2020-22 ACCESSORIES & EQUIPMENT

Acoustic Vehicle Alerting Control Unit - Diagnostics - CR-V (Hybrid)

DTC TROUBLESHOOTING

DTC B2890-13

DTC B2890-13 : An open in the acoustic vehicle alerting speaker circuit

NOTE: If you are troubleshooting multiple DTCs, be sure to follow the instructions in B-CAN System Diagnosis Test Mode A .

DTC Description	Confirmed DTC	Pending DTC
B2890-13 An open in the acoustic vehicle alerting speaker circuit	B	B

DTC (Acoustic Vehicle Alerting Control Unit)

1. Problem verification

   -1. Clear the DTCs with the HDS.

   -2. Turn the vehicle to the OFF (LOCK) mode and then the ON mode.

   -3. Wait for at least 20 seconds.

   -4. Check for Pending or Confirmed DTCs with the HDS.

DTC Description	Confirmed DTC	Pending DTC
B2890-13 An open in the acoustic vehicle alerting speaker circuit	B	B

   Is DTC B2890-13 indicated?

   YES

   Go to step 2.

   NO

   Intermittent failure, the system is OK at this time. Check for loose or poor connections.

2. AUDIBLE SPKR+, AUDIBLE SPKR- lines output check

   -1. Turn the vehicle to the OFF (LOCK) mode.

   -2. Disconnect the following connector.

Acoustic vehicle alerting speaker 2P connector

   -3. Raise the vehicle on a lift.

   -4. Turn the vehicle to the READY TO DRIVE mode.

   -5. Shift the transmission to D position/mode, release the brake pedal but do not operate the accelerator pedal.

NOTICE: Do not put on the brake hard when working on a running vehicle on a lift. It may cause some damage to the drive-line.

-6. Measure the voltage between test points 1 and 2.

Test condition	Vehicle READY TO DRIVE mode Acoustic vehicle alerting speaker 2P connector: disconnected
Test point 1	Acoustic vehicle alerting speaker 2P connector (female terminals) No. 1: ①
Test point 2	Acoustic vehicle alerting speaker 2P connector (female terminals) No. 2: ①

NOTE: The output voltage changes depending on vehicle speed.

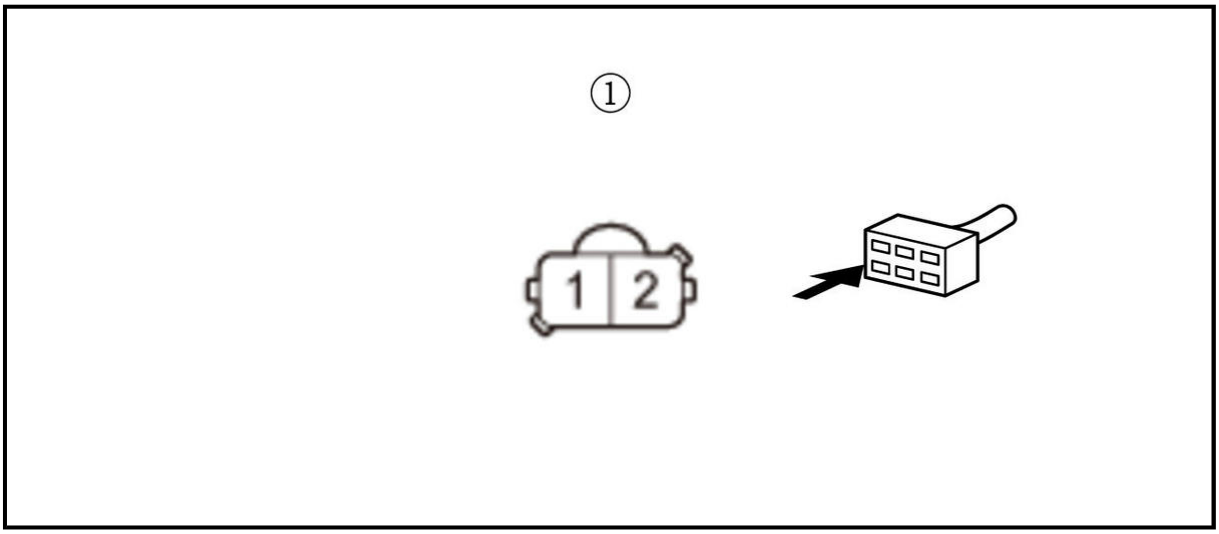

Is there about 5 V?

YES

Replace the acoustic vehicle alerting speaker .

NO

Go to step 3.

3. Open wire check (AUDIBLE SPKR+, AUDIBLE SPKR- lines)

-1. Turn the vehicle to the OFF (LOCK) mode.

-2. Disconnect the following connector.

Acoustic vehicle alerting control unit 12P connector

-3. Measure the resistance between test points 1 and 2 respectively.

Test condition	Vehicle ON mode Acoustic vehicle alerting speaker 2P connector: disconnected Acoustic vehicle alerting control unit 12P connector: disconnected
Test point 1	Acoustic vehicle alerting speaker 2P connector (female terminals) No. 2: ①
Test point 2	**Acoustic vehicle alerting control unit 12P connector No. 3**

Test point 1	Acoustic vehicle alerting speaker 2P connector (female terminals) No. 1: ①
Test point 2	Acoustic vehicle alerting control unit 12P connector No. 4

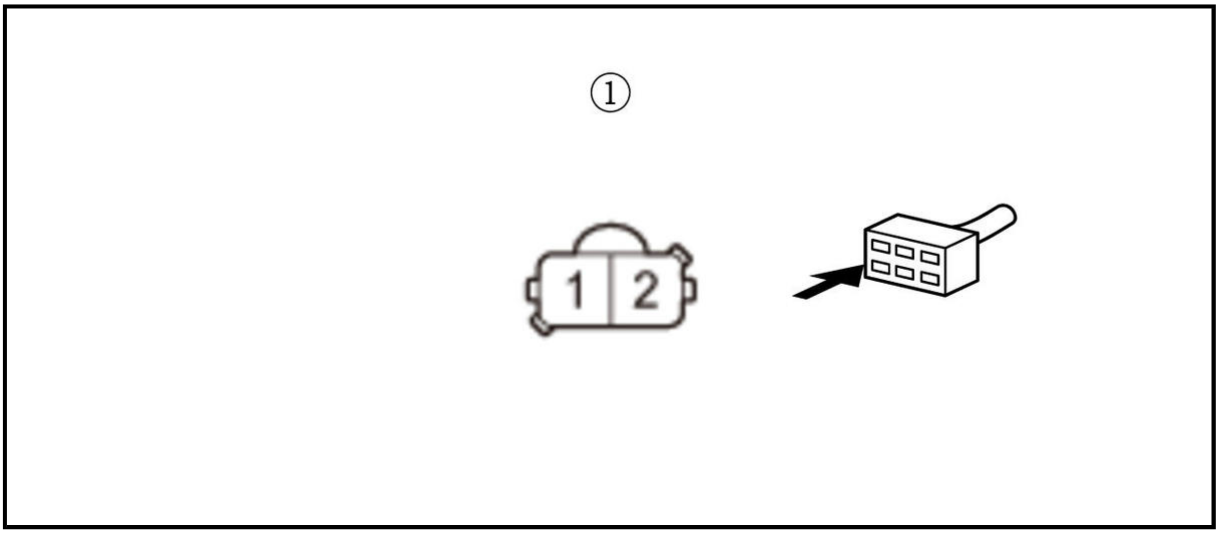

Is there 1.0 Ω or less?

YES

Replace the acoustic vehicle alerting control unit .

NO

Repair an open or high resistance in the wire.

DTC U0029-00 (ACOUSTIC VEHICLE ALERTING CONTROL UNIT)

DTC U0029-00 : F-CAN communication line error

NOTE:

- If you are troubleshooting multiple DTCs, be sure to follow the instructions in B-CAN System Diagnosis Test Mode A .
- Before you troubleshoot, record all freeze data and any on-board snapshot, and review the general troubleshooting information .

DTC Description	Confirmed DTC	Pending DTC
U0029-00 F-CAN communication line error	B	B

DTC (Acoustic Vehicle Alerting Control Unit)

1. Problem verification

   -1. Clear the DTCs with the HDS.

   -2. Turn the vehicle to the OFF (LOCK) mode and then the ON mode.

   -3. Wait for at least 6 seconds.

   -4. Check for DTCs with the HDS.

DTC Description	Confirmed DTC	Pending DTC
U0029-00 F-CAN communication line error	B	B

Is DTC U0029 indicated?

YES

Go to the troubleshooting for CAN gateway system DTC(s) .

NO

Intermittent failure, the system is OK at this time.

DTC U0100-00, U0101-00, U0122-00, U0128-00, U0129-00, U0155-00 (ACOUSTIC VEHICLE ALERTING CONTROL UNIT)

DTC U0100-00 : Acoustic vehicle alerting control unit lost communication with PCM

DTC U0101-00 : Acoustic vehicle alerting control unit lost communication with PCM/TCM

DTC U0122-00 : Acoustic vehicle alerting control unit lost communication with VSA modulator-control unit

DTC U0128-00 : Acoustic vehicle alerting control unit lost communication with Electric parking brake control unit

DTC U0129-00 : Acoustic vehicle alerting control unit lost communication with Electric servo brake control unit

DTC U0155-00 : Acoustic vehicle alerting control unit lost communication with Gauge control module

NOTE:

- If you are troubleshooting multiple DTCs, be sure to follow the instructions in B-CAN System Diagnosis Test Mode A .
- Before you troubleshoot, record all freeze data and any on-board snapshot, and review the general troubleshooting information .
- Refer to the DTC code shown on the display, and then inspect the connectors and terminals based on the instructions in the table below.
- The DTC may be stored due to the grounding failure or the power source failure at the transmitting control unit (the grounding inspection and the power source inspection on each control unit are required prior to this checking process).

DTC Description	Confirmed DTC	Pending DTC
U0100-00 Acoustic vehicle alerting control unit lost communication with PCM	B	B
U0101-00 Acoustic vehicle alerting control unit lost communication with PCM/TCM	B	B
U0122-00 Acoustic vehicle alerting control unit lost communication with VSA modulator-control unit	B	B
U0128-00 Acoustic vehicle alerting control unit lost communication with Electric parking brake control unit	B	B
U0129-00 Acoustic vehicle alerting control unit lost communication with Electric servo brake control unit	B	B
U0155-00 Acoustic vehicle alerting control unit lost communication with Gauge control module	B	B

DTC (Acoustic Vehicle Alerting Control Unit)

1. Problem verification

-1. Clear the DTCs with the HDS.

-2. Turn the vehicle to the OFF (LOCK) mode and then the ON mode.

-3. Wait for at least 6 seconds.

-4. Check for DTCs with the HDS.

DTC Description	Confirmed DTC	Pending DTC
U0100-00 Acoustic vehicle alerting control unit lost communication with PCM	B	B
U0101-00 Acoustic vehicle alerting control unit lost communication with PCM/TCM	B	B
U0122-00 Acoustic vehicle alerting control unit lost communication with VSA modulator-control unit	B	B
U0128-00 Acoustic vehicle alerting control unit lost communication with Electric parking brake control unit	B	B
U0129-00 Acoustic vehicle alerting control unit lost communication with Electric servo brake control unit	B	B
U0155-00 Acoustic vehicle alerting control unit lost communication with Gauge control module	B	B

Are any DTCs indicated?

YES

Go to step 2.

NO

Intermittent failure, the system is OK at this time. Check for poor connections or loose terminals.

2. CAN gateway system DTC check

-1. Check for CAN gateway system DTCs with the HDS.

DTC Description	DTC
U0029-00 CAN Gateway F-CAN ch A Bus Off	B
U0047-00 CAN Gateway F-CAN ch B Bus Off	B
U0056-00 CAN Gateway F-CAN ch C Bus Off	B
U0065-00 CAN Gateway F-CAN ch D Bus Off	B
U0038-00 CAN Gateway F-CAN ch E Bus Off	B
U3000-49 CAN Gateway Internal Failure	B

Is DTC U0029-00, U0047-00, U0056-00, U0038-00, and/or U3000-49 indicated?

YES

Go to the troubleshooting for CAN gateway system DTC(s) .

NO

Go to step 3.

3. F-CAN circuit communication check

-1. Select the FUNCTION TEST in the CAN gateway with the HDS, then select the F-CAN Bus Connected Unit Check.

F-CAN Bus Connected Unit Check

Does the acoustic vehicle alerting control unit detect the CAN gateway Bus channels B?

Bus B is Not Available

Go to step 4.

Bus B is Available

Go to step 5.

4. Open wire check (F-CAN B lines)

-1. Turn the vehicle to the OFF (LOCK) mode.

-2. Disconnect the following connectors.

CAN gateway 16P connector
Acoustic vehicle alerting control unit 12P connector

-3. Measure the resistance between test points 1 and 2.

Test condition	Vehicle OFF (LOCK) mode CAN gateway 16P connector: disconnected Acoustic vehicle alerting control unit 12P connector: disconnected
Test point 1	CAN gateway 16P connector (female terminals) No. 6: ①
Test point 2	**Acoustic vehicle alerting control unit 12P connector No. 5**

Test point 1	CAN gateway 16P connector (female terminals) No. 14: ①
Test point 2	**Acoustic vehicle alerting control unit 12P connector No. 6**

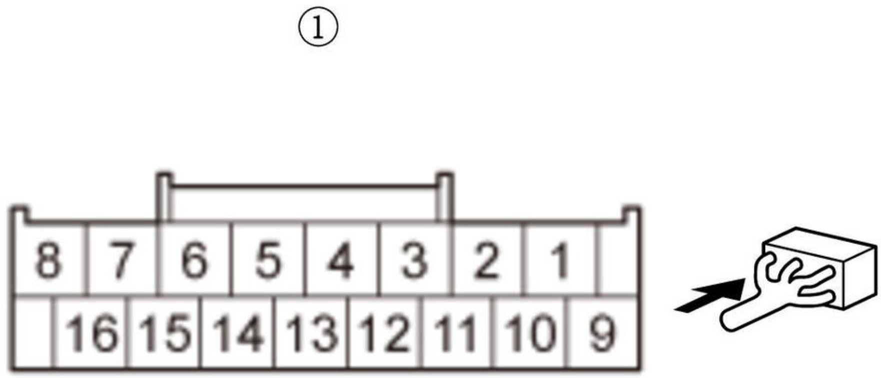

Is there 1.0 Ω or less?

YES

The F-CAN B_H and F-CAN B_L wires are OK. **Replace the acoustic vehicle alerting control unit** .

NO

Repair an open in F-CAN B_H or F-CAN B_L wire.

5. F-CAN circuit communication check (Transmitting control unit)

-1. Select the FUNCTION TEST in the CAN gateway with the HDS, then select the F-CAN Bus Connected Unit Check.

F-CAN Bus Connected Unit Check

According to the detected DTC on the following table, make sure that the transmitting control unit detects the CAN gateway Bus channel(s) normally.

DTC	Transmitting control unit	Detected CAN gateway Bus channel(s) at normal
U0100-00	PCM	A, B, E
U0101-00	PCM	A, B, E
U0122-00	VSA modulator-control unit	B, C
U0128-00	VSA modulator-control unit	B, C
U0129-00	Electric servo brake control unit	B, C
U0155-00	Gauge control module	D

Is it detected normally?

Detected normal

Intermittent failure, the system is OK at this time. Check for poor connections or loose terminals at the transmitting control unit and the CAN gateway.

U0100-00: PCM is Not Available for Bus A

Go to step 6.

U0100-00: PCM is Not Available for Bus B

Go to step 7.

U0100-00: PCM is Not Available for Bus E

Go to step 10.

U0101-00: PCM is Not Available for Bus A

Go to step 6.

U0101-00: PCM is Not Available for Bus B

Go to step 7.

U0101-00: PCM is Not Available for Bus E

Go to step 10.

U0122-00: VSA modulator-control unit is Not Available for Bus B

Go to step 7.

U0122-00: VSA modulator-control unit is Not Available for Bus C

Go to step 8.

U0128-00: VSA modulator-control unit is Not Available for Bus B

Go to step 7.

U0128-00: VSA modulator-control unit is Not Available for Bus C

Go to step 8.

U0129-00: Electric servo brake control unit is Not Available for Bus B

Go to step 7.

U0129-00: Electric servo brake control unit is Not Available for Bus C

Go to step 8.

U0155-00: Gauge control module is Not Available for Bus D

Go to step 9.

6. Open wire check (F-CAN A lines)

-1. Turn the vehicle to the OFF (LOCK) mode.

-2. U0100-00, U0101-00: Jump the SCS line with the HDS, and wait more than 1 minute.

SCS short

-3. According to the detected DTC on the following table, disconnect the transmitting control unit connector(s).

DTC	Connector
-	CAN gateway 16P connector
U0100-00	PCM connector A (50P)
U0101-00	PCM connector A (50P)

-4. Measure the resistance between test points 1 and 2.

Test condition	Vehicle OFF (LOCK) mode CAN gateway 16P connector: disconnected Transmitting control unit connector(s) for indicated DTCs: disconnected

DTC	Circuit name	Test point 1 (Receiving control unit)		Test point 2 (Transmitting control unit)	
		Connector	Terminal	Connector	Terminal
U0100-00	F-CAN A_H	CAN gateway 16P connector (female terminals): ①	No. 3	PCM connector A (50P)	No. 37
	F-CAN A_L		No. 11		No. 36
U0101-00	F-CAN A_H	CAN gateway 16P connector (female terminals): ①	No. 3	PCM connector A (50P)	No. 37
	F-CAN A_L		No. 11		No. 36

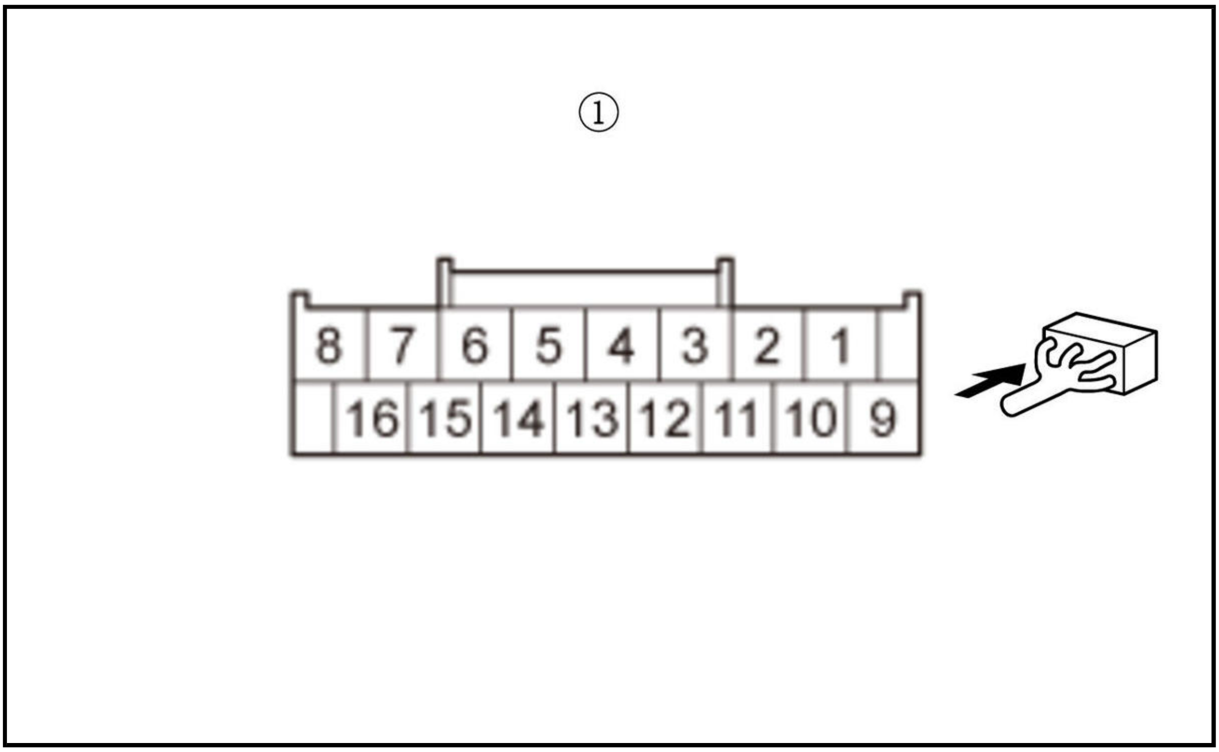

Is there 1.0 Ω or less?

YES

The F-CAN A_H wire and the F-CAN A_L wire are OK.

According to the detected DTC on the following table replace the correspond control unit.

DTC	Operation for transmitting control unit
U0100-00	**PCM**
U0101-00	**PCM**

NO

Repair an open in F-CAN A_H or F-CAN A_L wire.

7. Open wire check (F-CAN B lines)

   -1. Turn the vehicle to the OFF (LOCK) mode.

   -2. U0100-00, U0101-00: Jump the SCS line with the HDS, and wait more than 1 minute.

   SCS short

   -3. According to the detected DTC on the following table, disconnect the transmitting control unit connector(s).

DTC	Connector
-	CAN gateway 16P connector
U0100-00	PCM connector A (50P)
U0101-00	PCM connector A (50P)
U0122-00	VSA modulator-control unit 46P connector
U0128-00	VSA modulator-control unit 46P connector
U0129-00	Electric servo brake control unit 22P connector
U0155-00	Gauge control module connector A (32P)

-4. Measure the resistance between test points 1 and 2.

Test condition	Vehicle OFF (LOCK) mode CAN gateway 16P connector: disconnected Transmitting control unit connector(s) for indicated DTCs: disconnected

DTC	**Circuit name**	**Test point 1 (Receiving control unit)**		**Test point 2 (Transmitting control unit)**	
		Connector	**Terminal**	**Connector**	**Terminal**
U0100-00	F-CAN B_H	CAN gateway 16P connector (female terminals): ①	No. 6	**PCM connector A (50P)**	No. 39
	F-CAN B_L		No. 14		No. 38
U0101-00	F-CAN B_H	CAN gateway 16P connector (female terminals): ①	No. 6	**PCM connector A (50P)**	No. 39
	F-CAN B_L		No. 14		No. 38
U0122-00	F-CAN B_H	CAN gateway 16P connector (female terminals): ①	No. 6	**VSA modulator-control unit 46P connector**	No. 40
	F-CAN B_L		No. 14		No. 28

DTC	**Circuit name**	**Test point 1 (Receiving control unit)**		**Test point 2 (Transmitting control unit)**	
		Connector	**Terminal**	**Connector**	**Terminal**
U0128-00	F-CAN B_H	CAN gateway 16P connector (female terminals): ①	No. 6	**VSA modulator-control unit 46P connector**	No. 40
	F-CAN B_L		No. 14		No. 28
U0129-00	F-CAN B_H	CAN gateway 16P connector (female terminals): ①	No. 6	**Electric servo brake control unit 22P connector**	No. 15
	F-CAN B_L		No. 14		No. 14
U0155-00	F-CAN B_H	CAN gateway 16P connector (female terminals): ①	No. 6	**Gauge control module connector A (32P)**	No. 5
	F-CAN B_L		No. 14		No. 6

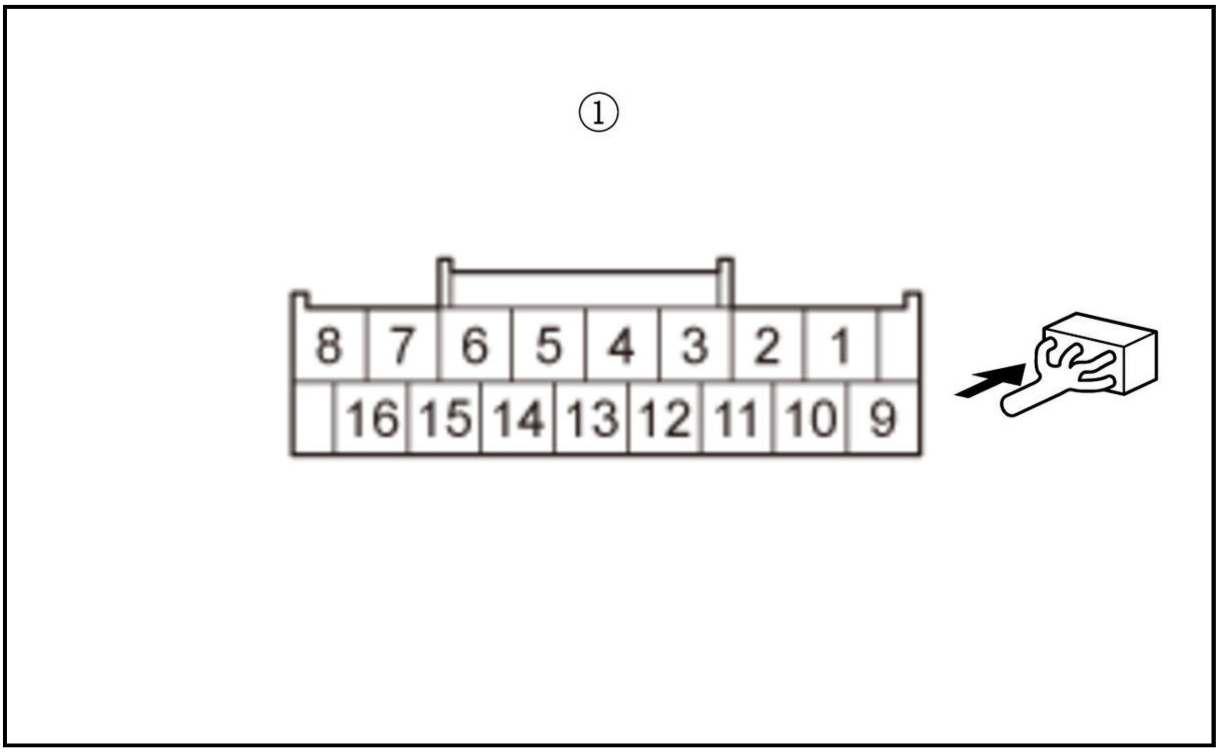

Is there 1.0 Ω or less?

YES

The F-CAN B_H wire and the F-CAN B_L wire are OK.

According to the detected DTC on the following table replace the correspond control unit.

DTC	Operation for transmitting control unit
U0100-00	**PCM**
U0101-00	**PCM**
U0122-00	**VSA modulator-control unit**
U0128-00	**VSA modulator-control unit**
U0129-00	**Electric servo brake control unit**
U0155-00	**Gauge control module**

NO

Repair an open in F-CAN B_H or F-CAN B_L wire.

8. Open wire check (F-CAN C lines)

-1. Turn the vehicle to the OFF (LOCK) mode.

-2. According to the detected DTC on the following table, disconnect the transmitting control unit connector(s).

DTC	Connector
-	CAN gateway 16P connector
U0122-00	VSA modulator-control unit 46P connector
U0128-00	VSA modulator-control unit 46P connector
U0129-00	Electric servo brake control unit 22P connector

-3. Measure the resistance between test points 1 and 2.

Test condition	Vehicle OFF (LOCK) mode CAN gateway 16P connector: disconnected Transmitting control unit connector(s) for indicated DTCs: disconnected

DTC	Circuit name	Test point 1 (Receiving control unit)		Test point 2 (Transmitting control unit)	
		Connector	Terminal	Connector	Terminal
U0122-00	F-CAN C_H	CAN gateway 16P connector (female terminals): ①	No. 5	VSA modulator-control unit 46P connector	No. 46
	F-CAN C_L		No. 13		No. 34

DTC	Circuit name	Test point 1 (Receiving control unit)		Test point 2 (Transmitting control unit)	
		Connector	Terminal	Connector	Terminal
U0128-00	F-CAN C_H	CAN gateway 16P connector (female terminals): ①	No. 5	VSA modulator-control unit 46P connector	No. 46
	F-CAN C_L		No. 13		No. 34
U0129-00	F-CAN C_H	CAN gateway 16P connector (female terminals): ①	No. 5	Electric servo brake control unit 22P connector	No. 19
	F-CAN C_L		No. 13		No. 18

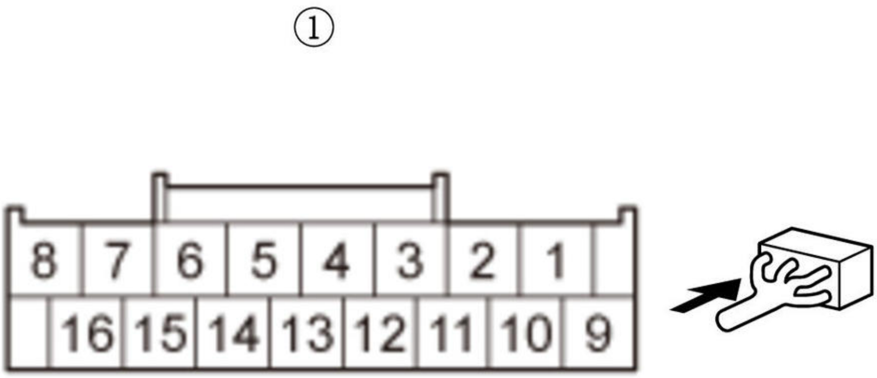

Is there 1.0 Ω or less?

YES

The F-CAN C_H wire and the F-CAN C_L wire are OK.

According to the detected DTC on the following table replace the correspond control unit.

DTC	Operation for transmitting control unit
U0122-00	VSA modulator-control unit

DTC	Operation for transmitting control unit
U0128-00	**VSA modulator-control unit**
U0129-00	**Electric servo brake control unit**

NO

Repair an open in F-CAN C_H or F-CAN C_L wire.

9. Open wire check (F-CAN D lines)

-1. Turn the vehicle to the OFF (LOCK) mode.

-2. According to the detected DTC on the following table, disconnect the transmitting control unit connector(s).

DTC	Connector
-	CAN gateway 16P connector
U0155-00	Gauge control module connector A (32P)

-3. Measure the resistance between test points 1 and 2.

Test condition	Vehicle OFF (LOCK) mode CAN gateway 16P connector: disconnected Transmitting control unit connector(s) for indicated DTCs: disconnected

DTC	Circuit name	Test point 1 (Receiving control unit)		Test point 2 (Transmitting control unit)	
		Connector	Terminal	Connector	Terminal
U0155-00	F-CAN D_H	CAN gateway 16P connector (female terminals): ①	No. 7	**Gauge control module connector A (32P)**	No. 19
	F-CAN D_L		No. 15		No. 20

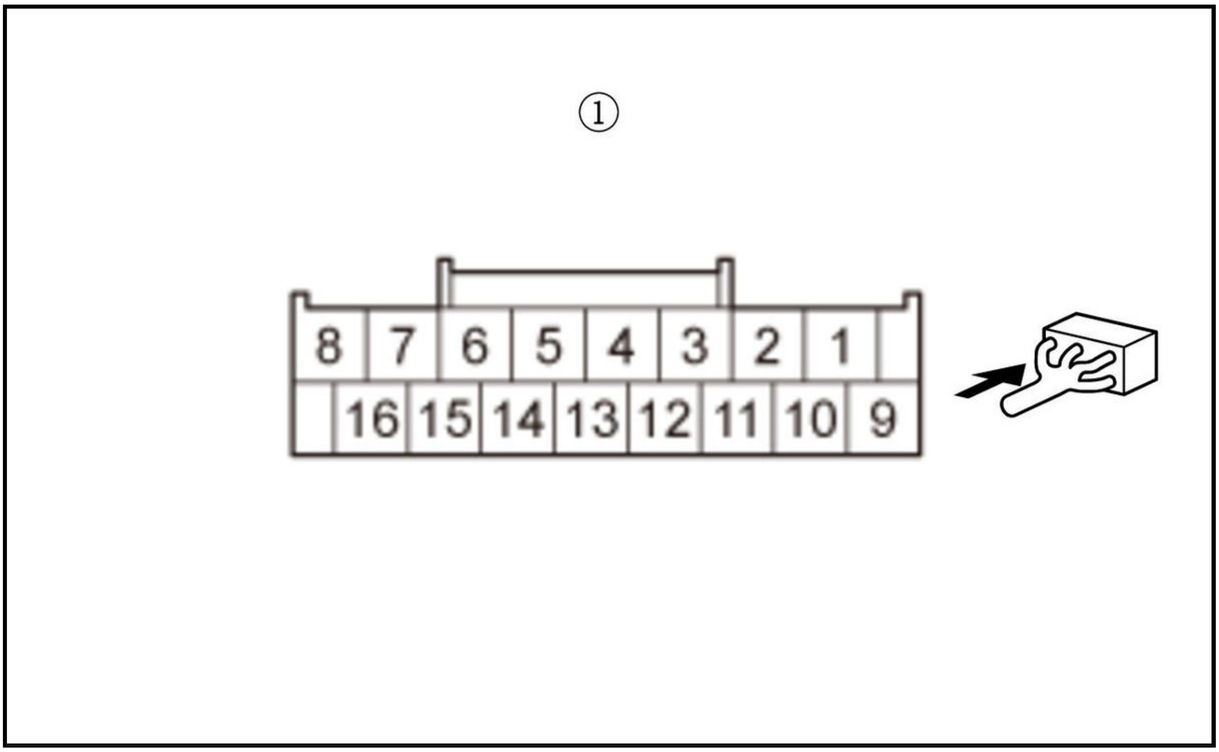

Is there 1.0 Ω or less?

YES

The F-CAN D_H wire and the F-CAN D_L wire are OK.

According to the detected DTC on the following table replace the correspond control unit.

DTC	Operation for transmitting control unit
U0155-00	Gauge control module

NO

Repair an open in F-CAN D_H or F-CAN D_L wire.

10. Open wire check (EP-CAN lines)

-1. Turn the vehicle to the OFF (LOCK) mode.

-2. U0100-00, U0101-00: Jump the SCS line with the HDS, and wait more than 1 minute.

SCS short

-3. According to the detected DTC on the following table, disconnect the transmitting control unit connector(s).

DTC	Connector
-	CAN gateway 16P connector
U0100-00	PCM connector A (50P)
U0101-00	PCM connector A (50P)

-4. Measure the resistance between test points 1 and 2.

Test condition	Vehicle OFF (LOCK) mode CAN gateway 16P connector: disconnected Transmitting control unit connector(s) for indicated DTCs: disconnected

DTC	Circuit name	Test point 1 (Receiving control unit)		Test point 2 (Transmitting control unit)	
		Connector	**Terminal**	**Connector**	**Terminal**
U0100-00	EP-CAN A_H	CAN gateway 16P connector (female terminals): ①	No. 16	PCM connector A (50P)	No. 21
	EP-CAN A_L		No. 8		No. 20
U0101-00	EP-CAN A_H	CAN gateway 16P connector (female terminals): ①	No. 16	PCM connector A (50P)	No. 21
	EP-CAN A_L		No. 8		No. 20

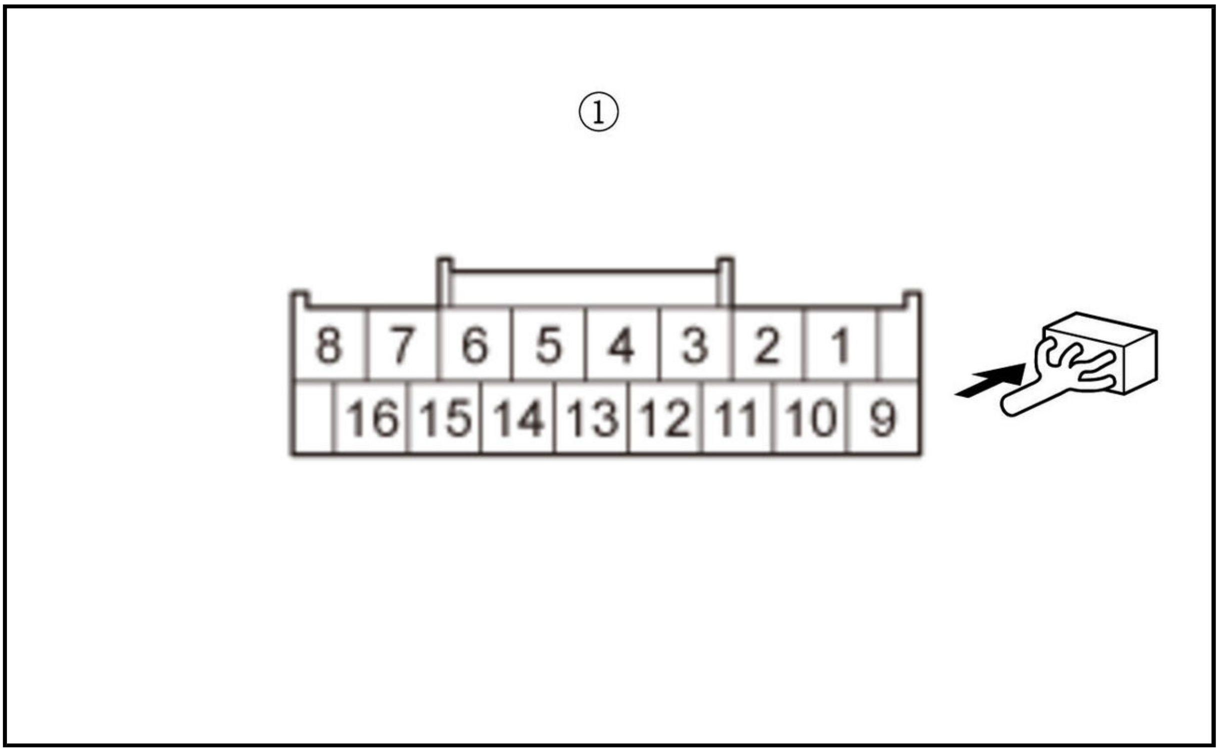

Is there 1.0 Ω or less?

YES

The EP-CAN A_H wire and the EP-CAN A_L wire are OK.

According to the detected DTC on the following table replace the correspond control unit.

DTC	Operation for transmitting control unit
U0100-00	**PCM**
U0101-00	**PCM**

NO

Repair an open in EP-CAN A_H or EP-CAN A_L wire.

SYMPTOM TROUBLESHOOTING INDEX FOR VIEWER

ACC OFF IS DISPLAYED ON THE MID UNEXPECTEDLY

Diagnostic procedure

- Check the ACC system auto stop control history.

ACC INDICATOR (ON THE MID) DOES NOT COME ON

Diagnostic procedure

- Symptom troubleshooting.

ACC INDICATOR (ON THE MID) DOES NOT GO OFF, AND NO DTCS ARE STORED

Diagnostic procedure

NOTE: If any of the CAN communication failure DTC is indicated in another system, troubleshoot the DTC first.

- Check for an open or a short in the F-CAN circuit;
-
    - -

      Between the gauge control module and the CAN gateway (F-CAN D_H, F-CAN D_L)
    - -

      Between the millimeter wave radar and the CAN gateway (F-CAN C_H, F-CAN C_L)
- Check the millimeter wave radar power circuit (IG1_OPTION).
- Check the millimeter wave radar ground circuit (GND).
- Do to the gauge control module self-diagnostic function .

Also check for

Refer to the followings about the indicator operating condition;

- General troubleshooting information

Refer to the followings about the circuit troubleshooting;

- Gauge control Module connector for inputs and outputs
- Millimeter wave radar connector for inputs and outputs
- Adaptive cruise control (ACC) circuit diagram
- Fuse to components index
- Ground to components index

CMBS OFF SWITCH DOES NOT TURN ON/TURN OFF (CMBS INDICATOR DOES NOT CHANGE) (CMBS)

Diagnostic procedure

- Do the gauge control module self-diagnostic function .
- Test the CMBS OFF switch .

Also check for

- An open or increased resistance in the wire

- A short in the wire

CMBS INDICATOR (ON THE MID) DOES NOT COME ON (CMBS)

Diagnostic procedure

- Do the gauge control module self-diagnostic function .

CMBS INDICATOR (ON THE MID) DOES NOT GO OFF (CMBS)

Diagnostic procedure

- Symptom troubleshooting.

DOES NOT SENSE THE VEHICLE DRIVING AHEAD

Diagnostic procedure

- Symptom troubleshooting.

Also check for

- Out of the performance limits
- Wheel alignment
- Undetectable environment

INTERMITTENTLY SENSES THE VEHICLE DRIVING AHEAD

Diagnostic procedure

- Symptom troubleshooting.

Also check for

- Incorrect millimeter wave radar installation
- Wheel alignment
- Undetectable environment

LKAS INDICATOR (ON THE MID) DOES NOT COME ON

Diagnostic procedure

- Symptom troubleshooting.

LKAS INDICATOR (ON THE MID) DOES NOT GO OFF, AND NO DTCS ARE STORED

Diagnostic procedure

NOTE: If any of the CAN communication failure DTC is indicated in another system, troubleshoot the DTC first.

- Check for an open or a short in the F-CAN circuit;
-
    - -

      Between the gauge control module and the CAN gateway (F-CAN D_H, F-CAN D_L)
    - -

      Between the millimeter wave radar and the CAN gateway (F-CAN C_H, F-CAN C_L)
- Check the millimeter wave radar power circuit (IG1_OPTION).
- Check the millimeter wave radar ground circuit (GND).
- Do to the gauge control module self-diagnostic function .

Also check for

Refer to the followings about the indicator operating condition;

- General troubleshooting information

Refer to the followings about the circuit troubleshooting;

- Gauge control Module connector for inputs and outputs
- Millimeter wave radar connector for inputs and outputs
- Lane Keeping Assist System (LKAS) Circuit Diagram
- Fuse to components index
- Ground to components index

SENSES A VEHICLE DRIVING IN ANOTHER LANE

Diagnostic procedure

- Symptom troubleshooting.

Also check for

- Incorrect millimeter wave radar installation
- Wheel alignment

SET DISTANCE CANNOT BE ADJUSTED WITH THE DISTANCE SWITCH

Diagnostic procedure

- Test the ACC combination switch .

SET SPEED DOES NOT CANCEL WHEN THE MAIN SWITCH IS TURNED OFF

Diagnostic procedure

- Test the ACC combination switch .

Also check for

An open in the wire

SET SPEED DOES NOT CANCEL WHEN THE BRAKE PEDAL IS PRESSED

Diagnostic procedure

- Test the brake pedal position switch .

Also check for

An open in the wire

THE CMBS DID NOT OPERATE (CMBS)

Diagnostic procedure

- Check the millimeter wave radar installation .
- Check the front grille for warpage.
- Check the wheel alignment .

Also check for

- Driving conditions, weather, environmental influences
- Undetectable environment

THE CMBS OPERATED WITHOUT DANGER OF COLLISION (CMBS)

Diagnostic procedure

- Check the millimeter wave radar installation .
- Check the front grille for warpage.
- Check the wheel alignment .

Also check for

Driving conditions, weather, environmental influence

THE CMBS OPERATES FREQUENTLY (CMBS)

Diagnostic procedure

- Check the millimeter wave radar installation .
- Check the front grille for warpage.
- Check the wheel alignment .

Also check for

Driving conditions, weather, environmental influence

THE MID DOES NOT INDICATE WHEN THE CMBS OFF SWITCH IS OPERATED (CMBS)

Diagnostic procedure

- Do the gauge control module self-diagnostic function .
- Test the CMBS OFF switch .

Also check for

- An open or increased resistance in the wire
- A short in the wire

THE MID DOES NOT INDICATE WITH THE CMBS OPERATING (CMBS)

Diagnostic procedure

- Do the gauge control module self-diagnostic function .

THE BUZZER DOES NOT SOUND WHEN THE CMBS OFF SWITCH IS OPERATED (CMBS)

Diagnostic procedure

- Do the gauge control module self-diagnostic function .

THE BUZZER DOES NOT SOUND (CMBS)

Diagnostic procedure

- Do the gauge control module self-diagnostic function .

VEHICLE DOES NOT DECELERATE OR ACCELERATE ACCORDINGLY WHEN THE SET- OR RES+ SWITCH IS PRESSED

Diagnostic procedure

- Test the ACC combination switch .

Also check for

An open in the wire

VEHICLE SPEED CAN BE SET, BUT THERE IS NO ACC INDICATION ON THE MID

Diagnostic procedure

- Do the gauge control module self-diagnostic function .

VEHICLE SPEED CAN BE SET, BUT VEHICLE DECELERATES

Diagnostic procedure

- Check for DTCs in the PGM-FI system with the HDS .

Also check for

Faulty ETCS

VEHICLE SPEED CANNOT BE SET WHEN THE SET SWITCH IS PRESSED BETWEEN 25 MPH (40 KM/H) AND 90 MPH (145 KM/H)

Diagnostic procedure

- Test the ACC combination switch .
- Test the brake pedal position switch .

Also check for

- An open in the wire
- A short in the wire
- The system is in service mode.

DESCRIPTION & OPERATION

ADAPTIVE CRUISE CONTROL (ACC) SYSTEM DESCRIPTION

Function

The ACC system with Low Speed Follow (LSF) uses the multipurpose camera unit and the millimeter wave radar to calculate and adjust the vehicle speed to maintain the appropriate following interval between your vehicle and the vehicle detected ahead based on your vehicle speed and driving conditions. When another vehicle cuts in between your vehicle and the vehicle detected, the system switches the target vehicle to a new vehicle using the image information (vehicle and lane information) from the multipurpose camera. When the vehicle detected changes the lane or goes out of the detection range, the vehicle drives at the preset vehicle speed until detecting a new target vehicle. ACC system works with the cruise control system to adjust the vehicle speed.

The cruise control mode can be entered by operating the distance switch while the ACC is working.

Control Block Diagram

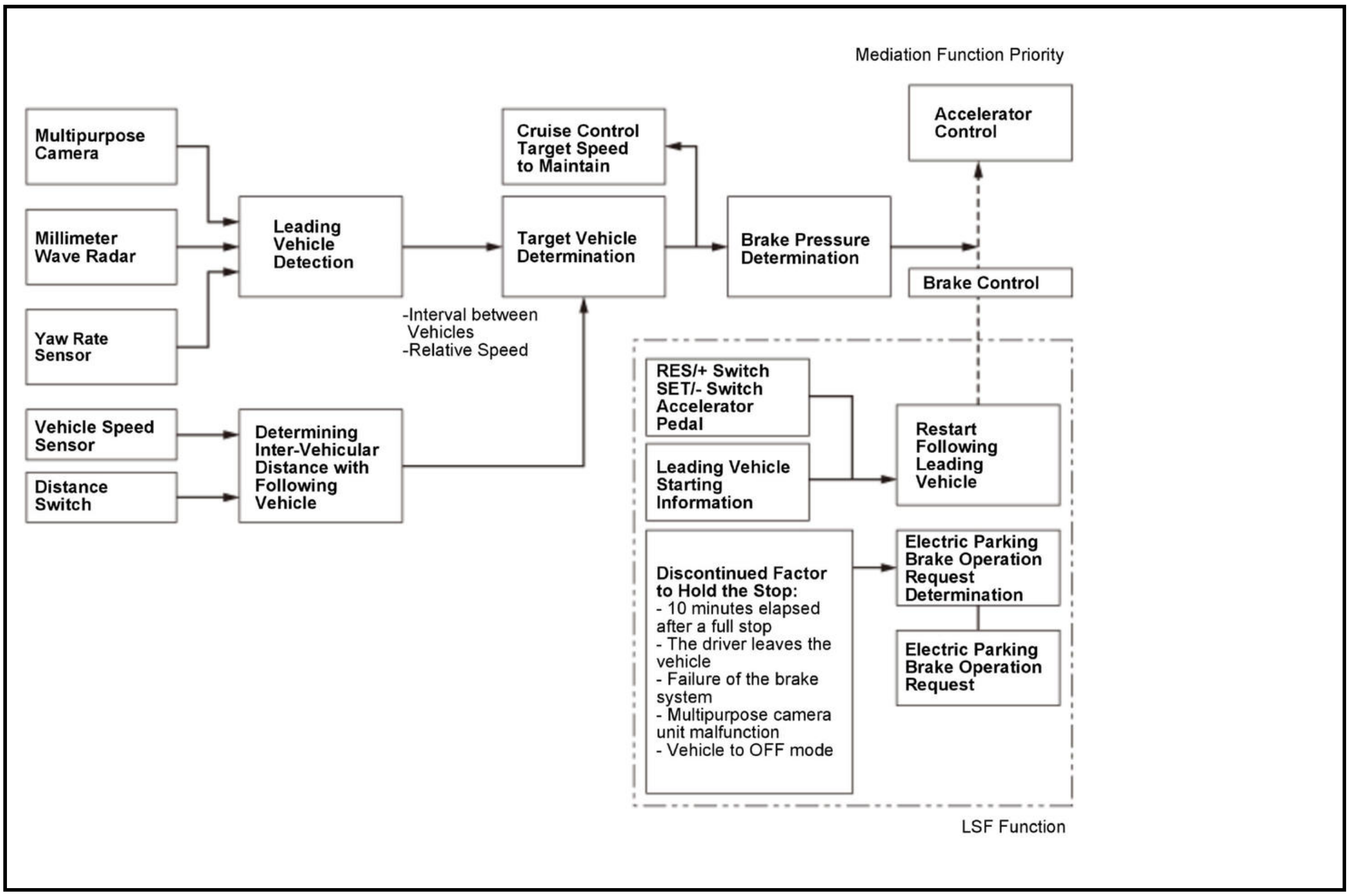
Mediation Function Priority
Multipurpose Camera
Millimeter Wave Radar
Yaw Rate Sensor
Leading Vehicle Detection
Cruise Control Target Speed to Maintain
Target Vehicle Determination
Brake Pressure Determination
Accelerator Control
Brake Control
-Interval between Vehicles
-Relative Speed
Vehicle Speed Sensor
Distance Switch
Determining Inter-Vehicular Distance with Following Vehicle
RES/+ Switch SET/- Switch Accelerator Pedal
Leading Vehicle Starting Information
Restart Following Leading Vehicle
Discontinued Factor to Hold the Stop:
- 10 minutes elapsed after a full stop
- The driver leaves the vehicle
- Failure of the brake system
- Multipurpose camera unit malfunction
- Vehicle to OFF mode
Electric Parking Brake Operation Request Determination
Electric Parking Brake Operation Request
LSF Function

Operation Conditions

Control vehicle speed	Following function	0 - 90 mph (0 - 145 km/h)
	Set speed range	25 - 90 mph (40 - 145 km/h)
Left/right detection angle of millimeter wave radar		+/-42.6 degrees
Up/down detection angle of millimeter wave radar		-6 to +11.5 degrees
Road inclination		Less than 6%
Detection object		Vehicle only

Basic Controls of ACC and Low Speed Follow (LSF)

- The ACC system uses the millimeter wave radar to detect the vehicle ahead, determines the target vehicle and measures the distance to the target vehicle and its vehicle speed. (the system also uses the multipurpose camera as needed to determine the target vehicle based on the lane and vehicle position information)
- When there is no vehicle detected ahead, your vehicle drives at the preset speed. When there is a vehicle detected ahead, your vehicle follows the vehicle and drives within the preset speed.

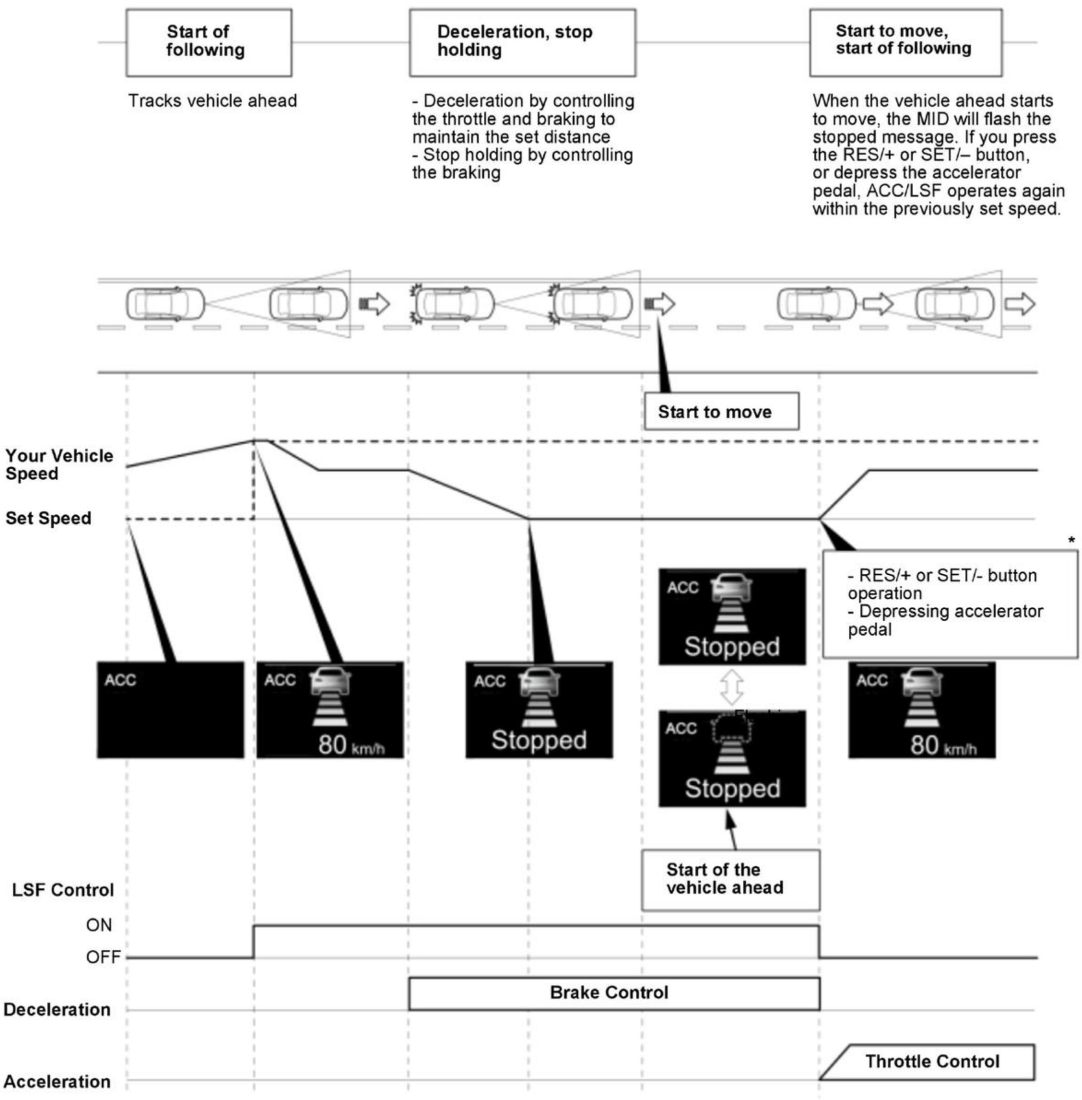
Start of following
Deceleration, stop holding
Start to move, start of following
Start to move
Your Vehicle Speed
Set Speed
ACC
ACC
80 km/h
ACC
Stopped
ACC
Stopped
ACC
Stopped
ACC
80 km/h
*
Start of the vehicle ahead
LSF Control
ON
OFF
Deceleration
Brake Control
Acceleration
Throttle Control

Tracks vehicle ahead

- Deceleration by controlling the throttle and braking to maintain the set distance
- Stop holding by controlling the braking

When the vehicle ahead starts to move, the MID will flash the stopped message. If you press the RES/+ or SET/– button, or depress the accelerator pedal, ACC/LSF operates again within the previously set speed.

- RES/+ or SET/- button operation
- Depressing accelerator pedal

*: If the driver presses the RES/+ or SET/- button on or the acceleration pedal before the leading vehicle restarting moving, your vehicle does not start moving except when the system detects that the leading vehicle restarts moving within a set period of time after the button or pedal is pressed.

When the ACC control stop factor occurs during the LSF operation

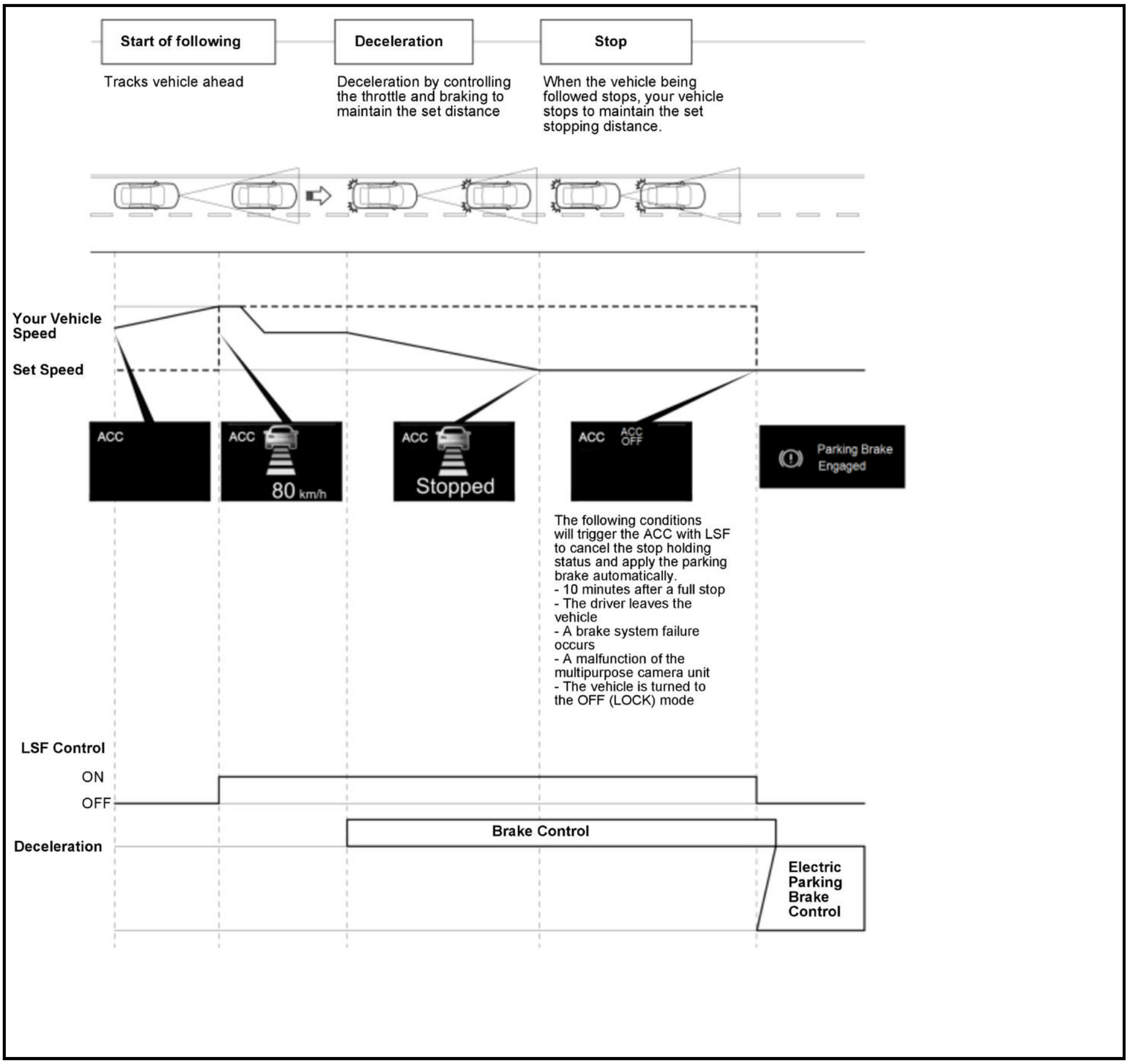
Start of following
Deceleration
Stop
Your Vehicle Speed
Set Speed
ACC
ACC
80 km/h
ACC
Stopped
ACC
ACC OFF
Parking Brake Engaged
LSF Control
ON
OFF
Deceleration
Brake Control
Electric Parking Brake Control

Tracks vehicle ahead

Deceleration by controlling the throttle and braking to maintain the set distance

When the vehicle being followed stops, your vehicle stops to maintain the set stopping distance.

The following conditions will trigger the ACC with LSF to cancel the stop holding status and apply the parking brake automatically.
- 10 minutes after a full stop
- The driver leaves the vehicle
- A brake system failure occurs
- A malfunction of the multipurpose camera unit
- The vehicle is turned to the OFF (LOCK) mode

Determination of the target vehicle

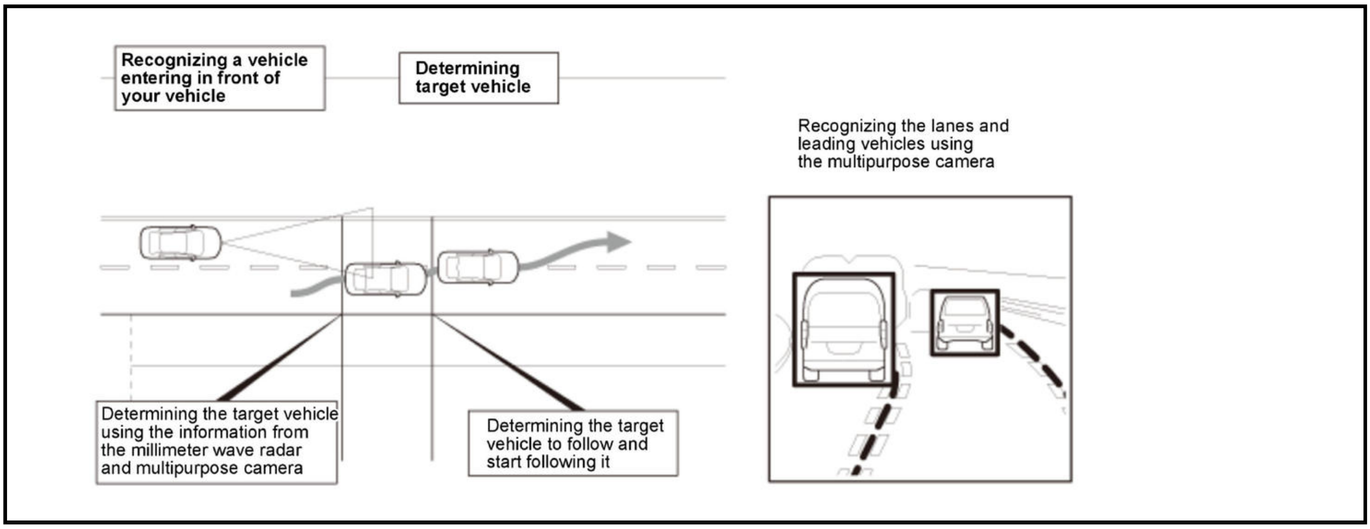
Recognizing a vehicle entering in front of your vehicle
Determining target vehicle

Recognizing the lanes and leading vehicles using the multipurpose camera

Determining the target vehicle using the information from the millimeter wave radar and multipurpose camera

Determining the target vehicle to follow and start following it

ADAPTIVE CRUISE CONTROL (ACC) SYSTEM DESCRIPTION - SYSTEM DIAGRAM

The system diagram of the ACC system is shown below.

For locations of each component on the vehicle, refer to Component Location Index:

- Millimeter wave radar
- Multipurpose camera unit
- VSA modulator-control unit
- Gauge control module
- PCM
- SRS unit
- Electric servo brake control unit/pedal feel simulator
- EPS control unit
- SBW shifter control module

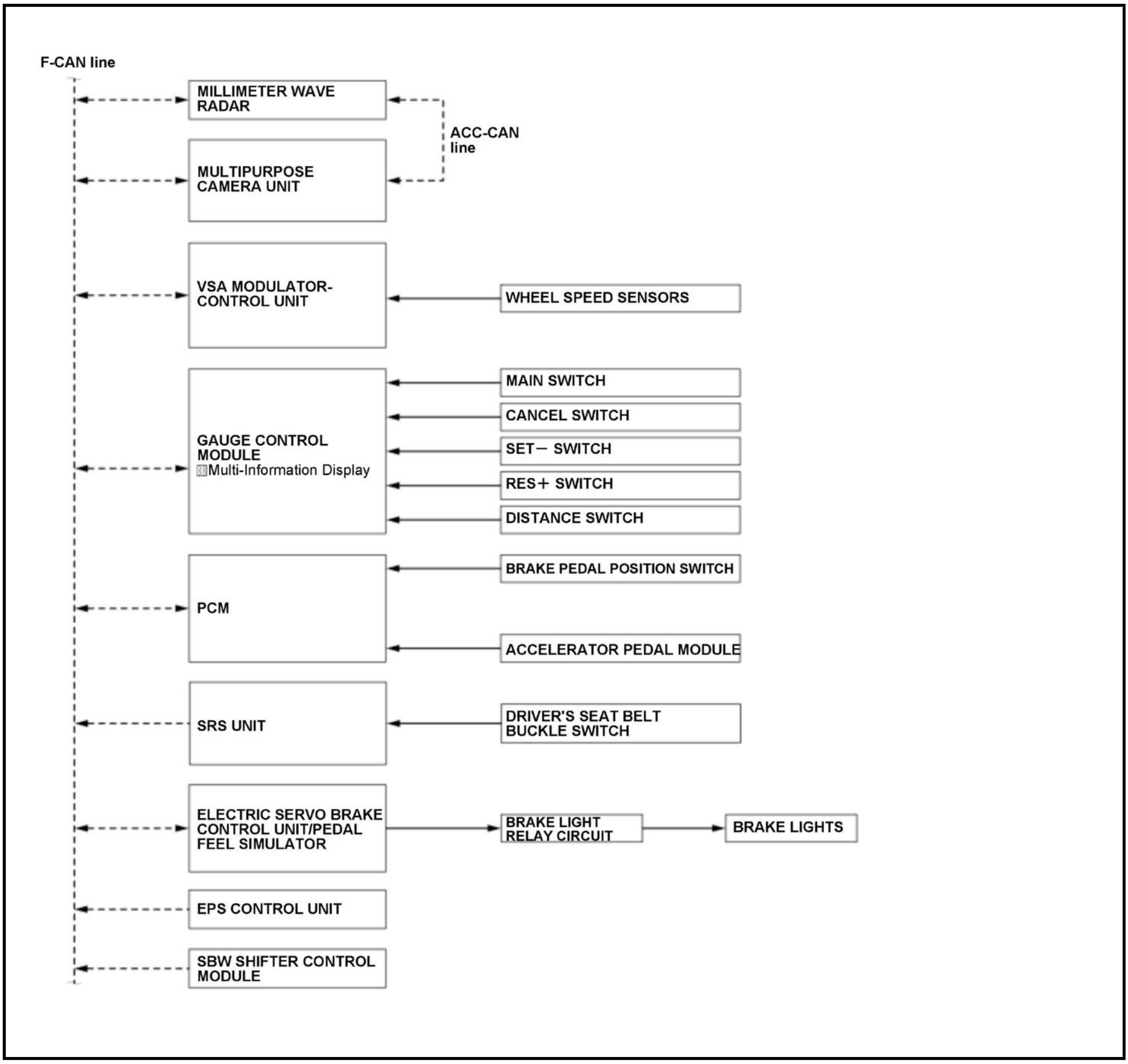
F-CAN line
MILLIMETER WAVE RADAR
ACC-CAN line
MULTIPURPOSE CAMERA UNIT
VSA MODULATOR-CONTROL UNIT
WHEEL SPEED SENSORS
GAUGE CONTROL MODULE
Multi-Information Display
MAIN SWITCH
CANCEL SWITCH
SET− SWITCH
RES+ SWITCH
DISTANCE SWITCH
PCM
BRAKE PEDAL POSITION SWITCH
ACCELERATOR PEDAL MODULE
SRS UNIT
DRIVER'S SEAT BELT BUCKLE SWITCH
ELECTRIC SERVO BRAKE CONTROL UNIT/PEDAL FEEL SIMULATOR
BRAKE LIGHT RELAY CIRCUIT
BRAKE LIGHTS
EPS CONTROL UNIT
SBW SHIFTER CONTROL MODULE

F-CAN Communication Data

Millimeter Wave Radar Receiving Signal:

Originating Unit	Signal Name
EPS control unit	• Steering angle signal • Steering angle neutral position learning information
Gauge control module	• ACC combination switch signal (switch failure information)

Originating Unit	Signal Name
	• Customization signal • Gauge control module failure information for ACC

*1: With the multipurpose camera unit via ACC-CAN line.

Originating Unit	Signal Name
Multipurpose camera unit *1	• Object recognition information • Multipurpose camera unit failure information • Traffic lane information

PCM	• ACC system driver request:
	•
	  • -
	  Accelerator pedal operation status
	  • -
	  Cancellation signal
	• PCM failure information for ACC system
	• Accelerator pedal position (APP) sensor control state signal
	• Brake pedal position switch signal
	• Engine torque information
	• Engine rotation speed information

SRS unit	• Driver's seat belt buckle switch status, Driver's seat belt buckle switch failure information • Longitudinal acceleration sensor signal, Longitudinal acceleration sensor failure information • Yaw rate sensor signal, Yaw rate sensor failure information
VSA modulator-control unit	• Electric parking brake status signal, Electric parking brake system failure information • Master cylinder pressure signal, Master cylinder pressure sensor failure information • VSA system failure information for ACC system • Wheel speed sensor signals, Wheel speed sensor failure information
Electric servo brake control unit/pedal feel simulator	• Brake control state signal • Brake light relay circuit failure information • Driver brake operation Information • Electric servo brake system failure information for ACC system
SBW shifter control module	Shift position status

*1: With the multipurpose camera unit via ACC-CAN line.

Millimeter Wave Radar Transmitting Signal:

Destination Unit	Signal Name
EPS control unit	---
Gauge control module	• ACC system failure information

Destination Unit	Signal Name
	• Buzzer request signal • Customization information • Multi information display (MID) screen requirement: • • - ACC indicator • - ACC activation indicator • - ACC system indicates for self-diagnostic function
Multipurpose camera unit *1	Vehicle information
PCM	• ACC system failure information • Target torque
SRS unit	---
VSA modulator-control unit	• ACC system failure information • Electric parking brake actuation request signal • Low speed following (LSF) function stoppage and retention information

*1: With the multipurpose camera unit via ACC-CAN line.

Destination Unit	Signal Name
Electric servo brake control unit/pedal feel simulator	• ACC automatic brake activation request signal • ACC system failure information • Target ACC deceleration information
SBW shifter control module	---

*1: With the multipurpose camera unit via ACC-CAN line.

COLLISION MITIGATION BRAKING SYSTEM (CMBS) DESCRIPTION

The CMBS can detect a possible collision and assist brake operation to reduce the impact on the vehicle.

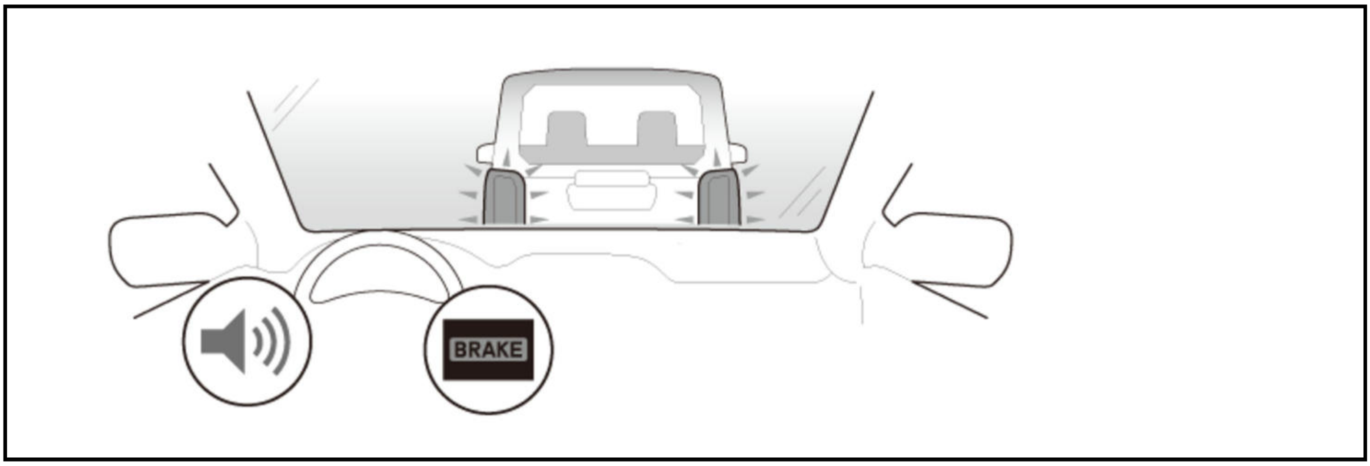

CMBS Operation Sequence

- When the speed difference between your vehicle and a vehicle or pedestrian detected ahead is greater than 3 mph (5 km/h) and the system detects a possible collision, the system issues a warning message on the Multi Information Display (MID) and sets an alarm off.
- When your vehicle is getting close to the vehicle or pedestrian detected ahead of your vehicle, the system issues a warning message on the MID and sets an alarm off to give the warning to the driver that there is a possible collision (First step).
- When your vehicle gets even closer to the vehicle or pedestrian detected ahead of your vehicle and the system anticipates a collision, CMBS applies light braking force while issuing the MID warning and setting an alarm off (Second step).
- When the system determines that a collision is inevitable, the CMBS applies strong brake force while issuing the MID warning and setting an alarm off (Third step).

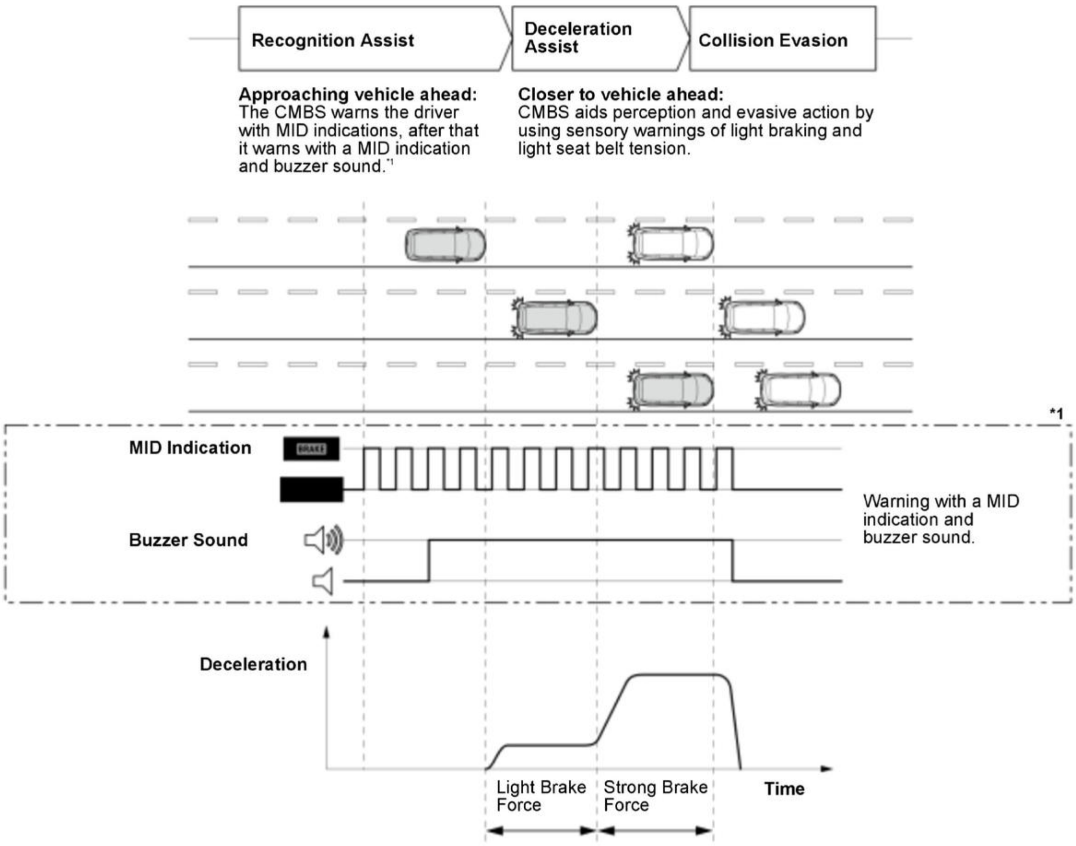
Recognition Assist
Deceleration Assist
Collision Evasion
Approaching vehicle ahead:
The CMBS warns the driver with MID indications, after that it warns with a MID indication and buzzer sound.*1
Closer to vehicle ahead:
CMBS aids perception and evasive action by using sensory warnings of light braking and light seat belt tension.
*1
MID Indication
BRAKE
Buzzer Sound
Warning with a MID indication and buzzer sound.
Deceleration
Light Brake Force
Strong Brake Force
Time

*1: Normally the alarm buzzer goes off after the MID warning message appears but they may be issued at the same time due to driving and weather conditions.

- The multipurpose camera unit records the number of operations from vehicle ON mode to OFF (LOCK) mode. When the limit for the number of operations is exceeded, "excessive CMBS operation" is judged, the CMBS function is disabled, the warning indicator comes on and DTCs are stored. The limit for the number of operations differs according to the CMBS operation conditions.
- When the multipurpose camera is malfunctioning (including a temporary function stop), CMBS does not function.

Operation Conditions

B	Vehicle Ahead	Opposite Vehicle	Pedestrian
Conditions for the object	Passenger vehicles, subcompact, or large vehicle (The system may have difficulty recognizing two wheeled vehicles, like motorcycles, or other unusual body styles.		The system uses analysis method using preprogrammed human figure patterns to detect pedestrians. (heights need to be approximately 1 to 2 meters for

B		Vehicle Ahead	Opposite Vehicle	Pedestrian
		The system will function as designed if the vehicles are detected.)		the system to recognize figures as pedestrians) • Pedestrians behind the vehicle, and persons crossing the road. • • - In some cases, persons crossing the road may not be detected if they jump out onto the road or are running. • - Depending on shape and material, human shaped posters or signs along the road may be detected.
System operation conditions	Operation vehicle speed	About 3 mph (5 km/h) or more	Between about 3 mph (5 km/h) and 62 mph (100 km/h).	
	Relative velocity	About 3 mph (5 km/h) or more	About 9 mph (15 km/h) or more	About 3 mph (5 km/h) or more
	Environment conditions*	• There is sufficient visibility and light available for the multipurpose camera to recognize objects • In environments where millimeter wave transmission/reception is not blocked (Some weather conditions such as fog, snowfall may have impact on system operation)		

*: For more details on environmental conditions and objects that are hard to be recognized, refer to the owner's manual.

COLLISION MITIGATION BRAKING SYSTEM (CMBS) DESCRIPTION - SYSTEM DIAGRAM

The system diagram of the CMBS is shown below.

For locations of each component on the vehicle, refer to Component Location Index:

- **Millimeter wave radar**
- **Multipurpose camera unit**
- **VSA modulator-control unit**
- **Gauge control module**
- **PCM**
- **SRS unit**
- **Electric servo brake control unit/pedal feel simulator**
- **EPS control unit**
- **SBW shifter control module**

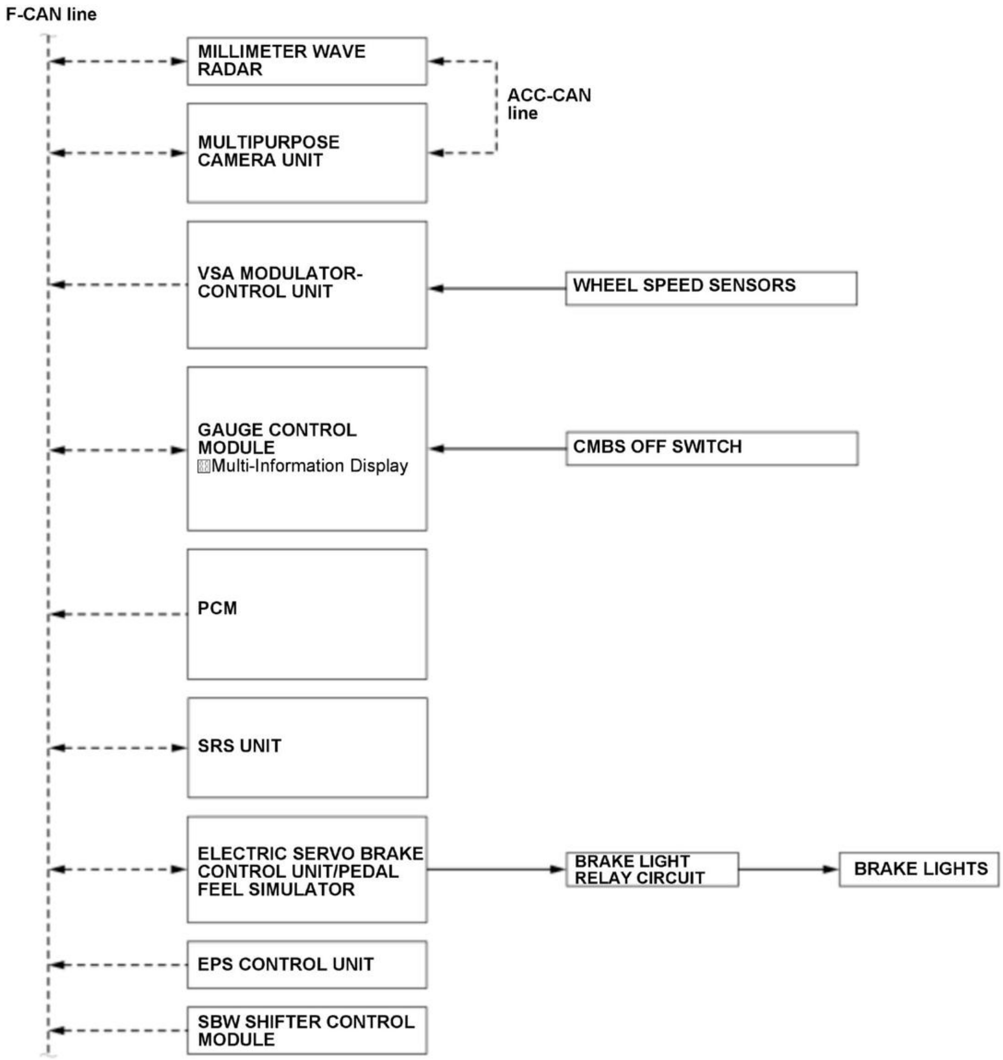
F-CAN line
MILLIMETER WAVE RADAR
ACC-CAN line
MULTIPURPOSE CAMERA UNIT
VSA MODULATOR-CONTROL UNIT
WHEEL SPEED SENSORS
GAUGE CONTROL MODULE
Multi-Information Display
CMBS OFF SWITCH
PCM
SRS UNIT
ELECTRIC SERVO BRAKE CONTROL UNIT/PEDAL FEEL SIMULATOR
BRAKE LIGHT RELAY CIRCUIT
BRAKE LIGHTS
EPS CONTROL UNIT
SBW SHIFTER CONTROL MODULE

F-CAN Communication Data

Millimeter Wave Radar Receiving Signal:

Originating Unit	Signal Name
EPS control unit	• EPS system failure information • Steering angle signal • Steering angle neutral position learning information
Gauge control module	• CMBS OFF switch status information • Gauge control module failure information • Customized information

*1: With the multipurpose camera unit via ACC-CAN line.

Originating Unit	Signal Name
Multipurpose camera unit *1	• Object recognition information • Multipurpose camera unit failure information

Originating Unit	Signal Name
PCM	• Accelerator pedal position (APP) sensor signal • Brake pedal position switch signal
SRS unit	• Yaw rate sensor signal • Yaw rate sensor failure information • Longitudinal acceleration sensor signal
VSA modulator-control unit	• Master cylinder pressure signal • VSA system actuation information • VSA system failure information • Wheel speed sensor signals
Electric servo brake control unit/pedal feel simulator	• Electric servo brake system failure information • Driver brake operation information
SBW shifter control module	Shift position status

*1: With the multipurpose camera unit via ACC-CAN line.

Millimeter Wave Radar Transmitting Signal:

Destination Unit	Signal Name
EPS control unit	---
Gauge control module	• Buzzer request signal • CMBS status information • Multi information display (MID) screen requirement: • • - CMBS indicator • - CMBS indicates for self-diagnostic function • - Customized information
PCM	---
Multipurpose camera unit *1	Vehicle information
SRS unit	CMBS operating information
VSA modulator-control unit	---
Electric servo brake control unit/pedal feel simulator	• Automatic brake actuation request signal • Target CMBS deceleration information • CMBS failure information
SBW shifter control module	---

*1: With the multipurpose camera unit via ACC-CAN line.

LANE KEEPING ASSIST SYSTEM (LKAS) DESCRIPTION

Lane Keeping Assist System (LKAS)

The LKAS uses the multipurpose camera to read the detected lane lines on both sides of the road. The multipurpose camera unit draws an imaginary line at the center between both lane lines, and lane keeping assist control is performed by assisting the steering so that the vehicle is guided along this imaginary line near the center of the lane. The system gets suspended when the system determines that the driver is not holding the steering wheel for a certain period of time while LKAS is in operation.

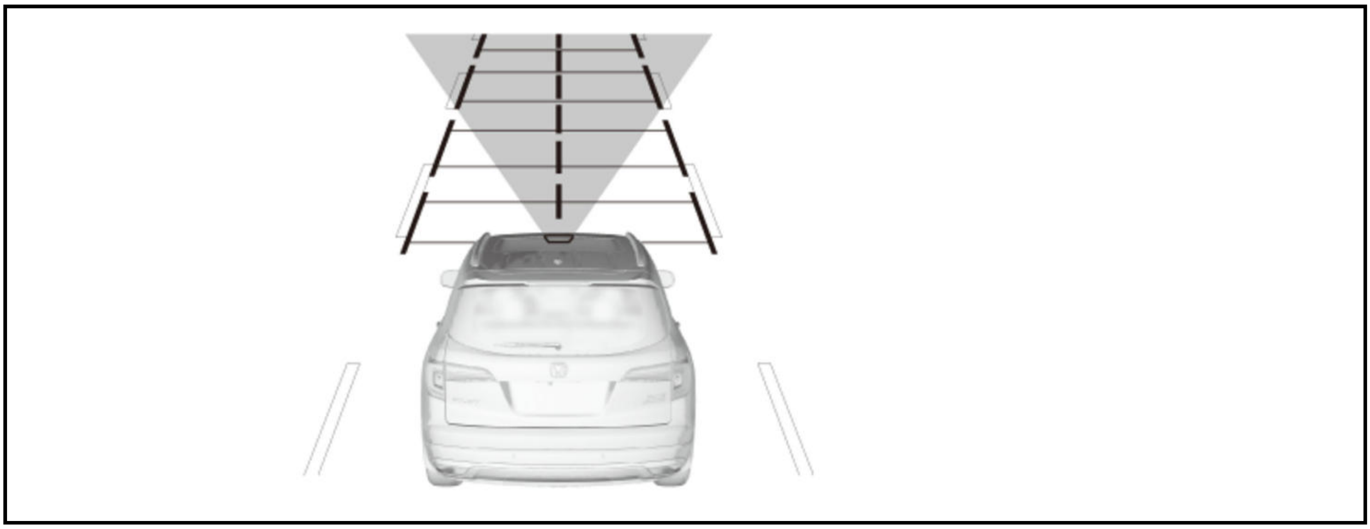

LKAS Inoperative Road Conditions

LKAS does not operate in the following road conditions (LKAS is inoperative while LDW continues to operate).

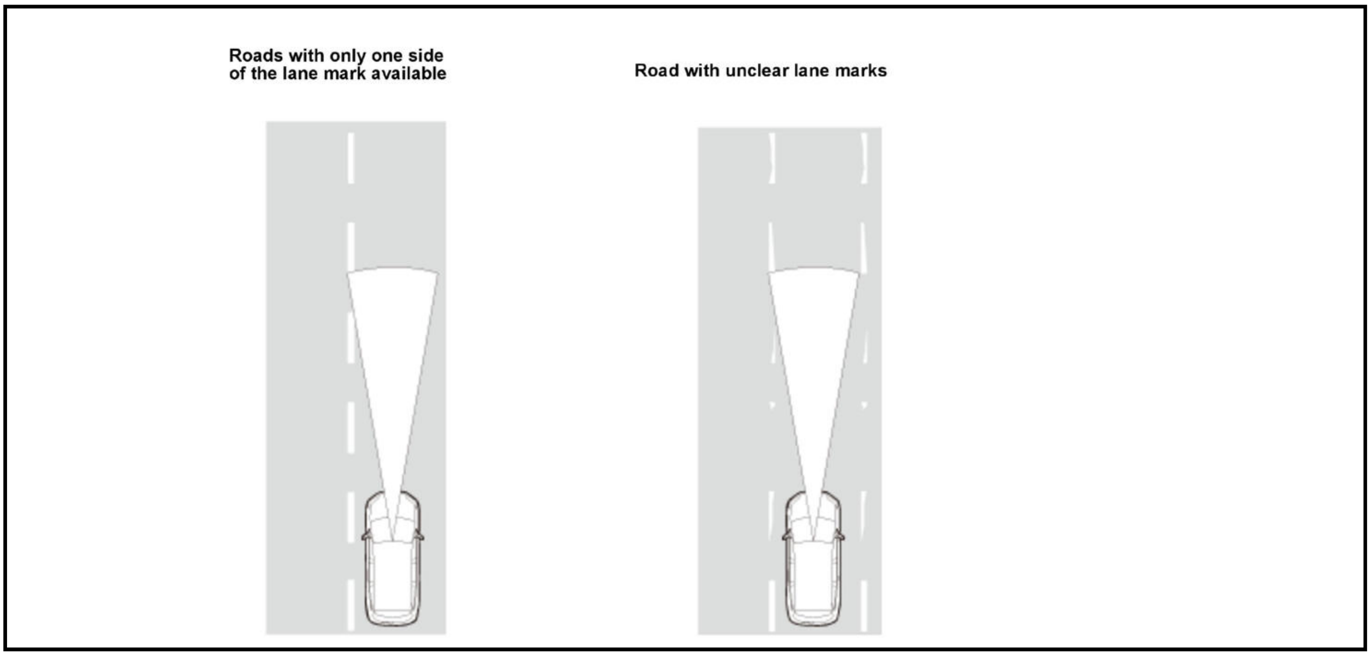
Roads with only one side of the lane mark available
Road with unclear lane marks

In case one side of lane mark is temporary missing (KA, KC models)

LKAS will continue to work even when one side of the lane mark is missing temporarily such as an intersection or a junction.

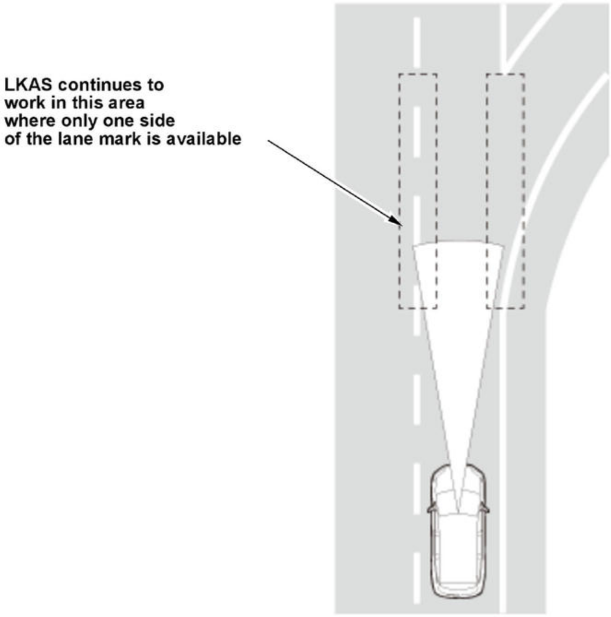

Operation Conditions

System Operation Conditions	Operation under conditions where lane line recognition is possible on both sides (Lane line recognition may not be possible in bad weather, snow-covered roads, or areas with backlight).	
	Operation vehicle speed	45 - 90 mph (72 - 145 km/h)
	Object lane line types	Broken lines or solid lines on the road (white and yellow)
	Driver operation	The LKAS is cancelled when the driver's intention to control the vehicle, such as intentional steering wheel operation, brake pedal operation, high speed wiper operation, and turn signal operation, is recognized.
LKAS Cancel Alarm	When the LKAS is canceled, a buzzer sounds ("beep") to warn the driver. The alarm can be set ON/OFF.	

LANE KEEPING ASSIST SYSTEM (LKAS) DESCRIPTION - SYSTEM DIAGRAM

The system diagram of the LKAS is shown below.

For locations of each component on the vehicle, refer to Component Location Index:

- **Multipurpose camera unit**
- **Millimeter wave radar**
- **PCM**
- **EPS control unit**
- **SRS unit**
- **VSA modulator-control unit**
- **Gauge control module**

The LKAS for this vehicle uses the multipurpose camera unit to calculate camera image information, and sends the LKAS indicated value to the control unit via the millimeter wave radar.

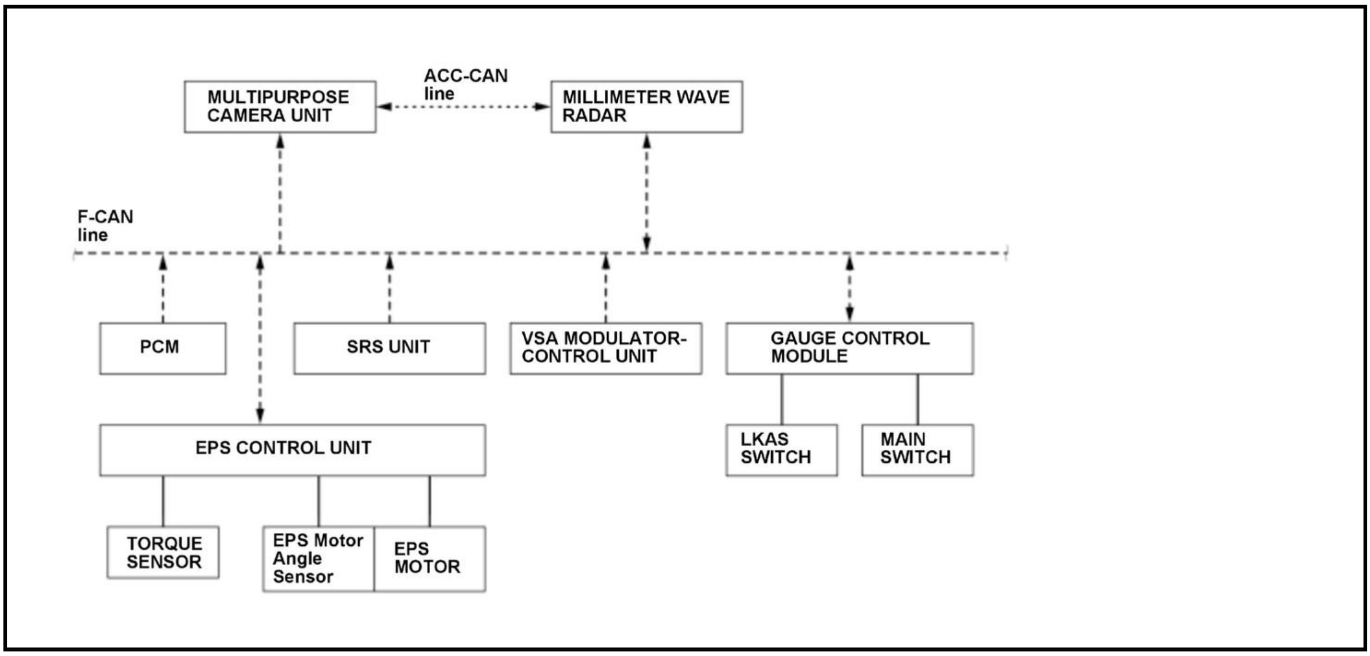
MULTIPURPOSE CAMERA UNIT
ACC-CAN line
MILLIMETER WAVE RADAR
F-CAN line
PCM
SRS UNIT
VSA MODULATOR-CONTROL UNIT
GAUGE CONTROL MODULE
EPS CONTROL UNIT
LKAS SWITCH
MAIN SWITCH
TORQUE SENSOR
EPS Motor Angle Sensor
EPS MOTOR

F-CAN Communication Data

Multipurpose Camera Unit Receiving Signal:

Originating Unit	Signal Name
EPS control unit	• EPS system failure information • Steering angle neutral position learning information • Steering angle signal • Torque sensor signal
Gauge control module	• Customization signal • MAIN switch signal • LKAS switch signal • Turn signal lights operating status • Wiper operating status

Originating Unit	Signal Name
PCM	• Brake pedal position switch signal • PCM failure information • Vehicle speed signal
SRS unit	• Yaw rate sensor signal • Yaw rate sensor failure information
VSA modulator-control unit	• VSA system actuation information • VSA system failure information • Wheel speed sensor signals

Millimeter Wave Radar Transmitting Signal:

Destination Unit	Signal Name
EPS control unit	• Integrated driver support system failure information • LKAS control command

Destination Unit	Signal Name

Gauge control module	- Buzzer request signal
	- Customization information
	- Integrated driver support system failure information
	- Multi information display (MID) screen requirement:
	-
	  - - LKAS indicator
	  - - LKAS activation indicator
	  - - LKAS indicates for self-diagnostic function

PCM	---
SRS unit	---
VSA modulator-control unit	---

GENERAL INFORMATION

ACC SYSTEM AUTO STOP CONTROL HISTORY

When the ACC is activated, if the millimeter wave radar determines that the ACC is unable to operate normally due to an environmental factors (such as weather or road surface condition and driving or vehicle condition) or other reasons even when the ACC system itself is normal, the millimeter wave radar automatically cancels the activation of the ACC and records the ACC system auto stop control code in it.

When the ACC is automatically cancelled, "ACC OFF" is displayed on the multi-information display (MID) to notify the driver of the cancellation. At this time, the ACC indicator (amber) does not come on.

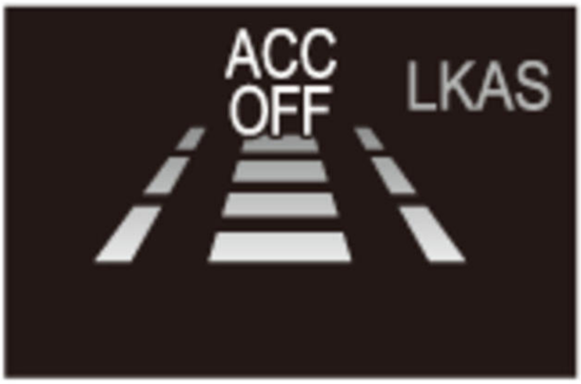

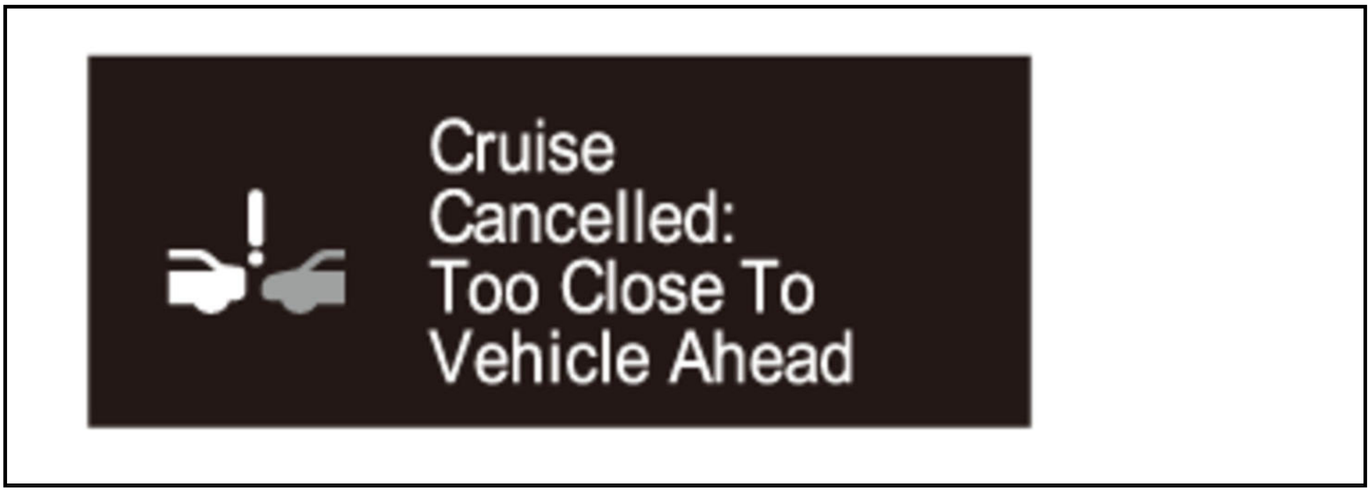

Cruise Cancelled: Too Close To Vehicle Ahead

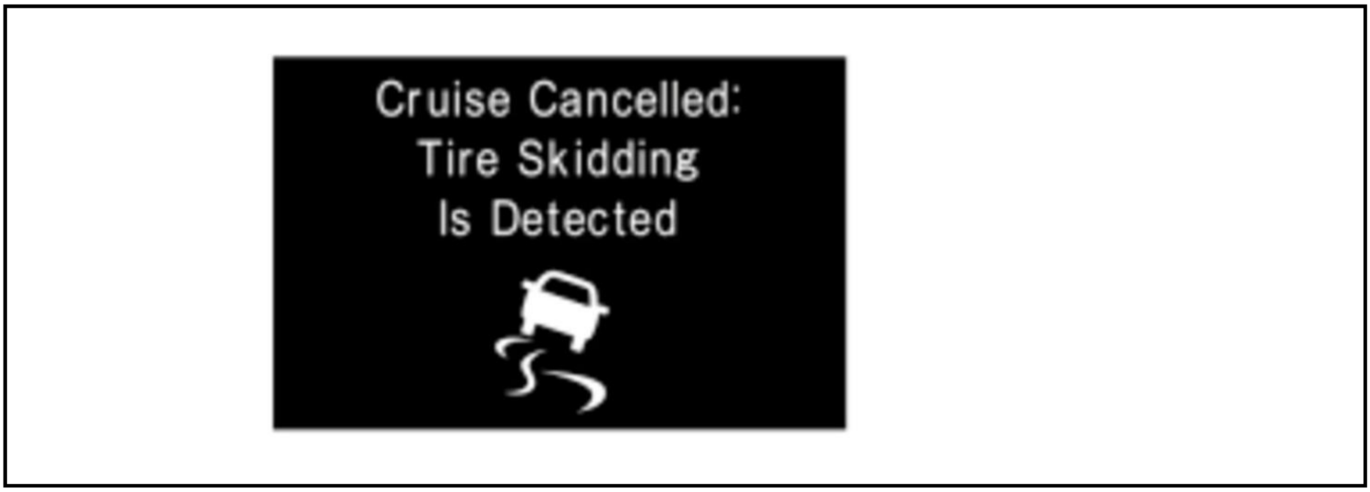

Cruise Cancelled: Tire Skidding Is Detected

Checking for ACC System Auto Stop Control Codes

The ACC system auto stop control codes recorded in the millimeter wave radar can be read out by the procedure below.

NOTE: Make sure the 12 volt battery is fully charged before you begin.

1. Connect the HDS .

2. In the Driving Support of the HDS, select Integrated Driver Support System, then select Data List on the HDS. Checking for ACC system auto stop control codes recorded in the Data List.

NOTE:

- **ACC system auto stop control history is recorded from 1. When automatic cancellation takes place 11 times or more, the past 10 records are held. In this case, history 10 is the latest record and the 10 latest records are held. When 0, no record is held.**
- **When DTCs are cleared with the HDS, the ACC system auto stop control history is cleared as well.**
- **Some of the following ACC system auto stop control codes may not be used for specific model specifications.**

ACC System Auto Stop Control Codes

Code	ACC System Auto Stops Operating	Examples	Detection Conditions	Restoration Conditions (Conditions under which ACC SET is possible)	Reasons for Control OFF
80	Engine Speed too high or too low	The vehicle decelerated because the leading vehicle decelerated, and	The driver did not operate the clutch pedal within 10	The engine speed returned to the	Prevention of engine stall while the vehicle is

Code	ACC System Auto Stops Operating	Examples	Detection Conditions	Restoration Conditions (Conditions under which ACC SET is possible)	Reasons for Control OFF
		the engine speed dropped below the mid-speed ranges.	seconds after the shift-down request was displayed.	specified speed or higher.	decelerating because the leading vehicle is decelerating.
84	Target vehicle comes closer than the radar detecting limits	- The leading vehicle slowed down rapidly. - Another vehicle suddenly cut in front of the own vehicle.	The distance between the leading vehicle and your vehicle is less than the minimum allowable vehicle-to-vehicle distance. - Models with the low speed follow (LSF) feature: 1.5 m (4.9 ft) - Models without the low speed follow (LSF) feature: 5 m (16 ft)	The system returns to normal when the distance between the leading vehicle and your vehicle reaches or exceeds the minimum allowable vehicle-to-vehicle distance + 0.5 m (1.6 ft).	The control is prohibited at a close distance to the leading vehicle where the ACC system is unavailable. If the leading vehicle is too close to your vehicle, the millimeter wave radar may fail to detect the leading vehicle.
89	Front wheel spin	- Driving on a slippery (low ') road - TCS control is executed.	A change in the wheel speed equivalent to 0.75 G occurs.	Other than those listed to the left	Prevention of use of ACC on a road where vehicle behavior is unstable

*: This value differs depending on whether or not the vehicle is equipped with Low Speed Follow (LSF).

Code	ACC System Auto Stops Operating	Examples	Detection Conditions	Restoration Conditions (Conditions under which ACC SET is possible)	Reasons for Control OFF
99	Acceleration/deceleration abnormality	- The inclination of the road changed significantly while the vehicle accelerates/decelerates at around the maximum acceleration/deceleration speed of the ACC system. - The powertrain or brake system is abnormal.	- While the ACC was operating, an acceleration of 0.4 G or more* continued for 1.0 second or more. - While the ACC was operating, a deceleration of -0.5 G or less*	Other than those listed to the left	Because the maximum acceleration/deceleration speed for the ACC system is exceeded.

Code	ACC System Auto Stops Operating	Examples	Detection Conditions	Restoration Conditions (Conditions under which ACC SET is possible)	Reasons for Control OFF
			continued for 1.5 seconds or more.		
101	Rear wheel locked	The parking brake is not released or the vehicle is driven on a frozen road surface.	A signal of 5 mph (8 km/h) or more is inputted to the front wheel sensor and a signal of 0 mph (0 km/h) is inputted to the rear wheel sensor.	The front and rear wheel sensors detect a wheel speed.	Prevention of unstable vehicle behavior
109	Movement distance too short after initiation	When the millimeter wave radar detects an object that turns on low speed follow (LSF) control immediately after vehicle ON mode.	When the distance the vehicle travels after vehicle ON mode, is less than 8 m (26 ft), which is calculated based on the vehicle speed.	When the distance the vehicle travels is 8 m (26 ft) or more.	This is because an object other than a vehicle may be recognized as the leading vehicle after vehicle ON mode in a parking lot etc.
110	Shift position 1st	• While driving in 1st gear. • Vehicle is driven at an extremely low speed.	1st gear shift position is detected.	Vehicle is driven in 2nd or higher gear (forward gear).	Inappropriate gear is selected for ACC system.

*: This value differs depending on whether or not the vehicle is equipped with Low Speed Follow (LSF).

Code	ACC System Auto Stops Operating	Examples	Detection Conditions	Restoration Conditions (Conditions under which ACC SET is possible)	Reasons for Control OFF
111	Brake pads temperature too high	• Driving down hill • Driving down hill on a long road • Excessive use of the footbrake • Turn the vehicle to the OFF (LOCK) mode when VSA system sets the brake pad high temperature information, then turn the vehicle to the ON mode again.	VSA system sets the brake pad high temperature information.	VSA system clears the brake pad high temperature information.	• Use of ACC while driving downhill on a long road cause the brake pads to increase in temperature which can result in change of the operation feeling of a brake pedal. In this case, driver may not be able to respond to changes in feeling of a brake pedal. • The driver may make a complaint about a nasty smell from high

Code	ACC System Auto Stops Operating	Examples	Detection Conditions	Restoration Conditions (Conditions under which ACC SET is possible)	Reasons for Control OFF
					temperature brake pads without noticing the ACC brake.

*: This value differs depending on whether or not the vehicle is equipped with Low Speed Follow (LSF).

SYMPTOM TROUBLESHOOTING INDEX

ADAPTIVE CRUISE CONTROL (ACC) SYMPTOM TROUBLESHOOTING INDEX

NOTE: The ACC system is cancelled when the VSA system is activated.

Symptom	Diagnostic procedure	Also check for
Vehicle speed can be set, but there is no ACC indication on the MID	**Do the gauge control module self-diagnostic function** .	B
ACC OFF is displayed on the MID unexpectedly	**Check the ACC system auto stop control history**.	B
Vehicle speed cannot be set when the SET switch is pressed between 25 mph (40 km/h) and 90 mph (145 km/h)	- **Test the ACC combination switch** . - **Test the brake pedal position switch** .	- An open in the wire - A short in the wire - The system is in service mode.
Vehicle does not decelerate or accelerate accordingly when the SET- or RES+ switch is pressed	**Test the ACC combination switch** .	An open in the wire
Set speed does not cancel when the brake pedal is pressed	**Test the brake pedal position switch** .	An open in the wire
Set speed does not cancel when the MAIN switch is turned off	**Test the ACC combination switch** .	An open in the wire
Set distance cannot be adjusted with the distance switch	**Test the ACC combination switch** .	B
Vehicle speed can be set, but vehicle decelerates	**Check for DTCs in the PGM-FI system with the HDS** .	Faulty ETCS
ACC indicator (on the MID) does not come on	**Symptom troubleshooting**.	B
ACC indicator (on the MID) does not go off, and no DTCs are stored	**NOTE:** If any of the CAN communication failure DTC is indicated in another system, troubleshoot the DTC first. - Check for an open or a short in the F-CAN circuit; - - - Between the gauge control module and the CAN gateway (F-CAN D_H, F-CAN D_L) - -	Refer to the followings about the indicator operating condition; - **General troubleshooting information** Refer to the followings about the circuit troubleshooting; - **Gauge control Module connector for inputs and outputs** - **Millimeter wave radar connector for inputs and outputs** - **Adaptive cruise control (ACC) circuit diagram**

Symptom	Diagnostic procedure	Also check for
	Between the millimeter wave radar and the CAN gateway (F-CAN C_H, F-CAN C_L) - Check the millimeter wave radar power circuit (IG1_OPTION). - Check the millimeter wave radar ground circuit (GND). - **Do to the gauge control module self-diagnostic function** .	- **Fuse to components index** - **Ground to components index**
Senses a vehicle driving in another lane	**Symptom troubleshooting**.	- Incorrect millimeter wave radar installation - Wheel alignment

Symptom	Diagnostic procedure	Also check for
Does not sense the vehicle driving ahead	**Symptom troubleshooting**.	- Out of the performance limits - Wheel alignment - Undetectable environment
Intermittently senses the vehicle driving ahead	**Symptom troubleshooting**.	- Incorrect millimeter wave radar installation - Wheel alignment - Undetectable environment

COLLISION MITIGATION BRAKING SYSTEM (CMBS) SYMPTOM TROUBLESHOOTING INDEX (CMBS)

Symptom	Diagnostic procedure	Also check for
CMBS OFF switch does not turn On/turn Off (CMBS indicator does not change)	- **Do the gauge control module self-diagnostic function** . - **Test the CMBS OFF switch** .	- An open or increased resistance in the wire - A short in the wire
The MID does not indicate when the CMBS OFF switch is operated	- **Do the gauge control module self-diagnostic function** . - **Test the CMBS OFF switch** .	- An open or increased resistance in the wire - A short in the wire
The buzzer does not sound	**Do the gauge control module self-diagnostic function** .	B
The buzzer does not sound when the CMBS OFF switch is operated	**Do the gauge control module self-diagnostic function** .	B
The MID does not indicate with the CMBS operating	**Do the gauge control module self-diagnostic function** .	B
The CMBS operates frequently	- **Check the millimeter wave radar installation** . - Check the front grille for warpage. - **Check the wheel alignment** .	Driving conditions, weather, environmental influence
The CMBS operated without danger of collision	- **Check the millimeter wave radar installation** .	Driving conditions, weather, environmental

Symptom	Diagnostic procedure	Also check for
	• Check the front grille for warpage. • **Check the wheel alignment** .	influence
The CMBS did not operate	• **Check the millimeter wave radar installation** . • Check the front grille for warpage. • **Check the wheel alignment** .	• Driving conditions, weather, environmental influences • Undetectable environment
CMBS indicator (on the MID) does not come on	**Do the gauge control module self-diagnostic function** .	B
CMBS indicator (on the MID) does not go off	**Symptom troubleshooting**.	B

LANE KEEPING ASSIST SYSTEM (LKAS) SYMPTOM TROUBLESHOOTING INDEX

Symptom	Diagnostic procedure	Also check for
LKAS indicator (on the MID) does not come on	**Symptom troubleshooting**.	B

LKAS indicator (on the MID) does not go off, and no DTCs are stored	**NOTE:** If any of the CAN communication failure DTC is indicated in another system, troubleshoot the DTC first.
	• Check for an open or a short in the F-CAN circuit;
	•
	  • -
	  Between the gauge control module and the CAN gateway (F-CAN D_H, F-CAN D_L)
	  • -
	  Between the millimeter wave radar and the CAN gateway (F-CAN C_H, F-CAN C_L)
	• Check the millimeter wave radar power circuit (IG1_OPTION).
	• Check the millimeter wave radar ground circuit (GND).
	• **Do to the gauge control module self-diagnostic function** .
		Refer to the followings about the indicator operating condition;
		• **General troubleshooting information**
		Refer to the followings about the circuit troubleshooting;
		• **Gauge control Module connector for inputs and outputs**
		• **Millimeter wave radar connector for inputs and outputs**
		• **Lane Keeping Assist System (LKAS) Circuit Diagram**
		• **Fuse to components index**
		• **Ground to components index**

SYMPTOM TROUBLESHOOTING

ADAPTIVE CRUISE CONTROL (ACC) SYMPTOM TROUBLESHOOTING - ACC INDICATOR (ON THE MID) DOES NOT COME ON

1. Gauge control module operation check

   -1. Turn the vehicle to the ON mode.

   Check the following indicators in the gauge control module:

- Malfunction indicator lamp (MIL)
- Brake system indicator
- 12 volt charging system indicator

Do the indicators come on?

YES

Go to the gauge control module self-diagnostic function .

NO

Go to step 2.

2. Fuse check

-1. Turn the vehicle to the OFF (LOCK) mode.

-2. Check the following fuse.

Fuse	No. D7

Is the fuse OK?

YES

The fuse is OK. Reinstall the fuse, then go to step 3.

NO

Replace the fuse. Turn the vehicle to the ON mode, then the OFF (LOCK) mode. If the fuse blows again, repair the short to ground on the No. D7 fuse circuit.

3. Open wire check (IG1_METER line)

-1. Disconnect the following connector.

Gauge control module connector A (32P)

-2. Turn the vehicle to the ON mode.

-3. Measure the voltage between test points 1 and 2.

Test condition	Vehicle ON mode
B	Gauge control module connector A (32P): disconnected
Test point 1	Gauge control module connector A (32P) No. 17
Test point 2	Body ground

Is there battery voltage?

YES

Replace the gauge control module .

NO

Repair an open in the IG1_METER wire between the under-dash fuse/relay box and the gauge control module.

ADAPTIVE CRUISE CONTROL (ACC) SYMPTOM TROUBLESHOOTING - DOES NOT SENSE THE VEHICLE DRIVING AHEAD

1. All condition check

-1. Find out if the detection problem occurs under all conditions.

Does it occur under all conditions?

YES

The millimeter wave radar vertical aiming is incorrect. **Aim the millimeter wave radar** .

NO

Go to step 2.

2. Road condition check

   -1. Find out if the detection problem occurs only on a particular road such as a winding road, an entrance of a corner, an exit of a corner, a tight corner, or a bad road.

   Does it occur only on a particular road?

   YES

   Explain to the customer that the system sometimes cannot detect under certain road conditions.

   NO

   Go to step 3.

3. Weather condition check

   -1. Find out if the detection problem occurs only under poor weather conditions such as fog, snow, heavy rain, or gusty winds.

   Does it occur only under poor weather conditions?

   YES

   Explain to the customer that the system sometimes cannot detect under poor weather conditions.

   NO

   Go to step 4.

4. Driving condition check:

   Find out if the detection problem occurs only when the vehicle ahead drives under these conditions:

   - Merged into the lane suddenly.
   - Closing on a vehicle within 4 m (13 ft).

   Does it occur only under certain driving conditions?

   YES

   Explain to the customer that the system sometimes cannot detect under certain driving conditions.

   NO

   Go to step 5.

5. Millimeter wave radar aiming check

   -1. Confirm if the radar detects vehicles driving in another lane.

   Does it detect vehicles in other lanes?

   YES

   The millimeter wave radar horizontal aiming is incorrect. **Aim the millimeter wave radar** .

NO

Go to step 6.

6. Other component check

   -1. Confirm if the detection problem is caused by instability.

   NOTE: If the cause of the misdetection or undetectable problems is unclear, it is possible that the problem was caused by environmental conditions. Explain to the customer that intermittent failures are sometimes caused by environmental conditions.

   Is the vehicle unstable? (Compare it to a known-good, like vehicle.)

   YES

   Check other components such as VSA modulator-control unit or wheel speed sensors, etc.

   NO

   Go to step 7.

7. Heavy load check

   -1. Check if there is a heavy load on the vehicle.

   Is there a heavy load on the vehicle?

   YES

   Remove the heavy load from the vehicle. Advise the customer that this problem may occur temporarily when hauling heavy loads.

   NO

   Go to step 8.

8. Millimeter wave radar and radar cover check

   -1. Check for dirt, dust, or snow on the surface of the millimeter wave radar and the radar cover.

   Are the millimeter wave radar and radar cover OK?

   YES

   Go to step 9.

   NO

   Clean the millimeter wave radar and the radar cover.

9. Vehicle ride height check

   -1. Measure the front and rear vehicle ride height.

   Is the vehicle ride height equal?

   YES

   Intermittent failure, the system is OK at this time. **Refer to intermittent failures troubleshooting** .

   NO

   Inspect the suspension for damage, and compare ride height to a known-good vehicle. **Adjust the wheel alignment as needed** .

ADAPTIVE CRUISE CONTROL (ACC) SYMPTOM TROUBLESHOOTING - INTERMITTENTLY SENSES THE VEHICLE DRIVING AHEAD

1. Road condition check

   -1. Find out if the detection problem occurs only on a particular road such as a winding road, an entrance of a corner, an exit of a corner, a tight corner, or a bad road.

   Does it occur only on a particular road?

   YES

   Explain to the customer that the system sometimes cannot detect under certain road conditions.

   NO

   Go to step 2.

2. Weather condition check

   -1. Find out if the detection problem occurs only under poor weather conditions such as fog, snow, heavy rain, or gusty winds.

   Does it occur only under poor weather conditions?

   YES

   Explain to the customer that the system sometimes cannot detect under poor weather conditions.

   NO

   Go to step 3.

3. Driving condition check:

   Find out if the detection problem occurs only when the vehicle ahead drives under these conditions:

   - Merged into the lane suddenly.
   - Closing on a vehicle within 4 m (13 ft).

   Does it occur only under certain driving conditions?

   YES

   Explain to the customer that the system sometimes cannot detect under certain driving conditions.

   NO

   Go to step 4.

4. Millimeter wave radar aiming check

   -1. Confirm if the radar detects vehicles driving in another lane.

   Does it detect vehicles in other lanes?

   YES

   The millimeter wave radar horizontal aiming is incorrect. **Aim the millimeter wave radar aiming** .

   NO

   Go to step 5.

5. All condition check

-1. Find out if the detection problem occurs under all conditions.

Does it occur under all conditions?

YES

The millimeter wave radar vertical aiming is incorrect. **Aim the millimeter wave radar aiming** .

NO

Go to step 6.

6. Other component check

   -1. Confirm if the detection problem is caused by instability.

   NOTE: If the cause of the misdetection or undetectable problems is unclear, it is possible that the problem was caused by environmental conditions. Explain to the customer that intermittent failures are sometimes caused by environmental conditions.

   Is the vehicle unstable? (Compare it to a known-good, like vehicle.)

   YES

   Check other components such as VSA modulator-control unit or wheel speed sensors, etc.

   NO

   Go to step 7.

7. Heavy load check

   -1. Check if there is a heavy load on the vehicle.

   Was there a heavy load on the vehicle?

   YES

   Remove the heavy load from the vehicle. Advise the customer that this problem may occur temporarily when hauling heavy loads.

   NO

   Go to step 8.

8. Millimeter wave radar and radar cover check

   -1. Check for dirt, dust, or snow on the surface of the millimeter wave radar and the radar cover.

   Are the millimeter wave radar and radar cover OK?

   YES

   Go to step 9.

   NO

   Clean the millimeter wave radar and the radar cover.

9. Vehicle's history check

   -1. Check the vehicle's history for front end collision repairs.

   Has the vehicle been in a collision and repaired?

   YES

Go to step 10.

NO

Go to step 12.

10. Millimeter wave radar installing check

    -1. Check if the millimeter wave radar and its bracket are installed correctly, and also check if the vehicle frame is straight.

    Are all parts installed correctly?

    YES

    Go to step 11.

    NO

    Reinstall the part correctly, or if damaged, replace the part, then **aim the millimeter wave radar** .

11. Vehicle ride height check

    -1. Measure the front and rear vehicle ride height.

    Is the vehicle ride height equal?

    YES

    Go to step 12.

    NO

    Inspect the suspension for damage, and compare ride height to a known-good vehicle. **Adjust the wheel alignment as needed** .

12. Wheel alignment check

    -1. **Check the wheel alignment** .

    Is the wheel alignment OK?

    YES

    Aim the millimeter wave radar .

    NO

    Adjust the wheel alignment .

ADAPTIVE CRUISE CONTROL (ACC) SYMPTOM TROUBLESHOOTING - SENSES A VEHICLE DRIVING IN ANOTHER LANE

1. Problem verification 1

    -1. Find out when and under what conditions the system has misdetections.

    Do they occur within 20 minutes or less?

    YES

    Go to step 2.

    NO

    Explain to the customer that system misdetections are sometimes caused by the environment (weather, road conditions, driving conditions, etc.).

2. Problem verification 2

   -1. Find out if the detection problem occurs only with certain types of vehicles (dirty vehicle, tall vehicle, motorcycle, or special vehicle).

   Does it occur only with certain types of vehicles?

   YES

   Explain to the customer that the system sometimes cannot detect certain vehicle types.

   NO

   Go to step 3.

3. Vehicle's history check

   -1. Check the vehicle's history for front end collision repairs.

   Has the vehicle been in a collision and repaired?

   YES

   Go to step 4.

   NO

   Go to step 5.

4. Millimeter wave radar installing check

   -1. Check if the millimeter wave radar and its bracket are installed correctly, and also check if the vehicle frame is straight.

   Are all parts installed correctly?

   YES

   Go to step 5.

   NO

   Reinstall the part correctly, or if damaged, replace the part, then **aim the millimeter wave radar** .

5. Wheel alignment check

   -1. **Check the wheel alignment** .

   Is the wheel alignment OK?

   YES

   Aim the millimeter wave radar .

   NO

   Adjust the wheel alignment .

COLLISION MITIGATION BRAKING SYSTEM (CMBS) SYMPTOM TROUBLESHOOTING - CMBS INDICATOR (ON THE MID) DOES NOT GO OFF

1. DTCs check

   -1. Turn the vehicle to the ON mode.

   -2. Check for DTCs with the HDS.

DTC Description	DTC
B	B

DTC (IDAS)

Are any DTCs indicated?

YES

Go to the indicated DTC's troubleshooting .

NO

Go to step 2.

2. VSA system DTCs check

   -1. Check for VSA system DTCs with the HDS.

DTC Description	DTC
B	B

Are any DTCs indicated?

YES

Go to the indicated DTC's troubleshooting .

NO

Go to step 3.

3. PGM-FI system DTCs check

   -1. Check for PGM-FI system DTCs with the HDS.

DTC Description	Confirmed DTC	Pending DTC
B	B	B

Are any DTCs indicated?

YES

Go to the indicated DTC's troubleshooting .

NO

Go to step 4.

4. Gauge control module operation check

   -1. **Do the gauge control module self-diagnostic function** .

Is the gauge control module OK?

YES

Go to step 5.

NO

Replace the gauge control module .

5. CMBS OFF switch check

-1. **Test the CMBS OFF switch** .

Is the switch OK?

YES

Check for loose terminals and poor connections in the millimeter wave radar 8P connector. Check for any authorized service information related to the DTCs or symptoms you are troubleshooting. If they are OK, **replace millimeter wave radar** .

NO

Replace the CMBS OFF switch .

LANE KEEPING ASSIST SYSTEM (LKAS) SYMPTOM TROUBLESHOOTING - LKAS INDICATOR (ON THE MID) DOES NOT COME ON

1. Gauge control module operation check

-1. Turn the vehicle to the ON mode.

Check the following indicators in the gauge control module:

- Malfunction indicator lamp (MIL)
- Brake system indicator
- 12 volt charging system indicator

Do the indicators come on?

YES

Go to the gauge control module self-diagnostic function .

NO

Go to step 2.

2. Fuse check

-1. Turn the vehicle to the OFF (LOCK) mode.

-2. Check the following fuse.

Fuse	**No. D7**

Is the fuse OK?

YES

The fuse is OK. Reinstall the fuse, then go to step 3.

NO

Replace the fuse. Turn the vehicle to the ON mode then the OFF (LOCK) mode. If the fuse blows again, repair the short to ground on the No. D7 fuse circuit.

3. Open wire check (IG1_METER line)

-1. Disconnect the following connector.

Gauge control module connector A (32P)

-2. Turn the vehicle to the ON mode.

-3. Measure the voltage between test points 1 and 2.

Test condition	Vehicle ON mode
B	Gauge control module connector A (32P): disconnected
Test point 1	Gauge control module connector A (32P) No. 17
Test point 2	Body ground

Is there battery voltage?

YES

Replace the gauge control module .

NO

Repair an open in the wire between the under-dash fuse/relay box and the gauge control module.

CIRCUIT DIAGRAM

ADAPTIVE CRUISE CONTROL (ACC) CIRCUIT DIAGRAM

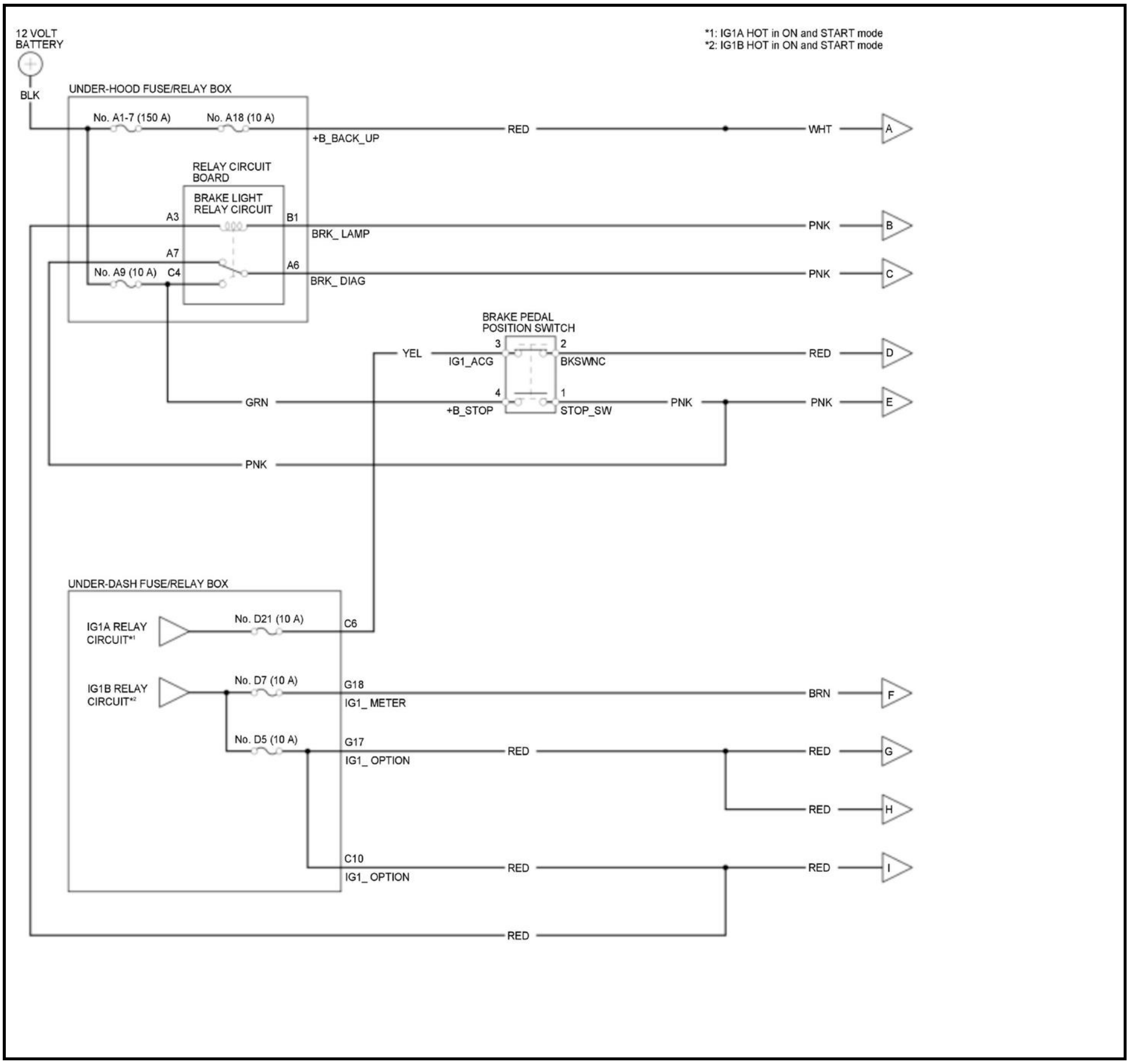
12 VOLT BATTERY
BLK
*1: IG1A HOT in ON and START mode
*2: IG1B HOT in ON and START mode
UNDER-HOOD FUSE/RELAY BOX
No. A1-7 (150 A)
No. A18 (10 A)
+B_BACK_UP
RED
WHT
A
RELAY CIRCUIT BOARD
BRAKE LIGHT RELAY CIRCUIT
A3
B1
BRK_ LAMP
PNK
B
A7
A6
No. A9 (10 A)
C4
BRK_ DIAG
PNK
C
BRAKE PEDAL POSITION SWITCH
YEL
3
2
IG1_ACG
BKSWNC
RED
D
GRN
4
1
+B_STOP
STOP_SW
PNK
PNK
E
PNK
UNDER-DASH FUSE/RELAY BOX
IG1A RELAY CIRCUIT*1
No. D21 (10 A)
C6
IG1B RELAY CIRCUIT*2
No. D7 (10 A)
G18
IG1_ METER
BRN
F
No. D5 (10 A)
G17
IG1_ OPTION
RED
RED
G
RED
H
C10
IG1_ OPTION
RED
RED
I
RED

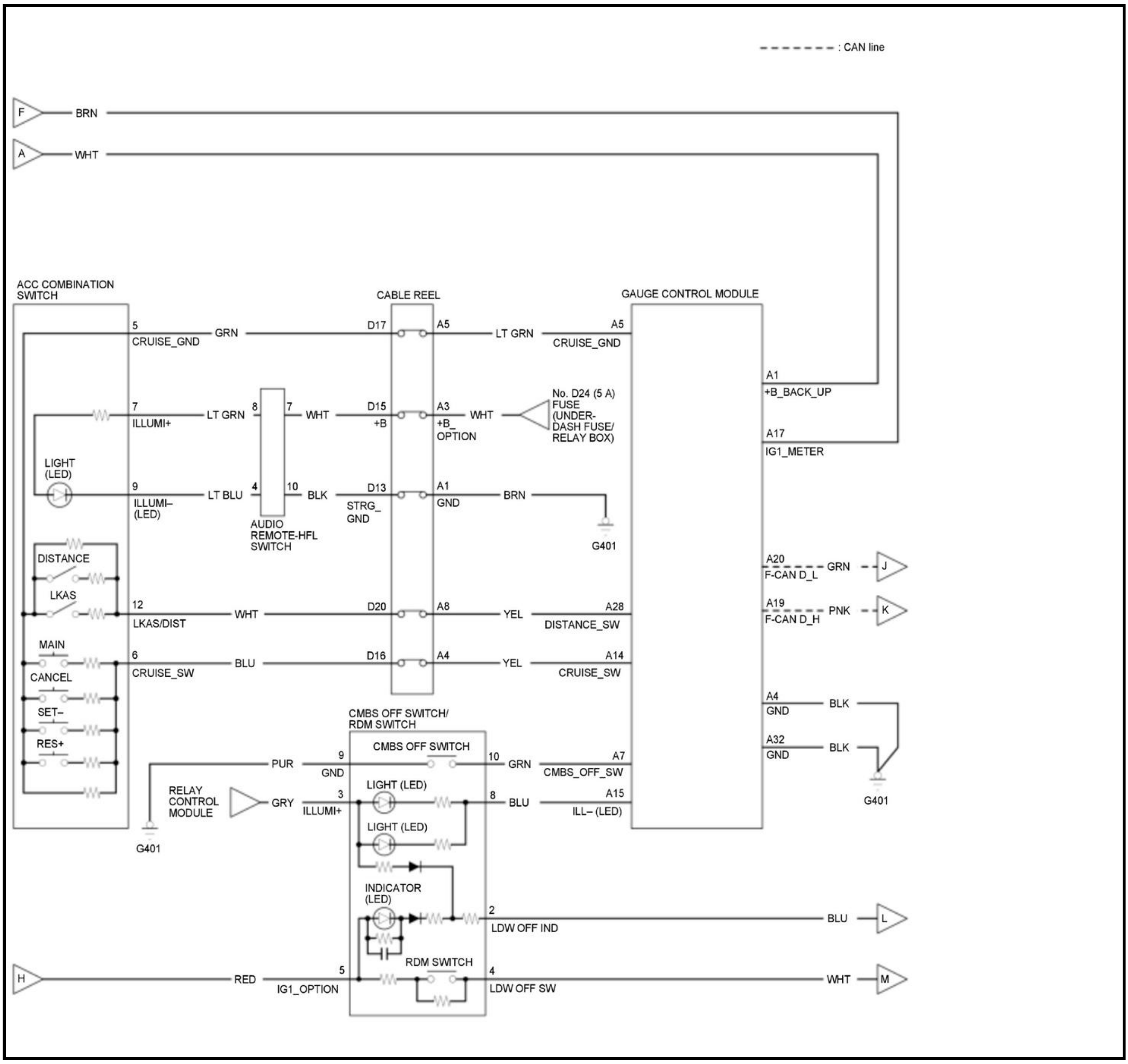
: CAN line
F
BRN
A
WHT
ACC COMBINATION SWITCH
CABLE REEL
GAUGE CONTROL MODULE
5
CRUISE_GND
GRN
D17
A5
LT GRN
A5
CRUISE_GND
A1
+B_BACK_UP
7
ILLUMI+
LT GRN
8
7
WHT
D15
+B
A3
+B_ OPTION
WHT
No. D24 (5 A) FUSE (UNDER-DASH FUSE/ RELAY BOX)
A17
IG1_METER
LIGHT (LED)
9
ILLUMI– (LED)
LT BLU
4
10
BLK
D13
STRG_ GND
A1
GND
BRN
AUDIO REMOTE-HFL SWITCH
G401
DISTANCE
LKAS
A20
F-CAN D_L
GRN
J
A19
F-CAN D_H
PNK
K
12
LKAS/DIST
WHT
D20
A8
YEL
A28
DISTANCE_SW
MAIN
6
CRUISE_SW
BLU
D16
A4
YEL
A14
CRUISE_SW
CANCEL
A4
GND
BLK
SET–
CMBS OFF SWITCH/ RDM SWITCH
RES+
A32
GND
BLK
CMBS OFF SWITCH
PUR
9
GND
10
GRN
A7
CMBS_OFF_SW
G401
RELAY CONTROL MODULE
GRY
3
ILLUMI+
LIGHT (LED)
8
BLU
A15
ILL– (LED)
G401
LIGHT (LED)
INDICATOR (LED)
2
LDW OFF IND
BLU
L
H
RED
5
IG1_OPTION
RDM SWITCH
4
LDW OFF SW
WHT
M

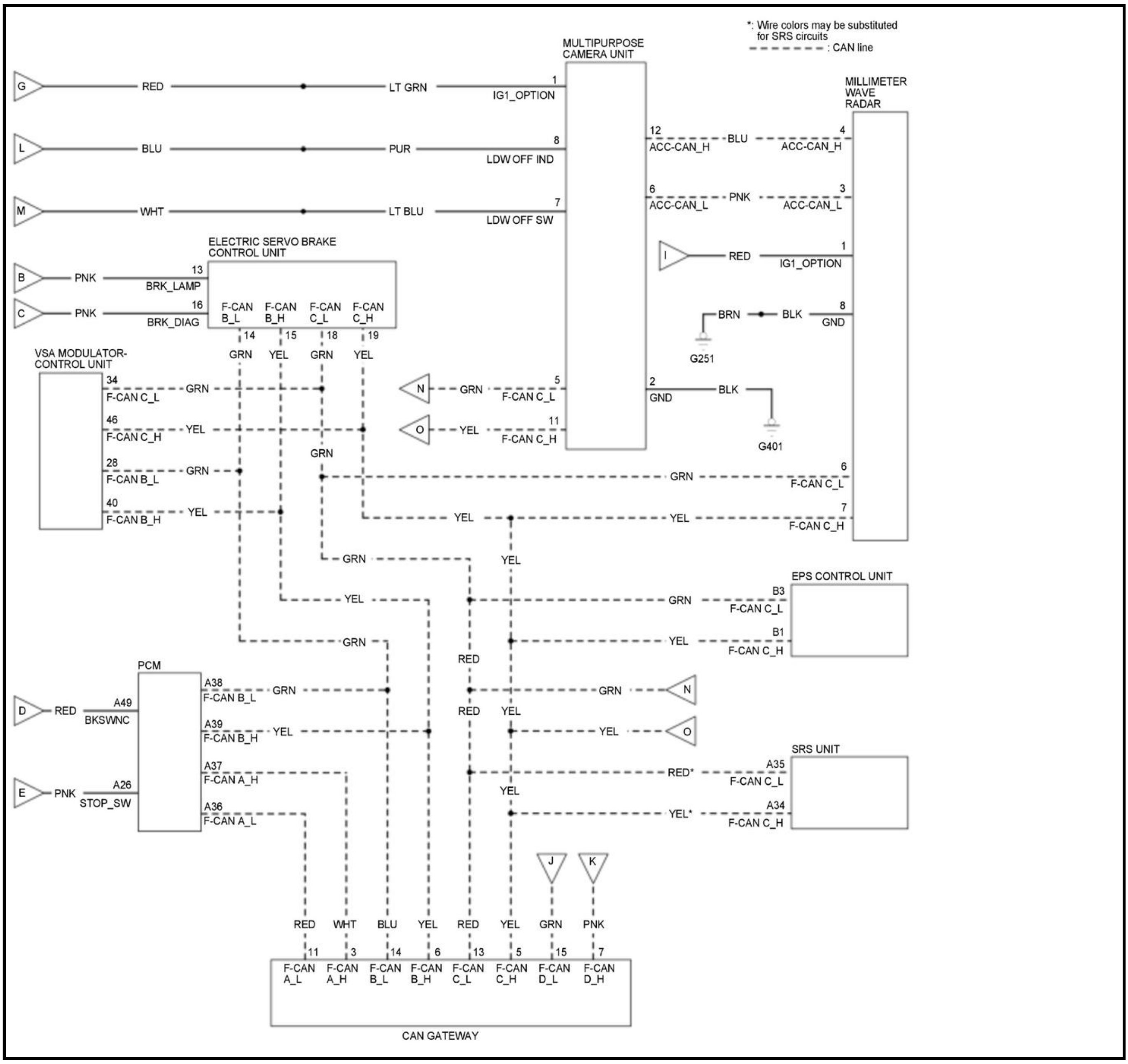
*: Wire colors may be substituted for SRS circuits
: CAN line
MULTIPURPOSE CAMERA UNIT
MILLIMETER WAVE RADAR
ELECTRIC SERVO BRAKE CONTROL UNIT
VSA MODULATOR-CONTROL UNIT
PCM
EPS CONTROL UNIT
SRS UNIT
CAN GATEWAY
G
RED
LT GRN
1
IG1_OPTION
L
BLU
PUR
8
LDW OFF IND
M
WHT
LT BLU
7
LDW OFF SW
12
ACC-CAN_H
BLU
4
ACC-CAN_H
6
ACC-CAN_L
PNK
3
ACC-CAN_L
I
RED
1
IG1_OPTION
BRN
BLK
8
GND
G251
B
PNK
13
BRK_LAMP
C
PNK
16
BRK_DIAG
F-CAN B_L
F-CAN B_H
F-CAN C_L
F-CAN C_H
14
15
18
19
GRN
YEL
GRN
YEL
34
F-CAN C_L
GRN
46
F-CAN C_H
YEL
28
F-CAN B_L
GRN
40
F-CAN B_H
YEL
N
GRN
5
F-CAN C_L
O
YEL
11
F-CAN C_H
2
GND
BLK
G401
GRN
GRN
6
F-CAN C_L
YEL
YEL
7
F-CAN C_H
GRN
YEL
YEL
GRN
B3
F-CAN C_L
GRN
YEL
B1
F-CAN C_H
RED
D
RED
A49
BKSWNC
A38
F-CAN B_L
GRN
RED
YEL
GRN
N
A39
F-CAN B_H
YEL
YEL
O
E
PNK
A26
STOP_SW
A37
F-CAN A_H
RED*
A35
F-CAN C_L
YEL
A36
F-CAN A_L
YEL*
A34
F-CAN C_H
J
K
RED
WHT
BLU
YEL
RED
YEL
GRN
PNK
11
3
14
6
13
5
15
7
F-CAN A_L
F-CAN A_H
F-CAN B_L
F-CAN B_H
F-CAN C_L
F-CAN C_H
F-CAN D_L
F-CAN D_H

COLLISION MITIGATION BRAKING SYSTEM (CMBS) CIRCUIT DIAGRAM

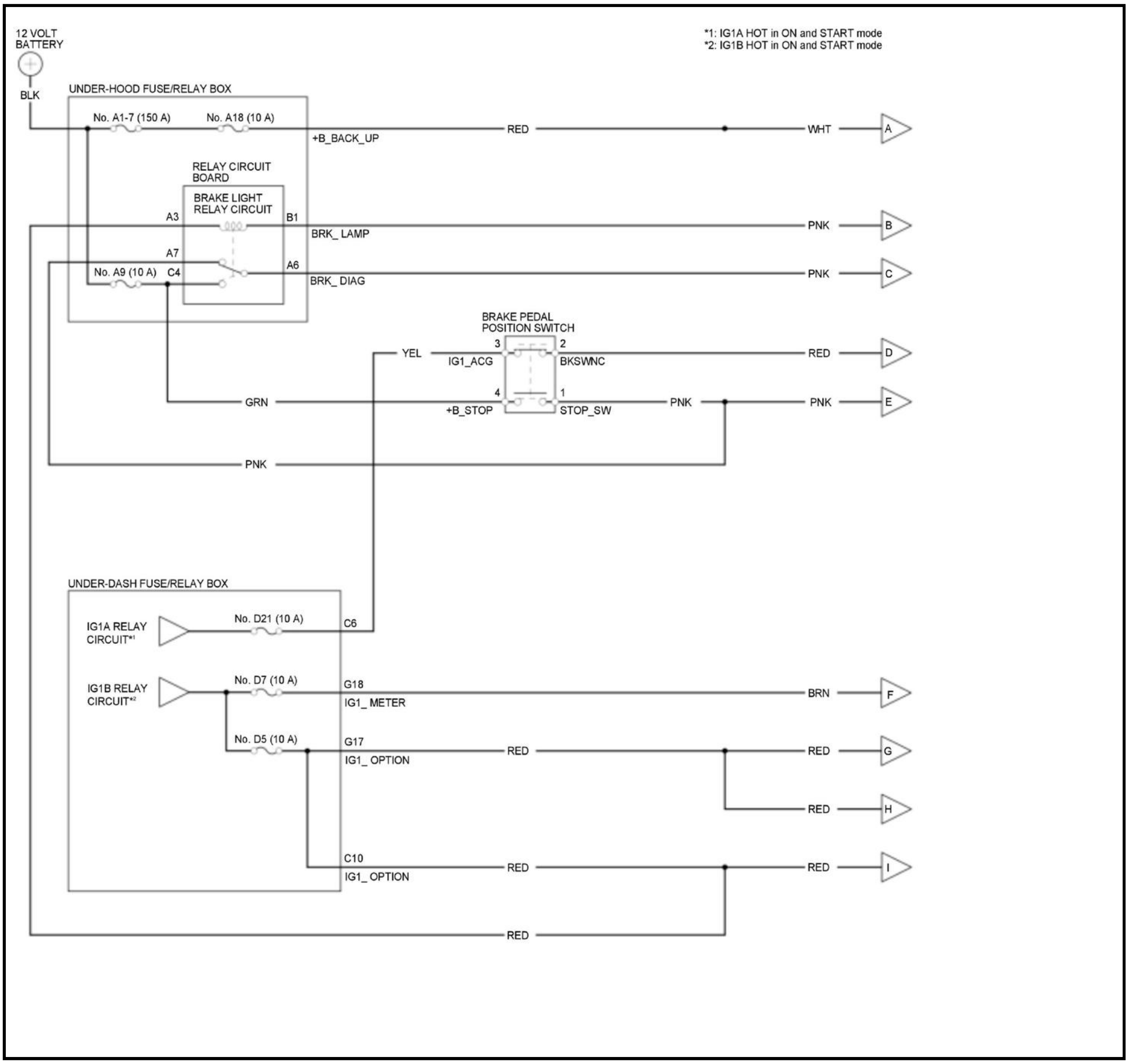
*1: IG1A HOT in ON and START mode
*2: IG1B HOT in ON and START mode
12 VOLT BATTERY
BLK
UNDER-HOOD FUSE/RELAY BOX
No. A1-7 (150 A)
No. A18 (10 A)
+B_BACK_UP
RED
WHT
A
RELAY CIRCUIT BOARD
BRAKE LIGHT RELAY CIRCUIT
A3
B1
BRK_ LAMP
PNK
B
A7
A6
No. A9 (10 A)
C4
BRK_ DIAG
PNK
C
BRAKE PEDAL POSITION SWITCH
YEL
3
IG1_ACG
2
BKSWNC
RED
D
GRN
4
+B_STOP
1
STOP_SW
PNK
PNK
E
PNK
UNDER-DASH FUSE/RELAY BOX
IG1A RELAY CIRCUIT*1
No. D21 (10 A)
C6
IG1B RELAY CIRCUIT*2
No. D7 (10 A)
G18
IG1_ METER
BRN
F
No. D5 (10 A)
G17
IG1_ OPTION
RED
RED
G
RED
H
C10
IG1_ OPTION
RED
RED
I
RED

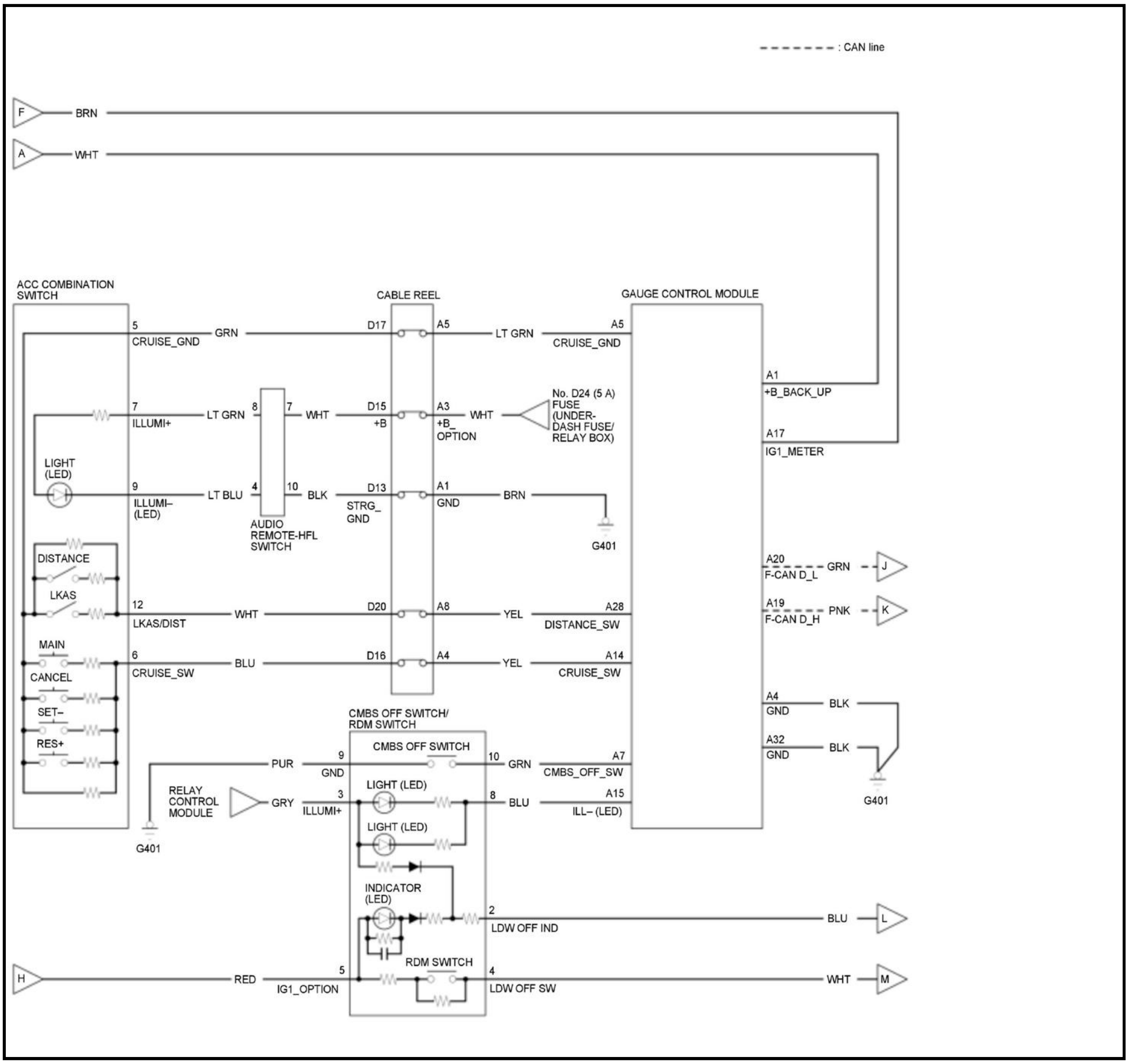

: CAN line
F
BRN
A
WHT
ACC COMBINATION SWITCH
CABLE REEL
GAUGE CONTROL MODULE
5
CRUISE_GND
GRN
D17
A5
LT GRN
A5
CRUISE_GND
A1
+B_BACK_UP
7
ILLUMI+
LT GRN
8
7
WHT
D15
+B
A3
+B_ OPTION
WHT
No. D24 (5 A) FUSE (UNDER-DASH FUSE/ RELAY BOX)
A17
IG1_METER
LIGHT (LED)
9
ILLUMI– (LED)
LT BLU
4
10
BLK
D13
STRG_ GND
A1
GND
BRN
AUDIO REMOTE-HFL SWITCH
G401
DISTANCE
LKAS
A20
F-CAN D_L
GRN
J
A19
F-CAN D_H
PNK
K
12
LKAS/DIST
WHT
D20
A8
YEL
A28
DISTANCE_SW
MAIN
6
CRUISE_SW
BLU
D16
A4
YEL
A14
CRUISE_SW
CANCEL
A4
GND
BLK
SET–
CMBS OFF SWITCH/ RDM SWITCH
RES+
CMBS OFF SWITCH
A32
GND
BLK
9
GND
PUR
10
GRN
A7
CMBS_OFF_SW
G401
RELAY CONTROL MODULE
GRY
3
ILLUMI+
LIGHT (LED)
8
BLU
A15
ILL– (LED)
G401
LIGHT (LED)
INDICATOR (LED)
2
LDW OFF IND
BLU
L
H
RED
5
IG1_OPTION
RDM SWITCH
4
LDW OFF SW
WHT
M

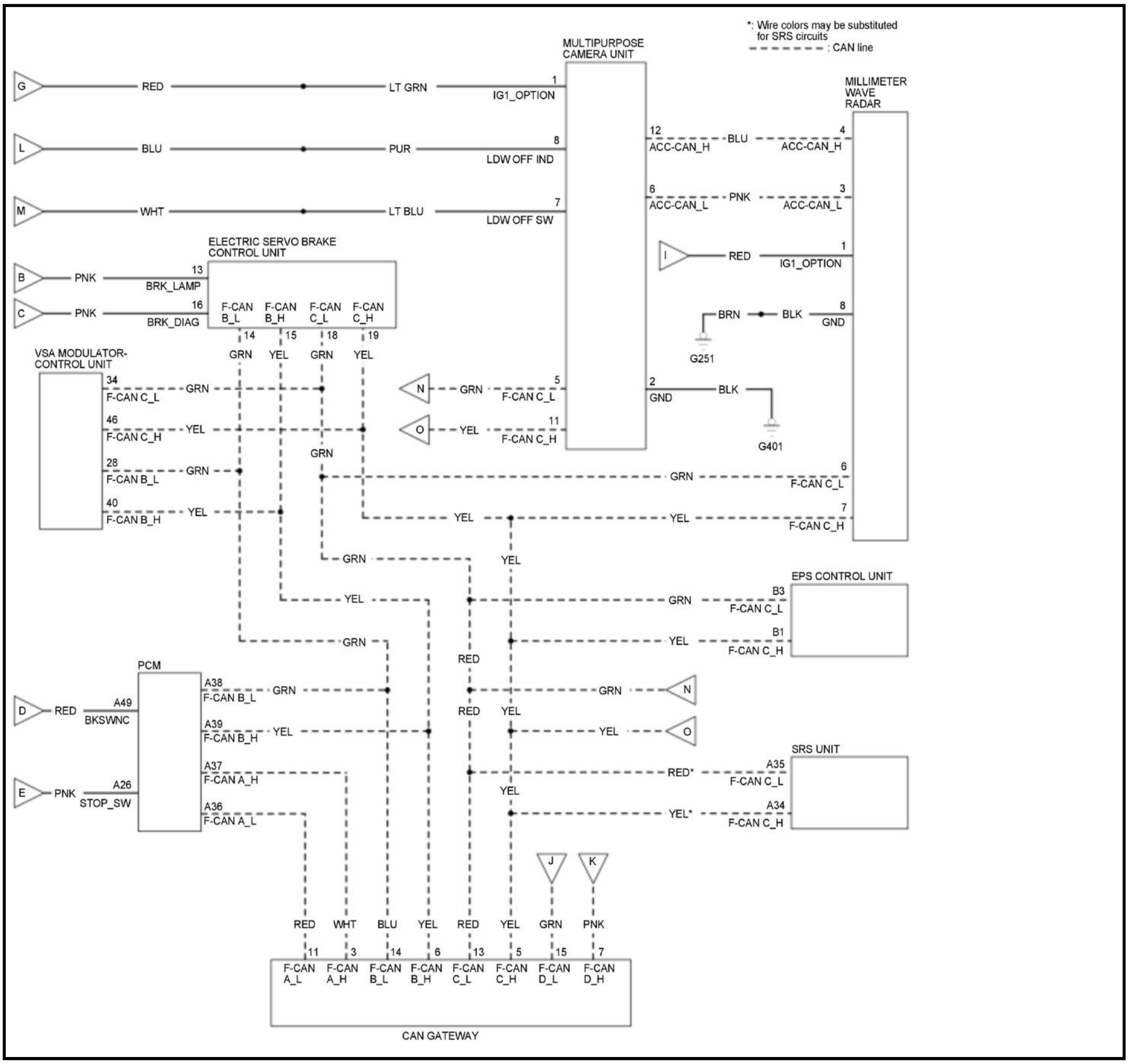
*: Wire colors may be substituted for SRS circuits
: CAN line
MULTIPURPOSE CAMERA UNIT
MILLIMETER WAVE RADAR
G
RED
LT GRN
1
IG1_OPTION
L
BLU
PUR
8
LDW OFF IND
M
WHT
LT BLU
7
LDW OFF SW
12
ACC-CAN_H
BLU
4
ACC-CAN_H
6
ACC-CAN_L
PNK
3
ACC-CAN_L
I
RED
1
IG1_OPTION
BRN
BLK
8
GND
G251
ELECTRIC SERVO BRAKE CONTROL UNIT
B
PNK
13
BRK_LAMP
C
PNK
16
BRK_DIAG
F-CAN B_L
F-CAN B_H
F-CAN C_L
F-CAN C_H
14
15
18
19
GRN
YEL
GRN
YEL
VSA MODULATOR-CONTROL UNIT
34
F-CAN C_L
GRN
46
F-CAN C_H
YEL
28
F-CAN B_L
GRN
40
F-CAN B_H
YEL
N
GRN
5
F-CAN C_L
O
YEL
11
F-CAN C_H
2
GND
BLK
G401
GRN
GRN
6
F-CAN C_L
YEL
YEL
7
F-CAN C_H
GRN
YEL
YEL
EPS CONTROL UNIT
GRN
B3
F-CAN C_L
YEL
B1
F-CAN C_H
GRN
RED
PCM
D
RED
A49
BKSWNC
A38
F-CAN B_L
GRN
GRN
N
A39
F-CAN B_H
YEL
RED
YEL
YEL
O
E
PNK
A26
STOP_SW
A37
F-CAN A_H
SRS UNIT
RED*
A35
F-CAN C_L
YEL
A36
F-CAN A_L
YEL*
A34
F-CAN C_H
J
K
RED
WHT
BLU
YEL
RED
YEL
GRN
PNK
11
3
14
6
13
5
15
7
F-CAN A_L
F-CAN A_H
F-CAN B_L
F-CAN B_H
F-CAN C_L
F-CAN C_H
F-CAN D_L
F-CAN D_H
CAN GATEWAY

LANE KEEPING ASSIST SYSTEM (LKAS) CIRCUIT DIAGRAM

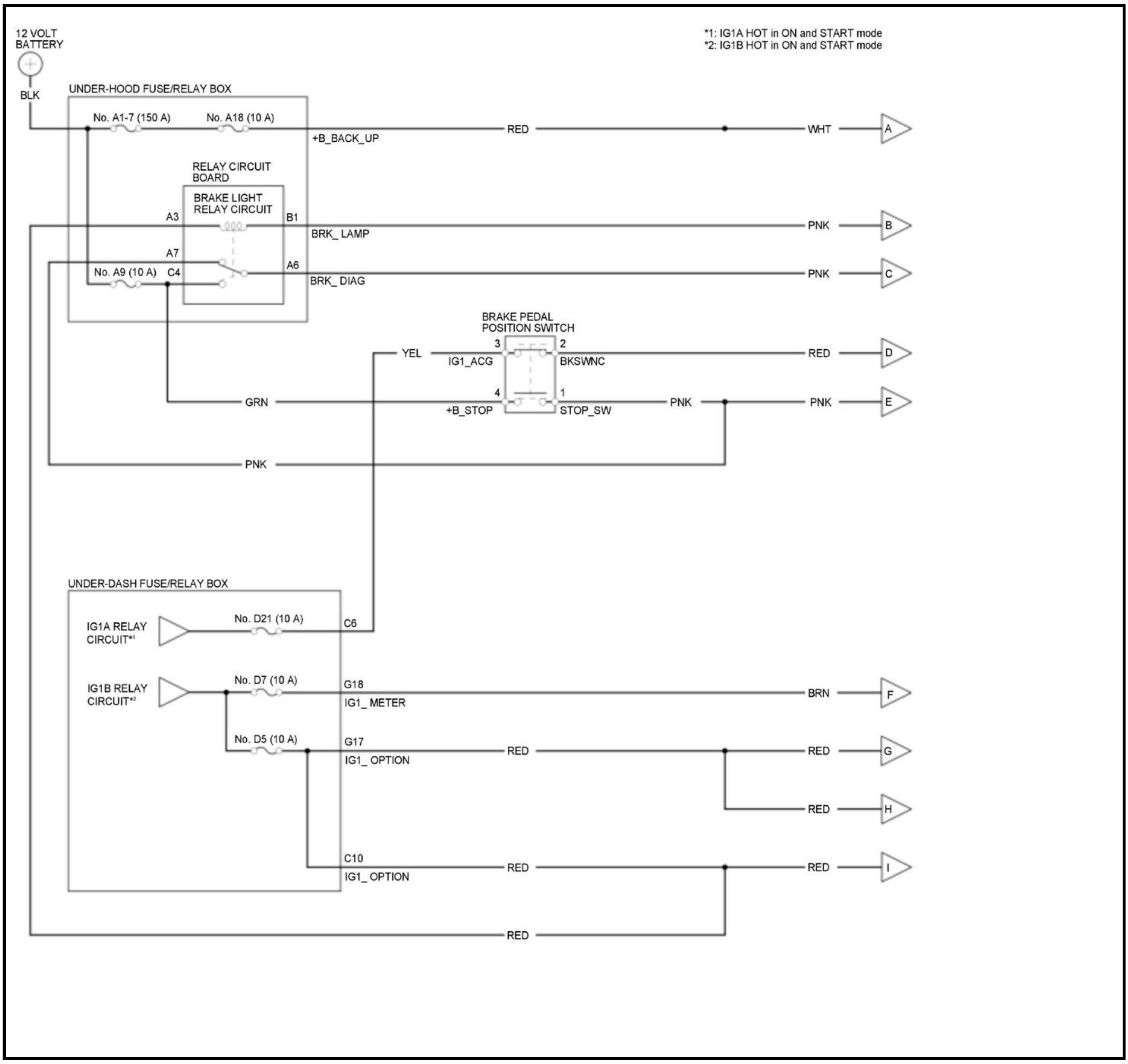
12 VOLT BATTERY
BLK
*1: IG1A HOT in ON and START mode
*2: IG1B HOT in ON and START mode
UNDER-HOOD FUSE/RELAY BOX
No. A1-7 (150 A)
No. A18 (10 A)
+B_BACK_UP
RED
WHT
A
RELAY CIRCUIT BOARD
BRAKE LIGHT RELAY CIRCUIT
A3
B1
BRK_ LAMP
PNK
B
A7
No. A9 (10 A)
C4
A6
BRK_ DIAG
PNK
C
BRAKE PEDAL POSITION SWITCH
YEL
3
IG1_ACG
2
BKSWNC
RED
D
GRN
4
+B_STOP
1
STOP_SW
PNK
PNK
E
PNK
UNDER-DASH FUSE/RELAY BOX
IG1A RELAY CIRCUIT*1
No. D21 (10 A)
C6
IG1B RELAY CIRCUIT*2
No. D7 (10 A)
G18
IG1_ METER
BRN
F
No. D5 (10 A)
G17
IG1_ OPTION
RED
RED
G
RED
H
C10
IG1_ OPTION
RED
RED
I
RED

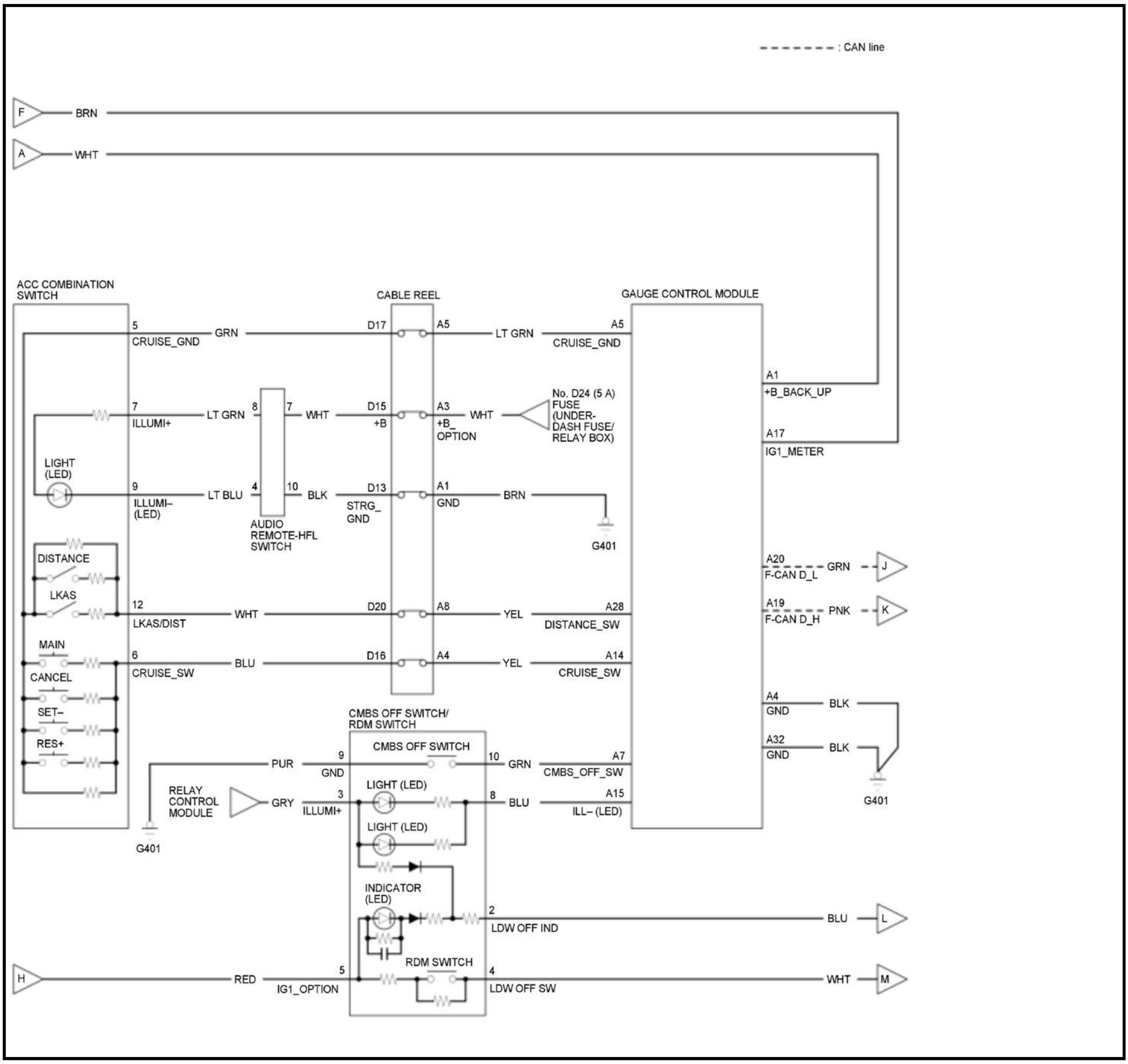
: CAN line
F
BRN
A
WHT
ACC COMBINATION SWITCH
CABLE REEL
GAUGE CONTROL MODULE
5
CRUISE_GND
GRN
D17
A5
LT GRN
A5
CRUISE_GND
A1
+B_BACK_UP
7
ILLUMI+
LT GRN
8
7
WHT
D15
+B
A3
+B_ OPTION
WHT
No. D24 (5 A) FUSE (UNDER-DASH FUSE/ RELAY BOX)
A17
IG1_METER
LIGHT (LED)
9
ILLUMI– (LED)
LT BLU
4
10
BLK
D13
STRG_ GND
A1
GND
BRN
AUDIO REMOTE-HFL SWITCH
G401
DISTANCE
LKAS
A20
F-CAN D_L
GRN
J
A19
F-CAN D_H
PNK
K
12
LKAS/DIST
WHT
D20
A8
YEL
A28
DISTANCE_SW
MAIN
6
CRUISE_SW
BLU
D16
A4
YEL
A14
CRUISE_SW
CANCEL
SET–
RES+
A4
GND
BLK
A32
GND
BLK
G401
CMBS OFF SWITCH/ RDM SWITCH
CMBS OFF SWITCH
9
GND
PUR
10
GRN
A7
CMBS_OFF_SW
RELAY CONTROL MODULE
GRY
3
ILLUMI+
LIGHT (LED)
8
BLU
A15
ILL– (LED)
G401
LIGHT (LED)
INDICATOR (LED)
2
LDW OFF IND
BLU
L
H
RED
5
IG1_OPTION
RDM SWITCH
4
LDW OFF SW
WHT
M

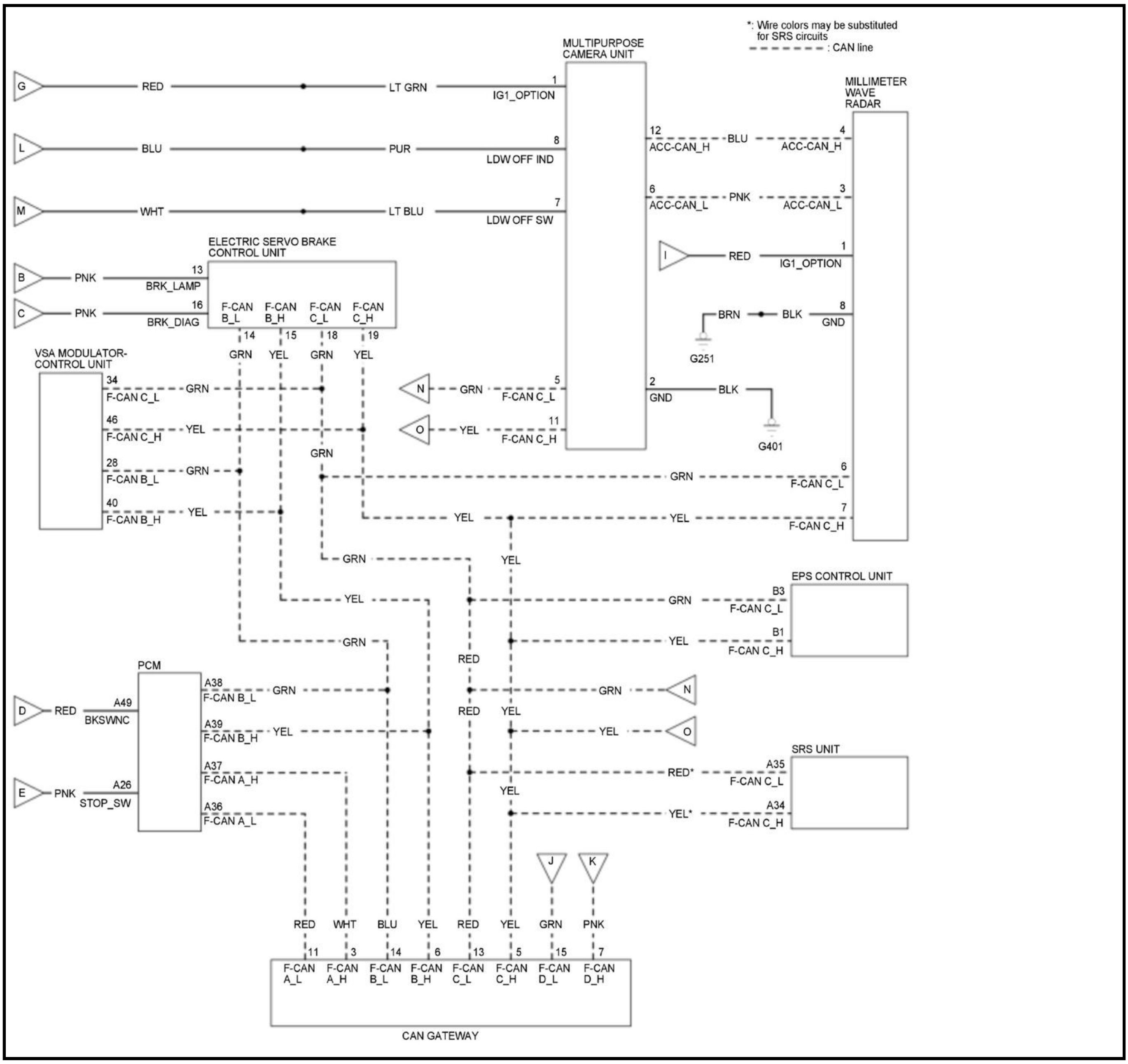
*: Wire colors may be substituted for SRS circuits
: CAN line
MULTIPURPOSE CAMERA UNIT
MILLIMETER WAVE RADAR
G
RED
LT GRN
1
IG1_OPTION
L
BLU
PUR
8
LDW OFF IND
M
WHT
LT BLU
7
LDW OFF SW
12
ACC-CAN_H
BLU
4
ACC-CAN_H
6
ACC-CAN_L
PNK
3
ACC-CAN_L
I
RED
1
IG1_OPTION
BRN
BLK
8
GND
G251
ELECTRIC SERVO BRAKE CONTROL UNIT
B
PNK
13
BRK_LAMP
C
PNK
16
BRK_DIAG
F-CAN B_L
F-CAN B_H
F-CAN C_L
F-CAN C_H
14
15
18
19
GRN
YEL
GRN
YEL
VSA MODULATOR-CONTROL UNIT
34
F-CAN C_L
GRN
46
F-CAN C_H
YEL
28
F-CAN B_L
GRN
40
F-CAN B_H
YEL
N
GRN
5
F-CAN C_L
O
YEL
11
F-CAN C_H
2
GND
BLK
G401
GRN
GRN
6
F-CAN C_L
YEL
YEL
7
F-CAN C_H
GRN
YEL
YEL
EPS CONTROL UNIT
GRN
B3
F-CAN C_L
GRN
YEL
B1
F-CAN C_H
RED
PCM
A38
F-CAN B_L
GRN
GRN
N
D
RED
A49
BKSWNC
A39
F-CAN B_H
YEL
RED
YEL
YEL
O
A37
F-CAN A_H
SRS UNIT
RED*
A35
F-CAN C_L
E
PNK
A26
STOP_SW
A36
F-CAN A_L
YEL
YEL*
A34
F-CAN C_H
J
K
RED
WHT
BLU
YEL
RED
YEL
GRN
PNK
11
3
14
6
13
5
15
7
F-CAN A_L
F-CAN A_H
F-CAN B_L
F-CAN B_H
F-CAN C_L
F-CAN C_H
F-CAN D_L
F-CAN D_H
CAN GATEWAY

COMPONENT LOCATION INDEX

ADAPTIVE CRUISE CONTROL (ACC) COMPONENT LOCATION INDEX

For relationships between signals in a system, refer to System Diagram.

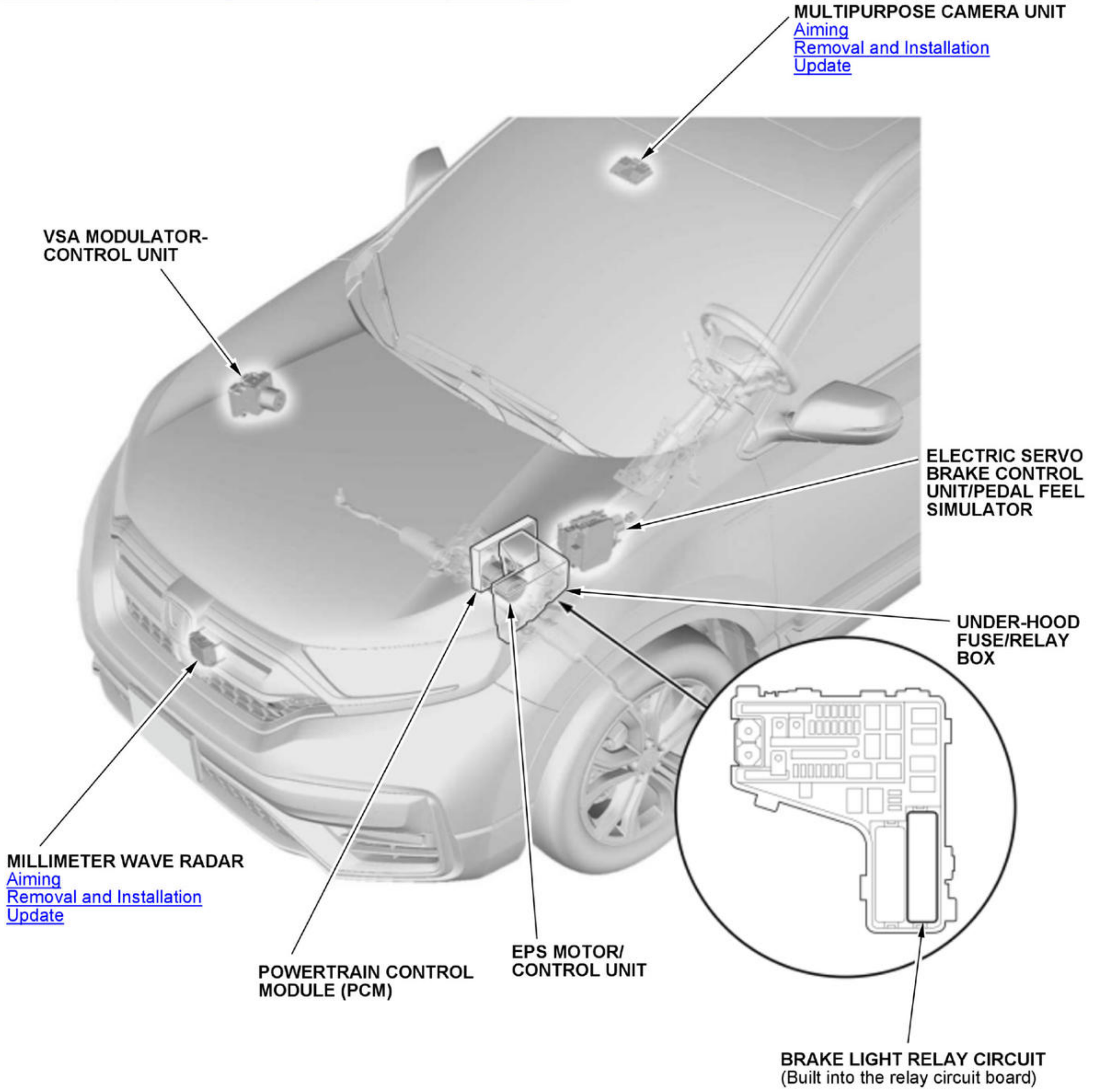
MULTIPURPOSE CAMERA UNIT
Aiming
Removal and Installation
Update
VSA MODULATOR-CONTROL UNIT
ELECTRIC SERVO BRAKE CONTROL UNIT/PEDAL FEEL SIMULATOR
UNDER-HOOD FUSE/RELAY BOX
MILLIMETER WAVE RADAR
Aiming
Removal and Installation
Update
POWERTRAIN CONTROL MODULE (PCM)
EPS MOTOR/ CONTROL UNIT
BRAKE LIGHT RELAY CIRCUIT
(Built into the relay circuit board)

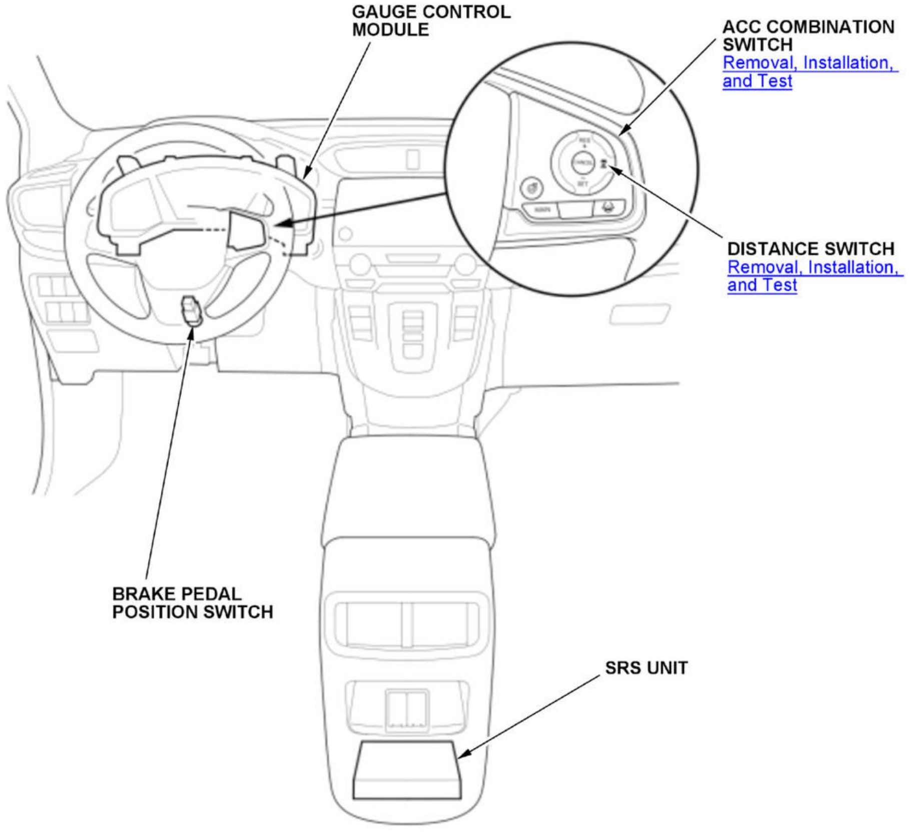
GAUGE CONTROL MODULE
ACC COMBINATION SWITCH
Removal, Installation, and Test
DISTANCE SWITCH
Removal, Installation, and Test
BRAKE PEDAL POSITION SWITCH
SRS UNIT

COLLISION MITIGATION BRAKING SYSTEM (CMBS) COMPONENT LOCATION INDEX

For relationships between signals in a system, refer to System Diagram.

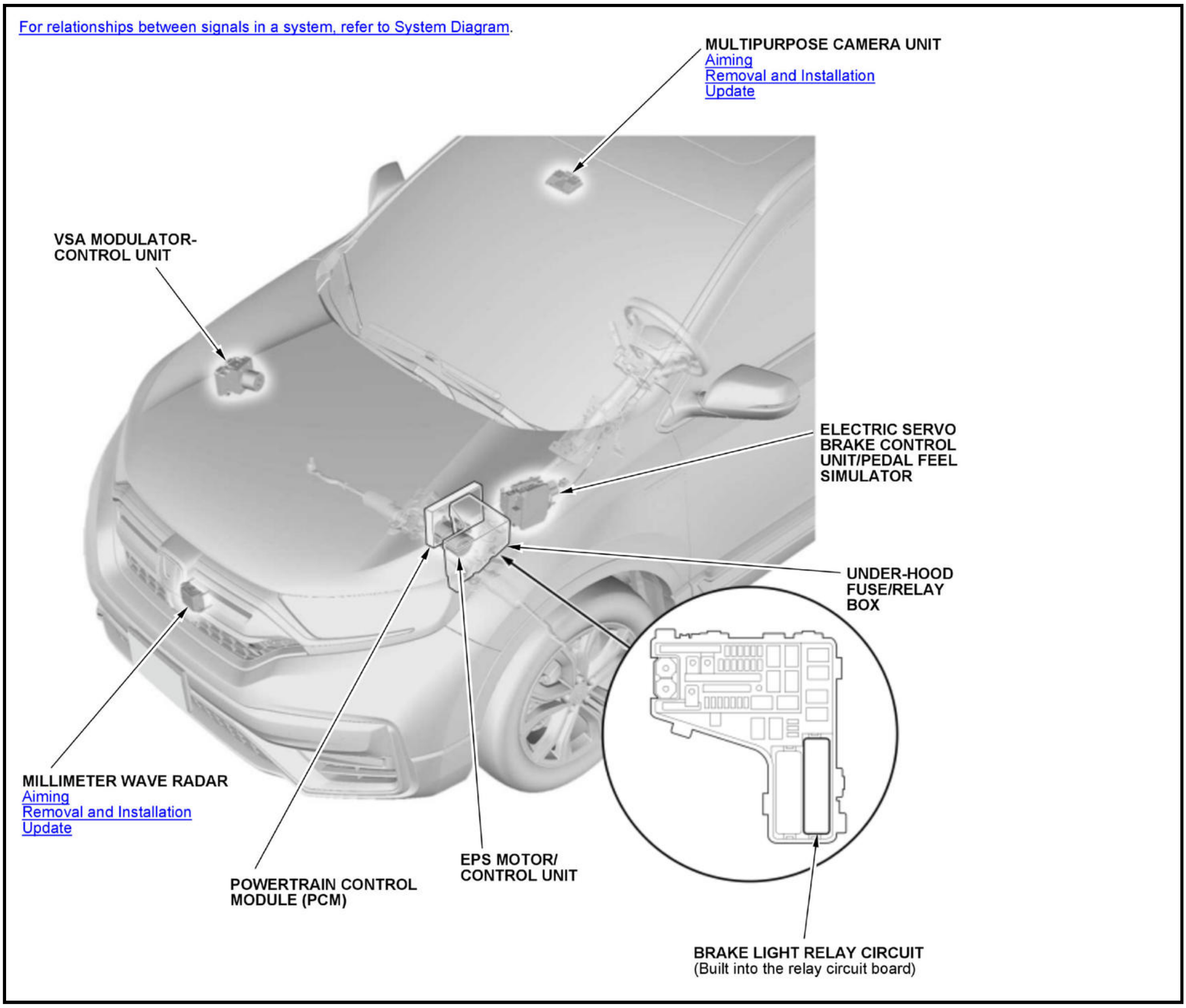
MULTIPURPOSE CAMERA UNIT
Aiming
Removal and Installation
Update
VSA MODULATOR-CONTROL UNIT
ELECTRIC SERVO BRAKE CONTROL UNIT/PEDAL FEEL SIMULATOR
UNDER-HOOD FUSE/RELAY BOX
MILLIMETER WAVE RADAR
Aiming
Removal and Installation
Update
EPS MOTOR/ CONTROL UNIT
POWERTRAIN CONTROL MODULE (PCM)
BRAKE LIGHT RELAY CIRCUIT
(Built into the relay circuit board)

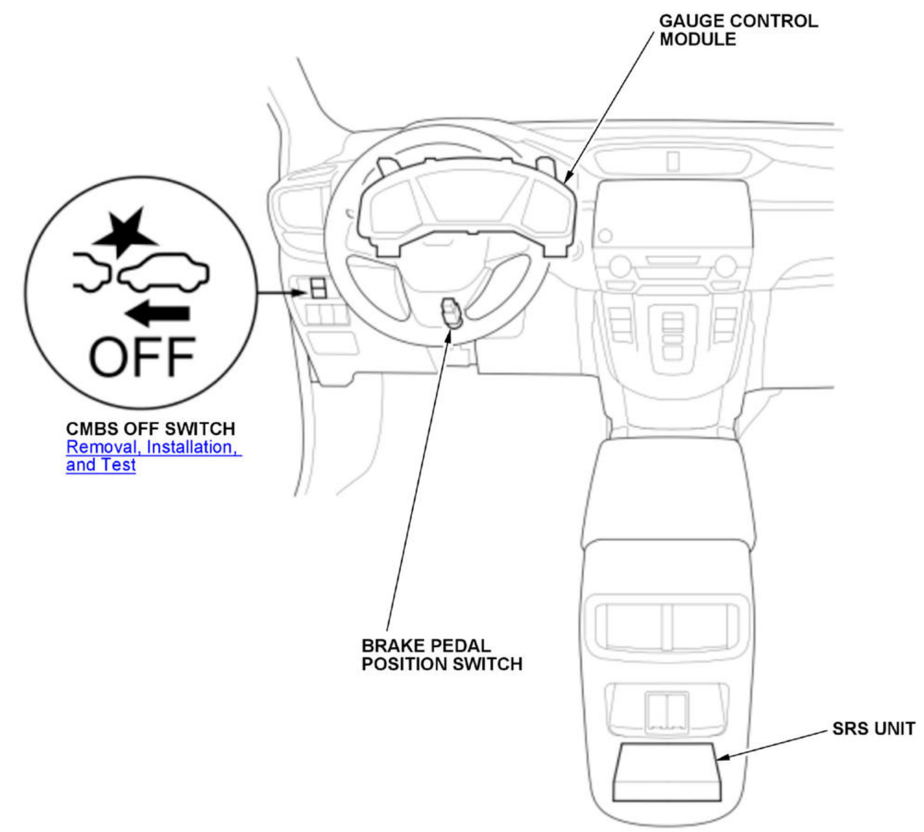
GAUGE CONTROL MODULE
OFF
CMBS OFF SWITCH
Removal, Installation, and Test
BRAKE PEDAL POSITION SWITCH
SRS UNIT

Position of the CMBS OFF switch is different depending on the model.

LANE KEEPING ASSIST SYSTEM (LKAS) COMPONENT LOCATION INDEX

For relationships between signals in a system, refer to System Diagram.

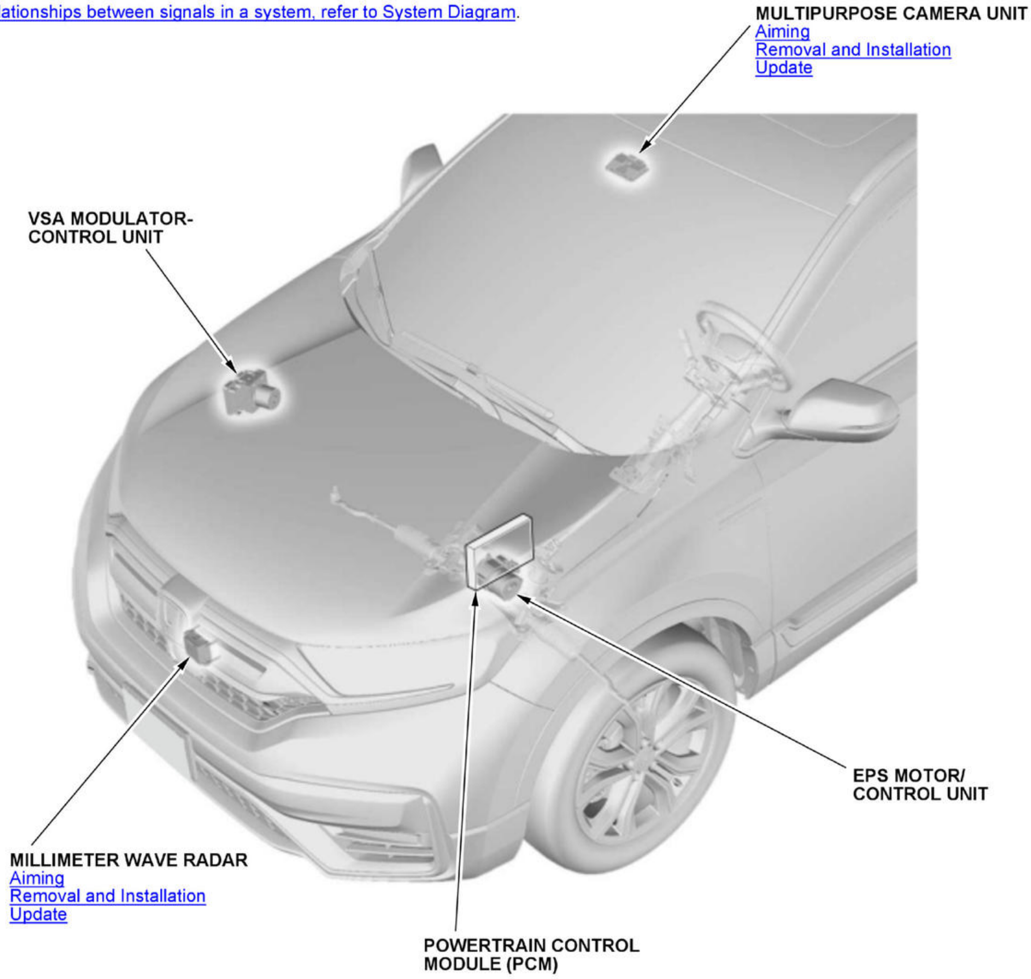
MULTIPURPOSE CAMERA UNIT
Aiming
Removal and Installation
Update
VSA MODULATOR-CONTROL UNIT
EPS MOTOR/ CONTROL UNIT
MILLIMETER WAVE RADAR
Aiming
Removal and Installation
Update
POWERTRAIN CONTROL MODULE (PCM)

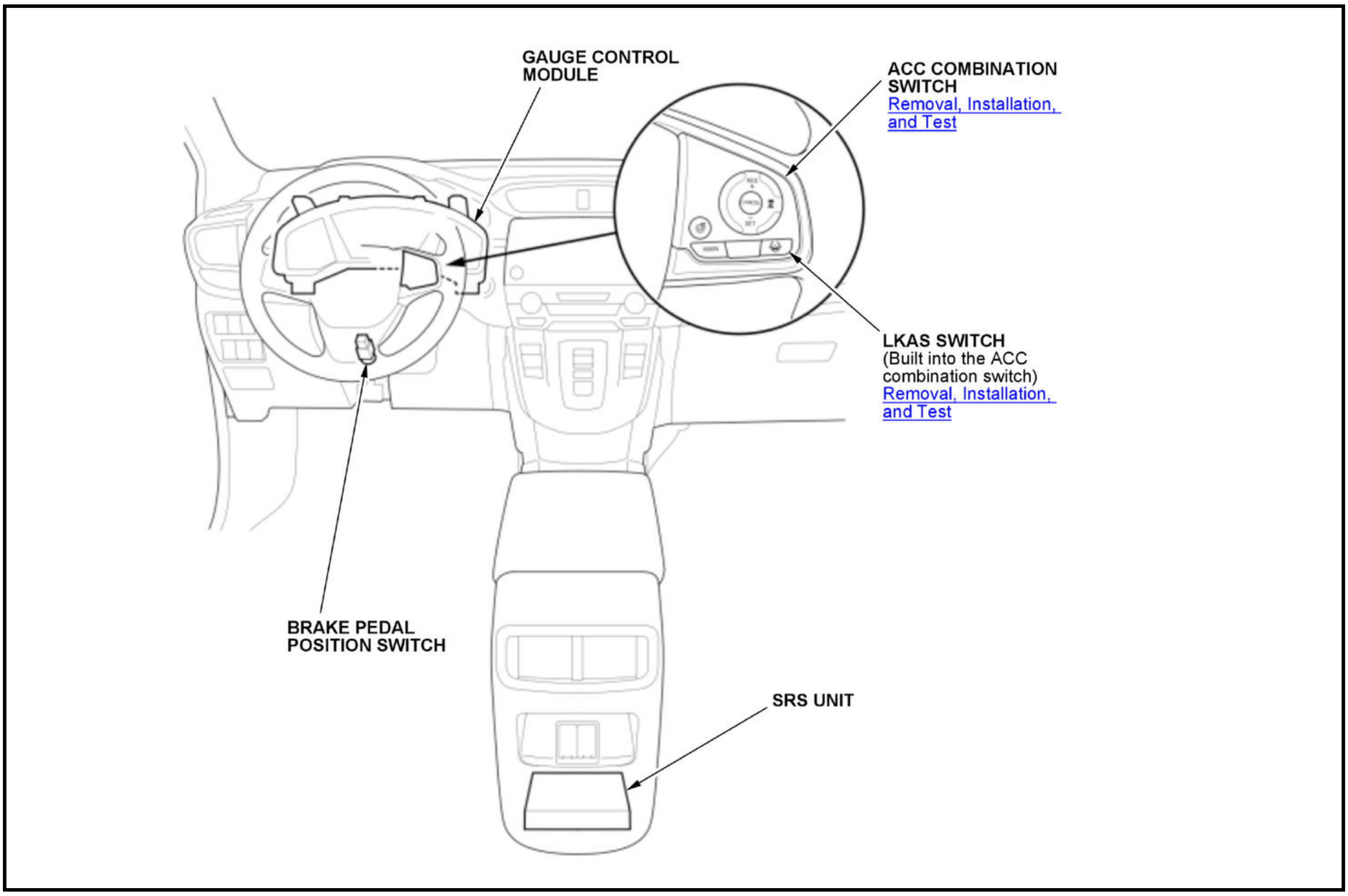
GAUGE CONTROL MODULE
ACC COMBINATION SWITCH
Removal, Installation, and Test
LKAS SWITCH
(Built into the ACC combination switch)
Removal, Installation, and Test
BRAKE PEDAL POSITION SWITCH
SRS UNIT

SYMPTOM TROUBLESHOOTING INDEX FOR VIEWER

AM RADIO RECEPTION CHANGES AT NIGHT (DISPLAY AUDIO TYPE)

Diagnostic Procedure

- This is a system characteristic. AM radio stations are required by the government (FCC) to lower their power at night

AM/FM RADIO DISPLAY IS BLANK OR NO STATION INFORMATION IS DISPLAYED (DISPLAY AUDIO TYPE)

Diagnostic Procedure

- Symptom Troubleshooting

AM/FM RADIO PRESET MEMORY IS LOST (COLOR AUDIO TYPE)

Diagnostic Procedure

- **Replace the audio unit**

Also Check for

Internal error

AM/FM RADIO PRESET MEMORY IS LOST (DISPLAY AUDIO TYPE)

Diagnostic Procedure

- **Replace the tuner unit**

Also Check for

Internal error

AUDIO REMOTE-HFL SWITCH DOES NOT WORK PROPERLY (AUDIO UNIT BUTTONS WORK) (COLOR AUDIO TYPE)

Diagnostic Procedure

- Symptom Troubleshooting

AUDIO REMOTE-HFL SWITCH DOES NOT WORK PROPERLY (AUDIO UNIT BUTTONS WORK) (DISPLAY AUDIO TYPE)

Diagnostic Procedure

- Symptom Troubleshooting

AUDIO SYSTEM SOUND IS WEAK OR DISTORTED (DISPLAY IS NORMAL) (COLOR AUDIO TYPE)

Diagnostic Procedure

- Symptom Troubleshooting

Also Check for

- Fader and balance positions
- Aftermarket amplifier or speakers

AUDIO SYSTEM SOUND IS WEAK OR DISTORTED (DISPLAY IS NORMAL) (DISPLAY AUDIO TYPE)

Diagnostic Procedure

- **Symptom Troubleshooting**

Also Check for

- Fader and balance positions
- Aftermarket amplifier or speakers

AUDIO UNIT BUTTON DOES NOT WORK (COLOR AUDIO TYPE)

Diagnostic Procedure

- **Do the Knob Check in the System Diagnostic Mode**

Also Check for

Check the connector for poor connections or loose terminals between the audio unit and the audio panel

AUDIO UNIT BUTTON ILLUMINATION DOES NOT WORK (COLOR AUDIO TYPE)

Diagnostic Procedure

- **Symptom Troubleshooting**

AUDIO UNIT DOES NOT EXIT ANTI-THEFT MODE (COLOR AUDIO TYPE)

Diagnostic Procedure

- **Anti-Theft Feature**

AUDIO UNIT DOES NOT EXIT ANTI-THEFT MODE (DISPLAY AUDIO TYPE)

Diagnostic Procedure

- **Anti-Theft Feature**

AUDIO UNIT WILL NOT TURN ON (NO INFORMATION DISPLAY) (COLOR AUDIO TYPE)

Diagnostic Procedure

- **Symptom Troubleshooting**

AUDIO UNIT WILL NOT TURN ON (NO INFORMATION DISPLAY) (DISPLAY AUDIO TYPE)

Diagnostic Procedure

- **Symptom Troubleshooting**

AUDIO-NAVIGATION UNIT POWER WILL NOT TURN ON (NO INFORMATION DISPLAY)

Diagnostic Procedure

- **Symptom Troubleshooting**

Also Check for

- Blown fuses
- Screen settings
- **Error Messages**
- Software not up to date

BLUETOOTH AUDIO DOES NOT WORK

Diagnostic Procedure

Check the Bluetooth module:

- With navigation: **Do the HFL/Mic in the System Diagnostic Mode**
- Display audio type without navigation: **Do the HFL/Mic in the System Diagnostic Mode**
- Color audio type: **Do the Version Display in the System Diagnostic Mode**

Also Check for

Bluetooth audio device compatibility (see the Owner's Manual)

BLUETOOTH AUDIO DOES NOT WORK (COLOR AUDIO TYPE)

Also Check for

Bluetooth phone compatibility (see the Owner's Manual)

BLUETOOTH AUDIO DOES NOT WORK (DISPLAY AUDIO TYPE)

Also Check for

Bluetooth phone compatibility (see the Owner's Manual)

BOOMING SOUND WHILE DRIVING WITH AUDIO SYSTEM ON OR OFF (COLOR AUDIO TYPE)

Diagnostic Procedure

- **Symptom Troubleshooting**

BOOMING SOUND WHILE DRIVING WITH AUDIO SYSTEM ON OR OFF (DISPLAY AUDIO TYPE)

Diagnostic Procedure

- **Symptom Troubleshooting**

Also Check for

Powertrain vibration or judder

CENTER DISPLAY UNIT BUTTON DOES NOT WORK (DISPLAY AUDIO TYPE)

Diagnostic Procedure

- **Do the Hard Key in the System Diagnostic Mode**

Also Check for

Check the Touch Panel Sensitivity in the System Settings

CENTER DISPLAY UNIT DOES NOT DIM (DISPLAY AUDIO TYPE)

Diagnostic Procedure

- Symptom Troubleshooting

CLOCK WILL NOT SET TO CORRECT TIME

Also Check for

Check the GPS signal

EXCESSIVE TRANSITION BETWEEN ANALOG BROADCAST AND DIGITAL HD RADIO (TM) BROADCAST (DISPLAY AUDIO TYPE)

Diagnostic Procedure

- Receiver is located near the edge of the digital HD Radio (TM) coverage area. Refer to www.hdradio.com to verify radio stations in your coverage area

HD RADIO (TM) CHANGES HD CHANNEL ON ITS OWN (DISPLAY AUDIO TYPE)

Diagnostic Procedure

- This is intended behavior. HD Radio (TM) is set to revert to main channel after extended loss of HD2/HD3 broadcast

HFL DOES NOT WORK PROPERLY

Diagnostic Procedure

- Symptom Troubleshooting

Also Check for

Bluetooth phone compatibility (see the Owner's Manual)

NAVIGATION SYSTEM STAYS ON THE CSF SCREEN

Diagnostic Procedure

- Navigation DTCs

Also Check for

- GPS Initialization
- Aftermarket metallic window tint on the front window or electronic aftermarket accessories (possibly hidden) mounted near the GPS antenna or the audio-navigation unit
- Disconnected or defective GPS antenna

NAVIGATION TOUCH PANEL DOES NOT WORK

Diagnostic Procedure

- Do the Touch Panel Check in the System Diagnostic Mode

Also Check for

Forced Rebooting of Audio-Navigation Unit

NO HD TRAFFIC INFORMATION

Diagnostic Procedure

- **Go to AM/FM radio display is blank or no station information is displayed troubleshooting**

Also Check for

Local outage or no local broadcast. Compare to a known-good vehicle of the same year and trim.

NO SOUND IS HEARD FROM ALL THE SPEAKERS (DISPLAY IS NORMAL) (COLOR AUDIO TYPE)

Diagnostic Procedure

- **Symptom Troubleshooting**

Also Check for

Aftermarket amplifier or speakers

NO SOUND IS HEARD FROM ALL THE SPEAKERS (DISPLAY IS NORMAL) (DISPLAY AUDIO TYPE)

Diagnostic Procedure

- **Symptom Troubleshooting**

Also Check for

Aftermarket amplifier or speakers

PANDORA IS NOT IS DISPLAYED AS AN AUDIO SOURCE (DISPLAY AUDIO TYPE)

Diagnostic Procedure

- **Do the PANDORA in the System Diagnostic Mode to check the Pandora settings is abled**

POOR AM OR FM RADIO RECEPTION OR INTERFERENCE (COLOR AUDIO TYPE)

Diagnostic Procedure

- **Symptom Troubleshooting**

Also Check for

- Check radio reception: **Do the FM or AM in the System Diagnostic Mode**
- Aftermarket FM modulator
- Loose antenna amplifier mounting bolt

POOR GPS RECEPTION OR INTERFERENCE

Diagnostic Procedure

- **Do the GPS Information in the System Diagnostic Mode**

Also Check for

- **Global Positioning System (GPS) Limitations**
- Aftermarket metallic window tint on the front window or electronic aftermarket accessories (possibly hidden) mounted near the GPS antenna or the audio-navigation unit

POOR OR NO SOUND WITH AM/FM RADIO (DISPLAY AUDIO TYPE)

Diagnostic Procedure

- **Symptom Troubleshooting**

Also Check for

- Check radio reception: **Do the Remote Tuner in the System Diagnostic Mode**
- Aftermarket FM modulator
- Loose antenna amplifier mounting bolt

REARVIEW CAMERA IMAGE DOES NOT CHANGE WHEN SELECTING DIFFERENT VIEWS (COLOR AUDIO TYPE)

Diagnostic Procedure

- **Symptom Troubleshooting**

REARVIEW CAMERA IMAGE DOES NOT CHANGE WHEN SELECTING DIFFERENT VIEWS (DISPLAY AUDIO TYPE)

Diagnostic Procedure

- **Symptom Troubleshooting**

REARVIEW CAMERA IMAGE DOES NOT COME ON (COLOR AUDIO TYPE)

Diagnostic Procedure

- **Symptom Troubleshooting**

REARVIEW CAMERA IMAGE DOES NOT COME ON (DISPLAY AUDIO TYPE)

Diagnostic Procedure

- **Symptom Troubleshooting**

SYSTEM ALWAYS COMES UP IN-LINE DIAGNOSTIC MODE

Diagnostic Procedure

- **Factory diagnostic screen In Line Diagnostic mode**

SYSTEM ALWAYS COMES UP IN-LINE DIAGNOSTIC MODE (DISPLAY AUDIO TYPE)

Diagnostic Procedure

- **Factory diagnostic screen In Line Diag**

THE MID DOES NOT DISPLAY THE AUDIO UNIT INFORMATION (DISPLAY AUDIO TYPE)

Diagnostic Procedure

- Symptom Troubleshooting

THE MID DOES NOT DISPLAY THE AUDIO-NAVIGATION UNIT INFORMATION

Diagnostic Procedure

- Symptom Troubleshooting

THE APPROVED BLUETOOTH CELL PHONE CANNOT USE ALL ITS FUNCTIONS

Diagnostic Procedure

- HFL System Troubleshooting

THE APPROVED BLUETOOTH CELL PHONE DOES NOT PLACE OR RECEIVE CALLS USING THE HFL SYSTEM

Diagnostic Procedure

- HFL System Troubleshooting

THE APPROVED BLUETOOTH CELL PHONE IS HAVING PROBLEMS PAIRING TO THE VEHICLE

Diagnostic Procedure

- HFL System Troubleshooting

USB CHARGER DOES NOT WORK (DISPLAY AUDIO TYPE)

Diagnostic Procedure

- Symptom Troubleshooting

USB DEVICE DOES NOT FUNCTION (COLOR AUDIO TYPE)

Diagnostic Procedure

- Symptom Troubleshooting

Also Check for

- Error Messages
- USB device compatibility (see the Owner's Manual)

USB DEVICE DOES NOT FUNCTION (DISPLAY AUDIO TYPE)

Diagnostic Procedure

- Symptom Troubleshooting

Also Check for

- Error messages
- USB device compatibility (see the Owner's Manual)

VEHICLE POSITION ICON WANDERS ACROSS THE MAP WHEN DRIVING (DOES NOT FOLLOW A DISPLAYED ROAD) OR MAP VEHICLE ICON SPINS

Diagnostic Procedure

- **Symptom Troubleshooting**

Also Check for

- **Global Positioning System (GPS) Limitations**
- **Map Matching**
- **Sensor Calibration**
- VSP missing
- Poor or no GPS reception
- Check for any related service bulletin software updates

VOICE CONTROL DOES NOT WORK/RESPOND

Also Check for

Check for any related service bulletin software updates

VOICE GUIDANCE CANNOT BE HEARD, IS BROKEN UP, OR THERE IS STATIC

Also Check for

Volume or voice feedback setting (see the Navigation System Manual)

VOLUME DOES NOT INCREASE WITH SPEED (COLOR AUDIO TYPE)

Diagnostic Procedure

- **Symptom Troubleshooting**

Also Check for

Speed-sensitive Volume Control settings (see the Owner's Manual)

VOLUME DOES NOT INCREASE WITH SPEED (DISPLAY AUDIO TYPE)

Diagnostic Procedure

- **Symptom Troubleshooting**

Also Check for

Speed-sensitive Volume Control settings (see the Owner's Manual)

VOLUME IS TOO HIGH OR TOO LOW WHEN DRIVING AT FREEWAY SPEEDS (COLOR AUDIO TYPE)

Also Check for

Speed-sensitive Volume Control settings (see the Owner's Manual)

VOLUME IS TOO HIGH OR TOO LOW WHEN DRIVING AT FREEWAY SPEEDS (DISPLAY AUDIO TYPE)

Also Check for

Speed-sensitive Volume Control settings (see the Owner's Manual)

XM RADIO DISPLAY IS BLANK AND NO STATION INFORMATION IS DISPLAYED (DISPLAY AUDIO TYPE)

Diagnostic Procedure

- With navigation: Navigation DTCs
- Without navigation: Audio DTCs

Also Check for

Error messages

CONNECTOR VIEW

ANC/ACTIVE SOUND CONTROL MICROPHONE CONNECTOR FOR INPUTS AND OUTPUTS

Connector Index
Front ANC/Active Sound Control Microphone 8P Connector
Rear ANC/Active Sound Control Microphone 2P Connector

NOTE: The front HFL-navigation-ANC/active sound control microphone and the front HFL-ANC/active sound control microphone are the same parts.

Front ANC/Active Sound Control Microphone 8P Connector (female terminals)

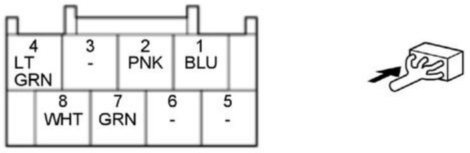

Cavity	Terminal Name	Description
1	MIC_GND	Ground for microphone
2	MIC+	Outputs microphone signal
3	---	Not used
4	MIC_PWR	Microphone power source
5	---	Not used
6	---	Not used
7	HFT_MUTE	Inputs HFL microphone directivity switching signal
8	ANC_F_MIC+8V	Outputs signal for front ANC/active sound control microphone

Rear ANC/Active Sound Control Microphone 2P Connector (female terminals)

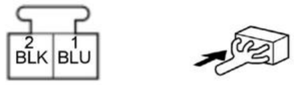

Cavity	Terminal Name	Description
1	ANC_R_MIC+8V	Outputs signal for rear ANC/active sound control microphone
2	SH_ANC_R_MIC	Shield for terminal No. 1

ANC/ACTIVE SOUND CONTROL UNIT CONNECTOR FOR INPUTS AND OUTPUTS

ANC/Active Sound Control Unit 20P Connector (female terminals)

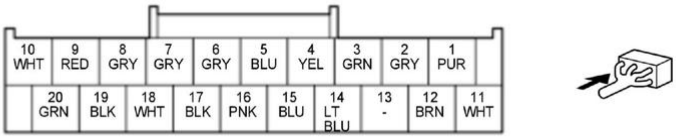

Cavity	Terminal Name	Description
1	GND	ANC/active sound control unit ground
2	AUD_F_MIX_SH	Shield for terminals No. 15 and No. 16
3	SWD+B	Inputs signal for ANC/active sound control unit switching ON/OFF
4	F-CAN B_H	Communication signal
5	F-CAN B_L	Communication signal
6	SH_ANC_R_MIC	Shield for terminal No. 17
7	SH_ANC_F_MIC	Shield for terminal No. 18
8	ANC_SH	Shield for terminals No. 9, No. 10, No. 19, and No. 20
9	ANC_R-	Outputs noise cancelling signal to related units
10	ANC_F-	Outputs noise cancelling signal to related units
11	+B_BACK_UP	+B power source
12	IG1_METER	IG1 power source
13	---	Not used
14	K-LINE	Communication signal
15	AUD_F_MIX_GND	Basis ground for terminals No. 16
16	AUD_F_MIX	Outputs noise cancelling mixing signal from related units
17	ANC_R_MIC+8V	Inputs signal for rear ANC/active sound control microphone
18	ANC_F_MIC+8V	Inputs signal for front ANC/active sound control microphone

Cavity	Terminal Name	Description
19	ANC_R+	Outputs noise cancelling signal to related units
20	ANC_F+	Outputs noise cancelling signal to related units

AUDIO REMOTE-HFL SWITCH CONNECTOR FOR INPUTS AND OUTPUTS

Audio Remote-HFL Switch 12P Connector (female terminals)

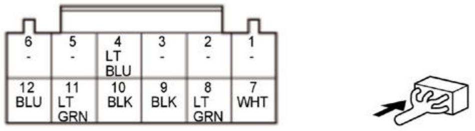

Cavity	Terminal Name	Description
1	---	Not used
2	---	Not used
3	---	Not used
4	ILL-(LED)	Outputs illumination control signal for related units
5	---	Not used
6	---	Not used
7	+B	+B power source
8	ILLUMI+	Outputs illumination signal
9*	STRG_GND	Ground for related units
10	STRG_GND	Audio remote-HFL switch ground
11*	HSW_LIN	Communication signal
12	STRG_SW_LIN	Communication signal

*: With heated steering wheel

AUDIO UNIT CONNECTOR FOR INPUTS AND OUTPUTS (COLOR AUDIO TYPE)

Connector Index
Audio Unit Connector A (24P)
Audio Unit Connector C (32P)
Audio Unit Connector E (3P)
Audio Unit Connector F (5P)

Audio Unit Connector A (24P) (female terminals)

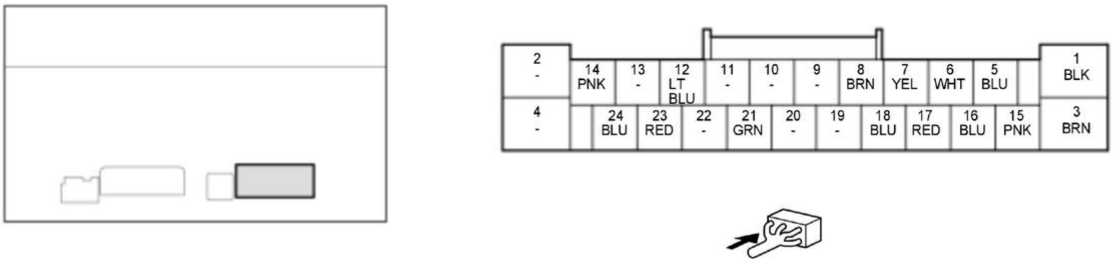
2 -
14 PNK
13 -
12 LT BLU
11 -
10 -
9 -
8 BRN
7 YEL
6 WHT
5 BLU
1 BLK
4 -
24 BLU
23 RED
22 -
21 GRN
20 -
19 -
18 BLU
17 RED
16 BLU
15 PNK
3 BRN

Cavity	Terminal Name	Description
A1	GND	Ground for audio unit
A2	---	Not used
A3	+B_AUDIO	+B power source
A4	---	Not used
A5	RL_SPKR+	Outputs sound signal for left rear speakers
A6	RL_SPKR-	Outputs sound signal for left rear speakers
A7	RR_SPKR+	Outputs sound signal for right rear speakers
A8	RR_SPKR-	Outputs sound signal for right rear speakers
A9	---	Not used
A10	---	Not used
A11	---	Not used
A12	K-LINE	Communication signal
A13	---	Not used
A14	B-CAN_H	Communication signal
A15	FL_SPKR+	Outputs sound signal for left front speakers
A16	FL_SPKR-	Outputs sound signal for left front speakers
A17	FR_SPKR+	Outputs sound signal for right front speakers
A18	FR_SPKR-	Outputs sound signal for right front speakers
A19	---	Not used
A20	---	Not used
A21	SWD+B	Outputs signal for related unit switching on/off

Cavity	Terminal Name	Description
A22	---	Not used
A23	ACC	ACCESSORY power source
A24	B-CAN_L	Communication signal

Audio Unit Connector C (32P) (female terminals)

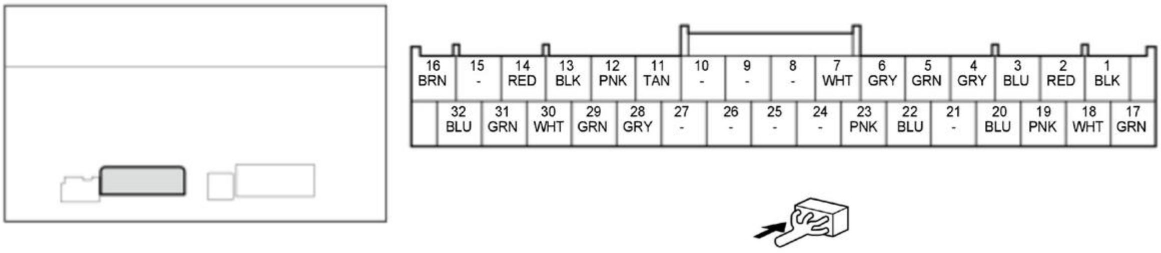
16 BRN
15 -
14 RED
13 BLK
12 PNK
11 TAN
10 -
9 -
8 -
7 WHT
6 GRY
5 GRN
4 GRY
3 BLU
2 RED
1 BLK
32 BLU
31 GRN
30 WHT
29 GRN
28 GRY
27 -
26 -
25 -
24 -
23 PNK
22 BLU
21 -
20 BLU
19 PNK
18 WHT
17 GRN

Cavity	Terminal Name	Description
C1	ANC_R+	Inputs noise cancelling signal from ANC/active sound control unit
C2	ANC_R-	Inputs noise cancelling signal from ANC/active sound control unit
C3	COMPASS_1	Communication signal
C4	COMPASS_2	Communication signal
C5	HFT_MUTE	Outputs HFL microphone directivity switching signal
C6	SH_MIC	Shield for terminals No. 22 and No. 23
C7	MIC_PWR	Power source for HFL microphone
C8	---	Not used
C9	---	Not used
C10	---	Not used
C11	COMPASS_3	Communication signal
C12	COMPASS_4	Communication signal
C13	CAMERA_VCC	Power source for rearview camera
C14	CAMERA_GND	Ground for rearview camera
C15	---	Not used
C16	CAMERA_ADPT	Detects connection for rearview camera
C17	ANC_F+	Inputs noise cancelling signal from ANC/active sound control unit
C18	ANC_F-	Inputs noise cancelling signal from ANC/active sound control unit
C19	AUD_F_MIX	Inputs noise cancelling mixing signal from ANC/active sound control unit
C20	AUD_F_MIX_GND	Basis ground for terminals No. 19
C21	---	Not used
C22	MIC+	Inputs sound signal from HFL microphone
C23	MIC_GND	Ground for HFL microphone
C24	---	Not used
C25	---	Not used

Cavity	Terminal Name	Description
C26	---	Not used
C27	---	Not used
C28	SH_CAMERA	Shield for terminals No. 13, No. 14, No. 29, and No. 30
C29	CAMERA_V	Inputs NTSC video signal from rearview camera

Cavity	Terminal Name	Description
C30	CAMERA_V_GND	Ground for NTSC video signal from rearview camera
C31	CAMERA_BIT0	Outputs mode select signal for rearview camera
C32	CAMERA_BIT1	Outputs mode select signal for rearview camera

Audio Unit Connector E (3P) (female terminals)

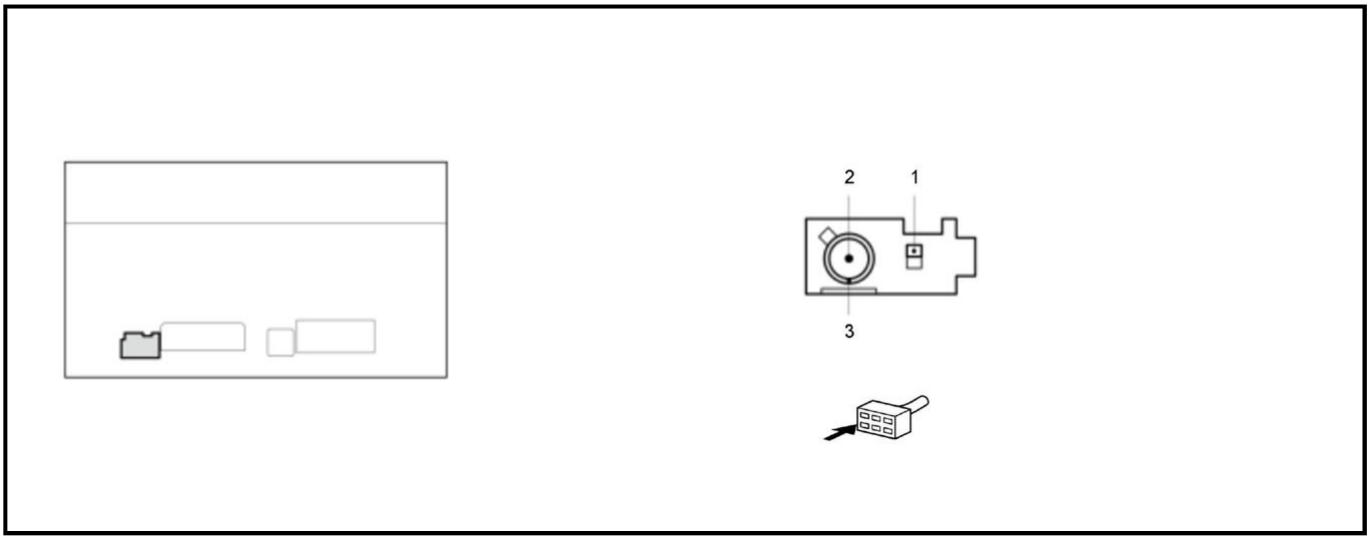

Cavity	Terminal Name	Description
E1	ANT+B	Power source for AM/FM antenna amplifier
E2	RF IN	Inputs AM/FM signal
E3	SH(RF IN)	Shield for terminal No. 2

Audio Unit Connector F (5P) (female terminals)

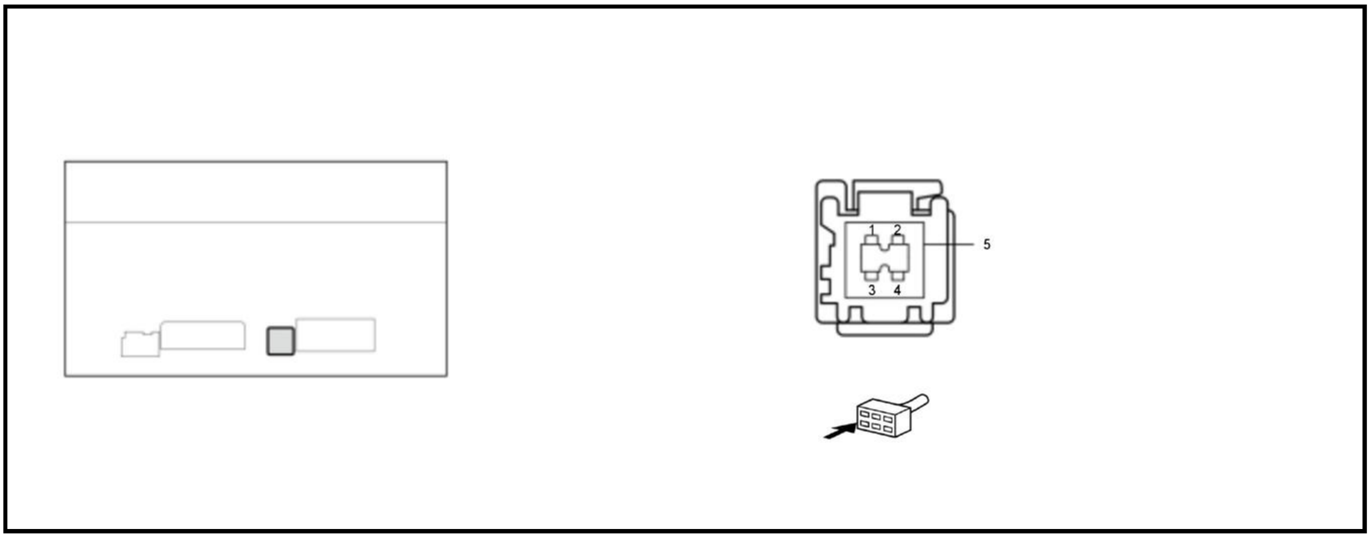

Cavity	Terminal Name	Description
F1	USB1 GND	Ground for USB port
F2	USB1 VBUS	Outputs power source for USB port
F3	USB1 DATA+	Communication signal
F4	USB1 DATA-	Communication signal
F5	USB1 SH	Shield for terminals No. 1, No. 2, No. 3, and No. 4

AUDIO UNIT CONNECTOR FOR INPUTS AND OUTPUTS (DISPLAY AUDIO TYPE)

Connector Index
Audio Unit Connector A (24P)
Audio Unit Connector B (24P)
Audio Unit Connector C (32P)
Audio Unit Connector E (16P)
Audio Unit Connector F (5P)
Audio Unit Connector G (5P)
Audio Unit Connector H (3P)
Audio Unit Connector J (3P)
Audio Unit Connector K (2P)
Audio Unit Connector L (2P)
Audio Unit Connector M (4P) (with Stereo Amplifier)
Audio Unit Connector N (2P)

Audio Unit Connector A (24P) (female terminals)

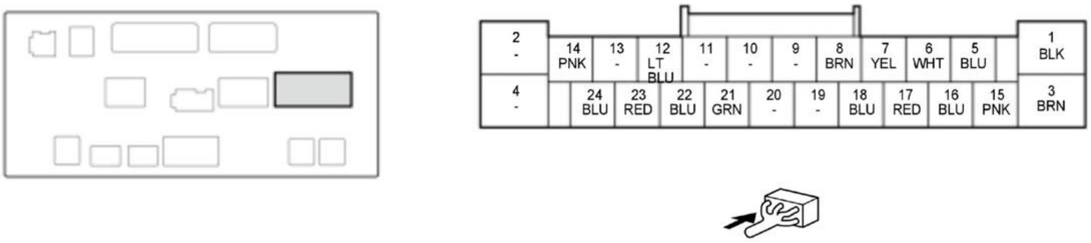

Cavity	Terminal Name	Description
A1	GND	Audio unit ground
A2	---	Not used
A3	+B_AUDIO	+B power source
A4	---	Not used
A5*	RL_SPKR+	Outputs sound signal for left rear speakers
A6*	RL_SPKR-	Outputs sound signal for left rear speakers
A7*	RR_SPKR+	Outputs sound signal for right rear speakers
A8*	RR_SPKR-	Outputs sound signal for right rear speakers
A9	---	Not used
A10	---	Not used
A11	---	Not used
A12	K-LINE	Communication signal
A13	---	Not used
A14	B-CAN_H	Communication signal

*: Without stereo amplifier

Cavity	Terminal Name	Description
A15*	FL_SPKR+	Outputs sound signal for left front speakers
A16*	FL_SPKR-	Outputs sound signal for left front speakers

Cavity	Terminal Name	Description
A17*	FR_SPKR+	Outputs sound signal for right front speakers
A18*	FR_SPKR-	Outputs sound signal for right front speakers
A19	---	Not used
A20	---	Not used
A21	SWD+B	Outputs signal for related unit switching on/off
A22	VSP	Inputs vehicle speed pulse
A23	ACC	ACCESSORY power source
A24	B-CAN_L	Communication signal

*: Without stereo amplifier

Audio Unit Connector B (24P) (female terminals)

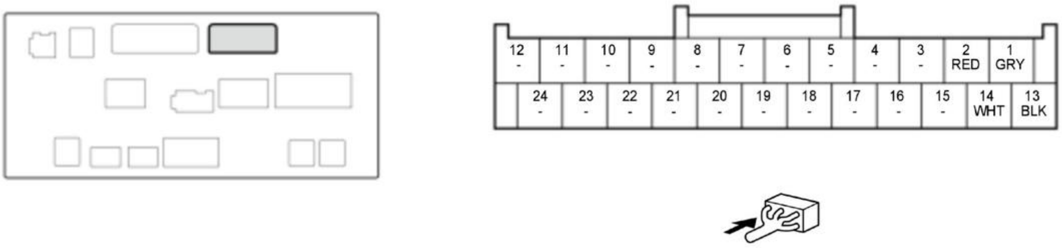

Cavity	Terminal Name	Description
B1*	AUX_NAVI_SH	Shield for terminals No. 2, No. 13, and No. 14
B2*	AUX BEEP	Outputs system beep signal
B3	---	Not used
B4	---	Not used
B5	---	Not used
B6	---	Not used
B7	---	Not used
B8	---	Not used
B9	---	Not used
B10	---	Not used
B11	---	Not used
B12	---	Not used
B13*	AUX NAVI	Outputs sound signal for voice guidance and Voice Recognition (VR) prompts
B14*	AUX NAVI GND	Basis ground for terminals No. 2 and No. 13
B15	---	Not used
B16	---	Not used
B17	---	Not used

*: With stereo amplifier

Cavity	Terminal Name	Description
B18	---	Not used
B19	---	Not used
B20	---	Not used
B21	---	Not used
B22	---	Not used
B23	---	Not used
B24	---	Not used

*: With stereo amplifier

Audio Unit Connector C (32P) (female terminals)

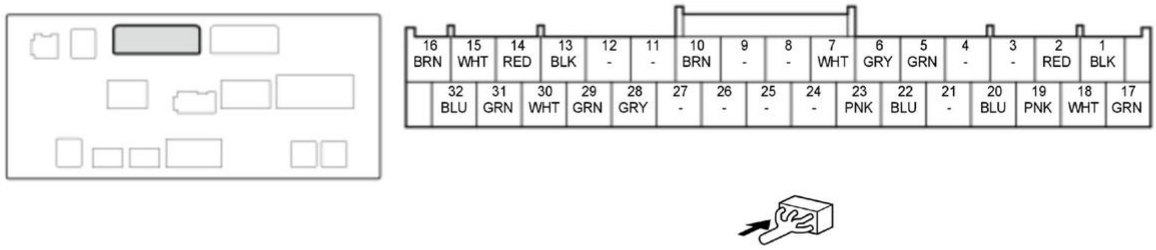
16 BRN
15 WHT
14 RED
13 BLK
12 -
11 -
10 BRN
9 -
8 -
7 WHT
6 GRY
5 GRN
4 -
3 -
2 RED
1 BLK
32 BLU
31 GRN
30 WHT
29 GRN
28 GRY
27 -
26 -
25 -
24 -
23 PNK
22 BLU
21 -
20 BLU
19 PNK
18 WHT
17 GRN

Cavity	Terminal Name	Description
C1*	ANC_R+	Inputs noise cancelling signal from ANC/active sound control unit
C2*	ANC_R-	Inputs noise cancelling signal from ANC/active sound control unit
C3	---	Not used
C4	---	Not used
C5	HFT_MUTE	Outputs HFL microphone directivity switching signal
C6	SH_MIC	Shield for terminals No. 22 and No. 23
C7	MIC_PWR	Power source for HFL microphone
C8	---	Not used
C9	---	Not used
C10	IG1_METER	IG1 power source
C11	---	Not used
C12	---	Not used
C13	CAMERA_VCC	Power source for rearview camera
C14	CAMERA_GND	Ground for rearview camera
C15	BACK_LT	Detects reverse signal
C16	CAMERA_ADPT	Detects connection for rearview camera
C17*	ANC_F+	Inputs noise cancelling signal from ANC/active sound control unit
C18*	ANC_F-	Inputs noise cancelling signal from ANC/active sound control unit
C19*	AUD_F_MIX	Inputs noise cancelling mixing signal from ANC/active sound

Cavity	Terminal Name	Description
		control unit
C20*	AUD_F_MIX_GND	Basis ground for terminals No. 19
C21	---	Not used

*: Without stereo amplifier

Cavity	Terminal Name	Description
C22	MIC+	Inputs sound signal from HFL microphone
C23	MIC_GND	Ground for HFL microphone
C24	---	Not used
C25	---	Not used
C26	---	Not used
C27	---	Not used
C28	SH_CAMERA	Shield for terminals No. 13, No. 14, No. 29, and No. 30
C29	CAMERA_V	Inputs NTSC video signal from rearview camera
C30	CAMERA_V_GND	Ground for NTSC video signal from rearview camera
C31	CAMERA_BIT0	Outputs mode select signal for rearview camera
C32	CAMERA_BIT1	Outputs mode select signal for rearview camera

*: Without stereo amplifier

Audio Unit Connector E (16P) (female terminals)

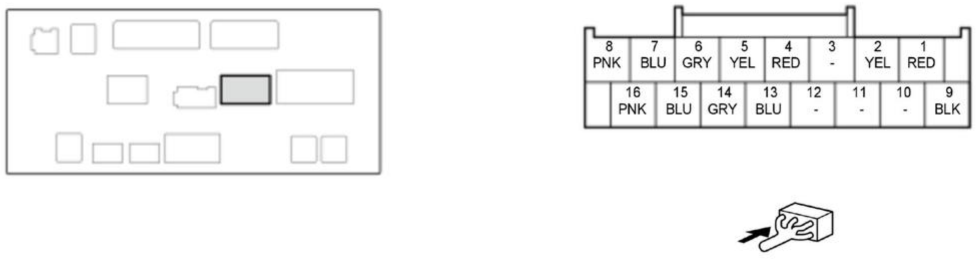

Cavity	Terminal Name	Description
E1	TUNER_6V	Power source for tuner unit
E2	TUNER_9V	Power source for tuner unit
E3	---	Not used
E4	DISP_CONT	Outputs signal for center display unit switching on/off
E5	F-CAN B_H	Communication signal
E6	AMP_RS485_SH	Shield for terminals No. 7 and No. 8
E7	RS485+	Communication signal
E8	RS485-	Communication signal
E9	TUNER_GND	Ground for tuner unit
E10	---	Not used
E11	---	Not used
E12	---	Not used

Cavity	Terminal Name	Description
E13	F-CAN B_L	Communication signal
E14	TUNER_RS485_SH	Shield for terminals No. 15 and No. 16
E15	TUNER_RS485+	Communication signal
E16	TUNER_RS485-	Communication signal

Audio Unit Connector F (5P) (female terminals)

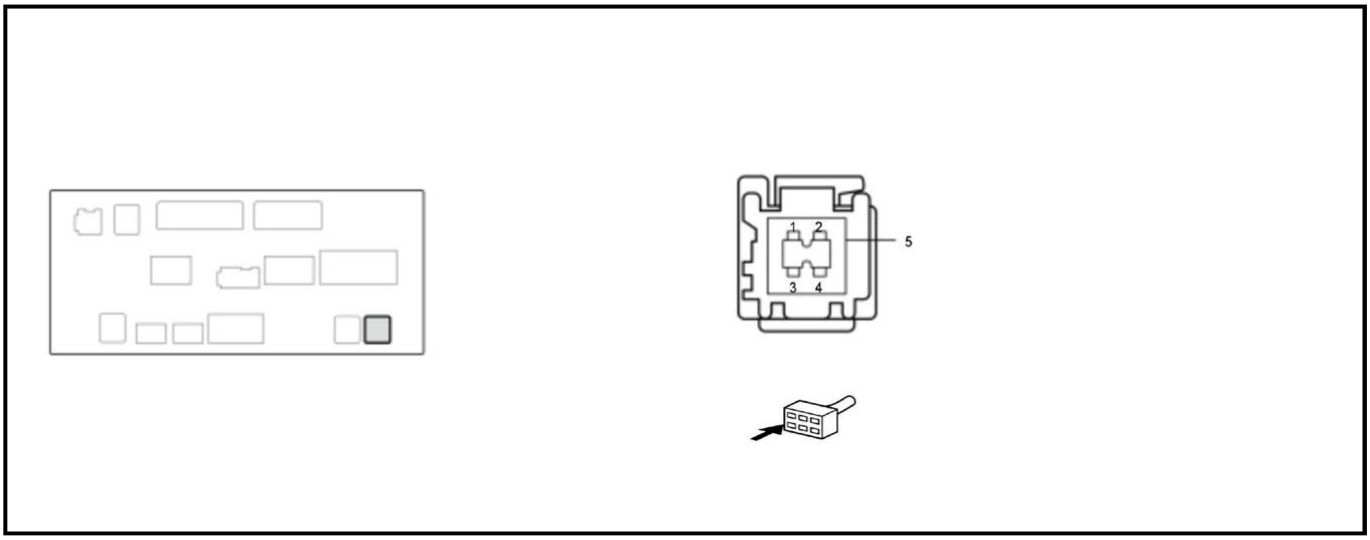

Cavity	Terminal Name	Description
F1	USB1 GND	Ground for USB port A
F2	USB1 VBUS	Outputs power source for USB port A
F3	USB1 DATA+	Communication signal
F4	USB1 DATA-	Communication signal
F5	USB1 SH	Shield for terminals No. 1, No. 2, No. 3, and No. 4

Audio Unit Connector G (5P) (female terminals)

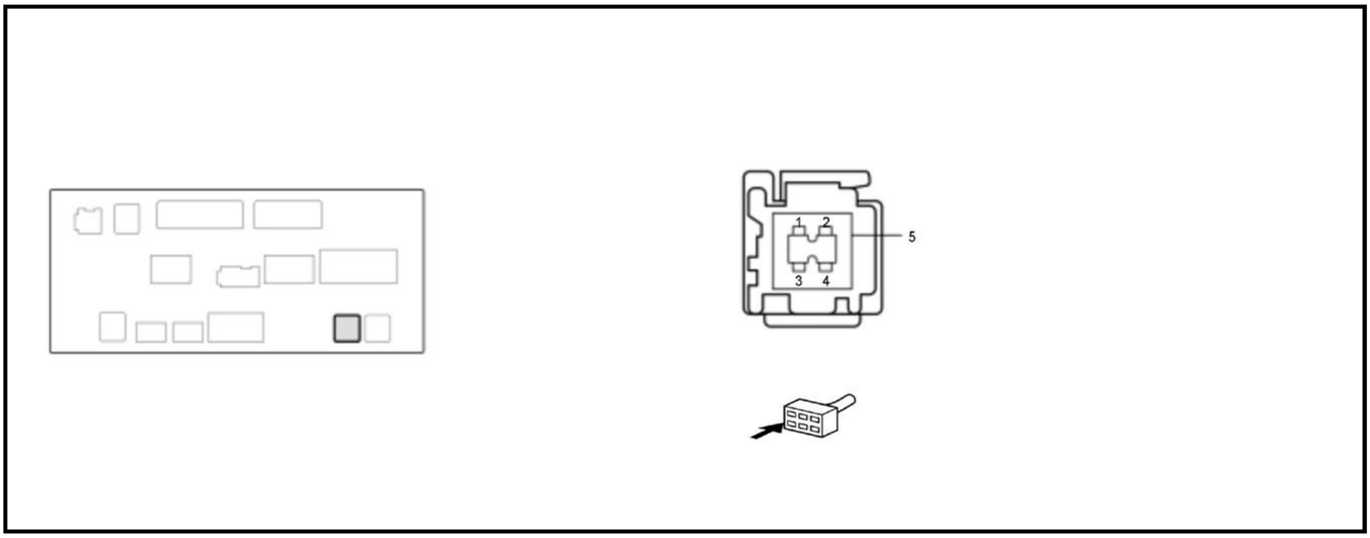

Cavity	Terminal Name	Description
G1	USB2 GND	Ground for USB port B
G2	USB2 VBUS	Outputs power source for USB port B
G3	USB2 DATA+	Communication signal
G4	USB2 DATA-	Communication signal
G5	USB2 SH	Shield for terminals No. 1, No. 2, No. 3, and No. 4

Audio Unit Connector H (3P) (female terminals)

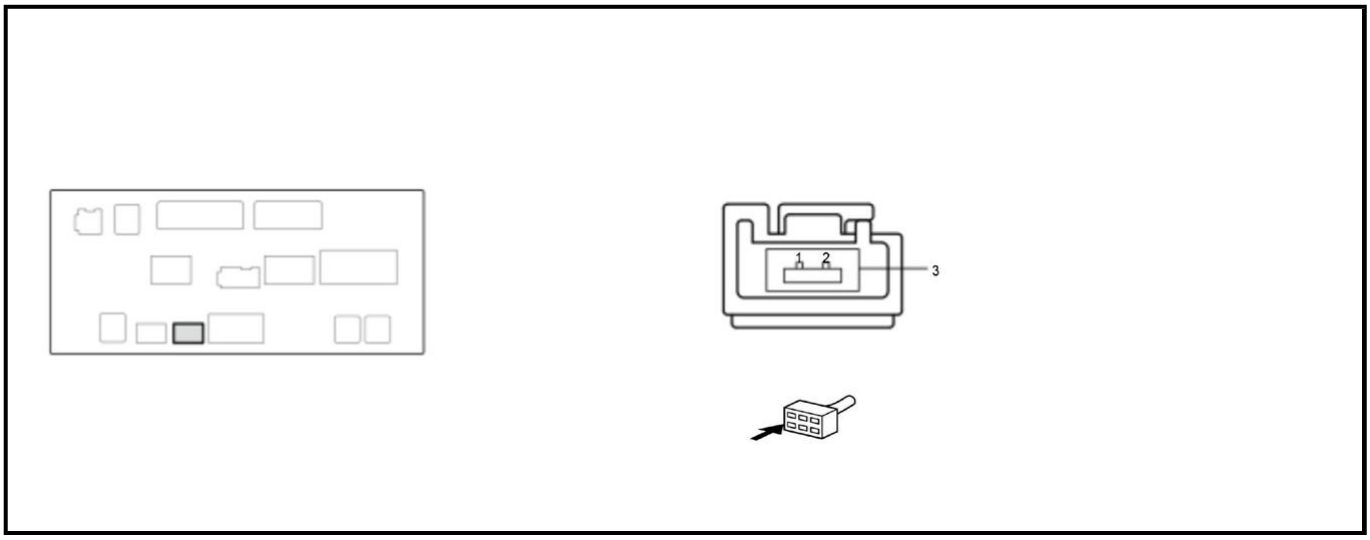

Cavity	Terminal Name	Description
H1	LVDS1+	Communication signal
H2	LVDS1-	Communication signal
H3	LVDS1 SH	Shield for terminals No. 1 and No. 2

Audio Unit Connector J (3P) (female terminals)

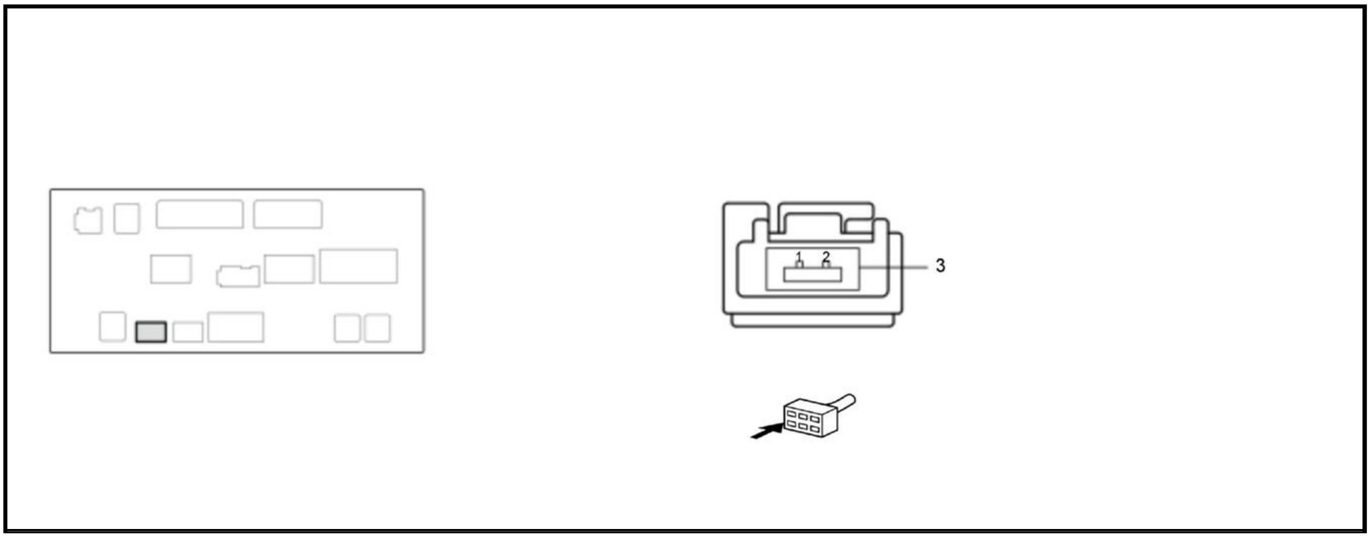

Cavity	Terminal Name	Description
J1	LVDS2+	Communication signal
J2	LVDS2-	Communication signal
J3	LVDS2 SH	Shield for terminals No. 1 and No. 2

Audio Unit Connector K (2P) (female terminals)

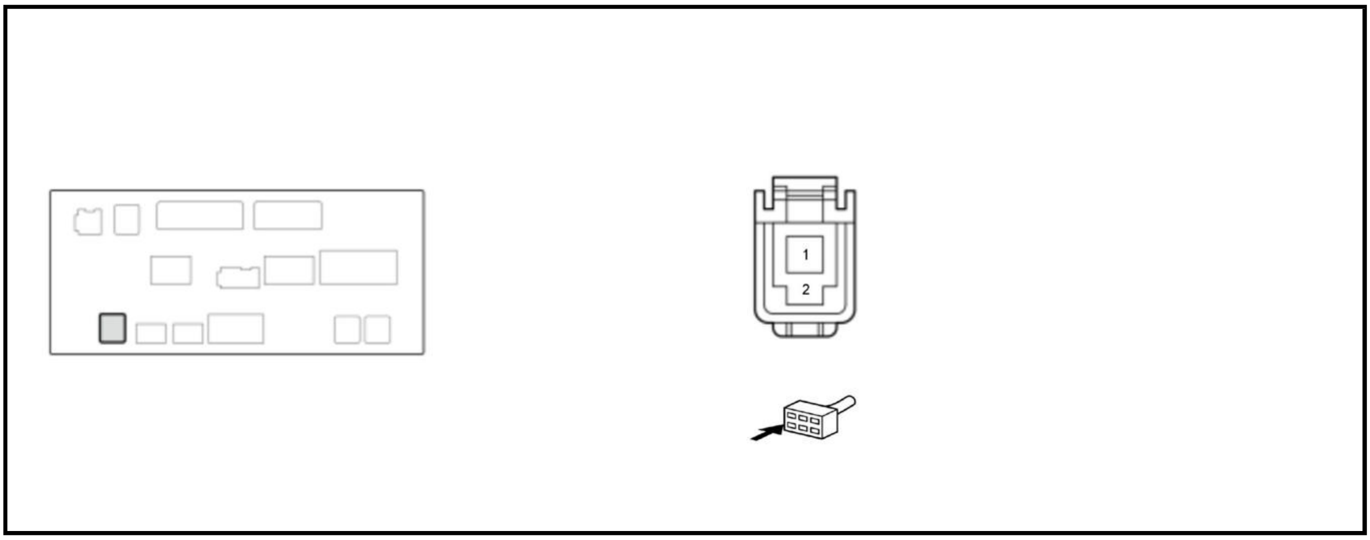

Cavity	Terminal Name	Description
K1	GPS ANT	Inputs GPS signal
K2	GPS SH	Shield for terminal No. 1

Audio Unit Connector L (2P) (female terminals)

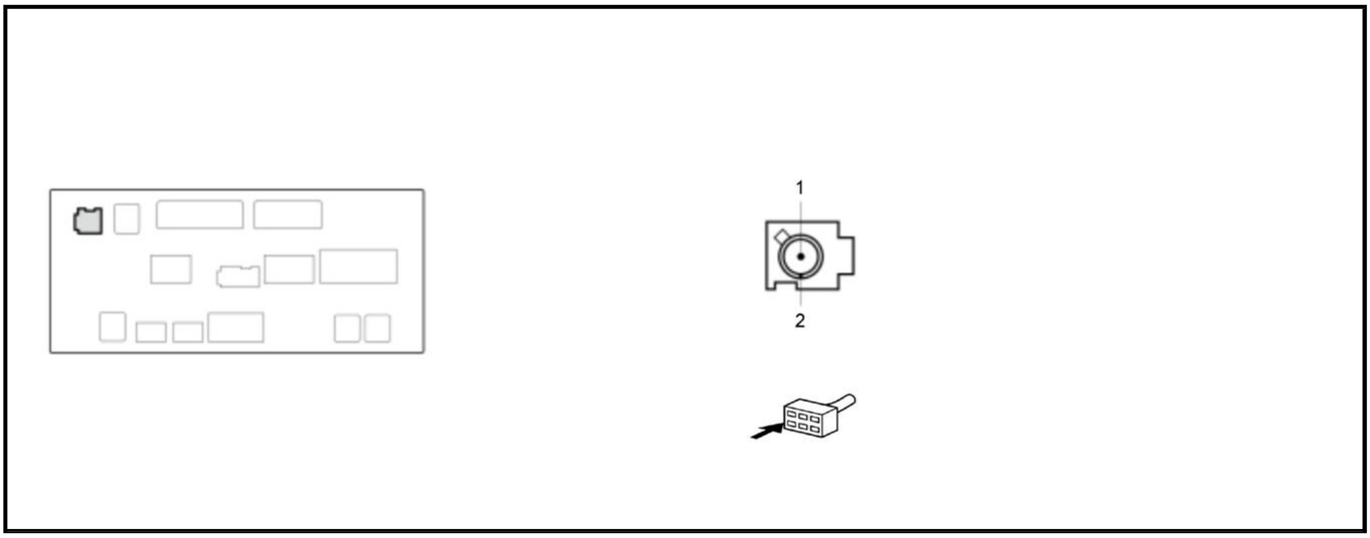

Cavity	Terminal Name	Description
L1	SPDIF1 SIG	Communication signal for tuner unit
L2	SPDIF1 SH	Shield for terminal No. 1

Audio Unit Connector M (4P) (female terminals) (with stereo amplifier)

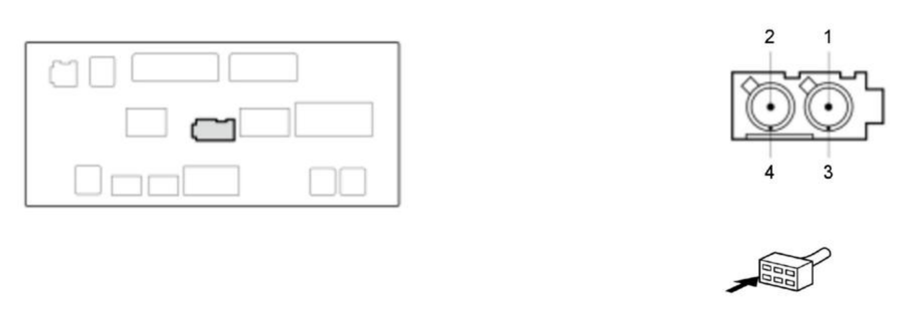

Cavity	Terminal Name	Description
M1	SPDIF2 SIG	Communication signal
M2	---	Not used
M3	SPDIF2 SH	Shield for terminal No. 1
M4	---	Not used

Audio Unit Connector N (2P) (female terminals)

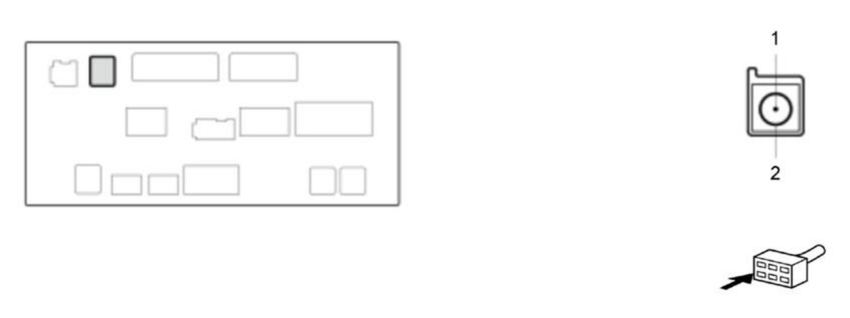

Cavity	Terminal Name	Description
N1	SAT/TER	Inputs satellite/terrestrial signal
N2	SH (SAT/TER)	Shield for terminal No. 1

AUDIO-NAVIGATION UNIT CONNECTOR FOR INPUTS AND OUTPUTS

Connector Index
Audio-Navigation Unit Connector A (24P)
Audio-Navigation Unit Connector B (24P)
Audio-Navigation Unit Connector C (32P)
Audio-Navigation Unit Connector E (16P)
Audio-Navigation Unit Connector F (5P)
Audio-Navigation Unit Connector G (5P)
Audio-Navigation Unit Connector H (3P)
Audio-Navigation Unit Connector J (3P)

Connector Index
Audio-Navigation Unit Connector K (2P)
Audio-Navigation Unit Connector L (2P)
Audio-Navigation Unit Connector M (4P)
Audio-Navigation Unit Connector N (2P)

Audio-Navigation Unit Connector A (24P) (female terminals)

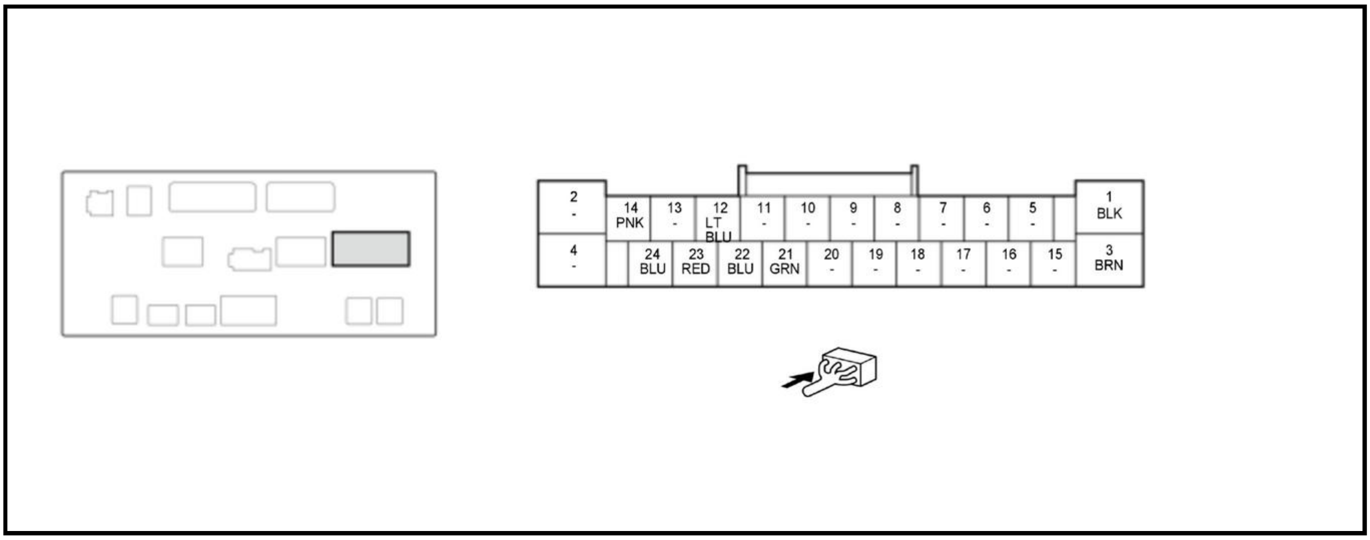

Cavity	Terminal Name	Description
A1	GND	Audio-navigation unit ground
A2	---	Not used
A3	+B_AUDIO	+B power source
A4	---	Not used
A5	---	Not used
A6	---	Not used
A7	---	Not used
A8	---	Not used
A9	---	Not used
A10	---	Not used
A11	---	Not used
A12	K-LINE	Communication signal
A13	---	Not used
A14	B-CAN_H	Communication signal
A15	---	Not used
A16	---	Not used

Cavity	Terminal Name	Description
A17	---	Not used
A18	---	Not used
A19	---	Not used
A20	---	Not used
A21	SWD+B	Outputs signal for related unit switching on/off
A22	VSP	Inputs vehicle speed pulse
A23	ACC	ACCESSORY power source
A24	B-CAN_L	Communication signal

Audio-Navigation Unit Connector B (24P) (female terminals)

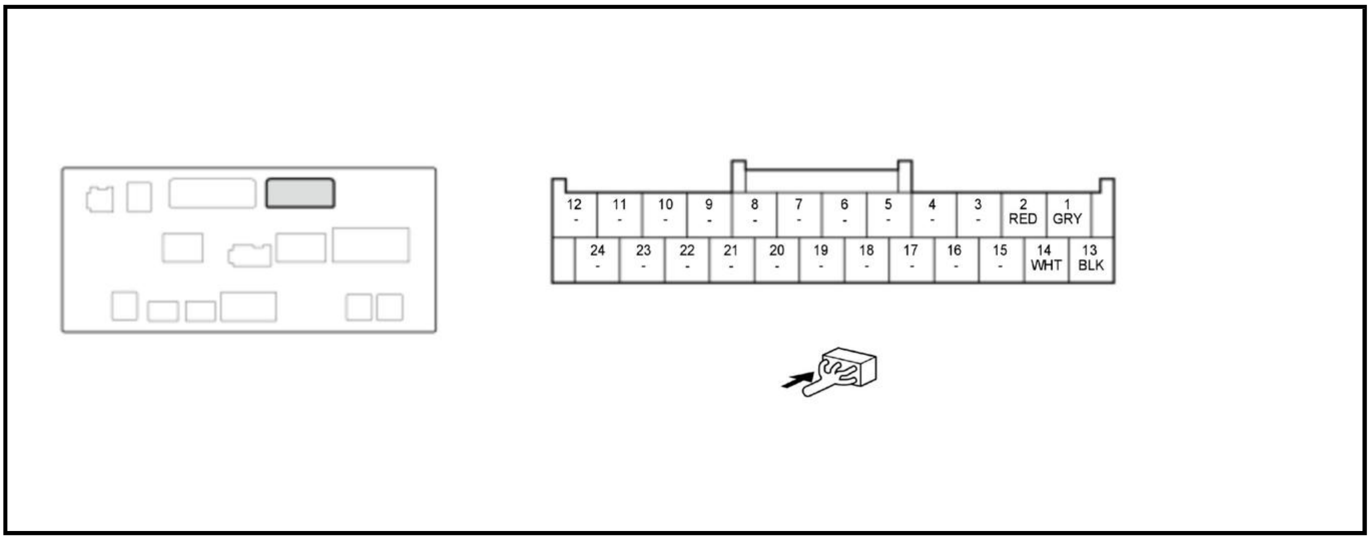

Cavity	Terminal Name	Description
B1	AUX_NAVI_SH	Shield for terminals No. 2, No. 13, and No. 14
B2	AUX BEEP	Outputs system beep signal
B3	---	Not used
B4	---	Not used
B5	---	Not used
B6	---	Not used
B7	---	Not used
B8	---	Not used
B9	---	Not used
B10	---	Not used
B11	---	Not used
B12	---	Not used
B13	AUX NAVI	Outputs sound signal for voice guidance and Voice Recognition (VR) prompts
B14	AUX NAVI GND	Basis ground for terminals No. 2 and No. 13
B15	---	Not used
B16	---	Not used
B17	---	Not used
B18	---	Not used
B19	---	Not used
B20	---	Not used

Cavity	Terminal Name	Description
B21	---	Not used
B22	---	Not used
B23	---	Not used
B24	---	Not used

Audio-Navigation Unit Connector C (32P) (female terminals)

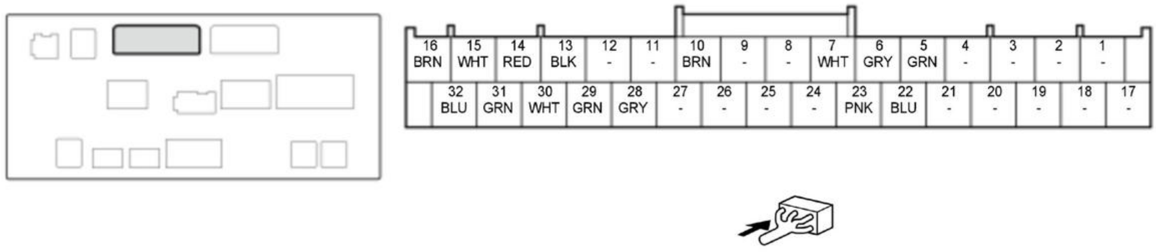
16
BRN
15
WHT
14
RED
13
BLK
12
-
11
-
10
BRN
9
-
8
-
7
WHT
6
GRY
5
GRN
4
-
3
-
2
-
1
-
32
BLU
31
GRN
30
WHT
29
GRN
28
GRY
27
-
26
-
25
-
24
-
23
PNK
22
BLU
21
-
20
-
19
-
18
-
17
-

Cavity	Terminal Name	Description
C1	---	Not used
C2	---	Not used
C3	---	Not used
C4	---	Not used
C5	HFT_MUTE	Outputs HFL microphone directivity switching signal
C6	SH_MIC	Shield for terminals No. 22 and No. 23
C7	MIC_PWR	Power source for HFL microphone
C8	---	Not used
C9	---	Not used
C10	IG1_METER	IG1 power source
C11	---	Not used
C12	---	Not used
C13	CAMERA_VCC	Power source for rearview camera
C14	CAMERA_GND	Ground for rearview camera
C15	BACK_LT	Detects reverse signal
C16	CAMERA_ADPT	Detects connection for rearview camera
C17	---	Not used
C18	---	Not used
C19	---	Not used
C20	---	Not used
C21	---	Not used
C22	MIC+	Inputs sound signal from HFL microphone
C23	MIC_GND	Ground for HFL microphone
C24	---	Not used
C25	---	Not used
C26	---	Not used
C27	---	Not used
C28	SH_CAMERA	Shield for terminals No. 13, No. 14, No. 29, and No. 30
C29	CAMERA_V	Inputs NTSC video signal from rearview camera
C30	CAMERA_V_GND	Ground for NTSC video signal from rearview camera
C31	CAMERA_BIT0	Outputs mode select signal for rearview camera
C32	CAMERA_BIT1	Outputs mode select signal for rearview camera

Audio-Navigation Unit Connector E (16P) (female terminals)

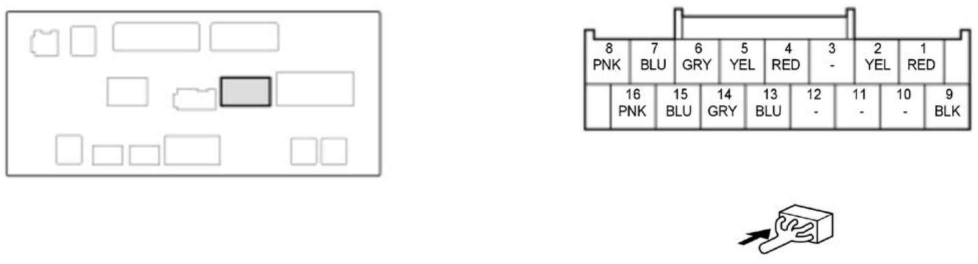
8
PNK
7
BLU
6
GRY
5
YEL
4
RED
3
-
2
YEL
1
RED
16
PNK
15
BLU
14
GRY
13
BLU
12
-
11
-
10
-
9
BLK

Cavity	Terminal Name	Description
E1	TUNER_6V	Power source for tuner unit
E2	TUNER_9V	Power source for tuner unit
E3	---	Not used
E4	DISP_CONT	Outputs signal for center display unit switching on/off
E5	F-CAN B_H	Communication signal
E6	AMP_RS485_SH	Shield for terminals No. 7 and No. 8
E7	RS485+	Communication signal
E8	RS485-	Communication signal
E9	TUNER_GND	Ground for tuner unit
E10	---	Not used
E11	---	Not used
E12	---	Not used
E13	F-CAN B_L	Communication signal
E14	TUNER_RS485_SH	Shield for terminals No. 15 and No. 16
E15	TUNER_RS485+	Communication signal
E16	TUNER_RS485-	Communication signal

Audio-Navigation Unit Connector F (5P) (female terminals)

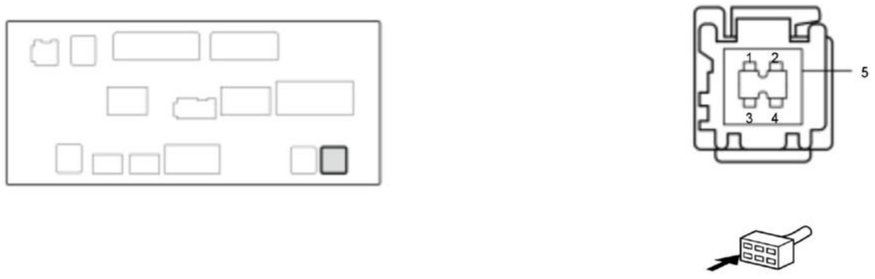

Cavity	Terminal Name	Description
F1	USB1 GND	Ground for USB port A
F2	USB1 VBUS	Outputs power source for USB port A
F3	USB1 DATA+	Communication signal
F4	USB1 DATA-	Communication signal
F5	USB1 SH	Shield for terminals No. 1, No. 2, No. 3, and No. 4

Audio-Navigation Unit Connector G (5P) (female terminals)

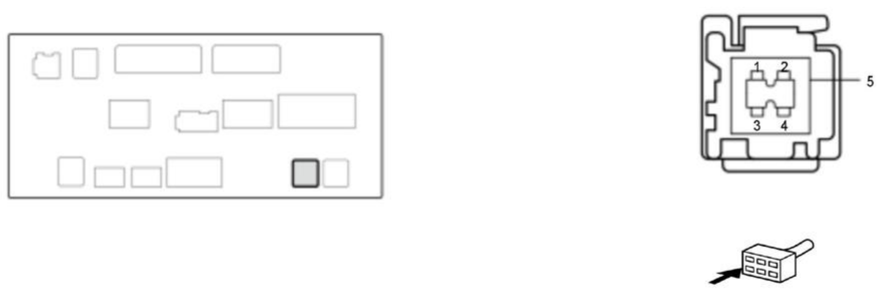

Cavity	Terminal Name	Description
G1	USB2 GND	Ground for USB port B
G2	USB2 VBUS	Outputs power source for USB port B
G3	USB2 DATA+	Communication signal
G4	USB2 DATA-	Communication signal
G5	USB2 SH	Shield for terminals No. 1, No. 2, No. 3, and No. 4

Audio-Navigation Unit Connector H (3P) (female terminals)

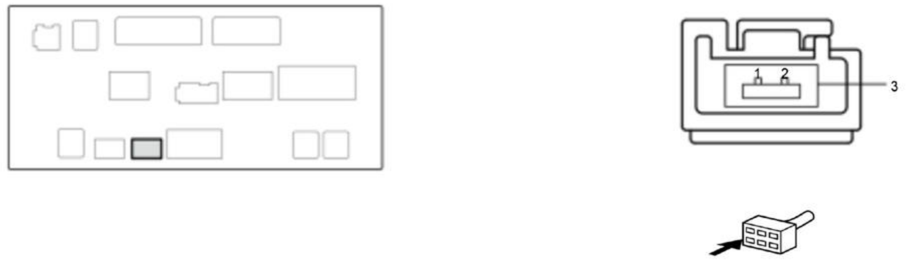

Cavity	Terminal Name	Description
H1	LVDS1+	Communication signal
H2	LVDS1-	Communication signal
H3	LVDS1 SH	Shield for terminals No. 1 and No. 2

Audio-Navigation Unit Connector J (3P) (female terminals)

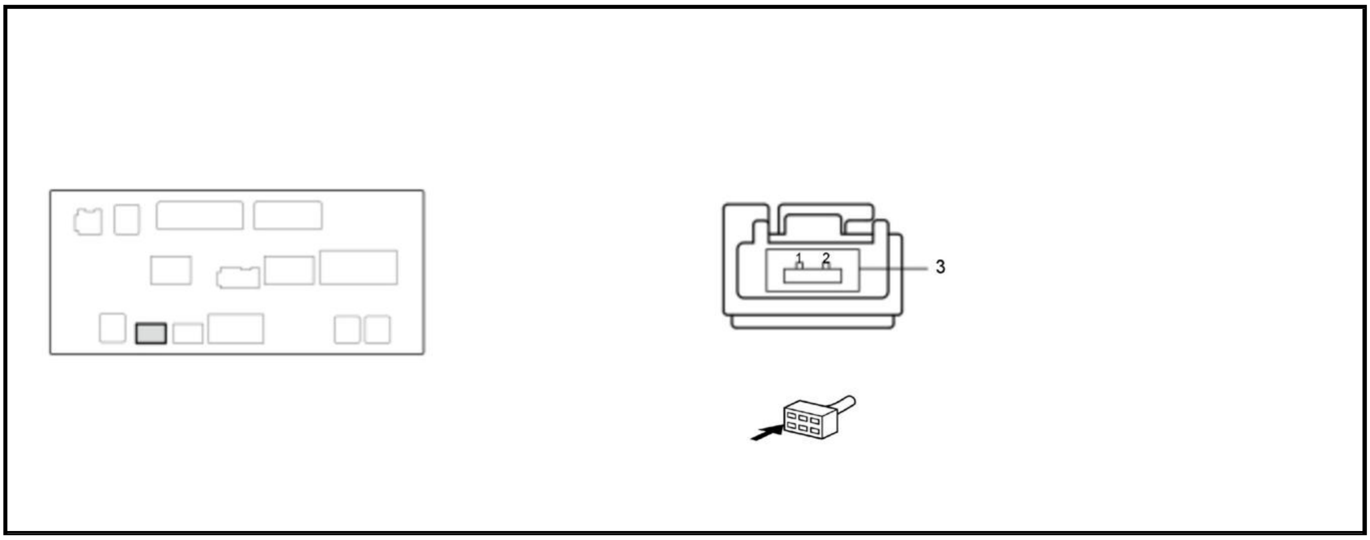

Cavity	Terminal Name	Description
J1	LVDS2+	Communication signal
J2	LVDS2-	Communication signal
J3	LVDS2 SH	Shield for terminals No. 1 and No. 2

Audio-Navigation Unit Connector K (2P) (female terminals)

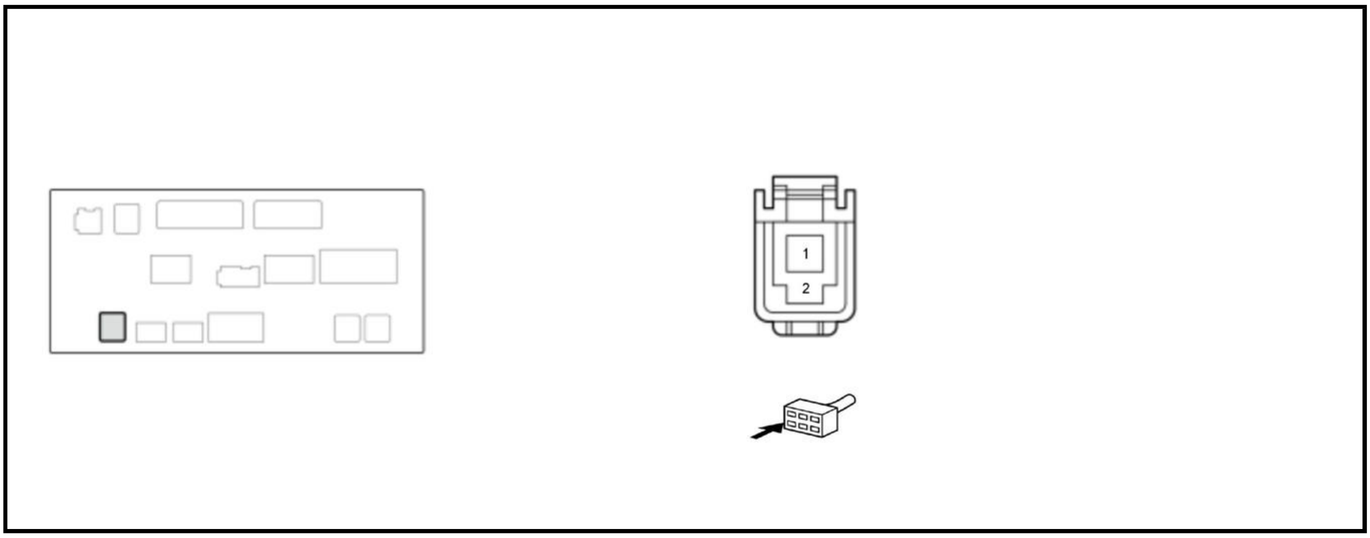

Cavity	Terminal Name	Description
K1	GPS ANT	Inputs GPS signal
K2	GPS SH	Shield for terminal No. 1

Audio-Navigation Unit Connector L (2P) (female terminals)

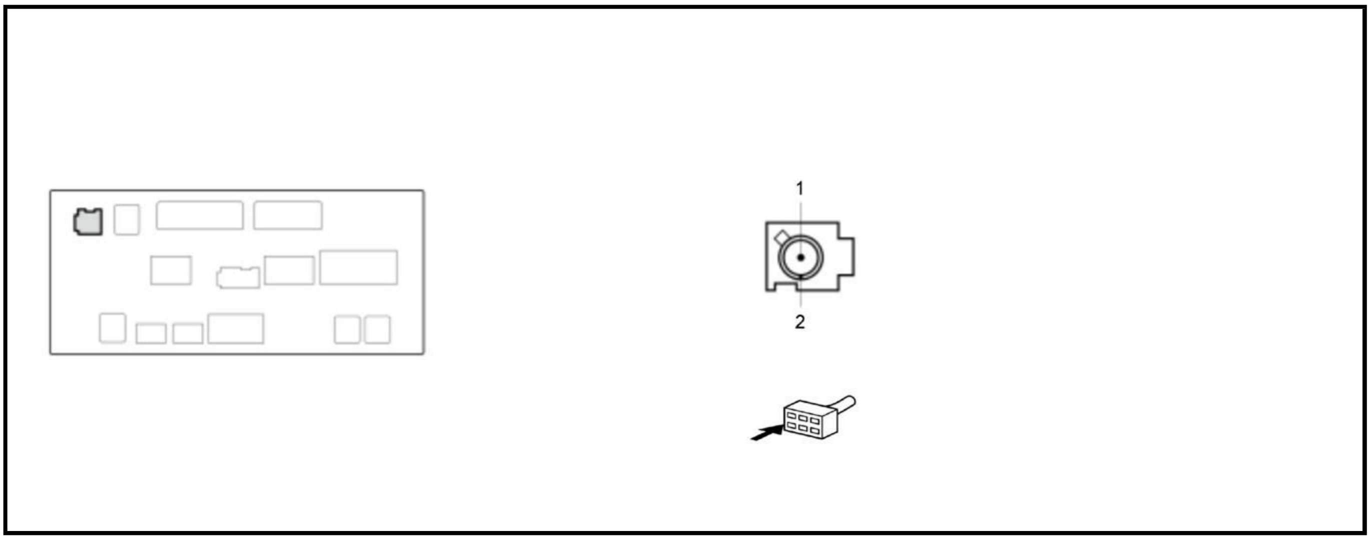

Cavity	Terminal Name	Description
L1	SPDIF1 SIG	Communication signal for tuner unit
L2	SPDIF1 SH	Shield for terminal No. 1

Audio-Navigation Unit Connector M (4P) (female terminals)

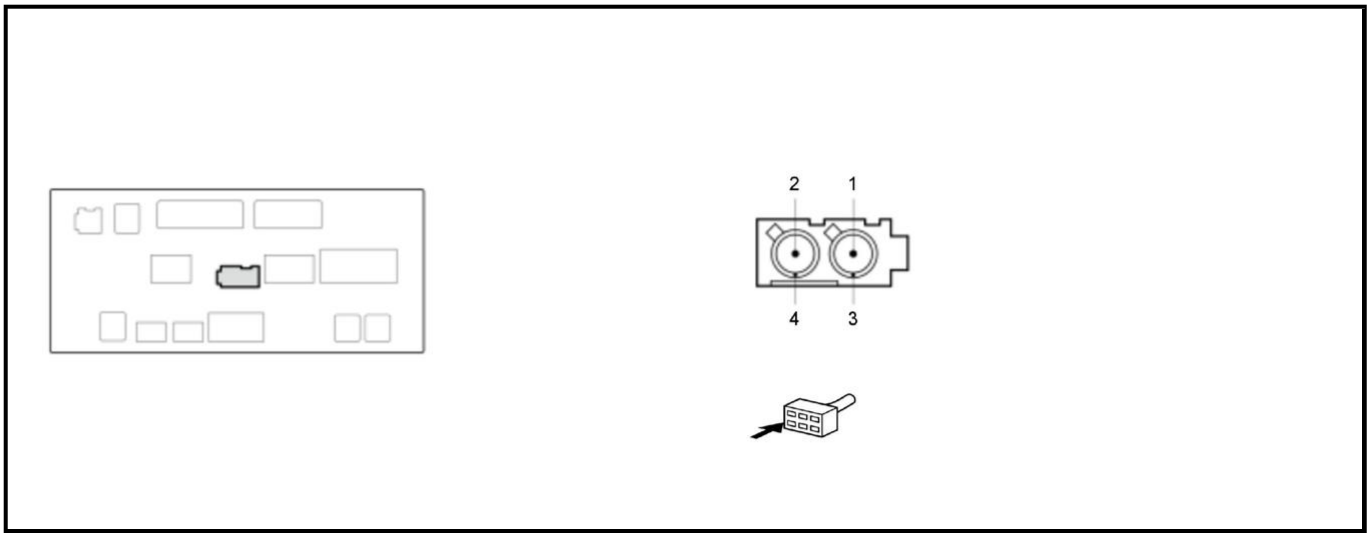

Cavity	Terminal Name	Description
M1	SPDIF2 SIG	Communication signal
M2	---	Not used
M3	SPDIF2 SH	Shield for terminal No. 1
M4	---	Not used

Audio-Navigation Unit Connector N (2P) (female terminals)

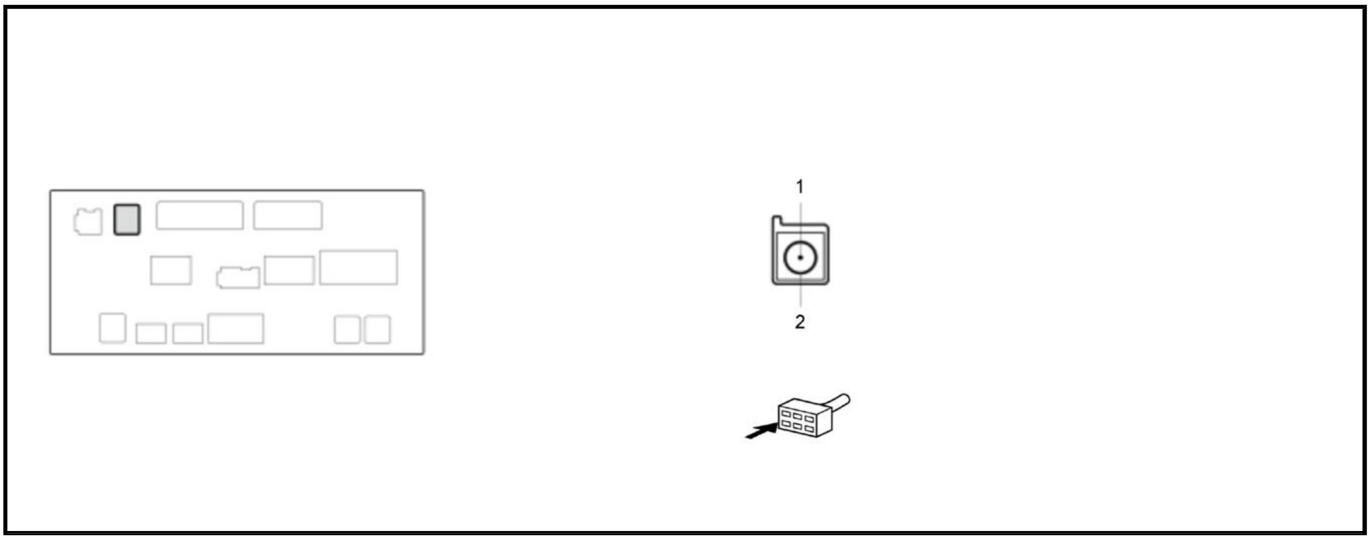

Cavity	Terminal Name	Description
N1	SAT/TER	Inputs satellite/terrestrial signal
N2	SH (SAT/TER)	Shield for terminal No. 1

CENTER DISPLAY UNIT CONNECTOR FOR INPUTS AND OUTPUTS

Connector Index
Center Display Unit Connector A (5P)
Center Display Unit Connector B (3P)

Center Display Unit Connector A (5P) (female terminals)

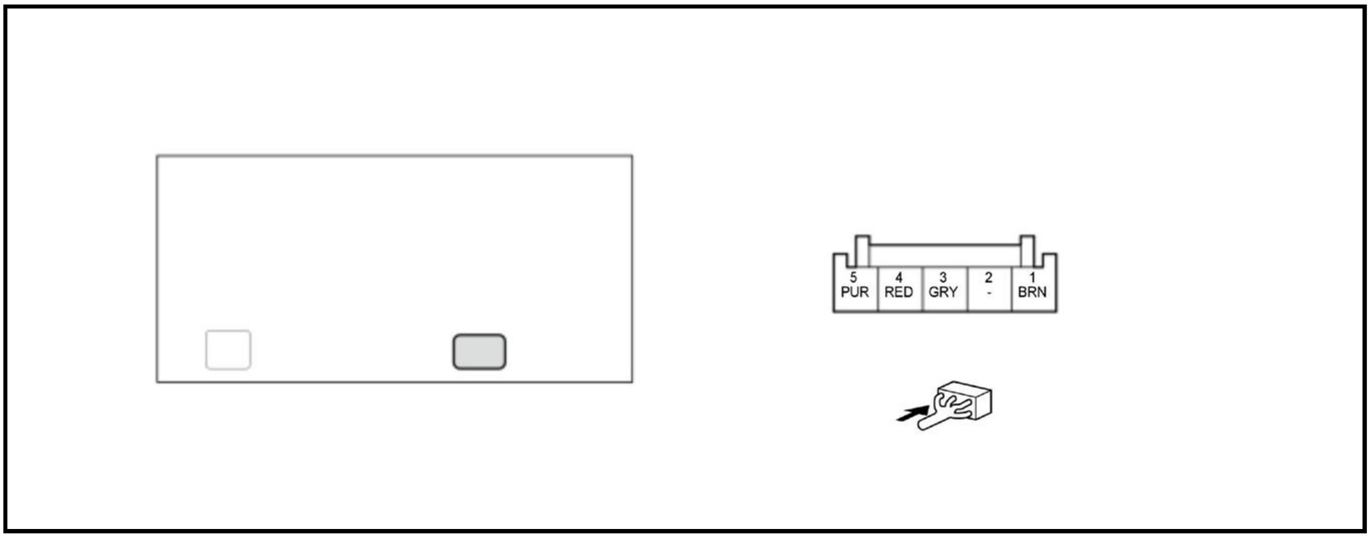

Cavity	Terminal Name	Description
A1	+B_AUDIO	+B power source
A2	---	Not used
A3	ILLUMI+	Detects illumination on signal
A4	DISP_CONT	Inputs signal for center display unit switching ON/OFF
A5	GND	Ground for center display unit

Center Display Unit Connector B (3P) (female terminals)

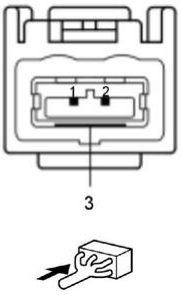

Cavity	Terminal Name	Description
B1	LVDS1+	Communication signal

Cavity	Terminal Name	Description
B2	LVDS1-	Communication signal
B3	LVDS1 SH	Shield for terminals No. 1 and No. 2

REARVIEW CAMERA CONNECTOR FOR INPUTS AND OUTPUTS

Rearview Camera 8P Connector (male terminals)

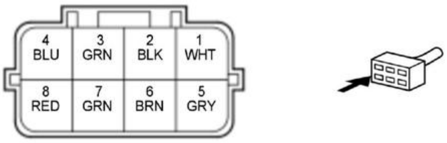

Cavity	Terminal Name	Description
1	CAMERA_V_GND	Ground for NTSC video signal
2	CAMERA_VCC	Power source for rearview camera
3	CAMERA_BIT0	Inputs mode select signal for rearview camera
4	CAMERA_BIT1	Inputs mode select signal for rearview camera
5	SH_CAMERA	Shield for terminals No. 1, No. 2, No. 7, and No. 8
6	CAMERA_ADPT	Detects connection for rearview camera
7	CAMERA_V	Outputs NTSC video signal
8	CAMERA_GND	Rearview camera ground

STEREO AMPLIFIER CONNECTOR FOR INPUTS AND OUTPUTS

Connector Index
Stereo Amplifier Connector A (18P)
Stereo Amplifier Connector B (8P) (Not used)

Connector Index
Stereo Amplifier Connector C (16P)
Stereo Amplifier Connector D (2P)

Stereo Amplifier Connector A (18P) (female terminals)

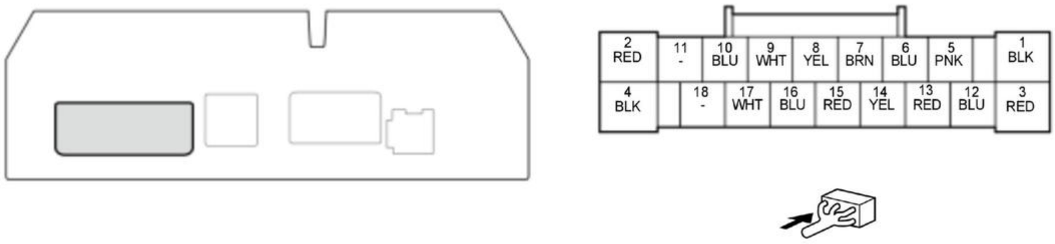

Cavity	Terminal Name	Description
A1	GND	Ground for stereo amplifier
A2	SUB_WOOFER+	Outputs sound signal for subwoofer
A3	+B_AUDIO_AMP	+B power source
A4	SUB_WOOFER-	Outputs sound signal for subwoofer
A5	FL_SPKR+	Outputs sound signal for left front door speaker
A6	FL_SPKR-	Outputs sound signal for left front door speaker
A7	RR_SPKR-	Outputs sound signal for right rear speakers
A8	RR_SPKR+	Outputs sound signal for right rear speakers
A9	RL_SPKR-	Outputs sound signal for left rear speakers
A10	RL_SPKR+	Outputs sound signal for left rear speaker
A11	---	Not used
A12	FR_SPKR-	Outputs sound signal for right front door speaker
A13	FR_SPKR+	Outputs sound signal for right front door speaker
A14	FL_TWEETER+	Outputs sound signal for left front tweeter
A15	FL_TWEETER-	Outputs sound signal for left front tweeter
A16	FR_TWEETER+	Outputs sound signal for right front tweeter
A17	FR_TWEETER-	Outputs sound signal for right front tweeter
A18	---	Not used

Stereo Amplifier Connector C (16P) (female terminals)

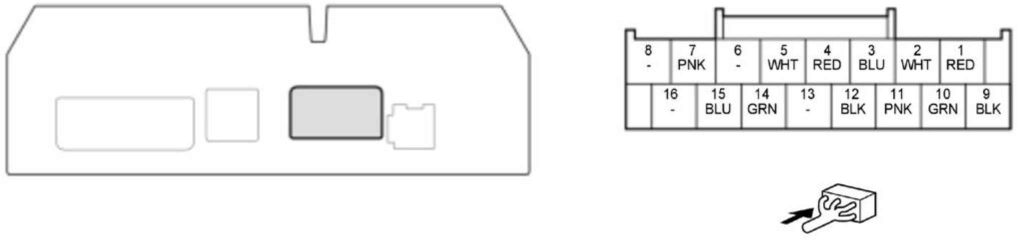

Cavity	Terminal Name	Description
C1	ANC_R-	Inputs noise cancelling signal from ANC/active sound control unit
C2	ANC_F-	Inputs noise cancelling signal from ANC/active sound control unit
C3	AUD_F_MIX_GND	Basis ground for terminals No. 11
C4	AUX BEEP	Inputs system beep signal
C5	AUX NAVI GND	Basis ground for terminals No. 4 and No. 12
C6	---	Not used
C7	RS485-	Communication signal
C8	---	Not used
C9	ANC_R+	Inputs noise cancelling signal from ANC/active sound control unit
C10	ANC_F+	Inputs noise cancelling signal from ANC/active sound control unit
C11	AUD_F_MIX	Inputs noise cancelling mixing signal from ANC/active sound control unit
C12	AUX NAVI	Inputs sound signal for voice guidance and Voice Recognition (VR) prompts
C13	---	Not used
C14	SWD+B	Inputs signal for stereo amplifier switching on/off
C15	RS485+	Communication signal
C16	---	Not used

Stereo Amplifier Connector D (2P) (female terminals)

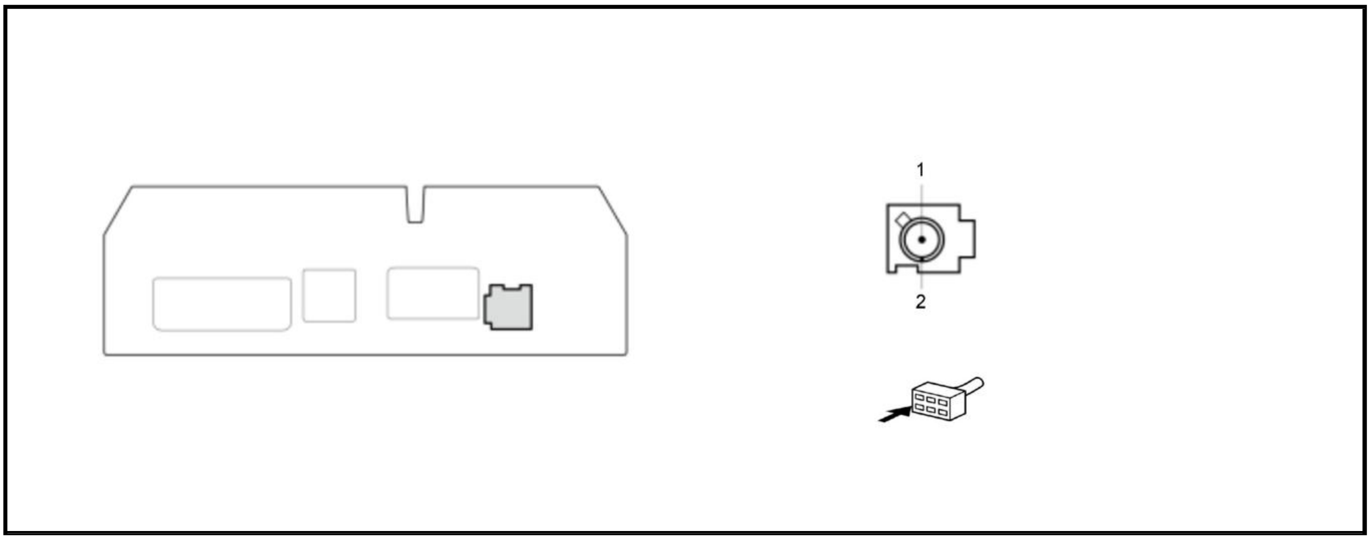

Cavity	Terminal Name	Description
D1	SPDIF2 SIG	Communication signal
D2	SPDIF2 SH	Shield for terminal No. 1

TUNER UNIT CONNECTOR FOR INPUTS AND OUTPUTS

Connector Index
Tuner Unit Connector A (10P)
Tuner Unit Connector B (2P)
Tuner Unit Connector C (5P)
Tuner Unit Connector D (2P) (Not used)

Tuner Unit Connector A (10P) (female terminals)

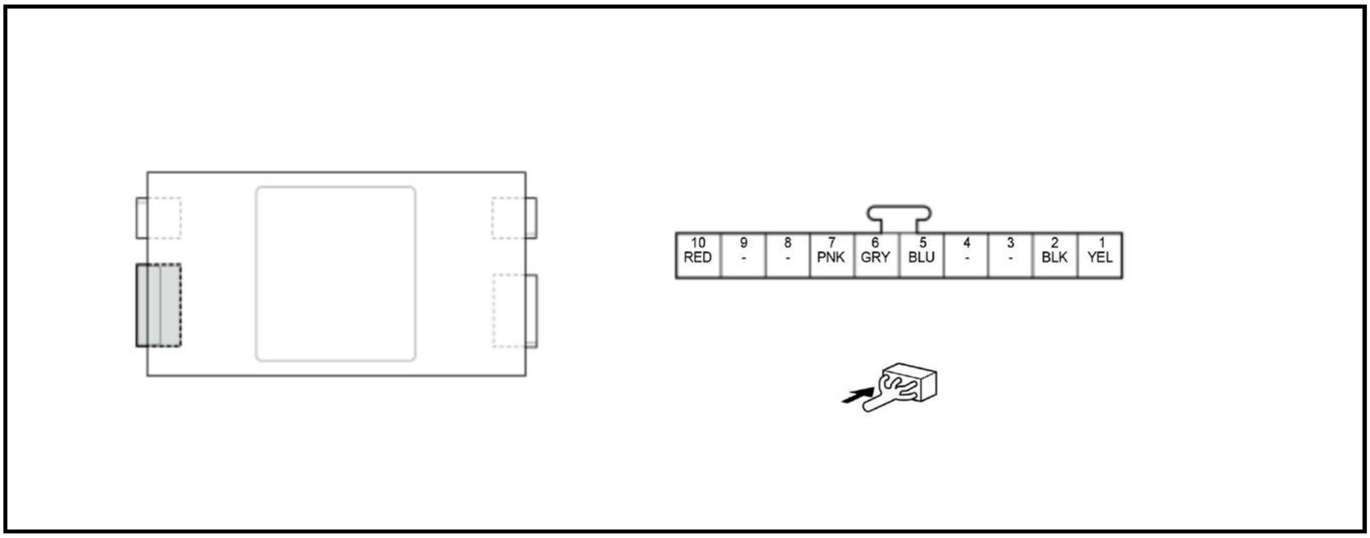

Cavity	Terminal Name	Description
A1	TUNER_9V	Power source for tuner unit
A2	TUNER_GND	Tuner unit ground
A3	---	Not used
A4	---	Not used
A5	TUNER_RS485+	Communication signal
A6	TUNER_RS485_SH	Shield for terminals No. 5 and No. 7
A7	TUNER_RS485-	Communication signal
A8	---	Not used

Cavity	Terminal Name	Description
A9	---	Not used
A10	TUNER_6V	Power source for tuner unit

Tuner Unit Connector B (2P) (female terminals)

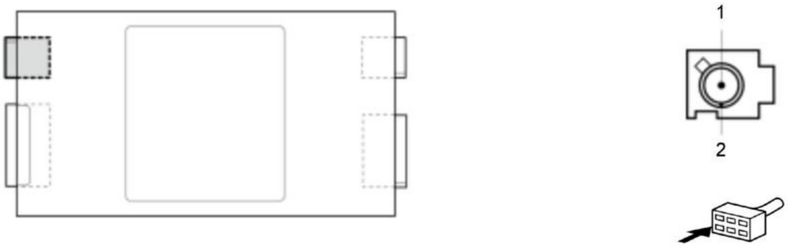

Cavity	Terminal Name	Description
B1	SPDIF1 SIG	Communication signal
B2	SPDIF1 SH	Shield for terminal No. 1

Tuner Unit Connector C (5P) (female terminals)

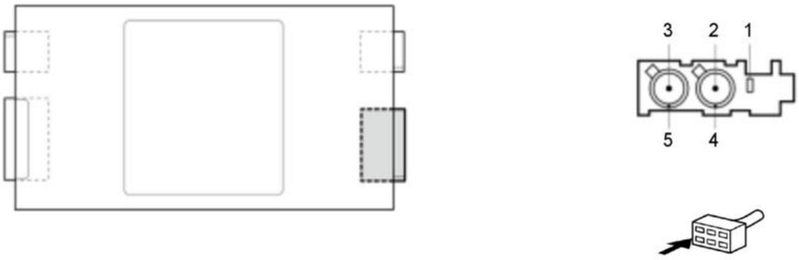

Cavity	Terminal Name	Description
C1	ANT+B	Power source for AM/FM antenna amplifier
C2	RF IN	Inputs AM/FM signal
C3	---	Not used
C4	SH(RF IN)	Shield for terminal No. 2
C5	---	Not used

USB CHARGER UNIT CONNECTOR FOR INPUTS AND OUTPUTS

Connector Index
USB Charger Unit 3P Connector (with wireless charger)
USB Charger Unit 3P Connector (without wireless charger)

USB Charger Unit 3P Connector (female terminals) (with wireless charger)

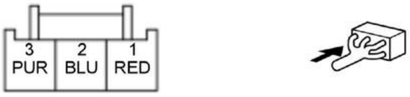

USB Charger Unit 3P Connector (female terminals) (without wireless charger)

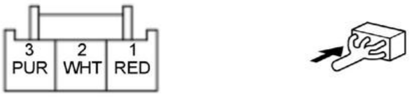

Cavity	Terminal Name	Description
1	ACC	ACCESSORY power source
2	+B_USB_CHARGER* 1+B_BACK_UP* 2	+B power source
3	GND	USB charger unit ground

*1: With wireless charger*2: Without wireless charger

CIRCUIT DIAGRAM

AUDIO AND VISUAL SYSTEM CIRCUIT DIAGRAM (COLOR AUDIO TYPE)

Color Audio type - 1/5

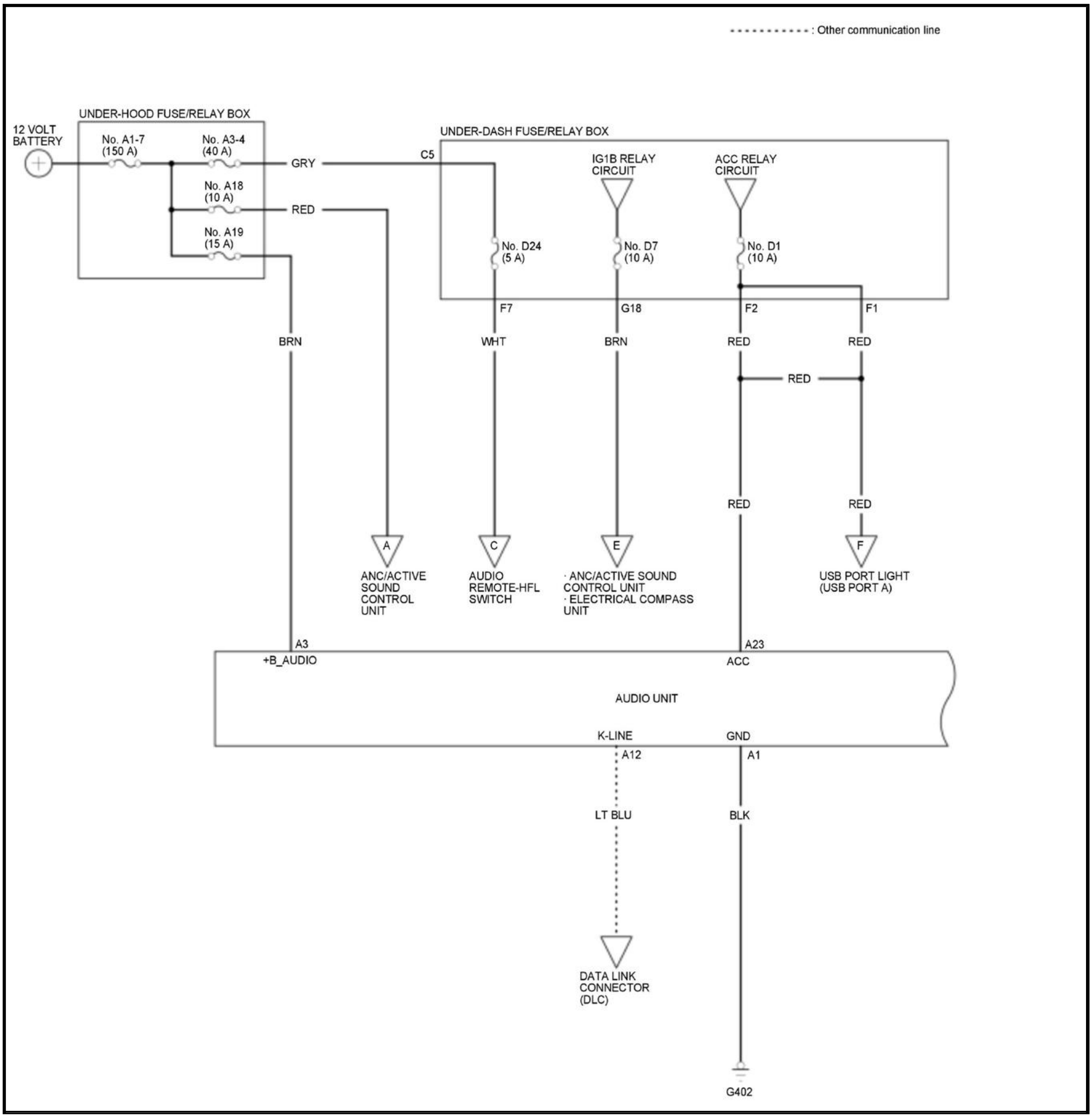
: Other communication line
12 VOLT BATTERY
UNDER-HOOD FUSE/RELAY BOX
No. A1-7 (150 A)
No. A3-4 (40 A)
No. A18 (10 A)
No. A19 (15 A)
GRY
RED
UNDER-DASH FUSE/RELAY BOX
C5
IG1B RELAY CIRCUIT
ACC RELAY CIRCUIT
No. D24 (5 A)
No. D7 (10 A)
No. D1 (10 A)
F7
G18
F2
F1
BRN
WHT
BRN
RED
RED
RED
RED
RED
A
ANC/ACTIVE SOUND CONTROL UNIT
C
AUDIO REMOTE-HFL SWITCH
E
· ANC/ACTIVE SOUND CONTROL UNIT
· ELECTRICAL COMPASS UNIT
F
USB PORT LIGHT (USB PORT A)
A3
+B_AUDIO
A23
ACC
AUDIO UNIT
K-LINE
GND
A12
A1
LT BLU
BLK
DATA LINK CONNECTOR (DLC)
G402

Color Audio type - 2/5

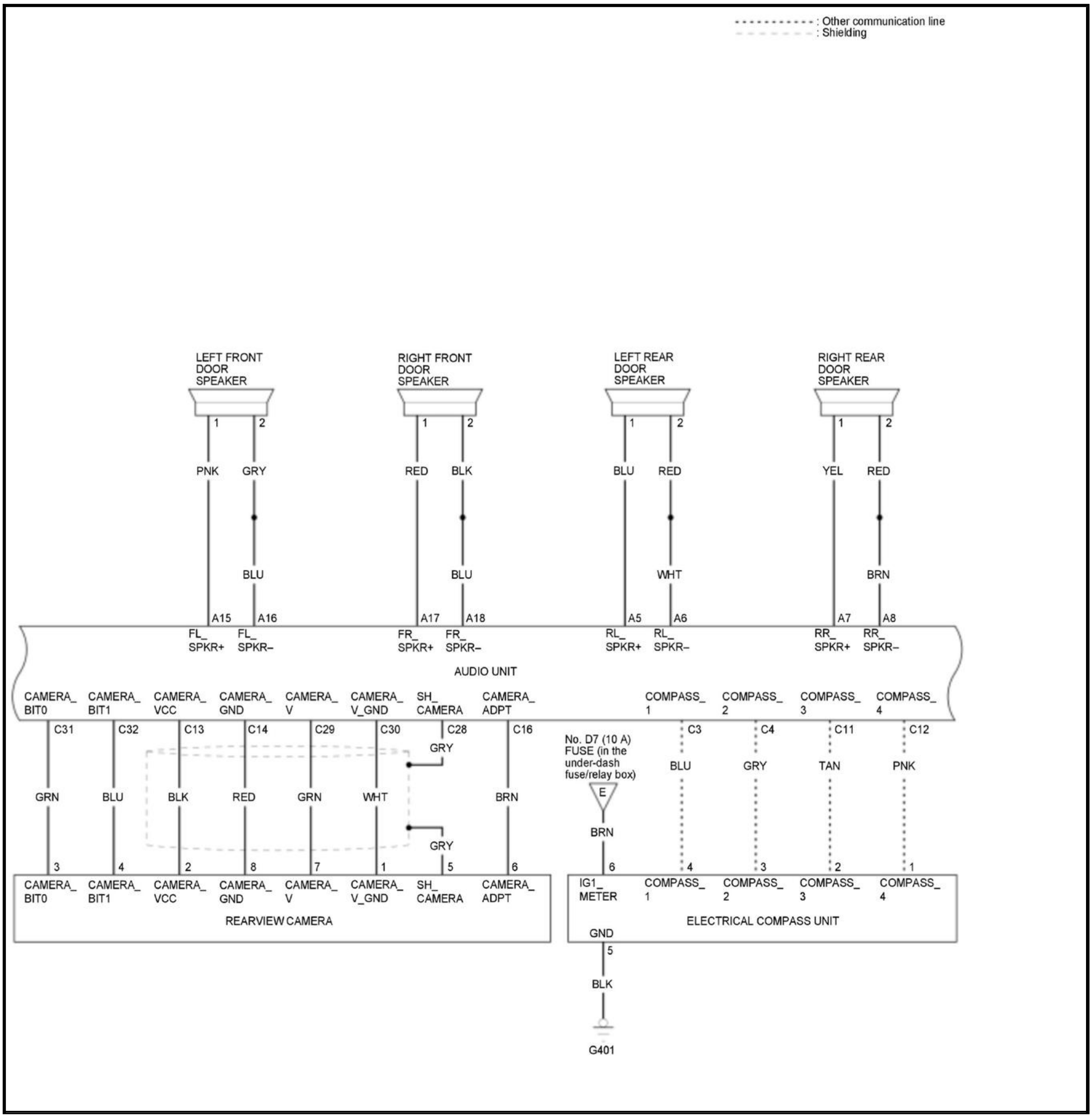
: Other communication line
: Shielding
LEFT FRONT DOOR SPEAKER
RIGHT FRONT DOOR SPEAKER
LEFT REAR DOOR SPEAKER
RIGHT REAR DOOR SPEAKER
1
2
PNK
GRY
BLU
RED
BLK
BLU
BLU
RED
WHT
YEL
RED
BRN
A15
A16
A17
A18
A5
A6
A7
A8
FL_ SPKR+
FL_ SPKR−
FR_ SPKR+
FR_ SPKR−
RL_ SPKR+
RL_ SPKR−
RR_ SPKR+
RR_ SPKR−
AUDIO UNIT
CAMERA_ BIT0
CAMERA_ BIT1
CAMERA_ VCC
CAMERA_ GND
CAMERA_ V
CAMERA_ V_GND
SH_ CAMERA
CAMERA_ ADPT
COMPASS_ 1
COMPASS_ 2
COMPASS_ 3
COMPASS_ 4
C31
C32
C13
C14
C29
C30
C28
C16
C3
C4
C11
C12
GRN
BLU
BLK
RED
GRN
WHT
GRY
GRY
BRN
No. D7 (10 A) FUSE (in the under-dash fuse/relay box)
E
BRN
BLU
GRY
TAN
PNK
3
4
2
8
7
1
5
6
6
4
3
2
1
REARVIEW CAMERA
IG1_ METER
ELECTRICAL COMPASS UNIT
GND
5
BLK
G401

Color Audio type - 3/5

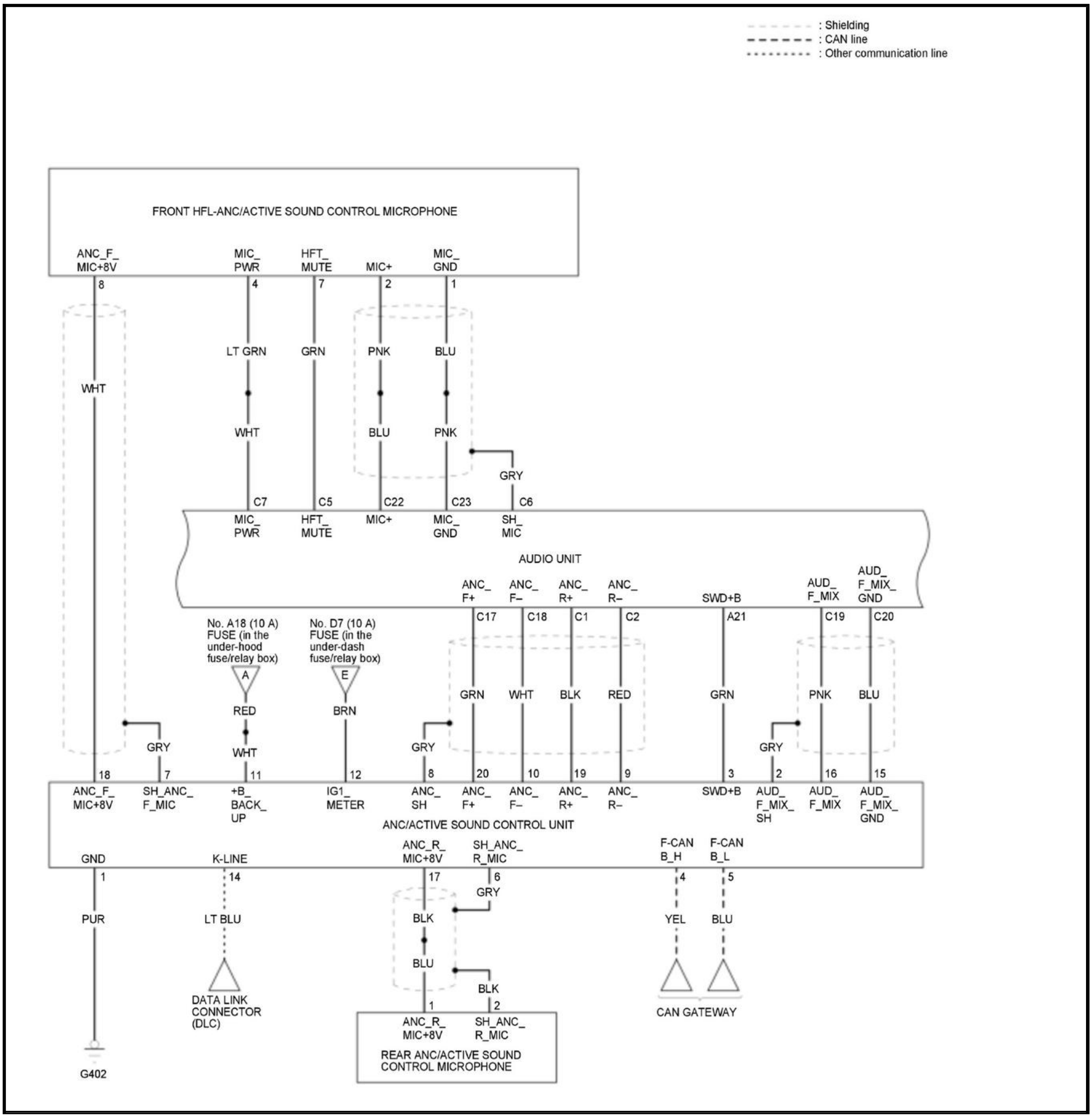
: Shielding
: CAN line
: Other communication line
FRONT HFL-ANC/ACTIVE SOUND CONTROL MICROPHONE
ANC_F_ MIC+8V
MIC_ PWR
HFT_ MUTE
MIC+
MIC_ GND
8
4
7
2
1
WHT
LT GRN
GRN
PNK
BLU
WHT
BLU
PNK
GRY
C7
C5
C22
C23
C6
MIC_ PWR
HFT_ MUTE
MIC+
MIC_ GND
SH_ MIC
AUDIO UNIT
ANC_ F+
ANC_ F–
ANC_ R+
ANC_ R–
SWD+B
AUD_ F_MIX
AUD_ F_MIX_ GND
C17
C18
C1
C2
A21
C19
C20
No. A18 (10 A) FUSE (in the under-hood fuse/relay box)
No. D7 (10 A) FUSE (in the under-dash fuse/relay box)
A
E
RED
BRN
WHT
GRN
WHT
BLK
RED
GRN
PNK
BLU
GRY
GRY
GRY
18
7
11
12
8
20
10
19
9
3
2
16
15
ANC_F_ MIC+8V
SH_ANC_ F_MIC
+B_ BACK_ UP
IG1_ METER
ANC_ SH
ANC_ F+
ANC_ F–
ANC_ R+
ANC_ R–
SWD+B
AUD_ F_MIX_ SH
AUD_ F_MIX
AUD_ F_MIX_ GND
ANC/ACTIVE SOUND CONTROL UNIT
GND
K-LINE
ANC_R_ MIC+8V
SH_ANC_ R_MIC
F-CAN B_H
F-CAN B_L
1
14
17
6
4
5
PUR
LT BLU
GRY
BLK
BLU
BLK
YEL
BLU
DATA LINK CONNECTOR (DLC)
CAN GATEWAY
1
2
ANC_R_ MIC+8V
SH_ANC_ R_MIC
REAR ANC/ACTIVE SOUND CONTROL MICROPHONE
G402

Color Audio type - 4/5

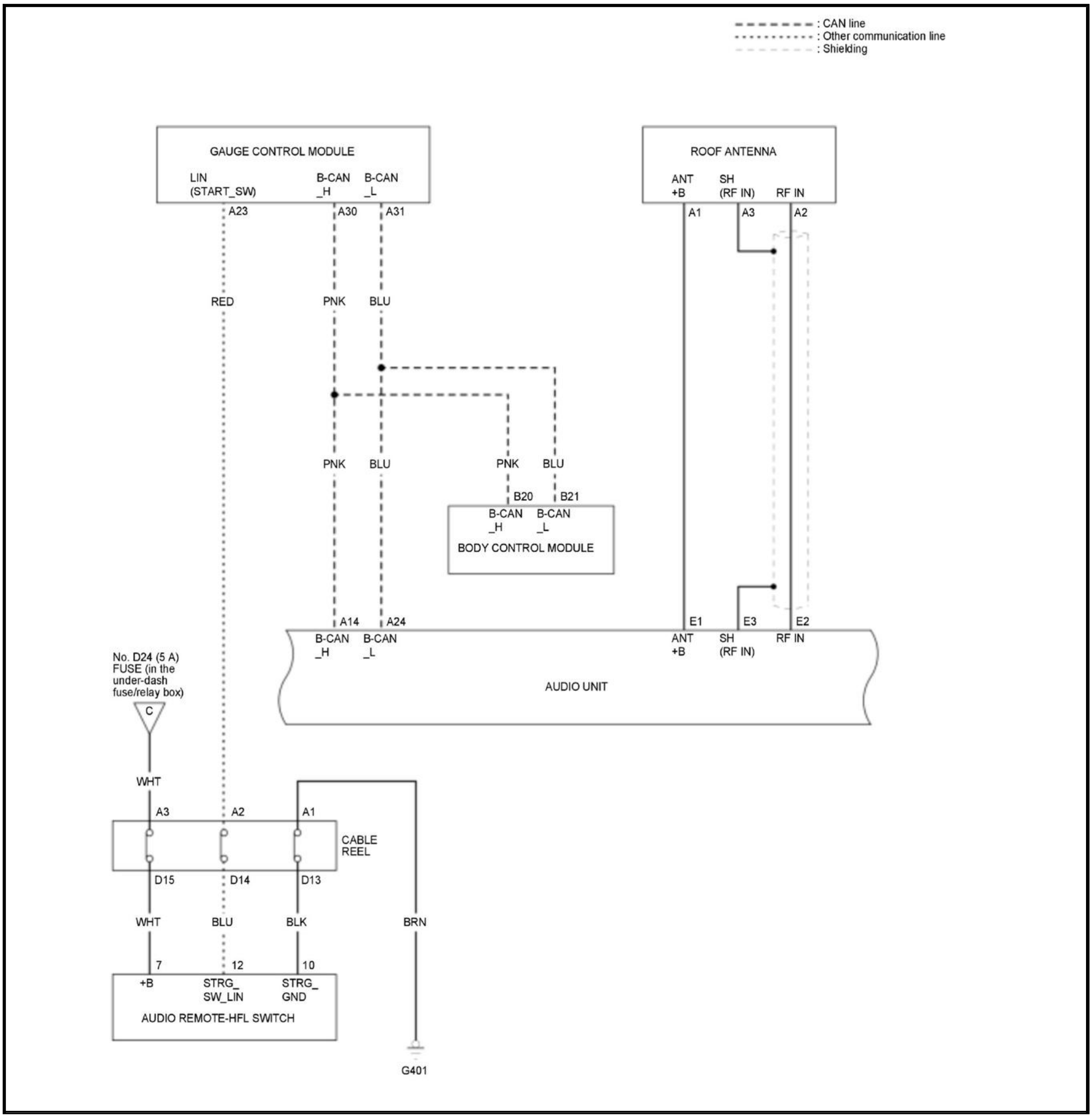
: CAN line
: Other communication line
: Shielding
GAUGE CONTROL MODULE
LIN (START_SW)
B-CAN _H
B-CAN _L
A23
A30
A31
RED
PNK
BLU
ROOF ANTENNA
ANT +B
SH (RF IN)
RF IN
A1
A3
A2
PNK
BLU
PNK
BLU
B20
B21
B-CAN _H
B-CAN _L
BODY CONTROL MODULE
A14
A24
B-CAN _H
B-CAN _L
E1
E3
E2
ANT +B
SH (RF IN)
RF IN
AUDIO UNIT
No. D24 (5 A) FUSE (in the under-dash fuse/relay box)
C
WHT
A3
A2
A1
CABLE REEL
D15
D14
D13
WHT
BLU
BLK
BRN
7
12
10
+B
STRG_ SW_LIN
STRG_ GND
AUDIO REMOTE-HFL SWITCH
G401

Color Audio type - 5/5

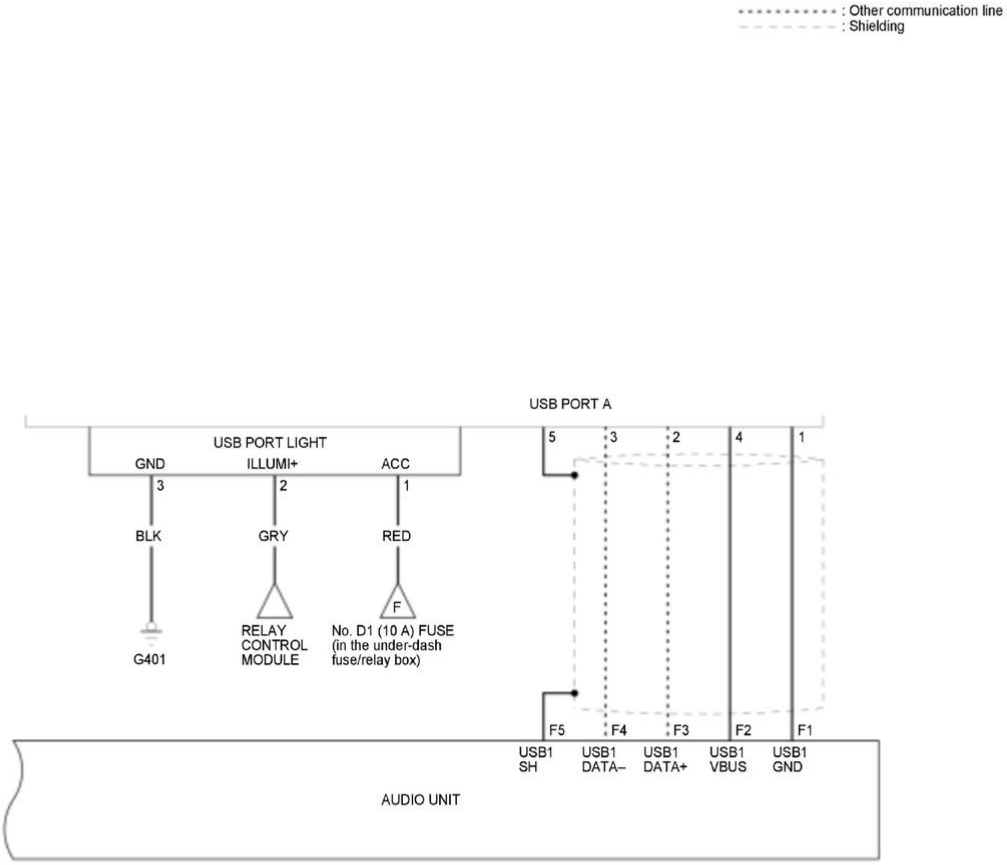
: Other communication line
: Shielding
USB PORT A
5
3
2
4
1
USB PORT LIGHT
GND
ILLUMI+
ACC
3
2
1
BLK
GRY
RED
F
G401
RELAY
CONTROL
MODULE
No. D1 (10 A) FUSE
(in the under-dash
fuse/relay box)
F5
F4
F3
F2
F1
USB1
SH
USB1
DATA–
USB1
DATA+
USB1
VBUS
USB1
GND
AUDIO UNIT

AUDIO AND VISUAL SYSTEM CIRCUIT DIAGRAM (DISPLAY AUDIO TYPE)

Display Audio type - 1/9

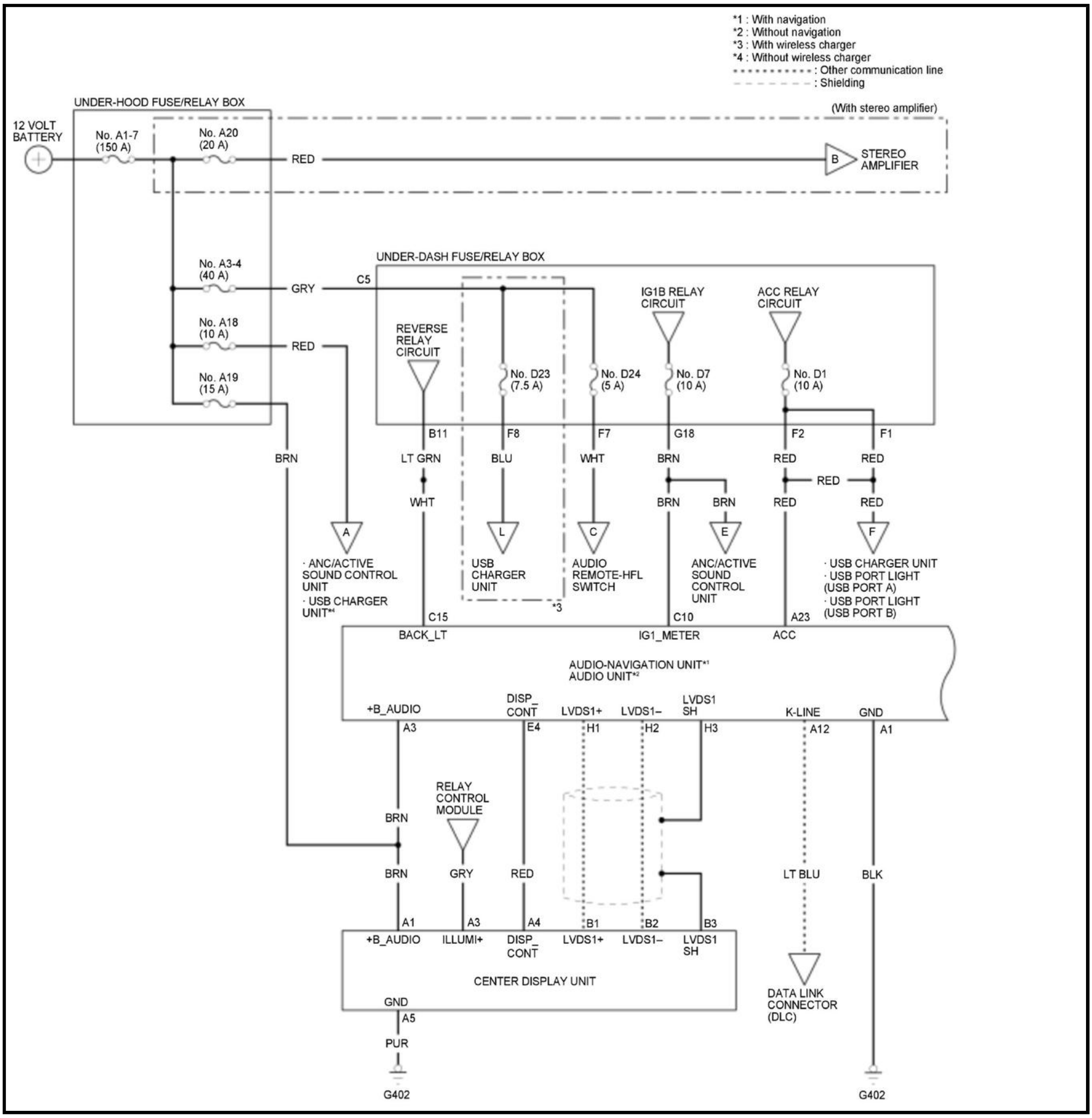
*1 : With navigation
*2 : Without navigation
*3 : With wireless charger
*4 : Without wireless charger
: Other communication line
: Shielding
UNDER-HOOD FUSE/RELAY BOX
(With stereo amplifier)
12 VOLT BATTERY
No. A1-7 (150 A)
No. A20 (20 A)
RED
B
STEREO AMPLIFIER
No. A3-4 (40 A)
GRY
C5
UNDER-DASH FUSE/RELAY BOX
No. A18 (10 A)
RED
No. A19 (15 A)
REVERSE RELAY CIRCUIT
No. D23 (7.5 A)
No. D24 (5 A)
IG1B RELAY CIRCUIT
No. D7 (10 A)
ACC RELAY CIRCUIT
No. D1 (10 A)
B11
F8
F7
G18
F2
F1
BRN
LT GRN
BLU
WHT
BRN
RED
RED
RED
WHT
BRN
BRN
RED
RED
A
L
C
E
F
· ANC/ACTIVE SOUND CONTROL UNIT
· USB CHARGER UNIT*4
USB CHARGER UNIT
*3
AUDIO REMOTE-HFL SWITCH
ANC/ACTIVE SOUND CONTROL UNIT
· USB CHARGER UNIT
· USB PORT LIGHT (USB PORT A)
· USB PORT LIGHT (USB PORT B)
C15
C10
A23
BACK_LT
IG1_METER
ACC
AUDIO-NAVIGATION UNIT*1
AUDIO UNIT*2
+B_AUDIO
DISP_ CONT
LVDS1+
LVDS1–
LVDS1 SH
K-LINE
GND
A3
E4
H1
H2
H3
A12
A1
BRN
RELAY CONTROL MODULE
BRN
GRY
RED
LT BLU
BLK
A1
A3
A4
B1
B2
B3
+B_AUDIO
ILLUMI+
DISP_ CONT
LVDS1+
LVDS1–
LVDS1 SH
CENTER DISPLAY UNIT
GND
A5
PUR
G402
DATA LINK CONNECTOR (DLC)
G402

Display Audio type - 2/9

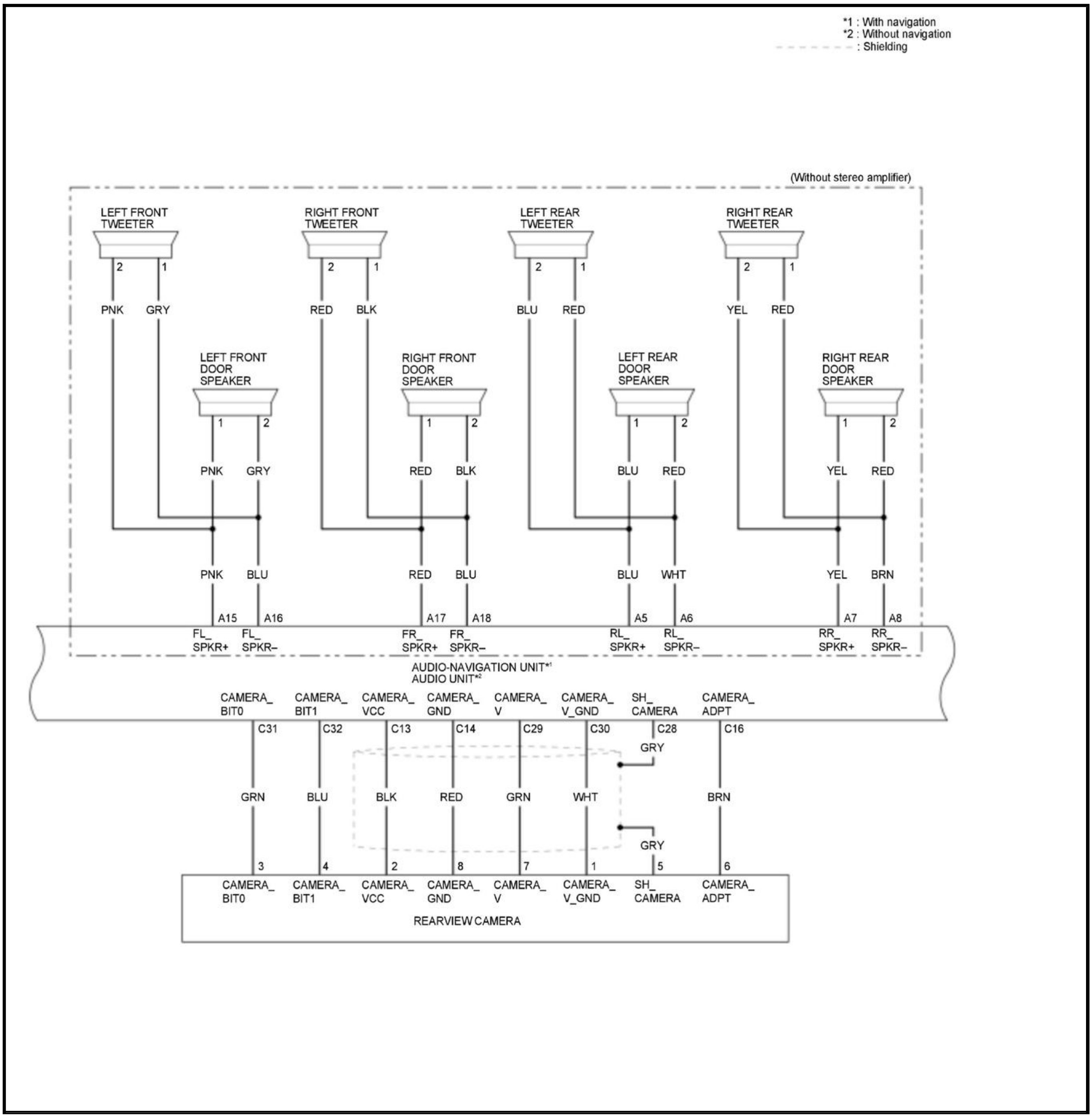
*1 : With navigation
*2 : Without navigation
: Shielding
(Without stereo amplifier)
LEFT FRONT TWEETER
RIGHT FRONT TWEETER
LEFT REAR TWEETER
RIGHT REAR TWEETER
2
1
PNK
GRY
RED
BLK
BLU
RED
YEL
RED
LEFT FRONT DOOR SPEAKER
RIGHT FRONT DOOR SPEAKER
LEFT REAR DOOR SPEAKER
RIGHT REAR DOOR SPEAKER
PNK
GRY
RED
BLK
BLU
RED
YEL
RED
PNK
BLU
RED
BLU
BLU
WHT
YEL
BRN
A15
A16
A17
A18
A5
A6
A7
A8
FL_ SPKR+
FL_ SPKR–
FR_ SPKR+
FR_ SPKR–
RL_ SPKR+
RL_ SPKR–
RR_ SPKR+
RR_ SPKR–
AUDIO-NAVIGATION UNIT*1
AUDIO UNIT*2
CAMERA_ BIT0
CAMERA_ BIT1
CAMERA_ VCC
CAMERA_ GND
CAMERA_ V
CAMERA_ V_GND
SH_ CAMERA
CAMERA_ ADPT
C31
C32
C13
C14
C29
C30
C28
C16
GRY
GRN
BLU
BLK
RED
GRN
WHT
BRN
GRY
3
4
2
8
7
1
5
6
CAMERA_ BIT0
CAMERA_ BIT1
CAMERA_ VCC
CAMERA_ GND
CAMERA_ V
CAMERA_ V_GND
SH_ CAMERA
CAMERA_ ADPT
REARVIEW CAMERA

Display Audio type - 3/9

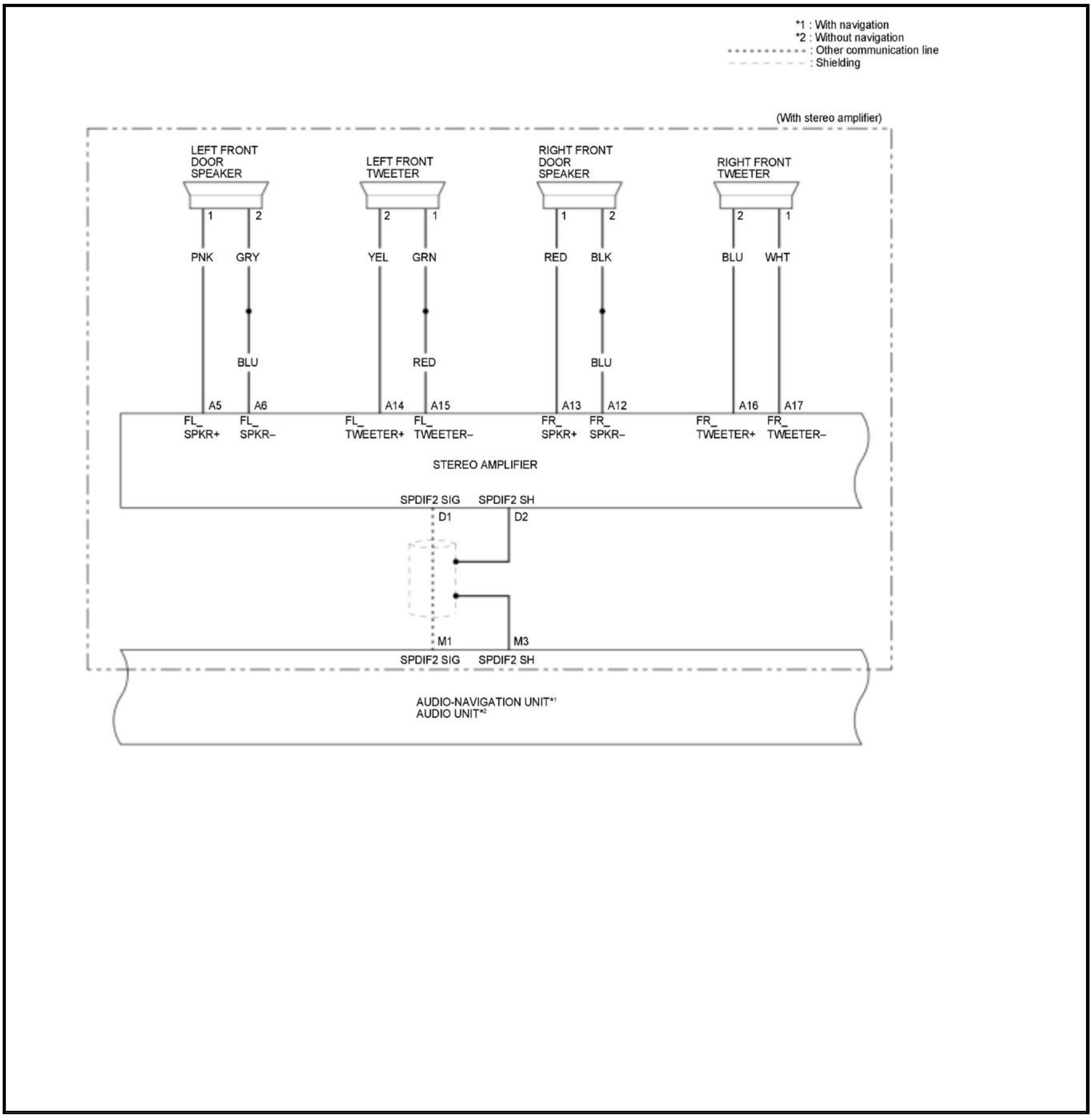
*1 : With navigation
*2 : Without navigation
: Other communication line
: Shielding
(With stereo amplifier)
LEFT FRONT DOOR SPEAKER
LEFT FRONT TWEETER
RIGHT FRONT DOOR SPEAKER
RIGHT FRONT TWEETER
1
2
2
1
1
2
2
1
PNK
GRY
YEL
GRN
RED
BLK
BLU
WHT
BLU
RED
BLU
A5
A6
A14
A15
A13
A12
A16
A17
FL_ SPKR+
FL_ SPKR–
FL_ TWEETER+
FL_ TWEETER–
FR_ SPKR+
FR_ SPKR–
FR_ TWEETER+
FR_ TWEETER–
STEREO AMPLIFIER
SPDIF2 SIG
SPDIF2 SH
D1
D2
M1
M3
SPDIF2 SIG
SPDIF2 SH
AUDIO-NAVIGATION UNIT*1
AUDIO UNIT*2

Display Audio type - 4/9

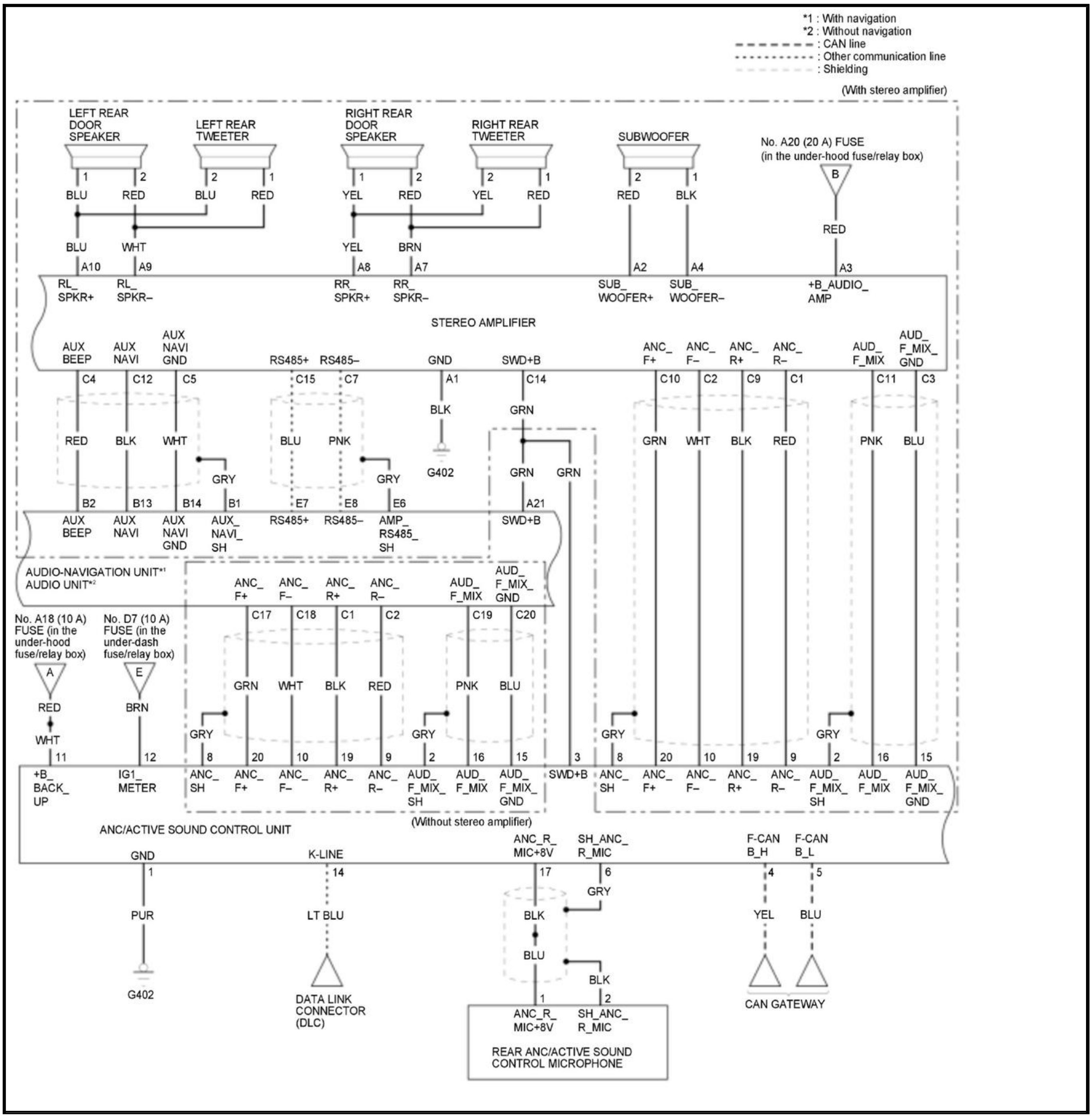
*1 : With navigation
*2 : Without navigation
: CAN line
: Other communication line
: Shielding
(With stereo amplifier)
LEFT REAR DOOR SPEAKER
LEFT REAR TWEETER
RIGHT REAR DOOR SPEAKER
RIGHT REAR TWEETER
SUBWOOFER
No. A20 (20 A) FUSE (in the under-hood fuse/relay box)
B
BLU
RED
YEL
BRN
WHT
BLK
RL_ SPKR+
RL_ SPKR–
RR_ SPKR+
RR_ SPKR–
SUB_ WOOFER+
SUB_ WOOFER–
+B_AUDIO_ AMP
STEREO AMPLIFIER
AUX BEEP
AUX NAVI
AUX NAVI GND
RS485+
RS485–
GND
SWD+B
ANC_ F+
ANC_ F–
ANC_ R+
ANC_ R–
AUD_ F_MIX
AUD_ F_MIX_ GND
GRY
GRN
PNK
G402
AUX_ NAVI_ SH
AMP_ RS485_ SH
AUDIO-NAVIGATION UNIT*1
AUDIO UNIT*2
No. A18 (10 A) FUSE (in the under-hood fuse/relay box)
No. D7 (10 A) FUSE (in the under-dash fuse/relay box)
A
E
+B_ BACK_ UP
IG1_ METER
ANC_ SH
AUD_ F_MIX_ SH
(Without stereo amplifier)
ANC/ACTIVE SOUND CONTROL UNIT
K-LINE
ANC_R_ MIC+8V
SH_ANC_ R_MIC
F-CAN B_H
F-CAN B_L
PUR
LT BLU
DATA LINK CONNECTOR (DLC)
CAN GATEWAY
REAR ANC/ACTIVE SOUND CONTROL MICROPHONE

Display Audio type - 5/9

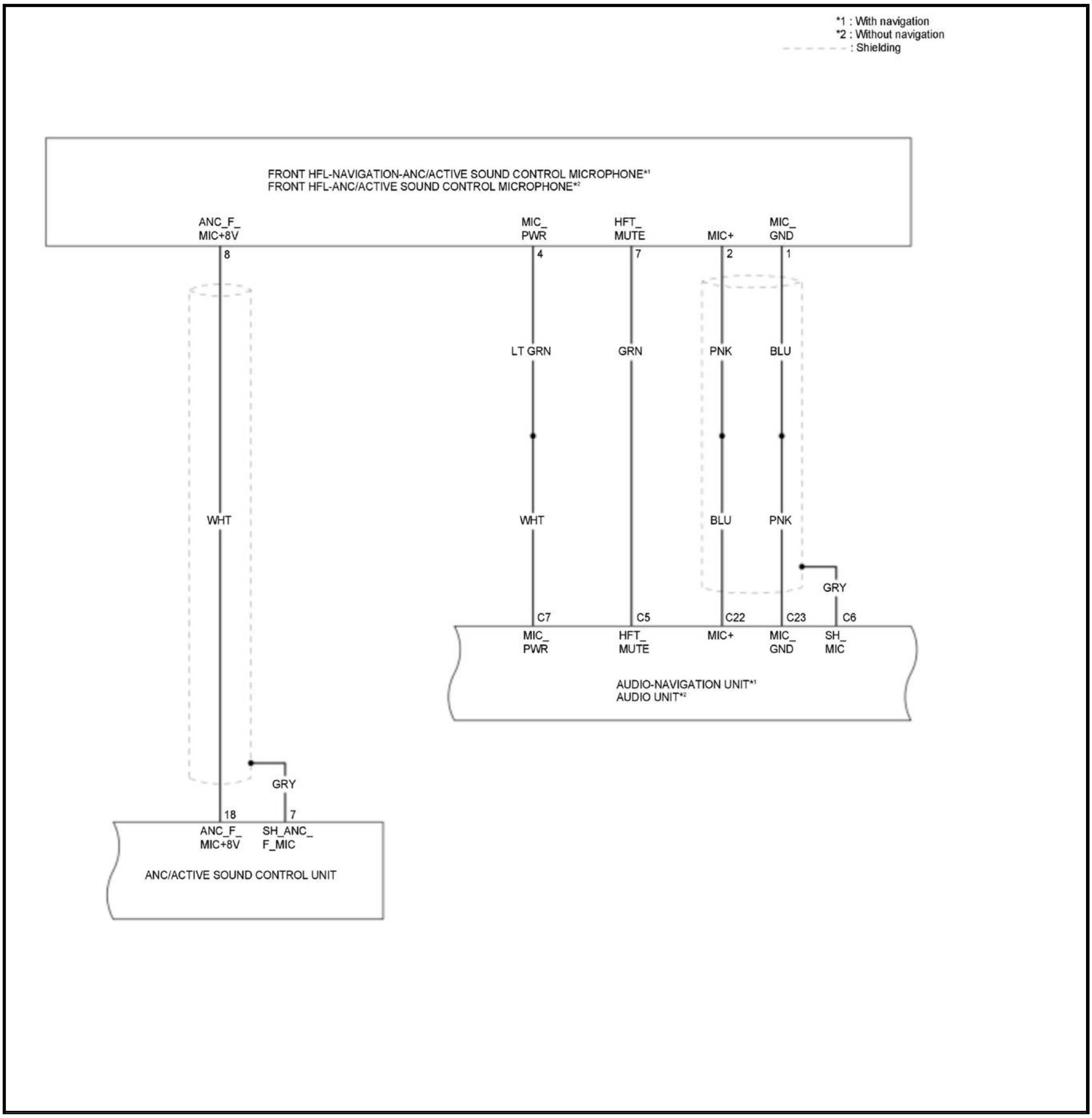
*1 : With navigation
*2 : Without navigation
: Shielding
FRONT HFL-NAVIGATION-ANC/ACTIVE SOUND CONTROL MICROPHONE*1
FRONT HFL-ANC/ACTIVE SOUND CONTROL MICROPHONE*2
ANC_F_ MIC+8V
MIC_ PWR
HFT_ MUTE
MIC+
MIC_ GND
8
4
7
2
1
LT GRN
GRN
PNK
BLU
WHT
WHT
BLU
PNK
GRY
C7
C5
C22
C23
C6
MIC_ PWR
HFT_ MUTE
MIC+
MIC_ GND
SH_ MIC
AUDIO-NAVIGATION UNIT*1
AUDIO UNIT*2
GRY
18
7
ANC_F_ MIC+8V
SH_ANC_ F_MIC
ANC/ACTIVE SOUND CONTROL UNIT

Display Audio type - 6/9

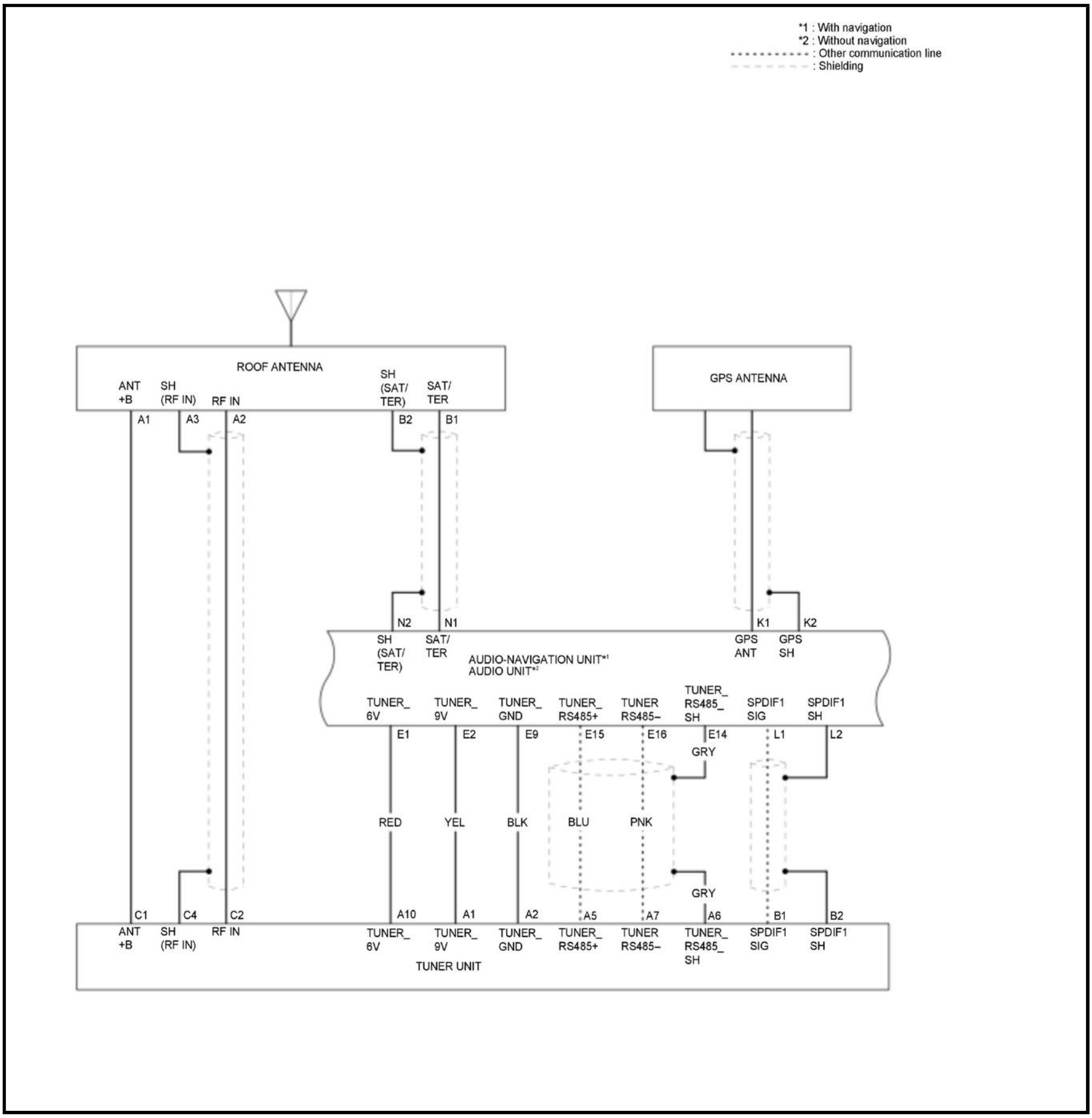
*1 : With navigation
*2 : Without navigation
: Other communication line
: Shielding
ROOF ANTENNA
ANT +B
SH (RF IN)
RF IN
SH (SAT/ TER)
SAT/ TER
A1
A3
A2
B2
B1
GPS ANTENNA
N2
N1
K1
K2
SH (SAT/ TER)
SAT/ TER
AUDIO-NAVIGATION UNIT*1
AUDIO UNIT*2
GPS ANT
GPS SH
TUNER_ 6V
TUNER_ 9V
TUNER_ GND
TUNER_ RS485+
TUNER RS485−
TUNER_ RS485_ SH
SPDIF1 SIG
SPDIF1 SH
E1
E2
E9
E15
E16
E14
L1
L2
GRY
RED
YEL
BLK
BLU
PNK
GRY
C1
C4
C2
A10
A1
A2
A5
A7
A6
B1
B2
ANT +B
SH (RF IN)
RF IN
TUNER_ 6V
TUNER_ 9V
TUNER_ GND
TUNER_ RS485+
TUNER RS485−
TUNER_ RS485_ SH
SPDIF1 SIG
SPDIF1 SH
TUNER UNIT

Display Audio type - 7/9

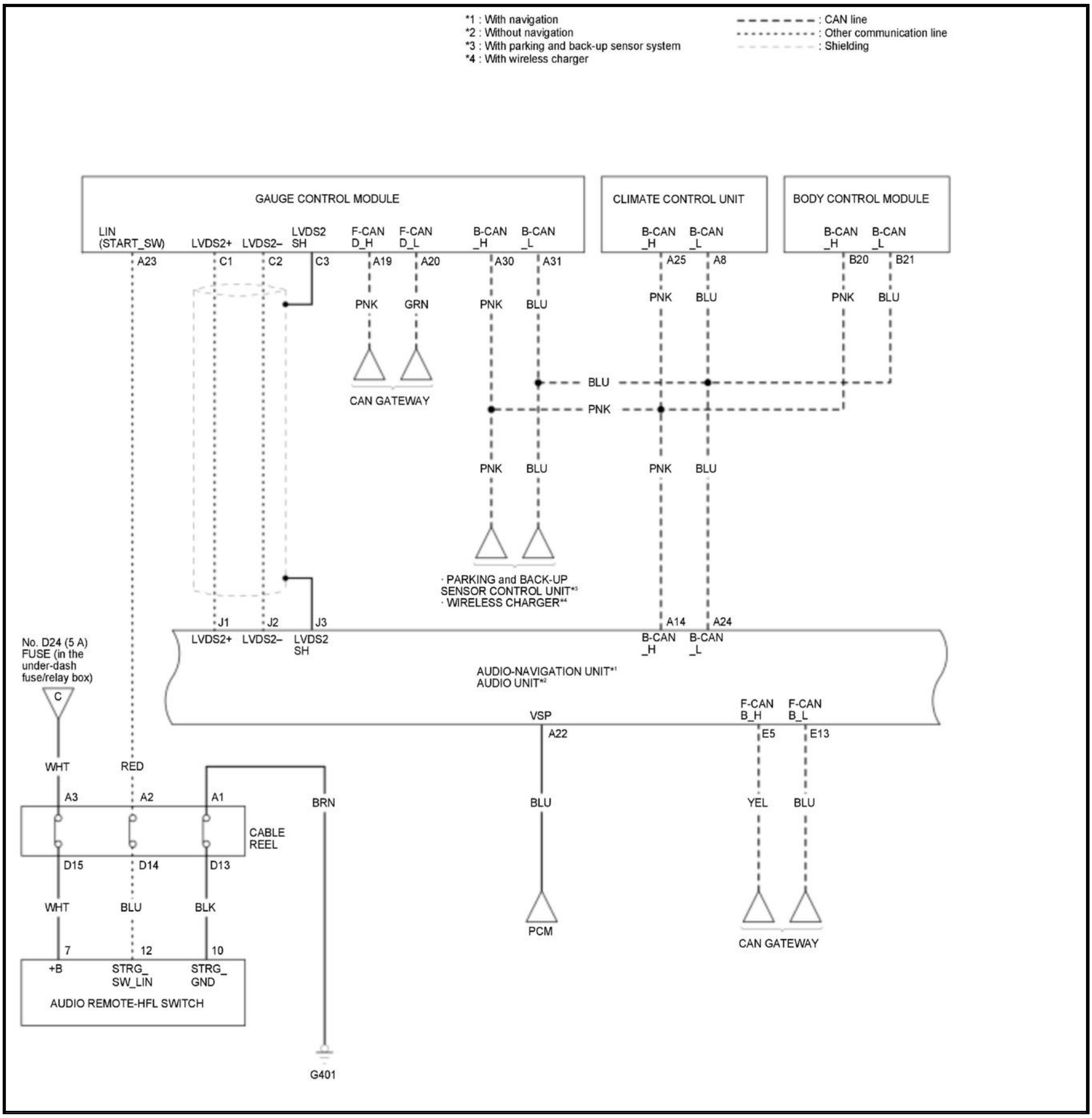
*1 : With navigation
*2 : Without navigation
*3 : With parking and back-up sensor system
*4 : With wireless charger
: CAN line
: Other communication line
: Shielding
GAUGE CONTROL MODULE
LIN (START_SW)
LVDS2+
LVDS2–
LVDS2 SH
F-CAN D_H
F-CAN D_L
B-CAN _H
B-CAN _L
A23
C1
C2
C3
A19
A20
A30
A31
CLIMATE CONTROL UNIT
B-CAN _H
B-CAN _L
A25
A8
BODY CONTROL MODULE
B-CAN _H
B-CAN _L
B20
B21
PNK
GRN
PNK
BLU
PNK
BLU
PNK
BLU
CAN GATEWAY
BLU
PNK
PNK
BLU
PNK
BLU
· PARKING and BACK-UP SENSOR CONTROL UNIT*3
· WIRELESS CHARGER*4
J1
J2
J3
A14
A24
LVDS2+
LVDS2–
LVDS2 SH
B-CAN _H
B-CAN _L
AUDIO-NAVIGATION UNIT*1
AUDIO UNIT*2
No. D24 (5 A) FUSE (in the under-dash fuse/relay box)
C
VSP
F-CAN B_H
F-CAN B_L
A22
E5
E13
WHT
RED
A3
A2
A1
BRN
BLU
YEL
BLU
CABLE REEL
D15
D14
D13
WHT
BLU
BLK
PCM
CAN GATEWAY
7
12
10
+B
STRG_ SW_LIN
STRG_ GND
AUDIO REMOTE-HFL SWITCH
G401

Display Audio type - 8/9

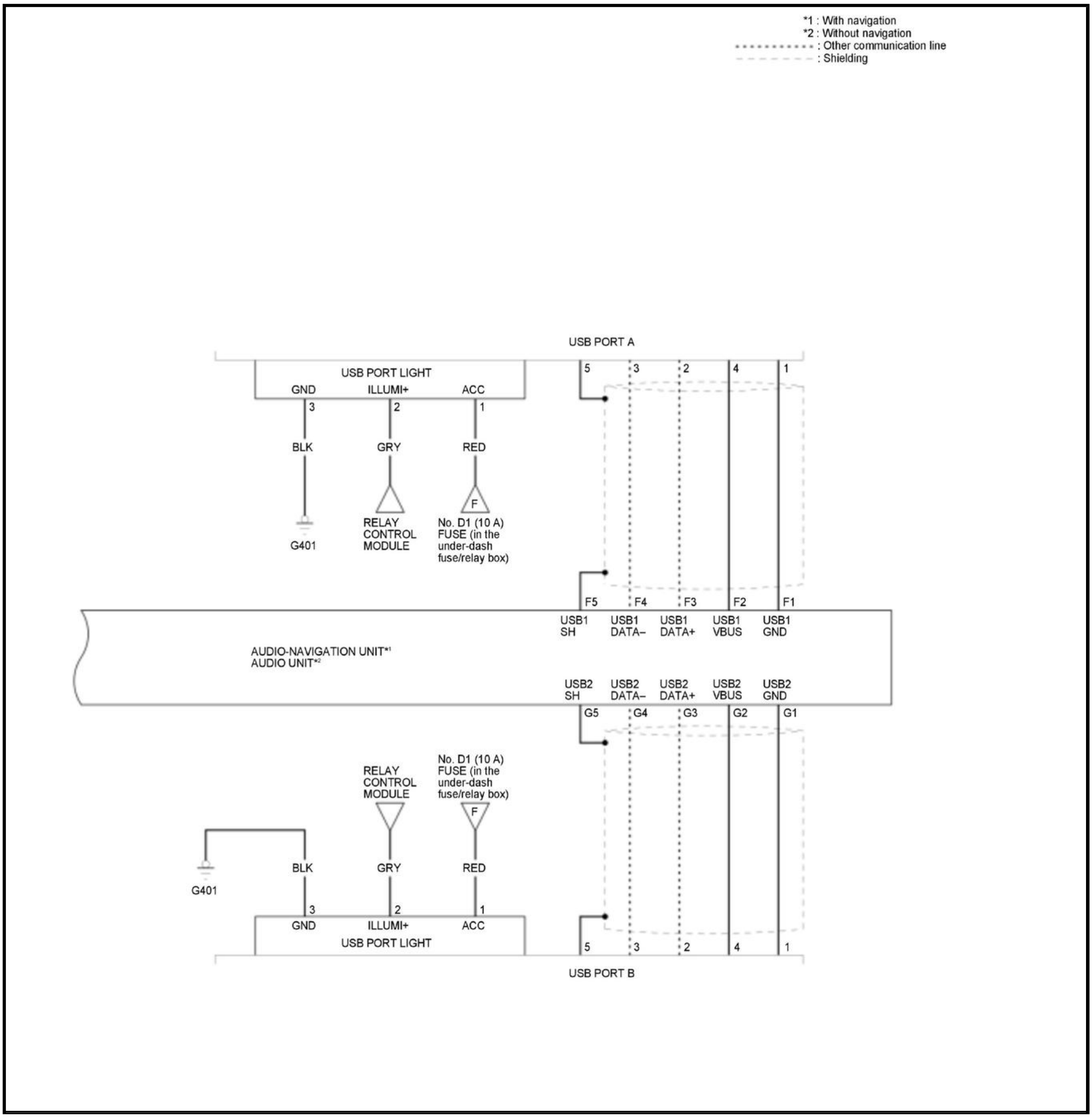
*1 : With navigation
*2 : Without navigation
: Other communication line
: Shielding
USB PORT A
USB PORT LIGHT
GND
ILLUMI+
ACC
3
2
1
BLK
GRY
RED
G401
RELAY CONTROL MODULE
F
No. D1 (10 A) FUSE (in the under-dash fuse/relay box)
5
3
2
4
1
F5
F4
F3
F2
F1
USB1 SH
USB1 DATA−
USB1 DATA+
USB1 VBUS
USB1 GND
AUDIO-NAVIGATION UNIT*1
AUDIO UNIT*2
USB2 SH
USB2 DATA−
USB2 DATA+
USB2 VBUS
USB2 GND
G5
G4
G3
G2
G1
RELAY CONTROL MODULE
No. D1 (10 A) FUSE (in the under-dash fuse/relay box)
F
G401
BLK
GRY
RED
3
2
1
GND
ILLUMI+
ACC
USB PORT LIGHT
5
3
2
4
1
USB PORT B

Display Audio type - 9/9

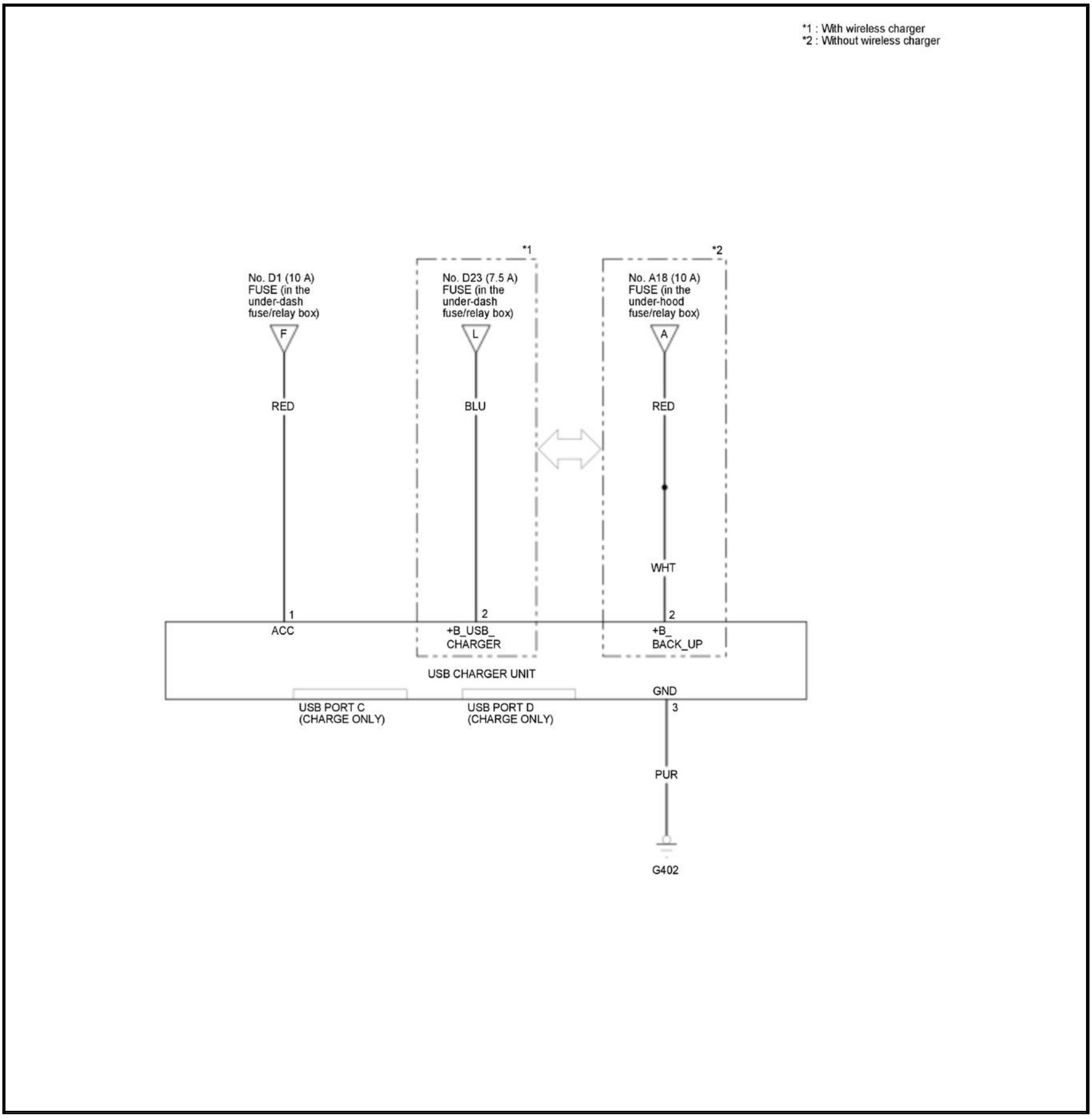
*1 : With wireless charger
*2 : Without wireless charger
*1
*2
No. D1 (10 A) FUSE (in the under-dash fuse/relay box)
F
RED
1
ACC
No. D23 (7.5 A) FUSE (in the under-dash fuse/relay box)
L
BLU
2
+B_USB_ CHARGER
No. A18 (10 A) FUSE (in the under-hood fuse/relay box)
A
RED
WHT
2
+B_ BACK_UP
USB CHARGER UNIT
USB PORT C (CHARGE ONLY)
USB PORT D (CHARGE ONLY)
GND
3
PUR
G402

REMOVAL AND INSTALLATION

ANC/ACTIVE SOUND CONTROL MICROPHONE REMOVAL AND INSTALLATION

Removal and Installation

SRS components are located in this area. Review the SRS component locations and the precautions and procedures before doing repairs or service.

NOTE: The front HFL-ANC/active sound control microphone and the front HFL-navigation-ANC/active sound control microphone are the same parts.

Front (With roof console module)

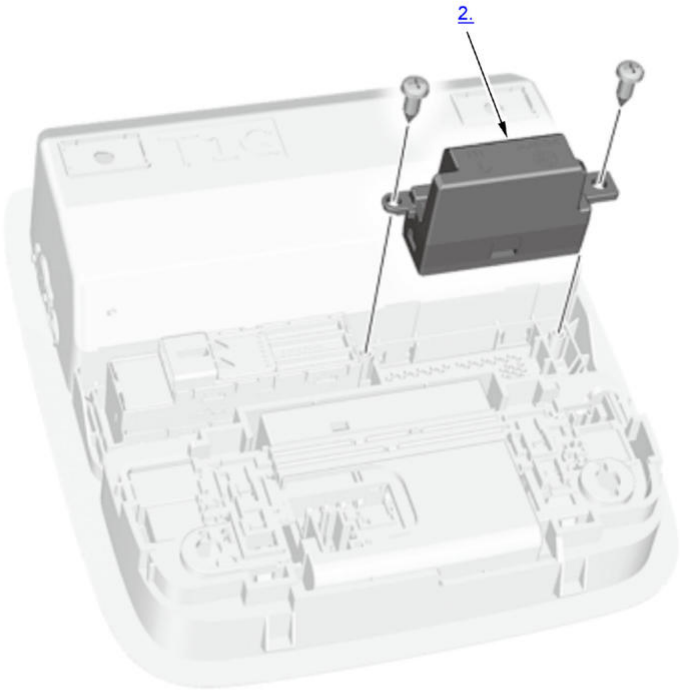

Fig. 1: Front ANC/Active Sound Control Microphone Components (With Roof Console Module)
Courtesy of HONDA, U.S.A., INC.

1. Roof Console Assembly - Remove
2. Front ANC/Active Sound Control Microphone - Remove
3. All Removed Parts - Install

   Install the parts in the reverse order of removal.

Front (Without roof console module)

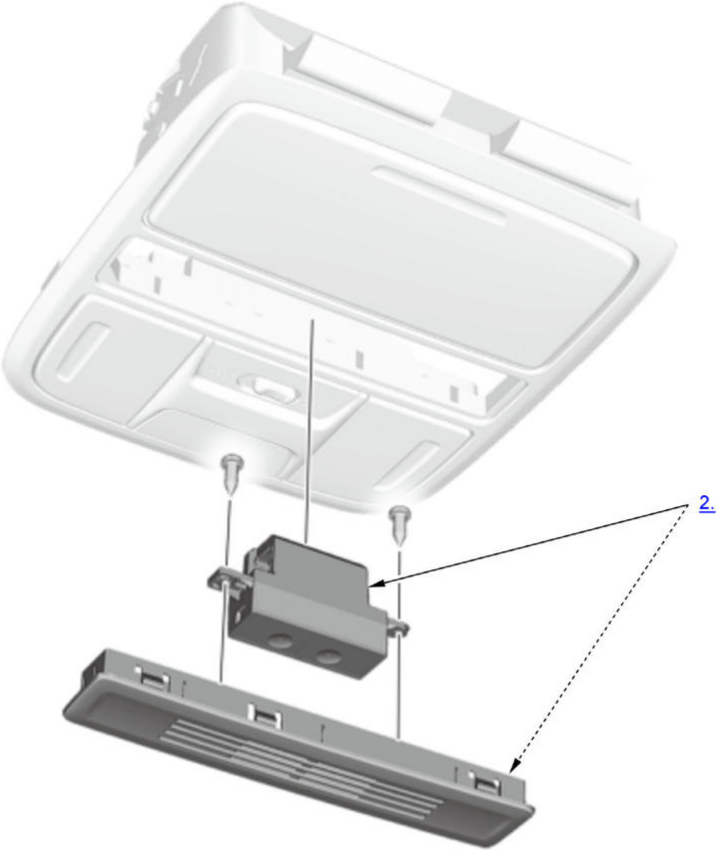

Fig. 2: Front ANC/Active Sound Control Microphone Components (Without Roof Console Module)
Courtesy of HONDA, U.S.A., INC.

1. If equipped, Roof Console Assembly - Remove
2. Front ANC/Active Sound Control Microphone - Remove
3. All Removed Parts - Install

   Install the parts in the reverse order of removal.

Rear

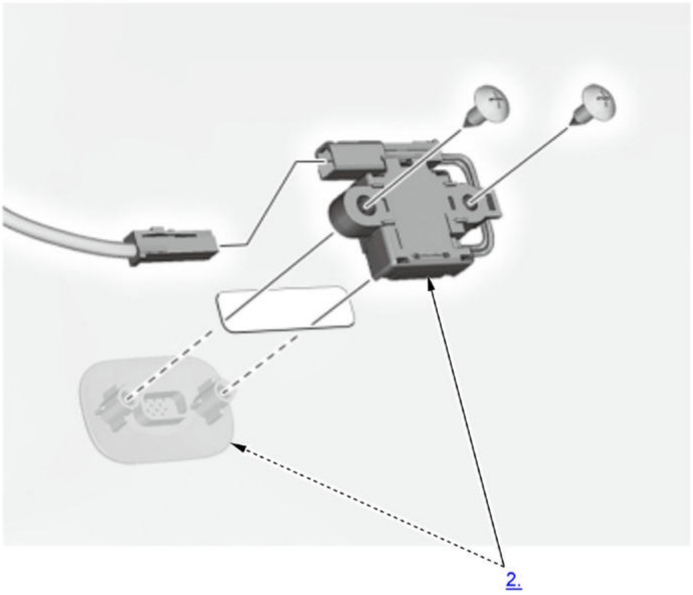

Fig. 3: Rear ANC/Active Sound Control Microphone Components
Courtesy of HONDA, U.S.A., INC.

1. Headliner - Remove
2. Rear ANC/Active Sound Control Microphone - Remove
3. All Removed Parts - Install

   Install the parts in the reverse order of removal.

ANC/ACTIVE SOUND CONTROL UNIT REMOVAL AND INSTALLATION

Removal and Installation

Procedure

NOTE: **Numbered call-outs in figure pertain to list numbers in following procedure.**

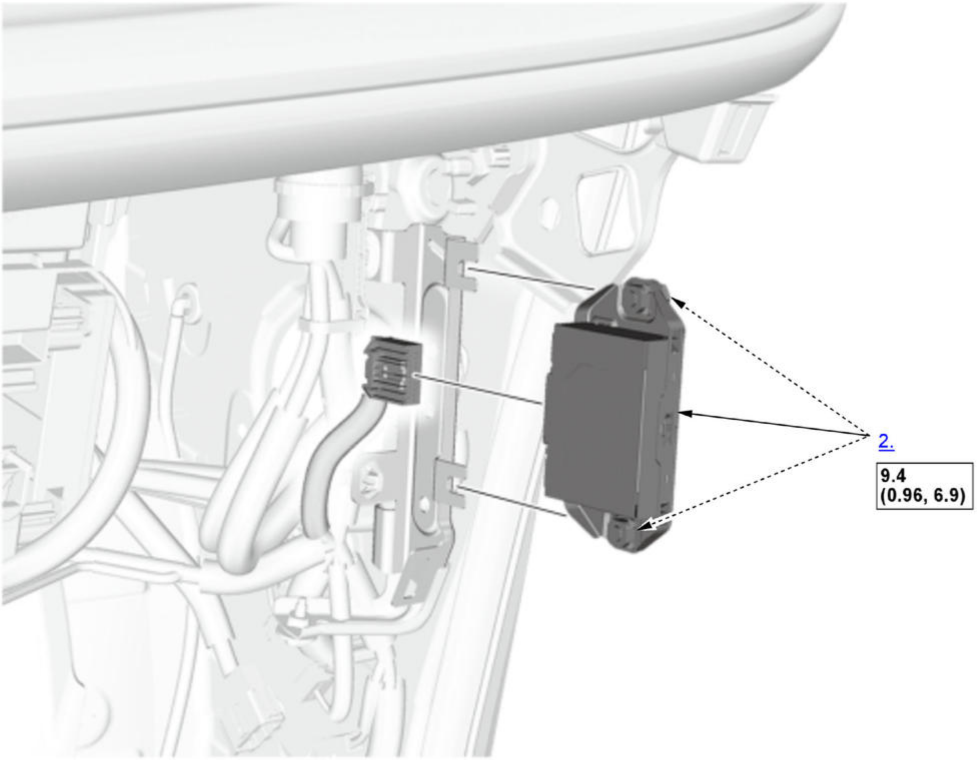

Fig. 4: ANC/Active Sound Control Unit Components
Courtesy of HONDA, U.S.A., INC.

☐	Torque: N.m (kgf.m, lbf.ft)

1. Glove box - Remove
2. ANC/Active Sound Control Unit - Remove
3. All Removed Parts - Install

   Install the parts in the reverse order of removal.

AUDIO REMOTE-HFL SWITCH REMOVAL AND INSTALLATION

Removal and Installation

SRS components are located in this area. Review the SRS component locations and the precautions and procedures before doing repairs or service.

1. Driver's Airbag - Remove
2. Audio Remote-HFL Switch - Remove
3. All Removed Parts - Install

   Install the parts in the reverse order of removal.

AUDIO UNIT REMOVAL AND INSTALLATION (COLOR AUDIO TYPE)

Removal and Installation

SRS components are located in this area. Review the **SRS component locations** and the **precautions and procedures** before doing repairs or service.

NOTE:

- 📖 Where icon is shown, for further information see below.
- When working on electronic components, make sure the work area is clean and dust free.
- Make sure your hands are clean and free of oils and grease.
- If you are replacing the audio unit, write down the audio presets (if possible), and enter them into a new audio unit.

Procedure

NOTE: **Numbered call-outs in figure pertain to list numbers in following procedure.**

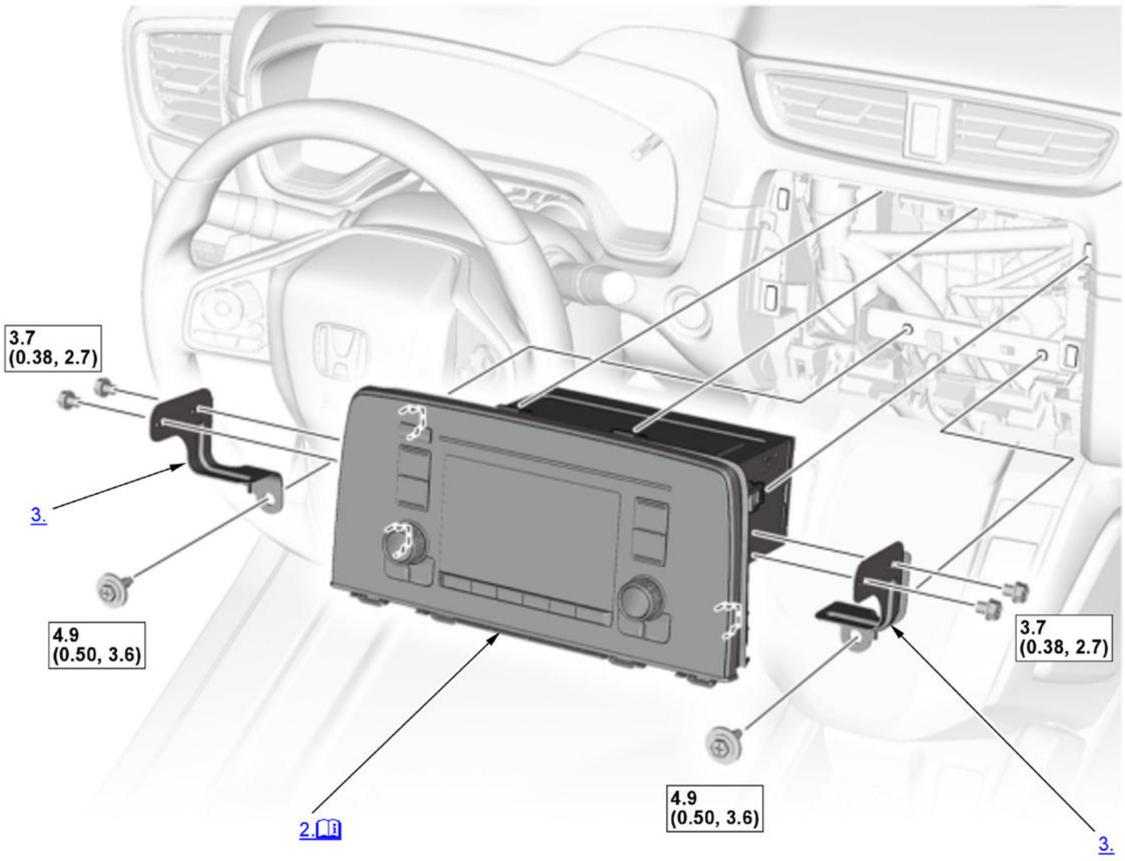

Fig. 5: Exploded View Of Audio Unit Components (Color Audio Type - 1 Of 2)
Courtesy of HONDA, U.S.A., INC.

📖	Detailed information, notes, and precautions

☐	Torque: N.m (kgf.m, lbf.ft)

NOTE: **Numbered call-outs in figure pertain to list numbers in following procedure.**

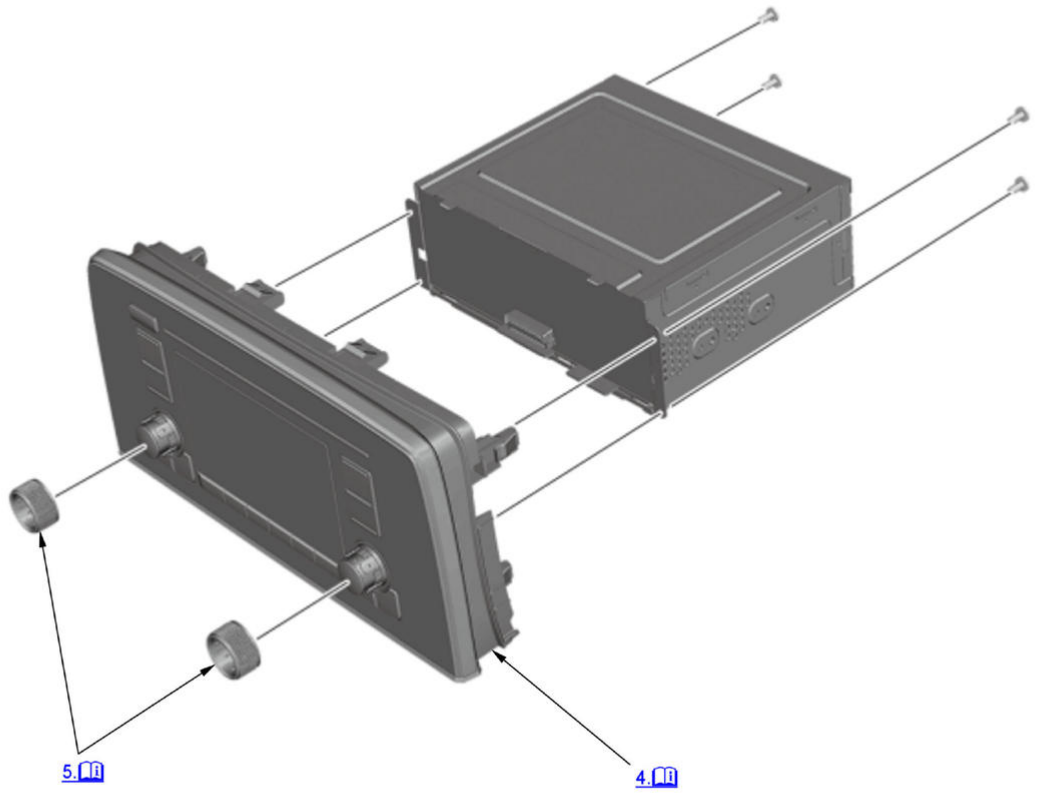

Fig. 6: Exploded View Of Audio Unit Components (Color Audio Type - 2 Of 2)
Courtesy of HONDA, U.S.A., INC.

📖i	Detailed information, notes, and precautions

1. Climate Control Panel - Remove
2. Audio Unit Assembly - Remove

   Note for installation

   - When installing, make sure all the connectors are secure.
   - After Installation, do the System Links in the System Diagnostic Mode to confirm that there are no problems in the system.
3. Audio Unit Bracket - Remove
4. Audio Panel - Remove

   NOTE:

   - Discharge static electricity from your body before and during the work.
   - Do not touch the circuit board(s) with your bare hands.
5. Volume/List Knob - Remove

   If necessary, remove the knob(s).

6. All Removed Parts - Install

Install the parts in the reverse order of removal.

AUDIO UNIT REMOVAL AND INSTALLATION (DISPLAY AUDIO TYPE)

Removal and Installation

SRS components are located in this area. Review the **SRS component locations** and the **precautions and procedures** before doing repairs or service.

NOTE:

- ℹ Where icon is shown, for further information see below.
- When working on electronic components, make sure the work area is clean and dust free.
- Make sure your hands are clean and free of oils and grease.

Procedure

NOTE: **Numbered call-outs in figure pertain to list numbers in following procedure.**

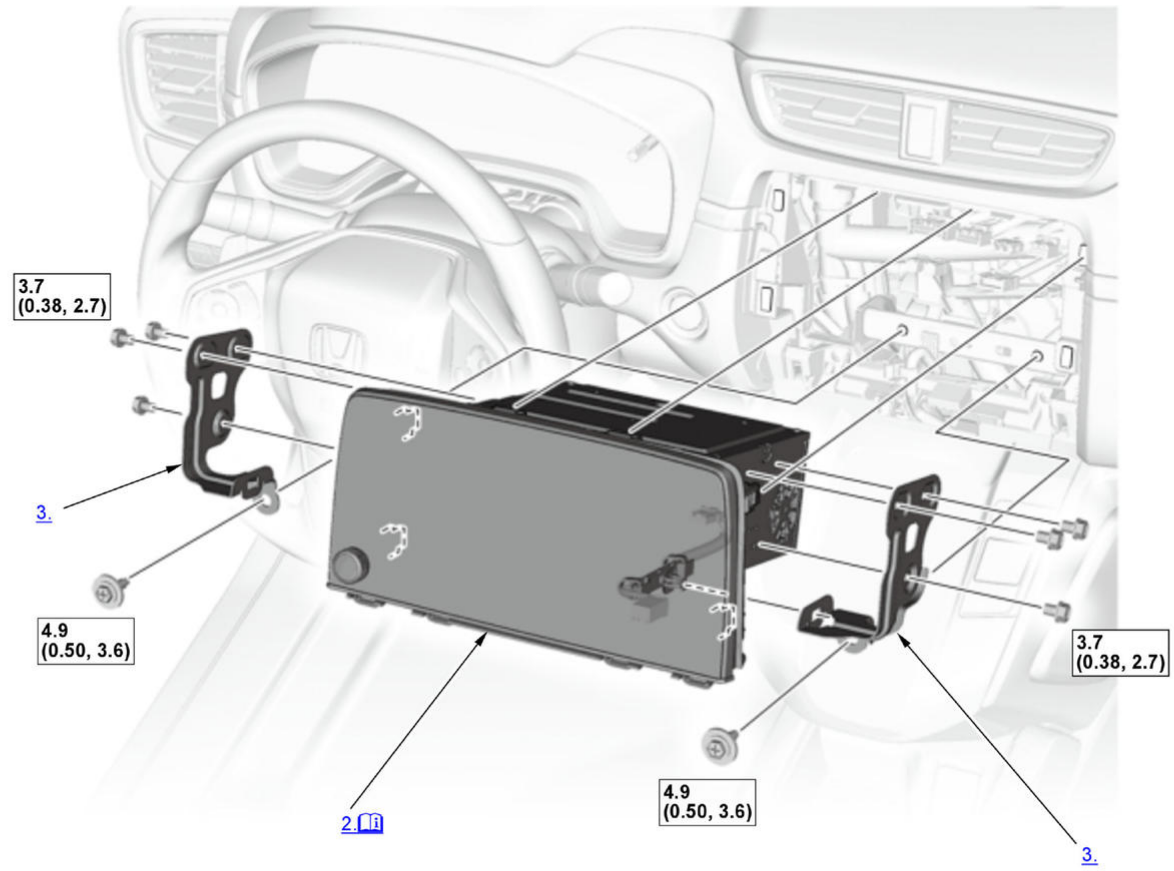

Fig. 7: Exploded View Of Audio Unit Components (Display Audio Type)
Courtesy of HONDA, U.S.A., INC.

ℹ	Detailed information, notes, and precautions
▭	Torque: N.m (kgf.m, lbf.ft)

1. Climate Control Panel - Remove
2. Audio Unit Assembly - Remove

   Note for installation

   - When installing, make sure all the connectors are secure.
   - After Installation, do the System Links in the System Diagnostic Mode to confirm that there are no problems in the system.
3. Audio Unit Bracket - Remove
4. Center Display Unit - Remove
5. Volume Knob - Remove

   If necessary, remove the knob.

6. All Removed Parts - Install

   Install the parts in the reverse order of removal.

AUDIO-NAVIGATION UNIT REMOVAL AND INSTALLATION

Removal and Installation

SRS components are located in this area. Review the SRS component locations and the precautions and procedures before doing repairs or service.

NOTE:

- ℹ Where icon is shown, for further information see below.
- When working on electronic components, make sure the work area is clean and dust free.
- Make sure your hands are clean and free of oils and grease.
- When the audio-navigation unit is replaced or disconnected, do the Map Matching. This part of the initialization matches the GPS coordinates with a road on the map screen. To do this part of the procedure, make sure that the navigation system displays a map, and drive the vehicle on a mapped road shown on the map screen. Do not enter a destination at this time. When the name of the current road you are driving on appears at the bottom of the screen, the entire procedure is complete.

Procedure

NOTE: **Numbered call-outs in figure pertain to list numbers in following procedure.**

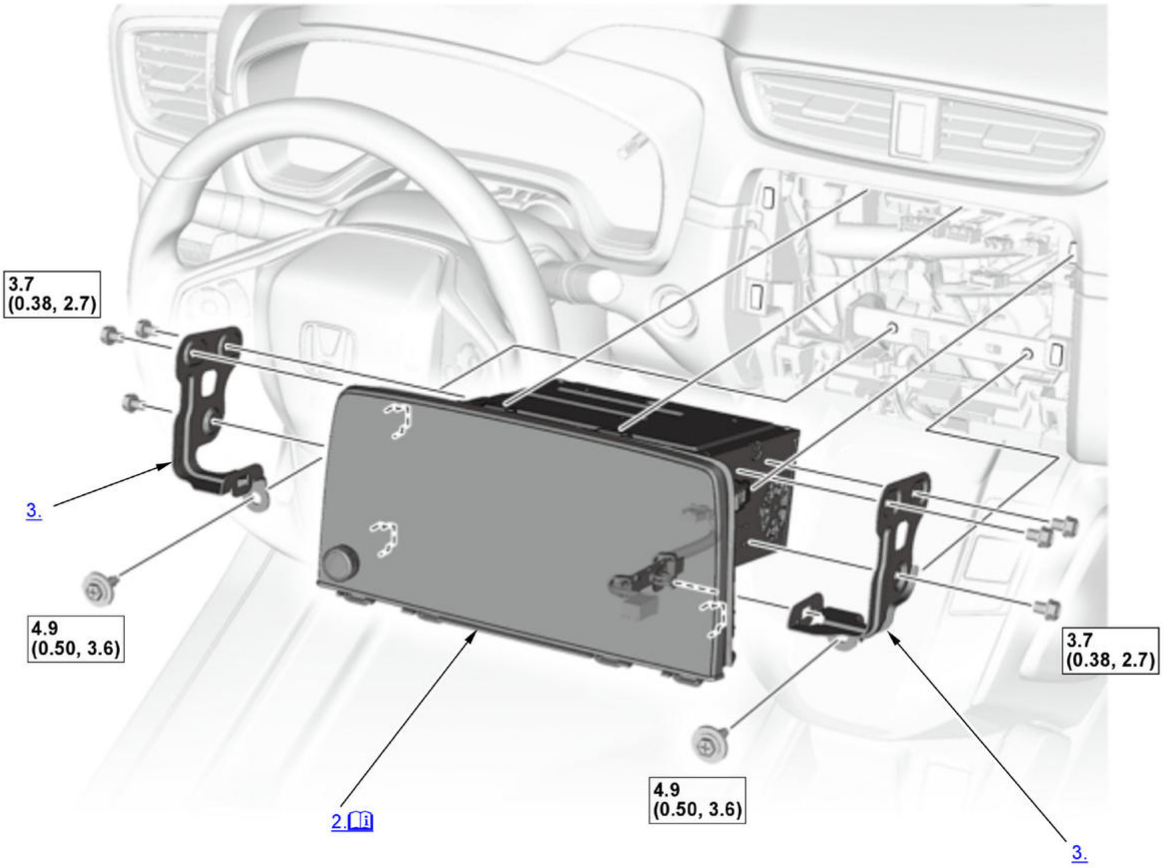

Fig. 8: Exploded View Of Audio-Navigation Unit Components
Courtesy of HONDA, U.S.A., INC.

ℹ	Detailed information, notes, and precautions
▭	Torque: N.m (kgf.m, lbf.ft)

1. **Climate Control Panel - Remove**
2. Audio-Navigation Unit Assembly - Remove

   Note for installation

   - When installing, make sure all the connectors are secure.
   - If the audio-navigation was replaced, it may take up to 30 minutes for the navigation system to calibrate and operate correctly.
   - After Installation, **do the System Links in the System Diagnostic Mode** to confirm that there are no problems in the system, then park the vehicle outside, and do the GPS initialization.
3. Audio-Navigation Unit Bracket - Remove
4. **Center Display Unit - Remove**
5. Volume Knob - Remove

   If necessary, remove the knob.
6. All Removed Parts - Install

Install the parts in the reverse order of removal.

CENTER DISPLAY UNIT REMOVAL AND INSTALLATION

Removal and Installation

NOTE: ℹ Where icon is shown, for further information see below.

Procedure

NOTE: **Numbered call-outs in figure pertain to list numbers in following procedure.**

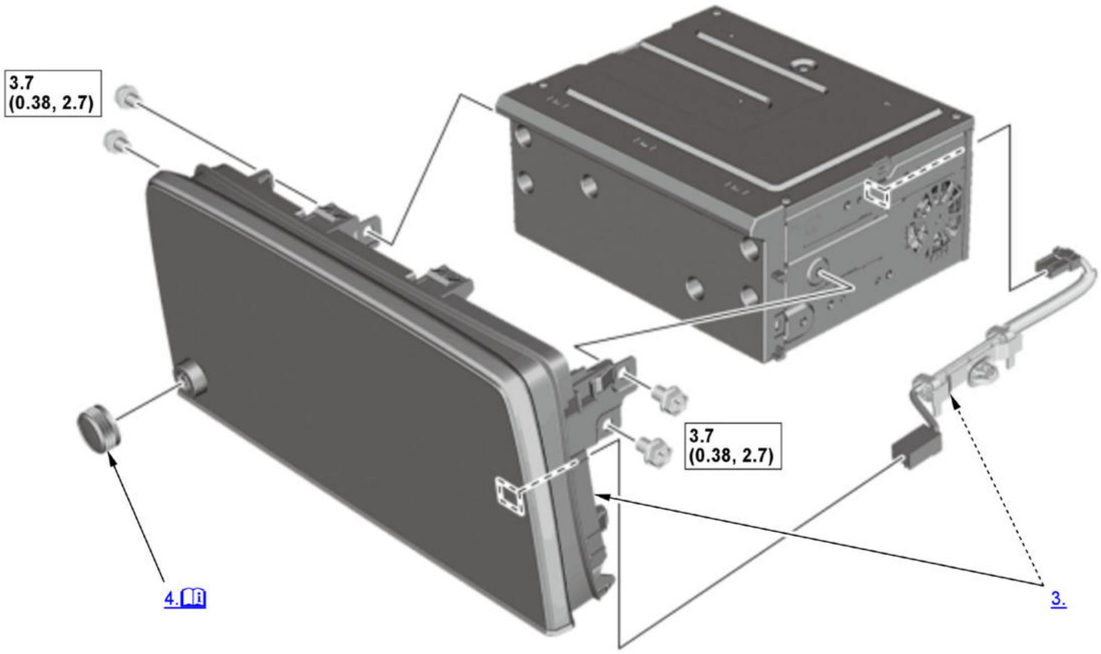

Fig. 9: Exploded View Of Center Display Unit Components
Courtesy of HONDA, U.S.A., INC.

ℹ	Detailed information, notes, and precautions
☐	Torque: N.m (kgf.m, lbf.ft)

1. Audio-Navigation Unit Assembly - Remove (With Navigation)
2. Audio Unit Assembly - Remove (Without Navigation)
3. Center Display Unit - Remove
4. Volume Knob - Remove

   If necessary, remove the knob.

5. All Removed Parts - Install

   Install the parts in the reverse order of removal.

GPS ANTENNA REMOVAL AND INSTALLATION

Removal and Installation

Procedure

NOTE: **Numbered call-outs in figure pertain to list numbers in following procedure.**

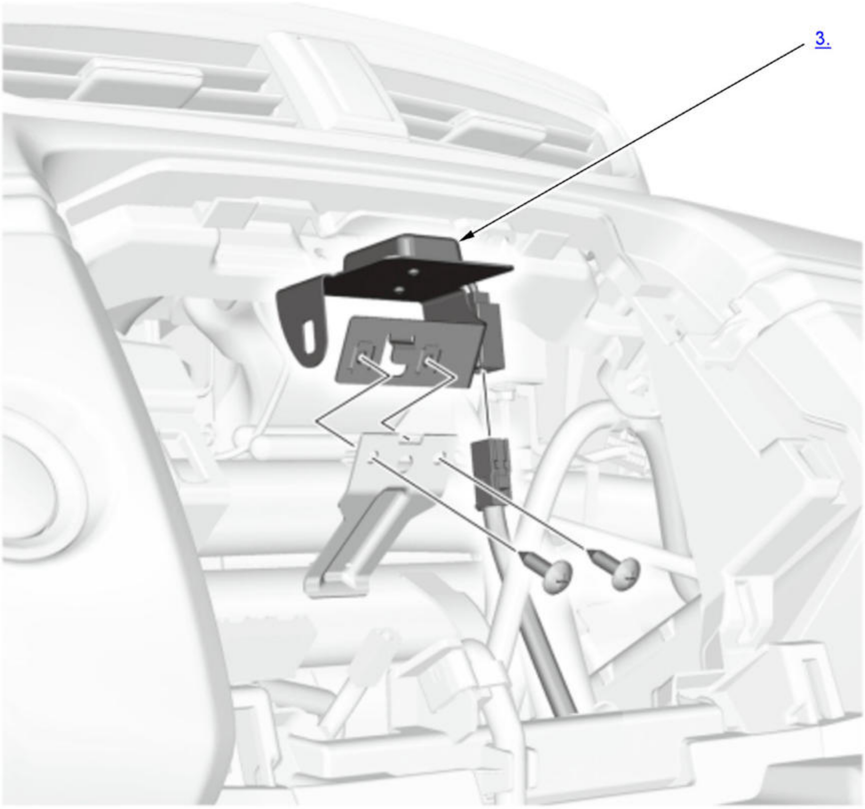

Fig. 10: GPS Antenna Components
Courtesy of HONDA, U.S.A., INC.

1. Audio-Navigation Unit Assembly - Remove (With Navigation)
2. Audio Unit Assembly - Remove (Without Navigation)
3. GPS Antenna - Remove
4. All Removed Parts - Install

   Install the parts in the reverse order of removal.

REARVIEW CAMERA REMOVAL AND INSTALLATION

Removal and Installation

Procedure

NOTE: **Numbered call-outs in figure pertain to list numbers in following procedure.**

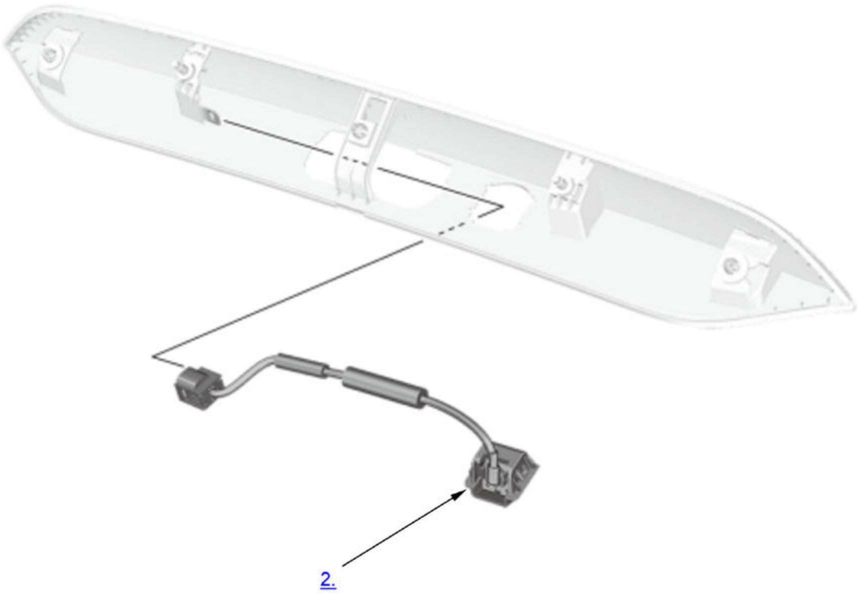

Fig. 11: Rearview Camera Components
Courtesy of HONDA, U.S.A., INC.

1. **Rear License Trim - Remove**
2. Rearview Camera - Remove
3. All Removed Parts - Install

   Install the parts in the reverse order of removal.

ROOF ANTENNA REMOVAL AND INSTALLATION

Removal and Installation

SRS components are located in this area. Review the **SRS component locations** and the **precautions and procedures** before doing repairs or service.

NOTE: 📖 Where icon is shown, for further information see below.

Procedure

NOTE: **Numbered call-outs in figure pertain to list numbers in following procedure.**

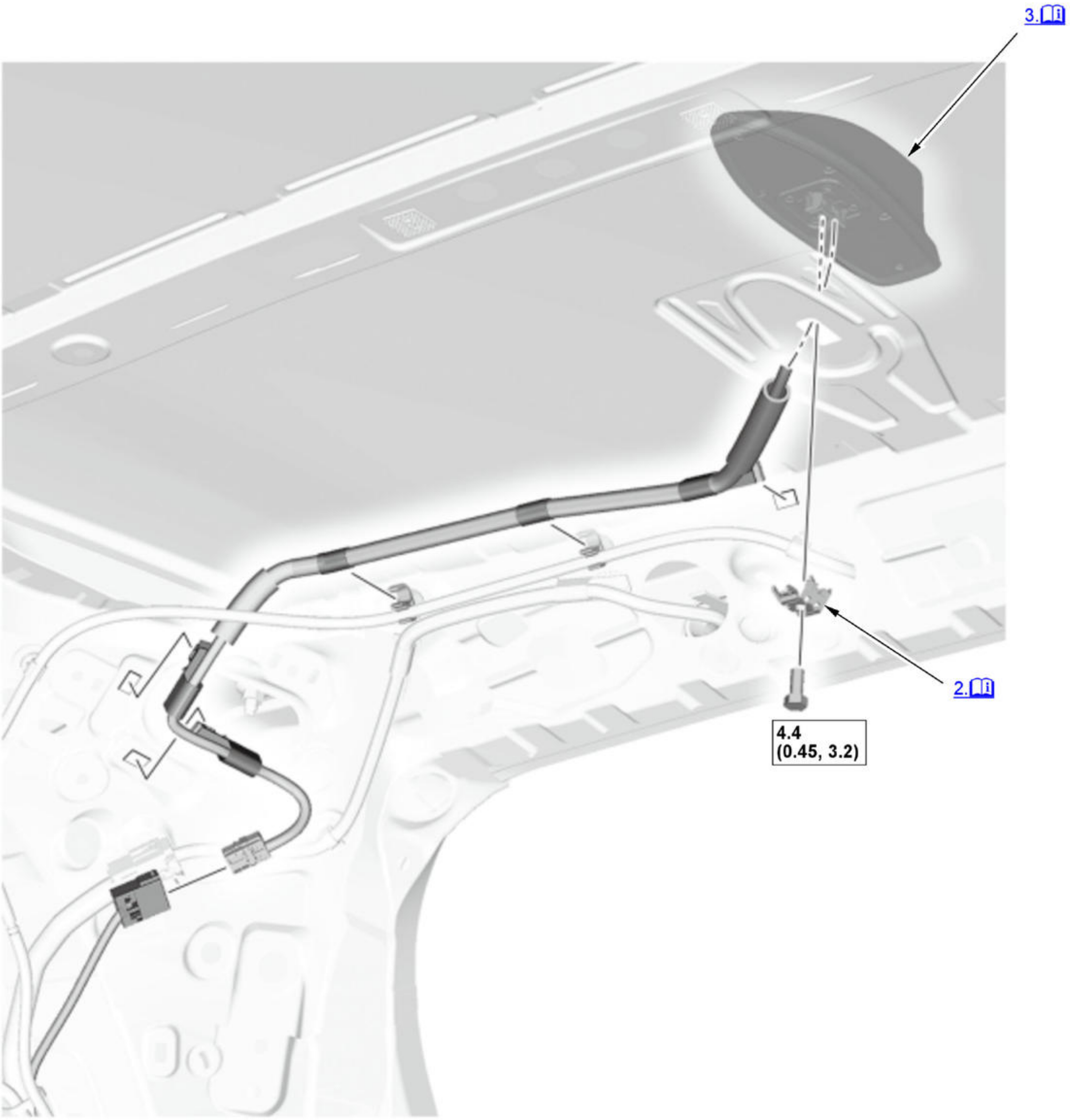

Fig. 12: Roof Antenna Components
Courtesy of HONDA, U.S.A., INC.

📖	Detailed information, notes, and precautions

☐	Torque: N.m (kgf.m, lbf.ft)
☒	Replace

1. **Headliner - Remove**
2. Capture Washer - Remove

   Note for installation

   - When removing the capture washer, replacing with a new one is recommended.
   - In case of reusing the capture washer, perform the shower test to confirm that there is no water leakage.
3. Roof Antenna - Remove

   NOTE: Take care not to damage the washer tube.

4. All Removed Parts - Install

Install the parts in the reverse order of removal.

STEREO AMPLIFIER REMOVAL AND INSTALLATION

Removal and Installation

SRS components are located in this area. Review the **SRS component locations** and the **precautions and procedures** before doing repairs or service.

Procedure

NOTE: **Numbered call-outs in figure pertain to list numbers in following procedure.**

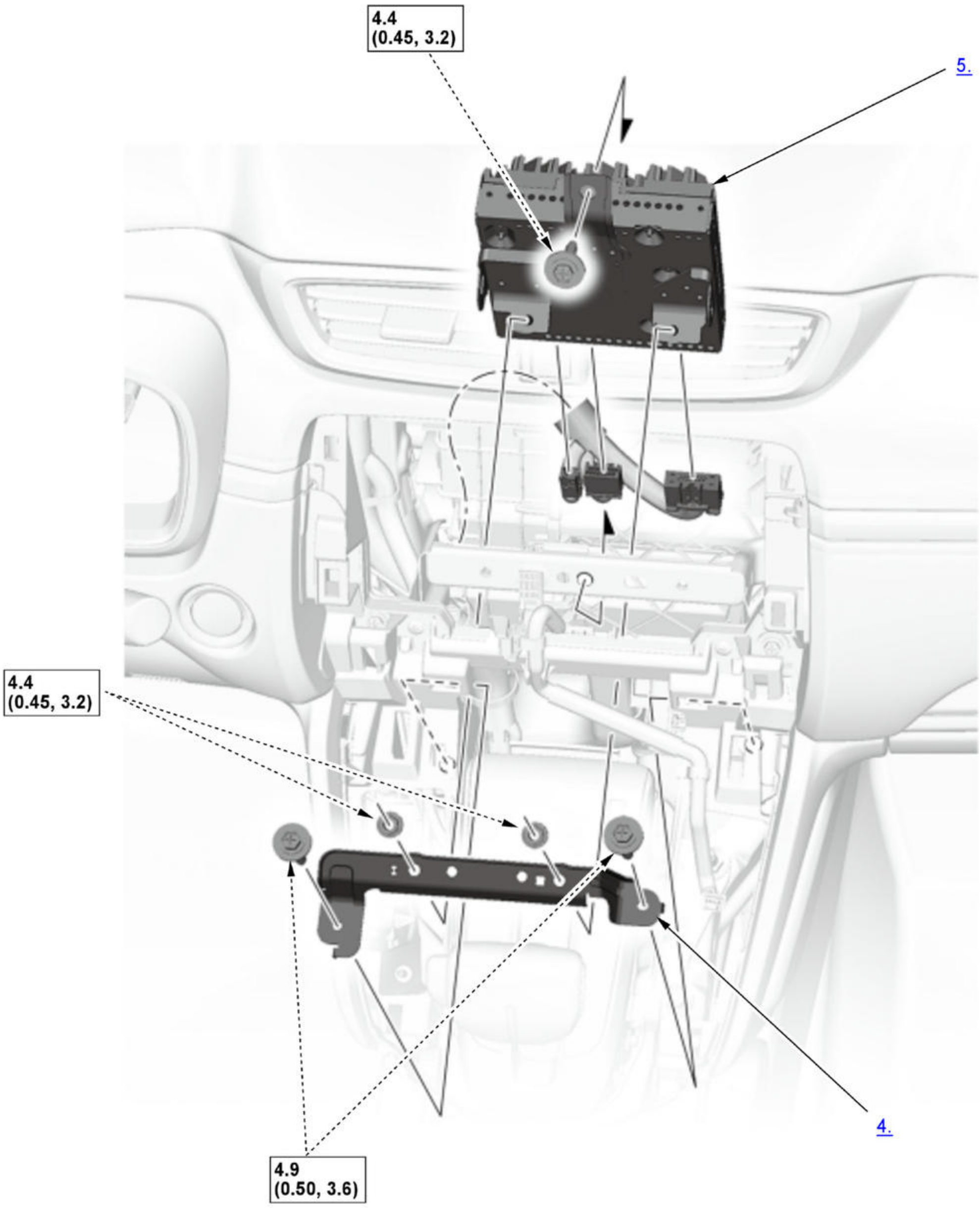

Fig. 13: Exploded View Of Stereo Amplifier Components
Courtesy of HONDA, U.S.A., INC.

	Torque: N.m (kgf.m, lbf.ft)

1. Audio-Navigation Unit Assembly - Remove (With Navigation)
2. Audio Unit Assembly - Remove (Without Navigation)
3. Escutcheon Panel - Remove
4. Stereo Amplifier Bracket - Remove
5. Stereo Amplifier - Remove
6. All Removed Parts - Install

   Install the parts in the reverse order of removal.

TUNER UNIT REMOVAL AND INSTALLATION

Removal and Installation

SRS components are located in this area. Review the SRS component locations and the precautions and procedures before doing repairs or service.

NOTE: If you are replacing the tuner unit, write down the AM/FM radio presets (if possible), and enter them into the new audio-navigation unit or the new audio unit.

Procedure

NOTE: **Numbered call-outs in figure pertain to list numbers in following procedure.**

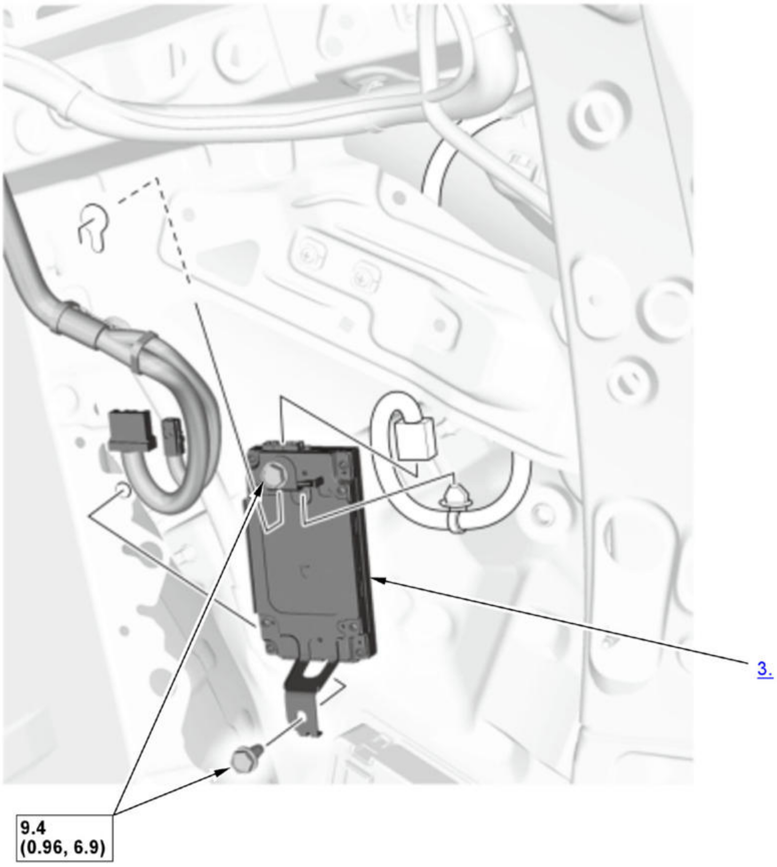

Fig. 14: Tuner Unit Components
Courtesy of HONDA, U.S.A., INC.

	Torque: N.m (kgf.m, lbf.ft)

1. Rear Side Trim Panel (Right Side) - Remove
2. Subwoofer - Remove (With subwoofer)
3. Tuner Unit - Remove
4. All Removed Parts - Install

   Install the parts in the reverse order of removal.

USB ADAPTER HOLDER REMOVAL AND INSTALLATION

Removal and Installation

SRS components are located in this area. Review the SRS component locations and the precautions and procedures before doing repairs or service.

USB Adapter Holder (USB Port A / B)

NOTE: **Numbered call-outs in figure pertain to list numbers in following procedure.**

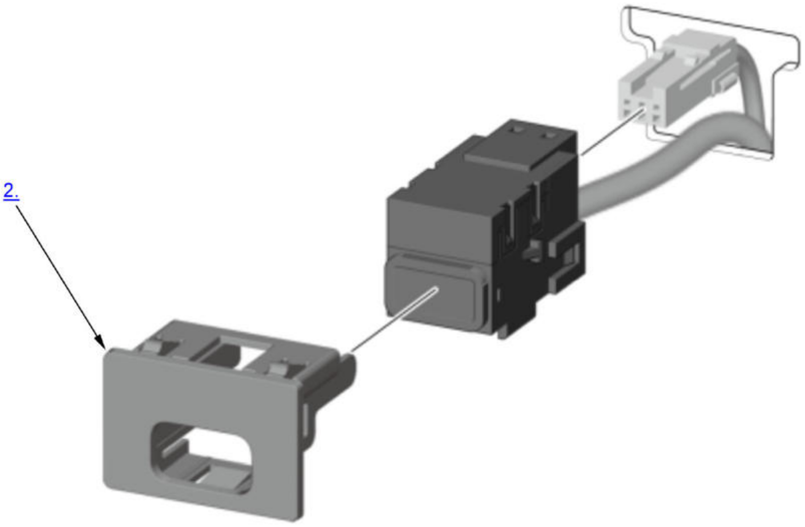

Fig. 15: USB Adapter Holder Components
Courtesy of HONDA, U.S.A., INC.

1. Dashboard Center Lower Panel - Remove
2. USB Adapter Holder - Remove
3. All Removed Parts - Install

   Install the parts in the reverse order of removal.

USB CHARGER UNIT REMOVAL AND INSTALLATION

Removal and Installation

Procedure

NOTE: **Numbered call-outs in figure pertain to list numbers in following procedure.**

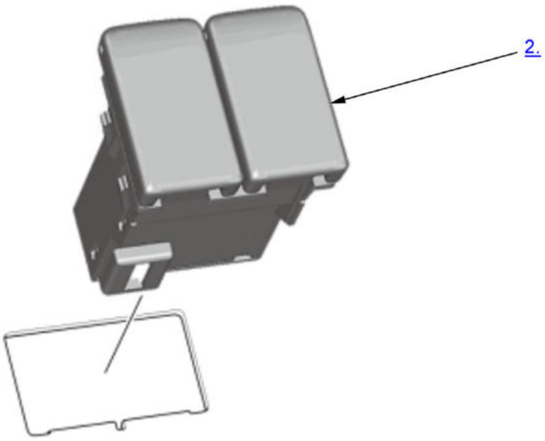

Fig. 16: USB Charger Unit Components
Courtesy of HONDA, U.S.A., INC.

1. Center Console Rear Trim - Remove
2. USB Charger Unit - Remove
3. All Removed Parts - Install

   Install the parts in the reverse order of removal.

REMOVAL, INSTALLATION & TEST

SPEAKER REMOVAL, INSTALLATION, AND TEST

Removal and Installation

NOTE: How to read the torque specifications .

Door Speaker

1. Door Panel - Remove
   - Front door
   - Rear door
2. Door Speaker - Remove

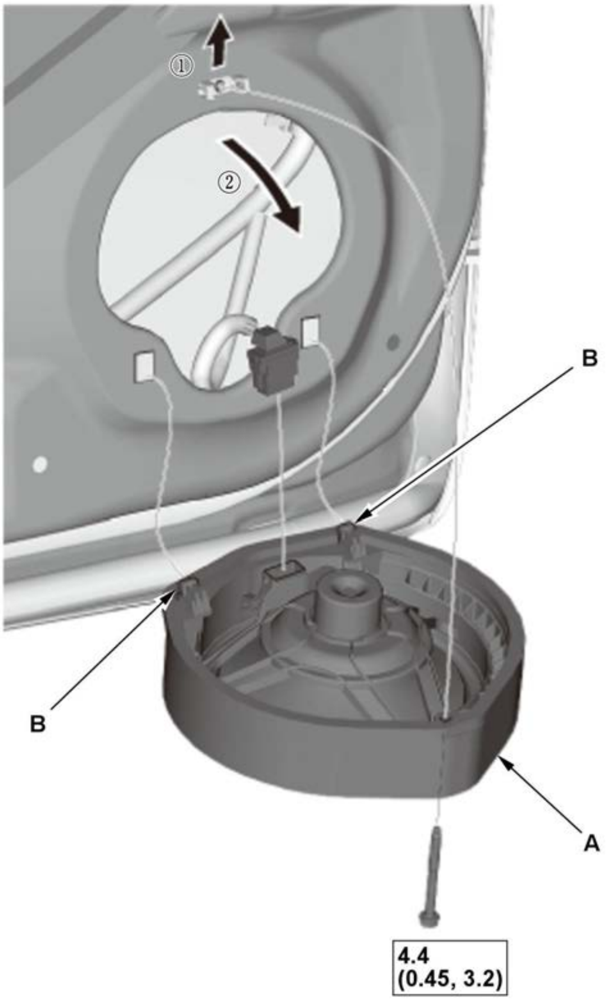	1. Remove the bolt, then lift the door speaker (A) straight up to release the lower clips (B). 2. Disconnect the connector.

3. All Removed Parts - Install

   Install the parts in the reverse order of removal.

Front Tweeter

1. **Mirror Trim - Remove**
2. Front Tweeter - Remove

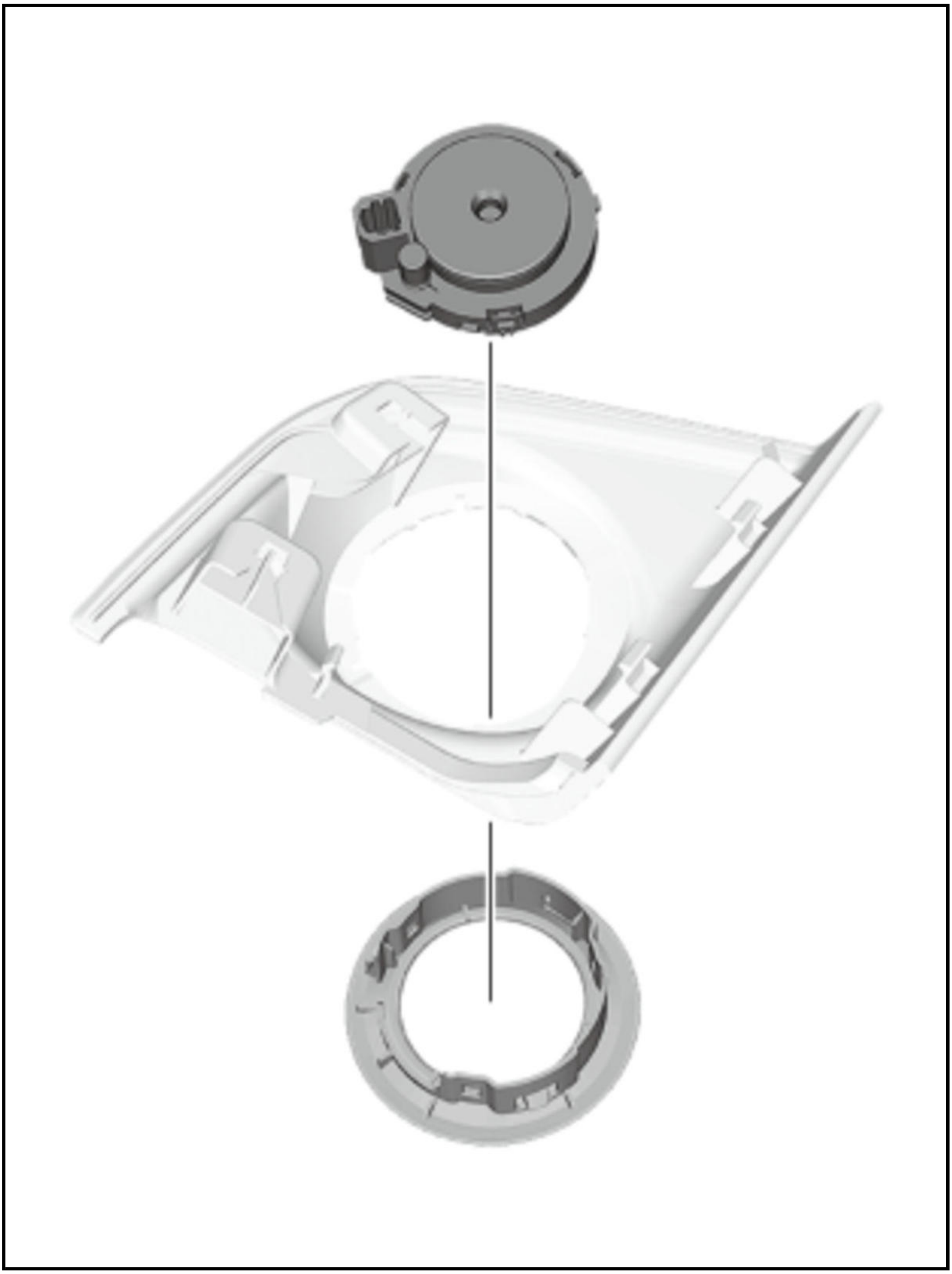

3. All Removed Parts - Install

   Install the parts in the reverse order of removal.

Rear Tweeter

1. **Rear Door Panel - Remove**
2. Rear Tweeter - Remove

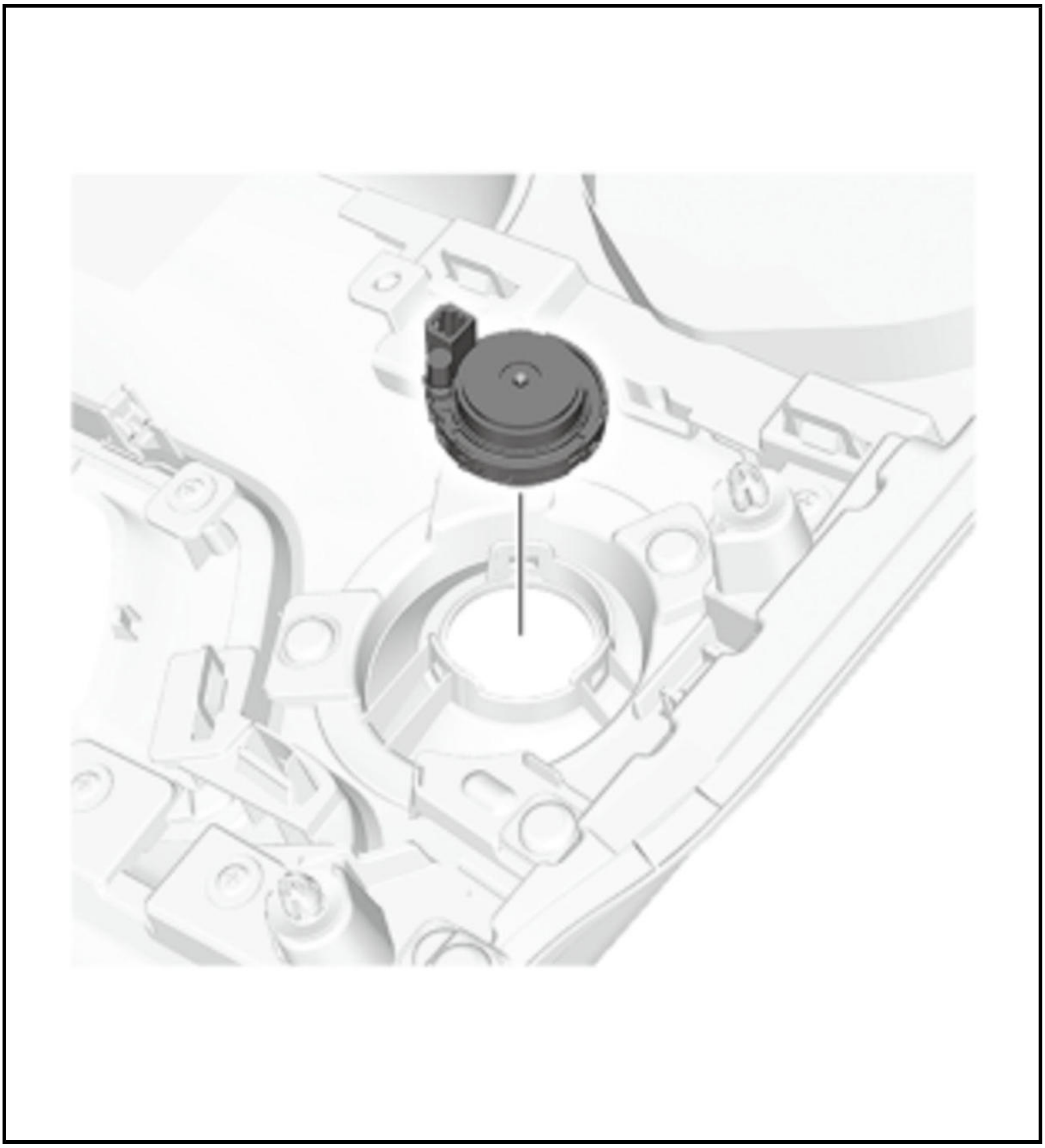

3. All Removed Parts - Install

   Install the parts in the reverse order of removal.

Subwoofer

1. **Rear Side Trim Panel (Right Side) - Remove**
2. Subwoofer - Remove

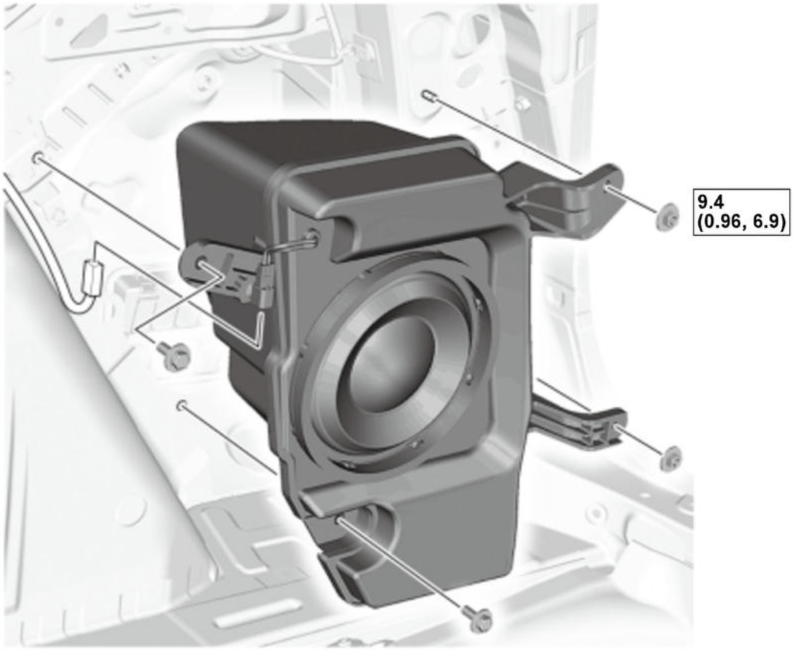

3. All Removed Parts - Install

   Install the parts in the reverse order of removal.

Test

Door Speaker, Rear Speaker

1. Door Speaker, Rear Speaker - Test

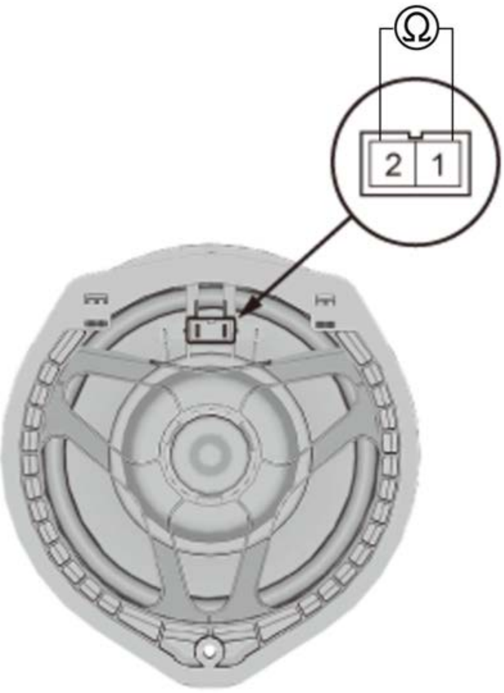	1. Measure the resistance between terminals No. 1 and No. 2. There should be about 4 Ω. 2. If the resistance is not as specified, replace the door speaker.

Tweeter

1. Tweeter - Test

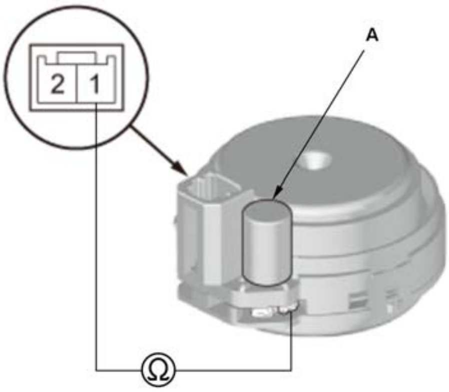	1. Measure the resistance between terminal No. 1 and the outside terminal of the capacitor (A). There should be about 4 Ω. Also visually check the capacitor for damage. 2. If the resistance is not as specified, replace the tweeter.

Subwoofer

1. Subwoofer - Test

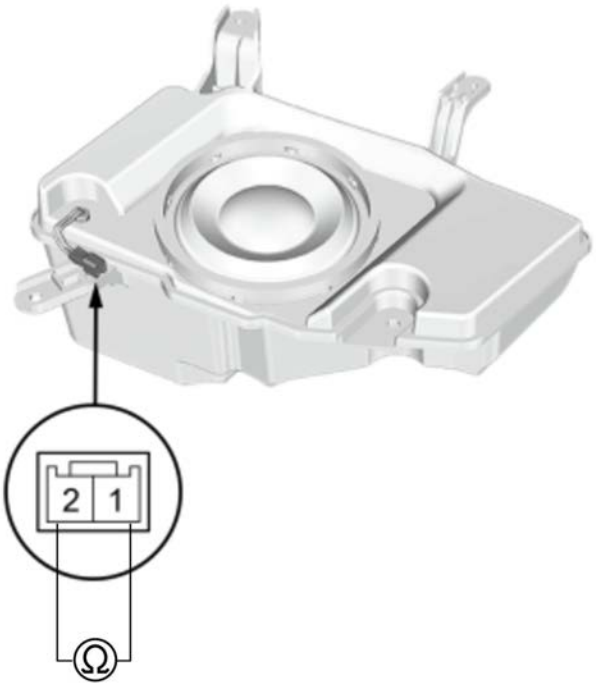	1. Measure the resistance between the terminals No. 1 and No. 2. There should be about 2 Ω. 2. If the resistance is not as specified, replace the subwoofer.

DESCRIPTION & OPERATION

AUDIO SYSTEM DESCRIPTION

Basic Configuration

The Audio and Visual system consists of a digital audio/video playback function, communication to the customer's device, and displaying the driver's support information.

Audio Unit

The audio unit acts as a processor which includes playback functions of the USB, BluetoothB® audio, iPod for music, and an internal radio tuner or an external radio tuner that is controlled with digital communication. Select audio functions from audio unit buttons, touch screen (touch the display directly to select items on the screen), or the audio remote switch (on the steering wheel).

There are two kinds of audio units according to a vehicle model:

B	Display Audio type	Color Audio type
With Navigation	o	x
Without Navigation	o	o

Display Audio type

The audio unit acts as a head unit that controls external audio/visual system related devices which do not have an audio disc player and a control module. The center display unit acts as an user interface and is located on the front of the audio unit. An antenna for BluetoothB® communication, and an antenna for wireless LAN communication are built into the audio unit. Each function regarding the system is installed in the audio unit as applications. As an advanced feature, a smartphone linkage and video playback functions are available.

An audio unit with navigation function is referred to as an audio-navigation unit. This unit has a built-in gyro sensor and a navigation map data (**refer to the Navigation System Description**).

The SD card is a storage media that saves the navigation map data. The audio-navigation unit and the SD card cannot be substituted separately because the SD card module is not a removable type.

Both the audio-navigation unit and the audio unit have a GPS antenna circuit. The GPS information is used for a function that needs vehicle location other than the navigation function.

For vehicles with Sirius XMB® radio, the XM receiver circuit is built into the audio unit circuit. The XM satellite/terrestrial signal is received by the XM antenna built-in the roof antenna. The audio unit holds XM presets and settings even when the 12 volt battery is disconnected (AM/FM presets are stored in the tuner unit).

There are two audio systems available for the display audio type:

- The system with stereo amplifier: An external stereo amplifier (10 channels output) and 10 speakers are equipped. The audio unit outputs a digital audio signal to the stereo amplifier.
- The system without stereo amplifier: 8 speakers are equipped. In this case, a power amplifier is built into the audio unit.

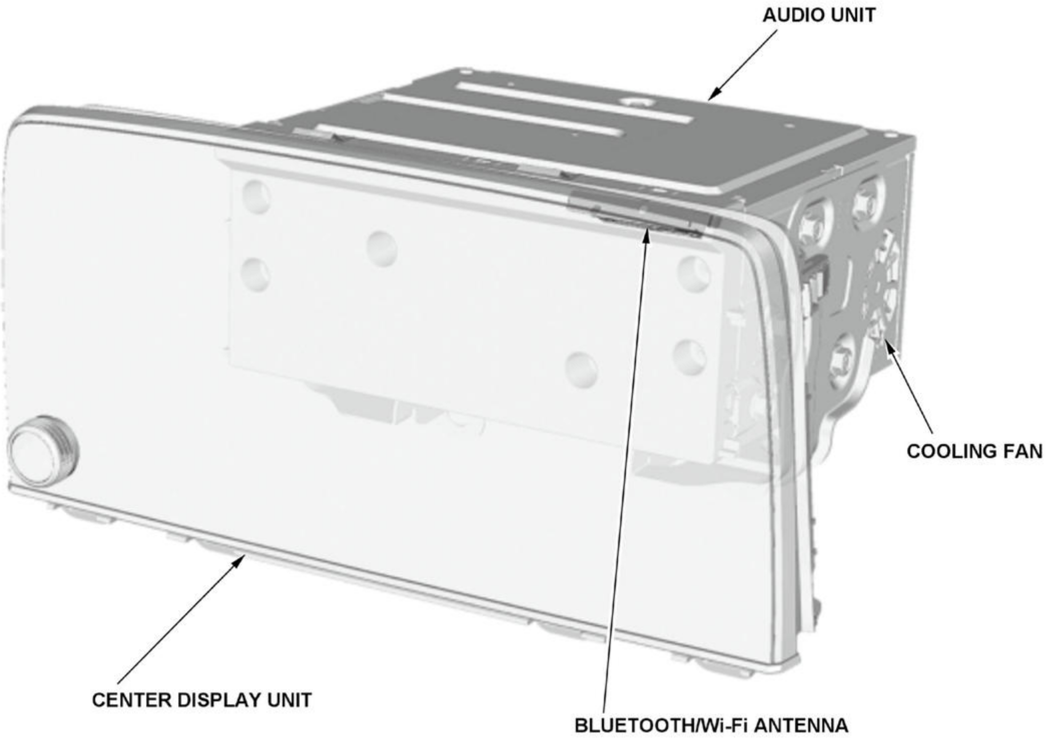

Fail-Safe Function

The audio unit performs a fail-safe control when the system detects an abnormal high temperature in the unit:

Built-in cooling fan on/off control: When the audio unit temperature is too high, the audio unit turns the cooling fan on until the temperature cools down.

Self-Diagnostic Function

The audio unit has a self-diagnostic function to check the failure of the audio unit or its connection. Additionally, the audio unit has original hard error codes that can be displayed on the diagnostic screen to identify the failure part.

Forced Rebooting Function

If the system is frozen, and the screen does not respond, you can attempt rebooting the audio unit by pressing and holding the AUDIO POWER (⏻) button for 5 seconds.

Center Display Unit (Display Audio type)

The center display unit has a 7-inch WVGA color TFT LCD that is driven by IPS (In-plane Switching) system with an electrostatic capacitive touch panel. The surface of the display is given an anti-glare coating. This unit displays the navigation map, vehicle information, various menu screens, and a rearview image, and can operate the audio, navigation, and HFL systems by touching the display. The HVAC information is displayed if the audio unit receives a feedback signal from the climate control unit via the B-CAN.

Controls

The center display unit turns on when the DISP CONT signal changes from OFF to ON.

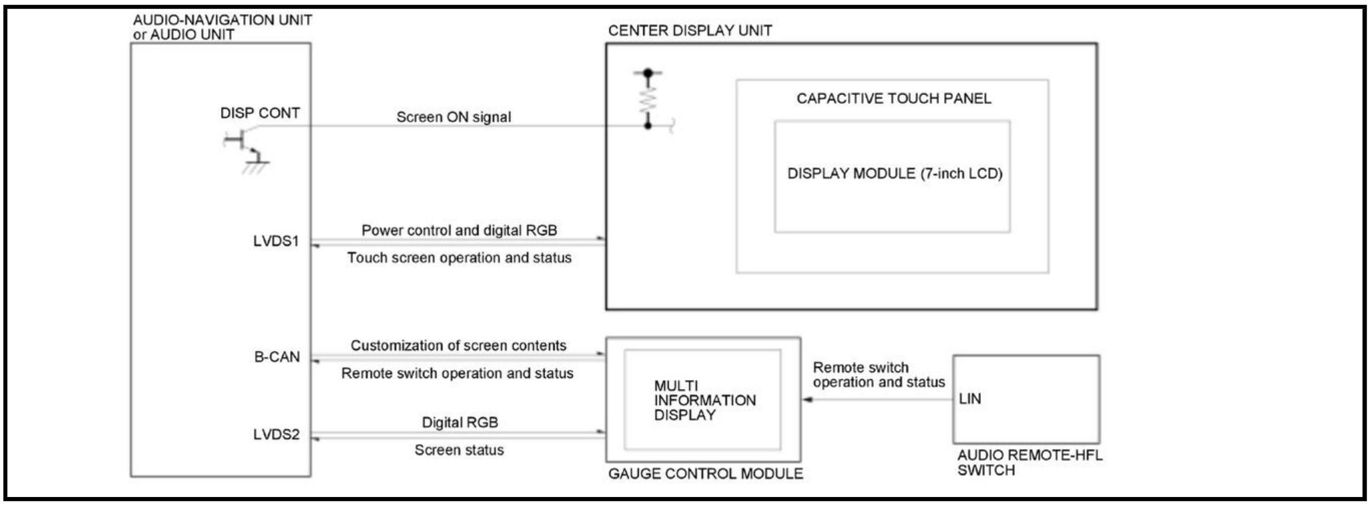
AUDIO-NAVIGATION UNIT or AUDIO UNIT
CENTER DISPLAY UNIT
DISP CONT
Screen ON signal
CAPACITIVE TOUCH PANEL
DISPLAY MODULE (7-inch LCD)
LVDS1
Power control and digital RGB
Touch screen operation and status
B-CAN
Customization of screen contents
Remote switch operation and status
MULTI INFORMATION DISPLAY
Remote switch operation and status
LIN
LVDS2
Digital RGB
Screen status
GAUGE CONTROL MODULE
AUDIO REMOTE-HFL SWITCH

Fail-Safe Function

The center display unit performs a fail-safe control when the system detects an abnormal high temperature in the unit:

- When the center display unit temperature rises over about 86B°F (30B°C), the display brightness dims gradually.
- When the center display unit temperature rises 158B°F (70B°C), the display brightness dims to 75% of normal brightness.
- When the center display unit temperature rises over 176B°F (80B°C) for 8 minutes, the center display unit sends the error status to the audio unit, and the center display unit displays the error message and then turns off (the background system stays on).
- When the center display unit temperature drops to below 167B°F (75B°C), the display back light turns on, and the display brightness returns gradually as the temperature drops.

Self-Diagnostic Function

The audio unit can check the center display unit status by performing the System Diagnostic Mode.

Electrostatic Capacitive Touch Panel

To use the touch screen, bring your finger close to the screen or gently touch it with your finger. The touch sensor senses the change of the electrical charge when your finger is close to the screen and detects the position of the electrical charge. Use only a gentle touch to select or move the screen image. A hard finger press is not necessary. The screen cannot sense your touch if you wear heavy gloves, use a fingernail, or a pen.

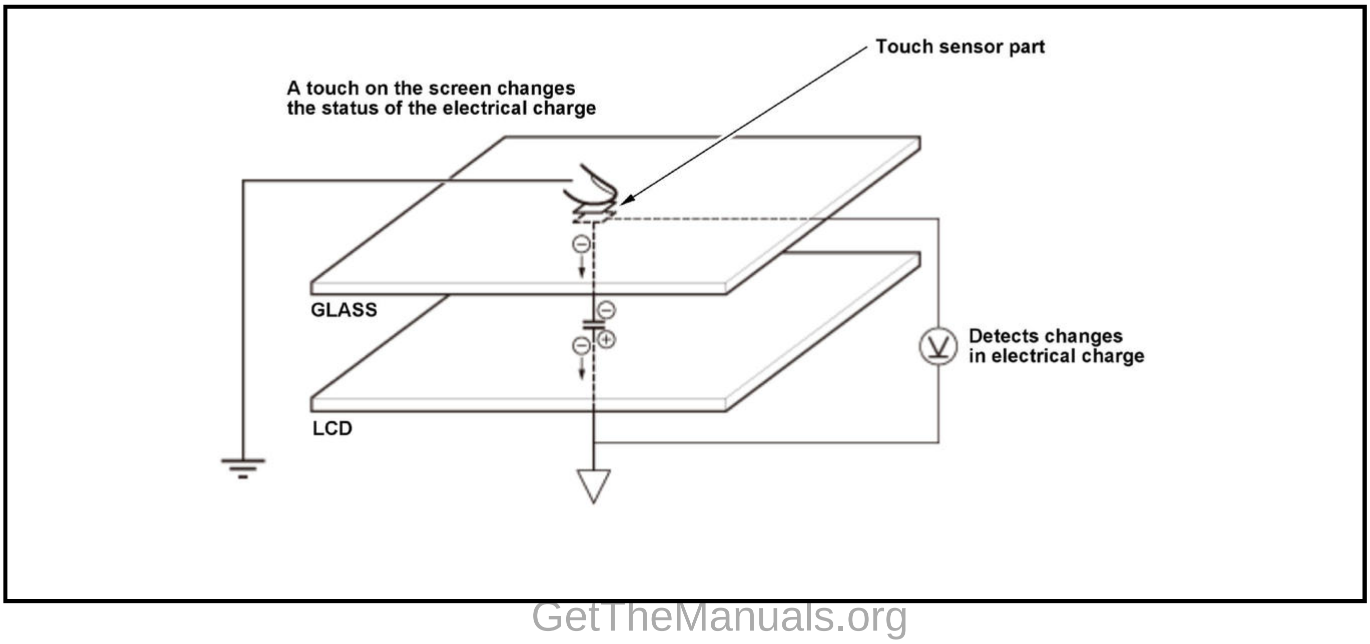
Touch sensor part
A touch on the screen changes the status of the electrical charge
GLASS
Detects changes in electrical charge
LCD

Color Audio type

The audio unit is a simple component which does not have an audio disc player, and has a 5-inch VGA color TFT LCD panel. The screen is not a touch sensitive and displays audio and HandsFreeLink (HFL) information. Additionally, the screen shows the rearview image when the transmission is shifted to the R position/mode. The audio panel has an illumination dimming function that is controlled by the B-CAN information. An antenna for BluetoothB® communication is built in the audio unit. As an advanced feature, the HFL function includes an external microphone that located in the roof console.

The AM/FM (RBDS) radio tuner is built into the audio unit. This unit holds AM/FM presets even when the 12 volt battery is disconnected.

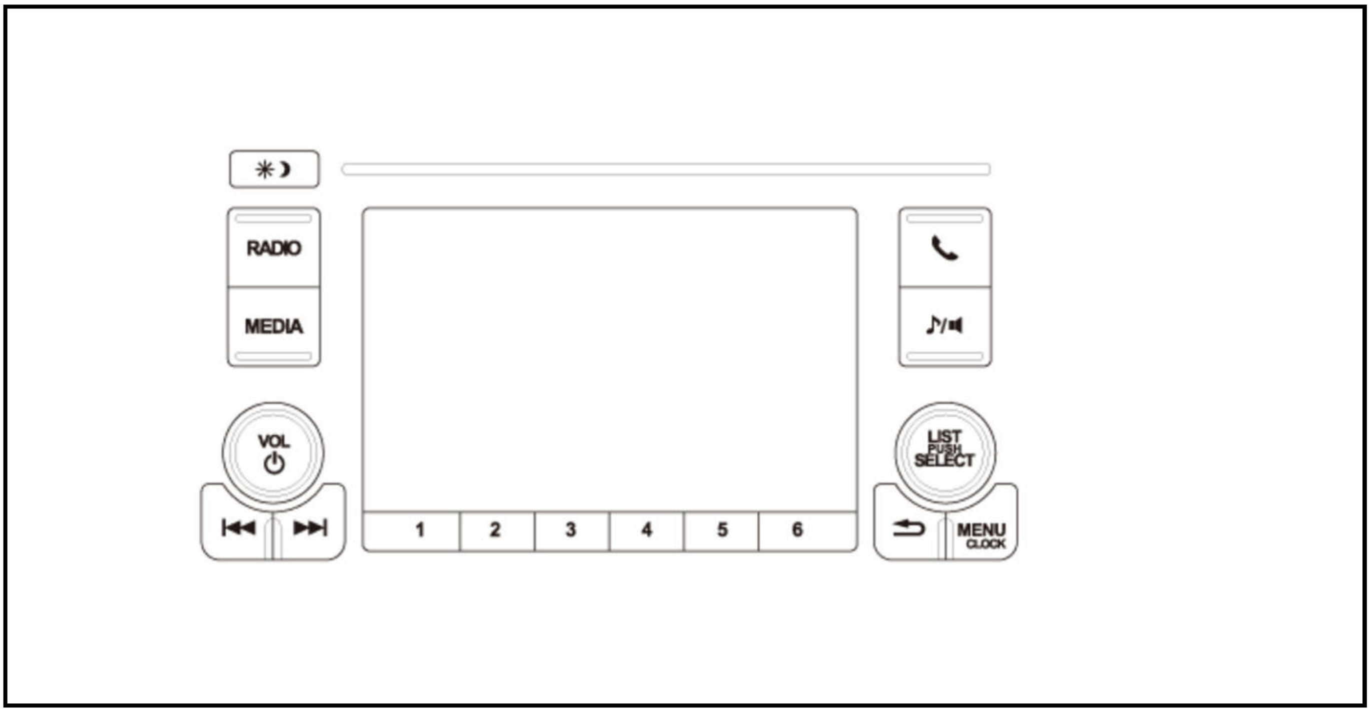

Fail-Safe Function

The audio unit performs the fail-safe control when the system detects an abnormal high temperature in the unit:

- When the surface of the LCD temperature rises over 194B°F (90B°C), the display back light turns off.
- When the surface of the LCD temperature drops to below 189B°F (87B°C), the display back light turns on.

Self-Diagnostic Function

The audio unit has the self-diagnostic function to check the failure of the audio unit or its connection.

Audio System Functions

Anti-Theft Function (With Audio System Theft Protection)

The audio unit has an anti-theft protection function separate from the security system of the vehicle. If the audio unit is removed from the vehicle, the audio unit requires a procedure to unlock the security system in order to use it again after the audio unit is reconnected.

There are two kinds of anti-theft mode release procedures:

- While displaying the security code entry screen or the conformation screen of the anti-theft system, press and hold the AUDIO POWER (⏻) button for at least 2 seconds. The audio unit automatically exits the anti-theft mode.

- While displaying the security code entry screen, enter the 5-digit anti-theft code.

The System Diagnostic Mode (includes checking hard error codes) can be used even if the audio unit is in the anti-theft mode.

If you substitute the audio unit into another vehicle, you must either enter the anti-theft code or perform the anti-theft skip mode in the System Diagnostic mode (This mode will release the anti-theft code for 150 seconds).

Muting Logic

The outline of the audio interruption function is shown in the following table.

With Stereo Amplifier

Contents	Audio Output			
	Front CH (driver's side)	Front CH (passenger's side)	Rear CH	Subwoofer CH
System beep	Beep and audio	Beep and audio	Audio	Audio
Pressing TALK/BACK buttons	Feedback output	Muted	Muted	Muted
Guidance	Guidance output and attenuated audio	Attenuated audio	Attenuated audio	Attenuated audio
HFL	HFL output	HFL output	Muted	Muted
HFL and Guidance	Guidance output	HFL output	Muted	Muted

Without Stereo Amplifier

Contents	Audio Output		
	Front CH (driver's side)	Front CH (passenger's side)	Rear CH
System beep	Beep and audio	Beep and audio	Audio
Pressing TALK/BACK buttons	Feedback output	Muted	Muted
Guidance	Guidance output and attenuated audio	Attenuated audio	Attenuated audio
HFL	HFL output	HFL output	Muted
HFL and Guidance	Guidance output	HFL output	Muted

Speed-Sensitive Volume Compensation (SVC)

All audio systems are equipped with speed-sensitive volume compensation (SVC). The audio unit receives the vehicle speed pulse (VSP) from the gauge control module (B-CAN). The system processes the speed input and increases the audio system volume level as the vehicle speed increases to compensate for the interior noise that occurs at higher speeds. When the vehicle slows down, the volume returns to its normal level. For vehicles with a stereo amplifier, SVC function is controlled by the stereo amplifier. The SVC has four settings: SVC OFF, SVC LOW, SVC MID, and SVC HIGH that can be adjusted using the audio unit.

Operation Restriction

The audio unit has a function that restricts certain operations of audio and visual systems that may affects safe driving.

Clock Function

The audio unit has a real time clock circuit that operates the clock even if the vehicle is in the OFF (LOCK) mode. Also, the audio unit (display audio type) can adjust the internal clock by linking a smartphone. Additionally, the audio unit with a GPS antenna can display clock information by receiving the GPS signal.

USB Connection

For vehicles with an audio unit (display audio type), two USB ports are equipped for an external device input and a smartphone connection. The USB port A is based on the specification of USB Battery Charging 1.2 (BC 1.2) that supports high-speed charging of the USB device. The audio unit can detect the USB device type (BC 1.2 or not), and change the charging mode automatically. The USB port B supports charging to USB devices by a 1.0 A electric supply.

For vehicles with an audio unit (color audio type), a USB port is equipped for an external device input. The USB port supports charging to USB devices by a 1.0 A electric supply.

USB Audio

The audio system can play digital music from portable audio players, a USB drive, etc. When the device is plugged into the vehicle's USB port, and the vehicle is turned to the ACCESSORY mode, the audio unit begins to communicate with the connected USB device, and to supply the VBUS power. The audio unit controls the device when searching and playing the files. Not all players and player functions work with the USB adapter. Please see the Owner's Manual for more information.

Supported Devices

- Supports for USB Mass storage class/Bulk-only transport.
- USB 2.0 Full-speed capable.
- At least 256 MB storage capacity.
- USB formatted to be compatible with Windows-based operating systems.
- If the USB has a security feature, like write protection, it must be turned off.

There are many different USB devices, manufacturers, and configurations with new devices being released every day, which makes it impossible to test all USB devices with the audio system. Even if the USB device has all these requirements, it may not be compatible.

Hard drives do not support overwriting the data for the track order, which is why they are not recommended.

When you disconnect a USB device, the data for the track order remains in the audio unit's memory so when you reconnect the same USB device, the audio unit continues playing from the location where it was disconnected. If a new USB device is connected, the data for the track order is rewritten and you need to select the album or music file.

BluetoothB® Connection

The audio unit can be paired with a compatible cell phone or a device for BluetoothB® communication. Pairing procedures vary by the connection history and BluetoothB® version of the cell phone or the device. Refer to the Owner's Manual.

The audio unit supports BluetoothB® Ver 4.0+EDR (Ver 2.1+EDR*). BluetoothB® enables audio streaming, wireless play back on an audio device, hands-free calling with a cell phone, data communication, and phone book loading.

*: Color audio type

BluetoothB® Audio

BluetoothB® audio allows approved BluetoothB® cell phones equipped with music function to play music via the vehicle's audio system using a BluetoothB® technology. You can control the cell phone's music player remotely using the wireless connection.

- You can play music stored in your cell phone using the wireless connection.
- You can choose the next song, a previous song and resume/pause via the wireless connection.

NOTE: Not all cell phones support the BluetoothB® audio function.

Supported Devices

- BluetoothB® music phones that support A2DP 1.2 and AVRCP 1.0, 1.3, and 1.4.
- BluetoothB® adapters for portable music devices including iPod are not supported.

NOTE: Availability of the functions depends on the connected cell phone.

Wireless LAN Connection (Display Audio type)

The audio unit supports wireless LAN connection based on the IEEE 802.11 a/b/g/n standard. The audio unit can connect the device that has a function as a Wi-Fi access point.

Video Playback Function (Display Audio type)

The audio system can play digital compressed video from a HDMI device or a USB device (MP4 is supported).

HD Radio (TM) (Display Audio Type)

HD Radio (TM) is a crystal clear digital audio broadcast by local radio stations. There is no charge for HD radio. Simply tune to your favorite station, and if the station is broadcasting with HD Radio (TM) technology, then the audio unit will automatically pick up the digital signal, and begin playing the crystal clear, subscription free audio. Refer to your Owner's Manual to determine how your particular receiver indicates HD Radio (TM) reception and how to transition from the main program to the multicast program(s).

- The HD1 channel acquires the analog station first and then blends with the digital signal. Therefore, the digital audio may have a short delay.
- There is no analog signal available on the HD2/HD3 channels. Therefore, there is a short delay while decoding the digital audio. Audio will begin playing when available.
- Go to www.hdradio.com for stations in the area to verify correct operation on the station.

Song By Voice (TM) (Display Audio Type)

A customer can use the Song By Voice (TM) feature to select and play the audio files in an iPod or a USB device with voice commands.

When an iPod or a USB device is connected to the audio unit, the unit makes a dictionary from the album name, folder name, artist name, track name, and the file name.

If a different device is connected, or the customer updates the files on the connected device, a new dictionary is created.

Smartphone Linkage Function (Display Audio type)

This function helps ensure the safe use of a smartphone while driving. Connect a smartphone to the audio unit to use it. Connection methods vary depending on carriers.

When using the navigation function via a smartphone, the audio unit can display the navigation map screen that is in the connected smartphone. In this case, the GPS signal is received by the audio unit, and the vehicle signals are received from the F-CAN and the B-CAN as information of vehicle position tuning.

When using the voice recognition function via a smartphone, the HFL microphone in the roof console picks up the driver's voice, and sends the voice signal to the smartphone via the audio unit using BluetoothB®.

When the voice recognition is in use, the audio unit sends the fan mute signal to the climate control unit via the B-CAN. The blower fan operating voltage may be reduced depending on the current fan speed.

HondaLink Assist (Display Audio Type)

HondaLink delivers remote services to the vehicle using the customer's compatible BluetoothB® cell phone.

If the SRS airbag is deployed, the SRS unit sends a signal to the audio unit via the F-CAN. Then, the audio unit calls a Public Safety Answering Point (PSAP) automatically using the customer's compatible BluetoothB® cell phone, and sends the vehicle location using Dual-Tone Multi-Frequency (DTMF). The audio unit uses the GPS antenna for tracking the vehicle location.

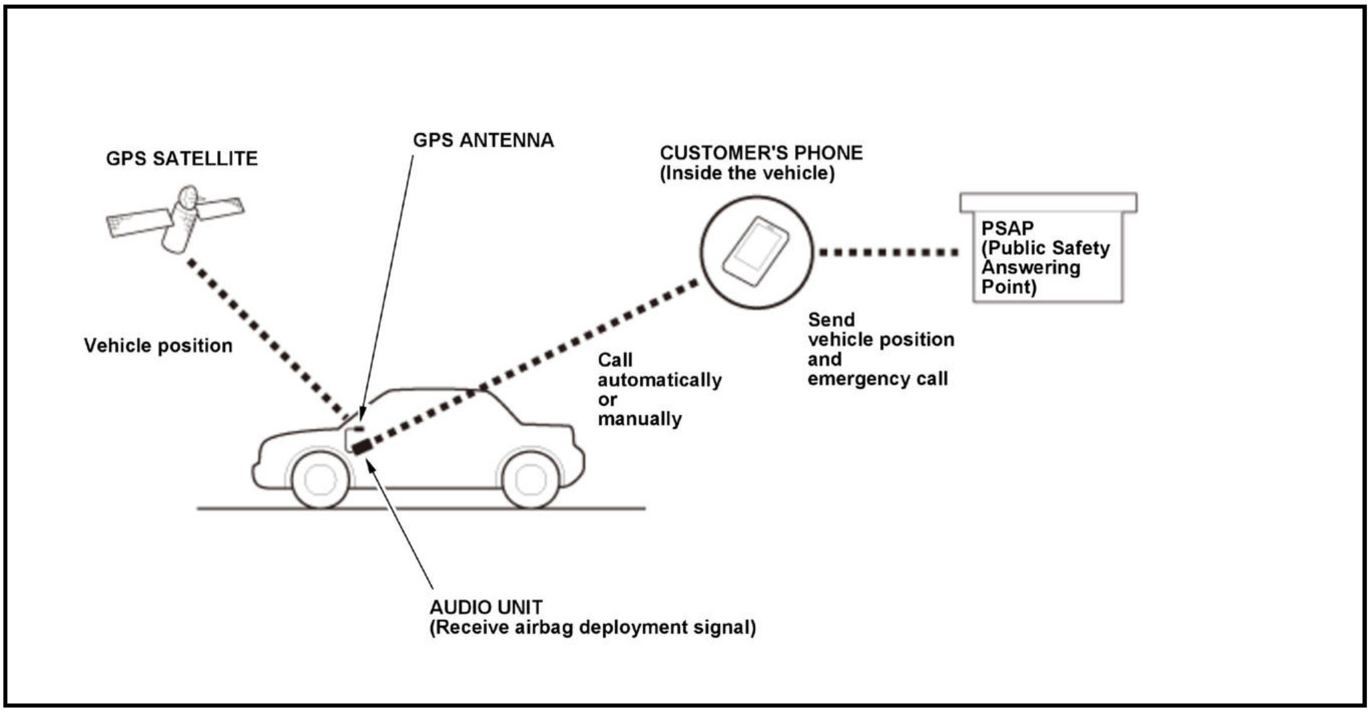
GPS SATELLITE
GPS ANTENNA
CUSTOMER'S PHONE
(Inside the vehicle)
PSAP
(Public Safety
Answering
Point)
Vehicle position
Send
vehicle position
and
emergency call
Call
automatically
or
manually
AUDIO UNIT
(Receive airbag deployment signal)

Tuner Unit

The tuner unit is a separate digital radio tuner interface. Received AM/FM radio waves are processed on the digital signal processor (DSP) and sent to the audio unit via the dedicated digital audio line (SPDIF1). At this time, HD radio (TM) sound signal is separated from normal AM radio sound signal. All of the information about AM/FM reception (includes RBDS information) are sent from the tuner unit via the dedicated serial bus (RS485). This unit holds AM/FM radio frequency presets even when the 12 volt battery is disconnected.

For vehicles with Sirius XMB® radio, the antenna for receiving AM/FM radio waves and satellite/terrestrial (XM) signal uses a roof antenna type. AM/FM radio wave is amplified by the AM/FM antenna amplifier. The sensitivity of the FM wave is raised by the auto gain control. The XM antenna receives satellite signal and terrestrial signal by using the high-gain antenna. Signals are sent to the audio unit via the dedicated single line (SAT/TER).

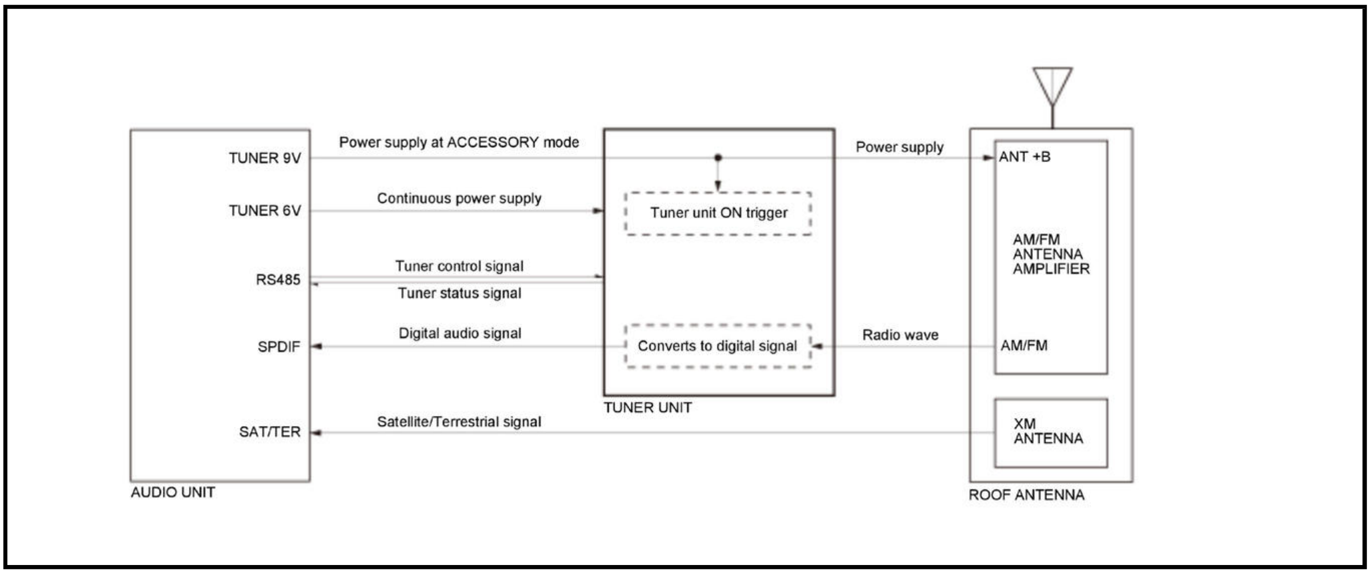
TUNER 9V
TUNER 6V
RS485
SPDIF
SAT/TER
AUDIO UNIT
Power supply at ACCESSORY mode
Continuous power supply
Tuner control signal
Tuner status signal
Digital audio signal
Satellite/Terrestrial signal
Tuner unit ON trigger
Converts to digital signal
TUNER UNIT
Power supply
Radio wave
ANT +B
AM/FM ANTENNA AMPLIFIER
AM/FM
XM ANTENNA
ROOF ANTENNA

Self-Diagnostic Function

The audio unit can check the tuner unit status by performing the System Diagnostic Mode.

Stereo Amplifier

The stereo amplifier is a separated power amplifier interface. Digital audio signal (SPDIF2) that is received from the audio unit is processed on the DSP, and sent to each speaker after amplified by the AMP IC.

The stereo amplifier communicates with the audio-navigation unit or the audio unit using the dedicated serial bus (RS485). This communication includes the vehicle speed (for SVC) information, audio settings, and the MUTE commands. The stereo amplifier adjusts the speaker outputs by oneself which is based on the received information.

The stereo amplifier receives the noise cancelling signal (ANC), guidance signal, and system beep signal via independent lines, and mixes them to the applicable audio lines.

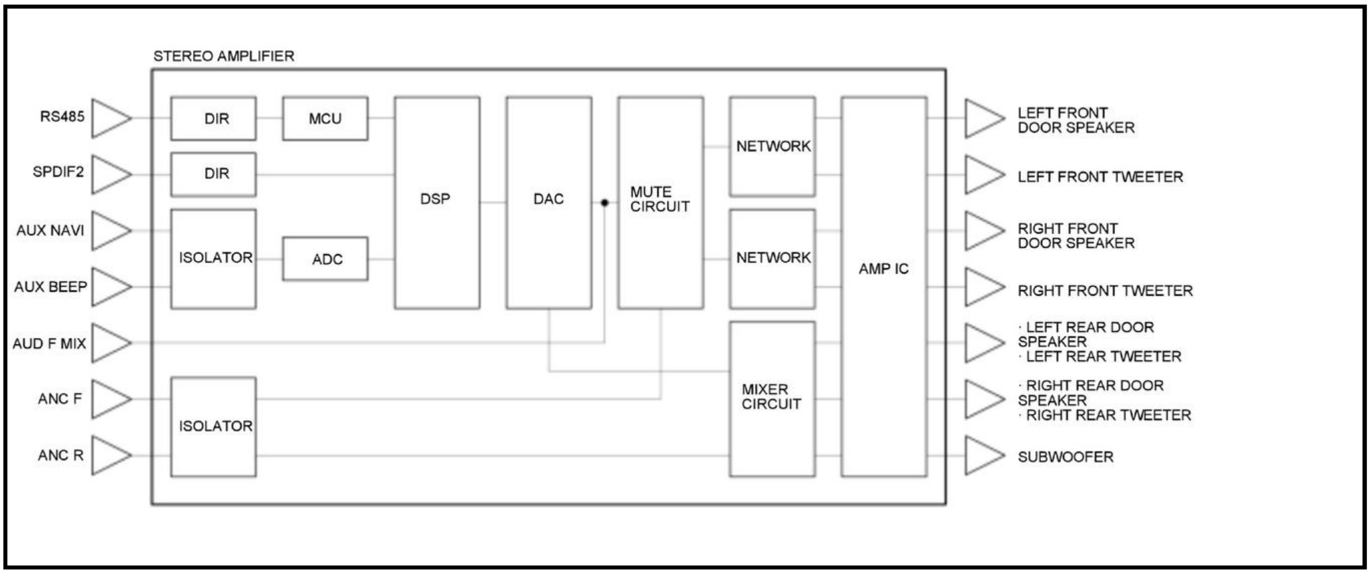
STEREO AMPLIFIER
RS485
SPDIF2
AUX NAVI
AUX BEEP
AUD F MIX
ANC F
ANC R
DIR
MCU
DIR
ISOLATOR
ADC
ISOLATOR
DSP
DAC
MUTE CIRCUIT
NETWORK
NETWORK
MIXER CIRCUIT
AMP IC
LEFT FRONT DOOR SPEAKER
LEFT FRONT TWEETER
RIGHT FRONT DOOR SPEAKER
RIGHT FRONT TWEETER
· LEFT REAR DOOR SPEAKER
· LEFT REAR TWEETER
· RIGHT REAR DOOR SPEAKER
· RIGHT REAR TWEETER
SUBWOOFER

Fail-Safe Function

The stereo amplifier performs a fail-safe control when the stereo amplifier detects an abnormal high temperature. The stereo amplifier then sends the error status to the audio unit, and the center display unit displays an error message which then the stereo amplifier inhibits sound output.

When the temperature cools down, the stereo amplifier outputs the sound again.

Active Noise Cancellation (ANC)/Active Sound Control

Both the active noise cancellation (ANC) and the active sound control are built into the ANC/active sound control unit. Both systems eliminate unwanted sound entering the passenger compartment. There are two microphones mounted in the headliner; one is just behind the front overhead roof console and the other is just ahead of the rear map lights. The microphones capture low frequencies entering the passenger compartment and send a signal to the ANC/active sound control unit. The ANC/active sound control unit then creates the sound wave that is sent out through the speakers to eliminate the unwanted sound.

Active Noise Cancellation (ANC)

The ANC system works to cancel the engine booming sound up to about 2000 RPM (min -1). The ANC/active sound control unit receives the engine speed pulse (NEP) from the PCM and outputs a sine-wave-sound through the audio speakers to cancel the low-frequency noise from the engine. The ANC system also uses two microphones to detect and monitor the low frequency noise in the passenger compartment. The microphones feedback the noise information to the audio unit or the audio-navigation unit which adjusts the speaker output to reduce the noise. The ANC also receives the output of the door open/close signal from the MICU. Whenever any door is opened, the ANC system temporarily stops working. Each signal is sent to the ANC/active sound control unit via F-CAN.

The ANC/Active sound control unit monitors the stereo amplifier output signals to the subwoofer, and if the subwoofer gives a sound more than the rated value, the ANC/Active sound control unit stops ANC control. This control is not for deleting bass of an audio output.

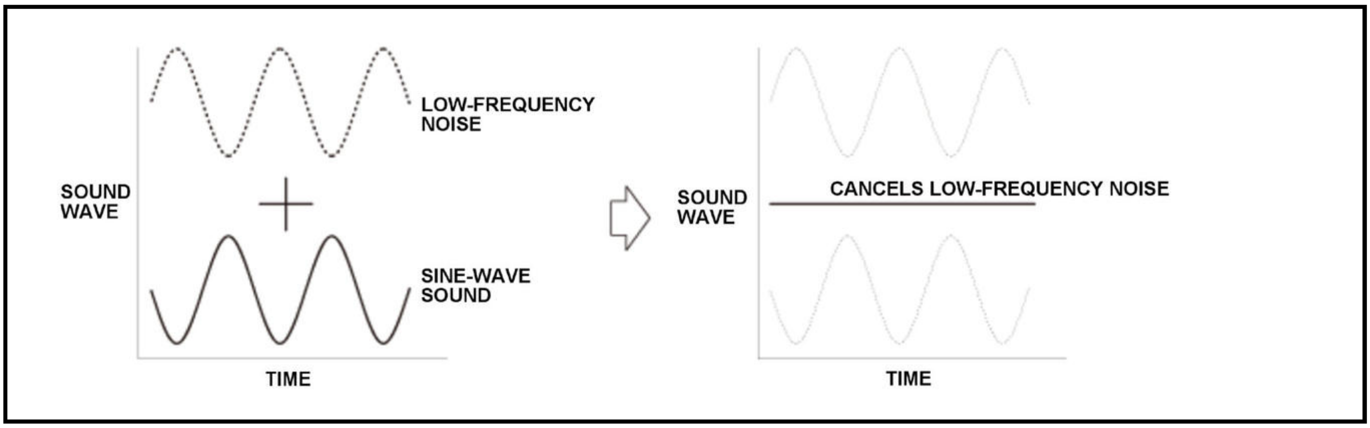

Active Sound Control

The active sound control is the next generation control of eliminating the unwanted sound in the passenger compartment. The active sound control has a much broader range than the ANC system. In addition to the microphones in the headliner, the active sound control also receives the output from the engine speed pulse (NEP) to provide various levels of the sound cancelling depending on changes in the engine RPM.

Front ANC/Active Sound Control Microphone

Receives a voice command, and transmits them to the audio unit or the audio-navigation unit. The microphone unit consists of two microphones. One of the microphones is combined with the ANC/active sound control microphone. It detects the driver's voice and the passenger's voice separately (**refer to the HandsFreeLink System Description for the HFL Microphone functions** .)

Audio Remote-HFL Switch

The audio remote switch and the HFL switch are integrated into the audio remote-HFL switch that uses a digital communication (LIN).

The audio remote-HFL switch has an electrostatic capacitance touch sensor (see Center Display Unit) for specific button operation.

When using any button or the touch switch on the audio remote-HFL switch, the control signal is sent to the audio unit via the gauge control module. The gauge control module reflects the control information of the audio remote-HFL switch as indication to the multi-information display (MID).

If the LIN circuit is open or shorted between the gauge control module and the audio remote-HFL switch, the gauge control module triggers the related DTC.

Audio remote-HFL switch circuit diagram

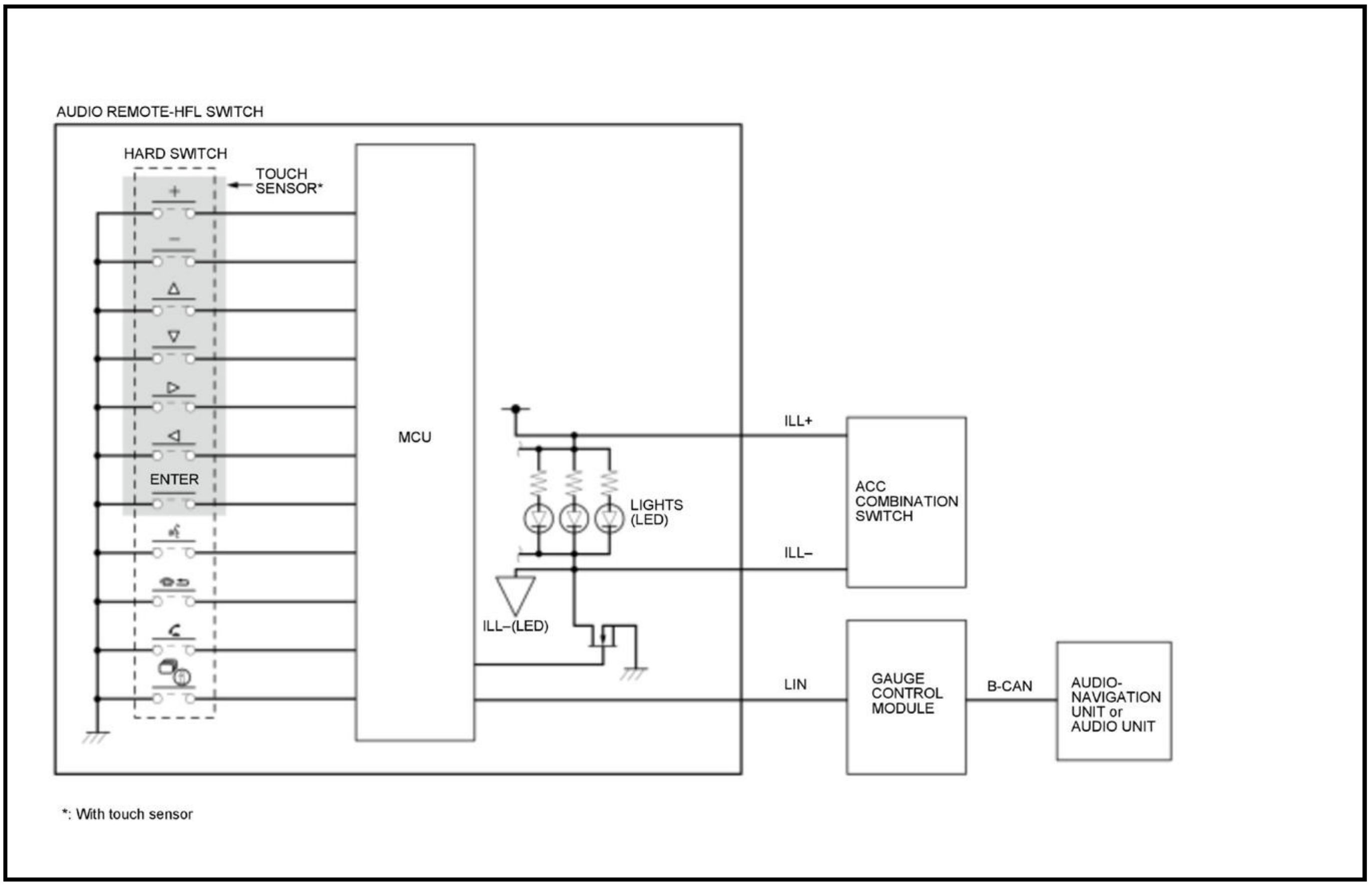
AUDIO REMOTE-HFL SWITCH
HARD SWITCH
TOUCH SENSOR*
+
–
ENTER
MCU
LIGHTS (LED)
ILL+
ILL–
ILL–(LED)
ACC COMBINATION SWITCH
LIN
GAUGE CONTROL MODULE
B-CAN
AUDIO-NAVIGATION UNIT or AUDIO UNIT
*: With touch sensor

Multi-View Rearview Camera

The multi-view rearview camera is a function that provides three different view images to the driver by the camera that is installed in the vehicle's rear end. The view images can be changed by the user. The rearview guide lines change according to the selected view. The rearview camera is connected directly to the audio unit.

- Normal View Mode

  The display shows the standard view.

- Wide View Mode

  The display shows wider visibility than the normal view, which helps the driver confirm any objects approaching from right and left.

- Top Down View Mode

  The display shows the view from the top angle of the vehicle, which helps the driver confirm the distance from any object behind.

Basic Control

The audio unit outputs the power source (CAMERA VCC) to the rearview camera under some conditions:

- Turn the vehicle to the ACCESSORY mode.
-

  - If the audio unit does not detect the BACK LT signal for 5 minutes, the audio unit cancels outputting the power source to the rearview camera.
- Detecting the BACK LT signal (when the transmission is shifted to R position/mode).
-
  - If the audio unit does not detect the BACK LT signal for 5 minutes after cancelling the rearview mode, the audio unit cancels outputting the power source to the rearview camera.
- When using the Rear Camera diagnosis in the System Diagnostic Mode.
-
  - If the audio unit does not detect the BACK LT signal for 5 minutes after exiting the System Diagnostic Mode, the audio unit cancels outputting the power source to the rearview camera.

When the audio unit detects the BACK LT signal for at least 0.5 seconds, the audio unit display turns on the rearview camera image. The display delays for 0.5 seconds to prevent changing the screen image too frequently because of incorrect shift position/mode selection. You can change the view mode by touching the mode icon* 1 or by pressing the SELECTOR knob* 2.

*1: Display audio type

*2: Color audio type

While displaying the rearview image, the LaneWatch function cannot be used because the LaneWatch image can be misunderstood as the rearview image.

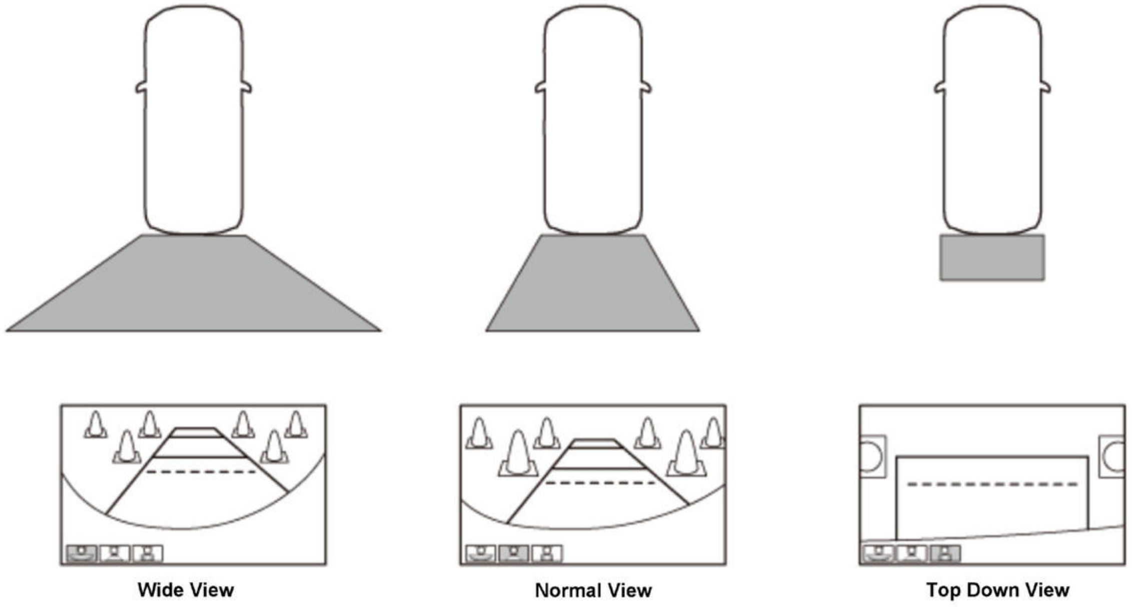

Guidelines type A

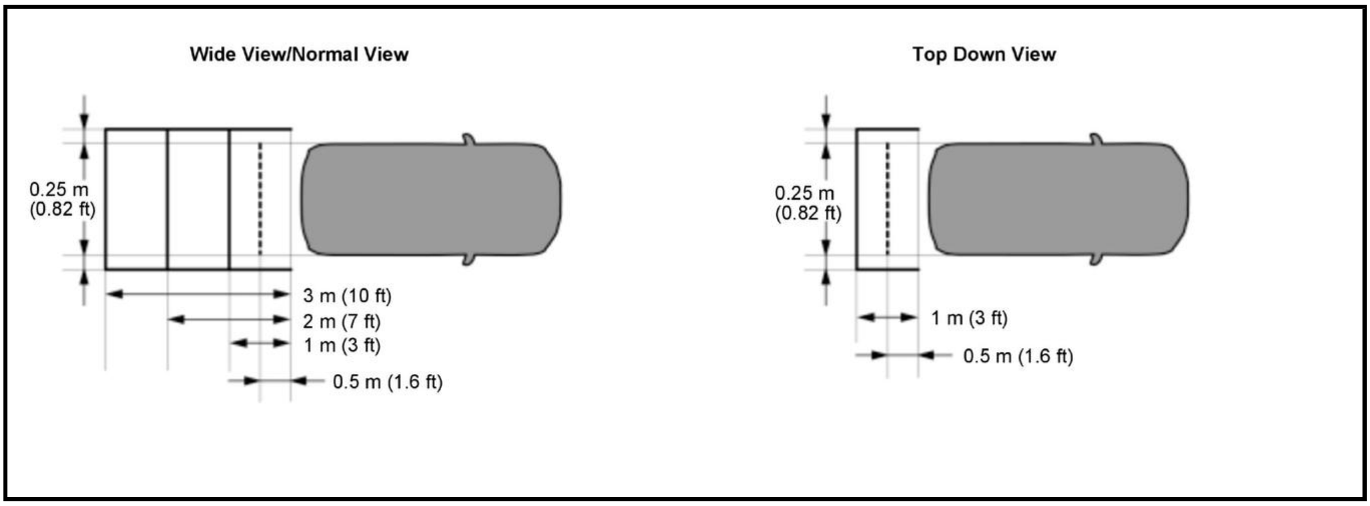
Wide View/Normal View
0.25 m (0.82 ft)
3 m (10 ft)
2 m (7 ft)
1 m (3 ft)
0.5 m (1.6 ft)
Top Down View
0.25 m (0.82 ft)
1 m (3 ft)
0.5 m (1.6 ft)

Guidelines type B

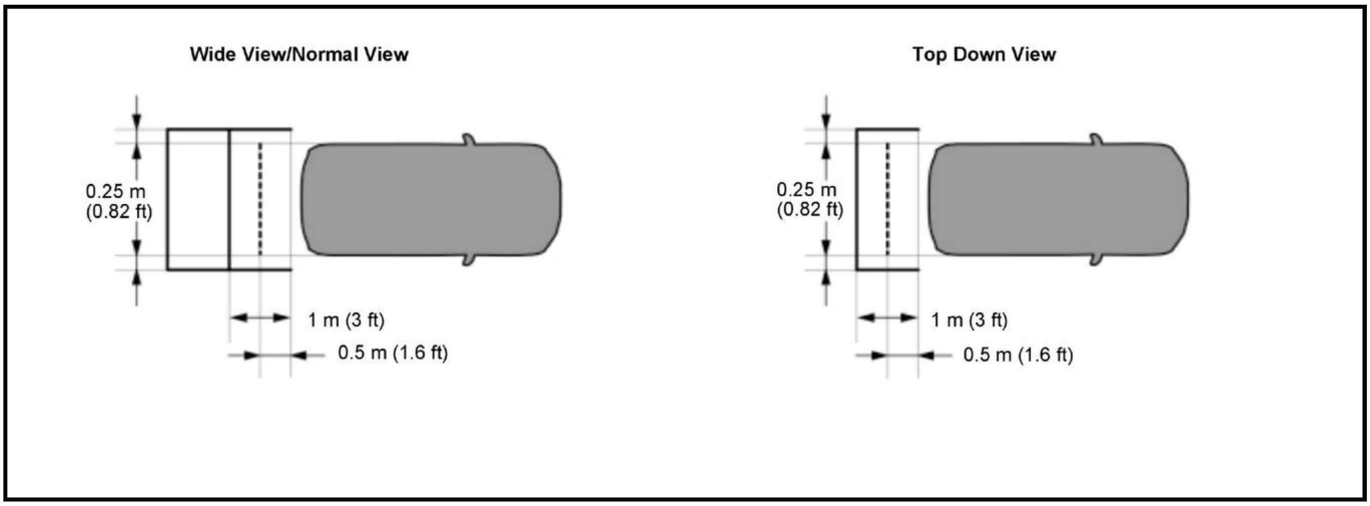
Wide View/Normal View
0.25 m (0.82 ft)
1 m (3 ft)
0.5 m (1.6 ft)
Top Down View
0.25 m (0.82 ft)
1 m (3 ft)
0.5 m (1.6 ft)

Changing Camera Views

When the rearview camera image is displayed, touching the mode icon sends a signal from the audio unit to the rearview camera using the CAMERA BIT0 and CAMERA BIT1 signal lines to change the rearview camera view.

B	Wide	Normal	Top Down
CAMERA BIT0 Signal	OFF (0 V)	ON (5 V - 8 V)	OFF (0 V)
CAMERA BIT1 Signal	OFF (0 V)	OFF (0 V)	ON (5 V - 8 V)

View Mode Memorization

Any time the audio unit loses power (battery disconnected, audio unit disconnected, etc.) the rearview camera defaults to the normal angle view. The rearview camera will also default to this angle if you had the top down angle selected when you turn the vehicle to the OFF (LOCK) mode. If you change the rearview camera to the wide view, the rearview camera will remember this view when you turn the vehicle to the ON mode.

Dynamic Guideline (Display Audio type)

When the rearview image is displayed with the guide line, the guide line changes according to the steering angle input (When the steering rotates 90 degrees or more). The steering angle information is received from the gauge control module via the B-CAN as vehicle signals.

USB Charger Unit

The USB charger unit controls an output current for charging of a USB device. The USB port C and D (CHARGE ONLY) located on the center console are a dedicated USB charging port. The USB charger unit is based on the specification of the USB Battery Charging 1.2 (BC 1.2) that supports high-speed charging of the USB device. The USB charger unit can detect the USB device type (BC 1.2 or not), and change the charging mode automatically.

The USB charger unit is launched by turning the vehicle to the ACCESSORY mode. When you connect the USB device to the USB port C and D (CHARGE ONLY), the USB charger unit supplies the appropriate current (1.0 A - 2.1 A) to the USB device via the USB VBUS. In this case, the USB charger unit detects the electrical characteristics from the USB DATA lines. No data communication occurs between the USB charger unit and the USB device. Also, there is no connection between the USB charger unit and the audio-navigation unit or the audio unit.

AUDIO SYSTEM DESCRIPTION - SYSTEM DIAGRAM (COLOR AUDIO TYPE)

For locations of each component on vehicle, refer to Audio System Component Location Index.

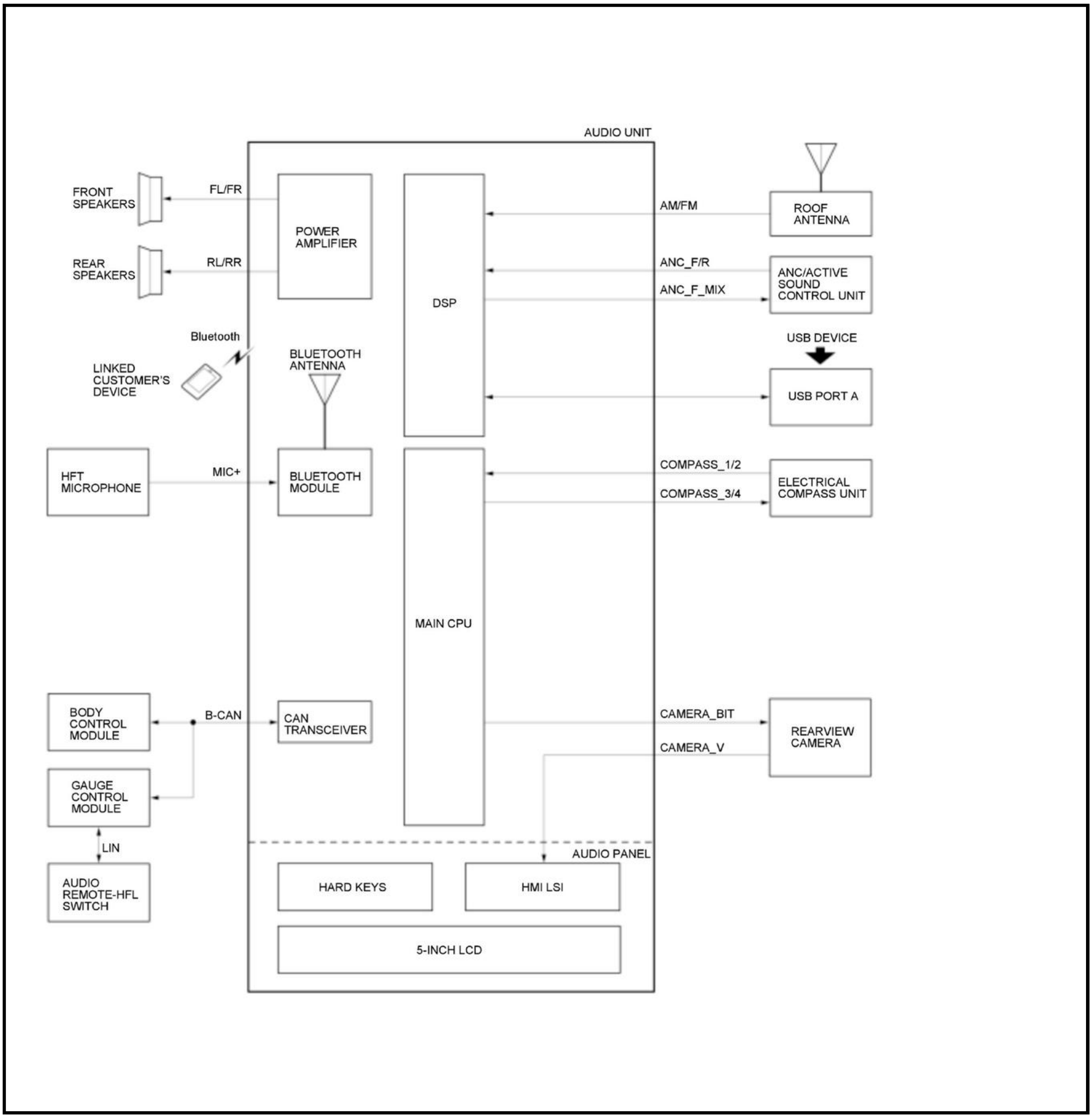
AUDIO UNIT
FRONT SPEAKERS
FL/FR
REAR SPEAKERS
RL/RR
POWER AMPLIFIER
DSP
AM/FM
ROOF ANTENNA
ANC_F/R
ANC_F_MIX
ANC/ACTIVE SOUND CONTROL UNIT
Bluetooth
LINKED CUSTOMER'S DEVICE
BLUETOOTH ANTENNA
USB DEVICE
USB PORT A
HFT MICROPHONE
MIC+
BLUETOOTH MODULE
COMPASS_1/2
COMPASS_3/4
ELECTRICAL COMPASS UNIT
MAIN CPU
BODY CONTROL MODULE
B-CAN
CAN TRANSCEIVER
CAMERA_BIT
CAMERA_V
REARVIEW CAMERA
GAUGE CONTROL MODULE
LIN
AUDIO PANEL
AUDIO REMOTE-HFL SWITCH
HARD KEYS
HMI LSI
5-INCH LCD

Power Supply Diagram

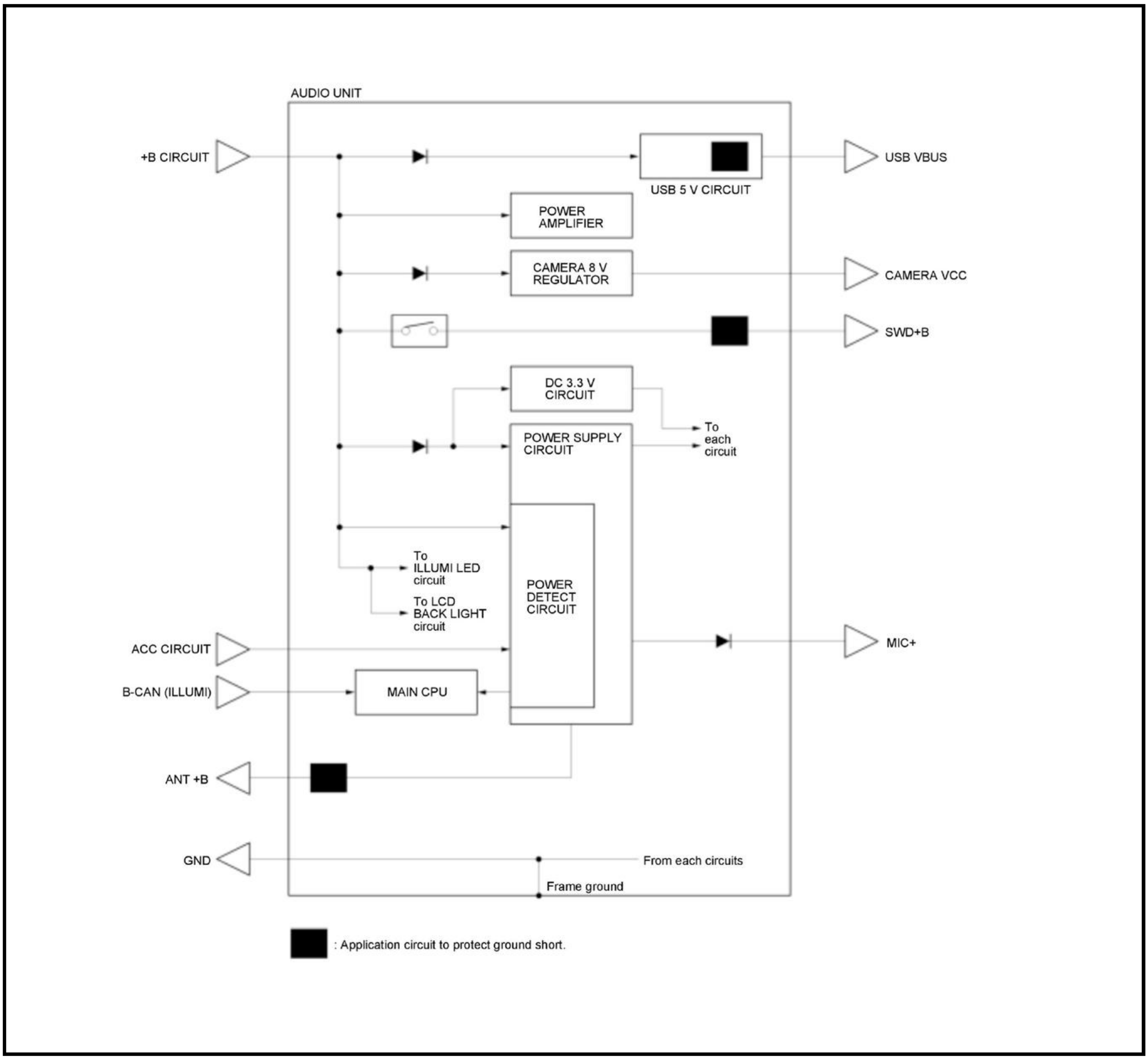
AUDIO UNIT
+B CIRCUIT
USB 5 V CIRCUIT
USB VBUS
POWER AMPLIFIER
CAMERA 8 V REGULATOR
CAMERA VCC
SWD+B
DC 3.3 V CIRCUIT
POWER SUPPLY CIRCUIT
To each circuit
To ILLUMI LED circuit
To LCD BACK LIGHT circuit
POWER DETECT CIRCUIT
ACC CIRCUIT
B-CAN (ILLUMI)
MAIN CPU
MIC+
ANT +B
GND
From each circuits
Frame ground
■ : Application circuit to protect ground short.

AUDIO SYSTEM DESCRIPTION - SYSTEM DIAGRAM (DISPLAY AUDIO TYPE)

For locations of each component on vehicle, refer to Audio System Component Location Index.

NOTE: Refer to the navigation system section for audio-navigation unit system diagram .

With Stereo Amplifier

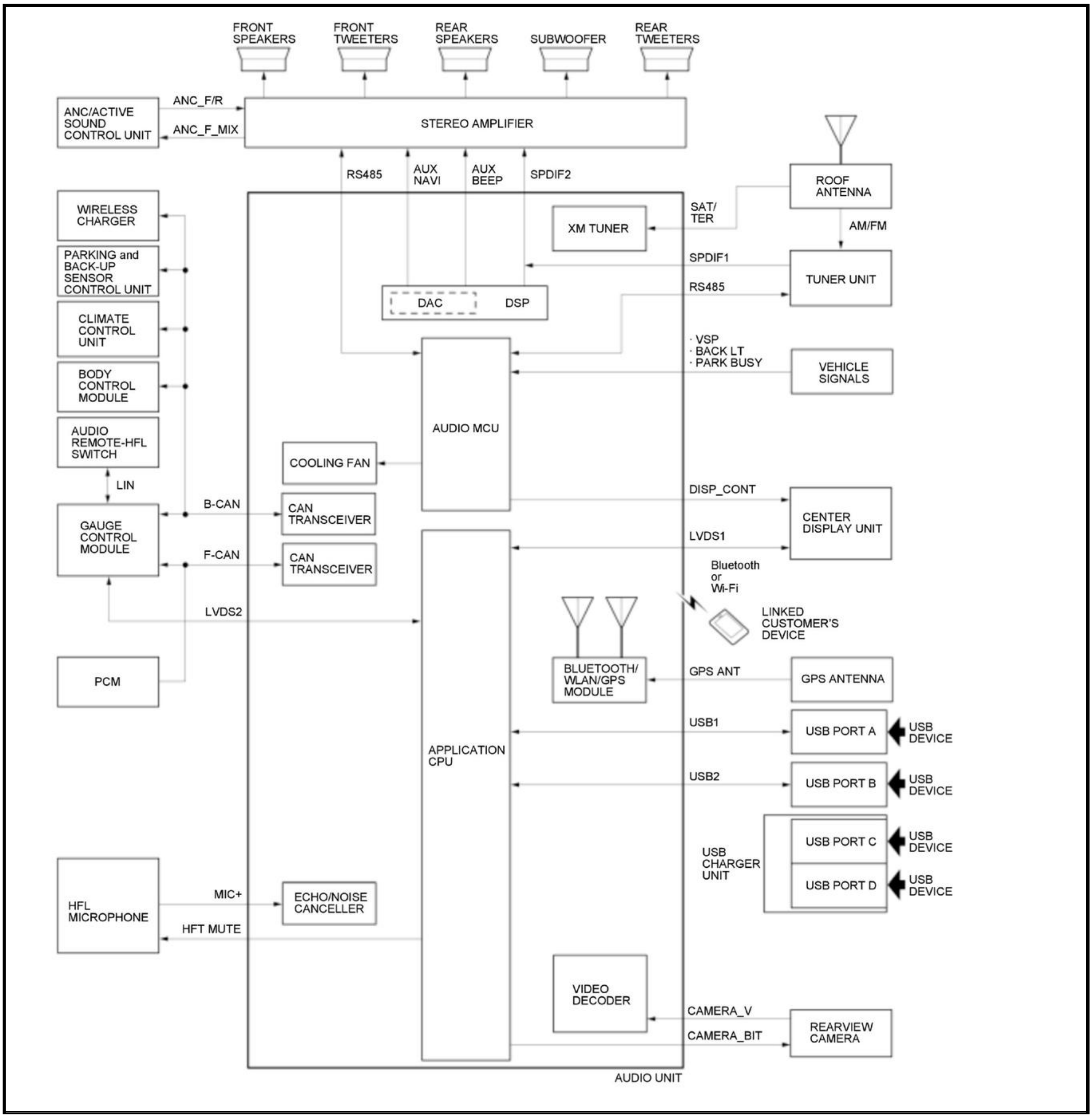
FRONT SPEAKERS
FRONT TWEETERS
REAR SPEAKERS
SUBWOOFER
REAR TWEETERS
ANC/ACTIVE SOUND CONTROL UNIT
ANC_F/R
ANC_F_MIX
STEREO AMPLIFIER
RS485
AUX NAVI
AUX BEEP
SPDIF2
ROOF ANTENNA
SAT/ TER
AM/FM
XM TUNER
SPDIF1
RS485
TUNER UNIT
WIRELESS CHARGER
PARKING and BACK-UP SENSOR CONTROL UNIT
CLIMATE CONTROL UNIT
BODY CONTROL MODULE
AUDIO REMOTE-HFL SWITCH
LIN
DAC
DSP
· VSP
· BACK LT
· PARK BUSY
VEHICLE SIGNALS
AUDIO MCU
COOLING FAN
DISP_CONT
CENTER DISPLAY UNIT
LVDS1
GAUGE CONTROL MODULE
B-CAN
CAN TRANSCEIVER
F-CAN
CAN TRANSCEIVER
Bluetooth or Wi-Fi
LVDS2
LINKED CUSTOMER'S DEVICE
PCM
BLUETOOTH/ WLAN/GPS MODULE
GPS ANT
GPS ANTENNA
USB1
USB PORT A
USB DEVICE
APPLICATION CPU
USB2
USB PORT B
USB DEVICE
USB CHARGER UNIT
USB PORT C
USB DEVICE
USB PORT D
USB DEVICE
HFL MICROPHONE
MIC+
ECHO/NOISE CANCELLER
HFT MUTE
VIDEO DECODER
CAMERA_V
CAMERA_BIT
REARVIEW CAMERA
AUDIO UNIT

Without Stereo Amplifier

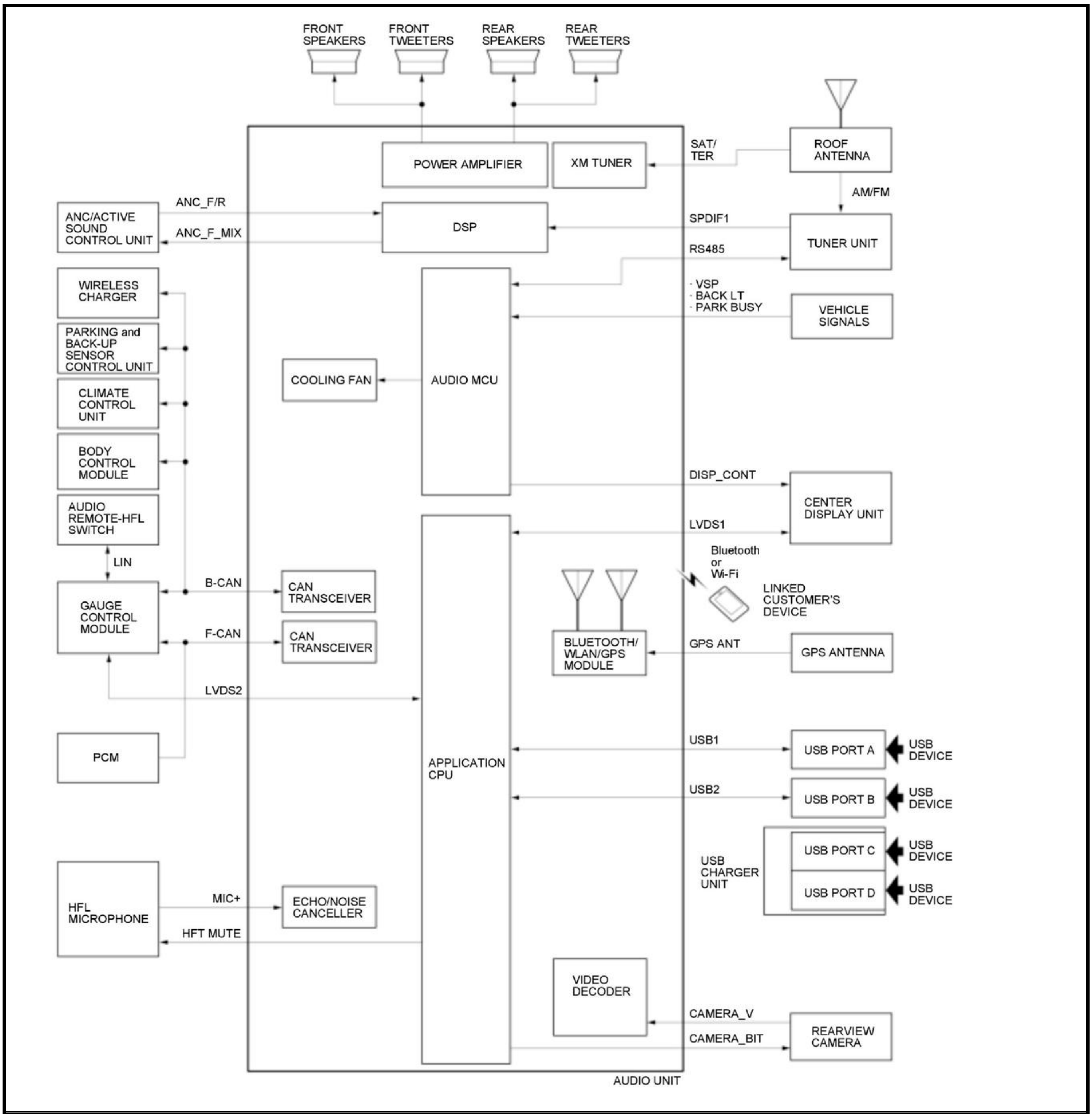
FRONT SPEAKERS
FRONT TWEETERS
REAR SPEAKERS
REAR TWEETERS
ROOF ANTENNA
SAT/ TER
POWER AMPLIFIER
XM TUNER
AM/FM
ANC/ACTIVE SOUND CONTROL UNIT
ANC_F/R
ANC_F_MIX
DSP
SPDIF1
TUNER UNIT
RS485
WIRELESS CHARGER
· VSP
· BACK LT
· PARK BUSY
VEHICLE SIGNALS
PARKING and BACK-UP SENSOR CONTROL UNIT
COOLING FAN
AUDIO MCU
CLIMATE CONTROL UNIT
BODY CONTROL MODULE
DISP_CONT
AUDIO REMOTE-HFL SWITCH
CENTER DISPLAY UNIT
LVDS1
LIN
Bluetooth or Wi-Fi
B-CAN
CAN TRANSCEIVER
LINKED CUSTOMER'S DEVICE
GAUGE CONTROL MODULE
F-CAN
CAN TRANSCEIVER
BLUETOOTH/ WLAN/GPS MODULE
GPS ANT
GPS ANTENNA
LVDS2
PCM
APPLICATION CPU
USB1
USB PORT A
USB DEVICE
USB2
USB PORT B
USB DEVICE
USB CHARGER UNIT
USB PORT C
USB DEVICE
USB PORT D
USB DEVICE
HFL MICROPHONE
MIC+
ECHO/NOISE CANCELLER
HFT MUTE
VIDEO DECODER
CAMERA_V
CAMERA_BIT
REARVIEW CAMERA
AUDIO UNIT

Power Supply Diagram

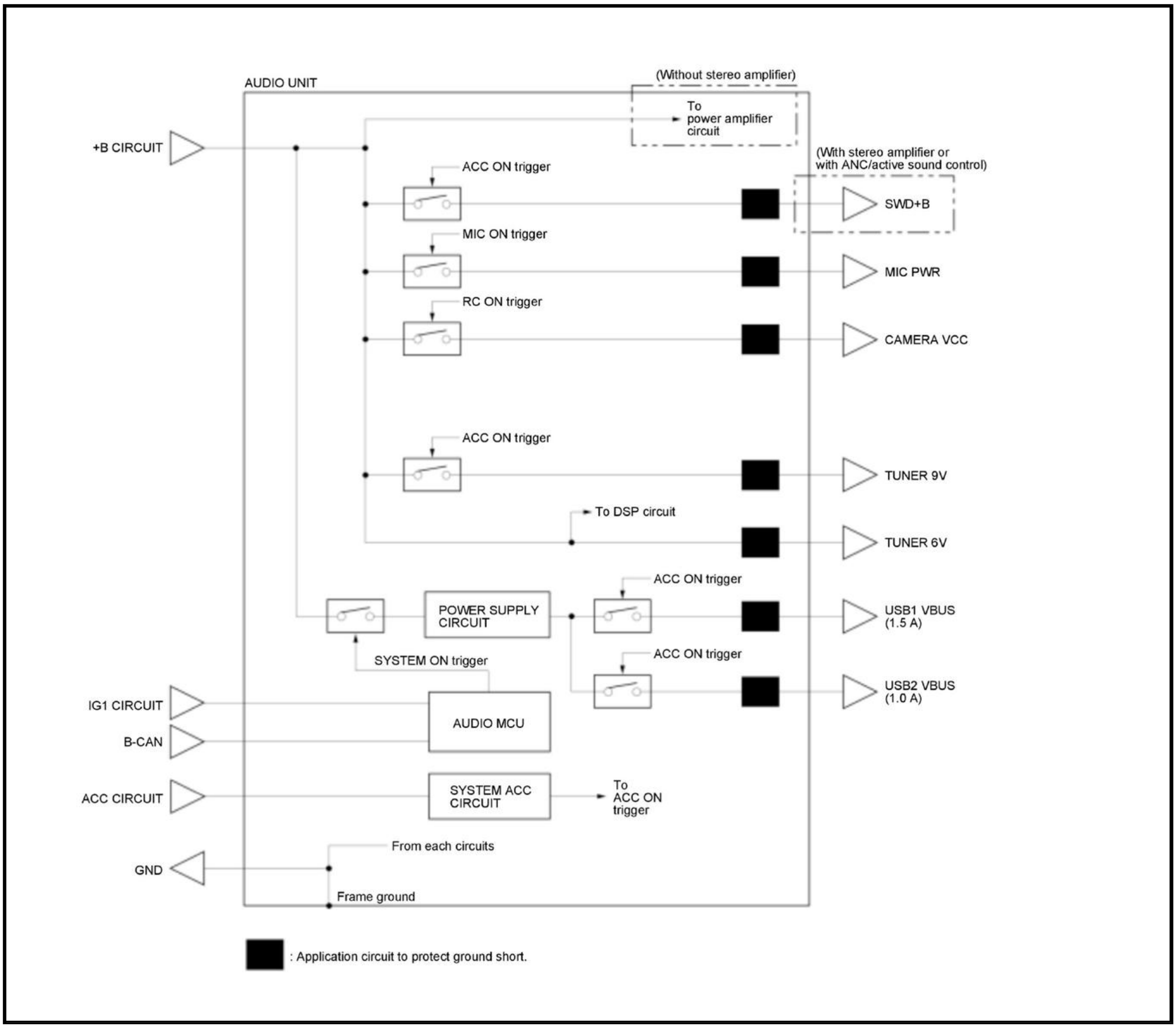
AUDIO UNIT
(Without stereo amplifier)
To power amplifier circuit
+B CIRCUIT
(With stereo amplifier or with ANC/active sound control)
ACC ON trigger
SWD+B
MIC ON trigger
MIC PWR
RC ON trigger
CAMERA VCC
ACC ON trigger
TUNER 9V
To DSP circuit
TUNER 6V
ACC ON trigger
POWER SUPPLY CIRCUIT
USB1 VBUS (1.5 A)
SYSTEM ON trigger
ACC ON trigger
USB2 VBUS (1.0 A)
IG1 CIRCUIT
AUDIO MCU
B-CAN
ACC CIRCUIT
SYSTEM ACC CIRCUIT
To ACC ON trigger
From each circuits
GND
Frame ground
■ : Application circuit to protect ground short.

DIAGNOSIS

AUDIO SYSTEM DIAGNOSTIC MODE (COLOR AUDIO TYPE)

Start-Up Procedure and Diagnostic Menu

NOTE:

- Check the vehicle 12 volt battery condition first .
- The screens detail indicated may change depending on equipment or specification.

1. Turn the vehicle to the ON mode. If needed, start the engine.

2. Press the POWER (⏻) button to turn off the audio unit.

3. Press and hold the preset No. 1 button, then preset No. 6 button and then the VOLUME/POWER (⏻) knob. The display screen goes directly to the Manual Diag menu shown.

NOTE: Do not press preset No. 1 and No. 6 buttons simultaneously.

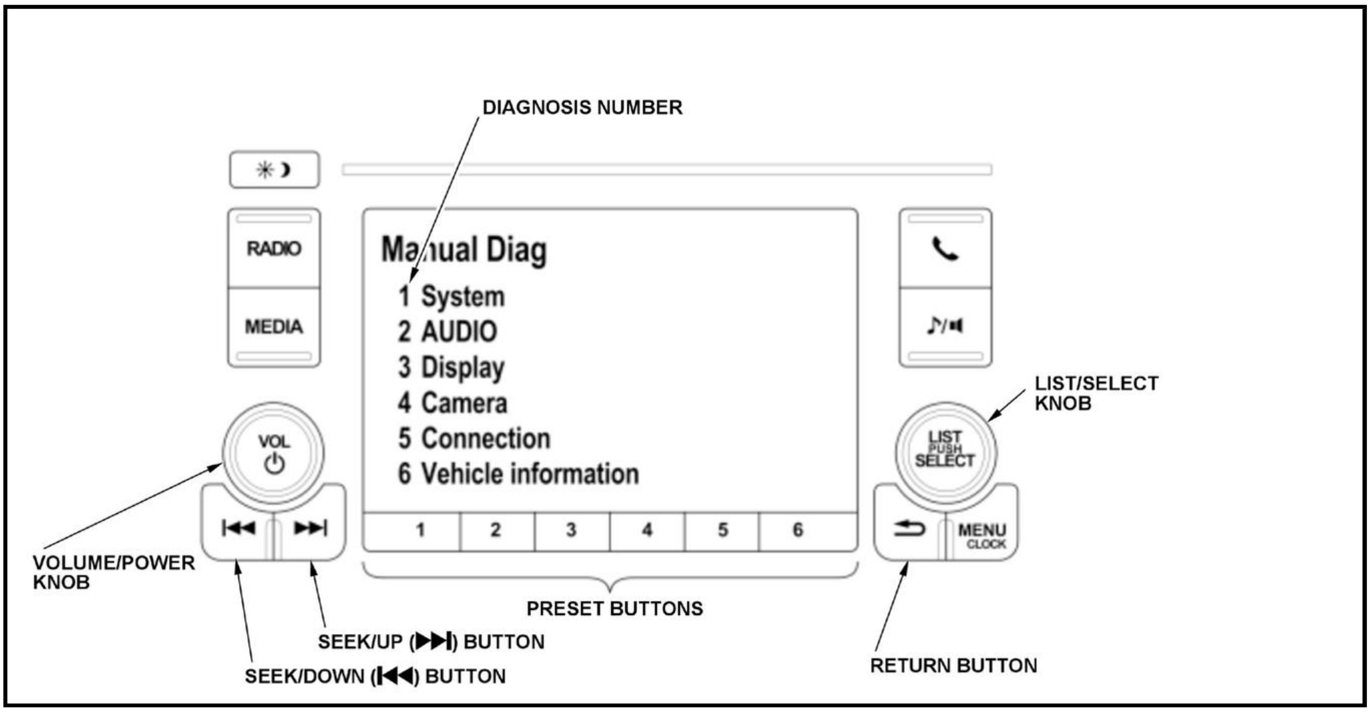
DIAGNOSIS NUMBER
RADIO
MEDIA
Manual Diag
1 System
2 AUDIO
3 Display
4 Camera
5 Connection
6 Vehicle information
1
2
3
4
5
6
LIST/SELECT KNOB
LIST PUSH SELECT
MENU CLOCK
VOL
VOLUME/POWER KNOB
PRESET BUTTONS
SEEK/UP (▶▶|) BUTTON
SEEK/DOWN (|◀◀) BUTTON
RETURN BUTTON

4. When you are in the system diagnostic mode, pressing a preset button starts the diagnosis that is assigned to that preset button. To return to the previous screen, press the RETURN button. To exit this mode, go to step 5. Once you exit this test, you must start again at step 1.

- Preset No. 1 button: System
- Preset No. 2 button: AUDIO
- Preset No. 3 button: Display
- Preset No. 4 button: Camera
- Preset No. 5 button: Connection
- Preset No. 6 button: Vehicle information

5. To end the system diagnostic mode, press the VOLUME/POWER knob, or turn the vehicle to the OFF (LOCK) mode.

How to Obtain the Audio Unit Serial Number (With Audio System Theft Protection)

NOTE: This procedure can be done only before anti-theft mode is cancelled.

1. Turn the vehicle to the ON mode. Make sure the audio unit is in the anti-theft mode.

2. Go into the System Diagnostic Mode, and select the System diagnosis, then press the preset No. 1 button.

3. The screen displays an 8-digit audio unit serial number.

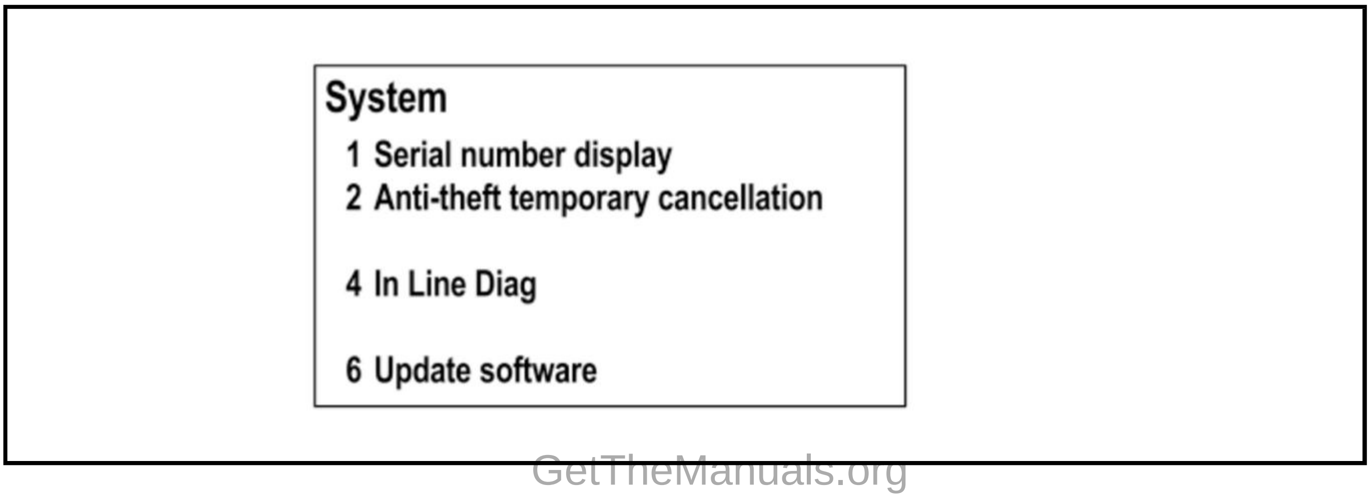

System

1 Serial number display

2 Anti-theft temporary cancellation

4 In Line Diag

6 Update software

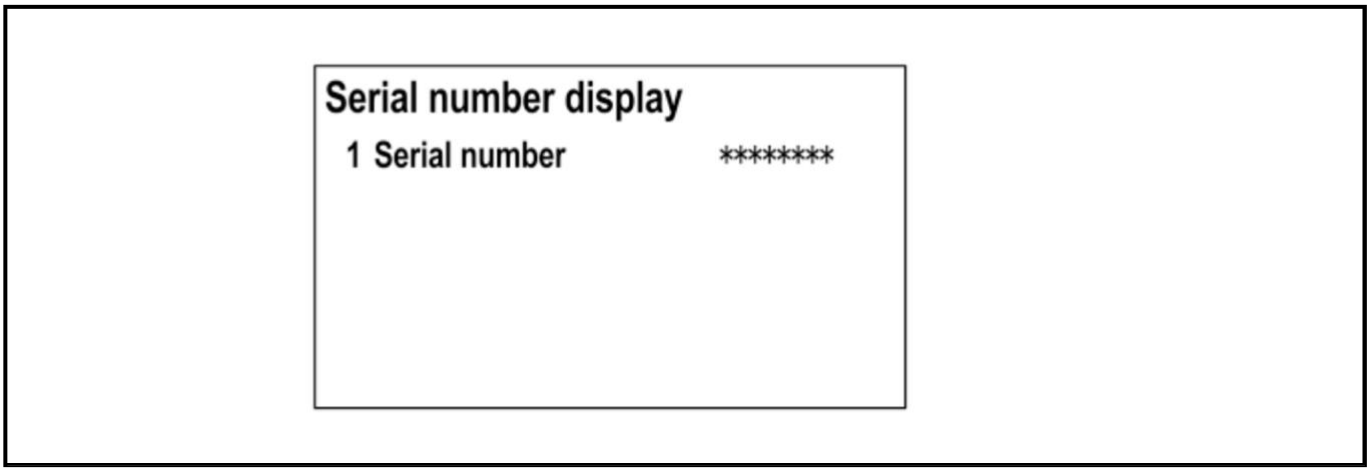

Serial number display

1 Serial number ********

4. Use all 8 numbers as the serial number when using the Interactive Network (iN) to retrieve the 5-digit anti-theft code.

Anti-Theft Temporary Cancellation

5. Return to the System diagnosis, when preset No. 2 button is pressed, the anti-theft mode is cancelled temporarily, and the system returns to the normal audio screen automatically.

System

This diagnosis displays the current version information about each module in the audio unit, and result of the In Line Diag, and detects the hard keys.

To start the diagnosis, press the preset button to select the diagnosis number you want to check.

NOTE: Items not listed are not available in this model.

- Preset No. 1 button: Driver distraction prevention
- Preset No. 3 button: Knob check
- Preset No. 4 button: In Line Diag
- Preset No. 5 button: Knob illumination check
- Preset No. 6 button: Update software (factory use only)

*: With audio system theft protection

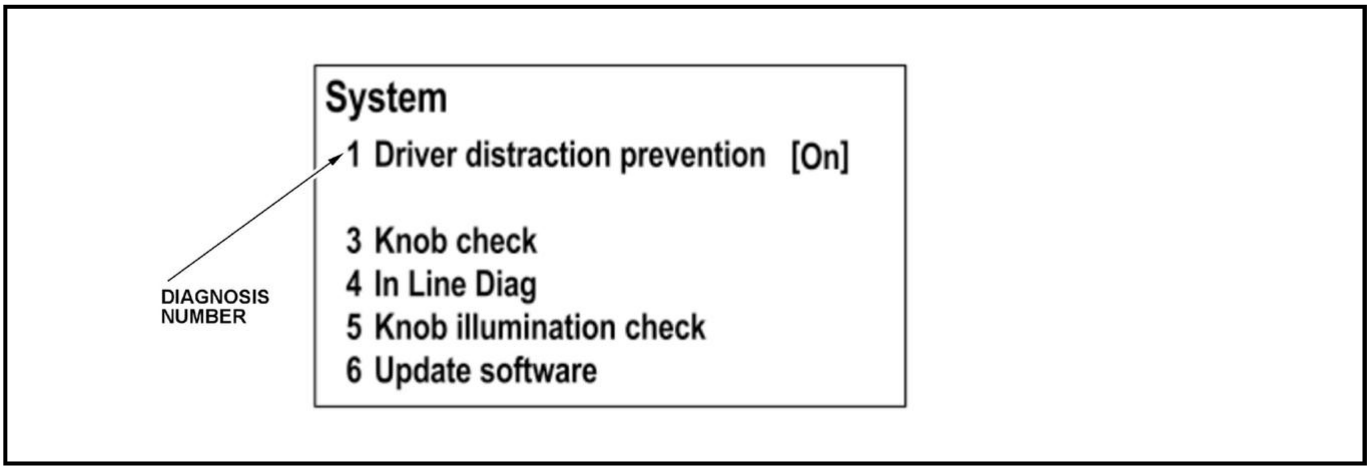

System

1 Driver distraction prevention [On]

3 Knob check

4 In Line Diag

5 Knob illumination check

6 Update software

Knob Check

This diagnosis checks the audio unit hard buttons and the audio remote-HFL switch.

As each function is tested, the corresponding button name should be displayed.

- If any button of the audio unit does not respond, **replace the audio panel or the audio unit** .
- If any button of the audio remote-HFL switch does not respond, **do the audio remote-HFL switch test** .
- If all buttons of the audio remote-HFL switch do not respond, go to **Audio remote-HFL switch does not work properly (audio unit buttons work) troubleshooting**.

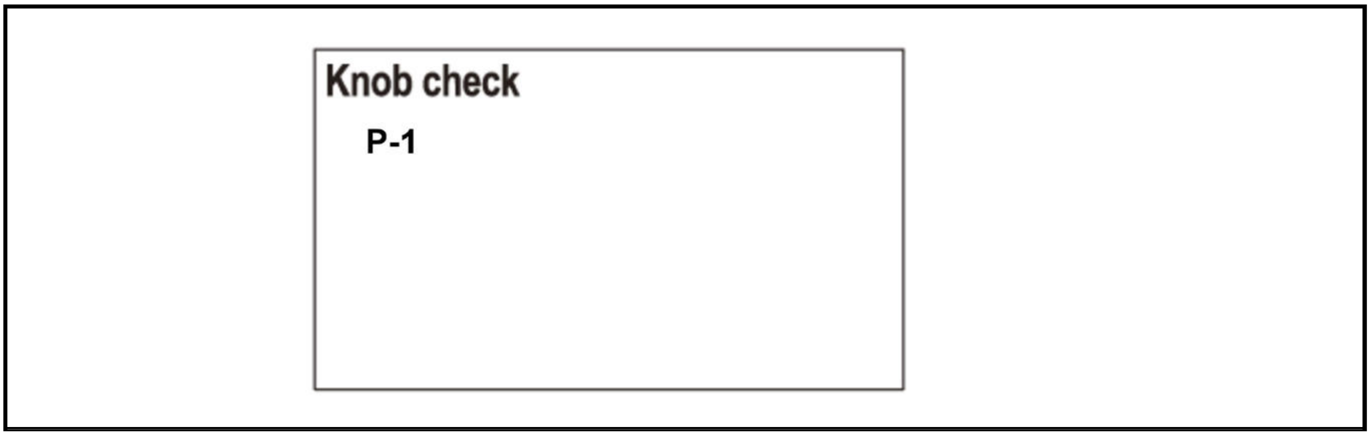

In Line Diag

This diagnosis checks whether the audio unit is receiving each unit signal properly, and clear the result(s).

To start the diagnosis, press the preset button to select the diagnosis number you want to check.

- Preset No. 1 button: Result All Display
- Preset No. 2 button: Result All Clear
- Preset No. 3 button: Result All OK

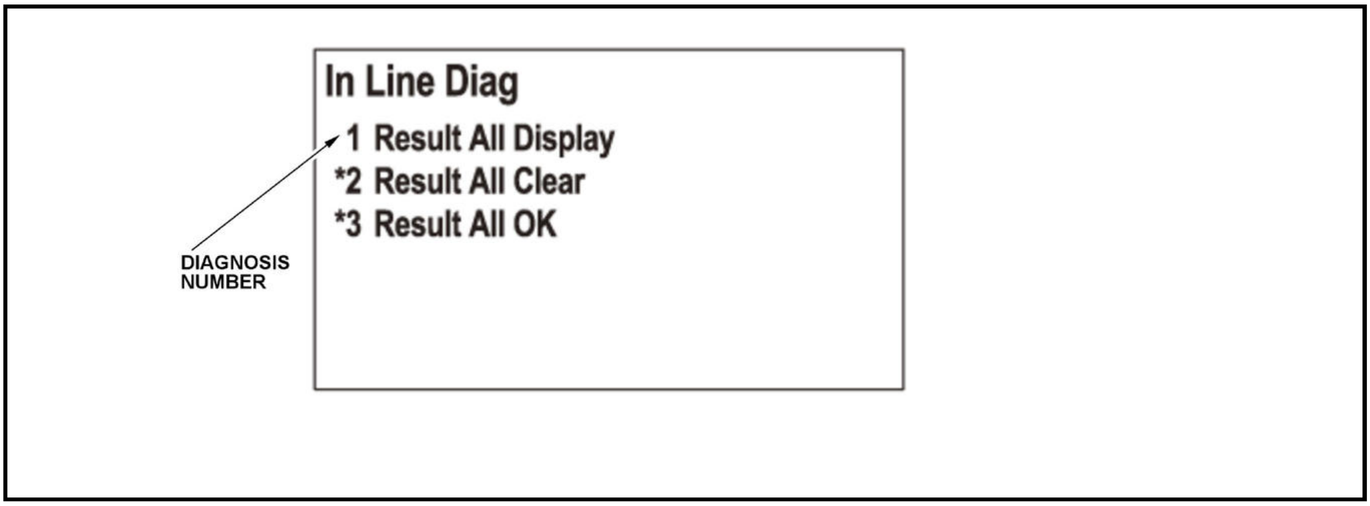

Result All Display

You can check the result of the In Line Diag.

The In Line Diag function runs automatically. When the diagnosis finishes, the icons turn different colors based on their test status (OK or NG).

NOTE: The STRG REMOTE and the HFL REMOTE indicates NG until the audio remote switch button and the HFL switch button are pressed.

Icon Colors	Description
Green	The system ran a diagnosis and the results are OK.
Red	Errors that require replacement of hardware or harness.

Icon Colors	Description
Yellow	Errors that do not require hardware replacement, such as a missing optional systems (rearview camera), or the connection check is in the state which is not done.

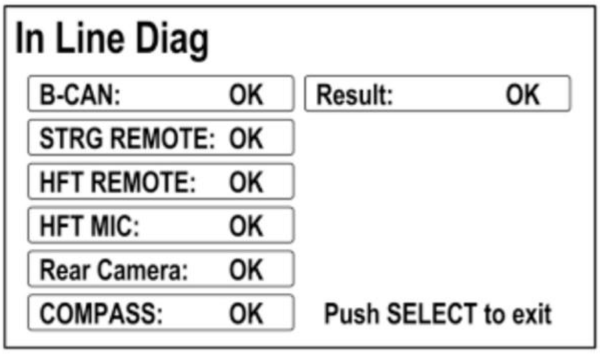

In Line Diag

B-CAN: OK

STRG REMOTE: OK

HFT REMOTE: OK

HFT MIC: OK

Rear Camera: OK

COMPASS: OK

Result: OK

Push SELECT to exit

Knob Illumination Check

This diagnosis checks the dimming circuit of the audio unit buttons.

When rotating the LIST/SELECT knob, you should see the value change from 1 (max low) to 22 (max high).

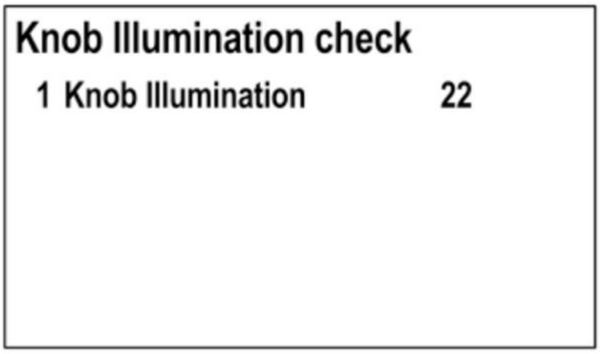

Knob Illumination check

1 Knob Illumination 22

AUDIO

This diagnosis checks the audio unit sound system.

To start the diagnosis, press the preset button to select the diagnosis number you want to check.

- Preset No. 1 button: Sound
- Preset No. 2 button: FM
- Preset No. 3 button: AM

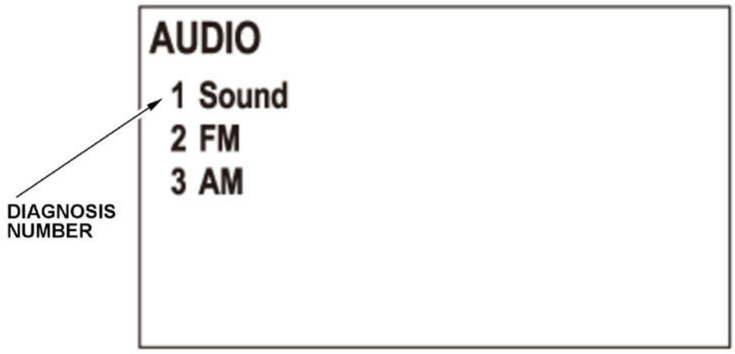

Sound (Speaker Check)

This diagnosis checks the audio speakers individually. The EQ (diagnosis No. 2) and the Loudness (diagnosis No. 3) are not supported in this diagnosis.

Press the preset No. 1 button to check speakers. A tone should sound from the speaker.

Each time you press the preset No. 1 button, the system checks the speakers in this order: ① -> ② -> ③ -> ④ -> ⑤ -> ⑥ -> ①

NOTE: If the audio system is not equipped with tweeter, the audio unit outputs a tone from each front door speaker when the FLTW or the FRTW is selected.

B	Display Message	Vehicle Test Condition
①	Off	Speaker check mode is OFF.
②	FL	You should hear a tone from the left front door speaker and the left front tweeter*.
③	FR	You should hear a tone from the right front door speaker and the right front tweeter*.
④	RR	You should hear a tone from the right rear door speaker and the right rear tweeter*.
⑤	RL	You should hear a tone from the left rear door speaker and the left rear tweeter*.
⑥	All	You should hear a tone from all speakers.

*: With tweeter

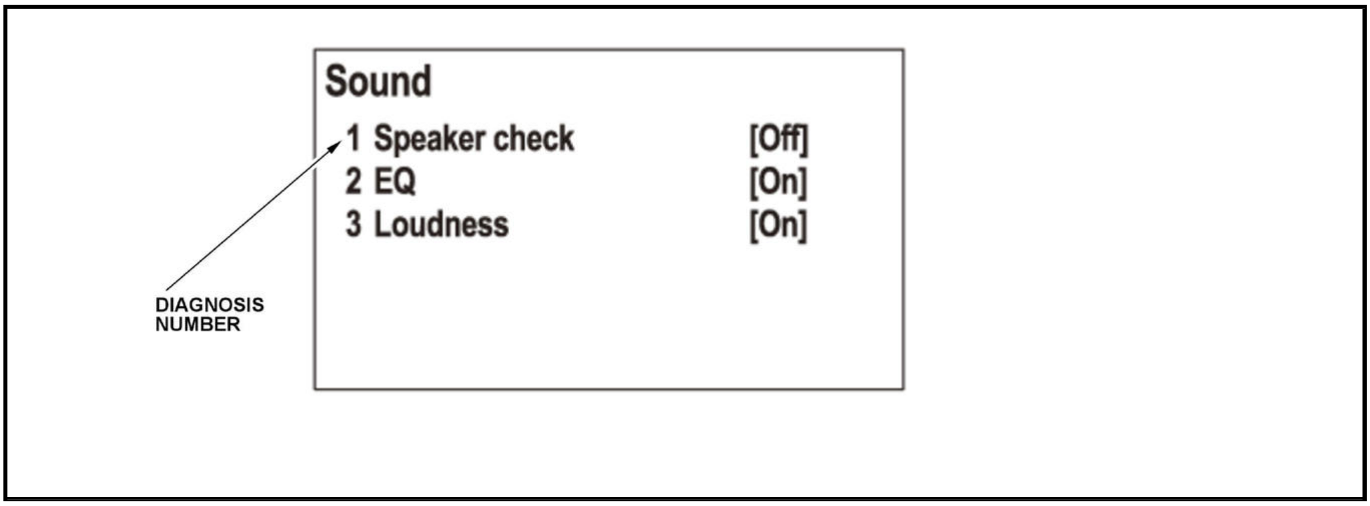

Sound

1 Speaker check [Off]
2 EQ [On]
3 Loudness [On]

FM

This diagnosis checks the FM reception level in the electric field strength (dB). This level then can be used in the diagnosis of audio unit reception quality.

Reception Level Check

Preparation:

- Park the vehicle outside in a good location away from tall buildings, mountains, high-voltage power line or any other object that may interfere with reception.
- Tune to a powerful local FM radio station then write down the radio station number.

Tune to the FM radio station you wrote down in preparation using the SEEK/DOWN (⏮) or SEEK/UP (⏭) button, and note the reception level of that station.

Press the preset No. 6 button to turn the AM/FM antenna power (ANT +B) off.

Note the decibel level of that station with the AM/FM antenna power off.

Press the preset No. 6 button to turn the AM/FM antenna power (ANT +B) on.

Compare your results to a known-good, (make sure it is the same year and trim level) in the same location and direction, and under the same environmental conditions.

- If the reception level is within 10% of the known-good vehicle, no repair is needed at this time.
- If the reception level is at least 10% less than the known good vehicle, go to Poor AM or FM radio reception or interference troubleshooting.

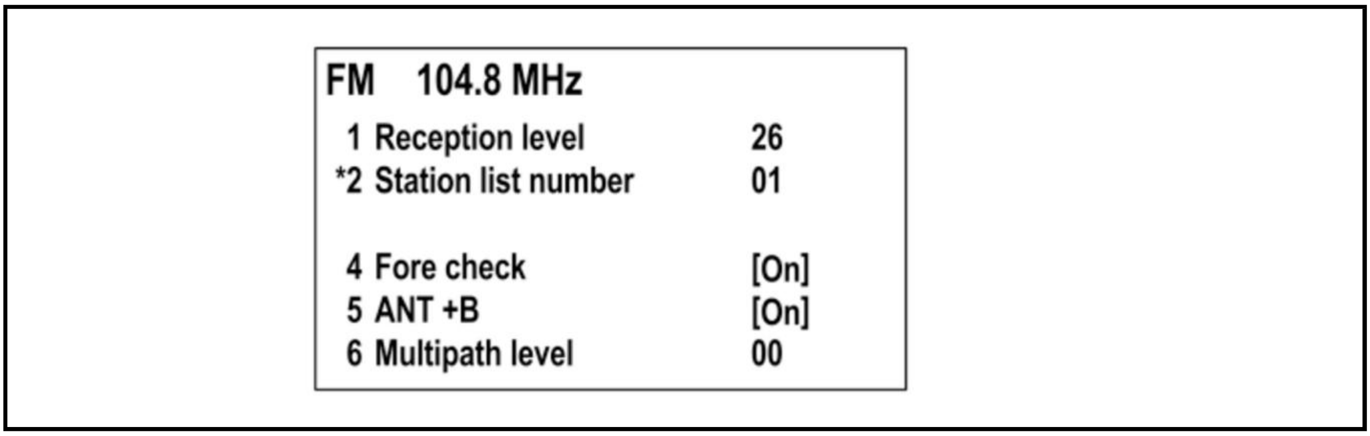

FM 104.8 MHz

1 Reception level 26
*2 Station list number 01

4 Fore check [On]
5 ANT +B [On]
6 Multipath level 00

AM

This diagnostic screen checks the AM reception level in the electric field strength (dB). This level then can be used in the diagnosis of audio unit reception quality.

Reception Level Check

Preparation:

- Park the vehicle outside in a good location away from tall buildings, mountains, high-voltage power line or any other object that may interfere with reception.
- Tune to a powerful local AM radio station then write down the radio station number.

Tune to the AM radio station you wrote down in preparation using the SEEK/DOWN (⏮) or SEEK/UP (⏭) button, and note the reception level of that station.

Press the preset No. 5 button to turn the AM/FM antenna power (ANT +B) off.

Note the decibel level of that station with the AM/FM antenna power off.

Press the preset No. 5 button to turn the AM/FM antenna power (ANT +B) on.

Compare your results to a known-good, (make sure it is the same year and trim level) in the same location and direction, and under the same environmental conditions.

- If the reception level is within 10% of the known-good vehicle, no repair is needed at this time.
- If the reception level is at least 10% less than the known good vehicle, **go to Poor AM or FM radio reception or interference troubleshooting**.

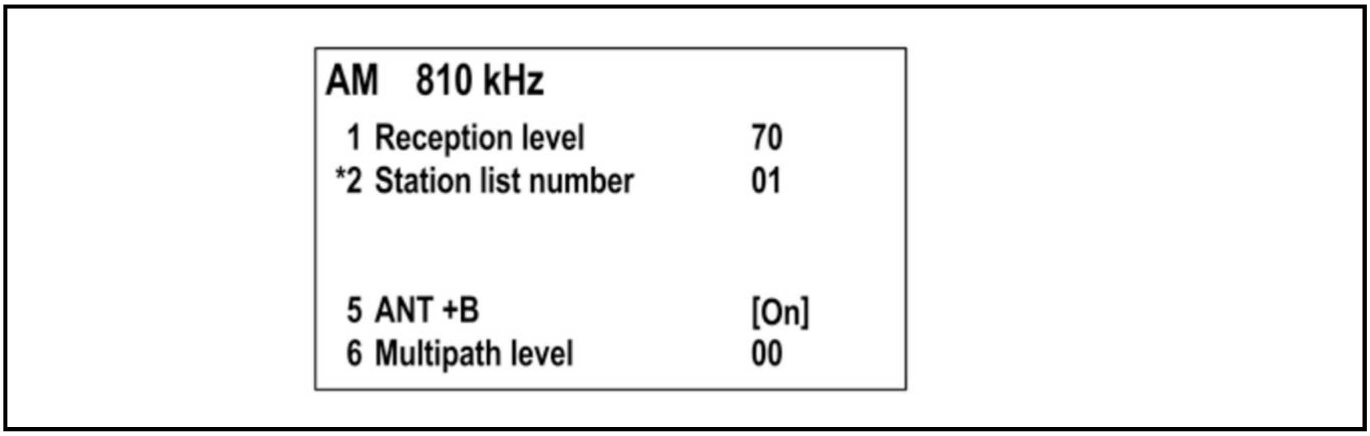

```
AM   810 kHz
  1 Reception level          70
 *2 Station list number      01


  5 ANT +B                   [On]
  6 Multipath level          00
```

Display

These screens allow you to troubleshoot the LCD display built into the audio unit. Select the item you want to check, and follow the diagnostic instructions.

To start the diagnosis, press the preset button to select the diagnosis number you want to check. The Artwork (diagnosis No. 4) is not supported in this diagnosis.

- Preset No. 1 button: R/G/B/White color
- Preset No. 2 button: Full gradation
- Preset No. 3 button: 16 step gradation

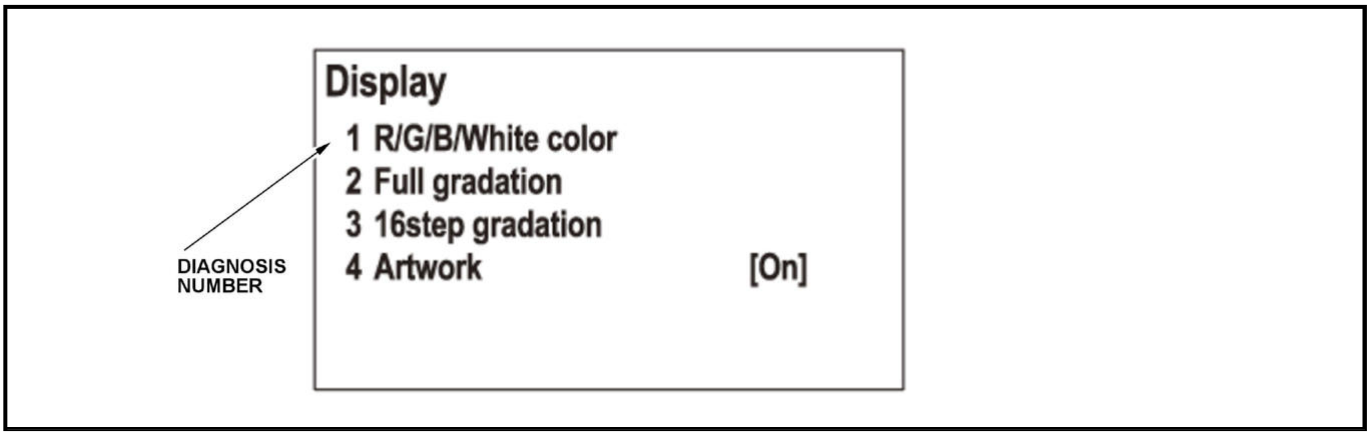

Display

1 R/G/B/White color

2 Full gradation

3 16step gradation

4 Artwork [On]

R/G/B/White Color

NOTE: Displaying an anomaly in this diagnosis screen is not necessarily a failure.

This screen verifies that the audio unit is displaying the RGB (Red, Green, and Blue) components properly. The three primary colors should all appear without distortion. The combination of all three should produce a central white section.

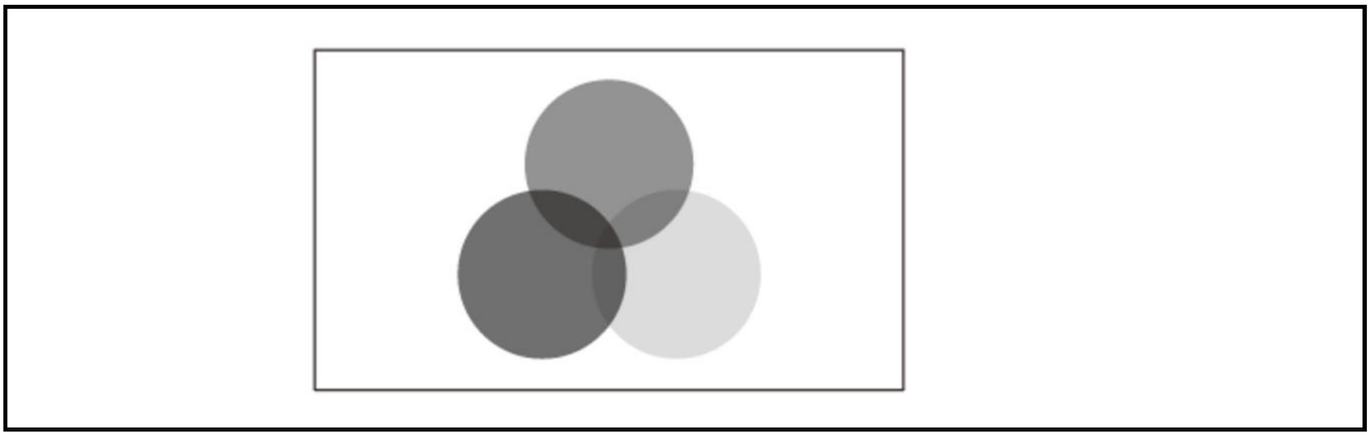

Full Gradation

NOTE: Displaying an anomaly in this diagnosis screen is not necessarily a failure.

This screen checks problems with contrast. You should be able to see the changes in the smooth across the scale.

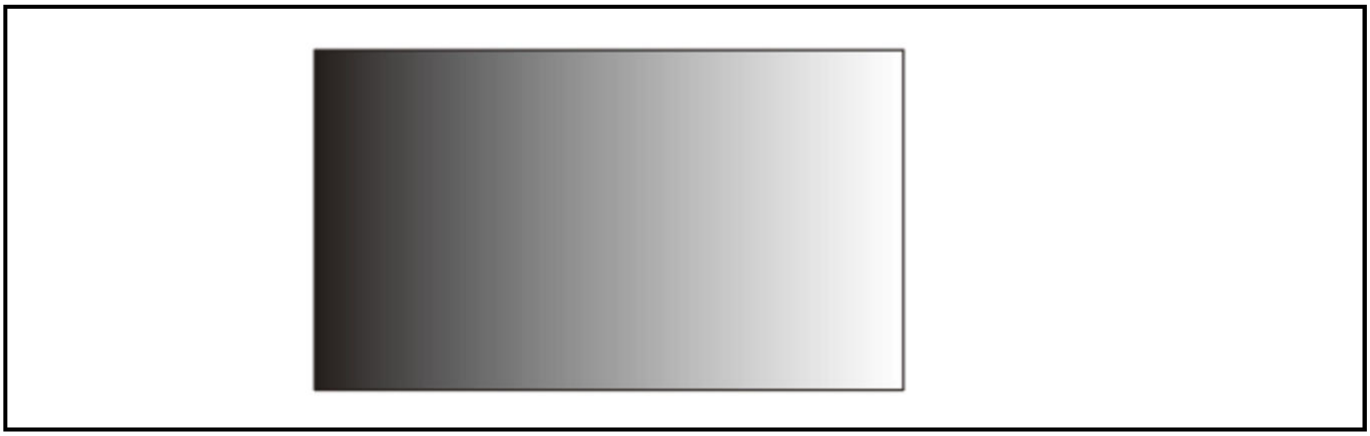

16 Step Gradation

NOTE: Displaying an anomaly in this diagnosis screen is not necessarily a failure.

This screen checks problems with contrast. You should be able to see the changes from bar to bar across the scale. It is normal for the two bars on either side to appear the same.

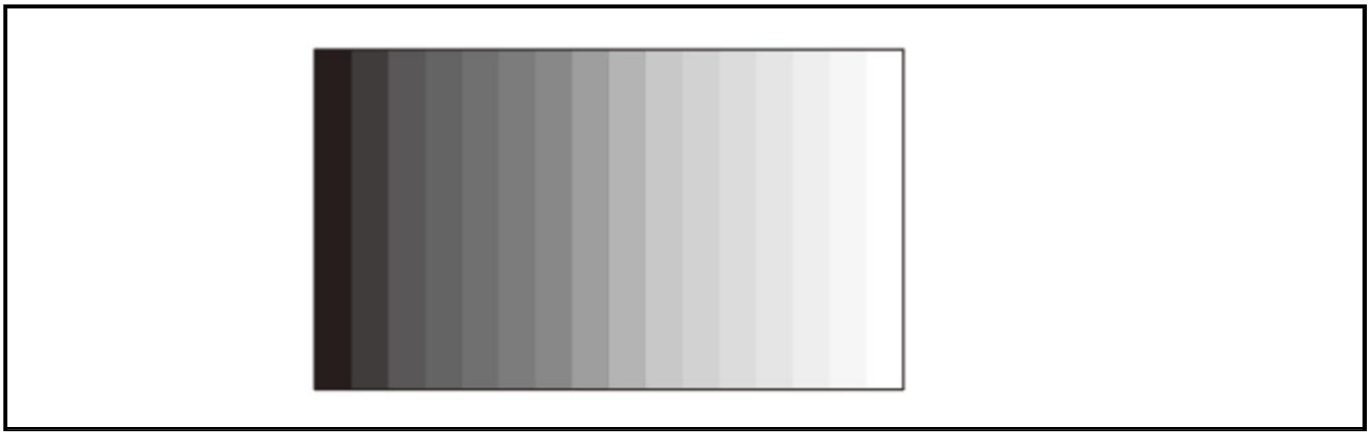

Camera

This screen checks the rearview camera image, and adjusts the guideline.

To start the diagnosis, press the preset button to select the diagnosis number you want to check.

- Preset No. 1 button: Forced Rear Camera View
- Preset No. 2 button: Guideline adjustment

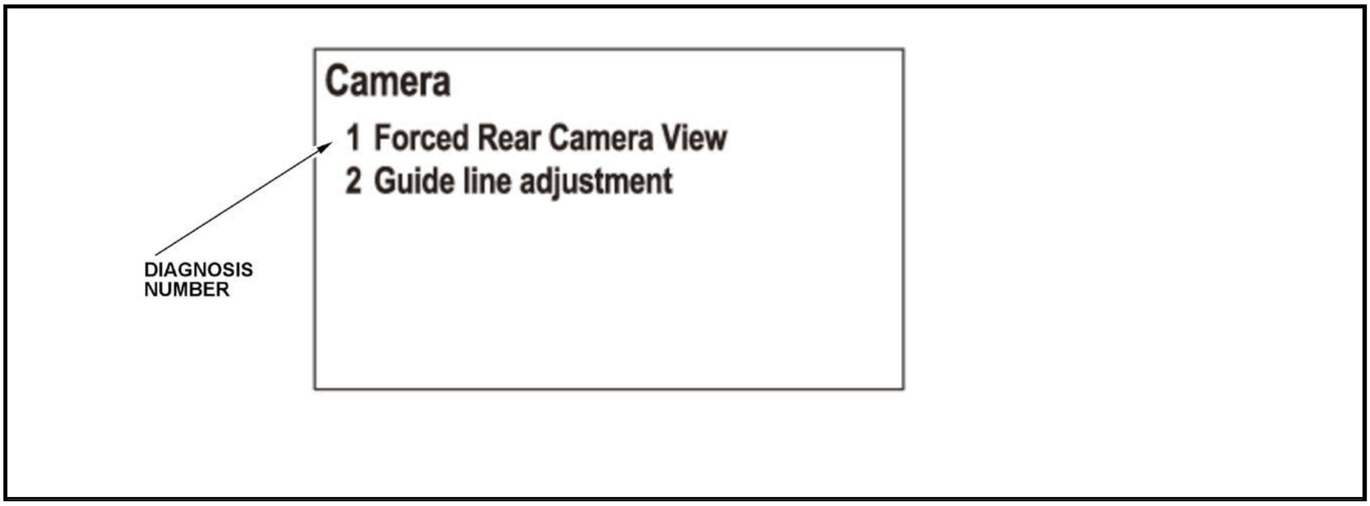

Camera

1 Forced Rear Camera View

2 Guide line adjustment

Forced Rear Camera View

This diagnosis displays the rearview camera image forcibly.

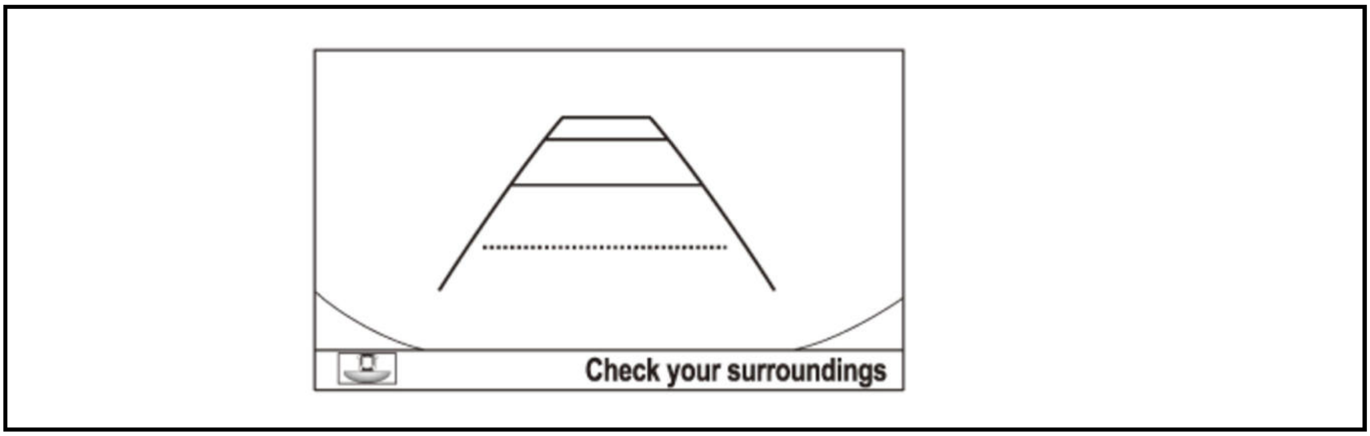

Guide Line Adjustment

This diagnostic adjusts the rearview camera image guide lines. If you need to adjust a guide line, refer to the following procedures.

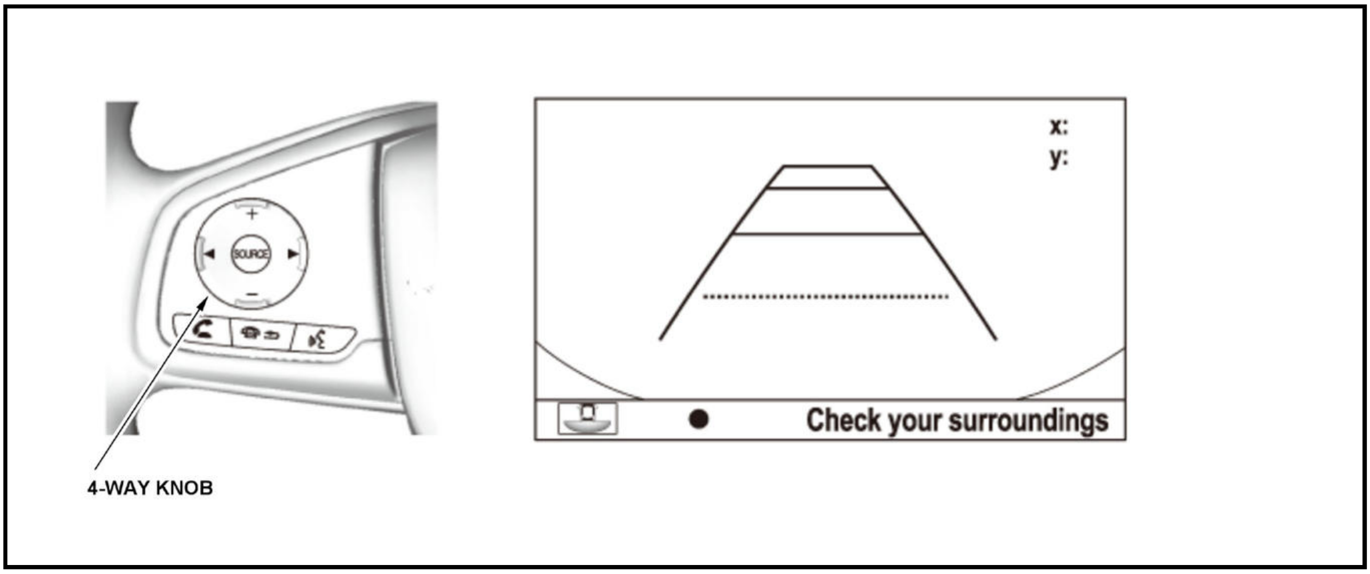

Title	Procedures	
Guide Line Adjustment	1	Press and hold the point up or down use the 4-WAY knob on the audio remote switch and select the view mode (Wide View, Normal View, Top Down View) for the rearview camera you want to adjust.
	2	You will move to the camera guideline adjustment mode by pressing the MENU button on the audio panel.
	3	Use LIST/SELECT knob on the audio panel and select the camera guide line you want to adjust. **NOTE:** After selecting the camera guide line, you will move to the point adjustment mode on the selected camera guide line by pressing the MENU button. By using the LIST/SELECT knob, you can select the point on the camera guide line you want to adjust.
	4	Use the 4-WAY knob on the audio remote switch and adjust the camera guide line or the point of the camera guide line.
	5	By pressing the RETURN button on the audio panel, the adjusted guide line data is saved.

If you need to reset the guide line to the factory settings, refer to the following procedures.

Title	Procedures	
Factory Settings	1	You will move to the camera guideline adjustment mode by pressing the MENU button on the audio panel.
	2	Press and hold the No. 2 button for more than 5 seconds, the guideline is reset to the factory default.

Connection

This diagnosis checks the connection between each component connected to the audio unit.

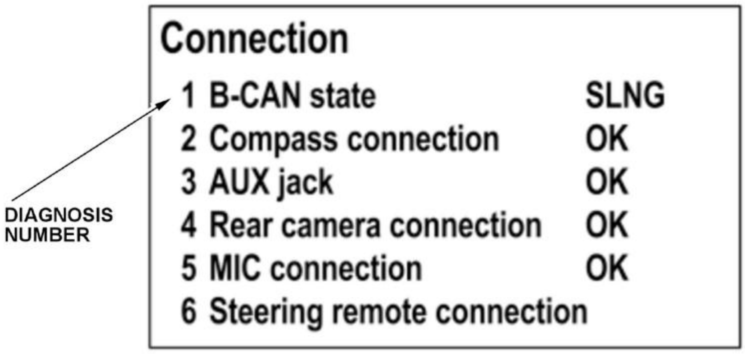

Connection

1 B-CAN state SLNG
2 Compass connection OK
3 AUX jack OK
4 Rear camera connection OK
5 MIC connection OK
6 Steering remote connection

To diagnose the Steering remote connection, press the preset No. 6 button.

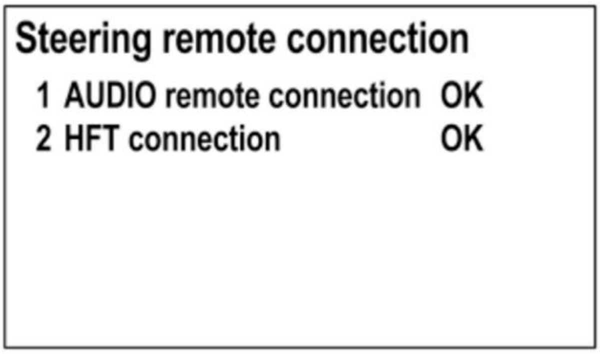
Steering remote connection

1 AUDIO remote connection OK
2 HFT connection OK

Diagnosis Number	Item	Description
1	B-CAN state	This diagnosis checks whether the audio unit is receiving B-CAN data properly. If the B-CAN state shows NG, check for B-CAN DTCs with the HDS. If no DTCs are detected, check for continuity in the B-CAN lines between the audio unit and the gauge control module.
2	Compass connection	The diagnosis check whether the audio unit is connecting the electric compass.
3	AUX jack (if equipped)	The diagnosis check whether the audio unit is connecting the auxiliary jack assembly.
4	Rear camera connection	The diagnosis check whether the audio unit is connecting the rearview camera.
5	MIC connection	This diagnosis checks whether the audio unit is connecting the HFL microphone properly.
6	Steering remote connection	This diagnosis checks whether the audio unit is connecting the audio remote-HFL switch properly. Press any audio remote-HFL switch button to check the connection.

Vehicle Information

Use this screen to confirm that the audio unit is properly receiving input signals. The displayed value changes each time according to the state of input signal.

To start the diagnosis, press the preset button to select the diagnosis number you want to check.

Vehicle Information 1/2

- Preset No. 1 button: ILLUMI
- Preset No. 2 button: VSPNE
- Preset No. 3 button: VINNO
- Preset No. 4 button: MICU_BCM
- Preset No. 5 button: PARKSENS (not available)
- Preset No. 6 button: ST_SW_PAD

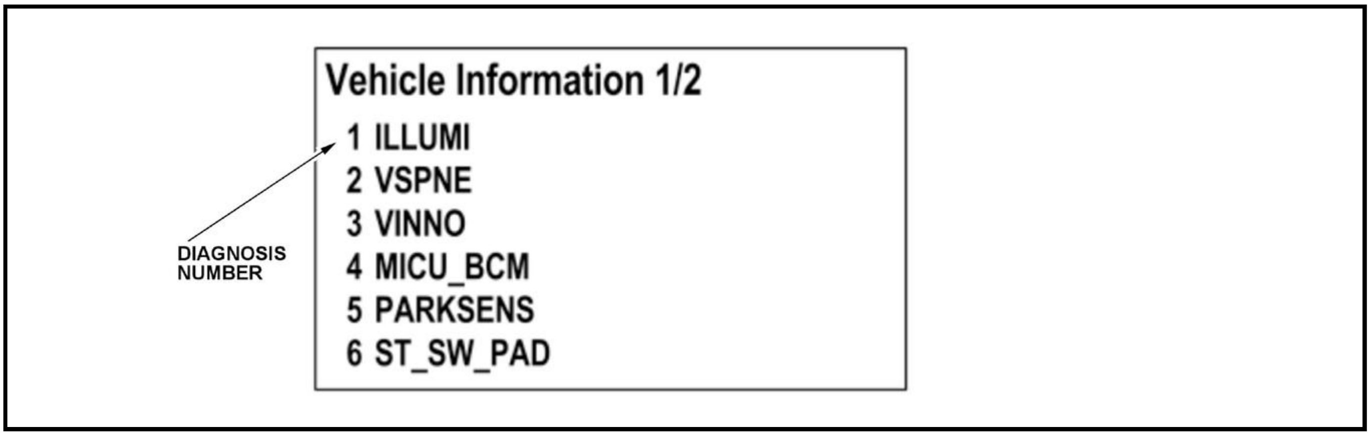
Vehicle Information 1/2
1 ILLUMI
2 VSPNE
3 VINNO
4 MICU_BCM
5 PARKSENS
6 ST_SW_PAD
DIAGNOSIS NUMBER

Vehicle Information 2/2

- Preset No. 1 button: AC
- Preset No. 2 button: GPSTIME_AHU
- Preset No. 3 button: ACCOM
- Preset No. 4 button: DA_SW_INFO_AHU

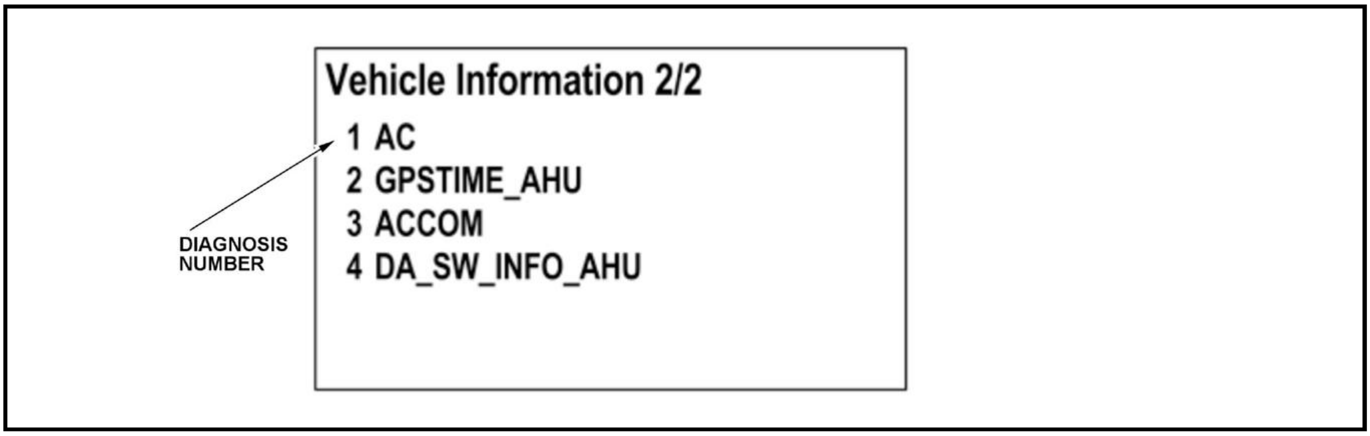
Vehicle Information 2/2
1 AC
2 GPSTIME_AHU
3 ACCOM
4 DA_SW_INFO_AHU
DIAGNOSIS NUMBER

AUDIO SYSTEM DIAGNOSTIC MODE (DISPLAY AUDIO TYPE)

NOTE:

- **Check the vehicle 12 volt battery condition first** .
- This diagnosis is applied to the audio unit (without navigation) only. **Refer to the navigation system section for audio-navigation unit System Diagnostic Mode** .
- The screens detail indicated may change depending on equipment or specification.

Start-Up Procedure and Diagnostic Menu

1. Turn the vehicle to the ON mode. If needed, start the engine.

2. Press and hold the PHONE button, the DISPLAY MODE (☼ ☽) button, and the AUDIO POWER (⏻) button until the Select Diagnosis Items menu screen is displayed:

NOTE: The buttons needs to be pressed together simultaneously.

- Self-Diagnosis Mode (runs the automatic diagnosis of the audio system)
- Detail Information and Setting (allows you to manually diagnose the audio system)

Displaying Select Diagnosis Items Menu Screen

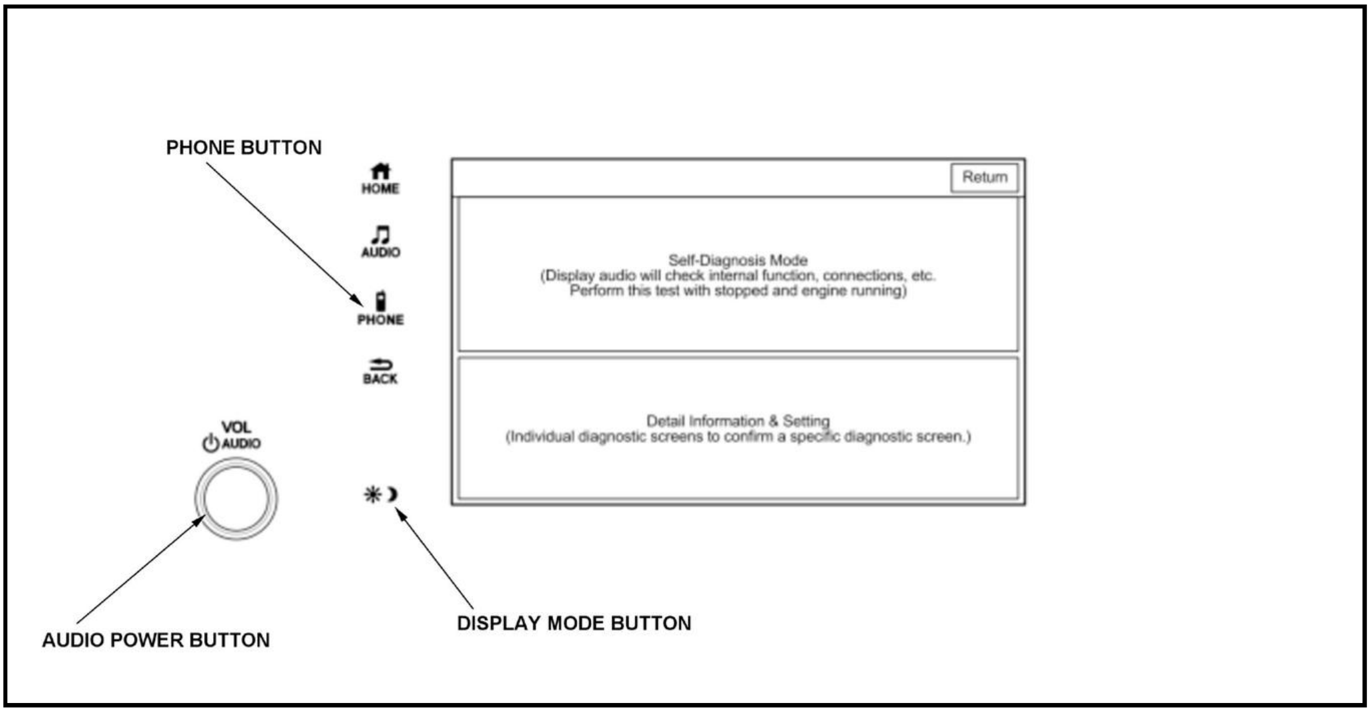
PHONE BUTTON
HOME
AUDIO
PHONE
BACK
VOL
AUDIO
AUDIO POWER BUTTON
DISPLAY MODE BUTTON
Return

Self-Diagnosis Mode
(Display audio will check internal function, connections, etc.
Perform this test with stopped and engine running)

Detail Information & Setting
(Individual diagnostic screens to confirm a specific diagnostic screen.)

Self-Diagnosis Mode (System Links)

1. Select the Self-Diagnosis Mode from the Select Diagnosis Items menu. The message at the bottom of the screen flashes indicating "Diagnosis in progress...", do not turn the vehicle to the OFF (LOCK) mode.

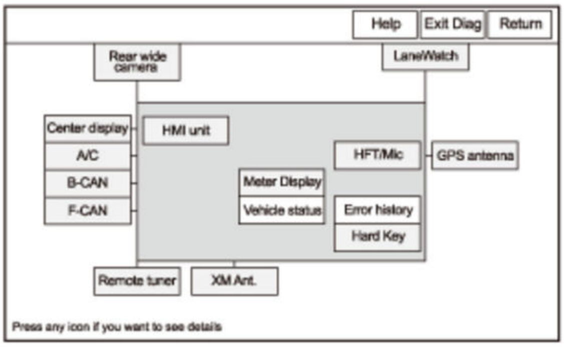
Help
Exit Diag
Return
Rear wide camera
LaneWatch
Center display
A/C
B-CAN
F-CAN
HMI unit
HFT/Mic
GPS antenna
Meter Display
Vehicle status
Error history
Hard Key
Remote tuner
XM Ant.

Press any icon if you want to see details

2. The diagnosis tests the following:

- Most of the wires connecting the external audio components shown in the block diagram.
- The results from the various components shown in the block diagram.
- The audio unit checks the microphone by listening to the "Pi Pi Pon" sound produced by the audio unit from the speakers when the diagnosis is started. This requires that the audio system be operating normally.

3. When the diagnosis finishes, the icons turn different colors based on their test status.

NOTE: By selecting the Help icon, you can see a description for each color.

Icon Colors	Description
Green	The system ran a diagnosis and the results are OK.
Red*	Errors that require replacement of hardware or harness. Examples are connection error or memory diagnosis errors. Select the red icon and check each diagnostic screen (refer to the description for diagnostic screens in the Unit Check).
Yellow	• Errors that do not require hardware replacement, or the connection check is in the state which is not done. Such as leaving the vehicle in the ACCESSORY mode or because of a missing accessory. • When the audio unit detects a failure, and stores DTC, the Error History icon turns yellow.
White	The diagnosis is running. The screen functions are locked out while the diagnosis runs.
Gray	• The system cannot automatically check this function. You have to select the diagnosis item and manually do additional testing, like checking the audio unit buttons in the Hard Key test. When you complete the Hard Key test and return to the System Links screen, the gray icon turns green. • The Vehicle Status icon anytime shows gray. • When the audio unit does not store DTCs, the Error History icon shows gray.

*: The F-CAN icon and the B-CAN icon turns red when the vehicle is in the ACCESSORY mode. Check the System Links with the engine running, and if the F-CAN icon and the B-CAN icon turns green, the system is OK at this time.

4. Select the icon to see the details of that diagnostic function. The icon colors on the screen may not change until you exit and reenter the Self-Diagnosis mode. In some cases, you may have to restart the engine for the indication to change. After you repair the affected component or harness, repeat this diagnosis.

Factory Diagnostic Screen In Line Diag and Linking

If the vehicle left the factory in the factory diagnostic mode, you will see this screen every time you turn the vehicle to the ON mode. Sometimes this screen also appears after you replace the audio unit with a new or remanufactured unit. Normally the factory does the steps necessary to verify proper operation and terminate the factory diagnosis. Until the proper confirmation sequence is done, the screen appears every time you turn the vehicle to the ON mode.

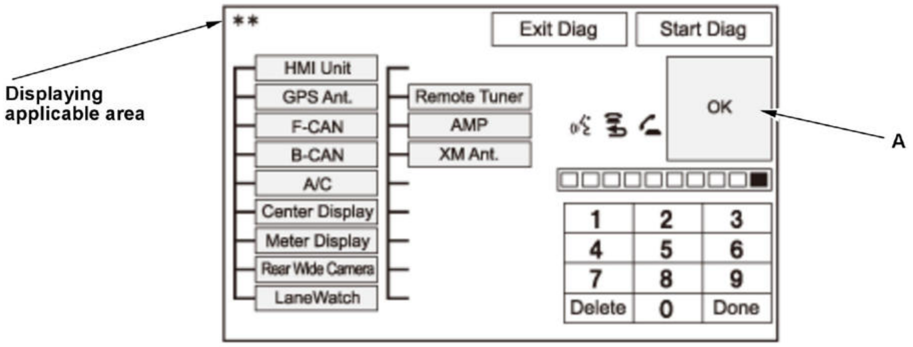

NOTE: The system cannot complete a full diagnosis unless vehicle is in the ON mode.

1. Select the Start Diag icon to check the connection between the audio unit and related components. When the connection diagnosis is in progress, the icon (A) indicates Detecting..., and each icon turns white. If the connection is OK, the icon turns green. If the connection is NG, the icon turns red. Check for connection between the audio unit and related unit on the failure connection line.

NOTE: When the item is a variation equipment, the icon shows yellow, and it is not reflected in diagnosis.

2. If the connection diagnosis is finished, press the steering commander switch buttons (the TALK button, PICK-UP button, and the HANG-UP/BACK button) to check the HFL switch. As each button is pressed, the corresponding icon on the display should turn green.

3. Press the TALK button, and within 5 seconds in a normal voice say "testing". The Mic Level indicator on the screen should momentarily turn green.

4. If all the diagnosis are OK, the icon (A) indicates OK. Select the Exit Diag icon to exit the diagnostic mode. The In Line Diag should not appear again.

Forced Completing of In Line Diag and Linking

Follow these steps to prevent the screen from appearing in the future:

1. While displaying the In Line Diag screen, press and hold the PHONE button, the DISPLAY MODE (☀ ☽) button, and the AUDIO POWER (⏻) button until the Select Diagnosis Items menu screen is displayed.

2. While displaying the Select Diagnosis Items menu screen, press and hold the HOME button until the In Line Diag setting screen is displayed.

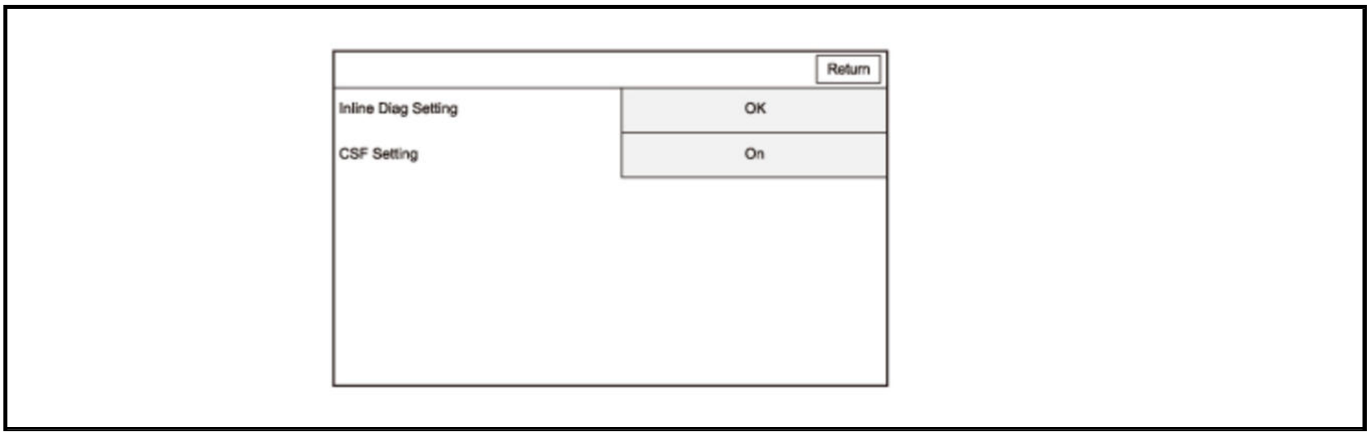

Inline Diag Setting	OK
CSF Setting	On

3. Set the Inline Diag Setting to OK (complete). The system restarts and a normal start-up process occurs. The In Line Diag should not appear again.

Detail Information and Setting

This section allows you to run a specific diagnosis and allows additional setting choices for some screens that are not shown when touching an icon from the System Links screen.

Select the item you want to check, and the test begins. To return to the previous screen, select the Return icon.

- Monitor Check
- Unit Check
- Audio Check
- Guideline Setup
- Functional Setup
- B-CAN*
- F-CAN*
- Version
- Vehicle Status*
- GPS Information

*: Refer to the Unit Check for details.

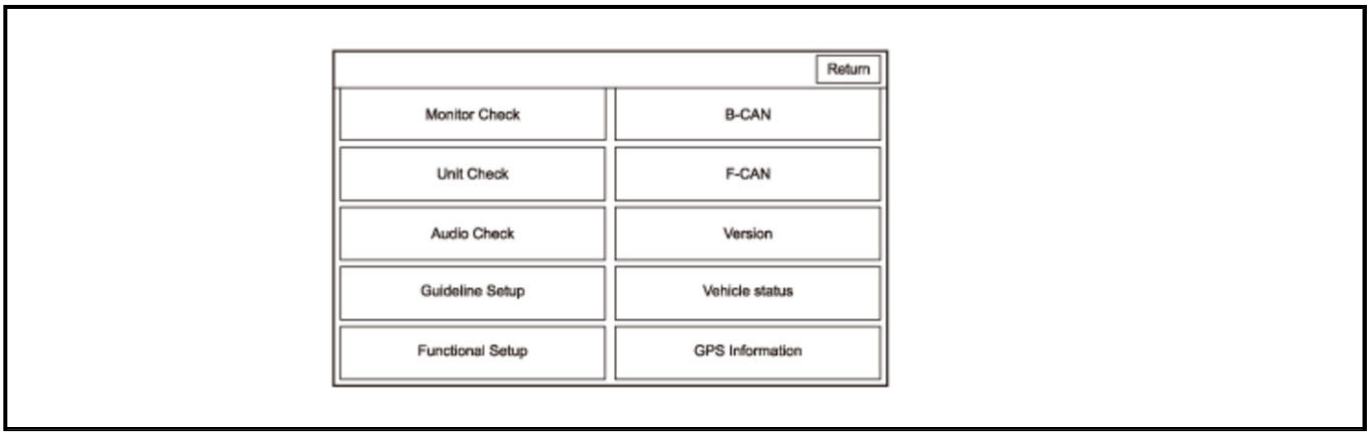
Return
Monitor Check
B-CAN
Unit Check
F-CAN
Audio Check
Version
Guideline Setup
Vehicle status
Functional Setup
GPS Information

Monitor Check

These screens allow you to troubleshoot the LCD display on the center display unit. Select the item you want to check, and follow the diagnostic instructions.

- RGB Color
- Gray Tone
- White Raster
- Black Raster
- Color Pattern
- Touch Panel Check
- Touch Panel Adjustment
- Monitor Adjustment

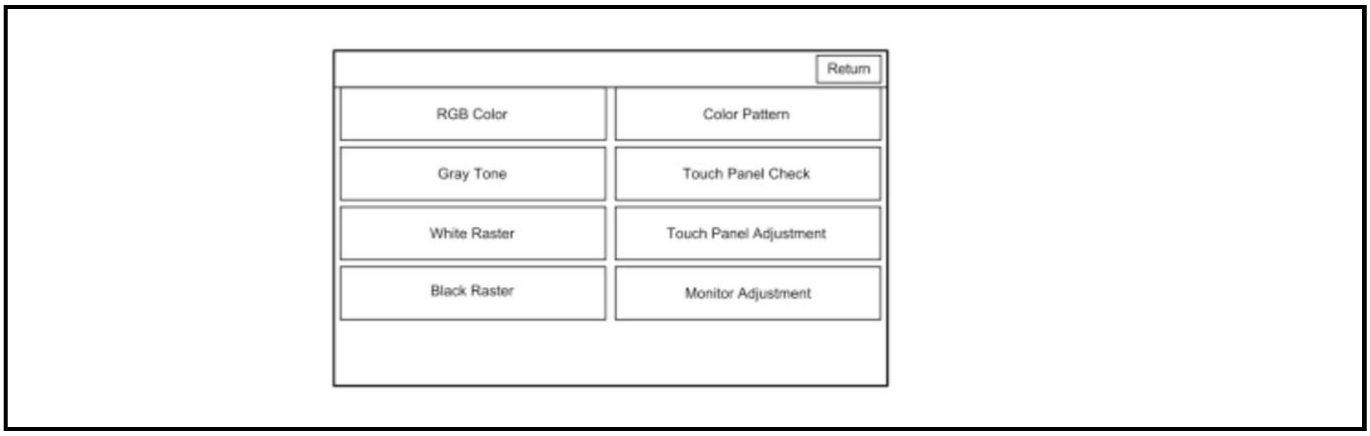
Return
RGB Color
Color Pattern
Gray Tone
Touch Panel Check
White Raster
Touch Panel Adjustment
Black Raster
Monitor Adjustment

RGB Color

NOTE: Displaying an anomaly in this diagnosis screen is not necessarily a failure.

This screen verifies that the display is receiving the video (R, G, B, and Composite sync) signals properly. The three primary colors should all appear without distortion. The combination of all three should produce a central white section. If any of the color circles are missing, **replace the center display unit** .

The diagnostic screen is displayed in full screen mode while pressing the HOME button.

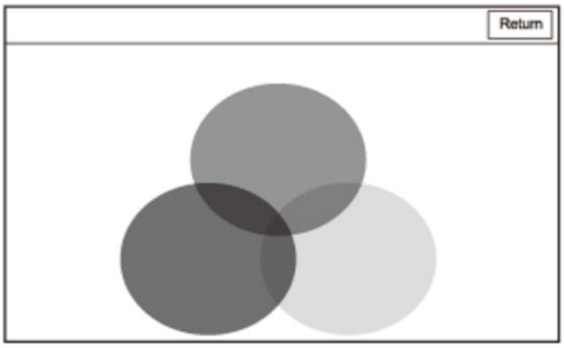

Gray Tone

NOTE: Displaying an anomaly in this diagnosis screen is not necessarily a failure.

This screen checks problems with contrast in 16 gradations. You should be able to see the changes from bar to bar across the scale. It is normal for the two bars on either side to appear the same.

The diagnostic screen is displayed in full screen mode while pressing the HOME button.

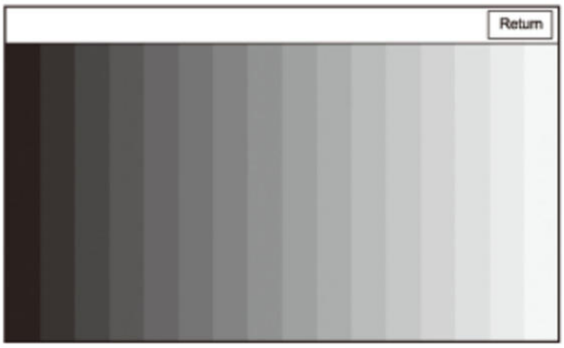

White Raster

NOTE: Displaying an anomaly in this diagnosis screen is not necessarily a failure.

This screen checks for pixels that may be dead (off). The entire display must be white.

The diagnostic screen is displayed in full screen mode while pressing the HOME button.

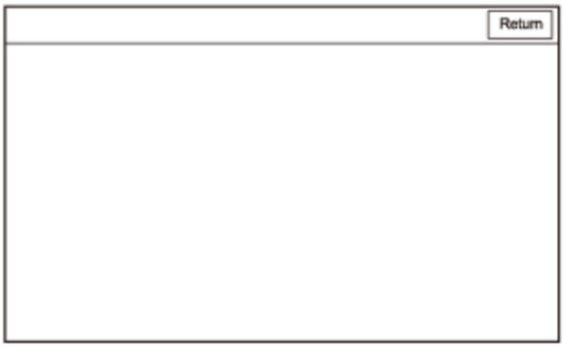

Black Raster

NOTE: Displaying an anomaly in this diagnosis screen is not necessarily a failure.

This screen checks for pixels that may be stuck on. The entire display must be black.

The diagnostic screen is displayed in full screen mode while pressing the HOME button.

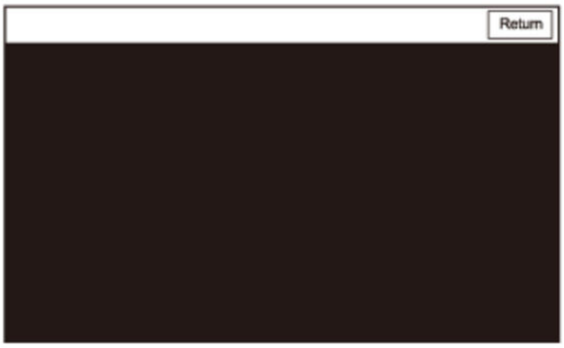

Color Pattern

NOTE: Displaying an anomaly in this diagnosis screen is not necessarily a failure.

The screen shows the colors being used for the map and menu screens. This is for factory use only. To check the color signal, use the RGB Color diagnosis.

The diagnostic screen is displayed in full screen mode while pressing the HOME button.

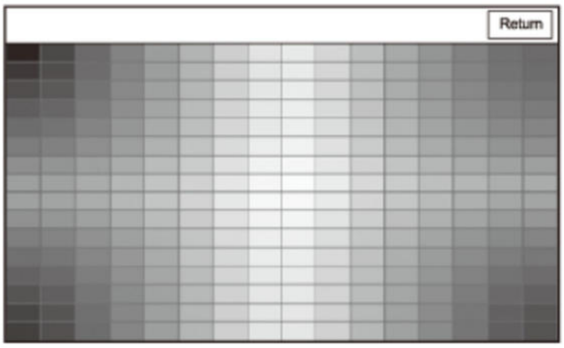

Touch Panel Check

This check allows you to check the sensitivity of touch panel. If the screen is operated in the state while the telop (A) is displayed, the track changes to black, and the action name (Tap, Double tap, Pinch, Slide, and Flick) appears on the caption (B) for 5 seconds. The screen displays the coordinates of where the screen was touched. If the BACK button is pressed, the screen returns to the Monitor Check menu. If another location other than the location pressed responds, do the Touch Panel Adjustment.

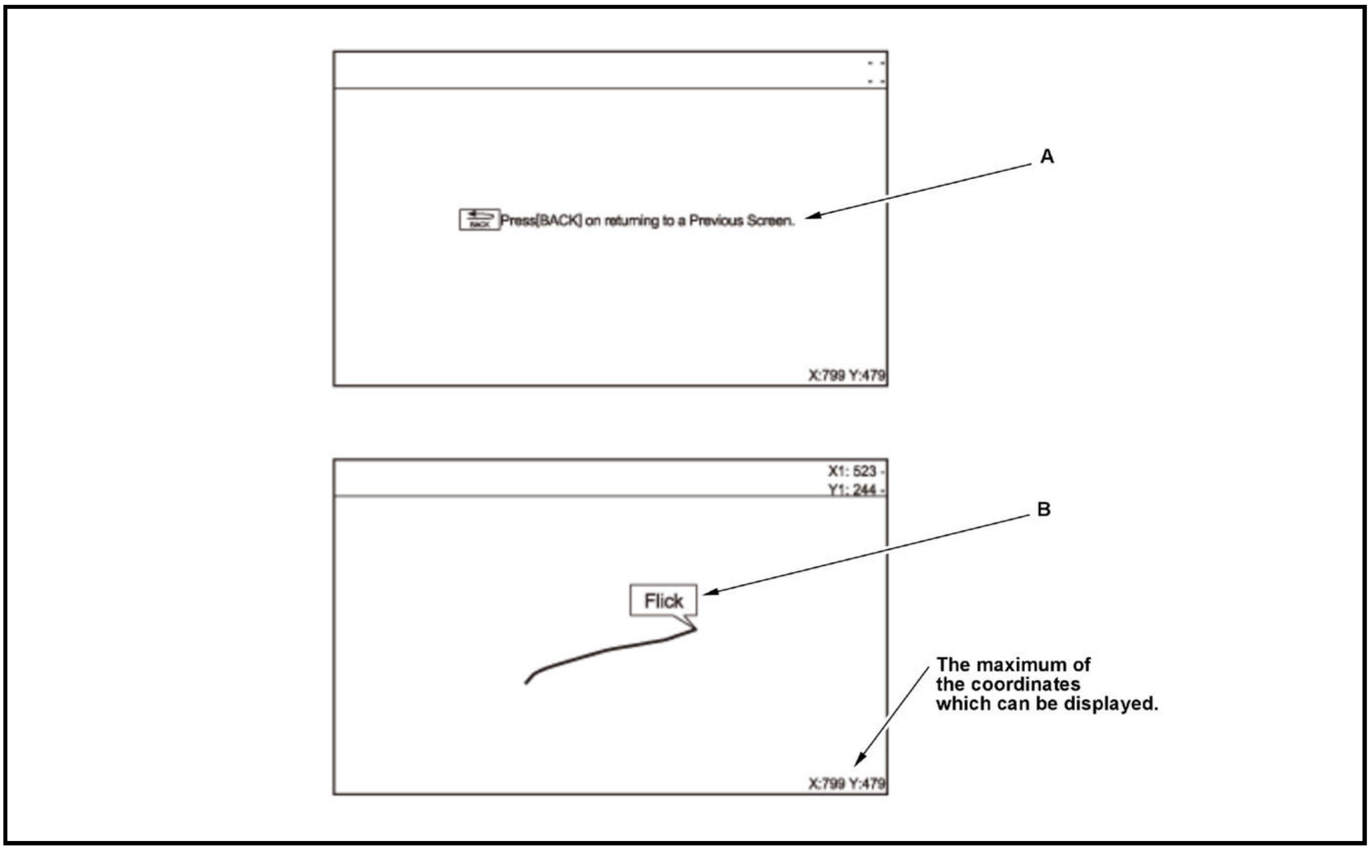

Press[BACK] on returning to a Previous Screen.

BACK
A
X:799 Y:479
X1: 523 -
Y1: 244 -
B
Flick
The maximum of the coordinates which can be displayed.
X:799 Y:479

Touch Panel Adjustment

This screen adjusts the alignment of these touch locations with the location of the buttons images on the screen.

The screen consists of the + icons. Touch the center of the five + icons on order 1-5. To store the settings, select the Set.

NOTE: Touch the center of the + icon correctly.

When selecting the Set icon, the audio unit reflects the result of the touch panel adjustment. Select Return to exit the Touch Panel Adjustment screen.

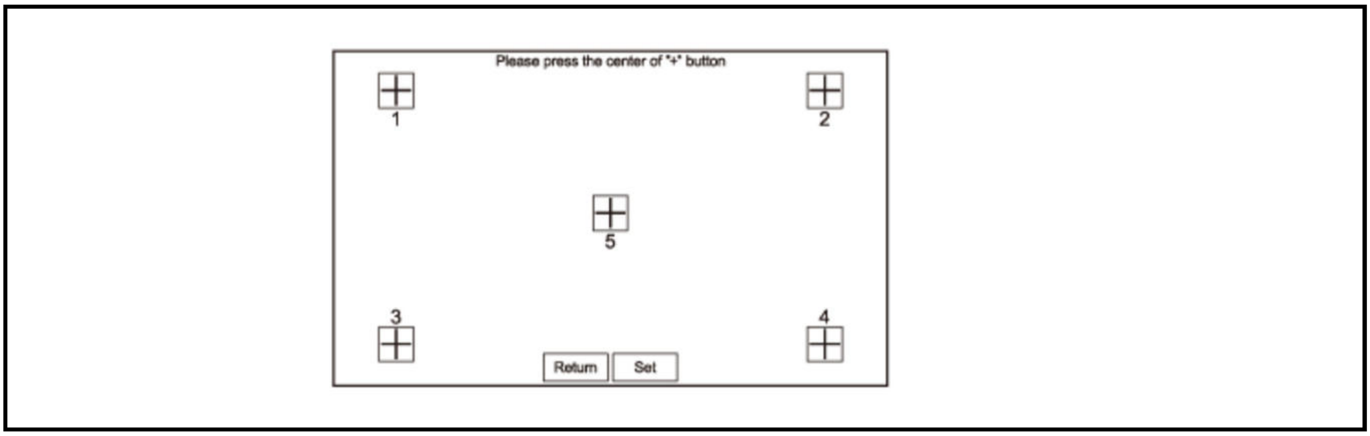

Please press the center of "+" button

1
2
5
3
4
Return
Set

Monitor Adjustment

This screen adjusts the brightness, etc. of the camera (rearview or LaneWatch) image.

Select Return to exit the Monitor Adjustment screen.

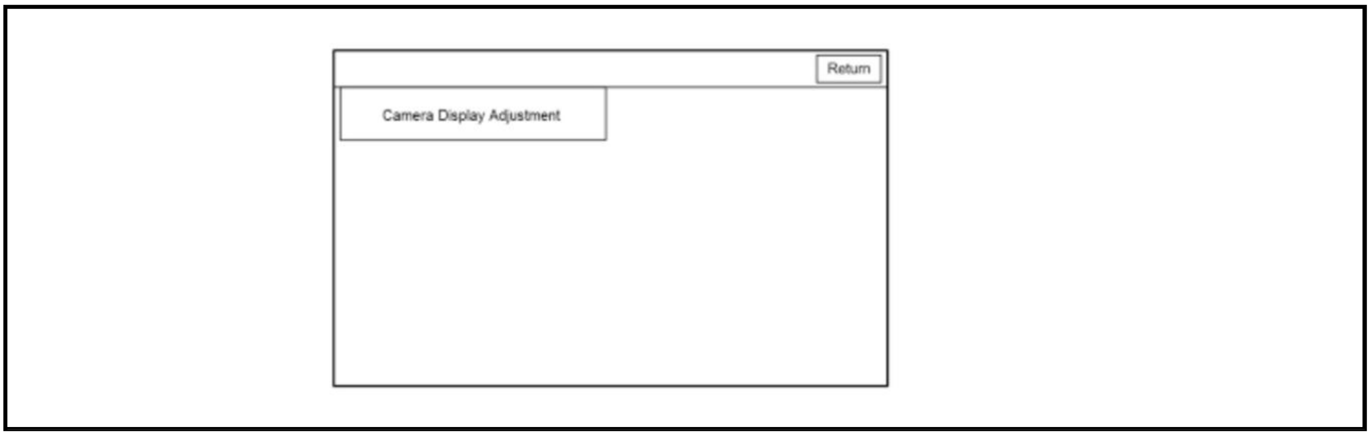

Unit Check (Quick Check)

These screens allow you to diagnose the audio unit and related units. Some of the tests and screens that are displayed under the Unit Check are same as the checks listed under the Detail Information and Setting.

To start the test, select the item you want to check.

NOTE: These items describe in indication order. Swipe the screen to check the next items.

- HMI unit
- F-CAN
- B-CAN
- USB
- Vehicle status
- HFL/Mic
- Hard Key
- Error history
- Rear wide camera
- Front Camera (not supported)
- LaneWatch (if equipped)
- Remote tuner
- AMP
- XM Ant.
- CD (not supported)
- Center display
- iPhone
- Meter Display
- GPS antenna
- A/C
- MirrorLink
- Telematics Diag (not supported)

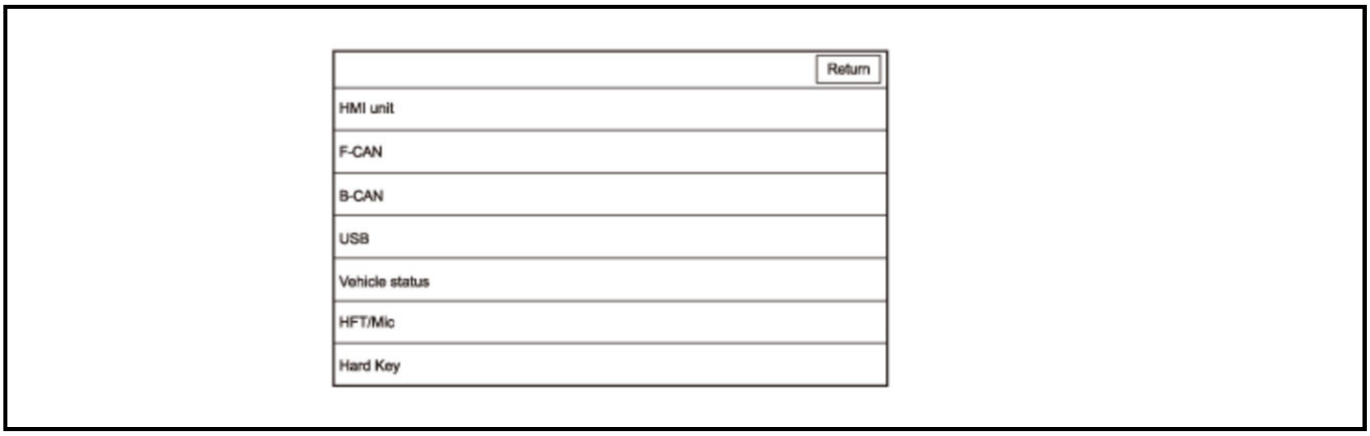

HMI Unit

This diagnosis checks for problems in the audio unit processor. When you start this diagnosis, the audio unit may freeze or delay up to a minute while the diagnosis runs.

- D-RAM: Displays the result of the access to the D-RAM (OK/NG). If NG, **check for hard error codes**.
- Model: Displays the audio unit manufacture's model number.
- Serial No. : Displays the audio unit serial number. That should be the same as the serial number found on the upper side of the audio unit.
- Flash: Displays the result of the access to the flash memory (OK/NG). If NG, **replace the audio unit** .

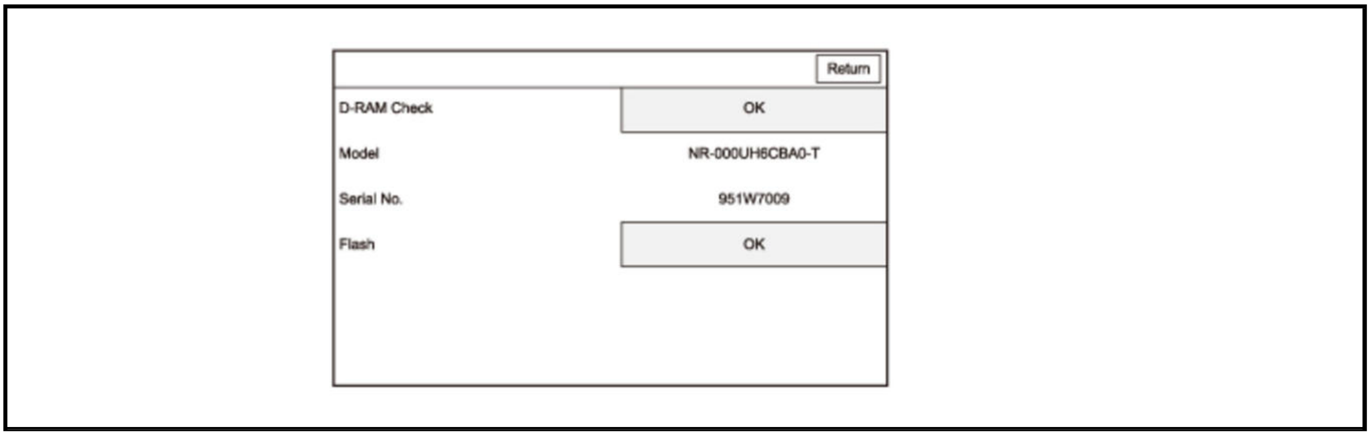

D-RAM Check	OK
Model	NR-000UH6CBA0-T
Serial No.	951W7009
Flash	OK

F-CAN

NOTE:

- This diagnosis must have the engine running.
- Swipe the screen to check the next items.

This diagnosis checks whether the audio unit has received specific F-CAN data. If F-CAN shows NO ERROR, an error is not detected between the F-CAN bus and the audio unit.

- If F-CAN shows RX ERROR, **replace the audio unit** .
- If F-CAN shows TIME OUT, There is a possibility that some items are NG (red icon). When all the items from each transmitting unit is NG, check for F-CAN DTCs with the HDS. If DTCs not detected, check for continuity in the F-CAN lines between the audio unit and the transmitting unit.

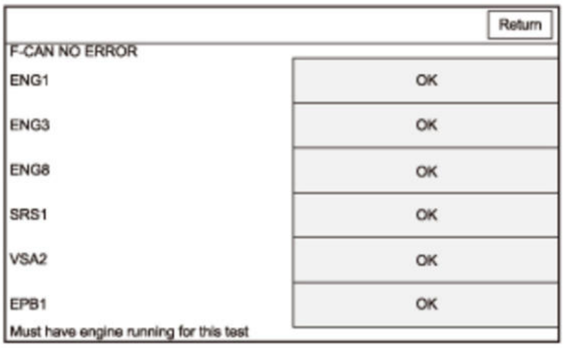

F-CAN NO ERROR

ENG1	OK
ENG3	OK
ENG8	OK
SRS1	OK
VSA2	OK
EPB1	OK

Must have engine running for this test

B-CAN

NOTE:

- This diagnosis must have the engine running.
- Swipe the screen to check the next items.

This diagnosis checks whether the audio unit has received specific B-CAN data. If B-CAN shows NO ERROR, an error is not detected between the B-CAN bus and the audio unit.

- If B-CAN shows RX ERROR, replace the audio unit .
- If B-CAN shows TIME OUT, There is a possibility that some items are NG (red icon). When all the items from each transmitting unit is NG, check for B-CAN DTCs with the HDS. If DTCs not detected, check for continuity in the B-CAN lines between the audio unit and the transmitting unit.

Item	Transmitting Unit
VSPNE, AT, ILLUMI, ST_SW_PAD, VINNO, STRG_ANG, ODO_TRIP, TRICOM1 - 4, METER_RMD	Gauge control module

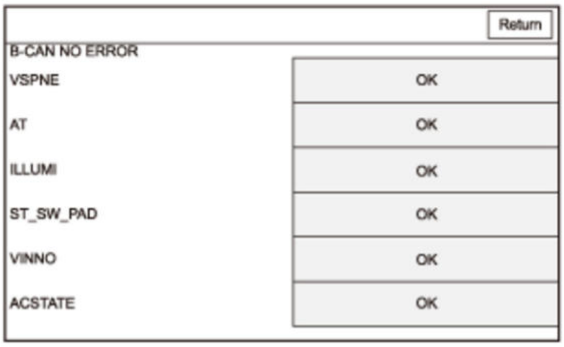

B-CAN NO ERROR

VSPNE	OK
AT	OK
ILLUMI	OK
ST_SW_PAD	OK
VINNO	OK
ACSTATE	OK

USB

This diagnosis displays the USB device status that is connected to the audio unit.

If the USB memory device is connected to the USB port A or B, the screen displays the USB controller status, the Bus power status, and the device status.

When you connect a USB mass storage device, you can see the capacity used and the amount of free space available.

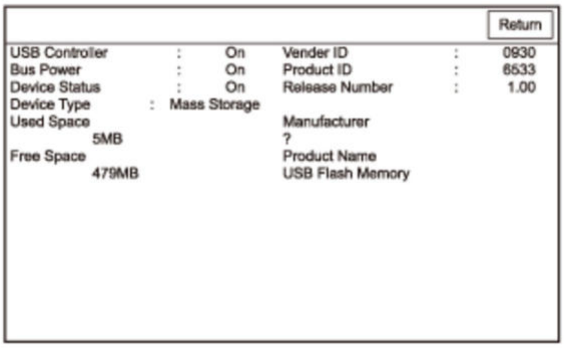

USB Controller : On
Bus Power : On
Device Status : On
Device Type : Mass Storage
Used Space 5MB
Free Space 479MB
Vender ID : 0930
Product ID : 6533
Release Number : 1.00
Manufacturer ?
Product Name USB Flash Memory

Vehicle Status

Use this screen to confirm that the audio unit is properly receiving input signals. The displayed value changes each time according to the state of input signal.

NOTE: These items describe in indication order. Swipe the screen to check the next items.

Item	Input	Description
BACK	BACK LT line	• 1: When the transmission is shifted to R position/mode • 0: When the transmission is shifted to any position/mode other than R position/mode
IG	B-CAN lines	• 1: When the vehicle is in the ON mode • 0: When vehicle is in the ACCESSORY mode

Item	Input	Description
C_METER_ILL_STATUS	B-CAN lines	• 1: When position lights, or headlights are on • 0: When position lights, or headlights are off
C_METER_ILL_CANCEL	B-CAN lines	• 1: When the dashlights brightness control knob is more than 90% brightness with the position lights turned on • 0: When the dashlights brightness control knob is less than 90% brightness with the position lights turned on
C_METER_ILL_STEP	B-CAN lines	With the position lights on, use the dashlights brightness control knob to dim and brighten the gauge. The value changes from 1 (max low) to 22 (max high).
Speed	B-CAN lines	This item indicates the vehicle speed (km/h).
TV-PARK	B-CAN lines	• 1: When the parking brake is applied • 0: When the parking brake is not applied
NAVI-PARK	B-CAN lines	• 1: When the parking brake is applied • 0: When the parking brake is not applied
Current received VIN	B-CAN lines	This item indicates the VIN that received from the PCM.

Item	Input	Description
Initial registered VIN	B-CAN lines	This item indicates the initial registration VIN (10 is added to the beginning of indicated VIN) that is saved in the audio unit.
Last registered VIN	B-CAN lines	This item indicates the additional registration VIN (11 is added to the beginning of indicated VIN) when the audio unit is substituted into another vehicle, or when a PCM is substituted or replaced into this vehicle.

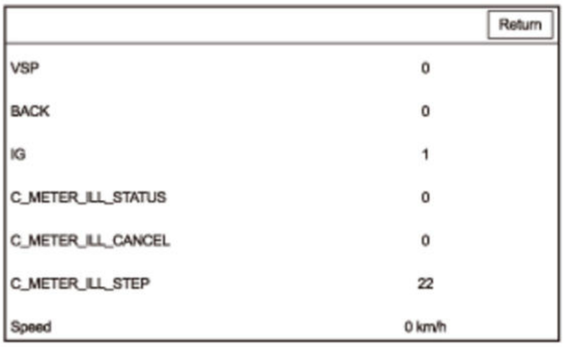

VSP 0
BACK 0
IG 1
C_METER_ILL_STATUS 0
C_METER_ILL_CANCEL 0
C_METER_ILL_STEP 22
Speed 0 km/h

HFL/Mic

This diagnosis allows you to independently test the Bluetooth module and the microphone. The Bluetooth module is built into the audio unit. To properly check the microphones, make sure you are sitting in the driver's seat.

NOTE: Before this diagnosis, check the response of the TALK button on the audio remote-HFL switch by the Hard Key diagnosis.

- If the Bluetooth Connection Diagnosis shows NG, replace the audio unit .
- Press the TALK button, and within 5 seconds in a normal voice say "testing" toward the microphone in the roof console. The Mic Level indicator on the screen should momentarily turn green. The test is set to OK by indicating green more than 6 steps. If there is no Mic Level movement when you speak, go to HFL does not work properly troubleshooting .

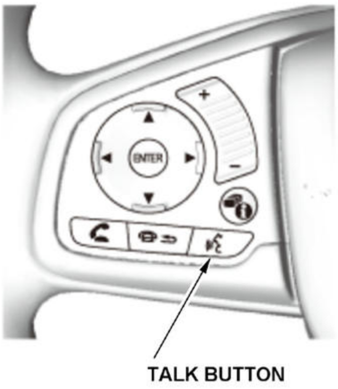

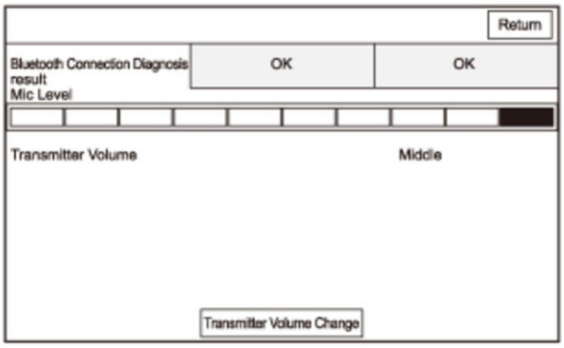

Bluetooth Connection Diagnosis result OK OK
Mic Level
Transmitter Volume Middle

If you select the Transmitter Volume Change icon, the transmitter volume can be selected from three selection (Large, Middle, Small).

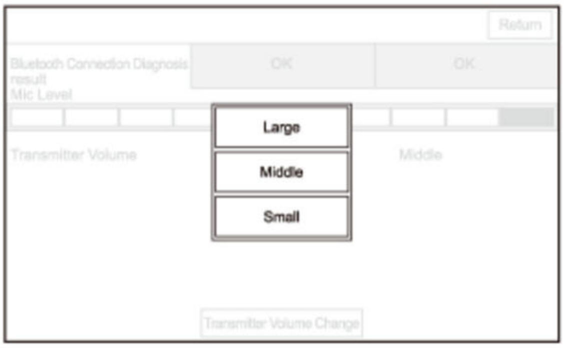
Return
Bluetooth Connection Diagnosis result
OK
OK
Mic Level
Large
Middle
Small
Transmitter Volume
Middle
Transmitter Volume Change

Hard Key

This diagnosis checks the center display unit face buttons, and the audio remote-HFL switch. For this model, the audio remote-HFL switch buttons use the data bus via the gauge control module for communications.

To complete the test, press each buttons. As each function is tested, the corresponding button on the display should highlight. If the test cannot be completed, the corresponding icon on the Hard Key menu screen shows red.

- If any button of the center display unit does not respond, **replace the center display unit** .
- If any button of the audio remote-HFL switch does not respond, **replace the audio remote-HFL switch** .
- If all buttons of the audio remote-HFL switch do not respond, go to **Audio remote-HFL switch does not work properly (audio unit buttons work) troubleshooting**.

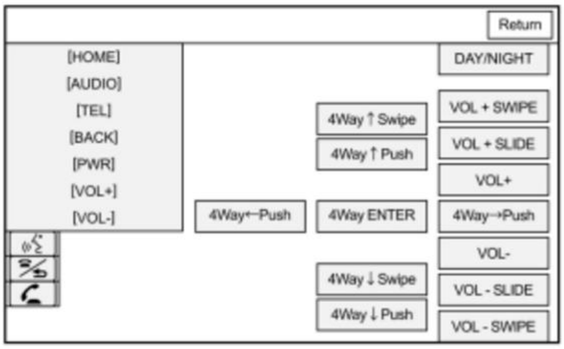
Return
[HOME]
[AUDIO]
[TEL]
[BACK]
[PWR]
[VOL+]
[VOL-]
DAY/NIGHT
4Way ↑ Swipe
4Way ↑ Push
VOL + SWIPE
VOL + SLIDE
VOL+
4Way←Push
4Way ENTER
4Way→Push
VOL-
4Way ↓ Swipe
4Way ↓ Push
VOL - SLIDE
VOL - SWIPE

Error History

If you select Hard Error or Soft Error, you can see the error information. **Refer to How to Check for Error History to use this diagnosis**.

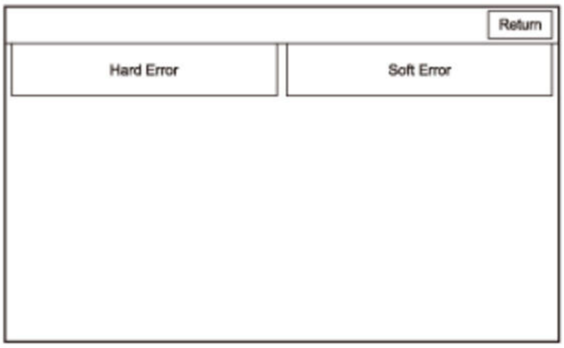
Return
Hard Error
Soft Error

Rear Wide Camera

This diagnosis checks the rearview camera connection.

- If Connection shows NG, **check for hard error codes**.
- If Connection shows OK, press the HOME button to display the rearview camera image. To return to the previous screen, press the HOME button again.

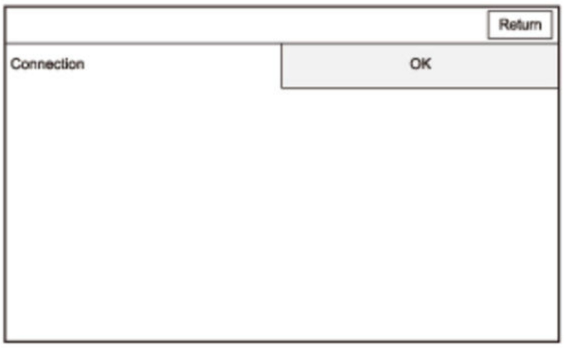

Connection OK

LaneWatch

This diagnosis checks the LaneWatch camera connection.

- If Connection shows NG, **check for hard error codes**.
- If Connection shows OK, press the HOME button to display the LaneWatch camera image. To return to the previous screen, press the HOME button again.

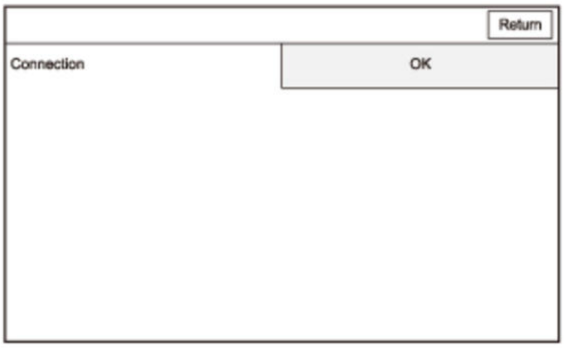

Connection OK

Remote Tuner

NOTE:

- For factory use only. Do not alter any settings unless directed.
- These items describe in indication order. Swipe the screen to check the next items.

This diagnosis displays the external AM/FM radio tuner (tuner unit) status.

- System µcom version display: Displays the tuner unit processor version.
- Serial number display: Displays the tuner unit serial number. That should be the same as the serial number found on the upper side of the tuner unit.
- Frequency: Displays frequency of the radio station which is being received. Frequency can be changed by selecting each icon (A).
- Source can be changed in this order: Radio sources by selecting the Band Change icon.
- Radio reception level display: Displays radio reception level (dB). The AM/FM antenna power status can be changed to on or off by selecting the Ant +B OFF icon.

- Target Area: Displays the destination of the tuner unit at 2 digits.
- Operating status display*: If the vehicle has diversity antenna, you can select the radio antenna function from M (Main), S (Sub), or P (Diversity).
- RBDS BER display: Displays the RBDS bit error ratio.
- SNR display: Displays the Sound/Noise ratio about the AM or FM.
- Total preset number: Displays number of radio station preset about the AM or FM.
- HD functions ON/OFF: Displays the HD function is available (YES) or not available (NO).
- VOL: Displays the current volume level.
- Split Mode: Displays the split mode on or off. That can be changed by selecting the Split Mode icon.
- Blend Mode: Displays the blend mode which is being received. The blend mode can be changed to AUTO/ANALOG/DIGITAL by selecting the Blend Mode icon.
- HD Mode: Displays the HD mode status (ON: HD, OFF: analog) at frequency of the radio station which is being received. That can be changed by selecting the HD Mode icon.

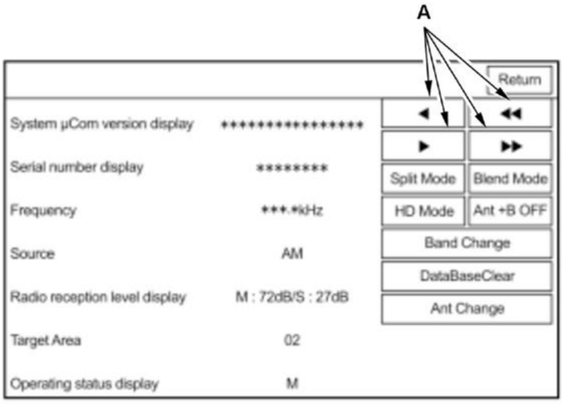

System μCom version display ****************
Serial number display ********
Frequency ***.*kHz
Source AM
Radio reception level display M : 72dB/S : 27dB
Target Area 02
Operating status display M

XM Ant.

This diagnosis checks the XM antenna connection between the audio unit and the roof antenna. The XM radio tuner is built into the audio unit.

If Connection shows NG, check for hard error codes.

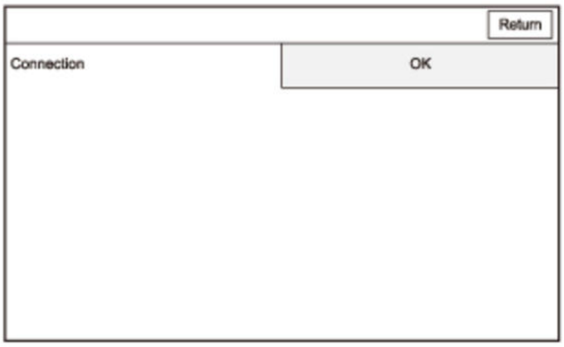

Connection OK

AMP

This diagnosis checks the digital bus (RS485) connection between the audio unit and the stereo amplifier.

If Connection shows NG, go to No sound is heard from all the speakers (display is normal) troubleshooting.

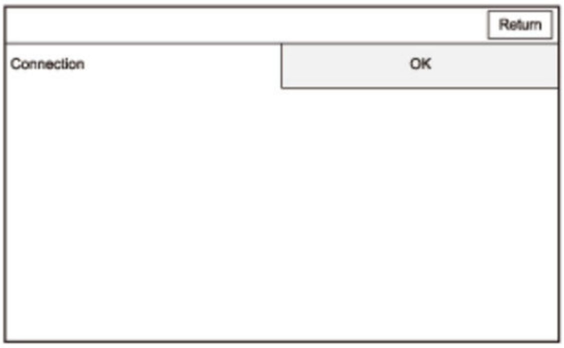

Connection OK

Center display

These items describe in indication order. Swipe the screen to check the next items.

This diagnosis checks the digital bus (LVDS1) connection between the audio unit and the center display unit, and displays the center display unit status.

- Connection: Checks the digital bus (LVDS1) between the audio unit and the center display unit. This item should indicate OK.
- Unit Status Information: Indicates the center display unit processor status. If any of the status indicates NG, turn the vehicle to the OFF (LOCK) mode then the ON mode, and recheck the status. If the status still indicates NG, **replace the center display unit** .
- Unit Version Information: Displays the center display unit various version number.

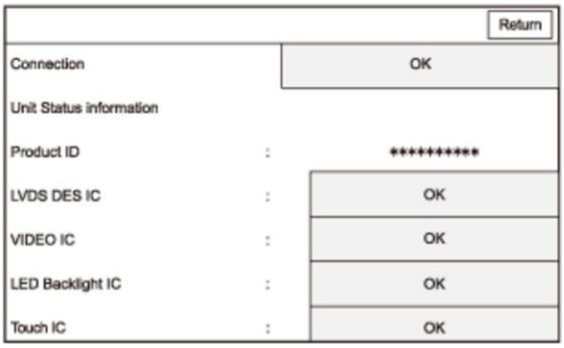

Connection OK

Unit Status information

Product ID : **********

LVDS DES IC : OK

VIDEO IC : OK

LED Backlight IC : OK

Touch IC : OK

iPhone

This screen shows the information about the connected iPhoneB® by App Mode.

Meter Display

This diagnosis checks the digital bus (LVDS2) between the audio unit and the gauge control module.

If Connection shows NG, **go to The MID does not display the audio unit information troubleshooting**.

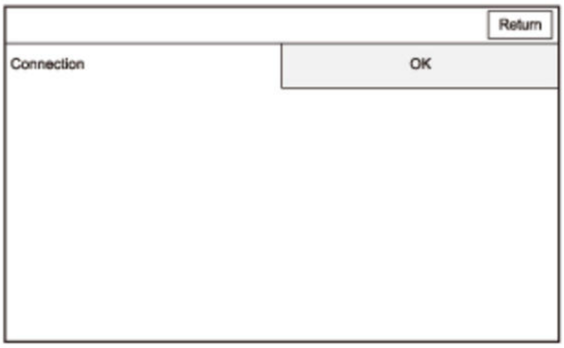

Connection	OK

GPS Antenna

This diagnosis checks the GPS antenna connection.

If Antenna shows NG, the GPS antenna may be failure. **Check for hard error codes**.

Select Information to see the GPS satellite details.

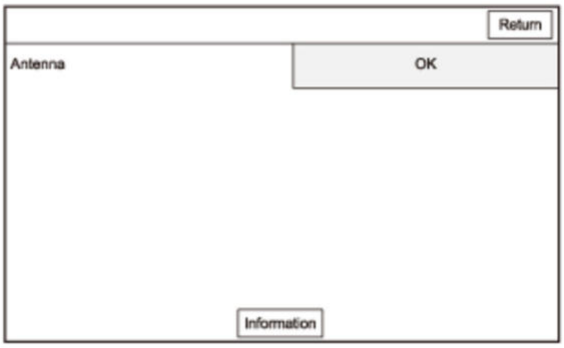

Antenna	OK

A/C

This diagnosis detects if the vehicle is in the ON mode using information provided over the F-CAN bus, then it tests the climate control signal via the B-CAN bus between the audio unit and the climate control unit. Make sure the engine is running for this test.

If Connection shows NG, **check for hard error codes**.

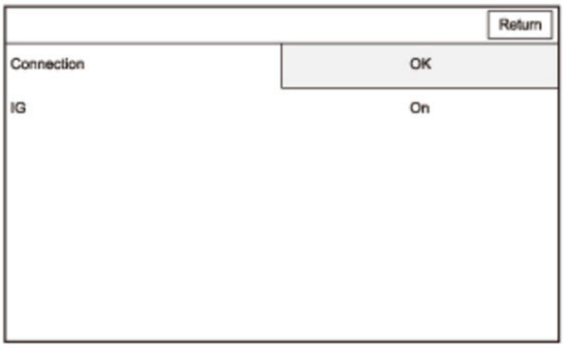

Connection	OK
IG	On

MirrorLink

This screen shows the information about the connected smartphone by MirrorLink.

Audio Check

These screens allow you to troubleshoot the audio function. Select the Speaker Check icon.

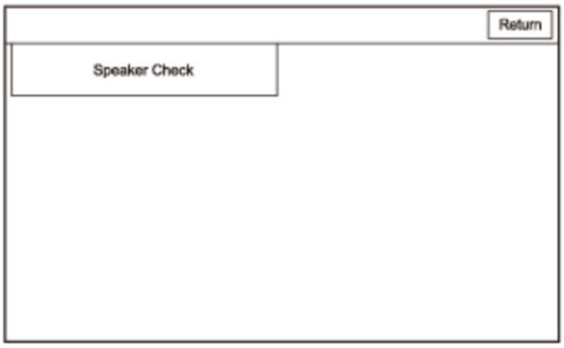

Speaker Check

NOTE:

- Make sure the audio system is off before this diagnosis.
- While doing the diagnosis, the fader and the balance positions are set to the center.

This diagnosis checks the audio speakers individually.

Select the UP icon or the Down icon to check speakers. A tone should sound from the speaker.

When you select the Up icon, the system checks the speakers in this order: ① -> ② -> ③ -> ④ -> ⑤ -> ⑥ -> ⑦ -> ⑧ -> ⑨ -> ⑩ -> ①
When you select the Down icon, the system checks the speakers in this order: ① -> ⑩ -> ⑨ -> ⑧ -> ⑦ -> ⑥ -> ⑤ -> ④ -> ③ -> ② -> ①

B	Display Message	Vehicle Test Condition
①	FR-L	You should hear a tone from the left front door speaker and the left front tweeter* 2.
② * 1	FRTW-L	You should hear a tone from the left front tweeter.
③	FR-R	You should hear a tone from the right front door speaker and the right front tweeter* 2.
④ * 1	FRTW-R	You should hear a tone from the right front tweeter.
⑤	RR1-R	You should hear a tone from the right rear door speaker and the right rear tweeter* 2.
⑥ * 1	RR1TW-R	You should hear a tone from the right rear tweeter.
⑦ * 1	SW1	You should hear a tone from the subwoofer.
⑧	RR1-L	You should hear a tone from the left rear door speaker and the left rear tweeter* 2.
⑨ * 1	RR1TW-L	You should hear a tone from the left rear tweeter.

B	Display Message	Vehicle Test Condition
⑩	ALL	You should hear a tone from all speakers.

*1: With stereo amplifier
*2: Without stereo amplifier

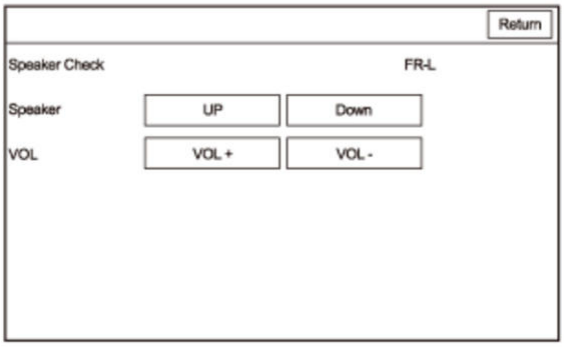
Return
Speaker Check
FR-L
Speaker
UP
Down
VOL
VOL +
VOL -

Guideline Setup

These screens adjusts the rearview camera image guide lines. Select the Rear wide camera icon to adjust the guide lines.

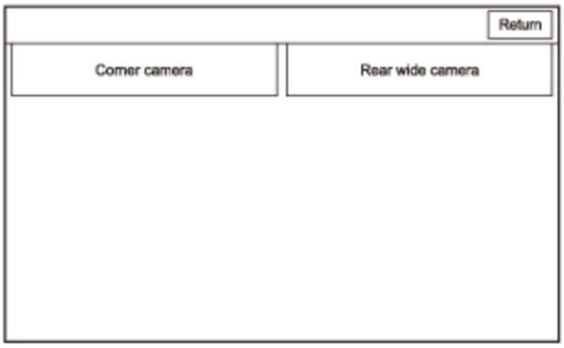
Return
Corner camera
Rear wide camera

Rear Wide Camera

Select the item you want to adjust.

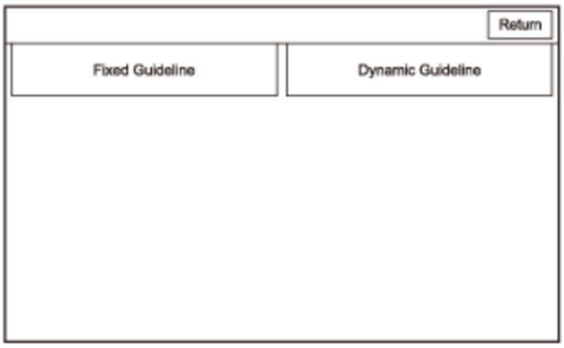
Return
Fixed Guideline
Dynamic Guideline

Select the view mode icons (Wide View, Normal View, Top Down View) you want to adjust.

NOTE: The Top Down View cannot be selected when the dynamic guideline is selected.

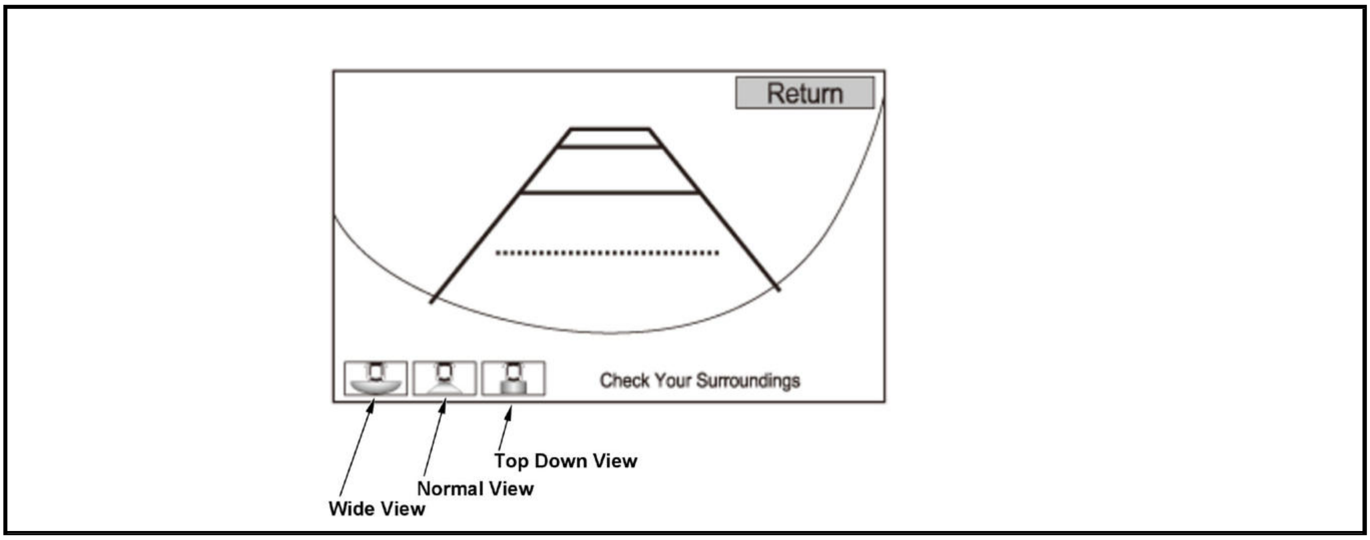
Return
Check Your Surroundings
Top Down View
Normal View
Wide View

Press the PHONE button to display the sub menu.

- Default: All guidelines can be reset to the factory specification.
- Save: Reflects the result of the guideline adjustment.
- Guideline Setup: Adjust the guideline.
- Message Setup: Adjust the caution message position.
- Rudder Angle (Dynamic Guideline): The steering angle which adjusts the position of the chosen guideline.

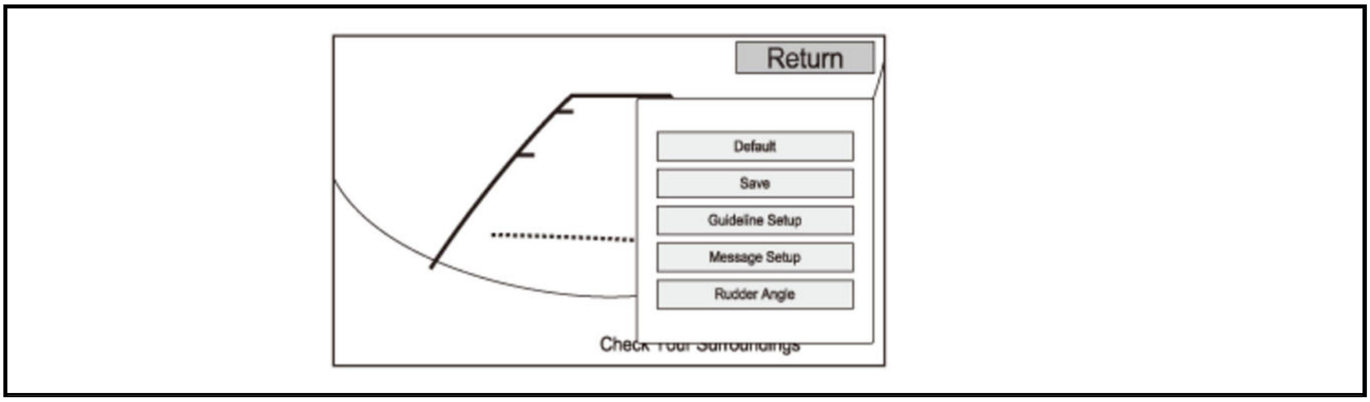
Return
Default
Save
Guideline Setup
Message Setup
Rudder Angle
Check Your Surroundings

Guideline Setup

Touch each arrow icon to move the guidelines up/down or left/right. The screen displays the information about the adjusted distance and its direction.

If you want to keep the setting, press the PHONE button to display the settings sub menu. The audio unit saves the setting by selecting the Save icon on the settings sub menu.

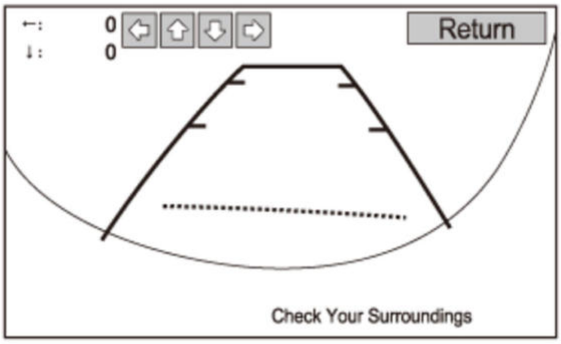
←: 0
↓: 0
Return
Check Your Surroundings

Message Setup

Touch each arrow to move the message (A) up/down or left/right.

If you want to keep the setting, press the PHONE button to display the settings sub menu. The audio unit saves the setting by selecting the Save icon on the settings sub menu.

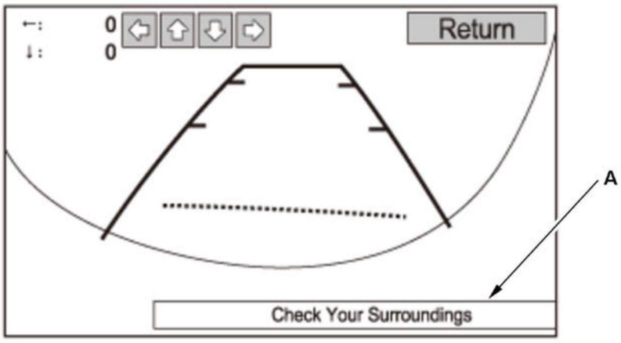
←: 0
↓: 0
Return
A
Check Your Surroundings

Rudder Angle

Select different steering angles (90B° - Lock end) from the sub menu. After selecting, do the Guideline Adjustment. The adjustment method for the guideline locations is the same as the Fixed Guideline.

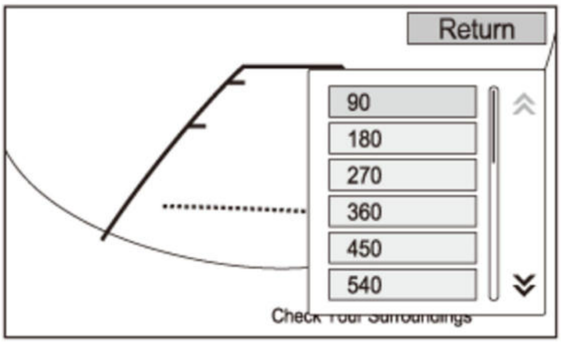
Return
90
180
270
360
450
540
Check Your Surroundings

Functional Setup

These screens allows for diagnosis and settings about functions of the audio unit. Select the item you want to check.

- Backup Data Clear
- Save User's Memory
- LaneWatch (if equipped)
- Phone Picture
- Anti-Theft Skip
- Other
- AMP Repro (factory use only)
- Display Repro (factory use only)

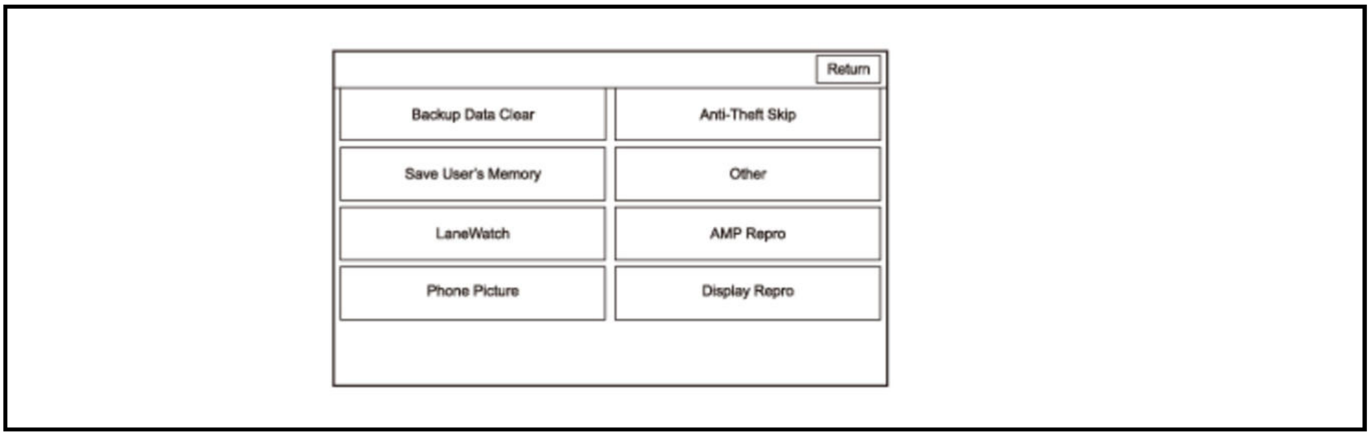
Return
Backup Data Clear
Anti-Theft Skip
Save User's Memory
Other
LaneWatch
AMP Repro
Phone Picture
Display Repro

Backup Data Clear

This screen initializes the back-up data in the audio unit. Select the All Clear icon.

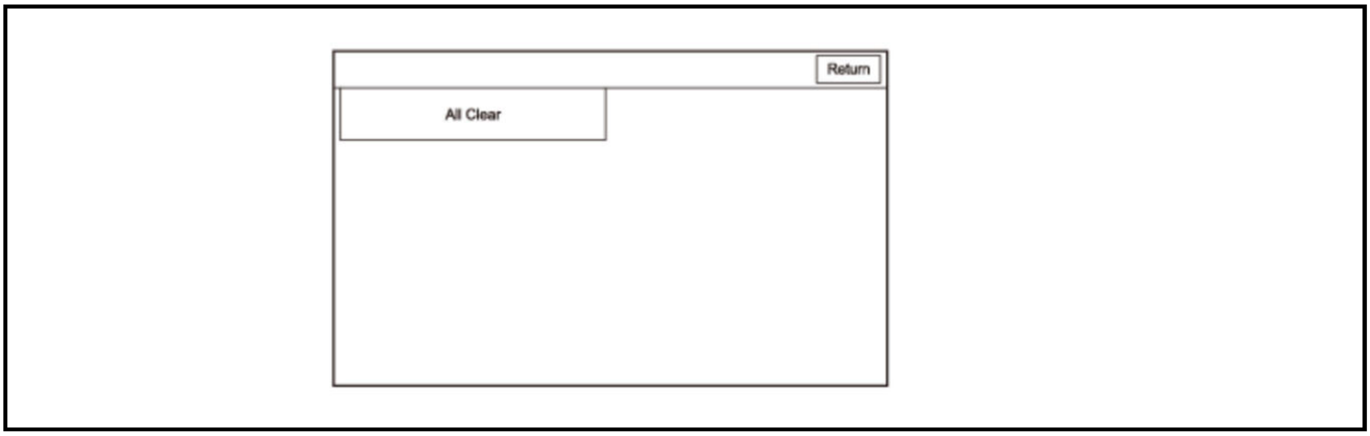
Return
All Clear

All Clear

The all clear function deletes the data in the audio unit, and restores it to the factory defaults. This function is equivalent to Memory Refresh in the System Settings Menu.

When selecting the All Clear icon, the confirmation screen appears.

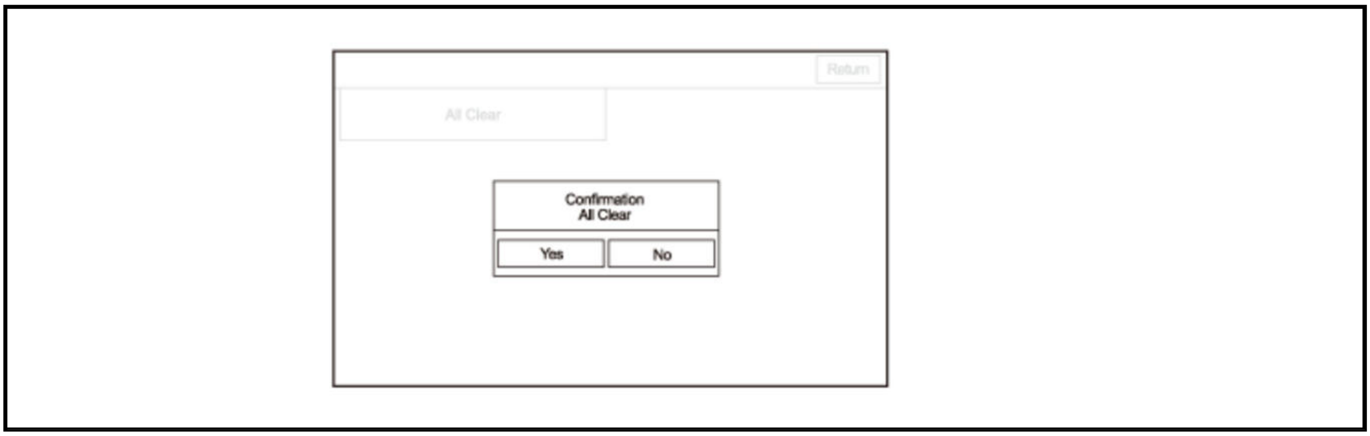

Confirmation
All Clear

When selecting the Yes icon, the second confirmation screen appears.

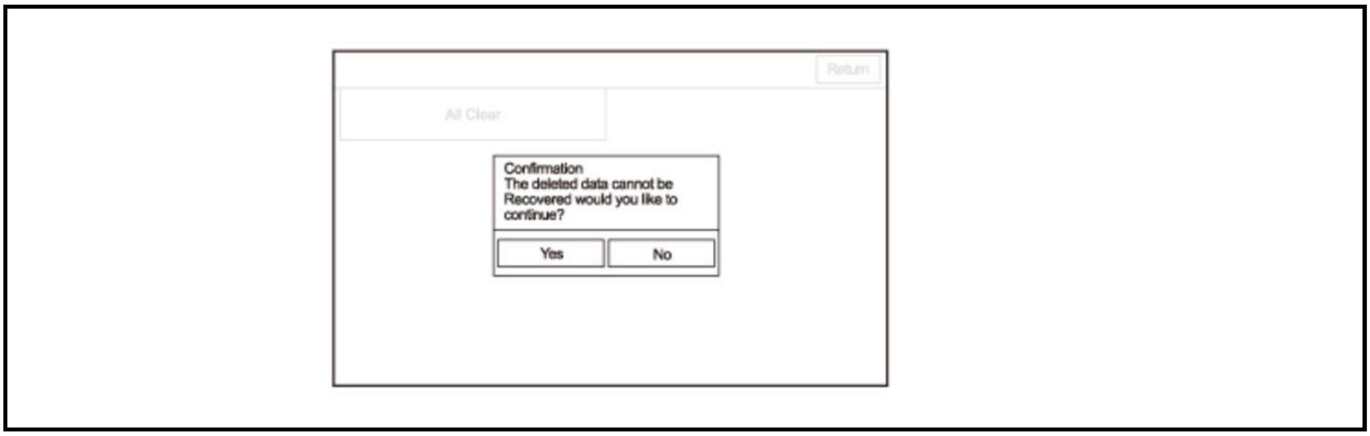

Confirmation
The deleted data cannot be Recovered would you like to continue?

When selecting the Yes icon, the system restarts after performing the All Clear process. After the restart, a normal start-up process occurs.

Save User's Memory

When replacing the audio unit, this function allows the technician to transfer the customer's personal data to the new audio unit. The transferred information includes their setup settings and personal addresses. The dealer inserts a USB device into the USB port A or B, and then selects the Save Users Memory function. The two functions in this diagnostic screen are Export and Import. Export saves the customer's data to the USB device, and Import moves the USB device files to the new audio unit.

This function does not start until you connect a USB device to the USB port.

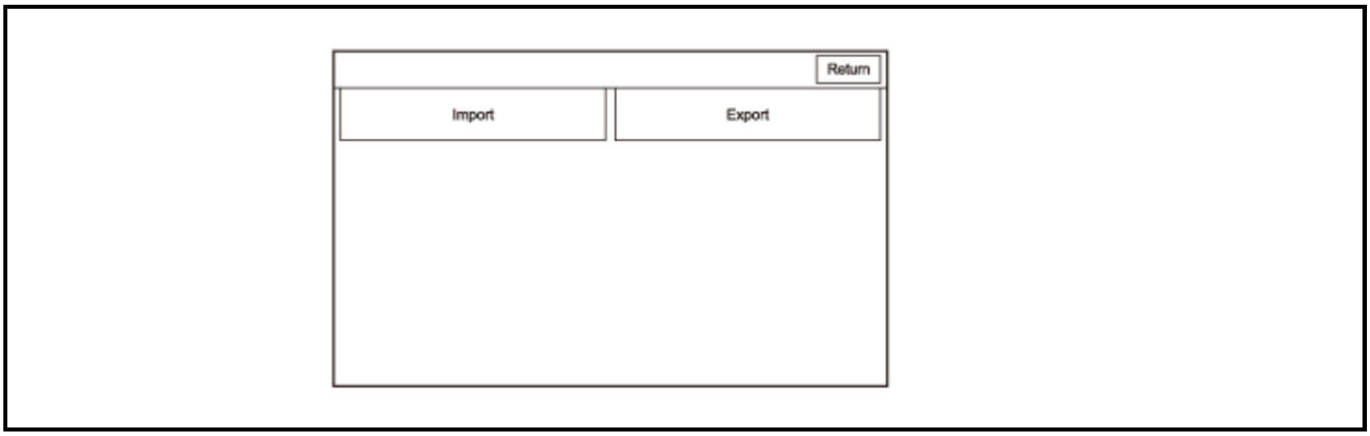

1. Select the Export icon to move the customer's data from the original audio unit to the USB device. Select the Yes icon on the Export User Data Confirmation screen. The process takes only a couple of seconds. The system stores.DAT files on the USB device.

NOTE: If the Export icon is grayed out, check the USB port.

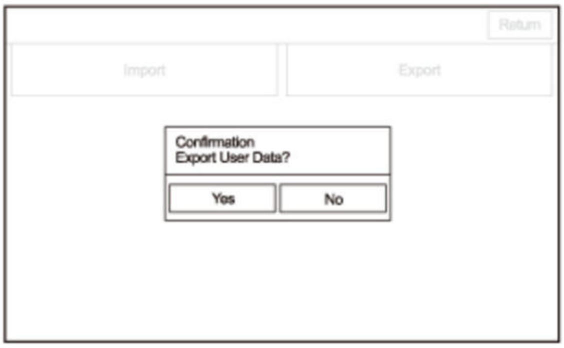

Confirmation
Export User Data?

2. After replacing the new audio unit, allow the system to boot up. Insert the USB device into the USB port A or B and enter the Save Users Memory in the System Diagnostic Mode.

3. Select the Import icon to move the two files stored by the Export process from the USB device to the new audio unit. Select the Yes icon on the Import User Data Confirmation screen. When the transfer is finished (a few seconds) the system automatically reboots. After the system reboots, remove the USB device from the USB port.

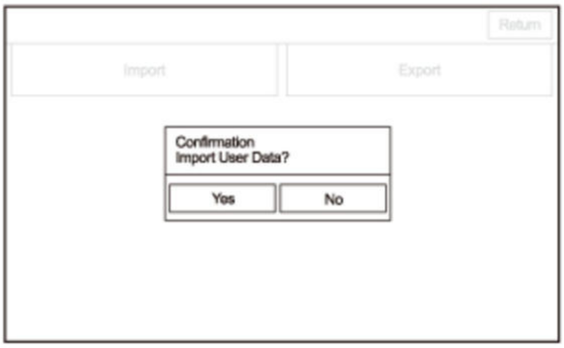

Confirmation
Import User Data?

LaneWatch

This diagnosis checks the LaneWatch status.

- If Connection shows hyphen (-), **check for hard error codes**.
- Error Status: Indicates LaneWatch camera status OK or NG. If Error Status shows NG, replace the LaneWatch camera. When the LaneWatch camera is disconnected, the status shows hyphen (-).
- If Error Status shows OK, press the HOME button to display the LaneWatch camera image. To return to the previous screen, press the HOME button again.
- LaneWatch Switch: LaneWatch switch status on or off. When the LaneWatch switch is pressing, the status shows ON. When the LaneWatch switch is released, the status shows hyphen (-).
- B-CAN: Checks whether the audio unit has received specific B-CAN data from the body control module. If B-CAN shows NG, check for B-CAN DTCs with the HDS. If DTCs are not detected, check for B-CAN lines continuity between the audio unit and the body control module.
- If Connection, Error Status, LaneWatch Switch, and B-CAN shows OK, the LaneWatch camera aiming procedure is available. If the LaneWatch camera need to aiming, refer to the How to Start LaneWatch Camera Aiming. When the aiming fails, Aiming shows NG.

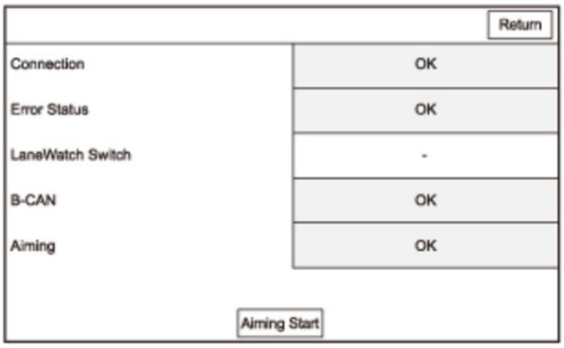
Return
Aiming Start

Connection	OK
Error Status	OK
LaneWatch Switch	-
B-CAN	OK
Aiming	OK

Phone Picture

This screen allows you to enable or disable the Show Contact Picture with On/Off.

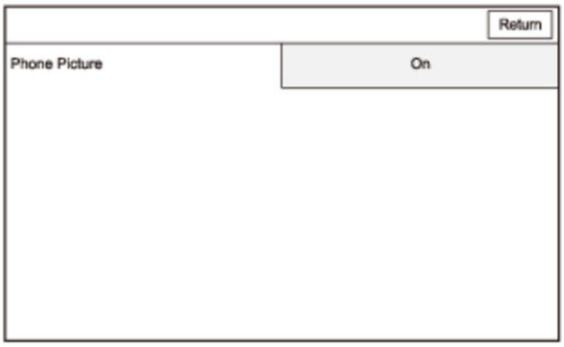

Phone Picture On

Anti-Theft Skip

This selection can cancel the anti-theft mode temporarily (for 150 seconds).

The Anti-Theft Skip icon is grayed out when the anti-theft mode is already canceled.

Other

Select the item you want to check.

- Pandora Setting
- HD Radio Setting
- SXM Setting
- Smartphone Information

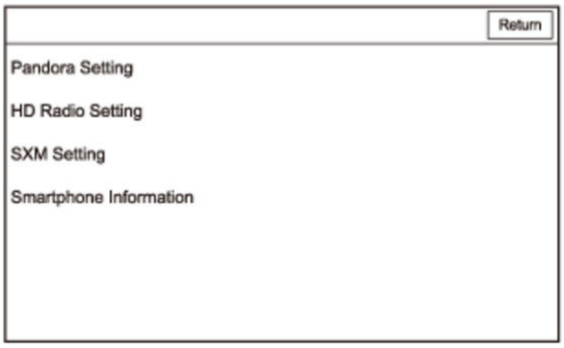
Return
Pandora Setting
HD Radio Setting
SXM Setting
Smartphone Information

Pandora Setting

This screen allows you to restrict the Pandora function to the running vehicle. Refer to the Owner's Manual for more information about the Pandora setting function.

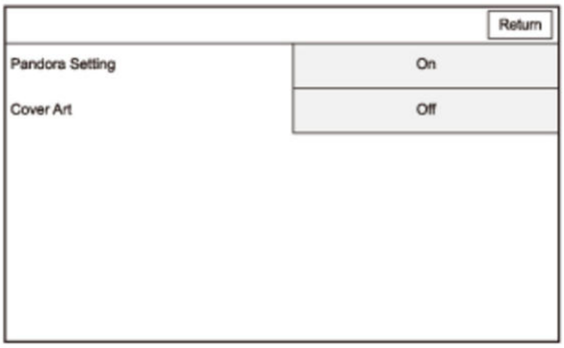

Pandora Setting: On

Cover Art: Off

HD Radio Setting

This screen allows you to restrict the HD radio album art function to the running vehicle. Refer to the Owner's Manual for more information about the album art function.

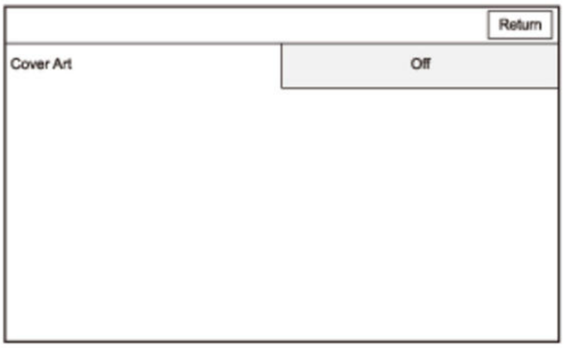

Cover Art: Off

SXM Setting

This screen allows you to restrict the XM radio album art function to the running vehicle. Refer to the Owner's Manual for more information about the album art function.

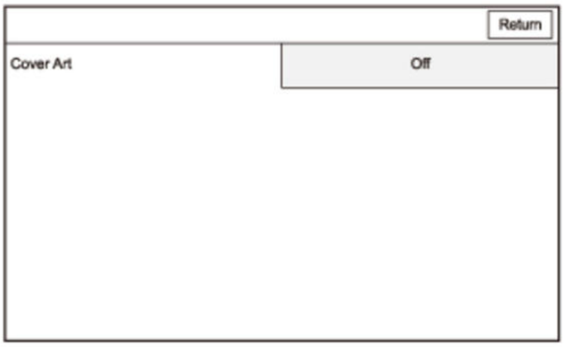

Cover Art: Off

Smartphone Information

This screen allows you to enable or disable the function about smartphone connection.

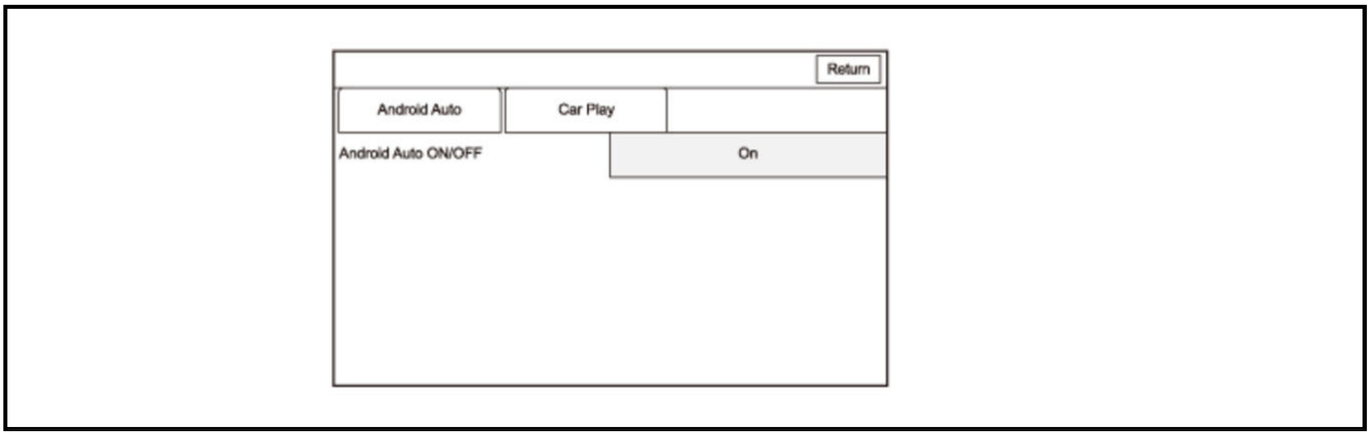

Android Auto ON/OFF: On

Version

This screen displays the current version information about each module in the audio unit.

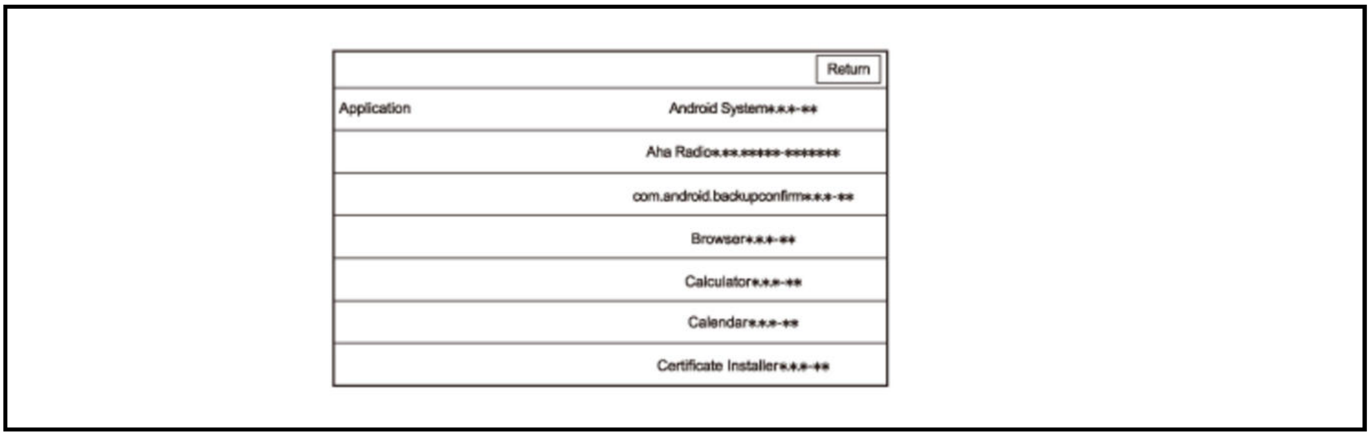

Application	Android System*.*.*-**
	Aha Radio*.**.*****-*******
	com.android.backupconfirm*.*.*-**
	Browser*.*.*-**
	Calculator*.*.*-**
	Calendar*.*.*-**
	Certificate Installer*.*.*-**

GPS Information

This screen shows the current status of GPS reception. The circular diagram shows the current location of the GPS satellites (yellow numbers) as they would appear in the sky. The outer circle represents the horizon (0 degrees elevation). The middle and inner circles represents 30 and 60 degrees respectively. The very center of the diagram (90 degrees elevation) is directly overhead. Nearby obstructions, like tall buildings will block satellites in that direction. That is why it is necessary to be in an open area to effectively troubleshoot GPS reception issues. The satellite numbers shown on the diagram while pressing the HOME button that correspond to the PRN (satellite ID number). There are always at least 24 active GPS satellites in orbit. Because satellites fail, and have to be removed from service, spares are always parked in orbit, ready to be activated. This is why the PRN can be greater than 24.

NOTE: When you use this screen for troubleshooting, park the vehicle outside, away from buildings, tall trees, and high tension wires for at least 10 minutes with the engine running.

- The Number of Satellites box shows the number of acquired satellites (maximum of 12). It should contain three or more icons.
- The Current Position shows latitude, longitude, and elevation (in feet). If there are less than four satellites, the elevation can be grossly inaccurate.
- The date/time field shows the current date and time that is received from the GPS satellite.

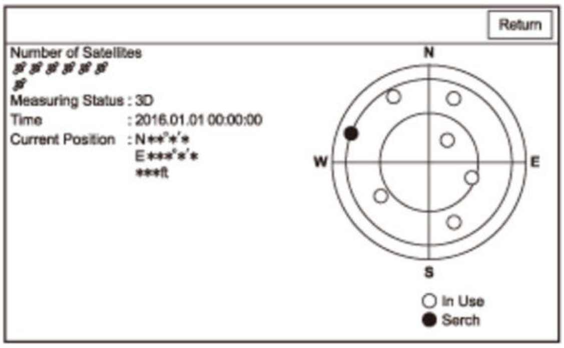

Number of Satellites

Measuring Status : 3D

Time : 2016.01.01 00:00:00

Current Position : N**°*'*
E***°*'*
***ft

GENERAL INFORMATION

AUDIO SYSTEM ERROR CODES

NOTE: The audio system can display a few error codes when some problems are detected with the audio unit and the USB. This is not a complete list of audio error codes. Refer to symptom troubleshooting.

Audio Unit Error Messages (Display audio type)

Error Message Displayed	Possible Cause	Solution
The system is unable to start due to excessive heat. The system will start after the system cools.	This message appears when the display temperature is too high.	Park the vehicle in a cooler place for a while. If the high temperature status is cancelled, the audio unit turns on the display.
Sounds are restricted because the AMP is in protection mode.	This message appears when the stereo amplifier temperature is too high, and the stereo amplifier inhibits sound output.	Park the vehicle in a cooler place for a while. If the high temperature status is cancelled, the stereo amplifier outputs the sound again.

USB Error Messages

Error Message Displayed	Possible Cause	Solution
The connected USB device has a problem. See Owner's Manual* 1	Faulty power supply to USB device.	Check for hard error code: - **With navigation** - **Without navigation**
Bad USB Device Please Check Owner's Manual* 2	Faulty power supply to USB device.	Disconnect the USB device, and turn the vehicle to the OFF (LOCK) mode then the ON mode. Then connect a known-good USB device to the USB port. If the error message appears on the screen, **replace the audio unit** .
Connect Retry	The audio unit failed to synchronize with the iPod.	Appears when the system does not acknowledge the iPod. Reconnect the iPod.
No Data	No music file(s) can be found in a USB device.	Check the music files in the USB device.
USB Error	There is an internal problem with the audio unit.	**Replace the audio-navigation unit** or **the audio unit** .
Unplayable File	The audio unit cannot read the file(s).	- Check the files in the USB device. There is a possibility

Error Message Displayed	Possible Cause	Solution
		that the files have been damaged - The WMA files or the AAC file cannot be read with the (DRM) copy protection rights
Unsupported	- Unsupported USB device is connected - Unsupported file system - USB device communication error	Connect the applicable USB device (see the Owner's Manual).
Unsupported Version	Unsupported version iPod is connected.	Connect the applicable iPod (see the Owner's Manual).

*1: Display audio type

*2: Color audio type

XM Error Messages

NOTE: Do these checks with the vehicle parked outside with a clear view of the southern horizon.

Error Message Displayed	Possible Cause	Solution
Channel Not Subscribed	Selected XM channel is not subscribed.	Check the XM channel subscription status.

Error Message Displayed	Possible Cause	Solution
Channel Not Available	Selected XM channel is not in service.	Try another XM channel.
No Signal	Loss of signal.	Both terrestrial and satellite antennas have lost the signal. Park the vehicle outside with a clear view of the southern horizon.
Antenna Disconnected	XM antenna/antenna lead error.	Check for hard error code: - **With navigation** - **Without navigation**

SYMPTOM TROUBLESHOOTING INDEX

AUDIO SYSTEM SYMPTOM TROUBLESHOOTING INDEX (COLOR AUDIO TYPE)

Symptom	Diagnostic Procedure	Also Check for
Poor AM or FM radio reception or interference	**Symptom Troubleshooting**	- Check radio reception: **Do the FM or AM in the System Diagnostic Mode** - Aftermarket FM modulator - Loose antenna amplifier mounting bolt

Symptom	Diagnostic Procedure	Also Check for
Audio unit will not turn on (No information display)	**Symptom Troubleshooting**	B
No sound is heard from all the speakers (display is normal)	**Symptom Troubleshooting**	Aftermarket amplifier or speakers
Audio system sound is weak or distorted (display is normal)	**Symptom Troubleshooting**	• Fader and balance positions • Aftermarket amplifier or speakers
AM/FM radio preset memory is lost	**Replace the audio unit**	Internal error
Audio unit button does not work	**Do the Knob Check in the System Diagnostic Mode**	Check the connector for poor connections or loose terminals between the audio unit and the audio panel
Volume does not increase with speed	**Symptom Troubleshooting**	Speed-sensitive Volume Control settings (see the Owner's Manual)
Volume is too high or too low when driving at freeway speeds	B	Speed-sensitive Volume Control settings (see the Owner's Manual)
Audio remote-HFL switch does not work properly (audio unit buttons work)	**Symptom Troubleshooting**	B
Audio unit does not exit anti-theft mode	**Anti-Theft Feature**	B
USB device does not function	**Symptom Troubleshooting**	• **Error Messages** • USB device compatibility (see the Owner's Manual)
Bluetooth audio does not work	B	Bluetooth phone compatibility (see the Owner's Manual)
Rearview camera image does not come on	**Symptom Troubleshooting**	B
Rearview camera image does not change when selecting different views	**Symptom Troubleshooting**	B
Audio unit button illumination does not work	**Symptom Troubleshooting**	B
Booming sound while driving with audio system on or off	**Symptom Troubleshooting**	B

AUDIO SYSTEM SYMPTOM TROUBLESHOOTING INDEX (DISPLAY AUDIO TYPE)

NOTE: **Refer to Navigation System Symptom Troubleshooting for information about the symptom of audio-navigation unit which is not in the following table** .

Symptom	Diagnostic Procedure	Also Check for
Poor or no sound with AM/FM radio	**Symptom Troubleshooting**	• Check radio reception: **Do the Remote Tuner in the System Diagnostic Mode** • Aftermarket FM modulator • Loose antenna amplifier mounting bolt

Symptom	Diagnostic Procedure	Also Check for
AM/FM radio display is blank or no station information is displayed	**Symptom Troubleshooting**	B
Excessive transition between analog broadcast and digital HD Radio (TM) broadcast	Receiver is located near the edge of the digital HD Radio (TM) coverage area. Refer to www.hdradio.com to verify radio stations in your coverage area	B
HD Radio (TM) changes HD channel on its own	This is intended behavior. HD Radio (TM) is set to revert to main channel after extended loss of HD2/HD3 broadcast	B
AM radio reception changes at night	This is a system characteristic. AM radio stations are required by the government (FCC) to lower their power at night	B
Audio unit will not turn on (No information display)	**Symptom Troubleshooting**	B
No sound is heard from all the speakers (display is normal)	**Symptom Troubleshooting**	Aftermarket amplifier or speakers
Audio system sound is weak or distorted (display is normal)	**Symptom Troubleshooting**	• Fader and balance positions • Aftermarket amplifier or speakers
AM/FM radio preset memory is lost	**Replace the tuner unit**	Internal error
Volume does not increase with speed	**Symptom Troubleshooting**	Speed-sensitive Volume Control settings (see the Owner's Manual)
Volume is too high or too low when driving at freeway speeds	B	Speed-sensitive Volume Control settings (see the Owner's Manual)
Center display unit button does not work	**Do the Hard Key in the System Diagnostic Mode**	Check the Touch Panel Sensitivity in the System Settings
Center display unit does not dim	**Symptom Troubleshooting**	B
The MID does not display the audio unit information	**Symptom Troubleshooting**	B
Audio remote-HFL switch does not work properly (audio unit buttons work)	**Symptom Troubleshooting**	B
Audio unit does not exit anti-theft mode	**Anti-Theft Feature**	B
USB device does not function	**Symptom Troubleshooting**	• **Error messages** • USB device compatibility (see the Owner's Manual)
Bluetooth audio does not work	B	Bluetooth phone compatibility (see the Owner's Manual)

Symptom	Diagnostic Procedure	Also Check for
Pandora is not is displayed as an audio source	**Do the PANDORA in the System Diagnostic Mode to check the Pandora settings is abled**	B

Symptom	Diagnostic Procedure	Also Check for
Rearview camera image does not come on	Symptom Troubleshooting	B
Rearview camera image does not change when selecting different views	Symptom Troubleshooting	B
USB charger does not work	Symptom Troubleshooting	B
Booming sound while driving with audio system on or off	Symptom Troubleshooting	Powertrain vibration or judder
XM radio display is blank and no station information is displayed	• With navigation: Navigation DTCs • Without navigation: Audio DTCs	Error messages
System always comes up in-line diagnostic mode	Factory diagnostic screen In Line Diag	B

DTC TROUBLESHOOTING INDEX

AUDIO SYSTEM DTC TROUBLESHOOTING INDEX

NOTE: These DTCs cannot be read with the HDS. To view them, refer to How to Check for Error History (Audio DTCs).

DTC	Description	Circuit
1102	USB Diag	USB
1301	GPS Antenna Error	GPS antenna
1302	GPS Receiver Error 1	GPS receiver
1306	Vehicle Speed Pulse	PCM or TCM
1702	XM Antenna Error	XM antenna
2608	R-Camera Diag	Rearview camera
2610	DRAM Diag	Audio unit DRAM
2701	GPS Diag: Antenna	GPS antenna
2703	Aircon Diag	Climate control unit

AUDIO SYSTEM SYMPTOM TROUBLESHOOTING

AM/FM RADIO DISPLAY IS BLANK OR NO STATION INFORMATION IS DISPLAYED

NOTE:

- Check the vehicle 12 volt battery condition first .
- Check the connectors for poor connections or loose terminals.

1. Problem verification

-1. Turn the vehicle to the ON mode.

-2. Turn on the audio system, and select AM or FM.

Does the AM or FM radio station information display blankΩ

YES

The failure is duplicated, go to step 2.

NO

Intermittent failure, the system is OK at this time. If the AM or FM sound is not heard, **go to Poor or no sound with AM/FM radio troubleshooting**.

2. Determine possible failure area (TUNER_6V line, others)

-1. Turn the vehicle to the OFF (LOCK) mode.

-2. Disconnect the following connector.

Tuner unit connector A (10P)

-3. Measure the voltage between test points 1 and 2.

Test condition	Vehicle OFF (LOCK) mode
B	Tuner unit connector A (10P): disconnected
Test point 1	**Tuner unit connector A (10P) No. 10**
Test point 2	Body ground

Is there about 6.0 V?

YES

The TUNER_6V wire is OK. Go to step 5.

NO

Go to step 3.

3. Open wire check (TUNER_6V line)

-1. Measure the voltage between test points 1 and 2.

Test condition	Vehicle OFF (LOCK) mode
B	Tuner unit connector A (10P): disconnected
Test point 1	**Audio-navigation unit connector E (16P) (with navigation) No. 1**
B	**Audio unit connector E (16P) (without navigation) No. 1**
Test point 2	Body ground

Is there about 6.0 V?

YES

Repair an open in the wire.

NO

The TUNER_6V wire is not open. Go to step 4.

4. Shorted wire check (TUNER_6V line)

-1. Disconnect the following connector.

Audio-navigation unit connector E (16P) (with navigation) Audio unit connector E (16P) (without navigation)

-2. Measure the resistance between test points 1 and 2.

Test condition	Vehicle OFF (LOCK) mode
B	Tuner unit connector A (10P): disconnected
B	Audio-navigation unit connector E (16P) (with navigation): disconnected Audio unit connector E (16P) (without navigation): disconnected
Test point 1	**Audio-navigation unit connector E (16P) (with navigation) No. 1**
B	**Audio unit connector E (16P) (without navigation) No. 1**
Test point 2	Body ground

Is there 1.0 MΩ or more?

YES: With navigation

Replace the audio-navigation unit .

YES: Without navigation

Replace the audio unit .

NO

Repair a short to body ground in the wire.

5. Determine possible failure area (TUNER_GND line, others)

-1. Measure the resistance between test points 1 and 2.

Test condition	Vehicle OFF (LOCK) mode
B	Tuner unit connector A (10P): disconnected
Test point 1	**Tuner unit connector A (10P) No. 2**
Test point 2	Body ground

Is there 1.0 Ω or less?

YES

The TUNER_GND wire is OK. Go to step 7.

NO

Go to step 6.

6. Open wire check (TUNER_GND line)

-1. Measure the resistance between test points 1 and 2.

Test condition	Vehicle OFF (LOCK) mode
B	Tuner unit connector A (10P): disconnected
Test point 1	**Audio-navigation unit connector E (16P) (with navigation) No. 9**
B	**Audio unit connector E (16P) (without navigation) No. 9**
Test point 2	Body ground

Is there 1.0 MΩ or more?

YES: With navigation

Replace the audio-navigation unit .

YES: Without navigation

Replace the audio unit .

NO

Repair an open in the wire.

7. Determine possible failure area (TUNER_9V line, others)

-1. Turn the vehicle to the ON mode.

-2. Measure the voltage between test points 1 and 2.

Test condition	Vehicle ON mode
B	Tuner unit connector A (10P): disconnected
Test point 1	Tuner unit connector A (10P) No. 1
Test point 2	Body ground

Is there about 9.0 V?

YES

The TUNER_9V wire is OK. Go to step 10.

NO

Go to step 8.

8. Open wire check (TUNER_9V line)

-1. Measure the voltage between test points 1 and 2.

Test condition	Vehicle ON mode
B	Tuner unit connector A (10P): disconnected
Test point 1	Audio-navigation unit connector E (16P) (with navigation) No. 2
B	Audio unit connector E (16P) (without navigation) No. 2
Test point 2	Body ground

Is there about 9.0 V?

YES

Repair an open in the wire.

NO

The TUNER_9V wire is not open. Go to step 9.

9. Shorted wire check (TUNER_9V line)

-1. Turn the vehicle to the OFF (LOCK) mode.

-2. Disconnect the following connector.

Audio-navigation unit connector E (16P) (with navigation) Audio unit connector E (16P) (without navigation)

-3. Measure the resistance between test points 1 and 2.

Test condition	Vehicle OFF (LOCK) mode

B	Tuner unit connector A (10P): disconnected
B	Audio-navigation unit connector E (16P) (with navigation): disconnected Audio unit connector E (16P) (without navigation): disconnected
Test point 1	**Audio-navigation unit connector E (16P) (with navigation) No. 2**
B	**Audio unit connector E (16P) (without navigation) No. 2**
Test point 2	Body ground

Is there 1.0 MΩ or more?

YES: With navigation

Replace the audio-navigation unit .

YES: Without navigation

Replace the audio unit .

NO

Repair a short to body ground in the wire.

10. Shorted wire check (TUNER_RS485+ line, TUNER_RS485- line)

-1. Turn the vehicle to the OFF (LOCK) mode.

-2. Disconnect the following connector.

Audio-navigation unit connector E (16P) (with navigation) Audio unit connector E (16P) (without navigation)

-3. Measure the resistance between test points 1 and 2.

Test condition	Vehicle OFF (LOCK) mode
B	Tuner unit connector A (10P): disconnected
B	Audio-navigation unit connector E (16P) (with navigation): disconnected Audio unit connector E (16P) (without navigation): disconnected

Test point 1	**Tuner unit connector A (10P) No. 5**
Test point 2	Body ground

Test point 1	**Tuner unit connector A (10P) No. 7**
Test point 2	Body ground

Is there 1.0 MΩ or more?

YES

The TUNER_RS485+ and the TUNER_RS485- wires are not shorted to ground. Go to step 11.

NO

There is a short to body ground in the wire(s). Replace the affected shielded harness.

11. Shorted wire check (TUNER_RS485+ line to TUNER_RS485- line)

-1. Measure the resistance between test points 1 and 2.

Test condition	Vehicle OFF (LOCK) mode

B	Tuner unit connector A (10P): disconnected
B	Audio-navigation unit connector E (16P) (with navigation): disconnected Audio unit connector E (16P) (without navigation): disconnected
Test point 1	**Tuner unit connector A (10P) No. 5**
Test point 2	**Tuner unit connector A (10P) No. 7**

Is there 1.0 MΩ or more?

YES

The TUNER_RS485+ wire and the TUNER_RS485- wire are not shorted. Go to step 12.

NO

There is a short in the wires. Replace the affected shielded harness.

12. Shorted wire check (TUNER_RS485_SH line to another lines)

-1. Measure the resistance between test points 1 and 2.

Test condition	Vehicle OFF (LOCK) mode
B	Tuner unit connector A (10P): disconnected
B	Audio-navigation unit connector E (16P) (with navigation): disconnected Audio unit connector E (16P) (without navigation): disconnected
Test point 1	**Tuner unit connector A (10P) No. 5**
Test point 2	**Tuner unit connector A (10P) No. 6**

Test point 1	**Tuner unit connector A (10P) No. 6**
Test point 2	**Tuner unit connector A (10P) No. 7**

Is there 1.0 MΩ or more?

YES

The TUNER_RS485_SH wire is not shorted. Go to step 13.

NO

There is a short in the wires. Replace the affected shielded harness.

13. Open wire check (TUNER_RS485+ line, TUNER_RS485- line)

-1. Measure the resistance between test points 1 and 2.

Test condition	Vehicle OFF (LOCK) mode
B	Tuner unit connector A (10P): disconnected
B	Audio-navigation unit connector E (16P) (with navigation): disconnected Audio unit connector E (16P) (without navigation): disconnected
Test point 1	**Tuner unit connector A (10P) No. 5**
Test point 2	**Audio-navigation unit connector E (16P) (with navigation) No. 15**

B	**Audio unit connector E (16P) (without navigation) No. 15**

Test point 1	**Tuner unit connector A (10P) No. 7**
Test point 2	**Audio-navigation unit connector E (16P) (with navigation) No. 16**
B	**Audio unit connector E (16P) (without navigation) No. 16**

Is there 1.0 Ω or less?

YES

The TUNER_RS485+ and the TUNER_RS485- wires are OK. Go to step 14.

NO

There is an open in the wire(s). Replace the affected shielded harness.

14. Tuner unit check (substitution)

    -1. Substitute a known-good tuner unit.

    -2. Reconnect all the connectors, and recheck.

    Does the symptom go away?

    YES

    Replace the original tuner unit .

    NO: With navigation

    Replace the audio-navigation unit .

    NO: Without navigation

    Replace the audio unit .

AUDIO REMOTE-HFL SWITCH DOES NOT WORK PROPERLY (AUDIO UNIT BUTTONS WORK)

NOTE:

- **Check the vehicle 12 volt battery condition first** .
- Check the connectors for poor connections or loose terminals.

1. Problem verification

   -1. Turn the vehicle to the ON mode.

   -2. Using the audio remote-HFL switch buttons, check if the audio system and the HFL system operates properly.

   Are the audio system and the HFL system operation OK?

   YES

   Intermittent failure, the system is OK at this time.

   NO

   The failure is duplicated, go to step 2.

2. Determine possible failure area (audio remote-HFL switch, others):

   Go into the System Diagnostic Mode;

   - With navigation: **Use the Hard Key test under the Unit Check menu** .
   - Display audio type without navigation: **Use the Hard Key test under the Unit Check menu**.
   - Color audio type: **Use the Knob Check test under the Version/System menu**.

-2. Check the audio remote-HFL switch status.

Do all of the buttons fail to respond?

YES

Go to step 3.

NO

Replace the audio remote-HFL switch .

3. Gauge control module DTCs check

-1. Check for gauge control module DTCs with the HDS.

DTC Description	DTC
B1195 Gauge control module lost communication with Audio Remote Switch (LIN bus connected)	B

DTC (Gauge Control Module)

Is DTC B1195 indicated?

YES

Go to the indicated DTC's troubleshooting .

NO

Go to step 4.

4. Open wire check (B-CAN_H line, B-CAN_L line)

-1. Turn the vehicle to the OFF (LOCK) mode.

-2. Disconnect the following connectors.

Gauge control module connector A (32P)
Audio-navigation unit connector A (24P) (with navigation)
Audio unit connector A (24P) (without navigation)

-3. Measure the resistance between test points 1 and 2.

Test condition	Vehicle OFF (LOCK) mode
B	Gauge control module connector A (32P): disconnected
B	Audio-navigation unit connector A (24P) (with navigation): disconnected
B	Audio unit connector A (24P) (without navigation): disconnected
Test point 1	**Gauge control module connector A (32P) No. 30**
Test point 2	**Audio-navigation unit connector A (24P) No. 14**
	Audio unit connector A (24P) No. 14

Test point 1	**Gauge control module connector A (32P) No. 31**
Test point 2	**Audio-navigation unit connector A (24P) No. 24**
	Audio unit connector A (24P) No. 24

Is there 1.0 Ω or less?

YES: With navigation

Replace the audio-navigation unit .

YES: Without navigation

Replace the audio unit .

NO

Repair an open in the wire(s).

AUDIO SYSTEM SOUND IS WEAK OR DISTORTED (DISPLAY IS NORMAL)

NOTE:

- **Check the vehicle 12 volt battery condition first** .
- Check the connectors for poor connections or loose terminals.

1. Problem verification

-1. Turn the vehicle to the ON mode.

Go into the System Diagnostic Mode, and use the speaker check mode.

- **With navigation**
- **Without navigation**

Is there tone from the speakers, and is the tone quality normal in each channel?

YES

Intermittent failure, the system is OK at this time.

NO: With stereo amplifier

The failure is duplicated, go to step 2.

NO: Without stereo amplifier

The failure is duplicated, go to step 5.

2. Determine possible failure area (speaker lines, others)

-1. Turn the vehicle to the OFF (LOCK) mode.

-2. Disconnect the following connectors.

Stereo amplifier connector A (18P)

-3. Measure the resistance between test points 1 and 2.

Test condition	Vehicle OFF (LOCK) mode
B	Stereo amplifier connector A (18P): disconnected

Test point 1:Stereo amplifier connector A (18P)	Test point 2:Stereo amplifier connector A (18P)	Resistance
No. 2	No. 4	About 2 Ω
No. 5	No. 6	About 4 Ω

Test point 1:Stereo amplifier connector A (18P)	Test point 2:Stereo amplifier connector A (18P)	Resistance
No. 7	No. 8	About 4 Ω* 1 About 3.2 Ω* 2
No. 9	No. 10	About 4 Ω* 1 About 3.2 Ω* 2
No. 12	No. 13	About 4 Ω
No. 14	No. 15	About 3.2 Ω
No. 16	No. 17	About 3.2 Ω

*1: Connect rear door speaker connector and disconnect rear tweeter connector.

*2: Disconnect rear door speaker connector and connect rear tweeter connector.

Is the resistance OK?

YES

Go to step 4.

NO

Go to step 3.

3. Speaker check

-1. **Test the speaker on the faulty speaker lines** .

Is the speaker OK?

YES

Repair a faulty speaker wire(s).

NO

Replace the speaker .

4. Speaker visual check

-1. **Remove the speaker** that is duplicating the failure, and check the speaker for any damage.

Is there any damage?

YES

Replace the speaker .

NO

Replace the stereo amplifier .

5. Determine possible failure area (speaker lines, others)

-1. Turn the vehicle to the OFF (LOCK) mode.

-2. Disconnect the following connectors.

Audio-navigation unit connector A (24P) (with navigation) Audio unit connector A (24P) (without navigation)

Left front tweeter 2P connector
Right front tweeter 2P connector
Left rear tweeter 2P connector
Right rear tweeter 2P connector

-3. Measure the resistance between test points 1 and 2.

Test condition	Vehicle OFF (LOCK) mode
B	Audio-navigation unit connector A (24P) (with navigation): disconnected Audio unit connector A (24P) (without navigation): disconnected
B	Left front tweeter 2P connector: disconnected
B	Right front tweeter 2P connector: disconnected
B	Left rear tweeter 2P connector: disconnected
B	Right rear tweeter 2P connector: disconnected

Test point 1:Audio-navigation unit connector A (24P) (with navigation) **Audio unit connector A (24P) (without navigation)**	**Test point 2:Audio-navigation unit connector A (24P) (with navigation)** **Audio unit connector A (24P) (without navigation)**	**Resistance**
No. 5	No. 6	About 4 Ω* 1 About 3.2 Ω* 2
No. 7	No. 8	About 4 Ω* 1 About 3.2 Ω* 2
No. 15	No. 16	About 4 Ω* 1 About 3.2 Ω* 2
No. 17	No. 18	About 4 Ω* 1 About 3.2 Ω* 2

*1: Connect door speaker connector and disconnect tweeter connector.

*2: Disconnect door speaker connector and connect tweeter connector.

Is the resistance OK?

YES: With navigation

Replace the audio-navigation unit .

YES: Without navigation

Replace the audio unit .

NO

Go to step 6.

6. Speaker check

-1. **Test the speaker on the faulty speaker lines** .

Is the speaker OK?

YES

Repair an open in the wire.

NO

Replace the speaker .

AUDIO UNIT BUTTON ILLUMINATION DOES NOT WORK

NOTE:

- **Check the vehicle 12 volt battery condition first** .
- Check for B-CAN DTCs and resolve them before troubleshooting.
- Check the connectors for poor connections or loose terminals.

1. Relay control module DTCs check

-1. Clear the DTCs with the HDS.

-2. Turn the vehicle to the OFF (LOCK) mode then the ON mode.

-3. Wait for at least 10 seconds.

-4. Check for DTCs with the HDS.

DTC Description	DTC
B	B

DTC (Relay Control Module)

Are any DTCs indicated?

YES

Go to the indicated DTC's troubleshooting .

NO

Go to step 2.

2. Problem verification

-1. Turn the vehicle to the ON mode.

-2. Turn the combination light switch to the PARKING ( ) position.

-3. Check the illumination of the audio unit buttons.

Are the buttons illuminated?

YES

Intermittent failure, the audio unit is OK at this time.

NO

The failure is duplicated, go to step 3.

3. Determine possible failure area (interior lights circuit, others)

-1. Check the illumination of several other buttons not related to the audio system.

Are the buttons illuminated?

YES

Go to step 4.

NO

Troubleshoot the interior lights.

4. Determine possible failure area (audio unit, others)

-1. **Go into the System Diagnostic Mode, and use the ILLUMI in the Vehicle Information to check the ILLUMI signal**.

Does the METER_ILL STATUS signal change from [0] to [1] when the combination light switch is turned to the parking light position?

YES

Replace the audio unit .

NO

Go to step 5.

5. Open wire check (B-CAN_H line, B-CAN_L line)

-1. Turn the combination light switch off.

-2. Turn the vehicle to the OFF (LOCK) mode.

-3. Disconnect the following connectors.

Gauge control module connector A (32P)
Audio unit connector A (24P)

-4. Measure the resistance between test points 1 and 2.

Test condition	Vehicle OFF (LOCK) mode
B	Gauge control module connector A (32P): disconnected
B	Audio unit connector A (24P): disconnected
Test point 1	**Gauge control module connector A (32P) No. 30**
Test point 2	**Audio unit connector A (24P) No. 14**

Test point 1	**Gauge control module connector A (32P) No. 31**

Test point 2	**Audio unit connector A (24P) No. 24**

Is there 1.0 Ω or less?

YES

Replace the audio unit .

NO

Repair an open in the wire(s).

AUDIO UNIT POWER WILL NOT TURN ON (NO INFORMATION DISPLAY)

NOTE:

- **Check the vehicle 12 volt battery condition first** .
- Check if the Display Mode (☼ ☽) button has been pressed, and turned off the display (see the Owner's Manual for more information).
- Check the connectors for poor connections or loose terminals.
- Check the fuses and **relays** associated with the system, and check for a short in the related lines.

1. Problem verification

-1. Turn the vehicle to the ON mode.

-2. Check if the display indicates any information.

Is any information displayed?

YES

Intermittent failure, the system is OK at this time.

NO: Display audio type

The failure is duplicated, go to step 2.

NO: Color audio type

The failure is duplicated, go to step 8.

2. Determine possible failure area (LVDS1 circuit, others)

-1. Shield the center display unit from the sun with your hand, and check that the display is back lit (only the back light is on).

Can you see the back light?

YES

Go to step 11.

NO

Go to step 3.

3. Open wire check (+B_AUDIO line)

-1. Disconnect the following connector.

Center display unit connector A (5P)

-2. Measure the voltage between test points 1 and 2.

Test condition	Vehicle OFF (LOCK) mode
B	Center display unit connector A (5P): disconnected
Test point 1	**Center display unit connector A (5P) No. 1**
Test point 2	Body ground

Is there battery voltage?

YES

The +B_AUDIO wire is OK. Go to step 4.

NO

Repair an open in the wire.

4. Open wire check (GND line)

-1. Measure the resistance between test points 1 and 2.

Test condition	Vehicle OFF (LOCK) mode
B	Center display unit connector A (5P): disconnected
Test point 1	**Center display unit connector A (5P) No. 5**
Test point 2	Body ground

Is there 1.0 Ω or less?

YES

The GND wire is OK. Go to step 5.

NO

Repair an open or high resistance in the ground wire or poor ground (G402).

5. Determine possible failure area (DISP_CONT line, others)

-1. Reconnect center display unit connector A (5P).

-2. Disconnect the following connector.

Audio unit connector E (16P)

-3. Turn the vehicle to the ON mode.

-4. Measure the voltage between test points 1 and 2.

Test condition	Vehicle ON mode
B	Audio unit connector E (16P): disconnected
Test point 1	**Audio unit connector E (16P) No. 4**
Test point 2	Body ground

Is there about 3.3 V?

YES

The DISP_CONT wire is OK. Go to step 7.

NO

Go to step 6.

6. Open wire check (DISP_CONT line)

-1. Measure the voltage between test points 1 and 2.

Test condition	Vehicle ON mode
B	Audio unit connector E (16P): disconnected
Test point 1	**Center display unit connector A (5P) No. 4**
Test point 2	Body ground

Is there about 3.3 V?

YES

Repair an open in the wire.

NO

Replace the center display unit .

7. Determine possible failure area (center display unit, others)

-1. Turn the vehicle to the OFF (LOCK) mode.

-2. Reconnect audio unit connector E (16P).

-3. Turn the vehicle to the ON mode.

-4. Measure the voltage between test points 1 and 2.

Test condition	Vehicle ON mode
Test point 1	**Audio unit connector E (16P) No. 4**
Test point 2	Body ground

Is there less than 0.2 V?

Yes

Replace the center display unit .

No

Go to step 8.

8. Open wire check (+B_AUDIO line)

-1. Turn the vehicle to the OFF (LOCK) mode.

-2. Disconnect the following connector.

Audio unit connector A (24P)

-3. Measure the voltage between test points 1 and 2.

Test condition	Vehicle OFF (LOCK) mode
B	Audio unit connector A (24P): disconnected
Test point 1	**Audio unit connector A (24P) No. 3**
Test point 2	Body ground

Is there battery voltage?

YES

The +B_AUDIO wire is OK. Go to step 9.

NO

Repair an open in the wire.

9. Open wire check (ACC line)

-1. Turn the vehicle to the ON mode.

-2. Measure the voltage between test points 1 and 2.

Test condition	Vehicle ON mode
B	Audio unit connector A (24P): disconnected
Test point 1	**Audio unit connector A (24P) No. 23**
Test point 2	Body ground

Is there battery voltage?

YES

The ACC wire is OK. Go to step 10.

NO

Repair an open in the wire.

10. Open wire check (GND line)

-1. Turn the vehicle to the OFF (LOCK) mode.

-2. Reconnect audio unit connector A (24P).

-3. Turn the vehicle to the ON mode.

-4. Measure the voltage between test points 1 and 2.

Test condition	Vehicle ON mode
Test point 1	**Audio unit connector A (24P) No. 1**
Test point 2	Body ground

Is there less than 0.2 V?

YES: Display audio type

Replace the audio unit .

YES: Color audio type

Substitute the known good audio panel then recheck. If the symptom does not go away, replace the audio unit .

NO

Repair an open or high resistance in the ground wire or poor ground (G402).

11. Shorted wire check (LVDS1+ line to LVDS1- line)

-1. Turn the vehicle to the OFF (LOCK) mode.

-2. Disconnect the following connectors.

Audio unit connector H (3P)
Center display unit connector B (3P)

-3. Measure the resistance between test points 1 and 2.

Test condition	Vehicle OFF (LOCK) mode
B	Audio unit connector H (3P): disconnected
B	Center display unit connector B (3P): disconnected
Test point 1	**Center display unit connector B (3P) No. 1**
Test point 2	**Center display unit connector B (3P) No. 2**

Is there 1.0 MΩ or more?

YES

The LVDS1+ wire and the LVDS1- wire are not shorted. Go to step 12.

NO

There is a short in the wires. Replace the affected shielded harness.

12. Shorted wire check (LVDS1 SH line to another lines)

-1. Measure the resistance between test points 1 and 2.

Test condition	Vehicle OFF (LOCK) mode
B	Audio unit connector H (3P): disconnected
B	Center display unit connector B (3P): disconnected
Test point 1	**Center display unit connector B (3P) No. 1**
Test point 2	**Center display unit connector B (3P) No. 3**

Test point 1	**Center display unit connector B (3P) No. 2**
Test point 2	**Center display unit connector B (3P) No. 3**

Is there 1.0 MΩ or more?

YES

The LVDS1 SH wire is not shorted. Go to step 13.

NO

There is a short in the wires. Replace the affected shielded harness.

13. Open wire check (LVDS1+ line, LVDS1- line)

-1. Measure the resistance between test points 1 and 2.

Test condition	Vehicle OFF (LOCK) mode
B	Audio unit connector H (3P): disconnected
B	Center display unit connector B (3P): disconnected
Test point 1	**Audio unit connector H (3P) No. 1**
Test point 2	**Center display unit connector B (3P) No. 1**

Test point 1	**Audio unit connector H (3P) No. 2**
Test point 2	**Center display unit connector B (3P) No. 2**

Is there 1.0 Ω or less?

YES

The LVDS1+ and the LVDS1- wires are OK. Go to step 14.

NO

There is an open in the wire(s). Replace the affected shielded harness.

14. Center display unit check (substitution)

    -1. Substitute a known-good center display unit.

    -2. Reconnect all the connectors, and recheck.

    Does the symptom go away?

    YES

    Replace the original center display unit .

    NO

    Replace the audio unit .

BOOMING SOUND WHILE DRIVING WITH AUDIO SYSTEM ON OR OFF

NOTE:

- **Check the vehicle 12 volt battery condition first** .
- Check for F-CAN and B-CAN DTCs and resolve them before troubleshooting.
- Check the connectors for poor connections or loose terminals.
- Check the fuses and **relays** associated with the system, and check for a short in the related lines.
- The front ANC/active sound control microphone is the same parts as the front HFL-navigation-ANC/active sound control microphone and the front HFL-ANC/active sound control microphone.

1. Problem verification

   -1. Make sure all doors, hood, and the tailgate are closed.

   -2. Start the engine.

   Is a booming sound or a low-frequency hum heard from speakers?

   YES

   The failure is duplicated, go to step 2.

   NO

   Intermittent failure, the system is OK at this time.

2. Determine possible failure area (speaker output circuit, others)

   -1. **Go into the System Diagnostic Mode, and use the speaker check mode**.

Is the sound quality normal at each speaker?

YES

Go to step 3.

NO

Go to No sound is heard from all the speakers (display is normal) troubleshooting.

3. Open wire check (+B_BACK_UP line)

-1. Turn the vehicle to the OFF (LOCK) mode.

-2. Disconnect the following connector.

ANC/active sound control unit 20P connector

-3. Measure the voltage between test points 1 and 2.

Test condition	Vehicle OFF (LOCK) mode
B	ANC/active sound control unit 20P connector: disconnected
Test point 1	**ANC/active sound control unit 20P connector No. 11**
Test point 2	Body ground

Is there battery voltage?

YES

The +B_BACK_UP wire is OK. Go to step 4.

NO

Repair an open in the wire.

4. Open wire check (IG1_METER line)

-1. Turn the vehicle to the ON mode.

-2. Measure the voltage between test points 1 and 2.

Test condition	Vehicle ON mode

B	ANC/active sound control unit 20P connector: disconnected
Test point 1	**ANC/active sound control unit 20P connector No. 12**
Test point 2	Body ground

Is there battery voltage?

YES

The IG1_METER wire is OK. Go to step 5.

NO

Repair an open in the wire.

5. Determine possible failure area (SWD+B line, others)

-1. Measure the voltage between test points 1 and 2.

Test condition	Vehicle ON mode
B	ANC/active sound control unit 20P connector: disconnected
Test point 1	**ANC/active sound control unit 20P connector No. 3**
Test point 2	Body ground

Is there battery voltage?

YES

The SWD+B wire is OK. Go to step 8.

NO

Go to step 6.

6. Open wire check (SWD+B line)

-1. Disconnect the following connector.

Stereo amplifier connector C (16P) (with stereo amplifier)

-2. Measure the voltage between test points 1 and 2.

Test condition	Vehicle ON mode
B	ANC/active sound control unit 20P connector: disconnected Stereo amplifier connector C (16P) (with stereo amplifier): disconnected
Test point 1	**Audio-navigation unit connector A (24P) (with navigation) No. 21**
B	**Audio unit connector A (24P) (without navigation) No. 21**
Test point 2	Body ground

Is there battery voltage?

YES

Repair an open in the wire.

NO

The SWD+B wire is not open. Go to step 7.

7. Shorted wire check (SWD+B line)

-1. Turn the vehicle to the OFF (LOCK) mode.

-2. Disconnect the following connector.

Audio-navigation unit connector A (24P) (with navigation) Audio unit connector A (24P) (without navigation)

-3. Measure the resistance between test points 1 and 2.

Test condition	Vehicle OFF (LOCK) mode
B	ANC/active sound control unit 20P connector: disconnected Stereo amplifier connector C (16P) (with stereo amplifier): disconnected Audio-navigation unit connector A (24P) (with navigation): disconnected Audio unit connector A (24P) (without navigation): disconnected

Test point 1	**Audio-navigation unit connector A (24P) (with navigation) No. 21**

B	**Audio unit connector A (24P) (without navigation) No. 21**
Test point 2	Body ground

Is there 1.0 MΩ or more?

YES: With navigation

Replace the audio-navigation unit .

YES: Without navigation

Replace the audio unit .

NO

Repair a short to body ground in the wire.

8. Open wire check (GND line)

-1. Turn the vehicle to the OFF (LOCK) mode.

-2. Reconnect the following connector.

ANC/active sound control unit 20P connector

-3. Turn the vehicle to the ON mode.

-4. Measure the voltage between test points 1 and 2.

Test condition	Vehicle ON mode
Test point 1	**ANC/active sound control unit 20P connector No. 1**
Test point 2	Body ground

Is there less than 0.2 V?

YES

The GND wire is OK. Go to step 9.

NO

Repair an open or high resistance in the wire or poor ground (G402).

9. Determine possible failure area (MIC_PWR line, others)

-1. Turn the vehicle to the OFF (LOCK) mode.

-2. Disconnect the following connector.

Front ANC/active sound control microphone 8P connector

-3. Measure the voltage between test points 1 and 2.

Test condition	Vehicle ON mode
B	Front ANC/active sound control microphone 8P connector: disconnected
Test point 1	**Front ANC/active sound control microphone 8P connector No. 4**

Test point 2	Body ground

Is there about 8.0 V?

YES

The MIC_PWR wire is OK. Go to step 12.

NO

Go to step 10.

10. Open wire check (MIC_PWR line)

-1. Measure the voltage between test points 1 and 2.

Test condition	Vehicle ON mode
B	Front ANC/active sound control microphone 8P connector: disconnected
Test point 1	**Audio-navigation unit connector C (36P) (with navigation) No. 7**
B	**Audio unit connector C (36P) (without navigation) No. 7**

Test point 2	Body ground

Is there about 8.0 V?

YES

Repair an open in the wire.

NO

The MIC_PWR wire is not open. Go to step 11.

11. Shorted wire check (MIC_PWR line)

-1. Turn the vehicle to the OFF (LOCK) mode.

-2. Disconnect the following connector.

Audio-navigation unit connector C (36P) (with navigation) Audio unit connector C (36P) (without navigation)

-3. Measure the resistance between test points 1 and 2.

Test condition	Vehicle OFF (LOCK) mode
B	Front ANC/active sound control microphone 8P connector: disconnected Audio-navigation unit connector C (36P) (with navigation): disconnected Audio unit connector C (36P) (without navigation): disconnected
Test point 1	**Audio-navigation unit connector C (36P) (with navigation) No. 7**
B	**Audio unit connector C (36P) (without navigation) No. 7**
Test point 2	Body ground

Is there 1.0 MΩ or more?

YES: With navigation

Replace the audio-navigation unit .

YES: without navigation

Replace the audio unit .

NO

Repair a short to body ground in the wire.

12. Determine possible failure area (ANC_F_MIC+8V line, others)

-1. Turn the vehicle to the OFF (LOCK) mode.

-2. Turn the vehicle to the ON mode.

-3. Measure the voltage between test points 1 and 2.

Test condition	Vehicle ON mode
B	Front ANC/active sound control microphone 8P connector: disconnected
Test point 1	**Front ANC/active sound control microphone 8P connector No. 8**
Test point 2	Body ground

Is there about 8.0 V?

YES

The ANC_F_MIC+8V wire is OK. Go to step 16.

NO

Go to step 13.

13. Open wire check (ANC_F_MIC+8V line)

-1. Measure the voltage between test points 1 and 2.

Test condition	Vehicle ON mode
B	Front ANC/active sound control microphone 8P connector: disconnected
Test point 1	**ANC/active sound control unit 20P connector No. 18**
Test point 2	Body ground

Is there about 8.0 V?

YES

There is an open in the wire. Replace the affected shielded harness.

NO

The ANC_F_MIC+8V wire is not open. Go to step 14.

14. Shorted wire check (ANC_F_MIC+8V line)

-1. Turn the vehicle to the OFF (LOCK) mode.

-2. Disconnect the following connector.

ANC/active sound control unit 20P connector

-3. Measure the resistance between test points 1 and 2.

Test condition	Vehicle OFF (LOCK) mode
B	Front ANC/active sound control microphone 8P connector: disconnected ANC/active sound control unit 20P connector: disconnected
Test point 1	**ANC/active sound control unit 20P connector No. 18**
Test point 2	Body ground

Is there 1.0 MΩ or more?

YES

The ANC_F_MIC+8V wire is not shorted to ground. Go to step 15.

NO

There is a short to body ground in the wire. Replace the affected shielded harness.

15. Shorted wire check (SH_ANC_F_MIC line to ANC_F_MIC+8V line)

-1. Measure the resistance between test points 1 and 2.

Test condition	Vehicle OFF (LOCK) mode
B	Front ANC/active sound control microphone 8P connector: disconnected ANC/active sound control unit 20P connector: disconnected
Test point 1	**ANC/active sound control unit 20P connector No. 7**
Test point 2	**ANC/active sound control unit 20P connector No. 18**

Is there 1.0 MΩ or more?

YES

Replace the ANC/active sound control unit .

NO

There is a short in the wires. Replace the affected shielded harness.

16. Open wire check (MIC_GND line)

-1. Turn the vehicle to the OFF (LOCK) mode.

-2. Measure the resistance between test points 1 and 2.

Test condition	Vehicle OFF (LOCK) mode
B	Front ANC/active sound control microphone 8P connector: disconnected
Test point 1	**Front ANC/active sound control microphone 8P connector No. 1**
Test point 2	Body ground

Is there 1.0 Ω or less?

YES

The MIC_GND wire is OK. Go to step 17.

NO

There is an open in the wire. Replace the affected shielded harness.

17. Determine possible failure area (front ANC/active sound control microphone, others)

-1. Reconnect the following connector.

Front ANC/active sound control microphone 8P connector

-2. Turn the vehicle to the ON mode.

-3. Measure the voltage between test points 1 and 2.

NOTE: Use the voltmeter in AC range.

Test condition	Vehicle ON mode, make a loud noise like clapping your hands in front of the front ANC/active sound control microphone.
Test point 1	**ANC/active sound control unit 20P connector No. 18**
Test point 2	**ANC/active sound control unit 20P connector No. 7**

Does the voltage change when making a loud noise in front of the microphone?

YES

Go to step 18.

NO

Replace the front ANC/active sound control microphone .

18. Determine possible failure area (ANC_R_MIC circuit, others)

-1. Turn the vehicle to the OFF (LOCK) mode.

-2. Disconnect the following connector.

Rear ANC/active sound control microphone 2P connector

-3. Turn the vehicle to the ON mode.

-4. Measure the voltage between test points 1 and 2.

Test condition	Vehicle ON mode
B	Rear ANC/active sound control microphone 2P connector: disconnected
Test point 1	**Rear ANC/active sound control microphone 2P connector No. 1**
Test point 2	**Rear ANC/active sound control microphone 2P connector No. 2**

Is there about 8.0 V?

YES

Go to step 23.

NO

Go to step 19.

19. Open wire check (SH_ANC_R_MIC line)

-1. Turn the vehicle to the OFF (LOCK) mode.

-2. Measure the resistance between test points 1 and 2.

Test condition	Vehicle OFF (LOCK) mode
B	Rear ANC/active sound control microphone 2P connector: disconnected
Test point 1	Rear ANC/active sound control microphone 2P connector No. 2
Test point 2	Body ground

Is there 1.0 Ω or less?

YES

The SH_ANC_R_MIC wire is not open. Go to step 20.

NO

There is an open in the wire. Replace the affected shielded harness.

20. Open wire check (ANC_R_MIC+8V line)

-1. Turn the vehicle to the ON mode.

-2. Measure the voltage between test points 1 and 2.

Test condition	Vehicle ON mode
B	Rear ANC/active sound control microphone 2P connector: disconnected
Test point 1	ANC/active sound control unit 20P connector No. 17
Test point 2	Body ground

Is there about 8.0 V?

YES

There is an open in the wire. Replace the affected shielded harness.

NO

The ANC_R_MIC+8V wire is not open. Go to step 21.

21. Shorted wire check (ANC_R_MIC+8V line)

-1. Turn the vehicle to the OFF (LOCK) mode.

-2. Disconnect the following connector.

ANC/active sound control unit 20P connector

-3. Measure the resistance between test points 1 and 2.

Test condition	Vehicle OFF (LOCK) mode
B	Rear ANC/active sound control microphone 2P connector: disconnected ANC/active sound control unit 20P connector: disconnected
Test point 1	ANC/active sound control unit 20P connector No. 17
Test point 2	Body ground

Is there 1.0 MΩ or more?

YES

The ANC_R_MIC+8V wire is not shorted to ground. Go to step 22.

NO

There is a short to body ground in the wire. Replace the affected shielded harness.

22. Shorted wire check (SH_ANC_R_MIC line to ANC_R_MIC+8V line)

-1. Measure the resistance between test points 1 and 2.

Test condition	Vehicle OFF (LOCK) mode
B	Rear ANC/active sound control microphone 2P connector: disconnected ANC/active sound control unit 20P connector: disconnected
Test point 1	**ANC/active sound control unit 20P connector No. 6**
Test point 2	**ANC/active sound control unit 20P connector No. 17**

Is there 1.0 MΩ or more?

YES

Replace the ANC/active sound control unit .

NO

There is a short in the wires. Replace the affected shielded harness.

23. Determine possible failure area (rear ANC/active sound control microphone, others)

-1. Turn the vehicle to the OFF (LOCK) mode.

-2. Reconnect the following connector.

Rear ANC/active sound control microphone 2P connector

-3. Turn the vehicle to the ON mode.

-4. Measure the voltage between test points 1 and 2.

NOTE: Use the voltmeter in AC range.

Test condition	Vehicle ON mode, make a loud noise like clapping your hands in front of the rear ANC/active sound control microphone.
Test point 1	**ANC/active sound control unit 20P connector No. 17**
Test point 2	**ANC/active sound control unit 20P connector No. 6**

Does the voltage change when making a loud noise in front of the microphone?

YES

Go to step 24.

NO

Replace the rear ANC/active sound control microphone .

24. Shorted wire check (ANC lines) 1

-1. Turn the vehicle to the OFF (LOCK) mode.

-2. Disconnect the following connectors.

ANC/active sound control unit 20P connector Stereo amplifier connector C (16P) (with stereo amplifier) Audio-navigation unit connector C (32P) (without stereo amplifier and with navigation) Audio unit connector C (32P) (without stereo amplifier and without navigation)

-3. Measure the resistance between these test points and body ground individually.

Test condition	Vehicle OFF (LOCK) mode
B	ANC/active sound control unit 20P connector: disconnected Stereo amplifier connector C (16P) (with stereo amplifier): disconnected Audio-navigation unit connector C (32P) (without stereo amplifier and with navigation): disconnected Audio unit connector C (32P) (without stereo amplifier and without navigation): disconnected

Connector	Terminal
ANC/active sound control unit 20P connector	No. 9
	No. 10
	No. 19
	No. 20

Is there 1.0 MΩ or more?

YES

The ANC wires are not shorted to ground. Go to step 25.

NO

There is a short in the wires. Replace the affected shielded harness.

25. Shorted wire check (ANC lines) 2

-1. Measure the resistance between test points 1 and 2.

Test condition	Vehicle OFF (LOCK) mode

B	ANC/active sound control unit 20P connector: disconnected Stereo amplifier connector C (16P) (with stereo amplifier): disconnected Audio-navigation unit connector C (32P) (without stereo amplifier and with navigation): disconnected Audio unit connector C (32P) (without stereo amplifier and without navigation): disconnected

Test point 1:ANC/active sound control unit 20P connector	Test points 2:ANC/active sound control unit 20P connector
No. 8	No. 9, No. 10, No. 19, No. 20
No. 9	No. 10, No. 19, No. 20
No. 10	No. 19, No. 20
No. 19	No. 20

Is there 1.0 MΩ or more between any of the terminals?

YES

The ANC wires are not shorted in the wires. Go to step 26.

NO

There is a short in the wires. Replace the affected shielded harness.

26. Open wire check (ANC lines)

-1. Measure the resistance between test points 1 and 2.

Test condition	Vehicle OFF (LOCK) mode
B	ANC/active sound control unit 20P connector: disconnected Stereo amplifier connector C (16P) (with stereo amplifier): disconnected Audio-navigation unit connector C (32P) (without stereo amplifier and with navigation): disconnected Audio unit connector C (32P) (without stereo amplifier and without navigation): disconnected

With stereo amplifier

Test point 1:ANC/active sound control unit 20P connector	Test point 2:Stereo amplifier connector C (16P)
No. 9	No. 1
No. 10	No. 2
No. 19	No. 9
No. 20	No. 10

Without stereo amplifier and with navigation

Test point 1:ANC/active sound control unit 20P connector	Test point 2:Audio-navigation unit connector C (36P)
No. 9	No. 2
No. 10	No. 18
No. 19	No. 1
No. 20	No. 17

Without stereo amplifier and without navigation

Test point 1:ANC/active sound control unit 20P connector	Test point 2:Audio unit connector C (32P)
No. 9	No. 2
No. 10	No. 18
No. 19	No. 1

Test point 1:ANC/active sound control unit 20P connector	Test point 2:Audio unit connector C (32P)
No. 20	No. 17

Is there 1.0 Ω or less?

YES

The ANC wires are OK. Go to step 27.

NO

There is an open in the wire(s). Replace the affected shielded harness.

27. Open wire check (F-CAN lines)

-1. Disconnect the following connector.

CAN gateway 16P connector

-2. Measure the resistance between test points 1 and 2.

Test condition	Vehicle OFF (LOCK) mode
B	ANC/active sound control unit 20P connector: disconnected Stereo amplifier connector C (16P) (with stereo amplifier): disconnected Audio-navigation unit connector C (32P) (without stereo amplifier and with navigation): disconnected Audio unit connector C (32P) (without stereo amplifier and without navigation): disconnected CAN gateway 16P connector: disconnected

Test point 1	CAN gateway 16P connector No. 6 (female terminals): ①
Test point 2	**ANC/active sound control unit 20P connector No. 4**

Test point 1	CAN gateway 16P connector No. 14 (female terminals): ①
Test point 2	**ANC/active sound control unit 20P connector No. 5**

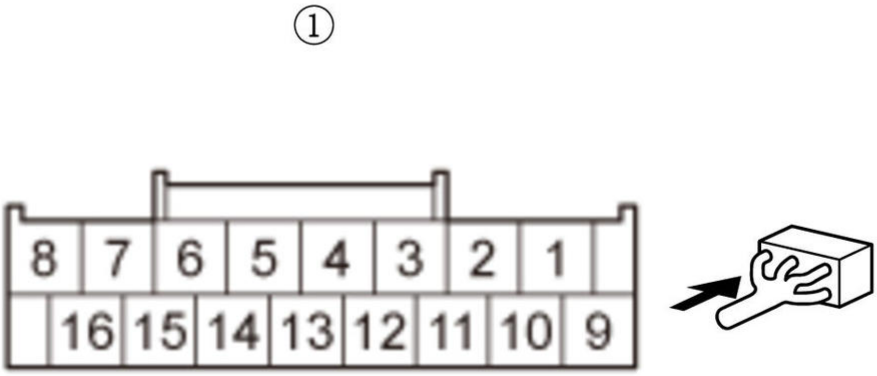

Is there 1.0 Ω or less?

YES

The F-CAN wires are OK. Go to step 28.

NO

Repair an open in the wire(s).

28. ANC/active sound control unit check (substitution)

-1. **Substitute a known-good ANC/active sound control unit** .

-2. Reconnect all the connectors, and recheck.

Does the symptom go away?

YES

Replace the original ANC/active sound control unit .

NO: with stereo amplifier

Replace the stereo amplifier .

NO: without stereo amplifier and with navigation

Replace the audio-navigation unit .

NO: without stereo amplifier and without navigation

Replace the audio unit .

CENTER DISPLAY UNIT DOES NOT DIM

NOTE:

- **Check the vehicle 12 volt battery condition first** .
- Turn the headlight on, and check that the dash brightness setting is not set to high.
- Check the connectors for poor connections or loose terminals.

1. Relay control module DTCs check

-1. Clear the DTCs with the HDS.

-2. Turn the vehicle to the OFF (LOCK) mode then the ON mode.

-3. Wait for at least 10 seconds.

-4. Check for DTCs with the HDS.

DTC Description	DTC
B	B

DTC (Relay Control Module)

Are any DTCs indicated?

YES

Go to the indicated DTC's troubleshooting .

NO

Go to step 2.

2. Problem verification

-1. Turn the vehicle to the ON mode.

-2. Turn the combination light switch to the PARKING ( ) position.

-3. Check the illumination of the center display unit screen and buttons.

Does the center display brightness change?

YES

Intermittent failure, the audio unit is OK at this time.

NO

The failure is duplicated, go to step 3.

3. Determine possible failure area (interior lights circuit, others)

-1. Check the illumination of several other buttons not related to the audio/navigation system.

Are the buttons illuminated?

YES

Go to step 4.

NO

Troubleshoot the interior lights.

4. Open wire check (ILLUMI+ line)

-1. Turn the combination light switch off.

-2. Turn the vehicle to the OFF (LOCK) mode.

-3. Disconnect the following connector.

Center display unit connector A (5P)

-4. Turn the combination lighting switch to the PARKING ( ) position.

-5. Measure the voltage between test points 1 and 2.

Test condition	Vehicle ON mode
B	Center display unit connector A (5P): disconnected
Test point 1	**Center display unit connector A (5P) No. 3**
Test point 2	Body ground

Is there battery voltage?

YES

Replace the center display unit .

NO

Repair an open in the wire.

NO SOUND IS HEARD FROM ALL THE SPEAKERS (DISPLAY IS NORMAL)

NOTE:

- **Check the vehicle 12 volt battery condition first** .
- Display audio type: **If the center display unit displays an error message, follow the instructions**.
- Before doing this troubleshooting, **go to Audio-navigation unit power will not turn on (No information display) troubleshooting**.
- Check the connectors for poor connections or loose terminals.
- Check the fuses associated with the system, and check for a short in the related lines.

1. Operation check

   -1. Turn the vehicle to the ON mode.

   -2. Check that the volume level is not set to the MIN level.

   Is it at the MIN level?

   YES

   Raise the volume level, and recheck the function.

   NO: Display audio type

   Go to step 2.

   NO: Color audio type

   Go to step 4.

2. Audio system check

   -1. Check if the center display unit keeps indicating audio mute indication.

   Is audio mute indication displayed?

   YES

   Go to step 3.

   NO

   Go to step 4.

3. Open wire check (ACC line)

   -1. Turn the vehicle to the OFF (LOCK) mode.

   -2. Disconnect the following connector.

Audio-navigation unit connector A (24P) (with navigation) Audio unit connector A (24P) (without navigation)

   -3. Turn the vehicle to the ON mode.

   -4. Measure the voltage between test points 1 and 2.

Test condition	Vehicle ON mode

B	Audio-navigation unit connector A (24P) (with navigation): disconnected Audio unit connector A (24P) (without navigation): disconnected
Test point 1	**Audio-navigation unit connector A (24P) (with navigation) No. 23**
B	**Audio unit connector A (24P) (without navigation) No. 23**
Test point 2	Body ground

Is there battery voltage?

YES: With navigation

Replace the audio-navigation unit .

YES: Without navigation

Replace the audio unit .

NO

Repair an open in the wire.

4. Problem verification:

   Go into the System Diagnostic Mode, and use the speaker check mode.

   - **With navigation**
   - **Without navigation**

   Did all speakers produce a tone?

   YES

   Intermittent failure, the system is OK at this time. Check for loose connections. If the tone is weak or distorted, **go to Audio system sound is weak or distorted (display is normal) troubleshooting**.

   NO: With stereo amplifier

   The failure is duplicated, go to step 5.

   NO: Without stereo amplifier

   The failure is duplicated, go to step 19.

5. System Diagnostic Mode check:

   Go into the System Diagnostic Mode, and use the System Links to check the AMP icon status.

   - **With navigation**
   - **Without navigation**

   Is the AMP icon green?

   YES

   Go to step 15.

   NO

   Go to step 6.

6. Open wire check (+B_AUDIO_AMP line)

-1. Disconnect the following connector.

Stereo amplifier connector A (18P)

-2. Measure the voltage between test points 1 and 2.

Test condition	Vehicle OFF (LOCK) mode
B	Stereo amplifier connector A (18P): disconnected
Test point 1	**Stereo amplifier connector A (18P) No. 3**
Test point 2	Body ground

Is there battery voltage?

YES

The +B_AUDIO_AMP wire is OK. Go to step 7.

NO

Repair an open in the wire.

7. Determine possible failure area (SWD+B line, others)

-1. Disconnect the following connector.

Stereo amplifier connector C (16P)

-2. Turn the vehicle to the ON mode.

-3. Measure the voltage between test points 1 and 2.

Test condition	Vehicle ON mode
B	Stereo amplifier connector A (18P): disconnected
B	Stereo amplifier connector C (16P): disconnected
Test point 1	**Stereo amplifier connector C (16P) No. 14**
Test point 2	Body ground

Is there battery voltage?

YES

The SWD+B wire is OK. Go to step 10.

NO

Go to step 8.

8. Open wire check (SWD+B line)

-1. Measure the voltage between test points 1 and 2.

Test condition	Vehicle ON mode
B	Stereo amplifier connector A (18P): disconnected
B	Stereo amplifier connector C (16P): disconnected
Test point 1	**Audio-navigation unit connector A (24P) (with navigation) No. 21**
B	**Audio unit connector A (24P) (without navigation) No. 21**
Test point 2	Body ground

Is there battery voltage?

YES

Repair an open in the wire.

NO

The SWD+B wire is not open. Go to step 9.

9. Shorted wire check (SWD+B line)

-1. Turn the vehicle to the OFF (LOCK) mode.

-2. Disconnect the following connector.

Audio-navigation unit connector A (24P) (with navigation) Audio unit connector A (24P) (without navigation)

-3. Measure the resistance between test points 1 and 2.

Test condition	Vehicle OFF (LOCK) mode
B	Stereo amplifier connector A (18P): disconnected
B	Stereo amplifier connector C (16P): disconnected
B	Audio-navigation unit connector A (24P) (with navigation): disconnected Audio unit connector A (24P) (without navigation): disconnected
Test point 1	**Audio-navigation unit connector A (24P) (with navigation) No. 21**
B	**Audio unit connector A (24P) (without navigation) No. 21**
Test point 2	Body ground

Is there 1.0 MΩ or more?

YES: With navigation

Replace the audio-navigation unit .

YES: Without navigation

Replace the audio unit .

NO

Repair a short to body ground in the wire.

10. Open wire check (GND line)

-1. Turn the vehicle to the OFF (LOCK) mode.

-2. Reconnect the following connectors.

Stereo amplifier connector A (18P) Stereo amplifier connector C (16P)

-3. Turn the vehicle to the ON mode.

-4. Measure the voltage between test points 1 and 2.

Test condition	Vehicle ON mode

Test point 1	Stereo amplifier connector A (18P) No. 1
Test point 2	Body ground

Is there less than 0.2 V?

YES

The GND wire is OK. Go to step 11.

NO

Repair an open or high resistance in the ground wire or poor ground (G402).

11. Shorted wire check (RS485+ line, RS485- line)

-1. Turn the vehicle to the OFF (LOCK) mode.

-2. Disconnect the following connectors.

Audio-navigation unit connector E (16P) (with navigation) Audio unit connector E (16P) (without navigation)
Stereo amplifier connector C (16P)

-3. Measure the resistance between test points 1 and 2.

Test condition	Vehicle OFF (LOCK) mode
B	Audio-navigation unit connector E (16P) (with navigation): disconnected Audio unit connector E (16P) (without navigation): disconnected
B	Stereo amplifier connector C (16P): disconnected
Test point 1	Audio-navigation unit connector E (16P) (with navigation) No. 7
B	Audio unit connector E (16P) (without navigation) No. 7
Test point 2	Body ground

Test point 1	Audio-navigation unit connector E (16P) (with navigation) No. 8
B	Audio unit connector E (16P) (without navigation) No. 8
Test point 2	Body ground

Is there 1.0 MΩ or more?

YES

The RS485+ and the RS485- wires are not shorted to ground. Go to step 12.

NO

There is a short to body ground in the wire(s). Replace the affected shielded harness.

12. Shorted wire check (RS485+ line to RS485- line)

-1. Measure the resistance between test points 1 and 2.

Test condition	Vehicle OFF (LOCK) mode
B	Audio-navigation unit connector E (16P) (with navigation): disconnected Audio unit connector E (16P) (without navigation): disconnected
B	Stereo amplifier connector C (16P): disconnected
Test point 1	Audio-navigation unit connector E (16P) (with navigation) No. 7
B	Audio unit connector E (16P) (without navigation) No. 7

Test point 2	**Audio-navigation unit connector E (16P) (with navigation) No. 8**
B	**Audio unit connector E (16P) (without navigation) No. 8**

Is there 1.0 MΩ or more?

YES

The RS485+ and the RS485- wires are not shorted. Go to step 13.

NO

There is a short in the wires. Replace the affected shielded harness.

13. Shorted wire check (AMP_RS485_SH line to another lines)

-1. Measure the resistance between test points 1 and 2.

Test condition	Vehicle OFF (LOCK) mode
B	Audio-navigation unit connector E (16P) (with navigation): disconnected Audio unit connector E (16P) (without navigation): disconnected
B	Stereo amplifier connector C (16P): disconnected
Test point 1	**Audio-navigation unit connector E (16P) (with navigation) No. 6**
B	**Audio unit connector E (16P) (without navigation) No. 6**
Test point 2	**Audio-navigation unit connector E (16P) (with navigation) No. 7**
B	**Audio unit connector E (16P) (without navigation) No. 7**

Test point 1	**Audio-navigation unit connector E (16P) (with navigation) No. 6**
B	**Audio unit connector E (16P) (without navigation) No. 6**
Test point 2	**Audio-navigation unit connector E (16P) (with navigation) No. 8**
B	**Audio unit connector E (16P) (without navigation) No. 8**

Is there 1.0 MΩ or more?

YES

The AMP_RS485_SH wire is OK. Go to step 14.

NO

There is a short in the wires. Replace the affected shielded harness.

14. Open wire check (RS485+ line, RS485- line)

-1. Measure the resistance between test points 1 and 2.

Test condition	Vehicle OFF (LOCK) mode
B	Audio-navigation unit connector E (16P) (with navigation): disconnected Audio unit connector E (16P) (without navigation): disconnected
B	Stereo amplifier connector C (16P): disconnected
Test point 1	**Audio-navigation unit connector E (16P) (with navigation) No. 7**
B	**Audio unit connector E (16P) (without navigation) No. 7**
Test point 2	**Stereo amplifier connector C (16P) No. 15**

Test point 1	**Audio-navigation unit connector E (16P) (with navigation) No. 8**
B	**Audio unit connector E (16P) (without navigation) No. 8**
Test point 2	**Stereo amplifier connector C (16P) No. 7**

Is there 1.0 Ω or less?

YES

The RS485+ and the RS485- wires are OK. Go to step 18.

NO

There is an open in the wire(s). Replace the affected shielded harness.

15. Shorted wire check (SPDIF2 SIG line)

-1. Turn the vehicle to the OFF (LOCK) mode.

-2. Disconnect the following connectors.

Audio-navigation unit connector M (4P) (with navigation) Audio unit connector M (4P) (without navigation)
Stereo amplifier connector D (2P)

-3. Measure the resistance between test points 1 and 2.

Test condition	Vehicle OFF (LOCK) mode
B	Audio-navigation unit connector M (4P) (with navigation): disconnected Audio unit connector M (4P) (without navigation): disconnected
B	Stereo amplifier connector D (2P): disconnected
Test point 1	**Audio-navigation unit connector M (4P) (with navigation) No. 1**
B	**Audio unit connector M (4P) (without navigation) No. 1**
Test point 2	Body ground

Is there 1.0 MΩ or more?

YES

The SPDIF2 SIG wire is not shorted to ground. Go to step 16.

NO

There is a short to body ground in the wire(s). Replace the affected shielded harness.

16. Shorted wire check (SPDIF2 SIG line to SPDIF2 SH line)

-1. Measure the resistance between test points 1 and 2.

Test condition	Vehicle OFF (LOCK) mode
B	Audio-navigation unit connector M (4P) (with navigation): disconnected Audio unit connector M (4P) (without navigation): disconnected
B	Stereo amplifier connector D (2P): disconnected
Test point 1	**Audio-navigation unit connector M (4P) (with navigation) No. 1**
B	**Audio unit connector M (4P) (without navigation) No. 1**
Test point 2	**Audio-navigation unit connector M (4P) (with navigation) No. 3**
B	**Audio unit connector M (4P) (without navigation) No. 3**

Is there 1.0 MΩ or more?

YES

The SPDIF2 SIG and the SPDIF2 SH wires are not shorted. Go to step 17.

NO

There is a short in the wires. Replace the affected shielded harness.

17. Open wire check (SPDIF2 SIG line)

-1. Measure the resistance between test points 1 and 2.

Test condition	Vehicle OFF (LOCK) mode
B	Audio-navigation unit connector M (4P) (with navigation): disconnected Audio unit connector M (4P) (without navigation): disconnected
B	Stereo amplifier connector D (2P): disconnected
Test point 1	**Audio-navigation unit connector M (4P) (with navigation) No. 1**
B	**Audio unit connector M (4P) (without navigation) No. 1**
Test point 2	**Stereo amplifier connector D (2P) No. 1**

Is there 1.0 Ω or less?

YES

The SPDIF2 SIG wire is OK. Go to step 18.

NO

There is an open in the wire(s). Replace the affected shielded harness.

18. Stereo amplifier check (substitution)

-1. **Substitute a known-good stereo amplifier** .

-2. Reconnect all the connectors, and recheck.

Does the symptom go away?

YES

Replace the original stereo amplifier .

NO: With navigation

Replace the audio-navigation unit .

NO: Without navigation

Replace the audio unit .

19. Shorted wire check (SPKR lines) 1

-1. Turn the vehicle to the OFF (LOCK) mode.

-2. Disconnect the following connector.

Audio-navigation unit connector A (24P) (with navigation) Audio unit connector A (24P) (without navigation)

-3. Measure the resistance between these test points and body ground individually.

Test condition	Vehicle OFF (LOCK) mode

B	Audio-navigation unit connector A (24P) (with navigation): disconnected Audio unit connector A (24P) (without navigation): disconnected

Connector	Terminal
Audio-navigation unit connector A (24P) (with navigation) Audio unit connector A (24P) (without navigation)	No. 5
	No. 6
	No. 7
	No. 8
	No. 15
	No. 16
	No. 17
	No. 18

Is there 1.0 MΩ or more?

YES

The SPKR wires are not shorted to ground. Go to step 20.

NO

Repair a short to body ground in the wire(s).

20. Shorted wire check (SPKR lines) 2

-1. Measure the resistance between test points 1 and 2.

Test condition	Vehicle OFF (LOCK) mode
B	Audio-navigation unit connector A (24P) (with navigation): disconnected Audio unit connector A (24P) (without navigation): disconnected

Test point 1: Audio-navigation unit connector A (24P) (with navigation) Audio unit connector A (24P) (without navigation)	**Test point 2:** Audio-navigation unit connector A (24P) (with navigation) Audio unit connector A (24P) (without navigation)	**Resistance**
No. 5	No. 6	About 4 Ω
No. 7	No. 8	About 4 Ω
No. 15	No. 16	About 4 Ω

Test point 1: Audio-navigation unit connector A (24P) (with navigation) Audio unit connector A (24P) (without navigation)	**Test point 2:** Audio-navigation unit connector A (24P) (with navigation) Audio unit connector A (24P) (without navigation)	**Resistance**
No. 17	No. 18	About 4 Ω

Is the resistance OK?

YES: With navigation

Replace the audio-navigation unit .

YES: Without navigation

Replace the audio unit .

NO

Repair a short in the wires.

POOR AM OR FM RADIO RECEPTION OR INTERFERENCE

NOTE:

- Check the vehicle 12 volt battery condition first .
- Check for aftermarket accessories plugged into the vehicle accessory power sockets.
- Check for any radio frequency modulators that are plugged into the FM antenna lead. These modulators allow customers to play audio from accessories like CD players or game consoles using the audio system, but they can create interference issues.
- Check the radio reception in an open area. Compare it to a known-good vehicle whenever possible. Poor reception/interference can be caused by the following:
-
    - The radio station is far away
    - Atmospheric conditions are unfavorable
    - Tall buildings, mountains, or high-voltage power lines are nearby
    - Electrical loads like the rear window defroster, seat heaters, game consoles, etc.
- Check the connectors for poor connections or loose terminals.

1. Problem verification

   -1. Park the vehicle in an open area.

   -2. Turn the vehicle to the ON mode.

   -3. Turn on the audio system, and select AM or FM radio station.

   Is the sound quality normal?

   YES

   Intermittent failure, the system is OK at this time.

   NO

   The failure is duplicated, go to step 2.

2. Reception/interference check

   -1. Check if the radio reception/interference is the same as the known-good vehicle in several locations.

   Is the AM or FM sound quality the same?

   YES

   Multipath interference or weak station. Operation is normal.

   NO

   Go to step 3.

3. Determine possible failure area (ANT +B line, others)

   -1. Disconnect the following connector.

Roof antenna connector A (3P)

-2. Turn the vehicle to the ON mode.

-3. Measure the voltage between test points 1 and 2.

Test condition	Vehicle ON mode
B	Roof antenna connector A (3P): disconnected
Test point 1	Roof antenna connector A (3P) (male terminals) No. 1: ①
Test point 2	Body ground

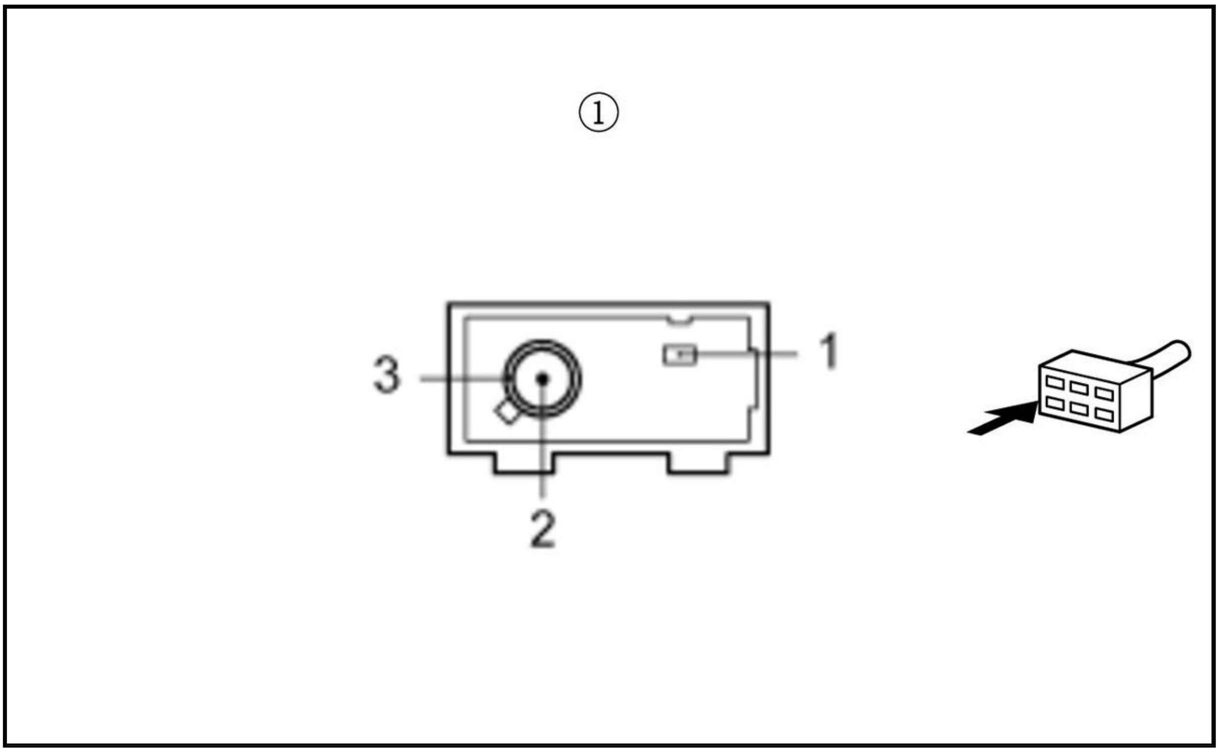

Is there battery voltage?

YES

The ANT +B wire is OK. Go to step 6.

NO

Go to step 4.

4. Shorted wire check (ANT +B line)

-1. Turn the vehicle to the OFF (LOCK) mode.

-2. Disconnect the following connector.

Audio unit connector E (3P)

-3. Measure the resistance between test points 1 and 2.

Test condition	Vehicle OFF (LOCK) mode
B	Roof antenna connector A (3P): disconnected
B	Audio unit connector E (3P): disconnected

Test point 1	Roof antenna connector A (3P) (male terminals) No. 1: ①
Test point 2	Body ground

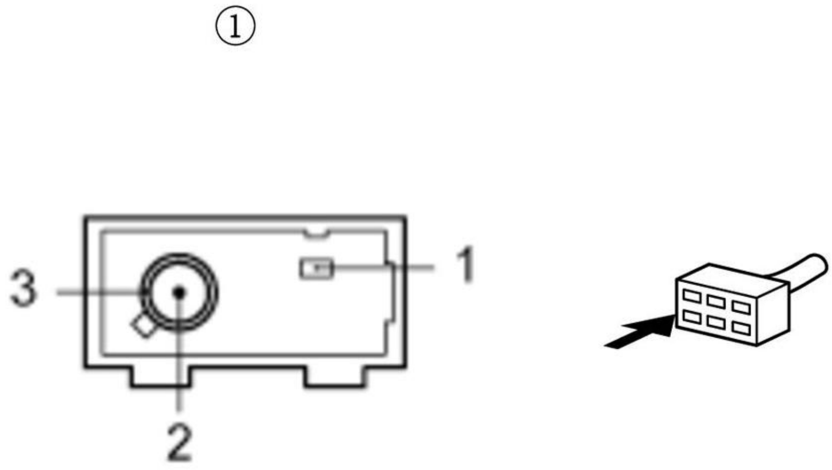

Is there 1.0 MΩ or more?

YES

The ANT +B wire is not shorted to ground. Go to step 5.

NO

Repair a short to body ground in the wire.

5. Open wire check (ANT +B line)

-1. Measure the resistance between test points 1 and 2.

Test condition	Vehicle OFF (LOCK) mode
B	Roof antenna connector A (3P): disconnected
B	Audio unit connector E (3P): disconnected

Test point 1	**Audio unit connector E (3P) No. 1**
Test point 2	Roof antenna connector A (3P) (male terminals) No. 1: ①

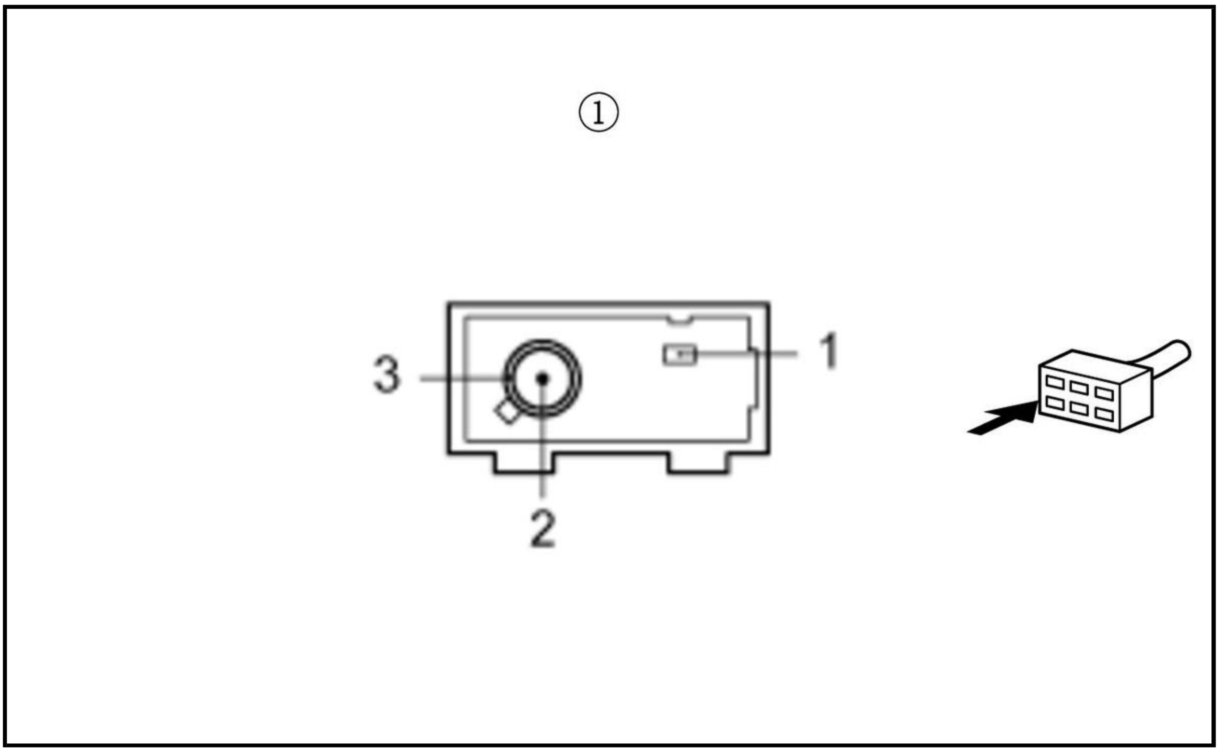

Is there 1.0 Ω or less?

YES

Replace the audio unit .

NO

Repair an open in the wire.

6. Shorted wire check (RF IN line)

-1. Turn the vehicle to the OFF (LOCK) mode.

-2. Disconnect the following connector.

Audio unit connector E (3P)

-3. Measure the resistance between test points 1 and 2.

Test condition	Vehicle OFF (LOCK) mode
B	Roof antenna connector A (3P): disconnected
B	Audio unit connector E (3P): disconnected
Test point 1	Roof antenna connector A (3P) (male terminals) No. 2: ①
Test point 2	Body ground

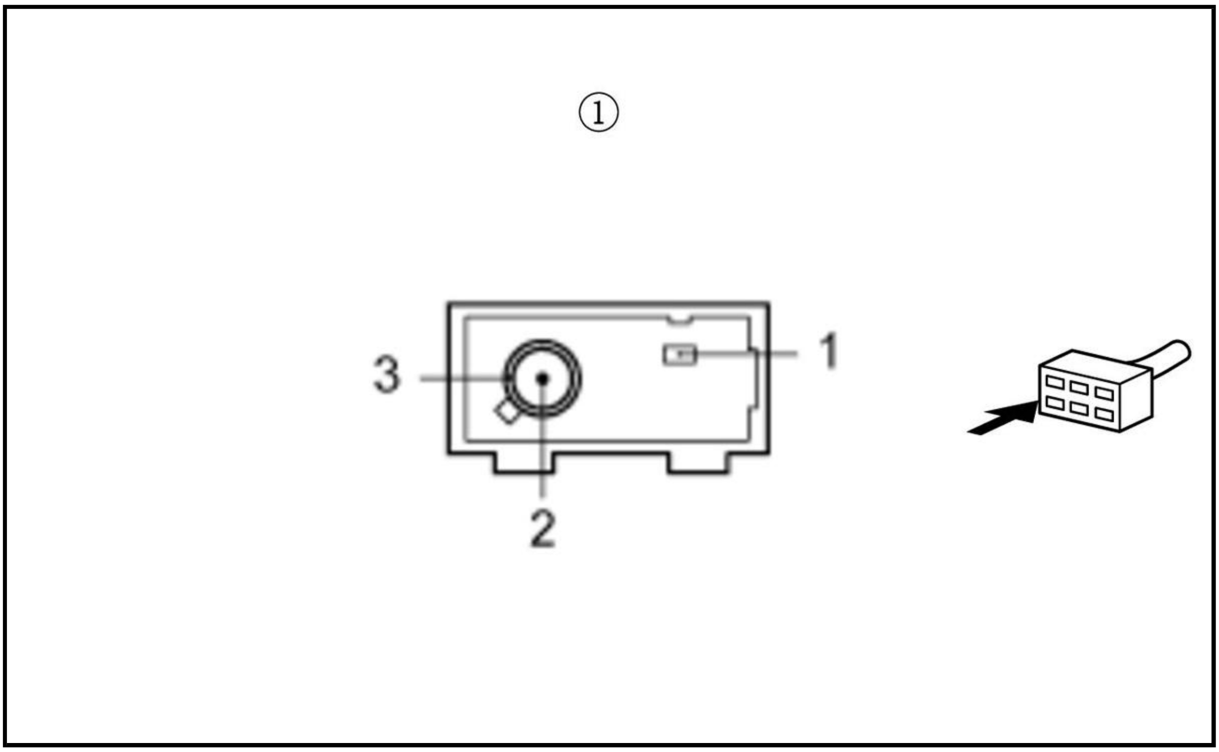

Is there 1.0 MΩ or more?

YES

The RF IN wire is not shorted to ground. Go to step 7.

NO

There is a short to body ground in the wire. Replace the affected antenna lead.

7. Shorted wire check (RF IN line to SH (RF IN) line)

-1. Measure the resistance between test points 1 and 2.

Test condition	Vehicle OFF (LOCK) mode
B	Roof antenna connector A (3P): disconnected

B	Audio unit connector E (3P): disconnected
Test point 1	**Audio unit connector E (3P) No. 2**
Test point 2	**Audio unit connector E (3P) No. 3**

Is there 1.0 MΩ or more?

YES

The RF IN wire is not shorted to SH (RF IN) wire. Go to step 8.

NO

There is a short in the wire. Replace the affected antenna lead.

8. Open wire check (RF IN line)

-1. Measure the resistance between test points 1 and 2.

Test condition	Vehicle OFF (LOCK) mode
B	Roof antenna connector A (3P): disconnected

B	Audio unit connector E (3P): disconnected
Test point 1	Roof antenna connector A (3P) (male terminals) No. 2: ①
Test point 2	**Audio unit connector E (3P) No. 2**

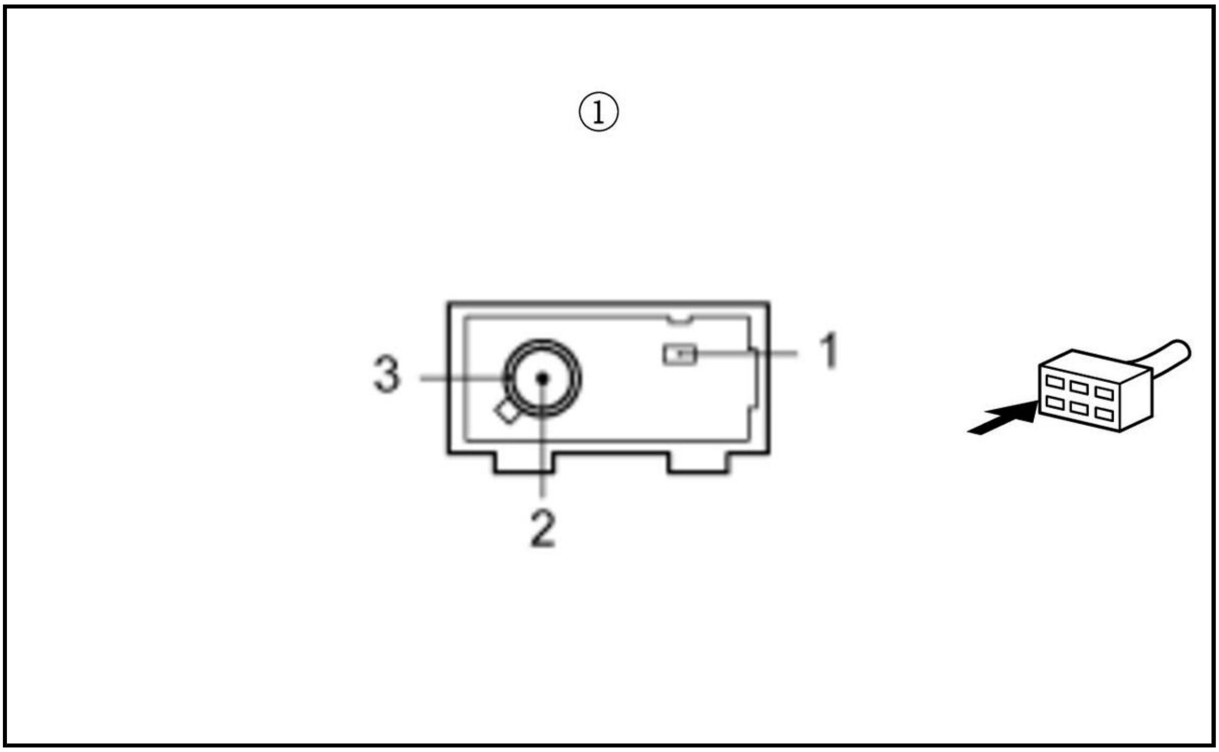

Is there 1.0 Ω or less?

YES

The RF IN wire is OK. Go to step 9.

NO

There is an open in the wire. Replace the affected antenna lead.

9. Roof antenna check (substitution)

-1. **Substitute a known-good roof antenna** .

-2. Reconnect all the connectors, and recheck.

Does the symptom go away?

YES

Replace the original roof antenna .

NO

Replace the audio unit .

POOR OR NO SOUND WITH AM/FM RADIO

NOTE:

- **Check the vehicle 12 volt battery condition first** .
- Check for aftermarket accessories plugged into the vehicle accessory power sockets.

- Check for any radio frequency modulators that are plugged into the FM antenna lead. These modulators allow customers to play audio from accessories like CD players or game consoles using the audio system, but they can create interference issues.
- Check the radio reception in an open area. Compare it to a known-good vehicle whenever possible. Poor reception/interference can be caused by the following:
-
    - The radio station is far away
    - Atmospheric conditions are unfavorable
    - Tall buildings, mountains, or high-voltage power lines are nearby
    - Electrical loads like the rear window defroster, seat heaters, game consoles, etc.
- Check the connectors for poor connections or loose terminals.

1. Problem verification

   -1. Park the vehicle in an open area.

   -2. Turn the vehicle to the ON mode.

   -3. Turn on the audio system, and select AM or FM radio station.

   Is the sound quality normal?

   YES

   Intermittent failure, the system is OK at this time.

   NO

   The failure is duplicated, go to step 2.

2. Reception/interference check

   -1. Check if the radio reception/interference is the same as the known-good vehicle in several locations.

   Is the AM or FM sound quality the same?

   YES

   Multipath interference or weak station. Operation is normal.

   NO

   Go to step 3.

3. Seek stop test

   -1. Select the SCAN to check if the number of received radio station are the same as the known-good vehicle.

   Are the number of radio station the same?

   YES

   Go to step 11.

   NO

   Go to step 4.

4. Determine possible failure area (ANT +B line, others)

-1. Turn the vehicle to the OFF (LOCK) mode.

-2. Disconnect the following connector.

Roof antenna connector A (3P)

-3. Turn the vehicle to the ON mode.

-4. Measure the voltage between test points 1 and 2.

Test condition	Vehicle ON mode
B	Roof antenna connector A (3P): disconnected
Test point 1	Roof antenna connector A (3P) (male terminals) No. 1: ①
Test point 2	Body ground

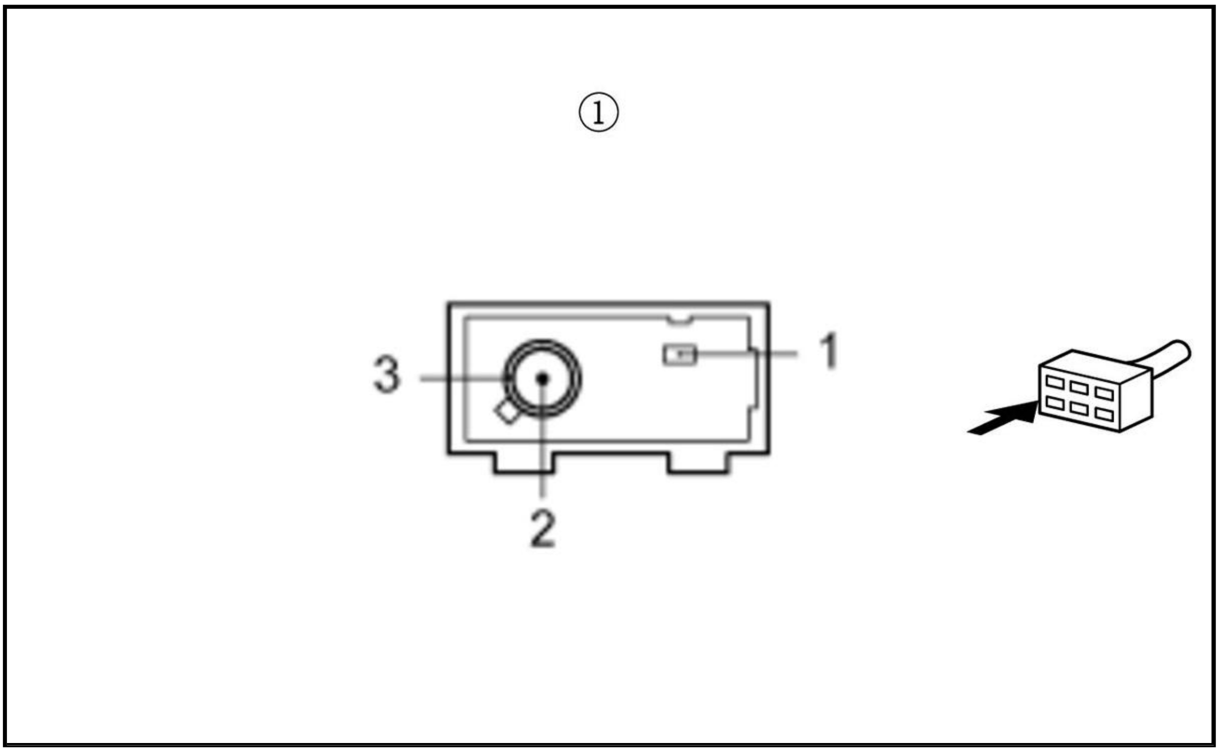

Is there about 9.0 V?

YES

The ANT +B wire is OK. Go to step 7.

NO

Go to step 5.

5. Shorted wire check (ANT +B line)

-1. Turn the vehicle to the OFF (LOCK) mode.

-2. Disconnect the following connector.

Tuner unit connector C (5P)

-3. Measure the resistance between test points 1 and 2.

Test condition	Vehicle OFF (LOCK) mode
B	Roof antenna connector A (3P): disconnected
B	Tuner unit connector C (5P): disconnected
Test point 1	**Tuner unit connector C (5P) No. 1**
Test point 2	Body ground

Is there 1.0 MΩ or more?

YES

The ANT +B wire is not shorted to ground. Go to step 6.

NO

Repair a short to body ground in the wire.

6. Open wire check (ANT +B line)

-1. Measure the resistance between test points 1 and 2.

Test condition	Vehicle OFF (LOCK) mode
B	Roof antenna connector A (3P): disconnected
B	Tuner unit connector C (5P): disconnected
Test point 1	**Tuner unit connector C (5P) No. 1**
Test point 2	Roof antenna connector A (3P) (male terminals) No. 1: ①

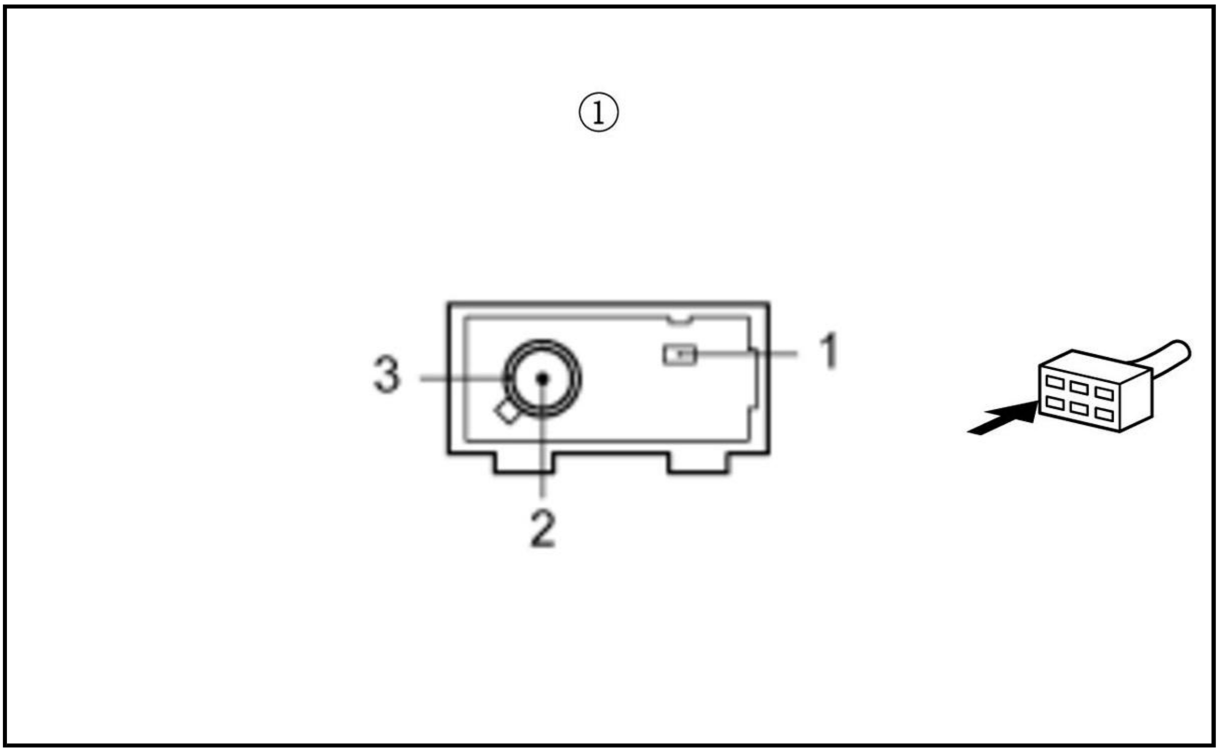

Is there 1.0 Ω or less?

YES

Replace the tuner unit .

NO

Repair an open in the wire.

7. Shorted wire check (RF IN line)

-1. Turn the vehicle to the OFF (LOCK) mode.

-2. Disconnect the following connector.

Tuner unit connector C (5P)

-3. Measure the resistance between test points 1 and 2.

Test condition	Vehicle OFF (LOCK) mode
B	Roof antenna connector A (3P): disconnected
B	Tuner unit connector C (5P): disconnected
Test point 1	**Tuner unit connector C (5P) No. 2**
Test point 2	Body ground

Is there 1.0 MΩ or more?

YES

The RF IN wire is not shorted to ground. Go to step 8.

NO

There is a short to body ground in the wire. Replace the affected antenna lead.

8. Shorted wire check (RF IN line to SH (RF IN) line)

-1. Measure the resistance between test points 1 and 2.

Test condition	Vehicle OFF (LOCK) mode
B	Roof antenna connector A (3P): disconnected
B	Tuner unit connector C (5P): disconnected
Test point 1	**Tuner unit connector C (5P) No. 2**
Test point 2	**Tuner unit connector C (5P) No. 4**

Is there 1.0 MΩ or more?

YES

The RF IN wire is not shorted to SH (RF IN) wire. Go to step 9.

NO

There is a short in the wire. Replace the affected antenna lead.

9. Open wire check (RF IN line)

-1. Measure the resistance between test points 1 and 2.

Test condition	Vehicle OFF (LOCK) mode

B	Roof antenna connector A (3P): disconnected
B	Tuner unit connector C (5P): disconnected
Test point 1	**Tuner unit connector C (5P) No. 2**

Test point 2	Roof antenna connector A (3P) (male terminals) No. 2: ①

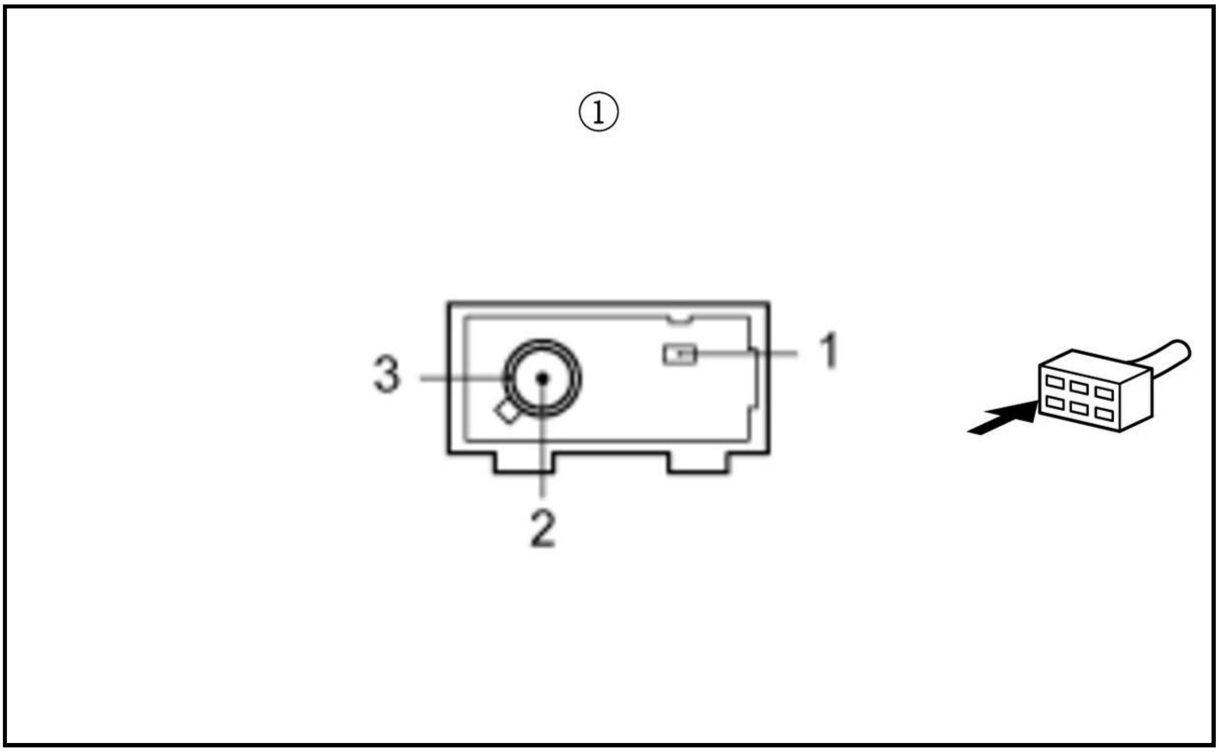

Is there 1.0 Ω or less?

YES

The RF IN wire is OK. Go to step 10.

NO

There is an open in the wire. Replace the affected antenna lead.

10. Roof antenna check (substitution)

-1. **Substitute a known-good roof antenna** .

-2. Reconnect all the connectors, and recheck.

Does the symptom go away?

YES

Replace the original roof antenna .

NO

Replace the tuner unit .

11. Shorted wire check (SPDIF1 SIG line)

-1. Turn the vehicle to the OFF (LOCK) mode.

-2. Disconnect the following connectors.

Audio-navigation unit connector L (2P) (with navigation)
Audio unit connector L (2P) (without navigation)
Tuner unit connector B (2P)

-3. Measure the resistance between test points 1 and 2.

Test condition	Vehicle OFF (LOCK) mode
B	Audio-navigation unit connector L (2P) (with navigation): disconnected
B	Audio unit connector L (2P) (without navigation): disconnected
B	Tuner unit connector B (2P): disconnected
Test point 1	**Tuner unit connector B (2P) No. 1**
Test point 2	Body ground

Is there 1.0 MΩ or more?

YES

The SPDIF1 wire is not shorted to ground. Go to step 12.

NO

There is a short to body ground in the wire. Replace the affected shielded harness.

12. Shorted wire check (SPDIF1 SIG line to SPDIF1 SH line)

-1. Measure the resistance between test points 1 and 2.

Test condition	Vehicle OFF (LOCK) mode
B	Audio-navigation unit connector L (2P) (with navigation): disconnected
B	Audio unit connector L (2P) (without navigation): disconnected
B	Tuner unit connector B (2P): disconnected
Test point 1	**Tuner unit connector B (2P) No. 1**
Test point 2	**Tuner unit connector B (2P) No. 2**

Is there 1.0 MΩ or more?

YES

The SPDIF1 SIG and the SPDIF1 SH wires are not shorted. Go to step 13.

NO

There is a short in the wires. Replace the affected shielded harness.

13. Open wire check (SPDIF1 SIG line, SPDIF1 SH line)

-1. Measure the resistance between test points 1 and 2.

Test condition	Vehicle OFF (LOCK) mode
B	Audio-navigation unit connector L (2P) (with navigation): disconnected
B	Audio unit connector L (2P) (without navigation): disconnected
B	Tuner unit connector B (2P): disconnected
Test point 1	**Audio-navigation unit connector L (2P) (with navigation) No. 1**
	Audio unit connector L (2P) (without navigation) No. 1
Test point 2	**Tuner unit connector B (2P) No. 1**

Test point 1	**Audio-navigation unit connector L (2P) (with navigation) No. 2**
	Audio unit connector L (2P) (without navigation) No. 2
Test point 2	**Tuner unit connector B (2P) No. 2**

Is there 1.0 Ω or less?

YES

The SPDIF1 SIG and the SPDIF1 SH wires are OK. Go to step 14.

NO

There is an open in the wire(s). Replace the affected shielded harness.

14. Tuner unit check (substitution)

-1. **Substitute a known-good tuner unit** .

-2. Reconnect all the connectors, and recheck.

Does the symptom go away?

YES

Replace the original tuner unit .

NO: With navigation

Replace the audio-navigation unit .

NO: Without navigation

Replace the audio unit .

REARVIEW CAMERA IMAGE DOES NOT CHANGE WHEN SELECTING DIFFERENT VIEWS

NOTE:

- **Check the vehicle 12 volt battery condition first** .
- You can select up to three different rearview camera angles when backing up. If there is no camera image on the display, **go to Rearview camera image does not come on troubleshooting**.
- Check the connectors for poor connections or loose terminals.

1. Problem verification

-1. Turn the vehicle to the ON mode.

-2. Shift the transmission to R position/mode.

-3. Operate the audio unit to see if the rearview image changes between the wide view, the normal view, and the top down view.

Does the rearview camera image change properly?

YES

Intermittent failure, the system is OK at this time.

NO

The failure is duplicated, go to step 2.

2. Shorted wire check (CAMERA_BIT0 line, CAMERA_BIT1 line)

-1. Shift the transmission to Neutral or P position/mode.

-2. Turn the vehicle to the OFF (LOCK) mode.

-3. Disconnect the following connectors.

Audio-navigation unit connector C (32P) (with navigation) Audio unit connector C (32P) (without navigation)
Rearview camera 8P connector

-4. Measure the resistance between test points 1 and 2.

Test condition	Vehicle OFF (LOCK) mode
B	Audio-navigation unit connector C (32P) (with navigation): disconnected Audio unit connector C (32P) (without navigation): disconnected
B	Rearview camera 8P connector: disconnected
Test point 1	**Audio-navigation unit connector C (32P) (with navigation) No. 31**
B	**Audio unit connector C (32P) (without navigation) No. 31**
Test point 2	Body ground

Test point 1	**Audio-navigation unit connector C (32P) (with navigation) No. 32**
B	**Audio unit connector C (32P) (without navigation) No. 32**
Test point 2	Body ground

Is there 1.0 MΩ or more?

YES

The CAMERA_BIT0 and the CAMERA_BIT1 wires are not shorted to ground. Go to step 3.

NO

Repair a short to body ground in the wire(s).

3. Shorted wire check (CAMERA_BIT0 line to CAMERA_BIT1 line)

-1. Measure the resistance between test points 1 and 2.

Test condition	Vehicle OFF (LOCK) mode
B	Audio-navigation unit connector C (32P) (with navigation): disconnected Audio unit connector C (32P) (without navigation): disconnected
B	Rearview camera 8P connector: disconnected
Test point 1	**Audio-navigation unit connector C (32P) (with navigation) No. 31**
B	**Audio unit connector C (32P) (without navigation) No. 31**
Test point 2	**Audio-navigation unit connector C (32P) (with navigation) No. 32**
B	**Audio unit connector C (32P) (without navigation) No. 32**

Is there 1.0 MΩ or more?

YES

The CAMERA_BIT0 and the CAMERA_BIT1 wires are not shorted. Go to step 4.

NO

Repair a short in the wires.

4. Open wire check (CAMERA_BIT0 line, CAMERA_BIT1 line)

-1. Measure the resistance between test points 1 and 2.

Test condition	Vehicle OFF (LOCK) mode
B	Audio-navigation unit connector C (32P) (with navigation): disconnected Audio unit connector C (32P) (without navigation): disconnected
B	Rearview camera 8P connector: disconnected
Test point 1	**Audio-navigation unit connector C (32P) (with navigation) No. 31**
B	**Audio unit connector C (32P) (without navigation) No. 31**
Test point 2	**Rearview camera 8P connector No. 3**

Test point 1	**Audio-navigation unit connector C (32P) (with navigation) No. 32**
B	**Audio unit connector C (32P) (without navigation) No. 32**
Test point 2	**Rearview camera 8P connector No. 4**

Is there 1.0 Ω or less?

YES

The CAMERA_BIT0 and the CAMERA_BIT1 wires are OK. Go to step 5.

NO

Repair an open in the wire(s).

5. Voltage check (CAMERA_BIT0 line)

-1. Reconnect the following connectors.

Audio-navigation unit connector C (32P) (with navigation) Audio unit connector C (32P) (without navigation)
Rearview camera 8P connector

-2. Turn the vehicle to the ON mode.

-3. Shift the transmission to R position/mode.

-4. Measure the voltage between test points 1 and 2 as specified in the table.

Test condition	Vehicle ON mode
Test point 1	**Audio-navigation unit connector C (32P) (with navigation) No. 31**
B	**Audio unit connector C (32P) (without navigation) No. 31**
Test point 2	Body ground

Selected view mode	Voltage
Wide View	0 V
Normal View	About 5 V - 8 V
Top Down View	0 V

Is the voltage OK?

YES

Go to step 6.

NO: With navigation

Replace the audio-navigation unit .

NO: Without navigation

Replace the audio unit .

6. Voltage check (CAMERA_BIT1 line)

-1. Measure the voltage between test points 1 and 2 as specified in the table.

Test condition	Vehicle ON mode
Test point 1	**Audio-navigation unit connector C (32P) (with navigation) No. 32**
B	**Audio unit connector C (32P) (without navigation) No. 32**
Test point 2	Body ground

Selected view mode	Voltage
Wide View	0 V
Normal View	0 V
Top Down View	About 5 V - 8 V

Is the voltage OK?

YES

Replace the rearview camera .

NO: With navigation

Replace the audio-navigation unit .

NO: Without navigation

Replace the audio unit .

REARVIEW CAMERA IMAGE DOES NOT COME ON

NOTE:

- **Check the vehicle 12 volt battery condition first** .
- Check the connectors for poor connections or loose terminals.

1. Problem verification

-1. Turn the vehicle to the ON mode.

-2. Shift the transmission to R position/mode.

Does the display image change to rearview when the transmission is shifted to R position/mode?

YES

Intermittent failure, the system is OK at this time.

NO: Display audio type

The failure is duplicated, go to step 2.

NO: Color audio type

The failure is duplicated, go to step 5.

2. System Diagnostic Mode check

-1. Shift the transmission to P position/mode.

Go into the System Diagnostic Mode, and use the System Links to check the Rear Wide Camera icon status.

- **With navigation**
- **Without navigation**

Is the Rear Camera icon green?

YES

Go to step 3.

NO: With navigation

Go to Navigation Unit DTC 2608 (R-Camera Diag) troubleshooting .

NO: Without navigation

Go to Audio Unit DTC 2608 (R-Camera Diag) troubleshooting .

3. Determine possible failure area (BACK_LT line, others):

Go into the System Diagnostic Mode, and use the Vehicle Status to check the BACK signal;

- **With navigation**
- **Without navigation**

-2. Shift the transmission to R position/mode.

Does the BACK signal change from [0] to [1] when the transmission is shifted from P position/mode to R position/mode?

YES

Go to step 12.

NO

Go to step 4.

4. Open wire check (BACK_LT line)

-1. Shift the transmission to P position/mode.

-2. Turn the vehicle to the OFF (LOCK) mode.

-3. Disconnect the following connector.

Audio-navigation unit connector C (32P) (with navigation) Audio unit connector C (32P) (without navigation)

-4. Turn the vehicle to the ON mode.

-5. Shift the transmission to R position/mode.

-6. Measure the voltage between test points 1 and 2.

Test condition	Vehicle ON mode
B	Audio-navigation unit connector C (32P) (with navigation): disconnected Audio unit connector C (32P) (without navigation): disconnected
Test point 1	**Audio-navigation unit connector C (32P) (with navigation) No. 15**
B	**Audio unit connector C (32P) (without navigation) No. 15**
Test point 2	Body ground

Is there battery voltage?

YES: with navigation

Replace the audio-navigation unit .

YES: without navigation

Replace the audio unit .

NO

Repair an open in the wire.

5. In Line Diag check

-1. Shift the transmission to P position/mode.

-2. **Go into the System Diagnostic Mode, and use the In Line Diag to check the rearview camera connection**.

Does the Rear Camera indicate OK?

YES

Go to step 10.

NO

Go to step 6.

6. Determine possible failure area (CAMERA_ADPT line, others)

-1. Turn the vehicle to the OFF (LOCK) mode.

-2. Disconnect the following connector.

Rearview camera 8P connector

-3. Turn the vehicle to the ON mode.

-4. Measure the voltage between test points 1 and 2.

Test condition	Vehicle ON mode
B	Rearview camera 8P connector: disconnected
B	B
Test point 1	**Rearview camera 8P connector No. 6**
Test point 2	Body ground

Is there about 5.0 V?

YES

Go to step 8.

NO

Go to step 7.

7. Open wire check (CAMERA_ADPT line)

-1. Measure the voltage between test points 1 and 2.

Test condition	Vehicle ON mode
B	Rearview camera 8P connector: disconnected
Test point 1	**Audio unit connector C (32P) No. 16**
Test point 2	Body ground

Is there about 5.0 V?

YES

Repair an open in the wire.

NO

Replace the audio unit .

8. Determine possible failure area (rearview camera, others)

-1. Turn the vehicle to the OFF (LOCK) mode.

-2. Measure the resistance between test points 1 and 2.

Test condition	Vehicle OFF (LOCK) mode
B	Rearview camera 8P connector: disconnected
Test point 1	**Rearview camera 8P connector No. 5**
Test point 2	Body ground

Is there 1.0 Ω or less?

YES

Replace the rearview camera .

NO

Go to step 9.

9. Open wire check (SH_CAMERA line)

-1. Measure the resistance between test points 1 and 2.

Test condition	Vehicle OFF (LOCK) mode
B	Rearview camera 8P connector: disconnected
Test point 1	**Audio unit connector C (32P) No. 28**
Test point 2	Body ground

Is there 1.0 MΩ or more?

YES

Replace the audio unit .

NO

There is an open in the wire(s). Replace the affected shielded harness.

10. Determine possible failure area (B-CAN lines, others)

-1. **Go into the System Diagnostic Mode, and use the MICU_ICU in the Vehicle Information to check the BACK signal**.

-2. Shift the transmission to R position/mode.

Does the C_BACKLTSW signal change from [0] to [1] when the transmission is shifted from P position/mode to R position/mode?

YES

Go to step 12.

NO

Go to step 11.

11. Open wire check (B-CAN_H line, B-CAN_L line)

-1. Shift the transmission to P position/mode.

-2. Turn the vehicle to the OFF (LOCK) mode.

-3. Disconnect the following connectors.

Body control module connector B (36P)
Audio unit connector A (24P)

-4. Measure the resistance between test points 1 and 2.

Test condition	Vehicle OFF (LOCK) mode
B	Body control module connector B (36P): disconnected
B	Audio unit connector A (24P): disconnected
Test point 1	**Body control module connector B (36P) No. 20**
Test point 2	**Audio unit connector A (24P) No. 14**

Test point 1	**Body control module connector B (36P) No. 21**
Test point 2	**Audio unit connector A (24P) No. 24**

Is there 1.0 Ω or less?

YES

Replace the audio unit .

NO

Repair an open in the wire(s).

12. Shorted wire check (CAMERA_VCC, CAMERA_GND, CAMERA_V, CAMERA_V_GND lines)

-1. Turn the vehicle to the OFF (LOCK) mode.

-2. Disconnect the following connectors.

Audio-navigation unit connector C (32P) (with navigation) Audio unit connector C (32P) (without navigation)
Rearview camera 8P connector

-3. Measure the resistance between the following test points and body ground individually.

Test condition	Vehicle OFF (LOCK) mode
B	Audio-navigation unit connector C (32P) (with navigation): disconnected Audio unit connector C (32P) (without navigation): disconnected
B	Rearview camera 8P connector: disconnected

Connector	Terminal
Audio-navigation unit connector C (32P) (with navigation) Audio unit connector C (32P) (without navigation)	No. 13
	No. 14
	No. 29
	No. 30

Is there 1.0 MΩ or more?

YES

The CAMERA_VCC, CAMERA_GND, CAMERA_V, and CAMERA_V_GND wires are not shorted to ground. Go to step 13.

NO

There is a short to body ground in the wire(s). Replace the affected shielded harness.

13. Shorted wire check (CAMERA lines)

-1. Measure the resistance between test points 1 and 2.

Test condition	Vehicle OFF (LOCK) mode

B	Audio-navigation unit connector C (32P) (with navigation): disconnected Audio unit connector C (32P) (without navigation): disconnected
B	Rearview camera 8P connector: disconnected

Test point 1: Audio-navigation unit connector C (32P) (with navigation) Audio unit connector C (32P) (without navigation)	Test point 2: Audio-navigation unit connector C (32P) (with navigation) Audio unit connector C (32P) (without navigation)
No. 13	No. 14, No. 28, No. 29, No. 30
No. 14	No. 28, No. 29, No. 30
No. 28	No. 29, No. 30
No. 29	No. 30

Is there 1.0 MΩ or more between any of the terminals?

YES

The CAMERA wires are not shorted in the wires. Go to step 14.

NO

There is a short in the wires. Replace the affected shielded harness.

14. Open wire check (CAMERA_VCC, CAMERA_GND, CAMERA_V, CAMERA_V_GND lines)

-1. Measure the resistance between test points 1 and 2.

Test condition	Vehicle OFF (LOCK) mode
B	Audio-navigation unit connector C (32P) (with navigation): disconnected Audio unit connector C (32P) (without navigation): disconnected
B	Rearview camera 8P connector: disconnected

Test point 1:Audio-navigation unit connector C (32P) (with navigation) **Audio unit connector C (32P) (without navigation)**	**Test point 2:Rearview camera 8P connector**
No. 13	No. 2
No. 14	No. 8
No. 29	No. 7
No. 30	No. 1

Is there 1.0 Ω or less?

YES

The CAMERA_VCC, CAMERA_GND, CAMERA_V, and CAMERA_V_GND wires are OK. Go to step 15.

NO

There is an open in the wire(s). Replace the affected shielded harness.

15. Voltage check (CAMERA_VCC line)

-1. Reconnect the following connectors.

Audio-navigation unit connector C (32P) (with navigation) Audio unit connector C (32P) (without navigation) Rearview camera 8P connector

-2. Turn the vehicle to the ON mode.

-3. Measure the voltage between test points 1 and 2.

Test condition	Vehicle ON mode
Test point 1	**Audio-navigation unit connector C (32P) (with navigation) No. 13**

B	**Audio unit connector C (32P) (without navigation) No. 13**
Test point 2	Body ground

Is there about 8.0 V?

YES

Go to step 16.

NO: With navigation

Replace the audio-navigation unit .

NO: Without navigation

Replace the audio unit .

16. Rearview camera check (substitution)

-1. Turn the vehicle to the OFF (LOCK) mode.

-2. **Substitute a known-good rearview camera** , and recheck.

Does the symptom go away?

YES

Replace the original rearview camera .

NO: With navigation

Replace the audio-navigation unit .

NO: Without navigation

Replace the audio unit .

THE MID DOES NOT DISPLAY THE AUDIO UNIT INFORMATION

NOTE:

- **Check the vehicle 12 volt battery condition first** .
- If the audio remote-HFL switch does not respond, **go to Audio remote-HFL switch does not work properly (audio unit buttons work) troubleshooting**.
- Check the connectors for poor connections or loose terminals.

1. Problem verification

-1. Turn the vehicle to the ON mode.

-2. Select Audio and HFL from the multi-information display (MID) menu screen.

Are audio and HFL information displayed?

YES

Intermittent failure, the system is OK at this time.

NO

The failure is duplicated, go to step 2.

2. Shorted wire check (LVDS2+ line, LVDS2- line)

-1. Turn the vehicle to the OFF (LOCK) mode.

-2. Disconnect the following connectors.

Audio unit connector J (3P)
Gauge control module connector C (3P)

-3. Measure the resistance between test points 1 and 2.

Test condition	Vehicle OFF (LOCK) mode
B	Audio unit connector J (3P): disconnected
B	Gauge control module connector C (3P): disconnected
Test point 1	**Audio unit connector J (3P) No. 1**
Test point 2	Body ground

Test point 1	**Audio unit connector J (3P) No. 2**
Test point 2	Body ground

Is there 1.0 MΩ or more?

YES

The LVDS2+ and the LVDS2- wires are not shorted to ground. Go to step 3.

NO

There is a short to body ground in the wire. Replace the affected shielded harness.

3. Shorted wire check (LVDS2+ line to LVDS2- line)

-1. Measure the resistance between test points 1 and 2.

Test condition	Vehicle OFF (LOCK) mode
B	Audio unit connector J (3P): disconnected
B	Gauge control module connector C (3P): disconnected
Test point 1	**Audio unit connector J (3P) No. 1**
Test point 2	**Audio unit connector J (3P) No. 2**

Is there 1.0 MΩ or more?

YES

The LVDS2+ wire and the LVDS2- wire are not shorted. Go to step 4.

NO

There is a short in the wires. Replace the affected shielded harness.

4. Shorted wire check (LVDS2 SH line to another lines)

-1. Measure the resistance between test points 1 and 2.

Test condition	Vehicle OFF (LOCK) mode
B	Audio unit connector J (3P): disconnected
B	Gauge control module connector C (3P): disconnected
Test point 1	**Audio unit connector J (3P) No. 1**
Test point 2	**Audio unit connector J (3P) No. 3**

Test point 1	**Audio unit connector J (3P) No. 2**
Test point 2	**Audio unit connector J (3P) No. 3**

Is there 1.0 MΩ or more?

YES

The LVDS2 SH wire is not shorted. Go to step 5.

NO

There is a short in the wires. Replace the affected shielded harness.

5. Open wire check (LVDS2+ line, LVDS2- line)

-1. Measure the resistance between test points 1 and 2.

Test condition	Vehicle OFF (LOCK) mode
B	Audio unit connector J (3P): disconnected
B	Gauge control module connector C (3P): disconnected
Test point 1	**Audio unit connector J (3P) No. 1**
Test point 2	**Gauge control module connector C (3P) No. 1**

Test point 1	**Audio unit connector J (3P) No. 2**
Test point 2	**Gauge control module connector C (3P) No. 2**

Is there 1.0 Ω or less?

YES

The LVDS2+ and the LVDS2- wires are OK. Go to step 6.

NO

There is an open in the wire(s). Replace the affected shielded harness.

6. Audio unit check (substitution)

-1. Substitute a known-good audio unit.

-2. Reconnect all the connectors, and recheck.

Does the symptom go away?

YES

Replace the original audio unit .

NO

Replace the gauge control module .

USB CHARGER DOES NOT WORK

NOTE:

- **Check the vehicle 12 volt battery condition first** .
- Check the connectors for poor connections or loose terminals.
- Check the fuses and relays associated with the system, and check for a short in the related lines.

1. Problem verification

-1. Connect a known-good USB device to the USB port(s) of the USB charger unit.

-2. Turn the vehicle to the ON mode.

Can the connection be checked (battery charging status) on the device?

YES

Intermittent failure, the system is OK at this time. Inspect the connectors of the USB device and USB port for wear.

NO

The failure is duplicated, go to step 2.

2. Open wire check (+B BACK UP or +B_USB_CHARGER line)

-1. Turn the vehicle to the OFF (LOCK) mode.

-2. Disconnect the following connector.

USB charger unit 3P connector

-3. Measure the voltage between test points 1 and 2.

Test condition	Vehicle OFF (LOCK) mode
B	USB charger unit 3P connector: disconnected
Test point 1	**USB charger unit 3P connector No. 2**
Test point 2	Body ground

Is there battery voltage?

YES

The +B BACK UP or +B_USB_CHARGER wire is OK. Go to step 3.

NO

Repair an open in the wire.

3. Open wire check (GND line)

-1. Measure the resistance between test points 1 and 2.

Test condition	Vehicle OFF (LOCK) mode
B	USB charger unit 3P connector: disconnected
Test point 1	**USB charger unit 3P connector No. 3**
Test point 2	Body ground

Is there 1.0 Ω or less?

YES

The GND wire is OK. Go to step 4.

NO

Repair an open or high resistance in the ground wire or poor ground (G402).

4. Open wire check (ACC line)

-1. Turn the vehicle to the ON mode.

-2. Measure the voltage between test points 1 and 2.

Test condition	Vehicle ON mode
B	USB charger unit 3P connector: disconnected
Test point 1	**USB charger unit 3P connector No. 1**
Test point 2	Body ground

Is there battery voltage?

YES

The ACC wire is OK. **Replace the USB charger unit** .

NO

Repair an open in the wire.

USB DEVICE DOES NOT FUNCTION

NOTE:

- **Check the vehicle 12 volt battery condition first** .
- Check the USB's specifications:
-
    - Mass-storage class ready digital audio player with USB 2.0 port
    - More than 256 MB storage space
    - Supports MP3, WMA, and AAC (encoded with the iTunes) files, DRM files are not supported
- Not all players and player functions work with the USB adapter. Please see the Owner's Manual for more information. Always test the customer's USB device in a known-good vehicle of the same year and trim (if possible). Technologies change and are updated frequently which may result that USB devices may work in newer vehicles, but not in older vehicles of the same model.
- If Unsupported Ver appears on the display, the vehicle is OK, there is a software problem with the USB device.
- Check the connectors for poor connections or loose terminals.
- Display audio type: Before doing this troubleshooting, check the hard error code;
-
    - -

      With navigation
    - -

      Without navigation

1. Determine possible failure area (USB device, others)

-1. Turn the vehicle to the OFF (LOCK) mode.

-2. Connect the customer's USB device to a known-good vehicle (same year/trim) that is equipped with a USB adapter, and check the USB device operation.

Does the USB device work properly in the known-good vehicle?

YES

Go to step 2.

NO

See the Owner's Manual for details about the USB device requirements and approved file types.

2. Problem verification 1

   -1. On the customer's vehicle, connect the customer's USB device to the USB port A.

   -2. Turn the vehicle to the ON mode.

   -3. Check the USB device operation in the customer's vehicle.

   Does the USB device work properly in the customer's vehicle?

   YES: With USB port B

   Go to step 3.

   YES: Without USB port B

   Intermittent failure, the system is OK at this time. Inspect the connectors of the USB device and USB port for wear.

   NO: With USB port B

   The failure is duplicated, go to step 4.

   NO: Without USB port B

   The failure is duplicated, go to step 5.

3. Problem verification 2

   -1. Turn the vehicle to the OFF (LOCK) mode.

   -2. Disconnect the customer's USB device from the USB port A.

   -3. Connect the customer's USB device to the USB port B.

   -4. Turn the vehicle to the ON mode.

   -5. Check the USB device operation in the customer's vehicle.

   Does the USB device work properly in the customer's vehicle?

   YES

   Intermittent failure, the system is OK at this time. Inspect the connectors of the USB device and USB port for wear.

   NO

   The failure is duplicated, go to step 6.

4. Determine possible failure area (USB1 line, others)

   -1. Turn the vehicle to the OFF (LOCK) mode.

-2. Disconnect the customer's USB device from the USB port A.

-3. Connect the customer's USB device to the USB port B located in the center console.

-4. Turn the vehicle to the ON mode.

-5. Check the USB device operation in the customer's vehicle.

Does the USB device work properly in the customer's vehicle?

YES

Go to step 5.

NO: With navigation

Replace the audio-navigation unit .

NO: Without navigation

Replace the audio unit .

5. Open wire check (USB1 lines)

-1. Turn the vehicle to the OFF (LOCK) mode.

-2. Disconnect the following connector.

Audio-navigation unit connector F (5P) (with navigation) Audio unit connector F (5P) (without navigation)

-3. Measure the resistance between test points 1 and 2.

Test condition	Vehicle OFF (LOCK) mode
B	Audio-navigation unit connector F (5P) (with navigation): disconnected Audio unit connector F (5P) (without navigation): disconnected

Test point 1:Audio-navigation unit connector F (5P) (with navigation) **Audio unit connector F (5P) (without navigation)**	**Test point 2: USB port A 5P connector (female terminals):** ①
No. 1	No. 1
No. 2	No. 4
No. 3	No. 2
No. 4	No. 3

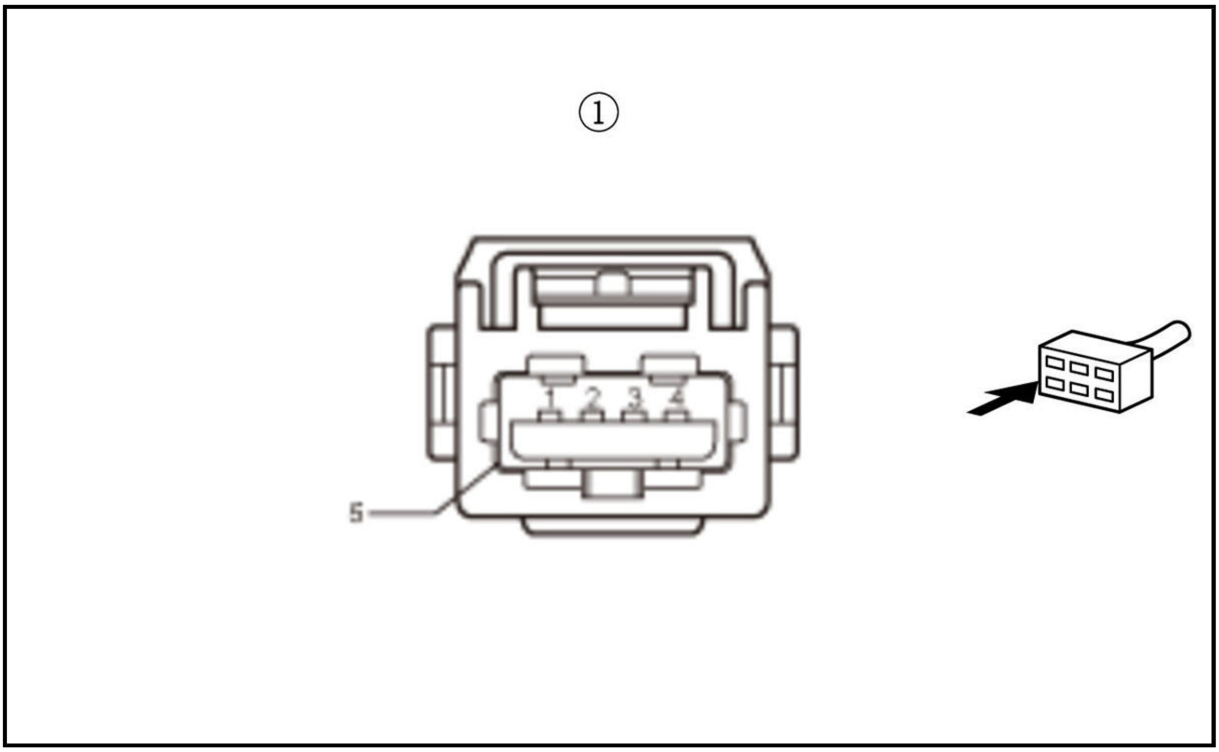

Is there 1.0 Ω or less?

YES: With navigation

Replace the audio-navigation unit .

YES: Without navigation

Replace the audio unit .

NO

There is an open in the wire(s). Replace the affected shielded harness.

6. Open wire check (USB2 lines)

-1. Turn the vehicle to the OFF (LOCK) mode.

-2. Disconnect the following connector.

Audio-navigation unit connector G (5P) (with navigation) Audio unit connector G (5P) (without navigation)

-3. Measure the resistance between test points 1 and 2.

Test condition	Vehicle OFF (LOCK) mode
B	Audio-navigation unit connector G (5P) (with navigation): disconnected Audio unit connector G (5P) (without navigation): disconnected

Test point 1:Audio-navigation unit connector G (5P) (with navigation) **Audio unit connector G (5P) (without navigation)**	**Test point 2: USB port B 5P connector (female terminals):** ①
No. 1	No. 1
No. 2	No. 4
No. 3	No. 2

Test point 1:Audio-navigation unit connector G (5P) (with navigation) **Audio unit connector G (5P) (without navigation)**	**Test point 2: USB port B 5P connector (female terminals):** ①
No. 4	No. 3

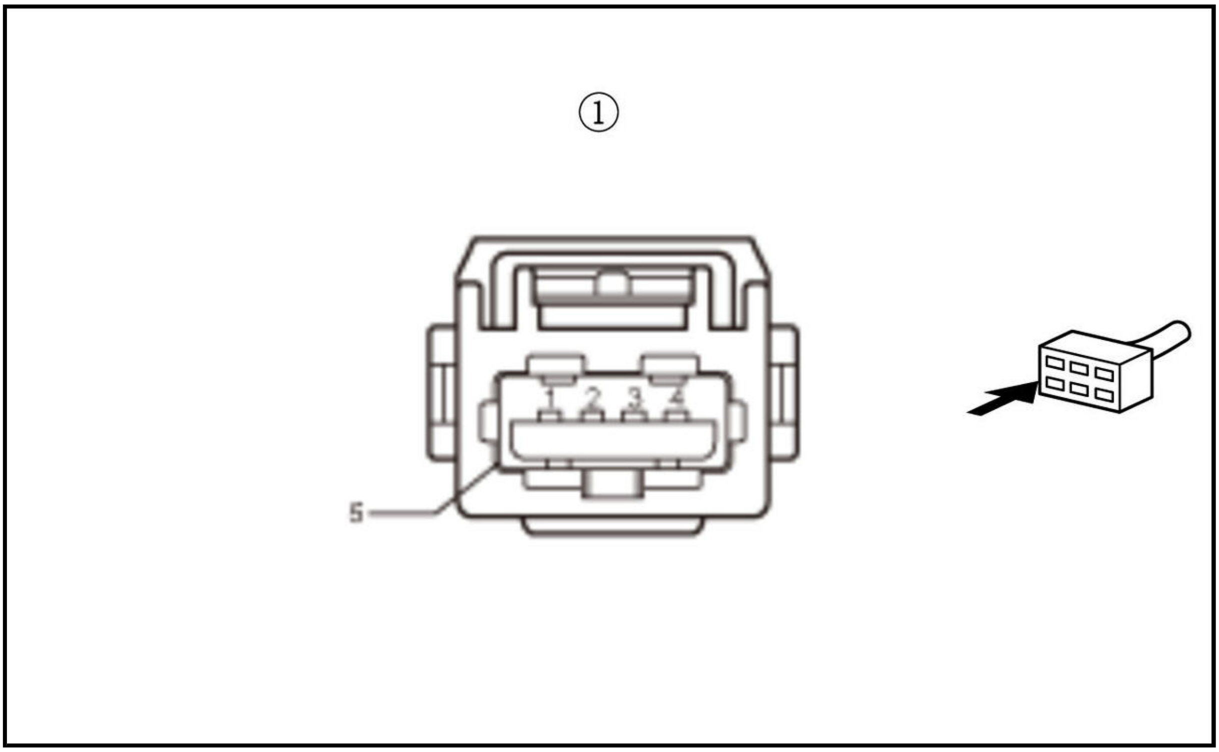

Is there 1.0 Ω or less?

YES: With navigation

Replace the audio-navigation unit .

YES: Without navigation

Replace the audio unit .

NO

There is an open in the wire(s). Replace the affected shielded harness.

VOLUME DOES NOT INCREASE WITH SPEED

NOTE:

- **Check the vehicle 12 volt battery condition first** .
- If possible, have the customer demonstrate their concern and compare it against a known-good vehicle.
- Check for B-CAN DTCs and resolve them before troubleshooting.
- Check the connectors for poor connections or loose terminals.

1. Problem verification

-1. Test-drive the vehicle at freeway speeds, and monitor if the volume increases.

Does the volume increase?

YES

Intermittent failure, the system is OK at this time.

NO

The failure is duplicated, go to step 2.

2. Determine possible failure area (audio setting, others)

   -1. Verify the SVC mode setting in the audio system sound set-up.

   Is the SVC set to off?

   YES

   Change the setting to SVC MID, and recheck.

   NO

   Go to step 3.

3. Determine possible failure area (audio unit, others):

   Go into the System Diagnostic Mode:

   - Display Audio Type: Do the Vehicle Status diagnosis to check the Speed indication;
   -
     - **With navigation**
     - **Without navigation**
   - Color Audio Type: **Do the VSPNE in the Vehicle Information to check the C_VSP indication**.

   -2. Test-drive the vehicle with the help of an assistant, and then watch the vehicle speed in the center display.

   Is the vehicle speed indicated?

   YES: With stereo amplifier

   Go to step 4.

   YES: Without stereo amplifier, with navigation

   Replace the audio-navigation unit .

   YES: Without stereo amplifier, without navigation

   Replace the audio unit .

   NO

   Go to step 5.

4. Stereo amplifier check (substitution)

   -1. Turn the vehicle to the OFF (LOCK) mode.

   -2. **Substitute a known-good stereo amplifier, and recheck** .

   Does the symptom go away?

   YES

Replace the original stereo amplifier .

NO: With navigation

Replace the audio-navigation unit .

NO: Without navigation

Replace the audio unit .

5. Open wire check (B-CAN_H line, B-CAN_L line)

-1. Turn the vehicle to the OFF (LOCK) mode.

-2. Disconnect the following connectors.

Gauge control module connector A (32P)

Audio-navigation unit connector A (24P) (with navigation)
Audio unit connector A (24P) (without navigation)

-3. Measure the resistance between test points 1 and 2.

Test condition	Vehicle OFF (LOCK) mode
B	Gauge control module connector A (32P): disconnected
B	Audio-navigation unit connector A (24P) (with navigation): disconnected
B	Audio unit connector A (24P) (without navigation): disconnected
Test point 1	**Gauge control module connector A (32P) No. 30**
Test point 2	**Audio-navigation unit connector A (24P) (with navigation) No. 14**
	Audio unit connector A (24P) (without navigation) No. 14

Test point 1	**Gauge control module connector A (32P) No. 31**
Test point 2	**Audio-navigation unit connector A (24P) (with navigation) No. 24**
	Audio unit connector A (24P) (without navigation) No. 24

Is there 1.0 Ω or less?

YES: With navigation

Replace the audio-navigation unit .

YES: Without navigation

Replace the audio unit .

NO

Repair an open in the wire(s).

HOW TO INFORMATION

HOW TO TROUBLESHOOT THE AUDIO SYSTEM

NOTE: **Refer to How to Troubleshoot the Navigation System for information about the audio-navigation unit** .

Forced Rebooting of Audio Unit (Display audio type)

If the system freezes, and the screen does not respond, you can attempt rebooting the audio unit by pressing and holding the AUDIO POWER (⏻) button for 5 seconds. When the function is effective, the confirmation screen appears.

Anti-Theft Feature (With audio system theft protection)

The audio unit has an anti-theft protection circuit. When one of the following occurs, the unit enters the anti-theft mode:

- Disconnecting the 12 volt battery terminal.
- Disconnecting audio unit connector A (24P).
- Removing the +B line's fuses.

After the service, reconnect power to the audio unit, and turn the vehicle to the ON mode. There are two ways to exit the anti-theft mode:

- Press and hold the AUDIO POWER (⏻) button for at least 2 seconds. The audio unit automatically exits the anti-theft mode. If the audio unit does not exit anti-theft mode, turn the vehicle to the OFF (LOCK) mode then the ON mode (if possible, start the engine), and try to release the anti-theft several times.
- Enter the 5-digit anti-theft code. If the input of code fails 10 times in a row, the screen is locked for 60 minutes.

When the audio unit is installed in another vehicle (same Year/Model/Trim), like in cases where a known-good unit was substituted for testing, **do the Anti-Theft Skip mode in the System Diagnostic Mode (display audio type)**, or **do the Anti-Theft Temporary Cancellation in the System Diagnostic Mode (color audio type)**. These mode will release the anti-theft code for 150 seconds.

Global Positioning System (GPS) Limitations (Display audio type)

The GPS signal is used for some functions about the audio unit. The GPS cannot detect the vehicle's position or elevation during the following instances:

- For the first 5 to 10 minutes after reconnecting the 12 volt battery (this process can take as long as 45 minutes).
- When the satellite signals are blocked by tall buildings, mountains, tunnels, large trees, inside parking structures or large trucks.
- When the GPS antenna is blocked by metallic window tinting or by an object placed above it in the vehicle. The GPS antenna requires a clear unobstructed view of the sky.
- When there is no satellite signal output (signal output is sometimes stopped for satellite servicing).
- When the satellite signals are blocked by the operation of some electronic aftermarket accessories including, but not limited to non-OEM in-dash entertainment units (amp, CD players/changers, radar detectors, theft recovery systems, etc.) and cell phones placed near the navigation system.

The accuracy of the GPS is reduced during these instances:

- Metallic window tinting above the GPS antenna.
- When only three or fewer satellite signals are received (Four satellite signals are required for accurate positioning).
- When driving near high tension power lines.
- When the satellite signals are blocked by the operation of some electronic aftermarket accessories including, but not limited to non-OEM in-dash entertainment units (amp, CD players/changers, radar detectors, theft recovery systems, etc.) and cell phones placed near the navigation system.
- When the satellite control centers are experiencing problems.

LCD Unit Limitations (Display audio type)

The center display unit is touch sensitive. Touch the display directly to select items on the screen.

- Heavy gloves, fingernails or pens cannot be used on the touch panel.
- In cold temperatures, the display may stay dark for the first minute until it warms up.
- When the display is too hot because of direct summer sunlight, it remains dark until the temperature drops (you may see an error message displayed stating this fact).
- Fingerprints on the screen may be noticeable. Clean the screen with a soft, damp cloth. You may use a mild cleaner intended for eye glasses or computer screens. To avoid scratching the panel, do not rub too hard or use abrasive cleaners or shop towels.

How to Check Error History (Audio DTCs) (Display audio type)

NOTE: The audio DTCs cannot be retrieved with the HDS.

The Error History feature is to record intermittent audio/navigation issues that occur while the customer is using the system. Sometimes the customer complaint cannot be duplicated. The error history may record the information needed to diagnose the problem. To check the error history:

1. Turn the vehicle to the ON mode.

2. Press and hold the PHONE button, the DISPLAY MODE (☼ ☽) button, and the AUDIO POWER (⏻) button until the Select Diagnosis Items menu screen is displayed:

NOTE: The buttons needs to be pressed together simultaneously.

Displaying Select Diagnosis Items Menu Screen

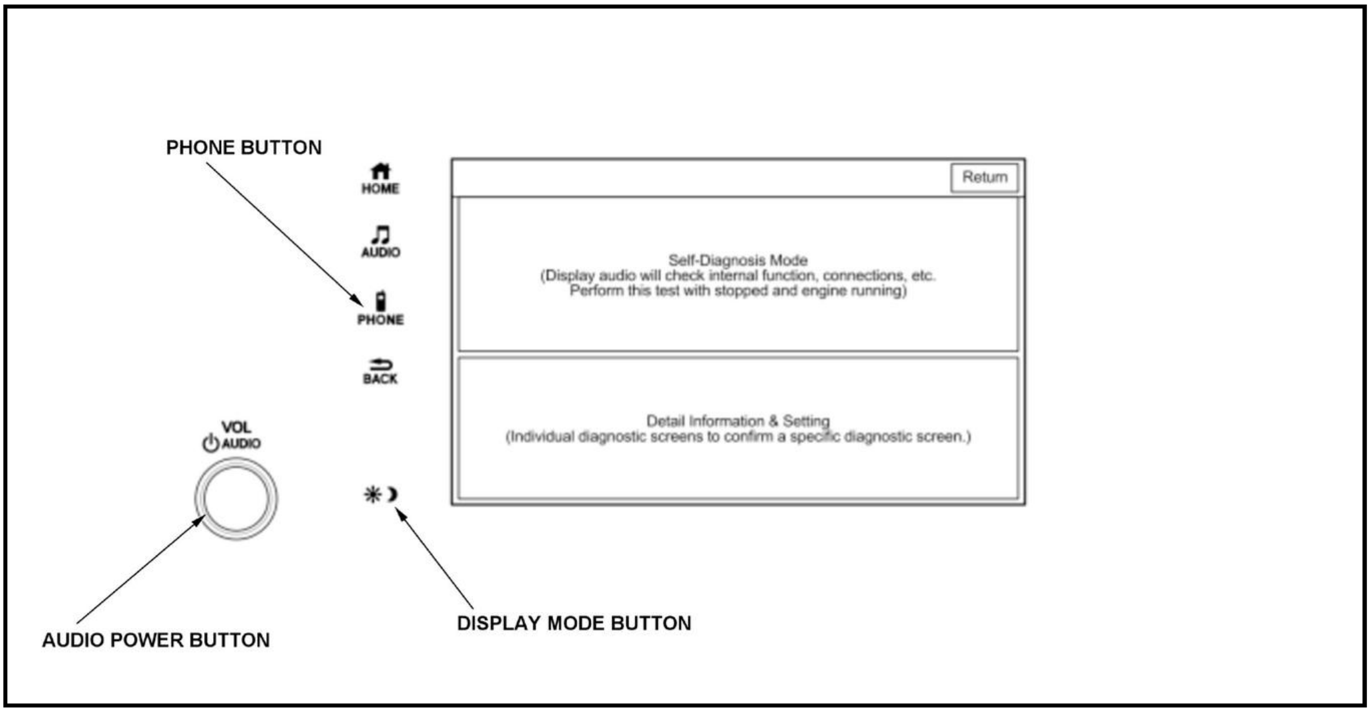

Self-Diagnosis Mode
(Display audio will check internal function, connections, etc.
Perform this test with stopped and engine running)

Detail Information & Setting
(Individual diagnostic screens to confirm a specific diagnostic screen.)

3. When the Select Diagnosis Items menu appears, select the Self-Diagnosis Mode.

4. When the audio unit has hard error codes, the Error History icon (A) appears yellow. When no hard error codes are stored, the icon appears gray. To view the errors with their navigation DTC, select the Error History icon.

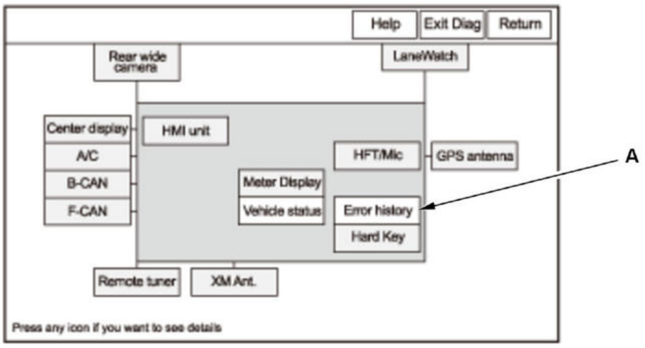
Help
Exit Diag
Return
Rear wide camera
LaneWatch
Center display
A/C
B-CAN
F-CAN
HMI unit
HFT/Mic
GPS antenna
Meter Display
Vehicle status
Error history
Hard Key
Remote tuner
XM Ant.
Press any icon if you want to see details
A

5. Select the Hard Error icon in the Error History menu.

NOTE: The Soft Error feature is for factory use only.

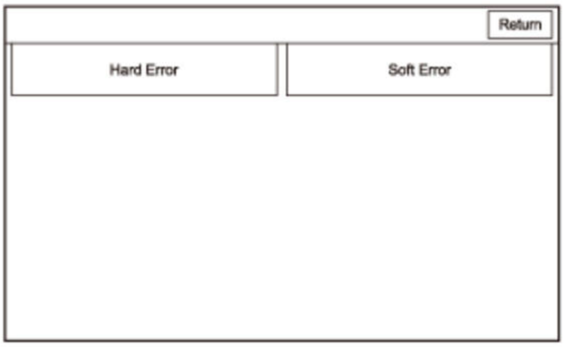
Return
Hard Error
Soft Error

6. The Hard Error screen displays the following information by selecting the Date/Time icon (A):

- The date and time when the error occurred. Swipe the screen to check the next items.
- The audio DTC for the error.
- A brief description of the audio DTC.

NOTE: The Save feature is for factory use only.

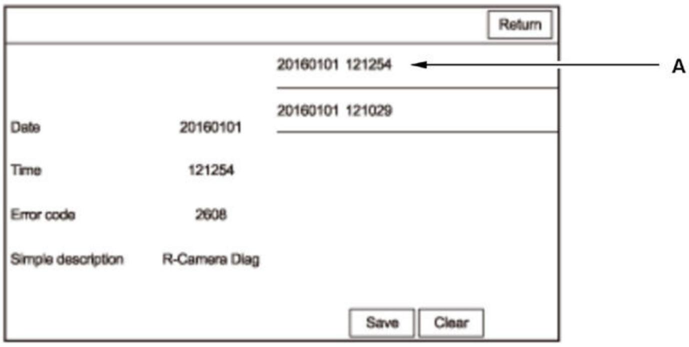
Return
20160101 121254
20160101 121029
A
Save
Clear

Date 20160101

Time 121254

Error code 2608

Simple description R-Camera Diag

7. Use the audio DTC Troubleshooting table to troubleshoot the error. Select the Return icon to exit the Error History main menu.

How to Clear Error History

NOTE: The audio DTCs cannot be deleted with the HDS.

8. Select the Clear icon in the Hard Error. The confirmation screen appears.

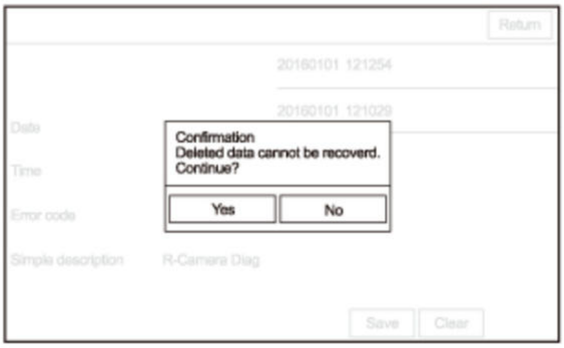
Return
Yes
No
Save
Clear

20160101 121254

20160101 121029

Date

Time

Error code

Simple description R-Camera Diag

Confirmation
Deleted data cannot be recoverd.
Continue?

9. Select the Yes icon. All Hard Error histories are cleared. Select the Return icon to exit the Error History.

COMPONENT LOCATION INDEX

AUDIO SYSTEM COMPONENT LOCATION INDEX (COLOR AUDIO TYPE)

For relationships between signals in a system,

refer to system diagram.

Audio-Navigation Unit - Faceview

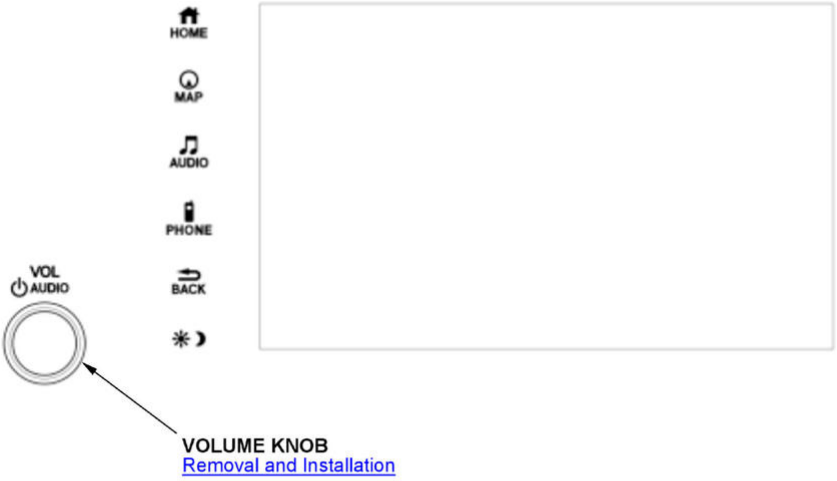
HOME
MAP
AUDIO
PHONE
BACK
VOL
AUDIO
VOLUME KNOB
Removal and Installation

Audio Unit (Display Audio type) - Faceview

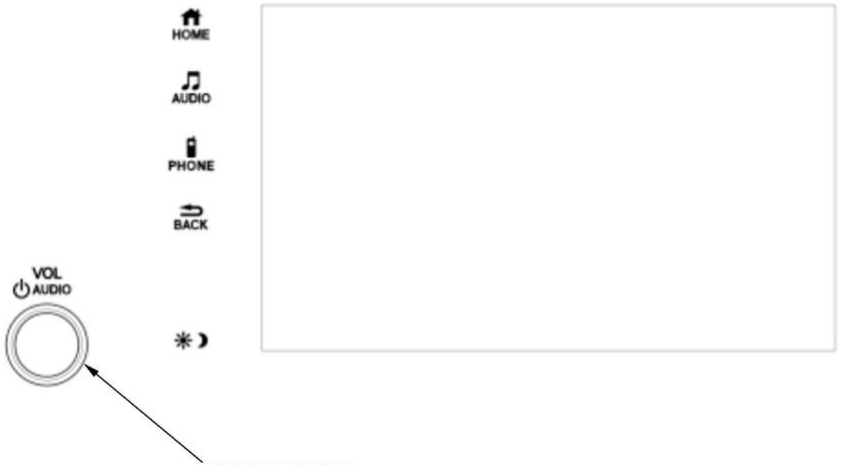
HOME
AUDIO
PHONE
BACK
VOL
AUDIO

VOLUME KNOB
Removal and Installation

Audio Unit (Color Audio type) - Faceview

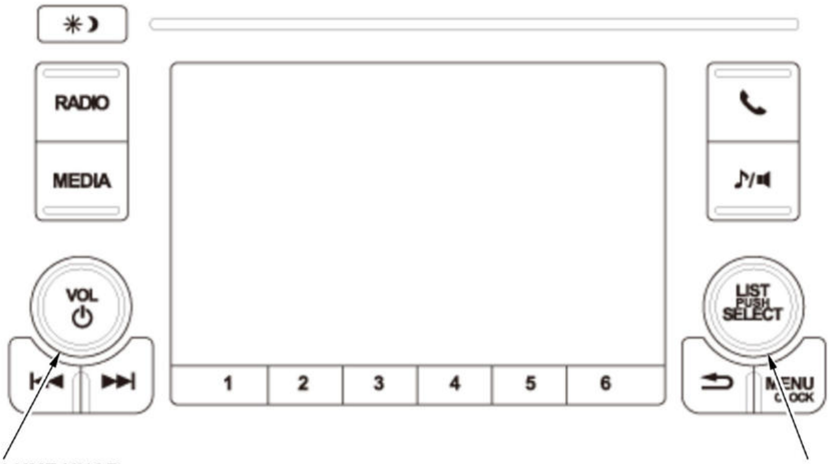
RADIO
MEDIA
VOL
LIST
PUSH
SELECT
MENU
CLOCK
1
2
3
4
5
6

VOLUME KNOB
Removal and Installation

LIST KNOB
Removal and Installation

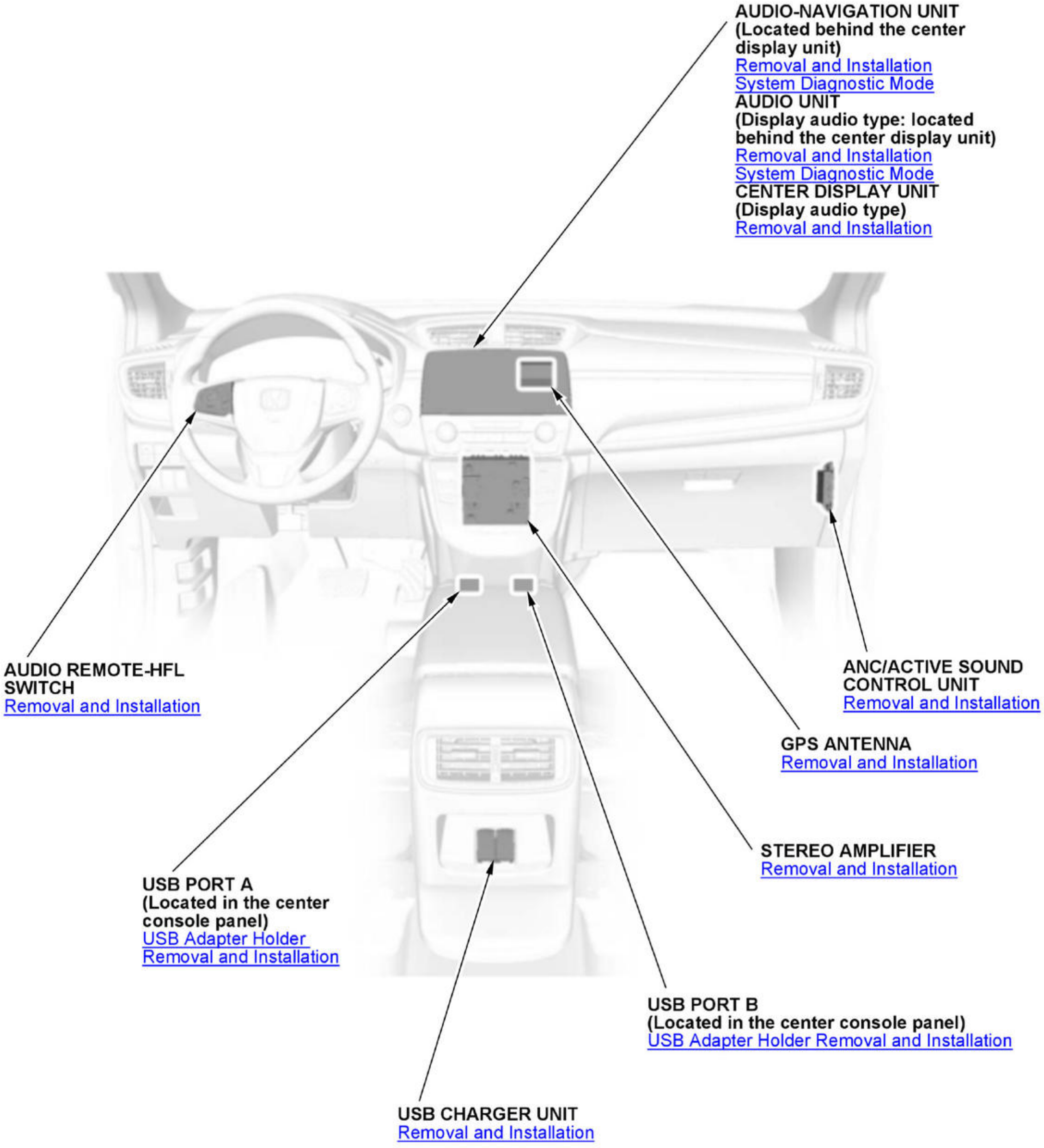
AUDIO-NAVIGATION UNIT
(Located behind the center display unit)
Removal and Installation
System Diagnostic Mode
AUDIO UNIT
(Display audio type: located behind the center display unit)
Removal and Installation
System Diagnostic Mode
CENTER DISPLAY UNIT
(Display audio type)
Removal and Installation
AUDIO REMOTE-HFL SWITCH
Removal and Installation
ANC/ACTIVE SOUND CONTROL UNIT
Removal and Installation
GPS ANTENNA
Removal and Installation
STEREO AMPLIFIER
Removal and Installation
USB PORT A
(Located in the center console panel)
USB Adapter Holder
Removal and Installation
USB PORT B
(Located in the center console panel)
USB Adapter Holder Removal and Installation
USB CHARGER UNIT
Removal and Installation

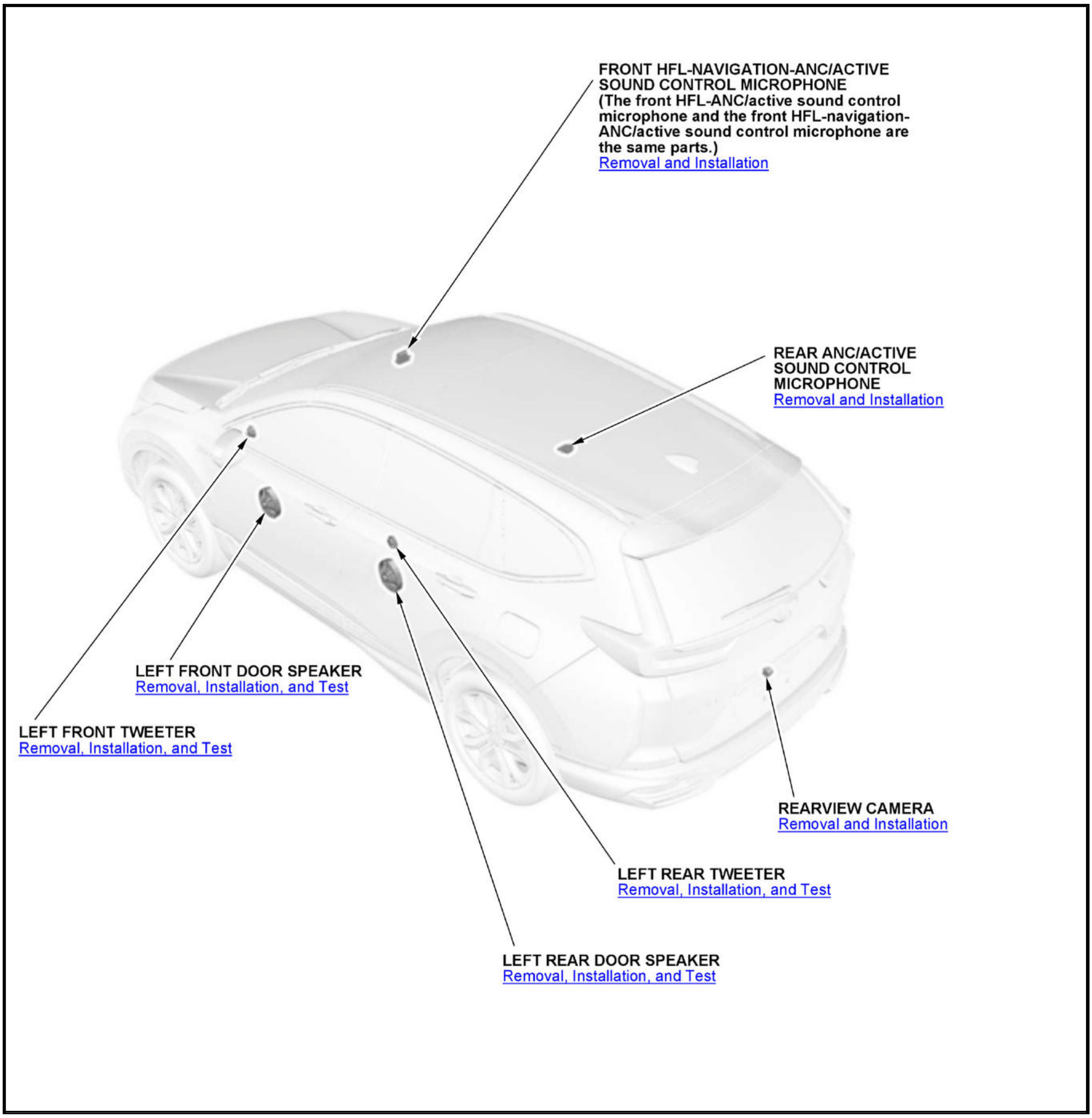
FRONT HFL-NAVIGATION-ANC/ACTIVE SOUND CONTROL MICROPHONE
(The front HFL-ANC/active sound control microphone and the front HFL-navigation-ANC/active sound control microphone are the same parts.)
Removal and Installation
REAR ANC/ACTIVE SOUND CONTROL MICROPHONE
Removal and Installation
LEFT FRONT DOOR SPEAKER
Removal, Installation, and Test
LEFT FRONT TWEETER
Removal, Installation, and Test
REARVIEW CAMERA
Removal and Installation
LEFT REAR TWEETER
Removal, Installation, and Test
LEFT REAR DOOR SPEAKER
Removal, Installation, and Test

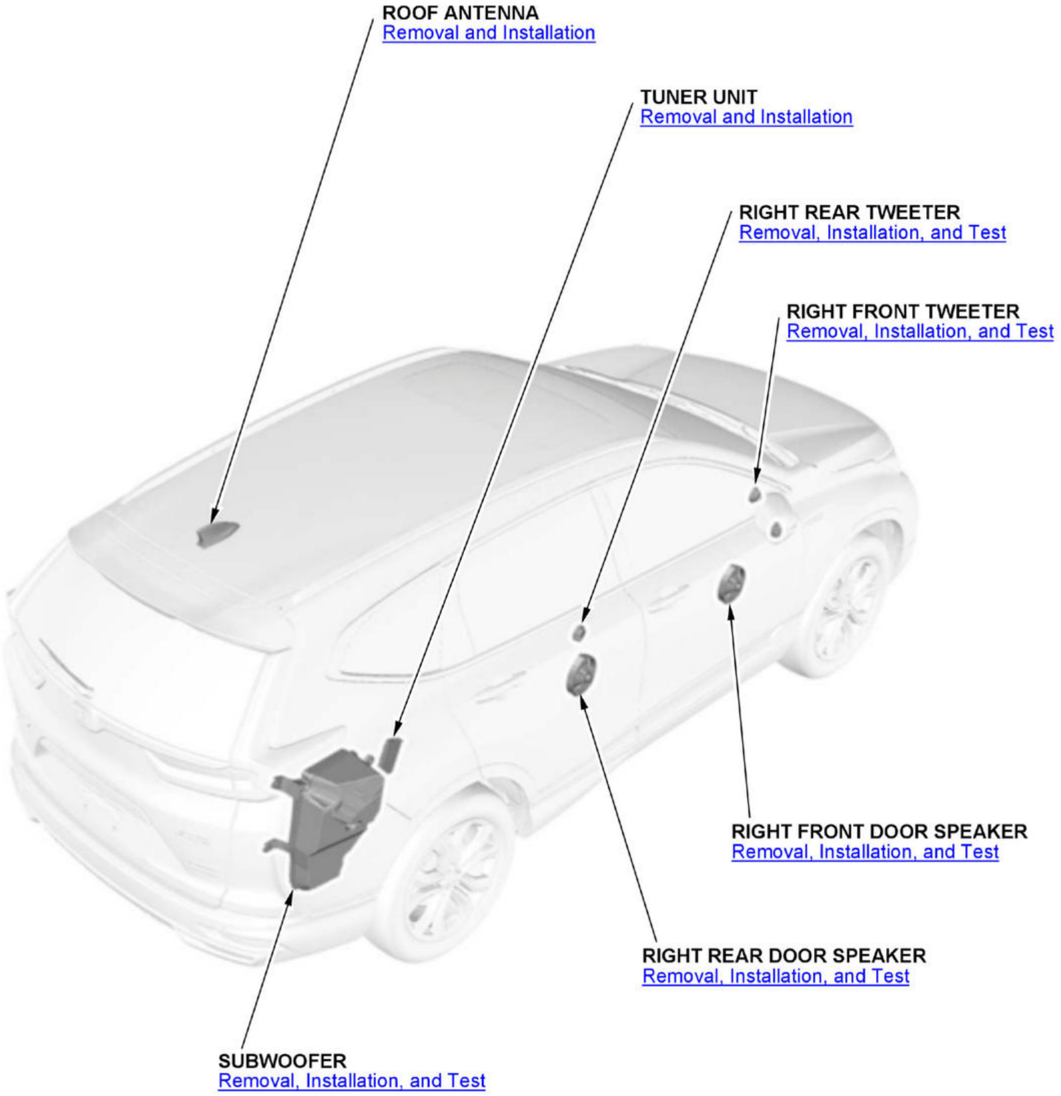
ROOF ANTENNA
Removal and Installation
TUNER UNIT
Removal and Installation
RIGHT REAR TWEETER
Removal, Installation, and Test
RIGHT FRONT TWEETER
Removal, Installation, and Test
RIGHT FRONT DOOR SPEAKER
Removal, Installation, and Test
RIGHT REAR DOOR SPEAKER
Removal, Installation, and Test
SUBWOOFER
Removal, Installation, and Test

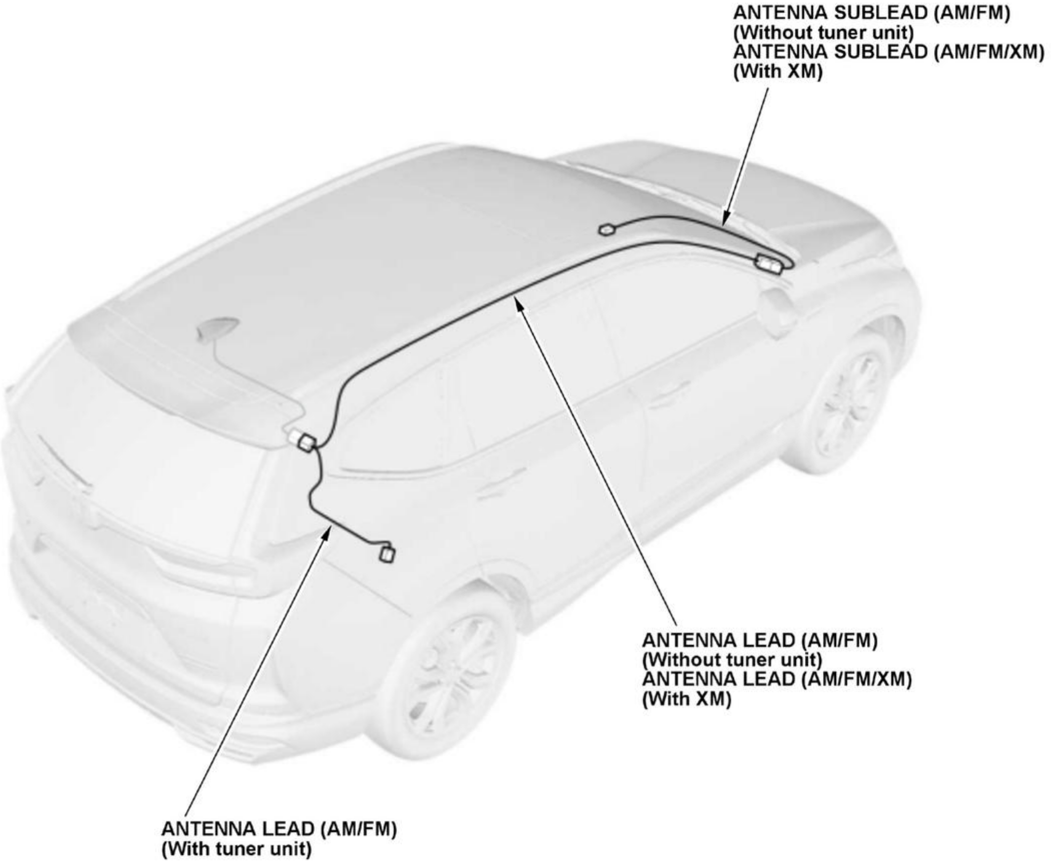
ANTENNA SUBLEAD (AM/FM)
(Without tuner unit)
ANTENNA SUBLEAD (AM/FM/XM)
(With XM)
ANTENNA LEAD (AM/FM)
(Without tuner unit)
ANTENNA LEAD (AM/FM/XM)
(With XM)
ANTENNA LEAD (AM/FM)
(With tuner unit)

DESCRIPTION AND OPERATION

AUDIO SYSTEM DESCRIPTION

Basic Configuration

The Audio and Visual system consists of a digital audio/video playback function, communication to the customer's device, and displaying the driver's support information.

Audio Unit

The audio unit acts as a processor which includes playback functions of the USB, Bluetooth B® audio, iPod for music, and an internal radio tuner or an external radio tuner that is controlled with digital communication. Select audio functions from audio unit buttons, touch screen (touch the display directly to select items on the screen), or the audio remote switch (on the steering wheel).

There are two kinds of audio units according to a vehicle model:

B	Display Audio type	Color Audio type
With Navigation	o	x
Without Navigation	o	o

Display Audio type

The audio unit acts as a head unit that controls external audio/visual system related devices which do not have an audio disc player and a control module. The center display unit acts as an user interface and is located on the front of the audio unit. An antenna for Bluetooth B® communication, and an antenna for wireless LAN communication are built into the audio unit. Each function regarding the system is installed in the audio unit as applications. As an advanced feature, a smartphone linkage and video playback functions are available.

An audio unit with navigation function is referred to as an audio-navigation unit. This unit has a built-in gyro sensor and a navigation map data (**refer to the Navigation System Description**).

The SD card is a storage media that saves the navigation map data. The audio-navigation unit and the SD card cannot be substituted separately because the SD card module is not a removable type.

Both the audio-navigation unit and the audio unit have a GPS antenna circuit. The GPS information is used for a function that needs vehicle location other than the navigation function.

For vehicles with Sirius XM B® radio, the XM receiver circuit is built into the audio unit circuit. The XM satellite/terrestrial signal is received by the XM antenna built-in the roof antenna. The audio unit holds XM presets and settings even when the 12 volt battery is disconnected (AM/FM presets are stored in the tuner unit).

There are two audio systems available for the display audio type:

- The system with stereo amplifier: An external stereo amplifier (10 channels output) and 10 speakers are equipped. The audio unit outputs a digital audio signal to the stereo amplifier.
- The system without stereo amplifier: 8 speakers are equipped. In this case, a power amplifier is built into the audio unit.

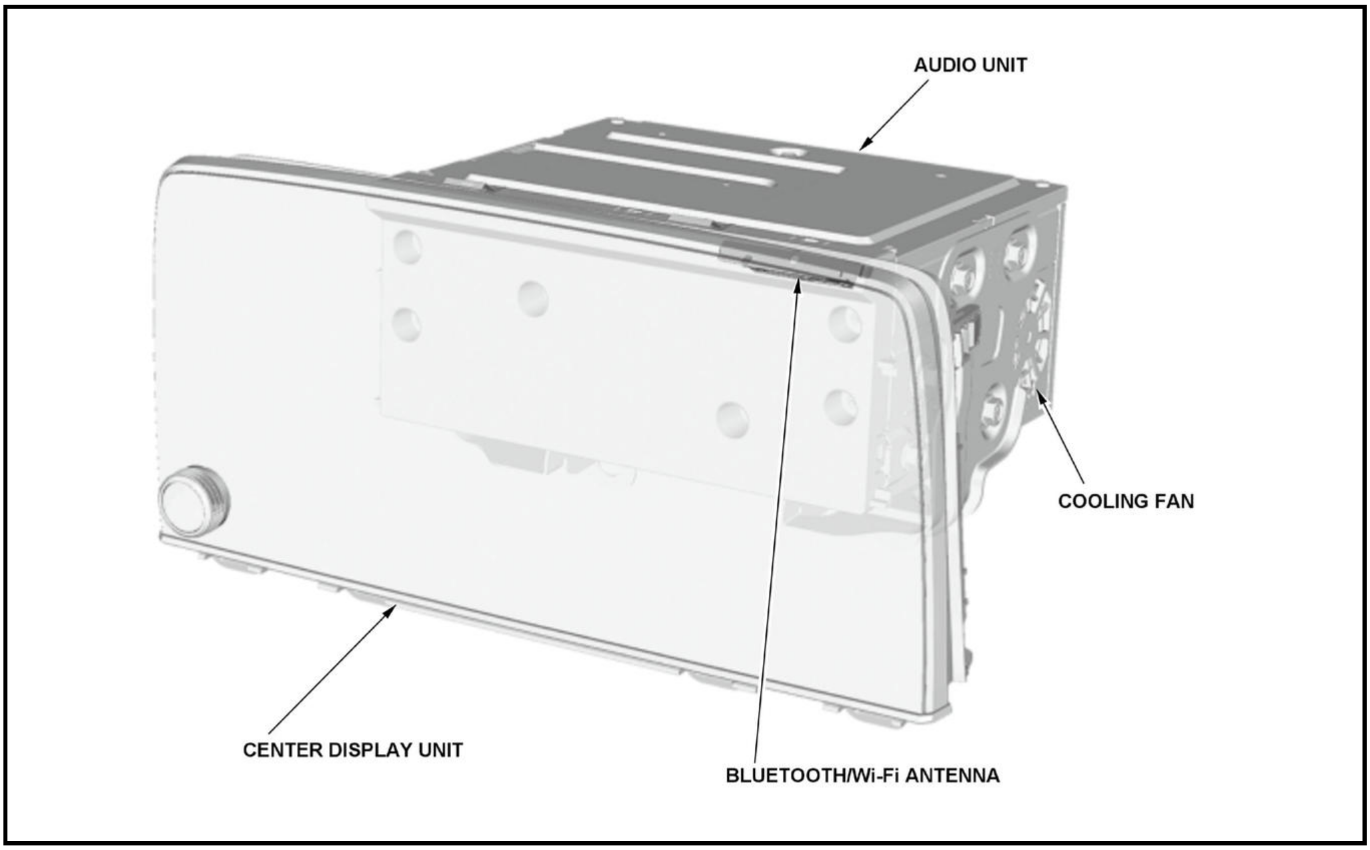

Fail-Safe Function

The audio unit performs a fail-safe control when the system detects an abnormal high temperature in the unit:

Built-in cooling fan on/off control: When the audio unit temperature is too high, the audio unit turns the cooling fan on until the temperature cools down.

Self-Diagnostic Function

The audio unit has a self-diagnostic function to check the failure of the audio unit or its connection. Additionally, the audio unit has original hard error codes that can be displayed on the diagnostic screen to identify the failure part.

Forced Rebooting Function

If the system is frozen, and the screen does not respond, you can attempt rebooting the audio unit by pressing and holding the AUDIO POWER (⏻) button for 5 seconds.

Center Display Unit (Display Audio type)

The center display unit has a 7-inch WVGA color TFT LCD that is driven by IPS (In-plane Switching) system with an electrostatic capacitive touch panel. The surface of the display is given an anti-glare coating. This unit displays the navigation map, vehicle information, various menu screens, and a rearview or LaneWatch* image, and can operate the audio, navigation, and HFL systems by touching the display. The HVAC information is displayed if the audio unit receives a feedback signal from the climate control unit via the B-CAN.

*: With LaneWatch

Controls

The center display unit turns on when the DISP CONT signal changes from OFF to ON.

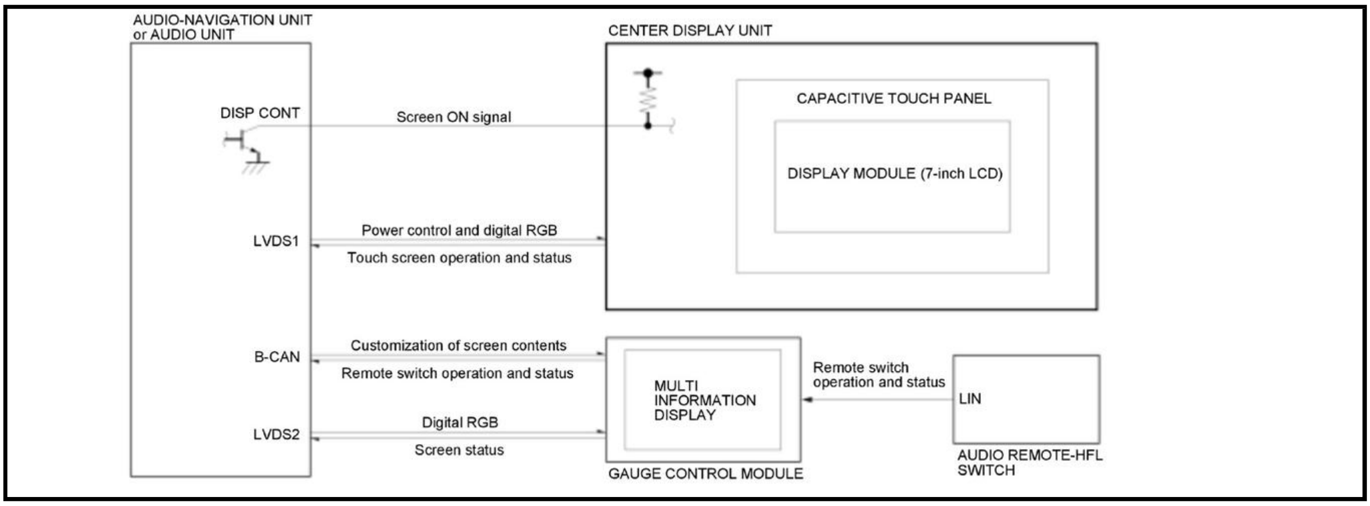
AUDIO-NAVIGATION UNIT or AUDIO UNIT
DISP CONT
LVDS1
B-CAN
LVDS2
Screen ON signal
Power control and digital RGB
Touch screen operation and status
Customization of screen contents
Remote switch operation and status
Digital RGB
Screen status
CENTER DISPLAY UNIT
CAPACITIVE TOUCH PANEL
DISPLAY MODULE (7-inch LCD)
MULTI INFORMATION DISPLAY
GAUGE CONTROL MODULE
Remote switch operation and status
LIN
AUDIO REMOTE-HFL SWITCH

Fail-Safe Function

The center display unit performs a fail-safe control when the system detects an abnormal high temperature in the unit:

- When the center display unit temperature rises over about 86 deg.F (30 deg.C), the display brightness dims gradually.
- When the center display unit temperature rises 158 deg.F (70 deg.C), the display brightness dims to 75 % of normal brightness.
- When the center display unit temperature rises over 176 deg.F (80 deg.C) for 8 minutes, the center display unit sends the error status to the audio unit, and the center display unit displays the error message and then turns off (the background system stays on).
- When the center display unit temperature drops to below 167 deg.F (75 deg.C), the display back light turns on, and the display brightness returns gradually as the temperature drops.

Self-Diagnostic Function

The audio unit can check the center display unit status by performing the System Diagnostic Mode.

Electrostatic Capacitive Touch Panel

To use the touch screen, bring your finger close to the screen or gently touch it with your finger. The touch sensor senses the change of the electrical charge when your finger is close to the screen and detects the position of the electrical charge. Use only a gentle touch to select or move the screen image. A hard finger press is not necessary. The screen cannot sense your touch if you wear heavy gloves, use a fingernail, or a pen.

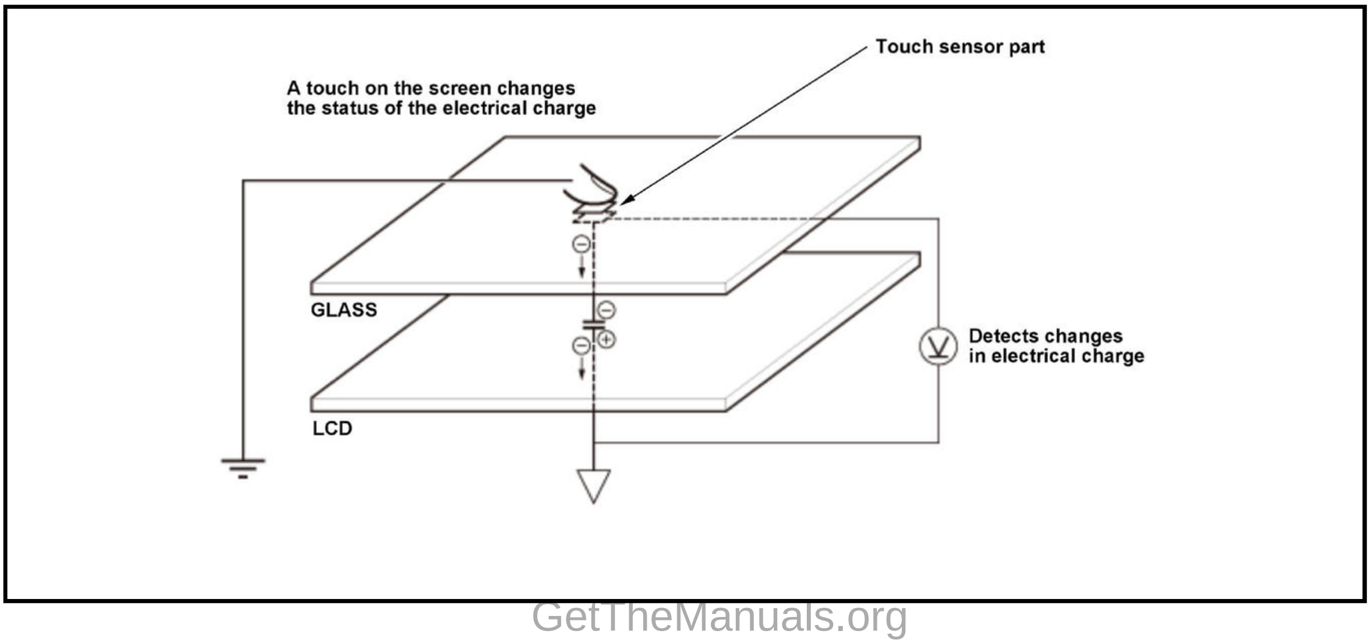
Touch sensor part
A touch on the screen changes the status of the electrical charge
GLASS
LCD
Detects changes in electrical charge

Color Audio type

The audio unit is a simple component which does not have an audio disc player, and has a 5-inch VGA color TFT LCD panel. The screen is not a touch sensitive and displays audio and HandsFreeLink (HFL) information. Additionally, the screen shows the rearview image when the transmission is shifted to the R position/mode. The audio panel has an illumination dimming function that is controlled by the B-CAN information. An antenna for Bluetooth B® communication is built in the audio unit. As an advanced feature, the HFL function includes an external microphone that located in the roof console.

The AM/FM (RBDS) radio tuner is built into the audio unit. This unit holds AM/FM presets even when the 12 volt battery is disconnected.

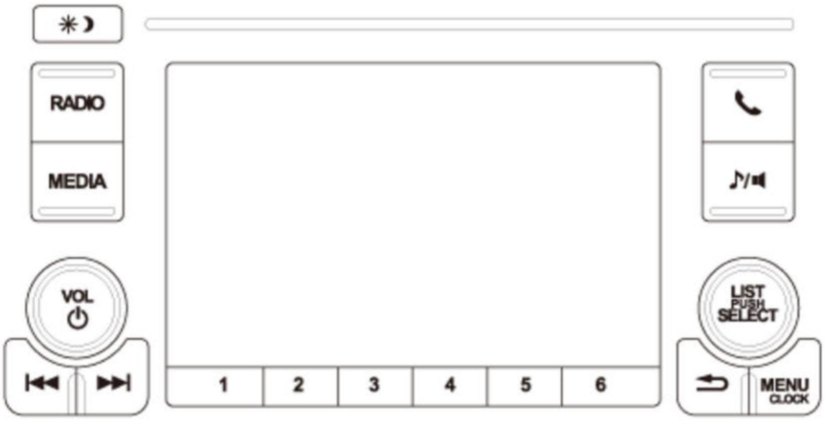

Fail-Safe Function

The audio unit performs the fail-safe control when the system detects an abnormal high temperature in the unit:

- When the surface of the LCD temperature rises over 194 deg.F (90 deg.C), the display back light turns off.
- When the surface of the LCD temperature drops to below 189 deg.F (87 deg.C), the display back light turns on.

Self-Diagnostic Function

The audio unit has the self-diagnostic function to check the failure of the audio unit or its connection.

Audio System Functions

Anti-Theft Function (With Audio System Theft Protection)

The audio unit has an anti-theft protection function separate from the security system of the vehicle. If the audio unit is removed from the vehicle, the audio unit requires a procedure to unlock the security system in order to use it again after the audio unit is reconnected.

There are two kinds of anti-theft mode release procedures:

- While displaying the security code entry screen or the conformation screen of the anti-theft system, press and hold the AUDIO POWER (⏻) button for at least 2 seconds. The audio unit automatically exits the

anti-theft mode.
- While displaying the security code entry screen, enter the 5-digit anti-theft code.

The System Diagnostic Mode (includes checking hard error codes) can be used even if the audio unit is in the anti-theft mode.

If you substitute the audio unit into another vehicle, you must either enter the anti-theft code or perform the anti-theft skip mode in the System Diagnostic mode (This mode will release the anti-theft code for 150 seconds).

Muting Logic

The outline of the audio interruption function is shown in the following table.

With Stereo Amplifier

Contents	Audio Output			
	Front CH (driver's side)	Front CH (passenger's side)	Rear CH	Subwoofer CH
System beep	Beep and audio	Beep and audio	Audio	Audio
Pressing TALK/BACK buttons	Feedback output	Muted	Muted	Muted
Guidance	Guidance output and attenuated audio	Attenuated audio	Attenuated audio	Attenuated audio
HFL	HFL output	HFL output	Muted	Muted
HFL and Guidance	Guidance output	HFL output	Muted	Muted

Without Stereo Amplifier

Contents	Audio Output		
	Front CH (driver's side)	Front CH (passenger's side)	Rear CH
System beep	Beep and audio	Beep and audio	Audio
Pressing TALK/BACK buttons	Feedback output	Muted	Muted
Guidance	Guidance output and attenuated audio	Attenuated audio	Attenuated audio
HFL	HFL output	HFL output	Muted
HFL and Guidance	Guidance output	HFL output	Muted

Speed-Sensitive Volume Compensation (SVC)

All audio systems are equipped with speed-sensitive volume compensation (SVC). The audio unit receives the vehicle speed pulse (VSP) from the gauge control module (B-CAN). The system processes the speed input and increases the audio system volume level as the vehicle speed increases to compensate for the interior noise that occurs at higher speeds. When the vehicle slows down, the volume returns to its normal level. For vehicles with a stereo amplifier, SVC function is controlled by the stereo amplifier. The SVC has four settings: SVC OFF, SVC LOW, SVC MID, and SVC HIGH that can be adjusted using the audio unit.

Operation Restriction

The audio unit has a function that restricts certain operations of audio and visual systems that may affects safe driving.

Clock Function

The audio unit has a real time clock circuit that operates the clock even if the vehicle is in the OFF (LOCK) mode. Also, the audio unit (display audio type) can adjust the internal clock by linking a smartphone. Additionally, the audio unit with a GPS antenna can display clock information by receiving the GPS signal.

USB Connection

For vehicles with an audio unit (display audio type), two USB ports are equipped for an external device input and a smartphone connection. The USB port A is based on the specification of USB Battery Charging 1.2 (BC 1.2) that supports high-speed charging of the USB device. The audio unit can detect the USB device type (BC 1.2 or not), and change the charging mode automatically. The USB port B supports charging to USB devices by a 1.0 A electric supply.

For vehicles with an audio unit (color audio type), a USB port is equipped for an external device input. The USB port supports charging to USB devices by a 1.0 A electric supply.

USB Audio

The audio system can play digital music from portable audio players, a USB drive, etc. When the device is plugged into the vehicle's USB port, and the vehicle is turned to the ACCESSORY mode, the audio unit begins to communicate with the connected USB device, and to supply the VBUS power. The audio unit controls the device when searching and playing the files. Not all players and player functions work with the USB adapter. Please see the Owner's Manual for more information.

Supported Devices

- Supports for USB Mass storage class/Bulk-only transport.
- USB 2.0 Full-speed capable.
- At least 256 MB storage capacity.
- USB formatted to be compatible with Windows-based operating systems.
- If the USB has a security feature, like write protection, it must be turned off.

There are many different USB devices, manufacturers, and configurations with new devices being released every day, which makes it impossible to test all USB devices with the audio system. Even if the USB device has all these requirements, it may not be compatible.

Hard drives do not support overwriting the data for the track order, which is why they are not recommended.

When you disconnect a USB device, the data for the track order remains in the audio unit's memory so when you reconnect the same USB device, the audio unit continues playing from the location where it was disconnected. If a new USB device is connected, the data for the track order is rewritten and you need to select the album or music file.

Bluetooth B® Connection

The audio unit can be paired with a Honda approved cell phone or a device for Bluetooth B® communication. Pairing procedures vary by the connection history and Bluetooth B® version of the cell phone or the device. Refer to the Owner's Manual.

The audio unit supports Bluetooth B® Ver 4.0+EDR (Ver 2.1+EDR*). Bluetooth B®enables audio streaming, wireless play back on an audio device, hands-free calling with a cell phone, data communication, and phone book loading.

*: Color audio type

Bluetooth B® Audio

Bluetooth B® audio allows approved Bluetooth B® cell phones equipped with music function to play music via the vehicle's audio system using a Bluetooth B® technology. You can control the cell phone's music player remotely using the wireless connection.

- You can play music stored in your cell phone using the wireless connection.
- You can choose the next song, a previous song and resume/pause via the wireless connection.

NOTE: Not all cell phones support the Bluetooth B® audio function.

Supported Devices

- Bluetooth B® music phones that support A2DP 1.2 and AVRCP 1.0, 1.3, and 1.4.
- Bluetooth B® adapters for portable music devices including iPod are not supported.

NOTE: Availability of the functions depends on the connected cell phone.

Wireless LAN Connection (Display Audio type)

The audio unit supports wireless LAN connection based on the IEEE 802.11 a/b/g/n standard. The audio unit can connect the device that has a function as a Wi-Fi access point.

Video Playback Function (Display Audio type)

The audio system can play digital compressed video from a HDMI device or a USB device (MP4 is supported).

HD Radio (TM) (Display Audio Type)

HD Radio (TM) is a crystal clear digital audio broadcast by local radio stations. There is no charge for HD radio. Simply tune to your favorite station, and if the station is broadcasting with HD Radio (TM) technology, then the audio unit will automatically pick up the digital signal, and begin playing the crystal clear, subscription free audio. Refer to your Owner's Manual to determine how your particular receiver indicates HD Radio (TM) reception and how to transition from the main program to the multicast program(s).

- The HD1 channel acquires the analog station first and then blends with the digital signal. Therefore, the digital audio may have a short delay.
- There is no analog signal available on the HD2/HD3 channels. Therefore, there is a short delay while decoding the digital audio. Audio will begin playing when available.
- Go to www.hdradio.com for stations in the area to verify correct operation on the station.

Song By Voice (TM) (Display Audio Type)

A customer can use the Song By Voice (TM) feature to select and play the audio files in an iPod or a USB device with voice commands.

When an iPod or a USB device is connected to the audio unit, the unit makes a dictionary from the album name, folder name, artist name, track name, and the file name.

If a different device is connected, or the customer updates the files on the connected device, a new dictionary is created.

Smartphone Linkage Function (Display Audio type)

This function helps ensure the safe use of a smartphone while driving. Connect a smartphone to the audio unit to use it. Connection methods vary depending on carriers.

When using the navigation function via a smartphone, the audio unit can display the navigation map screen that is in the connected smartphone. In this case, the GPS signal is received by the audio unit, and the vehicle signals are received from the F-CAN and the B-CAN as information of vehicle position tuning.

When using the voice recognition function via a smartphone, the HFL microphone in the roof console picks up the driver's voice, and sends the voice signal to the smartphone via the audio unit using Bluetooth B®.

When the voice recognition is in use, the audio unit sends the fan mute signal to the climate control unit via the B-CAN. The blower fan operating voltage may be reduced depending on the current fan speed.

HondaLink Assist (USA and Canada models Display Audio Type)

HondaLink delivers remote services to the vehicle using the customer's compatible Bluetooth B® cell phone.

If the SRS airbag is deployed, the SRS unit sends a signal to the audio unit via the F-CAN. Then, the audio unit calls a Public Safety Answering Point (PSAP) automatically using the customer's compatible Bluetooth B® cell phone, and sends the vehicle location using Dual-Tone Multi-Frequency (DTMF). The audio unit uses the GPS antenna for tracking the vehicle location.

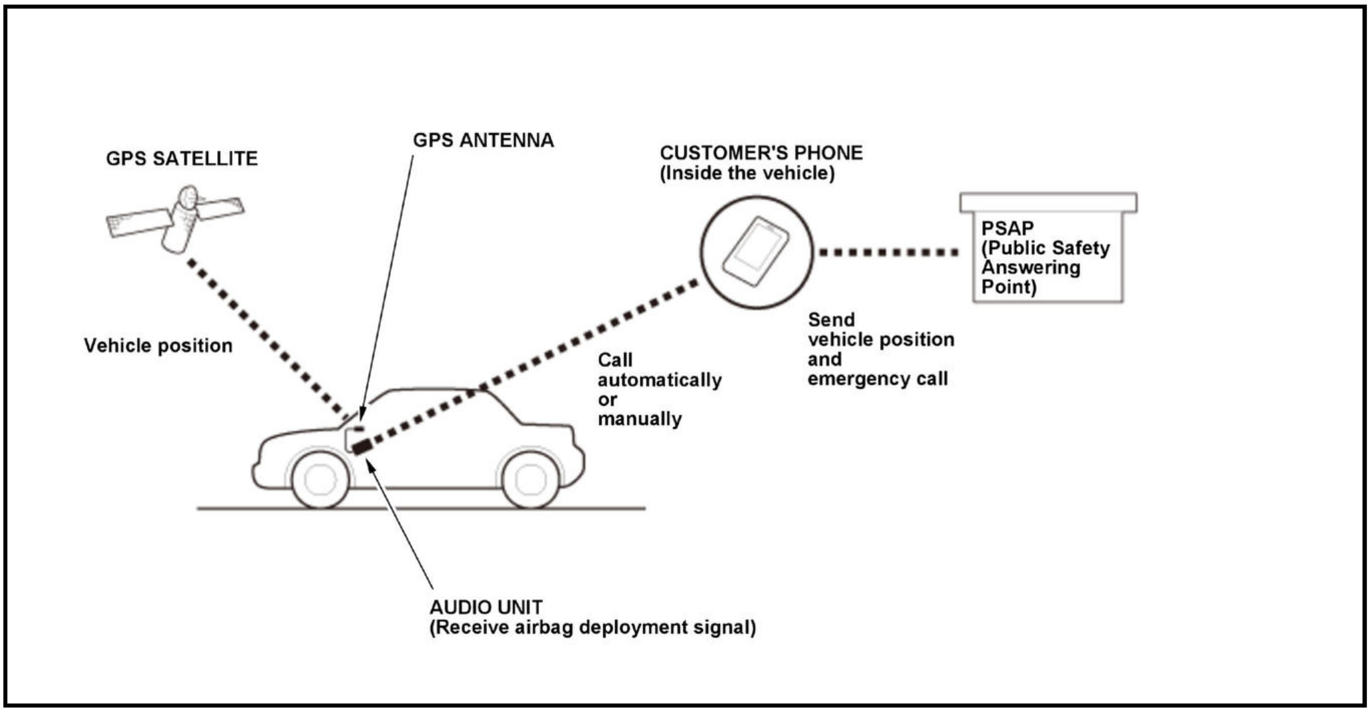
GPS SATELLITE
GPS ANTENNA
CUSTOMER'S PHONE
(Inside the vehicle)
PSAP
(Public Safety
Answering
Point)
Vehicle position
Send
vehicle position
and
emergency call
Call
automatically
or
manually
AUDIO UNIT
(Receive airbag deployment signal)

Tuner Unit

The tuner unit is a separate digital radio tuner interface. Received AM/FM radio waves are processed on the digital signal processor (DSP) and sent to the audio unit via the dedicated digital audio line (SPDIF1). At this time, HD radio (TM) sound signal is separated from normal AM radio sound signal. All of the information about AM/FM reception (includes RBDS information) are sent from the tuner unit via the dedicated serial bus (RS485). This unit holds AM/FM radio frequency presets even when the 12 volt battery is disconnected.

For vehicles with Sirius XM B® radio, the antenna for receiving AM/FM radio waves and satellite/terrestrial (XM) signal uses a roof antenna type. AM/FM radio wave is amplified by the AM/FM antenna amplifier. The sensitivity of the FM wave is raised by the auto gain control. The XM antenna receives satellite signal and terrestrial signal by using the high-gain antenna. Signals are sent to the audio unit via the dedicated single line (SAT/TER).

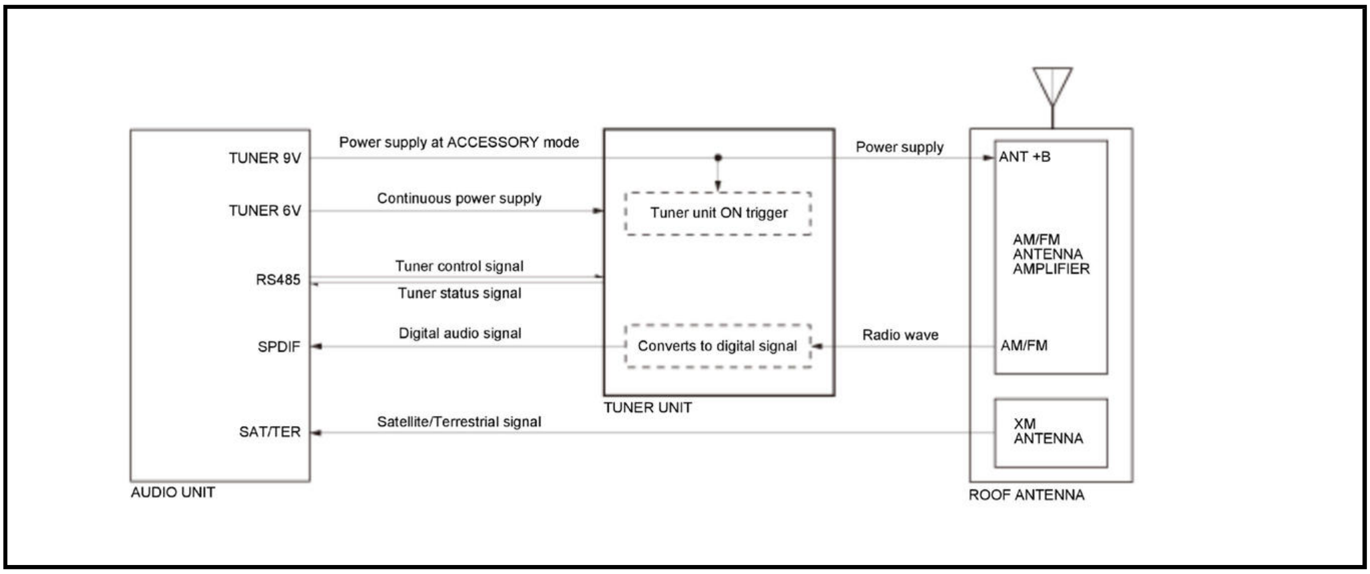

TUNER 9V
TUNER 6V
RS485
SPDIF
SAT/TER
AUDIO UNIT
Power supply at ACCESSORY mode
Continuous power supply
Tuner control signal
Tuner status signal
Digital audio signal
Satellite/Terrestrial signal
Tuner unit ON trigger
Converts to digital signal
TUNER UNIT
Power supply
Radio wave
ANT +B
AM/FM ANTENNA AMPLIFIER
AM/FM
XM ANTENNA
ROOF ANTENNA

Self-Diagnostic Function

The audio unit can check the tuner unit status by performing the System Diagnostic Mode.

Stereo Amplifier

The stereo amplifier is a separated power amplifier interface. Digital audio signal (SPDIF2) that is received from the audio unit is processed on the DSP, and sent to each speaker after amplified by the AMP IC.

The stereo amplifier communicates with the audio-navigation unit or the audio unit using the dedicated serial bus (RS485). This communication includes the vehicle speed (for SVC) information, audio settings, and the MUTE commands. The stereo amplifier adjusts the speaker outputs by oneself which is based on the received information.

The stereo amplifier receives the noise cancelling signal (ANC), guidance signal, and system beep signal via independent lines, and mixes them to the applicable audio lines.

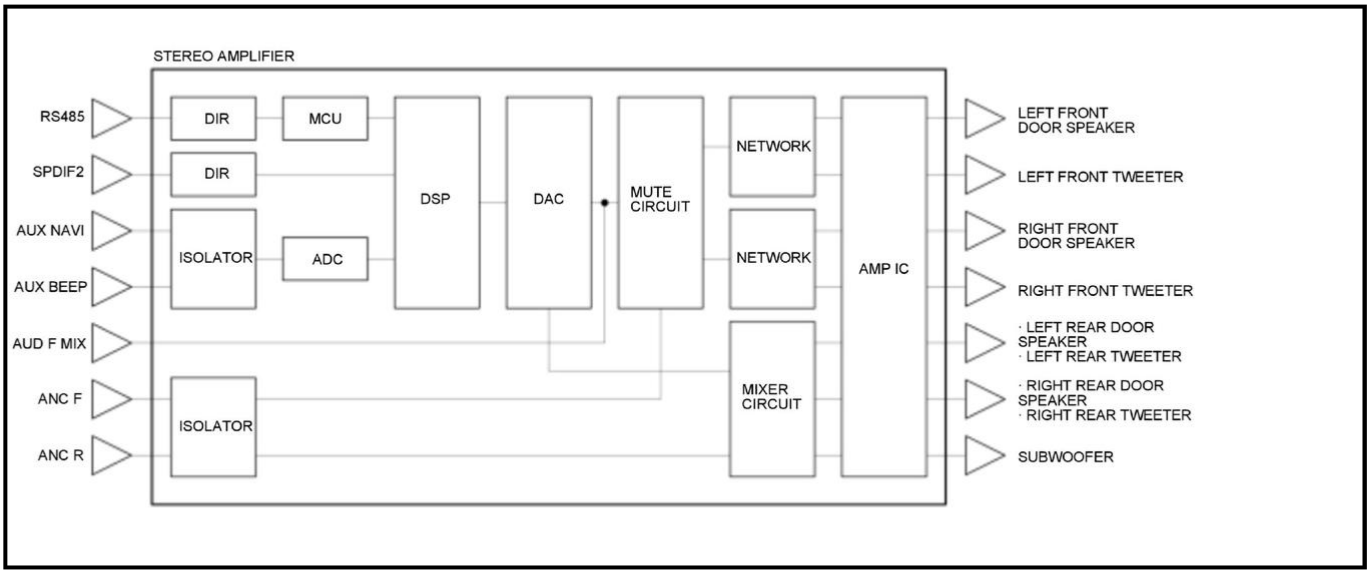

STEREO AMPLIFIER
RS485
SPDIF2
AUX NAVI
AUX BEEP
AUD F MIX
ANC F
ANC R
DIR
DIR
MCU
ISOLATOR
ADC
ISOLATOR
DSP
DAC
MUTE CIRCUIT
NETWORK
NETWORK
MIXER CIRCUIT
AMP IC
LEFT FRONT DOOR SPEAKER
LEFT FRONT TWEETER
RIGHT FRONT DOOR SPEAKER
RIGHT FRONT TWEETER
· LEFT REAR DOOR SPEAKER
· LEFT REAR TWEETER
· RIGHT REAR DOOR SPEAKER
· RIGHT REAR TWEETER
SUBWOOFER

Fail-Safe Function

The stereo amplifier performs a fail-safe control when the stereo amplifier detects an abnormal high temperature. The stereo amplifier then sends the error status to the audio unit, and the center display unit displays an error message which then the stereo amplifier inhibits sound output.

When the temperature cools down, the stereo amplifier outputs the sound again.

Active Noise Cancellation (ANC)/Active Sound Control

Both the active noise cancellation (ANC) and the active sound control are built into the ANC/active sound control unit. Both systems eliminate unwanted sound entering the passenger compartment. There are two microphones mounted in the headliner; one is just behind the front overhead roof console and the other is just ahead of the rear map lights. The microphones capture low frequencies entering the passenger compartment and send a signal to the ANC/active sound control unit. The ANC/active sound control unit then creates the sound wave that is sent out through the speakers to eliminate the unwanted sound.

Active Noise Cancellation (ANC)

The ANC system works to cancel the engine booming sound up to about 2, 000 rpm (min -1). The ANC/active sound control unit receives the engine speed pulse (NEP) from the PCM and outputs a sine-wave-sound through the audio speakers to cancel the low-frequency noise from the engine. The ANC system also uses two microphones to detect and monitor the low frequency noise in the passenger compartment. The microphones feedback the noise information to the audio unit or the audio-navigation unit which adjusts the speaker output to reduce the noise. The ANC also receives the output of the door open/close signal from the MICU. Whenever any door is opened, the ANC system temporarily stops working. Each signal is sent to the ANC/active sound control unit via F-CAN.

The ANC/Active sound control unit monitors the stereo amplifier output signals to the subwoofer, and if the subwoofer gives a sound more than the rated value, the ANC/Active sound control unit stops ANC control. This control is not for deleting bass of an audio output.

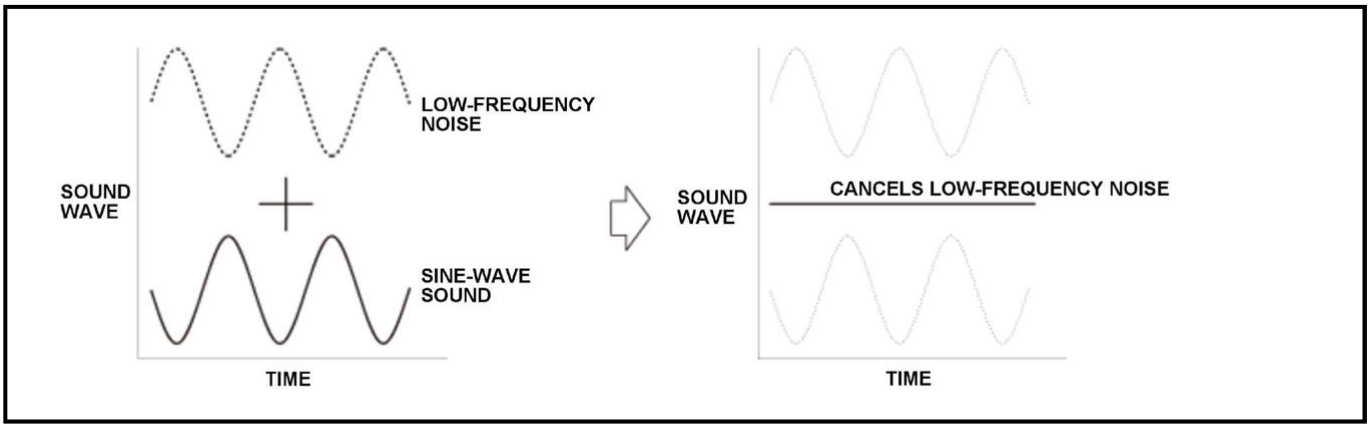

Active Sound Control

The active sound control is the next generation control of eliminating the unwanted sound in the passenger compartment. The active sound control has a much broader range than the ANC system. In addition to the microphones in the headliner, the active sound control also receives the output from the engine speed pulse (NEP) to provide various levels of the sound cancelling depending on changes in the engine RPM.

Front ANC/Active Sound Control Microphone

Receives a voice command, and transmits them to the audio unit or the audio-navigation unit. The microphone unit consists of two microphones. One of the microphones is combined with the ANC/active sound control microphone. It detects the driver's voice and the passenger's voice separately. (**refer to the HandsFreeLink System Description for the HFL Microphone functions** .)

Audio Remote-HFL Switch

There are two kinds of audio remote-HFL switches according to a vehicle model:

- With multi-information display: The audio remote switch and the HFL switch are integrated into the audio remote-HFL switch that uses a digital communication (LIN).
- Without multi-information display: The audio remote switch and the HFL switch are integrated into the audio remote-HFL switch that uses the resistor divider circuit.

With multi-information display, the audio remote-HFL switch has an electrostatic capacitance touch sensor (see Center Display Unit) for specific button operation.

When using any button or the touch switch on the audio remote-HFL switch, the control signal is sent to the audio unit via the gauge control module. The gauge control module reflects the control information of the audio remote-HFL switch as indication to the multi-information display (MID).

If the LIN circuit is open or shorted between the gauge control module and the audio remote-HFL switch, the gauge control module triggers the related DTC.

Audio remote-HFL switch circuit diagram (with multi-information display)

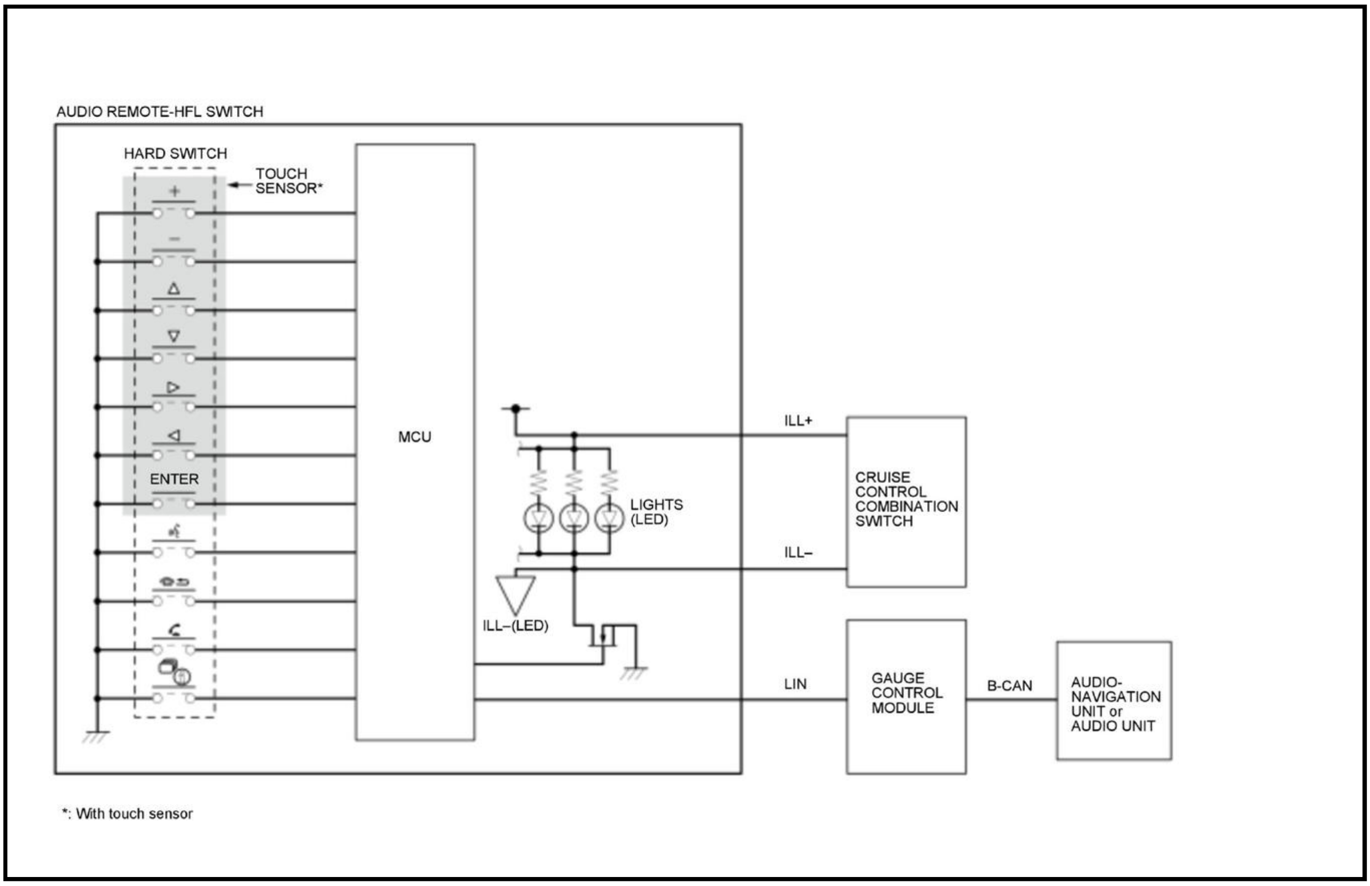
AUDIO REMOTE-HFL SWITCH
HARD SWITCH
TOUCH SENSOR*
+
−
△
▽
▷
◁
ENTER
MCU
LIGHTS (LED)
ILL−(LED)
ILL+
ILL−
CRUISE CONTROL COMBINATION SWITCH
LIN
GAUGE CONTROL MODULE
B-CAN
AUDIO-NAVIGATION UNIT or AUDIO UNIT
*: With touch sensor

Multi-View Rearview Camera

The multi-view rearview camera is a function that provides three different view images to the driver by the camera that is installed in the vehicle's rear end. The view images can be changed by the user. The rearview guide lines change according to the selected view. The rearview camera is connected directly to the audio unit.

- Normal View Mode

  The display shows the standard view.

- Wide View Mode

  The display shows wider visibility than the normal view, which helps the driver confirm any objects approaching from right and left.

- Top Down View Mode

  The display shows the view from the top angle of the vehicle, which helps the driver confirm the distance from any object behind.

Basic Control

The audio unit outputs the power source (CAMERA VCC) to the rearview camera under some conditions:

- Turn the vehicle to the ACCESSORY mode.
-
    - If the audio unit does not detect the BACK LT signal for 5 minutes, the audio unit cancels outputting the power source to the rearview camera.
- Detecting the BACK LT signal (when the transmission is shifted to R position/mode).
-
    - If the audio unit does not detect the BACK LT signal for 5 minutes after cancelling the rearview mode, the audio unit cancels outputting the power source to the rearview camera.
- When using the Rear Camera diagnosis in the System Diagnostic Mode.
-
    - If the audio unit does not detect the BACK LT signal for 5 minutes after exiting the System Diagnostic Mode, the audio unit cancels outputting the power source to the rearview camera.

When the audio unit detects the BACK LT signal for at least 0.5 seconds, the audio unit display turns on the rearview camera image. The display delays for 0.5 seconds to prevent changing the screen image too frequently because of incorrect shift position/mode selection. You can change the view mode by touching the mode icon* 1 or by pressing the SELECTOR knob* 2.

*1: Display audio type
*2: Color audio type

While displaying the rearview image, the LaneWatch function cannot be used because the LaneWatch image can be misunderstood as the rearview image.

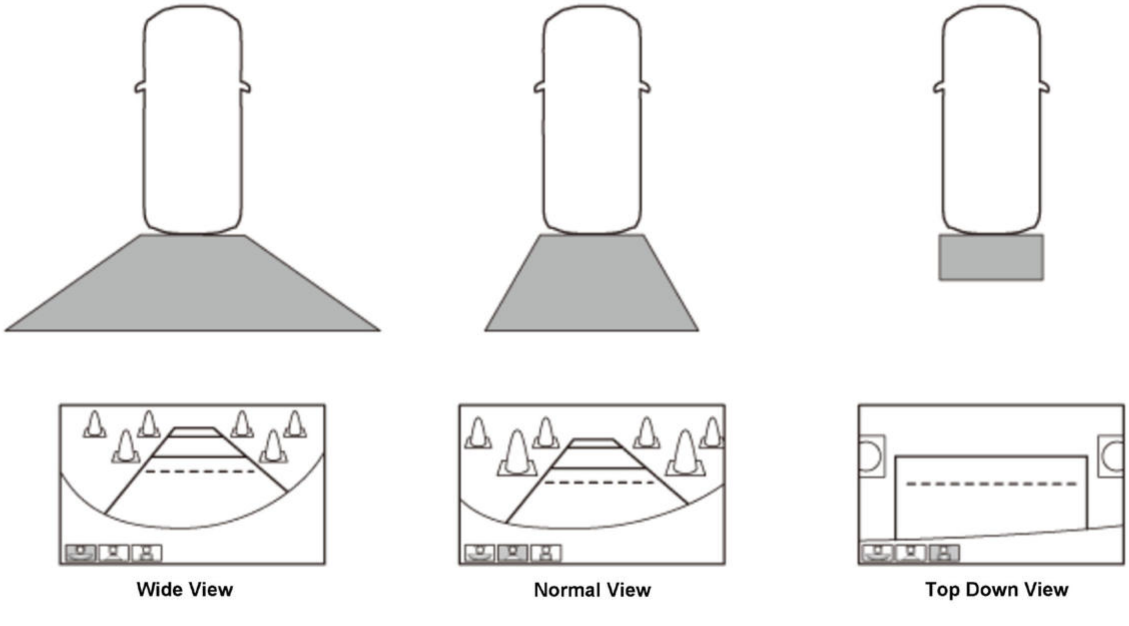

Guidelines type A

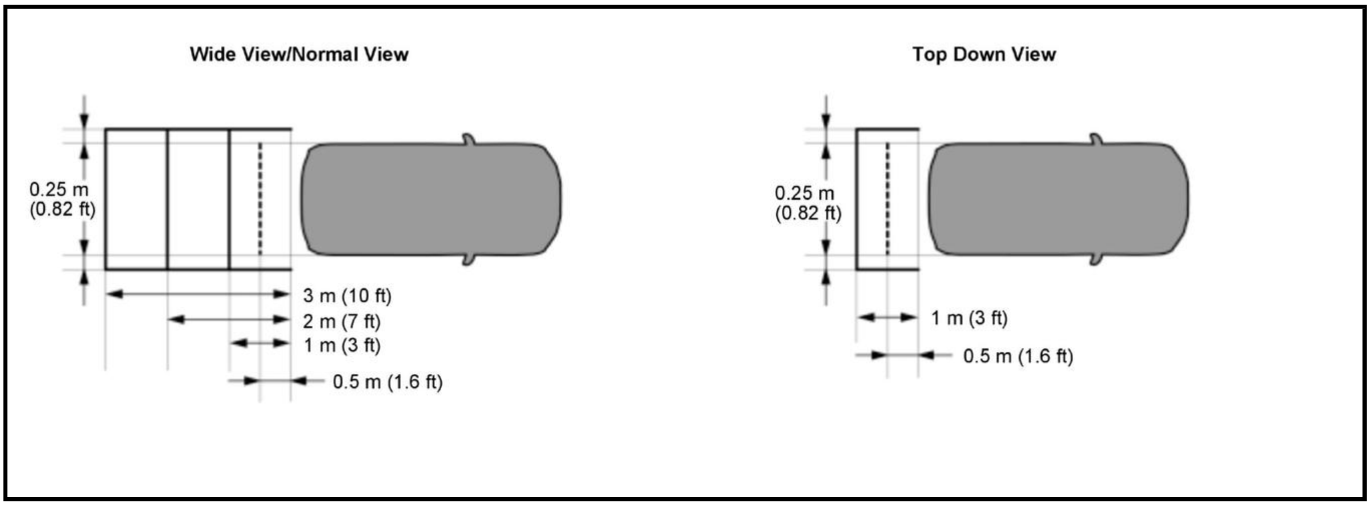

Wide View/Normal View
0.25 m (0.82 ft)
3 m (10 ft)
2 m (7 ft)
1 m (3 ft)
0.5 m (1.6 ft)
Top Down View
0.25 m (0.82 ft)
1 m (3 ft)
0.5 m (1.6 ft)

Guidelines type B

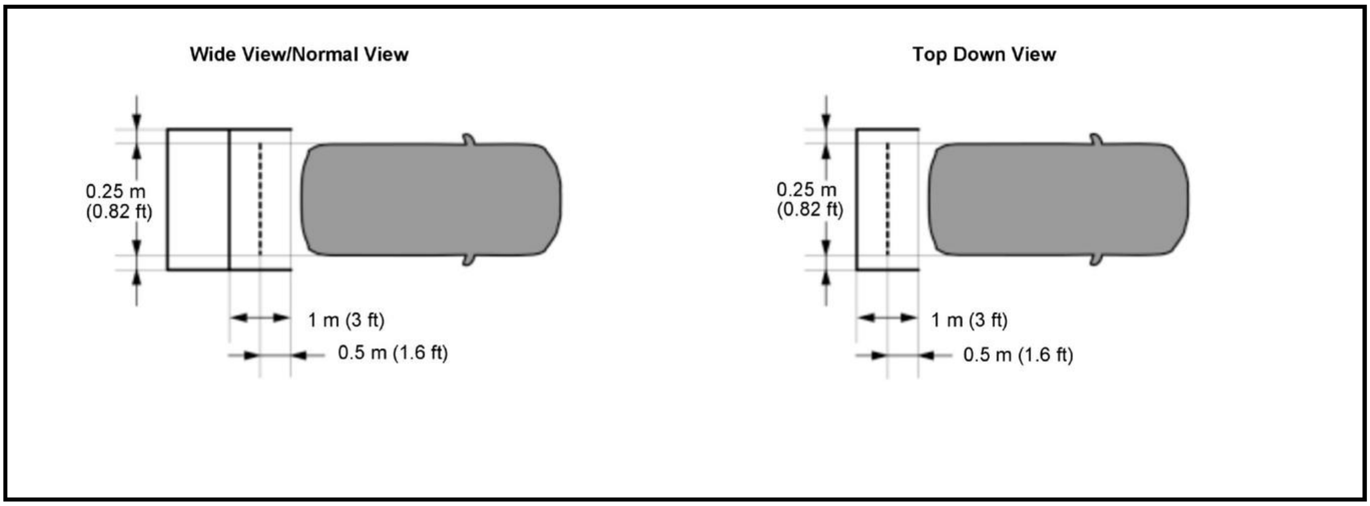

Wide View/Normal View
0.25 m (0.82 ft)
1 m (3 ft)
0.5 m (1.6 ft)
Top Down View
0.25 m (0.82 ft)
1 m (3 ft)
0.5 m (1.6 ft)

Changing Camera Views

When the rearview camera image is displayed, touching the mode icon sends a signal from the audio unit to the rearview camera using the CAMERA BIT0 and CAMERA BIT1 signal lines to change the rearview camera view.

B	Wide	Normal	Top Down
CAMERA BIT0 Signal	OFF (0 V)	ON (5 V - 8 V)	OFF (0 V)
CAMERA BIT1 Signal	OFF (0 V)	OFF (0 V)	ON (5 V - 8 V)

View Mode Memorization

Any time the audio unit loses power (battery disconnected, audio unit disconnected, etc.) the rearview camera defaults to the normal angle view. The rearview camera will also default to this angle if you had the top down angle selected when you turn the vehicle to the OFF (LOCK) mode. If you change the rearview camera to the wide view, the rearview camera will remember this view when you turn the vehicle to the ON mode.

Dynamic Guideline (Display Audio type)

When the rearview image is displayed with the guide line, the guide line changes according to the steering angle input (When the steering rotates 90 degrees or more). The steering angle information is received from the gauge control module via the B-CAN as vehicle signals.

USB Charger Unit

The USB charger unit controls an output current for charging of a USB device. The USB port C and D (CHARGE ONLY) located on the center console are a dedicated USB charging port. The USB charger unit is based on the specification of the USB Battery Charging 1.2 (BC 1.2) that supports high-speed charging of the USB device. The USB charger unit can detect the USB device type (BC 1.2 or not), and change the charging mode automatically.

The USB charger unit is launched by turning the vehicle to the ACCESSORY mode. When you connect the USB device to the USB port C and D (CHARGE ONLY), the USB charger unit supplies the appropriate current (1.0 A - 2.1 A) to the USB device via the USB VBUS. In this case, the USB charger unit detects the electrical characteristics from the USB DATA lines. No data communication occurs between the USB charger unit and the USB device. Also, there is no connection between the USB charger unit and the audio-navigation unit or the audio unit.

AUDIO SYSTEM DESCRIPTION - SYSTEM DIAGRAM (COLOR AUDIO TYPE)

For locations of each component on vehicle, refer to Audio System Component Location Index.

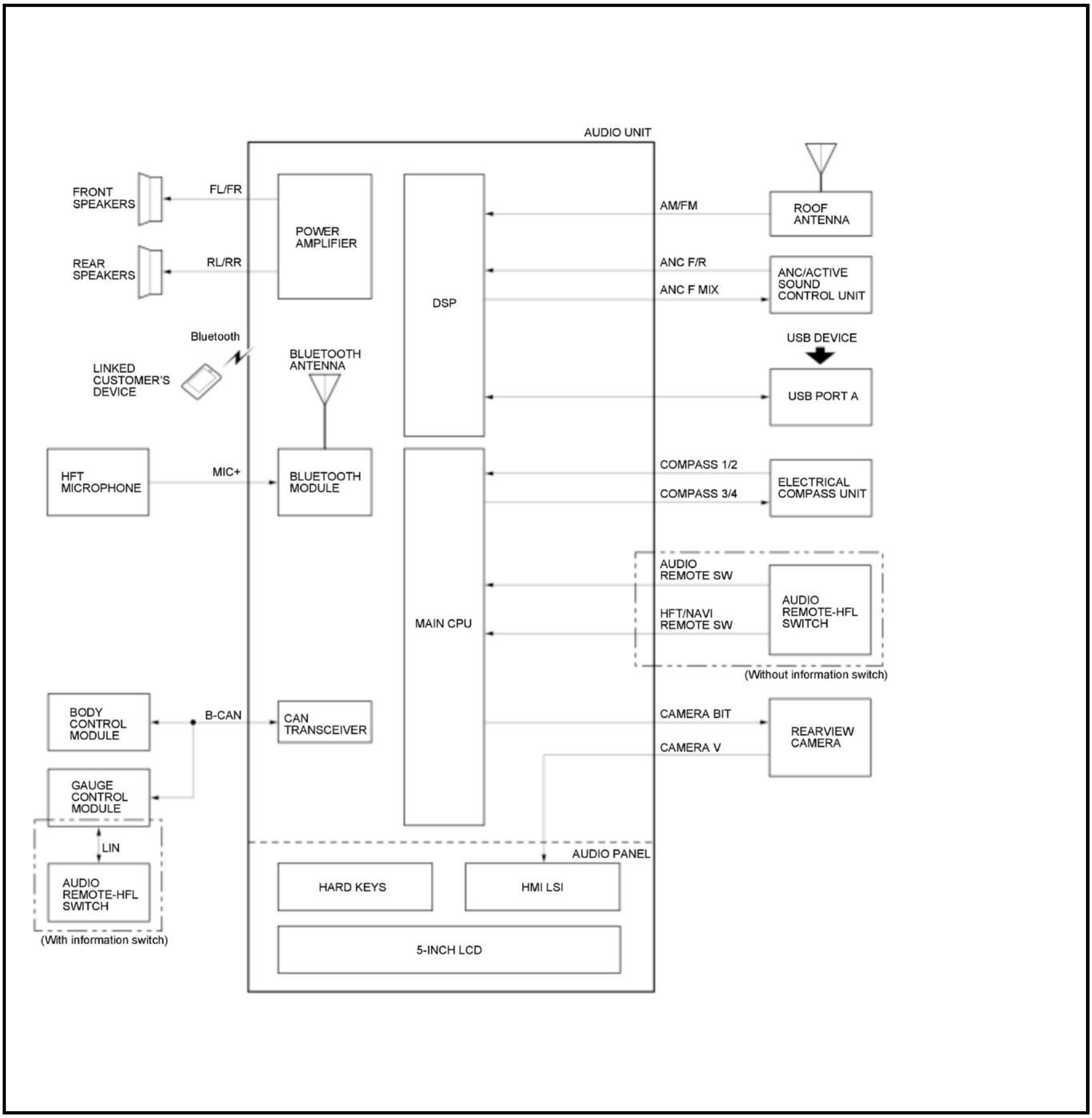
AUDIO UNIT
FRONT SPEAKERS
FL/FR
REAR SPEAKERS
RL/RR
POWER AMPLIFIER
DSP
AM/FM
ROOF ANTENNA
ANC F/R
ANC F MIX
ANC/ACTIVE SOUND CONTROL UNIT
Bluetooth
LINKED CUSTOMER'S DEVICE
BLUETOOTH ANTENNA
USB DEVICE
USB PORT A
HFT MICROPHONE
MIC+
BLUETOOTH MODULE
COMPASS 1/2
COMPASS 3/4
ELECTRICAL COMPASS UNIT
AUDIO REMOTE SW
HFT/NAVI REMOTE SW
AUDIO REMOTE-HFL SWITCH
MAIN CPU
(Without information switch)
BODY CONTROL MODULE
B-CAN
CAN TRANSCEIVER
CAMERA BIT
CAMERA V
REARVIEW CAMERA
GAUGE CONTROL MODULE
LIN
AUDIO PANEL
AUDIO REMOTE-HFL SWITCH
HARD KEYS
HMI LSI
(With information switch)
5-INCH LCD

Power Supply Diagram

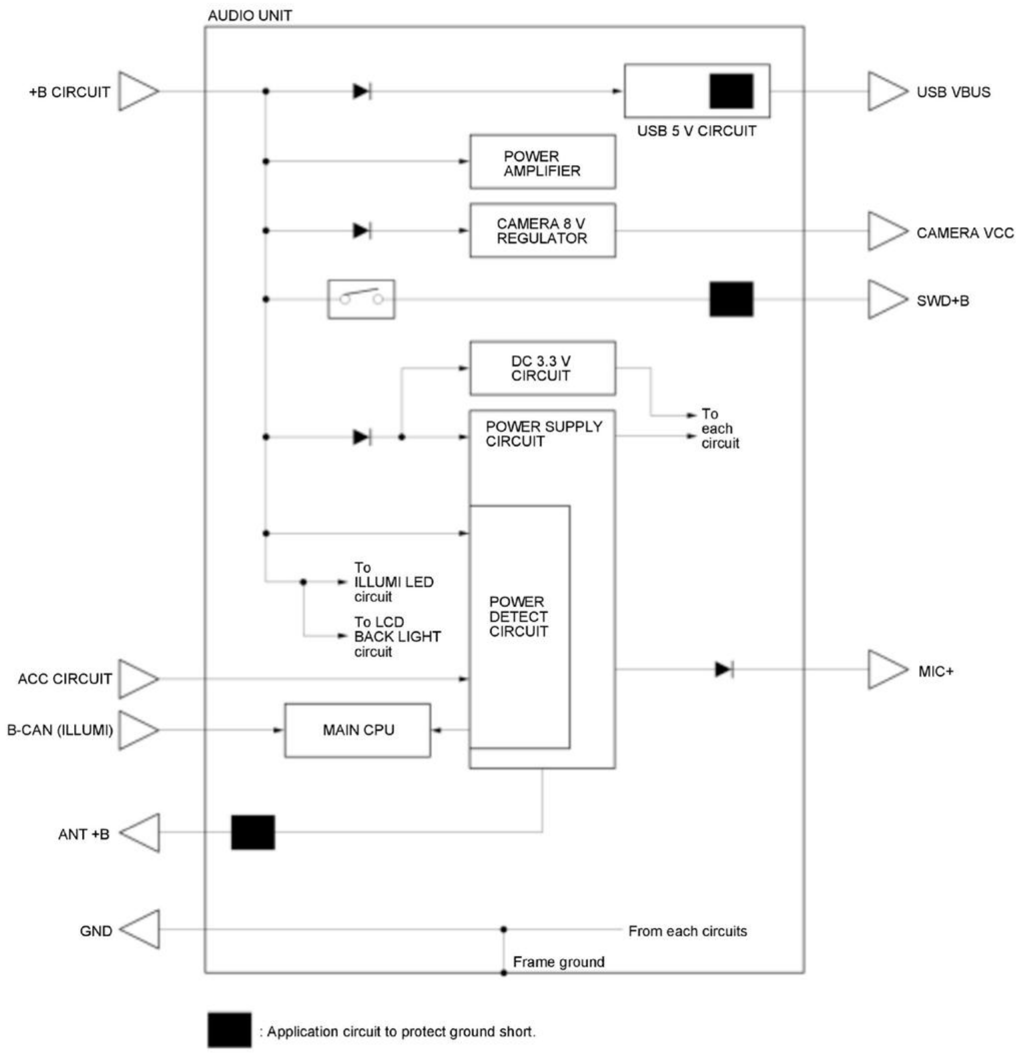
AUDIO UNIT
+B CIRCUIT
USB 5 V CIRCUIT
USB VBUS
POWER AMPLIFIER
CAMERA 8 V REGULATOR
CAMERA VCC
SWD+B
DC 3.3 V CIRCUIT
POWER SUPPLY CIRCUIT
To each circuit
To ILLUMI LED circuit
To LCD BACK LIGHT circuit
POWER DETECT CIRCUIT
ACC CIRCUIT
MIC+
B-CAN (ILLUMI)
MAIN CPU
ANT +B
GND
From each circuits
Frame ground
: Application circuit to protect ground short.

AUDIO SYSTEM DESCRIPTION - SYSTEM DIAGRAM (DISPLAY AUDIO TYPE)

For locations of each component on vehicle, refer to Audio System Component Location Index.

NOTE: Refer to the navigation system section for audio-navigation unit system diagram .

With Stereo Amplifier

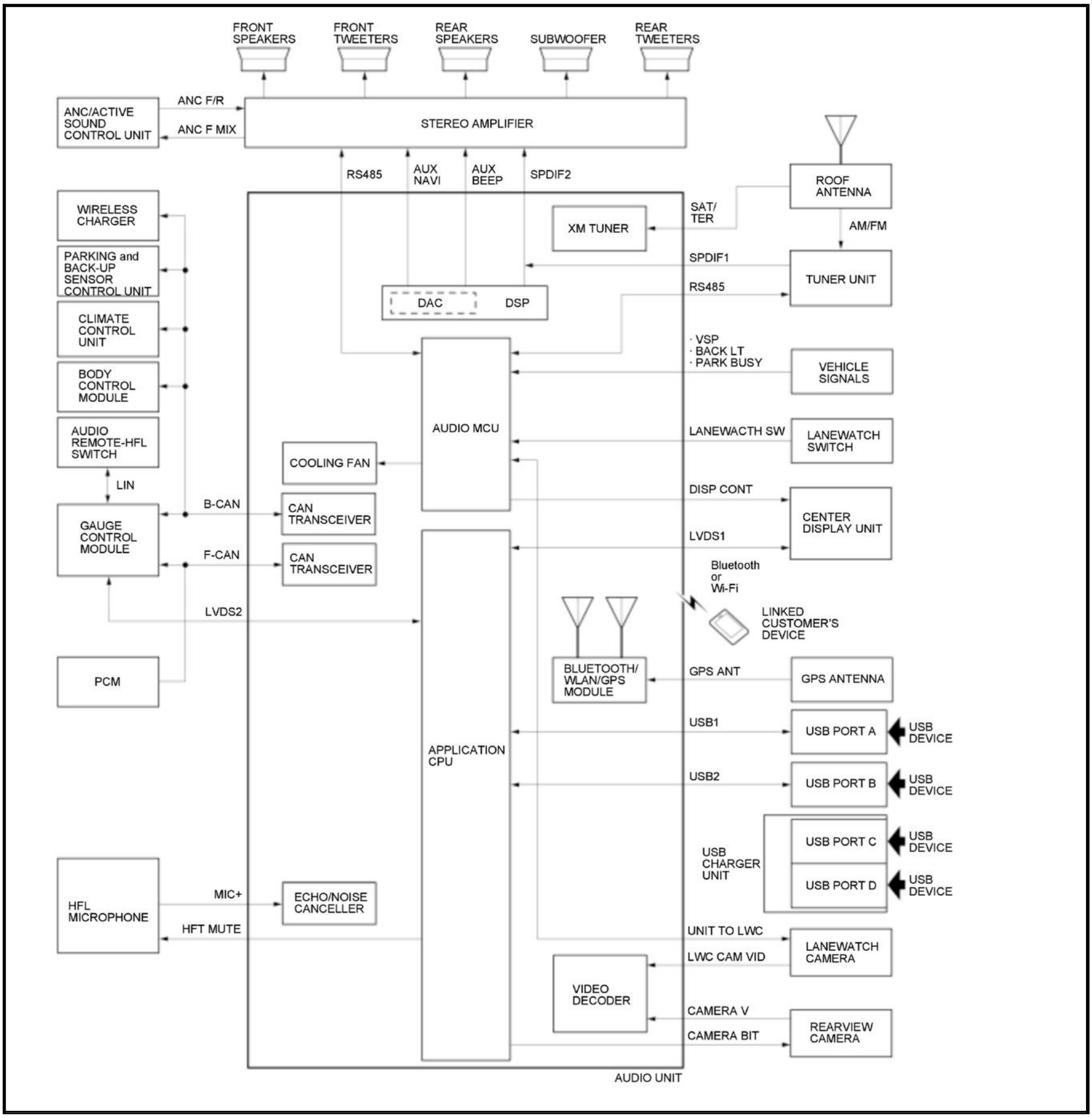
FRONT SPEAKERS
FRONT TWEETERS
REAR SPEAKERS
SUBWOOFER
REAR TWEETERS
ANC/ACTIVE SOUND CONTROL UNIT
ANC F/R
ANC F MIX
STEREO AMPLIFIER
RS485
AUX NAVI
AUX BEEP
SPDIF2
ROOF ANTENNA
SAT/ TER
XM TUNER
AM/FM
SPDIF1
TUNER UNIT
RS485
DAC
DSP
WIRELESS CHARGER
PARKING and BACK-UP SENSOR CONTROL UNIT
CLIMATE CONTROL UNIT
BODY CONTROL MODULE
AUDIO REMOTE-HFL SWITCH
LIN
· VSP
· BACK LT
· PARK BUSY
VEHICLE SIGNALS
AUDIO MCU
LANEWACTH SW
LANEWATCH SWITCH
COOLING FAN
B-CAN
CAN TRANSCEIVER
DISP CONT
CENTER DISPLAY UNIT
GAUGE CONTROL MODULE
F-CAN
CAN TRANSCEIVER
LVDS1
Bluetooth or Wi-Fi
LVDS2
LINKED CUSTOMER'S DEVICE
PCM
BLUETOOTH/ WLAN/GPS MODULE
GPS ANT
GPS ANTENNA
USB1
USB PORT A
USB DEVICE
APPLICATION CPU
USB2
USB PORT B
USB DEVICE
USB CHARGER UNIT
USB PORT C
USB DEVICE
USB PORT D
USB DEVICE
HFL MICROPHONE
MIC+
ECHO/NOISE CANCELLER
HFT MUTE
UNIT TO LWC
LANEWATCH CAMERA
LWC CAM VID
VIDEO DECODER
CAMERA V
CAMERA BIT
REARVIEW CAMERA
AUDIO UNIT

Without Stereo Amplifier

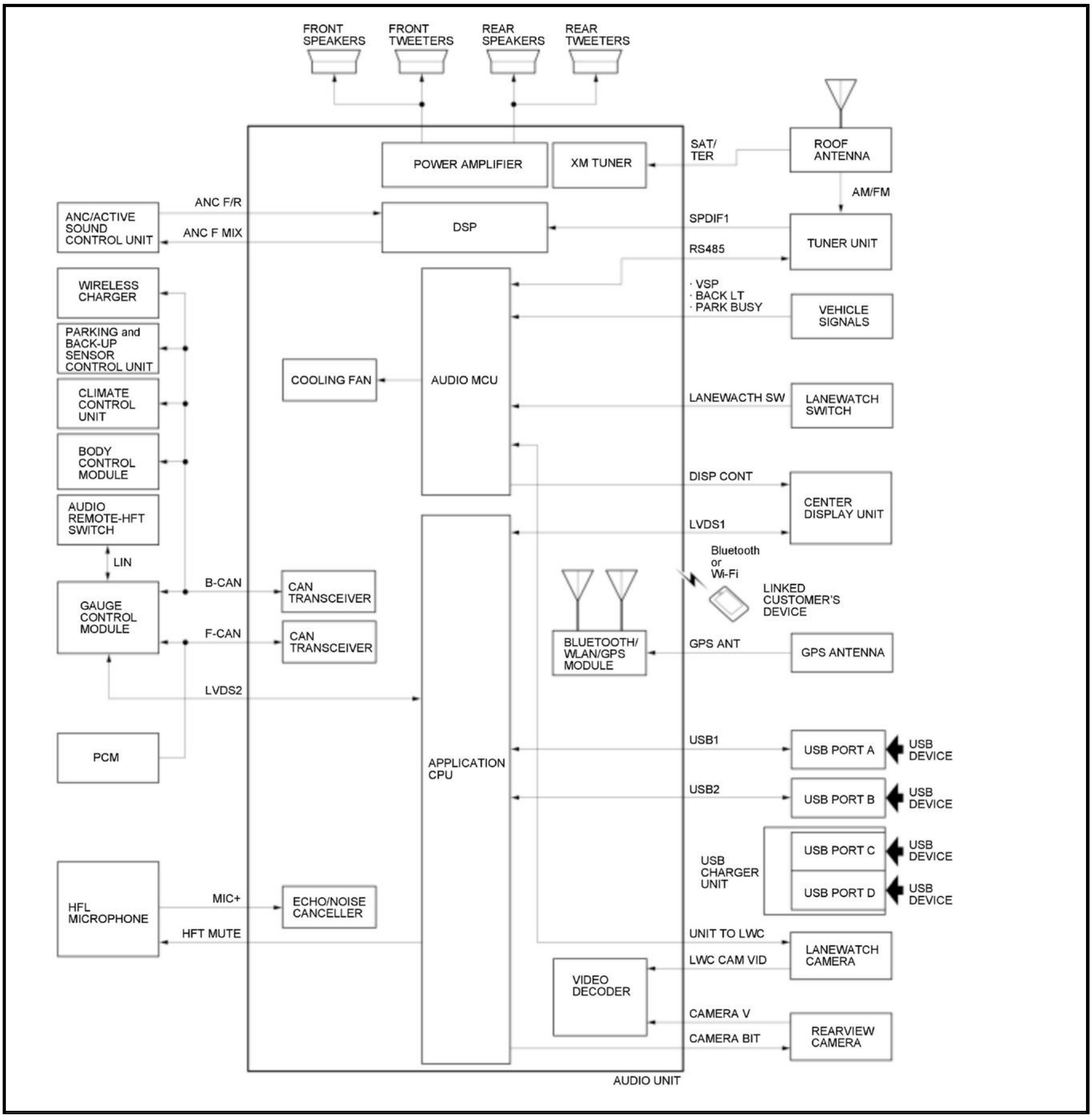
FRONT SPEAKERS
FRONT TWEETERS
REAR SPEAKERS
REAR TWEETERS
POWER AMPLIFIER
XM TUNER
SAT/ TER
ROOF ANTENNA
AM/FM
ANC/ACTIVE SOUND CONTROL UNIT
ANC F/R
ANC F MIX
DSP
SPDIF1
TUNER UNIT
RS485
· VSP
· BACK LT
· PARK BUSY
VEHICLE SIGNALS
WIRELESS CHARGER
PARKING and BACK-UP SENSOR CONTROL UNIT
CLIMATE CONTROL UNIT
BODY CONTROL MODULE
AUDIO REMOTE-HFT SWITCH
LIN
COOLING FAN
AUDIO MCU
LANEWACTH SW
LANEWATCH SWITCH
DISP CONT
CENTER DISPLAY UNIT
LVDS1
Bluetooth or Wi-Fi
LINKED CUSTOMER'S DEVICE
GAUGE CONTROL MODULE
B-CAN
CAN TRANSCEIVER
F-CAN
CAN TRANSCEIVER
BLUETOOTH/ WLAN/GPS MODULE
GPS ANT
GPS ANTENNA
LVDS2
PCM
APPLICATION CPU
USB1
USB PORT A
USB DEVICE
USB2
USB PORT B
USB DEVICE
USB CHARGER UNIT
USB PORT C
USB DEVICE
USB PORT D
USB DEVICE
HFL MICROPHONE
MIC+
ECHO/NOISE CANCELLER
HFT MUTE
UNIT TO LWC
LANEWATCH CAMERA
LWC CAM VID
VIDEO DECODER
CAMERA V
CAMERA BIT
REARVIEW CAMERA
AUDIO UNIT

Power Supply Diagram

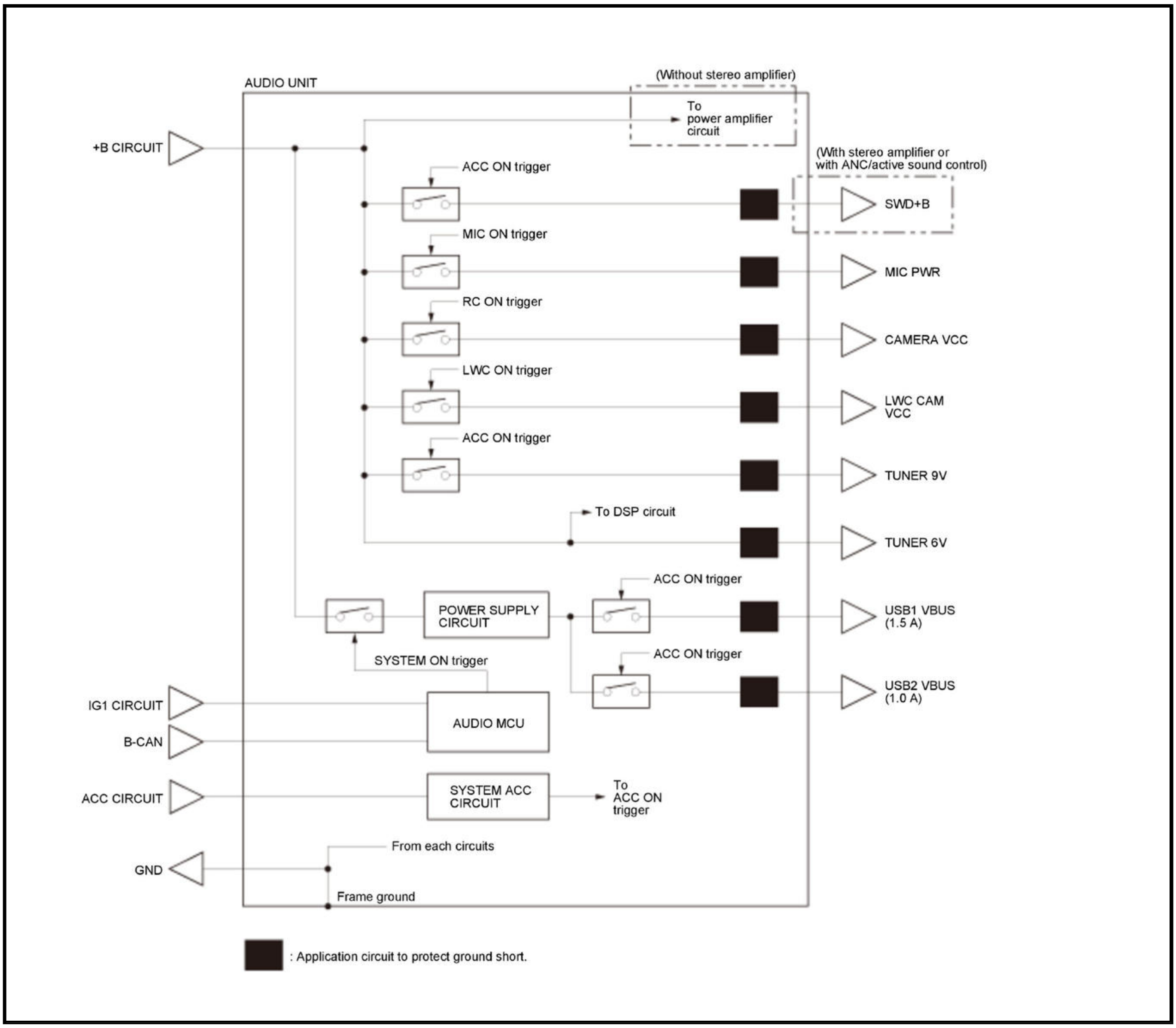
AUDIO UNIT
(Without stereo amplifier)
To power amplifier circuit
+B CIRCUIT
(With stereo amplifier or with ANC/active sound control)
ACC ON trigger
SWD+B
MIC ON trigger
MIC PWR
RC ON trigger
CAMERA VCC
LWC ON trigger
LWC CAM VCC
ACC ON trigger
TUNER 9V
To DSP circuit
TUNER 6V
ACC ON trigger
POWER SUPPLY CIRCUIT
USB1 VBUS (1.5 A)
SYSTEM ON trigger
ACC ON trigger
USB2 VBUS (1.0 A)
IG1 CIRCUIT
AUDIO MCU
B-CAN
ACC CIRCUIT
SYSTEM ACC CIRCUIT
To ACC ON trigger
From each circuits
GND
Frame ground
: Application circuit to protect ground short.

DIAGNOSIS

AUDIO SYSTEM DIAGNOSTIC MODE (COLOR AUDIO TYPE)

Start-Up Procedure and Diagnostic Menu

NOTE:

- Check the vehicle 12 volt battery condition first .
- The screens detail indicated may change depending on equipment or specification.

1. Turn the vehicle to the ON mode. If needed, start the engine.

2. Press the POWER button to turn off the audio unit.

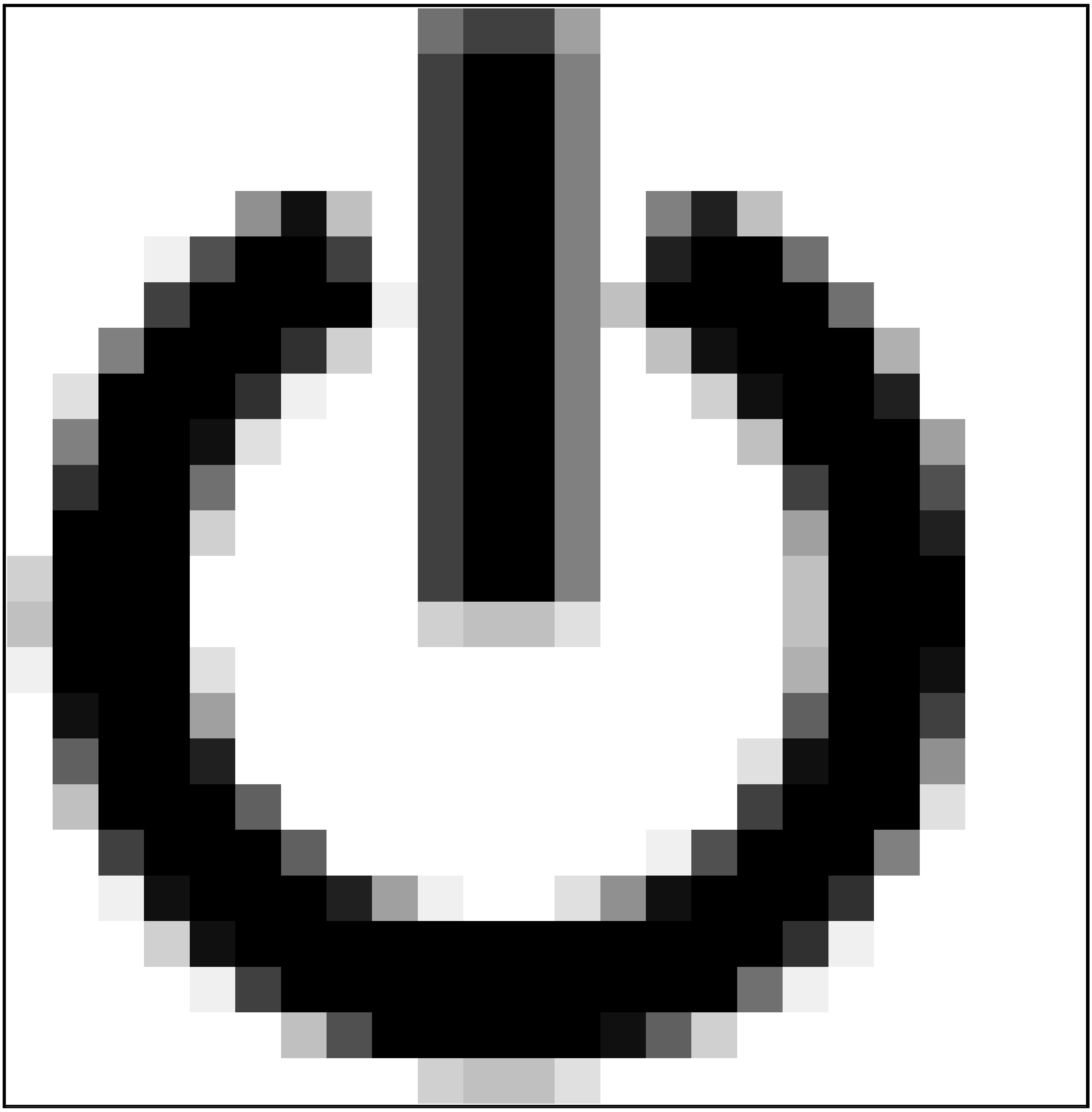

3. Press and hold the preset No. 1 button, then preset No. 6 button and then the VOLUME/POWER knob. The display screen goes directly to the Manual Diag menu shown.

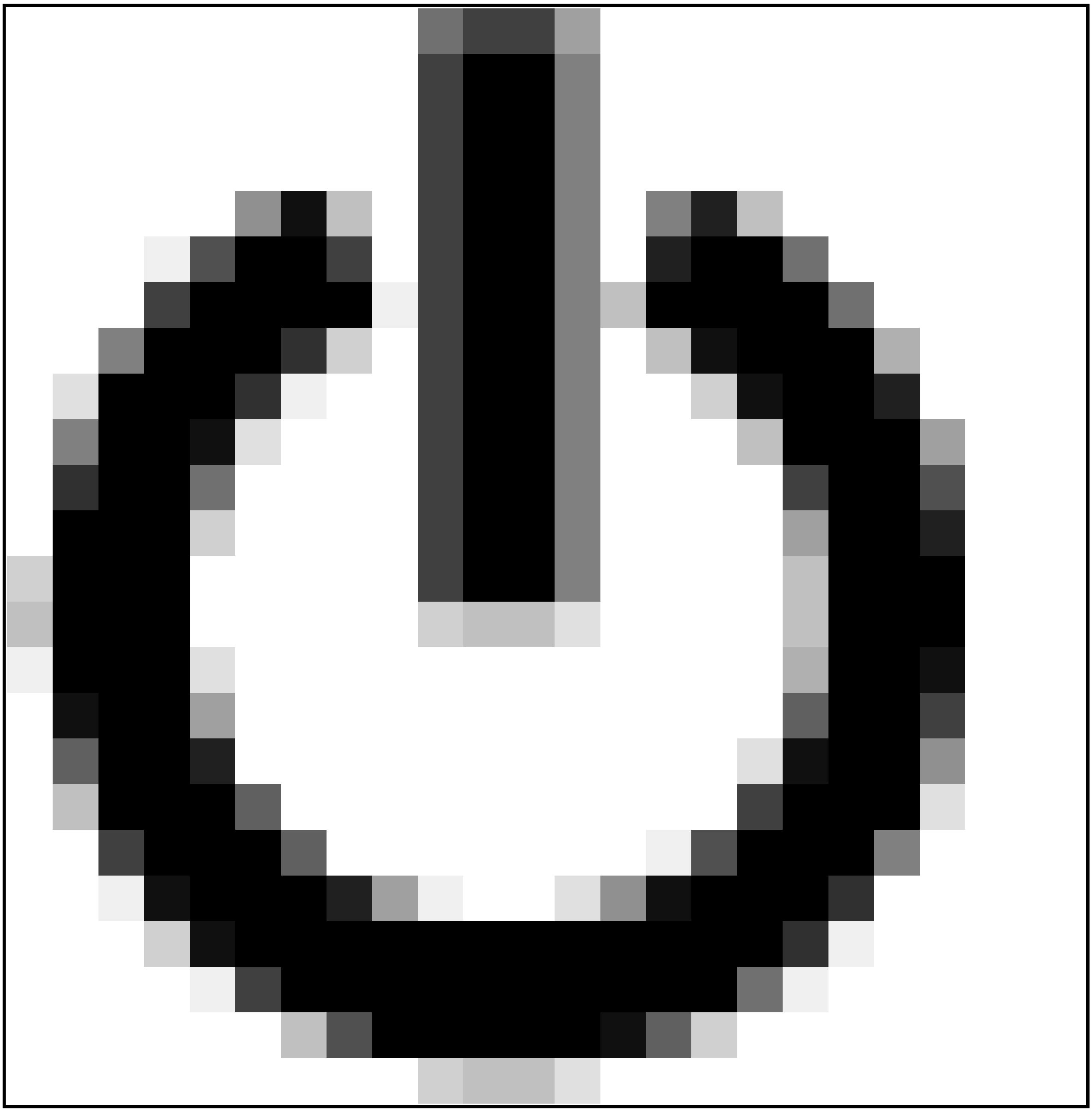

NOTE: Do not press preset No. 1 and No. 6 buttons simultaneously.

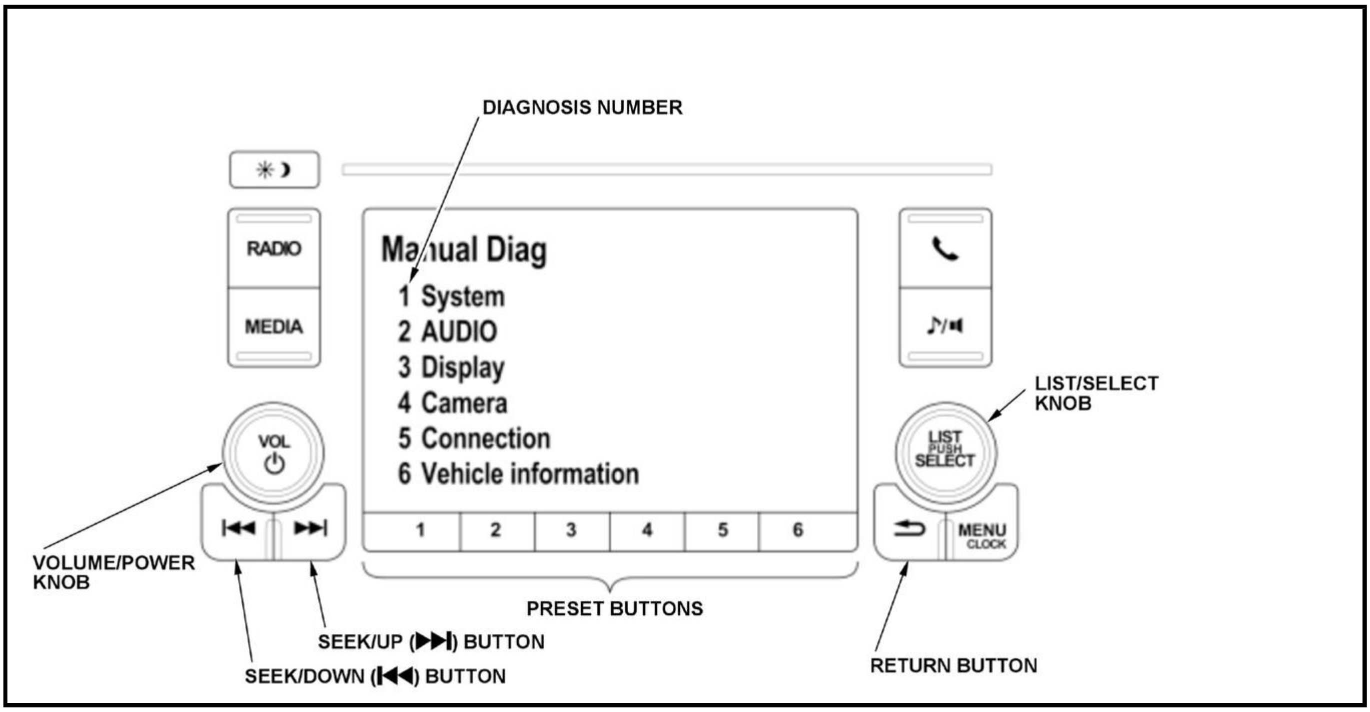
DIAGNOSIS NUMBER
RADIO
MEDIA
Manual Diag
1 System
2 AUDIO
3 Display
4 Camera
5 Connection
6 Vehicle information
1
2
3
4
5
6
VOL
LIST PUSH SELECT
MENU CLOCK
LIST/SELECT KNOB
VOLUME/POWER KNOB
PRESET BUTTONS
SEEK/UP (▶▶|) BUTTON
SEEK/DOWN (|◀◀) BUTTON
RETURN BUTTON

4. When you are in the system diagnostic mode, pressing a preset button starts the diagnosis that is assigned to that preset button. To return to the previous screen, press the RETURN button. To exit this mode, go to step 5. Once you exit this test, you must start again at step 1.

- Preset No. 1 button: System
- Preset No. 2 button: AUDIO
- Preset No. 3 button: Display
- Preset No. 4 button: Camera
- Preset No. 5 button: Connection
- Preset No. 6 button: Vehicle information

5. To end the system diagnostic mode, press the VOLUME/POWER knob, or turn the vehicle to the OFF (LOCK) mode.

How to Obtain the Audio Unit Serial Number (With Audio System Theft Protection)

NOTE: This procedure can be done only before anti-theft mode is cancelled.

1. Turn the vehicle to the ON mode. Make sure the audio unit is in the anti-theft mode.

2. Go into the System Diagnostic Mode, and select the System diagnosis, then press the preset No. 1 button

3. The screen displays an 8-digit audio unit serial number.

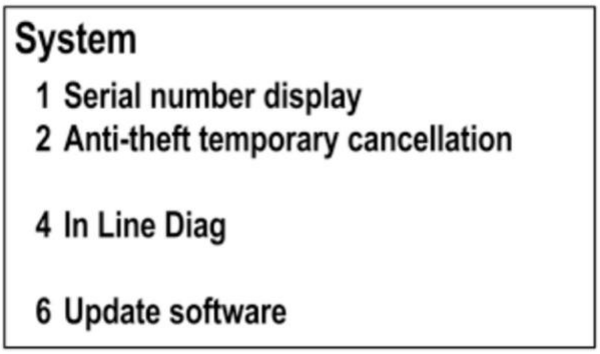

System

1 Serial number display

2 Anti-theft temporary cancellation

4 In Line Diag

6 Update software

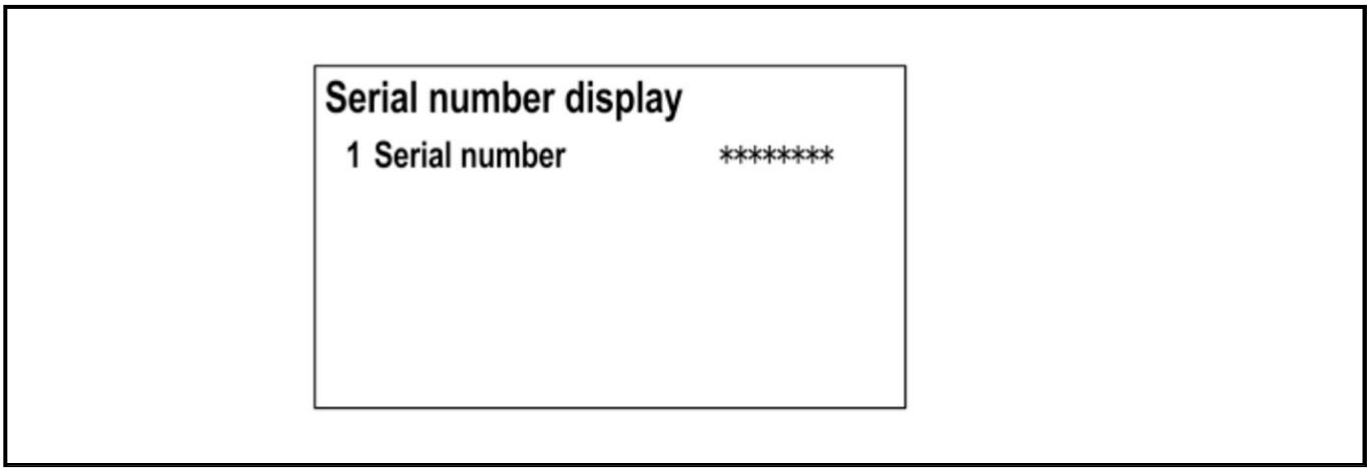

Serial number display

1 Serial number ********

4. Use all 8 numbers as the serial number when using the Interactive Network (iN) to retrieve the 5-digit anti-theft code.

Anti-Theft Temporary Cancellation

5. Return to the System diagnosis, when preset No. 2 button is pressed, the anti-theft mode is cancelled temporarily, and the system returns to the normal audio screen automatically.

System

This diagnosis displays the current version information about each module in the audio unit, and result of the In Line Diag, and detects the hard keys.

To start the diagnosis, press the preset button to select the diagnosis number you want to check.

NOTE: Items not listed are not available in this model.

- Preset No. 1 button: Driver distraction prevention
- Preset No. 3 button: Knob check
- Preset No. 4 button: In Line Diag
- Preset No. 5 button: Knob illumination check
- Preset No. 6 button: Update software (factory use only)

*: With audio system theft protection

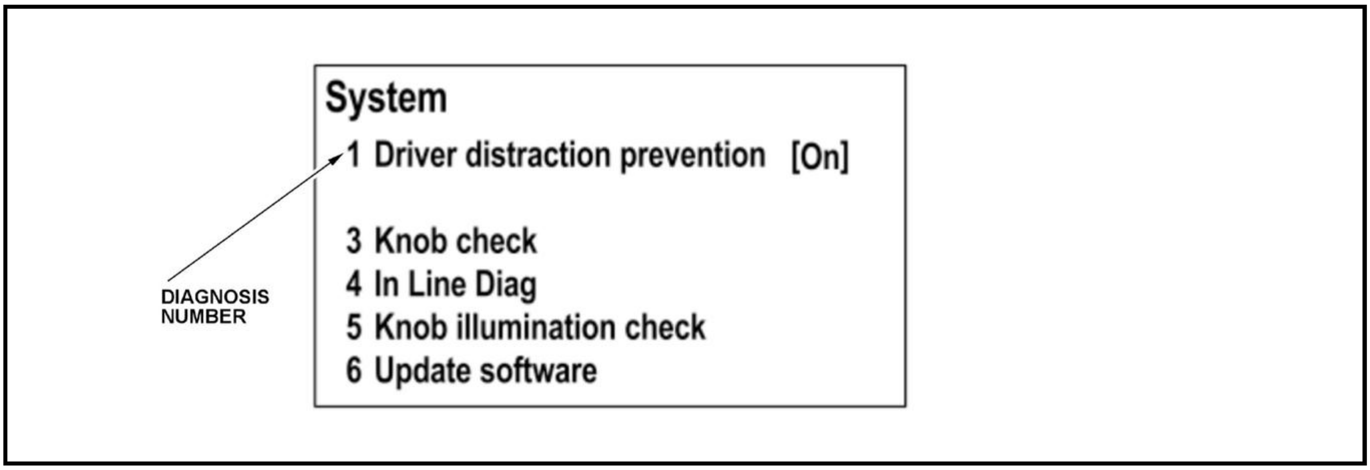

System

1 Driver distraction prevention [On]

3 Knob check

4 In Line Diag

5 Knob illumination check

6 Update software

Knob Check

This diagnosis checks the audio unit hard buttons and the audio remote-HFL switch.

As each function is tested, the corresponding button name should be displayed.

- If any button of the audio unit does not respond, **replace the audio panel or the audio unit** .
- If any button of the audio remote-HFL switch does not respond, **do the audio remote-HFL switch test** .
- If all buttons of the audio remote-HFL switch do not respond, go to **Audio remote-HFL switch does not work properly (audio unit buttons work) troubleshooting**.

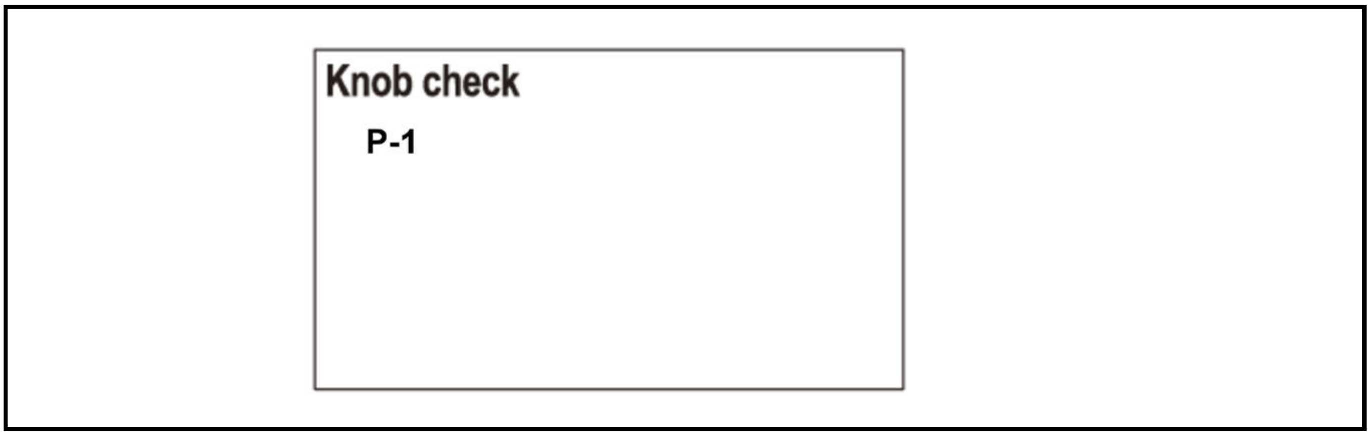
Knob check

P-1

In Line Diag

This diagnosis checks whether the audio unit is receiving each unit signal properly, and clear the result(s).

To start the diagnosis, press the preset button to select the diagnosis number you want to check.

- Preset No. 1 button: Result All Display
- Preset No. 2 button: Result All Clear
- Preset No. 3 button: Result All OK

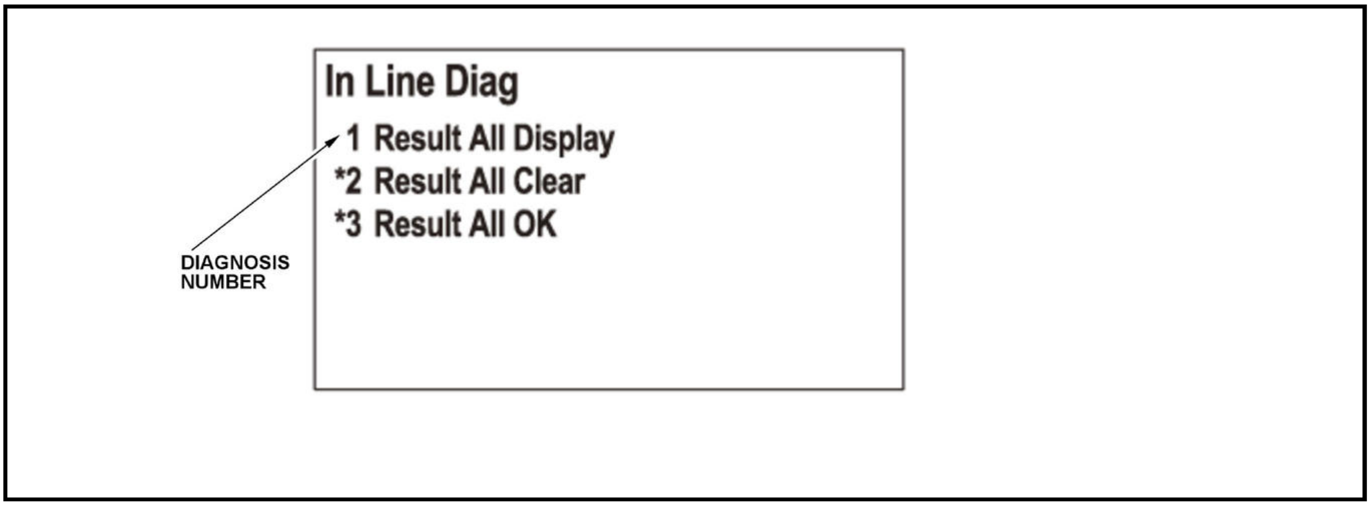
In Line Diag

1 Result All Display

*2 Result All Clear

*3 Result All OK

Result All Display

You can check the result of the In Line Diag.

The In Line Diag function runs automatically. When the diagnosis finishes, the icons turn different colors based on their test status (OK or NG).

NOTE: The STRG REMOTE and the HFL REMOTE indicates NG until the audio remote switch button and the HFL switch button are pressed.

Icon Colors	Description
Green	The system ran a diagnosis and the results are OK.
Red	Errors that require replacement of hardware or harness.

Icon Colors	Description
Yellow	Errors that do not require hardware replacement, such as a missing optional systems (rearview camera), or the connection check is in the state which is not done.

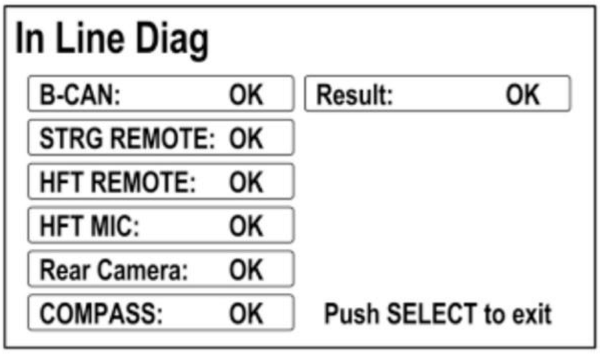

In Line Diag

B-CAN: OK

STRG REMOTE: OK

HFT REMOTE: OK

HFT MIC: OK

Rear Camera: OK

COMPASS: OK

Result: OK

Push SELECT to exit

Knob Illumination Check

This diagnosis checks the dimming circuit of the audio unit buttons.

When rotating the LIST/SELECT knob, you should see the value change from 1 (max low) to 22 (max high).

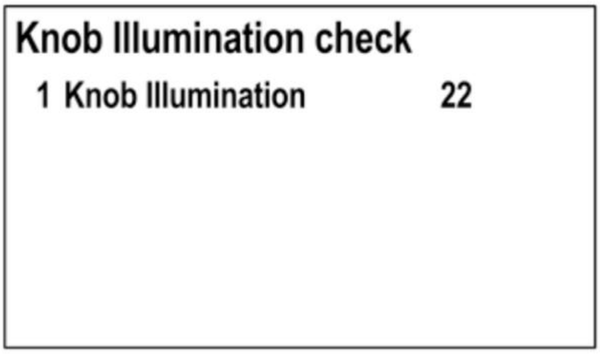

Knob Illumination check

1 Knob Illumination 22

AUDIO

This diagnosis checks the audio unit sound system.

To start the diagnosis, press the preset button to select the diagnosis number you want to check.

- Preset No. 1 button: Sound
- Preset No. 2 button: FM
- Preset No. 3 button: AM

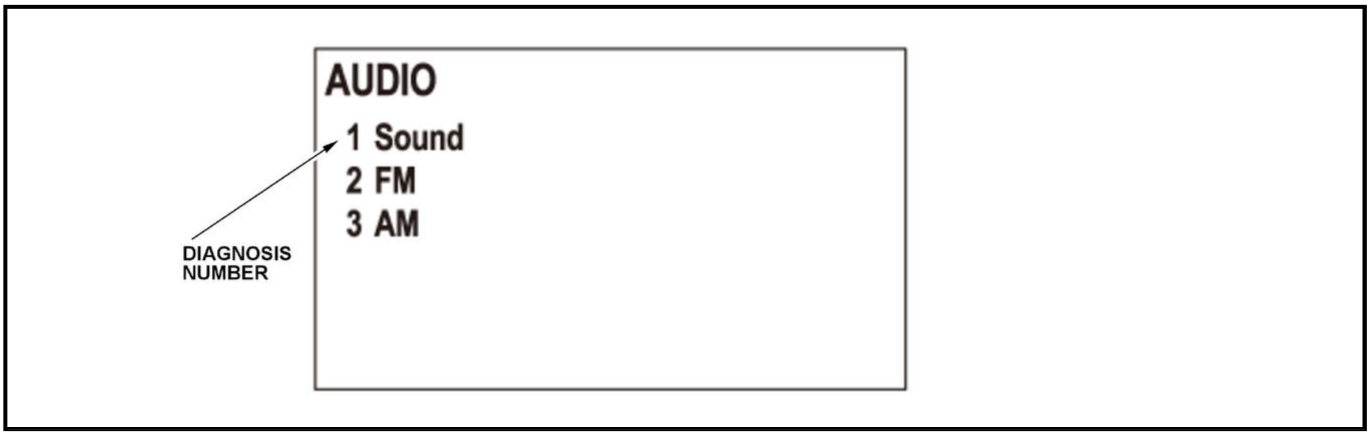

Sound (Speaker Check)

This diagnosis checks the audio speakers individually. The EQ (diagnosis No. 2) and the Loudness (diagnosis No. 3) are not supported in this diagnosis.

Press the preset No. 1 button to check speakers. A tone should sound from the speaker.

Each time you press the preset No. 1 button, the system checks the speakers in this order: ① -> ② -> ③ -> ④ -> ⑤ -> ⑥ -> ①

NOTE: If the audio system is not equipped with tweeter, the audio unit outputs a tone from each front door speaker when the FLTW or the FRTW is selected.

B	Display Message	Vehicle Test Condition
①	Off	Speaker check mode is OFF.
②	FL	You should hear a tone from the left front door speaker and the left front tweeter*.
③	FR	You should hear a tone from the right front door speaker and the right front tweeter*.
④	RR	You should hear a tone from the right rear door speaker and the right rear tweeter*.
⑤	RL	You should hear a tone from the left rear door speaker and the left rear tweeter*.
⑥	All	You should hear a tone from all speakers.

*: With tweeter

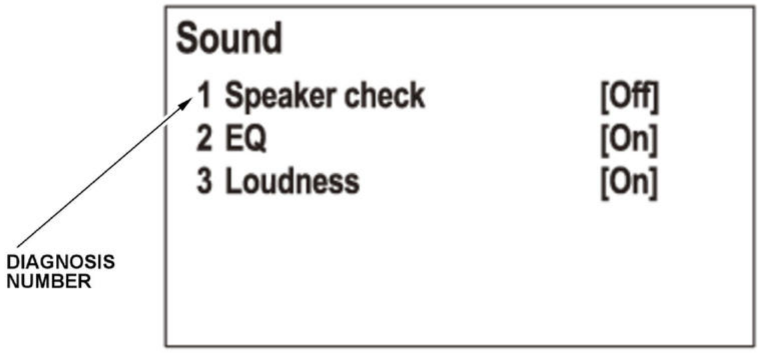

Sound
1 Speaker check [Off]
2 EQ [On]
3 Loudness [On]

FM

This diagnosis checks the FM reception level in the electric field strength (dB). This level then can be used in the diagnosis of audio unit reception quality.

Reception Level Check

Preparation:

- Park the vehicle outside in a good location away from tall buildings, mountains, high-voltage power line or any other object that may interfere with reception.
- Tune to a powerful local FM radio station then write down the radio station number.

Tune to the FM radio station you wrote down in preparation using the SEEK/DOWN (⏮) or SEEK/UP (⏭) button, and note the reception level of that station.

Press the preset No. 6 button to turn the AM/FM antenna power (ANT +B) off.

Note the decibel level of that station with the AM/FM antenna power off.

Press the preset No. 6 button to turn the AM/FM antenna power (ANT +B) on.

Compare your results to a known-good, (make sure it is the same year and trim level) in the same location and direction, and under the same environmental conditions.

- If the reception level is within 10 % of the known-good vehicle, no repair is needed at this time.
- If the reception level is at least 10 % less than the known good vehicle, **go to Poor AM or FM radio reception or interference troubleshooting**.

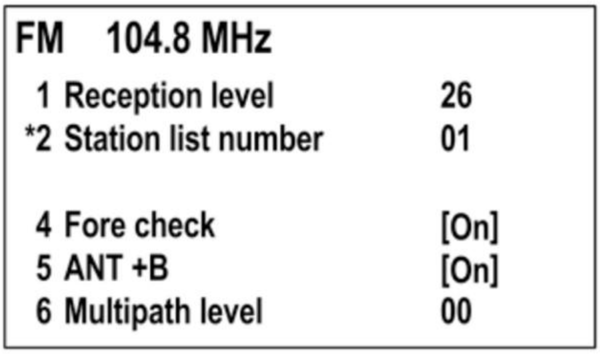

FM 104.8 MHz
1 Reception level 26
*2 Station list number 01

4 Fore check [On]
5 ANT +B [On]
6 Multipath level 00

AM

This diagnostic screen checks the AM reception level in the electric field strength (dB). This level then can be used in the diagnosis of audio unit reception quality.

Reception Level Check

Preparation:

- Park the vehicle outside in a good location away from tall buildings, mountains, high-voltage power line or any other object that may interfere with reception.
- Tune to a powerful local AM radio station then write down the radio station number.

Tune to the AM radio station you wrote down in preparation using the SEEK/DOWN (⏮) or SEEK/UP (⏭) button, and note the reception level of that station.

Press the preset No. 5 button to turn the AM/FM antenna power (ANT +B) off.

Note the decibel level of that station with the AM/FM antenna power off.

Press the preset No. 5 button to turn the AM/FM antenna power (ANT +B) on.

Compare your results to a known-good, (make sure it is the same year and trim level) in the same location and direction, and under the same environmental conditions.

- If the reception level is within 10 % of the known-good vehicle, no repair is needed at this time.
- If the reception level is at least 10 % less than the known good vehicle, **go to Poor AM or FM radio reception or interference troubleshooting**.

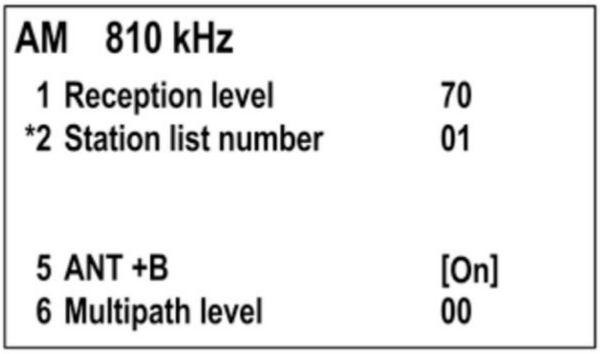

```
AM   810 kHz
  1 Reception level          70
 *2 Station list number      01


  5 ANT +B                   [On]
  6 Multipath level          00
```

Display

These screens allow you to troubleshoot the LCD display built into the audio unit. Select the item you want to check, and follow the diagnostic instructions.

To start the diagnosis, press the preset button to select the diagnosis number you want to check. The Artwork (diagnosis No. 4) is not supported in this diagnosis.

- Preset No. 1 button: R/G/B/White color
- Preset No. 2 button: Full gradation
- Preset No. 3 button: 16 step gradation

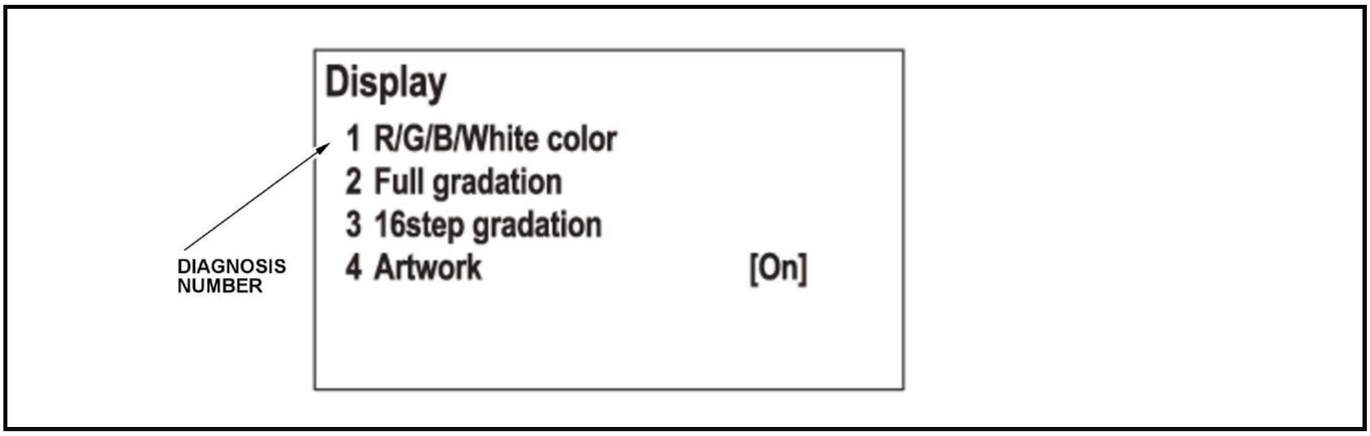
Display
1 R/G/B/White color
2 Full gradation
3 16step gradation
4 Artwork [On]
DIAGNOSIS NUMBER

R/G/B/White Color

NOTE: Displaying an anomaly in this diagnosis screen is not necessarily a failure.

This screen verifies that the audio unit is displaying the RGB (Red, Green, and Blue) components properly. The three primary colors should all appear without distortion. The combination of all three should produce a central white section.

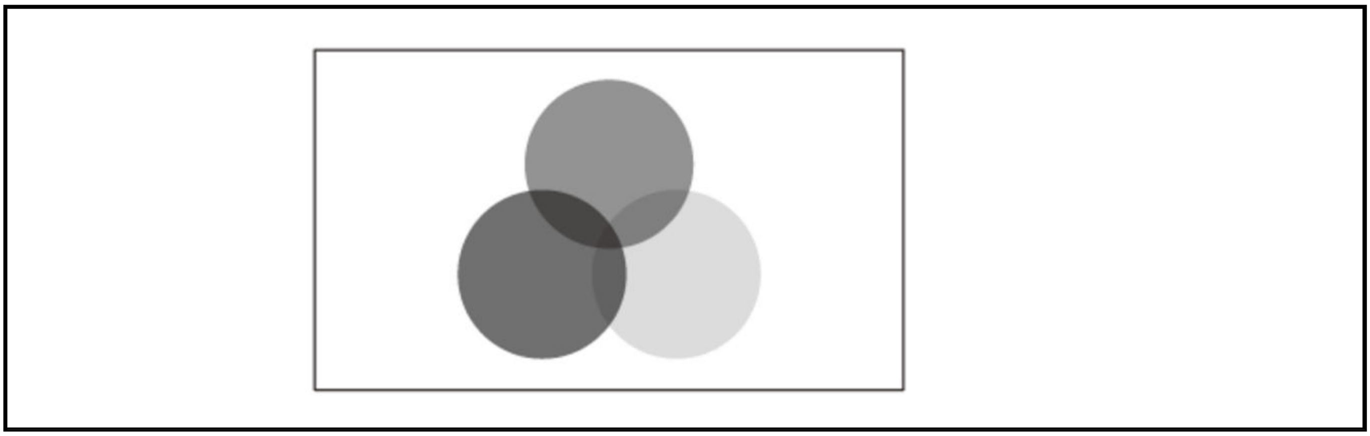

Full Gradation

NOTE: Displaying an anomaly in this diagnosis screen is not necessarily a failure.

This screen checks problems with contrast. You should be able to see the changes in the smooth across the scale.

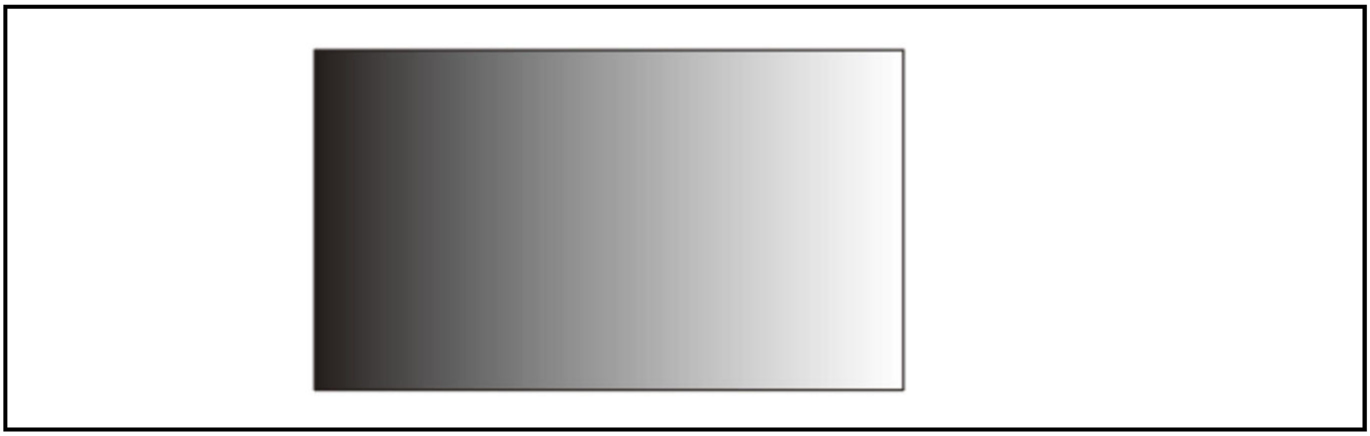

16 Step Gradation

NOTE: Displaying an anomaly in this diagnosis screen is not necessarily a failure.

This screen checks problems with contrast. You should be able to see the changes from bar to bar across the scale. It is normal for the two bars on either side to appear the same.

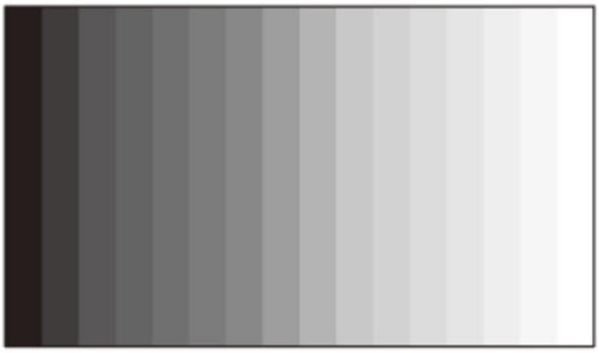

Camera

This screen checks the rearview camera image, and adjusts the guideline.

To start the diagnosis, press the preset button to select the diagnosis number you want to check.

- Preset No. 1 button: Forced Rear Camera View
- Preset No. 2 button: Guideline adjustment

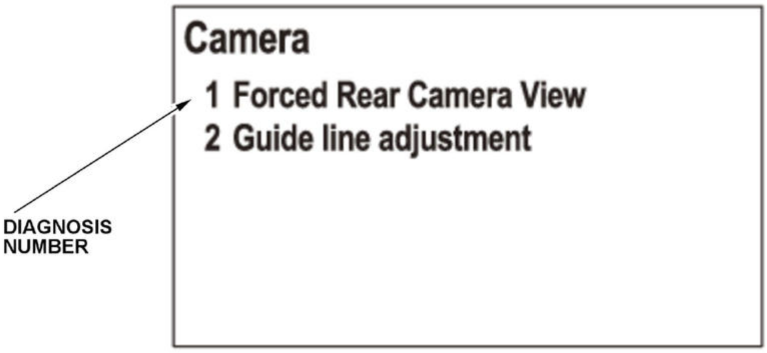
Camera
1 Forced Rear Camera View
2 Guide line adjustment
DIAGNOSIS NUMBER

Forced Rear Camera View

This diagnosis displays the rearview camera image forcibly.

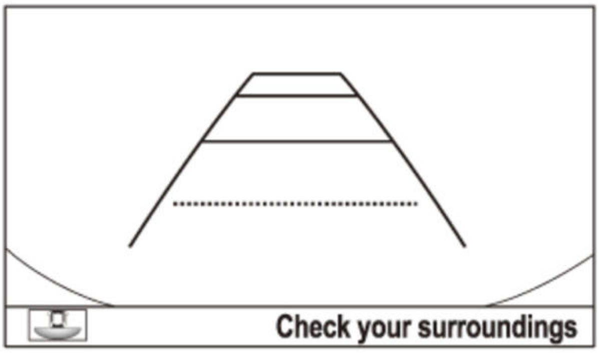
Check your surroundings

Guide Line Adjustment

This diagnostic adjusts the rearview camera image guide lines. If you need to adjust a guide line, refer to the following procedures.

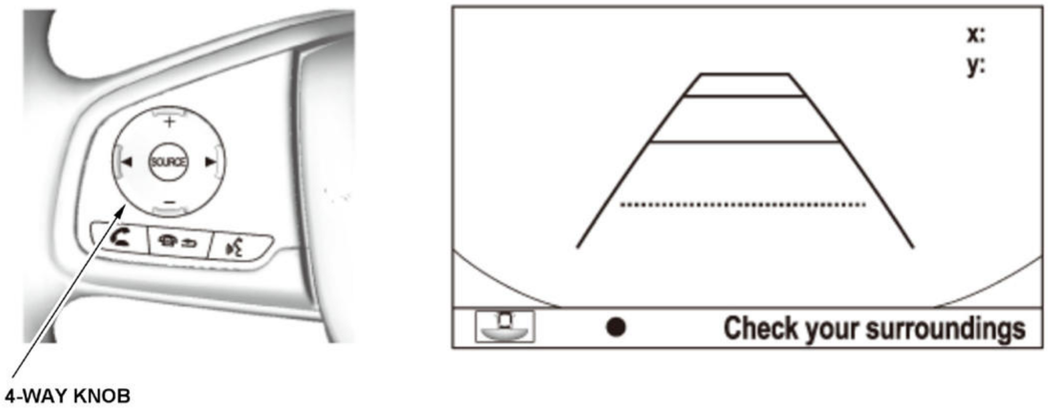

Title	Procedures	
Guide Line Adjustment	1	Press and hold the point up or down use the 4-WAY knob on the audio remote switch and select the view mode (Wide View, Normal View, Top Down View) for the rearview camera you want to adjust.
	2	You will move to the camera guideline adjustment mode by pressing the MENU button on the audio panel.
	3	Use LIST/SELECT knob on the audio panel and select the camera guide line you want to adjust. **NOTE:** After selecting the camera guide line, you will move to the point adjustment mode on the selected camera guide line by pressing the MENU button. By using the LIST/SELECT knob, you can select the point on the camera guide line you want to adjust.
	4	Use the 4-WAY knob on the audio remote switch and adjust the camera guide line or the point of the camera guide line.
	5	By pressing the RETURN button on the audio panel, the adjusted guide line data is saved.

If you need to reset the guide line to the factory settings, refer to the following procedures.

Title	Procedures	
Factory Settings	1	You will move to the camera guideline adjustment mode by pressing the MENU button on the audio panel.
	2	Press and hold the No. 2 button for more than 5 seconds, the guideline is reset to the factory default.

Connection

This diagnosis checks the connection between each component connected to the audio unit.

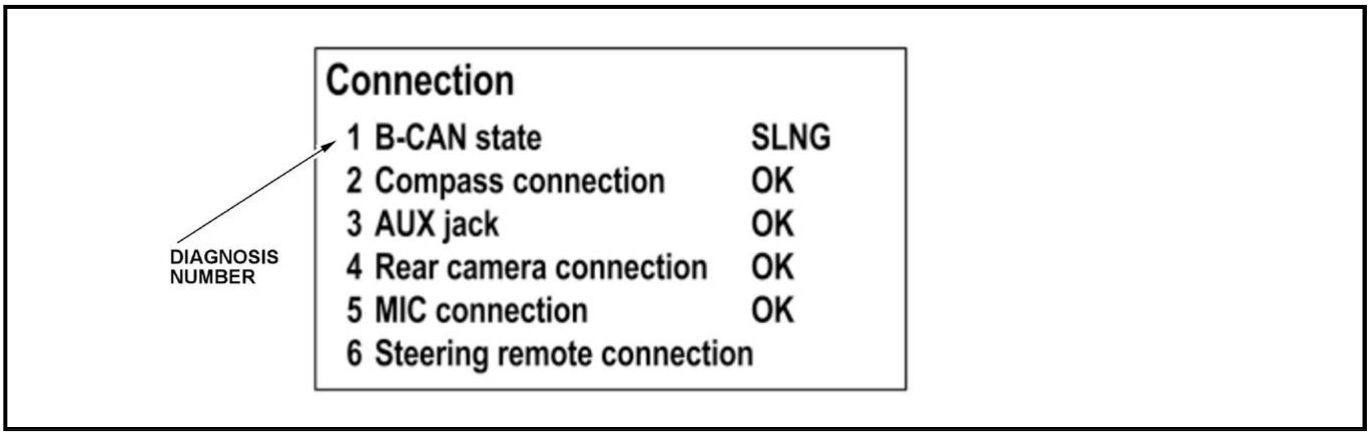

Connection

1 B-CAN state SLNG
2 Compass connection OK
3 AUX jack OK
4 Rear camera connection OK
5 MIC connection OK
6 Steering remote connection

To diagnose the Steering remote connection, press the preset No. 6 button.

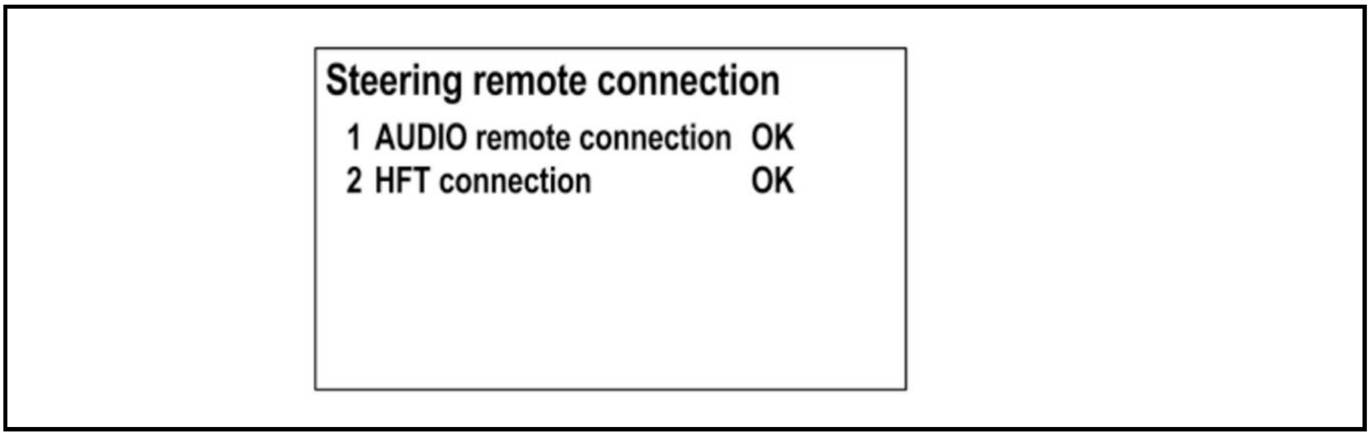

Steering remote connection

1 AUDIO remote connection OK
2 HFT connection OK

Diagnosis Number	Item	Description
1	B-CAN state	This diagnosis checks whether the audio unit is receiving B-CAN data properly. If the B-CAN state shows NG, check for B-CAN DTCs with the HDS. If no DTCs are detected, check for continuity in the B-CAN lines between the audio unit and the gauge control module.
2	Compass connection	The diagnosis check whether the audio unit is connecting the electric compass.
3	AUX jack	The diagnosis check whether the audio unit is connecting the auxiliary jack assembly.
4	Rear camera connection	The diagnosis check whether the audio unit is connecting the rearview camera.
5	MIC connection	This diagnosis checks whether the audio unit is connecting the HFL microphone properly.
6	Steering remote connection	This diagnosis checks whether the audio unit is connecting the audio remote-HFL switch properly. Press any audio remote-HFL switch button to check the connection.

Vehicle Information

Use this screen to confirm that the audio unit is properly receiving input signals. The displayed value changes each time according to the state of input signal.

To start the diagnosis, press the preset button to select the diagnosis number you want to check.

Vehicle Information 1/2

- Preset No. 1 button: ILLUMI
- Preset No. 2 button: VSPNE
- Preset No. 3 button: VINNO
- Preset No. 4 button: MICU_BCM
- Preset No. 5 button: PARKSENS (not available)
- Preset No. 6 button: ST_SW_PAD

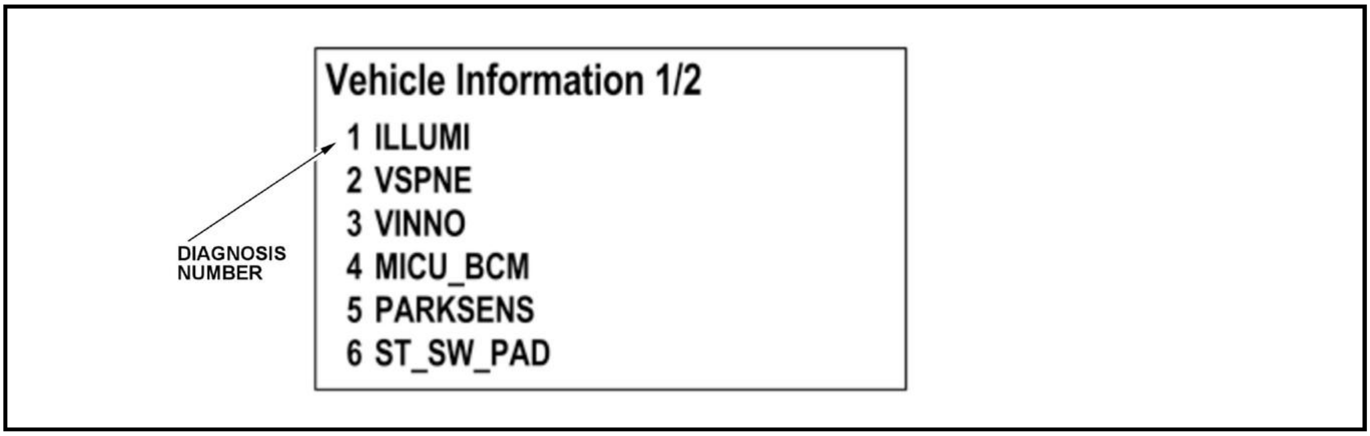

Vehicle Information 1/2

1 ILLUMI
2 VSPNE
3 VINNO
4 MICU_BCM
5 PARKSENS
6 ST_SW_PAD

Vehicle Information 2/2

- Preset No. 1 button: AC
- Preset No. 2 button: GPSTIME_AHU
- Preset No. 3 button: ACCOM
- Preset No. 4 button: DA_SW_INFO_AHU

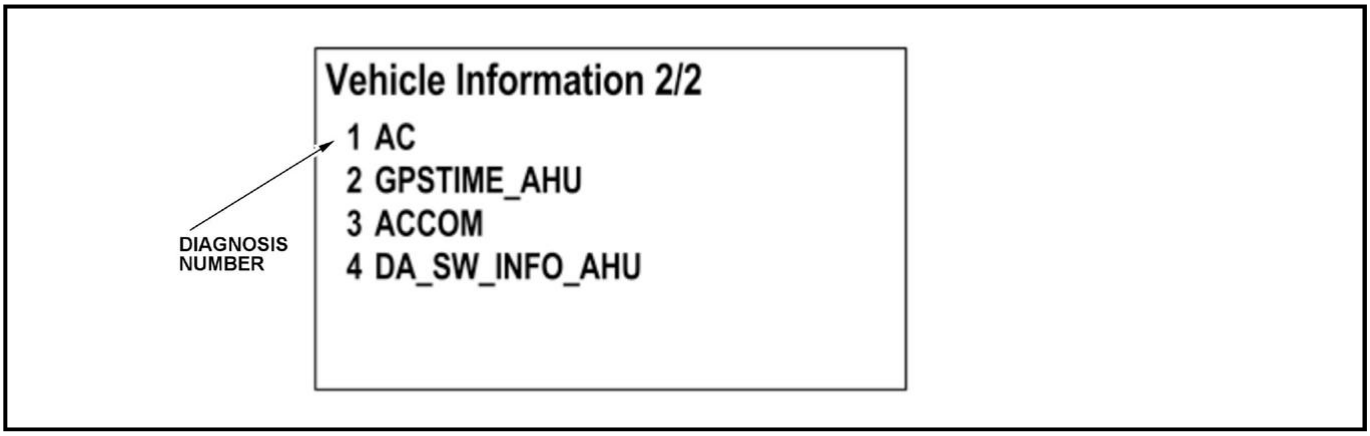

Vehicle Information 2/2

1 AC
2 GPSTIME_AHU
3 ACCOM
4 DA_SW_INFO_AHU

AUDIO SYSTEM DIAGNOSTIC MODE (DISPLAY AUDIO TYPE)

NOTE:

- **Check the vehicle 12 volt battery condition first** .
- This diagnosis is applied to the audio unit (without navigation) only. **Refer to the navigation system section for audio-navigation unit System Diagnostic Mode** .
- The screens detail indicated may change depending on equipment or specification.

Start-Up Procedure and Diagnostic Menu

1. Turn the vehicle to the ON mode. If needed, start the engine. Press and hold the PHONE button, the DISPLAY MODE (

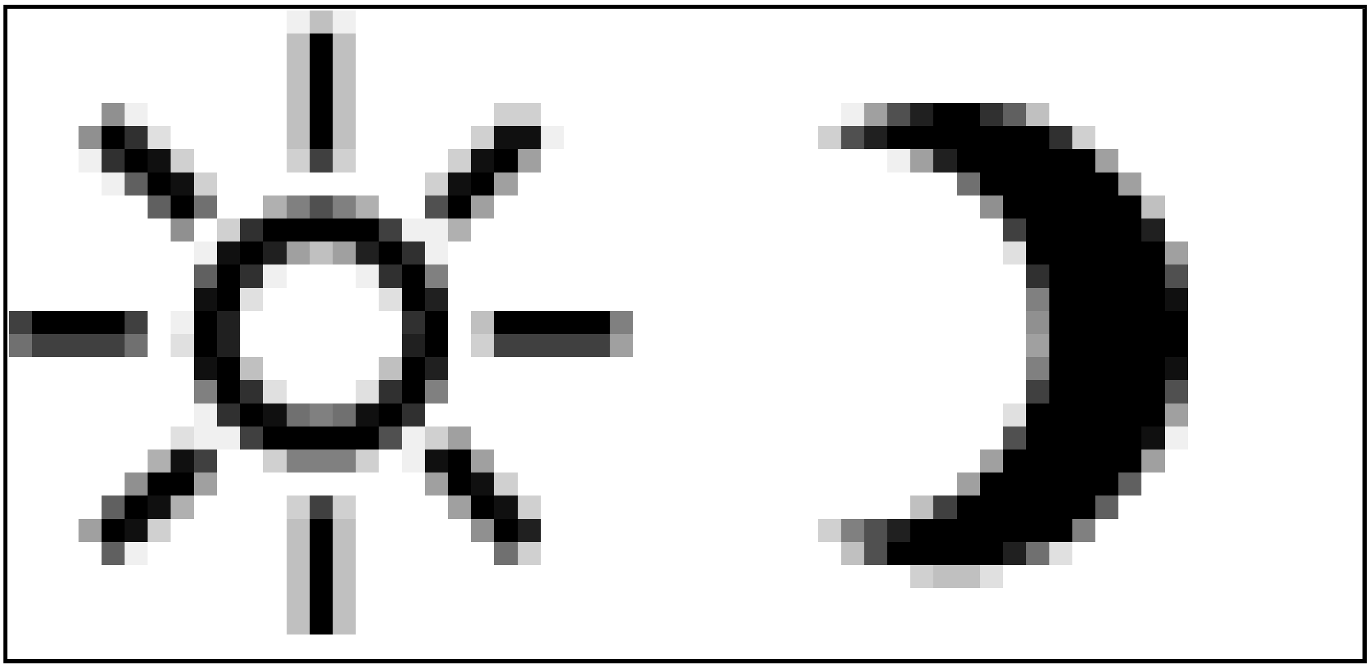

) button, and the AUDIO POWER button until the Select Diagnosis Items menu screen is displayed:

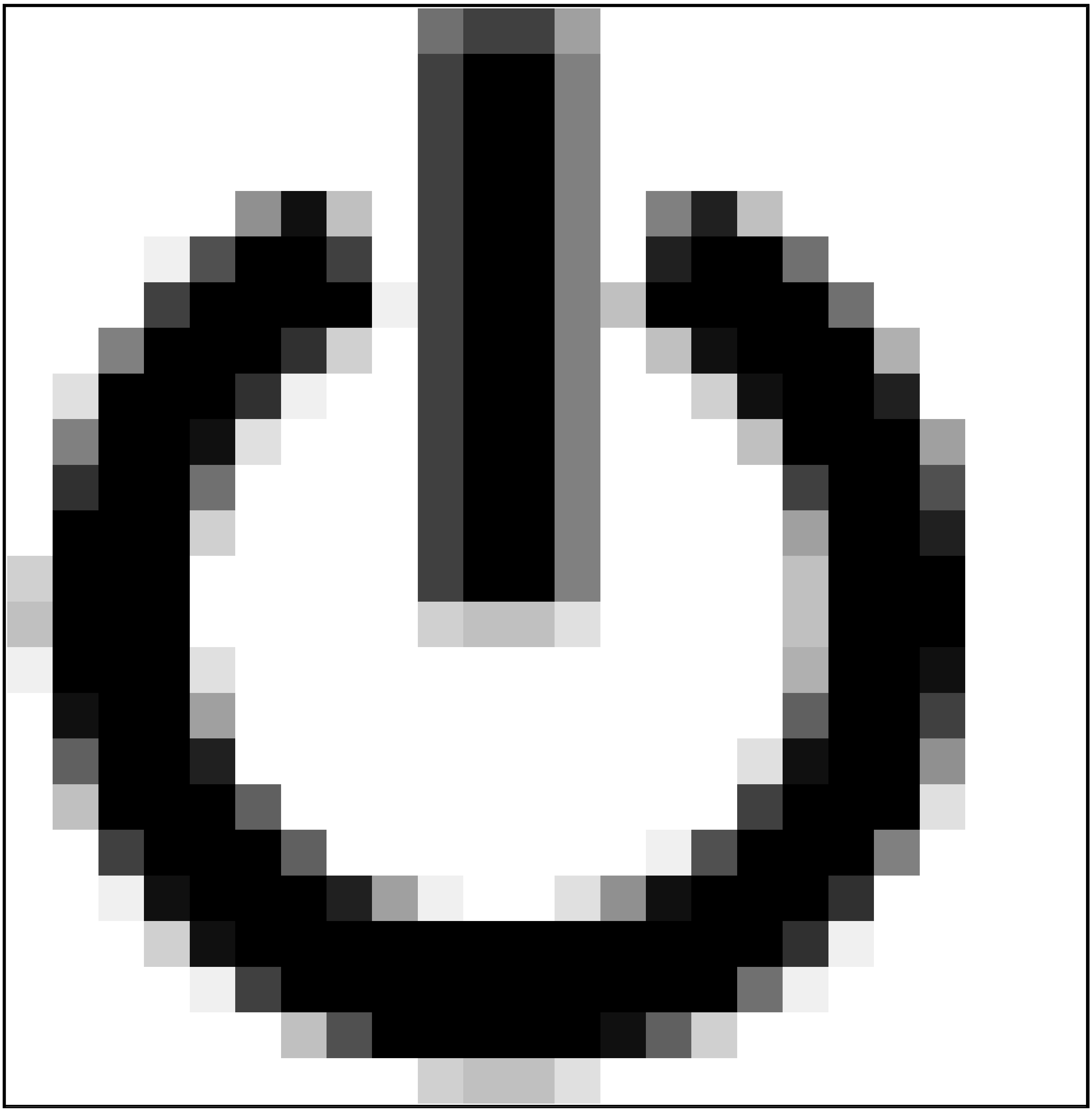

NOTE: The buttons needs to be pressed together simultaneously.

- Self-Diagnosis Mode (runs the automatic diagnosis of the audio system)
- Detail Information and Setting (allows you to manually diagnose the audio system)

Displaying Select Diagnosis Items Menu Screen

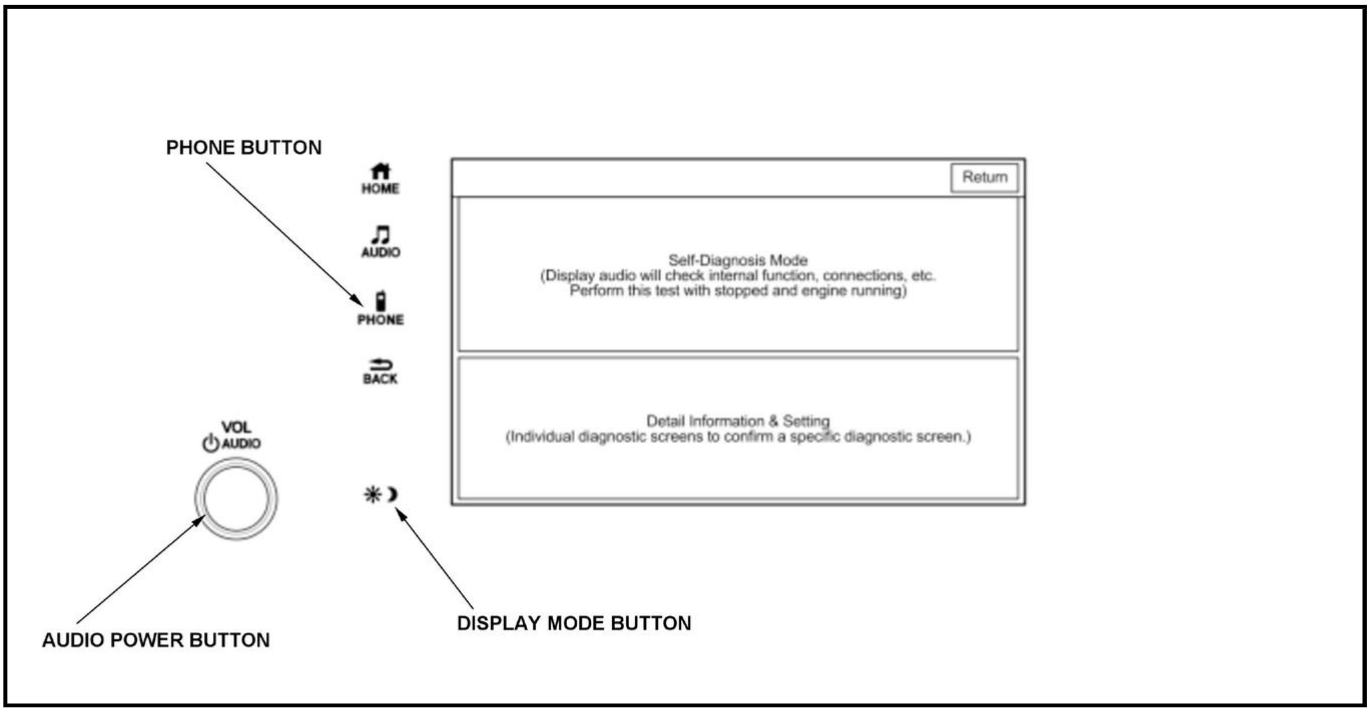
PHONE BUTTON
HOME
AUDIO
PHONE
BACK
VOL
AUDIO
Return
AUDIO POWER BUTTON
DISPLAY MODE BUTTON

Self-Diagnosis Mode
(Display audio will check internal function, connections, etc.
Perform this test with stopped and engine running)

Detail Information & Setting
(Individual diagnostic screens to confirm a specific diagnostic screen.)

Self-Diagnosis Mode (System Links)

1. Select the Self-Diagnosis Mode from the Select Diagnosis Items menu. The message at the bottom of the screen flashes indicating "Diagnosis in progress...", do not turn the vehicle to the OFF (LOCK) mode.

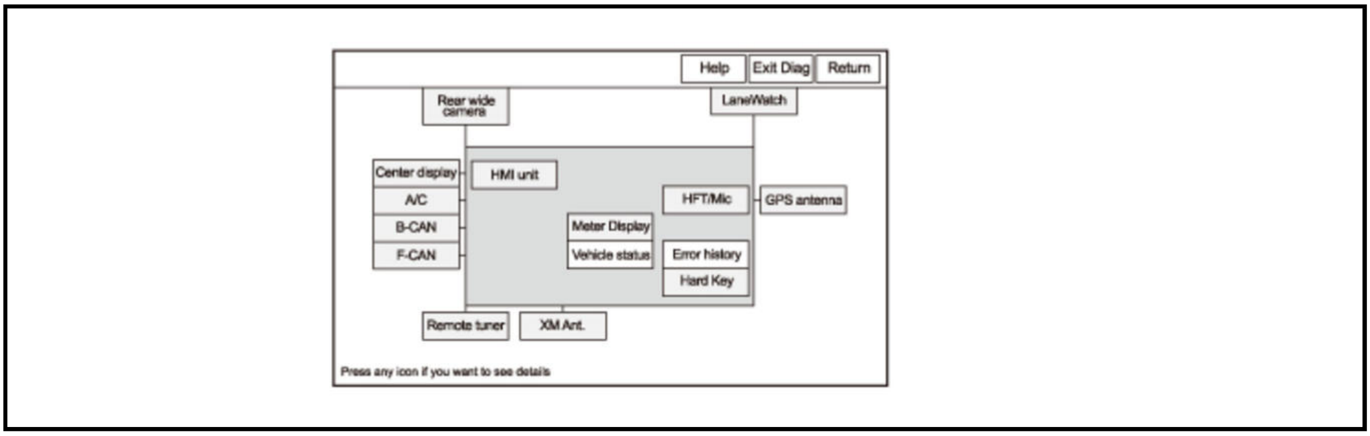
Help
Exit Diag
Return
Rear wide camera
LaneWatch
Center display
A/C
B-CAN
F-CAN
HMI unit
HFT/Mic
GPS antenna
Meter Display
Vehicle status
Error history
Hard Key
Remote tuner
XM Ant.

Press any icon if you want to see details

The diagnosis tests the following:

- Most of the wires connecting the external audio components shown in the block diagram.
- The results from the various components shown in the block diagram.
- The audio unit checks the microphone by listening to the "Pi Pi Pon" sound produced by the audio unit from the speakers when the diagnosis is started. This requires that the audio system be operating normally.

When the diagnosis finishes, the icons turn different colors based on their test status.

NOTE: By selecting the Help icon, you can see a description for each color.

Icon Colors	Description
Green	The system ran a diagnosis and the results are OK.
Red*	Errors that require replacement of hardware or harness. Examples are connection error or memory diagnosis errors. Select the red icon and check each diagnostic screen (refer to the description for diagnostic screens in the Unit Check).

Icon Colors	Description
Yellow	• Errors that do not require hardware replacement, or the connection check is in the state which is not done. Such as leaving the vehicle in the ACCESSORY mode or because of a missing accessory. • When the audio unit detects a failure, and stores DTC, the Error History icon turns yellow.
White	The diagnosis is running. The screen functions are locked out while the diagnosis runs.
Gray	• The system cannot automatically check this function. You have to select the diagnosis item and manually do additional testing, like checking the audio unit buttons in the Hard Key test. When you complete the Hard Key test and return to the System Links screen, the gray icon turns green. • The Vehicle Status icon anytime shows gray. • When the audio unit does not store DTCs, the Error History icon shows gray.

*: The F-CAN icon and the B-CAN icon turns red when the vehicle is in the ACCESSORY mode. Check the System Links with the engine running, and if the F-CAN icon and the B-CAN icon turns green, the system is OK at this time.

4. Select the icon to see the details of that diagnostic function. The icon colors on the screen may not change until you exit and reenter the Self-Diagnosis mode. In some cases, you may have to restart the engine for the indication to change. After you repair the affected component or harness, repeat this diagnosis.

Factory Diagnostic Screen In Line Diag and Linking

If the vehicle left the factory in the factory diagnostic mode, you will see this screen every time you turn the vehicle to the ON mode. Sometimes this screen also appears after you replace the audio unit with a new or remanufactured unit. Normally the factory does the steps necessary to verify proper operation and terminate the factory diagnosis. Until the proper confirmation sequence is done, the screen appears every time you turn the vehicle to the ON mode.

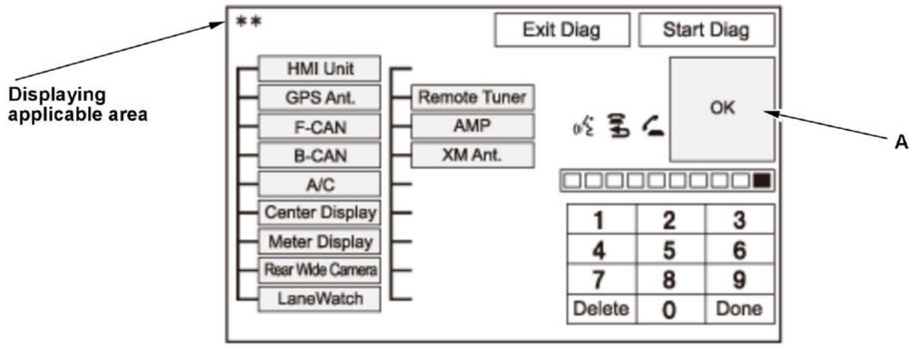

NOTE: The system cannot complete a full diagnosis unless vehicle is in the ON mode.

1. Select the Start Diag icon to check the connection between the audio unit and related components. When the connection diagnosis is in progress, the icon (A) indicates Detecting..., and each icon turns white. If the connection is OK, the icon turns green. If the connection is NG, the icon turns red. Check for connection between the audio unit and related unit on the failure connection line.

NOTE: When the item is a variation equipment, the icon shows yellow, and it is not reflected in diagnosis.

2. If the connection diagnosis is finished, press the steering commander switch buttons (the TALK button, PICK-UP button, and the HANG-UP/BACK button) to check the HFL switch. As each button is pressed, the

corresponding icon on the display should turn green.

3. Press the TALK button, and within 5 seconds in a normal voice say ' 'testing' '. The Mic Level indicator on the screen should momentarily turn green.

4. If all the diagnosis are OK, the icon (A) indicates OK. Select the Exit Diag icon to exit the diagnostic mode. The In Line Diag should not appear again.

Forced Completing of In Line Diag and Linking

Follow these steps to prevent the screen from appearing in the future:

1. While displaying the In Line Diag screen, press and hold the PHONE button, the DISPLAY MODE button, and the AUDIO POWER button until the Select Diagnosis Items menu screen is displayed.

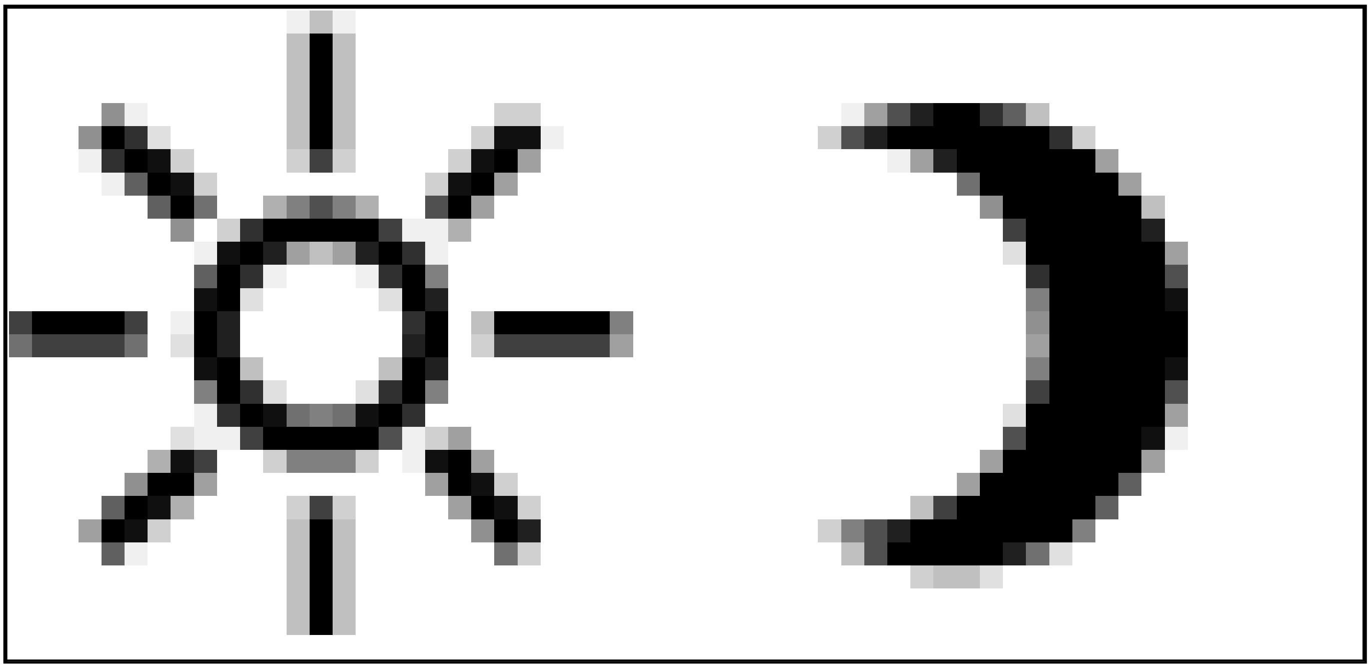

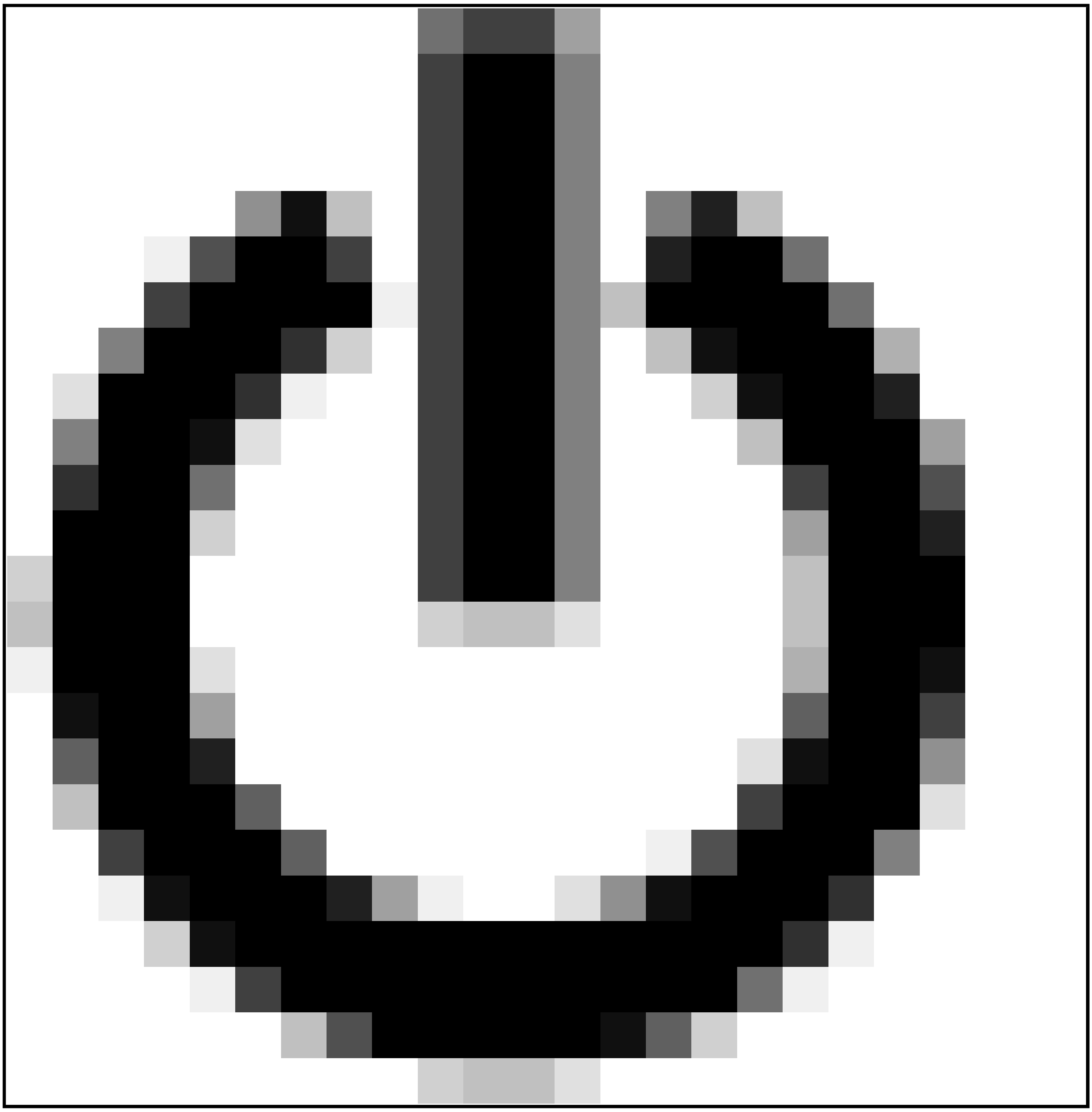

2. While displaying the Select Diagnosis Items menu screen, press and hold the HOME button until the In Line Diag setting screen is displayed.

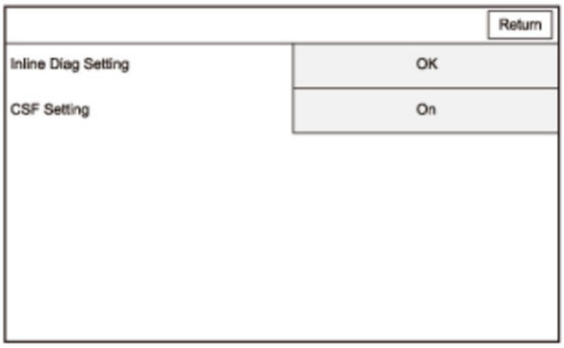

Inline Diag Setting: OK

CSF Setting: On

3. Set the Inline Diag Setting to OK (complete). The system restarts and a normal start-up process occurs. The In Line Diag should not appear again.

Detail Information and Setting

This section allows you to run a specific diagnosis and allows additional setting choices for some screens that are not shown when touching an icon from the System Links screen.

Select the item you want to check, and the test begins. To return to the previous screen, select the Return icon.

- Monitor Check
- Unit Check
- Audio Check
- Guideline Setup
- Functional Setup
- B-CAN*
- F-CAN*
- Version
- Vehicle Status*
- GPS Information

*: Refer to the Unit Check for details.

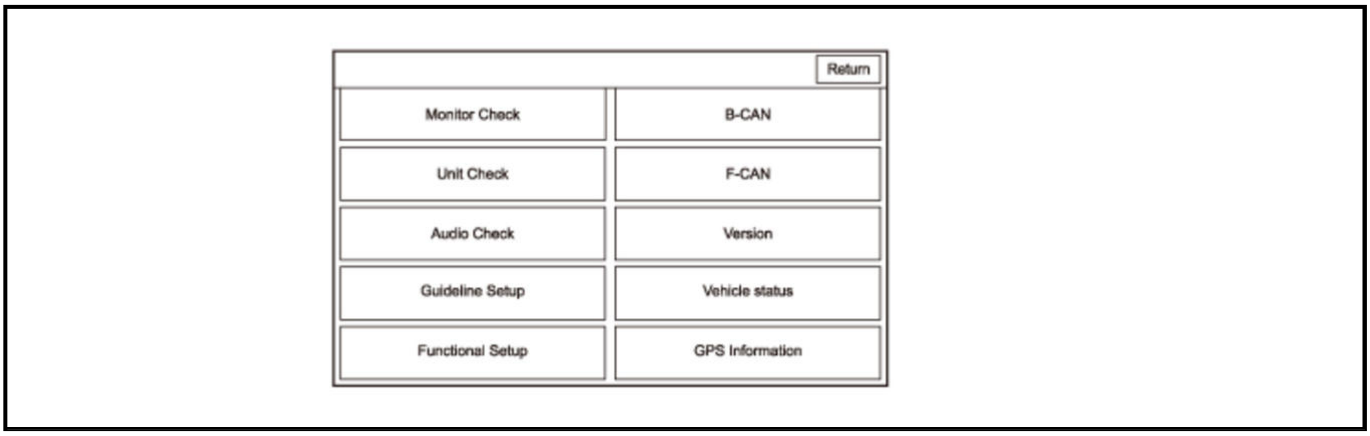
Return
Monitor Check
B-CAN
Unit Check
F-CAN
Audio Check
Version
Guideline Setup
Vehicle status
Functional Setup
GPS Information

Monitor Check

These screens allow you to troubleshoot the LCD display on the center display unit. Select the item you want to check, and follow the diagnostic instructions.

- RGB Color
- Gray Tone
- White Raster
- Black Raster
- Color Pattern
- Touch Panel Check
- Touch Panel Adjustment
- Monitor Adjustment

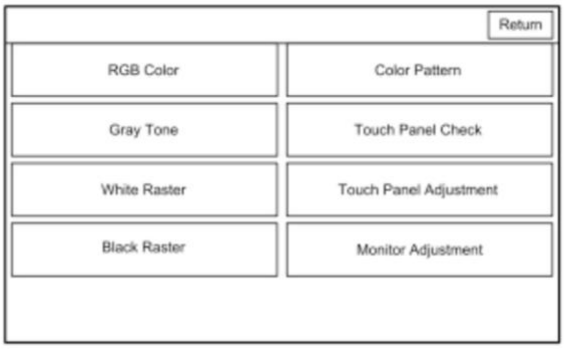
Return
RGB Color
Color Pattern
Gray Tone
Touch Panel Check
White Raster
Touch Panel Adjustment
Black Raster
Monitor Adjustment

RGB Color

NOTE: Displaying an anomaly in this diagnosis screen is not necessarily a failure.

This screen verifies that the display is receiving the video (R, G, B, and Composite sync) signals properly. The three primary colors should all appear without distortion. The combination of all three should produce a central white section. If any of the color circles are missing, **replace the center display unit** .

The diagnostic screen is displayed in full screen mode while pressing the HOME button.

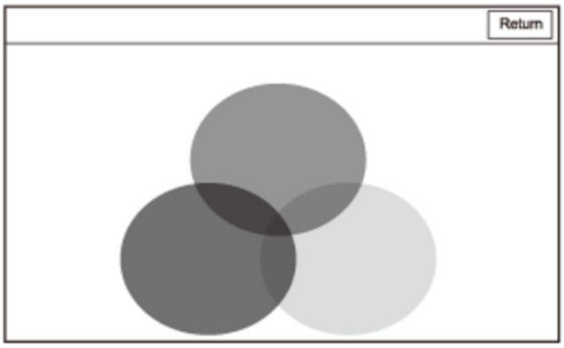

Gray Tone

NOTE: Displaying an anomaly in this diagnosis screen is not necessarily a failure.

This screen checks problems with contrast in 16 gradations. You should be able to see the changes from bar to bar across the scale. It is normal for the two bars on either side to appear the same.

The diagnostic screen is displayed in full screen mode while pressing the HOME button.

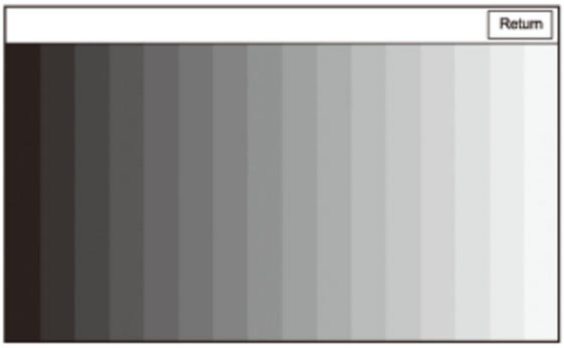

White Raster

NOTE: Displaying an anomaly in this diagnosis screen is not necessarily a failure.

This screen checks for pixels that may be dead (off). The entire display must be white.

The diagnostic screen is displayed in full screen mode while pressing the HOME button.

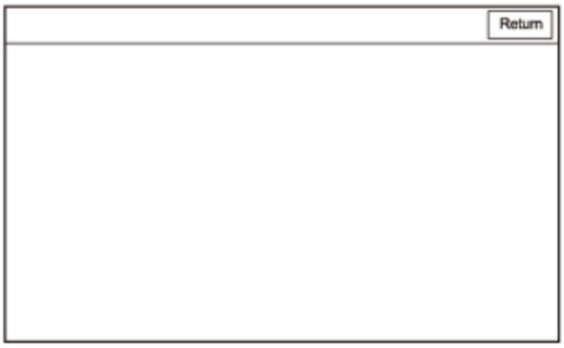

Black Raster

NOTE: Displaying an anomaly in this diagnosis screen is not necessarily a failure.

This screen checks for pixels that may be stuck on. The entire display must be black.

The diagnostic screen is displayed in full screen mode while pressing the HOME button.

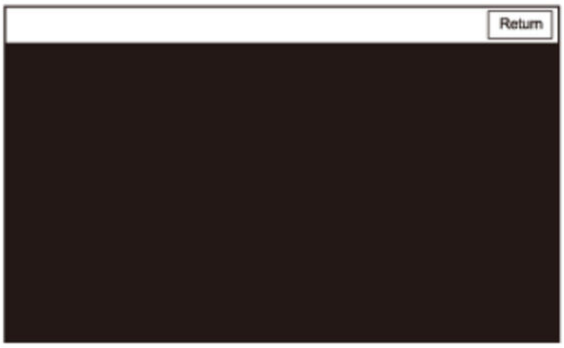

Color Pattern

NOTE: Displaying an anomaly in this diagnosis screen is not necessarily a failure.

The screen shows the colors being used for the map and menu screens. This is for factory use only. To check the color signal, use the RGB Color diagnosis.

The diagnostic screen is displayed in full screen mode while pressing the HOME button.

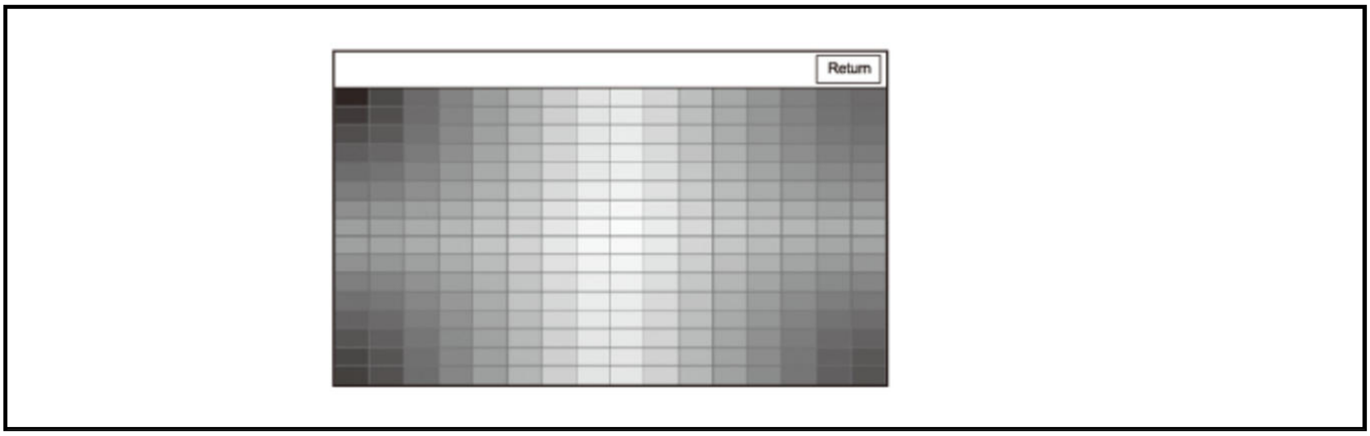

Touch Panel Check

This check allows you to check the sensitivity of touch panel. If the screen is operated in the state while the telop (A) is displayed, the track changes to black, and the action name (Tap, Double tap, Pinch, Slide, and Flick) appears on the caption (B) for 5 seconds. The screen displays the coordinates of where the screen was touched. If the BACK button is pressed, the screen returns to the Monitor Check menu. If another location other than the location pressed responds, do the Touch Panel Adjustment.

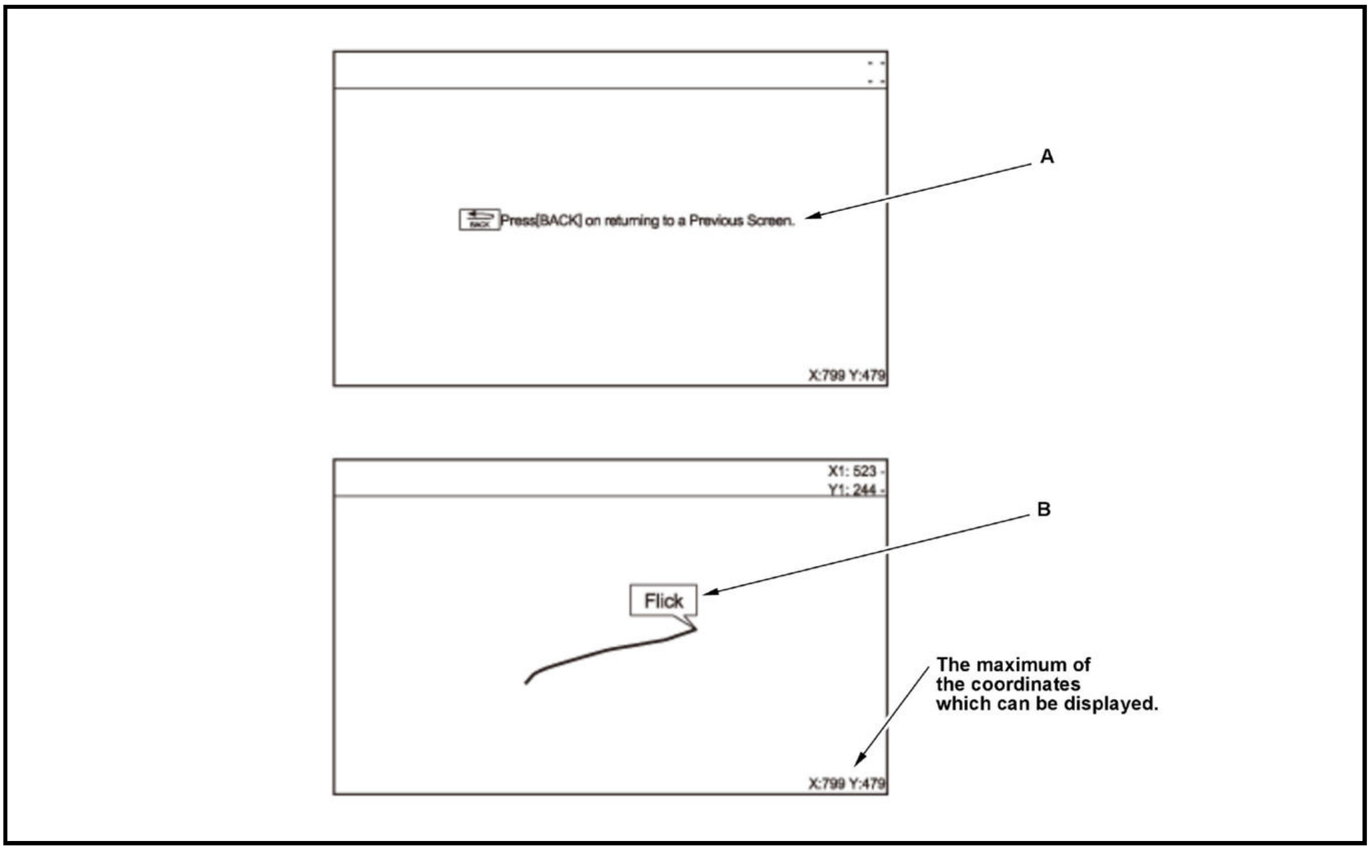

Press[BACK] on returning to a Previous Screen.

The maximum of the coordinates which can be displayed.

Touch Panel Adjustment

This screen adjusts the alignment of these touch locations with the location of the buttons images on the screen.

The screen consists of the + icons. Touch the center of the five + icons on order 1-5. To store the settings, select the Set.

NOTE: Touch the center of the +icon correctly.

When selecting the Set icon, the audio unit reflects the result of the touch panel adjustment. Select Return to exit the Touch Panel Adjustment screen.

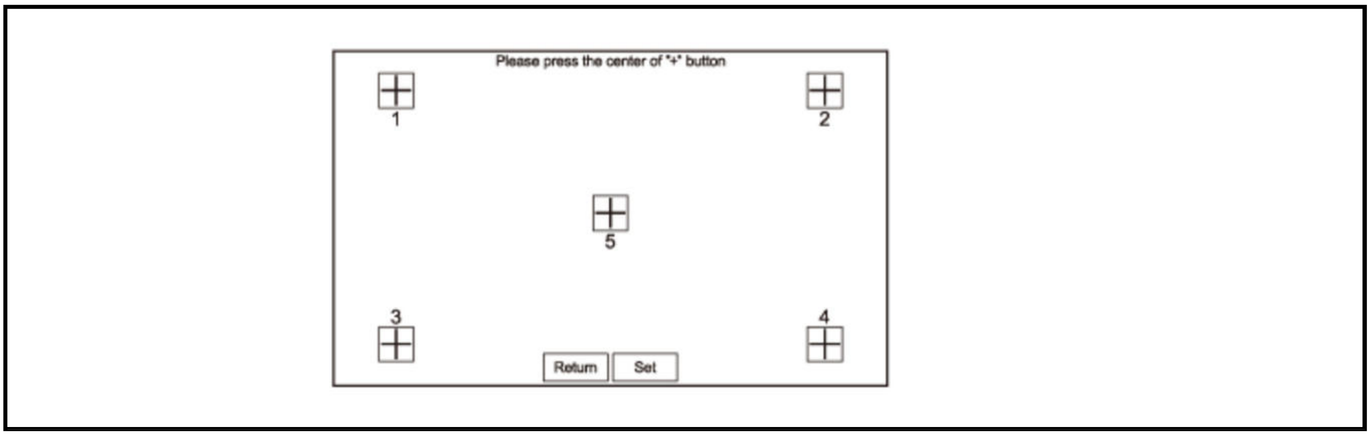
Please press the center of "+" button
1
2
5
3
4
Return
Set

Monitor Adjustment

This screen adjusts the brightness, etc. of the camera (rearview or LaneWatch) image.

Select Return to exit the Monitor Adjustment screen.

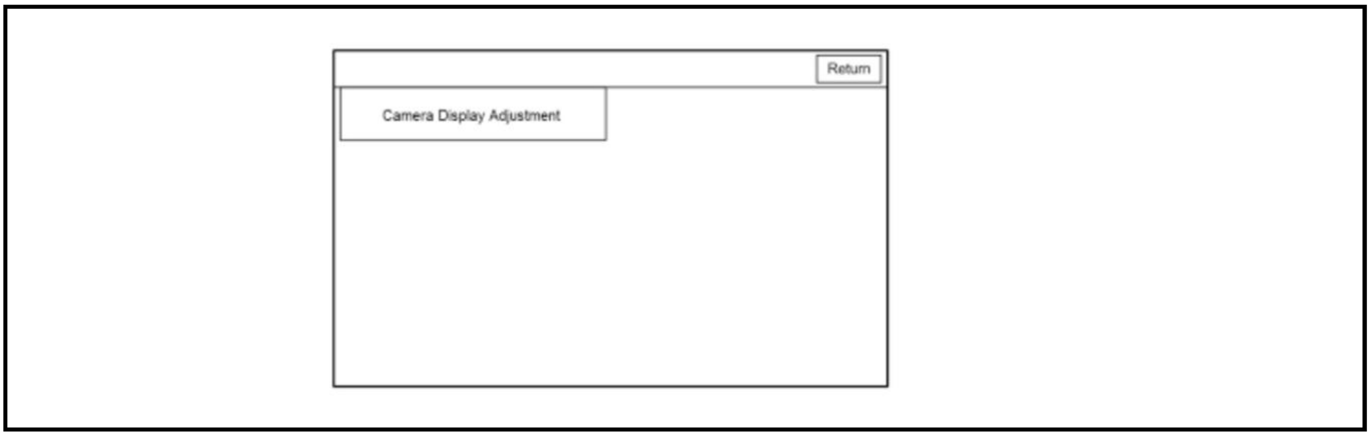
Return
Camera Display Adjustment

Unit Check (Quick Check)

These screens allow you to diagnose the audio unit and related units. Some of the tests and screens that are displayed under the Unit Check are same as the checks listed under the Detail Information and Setting.

To start the test, select the item you want to check.

NOTE: These items describe in indication order. Swipe the screen to check the next items.

- HMI unit
- F-CAN
- B-CAN
- USB
- Vehicle status
- HFL/Mic
- Hard Key
- Error history
- Rear wide camera
- Front Camera (not supported)
- LaneWatch
- Remote tuner
- AMP
- XM Ant.

- CD (not supported)
- Center display
- iPhone
- Meter Display
- GPS antenna
- A/C
- MirrorLink
- Telematics Diag (not supported)

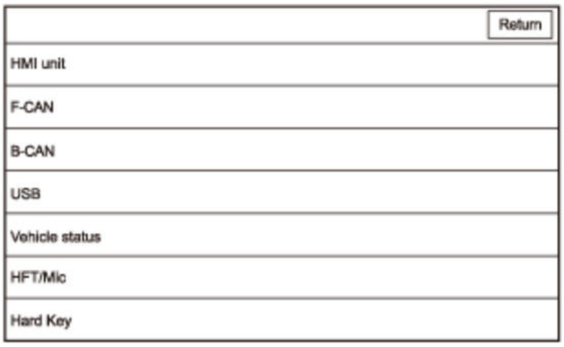

HMI Unit

This diagnosis checks for problems in the audio unit processor. When you start this diagnosis, the audio unit may freeze or delay up to a minute while the diagnosis runs.

- D-RAM: Displays the result of the access to the D-RAM (OK/NG). If NG, check for hard error codes.
- Model: Displays the audio unit manufacture's model number.
- Serial No. : Displays the audio unit serial number. That should be the same as the serial number found on the upper side of the audio unit.
- Flash: Displays the result of the access to the flash memory (OK/NG). If NG, replace the audio unit .

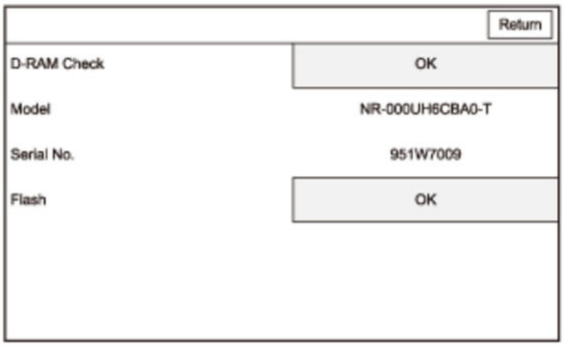

D-RAM Check	OK
Model	NR-000UH6CBA0-T
Serial No.	951W7009
Flash	OK

F-CAN

NOTE:

- This diagnosis must have the engine running.
- Swipe the screen to check the next items.

This diagnosis checks whether the audio unit has received specific F-CAN data. If F-CAN shows NO ERROR, an error is not detected between the F-CAN bus and the audio unit.

- If F-CAN shows RX ERROR, replace the audio unit .
- If F-CAN shows TIME OUT, There is a possibility that some items are NG (red icon). When all the items from each transmitting unit is NG, check for F-CAN DTCs with the HDS. If DTCs not detected, check for continuity in the F-CAN lines between the audio unit and the transmitting unit.

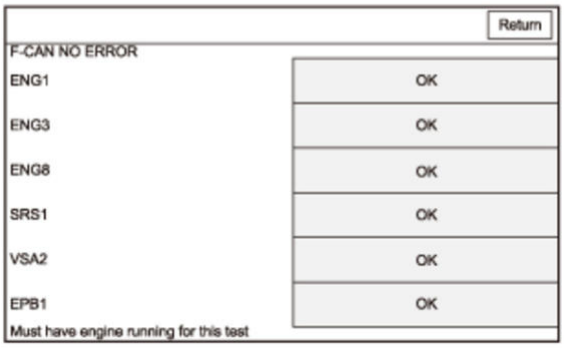

F-CAN NO ERROR

ENG1	OK
ENG3	OK
ENG8	OK
SRS1	OK
VSA2	OK
EPB1	OK

Must have engine running for this test

B-CAN

NOTE:

- This diagnosis must have the engine running.
- Swipe the screen to check the next items.

This diagnosis checks whether the audio unit has received specific B-CAN data. If B-CAN shows NO ERROR, an error is not detected between the B-CAN bus and the audio unit.

- If B-CAN shows RX ERROR, replace the audio unit .
- If B-CAN shows TIME OUT, There is a possibility that some items are NG (red icon). When all the items from each transmitting unit is NG, check for B-CAN DTCs with the HDS. If DTCs not detected, check for continuity in the B-CAN lines between the audio unit and the transmitting unit.

Item	Transmitting Unit
VSPNE, AT, ILLUMI, ST_SW_PAD, VINNO, STRG_ANG, ODO_TRIP, TRICOM1 - 4, METER_RMD	Gauge control module

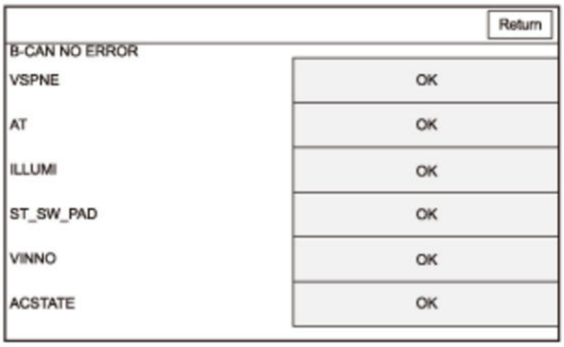

B-CAN NO ERROR

VSPNE	OK
AT	OK
ILLUMI	OK
ST_SW_PAD	OK
VINNO	OK
ACSTATE	OK

USB

This diagnosis displays the USB device status that is connected to the audio unit.

If the USB memory device is connected to the USB port A or B, the screen displays the USB controller status, the Bus power status, and the device status.

When you connect a USB mass storage device, you can see the capacity used and the amount of free space available.

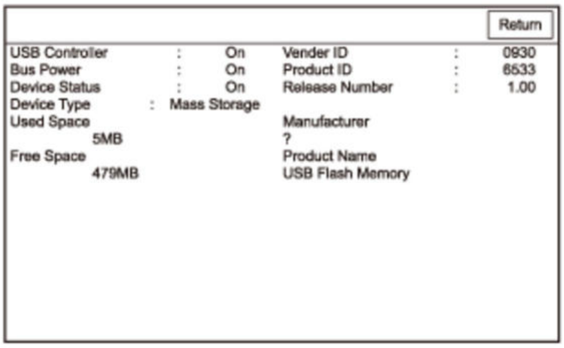

USB Controller : On
Bus Power : On
Device Status : On
Device Type : Mass Storage
Used Space
5MB
Free Space
479MB
Vender ID : 0930
Product ID : 6533
Release Number : 1.00
Manufacturer
?
Product Name
USB Flash Memory

Vehicle Status

Use this screen to confirm that the audio unit is properly receiving input signals. The displayed value changes each time according to the state of input signal.

NOTE: These items describe in indication order. Swipe the screen to check the next items.

Item	Input	Description
BACK	BACK LT line	• 1: When the transmission is shifted to R position/mode • 0: When the transmission is shifted to any position/mode other than R position/mode
IG	B-CAN lines	• 1: When the vehicle is in the ON mode • 0: When vehicle is in the ACCESSORY mode

Item	Input	Description
C_METER_ILL_STATUS	B-CAN lines	- 1: When position lights, or headlights are on - 0: When position lights, or headlights are off
C_METER_ILL_CANCEL	B-CAN lines	- 1: When the dashlights brightness control knob is more than 90 % brightness with the position lights turned on - 0: When the dashlights brightness control knob is less than 90 % brightness with the position lights turned on
C_METER_ILL_STEP	B-CAN lines	With the position lights on, use the dashlights brightness control knob to dim and brighten the gauge. The value changes from 1 (max low) to 22 (max high).
Speed	B-CAN lines	This item indicates the vehicle speed (km/h).
TV-PARK	B-CAN lines	- 1: When the parking brake is applied - 0: When the parking brake is not applied
NAVI-PARK	B-CAN lines	- 1: When the parking brake is applied - 0: When the parking brake is not applied
Current received VIN	B-CAN lines	This item indicates the VIN that received from the PCM.
Initial registered VIN	B-CAN lines	This item indicates the initial registration VIN (10 is added to the beginning of indicated VIN) that is saved in the audio unit.
Last registered VIN	B-CAN lines	This item indicates the additional registration VIN (11 is added to the beginning of indicated VIN) when the audio unit is substituted into another vehicle, or when a PCM is substituted or replaced into this vehicle.

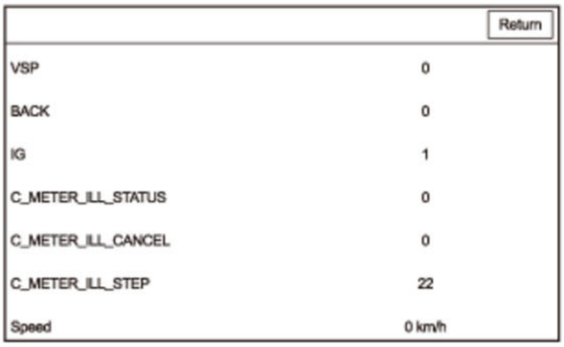

VSP	0
BACK	0
IG	1
C_METER_ILL_STATUS	0
C_METER_ILL_CANCEL	0
C_METER_ILL_STEP	22
Speed	0 km/h

HFL/Mic

This diagnosis allows you to independently test the Bluetooth module and the microphone. The Bluetooth module is built into the audio unit. To properly check the microphones, make sure you are sitting in the driver's seat.

NOTE: Before this diagnosis, check the response of the TALK button on the audio remote-HFL switch by the Hard Key diagnosis.

- If the Bluetooth Connection Diagnosis shows NG, **replace the audio unit** .
- Press the TALK button, and within 5 seconds in a normal voice say ' 'testing' ' toward the microphone in the roof console. The Mic Level indicator on the screen should momentarily turn green. The test is set to OK by indicating green more than 6 steps. If there is no Mic Level movement when you speak, **go to HFL does not work properly troubleshooting** .

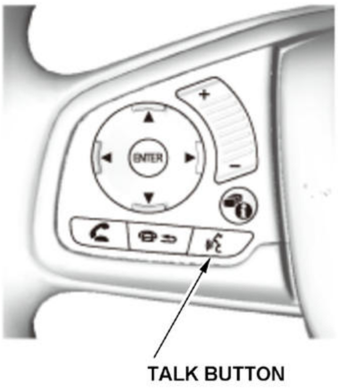
+
ENTER
−
TALK BUTTON

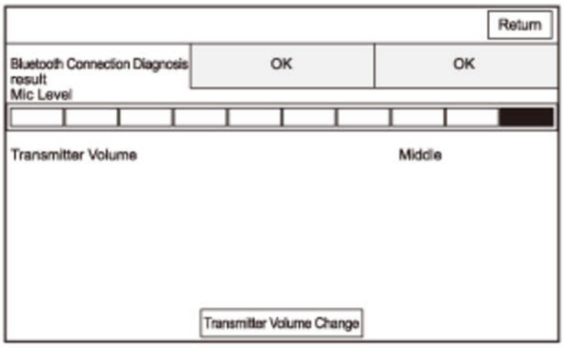
Return
Transmitter Volume Change

Bluetooth Connection Diagnosis result	OK	OK

Mic Level

Transmitter Volume Middle

If you select the Transmitter Volume Change icon, the transmitter volume can be selected from three selection (Large, Middle, Small).

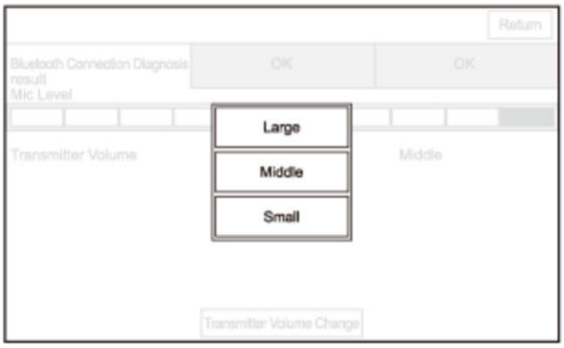
Return
Bluetooth Connection Diagnosis result
OK
OK
Mic Level
Large
Middle
Small
Transmitter Volume
Middle
Transmitter Volume Change

Hard Key

This diagnosis checks the center display unit face buttons, and the audio remote-HFL switch. For this model, the audio remote-HFL switch buttons use the data bus via the gauge control module for communications.

To complete the test, press each buttons. As each function is tested, the corresponding button on the display should highlight. If the test cannot be completed, the corresponding icon on the Hard Key menu screen shows red.

- If any button of the center display unit does not respond, **replace the center display unit** .
- If any button of the audio remote-HFL switch does not respond, **replace the audio remote-HFL switch** .
- If all buttons of the audio remote-HFL switch do not respond, go to **Audio remote-HFL switch does not work properly (audio unit buttons work) troubleshooting**.

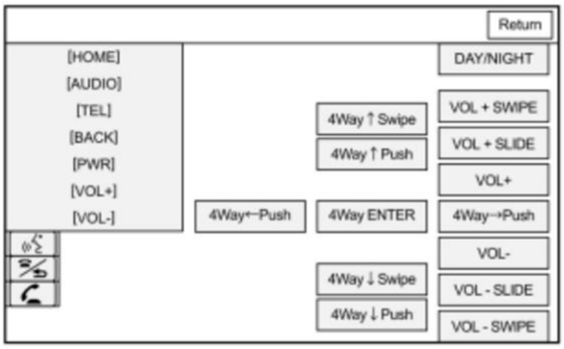
Return
[HOME]
[AUDIO]
[TEL]
[BACK]
[PWR]
[VOL+]
[VOL-]
DAY/NIGHT
VOL + SWIPE
4Way ↑ Swipe
4Way ↑ Push
VOL + SLIDE
VOL+
4Way←Push
4Way ENTER
4Way→Push
VOL-
4Way ↓ Swipe
VOL - SLIDE
4Way ↓ Push
VOL - SWIPE

Error History

If you select Hard Error or Soft Error, you can see the error information. **Refer to How to Check for Error History to use this diagnosis**.

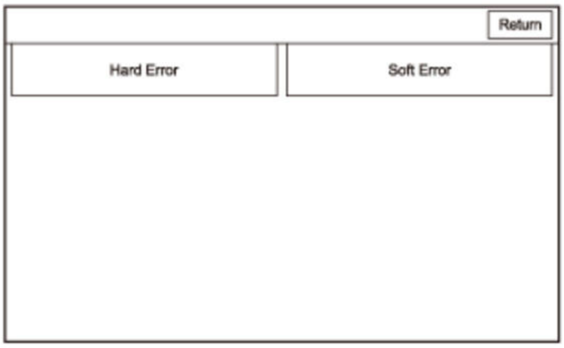
Return
Hard Error
Soft Error

Rear Wide Camera

This diagnosis checks the rearview camera connection.

- If Connection shows NG, **check for hard error codes**.
- If Connection shows OK, press the HOME button to display the rearview camera image. To return to the previous screen, press the HOME button again.

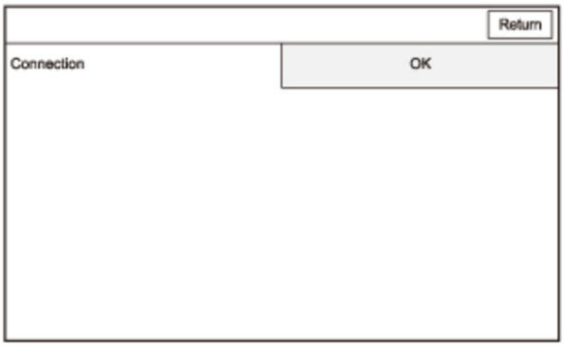

Connection OK

LaneWatch

This diagnosis checks the LaneWatch camera connection.

- If Connection shows NG, **check for hard error codes**.
- If Connection shows OK, press the HOME button to display the LaneWatch camera image. To return to the previous screen, press the HOME button again.

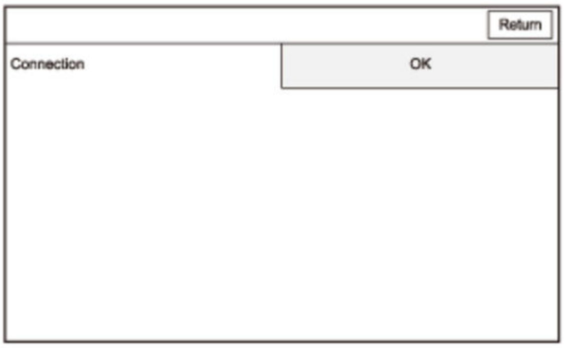

Connection	OK

Remote Tuner

NOTE:

- For factory use only. Do not alter any settings unless directed.
- These items describe in indication order. Swipe the screen to check the next items.

This diagnosis displays the external AM/FM radio tuner (tuner unit) status.

- System 'com version display: Displays the tuner unit processor version.
- Serial number display: Displays the tuner unit serial number. That should be the same as the serial number found on the upper side of the tuner unit.
- Frequency: Displays frequency of the radio station which is being received. Frequency can be changed by selecting each icon (A).
- Source can be changed in this order: Radio sources by selecting the Band Change icon.
- Radio reception level display: Displays radio reception level (dB). The AM/FM antenna power status can be changed to on or off by selecting the Ant +B OFF icon.
- Target Area: Displays the destination of the tuner unit at 2 digits.
- Operating status display*: If the vehicle has diversity antenna, you can select the radio antenna function from M (Main), S (Sub), or P (Diversity).
- RBDS BER display: Displays the RBDS bit error ratio.
- SNR display: Displays the Sound/Noise ratio about the AM or FM.
- Total preset number: Displays number of radio station preset about the AM or FM.
- HD functions ON/OFF: Displays the HD function is available (YES) or not available (NO).
- VOL: Displays the current volume level.
- Split Mode: Displays the split mode on or off. That can be changed by selecting the Split Mode icon.
- Blend Mode: Displays the blend mode which is being received. The blend mode can be changed to AUTO/ANALOG/DIGITAL by selecting the Blend Mode icon.
- HD Mode: Displays the HD mode status (ON: HD, OFF: analog) at frequency of the radio station which is being received. That can be changed by selecting the HD Mode icon.

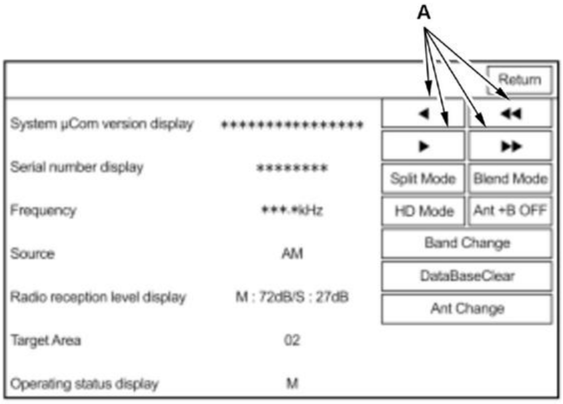
A
Return
◄
◄◄
►
►►
Split Mode
Blend Mode
HD Mode
Ant +B OFF
Band Change
DataBaseClear
Ant Change

System µCom version display	****************
Serial number display	********
Frequency	***.*kHz
Source	AM
Radio reception level display	M : 72dB/S : 27dB
Target Area	02
Operating status display	M

XM Ant.

This diagnosis checks the XM antenna connection between the audio unit and the roof antenna. The XM radio tuner is built into the audio unit.

If Connection shows NG, check for hard error codes.

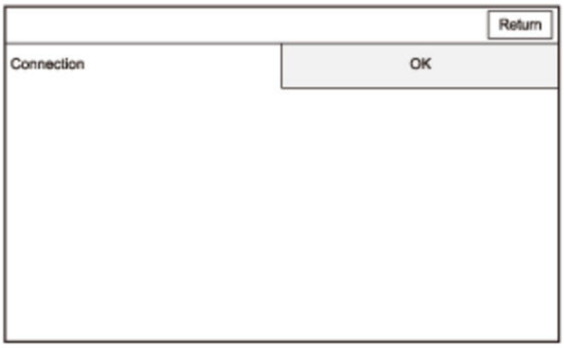

Connection	OK

AMP

This diagnosis checks the digital bus (RS485) connection between the audio unit and the stereo amplifier.

If Connection shows NG, go to No sound is heard from all the speakers (display is normal) troubleshooting.

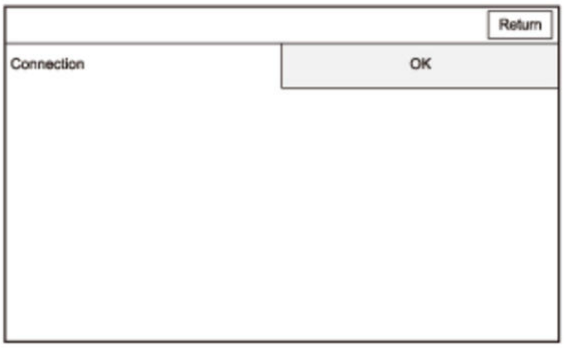

Connection	OK

Center display

These items describe in indication order. Swipe the screen to check the next items.

This diagnosis checks the digital bus (LVDS1) connection between the audio unit and the center display unit, and displays the center display unit status.

- Connection: Checks the digital bus (LVDS1) between the audio unit and the center display unit. This item should indicate OK.
- Unit Status Information: Indicates the center display unit processor status. If any of the status indicates NG, turn the vehicle to the OFF (LOCK) mode then the ON mode, and recheck the status. If the status still indicates NG, **replace the center display unit** .
- Unit Version Information: Displays the center display unit various version number.

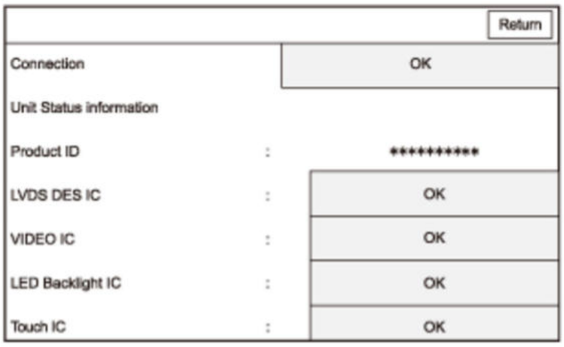

Connection OK

Unit Status information

Product ID : **********

LVDS DES IC : OK

VIDEO IC : OK

LED Backlight IC : OK

Touch IC : OK

iPhone

This screen shows the information about the connected iPhone B® by App Mode.

Meter Display

This diagnosis checks the digital bus (LVDS2) between the audio unit and the gauge control module.

If Connection shows NG, **go to The MID does not display the audio unit information troubleshooting**.

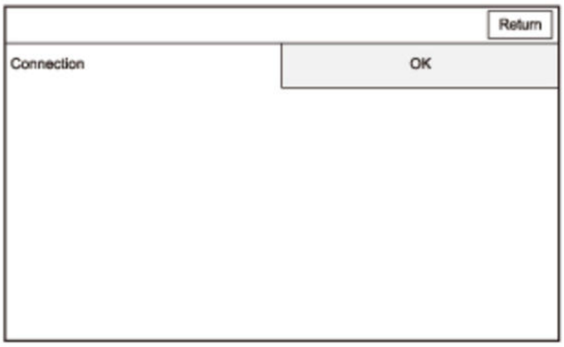

Connection OK

GPS Antenna

This diagnosis checks the GPS antenna connection.

If Antenna shows NG, the GPS antenna may be failure. **Check for hard error codes**.

Select Information to see the GPS satellite details.

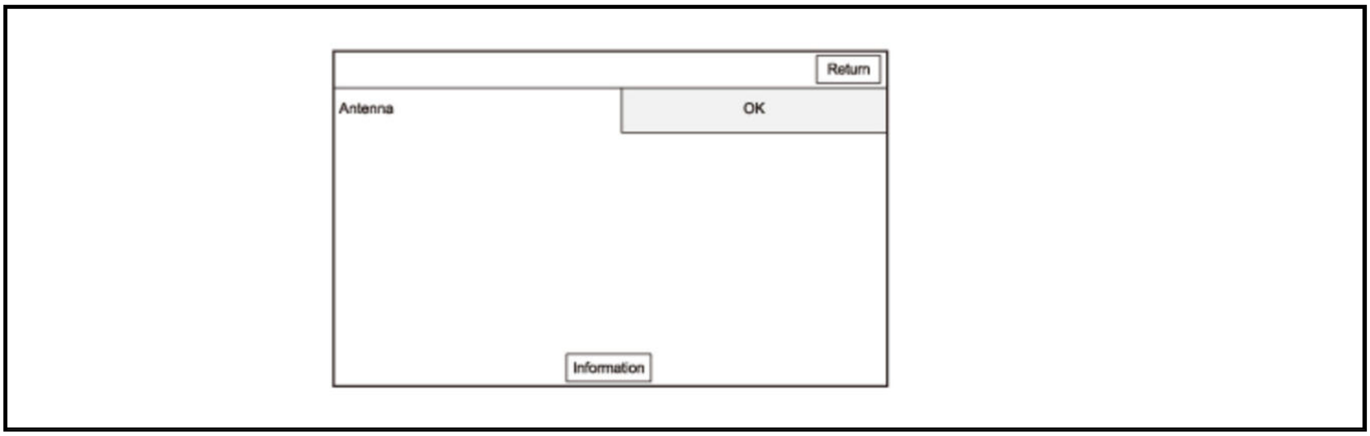
Return
Antenna
OK
Information

A/C

This diagnosis detects if the vehicle is in the ON mode using information provided over the F-CAN bus, then it tests the climate control signal via the B-CAN bus between the audio unit and the climate control unit. Make sure the engine is running for this test.

If Connection shows NG, **check for hard error codes**.

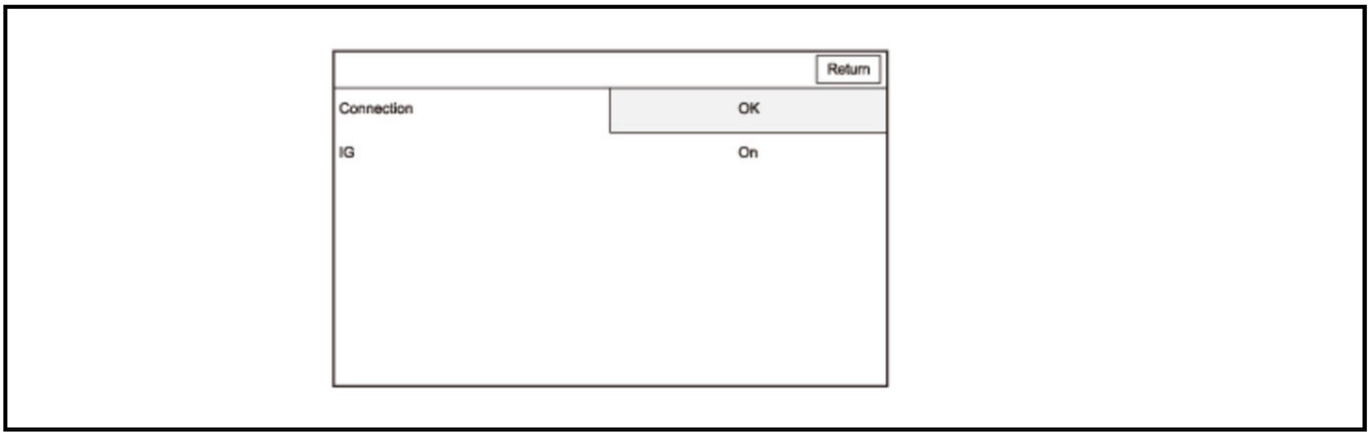
Return
Connection
OK
IG
On

MirrorLink

This screen shows the information about the connected smartphone by MirrorLink.

Audio Check

These screens allow you to troubleshoot the audio function. Select the Speaker Check icon.

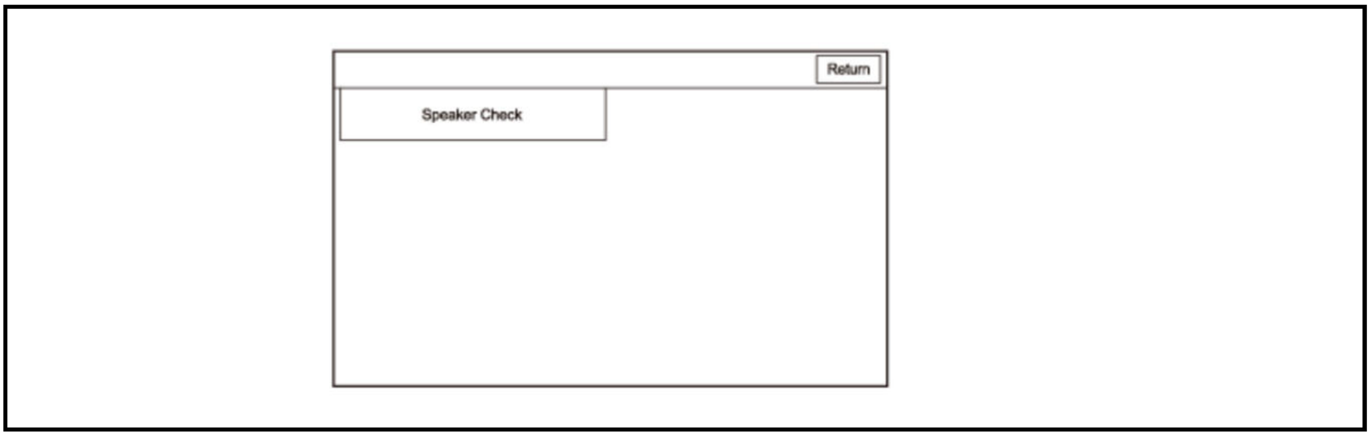
Return
Speaker Check

Speaker Check

NOTE:

- Make sure the audio system is off before this diagnosis.

- While doing the diagnosis, the fader and the balance positions are set to the center.

This diagnosis checks the audio speakers individually.

Select the UP icon or the Down icon to check speakers. A tone should sound from the speaker.

When you select the Up icon, the system checks the speakers in this order: ① -> ② -> ③ -> ④ -> ⑤ -> ⑥ -> ⑦ -> ⑧ -> ⑨ -> ⑩ -> ①
When you select the Down icon, the system checks the speakers in this order: ① -> ⑩ -> ⑨ -> ⑧ -> ⑦ -> ⑥ -> ⑤ -> ④ -> ③ -> ② -> ①

B	Display Message	Vehicle Test Condition
①	FR-L	You should hear a tone from the left front door speaker and the left front tweeter* 2.
② * 1	FRTW-L	You should hear a tone from the left front tweeter.
③	FR-R	You should hear a tone from the right front door speaker and the right front tweeter* 2.
④ * 1	FRTW-R	You should hear a tone from the right front tweeter.
⑤	RR1-R	You should hear a tone from the right rear door speaker and the right rear tweeter* 2.
⑥ * 1	RR1TW-R	You should hear a tone from the right rear tweeter.
⑦ * 1	SW1	You should hear a tone from the subwoofer.
⑧	RR1-L	You should hear a tone from the left rear door speaker and the left rear tweeter* 2.
⑨ * 1	RR1TW-L	You should hear a tone from the left rear tweeter.
⑩	ALL	You should hear a tone from all speakers.

*1: With stereo amplifier
*2: Without stereo amplifier

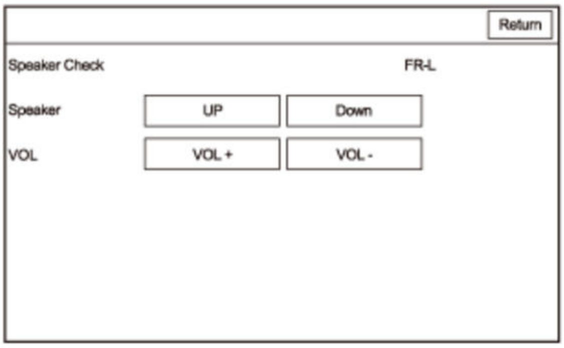

Guideline Setup

These screens adjusts the rearview camera image guide lines. Select the Rear wide camera icon to adjust the guide lines.

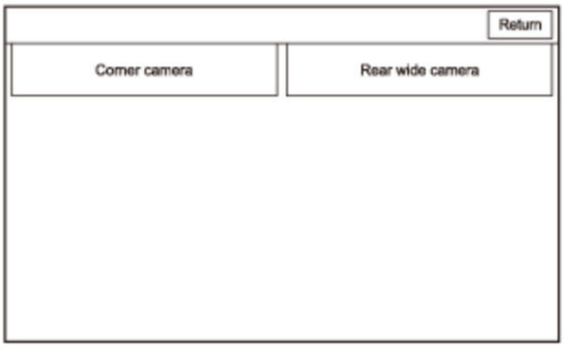
Return
Corner camera
Rear wide camera

Rear Wide Camera

Select the item you want to adjust.

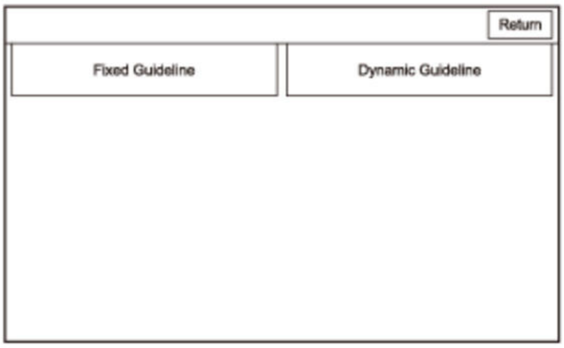
Return
Fixed Guideline
Dynamic Guideline

Select the view mode icons (Wide View, Normal View, Top Down View) you want to adjust.

NOTE: The Top Down View cannot be selected when the dynamic guideline is selected.

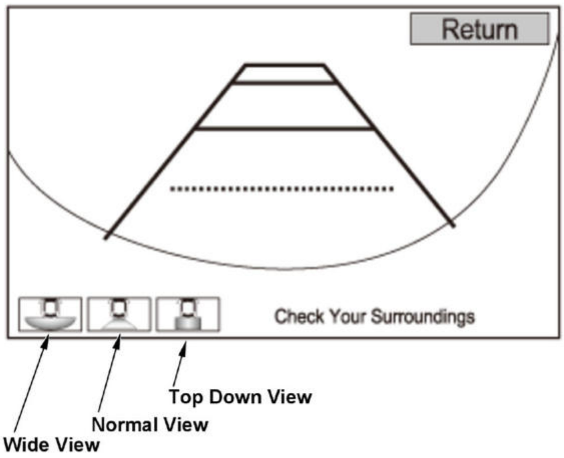
Return
Check Your Surroundings
Top Down View
Normal View
Wide View

Press the PHONE button to display the sub menu.

- Default: All guidelines can be reset to the factory specification.
- Save: Reflects the result of the guideline adjustment.
- Guideline Setup: Adjust the guideline.

- Message Setup: Adjust the caution message position.
- Rudder Angle (Dynamic Guideline): The steering angle which adjusts the position of the chosen guideline.

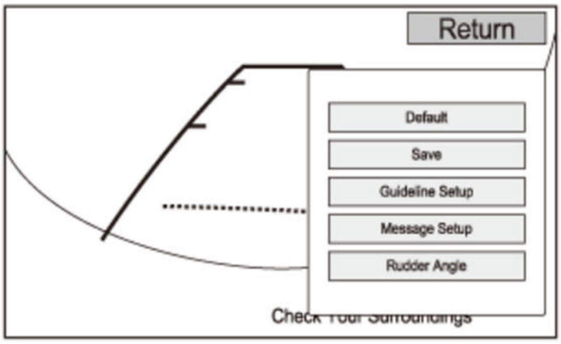
Return
Default
Save
Guideline Setup
Message Setup
Rudder Angle
Check Your Surroundings

Guideline Setup

Touch each arrow icon to move the guidelines up/down or left/right. The screen displays the information about the adjusted distance and its direction.

If you want to keep the setting, press the PHONE button to display the settings sub menu. The audio unit saves the setting by selecting the Save icon on the settings sub menu.

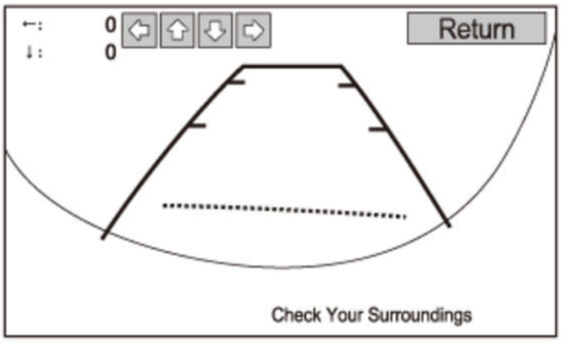
←: 0
↓: 0
Return
Check Your Surroundings

Message Setup

Touch each arrow to move the message (A) up/down or left/right.

If you want to keep the setting, press the PHONE button to display the settings sub menu. The audio unit saves the setting by selecting the Save icon on the settings sub menu.

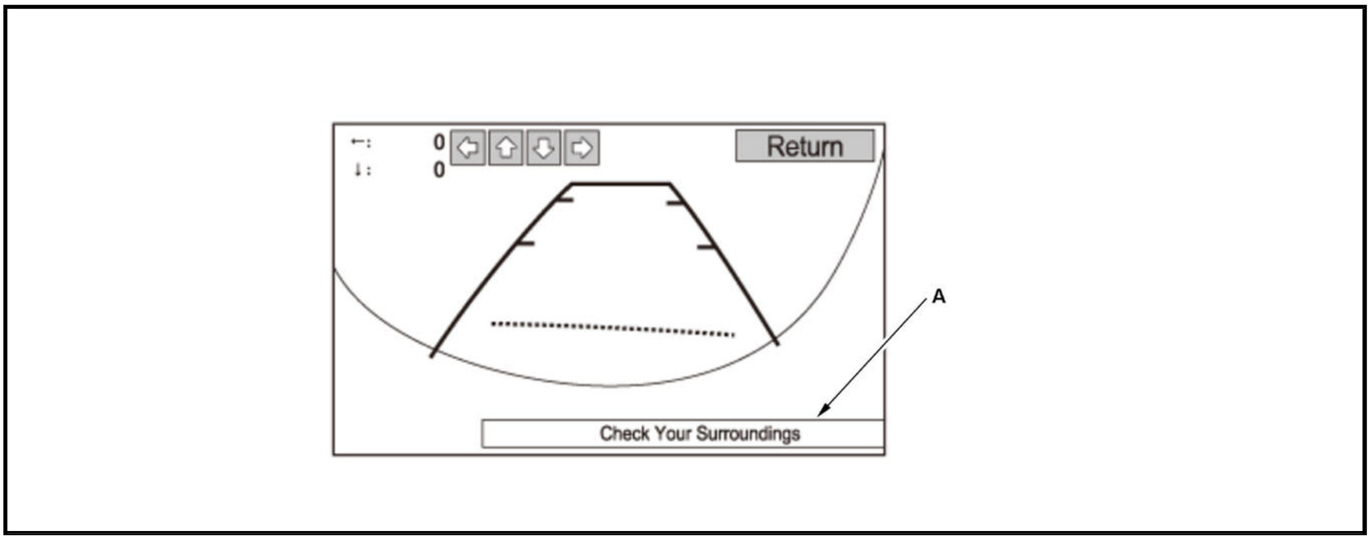
←: 0
↓: 0
Return
A
Check Your Surroundings

Rudder Angle

Select different steering angles (90 deg. - Lock end) from the sub menu. After selecting, do the Guideline Adjustment. The adjustment method for the guideline locations is the same as the Fixed Guideline.

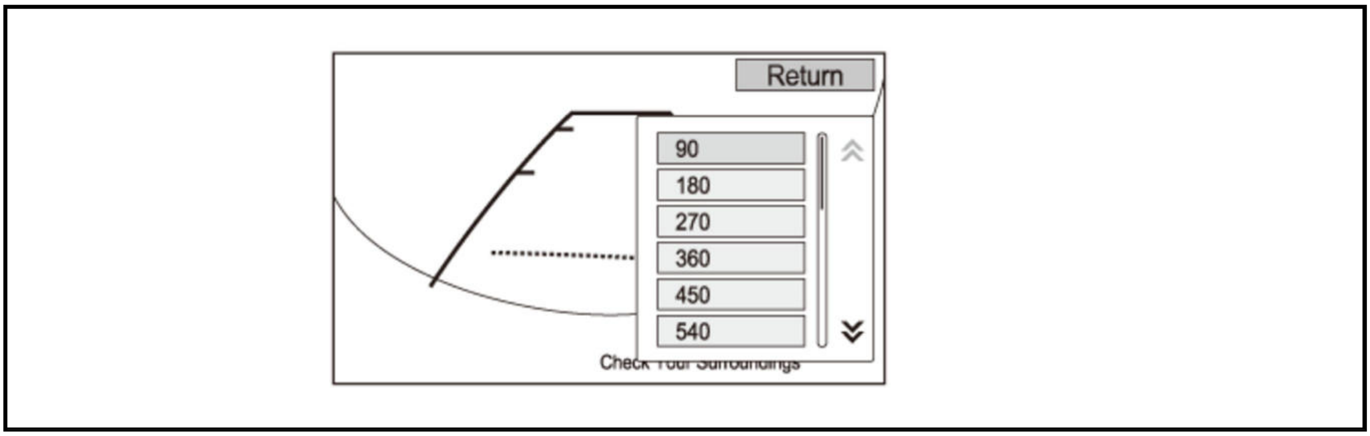
Return
90
180
270
360
450
540
Check Your Surroundings

Functional Setup

These screens allows for diagnosis and settings about functions of the audio unit. Select the item you want to check.

- Backup Data Clear
- Save User's Memory
- LaneWatch
- Phone Picture
- Anti-Theft Skip
- Other
- AMP Repro (factory use only)
- Display Repro (factory use only)

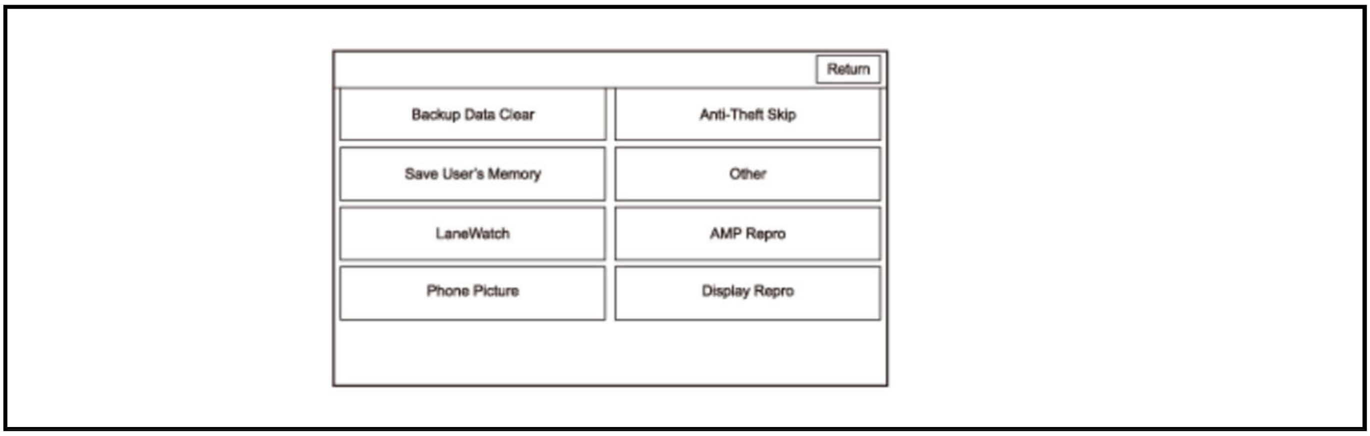
Return
Backup Data Clear
Anti-Theft Skip
Save User's Memory
Other
LaneWatch
AMP Repro
Phone Picture
Display Repro

Backup Data Clear

This screen initializes the back-up data in the audio unit. Select the All Clear icon.

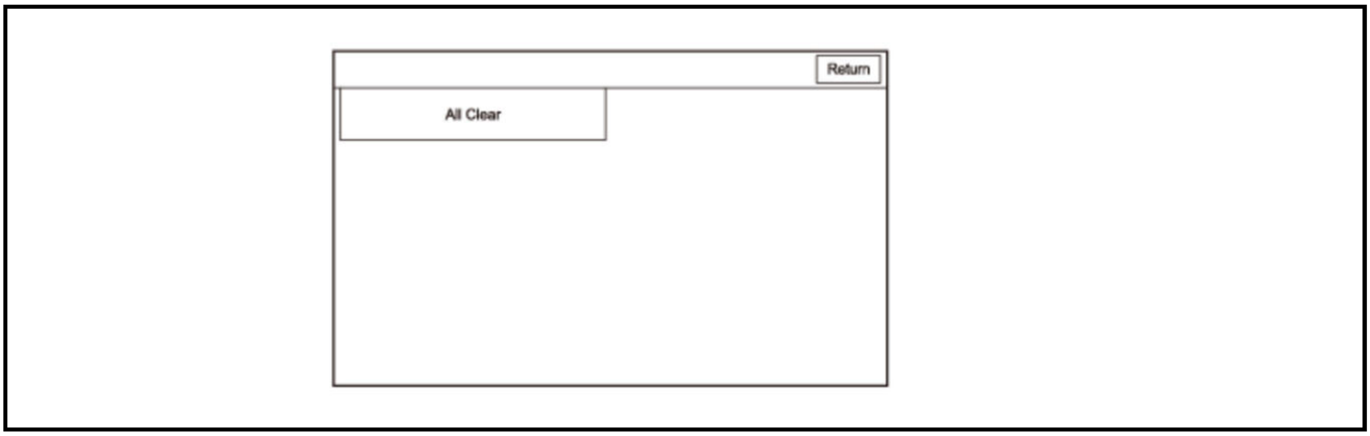
Return
All Clear

All Clear

The all clear function deletes the data in the audio unit, and restores it to the factory defaults. This function is equivalent to Memory Refresh in the System Settings Menu.

When selecting the All Clear icon, the confirmation screen appears.

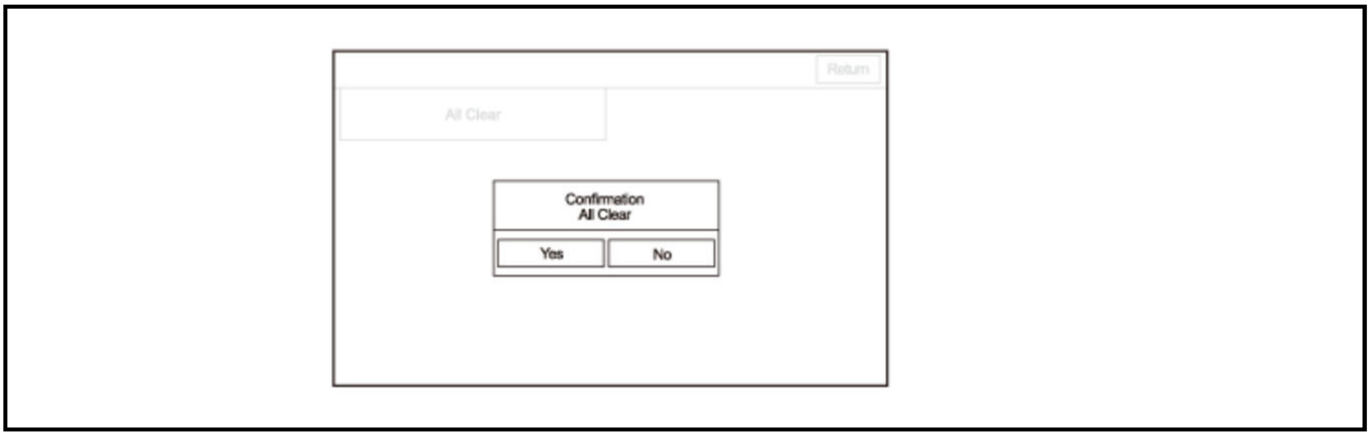
Return
All Clear
Confirmation
All Clear
Yes
No

When selecting the Yes icon, the second confirmation screen appears.

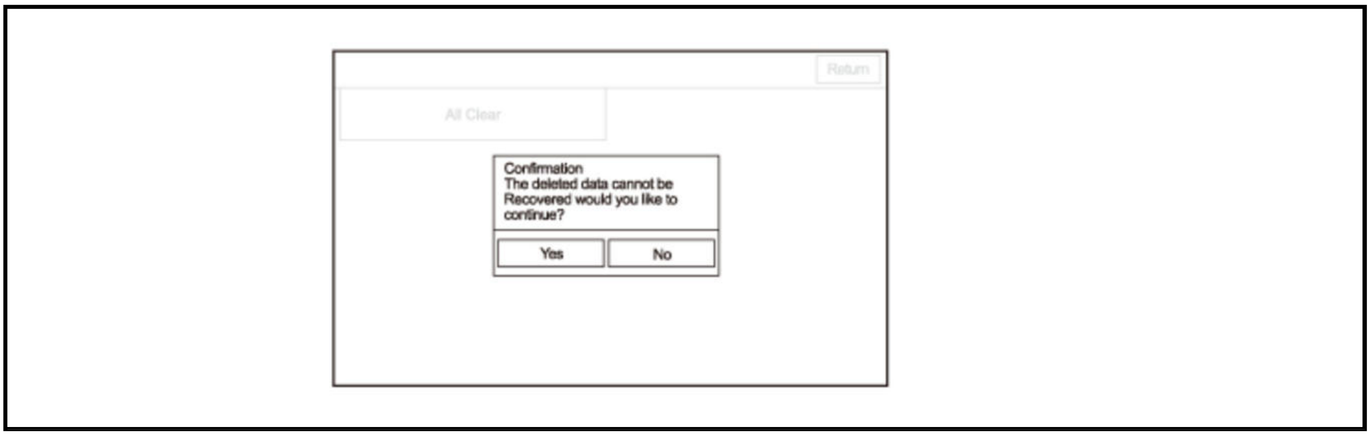

Confirmation
The deleted data cannot be Recovered would you like to continue?

When selecting the Yes icon, the system restarts after performing the All Clear process. After the restart, a normal start-up process occurs.

Save User's Memory

When replacing the audio unit, this function allows the technician to transfer the customer's personal data to the new audio unit. The transferred information includes their setup settings and personal addresses. The dealer inserts a USB device into the USB port A or B, and then selects the Save Users Memory function. The two functions in this diagnostic screen are Export and Import. Export saves the customer's data to the USB device, and Import moves the USB device files to the new audio unit.

This function does not start until you connect a USB device to the USB port.

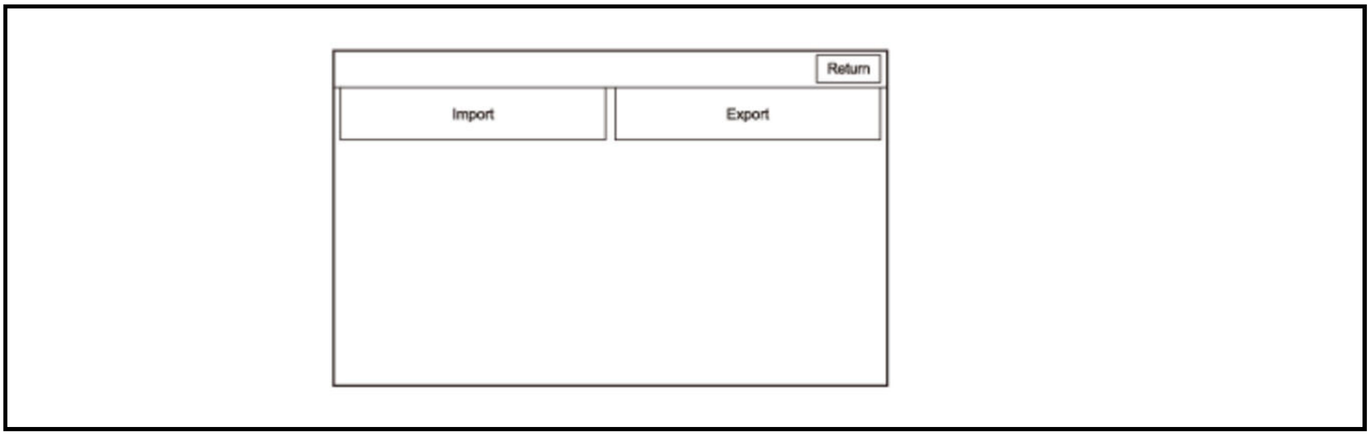

1. Select the Export icon to move the customer's data from the original audio unit to the USB device. Select the Yes icon on the Export User Data Confirmation screen. The process takes only a couple of seconds. The system stores. DAT files on the USB device.

NOTE: If the Export icon is grayed out, check the USB port.

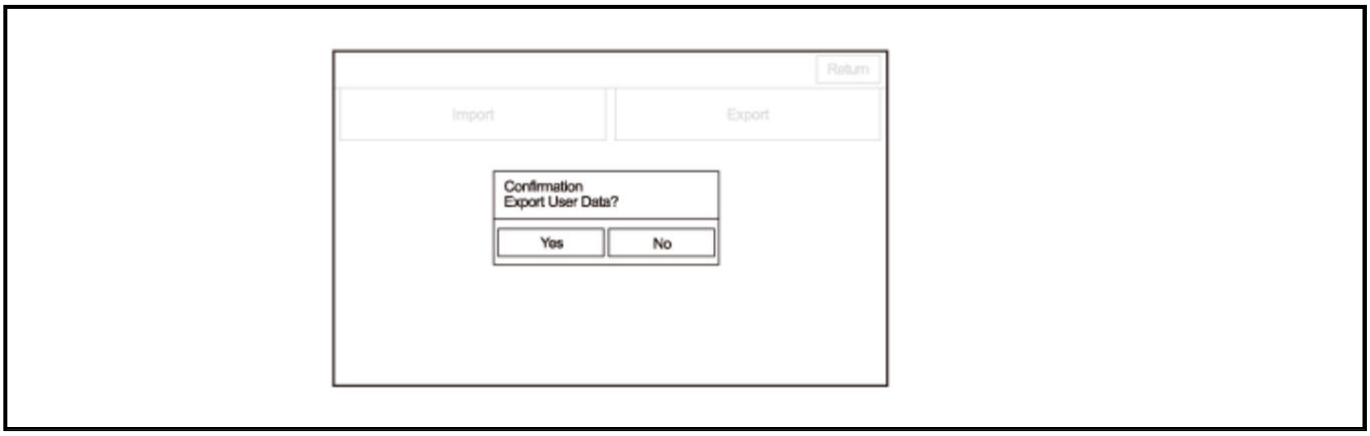

Confirmation
Export User Data?

2. After replacing the new audio unit, allow the system to boot up. Insert the USB device into the USB port A or B and enter the Save Users Memory in the System Diagnostic Mode.

3. Select the Import icon to move the two files stored by the Export process from the USB device to the new audio unit. Select the Yes icon on the Import User Data Confirmation screen. When the transfer is finished (a few seconds) the system automatically reboots. After the system reboots, remove the USB device from the USB port.

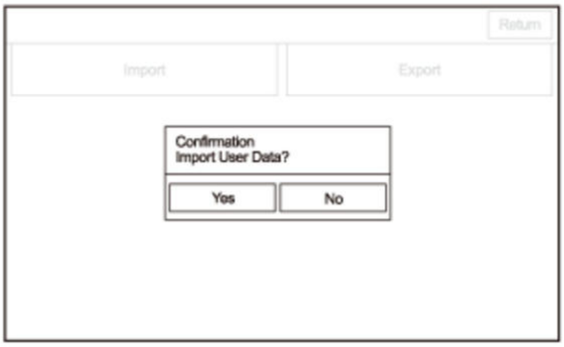

Confirmation
Import User Data?

LaneWatch

This diagnosis checks the LaneWatch status.

- If Connection shows hyphen (-), **check for hard error codes**.
- Error Status: Indicates LaneWatch camera status OK or NG. If Error Status shows NG, **replace the LaneWatch camera** . When the LaneWatch camera is disconnected, the status shows hyphen (-).
- If Error Status shows OK, press the HOME button to display the LaneWatch camera image. To return to the previous screen, press the HOME button again.
- LaneWatch Switch: LaneWatch switch status on or off. When the LaneWatch switch is pressing, the status shows ON. When the LaneWatch switch is released, the status shows hyphen (-).
- B-CAN: Checks whether the audio unit has received specific B-CAN data from the body control module. If B-CAN shows NG, check for B-CAN DTCs with the HDS. If DTCs are not detected, check for B-CAN lines continuity between the audio unit and the body control module.
- If Connection, Error Status, LaneWatch Switch, and B-CAN shows OK, the LaneWatch camera aiming procedure is available. If the LaneWatch camera need to aiming, **refer to the How to Start LaneWatch Camera Aiming** . When the aiming fails, Aiming shows NG.

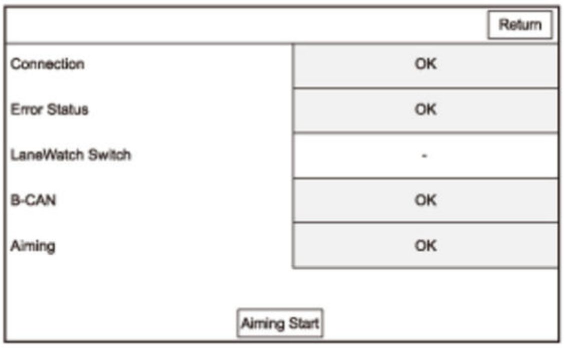

Connection	OK
Error Status	OK
LaneWatch Switch	-
B-CAN	OK
Aiming	OK

Phone Picture

This screen allows you to enable or disable the Show Contact Picture with On/Off.

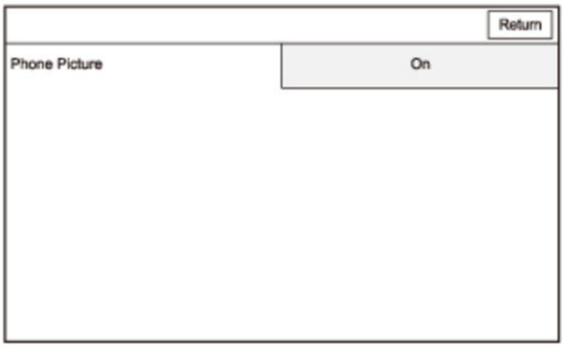

Phone Picture: On

Anti-Theft Skip

This selection can cancel the anti-theft mode temporarily (for 150 seconds).

The Anti-Theft Skip icon is grayed out when the anti-theft mode is already canceled.

Other

Select the item you want to check.

- Pandora Setting
- HD Radio Setting
- SXM Setting
- Smartphone Information

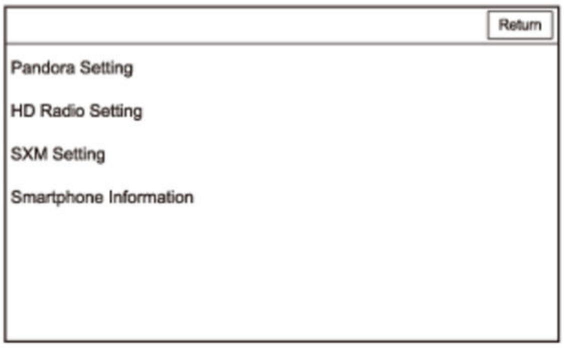
Return
Pandora Setting
HD Radio Setting
SXM Setting
Smartphone Information

Pandora Setting

This screen allows you to restrict the Pandora function to the running vehicle. Refer to the Owner's Manual for more information about the Pandora setting function.

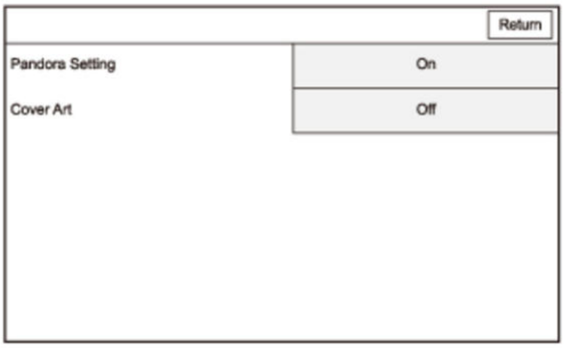

Pandora Setting: On

Cover Art: Off

HD Radio Setting

This screen allows you to restrict the HD radio album art function to the running vehicle. Refer to the Owner's Manual for more information about the album art function.

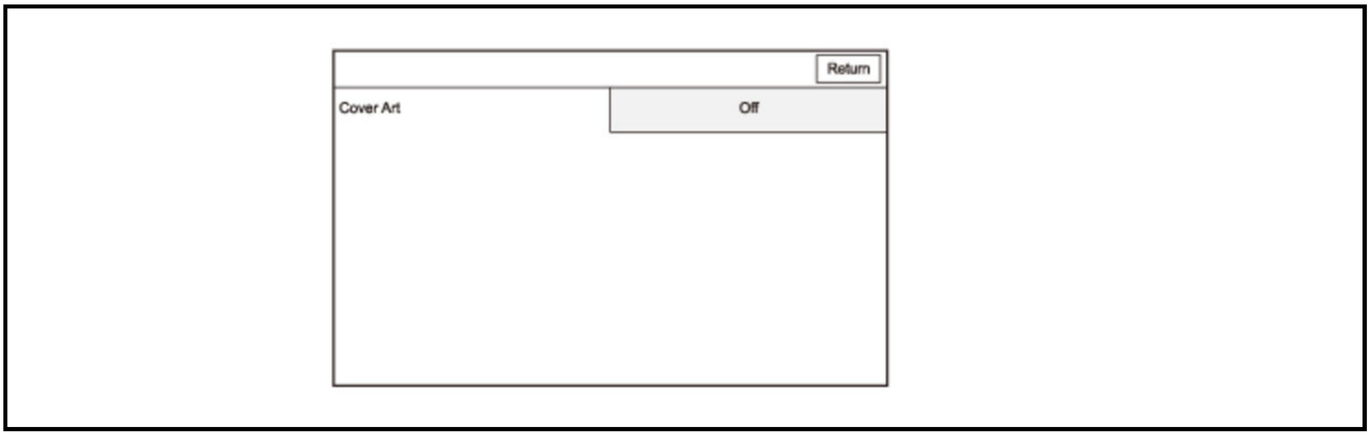

Cover Art: Off

SXM Setting

This screen allows you to restrict the XM radio album art function to the running vehicle. Refer to the Owner's Manual for more information about the album art function.

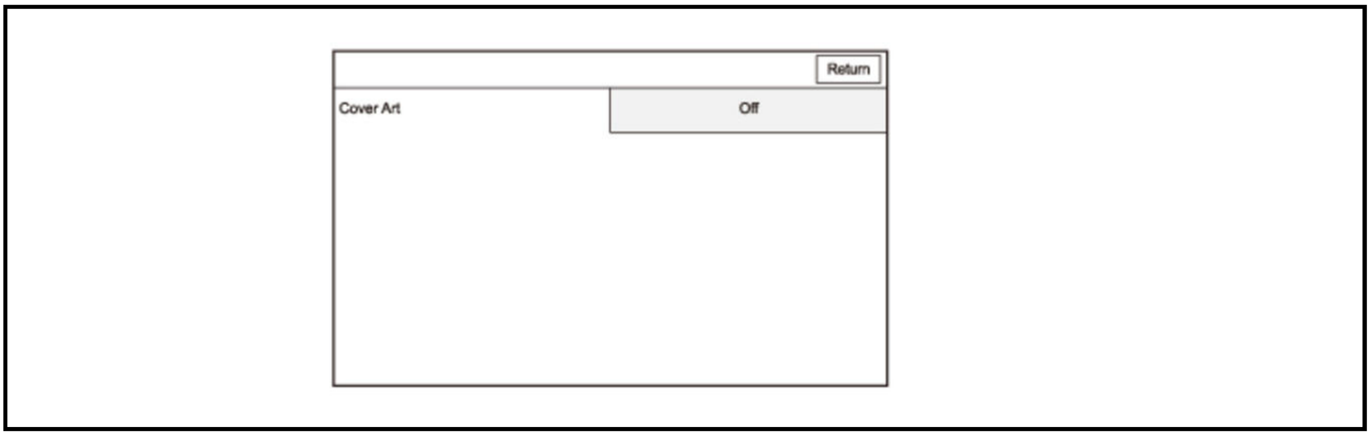

Cover Art: Off

Smartphone Information

This screen allows you to enable or disable the function about smartphone connection.

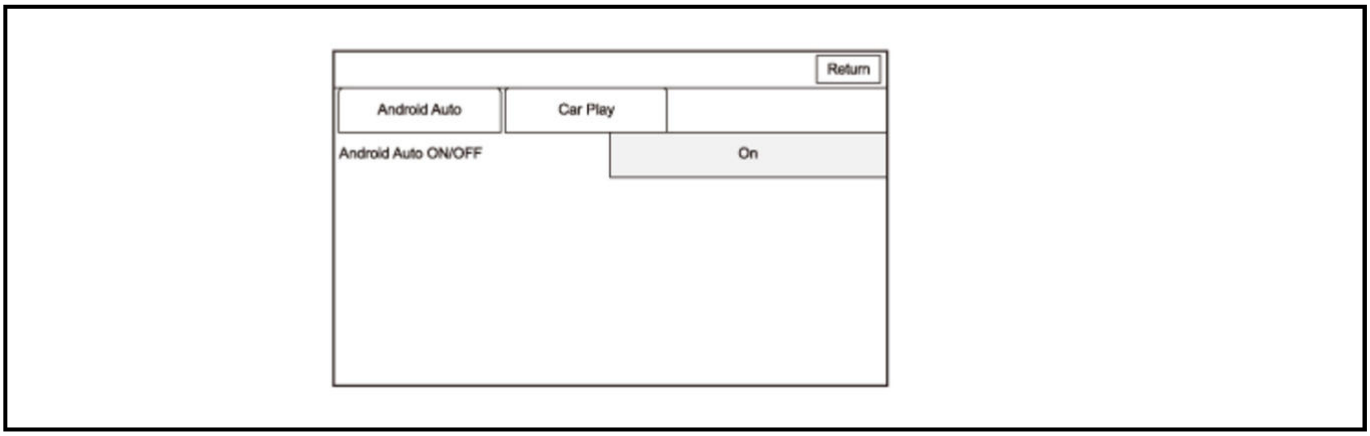

Android Auto ON/OFF: On

Version

This screen displays the current version information about each module in the audio unit.

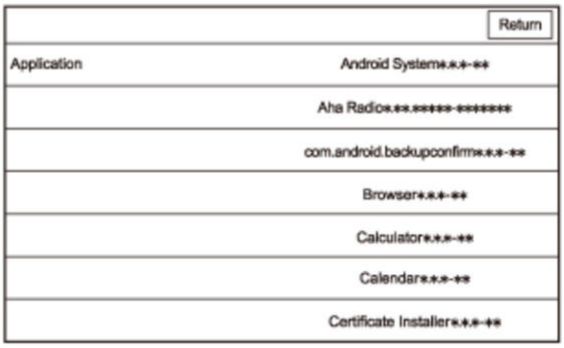

Application Android System*.*.*-**

Aha Radio*.**.*****-*******

com.android.backupconfirm*.*.*-**

Browser*.*.*-**

Calculator*.*.*-**

Calendar*.*.*-**

Certificate Installer*.*.*-**

GPS Information

This screen shows the current status of GPS reception. The circular diagram shows the current location of the GPS satellites (yellow numbers) as they would appear in the sky. The outer circle represents the horizon (0 degrees elevation). The middle and inner circles represents 30 and 60 degrees respectively. The very center of the diagram (90 degrees elevation) is directly overhead. Nearby obstructions, like tall buildings will block satellites in that direction. That is why it is necessary to be in an open area to effectively troubleshoot GPS reception issues. The satellite numbers shown on the diagram while pressing the HOME button that correspond to the PRN (satellite ID number). There are always at least 24 active GPS satellites in orbit. Because satellites fail, and have to be removed from service, spares are always parked in orbit, ready to be activated. This is why the PRN can be greater than 24.

NOTE: When you use this screen for troubleshooting, park the vehicle outside, away from buildings, tall trees, and hightension wires for at least 10 minutes with the engine running.

- The Number of Satellites box shows the number of acquired satellites (maximum of 12). It should contain three or more icons.
- The Current Position shows latitude, longitude, and elevation (in feet). If there are less than four satellites, the elevation can be grossly inaccurate.
- The date/time field shows the current date and time that is received from the GPS satellite.

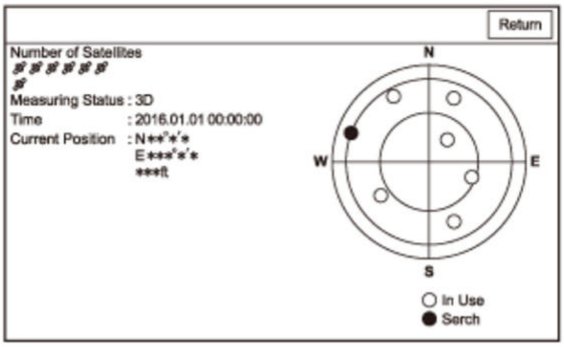

Measuring Status : 3D

Time : 2016.01.01 00:00:00

Current Position : N**°*'*
E***°*'*
***ft

DTC TROUBLESHOOTING INDEX

AUDIO SYSTEM DTC TROUBLESHOOTING INDEX

NOTE: These DTCs cannot be read with the HDS. To view them, refer to How to Check for Error History (Audio DTCs).

DTC	Description	Circuit
1102	USB Diag	USB
1301	GPS Antenna Error	GPS antenna

DTC	Description	Circuit
1302	GPS Receiver Error 1	GPS receiver
1306	Vehicle Speed Pulse	PCM or TCM
1702	XM Antenna Error	XM antenna
2608	R-Camera Diag	Rearview camera
2610	DRAM Diag	Audio unit DRAM
2618	LaneWatch Diag	LaneWatch camera
2701	GPS Diag: Antenna	GPS antenna
2703	Aircon Diag	Climate control unit

GENERAL INFORMATION

AUDIO SYSTEM ERROR CODES

NOTE: The audio system can display a few error codes when some problems are detected with the audio unit and the USB. This is not a complete list of audio error codes. Refer to symptom troubleshooting.

Audio Unit Error Messages (Display audio type)

Error Message Displayed	Possible Cause	Solution
The system is unable to start due to excessive heat. The system will start after the system cools.	This message appears when the display temperature is too high.	Park the vehicle in a cooler place for a while. If the high temperature status is cancelled, the audio unit turns on the display.
Sounds are restricted because the AMP is in protection mode.	This message appears when the stereo amplifier temperature is too high, and the stereo amplifier inhibits sound output.	Park the vehicle in a cooler place for a while. If the high temperature status is cancelled, the stereo amplifier outputs the sound again.

USB Error Messages

Error Message Displayed	Possible Cause	Solution
The connected USB device has a problem. See Owner's Manual* 1	Faulty power supply to USB device.	Check for hard error code: - **With navigation** - **Without navigation**
Bad USB Device Please Check Owner's Manual* 2	Faulty power supply to USB device.	Disconnect the USB device, and turn the vehicle to the OFF (LOCK) mode then the ON mode. Then connect a known-good USB device to the USB port. If the error message appears on the screen, **replace the audio unit** .
Connect Retry	The audio unit failed to synchronize with the iPod.	Appears when the system does not acknowledge the iPod. Reconnect the iPod.
No Data	No music file(s) can be found in a USB device.	Check the music files in the USB device.
USB Error	There is an internal problem with the audio unit.	**Replace the audio-navigation unit** or **the audio unit** .
Unplayable File	The audio unit cannot read the file(s).	- Check the files in the USB device. There is a possibility

Error Message Displayed	Possible Cause	Solution
		that the files have been damaged - The WMA files or the AAC file cannot be read with the (DRM) copy protection rights
Unsupported	- Unsupported USB device is connected - Unsupported file system - USB device communication error	Connect the applicable USB device (see the Owner's Manual).
Unsupported Version	Unsupported version iPod is connected.	Connect the applicable iPod (see the Owner's Manual).

*1: Display audio type

*2: Color audio type

XM Error Messages

NOTE: Do these checks with the vehicle parked outside with a clear view of the southern horizon.

Error Message Displayed	Possible Cause	Solution
Channel Not Subscribed	Selected XM channel is not subscribed.	Check the XM channel subscription status.

Error Message Displayed	Possible Cause	Solution
Channel Not Available	Selected XM channel is not in service.	Try another XM channel.
No Signal	Loss of signal.	Both terrestrial and satellite antennas have lost the signal. Park the vehicle outside with a clear view of the southern horizon.
Antenna Disconnected	XM antenna/antenna lead error.	Check for hard error code: - **With navigation** - **Without navigation**

COMPONENT LOCATION INDEX

AUDIO SYSTEM COMPONENT LOCATION INDEX(DISPLAY AUDIO TYPE)

For relationships between signals in a system,

refer to system diagram.

Audio-Navigation Unit - Faceview

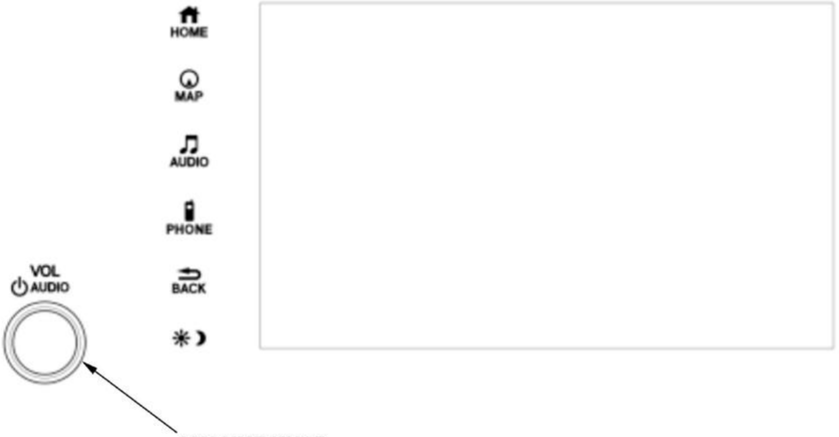
HOME
MAP
AUDIO
PHONE
BACK
VOL
AUDIO

VOLUME KNOB
Removal and Installation

Audio Unit (Display Audio type) - Faceview

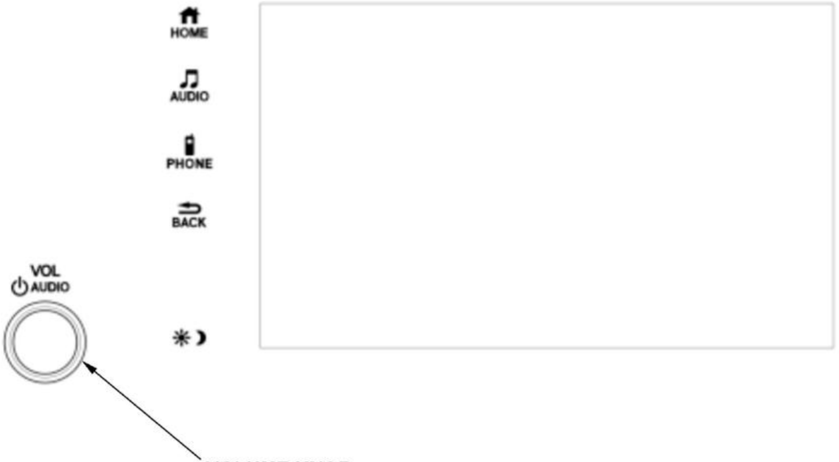
HOME
AUDIO
PHONE
BACK
VOL
AUDIO

VOLUME KNOB
Removal and Installation

Audio Unit (Color Audio type) - Faceview

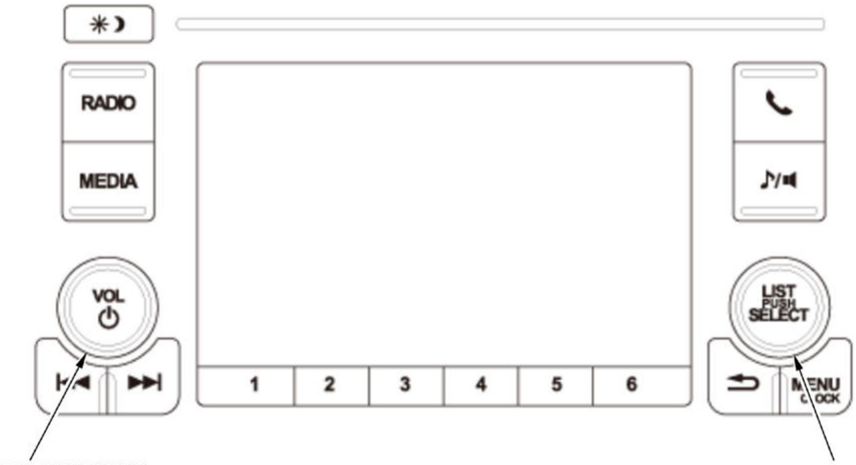
RADIO
MEDIA
VOL
LIST PUSH SELECT
1
2
3
4
5
6
MENU CLOCK

VOLUME KONB
Removal and Installation

LIST KONB
Removal and Installation

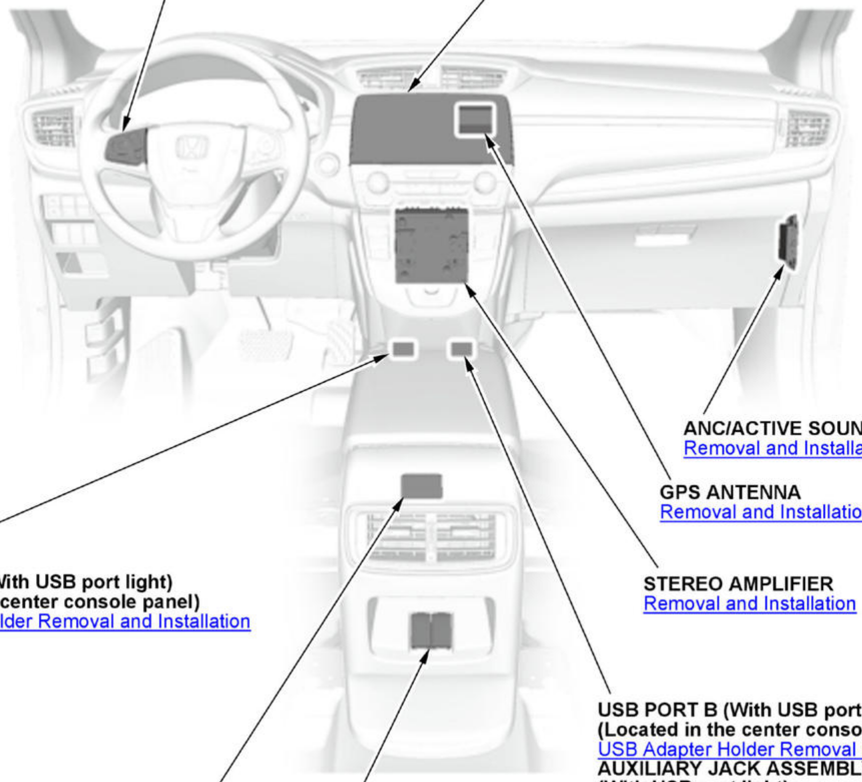

AUDIO REMOTE-HFL SWITCH
Removal, Installation, and Test
(Test of the switch is possible only on models without multi-information display)

AUDIO-NAVIGATION UNIT
(With navigation)
(Located behind the center display unit)
Removal and Installation
System Diagnostic Mode
AUDIO UNIT (Without navigation)
(Display audio type: located behind the center display unit)
Removal and Installation
System Diagnostic Mode
CENTER DISPLAY UNIT
(Display audio type)
Removal and Installation

ANC/ACTIVE SOUND CONTROL UNIT
Removal and Installation

GPS ANTENNA
Removal and Installation

USB PORT A (With USB port light)
(Located in the center console panel)
USB Adapter Holder Removal and Installation

STEREO AMPLIFIER
Removal and Installation

USB PORT B (With USB port light)
(Located in the center console panel)
USB Adapter Holder Removal and Installation
AUXILIARY JACK ASSEMBLY
(With USB port light)
(Located in the center console panel)
Removal and Installation

USB CHARGER UNIT
Removal and Installation

USB PORT A/B (Without USB port light)
(Located in the center console box)
USB Adapter Holder Removal and Installation
AUXILIARY JACK ASSEMBLY
(Without USB port light)
(Located in the center console box)
Removal and Installation

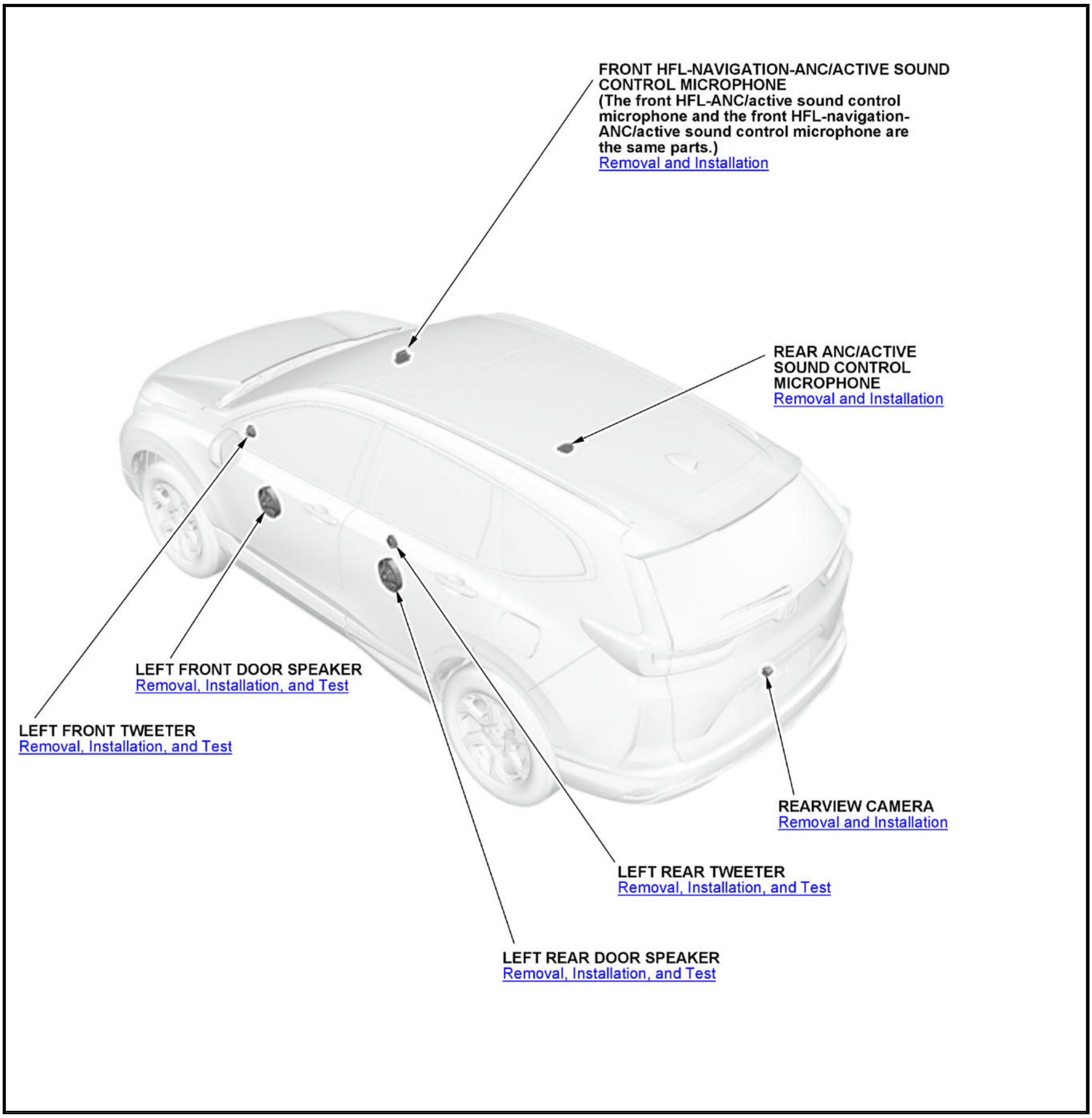
FRONT HFL-NAVIGATION-ANC/ACTIVE SOUND CONTROL MICROPHONE
(The front HFL-ANC/active sound control microphone and the front HFL-navigation-ANC/active sound control microphone are the same parts.)
Removal and Installation
REAR ANC/ACTIVE SOUND CONTROL MICROPHONE
Removal and Installation
LEFT FRONT DOOR SPEAKER
Removal, Installation, and Test
LEFT FRONT TWEETER
Removal, Installation, and Test
REARVIEW CAMERA
Removal and Installation
LEFT REAR TWEETER
Removal, Installation, and Test
LEFT REAR DOOR SPEAKER
Removal, Installation, and Test

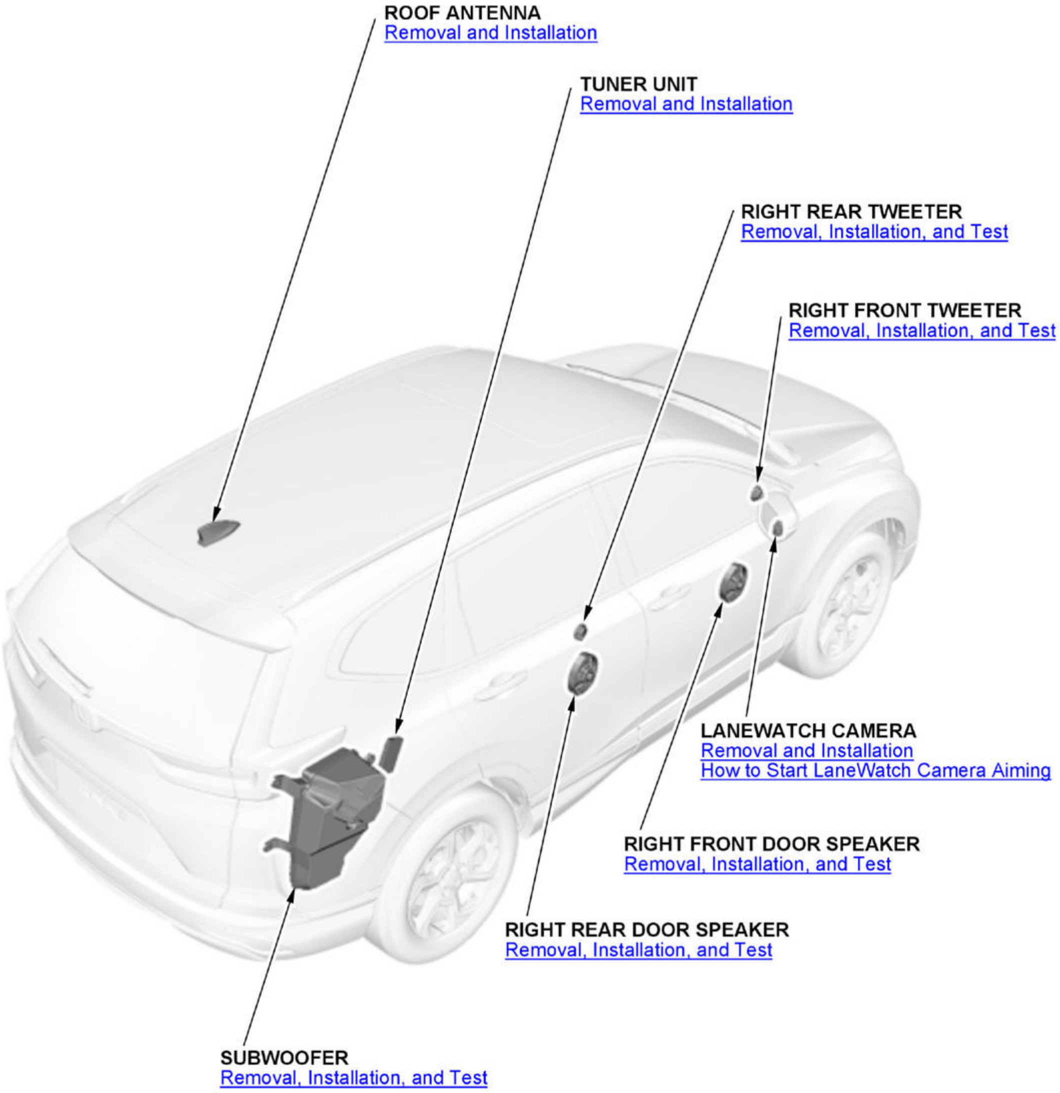
ROOF ANTENNA
Removal and Installation
TUNER UNIT
Removal and Installation
RIGHT REAR TWEETER
Removal, Installation, and Test
RIGHT FRONT TWEETER
Removal, Installation, and Test
LANEWATCH CAMERA
Removal and Installation
How to Start LaneWatch Camera Aiming
RIGHT FRONT DOOR SPEAKER
Removal, Installation, and Test
RIGHT REAR DOOR SPEAKER
Removal, Installation, and Test
SUBWOOFER
Removal, Installation, and Test

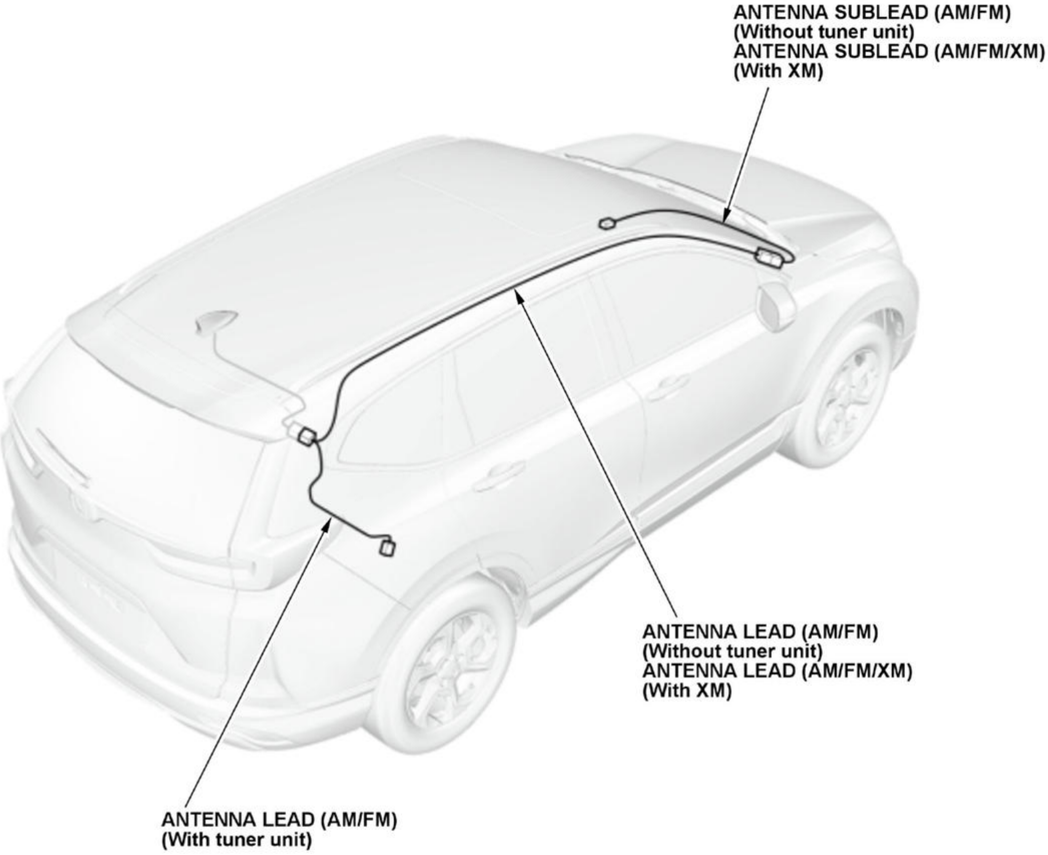
ANTENNA SUBLEAD (AM/FM)
(Without tuner unit)
ANTENNA SUBLEAD (AM/FM/XM)
(With XM)
ANTENNA LEAD (AM/FM)
(Without tuner unit)
ANTENNA LEAD (AM/FM/XM)
(With XM)
ANTENNA LEAD (AM/FM)
(With tuner unit)

SYMPTOM TROUBLESHOOTING

AUDIO SYSTEM SYMPTOM TROUBLESHOOTING

AM/FM radio display is blank or no station information is displayed

NOTE:

- **Check the vehicle 12 volt battery condition first** .
- Check the connectors for poor connections or loose terminals.

1. Problem verification

   -1. Turn the vehicle to the ON mode.

   -2. Turn on the audio system, and select AM or FM.

   Does the AM or FM radio station information display blankΩ

YES

The failure is duplicated, go to step 2.

NO

Intermittent failure, the system is OK at this time. If the AM or FM sound is not heard, **go to Poor or no sound with AM/FM radio troubleshooting**.

2. Determine possible failure area (TUNER 6V line, others)

-1. Turn the vehicle to the OFF (LOCK) mode.

-2. Disconnect the following connector.

Tuner unit connector A (10P)

-3. Measure the voltage between test points 1 and 2.

Test condition	Vehicle OFF (LOCK) mode
B	Tuner unit connector A (10P): disconnected
Test point 1	**Tuner unit connector A (10P) No. 10**
Test point 2	Body ground

Is there about 6.0 V?

YES

The TUNER 6V wire is OK. Go to step 5.

NO

Go to step 3.

3. Open wire check (TUNER 6V line)

-1. Measure the voltage between test points 1 and 2.

Test condition	Vehicle OFF (LOCK) mode
B	Tuner unit connector A (10P): disconnected
Test point 1	**Audio-navigation unit connector E (16P) (with navigation) No. 1**
B	**Audio unit connector E (16P) (without navigation) No. 1**
Test point 2	Body ground

Is there about 6.0 V?

YES

Repair an open in the wire.

NO

The TUNER 6V wire is not open. Go to step 4.

4. Shorted wire check (TUNER 6V line)

-1. Disconnect the following connector.

Audio-navigation unit connector E (16P) (with navigation)Audio unit connector E (16P) (without navigation)

-2. Check for continuity between test points 1 and 2.

Test condition	Vehicle OFF (LOCK) mode
B	Tuner unit connector A (10P): disconnected
B	Audio-navigation unit connector E (16P) (with navigation): disconnected Audio unit connector E (16P) (without navigation): disconnected
Test point 1	**Audio-navigation unit connector E (16P) (with navigation) No. 1**
B	**Audio unit connector E (16P) (without navigation) No. 1**
Test point 2	Body ground

Is there continuity?

YES

Repair a short to body ground in the wire.

NO: With navigation

Replace the audio-navigation unit .

NO: Without navigation

Replace the audio unit .

5. Determine possible failure area (TUNER GND line, others)

-1. Check for continuity between test points 1 and 2.

Test condition	Vehicle OFF (LOCK) mode
B	Tuner unit connector A (10P): disconnected
Test point 1	**Tuner unit connector A (10P) No. 2**
Test point 2	Body ground

Is there continuity?

YES

The TUNER GND wire is OK. Go to step 7.

NO

Go to step 6.

6. Open wire check (TUNER GND line)

-1. Check for continuity between test points 1 and 2.

Test condition	Vehicle OFF (LOCK) mode
B	Tuner unit connector A (10P): disconnected
Test point 1	**Audio-navigation unit connector E (16P) (with navigation) No. 9**
B	**Audio unit connector E (16P) (without navigation) No. 9**
Test point 2	Body ground

Is there continuity?

YES

Repair an open in the wire.

NO: With navigation

Replace the audio-navigation unit .

NO: Without navigation

Replace the audio unit .

7. Determine possible failure area (TUNER 9V line, others)

-1. Turn the vehicle to the ON mode.

-2. Measure the voltage between test points 1 and 2.

Test condition	Vehicle ON mode
B	Tuner unit connector A (10P): disconnected
Test point 1	**Tuner unit connector A (10P) No. 1**
Test point 2	Body ground

Is there about 9.0 V?

YES

The TUNER 9V wire is OK. Go to step 10.

NO

Go to step 8.

8. Open wire check (TUNER 9V line)

-1. Measure the voltage between test points 1 and 2.

Test condition	Vehicle ON mode
B	Tuner unit connector A (10P): disconnected
Test point 1	**Audio-navigation unit connector E (16P) (with navigation) No. 2**
B	**Audio unit connector E (16P) (without navigation) No. 2**
Test point 2	Body ground

Is there about 9.0 V?

YES

Repair an open in the wire.

NO

The TUNER 9V wire is not open. Go to step 9.

9. Shorted wire check (TUNER 9V line)

-1. Turn the vehicle to the OFF (LOCK) mode.

-2. Disconnect the following connector.

Audio-navigation unit connector E (16P) (with navigation)Audio unit connector E (16P) (without navigation)

-3. Check for continuity between test points 1 and 2.

Test condition	Vehicle OFF (LOCK) mode
B	Tuner unit connector A (10P): disconnected
B	Audio-navigation unit connector E (16P) (with navigation): disconnected Audio unit connector E (16P) (without navigation): disconnected
Test point 1	**Audio-navigation unit connector E (16P) (with navigation) No. 2**
B	**Audio unit connector E (16P) (without navigation) No. 2**
Test point 2	Body ground

Is there continuity?

YES

Repair a short to body ground in the wire.

NO: With navigation

Replace the audio-navigation unit .

NO: Without navigation

Replace the audio unit .

10. Shorted wire check (TUNER RS485+ line, TUNER RS485- line)

-1. Turn the vehicle to the OFF (LOCK) mode.

-2. Disconnect the following connector.

Audio-navigation unit connector E (16P) (with navigation) Audio unit connector E (16P) (without navigation)

-3. Check for continuity between test points 1 and 2.

Test condition	Vehicle OFF (LOCK) mode
B	Tuner unit connector A (10P): disconnected
B	Audio-navigation unit connector E (16P) (with navigation): disconnected Audio unit connector E (16P) (without navigation): disconnected

Test point 1	**Tuner unit connector A (10P) No. 5**
Test point 2	Body ground

Test point 1	**Tuner unit connector A (10P) No. 7**
Test point 2	Body ground

Is there continuity?

YES

There is a short to body ground in the wire(s). Replace the affected shielded harness.

NO

The TUNER RS485+ and the TUNER RS485**-** wires are not shorted to ground. Go to step 11.

11. Shorted wire check (TUNER RS485+ line to TUNER RS485- line)

-1. Check for continuity between test points 1 and 2.

Test condition	Vehicle OFF (LOCK) mode
B	Tuner unit connector A (10P): disconnected
B	Audio-navigation unit connector E (16P) (with navigation): disconnected Audio unit connector E (16P) (without navigation): disconnected
Test point 1	**Tuner unit connector A (10P) No. 5**
Test point 2	**Tuner unit connector A (10P) No. 7**

Is there continuity?

YES

There is a short in the wires. Replace the affected shielded harness.

NO

The TUNER RS485+ wire and the TUNER RS485**-** wire are not shorted. Go to step 12.

12. Shorted wire check (TUNER RS485 SH line to another lines)

-1. Check for continuity between test points 1 and 2.

Test condition	Vehicle OFF (LOCK) mode
B	Tuner unit connector A (10P): disconnected
B	Audio-navigation unit connector E (16P) (with navigation): disconnected Audio unit connector E (16P) (without navigation): disconnected
Test point 1	**Tuner unit connector A (10P) No. 5**
Test point 2	**Tuner unit connector A (10P) No. 6**

Test point 1	**Tuner unit connector A (10P) No. 6**
Test point 2	**Tuner unit connector A (10P) No. 7**

Is there continuity?

YES

There is a short in the wires. Replace the affected shielded harness.

NO

The TUNER RS485 SH wire is not shorted. Go to step 13.

13. Open wire check (TUNER RS485+ line, TUNER RS485- line)

-1. Check for continuity between test points 1 and 2.

Test condition	Vehicle OFF (LOCK) mode
B	Tuner unit connector A (10P): disconnected
B	Audio-navigation unit connector E (16P) (with navigation): disconnected Audio unit connector E (16P) (without navigation): disconnected
Test point 1	**Tuner unit connector A (10P) No. 5**
Test point 2	**Audio-navigation unit connector E (16P) (with navigation) No. 15**

B	Audio unit connector E (16P) (without navigation) No. 15

Test point 1	Tuner unit connector A (10P) No. 7
Test point 2	Audio-navigation unit connector E (16P) (with navigation) No. 16
B	Audio unit connector E (16P) (without navigation) No. 16

Is there continuity?

YES

The TUNER RS485+ and the TUNER RS485**-** wires are OK. Go to step 14.

NO

There is an open in the wire(s). Replace the affected shielded harness.

14. Tuner unit check (substitution)

-1. Substitute a known-good tuner unit.

-2. Reconnect all the connectors, and recheck.

Does the symptom go away?

YES

Replace the original tuner unit .

NO: With navigation

Replace the audio-navigation unit .

NO: Without navigation

Replace the audio unit .

Audio remote-HFL switch does not work properly (audio unit buttons work)

NOTE:

- **Check the vehicle 12 volt battery condition first** .
- Check the connectors for poor connections or loose terminals.

1. Problem verification

-1. Turn the vehicle to the ON mode.

-2. Using the audio remote-HFL switch buttons, check if the audio system and the HFL system operates properly.

Are the audio system and the HFL system operation OK?

YES

Intermittent failure, the system is OK at this time.

NO

The failure is duplicated, go to step 2.

2. Determine possible failure area (audio remote-HFL switch, others):

Go into the System Diagnostic Mode;

- With navigation: **Use the Hard Key test under the Unit Check menu** .
- Display audio type without navigation: **Use the Hard Key test under the Unit Check menu**.
- Color audio type: **Use the Knob Check test under the Version/System menu**.

-2. Check the audio remote-HFL switch status.

Do all of the buttons fail to respond?

YES: With multi-information display

Go to step 3.

YES: Without multi-information display

Go to step 5.

NO

Replace the audio remote-HFL switch .

3. Gauge control module DTCs check

-1. Check for gauge control module DTCs with the HDS.

DTC Description	DTC
B1195 Gauge control module lost communication with Audio Remote Switch(LIN bus connected)	B

DTC (Gauge Control Module)

Is DTC B1195 indicated?

YES

Go to the indicated DTC's troubleshooting .

NO

Go to step 4.

4. Open wire check (B-CAN_H line, B-CAN_L line)

-1. Turn the vehicle to the OFF (LOCK) mode.

-2. Disconnect the following connectors.

Gauge control module connector A (32P)

Audio-navigation unit connector A (24P) (with navigation)
Audio unit connector A (24P) (without navigation)

-3. Check for continuity between test points 1 and 2.

Test condition	Vehicle OFF (LOCK) mode

B	Gauge control module connector A (32P): disconnected
B	Audio-navigation unit connector A (24P) (with navigation): disconnected
B	Audio unit connector A (24P) (without navigation): disconnected
Test point 1	**Gauge control module connector A (32P) No. 30**
Test point 2	**Audio-navigation unit connector A (24P) No. 14**
	Audio unit connector A (24P) No. 14

Test point 1	**Gauge control module connector A (32P) No. 31**
Test point 2	**Audio-navigation unit connector A (24P) No. 24**
	Audio unit connector A (24P) No. 24

Is there continuity?

YES: With navigation

Replace the audio-navigation unit .

YES: Without navigation

Replace the audio unit .

NO

Repair an open in the wire(s).

5. Audio remote switch check

-1. Turn the vehicle to the OFF (LOCK) mode.

-2. Disconnect the following connector.

Audio remote-HFL switch 12P connector

-3. **Do the Audio Remote-HFL Switch Test** .

Is the audio remote-HFL switch OK?

YES

Go to step 6.

NO

Replace the audio remote-HFL switch .

6. Shorted wire check (AUDIO REMOTE SW line, HFT/NAVI REMOTE SW line)

-1. Disconnect the following connector.

Audio unit connector A (24P)

-2. Check for continuity between test points 1 and 2.

Test condition	Vehicle OFF (LOCK) mode
B	Audio remote-HFL switch 12P connector: disconnected
B	Audio unit connector A (24P): disconnected
Test point 1	**Audio unit connector A (24P) No. 9**

Test point 2	Body ground

Test point 1	**Audio unit connector A (24P) No. 20**
Test point 2	Body ground

Is there continuity?

YES

Repair a short to body ground in the wire(s).

NO

The AUDIO REMOTE SW and the HFT/NAVI REMOTE SW wires are not shorted to ground. Go to step 7.

7. Determine possible failure area (HFT/NAVI REMOTE SW line, others)

-1. Reconnect the audio remote-HFL switch 12P connector.

-2. Measure the resistance between test points 1 and 2 as specified in the table.

Test condition	Vehicle OFF (LOCK) mode
B	Audio unit connector A (24P): disconnected
Test point 1	**Audio unit connector A (24P) No. 9**
Test point 2	**Audio unit connector A (24P) No. 19**

Button held down	VOL DOWN (-)	VOL UP(+)	LEFT	RIGHT	SOURCE	No button pressed
Resistance	About 99 Ω	About 357 Ω	About 775 Ω	About 1.7 kΩ	About 3.7 kΩ	About 10 kΩ

Is the resistance OK?

YES

Go to step 8.

NO

Go to step 9.

8. Open wire check (HFT/NAVI REMOTE SW line)

-1. Measure the resistance between test points 1 and 2 as specified in the table.

Test condition	Vehicle OFF (LOCK) mode
B	Audio unit connector A (24P): disconnected
Test point 1	**Audio unit connector A (24P) No. 19**
Test point 2	**Audio unit connector A (24P) No. 20**

Button held down	HANG-UP	PICK-UP	No button pressed
Resistance	About 47 Ω	About 222 Ω	About 10 kΩ

Is the resistance OK?

YES

Replace the audio unit .

NO

Repair an open or high resistance in the HFT/NAVI REMOTE SW wire.

9. Determine possible failure area (AUDIO REMOTE SW line, REMOTE SW GND line)

    -1. Measure the resistance between test points 1 and 2 as specified in the table.

Test condition	Vehicle OFF (LOCK) mode
B	Audio unit connector A (24P): disconnected
Test point 1	**Audio unit connector A (24P) No. 19**
Test point 2	**Audio unit connector A (24P) No. 20**

Button held down	HANG-UP	PICK-UP	No button pressed
Resistance	About 47 Ω	About 222 Ω	About 10 kΩ

    Is the resistance OK?

    YES

    Repair an open or high resistance in the AUDIO REMOTE SW wire.

    NO

    Repair an open or high resistance in the REMOTE SW GND wire.

Audio system sound is weak or distorted (display is normal)

NOTE:

- **Check the vehicle 12 volt battery condition first** .
- Check the connectors for poor connections or loose terminals.

1. Problem verification

    -1. Turn the vehicle to the ON mode.

    Go into the System Diagnostic Mode, and use the speaker check mode.

    - **With navigation**
    - **Without navigation**

    Is there tone from the speakers, and is the tone quality normal in each channel?

    YES

    Intermittent failure, the system is OK at this time.

    NO: With stereo amplifier

    The failure is duplicated, go to step 2.

    NO: Without stereo amplifier

    The failure is duplicated, go to step 5.

2. Determine possible failure area (speaker lines, others)

-1. Turn the vehicle to the OFF (LOCK) mode.

-2. Disconnect the following connectors.

Stereo amplifier connector A (18P)

-3. Measure the resistance between test points 1 and 2.

Test condition	Vehicle OFF (LOCK) mode
B	Stereo amplifier connector A (18P): disconnected

Test point 1:Stereo amplifier connector A (18P)	**Test point 2:Stereo amplifier connector A (18P)**	**Resistance**
No. 2	No. 4	About 2 Ω
No. 5	No. 6	About 4 Ω
No. 7	No. 8	About 4 Ω* 1 About 3.2 Ω* 2
No. 9	No. 10	About 4 Ω* 1 About 3.2 Ω* 2
No. 12	No. 13	About 4 Ω
No. 14	No. 15	About 3.2 Ω
No. 16	No. 17	About 3.2 Ω

*1: Connect rear door speaker connector and disconnect rear tweeter connector.

*2: Disconnect rear door speaker connector and connect rear tweeter connector.

Is the resistance OK?

YES

Go to step 4.

NO

Go to step 3.

3. Speaker check

-1. **Test the speaker on the faulty speaker lines** .

Is the speaker OK?

YES

Repair a faulty speaker wire(s).

NO

Replace the speaker .

4. Speaker visual check

-1. **Remove the speaker** that is duplicating the failure, and check the speaker for any damage.

Is there any damage?

YES

Replace the speaker .

NO

Replace the stereo amplifier .

5. Determine possible failure area (speaker lines, others)

-1. Turn the vehicle to the OFF (LOCK) mode.

-2. Disconnect the following connectors.

Audio-navigation unit connector A (24P) (with navigation)Audio unit connector A (24P) (without navigation)
Left front tweeter 2P connector
Right front tweeter 2P connector
Left rear tweeter 2P connector
Right rear tweeter 2P connector

-3. Measure the resistance between test points 1 and 2.

Test condition	Vehicle OFF (LOCK) mode
B	Audio-navigation unit connector A (24P) (with navigation): disconnected Audio unit connector A (24P) (without navigation): disconnected
B	Left front tweeter 2P connector: disconnected
B	Right front tweeter 2P connector: disconnected
B	Left rear tweeter 2P connector: disconnected
B	Right rear tweeter 2P connector: disconnected

Test point 1:Audio-navigation unit connector A (24P) (with navigation) **Audio unit connector A (24P) (without navigation)**	**Test point 2:Audio-navigation unit connector A (24P) (with navigation)** **Audio unit connector A (24P) (without navigation)**	**Resistance**
No. 5	No. 6	About 4 Ω* 1 About 3.2 Ω* 2
No. 7	No. 8	About 4 Ω* 1 About 3.2 Ω* 2
No. 15	No. 16	About 4 Ω* 1 About 3.2 Ω* 2
No. 17	No. 18	About 4 Ω* 1 About 3.2 Ω* 2

*1: Connect door speaker connector and disconnect tweeter connector.*2: Disconnect door speaker connector and connect tweeter connector.

Is the resistance OK?

YES: With navigation

Replace the audio-navigation unit .

YES: Without navigation

Replace the audio unit .

NO

Go to step 6.

6. Speaker check

   -1. Test the speaker on the faulty speaker lines .

   Is the speaker OK?

   YES

   Repair an open in the wire.

   NO

   Replace the speaker .

Audio unit button illumination does not work

NOTE:

- Check the vehicle 12 volt battery condition first .
- Check for B-CAN DTCs and resolve them before troubleshooting.
- Check the connectors for poor connections or loose terminals.

1. Relay control module DTCs check

   -1. Clear the DTCs with the HDS.

   -2. Turn the vehicle to the OFF (LOCK) mode then the ON mode.

   -3. Wait for at least 10 seconds.

   -4. Check for DTCs with the HDS.

DTC Description	DTC
B	B

   DTC (Relay Control Module)

   Are any DTCs indicated?

   YES

   Go to the indicated DTC's troubleshooting .

   NO

   Go to step 2.

2. Problem verification

   -1. Turn the vehicle to the ON mode.

   -2. Turn the combination light switch to the PARKING ( ) position.

   -3. Check the illumination of the audio unit buttons.

   Are the buttons illuminated?

YES

Intermittent failure, the audio unit is OK at this time.

NO

The failure is duplicated, go to step 3.

3. Determine possible failure area (interior lights circuit, others)

-1. Check the illumination of several other buttons not related to the audio system.

Are the buttons illuminated?

YES

Go to step 4.

NO

Troubleshoot the interior lights.

4. Determine possible failure area (audio unit, others)

-1. **Go into the System Diagnostic Mode, and use the ILLUMI in the Vehicle Information to check the ILLUMI signal**.

Does the METER_ILL STATUS signal change from [0] to [1] when the combination light switch is turned to the parking light position?

YES

Replace the audio unit .

NO

Go to step 5.

5. Open wire check (B-CAN_H line, B-CAN_L line)

-1. Turn the combination light switch off.

-2. Turn the vehicle to the OFF (LOCK) mode.

-3. Disconnect the following connectors.

Gauge control module connector A (32P)
Audio unit connector A (24P)

-4. Check for continuity between test points 1 and 2.

Test condition	Vehicle OFF (LOCK) mode
B	Gauge control module connector A (32P): disconnected
B	Audio unit connector A (24P): disconnected
Test point 1	**Gauge control module connector A (32P) No. 30**
Test point 2	**Audio unit connector A (24P) No. 14**

Test point 1	**Gauge control module connector A (32P) No. 31**

Test point 2	**Audio unit connector A (24P) No. 24**

Is there continuity?

YES

Replace the audio unit .

NO

Repair an open in the wire(s).

Audio unit power will not turn on (No information display)

NOTE:

- **Check the vehicle 12 volt battery condition first** .
- Check if the Display Mode (☼ ☽) button has been pressed, and turned off the display (see the Owner's Manual for more information).
- Check the connectors for poor connections or loose terminals.
- Check the fuses and **relays** associated with the system, and check for a short in the related lines.

1. Problem verification

   -1. Turn the vehicle to the ON mode.

   -2. Check if the display indicates any information.

   Is any information displayed?

   YES

   Intermittent failure, the system is OK at this time.

   NO: Display audio type

   The failure is duplicated, go to step 2.

   NO: Color audio type

   The failure is duplicated, go to step 8.

2. Determine possible failure area (LVDS1 circuit, others)

   -1. Shield the center display unit from the sun with your hand, and check that the display is back lit (only the back light is on).

   Can you see the back light?

   YES

   Go to step 11.

   NO

   Go to step 3.

3. Open wire check (+B BACKUP2 SUB/+B AUDIO line) 1

-1. Disconnect the following connector.

Center display unit connector A (5P)

-2. Measure the voltage between test points 1 and 2.

Test condition	Vehicle OFF (LOCK) mode
B	Center display unit connector A (5P): disconnected
Test point 1	**Center display unit connector A (5P) No. 1**
Test point 2	Body ground

Is there battery voltage?

YES

The +B BACKUP2 SUB/+B AUDIO wire is OK. Go to step 4.

NO

Repair an open in the wire.

4. Open wire check (GND line) 1

-1. Measure the resistance between test points 1 and 2.

Test condition	Vehicle OFF (LOCK) mode
B	Center display unit connector A (5P): disconnected
Test point 1	**Center display unit connector A (5P) No. 5**
Test point 2	Body ground

Is there 1.0 Ω or less?

YES

The GND wire is OK. Go to step 5.

NO

Repair an open or high resistance in the ground wire or poor ground (G402).

5. Determine possible failure area (DISP CONT line, others)

-1. Reconnect center display unit connector A (5P).

-2. Disconnect the following connector.

Audio unit connector E (16P)

-3. Turn the vehicle to the ON mode.

-4. Measure the voltage between test points 1 and 2.

Test condition	Vehicle ON mode
B	Audio unit connector E (16P): disconnected
Test point 1	**Audio unit connector E (16P) No. 4**
Test point 2	Body ground

Is there about 3.3 V?

YES

The DISP CONT wire is OK. Go to step 7.

NO

Go to step 6.

6. Open wire check (DISP CONT line)

-1. Measure the voltage between test points 1 and 2.

Test condition	Vehicle ON mode
B	Audio unit connector E (16P): disconnected
Test point 1	**Center display unit connector A (5P) No. 4**
Test point 2	Body ground

Is there about 3.3 V?

YES

Repair an open in the wire.

NO

Replace the center display unit .

7. Determine possible failure area (center display unit, others)

-1. Turn the vehicle to the OFF (LOCK) mode.

-2. Reconnect audio unit connector E (16P).

-3. Turn the vehicle to the ON mode.

-4. Measure the voltage between test points 1 and 2.

Test condition	Vehicle ON mode
Test point 1	**Audio unit connector E (16P) No. 4**
Test point 2	Body ground

Is there less than 0.2 V?

Yes

Replace the center display unit .

No

Go to step 8.

8. Open wire check (+B BACKUP2 SUB/+B AUDIO line) 2

-1. Turn the vehicle to the OFF (LOCK) mode.

-2. Disconnect the following connector.

Audio unit connector A (24P)

-3. Measure the voltage between test points 1 and 2.

Test condition	Vehicle OFF (LOCK) mode
B	Audio unit connector A (24P): disconnected
Test point 1	**Audio unit connector A (24P) No. 3**
Test point 2	Body ground

Is there battery voltage?

YES

The +B BACKUP2 SUB/+B AUDIO wire is OK. Go to step 9.

NO

Repair an open in the wire.

9. Open wire check (ACC CUT(VST)/ACC/IG1 WITH DIODE FMVSS line)

-1. Turn the vehicle to the ON mode.

-2. Measure the voltage between test points 1 and 2.

Test condition	Vehicle ON mode
B	Audio unit connector A (24P): disconnected
Test point 1	**Audio unit connector A (24P) No. 23**
Test point 2	Body ground

Is there battery voltage?

YES

The ACC CUT(VST)/ACC/IG1 WITH DIODE FMVSS wire is OK. Go to step 10.

NO

Repair an open in the wire.

10. Open wire check (GND line) 2

-1. Turn the vehicle to the OFF (LOCK) mode.

-2. Reconnect audio unit connector A (24P).

-3. Turn the vehicle to the ON mode.

-4. Measure the voltage between test points 1 and 2.

Test condition	Vehicle ON mode
Test point 1	**Audio unit connector A (24P) No. 1**
Test point 2	Body ground

Is there less than 0.2 V?

YES: Display audio type

Replace the audio unit .

YES: Color audio type

Substitute the known good audio panel then recheck. If the symptom does not go away, replace the audio unit.

NO

Repair an open or high resistance in the ground wire or poor ground (G402).

11. Shorted wire check (LVDS1+ line to LVDS1- line)

-1. Turn the vehicle to the OFF (LOCK) mode.

-2. Disconnect the following connectors.

Audio unit connector H (3P)
Center display unit connector B (3P)

-3. Measure the resistance between test points 1 and 2.

Test condition	Vehicle OFF (LOCK) mode
B	Audio unit connector H (3P): disconnected
B	Center display unit connector B (3P): disconnected
Test point 1	**Center display unit connector B (3P) No. 1**
Test point 2	**Center display unit connector B (3P) No. 2**

Is there 1.0 MΩ or more?

YES

The LVDS1+ wire and the LVDS1- wire are not shorted. Go to step 12.

NO

There is a short in the wires. Replace the affected shielded harness.

12. Shorted wire check (LVDS1 SH line to another lines)

-1. Measure the resistance between test points 1 and 2.

Test condition	Vehicle OFF (LOCK) mode
B	Audio unit connector H (3P): disconnected
B	Center display unit connector B (3P): disconnected
Test point 1	**Center display unit connector B (3P) No. 1**
Test point 2	**Center display unit connector B (3P) No. 3**

Test point 1	**Center display unit connector B (3P) No. 2**
Test point 2	**Center display unit connector B (3P) No. 3**

Is there 1.0 MΩ or more?

YES

The LVDS1 SH wire is not shorted. Go to step 13.

NO

There is a short in the wires. Replace the affected shielded harness.

13. Open wire check (LVDS1+ line, LVDS1- line)

-1. Measure the resistance between test points 1 and 2.

Test condition	Vehicle OFF (LOCK) mode
B	Audio unit connector H (3P): disconnected
B	Center display unit connector B (3P): disconnected
Test point 1	**Audio unit connector H (3P) No. 1**
Test point 2	**Center display unit connector B (3P) No. 1**

Test point 1	**Audio unit connector H (3P) No. 2**
Test point 2	**Center display unit connector B (3P) No. 2**

Is there 1.0 Ω or less?

YES

The LVDS1+ and the LVDS1**-** wires are OK. Go to step 14.

NO

There is an open in the wire(s). Replace the affected shielded harness.

14. Center display unit check (substitution)

-1. Substitute a known-good center display unit.

-2. Reconnect all the connectors, and recheck.

Does the symptom go away?

YES

Replace the original center display unit .

NO

Replace the audio unit .

Auxiliary input sound is low or cannot be heard

NOTE:

- **Check the vehicle 12 volt battery condition first** .
- Use auxiliary stereo cables with 3.5 mm ends only.
- Auxiliary accessories may be played on the audio unit using the auxiliary input.
- Check the connectors for poor connections or loose terminals.

1. Problem verification 1

-1. Turn the vehicle to the ON mode.

-2. Turn on the audio system.

-3. Connect an auxiliary audio accessory to the auxiliary input jack.

Does the display change to the AUX mode?

YES

Go to step 2.

NO

The failure is duplicated, go to step 4.

2. Problem verification 2

-1. Check the auxiliary audio source sound.

Is the sound normal?

YES

Intermittent failure, the system is OK at this time.

NO

The failure is duplicated, go to step 3.

3. Determine possible failure area (auxiliary audio accessory, others)

-1. Substitute a known-good auxiliary audio accessory and/or auxiliary stereo cable, and recheck.

Is the sound normal?

YES

Original auxiliary audio accessory or auxiliary stereo cable is faulty.

NO

Go to step 8.

4. Determine possible failure area (auxiliary jack assembly, others)

-1. Turn the vehicle to the OFF (LOCK) mode.

-2. Disconnect the auxiliary audio accessory from the auxiliary input jack.

-3. Disconnect the following connector.

Auxiliary jack assembly 5P connector

-4. Connect terminals A and B with a jumper wire.

Terminal A	**Auxiliary jack assembly 5P connector No. 4**
Terminal B	**Auxiliary jack assembly 5P connector No. 5**

-5. Turn the vehicle to the ON mode.

-6. Turn on the audio system.

Does the display change to the AUX mode?

YES

Replace the auxiliary jack assembly .

NO

Go to step 5.

5. Determine possible failure area (AUX detect circuit, others)

-1. Turn the vehicle to the OFF (LOCK) mode.

-2. Remove the jumper wire.

-3. Turn the vehicle to the ON mode.

-4. Measure the voltage between test points 1 and 2.

Test condition	Vehicle ON mode
B	Auxiliary jack assembly 5P connector: disconnected
Test point 1	**Auxiliary jack assembly 5P connector No. 4**
Test point 2	**Auxiliary jack assembly 5P connector No. 5**

Is there about 3.3 V?

YES

Replace the audio unit .

NO

Go to step 6.

6. Determine possible failure area (AUX DET line, others)

-1. Measure the voltage between test points 1 and 2.

Test condition	Vehicle ON mode
B	Auxiliary jack assembly 5P connector: disconnected
Test point 1	**Auxiliary jack assembly 5P connector No. 5**
Test point 2	Body ground

Is there about 3.3 V?

YES

Repair an open in the wire.

NO

Go to step 7.

7. Open wire check (AUX DET line)

-1. Measure the voltage between test points 1 and 2.

Test condition	Vehicle ON mode
B	Auxiliary jack assembly 5P connector: disconnected
Test point 1	**Audio unit connector C (32P) No. 9**
Test point 2	Body ground

Is there about 3.3 V?

YES

Repair an open in the wire.

NO

Replace the audio unit .

8. Shorted wire check (AUX SGND, AUX R CH, AUX L CH lines)

-1. Turn the vehicle to the OFF (LOCK) mode.

-2. Disconnect the auxiliary audio accessory from the auxiliary input jack.

-3. Disconnect the following connectors.

Audio unit connector C (32P)
Auxiliary jack assembly 5P connector

-4. Check for continuity between these test points and body ground individually.

Test condition	Vehicle OFF (LOCK) mode
B	Audio unit connector C (32P): disconnected
B	Auxiliary jack assembly 5P connector: disconnected

Connector	Terminal
Audio unit connector C (32P)	No. 24
	No. 25
	No. 26

Is there continuity?

YES

There is a short to body ground in the wire(s). Replace the affected shielded harness.

NO

The AUX SGND, AUX LCH, and AUX RCH wires are not shorted to ground. Go to step 9.

9. Shorted wire check (AUX SH line to another lines)

-1. Check for continuity between test points 1 and 2.

Test condition	Vehicle OFF (LOCK) mode
B	Audio unit connector C (32P): disconnected
B	Auxiliary jack assembly 5P connector: disconnected

Test point 1:Audio unit connector C (32P)	Test point 2:Audio unit connector C (32P)
No. 8	No. 24, No. 25, No. 26

Is there continuity between any of the terminals?

YES

There is a short in the wires. Replace the affected shielded harness.

NO

The AUX SH wire is OK. Go to step 10.

10. Open wire check (AUX SGND, AUX R CH, AUX L CH lines)

-1. Check for continuity between test points 1 and 2.

Test condition	Vehicle OFF (LOCK) mode
B	Audio unit connector C (32P): disconnected
B	Auxiliary jack assembly 5P connector: disconnected

Test point 1:Audio unit connector C (32P)	Test point 2:Auxiliary jack assembly 5P connector
No. 24	No. 1
No. 25	No. 3
No. 26	No. 2

Is there continuity?

YES

The AUX SGND, AUX L CH, and AUX R CH wires are OK. Go to step 11.

NO

There is an open in the wire(s). Replace the affected shielded harness.

11. Auxiliary jack assembly check (substitution)

-1. **Substitute a known-good auxiliary jack assembly** .

-2. Reconnect all the connectors, and recheck.

Does the symptom go away?

YES

Replace the original auxiliary jack assembly .

NO

Replace the audio unit .

Booming sound while driving with audio system on or off

NOTE:

- **Check the vehicle 12 volt battery condition first** .
- Check for F-CAN and B-CAN DTCs and resolve them before troubleshooting.
- Check the connectors for poor connections or loose terminals.
- Check the fuses and **relays** associated with the system, and check for a short in the related lines.
- The front ANC/active sound control microphone is the same parts as the front HFL-navigation-ANC/active sound control microphone and the front HFL-ANC/active sound control microphone.

1. Problem verification

-1. Make sure all doors, hood, and the tailgate are closed.

-2. Start the engine.

Is a booming sound or a low-frequency hum heard from speakers?

YES

The failure is duplicated, go to step 2.

NO

Intermittent failure, the system is OK at this time.

2. Determine possible failure area (speaker output circuit, others)

-1. **Go into the System Diagnostic Mode, and use the speaker check mode**.

Is the sound quality normal at each speaker?

YES

Go to step 3.

NO

Go to No sound is heard from all the speakers (display is normal) troubleshooting.

3. Open wire check (+B BACK UP line)

-1. Turn the vehicle to the OFF (LOCK) mode.

-2. Disconnect the following connector.

ANC/active sound control unit 20P connector

-3. Measure the voltage between test points 1 and 2.

Test condition	Vehicle OFF (LOCK) mode
B	ANC/active sound control unit 20P connector: disconnected
Test point 1	**ANC/active sound control unit 20P connector No. 11**
Test point 2	Body ground

Is there battery voltage?

YES

The +B BACK UP wire is OK. Go to step 4.

NO

Repair an open in the wire.

4. Open wire check (IG1 METER line)

-1. Turn the vehicle to the ON mode.

-2. Measure the voltage between test points 1 and 2.

Test condition	Vehicle ON mode

B	ANC/active sound control unit 20P connector: disconnected
Test point 1	**ANC/active sound control unit 20P connector No. 12**
Test point 2	Body ground

Is there battery voltage?

YES

The IG1 METER wire is OK. Go to step 5.

NO

Repair an open in the wire.

5. Determine possible failure area (SWD+B line, others)

-1. Measure the voltage between test points 1 and 2.

Test condition	Vehicle ON mode
B	ANC/active sound control unit 20P connector: disconnected
Test point 1	**ANC/active sound control unit 20P connector No. 3**
Test point 2	Body ground

Is there battery voltage?

YES

The SWD+B wire is OK. Go to step 8.

NO

Go to step 6.

6. Open wire check (SWD+B line)

-1. Disconnect the following connector.

Stereo amplifier connector C (16P) (with stereo amplifier)

-2. Measure the voltage between test points 1 and 2.

Test condition	Vehicle ON mode
B	ANC/active sound control unit 20P connector: disconnected Stereo amplifier connector C (16P) (with stereo amplifier): disconnected
Test point 1	**Audio-navigation unit connector A (24P) (with navigation) No. 21**
B	**Audio unit connector A (24P) (without navigation) No. 21**
Test point 2	Body ground

Is there battery voltage?

YES

Repair an open in the wire.

NO

The SWD+B wire is not open. Go to step 7.

7. Shorted wire check (SWD+B line)

-1. Turn the vehicle to the OFF (LOCK) mode.

-2. Disconnect the following connector.

Audio-navigation unit connector A (24P) (with navigation)Audio unit connector A (24P) (without navigation)

-3. Check for continuity between test points 1 and 2.

Test condition	Vehicle OFF (LOCK) mode
B	ANC/active sound control unit 20P connector: disconnected Stereo amplifier connector C (16P) (with stereo amplifier): disconnected Audio-navigation unit connector A (24P) (with navigation): disconnected Audio unit connector A (24P) (without navigation): disconnected
Test point 1	**Audio-navigation unit connector A (24P) (with navigation) No. 21**
B	**Audio unit connector A (24P) (without navigation) No. 21**
Test point 2	Body ground

Is there continuity?

YES

Repair a short to body ground in the wire.

NO: With navigation

Replace the audio-navigation unit .

NO: Without navigation

Replace the audio unit .

8. Open wire check (GND line)

-1. Turn the vehicle to the OFF (LOCK) mode.

-2. Reconnect the following connector.

ANC/active sound control unit 20P connector

-3. Turn the vehicle to the ON mode.

-4. Measure the voltage between test points 1 and 2.

Test condition	Vehicle ON mode
Test point 1	**ANC/active sound control unit 20P connector No. 1**
Test point 2	Body ground

Is there less than 0.2 V?

YES

The GND wire is OK. Go to step 9.

NO

Repair an open or high resistance in the wire or poor ground (G402).

9. Determine possible failure area (MIC PWR line, others)

-1. Turn the vehicle to the OFF (LOCK) mode.

-2. Disconnect the following connector.

Front ANC/active sound control microphone 8P connector

-3. Measure the voltage between test points 1 and 2.

Test condition	Vehicle ON mode
B	Front ANC/active sound control microphone 8P connector: disconnected
Test point 1	**Front ANC/active sound control microphone 8P connector No. 4**
Test point 2	Body ground

Is there about 8.0 V?

YES

The MIC PWR wire is OK. Go to step 12.

NO

Go to step 10.

10. Open wire check (MIC PWR line)

-1. Measure the voltage between test points 1 and 2.

Test condition	Vehicle ON mode
B	Front ANC/active sound control microphone 8P connector: disconnected
Test point 1	**Audio-navigation unit connector C (36P) (with navigation) No. 7**
B	**Audio unit connector C (36P) (without navigation) No. 7**

Test point 2	Body ground

Is there about 8.0 V?

YES

Repair an open in the wire.

NO

The MIC PWR wire is not open. Go to step 11.

11. Shorted wire check (MIC PWR line)

-1. Turn the vehicle to the OFF (LOCK) mode.

-2. Disconnect the following connector.

Audio-navigation unit connector C (36P) (with navigation)Audio unit connector C (36P) (without navigation)

-3. Check for continuity between test points 1 and 2.

Test condition	Vehicle OFF (LOCK) mode
B	Front ANC/active sound control microphone 8P connector: disconnected Audio-navigation unit connector C (36P) (with navigation): disconnected Audio unit connector C (36P) (without navigation): disconnected
Test point 1	**Audio-navigation unit connector C (36P) (with navigation) No. 7**

B	**Audio unit connector C (36P) (without navigation) No. 7**
Test point 2	Body ground

Is there continuity?

YES

Repair a short to body ground in the wire.

NO: With navigation

Replace the audio-navigation unit .

NO: without navigation

Replace the audio unit .

12. Determine possible failure area (ANC F MIC+8V line, others)

-1. Turn the vehicle to the OFF (LOCK) mode.

-2. Turn the vehicle to the ON mode.

-3. Measure the voltage between test points 1 and 2.

Test condition	Vehicle ON mode
B	Front ANC/active sound control microphone 8P connector: disconnected
Test point 1	**Front ANC/active sound control microphone 8P connector No. 8**
Test point 2	Body ground

Is there about 8.0 V?

YES

The ANC F MIC+8V wire is OK. Go to step 16.

NO

Go to step 13.

13. Open wire check (ANC F MIC+8V line)

-1. Measure the voltage between test points 1 and 2.

Test condition	Vehicle ON mode
B	Front ANC/active sound control microphone 8P connector: disconnected
Test point 1	**ANC/active sound control unit 20P connector No. 18**
Test point 2	Body ground

Is there about 8.0 V?

YES

There is an open in the wire. Replace the affected shielded harness.

NO

The ANC F MIC+8V wire is not open. Go to step 14.

14. Shorted wire check (ANC F MIC+8V line)

-1. Turn the vehicle to the OFF (LOCK) mode.

-2. Disconnect the following connector.

ANC/active sound control unit 20P connector

-3. Check for continuity between test points 1 and 2.

Test condition	Vehicle OFF (LOCK) mode
B	Front ANC/active sound control microphone 8P connector: disconnected ANC/active sound control unit 20P connector: disconnected
Test point 1	**ANC/active sound control unit 20P connector No. 18**
Test point 2	Body ground

Is there continuity?

YES

There is a short to body ground in the wire. Replace the affected shielded harness.

NO

The ANC F MIC+8V wire is not shorted to ground. Go to step 15.

15. Shorted wire check (SH ANC F MIC line to ANC F MIC+8V line)

-1. Check for continuity between test points 1 and 2.

Test condition	Vehicle OFF (LOCK) mode
B	Front ANC/active sound control microphone 8P connector: disconnected ANC/active sound control unit 20P connector: disconnected
Test point 1	**ANC/active sound control unit 20P connector No. 7**
Test point 2	**ANC/active sound control unit 20P connector No. 18**

Is there continuity?

YES

There is a short in the wires. Replace the affected shielded harness.

NO

Replace the ANC/active sound control unit .

16. Open wire check (MIC GND line)

-1. Turn the vehicle to the OFF (LOCK) mode.

-2. Check for continuity between test points 1 and 2.

Test condition	Vehicle OFF (LOCK) mode
B	Front ANC/active sound control microphone 8P connector: disconnected
Test point 1	**Front ANC/active sound control microphone 8P connector No. 1**
Test point 2	Body ground

Is there continuity?

YES

The MIC GND wire is OK. Go to step 17.

NO

There is an open in the wire. Replace the affected shielded harness.

17. Determine possible failure area (front ANC/active sound control microphone, others)

-1. Reconnect the following connector.

Front ANC/active sound control microphone 8P connector

-2. Turn the vehicle to the ON mode.

-3. Measure the voltage between test points 1 and 2.

NOTE: Use the voltmeter in AC range.

Test condition	Vehicle ON mode, make a loud noise like clapping your hands in front of the front ANC/active sound control microphone.
Test point 1	**ANC/active sound control unit 20P connector No. 18**
Test point 2	**ANC/active sound control unit 20P connector No. 7**

Does the voltage change when making a loud noise in front of the microphone?

YES

Go to step 18.

NO

Replace the front ANC/active sound control microphone .

18. Determine possible failure area (ANC R MIC circuit, others)

-1. Turn the vehicle to the OFF (LOCK) mode.

-2. Disconnect the following connector.

Rear ANC/active sound control microphone 2P connector

-3. Turn the vehicle to the ON mode.

-4. Measure the voltage between test points 1 and 2.

Test condition	Vehicle ON mode
B	Rear ANC/active sound control microphone 2P connector: disconnected
Test point 1	**Rear ANC/active sound control microphone 2P connector No. 1**
Test point 2	**Rear ANC/active sound control microphone 2P connector No. 2**

Is there about 8.0 V?

YES

Go to step 23.

NO

Go to step 19.

19. Open wire check (SH ANC R MIC line)

-1. Turn the vehicle to the OFF (LOCK) mode.

-2. Check for continuity between test points 1 and 2.

Test condition	Vehicle OFF (LOCK) mode
B	Rear ANC/active sound control microphone 2P connector: disconnected
Test point 1	**Rear ANC/active sound control microphone 2P connector No. 2**
Test point 2	Body ground

Is there continuity?

YES

The SH ANC R MIC wire is not open. Go to step 20.

NO

There is an open in the wire. Replace the affected shielded harness.

20. Open wire check (ANC R MIC+8V line)

-1. Turn the vehicle to the ON mode.

-2. Measure the voltage between test points 1 and 2.

Test condition	Vehicle ON mode
B	Rear ANC/active sound control microphone 2P connector: disconnected
Test point 1	**ANC/active sound control unit 20P connector No. 17**
Test point 2	Body ground

Is there about 8.0 V?

YES

There is an open in the wire. Replace the affected shielded harness.

NO

The ANC R MIC+8V wire is not open. Go to step 21.

21. Shorted wire check (ANC R MIC+8V line)

-1. Turn the vehicle to the OFF (LOCK) mode.

-2. Disconnect the following connector.

ANC/active sound control unit 20P connector

-3. Check for continuity between test points 1 and 2.

Test condition	Vehicle OFF (LOCK) mode
B	Rear ANC/active sound control microphone 2P connector: disconnected ANC/active sound control unit 20P connector: disconnected

Test point 1	**ANC/active sound control unit 20P connector No. 17**
Test point 2	Body ground

Is there continuity?

YES

There is a short to body ground in the wire. Replace the affected shielded harness.

NO

The ANC R MIC+8V wire is not shorted to ground. Go to step 22.

22. Shorted wire check (SH ANC R MIC line to ANC R MIC+8V line)

-1. Check for continuity between test points 1 and 2.

Test condition	Vehicle OFF (LOCK) mode
B	Rear ANC/active sound control microphone 2P connector: disconnected ANC/active sound control unit 20P connector: disconnected
Test point 1	**ANC/active sound control unit 20P connector No. 6**
Test point 2	**ANC/active sound control unit 20P connector No. 17**

Is there continuity?

YES

There is a short in the wires. Replace the affected shielded harness.

NO

Replace the ANC/active sound control unit .

23. Determine possible failure area (rear ANC/active sound control microphone, others)

-1. Turn the vehicle to the OFF (LOCK) mode.

-2. Reconnect the following connector.

Rear ANC/active sound control microphone 2P connector

-3. Turn the vehicle to the ON mode.

-4. Measure the voltage between test points 1 and 2.

NOTE: Use the voltmeter in AC range.

Test condition	Vehicle ON mode, make a loud noise like clapping your hands in front of the rear ANC/active sound control microphone.
Test point 1	**ANC/active sound control unit 20P connector No. 17**
Test point 2	**ANC/active sound control unit 20P connector No. 6**

Does the voltage change when making a loud noise in front of the microphone?

YES

Go to step 24.

NO

Replace the rear ANC/active sound control microphone .

24. Shorted wire check (ANC lines) 1

-1. Turn the vehicle to the OFF (LOCK) mode.

-2. Disconnect the following connectors.

ANC/active sound control unit 20P connector Stereo amplifier connector C (16P) (with stereo amplifier)Audio-navigation unit connector C (32P) (without stereo amplifier and with navigation)Audio unit connector C (32P) (without stereo amplifier and without navigation)

-3. Check for continuity between these test points and body ground individually.

Test condition	Vehicle OFF (LOCK) mode
B	ANC/active sound control unit 20P connector: disconnected Stereo amplifier connector C (16P) (with stereo amplifier): disconnected Audio-navigation unit connector C (32P) (without stereo amplifier and with navigation): disconnected Audio unit connector C (32P) (without stereo amplifier and without navigation): disconnected

Connector	Terminal
ANC/active sound control unit 20P connector	No. 9
	No. 10
	No. 19
	No. 20

Is there continuity?

YES

There is a short in the wires. Replace the affected shielded harness.

NO

The ANC wires are not shorted to ground. Go to step 25.

25. Shorted wire check (ANC lines) 2

-1. Check for continuity between test points 1 and 2.

Test condition	Vehicle OFF (LOCK) mode

B	ANC/active sound control unit 20P connector: disconnected Stereo amplifier connector C (16P) (with stereo amplifier): disconnected Audio-navigation unit connector C (32P) (without stereo amplifier and with navigation): disconnected Audio unit connector C (32P) (without stereo amplifier and without navigation): disconnected

Test point 1:**ANC/active sound control unit 20P connector**	Test points 2:**ANC/active sound control unit 20P connector**
No. 8	No. 9, No. 10, No. 19, No. 20
No. 9	No. 10, No. 19, No. 20
No. 10	No. 19, No. 20
No. 19	No. 20

Is there continuity between any of the terminals?

YES

There is a short in the wires. Replace the affected shielded harness.

NO

The ANC wires are not shorted in the wires. Go to step 26.

26. Open wire check (ANC lines)

-1. Check for continuity between test points 1 and 2.

Test condition	Vehicle OFF (LOCK) mode
B	ANC/active sound control unit 20P connector: disconnected Stereo amplifier connector C (16P) (with stereo amplifier): disconnected Audio-navigation unit connector C (32P) (without stereo amplifier and with navigation): disconnected Audio unit connector C (32P) (without stereo amplifier and without navigation): disconnected

With stereo amplifier

Test point 1:ANC/active sound control unit 20P connector	**Test point 2:Stereo amplifier connector C (16P)**
No. 9	No. 1
No. 10	No. 2
No. 19	No. 9
No. 20	No. 10

Without stereo amplifier and with navigation

Test point 1:ANC/active sound control unit 20P connector	**Test point 2:Audio-navigation unit connector C (36P)**
No. 9	No. 2
No. 10	No. 18
No. 19	No. 1
No. 20	No. 17

Without stereo amplifier and without navigation

Test point 1:ANC/active sound control unit 20P connector	**Test point 2:Audio unit connector C (32P)**
No. 9	No. 2
No. 10	No. 18
No. 19	No. 1

Test point 1:ANC/active sound control unit 20P connector	**Test point 2:Audio unit connector C (32P)**
No. 20	No. 17

Is there continuity?

YES

The ANC wires are OK. Go to step 27.

NO

There is an open in the wire(s). Replace the affected shielded harness.

27. Open wire check (F-CAN lines)

-1. Jump the SCS line with the HDS, and wait more than 1 minute.

-2. Disconnect the following connector.

PCM connector A (50P) (1.5 L engine)PCM connector A (51P) (2.4 L engine)

-3. Check for continuity between test points 1 and 2.

Test condition	Vehicle OFF (LOCK) mode
B	ANC/active sound control unit 20P connector: disconnected Stereo amplifier connector C (16P) (with stereo amplifier): disconnected Audio-navigation unit connector C (32P) (without stereo amplifier and with navigation): disconnected Audio unit connector C (32P) (without stereo amplifier and without navigation): disconnected PCM connector A (50P) (1.5 L engine): disconnected PCM connector A (51P) (2.4 L engine): disconnected

Test point 1	**PCM connector A (50P) (1.5 L engine) No. 39**
B	**PCM connector A (51P) (2.4 L engine) No. 2**
Test point 2	**ANC/active sound control unit 20P connector No. 4**

Test point 1	**PCM connector A (50P) (1.5 L engine) No. 38**
B	**PCM connector A (51P) (2.4 L engine) No. 1**
Test point 2	**ANC/active sound control unit 20P connector No. 5**

Is there continuity?

YES

The F-CAN wires are OK. Go to step 28.

NO

Repair an open in the wire(s).

28. ANC/active sound control unit check (substitution)

-1. **Substitute a known-good ANC/active sound control unit** .

-2. Reconnect all the connectors, and recheck.

Does the symptom go away?

YES

Replace the original ANC/active sound control unit .

NO: with stereo amplifier

Replace the stereo amplifier .

NO: without stereo amplifier and with navigation

Replace the audio-navigation unit .

NO: without stereo amplifier and without navigation

Replace the audio unit .

Center display unit does not dim

NOTE:

- Check the vehicle 12 volt battery condition first .
- Turn the headlight on, and check that the dash brightness setting is not set to high.
- Check the connectors for poor connections or loose terminals.

1. Relay control module DTCs check

   -1. Clear the DTCs with the HDS.

   -2. Turn the vehicle to the OFF (LOCK) mode then the ON mode.

   -3. Wait for at least 10 seconds.

   -4. Check for DTCs with the HDS.

DTC Description	DTC
B	B

   DTC (Relay Control Module)

   Are any DTCs indicated?

   YES

   Go to the indicated DTC's troubleshooting .

   NO

   Go to step 2.

2. Problem verification

   -1. Turn the vehicle to the ON mode.

   -2. Turn the combination light switch to the PARKING ( ) position.

   -3. Check the illumination of the center display unit screen and buttons.

   Does the center display brightness change?

   YES

   Intermittent failure, the audio unit is OK at this time.

   NO

   The failure is duplicated, go to step 3.

3. Determine possible failure area (interior lights circuit, others)

   -1. Check the illumination of several other buttons not related to the audio/navigation system.

   Are the buttons illuminated?

YES

Go to step 4.

NO

Troubleshoot the interior lights.

4. Open wire check (ILLUMI+ line)

-1. Turn the combination light switch off.

-2. Turn the vehicle to the OFF (LOCK) mode.

-3. Disconnect the following connector.

Center display unit connector A (5P)

-4. Turn the combination lighting switch to the PARKING ( ) position.

-5. Measure the voltage between test points 1 and 2.

Test condition	Vehicle ON mode
B	Center display unit connector A (5P): disconnected
Test point 1	**Center display unit connector A (5P) No. 3**
Test point 2	Body ground

Is there battery voltage?

YES

Replace the center display unit .

NO

Repair an open in the wire.

No sound is heard from all the speakers (display is normal)

NOTE:

- **Check the vehicle 12 volt battery condition first** .
- Display audio type: **If the center display unit displays an error message, follow the instructions**.
- Before doing this troubleshooting, **go to Audio-navigation unit power will not turn on (No information display) troubleshooting**.
- Check the connectors for poor connections or loose terminals.
- Check the fuses and **relays** associated with the system, and check for a short in the related lines.

1. Operation check

-1. Turn the vehicle to the ON mode.

-2. Check that the volume level is not set to the MIN level.

Is it at the MIN level?

YES

Raise the volume level, and recheck the function.

NO: Display audio type

Go to step 2.

NO: Color audio type

Go to step 4.

2. Audio system check

-1. Check if the center display unit keeps indicating audio mute indication.

Is audio mute indication displayed?

YES

Go to step 3.

NO

Go to step 4.

3. Open wire check (ACC CUT(VST)/ACC/IG1 WITH DIODE FMVSS line)

-1. Turn the vehicle to the OFF (LOCK) mode.

-2. Disconnect the following connector.

Audio-navigation unit connector A (24P) (with navigation)Audio unit connector A (24P) (without navigation)

-3. Turn the vehicle to the ON mode.

-4. Measure the voltage between test points 1 and 2.

Test condition	Vehicle ON mode
B	Audio-navigation unit connector A (24P) (with navigation): disconnected Audio unit connector A (24P) (without navigation): disconnected
Test point 1	**Audio-navigation unit connector A (24P) (with navigation) No. 23**
B	**Audio unit connector A (24P) (without navigation) No. 23**
Test point 2	Body ground

Is there battery voltage?

YES: With navigation

Replace the audio-navigation unit .

YES: Without navigation

Replace the audio unit .

NO

Repair an open in the wire.

4. Problem verification:

Go into the System Diagnostic Mode, and use the speaker check mode.

- **With navigation**
- **Without navigation**

Did all speakers produce a tone?

YES

Intermittent failure, the system is OK at this time. Check for loose connections. If the tone is weak or distorted, **go to Audio system sound is weak or distorted (display is normal) troubleshooting**.

NO: With stereo amplifier

The failure is duplicated, go to step 5.

NO: Without stereo amplifier

The failure is duplicated, go to step 19.

5. System Diagnostic Mode check:

Go into the System Diagnostic Mode, and use the System Links to check the AMP icon status.

- **With navigation**
- **Without navigation**

Is the AMP icon green?

YES

Go to step 15.

NO

Go to step 6.

6. Open wire check (+B AUDIO AMP line)

-1. Disconnect the following connector.

Stereo amplifier connector A (18P)

-2. Measure the voltage between test points 1 and 2.

Test condition	Vehicle OFF (LOCK) mode
B	Stereo amplifier connector A (18P): disconnected
Test point 1	**Stereo amplifier connector A (18P) No. 3**
Test point 2	Body ground

Is there battery voltage?

YES

The +B AUDIO AMP wire is OK. Go to step 7.

NO

Repair an open in the wire.

7. Determine possible failure area (SWD+B line, others)

-1. Disconnect the following connector.

Stereo amplifier connector C (16P)

-2. Turn the vehicle to the ON mode.

-3. Measure the voltage between test points 1 and 2.

Test condition	Vehicle ON mode
B	Stereo amplifier connector A (18P): disconnected
B	Stereo amplifier connector C (16P): disconnected
Test point 1	**Stereo amplifier connector C (16P) No. 14**
Test point 2	Body ground

Is there battery voltage?

YES

The SWD+B wire is OK. Go to step 10.

NO

Go to step 8.

8. Open wire check (SWD+B line)

-1. Measure the voltage between test points 1 and 2.

Test condition	Vehicle ON mode
B	Stereo amplifier connector A (18P): disconnected
B	Stereo amplifier connector C (16P): disconnected
Test point 1	**Audio-navigation unit connector A (24P) (with navigation) No. 21**
B	**Audio unit connector A (24P) (without navigation) No. 21**
Test point 2	Body ground

Is there battery voltage?

YES

Repair an open in the wire.

NO

The SWD+B wire is not open. Go to step 9.

9. Shorted wire check (SWD+B line)

-1. Turn the vehicle to the OFF (LOCK) mode.

-2. Disconnect the following connector.

Audio-navigation unit connector A (24P) (with navigation)Audio unit connector A (24P) (without navigation)

-3. Measure the resistance between test points 1 and 2.

Test condition	Vehicle OFF (LOCK) mode
B	Stereo amplifier connector A (18P): disconnected
B	Stereo amplifier connector C (16P): disconnected
B	Audio-navigation unit connector A (24P) (with navigation): disconnected Audio unit connector A (24P) (without navigation): disconnected
Test point 1	**Audio-navigation unit connector A (24P) (with navigation) No. 21**
B	**Audio unit connector A (24P) (without navigation) No. 21**
Test point 2	Body ground

Is there 1.0 MΩ or more?

YES: With navigation

Replace the audio-navigation unit .

YES: Without navigation

Replace the audio unit .

NO

Repair a short to body ground in the wire.

10. Open wire check (GND line)

-1. Turn the vehicle to the OFF (LOCK) mode.

-2. Reconnect stereo amplifier connector A (18P).

-3. Reconnect stereo amplifier connector C (16P).

-4. Turn the vehicle to the ON mode.

-5. Measure the voltage between test points 1 and 2.

Test condition	Vehicle ON mode
Test point 1	**Stereo amplifier connector A (18P) No. 1**
Test point 2	Body ground

Is there less than 0.2 V?

YES

The GND wire is OK. Go to step 11.

NO

Repair an open or high resistance in the ground wire or poor ground (G402).

11. Shorted wire check (RS485+ line, RS485- line)

-1. Turn the vehicle to the OFF (LOCK) mode.

-2. Disconnect the following connectors.

Audio-navigation unit connector E (16P) (with navigation)Audio unit connector E (16P) (without navigation)
Stereo amplifier connector C (16P)

-3. Measure the resistance between test points 1 and 2.

Test condition	Vehicle OFF (LOCK) mode
B	Audio-navigation unit connector E (16P) (with navigation): disconnected Audio unit connector E (16P) (without navigation): disconnected
B	Stereo amplifier connector C (16P): disconnected
Test point 1	**Audio-navigation unit connector E (16P) (with navigation) No. 7**
B	**Audio unit connector E (16P) (without navigation) No. 7**
Test point 2	Body ground

Test point 1	**Audio-navigation unit connector E (16P) (with navigation) No. 8**
B	**Audio unit connector E (16P) (without navigation) No. 8**
Test point 2	Body ground

Is there 1.0 MΩ or more?

YES

The RS485+ and the RS485- wires are not shorted to ground. Go to step 12.

NO

There is a short to body ground in the wire(s). Replace the affected shielded harness.

12. Shorted wire check (RS485+ line to RS485- line)

-1. Measure the resistance between test points 1 and 2.

Test condition	Vehicle OFF (LOCK) mode
B	Audio-navigation unit connector E (16P) (with navigation): disconnected Audio unit connector E (16P) (without navigation): disconnected
B	Stereo amplifier connector C (16P): disconnected
Test point 1	**Audio-navigation unit connector E (16P) (with navigation) No. 7**
B	**Audio unit connector E (16P) (without navigation) No. 7**

Test point 2	**Audio-navigation unit connector E (16P) (with navigation) No. 8**
B	**Audio unit connector E (16P) (without navigation) No. 8**

Is there 1.0 MΩ or more?

YES

The RS485+ and the RS485- wires are not shorted. Go to step 13.

NO

There is a short in the wires. Replace the affected shielded harness.

13. Shorted wire check (AMP RS485 SH line to another lines)

-1. Measure the resistance between test points 1 and 2.

Test condition	Vehicle OFF (LOCK) mode
B	Audio-navigation unit connector E (16P) (with navigation): disconnected Audio unit connector E (16P) (without navigation): disconnected
B	Stereo amplifier connector C (16P): disconnected

Test point 1	**Audio-navigation unit connector E (16P) (with navigation) No. 6**
B	**Audio unit connector E (16P) (without navigation) No. 6**
Test point 2	**Audio-navigation unit connector E (16P) (with navigation) No. 7**
B	**Audio unit connector E (16P) (without navigation) No. 7**

Test point 1	**Audio-navigation unit connector E (16P) (with navigation) No. 6**
B	**Audio unit connector E (16P) (without navigation) No. 6**
Test point 2	**Audio-navigation unit connector E (16P) (with navigation) No. 8**
B	**Audio unit connector E (16P) (without navigation) No. 8**

Is there 1.0 MΩ or more?

YES

The AMP RS485 SH wire is OK. Go to step 14.

NO

There is a short in the wires. Replace the affected shielded harness.

14. Open wire check (RS485+ line, RS485- line)

-1. Measure the resistance between test points 1 and 2.

Test condition	Vehicle OFF (LOCK) mode
B	Audio-navigation unit connector E (16P) (with navigation): disconnected Audio unit connector E (16P) (without navigation): disconnected
B	Stereo amplifier connector C (16P): disconnected
Test point 1	**Audio-navigation unit connector E (16P) (with navigation) No. 7**
B	**Audio unit connector E (16P) (without navigation) No. 7**
Test point 2	**Stereo amplifier connector C (16P) No. 15**

Test point 1	**Audio-navigation unit connector E (16P) (with navigation) No. 8**
B	**Audio unit connector E (16P) (without navigation) No. 8**
Test point 2	**Stereo amplifier connector C (16P) No. 7**

Is there 1.0 Ω or less?

YES

The RS485+ and the RS485**-** wires are OK. Go to step 18.

NO

There is an open in the wire(s). Replace the affected shielded harness.

15. Shorted wire check (SPDIF2 SIG line)

-1. Turn the vehicle to the OFF (LOCK) mode.

-2. Disconnect the following connectors.

Audio-navigation unit connector M (4P) (with navigation)Audio unit connector M (4P) (without navigation)
Stereo amplifier connector D (2P)

-3. Measure the resistance between test points 1 and 2.

Test condition	Vehicle OFF (LOCK) mode
B	Audio-navigation unit connector M (4P) (with navigation): disconnected Audio unit connector M (4P) (without navigation): disconnected
B	Stereo amplifier connector D (2P): disconnected
Test point 1	**Audio-navigation unit connector M (4P) (with navigation) No. 1**
B	**Audio unit connector M (4P) (without navigation) No. 1**
Test point 2	Body ground

Is there 1.0 MΩ or more?

YES

The SPDIF2 SIG wire is not shorted to ground. Go to step 16.

NO

There is a short to body ground in the wire(s). Replace the affected shielded harness.

16. Shorted wire check (SPDIF2 SIG line to SPDIF2 SH line)

-1. Measure the resistance between test points 1 and 2.

Test condition	Vehicle OFF (LOCK) mode
B	Audio-navigation unit connector M (4P) (with navigation): disconnected Audio unit connector M (4P) (without navigation): disconnected
B	Stereo amplifier connector D (2P): disconnected
Test point 1	**Audio-navigation unit connector M (4P) (with navigation) No. 1**
B	**Audio unit connector M (4P) (without navigation) No. 1**
Test point 2	**Audio-navigation unit connector M (4P) (with navigation) No. 3**
B	**Audio unit connector M (4P) (without navigation) No. 3**

Is there 1.0 MΩ or more?

YES

The SPDIF2 SIG and the SPDIF2 SH wires are not shorted. Go to step 17.

NO

There is a short in the wires. Replace the affected shielded harness.

17. Open wire check (SPDIF2 SIG line)

-1. Measure the resistance between test points 1 and 2.

Test condition	Vehicle OFF (LOCK) mode
B	Audio-navigation unit connector M (4P) (with navigation): disconnected Audio unit connector M (4P) (without navigation): disconnected
B	Stereo amplifier connector D (2P): disconnected
Test point 1	**Audio-navigation unit connector M (4P) (with navigation) No. 1**
B	**Audio unit connector M (4P) (without navigation) No. 1**
Test point 2	**Stereo amplifier connector D (2P) No. 1**

Is there 1.0 Ω or less?

YES

The SPDIF2 SIG wire is OK. Go to step 18.

NO

There is an open in the wire(s). Replace the affected shielded harness.

18. Stereo amplifier check (substitution)

-1. **Substitute a known-good stereo amplifier** .

-2. Reconnect all the connectors, and recheck.

Does the symptom go away?

YES

Replace the original stereo amplifier .

NO: With navigation

Replace the audio-navigation unit .

NO: Without navigation

Replace the audio unit .

19. Shorted wire check (SPKR lines) 1

-1. Turn the vehicle to the OFF (LOCK) mode.

-2. Disconnect the following connector.

Audio-navigation unit connector A (24P) (with navigation)Audio unit connector A (24P) (without navigation)

-3. Measure the resistance between these test points and body ground individually.

Test condition	Vehicle OFF (LOCK) mode
B	Audio-navigation unit connector A (24P) (with navigation): disconnected Audio unit connector A (24P) (without navigation): disconnected

Connector	Terminal
Audio-navigation unit connector A (24P) (with navigation) **Audio unit connector A (24P) (without navigation)**	No. 5
	No. 6
	No. 7
	No. 8
	No. 15
	No. 16
	No. 17
	No. 18

Is there 1.0 MΩ or more?

YES

The SPKR wires are not shorted to ground. Go to step 20.

NO

Repair a short to body ground in the wire(s).

20. Shorted wire check (SPKR lines) 2

-1. Measure the resistance between test points 1 and 2.

Test condition	Vehicle OFF (LOCK) mode
B	Audio-navigation unit connector A (24P) (with navigation): disconnected Audio unit connector A (24P) (without navigation): disconnected

Test point 1:Audio-navigation unit connector A (24P) (with navigation) **Audio unit connector A (24P) (without navigation)**	**Test point 2:Audio-navigation unit connector A (24P) (with navigation)** **Audio unit connector A (24P) (without navigation)**	**Resistance**
No. 5	No. 6	About 4 Ω
No. 7	No. 8	About 4 Ω
No. 15	No. 16	About 4 Ω

Test point 1:Audio-navigation unit connector A (24P) (with navigation) **Audio unit connector A (24P) (without navigation)**	**Test point 2:Audio-navigation unit connector A (24P) (with navigation)** **Audio unit connector A (24P) (without navigation)**	**Resistance**
No. 17	No. 18	About 4 Ω

Is the resistance OK?

YES: With navigation

Replace the audio-navigation unit .

YES: Without navigation

Replace the audio unit .

NO

Repair a short in the wires.

Poor AM or FM radio reception or interference

NOTE:

- **Check the vehicle 12 volt battery condition first** .
- Check for aftermarket accessories plugged into the vehicle accessory power sockets.
- Check for any radio frequency modulators that are plugged into the FM antenna lead. These modulators allow customers to play audio from accessories like CD players or game consoles using the audio system, but they can create interference issues.
- Check the radio reception in an open area. Compare it to a known-good vehicle whenever possible. Poor reception/interference can be caused by the following:
-
  - The radio station is far away
  - Atmospheric conditions are unfavorable
  - Tall buildings, mountains, or high-voltage power lines are nearby
  - Electrical loads like the rear window defroster, seat heaters, game consoles, etc.

- Check the connectors for poor connections or loose terminals.

1. Problem verification

   -1. Park the vehicle in an open area.

   -2. Turn the vehicle to the ON mode.

   -3. Turn on the audio system, and select AM or FM radio station.

   Is the sound quality normal?

   YES

   Intermittent failure, the system is OK at this time.

   NO

   The failure is duplicated, go to step 2.

2. Reception/interference check

   -1. Check if the radio reception/interference is the same as the known-good vehicle in several locations.

   Is the AM or FM sound quality the same?

   YES

   Multipath interference or weak station. Operation is normal.

   NO

   Go to step 3.

3. Determine possible failure area (ANT +B line, others)

   -1. Disconnect the following connector.

Roof antenna connector A (3P)

-2. Turn the vehicle to the ON mode.

-3. Measure the voltage between test points 1 and 2.

Test condition	Vehicle ON mode
B	Roof antenna connector A (3P): disconnected
Test point 1	Roof antenna connector A (3P) (male terminals) No. 1: ①
Test point 2	Body ground

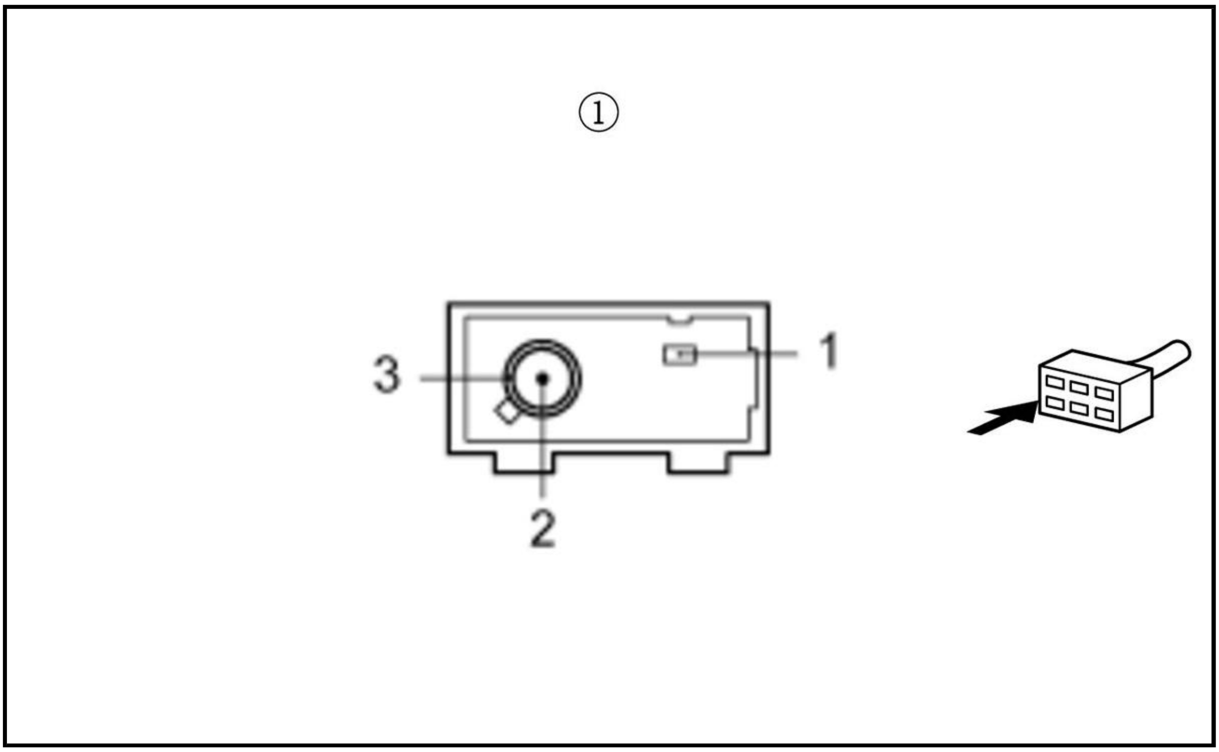

Is there battery voltage?

YES

The ANT +B wire is OK. Go to step 6.

NO

Go to step 4.

4. Shorted wire check (ANT +B line)

-1. Turn the vehicle to the OFF (LOCK) mode.

-2. Disconnect the following connector.

Audio unit connector E (3P)

-3. Check for continuity between test points 1 and 2.

Test condition	Vehicle OFF (LOCK) mode
B	Roof antenna connector A (3P): disconnected
B	Audio unit connector E (3P): disconnected
Test point 1	Roof antenna connector A (3P) (male terminals) No. 1: ①
Test point 2	Body ground

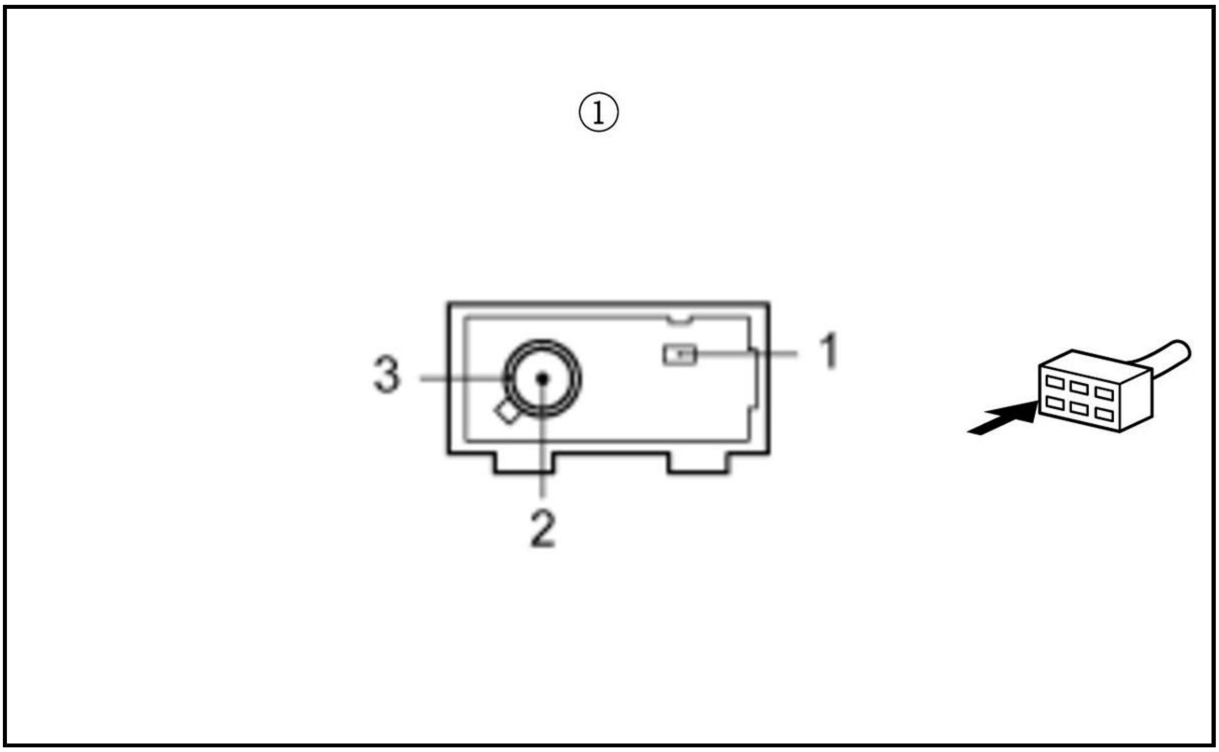

Is there continuity?

YES

Repair a short to body ground in the wire.

NO

The ANT +B wire is not shorted to ground. Go to step 5.

5. Open wire check (ANT +B line)

-1. Check for continuity between test points 1 and 2.

Test condition	Vehicle OFF (LOCK) mode
B	Roof antenna connector A (3P): disconnected
B	Audio unit connector E (3P): disconnected

Test point 1	**Audio unit connector E (3P) No. 1**
Test point 2	Roof antenna connector A (3P) (male terminals) No. 1: ①

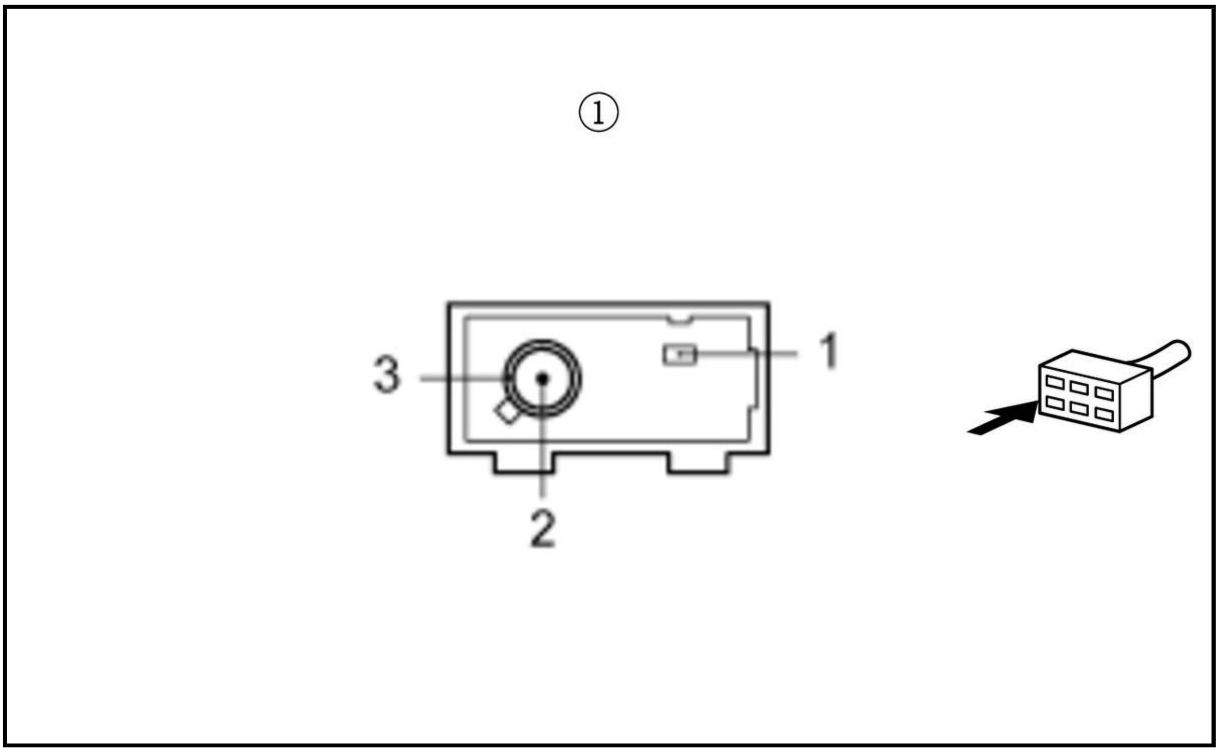

Is there continuity?

YES

Replace the audio unit .

NO

Repair an open in the wire.

6. Shorted wire check (RF IN line)

-1. Turn the vehicle to the OFF (LOCK) mode.

-2. Disconnect the following connector.

Audio unit connector E (3P)

-3. Check for continuity between test points 1 and 2.

Test condition	Vehicle OFF (LOCK) mode
B	Roof antenna connector A (3P): disconnected
B	Audio unit connector E (3P): disconnected
Test point 1	Roof antenna connector A (3P) (male terminals) No. 2: ①
Test point 2	Body ground

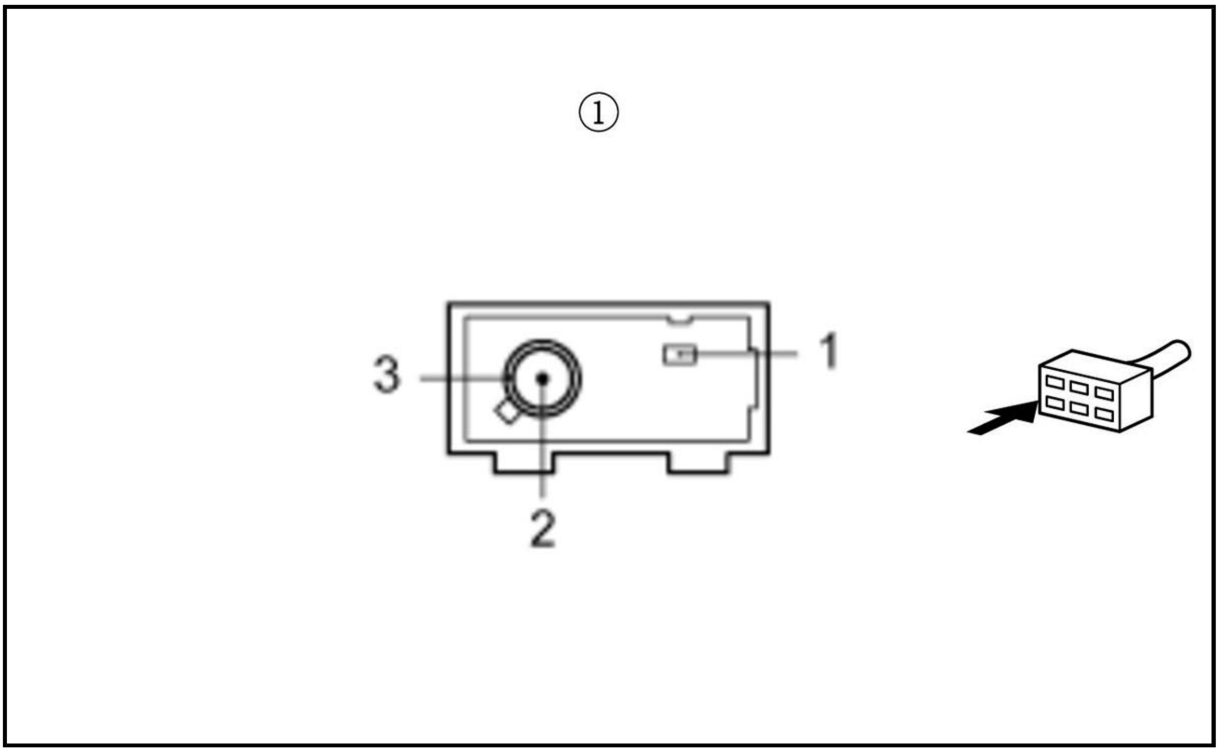

Is there continuity?

YES

There is a short to body ground in the wire. Replace the affected antenna lead.

NO

The RF IN wire is not shorted to ground. Go to step 7.

7. Shorted wire check (RF IN line to SH (RF IN) line)

-1. Check for continuity between test points 1 and 2.

Test condition	Vehicle OFF (LOCK) mode
B	Roof antenna connector A (3P): disconnected

B	Audio unit connector E (3P): disconnected
Test point 1	**Audio unit connector E (3P) No. 2**
Test point 2	**Audio unit connector E (3P) No. 3**

Is there continuity?

YES

There is a short in the wire. Replace the affected antenna lead.

NO

The RF IN wire is not shorted to SH(RF IN) wire. Go to step 8.

8. Open wire check (RF IN line)

-1. Check for continuity between test points 1 and 2.

Test condition	Vehicle OFF (LOCK) mode
B	Roof antenna connector A (3P): disconnected

B	Audio unit connector E (3P): disconnected
Test point 1	Roof antenna connector A (3P) (male terminals) No. 2: ①
Test point 2	**Audio unit connector E (3P) No. 2**

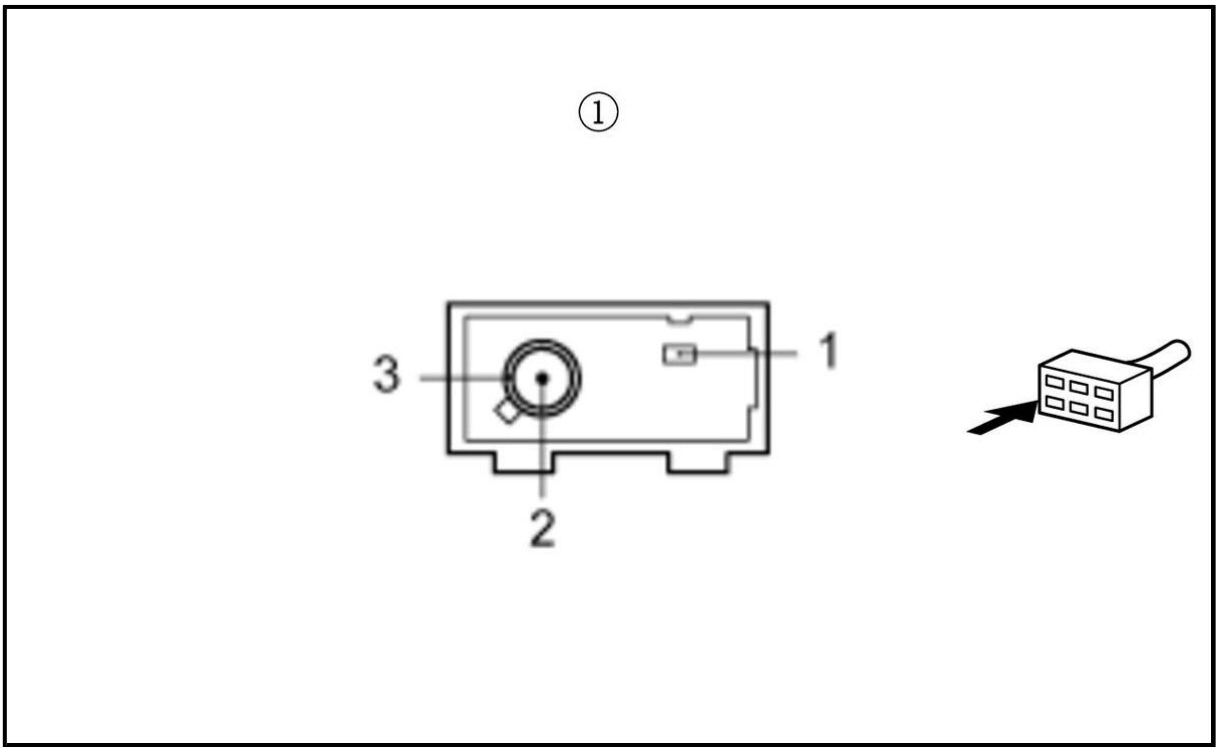

Is there continuity?

YES

The RF IN wire is OK. Go to step 9.

NO

There is an open in the wire. Replace the affected antenna lead.

9. Roof antenna check (substitution)

-1. **Substitute a known-good roof antenna** .

-2. Reconnect all the connectors, and recheck.

Does the symptom go away?

YES

Replace the original roof antenna .

NO

Replace the audio unit .

Poor or no sound with AM/FM radio

NOTE:

- **Check the vehicle 12 volt battery condition first** .
- Check for aftermarket accessories plugged into the vehicle accessory power sockets.

- Check for any radio frequency modulators that are plugged into the FM antenna lead. These modulators allow customers to play audio from accessories like CD players or game consoles using the audio system, but they can create interference issues.
- Check the radio reception in an open area. Compare it to a known-good vehicle whenever possible. Poor reception/interference can be caused by the following:
-
    - The radio station is far away
    - Atmospheric conditions are unfavorable
    - Tall buildings, mountains, or high-voltage power lines are nearby
    - Electrical loads like the rear window defroster, seat heaters, game consoles, etc.
- Check the connectors for poor connections or loose terminals.

1. Problem verification

   -1. Park the vehicle in an open area.

   -2. Turn the vehicle to the ON mode.

   -3. Turn on the audio system, and select AM or FM radio station.

   Is the sound quality normal?

   YES

   Intermittent failure, the system is OK at this time.

   NO

   The failure is duplicated, go to step 2.

2. Reception/interference check

   -1. Check if the radio reception/interference is the same as the known-good vehicle in several locations.

   Is the AM or FM sound quality the same?

   YES

   Multipath interference or weak station. Operation is normal.

   NO

   Go to step 3.

3. Seek stop test

   -1. Select the SCAN to check if the number of received radio station are the same as the known-good vehicle.

   Are the number of radio station the same?

   YES

   Go to step 11.

   NO

   Go to step 4.

4. Determine possible failure area (ANT +B line, others)

-1. Turn the vehicle to the OFF (LOCK) mode.

-2. Disconnect the following connector.

Roof antenna connector A (3P)

-3. Turn the vehicle to the ON mode.

-4. Measure the voltage between test points 1 and 2.

Test condition	Vehicle ON mode
B	Roof antenna connector A (3P): disconnected
Test point 1	Roof antenna connector A (3P) (male terminals) No. 1: ①
Test point 2	Body ground

①

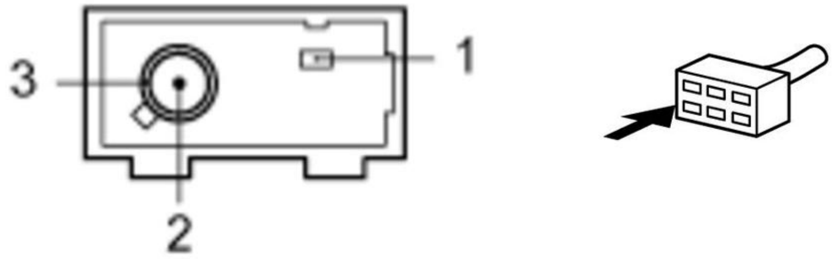

Is there about 9.0 V?

YES

The ANT +B wire is OK. Go to step 7.

NO

Go to step 5.

5. Shorted wire check (ANT +B line)

-1. Turn the vehicle to the OFF (LOCK) mode.

-2. Disconnect the following connector.

Tuner unit connector C (5P)

-3. Check for continuity between test points 1 and 2.

Test condition	Vehicle OFF (LOCK) mode
B	Roof antenna connector A (3P): disconnected
B	Tuner unit connector C (5P): disconnected
Test point 1	**Tuner unit connector C (5P) No. 1**
Test point 2	Body ground

Is there continuity?

YES

Repair a short to body ground in the wire.

NO

The ANT +B wire is not shorted to ground. Go to step 6.

6. Open wire check (ANT +B line)

-1. Check for continuity between test points 1 and 2.

Test condition	Vehicle OFF (LOCK) mode
B	Roof antenna connector A (3P): disconnected
B	Tuner unit connector C (5P): disconnected
Test point 1	**Tuner unit connector C (5P) No. 1**
Test point 2	Roof antenna connector A (3P) (male terminals) No. 1: ①

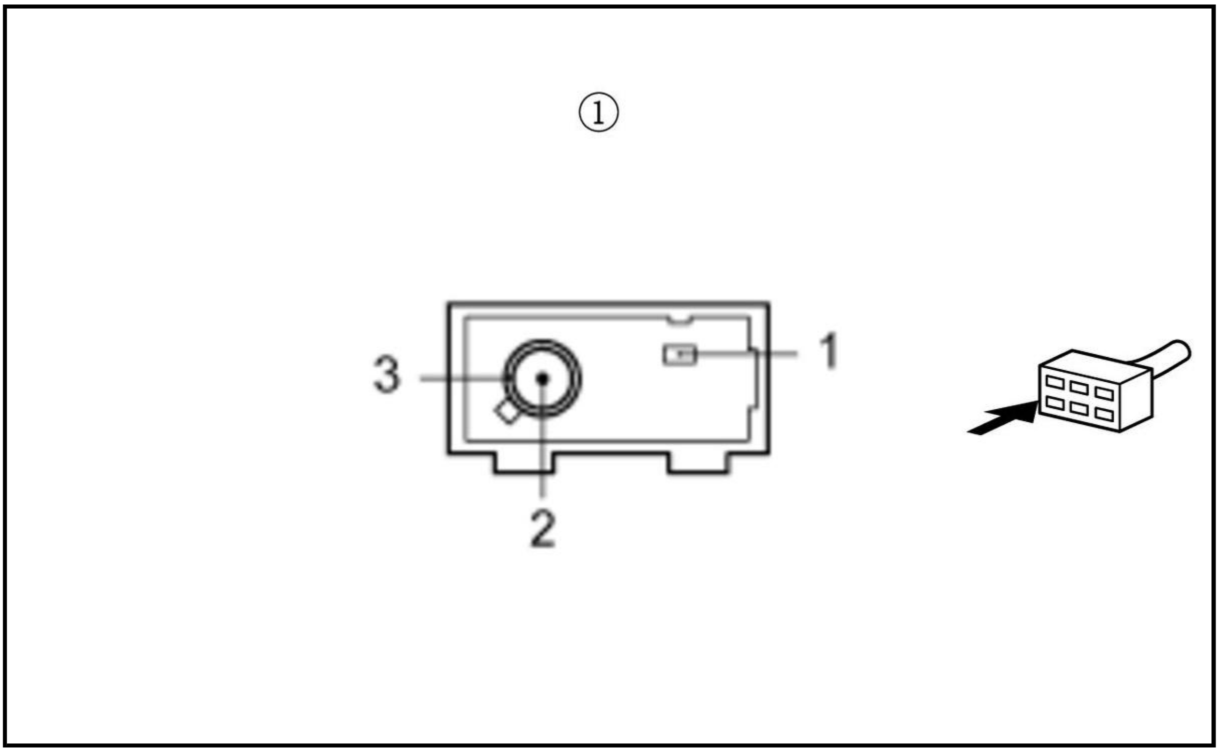

Is there continuity?

YES

Replace the tuner unit .

NO

Repair an open in the wire.

7. Shorted wire check (RF IN line)

-1. Turn the vehicle to the OFF (LOCK) mode.

-2. Disconnect the following connector.

Tuner unit connector C (5P)

-3. Check for continuity between test points 1 and 2.

Test condition	Vehicle OFF (LOCK) mode
B	Roof antenna connector A (3P): disconnected
B	Tuner unit connector C (5P): disconnected
Test point 1	**Tuner unit connector C (5P) No. 2**
Test point 2	Body ground

Is there continuity?

YES

There is a short to body ground in the wire. Replace the affected antenna lead.

NO

The RF IN wire is not shorted to ground. Go to step 8.

8. Shorted wire check (RF IN line to SH (RF IN) line)

-1. Check for continuity between test points 1 and 2.

Test condition	Vehicle OFF (LOCK) mode
B	Roof antenna connector A (3P): disconnected
B	Tuner unit connector C (5P): disconnected
Test point 1	**Tuner unit connector C (5P) No. 2**
Test point 2	**Tuner unit connector C (5P) No. 4**

Is there continuity?

YES

There is a short in the wire. Replace the affected antenna lead.

NO

The RF IN wire is not shorted to SH(RF IN) wire. Go to step 9.

9. Open wire check (RF IN line)

-1. Check for continuity between test points 1 and 2.

Test condition	Vehicle OFF (LOCK) mode
B	Roof antenna connector A (3P): disconnected
B	Tuner unit connector C (5P): disconnected
Test point 1	**Tuner unit connector C (5P) No. 2**

Test point 2	Roof antenna connector A (3P) (male terminals) No. 2: ①

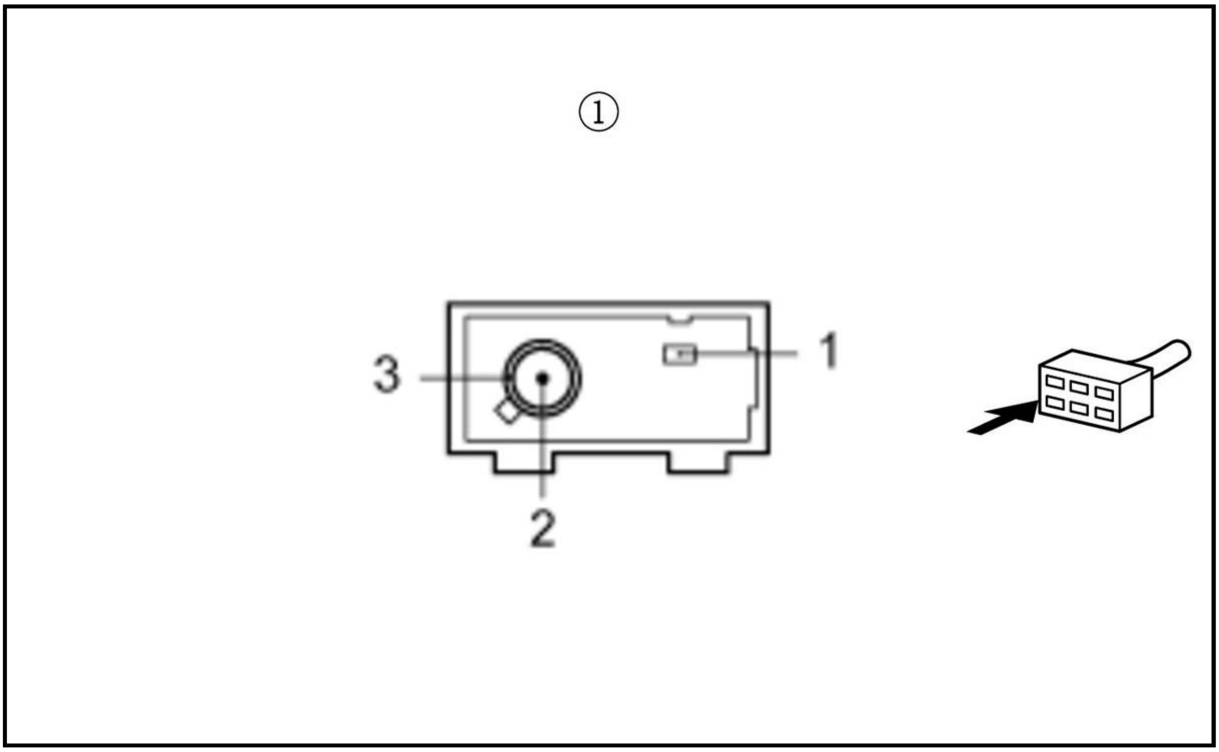

Is there continuity?

YES

The RF IN wire is OK. Go to step 10.

NO

There is an open in the wire. Replace the affected antenna lead.

10. Roof antenna check (substitution)

-1. **Substitute a known-good roof antenna** .

-2. Reconnect all the connectors, and recheck.

Does the symptom go away?

YES

Replace the original roof antenna .

NO

Replace the tuner unit .

11. Shorted wire check (SPDIF1 SIG line)

-1. Turn the vehicle to the OFF (LOCK) mode.

-2. Disconnect the following connectors.

Audio-navigation unit connector L (2P) (with navigation)
Audio unit connector L (2P) (without navigation)
Tuner unit connector B (2P)

-3. Check for continuity between test points 1 and 2.

Test condition	Vehicle OFF (LOCK) mode
B	Audio-navigation unit connector L (2P) (with navigation): disconnected
B	Audio unit connector L (2P) (without navigation): disconnected
B	Tuner unit connector B (2P): disconnected
Test point 1	**Tuner unit connector B (2P) No. 1**
Test point 2	Body ground

Is there continuity?

YES

There is a short to body ground in the wire. Replace the affected shielded harness.

NO

The SPDIF1 wire is not shorted to ground. Go to step 12.

12. Shorted wire check (SPDIF1 SIG line to SPDIF1 SH line)

-1. Check for continuity between test points 1 and 2.

Test condition	Vehicle OFF (LOCK) mode
B	Audio-navigation unit connector L (2P) (with navigation): disconnected
B	Audio unit connector L (2P) (without navigation): disconnected
B	Tuner unit connector B (2P): disconnected
Test point 1	**Tuner unit connector B (2P) No. 1**
Test point 2	**Tuner unit connector B (2P) No. 2**

Is there continuity?

YES

There is a short in the wires. Replace the affected shielded harness.

NO

The SPDIF1 SIG and the SPDIF1 SH wires are not shorted. Go to step 13.

13. Open wire check (SPDIF1 SIG line, SPDIF1 SH line)

-1. Check for continuity between test points 1 and 2.

Test condition	Vehicle OFF (LOCK) mode
B	Audio-navigation unit connector L (2P) (with navigation): disconnected
B	Audio unit connector L (2P) (without navigation): disconnected
B	Tuner unit connector B (2P): disconnected
Test point 1	**Audio-navigation unit connector L (2P) (with navigation) No. 1**
	Audio unit connector L (2P) (without navigation) No. 1
Test point 2	**Tuner unit connector B (2P) No. 1**

Test point 1	**Audio-navigation unit connector L (2P) (with navigation) No. 2**
	Audio unit connector L (2P) (without navigation) No. 2
Test point 2	**Tuner unit connector B (2P) No. 2**

Is there continuity?

YES

The SPDIF1 SIG and the SPDIF1 SH wires are OK. Go to step 14.

NO

There is an open in the wire(s). Replace the affected shielded harness.

14. Tuner unit check (substitution)

    -1. **Substitute a known-good tuner unit** .

    -2. Reconnect all the connectors, and recheck.

    Does the symptom go away?

    YES

    Replace the original tuner unit .

    NO: With navigation

    Replace the audio-navigation unit .

    NO: Without navigation

    Replace the audio unit .

Rearview camera image does not change when selecting different views

NOTE:

- **Check the vehicle 12 volt battery condition first** .
- You can select three different rearview camera angles for backing up. If there is no camera image on the display, **go to Rearview camera image does not come on troubleshooting**.
- Check the connectors for poor connections or loose terminals.

1. Problem verification

    -1. Turn the vehicle to the ON mode.

    -2. Shift the transmission to R position/mode.

    -3. Operate the audio unit to see if the rearview image changes between the wide view, the normal view, and the top down view.

    Does the rearview camera image change properly?

    YES

    Intermittent failure, the system is OK at this time.

    NO

    The failure is duplicated, go to step 2.

2. Shorted wire check (CAMERA BIT0 line, CAMERA BIT1 line)

    -1. Shift the transmission to Neutral or P position/mode.

-2. Turn the vehicle to the OFF (LOCK) mode.

-3. Disconnect the following connectors.

Audio-navigation unit connector C (32P) (with navigation)Audio unit connector C (32P) (without navigation)
Rearview camera 8P connector

-4. Check for continuity between test points 1 and 2.

Test condition	Vehicle OFF (LOCK) mode
B	Audio-navigation unit connector C (32P) (with navigation): disconnected Audio unit connector C (32P) (without navigation): disconnected
B	Rearview camera 8P connector: disconnected
Test point 1	**Audio-navigation unit connector C (32P) (with navigation) No. 31**
B	**Audio unit connector C (32P) (without navigation) No. 31**
Test point 2	Body ground

Test point 1	**Audio-navigation unit connector C (32P) (with navigation) No. 32**
B	**Audio unit connector C (32P) (without navigation) No. 32**
Test point 2	Body ground

Is there continuity?

YES

Repair a short to body ground in the wire(s).

NO

The CAMERA BIT0 and the CAMERA BIT1 wires are not shorted to ground. Go to step 3.

3. Shorted wire check (CAMERA BIT0 line to CAMERA BIT1 line)

-1. Check for continuity between test points 1 and 2.

Test condition	Vehicle OFF (LOCK) mode
B	Audio-navigation unit connector C (32P) (with navigation): disconnected Audio unit connector C (32P) (without navigation): disconnected
B	Rearview camera 8P connector: disconnected
Test point 1	**Audio-navigation unit connector C (32P) (with navigation) No. 31**
B	**Audio unit connector C (32P) (without navigation) No. 31**
Test point 2	**Audio-navigation unit connector C (32P) (with navigation) No. 32**
B	**Audio unit connector C (32P) (without navigation) No. 32**

Is there continuity?

YES

Repair a short in the wires.

NO

The CAMERA BIT0 and the CAMERA BIT1 wires are not shorted. Go to step 4.

4. Open wire check (CAMERA BIT0 line, CAMERA BIT1 line)

-1. Check for continuity between test points 1 and 2.

Test condition	Vehicle OFF (LOCK) mode
B	Audio-navigation unit connector C (32P) (with navigation): disconnected Audio unit connector C (32P) (without navigation): disconnected
B	Rearview camera 8P connector: disconnected
Test point 1	**Audio-navigation unit connector C (32P) (with navigation) No. 31**
B	**Audio unit connector C (32P) (without navigation) No. 31**
Test point 2	**Rearview camera 8P connector No. 3**

Test point 1	**Audio-navigation unit connector C (32P) (with navigation) No. 32**
B	**Audio unit connector C (32P) (without navigation) No. 32**
Test point 2	**Rearview camera 8P connector No. 4**

Is there continuity?

YES

The CAMERA BIT0 and the CAMERA BIT1 wires are OK. Go to step 5.

NO

Repair an open in the wire(s).

5. Voltage check (CAMERA BIT0 line)

-1. Reconnect audio-navigation unit connector C (32P) (with navigation).

-2. Reconnect audio unit connector C (32P) (without navigation).

-3. Reconnect the rearview camera 8P connector.

-4. Turn the vehicle to the ON mode.

-5. Shift the transmission to R position/mode.

-6. Measure the voltage between test points 1 and 2 as specified in the table.

Test condition	Vehicle ON mode
Test point 1	**Audio-navigation unit connector C (32P) (with navigation) No. 31**
B	**Audio unit connector C (32P) (without navigation) No. 31**
Test point 2	Body ground

Selected view mode	Voltage
Wide View	0 V
Normal View	About 5 V - 8 V
Top Down View	0 V

Is the voltage OK?

YES

Go to step 6.

NO: With navigation

Replace the audio-navigation unit .

NO: Without navigation

Replace the audio unit .

6. Voltage check (CAMERA BIT1 line)

-1. Measure the voltage between test points 1 and 2 as specified in the table.

Test condition	Vehicle ON mode
Test point 1	Audio-navigation unit connector C (32P) (with navigation) No. 32
B	Audio unit connector C (32P) (without navigation) No. 32

Test point 2	Body ground

Selected view mode	Voltage
Wide View	0 V
Normal View	0 V
Top Down View	About 5 V - 8 V

Is the voltage OK?

YES

Replace the rearview camera .

NO: With navigation

Replace the audio-navigation unit .

NO: Without navigation

Replace the audio unit .

Rearview camera image does not come on

NOTE:

- Check the vehicle 12 volt battery condition first .
- Check the connectors for poor connections or loose terminals.

1. Problem verification

-1. Turn the vehicle to the ON mode.

-2. Shift the transmission to R position/mode.

Does the center display image change to rearview when the transmission is shifted to R position/mode?

YES

Intermittent failure, the system is OK at this time.

NO: Display audio type

The failure is duplicated, go to step 2.

NO: Color audio type

The failure is duplicated, go to step 5.

2. System Diagnostic Mode check

   -1. Shift the transmission to P position/mode.

   Go into the System Diagnostic Mode, and use the System Links to check the Rear Wide Camera icon status.

   - **With navigation**
   - **Without navigation**

   Is the Rear Camera icon green?

   YES

   Go to step 3.

   NO: With navigation

   Go to Navigation Unit DTC 2608 (R-Camera Diag) troubleshooting .

   NO: Without navigation

   Go to Audio Unit DTC 2608 (R-Camera Diag) troubleshooting .

3. Determine possible failure area (BACK LT line, others):

   Go into the System Diagnostic Mode, and use the Vehicle Status to check the BACK signal;

   - **With navigation**
   - **Without navigation**

   -2. Shift the transmission to R position/mode.

   Does the BACK signal change from [0] to [1] when the transmission is shifted from P position/mode to R position/mode?

   YES

   Go to step 12.

   NO

   Go to step 4.

4. Open wire check (BACK LT line)

   -1. Shift the transmission to P position/mode.

   -2. Turn the vehicle to the OFF (LOCK) mode.

   -3. Disconnect the following connector.

Audio-navigation unit connector C (32P) (with navigation)Audio unit connector C (32P) (without navigation)

   -4. Turn the vehicle to the ON mode.

   -5. Shift the transmission to R position/mode.

   -6. Measure the voltage between test points 1 and 2.

Test condition	Vehicle ON mode
B	Audio-navigation unit connector C (32P) (with navigation): disconnected Audio unit connector C (32P) (without navigation): disconnected
Test point 1	**Audio-navigation unit connector C (32P) (with navigation) No. 15**
B	**Audio unit connector C (32P) (without navigation) No. 15**
Test point 2	Body ground

Is there battery voltage?

YES: with navigation

Replace the audio-navigation unit .

YES: without navigation

Replace the audio unit .

NO

Repair an open in the wire.

5. In Line Diag check

-1. Shift the transmission to P position/mode.

-2. **Go into the System Diagnostic Mode, and use the In Line Diag to check the rearview camera connection**.

Does the Rear Camera indicate OK?

YES

Go to step 10.

NO

Go to step 6.

6. Determine possible failure area (CAMERA ADPT line, others)

-1. Turn the vehicle to the OFF (LOCK) mode.

-2. Disconnect the following connector.

Rearview camera 8P connector

-3. Turn the vehicle to the ON mode.

-4. Measure the voltage between test points 1 and 2.

Test condition	Vehicle ON mode
B	Rearview camera 8P connector: disconnected
B	B
Test point 1	**Rearview camera 8P connector No. 6**
Test point 2	Body ground

Is there about 5.0 V?

YES

Go to step 8.

NO

Go to step 7.

7. Open wire check (CAMERA ADPT line)

-1. Measure the voltage between test points 1 and 2.

Test condition	Vehicle ON mode
B	Rearview camera 8P connector: disconnected
Test point 1	**Audio unit connector C (32P) No. 16**
Test point 2	Body ground

Is there about 5.0 V?

YES

Repair an open in the wire.

NO

Replace the audio unit .

8. Determine possible failure area (rearview camera, others)

-1. Turn the vehicle to the OFF (LOCK) mode.

-2. Check for continuity between test points 1 and 2.

Test condition	Vehicle OFF (LOCK) mode
B	Rearview camera 8P connector: disconnected
Test point 1	**Rearview camera 8P connector No. 5**
Test point 2	Body ground

Is there continuity?

YES

Replace the rearview camera .

NO

Go to step 9.

9. Open wire check (SH CAMERA line)

-1. Check for continuity between test points 1 and 2.

Test condition	Vehicle OFF (LOCK) mode
B	Rearview camera 8P connector: disconnected
Test point 1	**Audio unit connector C (32P) No. 28**
Test point 2	Body ground

Is there continuity?

YES

There is an open in the wire(s). Replace the affected shielded harness.

NO

Replace the audio unit .

10. Determine possible failure area (BACK LT line, others)

    -1. **Go into the System Diagnostic Mode, and use the MICU_ICU in the Vehicle Information to check the BACK signal**.

    -2. Shift the transmission to R position/mode.

    Does the C_BACKLTSW signal change from [0] to [1] when the transmission is shifted from P position/mode to R position/mode?

    YES

    Go to step 12.

    NO

    Go to step 11.

11. Open wire check (B-CAN_H line, B-CAN_L line)

    -1. Shift the transmission to P position/mode.

    -2. Turn the vehicle to the OFF (LOCK) mode.

    -3. Disconnect the following connectors.

Body control module connector B (36P)
Audio unit connector A (24P)

-4. Check for continuity between test points 1 and 2.

Test condition	Vehicle OFF (LOCK) mode
B	Body control module connector B (36P): disconnected
B	Audio unit connector A (24P): disconnected
Test point 1	**Body control module connector B (36P) No. 20**
Test point 2	**Audio unit connector A (24P) No. 14**

Test point 1	**Body control module connector B (36P) No. 21**
Test point 2	**Audio unit connector A (24P) No. 24**

Is there continuity?

YES

Replace the audio unit .

NO

Repair an open in the wire(s).

12. Shorted wire check (CAMERA VCC, CAMERA GND, CAMERA V, CAMERA V GND lines)

    -1. Turn the vehicle to the OFF (LOCK) mode.

-2. Disconnect the following connectors.

Audio-navigation unit connector C (32P) (with navigation)Audio unit connector C (32P) (without navigation)
Rearview camera 8P connector

-3. Check for continuity between the following test points and body ground individually.

Test condition	Vehicle OFF (LOCK) mode
B	Audio-navigation unit connector C (32P) (with navigation): disconnected Audio unit connector C (32P) (without navigation): disconnected
B	Rearview camera 8P connector: disconnected

Connector	Terminal
Audio-navigation unit connector C (32P) (with navigation) Audio unit connector C (32P) (without navigation)	No. 13
	No. 14
	No. 29
	No. 30

Is there continuity?

YES

There is a short to body ground in the wire(s). Replace the affected shielded harness.

NO

The CAMERA VCC, CAMERA GND, CAMERA V, and CAMERA V GND wires are not shorted to ground. Go to step 13.

13. Shorted wire check (CAMERA lines)

-1. Check for continuity between test points 1 and 2.

Test condition	Vehicle OFF (LOCK) mode

B	Audio-navigation unit connector C (32P) (with navigation): disconnected Audio unit connector C (32P) (without navigation): disconnected
B	Rearview camera 8P connector: disconnected

Test point 1: Audio-navigation unit connector C (32P) (with navigation) Audio unit connector C (32P) (without navigation)	**Test point 2:**Audio-navigation unit connector C (32P) (with navigation) Audio unit connector C (32P) (without navigation)
No. 13	No. 14, No. 28, No. 29, No. 30
No. 14	No. 28, No. 29, No. 30
No. 28	No. 29, No. 30
No. 29	No. 30

Is there continuity between any of the terminals?

YES

There is a short in the wires. Replace the affected shielded harness.

NO

The CAMERA wires are not shorted in the wires. Go to step 14.

14. Open wire check (CAMERA VCC, CAMERA GND, CAMERA V, CAMERA V GND lines)

-1. Check for continuity between test points 1 and 2.

Test condition	Vehicle OFF (LOCK) mode
B	Audio-navigation unit connector C (32P) (with navigation): disconnected Audio unit connector C (32P) (without navigation): disconnected
B	Rearview camera 8P connector: disconnected

Test point 1:Audio-navigation unit connector C (32P) (with navigation) **Audio unit connector C (32P) (without navigation)**	**Test point 2:Rearview camera 8P connector**
No. 13	No. 2
No. 14	No. 8
No. 29	No. 7
No. 30	No. 1

Is there continuity?

YES

The CAMERA VCC, CAMERA GND, CAMERA V, and CAMERA V GND wires are OK. Go to step 15.

NO

There is an open in the wire(s). Replace the affected shielded harness.

15. Voltage check (CAMERA VCC line)

-1. Reconnect audio-navigation unit connector C (32P) (with navigation).

-2. Reconnect audio unit connector C (32P) (without navigation).

-3. Reconnect the rearview camera 8P connector.

-4. Turn the vehicle to the ON mode.

-5. Measure the voltage between test points 1 and 2.

Test condition	Vehicle ON mode
Test point 1	**Audio-navigation unit connector C (32P) (with navigation) No. 13**
B	**Audio unit connector C (32P) (without navigation) No. 13**
Test point 2	Body ground

Is there about 8.0 V?

YES

Go to step 16.

NO: With navigation

Replace the audio-navigation unit .

NO: Without navigation

Replace the audio unit .

16. Rearview camera check (substitution)

    -1. Turn the vehicle to the OFF (LOCK) mode.

    -2. **Substitute a known-good rearview camera** , and recheck.

    Does the symptom go away?

    YES

    Replace the original rearview camera .

    NO: With navigation

    Replace the audio-navigation unit .

    NO: Without navigation

    Replace the audio unit .

The MID does not display the audio unit information

NOTE:

- **Check the vehicle 12 volt battery condition first** .
- If the audio remote-HFL switch does not respond, **go to Audio remote-HFL switch does not work properly (audio unit buttons work) troubleshooting**.
- Check the connectors for poor connections or loose terminals.

1. Problem verification

    -1. Turn the vehicle to the ON mode.

    -2. Select Audio and HFL from the multi-information display (MID) menu screen.

    Are audio and HFL information displayed?

    YES

    Intermittent failure, the system is OK at this time.

    NO

    The failure is duplicated, go to step 2.

2. Shorted wire check (LVDS2+ line, LVDS2- line)

    -1. Turn the vehicle to the OFF (LOCK) mode.

    -2. Disconnect the following connectors.

Audio unit connector J (3P)
Gauge control module connector C (3P)

-3. Check for continuity between test points 1 and 2.

Test condition	Vehicle OFF (LOCK) mode
B	Audio unit connector J (3P): disconnected
B	Gauge control module connector C (3P): disconnected
Test point 1	**Audio unit connector J (3P) No. 1**
Test point 2	Body ground

Test point 1	**Audio unit connector J (3P) No. 2**
Test point 2	Body ground

Is there continuity?

YES

There is a short to body ground in the wire. Replace the affected shielded harness.

NO

The LVDS2+ and the LVDS2**-** wires are not shorted to ground. Go to step 3.

3. Shorted wire check (LVDS2+ line to LVDS2- line)

-1. Check for continuity between test points 1 and 2.

Test condition	Vehicle OFF (LOCK) mode
B	Audio unit connector J (3P): disconnected
B	Gauge control module connector C (3P): disconnected
Test point 1	**Audio unit connector J (3P) No. 1**
Test point 2	**Audio unit connector J (3P) No. 2**

Is there continuity?

YES

There is a short in the wires. Replace the affected shielded harness.

NO

The LVDS2+ wire and the LVDS2**-** wire are not shorted. Go to step 4.

4. Shorted wire check (LVDS2 SH line to another lines)

-1. Check for continuity between test points 1 and 2.

Test condition	Vehicle OFF (LOCK) mode
B	Audio unit connector J (3P): disconnected
B	Gauge control module connector C (3P): disconnected
Test point 1	**Audio unit connector J (3P) No. 1**
Test point 2	**Audio unit connector J (3P) No. 3**

Test point 1	**Audio unit connector J (3P) No. 2**
Test point 2	**Audio unit connector J (3P) No. 3**

Is there continuity?

YES

There is a short in the wires. Replace the affected shielded harness.

NO

The LVDS2 SH wire is not shorted. Go to step 5.

5. Open wire check (LVDS2+ line, LVDS2- line)

-1. Check for continuity between test points 1 and 2.

Test condition	Vehicle OFF (LOCK) mode
B	Audio unit connector J (3P): disconnected
B	Gauge control module connector C (3P): disconnected
Test point 1	**Audio unit connector J (3P) No. 1**
Test point 2	**Gauge control module connector C (3P) No. 1**

Test point 1	**Audio unit connector J (3P) No. 2**
Test point 2	**Gauge control module connector C (3P) No. 2**

Is there continuity?

YES

The LVDS2+ and the LVDS2**-** wires are OK. Go to step 6.

NO

There is an open in the wire(s). Replace the affected shielded harness.

6. Audio unit check (substitution)

-1. Substitute a known-good audio unit.

-2. Reconnect all the connectors, and recheck.

Does the symptom go away?

YES

Replace the original audio unit .

NO

Replace the gauge control module .

USB charger does not work

NOTE:

- **Check the vehicle 12 volt battery condition first** .
- Check the connectors for poor connections or loose terminals.
- Check the fuses and **relays** associated with the system, and check for a short in the related lines.

1. Problem verification

-1. Connect a known-good USB device to the USB port(s) of the USB charger unit.

-2. Turn the vehicle to the ON mode.

Can the connection be checked (battery charging status) on the device?

YES

Intermittent failure, the system is OK at this time. Inspect the connectors of the USB device and USB port for wear.

NO

The failure is duplicated, go to step 2.

2. Open wire check (+B USB CHARGER/+B BACK UP line)

-1. Turn the vehicle to the OFF (LOCK) mode.

-2. Disconnect the following connector.

USB charger unit 3P connector

-3. Measure the voltage between test points 1 and 2.

Test condition	Vehicle OFF (LOCK) mode
B	USB charger unit 3P connector: disconnected
Test point 1	**USB charger unit 3P connector No. 2**
Test point 2	Body ground

Is there battery voltage?

YES

The +B USB CHARGER/+B BACK UP wire is OK. Go to step 3.

NO

Repair an open in the wire.

3. Open wire check (GND line)

-1. Measure the resistance between test points 1 and 2.

Test condition	Vehicle OFF (LOCK) mode
B	USB charger unit 3P connector: disconnected
Test point 1	**USB charger unit 3P connector No. 3**
Test point 2	Body ground

Is there 1.0 Ω or less?

YES

The GND wire is OK. Go to step 4.

NO

Repair an open or high resistance in the ground wire or poor ground (G402).

4. Open wire check (ACC line)

-1. Turn the vehicle to the ON mode.

-2. Measure the voltage between test points 1 and 2.

Test condition	Vehicle ON mode
B	USB charger unit 3P connector: disconnected
Test point 1	**USB charger unit 3P connector No. 1**
Test point 2	Body ground

Is there battery voltage?

YES

The ACC wire is OK. **Replace the USB charger unit** .

NO

Repair an open in the wire.

USB device does not function

NOTE:

- **Check the vehicle 12 volt battery condition first** .
- Check the USB's specifications:
-
    - Mass-storage class ready digital audio player with USB 2.0 port
    - More than 256 MB storage space
    - Supports MP3, WMA, and AAC (encoded with the iTunes) files, DRM files are not supported
- Not all players and player functions work with the USB adapter. Please see the Owner's Manual for more information. Always test the customer's USB device in a known-good vehicle of the same year and trim (if possible). Technologies change and are updated frequently which may result that USB devices may work in newer vehicles, but not in older vehicles of the same model.
- If Unsupported Ver appears on the display, the vehicle is OK, there is a software problem with the USB device.
- Check the connectors for poor connections or loose terminals.
- Display audio type: Before doing this troubleshooting, check the hard error code;
-
    - **With navigation**
    - **Without navigation**

1. Determine possible failure area (USB device, others)

   -1. Turn the vehicle to the OFF (LOCK) mode.

   -2. Connect the customer's USB device to a known-good vehicle (same year/trim) that is equipped with a USB adapter, and check the USB device operation.

   Does the USB device work properly in the known-good vehicle?

   YES

   Go to step 2.

   NO

   See the Owner's Manual for details about the USB device requirements and approved file types.

2. Problem verification 1

   -1. On the customer's vehicle, connect the customer's USB device to the USB port A.

   -2. Turn the vehicle to the ON mode.

   -3. Check the USB device operation in the customer's vehicle.

   Does the USB device work properly in the customer's vehicle?

   YES: With USB port B

   Go to step 3.

   YES: Without USB port B

   Intermittent failure, the system is OK at this time. Inspect the connectors of the USB device and USB port for wear.

   NO: With USB port B

   The failure is duplicated, go to step 4.

   NO: Without USB port B

   The failure is duplicated, go to step 5.

3. Problem verification 2

   -1. Turn the vehicle to the OFF (LOCK) mode.

   -2. Disconnect the customer's USB device from the USB port A.

   -3. Connect the customer's USB device to the USB port B.

   -4. Turn the vehicle to the ON mode.

   -5. Check the USB device operation in the customer's vehicle.

   Does the USB device work properly in the customer's vehicle?

   YES

   Intermittent failure, the system is OK at this time. Inspect the connectors of the USB device and USB port for wear.

   NO

   The failure is duplicated, go to step 6.

4. Determine possible failure area (USB1 line, others)

   -1. Turn the vehicle to the OFF (LOCK) mode.

   -2. Disconnect the customer's USB device from the USB port A.

   -3. Connect the customer's USB device to the USB port B located in the center console.

   -4. Turn the vehicle to the ON mode.

   -5. Check the USB device operation in the customer's vehicle.

Does the USB device work properly in the customer's vehicle?

YES

Go to step 5.

NO: With navigation

Replace the audio-navigation unit .

NO: Without navigation

Replace the audio unit .

5. Open wire check (USB1 lines)

-1. Turn the vehicle to the OFF (LOCK) mode.

-2. Disconnect the following connector.

Audio-navigation unit connector F (5P) (with navigation)Audio unit connector F (5P) (without navigation)

-3. Check for continuity between test points 1 and 2.

Test condition	Vehicle OFF (LOCK) mode
B	Audio-navigation unit connector F (5P) (with navigation): disconnected Audio unit connector F (5P) (without navigation): disconnected

Test point 1:Audio-navigation unit connector F (5P) (with navigation) **Audio unit connector F (5P) (without navigation)**	**Test point 2:USB port A 5P connector (female terminals):** ①
No. 1	No. 1
No. 2	No. 4
No. 3	No. 2
No. 4	No. 3

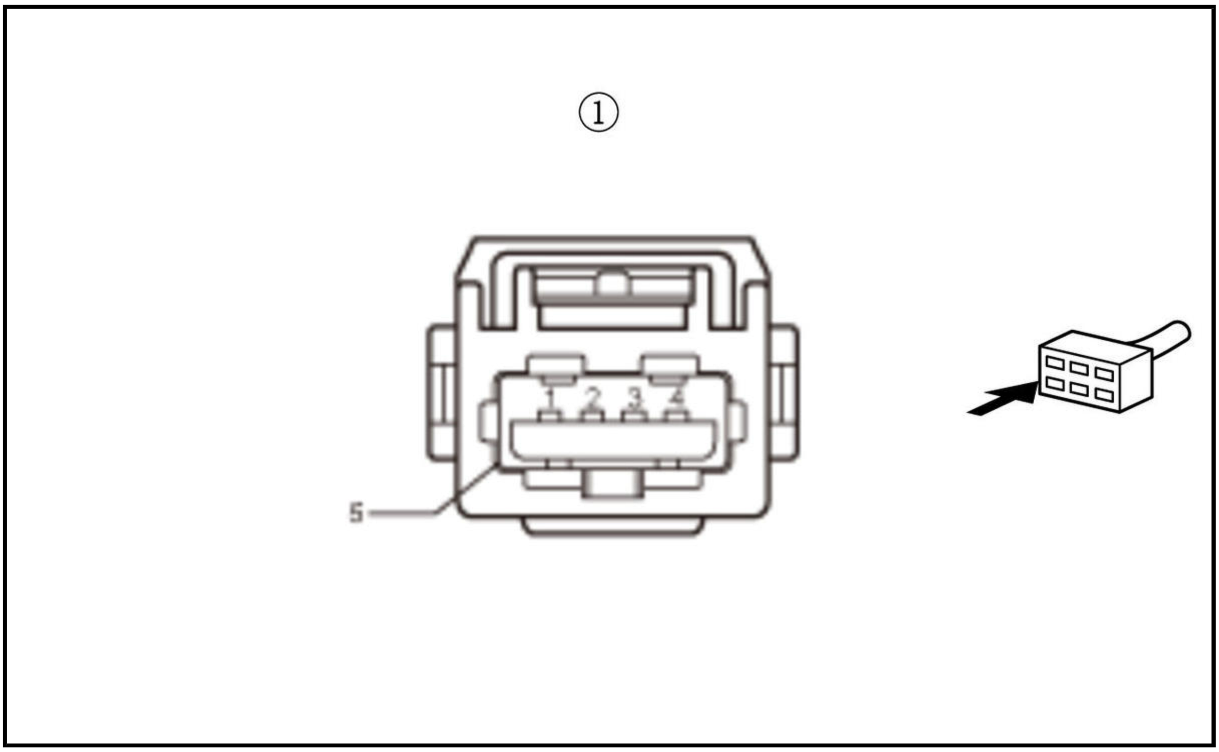

Is there continuity?

YES: With navigation

Replace the audio-navigation unit .

YES: Without navigation

Replace the audio unit .

NO

There is an open in the wire(s). Replace the affected shielded harness.

6. Open wire check (USB2 lines)

-1. Turn the vehicle to the OFF (LOCK) mode.

-2. Disconnect the following connector.

Audio-navigation unit connector G (5P) (with navigation)Audio unit connector G (5P) (without navigation)

-3. Check for continuity between test points 1 and 2.

Test condition	Vehicle OFF (LOCK) mode
B	Audio-navigation unit connector G (5P) (with navigation): disconnected Audio unit connector G (5P) (without navigation): disconnected

Test point 1:Audio-navigation unit connector G (5P) (with navigation) **Audio unit connector G (5P) (without navigation)**	**Test point 2:USB port B 5P connector (female terminals):** ①
No. 1	No. 1
No. 2	No. 4
No. 3	No. 2

Test point 1:Audio-navigation unit connector G (5P) (with navigation) **Audio unit connector G (5P) (without navigation)**	**Test point 2:USB port B 5P connector (female terminals):** ①
No. 4	No. 3

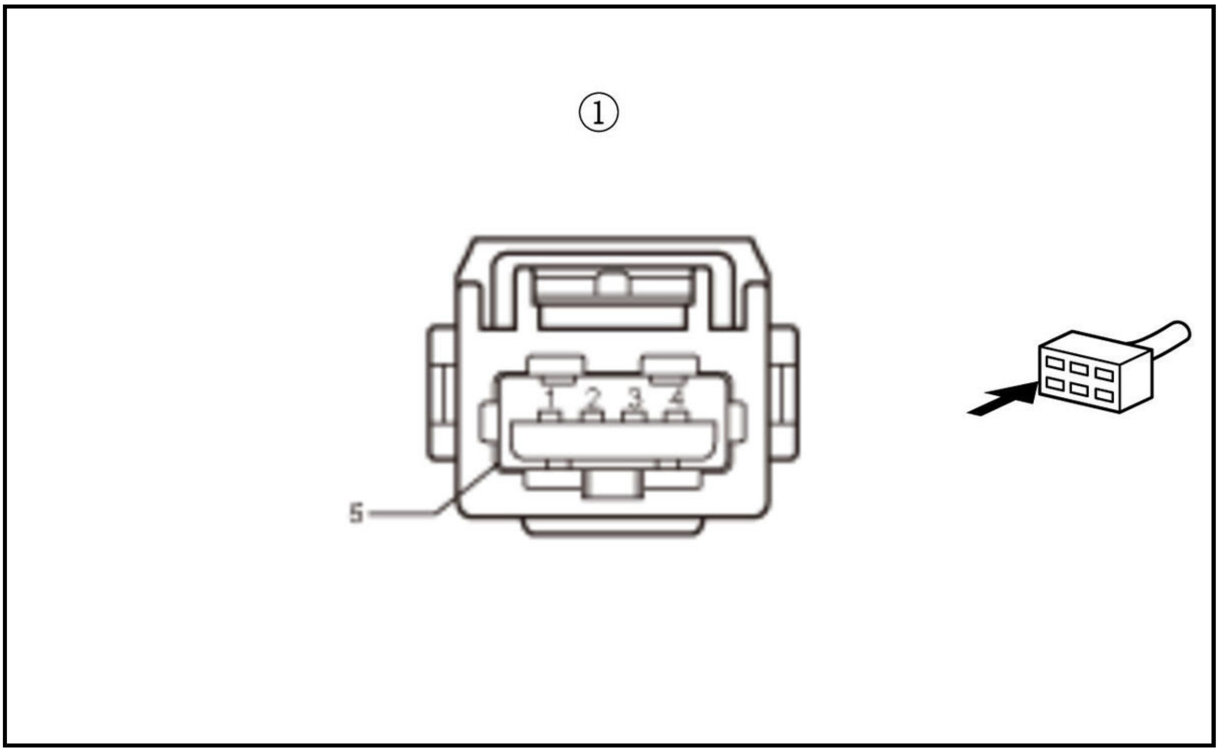

Is there continuity?

YES: With navigation

Replace the audio-navigation unit .

YES: Without navigation

Replace the audio unit .

NO

There is an open in the wire(s). Replace the affected shielded harness.

Volume does not increase with speed

NOTE:

- **Check the vehicle 12 volt battery condition first** .
- If possible, have the customer demonstrate their concern and compare it against a known-good vehicle.
- Check for B-CAN DTCs and resolve them before troubleshooting.
- Check the connectors for poor connections or loose terminals.

1. Problem verification

-1. Test-drive the vehicle at freeway speeds, and monitor if the volume increases.

Does the volume increase?

YES

Intermittent failure, the system is OK at this time.

NO

The failure is duplicated, go to step 2.

2. Determine possible failure area (audio setting, others)

   -1. Verify the SVC mode setting in the audio system sound set-up.

   Is the SVC set to off?

   YES

   Change the setting to SVC MID, and recheck.

   NO

   Go to step 3.

3. Determine possible failure area (audio unit, others):

   Go into the System Diagnostic Mode:

   - Display Audio Type: Do the Vehicle Status diagnosis to check the Speed indication;
   -
     - **With navigation**
     - **Without navigation**
   - Color Audio Type: **Do the VSPNE in the Vehicle Information to check the C_VSP indication**.

   -2. Test-drive the vehicle with the help of an assistant, and then watch the vehicle speed in the center display.

   Is the vehicle speed indicated?

   YES: With stereo amplifier

   Go to step 4.

   YES: Without stereo amplifier, with navigation

   Replace the audio-navigation unit .

   YES: Without stereo amplifier, without navigation

   Replace the audio unit .

   NO

   Go to step 5.

4. Stereo amplifier check (substitution)

   -1. Turn the vehicle to the OFF (LOCK) mode.

   -2. **Substitute a known-good stereo amplifier, and recheck** .

   Does the symptom go away?

   YES

Replace the original stereo amplifier .

NO: With navigation

Replace the audio-navigation unit .

NO: Without navigation

Replace the audio unit .

5. Open wire check (B-CAN_H line, B-CAN_L line)

-1. Turn the vehicle to the OFF (LOCK) mode.

-2. Disconnect the following connectors.

Gauge control module connector A (32P)

Audio-navigation unit connector A (24P) (with navigation)
Audio unit connector A (24P) (without navigation)

-3. Check for continuity between test points 1 and 2.

Test condition	Vehicle OFF (LOCK) mode
B	Gauge control module connector A (32P): disconnected
B	Audio-navigation unit connector A (24P) (with navigation): disconnected
B	Audio unit connector A (24P) (without navigation): disconnected
Test point 1	Gauge control module connector A (32P) No. 30
Test point 2	Audio-navigation unit connector A (24P) (with navigation) No. 14
	Audio unit connector A (24P) (without navigation) No. 14

Test point 1	Gauge control module connector A (32P) No. 31
Test point 2	Audio-navigation unit connector A (24P) (with navigation) No. 24
	Audio unit connector A (24P) (without navigation) No. 24

Is there continuity?

YES: With navigation

Replace the audio-navigation unit .

YES: Without navigation

Replace the audio unit .

NO

Repair an open in the wire(s).

SYMPTOM TROUBLESHOOTING INDEX

AUDIO SYSTEM SYMPTOM TROUBLESHOOTING INDEX(COLOR AUDIO TYPE)

Symptom	Diagnostic Procedure	Also Check for
Poor AM or FM radio reception or interference	Symptom Troubleshooting	• Check radio reception: Do the FM or AM in the System Diagnostic Mode

Symptom	Diagnostic Procedure	Also Check for
		- Aftermarket FM modulator - Loose antenna amplifier mounting bolt
Audio unit will not turn on (No information display)	**Symptom Troubleshooting**	B
No sound is heard from all the speakers (display is normal)	**Symptom Troubleshooting**	Aftermarket amplifier or speakers
Audio system sound is weak or distorted (display is normal)	**Symptom Troubleshooting**	- Fader and balance positions - Aftermarket amplifier or speakers
Auxiliary input sound is low or cannot be heard	**Symptom Troubleshooting**	- Auxiliary audio device volume is too low - Auxiliary stereo cables compatibility
AM/FM radio preset memory is lost	**Replace the audio unit**	Internal error
Audio unit button does not work	**Do the Knob Check in the System Diagnostic Mode**	Check the connector for poor connections or loose terminals between the audio unit and the audio panel
Volume does not increase with speed	**Symptom Troubleshooting**	Speed-sensitive Volume Control settings (see the Owner's Manual)
Volume is too high or too low when driving at freeway speeds	B	Speed-sensitive Volume Control settings (see the Owner's Manual)
Audio remote-HFL switch does not work properly (audio unit buttons work)	**Symptom Troubleshooting**	B
Audio unit does not exit anti-theft mode	**Anti-Theft Feature**	B
USB device does not function	**Symptom Troubleshooting**	- **Error Messages** - USB device compatibility (see the Owner's Manual)
Bluetooth audio does not work	B	Bluetooth phone compatibility (see the Owner's Manual)
Rearview camera image does not come on	**Symptom Troubleshooting**	B
Rearview camera image does not change when selecting different views	**Symptom Troubleshooting**	B
Audio unit button illumination does not work	**Symptom Troubleshooting**	B
Booming sound while driving with audio system on or off	**Symptom Troubleshooting**	B

AUDIO SYSTEM SYMPTOM TROUBLESHOOTING INDEX(DISPLAY AUDIO TYPE)

NOTE: **Refer to Navigation System Symptom Troubleshooting for information about the symptom of audio-navigation unit which is not in the following table** .

Symptom	Diagnostic Procedure	Also Check for
Poor or no sound with AM/FM radio	**Symptom Troubleshooting**	- Check radio reception: **Do the Remote Tuner in the System Diagnostic Mode** - Aftermarket FM modulator - Loose antenna amplifier mounting bolt
AM/FM radio display is blank or no station information is displayed	**Symptom Troubleshooting**	B
Excessive transition between analog broadcast and digital HD Radio (TM) broadcast	Receiver is located near the edge of the digital HD Radio (TM) coverage area. Refer to www.hdradio.com to verify radio stations in your coverage area	B
HD Radio (TM) changes HD channel on its own	This is intended behavior. HD Radio (TM) is set to revert to main channel after extended loss of HD2/HD3 broadcast	B
AM radio reception changes at night	This is a system characteristic. AM radio stations are required by the government (FCC) to lower their power at night	B
Audio unit will not turn on (No information display)	**Symptom Troubleshooting**	B
No sound is heard from all the speakers (display is normal)	**Symptom Troubleshooting**	Aftermarket amplifier or speakers
Audio system sound is weak or distorted (display is normal)	**Symptom Troubleshooting**	- Fader and balance positions - Aftermarket amplifier or speakers
AM/FM radio preset memory is lost	**Replace the tuner unit**	Internal error
Volume does not increase with speed	**Symptom Troubleshooting**	Speed-sensitive Volume Control settings (see the Owner's Manual)
Volume is too high or too low when driving at freeway speeds	B	Speed-sensitive Volume Control settings (see the Owner's Manual)
Center display unit button does not work	**Do the Hard Key in the System Diagnostic Mode**	Check the Touch Panel Sensitivity in the System Settings
Center display unit does not dim	**Symptom Troubleshooting**	B
The MID does not display the audio unit information	**Symptom Troubleshooting**	B
Audio remote-HFL switch does not work properly (audio unit buttons work)	**Symptom Troubleshooting**	B
Audio unit does not exit anti-theft mode	**Anti-Theft Feature**	B
USB device does not function	**Symptom Troubleshooting**	- **Error messages** - USB device compatibility (see the Owner's Manual)
Bluetooth audio does not work	B	Bluetooth phone compatibility (see the Owner's Manual)

Symptom	Diagnostic Procedure	Also Check for
Pandora is not is displayed as an audio source	Do the PANDORA in the System Diagnostic Mode to check the Pandora settings is abled	B
Rearview camera image does not come on	Symptom Troubleshooting	B
Rearview camera image does not change when selecting different views	Symptom Troubleshooting	B
USB charger does not work	Symptom Troubleshooting	B
Booming sound while driving with audio system on or off	Symptom Troubleshooting	Powertrain vibration or judder
LaneWatch camera image does not come on	Symptom Troubleshooting	Audio DTCs
XM radio display is blank and no station information is displayed	• With navigation: Navigation DTCs • Without navigation: Audio DTCs	Error messages
System always comes up in-line diagnostic mode	Factory diagnostic screen In Line Diag	B

HOW TO INFORMATION

HOW TO TROUBLESHOOT THE AUDIO SYSTEM

NOTE: Refer to How to Troubleshoot the Navigation System for information about the audio-navigation unit .

How to Recognize Audio Unit and Audio-Navigation Unit (Display audio type)

There are two kinds of audio units with a 7-inch display unit depending on the vehicle model. These units exist as an audio unit (without navigation) and an audio-navigation unit (with navigation), and appear the same. However, the audio-navigation unit displays a Honda Globe screen after displaying a Honda logo screen* every time when you turn the vehicle to the ACCESSORY mode.

*: When the vehicle is turned to the ACCESSORY or ON mode.

Forced Rebooting of Audio Unit (Display audio type)

If the system is frozen, and the screen does not respond, you can attempt rebooting the audio unit by pressing and holding the AUDIO POWER (⏻) button for 5 seconds. When the function is effective, the confirmation screen appears.

Anti-Theft Feature (With audio system theft protection)

The audio unit has an anti-theft protection circuit. When one of the following occurs, the unit enters the anti-theft mode:

- Disconnecting the 12 volt battery terminal.
- Disconnecting audio unit connector A (24P).
- Removing the +B line's fuses.

After the service, reconnect power to the audio unit, and turn the vehicle to the ON mode. There are two ways to exit the anti-theft mode:

- Press and hold the AUDIO POWER (⏻) button for at least 2 seconds. The audio unit automatically exits the anti-theft mode. If the audio unit does not exit anti-theft mode, turn the vehicle to the OFF (LOCK) mode then the ON mode (if possible, start the engine), and try to release the anti-theft several times.
- Enter the 5-digit anti-theft code. If the input of code fails 10 times in a row, the screen is locked for 60 minutes.

When the audio unit is installed in another vehicle (same Year/Model/Trim), like in cases where a known-good unit was substituted for testing, **do the Anti-Theft Skip mode in the System Diagnostic Mode (display audio type)**, or **do the Anti-Theft Temporary Cancellation in the System Diagnostic Mode (color audio type)**. These mode will release the anti-theft code for 150 seconds.

Global Positioning System (GPS) Limitations (Display audio type)

The GPS signal is used for some functions about the audio unit. The GPS cannot detect the vehicle's position or elevation during the following instances:

- For the first 5 to 10 minutes after reconnecting the 12 volt battery (this process can take as long as 45 minutes).
- When the satellite signals are blocked by tall buildings, mountains, tunnels, large trees, inside parking structures or large trucks.
- When the GPS antenna is blocked by metallic window tinting or by an object placed above it in the vehicle. The GPS antenna requires a clear unobstructed view of the sky.
- When there is no satellite signal output (signal output is sometimes stopped for satellite servicing).
- When the satellite signals are blocked by the operation of some electronic aftermarket accessories including, but not limited to non-OEM in-dash entertainment units (amp, CD players/changers, radar detectors, theft recovery systems, etc.) and cell phones placed near the navigation system.

The accuracy of the GPS is reduced during these instances:

- Metallic window tinting above the GPS antenna.
- When only three or fewer satellite signals are received (Four satellite signals are required for accurate positioning).
- When driving near high tension power lines.
- When the satellite signals are blocked by the operation of some electronic aftermarket accessories including, but not limited to non-OEM in-dash entertainment units (amp, CD players/changers, radar detectors, theft recovery systems, etc.) and cell phones placed near the navigation system.
- When the satellite control centers are experiencing problems.

LCD Unit Limitations (Display audio type)

The center display unit is touch sensitive. Touch the display directly to select items on the screen.

- Heavy gloves, fingernails or pens cannot be used on the touch panel.
- In cold temperatures, the display may stay dark for the first minute until it warms up.
- When the display is too hot because of direct summer sunlight, it remains dark until the temperature drops (you may see an error message displayed stating this fact).
- Fingerprints on the screen may be noticeable. Clean the screen with a soft, damp cloth. You may use a mild cleaner intended for eye glasses or computer screens. To avoid scratching the panel, do not rub too hard or use abrasive cleaners or shop towels.

How to Check Error History (Audio DTCs) (Display audio type)

NOTE: The audio DTCs cannot be retrieved with the HDS.

The Error History feature is to record intermittent audio/navigation issues that occur while the customer is using the system. Sometimes the customer complaint cannot be duplicated. The error history may record the information needed to diagnose the problem. To check the error history:

1. Turn the vehicle to the ON mode.

2. Press and hold the PHONE button, the DISPLAY MODE button, and the AUDIO POWER button until the Select Diagnosis Items menu screen is displayed:

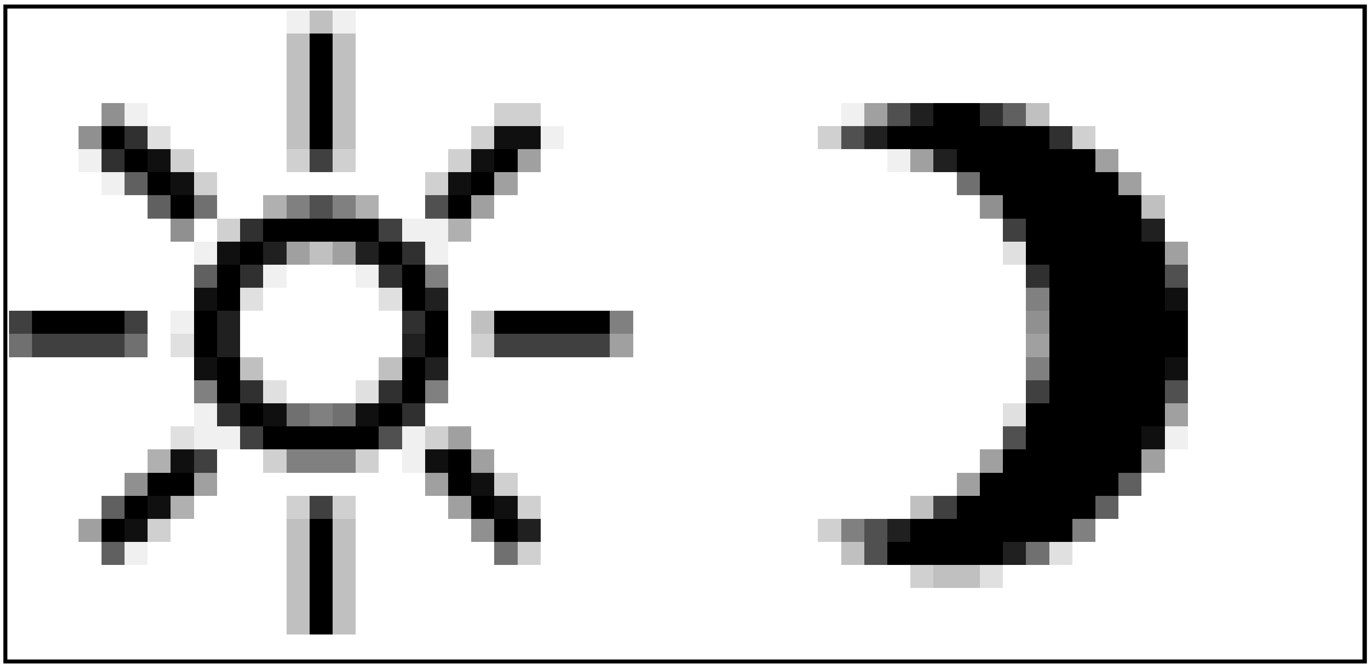

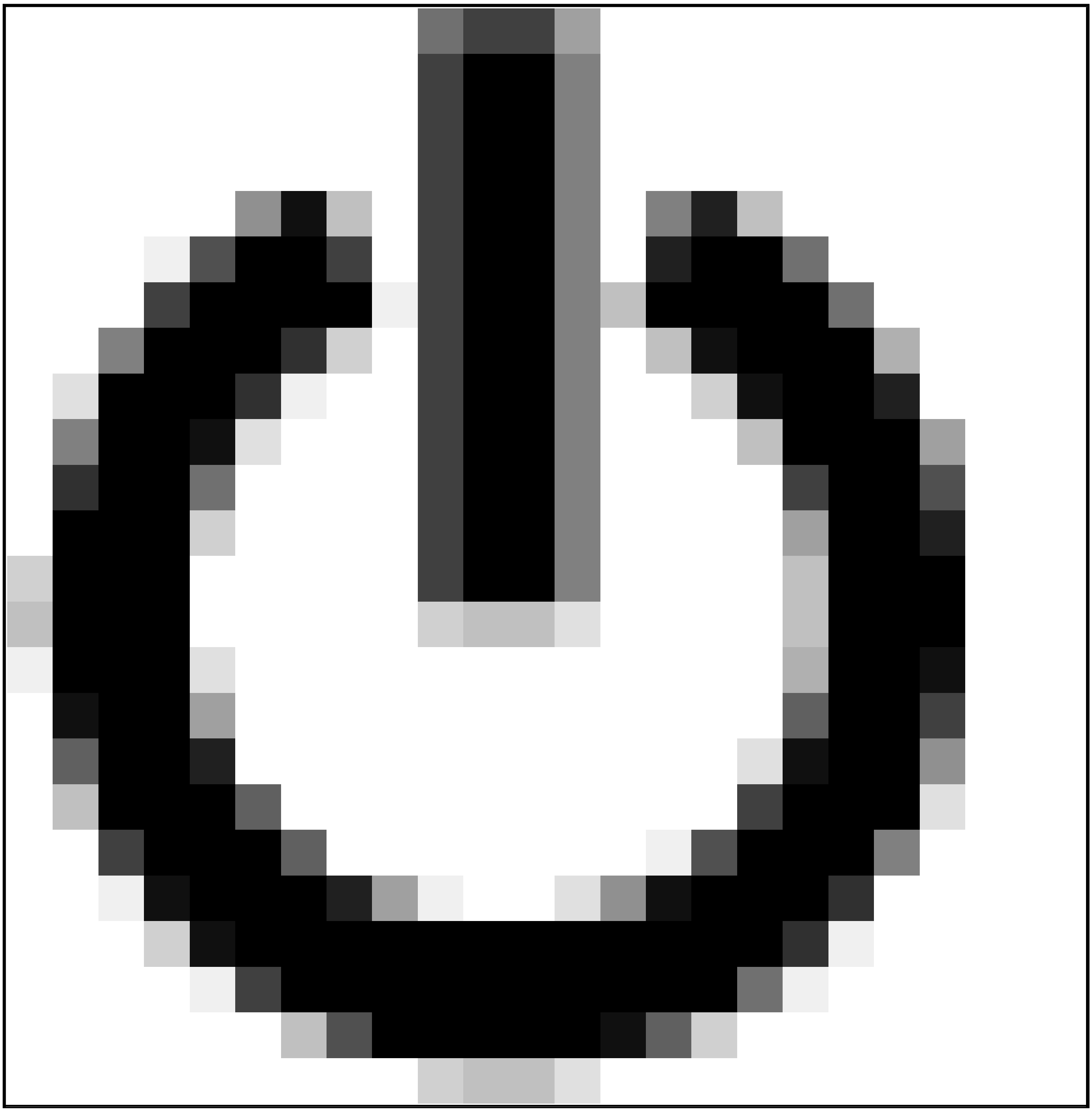

NOTE: The buttons needs to be pressed together simultaneously.

Displaying Select Diagnosis Items Menu Screen

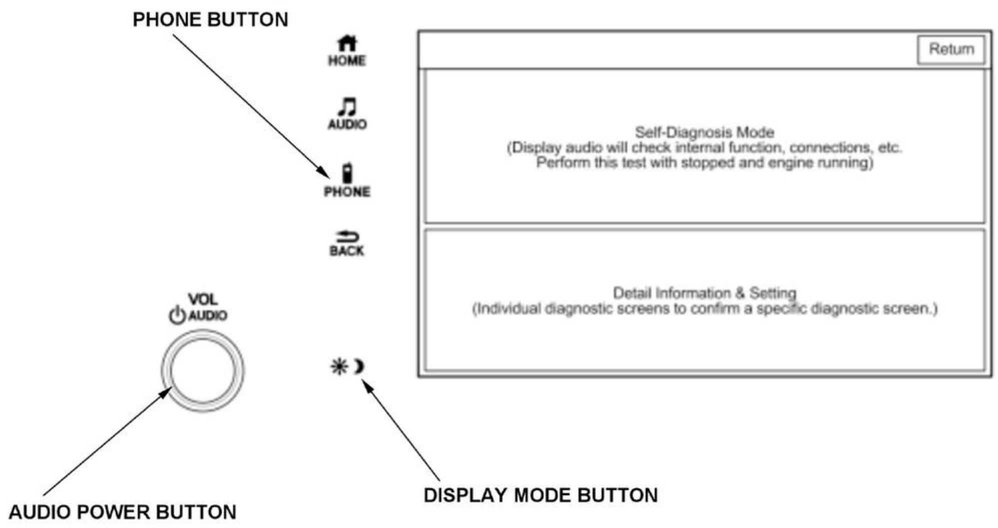
PHONE BUTTON
HOME
AUDIO
PHONE
BACK
VOL AUDIO
AUDIO POWER BUTTON
DISPLAY MODE BUTTON
Return

Self-Diagnosis Mode
(Display audio will check internal function, connections, etc.
Perform this test with stopped and engine running)

Detail Information & Setting
(Individual diagnostic screens to confirm a specific diagnostic screen.)

3. When the Select Diagnosis Items menu appears, select the Self-Diagnosis Mode.

4. When the audio unit has hard error codes, the Error History icon (A) appears yellow. When no hard error codes are stored, the icon appears gray. To view the errors with their navigation DTC, select the Error History icon.

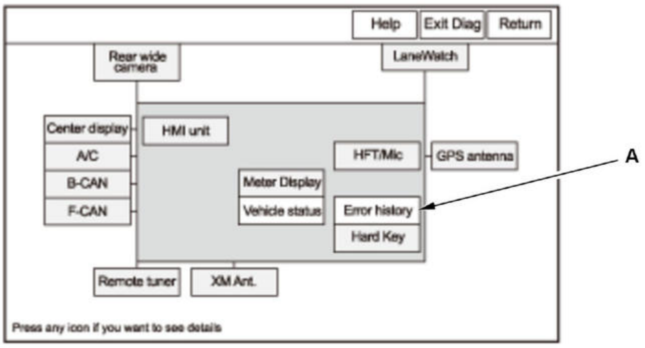
Help
Exit Diag
Return
Rear wide camera
LaneWatch
Center display
A/C
B-CAN
F-CAN
HMI unit
HFT/Mic
GPS antenna
Meter Display
Vehicle status
Error history
Hard Key
Remote tuner
XM Ant.
A

Press any icon if you want to see details

5. Select the Hard Error icon in the Error History menu.

NOTE: The Soft Error feature is for factory use only.

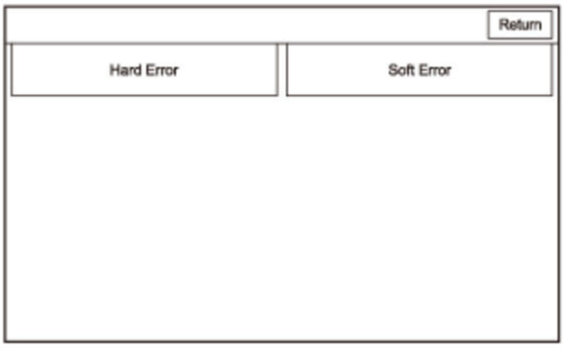
Return
Hard Error
Soft Error

The Hard Error screen displays the following information by selecting the Date/Time icon (A):

- The date and time when the error occurred. Swipe the screen to check the next items.
- The audio DTC for the error.
- A brief description of the audio DTC.

NOTE: The Save feature is for factory use only.

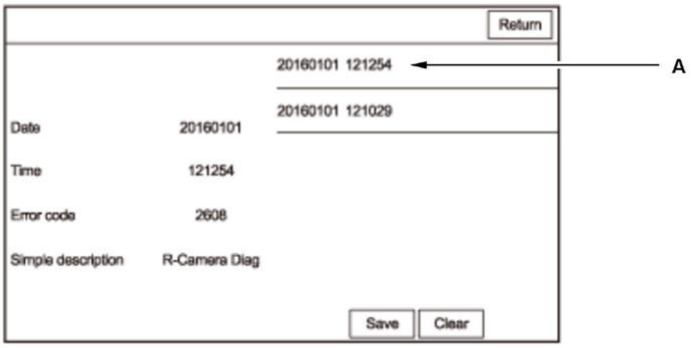

20160101 121254

20160101 121029

Date 20160101

Time 121254

Error code 2608

Simple description R-Camera Diag

7. Use the audio DTC Troubleshooting table to troubleshoot the error. Select the Return icon to exit the Error History main menu.

How to Clear Error History

NOTE: The audio DTCs cannot be deleted with the HDS.

8. Select the Clear icon in the Hard Error. The confirmation screen appears.

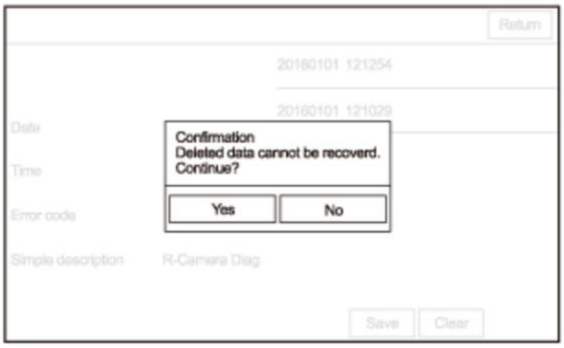

Confirmation
Deleted data cannot be recoverd.
Continue?

9. Select the Yes icon. All Hard Error histories are cleared. Select the Return icon to exit the Error History.

REMOVAL & INSTALLATION TEST

AUDIO REMOTE - HFL SWITCH REMOVAL, INSTALLATION, AND TEST

Removal and Installation

SRS components are located in this area. Review the SRS component locations and the precautions and procedures before doing repairs or service.

1. Driver's Airbag - Remove
2. Audio Remote-HFL Switch - Remove
3. All Removed Parts - Install

   Install the parts in the reverse order of removal.

Test

NOTE: Testing of the switch only applies to models without multi-information display.

1. Steering Wheel Trim - Remove
2. Audio Remote-HFL Switch - Test

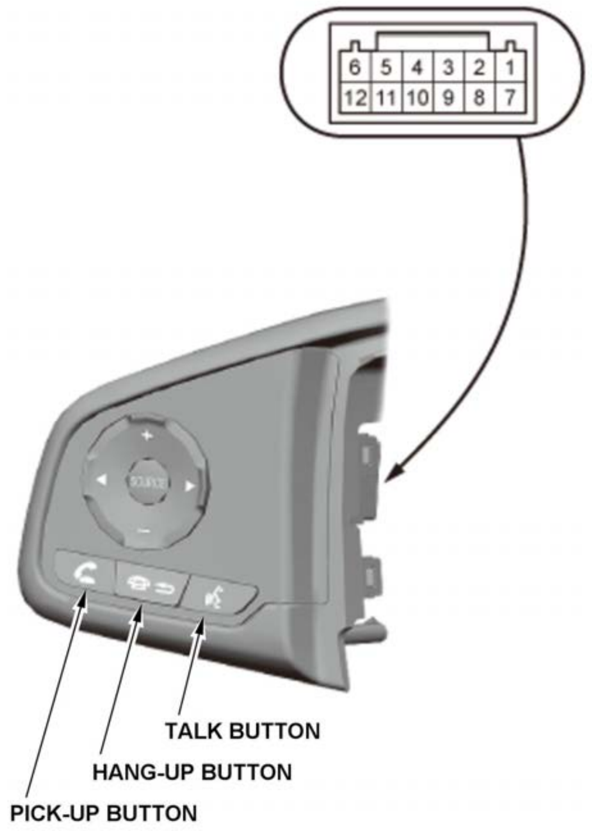 6 5 4 3 2 1 12 11 10 9 8 7 SOURCE TALK BUTTON HANG-UP BUTTON PICK-UP BUTTON	1. Measure the resistance between terminals No. 3 and No. 6 in each switch position according to the table. 2. Measure the resistance between terminals No. 6 and No. 9 in each switch position according to the table. 3. If the resistance is not as specified, replace the audio remote-HFL switch.

Button Held Down	Resistance
No button pressed	About 10 kΩ
HANG-UP	About 47 Ω

Button Held Down	Resistance
PICK-UP	About 222 Ω
TALK	About 2.2 kΩ

Button Held Down	Resistance
No button pressed	About 10 kΩ
SOURCE	About 3.7 kΩ
Right (CH +)	About 1.7 kΩ
Left (CH -)	About 775 Ω
+ (VOL.UP)	About 357 Ω
- (VOL.DOWN)	About 99 Ω

3. All Removed Parts - Install

   Install the parts in the reverse order of removal.

SPEAKER REMOVAL, INSTALLATION, AND TEST

Removal and Installation

NOTE: **How to read the torque specifications** .

Door Speaker

1. Door Panel - Remove
   - **Front door**
   - **Rear door**
2. Door Speaker - Remove

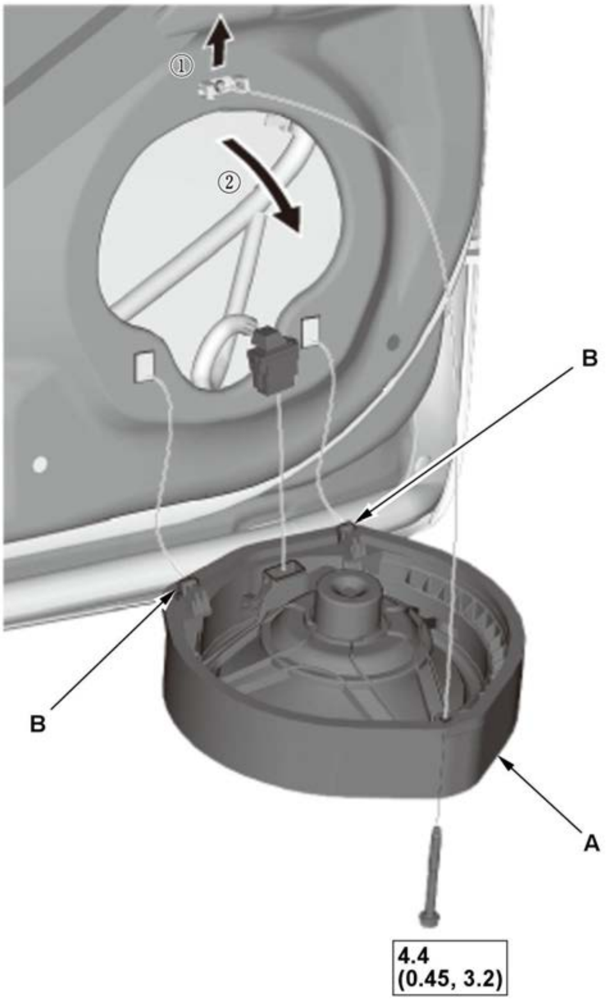	1. Remove the bolt, then lift the door speaker (A) straight up to release the lower clips (B). 2. Disconnect the connector.

3. All Removed Parts - Install

   Install the parts in the reverse order of removal.

   Front Tweeter

4. **Mirror Trim - Remove**
5. Front Tweeter - Remove

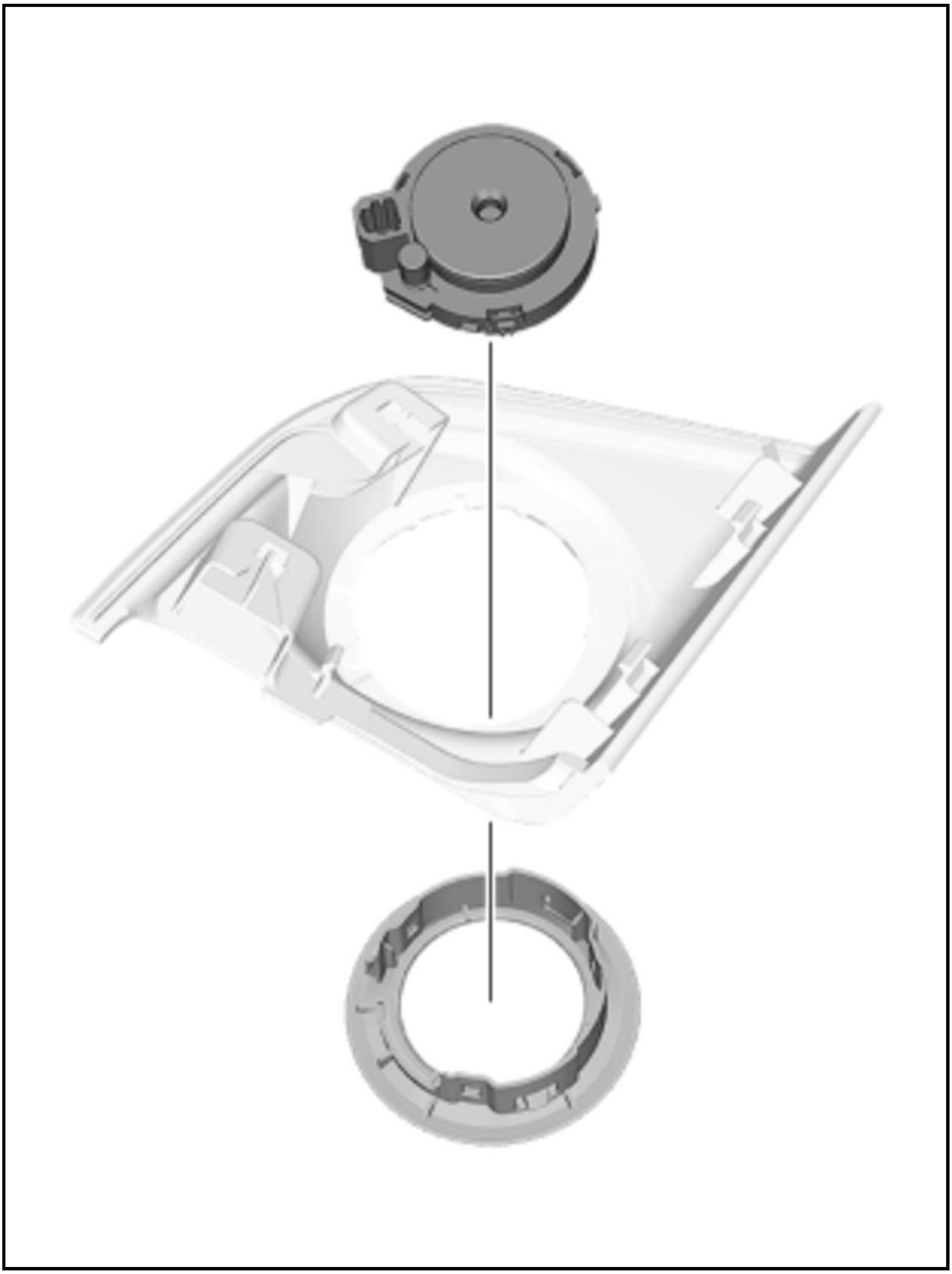

6. All Removed Parts - Install

   Install the parts in the reverse order of removal.

   Rear Tweeter

7. **Rear Door Panel - Remove**
8. Rear Tweeter - Remove

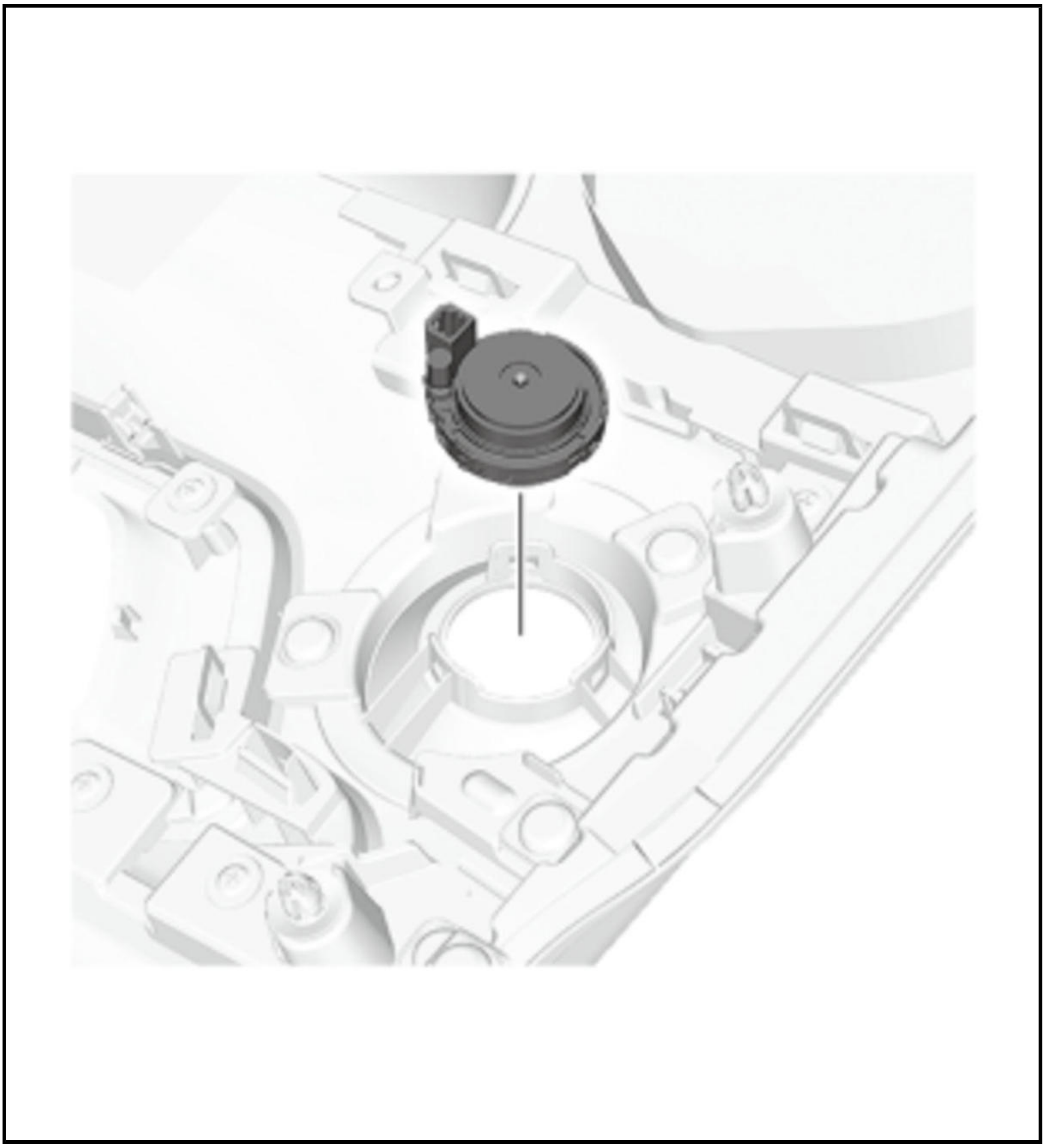

9. All Removed Parts - Install

   Install the parts in the reverse order of removal.

   Subwoofer

10. **Rear Side Trim Panel (Right Side) - Remove**
11. Subwoofer - Remove

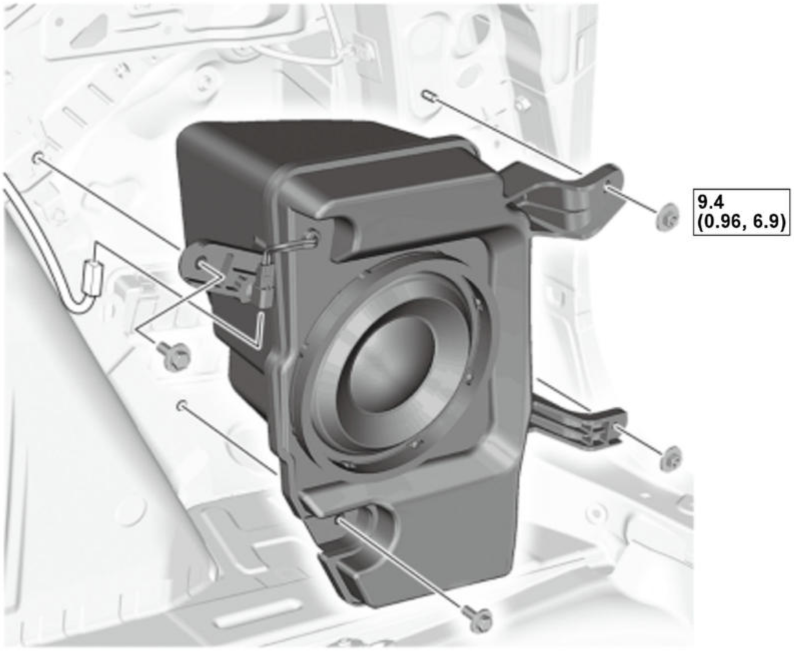

12. All Removed Parts - Install

    Install the parts in the reverse order of removal.

Test

Door Speaker, Rear Speaker

1. Door Speaker, Rear Speaker - Test

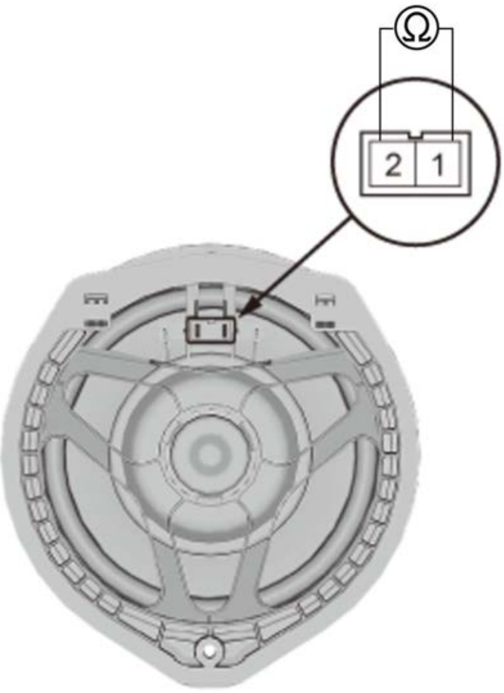	1. Measure the resistance between terminals No. 1 and No. 2. There should be about 4 Ω. 2. If the resistance is not as specified, replace the door speaker.

Tweeter

2. Tweeter - Test

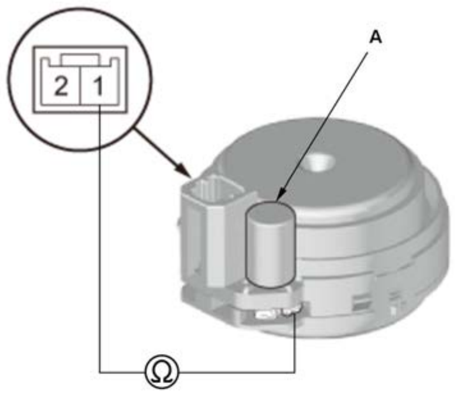	1. Measure the resistance between terminal No. 1 and the outside terminal of the capacitor (A). There should be about 4 Ω. Also visually check the capacitor for damage. 2. If the resistance is not as specified, replace the tweeter.

Subwoofer

3. Subwoofer - Test

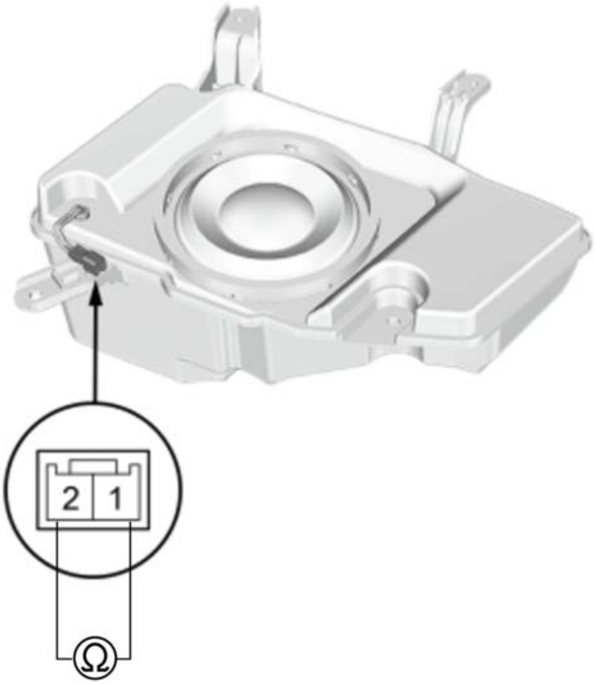	1. Measure the resistance between the terminals No. 1 and No. 2. There should be about 2 Ω. 2. If the resistance is not as specified, replace the subwoofer.

REMOVAL AND INSTALLATION

ANC/ACTIVE SOUND CONTROL MICROPHONE REMOVAL AND INSTALLATION

Removal and Installation

SRS components are located in this area. Review the **SRS component locations** and the **precautions and procedures** before doing repairs or service.

NOTE: The front HFL-ANC/active sound control microphone and the front HFL-navigation-ANC/active sound control microphone are the same parts.

1

Front (Some of equipment next to microphone)

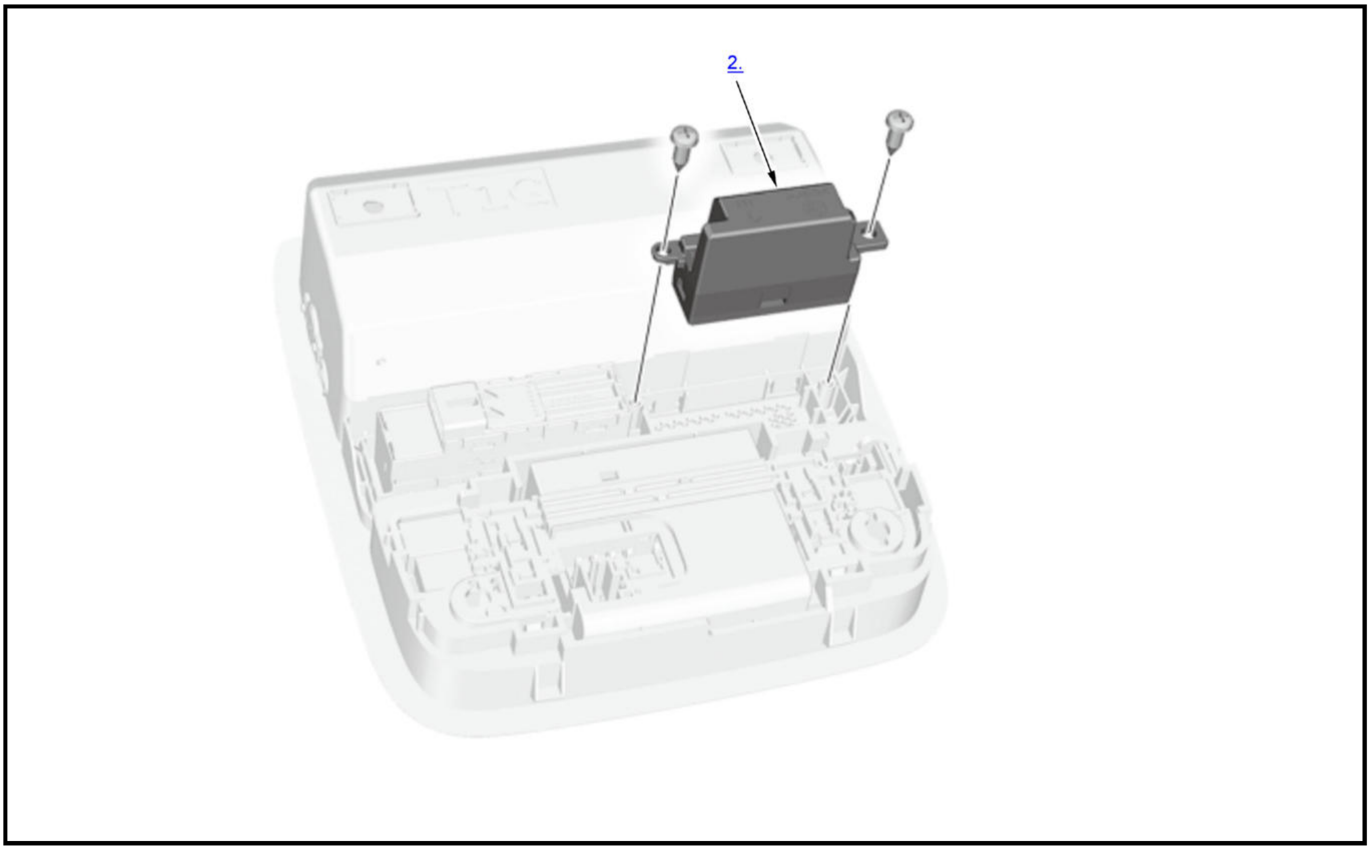

2

Front (Equipped with only microphone)

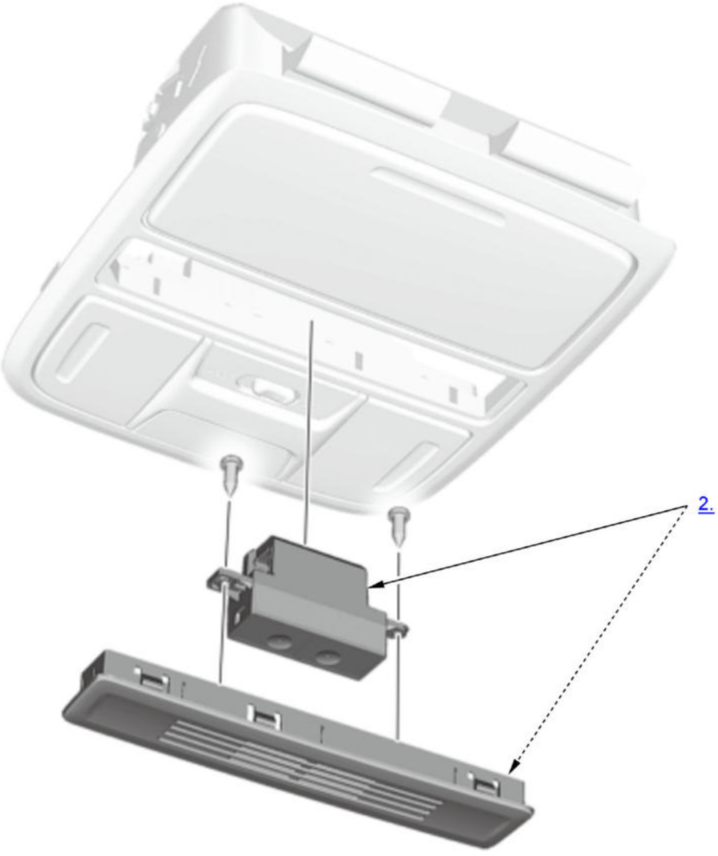

3

Rear

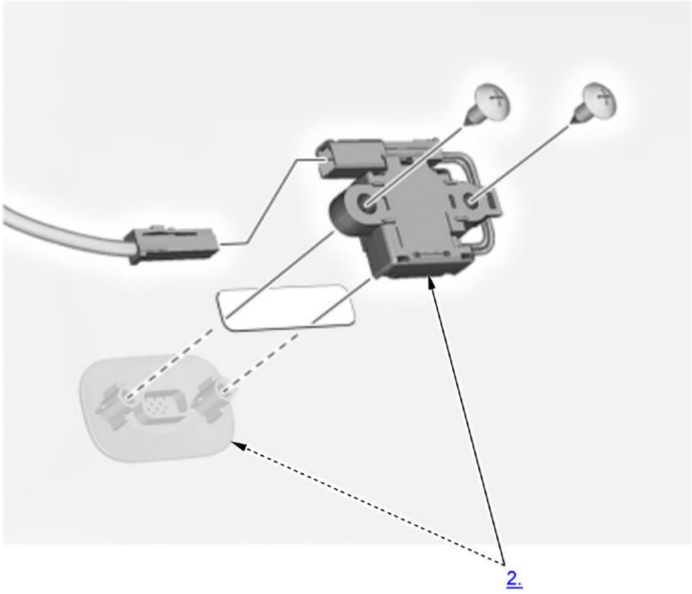

Front

1. **Roof Console Assembly - Remove**
2. Front ANC/Active Sound Control Microphone - Remove
3. All Removed Parts - Install

   Install the parts in the reverse order of removal.

   Rear

4. **Headliner - Remove**
5. Rear ANC/Active Sound Control Microphone - Remove
6. All Removed Parts - Install

   Install the parts in the reverse order of removal.

ANC/ACTIVE SOUND CONTROL UNIT REMOVAL AND INSTALLATION

Removal and Installation

1

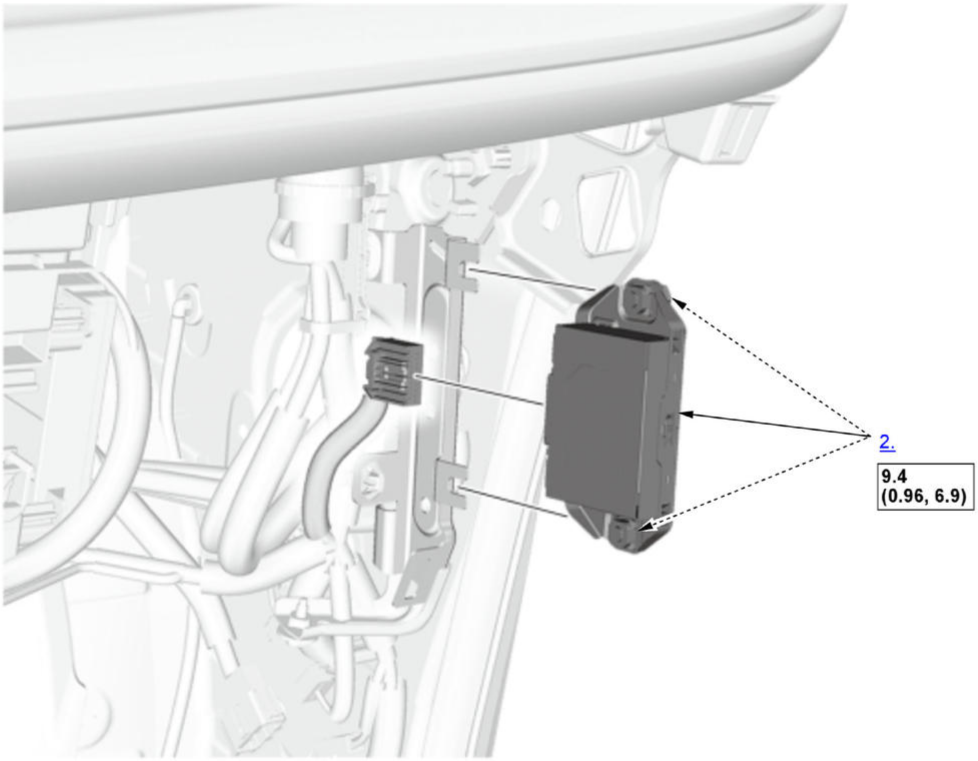

▭	Torque: N.m (kgf.m, lbf.ft)

1. **Glove box - Remove**
2. ANC/Active Sound Control Unit - Remove
3. All Removed Parts - Install

   Install the parts in the reverse order of removal.

AUDIO UNIT REMOVAL AND INSTALLATION (COLOR AUDIO TYPE)

Removal and Installation

SRS components are located in this area. Review the **SRS component locations** and the **precautions and procedures** before doing repairs or service.

NOTE:

- ℹ Where icon is shown, further information shown below.
- When working on electronic components, make sure the work area is clean and dust free.
- Make sure your hands are clean and free of oils and grease.
- If you are replacing the audio unit, write down the audio presets (if possible), and enter them into a new audio unit.

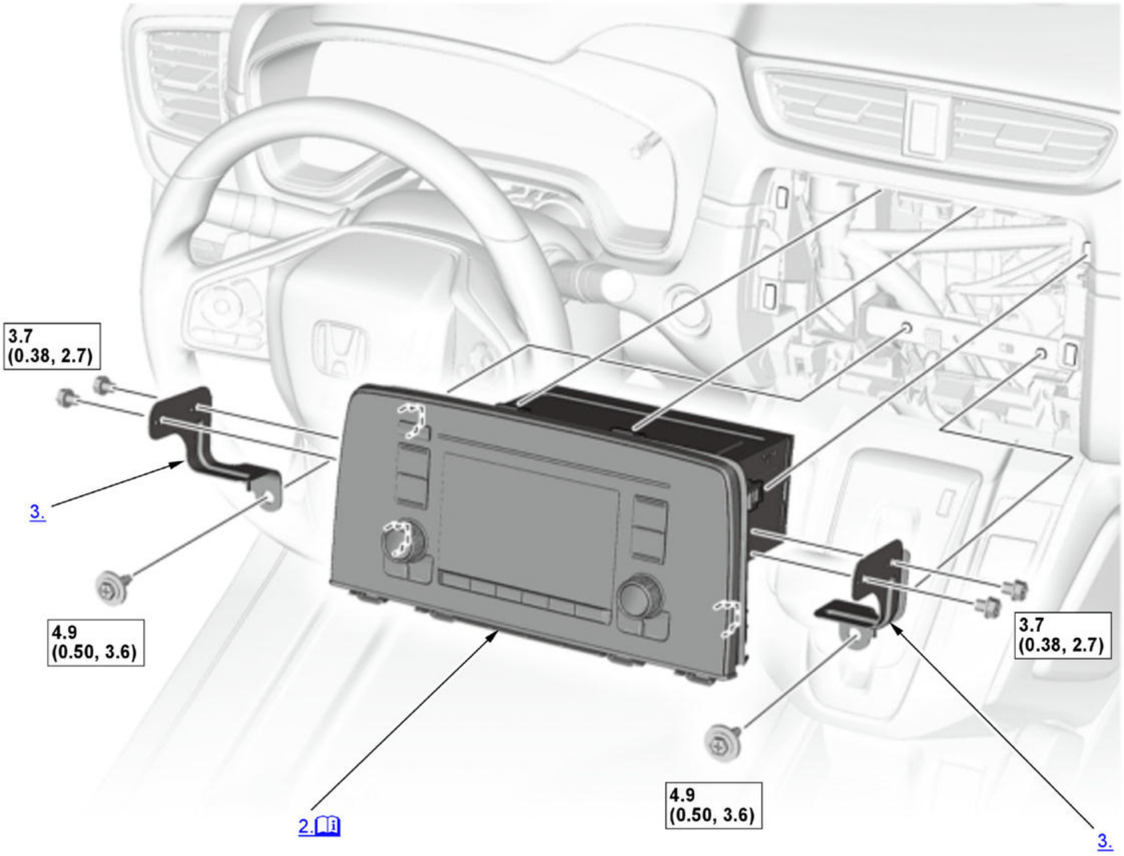
3.7
(0.38, 2.7)
3.
4.9
(0.50, 3.6)
2.
4.9
(0.50, 3.6)
3.7
(0.38, 2.7)
3.

	Detailed information, notes, and precautions
	Torque: N.m (kgf.m, lbf.ft)

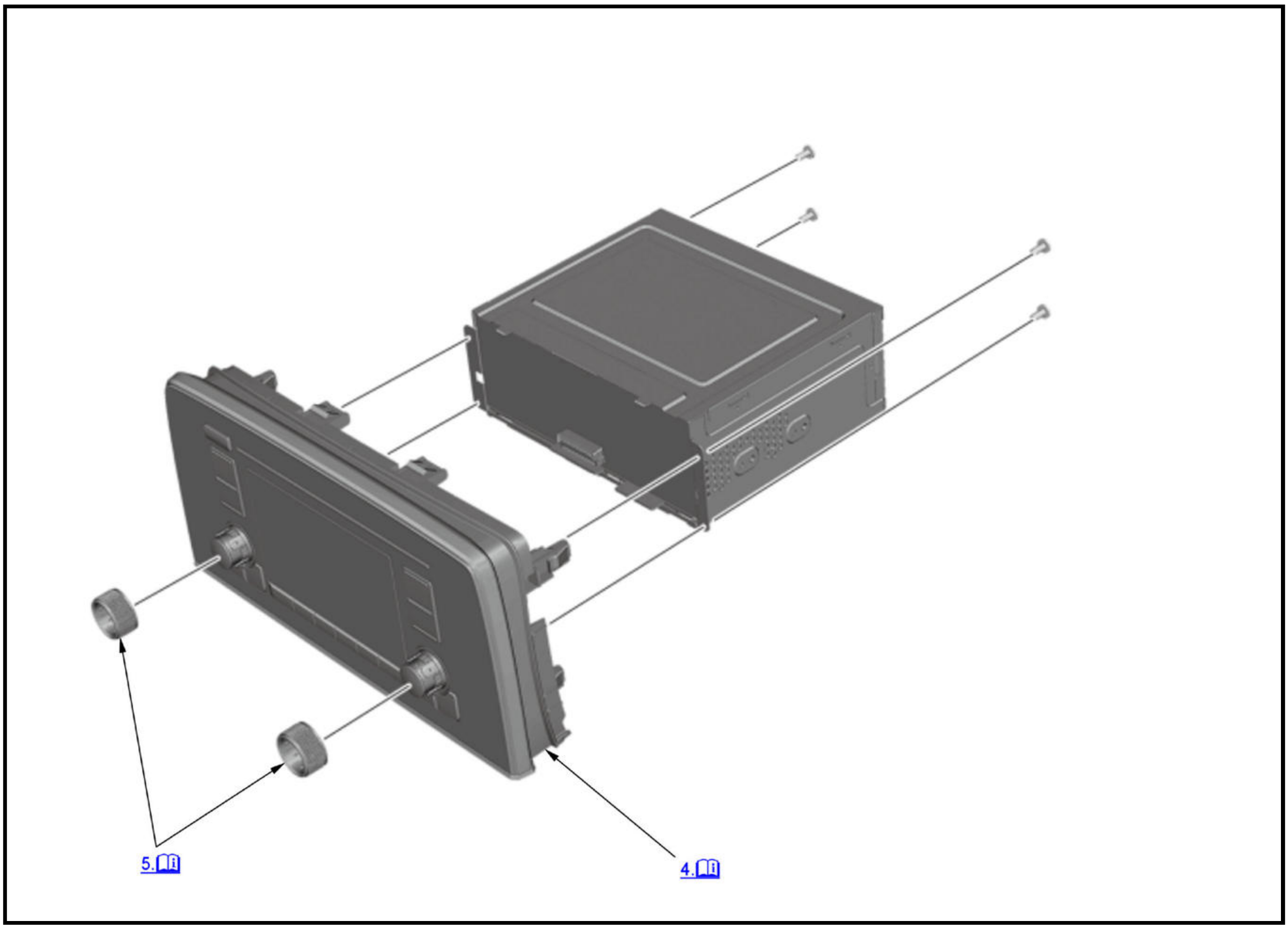

🕮i	Detailed information, notes, and precautions

1. **Climate Control Panel - Remove**
2. Audio Unit Assembly - Remove

   NOTE:

   - When installing, make sure all the connectors are secure.
   - After Installation, **do the System Links in the System Diagnostic Mode** to confirm that there are no problems in the system.
3. Audio Unit Bracket - Remove
4. Audio Panel - Remove

   NOTE:

   - Discharge static electricity from your body before and during the work.
   - Do not touch the circuit board(s) with your bare hands.
5. Volume/List Knob - Remove

   If necessary, remove the knob(s).

6. All Removed Parts - Install

   Install the parts in the reverse order of removal.

AUDIO UNIT REMOVAL AND INSTALLATION (DISPLAY AUDIO TYPE)

Removal and Installation

SRS components are located in this area. Review the SRS component locations and the precautions and procedures before doing repairs or service.

NOTE:

- ℹ Where icon is shown, further information shown below.
- When working on electronic components, make sure the work area is clean and dust free.
- Make sure your hands are clean and free of oils and grease.

1

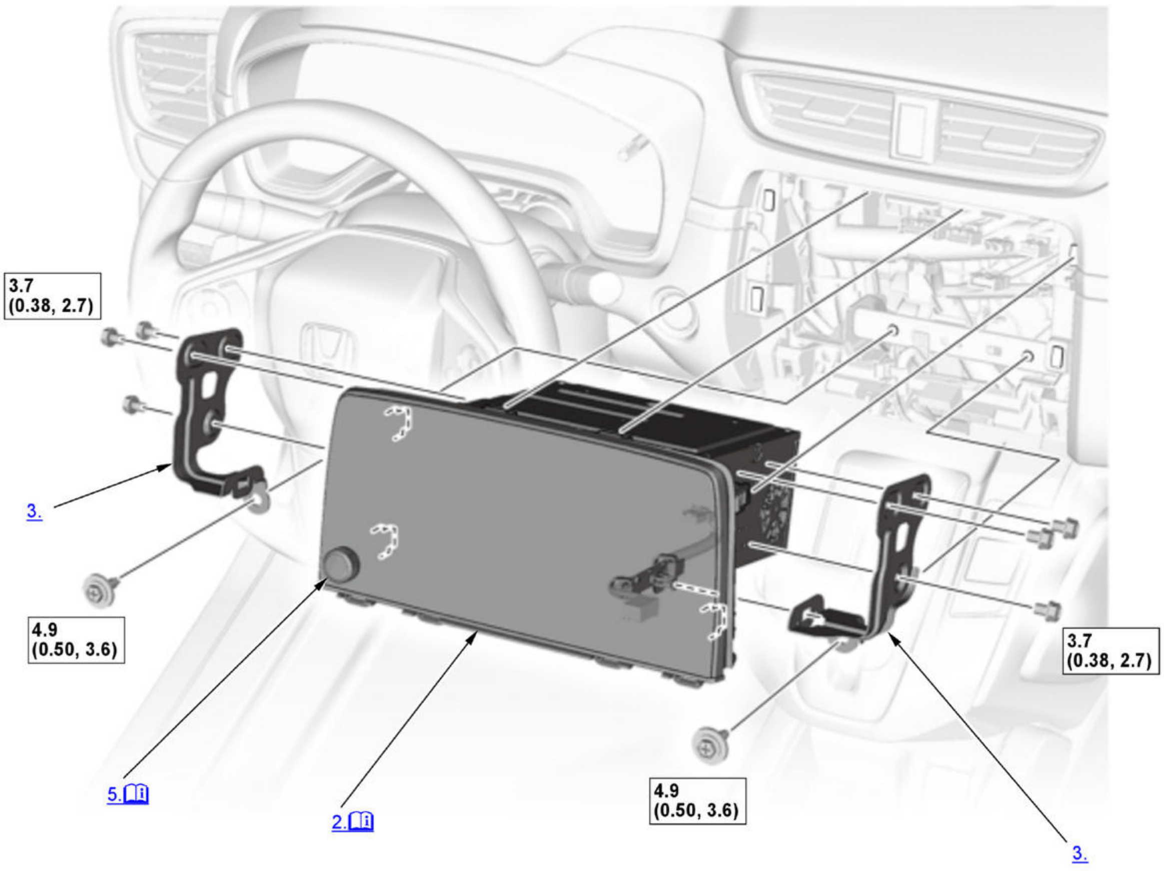

ℹ	Detailed information, notes, and precautions
☐	Torque: N.m (kgf.m, lbf.ft)

1. Climate Control Panel - Remove
2. Audio Unit Assembly - Remove

   NOTE:

   - When installing, make sure all the connectors are secure.
   - After Installation, do the System Links in the System Diagnostic Mode to confirm that there are no problems in the system.

3. Audio Unit Bracket - Remove
4. Center Display Unit - Remove
5. Volume Knob - Remove

   If necessary, remove the knob.

6. All Removed Parts - Install

   Install the parts in the reverse order of removal.

AUDIO-NAVIGATION UNIT REMOVAL AND INSTALLATION

Removal and Installation

SRS components are located in this area. Review the SRS component locations and the precautions and procedures before doing repairs or service.

NOTE:

- ℹ Where icon is shown, further information shown below.
- When working on electronic components, make sure the work area is clean and dust free.
- Make sure your hands are clean and free of oils and grease.
- When the audio-navigation unit is replaced or disconnected, do the Map Matching. This part of the initialization matches the GPS coordinates with a road on the map screen. To do this part of the procedure, make sure that the navigation system displays a map, and drive the vehicle on a mapped road shown on the map screen. Do not enter a destination at this time. When the name of the current road you are driving on appears at the bottom of the screen, the entire procedure is complete.

1

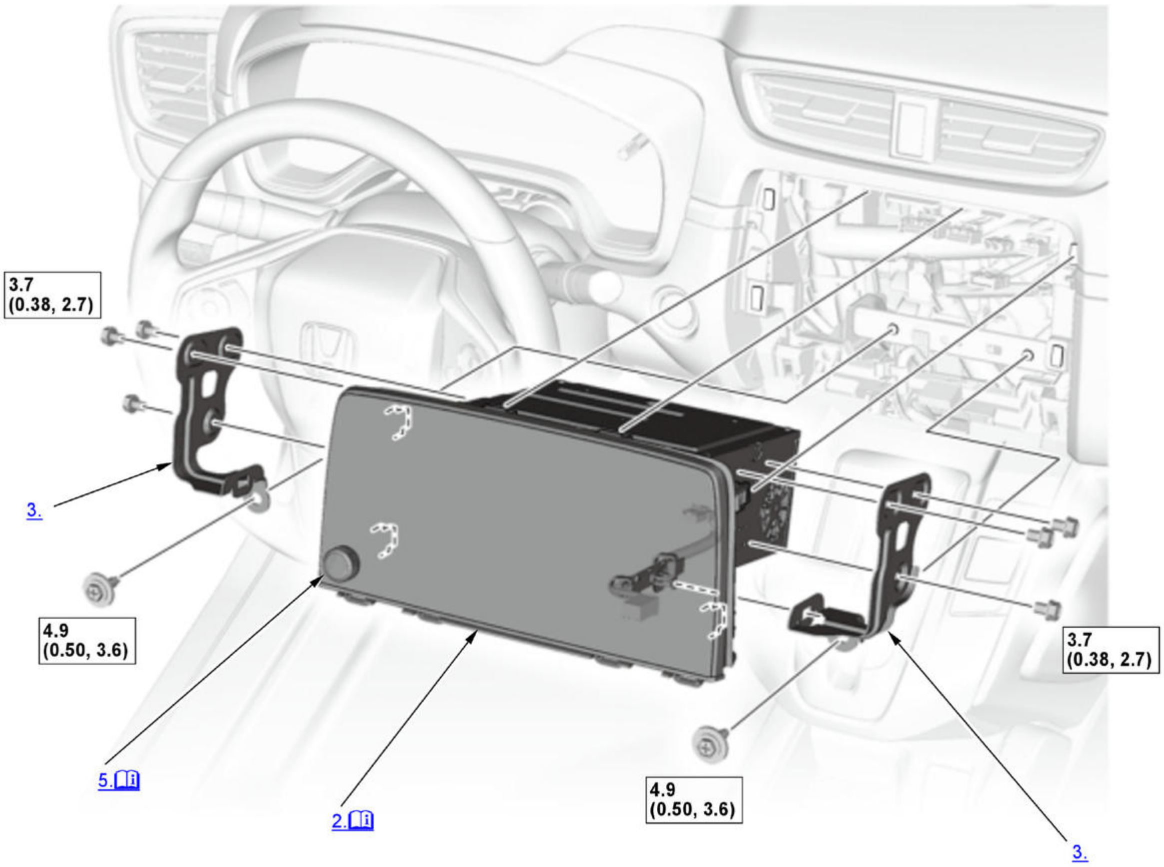

ℹ	Detailed information, notes, and precautions
☐	Torque: N.m (kgf.m, lbf.ft)

1. Climate Control Panel - Remove
2. Audio-Navigation Unit Assembly - Remove

   NOTE:

   - When installing, make sure all the connectors are secure.
   - If the audio-navigation was replaced, it may take up to 30 minutes for the navigation system to calibrate and operate correctly.
   - After Installation, do the System Links in the System Diagnostic Mode to confirm that there are no problems in the system, then park the vehicle outside, and do the GPS initialization.
3. Audio-Navigation Unit Bracket - Remove
4. Center Display Unit - Remove
5. Volume Knob - Remove

   If necessary, remove the knob.

6. All Removed Parts - Install

   Install the parts in the reverse order of removal.

AUXILIARY JACK ASSEMBLY REMOVAL AND INSTALLATION

Removal and Installation

SRS components are located in this area. Review the **SRS component locations** and the **precautions and procedures** before doing repairs or service.

1

Without USB port light

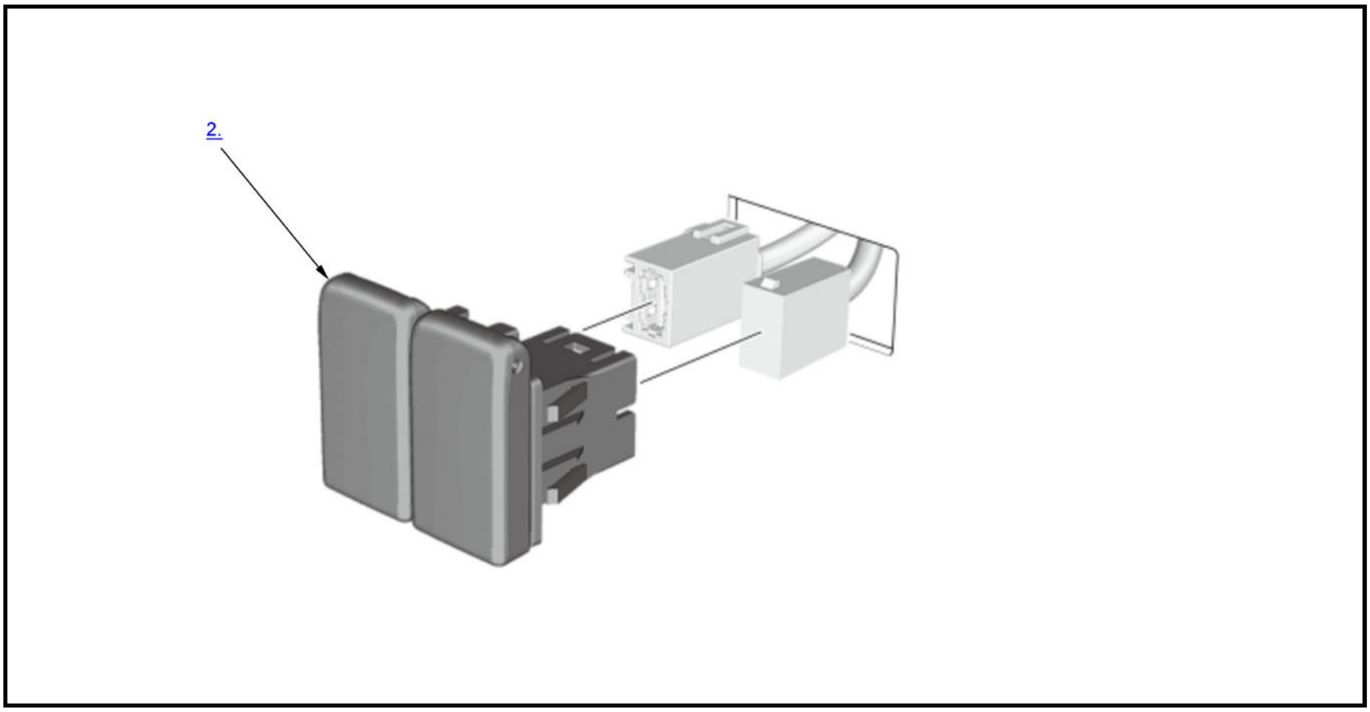

2

With USB port light

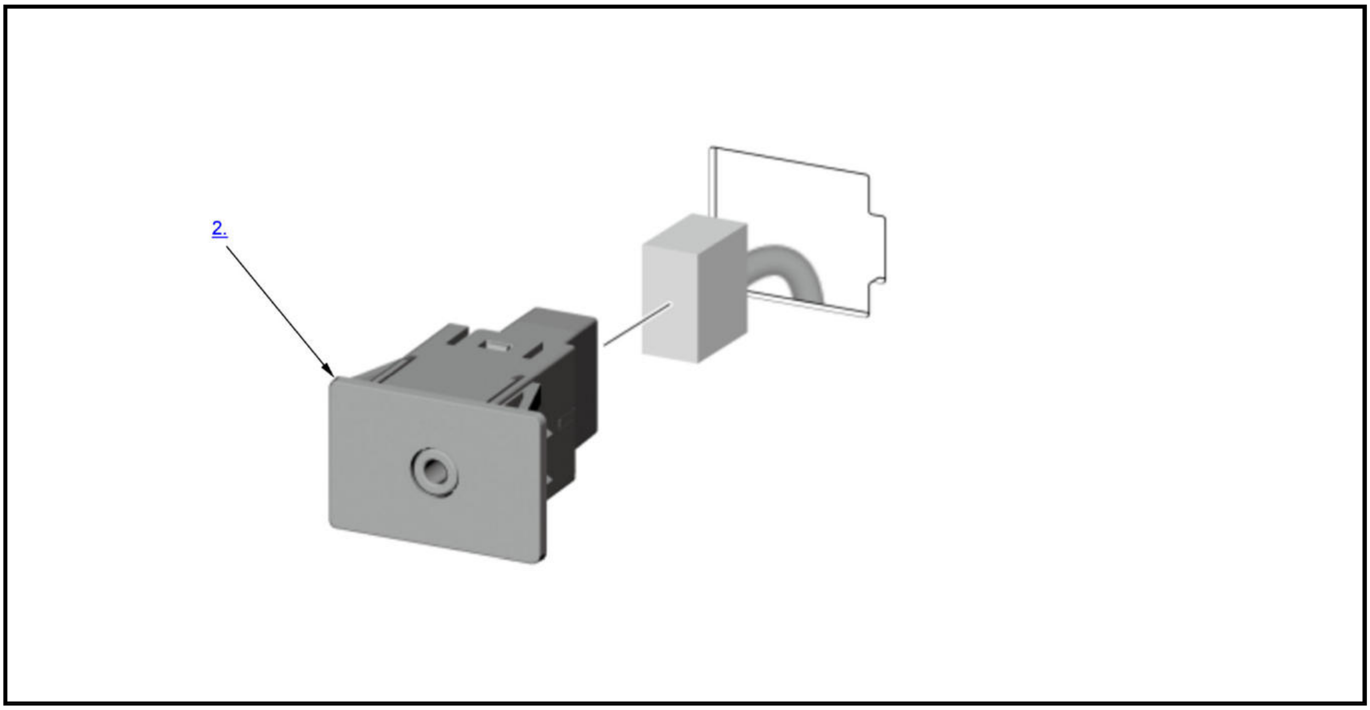

Without USB Port Light

1. **Center Console Panel - Remove**

2. Auxiliary Jack Assembly - Remove
3. All Removed Parts - Install

   Install the parts in the reverse order of removal.

   With USB Port Light

4. Dashboard Center Lower Panel - Remove
5. Auxiliary Jack Assembly - Remove
6. All Removed Parts - Install

   Install the parts in the reverse order of removal.

CENTER DISPLAY UNIT REMOVAL AND INSTALLATION

Removal and Installation

NOTE: ℹ Where icon is shown, further information shown below.

1

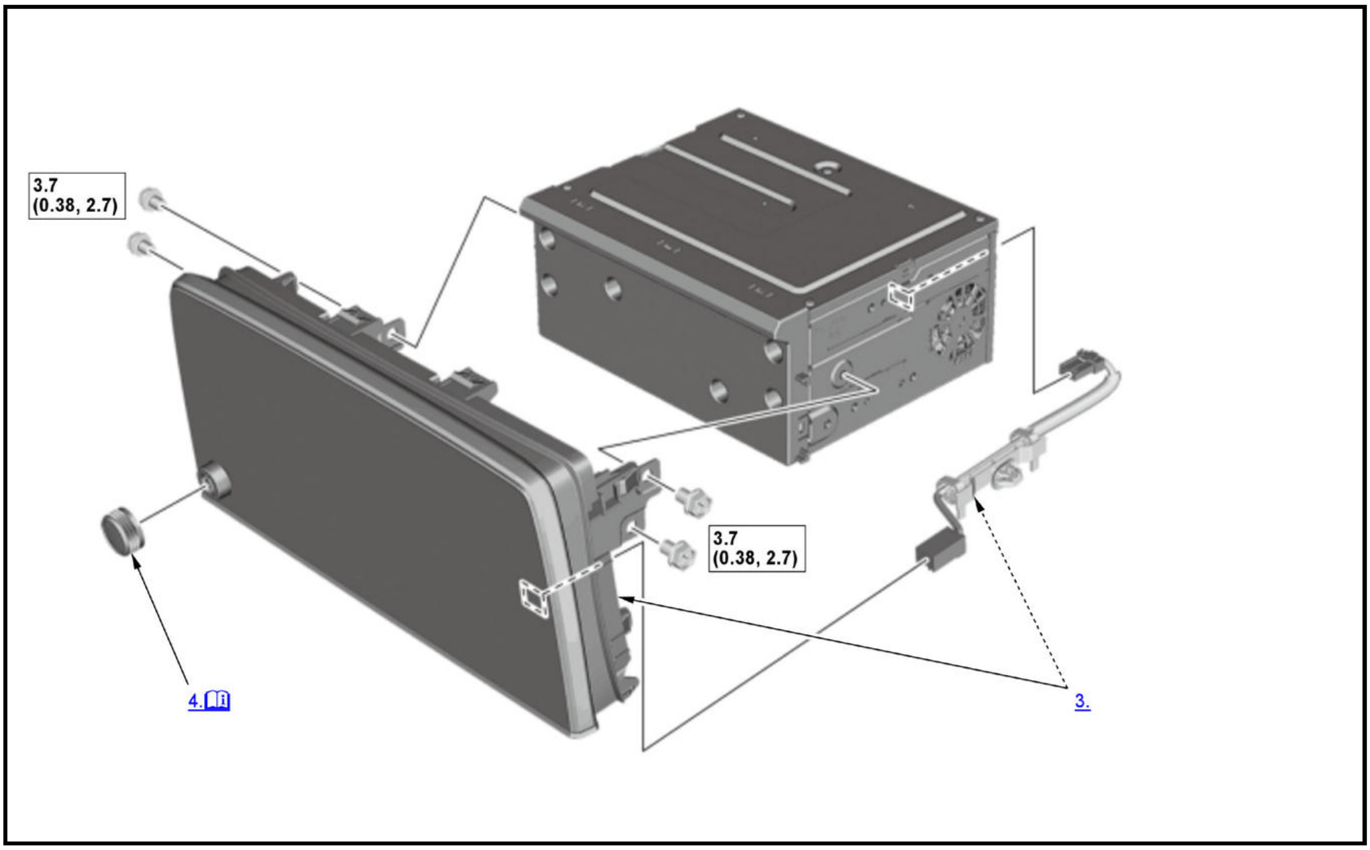

ℹ	Detailed information, notes, and precautions
☐	Torque: N.m (kgf.m, lbf.ft)

1. Audio-Navigation Unit Assembly - Remove (With Navigation)
2. Audio Unit Assembly - Remove (Without Navigation)
3. Center Display Unit - Remove
4. Volume Knob - Remove

   If necessary, remove the knob.

5. All Removed Parts - Install

   Install the parts in the reverse order of removal.

GPS ANTENNA REMOVAL AND INSTALLATION

Removal and Installation

1

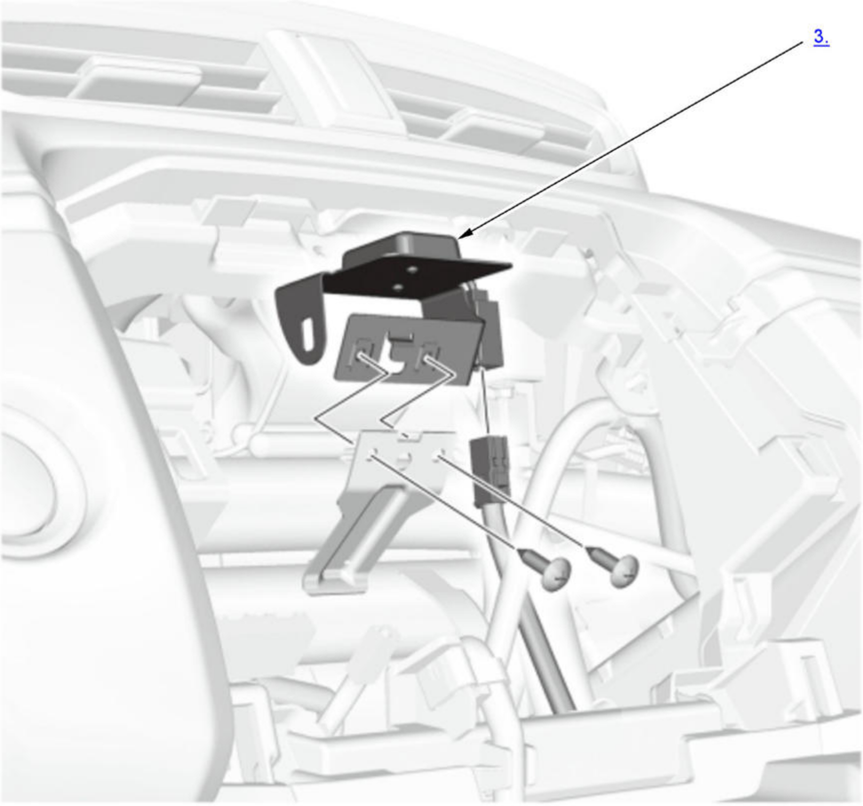

1. **Audio-Navigation Unit Assembly - Remove (With Navigation)**
2. **Audio Unit Assembly - Remove (Without Navigation)**
3. GPS Antenna - Remove
4. All Removed Parts - Install

   Install the parts in the reverse order of removal.

REARVIEW CAMERA REMOVAL AND INSTALLATION

Removal and Installation

1

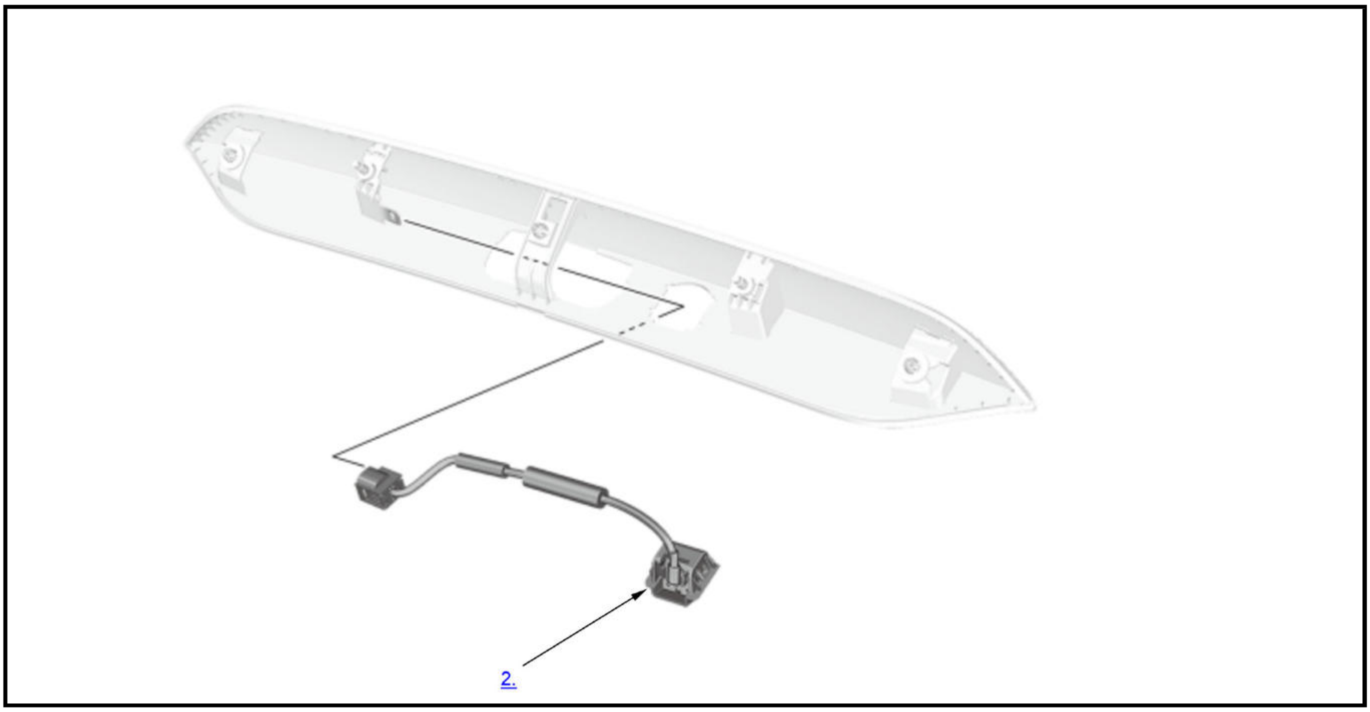

1. **Rear License Trim - Remove**
2. Rearview Camera - Remove
3. All Removed Parts - Install

   Install the parts in the reverse order of removal.

ROOF ANTENNA REMOVAL AND INSTALLATION

Removal and Installation

SRS components are located in this area. Review the **SRS component locations** and the **precautions and procedures** before doing repairs or service.

NOTE: 🛈 Where icon is shown, further information shown below.

1

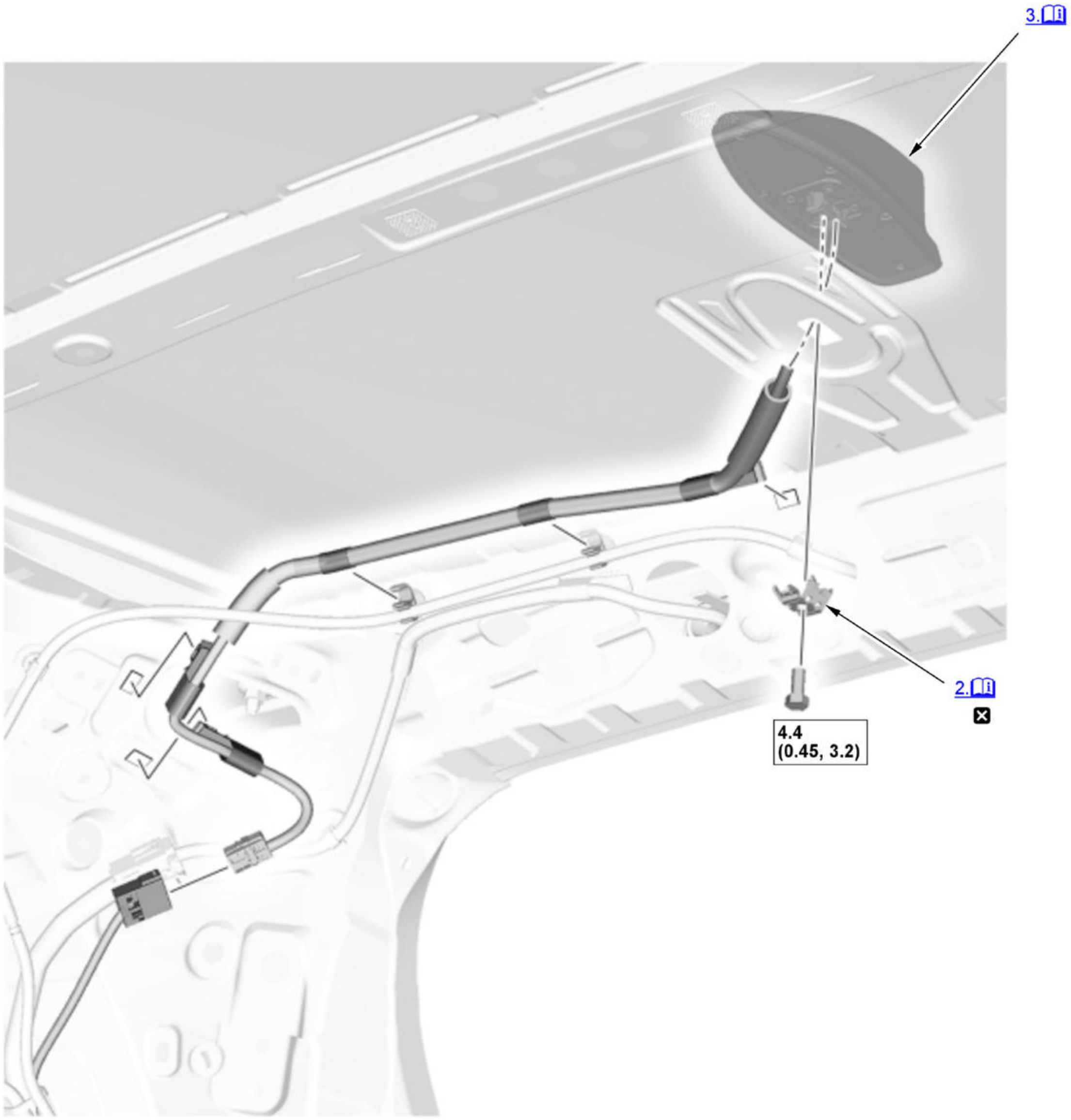

ℹ	Detailed information, notes, and precautions

☐	Torque: N.m (kgf.m, lbf.ft)
☒	Replace

1. **Headliner - Remove**
2. Capture Washer - Remove

   NOTE: Make sure to use a new capture washer when installing the roof antenna.

3. Roof Antenna - Remove

   NOTE: Perform the shower test to confirm that there is no water leakage.

4. All Removed Parts - Install

   Install the parts in the reverse order of removal.

STEREO AMPLIFIER REMOVAL AND INSTALLATION

Removal and Installation

SRS components are located in this area. Review the **SRS component locations** and the **precautions and procedures** before doing repairs or service.

1

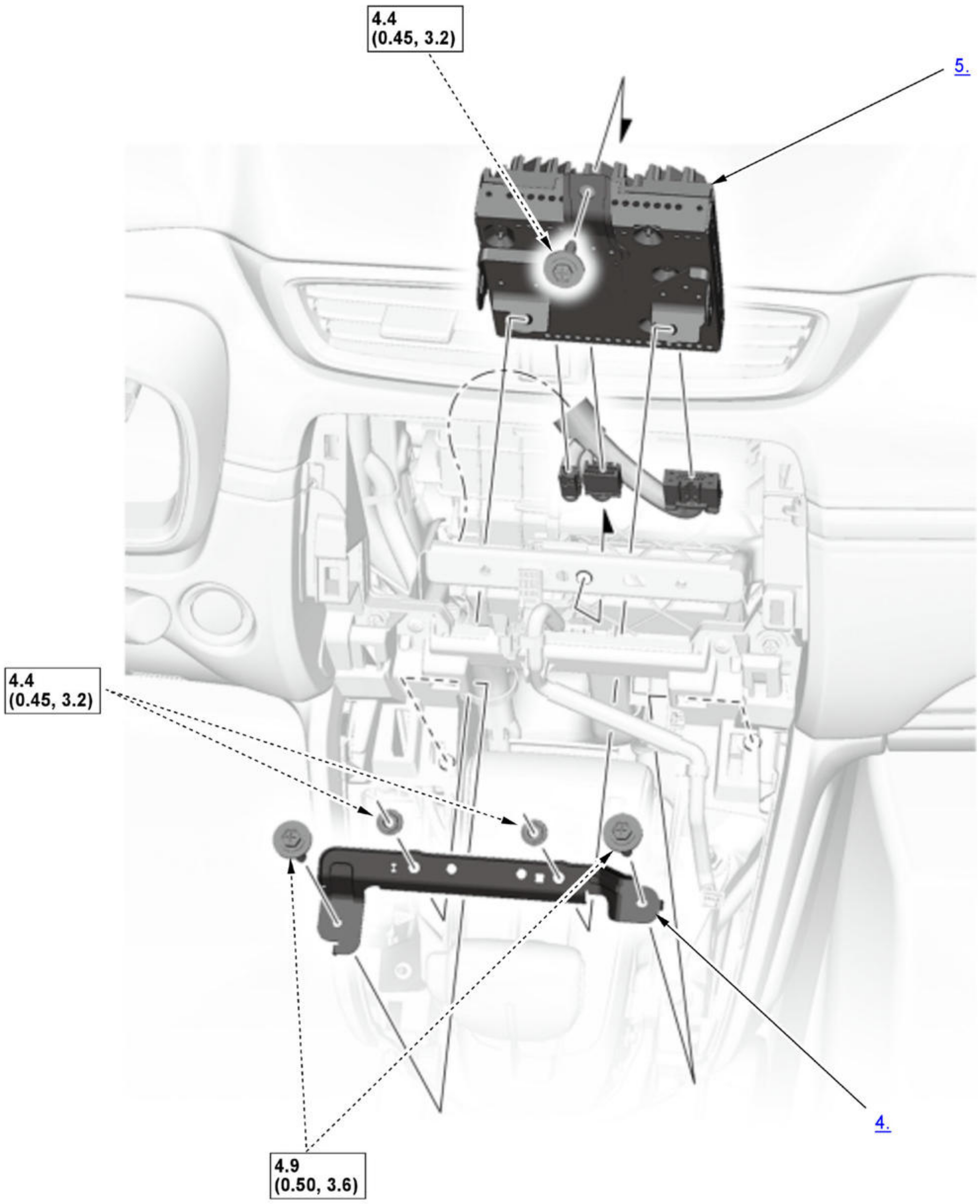

☐	Torque: N.m (kgf.m, lbf.ft)

1. **Audio-Navigation Unit Assembly - Remove (With Navigation)**
2. **Audio Unit Assembly - Remove (Without Navigation)**
3. **Center Maintenance Cover - Remove**

   NOTE: The center maintenance cover is only available for the the side.

4. Stereo Amplifier Bracket - Remove
5. Stereo Amplifier - Remove

6. All Removed Parts - Install

   Install the parts in the reverse order of removal.

TUNER UNIT REMOVAL AND INSTALLATION

Removal and Installation

SRS components are located in this area. Review the **SRS component locations** and the **precautions and procedures** before doing repairs or service.

NOTE: If you are replacing the tuner unit, write down the AM/FM radio presets (if possible), and enter them into the new audio-navigation unit or the new audio unit.

1

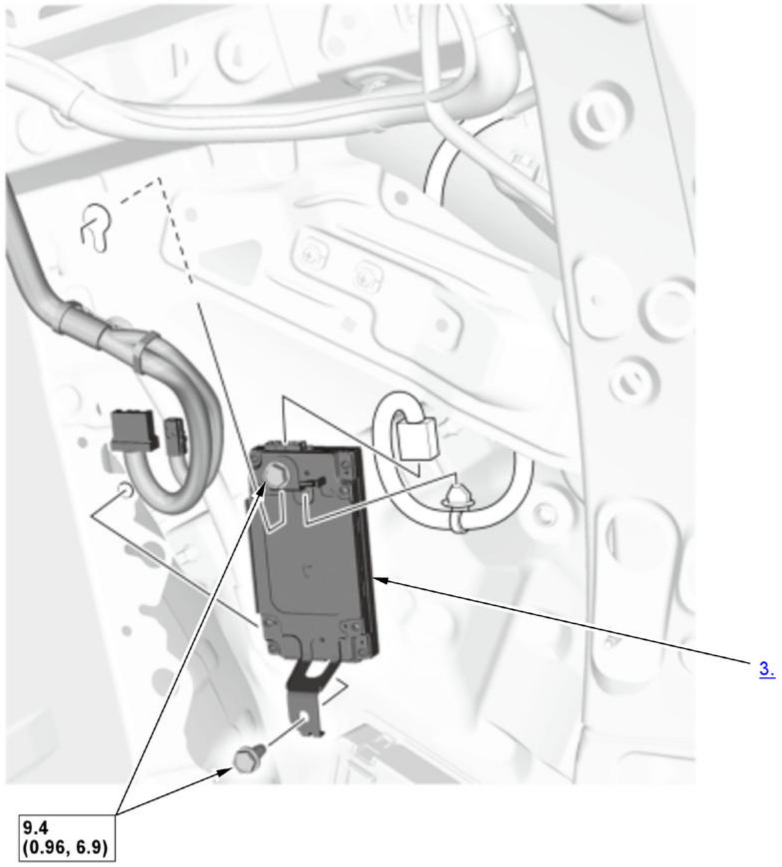

▭	Torque: N.m (kgf.m, lbf.ft)

1. **Rear Side Trim Panel (Right Side) - Remove**
2. **Subwoofer - Remove (With subwoofer)**
3. Tuner Unit - Remove
4. All Removed Parts - Install

   Install the parts in the reverse order of removal.

USB ADAPTER HOLDER REMOVAL AND INSTALLATION

Removal and Installation

SRS components are located in this area. Review the SRS component locations and the precautions and procedures before doing repairs or service.

NOTE: USB adapter holder (one USB) with auxiliary jack assembly, refer to Auxiliary Jack Assembly Removal and Installation.

1

USB Adapter Holder (two USB) (Without USB port light)

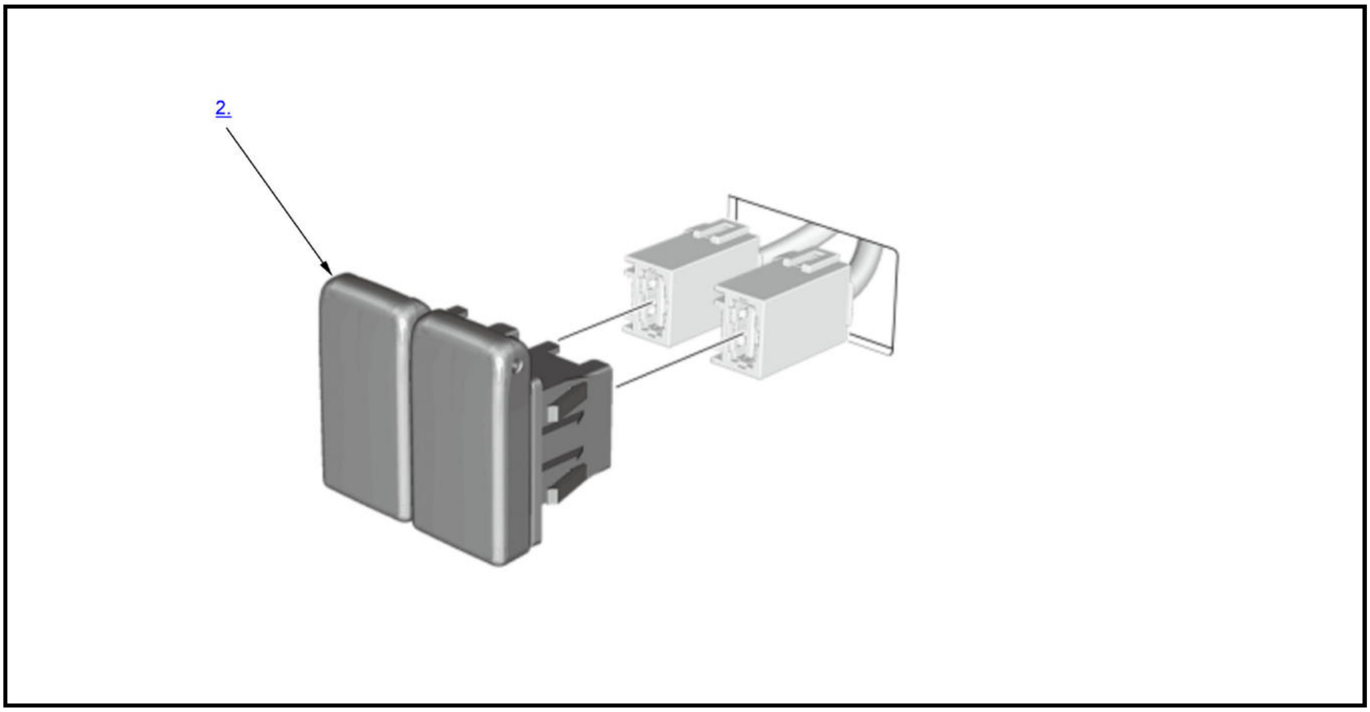

USB Adapter Holder (one USB without auxiliary jack assembly) (Without USB port light)

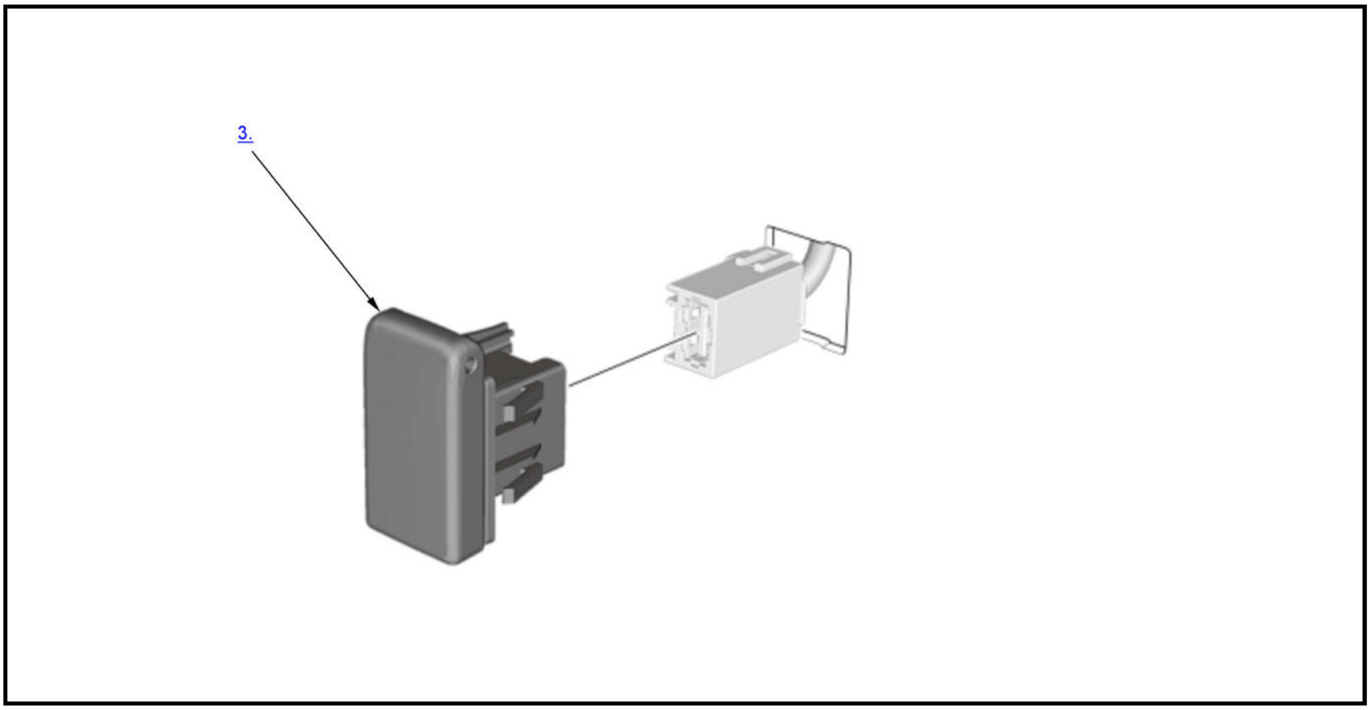

2

USB Adapter Holder (USB port A/B) (With USB port light)

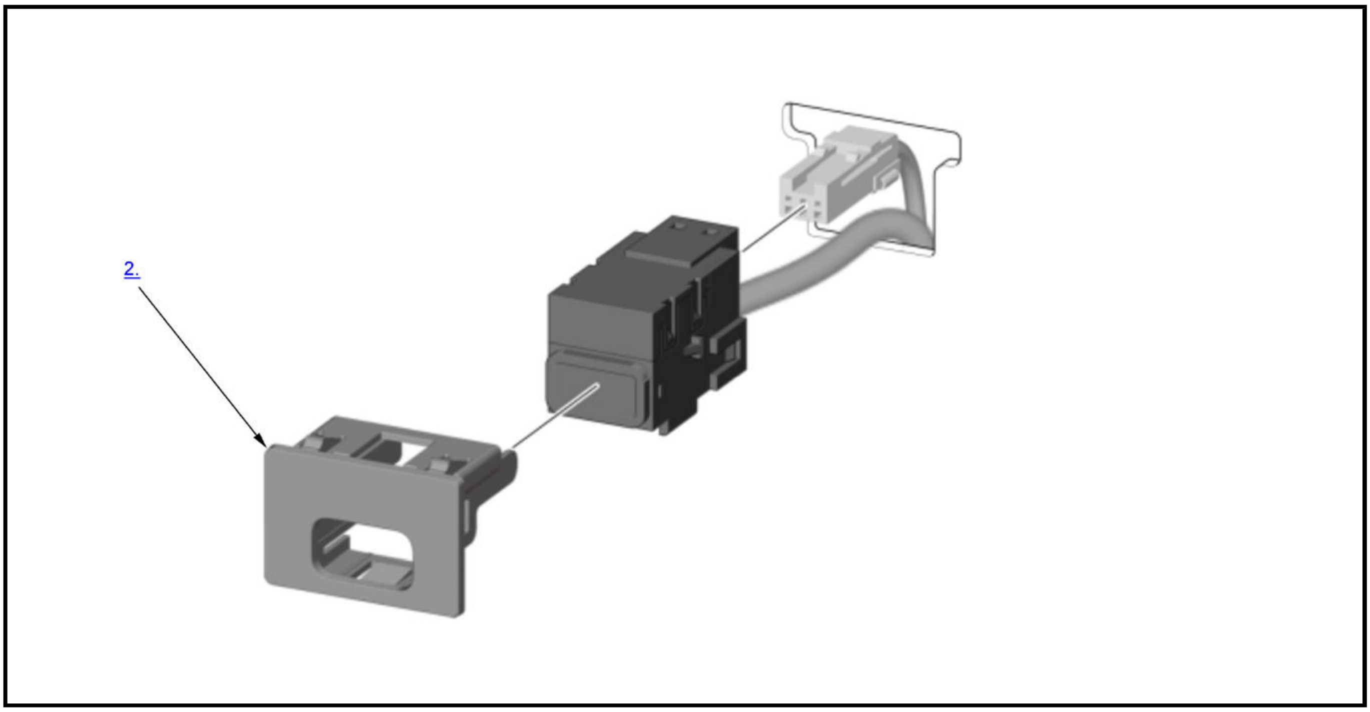

Without USB Port Light

1. Center Console Panel - Remove
2. USB Adapter Holder (two USB) - Remove
3. USB Adapter Holder (one USB without auxiliary jack assembly) - Remove
4. All Removed Parts - Install

   Install the parts in the reverse order of removal.

   With USB Port Light

5. Dashboard Center Lower Panel - Remove
6. USB Adapter Holder (USB port A/B) - Remove
7. All Removed Parts - Install

   Install the parts in the reverse order of removal.

USB CHARGER UNIT REMOVAL AND INSTALLATION

Removal and Installation

1

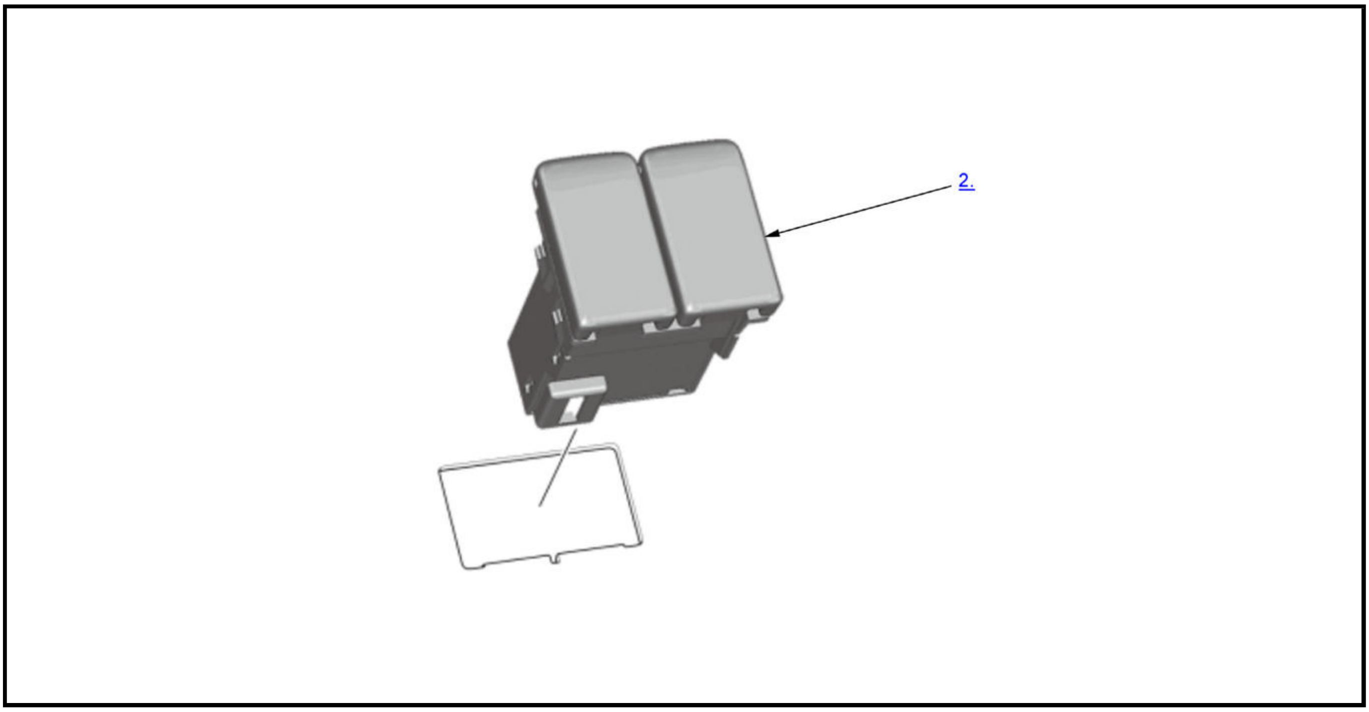

1. **Center Console Rear Trim - Remove**
2. USB Charger Unit - Remove
3. All Removed Parts - Install

   Install the parts in the reverse order of removal.

CONNECTOR VIEW

ANC/ACTIVE SOUND CONTROL MICROPHONE CONNECTOR FOR INPUTS AND OUTPUTS

Connector Index
Front ANC/Active Sound Control Microphone 8P Connector
Rear ANC/Active Sound Control Microphone 2P Connector

NOTE: The front HFL-navigation-ANC/active sound control microphone and the front HFL-ANC/active sound control microphone are the same parts.

Front ANC/Active Sound Control Microphone 8P Connector (female terminals)

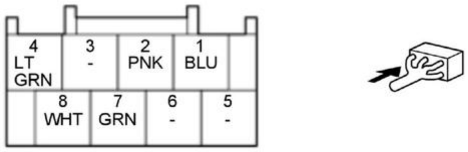

Cavity	Terminal Name	Description
1	MIC GND	Ground for microphone
2	MIC+	Outputs microphone signal
3	---	Not used
4	MIC PWR	Microphone power source
5	---	Not used
6	---	Not used
7	HFT MUTE	Inputs HFL microphone directivity switching signal
8	ANC F MIC+8V	Outputs signal for front ANC/active sound control microphone

Rear ANC/Active Sound Control Microphone 2P Connector (female terminals)

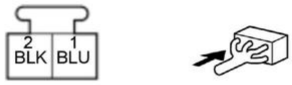

Cavity	Terminal Name	Description
1	ANC R MIC+8V	Outputs signal for rear ANC/active sound control microphone
2	SH ANC R MIC	Shield for terminal No. 1

ANC/ACTIVE SOUND CONTROL UNIT CONNECTOR FOR INPUTS AND OUTPUTS

ANC/Active Sound Control Unit 20P Connector (female terminals)

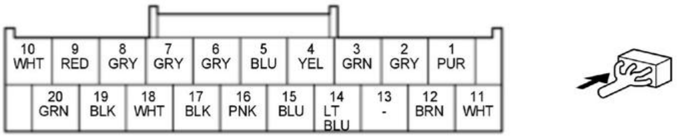

Cavity	Terminal Name	Description
1	GND	ANC/active sound control unit ground
2	AUD F MIX SH	Shield for terminals No. 15 and No. 16
3	SWD+B	Inputs signal for ANC/active sound control unit switching ON/OFF
4	F-CAN B_H	Communication signal
5	F-CAN B_L	Communication signal
6	SH ANC R MIC	Shield for terminal No. 17
7	SH ANC F MIC	Shield for terminal No. 18
8	ANC SH	Shield for terminals No. 9, No. 10, No. 19, and No. 20
9	ANC R-	Outputs noise cancelling signal to related units
10	ANC F-	Outputs noise cancelling signal to related units
11	+B BACK UP	+B power source
12	IG1 METER	IG1 power source
13	---	Not used
14	K LINE	Communication signal
15	AUD F MIX GND	Basis ground for terminals No. 16
16	AUD F MIX	Outputs noise cancelling mixing signal from related units
17	ANC R MIC+8V	Inputs signal for rear ANC/active sound control microphone
18	ANC F MIC+8V	Inputs signal for front ANC/active sound control microphone
19	ANC R+	Outputs noise cancelling signal to related units
20	ANC F+	Outputs noise cancelling signal to related units

AUDIO REMOTE-HFL SWITCH CONNECTOR FOR INPUTS AND OUTPUTS

Connector Index
Audio Remote-HFL Switch 12P Connector (with multi-information display)
Audio Remote-HFL Switch 12P Connector (without multi-information display)

Audio Remote-HFL Switch 12P Connector (female terminals) (with multi-information display)

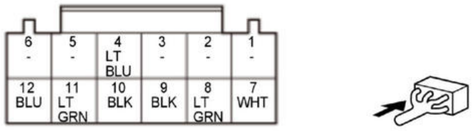

Cavity	Terminal Name	Description
1	---	Not used
2	---	Not used
3	---	Not used
4	ILL-(LED)	Outputs illumination control signal for related units
5	---	Not used
6	---	Not used
7	+B	+B power source
8	ILLUMI+	Outputs illumination signal
9*	STRG GND	Ground for related units
10	STRG GND	Audio remote-HFL switch ground
11*	HSW LIN	Communication signal
12	STRG SW LIN	Communication signal

*: With heated steering wheel

Audio Remote-HFL Switch 12P Connector (female terminals) (without multi-information display)

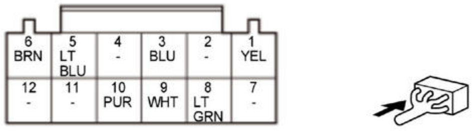

Cavity	Terminal Name	Description
1	ILLUMI+	Detects illumination signal

Cavity	Terminal Name	Description
2	---	Not used
3	AUDIO REMOTE SW	Outputs control signal from audio remote switch
4	---	Not used
5	ILL-(LED)	Outputs illumination control signal for related units
6	REMOTE SW GND	Audio remote-HFL switch ground
7	---	Not used
8	ILLUMI+	Outputs illumination signal for related units
9	HFT/NAVI REMOTE SW	Outputs control signal from HFL switch
10	ILL-(LED)	Outputs illumination control signal

Cavity	Terminal Name	Description
11	---	Not used
12	---	Not used

AUDIO UNIT CONNECTOR FOR INPUTS AND OUTPUTS (COLOR AUDIO TYPE)

Connector Index
Audio Unit Connector A (24P) (with rearview camera diode)
Audio Unit Connector A (24P) (without rearview camera diode)
Audio Unit Connector C (32P)
Audio Unit Connector E (3P)
Audio Unit Connector F (5P) (with USB)

Audio Unit Connector A (24P) (female terminals) (with rearview camera diode)

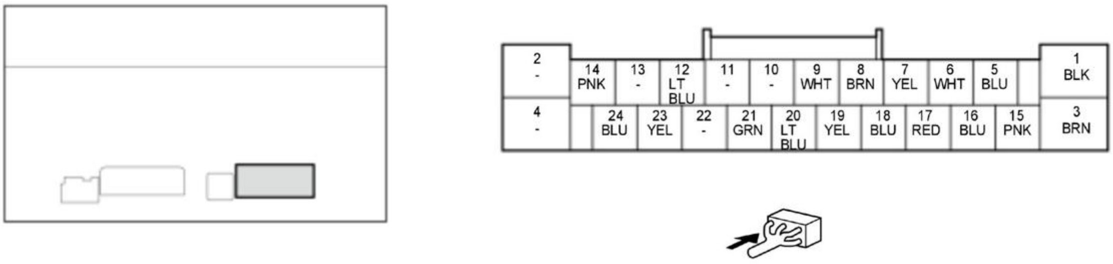
2 -
14 PNK
13 -
12 LT BLU
11 -
10 -
9 WHT
8 BRN
7 YEL
6 WHT
5 BLU
1 BLK
4 -
24 BLU
23 YEL
22 -
21 GRN
20 LT BLU
19 YEL
18 BLU
17 RED
16 BLU
15 PNK
3 BRN

Audio Unit Connector A (24P) (female terminals) (without rearview camera diode)

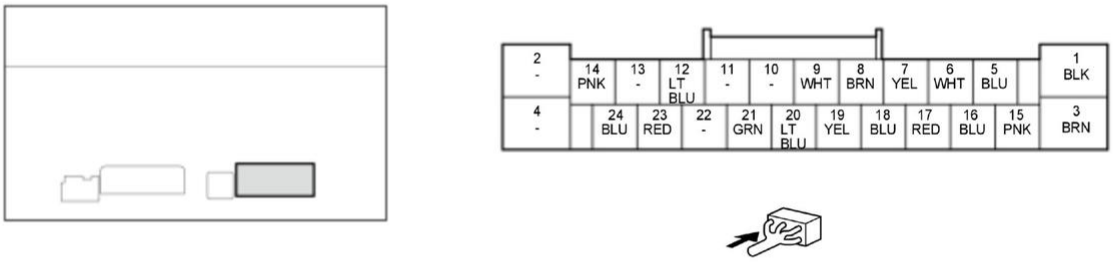
2 -
14 PNK
13 -
12 LT BLU
11 -
10 -
9 WHT
8 BRN
7 YEL
6 WHT
5 BLU
1 BLK
4 -
24 BLU
23 RED
22 -
21 GRN
20 LT BLU
19 YEL
18 BLU
17 RED
16 BLU
15 PNK
3 BRN

Cavity	Terminal Name	Description
A1	GND	Ground for audio unit
A2	---	Not used
A3	+B BACKUP2 SUB* 3+B AUDIO* 4	+B power source
A4	---	Not used
A5	RL SPKR+	Outputs sound signal for left rear speakers

*1: With rearview camera diode

*2: Without rearview camera diode

*3: With auto idle stop system

*4: Without auto idle stop system

Cavity	Terminal Name	Description
A6	RL SPKR-	Outputs sound signal for left rear speakers
A7	RR SPKR+	Outputs sound signal for right rear speakers
A8	RR SPKR-	Outputs sound signal for right rear speakers
A9	AUDIO REMOTE SW	Detects control signal from audio remote switch
A10	---	Not used
A11	---	Not used
A12	K LINE	Communication signal
A13	---	Not used
A14	B-CAN_H	Communication signal
A15	FL SPKR+	Outputs sound signal for left front speakers
A16	FL SPKR-	Outputs sound signal for left front speakers
A17	FR SPKR+	Outputs sound signal for right front speakers
A18	FR SPKR-	Outputs sound signal for right front speakers
A19	REMOTE SW GND	Ground for audio remote-HFL switch
A20	HFT/NAVI REMOTE SW	Detects control signal from HFL switch
A21	SWD+B	Outputs signal for related unit switching on/off
A22	---	Not used
A23	IG1 WITH DIODE FMVSS* 1ACC CUT(VST)* 2* 3ACC* 2* 4	ACCESSORY power source
A24	B-CAN_L	Communication signal

*1: With rearview camera diode

*2: Without rearview camera diode

*3: With auto idle stop system

*4: Without auto idle stop system

Audio Unit Connector C (32P) (female terminals)

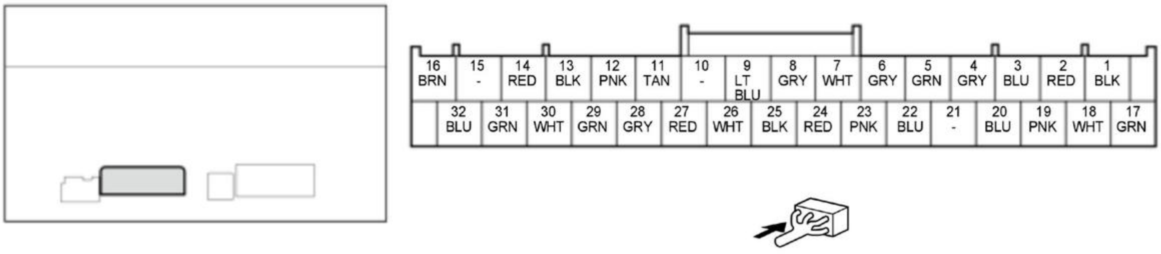

Cavity	Terminal Name	Description
C1	ANC R+	Inputs noise cancelling signal from ANC/active sound control unit
C2	ANC R-	Inputs noise cancelling signal from ANC/active sound control unit
C3* 1	COMPASS 1	Communication signal
C4* 1	COMPASS 2	Communication signal
C5	HFT MUTE	Outputs HFL microphone directivity switching signal

*1: With electrical compass

*2: With auxiliary jack assembly

Cavity	Terminal Name	Description
C6	SH MIC	Shield for terminals No. 22 and No. 23
C7	MIC PWR	Power source for HFL microphone
C8* 2	AUX SH	Shield for terminals No. 24, No. 25, and No. 26
C9* 2	AUX DET	Detects connection signal for auxiliary jack assembly
C10	---	Not used
C11* 1	COMPASS 3	Communication signal
C12* 1	COMPASS 4	Communication signal
C13	CAMERA VCC	Power source for rearview camera
C14	CAMERA GND	Ground for rearview camera
C15	---	Not used
C16	CAMERA ADPT	Detects connection for rearview camera
C17	ANC F+	Inputs noise cancelling signal from ANC/active sound control unit
C18	ANC F-	Inputs noise cancelling signal from ANC/active sound control unit
C19	AUD F MIX	Inputs noise cancelling mixing signal from ANC/active sound control unit
C20	AUD F MIX GND	Basis ground for terminals No. 19
C21	---	Not used
C22	MIC+	Inputs sound signal from HFL microphone
C23	MIC GND	Ground for HFL microphone
C24* 2	AUX R CH	Inputs sound signal from auxiliary jack assembly
C25* 2	AUX SGND	Ground for sound signal from auxiliary jack assembly
C26* 2	AUC L CH	Inputs sound signal from auxiliary jack assembly
C27* 2	AUX GND	Ground for auxiliary jack assembly
C28	SH CAMERA	Shield for terminals No. 13, No. 14, No. 29, and No. 30
C29	CAMERA V	Inputs NTSC video signal from rearview camera

Cavity	Terminal Name	Description
C30	CAMERA V GND	Ground for NTSC video signal from rearview camera
C31	CAMERA BIT0	Outputs mode select signal for rearview camera
C32	CAMERA BIT1	Outputs mode select signal for rearview camera

*1: With electrical compass

*2: With auxiliary jack assembly

Audio Unit Connector E (3P) (female terminals)

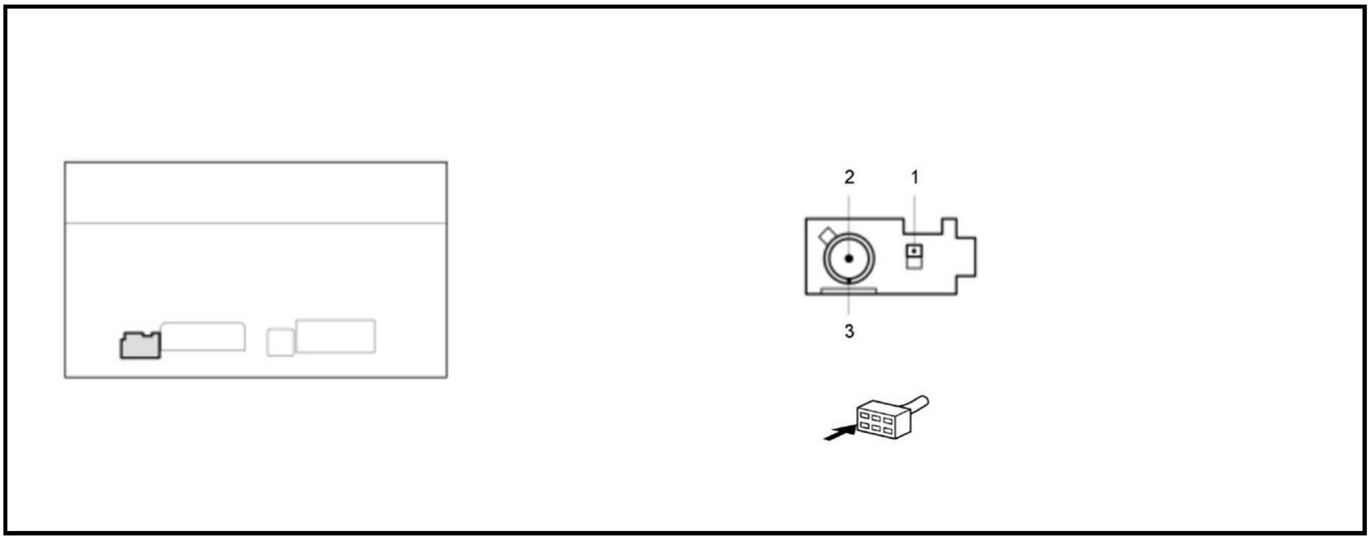

Cavity	Terminal Name	Description
E1	ANT+B	Power source for AM/FM antenna amplifier
E2	RF IN	Inputs AM/FM signal
E3	SH(RF IN)	Shield for terminal No. 2

Audio Unit Connector F (5P) (female terminals) (with USB)

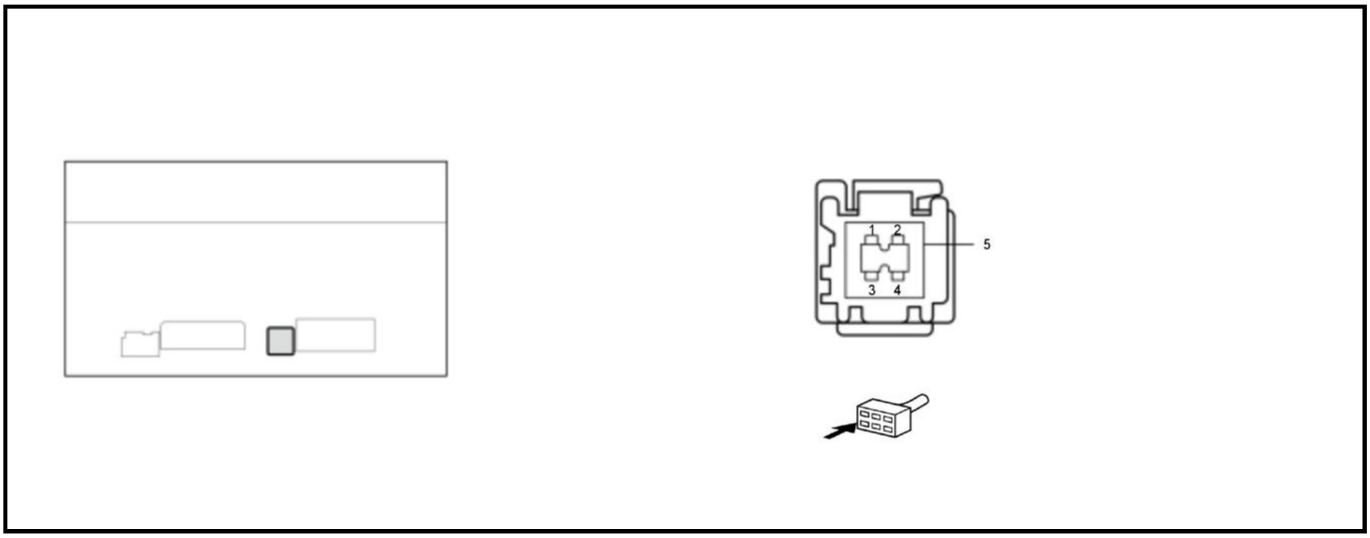

Cavity	Terminal Name	Description
F1	USB1 GND	Ground for USB port
F2	USB1 VBUS	Outputs power source for USB port
F3	USB1 DATA+	Communication signal
F4	USB1 DATA-	Communication signal
F5	USB1 SH	Shield for terminals No. 1, No. 2, No. 3, and No. 4

AUDIO UNIT CONNECTOR FOR INPUTS AND OUTPUTS (DISPLAY AUDIO TYPE)

Connector Index
Audio Unit Connector A (24P) (with rearview camera diode)
Audio Unit Connector A (24P) (without rearview camera diode)
Audio Unit Connector B (24P)
Audio Unit Connector C (32P)
Audio Unit Connector E (16P)
Audio Unit Connector F (5P)
Audio Unit Connector G (5P)
Audio Unit Connector H (3P)
Audio Unit Connector J (3P)
Audio Unit Connector K (2P)
Audio Unit Connector L (2P)
Audio Unit Connector M (4P) (with Stereo Amplifier)
Audio Unit Connector N (2P) (with XM)

Audio Unit Connector A (24P) (female terminals) (with rearview camera diode)

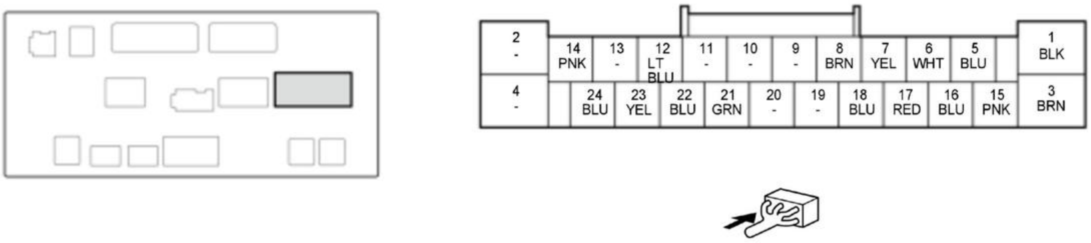
2 -
14 PNK
13 -
12 LT BLU
11 -
10 -
9 -
8 BRN
7 YEL
6 WHT
5 BLU
1 BLK
4 -
24 BLU
23 YEL
22 BLU
21 GRN
20 -
19 -
18 BLU
17 RED
16 BLU
15 PNK
3 BRN

Audio Unit Connector A (24P) (female terminals) (without rearview camera diode)

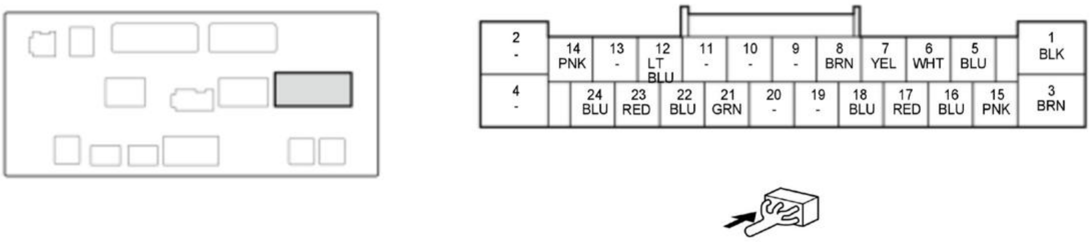
2 -
14 PNK
13 -
12 LT BLU
11 -
10 -
9 -
8 BRN
7 YEL
6 WHT
5 BLU
1 BLK
4 -
24 BLU
23 RED
22 BLU
21 GRN
20 -
19 -
18 BLU
17 RED
16 BLU
15 PNK
3 BRN

Cavity	Terminal Name	Description
A1	GND	Audio unit ground
A2	---	Not used

Cavity	Terminal Name	Description
A3	+B BACKUP2 SUB* 4+B AUDIO* 5	+B power source
A4	---	Not used
A5* 1	RL SPKR+	Outputs sound signal for left rear speakers
A6* 1	RL SPKR-	Outputs sound signal for left rear speakers
A7* 1	RR SPKR+	Outputs sound signal for right rear speakers
A8* 1	RR SPKR-	Outputs sound signal for right rear speakers
A9	---	Not used
A10	---	Not used
A11	---	Not used
A12	K LINE	Communication signal
A13	---	Not used
A14	B-CAN_H	Communication signal
A15* 1	FL SPKR+	Outputs sound signal for left front speakers
A16* 1	FL SPKR-	Outputs sound signal for left front speakers
A17* 1	FR SPKR+	Outputs sound signal for right front speakers
A18* 1	FR SPKR-	Outputs sound signal for right front speakers
A19	---	Not used
A20	---	Not used
A21	SWD+B	Outputs signal for related unit switching on/off
A22	VSP	Inputs vehicle speed pulse
A23	IG1 WITH DIODE FMVSS* 2ACC CUT(VST)* 3* 4ACC* 3* 5	ACCESSORY power source
A24	B-CAN_L	Communication signal

*1: Without stereo amplifier

*2: With rearview camera diode

*3: Without rearview camera diode

*4: With auto idle stop system

*5: Without auto idle stop system

Audio Unit Connector B (24P) (female terminals)

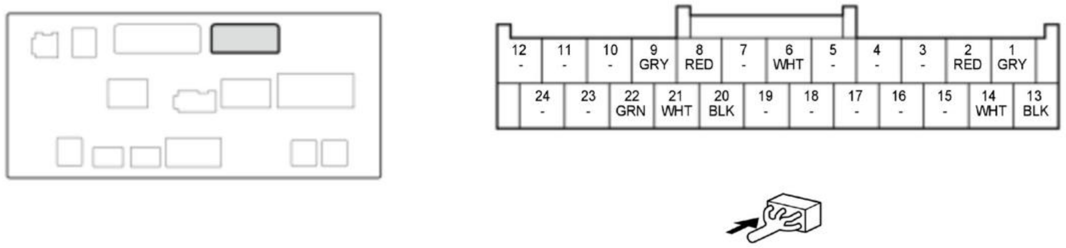

Cavity	Terminal Name	Description
B1* 1	AUX NAVI SH	Shield for terminals No. 2, No. 13, and No. 14
B2* 1	AUX BEEP	Outputs system beep signal
B3	---	Not used
B4	---	Not used
B5	---	Not used
B6* 2	LWC SW	Detects LaneWatch switch signal
B7	---	Not used
B8* 2	LWC CAM VCC	Power source for LaneWatch camera
B9* 2	SH LWC CAM	Shield for terminals No. 8, No. 20, No. 21, and No. 22
B10	---	Not used
B11	---	Not used
B12	---	Not used
B13* 1	AUX NAVI	Outputs sound signal for voice guidance and Voice Recognition (VR) prompts
B14* 1	AUX NAVI GND	Basis ground for terminals No. 2 and No. 13
B15	---	Not used
B16	---	Not used
B17	---	Not used
B18	---	Not used
B19	---	Not used
B20* 2	LWC CAM VID	Inputs video signal from LaneWatch camera
B21* 2	LWC CAM VGND	Ground for LaneWatch camera
B22* 2	LWC UART	Communication signal
B23	---	Not used
B24	---	Not used

*1: With stereo amplifier

*2: With LaneWatch

Audio Unit Connector C (32P) (female terminals)

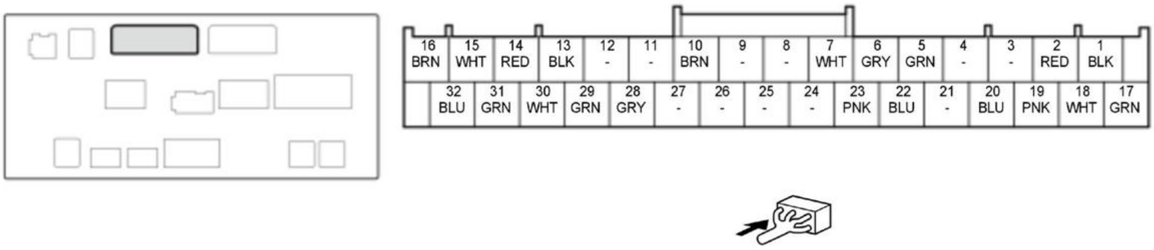
16 BRN
15 WHT
14 RED
13 BLK
12 -
11 -
10 BRN
9 -
8 -
7 WHT
6 GRY
5 GRN
4 -
3 -
2 RED
1 BLK
32 BLU
31 GRN
30 WHT
29 GRN
28 GRY
27 -
26 -
25 -
24 -
23 PNK
22 BLU
21 -
20 BLU
19 PNK
18 WHT
17 GRN

Cavity	Terminal Name	Description
C1*	ANC R+	Inputs noise cancelling signal from ANC/active sound control unit
C2*	ANC R-	Inputs noise cancelling signal from ANC/active sound control unit

*: Without stereo amplifier

Cavity	Terminal Name	Description
C3	---	Not used
C4	---	Not used
C5	HFT MUTE	Outputs HFL microphone directivity switching signal
C6	SH MIC	Shield for terminals No. 22 and No. 23
C7	MIC PWR	Power source for HFL microphone
C8	---	Not used
C9	---	Not used
C10	IG1 METER	IG1 power source
C11	---	Not used
C12	---	Not used
C13	CAMERA VCC	Power source for rearview camera
C14	CAMERA GND	Ground for rearview camera
C15	BACK LT	Detects reverse signal
C16	CAMERA ADPT	Detects connection for rearview camera
C17*	ANC F+	Inputs noise cancelling signal from ANC/active sound control unit
C18*	ANC F-	Inputs noise cancelling signal from ANC/active sound control unit
C19*	AUD F MIX	Inputs noise cancelling mixing signal from ANC/active sound control unit
C20*	AUD F MIX GND	Basis ground for terminals No. 19
C21	---	Not used
C22	MIC+	Inputs sound signal from HFL microphone
C23	MIC GND	Ground for HFL microphone
C24	---	Not used
C25	---	Not used
C26	---	Not used
C27	---	Not used
C28	SH CAMERA	Shield for terminals No. 13, No. 14, No. 29, and No. 30
C29	CAMERA V	Inputs NTSC video signal from rearview camera
C30	CAMERA V GND	Ground for NTSC video signal from rearview camera
C31	CAMERA BIT0	Outputs mode select signal for rearview camera
C32	CAMERA BIT1	Outputs mode select signal for rearview camera

*: Without stereo amplifier

Audio Unit Connector E (16P) (female terminals)

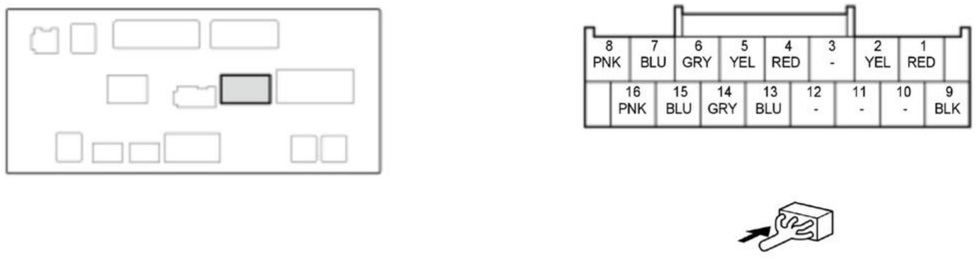

Cavity	Terminal Name	Description
E1	TUNER 6V	Power source for tuner unit
E2	TUNER 9V	Power source for tuner unit
E3	---	Not used
E4	DISP CONT	Outputs signal for center display unit switching on/off
E5	F-CAN B_H	Communication signal
E6	AMP RS485 SH	Shield for terminals No. 7 and No. 8
E7	RS485+	Communication signal
E8	RS485-	Communication signal
E9	TUNER GND	Ground for tuner unit
E10	---	Not used
E11	---	Not used
E12	---	Not used
E13	F-CAN B_L	Communication signal
E14	TUNER RS485 SH	Shield for terminals No. 15 and No. 16
E15	TUNER RS485+	Communication signal
E16	TUNER RS485-	Communication signal

Audio Unit Connector F (5P) (female terminals)

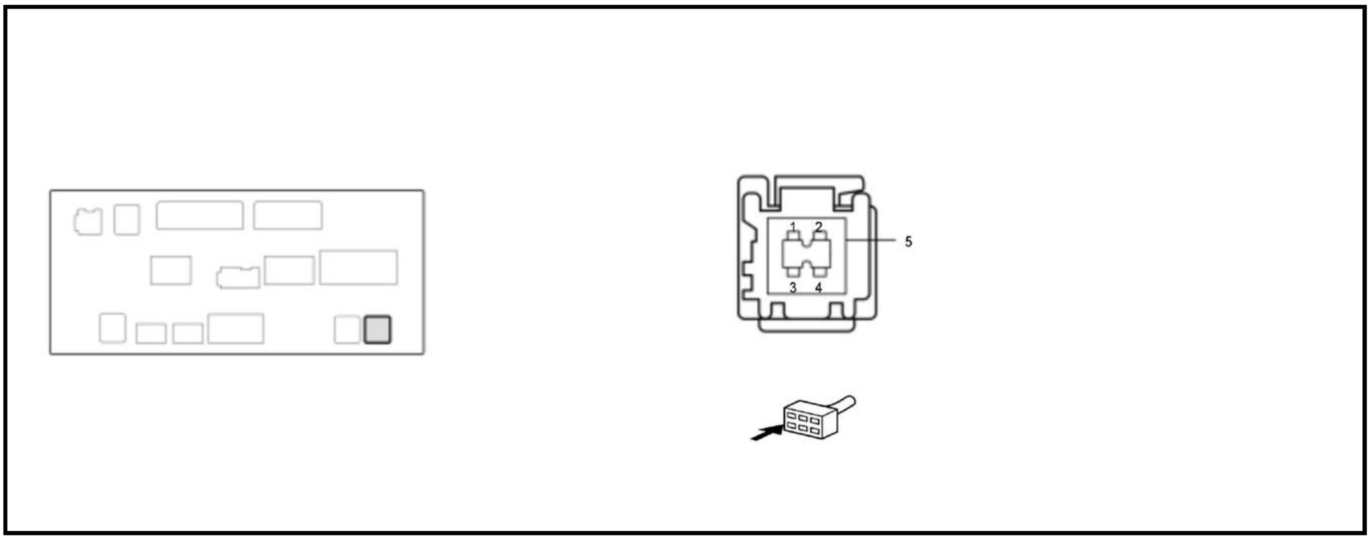

Cavity	Terminal Name	Description
F1	USB1 GND	Ground for USB port A
F2	USB1 VBUS	Outputs power source for USB port A
F3	USB1 DATA+	Communication signal
F4	USB1 DATA-	Communication signal
F5	USB1 SH	Shield for terminals No. 1, No. 2, No. 3, and No. 4

Audio Unit Connector G (5P) (female terminals)

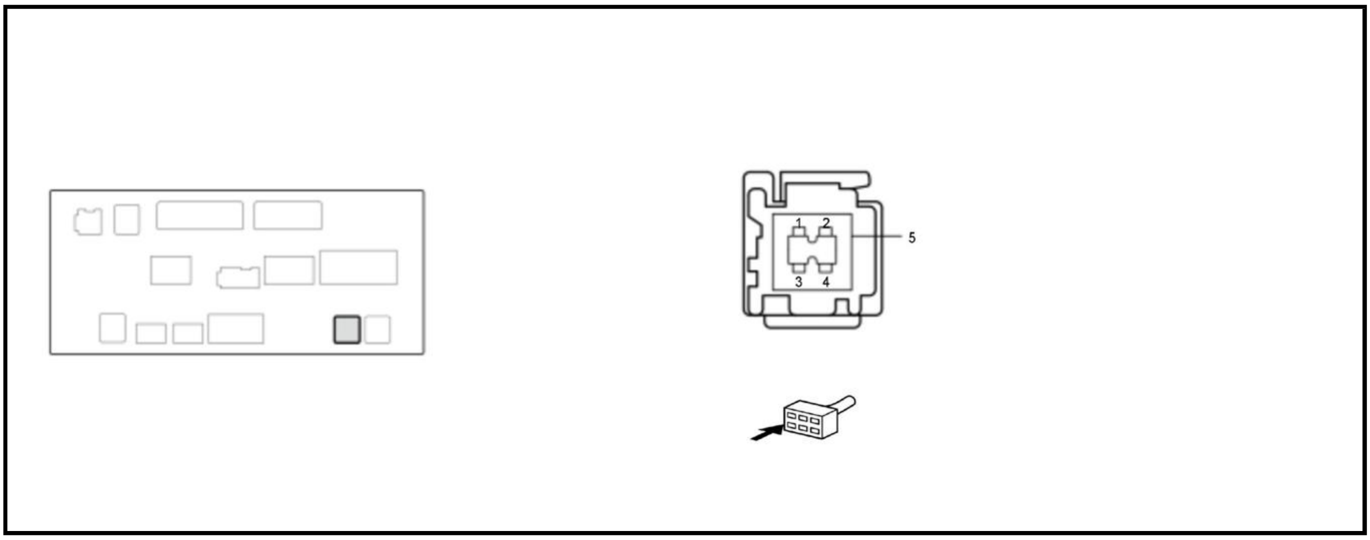

Cavity	Terminal Name	Description
G1	USB2 GND	Ground for USB port B
G2	USB2 VBUS	Outputs power source for USB port B
G3	USB2 DATA+	Communication signal
G4	USB2 DATA-	Communication signal
G5	USB2 SH	Shield for terminals No. 1, No. 2, No. 3, and No. 4

Audio Unit Connector H (3P) (female terminals)

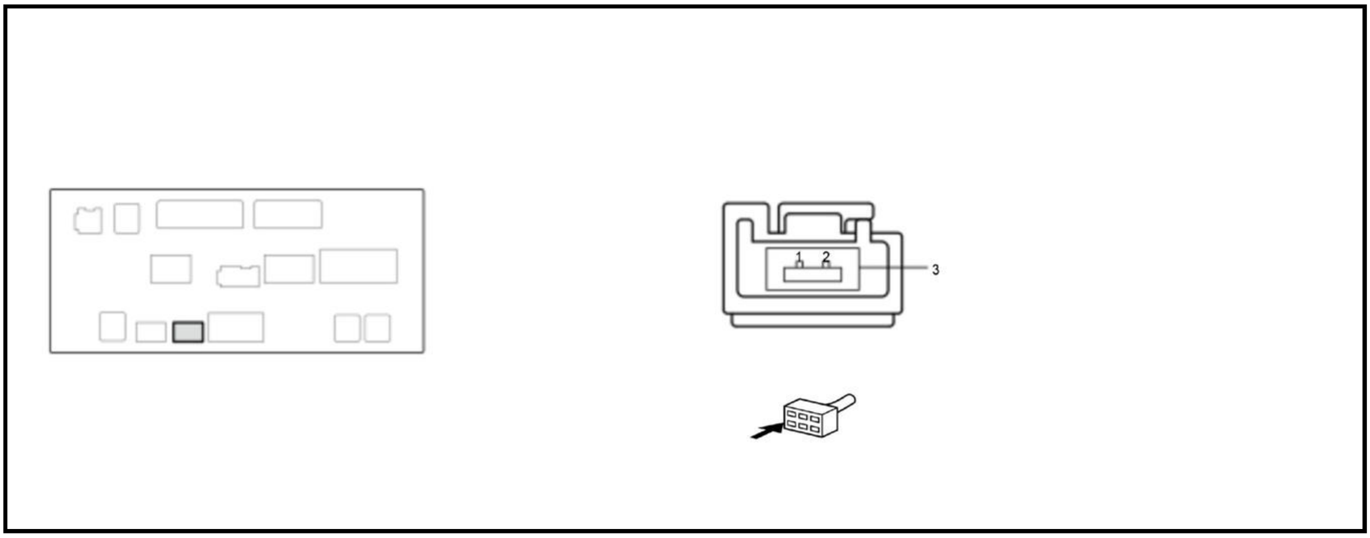

Cavity	Terminal Name	Description
H1	LVDS1+	Communication signal
H2	LVDS1-	Communication signal
H3	LVDS1 SH	Shield for terminals No. 1 and No. 2

Audio Unit Connector J (3P) (female terminals)

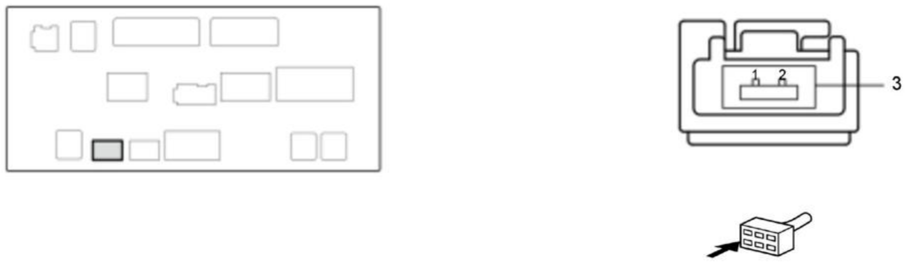

Cavity	Terminal Name	Description
J1	LVDS2+	Communication signal
J2	LVDS2-	Communication signal
J3	LVDS2 SH	Shield for terminals No. 1 and No. 2

Audio Unit Connector K (2P) (female terminals)

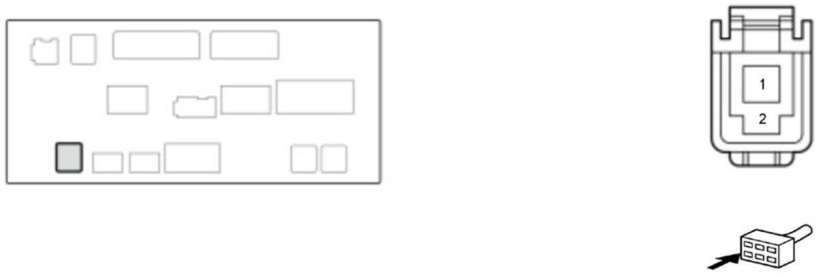

Cavity	Terminal Name	Description
K1	GPS ANT	Inputs GPS signal
K2	GPS SH	Shield for terminal No. 1

Audio Unit Connector L (2P) (female terminals)

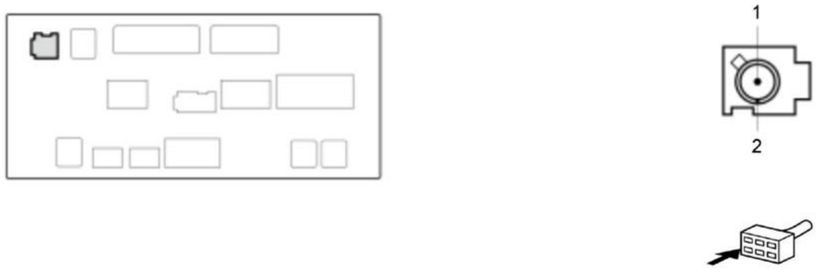

Cavity	Terminal Name	Description
L1	SPDIF1 SIG	Communication signal for tuner unit
L2	SPDIF1 SH	Shield for terminal No. 1

Audio Unit Connector M (4P) (female terminals) (with stereo amplifier)

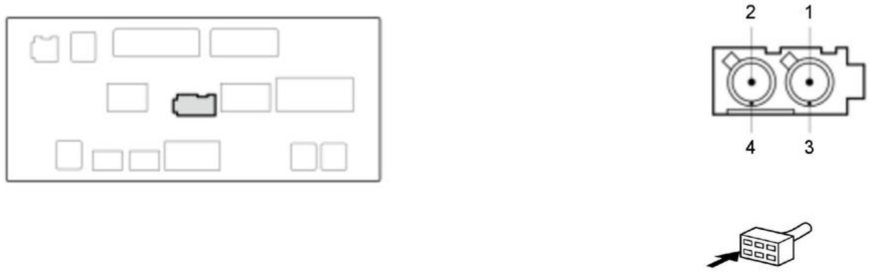

Cavity	Terminal Name	Description
M1	SPDIF2 SIG	Communication signal
M2	---	Not used
M3	SPDIF2 SH	Shield for terminal No. 1
M4	---	Not used

Audio Unit Connector N (2P) (female terminals) (with XM)

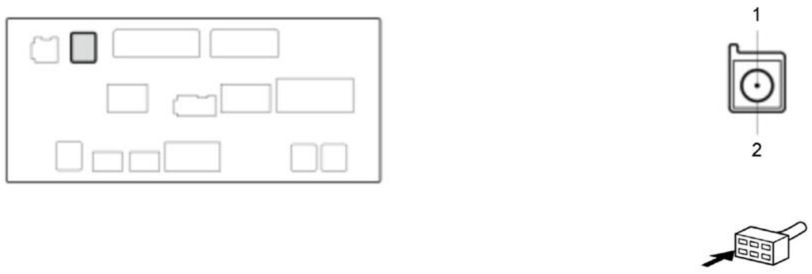

Cavity	Terminal Name	Description
N1	SAT/TER	Inputs satellite/terrestrial signal
N2	SH (SAT/TER)	Shield for terminal No. 1

AUDIO-NAVIGATION UNIT CONNECTOR FOR INPUTS AND OUTPUTS

Connector Index
Audio-Navigation Unit Connector A (24P) (with rearview camera diode)
Audio-Navigation Unit Connector A (24P) (without rearview camera diode)
Audio-Navigation Unit Connector B (24P)
Audio-Navigation Unit Connector C (32P)
Audio-Navigation Unit Connector E (16P)
Audio-Navigation Unit Connector F (5P)
Audio-Navigation Unit Connector G (5P)
Audio-Navigation Unit Connector H (3P)
Audio-Navigation Unit Connector J (3P)
Audio-Navigation Unit Connector K (2P)
Audio-Navigation Unit Connector L (2P)
Audio-Navigation Unit Connector M (4P) (with Stereo Amplifier)
Audio-Navigation Unit Connector N (2P) (with XM)

Audio-Navigation Unit Connector A (24P) (female terminals) (with rearview camera diode)

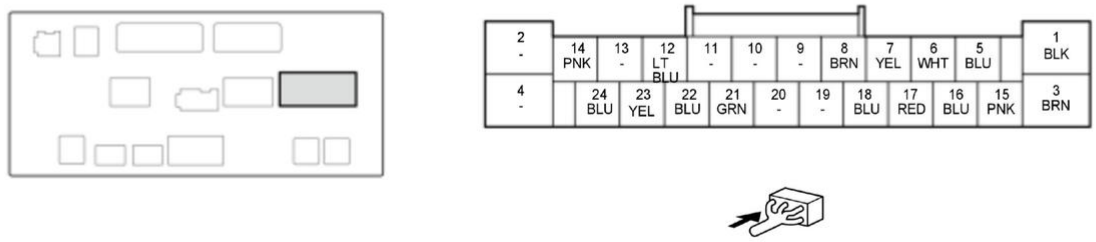
2
-
14
PNK
13
-
12
LT
BLU
11
-
10
-
9
-
8
BRN
7
YEL
6
WHT
5
BLU
1
BLK
4
-
24
BLU
23
YEL
22
BLU
21
GRN
20
-
19
-
18
BLU
17
RED
16
BLU
15
PNK
3
BRN

Audio-Navigation Unit Connector A (24P) (female terminals) (without rearview camera diode)

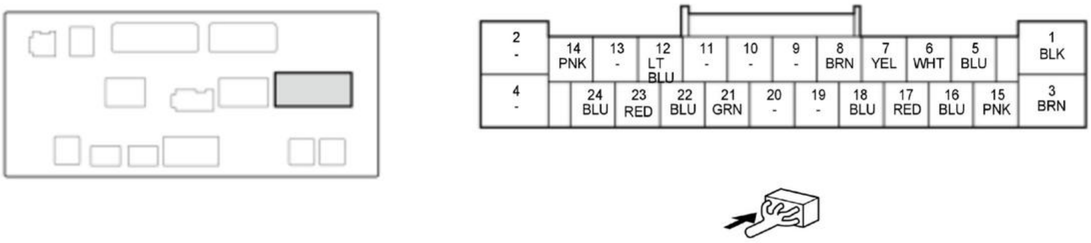

Cavity	Terminal Name	Description
A1	GND	Audio-navigation unit ground
A2	---	Not used
A3	+B BACKUP2 SUB* 4+B AUDIO* 5	+B power source
A4	---	Not used
A5* 1	RL SPKR+	Outputs sound signal for left rear speakers
A6* 1	RL SPKR-	Outputs sound signal for left rear speakers
A7* 1	RR SPKR+	Outputs sound signal for right rear speakers
A8* 1	RR SPKR-	Outputs sound signal for right rear speakers
A9	---	Not used
A10	---	Not used
A11	---	Not used
A12	K LINE	Communication signal
A13	---	Not used
A14	B-CAN_H	Communication signal
A15* 1	FL SPKR+	Outputs sound signal for left front speakers
A16* 1	FL SPKR-	Outputs sound signal for left front speakers
A17* 1	FR SPKR+	Outputs sound signal for right front speakers
A18* 1	FR SPKR-	Outputs sound signal for right front speakers
A19	---	Not used
A20	---	Not used
A21	SWD+B	Outputs signal for related unit switching on/off
A22	VSP	Inputs vehicle speed pulse
A23	IG1 WITH DIODE FMVSS* 2ACC CUT(VST)* 3* 4ACC* 3* 5	ACCESSORY power source
A24	B-CAN_L	Communication signal

*1: Without stereo amplifier

*2: With rearview camera diode

*3: Without rearview camera diode

*4: With auto idle stop system

*5: Without auto idle stop system

Audio-Navigation Unit Connector B (24P) (female terminals)

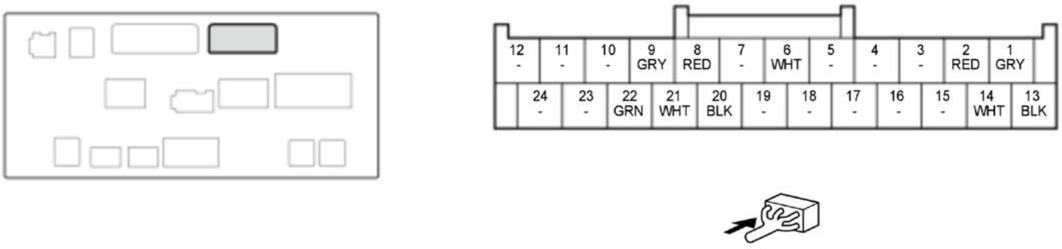

Cavity	Terminal Name	Description
B1* 1	AUX NAVI SH	Shield for terminals No. 2, No. 13, and No. 14
B2* 1	AUX BEEP	Outputs system beep signal
B3	---	Not used
B4	---	Not used
B5	---	Not used
B6* 2	LWC SW	Detects LaneWatch switch signal
B7	---	Not used
B8* 2	LWC CAM VCC	Power source for LaneWatch camera
B9* 2	SH LWC CAM	Shield for terminals No. 8, No. 20, No. 21, and No. 22
B10	---	Not used
B11	---	Not used
B12	---	Not used
B13* 1	AUX NAVI	Outputs sound signal for voice guidance and Voice Recognition (VR) prompts
B14* 1	AUX NAVI GND	Basis ground for terminals No. 2 and No. 13
B15	---	Not used
B16	---	Not used
B17	---	Not used
B18	---	Not used
B19	---	Not used
B20* 2	LWC CAM VID	Inputs video signal from LaneWatch camera
B21* 2	LWC CAM VGND	Ground for LaneWatch camera
B22* 2	LWC UART	Communication signal
B23	---	Not used
B24	---	Not used

*1: With stereo amplifier

*2: With LaneWatch

Audio-Navigation Unit Connector C (32P) (female terminals)

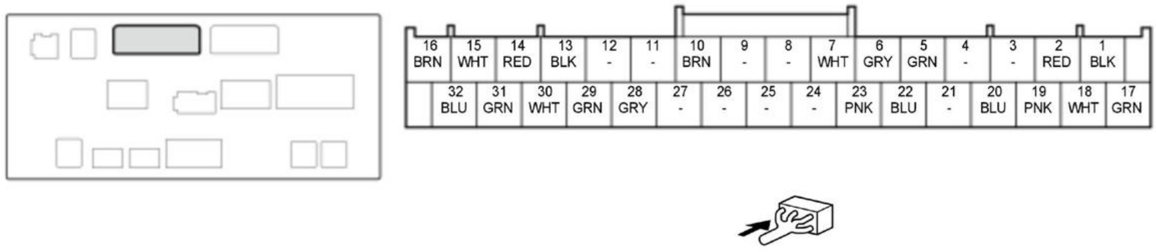

Cavity	Terminal Name	Description
C1*	ANC R+	Inputs noise cancelling signal from ANC/active sound control unit
C2*	ANC R-	Inputs noise cancelling signal from ANC/active sound control unit
C3	---	Not used
C4	---	Not used
C5	HFT MUTE	Outputs HFL microphone directivity switching signal
C6	SH MIC	Shield for terminals No. 22 and No. 23
C7	MIC PWR	Power source for HFL microphone
C8	---	Not used
C9	---	Not used
C10	IG1 METER	IG1 power source
C11	---	Not used
C12	---	Not used
C13	CAMERA VCC	Power source for rearview camera
C14	CAMERA GND	Ground for rearview camera
C15	BACK LT	Detects reverse signal
C16	CAMERA ADPT	Detects connection for rearview camera
C17*	ANC F+	Inputs noise cancelling signal from ANC/active sound control unit
C18*	ANC F-	Inputs noise cancelling signal from ANC/active sound control unit
C19*	AUD F MIX	Inputs noise cancelling mixing signal from ANC/active sound control unit
C20*	AUD F MIX GND	Basis ground for terminals No. 19
C21	---	Not used
C22	MIC+	Inputs sound signal from HFL microphone
C23	MIC GND	Ground for HFL microphone
C24	---	Not used
C25	---	Not used
C26	---	Not used
C27	---	Not used
C28	SH CAMERA	Shield for terminals No. 13, No. 14, No. 29, and No. 30
C29	CAMERA V	Inputs NTSC video signal from rearview camera
C30	CAMERA V GND	Ground for NTSC video signal from rearview camera
C31	CAMERA BIT0	Outputs mode select signal for rearview camera
C32	CAMERA BIT1	Outputs mode select signal for rearview camera

*: Without stereo amplifier

Audio-Navigation Unit Connector E (16P) (female terminals)

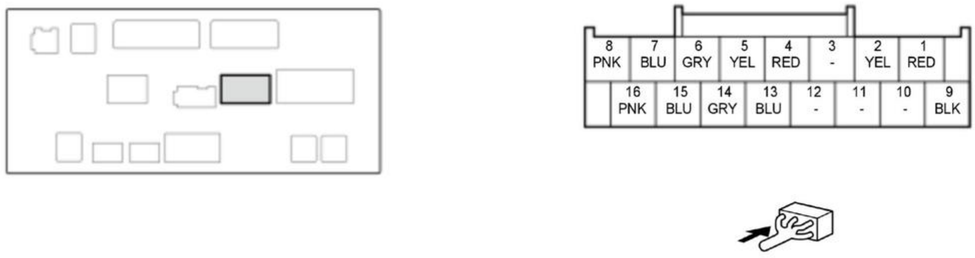
8 PNK
7 BLU
6 GRY
5 YEL
4 RED
3 -
2 YEL
1 RED
16 PNK
15 BLU
14 GRY
13 BLU
12 -
11 -
10 -
9 BLK

Cavity	Terminal Name	Description
E1	TUNER 6V	Power source for tuner unit
E2	TUNER 9V	Power source for tuner unit
E3	---	Not used
E4	DISP CONT	Outputs signal for center display unit switching on/off
E5	F-CAN B_H	Communication signal
E6	AMP RS485 SH	Shield for terminals No. 7 and No. 8
E7	RS485+	Communication signal
E8	RS485-	Communication signal
E9	TUNER GND	Ground for tuner unit
E10	---	Not used
E11	---	Not used
E12	---	Not used
E13	F-CAN B_L	Communication signal
E14	TUNER RS485 SH	Shield for terminals No. 15 and No. 16
E15	TUNER RS485+	Communication signal
E16	TUNER RS485-	Communication signal

Audio-Navigation Unit Connector F (5P) (female terminals)

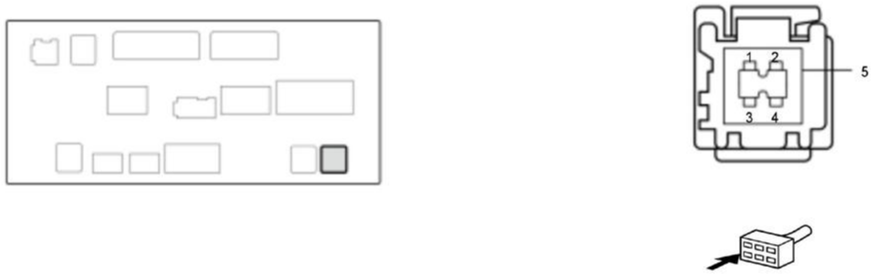

Cavity	Terminal Name	Description
F1	USB1 GND	Ground for USB port A
F2	USB1 VBUS	Outputs power source for USB port A
F3	USB1 DATA+	Communication signal
F4	USB1 DATA-	Communication signal
F5	USB1 SH	Shield for terminals No. 1, No. 2, No. 3, and No. 4

Audio-Navigation Unit Connector G (5P) (female terminals)

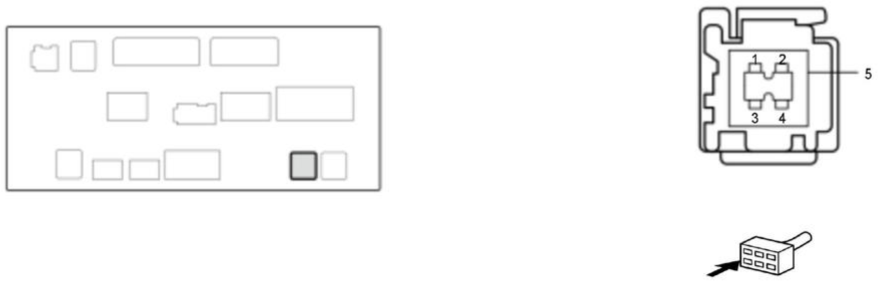

Cavity	Terminal Name	Description
G1	USB2 GND	Ground for USB port B
G2	USB2 VBUS	Outputs power source for USB port B
G3	USB2 DATA+	Communication signal
G4	USB2 DATA-	Communication signal
G5	USB2 SH	Shield for terminals No. 1, No. 2, No. 3, and No. 4

Audio-Navigation Unit Connector H (3P) (female terminals)

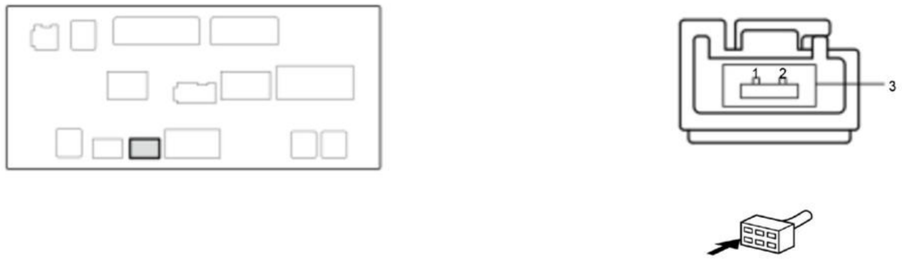

Cavity	Terminal Name	Description
H1	LVDS1+	Communication signal
H2	LVDS1-	Communication signal
H3	LVDS1 SH	Shield for terminals No. 1 and No. 2

Audio-Navigation Unit Connector J (3P) (female terminals)

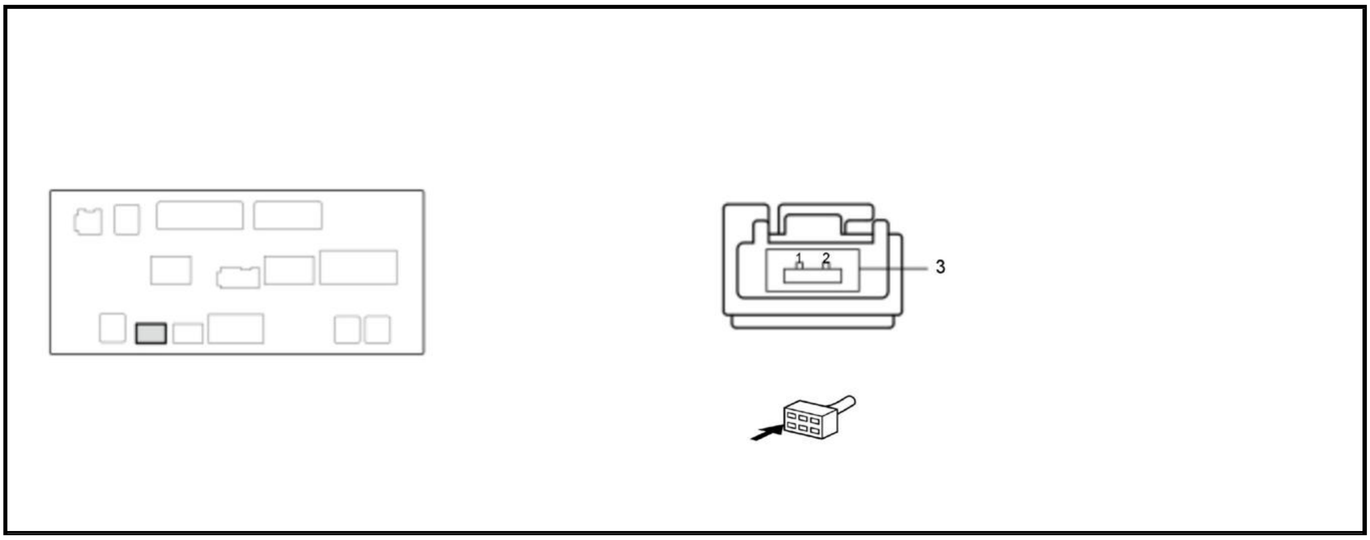

Cavity	Terminal Name	Description
J1	LVDS2+	Communication signal
J2	LVDS2-	Communication signal
J3	LVDS2 SH	Shield for terminals No. 1 and No. 2

Audio-Navigation Unit Connector K (2P) (female terminals)

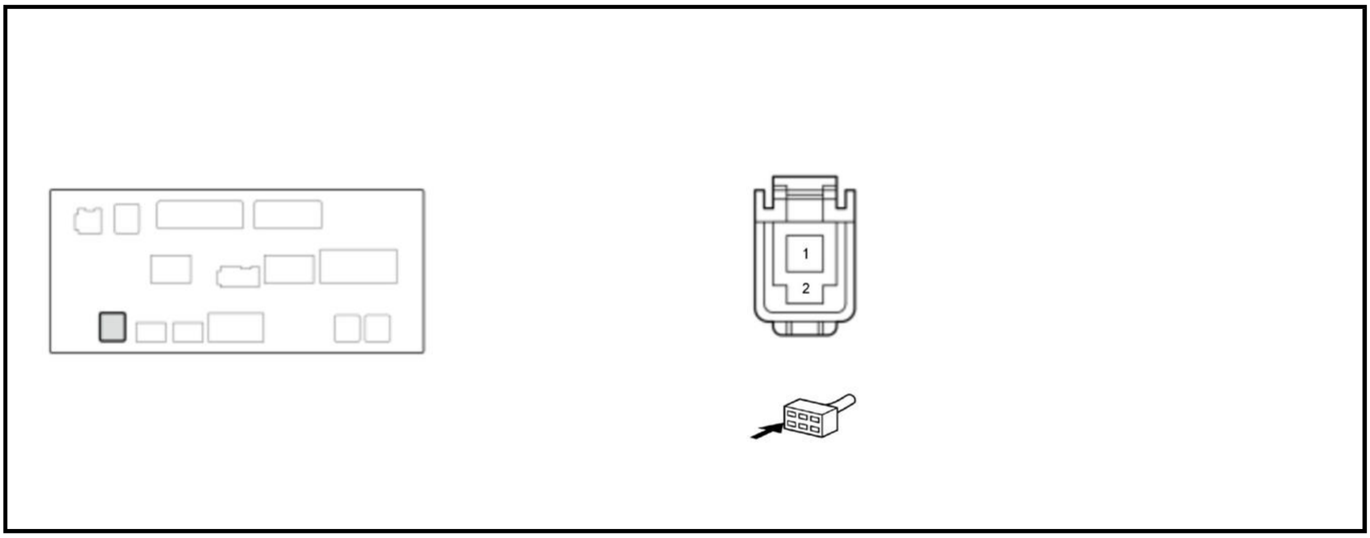

Cavity	Terminal Name	Description
K1	GPS ANT	Inputs GPS signal
K2	GPS SH	Shield for terminal No. 1

Audio-Navigation Unit Connector L (2P) (female terminals)

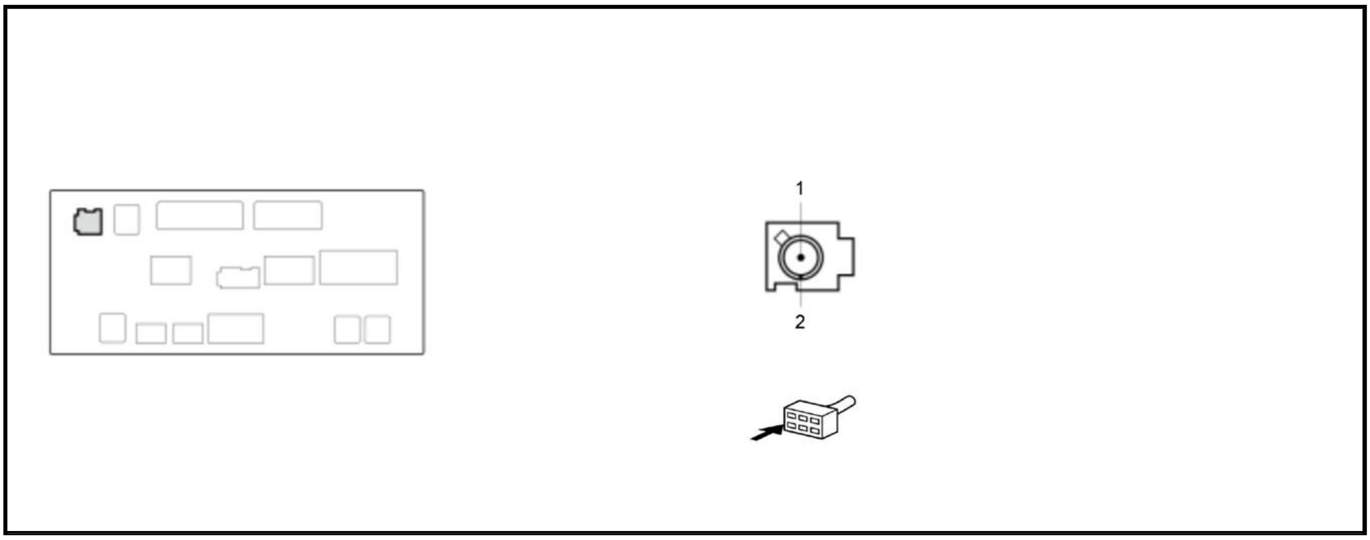

Cavity	Terminal Name	Description
L1	SPDIF1 SIG	Communication signal for tuner unit
L2	SPDIF1 SH	Shield for terminal No. 1

Audio-Navigation Unit Connector M (4P) (female terminals) (with stereo amplifier)

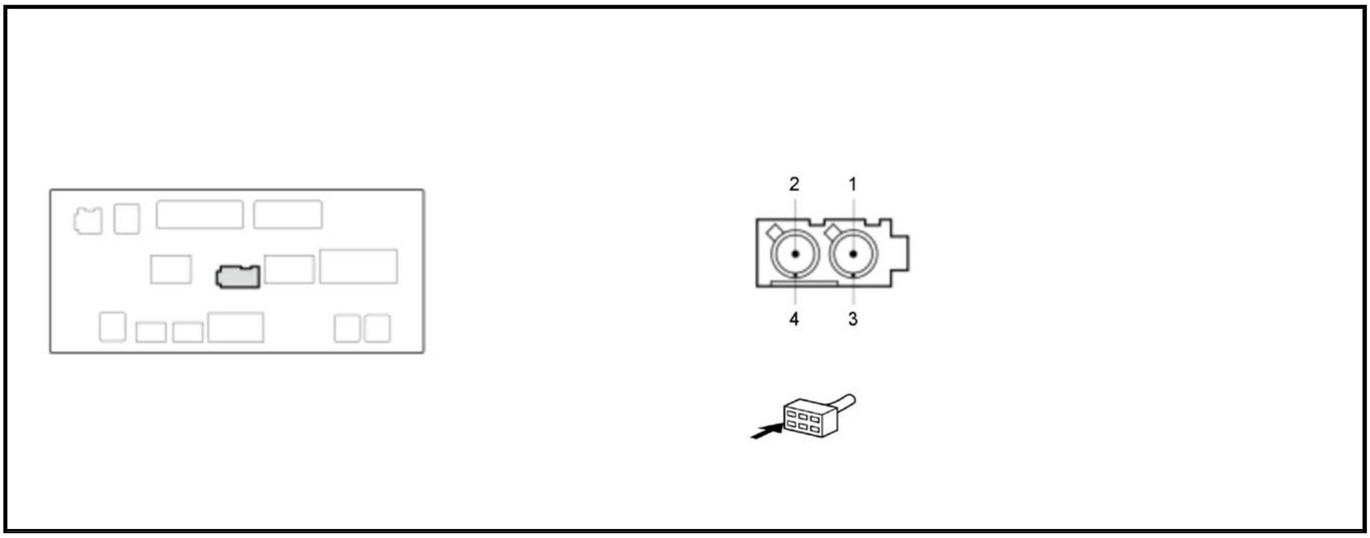

Cavity	Terminal Name	Description
M1	SPDIF2 SIG	Communication signal
M2	---	Not used
M3	SPDIF2 SH	Shield for terminal No. 1
M4	---	Not used

Audio-Navigation Unit Connector N (2P) (female terminals) (with XM)

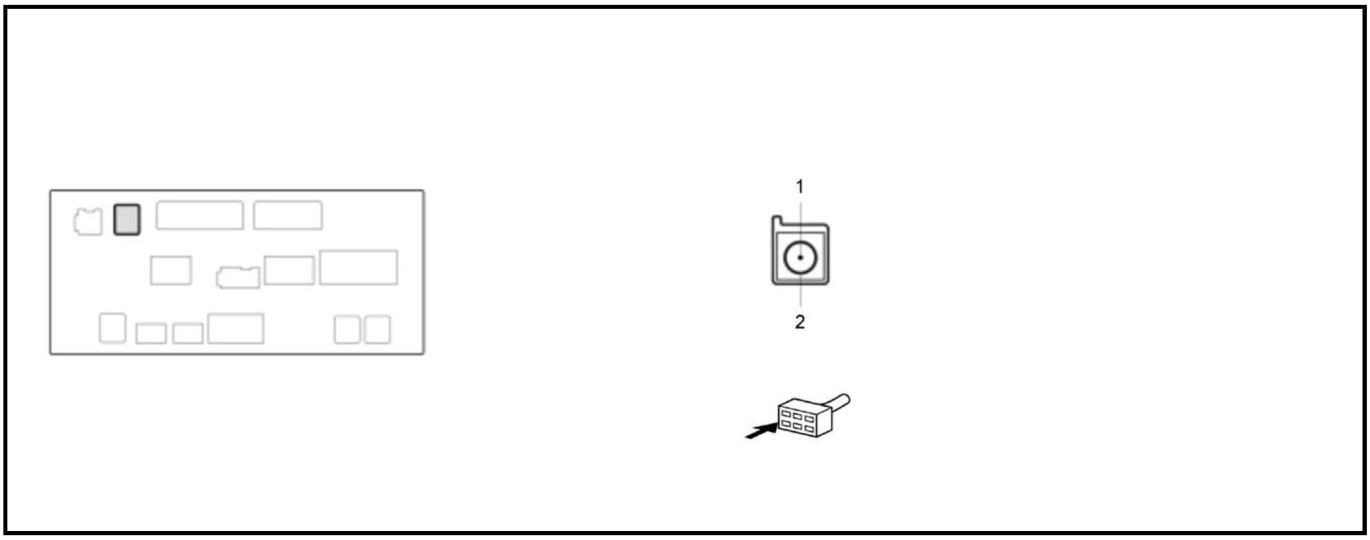

Cavity	Terminal Name	Description
N1	SAT/TER	Inputs satellite/terrestrial signal
N2	SH (SAT/TER)	Shield for terminal No. 1

AUXILIARY JACK ASSEMBLY CONNECTOR FOR INPUTS AND OUTPUTS

Auxiliary Jack Assembly 5P Connector (female terminals)

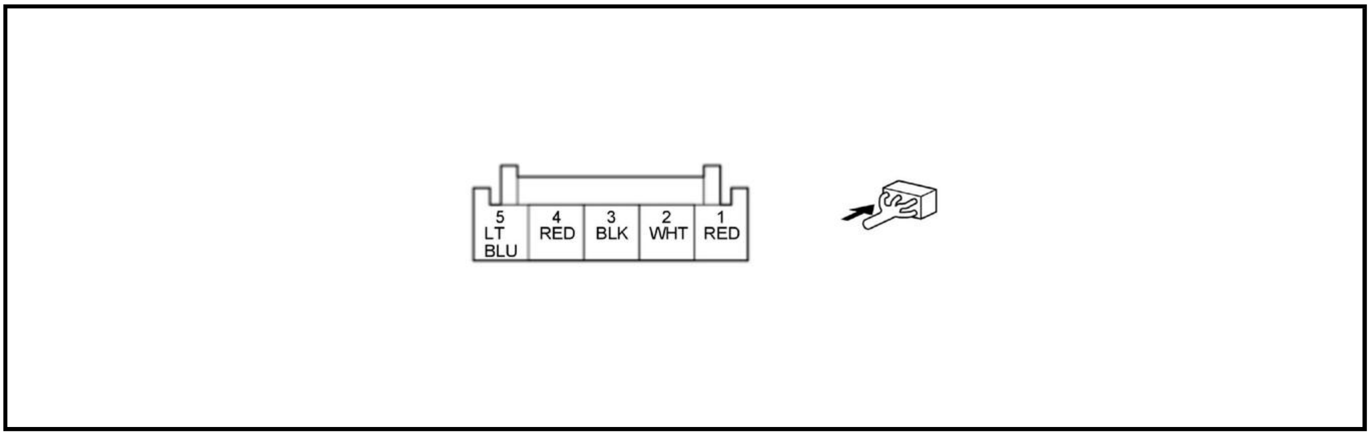

Cavity	Terminal Name	Description
1	AUX R CH	Outputs auxiliary sound signal
2	AUX L CH	Outputs auxiliary sound signal
3	AUX SGND	Ground for auxiliary sound signal
4	AUX GND	Ground for auxiliary jack assembly connection signal
5	AUX DET	Inputs connection signal for auxiliary jack assembly

CENTER DISPLAY UNIT CONNECTOR FOR INPUTS AND OUTPUTS

Connector Index
Center Display Unit Connector A (5P)
Center Display Unit Connector B (3P)

Center Display Unit Connector A (5P) (female terminals)

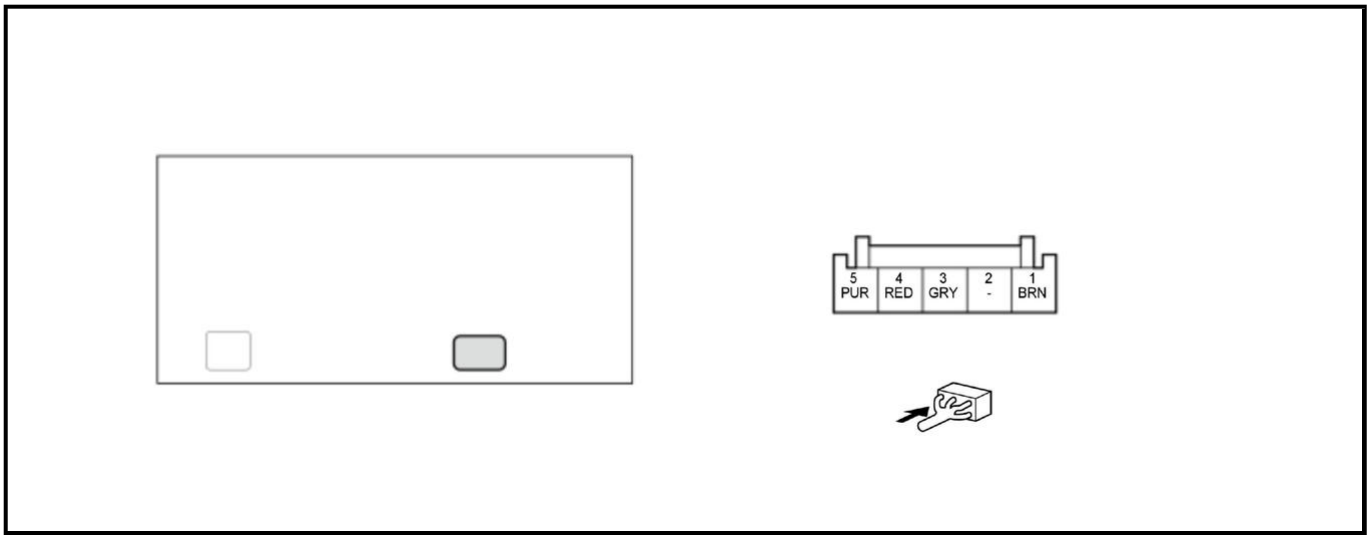

Cavity	Terminal Name	Description
A1	+B BACKUP2 SUB* 1+B AUDIO* 2	+B power source
A2	---	Not used
A3	ILLUMI+	Detects illumination on signal
A4	DISP CONT	Inputs signal for center display unit switching ON/OFF
A5	GND	Ground for center display unit

*1: With auto idle stop system

*2: Without auto idle stop system

Center Display Unit Connector B (3P) (female terminals)

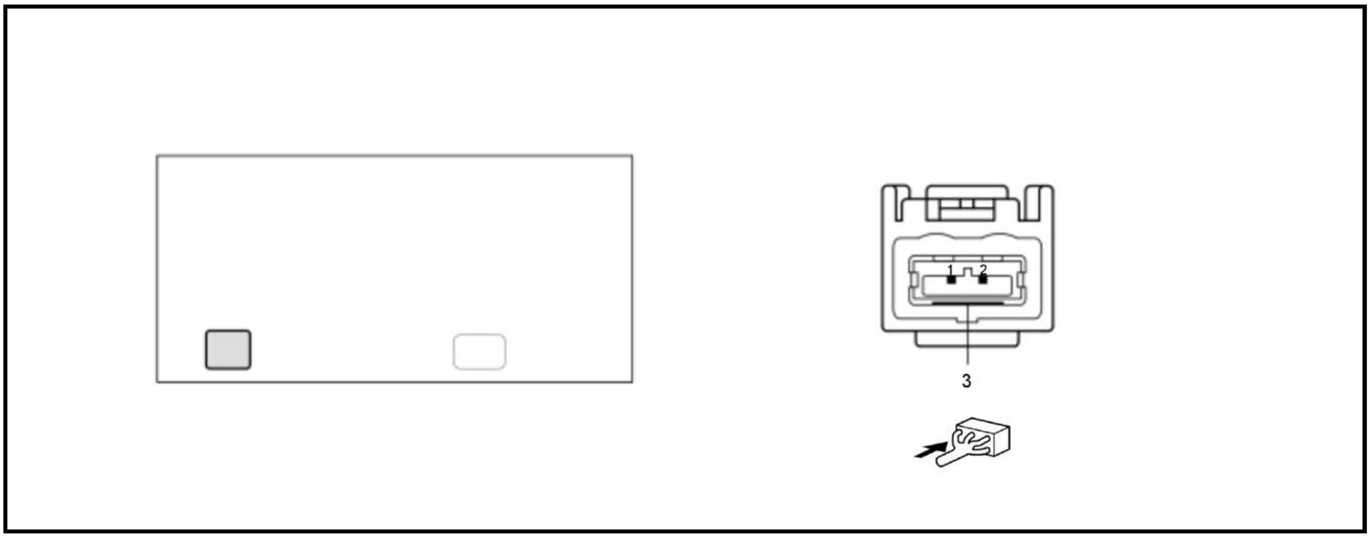

Cavity	Terminal Name	Description
B1	LVDS1+	Communication signal
B2	LVDS1-	Communication signal
B3	LVDS1 SH	Shield for terminals No. 1 and No. 2

REARVIEW CAMERA CONNECTOR FOR INPUTS AND OUTPUTS

Rearview Camera 8P Connector (male terminals)

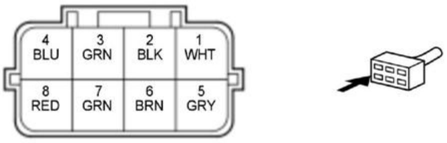
4 BLU
3 GRN
2 BLK
1 WHT
8 RED
7 GRN
6 BRN
5 GRY

Cavity	Terminal Name	Description
1	CAMERA V GND	Ground for NTSC video signal
2	CAMERA VCC	Power source for rearview camera
3	CAMERA BIT0	Inputs mode select signal for rearview camera
4	CAMERA BIT1	Inputs mode select signal for rearview camera
5	SH CAMERA	Shield for terminals No. 1, No. 2, No. 7, and No. 8
6	CAMERA ADPT	Detects connection for rearview camera
7	CAMERA V	Outputs NTSC video signal
8	CAMERA GND	Rearview camera ground

STEREO AMPLIFIER CONNECTOR FOR INPUTS AND OUTPUTS

Connector Index
Stereo Amplifier Connector A (18P)
Stereo Amplifier Connector B (8P) (Not used)
Stereo Amplifier Connector C (16P)
Stereo Amplifier Connector D (2P)

Stereo Amplifier Connector A (18P) (female terminals)

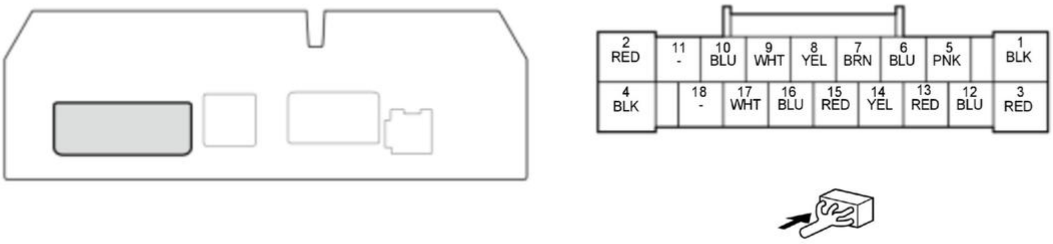
2 RED
11 -
10 BLU
9 WHT
8 YEL
7 BRN
6 BLU
5 PNK
1 BLK
4 BLK
18 -
17 WHT
16 BLU
15 RED
14 YEL
13 RED
12 BLU
3 RED

Cavity	Terminal Name	Description
A1	GND	Ground for stereo amplifier
A2	SUB WOOFER+	Outputs sound signal for subwoofer
A3	+B AUDIO AMP	+B power source
A4	SUB WOOFER-	Outputs sound signal for subwoofer
A5	FL SPKR+	Outputs sound signal for left front door speaker

Cavity	Terminal Name	Description
A6	FL SPKR-	Outputs sound signal for left front door speaker
A7	RR SPKR-	Outputs sound signal for right rear speakers
A8	RR SPKR+	Outputs sound signal for right rear speakers
A9	RL SPKR-	Outputs sound signal for left rear speakers
A10	RL SPKR+	Outputs sound signal for left rear speaker
A11	---	Not used
A12	FR SPKR-	Outputs sound signal for right front door speaker
A13	FR SPKR+	Outputs sound signal for right front door speaker
A14	FL TWEETER+	Outputs sound signal for left front tweeter
A15	FL TWEETER-	Outputs sound signal for left front tweeter
A16	FR TWEETER+	Outputs sound signal for right front tweeter
A17	FR TWEETER-	Outputs sound signal for right front tweeter
A18	---	Not used

Stereo Amplifier Connector C (16P) (female terminals)

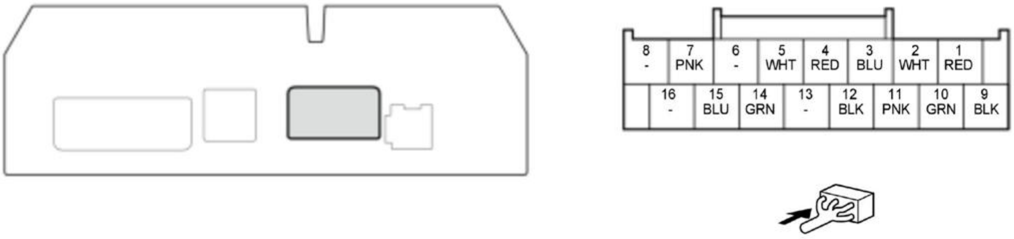

Cavity	Terminal Name	Description
C1	ANC R-	Inputs noise cancelling signal from ANC/active sound control unit
C2	ANC F-	Inputs noise cancelling signal from ANC/active sound control unit
C3	AUD F MIX GND	Basis ground for terminals No. 11
C4	AUX BEEP	Inputs system beep signal
C5	AUX NAVI GND	Basis ground for terminals No. 4 and No. 12
C6	---	Not used
C7	RS485-	Communication signal
C8	---	Not used
C9	ANC R+	Inputs noise cancelling signal from ANC/active sound control unit
C10	ANC F+	Inputs noise cancelling signal from ANC/active sound control unit
C11	AUD F MIX	Inputs noise cancelling mixing signal from ANC/active sound control unit
C12	AUX NAVI	Inputs sound signal for voice guidance and Voice Recognition (VR) prompts
C13	---	Not used
C14	SWD+B	Inputs signal for stereo amplifier switching on/off
C15	RS485+	Communication signal
C16	---	Not used

Stereo Amplifier Connector D (2P) (female terminals)

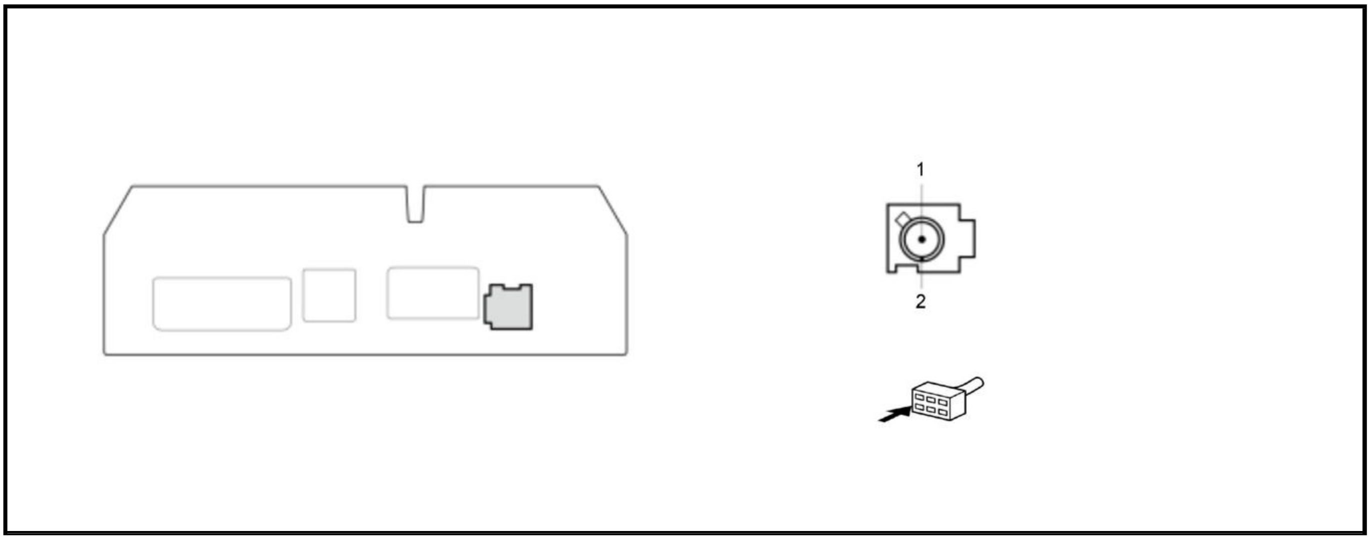

Cavity	Terminal Name	Description
D1	SPDIF2 SIG	Communication signal
D2	SPDIF2 SH	Shield for terminal No. 1

TUNER UNIT CONNECTOR FOR INPUTS AND OUTPUTS

Connector Index
Tuner Unit Connector A (10P)
Tuner Unit Connector B (2P)
Tuner Unit Connector C (5P)
Tuner Unit Connector D (2P) (Not used)

Tuner Unit Connector A (10P) (female terminals)

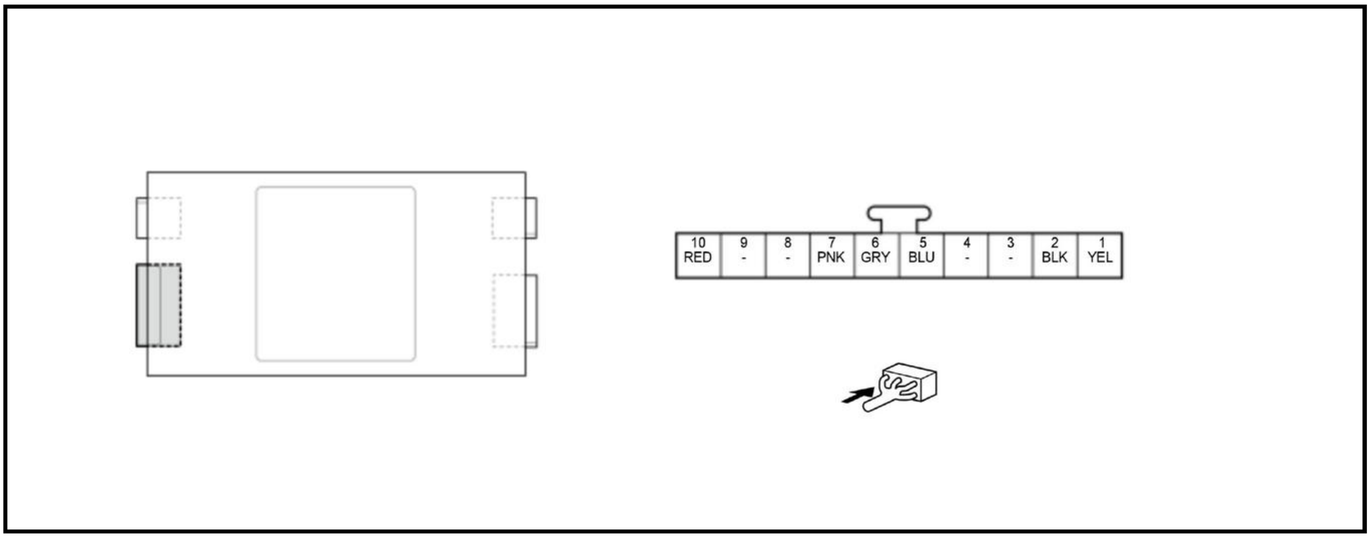

Cavity	Terminal Name	Description
A1	TUNER 9V	Power source for tuner unit
A2	TUNER GND	Tuner unit ground
A3	---	Not used
A4	---	Not used
A5	TUNER RS485+	Communication signal
A6	TUNER RS485 SH	Shield for terminals No. 5 and No. 7
A7	TUNER RS485-	Communication signal

Cavity	Terminal Name	Description
A8	---	Not used
A9	---	Not used
A10	TUNER 6V	Power source for tuner unit

Tuner Unit Connector B (2P) (female terminals)

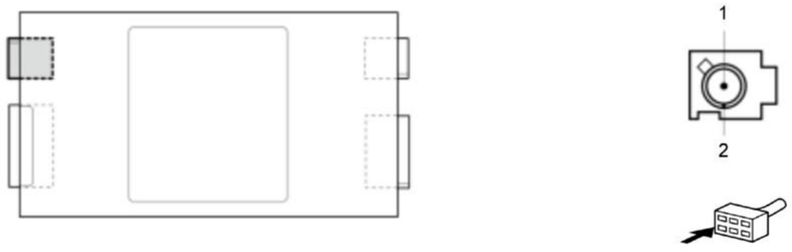

Cavity	Terminal Name	Description
B1	SPDIF1 SIG	Communication signal
B2	SPDIF1 SH	Shield for terminal No. 1

Tuner Unit Connector C (5P) (female terminals)

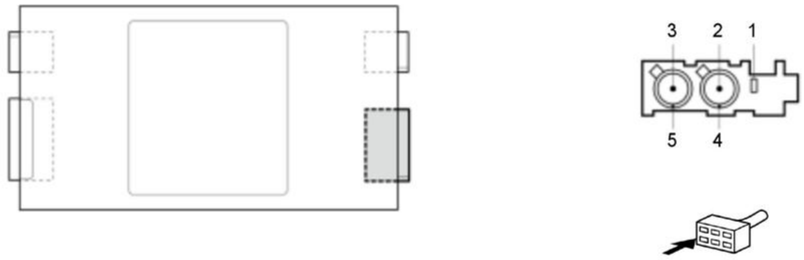

Cavity	Terminal Name	Description
C1	ANT+B	Power source for AM/FM antenna amplifier
C2	RF IN	Inputs AM/FM signal
C3	---	Not used
C4	SH(RF IN)	Shield for terminal No. 2
C5	---	Not used

USB CHARGER UNIT CONNECTOR FOR INPUTS AND OUTPUTS

Connector Index
USB Charger Unit 3P Connector (with wireless charger)

Connector Index
USB Charger Unit 3P Connector (without wireless charger)

USB Charger Unit 3P Connector (female terminals) (with wireless charger)

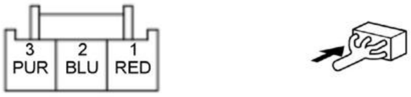

USB Charger Unit 3P Connector (female terminals) (without wireless charger)

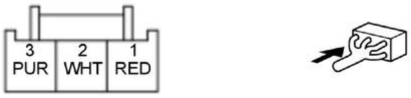

Cavity	Terminal Name	Description
1	ACC	ACCESSORY power source
2	+B USB CHARGER* 1+B BACK UP* 2	+B power source
3	GND	USB charger unit ground

*1: With wireless charger

*2: Without wireless charger

CIRCUIT DIAGRAM

AUDIO AND VISUAL SYSTEM CIRCUIT DIAGRAM (COLOR AUDIO TYPE)

Color Audio type - 1/9

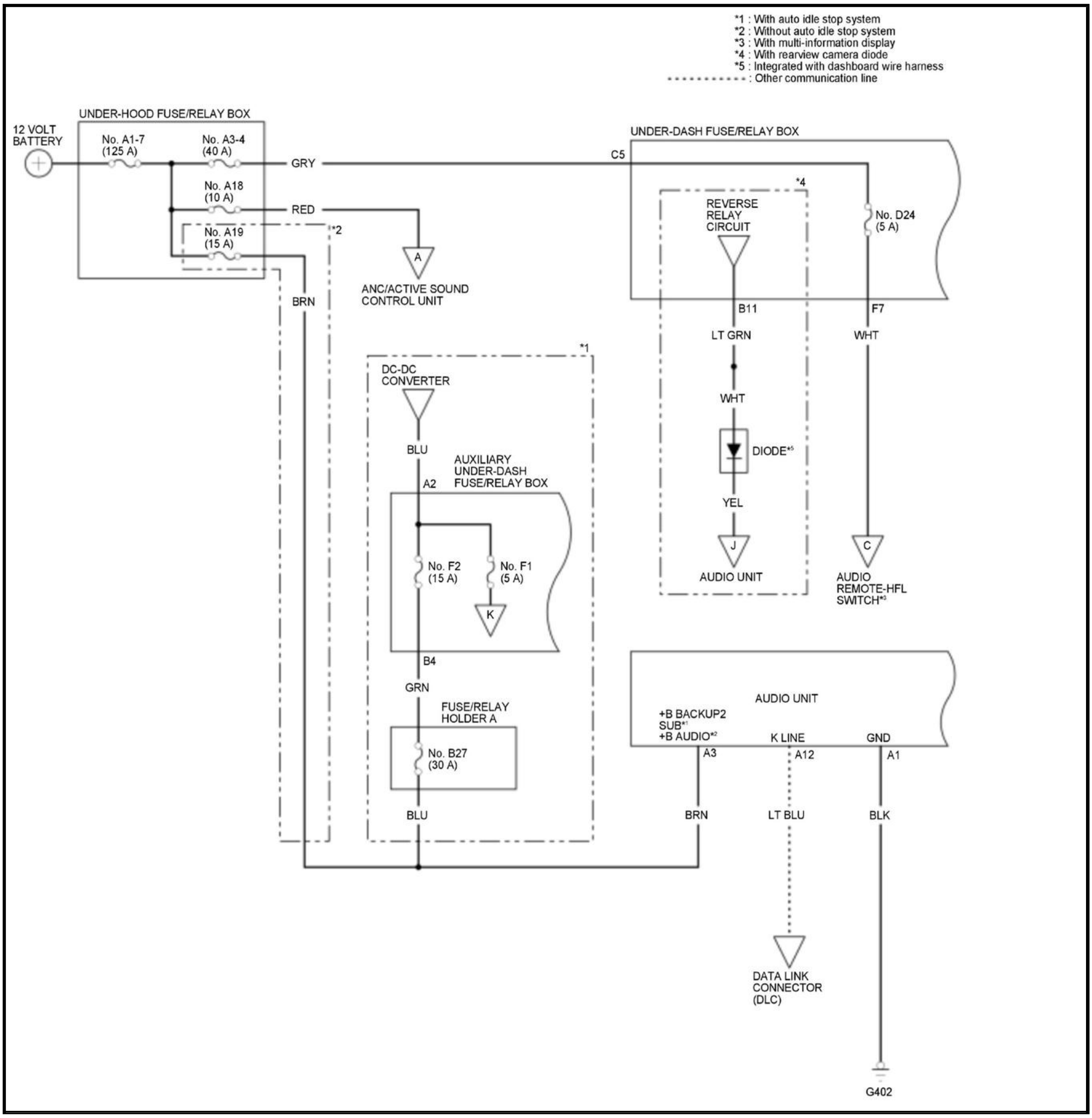
*1 : With auto idle stop system
*2 : Without auto idle stop system
*3 : With multi-information display
*4 : With rearview camera diode
*5 : Integrated with dashboard wire harness
: Other communication line
12 VOLT BATTERY
UNDER-HOOD FUSE/RELAY BOX
No. A1-7 (125 A)
No. A3-4 (40 A)
No. A18 (10 A)
No. A19 (15 A)
GRY
RED
BRN
A
ANC/ACTIVE SOUND CONTROL UNIT
UNDER-DASH FUSE/RELAY BOX
C5
REVERSE RELAY CIRCUIT
No. D24 (5 A)
B11
F7
LT GRN
WHT
DIODE*5
YEL
J
AUDIO UNIT
C
AUDIO REMOTE-HFL SWITCH*3
DC-DC CONVERTER
BLU
AUXILIARY UNDER-DASH FUSE/RELAY BOX
A2
No. F2 (15 A)
No. F1 (5 A)
K
B4
GRN
FUSE/RELAY HOLDER A
No. B27 (30 A)
BLU
AUDIO UNIT
+B BACKUP2 SUB*1
+B AUDIO*2
K LINE
GND
A3
A12
A1
BRN
LT BLU
BLK
DATA LINK CONNECTOR (DLC)
G402

Color Audio type - 2/9

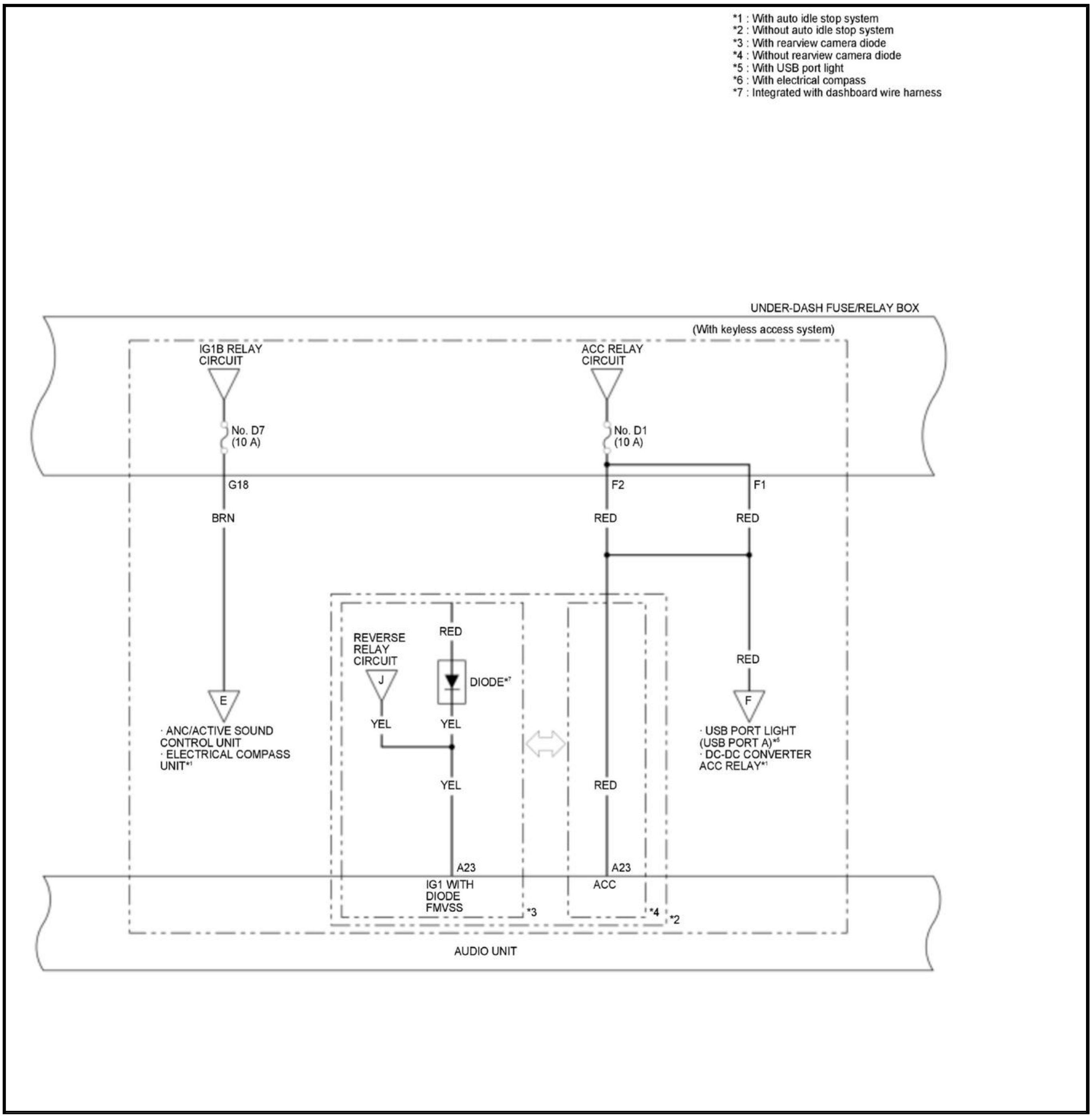
*1 : With auto idle stop system
*2 : Without auto idle stop system
*3 : With rearview camera diode
*4 : Without rearview camera diode
*5 : With USB port light
*6 : With electrical compass
*7 : Integrated with dashboard wire harness
UNDER-DASH FUSE/RELAY BOX
(With keyless access system)
IG1B RELAY CIRCUIT
ACC RELAY CIRCUIT
No. D7 (10 A)
No. D1 (10 A)
G18
F2
F1
BRN
RED
RED
RED
REVERSE RELAY CIRCUIT
J
DIODE*7
YEL
YEL
YEL
RED
RED
E
· ANC/ACTIVE SOUND CONTROL UNIT
· ELECTRICAL COMPASS UNIT*1
F
· USB PORT LIGHT (USB PORT A)*5
· DC-DC CONVERTER ACC RELAY*1
A23
A23
IG1 WITH DIODE FMVSS
ACC
*3
*4
*2
AUDIO UNIT

Color Audio type - 3/9

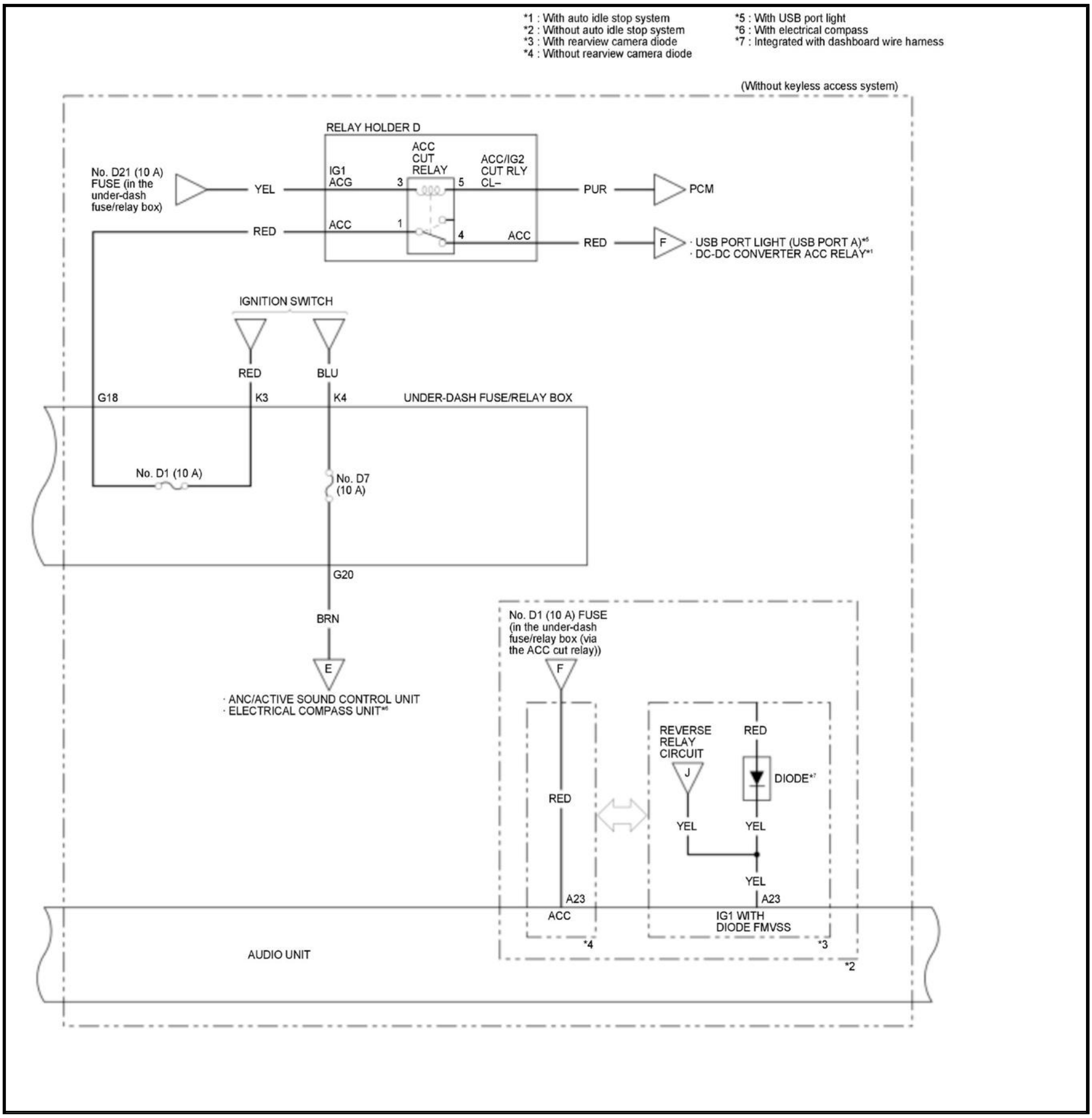
*1 : With auto idle stop system
*2 : Without auto idle stop system
*3 : With rearview camera diode
*4 : Without rearview camera diode
*5 : With USB port light
*6 : With electrical compass
*7 : Integrated with dashboard wire harness
(Without keyless access system)
RELAY HOLDER D
No. D21 (10 A) FUSE (in the under-dash fuse/relay box)
YEL
IG1 ACG
3
ACC CUT RELAY
5
ACC/IG2 CUT RLY CL–
PUR
PCM
RED
ACC
1
4
ACC
RED
F
· USB PORT LIGHT (USB PORT A)*5
· DC-DC CONVERTER ACC RELAY*1
IGNITION SWITCH
RED
BLU
G18
K3
K4
UNDER-DASH FUSE/RELAY BOX
No. D1 (10 A)
No. D7 (10 A)
G20
BRN
E
· ANC/ACTIVE SOUND CONTROL UNIT
· ELECTRICAL COMPASS UNIT*6
No. D1 (10 A) FUSE (in the under-dash fuse/relay box (via the ACC cut relay))
F
RED
REVERSE RELAY CIRCUIT
J
RED
DIODE*7
YEL
YEL
YEL
A23
A23
ACC
IG1 WITH DIODE FMVSS
*4
*3
*2
AUDIO UNIT

Color Audio type - 4/9

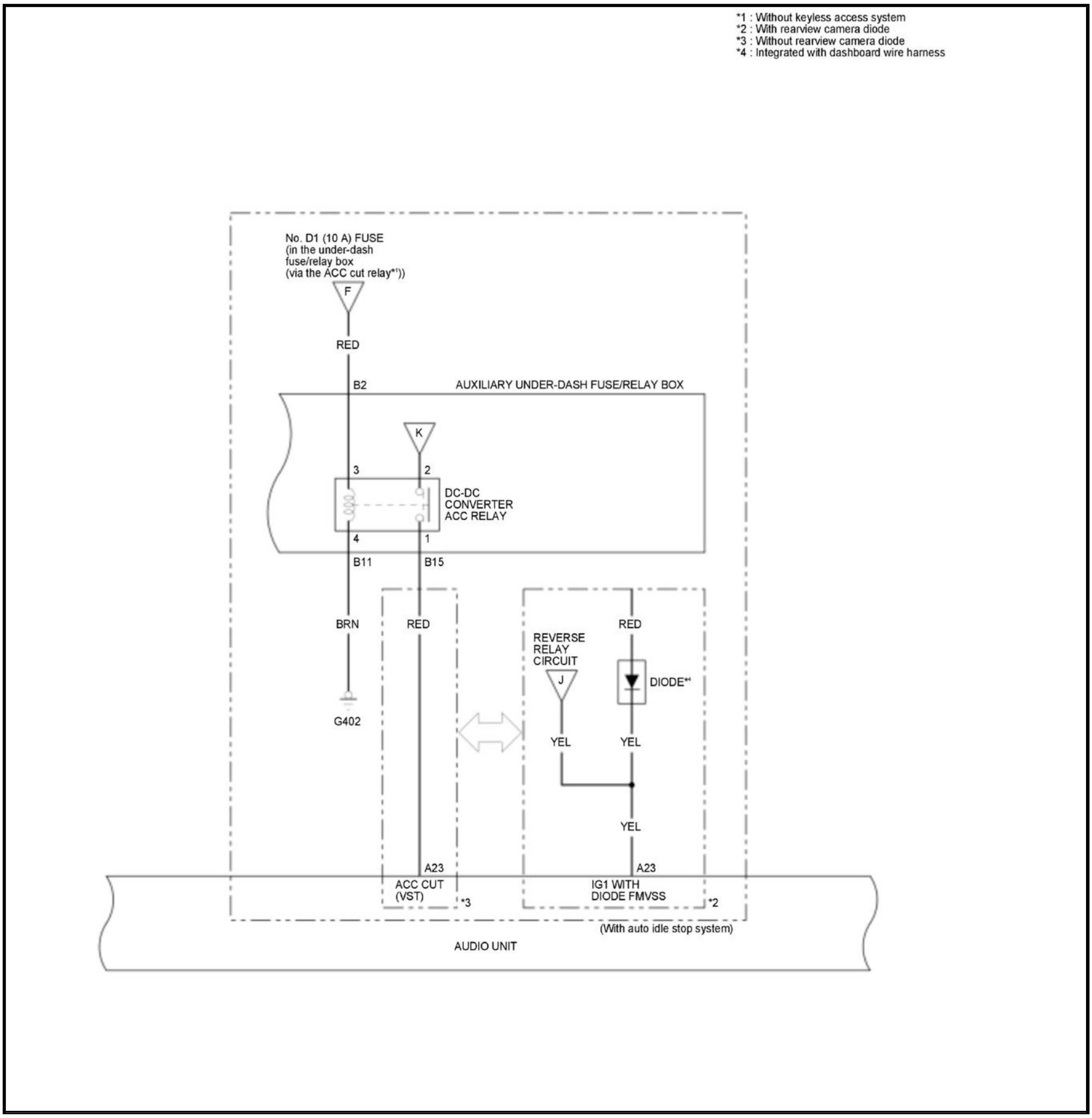
*1 : Without keyless access system
*2 : With rearview camera diode
*3 : Without rearview camera diode
*4 : Integrated with dashboard wire harness
No. D1 (10 A) FUSE
(in the under-dash
fuse/relay box
(via the ACC cut relay*1))
F
RED
B2
AUXILIARY UNDER-DASH FUSE/RELAY BOX
K
3
2
DC-DC
CONVERTER
ACC RELAY
4
1
B11
B15
BRN
RED
G402
REVERSE
RELAY
CIRCUIT
J
RED
DIODE*4
YEL
YEL
YEL
A23
A23
ACC CUT
(VST)
*3
IG1 WITH
DIODE FMVSS
*2
(With auto idle stop system)
AUDIO UNIT

Color Audio type - 5/9

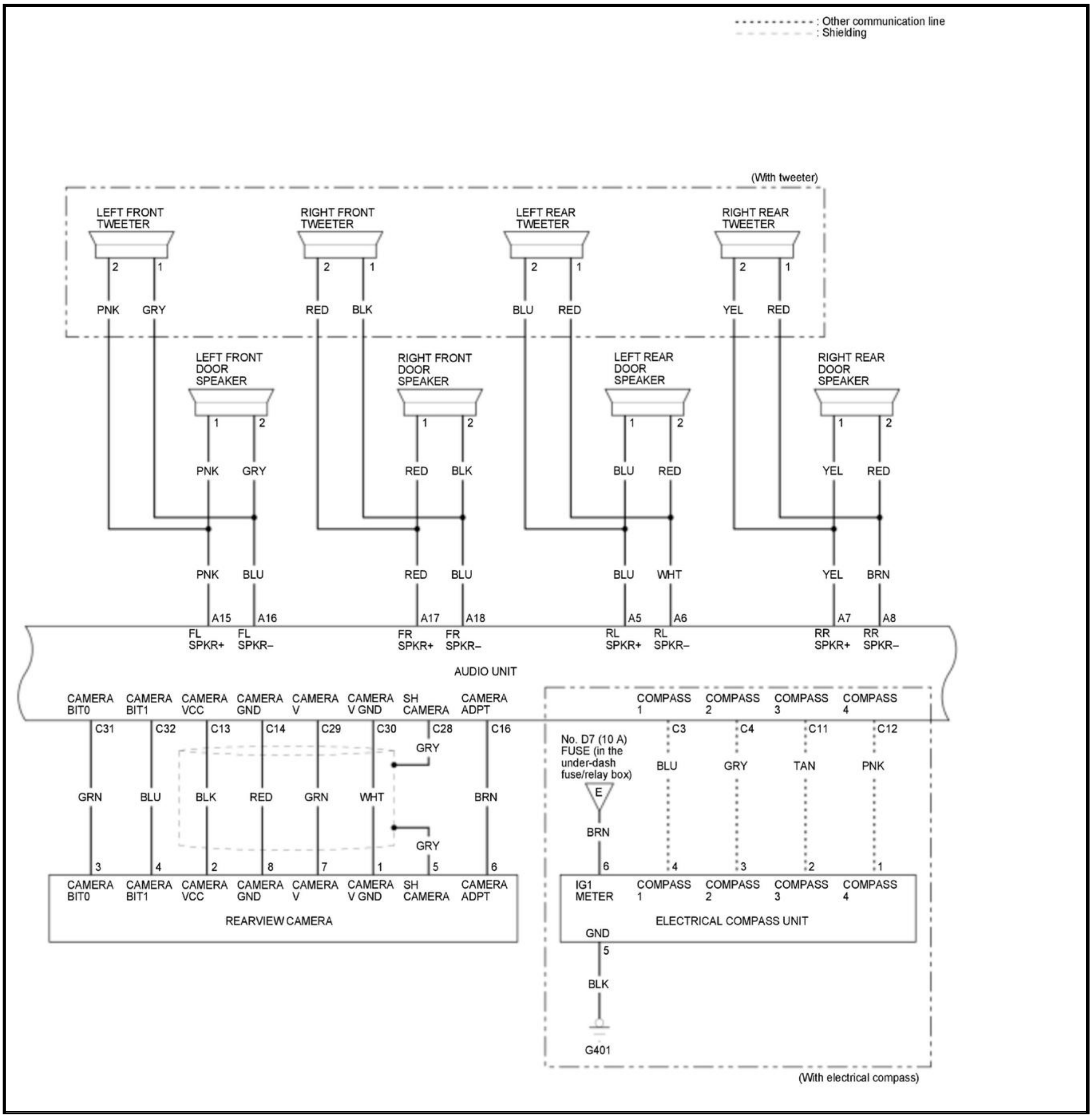
: Other communication line
: Shielding
(With tweeter)
LEFT FRONT TWEETER
RIGHT FRONT TWEETER
LEFT REAR TWEETER
RIGHT REAR TWEETER
2
1
PNK
GRY
RED
BLK
BLU
RED
YEL
RED
LEFT FRONT DOOR SPEAKER
RIGHT FRONT DOOR SPEAKER
LEFT REAR DOOR SPEAKER
RIGHT REAR DOOR SPEAKER
PNK
GRY
RED
BLK
BLU
RED
YEL
RED
PNK
BLU
RED
BLU
BLU
WHT
YEL
BRN
A15
A16
A17
A18
A5
A6
A7
A8
FL SPKR+
FL SPKR–
FR SPKR+
FR SPKR–
RL SPKR+
RL SPKR–
RR SPKR+
RR SPKR–
AUDIO UNIT
CAMERA BIT0
CAMERA BIT1
CAMERA VCC
CAMERA GND
CAMERA V
CAMERA V GND
SH CAMERA
CAMERA ADPT
COMPASS 1
COMPASS 2
COMPASS 3
COMPASS 4
C31
C32
C13
C14
C29
C30
C28
C16
C3
C4
C11
C12
GRY
GRN
BLU
BLK
RED
GRN
WHT
BRN
No. D7 (10 A) FUSE (in the under-dash fuse/relay box)
E
BRN
BLU
GRY
TAN
PNK
GRY
3
4
2
8
7
1
5
6
6
4
3
2
1
CAMERA BIT0
CAMERA BIT1
CAMERA VCC
CAMERA GND
CAMERA V
CAMERA V GND
SH CAMERA
CAMERA ADPT
REARVIEW CAMERA
IG1 METER
COMPASS 1
COMPASS 2
COMPASS 3
COMPASS 4
ELECTRICAL COMPASS UNIT
GND
5
BLK
G401
(With electrical compass)

Color Audio type - 6/9

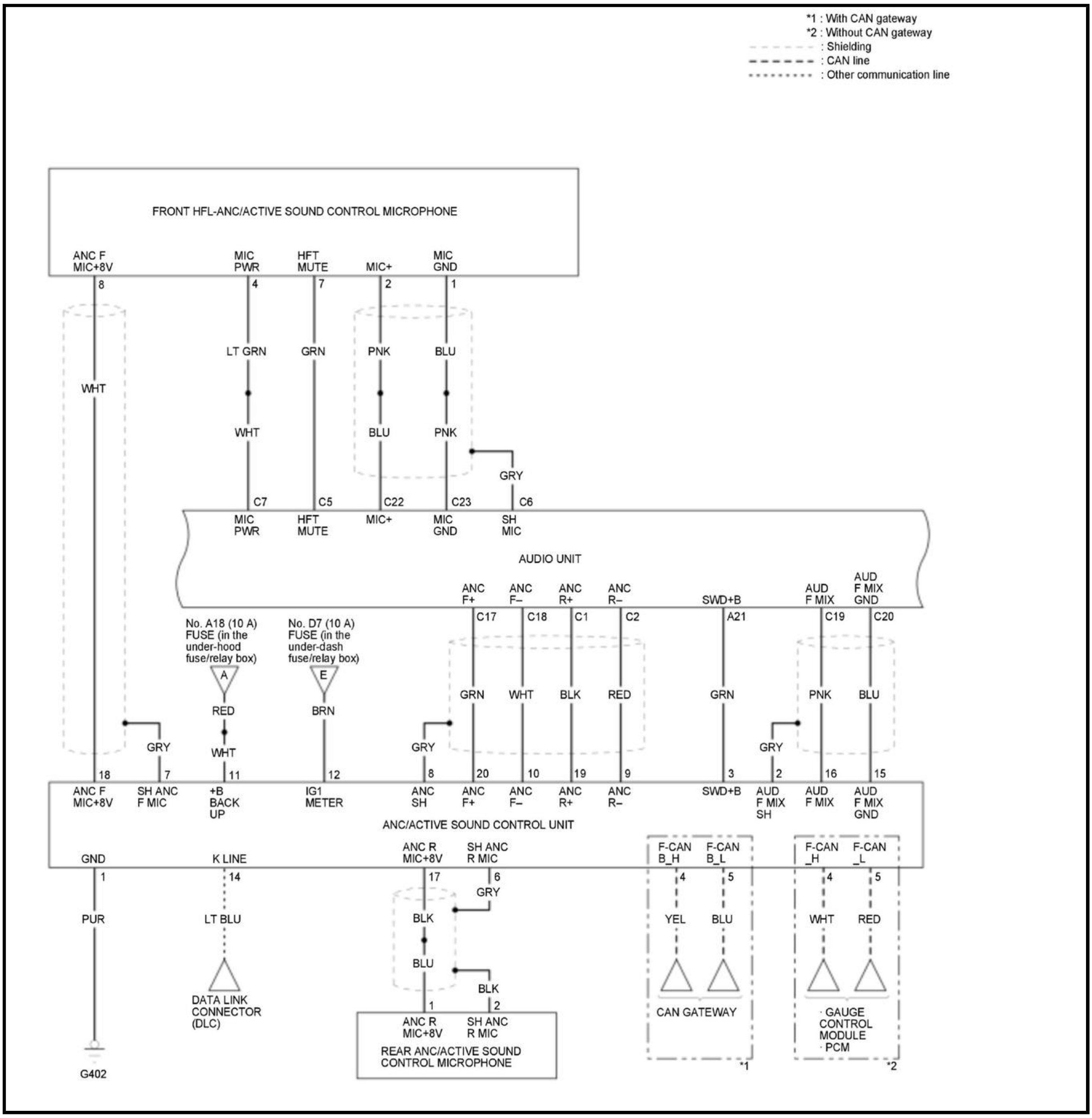
*1 : With CAN gateway
*2 : Without CAN gateway
: Shielding
: CAN line
: Other communication line
FRONT HFL-ANC/ACTIVE SOUND CONTROL MICROPHONE
ANC F MIC+8V
MIC PWR
HFT MUTE
MIC+
MIC GND
8
4
7
2
1
LT GRN
GRN
PNK
BLU
WHT
WHT
BLU
PNK
GRY
C7
C5
C22
C23
C6
MIC PWR
HFT MUTE
MIC+
MIC GND
SH MIC
AUDIO UNIT
ANC F+
ANC F–
ANC R+
ANC R–
SWD+B
AUD F MIX
AUD F MIX GND
C17
C18
C1
C2
A21
C19
C20
No. A18 (10 A) FUSE (in the under-hood fuse/relay box)
No. D7 (10 A) FUSE (in the under-dash fuse/relay box)
A
E
RED
BRN
WHT
GRY
GRY
GRN
WHT
BLK
RED
GRN
GRY
PNK
BLU
18
7
11
12
8
20
10
19
9
3
2
16
15
ANC F MIC+8V
SH ANC F MIC
+B BACK UP
IG1 METER
ANC SH
ANC F+
ANC F–
ANC R+
ANC R–
SWD+B
AUD F MIX SH
AUD F MIX
AUD F MIX GND
ANC/ACTIVE SOUND CONTROL UNIT
GND
K LINE
ANC R MIC+8V
SH ANC R MIC
F-CAN B_H
F-CAN B_L
F-CAN _H
F-CAN _L
1
14
17
6
4
5
4
5
PUR
LT BLU
GRY
BLK
BLU
BLK
YEL
BLU
WHT
RED
DATA LINK CONNECTOR (DLC)
1
2
ANC R MIC+8V
SH ANC R MIC
REAR ANC/ACTIVE SOUND CONTROL MICROPHONE
CAN GATEWAY
· GAUGE CONTROL MODULE
· PCM
*1
*2
G402

Color Audio type - 7/9

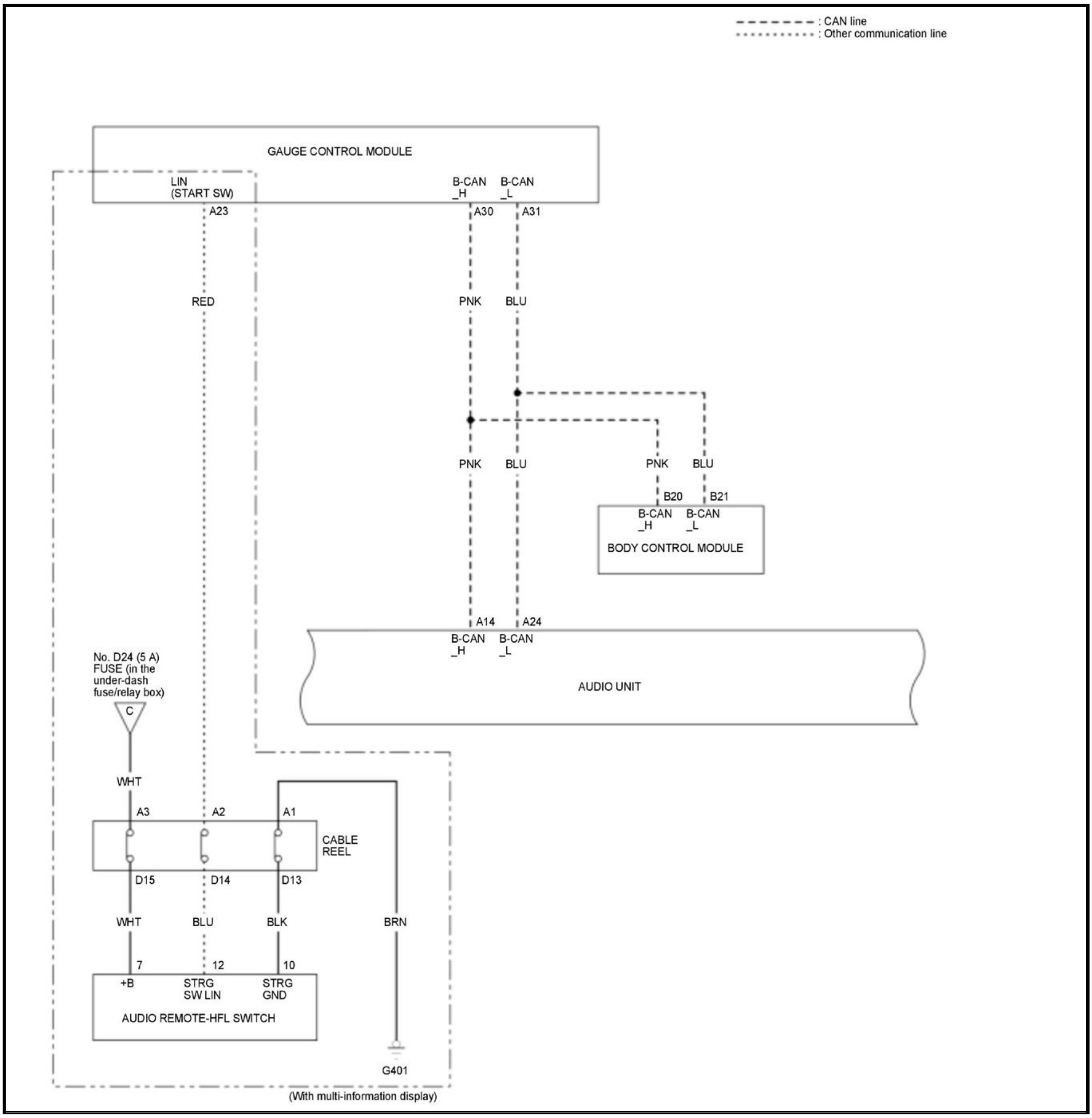

: CAN line
: Other communication line
GAUGE CONTROL MODULE
LIN (START SW)
B-CAN _H
B-CAN _L
A23
A30
A31
RED
PNK
BLU
PNK
BLU
PNK
BLU
B20
B21
B-CAN _H
B-CAN _L
BODY CONTROL MODULE
A14
A24
B-CAN _H
B-CAN _L
AUDIO UNIT
No. D24 (5 A) FUSE (in the under-dash fuse/relay box)
C
WHT
A3
A2
A1
CABLE REEL
D15
D14
D13
WHT
BLU
BLK
BRN
7
12
10
+B
STRG SW LIN
STRG GND
AUDIO REMOTE-HFL SWITCH
G401
(With multi-information display)

Color Audio type - 8/9

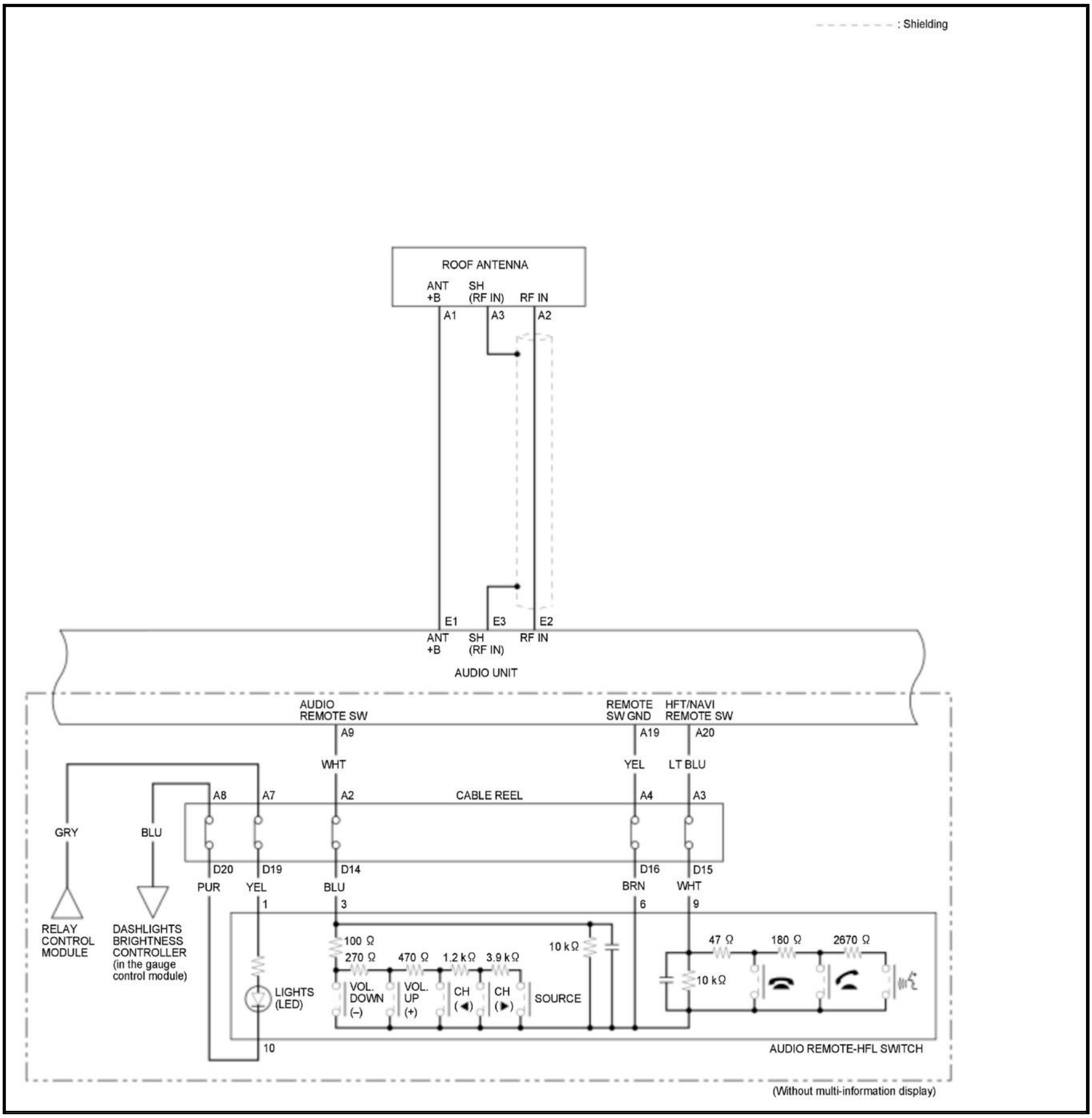
: Shielding
ROOF ANTENNA
ANT +B
SH (RF IN)
RF IN
A1
A3
A2
E1
E3
E2
ANT +B
SH (RF IN)
RF IN
AUDIO UNIT
AUDIO REMOTE SW
REMOTE SW GND
HFT/NAVI REMOTE SW
A9
A19
A20
WHT
YEL
LT BLU
CABLE REEL
A8
A7
A2
A4
A3
GRY
BLU
D20
D19
D14
D16
D15
PUR
YEL
BLU
BRN
WHT
RELAY CONTROL MODULE
DASHLIGHTS BRIGHTNESS CONTROLLER (in the gauge control module)
1
3
6
9
100 Ω
270 Ω
470 Ω
1.2 kΩ
3.9 kΩ
10 kΩ
47 Ω
180 Ω
2670 Ω
10 kΩ
LIGHTS (LED)
VOL. DOWN (–)
VOL. UP (+)
CH (◀)
CH (▶)
SOURCE
10
AUDIO REMOTE-HFL SWITCH
(Without multi-information display)

Color Audio type - 9/9

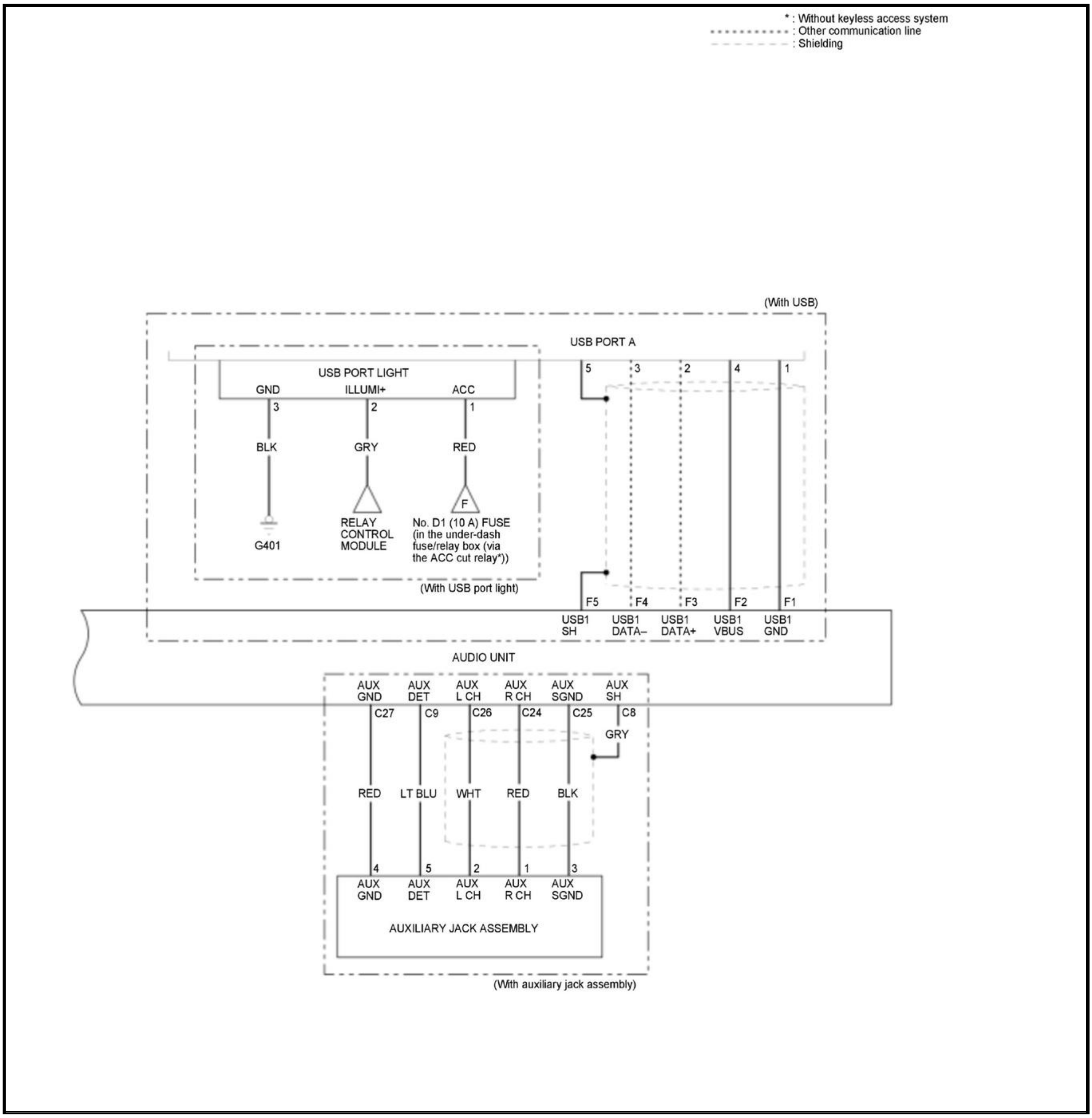

* : Without keyless access system
: Other communication line
: Shielding
(With USB)
USB PORT A
USB PORT LIGHT
GND
ILLUMI+
ACC
3
2
1
BLK
GRY
RED
G401
RELAY CONTROL MODULE
F
No. D1 (10 A) FUSE (in the under-dash fuse/relay box (via the ACC cut relay*))
(With USB port light)
5
3
2
4
1
F5
F4
F3
F2
F1
USB1 SH
USB1 DATA–
USB1 DATA+
USB1 VBUS
USB1 GND
AUDIO UNIT
AUX GND
AUX DET
AUX L CH
AUX R CH
AUX SGND
AUX SH
C27
C9
C26
C24
C25
C8
GRY
RED
LT BLU
WHT
RED
BLK
4
5
2
1
3
AUX GND
AUX DET
AUX L CH
AUX R CH
AUX SGND
AUXILIARY JACK ASSEMBLY
(With auxiliary jack assembly)

AUDIO AND VISUAL SYSTEM CIRCUIT DIAGRAM (DISPLAY AUDIO TYPE)

Display Audio type - 1/11

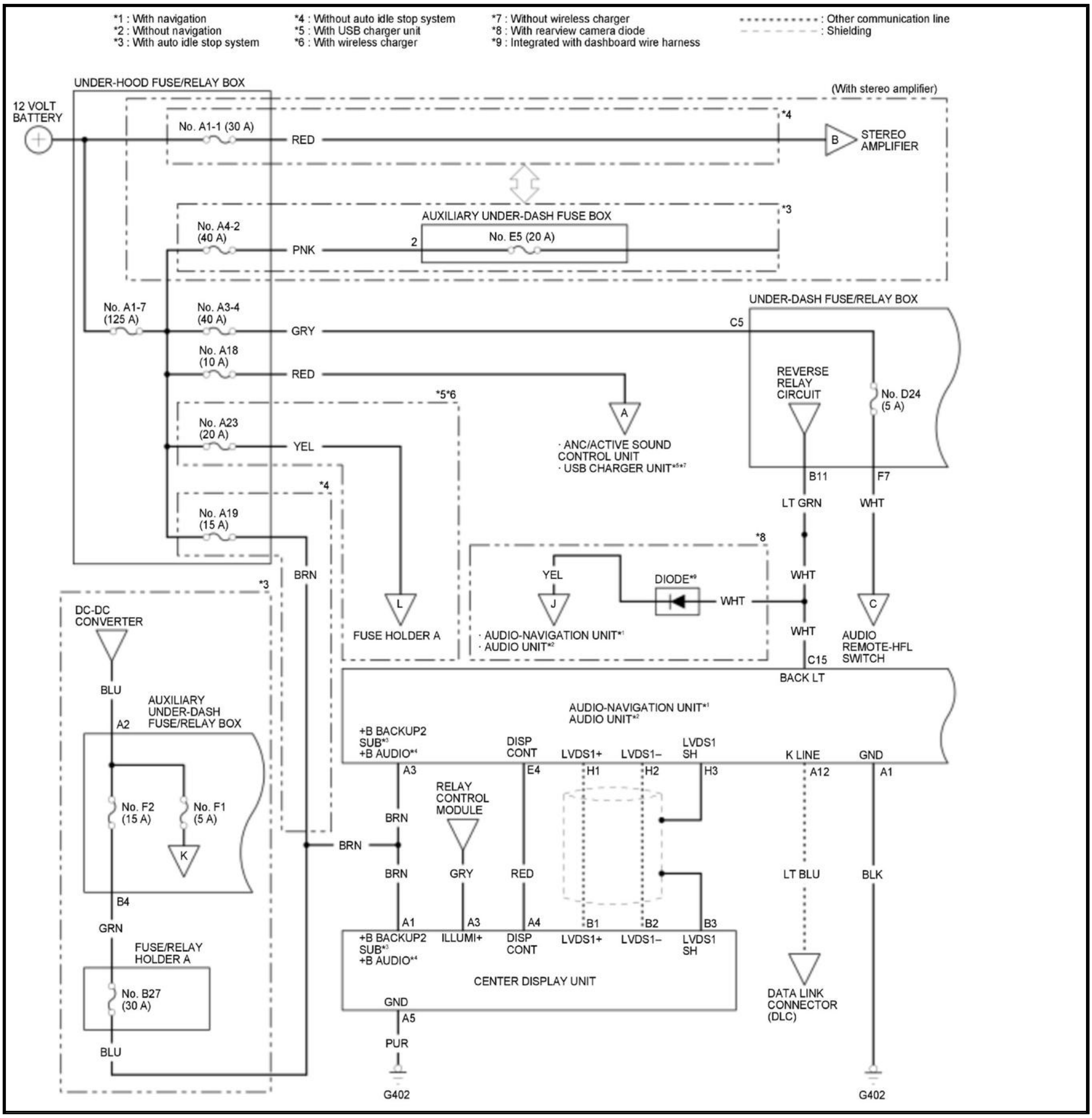
*1 : With navigation
*2 : Without navigation
*3 : With auto idle stop system
*4 : Without auto idle stop system
*5 : With USB charger unit
*6 : With wireless charger
*7 : Without wireless charger
*8 : With rearview camera diode
*9 : Integrated with dashboard wire harness
: Other communication line
: Shielding
UNDER-HOOD FUSE/RELAY BOX
(With stereo amplifier)
12 VOLT BATTERY
No. A1-1 (30 A)
RED
*4
B
STEREO AMPLIFIER
*3
AUXILIARY UNDER-DASH FUSE BOX
No. A4-2 (40 A)
PNK
2
No. E5 (20 A)
No. A1-7 (125 A)
No. A3-4 (40 A)
GRY
C5
UNDER-DASH FUSE/RELAY BOX
No. A18 (10 A)
RED
REVERSE RELAY CIRCUIT
No. D24 (5 A)
*5*6
A
No. A23 (20 A)
YEL
· ANC/ACTIVE SOUND CONTROL UNIT
· USB CHARGER UNIT*5*7
B11
F7
*4
LT GRN
WHT
No. A19 (15 A)
*8
BRN
YEL
DIODE*9
WHT
WHT
*3
L
J
C
DC-DC CONVERTER
FUSE HOLDER A
· AUDIO-NAVIGATION UNIT*1
· AUDIO UNIT*2
WHT
AUDIO REMOTE-HFL SWITCH
C15
BACK LT
BLU
AUXILIARY UNDER-DASH FUSE/RELAY BOX
AUDIO-NAVIGATION UNIT*1
AUDIO UNIT*2
A2
+B BACKUP2
SUB*3
+B AUDIO*4
DISP CONT
LVDS1+
LVDS1–
LVDS1 SH
K LINE
GND
A3
E4
H1
H2
H3
A12
A1
No. F2 (15 A)
No. F1 (5 A)
RELAY CONTROL MODULE
BRN
K
BRN
BRN
GRY
RED
LT BLU
BLK
B4
GRN
A1
A3
A4
B1
B2
B3
FUSE/RELAY HOLDER A
+B BACKUP2
SUB*3
+B AUDIO*4
ILLUMI+
DISP CONT
LVDS1+
LVDS1–
LVDS1 SH
No. B27 (30 A)
CENTER DISPLAY UNIT
DATA LINK CONNECTOR (DLC)
GND
A5
BLU
PUR
G402
G402

Display Audio type - 2/11

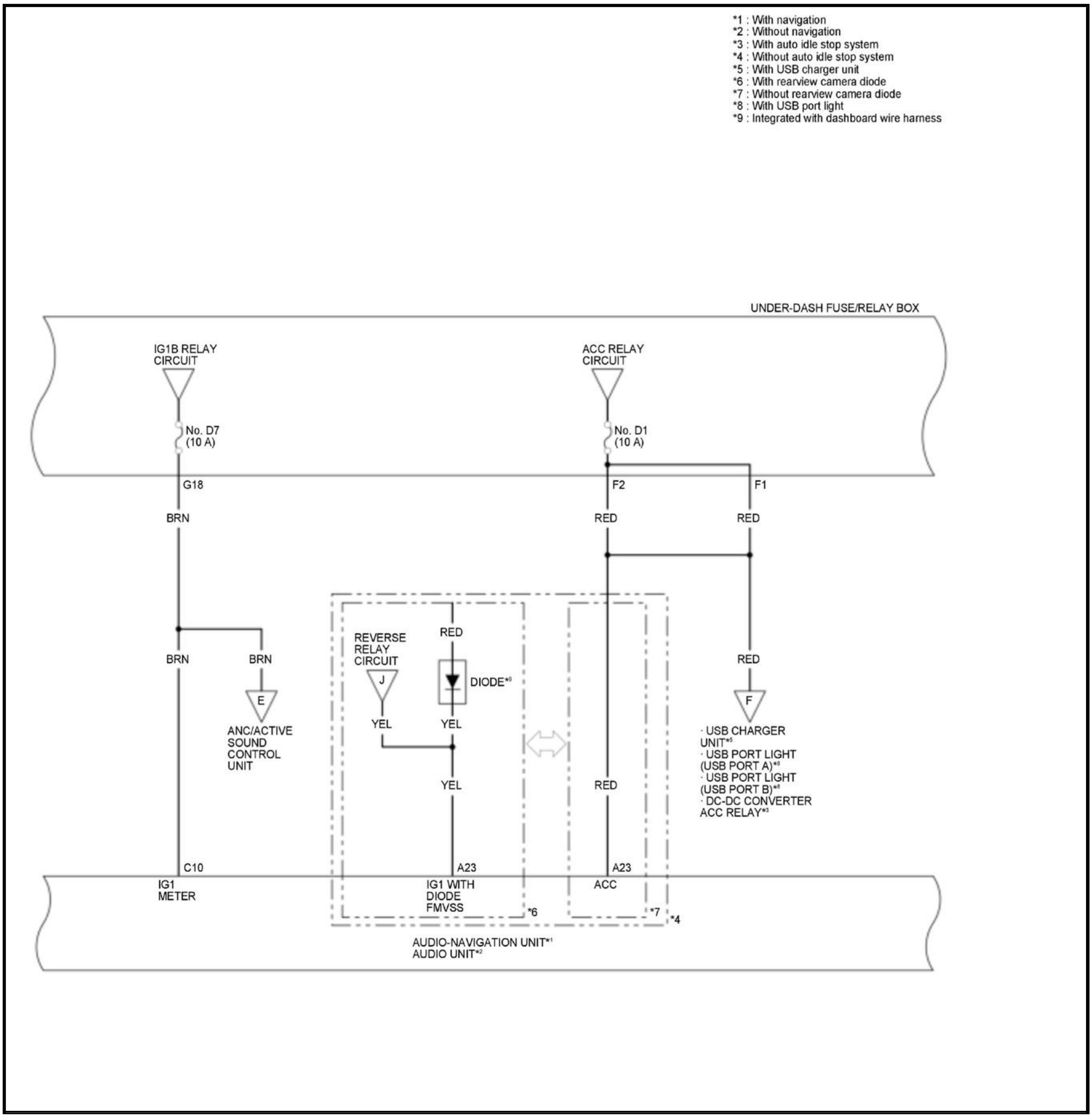
*1 : With navigation
*2 : Without navigation
*3 : With auto idle stop system
*4 : Without auto idle stop system
*5 : With USB charger unit
*6 : With rearview camera diode
*7 : Without rearview camera diode
*8 : With USB port light
*9 : Integrated with dashboard wire harness
UNDER-DASH FUSE/RELAY BOX
IG1B RELAY CIRCUIT
No. D7 (10 A)
G18
BRN
ACC RELAY CIRCUIT
No. D1 (10 A)
F2
F1
RED
RED
BRN
BRN
E
ANC/ACTIVE SOUND CONTROL UNIT
REVERSE RELAY CIRCUIT
J
RED
DIODE*9
YEL
YEL
YEL
RED
RED
F
· USB CHARGER UNIT*5
· USB PORT LIGHT (USB PORT A)*8
· USB PORT LIGHT (USB PORT B)*8
· DC-DC CONVERTER ACC RELAY*3
C10
IG1 METER
A23
IG1 WITH DIODE FMVSS
*6
A23
ACC
*7
*4
AUDIO-NAVIGATION UNIT*1
AUDIO UNIT*2

Display Audio type - 3/11

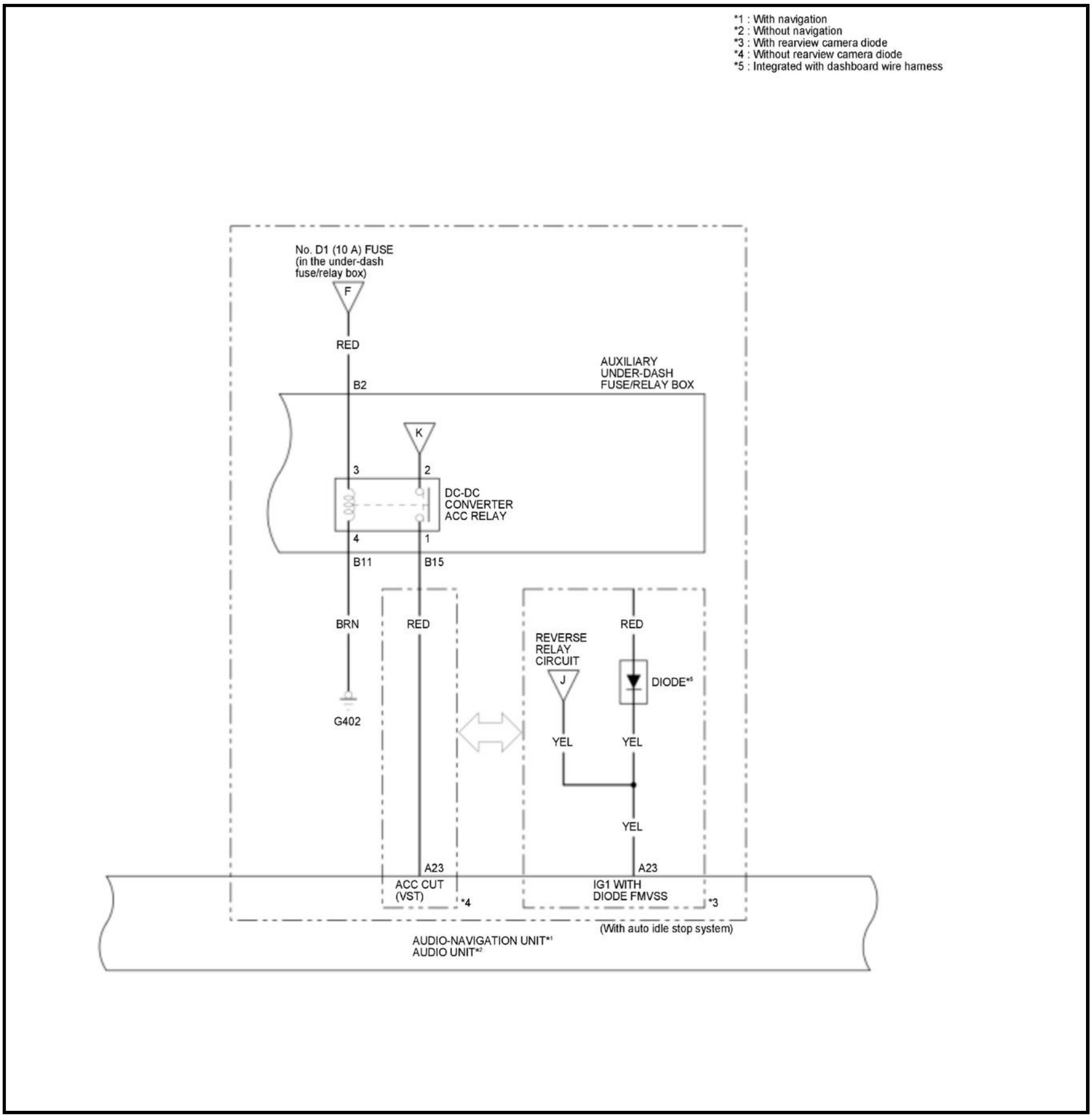
*1 : With navigation
*2 : Without navigation
*3 : With rearview camera diode
*4 : Without rearview camera diode
*5 : Integrated with dashboard wire harness
No. D1 (10 A) FUSE
(in the under-dash
fuse/relay box)
F
RED
B2
AUXILIARY
UNDER-DASH
FUSE/RELAY BOX
K
3
2
DC-DC
CONVERTER
ACC RELAY
4
1
B11
B15
BRN
RED
G402
RED
REVERSE
RELAY
CIRCUIT
J
DIODE*5
YEL
YEL
YEL
A23
A23
ACC CUT
(VST)
*4
IG1 WITH
DIODE FMVSS
*3
(With auto idle stop system)
AUDIO-NAVIGATION UNIT*1
AUDIO UNIT*2

Display Audio type - 4/11

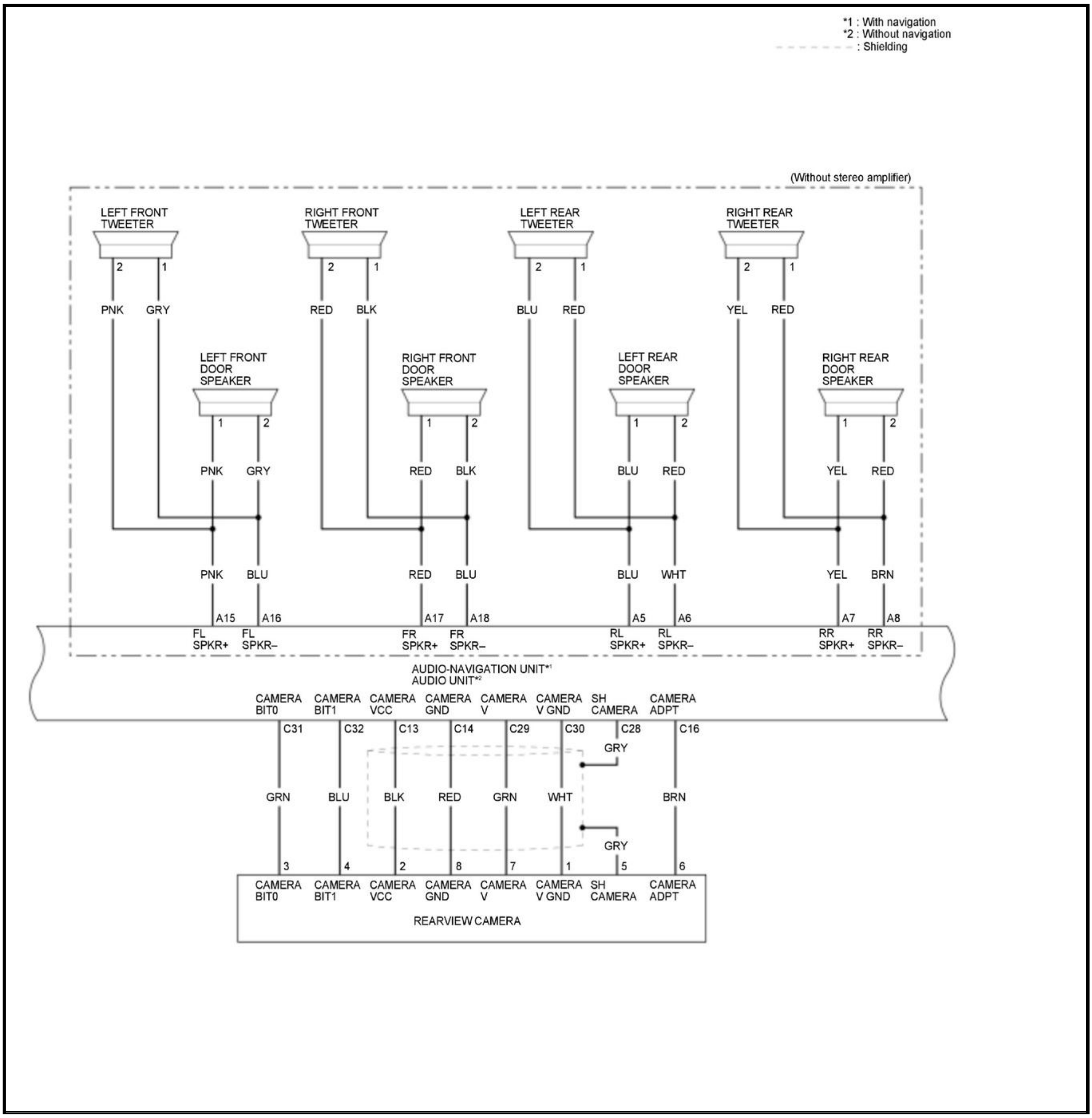
*1 : With navigation
*2 : Without navigation
: Shielding
(Without stereo amplifier)
LEFT FRONT TWEETER
RIGHT FRONT TWEETER
LEFT REAR TWEETER
RIGHT REAR TWEETER
LEFT FRONT DOOR SPEAKER
RIGHT FRONT DOOR SPEAKER
LEFT REAR DOOR SPEAKER
RIGHT REAR DOOR SPEAKER
PNK
GRY
RED
BLK
BLU
RED
YEL
RED
PNK
BLU
RED
BLU
BLU
WHT
YEL
BRN
A15
A16
A17
A18
A5
A6
A7
A8
FL SPKR+
FL SPKR–
FR SPKR+
FR SPKR–
RL SPKR+
RL SPKR–
RR SPKR+
RR SPKR–
AUDIO-NAVIGATION UNIT*1
AUDIO UNIT*2
CAMERA BIT0
CAMERA BIT1
CAMERA VCC
CAMERA GND
CAMERA V
CAMERA V GND
SH CAMERA
CAMERA ADPT
C31
C32
C13
C14
C29
C30
C28
C16
GRN
BLU
BLK
RED
GRN
WHT
GRY
BRN
REARVIEW CAMERA

Display Audio type - 5/11

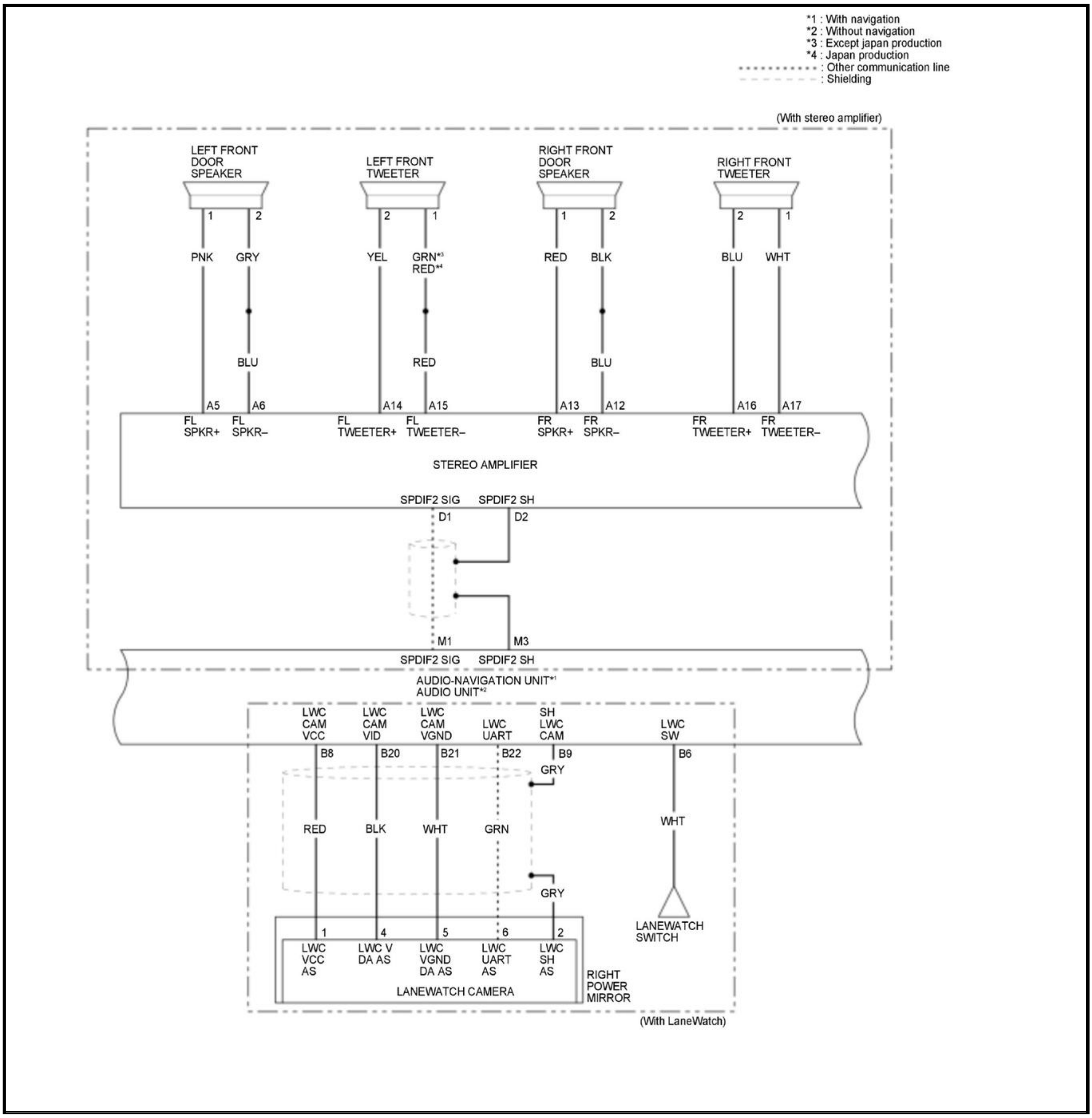
*1 : With navigation
*2 : Without navigation
*3 : Except japan production
*4 : Japan production
: Other communication line
: Shielding
(With stereo amplifier)
LEFT FRONT DOOR SPEAKER
LEFT FRONT TWEETER
RIGHT FRONT DOOR SPEAKER
RIGHT FRONT TWEETER
1
2
2
1
1
2
2
1
PNK
GRY
YEL
GRN*3
RED*4
RED
BLK
BLU
WHT
BLU
RED
BLU
A5
A6
A14
A15
A13
A12
A16
A17
FL SPKR+
FL SPKR–
FL TWEETER+
FL TWEETER–
FR SPKR+
FR SPKR–
FR TWEETER+
FR TWEETER–
STEREO AMPLIFIER
SPDIF2 SIG
SPDIF2 SH
D1
D2
M1
M3
SPDIF2 SIG
SPDIF2 SH
AUDIO-NAVIGATION UNIT*1
AUDIO UNIT*2
LWC CAM VCC
LWC CAM VID
LWC CAM VGND
LWC UART
SH LWC CAM
LWC SW
B8
B20
B21
B22
B9
B6
GRY
RED
BLK
WHT
GRN
WHT
GRY
LANEWATCH SWITCH
1
4
5
6
2
LWC VCC AS
LWC V DA AS
LWC VGND DA AS
LWC UART AS
LWC SH AS
LANEWATCH CAMERA
RIGHT POWER MIRROR
(With LaneWatch)

Display Audio type - 6/11

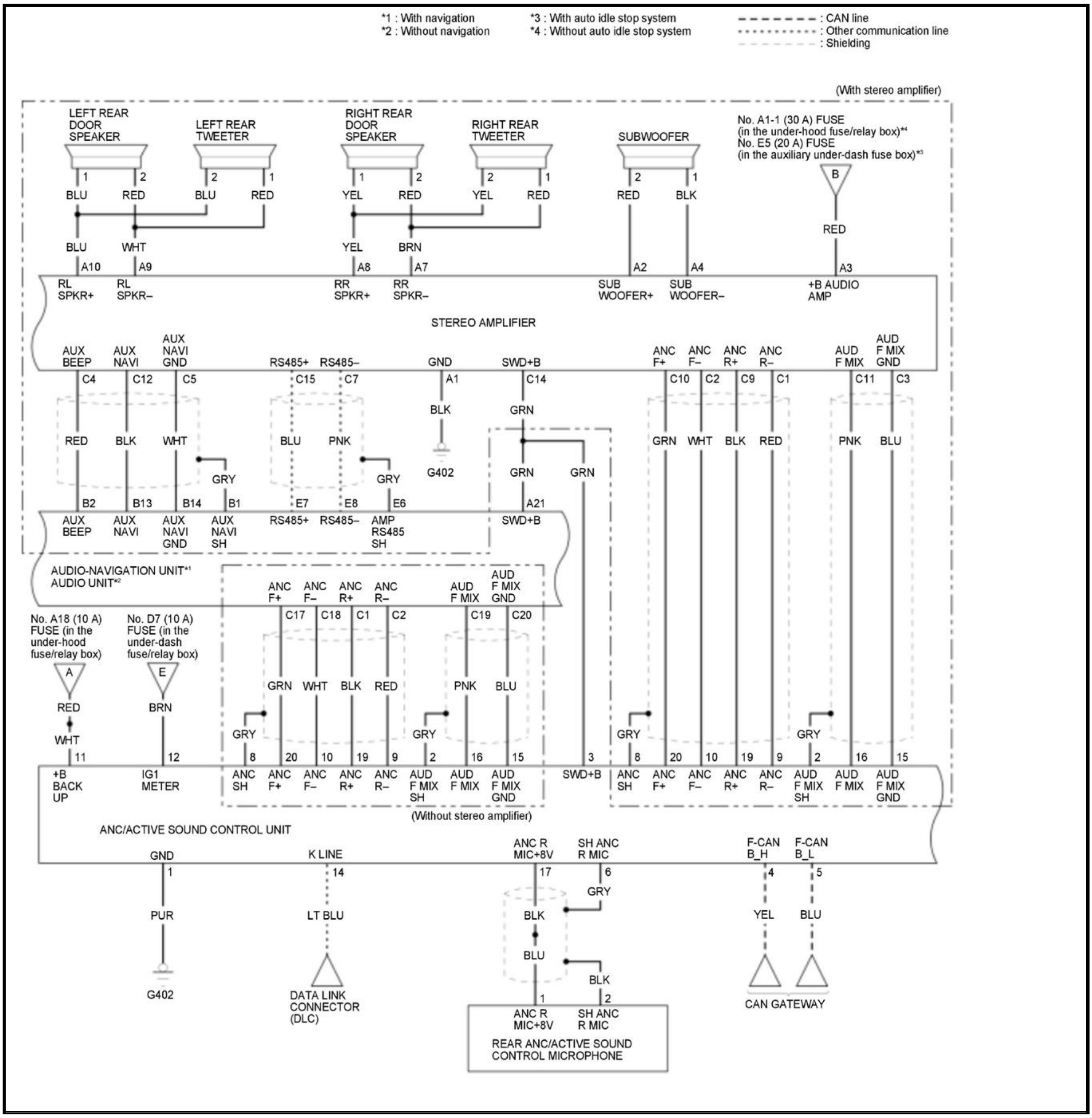
*1 : With navigation
*2 : Without navigation
*3 : With auto idle stop system
*4 : Without auto idle stop system
: CAN line
: Other communication line
: Shielding
(With stereo amplifier)
LEFT REAR DOOR SPEAKER
LEFT REAR TWEETER
RIGHT REAR DOOR SPEAKER
RIGHT REAR TWEETER
SUBWOOFER
No. A1-1 (30 A) FUSE (in the under-hood fuse/relay box)*4
No. E5 (20 A) FUSE (in the auxiliary under-dash fuse box)*3
B
BLU
RED
YEL
BRN
WHT
BLK
A10
A9
A8
A7
A2
A4
A3
RL SPKR+
RL SPKR–
RR SPKR+
RR SPKR–
SUB WOOFER+
SUB WOOFER–
+B AUDIO AMP
STEREO AMPLIFIER
AUX BEEP
AUX NAVI
AUX NAVI GND
RS485+
RS485–
GND
SWD+B
ANC F+
ANC F–
ANC R+
ANC R–
AUD F MIX
AUD F MIX GND
C4
C12
C5
C15
C7
A1
C14
C10
C2
C9
C1
C11
C3
GRN
PNK
GRY
G402
B2
B13
B14
B1
E7
E8
E6
A21
AUX NAVI SH
AMP RS485 SH
AUDIO-NAVIGATION UNIT*1
AUDIO UNIT*2
C17
C18
C19
C20
No. A18 (10 A) FUSE (in the under-hood fuse/relay box)
No. D7 (10 A) FUSE (in the under-dash fuse/relay box)
A
E
11
12
8
20
10
19
9
2
16
15
3
+B BACK UP
IG1 METER
ANC SH
AUD F MIX SH
(Without stereo amplifier)
ANC/ACTIVE SOUND CONTROL UNIT
K LINE
ANC R MIC+8V
SH ANC R MIC
F-CAN B_H
F-CAN B_L
1
14
17
6
4
5
PUR
LT BLU
DATA LINK CONNECTOR (DLC)
CAN GATEWAY
REAR ANC/ACTIVE SOUND CONTROL MICROPHONE

Display Audio type - 7/11

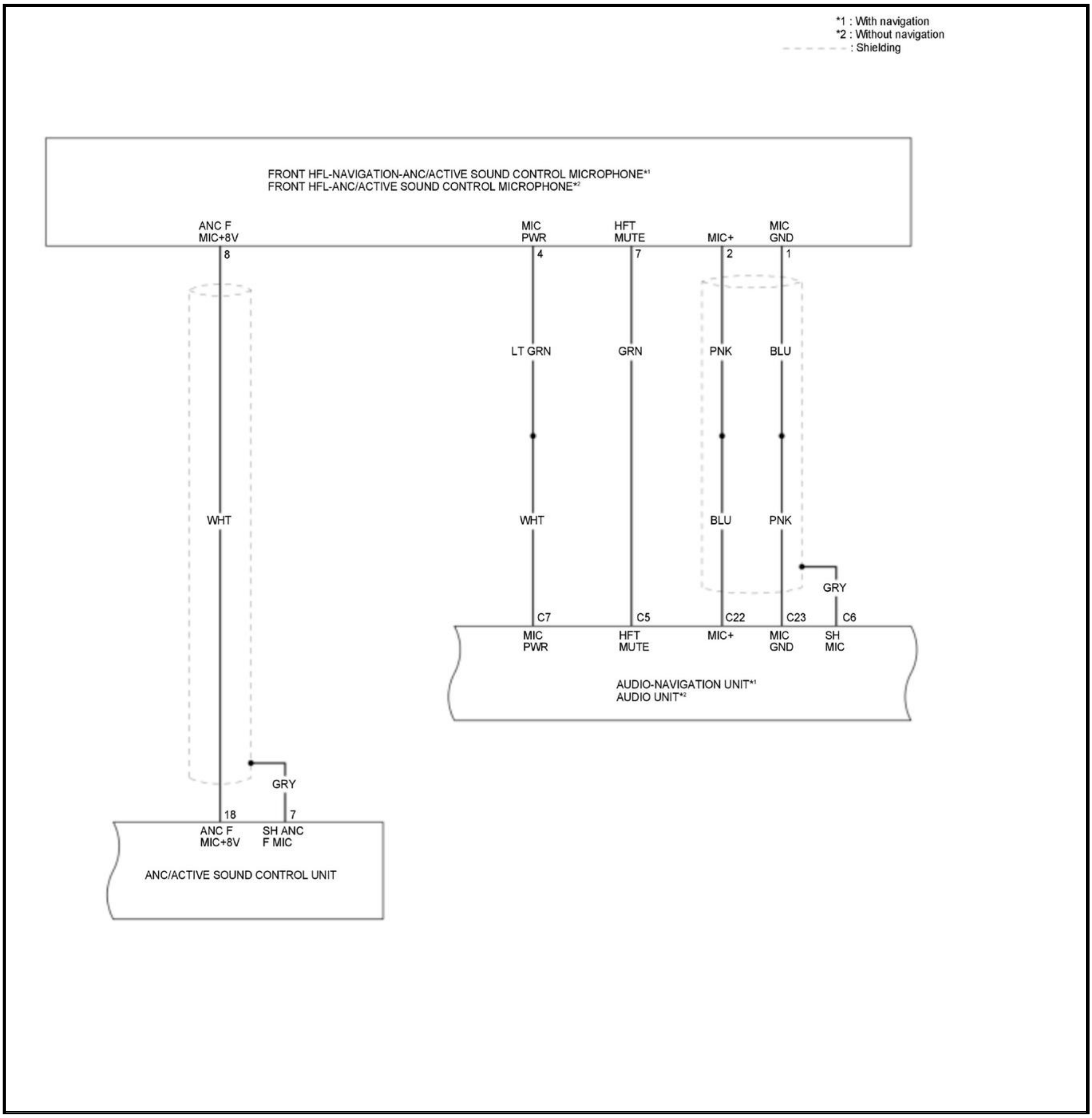
*1 : With navigation
*2 : Without navigation
: Shielding
FRONT HFL-NAVIGATION-ANC/ACTIVE SOUND CONTROL MICROPHONE*1
FRONT HFL-ANC/ACTIVE SOUND CONTROL MICROPHONE*2
ANC F MIC+8V
8
MIC PWR
4
HFT MUTE
7
MIC+
2
MIC GND
1
LT GRN
GRN
PNK
BLU
WHT
WHT
BLU
PNK
GRY
C7
C5
C22
C23
C6
MIC PWR
HFT MUTE
MIC+
MIC GND
SH MIC
AUDIO-NAVIGATION UNIT*1
AUDIO UNIT*2
GRY
18
7
ANC F MIC+8V
SH ANC F MIC
ANC/ACTIVE SOUND CONTROL UNIT

Display Audio type - 8/11

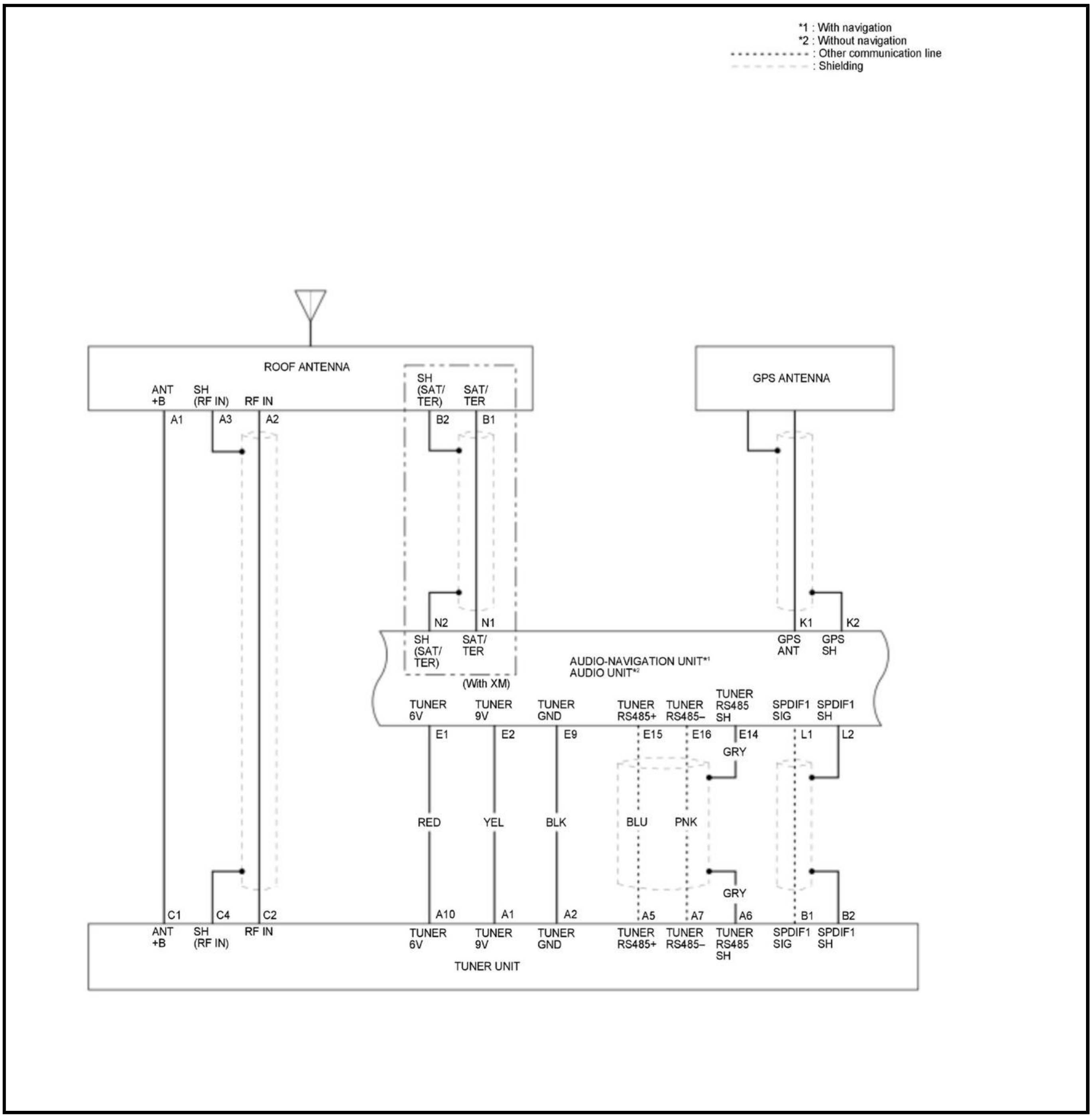
*1 : With navigation
*2 : Without navigation
: Other communication line
: Shielding
ROOF ANTENNA
ANT +B
SH (RF IN)
RF IN
A1
A3
A2
SH (SAT/ TER)
SAT/ TER
B2
B1
GPS ANTENNA
N2
N1
K1
K2
SH (SAT/ TER)
SAT/ TER
(With XM)
AUDIO-NAVIGATION UNIT*1
AUDIO UNIT*2
GPS ANT
GPS SH
TUNER 6V
TUNER 9V
TUNER GND
TUNER RS485+
TUNER RS485–
TUNER RS485 SH
SPDIF1 SIG
SPDIF1 SH
E1
E2
E9
E15
E16
E14
L1
L2
GRY
RED
YEL
BLK
BLU
PNK
GRY
C1
C4
C2
A10
A1
A2
A5
A7
A6
B1
B2
ANT +B
SH (RF IN)
RF IN
TUNER 6V
TUNER 9V
TUNER GND
TUNER RS485+
TUNER RS485–
TUNER RS485 SH
SPDIF1 SIG
SPDIF1 SH
TUNER UNIT

Display Audio type - 9/11

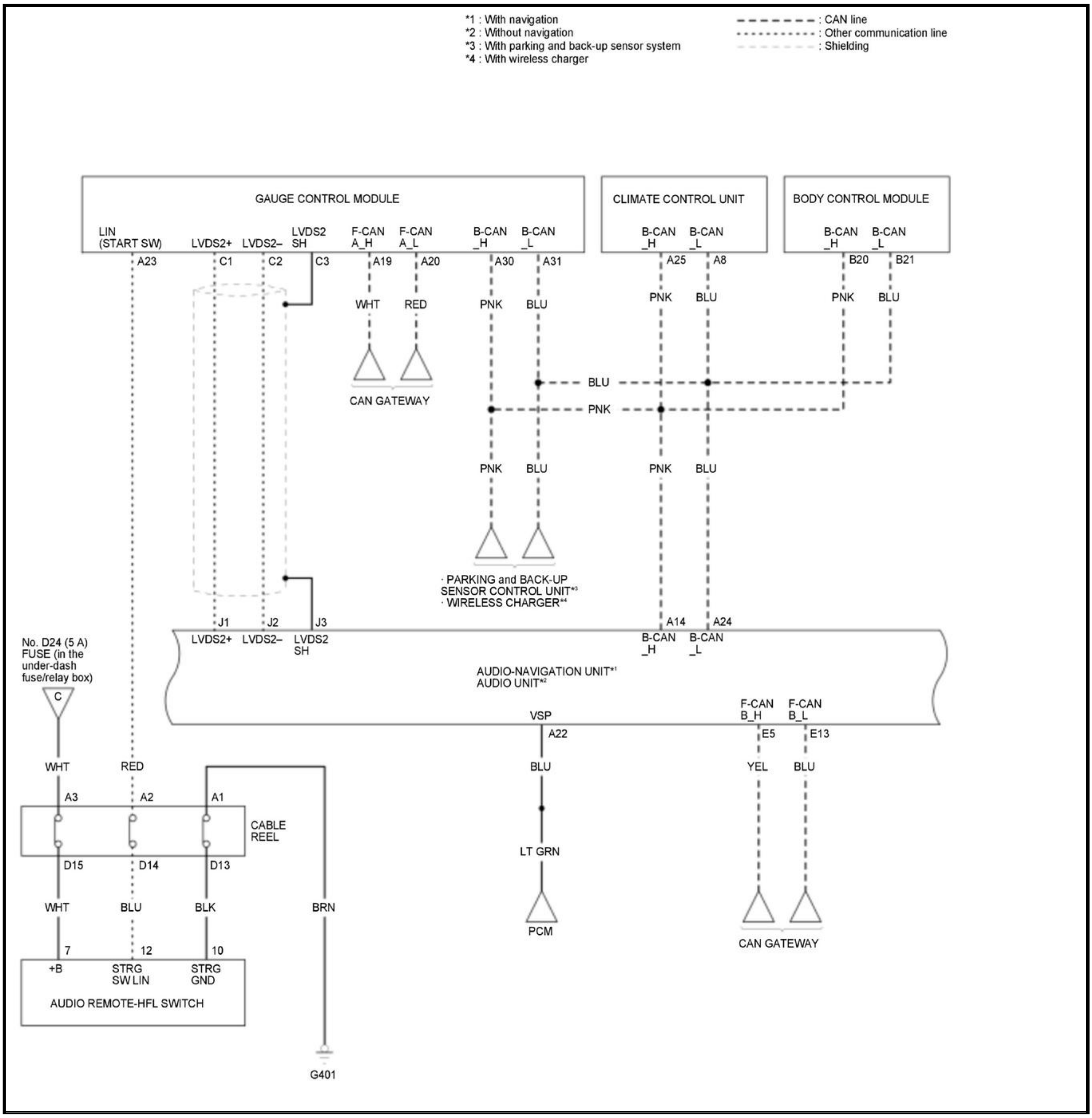
*1 : With navigation
*2 : Without navigation
*3 : With parking and back-up sensor system
*4 : With wireless charger
: CAN line
: Other communication line
: Shielding
GAUGE CONTROL MODULE
LIN (START SW)
LVDS2+
LVDS2–
LVDS2 SH
F-CAN A_H
F-CAN A_L
B-CAN _H
B-CAN _L
A23
C1
C2
C3
A19
A20
A30
A31
WHT
RED
PNK
BLU
CAN GATEWAY
CLIMATE CONTROL UNIT
B-CAN _H
B-CAN _L
A25
A8
PNK
BLU
BODY CONTROL MODULE
B-CAN _H
B-CAN _L
B20
B21
PNK
BLU
BLU
PNK
PNK
BLU
PNK
BLU
· PARKING and BACK-UP SENSOR CONTROL UNIT*3
· WIRELESS CHARGER*4
J1
J2
J3
A14
A24
LVDS2+
LVDS2–
LVDS2 SH
B-CAN _H
B-CAN _L
AUDIO-NAVIGATION UNIT*1
AUDIO UNIT*2
VSP
F-CAN B_H
F-CAN B_L
A22
E5
E13
BLU
YEL
BLU
LT GRN
PCM
CAN GATEWAY
No. D24 (5 A) FUSE (in the under-dash fuse/relay box)
C
WHT
RED
A3
A2
A1
CABLE REEL
D15
D14
D13
WHT
BLU
BLK
BRN
7
12
10
+B
STRG SW LIN
STRG GND
AUDIO REMOTE-HFL SWITCH
G401

Display Audio type - 10/11

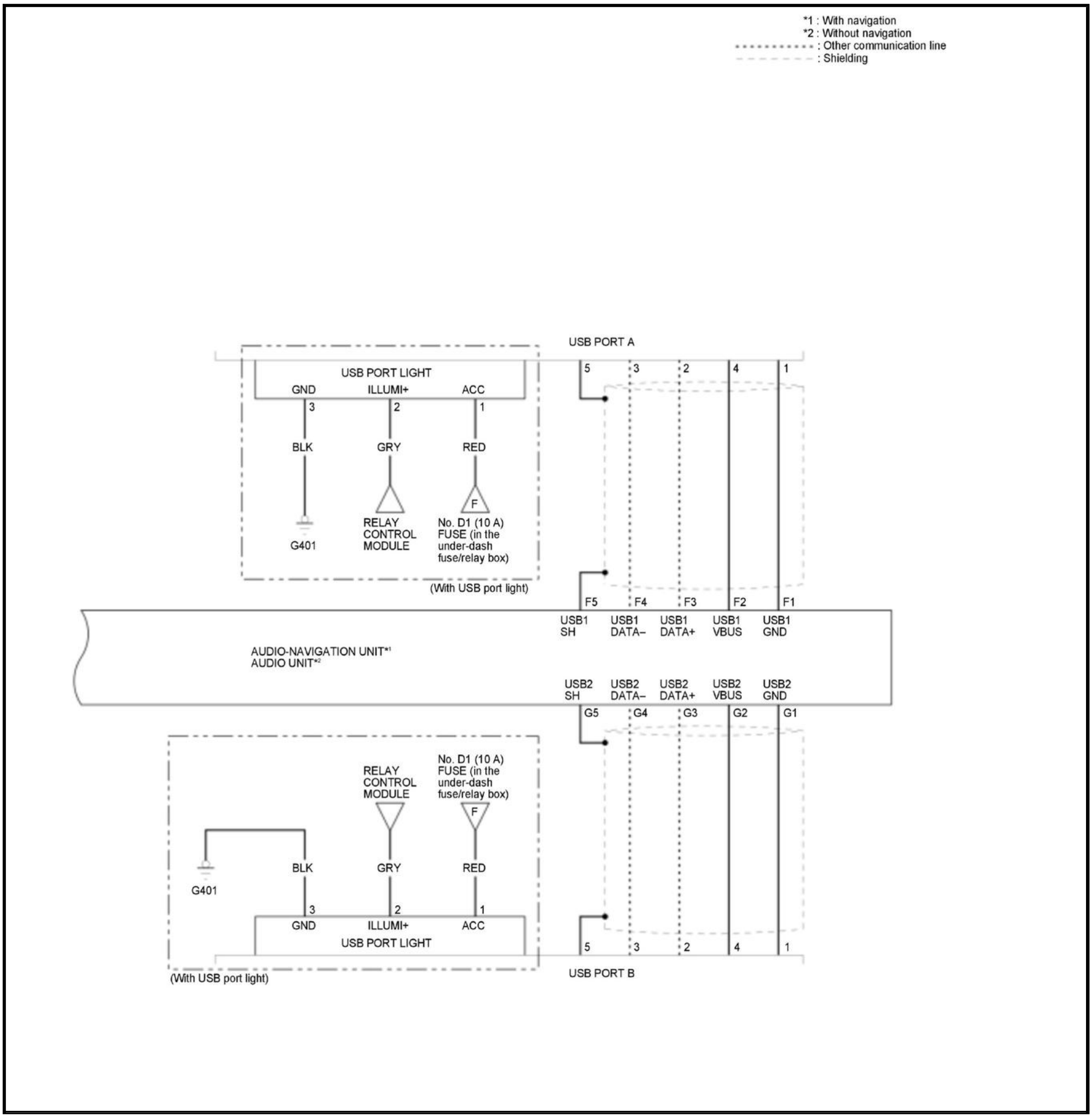
*1 : With navigation
*2 : Without navigation
: Other communication line
: Shielding
USB PORT A
USB PORT LIGHT
GND
ILLUMI+
ACC
3
2
1
BLK
GRY
RED
F
G401
RELAY CONTROL MODULE
No. D1 (10 A) FUSE (in the under-dash fuse/relay box)
(With USB port light)
5
3
2
4
1
F5
F4
F3
F2
F1
USB1 SH
USB1 DATA–
USB1 DATA+
USB1 VBUS
USB1 GND
AUDIO-NAVIGATION UNIT*1
AUDIO UNIT*2
USB2 SH
USB2 DATA–
USB2 DATA+
USB2 VBUS
USB2 GND
G5
G4
G3
G2
G1
RELAY CONTROL MODULE
No. D1 (10 A) FUSE (in the under-dash fuse/relay box)
F
G401
BLK
GRY
RED
3
2
1
GND
ILLUMI+
ACC
USB PORT LIGHT
(With USB port light)
5
3
2
4
1
USB PORT B

Display Audio type - 11/11

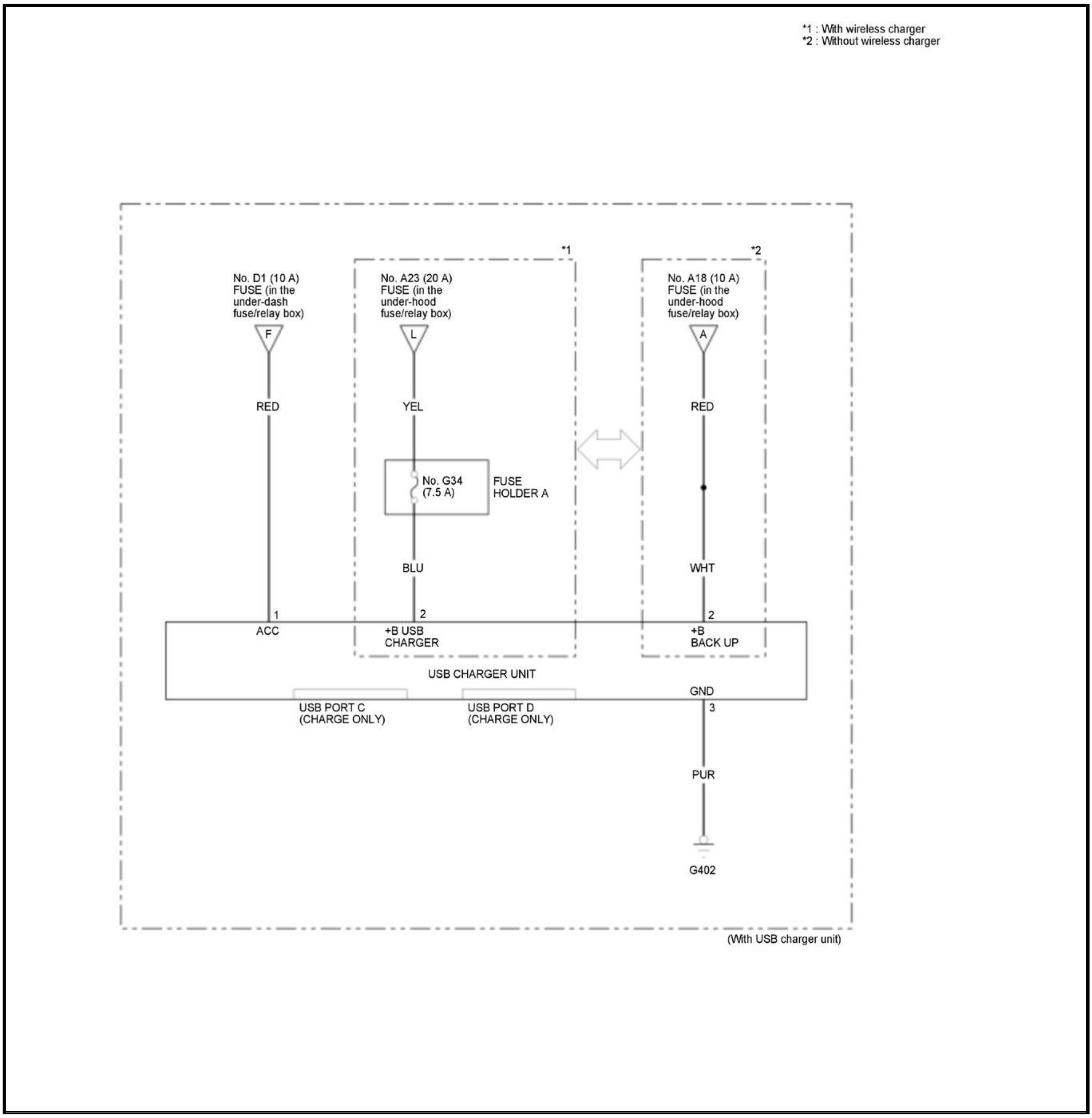
*1 : With wireless charger
*2 : Without wireless charger
No. D1 (10 A) FUSE (in the under-dash fuse/relay box)
F
RED
*1
No. A23 (20 A) FUSE (in the under-hood fuse/relay box)
L
YEL
No. G34 (7.5 A)
FUSE HOLDER A
BLU
*2
No. A18 (10 A) FUSE (in the under-hood fuse/relay box)
A
RED
WHT
1
ACC
2
+B USB CHARGER
2
+B BACK UP
USB CHARGER UNIT
USB PORT C (CHARGE ONLY)
USB PORT D (CHARGE ONLY)
GND
3
PUR
G402
(With USB charger unit)

SYMPTOM TROUBLESHOOTING INDEX FOR VIEWER

AM RADIO RECEPTION CHANGES AT NIGHT (DISPLAY AUDIO TYPE)

Diagnostic Procedure

- This is a system characteristic. AM radio stations are required by the government (FCC) to lower their power at night

AM/FM RADIO DISPLAY IS BLANK OR NO STATION INFORMATION IS DISPLAYED (DISPLAY AUDIO TYPE)

Diagnostic Procedure

- Symptom Troubleshooting

AM/FM RADIO PRESET MEMORY IS LOST (COLOR AUDIO TYPE)

Diagnostic Procedure

- **Replace the audio unit**

Also Check for

Internal error

AM/FM RADIO PRESET MEMORY IS LOST (DISPLAY AUDIO TYPE)

Diagnostic Procedure

- **Replace the tuner unit**

Also Check for

Internal error

AUDIO REMOTE-HFL SWITCH DOES NOT WORK PROPERLY (AUDIO UNIT BUTTONS WORK) (COLOR AUDIO TYPE)

Diagnostic Procedure

- **Symptom Troubleshooting**

AUDIO REMOTE-HFL SWITCH DOES NOT WORK PROPERLY (AUDIO UNIT BUTTONS WORK) (DISPLAY AUDIO TYPE)

Diagnostic Procedure

- **Symptom Troubleshooting**

AUDIO SYSTEM SOUND IS WEAK OR DISTORTED (DISPLAY IS NORMAL) (COLOR AUDIO TYPE)

Diagnostic Procedure

- **Symptom Troubleshooting**

Also Check for

- Fader and balance positions
- Aftermarket amplifier or speakers

AUDIO SYSTEM SOUND IS WEAK OR DISTORTED (DISPLAY IS NORMAL) (DISPLAY AUDIO TYPE)

Diagnostic Procedure

- **Symptom Troubleshooting**

Also Check for

- Fader and balance positions
- Aftermarket amplifier or speakers

AUDIO UNIT BUTTON DOES NOT WORK (COLOR AUDIO TYPE)

Diagnostic Procedure

- **Do the Knob Check in the System Diagnostic Mode**

Also Check for

Check the connector for poor connections or loose terminals between the audio unit and the audio panel

AUDIO UNIT BUTTON ILLUMINATION DOES NOT WORK (COLOR AUDIO TYPE)

Diagnostic Procedure

- **Symptom Troubleshooting**

AUDIO UNIT DOES NOT EXIT ANTI-THEFT MODE (COLOR AUDIO TYPE)

Diagnostic Procedure

- **Anti-Theft Feature**

AUDIO UNIT DOES NOT EXIT ANTI-THEFT MODE (DISPLAY AUDIO TYPE)

Diagnostic Procedure

- **Anti-Theft Feature**

AUDIO UNIT WILL NOT TURN ON (NO INFORMATION DISPLAY) (COLOR AUDIO TYPE)

Diagnostic Procedure

- **Symptom Troubleshooting**

AUDIO UNIT WILL NOT TURN ON (NO INFORMATION DISPLAY) (DISPLAY AUDIO TYPE)

Diagnostic Procedure

- **Symptom Troubleshooting**

AUDIO-NAVIGATION UNIT POWER WILL NOT TURN ON (NO INFORMATION DISPLAY)

Diagnostic Procedure

- **Symptom Troubleshooting**

Also Check for

- Blown fuses
- Screen settings
- **Error Messages**
- Software not up to date

AUXILIARY INPUT SOUND IS LOW OR CANNOT BE HEARD (COLOR AUDIO TYPE)

Diagnostic Procedure

- **Symptom Troubleshooting**

Also Check for

- Auxiliary audio device volume is too low
- Auxiliary stereo cables compatibility

BLUETOOTH AUDIO DOES NOT WORK

Diagnostic Procedure

Check the Bluetooth module:

- With navigation: **Do the HFL/Mic in the System Diagnostic Mode**
- Display audio type without navigation: **Do the HFL/Mic in the System Diagnostic Mode**
- Color audio type: **Do the Version Display in the System Diagnostic Mode**

Also Check for

Bluetooth audio device compatibility (see the Owner's Manual)

BLUETOOTH AUDIO DOES NOT WORK (COLOR AUDIO TYPE)

Also Check for

Bluetooth phone compatibility (see the Owner's Manual)

BLUETOOTH AUDIO DOES NOT WORK (DISPLAY AUDIO TYPE)

Also Check for

Bluetooth phone compatibility (see the Owner's Manual)

BOOMING SOUND WHILE DRIVING WITH AUDIO SYSTEM ON OR OFF (COLOR AUDIO TYPE)

Diagnostic Procedure

- **Symptom Troubleshooting**

BOOMING SOUND WHILE DRIVING WITH AUDIO SYSTEM ON OR OFF (DISPLAY AUDIO TYPE)

Diagnostic Procedure

- **Symptom Troubleshooting**

Also Check for

Powertrain vibration or judder

CENTER DISPLAY UNIT BUTTON DOES NOT WORK (DISPLAY AUDIO TYPE)

Diagnostic Procedure

- **Do the Hard Key in the System Diagnostic Mode**

Also Check for

Check the Touch Panel Sensitivity in the System Settings

CENTER DISPLAY UNIT DOES NOT DIM (DISPLAY AUDIO TYPE)

Diagnostic Procedure

- **Symptom Troubleshooting**

CLOCK WILL NOT SET TO CORRECT TIME

Also Check for

Check the GPS signal

EXCESSIVE TRANSITION BETWEEN ANALOG BROADCAST AND DIGITAL HD RADIO (TM) BROADCAST (DISPLAY AUDIO TYPE)

Diagnostic Procedure

- Receiver is located near the edge of the digital HD Radio (TM) coverage area. Refer to www.hdradio.com to verify radio stations in your coverage area

HD RADIO (TM) CHANGES HD CHANNEL ON ITS OWN (DISPLAY AUDIO TYPE)

Diagnostic Procedure

- This is intended behavior. HD Radio (TM) is set to revert to main channel after extended loss of HD2/HD3 broadcast

HFL DOES NOT WORK PROPERLY

Diagnostic Procedure

- Symptom Troubleshooting

Also Check for

Bluetooth phone compatibility (see the Owner's Manual)

LANEWATCH CAMERA IMAGE DOES NOT COME ON

Diagnostic Procedure

- Symptom Troubleshooting

Also Check for

Navigation DTCs

LANEWATCH CAMERA IMAGE DOES NOT COME ON (DISPLAY AUDIO TYPE)

Diagnostic Procedure

- Symptom Troubleshooting

Also Check for

Audio DTCs

NAVIGATION SYSTEM STAYS ON THE CSF SCREEN

Diagnostic Procedure

- Navigation DTCs

Also Check for

- GPS Initialization
- Aftermarket metallic window tint on the front window or electronic aftermarket accessories (possibly hidden) mounted near the GPS antenna or the audio-navigation unit

- Disconnected or defective GPS antenna

NAVIGATION TOUCH PANEL DOES NOT WORK

Diagnostic Procedure

- Do the Touch Panel Check in the System Diagnostic Mode

Also Check for

Forced Rebooting of Audio-Navigation Unit

NO HD TRAFFIC INFORMATION

Diagnostic Procedure

- Go to AM/FM radio display is blank or no station information is displayed troubleshooting

Also Check for

Local outage or no local broadcast. Compare to a known-good vehicle of the same year and trim.

NO SOUND IS HEARD FROM ALL THE SPEAKERS (DISPLAY IS NORMAL) (COLOR AUDIO TYPE)

Diagnostic Procedure

- Symptom Troubleshooting

Also Check for

Aftermarket amplifier or speakers

NO SOUND IS HEARD FROM ALL THE SPEAKERS (DISPLAY IS NORMAL) (DISPLAY AUDIO TYPE)

Diagnostic Procedure

- Symptom Troubleshooting

Also Check for

Aftermarket amplifier or speakers

PANDORA IS NOT IS DISPLAYED AS AN AUDIO SOURCE (DISPLAY AUDIO TYPE)

Diagnostic Procedure

- Do the PANDORA in the System Diagnostic Mode to check the Pandora settings is abled

POOR AM OR FM RADIO RECEPTION OR INTERFERENCE (COLOR AUDIO TYPE)

Diagnostic Procedure

- Symptom Troubleshooting

Also Check for

- Check radio reception: Do the FM or AM in the System Diagnostic Mode
- Aftermarket FM modulator

- Loose antenna amplifier mounting bolt

POOR GPS RECEPTION OR INTERFERENCE

Diagnostic Procedure

- **Do the GPS Information in the System Diagnostic Mode**

Also Check for

- **Global Positioning System (GPS) Limitations**
- Aftermarket metallic window tint on the front window or electronic aftermarket accessories (possibly hidden) mounted near the GPS antenna or the audio-navigation unit

POOR OR NO SOUND WITH AM/FM RADIO (DISPLAY AUDIO TYPE)

Diagnostic Procedure

- **Symptom Troubleshooting**

Also Check for

- Check radio reception: **Do the Remote Tuner in the System Diagnostic Mode**
- Aftermarket FM modulator
- Loose antenna amplifier mounting bolt

REARVIEW CAMERA IMAGE DOES NOT CHANGE WHEN SELECTING DIFFERENT VIEWS (COLOR AUDIO TYPE)

Diagnostic Procedure

- **Symptom Troubleshooting**

REARVIEW CAMERA IMAGE DOES NOT CHANGE WHEN SELECTING DIFFERENT VIEWS (DISPLAY AUDIO TYPE)

Diagnostic Procedure

- **Symptom Troubleshooting**

REARVIEW CAMERA IMAGE DOES NOT COME ON (COLOR AUDIO TYPE)

Diagnostic Procedure

- **Symptom Troubleshooting**

REARVIEW CAMERA IMAGE DOES NOT COME ON (DISPLAY AUDIO TYPE)

Diagnostic Procedure

- **Symptom Troubleshooting**

SYSTEM ALWAYS COMES UP IN-LINE DIAGNOSTIC MODE

Diagnostic Procedure

- **Factory diagnostic screen In Line Diagnostic mode**

SYSTEM ALWAYS COMES UP IN-LINE DIAGNOSTIC MODE (DISPLAY AUDIO TYPE)

Diagnostic Procedure

- Factory diagnostic screen In Line Diag

THE HONDA APPROVED BLUETOOTH CELL PHONE CANNOT USE ALL ITS FUNCTIONS

Diagnostic Procedure

- HFL System Troubleshooting

THE HONDA APPROVED BLUETOOTH CELL PHONE DOES NOT PLACE OR RECEIVE CALLS USING THE HFL SYSTEM

Diagnostic Procedure

- HFL System Troubleshooting

THE HONDA APPROVED BLUETOOTH CELL PHONE IS HAVING PROBLEMS PAIRING TO THE VEHICLE

Diagnostic Procedure

- HFL System Troubleshooting

THE MID DOES NOT DISPLAY THE AUDIO UNIT INFORMATION (DISPLAY AUDIO TYPE)

Diagnostic Procedure

- Symptom Troubleshooting

THE MID DOES NOT DISPLAY THE AUDIO-NAVIGATION UNIT INFORMATION

Diagnostic Procedure

- Symptom Troubleshooting

USB CHARGER DOES NOT WORK (DISPLAY AUDIO TYPE)

Diagnostic Procedure

- Symptom Troubleshooting

USB DEVICE DOES NOT FUNCTION (COLOR AUDIO TYPE)

Diagnostic Procedure

- Symptom Troubleshooting

Also Check for

- Error Messages
- USB device compatibility (see the Owner's Manual)

USB DEVICE DOES NOT FUNCTION (DISPLAY AUDIO TYPE)

Diagnostic Procedure

- Symptom Troubleshooting

Also Check for

- **Error messages**
- USB device compatibility (see the Owner's Manual)

VEHICLE POSITION ICON WANDERS ACROSS THE MAP WHEN DRIVING (DOES NOT FOLLOW A DISPLAYED ROAD) OR MAP VEHICLE ICON SPINS

Diagnostic Procedure

- **Symptom Troubleshooting**

Also Check for

- **Global Positioning System (GPS) Limitations**
- **Map Matching**
- **Sensor Calibration**
- VSP missing
- Poor or no GPS reception
- Check for any related service bulletin software updates

VOICE CONTROL DOES NOT WORK/RESPOND

Also Check for

Check for any related service bulletin software updates

VOICE GUIDANCE CANNOT BE HEARD, IS BROKEN UP, OR THERE IS STATIC

Also Check for

Volume or voice feedback setting (see the Navigation System Manual)

VOLUME DOES NOT INCREASE WITH SPEED (COLOR AUDIO TYPE)

Diagnostic Procedure

- **Symptom Troubleshooting**

Also Check for

Speed-sensitive Volume Control settings (see the Owner's Manual)

VOLUME DOES NOT INCREASE WITH SPEED (DISPLAY AUDIO TYPE)

Diagnostic Procedure

- **Symptom Troubleshooting**

Also Check for

Speed-sensitive Volume Control settings (see the Owner's Manual)

VOLUME IS TOO HIGH OR TOO LOW WHEN DRIVING AT FREEWAY SPEEDS (COLOR AUDIO TYPE)

Also Check for

Speed-sensitive Volume Control settings (see the Owner's Manual)

VOLUME IS TOO HIGH OR TOO LOW WHEN DRIVING AT FREEWAY SPEEDS (DISPLAY AUDIO TYPE)

Also Check for

Speed-sensitive Volume Control settings (see the Owner's Manual)

XM RADIO DISPLAY IS BLANK AND NO STATION INFORMATION IS DISPLAYED (DISPLAY AUDIO TYPE)

Diagnostic Procedure

- With navigation: **Navigation DTCs**
- Without navigation: **Audio DTCs**

Also Check for

Error messages

TROUBLESHOOTING

DTC 1102 (AUDIO UNIT)

DTC 1102 : USB Diag

NOTE:

- Check the vehicle 12 volt battery condition first .
- This audio DTC sets when a problem is detected with the USB device that is connected to the USB port.
- Before you troubleshoot, make sure to follow the General Troubleshooting Information .
- Check the connectors for poor connections or loose terminals.

1. Problem verification

    -1. Clear the hard error codes .

    -2. Turn the vehicle to the OFF (LOCK) mode.

    -3. Wait for at least 6 seconds.

    -4. Connect the USB device to the USB port A or B.

    -5. Check for hard error codes .

    Is DTC 1102 indicated?

    YES

    The failure is duplicated, go to step 2.

    NO

    Intermittent failure, the system is OK at this time.

2. Audio unit check

    -1. Clear the hard error codes .

    -2. Turn the vehicle to the OFF (LOCK) mode.

    -3. Wait for at least 6 seconds.

    -4. Disconnect the USB device, then connect a known-good USB device to the USB port A or B.

    -5. Check for hard error codes .

    Is DTC 1102 indicated?

    YES

    Replace the audio unit .

    NO

Original USB device is faulty.

DTC 1301 (AUDIO UNIT)

DTC 1301 : GPS Antenna Error

NOTE:

- **Check the vehicle 12 volt battery condition first** .
- This audio DTC sets when there is poor connectors or loose terminals at the GPS antenna connector or an open in GPS antenna lead.
- **Before you troubleshoot, make sure to follow the General Troubleshooting Information** .
- Check the connectors for poor connections or loose terminals.

1. Problem verification

   -1. **Clear the hard error codes** .

   -2. Turn the vehicle to the OFF (LOCK) mode.

   -3. Wait for at least 6 seconds.

   -4. Turn the vehicle to the ON mode, and wait at least 1 minute.

   -5. **Check for hard error codes** .

   Is DTC 1301 indicated?

   YES

   The failure is duplicated, go to step 2.

   NO

   Intermittent failure, the system is OK at this time.

2. DTC check

   -1. **Check for hard error codes** .

   Is DTC 2701 indicated?

   YES

   Go to DTC 2701 troubleshooting.

   NO

   Replace the audio unit .

DTC 1302 (AUDIO UNIT)

DTC 1302 : GPS Receiver Error 1

NOTE:

- **Check the vehicle 12 volt battery condition first** .
- This audio DTC sets when there is an internal GPS receiver problem (freeze error).
- **Before you troubleshoot, make sure to follow the General Troubleshooting Information** .

1. Problem verification

   -1. **Clear the hard error codes** .

   -2. Turn the vehicle to the OFF (LOCK) mode.

   -3. Wait for at least 6 seconds.

   -4. Turn the vehicle to the ON mode, and wait at least 1 minute.

   -5. **Check for hard error codes** .

   Is DTC 1302 indicated?

   YES

   Replace the audio unit .

   NO

   Intermittent failure, the system is OK at this time.

DTC 1306 (AUDIO UNIT)

DTC 1306 : Vehicle Speed Pulse

NOTE:

- **Check the vehicle 12 volt battery condition first** .
- This navigation DTC sets when there is a problem with the VSP circuit.
- Check for aftermarket accessories that may interfere with the navigation system.
- Check the GPS reception in an open area (vehicle position should be detected in three dimensions).
- Aftermarket metallic window tint or electronic devices located near the audio unit or GPS antenna can potentially interfere with the operation of the audio system.
- **Before you troubleshoot, make sure to follow the General Troubleshooting Information** .
- Check the connectors for poor connections or loose terminals.

1. Problem verification

   -1. **Clear the hard error codes** .

   -2. Wait for at least 6 seconds.

   -3. Turn the vehicle to the ON mode.

   -4. Test-drive the vehicle at steady speed more than 12 mph (20 km/h) for about 1 minute.

   -5. **Check for hard error codes** .

   Is DTC 1306 indicated?

   YES

   The failure is duplicated, go to step 2.

   NO

   Intermittent failure, the system is OK at this time.

2. Determine possible failure area (audio unit, others)

   -1. **Go into the System Diagnostic Mode, and select the Vehicle status in the Unit Check** .

   -2. With the help of an assistant test-drive the vehicle, and watch the VSP status.

   Does the VSP change from [0] (stopped) to [1] (driving) as you drive?

   YES

   Replace the audio unit .

   NO

   Go to step 3.

3. Determine possible failure area (VSP line, others)

   -1. Turn the vehicle to the OFF (LOCK) mode.

   -2. Jump the SCS line with the HDS.

   -3. Disconnect the following connector.

PCM connector A (50P) (1.5 L engine)PCM connector A (51P) (2.4 L engine)

   -4. Turn the vehicle to the ON mode.

   -5. Measure the voltage between test points 1 and 2.

Test condition	Vehicle ON mode
B	PCM connector A (50P) (1.5 L engine): disconnectedPCM connector A (51P) (2.4 L engine): disconnected
Test point 1	**PCM connector A (50P) (1.5 L engine) No. 35**
B	**PCM connector A (51P) (2.4 L engine) No. 25**
Test point 2	Body ground

   Is there about 5.0 V?

   YES

   The VSP wire is OK. Go to step 4.

   NO

   Go to step 5.

4. Determine possible failure area (audio unit, PCM)

   -1. Turn the vehicle to the OFF (LOCK) mode.

   -2. Reconnect PCM connector A (50P) (1.5 L engine).

   -3. Reconnect PCM connector A (51P) (2.4 L engine).

   -4. Raise the vehicle on a lift.

   -5. Turn the vehicle to the ON mode.

-6. Block the front tire of one side, and rotate the front tire slowly that is not blocked.

-7. Measure the voltage between test points 1 and 2.

Test condition	Vehicle ON mode, with the front tire slowly rotating
Test point 1	**Audio unit connector A (24P) No. 22**
Test point 2	Body ground

Does the voltage pulse between 0 V and 5 V as you rotate the tire?

YES

Replace the audio unit .

NO

Replace the PCM .

5. Open wire check (VSP line)

-1. Measure the voltage between test points 1 and 2.

Test condition	Vehicle ON mode
B	PCM connector A (50P) (1.5 L engine): disconnectedPCM connector A (51P) (2.4 L engine): disconnected
Test point 1	**Audio unit connector A (24P) No. 22**
Test point 2	Body ground

Is there about 5.0 V?

YES

Repair an open in the wire.

NO

The VSP wire is not open. Go to step 6.

6. Shorted wire check (VSP line)

-1. Turn the vehicle to the OFF (LOCK) mode.

-2. Disconnect the following connector.

Audio unit connector A (24P)

-3. Check for continuity between test points 1 and 2.

Test condition	Vehicle OFF (LOCK) mode
B	PCM connector A (50P) (1.5 L engine): disconnectedPCM connector A (51P) (2.4 L engine): disconnected
B	Audio unit connector A (24P): disconnected
Test point 1	**Audio unit connector A (24P) No. 22**
Test point 2	Body ground

Is there continuity?

YES

Repair a short to body ground in the wire.

NO

Replace the audio unit .

DTC 1702 (AUDIO UNIT)

DTC 1702 : XM Antenna Error

NOTE:

- **Check the vehicle 12 volt battery condition first** .
- This audio DTC sets when there is poor connectors or loose terminals at the XM antenna connector or an open or short in the antenna lead.
- **Before you troubleshoot, make sure to follow the General Troubleshooting Information** .
- Check the connectors for poor connections or loose terminals.

1. Problem verification

-1. **Clear the hard error codes** .

-2. Turn the vehicle to the OFF (LOCK) mode.

-3. Wait for at least 6 seconds.

-4. Turn the vehicle to the ON mode.

-5. Turn on the audio system, and select the XM radio.

-6. **Check for hard error codes** .

Is DTC 1702 indicated?

YES

The failure is duplicated, go to step 2.

NO

Intermittent failure, the system is OK at this time.

2. Determine possible failure area (XM antenna, others)

-1. Turn the vehicle to the OFF (LOCK) mode.

-2. Disconnect the following connector.

Roof antenna connector B (2P)

-3. Turn the vehicle to the ON mode.

-4. Measure the voltage between test points 1 and 2.

Test condition	Vehicle ON mode
B	Roof antenna connector B (2P): disconnected
Test point 1	Roof antenna connector B (2P) (male terminals) No. 1: ①

Test point 2	Body ground

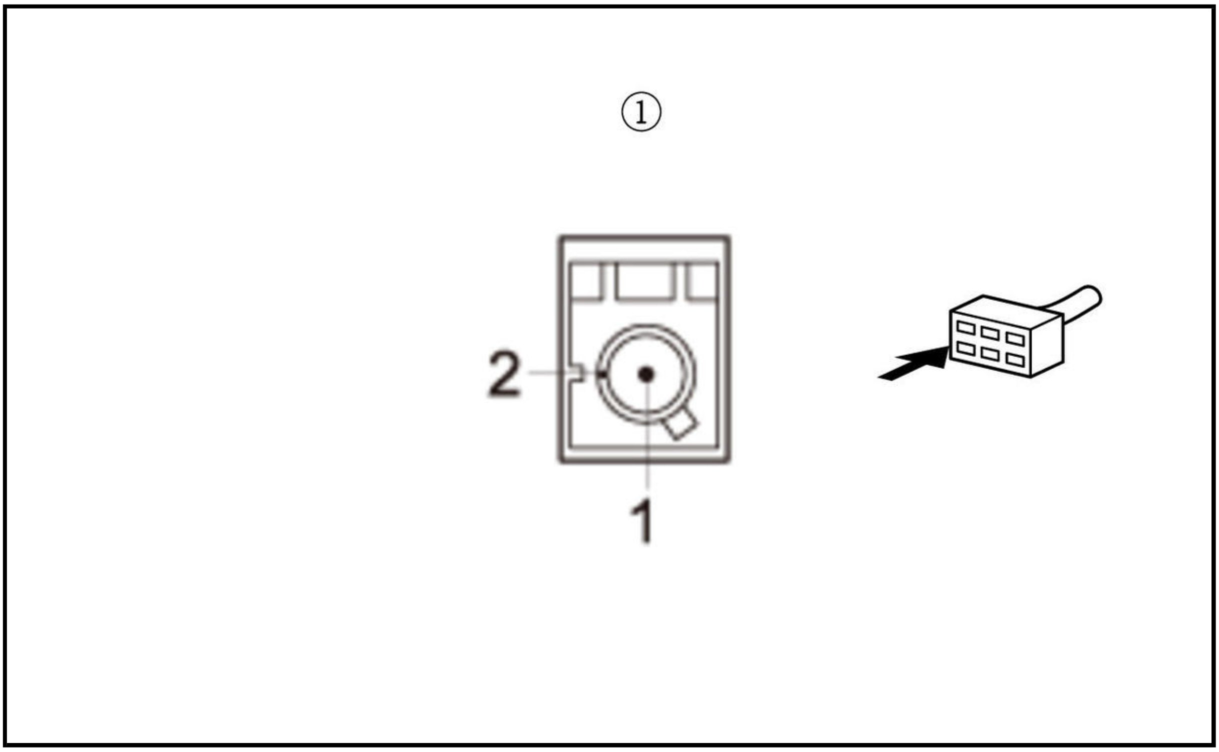

Is there about 5.0 V?

YES

Replace the roof antenna .

NO

Go to step 3.

3. Shorted wire check (SAT/TER line)

-1. Turn the vehicle to the OFF (LOCK) mode.

-2. Disconnect the following connector.

Audio unit connector N (2P)

-3. Check for continuity between test points 1 and 2.

Test condition	Vehicle OFF (LOCK) mode
B	Roof antenna connector B (2P): disconnected
B	Audio unit connector N (2P): disconnected
Test point 1	Roof antenna connector B (2P) (male terminals) No. 1: ①
Test point 2	Body ground

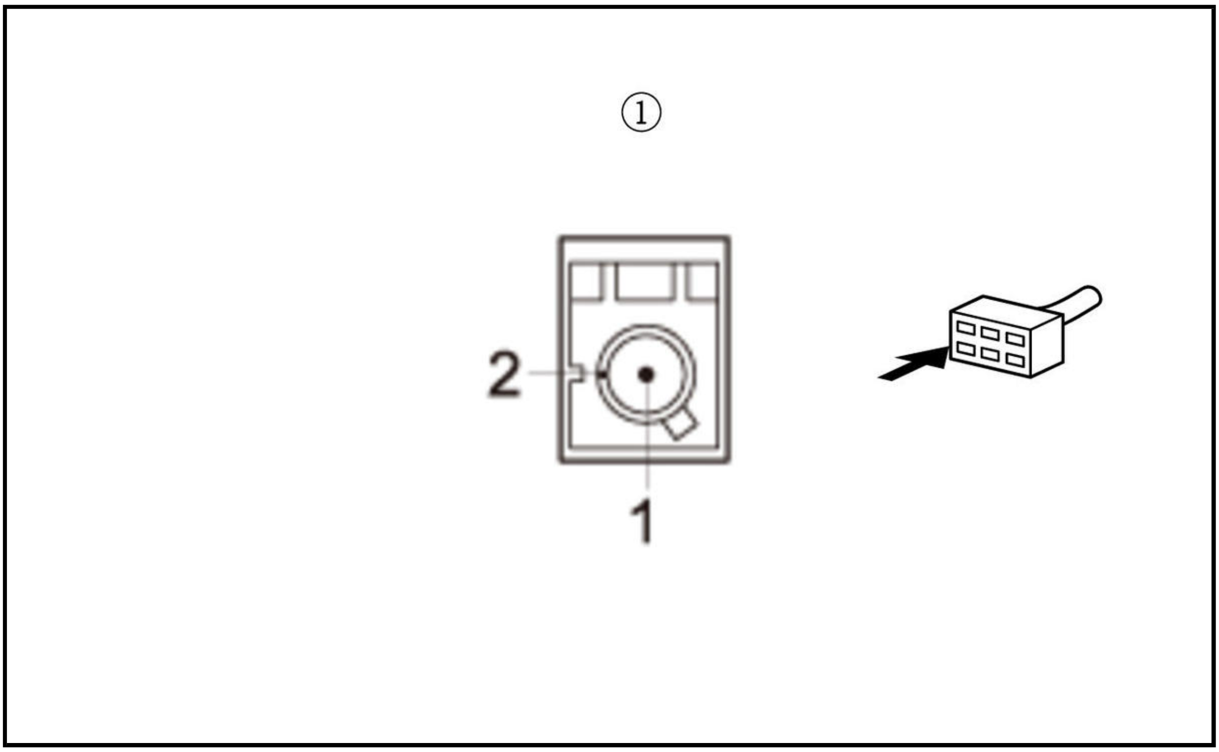

Is there continuity?

YES

There is a short to body ground in the wire. Replace the affected antenna lead.

NO

The SAT/TER wire is not shorted to ground. Go to step 4.

4. Shorted wire check (SAT/TER line to SH(SAT/TER) line)

-1. Check for continuity between test points 1 and 2.

Test condition	Vehicle OFF (LOCK) mode
B	Roof antenna connector B (2P): disconnected
B	Audio unit connector N (2P): disconnected
Test point 1	Roof antenna connector B (2P) (male terminals) No. 1: ①
Test point 2	Roof antenna connector B (2P) (male terminals) No. 2: ①

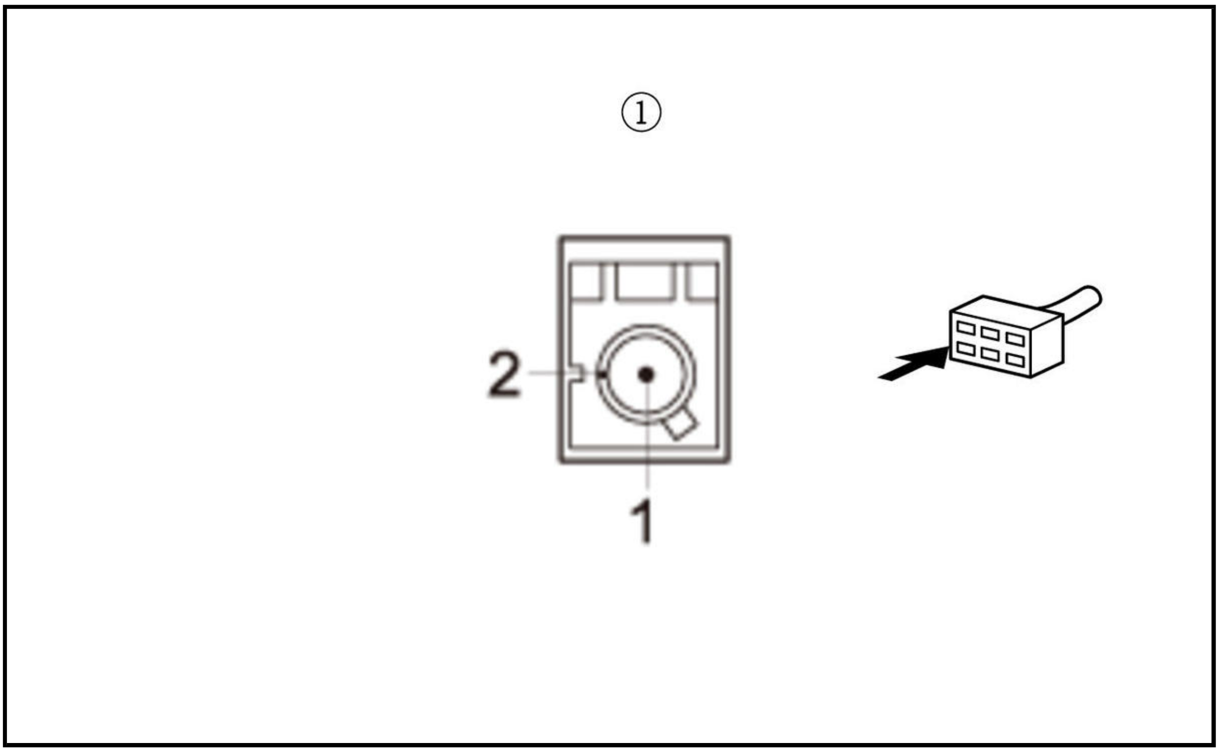

Is there continuity?

YES

There is a short in the wire. Replace the affected antenna lead.

NO

The SAT/TER wire is not shorted to SH(SAT/TER) wire. Go to step 5.

5. Open wire check (SAT/TER line)

-1. Check for continuity between test points 1 and 2.

Test condition	Vehicle OFF (LOCK) mode
B	Roof antenna connector B (2P): disconnected
B	Audio unit connector N (2P): disconnected
Test point 1	**Audio unit connector N (2P) No. 1**
Test point 2	Roof antenna connector B (2P) (male terminals) No. 1: ①

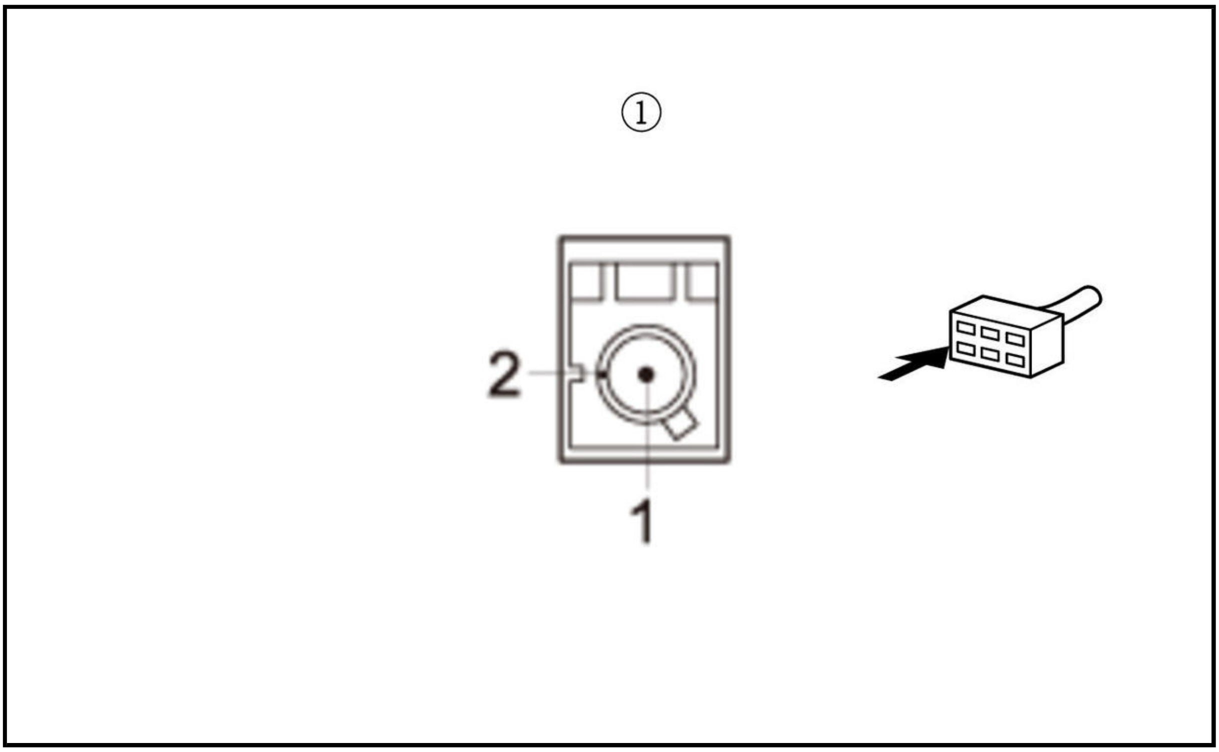

Is there continuity?

YES

Replace the audio unit .

NO

There is an open in the wire. Replace the affected antenna lead.

DTC 2608 (AUDIO UNIT)

DTC 2608 : R-Camera Diag

NOTE:

- **Check the vehicle 12 volt battery condition first** .
- This audio DTC sets when NG is indicated in the Rear wide camera diagnosis (the Rear wide camera icon is red in the System Links).
- **Before you troubleshoot, make sure to follow the General Troubleshooting Information** .
- Check the connectors for poor connections or loose terminals.

1. Problem verification

-1. **Clear the hard error codes** .

-2. Turn the vehicle to the OFF (LOCK) mode.

-3. Wait for at least 6 seconds.

-4. **Check for hard error codes** .

Is DTC 2608 indicated?

YES

The failure is duplicated, go to step 2.

NO

Intermittent failure, the system is OK at this time.

2. Determine possible failure area (CAMERA ADPT line, others)

-1. Turn the vehicle to the OFF (LOCK) mode.

-2. Disconnect the following connector.

Rearview camera 8P connector

-3. Turn the vehicle to the ON mode.

-4. Measure the voltage between test points 1 and 2.

Test condition	Vehicle ON mode
B	Rearview camera 8P connector: disconnected
Test point 1	**Rearview camera 8P connector No. 6**
Test point 2	Body ground

Is there about 5.0 V?

YES

The CAMERA ADPT wire is OK. Go to step 4.

NO

Go to step 3.

3. Open wire check (CAMERA ADPT line)

-1. Measure the voltage between test points 1 and 2.

Test condition	Vehicle ON mode
B	Rearview camera 8P connector: disconnected
Test point 1	**Audio unit connector C (32P) No. 16**
Test point 2	Body ground

Is there about 5.0 V?

YES

Repair an open in the wire.

NO

Replace the audio unit .

4. Determine possible failure area (rearview camera, others)

-1. Turn the vehicle to the OFF (LOCK) mode.

-2. Check for continuity between test points 1 and 2.

Test condition	Vehicle OFF (LOCK) mode
B	Rearview camera 8P connector: disconnected

Test point 1	**Rearview camera 8P connector No. 5**
Test point 2	Body ground

Is there continuity?

YES

Replace the rearview camera .

NO

Go to step 5.

5. Open wire check (SH CAMERA line)

-1. Check for continuity between test points 1 and 2.

Test condition	Vehicle OFF (LOCK) mode

B	Rearview camera 8P connector: disconnected
Test point 1	**Audio unit connector C (32P) No. 28**
Test point 2	Body ground

Is there continuity?

YES

There is an open in the wire(s). Replace the affected shielded harness.

NO

Replace the audio unit .

DTC 2610 (AUDIO UNIT)

DTC 2610 : DRAM Diag

NOTE:

- **Check the vehicle 12 volt battery condition first** .
- This audio DTC sets when a problem with the internal DRAM is detected (the HMI Unit icon is red in the System Links).
- **Before you troubleshoot, make sure to follow the General Troubleshooting Information** .

1. Problem verification

-1. **Clear the hard error codes** .

-2. Turn the vehicle to the OFF (LOCK) mode.

-3. Wait for at least 6 seconds.

-4. **Check for hard error codes** .

Is DTC 2610 indicated?

YES

Replace the audio unit .

NO

Intermittent failure, the system is OK at this time.

DTC 2618 (AUDIO UNIT)

DTC 2618 : LaneWatch Diag

NOTE:

- **Check the vehicle 12 volt battery condition first** .
- This audio DTC sets when Connection NG is indicated in the LaneWatch diagnosis (the LaneWatch icon is red in the System Links).
- **Before you troubleshoot, make sure to follow the General Troubleshooting Information** .
- Check the connectors for poor connections or loose terminals.

1. Problem verification

-1. **Clear the hard error codes** .

-2. Turn the vehicle to the OFF (LOCK) mode.

-3. Wait for at least 6 seconds.

-4. **Check for hard error codes** .

Is DTC 2618 indicated?

YES

The failure is duplicated, go to step 2.

NO

Intermittent failure, the system is OK at this time.

2. Determine possible failure area (LWC CAM VCC line, others)

-1. Turn the vehicle to the OFF (LOCK) mode.

-2. Disconnect the following connector.

LaneWatch camera 6P connector

-3. Turn the vehicle to the ON mode.

-4. Measure the voltage between test points 1 and 2.

Test condition	Vehicle ON mode
B	LaneWatch camera 6P connector: disconnected
Test point 1	LaneWatch camera 6P connector (female terminals) No. 1: ①
Test point 2	Body ground

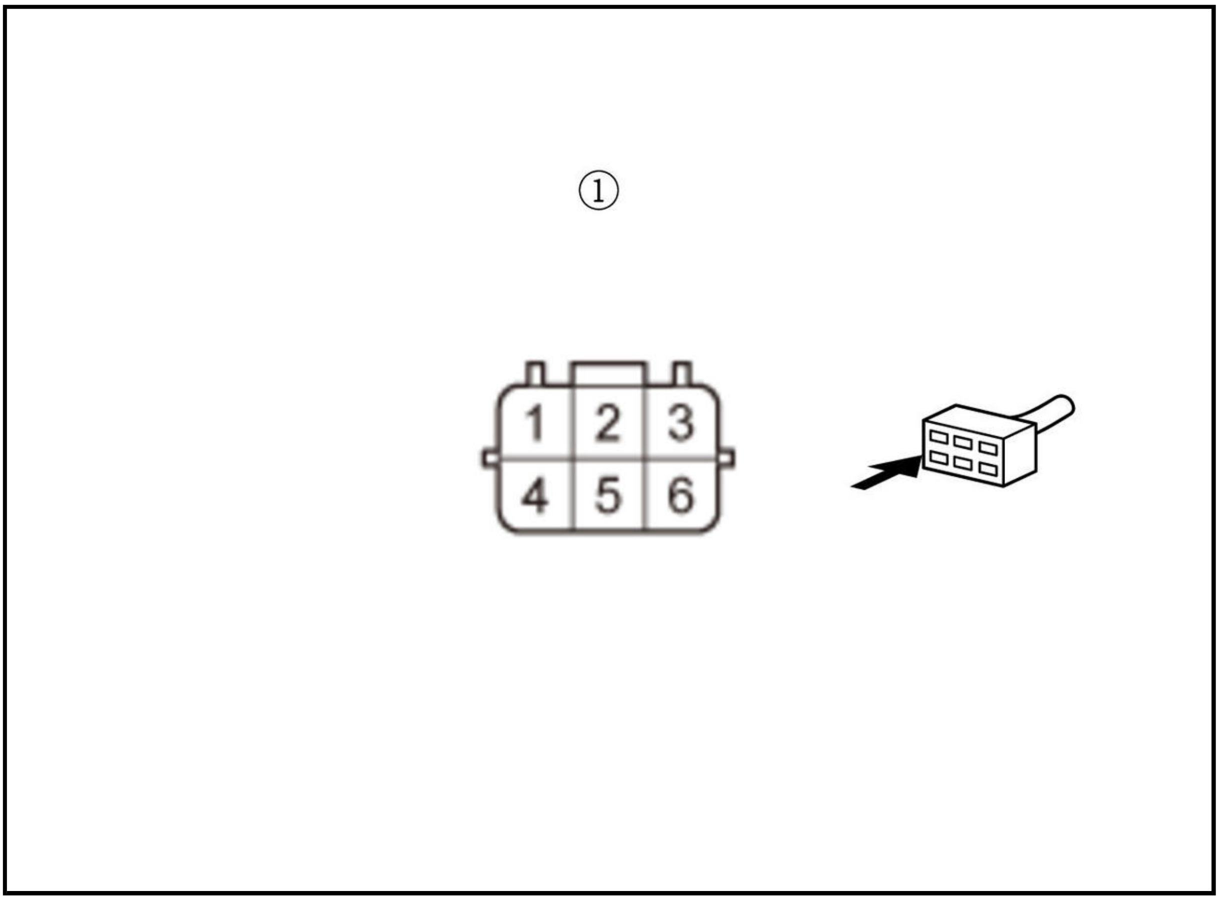

Is there about 8.0 V?

YES

The LWC CAM VCC wire is OK. Go to step 5.

NO

Go to step 3.

3. Open wire check (LWC CAM VCC line)

-1. Measure the voltage between test points 1 and 2.

Test condition	Vehicle ON mode
B	LaneWatch camera 6P connector: disconnected
Test point 1	**Audio unit connector B (24P) No. 8**
Test point 2	Body ground

Is there about 8.0 V?

YES

There is an open in the wire. Replace the affected shielded harness.

NO

The LWC CAM VCC wire is not open. Go to step 4.

4. Shorted wire check (LWC CAM VCC line)

-1. Turn the vehicle to the OFF (LOCK) mode.

-2. Disconnect the following connector.

Audio unit connector B (24P)

-3. Check for continuity between test points 1 and 2.

Test condition	Vehicle OFF (LOCK) mode
B	LaneWatch camera 6P connector: disconnected
B	Audio unit connector B (24P): disconnected
Test point 1	**Audio unit connector B (24P) No. 8**
Test point 2	Body ground

Is there continuity?

YES

There is a short to body ground in the wire. Replace the affected shielded harness.

NO

Replace the audio unit .

5. Determine possible failure area (SH LWC CAM line, others)

-1. Turn the vehicle to the OFF (LOCK) mode.

-2. Check for continuity between test points 1 and 2.

Test condition	Vehicle OFF (LOCK) mode
B	LaneWatch camera 6P connector: disconnected
Test point 1	LaneWatch camera 6P connector (female terminals) No. 2: ①
Test point 2	Body ground

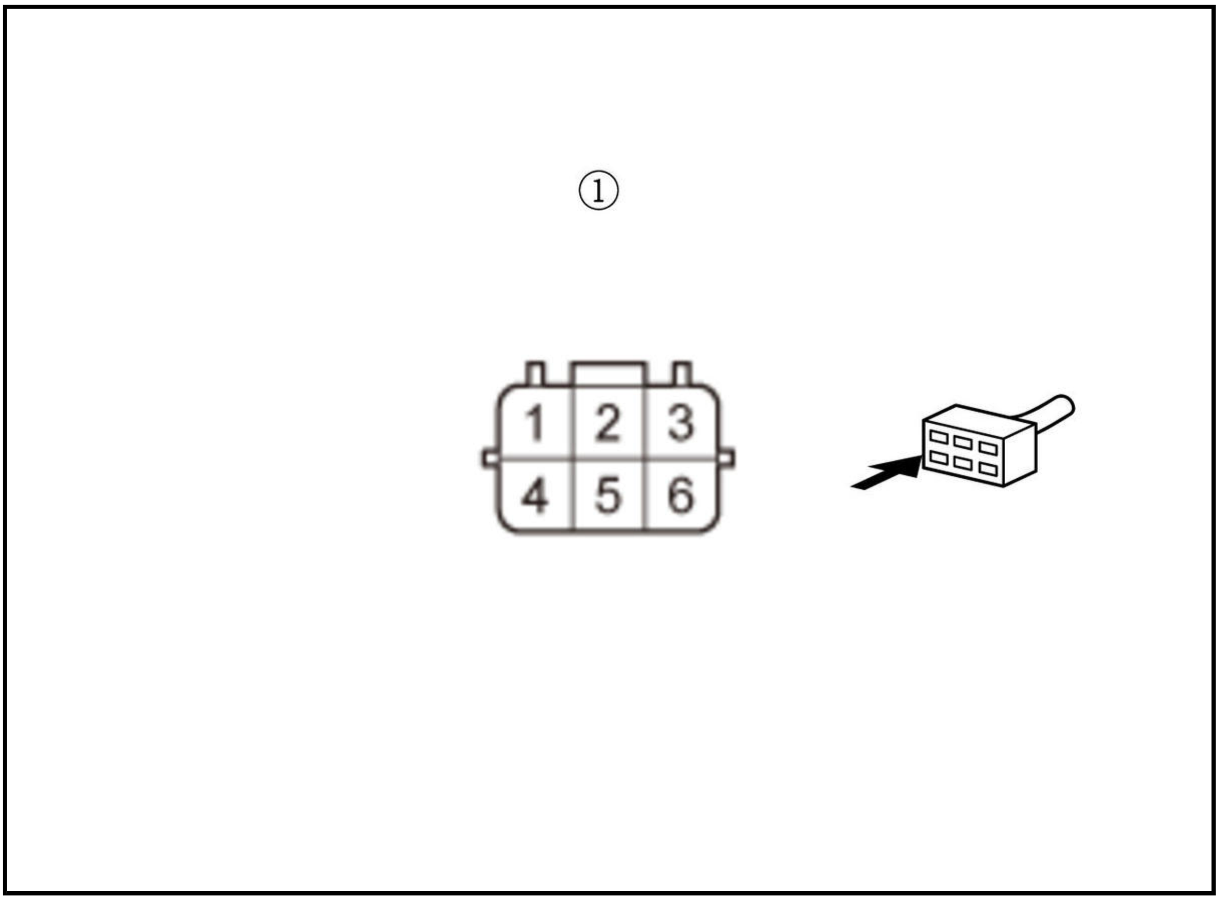

Is there continuity?

YES

The SH LWC CAM wire is OK. Go to step 7.

NO

Go to step 6.

6. Open wire check (SH LWC CAM line)

-1. Check for continuity between test points 1 and 2.

Test condition	Vehicle OFF (LOCK) mode
B	LaneWatch camera 6P connector: disconnected
Test point 1	**Audio unit connector B (24P) No. 9**
Test point 2	Body ground

Is there continuity?

YES

There is an open in the wire(s). Replace the affected shielded harness.

NO

Replace the audio unit .

7. Shorted wire check (LWC UART line)

-1. Disconnect the following connector.

Audio unit connector B (24P)

-2. Check for continuity between test points 1 and 2.

Test condition	Vehicle OFF (LOCK) mode
B	LaneWatch camera 6P connector: disconnected
B	Audio unit connector B (24P): disconnected
Test point 1	**Audio unit connector B (24P) No. 22**
Test point 2	Body ground

Is there continuity?

YES

There is a short to body ground in the wire(s). Replace the affected shielded harness.

NO

The LWC UART wire is not shorted to ground. Go to step 8.

8. Open wire check (LWC UART line)

-1. Check for continuity between test points 1 and 2.

Test condition	Vehicle OFF (LOCK) mode
B	LaneWatch camera 6P connector: disconnected
B	Audio unit connector B (24P): disconnected
Test point 1	**Audio unit connector B (24P) No. 22**
Test point 2	LaneWatch camera 6P connector (female terminals) No. 6: ①

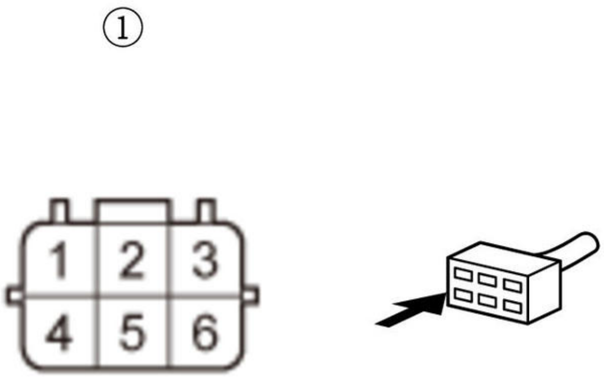

Is there continuity?

YES

Replace the LaneWatch camera .

NO

There is an open in the wire(s). Replace the affected shielded harness.

DTC 2701 (AUDIO UNIT)

DTC 2701 : GPS Diag: Antenna

NOTE:

- **Check the vehicle 12 volt battery condition first** .
- This audio DTC sets when Connection NG is indicated in the GPS antenna diagnosis (the GPS antenna icon is red in the System Links).
- **Before you troubleshoot, make sure to follow the General Troubleshooting Information** .

1. Problem verification

   -1. **Clear the hard error codes** .

   -2. Turn the vehicle to the OFF (LOCK) mode.

   -3. Wait for at least 6 seconds.

   -4. **Check for hard error codes** .

   Is DTC 2701 indicated?

   YES

   The failure is duplicated, go to step 2.

   NO

   Intermittent failure, the system is OK at this time.

2. GPS antenna check (substitution)

   -1. **Clear the hard error codes** .

   -2. Turn the vehicle to the OFF (LOCK) mode.

   -3. **Substitute a known-good GPS antenna** .

   -4. **Check for hard error codes** .

   Is DTC 1301 indicated?

   YES

   Replace the audio unit .

   NO

   Replace the original GPS antenna .

DTC 2703 (AUDIO UNIT)

DTC 2703 : Aircon Diag

NOTE:

- **Check the vehicle 12 volt battery condition first** .
- This audio DTC sets when Connection NG is indicated in the A/C diagnosis (the A/C icon is red in the System Links).
- Check for B-CAN DTCs and resolve them before troubleshooting.
- **Before you troubleshoot, make sure to follow the General Troubleshooting Information** .
- Check the connectors for poor connections or loose terminals.

1. Problem verification

   -1. **Clear the hard error codes** .

   -2. Turn the vehicle to the OFF (LOCK) mode.

   -3. Wait for at least 6 seconds.

   -4. **Check for hard error codes** .

   Is DTC 2703 indicated?

   YES

   The failure is duplicated, go to step 2.

   NO

   Intermittent failure, the system is OK at this time.

2. Open wire check (B-CAN_H line, B-CAN_L line)

   -1. Turn the vehicle to the OFF (LOCK) mode.

   -2. Disconnect the following connectors.

Audio unit connector A (24P)
Climate control unit connector A (32P)

   -3. Check for continuity between test points 1 and 2.

Test condition	Vehicle OFF (LOCK) mode
B	Audio unit connector A (24P): disconnected
B	Climate control unit connector A (32P): disconnected
Test point 1	**Audio unit connector A (24P) No. 14**
Test point 2	**Climate control unit connector A (32P) No. 25**

Test point 1	**Audio unit connector A (24P) No. 24**

Test point 2	**Climate control unit connector A (32P) No. 8**

   Is there continuity?

   YES

Replace the climate control unit .

NO

Repair an open in the wire(s).

DTC 1102 (NAVIGATION UNIT)

DTC 1102 : USB Diag

NOTE:

- Check the vehicle 12 volt battery condition first .
- This navigation DTC sets when a problem is detected with the USB device that is connected to the USB port.
- Before you troubleshoot, make sure to follow the General Troubleshooting Information .
- Check the connectors for poor connections or loose terminals.

1. Problem verification

   -1. Clear the hard error codes .

   -2. Turn the vehicle to the OFF (LOCK) mode.

   -3. Wait for at least 6 seconds.

   -4. Connect the USB device to the USB port A or B.

   -5. Check for hard error codes .

   Is DTC 1102 indicated?

   YES

   The failure is duplicated, go to step 2.

   NO

   Intermittent failure, the system is OK at this time.

2. Audio-navigation unit check

   -1. Clear the hard error codes .

   -2. Turn the vehicle to the OFF (LOCK) mode.

   -3. Wait for at least 6 seconds.

   -4. Disconnect the USB device, then connect a known-good USB device to the USB port A or B.

   -5. Check for hard error codes .

   Is DTC 1102 indicated?

   YES

   Replace the audio-navigation unit .

   NO

Original USB device is faulty.

DTC 1301 (NAVIGATION UNIT)

DTC 1301 : GPS Antenna Error

NOTE:

- **Check the vehicle 12 volt battery condition first** .
- This navigation DTC sets when there is poor connectors or loose terminals at the GPS antenna connector or an open in GPS antenna lead.
- **Before you troubleshoot, make sure to follow the General Troubleshooting Information** .
- Check the connectors for poor connections or loose terminals.

1. Problem verification

   -1. **Clear the hard error codes** .

   -2. Turn the vehicle to the OFF (LOCK) mode.

   -3. Wait for at least 6 seconds.

   -4. Turn the vehicle to the ON mode, and wait at least 1 minute.

   -5. **Check for hard error codes** .

   Is DTC 1301 indicated?

   YES

   The failure is duplicated, go to step 2.

   NO

   Intermittent failure, the system is OK at this time.

2. DTC check

   -1. **Check for hard error codes** .

   Is DTC 2701 indicated?

   YES

   Go to DTC 2701 troubleshooting.

   NO

   Replace the audio-navigation unit .

DTC 1302 (NAVIGATION UNIT)

DTC 1302 : GPS Receiver Error 1

NOTE:

- **Check the vehicle 12 volt battery condition first** .
- This navigation DTC sets when there is an internal GPS receiver problem (freeze error).
- **Before you troubleshoot, make sure to follow the General Troubleshooting Information** .

1. Problem verification

   -1. **Clear the hard error codes** .

   -2. Turn the vehicle to the OFF (LOCK) mode.

   -3. Wait for at least 6 seconds.

   -4. Turn the vehicle to the ON mode, and wait at least 1 minute.

   -5. **Check for hard error codes** .

   Is DTC 1302 indicated?

   YES

   Replace the audio-navigation unit .

   NO

   Intermittent failure, the system is OK at this time.

DTC 1304 (NAVIGATION UNIT)

DTC 1304 : Gyro Error 1

NOTE:

- **Check the vehicle 12 volt battery condition first** .
- This navigation DTC sets when there is a problem with the output voltage of the internal gyro sensor
- **Before you troubleshoot, make sure to follow the General Troubleshooting Information** .

1. Problem verification

   -1. **Clear the hard error codes** .

   -2. Turn the vehicle to the OFF (LOCK) mode.

   -3. Wait for at least 6 seconds.

   -4. Turn the vehicle to the ON mode, and wait at least 1 minute.

   -5. **Check for hard error codes** .

   Is DTC 1304 indicated?

   YES

   Replace the audio-navigation unit .

   NO

   Intermittent failure, the system is OK at this time.

DTC 1306 (NAVIGATION UNIT)

DTC 1306 : Vehicle Speed Pulse

NOTE:

- **Check the vehicle 12 volt battery condition first** .
- This navigation DTC sets when there is a problem with the VSP circuit.
- Check for aftermarket accessories that may interfere with the navigation system.
- Check the GPS reception in an open area (vehicle position should be detected in three dimensions).
- Aftermarket metallic window tint or electronic devices located near the audio-navigation unit or GPS antenna can potentially interfere with the operation of the navigation system.
- **Before you troubleshoot, make sure to follow the General Troubleshooting Information** .
- Check the connectors for poor connections or loose terminals.

1. Problem verification

   -1. **Clear the hard error codes** .

   -2. Wait for at least 6 seconds.

   -3. Turn the vehicle to the ON mode.

   -4. Test-drive the vehicle at steady speed more than 12 mph (20 km/h) for about 1 minute.

   -5. **Check for hard error codes** .

   Is DTC 1306 indicated?

   YES

   The failure is duplicated, go to step 2.

   NO

   Intermittent failure, the system is OK at this time.

2. Determine possible failure area (audio-navigation unit, others)

   -1. **Go into the System Diagnostic Mode, and select the Vehicle status in the Unit Check** .

   -2. With the help of an assistant test-drive the vehicle, and watch the VSP status.

   Does the VSP change from [0] (stopped) to [1] (driving) as you drive?

   YES

   Replace the audio-navigation unit .

   NO

   Go to step 3.

3. Determine possible failure area (VSP line, others)

   -1. Turn the vehicle to the OFF (LOCK) mode.

   -2. Jump the SCS line with the HDS.

   -3. Disconnect the following connector.

PCM connector A (50P) (1.5 L engine)PCM connector A (51P) (2.4 L engine)

   -4. Turn the vehicle to the ON mode.

-5. Measure the voltage between test points 1 and 2.

Test condition	Vehicle ON mode
B	PCM connector A (50P) (1.5 L engine): disconnectedPCM connector A (51P) (2.4 L engine): disconnected
Test point 1	**PCM connector A (50P) (1.5 L engine) No. 35**
B	**PCM connector A (51P) (2.4 L engine) No. 25**
Test point 2	Body ground

Is there about 5.0 V?

YES

The VSP wire is OK. Go to step 4.

NO

Go to step 5.

4. Determine possible failure area (audio-navigation unit, PCM)

-1. Turn the vehicle to the OFF (LOCK) mode.

-2. Reconnect PCM connector A (50P) (1.5 L engine).

-3. Reconnect PCM connector A (51P) (2.4 L engine).

-4. Raise the vehicle on a lift.

-5. Turn the vehicle to the ON mode.

-6. Block the front tire of one side, and rotate the front tire slowly that is not blocked.

-7. Measure the voltage between test points 1 and 2.

Test condition	Vehicle ON mode, with the front tire slowly rotating
Test point 1	**Audio-navigation unit connector A (24P) No. 22**
Test point 2	Body ground

Does the voltage pulse between 0 V and 5 V as you rotate the tire?

YES

Replace the audio-navigation unit .

NO

Replace the PCM .

5. Open wire check (VSP line)

-1. Measure the voltage between test points 1 and 2.

Test condition	Vehicle ON mode
B	PCM connector A (50P) (1.5 L engine): disconnectedPCM connector A (51P) (except 1.5 L engine): disconnected
Test point 1	**Audio-navigation unit connector A (24P) No. 22**
Test point 2	Body ground

Is there about 5.0 V?

YES

Repair an open in the wire.

NO

The VSP wire is not open. Go to step 6.

6. Shorted wire check (VSP line)

-1. Turn the vehicle to the OFF (LOCK) mode.

-2. Disconnect the following connector.

Audio-navigation unit connector A (24P)

-3. Check for continuity between test points 1 and 2.

Test condition	Vehicle OFF (LOCK) mode
B	PCM connector A (50P) (1.5 L engine): disconnectedPCM connector A (51P) (except 1.5 L engine): disconnected
B	Audio-navigation unit connector A (24P): disconnected
Test point 1	**Audio-navigation unit connector A (24P) No. 22**
Test point 2	Body ground

Is there continuity?

YES

Repair a short to body ground in the wire.

NO

Replace the audio-navigation unit .

DTC 1702 (NAVIGATION UNIT)

DTC 1702 : XM Antenna Error

NOTE:

- **Check the vehicle 12 volt battery condition first** .
- This audio DTC sets when there is poor connectors or loose terminals at the XM antenna connector or an open or short in the antenna lead.
- **Before you troubleshoot, make sure to follow the General Troubleshooting Information** .
- Check the connectors for poor connections or loose terminals.

1. Problem verification

-1. **Clear the hard error codes** .

-2. Turn the vehicle to the OFF (LOCK) mode.

-3. Wait for at least 6 seconds.

-4. Turn the vehicle to the ON mode.

-5. Turn on the audio system, and select the XM radio.

-6. Check for hard error codes .

Is DTC 1702 indicated?

YES

The failure is duplicated, go to step 2.

NO

Intermittent failure, the system is OK at this time.

2. Determine possible failure area (XM antenna, others)

-1. Turn the vehicle to the OFF (LOCK) mode.

-2. Disconnect the following connector.

Roof antenna connector B (2P)

-3. Turn the vehicle to the ON mode.

-4. Measure the voltage between test points 1 and 2.

Test condition	Vehicle ON mode
B	Roof antenna connector B (2P): disconnected
Test point 1	Roof antenna connector B (2P) (male terminals) No. 1: ①
Test point 2	Body ground

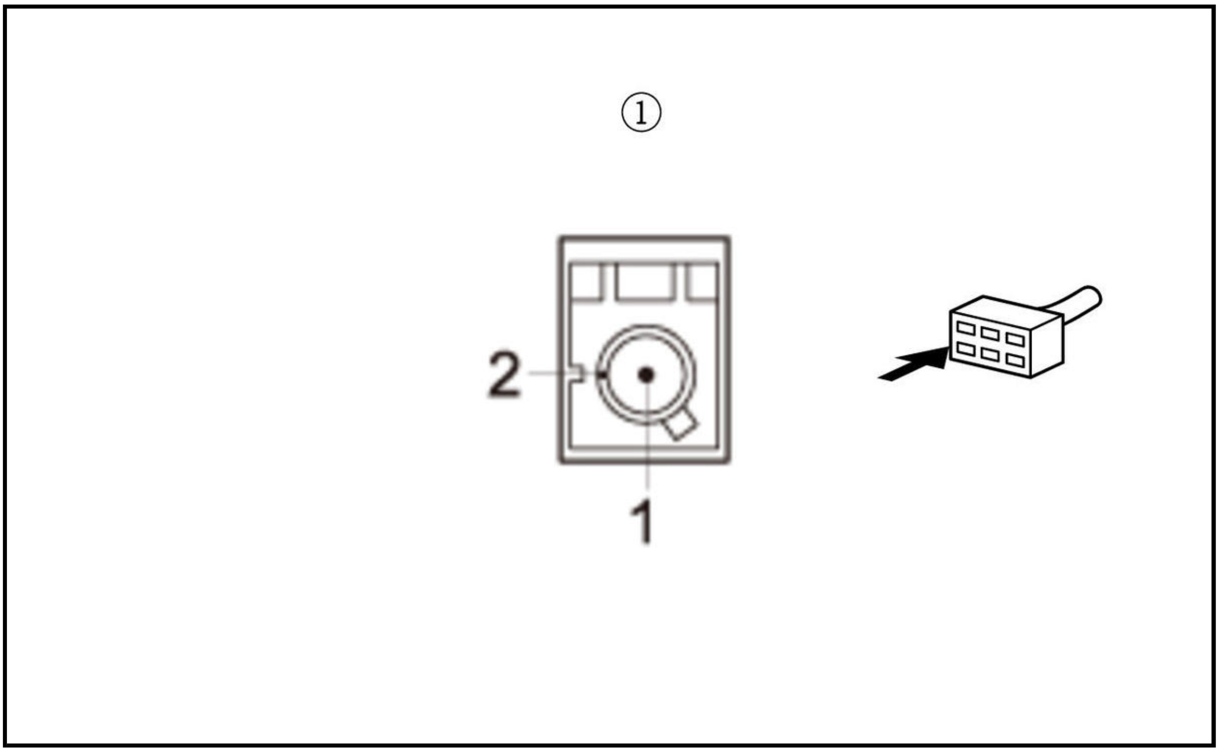

Is there about 5.0 V?

YES

Replace the roof antenna .

NO

Go to step 3.

3. Shorted wire check (SAT/TER line)

-1. Turn the vehicle to the OFF (LOCK) mode.

-2. Disconnect the following connector.

Audio-navigation unit connector N (2P)

-3. Check for continuity between test points 1 and 2.

Test condition	Vehicle OFF (LOCK) mode
B	Roof antenna connector B (2P): disconnected
B	Audio-navigation unit connector N (2P): disconnected
Test point 1	Roof antenna connector B (2P) (male terminals) No. 1: ①
Test point 2	Body ground

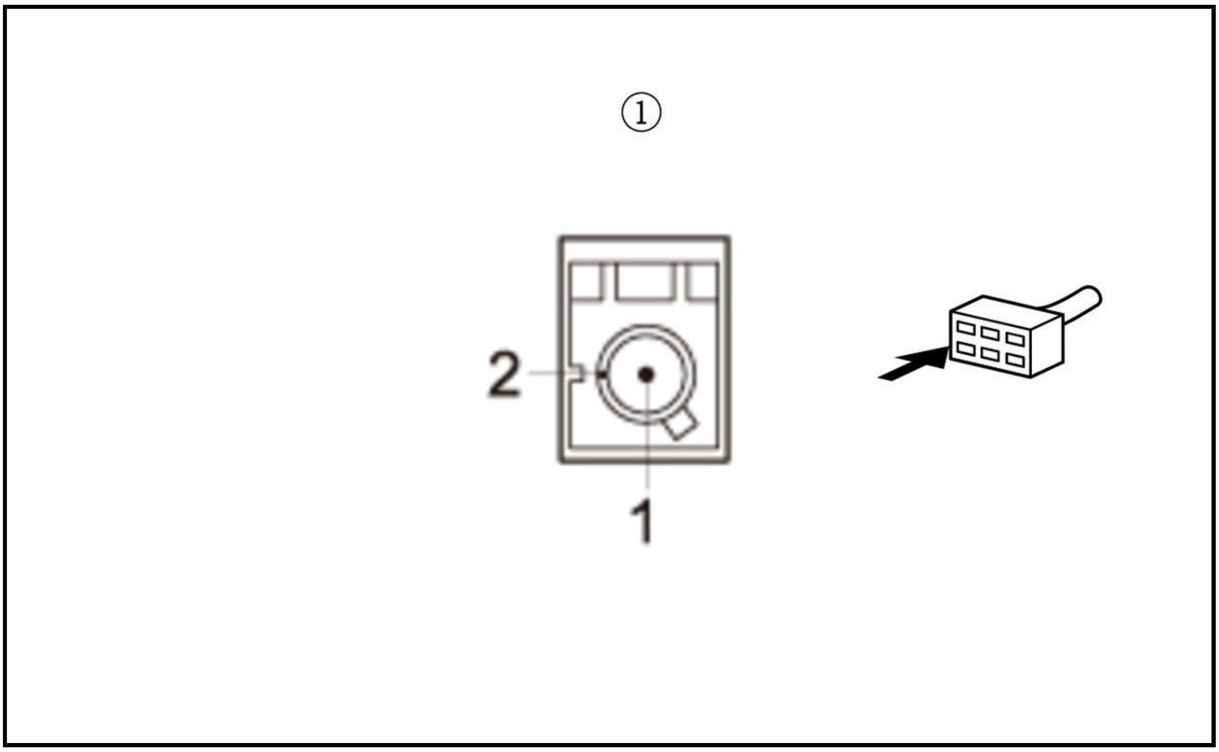

Is there continuity?

YES

There is a short to body ground in the wire. Replace the affected antenna lead.

NO

The SAT/TER wire is not shorted to ground. Go to step 4.

4. Shorted wire check (SAT/TER line to SH(SAT/TER) line)

-1. Check for continuity between test points 1 and 2.

Test condition	Vehicle OFF (LOCK) mode
B	Roof antenna connector B (2P): disconnected

B	Audio-navigation unit connector N (2P): disconnected
Test point 1	Roof antenna connector B (2P) (male terminals) No. 1: ①
Test point 2	Roof antenna connector B (2P) (male terminals) No. 2: ①

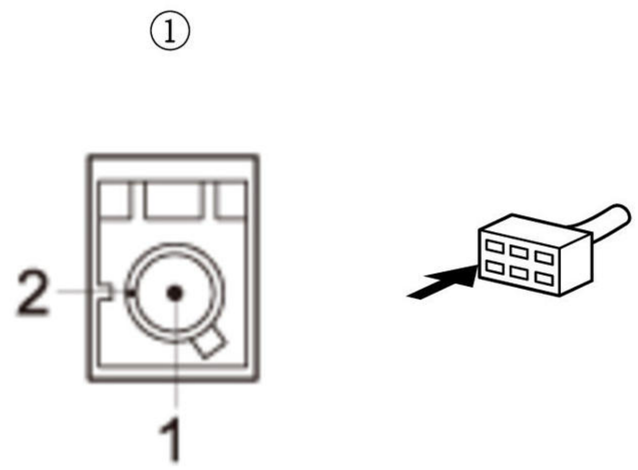

Is there continuity?

YES

There is a short in the wire. Replace the affected antenna lead.

NO

The SAT/TER wire is not shorted to SH(SAT/TER) wire. Go to step 5.

5. Open wire check (SAT/TER line)

-1. Check for continuity between test points 1 and 2.

Test condition	Vehicle OFF (LOCK) mode
B	Roof antenna connector B (2P): disconnected
B	Audio-navigation unit connector N (2P): disconnected
Test point 1	**Audio-navigation unit connector N (2P) No. 1**
Test point 2	Roof antenna connector B (2P) (male terminals) No. 1: ①

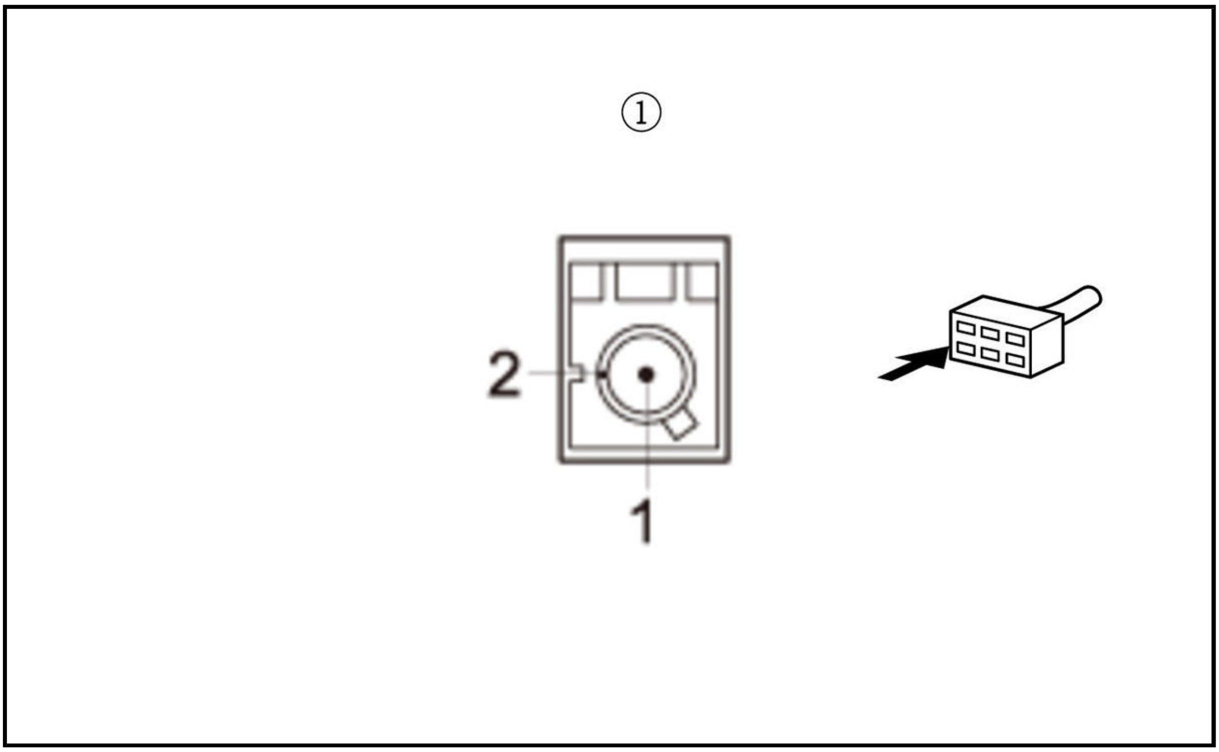

Is there continuity?

YES

Replace the audio-navigation unit .

NO

There is an open in the wire. Replace the affected antenna lead.

DTC 2608 (NAVIGATION UNIT)

DTC 2608 : R-Camera Diag

NOTE:

- **Check the vehicle 12 volt battery condition first** .
- This navigation DTC sets when NG is indicated in the Rear wide camera diagnosis (the Rear wide camera icon is red in the System Links).
- **Before you troubleshoot, make sure to follow the General Troubleshooting Information** .
- Check the connectors for poor connections or loose terminals.

1. Problem verification

-1. **Clear the hard error codes** .

-2. Turn the vehicle to the OFF (LOCK) mode.

-3. Wait for at least 6 seconds.

-4. **Check for hard error codes** .

Is DTC 2608 indicated?

YES

The failure is duplicated, go to step 2.

NO

Intermittent failure, the system is OK at this time.

2. Determine possible failure area (CAMERA ADPT line, others)

-1. Turn the vehicle to the OFF (LOCK) mode.

-2. Disconnect the following connector.

Rearview camera 8P connector

-3. Turn the vehicle to the ON mode.

-4. Measure the voltage between test points 1 and 2.

Test condition	Vehicle ON mode
B	Rearview camera 8P connector: disconnected
Test point 1	**Rearview camera 8P connector No. 6**
Test point 2	Body ground

Is there about 5.0 V?

YES

The CAMERA ADPT wire is OK. Go to step 4.

NO

Go to step 3.

3. Open wire check (CAMERA ADPT line)

-1. Measure the voltage between test points 1 and 2.

Test condition	Vehicle ON mode
B	Rearview camera 8P connector: disconnected
Test point 1	**Audio-navigation unit connector C (32P) No. 16**
Test point 2	Body ground

Is there about 5.0 V?

YES

Repair an open in the wire.

NO

Replace the audio-navigation unit .

4. Determine possible failure area (rearview camera, others)

-1. Turn the vehicle to the OFF (LOCK) mode.

-2. Check for continuity between test points 1 and 2.

Test condition	Vehicle OFF (LOCK) mode
B	Rearview camera 8P connector: disconnected

Test point 1	**Rearview camera 8P connector No. 5**
Test point 2	Body ground

Is there continuity?

YES

Replace the rearview camera .

NO

Go to step 5.

5. Open wire check (SH CAMERA line)

   -1. Check for continuity between test points 1 and 2.

Test condition	Vehicle OFF (LOCK) mode

B	Rearview camera 8P connector: disconnected
Test point 1	**Audio-navigation unit connector C (32P) No. 28**
Test point 2	Body ground

Is there continuity?

YES

There is an open in the wire(s). Replace the affected shielded harness.

NO

Replace the audio-navigation unit .

DTC 2610 (NAVIGATION UNIT)

DTC 2610 : DRAM Diag

- **Check the vehicle 12 volt battery condition first** .
- This navigation DTC sets when a problem with the internal DRAM is detected (the HMI Unit icon is red in the System Links).
- **Before you troubleshoot, make sure to follow the General Troubleshooting Information** .

1. Problem verification

   -1. **Clear the hard error codes** .

   -2. Turn the vehicle to the OFF (LOCK) mode.

   -3. Wait for at least 6 seconds.

   -4. **Check for hard error codes** .

Is DTC 2610 indicated?

YES

Replace the audio-navigation unit .

NO

Intermittent failure, the system is OK at this time.

DTC 2618 (NAVIGATION UNIT)

DTC 2618 : LaneWatch Diag

NOTE:

- Check the vehicle 12 volt battery condition first .
- This navigation DTC sets when Connection NG is indicated in the LaneWatch diagnosis (the LaneWatch icon is red in the System Links).
- Before you troubleshoot, make sure to follow the General Troubleshooting Information .
- Check the connectors for poor connections or loose terminals.

1. Problem verification

-1. Clear the hard error codes .

-2. Turn the vehicle to the OFF (LOCK) mode.

-3. Wait for at least 6 seconds.

-4. Check for hard error codes .

Is DTC 2618 indicated?

YES

The failure is duplicated, go to step 2.

NO

Intermittent failure, the system is OK at this time.

2. Determine possible failure area (LWC CAM VCC line, others)

-1. Turn the vehicle to the OFF (LOCK) mode.

-2. Disconnect the following connector.

LaneWatch camera 6P connector

-3. Turn the vehicle to the ON mode.

-4. Measure the voltage between test points 1 and 2.

Test condition	Vehicle ON mode
B	LaneWatch camera 6P connector: disconnected
Test point 1	LaneWatch camera 6P connector (female terminals) No. 1: ①
Test point 2	Body ground

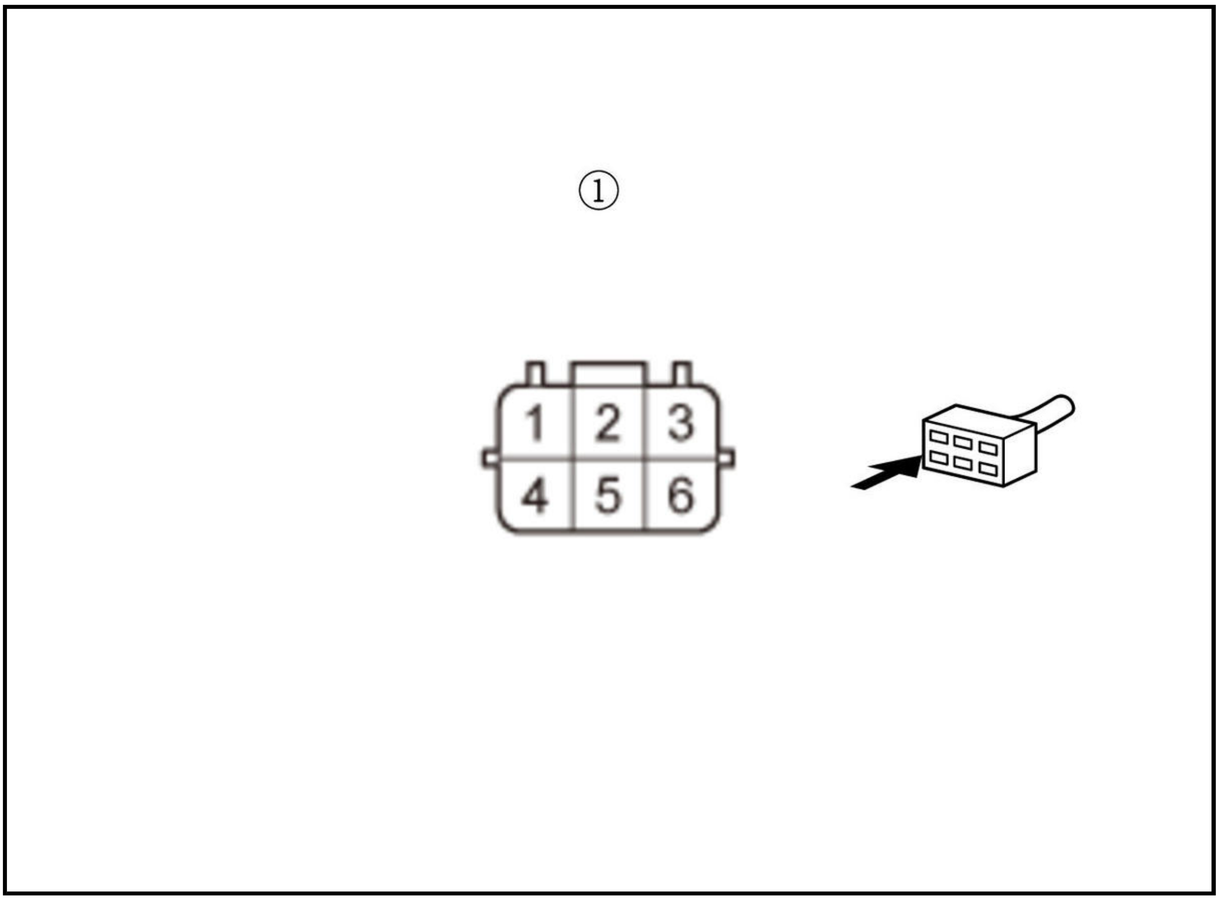

Is there about 8.0 V?

YES

The LWC CAM VCC wire is OK. Go to step 5.

NO

Go to step 3.

3. Open wire check (LWC CAM VCC line)

-1. Measure the voltage between test points 1 and 2.

Test condition	Vehicle ON mode
B	LaneWatch camera 6P connector: disconnected
Test point 1	**Audio-navigation unit connector B (24P) No. 8**
Test point 2	Body ground

Is there about 8.0 V?

YES

There is an open in the wire. Replace the affected shielded harness.

NO

The LWC CAM VCC wire is not open. Go to step 4.

4. Shorted wire check (LWC CAM VCC line)

-1. Turn the vehicle to the OFF (LOCK) mode.

-2. Disconnect the following connector.

Audio-navigation unit connector B (24P)

-3. Check for continuity between test points 1 and 2.

Test condition	Vehicle OFF (LOCK) mode
B	LaneWatch camera 6P connector: disconnected
B	Audio-navigation unit connector B (24P): disconnected
Test point 1	**Audio-navigation unit connector B (24P) No. 8**
Test point 2	Body ground

Is there continuity?

YES

There is a short to body ground in the wire. Replace the affected shielded harness.

NO

Replace the audio-navigation unit .

5. Determine possible failure area (SH LWC CAM line, others)

-1. Turn the vehicle to the OFF (LOCK) mode.

-2. Check for continuity between test points 1 and 2.

Test condition	Vehicle OFF (LOCK) mode
B	LaneWatch camera 6P connector: disconnected
Test point 1	LaneWatch camera 6P connector (female terminals) No. 2: ①
Test point 2	Body ground

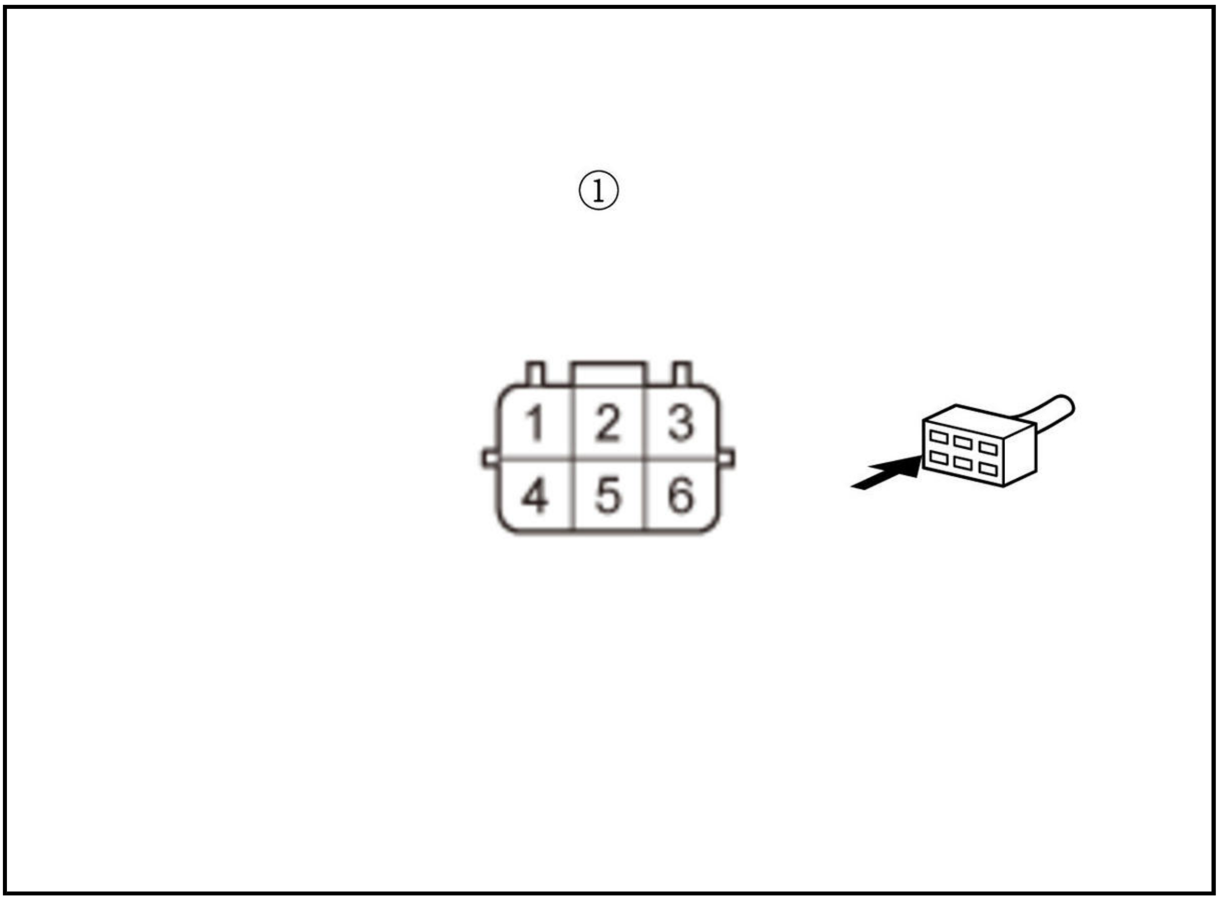

Is there continuity?

YES

The SH LWC CAM wire is OK. Go to step 7.

NO

Go to step 6.

6. Open wire check (SH LWC CAM line)

-1. Check for continuity between test points 1 and 2.

Test condition	Vehicle OFF (LOCK) mode
B	LaneWatch camera 6P connector: disconnected
Test point 1	**Audio-navigation unit connector B (24P) No. 9**
Test point 2	Body ground

Is there continuity?

YES

There is an open in the wire(s). Replace the affected shielded harness.

NO

Replace the audio-navigation unit .

7. Shorted wire check (LWC UART line)

-1. Disconnect the following connector.

Audio-navigation unit connector B (24P)

-2. Check for continuity between test points 1 and 2.

Test condition	Vehicle OFF (LOCK) mode
B	LaneWatch camera 6P connector: disconnected
B	Audio-navigation unit connector B (24P): disconnected
Test point 1	**Audio-navigation unit connector B (24P) No. 22**
Test point 2	Body ground

Is there continuity?

YES

There is a short to body ground in the wire(s). Replace the affected shielded harness.

NO

The LWC UART wire is not shorted to ground. Go to step 8.

8. Open wire check (LWC UART line)

-1. Check for continuity between test points 1 and 2.

Test condition	Vehicle OFF (LOCK) mode
B	LaneWatch camera 6P connector: disconnected
B	Audio-navigation unit connector B (24P): disconnected
Test point 1	**Audio-navigation unit connector B (24P) No. 22**
Test point 2	LaneWatch camera 6P connector (female terminals) No. 6: ①

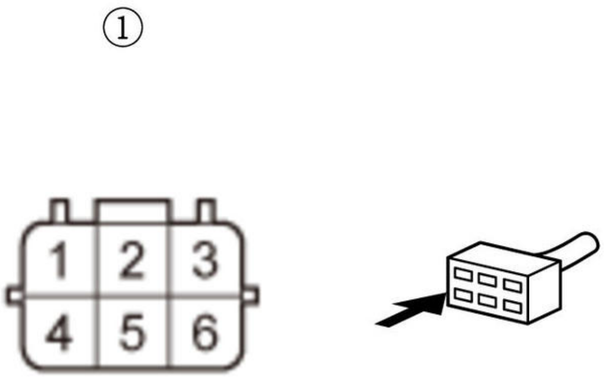

Is there continuity?

YES

Replace the LaneWatch camera .

NO

There is an open in the wire(s). Replace the affected shielded harness.

DTC 2701 (NAVIGATION UNIT)

DTC 2701 : GPS Diag: Antenna

NOTE:

- **Check the vehicle 12 volt battery condition first** .
- This navigation DTC sets when Connection NG is indicated in the GPS antenna diagnosis (the GPS antenna icon is red in the System Links).
- **Before you troubleshoot, make sure to follow the General Troubleshooting Information** .

1. Problem verification

   -1. **Clear the hard error codes** .

   -2. Turn the vehicle to the OFF (LOCK) mode.

   -3. Wait for at least 6 seconds.

   -4. **Check for hard error codes** .

   Is DTC 2701 indicated?

   YES

   The failure is duplicated, go to step 2.

   NO

   Intermittent failure, the system is OK at this time.

2. GPS antenna check (substitution)

   -1. **Clear the hard error codes** .

   -2. Turn the vehicle to the OFF (LOCK) mode.

   -3. **Substitute a known-good GPS antenna** .

   -4. **Check for hard error codes** .

   Is DTC 1301 indicated?

   YES

   Replace the audio-navigation unit .

   NO

   Replace the original GPS antenna .

DTC 2703 (NAVIGATION UNIT)

DTC 2703 : Aircon Diag

NOTE:

- **Check the vehicle 12 volt battery condition first** .
- This navigation DTC sets when Connection NG is indicated in the A/C diagnosis (the A/C icon is red in the System Links).
- Check for B-CAN DTCs and resolve them before troubleshooting.
- **Before you troubleshoot, make sure to follow the General Troubleshooting Information** .
- Check the connectors for poor connections or loose terminals.

1. Problem verification

-1. **Clear the hard error codes** .

-2. Turn the vehicle to the OFF (LOCK) mode.

-3. Wait for at least 6 seconds.

-4. **Check for hard error codes** .

Is DTC 2703 indicated?

YES

The failure is duplicated, go to step 2.

NO

Intermittent failure, the system is OK at this time.

2. Open wire check (B-CAN_H line, B-CAN_L line)

-1. Turn the vehicle to the OFF (LOCK) mode.

-2. Disconnect the following connectors.

Audio-navigation unit connector A (24P)
Climate control unit connector A (32P)

-3. Check for continuity between test points 1 and 2.

Test condition	Vehicle OFF (LOCK) mode
B	Audio-navigation unit connector A (24P): disconnected
B	Climate control unit connector A (32P): disconnected
Test point 1	**Audio-navigation unit connector A (24P) No. 14**
Test point 2	**Climate control unit connector A (32P) No. 25**

Test point 1	**Audio-navigation unit connector A (24P) No. 24**

Test point 2	**Climate control unit connector A (32P) No. 8**

Is there continuity?

YES

Replace the climate control unit .

NO

Repair an open in the wire(s).

DTC 2706 (NAVIGATION UNIT)

DTC 2706 : Gyro Diag: ECU Temp XX deg.C

NOTE:

- **Check the vehicle 12 volt battery condition first** .
- This navigation DTC sets when NG is indicated in the GYRO sensor diagnosis (the Gyro Sensor icon is red in the System Links), and indicates the gyro sensor temperature when the DTC is detected.
- **Before you troubleshoot, make sure to follow the General Troubleshooting Information** .

1. Problem verification

   -1. **Clear the hard error codes** .

   -2. Turn the vehicle to the OFF (LOCK) mode.

   -3. Wait for at least 6 seconds.

   -4. **Check for hard error codes** .

   Is DTC 2706 indicated?

   YES

   Replace the audio-navigation unit .

   NO

   Intermittent failure, the system is OK at this time.

DTC TROUBLESHOOTING

AUDIO SYSTEM DTC 1102 (AUDIO UNIT)

DTC 1102 : USB Diag

NOTE:

- **Check the vehicle 12 volt battery condition first** .
- This audio DTC sets when a problem is detected with the USB device that is connected to the USB port.
- **Before you troubleshoot, make sure to follow the General Troubleshooting Information** .
- Check the connectors for poor connections or loose terminals.

1. Problem verification

   -1. **Clear the hard error codes** .

   -2. Turn the vehicle to the OFF (LOCK) mode.

   -3. Wait for at least 6 seconds.

   -4. Connect the USB device to the USB port A or B.

   -5. **Check for hard error codes** .

   Is DTC 1102 indicated?

   YES

   The failure is duplicated, go to step 2.

   NO

   Intermittent failure, the system is OK at this time.

2. Audio unit check

   -1. **Clear the hard error codes** .

   -2. Turn the vehicle to the OFF (LOCK) mode.

   -3. Wait for at least 6 seconds.

   -4. Disconnect the USB device, then connect a known-good USB device to the USB port A or B.

   -5. **Check for hard error codes** .

   Is DTC 1102 indicated?

   YES

   Replace the audio unit .

   NO

Original USB device is faulty.

AUDIO SYSTEM DTC 1301 (AUDIO UNIT)

DTC 1301 : GPS Antenna Error

NOTE:

- **Check the vehicle 12 volt battery condition first** .
- This audio DTC sets when there is poor connectors or loose terminals at the GPS antenna connector or an open in GPS antenna lead.
- **Before you troubleshoot, make sure to follow the General Troubleshooting Information** .
- Check the connectors for poor connections or loose terminals.

1. Problem verification

-1. **Clear the hard error codes** .

-2. Turn the vehicle to the OFF (LOCK) mode.

-3. Wait for at least 6 seconds.

-4. Turn the vehicle to the ON mode, and wait at least 1 minute.

-5. **Check for hard error codes** .

Is DTC 1301 indicated?

YES

The failure is duplicated, go to step 2.

NO

Intermittent failure, the system is OK at this time.

2. DTC check

-1. **Check for hard error codes** .

Is DTC 2701 indicated?

YES

Go to DTC 2701 troubleshooting.

NO

Replace the audio unit .

AUDIO SYSTEM DTC 1302 (AUDIO UNIT)

DTC 1302 : GPS Receiver Error 1

NOTE:

- **Check the vehicle 12 volt battery condition first** .
- This audio DTC sets when there is an internal GPS receiver problem (freeze error).
- **Before you troubleshoot, make sure to follow the General Troubleshooting Information** .

1. Problem verification

   -1. **Clear the hard error codes** .

   -2. Turn the vehicle to the OFF (LOCK) mode.

   -3. Wait for at least 6 seconds.

   -4. Turn the vehicle to the ON mode, and wait at least 1 minute.

   -5. **Check for hard error codes** .

   Is DTC 1302 indicated?

   YES

   Replace the audio unit .

   NO

   Intermittent failure, the system is OK at this time.

AUDIO SYSTEM DTC 1306 (AUDIO UNIT)

DTC 1306 : Vehicle Speed Pulse

NOTE:

- **Check the vehicle 12 volt battery condition first** .
- This navigation DTC sets when there is a problem with the VSP circuit.
- Check for aftermarket accessories that may interfere with the navigation system.
- Check the GPS reception in an open area (vehicle position should be detected in three dimensions).
- Aftermarket metallic window tint or electronic devices located near the audio unit or GPS antenna can potentially interfere with the operation of the audio system.
- **Before you troubleshoot, make sure to follow the General Troubleshooting Information** .
- Check the connectors for poor connections or loose terminals.

1. Problem verification

   -1. **Clear the hard error codes** .

   -2. Wait for at least 6 seconds.

   -3. Turn the vehicle to the ON mode.

   -4. Test-drive the vehicle at steady speed more than 12 mph (20 km/h) for about 1 minute.

   -5. **Check for hard error codes** .

   Is DTC 1306 indicated?

   YES

   The failure is duplicated, go to step 2.

   NO

   Intermittent failure, the system is OK at this time.

2. Determine possible failure area (audio unit, others)

-1. **Go into the System Diagnostic Mode, and select the Vehicle status in the Unit Check** .

-2. With the help of an assistant test-drive the vehicle, and watch the VSP status.

Does the VSP change from [0] (stopped) to [1] (driving) as you drive?

YES

Replace the audio unit .

NO

Go to step 3.

3. Determine possible failure area (VSP line, others)

-1. Turn the vehicle to the OFF (LOCK) mode.

-2. Jump the SCS line with the HDS.

-3. Disconnect the following connector.

PCM connector A (50P)

-4. Turn the vehicle to the ON mode.

-5. Measure the voltage between test points 1 and 2.

Test condition	Vehicle ON mode
B	PCM connector A (50P): disconnected
Test point 1	**PCM connector A (50P) No. 35**
Test point 2	Body ground

Is there about 5.0 V?

YES

The VSP wire is OK. Go to step 4.

NO

Go to step 5.

4. Determine possible failure area (audio unit, PCM)

-1. Turn the vehicle to the OFF (LOCK) mode.

-2. Reconnect PCM connector A (50P).

-3. Raise the vehicle on a lift.

-4. Turn the vehicle to the ON mode.

-5. Block the front tire of one side, and rotate the front tire slowly that is not blocked.

-6. Measure the voltage between test points 1 and 2.

Test condition	Vehicle ON mode, with the front tire slowly rotating
Test point 1	**Audio unit connector A (24P) No. 22**
Test point 2	Body ground

Does the voltage pulse between 0 V and 5 V as you rotate the tire?

YES

Replace the audio unit .

NO

Replace the PCM .

5. Open wire check (VSP line)

-1. Measure the voltage between test points 1 and 2.

Test condition	Vehicle ON mode
B	PCM connector A (50P): disconnected
Test point 1	**Audio unit connector A (24P) No. 22**
Test point 2	Body ground

Is there about 5.0 V?

YES

Repair an open in the wire.

NO

The VSP wire is not open. Go to step 6.

6. Shorted wire check (VSP line)

-1. Turn the vehicle to the OFF (LOCK) mode.

-2. Disconnect the following connector.

Audio unit connector A (24P)

-3. Measure the resistance between test points 1 and 2.

Test condition	Vehicle OFF (LOCK) mode
B	PCM connector A (50P): disconnected
B	Audio unit connector A (24P): disconnected
Test point 1	**Audio unit connector A (24P) No. 22**
Test point 2	Body ground

Is there 1.0 MΩ or more?

YES

Replace the audio unit .

NO

Repair a short to body ground in the wire.

AUDIO SYSTEM DTC 1702 (AUDIO UNIT)

DTC 1702 : XM Antenna Error

NOTE:

- **Check the vehicle 12 volt battery condition first** .
- This audio DTC sets when there is poor connectors or loose terminals at the XM antenna connector or an open or short in the antenna lead.
- **Before you troubleshoot, make sure to follow the General Troubleshooting Information** .
- Check the connectors for poor connections or loose terminals.

1. Problem verification

   -1. **Clear the hard error codes** .

   -2. Turn the vehicle to the OFF (LOCK) mode.

   -3. Wait for at least 6 seconds.

   -4. Turn the vehicle to the ON mode.

   -5. Turn on the audio system, and select the XM radio.

   -6. **Check for hard error codes** .

   Is DTC 1702 indicated?

   YES

   The failure is duplicated, go to step 2.

   NO

   Intermittent failure, the system is OK at this time.

2. Determine possible failure area (XM antenna, others)

   -1. Turn the vehicle to the OFF (LOCK) mode.

   -2. Disconnect the following connector.

Roof antenna connector B (2P)

   -3. Turn the vehicle to the ON mode.

   -4. Measure the voltage between test points 1 and 2.

Test condition	Vehicle ON mode
B	Roof antenna connector B (2P): disconnected
Test point 1	Roof antenna connector B (2P) (male terminals) No. 1: ①
Test point 2	Body ground

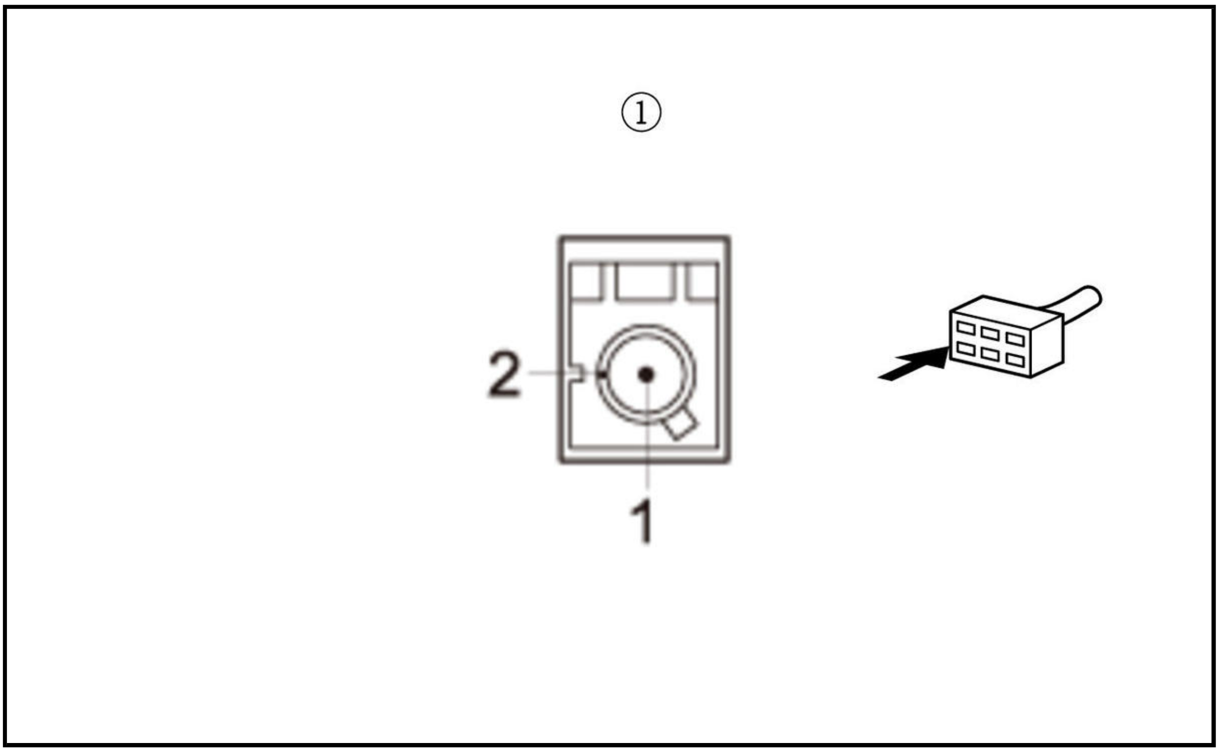

Is there about 5.0 V?

YES

Replace the roof antenna .

NO

Go to step 3.

3. Shorted wire check (SAT/TER line)

-1. Turn the vehicle to the OFF (LOCK) mode.

-2. Disconnect the following connector.

Audio unit connector N (2P)

-3. Measure the resistance between test points 1 and 2.

Test condition	Vehicle OFF (LOCK) mode
B	Roof antenna connector B (2P): disconnected
B	Audio unit connector N (2P): disconnected
Test point 1	Roof antenna connector B (2P) (male terminals) No. 1: ①
Test point 2	Body ground

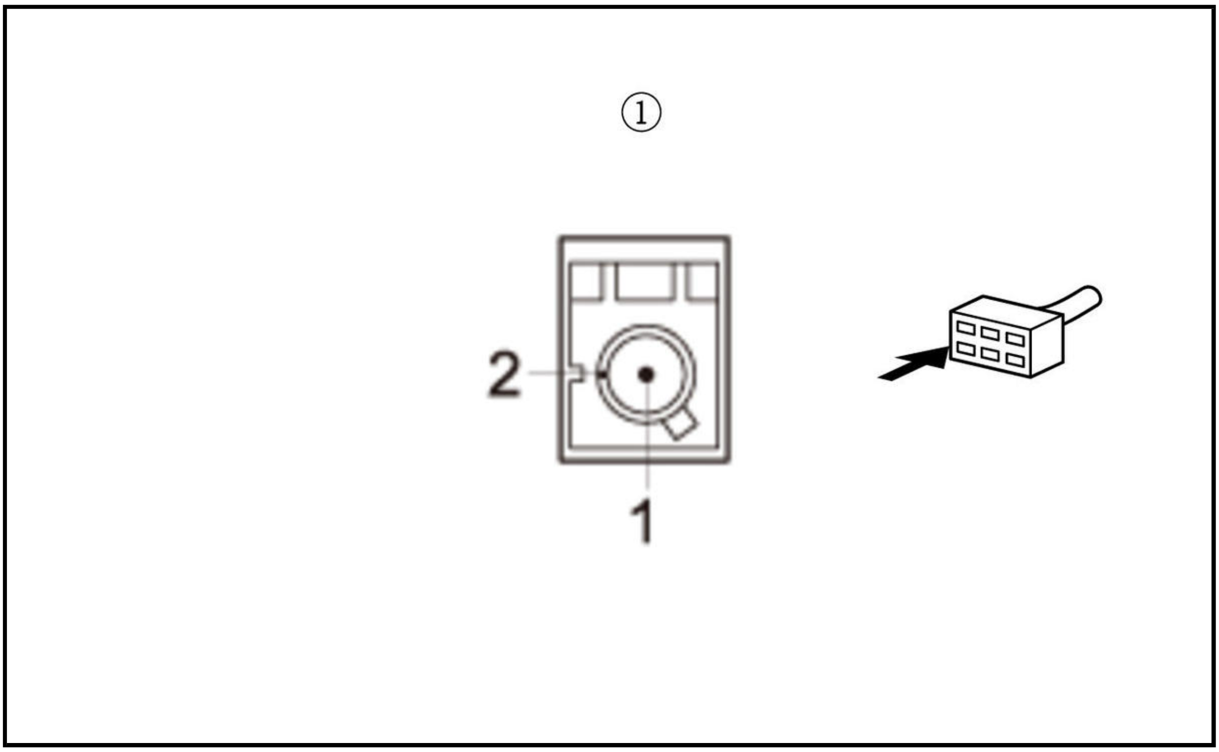

Is there 1.0 MΩ or more?

YES

The SAT/TER wire is not shorted to ground. Go to step 4.

NO

There is a short to body ground in the wire. Replace the affected antenna lead.

4. Shorted wire check (SAT/TER line to SH (SAT/TER) line)

-1. Measure the resistance between test points 1 and 2.

Test condition	Vehicle OFF (LOCK) mode
B	Roof antenna connector B (2P): disconnected
B	Audio unit connector N (2P): disconnected
Test point 1	Roof antenna connector B (2P) (male terminals) No. 1: ①
Test point 2	Roof antenna connector B (2P) (male terminals) No. 2: ①

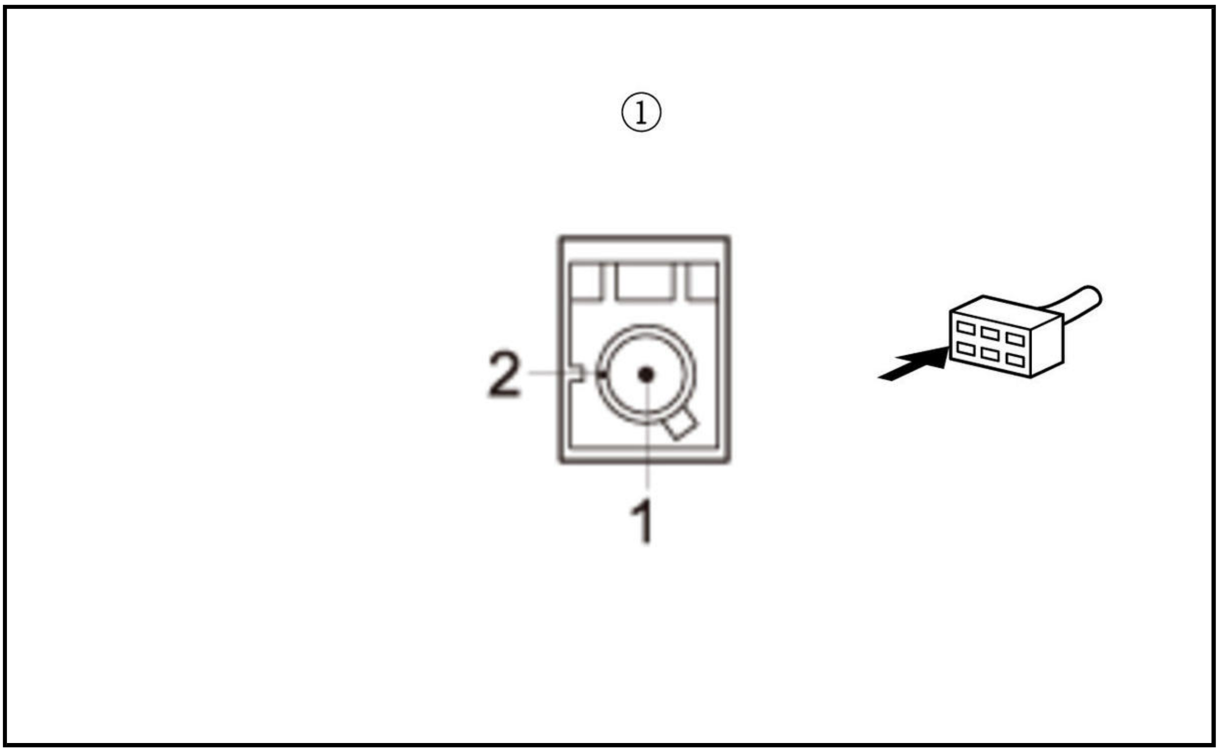

Is there 1.0 MΩ or more?

YES

The SAT/TER wire is not shorted to SH (SAT/TER) wire. Go to step 5.

NO

There is a short in the wire. Replace the affected antenna lead.

5. Open wire check (SAT/TER line)

-1. Measure the resistance between test points 1 and 2.

Test condition	Vehicle OFF (LOCK) mode
B	Roof antenna connector B (2P): disconnected
B	Audio unit connector N (2P): disconnected
Test point 1	**Audio unit connector N (2P) No. 1**
Test point 2	Roof antenna connector B (2P) (male terminals) No. 1: ①

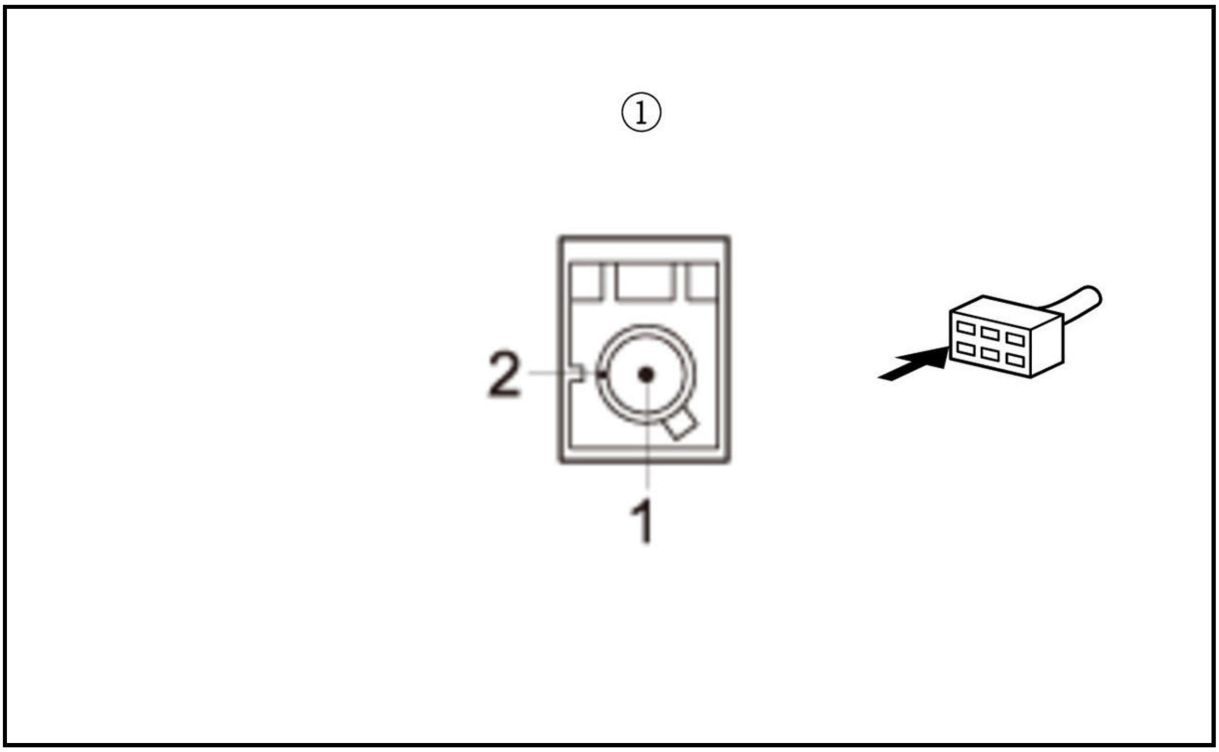

Is there 1.0 Ω or less?

YES

Replace the audio unit .

NO

There is an open in the wire. Replace the affected antenna lead.

AUDIO SYSTEM DTC 2608 (AUDIO UNIT)

DTC 2608 : R-Camera Diag

NOTE:

- **Check the vehicle 12 volt battery condition first** .
- This audio DTC sets when NG is indicated in the Rear wide camera diagnosis (the Rear wide camera icon is red in the System Links).
- **Before you troubleshoot, make sure to follow the General Troubleshooting Information** .
- Check the connectors for poor connections or loose terminals.

1. Problem verification

-1. **Clear the hard error codes** .

-2. Turn the vehicle to the OFF (LOCK) mode.

-3. Wait for at least 6 seconds.

-4. **Check for hard error codes** .

Is DTC 2608 indicated?

YES

The failure is duplicated, go to step 2.

NO

Intermittent failure, the system is OK at this time.

2. Determine possible failure area (CAMERA_ADPT line, others)

-1. Turn the vehicle to the OFF (LOCK) mode.

-2. Disconnect the following connector.

Rearview camera 8P connector

-3. Turn the vehicle to the ON mode.

-4. Measure the voltage between test points 1 and 2.

Test condition	Vehicle ON mode
B	Rearview camera 8P connector: disconnected
Test point 1	**Rearview camera 8P connector No. 6**
Test point 2	Body ground

Is there about 5.0 V?

YES

The CAMERA_ADPT wire is OK. Go to step 4.

NO

Go to step 3.

3. Open wire check (CAMERA_ADPT line)

-1. Measure the voltage between test points 1 and 2.

Test condition	Vehicle ON mode
B	Rearview camera 8P connector: disconnected
Test point 1	**Audio unit connector C (32P) No. 16**
Test point 2	Body ground

Is there about 5.0 V?

YES

Repair an open in the wire.

NO

Replace the audio unit .

4. Determine possible failure area (rearview camera, others)

-1. Turn the vehicle to the OFF (LOCK) mode.

-2. Measure the resistance between test points 1 and 2.

Test condition	Vehicle OFF (LOCK) mode
B	Rearview camera 8P connector: disconnected

Test point 1	**Rearview camera 8P connector No. 5**
Test point 2	Body ground

Is there 1.0 Ω or less?

YES

Replace the rearview camera .

NO

Go to step 5.

5. Open wire check (SH_CAMERA line)

   -1. Measure the resistance between test points 1 and 2.

Test condition	Vehicle OFF (LOCK) mode

B	Rearview camera 8P connector: disconnected
Test point 1	**Audio unit connector C (32P) No. 28**
Test point 2	Body ground

Is there 1.0 MΩ or more?

YES

Replace the audio unit .

NO

There is an open in the wire(s). Replace the affected shielded harness.

AUDIO SYSTEM DTC 2610 (AUDIO UNIT)

DTC 2610 : DRAM Diag

NOTE:

- **Check the vehicle 12 volt battery condition first** .
- This audio DTC sets when a problem with the internal DRAM is detected (the HMI Unit icon is red in the System Links).
- **Before you troubleshoot, make sure to follow the General Troubleshooting Information** .

1. Problem verification

   -1. **Clear the hard error codes** .

   -2. Turn the vehicle to the OFF (LOCK) mode.

   -3. Wait for at least 6 seconds.

   -4. **Check for hard error codes** .

Is DTC 2610 indicated?

YES

Replace the audio unit .

NO

Intermittent failure, the system is OK at this time.

AUDIO SYSTEM DTC 2701 (AUDIO UNIT)

DTC 2701 : GPS Diag: Antenna

NOTE:

- **Check the vehicle 12 volt battery condition first** .
- This audio DTC sets when Connection NG is indicated in the GPS antenna diagnosis (the GPS antenna icon is red in the System Links).
- **Before you troubleshoot, make sure to follow the General Troubleshooting Information** .

1. Problem verification

-1. **Clear the hard error codes** .

-2. Turn the vehicle to the OFF (LOCK) mode.

-3. Wait for at least 6 seconds.

-4. **Check for hard error codes** .

Is DTC 2701 indicated?

YES

The failure is duplicated, go to step 2.

NO

Intermittent failure, the system is OK at this time.

2. GPS antenna check (substitution)

-1. **Clear the hard error codes** .

-2. Turn the vehicle to the OFF (LOCK) mode.

-3. **Substitute a known-good GPS antenna** .

-4. **Check for hard error codes** .

Is DTC 1301 indicated?

YES

Replace the audio unit .

NO

Replace the original GPS antenna .

AUDIO SYSTEM DTC 2703 (AUDIO UNIT)

DTC 2703 : Aircon Diag

NOTE:

- Check the vehicle 12 volt battery condition first .
- This audio DTC sets when Connection NG is indicated in the A/C diagnosis (the A/C icon is red in the System Links).
- Check for B-CAN DTCs and resolve them before troubleshooting.
- Before you troubleshoot, make sure to follow the General Troubleshooting Information .
- Check the connectors for poor connections or loose terminals.

1. Problem verification

   -1. Clear the hard error codes .

   -2. Turn the vehicle to the OFF (LOCK) mode.

   -3. Wait for at least 6 seconds.

   -4. Check for hard error codes .

   Is DTC 2703 indicated?

   YES

   The failure is duplicated, go to step 2.

   NO

   Intermittent failure, the system is OK at this time.

2. Open wire check (B-CAN_H line, B-CAN_L line)

   -1. Turn the vehicle to the OFF (LOCK) mode.

   -2. Disconnect the following connectors.

Audio unit connector A (24P)
Climate control unit connector A (32P)

   -3. Measure the resistance between test points 1 and 2.

Test condition	Vehicle OFF (LOCK) mode
B	Audio unit connector A (24P): disconnected
B	Climate control unit connector A (32P): disconnected
Test point 1	Audio unit connector A (24P) No. 14
Test point 2	Climate control unit connector A (32P) No. 25

Test point 1	Audio unit connector A (24P) No. 24

Test point 2	Climate control unit connector A (32P) No. 8

   Is there 1.0 Ω or less?

   YES

   Replace the climate control unit .

   NO

   Repair an open in the wire(s).

AUDIO-NAVIGATION SYSTEM DTC 1102 (NAVIGATION UNIT)

DTC 1102 : USB Diag

NOTE:

- **Check the vehicle 12 volt battery condition first** .
- This navigation DTC sets when a problem is detected with the USB device that is connected to the USB port.
- **Before you troubleshoot, make sure to follow the General Troubleshooting Information** .
- Check the connectors for poor connections or loose terminals.

1. Problem verification

   -1. **Clear the hard error codes** .

   -2. Turn the vehicle to the OFF (LOCK) mode.

   -3. Wait for at least 6 seconds.

   -4. Connect the USB device to the USB port A or B.

   -5. **Check for hard error codes** .

   Is DTC 1102 indicated?

   YES

   The failure is duplicated, go to step 2.

   NO

   Intermittent failure, the system is OK at this time.

2. Audio-navigation unit check

   -1. **Clear the hard error codes** .

   -2. Turn the vehicle to the OFF (LOCK) mode.

   -3. Wait for at least 6 seconds.

   -4. Disconnect the USB device, then connect a known-good USB device to the USB port A or B.

   -5. **Check for hard error codes** .

   Is DTC 1102 indicated?

   YES

   Replace the audio-navigation unit .

   NO

   Original USB device is faulty.

AUDIO-NAVIGATION SYSTEM DTC 1301 (NAVIGATION UNIT)

DTC 1301 : GPS Antenna Error

NOTE:

- Check the vehicle 12 volt battery condition first .
- This navigation DTC sets when there is poor connectors or loose terminals at the GPS antenna connector or an open in GPS antenna lead.
- Before you troubleshoot, make sure to follow the General Troubleshooting Information .
- Check the connectors for poor connections or loose terminals.

1. Problem verification

   -1. Clear the hard error codes .

   -2. Turn the vehicle to the OFF (LOCK) mode.

   -3. Wait for at least 6 seconds.

   -4. Turn the vehicle to the ON mode, and wait at least 1 minute.

   -5. Check for hard error codes .

   Is DTC 1301 indicated?

   YES

   The failure is duplicated, go to step 2.

   NO

   Intermittent failure, the system is OK at this time.

2. DTC check

   -1. Check for hard error codes .

   Is DTC 2701 indicated?

   YES

   Go to DTC 2701 troubleshooting.

   NO

   Replace the audio-navigation unit .

AUDIO-NAVIGATION SYSTEM DTC 1302 (NAVIGATION UNIT)

DTC 1302 : GPS Receiver Error 1

NOTE:

- Check the vehicle 12 volt battery condition first .
- This navigation DTC sets when there is an internal GPS receiver problem (freeze error).
- Before you troubleshoot, make sure to follow the General Troubleshooting Information .

1. Problem verification

   -1. Clear the hard error codes .

   -2. Turn the vehicle to the OFF (LOCK) mode.

-3. Wait for at least 6 seconds.

-4. Turn the vehicle to the ON mode, and wait at least 1 minute.

-5. Check for hard error codes .

Is DTC 1302 indicated?

YES

Replace the audio-navigation unit .

NO

Intermittent failure, the system is OK at this time.

AUDIO-NAVIGATION SYSTEM DTC 1304 (NAVIGATION UNIT)

DTC 1304 : Gyro Error 1

NOTE:

- Check the vehicle 12 volt battery condition first .
- This navigation DTC sets when there is a problem with the output voltage of the internal gyro sensor
- Before you troubleshoot, make sure to follow the General Troubleshooting Information .

1. Problem verification

-1. Clear the hard error codes .

-2. Turn the vehicle to the OFF (LOCK) mode.

-3. Wait for at least 6 seconds.

-4. Turn the vehicle to the ON mode, and wait at least 1 minute.

-5. Check for hard error codes .

Is DTC 1304 indicated?

YES

Replace the audio-navigation unit .

NO

Intermittent failure, the system is OK at this time.

AUDIO-NAVIGATION SYSTEM DTC 1306 (NAVIGATION UNIT)

DTC 1306 : Vehicle Speed Pulse

NOTE:

- Check the vehicle 12 volt battery condition first .
- This navigation DTC sets when there is a problem with the VSP circuit.
- Check for aftermarket accessories that may interfere with the navigation system.
- Check the GPS reception in an open area (vehicle position should be detected in three dimensions).

- Aftermarket metallic window tint or electronic devices located near the audio-navigation unit or GPS antenna can potentially interfere with the operation of the navigation system.
- **Before you troubleshoot, make sure to follow the General Troubleshooting Information** .
- Check the connectors for poor connections or loose terminals.

1. Problem verification

   -1. **Clear the hard error codes** .

   -2. Wait for at least 6 seconds.

   -3. Turn the vehicle to the ON mode.

   -4. Test-drive the vehicle at steady speed more than 12 mph (20 km/h) for about 1 minute.

   -5. **Check for hard error codes** .

   Is DTC 1306 indicated?

   YES

   The failure is duplicated, go to step 2.

   NO

   Intermittent failure, the system is OK at this time.

2. Determine possible failure area (audio-navigation unit, others)

   -1. **Go into the System Diagnostic Mode, and select the Vehicle status in the Unit Check** .

   -2. With the help of an assistant test-drive the vehicle, and watch the VSP status.

   Does the VSP change from [0] (stopped) to [1] (driving) as you drive?

   YES

   Replace the audio-navigation unit .

   NO

   Go to step 3.

3. Determine possible failure area (VSP line, others)

   -1. Turn the vehicle to the OFF (LOCK) mode.

   -2. Jump the SCS line with the HDS.

   -3. Disconnect the following connector.

PCM connector A (50P)

   -4. Turn the vehicle to the ON mode.

   -5. Measure the voltage between test points 1 and 2.

Test condition	Vehicle ON mode
B	PCM connector A (50P): disconnected

Test point 1	**PCM connector A (50P) No. 35**
Test point 2	Body ground

Is there about 5.0 V?

YES

The VSP wire is OK. Go to step 4.

NO

Go to step 5.

4. Determine possible failure area (audio-navigation unit, PCM)

-1. Turn the vehicle to the OFF (LOCK) mode.

-2. Reconnect PCM connector A (50P).

-3. Raise the vehicle on a lift.

-4. Turn the vehicle to the ON mode.

-5. Block the front tire of one side, and rotate the front tire slowly that is not blocked.

-6. Measure the voltage between test points 1 and 2.

Test condition	Vehicle ON mode, with the front tire slowly rotating
Test point 1	**Audio-navigation unit connector A (24P) No. 22**
Test point 2	Body ground

Does the voltage pulse between 0 V and 5 V as you rotate the tire?

YES

Replace the audio-navigation unit .

NO

Replace the PCM .

5. Open wire check (VSP line)

-1. Measure the voltage between test points 1 and 2.

Test condition	Vehicle ON mode
B	PCM connector A (50P): disconnected
Test point 1	**Audio-navigation unit connector A (24P) No. 22**
Test point 2	Body ground

Is there about 5.0 V?

YES

Repair an open in the wire.

NO

The VSP wire is not open. Go to step 6.

6. Shorted wire check (VSP line)

-1. Turn the vehicle to the OFF (LOCK) mode.

-2. Disconnect the following connector.

Audio-navigation unit connector A (24P)

-3. Measure the resistance between test points 1 and 2.

Test condition	Vehicle OFF (LOCK) mode
B	PCM connector A (50P): disconnected
B	Audio-navigation unit connector A (24P): disconnected
Test point 1	**Audio-navigation unit connector A (24P) No. 22**
Test point 2	Body ground

Is there 1.0 MΩ or more?

YES

Replace the audio-navigation unit .

NO

Repair a short to body ground in the wire.

AUDIO-NAVIGATION SYSTEM DTC 1702 (NAVIGATION UNIT)

DTC 1702 : XM Antenna Error

NOTE:

- **Check the vehicle 12 volt battery condition first** .
- This audio DTC sets when there is poor connectors or loose terminals at the XM antenna connector or an open or short in the antenna lead.
- **Before you troubleshoot, make sure to follow the General Troubleshooting Information** .
- Check the connectors for poor connections or loose terminals.

1. Problem verification

-1. **Clear the hard error codes** .

-2. Turn the vehicle to the OFF (LOCK) mode.

-3. Wait for at least 6 seconds.

-4. Turn the vehicle to the ON mode.

-5. Turn on the audio system, and select the XM radio.

-6. **Check for hard error codes** .

Is DTC 1702 indicated?

YES

The failure is duplicated, go to step 2.

NO

Intermittent failure, the system is OK at this time.

2. Determine possible failure area (XM antenna, others)

-1. Turn the vehicle to the OFF (LOCK) mode.

-2. Disconnect the following connector.

Roof antenna connector B (2P)

-3. Turn the vehicle to the ON mode.

-4. Measure the voltage between test points 1 and 2.

Test condition	Vehicle ON mode
B	Roof antenna connector B (2P): disconnected
Test point 1	Roof antenna connector B (2P) (male terminals) No. 1: ①
Test point 2	Body ground

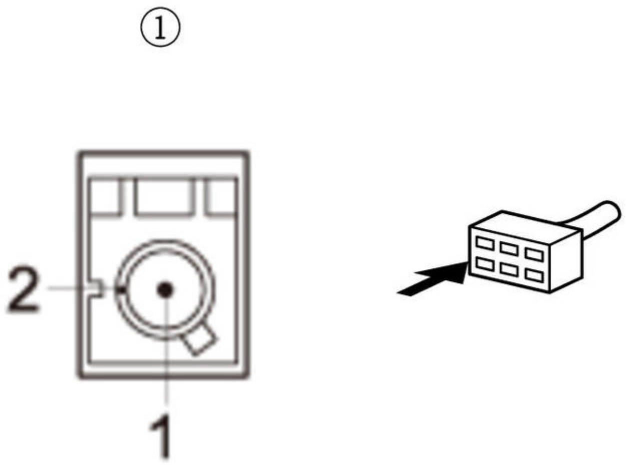

Is there about 5.0 V?

YES

Replace the roof antenna .

NO

Go to step 3.

3. Shorted wire check (SAT/TER line)

-1. Turn the vehicle to the OFF (LOCK) mode.

-2. Disconnect the following connector.

Audio-navigation unit connector N (2P)

-3. Measure the resistance between test points 1 and 2.

Test condition	Vehicle OFF (LOCK) mode
B	Roof antenna connector B (2P): disconnected
B	Audio-navigation unit connector N (2P): disconnected
Test point 1	Roof antenna connector B (2P) (male terminals) No. 1: ①
Test point 2	Body ground

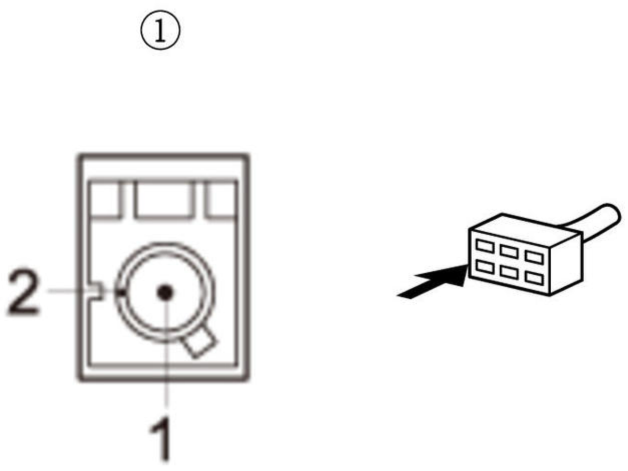

Is there 1.0 MΩ or more?

YES

The SAT/TER wire is not shorted to ground. Go to step 4.

NO

There is a short to body ground in the wire. Replace the affected antenna lead.

4. Shorted wire check (SAT/TER line to SH (SAT/TER) line)

-1. Measure the resistance between test points 1 and 2.

Test condition	Vehicle OFF (LOCK) mode
B	Roof antenna connector B (2P): disconnected
B	Audio-navigation unit connector N (2P): disconnected
Test point 1	Roof antenna connector B (2P) (male terminals) No. 1: ①
Test point 2	Roof antenna connector B (2P) (male terminals) No. 2: ①

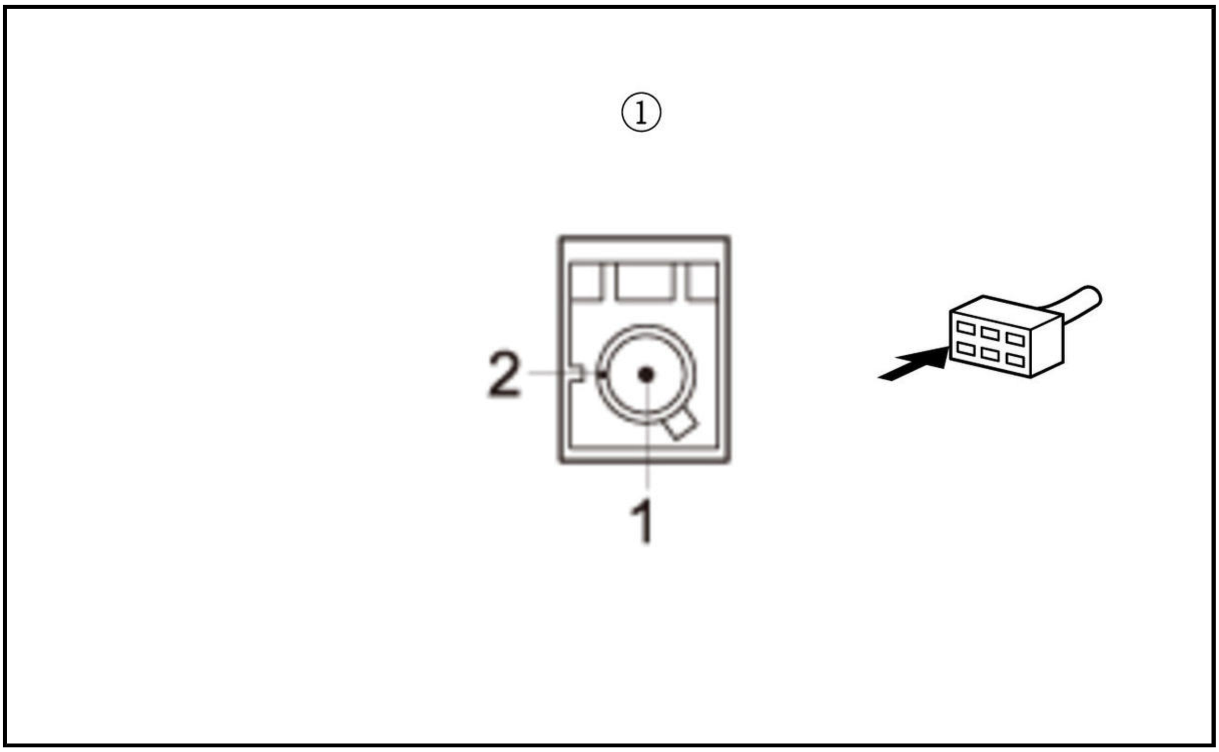

Is there 1.0 MΩ or more?

YES

The SAT/TER wire is not shorted to SH (SAT/TER) wire. Go to step 5.

NO

There is a short in the wire. Replace the affected antenna lead.

5. Open wire check (SAT/TER line)

-1. Measure the resistance between test points 1 and 2.

Test condition	Vehicle OFF (LOCK) mode
B	Roof antenna connector B (2P): disconnected
B	Audio-navigation unit connector N (2P): disconnected
Test point 1	**Audio-navigation unit connector N (2P) No. 1**
Test point 2	Roof antenna connector B (2P) (male terminals) No. 1: ①

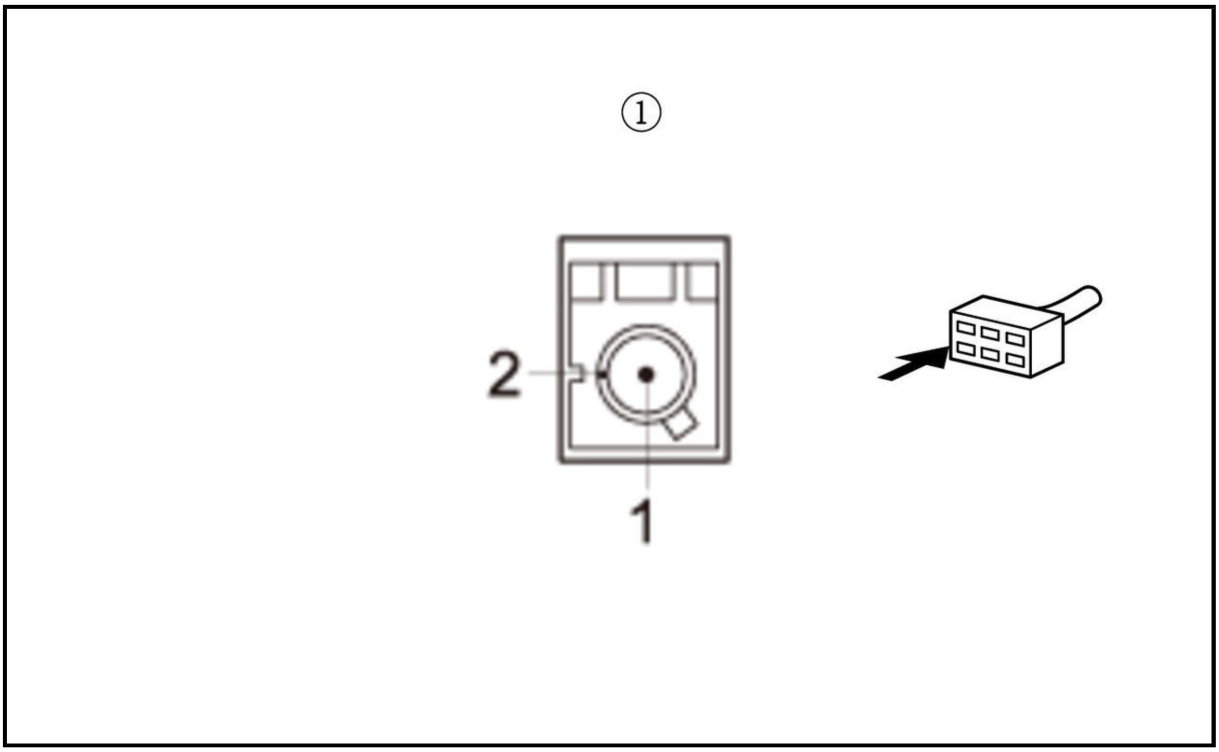

Is there 1.0 Ω or less?

YES

Replace the audio-navigation unit .

NO

There is an open in the wire. Replace the affected antenna lead.

AUDIO-NAVIGATION SYSTEM DTC 2608 (NAVIGATION UNIT)

DTC 2608 : R-Camera Diag

NOTE:

- **Check the vehicle 12 volt battery condition first** .
- This navigation DTC sets when NG is indicated in the Rear wide camera diagnosis (the Rear wide camera icon is red in the System Links).
- **Before you troubleshoot, make sure to follow the General Troubleshooting Information** .
- Check the connectors for poor connections or loose terminals.

1. Problem verification

-1. **Clear the hard error codes** .

-2. Turn the vehicle to the OFF (LOCK) mode.

-3. Wait for at least 6 seconds.

-4. **Check for hard error codes** .

Is DTC 2608 indicated?

YES

The failure is duplicated, go to step 2.

NO

Intermittent failure, the system is OK at this time.

2. Determine possible failure area (CAMERA_ADPT line, others)

-1. Turn the vehicle to the OFF (LOCK) mode.

-2. Disconnect the following connector.

Rearview camera 8P connector

-3. Turn the vehicle to the ON mode.

-4. Measure the voltage between test points 1 and 2.

Test condition	Vehicle ON mode
B	Rearview camera 8P connector: disconnected
Test point 1	**Rearview camera 8P connector No. 6**
Test point 2	Body ground

Is there about 5.0 V?

YES

The CAMERA_ADPT wire is OK. Go to step 4.

NO

Go to step 3.

3. Open wire check (CAMERA_ADPT line)

-1. Measure the voltage between test points 1 and 2.

Test condition	Vehicle ON mode
B	Rearview camera 8P connector: disconnected
Test point 1	**Audio-navigation unit connector C (32P) No. 16**
Test point 2	Body ground

Is there about 5.0 V?

YES

Repair an open in the wire.

NO

Replace the audio-navigation unit .

4. Determine possible failure area (rearview camera, others)

-1. Turn the vehicle to the OFF (LOCK) mode.

-2. Measure the resistance between test points 1 and 2.

Test condition	Vehicle OFF (LOCK) mode
B	Rearview camera 8P connector: disconnected

Test point 1	Rearview camera 8P connector No. 5
Test point 2	Body ground

Is there 1.0 Ω or less?

YES

Replace the rearview camera .

NO

Go to step 5.

5. Open wire check (SH_CAMERA line)

-1. Measure the resistance between test points 1 and 2.

Test condition	Vehicle OFF (LOCK) mode

B	Rearview camera 8P connector: disconnected
Test point 1	Audio-navigation unit connector C (32P) No. 28
Test point 2	Body ground

Is there 1.0 MΩ or more?

YES

Replace the audio-navigation unit .

NO

There is an open in the wire(s). Replace the affected shielded harness.

AUDIO-NAVIGATION SYSTEM DTC 2610 (NAVIGATION UNIT)

DTC 2610 : DRAM Diag

- Check the vehicle 12 volt battery condition first .
- This navigation DTC sets when a problem with the internal DRAM is detected (the HMI Unit icon is red in the System Links).
- Before you troubleshoot, make sure to follow the General Troubleshooting Information .

1. Problem verification

-1. Clear the hard error codes .

-2. Turn the vehicle to the OFF (LOCK) mode.

-3. Wait for at least 6 seconds.

-4. Check for hard error codes .

Is DTC 2610 indicated?

YES

Replace the audio-navigation unit .

NO

Intermittent failure, the system is OK at this time.

AUDIO-NAVIGATION SYSTEM DTC 2701 (NAVIGATION UNIT)

DTC 2701 : GPS Diag: Antenna

NOTE:

- **Check the vehicle 12 volt battery condition first** .
- This navigation DTC sets when Connection NG is indicated in the GPS antenna diagnosis (the GPS antenna icon is red in the System Links).
- **Before you troubleshoot, make sure to follow the General Troubleshooting Information** .

1. Problem verification

   -1. **Clear the hard error codes** .

   -2. Turn the vehicle to the OFF (LOCK) mode.

   -3. Wait for at least 6 seconds.

   -4. **Check for hard error codes** .

   Is DTC 2701 indicated?

   YES

   The failure is duplicated, go to step 2.

   NO

   Intermittent failure, the system is OK at this time.

2. GPS antenna check (substitution)

   -1. **Clear the hard error codes** .

   -2. Turn the vehicle to the OFF (LOCK) mode.

   -3. **Substitute a known-good GPS antenna** .

   -4. **Check for hard error codes** .

   Is DTC 1301 indicated?

   YES

   Replace the audio-navigation unit .

   NO

   Replace the original GPS antenna .

AUDIO-NAVIGATION SYSTEM DTC 2703 (NAVIGATION UNIT)

DTC 2703 : Aircon Diag

NOTE:

- **Check the vehicle 12 volt battery condition first** .

- This navigation DTC sets when Connection NG is indicated in the A/C diagnosis (the A/C icon is red in the System Links).
- Check for B-CAN DTCs and resolve them before troubleshooting.
- **Before you troubleshoot, make sure to follow the General Troubleshooting Information** .
- Check the connectors for poor connections or loose terminals.

1. Problem verification

   -1. **Clear the hard error codes** .

   -2. Turn the vehicle to the OFF (LOCK) mode.

   -3. Wait for at least 6 seconds.

   -4. **Check for hard error codes** .

   Is DTC 2703 indicated?

   YES

   The failure is duplicated, go to step 2.

   NO

   Intermittent failure, the system is OK at this time.

2. Open wire check (B-CAN_H line, B-CAN_L line)

   -1. Turn the vehicle to the OFF (LOCK) mode.

   -2. Disconnect the following connectors.

Audio-navigation unit connector A (24P)
Climate control unit connector A (32P)

   -3. Measure the resistance between test points 1 and 2.

Test condition	Vehicle OFF (LOCK) mode
B	Audio-navigation unit connector A (24P): disconnected
B	Climate control unit connector A (32P): disconnected
Test point 1	**Audio-navigation unit connector A (24P) No. 14**
Test point 2	**Climate control unit connector A (32P) No. 25**

Test point 1	**Audio-navigation unit connector A (24P) No. 24**

Test point 2	**Climate control unit connector A (32P) No. 8**

   Is there 1.0 Ω or less?

   YES

   Replace the climate control unit .

   NO

   Repair an open in the wire(s).

AUDIO-NAVIGATION SYSTEM DTC 2706 (NAVIGATION UNIT)

DTC 2706 : Gyro Diag: ECU Temp XX B°C

NOTE:

- **Check the vehicle 12 volt battery condition first** .
- This navigation DTC sets when NG is indicated in the GYRO sensor diagnosis (the Gyro Sensor icon is red in the System Links), and indicates the gyro sensor temperature when the DTC is detected.
- **Before you troubleshoot, make sure to follow the General Troubleshooting Information** .

1. Problem verification

   -1. **Clear the hard error codes** .

   -2. Turn the vehicle to the OFF (LOCK) mode.

   -3. Wait for at least 6 seconds.

   -4. **Check for hard error codes** .

   Is DTC 2706 indicated?

   YES

   Replace the audio-navigation unit .

   NO

   Intermittent failure, the system is OK at this time.

TROUBLESHOOTING

DTC B1575

DTC B1575 : Auto light sensor error

NOTE: If you are troubleshooting multiple DTCs, be sure to follow the instructions in B-CAN System Diagnosis Test Mode A .

DTC Description	DTC
B1575 Auto light sensor error	B

DTC (Automatic Lighting Control Unit)

1. Problem verification

   -1. Clear the DTCs with the HDS.

   -2. Turn the vehicle to the OFF (LOCK) mode and then the ON mode.

   -3. Check for DTCs with the HDS.

DTC Description	DTC
B1575 Auto light sensor error	B

   Is DTC B1575 indicated?

   YES

   Replace the automatic lighting control unit-sensor .

   NO

   Intermittent failure, the system is OK at this time.

DTC U1280 (AUTOMATIC LIGHTING CONTROL UNIT)

DTC U1280 : BUS OFF state is detected by CAN controller

NOTE: If you are troubleshooting multiple DTCs, be sure to follow the instructions in B-CAN System Diagnosis Test Mode A .

DTC Description	DTC
U1280 BUS OFF state is detected by CAN controller	B

DTC (Automatic Lighting Control Unit)

1. Problem verification

   -1. Clear the DTCs with the HDS.

   -2. Turn the vehicle to the OFF (LOCK) mode and then the ON mode.

   -3. Wait for at least 6 seconds.

-4. Check for DTCs with the HDS.

DTC Description	DTC
U1280 BUS OFF state is detected by CAN controller	B

Is DTC U1280 indicated?

YES

Go to body control module DTC U1280 troubleshooting .

NO

Intermittent failure, the system is OK at this time.

DTC U1281, U128D (AUTOMATIC LIGHTING CONTROL UNIT)

DTC U1281 : Auto light control unit lost communication with MICU **DTC U128D** : Auto light control unit lost communication with gauge control module

NOTE:

- If you are troubleshooting multiple DTCs, be sure to follow the instructions in B-CAN System Diagnosis Test Mode A .
- Refer to the DTC code shown on the display, and then inspect the connectors and terminals based on the instructions in the chart below.
- The DTC may be stored due to the grounding failure or the power source failure at the transmitting control unit (the grounding inspection and the power source inspection on each control unit are required prior to this checking process).

DTC Description	DTC
U1281 Auto light control unit lost communication with MICU	B
U128D Auto light control unit lost communication with gauge control module	B

DTC (Automatic Lighting Control Unit)

1. Problem verification

-1. Clear the DTC with the HDS.

-2. Turn the vehicle to the OFF (LOCK) mode and then the ON mode.

-3. Wait for at least 6 seconds.

-4. Check for DTCs with the HDS.

DTC Description	DTC
U1281 Auto light control unit lost communication with MICU	B
U128D Auto light control unit lost communication with gauge control module	B

Are any DTCs indicated?

YES

Go to step 2.

NO

Intermittent failure, the system is OK at this time. Check for poor connections or loose terminals.

2. Open wire check (B-CAN_H line, B-CAN_L line)

-1. Turn the vehicle to the OFF (LOCK) mode.

-2. Disconnect the receiving control unit connector.

Automatic lighting control unit-sensor 5P connector

-3. Disconnect the transmitting control unit connector(s).

Refer to the DTC shown on the display, then disconnect the connector(s) based on the instructions (see chart below).

DTC	Connector
U1281	Body control module connector B (36P)
U128D	Gauge control module connector A (32P)

-4. Check for continuity between the receiving control unit and the transmitting control unit on the B-CAN_H circuit and the B-CAN_L circuit.

Test condition	Vehicle OFF (LOCK) mode Automatic lighting control unit-sensor 5P connector: disconnected Transmitting control unit connector(s) for indicated DTCs: disconnected

DTC	Circuit name	Receiving control unit		Transmitting control unit	
		Connector	Terminal	Connector	Terminal
U1281	B-CAN_H	Automatic lighting control unit-sensor 5P connector	No. 1	Body control module connector B (36P)	No. 20
	B-CAN_L		No. 2		No. 21
U128D	B-CAN_H	Automatic lighting control unit-sensor 5P connector	No. 1	Gauge control module connector A (32P)	No. 30
	B-CAN_L		No. 2		No. 31

Is there continuity?

YES

The B-CAN_H wire and the B-CAN_L wire are OK. Refer to the DTC shown on the display, then replace the control unit based on the instructions (see chart below).

DTC	Operation for transmitting control unit
U1281	Body control module
U128D	Gauge control module

NO

Repair an open in the B-CAN_H wire and/or the B-CAN_L wire.

DTC TROUBLESHOOTING

DTC B1575

DTC B1575 : Auto light sensor error

NOTE: If you are troubleshooting multiple DTCs, be sure to follow the instructions in B-CAN System Diagnosis Test Mode A .

DTC Description	DTC
B1575 Auto light sensor error	B

DTC (Automatic Lighting Control Unit)

1. Problem verification

   -1. Clear the DTCs with the HDS.

   -2. Turn the vehicle to the OFF (LOCK) mode and then the ON mode.

   -3. Check for DTCs with the HDS.

DTC Description	DTC
B1575 Auto light sensor error	B

Is DTC B1575 indicated?

YES

Replace the automatic lighting control unit-sensor .

NO

Intermittent failure, the system is OK at this time.

DTC U1280 (AUTOMATIC LIGHTING CONTROL UNIT)

DTC U1280 : B-CAN communication bus line error (BUS-OFF)

NOTE: If you are troubleshooting multiple DTCs, be sure to follow the instructions in B-CAN System Diagnosis Test Mode A .

DTC Description	DTC
U1280 B-CAN communication bus line error (BUS-OFF)	B

DTC (Automatic Lighting Control Unit)

1. Problem verification

   -1. Clear the DTCs with the HDS.

   -2. Turn the vehicle to the OFF (LOCK) mode and then the ON mode.

   -3. Wait for at least 6 seconds.

-4. Check for DTCs with the HDS.

DTC Description	DTC
U1280 B-CAN communication bus line error (BUS-OFF)	B

Is DTC U1280 indicated?

YES

Go to body control module DTC U1280 troubleshooting .

NO

Intermittent failure, the system is OK at this time.

DTC U1281, U128D (AUTOMATIC LIGHTING CONTROL UNIT)

DTC U1281 : Auto Light Control Unit lost communication with MICU (body control module)

DTC U128D : Auto light control unit lost communication with gauge control module

NOTE:

- If you are troubleshooting multiple DTCs, be sure to follow the instructions in **B-CAN System Diagnosis Test Mode A** .
- Refer to the DTC code shown on the display, and then inspect the connectors and terminals based on the instructions in the table below.
- The DTC may be stored due to the grounding failure or the power source failure at the transmitting control unit (the grounding inspection and the power source inspection on each control unit are required prior to this checking process).

DTC Description	DTC
U1281 Auto Light Control Unit lost communication with MICU (body control module)	B
U128D Auto light control unit lost communication with gauge control module	B

DTC (Automatic Lighting Control Unit)

1. Problem verification

-1. Clear the DTC with the HDS.

-2. Turn the vehicle to the OFF (LOCK) mode and then the ON mode.

-3. Wait for at least 6 seconds.

-4. Check for DTCs with the HDS.

DTC Description	DTC
U1281 Auto Light Control Unit lost communication with MICU (body control module)	B

DTC Description	DTC
U128D Auto light control unit lost communication with gauge control module	B

Are any DTCs indicated?

YES

Go to step 2.

NO

Intermittent failure, the system is OK at this time. Check for poor connections or loose terminals.

2. Open wire check (B-CAN_H line, B-CAN_L line)

-1. Turn the vehicle to the OFF (LOCK) mode.

-2. Disconnect the receiving control unit connector.

Automatic lighting control unit-sensor 5P connector

-3. Disconnect the transmitting control unit connector(s).

Refer to the DTC shown on the display, then disconnect the connector(s) based on the instructions (see table).

DTC	Connector
U1281	Body control module connector B (36P)
U128D	Gauge control module connector A (32P)

-4. Measure the resistance between the receiving control unit and the transmitting control unit on the B-CAN_H circuit and the B-CAN_L circuit.

Test condition	Vehicle OFF (LOCK) mode Automatic lighting control unit-sensor 5P connector: disconnected Transmitting control unit connector(s) for indicated DTCs: disconnected

DTC	Circuit name	Receiving control unit		Transmitting control unit	
		Connector	Terminal	Connector	Terminal
U1281	B-CAN_H	Automatic lighting control unit-sensor 5P connector	No. 1	Body control module connector B (36P)	No. 20
	B-CAN_L		No. 2		No. 21
U128D	B-CAN_H	Automatic lighting control unit-sensor 5P connector	No. 1	Gauge control module connector A (32P)	No. 30
	B-CAN_L		No. 2		No. 31

Is there 1.0 Ω or less?

YES

The B-CAN_H wire and the B-CAN_L wire are OK.

Refer to the DTC shown on the display, then replace the control unit based on the instructions (see table).

DTC	Operation for transmitting control unit
U1281	Body control module
U128D	Gauge control module

NO

Repair an open in the B-CAN_H wire and/or the B-CAN_L wire.

DTC TROUBLESHOOTING INDEX

BLIND SPOT INFORMATION (BSI) SYSTEM DTC TROUBLESHOOTING INDEX

Left Side BSI Radar Unit DTC

DTC	Detection Item
B18A1	Left Side BSI Radar Unit Internal Circuit Error
B18A5	Left Side BSI Radar Unit Temperature High
B18B4	Left Side BSI Radar Unit Dirty
B18B8	Left Side BSI Radar Unit Azimuth Off Alignment
B18BA	Different Version in the Left and Right Side BSI Radar Unit
B18C5	Short to GND in the Left Side BSI Radar Unit Indicator Circuit
B18C6	Short to Power in the Left Side BSI Radar Unit Indicator Circuit
B18C7	Open in the Left Side BSI Radar Unit Indicator Circuit
B18DB	Left Side BSI Radar Unit Received The Audio/Navigation Unit Failure Information
B18EA	(Left Side BSI Radar Unit Received PCM (A/T System) Failure Information)
U1280	Communication Bus Line Error (Bus-Off)
U1281	Left Side BSI Radar Unit Lost Communication With MICU or BCM
U128D	Left Side BSI Radar Unit Lost Communication With Gauge Control Module
U1297	Left Side BSI Radar Unit Lost Communication With Right Side BSI Radar Unit

Right Side BSI Radar Unit DTC

DTC	Detection Item
B1E51	Right Side BSI Radar Unit Internal Circuit Error
B1E55	Right Side BSI Radar Unit Temperature High
B1E64	Right Side BSI Radar Unit Dirty
B1E68	Right Side BSI Radar Unit Azimuth Off Alignment
B1E6A	Different Version in the Left and Right Side BSI Radar Unit
B1E75	Short to GND in the Right Side BSI Radar Unit Indicator Circuit
B1E76	Short to Power in the Right Side BSI Radar Unit Indicator Circuit
B1E77	Open in the Right Side BSI Radar Unit Indicator Circuit
B1E9A	(Right Side BSI Radar Unit Received PCM (A/T System) Failure Information)
U1280	Communication Bus Line Error (Bus-Off)
U1281	Right Side BSI Radar Unit Lost Communication With MICU or BCM
U128D	Right Side BSI Radar Unit Lost Communication With Gauge Control Module
U128F	Right Side BSI Radar Unit Lost Communication With Left Side BSI Radar Unit

HOW TO INFORMATION

HOW TO TROUBLESHOOT THE BLIND SPOT INFORMATION (BSI) SYSTEM

NOTE: Do not make any bumper repairs in the areas over or near the two radar units on vehicles equipped with the Blind Spot Information (BSI) System. The composition of the repair materials, and/or increased material thickness in the repaired area, may interfere with the BSI radar unit operation.

BSI Indicator (Amber)

When the BSI system detects a problem, the BSI system stops operating, then the BSI indicator (amber) turns on.

NOTE:

- For locations of the indicator, refer to System Warning/Indicator Index .
- For BSI system function, review the Blind Spot Information System Description .
- The BSI communicates with other control units via B-CAN. For BSI system diagram, review the Blind Spot Information (BSI) System Diagram .

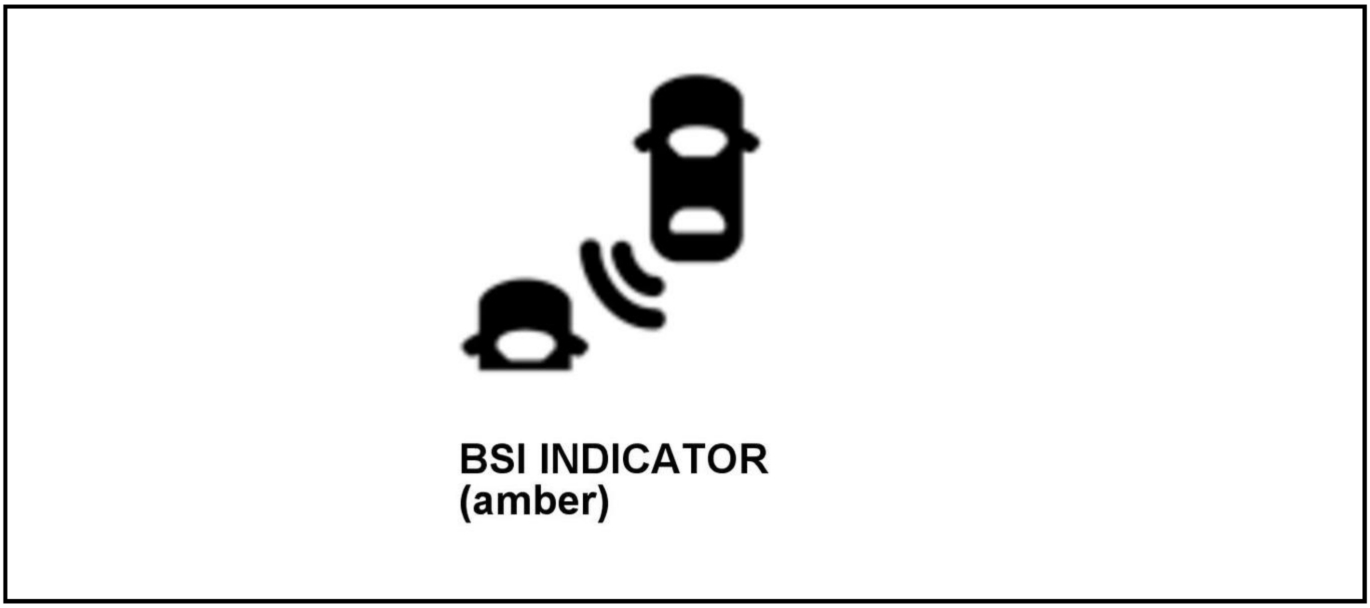

BSI Alert Indicator

While the BSI system is working, the system turns on/blinks * the appropriate BSI alert indicator (right or left) when it detects another vehicle on either side of the rear.

*: When the driver moves the turn signal lever toward the side with the BSI alert indicator on, the alert indicator blinks to alert the driver.

NOTE: For locations of each indicator, refer to Component Location Index .

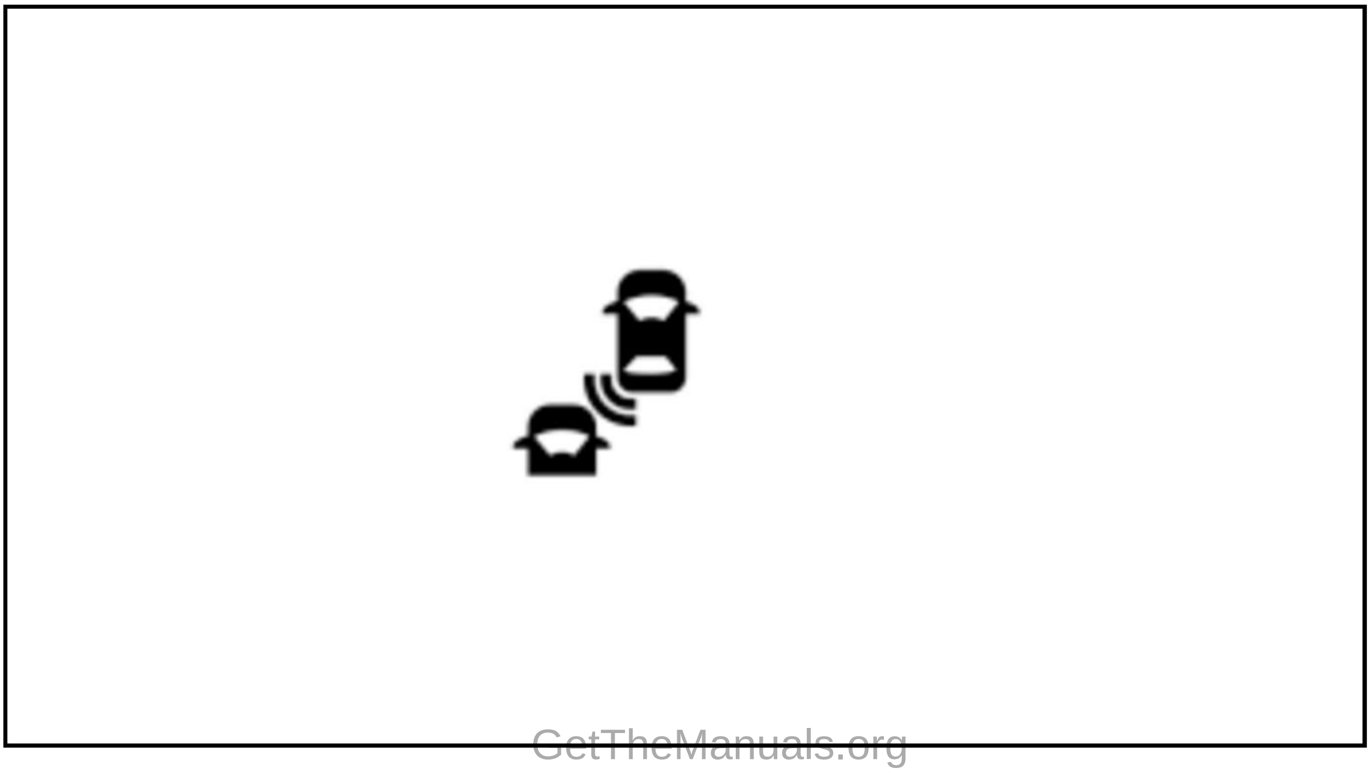

Self-Diagnostic Function

When a problem is detected by the self-diagnostic function, the BSI stops operating, the BSI unit is display the warning information on the MID.

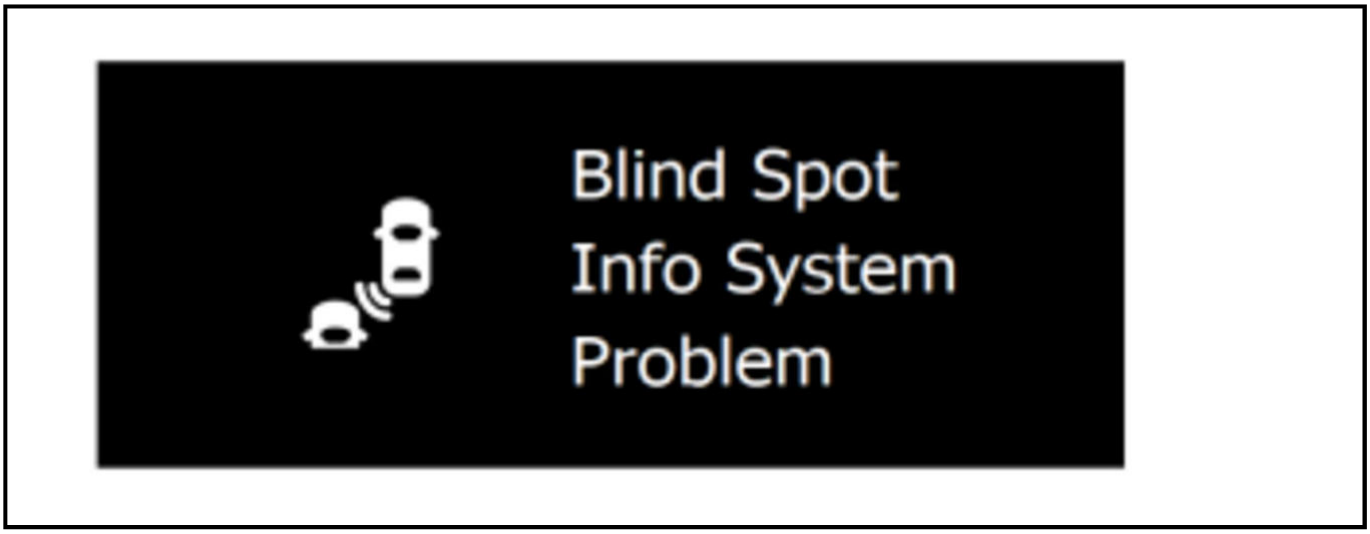

Blind Spot
Info System
Problem

When mud, dirt, wet snow, leaves, or other foreign material sticks to the side of the rear bumper, the BSI system stops operating and the message on the MID indicates that the BSI radar units must be cleaned. It also turns on the BSI indicator at the same time, and stores the DTC(s).

When the obstruction or contamination is removed, the indicator on the MID goes off and the BSI system automatically returns to ON.

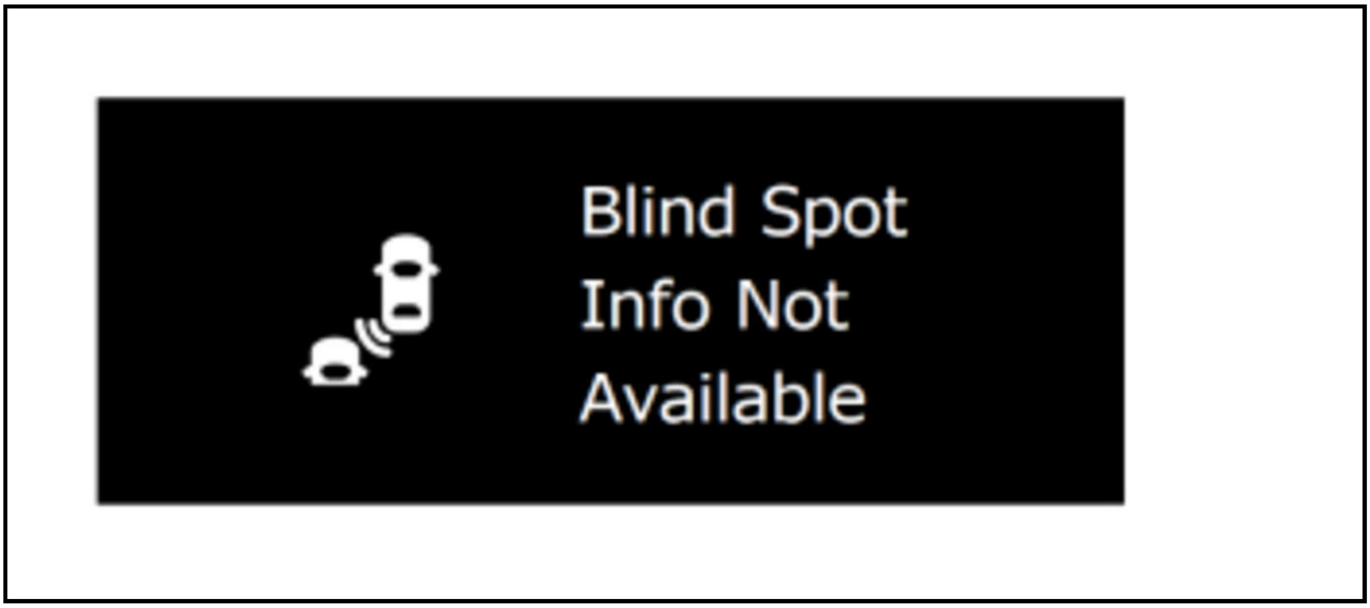

Blind Spot
Info Not
Available

BSI Radar Units

The BSI radar units are installed behind the rear bumper on both sides of the vehicle, and they have a control unit. Each BSI radar unit communicates with the other BSI radar unit. The BSI radar units detect other vehicles as they approach your vehicle from the rear sides, and the BSI radar units send this information to the BSI alert indicator.

CAN Communications

B-CAN

The BSI radar units are on the B-CAN system, and they communicate with other units (gauge control module, MICU) via B-CAN.

If the BSI radar units detect a communication error or a malfunction in another connected unit, the BSI system will not operate even though it is OK.

In this case, the BSI indicator and the related unit indicator will come on and stay on.

Intermittent Failures

The term "intermittent failure" means a system may have had a failure, but it checks OK now. If you cannot reproduce the condition, check for loose connections and terminals. Also check ground and power connections related to the circuit that you are troubleshooting.

How to Troubleshoot DTCs

Check the DTCs with the HDS.

Before troubleshooting, check and note these items:

- Ask the customer about the conditions when the problem occurred, and try to reproduce the same conditions for troubleshooting.
- After the troubleshooting or repairs are done, clear the DTCs, and test-drive the vehicle under the same conditions as when the DTC was originally set. Make sure the BSI indicator does not come on.
- The BSI system sometimes stops operating because of the environment (weather, road conditions, driving conditions, etc.). A DTC may be stored in these cases.

Some DTCs may be stored even when the system is OK. For example, the BSI indicator may come on with one or more of these DTCs:

B18A5:	Left Side BSI Radar Unit Temperature High
B1E55:	Right Side BSI Radar Unit Temperature High
B18B4:	Left Side BSI Radar Unit Dirty
B1E64:	Right Side BSI Radar Unit Dirty

How to Retrieve DTCs

1. Connect the HDS

2. Use the HDS to check for BSI system DTCs.

3. Read and record the DTC:4. Turn the vehicle to the OFF (LOCK) mode.

5. Disconnect the HDS from the DLC.

6. Do the troubleshooting procedure for the DTC.

How to Clear DTCs

1. Connect the HDS

2. Clear the DTC(s) by following the screen prompts on the HDS.

3. Turn the vehicle to the OFF (LOCK) mode.

4. Disconnect the HDS from the DLC.

HOW TO TROUBLESHOOT THE CROSS TRAFFIC MONITOR

Cross Traffic Monitor Indicator

When the cross traffic monitor system fails, the cross traffic monitor indicator comes on on the center display unit.

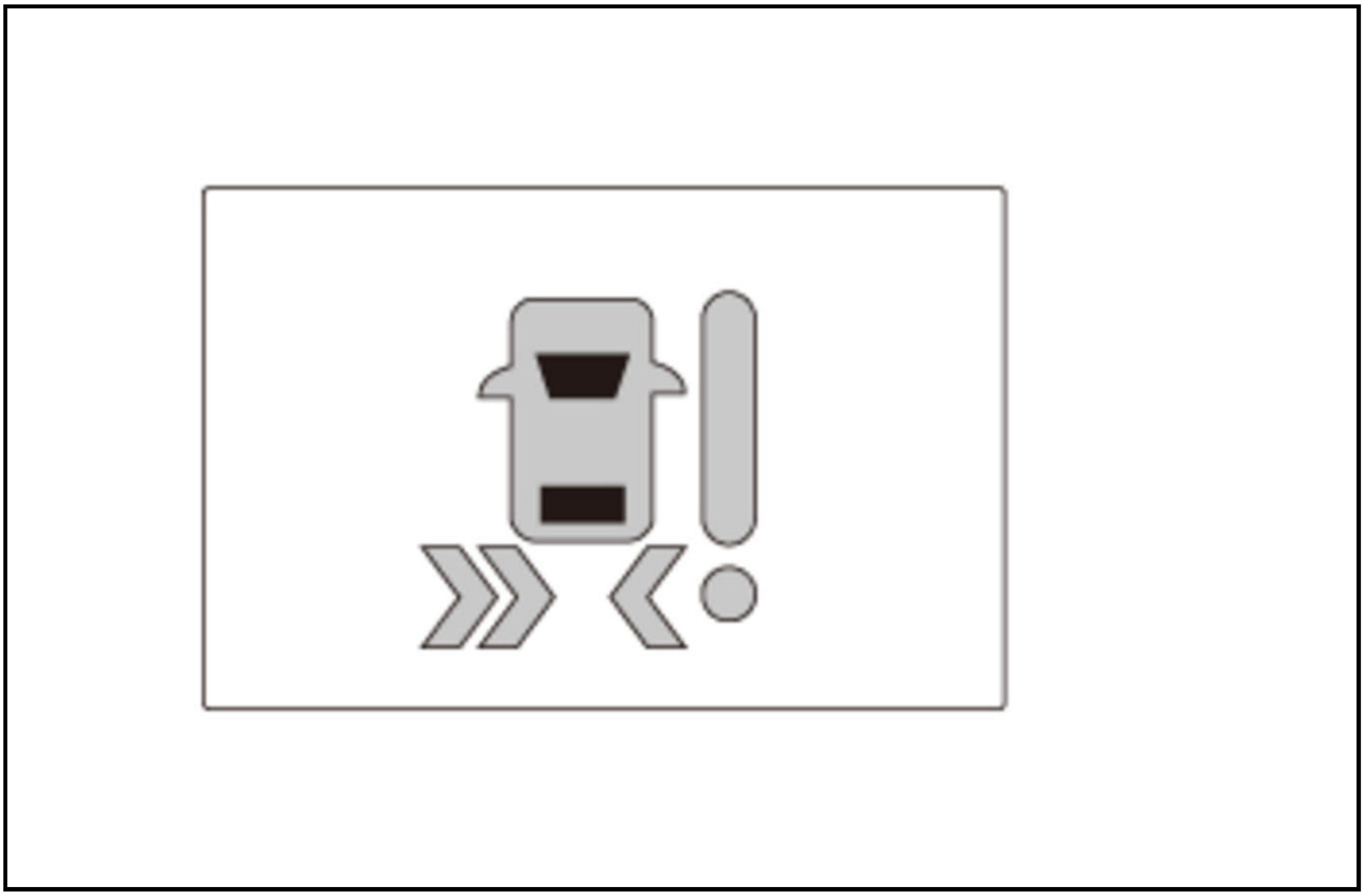

Control Units

The cross traffic monitor system is controlled by BSI radar units. If the BSI radar unit malfunctions, the cross traffic monitor system stops operating.

CAN Communications

B-CAN

The cross traffic monitor system is controlled by the BSI radar units. The BSI radar units are on the B-CAN system, and they communicate with other units via B-CAN.

If the BSI radar units detect a communication error or a malfunction in another connected unit, the cross traffic monitor system will not operate even though it is OK.

Intermittent Failures

The term "intermittent failure" means a system may have had a failure, but it checks OK now. If you cannot reproduce the condition, check for loose connections and terminals. Also check ground and power connections related to the circuit that you are troubleshooting.

How to Troubleshoot DTCs

Check the DTCs with the HDS.

Before troubleshooting, check and note these items:

- Ask the customer about the conditions when the problem occurred, and try to reproduce the same conditions for troubleshooting.
- After the troubleshooting or repairs are done, clear the DTCs, and test-drive the vehicle under the same conditions as when the DTC was originally set. Make sure the cross traffic monitor indicator does not

come on.

How to Retrieve DTCs

1. Connect the HDS

2. Use the HDS to check for BSI system DTCs.

3. Read and record the DTC:4. Turn the vehicle to the OFF (LOCK) mode.

5. Disconnect the HDS from the DLC.

6. Do the troubleshooting procedure for the DTC.

How to Clear DTCs

1. Connect the HDS

2. Clear the DTC(s) by following the screen prompts on the HDS.

3. Turn the vehicle to the OFF (LOCK) mode.

4. Disconnect the HDS from the DLC.

DTC TROUBLESHOOTING

DTC B18A1, B1E51

DTC B18A1 : Left Side BSI Radar Unit Internal Circuit Error

DTC B1E51 : Right Side BSI Radar Unit Internal Circuit Error

NOTE: Before you troubleshoot, review the general troubleshooting information.

DTC Description	DTC
B18A1 Left side BSI radar unit internal circuit error	B
B1E51 Right side BSI radar unit internal circuit error	B

DTC (BSI)

1. Problem verification

   -1. Turn the vehicle to the ON mode.

   -2. Clear the DTC with the HDS.

   -3. Turn the vehicle to the OFF (LOCK) mode.

   -4. Turn the vehicle to the ON mode, then wait for at least 5 seconds.

   -5. Check for DTCs with the HDS.

DTC Description	DTC
B18A1 Left side BSI radar unit internal circuit error	B
B1E51 Right side BSI radar unit internal circuit error	B

Are any DTCs indicated?

YES

Replace the appropriate BSI radar unit .

NO

Intermittent failure, the system is OK at this time. Refer to intermittent failures troubleshooting.

DTC B18A5, B1E55

DTC B18A5 : Left Side BSI Radar Unit Temperature High

DTC B1E55 : Right Side BSI Radar Unit Temperature High

NOTE: Before you troubleshoot, review the general troubleshooting information.

DTC Description	DTC
B18A5 Left side BSI radar unit temperature high	B
B1E55 Right side BSI radar unit temperature high	B

DTC (BSI)

1. Problem verification

   -1. Check the exhaust system and the heat shields for modifications or damage.

   Are all parts OK?

   YES

   Intermittent failure due to temporary high temperature around the appropriate BSI radar unit, the system is OK at this time. Refer to intermittent failures troubleshooting.

   NO

   Repair or replace the faulty part.

DTC B18B4, B1E64

DTC B18B4 : Left Side BSI Radar Unit Dirty

DTC B1E64 : Right Side BSI Radar Unit Dirty

NOTE:

- Before you troubleshoot, review the general troubleshooting information.
- DTC B18B4 or DTC B1E64 may be stored due to environment (including weather, a traffic condition, and the drive situation) or temporary contamination around the rear bumper.

DTC Description	DTC
B18B4 Left side BSI radar unit dirty	B
B1E64 Right side BSI radar unit dirty	B

DTC (BSI)

1. Problem verification

   -1. Turn the vehicle to the ON mode.

   -2. Clear the DTC with the HDS.

-3. Turn the vehicle to the OFF (LOCK) mode.

-4. Turn the vehicle to the ON mode, then wait for at least 5 seconds.

-5. Check for DTCs with the HDS.

DTC Description	DTC
B18B4 Left side BSI radar unit dirty	B
B1E64 Right side BSI radar unit dirty	B

Is DTC B18B4 or B1E64 indicated?

YES

The failure is duplicated. Go to step 2.

NO

Intermittent failure, the system is OK at this time. **Refer to intermittent failures troubleshooting**.

2. Outside rear bumper check

-1. Turn the vehicle to the OFF (LOCK) mode.

-2. Check the outside of rear bumper for snow, ice, dirt, contaminants, or stickers.

Is it OK?

YES

Go to step 3.

NO

Completely wipe off any dirt or contaminants from the rear bumper.

3. Inside rear bumper check

-1. **From the rear wheel arch, remove the appropriate side of the rear bumper** .

-2. Check the inside of the rear bumper for snow, ice, dirt, or contaminants. Also, check the appropriate BSI radar unit surface for dirt or contaminants.

Is it OK?

YES

Replace the appropriate BSI radar unit .

NO

Clean the inside of the rear bumper for dirt or contaminations around the BSI radar unit.

DTC B18B8, B1E68

DTC B18B8 : Left Side BSI Radar Unit Azimuth Off Alignment

DTC B1E68 : Right Side BSI Radar Unit Azimuth Off Alignment

NOTE: **Before you troubleshoot, review the general troubleshooting information**.

DTC Description	DTC
B18B8 Left side BSI radar unit azimuth off alignment	B
B1E68 Right side BSI radar unit azimuth off alignment	B

DTC (BSI)

1. Vehicle condition check:

   Check the vehicle condition.

   NOTE: The BSI system cannot work properly in the following vehicle conditions:

   - Make sure the suspension is not modified.
   - Make sure all the tires are the correct size.
   - Set the tire pressures to the specifications shown on the doorjamb label.

   Is it OK?

   YES

   Go to step 2.

   NO

   Explain to the customer that the system sometimes cannot detect under certain vehicle conditions.

2. BSI radar unit installation check

   -1. Check the installation of the appropriate BSI radar unit .

   Is it OK?

   YES

   Go to the BSI radar unit mounting area check .

   NO

   Install the BSI radar unit assembly properly. If damaged, replace the appropriate BSI radar unit assembly .

DTC B18BA, B1E6A

DTC B18BA : Different Version in the Left and Right Side BSI Radar Unit

DTC B1E6A : Different Version in the Left and Right Side BSI Radar Unit

NOTE: Before you troubleshoot, review the general troubleshooting information.

DTC Description	DTC
B18BA Different version in the left and right side BSI radar unit	B
B1E6A Different version in the left and right side BSI radar unit	B

DTC (BSI)

1. Problem verification

   -1. Turn the vehicle to the ON mode.

-2. Clear the DTC with the HDS.

-3. Turn the vehicle to the OFF (LOCK) mode.

-4. Turn the vehicle to the ON mode, then wait for at least 5 seconds.

-5. Check for DTCs with the HDS.

DTC Description	DTC
B18BA Different version in the left and right side BSI radar unit	B
B1E6A Different version in the left and right side BSI radar unit	B

Is DTC B18BA or B1E6A indicated?

YES

An incorrect BSI radar unit is installed. **Replace the appropriate BSI radar unit** with the proper part.

NO

Intermittent failure, the system is OK at this time. **Refer to intermittent failures troubleshooting**.

DTC B18C5, B1E75

DTC B18C5 : Short to GND in the Left Side BSI Radar Unit Indicator Circuit

DTC B1E75 : Short to GND in the Right Side BSI Radar Unit Indicator Circuit

NOTE: **Before you troubleshoot, review the general troubleshooting information**.

DTC Description	DTC
B18C5 Short to GND in the left side BSI radar unit indicator circuit	B
B1E75 Short to GND in the right side BSI radar unit indicator circuit	B

DTC (BSI)

1. Problem verification

-1. Turn the vehicle to the ON mode.

-2. Clear the DTC with the HDS.

-3. Turn the vehicle to the OFF (LOCK) mode.

-4. Turn the vehicle to the ON mode, then wait for at least 2 seconds.

-5. Check for DTCs with the HDS.

DTC Description	DTC
B18C5 Short to GND in the left side BSI radar unit indicator circuit	B
B1E75 Short to GND in the right side BSI radar unit indicator circuit	B

Is DTC B18C5 or B1E75 indicated?

YES

The failure is duplicated. Go to step 2.

NO

Intermittent failure, the system is OK at this time. **Refer to intermittent failures troubleshooting**.

2. DTC check

-1. Clear the DTC with the HDS.

-2. Turn the vehicle to the OFF (LOCK) mode.

-3. Disconnect the following connector(s) related to the DTC.

Left BSI alert indicator 2P connector
Right BSI alert indicator 2P connector

-4. Turn the vehicle to the ON mode.

-5. Check for DTCs with the HDS.

DTC Description	DTC
B18C5 Short to GND in the left side BSI radar unit indicator circuit	B
B1E75 Short to GND in the right side BSI radar unit indicator circuit	B
B18C7 Open in the left side BSI radar unit indicator circuit	B
B1E77 Open in the right side BSI radar unit indicator circuit	B

Does DTC B18C5 change to DTC B18C7, or B1E75 change to DTC B1E77?

YES

Replace the appropriate BSI alert indicator .

NO

Go to step 3.

3. Shorted wire check (BSI_L_IND, BSI_R_IND line)

-1. Turn the vehicle to the OFF (LOCK) mode.

-2. Disconnect the following connector(s) related to the DTC.

Left side BSI radar unit 6P connector
Right side BSI radar unit 6P connector

-3. Check for continuity between test points 1 and 2.

Test condition	Vehicle OFF (LOCK) mode
B	Left side BSI radar unit 6P connector: disconnected
B	Right side BSI radar unit 6P connector: disconnected
B	Left BSI alert indicator 2P connector: disconnected
B	Right BSI alert indicator 2P connector: disconnected
Test point 1	Left BSI alert indicator 2P connector (female terminals) No. 1: ①
Test point 2	Body ground

Test point 1	Right BSI alert indicator 2P connector (female terminals) No. 1: ①
Test point 2	Body ground

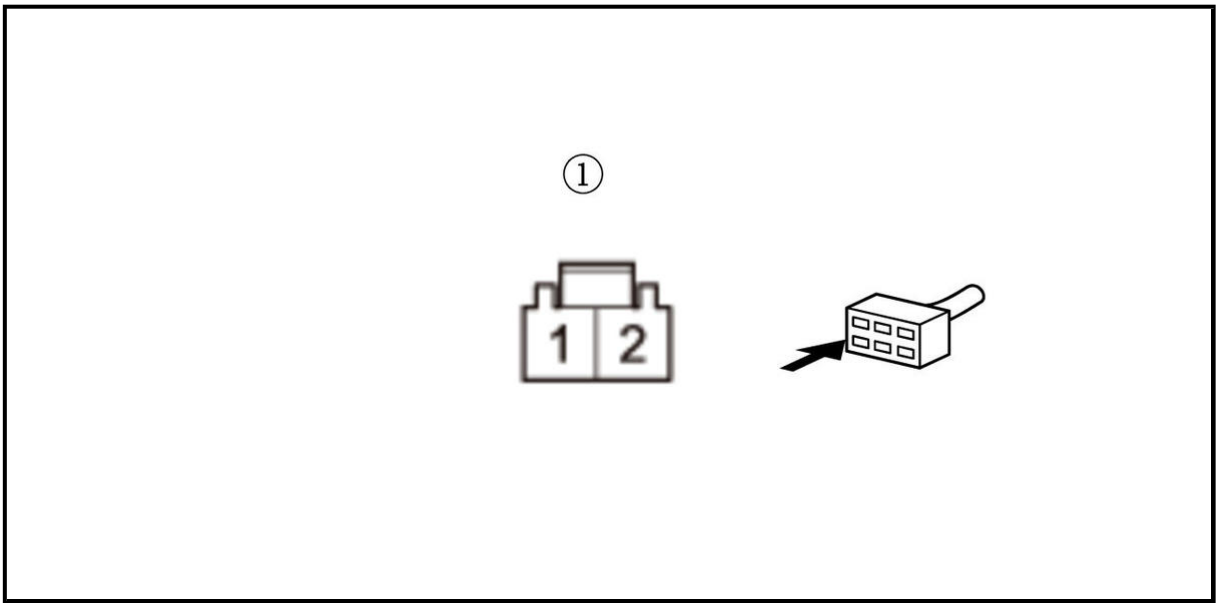

Is there continuity?

YES

Repair a short to ground in the wire between the BSI alert indicator and the BSI radar unit.

NO

Replace the appropriate BSI radar unit .

DTC B18C6, B1E76

DTC B18C6 : Short to Power in the Left Side BSI Radar Unit Indicator Circuit

DTC B1E76 : Short to Power in the Right Side BSI Radar Unit Indicator Circuit

NOTE: **Before you troubleshoot, review the general troubleshooting information**.

DTC Description	DTC
B18C6 Short to power in the left side BSI radar unit indicator circuit	B
B1E76 Short to power in the right side BSI radar unit indicator circuit	B

DTC (BSI)

1. Problem verification

-1. Turn the vehicle to the ON mode.

-2. Clear the DTC with the HDS.

-3. Turn the vehicle to the OFF (LOCK) mode.

-4. Turn the vehicle to the ON mode, then wait for at least 2 seconds.

-5. Check for DTCs with the HDS.

DTC Description	DTC
B18C6 Short to power in the left side BSI radar unit indicator circuit	B
B1E76 Short to power in the right side BSI radar unit indicator circuit	B

Is DTC B18C6 or B1E76 indicated?

YES

The failure is duplicated. Go to step 2.

NO

Intermittent failure, the system is OK at this time. **Refer to intermittent failures troubleshooting**.

2. DTC check

-1. Turn the vehicle to the ON mode.

-2. Clear the DTC with the HDS.

-3. Turn the vehicle to the OFF (LOCK) mode.

-4. Disconnect the following connector(s) related to the DTC.

Left BSI alert indicator 2P connector
Right BSI alert indicator 2P connector

-5. Turn the vehicle to the ON mode.

-6. Check for DTCs with the HDS.

DTC Description	DTC
B18C6 Short to power in the left side BSI radar unit indicator circuit	B
B1E76 Short to power in the right side BSI radar unit indicator circuit	B
B18C7 Open in the left side BSI radar unit indicator circuit	B
B1E77 Open in the right side BSI radar unit indicator circuit	B

Does DTC B18C6 change to DTC B18C7, or B1E76 change to DTC B1E77?

YES

Replace the appropriate BSI alert indicator .

NO

Go to step 3.

3. Shorted wire check (BSI_L_IND, BSI_R_IND line)

-1. Turn the vehicle to the OFF (LOCK) mode.

-2. Disconnect the following connector(s) related to the DTC.

Left side BSI radar unit 6P connector
Right side BSI radar unit 6P connector

-3. Turn the vehicle to the ON mode.

-4. Measure the voltage between test points 1 and 2.

Test condition	Vehicle ON mode
B	Left side BSI radar unit 6P connector: disconnected
B	Right side BSI radar unit 6P connector: disconnected
B	Left BSI alert indicator 2P connector: disconnected

B	Right BSI alert indicator 2P connector: disconnected
Test point 1	Left BSI alert indicator 2P connector (female terminals) No. 1: ①
Test point 2	Body ground

Test point 1	Right BSI alert indicator 2P connector (female terminals) No. 1: ①
Test point 2	Body ground

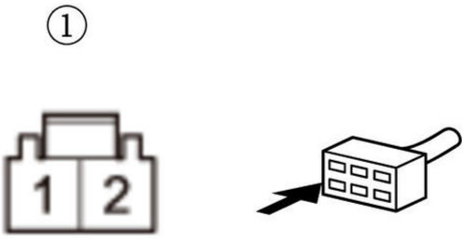

Is there battery voltage?

YES

Repair a short to power in the wire between the BSI alert indicator and the BSI radar unit.

NO

Replace the appropriate BSI radar unit .

DTC B18C7, B1E77

DTC B18C7 : Open in the Left Side BSI Radar Unit Indicator Circuit

DTC B1E77 : Open in the Right Side BSI Radar Unit Indicator Circuit

NOTE: **Before you troubleshoot, review the general troubleshooting information**.

DTC Description	DTC
B18C7 Open in the left side BSI radar unit indicator circuit	B
B1E77 Open in the right side BSI radar unit indicator circuit	B

DTC (BSI)

1. Problem verification

-1. Turn the vehicle to the ON mode.

-2. Clear the DTC with the HDS.

-3. Turn the vehicle to the OFF (LOCK) mode.

-4. Turn the vehicle to the ON mode, then wait for at least 2 seconds.

-5. Check for DTCs with the HDS.

DTC Description	**DTC**
B18C7 Open in the left side BSI radar unit indicator circuit	B

DTC Description	**DTC**
B1E77 Open in the right side BSI radar unit indicator circuit	B

Is DTC B18C7 or B1E77 indicated?

YES

The failure is duplicated. Go to step 2.

NO

Intermittent failure, the system is OK at this time. **Refer to intermittent failures troubleshooting**.

2. BSI alert indicator check

-1. Turn the vehicle to the OFF (LOCK) mode.

-2. Disconnect the following connector(s) related to the DTC.

Left BSI alert indicator 2P connector
Right BSI alert indicator 2P connector

-3. Connect terminals 1 and body ground with a jumper wire.

Test condition	Vehicle OFF (LOCK) mode
B	Left BSI alert indicator 2P connector: disconnected
B	Right BSI alert indicator 2P connector: disconnected
Test point 1	Left BSI alert indicator 2P connector (female terminals) No. 1: ①
Test point 2	Body ground

Test point 1	Right BSI alert indicator 2P connector (female terminals) No. 1: ①
Test point 2	Body ground

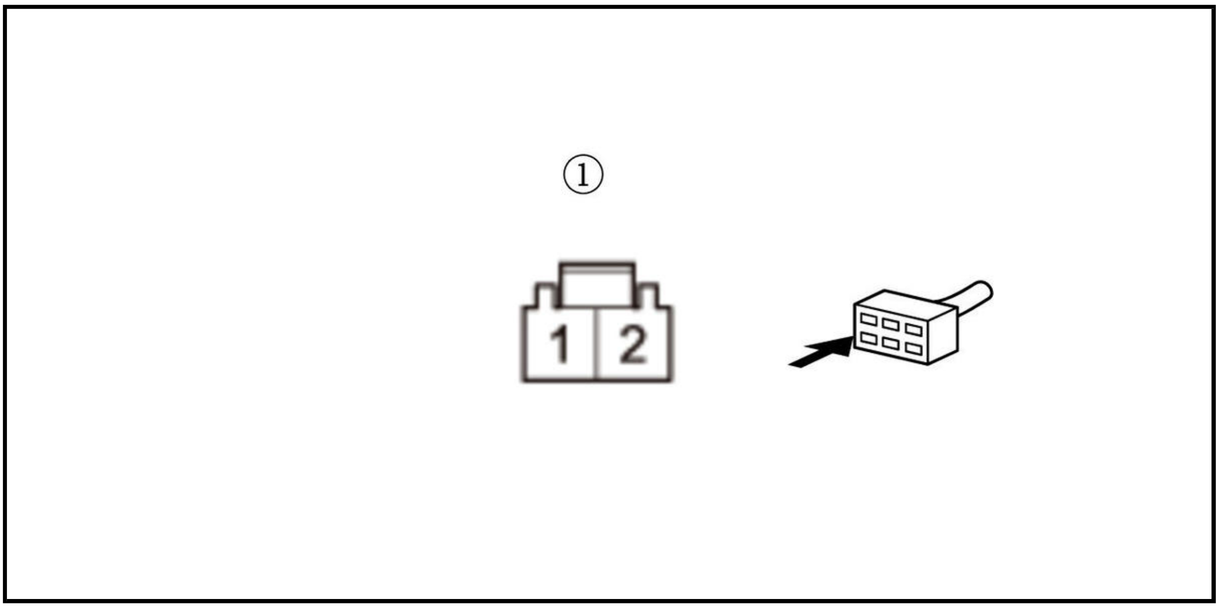

-4. Turn the vehicle to the ON mode.

-5. Check for DTCs with the HDS.

DTC Description	DTC
B18C7 Open in the left side BSI radar unit indicator circuit	B
B1E77 Open in the right side BSI radar unit indicator circuit	B
B18C5 Short to GND in the left side BSI radar unit indicator circuit	B
B1E75 Short to GND in the right side BSI radar unit indicator circuit	B

Does DTC B18C7 change to DTC B18C5, or DTC B1E77 change to B1E75?

YES

Go to step 3.

NO

Go to step 4.

3. Open wire check (GND line)

-1. Turn the vehicle to the OFF (LOCK) mode.

-2. Remove the jumper wire from the BSI alert indicator 2P connector.

-3. Check for continuity between test points 1 and 2.

Test condition	Vehicle OFF (LOCK) mode
B	Left BSI alert indicator 2P connector: disconnected
B	Right BSI alert indicator 2P connector: disconnected
Test point 1	Left BSI alert indicator 2P connector (female terminals) No. 2: ①
Test point 2	Body ground

Test point 1	Right BSI alert indicator 2P connector (female terminals) No. 2: ①
Test point 2	Body ground

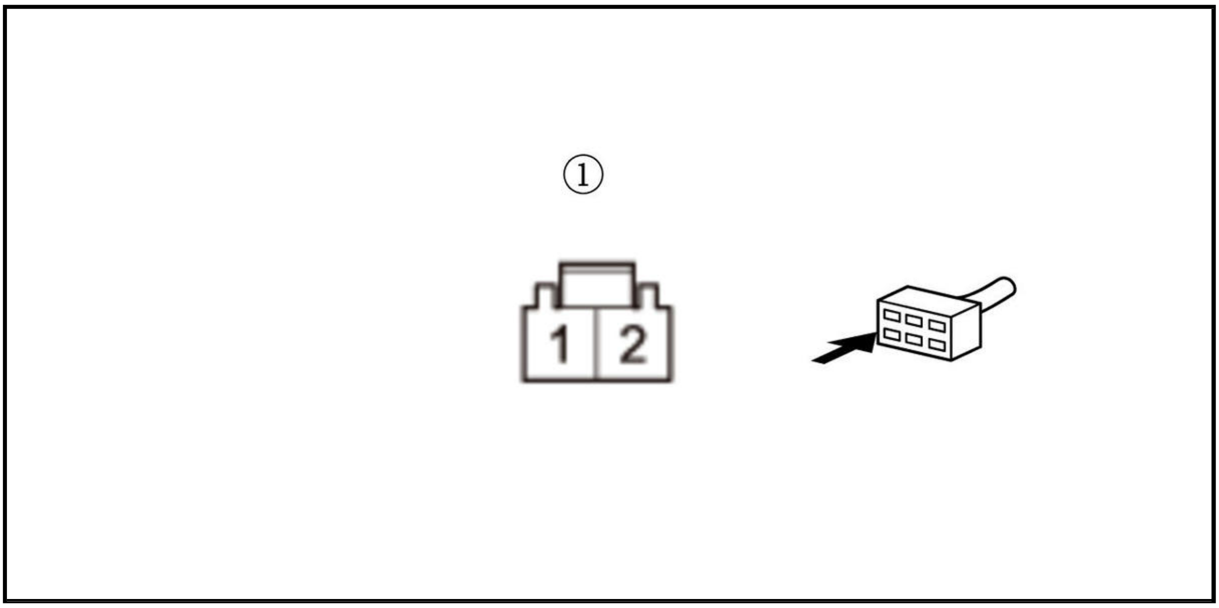

Is there continuity?

YES

Replace the appropriate BSI alert indicator .

NO

Repair an open in the wire between the BSI alert indicator and the body ground at G401 (left BSI alert indicator), G402 (right BSI alert indicator).

4. Open wire check (BSI_L_IND, BSI_R_IND lines)

-1. Turn the vehicle to the OFF (LOCK) mode.

-2. Remove the jumper wire from the BSI alert indicator 2P connector.

-3. Disconnect the following connector(s) related to the DTC.

Left side BSI radar unit 6P connector
Right side BSI radar unit 6P connector

-4. Measure the resistance between test points 1 and 2.

Test condition	Vehicle OFF (LOCK) mode
B	Left side BSI radar unit 6P connector: disconnected
B	Right side BSI radar unit 6P connector: disconnected
B	Left BSI alert indicator 2P connector: disconnected
B	Right BSI alert indicator 2P connector: disconnected
Test point 1	Left side BSI radar unit 6P connector No. 2
Test point 2	Left BSI alert indicator 2P connector (female terminals) No. 1: ①

Test point 1	Right side BSI radar unit 6P connector No. 2
Test point 2	Right BSI alert indicator 2P connector (female terminals) No. 1: ①

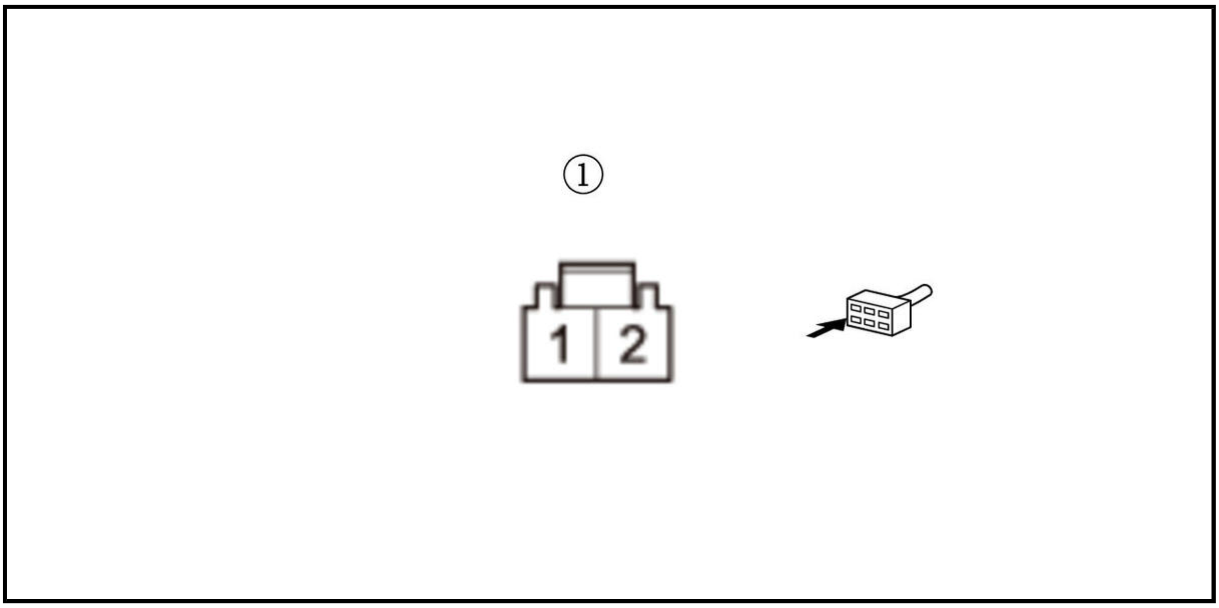

Is there 1.0 Ω or less?

YES

Replace the appropriate BSI radar unit .

NO

Repair an open in the wire between the BSI radar unit and the BSI alert indicator.

DTC B18DB

DTC B18DB : Left Side BSI Radar Unit Received The Audio/Navigation Unit Failure Information

NOTE: Before you troubleshoot, review the general troubleshooting information.

DTC Description	DTC
B18DB Left Side BSI Radar Unit Received The Audio/Navigation Unit Failure Information	B

DTC (BSI)

1. BSI radar unit connector check

   -1. Check for poor connections or loose terminals at the BSI radar unit 6P connector.

   Is the BSI radar unit 6P connector OK?

   YES

   Go to step 2.

   NO

   Repair or reconnect the connector securely.

2. BSI radar unit check

   -1. Turn the vehicle to the ON mode, and read the HDS.

DTC Description	DTC
B18DB Left Side BSI Radar Unit Received The Audio/Navigation Unit Failure Information	B

Is DTC B18DB indicated?

YES

Go to the **audio system** or **navigation system** general troubleshooting information. If the symptom is still present, **replace the appropriate BSI radar unit.**

NO

Intermittent failure, the system is OK at this time. **Refer to intermittent failures troubleshooting**.

DTC B18EA, B1E9A

DTC B18EA : (Left Side BSI Radar Unit Received PCM (A/T System) Failure Information)

DTC B1E9A : (Right Side BSI Radar Unit Received PCM (A/T System) Failure Information)

NOTE: **Before you troubleshoot, review the general troubleshooting information**.

DTC Description	DTC
B18EA (Left Side BSI Radar Unit Received PCM (A/T System) Failure Information)	B
B1E9A (Right Side BSI Radar Unit Received PCM (A/T System) Failure Information)	B

DTC (BSI)

1. BSI radar unit check

-1. Turn the vehicle to the ON mode, and read the HDS.

DTC Description	DTC
B18EA (Left Side BSI Radar Unit Received PCM (A/T System) Failure Information)	B
B1E9A (Right Side BSI Radar Unit Received PCM (A/T System) Failure Information)	B

Is DTC B18EA or B1E9A indicated?

YES

Go to the gear system general troubleshooting . If the symptom is still present, **replace the appropriate BSI radar unit** .

NO

Intermittent failure, the system is OK at this time. **Refer to intermittent failures troubleshooting**.

DTC U1280 (BSI RADAR UNIT)

DTC U1280 : Communication Bus Line Error (Bus-Off)

NOTE:

- Before you troubleshoot, review the general troubleshooting information.
- If the B-CAN lines problem or BSI radar unit internal circuit malfunction, HDS does not communicate with the BSI radar unit. If DTC U1280 is indicated HDS, the system is OK at this time.

DTC Description	DTC
U1280 Communication Bus Line Error (Bus-Off)	B
U1280 Communication bus line error (BUS-OFF)	B

DTC (BSI)

1. BSI radar unit connector check

   -1. Check for poor connections or loose terminals at the BSI radar unit 6P connector.

   Is the BSI radar unit 6P connector OK?

   YES

   Go to step 2.

   NO

   Repair or reconnect the connector securely.

2. BSI radar unit check

   -1. Turn the vehicle to the ON mode, and read the HDS.

DTC Description	DTC
U1280 Communication bus line error (BUS-OFF)	B
U1280 Communication bus line error (BUS-OFF)	B

   Does the HDS communicate with the BSI radar unit?

   YES

   Intermittent failure, the system is OK at this time. Refer to intermittent failures troubleshooting.

   NO

   Go to the multiplex integrated control system general troubleshooting . If the symptom is still present, replace the appropriate BSI radar unit .

DTC U1281 (BSI RADAR UNIT)

DTC U1281 : Left Side BSI Radar Unit Lost Communication With MICU or BCM

DTC U1281 : Right Side BSI Radar Unit Lost Communication With MICU or BCM

NOTE: Before you troubleshoot, review the general troubleshooting information.

DTC Description	DTC
U1281 Left Side BSI Radar Unit Lost Communication With MICU or BCM	B
U1281 Right Side BSI Radar Unit Lost Communication With MICU or BCM	B

DTC (BSI)

1. Problem verification

-1. Turn the vehicle to the ON mode.

-2. Clear the DTC with the HDS.

-3. Turn the vehicle to the OFF (LOCK) mode.

-4. Turn the vehicle to the ON mode, then wait for at least 2 seconds.

-5. Check for DTCs with the HDS.

DTC Description	DTC
U1281 Left Side BSI Radar Unit Lost Communication With MICU or BCM	B
U1281 Right Side BSI Radar Unit Lost Communication With MICU or BCM	B

Is DTC U1281 indicated?

YES

Go to the multiplex integrated control system general troubleshooting . If the symptom is still present, **replace the appropriate BSI radar unit** .

NO

Intermittent failure, the system is OK at this time. **Refer to intermittent failures troubleshooting**.

DTC U128D (BSI RADAR UNIT)

DTC U128D : Left Side BSI Radar Unit Lost Communication With Gauge Control Module

DTC U128D : Right Side BSI Radar Unit Lost Communication With Gauge Control Module

NOTE: **Before you troubleshoot, review the general troubleshooting information**.

DTC Description	DTC
U128D Left side BSI radar unit lost communication with gauge control module	B
U128D Right side BSI radar unit lost communication with gauge control module	B

DTC (BSI)

1. Problem verification

-1. Turn the vehicle to the ON mode.

-2. Clear the DTC with the HDS.

-3. Turn the vehicle to the OFF (LOCK) mode.

-4. Turn the vehicle to the ON mode, then wait for at least 2 seconds.

-5. Check for DTCs with the HDS.

DTC Description	DTC
U128D Left side BSI radar unit lost communication with gauge control module	B
U128D Right side BSI radar unit lost communication with gauge control module	B

Is DTC U128D indicated?

YES

Go to the multiplex integrated control system general troubleshooting . If the symptom is still present, replace the appropriate BSI radar unit .

NO

Intermittent failure, the system is OK at this time. Refer to intermittent failures troubleshooting.

DTC U1297, U128F (BSI RADAR UNIT)

DTC U1297 : Left Side BSI Radar Unit Lost Communication With Right Side BSI Radar Unit

DTC U128F : Right Side BSI Radar Unit Lost Communication With Left Side BSI Radar Unit

NOTE: Before you troubleshoot, review the general troubleshooting information.

DTC Description	DTC
U1297 Left side BSI radar unit lost communication with right side BSI radar unit	B
U128F Right side BSI radar unit lost communication with left side BSI control unit	B

DTC (BSI)

1. Problem verification

   -1. Turn the vehicle to the ON mode.

   -2. Clear the DTC with the HDS.

   -3. Turn the vehicle to the OFF (LOCK) mode.

   -4. Turn the vehicle to the ON mode, then wait for at least 2 seconds.

   -5. Check for DTCs with the HDS.

DTC Description	DTC
U1297 Left side BSI radar unit lost communication with right side BSI radar unit	B
U128F Right side BSI radar unit lost communication with left side BSI control unit	B

Is DTC U1297 or U128F indicated?

YES

Go to the multiplex integrated control system general troubleshooting . If the symptom is still present, replace the appropriate BSI radar unit .

NO

Intermittent failure, the system is OK at this time. Refer to intermittent failures troubleshooting.

DTC TROUBLESHOOTING

DTC B18A1, B1E51

DTC B18A1 : Left Side BSI Radar Unit Internal Circuit Error **DTC B1E51** : Right Side BSI Radar Unit Internal Circuit Error

NOTE: Before you troubleshoot, review the general troubleshooting information.

DTC Description	DTC
B18A1 Left side BSI radar unit internal circuit error	B
B1E51 Right side BSI radar unit internal circuit error	B

DTC (BSI)

1. Problem verification

   -1. Turn the vehicle to the ON mode.

   -2. Clear the DTC with the HDS.

   -3. Turn the vehicle to the OFF (LOCK) mode.

   -4. Turn the vehicle to the ON mode, then wait for at least 5 seconds.

   -5. Check for DTCs with the HDS.

DTC Description	DTC
B18A1 Left side BSI radar unit internal circuit error	B
B1E51 Right side BSI radar unit internal circuit error	B

Are any DTCs indicated?

YES

Replace the appropriate BSI radar unit .

NO

Intermittent failure, the system is OK at this time. Refer to intermittent failures troubleshooting.

DTC B18A5, B1E55

DTC B18A5 : Left Side BSI Radar Unit Temperature High **DTC B1E55** : Right Side BSI Radar Unit Temperature High

NOTE: Before you troubleshoot, review the general troubleshooting information.

DTC Description	DTC
B18A5 Left side BSI radar unit temperature high	B
B1E55 Right side BSI radar unit temperature high	B

DTC (BSI)

1. Problem verification

   -1. Check the exhaust system and the heat shields for modifications or damage.

   Are all parts OK?

   YES

   Intermittent failure due to temporary high temperature around the appropriate BSI radar unit, the system is OK at this time. **Refer to intermittent failures troubleshooting**.

   NO

   Repair or replace the faulty part.

DTC B18B4, B1E64

DTC B18B4 : Left Side BSI Radar Unit Dirty **DTC B1E64** : Right Side BSI Radar Unit Dirty

NOTE:

- **Before you troubleshoot, review the general troubleshooting information**.
- DTC B18B4 or DTC B1E64 may be stored due to environment (including weather, a traffic condition, and the drive situation) or temporary contamination around the rear bumper.

DTC Description	DTC
B18B4 Left side BSI radar unit dirty	B
B1E64 Right side BSI radar unit dirty	B

DTC (BSI)

1. Problem verification

   -1. Turn the vehicle to the ON mode.

   -2. Clear the DTC with the HDS.

   -3. Turn the vehicle to the OFF (LOCK) mode.

   -4. Turn the vehicle to the ON mode, then wait for at least 5 seconds.

   -5. Check for DTCs with the HDS.

DTC Description	DTC
B18B4 Left side BSI radar unit dirty	B
B1E64 Right side BSI radar unit dirty	B

   Are any DTCs indicated?

   YES

   The failure is duplicated. Go to step 2.

   NO

   Intermittent failure, the system is OK at this time. **Refer to intermittent failures troubleshooting**.

2. Outside rear bumper check

-1. Check the outside of rear bumper for snow, ice, dirt, contaminants, or stickers.

Is it OK?

YES

Go to step 3.

NO

Completely wipe off any dirt or contaminants from the rear bumper.

3. Inside rear bumper check

   -1. From the rear wheel arch, remove the appropriate side of the rear bumper .

   -2. Check the inside of the rear bumper for snow, ice, dirt, or contaminants. Also, check the appropriate BSI radar unit surface for dirt or contaminants.

   Is it OK?

   YES

   Replace the appropriate BSI radar unit .

   NO

   Clean the inside of the rear bumper for dirt or contaminations around the BSI radar unit.

DTC B18B8, B1E68

DTC B18B8 : Left Side BSI Radar Unit Azimuth Off Alignment **DTC B1E68** : Right Side BSI Radar Unit Azimuth Off Alignment

NOTE: Before you troubleshoot, review the general troubleshooting information.

DTC Description	DTC
B18B8 Left side BSI radar unit azimuth off alignment	B
B1E68 Right side BSI radar unit azimuth off alignment	B

DTC (BSI)

1. Vehicle condition check:

   Check the vehicle condition.

   NOTE: The BSI system cannot work properly in the following vehicle conditions:

   - Make sure the vehicle does not have aftermarket suspension.
   - Make sure all the tires are the correct size.
   - Set the tire pressures to the specifications shown on the doorjamb label.

   Is it OK?

   YES

   Go to step 2.

   NO

Explain to the customer that the system sometimes cannot detect under certain vehicle conditions.

2. BSI radar unit installation check

-1. Check the installation of the appropriate BSI radar unit .

Is it OK?

YES

Go to the BSI radar unit mounting area check .

NO

Install the BSI radar unit assembly properly. If damaged, replace the appropriate BSI radar unit assembly .

DTC B18BA, B1E6A

DTC B18BA : Different Version in the Left and Right Side BSI Radar Unit **DTC B1E6A** : Different Version in the Left and Right Side BSI Radar Unit

NOTE: Before you troubleshoot, review the general troubleshooting information.

DTC Description	DTC
B18BA Different version in the left and right side BSI radar unit	B
B1E6A Different version in the left and right side BSI radar unit	B

DTC (BSI)

1. Problem verification

-1. Turn the vehicle to the ON mode.

-2. Clear the DTC with the HDS.

-3. Turn the vehicle to the OFF (LOCK) mode.

-4. Turn the vehicle to the ON mode, then wait for at least 5 seconds.

-5. Check for DTCs with the HDS.

DTC Description	DTC
B18BA Different version in the left and right side BSI radar unit	B
B1E6A Different version in the left and right side BSI radar unit	B

Is DTC B18BA or B1E6A indicated?

YES

An incorrect BSI radar unit is installed. Replace the appropriate BSI radar unit with the proper part.

NO

Intermittent failure, the system is OK at this time. Refer to intermittent failures troubleshooting.

DTC B18C5, B1E75

DTC B18C5 : Short to GND in the Left Side BSI Radar Unit Indicator Circuit **DTC B1E75** : Short to GND in the Right Side BSI Radar Unit Indicator Circuit

NOTE: **Before you troubleshoot, review the general troubleshooting information**.

DTC Description	DTC
B18C5 Short to GND in the left side BSI radar unit indicator circuit	B
B1E75 Short to GND in the right side BSI radar unit indicator circuit	B

DTC (BSI)

1. Problem verification

   -1. Turn the vehicle to the ON mode.

   -2. Clear the DTC with the HDS.

   -3. Turn the vehicle to the OFF (LOCK) mode.

   -4. Turn the vehicle to the ON mode, then wait for at least 2 seconds.

   -5. Check for DTCs with the HDS.

DTC Description	DTC
B18C5 Short to GND in the left side BSI radar unit indicator circuit	B
B1E75 Short to GND in the right side BSI radar unit indicator circuit	B

   Is DTC B18C5 or B1E75 indicated?

   YES

   The failure is duplicated. Go to step 2.

   NO

   Intermittent failure, the system is OK at this time. **Refer to intermittent failures troubleshooting**.

2. DTC check

   -1. Clear the DTC with the HDS.

   -2. Turn the vehicle to the OFF (LOCK) mode.

   -3. Disconnect the following connectors.

Left BSI alert indicator 2P connector
Right BSI alert indicator 2P connector

   -4. Turn the vehicle to the ON mode.

   -5. Check for DTCs with the HDS.

DTC Description	DTC
B18C5 Short to GND in the left side BSI radar unit indicator circuit	B
B1E75 Short to GND in the right side BSI radar unit indicator circuit	B
B18C7 Open in the left side BSI radar unit indicator circuit	B
B1E77 Open in the right side BSI radar unit indicator circuit	B

   Is DTC B18C5 change to DTC B18C7, or B1E75 change to DTC B1E77?

YES

Replace the appropriate BSI alert indicator .

NO

Go to step 3.

3. Shorted wire check (BSI L IND, BSI R IND line)

-1. Turn the vehicle to the OFF (LOCK) mode.

-2. Disconnect the following connectors.

Left side BSI radar unit 6P connector
Right side BSI radar unit 6P connector

-3. Check for continuity between test points 1 and 2.

Test condition	Vehicle OFF (LOCK) mode
B	Left side BSI radar unit 6P connector: disconnected
B	Right side BSI radar unit 6P connector: disconnected
B	Left BSI alert indicator 2P connector: disconnected
B	Right BSI alert indicator 2P connector: disconnected
Test point 1	Left BSI alert indicator 2P connector (female terminals) No. 1: ①
Test point 2	Body ground

Test point 1	Right BSI alert indicator 2P connector (female terminals) No. 1: ①
Test point 2	Body ground

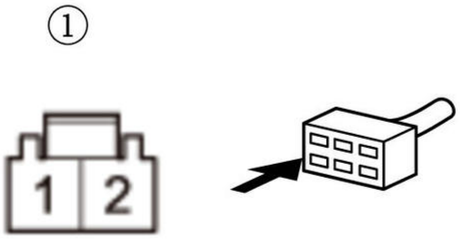

Is there continuity?

YES

Repair a short to ground in the wire between the BSI alert indicator and the BSI radar unit.

NO

Replace the appropriate BSI radar unit .

DTC B18C6, B1E76

DTC B18C6 : Short to Power in the Left Side BSI Radar Unit Indicator Circuit **DTC B1E76** : Short to Power in the Right Side BSI Radar Unit Indicator Circuit

NOTE: Before you troubleshoot, review the general troubleshooting information.

DTC Description	DTC
B18C6 Short to power in the left side BSI radar unit indicator circuit	B
B1E76 Short to power in the right side BSI radar unit indicator circuit	B

DTC (BSI)

1. Problem verification

   -1. Turn the vehicle to the ON mode.

   -2. Clear the DTC with the HDS.

   -3. Turn the vehicle to the OFF (LOCK) mode.

   -4. Turn the vehicle to the ON mode, then wait for at least 2 seconds.

   -5. Check for DTCs with the HDS.

DTC Description	DTC
B18C6 Short to power in the left side BSI radar unit indicator circuit	B
B1E76 Short to power in the right side BSI radar unit indicator circuit	B

   Is DTC B18C6 or B1E76 indicated?

   YES

   The failure is duplicated. Go to step 2.

   NO

   Intermittent failure, the system is OK at this time. Refer to intermittent failures troubleshooting.

2. DTC check

   -1. Turn the vehicle to the ON mode.

   -2. Clear the DTC with the HDS.

   -3. Turn the vehicle to the OFF (LOCK) mode.

   -4. Disconnect the following connector.

Left BSI alert indicator 2P connector	
Right BSI alert indicator 2P connector	

   -5. Turn the vehicle to the ON mode.

   -6. Check for DTCs with the HDS.

DTC Description	DTC
B18C6 Short to power in the left side BSI radar unit indicator circuit	B
B1E76 Short to power in the right side BSI radar unit indicator circuit	B
B18C7 Open in the left side BSI radar unit indicator circuit	B
B1E77 Open in the right side BSI radar unit indicator circuit	B

Is DTC B18C6 change to DTC B18C7, or B1E76 change to DTC B1E77?

YES

Replace the appropriate BSI alert indicator .

NO

Go to step 3.

3. Shorted wire check (BSI L IND, BSI R IND line)

-1. Turn the vehicle to the OFF (LOCK) mode.

-2. Disconnect the following connector.

Left side BSI radar unit 6P connector
Right side BSI radar unit 6P connector

-3. Turn the vehicle to the ON mode.

-4. Measure the voltage between test points 1 and 2.

Test condition	Vehicle ON mode
B	Left side BSI radar unit 6P connector: disconnected
B	Right side BSI radar unit 6P connector: disconnected
B	Left BSI alert indicator 2P connector: disconnected
B	Right BSI alert indicator 2P connector: disconnected
Test point 1	Left BSI alert indicator 2P connector (female terminals) No. 1: ①
Test point 2	Body ground

Test point 1	Right BSI alert indicator 2P connector (female terminals) No. 1: ①
Test point 2	Body ground

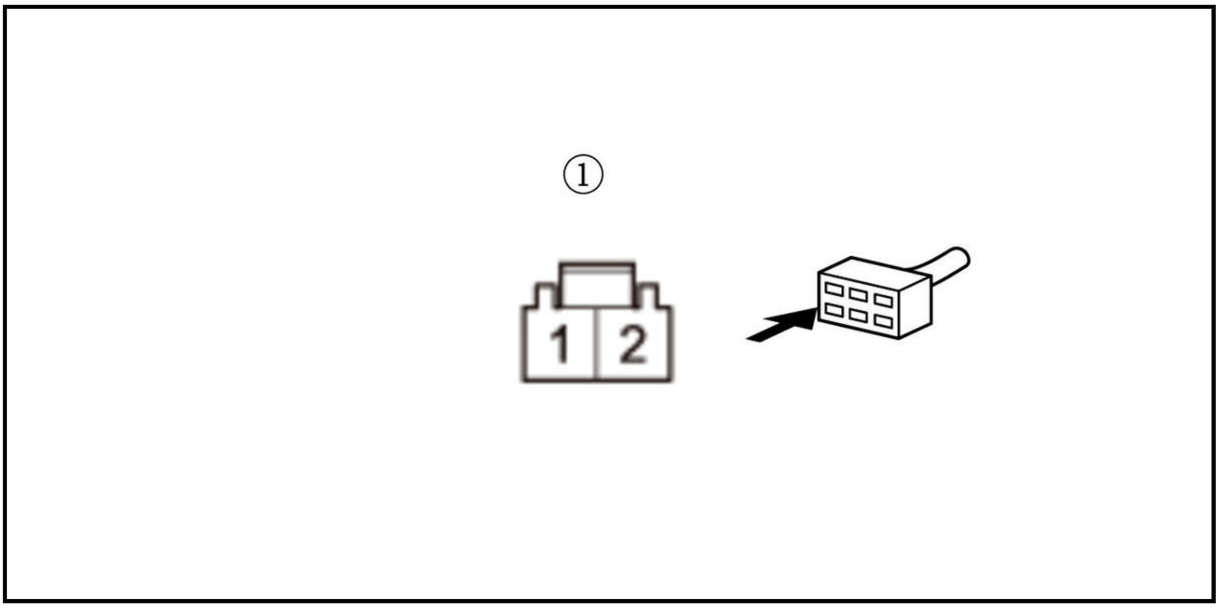

Is there battery voltage?

YES

Repair a short to power between the BSI alert indicator and the BSI radar unit.

NO

Replace the appropriate BSI radar unit .

DTC B18C7, B1E77

DTC B18C7 : Open in the Left Side BSI Radar Unit Indicator Circuit **DTC B1E77** : Open in the Right Side BSI Radar Unit Indicator Circuit

NOTE: Before you troubleshoot, review the general troubleshooting information.

DTC Description	DTC
B18C7 Open in the left side BSI radar unit indicator circuit	B
B1E77 Open in the right side BSI radar unit indicator circuit	B

DTC (BSI)

1. Problem verification

   -1. Turn the vehicle to the ON mode.

   -2. Clear the DTC with the HDS.

   -3. Turn the vehicle to the OFF (LOCK) mode.

   -4. Turn the vehicle to the ON mode, then wait for at least 2 seconds.

   -5. Check for DTCs with the HDS.

DTC Description	DTC
B18C7 Open in the left side BSI radar unit indicator circuit	B
B1E77 Open in the right side BSI radar unit indicator circuit	B

Is DTC B18C7 or B1E77 indicated?

YES

The failure is duplicated. Go to step 2.

NO

Intermittent failure, the system is OK at this time. **Refer to intermittent failures troubleshooting**.

2. BSI alert indicator check

-1. Turn the vehicle to the OFF (LOCK) mode.

-2. Disconnect the following connector.

Left BSI alert indicator 2P connector
Right BSI alert indicator 2P connector

-3. Connect terminals 1 and body ground with a jumper wire.

Test condition	Vehicle OFF (LOCK) mode
B	Left BSI alert indicator 2P connector: disconnected
B	Right BSI alert indicator 2P connector: disconnected
Test point 1	Left BSI alert indicator 2P connector (female terminals) No. 1: ①
Test point 2	Body ground

Test point 1	Right BSI alert indicator 2P connector (female terminals) No. 1: ①
Test point 2	Body ground

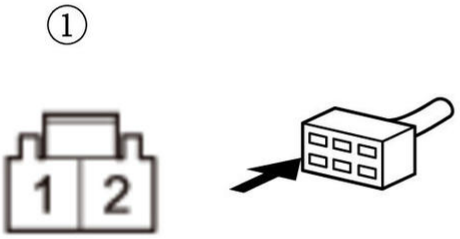

-4. Turn the vehicle to the ON mode.

-5. Check for DTCs with the HDS.

DTC Description	DTC
B18C7 Open in the left side BSI radar unit indicator circuit	B
B1E77 Open in the right side BSI radar unit indicator circuit	B
B18C5 Short to GND in the left side BSI radar unit indicator circuit	B
B1E75 Short to GND in the right side BSI radar unit indicator circuit	B

Is DTC B18C7 change to DTC B18C5, or DTC B1E77 change to B1E75?

YES

Go to step 3.

NO

Go to step 4.

3. Open wire check (GND line)

-1. Turn the vehicle to the OFF (LOCK) mode.

-2. Remove the jumper wire from the BSI alert indicator 2P connector.

-3. Check for continuity between test points 1 and 2.

Test condition	Vehicle OFF (LOCK) mode
B	Left side BSI radar unit 6P connector: disconnected
B	Right side BSI radar unit 6P connector: disconnected
B	Left BSI alert indicator 2P connector: disconnected
B	Right BSI alert indicator 2P connector: disconnected
Test point 1	Left BSI alert indicator 2P connector (female terminals) No. 2: ①
Test point 2	Body ground

Test point 1	Right BSI alert indicator 2P connector (female terminals) No. 2: ①
Test point 2	Body ground

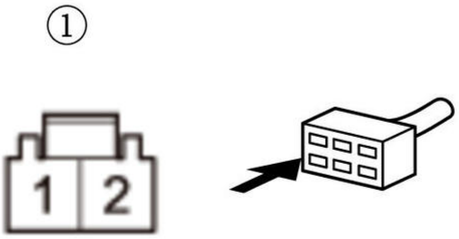

Is there continuity?

YES

Replace the appropriate BSI alert indicator .

NO

Repair an open in the wire between the BSI alert indicator and the body ground at G401 (left BSI alert indicator), G402 (right BSI alert indicator).

4. Open wire check (BSI L IND, BSI R IND lines)

-1. Turn the vehicle to the OFF (LOCK) mode.

-2. Remove the jumper wire from the BSI alert indicator 2P connector.

-3. Disconnect the following connector.

Left side BSI radar unit 6P connector
Right side BSI radar unit 6P connector

-4. Check for continuity between test points 1 and 2.

Test condition	Vehicle OFF (LOCK) mode
B	Left side BSI radar unit 6P connector: disconnected
B	Right side BSI radar unit 6P connector: disconnected
B	Left BSI alert indicator 2P connector: disconnected
B	Right BSI alert indicator 2P connector: disconnected
Test point 1	Left side BSI radar unit 6P connector No. 2
Test point 2	Left BSI alert indicator 2P connector (female terminals) No. 1: ①

Test point 1	Right side BSI radar unit 6P connector No. 2
Test point 2	Right BSI alert indicator 2P connector (female terminals) No. 1: ①

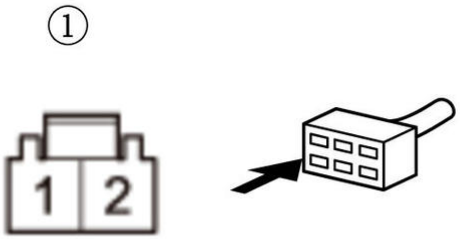

Is there continuity?

YES

Replace the appropriate BSI radar unit .

NO

Repair an open in the wire between the BSI radar unit and the BSI alert indicator.

DTC B18DB

DTC B18DB : Left Side BSI Radar Unit Received The Audio/Navigation Unit Failure Information

NOTE: **Before you troubleshoot, review the general troubleshooting information**.

DTC Description	DTC
B18DB Left Side BSI Radar Unit Received The Audio/Navigation Unit Failure Information	B

DTC (BSI)

1. BSI radar unit connector check

   -1. Check for poor connections or loose terminals at the BSI radar unit 6P connector.

   Is the BSI radar unit 6P connector OK?

   YES

   Go to step 2.

   NO

   Repair or reconnect the connector securely.

2. BSI radar unit check

   -1. Turn the vehicle to the ON mode, and read the HDS.

DTC Description	DTC
B18DB Left Side BSI Radar Unit Received The Audio/Navigation Unit Failure Information	B

   Is DTC B18DB indicated?

   YES

   Go to the **audio system** or **navigation system** general troubleshooting information. If the symptom is still present, **replace the appropriate BSI radar unit.**

   NO

   Intermittent failure, the system is OK at this time. **Refer to intermittent failures troubleshooting**.

DTC B18EA, B1E9A

DTC B18EA : Left Side BSI Radar Unit received PCM (A/T System) Failure information **DTC B1E9A** : Right Side BSI Radar Unit received PCM (A/T System) Failure information

NOTE: **Before you troubleshoot, review the general troubleshooting information**.

DTC Description	DTC
B18EA Left Side BSI Radar Unit received PCM (A/T System) Failure information	B
B1E9A Right Side BSI Radar Unit received PCM (A/T System) Failure information	B

DTC (BSI)

1. BSI radar unit connector check

   -1. Check for poor connections or loose terminals at the BSI radar unit 6P connector.

Is the BSI radar unit 6P connector OK?

YES

Go to step 2.

NO

Repair or reconnect the connector securely.

2. BSI radar unit check

-1. Turn the vehicle to the ON mode, and read the HDS.

DTC Description	DTC
B18EA Left Side BSI Radar Unit received PCM (A/T System) Failure information	B
B1E9A Right Side BSI Radar Unit received PCM (A/T System) Failure information	B

Is DTC B18EA or B1E9A indicated?

YES

Go to the CVT System general troubleshooting . If the symptom is still present, **replace the appropriate BSI radar unit** .

NO

Intermittent failure, the system is OK at this time. **Refer to intermittent failures troubleshooting**.

DTC U1280 (BSI RADAR UNIT)

DTC U1280 : Communication Bus Line Error (Bus-Off)

NOTE:

- **Before you troubleshoot, review the general troubleshooting information**.
- If the B-CAN lines problem or BSI radar unit internal circuit malfunction, HDS does not communicate with the BSI radar unit. If DTC U1280 is indicated HDS, the system is OK at this time.

DTC Description	DTC
U1280 Communication bus line error (BUS-OFF)	B
U1280 Communication bus line error (BUS-OFF)	B

DTC (BSI)

1. BSI radar unit connector check

-1. Check for poor connections or loose terminals at the BSI radar unit 6P connector.

Is the BSI radar unit 6P connector OK?

YES

Go to step 2.

NO

Repair or reconnect the connector securely.

2. BSI radar unit check

   -1. Turn the vehicle to the ON mode, and read the HDS.

DTC Description	DTC
U1280 Communication bus line error (BUS-OFF)	B
U1280 Communication bus line error (BUS-OFF)	B

   Does the HDS communicate with the BSI radar unit?

   YES

   Intermittent failure, the system is OK at this time. **Refer to intermittent failures troubleshooting**.

   NO

   Go to the multiplex integrated control system general troubleshooting . If the symptom is still present, **replace the appropriate BSI radar unit** .

DTC U1281 (BSI RADAR UNIT)

DTC U1281 : Left Side BSI Radar Unit Lost Communication With MICU or BCM **DTC U1281** : Right Side BSI Radar Unit Lost Communication With MICU or BCM

NOTE: **Before you troubleshoot, review the general troubleshooting information**.

DTC Description	DTC
U1281 Left Side BSI Radar Unit Lost Communication With MICU or BCM	B
U1281 Right Side BSI Radar Unit Lost Communication With MICU or BCM	B

DTC (BSI)

1. Problem verification

   -1. Turn the vehicle to the ON mode.

   -2. Clear the DTC with the HDS.

   -3. Turn the vehicle to the OFF (LOCK) mode.

   -4. Turn the vehicle to the ON mode, then wait for at least 2 seconds.

   -5. Check for DTCs with the HDS.

DTC Description	DTC
U1281 Left Side BSI Radar Unit Lost Communication With MICU or BCM	B
U1281 Right Side BSI Radar Unit Lost Communication With MICU or BCM	B

   Is DTC U1281 indicated?

   YES

   Go to the multiplex integrated control system general troubleshooting . If the symptom is still present, **replace the appropriate BSI radar unit** .

   NO

Intermittent failure, the system is OK at this time. Refer to intermittent failures troubleshooting.

DTC U128D (BSI RADAR UNIT)

DTC U128D : Left Side BSI Radar Unit Lost Communication With Gauge Control Module **DTC U128D** : Right Side BSI Radar Unit Lost Communication With Gauge Control Module

NOTE: Before you troubleshoot, review the general troubleshooting information.

DTC Description	DTC
U128D Left side BSI radar unit lost communication with gauge control module	B
U128D Right side BSI radar unit lost communication with gauge control module	B

DTC (BSI)

1. Problem verification

-1. Turn the vehicle to the ON mode.

-2. Clear the DTC with the HDS.

-3. Turn the vehicle to the OFF (LOCK) mode.

-4. Turn the vehicle to the ON mode, then wait for at least 2 seconds.

-5. Check for DTCs with the HDS.

DTC Description	DTC
U128D Left side BSI radar unit lost communication with gauge control module	B
U128D Right side BSI radar unit lost communication with gauge control module	B

Is DTC U128D indicated?

YES

Go to the multiplex integrated control system general troubleshooting . If the symptom is still present, replace the appropriate BSI radar unit .

NO

Intermittent failure, the system is OK at this time. Refer to intermittent failures troubleshooting.

DTC U1297, U128F (BSI RADAR UNIT)

DTC U1297 : Left Side BSI Radar Unit Lost Communication With Right Side BSI Radar Unit **DTC U128F** : Right Side BSI Radar Unit Lost Communication With Left Side BSI Radar Unit

NOTE: Before you troubleshoot, review the general troubleshooting information.

DTC Description	DTC
U1297 Left side BSI radar unit lost communication with right side BSI radar unit	B
U128F Right side BSI radar unit lost communication with left side BSI control unit	B

DTC (BSI)

1. Problem verification

   -1. Turn the vehicle to the ON mode.

   -2. Clear the DTC with the HDS.

   -3. Turn the vehicle to the OFF (LOCK) mode.

   -4. Turn the vehicle to the ON mode, then wait for at least 2 seconds.

   -5. Check for DTCs with the HDS.

DTC Description	DTC
U1297 Left side BSI radar unit lost communication with right side BSI radar unit	B
U128F Right side BSI radar unit lost communication with left side BSI control unit	B

Is DTC U1297 or U128F indicated?

YES

Go to the multiplex integrated control system general troubleshooting . If the symptom is still present, **replace the appropriate BSI radar unit** .

NO

Intermittent failure, the system is OK at this time. **Refer to intermittent failures troubleshooting**.

HOW TO INFORMATION

HOW TO TROUBLESHOOT THE BLIND SPOT INFORMATION (BSI) SYSTEM

NOTE: Do not make any bumper repairs in the areas over or near the two radar units on vehicles equipped with the Blind Spot Information (BSI) System. The composition of the repair materials, and/or increased material thickness in the repaired area, may interfere with BSI radar unit operation.

BSI Indicator (Amber)

When the BSI system is OK, the BSI indicator comes on for a few seconds after the vehicle is turned to the ON mode, then it goes off.

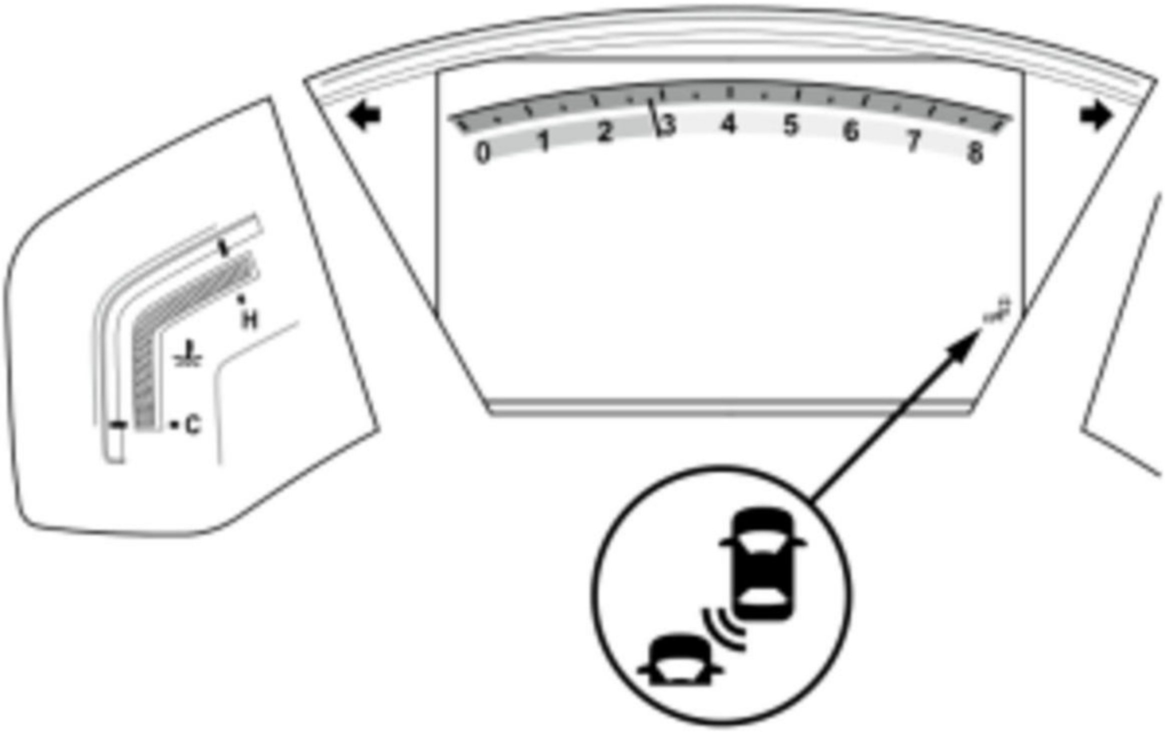

BSI INDICATOR (amber)

BSI Alert Indicator

While the BSI system is working, the system turns on/blinks * the appropriate BSI alert indicator (right or left) when it detects another vehicle on either side of the rear.

*: When the driver moves the turn signal lever toward the side with the BSI alert indicator on, the alert indicator blinks to alert the driver.

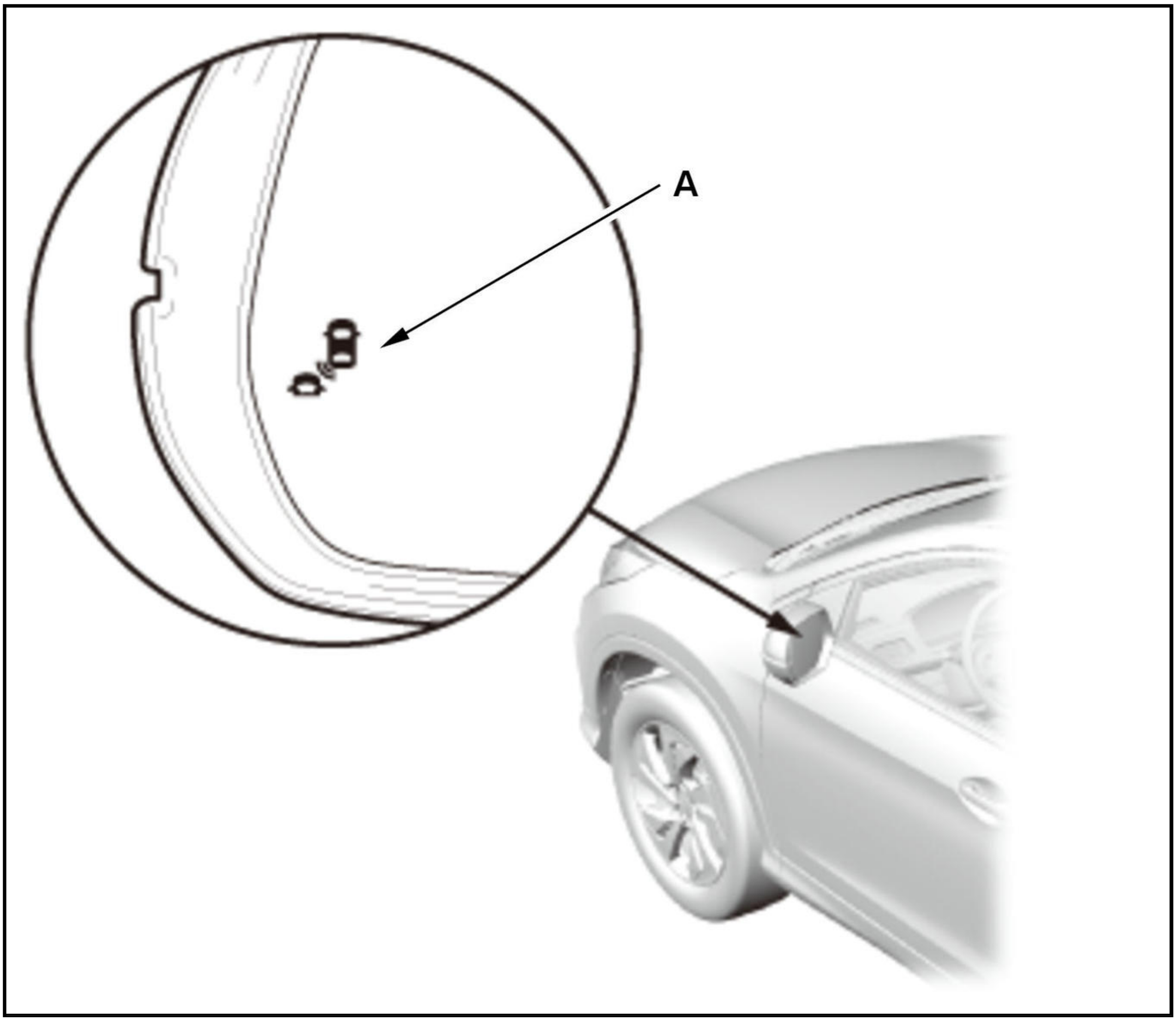

Multi-Information Display (MID) Indication

When the BSI system is OK, the BSI indicates its operation on the MID in the gauge control module as below.

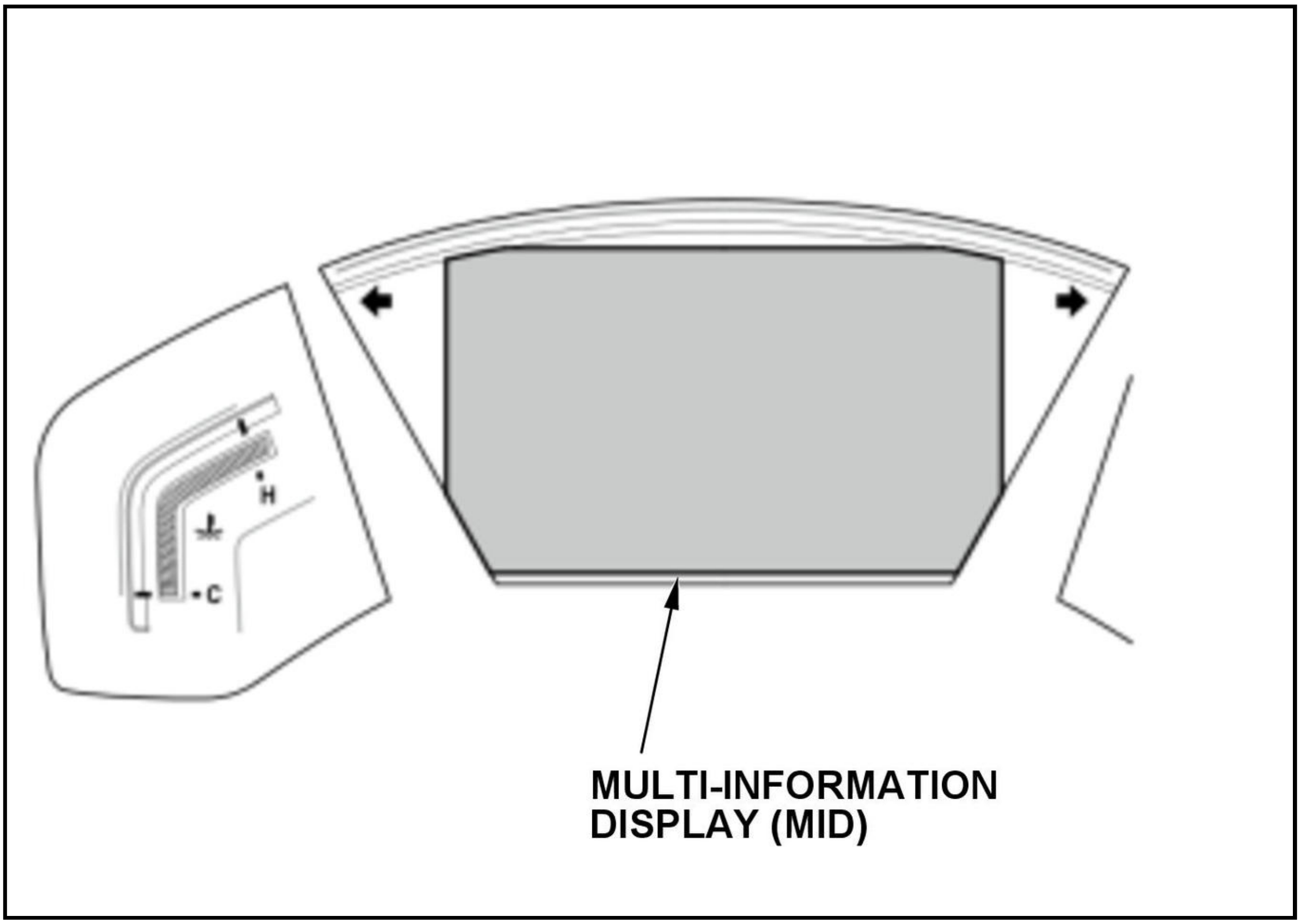

Self-Diagnostic Function

The BSI system has a self-diagnostic function. If the self-diagnostic function detects a malfunction, the BSI system stops operating. The BSI indicator comes on, and the BSI system indicates "Blind Spot Info System Problem" on the MID.

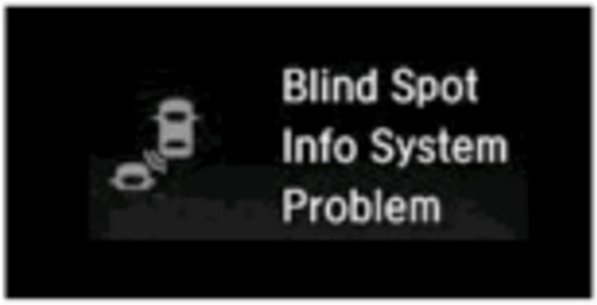

Blind Spot
Info System
Problem

When mud, dirt, wet snow, leaves, or other foreign material sticks to the side of the rear bumper, the BSI system stops operating and the message on the MID indicates that the BSI radar units must be cleaned. It also turns on the BSI indicator at the same time, and stores the DTC (s).

When the obstruction or contamination is removed, the indicator on the MID goes off and the BSI system automatically returns to ON.

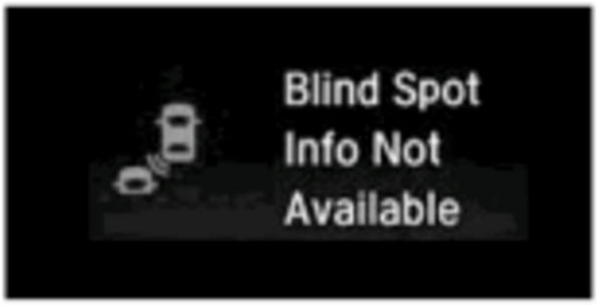

Blind Spot
Info Not
Available

BSI Radar Units

The BSI radar units are installed behind the rear bumper on both sides of the vehicle, and they have a control unit. Each BSI radar unit communicates with the other BSI radar unit. The BSI radar units detect other vehicles as they approach your vehicle from the rear sides, and the BSI radar units send this information to the BSI alert indicator.

CAN Communications

B-CAN

The BSI radar units are on the B-CAN system, and they communicate with other units (gauge control module, MICU) via B-CAN.

If the BSI radar units detect a communication error or a malfunction in another connected unit, the BSI system will not operate even though it is OK.

In this case, the BSI indicator and the related unit indicator will come on and stay on.

Intermittent Failures

The term "intermittent failure" means a system may have had a failure, but it checks OK now. If you cannot reproduce the condition, check for loose connections and terminals. Also check ground and power connections related to the circuit that you are troubleshooting.

How to Troubleshoot DTCs

Check the DTCs with the HDS.

Before troubleshooting, check and note these items:

- Ask the customer about the conditions when the problem occurred, and try to reproduce the same conditions for troubleshooting.
- After the troubleshooting or repairs are done, clear the DTCs, and test-drive the vehicle under the same conditions as when the DTC was originally set. Make sure the BSI indicator does not come on.
- The BSI system sometimes stops operating because of the environment (weather, road conditions, driving conditions, etc.). A DTC may be stored in these cases.

Some DTCs may be stored even when the system is OK. For example, the BSI indicator may come on with one or more of these DTCs:

B18A5:	Left Side BSI Radar Unit Temperature High
B1E55:	Right Side BSI Radar Unit Temperature High
B18B4:	Left Side BSI Radar Unit Dirty
B1E64:	Right Side BSI Radar Unit Dirty

How to Retrieve DTCs

1. Turn the vehicle to the OFF (LOCK) mode.

2. **Connect the HDS**

3. Turn the vehicle to the ON mode.

4. Make sure the HDS communicates with the vehicle and the BSI radar unit. If it does not communicate **go to the DTC troubleshooting index**

5. Use the HDS to check for BSI system DTCs.

6. Read and record the DTC:7. Turn the vehicle to the OFF (LOCK) mode.

8. Disconnect the HDS from the DLC.

9. Do the troubleshooting procedure for the DTC.

How to Clear DTCs

1. Turn the vehicle to the OFF (LOCK) mode.

2. **Connect the HDS**

3. Turn the vehicle to the ON mode.

4. Make sure the HDS communicates with the vehicle and the BSI radar unit. If it does not communicate **go to the DTC troubleshooting index**

5. Clear the DTC (s) by following the screen prompts on the HDS.

6. Turn the vehicle to the OFF (LOCK) mode.

7. Disconnect the HDS from the DLC.

HOW TO TROUBLESHOOT THE CROSS TRAFFIC MONITOR

Cross Traffic Monitor Indicator

When the cross traffic monitor system fails, the cross traffic monitor indicator comes on on the center display unit.

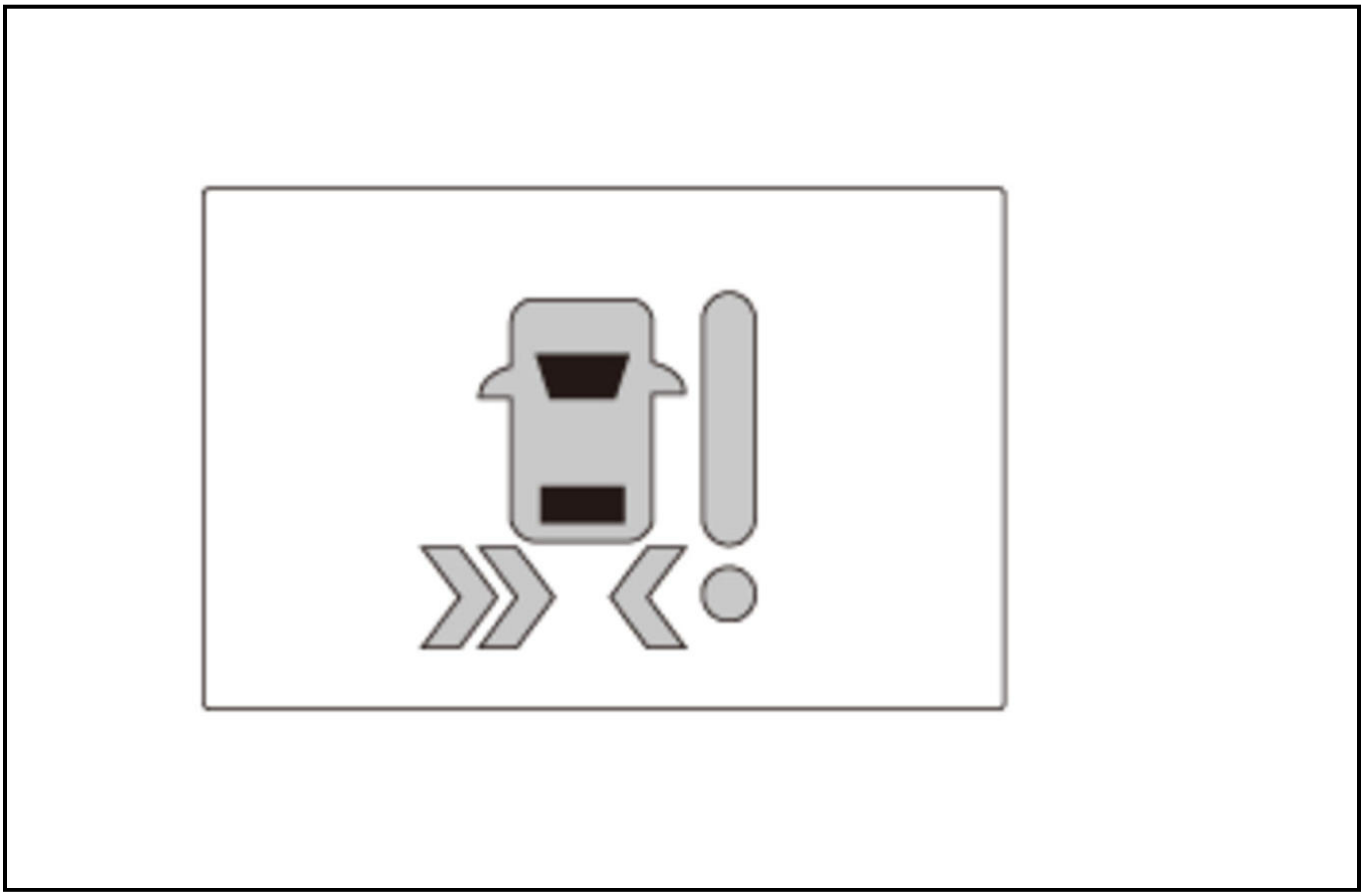

Control Units

The cross traffic monitor system is controlled by BSI radar units. If the BSI radar unit malfunctions, the cross traffic monitor system stops operating.

CAN Communications

B-CAN

The cross traffic monitor system is controlled by the BSI radar units. The BSI radar units are on the B-CAN system, and they communicate with other units via B-CAN.

If the BSI radar units detect a communication error or a malfunction in another connected unit, the cross traffic monitor system will not operate even though it is OK.

Intermittent Failures

The term "intermittent failure" means a system may have had a failure, but it checks OK now. If you cannot reproduce the condition, check for loose connections and terminals. Also check ground and power connections related to the circuit that you are troubleshooting.

How to Troubleshoot DTCs

Check the DTCs with the HDS.

Before troubleshooting, check and note these items:

- Ask the customer about the conditions when the problem occurred, and try to reproduce the same conditions for troubleshooting.
- After the troubleshooting or repairs are done, clear the DTCs, and test-drive the vehicle under the same conditions as when the DTC was originally set. Make sure the cross traffic monitor indicator does not come on.

How to Retrieve DTCs

1. Turn the vehicle to the OFF (LOCK) mode.

2. **Connect the HDS**

3. Turn the vehicle to the ON mode.

4. Make sure the HDS communicates with the vehicle and the BSI radar unit. If it does not communicate **go to the DTC troubleshooting index**

5. Use the HDS to check for BSI system DTCs.

6. Read and record the DTC:7. Turn the vehicle to the OFF (LOCK) mode.

8. Disconnect the HDS from the DLC.

9. Do the troubleshooting procedure for the DTC.

How to Clear DTCs

1. Turn the vehicle to the OFF (LOCK) mode.

2. **Connect the HDS**

3. Turn the vehicle to the ON mode.

4. Make sure the HDS communicates with the vehicle and the BSI radar unit. If it does not communicate **go to the DTC troubleshooting index**

5. Clear the DTC (s) by following the screen prompts on the HDS.

6. Turn the vehicle to the OFF (LOCK) mode.

7. Disconnect the HDS from the DLC.

SYMPTOM TROUBLESHOOTING INDEX FOR VIEWER

THE BSI ALERT INDICATOR COMES ON WHEN NO OTHER VEHICLE IS IN THE DETECTABLE AREA (WRONG INDICATION) (BSI)

Diagnostic procedure

- Symptom troubleshooting.

THE BSI DOES NOT COME ON WHEN OTHER VEHICLES ARE IN THE DETECTABLE AREA (NO INDICATION) (BSI)

Diagnostic procedure

- Symptom troubleshooting.

THE BSI INDICATOR DOES NOT COME ON (BSI)

Diagnostic procedure

- Symptom troubleshooting.

THE BSI INDICATOR DOES NOT GO OFF (BSI)

Diagnostic procedure

NOTE: If any of the CAN communication failure DTCs are indicated in other systems, troubleshoot the DTC first.

- Check for open wire or shorted wire in the B-CAN circuit;
-
    - -

      Between the gauge control module and BSI radar unit (B-CAN_H, B-CAN _L)
- Check the left and/or right side BSI radar unit power circuit (IG1_OPTION)
- Check the left and/or right side BSI radar unit ground circuit (GND)
- Do the gauge control module self-diagnostic function .

Also check for

Refer to the following about the indicator operating condition;

- How to Troubleshoot

Refer to the following about the circuit troubleshooting;

- Gauge control module connector for inputs and outputs
- BSI radar unit connector for inputs and outputs
- BSI system circuit diagram
- Fuse to components index
- Ground to components index

THE HDS DOES NOT COMMUNICATE WITH THE BSI SYSTEM (BSI)

Diagnostic procedure

- Symptom troubleshooting.

Also check for

Incorrect HDS software.

THE BUZZER DOES NOT SOUND (BSI)

Diagnostic procedure

- Symptom troubleshooting.

DESCRIPTION & OPERATION

BLIND SPOT INFORMATION (BSI) SYSTEM DESCRIPTION

The BSI radar unit emits radar waves from the left and right BSI radar and detects other vehicles in the blind spot. BSI system function uses the BSI radar unit. The BSI alert indicators warn the driver when a vehicle enters the driver's side or the passenger's side blind spot alert zone. If the driver turns on the turn signal while the BSI alert is on, the BSI alert flashes and an audible alarm sounds to warn the driver.

If the BSI radar unit malfunctions, the BSI system stops operating. The vehicle alerts the driver that there is a problem by turning on a warning indicator on the gauge control module.

Radar Zone Definition

The BSI radars are installed on the left and right sides of the rear side outer panel and covered by the rear bumper. The mounting positions are symmetrical on the left and the right.

The radar wave emission range and the vehicle detection range of the BSI radar unit are shown. They are symmetrical. The vehicle detection range makes up only a part of the radar wave emission range.

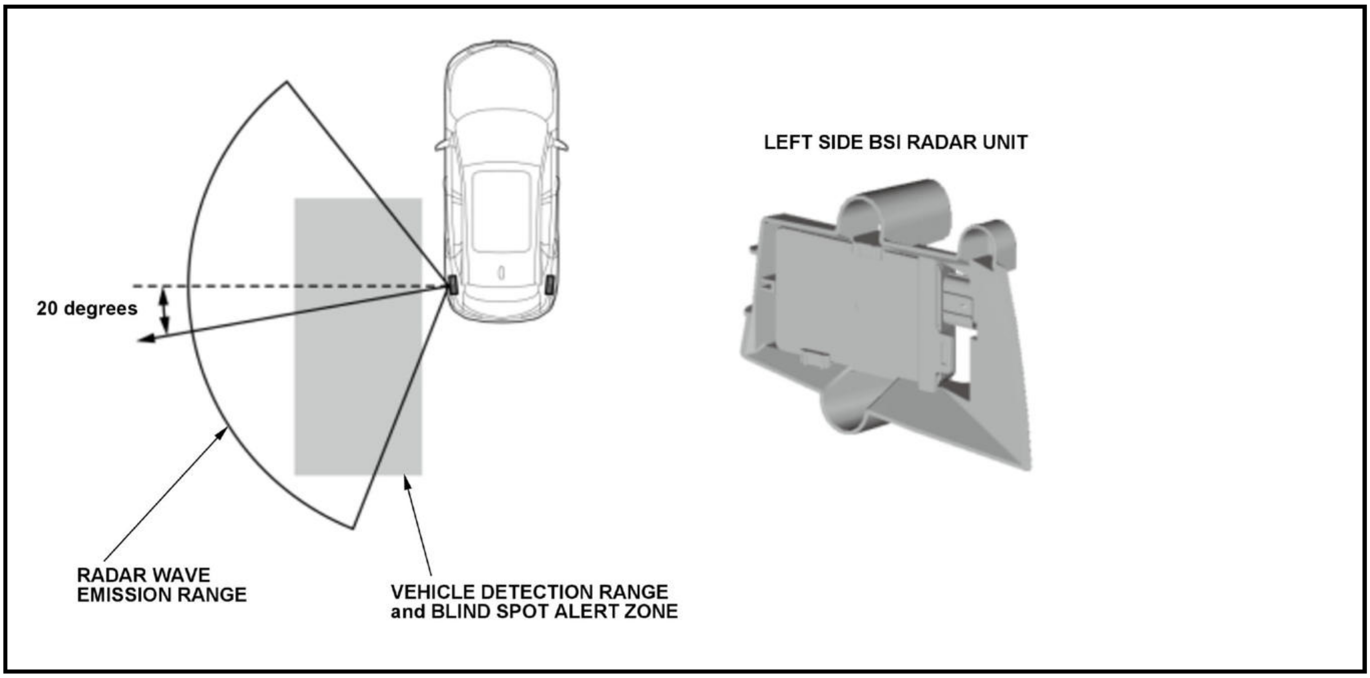
LEFT SIDE BSI RADAR UNIT
20 degrees
RADAR WAVE EMISSION RANGE
VEHICLE DETECTION RANGE and BLIND SPOT ALERT ZONE

Blind Spot Information (BSI) system

The BSI system alerts the driver by the BSI alert indicator when a vehicle enters the blind spot alert zone. See Warning Conditions for more information.

Warning Conditions

Under normal conditions, the BSI system generally does not alert stationary objects like highway infrastructure, guardrails, posts, walls, foliage, parked vehicles, etc. The system also does not notify when vehicles are traveling in the opposite direction.

B	Vehicle operation speed:	Relative speed: Less than
Passing from the rear	20-99 mph (32-160 km/h)	31 mph (50 km/h)
Lane changes		12 mph (20 km/h)
Passing a vehicle		12 mph (20 km/h)
Starting from a stop		---

Passing from the Rear

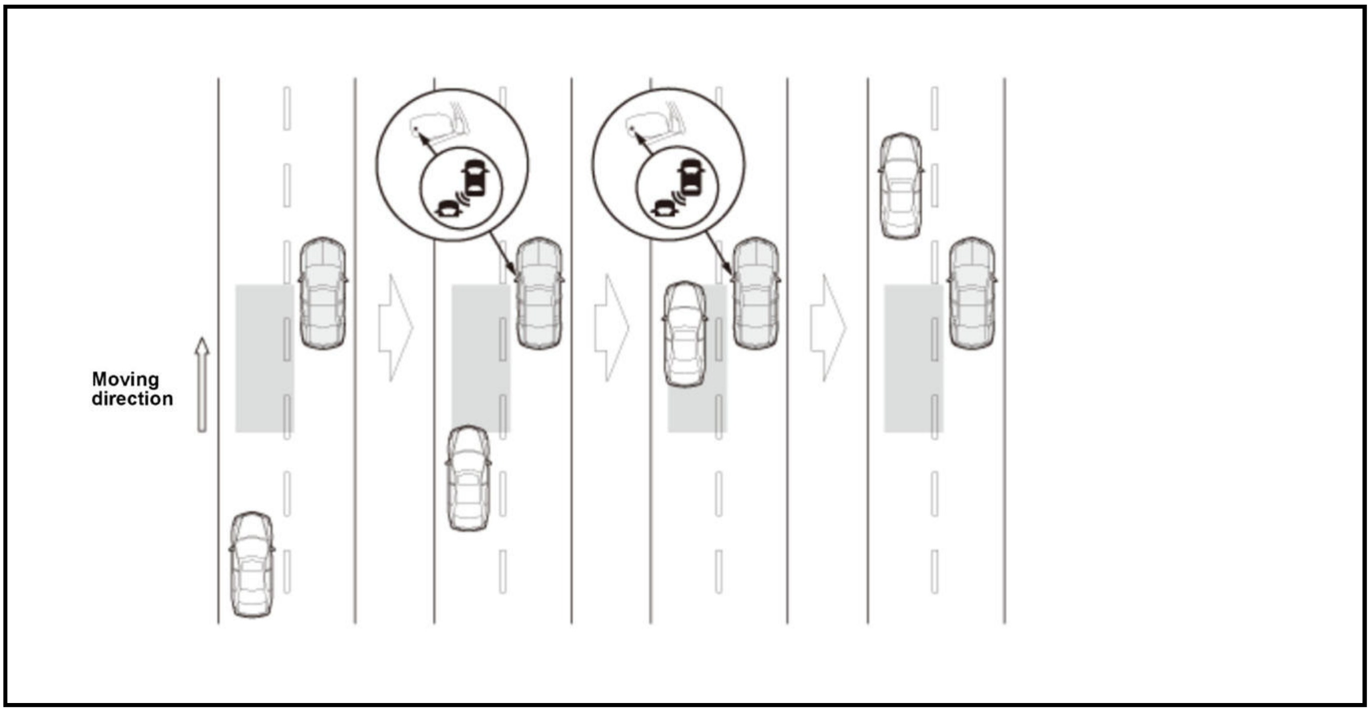

Lane changes

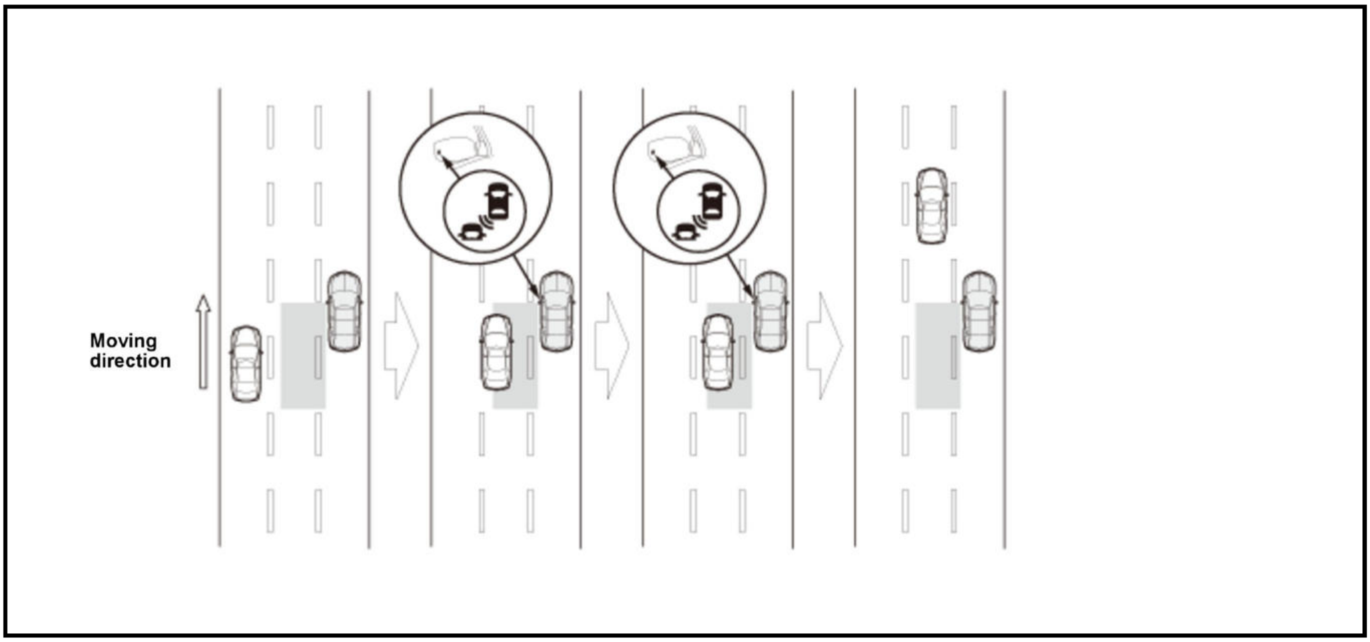

Passing a vehicle

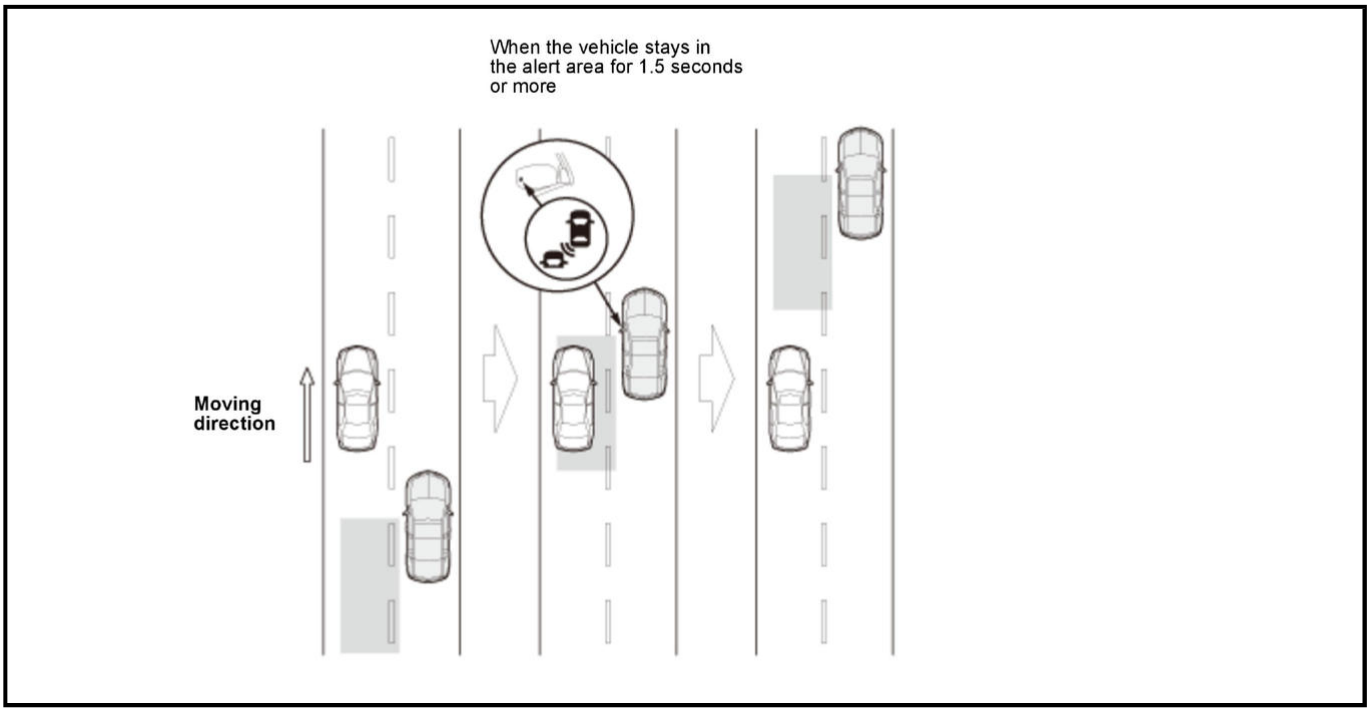
When the vehicle stays in
the alert area for 1.5 seconds
or more
Moving
direction

Starting from a stop

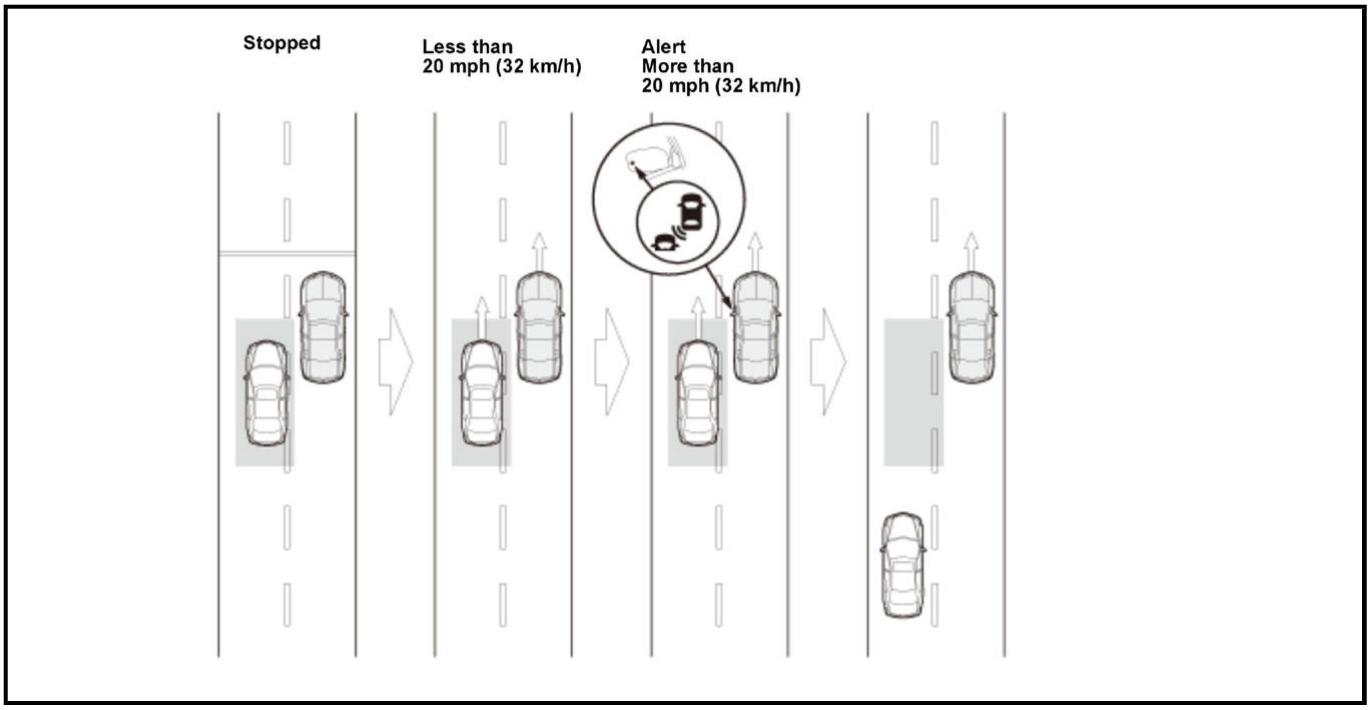
Stopped
Less than
20 mph (32 km/h)
Alert
More than
20 mph (32 km/h)

No Warning Conditions

One or more lanes apart

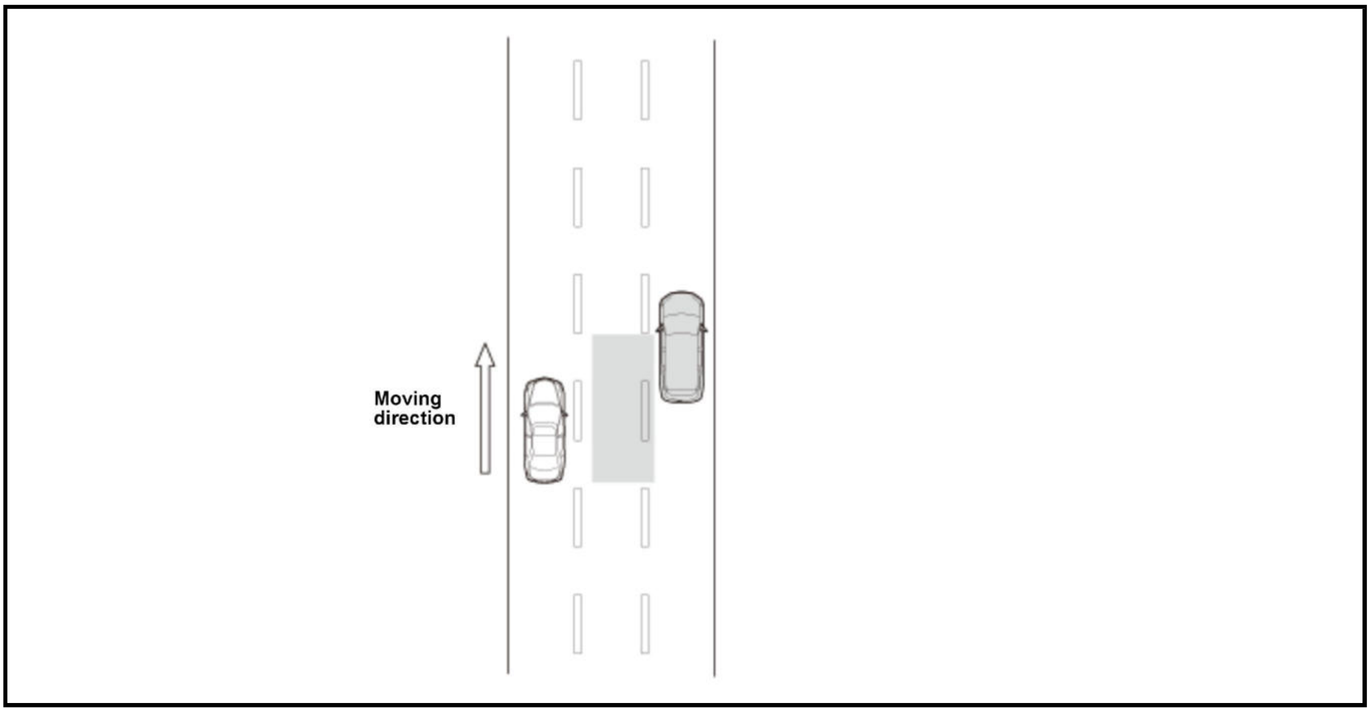
Moving
direction

Opposing Vehicles

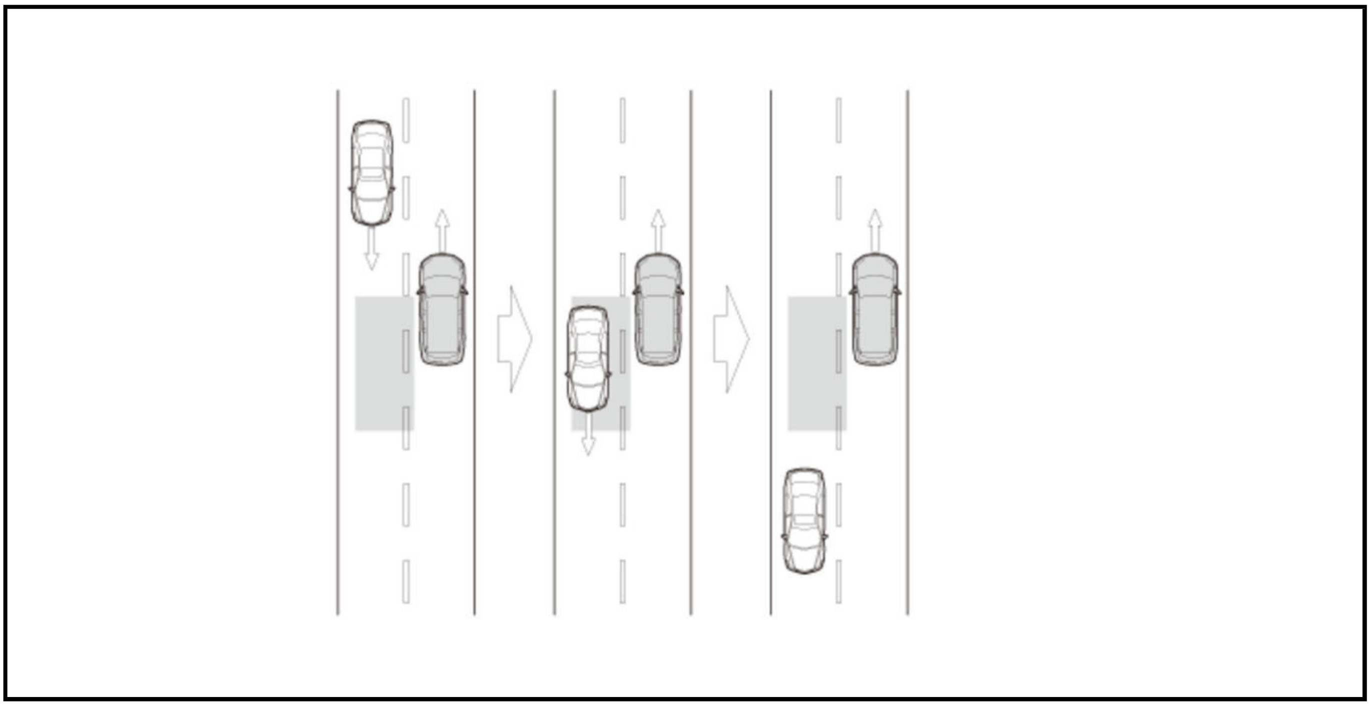

Static objects

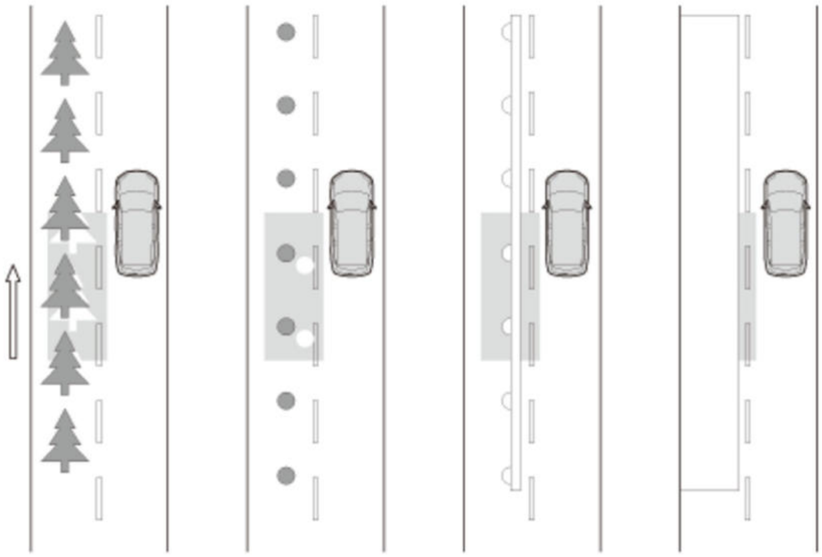

BLIND SPOT INFORMATION (BSI) SYSTEM DESCRIPTION - SYSTEM DIAGRAM

The system diagram of the BSI system is shown below.

For locations of each component on the vehicle, refer to Component Location Index:

- PCM
- Gauge control module
- Left side BSI radar unit, Left BSI alert indicator, Right side BSI radar unit, Right BSI alert indicator
- Body control module
- Combination Light Switch

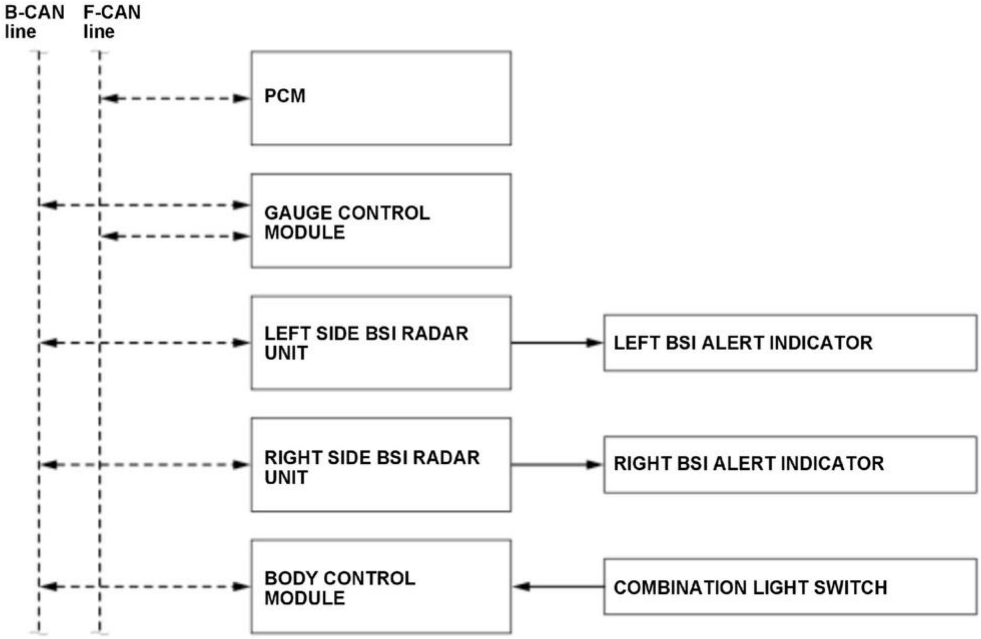
B-CAN line
F-CAN line
PCM
GAUGE CONTROL MODULE
LEFT SIDE BSI RADAR UNIT
LEFT BSI ALERT INDICATOR
RIGHT SIDE BSI RADAR UNIT
RIGHT BSI ALERT INDICATOR
BODY CONTROL MODULE
COMBINATION LIGHT SWITCH

CROSS TRAFFIC MONITOR SYSTEM DESCRIPTION

The BSI radar unit emits radar waves from the left and right BSI radar and detects other vehicles in the blind spot. Cross traffic monitor system function uses the BSI radar unit.

The cross traffic monitor system's alerting arrows are displayed on the rearview camera image of the center display unit when the vehicle is in reverse. When an approaching vehicle enters the cross traffic monitor alert zone, the cross traffic monitor warns the driver with a warning indicator and an audible alarm.

If the BSI radar unit malfunctions, the cross traffic monitor system stops operating. The vehicle alerts the driver that there is a problem by turning on the BSI indicator on the gauge control module, and the cross traffic monitor indicator is shown on the rearview camera image when the vehicle is in reverse gear.

Radar Zone Definition

The BSI radars are installed on the left and right sides of the rear side outer panel and covered by the bumper. The mounting positions are symmetrical on the left and the right.

When the BSI radar has a clear view of the environment around it, the cross traffic monitor system will warn of detected approaching vehicles.

The cross traffic monitor system evaluates the approaching target's speed, time to potential collision and location in the cross traffic monitor system's alert zone to decide if the system should warn or not warn the driver.

Detection Conditions

Parameter	Warn
Your vehicle speed	Less than 3 mph (5 km/h)*
Time to collision	1.2 to 3.2 seconds*
Target closing speed	Greater than 6 mph (10 km/h) and less than 16 mph (25 km/h)*
Detection range	More than 10.8 ft (3.3 m) (example: Target vehicle speed 6 mph (10 km/h) and time to collision is estimated as 1.2 seconds)*

*: Warnings may be issued outside of these conditions listed above.

The system defines the time to collision, measured in seconds, that it takes for the target vehicle traveling at its current speed to reach line L when the target vehicle is approaching perpendicular (between line A and B) to the customer's vehicle. If the target vehicle is approaching from a wider angle (between line B and C), the time to collision is measured by how long it takes the target vehicle traveling at its current speed to reach point B.

Detection Range

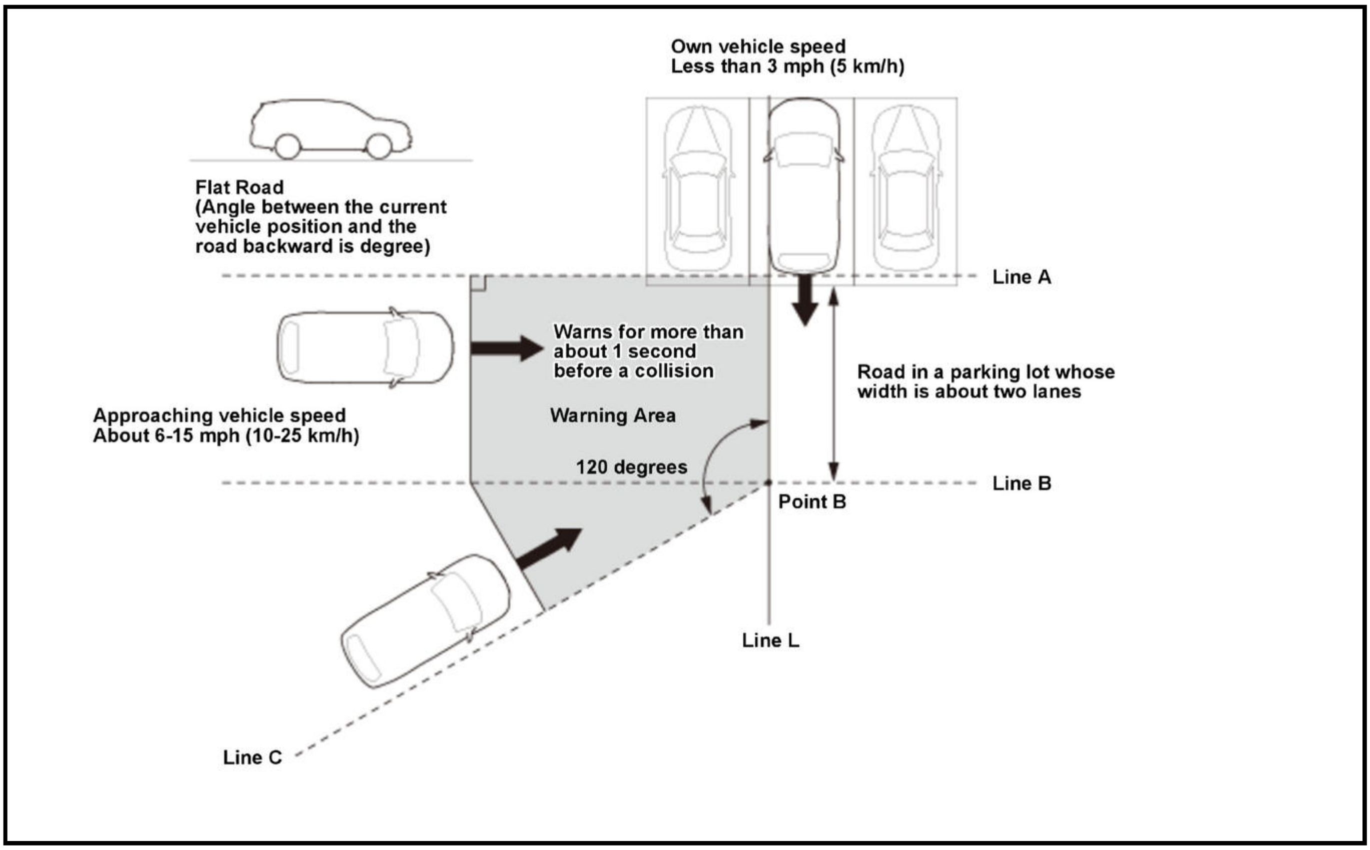
Own vehicle speed
Less than 3 mph (5 km/h)
Flat Road
(Angle between the current vehicle position and the road backward is degree)
Line A
Warns for more than about 1 second before a collision
Road in a parking lot whose width is about two lanes
Approaching vehicle speed
About 6-15 mph (10-25 km/h)
Warning Area
120 degrees
Line B
Point B
Line L
Line C

Cross Traffic Monitor System

When driving in reverse, the BSI radar unit monitors vehicles approaching from behind your vehicle. When detecting a vehicle approaching from behind, the unit sends the information to the center display unit via B-CAN line. When receiving the information, the center display unit gives the warning to the driver by displaying "<<" (a warning arrow) on the rearview camera image. An audible alarm is generated by the gauge control module. The warning indicates left, right or both. The cross traffic monitor system gives a warning depending on the position, speed of the target vehicle in the detection range and the time remaining to the collision.

Restriction Factors	Warning Conditions
Your Vehicle Speed	Less than 3 mph (5 km/h)*
Remaining Time to Collision	Greater than 1.2 seconds to less than 3.2 seconds*
Target Vehicle Speed	Greater than 6 mph (10 km/h) and less than 16 mph (25 km/h)*
Distance to Target Vehicle	Less than 27.2 ft (8.3m) or based on time to collision (up to 82 ft (25m))

*: Warnings may be issued out side of these conditions listed above.

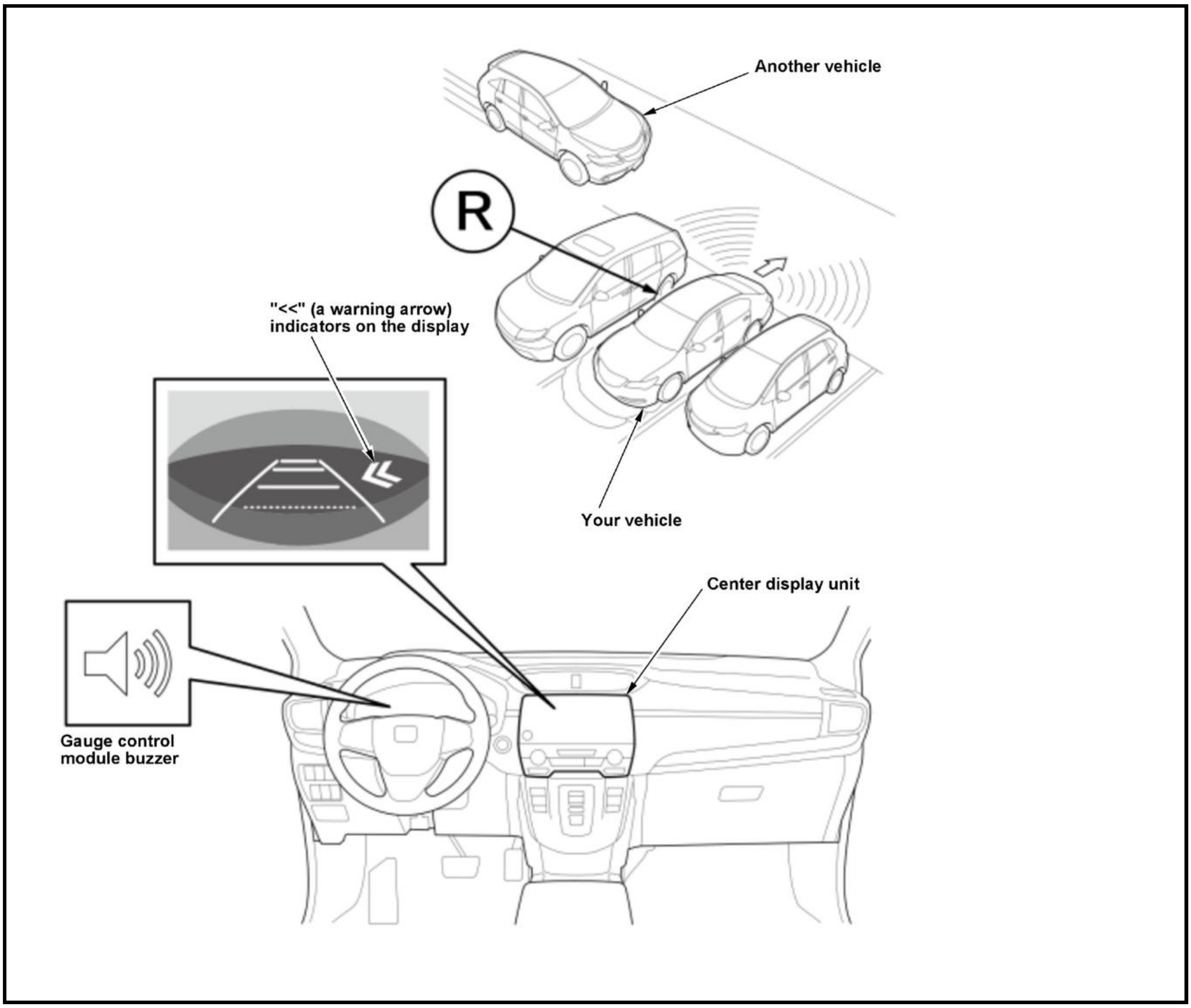
Another vehicle
R
"<<" (a warning arrow) indicators on the display
Your vehicle
Center display unit
Gauge control module buzzer

CROSS TRAFFIC MONITOR SYSTEM DESCRIPTION - SYSTEM DIAGRAM

The system diagram of the cross traffic monitor system is shown below.

For locations of each component on the vehicle, refer to Component Location Index:

- **PCM**
- **Gauge control module**
- **Left side BSI radar unit, Right side BSI radar unit**
- **Audio unit** or **Audio-navigation unit, Center display unit** , **Center display unit**
- **Rearview camera**

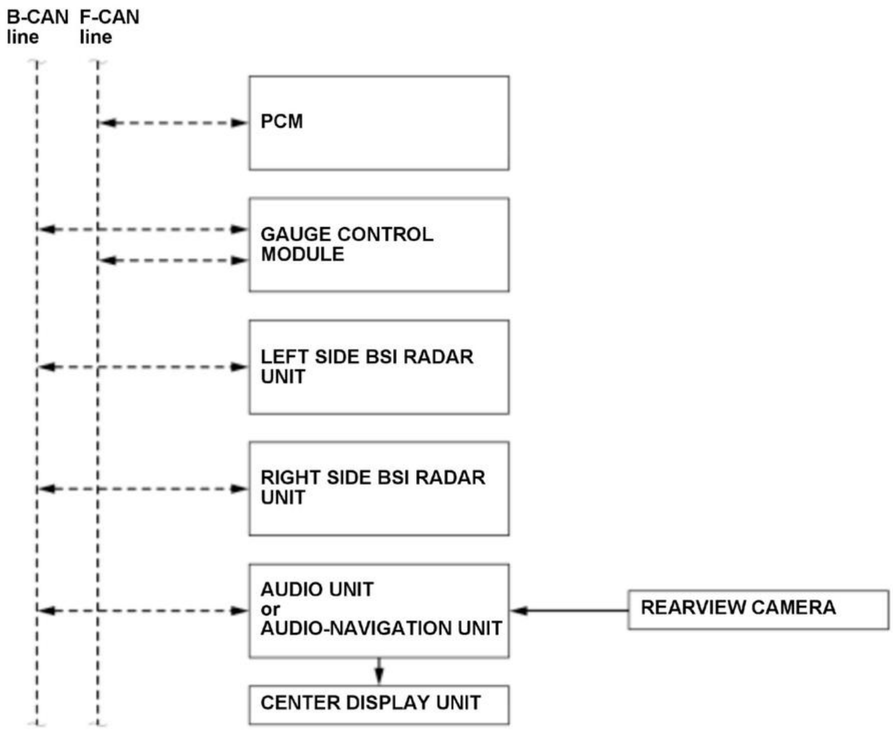
B-CAN line
F-CAN line
PCM
GAUGE CONTROL MODULE
LEFT SIDE BSI RADAR UNIT
RIGHT SIDE BSI RADAR UNIT
AUDIO UNIT or AUDIO-NAVIGATION UNIT
REARVIEW CAMERA
CENTER DISPLAY UNIT

SYMPTOM TROUBLESHOOTING INDEX

BLIND SPOT INFORMATION (BSI) SYSTEM SYMPTOM TROUBLESHOOTING INDEX (BSI)

Symptom	Diagnostic procedure	Also check for
The BSI alert indicator comes on when no other vehicle is in the detectable area (Wrong indication)	Symptom troubleshooting.	B
The BSI does not come on when other vehicles are in the detectable area (No indication)	Symptom troubleshooting.	B
The BSI indicator does not come on	Symptom troubleshooting.	B
The BSI indicator does not go off	**NOTE:** If any of the CAN communication failure DTCs are indicated in other systems, troubleshoot the DTC first. • Check for open wire or shorted wire in the B-CAN circuit; • • - Between the gauge control module and BSI radar unit (B-CAN_H, B-CAN _L) • Check the left and/or right side BSI radar unit power circuit (IG1_OPTION) • Check the left and/or right side BSI radar unit ground circuit (GND)	Refer to the following about the indicator operating condition; • How to Troubleshoot Refer to the following about the circuit troubleshooting; • Gauge control module connector for inputs and outputs • BSI radar unit connector for inputs and outputs

Symptom	Diagnostic procedure	Also check for
	• Do the gauge control module self-diagnostic function .	• BSI system circuit diagram • Fuse to components index • Ground to components index
The buzzer does not sound	Symptom troubleshooting.	B
The HDS does not communicate with the BSI system	Symptom troubleshooting.	Incorrect HDS software.

INSPECTION

BSI RADAR UNIT AIMING INSPECTION

Special Tools Required

Image	Description/Tool Number
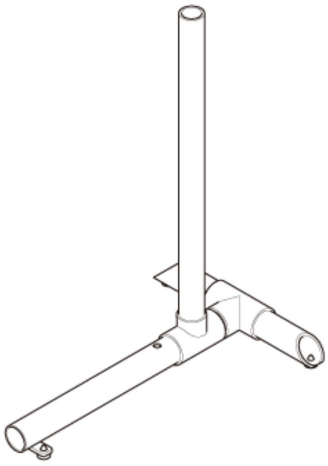	Stand 07AAJ-TK8A100*
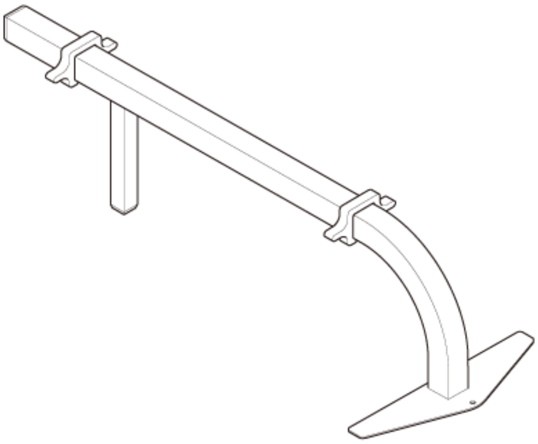	Rim Frame 07AAJ-TK8A150

Image	Description/Tool Number
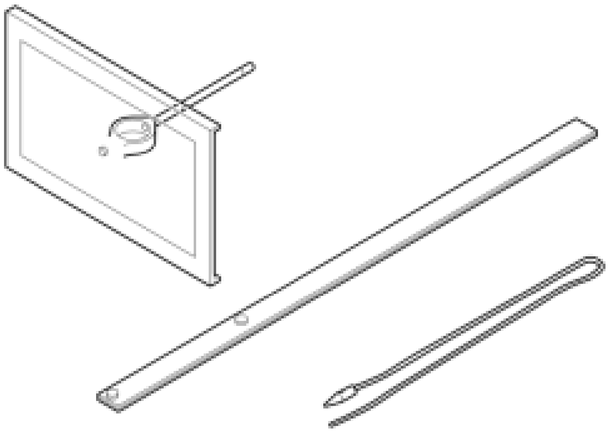	Target Set 07AAJ-STKA160
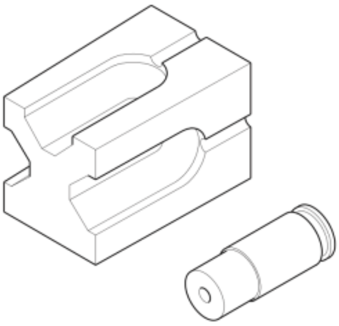	Angle Gauge 07AAJ-STKA170
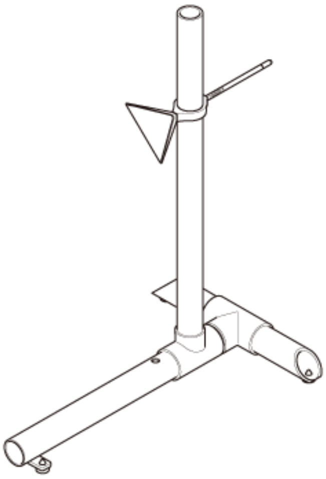	Stand Set 07AAJ-STKA220*

*: Use Stand 07AAJ-TK8A100 or Stand Set 07AAJ-STKA220 for aiming.

Adjustment

NOTE: Inspect the BSI radar unit aiming in these instances:

- After replacing or removing and reinstalling one or both of the BSI radar units.
- After repairing the body panel(s) where the BSI radar unit(s) mount.
- For any of the following DTCs:
-

- -

  B18B8: **Left Side BSI Radar Unit Azimuth Off Alignment**

- -

  B1E68: **Right Side BSI Radar Unit Azimuth Off Alignment**

- Park the vehicle on level ground (within 1 degree of slope) with at least 4 m (13 ft) of space on both sides and behind the vehicle. Do not do this procedure with the vehicle on a lift or with the tires on steel plates or rollers.
- Keep the front wheels in the straight ahead position.
- Unless otherwise indicated, illustration shows left of the vehicle; right of the vehicle is symmetrical.

- When marking on the floor, use suitable tape to mark the exact locations.

1. **Rear Bumper - Remove**
2. BSI Radar Unit Aiming - Inspect

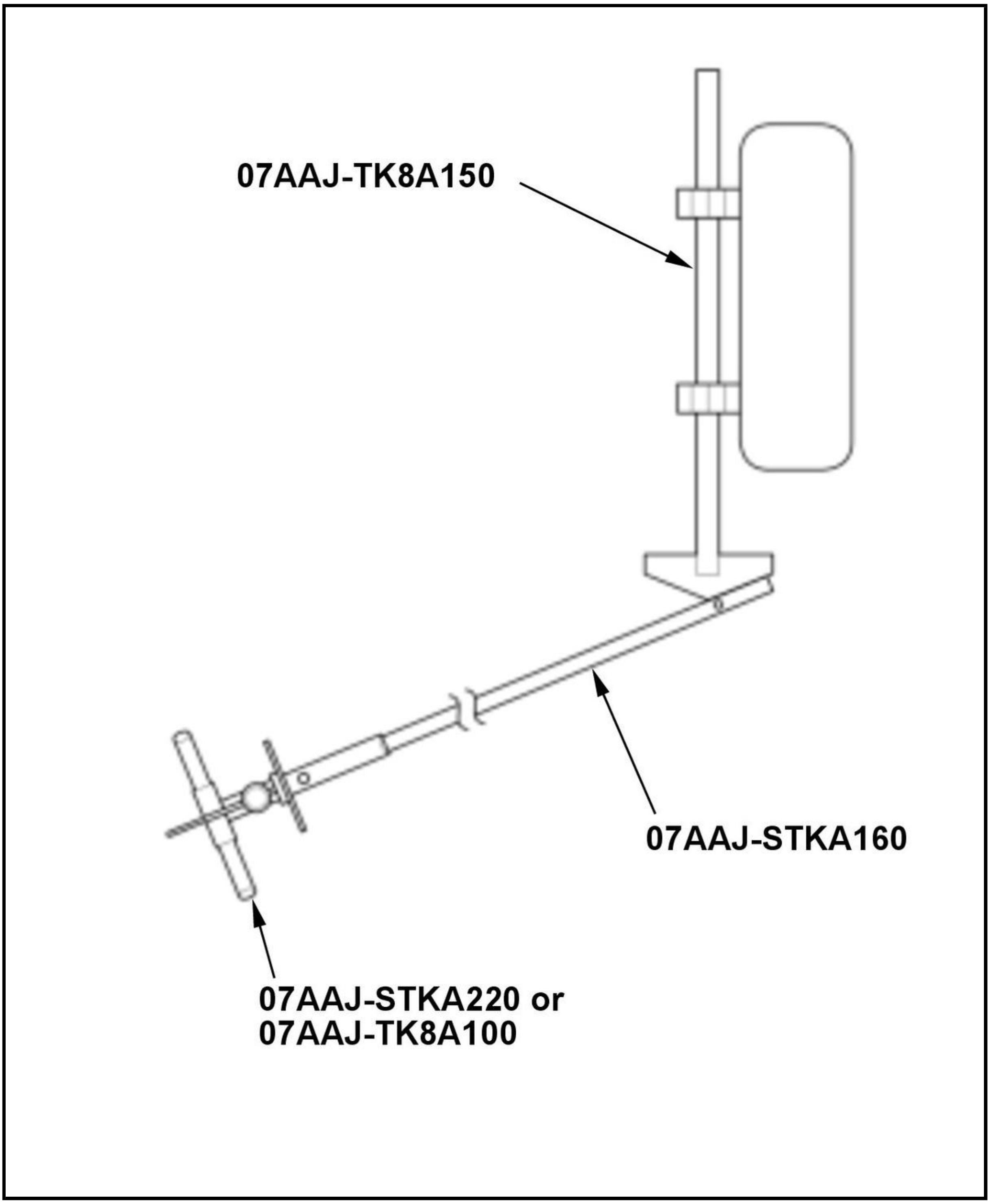

Prepare the items shown:

- Felt-tip pen
- Tape

Before Inspection:

- Do not make any bumper repairs in the areas over or near the two radar units on vehicles equipped with the Blind Spot Information (BSI) system. The composition of the repair materials, and/or increased material thickness in the repaired area, may interfere with BSI radar unit operation.
- Clean the surface of the BSI radar unit.
- If the vehicle you are aiming was involved in a collision or if you suspect the alignment is out of specifications, you must perform a wheel alignment prior to aiming the BSI radar unit.
- Make sure the vehicle does not have aftermarket suspension.
- Make sure that all of the tires are the correct size and inflated to the proper pressure.

- Make sure the fuel tank is full.
- Remove all cargo from the vehicle except the tool kit and the spare tire.
- Make sure the steering wheel is pointed straight ahead, and do not turn it after setting the vehicle.
- Shift the transmission to P position/mode, and apply the parking brake.

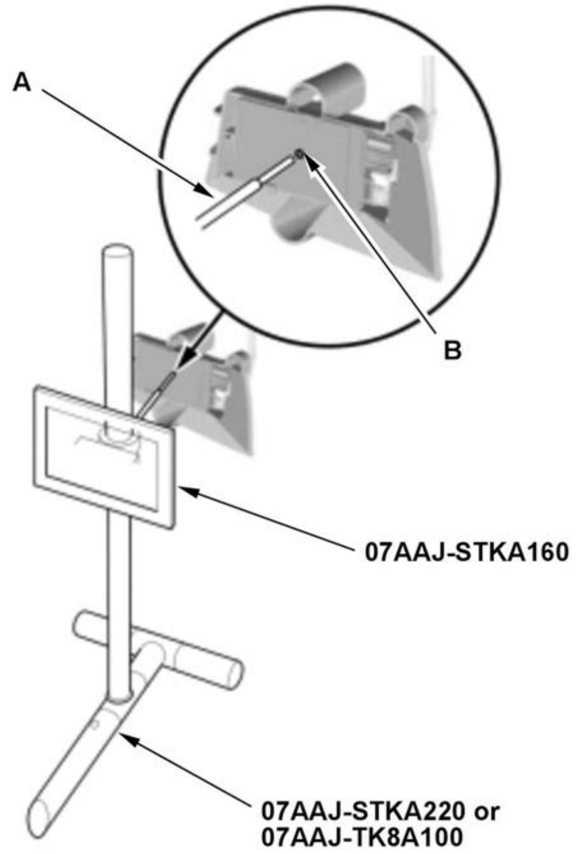 A B 07AAJ-STKA160 07AAJ-STKA220 or 07AAJ-TK8A100	1. Set the target on the stand. 2. Set the tip (A) of the target at the same height as the center (B).

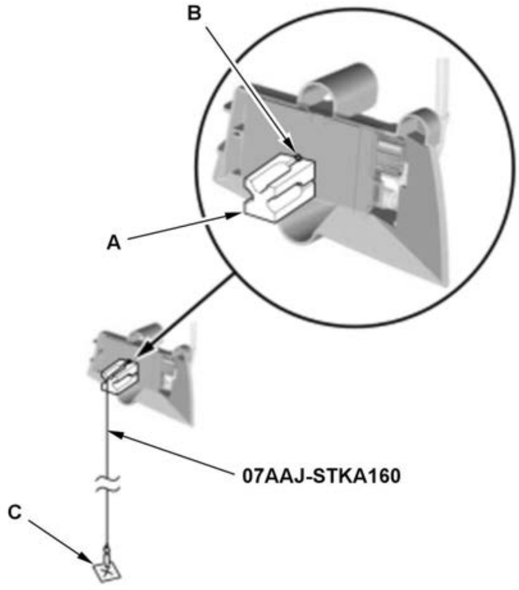	3. Set the angle gauge (A) against the radar unit, and align the cutout of the angle gauge with the center (B) on the radar unit. **NOTE:** The angle gauge can be set at any of the 3 angle settings for this procedure. 4. Hang the plumb bob from the angle gauge, and mark a point (C) on the floor where the tip of the plumb bob touches the floor.

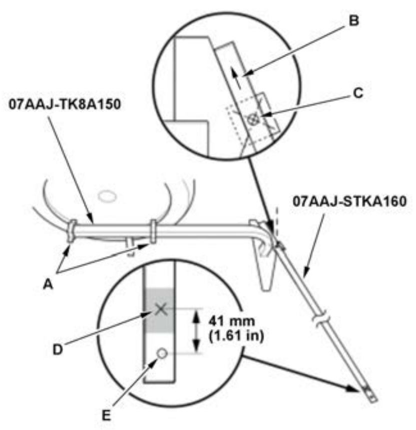
B
C
07AAJ-TK8A150
07AAJ-STKA160
A
41 mm
(1.61 in)
D
E

5. Place the rim frame by the rear wheel on the side of the vehicle you are aiming. Adjust the spacers (A) to fit against the wheel rim to make the rim frame parallel with the wheel.

NOTE: Make sure the spacers are touching the wheel rim.

6. Assemble the two sections of the straightedge, then place the hole on the end of the straightedge over the point (C) that you made on the floor in the previous step. Slide the rim frame rearward until the rim frame and the straightedge meet.

NOTE: Set the straightedge according to the arrow (B).

7. Mark a point (D) that is 41 mm (1.61 in) from the hole (E) on the end of the straightedge.

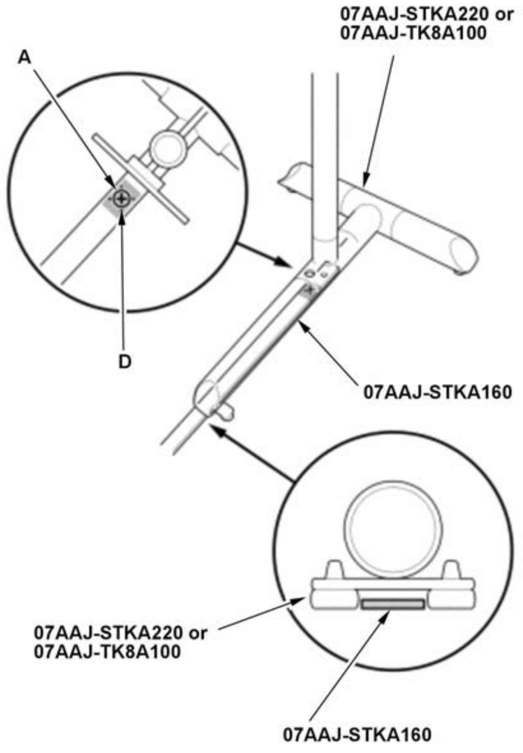
07AAJ-STKA220 or
07AAJ-TK8A100
A
D
07AAJ-STKA160
07AAJ-STKA220 or
07AAJ-TK8A100
07AAJ-STKA160

8. Place the target over the other end of the straight edge, and align the hole (A) at the base of the target with the point (D) on the straightedge.

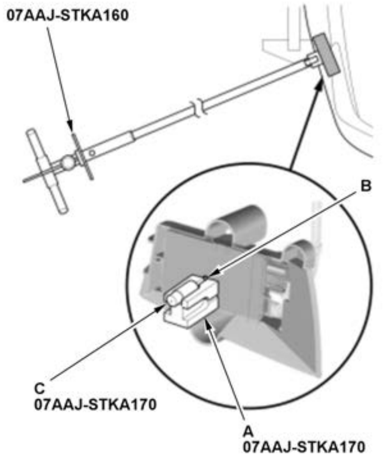
07AAJ-STKA160
B
C
07AAJ-STKA170
A
07AAJ-STKA170

9. With the angle gauge (A) facing up at the 0 degree setting (indicated on the angle gauge), set the angle gauge against the BSI radar unit. Align the cutout in the angle gauge with the center (B) on the radar unit.

WARNING: Do not aim the laser beam at anyone's eyes.

10. Turn on the laser pointer (C), and set it on the angle gauge so that the beam hits on the target.

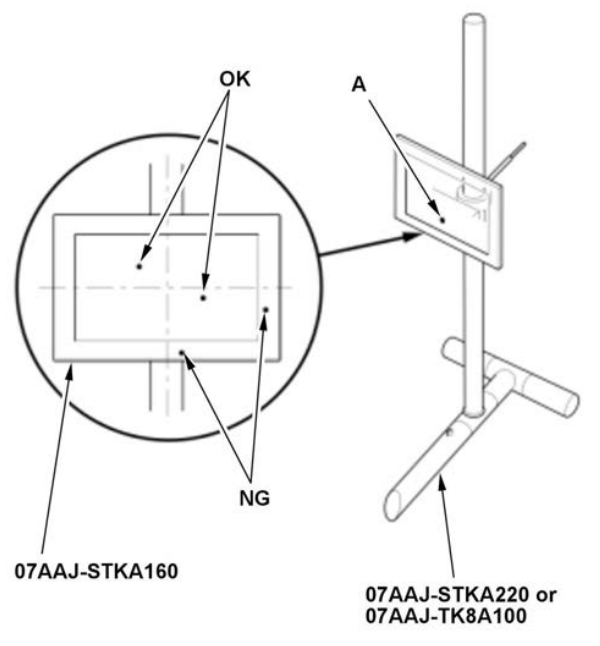 OK A NG 07AAJ-STKA160 07AAJ-STKA220 or 07AAJ-TK8A100	11. Check the point (A) where the laser beam hits the target: - If the laser beam is within the inner square of the target, the BSI radar unit is aimed properly. - If the laser beam is out of the inner square of the target, **check the BSI radar unit mounting area**.

3. **Rear Bumper - Install**

SYMPTOM TROUBLESHOOTING

BLIND SPOT INFORMATION (BSI) SYSTEM SYMPTOM TROUBLESHOOTING - THE BSI ALERT INDICATOR COMES ON WHEN NO OTHER VEHICLE IS IN THE DETECTABLE AREA (WRONG INDICATION)

1. DTC check

-1. Turn the vehicle to the ON mode.

-2. Check for DTCs with the HDS.

DTC Description	DTC
B	B

DTC Description	DTC
B	B

DTC (BSI)

Are any DTCs indicated?

YES

Go to the indicated DTC troubleshooting .

NO

Go to step 2.

2. Vehicle settings check

-1. Check the BSI system is ON status, and make sure the BSI system customizing operation.

Is the BSI system ON?

YES

Go to step 3.

NO

Cancel the OFF status by operating the BSI customization.

3. Driving condition check

-1. Turn the vehicle to the OFF (LOCK) mode.

Interview the customer about when the symptom occurred to determine if an inspection is needed.

NOTE: The BSI system cannot work properly in the following driving situations:

- In rainy, snowy, or foggy weather.
- When receiving a jamming signal from outside.
- When followed by other vehicles at a curve in a road.
- When another vehicle is getting close to yours when turning right or left.
- When the rear bumper is deformed.
- When the sensor is out of place.
- In places where there is a guardrail, pole, or tree.
- When an area of bumper around the installed sensor is soiled.

Is an inspection required?

YES

Go to step 4.

NO

Explain to the customer that the system sometimes cannot detect under certain driving conditions.

4. Rear bumper installation check

-1. Make sure that the rear bumper is correctly installed, and check the rear bumper for alteration or deformation.

NOTE: Do not make any bumper repairs in the areas over or near the two radar units on vehicles equipped with the Blind Spot Information (BSI) System. The composition of the repair materials, and/or increased material thickness in the repaired area, may interfere with BSI radar unit operation.

Is the rear bumper OK?

YES

Go to step 5.

NO

If the rear bumper is incorrectly installed, reinstall it correctly. If it is damaged or deformed, replace it. If it is modified, explain to the customer that modifying rear bumper may lead to improper BSI system operation.

5. BSI radar visual check

-1. **Remove the rear bumper** .

-2. Check the inside and outside of the rear bumper for dirt, contaminants, or stickers. Also, check the BSI radar unit surface for dirt or contaminants.

Are the BSI radar unit and the rear bumper OK?

YES

Go to step 6.

NO

Completely wipe off any dirt or contaminants from the BSI radar unit surface or rear bumper.

6. BSI radar installation check

-1. Check the body surface where the BSI radar unit is mounted for deformation.

Is the body surface OK?

YES

Replace the appropriate BSI radar unit .

NO

Go to the BSI radar unit mounting area check.

BLIND SPOT INFORMATION (BSI) SYSTEM SYMPTOM TROUBLESHOOTING - THE BSI DOES NOT COME ON WHEN OTHER VEHICLES ARE IN THE DETECTABLE AREA (NO INDICATION)

1. DTC check

-1. Turn the vehicle to the ON mode.

-2. Check for DTCs with the HDS.

DTC Description	DTC
B	B

DTC Description	DTC
B	B

DTC (BSI)

Are any DTCs indicated?

YES

Go to the indicated DTC troubleshooting .

NO

Go to step 2.

2. Vehicle settings check

-1. Check the BSI system is ON status, and make sure the BSI system customizing operation.

Is the BSI system ON?

YES

Go to step 3.

NO

Cancel the OFF status by operating the BSI customization.

3. Driving condition check

   -1. Turn the vehicle to the OFF (LOCK) mode.

   Interview the customer about when the symptom occurred to determine if an inspection is needed.

   NOTE: The BSI system cannot work properly in the following driving situations:

   - In rainy, snowy, or foggy weather.
   - When small targets in the detectable area cannot reflect radar; for example, a motor bike.
   - When there is ice, snow, or dirt is stuck to the rear bumper.
   - When driving in a traffic lane divided with road marking ramps.
   - When a vehicle comes over in the lane next to yours from a far lane.
   - When the temperature around the sensor is high.
   - When the rear bumper is deformed.
   - When the sensor is out of place.
   - When an area of bumper around the installed sensor is soiled.

   Is an inspection required?

   YES

   Go to step 4.

   NO

   The system is OK at this time. Check the rear bumper for dirt contamination. If everything looks OK, explain BSI system precautions to the customer.

4. Rear bumper installation check

   -1. Make sure that the rear bumper is correctly installed, and check the rear bumper for alteration or deformation.

   NOTE: Do not make any bumper repairs in the areas over or near the two radar units on vehicles equipped with the Blind Spot Information (BSI) System. The composition of the repair materials, and/or increased material thickness in the repaired area, may interfere with BSI radar unit operation.

   Is the rear bumper OK?

   YES

   Go to step 5.

   NO

   If the rear bumper is incorrectly installed, reinstall it correctly. If it is damaged or deformed, replace it. If it is modified, explain to the customer that modifying rear bumper may lead to improper BSI system operation.

5. BSI radar visual check

   -1. **Remove the rear bumper** .

   -2. Check the inside and outside of the rear bumper for dirt, contaminants, or stickers. Also, check the BSI radar unit surface for dirt or contaminants.

   Are the BSI radar unit surface and the rear bumper surface dirty OK?

   YES

   Go to step 6.

   NO

   Completely wipe off any dirt or contaminants from the BSI radar unit surface or the rear bumper.

6. BSI radar installation check

   -1. Check the body surface where the BSI radar unit is mounted for deformation.

   Is the body surface OK?

   YES

   Replace the appropriate BSI radar unit .

   NO

   Go to the BSI radar unit mounting area check.

BLIND SPOT INFORMATION (BSI) SYSTEM SYMPTOM TROUBLESHOOTING - THE BSI INDICATOR DOES NOT COME ON

1. DTC check

   -1. Turn the vehicle to the ON mode.

   -2. Check for DTCs with the HDS.

DTC Description	DTC
B	B

DTC Description	DTC
B	B

   DTC (BSI)

   Are any DTCs indicated?

   YES

   Go to the indicated DTC troubleshooting .

   NO

   Go to step 2.

2. Problem verification

-1. Turn the vehicle to the OFF (LOCK) mode, then to the ON mode.

-2. Check the BSI indicator comes on, and then goes off.

Does the BSI indicator come on, then go off?

YES

Intermittent failure, the system is OK at this time. **Refer to intermittent failures troubleshooting** .

NO

Go to step 3.

3. Vehicle settings check

-1. Check the BSI system is ON status, and make sure the BSI system customizing operation.

Is the BSI system ON?

YES

Go to step 4.

NO

Cancel the OFF status by operating the BSI customization.

4. Gauge control module check

-1. **Do the gauge control module self-diagnostic function** .

Is the gauge control module OK?

YES

Replace the appropriate BSI radar unit .

NO

Replace the gauge control module .

BLIND SPOT INFORMATION (BSI) SYSTEM SYMPTOM TROUBLESHOOTING - THE HDS DOES NOT COMMUNICATE WITH THE BSI SYSTEM

1. 12 volt battery check

-1. **Test the 12 volt battery** .

Is the 12 volt battery OK?

YES

Go to step 2.

NO

Charge or replace the 12 volt battery .

2. Body electrical system communication check

-1. **Connect the HDS** .

-2. Check that the HDS can communicate with the body electrical system.

Is the communication possible?

YES

Go to step 3.

NO

Go to the DLC Circuit Troubleshooting .

3. Body electrical system check

-1. **Check for body electrical system DTCs** .

Are any DTCs indicated?

YES

Go to the indicated DTC troubleshooting .

NO

Go to step 4.

4. Determine possible failure area (B-CAN_H line, B-CAN_L line, others)

-1. Turn the vehicle to the OFF (LOCK) mode.

-2. Disconnect the following connectors.

Left side BSI radar unit 6P connector
Right side BSI radar unit 6P connector

-3. Turn the vehicle to the ON mode.

-4. Measure the voltage between test points 1 and 2.

Test condition	Vehicle ON mode
B	Left side BSI radar unit 6P connector: disconnected
B	Right side BSI radar unit 6P connector: disconnected
Test point 1	**Left side BSI radar unit 6P connector No. 1**
Test point 2	**Left side BSI radar unit 6P connector No. 6**

Test point 1	**Right side BSI radar unit 6P connector No. 1**
Test point 2	**Right side BSI radar unit 6P connector No. 4/No. 6**

Is there battery voltage?

YES

Go to step 5.

NO

Go to step 6.

5. Open wire check (B-CAN_H line, B-CAN_L line)

-1. Turn the vehicle to the OFF (LOCK) mode.

-2. Disconnect the following connector.

Body control module connector B (36P)

-3. Measure the resistance between test points 1 and 2.

Test condition	Vehicle OFF (LOCK) mode
B	Left side BSI radar unit 6P connector: disconnected
B	Right side BSI radar unit 6P connector: disconnected
B	Body control module connector B (36P): disconnected

Left side BSI radar unit

Circuit name	Test point 1		Test point 2	
	Connector	Terminal	Connector	Terminal
B-CAN_H	Left side BSI radar unit 6P connector	No. 3	Body control module connector B (36P)	No. 20
B-CAN_L		No. 5		No. 21

Right side BSI radar unit

Circuit name	Test point 1		Test point 2	
	Connector	Terminal	Connector	Terminal
B-CAN_H	Right side BSI radar unit 6P connector	No. 3	Body control module connector B (36P)	No. 20
B-CAN_L		No. 5		No. 21

Is there 1.0 Ω or less?

YES

Replace the appropriate BSI radar unit .

NO

Repair an open in the B-CAN_H wire or B-CAN_L wire between the appropriate BSI radar unit and the body control module.

6. Open wire check (IG1_OPTION line)

-1. Turn the vehicle to the ON mode.

-2. Measure the voltage between test points 1 and 2.

Test condition	Vehicle ON mode
B	Left side BSI radar unit 6P connector: disconnected
B	Right side BSI radar unit 6P connector: disconnected
Test point 1	Left side BSI radar unit 6P connector No. 1
Test point 2	Body ground

Test point 1	Right side BSI radar unit 6P connector No. 1
Test point 2	Body ground

Is there battery voltage?

1. **YES**

- Left side BSI radar unit: Repair an open in the GND wire between the left side BSI radar unit and body ground (G505).
- Right side BSI radar unit: Repair an open in the GND wire between the right side BSI radar unit and body ground (G504).

NO

Repair an open in the wire between the appropriate BSI radar unit and **No. D5** fuse.

BLIND SPOT INFORMATION (BSI) SYSTEM SYMPTOM TROUBLESHOOTING - THE BUZZER DOES NOT SOUND

1. DTC check

-1. Turn the vehicle to the ON mode.

-2. Check for DTCs with the HDS.

DTC Description	DTC
B	B

DTC Description	DTC
B	B

DTC (BSI)

Are any DTCs indicated?

YES

Go to the indicated DTC troubleshooting .

NO

Go to step 2.

2. Vehicle settings check

-1. Check the BSI system is ON status, and make sure the BSI system customizing operation.

Is the BSI system ON?

YES

Go to step 3.

NO

Cancel the OFF status by operating the BSI customization.

3. Gauge control module check

-1. **Do the gauge control module self-diagnostic function** .

Does the buzzer sound?

YES

Replace the appropriate BSI radar unit .

NO

Replace the gauge control module .

CONNECTOR VIEW

BSI RADAR UNIT CONNECTOR FOR INPUTS AND OUTPUTS

Left Side BSI Radar Unit 6P Connector (female terminals)

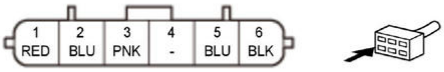

Terminal number	Terminal name	Description
1	IG1_OPTION	Detects ignition signal
2	BSI_L_IND	Drives the left BSI alert indicator
3	B-CAN_H	B-CAN communication (high) circuit
4	Not used	-
5	B-CAN_L	B-CAN communication (low) circuit
6	GND	Ground circuit for the BSI radar unit

Right Side BSI Radar Unit 6P Connector (female terminals)

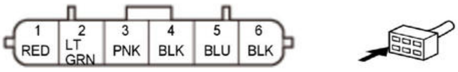

Terminal number	Terminal name	Description
1	IG1_OPTION	Detects ignition signal
2	BSI_R_IND	Drives the right BSI alert indicator
3	B-CAN_H	B-CAN communication (high) circuit
4	GND	Ground circuit for the BSI radar unit
5	B-CAN_L	B-CAN communication (low) circuit
6	GND	Ground circuit for the BSI radar unit

CHECK

BSI RADAR UNIT MOUNTING AREA CHECK

NOTE: Electronic 3-dimensional measuring equipment can be used with this procedure.

Special Tools Required

Image	Description/Tool Number
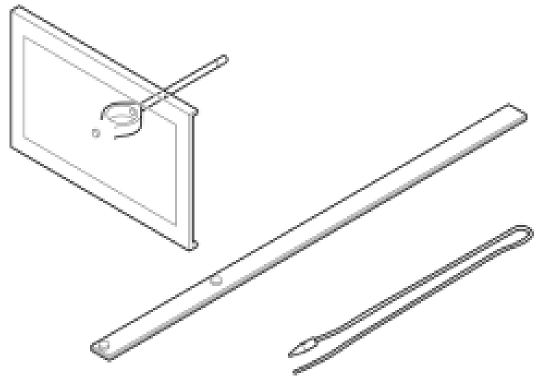	Target Set 07AAJ-STKA160

NOTE: Electronic 3-dimensional measuring equipment can be used with this procedure.

Adjustment

1. **Center Line - Set**
2. **BSI Radar Unit - Remove**
3. Upper Body Measuring Dimensions - BSI Radar Unit Mounting Positions

    1. Install bolts on each hole of the body panel.

    2. Measure the length from the tip of the bolt installed to each hole A, B, and C to the body center line.

    NOTE: If the measured lengths between the body center line and hole A to C are different from the standard, take the vehicle to a body repair shop to have the panel adjusted to standard.

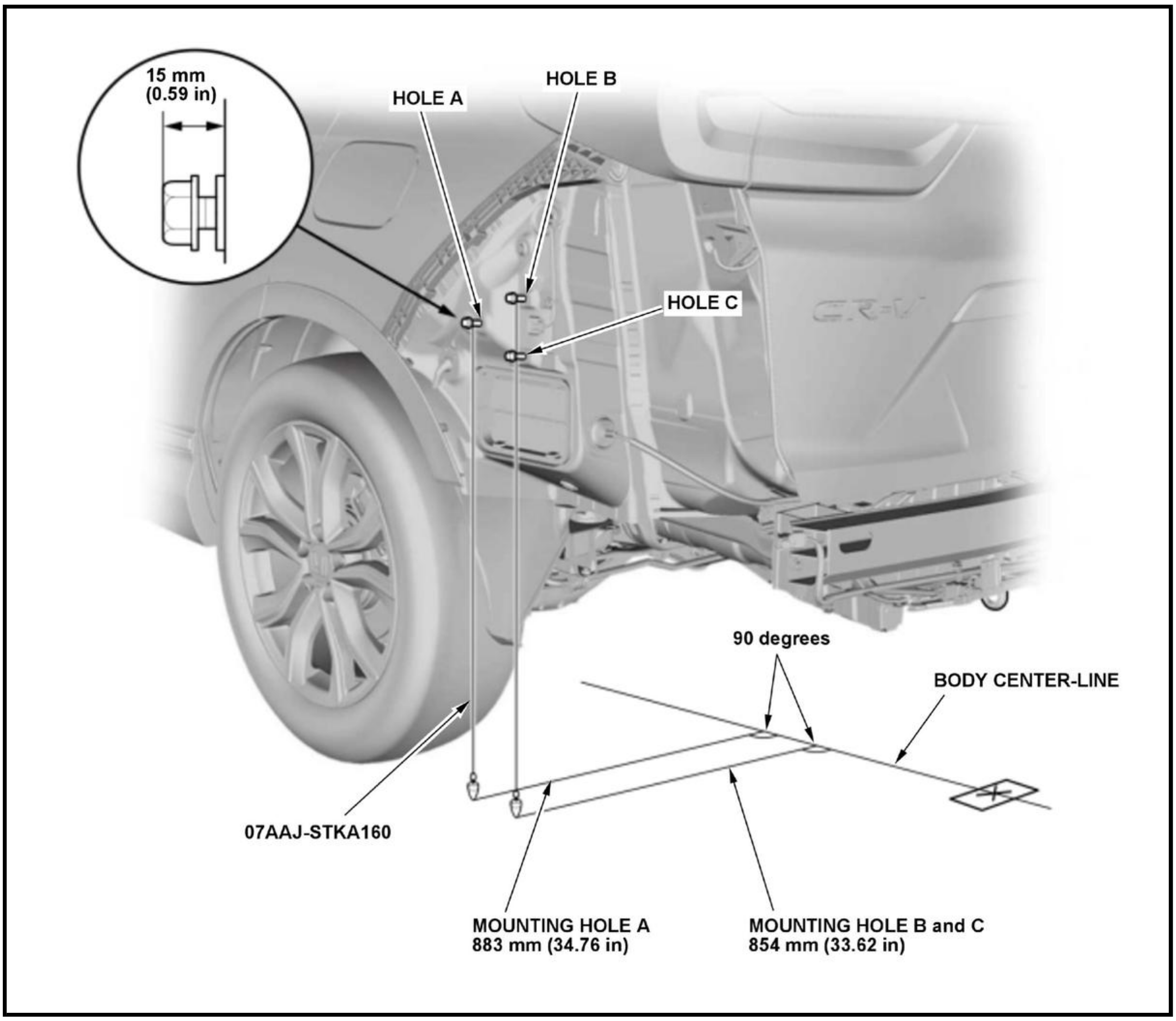
15 mm
(0.59 in)
HOLE A
HOLE B
HOLE C
90 degrees
BODY CENTER-LINE
07AAJ-STKA160
MOUNTING HOLE A
883 mm (34.76 in)
MOUNTING HOLE B and C
854 mm (33.62 in)

4. BSI Radar Unit - Install
5. Rear Bumper - Install

CIRCUIT DIAGRAM

BLIND SPOT INFORMATION (BSI) SYSTEM CIRCUIT DIAGRAM

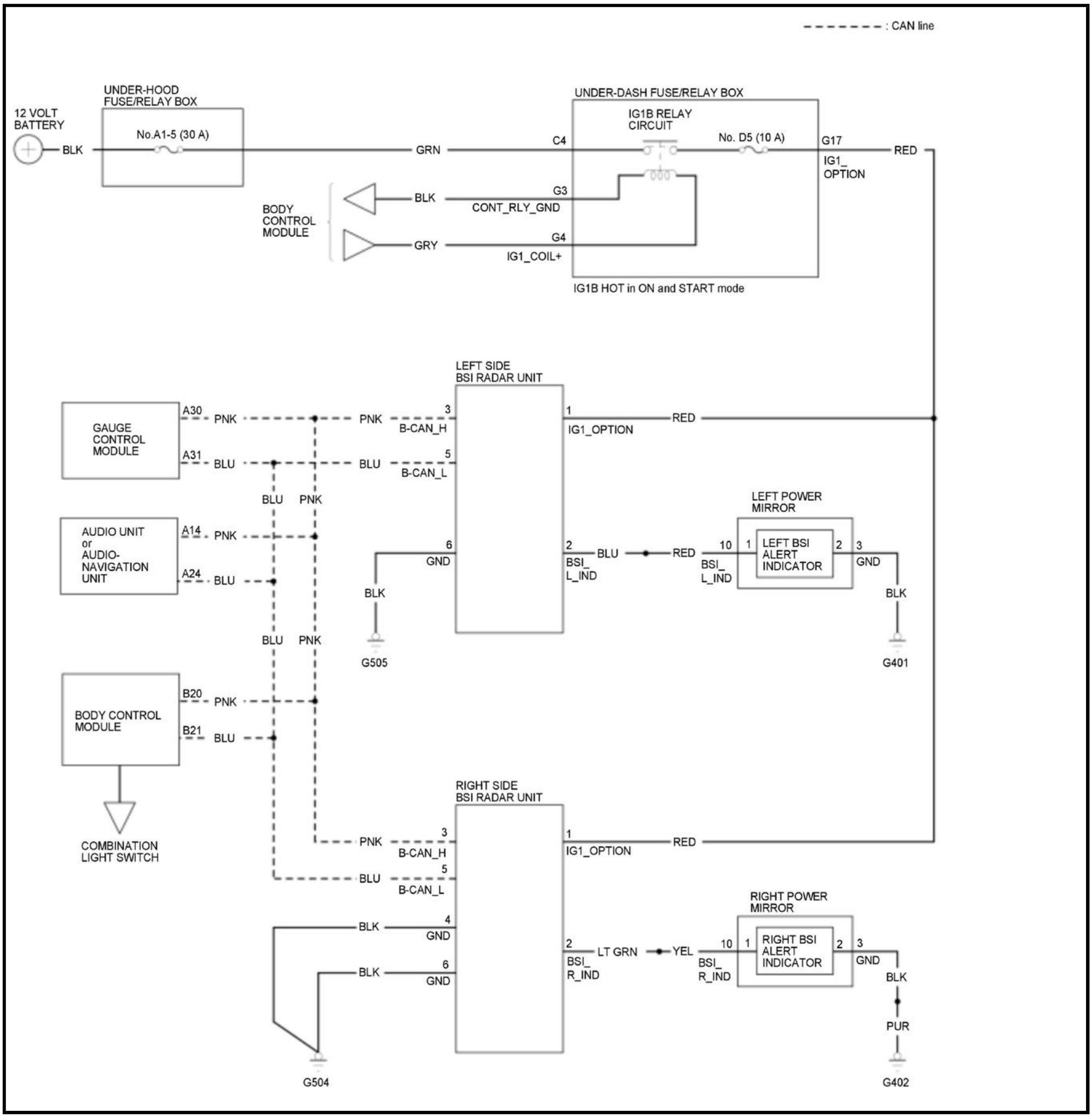

- - - - - - - - : CAN line
12 VOLT BATTERY
BLK
UNDER-HOOD FUSE/RELAY BOX
No.A1-5 (30 A)
GRN
C4
UNDER-DASH FUSE/RELAY BOX
IG1B RELAY CIRCUIT
No. D5 (10 A)
G17
IG1_ OPTION
RED
BODY CONTROL MODULE
BLK
G3
CONT_RLY_GND
GRY
G4
IG1_COIL+
IG1B HOT in ON and START mode
LEFT SIDE BSI RADAR UNIT
GAUGE CONTROL MODULE
A30
PNK
PNK
3
B-CAN_H
A31
BLU
BLU
5
B-CAN_L
1
IG1_OPTION
RED
BLU
PNK
AUDIO UNIT or AUDIO-NAVIGATION UNIT
A14
PNK
A24
BLU
6
GND
BLK
G505
2
BSI_ L_IND
BLU
RED
LEFT POWER MIRROR
10
BSI_ L_IND
1
LEFT BSI ALERT INDICATOR
2
3
GND
BLK
G401
BLU
PNK
BODY CONTROL MODULE
B20
PNK
B21
BLU
COMBINATION LIGHT SWITCH
RIGHT SIDE BSI RADAR UNIT
PNK
3
B-CAN_H
BLU
5
B-CAN_L
1
IG1_OPTION
RED
BLK
4
GND
BLK
6
GND
G504
2
BSI_ R_IND
LT GRN
YEL
RIGHT POWER MIRROR
10
BSI_ R_IND
1
RIGHT BSI ALERT INDICATOR
2
3
GND
BLK
PUR
G402

COMPONENT LOCATION INDEX

BLIND SPOT INFORMATION (BSI) SYSTEM COMPONENT LOCATION INDEX

For relationships between signals in a system, refer to System Diagram.

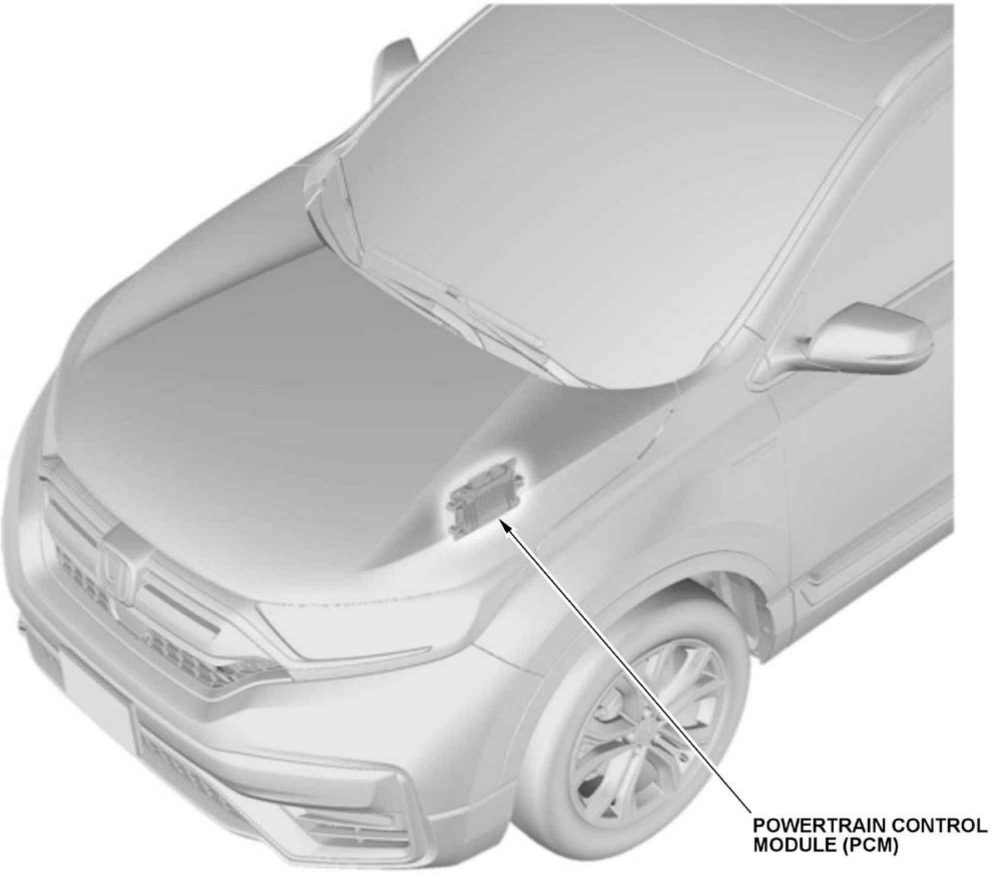
POWERTRAIN CONTROL MODULE (PCM)

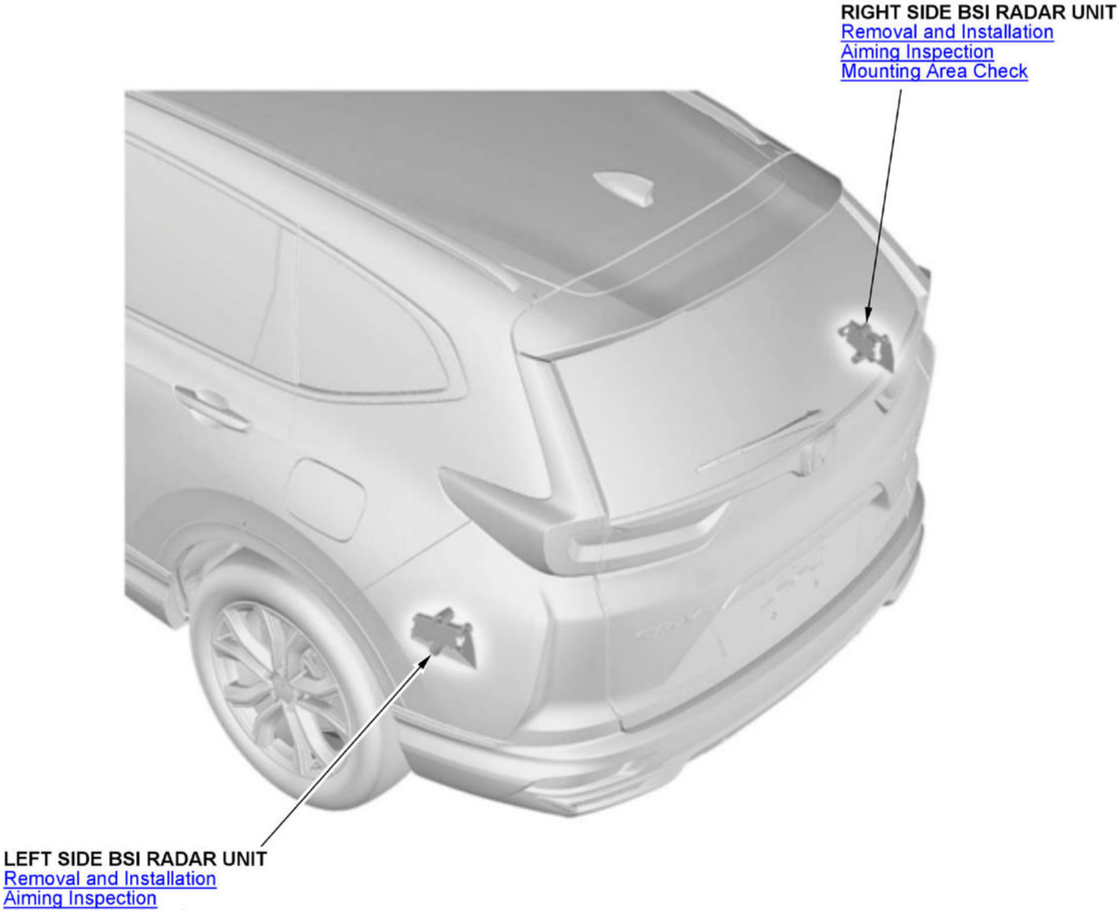
RIGHT SIDE BSI RADAR UNIT
Removal and Installation
Aiming Inspection
Mounting Area Check
LEFT SIDE BSI RADAR UNIT
Removal and Installation
Aiming Inspection
Mounting Area Check

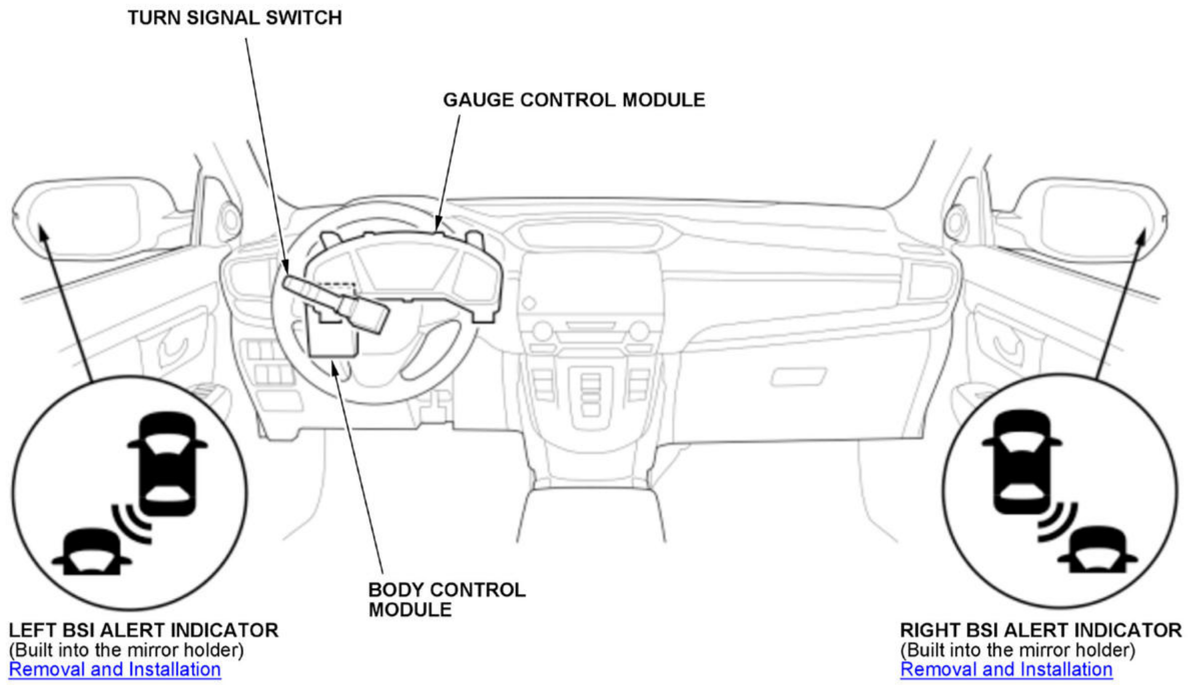
TURN SIGNAL SWITCH
GAUGE CONTROL MODULE
BODY CONTROL MODULE
LEFT BSI ALERT INDICATOR
(Built into the mirror holder)
Removal and Installation
RIGHT BSI ALERT INDICATOR
(Built into the mirror holder)
Removal and Installation

CROSS TRAFFIC MONITOR COMPONENT LOCATION INDEX

For relationships between signals in a system, refer to System Diagram.

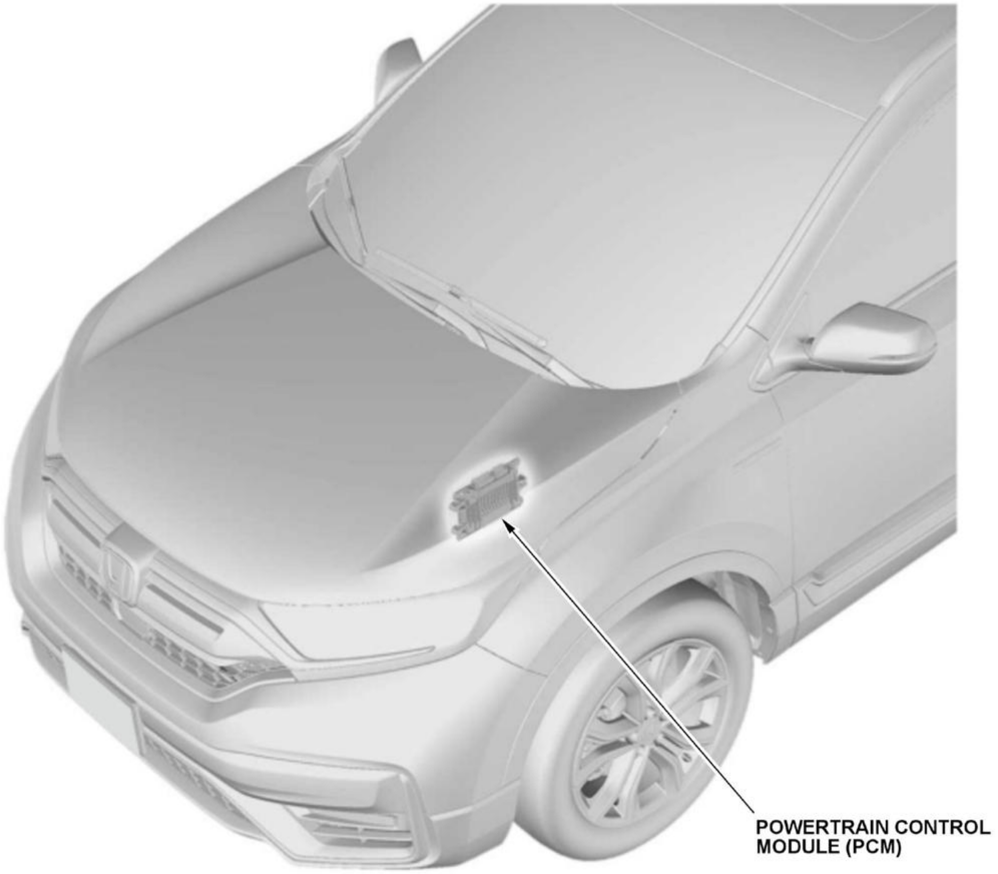
POWERTRAIN CONTROL MODULE (PCM)

For relationships between signals in a system, refer to System Diagram.

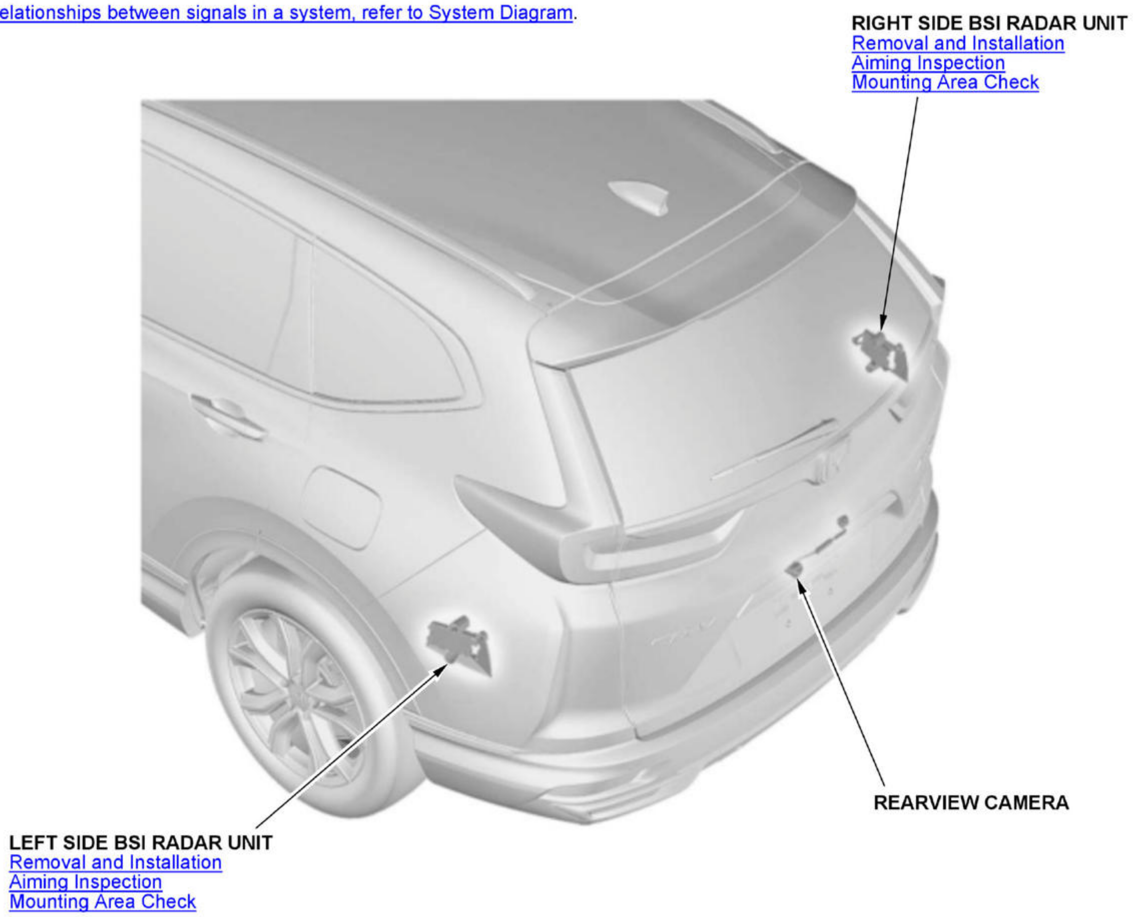
RIGHT SIDE BSI RADAR UNIT
Removal and Installation
Aiming Inspection
Mounting Area Check
REARVIEW CAMERA
LEFT SIDE BSI RADAR UNIT
Removal and Installation
Aiming Inspection
Mounting Area Check

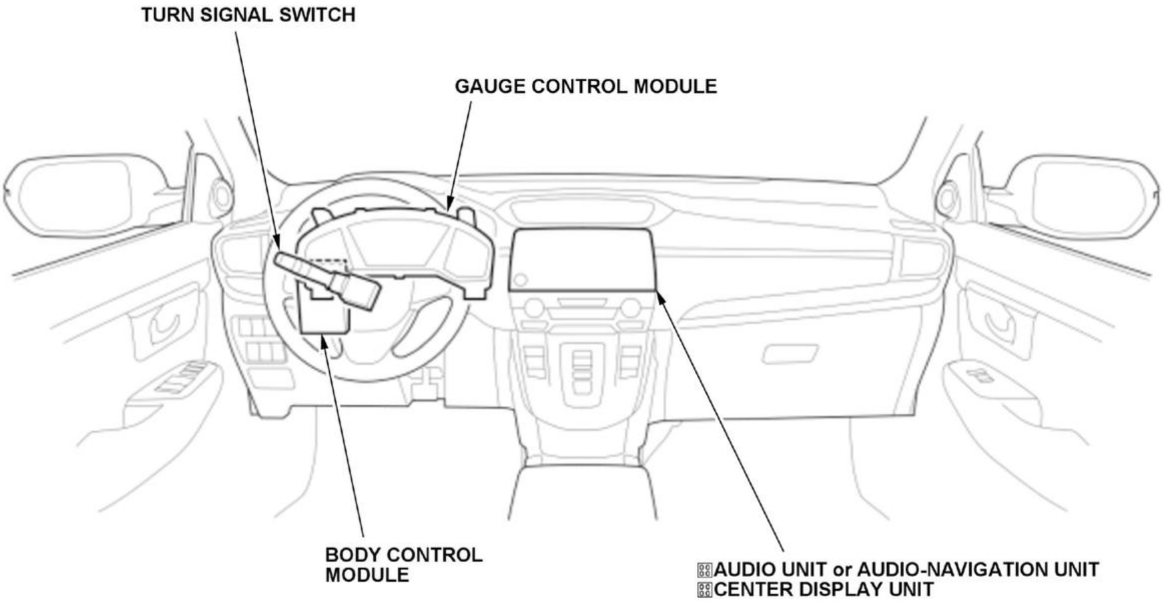
TURN SIGNAL SWITCH
GAUGE CONTROL MODULE
BODY CONTROL MODULE
AUDIO UNIT or AUDIO-NAVIGATION UNIT
CENTER DISPLAY UNIT

TROUBLESHOOTING

DTC B1002

DTC B1002 : MICU internal error (EEPROM error)

NOTE: If you are troubleshooting multiple DTCs, be sure to follow the instructions in **B-CAN System Diagnosis Test Mode A** .

DTC Description	DTC
B1002 MICU internal error (EEPROM error)	B

DTC (Body Control Module)

1. Problem verification

   -1. Clear the DTCs with the HDS.

   -2. Turn the vehicle to the OFF (LOCK) mode and then the ON mode.

   -3. Wait for at least 6 seconds.

   -4. Check for DTCs with the HDS.

DTC Description	DTC
B1002 MICU internal error (EEPROM error)	B

   Is DTC B1002 indicated?

   YES

   Replace the body control module .

   NO

   Intermittent failure, the body control module is OK at this time.

DTC B1003

DTC B1003 : MICU Update Error

NOTE:

- If you are troubleshooting multiple DTCs, be sure to follow the instructions in **B-CAN System Diagnosis Test Mode A** .
- This DTC is indicated when a body control module update is not completed properly.
- Before updating the body control module, make sure the 12 volt battery in the vehicle is fully charged, and connect a 12 volt jumper battery (not a 12 volt battery charger) to maintain system voltage.
- Never turn the vehicle to the ACCESSORY mode or OFF (LOCK) mode, during the reprogramming. If there is a problem with the reprogramming, turn the vehicle to the ON mode.

DTC Description	DTC
B1003 MICU Update Error	B

DTC (Body Control Module)

1. Problem verification

   -1. Clear the DTCs with the HDS.

   -2. Turn the vehicle to the OFF (LOCK) mode and then the ON mode.

   -3. Check for DTCs with the HDS.

DTC Description	DTC
B1003 MICU Update Error	B

   Is DTC B1003 indicated?

   YES

   Update the body control module .

   NO

   Intermittent failure, the system is OK at this time.

DTC B1028

DTC B1028 : Rear wiper motor(Park) signal error

NOTE: If you are troubleshooting multiple DTCs, be sure to follow the instructions in **B-CAN System Diagnosis Test Mode A** .

DTC Description	DTC
B1028 Rear wiper motor (Park) signal error	B

DTC (Body Control Module)

1. Problem verification

   -1. Clear the DTCs with the HDS.

   -2. Turn the vehicle to the OFF (LOCK) mode and then the ON mode.

   -3. Turn the rear window wiper switch to INT for 15 seconds or more, then turn the switch OFF.

   -4. Check for DTCs with the HDS.

DTC Description	DTC
B1028 Rear wiper motor (Park) signal error	B

   Is DTC B1028 indicated?

   YES

   Go to step 2.

   NO

   Intermittent failure, the system is OK at this time. Check for loose or poor connections.

2. Fuse check

-1. Check the following fuse.

Fuse	No. D4 (5 A) (with keyless access system) No. D17 (5 A) (without keyless access system)
Location	Under-dash fuse/relay box

Is the fuse OK?

YES

Go to step 3.

NO

Replace the fuse. If the fuse blows again, repair the short to ground in the IG1 HAC wire.

3. Open wire check (IG1 HAC line)

-1. Turn the vehicle to the OFF (LOCK) mode.

-2. Disconnect the following connector.

Rear window wiper motor 3P connector

-3. Turn the vehicle to the ON mode.

-4. Measure the voltage between test points 1 and 2.

Test condition	Vehicle ON mode Rear window wiper motor 3P connector: disconnected
Test point 1	Rear window wiper motor 3P connector (female terminals) No. 1: ①
Test point 2	Body ground

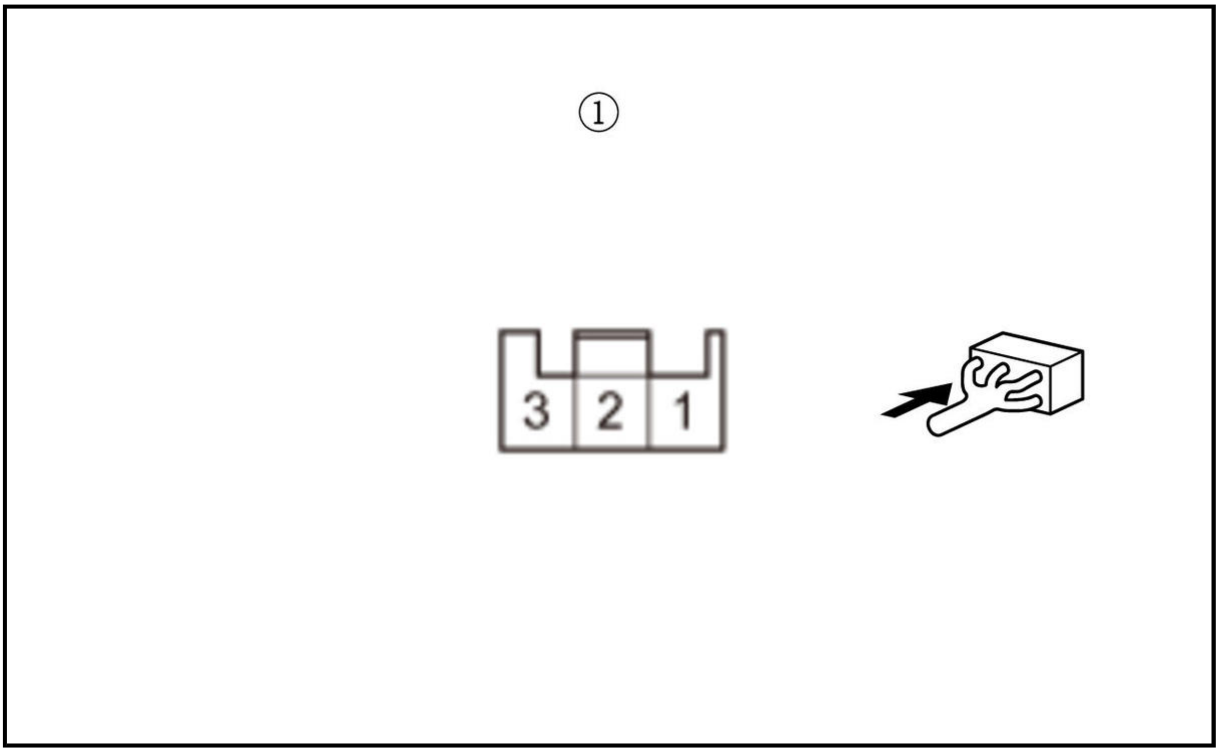

Is there battery voltage?

YES

The IG1 HAC wire is OK. Go to step 4.

NO

Repair an open or high resistance in the wire.

4. Rear window wiper motor check

-1. Turn the vehicle to the OFF (LOCK) mode.

-2. **Do the rear window wiper motor test** .

Does the wiper motor run and does it pulse normally?

YES

Go to step 5.

NO

Replace the rear window wiper motor .

5. Shorted wire check (RR WIPER MTR line to power)

-1. Disconnect the following connector.

Body control module connector A (14P)

-2. Measure the voltage between test points 1 and 2.

Test condition	Vehicle OFF (LOCK) mode Rear window wiper motor 3P connector: disconnected Body control module connector A (14P): disconnected
Test point 1	Rear window wiper motor 3P connector (female terminals) No. 3: ①
Test point 2	Body ground

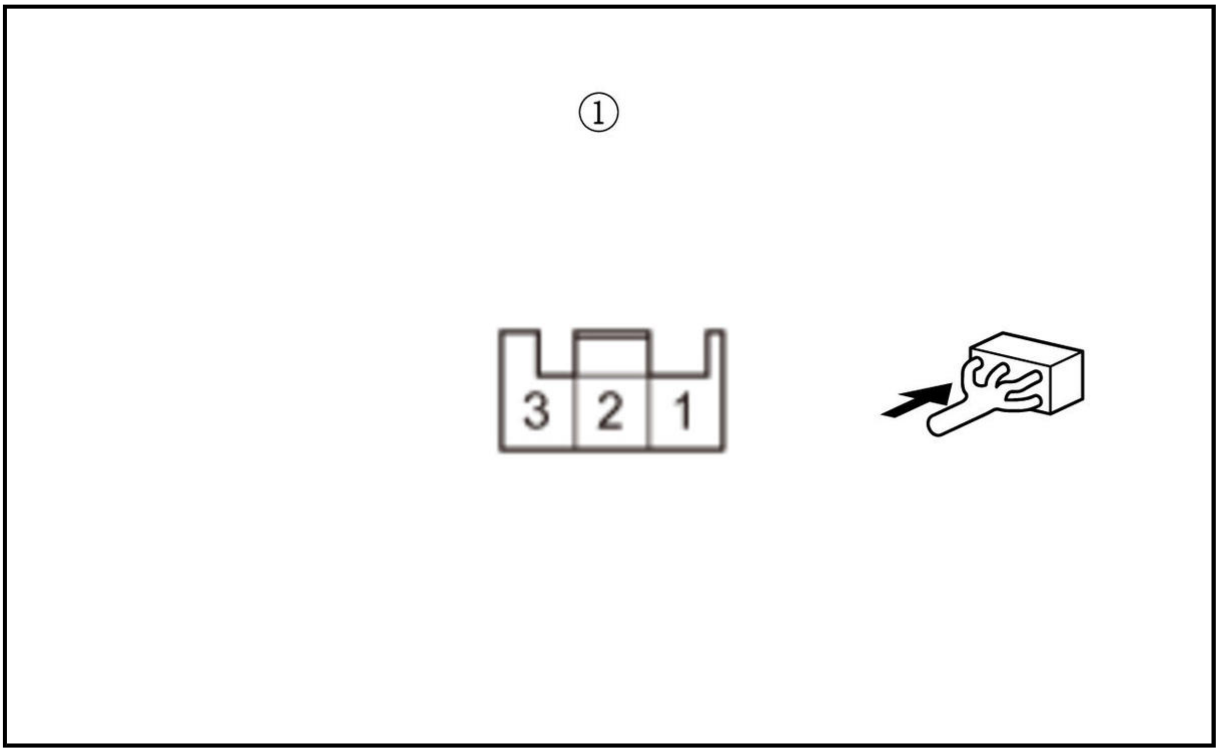

Is there battery voltage?

YES

Repair a short to power in the wire to power.

NO

The RR WIPER MTR wire is not shorted to power. Go to step 6

6. Shorted wire check (RR WIPER MTR line)

-1. Check for continuity between test points 1 and 2.

Test condition	Vehicle OFF (LOCK) mode Rear window wiper motor 3P connector: disconnected Body control module connector A (14P): disconnected
Test point 1	Rear window wiper motor 3P connector (female terminals) No. 3: ①
Test point 2	Body ground

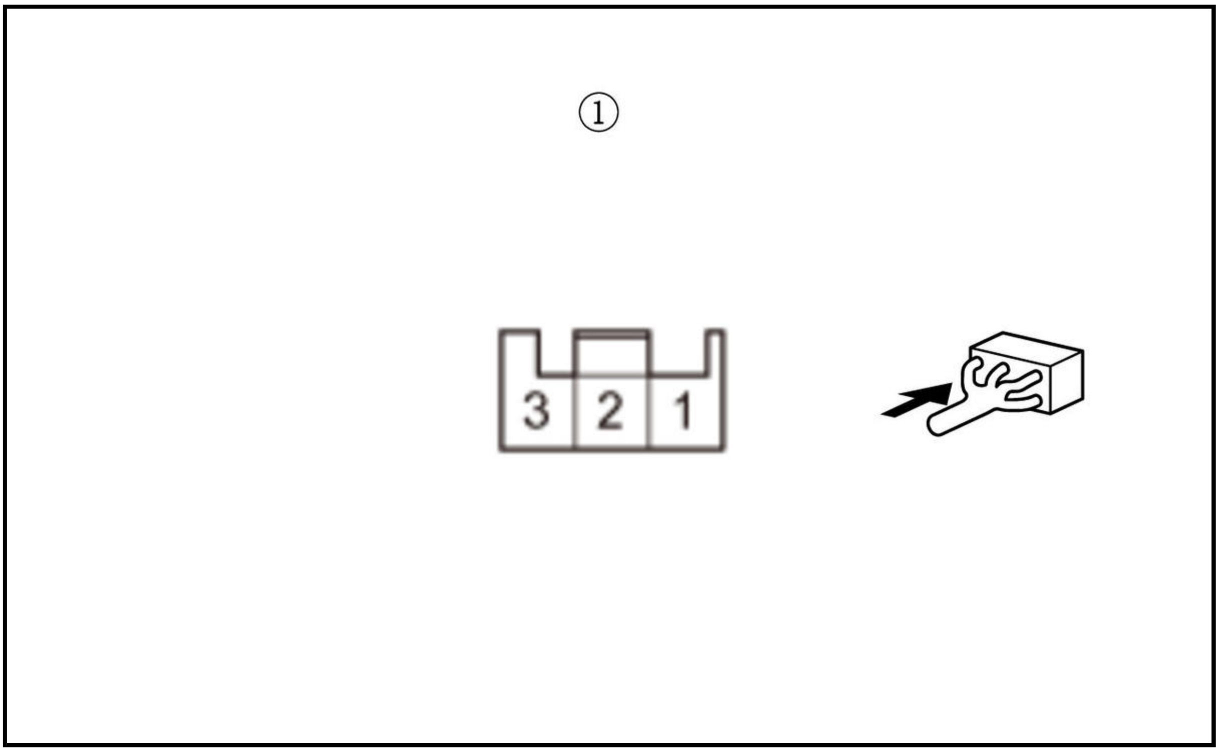

Is there continuity?

YES

Repair a short to ground in the wire.

NO

The RR WIPER MTR wire is not shorted. Go to step 7.

7. Open wire check (RR WIPER MTR line)

-1. Check for continuity between test points 1 and 2.

Test condition	Vehicle OFF (LOCK) mode Rear window wiper motor 3P connector: disconnected Body control module connector A (14P): disconnected
Test point 1	**Body control module connector A (14P) No. 7**
Test point 2	Rear window wiper motor 3P connector (female terminals) No. 3: ①

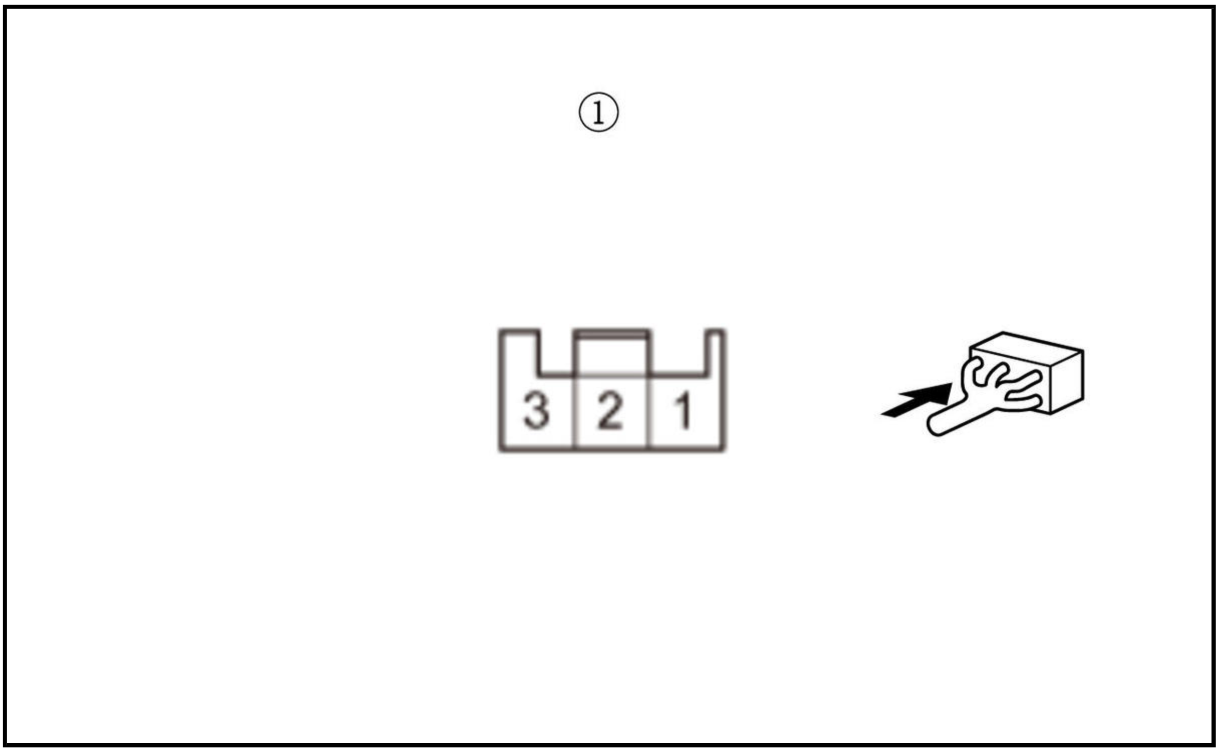

Is there continuity?

YES

The RR WIPER MTR wire is OK. Go to step 8.

NO

Repair an open or high resistance in the wire.

8. Open wire check (GND line)

-1. Check for continuity between test points 1 and 2.

Test condition	Vehicle OFF (LOCK) mode Rear window wiper motor 3P connector: disconnected Body control module connector A (14P): disconnected
Test point 1	**Body control module connector A (14P) No. 6**
Test point 2	Body ground

Is there continuity?

YES

The GND wire is OK. **Replace the body control module** .

NO

Repair an open or high resistance in the ground wire or poor ground (G401).

DTC B1032

DTC B1032 : MICU lost communication with SRS unit (CDS message)

NOTE: If you are troubleshooting multiple DTCs, be sure to follow the instructions in **B-CAN System Diagnosis Test Mode A** .

DTC Description	DTC
B1032 MICU lost communication with SRS unit (CDS message)	B

DTC (Body Control Module)

1. Problem verification

   -1. Clear the DTCs with the HDS.

   -2. Turn the vehicle to the OFF (LOCK) mode and then the ON mode.

   -3. Wait for at least 6 seconds.

   -4. Check for DTCs with the HDS.

DTC Description	DTC
B1032 MICU lost communication with SRS unit (CDS message)	B

   Is DTC B1032 indicated?

   YES

   Go to step 2.

   NO

   Intermittent failure, the system is OK at this time.

2. Open wire check (CDS line)

   -1. Turn the vehicle to the OFF (LOCK) mode.

   -2. **Do the 12 volt battery terminal disconnection procedure** , and wait for at least 3 minutes.

   -3. Disconnect the following connectors.

Body control module connector D (40P)SRS unit connector A (39P)

   -4. Check for continuity between test points 1 and 2.

Test condition	Vehicle OFF (LOCK) modeBody control module connector D (40P): disconnectedSRS unit connector A (39P): disconnected
Test point 1	**Body control module connector D (40P) No. 34**
Test point 2	**SRS unit connector A (39P) No. 1**

   Is there continuity?

   YES

   Go to step 3.

   NO

   Repair an open or high resistance in the wire.

3. Shorted wire check (CDS line)

   -1. Check for continuity between test points 1 and 2.

Test condition	Vehicle OFF (LOCK) modeBody control module connector D (40P): disconnectedSRS unit connector A (39P): disconnected
Test point 1	**SRS unit connector A (39P) No. 1**
Test point 2	Body ground

Is there continuity?

YES

Repair a short to ground in the wire.

NO

The CDS wire is OK. Go to step 4.

4. Body control module check

-1. Reconnect the following connector.

Body control module connector D (40P)

-2. **Do the 12 volt battery terminal reconnection procedure** .

-3. Turn the vehicle to the ON mode.

-4. Measure the voltage between test points 1 and 2.

Test condition	Vehicle ON modeSRS unit connector A (39P): disconnected
Test point 1	**Body control module connector D (40P) No. 34**
Test point 2	Body ground

Is there battery voltage?

YES

Replace the SRS unit .

NO

Replace the body control module .

DTC B1036

DTC B1036 : IG1 Power Supply Circuit Malfunction

NOTE: If you are troubleshooting multiple DTCs, be sure to follow the instructions in **B-CAN System Diagnosis Test Mode A** .

DTC Description	DTC
B1036 IG1 Power supply Circuit Malfunction	B

DTC (Body Control Module)

1. Problem verification

-1. Clear the DTCs with the HDS.

-2. Turn the vehicle to the OFF (LOCK) mode and then the ON mode.

-3. Wait for at least 6 seconds.

-4. Check for DTCs with the HDS.

DTC Description	DTC
B1036 IG1 Power supply Circuit Malfunction	B

Is DTC B1036 indicated?

YES

Go to step 2.

NO

Intermittent failure, the system is OK at this time. Check for loose or poor connections.

2. Fuse check

-1. Check the following fuse.

Fuse	No. D8 (15 A)
Location	Under-dash fuse/relay box

Is the fuse OK?

YES

Repair an open or high resistance in the wire.

NO

Replace the fuse. If the fuse blows again, repair a short to ground in the IG1 FUEL PUMP wire.

DTC B1038

DTC B1038 : IMMOBILIZER F-CAN Authentication ID Not Received

NOTE:

- If you are troubleshooting multiple DTCs, be sure to follow the instructions in **B-CAN System Diagnosis Test Mode A** .
- If keyless access power control unit DTC U0073 is stored, troubleshoot DTC U0073 first.

DTC Description	DTC
B1038 IMMOBILIZER F-CAN Authentication ID Not Received	B

DTC (Body Control Module)

1. Problem verification

-1. Clear the DTCs with the HDS.

-2. Turn the vehicle to the OFF (LOCK) mode and then the ON mode.

-3. Check for DTCs with the HDS.

DTC Description	DTC
B1038 IMMOBILIZER F-CAN Authentication ID Not Received	B

Is DTC B1038 indicated?

YES: with CAN gateway

Go to step 2.

YES: without CAN gateway

Go to step 3.

NO

Intermittent failure, the system is OK at this time. Check for loose or poor connections.

2. CAN gateway system DTC check

-1. Check for CAN gateway system DTCs with the HDS.

DTC Description	DTC
U0029-00 CAN Gateway F-CAN ch A Bus Off	B
U0047-00 CAN Gateway F-CAN ch B Bus Off	B
U3000-49 CAN Gateway Internal Failure	B

Is DTC U0029-00, U0047-00, and/or U3000-49 indicated?

YES

Go to the troubleshooting for CAN gateway system DTC(s) .

NO

Go to step 3.

3. Gauge control module DTC check

-1. Check for gauge control module DTCs with the HDS.

DTC Description	DTC
U0122 Gauge control module lost communication with VSA modulator-control unit	B

Is DTC U0122 indicated?

YES

Go to gauge control module DTC U0122 troubleshooting .

NO: with CAN gateway

Go to step 4.

NO: without CAN gateway

Go to step 9.

4. F-CAN circuit communication check

-1. Select the FUNCTION TEST in the CAN gateway with the HDS, then select the F-CAN Bus Connected Unit Check.

F-CAN Bus Connected Unit Check

Does the body control module detect the CAN gateway Bus channels A?

Bus A is Not Available

Go to step 5.

Bus A is Available

Go to step 6.

5. Open wire check (F-CAN A lines)

-1. Turn the vehicle to the OFF (LOCK) mode.

-2. Disconnect the following connectors.

CAN gateway 12P connector Body control module connector B (36P)

-3. Check for continuity between test points 1 and 2.

Test condition	Vehicle OFF (LOCK) mode CAN gateway 12P connector: disconnected Body control module connector B (36P): disconnected
Test point 1	CAN gateway 12P connector (female terminals) No. 3: ①
Test point 2	**Body control module connector B (36P) No. 22**

Test point 1	CAN gateway 12P connector (female terminals) No. 9: ①
Test point 2	**Body control module connector B (36P) No. 23**

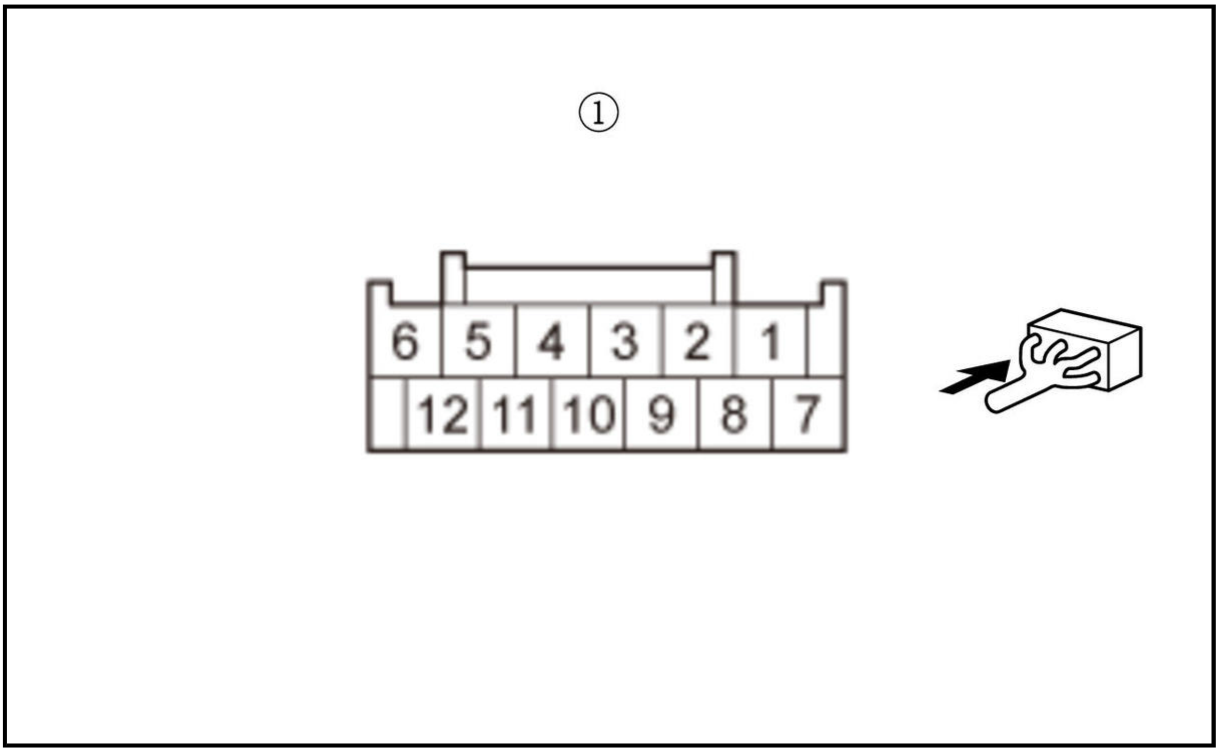

Is there continuity?

YES

The F-CAN A_H and F-CAN A_L wires are OK. **Replace the body control module** .

NO

Repair an open in F-CAN A_H or F-CAN A_L wire.

6. F-CAN circuit communication check (Transmitting control unit)

   -1. Select the FUNCTION TEST in the CAN gateway with the HDS, then select the F-CAN Bus Connected Unit Check.

   F-CAN Bus Connected Unit Check

   According to the detected DTC on the following chart, make sure that the transmitting control unit detects the CAN gateway Bus channels normally.

DTC	Transmitting control unit	Detected CAN gateway Bus channels at normal
B1038	VSA modulator-control unit	A, B

   Is it detected normally?

   Detected normal

   Intermittent failure, the system is OK at this time. Check for poor connections or loose terminals at the transmitting control unit and the CAN gateway.

   U0122: VSA modulator-control unit is Not Available for Bus A

   Go to step 7.

   U0122: VSA modulator-control unit is Not Available for Bus B

   Go to step 8.

7. Open wire check (F-CAN A lines)

   -1. Turn the vehicle to the OFF (LOCK) mode.

   -2. According to the detected DTC on the following chart, disconnect the transmitting control unit connectors.

DTC	Connector
-	CAN gateway 12P connector
B1038	VSA modulator-control unit 46P connector

   -3. Check for continuity between test points 1 and 2.

Test condition	Vehicle OFF (LOCK) mode CAN gateway 12P connector: disconnected Transmitting control unit connector for indicated DTCs: disconnected

DTC	Circuit name	Test point 1 (Receiving control unit)		Test point 2 (Transmitting control unit)	
		Connector	Terminal	Connector	Terminal
B1038	F-CAN A_H	CAN gateway 12P connector (female terminals): ①	No. 3	**VSA modulator-control unit 46P connector**	No. 40
	F-CAN A_L		No. 9		No. 28

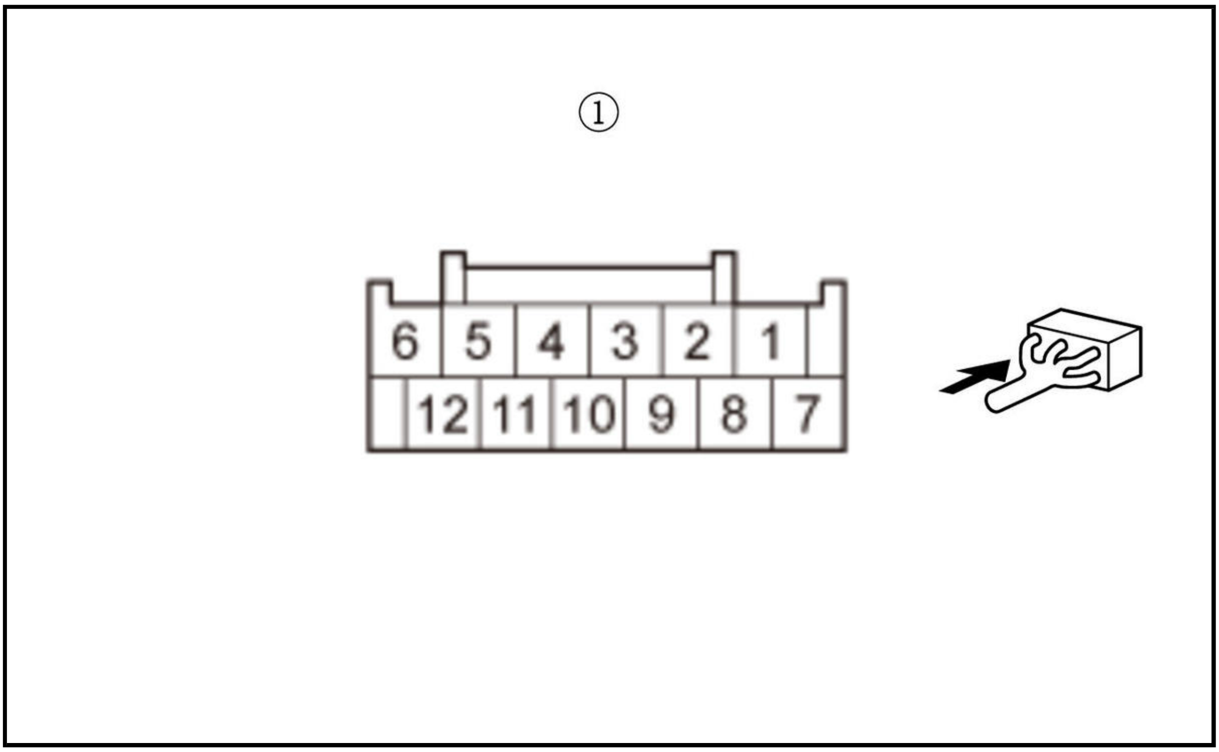

Is there continuity?

YES

The F-CAN A_H wire and the F-CAN A_L wire are OK.Refer to the DTC shown on the display, replace the control unit based on the instructions (see chart below).

DTC	Operation for transmitting control unit
B1038	VSA modulator-control unit

NO

Repair an open in F-CAN A_H or F-CAN A_L wire.

8. Open wire check (F-CAN B lines)

   -1. Turn the vehicle to the OFF (LOCK) mode.

   -2. According to the detected DTC on the following chart, disconnect the transmitting control unit connectors.

DTC	Connector
-	CAN gateway 12P connector
B1038	VSA modulator-control unit 46P connector

   -3. Check for continuity between test points 1 and 2.

Test condition	Vehicle OFF (LOCK) mode CAN gateway 12P connector: disconnected Transmitting control unit connector for indicated DTCs: disconnected

DTC	Circuit name	Test point 1 (Receiving control unit)		Test point 2 (Transmitting control unit)	
		Connector	Terminal	Connector	Terminal
B1038	F-CAN B_H	CAN gateway 12P connector (female	No. 12	VSA modulator-control unit 46P connector	No. 46
	F-CAN B_L		No. 5		No. 34

DTC	Circuit name	Test point 1 (Receiving control unit)		Test point 2 (Transmitting control unit)	
		Connector	Terminal	Connector	Terminal

terminals): ①

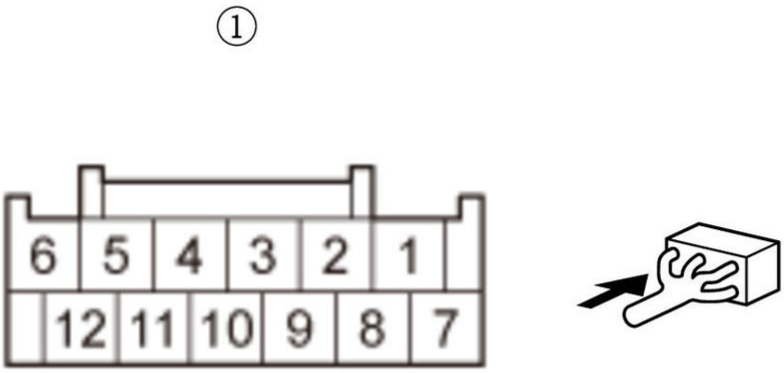

Is there continuity?

YES

The F-CAN B_H wire and the F-CAN B_L wire are OK. Refer to the DTC shown on the display, replace the control unit based on the instructions (see chart below).

DTC	Operation for transmitting control unit
B1038	VSA modulator-control unit

NO

Repair an open in F-CAN B_H or F-CAN B_L wire.

9. Open wire check (F-CAN lines)

-1. Turn the vehicle to the OFF (LOCK) mode.

-2. Disconnect the following connectors.

Body control module connector B (36P) VSA modulator-control unit 46P connector

-3. Check for continuity between test points 1 and 2.

Test condition	Vehicle OFF (LOCK) mode Body control module connector B (36P): disconnected VSA modulator-control unit 46P connector: disconnected

Test point 1	Body control module connector B (36P) No. 22
Test point 2	VSA modulator-control unit 46P connector No. 40

Test point 1	Body control module connector B (36P) No. 23

Test point 2	VSA modulator-control unit 46P connector No. 28

Is there continuity?

YES

Replace the body control module .

NO

An open or poor connection in the F-CAN_H and/or F-CAN_L wire.

DTC B1039

DTC B1039 : IMMOBILIZER F-CAN Authentication ID Unmatch

NOTE: If you are troubleshooting multiple DTCs, be sure to follow the instructions in B-CAN System Diagnosis Test Mode A .

DTC Description	DTC
U1039 IMMOBILIZER F-CAN Authentication ID Unmatch	B

DTC (Body Control Module)

1. Problem verification

   -1. Clear the DTCs with the HDS.

   -2. Turn the vehicle to the OFF (LOCK) mode and then the ON mode.

   -3. Check for DTCs with the HDS.

DTC Description	DTC
U1039 IMMOBILIZER F-CAN Authentication ID Unmatch	B

   Is DTC B1039 indicated?

   1. **YES**

      Register the body control module.

      - With keyless access system
      - Without keyless access system

      NO

      Intermittent failure, the system is OK at this time.

DTC B1040

DTC B1040 : BCM lost communication with Front wiper

NOTE: If you are troubleshooting multiple DTCs, be sure to follow the instructions in B-CAN System Diagnosis Test Mode A .

DTC Description	DTC
B1040 BCM lost communication with Front wiper	B

DTC (Body Control Module)

1. Problem verification

   -1. Clear the DTCs with the HDS.

   -2. Turn the vehicle to the OFF (LOCK) mode and then the ON mode.

   -3. Wait for at least 6 seconds.

   -4. Check for DTCs with the HDS.

DTC Description	DTC
B1040 BCM lost communication with Front wiper	B

   Is DTC B1040 indicated?

   YES

   Go to step 2.

   NO

   Intermittent failure, the system is OK at this time. Check for loose or poor connections.

2. Fuse check

   -1. Check the following fuse.

Fuse	No. A2-5 (30 A)
Location	Under-hood fuse/relay box

   Is the fuse OK?

   YES

   Go to step 3.

   NO

   Replace the fuse. If the fuse blows again, repair a short to ground in the +B WIPER wire.

3. Determine possible failure area (windshield wiper control unit/motor power and ground, LIN (FR WIPER) line)

   -1. Turn the vehicle to the OFF (LOCK) mode.

   -2. Disconnect the following connector.

Windshield wiper control unit/motor 6P connector

   -3. Measure the voltage between test points 1 and 2.

Test condition	Vehicle OFF (LOCK) mode Windshield wiper control unit/motor 6P connector: disconnected
Test point 1	**Windshield wiper control unit/motor 6P connector No. 2**
Test point 2	**Windshield wiper control unit/motor 6P connector No. 1**

   Is there battery voltage?

YES

Go to step 5.

NO

Go to step 4.

4. Open wire check (+B WIPER line)

-1. Check for continuity between test points 1 and 2.

Test condition	Vehicle OFF (LOCK) mode Windshield wiper control unit/motor 6P connector: disconnected
Test point 1	**Windshield wiper control unit/motor 6P connector No. 2**
Test point 2	Body ground

Is there battery voltage?

YES

Repair an open or high resistance in the ground wire or poor ground (G351).

NO

Repair an open or high resistance in the wire.

5. Shorted wire check (LIN (FR WIPER) line)

-1. Disconnect the following connector.

Body control module connector C (28P)

-2. Check for continuity between test points 1 and 2.

Test condition	Vehicle OFF (LOCK) mode Body control module connector C (28P): disconnected Windshield wiper control unit/motor 6P connector: disconnected
Test point 1	**Windshield wiper control unit/motor 6P connector No. 4**
Test point 2	Body ground

Is there continuity?

YES

Repair a short to ground in the wire.

NO

The LIN (FR WIPER) wire is not shorted. Go to step 6.

6. Open wire check (LIN (FR WIPER) line)

-1. Check for continuity between test points 1 and 2.

Test condition	Vehicle OFF (LOCK) mode Body control module connector C (28P): disconnected Windshield wiper control unit/motor 6P connector: disconnected
Test point 1	**Body control module connector C (28P) No. 13**
Test point 2	**Windshield wiper control unit/motor 6P connector No. 4**

Is there continuity?

YES

The LIN (FR WIPER) wire is OK. **Replace the windshield wiper control unit/motor** . If the DTC is still present, **replace the body control module** .

NO

An open or poor connection in the wire.

DTC B1041

DTC B1041 : Front Wiper motor malfunction

NOTE: If you are troubleshooting multiple DTCs, be sure to follow the instructions in **B-CAN System Diagnosis Test Mode A** .

DTC Description	DTC
B1041 Front Wiper motor malfunction	B

DTC (Body Control Module)

1. Problem verification

   -1. Clear the DTCs with the HDS.

   -2. Turn the vehicle to the OFF (LOCK) mode and then the ON mode.

   -3. Check for DTCs with the HDS.

DTC Description	DTC
B1041 Front Wiper motor malfunction	B

Is DTC B1041 indicated?

YES

Replace the windshield wiper control unit/motor .

NO

Intermittent failure, the system is OK at this time.

DTC B1042

DTC B1042 : Front Wiper security line error

NOTE: If you are troubleshooting multiple DTCs, be sure to follow the instructions in **B-CAN System Diagnosis Test Mode A** .

DTC Description	DTC
B1042 Front Wiper security line error	B

DTC (Body Control Module)

1. Problem verification

   -1. Clear the DTCs with the HDS.

-2. Turn the vehicle to the OFF (LOCK) mode and then the ON mode.

-3. Check for DTCs with the HDS.

DTC Description	DTC
B1042 Front Wiper security line error	B

Is DTC B1042 indicated?

YES

Go to step 2.

NO

Intermittent failure, the system is OK at this time. Check for loose or poor connections.

2. Shorted wire check (BACK UP (WIPER) line)

-1. Turn the vehicle to the OFF (LOCK) mode.

-2. Disconnect the following connectors.

Body control module connector B (36P) Windshield wiper control unit/motor 6P connector

-3. Check for continuity between test points 1 and 2.

Test condition	Vehicle OFF (LOCK) mode Body control module connector B (36P): disconnected Windshield wiper control unit/motor 6P connector: disconnected
Test point 1	Windshield wiper control unit/motor 6P connector No. 3
Test point 2	Body ground

Is there continuity?

YES

Repair a short to ground in the wire.

NO

The BACK UP (WIPER) wire is not shorted. Go to step 3.

3. Open wire check (BACK UP (WIPER) line)

-1. Check for continuity between test points 1 and 2.

Test condition	Vehicle OFF (LOCK) mode Body control module connector B (36P): disconnected Windshield wiper control unit/motor 6P connector: disconnected
Test point 1	Body control module connector B (36P) No. 10
Test point 2	Windshield wiper control unit/motor 6P connector No. 3

Is there continuity?

YES

The BACK UP(WIPER) wire is OK. Replace the windshield wiper control unit/motor . If the DTC is still present, replace the body control module .

NO

An open or poor connection in the wire.

DTC B1043

DTC B1043 : Front Wiper unit internal error (EEPROM error)

NOTE: If you are troubleshooting multiple DTCs, be sure to follow the instructions in **B-CAN System Diagnosis Test Mode A** .

DTC Description	DTC
B1043 Front Wiper unit internal error (EEPROM error)	B

DTC (Body Control Module)

1. Problem verification

   -1. Clear the DTCs with the HDS.

   -2. Turn the vehicle to the OFF (LOCK) mode and then the ON mode.

   -3. Check for DTCs with the HDS.

DTC Description	DTC
B1043 Front Wiper unit internal error (EEPROM error)	B

Is DTC B1043 indicated?

YES

Replace the windshield wiper control unit/motor .

NO

Intermittent failure, the system is OK at this time.

DTC B1077

DTC B1077 : Windshield wiper motor (Park) signal error

NOTE: If you are troubleshooting multiple DTCs, be sure to follow the instructions in **B-CAN System Diagnosis Test Mode A** .

DTC Description	DTC
B1077 Windshield wiper motor (Park) signal error	B

DTC (Body Control Module)

1. Problem verification

   -1. Clear the DTCs with the HDS.

   -2. Turn the vehicle to the OFF (LOCK) mode and then the ON mode.

   -3. Check for DTCs with the HDS.

DTC Description	DTC
B1077 Windshield wiper motor (Park) signal error	B

Is DTC B1077 indicated?

YES

Replace the windshield wiper control unit/motor .

NO

Intermittent failure, the system is OK at this time.

DTC B1275, B1276, B1277, B1278

DTC B1275 : Head light OFF position Circuit Malfunction **DTC B1276** : Head light switch parking (small) position Circuit Malfunction **DTC B1277** : Head light AUTO position Circuit Malfunction **DTC B1278** : Head light ON position Circuit Malfunction

NOTE: If you are troubleshooting multiple DTCs, be sure to follow the instructions in **B-CAN System Diagnosis Test Mode A** .

DTC Description	DTC
B1275 Head light OFF position Circuit Malfunction	B
B1276 Head light switch parking (small) position Circuit Malfunction	B

DTC Description	DTC
B1277 Head light AUTO position Circuit Malfunction	B
B1278 Head light ON position Circuit Malfunction	B

DTC (Body Control Module)

1. Problem verification

-1. Check the parameter(s) below with the HDS.

When the combination light switch is turned OFF

Signal	Threshold		Current conditions	
	Values	Unit	Values	Unit
Headlight Switch (OFF)	ON	B	B	B
Headlight Switch (PARKING)	OFF	B	B	B
Headlight Switch (AUTO)	OFF	B	B	B
Headlight Switch (HEADLIGHT)	OFF	B	B	B

When the combination light switch is turned to PARKING

Signal	Threshold		Current conditions	
	Values	Unit	Values	Unit
Headlight Switch (OFF)	OFF	B	B	B
Headlight Switch (PARKING)	ON	B	B	B
Headlight Switch (AUTO)	OFF	B	B	B
Headlight Switch (HEADLIGHT)	OFF	B	B	B

When the combination light switch is turned to AUTO

Signal	Threshold		Current conditions	
	Values	Unit	Values	Unit
Headlight Switch (OFF)	OFF	B	B	B
Headlight Switch (PARKING)	OFF	B	B	B

Signal	Threshold		Current conditions	
	Values	Unit	Values	Unit
Headlight Switch (AUTO)	ON	B	B	B
Headlight Switch (HEADLIGHT)	OFF	B	B	B

When the combination light switch is turned ON (HEADLIGHT)

Signal	Threshold		Current conditions	
	Values	Unit	Values	Unit
Headlight Switch (OFF)	OFF	B	B	B
Headlight Switch (PARKING)	ON	B	B	B
Headlight Switch (AUTO)	OFF	B	B	B
Headlight Switch (HEADLIGHT)	ON	B	B	B

Are all data list values correct?

YES

Intermittent failure, the system is OK at this time. Check for loose or poor connections.

NO

Go to step 2.

2. Exterior lights system check

-1. Check the parameter(s) below with the HDS.

Cycle through all switch selections

Signal	Current conditions	
	Values	Unit
Headlight Switch (OFF)	B	B
Headlight Switch (PARKING)	B	B
Headlight Switch (AUTO)	B	B
Headlight Switch (HEADLIGHT)	B	B

Is any data list value OFF, not ON?

YES

Go to step 5.

NO

Go to step 3.

3. Determine possible failure area (combination light switch, others)

-1. Turn the vehicle to the OFF (LOCK) mode.

-2. Disconnect the following connector.

Combination light switch 12P connector

-3. Check the parameter(s) below with the HDS.

Signal	Current conditions	
	Values	Unit
Headlight Switch (OFF)	B	B
Headlight Switch (PARKING)	B	B
Headlight Switch (AUTO)	B	B
Headlight Switch (HEADLIGHT)	B	B

Are all data lists values OFF?

YES

Replace the combination light switch .

NO

Go to step 4.

4. Shorted wire check (H/L OFF SW, H/L ON SW, PARKING LT SW lines)

-1. Turn the vehicle to the OFF (LOCK) mode.

-2. Disconnect the following connector.

Body control module connector C (28P)

-3. Check for continuity between test points 1 and 2.

Test condition	Vehicle OFF (LOCK) mode Combination light switch 12P connector: disconnected Body control module connector C (28P): disconnected
Test point 1	**Body control module connector C (28P) No. 10**
Test point 2	Body ground

Test point 1	**Body control module connector C (28P) No. 9**
Test point 2	Body ground

Test point 1	**Body control module connector C (28P) No. 11**
Test point 2	Body ground

Is there continuity?

YES

Repair a short to ground in the wire.

NO

The H/L OFF SW, H/L ON SW, and PARKING LT SW wires are OK. **Replace the body control module** .

5. Determine possible failure area (combination light switch, others)

-1. Turn the vehicle to the OFF (LOCK) mode.

-2. Disconnect the following connector.

Combination light switch 12P connector

-3. Connect terminals A and B with jumper wires.

Terminal A	Combination light switch 12P connector (female terminals) No. 1: ①
Terminal B	Body ground

Terminal A	Combination light switch 12P connector (female terminals) No. 7: ①
Terminal B	Body ground

Terminal A	Combination light switch 12P connector (female terminals) No. 8: ①
Terminal B	Body ground

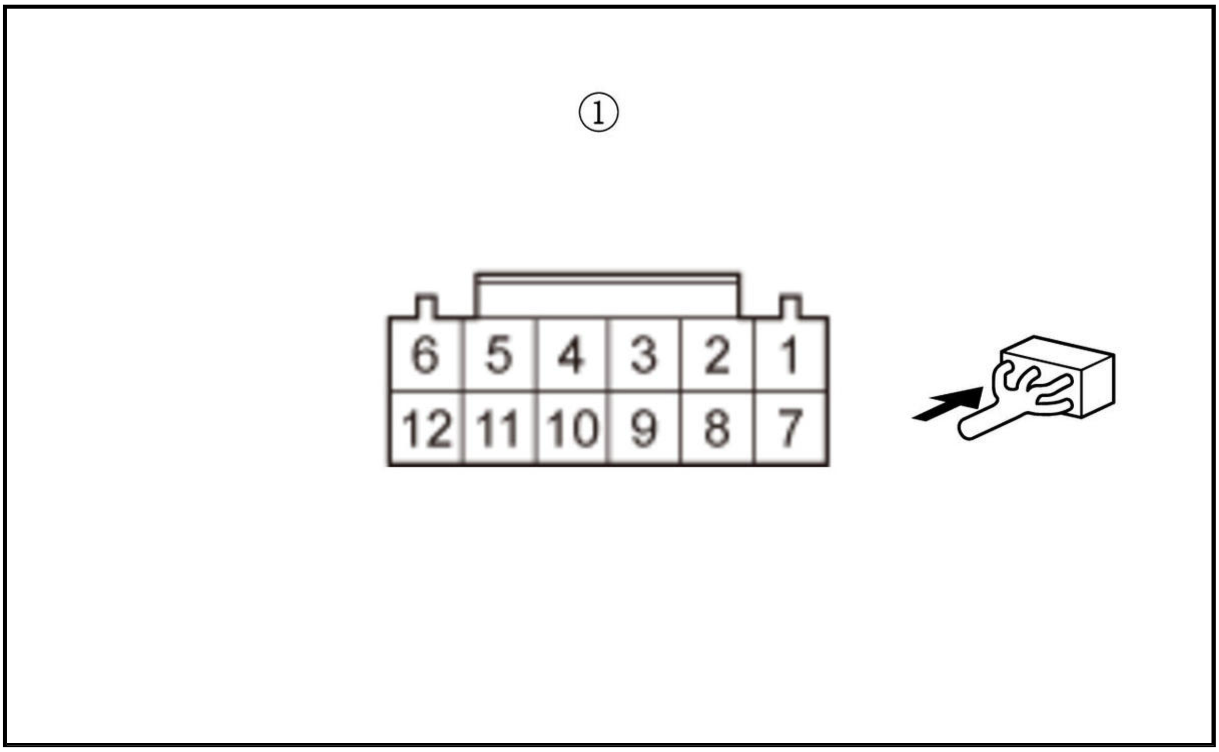

-4. Check the parameter(s) below with the HDS.

Signal	Current conditions	
	Values	Unit
Headlight Switch (OFF)	B	B
Headlight Switch (PARKING)	B	B
Headlight Switch (AUTO)	B	B
Headlight Switch (HEADLIGHT)	B	B

Has the data list value changed from OFF to ON?

YES

Replace the combination light switch .

NO

Go to step 6.

6. Open wire check (H/L OFF SW, H/L ON SW, PARKING LT SW, COMBI SW GND (LT) lines)

-1. Turn the vehicle to the OFF (LOCK) mode.

-2. Disconnect the following connector.

Body control module connector C (28P)

-3. Check for continuity between test points 1 and 2.

Test condition	Vehicle OFF (LOCK) mode Body control module connector C (28P): disconnected Combination light switch 12P connector: disconnected
Test point 1	**Body control module connector C (28P) No. 10**
Test point 2	Combination light switch 12P connector (female terminals) No. 1: ①

Test point 1	**Body control module connector C (28P) No. 9**
Test point 2	Combination light switch 12P connector (female terminals) No. 7: ①

Test point 1	**Body control module connector C (28P) No. 11**
Test point 2	Combination light switch 12P connector (female terminals) No. 8: ①

Test point 1	**Body control module connector C (28P) No. 3**
Test point 2	Combination light switch 12P connector (female terminals) No. 6: ①

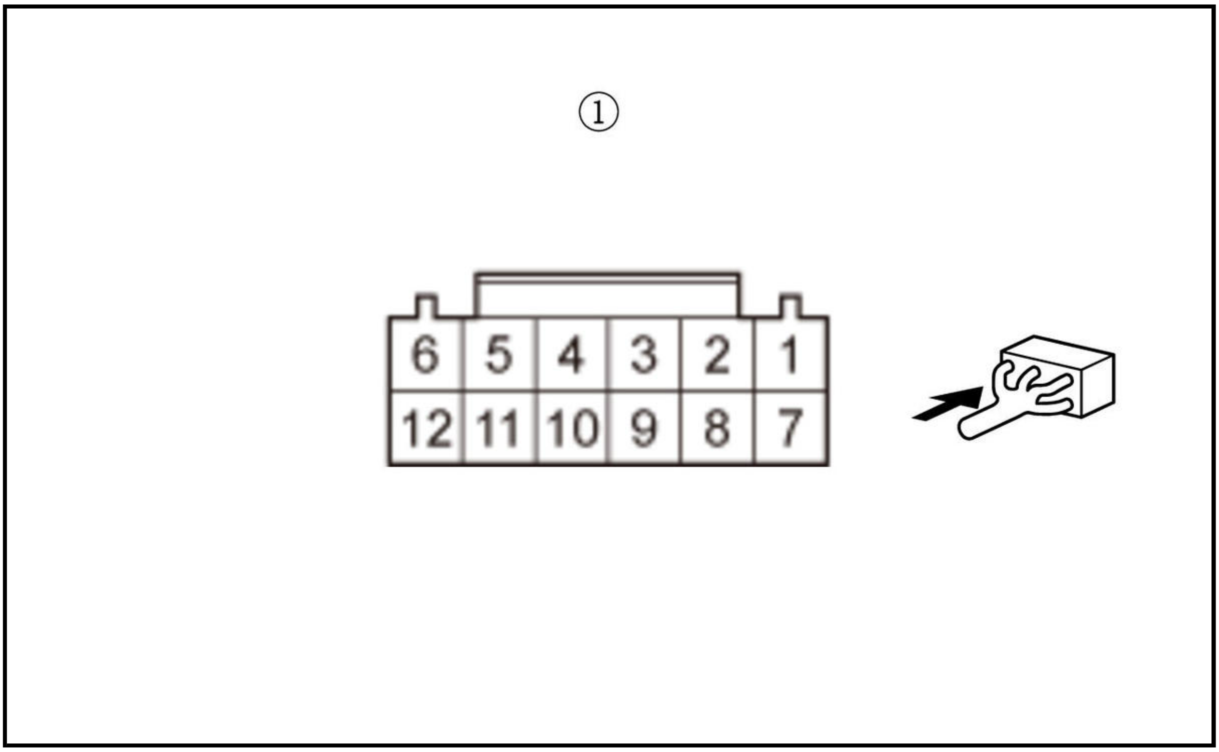

Is there continuity?

YES

The H/L OFF SW, H/L ON SW, PARKING LT SW, and COMBI SW GND (LT) wires are OK. **Replace the body control module** .

NO

Repair an open or high resistance in the wire.

DTC B1279

DTC B1279 : Dimmer switch Circuit Malfunction

NOTE: If you are troubleshooting multiple DTCs, be sure to follow the instructions in **B-CAN System Diagnosis Test Mode A** .

DTC Description	DTC
B1279 Dimmer switch Circuit Malfunction	B

DTC (Body Control Module)

1. Exterior lights system check 1

   -1. With the headlight dimmer switch in the neutral position, check the parameter(s) below with the HDS.

Signal	Current conditions	
	Values	Unit
Headlight Switch (HIGH BEAM)	B	B
Headlight Switch (PASSING)	B	B

   Is either information indicator ON?

   YES

   Go to step 4.

   NO

   Go to step 2.

2. Exterior lights system check 2

   -1. With the headlight dimmer switch in the high beam position, check the parameter(s) below with the HDS.

Signal	Current conditions	
	Values	Unit
Headlight Switch (HIGH BEAM)	B	B
Headlight Switch (PASSING)	B	B

   Are both information indicators ON?

   YES

   Go to step 3.

   NO

   Intermittent failure, the system is OK at this time.

3. Shorted wire check (H/L HI SW to PASSING SW line)

   -1. Turn the vehicle to the OFF (LOCK) mode.

   -2. Disconnect the following connector.

Combination light switch 12P connector

-3. Connect terminals A and B with a jumper wire.

Terminal A	**Body control module connector C (28P) No. 8**
Terminal B	Body ground

-4. Check the parameter(s) below with the HDS.

Signal	Current conditions	
	Values	Unit
Headlight Switch (HIGH BEAM)	B	B
Headlight Switch (PASSING)	B	B

Are both information indicators ON?

YES

Repair a short between the wires.

NO

The H/L HI SW to PASSING SW wire is OK. **Replace the combination light switch** .

4. Determine possible failure area (combination light switch, others)

-1. Turn the vehicle to the OFF (LOCK) mode.

-2. Disconnect the following connector.

Combination light switch 12P connector

-3. Check the parameter(s) below with the HDS.

Signal	Current conditions	
	Values	Unit
Headlight Switch (HIGH BEAM)	B	B
Headlight Switch (PASSING)	B	B

Is either information indicator ON?

YES

Go to step 5.

NO

Replace the combination light switch .

5. Shorted wire check (PASSING SW, H/L HI SW lines)

-1. Turn the vehicle to the OFF (LOCK) mode.

-2. Disconnect the following connector.

Body control module connector C (28P)

-3. Check for continuity between test points 1 and 2.

Test condition	Vehicle OFF (LOCK) mode Combination light switch 12P connector: disconnected Body control module connector C (28P): disconnected
Test point 1	**Body control module connector C (28P) No. 7**
Test point 2	Body ground

Test point 1	**Body control module connector C (28P) No. 8**
Test point 2	Body ground

Are there continuity?

YES

Repair a short to ground in the wire.

NO

The PASSING SW and H/L HI SW wires are OK. **Replace the body control module** .

DTC B1280

DTC B1280 : Turn signal switch Circuit Malfunction

NOTE: If you are troubleshooting multiple DTCs, be sure to follow the instructions in **B-CAN System Diagnosis Test Mode A** .

DTC Description	DTC
B1280 Turn signal switch Circuit Malfunction	B

DTC (Body Control Module)

1. Turn signal/hazard warning lights system check

   -1. Check the parameter(s) below with the HDS.

Signal	Threshold		Current conditions	
	Values	Unit	Values	Unit
Turn Signal Switch (LEFT)	OFF	B	B	B
Turn Signal Switch (RIGHT)	OFF	B	B	B

   Are both data list values indicated OFF?

   YES

   Go to step 2.

   NO

   Go to step 4.

2. Turn signal/hazard warning lights system check 2

   -1. Operate the turn signal switch to the left or right position.

   -2. Check the parameter(s) below with the HDS.

Signal	Threshold		Current conditions	
	Values	Unit	Values	Unit
Turn Signal Switch (LEFT)	ON	B	B	B
Turn Signal Switch (RIGHT)	ON	B	B	B

Are both data list values indicated ON?

YES

Go to step 3.

NO

Intermittent failure, the system is OK at this time.

3. Shorted wire check (R TURN SW to L TURN SW line)

-1. Turn the vehicle to the OFF (LOCK) mode.

-2. Disconnect the following connector.

Combination light switch 12P connector

-3. Connect terminals A and B with a jumper wire.

Terminal A	Combination light switch 12P connector (female terminals) No. 10: ①
Terminal B	Body ground

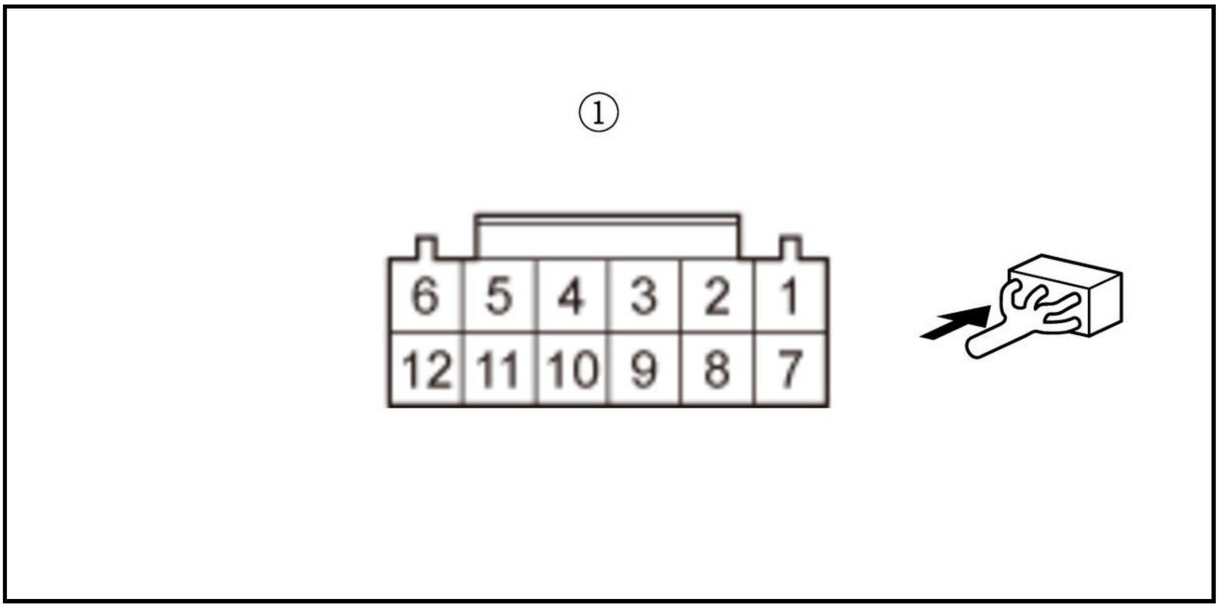

-4. Check the parameter(s) below with the HDS.

Signal	Threshold		Current conditions	
	Values	Unit	Values	Unit
Turn Signal Switch (LEFT)	OFF	B	B	B
Turn Signal Switch (RIGHT)	ON	B	B	B

Are both data list values correct?

YES

The R TURN SW wire and the L TURN SW wire is not shorted. **Replace the combination light switch** .

NO

Repair a short between the wires.

4. Shorted wire check (L TURN SW line or R TURN SW line)

-1. Check the parameter(s) below with the HDS.

Signal	Threshold		Current conditions	
	Values	Unit	Values	Unit
Turn Signal Switch (LEFT)	ON	B	B	B
Turn Signal Switch (RIGHT)	OFF	B	B	B

Is TURN SIGNAL SWITCH (LEFT) value ON?

YES

Go to step 5.

NO

Go to step 6.

5. Shorted wire check (L TURN SW line)

-1. Turn the vehicle to the OFF (LOCK) mode.

-2. Disconnect the following connector.

Combination light switch 12P connector

-3. Check the parameter (s) below with the HDS.

Signal	Threshold		Current conditions	
	Values	Unit	Values	Unit
Turn Signal Switch (LEFT)	ON	B	B	B

Is TURN SIGNAL SWITCH (LEFT) value ON?

YES

Repair a short to ground in the wire.

NO

The L TURN SW wire is OK. **Replace the combination light switch** .

6. Shorted wire check (R TURN SW line)

-1. Turn the vehicle to the OFF (LOCK) mode.

-2. Disconnect the following connector.

Combination light switch 12P connector

-3. Check the parameter(s) below with the HDS.

Signal	Threshold		Current conditions	
	Values	Unit	Values	Unit
Turn Signal Switch (RIGHT)	ON	B	B	B

Is TURN SIGNAL SWITCH (RIGHT) value ON?

YES

Repair a short to ground in the wire.

NO

The R TURN SW wire is OK. Replace the combination light switch .

DTC B1281, B1282, B1283, B1284

DTC B1281 : Front wiper MIST position Circuit Malfunction **DTC B1282** : Front wiper INT(AUTO) position Circuit Malfunction **DTC B1283** : Front wiper LOW position Circuit Malfunction **DTC B1284** : Front wiper HIGH position Circuit Malfunction

NOTE: If you are troubleshooting multiple DTCs, be sure to follow the instructions in B-CAN System Diagnosis Test Mode A .

DTC Description	DTC
B1281 Front wiper MIST position Circuit Malfunction	B
B1282 Front wiper INT (AUTO) position Circuit Malfunction	B
B1283 Front wiper LOW position Circuit Malfunction	B

DTC Description	DTC
B1284 Front wiper HIGH position Circuit Malfunction	B

DTC (Body Control Module)

1. Wiper/washers system check

-1. Turn the windshield wiper switch to the OFF position, check the parameter(s) below with the HDS.

Signal	Threshold		Current conditions	
	Values	Unit	Values	Unit
Windshield Wiper Switch (LOW)	OFF	B	B	B
Windshield Wiper Switch (HIGH)	OFF	B	B	B
Windshield Wiper Switch (INT)	OFF	B	B	B
Windshield Wiper Switch (LOW)	OFF	B	B	B

Are all data list values correct?

YES

Go to step 4.

NO

Go to step 2.

2. Determine possible failure area (windshield wiper/washer switch, others)

-1. Turn the vehicle to the OFF (LOCK) mode.

-2. Disconnect the following connector.

Windshield wiper/washer switch 10P connector

-3. Check the parameter(s) below with the HDS.

Signal	Threshold		Current conditions	
	Values	Unit	Values	Unit
Windshield Wiper Switch (LOW)	OFF	B	B	B
Windshield Wiper Switch (HIGH)	OFF	B	B	B
Windshield Wiper Switch (INT)	OFF	B	B	B
Windshield Wiper Switch (MIST)	OFF	B	B	B

Has the data list value changed from ON to OFF?

YES

Replace the windshield wiper/washer switch .

NO

Go to step 3.

3. Shorted wire check (FR WIPER INT SW, FR WIPER HI SW, FR WIPER MIST SW lines)

-1. Turn the vehicle to the OFF (LOCK) mode.

-2. Disconnect the following connector.

Body control module connector D (40P) Body control module connector E (24P)

-3. Check for continuity between test points 1 and 2.

Test condition	Vehicle OFF (LOCK) mode Windshield wiper/washer switch 10P connector: disconnected Body control module connector D (40P): disconnected
Test point 1	**Body control module connector D (40P) No. 2**
Test point 2	Body ground

Test point 1	**Body control module connector D (40P) No. 3**
Test point 2	Body ground

Test point 1	**Body control module connector D (40P) No. 4**
Test point 2	Body ground

Is there continuity?

YES

Repair a short to ground in the wire.

NO

The FR WIPER INT SW, FR WIPER HI SW, and FR WIPER MIST SW wires are OK. Faulty body control module; **replace the body control module** .

4. Shorted wire check (FR WIPER MIST SW to FR WIPER HI SW, FR WIPER HI SW to FR WIPER INT SW, FR WIPER MIST SW to FR WIPER INT SW lines)

-1. Check the parameter(s) below with the HDS.

When the windshield wiper switch is turned to HI

Signal	Threshold		Current conditions	
	Values	Unit	Values	Unit
Windshield Wiper Switch (LOW)	OFF	B	B	B
Windshield Wiper Switch (HIGH)	ON	B	B	B
Windshield Wiper Switch (INT)	OFF	B	B	B
Windshield Wiper Switch (MIST)	OFF	B	B	B

When the windshield wiper switch is turned to LO

Signal	Threshold		Current conditions	
	Values	Unit	Values	Unit
Windshield Wiper Switch (LOW)	ON	B	B	B
Windshield Wiper Switch (HIGH)	ON	B	B	B
Windshield Wiper Switch (INT)	OFF	B	B	B
Windshield Wiper Switch (MIST)	OFF	B	B	B

When the windshield wiper switch is turned to INT

Signal	Threshold		Current conditions	
	Values	Unit	Values	Unit
Windshield Wiper Switch (LOW)	ON	B	B	B
Windshield Wiper Switch (HIGH)	OFF	B	B	B
Windshield Wiper Switch (INT)	ON	B	B	B
Windshield Wiper Switch (MIST)	OFF	B	B	B

When the windshield wiper switch is turned OFF

Signal	Threshold		Current conditions	
	Values	Unit	Values	Unit
Windshield Wiper Switch (LOW)	OFF	B	B	B
Windshield Wiper Switch (HIGH)	OFF	B	B	B
Windshield Wiper Switch (INT)	OFF	B	B	B
Windshield Wiper Switch (MIST)	OFF	B	B	B

When the windshield wiper switch is turned to MIST

Signal	Threshold		Current conditions	
	Values	Unit	Values	Unit
Windshield Wiper Switch (LOW)	OFF	B	B	B
Windshield Wiper Switch (HIGH)	OFF	B	B	B

Signal	Threshold		Current conditions	
	Values	Unit	Values	Unit
Windshield Wiper Switch (INT)	OFF	B	B	B
Windshield Wiper Switch (MIST)	ON	B	B	B

Are all data list values correct?

YES

The FR WIPER MIST SW to FR WIPER HI SW, FR WIPER HI SW to FR WIPER INT SW, and FR WIPER MIST SW to FR WIPER INT SW wires are OK. Intermittent failure, the system is OK at this time. Check for loose or poor connections.

NO

Repair a short in the wires.

DTC B2352

DTC B2352 : Rain Light Sensor Unit Internal error (EEPROM error)

NOTE: If you are troubleshooting multiple DTCs, be sure to follow the instructions in **B-CAN System Diagnosis Test Mode A** .

DTC Description	DTC
B2352 Rain Light Sensor Unit Internal error (EEPROM error)	B

DTC (Body Control Module)

1. Problem verification

   -1. Clear the DTCs with the HDS.

   -2. Turn the vehicle to the OFF (LOCK) mode and then the ON mode.

   -3. Wait for at least 6 seconds.

   -4. Check for DTCs with the HDS.

DTC Description	DTC
B2352 Rain Light Sensor Unit Internal error (EEPROM error)	B

   Is DTC B2352 indicated?

   YES

   Replace the automatic lighting/rain sensor .

   NO

   Intermittent failure, the system is OK at this time. Check for loose or poor connections.

DTC B2375

DTC B2375 : Rain Sensing malfunction

NOTE: If you are troubleshooting multiple DTCs, be sure to follow the instructions in **B-CAN System Diagnosis Test Mode A** .

DTC Description	DTC
B2375 Rain Sensing malfunction	B

DTC (Body Control Module)

1. Problem verification

   -1. Clear the DTCs with the HDS.

-2. Turn the vehicle to the OFF (LOCK) mode and then the ON mode.

-3. Check for DTCs with the HDS.

DTC Description	DTC
B2375 Rain Sensing malfunction	B

Is DTC B2375 indicated?

YES

Go to step 2.

NO

Intermittent failure, the system is OK at this time. Check for loose or poor connections.

2. Connector check

-1. Check for loose or poor connections at the automatic lighting/rain sensor 5P connector.

Is the connection OK?

YES

Go to step 3.

NO

Reconnect or repair the connector.

3. Rain sensor visual check

-1. **Remove the automatic lighting/rain sensor** .

-2. Check for dirt and dust on the surface of the automatic lighting/rain sensor.

Is it dirty?

YES

Clean the rain sensor, and then recheck the system.

NO

Go to step 4.

4. Windshield glass visual check: Is it dirty or damaged?

YES

Clean the windshield and, if necessary, repair or replace the windshield glass.

NO

Replace the automatic lighting/rain sensor .

DTC B2376

DTC B2376 : Light sensing malfunction

NOTE: If you are troubleshooting multiple DTCs, be sure to follow the instructions in **B-CAN System Diagnosis Test Mode A** .

DTC Description	DTC
B2376 Light sensing malfunction	B

DTC (Body Control Module)

1. Problem verification

   -1. Clear the DTCs with the HDS.

   -2. Turn the vehicle to the OFF (LOCK) mode and then the ON mode.

   -3. Wait for at least 6 seconds.

   -4. Check for DTCs with the HDS.

DTC Description	DTC
B2376 Light sensing malfunction	B

   Is DTC B2376 indicated?

   YES

   Replace the automatic lighting/rain sensor .

   NO

   Intermittent failure, the system is OK at this time. Check for loose or poor connections.

DTC U0073 (BODY CONTROL MODULE)

DTC U0073 : F-CAN communication bus line error

NOTE: If you are troubleshooting multiple DTCs, be sure to follow the instructions in **B-CAN System Diagnosis Test Mode A** .

DTC Description	DTC
U0073 F-CAN communication bus line error	B

DTC (Body Control Module)

1. Problem verification

   -1. Clear the DTCs with the HDS.

   -2. Turn the vehicle to the OFF (LOCK) mode and then the ON mode.

   -3. Wait for at least 6 seconds.

   -4. Check for DTCs with the HDS.

DTC Description	DTC
U0073 F-CAN communication bus line error	B

   Is DTC U0073 indicated?

   YES: with CAN gateway

Go to the troubleshooting for CAN gateway system DTC(s) .

YES: without CAN gateway

Go to F-CAN Circuit Troubleshooting .

NO

Intermittent failure, the system is OK at this time.

DTC U0100, U0122 (BODY CONTROL MODULE)

DTC U0100 : BCM lost communication with ECM/PCM **DTC U0122** : BCM lost communication with VSA/ABS

NOTE:

- If you are troubleshooting multiple DTCs, be sure to follow the instructions in B-CAN System Diagnosis Test Mode A .
- Refer to the DTC code shown on the display, and then inspect the connectors and terminals based on the instructions in the chart below.
- The DTC may be stored due to the grounding failure or the power source failure at the transmitting control unit (the grounding inspection and the power source inspection on each control unit are required prior to this checking process).

DTC Description	DTC
U0100 BCM lost communication with ECM/PCM	B
U0122 BCM lost communication with VSA/ABS	B

DTC (Body Control Module)

1. Problem verification

-1. Clear the DTCs with the HDS.

-2. Turn the vehicle to the OFF (LOCK) mode and then the ON mode.

-3. Wait for at least 6 seconds.

-4. Check for DTCs with the HDS.

DTC Description	DTC
U0100 BCM lost communication with ECM/PCM	B
U0122 BCM lost communication with VSA/ABS	B

Are any DTCs indicated?

YES: with CAN gateway

Go to step 2.

YES: without CAN gateway

Go to step 8.

NO

Intermittent failure, the system is OK at this time. Check for poor connections or loose terminals.

2. CAN gateway system DTC check

-1. Turn the vehicle to the ON mode.

-2. Check for CAN gateway system DTCs with the HDS.

DTC Description	DTC
U0029-00 CAN Gateway F-CAN ch A Bus Off	B
U0047-00 CAN Gateway F-CAN ch B Bus Off	B
U3000-49 CAN Gateway Internal Failure	B

Is DTC U0029-00, U0047-00, and/or U3000-49 indicated?

YES

Go to the troubleshooting for CAN gateway system DTC(s) .

NO

Go to step 3.

3. F-CAN circuit communication check (Receiving control unit)

-1. Select the FUNCTION TEST in the CAN gateway with the HDS, then select the F-CAN Bus Connected Unit Check.

F-CAN Bus Connected Unit Check

Does the body control module detect the CAN gateway Bus channels A?

Bus A is Not Available

Go to step 4.

Bus A is Available

Go to step 5.

4. Open wire check (F-CAN A lines)

-1. Turn the vehicle to the OFF (LOCK) mode.

-2. Disconnect the following connectors.

CAN gateway 12P connector (12P connector type) CAN gateway 16P connector (16P connector type) Body control module connector B (36P)

-3. Measure the resistance between test points 1 and 2.

Test condition	Vehicle OFF (LOCK) mode CAN gateway 12P connector (12P connector type): disconnected CAN gateway 16P connector (16P connector type): disconnected Body control module connector B (36P): disconnected
Test point 1	CAN gateway 12P connector (female terminals) (12P connector type) No. 3: ① CAN gateway 16P connector (female terminals) (16P connector type) No. 3: ②
Test point 2	**Body control module connector B (36P) No. 22**

Test point 1	CAN gateway 12P connector (female terminals) (12P connector type) No. 9: ① CAN gateway 16P connector (female terminals) (16P connector type) No. 11: ②
Test point 2	**Body control module connector B (36P) No. 23**

①

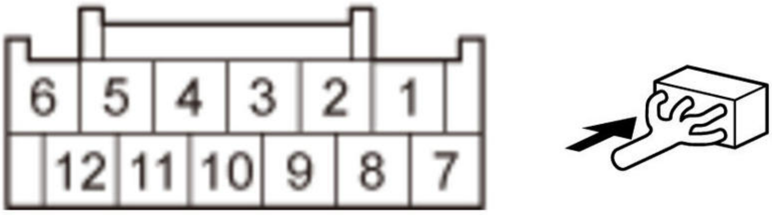
6 5 4 3 2 1
12 11 10 9 8 7

②

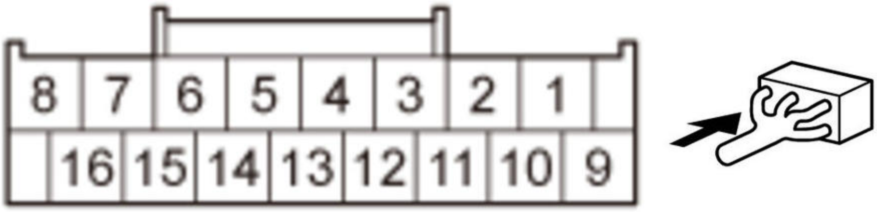
8 7 6 5 4 3 2 1
16 15 14 13 12 11 10 9

Is there 1.0 Ω or less?

YES

The F-CAN A_H and F-CAN A_L wires are OK. **Replace the body control module** .

NO

Repair an open in F-CAN A_H or F-CAN A_L wire.

5. F-CAN circuit communication check (Transmitting control unit)

-1. Select the FUNCTION TEST in the CAN gateway with the HDS, then select the F-CAN Bus Connected Unit Check.

F-CAN Bus Connected Unit Check

According to the detected DTC on the following chart, make sure that the transmitting control unit detects the CAN gateway Bus channel(s) normally.

DTC	Transmitting control unit	Detected CAN gateway Bus channel(s) at normal
U0100	PCM	A, B
U0122	VSA modulator-control unit	A, B

Is it detected normally?

Detected normal

Intermittent failure, the system is OK at this time. Check for poor connections or loose terminals at the transmitting control unit and the CAN gateway.

U0100: PCM is Not Available for Bus A

Go to step 6.

U0100: PCM is Not Available for Bus B

Go to step 7.

U0122: VSA modulator-control unit is Not Available for Bus A

Go to step 6.

U0122: VSA modulator-control unit is Not Available for Bus B

Go to step 7.

6. Open wire check (F-CAN A lines)

-1. Turn the vehicle to the OFF (LOCK) mode.

-2. U0100: Jump the SCS line with the HDS, and wait more than 1 minute.

SCS short

-3. According to the detected DTC on the following chart, disconnect the transmitting control unit connector(s).

DTC	Connector
-	CAN gateway 12P connector (12P connector type) CAN gateway 16P connector (16P connector type)
U0100	PCM connector A (50P)
U0122	VSA modulator-control unit 46P connector

-4. Measure the resistance between test points 1 and 2.

Test condition	Vehicle OFF (LOCK) mode CAN gateway 12P connector (12P connector type): disconnected CAN gateway 16P connector (16P connector type): disconnected Transmitting control unit connector(s) for indicated DTCs: disconnected

CAN gateway 12P connector type

DTC	Circuit name	Test point 1 (Receiving control unit)		Test point 2 (Transmitting control unit)	
		Connector	Terminal	Connector	Terminal
U0100	F-CAN A_H	CAN gateway 12P connector (female terminals): ①	No. 3	PCM connector A (50P)	No. 37
	F-CAN A_L		No. 9		No. 36
U0122	F-CAN A_H	CAN gateway 12P connector (female terminals): ①	No. 3	VSA modulator-control unit 46P connector	No. 40
	F-CAN A_L		No. 9		No. 28

CAN gateway 16P connector type

DTC	Circuit name	Test point 1 (Receiving control unit)		Test point 2 (Transmitting control unit)	
		Connector	Terminal	Connector	Terminal
U0100	F-CAN A_H	CAN gateway 16P connector (female terminals): ②	No. 3	PCM connector A (50P)	No. 37
	F-CAN A_L		No. 11		No. 36
U0122	F-CAN A_H	CAN gateway 16P connector (female terminals): ②	No. 3	VSA modulator-control unit 46P connector	No. 40
	F-CAN A_L		No. 11		No. 28

①

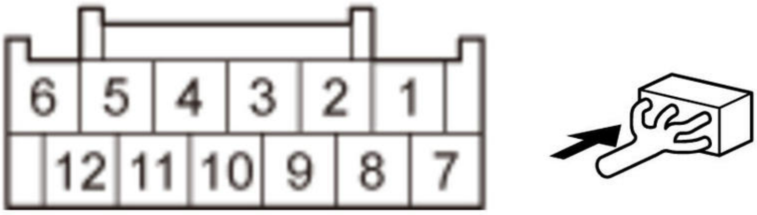

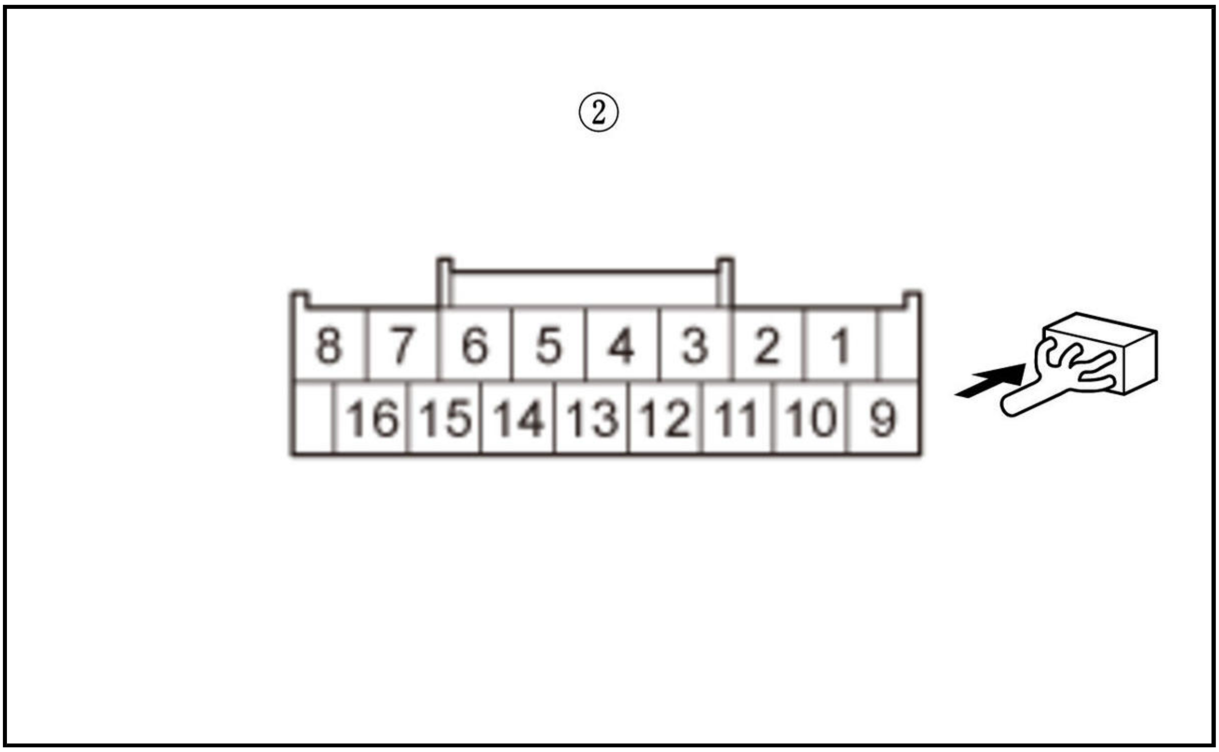

Is there 1.0 Ω or less?

YES

The F-CAN A_H wire and the F-CAN A_L wire are OK. According to the detected DTC on the following chart below replace the correspond control unit.

DTC	Operation for transmitting control unit
U0100	PCM
U0122	VSA modulator-control unit

NO

Repair an open in F-CAN A_H or F-CAN A_L wire.

7. Open wire check (F-CAN B lines)

-1. Turn the vehicle to the OFF (LOCK) mode.

-2. U0100: Jump the SCS line with the HDS, and wait more than 1 minute.

SCS short

-3. According to the detected DTC on the following chart, disconnect the transmitting control unit connector(s).

DTC	Connector
-	CAN gateway 12P connector (12P connector type) CAN gateway 16P connector (16P connector type)
U0100	PCM connector A (50P)
U0122	VSA modulator-control unit 46P connector

-4. Measure the resistance between test points 1 and 2.

Test condition	Vehicle OFF (LOCK) mode CAN gateway 12P connector (12P connector type): disconnected CAN gateway 16P connector (16P connector type): disconnected

	Transmitting control unit connector(s) for indicated DTCs: disconnected

CAN gateway 12P connector type

DTC	Circuit name	Test point 1 (Receiving control unit)		Test point 2 (Transmitting control unit)	
		Connector	Terminal	Connector	Terminal
U0100	F-CAN B_H	CAN gateway 12P connector (female terminals): ①	No. 12	PCM connector A (50P)	No. 39
	F-CAN B_L		No. 5		No. 38
U0122	F-CAN B_H	CAN gateway 12P connector (female terminals): ①	No. 12	VSA modulator-control unit 46P connector	No. 46
	F-CAN B_L		No. 5		No. 34

CAN gateway 16P connector type

DTC	Circuit name	Test point 1 (Receiving control unit)		Test point 2 (Transmitting control unit)	
		Connector	Terminal	Connector	Terminal
U0100	F-CAN B_H	CAN gateway 16P connector (female terminals): ②	No. 6	PCM connector A (50P)	No. 39
	F-CAN B_L		No. 14		No. 38
U0122	F-CAN B_H	CAN gateway 16P connector (female terminals): ②	No. 6	VSA modulator-control unit 46P connector	No. 46
	F-CAN B_L		No. 14		No. 34

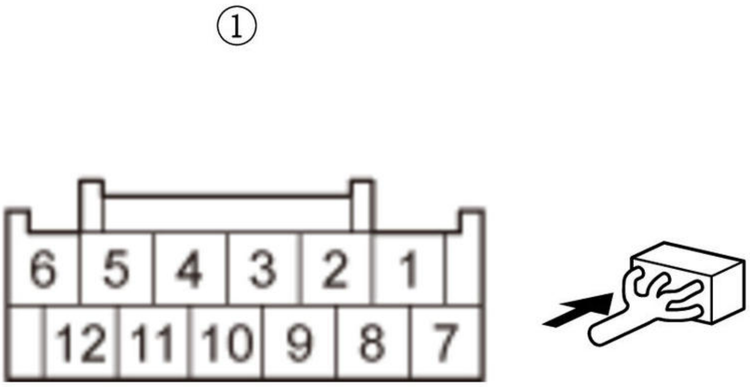

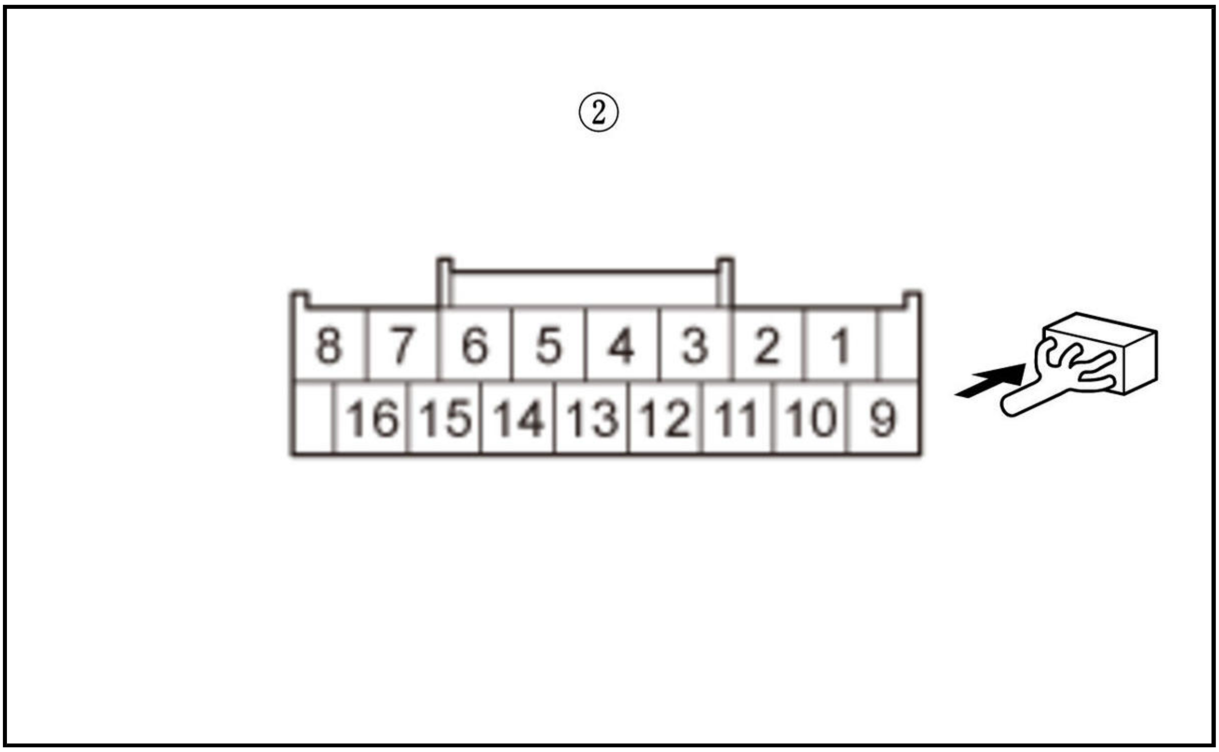

Is there 1.0 Ω or less?

YES

The F-CAN B_H wire and the F-CAN B_L wire are OK. According to the detected DTC on the following chart replace the correspond control unit.

DTC	Operation for transmitting control unit
U0100	**PCM**
U0122	**VSA modulator-control unit**

NO

Repair an open in F-CAN B_H or F-CAN B_L wire.

8. Open wire check (F-CAN_H line, F-CAN_L line)

-1. Turn the vehicle to the OFF (LOCK) mode.

-2. Disconnect the following connector.

Body control module connector B (36P)

-3. U0100: Jump the SCS line with the HDS, and wait more than 1 minute.

SCS short

-4. Disconnect the transmitting control unit connector(s).

Refer to the DTC shown on the display, then disconnect the connector(s) based on the instructions (see chart below).

DTC	Connector
U0100	PCM connector A (51P)
U0122	VSA modulator-control unit 46P connector

-5. Measure the resistance between the receiving control unit and the transmitting control unit on the F-CAN_H circuit and the F-CAN_L circuit.

Test condition	Receiving control unit connector(s): disconnected Transmitting control unit connector(s) for indicated DTCs: disconnected

DTC	Circuit name	Receiving control unit		Transmitting control unit	
		Connector	Terminal	Connector	Terminal
U0100	F-CAN_H	Body control module connector B (36P)	No. 22	PCM connector A (51P)	No. 2
	F-CAN_L		No. 23		No. 1
U0122	F-CAN_H	Body control module connector B (36P)	No. 22	VSA modulator-control unit 46P connector	No. 40
	F-CAN_L		No. 23		No. 28

Is there 1.0 Ω or less?

YES

The F-CAN_H wire and the F-CAN_L wire are OK. Refer to the DTC shown on the display, replace the control unit based on the instructions (see chart below).

DTC	Operation for transmitting control unit
U0100	PCM
U0122	VSA modulator-control unit

NO

Repair an open in the F-CAN_H wire and/or the F-CAN_L wire.

DTC U1280 (BODY CONTROL MODULE)

DTC U1280 : B-CAN communication bus line error (BUS-OFF)

NOTE: If you are troubleshooting multiple DTCs, be sure to follow the instructions in B-CAN System Diagnosis Test Mode A .

DTC Description	DTC
U1280 B-CAN communication bus line error (BUS-OFF)	B

DTC (Body Control Module)

1. Problem verification

-1. Clear the DTCs with the HDS.

-2. Turn the vehicle to the OFF (LOCK) mode and then the ON mode.

-3. Wait for at least 6 seconds.

-4. Check for DTCs with the HDS.

DTC Description	DTC
U1280 B-CAN communication bus line error (BUS-OFF)	B

Is DTC U1280 indicated?

YES

Go to step 2.

NO

Intermittent failure, the system is OK at this time. Check for loose or poor connections.

2. B-CAN related units check

-1. Turn the vehicle to the OFF (LOCK) mode.

-2. Disconnect the appropriate connector at each control unit in the chart one at a time. Clear the DTC, then recheck for DTCs after each unit is disconnected.

Control Unit	Connector
Gauge control module	Connector A (32P)
Climate control unit / HVAC control unit	Connector A (32P)
Immobilizer-keyless control unit	7P connector
Power window master switch	37P connector
Automatic lighting control unit-sensor	5P connector
Audio unit / Audio-navigation unit	Connector A (24P)
Front seat heater control unit	24P connector
Power seat control unit	Connector A (20P)
Power tailgate control unit	Connector A (24P)
Relay control module	Connector A (6P)
Parking and back-up sensor control unit	16P connector
Wireless charger	7P connector
Left BSI radar unit	6P connector
Right BSI radar unit	6P connector

DTC Description	DTC
U1280 B-CAN communication bus line error (BUS-OFF)	B

Is DTC U1280 indicated with each individual unit disconnected?

YES

Leave the connectors disconnected, and go to step 3.

NO

Replace the control unit that was disconnected when DTC U1280 did not reset.

3. Shorted wire check (B-CAN lines)

-1. Turn the vehicle to the OFF (LOCK) mode.

-2. Disconnect the following connector.

Body control module connector B (36P)

-3. Measure the resistance between test points 1 and 2.

Test condition	Vehicle OFF (LOCK) mode Body control module connector B (36P): disconnected
Test point 1	**Body control module connector B (36P) No. 20**
Test point 2	Body ground

Test point 1	**Body control module connector B (36P) No. 21**
Test point 2	Body ground

Is there 1.0 MΩ or more?

YES

Go to step 4.

NO

Repair a short to ground in the B-CAN wires.

4. Shorted wire check (B-CAN_L to B-CAN_H line)

-1. Measure the resistance between test points 1 and 2.

Test condition	Vehicle OFF (LOCK) mode Body control module connector B (36P): disconnected
Test point 1	**Body control module connector B (36P) No. 20**
Test point 2	**Body control module connector B (36P) No. 21**

Is there 1.0 MΩ or more?

YES

The B-CAN_L to B-CAN_H wire is OK. **Replace the body control module** .

NO

Repair a short in the B-CAN_L to B-CAN_H wire.

DTC U128D, U1291 (BODY CONTROL MODULE)

DTC U128D : MICU lost communication with gauge control module **DTC U1291** : MICU lost communication with relay control module

NOTE:

- If you are troubleshooting multiple DTCs, be sure to follow the instructions in **B-CAN System Diagnosis Test Mode A** .
- Refer to the DTC code shown on the display, and then inspect the connectors and terminals based on the instructions in the chart below.
- The DTC may be stored due to the grounding failure or the power source failure at the transmitting control unit (the grounding inspection and the power source inspection on each control unit are required prior to this checking process).

DTC Description	DTC
U128D MICU lost communication with gauge control module	B
U1291 MICU lost communication with relay control module	B

DTC (Body Control Module)

1. Problem verification

-1. Clear the DTC with the HDS.

-2. Turn the vehicle to the OFF (LOCK) mode and then the ON mode.

-3. Wait for at least 6 seconds.

-4. Check for DTCs with the HDS.

DTC Description	DTC
U128D MICU lost communication with gauge control module	B
U1291 MICU lost communication with relay control module	B

Are any DTCs indicated?

YES

Go to step 2.

NO

Intermittent failure, the system is OK at this time. Check for poor connections or loose terminals.

2. Open wire check (B-CAN_H line, B-CAN_L line)

-1. Turn the vehicle to the OFF (LOCK) mode.

-2. Disconnect the receiving control unit connector.

Body control module connector B (36P)

-3. Disconnect the transmitting control unit connector(s).

Refer to the DTC shown on the display, then disconnect the connector(s) based on the instructions (see chart below).

DTC	Connector
U128D	Gauge control module connector A (32P)
U1291	Relay control module connector A (6P)

-4. Check for continuity between the receiving control unit and the transmitting control unit on the B-CAN_H circuit and the B-CAN_L circuit.

Test condition	Vehicle OFF (LOCK) mode Body control module connector B (36P): disconnected Transmitting control unit connector(s) for indicated DTCs: disconnected

DTC	Circuit name	Receiving control unit		Transmitting control unit	
		Connector	Terminal	Connector	Terminal
U128D	B-CAN_H	**Body control module connector B (36P)**	No. 20	**Gauge control module connector A (32P)**	No. 30
	B-CAN_L		No. 21		No. 31
U1291	B-CAN_H	**Body control module connector B (36P)**	No. 20	**Relay control module connector A (6P)**	No. 2
	B-CAN_L		No. 21		No. 3

Is there continuity?

YES

The B-CAN_H wire and the B-CAN_L wire are OK. Refer to the DTC shown on the display, then replace the control unit based on the instructions (see chart below).

DTC	Operation for transmitting control unit
U128D	Gauge control module
U1291	Relay control module

NO

Repair an open in the B-CAN_H wire and/or the B-CAN_L wire.

DTC TROUBLESHOOTING

DTC B1002

DTC B1002 : BCM internal error (EEPROM error)

NOTE: If you are troubleshooting multiple DTCs, be sure to follow the instructions in B-CAN System Diagnosis Test Mode A .

DTC Description	DTC
B1002 BCM internal error (EEPROM error)	B

DTC (Body Control Module)

1. Problem verification

   -1. Clear the DTCs with the HDS.

   -2. Turn the vehicle to the OFF (LOCK) mode and then the ON mode.

   -3. Wait for at least 6 seconds.

   -4. Check for DTCs with the HDS.

DTC Description	DTC
B1002 BCM internal error (EEPROM error)	B

   Is DTC B1002 indicated?

   YES

   Replace the body control module .

   NO

   Intermittent failure, the body control module is OK at this time.

DTC B1003

DTC B1003 : BCM Update error

NOTE:

- If you are troubleshooting multiple DTCs, be sure to follow the instructions in B-CAN System Diagnosis Test Mode A .
- This DTC is indicated when a body control module update is not completed properly.
- Before updating the body control module, make sure the 12 volt battery in the vehicle is fully charged, and connect a 12 volt jumper battery (not a 12 volt battery charger) to maintain system voltage.
- Never turn the vehicle to the ACCESSORY mode or OFF (LOCK) mode, during the reprogramming. If there is a problem with the reprogramming, turn the vehicle to the ON mode.

DTC Description	DTC
B1003 BCM Update error	B

DTC (Body Control Module)

1. Problem verification

   -1. Clear the DTCs with the HDS.

   -2. Turn the vehicle to the OFF (LOCK) mode and then the ON mode.

   -3. Check for DTCs with the HDS.

DTC Description	DTC
B1003 BCM Update error	B

Is DTC B1003 indicated?

YES

Update the body control module .

NO

Intermittent failure, the system is OK at this time.

DTC B1028

DTC B1028 : Rear wiper motor (park) signal error

NOTE:

- If you are troubleshooting multiple DTCs, be sure to follow the instructions in **B-CAN System Diagnosis Test Mode A** .
- Before troubleshooting, make sure the fuses and **relays** associated with the system is OK.

DTC Description	DTC
B1028 Rear wiper motor (park) signal error	B

DTC (Body Control Module)

1. Problem verification

   -1. Clear the DTCs with the HDS.

   -2. Turn the vehicle to the OFF (LOCK) mode and then the ON mode.

   -3. Turn the rear window wiper switch to INT for 15 seconds or more, then turn the switch OFF.

   -4. Check for DTCs with the HDS.

DTC Description	DTC
B1028 Rear wiper motor (park) signal error	B

Is DTC B1028 indicated?

YES

Go to step 2.

NO

Intermittent failure, the system is OK at this time. Check for loose or poor connections.

2. Open wire check (IG1_HAC line)

   -1. Turn the vehicle to the OFF (LOCK) mode.

   -2. Disconnect the following connector.

Rear window wiper motor 3P connector

   -3. Turn the vehicle to the ON mode.

   -4. Measure the voltage between test points 1 and 2.

Test condition	Vehicle ON mode Rear window wiper motor 3P connector: disconnected
Test point 1	Rear window wiper motor 3P connector (female terminals) No. 1: ①
Test point 2	Body ground

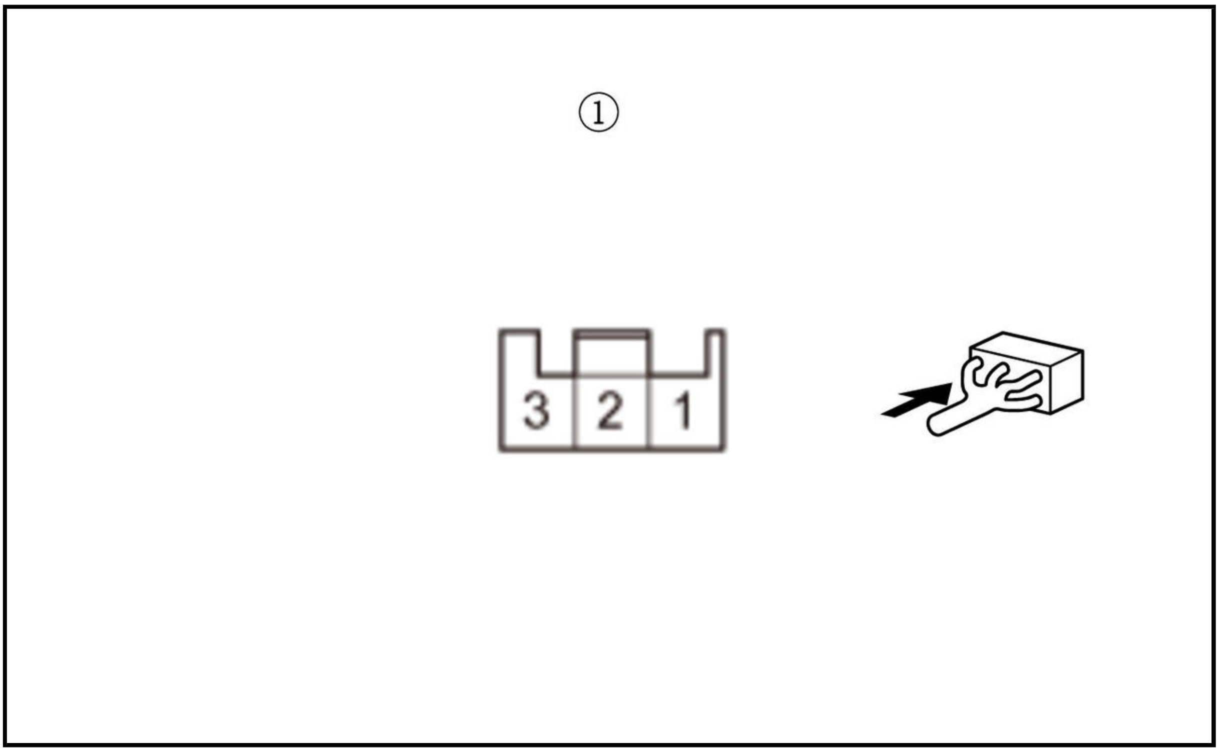

Is there battery voltage?

YES

The IG1_HAC wire is OK. Go to step 3.

NO

Repair an open or high resistance in the wire.

3. Rear window wiper motor check

   -1. Turn the vehicle to the OFF (LOCK) mode.

   -2. **Do the rear window wiper motor test** .

Does the wiper motor run and does it pulse normally?

YES

Go to step 4.

NO

Replace the rear window wiper motor .

4. Shorted wire check (RR_WIPER_MTR line to power)

-1. Disconnect the following connector.

Body control module connector A (14P)

-2. Measure the voltage between test points 1 and 2.

Test condition	Vehicle OFF (LOCK) mode Rear window wiper motor 3P connector: disconnected Body control module connector A (14P): disconnected
Test point 1	Rear window wiper motor 3P connector (female terminals) No. 3: ①
Test point 2	Body ground

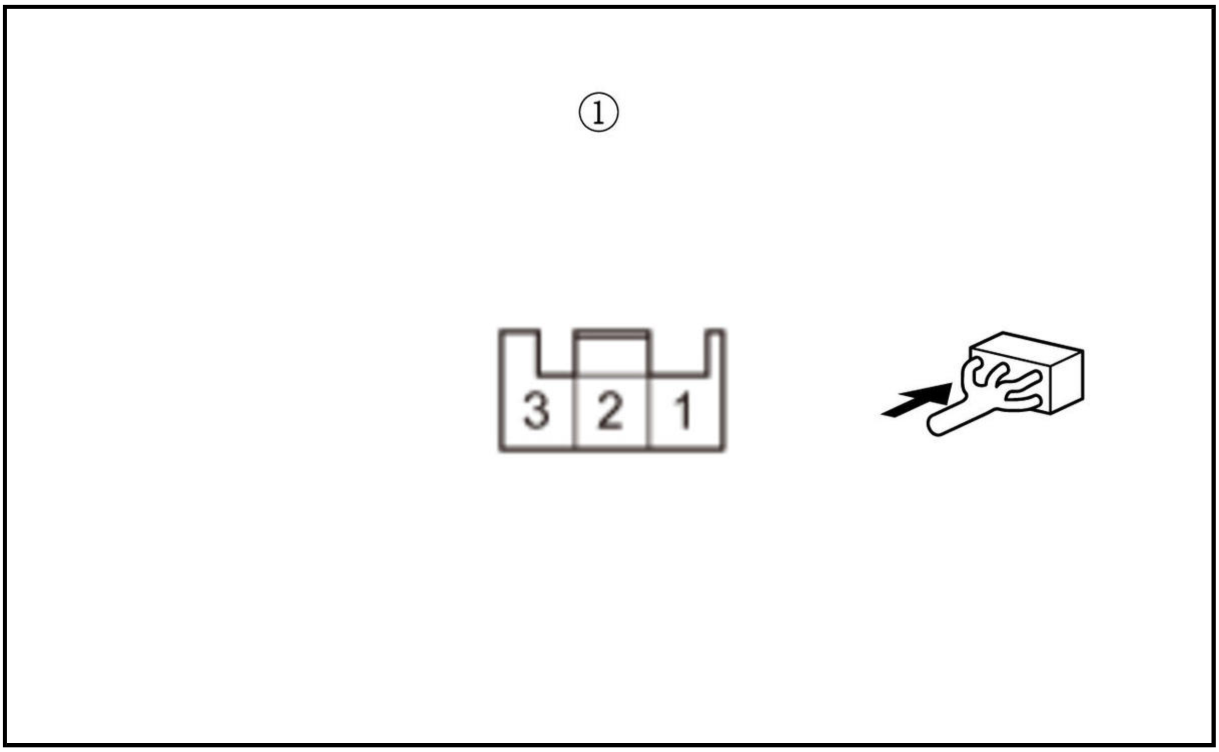

Is there battery voltage?

YES

Repair a short to power in the wire to power.

NO

The RR_WIPER_MTR wire is not shorted to power. Go to step 5

5. Shorted wire check (RR_WIPER_MTR line)

-1. Measure the resistance between test points 1 and 2.

Test condition	Vehicle OFF (LOCK) mode Rear window wiper motor 3P connector: disconnected Body control module connector A (14P): disconnected
Test point 1	Rear window wiper motor 3P connector (female terminals) No. 3: ①
Test point 2	Body ground

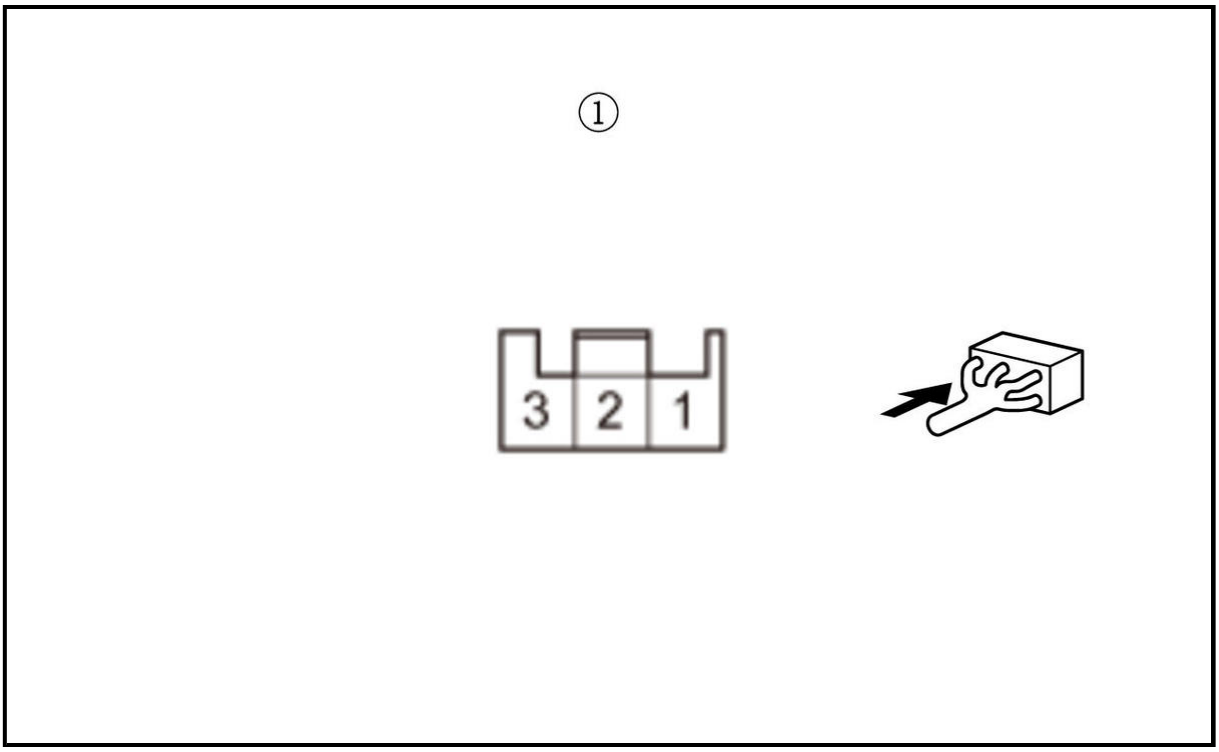

Is there 1.0 MΩ or more?

YES

The RR_WIPER_MTR wire is not shorted. Go to step 6.

NO

Repair a short to ground in the wire.

6. Open wire check (RR_WIPER_MTR line)

-1. Measure the resistance between test points 1 and 2.

Test condition	Vehicle OFF (LOCK) mode Rear window wiper motor 3P connector: disconnected Body control module connector A (14P): disconnected
Test point 1	**Body control module connector A (14P) No. 7**
Test point 2	Rear window wiper motor 3P connector (female terminals) No. 3: ①

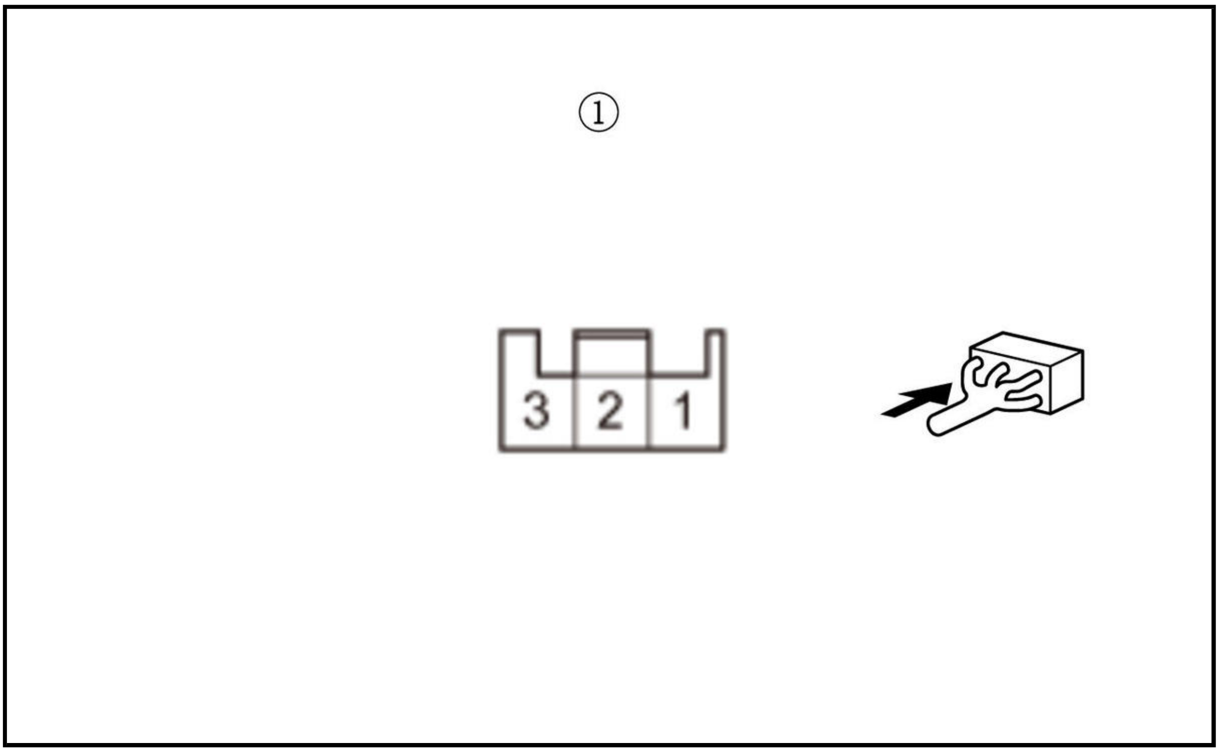

Is there 1.0 Ω or less?

YES

The RR_WIPER_MTR wire is OK. Go to step 7.

NO

Repair an open or high resistance in the wire.

7. Open wire check (GND line)

-1. Measure the resistance between test points 1 and 2.

Test condition	Vehicle OFF (LOCK) mode Rear window wiper motor 3P connector: disconnected Body control module connector A (14P): disconnected
Test point 1	**Body control module connector A (14P) No. 6**
Test point 2	Body ground

Is there 1.0 Ω or less?

YES

The GND wire is OK. **Replace the body control module** .

NO

Repair an open or high resistance in the ground wire or poor ground (G401).

DTC B1032

DTC B1032 : CDS (Collision detection signal) signal error

NOTE: If you are troubleshooting multiple DTCs, be sure to follow the instructions in **B-CAN System Diagnosis Test Mode A** .

DTC Description	DTC
B1032 CDS (Collision detection signal) signal error	B

DTC (Body Control Module)

1. Problem verification

   -1. Clear the DTCs with the HDS.

   -2. Turn the vehicle to the OFF (LOCK) mode and then the ON mode.

   -3. Wait for at least 6 seconds.

   -4. Check for DTCs with the HDS.

DTC Description	DTC
B1032 CDS (Collision detection signal) signal error	B

Is DTC B1032 indicated?

YES: with power tailgate

Go to step 2.

YES: without power tailgate

Go to step 3.

NO

Intermittent failure, the system is OK at this time.

2. Open wire check (B-CAN_H line, B-CAN_L line)

   -1. Turn the vehicle to the OFF (LOCK) mode.

   -2. Disconnect the following connectors.

Body control module connector B (36P) Gauge control module connector A (32P)

-3. Measure the resistance between test points 1 and 2.

Test condition	Vehicle OFF (LOCK) mode Body control module connector B (36P): disconnected Gauge control module connector A (32P): disconnected

Circuit name	Test points 1		Test points 2	
	Connector	Terminal	Connector	Terminal
B-CAN_H	**Body control module connector B (36P)**	No. 20	**Gauge control module connector A (32P)**	No. 30
B-CAN_L		No. 21		No. 31

Is there 1.0 Ω or less?

YES

The B-CAN_H wire and the B-CAN_L wire are OK. **Replace the gauge control module**

NO

Repair an open in the B-CAN_H wire and/or the B-CAN_L wire.

3. Open wire check (CDS line)

-1. Turn the vehicle to the OFF (LOCK) mode.

-2. Do the 12 volt battery terminal disconnection procedure , and wait for at least 3 minutes.

-3. Disconnect the following connectors.

Body control module connector D (40P)SRS unit connector A (39P)

-4. Measure the resistance between test points 1 and 2.

Test condition	Vehicle OFF (LOCK) mode Body control module connector D (40P): disconnected SRS unit connector A (39P): disconnected
Test point 1	Body control module connector D (40P) No. 34
Test point 2	SRS unit connector A (39P) No. 1

Is there 1.0 Ω or less?

YES

Go to step 4.

NO

Repair an open or high resistance in the wire.

4. Shorted wire check (CDS line)

-1. Measure the resistance between test points 1 and 2.

Test condition	Vehicle OFF (LOCK) mode Body control module connector D (40P): disconnected SRS unit connector A (39P): disconnected
Test point 1	SRS unit connector A (39P) No. 1
Test point 2	Body ground

Is there 1.0 MΩ or more?

YES

The CDS wire is OK. Go to step 5.

NO

Repair a short to ground in the wire.

5. Body control module check

-1. Reconnect the following connector.

Body control module connector D (40P)

-2. Do the 12 volt battery terminal reconnection procedure .

-3. Turn the vehicle to the ON mode.

-4. Measure the voltage between test points 1 and 2.

Test condition	Vehicle ON mode SRS unit connector A (39P): disconnected
Test point 1	**Body control module connector D (40P) No. 34**
Test point 2	Body ground

Is there battery voltage?

YES

Replace the SRS unit .

NO

Replace the body control module .

DTC B1036

DTC B1036 : IG1 Power supply Circuit Malfunction

NOTE: If you are troubleshooting multiple DTCs, be sure to follow the instructions in **B-CAN System Diagnosis Test Mode A** .

DTC Description	DTC
B1036 IG1 Power supply Circuit Malfunction	B

DTC (Body Control Module)

1. Problem verification

-1. Clear the DTCs with the HDS.

-2. Turn the vehicle to the OFF (LOCK) mode and then the ON mode.

-3. Wait for at least 6 seconds.

-4. Check for DTCs with the HDS.

DTC Description	DTC
B1036 IG1 Power supply Circuit Malfunction	B

Is DTC B1036 indicated?

YES

Go to step 2.

NO

Intermittent failure, the system is OK at this time. Check for loose or poor connections.

2. Fuse check

-1. Check the following fuse.

Fuse	**No. D8**

Is the fuse OK?

YES

Repair an open or high resistance in the wire.

NO

Replace the fuse. If the fuse blows again, repair a short to ground in the IG1_FUEL_PUMP wire.

DTC B1038

DTC B1038 : IMMOBILIZER F-CAN Authentication ID Not Received

NOTE:

- If you are troubleshooting multiple DTCs, be sure to follow the instructions in **B-CAN System Diagnosis Test Mode A** .
- If keyless access power control unit DTC U0073 is stored, troubleshoot DTC U0073 first.

DTC Description	DTC
B1038 IMMOBILIZER F-CAN Authentication ID Not Received	B

DTC (Body Control Module)

1. Problem verification

-1. Clear the DTCs with the HDS.

-2. Turn the vehicle to the OFF (LOCK) mode and then the ON mode.

-3. Check for DTCs with the HDS.

DTC Description	DTC
B1038 IMMOBILIZER F-CAN Authentication ID Not Received	B

Is DTC B1038 indicated?

YES

Go to step 2.

NO

Intermittent failure, the system is OK at this time. Check for loose or poor connections.

2. CAN gateway system DTC check

-1. Check for CAN gateway system DTCs with the HDS.

DTC Description	DTC
U0029-00 CAN Gateway F-CAN ch A Bus Off	B
U0047-00 CAN Gateway F-CAN ch B Bus Off	B
U0056-00 CAN Gateway F-CAN ch C Bus Off	B
U0065-00 CAN Gateway F-CAN ch D Bus Off	B
U0038-00 CAN Gateway F-CAN ch E Bus Off	B
U3000-49 CAN Gateway Internal Failure	B

Is DTC U0029-00, U0047-00, U0056-00, U0038-00, and/or U3000-49 indicated?

YES

Go to the troubleshooting for CAN gateway system DTC(s) .

NO

Go to step 3.

3. Gauge control module DTC check

-1. Check for gauge control module DTCs with the HDS.

DTC Description	DTC
U0122 Gauge control module lost communication with VSA modulator-control unit	B

Is DTC U0122 indicated?

YES

Go to gauge control module DTC U0122 troubleshooting .

NO

Go to step 4.

4. F-CAN circuit communication check

-1. Select the FUNCTION TEST in the CAN gateway with the HDS, then select the F-CAN Bus Connected Unit Check.

F-CAN Bus Connected Unit Check

Does the body control module detect the CAN gateway Bus channels B?

Bus B is Not Available

Go to step 5.

Bus B is Available

Go to step 6.

5. Open wire check (F-CAN A lines)

-1. Turn the vehicle to the OFF (LOCK) mode.

-2. Disconnect the following connectors.

CAN gateway 16P connector Body control module connector B (36P)

-3. Measure the resistance between test points 1 and 2.

Test condition	Vehicle OFF (LOCK) mode CAN gateway 16P connector: disconnected Body control module connector B (36P): disconnected

Test point 1	CAN gateway 16P connector (female terminals) No. 6: ①
Test point 2	**Body control module connector B (36P) No. 22**

Test point 1	CAN gateway 16P connector (female terminals) No. 14: ①
Test point 2	**Body control module connector B (36P) No. 23**

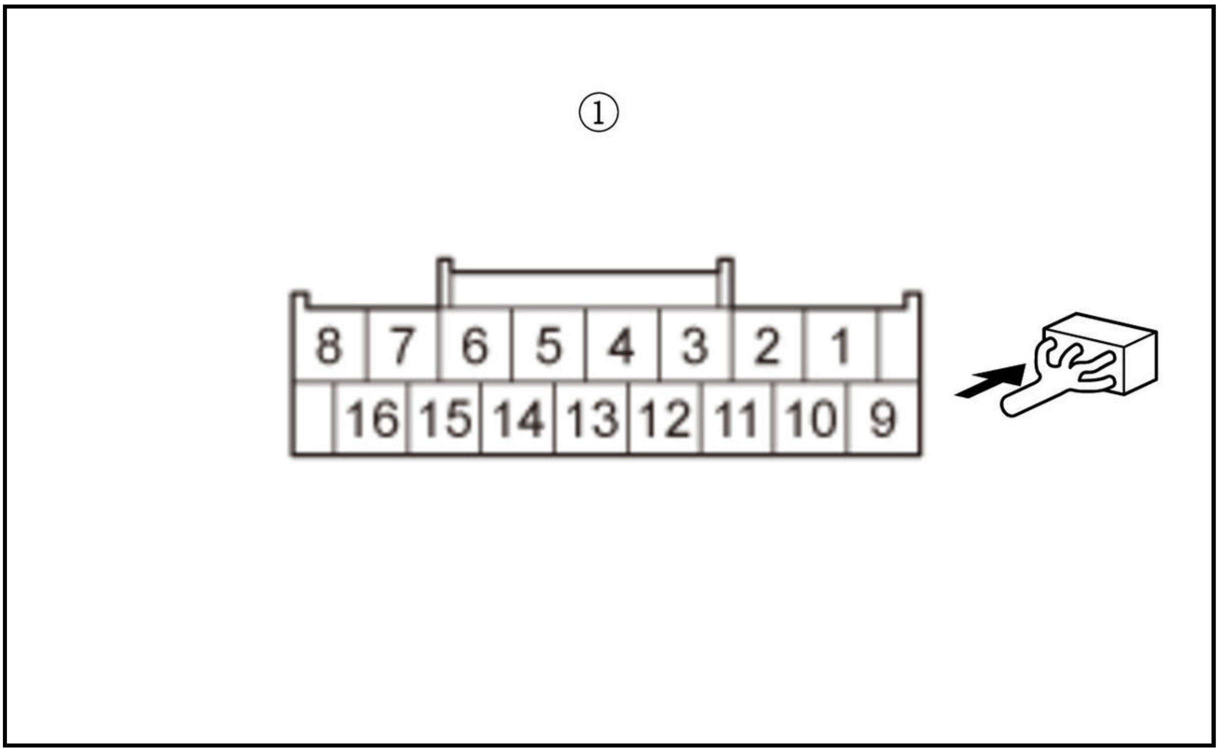

Is there 1.0 Ω or less?

YES

The F-CAN B_H and F-CAN B_L wires are OK. **Replace the body control module** .

NO

Repair an open in F-CAN B_H or F-CAN B_L wire.

6. F-CAN circuit communication check (Transmitting control unit)

-1. Select the FUNCTION TEST in the CAN gateway with the HDS, then select the F-CAN Bus Connected Unit Check.

F-CAN Bus Connected Unit Check

According to the detected DTC on the following table, make sure that the transmitting control unit detects the CAN gateway Bus channels normally.

DTC	Transmitting control unit	Detected CAN gateway Bus channels at normal
B1038	VSA modulator-control unit	B, C

Is it detected normally?

Detected normal

Intermittent failure, the system is OK at this time. Check for poor connections or loose terminals at the transmitting control unit and the CAN gateway.

B1038: VSA modulator-control unit is Not Available for Bus B

Go to step 7.

B1038: VSA modulator-control unit is Not Available for Bus C

Go to step 8.

7. Open wire check (F-CAN B lines)

-1. Turn the vehicle to the OFF (LOCK) mode.

-2. According to the detected DTC on the following table, disconnect the transmitting control unit connectors.

DTC	Connector
-	CAN gateway 16P connector
B1038	VSA modulator-control unit 46P connector

-3. Measure the resistance between test points 1 and 2.

Test condition	Vehicle OFF (LOCK) mode CAN gateway 16P connector: disconnected Transmitting control unit connector for indicated DTCs: disconnected

DTC	Circuit name	Test point 1 (Receiving control unit)		Test point 2 (Transmitting control unit)	
		Connector	Terminal	Connector	Terminal
B1038	F-CAN B_H	CAN gateway 16P connector (female terminals): ①	No. 6	VSA modulator-control unit 46P connector	No. 40
	F-CAN B_L		No. 14		No. 28

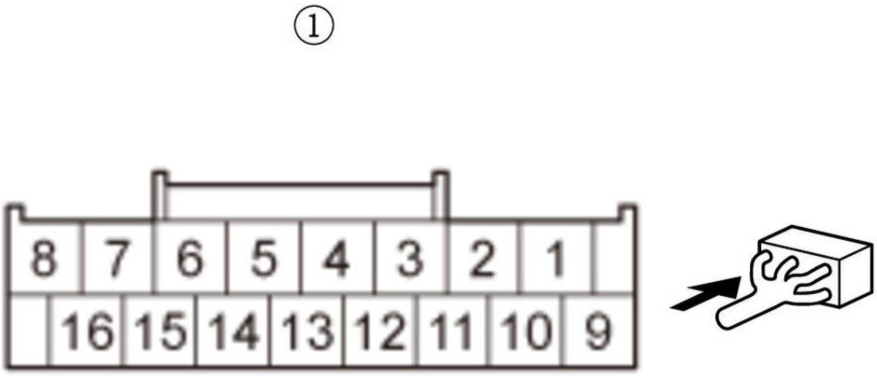

Is there 1.0 Ω or less?

YES

The F-CAN B_H wire and the F-CAN B_L wire are OK. Refer to the DTC shown on the display, replace the control unit based on the instructions (see table).

DTC	Operation for transmitting control unit
B1038	**VSA modulator-control unit**

NO

Repair an open in F-CAN B_H or F-CAN B_L wire.

8. Open wire check (F-CAN C lines)

-1. Turn the vehicle to the OFF (LOCK) mode.

-2. According to the detected DTC on the following table, disconnect the transmitting control unit connectors.

DTC	Connector
-	CAN gateway 16P connector
B1038	VSA modulator-control unit 46P connector

-3. Measure the resistance between test points 1 and 2.

Test condition	Vehicle OFF (LOCK) mode CAN gateway 16P connector: disconnected Transmitting control unit connector for indicated DTCs: disconnected

DTC	Circuit name	Test point 1 (Receiving control unit)		Test point 2 (Transmitting control unit)	
		Connector	**Terminal**	**Connector**	**Terminal**
B1038	F-CAN C_H	CAN gateway 16P connector (female terminals): ①	No. 5	**VSA modulator-control unit 46P connector**	No. 46
	F-CAN C_L		No. 13		No. 34

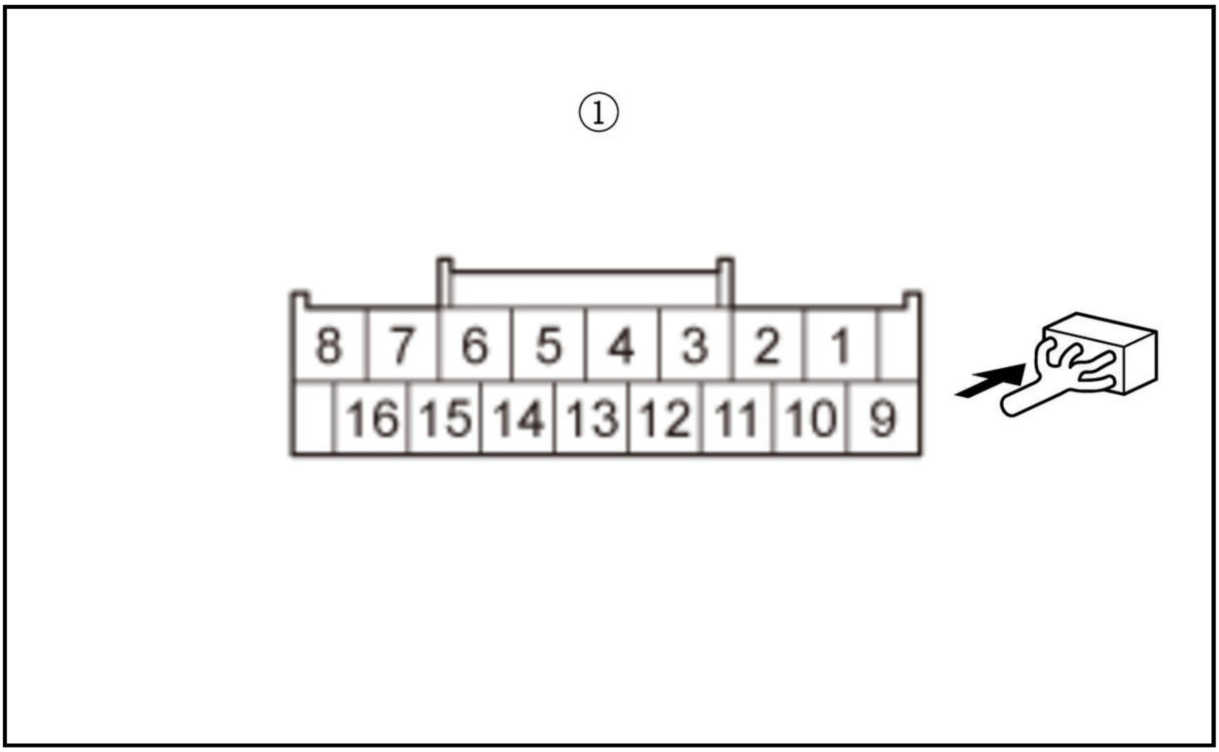

Is there 1.0 Ω or less?

YES

The F-CAN C_H wire and the F-CAN C_L wire are OK. Refer to the DTC shown on the display, replace the control unit based on the instructions (see table).

DTC	Operation for transmitting control unit
B1038	VSA modulator-control unit

NO

Repair an open in F-CAN C_H or F-CAN C_L wire.

DTC B1039

DTC B1039 : IMMOBILIZER F-CAN Authentication ID Unmatch

NOTE: If you are troubleshooting multiple DTCs, be sure to follow the instructions in B-CAN System Diagnosis Test Mode A .

DTC Description	DTC
B1039 IMMOBILIZER F-CAN Authentication ID Unmatch	B

DTC (Body Control Module)

1. Problem verification

-1. Clear the DTCs with the HDS.

-2. Turn the vehicle to the OFF (LOCK) mode and then the ON mode.

-3. Check for DTCs with the HDS.

DTC Description	DTC
B1039 IMMOBILIZER F-CAN Authentication ID Unmatch	B

Is DTC B1039 indicated?

YES

Do the System Registration .

NO

Intermittent failure, the system is OK at this time.

DTC B1040

DTC B1040 : BCM lost communication with Front wiper

NOTE:

- If you are troubleshooting multiple DTCs, be sure to follow the instructions in B-CAN System Diagnosis Test Mode A .
- Before troubleshooting, make sure the fuses and relays associated with the system is OK.

DTC Description	DTC
B1040 BCM lost communication with Front wiper	B

DTC (Body Control Module)

1. Problem verification

   -1. Clear the DTCs with the HDS.

   -2. Turn the vehicle to the OFF (LOCK) mode and then the ON mode.

   -3. Wait for at least 6 seconds.

   -4. Check for DTCs with the HDS.

DTC Description	DTC
B1040 BCM lost communication with Front wiper	B

   Is DTC B1040 indicated?

   YES

   Go to step 2.

   NO

   Intermittent failure, the system is OK at this time. Check for loose or poor connections.

2. Determine possible failure area (windshield wiper control unit/motor power and ground, LIN(FR_WIPER) line)

   -1. Turn the vehicle to the OFF (LOCK) mode.

   -2. Disconnect the following connector.

Windshield wiper control unit/motor 6P connector

   -3. Measure the voltage between test points 1 and 2.

Test condition	Vehicle OFF (LOCK) mode Windshield wiper control unit/motor 6P connector: disconnected
Test point 1	Windshield wiper control unit/motor 6P connector No. 2
Test point 2	Windshield wiper control unit/motor 6P connector No. 1

Is there battery voltage?

YES

Go to step 4.

NO

Go to step 3.

3. Open wire check (+B_WIPER line)

-1. Measure the voltage between test points 1 and 2.

Test condition	Vehicle OFF (LOCK) mode Windshield wiper control unit/motor 6P connector: disconnected
Test point 1	Windshield wiper control unit/motor 6P connector No. 2
Test point 2	Body ground

Is there battery voltage?

YES

Repair an open or high resistance in the ground wire or poor ground (G351).

NO

Repair an open or high resistance in the wire.

4. Shorted wire check (LIN(FR_WIPER) line)

-1. Disconnect the following connector.

Body control module connector C (28P)

-2. Measure the resistance between test points 1 and 2.

Test condition	Vehicle OFF (LOCK) mode Body control module connector C (28P): disconnected Windshield wiper control unit/motor 6P connector: disconnected

Test point 1	Windshield wiper control unit/motor 6P connector No. 4
Test point 2	Body ground

Is there 1.0 MΩ or more?

YES

The LIN(FR_WIPER) wire is not shorted. Go to step 5.

NO

Repair a short to ground in the wire.

5. Open wire check (LIN(FR_WIPER) line)

-1. Measure the resistance between test points 1 and 2.

Test condition	Vehicle OFF (LOCK) mode Body control module connector C (28P): disconnected Windshield wiper control unit/motor 6P connector: disconnected
Test point 1	**Body control module connector C (28P) No. 13**
Test point 2	**Windshield wiper control unit/motor 6P connector No. 4**

Is there 1.0 Ω or less?

YES

The LIN(FR_WIPER) wire is OK. **Replace the windshield wiper control unit/motor** . If the DTC is still present, **replace the body control module** .

NO

An open or poor connection in the wire.

DTC B1041

DTC B1041 : Front Wiper motor malfunction

NOTE: If you are troubleshooting multiple DTCs, be sure to follow the instructions in **B-CAN System Diagnosis Test Mode A** .

DTC Description	DTC
B1041 Front Wiper motor malfunction	B

DTC (Body Control Module)

1. Problem verification

-1. Clear the DTCs with the HDS.

-2. Turn the vehicle to the OFF (LOCK) mode and then the ON mode.

-3. Check for DTCs with the HDS.

DTC Description	DTC
B1041 Front Wiper motor malfunction	B

Is DTC B1041 indicated?

YES

Replace the windshield wiper control unit/motor .

NO

Intermittent failure, the system is OK at this time.

DTC B1042

DTC B1042 : Front Wiper security line error

NOTE: If you are troubleshooting multiple DTCs, be sure to follow the instructions in **B-CAN System Diagnosis Test Mode A** .

DTC Description	DTC
B1042 Front Wiper security line error	B

DTC (Body Control Module)

1. Problem verification

   -1. Clear the DTCs with the HDS.

   -2. Turn the vehicle to the OFF (LOCK) mode and then the ON mode.

   -3. Check for DTCs with the HDS.

DTC Description	DTC
B1042 Front Wiper security line error	B

   Is DTC B1042 indicated?

   YES

   Go to step 2.

   NO

   Intermittent failure, the system is OK at this time. Check for loose or poor connections.

2. Shorted wire check (BACK_UP(WIPER) line)

   -1. Turn the vehicle to the OFF (LOCK) mode.

   -2. Disconnect the following connectors.

Body control module connector B (36P) Windshield wiper control unit/motor 6P connector

   -3. Measure the resistance between test points 1 and 2.

Test condition	Vehicle OFF (LOCK) mode Body control module connector B (36P): disconnected Windshield wiper control unit/motor 6P connector: disconnected
Test point 1	**Windshield wiper control unit/motor 6P connector No. 3**
Test point 2	Body ground

   Is there 1.0 MΩ or more?

   YES

   The BACK_UP(WIPER) wire is not shorted. Go to step 3.

   NO

   Repair a short to ground in the wire.

3. Open wire check (BACK_UP(WIPER) line)

-1. Measure the resistance between test points 1 and 2.

Test condition	Vehicle OFF (LOCK) mode Body control module connector B (36P): disconnected Windshield wiper control unit/motor 6P connector: disconnected
Test point 1	**Body control module connector B (36P) No. 10**
Test point 2	**Windshield wiper control unit/motor 6P connector No. 3**

Is there 1.0 Ω or less?

YES

The BACK_UP(WIPER) wire is OK. **Replace the windshield wiper control unit/motor** . If the DTC is still present, **replace the body control module** .

NO

An open or poor connection in the wire.

DTC B1043

DTC B1043 : Front Wiper unit internal error (EEPROM error)

NOTE: If you are troubleshooting multiple DTCs, be sure to follow the instructions in **B-CAN System Diagnosis Test Mode A** .

DTC Description	DTC
B1043 Front Wiper unit internal error (EEPROM error)	B

DTC (Body Control Module)

1. Problem verification

-1. Clear the DTCs with the HDS.

-2. Turn the vehicle to the OFF (LOCK) mode and then the ON mode.

-3. Check for DTCs with the HDS.

DTC Description	DTC
B1043 Front Wiper unit internal error (EEPROM error)	B

Is DTC B1043 indicated?

YES

Replace the windshield wiper control unit/motor .

NO

Intermittent failure, the system is OK at this time.

DTC B1077

DTC B1077 : Front wiper auto stop switch signal error

NOTE: If you are troubleshooting multiple DTCs, be sure to follow the instructions in **B-CAN System Diagnosis Test Mode A** .

DTC Description	DTC
B1077 Front wiper auto stop switch signal error	B

DTC (Body Control Module)

1. Problem verification

-1. Clear the DTCs with the HDS.

-2. Turn the vehicle to the OFF (LOCK) mode and then the ON mode.

-3. Check for DTCs with the HDS.

DTC Description	DTC
B1077 Front wiper auto stop switch signal error	B

Is DTC B1077 indicated?

YES

Replace the windshield wiper control unit/motor .

NO

Intermittent failure, the system is OK at this time.

DTC B1275, B1276, B1277, B1278

DTC B1275 : Head light OFF position Circuit Malfunction

DTC B1276 : Headlight Switch Parking (Small) Position Circuit Malfunction

DTC B1277 : Head light AUTO position Circuit Malfunction

DTC B1278 : Head light ON position Circuit Malfunction

NOTE: If you are troubleshooting multiple DTCs, be sure to follow the instructions in **B-CAN System Diagnosis Test Mode A** .

DTC Description	DTC
B1275 Head light OFF position Circuit Malfunction	B
B1276 Headlight Switch Parking (Small) Position Circuit Malfunction	B
B1277 Head light AUTO position Circuit Malfunction	B
B1278 Head light ON position Circuit Malfunction	B

DTC (Body Control Module)

1. Problem verification

-1. Check the parameter(s) below with the HDS.

When the combination light switch is turned OFF

Signal	Threshold		Current conditions	
	Values	Unit	Values	Unit
Headlight Switch (OFF)	ON	B	B	B
Headlight Switch (PARKING)	OFF	B	B	B

Signal	Threshold		Current conditions	
	Values	Unit	Values	Unit
Headlight Switch (AUTO)	OFF	B	B	B
Headlight Switch (HEADLIGHT)	OFF	B	B	B

When the combination light switch is turned to PARKING

Signal	Threshold		Current conditions	
	Values	Unit	Values	Unit
Headlight Switch (OFF)	OFF	B	B	B
Headlight Switch (PARKING)	ON	B	B	B
Headlight Switch (AUTO)	OFF	B	B	B
Headlight Switch (HEADLIGHT)	OFF	B	B	B

When the combination light switch is turned to AUTO

Signal	Threshold		Current conditions	
	Values	Unit	Values	Unit
Headlight Switch (OFF)	OFF	B	B	B
Headlight Switch (PARKING)	OFF	B	B	B
Headlight Switch (AUTO)	ON	B	B	B
Headlight Switch (HEADLIGHT)	OFF	B	B	B

When the combination light switch is turned ON (HEADLIGHT)

Signal	Threshold		Current conditions	
	Values	Unit	Values	Unit
Headlight Switch (OFF)	OFF	B	B	B
Headlight Switch (PARKING)	ON	B	B	B
Headlight Switch (AUTO)	OFF	B	B	B
Headlight Switch (HEADLIGHT)	ON	B	B	B

Are all data list values correct?

YES

Intermittent failure, the system is OK at this time. Check for loose or poor connections.

NO

Go to step 2.

2. Exterior lights system check

-1. Check the parameter(s) below with the HDS.

Cycle through all switch selections

Signal	Current conditions	
	Values	Unit
Headlight Switch (OFF)	B	B
Headlight Switch (PARKING)	B	B
Headlight Switch (AUTO)	B	B
Headlight Switch (HEADLIGHT)	B	B

Is any data list value OFF, not ON?

YES

Go to step 5.

NO

Go to step 3.

3. Determine possible failure area (combination light switch, others)

-1. Turn the vehicle to the OFF (LOCK) mode.

-2. Disconnect the following connector.

Combination light switch 12P connector

-3. Check the parameter(s) below with the HDS.

Signal	Current conditions	
	Values	**Unit**
Headlight Switch (OFF)	B	B
Headlight Switch (PARKING)	B	B
Headlight Switch (AUTO)	B	B
Headlight Switch (HEADLIGHT)	B	B

Are all data lists values OFF?

YES

Replace the combination light switch .

NO

Go to step 4.

4. Shorted wire check (H/L_OFF_SW, H/L_ON_SW, PARKING_LT_SW lines)

-1. Turn the vehicle to the OFF (LOCK) mode.

-2. Disconnect the following connector.

Body control module connector C (28P)

-3. Measure the resistance between test points 1 and 2.

Test condition	Vehicle OFF (LOCK) mode Combination light switch 12P connector: disconnected Body control module connector C (28P): disconnected
Test point 1	**Body control module connector C (28P) No. 10**
Test point 2	Body ground

Test point 1	**Body control module connector C (28P) No. 9**
Test point 2	Body ground

Test point 1	**Body control module connector C (28P) No. 11**

Test point 2	Body ground

Is there 1.0 MΩ or more?

YES

The H/L_OFF_SW, H/L_ON_SW, and PARKING_LT_SW wires are OK. **Replace the body control module** .

NO

Repair a short to ground in the wire.

5. Determine possible failure area (combination light switch, others)

-1. Turn the vehicle to the OFF (LOCK) mode.

-2. Disconnect the following connector.

Combination light switch 12P connector

-3. Connect terminals A and B with jumper wires.

Terminal A	Combination light switch 12P connector (female terminals) No. 1: ①
Terminal B	Body ground

Terminal A	Combination light switch 12P connector (female terminals) No. 7: ①
Terminal B	Body ground

Terminal A	Combination light switch 12P connector (female terminals) No. 8: ①
Terminal B	Body ground

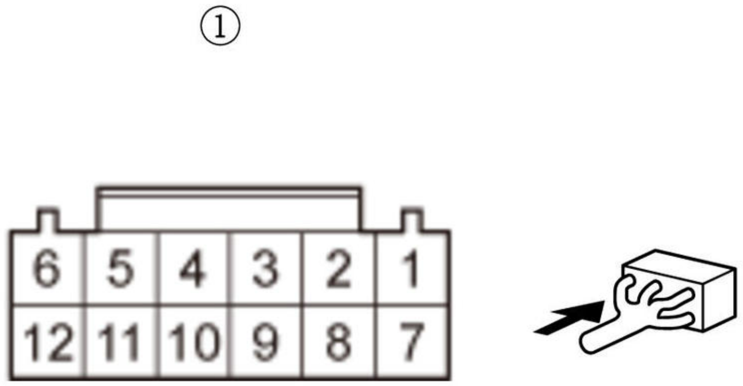

-4. Check the parameter(s) below with the HDS.

Signal	Current conditions	
	Values	Unit
Headlight Switch (OFF)	B	B
Headlight Switch (PARKING)	B	B
Headlight Switch (AUTO)	B	B
Headlight Switch (HEADLIGHT)	B	B

Has the data list value changed from OFF to ON?

YES

Replace the combination light switch .

NO

Go to step 6.

6. Open wire check (H/L_OFF_SW, H/L_ON_SW, PARKING_LT_SW, COMBI_SW_GND(LT) lines)

-1. Turn the vehicle to the OFF (LOCK) mode.

-2. Disconnect the following connector.

Body control module connector C (28P)

-3. Measure the resistance between test points 1 and 2.

Test condition	Vehicle OFF (LOCK) mode Body control module connector C (28P): disconnected Combination light switch 12P connector: disconnected
Test point 1	**Body control module connector C (28P) No. 10**
Test point 2	Combination light switch 12P connector (female terminals) No. 1: ①

Test point 1	**Body control module connector C (28P) No. 9**
Test point 2	Combination light switch 12P connector (female terminals) No. 7: ①

Test point 1	**Body control module connector C (28P) No. 11**
Test point 2	Combination light switch 12P connector (female terminals) No. 8: ①

Test point 1	**Body control module connector C (28P) No. 3**
Test point 2	Combination light switch 12P connector (female terminals) No. 6: ①

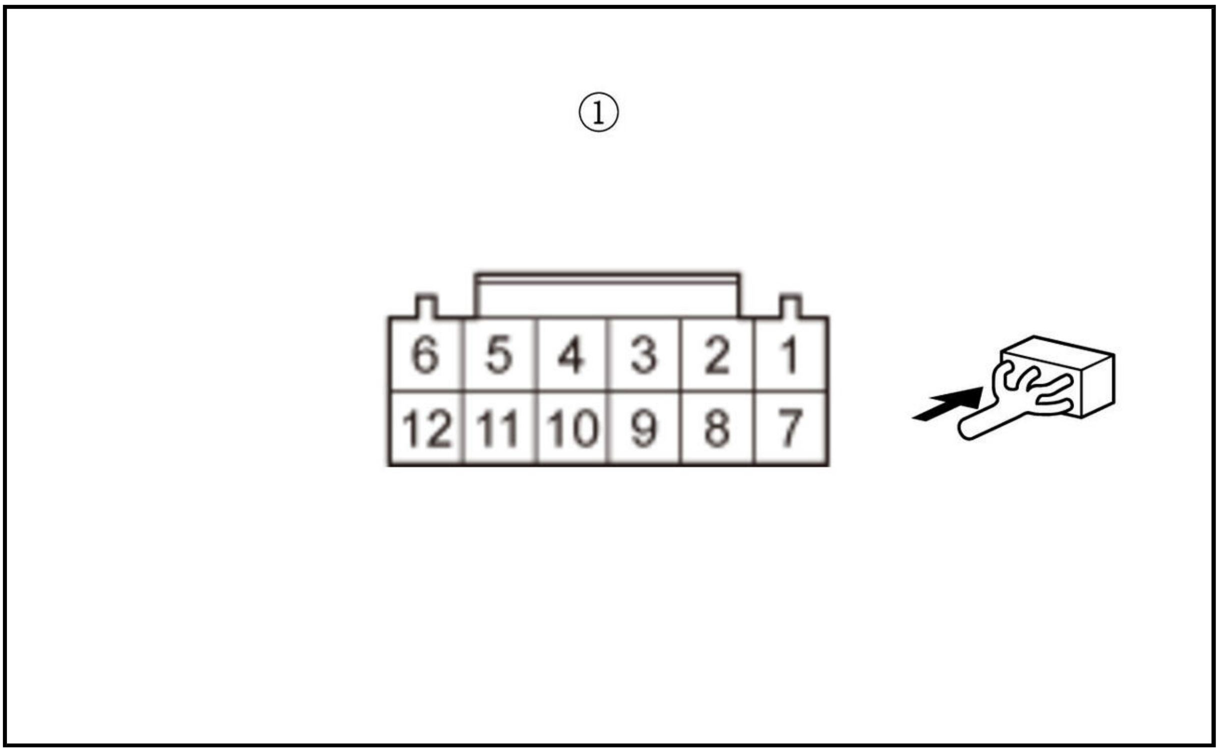

Is there 1.0 Ω or less?

YES

The H/L_OFF_SW, H/L_ON_SW, PARKING_LT_SW, and COMBI_SW_GND(LT) wires are OK. **Replace the body control module** .

NO

Repair an open or high resistance in the wire.

DTC B1279

DTC B1279 : Dimmer switch Circuit Malfunction

NOTE: If you are troubleshooting multiple DTCs, be sure to follow the instructions in **B-CAN System Diagnosis Test Mode A** .

DTC Description	DTC
B1279 Dimmer switch Circuit Malfunction	B

DTC (Body Control Module)

1. Exterior lights system check 1

-1. With the headlight dimmer switch in the neutral position, check the parameter(s) below with the HDS.

Signal	Current conditions	
	Values	Unit
Headlight Switch (HIGH BEAM)	B	B
Headlight Switch (PASSING)	B	B

Is either information indicator ON?

YES

Go to step 4.

NO

Go to step 2.

2. Exterior lights system check 2

-1. With the headlight dimmer switch in the high beam position, check the parameter(s) below with the HDS.

Signal	Current conditions	
	Values	**Unit**
Headlight Switch (HIGH BEAM)	B	B
Headlight Switch (PASSING)	B	B

Are both information indicators ON?

YES

Go to step 3.

NO

Intermittent failure, the system is OK at this time.

3. Shorted wire check (H/L_HI_SW to PASSING_SW line)

-1. Turn the vehicle to the OFF (LOCK) mode.

-2. Disconnect the following connector.

Combination light switch 12P connector

-3. Connect terminals A and B with a jumper wire.

Terminal A	Body control module connector C (28P) No. 8
Terminal B	Body ground

-4. Check the parameter(s) below with the HDS.

Signal	Current conditions	
	Values	**Unit**
Headlight Switch (HIGH BEAM)	B	B
Headlight Switch (PASSING)	B	B

Are both information indicators ON?

YES

Repair a short between the wires.

NO

The H/L_HI_SW to PASSING_SW wire is OK. Replace the combination light switch .

4. Determine possible failure area (combination light switch, others)

-1. Turn the vehicle to the OFF (LOCK) mode.

-2. Disconnect the following connector.

Combination light switch 12P connector

-3. Check the parameter(s) below with the HDS.

Signal	Current conditions	
	Values	Unit
Headlight Switch (HIGH BEAM)	B	B
Headlight Switch (PASSING)	B	B

Is either information indicator ON?

YES

Go to step 5.

NO

Replace the combination light switch .

5. Shorted wire check (PASSING_SW, H/L_HI_SW lines)

-1. Turn the vehicle to the OFF (LOCK) mode.

-2. Disconnect the following connector.

Body control module connector C (28P)

-3. Measure the resistance between test points 1 and 2.

Test condition	Vehicle OFF (LOCK) mode Combination light switch 12P connector: disconnected Body control module connector C (28P): disconnected
Test point 1	**Body control module connector C (28P) No. 7**
Test point 2	Body ground

Test point 1	**Body control module connector C (28P) No. 8**
Test point 2	Body ground

Are there 1.0 MΩ or more?

YES

The PASSING_SW and H/L_HI_SW wires are OK. **Replace the body control module** .

NO

Repair a short to ground in the wire.

DTC B1280

DTC B1280 : Turn signal switch Circuit Malfunction

NOTE: If you are troubleshooting multiple DTCs, be sure to follow the instructions in **B-CAN System Diagnosis Test Mode A** .

DTC Description	DTC
B1280 Turn signal switch Circuit Malfunction	B

DTC (Body Control Module)

1. Turn signal/hazard warning lights system check

   -1. Check the parameter(s) below with the HDS.

Signal	Threshold		Current conditions	
	Values	Unit	Values	Unit
Turn Signal Switch (LEFT)	OFF	B	B	B
Turn Signal Switch (RIGHT)	OFF	B	B	B

Are both data list values indicated OFF?

YES

Go to step 2.

NO

Go to step 4.

2. Turn signal/hazard warning lights system check 2

   -1. Operate the turn signal switch to the left or right position.

   -2. Check the parameter(s) below with the HDS.

Signal	Threshold		Current conditions	
	Values	Unit	Values	Unit
Turn Signal Switch (LEFT)	ON	B	B	B
Turn Signal Switch (RIGHT)	ON	B	B	B

Are both data list values indicated ON?

YES

Go to step 3.

NO

Intermittent failure, the system is OK at this time.

3. Shorted wire check (R_TURN_SW to L_TURN_SW line)

   -1. Turn the vehicle to the OFF (LOCK) mode.

   -2. Disconnect the following connector.

Combination light switch 12P connector

-3. Connect terminals A and B with a jumper wire.

Terminal A	Combination light switch 12P connector (female terminals) No. 10: ①

Terminal B	Body ground

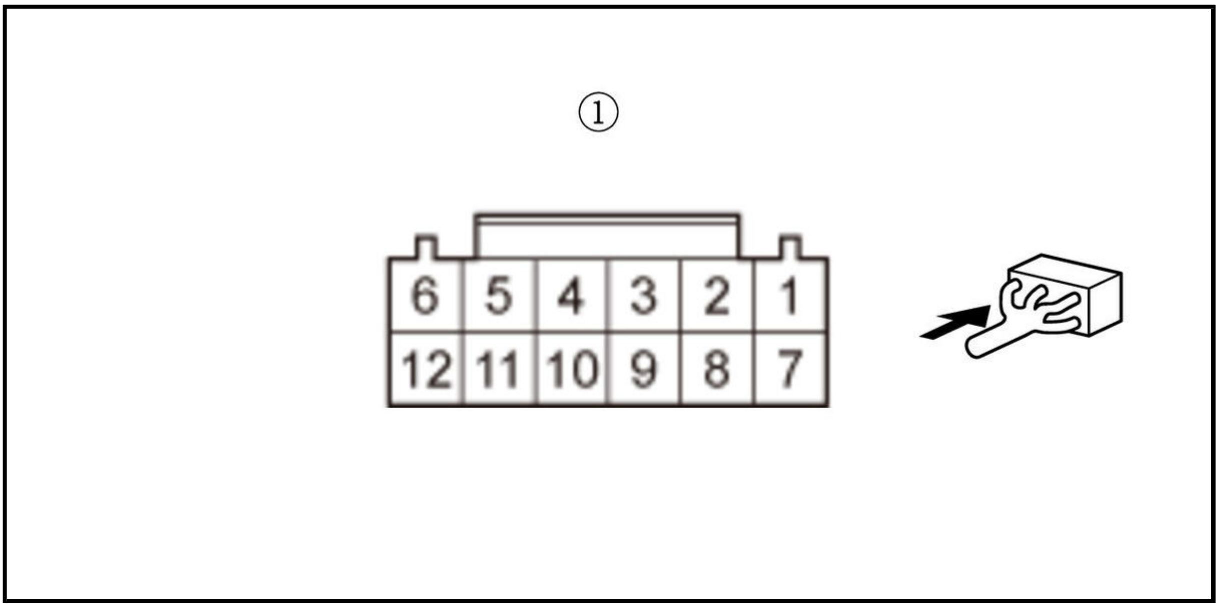

-4. Check the parameter(s) below with the HDS.

Signal	Threshold		Current conditions	
	Values	Unit	Values	Unit
Turn Signal Switch (LEFT)	OFF	B	B	B
Turn Signal Switch (RIGHT)	ON	B	B	B

Are both data list values correct?

YES

The R_TURN_SW wire and the L_TURN_SW wire is not shorted. **Replace the combination light switch** .

NO

Repair a short between the wires.

4. Shorted wire check (L_TURN_SW line or R_TURN_SW line)

-1. Check the parameter(s) below with the HDS.

Signal	Threshold		Current conditions	
	Values	Unit	Values	Unit
Turn Signal Switch (LEFT)	ON	B	B	B
Turn Signal Switch (RIGHT)	OFF	B	B	B

Is TURN SIGNAL SWITCH (LEFT) value ON?

YES

Go to step 5.

NO

Go to step 6.

5. Shorted wire check (L_TURN_SW line)

-1. Turn the vehicle to the OFF (LOCK) mode.

-2. Disconnect the following connector.

Combination light switch 12P connector

-3. Check the parameter (s) below with the HDS.

Signal	Threshold		Current conditions	
	Values	**Unit**	**Values**	**Unit**
Turn Signal Switch (LEFT)	ON	B	B	B

Is TURN SIGNAL SWITCH (LEFT) value ON?

YES

Repair a short to ground in the wire.

NO

The L_TURN_SW wire is OK. **Replace the combination light switch** .

6. Shorted wire check (R_TURN_SW line)

-1. Turn the vehicle to the OFF (LOCK) mode.

-2. Disconnect the following connector.

Combination light switch 12P connector

-3. Check the parameter(s) below with the HDS.

Signal	Threshold		Current conditions	
	Values	**Unit**	**Values**	**Unit**
Turn Signal Switch (RIGHT)	ON	B	B	B

Is TURN SIGNAL SWITCH (RIGHT) value ON?

YES

Repair a short to ground in the wire.

NO

The R_TURN_SW wire is OK. **Replace the combination light switch** .

DTC B1281, B1282, B1283, B1284

DTC B1281 : Front wiper MIST position Circuit Malfunction

DTC B1282 : Front wiper INT (AUTO) position Circuit Malfunction

DTC B1283 : Front wiper LOW position Circuit Malfunction

DTC B1284 : Front wiper HIGH position Circuit Malfunction

NOTE: If you are troubleshooting multiple DTCs, be sure to follow the instructions in **B-CAN System Diagnosis Test Mode A** .

DTC Description	DTC
B1281 Front wiper MIST position Circuit Malfunction	B

DTC Description	DTC
B1282 Front wiper INT (AUTO) position Circuit Malfunction	B
B1283 Front wiper LOW position Circuit Malfunction	B
B1284 Front wiper HIGH position Circuit Malfunction	B

DTC (Body Control Module)

1. Wiper/washers system check

-1. Turn the windshield wiper switch to the OFF position, check the parameter(s) below with the HDS.

Signal	Threshold		Current conditions	
	Values	Unit	Values	Unit
Windshield Wiper Switch (LOW)	OFF	B	B	B
Windshield Wiper Switch (HIGH)	OFF	B	B	B
Windshield Wiper Switch (INT)	OFF	B	B	B
Windshield Wiper Switch (LOW)	OFF	B	B	B

Are all data list values correct?

YES

Go to step 4.

NO

Go to step 2.

2. Determine possible failure area (windshield wiper/washer switch, others)

-1. Turn the vehicle to the OFF (LOCK) mode.

-2. Disconnect the following connector.

Windshield wiper/washer switch 10P connector

-3. Check the parameter(s) below with the HDS.

Signal	Threshold		Current conditions	
	Values	Unit	Values	Unit
Windshield Wiper Switch (LOW)	OFF	B	B	B
Windshield Wiper Switch (HIGH)	OFF	B	B	B
Windshield Wiper Switch (INT)	OFF	B	B	B
Windshield Wiper Switch (MIST)	OFF	B	B	B

Has the data list value changed from ON to OFF?

YES

Replace the windshield wiper/washer switch .

NO

Go to step 3.

3. Shorted wire check (FR_WIPER_INT_SW, FR_WIPER_HI_SW, FR_WIPER_MIST_SW lines)

-1. Turn the vehicle to the OFF (LOCK) mode.

-2. Disconnect the following connector.

Body control module connector D (40P) Body control module connector E (24P)

-3. Measure the resistance between test points 1 and 2.

Test condition	Vehicle OFF (LOCK) mode Windshield wiper/washer switch 10P connector: disconnected Body control module connector D (40P): disconnected
Test point 1	Body control module connector D (40P) No. 2
Test point 2	Body ground

Test point 1	Body control module connector D (40P) No. 3
Test point 2	Body ground

Test point 1	Body control module connector D (40P) No. 4
Test point 2	Body ground

Is there 1.0 MΩ or more?

YES

The FR_WIPER_INT_SW, FR_WIPER_HI_SW, and FR_WIPER_MIST_SW wires are OK. Faulty body control module; replace the body control module .

NO

Repair a short to ground in the wire.

4. Shorted wire check (FR_WIPER_MIST_SW to FR_WIPER_HI_SW, FR_WIPER_HI_SW to FR_WIPER_INT_SW, FR_WIPER_MIST_SW to FR_WIPER_INT_SW lines)

-1. Check the parameter(s) below with the HDS.

When the windshield wiper switch is turned to HI

Signal	Threshold		Current conditions	
	Values	Unit	Values	Unit
Windshield Wiper Switch (LOW)	OFF	B	B	B
Windshield Wiper Switch (HIGH)	ON	B	B	B
Windshield Wiper Switch (INT)	OFF	B	B	B
Windshield Wiper Switch (MIST)	OFF	B	B	B

When the windshield wiper switch is turned to LO

Signal	Threshold		Current conditions	
	Values	Unit	Values	Unit
Windshield Wiper Switch (LOW)	ON	B	B	B
Windshield Wiper Switch (HIGH)	ON	B	B	B
Windshield Wiper Switch (INT)	OFF	B	B	B

Signal	Threshold		Current conditions	
	Values	Unit	Values	Unit
Windshield Wiper Switch (MIST)	OFF	B	B	B

When the windshield wiper switch is turned to INT

Signal	Threshold		Current conditions	
	Values	Unit	Values	Unit
Windshield Wiper Switch (LOW)	ON	B	B	B
Windshield Wiper Switch (HIGH)	OFF	B	B	B
Windshield Wiper Switch (INT)	ON	B	B	B
Windshield Wiper Switch (MIST)	OFF	B	B	B

When the windshield wiper switch is turned OFF

Signal	Threshold		Current conditions	
	Values	Unit	Values	Unit
Windshield Wiper Switch (LOW)	OFF	B	B	B
Windshield Wiper Switch (HIGH)	OFF	B	B	B
Windshield Wiper Switch (INT)	OFF	B	B	B

Signal	Threshold		Current conditions	
	Values	Unit	Values	Unit
Windshield Wiper Switch (MIST)	OFF	B	B	B

When the windshield wiper switch is turned to MIST

Signal	Threshold		Current conditions	
	Values	Unit	Values	Unit
Windshield Wiper Switch (LOW)	OFF	B	B	B
Windshield Wiper Switch (HIGH)	OFF	B	B	B
Windshield Wiper Switch (INT)	OFF	B	B	B
Windshield Wiper Switch (MIST)	ON	B	B	B

Are all data list values correct?

YES

The FR_WIPER_MIST_SW to FR_WIPER_HI_SW, FR_WIPER_HI_SW to FR_WIPER_INT_SW, and FR_WIPER_MIST_SW to FR_WIPER_INT_SW wires are OK. Intermittent failure, the system is OK at this time. Check for loose or poor connections.

NO

Repair a short in the wires.

DTC B2352

DTC B2352 : Rain Light Sensor Unit Internal error (EEPROM error)

NOTE: If you are troubleshooting multiple DTCs, be sure to follow the instructions in **B-CAN System Diagnosis Test Mode A** .

DTC Description	DTC
B2352 Rain Light Sensor Unit Internal error (EEPROM error)	B

DTC (Body Control Module)

1. Problem verification

-1. Clear the DTCs with the HDS.

-2. Turn the vehicle to the OFF (LOCK) mode and then the ON mode.

-3. Wait for at least 6 seconds.

-4. Check for DTCs with the HDS.

DTC Description	DTC
B2352 Rain Light Sensor Unit Internal error (EEPROM error)	B

Is DTC B2352 indicated?

YES

Replace the automatic lighting/rain sensor .

NO

Intermittent failure, the system is OK at this time. Check for loose or poor connections.

DTC B2375

DTC B2375 : Rain Sensing malfunction in Rain/Light sensor

NOTE: If you are troubleshooting multiple DTCs, be sure to follow the instructions in **B-CAN System Diagnosis Test Mode A** .

DTC Description	DTC
B2375 Rain Sensing malfunction in Rain/Light sensor	B

DTC (Body Control Module)

1. Problem verification

-1. Clear the DTCs with the HDS.

-2. Turn the vehicle to the OFF (LOCK) mode and then the ON mode.

-3. Check for DTCs with the HDS.

DTC Description	DTC
B2375 Rain Sensing malfunction in Rain/Light sensor	B

Is DTC B2375 indicated?

YES

Go to step 2.

NO

Intermittent failure, the system is OK at this time. Check for loose or poor connections.

2. Connector check

   -1. Check for loose or poor connections at the automatic lighting/rain sensor 5P connector.

   Is the connection OK?

   YES

   Go to step 3.

   NO

   Reconnect or repair the connector.

3. Rain sensor visual check

   -1. **Remove the automatic lighting/rain sensor** .

   -2. Check for dirt and dust on the surface of the automatic lighting/rain sensor.

   Is it dirty?

   YES

   Clean the rain sensor, and then recheck the system.

   NO

   Go to step 4.

4. Windshield glass visual check:Is it dirty or damaged?

   YES

   Clean the windshield and, if necessary, repair or replace the windshield glass.

   NO

   Replace the automatic lighting/rain sensor .

DTC B2376

DTC B2376 : Light sensing malfunction in Rain/Light sensor

NOTE: If you are troubleshooting multiple DTCs, be sure to follow the instructions in **B-CAN System Diagnosis Test Mode A** .

DTC Description	DTC
B2376 Light sensing malfunction in Rain/Light sensor	B

DTC (Body Control Module)

1. Problem verification

   -1. Clear the DTCs with the HDS.

   -2. Turn the vehicle to the OFF (LOCK) mode and then the ON mode.

   -3. Wait for at least 6 seconds.

-4. Check for DTCs with the HDS.

DTC Description	DTC
B2376 Light sensing malfunction in Rain/Light sensor	B

Is DTC B2376 indicated?

YES

Replace the automatic lighting/rain sensor .

NO

Intermittent failure, the system is OK at this time. Check for loose or poor connections.

DTC U0073 (BODY CONTROL MODULE)

DTC U0073 : F-CAN communication bus line error (BUS-OFF)

NOTE: If you are troubleshooting multiple DTCs, be sure to follow the instructions in **B-CAN System Diagnosis Test Mode A** .

DTC Description	DTC
U0073 F-CAN communication bus line error (BUS-OFF)	B

DTC (Body Control Module)

1. Problem verification

-1. Clear the DTCs with the HDS.

-2. Turn the vehicle to the OFF (LOCK) mode and then the ON mode.

-3. Wait for at least 6 seconds.

-4. Check for DTCs with the HDS.

DTC Description	DTC
U0073 F-CAN communication bus line error (BUS-OFF)	B

Is DTC U0073 indicated?

YES

Go to the troubleshooting for CAN gateway system DTC(s) .

NO

Intermittent failure, the system is OK at this time.

DTC U0100, U0122 (BODY CONTROL MODULE)

DTC U0100 : BCM lost communication with ECM/PCM

DTC U0122 : BCM lost communication with VSA/ABS

NOTE:

- If you are troubleshooting multiple DTCs, be sure to follow the instructions in B-CAN System Diagnosis Test Mode A .
- Refer to the DTC code shown on the display, and then inspect the connectors and terminals based on the instructions in the table below.
- The DTC may be stored due to the grounding failure or the power source failure at the transmitting control unit (the grounding inspection and the power source inspection on each control unit are required prior to this checking process).

DTC Description	DTC
U0100 BCM lost communication with ECM/PCM	B
U0122 BCM lost communication with VSA/ABS	B

DTC (Body Control Module)

1. Problem verification

   -1. Clear the DTCs with the HDS.

   -2. Turn the vehicle to the OFF (LOCK) mode and then the ON mode.

   -3. Wait for at least 6 seconds.

   -4. Check for DTCs with the HDS.

DTC Description	DTC
U0100 BCM lost communication with ECM/PCM	B
U0122 BCM lost communication with VSA/ABS	B

   Are any DTCs indicated?

   YES

   Go to step 2.

   NO

   Intermittent failure, the system is OK at this time. Check for poor connections or loose terminals.

2. CAN gateway system DTC check

   -1. Check for CAN gateway system DTCs with the HDS.

DTC Description	DTC
U0029-00 CAN Gateway F-CAN ch A Bus Off	B
U0047-00 CAN Gateway F-CAN ch B Bus Off	B
U0056-00 CAN Gateway F-CAN ch C Bus Off	B
U0065-00 CAN Gateway F-CAN ch D Bus Off	B
U0038-00 CAN Gateway F-CAN ch E Bus Off	B
U3000-49 CAN Gateway Internal Failure	B

   Is DTC U0029-00, U0047-00, U0056-00, U0038-00, and/or U3000-49 indicated?

   YES

   Go to the troubleshooting for CAN gateway system DTC(s) .

NO

Go to step 3.

3. F-CAN circuit communication check (Receiving control unit)

-1. Select the FUNCTION TEST in the CAN gateway with the HDS, then select the F-CAN Bus Connected Unit Check.

F-CAN Bus Connected Unit Check

Does the body control module detect the CAN gateway Bus channels B?

Bus B is Not Available

Go to step 4.

Bus B is Available

Go to step 5.

4. Open wire check (F-CAN B lines)

-1. Turn the vehicle to the OFF (LOCK) mode.

-2. Disconnect the following connectors.

CAN gateway 16P connector
Body control module connector B (36P)

-3. Measure the resistance between test points 1 and 2.

Test condition	Vehicle OFF (LOCK) mode CAN gateway 16P connector: disconnected Body control module connector B (36P): disconnected
Test point 1	CAN gateway 16P connector (female terminals) No. 6: ①
Test point 2	**Body control module connector B (36P) No. 22**

Test point 1	CAN gateway 16P connector (female terminals) No. 14: ①
Test point 2	**Body control module connector B (36P) No. 23**

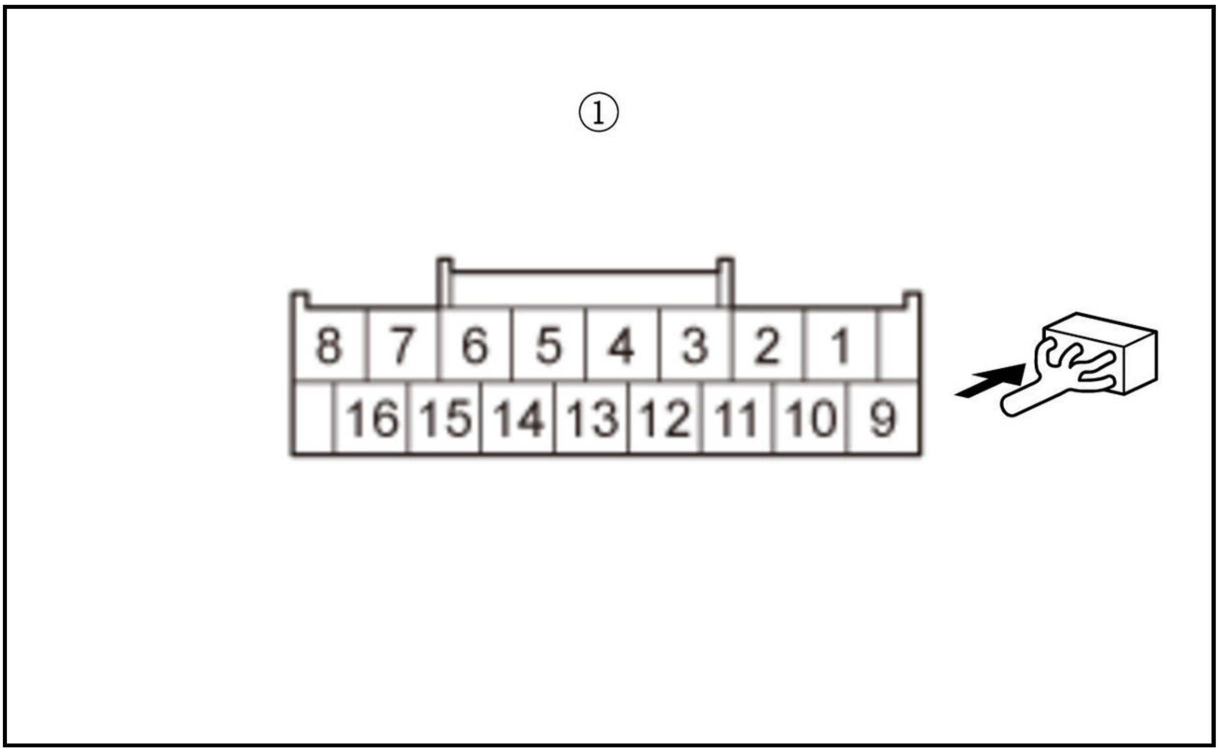

Is there 1.0 Ω or less?

YES

The F-CAN B_H and F-CAN B_L wires are OK. **Replace the body control module** .

NO

Repair an open in F-CAN B_H or F-CAN B_L wire.

5. F-CAN circuit communication check (Transmitting control unit)

-1. Select the FUNCTION TEST in the CAN gateway with the HDS, then select the F-CAN Bus Connected Unit Check.

F-CAN Bus Connected Unit Check

According to the detected DTC on the following table, make sure that the transmitting control unit detects the CAN gateway Bus channel(s) normally.

DTC	Transmitting control unit	Detected CAN gateway Bus channel(s) at normal
U0100	PCM	A, B, E
U0122	VSA modulator-control unit	B, C

Is it detected normally?

Detected normal

Intermittent failure, the system is OK at this time. Check for poor connections or loose terminals at the transmitting control unit and the CAN gateway.

U0100: PCM is Not Available for Bus A

Go to step 6.

U0100: PCM is Not Available for Bus B

Go to step 7.

U0100: PCM is Not Available for Bus E

Go to step 9.

U0122: VSA modulator-control unit is Not Available for Bus B

Go to step 7.

U0122: VSA modulator-control unit is Not Available for Bus C

Go to step 8.

6. Open wire check (F-CAN A lines)

-1. Turn the vehicle to the OFF (LOCK) mode.

-2. U0100: Jump the SCS line with the HDS, and wait more than 1 minute.

SCS short

-3. According to the detected DTC on the following table, disconnect the transmitting control unit connector(s).

DTC	Connector
-	CAN gateway 16P connector
U0100	PCM connector A (50P)

-4. Measure the resistance between test points 1 and 2.

Test condition	Vehicle OFF (LOCK) mode CAN gateway 16P connector: disconnected Transmitting control unit connector(s) for indicated DTCs: disconnected

DTC	Circuit name	Test point 1 (Receiving control unit)		Test point 2 (Transmitting control unit)	
		Connector	Terminal	Connector	Terminal
U0100	F-CAN A_H	CAN gateway 16P connector (female terminals): ①	No. 3	PCM connector A (50P)	No. 37
	F-CAN A_L		No. 11		No. 36

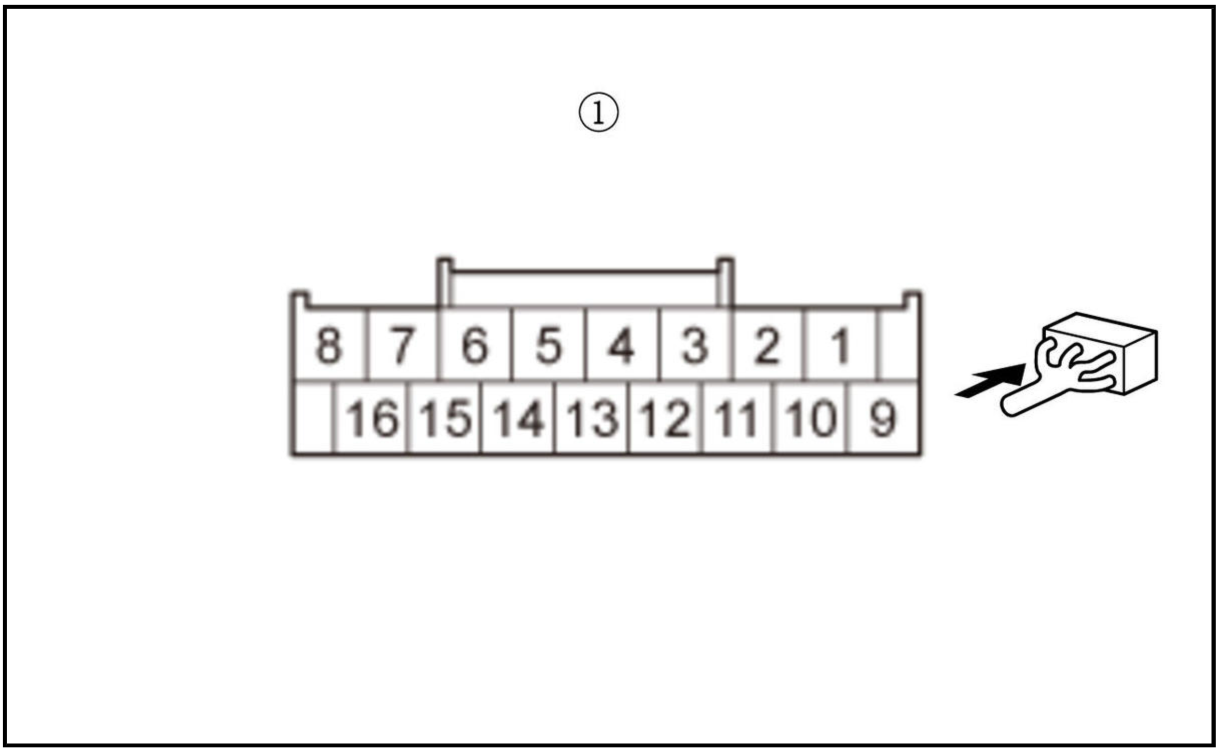

Is there 1.0 Ω or less?

YES

The F-CAN A_H wire and the F-CAN A_L wire are OK. According to the detected DTC on the following table replace the correspond control unit.

DTC	Operation for transmitting control unit
U0100	PCM

NO

Repair an open in F-CAN A_H or F-CAN A_L wire.

7. Open wire check (F-CAN B lines)

-1. Turn the vehicle to the OFF (LOCK) mode.

-2. U0100: Jump the SCS line with the HDS, and wait more than 1 minute.

SCS short

-3. According to the detected DTC on the following table, disconnect the transmitting control unit connector(s).

DTC	Connector
-	CAN gateway 16P connector
U0100	PCM connector A (50P)
U0122	VSA modulator-control unit 46P connector

-4. Measure the resistance between test points 1 and 2.

Test condition	Vehicle OFF (LOCK) mode CAN gateway 16P connector: disconnected Transmitting control unit connector(s) for indicated DTCs: disconnected

DTC	Circuit name	Test point 1 (Receiving control unit)		Test point 2 (Transmitting control unit)	
		Connector	Terminal	Connector	Terminal
U0100	F-CAN B_H	CAN gateway 16P connector (female terminals): ①	No. 6	**PCM connector A (50P)**	No. 39
	F-CAN B_L		No. 14		No. 38
U0122	F-CAN B_H	CAN gateway 16P connector (female terminals): ①	No. 6	**VSA modulator-control unit 46P connector**	No. 40
	F-CAN B_L		No. 14		No. 28

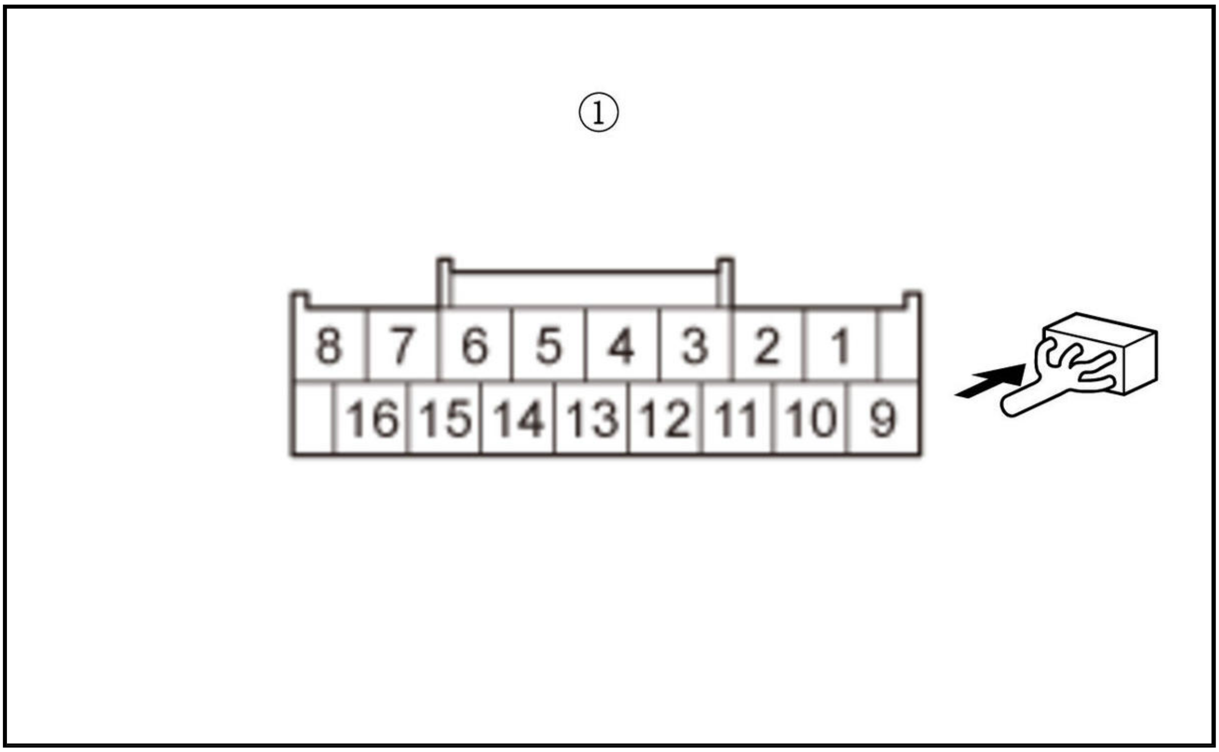

Is there 1.0 Ω or less?

YES

The F-CAN B_H wire and the F-CAN B_L wire are OK. According to the detected DTC on the following table replace the correspond control unit.

DTC	Operation for transmitting control unit
U0100	**PCM**
U0122	**VSA modulator-control unit**

NO

Repair an open in F-CAN B_H or F-CAN B_L wire.

8. Open wire check (F-CAN C lines)

-1. Turn the vehicle to the OFF (LOCK) mode.

-2. According to the detected DTC on the following table, disconnect the transmitting control unit connector(s).

DTC	Connector
-	CAN gateway 16P connector

DTC	Connector
U0122	VSA modulator-control unit 46P connector

-3. Measure the resistance between test points 1 and 2.

Test condition	Vehicle OFF (LOCK) mode CAN gateway 16P connector: disconnected Transmitting control unit connector(s) for indicated DTCs: disconnected

DTC	Circuit name	Test point 1 (Receiving control unit)		Test point 2 (Transmitting control unit)	
		Connector	Terminal	Connector	Terminal
U0122	F-CAN C_H	CAN gateway 16P connector (female terminals): ①	No. 5	VSA modulator-control unit 46P connector	No. 46
	F-CAN C_L		No. 13		No. 34

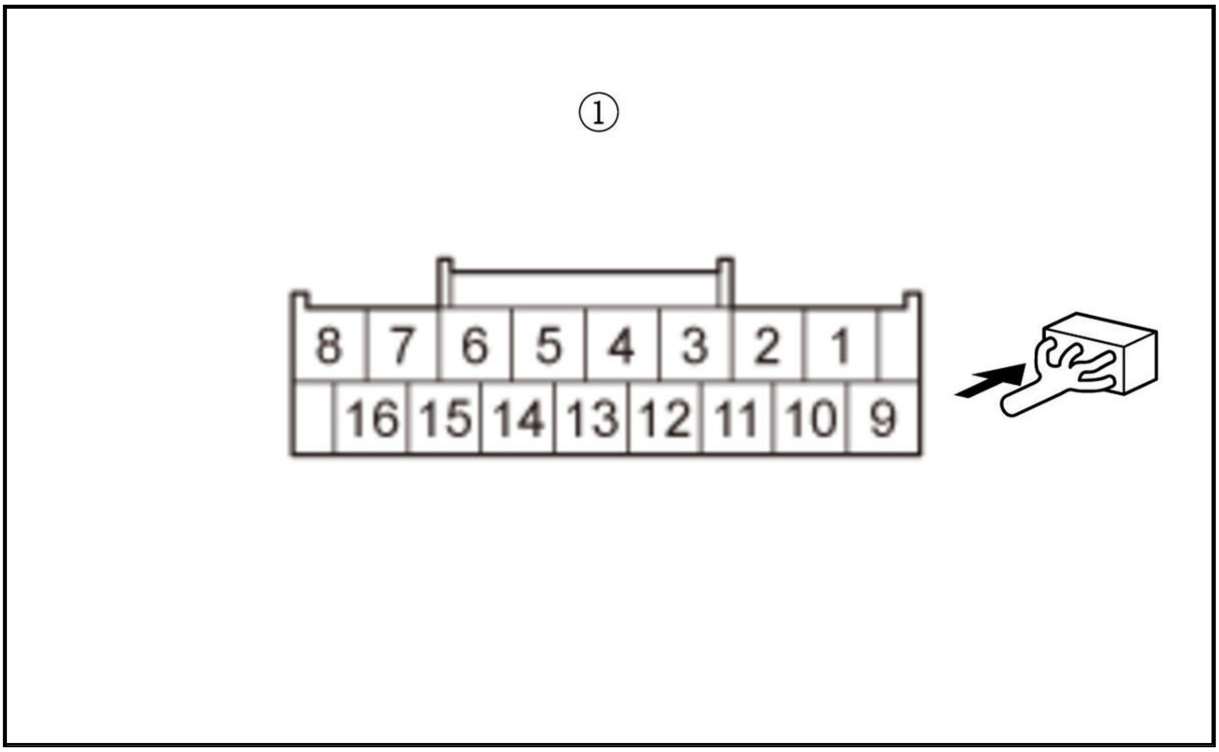

Is there 1.0 Ω or less?

YES

The F-CAN C_H wire and the F-CAN C_L wire are OK. According to the detected DTC on the following table replace the correspond control unit.

DTC	Operation for transmitting control unit
U0122	VSA modulator-control unit

NO

Repair an open in F-CAN C_H or F-CAN C_L wire.

9. Open wire check (EP-CAN A lines)

-1. Turn the vehicle to the OFF (LOCK) mode.

-2. U0100: Jump the SCS line with the HDS, and wait more than 1 minute.

SCS short

-3. According to the detected DTC on the following table, disconnect the transmitting control unit connector(s).

DTC	Connector
-	CAN gateway 16P connector
U0100	PCM connector A (50P)

-4. Measure the resistance between test points 1 and 2.

Test condition	Vehicle OFF (LOCK) mode CAN gateway 16P connector: disconnected Transmitting control unit connector(s) for indicated DTCs: disconnected

DTC	Circuit name	Test point 1 (Receiving control unit)		Test point 2 (Transmitting control unit)	
		Connector	Terminal	Connector	Terminal
U0100	EP-CAN A_H	CAN gateway 16P connector (female terminals): ①	No. 16	PCM connector A (50P)	No. 21
	EP-CAN A_L		No. 8		No. 20

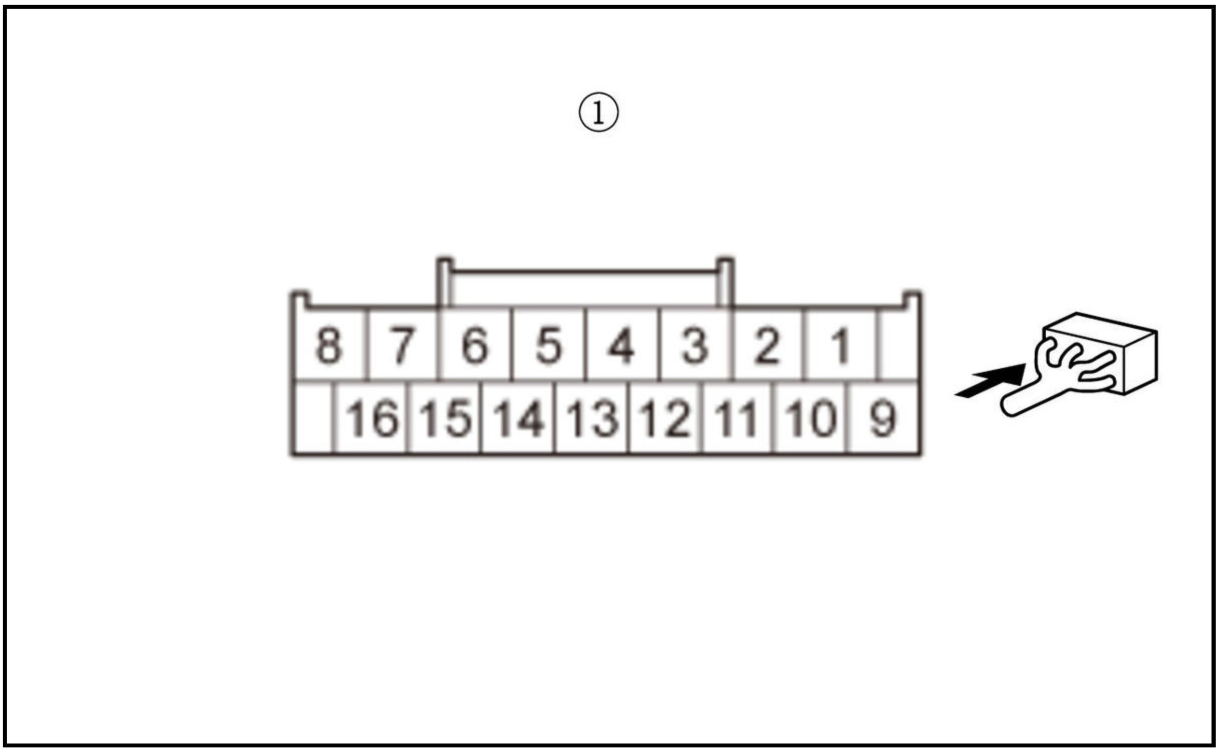

Is there 1.0 Ω or less?

YES

The EP-CAN A_H wire and the EP-CAN A_L wire are OK. According to the detected DTC on the following table replace the correspond control unit.

DTC	Operation for transmitting control unit
U0100	PCM

NO

Repair an open in EP-CAN A_H or EP-CAN A_L wire.

DTC U1280 (BODY CONTROL MODULE)

DTC U1280 : B-CAN communication bus line error (BUS-OFF)

NOTE: If you are troubleshooting multiple DTCs, be sure to follow the instructions in **B-CAN System Diagnosis Test Mode A** .

DTC Description	DTC
U1280 B-CAN communication bus line error (BUS-OFF)	B

DTC (Body Control Module)

1. Problem verification

   -1. Clear the DTCs with the HDS.

   -2. Turn the vehicle to the OFF (LOCK) mode and then the ON mode.

   -3. Wait for at least 6 seconds.

   -4. Check for DTCs with the HDS.

DTC Description	DTC
U1280 B-CAN communication bus line error (BUS-OFF)	B

   Is DTC U1280 indicated?

   YES

   Go to step 2.

   NO

   Intermittent failure, the system is OK at this time. Check for loose or poor connections.

2. B-CAN related units check

   -1. Turn the vehicle to the OFF (LOCK) mode.

   -2. Disconnect the appropriate connector at each control unit in the table one at a time. Clear the DTC, then recheck for DTCs after each unit is disconnected.

Control Unit	Connector
Audio unit	Connector A (24P)
Audio-navigation unit	Connector A (24P)
Automatic lighting control unit-sensor	5P connector
BSI radar unit	6P connector
Climate control unit	Connector A (32P)
Front seat heater control unit	24P connector
Gauge control module	Connector A (32P)
Parking and back-up sensor control unit	16P connector
Power seat control unit	Connector A (20P)
Power tailgate control unit	Connector A (24P)
Power window master switch	37P connector
Relay control module	Connector A (6P)

Control Unit	Connector
Wireless charger	7P connector

DTC Description	DTC
U1280 B-CAN communication bus line error (BUS-OFF)	B

Is DTC U1280 indicated with each individual unit disconnected?

YES

Leave the connectors disconnected, and go to step 3.

NO

Replace the control unit that was disconnected when DTC U1280 did not reset.

3. Shorted wire check (B-CAN lines)

-1. Turn the vehicle to the OFF (LOCK) mode.

-2. Disconnect the following connector.

Body control module connector B (36P)

-3. Measure the resistance between test points 1 and 2.

Test condition	Vehicle OFF (LOCK) mode Body control module connector B (36P): disconnected
Test point 1	**Body control module connector B (36P) No. 20**
Test point 2	Body ground

Test point 1	**Body control module connector B (36P) No. 21**
Test point 2	Body ground

Is there 1.0 MΩ or more?

YES

Go to step 4.

NO

Repair a short to ground in the B-CAN wires.

4. Shorted wire check (B-CAN_L to B-CAN_H line)

-1. Measure the resistance between test points 1 and 2.

Test condition	Vehicle OFF (LOCK) mode Body control module connector B (36P): disconnected
Test point 1	**Body control module connector B (36P) No. 20**
Test point 2	**Body control module connector B (36P) No. 21**

Is there 1.0 MΩ or more?

YES

The B-CAN_L to B-CAN_H wire is OK. **Replace the body control module** .

NO

Repair a short in the B-CAN_L to B-CAN_H wire.

DTC U128D, U1291 (BODY CONTROL MODULE)

DTC U128D : BCM lost communication with gauge control module

DTC U1291 : BCM lost communication with relay control module

NOTE:

- If you are troubleshooting multiple DTCs, be sure to follow the instructions in **B-CAN System Diagnosis Test Mode A** .
- Refer to the DTC code shown on the display, and then inspect the connectors and terminals based on the instructions in the table below.
- The DTC may be stored due to the grounding failure or the power source failure at the transmitting control unit (the grounding inspection and the power source inspection on each control unit are required prior to this checking process).

DTC Description	DTC
U128D BCM lost communication with gauge control module	B
U1291 BCM lost communication with relay control module	B

DTC (Body Control Module)

1. Problem verification

   -1. Clear the DTC with the HDS.

   -2. Turn the vehicle to the OFF (LOCK) mode and then the ON mode.

   -3. Wait for at least 6 seconds.

   -4. Check for DTCs with the HDS.

DTC Description	DTC
U128D BCM lost communication with gauge control module	B
U1291 BCM lost communication with relay control module	B

   Are any DTCs indicated?

   YES

   Go to step 2.

   NO

   Intermittent failure, the system is OK at this time. Check for poor connections or loose terminals.

2. Open wire check (B-CAN_H line, B-CAN_L line)

   -1. Turn the vehicle to the OFF (LOCK) mode.

   -2. Disconnect the receiving control unit connector.

Body control module connector B (36P)

-3. Disconnect the transmitting control unit connector(s).

Refer to the DTC shown on the display, then disconnect the connector(s) based on the instructions (see table).

DTC	Connector
U128D	Gauge control module connector A (32P)
U1291	Relay control module connector A (6P)

-4. Measure the resistance between the receiving control unit and the transmitting control unit on the B-CAN_H circuit and the B-CAN_L circuit.

Test condition	Vehicle OFF (LOCK) mode Body control module connector B (36P): disconnected Transmitting control unit connector(s) for indicated DTCs: disconnected

DTC	Circuit name	Receiving control unit		Transmitting control unit	
		Connector	Terminal	Connector	Terminal
U128D	B-CAN_H	**Body control module connector B (36P)**	No. 20	**Gauge control module connector A (32P)**	No. 30
	B-CAN_L		No. 21		No. 31
U1291	B-CAN_H	**Body control module connector B (36P)**	No. 20	**Relay control module connector A (6P)**	No. 2
	B-CAN_L		No. 21		No. 3

Is there 1.0 Ω or less?

YES

The B-CAN_H wire and the B-CAN_L wire are OK. Refer to the DTC shown on the display, then replace the control unit based on the instructions (see table).

DTC	Operation for transmitting control unit
U128D	**Gauge control module**
U1291	**Relay control module**

NO

Repair an open in the B-CAN_H wire and/or the B-CAN_L wire.

ADVANCED DIAGNOSTICS

DTC U0029-00 (CAN GATEWAY)

DTC U0029-00: CAN Gateway F-CAN ch A Bus Off

General Description

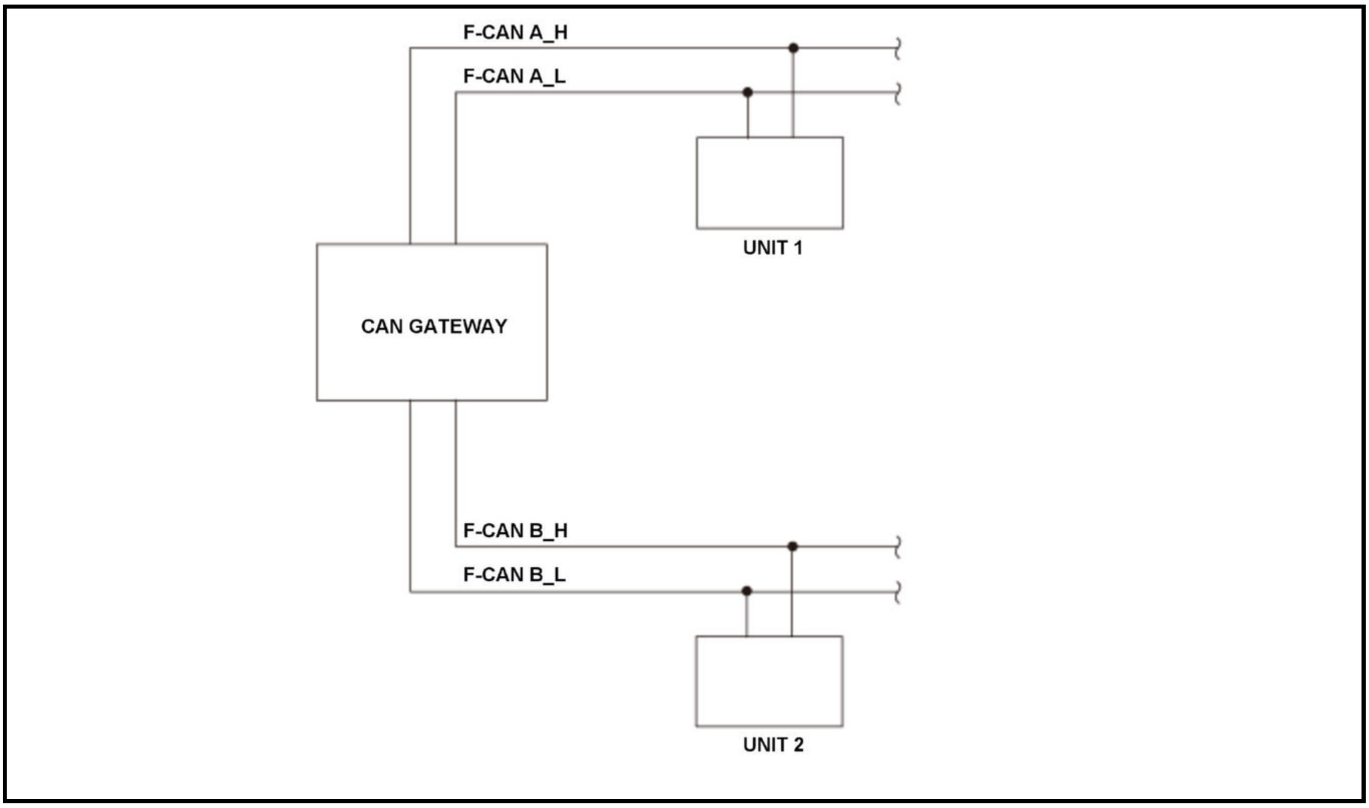

The CAN gateway performs self-diagnosis to detect the state where the CAN frame cannot be sent due to failure in the F-CAN line. If the bus-off occurs due to open and short circuit in the F-CAN line is detected for a prescribed time, the CAN gateway detects a malfunction and stores a DTC.

Monitor Execution, Sequence, Duration, DTC Type

Execution	Continuous
Sequence	None
Duration	1 seconds or more
DTC Type	One drive cycle, MIL on or off (CAN gateway does not output MIL on/off request)

Enable Conditions

Condition	Minimum	Maximum
Elapsed time since the 12 volt battery voltage reaches to a specified value after the vehicle condition is turned to the ON mode	3 seconds	-
12 volt battery voltage	10 V	-

Condition	Minimum	Maximum
[BATTERY]		

[ ]: HDS Parameter

Malfunction Threshold

One of these conditions is met:

- The F-CAN A line bus-off continues for at least 1 seconds.
- The CAN frame transmission to the F-CAN A line does not complete within 1 seconds.

Possible Cause

NOTE: The causes shown may not be a complete list of all potential problems, and it is possible that there may be other causes.

- CAN gateway F-CAN A_H line open (include connector loose connection or disconnection)
- CAN gateway F-CAN A_L line open (include connector loose connection or disconnection)
- CAN gateway F-CAN A_H line short to CAN gateway F-CAN A_L line
- CAN gateway F-CAN A_H line short to ground
- CAN gateway F-CAN A_L line short to ground
- CAN gateway internal circuit short
- Unit communicating on F-CAN A failure

Diagnosis Details

Conditions for setting the DTC

When a malfunction is detected, a Pending DTC, a Confirmed DTC, and the freeze data are stored in the CAN gateway memory.

Conditions for clearing the DTC

The Pending DTC, the Confirmed DTC, and the freeze data can be cleared with the scan tool Clear command.

DTC U0047-00 (CAN GATEWAY)

DTC U0047-00: CAN Gateway F-CAN ch B Bus Off

General Description

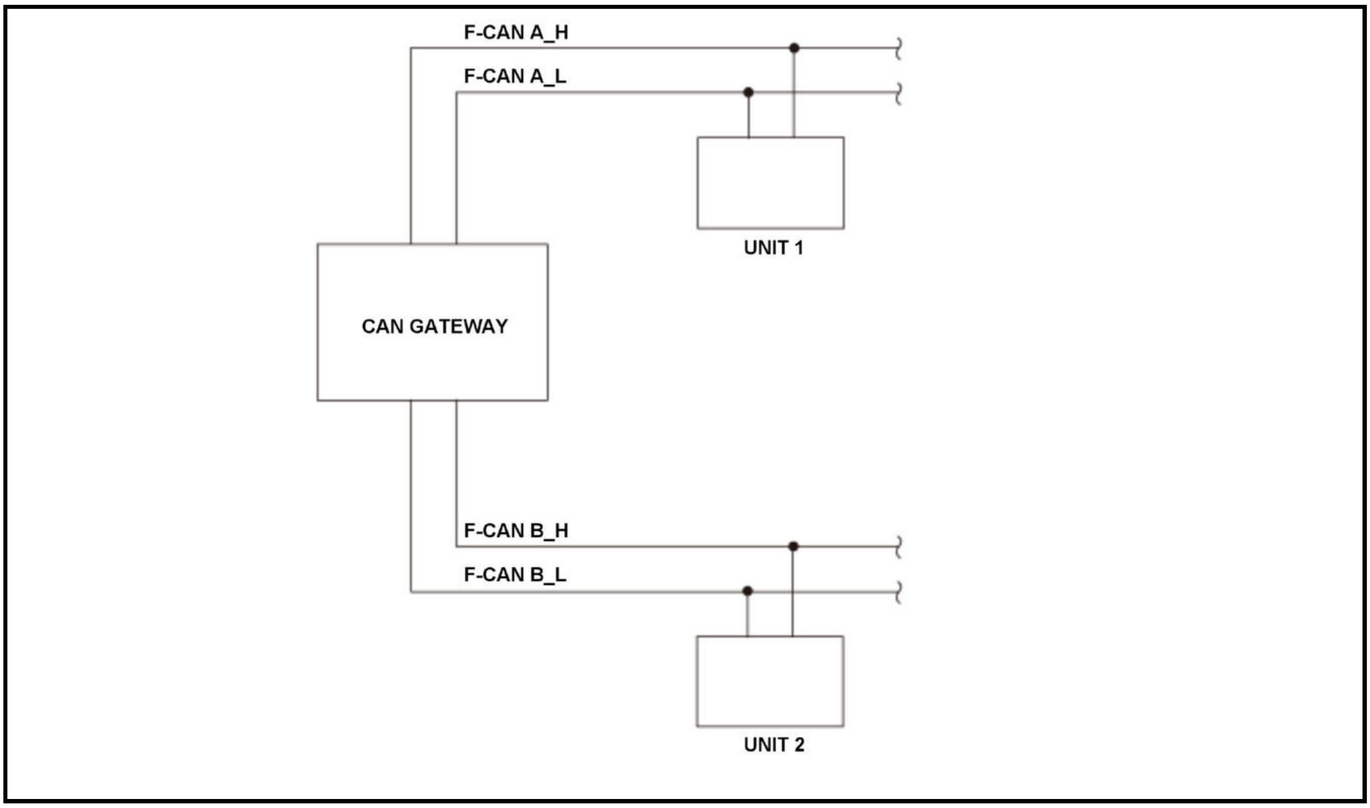

The CAN gateway performs self-diagnosis to detect the state where the CAN frame cannot be sent due to failure in the F-CAN line. If the bus-off occurs due to open and short circuit in the F-CAN line is detected for a prescribed time, the CAN gateway detects a malfunction and stores a DTC.

Monitor Execution, Sequence, Duration, DTC Type

Execution	Continuous
Sequence	None
Duration	1 seconds or more
DTC Type	One drive cycle, MIL on or off (CAN gateway does not output MIL on/off request)

Enable Conditions

Condition	Minimum	Maximum
Elapsed time since the 12 volt battery voltage reaches to a specified value after the vehicle condition is turned to the ON mode	3 seconds	-
12 volt battery voltage [BATTERY]	10 V	-

[ ]: HDS Parameter

Malfunction Threshold

One of these conditions is met:

- The F-CAN B line bus-off continues for at least 1 seconds.
- The CAN frame transmission to the F-CAN B line does not complete within 1 seconds.

Possible Cause

NOTE: The causes shown may not be a complete list of all potential problems, and it is possible that there may be other causes.

- CAN gateway F-CAN B_H line open (include connector loose connection or disconnection)
- CAN gateway F-CAN B_L line open (include connector loose connection or disconnection)
- CAN gateway F-CAN B_H line short to CAN gateway F-CAN B_L line
- CAN gateway F-CAN B_H line short to ground
- CAN gateway F-CAN B_L line short to ground
- CAN gateway internal circuit short
- Unit communicating on F-CAN B failure

Diagnosis Details

Conditions for setting the DTC

When a malfunction is detected, a Pending DTC, a Confirmed DTC, and the freeze data are stored in the CAN gateway memory.

Conditions for clearing the DTC

The Pending DTC, the Confirmed DTC, and the freeze data can be cleared with the scan tool Clear command.

DTC U3000-49 (CAN GATEWAY)

DTC U3000-49: CAN Gateway Internal Failure

General Description

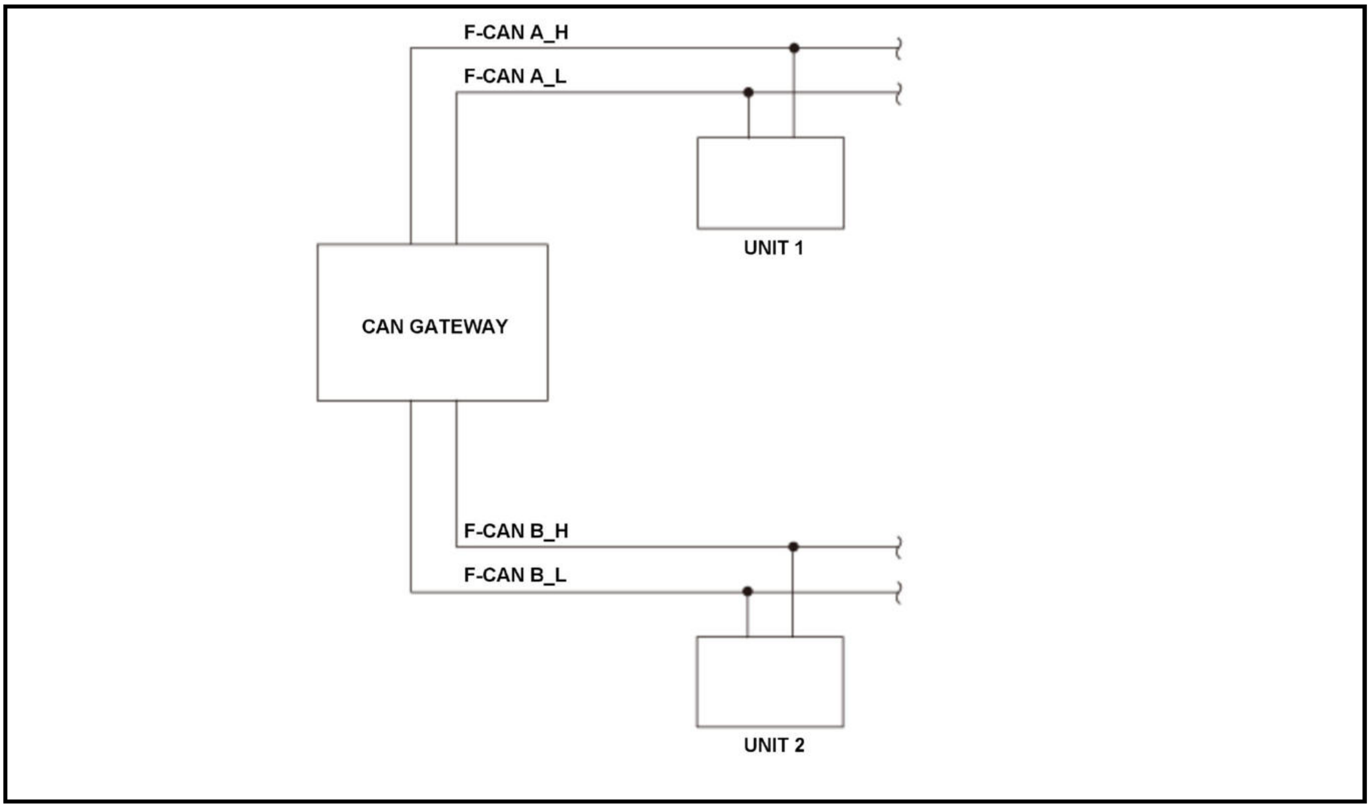

The CAN gateway performs on-board self-diagnosis to prevent transferring erroneous information when there is a malfunction in the CPU. If the CAN gateway detects a malfunction in the CPU, a DTC is stored.

Monitor Execution, Sequence, Duration, DTC Type

Execution	Immediately after the vehicle is turned to the ON mode, Continuous

Sequence	None
Duration	-
DTC Type	One drive cycle, MIL on or off (CAN gateway does not output MIL on/off request)

Enable Conditions

Condition	Minimum	Maximum
12 volt battery voltage [BATTERY]	9.5 V	-
Vehicle	ON mode	

[ ]: HDS Parameter

Malfunction Threshold

The CAN gateway detects a malfunction in the CPU.

Possible Cause

NOTE: The causes shown may not be a complete list of all potential problems, and it is possible that there may be other causes.

- CAN gateway internal failure

Diagnosis Details

Conditions for setting the DTC

When a malfunction is detected, a Pending DTC, a Confirmed DTC, and the freeze data are stored in the CAN gateway memory.

Conditions for clearing the DTC

The Pending DTC, the Confirmed DTC, and the freeze data can be cleared with the scan tool Clear command.

DTC U3000-51 (CAN GATEWAY)

DTC U3000-51: CAN Gateway Programming Error

General Description

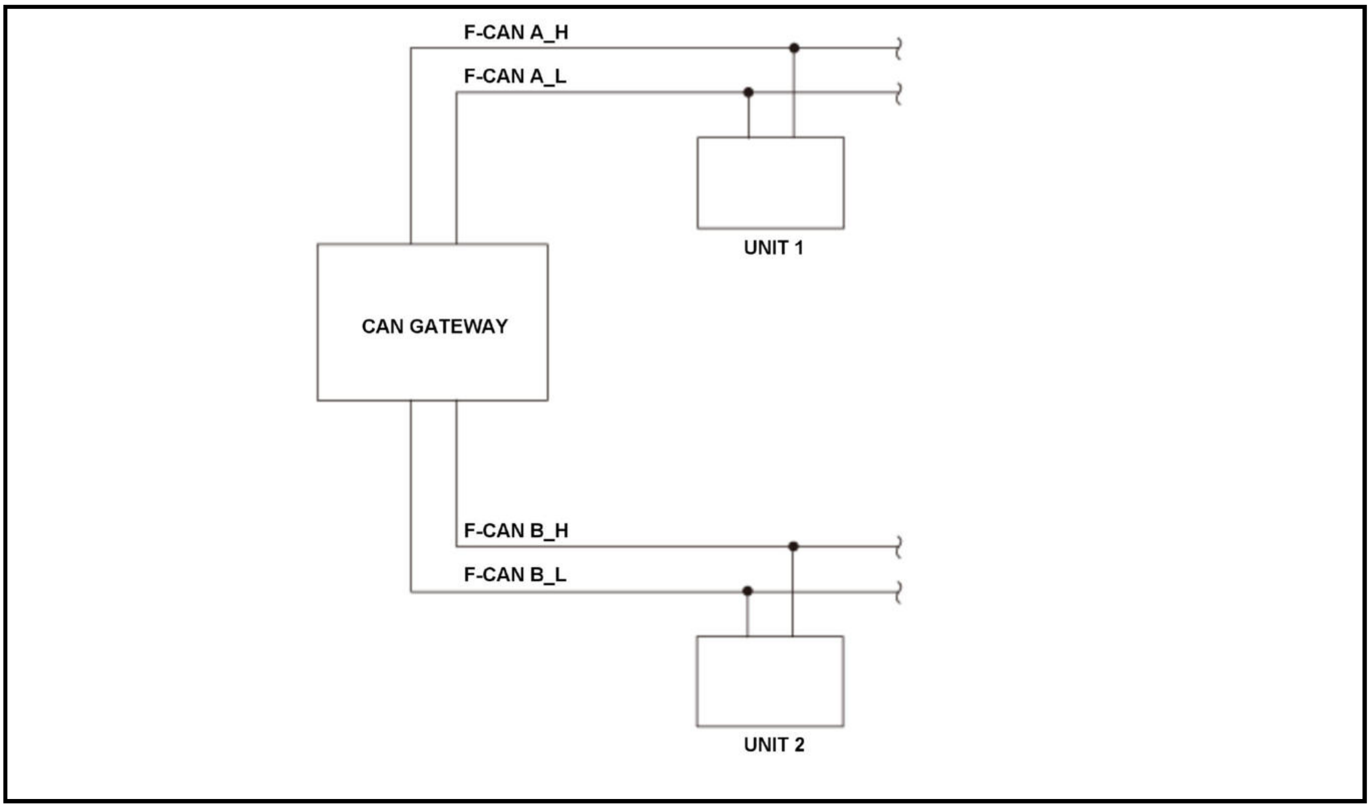

The CAN gateway has a reprogramming function. The CAN gateway could not be able to operate normally if the reprogramming is failed. If the CAN gateway reprogramming fails, a malfunction is detected and a DTC is stored.

Monitor Execution, Sequence, Duration, DTC Type

Execution	Immediately after the vehicle is turned to the ON mode
Sequence	None
Duration	-
DTC Type	One drive cycle, MIL on or off (CAN gateway does not output MIL on/off request)

Enable Conditions

Condition	Minimum	Maximum
12 volt battery voltage [BATTERY]	8 V	-
Vehicle	ON mode	

[ ]: HDS Parameter

Malfunction Threshold

The CAN gateway reprogramming is failed.

Possible Cause

NOTE: The causes shown may not be a complete list of all potential problems, and it is possible that there may be other causes.

- CAN gateway internal software reprogramming failure

Diagnosis Details

Conditions for setting the DTC

When a malfunction is detected, a Pending DTC, a Confirmed DTC, and the freeze data are stored in the CAN gateway memory.

Conditions for clearing the DTC

When the CAN gateway reprogramming is completed, DTC is cleared.

ADVANCED DIAGNOSTICS

DTC U0029-00 (CAN GATEWAY)

DTC U0029-00: CAN Gateway F-CAN ch A Bus Off

General Description

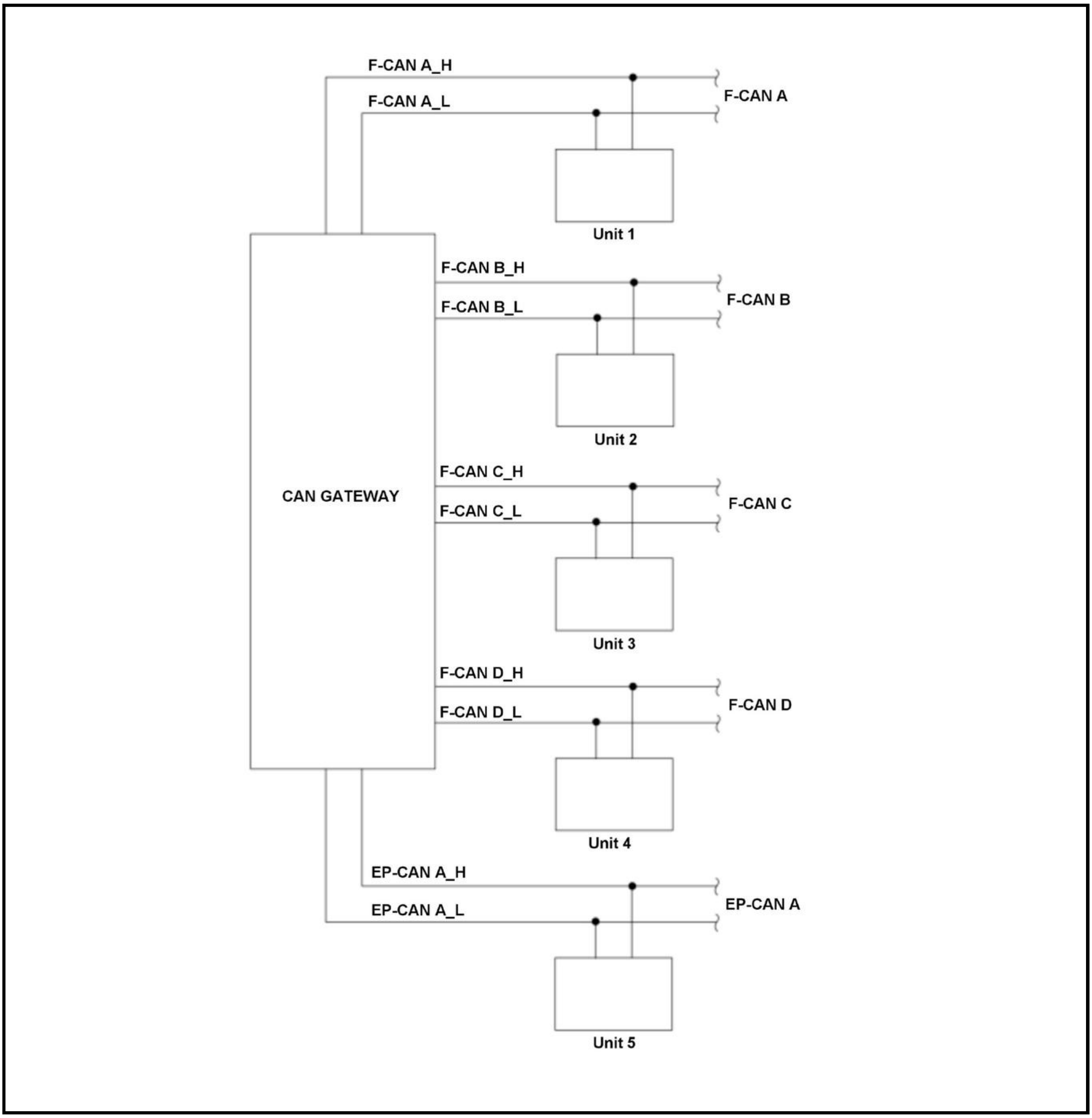
F-CAN A_H
F-CAN A_L
F-CAN A
Unit 1
F-CAN B_H
F-CAN B_L
F-CAN B
Unit 2
CAN GATEWAY
F-CAN C_H
F-CAN C_L
F-CAN C
Unit 3
F-CAN D_H
F-CAN D_L
F-CAN D
Unit 4
EP-CAN A_H
EP-CAN A_L
EP-CAN A
Unit 5

The CAN gateway performs self-diagnosis to detect the state where the CAN frame cannot be sent due to failure in the F-CAN line. If the bus-off occurs due to open and short circuit in the F-CAN line is detected for a prescribed time, the CAN gateway detects a malfunction and stores a DTC.

Monitor Execution, Sequence, Duration, DTC Type

Execution	Continuous
Sequence	None

Duration	6 seconds or more
DTC Type	One drive cycle, MIL on or off (CAN gateway does not output MIL on/off request)

Enable Conditions

Condition	Minimum	Maximum
Elapsed time since the 12 volt battery voltage reaches to a specified value after the vehicle condition is turned to the ON mode	5 seconds	-
12 volt battery voltage [BATTERY]	10 V	-

[ ]: HDS Parameter

Malfunction Threshold

One of these conditions is met:

- The F-CAN A line bus-off continues for at least 6 seconds.
- The CAN frame transmission to the F-CAN A line does not complete within 6 seconds.

Possible Cause

NOTE: The causes shown may not be a complete list of all potential problems, and it is possible that there may be other causes.

- CAN gateway F-CAN A_H line open (include connector loose connection or disconnection)
- CAN gateway F-CAN A_L line open (include connector loose connection or disconnection)
- CAN gateway F-CAN A_H line short to CAN gateway F-CAN A_L line
- CAN gateway F-CAN A_H line short to ground
- CAN gateway F-CAN A_L line short to ground
- CAN gateway internal circuit short
- Unit communicating on F-CAN A failure

Diagnosis Details

Conditions for setting the DTC

When a malfunction is detected, a DTC and the freeze data are stored in the CAN gateway memory.

Conditions for clearing the DTC

The Pending DTC, the Confirmed DTC, and the freeze data can be cleared with the scan tool Clear command.

DTC U0038-00 (CAN GATEWAY)

DTC U0038-00: CAN Gateway F-CAN ch E Bus Off

General Description

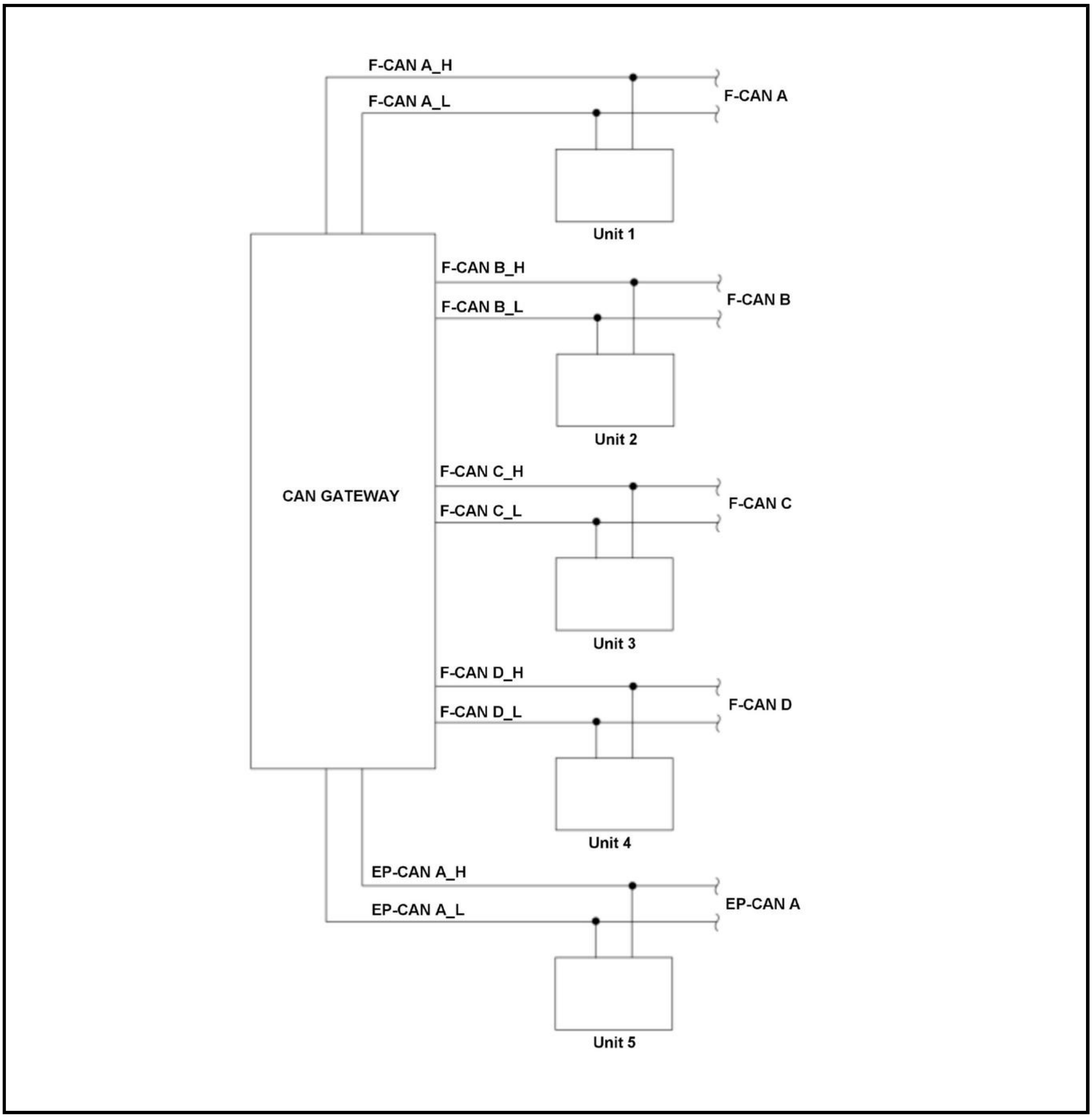
F-CAN A_H
F-CAN A_L
F-CAN A
Unit 1
F-CAN B_H
F-CAN B_L
F-CAN B
Unit 2
CAN GATEWAY
F-CAN C_H
F-CAN C_L
F-CAN C
Unit 3
F-CAN D_H
F-CAN D_L
F-CAN D
Unit 4
EP-CAN A_H
EP-CAN A_L
EP-CAN A
Unit 5

The CAN gateway performs self-diagnosis to detect the state where the CAN frame cannot be sent due to failure in the EP-CAN line. If the bus-off occurs due to an open or a short circuit in the EP-CAN line is detected for a prescribed time, the CAN gateway detects a malfunction and stores a DTC.

Monitor Execution, Sequence, Duration, DTC Type

Execution	Continuous
Sequence	None

Duration	6 seconds or more
DTC Type	One drive cycle, MIL on or off (CAN gateway does not output MIL on/off request)

Enable Conditions

Condition	Minimum	Maximum
Elapsed time since the 12 volt battery voltage reaches to a specified value after the vehicle condition is turned to the ON mode	5 seconds	-
12 volt battery voltage [Battery]	10 V	-

[ ]: HDS Parameter

Malfunction Threshold

One of these conditions is met:

- The EP-CAN A line bus-off continues for at least 6 seconds.
- The CAN frame transmission to the EP-CAN A line does not complete within 6 seconds.

Possible Cause

NOTE: The causes shown may not be a complete list of all potential problems, and it is possible that there may be other causes.

- CAN gateway EP-CAN A_H line open (includes a loose or disconnected connector)
- CAN gateway EP-CAN A_L line open (includes a loose or disconnected connector)
- CAN gateway EP-CAN A_H line short to CAN gateway EP-CAN A_L line
- CAN gateway EP-CAN A_H line short to ground
- CAN gateway EP-CAN A_L line short to ground
- CAN gateway internal circuit short
- Unit communicating on EP-CAN A failure

Diagnosis Details

Conditions for setting the DTC

When a malfunction is detected, a DTC and the freeze data are stored in the CAN gateway memory.

Conditions for clearing the DTC

The Pending DTC, the Confirmed DTC, and the freeze data can be cleared with the scan tool Clear command.

DTC U0047-00 (CAN GATEWAY)

DTC U0047-00: CAN Gateway F-CAN ch B Bus Off

General Description

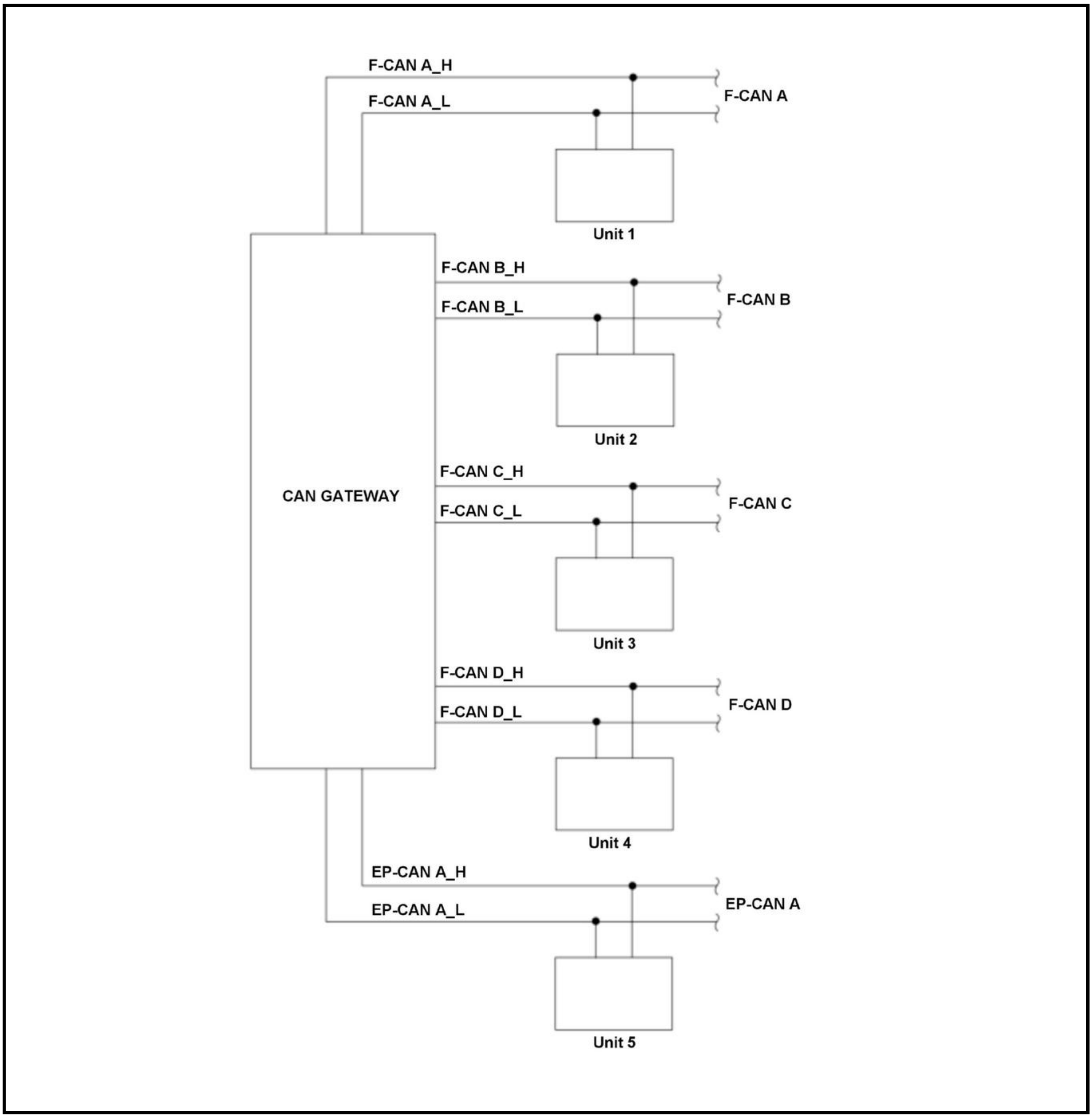
F-CAN A_H
F-CAN A_L
F-CAN A
Unit 1
F-CAN B_H
F-CAN B_L
F-CAN B
Unit 2
CAN GATEWAY
F-CAN C_H
F-CAN C_L
F-CAN C
Unit 3
F-CAN D_H
F-CAN D_L
F-CAN D
Unit 4
EP-CAN A_H
EP-CAN A_L
EP-CAN A
Unit 5

The CAN gateway performs self-diagnosis to detect the state where the CAN frame cannot be sent due to failure in the F-CAN line. If the bus-off occurs due to open and short circuit in the F-CAN line is detected for a prescribed time, the CAN gateway detects a malfunction and stores a DTC.

Monitor Execution, Sequence, Duration, DTC Type

Execution	Continuous
Sequence	None

Duration	6 seconds or more
DTC Type	One drive cycle, MIL on or off (CAN gateway does not output MIL on/off request)

Enable Conditions

Condition	Minimum	Maximum
Elapsed time since the 12 volt battery voltage reaches to a specified value after the vehicle condition is turned to the ON mode	5 seconds	-
12 volt battery voltage [BATTERY]	10 V	-

[ ]: HDS Parameter

Malfunction Threshold

One of these conditions is met:

- The F-CAN B line bus-off continues for at least 6 seconds.
- The CAN frame transmission to the F-CAN B line does not complete within 6 seconds.

Possible Cause

NOTE: The causes shown may not be a complete list of all potential problems, and it is possible that there may be other causes.

- CAN gateway F-CAN B_H line open (include connector loose connection or disconnection)
- CAN gateway F-CAN B_L line open (include connector loose connection or disconnection)
- CAN gateway F-CAN B_H line short to CAN gateway F-CAN B_L line
- CAN gateway F-CAN B_H line short to ground
- CAN gateway F-CAN B_L line short to ground
- CAN gateway internal circuit short
- Unit communicating on F-CAN B failure

Diagnosis Details

Conditions for setting the DTC

When a malfunction is detected, a DTC and the freeze data are stored in the CAN gateway memory.

Conditions for clearing the DTC

The Pending DTC, the Confirmed DTC, and the freeze data can be cleared with the scan tool Clear command.

DTC U0056-00 (CAN GATEWAY)

DTC U0056-00: CAN Gateway F-CAN ch C Bus Off

General Description

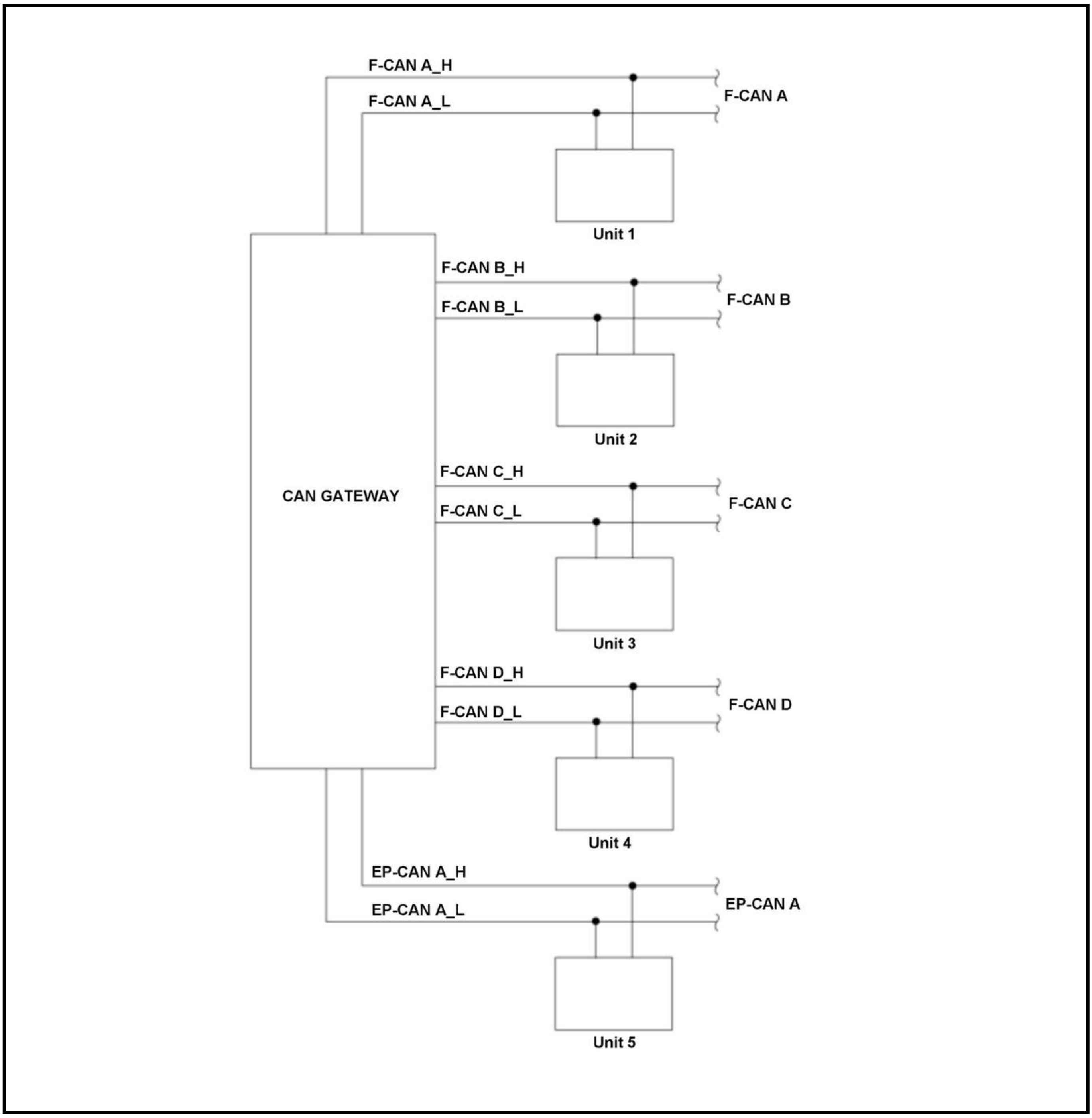
F-CAN A_H
F-CAN A_L
F-CAN A
Unit 1
F-CAN B_H
F-CAN B_L
F-CAN B
Unit 2
CAN GATEWAY
F-CAN C_H
F-CAN C_L
F-CAN C
Unit 3
F-CAN D_H
F-CAN D_L
F-CAN D
Unit 4
EP-CAN A_H
EP-CAN A_L
EP-CAN A
Unit 5

The CAN gateway performs self-diagnosis to detect the state where the CAN frame cannot be sent due to failure in the F-CAN line. If the bus-off occurs due to an open or a short circuit in the F-CAN line is detected for a prescribed time, the CAN gateway detects a malfunction and stores a DTC.

Monitor Execution, Sequence, Duration, DTC Type

Execution	Continuous
Sequence	None

Duration	6 seconds or more
DTC Type	One drive cycle, MIL on or off (CAN gateway does not output MIL on/off request)

Enable Conditions

Condition	Minimum	Maximum
Elapsed time since the 12 volt battery voltage reaches to a specified value after the vehicle condition is turned to the ON mode	5 seconds	-
12 volt battery voltage [Battery]	10 V	-

[ ]: HDS Parameter

Malfunction Threshold

One of these conditions is met:

- The F-CAN C line bus-off continues for at least 6 seconds.
- The CAN frame transmission to the F-CAN C line does not complete within 6 seconds.

Possible Cause

NOTE: The causes shown may not be a complete list of all potential problems, and it is possible that there may be other causes.

- CAN gateway F-CAN C_H line open (includes a loose or disconnected connector)
- CAN gateway F-CAN C_L line open (includes a loose or disconnected connector)
- CAN gateway F-CAN C_H line short to CAN gateway F-CAN C_L line
- CAN gateway F-CAN C_H line short to ground
- CAN gateway F-CAN C_L line short to ground
- CAN gateway internal circuit short
- Unit communicating on F-CAN C failure

Diagnosis Details

Conditions for setting the DTC

When a malfunction is detected, a DTC and the freeze data are stored in the CAN gateway memory.

Conditions for clearing the DTC

The Pending DTC, the Confirmed DTC, and the freeze data can be cleared with the scan tool Clear command.

DTC U0065-00 (CAN GATEWAY)

DTC U0065-00: CAN Gateway F-CAN ch D Bus Off

General Description

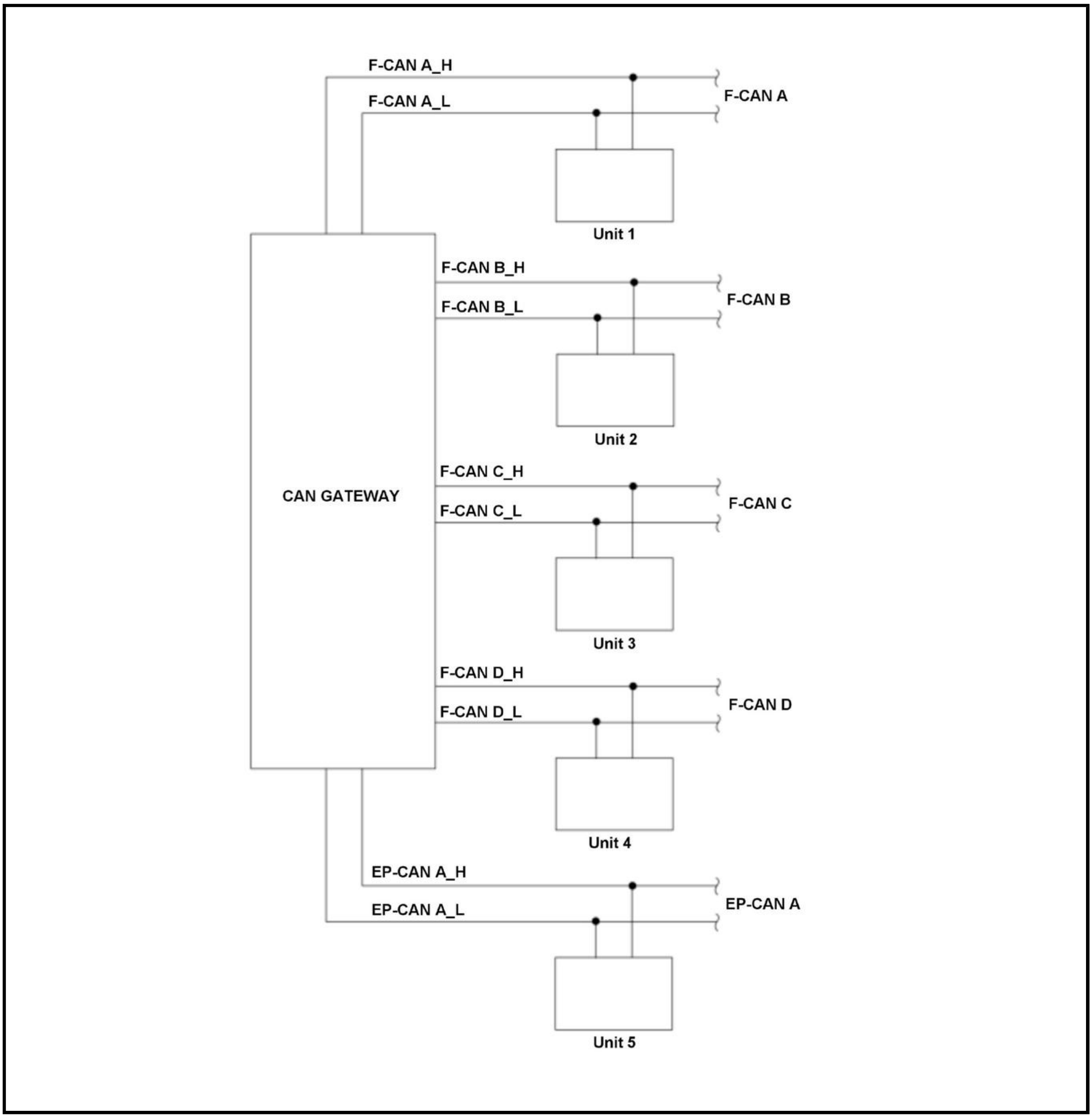
F-CAN A_H
F-CAN A_L
F-CAN A
Unit 1
F-CAN B_H
F-CAN B_L
F-CAN B
Unit 2
CAN GATEWAY
F-CAN C_H
F-CAN C_L
F-CAN C
Unit 3
F-CAN D_H
F-CAN D_L
F-CAN D
Unit 4
EP-CAN A_H
EP-CAN A_L
EP-CAN A
Unit 5

The CAN gateway performs self-diagnosis to detect the state where the CAN frame cannot be sent due to failure in the F-CAN line. If the bus-off occurs due to an open or a short circuit in the F-CAN line is detected for a prescribed time, the CAN gateway detects a malfunction and stores a DTC.

Monitor Execution, Sequence, Duration, DTC Type

Execution	Continuous
Sequence	None

Duration	6 seconds or more
DTC Type	One drive cycle, MIL on or off (CAN gateway does not output MIL on/off request)

Enable Conditions

Condition	Minimum	Maximum
Elapsed time since the 12 volt battery voltage reaches to a specified value after the vehicle condition is turned to the ON mode	5 seconds	-
12 volt battery voltage [Battery]	10 V	-

[ ]: HDS Parameter

Malfunction Threshold

One of these conditions is met:

- The F-CAN D line bus-off continues for at least 6 seconds.
- The CAN frame transmission to the F-CAN D line does not complete within 6 seconds.

Possible Cause

NOTE: The causes shown may not be a complete list of all potential problems, and it is possible that there may be other causes.

- CAN gateway F-CAN D_H line open (includes a loose or disconnected connector)
- CAN gateway F-CAN D_L line open (includes a loose or disconnected connector)
- CAN gateway F-CAN D_H line short to CAN gateway F-CAN D_L line
- CAN gateway F-CAN D_H line short to ground
- CAN gateway F-CAN D_L line short to ground
- CAN gateway internal circuit short
- Unit communicating on F-CAN D failure

Diagnosis Details

Conditions for setting the DTC

When a malfunction is detected, a DTC and the freeze data are stored in the CAN gateway memory.

Conditions for clearing the DTC

The Pending DTC, the Confirmed DTC, and the freeze data can be cleared with the scan tool Clear command.

DTC U3000-49 (CAN GATEWAY)

DTC U3000-49: CAN Gateway Internal Failure

General Description

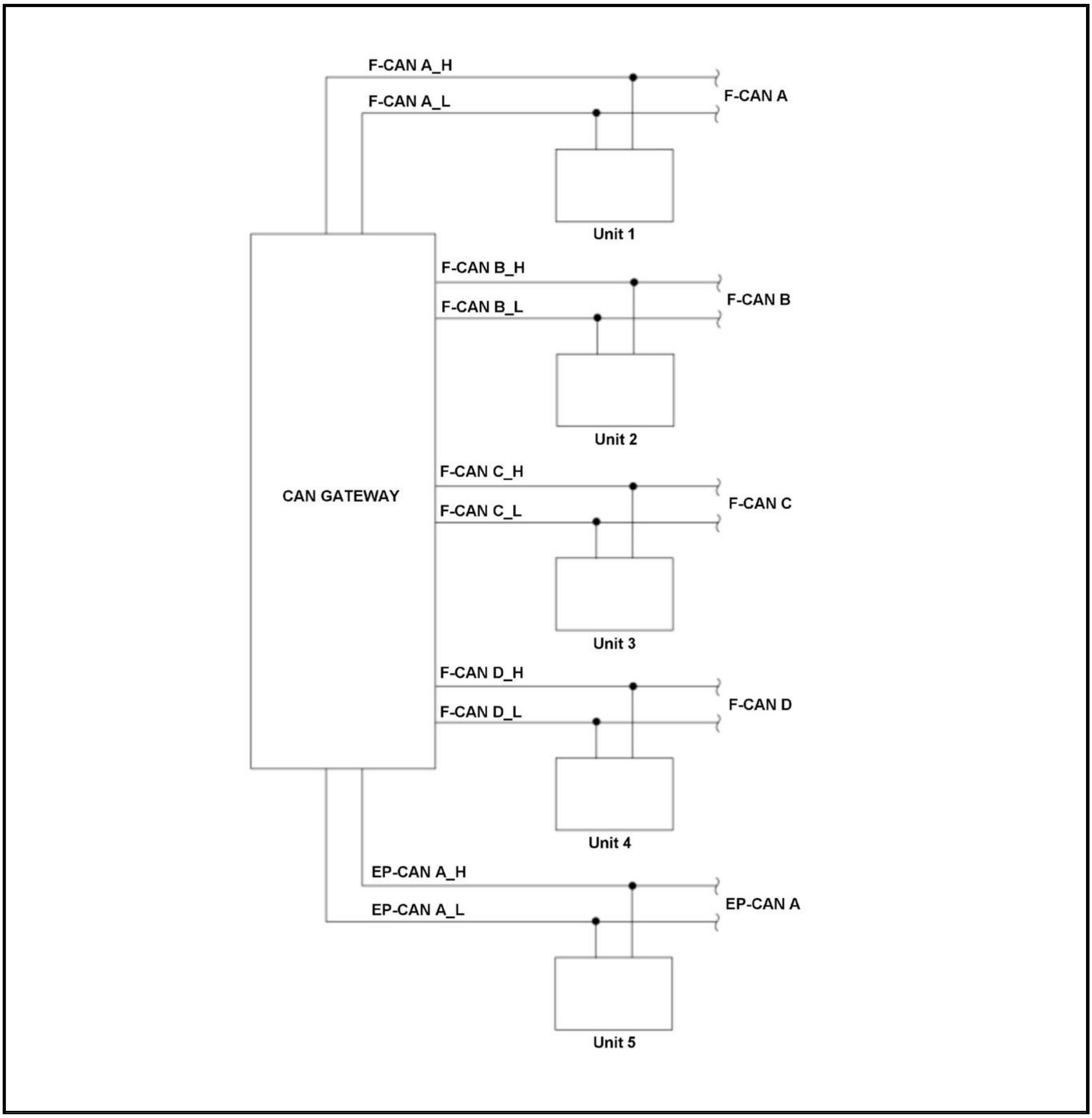
F-CAN A_H
F-CAN A_L
F-CAN A
Unit 1
F-CAN B_H
F-CAN B_L
F-CAN B
Unit 2
CAN GATEWAY
F-CAN C_H
F-CAN C_L
F-CAN C
Unit 3
F-CAN D_H
F-CAN D_L
F-CAN D
Unit 4
EP-CAN A_H
EP-CAN A_L
EP-CAN A
Unit 5

The CAN gateway performs onboard self-diagnosis to prevent transferring erroneous information when there is a malfunction in the CPU. If the CAN gateway detects a malfunction in the CPU, a DTC is stored.

Monitor Execution, Sequence, Duration, DTC Type

Execution	Immediately after the vehicle is turned to the ON mode, Continuous
Sequence	None

Duration	-
DTC Type	One drive cycle, MIL on or off (CAN gateway does not output MIL on/off request)

Enable Conditions

Condition	Minimum	Maximum
12 volt battery voltage [BATTERY]	8 V	-

Condition	Minimum	Maximum
Vehicle	ON mode	

[ ]: HDS Parameter

Malfunction Threshold

The CAN gateway detects a malfunction in the CPU.

Possible Cause

NOTE: The causes shown may not be a complete list of all potential problems, and it is possible that there may be other causes.

- CAN gateway internal failure

Diagnosis Details

Conditions for setting the DTC

When a malfunction is detected, a DTC and the freeze data are stored in the CAN gateway memory.

Conditions for clearing the DTC

The Pending DTC, the Confirmed DTC, and the freeze data can be cleared with the scan tool Clear command.

DTC U3000-51 (CAN GATEWAY)

DTC U3000-51: CAN Gateway Programming Error

General Description

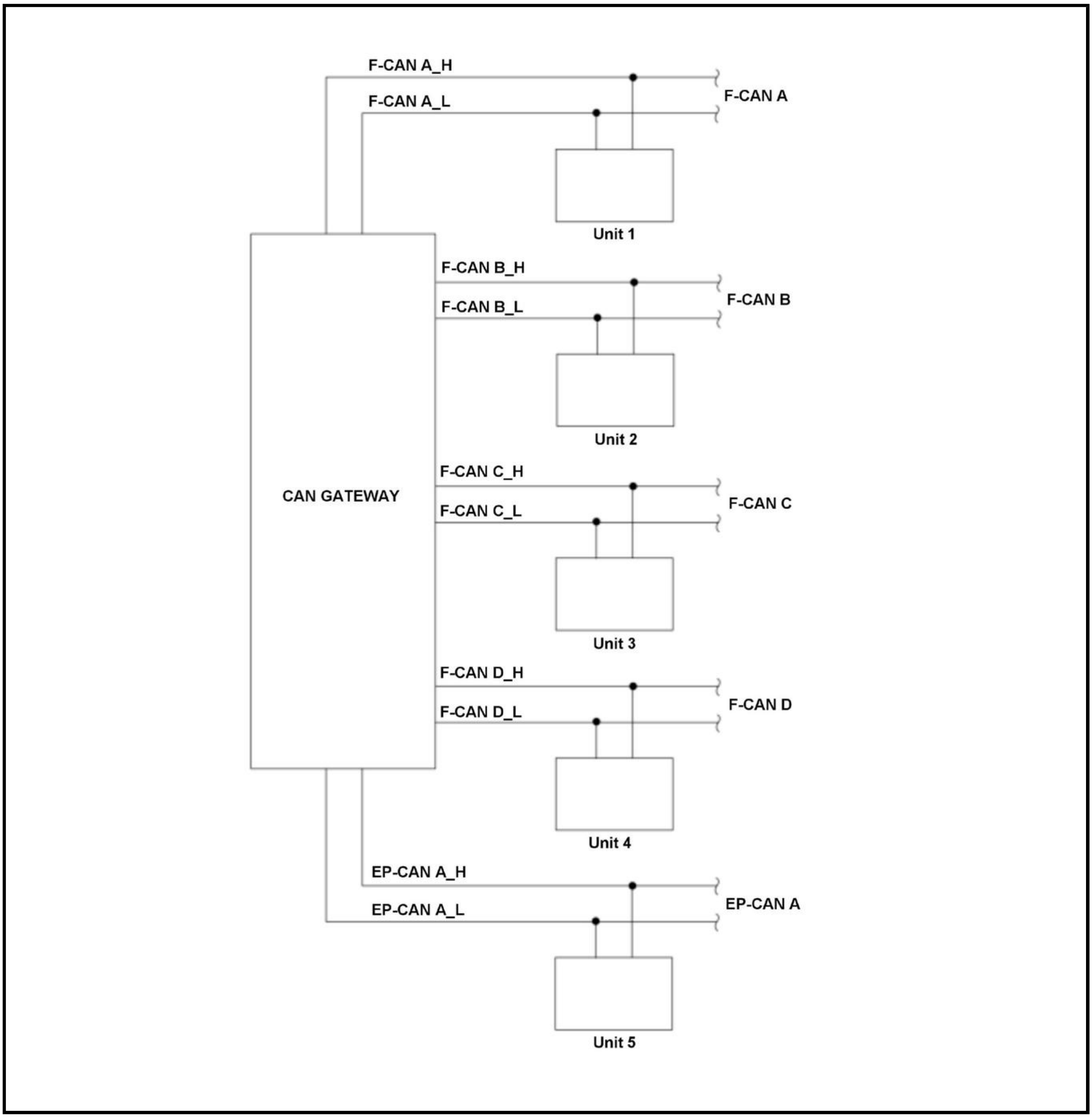
F-CAN A_H
F-CAN A_L
F-CAN A
Unit 1
CAN GATEWAY
F-CAN B_H
F-CAN B_L
F-CAN B
Unit 2
F-CAN C_H
F-CAN C_L
F-CAN C
Unit 3
F-CAN D_H
F-CAN D_L
F-CAN D
Unit 4
EP-CAN A_H
EP-CAN A_L
EP-CAN A
Unit 5

The CAN gateway has a reprogramming function. The CAN gateway could not operate normally if the reprogramming is failed. If the CAN gateway reprogramming fails, a malfunction is detected and a DTC is stored.

Monitor Execution, Sequence, Duration, DTC Type

Execution	Immediately after the vehicle is turned to the ON mode
Sequence	None

Duration	-
DTC Type	One drive cycle, MIL on or off (CAN gateway does not output MIL on/off request)

Enable Conditions

Condition	Minimum	Maximum
12 volt battery voltage [BATTERY]	8 V	-
Vehicle	ON mode	

[ ]: HDS Parameter

Malfunction Threshold

The CAN gateway reprogramming is failed.

Possible Cause

NOTE: The causes shown may not be a complete list of all potential problems, and it is possible that there may be other causes.

- CAN gateway internal software reprogramming failure

Diagnosis Details

Conditions for setting the DTC

When a malfunction is detected, a DTC and the freeze data are stored in the CAN gateway memory.

Conditions for clearing the DTC

When the CAN gateway reprogramming is completed, DTC is cleared.

TROUBLESHOOTING

DTC U0029-00 (CAN GATEWAY)

DTC U0029-00 : CAN Gateway F-CAN ch A Bus Off

NOTE:

- Before you troubleshoot, review the general troubleshooting information .
- Information marked with an asterisk (*) applies to the CAN gateway (16P connector type).

DTC Description	DTC
U0029-00 CAN Gateway F-CAN ch A Bus Off	B

DTC (CAN gateway)

1. Problem verification

-1. Turn the vehicle to the ON mode.

-2. Clear the DTC with the HDS.

-3. Turn the vehicle to the OFF (LOCK) mode.

-4. Turn the vehicle to the ON mode, and wait 6 seconds.

-5. Check for DTCs with the HDS.

DTC Description	DTC
U0029-00 CAN Gateway F-CAN ch A Bus Off	B

Is DTC U0029-00 indicated?

YES

Go to step 2.

NO

Intermittent failure, the system is OK at this time.

2. Shorted unit check (PCM)

-1. Turn the vehicle to the OFF (LOCK) mode.

-2. Jump the SCS line with the HDS, and wait more than 1 minute.

-3. Disconnect the following connector.

PCM connector A (50P)

-4. Exit the SCS mode with the HDS.

-5. Turn the vehicle to the ON mode.

-6. Clear the DTC with the HDS.

-7. Turn the vehicle to the OFF (LOCK) mode.

-8. Turn the vehicle to the ON mode, and wait 6 seconds.

-9. Check for DTCs with the HDS.

DTC Description	DTC
U0029-00 CAN Gateway F-CAN ch A Bus Off	B

Is DTC U0029-00 indicated?

YES

Go to step 3.

NO

Check for any authorized service information related to the DTCs or symptoms you are troubleshooting, or **substitute a known-good PCM** .

3. Shorted unit check (TCM)

-1. Turn the vehicle to the OFF (LOCK) mode.

-2. Jump the SCS line with the HDS, and wait more than 1 minute.

-3. Disconnect the following connector.

TCM 50P connector

-4. Turn the vehicle to the ON mode.

-5. Clear the DTC with the HDS.

-6. Turn the vehicle to the OFF (LOCK) mode.

-7. Turn the vehicle to the ON mode, and wait 6 seconds.

-8. Check for DTCs with the HDS.

DTC Description	DTC
U0029-00 CAN Gateway F-CAN ch A Bus Off	B

Is DTC U0029-00 indicated?

YES

Go to step 4.

NO

Check for any authorized service information related to the DTCs or symptoms you are troubleshooting, or **substitute a known-good TCM** .

4. Shorted unit check (VSA modulator-control unit)

-1. Turn the vehicle to the OFF (LOCK) mode.

-2. Disconnect the following connector.

VSA modulator-control unit 46P connector

-3. Turn the vehicle to the ON mode.

-4. Clear the DTC with the HDS.

-5. Turn the vehicle to the OFF (LOCK) mode.

-6. Turn the vehicle to the ON mode, and wait 6 seconds.

-7. Check for DTCs with the HDS.

DTC Description	DTC
U0029-00 CAN Gateway F-CAN ch A Bus Off	B

Is DTC U0029-00 indicated?

YES

Go to step 5.

NO

Check for any authorized service information related to the DTCs or symptoms you are troubleshooting, or **replace the known-good VSA modulator-control unit** .

5. Shorted unit check (electric brake booster)

-1. Turn the vehicle to the OFF (LOCK) mode with driver's door open, then wait 3 minutes.

NOTE: Do not close the driver's door.

-2. Disconnect the following connector.

Electric brake booster 26P connector

-3. Turn the vehicle to the ON mode.

-4. Clear the DTC with the HDS.

-5. Turn the vehicle to the OFF (LOCK) mode.

-6. Turn the vehicle to the ON mode, and wait 6 seconds.

-7. Check for DTCs with the HDS.

DTC Description	DTC
U0029-00 CAN Gateway F-CAN ch A Bus Off	B

Is DTC U0029-00 indicated?

YES

Go to step 6.

NO

Check for any authorized service information related to the DTCs or symptoms you are troubleshooting, or **replace the electric brake booster** .

6. Shorted unit check (body control module)

   -1. Turn the vehicle to the OFF (LOCK) mode.

   -2. Disconnect the following connector.

Body control module connector B (36P)

   -3. Turn the vehicle to the ON mode.

   -4. Clear the DTC with the HDS.

   -5. Turn the vehicle to the OFF (LOCK) mode.

   -6. Turn the vehicle to the ON mode, and wait 6 seconds.

   -7. Check for DTCs with the HDS.

DTC Description	DTC
U0029-00 CAN Gateway F-CAN ch A Bus Off	B

Is DTC U0029-00 indicated?

YES

Go to step 7.

NO

Substitute a known-good body control module .

7. Shorted unit check (gauge control module)

   -1. Turn the vehicle to the OFF (LOCK) mode.

   -2. Disconnect the following connector.

Gauge control module connector A (32P)

   -3. Turn the vehicle to the ON mode.

   -4. Clear the DTC with the HDS.

   -5. Turn the vehicle to the OFF (LOCK) mode.

   -6. Turn the vehicle to the ON mode, and wait 6 seconds.

   -7. Check for DTCs with the HDS.

DTC Description	DTC
U0029-00 CAN Gateway F-CAN ch A Bus Off	B

Is DTC U0029-00 indicated?

YES

Go to step 8.

NO

Substitute a known-good gauge control module .

8. Shorted wire check (F-CAN A_H line)

-1. Turn the vehicle to the OFF (LOCK) mode.

-2. Disconnect the following connector.

CAN gateway 12P (16P)* connector

-3. Measure the resistance between test points 1 and 2.

Test condition	Vehicle OFF (LOCK) mode
	PCM connector A (50P): disconnected
	TCM 50P connector: disconnected
	VSA modulator-control unit 46P connector
	Electric brake booster 26P connector: disconnected
	Body control module connector B (36P): disconnected
	Gauge control module connector A (32P): disconnected
	CAN gateway 12P (16P)* connector: disconnected
Test point 1	CAN gateway 12P connector (female terminal) No. 3: ① CAN gateway 16P connector (female terminal) No. 3: ② *
Test point 2	Body ground

12P Connector Type

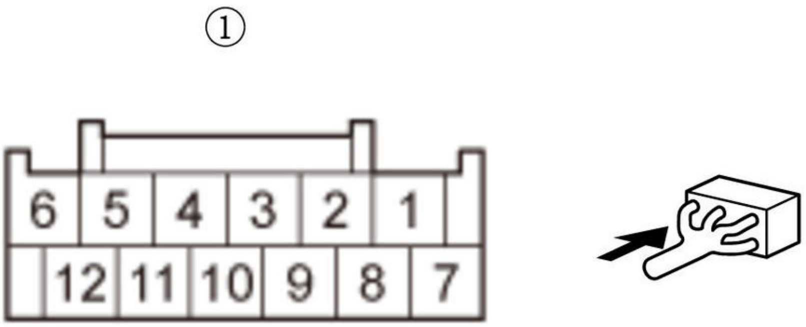

16P Connector Type*

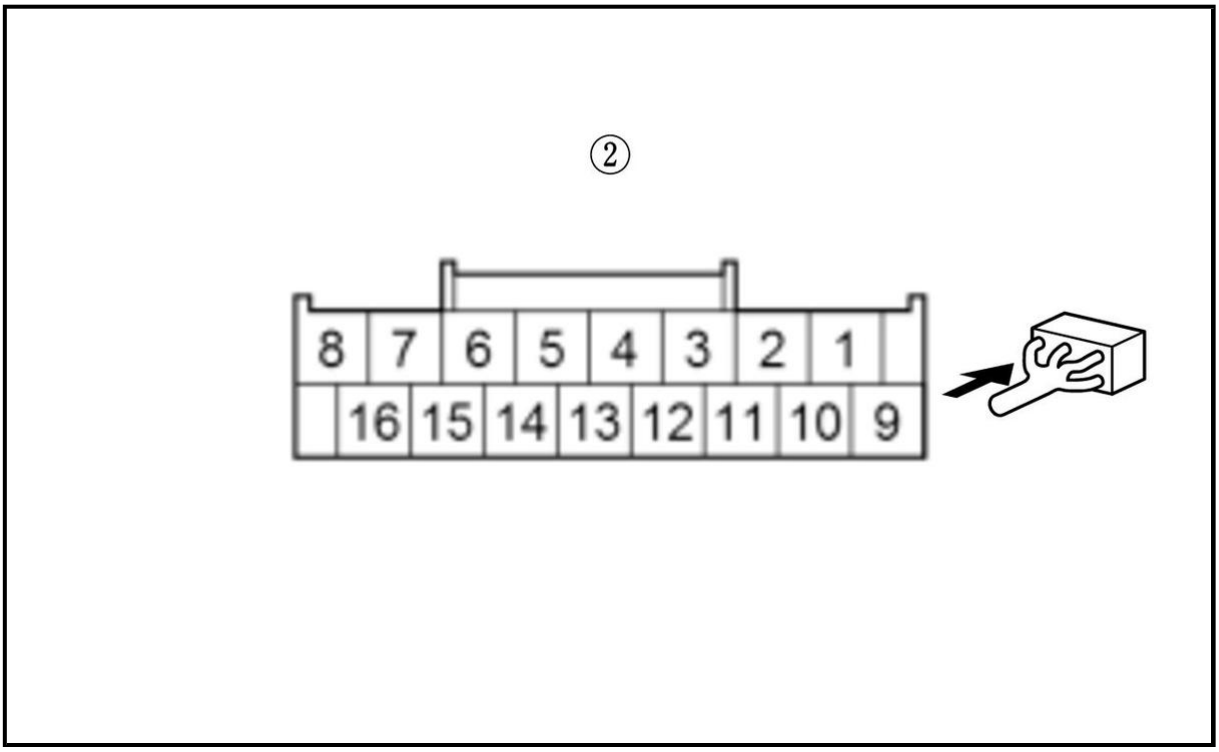

Is there 1 MΩ or more?

YES

Go to step 9.

NO

Repair a short in the F-CAN A_H wire between the CAN gateway and the connected units.

9. Shorted wire check (F-CAN A_L line)

-1. Measure the resistance between test points 1 and 2.

Test condition	Vehicle OFF (LOCK) mode
	PCM connector A (50P): disconnected
	TCM 50P connector: disconnected
	VSA modulator-control unit 46P connector
	Electric brake booster 26P connector: disconnected
	Body control module connector B (36P): disconnected
	Gauge control module connector A (32P): disconnected
	CAN gateway 12P (16P)* connector: disconnected

Test point 1	CAN gateway 12P connector (female terminal) No. 9: ① CAN gateway 16P connector (female terminals) No. 11: ② *
Test point 2	Body ground

12P Connector Type

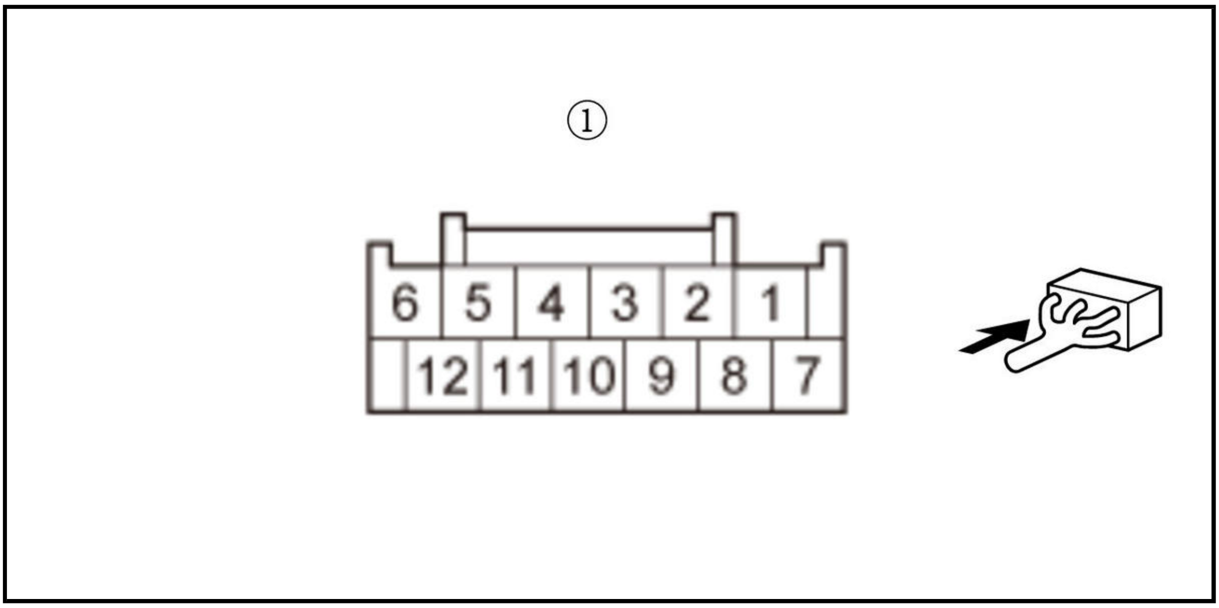
①
6
5
4
3
2
1
12
11
10
9
8
7

16P Connector Type*

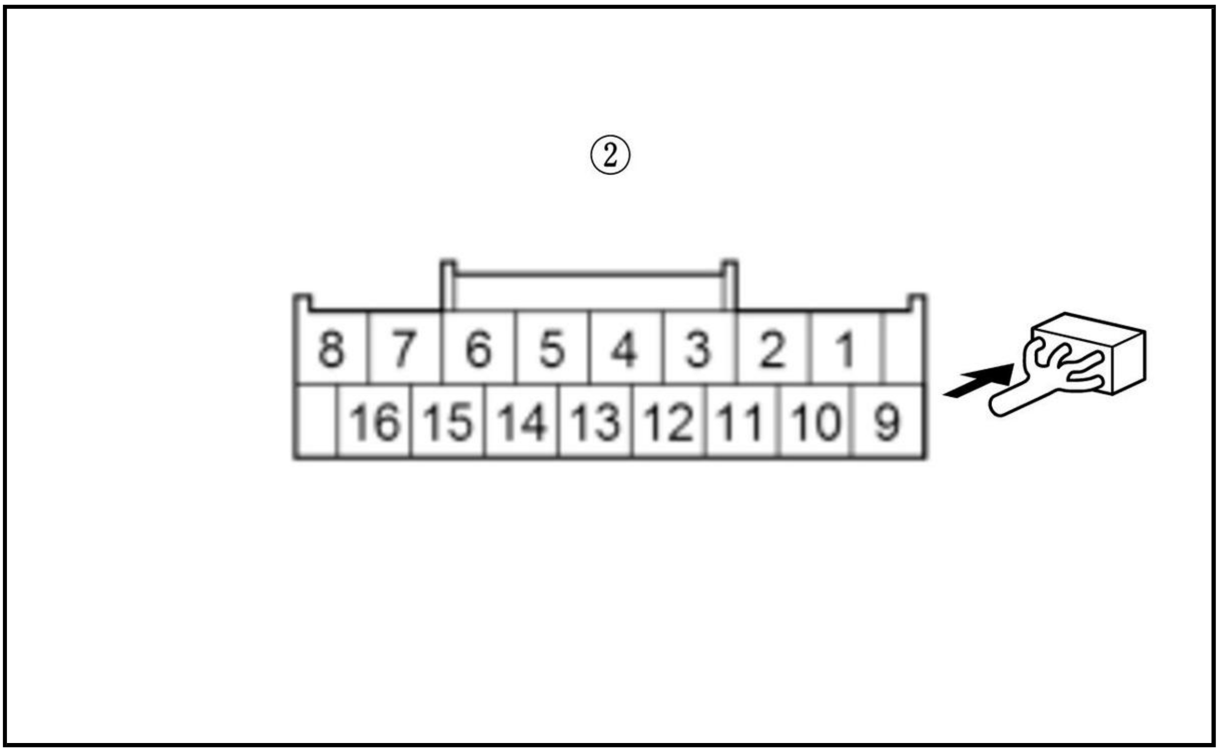
②
8
7
6
5
4
3
2
1
16
15
14
13
12
11
10
9

Is there 1 MΩ or more?

YES

Go to step 10.

NO

Repair a short in the F-CAN A_L wire between the CAN gateway and the connected units.

10. Shorted wire check (F-CAN A_H line to F-CAN A_L line)

-1. Measure the resistance between test points 1 and 2.

Test condition	Vehicle OFF (LOCK) mode
	PCM connector A (50P): disconnected
	TCM 50P connector: disconnected

	VSA modulator-control unit 46P connector
	Electric brake booster 26P connector: disconnected
	Body control module connector B (36P): disconnected
	Gauge control module connector A (32P): disconnected
Test point 1	CAN gateway 12P (16P)* connector: disconnected
	CAN gateway 12P connector (female terminal) No. 3: ① CAN gateway 16P connector (female terminal) No. 3: ② *
Test point 2	CAN gateway 12P connector (female terminal) No. 9: ① CAN gateway 16P connector (female terminals) No. 11: ② *

12P Connector Type

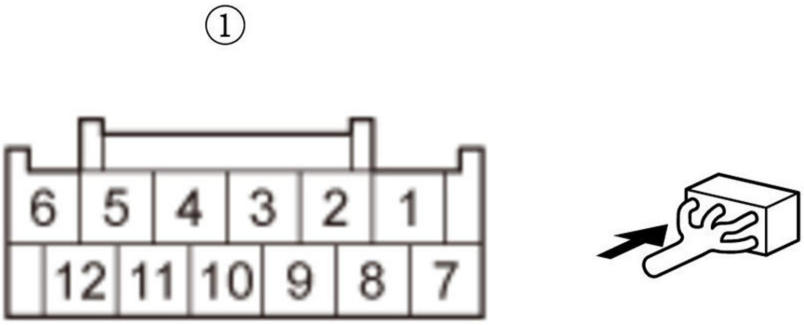

16P Connector Type*

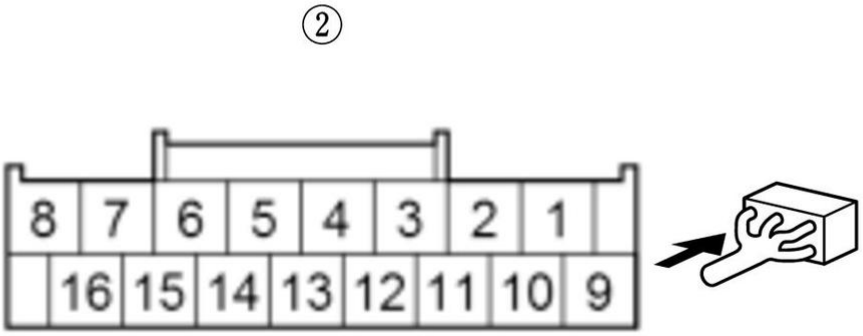

Is there 1 MΩ or more?

YES

Check for any authorized service information related to the DTCs or symptoms you are troubleshooting, or **substitute a known-good real time CAN gateway** .

NO

Repair a short in the F-CAN A_H wire to the F-CAN A_L wire between CAN gateway terminals No. 3 and No. 9 (No. 3 and No. 11)*.

DTC U0047-00 (CAN GATEWAY)

DTC U0047-00 : CAN Gateway F-CAN ch B Bus Off

NOTE:

- Before you troubleshoot, **review the general troubleshooting information** .
- Before disconnecting the SRS unit connector, **do the 12 volt battery terminal disconnection procedure** , and wait for at least 3 minutes.
- Information marked with an asterisk (*) applies to the CAN gateway (16P connector type).

*1: With navigation
*2: Without navigation

DTC Description	DTC
U0047-00 CAN Gateway F-CAN ch B Bus Off	B

DTC (CAN gateway)

1. Problem verification

   -1. Turn the vehicle to the ON mode.

   -2. Clear the DTC with the HDS.

   -3. Turn the vehicle to the OFF (LOCK) mode.

   -4. Turn the vehicle to the ON mode, and wait 6 seconds.

   -5. Check for DTCs with the HDS.

DTC Description	DTC
U0047-00 CAN Gateway F-CAN ch B Bus Off	B

   Is DTC U0047-00 indicated?

   YES

   Go to step 2.

   NO

   Intermittent failure, the system is OK at this time.

2. Shorted unit check (PCM)

-1. Turn the vehicle to the OFF (LOCK) mode.

-2. Jump the SCS line with the HDS, and wait more than 1 minute.

-3. Disconnect the following connector.

PCM connector A (50P)

-4. Exit the SCS mode with the HDS.

-5. Turn the vehicle to the ON mode.

-6. Clear the DTC with the HDS.

-7. Turn the vehicle to the OFF (LOCK) mode.

-8. Turn the vehicle to the ON mode, and wait 6 seconds.

-9. Check for DTCs with the HDS.

DTC Description	DTC
U0047-00 CAN Gateway F-CAN ch B Bus Off	B

Is DTC U0047-00 indicated?

YES

Go to step 3.

NO

Check for any authorized service information related to the DTCs or symptoms you are troubleshooting, or **substitute a known-good PCM** .

3. Shorted unit check (VSA modulator-control unit)

-1. Turn the vehicle to the OFF (LOCK) mode.

-2. Disconnect the following connector.

VSA modulator-control unit 46P connector

-3. Turn the vehicle to the ON mode.

-4. Clear the DTC with the HDS.

-5. Turn the vehicle to the OFF (LOCK) mode.

-6. Turn the vehicle to the ON mode, and wait 6 seconds.

-7. Check for DTCs with the HDS.

DTC Description	DTC
U0047-00 CAN Gateway F-CAN ch B Bus Off	B

Is DTC U0047-00 indicated?

YES

Go to step 4.

NO

Replace the VSA modulator-control unit .

4. Shorted unit check (ANC/active sound control unit)

-1. Turn the vehicle to the OFF (LOCK) mode.

-2. Disconnect the following connector.

ANC/active sound control unit 20P connector

-3. Turn the vehicle to the ON mode.

-4. Clear the DTC with the HDS.

-5. Turn the vehicle to the OFF (LOCK) mode.

-6. Turn the vehicle to the ON mode, and wait 6 seconds.

-7. Check for DTCs with the HDS.

DTC Description	DTC
U0047-00 CAN Gateway F-CAN ch B Bus Off	B

Is DTC U0047-00 indicated?

YES

Go to step 5.

NO

Substitute a known-good ANC/active sound control unit .

5. Shorted unit check (audio-navigation unit *1 audio unit *2):-1.

Turn the vehicle to the OFF (LOCK) mode.

-2. Disconnect the following connector.

Audio-navigation unit *1 Audio unit *2 connector E (16P)

-3. Turn the vehicle to the ON mode.

-4. Clear the DTC with the HDS.

-5. Turn the vehicle to the OFF (LOCK) mode.

-6. Turn the vehicle to the ON mode, and wait 6 seconds.

-7. Check for DTCs with the HDS.

DTC Description	DTC
U0047-00 CAN Gateway F-CAN ch B Bus Off	B

Is DTC U0047-00 indicated?

YES

Go to step 6.

NO

Substitute a known-good audio unit .

6. Shorted unit check (SRS unit)

-1. Turn the vehicle to the OFF (LOCK) mode.

-2. Disconnect the following connector.

SRS unit connector A (39P)

-3. Turn the vehicle to the ON mode.

-4. Clear the DTC with the HDS.

-5. Turn the vehicle to the OFF (LOCK) mode.

-6. Turn the vehicle to the ON mode, and wait 6 seconds.

-7. Check for DTCs with the HDS.

DTC Description	DTC
U0047-00 CAN Gateway F-CAN ch B Bus Off	B

Is DTC U0047-00 indicated?

YES

Go to step 7.

NO

Check for any authorized service information related to the DTCs or symptoms you are troubleshooting, or **substitute a known-good SRS unit** .

7. Shorted unit check (EPS control unit)

-1. Turn the vehicle to the OFF (LOCK) mode.

-2. Disconnect the following connector.

EPS control unit connector B (6P)

-3. Turn the vehicle to the ON mode.

-4. Clear the DTC with the HDS.

-5. Turn the vehicle to the OFF (LOCK) mode.

-6. Turn the vehicle to the ON mode, and wait 6 seconds.

-7. Check for DTCs with the HDS.

DTC Description	DTC
U0047-00 CAN Gateway F-CAN ch B Bus Off	B

Is DTC U0047-00 indicated?

YES

Go to step 8.

NO

Check for any authorized service information related to the DTCs or symptoms you are troubleshooting, or **substitute a known-good EPS control unit** .

8. Shorted unit check (electric brake booster)

-1. Turn the vehicle to the OFF (LOCK) mode with driver's door open, then wait 3 minutes.

NOTE: Do not close the driver's door.

-2. Disconnect the following connector.

Electric brake booster 26P connector

-3. Turn the vehicle to the ON mode.

-4. Clear the DTC with the HDS.

-5. Turn the vehicle to the OFF (LOCK) mode.

-6. Turn the vehicle to the ON mode, and wait 6 seconds.

-7. Check for DTCs with the HDS.

DTC Description	DTC
U0047-00 CAN Gateway F-CAN ch B Bus Off	B

Is DTC U0047-00 indicated?

YES

Go to step 9.

NO

Check for any authorized service information related to the DTCs or symptoms you are troubleshooting, or **replace the electric brake booster** .

9. Shorted unit check (real time AWD control unit)

-1. Turn the vehicle to the OFF (LOCK) mode.

-2. Disconnect the following connector.

Real time AWD control unit 24P connector

-3. Turn the vehicle to the ON mode.

-4. Clear the DTC with the HDS.

-5. Turn the vehicle to the OFF (LOCK) mode.

-6. Turn the vehicle to the ON mode, and wait 6 seconds.

-7. Check for DTCs with the HDS.

DTC Description	DTC
U0047-00 CAN Gateway F-CAN ch B Bus Off	B

Is DTC U0047-00 indicated?

YES

Go to step 10.

NO

Check for any authorized service information related to the DTCs or symptoms you are troubleshooting, or **substitute a known-good real time AWD control unit** .

10. Shorted unit check (multipurpose camera unit)

-1. Turn the vehicle to the OFF (LOCK) mode.

-2. Disconnect the following connector.

Multipurpose camera unit 12P connector

-3. Turn the vehicle to the ON mode.

-4. Clear the DTC with the HDS.

-5. Turn the vehicle to the OFF (LOCK) mode.

-6. Turn the vehicle to the ON mode, and wait 6 seconds.

-7. Check for DTCs with the HDS.

DTC Description	DTC
U0047-00 CAN Gateway F-CAN ch B Bus Off	B

Is DTC U0047-00 indicated?

YES

Go to step 11.

NO

Check for any authorized service information related to the DTCs or symptoms you are troubleshooting, or **substitute a known-good multipurpose camera unit** .

11. Shorted unit check (millimeter wave radar)

-1. Turn the vehicle to the OFF (LOCK) mode.

-2. Disconnect the following connector.

Millimeter wave radar 8P connector

-3. Turn the vehicle to the ON mode.

-4. Clear the DTC with the HDS.

-5. Turn the vehicle to the OFF (LOCK) mode.

-6. Turn the vehicle to the ON mode, and wait 6 seconds.

-7. Check for DTCs with the HDS.

DTC Description	DTC
U0047-00 CAN Gateway F-CAN ch B Bus Off	B

Is DTC U0047-00 indicated?

YES

Go to step 12.

NO

Check for any authorized service information related to the DTCs or symptoms you are troubleshooting, or **substitute a known-good millimeter wave radar** .

12. Shorted wire check (F-CAN B_H line)

-1. Turn the vehicle to the OFF (LOCK) mode.

-2. Disconnect the following connector.

CAN gateway 12P (16P)* connector

-3. Measure the resistance between test points 1 and 2.

Test condition	Vehicle OFF (LOCK) mode
	PCM connector A (50P): disconnected
	VSA modulator-control unit 46P connector: disconnected
	ANC/active sound control unit 20P connector: disconnected
	Audio-navigation unit *1 Audio unit *2 connector E (16P): disconnected
	SRS unit connector A (39P): disconnected
	EPS control unit connector B (6P): disconnected
	Electric brake booster 26P connector: disconnected
	Real time AWD control unit 24P connector: disconnected
	Multipurpose camera unit 12P connector: disconnected
	Millimeter wave radar 8P connector: disconnected
B	CAN gateway 12P (16P)* connector: disconnected
Test point 1	CAN gateway 12P connector (female terminal) No. 12: ① CAN gateway 16P connector (female terminals) No. 6: ② *
Test point 2	Body ground

12P Connector Type

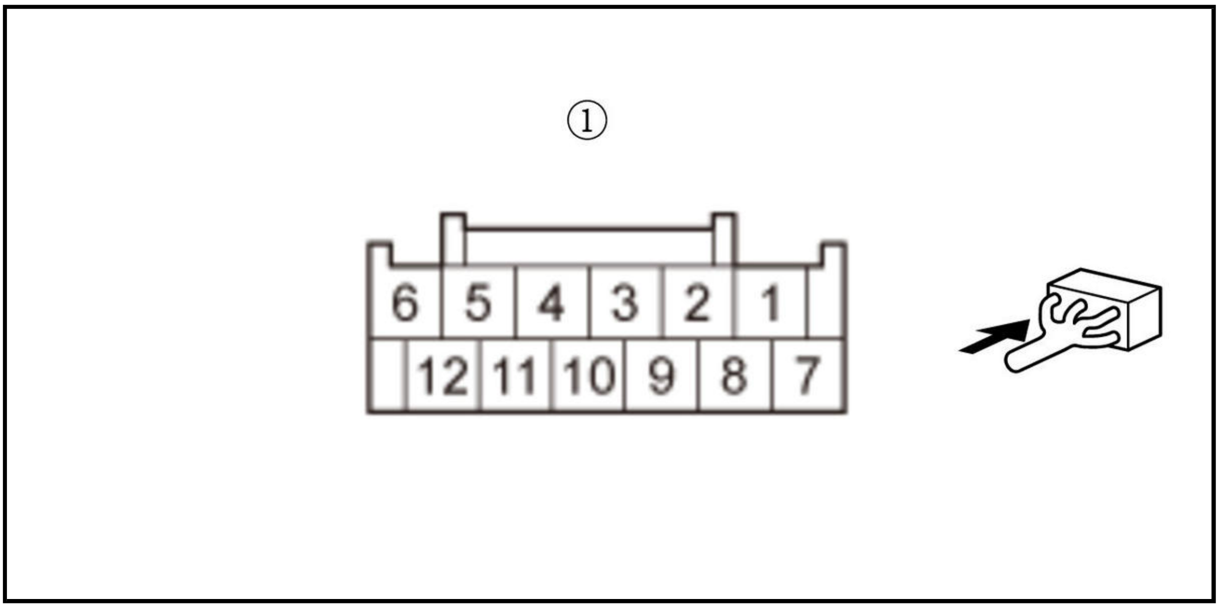
①
6
5
4
3
2
1
12
11
10
9
8
7

16P Connector Type*

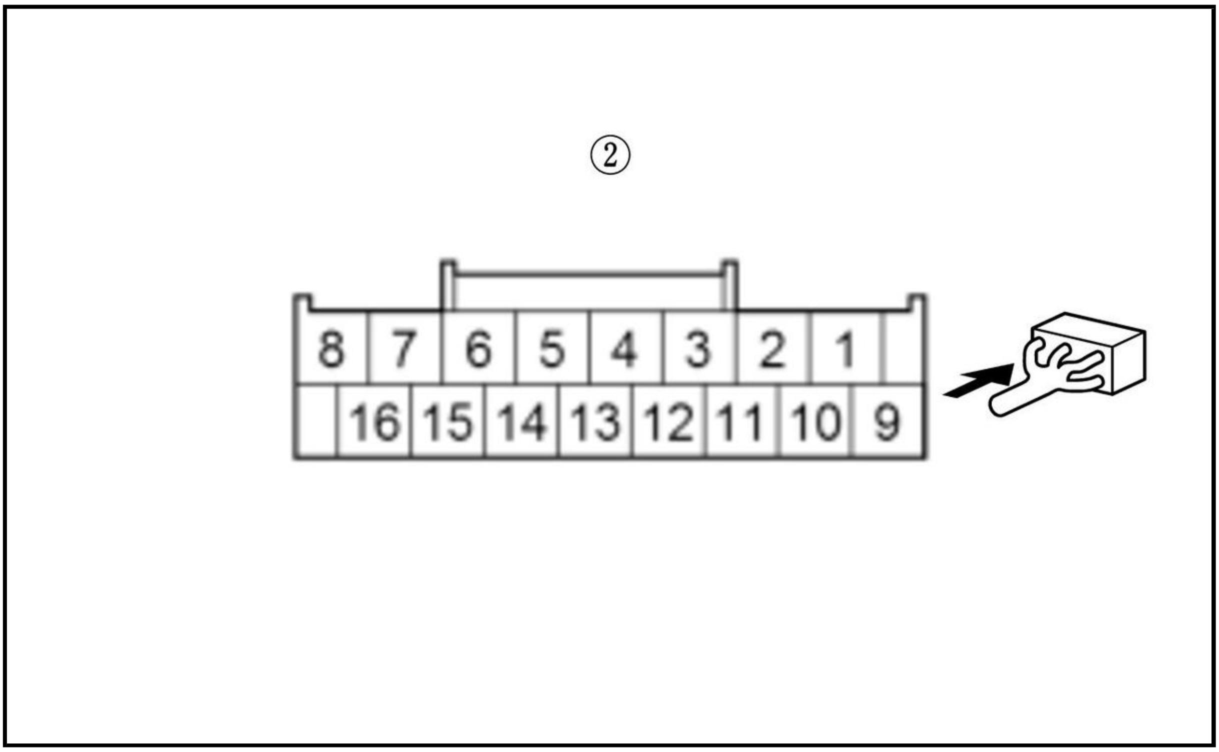
②
8
7
6
5
4
3
2
1
16
15
14
13
12
11
10
9

Is there 1 MΩ or more?

YES

Go to step 13.

NO

Repair a short in the F-CAN B_H wire between the CAN gateway and the connected units.

13. Shorted wire check (F-CAN B_L line)

-1. Measure the resistance between test points 1 and 2.

Test condition	Vehicle OFF (LOCK) mode
	PCM connector A (50P): disconnected
	VSA modulator-control unit 46P connector: disconnected

	ANC/active sound control unit 20P connector: disconnected
	Audio-navigation unit *1 Audio unit *2 connector E (16P): disconnected
	SRS unit connector A (39P): disconnected
	EPS control unit connector B (6P): disconnected
	Electric brake booster 26P connector: disconnected
	Real time AWD control unit 24P connector: disconnected
	Multipurpose camera unit 12P connector: disconnected
	Millimeter wave radar 8P connector: disconnected
	CAN gateway 12P (16P)* connector: disconnected
Test point 1	CAN gateway 12P connector (female terminal) No. 5: ① CAN gateway 16P connector (female terminals) No. 14: ② *
Test point 2	Body ground

12P Connector Type

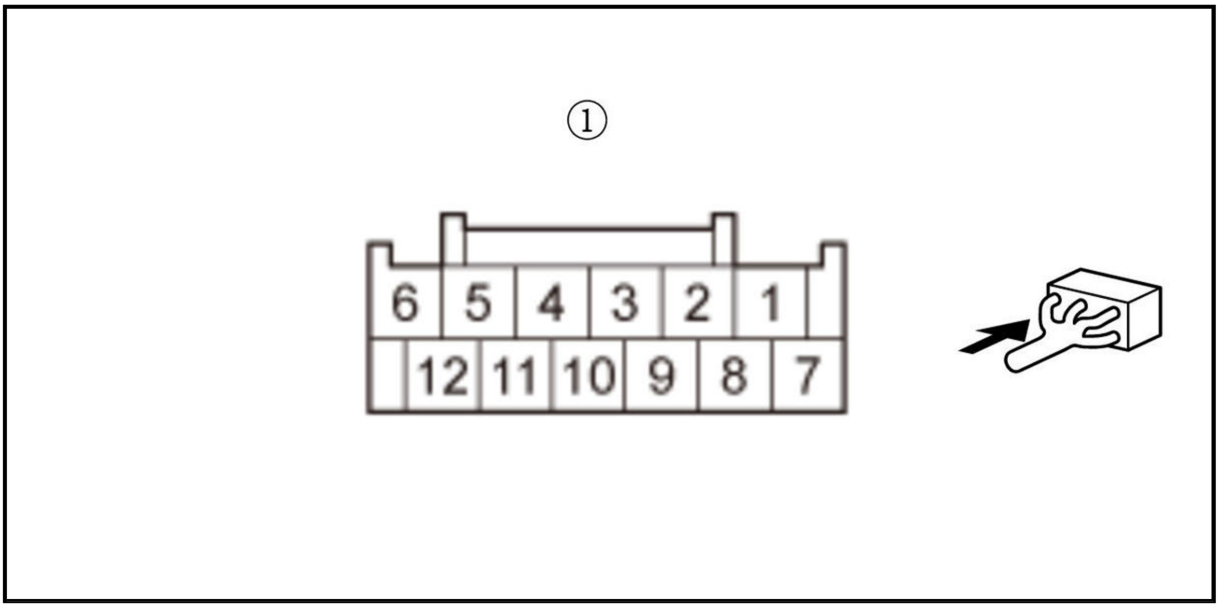

16P Connector Type*

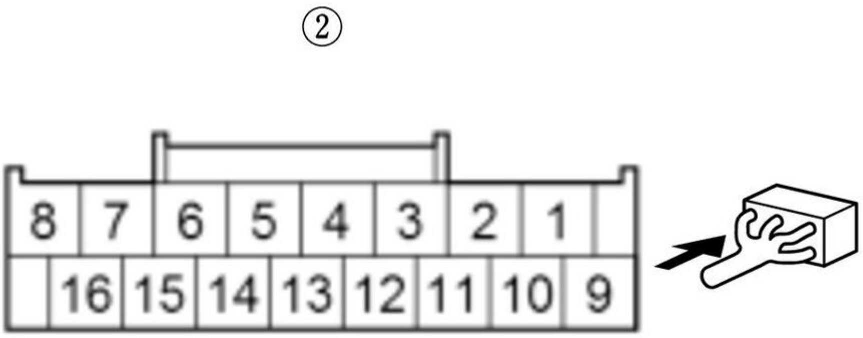

Is there 1 MΩ or more?

YES

Go to step 14.

NO

Repair a short in the F-CAN B_L wire between the CAN gateway and the connected units.

14. Shorted wire check (F-CAN B_H line to F-CAN B_L line)

-1. Measure the resistance between test points 1 and 2.

Test condition	Vehicle OFF (LOCK) mode
	PCM connector A (50P): disconnected
	VSA modulator-control unit 46P connector: disconnected
	ANC/active sound control unit 20P connector: disconnected
	Audio-navigation unit *1 Audio unit *2 connector E (16P): disconnected
	SRS unit connector A (39P): disconnected
	EPS control unit connector B (6P): disconnected
	Electric brake booster 26P connector: disconnected
	Real time AWD control unit 24P connector: disconnected
	Multipurpose camera unit 12P connector: disconnected
	Millimeter wave radar 8P connector: disconnected
	CAN gateway 12P (16P)* connector: disconnected
Test point 1	CAN gateway 12P connector (female terminal) No. 5: ① CAN gateway 16P connector (female terminals) No. 14: ② *
Test point 2	CAN gateway 12P connector (female terminal) No. 12: ① CAN gateway 16P connector (female terminals) No. 6: ② *

12P Connector Type

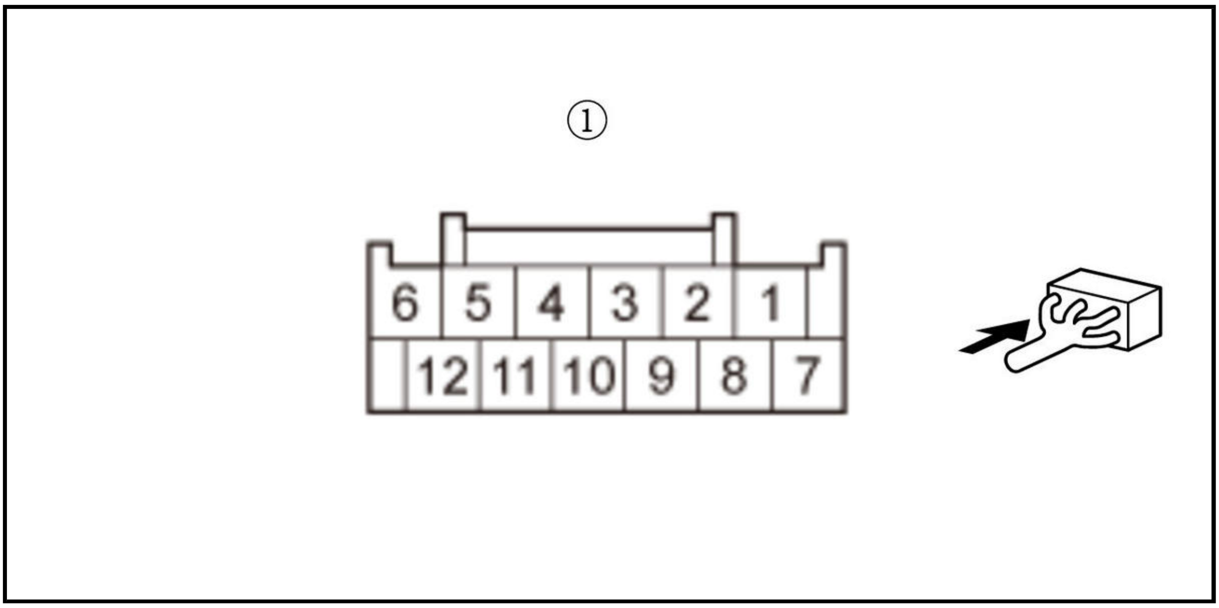
①
6
5
4
3
2
1
12
11
10
9
8
7

16P Connector Type*

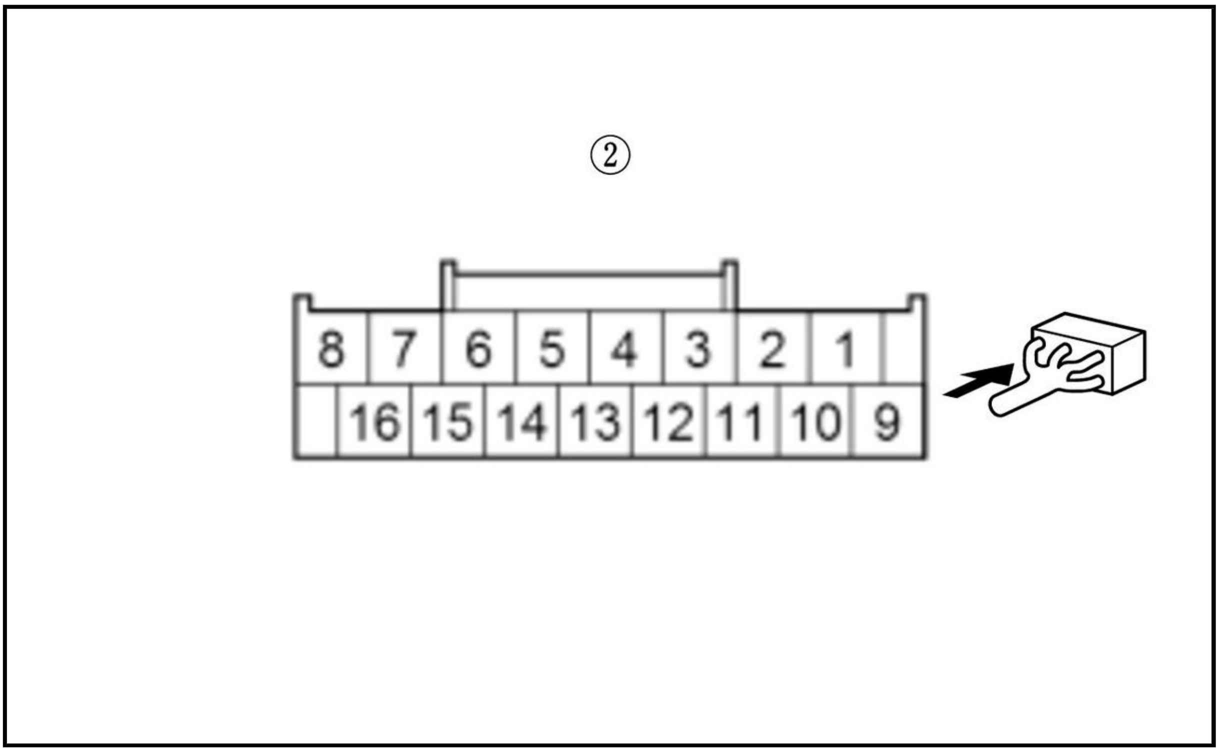
②
8
7
6
5
4
3
2
1
16
15
14
13
12
11
10
9

Is there 1 MΩ or more?

YES

Check for any authorized service information related to the DTCs or symptoms you are troubleshooting, or **substitute a known-good real time CAN gateway** .

NO

Repair a short in the F-CAN B_H wire to the F-CAN B_L wire between CAN gateway terminals No. 5 and No. 12 (No. 6 and No. 14)*.

DTC U3000-49 (CAN GATEWAY)

DTC U3000-49 : CAN Gateway Internal Failure

NOTE: Before you troubleshoot, **review the general troubleshooting information** .

DTC Description	DTC
U3000-49 CAN Gateway Internal Failure	B

DTC (CAN gateway)

1. Problem verification

   -1. Turn the vehicle to the ON mode.

   -2. Clear the DTC with the HDS.

   -3. Turn the vehicle to the OFF (LOCK) mode.

   -4. Turn the vehicle to the ON mode.

   -5. Check for DTCs with the HDS.

DTC Description	DTC
U3000-49 CAN Gateway Internal Failure	B

   Is DTC U3000-49 indicated?

   YES

   Replace the CAN gateway .

   NO

   Intermittent failure, the system is OK at this time.

DTC U3000-51 (CAN GATEWAY)

DTC U3000-51 : CAN Gateway Programming Error

NOTE: Before you troubleshoot, **review the general troubleshooting information** .

DTC Description	DTC
U3000-51 CAN Gateway Programming Error	B

DTC (CAN gateway)

1. Problem verification

   -1. Turn the vehicle to the ON mode.

   -2. Clear the DTC with the HDS.

   -3. Turn the vehicle to the OFF (LOCK) mode.

   -4. Turn the vehicle to the ON mode.

   -5. Check for DTCs with the HDS.

DTC Description	DTC
U3000-51 CAN Gateway Programming Error	B

   Is DTC U3000-51 indicated?

YES

Reprogram the CAN gateway .

NO

Intermittent failure, the system is OK at this time.

DTC TROUBLESHOOTING INDEX

COMMUNICATION SYSTEMS DTC TROUBLESHOOTING INDEX (CAN GATEWAY)

DTC Troubleshooting Index

DTC	Two Drive Cycle Detection	Detection Item	MIL
U0029-00	---	CAN Gateway F-CAN ch A Bus Off	---
U0047-00	---	CAN Gateway F-CAN ch B Bus Off	---
U3000-49	---	CAN Gateway Internal Failure	---
U3000-51	---	CAN Gateway Programming Error	---

CAN Gateway - DTC Diagnostics - CR-V (Hybrid)

DTC TROUBLESHOOTING INDEX

COMMUNICATION SYSTEMS DTC TROUBLESHOOTING INDEX

DTC	Detection Item	Troubleshooting	Advanced Diagnostics	Note
U0029-00	CAN Gateway F-CAN ch A Bus Off	TRS	AD	B
U0038-00	CAN Gateway F-CAN ch E Bus Off	TRS	AD	B
U0047-00	CAN Gateway F-CAN ch B Bus Off	TRS	AD	B
U0056-00	CAN Gateway F-CAN ch C Bus Off	TRS	AD	B
U0065-00	CAN Gateway F-CAN ch D Bus Off	TRS	AD	B
U3000-49	CAN Gateway Internal Failure	TRS	AD	B
U3000-51	CAN Gateway Programming Error	TRS	AD	B

NOTE: The above DTCs are indicated when the CAN gateway system is selected with the HDS.

TROUBLESHOOTING

DTC U0029-00 (CAN GATEWAY)

DTC U0029-00 : CAN Gateway F-CAN ch A Bus Off

NOTE: Before you troubleshoot, review the general troubleshooting information .

DTC Description	DTC
U0029-00 CAN Gateway F-CAN ch A Bus Off	B

DTC (CAN GATEWAY)

1. Problem verification

   -1. Turn the vehicle to the ON mode.

   -2. Clear the DTC with the HDS.

   -3. Turn the vehicle to the OFF (LOCK) mode.

   -4. Turn the vehicle to the ON mode, and wait 6 seconds.

   -5. Check for DTCs with the HDS.

DTC Description	DTC
U0029-00 CAN Gateway F-CAN ch A Bus Off	B

Is DTC U0029-00 indicated?

YES

The failure is duplicated. Go to step 2.

NO

Intermittent failure, the system is OK at this time. **If the on-board snapshot of this DTC is recorded, try to reproduce the failure under the same conditions with the on-board snapshot** .

2. Shorted unit check (PCM)

-1. Turn the vehicle to the OFF (LOCK) mode.

-2. Jump the SCS line with the HDS, and wait more than 1 minute.

-3. Disconnect the following connector.

PCM connector A (50P)

-4. Turn the vehicle to the ON mode.

-5. Clear the DTC with the HDS.

-6. Turn the vehicle to the OFF (LOCK) mode.

-7. Turn the vehicle to the ON mode, and wait 6 seconds.

-8. Check for DTCs with the HDS.

DTC Description	DTC
U0029-00 CAN Gateway F-CAN ch A Bus Off	B

Is DTC U0029-00 indicated?

YES

Go to step 3.

NO

Check for any authorized service information related to the DTCs or symptoms you are troubleshooting, or **substitute a known-good PCM** .

3. Shorted unit check (SBW shifter control module)

-1. Turn the vehicle to the OFF (LOCK) mode.

-2. Disconnect the following connector.

SBW shifter control module 20P connector

-3. Turn the vehicle to the ON mode.

-4. Clear the DTC with the HDS.

-5. Turn the vehicle to the OFF (LOCK) mode.

-6. Turn the vehicle to the ON mode, and wait 6 seconds.

-7. Check for DTCs with the HDS.

DTC Description	DTC
U0029-00 CAN Gateway F-CAN ch A Bus Off	B

Is DTC U0029-00 indicated?

YES

Go to step 4.

NO

Check for any authorized service information related to the DTCs or symptoms you are troubleshooting, or **substitute a known-good SBW shifter control module** .

4. Shorted unit check (PCU)

-1. Turn the vehicle to the OFF (LOCK) mode.

-2. Disconnect the following connector.

PCU 33P connector

NOTE: Before disconnecting the PCU connector, **do the 12 volt battery terminal disconnection procedure** , and **turn off the service plug** .

-3. **Do the 12 volt battery terminal reconnection procedure** .

-4. Turn the vehicle to the ON mode.

-5. Clear the DTC with the HDS.

-6. Turn the vehicle to the OFF (LOCK) mode.

-7. Turn the vehicle to the ON mode, and wait 6 seconds.

-8. Check for DTCs with the HDS.

DTC Description	DTC
U0029-00 CAN Gateway F-CAN ch A Bus Off	B

Is DTC U0029-00 indicated?

YES

Go to step 5.

NO

Check for any authorized service information related to the DTCs or symptoms you are troubleshooting, or **substitute a known-good PCU** .

5. Shorted unit check (battery condition monitor module)

-1. Turn the vehicle to the OFF (LOCK) mode.

-2. Disconnect the following connector.

NOTE: Before disconnecting the battery condition monitor module connector, **do the 12 volt battery terminal disconnection procedure** , and **turn off the service plug** .

Battery condition monitor module connector E (32P)

-3. **Do the 12 volt battery terminal reconnection procedure** .

-4. Turn the vehicle to the ON mode.

-5. Clear the DTC with the HDS.

-6. Turn the vehicle to the OFF (LOCK) mode.

-7. Turn the vehicle to the ON mode, and wait 6 seconds.

-8. Check for DTCs with the HDS.

DTC Description	DTC
U0029-00 CAN Gateway F-CAN ch A Bus Off	B

Is DTC U0029-00 indicated?

YES

Go to step 6.

NO

Check for any authorized service information related to the DTCs or symptoms you are troubleshooting, or **substitute a known-good battery condition monitor module** .

6. Shorted wire check (F-CAN A_H line)

-1. Turn the vehicle to the OFF (LOCK) mode.

-2. Disconnect the following connector.

CAN gateway 16P connector

-3. Measure the resistance between test points 1 and 2.

Test condition	Vehicle OFF (LOCK) mode
B	PCM connector A (50P): disconnected
B	SBW shifter control module 20P connector: disconnected
B	PCU 33P connector: disconnected
B	Battery condition monitor module connector E (32P): disconnected
B	CAN gateway 16P connector: disconnected
Test point 1	CAN gateway 16P connector (female terminals) No. 3: ①
Test point 2	Body ground

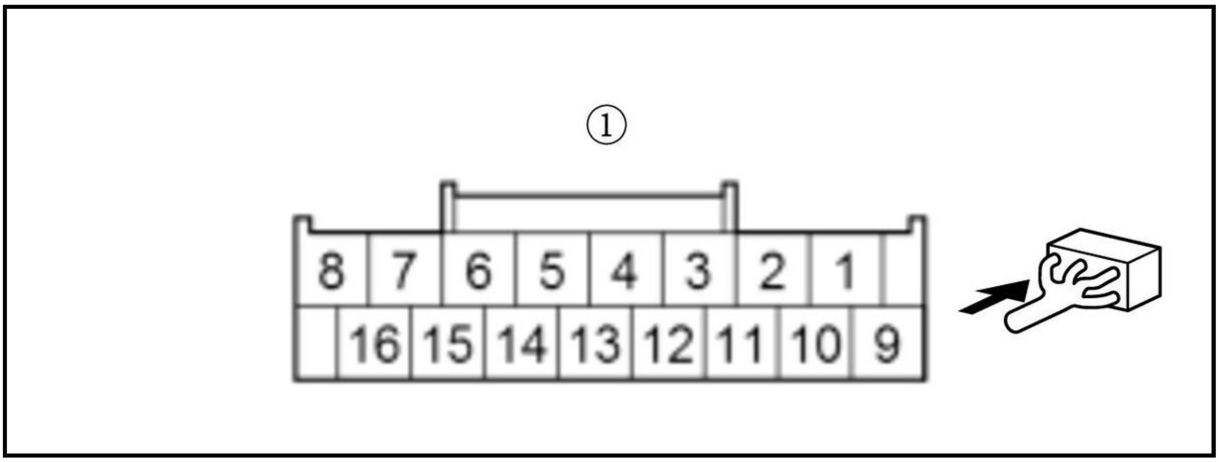

Is there 1 MΩ or more?

YES

Go to step 7.

NO

Repair a short in the F-CAN A_H wire between the CAN gateway and the connected units.

7. Shorted wire check (F-CAN A_L line)

-1. Measure the resistance between test points 1 and 2.

Test condition	Vehicle OFF (LOCK) mode
B	PCM connector A (50P): disconnected
B	SBW shifter control module 20P connector: disconnected
B	PCU 33P connector: disconnected
B	Battery condition monitor module connector E (32P): disconnected
B	CAN gateway 16P connector: disconnected
Test point 1	CAN gateway 16P connector (female terminals) No. 11: ①
Test point 2	Body ground

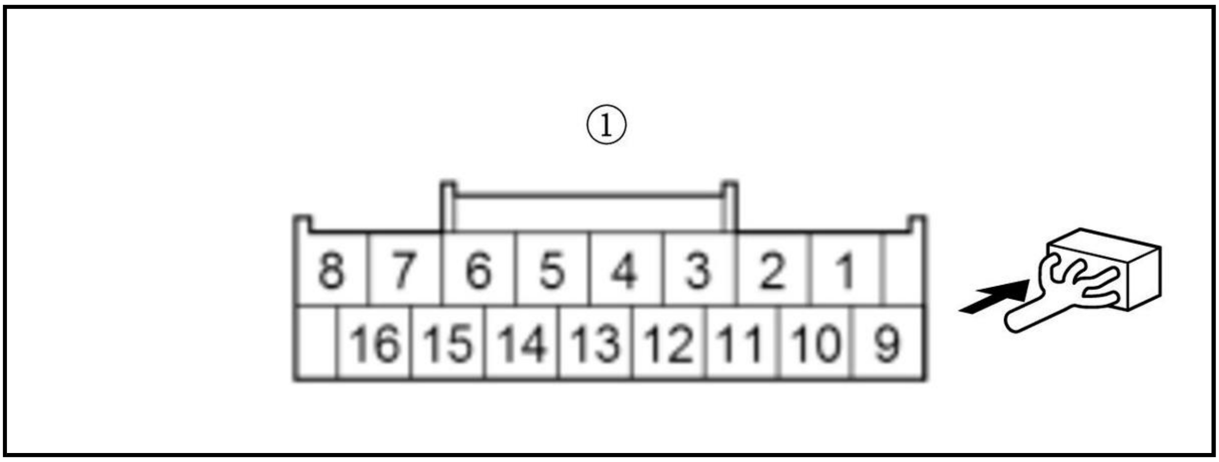

Is there 1 MΩ or more?

YES

Go to step 8.

NO

Repair a short in the F-CAN A_L wire between the CAN gateway and the connected units.

8. Shorted wire check (F-CAN A_H line to F-CAN A_L line)

-1. Measure the resistance between test points 1 and 2.

Test condition	Vehicle OFF (LOCK) mode
B	PCM connector A (50P): disconnected
B	SBW shifter control module 20P connector: disconnected
B	PCU 33P connector: disconnected
B	Battery condition monitor module connector E (32P): disconnected
B	CAN gateway 16P connector: disconnected
Test point 1	CAN gateway 16P connector (female terminals) No. 3: ①

Test point 2	CAN gateway 16P connector (female terminals) No. 11: ①

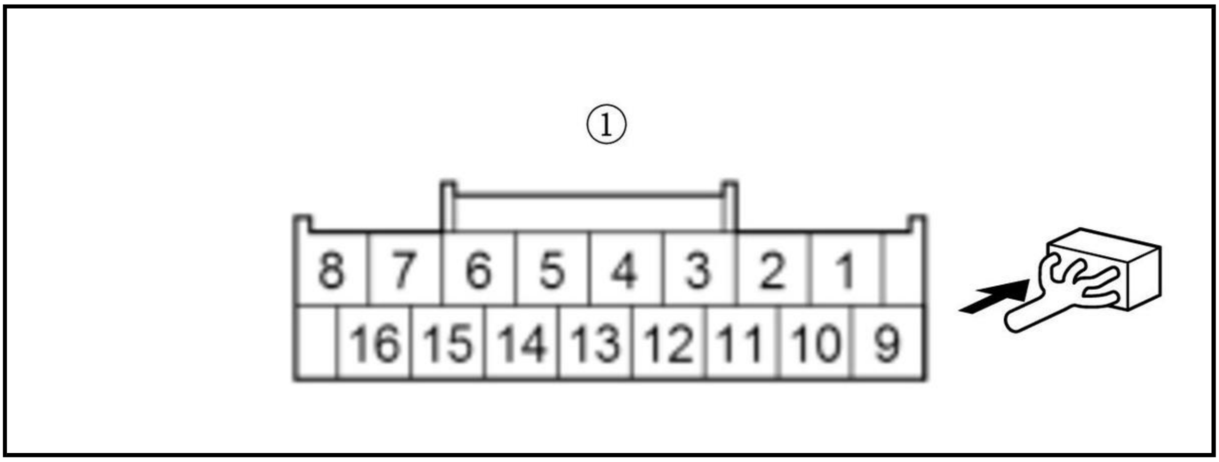

Is there 1 MΩ or more?

YES

Check for any authorized service information related to the DTCs or symptoms you are troubleshooting, or substitute a known-good CAN gateway .

NO

Repair a short in the F-CAN A_H wire to the F-CAN A_L wire between CAN gateway terminals No. 3 and No. 11.

DTC U0038-00 (CAN GATEWAY)

DTC U0038-00 : CAN Gateway F-CAN ch E Bus Off

NOTE: Before you troubleshoot, review the general troubleshooting information .

DTC Description	DTC
U0038-00 CAN Gateway F-CAN ch E Bus Off	B

DTC (CAN GATEWAY)

1. Problem verification

-1. Turn the vehicle to the ON mode.

-2. Clear the DTC with the HDS.

-3. Turn the vehicle to the OFF (LOCK) mode.

-4. Turn the vehicle to the ON mode, and wait 6 seconds.

-5. Check for Pending or Confirmed DTCs with the HDS.

DTC Description	DTC
U0038-00 CAN Gateway F-CAN ch E Bus Off	B

Is DTC U0038-00 indicated?

YES

The failure is duplicated. Go to step 2.

NO

Intermittent failure, the system is OK at this time. **If the on-board snapshot of this DTC is recorded, try to reproduce the failure under the same conditions with the on-board snapshot** .

2. Shorted unit check (PCM)

-1. Turn the vehicle to the OFF (LOCK) mode.

-2. Jump the SCS line with the HDS, and wait more than 1 minute.

-3. Disconnect the following connector.

PCM connector A (50P)

-4. Turn the vehicle to the ON mode.

-5. Clear the DTC with the HDS.

-6. Turn the vehicle to the OFF (LOCK) mode.

-7. Turn the vehicle to the ON mode, and wait 6 seconds.

-8. Check for Pending or Confirmed DTCs with the HDS.

DTC Description	DTC
U0038-00 CAN Gateway F-CAN ch E Bus Off	B

Is DTC U0038-00 indicated?

YES

Go to step 3.

NO

Check for any authorized service information related to the DTCs or symptoms you are troubleshooting, or **substitute a known-good PCM** .

3. Shorted unit check (SBW shifter control module)

-1. Turn the vehicle to the OFF (LOCK) mode.

-2. Disconnect the following connector.

SBW shifter control module 20P connector

-3. Turn the vehicle to the ON mode.

-4. Clear the DTC with the HDS.

-5. Turn the vehicle to the OFF (LOCK) mode.

-6. Turn the vehicle to the ON mode, and wait 6 seconds.

-7. Check for Pending or Confirmed DTCs with the HDS.

DTC Description	DTC
U0038-00 CAN Gateway F-CAN ch E Bus Off	B

Is DTC U0038-00 indicated?

YES

Go to step 4.

NO

Check for any authorized service information related to the DTCs or symptoms you are troubleshooting, or **substitute a known-good SBW shifter control module** .

4. Shorted unit check (park pawl actuator driver unit)

-1. Turn the vehicle to the OFF (LOCK) mode.

-2. Disconnect the following connector.

Park pawl actuator driver unit 26P connector

-3. Turn the vehicle to the ON mode.

-4. Clear the DTC with the HDS.

-5. Turn the vehicle to the OFF (LOCK) mode.

-6. Turn the vehicle to the ON mode, and wait 6 seconds.

-7. Check for Pending or Confirmed DTCs with the HDS.

DTC Description	DTC
U0038-00 CAN Gateway F-CAN ch E Bus Off	B

Is DTC U0038-00 indicated?

YES

Go to step 5.

NO

Check for any authorized service information related to the DTCs or symptoms you are troubleshooting, or **substitute a known-good park pawl actuator driver unit** .

5. Shorted unit check (PCU)

-1. Turn the vehicle to the OFF (LOCK) mode.

-2. Disconnect the following connector.

PCU 33P connector

NOTE: Before disconnecting the PCU connector, **do the 12 volt battery terminal disconnection procedure** , and **turn off the service plug** .

-3. **Do the 12 volt battery terminal reconnection procedure** .

-4. Turn the vehicle to the ON mode.

-5. Clear the DTC with the HDS.

-6. Turn the vehicle to the OFF (LOCK) mode.

-7. Turn the vehicle to the ON mode, and wait 6 seconds.

-8. Check for Pending or Confirmed DTCs with the HDS.

DTC Description	DTC
U0038-00 CAN Gateway F-CAN ch E Bus Off	B

Is DTC U0038-00 indicated?

YES

Go to step 6.

NO

Check for any authorized service information related to the DTCs or symptoms you are troubleshooting, or **substitute a known-good PCU** .

6. Shorted unit check (battery condition monitor module)

-1. Turn the vehicle to the OFF (LOCK) mode.

-2. Disconnect the following connector.

Battery condition monitor module connector E (32P)

NOTE: Before disconnecting the battery condition monitor module connector, **do the 12 volt battery terminal disconnection procedure** , and **turn off the service plug** .

-3. **Do the 12 volt battery terminal reconnection procedure** .

-4. Turn the vehicle to the ON mode.

-5. Clear the DTC with the HDS.

-6. Turn the vehicle to the OFF (LOCK) mode.

-7. Turn the vehicle to the ON mode, and wait 6 seconds.

-8. Check for Pending or Confirmed DTCs with the HDS.

DTC Description	DTC
U0038-00 CAN Gateway F-CAN ch E Bus Off	B

Is DTC U0038-00 indicated?

YES

Go to step 7.

NO

Check for any authorized service information related to the DTCs or symptoms you are troubleshooting, or **substitute a known-good battery condition monitor module** .

7. Shorted wire check (EP-CAN A_H line)

-1. Turn the vehicle to the OFF (LOCK) mode.

-2. Disconnect the following connector.

CAN gateway 16P connector

-3. Measure the resistance between test points 1 and 2.

Test condition	Vehicle OFF (LOCK) mode
B	PCM connector A (50P): disconnected
B	SBW shifter control module 20P connector: disconnected
B	Park pawl actuator driver unit 26P connector: disconnected
B	PCU 33P connector: disconnected
B	Battery condition monitor module connector E (32P): disconnected
B	CAN gateway 16P connector: disconnected
Test point 1	CAN gateway 16P connector (female terminals) No. 16: ①
Test point 2	Body ground

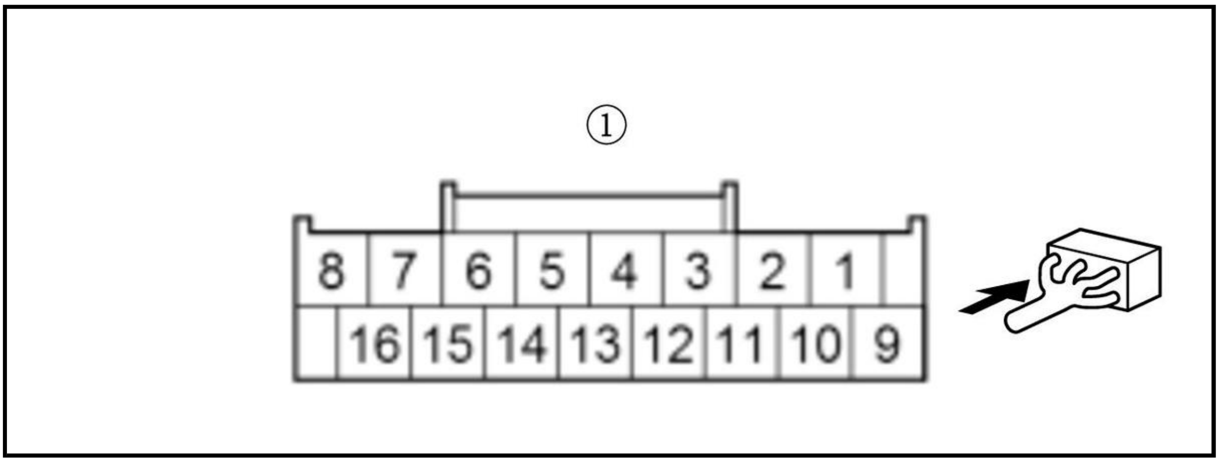

Is there 1 MΩ or more?

YES

Go to step 8.

NO

Repair a short in the EP-CAN A_H wire between the CAN gateway and the connected units.

8. Shorted wire check (EP-CAN A_L line)

-1. Measure the resistance between test points 1 and 2.

Test condition	Vehicle OFF (LOCK) mode
B	PCM connector A (50P): disconnected
B	SBW shifter control module 20P connector: disconnected
B	Park pawl actuator driver unit 26P connector: disconnected
B	PCU 33P connector: disconnected
B	Battery condition monitor module connector E (32P): disconnected
B	CAN gateway 16P connector: disconnected
Test point 1	CAN gateway 16P connector (female terminals) No. 8: ①

Test point 2	Body ground

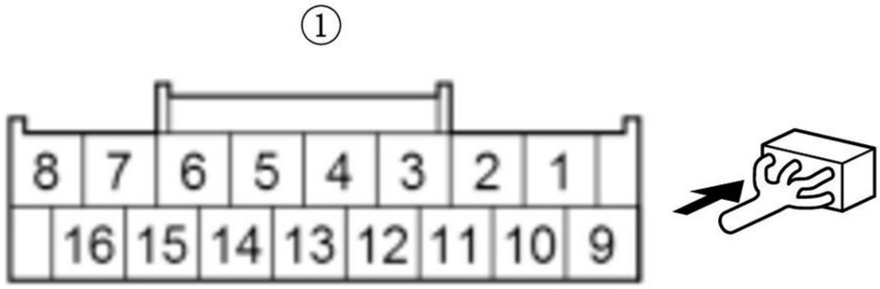

Is there 1 MΩ or more?

YES

Go to step 9.

NO

Repair a short in the EP-CAN A_L wire between the CAN gateway and the connected units.

9. Shorted wire check (EP-CAN A_H line to EP-CAN A_L line)

-1. Measure the resistance between test points 1 and 2.

Test condition	Vehicle OFF (LOCK) mode
B	PCM connector A (50P): disconnected
B	SBW shifter control module 20P connector: disconnected
B	Park pawl actuator driver unit 26P connector: disconnected
B	PCU 33P connector: disconnected
B	Battery condition monitor module connector E (32P): disconnected
B	CAN gateway 16P connector: disconnected
Test point 1	CAN gateway 16P connector (female terminals) No. 8: ①
Test point 2	CAN gateway 16P connector (female terminals) No. 16: ①

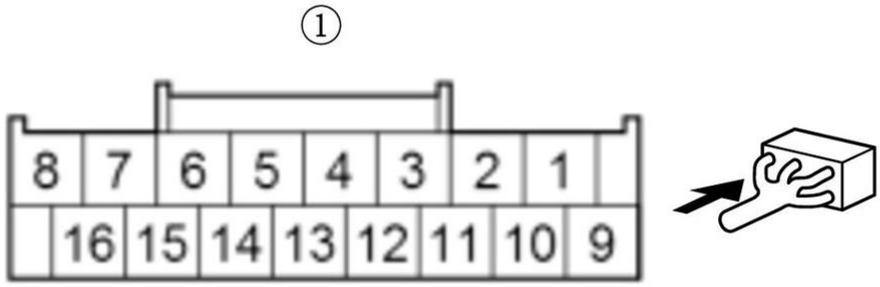

Is there 1 MΩ or more?

YES

Check for any authorized service information related to the DTCs or symptoms you are troubleshooting, or substitute a known-good CAN gateway .

NO

Repair a short in the EP-CAN A_H wire to the EP-CAN A_L wire between CAN gateway terminals No. 8 and No. 16.

DTC U0047-00 (CAN GATEWAY)

DTC U0047-00 : CAN Gateway F-CAN ch B Bus Off

NOTE: Before you troubleshoot, review the general troubleshooting information .

*1: With navigation
*2: Without navigation

DTC Description	DTC
U0047-00 CAN Gateway F-CAN ch B Bus Off	B

DTC (CAN GATEWAY)

1. Problem verification

-1. Turn the vehicle to the ON mode.

-2. Clear the DTC with the HDS.

-3. Turn the vehicle to the OFF (LOCK) mode.

-4. Turn the vehicle to the ON mode, and wait 6 seconds.

-5. Check for DTCs with the HDS.

DTC Description	DTC
U0047-00 CAN Gateway F-CAN ch B Bus Off	B

Is DTC U0047-00 indicated?

YES

The failure is duplicated. Go to step 2.

NO

Intermittent failure, the system is OK at this time. If the on-board snapshot of this DTC is recorded, try to reproduce the failure under the same conditions with the on-board snapshot .

2. Shorted unit check (PCM)

-1. Turn the vehicle to the OFF (LOCK) mode.

-2. Jump the SCS line with the HDS, and wait more than 1 minute.

-3. Disconnect the following connector.

PCM connector A (50P)

-4. Turn the vehicle to the ON mode.

-5. Clear the DTC with the HDS.

-6. Turn the vehicle to the OFF (LOCK) mode.

-7. Turn the vehicle to the ON mode, and wait 6 seconds.

-8. Check for DTCs with the HDS.

DTC Description	DTC
U0047-00 CAN Gateway F-CAN ch B Bus Off	B

Is DTC U0047-00 indicated?

YES

Go to step 3.

NO

Check for any authorized service information related to the DTCs or symptoms you are troubleshooting, or **substitute a known-good PCM** .

3. Shorted unit check (electric servo brake control unit)

-1. Turn the vehicle to the OFF (LOCK) mode.

-2. Disconnect the following connector.

Electric servo brake control unit 22P connector

-3. Turn the vehicle to the ON mode.

-4. Clear the DTC with the HDS.

-5. Turn the vehicle to the OFF (LOCK) mode.

-6. Turn the vehicle to the ON mode, and wait 6 seconds.

-7. Check for DTCs with the HDS.

DTC Description	DTC
U0047-00 CAN Gateway F-CAN ch B Bus Off	B

Is DTC U0047-00 indicated?

YES (with display audio)

Go to step 4.

YES (without display audio)

Go to step 5.

NO

Check for any authorized service information related to the DTCs or symptoms you are troubleshooting, or **replace the original electric servo brake control unit** .

4. Shorted unit check (audio-navigation unit *1, audio unit *2

-1. Turn the vehicle to the OFF (LOCK) mode.

-2. Disconnect the following connector.

Audio-navigation unit *1, Audio unit *2 connector E (16P)

-3. Turn the vehicle to the ON mode.

-4. Clear the DTC with the HDS.

-5. Turn the vehicle to the OFF (LOCK) mode.

-6. Turn the vehicle to the ON mode, and wait 6 seconds.

-7. Check for DTCs with the HDS.

DTC Description	DTC
U0047-00 CAN Gateway F-CAN ch B Bus Off	B

Is DTC U0047-00 indicated?

YES

Go to step 5.

NO

Substitute a known-good audio unit .

5. Shorted unit check (ANC/active sound control unit)

-1. Turn the vehicle to the OFF (LOCK) mode.

-2. Disconnect the following connector.

ANC/active sound control unit 20P connector

-3. Turn the vehicle to the ON mode.

-4. Clear the DTC with the HDS.

-5. Turn the vehicle to the OFF (LOCK) mode.

-6. Turn the vehicle to the ON mode, and wait 6 seconds.

-7. Check for DTCs with the HDS.

DTC Description	DTC
U0047-00 CAN Gateway F-CAN ch B Bus Off	B

Is DTC U0047-00 indicated?

YES

Go to step 6.

NO

Substitute a known-good ANC/active sound control unit .

6. Shorted unit check (acoustic vehicle alerting control unit)

   -1. Turn the vehicle to the OFF (LOCK) mode.

   -2. Disconnect the following connector.

Acoustic vehicle alerting control unit 12P connector

   -3. Turn the vehicle to the ON mode.

   -4. Clear the DTC with the HDS.

   -5. Turn the vehicle to the OFF (LOCK) mode.

   -6. Turn the vehicle to the ON mode, and wait 6 seconds.

   -7. Check for DTCs with the HDS.

DTC Description	DTC
U0047-00 CAN Gateway F-CAN ch B Bus Off	B

   Is DTC U0047-00 indicated?

   YES

   Go to step 7.

   NO

   Substitute a known-good acoustic vehicle alerting control unit .

7. Shorted unit check (VSA modulator-control unit)

   -1. Turn the vehicle to the OFF (LOCK) mode.

   -2. Disconnect the following connector.

VSA modulator-control unit 46P connector

   -3. Turn the vehicle to the ON mode.

   -4. Clear the DTC with the HDS.

   -5. Turn the vehicle to the OFF (LOCK) mode.

   -6. Turn the vehicle to the ON mode, and wait 6 seconds.

   -7. Check for DTCs with the HDS.

DTC Description	DTC
U0047-00 CAN Gateway F-CAN ch B Bus Off	B

   Is DTC U0047-00 indicated?

   1. **YES**

      - Check for any authorized service information related to the DTCs or symptoms you are troubleshooting, or **substitute a known-good body control module** .

- If the original body control module is OK, go to step 8.

NO

Check for any authorized service information related to the DTCs or symptoms you are troubleshooting, or **replace the VSA modulator-control unit** .

8. Shorted wire check (F-CAN B_H line)

-1. Turn the vehicle to the OFF (LOCK) mode.

-2. Disconnect the following connectors.

Body control module connector B (36P)
CAN gateway 16P connector

-3. Measure the resistance between test points 1 and 2.

Test condition	Vehicle OFF (LOCK) mode
B	PCM connector A (50P): disconnected
B	Electric servo brake control unit 22P connector: disconnected
B	Audio-navigation unit *1, Audio unit *2 connector E (16P) (with display audio): disconnected
B	ANC/active sound control unit 20P connector: disconnected
B	Acoustic vehicle alerting control unit 12P connector: disconnected
B	VSA modulator-control unit 46P connector: disconnected
B	Body control module connector B (36P): disconnected
B	CAN gateway 16P connector: disconnected
Test point 1	CAN gateway 16P connector (female terminals) No. 6: ①
Test point 2	Body ground

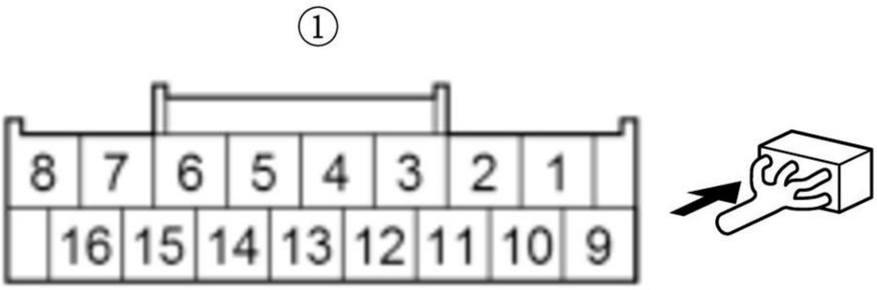

Is there 1 MΩ or more?

YES

Go to step 9.

NO

Repair a short in the F-CAN B_H wire between the CAN gateway and the connected units.

9. Shorted wire check (F-CAN B_L line)

-1. Measure the resistance between test points 1 and 2.

Test condition	Vehicle OFF (LOCK) mode
B	PCM connector A (50P): disconnected
B	Electric servo brake control unit 22P connector: disconnected
B	Audio-navigation unit *1, Audio unit *2 connector E (16P) (with display audio): disconnected
B	ANC/active sound control unit 20P connector: disconnected
B	Acoustic vehicle alerting control unit 12P connector: disconnected
B	VSA modulator-control unit 46P connector: disconnected
B	Body control module connector B (36P): disconnected
B	CAN gateway 16P connector: disconnected
Test point 1	CAN gateway 16P connector (female terminals) No. 14: ①
Test point 2	Body ground

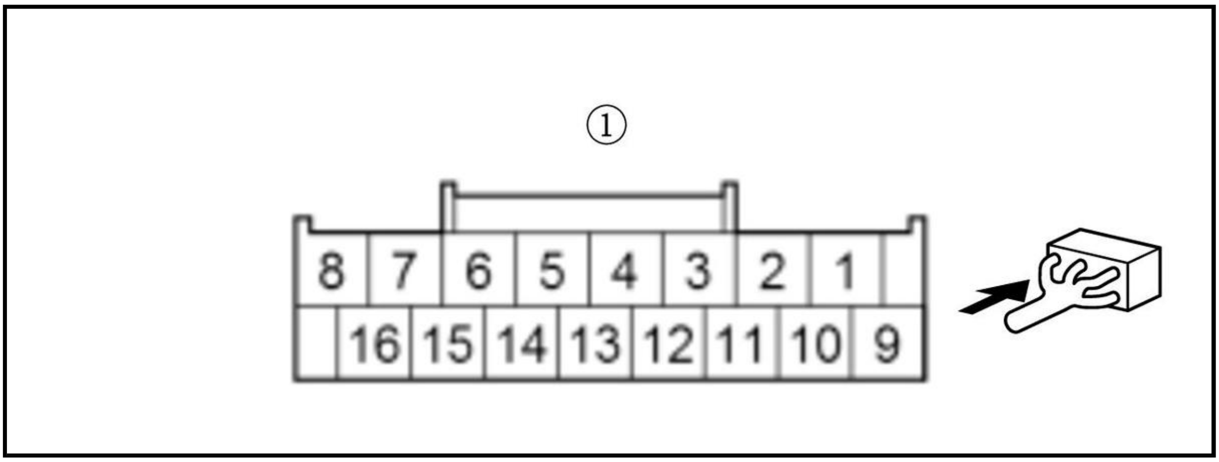

Is there 1 MΩ or more?

YES

Go to step 10.

NO

Repair a short in the F-CAN B_L wire between the CAN gateway and the connected units.

10. Shorted wire check (F-CAN B_H line to F-CAN B_L line)

-1. Measure the resistance between test points 1 and 2.

Test condition	Vehicle OFF (LOCK) mode
B	PCM connector A (50P): disconnected
B	Electric servo brake control unit 22P connector: disconnected
B	Audio-navigation unit *1, Audio unit *2 connector E (16P) (with display audio): disconnected
B	ANC/active sound control unit 20P connector: disconnected
B	Acoustic vehicle alerting control unit 12P connector: disconnected
B	VSA modulator-control unit 46P connector: disconnected
B	Body control module connector B (36P): disconnected
B	CAN gateway 16P connector: disconnected

Test point 1	CAN gateway 16P connector (female terminals) No. 6: ①
Test point 2	CAN gateway 16P connector (female terminals) No. 14: ①

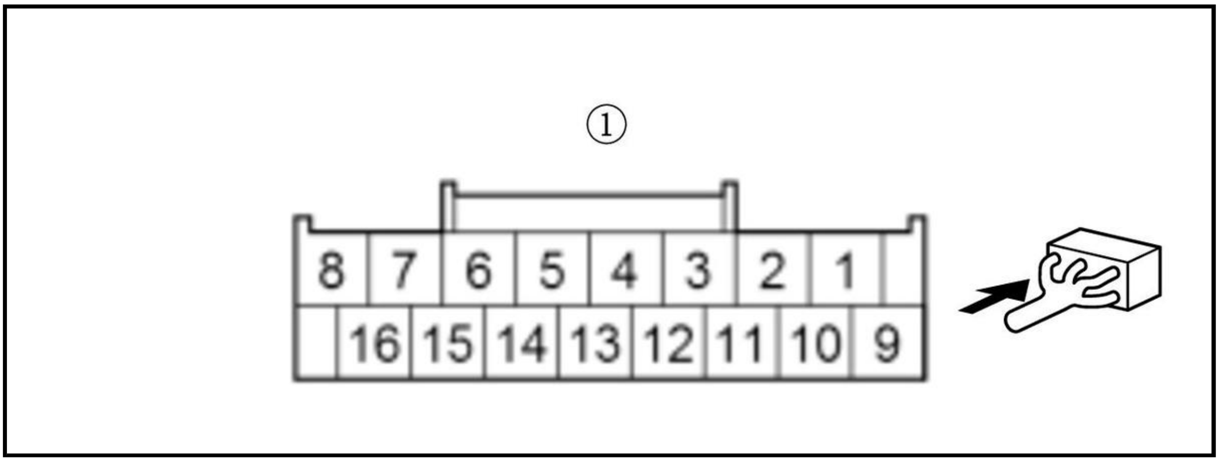

Is there 1 MΩ or more?

YES

Check for any authorized service information related to the DTCs or symptoms you are troubleshooting, or **substitute a known-good CAN gateway** .

NO

Repair a short in the F-CAN B_H wire to the F-CAN B_L wire between CAN gateway terminals No. 6 and No. 14.

DTC U0056-00 (CAN GATEWAY)

DTC U0056-00 : CAN Gateway F-CAN ch C Bus Off

NOTE: Before you troubleshoot, **review the general troubleshooting information** .

DTC Description	DTC
U0056-00 CAN Gateway F-CAN ch C Bus Off	B

DTC (CAN GATEWAY)

1. Problem verification

   -1. Turn the vehicle to the ON mode.

   -2. Clear the DTC with the HDS.

   -3. Turn the vehicle to the OFF (LOCK) mode.

   -4. Turn the vehicle to the ON mode, and wait 6 seconds.

   -5. Check for DTCs with the HDS.

DTC Description	DTC
U0056-00 CAN Gateway F-CAN ch C Bus Off	B

Is DTC U0056-00 indicated?

YES

The failure is duplicated. Go to step 2.

NO

Intermittent failure, the system is OK at this time. **If the on-board snapshot of this DTC is recorded, try to reproduce the failure under the same conditions with the on-board snapshot** .

2. Shorted unit check (EPS control unit)

-1. Turn the vehicle to the OFF (LOCK) mode.

-2. Disconnect the following connector.

EPS control unit connector B (6P)

-3. Turn the vehicle to the ON mode.

-4. Clear the DTC with the HDS.

-5. Turn the vehicle to the OFF (LOCK) mode.

-6. Turn the vehicle to the ON mode, and wait 6 seconds.

-7. Check for DTCs with the HDS.

DTC Description	DTC
U0056-00 CAN Gateway F-CAN ch C Bus Off	B

Is DTC U0056-00 indicated?

YES

Go to step 3.

NO

Check for any authorized service information related to the DTCs or symptoms you are troubleshooting, or **replace the original EPS control unit** .

3. Shorted unit check (VSA modulator-control unit)

-1. Turn the vehicle to the OFF (LOCK) mode.

-2. Disconnect the following connector.

VSA modulator-control unit 46P connector

-3. Turn the vehicle to the ON mode.

-4. Clear the DTC with the HDS.

-5. Turn the vehicle to the OFF (LOCK) mode.

-6. Turn the vehicle to the ON mode, and wait 6 seconds.

-7. Check for DTCs with the HDS.

DTC Description	DTC
U0056-00 CAN Gateway F-CAN ch C Bus Off	B

Is DTC U0056-00 indicated?

YES

Go to step 4.

NO

Check for any authorized service information related to the DTCs or symptoms you are troubleshooting, or **replace the VSA modulator-control unit** .

4. Shorted unit check (electric servo brake control unit)

-1. Turn the vehicle to the OFF (LOCK) mode.

-2. Disconnect the following connector.

Electric servo brake control unit 22P connector

-3. Turn the vehicle to the ON mode.

-4. Clear the DTC with the HDS.

-5. Turn the vehicle to the OFF (LOCK) mode.

-6. Turn the vehicle to the ON mode, and wait 6 seconds.

-7. Check for DTCs with the HDS.

DTC Description	DTC
U0056-00 CAN Gateway F-CAN ch C Bus Off	B

Is DTC U0056-00 indicated?

YES

Go to step 5.

NO

Check for any authorized service information related to the DTCs or symptoms you are troubleshooting, or **replace the electric servo brake control unit** .

5. Shorted unit check (multipurpose camera unit)

-1. Turn the vehicle to the OFF (LOCK) mode.

-2. Disconnect the following connector.

Multipurpose camera unit 12P connector

-3. Turn the vehicle to the ON mode.

-4. Clear the DTC with the HDS.

-5. Turn the vehicle to the OFF (LOCK) mode.

-6. Turn the vehicle to the ON mode, and wait 6 seconds.

-7. Check for DTCs with the HDS.

DTC Description	DTC
U0056-00 CAN Gateway F-CAN ch C Bus Off	B

Is DTC U0056-00 indicated?

YES

Go to step 6.

NO

Check for any authorized service information related to the DTCs or symptoms you are troubleshooting, or **substitute a known-good multipurpose camera unit** .

6. Shorted unit check (millimeter wave radar)

-1. Turn the vehicle to the OFF (LOCK) mode.

-2. Disconnect the following connector.

Millimeter wave radar 8P connector

-3. Turn the vehicle to the ON mode.

-4. Clear the DTC with the HDS.

-5. Turn the vehicle to the OFF (LOCK) mode.

-6. Turn the vehicle to the ON mode, and wait 6 seconds.

-7. Check for DTCs with the HDS.

DTC Description	DTC
U0056-00 CAN Gateway F-CAN ch C Bus Off	B

Is DTC U0056-00 indicated?

YES

Go to step 7.

NO

Check for any authorized service information related to the DTCs or symptoms you are troubleshooting, or **substitute a known-good millimeter wave radar** .

7. Shorted unit check (SRS unit)

-1. Turn the vehicle to the OFF (LOCK) mode.

-2. Disconnect the following connector.

SRS unit connector A (39P)

NOTE: Before disconnecting the SRS unit connector, **do the 12 volt battery terminal disconnection procedure** , and wait for at least 3 minutes.

-3. Do the 12 volt battery terminal reconnection procedure .

-4. Turn the vehicle to the ON mode.

-5. Clear the DTC with the HDS.

-6. Turn the vehicle to the OFF (LOCK) mode.

-7. Turn the vehicle to the ON mode, and wait 6 seconds.

-8. Check for DTCs with the HDS.

DTC Description	DTC
U0056-00 CAN Gateway F-CAN ch C Bus Off	B

Is DTC U0056-00 indicated?

YES

Go to step 8.

NO

Check for any authorized service information related to the DTCs or symptoms you are troubleshooting, or substitute a known-good SRS unit .

8. Shorted wire check (F-CAN C_H line)

-1. Turn the vehicle to the OFF (LOCK) mode.

-2. Disconnect the following connector.

CAN gateway 16P connector

-3. Measure the resistance between test points 1 and 2.

Test condition	Vehicle OFF (LOCK) mode
B	EPS control unit connector B (6P): disconnected
B	VSA modulator-control unit 46P connector: disconnected
B	Electric servo brake control unit 22P connector: disconnected
B	Multipurpose camera unit 12P connector: disconnected
B	Millimeter wave radar 8P connector: disconnected
B	SRS unit connector A (39P): disconnected
B	CAN gateway 16P connector: disconnected
Test point 1	CAN gateway 16P connector (female terminals) No. 5: ①
Test point 2	Body ground

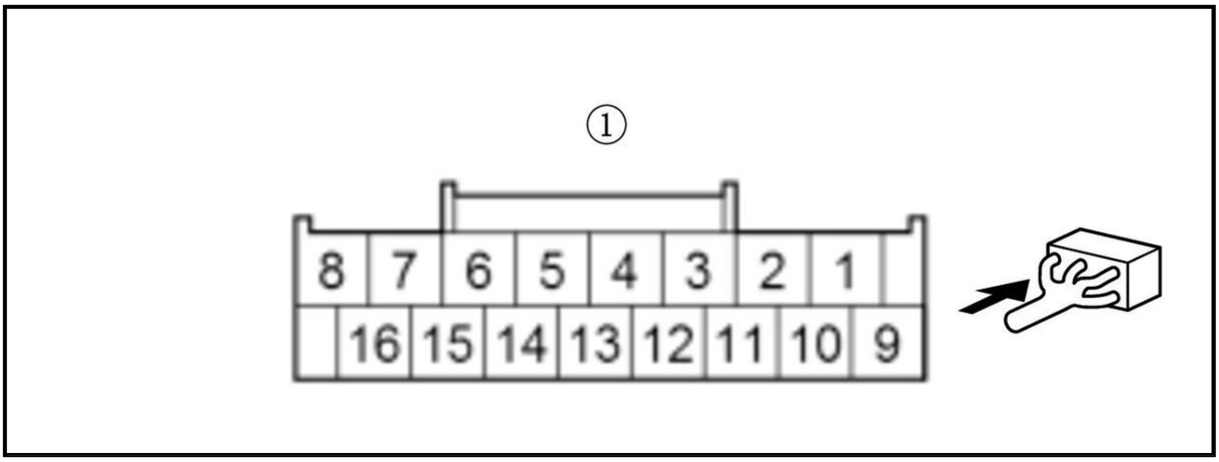

Is there 1 MΩ or more?

YES

Go to step 9.

NO

Repair a short in the F-CAN C_H wire between the CAN gateway and the connected units.

9. Shorted wire check (F-CAN C_L line)

-1. Measure the resistance between test points 1 and 2.

Test condition	Vehicle OFF (LOCK) mode
B	EPS control unit connector B (6P): disconnected
B	VSA modulator-control unit 46P connector: disconnected
B	Electric servo brake control unit 22P connector: disconnected
B	Multipurpose camera unit 12P connector: disconnected
B	Millimeter wave radar 8P connector: disconnected
B	SRS unit connector A (39P): disconnected
B	CAN gateway 16P connector: disconnected
Test point 1	CAN gateway 16P connector (female terminals) No. 13: ①
Test point 2	Body ground

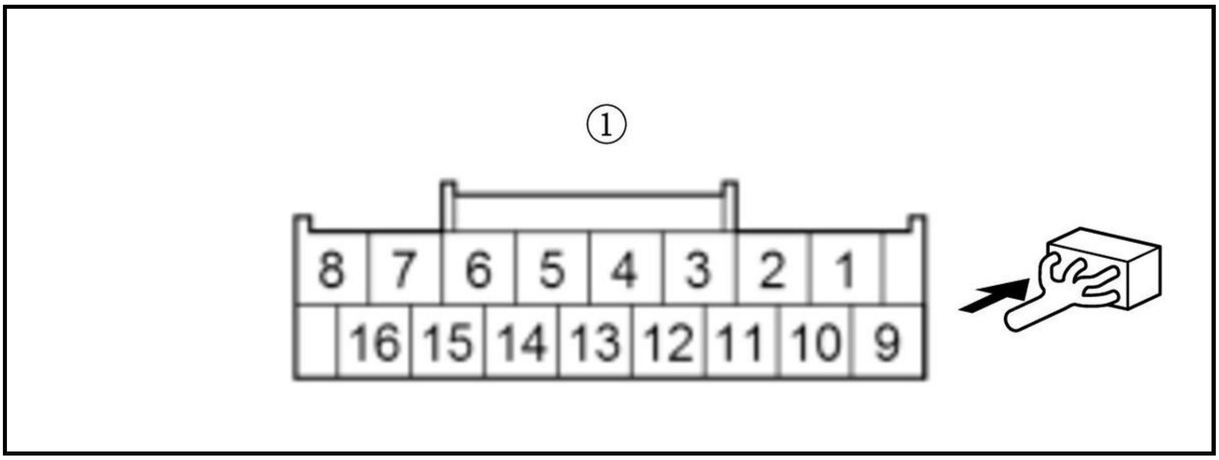

Is there 1 MΩ or more?

YES

Go to step 10.

NO

Repair a short in the F-CAN C_L wire between the CAN gateway and the connected units.

10. Shorted wire check (F-CAN C_H line to F-CAN C_L line)

-1. Measure the resistance between test points 1 and 2.

Test condition	Vehicle OFF (LOCK) mode
B	EPS control unit connector B (6P): disconnected
B	VSA modulator-control unit 46P connector: disconnected
B	Electric servo brake control unit 22P connector: disconnected
B	Multipurpose camera unit 12P connector: disconnected
B	Millimeter wave radar 8P connector: disconnected
B	SRS unit connector A (39P): disconnected
B	CAN gateway 16P connector: disconnected
Test point 1	CAN gateway 16P connector (female terminals) No. 5: ①
Test point 2	CAN gateway 16P connector (female terminals) No. 13: ①

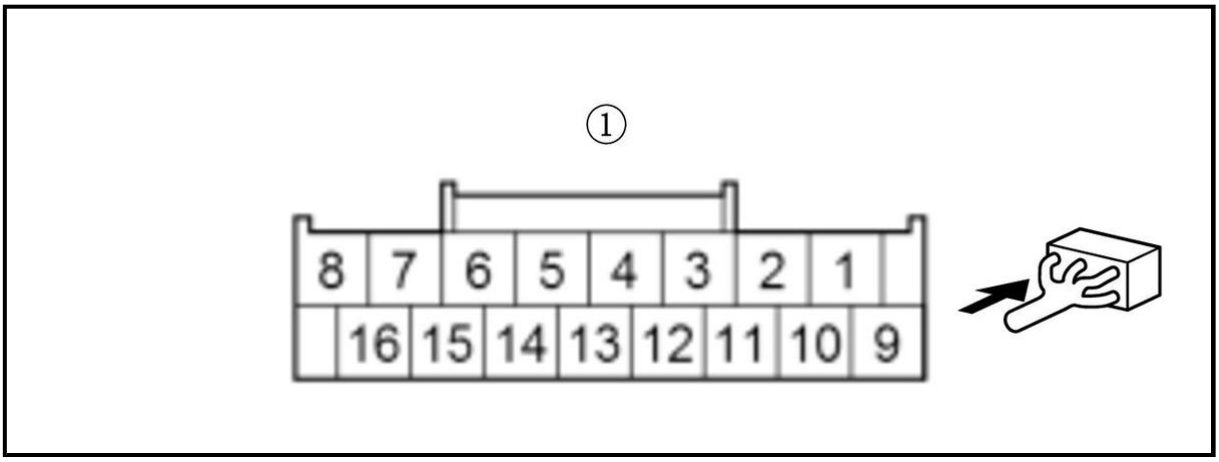

Is there 1 MΩ or more?

YES

Check for any authorized service information related to the DTCs or symptoms you are troubleshooting, or **substitute a known-good CAN gateway** .

NO

Repair a short in the F-CAN C_H wire to the F-CAN C_L wire between CAN gateway terminals No. 5 and No. 13.

DTC U0065-00 (CAN GATEWAY)

DTC U0065-00 : CAN Gateway F-CAN ch D Bus Off

NOTE: Before you troubleshoot, **review the general troubleshooting information** .

DTC Description	DTC
U0065-00 CAN Gateway F-CAN ch D Bus Off	B

DTC (CAN GATEWAY)

1. Problem verification

-1. Turn the vehicle to the ON mode.

-2. Clear the DTC with the HDS.

-3. Turn the vehicle to the OFF (LOCK) mode.

-4. Turn the vehicle to the ON mode, and wait 6 seconds.

-5. Check for Pending or Confirmed DTCs with the HDS.

DTC Description	DTC
U0065-00 CAN Gateway F-CAN ch D Bus Off	B

Is DTC U0065-00 indicated?

YES

The failure is duplicated. Go to step 2.

NO

Intermittent failure, the system is OK at this time. **If the on-board snapshot of this DTC is recorded, try to reproduce the failure under the same conditions with the on-board snapshot** .

2. Shorted unit check (gauge control module)

-1. Turn the vehicle to the OFF (LOCK) mode.

-2. Disconnect the following connector.

Gauge control module connector A (32P)

-3. Turn the vehicle to the ON mode.

-4. Clear the DTC with the HDS.

-5. Turn the vehicle to the OFF (LOCK) mode.

-6. Turn the vehicle to the ON mode, and wait 6 seconds.

-7. Check for DTCs with the HDS.

DTC Description	DTC
U0065-00 CAN Gateway F-CAN ch D Bus Off	B

Is DTC U0065-00 indicated?

YES

Go to step 3.

NO

Check for any authorized service information related to the DTCs or symptoms you are troubleshooting, or **substitute a known-good gauge control module** .

3. Shorted unit check (electric A/C compressor)

-1. Turn the vehicle to the OFF (LOCK) mode.

-2. Disconnect the following connector.

Electric A/C compressor 4P connector

NOTE: Before disconnecting the electric A/C compressor connector, **do the 12 volt battery terminal disconnection procedure** , and **turn off the service plug** .

-3. **Do the 12 volt battery terminal reconnection procedure** .

-4. Turn the vehicle to the ON mode.

-5. Clear the DTC with the HDS.

-6. Turn the vehicle to the OFF (LOCK) mode.

-7. Turn the vehicle to the ON mode, and wait 6 seconds.

-8. Check for DTCs with the HDS.

DTC Description	DTC
U0065-00 CAN Gateway F-CAN ch D Bus Off	B

Is DTC U0065-00 indicated?

YES

Go to step 4.

NO

Substitute a known-good electric A/C compressor .

4. Shorted unit check (real time AWD control unit)

-1. Turn the vehicle to the OFF (LOCK) mode.

-2. Disconnect the following connector.

Real time AWD control unit 24P connector

-3. Turn the vehicle to the ON mode.

-4. Clear the DTC with the HDS.

-5. Turn the vehicle to the OFF (LOCK) mode.

-6. Turn the vehicle to the ON mode, and wait 6 seconds.

-7. Check for Pending or Confirmed DTCs with the HDS.

DTC Description	DTC
U0065-00 CAN Gateway F-CAN ch D Bus Off	B

Is DTC U0065-00 indicated?

YES

Go to step 5.

NO

Substitute a known-good real time AWD control unit .

5. Shorted wire check (F-CAN D_H line)

-1. Turn the vehicle to the OFF (LOCK) mode.

-2. Disconnect the following connector.

CAN gateway 16P connector

-3. Measure the resistance between test points 1 and 2.

Test condition	Vehicle OFF (LOCK) mode
B	Gauge control module connector A (32P): disconnected
B	Electric A/C compressor 4P connector: disconnected
B	Real time AWD control unit 24P connector: disconnected
B	CAN gateway 16P connector: disconnected

Test point 1	CAN gateway 16P connector (female terminals) No. 7: ①
Test point 2	Body ground

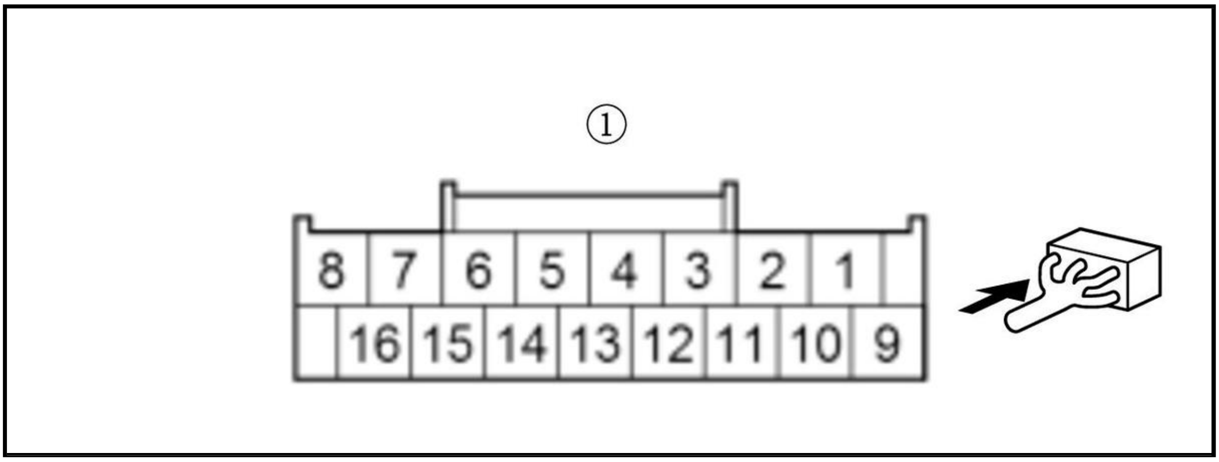

Is there 1 MΩ or more?

YES

Go to step 6.

NO

Repair a short in the F-CAN D_H wire between the CAN gateway and the connected units.

6. Shorted wire check (F-CAN D_L line)

-1. Measure the resistance between test points 1 and 2.

Test condition	Vehicle OFF (LOCK) mode
B	Gauge control module connector A (32P): disconnected
B	Electric A/C compressor 4P connector: disconnected
B	Real time AWD control unit 24P connector: disconnected
B	CAN gateway 16P connector: disconnected

Test point 1	CAN gateway 16P connector (female terminals) No. 15: ①
Test point 2	Body ground

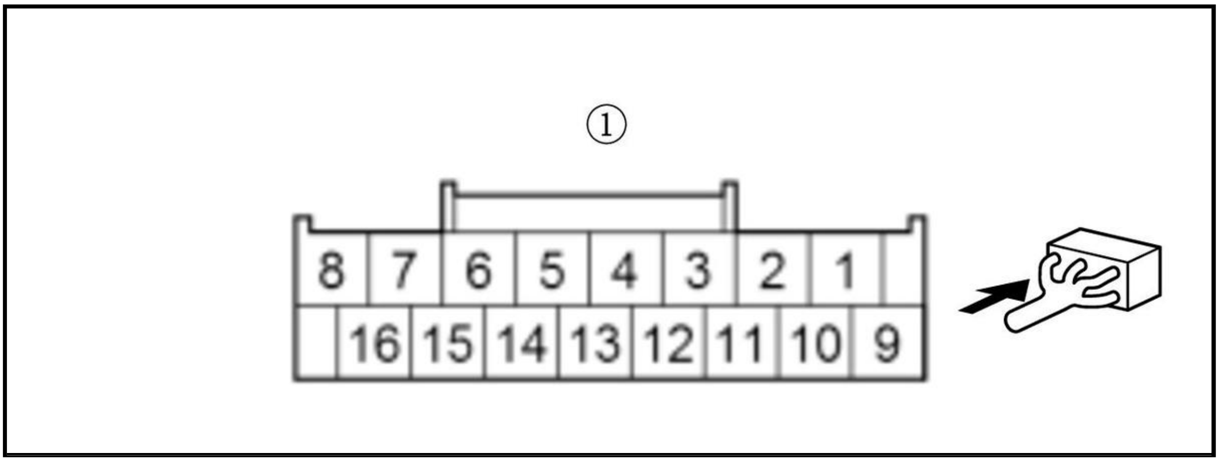

Is there 1 MΩ or more?

YES

Go to step 7.

NO

Repair a short in the F-CAN D_L wire between the CAN gateway and the connected units.

7. Shorted wire check (F-CAN D_H line to F-CAN D_L line)

-1. Measure the resistance between test points 1 and 2.

Test condition	Vehicle OFF (LOCK) mode
B	Gauge control module connector A (32P): disconnected
B	Electric A/C compressor 4P connector: disconnected
B	Real time AWD control unit 24P connector: disconnected
B	CAN gateway 16P connector: disconnected
Test point 1	CAN gateway 16P connector (female terminals) No. 7: ①
Test point 2	CAN gateway 16P connector (female terminals) No. 15: ①

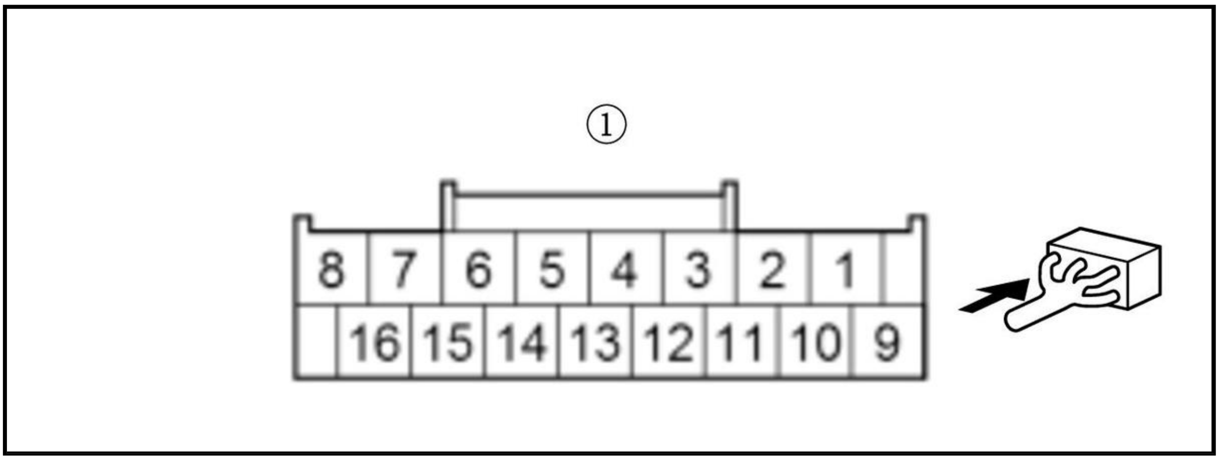

Is there 1 MΩ or more?

YES

Check for any authorized service information related to the DTCs or symptoms you are troubleshooting, or **substitute a known-good CAN gateway** .

NO

Repair a short in the F-CAN D_H wire to the F-CAN D_L wire between CAN gateway terminals No. 7 and No. 15.

DTC U3000-49 (CAN GATEWAY)

DTC U3000-49 : CAN Gateway Internal Failure

NOTE: Before you troubleshoot, **review the general troubleshooting information** .

DTC Description	DTC
U3000-49 CAN Gateway Internal Failure	B

DTC (CAN GATEWAY)

1. Problem verification

-1. Turn the vehicle to the ON mode.

-2. Clear the DTC with the HDS.

-3. Turn the vehicle to the OFF (LOCK) mode.

-4. Turn the vehicle to the ON mode.

-5. Check for DTCs with the HDS.

DTC Description	DTC
U3000-49 CAN Gateway Internal Failure	B

Is DTC U3000-49 indicated?

YES

Replace the CAN gateway .

NO

Intermittent failure, the system is OK at this time.

DTC U3000-51 (CAN GATEWAY)

DTC U3000-51 : CAN Gateway Programming Error

NOTE:

- Before you troubleshoot, **review the general troubleshooting information** .
- This DTC is indicated when the CAN gateway update is not completed.

DTC Description	DTC
U3000-51 CAN Gateway Programming Error	B

DTC (CAN GATEWAY)

1. Problem verification

-1. Turn the vehicle to the ON mode.

-2. Clear the DTC with the HDS.

-3. Turn the vehicle to the OFF (LOCK) mode.

-4. Turn the vehicle to the ON mode.

-5. Check for DTCs with the HDS.

DTC Description	DTC
U3000-51 CAN Gateway Programming Error	B

Is DTC U3000-51 indicated?

YES

Reprogram the CAN gateway .

NO

Intermittent failure, the system is OK at this time.

DTC TROUBLESHOOTING

DTC B0050-F0, C0061-F0, C0062-F0 (MILLIMETER WAVE RADAR)

DTC B0050-F0 : Driver's Seat Belt Buckle Switch (Subfault) Fault Detection By SRS Unit

DTC C0061-F0 : Lateral Acceleration Sensor(Subfault) Fault Detection By Source Module

DTC C0062-F0 : Longitudinal Acceleration Sensor (Subfault) Fault Detection By Source Module

NOTE:

- Before you troubleshoot, **review the general troubleshooting information**.
- These DTCs are recorded when the millimeter wave radar receives the SRS unit failure information via the F-CAN.
- If a DTC is recorded again after it is cleared with the HDS, **refer to the DTC troubleshoot for the SRS system** .
- The functions of the integrated driver support system that will be temporarily canceled when this DTC is recorded can be confirmed with the **DTC troubleshooting index** .

DTC Description	DTC
B0050-F0 Driver's Seat Belt Buckle Switch (Subfault) Fault Detection By SRS Unit	B
C0061-F0 Lateral Acceleration Sensor(Subfault) Fault Detection By Source Module	B
C0062-F0 Longitudinal Acceleration Sensor (Subfault) Fault Detection By Source Module	B

DTC (IDAS)

1. Problem verification

   -1. Turn the vehicle to the ON mode.

   -2. Clear the DTC with the HDS.

   -3. Turn the vehicle to the OFF (LOCK) mode.

   -4. Turn the vehicle to the ON mode, then wait for at least 6 seconds.

   -5. Check for DTCs with the HDS.

DTC Description	DTC
B0050-F0 Driver's Seat Belt Buckle Switch (Subfault) Fault Detection By SRS Unit	B

DTC Description	DTC
C0061-F0 Lateral Acceleration Sensor(Subfault) Fault Detection By Source Module	B
C0062-F0 Longitudinal Acceleration Sensor (Subfault) Fault Detection By Source Module	B

Is DTC B0050-F0, C0061-F0, or C0062-F0 indicated?

YES

The failure is duplicated. Go to the indicated DTC's troubleshooting in the SRS system .

NO

Intermittent failure, the system is OK at this time. Refer to intermittent failures troubleshooting.

DTC B2A00-92

DTC B2A00-92 : Temporary stop of Integrated Driver Support System (Detected Abnormal Signals)

NOTE:

- Before you troubleshoot, review the general troubleshooting information.
- This DTC is recorded when the millimeter wave radar and multipurpose camera receive an unexpected or out of range yaw rate, steering angle, or wheel speed sensor signal via F-CAN.
- The specific driving conditions that may cause this DTC to be recorded are as follows:
-
    - The vehicle is being driven in a manner that exceeds the capabilities and control of the driving support system. Question the customer about how and where the vehicle was being driven at the time of the warning.
    - Sharp turn, sudden steering, rapid acceleration or deceleration.
    - When the vehicle is driven in mountains or rough roads.
    - When the vehicle loses traction while driving (wheel spin or lock up).
- If input data from another system on F-CAN is out of range or incorrect. Inspect these systems for DTCs and/or OBS data and troubleshoot as needed.
- If this DTC is recorded, the integrated driver support system temporarily cancels its control.
- If this DTC is recorded, turn the vehicle OFF mode and ON mode again on the flat place or then test-drive for 10 minutes stably at 25 mph (40 km/h) or more to restore the vehicle to normal.
- The functions of the integrated driver support system that will be temporarily canceled when this DTC is recorded can be confirmed with the DTC troubleshooting index .

DTC Description	DTC
B2A00-92 Temporary stop of Integrated Driver Support System (Detected Abnormal Signals)	B

DTC (IDAS)

1. DTC check

    -1. Turn the vehicle to the ON mode, then wait for at least 6 seconds.

    -2. Check for DTCs with the HDS.

DTC Description	DTC
B	B

    Is there any DTC(s) other than DTC B2A00-92?

    YES

    Perform a troubleshooting for the recorded DTC.

NO

Clear the DTC with the HDS and explain to the customer that it is not a failure.

DTC B2A60-49, B2A60-96

DTC B2A60-49 : Multipurpose Camera Unit Internal Electronic Failure

DTC B2A60-96 : Multipurpose Camera Unit Hardware Malfunction

NOTE:

- Before you troubleshoot, **review the general troubleshooting information**.
- The functions of the integrated driver support system that will be temporarily canceled when this DTC is recorded can be confirmed with the **DTC troubleshooting index** .

DTC Description	DTC
B2A60-49 Multipurpose Camera Unit Internal Electronic Failure	B
B2A60-96 Multipurpose Camera Unit Hardware Malfunction	B

DTC (IDAS)

1. Problem verification

-1. Turn the vehicle to the ON mode.

-2. Clear the DTC with the HDS.

-3. Turn the vehicle to OFF (LOCK) mode and then ON mode repeatedly at least 3 times.

-4. Check for DTCs with the HDS.

DTC Description	DTC
B2A60-49 Multipurpose Camera Unit Internal Electronic Failure	B
B2A60-96 Multipurpose Camera Unit Hardware Malfunction	B

Is DTC B2A60-49 or B2A60-96 indicated?

YES

The failure is duplicated. **Replace the multipurpose camera unit** .

NO

Intermittent failure, the system is OK at this time. **Refer to intermittent failures troubleshooting**.

DTC B2A60-54, P2583-54

DTC B2A60-54 : Static Camera Aiming Incomplete

DTC P2583-54 : Millimeter Wave Radar Aiming Incomplete

NOTE:

- Before you troubleshoot, **review the general troubleshooting information**.
- These DTCs are recorded when aiming is not performed or aiming is not successfully completed.
- If a DTC is recorded again after it is cleared with the HDS, perform the aiming procedure below:
-

  - B2A60-54: **Aim the multipurpose camera** .
  - P2583-54: **Aim the millimeter wave radar** .
- The functions of the integrated driver support system that will be temporarily canceled when this DTC is recorded can be confirmed with the **DTC troubleshooting index** .

DTC Description	DTC
B2A60-54 Static Camera Aiming Incomplete	B
P2583-54 Millimeter Wave Radar Aiming Incomplete	B

DTC (IDAS)

1. Problem verification

   -1. Turn the vehicle to the ON mode.

   -2. Clear the DTC with the HDS.

   -3. Turn the vehicle to the OFF (LOCK) mode.

   -4. Turn the vehicle to the ON mode, then wait for at least 6 seconds.

   -5. Check for DTCs with the HDS.

DTC Description	DTC
B2A60-54 Static Camera Aiming Incomplete	B
P2583-54 Millimeter Wave Radar Aiming Incomplete	B

   Is DTC B2A60-54 or P2583-54 indicated?

   YES

   The failure is duplicated. Aiming is incomplete. Aim **the millimeter wave radar** or **the multipurpose camera** .

   NO

   Intermittent failure, the system is OK at this time. **Refer to intermittent failures troubleshooting**.

DTC B2A60-57, U1387-4A, U1387-55, U3000-55

DTC B2A60-57 : Multipurpose Camera Unit Software Failure

DTC U1387-4A : Unmatch Combination of Millimeter Wave Radar-Multipurpose Camera Unit

DTC U1387-55 : Multipurpose Camera Unit Variant Incomplete

DTC U3000-55 : Millimeter Wave Radar Variant Incomplete

NOTE:

- Before you troubleshoot, **review the general troubleshooting information**.
- If a DTC is recorded again after it is cleared with the HDS, confirm the part numbers compatible with the vehicle with the parts catalogue and replace the relevant parts.
- If DTC U1387-4A is recorded, confirm the part numbers of the multipurpose camera unit and the millimeter wave radar currently installed to the vehicle and replace the parts not compatible with the vehicle.
-

- B2A60-57: **Replace the multipurpose camera unit** .
- U1387-4A: **Replace the multipurpose camera unit** or **the millimeter wave radar** .
- U1387-55: **Replace the multipurpose camera unit** .
- U3000-55: **Replace the millimeter wave radar** .

- The functions of the integrated driver support system that will be temporarily canceled when this DTC is recorded can be confirmed with the **DTC troubleshooting index** .

DTC Description	DTC
B2A60-57 Multipurpose Camera Unit Software Failure	B
U1387-4A Unmatch Combination of Millimeter Wave Radar-Multipurpose Camera Unit	B
U1387-55 Multipurpose Camera Unit Variant Incomplete	B
U3000-55 Millimeter Wave Radar Variant Incomplete	B

DTC (IDAS)

1. Problem verification

   -1. Turn the vehicle to the ON mode.

   -2. Clear the DTC with the HDS.

   -3. Turn the vehicle to the OFF (LOCK) mode.

   -4. Turn the vehicle to the ON mode, then wait for at least 6 seconds.

   -5. Check for DTCs with the HDS.

DTC Description	DTC
B2A60-57 Multipurpose Camera Unit Software Failure	B
U1387-4A Unmatch Combination of Millimeter Wave Radar-Multipurpose Camera Unit	B
U1387-55 Multipurpose Camera Unit Variant Incomplete	B
U3000-55 Millimeter Wave Radar Variant Incomplete	B

   Is DTC B2A60-57, U1387-4A, U1387-55, or U3000-55 indicated?

   YES

   The failure is duplicated. Confirm the parts catalogue and replace the parts related to the DTC with compatible ones.

   NO

   Intermittent failure, the system is OK at this time. **Refer to intermittent failures troubleshooting**.

DTC B2A60-97

DTC B2A60-97 : Dust or Dirt On The Camera

NOTE:

- Before you troubleshoot, **review the general troubleshooting information**.
- The functions of the integrated driver support system that will be temporarily canceled when this DTC is recorded can be confirmed with the **DTC troubleshooting index** .

DTC Description	DTC
B2A60-97 Dust or Dirt On The Camera	B

DTC (IDAS)

1. Multipurpose camera unit visual check

   -1. Check for dust or dirt at the multipurpose camera lens, and crack, dust, or interference at the windshield surface.

   Are the multipurpose camera lens and the windshield surface OK?

   YES

   Go to step 2.

   NO

   Clean the multipurpose camera lens, or both sides of the windshield surface. If necessary, replace or repair the windshield.

2. Problem verification

   -1. Turn the vehicle to the ON mode.

   -2. Clear the DTC with the HDS.

   -3. Turn the vehicle to the OFF (LOCK) mode.

   -4. Test-drive the vehicle at 3 mph (5 km/h) or more.

   -5. Check for DTCs with the HDS.

DTC Description	DTC
B2A60-97 Dust or Dirt On The Camera	B

   Is DTC B2A60-97 indicated?

   YES

   The failure is duplicated. Check for loose terminals and poor connections in the multipurpose camera unit 12P connector. Check for any authorized service information related to the DTCs or symptoms you are troubleshooting. If they are OK, **replace the multipurpose camera unit** .

   NO

   Intermittent failure, the system is OK at this time. **Refer to intermittent failures troubleshooting**.

DTC B2A60-98, P2583-98

DTC B2A60-98 : Multipurpose Camera Unit Temperature Too High

DTC P2583-98 : Millimeter Wave Radar Temperature Too High

NOTE:

- Before you troubleshoot, **review the general troubleshooting information**.
- These DTC are recorded when the vehicle is left in the scorching heat, is in a traffic jam at high temperature, or is driving uphill continuously and the millimeter wave radar and the multipurpose camera

unit gets extremely hot.

- The function automatically returns to normal when the internal temperatures of the millimeter wave radar and the multipurpose camera unit drop.
- The functions of the integrated driver support system that will be temporarily canceled when this DTC is recorded can be confirmed with the **DTC troubleshooting index** .

DTC Description	DTC
B2A60-98 Multipurpose Camera Unit Temperature Too High	B
P2583-98 Millimeter Wave Radar Temperature Too High	B

DTC (IDAS)

1. Inspecting the temperature in the control unit

   -1. Turn the vehicle to the ON mode.

   -2. Check the parameter(s) of the internal temperatures of the millimeter wave radar and the multipurpose camera unit with the HDS.

   Is the temperature 185 deg.F (85 deg.C) or less?

   YES

   Go to step 2.

   NO

   Cool the control unit until the internal temperature is 167 deg.F (75 deg.C) or less. Clear the DTC with the HDS.

2. Problem verification:

   NOTE: If the control unit has an internal temperature of 167 deg.F (75 deg.C) or more, cool the control unit until the internal temperature is 167 deg.F (75 deg.C) or less.

   -1. Clear the DTC with the HDS.

   -2. Turn the vehicle to the OFF (LOCK) mode.

   -3. Turn the vehicle to the ON mode, then wait for at least 6 seconds.

   -4. Check for DTCs with the HDS.

DTC Description	DTC
B2A60-98 Multipurpose Camera Unit Temperature Too High	B
P2583-98 Millimeter Wave Radar Temperature Too High	B

   Is DTC B2A60-98 or P2583-98 indicated?

   YES

   The failure is duplicated. Faulty a control unit, replace the control unit related to the DTC.

   NO

   Intermittent failure, the system is OK at this time. The control unit was temporarily in a high temperature state.

DTC B2A60-99

DTC B2A60-99 : Out of automatic correction range for Misalignment of Multipurpose Camera Unit image

NOTE:

- Before you troubleshoot, **review the general troubleshooting information**.
- If this DTC is recorded, the following is suspected:
-
    - Improper installation of the multipurpose camera unit (aging of vehicle, incorrect assembly, etc.).
    - The multipurpose camera unit installing portion is deformed by a minor collision or strong impact.
    - The axis of the multipurpose camera unit is out of alignment due to abnormal wheel alignment, abnormal tire pressure, etc.
    - Altered suspension
- After inspecting, repairing, or adjusting a possible cause of the failure, be sure to **perform multipurpose camera unit aiming** . If the DTC cannot be deleted after multipurpose camera unit aiming, **replace the multipurpose camera unit** .
- The functions of the integrated driver support system that will be temporarily canceled when this DTC is recorded can be confirmed with the **DTC troubleshooting index** .

DTC Description	DTC
B2A60-99 Out of automatic correction range for Misalignment of Multipurpose Camera Unit image	B

DTC (IDAS)

1. Problem verification 1

   -1. Turn the vehicle to the ON mode.

   -2. Clear the DTC with the HDS.

   -3. Turn the vehicle to the OFF (LOCK) mode.

   -4. Test-drive the vehicle on a straight road at speeds 25 mph (40 km/h) or more for 15 minutes or more.

   -5. Check for DTCs with the HDS.

DTC Description	DTC
B2A60-99 Out of automatic correction range for Misalignment of Multipurpose Camera Unit image	B

   Is DTC B2A60-99 indicated?

   YES

   The failure is duplicated. Go to step 2.

   NO

   Intermittent failure, the system is OK at this time. **Refer to intermittent failures troubleshooting**.

2. Multipurpose camera unit visual check

   -1. Turn the vehicle to the OFF (LOCK) mode.

-2. Check that the multipurpose camera unit and camera bracket are installed properly and check them for deformation and damage.

Are the multipurpose camera unit and the camera bracket installed properly, and/or is there any no damage?

YES

Go to step 3.

NO

Repair or replace faulty parts, then **aim the multipurpose camera unit** .

3. Problem verification 2

-1. **Aim the multipurpose camera unit** .

-2. Test-drive the vehicle on a straight road at speeds 25 mph (40 km/h) or more for 15 minutes or more.

-3. Check for DTCs with the HDS.

DTC Description	DTC
B2A60-99 Out of automatic correction range for Misalignment of Multipurpose Camera Unit image	B

Is DTC B2A60-99 indicated?

YES

If the multipurpose camera unit is installed properly but the DTC is recorded again after multipurpose camera unit aiming, **replace the multipurpose camera unit** .

NO

The system is OK at this time.

DTC B2A60-A2, U3006-16

DTC B2A60-A2 : Power Supply Voltage Too Low (Multipurpose Camera Unit)

DTC U3006-16 : Power Supply Voltage Too Low (Millimeter Wave Radar)

NOTE:

- Before you troubleshoot, **review the general troubleshooting information**.
- Before performing a troubleshooting, check the 12 volt battery voltage. If the voltage is less than 12 volt, charge the battery.
- These DTCs are recorded when the voltage supplied to the millimeter wave radar or the multipurpose camera unit drops below 9.5 volt while the vehicle is driving.
- The functions of the integrated driver support system that will be temporarily canceled when this DTC is recorded can be confirmed with the **DTC troubleshooting index** .

DTC Description	DTC
B2A60-A2 Power Supply Voltage Too Low (Multipurpose Camera Unit)	B
U3006-16 Power Supply Voltage Too Low (Millimeter Wave Radar)	B

DTC (IDAS)

1. Problem verification

   -1. Turn the vehicle to the ON mode.

   -2. Clear the DTC with the HDS.

   -3. Turn the vehicle to the OFF (LOCK) mode, then to the ON mode.

   -4. Test-drive the vehicle at speeds 5 mph (8 km/h) or more for at least 5 minutes.

   -5. Check for DTCs with the HDS.

DTC Description	DTC
B2A60-A2 Power Supply Voltage Too Low (Multipurpose Camera Unit)	B
U3006-16 Power Supply Voltage Too Low (Millimeter Wave Radar)	B

   Is DTC B2A60-A2 or U3006-16 indicated?

   YES

   The failure is duplicated. Go to step 2.

   NO

   Intermittent failure, the system is OK at this time. **Refer to intermittent failures troubleshooting**.

2. PGM-FI system DTC check

   -1. Turn the vehicle to the ON mode.

   -2. Check for DTCs with the HDS.

DTC Description	Confirmed DTC	Pending DTC
B	B	B

   Are any DTCs indicated?

   YES

   Go to the indicated DTC's troubleshooting in the PGM-FI system . After performing a DTC troubleshooting for the PGM-FI system, clear the DTC again.

   NO

   Check the control unit related to the DTC for loose terminals and poor connections. If no problem is found, replace the control unit related to the DTC.

DTC B2A60-A3, U3006-17

DTC B2A60-A3 : Power Supply Voltage Too High (Multipurpose Camera Unit)

DTC U3006-17 : Power Supply Voltage Too High (Millimeter Wave Radar)

NOTE:

- Before you troubleshoot, **review the general troubleshooting information**.
- Before starting a troubleshooting, check that a 12 volt battery of a capacity compatible with the vehicle is installed.

- These DTCs are recorded when a voltage of 17 volt or more is supplied to the millimeter wave radar or the multipurpose camera unit.
- The functions of the integrated driver support system that will be temporarily canceled when this DTC is recorded can be confirmed with the **DTC troubleshooting index** .

DTC Description	DTC
B2A60-A3 Power Supply Voltage Too High (Multipurpose Camera Unit)	B
U3006-17 Power Supply Voltage Too High (Millimeter Wave Radar)	B

DTC (IDAS)

1. Problem verification

   -1. Turn the vehicle to the ON mode.

   -2. Clear the DTC with the HDS.

   -3. Turn the vehicle to the OFF (LOCK) mode.

   -4. Turn the vehicle to the ON mode, then wait for at least 6 seconds.

   -5. Check for DTCs with the HDS.

DTC Description	DTC
B2A60-A3 Power Supply Voltage Too High (Multipurpose Camera Unit)	B
U3006-17 Power Supply Voltage Too High (Millimeter Wave Radar)	B

   Is DTC B2A60-A3 or U3006-17 indicated?

   YES

   The failure is duplicated. Go to step 2.

   NO

   Intermittent failure, the system is OK at this time. **Refer to intermittent failures troubleshooting**.

2. PGM-FI system DTC check

   -1. Turn the vehicle to the ON mode.

   -2. Check for DTCs with the HDS.

DTC Description	Confirmed DTC	Pending DTC
B	B	B

   Are any DTCs indicated?

   YES

   Go to the indicated DTC's troubleshooting in the PGM-FI system . After performing a DTC troubleshooting for the PGM-FI system, clear the DTC again.

   NO

   Faulty a control unit, replace the control unit related to the DTC.

DTC B2A70-12

DTC B2A70-12 : LDW/RDM Switch Signal Circuit Short

NOTE:

- Before you troubleshoot, **review the general troubleshooting information** .
- The functions of the integrated driver support system that will be temporarily canceled when this DTC is recorded can be confirmed with the **DTC troubleshooting index** .

DTC Description	DTC
B2A70-12 LDW/RDM Switch Signal Circuit Short	B

DTC (IDAS)

*1: Without auto idle stop system*2: With auto idle stop system

1. Problem verification

   -1. Turn the vehicle to the ON mode.

   -2. Clear the DTC with the HDS.

   -3. Turn the vehicle to the OFF (LOCK) mode.

   -4. Turn the vehicle to the ON mode, then wait for at least 6 seconds.

   -5. Press the RDM switch.

   -6. Check for DTCs with the HDS.

DTC Description	DTC
B2A70-12 LDW/RDM Switch Signal Circuit Short	B

   Is DTC B2A70-12 indicated?

   YES

   The failure is duplicated. Go to step 2.

   NO

   Intermittent failure, the system is OK at this time. **Refer to intermittent failures troubleshooting** .

2. Fuse check

   -1. Turn the vehicle to the OFF (LOCK) mode.

   -2. Check the following fuse.

Fuse	No. D5 (10 A) *1 No. F7 (7.5 A) *2
Location	Under-dash fuse/relay box *1 Auxiliary under-dash fuse/relay box *2

   Is the fuse OK?

   YES

   The fuse is OK. Reinstall the fuse, then go to step 3.

NO

Replace the fuse. Turn the vehicle to the ON mode, then the OFF (LOCK) mode. If the fuse blows again, repair the short to ground on the No. D5 (10 A) *1/F7 (7.5 A) *2 fuse circuit.

3. Open wire check (IG1 OPTION *1/IG1 EBB *2 line):-1.

Disconnect the following connector.

CMBS OFF/RDM switch 10P connector

-2. Turn the vehicle to the ON mode.

-3. Measure the voltage between test points 1 and 2.

Test condition	Vehicle ON mode
B	CMBS OFF/RDM switch 10P connector: disconnected
Test point 1	CMBS OFF/RDM switch 10P connector (female terminals) No. 5: ①
Test point 2	Body ground

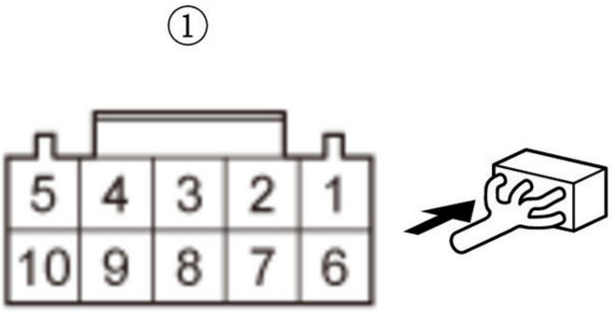

Is there battery voltage?

YES

IG1 OPTION *1/IG1 EBB *2 wire is OK. Go to step 4.

NO

Repair an open in the IG1 OPTION *1/IG1 EBB *2 wire between the RDM switch and No. D5 (10 A) *1/F7 (7.5 A) *2 fuse in the under-dash fuse/relay box *1/auxiliary under-dash fuse/relay box *2.

4. RDM switch internal resistance check

-1. Turn the vehicle to the OFF (LOCK) mode.

-2. **Remove and test the RDM switch** .

Is the RDM switch OK?

YES

RDM switch is OK. Go to step 5.

NO

Replace the RDM switch .

5. Open wire check (LDW OFF SW line)

-1. Disconnect the following connector.

Multipurpose camera unit 12P connector

-2. Check for continuity between test points 1 and 2.

Test condition	Vehicle OFF (LOCK) mode
	CMBS OFF/RDM switch 10P connector: disconnected
	Multipurpose camera unit 12P connector: disconnected
Test point 1	Multipurpose camera unit 12P connector No. 7
Test point 2	CMBS OFF/RDM switch 10P connector (female terminals) No. 4: ①

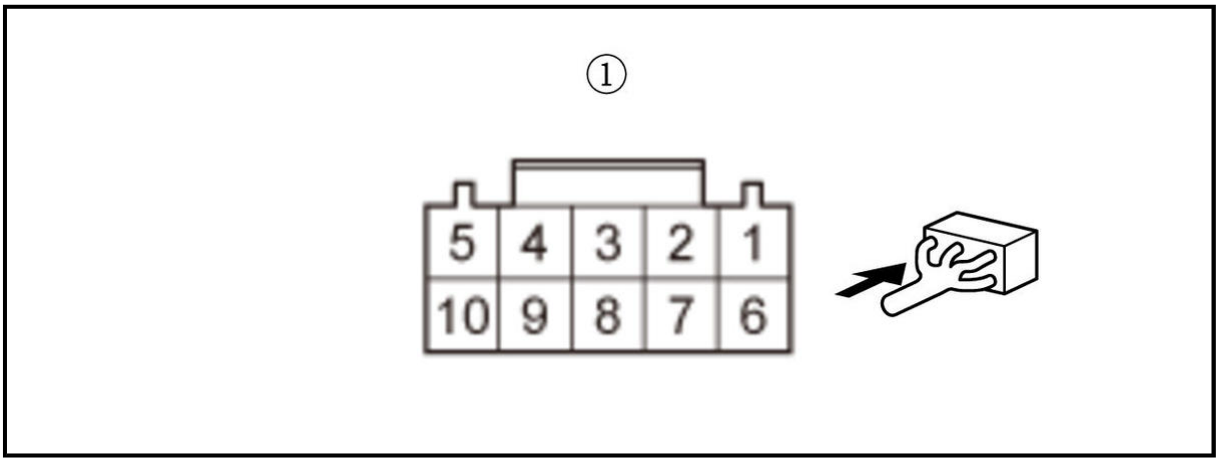

Is there continuity?

YES

Go to step 6.

NO

Repair an open in the LDW OFF SW wire between the RDM switch and the multipurpose camera unit.

6. Open wire check (LDW OFF IND line)

-1. Check for continuity between test points 1 and 2.

Test condition	Vehicle OFF (LOCK) mode
	CMBS OFF/RDM switch 10P connector: disconnected
	Multipurpose camera unit 12P connector: disconnected
Test point 1	Multipurpose camera unit 12P connector No. 8
Test point 2	CMBS OFF/RDM switch 10P connector (female terminals) No. 2: ①

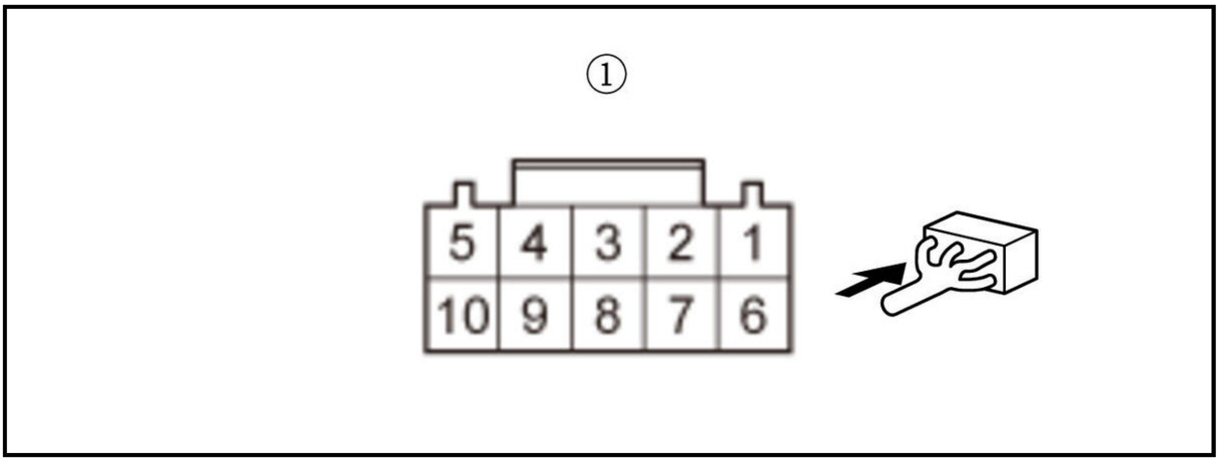

Is there continuity?

YES

Replace the multipurpose camera unit .

NO

Repair an open in the LDW OFF IND wire between the RDM switch and the multipurpose camera unit.

DTC B2A70-14

DTC B2A70-14 : LDW/RDM Switch Signal Circuit Short to Power

NOTE:

- Before you troubleshoot, **review the general troubleshooting information** .
- The functions of the integrated driver support system that will be temporarily canceled when this DTC is recorded can be confirmed with the **DTC troubleshooting index** .

DTC Description	DTC
B2A70-14 LDW/RDM Switch Signal Circuit Short to Power	B

DTC (IDAS)

1. Problem verification

-1. Turn the vehicle to the ON mode.

-2. Clear the DTC with the HDS.

-3. Turn the vehicle to the OFF (LOCK) mode.

-4. Turn the vehicle to the ON mode, then wait for at least 6 seconds.

-5. Check for DTCs with the HDS.

DTC Description	DTC
B2A70-14 LDW/RDM Switch Signal Circuit Short to Power	B

Is DTC B2A70-14 indicated?

YES

The failure is duplicated. Go to step 2.

NO

Intermittent failure, the system is OK at this time. **Refer to intermittent failures troubleshooting** .

2. RDM switch internal resistance check

-1. Turn the vehicle to the OFF (LOCK) mode.

-2. **Remove and test the RDM switch** .

Is the RDM switch OK?

YES

RDM switch is OK. Go to step 3.

NO

Replace the RDM switch .

3. Shorted wire check (LDW OFF SW line to power)

-1. **Install the RDM switch** .

-2. Connect the following connector.

CMBS OFF/RDM switch 10P connector

-3. Disconnect the following connector.

Multipurpose camera unit 12P connector

-4. Turn the vehicle to the ON mode.

-5. Measure the voltage between test points 1 and 2.

Test condition	Vehicle ON mode
B	Multipurpose camera unit 12P connector: disconnected
Test point 1	**Multipurpose camera unit 12P connector No. 7**
Test point 2	Body ground

Is there battery voltage?

YES

Repair a short to power in the LDW OFF SW wire between the RDM switch and the multipurpose camera unit.

NO

Check for loose terminals and poor connections in the multipurpose camera unit 12P connector. Check for any authorized service information related to the DTCs or symptoms you are troubleshooting. If they are OK, **replace the multipurpose camera unit** .

DTC C0023-F0, C0044-F0, U0416-68, U0416-F8

DTC C0023-F0 : Brake Light Drive Relay Circuit Malfunction

DTC C0044-F0 : Master Cylinder Pressure Sensor Failure

DTC U0416-68 : Brake Actuator Malfunction

DTC U0416-F8 : VSA Modulator-Control Unit Malfunction

NOTE:

- Before you troubleshoot, **review the general troubleshooting information**.
- These DTCs are recorded when the millimeter wave radar receives failure information from the VSA modulator-control unit via the F-CAN.
- If a DTC is recorded again after it is cleared with the HDS, perform a troubleshooting for the VSA system.
- The functions of the integrated driver support system that will be temporarily canceled when this DTC is recorded can be confirmed with the **DTC troubleshooting index** .

DTC Description	DTC
C0023-F0 Brake Light Drive Relay Circuit Malfunction	B
C0044-F0 Master Cylinder Pressure Sensor Failure	B
U0416-68 Brake Actuator Malfunction	B
U0416-F8 VSA Modulator-Control Unit Malfunction	B

DTC (IDAS)

1. Problem verification

-1. Turn the vehicle to the ON mode.

-2. Clear the DTC with the HDS.

-3. Turn the vehicle to the OFF (LOCK) mode.

-4. Turn the vehicle to the ON mode, then wait for at least 6 seconds.

-5. Check for DTCs with the HDS.

DTC Description	DTC
C0023-F0 Brake Light Drive Relay Circuit Malfunction	B
C0044-F0 Master Cylinder Pressure Sensor Failure	B
U0416-68 Brake Actuator Malfunction	B

DTC Description	DTC
U0416-F8 VSA Modulator-Control Unit Malfunction	B

Is DTC C0023-F0, C0044-F0, U0416-68, or U0416-F8 indicated?

YES

The failure is duplicated. **Go to the indicated DTC's troubleshooting in the VSA system** .

NO

Intermittent failure, the system is OK at this time. **Refer to intermittent failures troubleshooting**.

DTC C0031-62, C0034-62, C0037-62, C003A-62 (MILLIMETER WAVE RADAR)

DTC C0031-62 : Left Front Wheel Speed Sensor Signal Error

DTC C0034-62 : Right Front Wheel Speed Sensor Signal Error

DTC C0037-62 : Left Rear Wheel Speed Sensor Signal Error

DTC C003A-62 : Right Rear Wheel Speed Sensor Signal Error

NOTE:

- Before you troubleshoot, **review the general troubleshooting information**.
- These DTCs are recorded when the millimeter wave radar receives wheel speed sensor failure information from the VSA modulator-control unit via the F-CAN.
- If a DTC is recorded again after it is cleared with the HDS, **perform a troubleshooting for the VSA system** .
- The functions of the integrated driver support system that will be temporarily canceled when these DTC are recorded can be confirmed with the **DTC troubleshooting index** .

DTC Description	DTC
C0031-62 Left Front Wheel Speed Sensor Signal Error	B
C0034-62 Right Front Wheel Speed Sensor Signal Error	B
C0037-62 Left Rear Wheel Speed Sensor Signal Error	B
C003A-62 Right Rear Wheel Speed Sensor Signal Error	B

DTC (IDAS)

1. Problem verification

-1. Turn the vehicle to the ON mode.

-2. Clear the DTC with the HDS.

-3. Turn the vehicle to the OFF (LOCK) mode.

-4. Test-drive the vehicle on a straight road at speeds 25 mph (40 km/h) or more for 5 minutes.

NOTE: Check for abnormal tire diameter (low tire pressure, uneven wear, and spare tire) before test-driving.

-5. Check for DTCs with the HDS.

DTC Description	DTC
C0031-62 Left Front Wheel Speed Sensor Signal Error	B

DTC Description	DTC
C0034-62 Right Front Wheel Speed Sensor Signal Error	B
C0037-62 Left Rear Wheel Speed Sensor Signal Error	B
C003A-62 Right Rear Wheel Speed Sensor Signal Error	B

Is DTC C0031-62, C0034-62, C0037-62, or C003A-62 indicated?

YES

The failure is duplicated. **Go to the indicated DTC's troubleshooting in the VSA system** .

NO

Intermittent failure, the system is OK at this time. **Refer to intermittent failures troubleshooting**.

DTC C0051-54 (MILLIMETER WAVE RADAR)

DTC C0051-54 : Steering Angle Neutral Position Learning Incomplete

NOTE:

- Before you troubleshoot, **review the general troubleshooting information**.
- This DTC is recorded if VSA sensor neutral position memorization is not completed.
- This DTC is automatically deleted without using the HDS when VSA sensor neutral position memorization is successfully completed.
- The functions of the integrated driver support system that will be temporarily canceled when this DTC is recorded can be confirmed with the **DTC troubleshooting index** .

DTC Description	DTC
C0051-54 Steering Angle Neutral Position Learning Incomplete	B

DTC (IDAS)

1. Problem verification

-1. Turn the vehicle to the ON mode.

-2. Clear the DTC with the HDS.

-3. Turn the vehicle to the OFF (LOCK) mode.

-4. Turn the vehicle to the ON mode, then wait for at least 6 seconds.

-5. Check for DTCs with the HDS.

DTC Description	DTC
C0051-54 Steering Angle Neutral Position Learning Incomplete	B

Is DTC C0051-54 indicated?

YES

The failure is duplicated. **Perform the VSA sensor neutral position memorization** .

NO

Intermittent failure, the system is OK at this time. **Refer to intermittent failures troubleshooting**.

DTC C0051-96 (MILLIMETER WAVE RADAR)

DTC C0051-96 : Steering Angle Sensor Malfunction

NOTE:

- Before you troubleshoot, **review the general troubleshooting information**.
- This DTC is recorded when the millimeter wave radar receives the EPS control unit failure information via the F-CAN.
- If a DTC is recorded again after it is cleared with the HDS, **perform a troubleshooting for the EPS system** .
- The functions of the integrated driver support system that will be temporarily canceled when this DTC is recorded can be confirmed with the **DTC troubleshooting index** .

DTC Description	DTC
C0051-96 Steering Angle Sensor Malfunction	B

DTC (IDAS)

1. Problem verification

   -1. Turn the vehicle to the ON mode.

   -2. Clear the DTC with the HDS.

   -3. Turn the vehicle to the OFF (LOCK) mode.

   -4. Turn the vehicle to the ON mode, then wait for at least 6 seconds.

   -5. Check for DTCs with the HDS.

DTC Description	DTC
C0051-96 Steering Angle Sensor Malfunction	B

   Is DTC C0051-96 indicated?

   YES

   The failure is duplicated. **Go to the indicated DTC's troubleshooting in the EPS system** .

   NO

   Intermittent failure, the system is OK at this time. **Refer to intermittent failures troubleshooting**.

DTC C0061-9A, C0062-9A, C0063-9A

DTC C0061-9A : Temporary stop of Integrated Driver Support System (Unstable Lateral Acceleration Sensor Signal)

DTC C0062-9A : Temporary stop of Integrated Driver Support System (Unstable Longitudinal Acceleration Sensor Signal)

DTC C0063-9A : Temporary stop of Integrated Driver Support System (Unstable Yaw Rate Sensor Signal)

NOTE:

- Before you troubleshoot, **review the general troubleshooting information**.
- These DTCs are recorded when the sensor signal reliability temporarily decreases due to a drop in the power supply voltage supplied to the yaw rate sensor and lateral acceleration sensor built in the SRS unit or for other reason.
- If this DTC is recorded, some of the integrated driver support system functions are temporarily canceled but it is not a failure.
- When the power supply voltage supplied to the yaw rate sensor and lateral acceleration sensor built in the SRS unit return to normal, the temporarily cancelled integrated driver support system functions are re-activated.
- The functions of the integrated driver support system that will be temporarily canceled when this DTC is recorded can be confirmed with the **DTC troubleshooting index** .

DTC Description	DTC
C0061-9A Temporary stop of Integrated Driver Support System (Unstable Lateral Acceleration Sensor Signal)	B
C0062-9A Temporary stop of Integrated Driver Support System (Unstable Longitudinal Acceleration Sensor Signal)	B

DTC Description	DTC
C0063-9A Temporary stop of Integrated Driver Support System (Unstable Yaw Rate Sensor Signal)	B

DTC (IDAS)

1. DTC check

   -1. Turn the vehicle to the ON mode, then wait for at least 6 seconds.

   -2. Check for DTCs with the HDS.

DTC Description	DTC
C0061-9A Temporary stop of Integrated Driver Support System (Unstable Lateral Acceleration Sensor Signal)	B

DTC Description	DTC
C0062-9A Temporary stop of Integrated Driver Support System (Unstable Longitudinal Acceleration Sensor Signal)	B
C0063-9A Temporary stop of Integrated Driver Support System (Unstable Yaw Rate Sensor Signal)	B

Is there any DTC(s) other than DTC C0061-9A, C0062-9A, or C0063-9A?

YES

Perform a troubleshooting for the recorded DTC.

NO

Clear the DTC with the HDS and explain to the customer that it is not a failure.

DTC C0063-F0 (MILLIMETER WAVE RADAR)

DTC C0063-F0 : Yaw Rate Sensor (Subfault) Fault Detection By Source Module

NOTE:

- Before you troubleshoot, **review the general troubleshooting information**.
- This vehicle's millimeter wave radar receives the failure information of the yaw rate sensor from the SRS unit. The SRS unit does not uses the yaw rate sensor for airbag deployment control, so the SRS system indicator does not come on even if the yaw rate sensor is faulty. If this DTC is stored, clear the DTC and then perform problem verification according to the troubleshooting flow. If this DTC is stored again, replace the SRS unit.
- If the DTC is recorded after it is cleared with the HDS, **replace the SRS unit** .
- The functions of the integrated driver support system that will be temporarily canceled when this DTC is recorded can be confirmed with the **DTC troubleshooting index** .

DTC Description	DTC
C0063-F0 Yaw Rate Sensor (Subfault) Fault Detection By Source Module	B

DTC (IDAS)

1. Problem verification

   -1. Turn the vehicle to the ON mode.

-2. Clear the DTC with the HDS.

-3. Turn the vehicle to the OFF (LOCK) mode.

-4. Turn the vehicle to the ON mode, then wait for at least 6 seconds.

-5. Check for DTCs with the HDS.

DTC Description	DTC
C0063-F0 Yaw Rate Sensor (Subfault) Fault Detection By Source Module	B

Is DTC C0063-F0 indicated?

YES

The failure is duplicated. **Replace the SRS unit** .

NO

Intermittent failure, the system is OK at this time. **Refer to intermittent failures troubleshooting**.

DTC C1040-00 (MILLIMETER WAVE RADAR)

DTC C1040-00 : Wheel Speed Signal Error

NOTE:

- Before you troubleshoot, **review the general troubleshooting information**.
- This DTC is recorded when the estimated yaw rate calculated based on the wheel speeds of the right and left wheels differs between the front and rear wheels.
- The specific conditions under which this DTC are as follows:
-
    - Abnormal tire diameter (low tire pressure, uneven wear, etc.)
    - Driving on a road having different road conditions on the right and left sides
- If this DTC is recorded, the integrated driver support system temporarily cancels its control to prevent the system from selecting an incorrect leading vehicle.
- When the difference in the estimated yaw rate between the front and rear wheels returns to normal, the integrated driver support system resumes its control.
- The functions of the integrated driver support system that will be temporarily canceled when this DTC is recorded can be confirmed with the **DTC troubleshooting index** .

DTC Description	DTC
C1040-00 Wheel Speed Signal Error	B

DTC (IDAS)

1. Problem verification

-1. Turn the vehicle to the ON mode.

-2. Clear the DTC with the HDS.

-3. Turn the vehicle to the OFF (LOCK) mode.

-4. Test-drive the vehicle on a straight road at speeds 25 mph (40 km/h) or more for 10 minutes or more.

-5. Check for DTCs with the HDS.

DTC Description	DTC
C1040-00 Wheel Speed Signal Error	B

Is DTC C1040-00 indicated?

YES

The failure is duplicated. Check the tire pressure and inspect for uneven wear.

NO

Intermittent failure, the system is OK at this time. **Refer to intermittent failures troubleshooting**.

DTC C1C00-F0, U0401-68, U0402-68

DTC C1C00-F0 : APP Sensor Signal Failure

DTC U0401-68 : PCM (PGM-FI System) Malfunction

DTC U0402-68 : PCM/TCM Malfunction

NOTE:

- Before you troubleshoot, **review the general troubleshooting information** .
- This DTC is recorded when the millimeter wave radar receives failure information for the PCM via the F-CAN.
- If a DTC is recorded again after it is cleared with the HDS, **perform a troubleshooting for the PGM-FI system** .
- The functions of the integrated driver support system that will be temporarily canceled when this DTC is recorded can be confirmed with the **DTC troubleshooting index** .

DTC Description	DTC
C1C00-F0 APP Sensor Signal Failure	B
U0401-68 PCM (PGM-FI System) Malfunction	B
U0402-68 PCM/TCM Malfunction	B

DTC (IDAS)

1. Problem verification

-1. Turn the vehicle to the ON mode.

-2. Clear the DTC with the HDS.

-3. Turn the vehicle to the OFF (LOCK) mode.

-4. Turn the vehicle to the ON mode, then wait for at least 6 seconds.

-5. Check for DTCs with the HDS.

DTC Description	DTC
C1C00-F0 APP Sensor Signal Failure	B
U0401-68 PCM (PGM-FI System) Malfunction	B
U0402-68 PCM/TCM Malfunction	B

Is DTC C1C00-F0, U0401-68, or U0402-68 indicated?

YES

The failure is duplicated. Go to the indicated DTC's troubleshooting in the PGM-FI system .

NO

Intermittent failure, the system is OK at this time. Refer to intermittent failures troubleshooting .

DTC P0564-11

DTC P0564-11 : ACC/LKAS Switch Signal Circuit Short

NOTE:

- Before you troubleshoot, review the general troubleshooting information.
- The functions of the integrated driver support system that will be temporarily canceled when this DTC is recorded can be confirmed with the DTC troubleshooting index .

DTC Description	DTC
P0564-11 ACC/LKAS Switch Signal Circuit Short	B

DTC (IDAS)

1. Problem verification

-1. Turn the vehicle to the ON mode.

-2. Clear the DTC with the HDS.

-3. Turn the vehicle to the OFF (LOCK) mode.

-4. Turn the vehicle to the ON mode, then wait for at least 6 seconds.

-5. Check for DTCs with the HDS.

DTC Description	DTC
P0564-11 ACC/LKAS Switch Signal Circuit Short	B

Is DTC P0564-11 indicated?

YES

The failure is duplicated. Go to step 2.

NO

Intermittent failure, the system is OK at this time. Refer to intermittent failures troubleshooting.

2. Shorted wire check (LKAS/DIST line) 1

-1. Turn the vehicle to the OFF (LOCK) mode.

-2. Disconnect the following connector.

ACC combination switch 12P connector

-3. Turn the vehicle to the ON mode.

-4. Measure the voltage between test points 1 and 2.

Test condition	Vehicle ON mode
B	ACC combination switch 12P connector: disconnected
Test point 1	ACC combination switch 12P connector (female terminals) No. 12: ①
Test point 2	Body ground

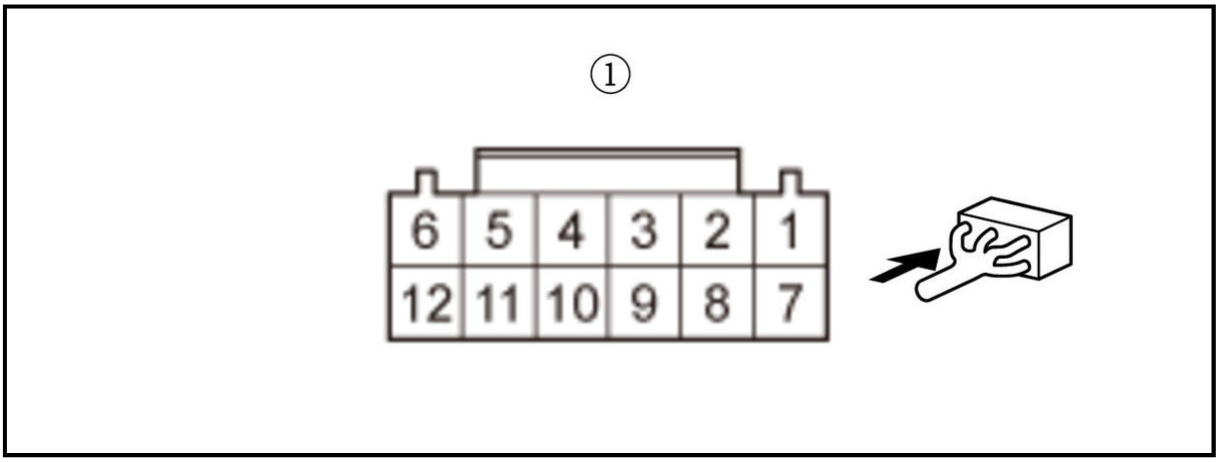

Is there about 5 V?

YES

Replace the ACC combination switch .

NO

Go to step 3.

3. Shorted wire check (LKAS/DIST line) 2

-1. Turn the vehicle to the OFF (LOCK) mode.

-2. Disconnect the following connector.

Cable reel connector D (20P)

-3. On the cable reel side, check for continuity between test points 1 and 2.

Test condition	Vehicle OFF (LOCK) mode
B	ACC combination switch 12P connector: disconnected
B	Cable reel connector D (20P): disconnected
Test point 1	Cable reel connector D (20P) (male terminals) No. 20: ①
Test point 2	Body ground

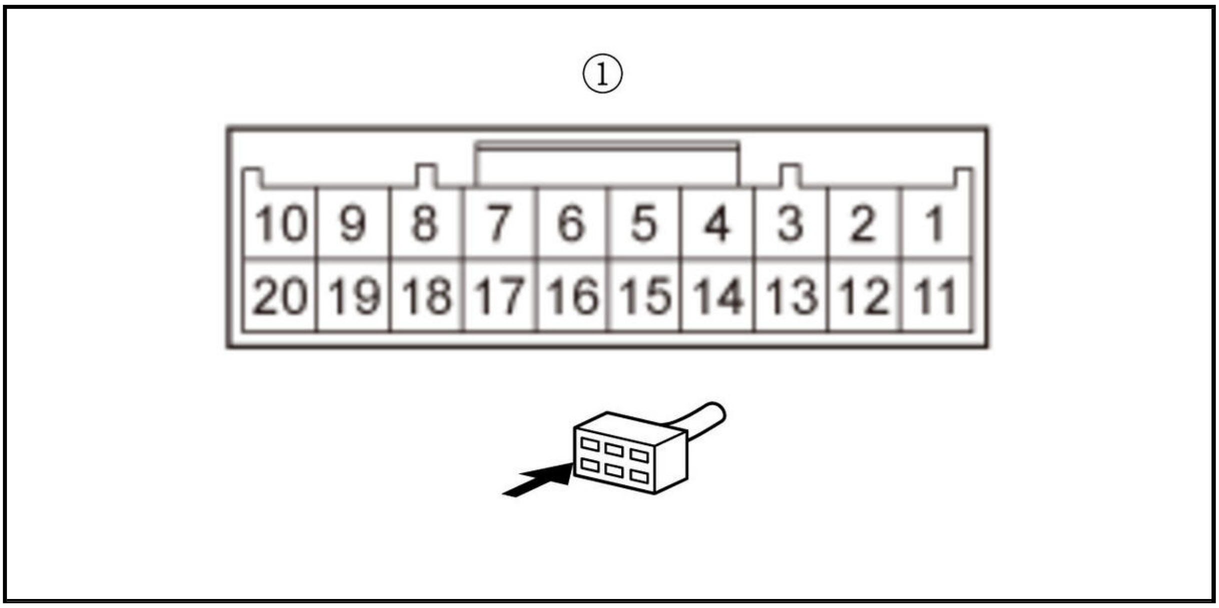

Is there continuity?

YES

Go to step 4.

NO

Repair a short to ground in the LKAS/DIST wire between the ACC combination switch and the cable reel.

4. Shorted wire check (DISTANCE SW line) 1

-1. Disconnect the following connector.

Cable reel connector A (20P)

-2. Check for continuity between test points 1 and 2.

Test condition	Vehicle OFF (LOCK) mode
B	ACC combination switch 12P connector: disconnected
B	Cable reel connector A (20P): disconnected
B	Cable reel connector D (20P): disconnected
Test point 1	Cable reel connector A (20P) (female terminals) No. 8: ①
Test point 2	Body ground

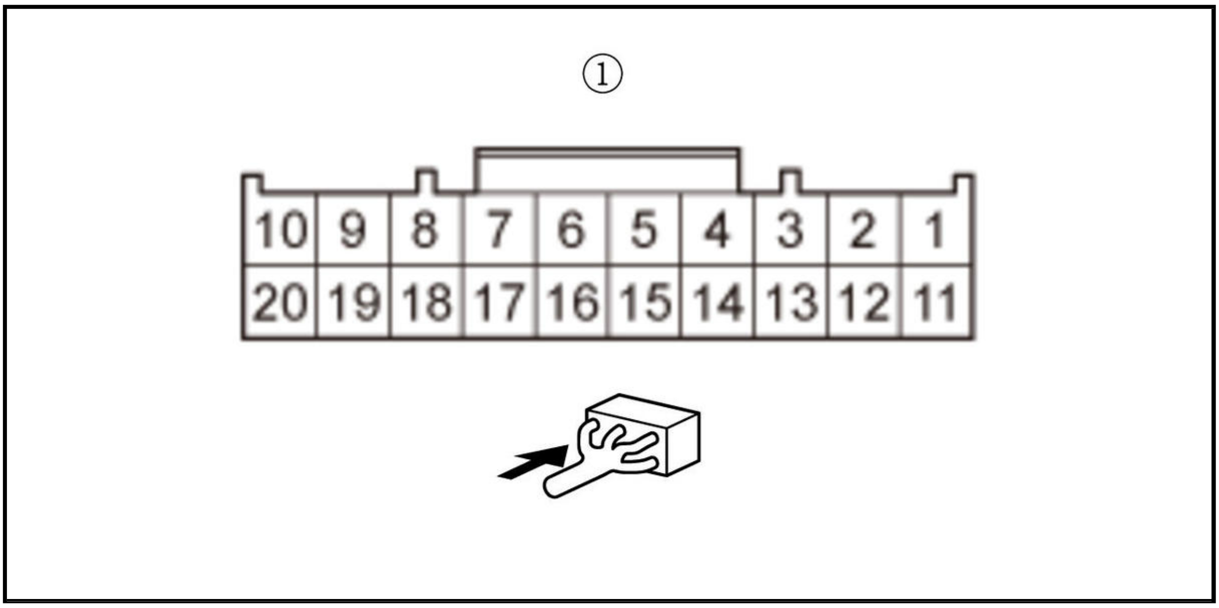

Is there continuity?

YES

Go to step 5.

NO

Replace the cable reel .

5. Shorted wire check (DISTANCE SW line) 2

-1. Disconnect the following connector.

Gauge control module connector A (32P)

-2. Check for continuity between test points 1 and 2.

Test condition	Vehicle OFF (LOCK) mode
B	ACC combination switch 12P connector: disconnected
B	Cable reel connector A (20P): disconnected
B	Cable reel connector D (20P): disconnected
B	Gauge control module connector A (32P): disconnected
Test point 1	**Gauge control module connector A (32P) No. 28**

Test point 2	Body ground

Is there continuity?

YES

Repair a short to ground in the DISTANCE SW wire between the gauge control module and the cable reel.

NO

Replace the gauge control module .

DTC P0564-15

DTC P0564-15 : ACC/LKAS Switch Signal Circuit Open

NOTE:

- Before you troubleshoot, **review the general troubleshooting information**.
- The functions of the integrated driver support system that will be temporarily canceled when this DTC is recorded can be confirmed with the **DTC troubleshooting index** .

DTC Description	DTC
P0564-15 ACC/LKAS Switch Signal Circuit Open	B

DTC (IDAS)

1. Problem verification

   -1. Turn the vehicle to the ON mode.

   -2. Clear the DTC with the HDS.

   -3. Turn the vehicle to the OFF (LOCK) mode.

   -4. Turn the vehicle to the ON mode, then wait for at least 6 seconds.

   -5. Check for DTCs with the HDS.

DTC Description	DTC
P0564-15 ACC/LKAS Switch Signal Circuit Open	B

   Is DTC P0564-15 indicated?

   YES

   The failure is duplicated. Go to step 2.

   NO

   Intermittent failure, the system is OK at this time. **Refer to intermittent failures troubleshooting**.

2. Open wire check (LKAS/DIST line) 1

   -1. Turn the vehicle to the OFF (LOCK) mode.

   -2. Disconnect the following connector.

ACC combination switch 12P connector

   -3. Turn the vehicle to the ON mode.

   -4. Measure the voltage between test points 1 and 2.

Test condition	Vehicle ON mode
B	ACC combination switch 12P connector: disconnected
Test point 1	ACC combination switch 12P connector (female terminals) No. 12: ①
Test point 2	Body ground

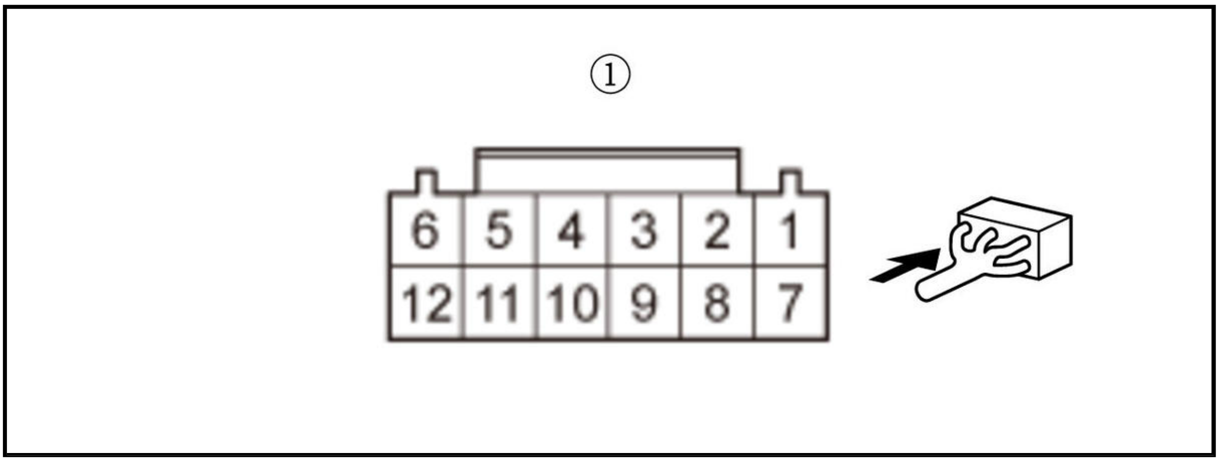

Is there about 5 V?

YES

Go to step 3.

NO

Go to step 7.

3. Determine possible failure area (ACC combination switch, CRUISE GND line)

-1. Measure the voltage between test points 1 and 2.

Test condition	Vehicle ON mode
B	ACC combination switch 12P connector: disconnected
Test point 1	ACC combination switch 12P connector (female terminals) No. 12: ①
Test point 2	ACC combination switch 12P connector (female terminals) No. 5: ①

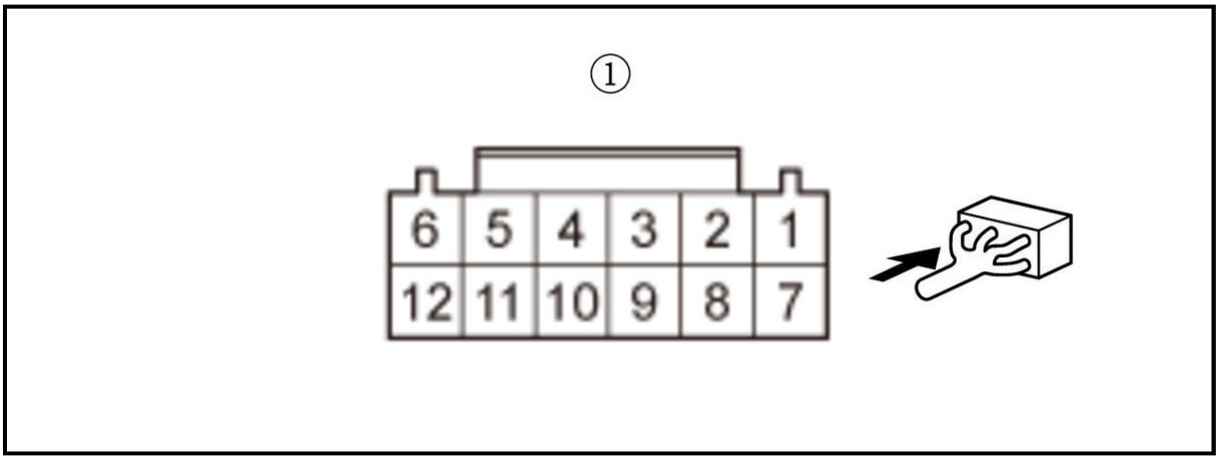

Is there about 5 V?

YES

Replace the ACC combination switch .

NO

Go to step 4.

4. Open wire check (CRUISE GND line) 1

-1. Turn the vehicle to the OFF (LOCK) mode.

-2. Disconnect the following connector.

Cable reel connector D (20P)

-3. Check for continuity between test points 1 and 2.

Test condition	Vehicle OFF (LOCK) mode
B	ACC combination switch 12P connector: disconnected
B	Cable reel connector D (20P): disconnected
Test point 1	ACC combination switch 12P connector (female terminals) No. 5: ①
Test point 2	Cable reel connector D (20P) (female terminals) No. 17: ②

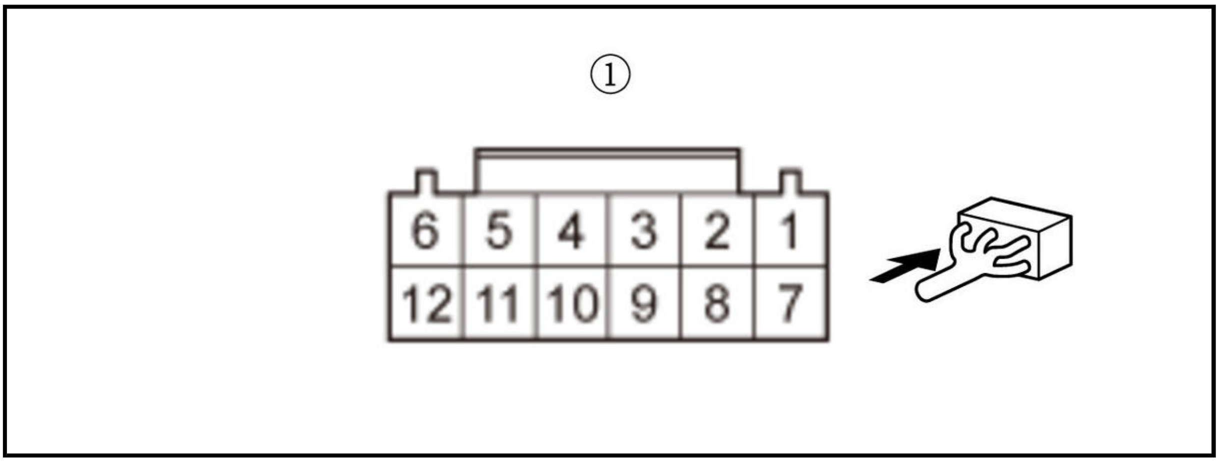

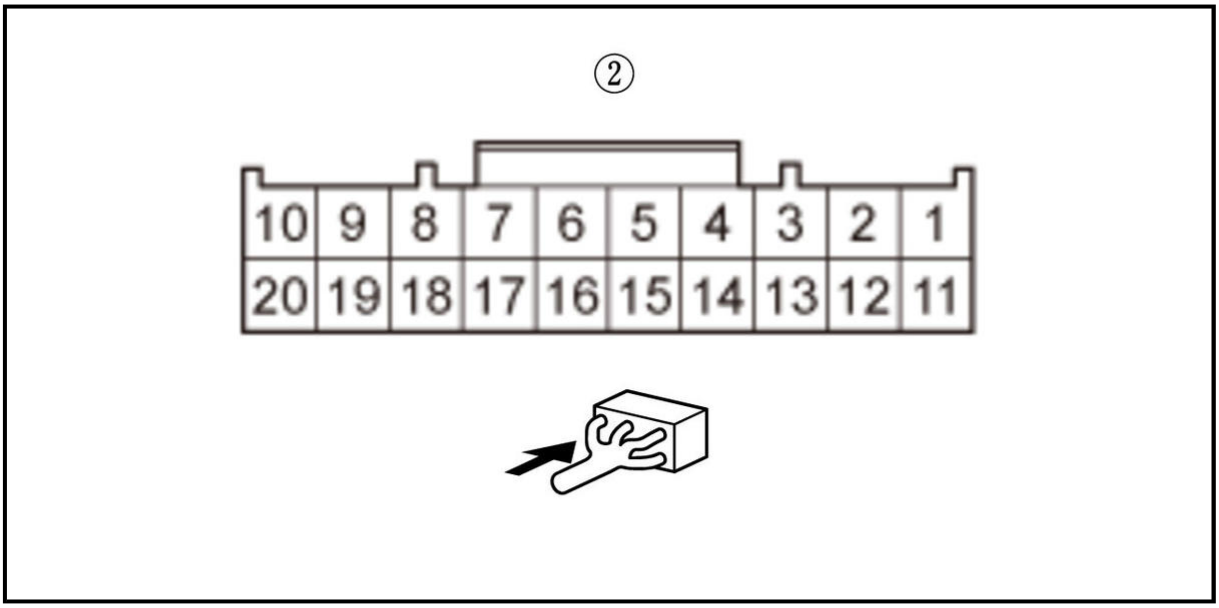

Is there continuity?

YES

Go to step 5.

NO

Repair an open in the CRUISE GND wire between the ACC combination switch and the cable reel.

5. Cable reel check

-1. **Remove the cable reel** .

-2. On the cable reel side, check for continuity between test points 1 and 2.

Test condition	Vehicle OFF (LOCK) mode
B	ACC combination switch 12P connector: disconnected
B	Cable reel connector D (20P): disconnected
B	Cable reel connector A (20P): disconnected
Test point 1	Cable reel connector A (20P) (male terminals) No. 5: ①
Test point 2	Cable reel connector D (20P) (male terminals) No. 17: ②

①

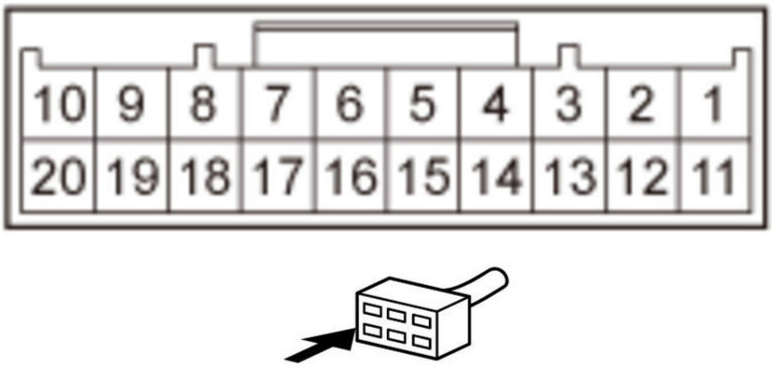
10
9
8
7
6
5
4
3
2
1
20
19
18
17
16
15
14
13
12
11

②

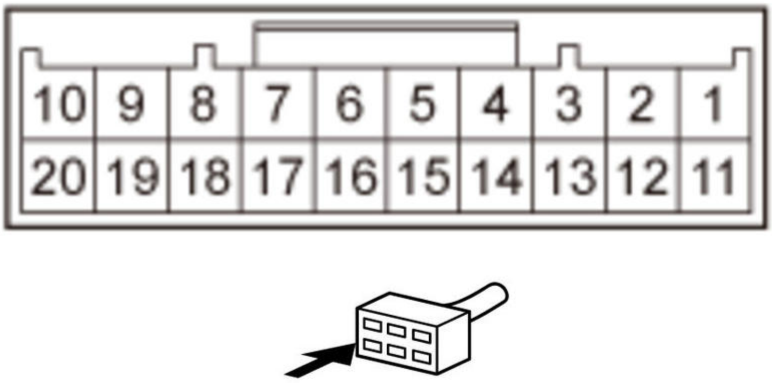
10
9
8
7
6
5
4
3
2
1
20
19
18
17
16
15
14
13
12
11

Is there continuity?

YES

Go to step 6.

NO

Replace the cable reel .

6. Open wire check (CRUISE GND line) 2

-1. Disconnect the following connector.

Gauge control module connector A (32P)

-2. Check for continuity between test points 1 and 2.

Test condition	Vehicle OFF (LOCK) mode
B	ACC combination switch 12P connector: disconnected
B	Cable reel connector D (20P): disconnected
B	Cable reel connector A (20P): disconnected
B	Gauge control module connector A (32P): disconnected
Test point 1	**Gauge control module connector A (32P) No. 5**

Test point 2	Cable reel connector A (20P) (female terminals) No. 5: ①

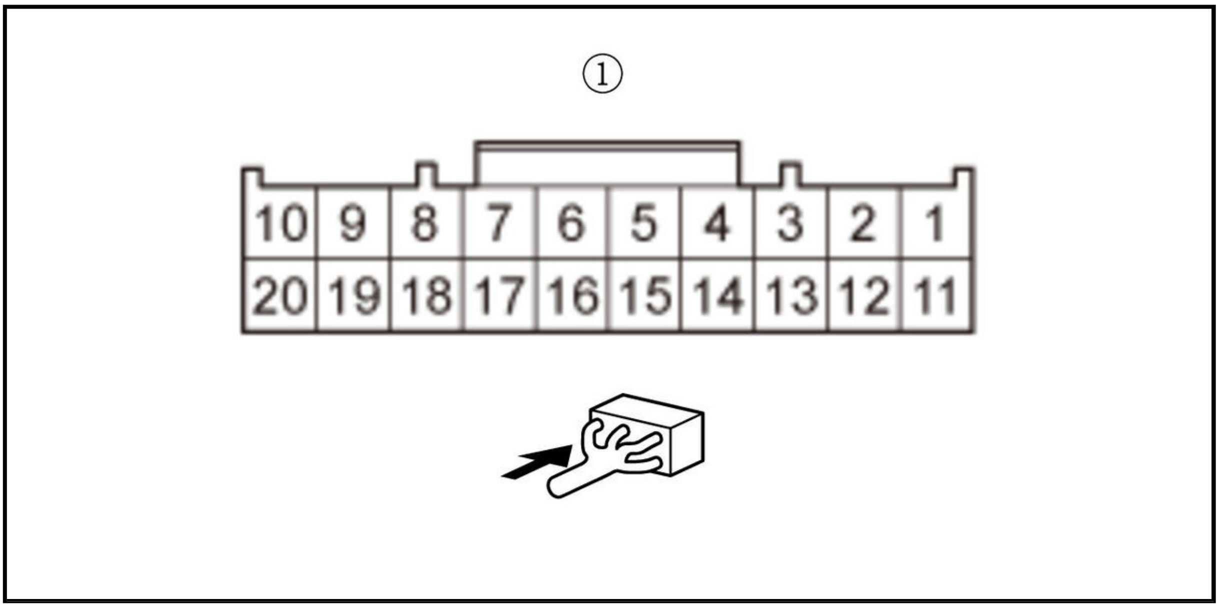

Is there continuity?

YES

Replace the gauge control module .

NO

Repair an open in the CRUISE GND wire between the gauge control module and the cable reel.

7. Open wire check (LKAS/DIST line) 2

-1. Turn the vehicle to the OFF (LOCK) mode.

-2. Disconnect the following connector.

Cable reel connector D (20P)

-3. Turn the vehicle to the ON mode.

-4. On the cable reel side, measure the voltage between test points 1 and 2.

Test condition	Vehicle ON mode
B	ACC combination switch 12P connector: disconnected
B	Cable reel connector D (20P): disconnected
Test point 1	Cable reel connector D (20P) (male terminals) No. 20: ①
Test point 2	Body ground

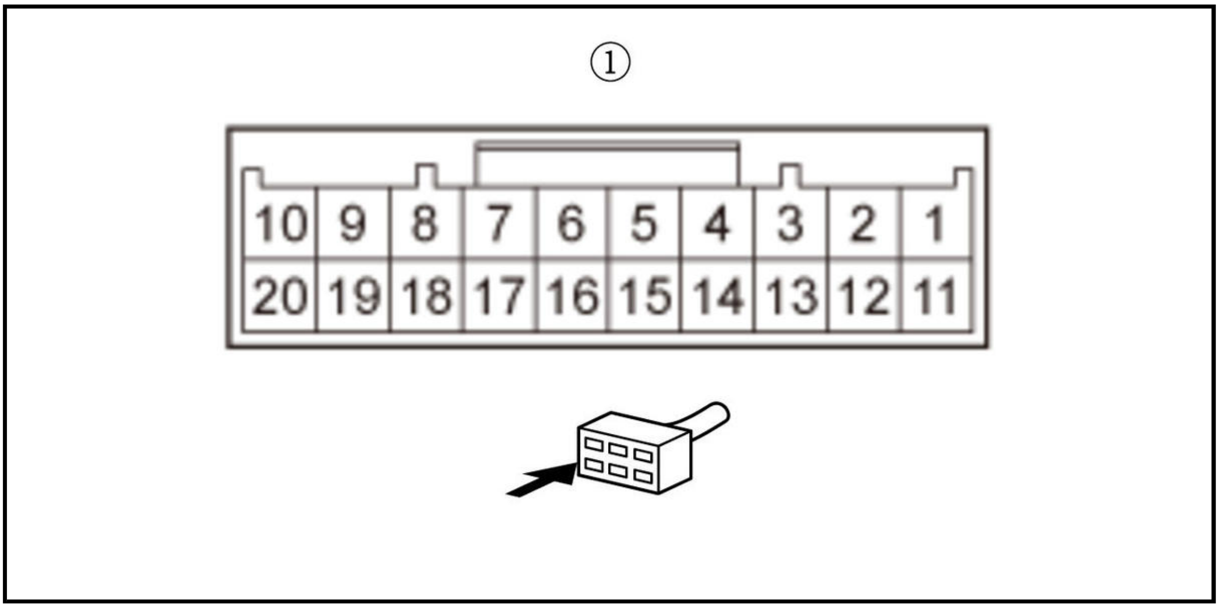

Is there about 5 V?

YES

Repair an open in the LKAS/DIST wire between the ACC combination switch and the cable reel.

NO

Go to step 8.

8. Cable reel check

-1. Turn the vehicle to the OFF (LOCK) mode.

-2. Disconnect the following connector.

Cable reel connector A (20P)

-3. Turn the vehicle to the ON mode.

-4. Measure the voltage between test points 1 and 2.

Test condition	Vehicle ON mode
B	ACC combination switch 12P connector: disconnected
B	Cable reel connector D (20P): disconnected
B	Cable reel connector A (20P): disconnected
Test point 1	Cable reel connector A (20P) (female terminals) No. 8: ①
Test point 2	Body ground

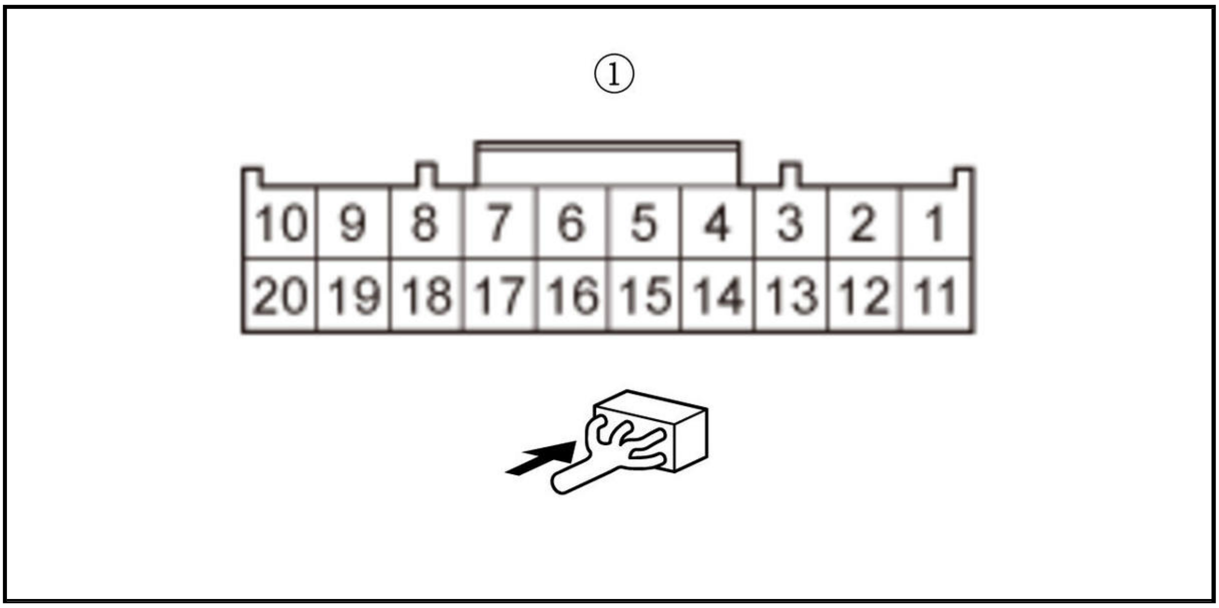

Is there about 5 V?

YES

Replace the cable reel .

NO

Go to step 9.

9. Open wire check (DISTANCE SW line)

-1. Turn the vehicle to the OFF (LOCK) mode.

-2. Disconnect the following connector.

Gauge control module connector A (32P)

-3. Check for continuity between test points 1 and 2.

Test condition	Vehicle OFF mode
B	ACC combination switch 12P connector: disconnected
B	Cable reel connector D (20P): disconnected
B	Cable reel connector A (20P): disconnected
B	Gauge control module connector A (32P): disconnected
Test point 1	**Gauge control module connector A (32P) No. 28**
Test point 2	Cable reel connector A (20P) (female terminals) No. 8: ①

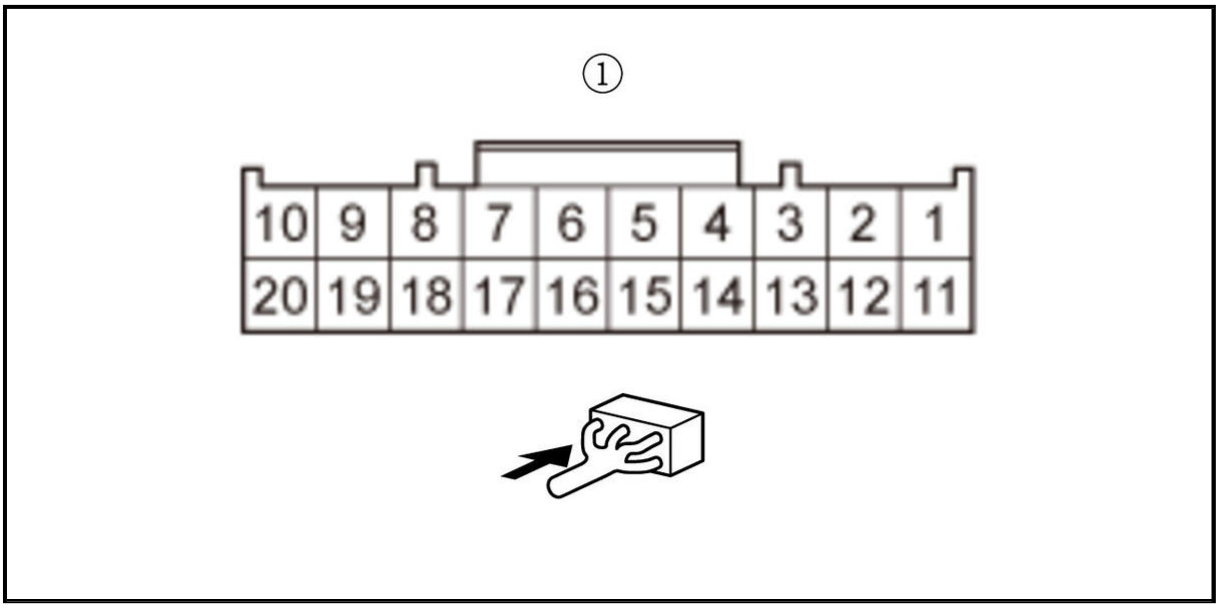

Is there continuity?

YES

Replace the gauge control module .

NO

Repair an open in the DISTANCE SW wire between the gauge control module and the cable reel.

DTC P0589-11

DTC P0589-11 : Main Switch Signal Circuit Short

NOTE:

- Before you troubleshoot, **review the general troubleshooting information**.
- The functions of the integrated driver support system that will be temporarily canceled when this DTC is recorded can be confirmed with the **DTC troubleshooting index** .

DTC Description	DTC
P0589-11 Main Switch Signal Circuit Short	B

DTC (IDAS)

1. Problem verification

-1. Turn the vehicle to the ON mode.

-2. Clear the DTC with the HDS.

-3. Turn the vehicle to the OFF (LOCK) mode.

-4. Turn the vehicle to the ON mode, then wait for at least 6 seconds.

-5. Check for DTCs with the HDS.

DTC Description	DTC
P0589-11 Main Switch Signal Circuit Short	B

Is DTC P0589-11 indicated?

YES

The failure is duplicated. Go to step 2.

NO

Intermittent failure, the system is OK at this time. **Refer to intermittent failures troubleshooting**.

2. Shorted wire check (CRUISE SW line) 1

-1. Turn the vehicle to the OFF (LOCK) mode.

-2. Disconnect the following connector.

ACC combination switch 12P connector

-3. Turn the vehicle to the ON mode.

-4. Measure the voltage between test points 1 and 2.

Test condition	Vehicle ON mode
B	ACC combination switch 12P connector: disconnected
Test point 1	ACC combination switch 12P connector (female terminals) No. 6: ①
Test point 2	Body ground

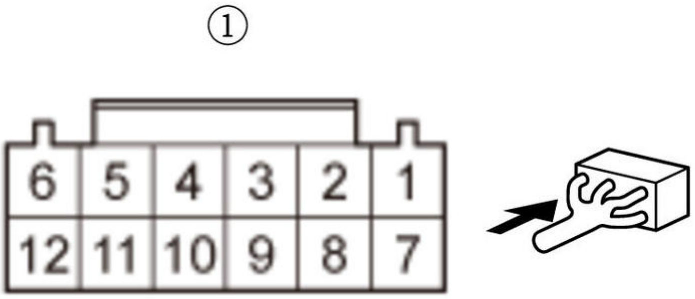

Is there about 5 V?

YES

Replace the ACC combination switch .

NO

Go to step 3.

3. Shorted wire check (CRUISE SW line) 2

-1. Turn the vehicle to the OFF (LOCK) mode.

-2. Disconnect the following connector.

Cable reel connector D (20P)

-3. On the cable reel side, check for continuity between test points 1 and 2.

Test condition	Vehicle OFF (LOCK) mode
B	ACC combination switch 12P connector: disconnected
B	Cable reel connector D (20P): disconnected
Test point 1	Cable reel connector D (20P) (male terminals) No. 16: ①
Test point 2	Body ground

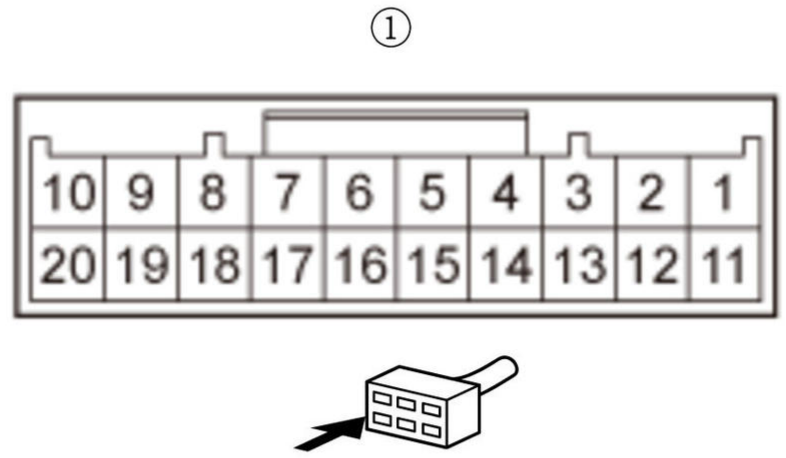

Is there continuity?

YES

Go to step 4.

NO

Repair a short to ground in the CRUISE SW wire between the ACC combination switch and the cable reel.

4. Shorted wire check (CRUISE SW line) 3

-1. Disconnect the following connector.

Cable reel connector A (20P)

-2. Check for continuity between test points 1 and 2.

Test condition	Vehicle OFF (LOCK) mode
B	ACC combination switch 12P connector: disconnected
B	Cable reel connector D (20P): disconnected
B	Cable reel connector A (20P): disconnected
Test point 1	Cable reel connector A (20P) (female terminals) No. 4: ①
Test point 2	Body ground

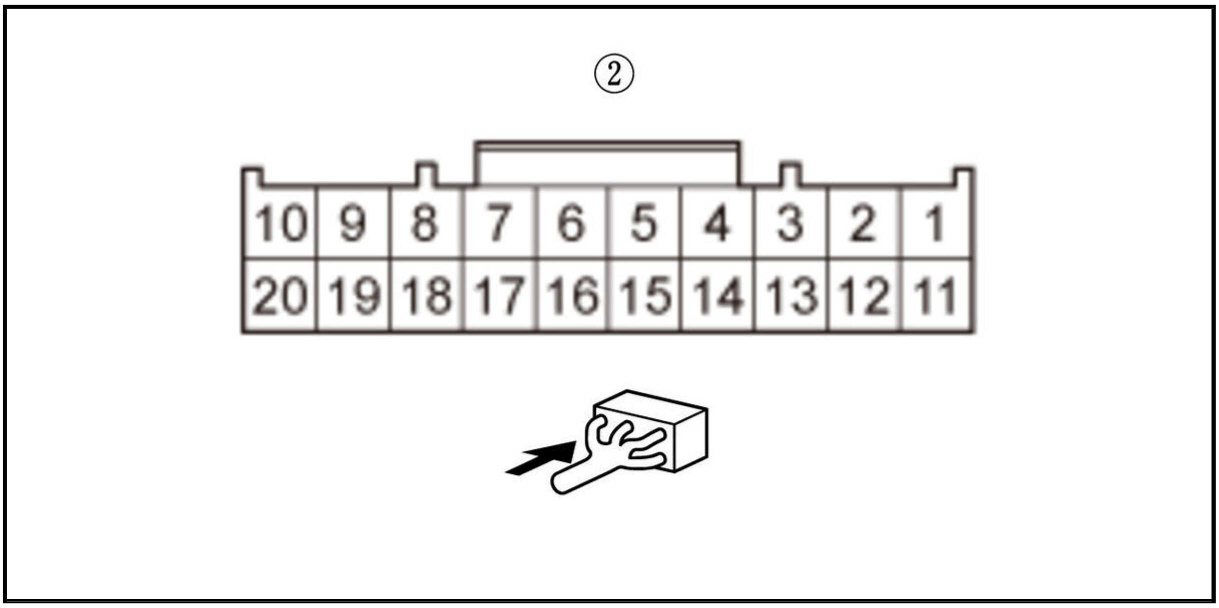

Is there continuity?

YES

Go to step 5.

NO

Replace the cable reel .

5. Shorted wire check (CRUISE SW line) 4

-1. Disconnect the following connector.

Gauge control module connector A (32P)

-2. Check for continuity between test points 1 and 2.

Test condition	Vehicle OFF (LOCK) mode
B	ACC combination switch 12P connector: disconnected
B	Cable reel connector D (20P): disconnected
B	Cable reel connector A (20P): disconnected
B	Gauge control module connector A (32P): disconnected
Test point 1	**Gauge control module connector A (32P) No. 14**

Test point 2	Body ground

Is there continuity?

YES

Repair a short to ground in the CRUISE SW wire between the gauge control module and the cable reel.

NO

Replace the gauge control module .

DTC P0589-15

DTC P0589-15 : Main Switch Signal Circuit Open

NOTE:

- Before you troubleshoot, **review the general troubleshooting information**.
- The functions of the integrated driver support system that will be temporarily canceled when this DTC is recorded can be confirmed with the **DTC troubleshooting index** .

DTC Description	DTC
P0589-15 Main Switch Signal Circuit Open	B

DTC (IDAS)

1. Problem verification

   -1. Turn the vehicle to the ON mode.

   -2. Clear the DTC with the HDS.

   -3. Turn the vehicle to the OFF (LOCK) mode.

   -4. Turn the vehicle to the ON mode, then wait for at least 6 seconds.

   -5. Check for DTCs with the HDS.

DTC Description	DTC
P0589-15 Main Switch Signal Circuit Open	B

   Is DTC P0589-15 indicated?

   YES

   The failure is duplicated. Go to step 2.

   NO

   Intermittent failure, the system is OK at this time. **Refer to intermittent failures troubleshooting**.

2. Open wire check (CRUISE SW line) 1

   -1. Turn the vehicle to the OFF (LOCK) mode.

   -2. Disconnect the following connector.

ACC combination switch 12P connector

   -3. Turn the vehicle to the ON mode.

   -4. Measure the voltage between test points 1 and 2.

Test condition	Vehicle ON mode
B	ACC combination switch 12P connector: disconnected
Test point 1	ACC combination switch 12P connector (female terminals) No. 6: ①
Test point 2	Body ground

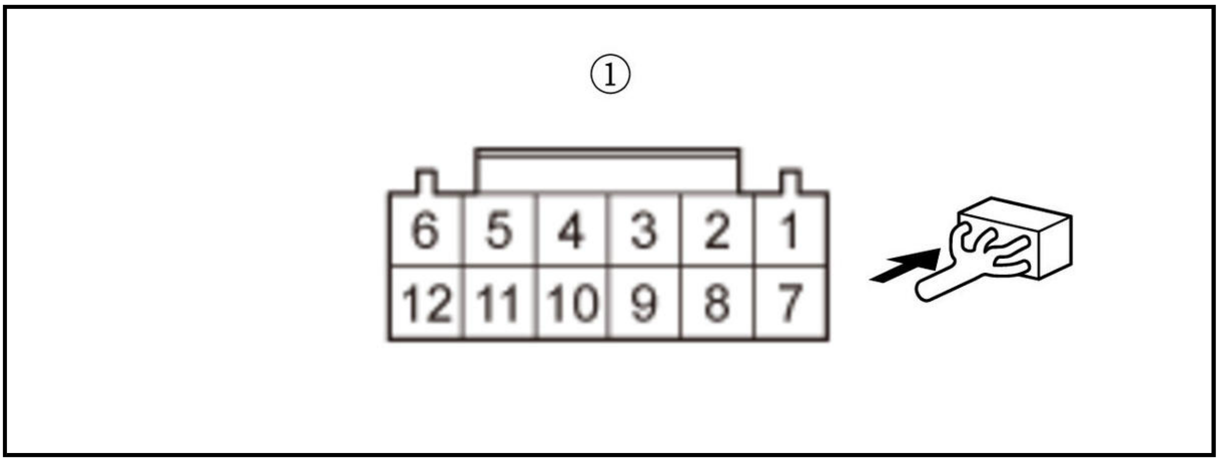

Is there about 5 V?

YES

Go to step 3.

NO

Go to step 7.

3. ACC combination switch circuit check

-1. Measure the voltage between test points 1 and 2.

Test condition	Vehicle ON mode
B	ACC combination switch 12P connector: disconnected
Test point 1	ACC combination switch 12P connector (female terminals) No. 6: ①
Test point 2	ACC combination switch 12P connector (female terminals) No. 5: ①

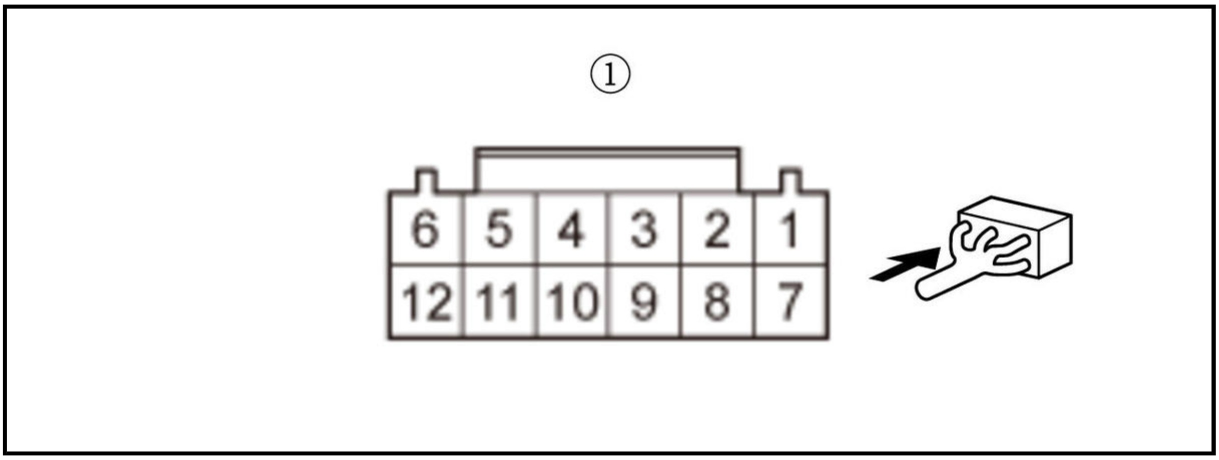

Is there about 5 V?

YES

Replace the ACC combination switch .

NO

Go to step 4.

4. Open wire check (CRUISE GND line) 1

-1. Turn the vehicle to the OFF (LOCK) mode.

-2. Disconnect the following connector.

Cable reel connector D (20P)

-3. Check for continuity between test points 1 and 2.

Test condition	Vehicle OFF (LOCK) mode
B	ACC combination switch 12P connector: disconnected
B	Cable reel connector D (20P) connector: disconnected
Test point 1	ACC combination switch 12P connector (female terminals) No. 5: ①
Test point 2	Cable reel connector D (20P) (female terminals) No. 17: ②

①

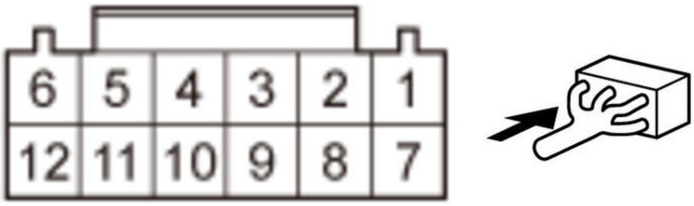

②

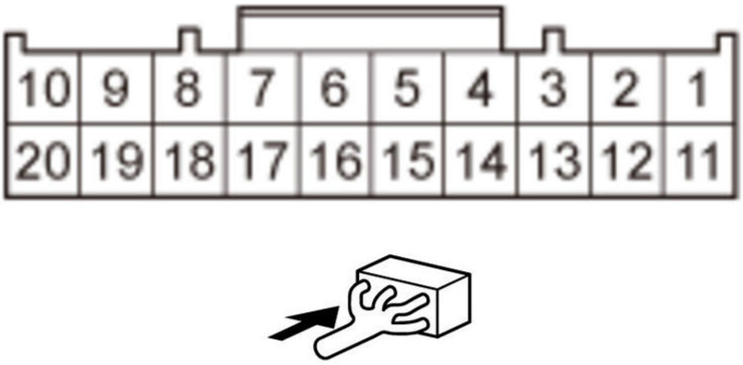

Is there continuity?

YES

Go to step 5.

NO

Repair an open in the CRUISE GND wire between the ACC combination switch and the cable reel.

5. Cable reel check

-1. **Remove the cable reel** .

-2. On the cable reel side, check for continuity between test points 1 and 2.

Test condition	Vehicle OFF (LOCK) mode
B	ACC combination switch 12P connector: disconnected
B	Cable reel connector D (20P) connector: disconnected
B	Cable reel connector A (20P) connector: disconnected
Test point 1	Cable reel connector A (20P) (male terminals) No. 5: ①
Test point 2	Cable reel connector D (20P) (male terminals) No. 17: ②

①

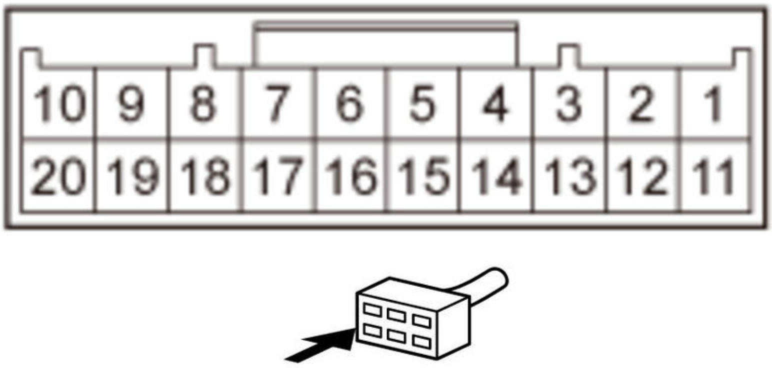
10
9
8
7
6
5
4
3
2
1
20
19
18
17
16
15
14
13
12
11

②

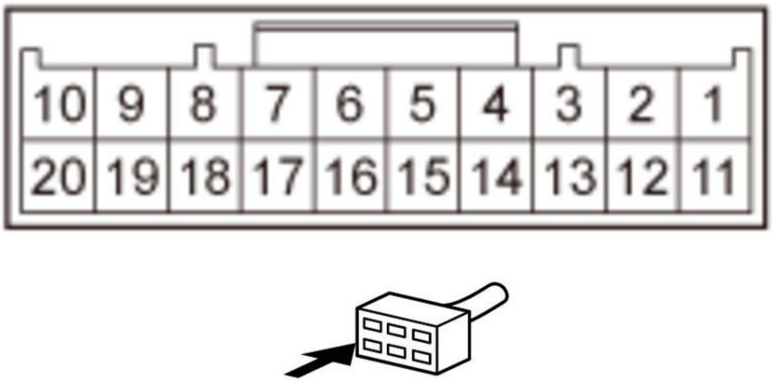
10
9
8
7
6
5
4
3
2
1
20
19
18
17
16
15
14
13
12
11

Is there continuity?

YES

Go to step 6.

NO

Replace the cable reel .

6. Open wire check (CRUISE GND line) 2

-1. Disconnect the following connector.

Gauge control module connector A (32P)

-2. Check for continuity between test points 1 and 2.

Test condition	Vehicle OFF (LOCK) mode
B	ACC combination switch 12P connector: disconnected
B	Cable reel connector D (20P) connector: disconnected
B	Cable reel connector A (20P) connector: disconnected
B	Gauge control module connector A (32P): disconnected
Test point 1	**Gauge control module connector A (32P) No. 5**
Test point 2	Cable reel connector A (20P) (female terminals) No. 5: ①

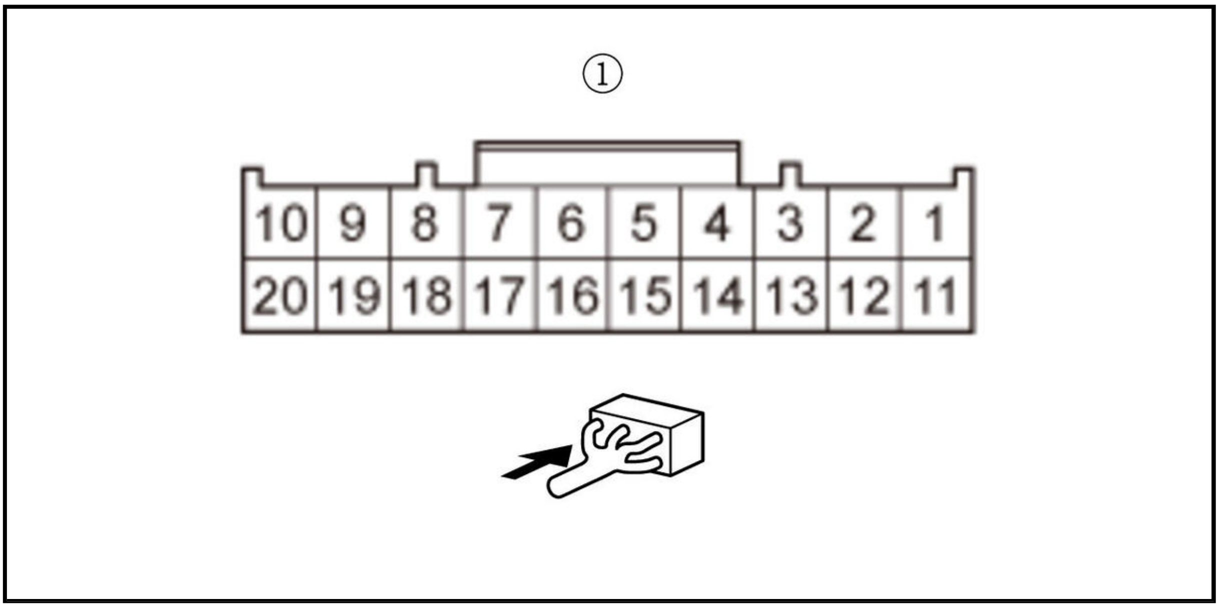

Is there continuity?

YES

Replace the gauge control module .

NO

Repair an open in the CRUISE GND wire between the gauge control module and the cable reel.

7. Open wire check (CRUISE SW line) 2

-1. Turn the vehicle to the OFF (LOCK) mode.

-2. Disconnect the following connector.

Cable reel connector D (20P)

-3. Turn the vehicle to the ON mode.

-4. Measure the voltage between test points 1 and 2.

Test condition	Vehicle ON mode

B	ACC combination switch 12P connector: disconnected
B	Cable reel connector D (20P) connector: disconnected
Test point 1	Cable reel connector D (20P) (male terminals) No. 16: ①
Test point 2	Body ground

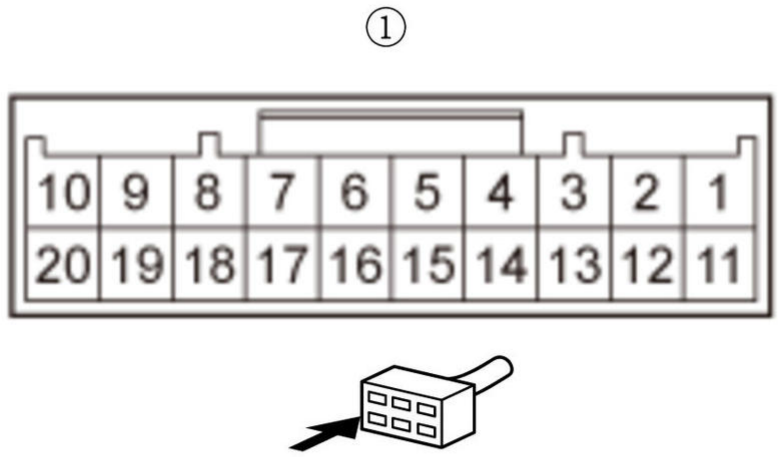

Is there about 5 V?

YES

Repair an open in the CRUISE SW wire between the ACC combination switch and the cable reel.

NO

Go to step 8.

8. Open wire check (CRUISE SW line) 3

-1. Turn the vehicle to the OFF (LOCK) mode.

-2. Disconnect the following connector.

Cable reel connector A (20P)

-3. Turn the vehicle to the ON mode.

-4. Measure the voltage between test points 1 and 2.

Test condition	Vehicle ON mode
B	ACC combination switch 12P connector: disconnected
B	Cable reel connector D (20P) connector: disconnected
B	Cable reel connector A (20P) connector: disconnected
Test point 1	Cable reel connector A (20P) (female terminals) No. 4: ①
Test point 2	Body ground

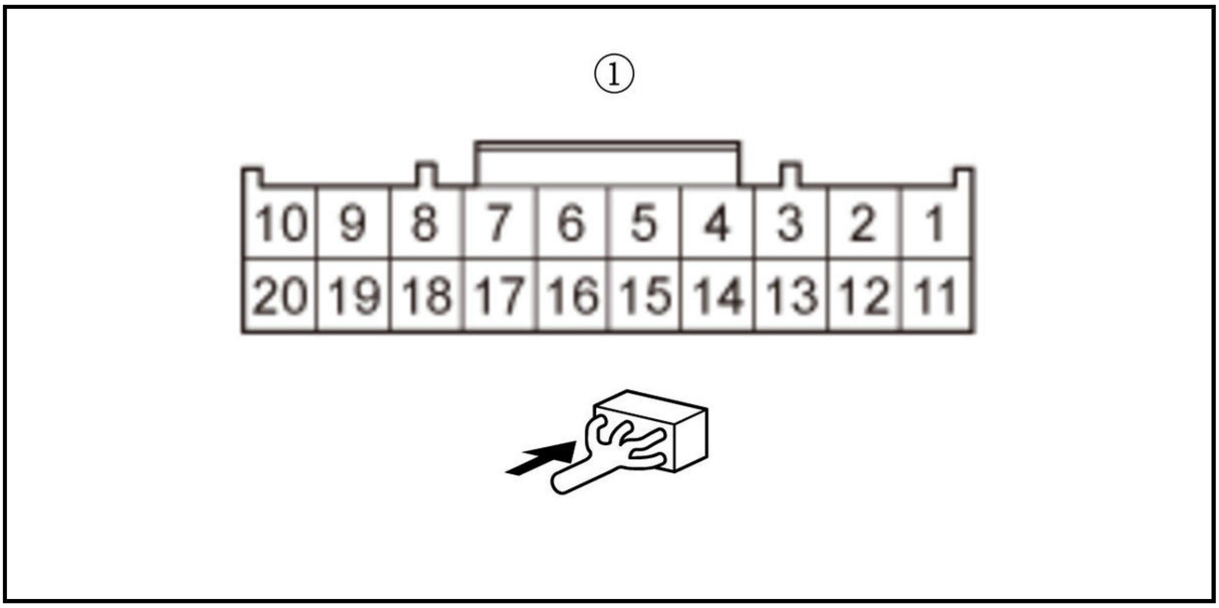

Is there about 5 V?

YES

Replace the cable reel .

NO

Go to step 9.

9. Open wire check (CRUISE SW line) 4

-1. Turn the vehicle to the OFF (LOCK) mode.

-2. Disconnect the following connector.

Gauge control module connector A (32P)

-3. Check for continuity between test points 1 and 2.

Test condition	Vehicle OFF mode
B	ACC combination switch 12P connector: disconnected
B	Cable reel connector D (20P) connector: disconnected
B	Cable reel connector A (20P) connector: disconnected
B	Gauge control module connector A (32P): disconnected
Test point 1	**Gauge control module connector A (32P) No. 14**
Test point 2	Cable reel connector A (20P) (female terminals) No. 4: ①

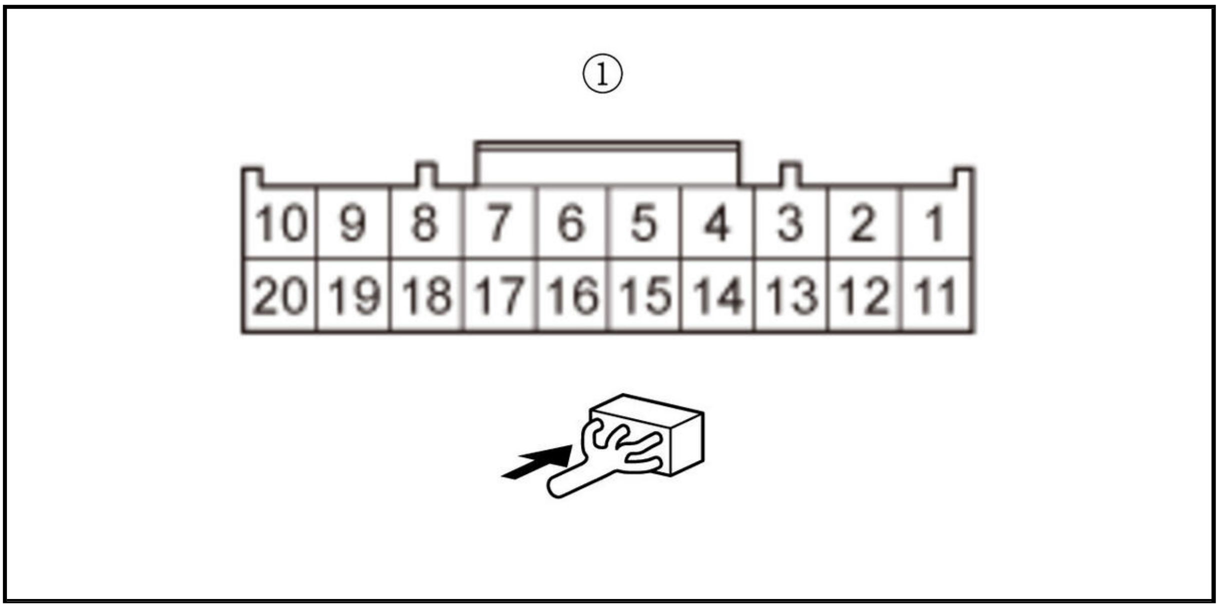

Is there continuity?

YES

Replace the gauge control module .

NO

Repair an open in the CRUISE SW wire between the gauge control module and the cable reel.

DTC P2583-49, U3000-49, U3000-57 (MILLIMETER WAVE RADAR)

DTC P2583-49 : Millimeter Wave Radar Internal Electronic Failure

DTC U3000-49 : Millimeter Wave Radar Internal Electronic Failure

DTC U3000-57 : Millimeter Wave Radar Software Failure

NOTE:

- Before you troubleshoot, **review the general troubleshooting information**.
- The functions of the integrated driver support system that will be temporarily canceled when this DTC is recorded can be confirmed with the **DTC troubleshooting index** .

DTC Description	DTC
P2583-49 Millimeter Wave Radar Internal Electronic Failure	B
U3000-49 Millimeter Wave Radar Internal Electronic Failure	B
U3000-57 Millimeter Wave Radar Software Failure	B

DTC (IDAS)

1. Problem verification

   -1. Turn the vehicle to the ON mode.

   -2. Clear the DTC with the HDS.

   -3. Turn the vehicle to OFF (LOCK) mode and then ON mode repeatedly at least 3 times.

   -4. Check for DTCs with the HDS.

DTC Description	DTC
P2583-49 Millimeter Wave Radar Internal Electronic Failure	B
U3000-49 Millimeter Wave Radar Internal Electronic Failure	B
U3000-57 Millimeter Wave Radar Software Failure	B

Is DTC P2583-49, U3000-49, or U3000-57 indicated?

YES

The failure is duplicated. **Replace the millimeter wave radar** .

NO

Intermittent failure, the system is OK at this time. **Refer to intermittent failures troubleshooting**.

DTC P2583-76

DTC P2583-76 : Temporary stop of Integrated Driver Support System (Misalignment Millimeter Wave Radar)

NOTE:

- Before you troubleshoot, **review the general troubleshooting information**.
- Before you troubleshoot, make sure all the tire pressures are correct, and remove all the cargo from the vehicle.
- This DTC is recorded if the beam axis of the millimeter wave radar gets out of alignment as follows while the vehicle is driving.
-
  - Vertical direction: 3.0 degrees or more
  - Horizontal direction: 2.5 degrees or more
- If this DTC is recorded, the following is suspected:
-
  - Change in the vehicle posture caused by an overload or the vehicle being towed.
  - It has been detected that the beam axis of the millimeter wave radar is out of alignment due to improper installation.
  - The millimeter wave radar installing portion is deformed by a minor collision or strong impact.
  - The beam axis of the millimeter wave radar is out of alignment due to abnormal wheel alignment, abnormal tire pressure, etc.
  - Altered suspension
  - When it is snowing, the radio waves transmitted and received by the millimeter wave radar may be refracted by the snow or ice attached around the millimeter wave radar such as the front grille, and are detected as a misalignment.
- If this DTC is recorded, the integrated drive support system temporarily cancels its control to prevent excessive operation or malfunction.
- Even when this DTC is recorded, the vehicle returns to normal if the misalignment of the detection axis of the millimeter wave radar is 1.5 degrees or less.
- The functions of the integrated driver support system that will be temporarily canceled when this DTC is recorded can be confirmed with the **DTC troubleshooting index** .

DTC Description	DTC
P2583-76 Temporary stop of Integrated Driver Support System (Misalignment Millimeter Wave Radar)	B

1. Check the vehicle condition

   -1. Turn the vehicle to the ON mode.

   -2. Check if any integrated driver support system related indicator comes on in the gauge control module.

   Is any indicator currently comes on?

   YES

   The failure is duplicated. Go to step 2.

   NO

   The system is OK at this time. Clear the DTC with the HDS. If the indicator is turned off, and axis misalignment has been recorded, explain to the customer that the system detected a temporarily misaligned millimeter wave axis and stopped functioning.

2. Millimeter wave radar installation check

   -1. Turn the vehicle to the OFF (LOCK) mode.

   -2. **Remove the front bumper** .

   -3. Check that the millimeter wave radar and radar bracket are installed properly and check them for deformation and damage.

   Are the millimeter wave radar and the radar bracket installed properly, and/or there are no signs of damage?

   YES

   Aim the millimeter wave radar . After the millimeter wave radar aiming is complete, clear the DTC with the HDS.

   NO

   Repair or replace faulty parts, then **aim the millimeter wave radar** .

DTC P2583-92

DTC P2583-92 : CMBS or FCW Over Working

NOTE:

- Before you troubleshoot, **review the general troubleshooting information**.
- This DTC is recorded when the CMBS is activated several times in a single vehicle ON mode cycle.
- If this DTC is recorded, the CMBS function does not return to normal until the DTC is cleared with the HDS.
- If this DTC is recorded, the following is suspected:
-
    - The millimeter wave radar is installed improperly and close-range obstacles are detected frequently.
    - The millimeter wave radar installing portion is deformed by a minor collision or strong impact.
    - The beam axis of the millimeter wave radar is out of alignment due to abnormal wheel alignment, abnormal tire pressure, etc.
    - The CMBS is activated several times in a row intentionally by the driver.

- After inspecting, repairing, or adjusting a possible cause of the failure, be sure to **perform millimeter wave radar aiming** . If the DTC cannot be deleted after millimeter wave radar aiming, **replace the millimeter wave radar** .
- The functions of the integrated driver support system that will be temporarily canceled when this DTC is recorded can be confirmed with the **DTC troubleshooting index** .

DTC Description	DTC
P2583-92 CMBS or FCW Over Working	B

DTC (IDAS)

1. Problem verification

   -1. Turn the vehicle to the ON mode.

   -2. Clear the DTC with the HDS.

   -3. Turn the vehicle to the OFF (LOCK) mode.

   -4. Turn the vehicle to the ON mode, then wait for at least 6 seconds.

   -5. Check for DTCs with the HDS.

DTC Description	DTC
P2583-92 CMBS or FCW Over Working	B

   Is DTC P2583-92 indicated?

   YES

   The failure is duplicated. Go to step 2.

   NO

   Intermittent failure, the system is OK at this time. **Refer to intermittent failures troubleshooting**.

2. Millimeter wave radar installation check

   -1. Turn the vehicle to the OFF (LOCK) mode.

   -2. **Remove the front bumper** .

   -3. Check that the millimeter wave radar and radar bracket are installed properly and check them for deformation and damage.

   Are the millimeter wave radar and the radar bracket installed properly, and/or is there any no damage?

   YES

   Go to step 3.

   NO

   Repair or replace faulty parts, then **aim the millimeter wave radar** .

3. Millimeter wave radar check (aiming)

   -1. **Install the front bumper** .

-2. **Aim the millimeter wave radar** .

-3. Turn the vehicle to the ON mode.

-4. Clear the DTC with the HDS.

-5. Turn the vehicle to the OFF (LOCK) mode.

-6. **Test-drive the vehicle in a speed range where the CMBS is activated** .

-7. Check the operation of the CMBS.

Is the CMBS activated frequently?

YES

If the millimeter wave radar is installed properly but the DTC is recorded again after millimeter wave radar aiming, **replace the millimeter wave radar** .

NO

The system is OK at this time.

DTC P2583-97

DTC P2583-97 : Dust or Dirt On The Millimeter Wave Radar

NOTE:

- Before you troubleshoot, **review the general troubleshooting information**.
- This DTC is stored when the millimeter wave radar determines that the detection capability (sensitivity) has decreased. A decrease in the detection capability (sensitivity) of the millimeter wave radar does not always mean a there is an obstruction on the radar surface.
-
    - Wipe off any dirt or dust off the millimeter wave radar surface and cover and test drive the vehicle. If the DTC is not record again, the millimeter wave radar is OK.
- This DTC may be stored when passing through an enclosed space such as a tunnel.
- The functions of the integrated driver support system that will be temporarily canceled when this DTC is recorded can be confirmed with the **DTC troubleshooting index** .

DTC Description	DTC
P2583-97 Dust or Dirt On The Millimeter Wave Radar	B

DTC (IDAS)

1. Millimeter wave radar and radar cover visual check

   -1. Check for dirt and dust on the radar cover surface.

   -2. Remove the radar cover, and check for dirt and dust on the inner side of the radar cover.

   -3. Check for dirt and dust on the millimeter wave radar surface.

   Is it surface dirty?

   YES

Clean the millimeter wave radar and/or the radar cover. After cleaning, install the radar cover, then go to step 2.

NO

Go to step 2.

2. Problem verification

-1. Turn the vehicle to the ON mode.

-2. Clear the DTC with the HDS.

-3. Turn the vehicle to the OFF (LOCK) mode.

-4. Test-drive the vehicle at speeds 25 mph (40 km/h) or more for 2 minutes.

-5. Check for DTCs with the HDS.

DTC Description	DTC
P2583-97 Dust or Dirt On The Millimeter Wave Radar	B

Is DTC P2583-97 indicated?

YES

The failure is duplicated. **Replace the millimeter wave radar** .

NO

Intermittent failure, the system is OK at this time. **Refer to intermittent failures troubleshooting**.

DTC P2583-9A

DTC P2583-9A : Temporary stop of Integrated Driver Support System (Jammed Millimeter Wave Radar)

NOTE:

- Before you troubleshoot, **review the general troubleshooting information**.
- This DTC is recorded when the millimeter wave radar malfunctions due to the impact of external radio waves.
- If this DTC is recorded, the integrated driver support system temporarily cancels its control.
- If this DTC is recorded, the vehicle returns to normal if the factor causing the failure has disappeared when the vehicle is stopped (vehicle OFF mode) and is turned to the ON mode again.
- The functions of the integrated driver support system that will be temporarily canceled when this DTC is recorded can be confirmed with the **DTC troubleshooting index** .

DTC Description	DTC
P2583-9A Temporary stop of Integrated Driver Support System (Jammed Millimeter Wave Radar)	B

DTC (IDAS)

1. DTC check

-1. Turn the vehicle to the ON mode, then wait for at least 6 seconds.

-2. Check for DTCs with the HDS.

DTC Description	DTC
P2583-9A Temporary stop of Integrated Driver Support System (Jammed Millimeter Wave Radar)	B

Is there any DTC(s) other than DTC P2583-9A?

YES

Perform a troubleshooting for the recorded DTC.

NO

Clear the DTC with the HDS and explain to the customer that it is not a failure.

DTC U0029-00 (MILLIMETER WAVE RADAR)

DTC U0029-00 : Millimeter Wave Radar F-CAN Malfunction (BUS-OFF)

NOTE:

- Before you troubleshoot, **review the how to troubleshooting information**.
- This DTC is stored by communication failure between the F-CAN line and the millimeter wave radar. When DTC U0029-00 is indicated, the F-CAN line has already returned to normal. Check for loose terminals and poor connections at the connectors. If the connectors are OK, clear the DTC and following this troubleshooting.
- The functions of the integrated driver support system that will be temporarily canceled when this DTC is recorded can be confirmed with the **DTC troubleshooting index** .

DTC Description	DTC
U0029-00 Millimeter Wave Radar F-CAN Malfunction (BUS-OFF)	B

DTC (IDAS)

1. CAN gateway system DTC check

   -1. Turn the vehicle to the ON mode.

   -2. Check for DTCs with the HDS.

DTC Description	DTC
B	B

Are any DTCs indicated?

YES

Go to indicated DTC's troubleshooting in the CAN gateway system .

NO

Intermittent failure, the system is OK at this time. **Refer to intermittent failures troubleshooting**.

DTC U0029-F1 (MILLIMETER WAVE RADAR)

DTC U0029-F1 : F-CAN Malfunction (BUS-OFF) (Multipurpose Camera Unit)

NOTE:

- Before you troubleshoot, **review the how to troubleshooting information**.
- This DTC is stored by communication failure between the F-CAN line and the multipurpose camera unit. When DTC U0029-F1 is indicated, the F-CAN line has already returned to normal. Check for loose terminals and poor connections at the connectors. If the connectors are OK, clear the DTC and following this troubleshooting.
- The functions of the integrated driver support system that will be temporarily canceled when this DTC is recorded can be confirmed with the **DTC troubleshooting index** .

DTC Description	DTC
U0029-F1 F-CAN Malfunction (BUS-OFF) (Multipurpose Camera Unit)	B

DTC (IDAS)

1. CAN gateway system DTC check

   -1. Turn the vehicle to the ON mode.

   -2. Check for DTCs with the HDS.

DTC Description	DTC
B	B

   Are any DTCs indicated?

   YES

   Go to indicated DTC's troubleshooting in the CAN gateway system .

   NO

   Intermittent failure, the system is OK at this time. **Refer to intermittent failures troubleshooting**.

DTC U0047-00, U0047-F1, U12B7-00 (MILLIMETER WAVE RADAR)

DTC U0047-00 : Millimeter Wave Radar Local-CAN Malfunction (BUS-OFF)

DTC U0047-F1 : Multipurpose Camera Unit Local-CAN Malfunction

DTC U12B7-00 : Millimeter Wave Radar Local-CAN Malfunction

NOTE:

- Before you troubleshoot, **review the general troubleshooting information**.
- If the transmitting control unit is malfunctioning, a DTC may be recorded. According to the recorded DTC, inspect the power circuits and ground circuits of the millimeter wave radar or the multipurpose camera unit.
- The functions of the integrated driver support system that will be temporarily canceled when this DTC is recorded can be confirmed with the **DTC troubleshooting index** .

DTC Description	DTC
U0047-00 Millimeter Wave Radar Local-CAN Malfunction (BUS-OFF)	B
U0047-F1 Multipurpose Camera Unit Local-CAN Malfunction	B
U12B7-00 Millimeter Wave Radar Local-CAN Malfunction	B

DTC (IDAS)

1. Problem verification

-1. Turn the vehicle to the ON mode.

-2. Clear the DTC with the HDS.

-3. Turn the vehicle to the OFF (LOCK) mode.

-4. Turn the vehicle to the ON mode, then wait for at least 6 seconds.

-5. Check for DTCs with the HDS.

DTC Description	DTC
U0047-00 Millimeter Wave Radar Local-CAN Malfunction (BUS-OFF)	B

DTC Description	DTC
U0047-F1 Multipurpose Camera Unit Local-CAN Malfunction	B
U12B7-00 Millimeter Wave Radar Local-CAN Malfunction	B

Is DTC U0047-00, U0047-F1, or U12B7-00 indicated?

YES

The failure is duplicated. Go to step 2.

NO

Intermittent failure, the system is OK at this time. Check for poor connections or loose terminals at the millimeter wave radar and the multipurpose camera unit.

2. Open wire check (ACC CAN-H line, ACC CAN-L line)

-1. Turn the vehicle to the OFF (LOCK) mode.

-2. Disconnect the following connectors.

Millimeter wave radar 8P connector
Multipurpose camera unit 12P connector

-3. Check for continuity between test points 1 and 2.

Test condition	Vehicle OFF (LOCK) mode
B	Millimeter wave radar 8P connector: disconnected
B	Multipurpose camera unit 12P connector: disconnected

DTC	Circuit name	Test point 1 (Receiving control unit)		Test point 2 (Transmitting control unit)	
		Connector	Terminal	Connector	Terminal
U0047-00	ACC CAN-H	**Millimeter wave radar 8P connector**	No. 4	**Multipurpose camera unit 12P connector**	No. 12
	ACC CAN-L		No. 3		No. 6
U0047-F1	ACC CAN-H	**Multipurpose camera unit 12P connector**	No. 12	**Millimeter wave radar 8P connector**	No. 4
	ACC CAN-L		No. 6		No. 3
U12B7-00	ACC CAN-H	**Millimeter wave radar 8P connector**	No. 4	**Multipurpose camera unit 12P connector**	No. 12
	ACC CAN-L		No. 3		No. 6

Is there continuity?

YES

Check for poor connections or loose terminals at the millimeter wave radar and the multipurpose camera unit. Check for any authorized service information related to the DTCs or symptoms you are troubleshooting. If they are OK, replace **the millimeter wave radar** or **the multipurpose camera unit** .

NO

Repair an open in the ACC CAN-H wire or the ACC CAN-L wire between the millimeter wave radar and the multipurpose camera unit.

DTC U0100-00, U0101-00, U0122-00, U0128-00, U0129-00, U0131-00, U0151-00, U0155-00 (MILLIMETER WAVE RADAR) (2017 2018 2019)

DTC U0100-00 : Lost Communication With The PCM (PGM-FI System) (Millimeter Wave Radar)

DTC U0101-00 : Lost Communication With The PCM/TCM (Millimeter Wave Radar)

DTC U0122-00 : Lost Communication With The VSA Modulator-Control Unit (Millimeter Wave Radar)

DTC U0128-00 : Lost Communication With The Electric Parking Brake Control Unit (Millimeter Wave Radar)

DTC U0129-00 : Lost Communication With The Electric Servo Brake Control Unit or Electric Brake Booster Control Unit (Millimeter Wave Radar)

DTC U0131-00 : Lost Communication With The EPS Control Unit (Millimeter Wave Radar)

DTC U0151-00 : Lost Communication With The SRS Unit (Millimeter Wave Radar)

DTC U0155-00 : Lost Communication With The Gauge Control Module (Millimeter Wave Radar)

NOTE:

- Before you troubleshoot, **review the general troubleshooting information**.
- If the transmitting control unit is malfunctioning, a DTC may be recorded. According to the recorded DTC, inspect the power circuits and ground circuits of the units with which the millimeter wave radar does not communicate.
- The functions of the integrated driver support system that will be temporarily canceled when this DTC is recorded can be confirmed with the **DTC troubleshooting index** .

DTC Description	DTC
U0100-00 Lost Communication With The PCM (PGM-FI System) (Millimeter Wave Radar)	B
U0101-00 Lost Communication With The PCM/TCM (Millimeter Wave Radar)	B
U0122-00 Lost Communication With The VSA Modulator-Control Unit (Millimeter Wave Radar)	B
U0128-00 Lost Communication With The Electric Parking Brake Control Unit (Millimeter Wave Radar)	B
U0129-00 Lost Communication With The Electric Servo Brake Control Unit or Electric Brake Booster Control Unit (Millimeter Wave Radar)	B
U0131-00 Lost Communication With The EPS Control Unit (Millimeter Wave Radar)	B
U0151-00 Lost Communication With The SRS Unit (Millimeter Wave Radar)	B
U0155-00 Lost Communication With The Gauge Control Module (Millimeter Wave Radar)	B

DTC (IDAS)

1. CAN gateway system DTC check

   -1. Turn the vehicle to the ON mode.

   -2. Check for CAN gateway system DTCs with the HDS.

DTC Description	DTC
U0029-00 CAN Gateway F-CAN ch A Bus Off	B
U0047-00 CAN Gateway F-CAN ch B Bus Off	B
U3000-49 CAN Gateway Internal Failure	B

   Is DTC U0029-00, U0047-00, and/or U3000-49 indicated?

   YES

   Go to the indicated DTCs troubleshooting .

   NO

   Go to step 2.

2. F-CAN circuit communication check (Receiving control unit)

   -1. Select the FUNCTION TEST in the CAN gateway with the HDS, then select the F-CAN Bus Connected Unit Check.

   F-CAN Bus Connected Unit Check

   Does the millimeter wave radar detect the CAN gateway Bus channels B?

   Bus B is Not Available

   Go to step 3.

   Bus B is Available

   Go to step 4.

3. Open wire check (F-CAN B_H line, F-CAN B_L line)

   -1. Turn the vehicle to the OFF (LOCK) mode.

   -2. Disconnect the following connectors.

CAN gateway 12P connector
Millimeter wave radar 8P connector

   -3. Check for continuity between test points 1 and 2.

Test condition	Vehicle OFF (LOCK) mode
B	CAN gateway 12P connector: disconnected
B	Millimeter wave radar 8P connector: disconnected
Test point 1	CAN gateway 12P connector (female terminals) No. 5: ①
Test point 2	**Millimeter wave radar 8P connector No. 6**

Test point 1	CAN gateway 12P connector (female terminals) No. 12: ①
Test point 2	**Millimeter wave radar 8P connector No. 7**

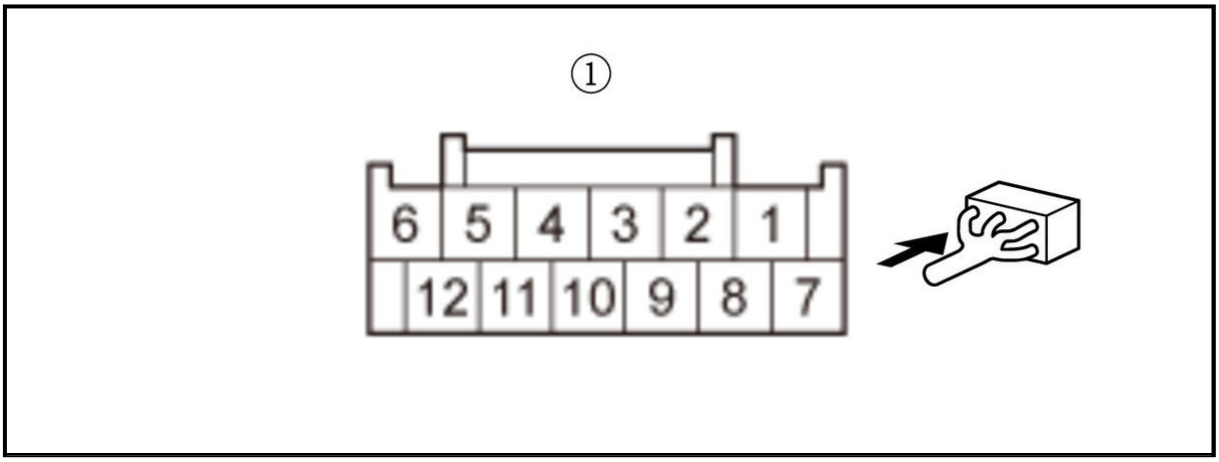

Is there continuity?

YES

Check for poor connections or loose terminals at the CAN gateway and the millimeter wave radar. Check for any authorized service information related to the DTCs or symptoms you are troubleshooting. If they are OK, **replace the millimeter wave radar** .

NO

Repair an open in the F-CAN B_H wire or the F-CAN B_L wire between the millimeter wave radar and the CAN gateway.

4. F-CAN circuit communication check (Transmitting control unit)

-1. Select the FUNCTION TEST in the CAN gateway with the HDS, then select the F-CAN Bus Connected Unit Check.

F-CAN Bus Connected Unit Check

According to the detected DTC on the following table, make sure that the transmitting control unit detects the CAN gateway Bus channel(s) normally.

DTC	Transmitting control unit	Detected CAN getaway Bus channel(s) at normal
U0100-00	PCM	A, B
U0101-00	TCM	A
U0122-00	VSA modulator-control unit	A, B
U0128-00	VSA modulator-control unit	A, B
U0129-00	Electric brake booster	A, B
U0131-00	EPS control unit	B
U0151-00	SRS unit	B
U0155-00	Gauge control module	A

Is it detected normally?

Detected normal

Intermittent failure, the system is OK at this time. Check for poor connections or loose terminals at the transmitting control unit and the CAN gateway.

U0100-00: PCM is Not Available for Bus A

Go to step 5.

U0100-00: PCM is Not Available for Bus B

Go to step 6.

U0101-00: TCM is Not Available for Bus A

Go to step 5.

U0122-00: VSA modulator-control unit is Not Available for Bus A

Go to step 5.

U0122-00: VSA modulator-control unit is Not Available for Bus B

Go to step 6.

U0128-00: VSA modulator-control unit is Not Available for Bus A

Go to step 5.

U0128-00: VSA modulator-control unit is Not Available for Bus B

Go to step 6.

U0129-00: Electric brake booster is Not Available for Bus A

Go to step 5.

U0129-00: Electric brake booster is Not Available for Bus B

Go to step 6.

U0131-00: EPS control unit is Not Available for Bus B

Go to step 6.

U0151-00: SRS unit is Not Available for Bus B

Go to step 6.

U0155-00: Gauge control module is Not Available for Bus A

Go to step 5.

5. Open wire check (F-CAN A_H line, F-CAN A_L line)

-1. Turn the vehicle to the OFF (LOCK) mode.

-2. According to the detected DTC on the following table, disconnect the transmitting control unit connector(s).

DTC	Connector
B	CAN gateway 12P connector
U0100-00	PCM connector A (50P)
U0101-00	TCM 50P connector
U0122-00	VSA modulator-control unit 46P connector

DTC	Connector
U0128-00	VSA modulator-control unit 46P connector
U0129-00	Electric brake booster 26P connector
U0155-00	Gauge control module connector A (32P)

NOTE: Before disconnecting the PCM connector, jump the SCS line with the HDS, and wait more than 1 minute.

-3. Check for continuity between test points 1 and 2.

Test condition	Vehicle OFF (LOCK) mode
B	CAN gateway 12P connector: disconnected
B	Transmitting control unit connector(s) for indicated DTCs: disconnected

DTC	**Circuit name**	**Test point 1 (Receiving control unit)**		**Test point 2 (Transmitting control unit)**	
		Connector	**Terminal**	**Connector**	**Terminal**
U0100-00	F-CAN A_H	CAN gateway 12P connector (female terminals): ①	No. 3	**PCM connector A (50P)**	No. 37
	F-CAN A_L		No. 9		No. 36

DTC	**Circuit name**	**Test point 1 (Receiving control unit)**		**Test point 2 (Transmitting control unit)**	
		Connector	**Terminal**	**Connector**	**Terminal**
U0101-00	F-CAN A_H	CAN gateway 12P connector (female terminals): ①	No. 3	**TCM 50P connector**	No. 3
	F-CAN A_L		No. 9		No. 11
U0122-00	F-CAN A_H	CAN gateway 12P connector (female terminals): ①	No. 3	**VSA modulator-control unit 46P connector**	No. 40
	F-CAN A_L		No. 9		No. 28
U0128-00	F-CAN A_H	CAN gateway 12P connector (female terminals): ①	No. 3	**VSA modulator-control unit 46P connector**	No. 40
	F-CAN A_L		No. 9		No. 28
U0129-00	F-CAN A_H	CAN gateway 12P connector (female terminals): ①	No. 3	**Electric brake booster 26P connector**	No. 26
	F-CAN A_L		No. 9		No. 18
U0155-00	F-CAN A_H	CAN gateway 12P connector (female terminals): ①	No. 3	**Gauge control module connector A (32P)**	No. 19
	F-CAN A_L		No. 9		No. 20

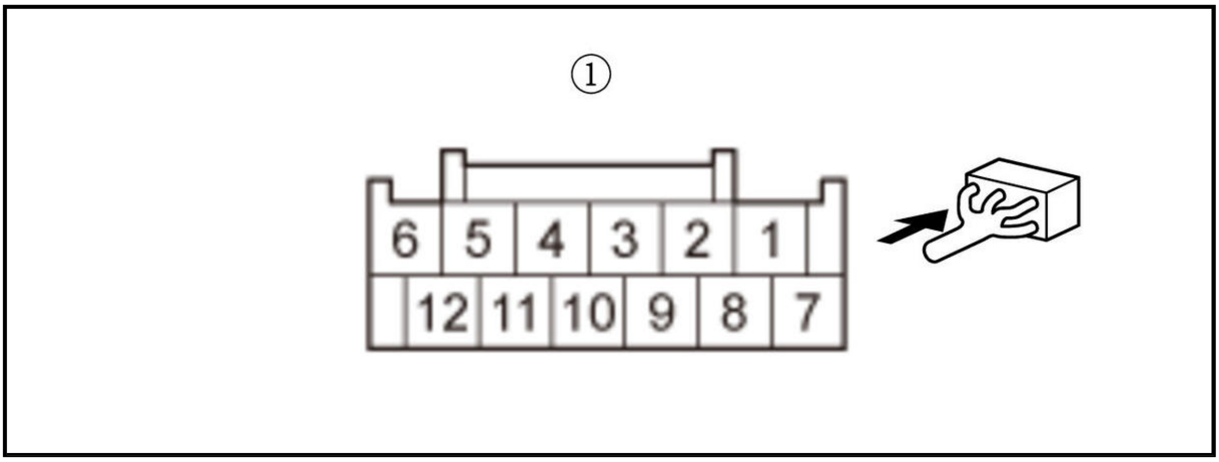

Is there continuity?

YES

According to the detected DTC on the following table, substitute or replace the correspond control unit.

DTC	Operation for transmitting control unit
U0100-00	Check for poor connections or loose terminals at the millimeter wave radar and the PCM. Check for any authorized service information related to the DTCs or symptoms you are troubleshooting, or **substitute a good-known PCM** , then recheck. If they are OK, **replace the original PCM** .
U0101-00	Check for poor connections or loose terminals at the millimeter wave radar and the TCM. Check for any authorized service information related to the DTCs or symptoms you are troubleshooting, or **substitute a good-known TCM** , then recheck. If they are OK, **replace the original TCM** .
U0122-00	Check for poor connections or loose terminals at the millimeter wave radar and the VSA modulator-control unit. Check for any authorized service information related to the DTCs or symptoms you are troubleshooting. If they are OK, **replace the VSA modulator-control unit** .
U0128-00	Check for poor connections or loose terminals at the millimeter wave radar and the VSA modulator-control unit. Check for any authorized service information related to the DTCs or symptoms you are troubleshooting. If they are OK, **replace the VSA modulator-control unit** .
U0129-00	Check for poor connections or loose terminals at the millimeter wave radar and the electric brake booster. Check for any authorized service information related to the DTCs or symptoms you are troubleshooting. If they are OK, **replace the electric brake booster** .
U0155-00	Check for poor connections or loose terminals at the millimeter wave radar and the gauge control module. Check for any authorized service information related to the DTCs or symptoms you are troubleshooting, or **substitute a known-good gauge control module** , then recheck. If they are OK, **replace the original gauge control module** .

NO

Repair an open in the F-CAN A_H wire or the F-CAN A_L wire between the transmitting control unit and the CAN gateway.

6. Open wire check (F-CAN B_H line, F-CAN B_L line)

-1. Turn the vehicle to the OFF (LOCK) mode.

-2. According to the detected DTC on the following table, disconnect the transmitting control unit connector(s).

DTC	Connector
B	CAN gateway 12P connector
U0100-00	PCM connector A (50P)
U0122-00	VSA modulator-control unit 46P connector
U0128-00	VSA modulator-control unit 46P connector
U0129-00	Electric brake booster 26P connector
U0131-00	EPS control unit connector B (6P)
U0151-00	SRS unit connector A (39P)

NOTE: Before disconnecting the PCM connector, jump the SCS line with the HDS, and wait more than 1 minute.

-3. Check for continuity between test points 1 and 2.

Test condition	Vehicle OFF (LOCK) mode
B	CAN gateway 12P connector: disconnected
B	Transmitting control unit connector(s) for indicated DTCs: disconnected

DTC	Circuit name	Test point 1 (Receiving control unit)		Test point 2 (Transmitting control unit)	
		Connector	Terminal	Connector	Terminal
U0100-00	F-CAN B_H	CAN gateway 12P connector (female terminals): ①	No. 12	**PCM connector A (50P) (L15BE engine)**	No. 39
	F-CAN B_L		No. 5		No. 38
U0122-00	F-CAN B_H	CAN gateway 12P connector (female terminals): ①	No. 12	**VSA modulator-control unit 46P connector**	No. 46
	F-CAN B_L		No. 5		No. 34
U0128-00	F-CAN B_H	CAN gateway 12P connector (female terminals): ①	No. 12	**VSA modulator-control unit 46P connector**	No. 46
	F-CAN B_L		No. 5		No. 34
U0129-00	F-CAN B_H	CAN gateway 12P connector (female terminals): ①	No. 12	**Electric brake booster 26P connector**	No. 19
	F-CAN B_L		No. 5		No. 12
U0131-00	F-CAN B_H	CAN gateway 12P connector (female terminals): ①	No. 12	**EPS control unit connector B (6P)**	No. 3
	F-CAN B_L		No. 5		No. 1
U0151-00	F-CAN B_H	CAN gateway 12P connector (female terminals): ①	No. 12	**SRS unit connector A (39P)**	No. 34
	F-CAN B_L		No. 5		No. 35

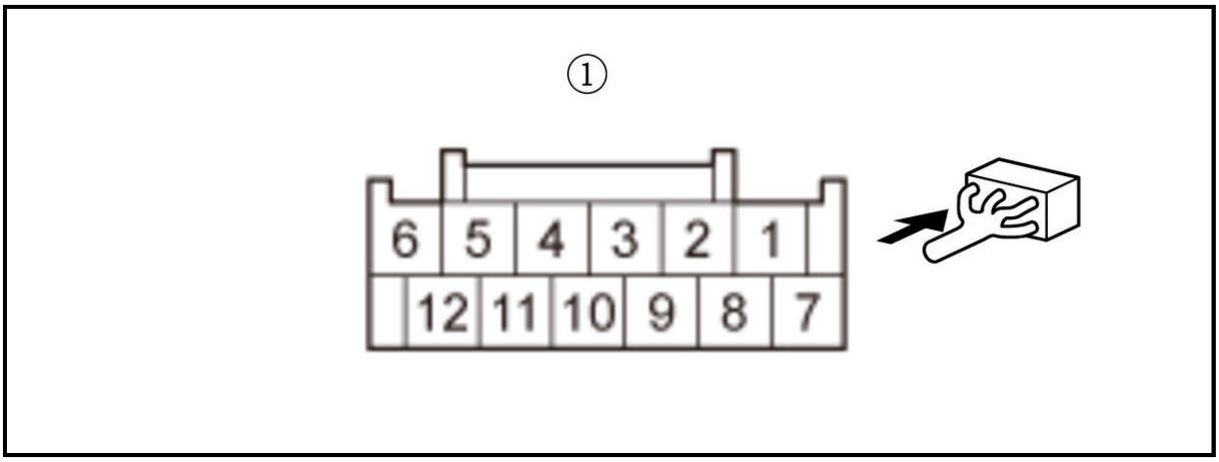

Is there continuity?

YES

According to the detected DTC on the following table, substitute or replace the correspond control unit.

DTC	Operation for transmitting control unit
U0100-00	Check for poor connections or loose terminals at the millimeter wave radar and the PCM. Check for any authorized service information related to the DTCs or symptoms you are troubleshooting, or **substitute a good-known PCM** , then recheck. If they are OK, **replace the original PCM** .

DTC	Operation for transmitting control unit
U0122-00	Check for poor connections or loose terminals at the millimeter wave radar and the VSA modulator-control unit. Check for any authorized service information related to the DTCs or symptoms you are troubleshooting. If they are OK, **replace the VSA modulator-control unit** .
U0128-00	Check for poor connections or loose terminals at the millimeter wave radar and the VSA modulator-control unit. Check for any authorized service information related to the DTCs or symptoms you are troubleshooting. If they are OK, **replace the VSA modulator-control unit** .
U0129-00	Check for poor connections or loose terminals at the millimeter wave radar and the electric brake booster. Check for any authorized service information related to the DTCs or symptoms you are troubleshooting. If they are OK, **replace the electric brake booster** .
U0131-00	Check for poor connections or loose terminals at the multipurpose camera unit and the EPS control unit. Check for any authorized service information related to the DTCs or symptoms you are troubleshooting. If they are OK, **replace the EPS motor/control unit** .
U0151-00	Check for poor connections or loose terminals at the millimeter wave radar and the SRS unit. Check for any authorized service information related to the DTCs or symptoms you are troubleshooting. If they are OK, **replace the SRS unit** .

NO

Repair an open in the F-CAN B_H wire or the F-CAN B_L wire between the transmitting control unit and the CAN gateway.

DTC U0100-00, U0101-00, U0122-00, U0128-00, U0129-00, U0131-00, U0151-00, U0155-00 (MILLIMETER WAVE RADAR) (2020 2021)

DTC U0100-00 : Lost Communication With The PCM (PGM-FI System) (Millimeter Wave Radar)

DTC U0101-00 : Lost Communication With The PCM/TCM (Millimeter Wave Radar)

DTC U0122-00 : Lost Communication With The VSA Modulator-Control Unit (Millimeter Wave Radar)

DTC U0128-00 : Lost Communication With The Electric Parking Brake Control Unit (Millimeter Wave Radar)

DTC U0129-00 : Lost Communication With The Electric Servo Brake Control Unit or Electric Brake Booster Control Unit (Millimeter Wave Radar)

DTC U0131-00 : Lost Communication With The EPS Control Unit (Millimeter Wave Radar)

DTC U0151-00 : Lost Communication With The SRS Unit (Millimeter Wave Radar)

DTC U0155-00 : Lost Communication With The Gauge Control Module (Millimeter Wave Radar)

NOTE:

- Before you troubleshoot, **review the general troubleshooting information**.
- If the transmitting control unit is malfunctioning, a DTC may be recorded. According to the recorded DTC, inspect the power circuits and ground circuits of the units with which the millimeter wave radar does not communicate.
- The functions of the integrated driver support system that will be temporarily canceled when this DTC is recorded can be confirmed with the **DTC troubleshooting index** .

DTC Description	DTC
U0100-00 Lost Communication With The PCM (PGM-FI System) (Millimeter Wave Radar)	B
U0101-00 Lost Communication With The PCM/TCM (Millimeter Wave Radar)	B
U0122-00 Lost Communication With The VSA Modulator-Control Unit (Millimeter Wave Radar)	B
U0128-00 Lost Communication With The Electric Parking Brake Control Unit (Millimeter Wave Radar)	B
U0129-00 Lost Communication With The Electric Servo Brake Control Unit or Electric Brake Booster Control Unit (Millimeter Wave Radar)	B
U0131-00 Lost Communication With The EPS Control Unit (Millimeter Wave Radar)	B
U0151-00 Lost Communication With The SRS Unit (Millimeter Wave Radar)	B
U0155-00 Lost Communication With The Gauge Control Module (Millimeter Wave Radar)	B

DTC (IDAS)

1. CAN gateway system DTC check

   -1. Turn the vehicle to the ON mode.

   -2. Check for CAN gateway system DTCs with the HDS.

DTC Description	DTC
U0029-00 CAN Gateway F-CAN ch A Bus Off	B
U0047-00 CAN Gateway F-CAN ch B Bus Off	B
U3000-49 CAN Gateway Internal Failure	B

   Is DTC U0029-00, U0047-00, and/or U3000-49 indicated?

   YES

   Go to the indicated DTCs troubleshooting .

NO

Go to step 2.

2. F-CAN circuit communication check (Receiving control unit)

   -1. Select the FUNCTION TEST in the CAN gateway with the HDS, then select the F-CAN Bus Connected Unit Check.

   F-CAN Bus Connected Unit Check

   Does the millimeter wave radar detect the CAN gateway Bus channels B?

   Bus B is Not Available

   Go to step 3.

   Bus B is Available

   Go to step 4.

3. Open wire check (F-CAN B_H line, F-CAN B_L line)

   -1. Turn the vehicle to the OFF (LOCK) mode.

   -2. Disconnect the following connectors.

CAN gateway 16P connector
Millimeter wave radar 8P connector

-3. Check for continuity between test points 1 and 2.

Test condition	Vehicle OFF (LOCK) mode
B	CAN gateway 16P connector: disconnected
B	Millimeter wave radar 8P connector: disconnected
Test point 1	CAN gateway 16P connector (female terminals) No. 6: ①
Test point 2	**Millimeter wave radar 8P connector No. 7**

Test point 1	CAN gateway 16P connector (female terminals) No. 14: ①
Test point 2	**Millimeter wave radar 8P connector No. 6**

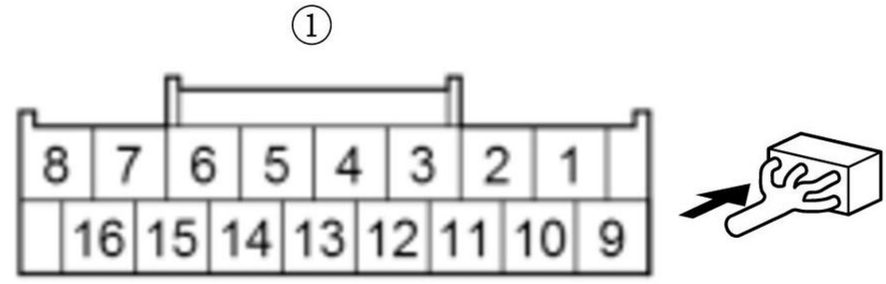

Is there continuity?

YES

Check for poor connections or loose terminals at the CAN gateway and the millimeter wave radar. Check for any authorized service information related to the DTCs or symptoms you are troubleshooting. If they are OK, **replace the millimeter wave radar** .

NO

Repair an open in the F-CAN B_H wire or the F-CAN B_L wire between the millimeter wave radar and the CAN gateway.

4. F-CAN circuit communication check (Transmitting control unit)

-1. Select the FUNCTION TEST in the CAN gateway with the HDS, then select the F-CAN Bus Connected Unit Check.

F-CAN Bus Connected Unit Check

According to the detected DTC on the following table, make sure that the transmitting control unit detects the CAN gateway Bus channel(s) normally.

DTC	Transmitting control unit	Detected CAN gateway Bus channel(s) at normal
U0100-00	PCM	A, B
U0101-00	TCM	A
U0122-00	VSA modulator-control unit	A, B
U0128-00	VSA modulator-control unit	A, B
U0129-00	Electric brake booster	A, B
U0131-00	EPS control unit	B
U0151-00	SRS unit	B
U0155-00	Gauge control module	A

Is it detected normally?

Detected normal

Intermittent failure, the system is OK at this time. Check for poor connections or loose terminals at the transmitting control unit and the CAN gateway.

U0100-00: PCM is Not Available for Bus A

Go to step 5.

U0100-00: PCM is Not Available for Bus B

Go to step 6.

U0101-00: TCM is Not Available for Bus A

Go to step 5.

U0122-00: VSA modulator-control unit is Not Available for Bus A

Go to step 5.

U0122-00: VSA modulator-control unit is Not Available for Bus B

Go to step 6.

U0128-00: VSA modulator-control unit is Not Available for Bus A

Go to step 5.

U0128-00: VSA modulator-control unit is Not Available for Bus B

Go to step 6.

U0129-00: Electric brake booster is Not Available for Bus A

Go to step 5.

U0129-00: Electric brake booster is Not Available for Bus B

Go to step 6.

U0131-00: EPS control unit is Not Available for Bus B

Go to step 6.

U0151-00: SRS unit is Not Available for Bus B

Go to step 6.

U0155-00: Gauge control module is Not Available for Bus A

Go to step 5.

5. Open wire check (F-CAN A_H line, F-CAN A_L line)

-1. Turn the vehicle to the OFF (LOCK) mode.

-2. According to the detected DTC on the following table, disconnect the transmitting control unit connector(s).

DTC	Connector
B	CAN gateway 16P connector
U0100-00	PCM connector A (50P)
U0101-00	TCM 50P connector
U0122-00	VSA modulator-control unit 46P connector
U0128-00	VSA modulator-control unit 46P connector
U0129-00	Electric brake booster 26P connector
U0155-00	Gauge control module connector A (32P)

NOTE: Before disconnecting the PCM connector, jump the SCS line with the HDS, and wait more than 1 minute.

-3. Check for continuity between test points 1 and 2.

Test condition	Vehicle OFF (LOCK) mode
B	CAN gateway 16P connector: disconnected
B	Transmitting control unit connector(s) for indicated DTCs: disconnected

DTC	Circuit name	Test point 1 (Receiving control unit)		Test point 2 (Transmitting control unit)	
		Connector	Terminal	Connector	Terminal
U0100-00	F-CAN A_H	CAN gateway 16P connector (female	No. 3	PCM connector A (50P)	No. 37

DTC	Circuit name	Test point 1 (Receiving control unit)		Test point 2 (Transmitting control unit)	
		Connector	Terminal	Connector	Terminal
	F-CAN A_L	terminals): ①	No. 11		No. 36

DTC	Circuit name	Test point 1 (Receiving control unit)		Test point 2 (Transmitting control unit)	
		Connector	Terminal	Connector	Terminal
U0101-00	F-CAN A_H	CAN gateway 16P connector (female terminals): ①	No. 3	**TCM 50P connector**	No. 3
	F-CAN A_L		No. 11		No. 11
U0122-00	F-CAN A_H	CAN gateway 16P connector (female terminals): ①	No. 3	**VSA modulator-control unit 46P connector**	No. 40
	F-CAN A_L		No. 11		No. 28
U0128-00	F-CAN A_H	CAN gateway 16P connector (female terminals): ①	No. 3	**VSA modulator-control unit 46P connector**	No. 40
	F-CAN A_L		No. 11		No. 28
U0129-00	F-CAN A_H	CAN gateway 16P connector (female terminals): ①	No. 3	**Electric brake booster 26P connector**	No. 26
	F-CAN A_L		No. 11		No. 18
U0155-00	F-CAN A_H	CAN gateway 16P connector (female terminals): ①	No. 3	**Gauge control module connector A (32P)**	No. 19
	F-CAN A_L		No. 11		No. 20

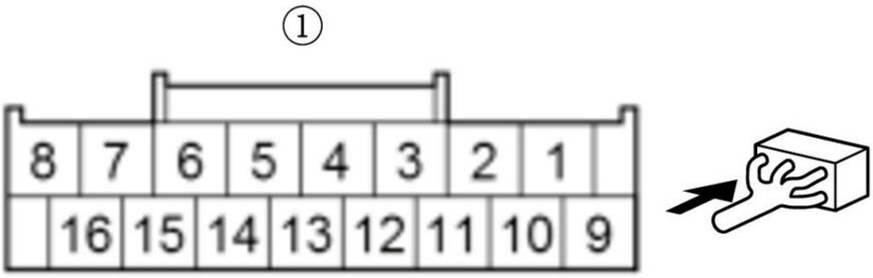

Is there continuity?

YES

According to the detected DTC on the following table, substitute or replace the correspond control unit.

DTC	Operation for transmitting control unit
U0100-00	Check for poor connections or loose terminals at the millimeter wave radar and the PCM. Check for any authorized service information related to the DTCs or symptoms you are troubleshooting, or **substitute a good-known PCM** , then recheck. If they are OK, **replace the original PCM** .

DTC	Operation for transmitting control unit
U0101-00	Check for poor connections or loose terminals at the millimeter wave radar and the TCM. Check for any authorized service information related to the DTCs or symptoms you are troubleshooting, or **substitute a good-known TCM** , then recheck. If they are OK, **replace the original TCM** .
U0122-00	Check for poor connections or loose terminals at the millimeter wave radar and the VSA modulator-control unit. Check for any authorized service information related to the DTCs or symptoms you are troubleshooting. If they are OK, **replace the VSA modulator-control unit** .
U0128-00	Check for poor connections or loose terminals at the millimeter wave radar and the VSA modulator-control unit. Check for any authorized service information related to the DTCs or symptoms you are troubleshooting. If they are OK, **replace the VSA modulator-control unit** .
U0129-00	Check for poor connections or loose terminals at the millimeter wave radar and the electric brake booster. Check for any authorized service information related to the DTCs or symptoms you are troubleshooting. If they are OK, **replace the electric brake booster** .
U0155-00	Check for poor connections or loose terminals at the millimeter wave radar and the gauge control module. Check for any authorized service information related to the DTCs or symptoms you are troubleshooting, or **substitute a known-good gauge control module** , then recheck. If they are OK, **replace the original gauge control module** .

NO

Repair an open in the F-CAN A_H wire or the F-CAN A_L wire between the transmitting control unit and the CAN gateway.

6. Open wire check (F-CAN B_H line, F-CAN B_L line)

-1. Turn the vehicle to the OFF (LOCK) mode.

-2. According to the detected DTC on the following table, disconnect the transmitting control unit connector(s).

DTC	Connector
B	CAN gateway 16P connector
U0100-00	PCM connector A (50P)
U0122-00	VSA modulator-control unit 46P connector
U0128-00	VSA modulator-control unit 46P connector
U0129-00	Electric brake booster 26P connector
U0131-00	EPS control unit connector B (6P)
U0151-00	SRS unit connector A (39P)

NOTE: Before disconnecting the PCM connector, jump the SCS line with the HDS, and wait more than 1 minute.

-3. Check for continuity between test points 1 and 2.

Test condition	Vehicle OFF (LOCK) mode
B	CAN gateway 16P connector: disconnected
B	Transmitting control unit connector(s) for indicated DTCs: disconnected

DTC	Circuit name	Test point 1 (Receiving control unit)		Test point 2 (Transmitting control unit)	
		Connector	Terminal	Connector	Terminal
U0100-00	F-CAN B_H	CAN gateway 16P connector (female	No. 6	**PCM connector A (50P) (L15BE engine)**	No. 39

DTC	Circuit name	Test point 1 (Receiving control unit)		Test point 2 (Transmitting control unit)	
		Connector	Terminal	Connector	Terminal
	F-CAN B_L	terminals): ①	No. 14		No. 38
U0122-00	F-CAN B_H	CAN gateway 16P connector (female terminals): ①	No. 6	**VSA modulator-control unit 46P connector**	No. 46
	F-CAN B_L		No. 14		No. 34
U0128-00	F-CAN B_H	CAN gateway 16P connector (female terminals): ①	No. 6	**VSA modulator-control unit 46P connector**	No. 46
	F-CAN B_L		No. 14		No. 34
U0129-00	F-CAN B_H	CAN gateway 16P connector (female terminals): ①	No. 6	**Electric brake booster 26P connector**	No. 19
	F-CAN B_L		No. 14		No. 12
U0131-00	F-CAN B_H	CAN gateway 16P connector (female terminals): ①	No. 6	**EPS control unit connector B (6P)**	No. 3
	F-CAN B_L		No. 14		No. 1
U0151-00	F-CAN B_H	CAN gateway 16P connector (female terminals): ①	No. 6	**SRS unit connector A (39P)**	No. 34
	F-CAN B_L		No. 14		No. 35

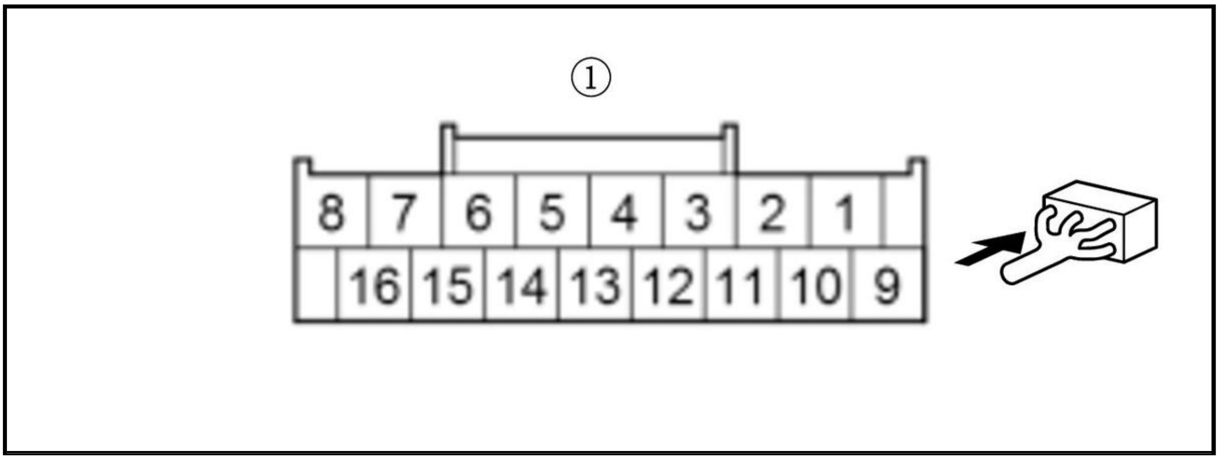

Is there continuity?

YES

According to the detected DTC on the following table, substitute or replace the correspond control unit.

DTC	Operation for transmitting control unit
U0100-00	Check for poor connections or loose terminals at the millimeter wave radar and the PCM. Check for any authorized service information related to the DTCs or symptoms you are troubleshooting, or **substitute a good-known PCM** , then recheck. If they are OK, **replace the original PCM** .

DTC	Operation for transmitting control unit
U0122-00	Check for poor connections or loose terminals at the millimeter wave radar and the VSA modulator-control unit. Check for any authorized service information related to the DTCs or symptoms you are troubleshooting. If they are OK, **replace the VSA modulator-control unit** .

DTC	Operation for transmitting control unit
U0128-00	Check for poor connections or loose terminals at the millimeter wave radar and the VSA modulator-control unit. Check for any authorized service information related to the DTCs or symptoms you are troubleshooting. If they are OK, **replace the VSA modulator-control unit** .
U0129-00	Check for poor connections or loose terminals at the millimeter wave radar and the electric brake booster. Check for any authorized service information related to the DTCs or symptoms you are troubleshooting. If they are OK, **replace the electric brake booster** .
U0131-00	Check for poor connections or loose terminals at the multipurpose camera unit and the EPS control unit. Check for any authorized service information related to the DTCs or symptoms you are troubleshooting. If they are OK, **replace the EPS motor/control unit** .
U0151-00	Check for poor connections or loose terminals at the millimeter wave radar and the SRS unit. Check for any authorized service information related to the DTCs or symptoms you are troubleshooting. If they are OK, **replace the SRS unit** .

NO

Repair an open in the F-CAN B_H wire or the F-CAN B_L wire between the transmitting control unit and the CAN gateway.

DTC U0100-F1, U0101-F1, U0122-F1, U0129-F1, U0131-F1, U0151-F1, U0155-F1 (MILLIMETER WAVE RADAR) (2017 2018 2019)

DTC U0100-F1 : Lost Communication With The PCM (PGM-FI System) (Multipurpose Camera Unit)

DTC U0101-F1 : Lost Communication With The PCM/TCM (Multipurpose Camera Unit)

DTC U0122-F1 : Lost Communication With The VSA Modulator-Control Unit (Multipurpose Camera Unit)

DTC U0129-F1 : Lost Communication With The Electric Servo Brake Control Unit/Electric Brake Booster Control Unit (Multipurpose Camera Unit)

DTC U0131-F1 : Lost Communication With The EPS Control Unit (Multipurpose Camera Unit)

DTC U0151-F1 : Lost Communication With The SRS Unit (Multipurpose Camera Unit)

DTC U0155-F1 : Lost Communication With The Gauge Control Module (Multipurpose Camera Unit)

NOTE:

- Before you troubleshoot, **review the general troubleshooting information**.
- If the transmitting control unit is malfunctioning, a DTC may be recorded. According to the recorded DTC, inspect the power circuits and ground circuits of the units with which the multipurpose camera unit does not communicate.
- The functions of the integrated driver support system that will be temporarily canceled when this DTC is recorded can be confirmed with the **DTC troubleshooting index** .

DTC Description	DTC
U0100-F1 Lost Communication With The PCM (PGM-FI System) (Multipurpose Camera Unit)	B
U0101-F1 Lost Communication With The PCM/TCM (Multipurpose Camera Unit)	B
U0122-F1 Lost Communication With The VSA Modulator-Control Unit (Multipurpose Camera Unit)	B
U0129-F1 Lost Communication With The Electric Servo Brake Control Unit/Electric Brake Booster Control Unit (Multipurpose Camera Unit)	B

DTC Description	DTC
U0131-F1 Lost Communication With The EPS Control Unit (Multipurpose Camera Unit)	B
U0151-F1 Lost Communication With The SRS Unit (Multipurpose Camera Unit)	B
U0155-F1 Lost Communication With The Gauge Control Module (Multipurpose Camera Unit)	B

DTC (IDAS)

1. CAN gateway system DTC check

   -1. Turn the vehicle to the ON mode.

   -2. Check for CAN gateway system DTCs with the HDS.

DTC Description	DTC
U0029-00 CAN Gateway F-CAN ch A Bus Off	B
U0047-00 CAN Gateway F-CAN ch B Bus Off	B

DTC Description	DTC
U3000-49 CAN Gateway Internal Failure	B

   Is DTC U0029-00, U0047-00, and/or U3000-49 indicated?

   YES

   Go to the indicated DTCs troubleshooting .

   NO

   Go to step 2.

2. F-CAN circuit communication check (Receiving control unit)

   -1. Select the FUNCTION TEST in the CAN gateway with the HDS, then select the F-CAN Bus Connected Unit Check.

   F-CAN Bus Connected Unit Check

   Does the millimeter wave radar detect the CAN gateway Bus channels B?

   Bus B is Not Available

   Go to step 3.

   Bus B is Available

   Go to step 4.

3. Open wire check (F-CAN B_H line, F-CAN B_L line)

   -1. Turn the vehicle to the OFF (LOCK) mode.

   -2. Disconnect the following connectors.

CAN gateway 12P connector
Multipurpose camera unit 12P connector

-3. Check for continuity between test points 1 and 2.

Test condition	Vehicle OFF (LOCK) mode
B	CAN gateway 12P connector: disconnected
B	Multipurpose camera unit 12P connector: disconnected
Test point 1	CAN gateway 12P connector (female terminals) No. 5: ①
Test point 2	**Multipurpose camera unit 12P connector No. 5**

Test point 1	CAN gateway 12P connector (female terminals) No. 12: ①
Test point 2	**Multipurpose camera unit 12P connector No. 11**

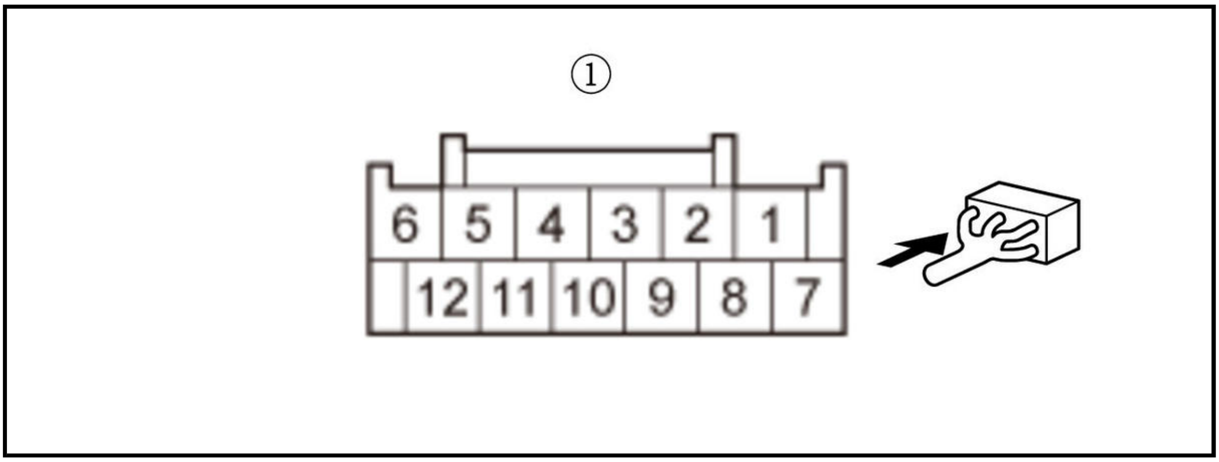

Is there continuity?

YES

Check for poor connections or loose terminals at the CAN gateway and the multipurpose camera unit. Check for any authorized service information related to the DTCs or symptoms you are troubleshooting. If they are OK, **replace the multipurpose camera unit** .

NO

Repair an open in the F-CAN B_H wire or the F-CAN B_L wire between the multipurpose camera unit and the CAN gateway.

4. F-CAN circuit communication check (Transmitting control unit)

-1. Select the FUNCTION TEST in the CAN gateway with the HDS, then select the F-CAN Bus Connected Unit Check.

-2. According to the detected DTC on the following table, make sure that the transmitting control unit detects the CAN gateway Bus channel(s) normally.

DTC	Transmitting control unit	Detected CAN getaway Bus channel(s) at normal
U0100-F1	PCM	A, B
U0101-F1	TCM	A
U0122-F1	VSA modulator-control unit	A, B
U0129-F1	Electric brake booster	A, B
U0131-F1	EPS control unit	B
U0151-F1	SRS unit	B
U0155-F1	Gauge control module	A

Is it detected normally?

Detected normal

Intermittent failure, the system is OK at this time. Check for poor connections or loose terminals at the transmitting control unit and the CAN gateway.

U0100-F1: PCM is Not Available for Bus A

Go to step 5.

U0100-F1: PCM is Not Available for Bus B

Go to step 6.

U0101-F1: TCM is Not Available for Bus A

Go to step 5.

U0122-F1: VSA modulator-control unit is Not Available for Bus A

Go to step 5.

U0122-F1: VSA modulator-control unit is Not Available for Bus B

Go to step 6.

U0129-F1: Electric brake booster is Not Available for Bus A

Go to step 5.

U0129-F1: Electric brake booster is Not Available for Bus B

Go to step 6.

U0131-F1: EPS control unit is Not Available for Bus B

Go to step 6.

U0151-F1: SRS unit is Not Available for Bus B

Go to step 6.

U0155-F1: Gauge control module is Not Available for Bus A

Go to step 5.

5. Open wire check (F-CAN A_H line, F-CAN A_L line)

   -1. Turn the vehicle to the OFF (LOCK) mode.

   -2. According to the detected DTC on the following table, disconnect the transmitting control unit connector(s).

DTC	Connector
B	CAN gateway 12P connector
U0100-F1	PCM connector A (50P)

DTC	Connector
U0101-F1	TCM 50P connector

DTC	Connector
U0122-F1	VSA modulator-control unit 46P connector
U0129-F1	Electric brake booster 26P connector
U0155-F1	Gauge control module connector A (32P)

NOTE: Before disconnecting the PCM connector, jump the SCS line with the HDS, and wait more than 1 minute.

-3. Check for continuity between test points 1 and 2.

Test condition	Vehicle OFF (LOCK) mode
B	CAN gateway 12P connector: disconnected
B	Transmitting control unit connector(s) for indicated DTCs: disconnected

DTC	**Circuit name**	**Test point 1 (Receiving control unit)**		**Test point 2 (Transmitting control unit)**	
		Connector	**Terminal**	**Connector**	**Terminal**
U0100-F1	F-CAN A_H	CAN gateway 12P connector (female terminals): ①	No. 3	PCM connector A (50P)	No. 37
	F-CAN A_L		No. 9		No. 36
U0101-F1	F-CAN A_H	CAN gateway 12P connector (female terminals): ①	No. 3	TCM 50P connector	No. 3
	F-CAN A_L		No. 9		No. 11
U0122-F1	F-CAN A_H	CAN gateway 12P connector (female terminals): ①	No. 3	VSA modulator-control unit 46P connector	No. 40
	F-CAN A_L		No. 9		No. 28
U0129-F1	F-CAN A_H	CAN gateway 12P connector (female terminals): ①	No. 3	Electric brake booster 26P connector	No. 26
	F-CAN A_L		No. 9		No. 18
U0155-F1	F-CAN A_H	CAN gateway 12P connector (female terminals): ①	No. 3	Gauge control module connector A (32P)	No. 19
	F-CAN A_L		No. 9		No. 20

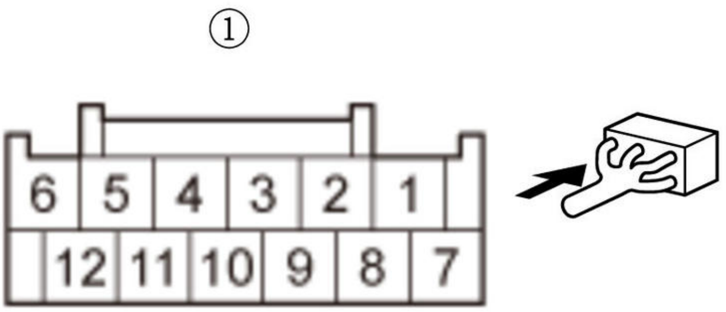

Is there continuity?

YES

According to the detected DTC on the following table, substitute or replace the correspond control unit.

DTC	Operation for transmitting control unit
U0100-F1	Check for poor connections or loose terminals at the millimeter wave radar and the PCM. Check for any authorized service information related to the DTCs or symptoms you are troubleshooting, or **substitute a good-known PCM** , then recheck. If they are OK, **replace the original PCM** .
U0101-F1	Check for poor connections or loose terminals at the millimeter wave radar and the TCM. Check for any authorized service information related to the DTCs or symptoms you are troubleshooting, or **substitute a good-known TCM** , then recheck. If they are OK, **replace the original TCM** .
U0122-F1	Check for poor connections or loose terminals at the millimeter wave radar and the VSA modulator-control unit. Check for any authorized service information related to the DTCs or symptoms you are troubleshooting. If they are OK, **replace the VSA modulator-control unit** .

DTC	Operation for transmitting control unit
U0129-F1	Check for poor connections or loose terminals at the millimeter wave radar and the electric brake booster. Check for any authorized service information related to the DTCs or symptoms you are troubleshooting. If they are OK, **replace the electric brake booster** .
U0155-F1	Check for poor connections or loose terminals at the millimeter wave radar and the gauge control module. Check for any authorized service information related to the DTCs or symptoms you are troubleshooting, or **substitute a known-good gauge control module** , then recheck. If they are OK, **replace the original gauge control module** .

NO

Repair an open in the F-CAN A_H wire or the F-CAN A_L wire between the transmitting control unit and the CAN gateway.

6. Open wire check (F-CAN B_H line, F-CAN B_L line)

-1. Turn the vehicle to the OFF (LOCK) mode.

-2. According to the detected DTC on the following table, disconnect the transmitting control unit connector(s).

DTC	Connector
B	CAN gateway 12P connector
U0100-F1	PCM connector A (50P)
U0122-F1	VSA modulator-control unit 46P connector
U0129-F1	Electric brake booster 26P connector
U0131-F1	EPS control unit connector B (6P)
U0151-F1	SRS unit connector A (39P)

NOTE: Before disconnecting the PCM connector, jump the SCS line with the HDS, and wait more than 1 minute.

-3. Check for continuity between test points 1 and 2.

Test condition	Vehicle OFF (LOCK) mode
B	CAN gateway 12P connector: disconnected
B	Transmitting control unit connector(s) for indicated DTCs: disconnected

DTC	Circuit name	Test point 1 (Receiving control unit)		Test point 2 (Transmitting control unit)	
		Connector	Terminal	Connector	Terminal
U0100-F1	F-CAN B_H	CAN gateway 12P connector (female terminals): ①	No. 12	**PCM connector A (50P)**	No. 39
	F-CAN B_L		No. 5		No. 38
U0122-F1	F-CAN B_H	CAN gateway 12P connector (female terminals): ①	No. 12	**VSA modulator-control unit 46P connector**	No. 46
	F-CAN B_L		No. 5		No. 34
U0129-F1	F-CAN B_H	CAN gateway 12P connector (female terminals): ①	No. 12	**Electric brake booster 26P connector**	No. 19
	F-CAN B_L		No. 5		No. 12
U0131-F1	F-CAN B_H	CAN gateway 12P connector (female terminals): ①	No. 12	**EPS control unit connector B (6P)**	No. 3
	F-CAN B_L		No. 5		No. 1
U0151-F1	F-CAN B_H	CAN gateway 12P connector (female terminals): ①	No. 12	**SRS unit connector A (39P)**	No. 34
	F-CAN B_L		No. 5		No. 35

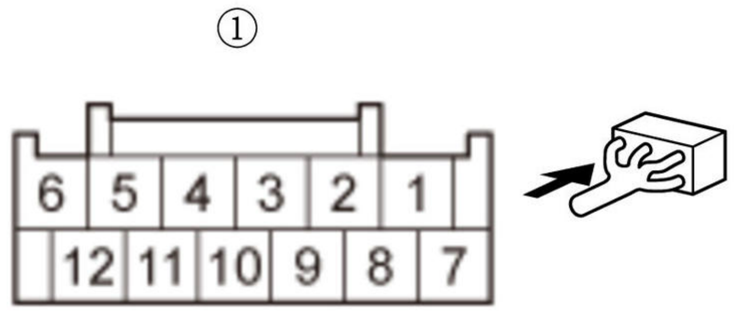

Is there continuity?

YES

According to the detected DTC on the following table, substitute or replace the correspond control unit.

DTC	Operation for transmitting control unit
U0100-F1	Check for poor connections or loose terminals at the millimeter wave radar and the PCM. Check for any authorized service information related to the DTCs or symptoms you are troubleshooting, or **substitute a good-known PCM** , then recheck. If they are OK, **replace the original PCM** .
U0122-F1	Check for poor connections or loose terminals at the millimeter wave radar and the VSA modulator-control unit. Check for any authorized service information related to the DTCs or symptoms you are troubleshooting. If they are OK, **replace the VSA modulator-control unit** .
U0129-F1	Check for poor connections or loose terminals at the millimeter wave radar and the electric brake booster. Check for any authorized service information related to the DTCs or symptoms you are troubleshooting. If they are OK, **replace the electric brake booster** .

DTC	Operation for transmitting control unit
U0131-F1	Check for poor connections or loose terminals at the multipurpose camera unit and the EPS control unit. Check for any authorized service information related to the DTCs or symptoms you are troubleshooting. If they are OK, **replace the EPS motor/control unit** .
U0151-F1	Check for poor connections or loose terminals at the millimeter wave radar and the SRS unit. Check for any authorized service information related to the DTCs or symptoms you are troubleshooting. If they are OK, **replace the SRS unit** .

NO

Repair an open in the F-CAN B_H wire or the F-CAN B_L wire between the transmitting control unit and the CAN gateway.

DTC U0100-F1, U0101-F1, U0122-F1, U0129-F1, U0131-F1, U0151-F1, U0155-F1 (MILLIMETER WAVE RADAR) (2020 2021)

DTC U0100-F1 : Lost Communication With The PCM (PGM-FI System) (Multipurpose Camera Unit)

DTC U0101-F1 : Lost Communication With The PCM/TCM (Multipurpose Camera Unit)

DTC U0122-F1 : Lost Communication With The VSA Modulator-Control Unit (Multipurpose Camera Unit)

DTC U0129-F1 : Lost Communication With The Electric Servo Brake Control Unit/Electric Brake Booster Control Unit (Multipurpose Camera Unit)

DTC U0131-F1 : Lost Communication With The EPS Control Unit (Multipurpose Camera Unit)

DTC U0151-F1 : Lost Communication With The SRS Unit (Multipurpose Camera Unit)

DTC U0155-F1 : Lost Communication With The Gauge Control Module (Multipurpose Camera Unit)

NOTE:

- Before you troubleshoot, **review the general troubleshooting information**.
- If the transmitting control unit is malfunctioning, a DTC may be recorded. According to the recorded DTC, inspect the power circuits and ground circuits of the units with which the multipurpose camera unit does not communicate.
- The functions of the integrated driver support system that will be temporarily canceled when this DTC is recorded can be confirmed with the **DTC troubleshooting index** .

DTC Description	DTC
U0100-F1 Lost Communication With The PCM (PGM-FI System) (Multipurpose Camera Unit)	B
U0101-F1 Lost Communication With The PCM/TCM (Multipurpose Camera Unit)	B
U0122-F1 Lost Communication With The VSA Modulator-Control Unit (Multipurpose Camera Unit)	B
U0129-F1 Lost Communication With The Electric Servo Brake Control Unit/Electric Brake Booster Control Unit (Multipurpose Camera Unit)	B
U0131-F1 Lost Communication With The EPS Control Unit (Multipurpose Camera Unit)	B
U0151-F1 Lost Communication With The SRS Unit (Multipurpose Camera Unit)	B
U0155-F1 Lost Communication With The Gauge Control Module (Multipurpose Camera Unit)	B

DTC (IDAS)

1. CAN gateway system DTC check

-1. Turn the vehicle to the ON mode.

-2. Check for CAN gateway system DTCs with the HDS.

DTC Description	DTC
U0029-00 CAN Gateway F-CAN ch A Bus Off	B
U0047-00 CAN Gateway F-CAN ch B Bus Off	B

DTC Description	DTC
U3000-49 CAN Gateway Internal Failure	B

Is DTC U0029-00, U0047-00, and/or U3000-49 indicated?

YES

Go to the indicated DTCs troubleshooting .

NO

Go to step 2.

2. F-CAN circuit communication check (Receiving control unit)

-1. Select the FUNCTION TEST in the CAN gateway with the HDS, then select the F-CAN Bus Connected Unit Check.

F-CAN Bus Connected Unit Check

Does the millimeter wave radar detect the CAN gateway Bus channels B?

Bus B is Not Available

Go to step 3.

Bus B is Available

Go to step 4.

3. Open wire check (F-CAN B_H line, F-CAN B_L line)

-1. Turn the vehicle to the OFF (LOCK) mode.

-2. Disconnect the following connectors.

CAN gateway 16P connector
Multipurpose camera unit 12P connector

-3. Check for continuity between test points 1 and 2.

Test condition	Vehicle OFF (LOCK) mode
B	CAN gateway 12P connector: disconnected
B	Multipurpose camera unit 12P connector: disconnected
Test point 1	CAN gateway 16P connector (female terminals) No. 6: ①
Test point 2	**Multipurpose camera unit 12P connector No. 11**

Test point 1	CAN gateway 16P connector (female terminals) No. 14: ①
Test point 2	**Multipurpose camera unit 12P connector No. 5**

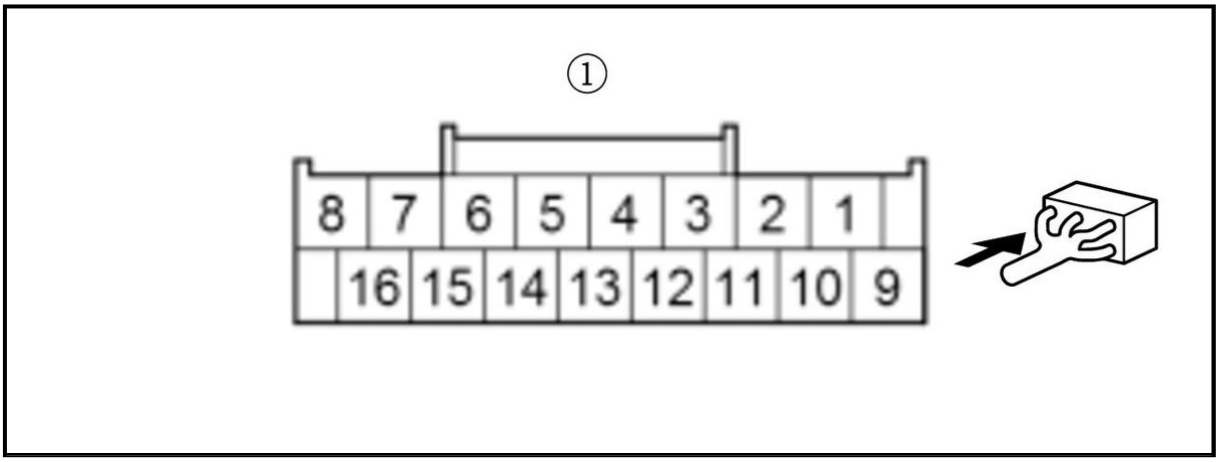

Is there continuity?

YES

Check for poor connections or loose terminals at the CAN gateway and the multipurpose camera unit. Check for any authorized service information related to the DTCs or symptoms you are troubleshooting. If they are OK, **replace the multipurpose camera unit** .

NO

Repair an open in the F-CAN B_H wire or the F-CAN B_L wire between the multipurpose camera unit and the CAN gateway.

4. F-CAN circuit communication check (Transmitting control unit)

-1. Select the FUNCTION TEST in the CAN gateway with the HDS, then select the F-CAN Bus Connected Unit Check.

-2. According to the detected DTC on the following table, make sure that the transmitting control unit detects the CAN gateway Bus channel(s) normally.

DTC	Transmitting control unit	Detected CAN gateway Bus channel(s) at normal
U0100-F1	PCM	A, B
U0101-F1	TCM	A
U0122-F1	VSA modulator-control unit	A, B
U0129-F1	Electric brake booster	A, B
U0131-F1	EPS control unit	B
U0151-F1	SRS unit	B
U0155-F1	Gauge control module	A

Is it detected normally?

Detected normal

Intermittent failure, the system is OK at this time. Check for poor connections or loose terminals at the transmitting control unit and the CAN gateway.

U0100-F1: PCM is Not Available for Bus A

Go to step 5.

U0100-F1: PCM is Not Available for Bus B

Go to step 6.

U0101-F1: TCM is Not Available for Bus A

Go to step 5.

U0122-F1: VSA modulator-control unit is Not Available for Bus A

Go to step 5.

U0122-F1: VSA modulator-control unit is Not Available for Bus B

Go to step 6.

U0129-F1: Electric brake booster is Not Available for Bus A

Go to step 5.

U0129-F1: Electric brake booster is Not Available for Bus B

Go to step 6.

U0131-F1: EPS control unit is Not Available for Bus B

Go to step 6.

U0151-F1: SRS unit is Not Available for Bus B

Go to step 6.

U0155-F1: Gauge control module is Not Available for Bus A

Go to step 5.

5. Open wire check (F-CAN A_H line, F-CAN A_L line)

-1. Turn the vehicle to the OFF (LOCK) mode.

-2. According to the detected DTC on the following table, disconnect the transmitting control unit connector(s).

DTC	Connector
B	CAN gateway 16P connector
U0100-F1	PCM connector A (50P)

DTC	Connector
U0101-F1	TCM 50P connector
U0122-F1	VSA modulator-control unit 46P connector
U0129-F1	Electric brake booster 26P connector
U0155-F1	Gauge control module connector A (32P)

NOTE: Before disconnecting the PCM connector, jump the SCS line with the HDS, and wait more than 1 minute.

-3. Check for continuity between test points 1 and 2.

Test condition	Vehicle OFF (LOCK) mode
B	CAN gateway 16P connector: disconnected
B	Transmitting control unit connector(s) for indicated DTCs: disconnected

DTC	Circuit name	Test point 1 (Receiving control unit)		Test point 2 (Transmitting control unit)	
		Connector	Terminal	Connector	Terminal
U0100-F1	F-CAN A_H	CAN gateway 16P connector (female terminals): ①	No. 3	**PCM connector A (50P)**	No. 37
	F-CAN A_L		No. 11		No. 36
U0101-F1	F-CAN A_H	CAN gateway 16P connector (female terminals): ①	No. 3	**TCM 50P connector**	No. 3
	F-CAN A_L		No. 11		No. 11
U0122-F1	F-CAN A_H	CAN gateway 16P connector (female terminals): ①	No. 3	**VSA modulator-control unit 46P connector**	No. 40
	F-CAN A_L		No. 11		No. 28
U0129-F1	F-CAN A_H	CAN gateway 16P connector (female terminals): ①	No. 3	**Electric brake booster 26P connector**	No. 26
	F-CAN A_L		No. 11		No. 18
U0155-F1	F-CAN A_H	CAN gateway 16P connector (female terminals): ①	No. 3	**Gauge control module connector A (32P)**	No. 19
	F-CAN A_L		No. 11		No. 20

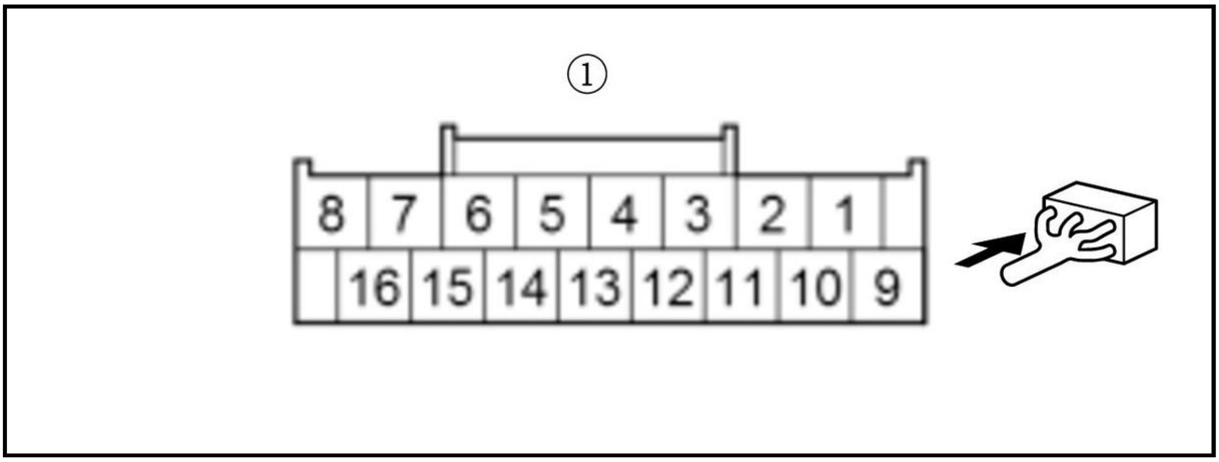

Is there continuity?

YES

According to the detected DTC on the following table, substitute or replace the correspond control unit.

DTC	Operation for transmitting control unit
U0100-F1	Check for poor connections or loose terminals at the millimeter wave radar and the PCM. Check for any authorized service information related to the DTCs or symptoms you are troubleshooting, or **substitute a good-known PCM** , then recheck. If they are OK, **replace the original PCM** .
U0101-F1	Check for poor connections or loose terminals at the millimeter wave radar and the TCM. Check for any authorized service information related to the DTCs or symptoms you are

DTC	Operation for transmitting control unit
	troubleshooting, or **substitute a good-known TCM** , then recheck. If they are OK, **replace the original TCM** .
U0122-F1	Check for poor connections or loose terminals at the millimeter wave radar and the VSA modulator-control unit. Check for any authorized service information related to the DTCs or symptoms you are troubleshooting. If they are OK, **replace the VSA modulator-control unit** .

DTC	Operation for transmitting control unit
U0129-F1	Check for poor connections or loose terminals at the millimeter wave radar and the electric brake booster. Check for any authorized service information related to the DTCs or symptoms you are troubleshooting. If they are OK, **replace the electric brake booster** .
U0155-F1	Check for poor connections or loose terminals at the millimeter wave radar and the gauge control module. Check for any authorized service information related to the DTCs or symptoms you are troubleshooting, or **substitute a known-good gauge control module** , then recheck. If they are OK, **replace the original gauge control module** .

NO

Repair an open in the F-CAN A_H wire or the F-CAN A_L wire between the transmitting control unit and the CAN gateway.

6. Open wire check (F-CAN B_H line, F-CAN B_L line)

-1. Turn the vehicle to the OFF (LOCK) mode.

-2. According to the detected DTC on the following table, disconnect the transmitting control unit connector(s).

DTC	Connector
B	CAN gateway 16P connector
U0100-F1	PCM connector A (50P)
U0122-F1	VSA modulator-control unit 46P connector
U0129-F1	Electric brake booster 26P connector
U0131-F1	EPS control unit connector B (6P)
U0151-F1	SRS unit connector A (39P)

NOTE: Before disconnecting the PCM connector, jump the SCS line with the HDS, and wait more than 1 minute.

-3. Check for continuity between test points 1 and 2.

Test condition	Vehicle OFF (LOCK) mode
B	CAN gateway 16P connector: disconnected
B	Transmitting control unit connector(s) for indicated DTCs: disconnected

DTC	Circuit name	Test point 1 (Receiving control unit)		Test point 2 (Transmitting control unit)	
		Connector	Terminal	Connector	Terminal
U0100-F1	F-CAN B_H	CAN gateway 16P connector (female terminals): ①	No. 6	**PCM connector A (50P)**	No. 39
	F-CAN B_L		No. 14		No. 38
U0122-F1	F-CAN B_H	CAN gateway 16P connector (female terminals): ①	No. 6	**VSA modulator-control unit 46P connector**	No. 46
	F-CAN B_L		No. 14		No. 34
U0129-F1	F-CAN B_H	CAN gateway 16P connector (female terminals): ①	No. 6	**Electric brake booster 26P connector**	No. 19
	F-CAN B_L		No. 14		No. 12
U0131-F1	F-CAN B_H	CAN gateway 16P connector (female terminals): ①	No. 6	**EPS control unit connector B (6P)**	No. 3
	F-CAN B_L		No. 14		No. 1
U0151-F1	F-CAN B_H	CAN gateway 16P connector (female terminals): ①	No. 6	**SRS unit connector A (39P)**	No. 34
	F-CAN B_L		No. 14		No. 35

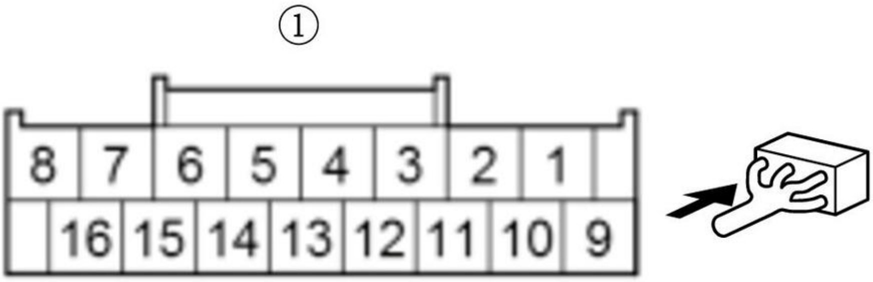

Is there continuity?

YES

According to the detected DTC on the following table, substitute or replace the correspond control unit.

DTC	Operation for transmitting control unit
U0100-F1	Check for poor connections or loose terminals at the millimeter wave radar and the PCM. Check for any authorized service information related to the DTCs or symptoms you are troubleshooting, or **substitute a good-known PCM** , then recheck. If they are OK, **replace the original PCM** .
U0122-F1	Check for poor connections or loose terminals at the millimeter wave radar and the VSA modulator-control unit. Check for any authorized service information related to the DTCs or symptoms you are troubleshooting. If they are OK, **replace the VSA modulator-control unit** .
U0129-F1	Check for poor connections or loose terminals at the millimeter wave radar and the electric brake booster. Check for any authorized service information related to the DTCs or symptoms you are troubleshooting. If they are OK, **replace the electric brake booster** .

DTC	Operation for transmitting control unit
U0131-F1	Check for poor connections or loose terminals at the multipurpose camera unit and the EPS control unit. Check for any authorized service information related to the DTCs or symptoms you are troubleshooting. If they are OK, **replace the EPS motor/control unit** .
U0151-F1	Check for poor connections or loose terminals at the millimeter wave radar and the SRS unit. Check for any authorized service information related to the DTCs or symptoms you are troubleshooting. If they are OK, **replace the SRS unit** .

NO

Repair an open in the F-CAN B_H wire or the F-CAN B_L wire between the transmitting control unit and the CAN gateway.

DTC U0401-53, U0401-92 (MILLIMETER WAVE RADAR)

DTC U0401-53 : Temporary stop of Integrated Driver Support System (Received stop request by PGM-FI System)

DTC U0401-92 : Temporary stop of Integrated Driver Support System (Rejected control request by PGM-FI System)

NOTE:

- Before you troubleshoot, **review the general troubleshooting information**.
- If these DTC are recorded, the following is suspected:
-
    - ACC operation is inhibited this way when there is a transmission malfunction, transmission and transmission fluid temperatures are too high, or if the PCM determines ACC is still active when the brake pedal is pressed.
    - The brake pedal position switch is failed or out of adjustment, or the brake pedal was pressed lightly while driving. (electric brake booster equipped models)
    - If this sets due to transmission fluid temperature, a warning will also be displayed in the MID.
- If these DTC are recorded, some of the integrated driver support system functions are temporarily canceled but it is not a failure.
- When the PCM becomes ready to receive a control request from the millimeter wave radar and the multipurpose camera unit, the temporarily cancelled integrated driver support system functions are re-activated.
- The functions of the integrated driver support system that will be temporarily canceled when these DTC are recorded can be confirmed with the **DTC troubleshooting index** .

DTC Description	DTC
U0401-53 Temporary stop of Integrated Driver Support System (Received stop request by PGM-FI System)	B
U0401-92 Temporary stop of Integrated Driver Support System (Rejected control request by PGM-FI System)	B

DTC (IDAS)

1. DTC check

   -1. Turn the vehicle to the ON mode, then wait for at least 6 seconds.

   -2. Check for DTCs with the HDS.

DTC Description	DTC
U0401-53 Temporary stop of Integrated Driver Support System (Received stop request by PGM-FI System)	B
U0401-92 Temporary stop of Integrated Driver Support System (Rejected control request by PGM-FI System)	B

Is there any DTC(s) other than DTC U0401-53 or U0401-92?

YES

Perform a troubleshooting for the recorded DTC.

NO

Clear the DTC with the HDS and explain to the customer that it is not a failure.

DTC U0416-92, U0416-9A (MILLIMETER WAVE RADAR)

DTC U0416-92 : Temporary stop of Integrated Driver Support System (Rejected control request by VSA System)

DTC U0416-9A : Temporary stop of Integrated Driver Support System (Unstable Wheel Speed Sensor Signal)

NOTE:

- Before you troubleshoot, **review the general troubleshooting information**.
- These DTCs are recorded when the VSA modulator-control unit cannot temporarily receives a brake request from the integrated driver support system due to a drop in the 12 volt battery voltage supplied to the VSA modulator-control unit.
- If this DTC is recorded, some of the integrated driver support system functions are temporarily canceled but it is not a failure.
- When the VSA modulator-control unit returns to normal, the temporarily cancelled integrated driver support system functions are re-activated.
- The functions of the integrated driver support system that will be temporarily canceled when this DTC is recorded can be confirmed with the **DTC troubleshooting index** .

DTC Description	DTC
U0416-92 Temporary stop of Integrated Driver Support System (Rejected control request by VSA System)	B
U0416-9A Temporary stop of Integrated Driver Support System (Unstable Wheel Speed Sensor Signal)	B

DTC (IDAS)

1. DTC check

-1. Turn the vehicle to the ON mode, then wait for at least 6 seconds.

-2. Check for DTCs with the HDS.

DTC Description	DTC
U0416-92 Temporary stop of Integrated Driver Support System (Rejected control request by VSA System)	B
U0416-9A Temporary stop of Integrated Driver Support System (Unstable Wheel Speed Sensor Signal)	B

Is there any DTC(s) other than U0416-92 or U0416-9A?

YES

Perform a troubleshooting for the recorded DTC.

NO

Clear the DTC with the HDS and explain to the customer that it is not a failure.

DTC U0417-68 (MILLIMETER WAVE RADAR)

DTC U0417-68 : Electric Parking Brake Control Unit Malfunction

NOTE:

- Before you troubleshoot, **review the general troubleshooting information**.
- This DTCs are recorded when the millimeter wave radar receives electric parking brake control unit failure information via the F-CAN.
- If a DTC is recorded again after it is cleared with the HDS, **perform a troubleshooting for the electric parking brake system** .
- The functions of the integrated driver support system that will be temporarily canceled when this DTC is recorded can be confirmed with the **DTC troubleshooting index** .

DTC Description	DTC
U0417-68 Electric Parking Brake Control Unit Malfunction	B

DTC (IDAS)

1. Problem verification

-1. Turn the vehicle to the ON mode.

-2. Clear the DTC with the HDS.

-3. Turn the vehicle to the OFF (LOCK) mode.

-4. Turn the vehicle to the ON mode, then wait for at least 6 seconds.

-5. Check for DTCs with the HDS.

DTC Description	DTC
U0417-68 Electric Parking Brake Control Unit Malfunction	B

Is DTC U0417-68 indicated?

YES

The failure is duplicated. **Go to the indicated DTC's troubleshooting in the electric parking brake system** .

NO

Intermittent failure, the system is OK at this time. **Refer to intermittent failures troubleshooting**.

DTC U0418-68 (MILLIMETER WAVE RADAR)

DTC U0418-68 : Electric Servo Brake System/Electric Brake Booster System Malfunction

NOTE:

- Before you troubleshoot, **review the general troubleshooting information**.
- This DTC is recorded when the millimeter wave radar receives electric brake booster failure information via the F-CAN.
- If a DTC is recorded again after it is cleared with the HDS, **perform a troubleshooting for the electric brake booster system** .
- The functions of the integrated driver support system that will be temporarily canceled when this DTC is recorded can be confirmed with the **DTC troubleshooting index** .

DTC Description	DTC
U0418-68 Electric Servo Brake System/Electric Brake Booster System Malfunction	B

DTC (IDAS)

1. Problem verification

   -1. Turn the vehicle to the ON mode.

   -2. Clear the DTC with the HDS.

   -3. Turn the vehicle to the OFF (LOCK) mode.

   -4. Turn the vehicle to the ON mode, then wait for at least 6 seconds.

   -5. Check for DTCs with the HDS.

DTC Description	DTC
U0418-68 Electric Servo Brake System/Electric Brake Booster System Malfunction	B

   Is DTC U0418-68 indicated?

   YES

   The failure is duplicated. **Go to the indicated DTC's troubleshooting in the electric brake booster system** .

   NO

   Intermittent failure, the system is OK at this time. **Refer to intermittent failures troubleshooting**.

DTC U0418-9A (MILLIMETER WAVE RADAR)

DTC U0418-9A : Temporary stop of Integrated Driver Support System (Not Start-Up Electric Brake Booster Control Unit)

NOTE:

- Before you troubleshoot, **review the general troubleshooting information**.
- These DTCs are recorded when the electric brake booster cannot temporarily receives a brake request from the integrated driver support system due to a drop in the 12 volt battery voltage supplied to the electric brake booster.
- If this DTC is recorded, some of the integrated driver support system functions are temporarily canceled but it is not a failure.

- When the electric brake booster returns to normal, the temporarily cancelled integrated driver support system functions are re-activated.
- The functions of the integrated driver support system that will be temporarily canceled when this DTC is recorded can be confirmed with the **DTC troubleshooting index** .

DTC Description	DTC
U0418-9A Temporary stop of Integrated Driver Support System (Not Start-Up Electric Brake Booster Control Unit)	B

DTC (IDAS)

1. DTC check

-1. Turn the vehicle to the ON mode, then wait for at least 6 seconds.

-2. Check for DTCs with the HDS.

DTC Description	DTC
U0418-9A Temporary stop of Integrated Driver Support System (Not Start-Up Electric Brake Booster Control Unit)	B

Is there any DTC(s) other than U0418-9A?

YES

Perform a troubleshooting for the recorded DTC.

NO

Clear the DTC with the HDS and explain to the customer that it is not a failure.

DTC U0420-68 (MILLIMETER WAVE RADAR)

DTC U0420-68 : EPS Control Unit Malfunction

NOTE:

- Before you troubleshoot, **review the general troubleshooting information**.
- This DTC is recorded when the millimeter wave radar receives the EPS control unit failure information via the F-CAN.
- If a DTC is recorded again after it is cleared with the HDS, **perform a troubleshooting for the EPS system** .
- The functions of the integrated driver support system that will be temporarily canceled when this DTC is recorded can be confirmed with the **DTC troubleshooting index** .

DTC Description	DTC
U0420-68 EPS Control Unit Malfunction	B

DTC (IDAS)

1. Problem verification

-1. Turn the vehicle to the ON mode.

-2. Clear the DTC with the HDS.

-3. Turn the vehicle to the OFF (LOCK) mode.

-4. Turn the vehicle to the ON mode, then wait for at least 6 seconds.

-5. Check for DTCs with the HDS.

DTC Description	DTC
U0420-68 EPS Control Unit Malfunction	B

Is DTC U0420-68 indicated?

YES

The failure is duplicated. **Go to the indicated DTC's troubleshooting in the EPS system** .

NO

Intermittent failure, the system is OK at this time. **Refer to intermittent failures troubleshooting**.

DTC U0423-68, U1280-00, U1281-00, U128C-00 (MILLIMETER WAVE RADAR)

DTC U0423-68 : Gauge Control Module Malfunction

DTC U1280-00 : Lost Communication With The B-CAN Systems

DTC U1281-00 : Lost Communication with The MICU (Body Control Module)

DTC U128C-00 : Lost Communication with The Wiper Control Unit

NOTE:

- Before you troubleshoot, **review the general troubleshooting information** .
- These DTCs are recorded when the millimeter wave radar receives failure information for relevant B-CAN systems or switches judged by the gauge control module.
- B-CAN system information used to control the integrated driver support system of this vehicle is obtained from the gauge control module via the F-CAN.
- If a DTC is recorded after it is cleared with the HDS, **perform a self-diagnostic function for the gauge control module** .
- The functions of the integrated driver support system that will be temporarily canceled when this DTC is recorded can be confirmed with the **DTC troubleshooting index** .

DTC Description	DTC
U0423-68 Gauge Control Module Malfunction	B
U1280-00 Lost Communication With The B-CAN Systems	B
U1281-00 Lost Communication with The MICU (Body Control Module)	B
U128C-00 Lost Communication with The Wiper Control Unit	B

DTC (IDAS)

1. Problem verification

-1. Turn the vehicle to the ON mode.

-2. Clear the DTC with the HDS.

-3. Turn the vehicle to the OFF (LOCK) mode.

-4. Turn the vehicle to the ON mode, then wait for at least 6 seconds.

-5. Check for DTCs with the HDS.

DTC Description	DTC
U0423-68 Gauge Control Module Malfunction	B

DTC Description	DTC
U1280-00 Lost Communication With The B-CAN Systems	B
U1281-00 Lost Communication with The MICU (Body Control Module)	B
U128C-00 Lost Communication with The Wiper Control Unit	B

Is DTC U0423-68, U1280-00, U1281-00, or U128C-00 indicated?

YES

The failure is duplicated. **Go to the indicated DTC's troubleshooting in the gauge control module** .

NO

Intermittent failure, the system is OK at this time. **Refer to intermittent failures troubleshooting** .

DTC U3000-51 (MILLIMETER WAVE RADAR)

DTC U3000-51 : Millimeter Wave Radar Update Incomplete

NOTE:

- Before you troubleshoot, **review the general troubleshooting information**.
- This DTC is indicated when a millimeter wave radar update is not completed properly.
- This DTC is not deleted until the millimeter wave radar is updated.
- After the update is successfully completed, these DTCs are automatically deleted without using the HDS.
- The functions of the integrated driver support system that will be temporarily canceled when this DTC is recorded can be confirmed with the **DTC troubleshooting index** .

DTC Description	DTC
U3000-51 Millimeter Wave Radar Update Incomplete	B

DTC (IDAS)

1. Millimeter wave radar (update)

-1. **Update the millimeter wave radar** .

NOTE: When updating control units, use the most current version of the HDS software and interface device. Check any official service information website for more information about updating control units.

-2. Check for DTCs with the HDS.

DTC Description	DTC
U3000-51 Millimeter Wave Radar Update Incomplete	B

Is DTC U3000-51 indicated?

YES

The failure is duplicated. **Replace the millimeter wave radar** .

NO

Update is complete.

HOW TO INFORMATION

HOW TO TROUBLESHOOT THE ADAPTIVE CRUISE CONTROL (ACC)

ACC Indicator (Amber)

When the ACC system detects a problem while operating, the ACC system stops working, then the ACC indicator and the brake system indicator (amber) stay on.

NOTE:

- For ACC function, **review the Adaptive Cruise Control (ACC) Description** .
- The ACC system communicates with other control units via F-CAN. For ACC system diagram, **review the ACC System Diagram** . If a connected unit malfunctions, the ACC system will not operate. In this case, both ACC indicator and connected unit indicator come on and stay on (except for the gauge control module).

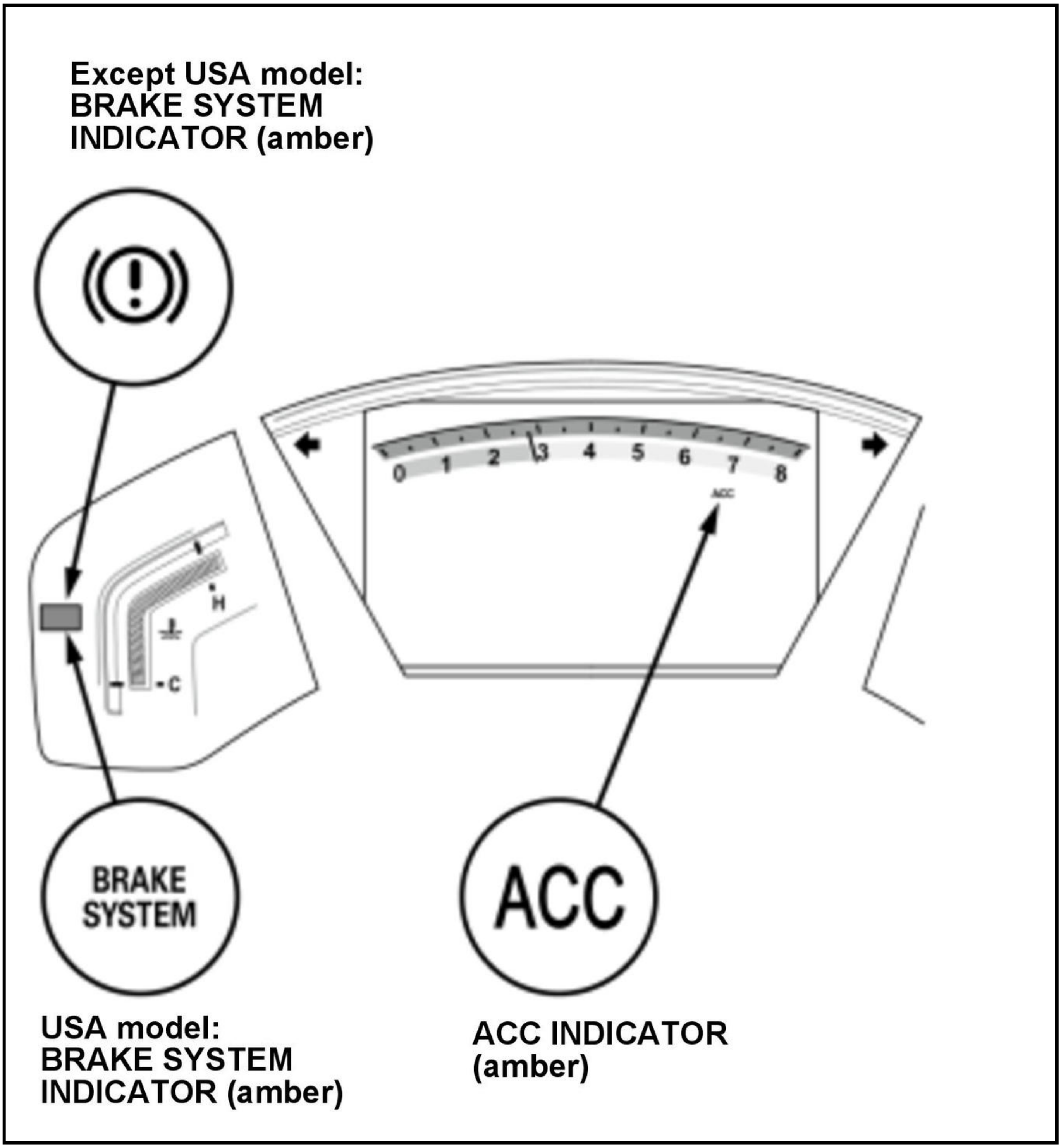
Except USA model:
BRAKE SYSTEM
INDICATOR (amber)
0
1
2
3
4
5
6
7
8
ACC
H
C
BRAKE SYSTEM
ACC
USA model:
BRAKE SYSTEM
INDICATOR (amber)
ACC INDICATOR
(amber)

Multi-Information Display (MID) Indication

When the ACC system is OK, the ACC indicates its status on the multi-information display (MID) when the MAIN switch is ON.

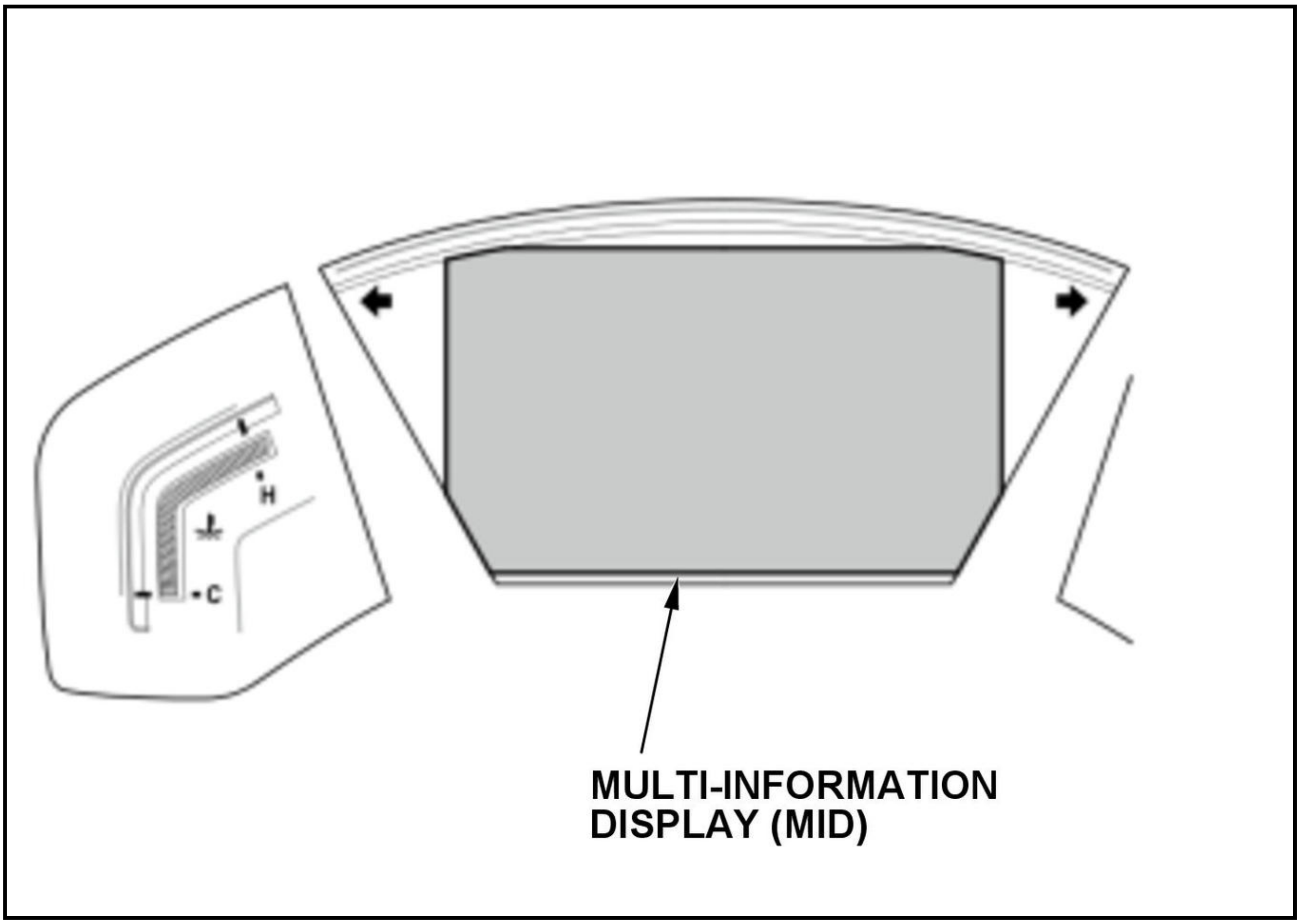

Self-Diagnostic Function

The ACC system has a self-diagnostic function. If the self-diagnostic function detects a malfunction, the ACC system stops operating. The ACC indicator comes on, and the ACC system indicates "Adaptive Cruise Control Problem" on the MID.

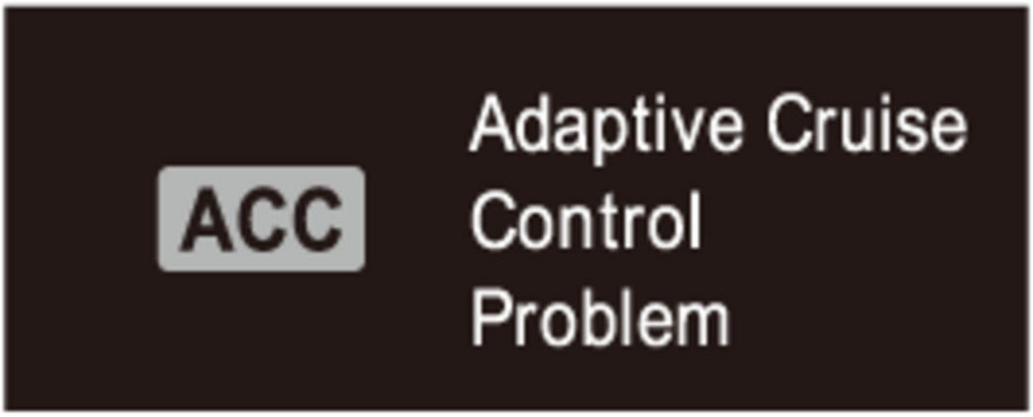

ACC

Adaptive Cruise
Control
Problem

Millimeter Wave Radar

The millimeter wave radar measures the distance between your vehicle and the vehicle directly ahead to calculate the difference in speed between the vehicles.

The millimeter wave radar has a self-diagnostic function. If the system detects a problem, it disables the ACC, and turns on the ACC indicator.

Dirt or dust detective function (Clean Millimeter Wave Radar Indication)

If the millimeter wave radar or front grille gets dirty, the ACC system stops operating and the following message on the MID will appear. Clean the millimeter wave radar and the front grille surface. Once the millimeter wave radar and front grille surface are clean, the message on the MID disappears and the ACC system automatically turns on.

NOTE:

- The following MID message may come on temporarily when passing through an enclosed space, such as tunnel.
- Under the above conditions DTC P2583-97 is stored.
- When it is snowing, the radio waves transmitted and received by the millimeter wave radar may be refracted by the snow or ice attached around the millimeter wave radar such as the front grille. At this time, DTC P2583-76 is stored depending on the situation.
- After DTC P2583-76 is stored, the message (Radar Obstructed) is displayed on the MID at the initial stage in some models, and then the indicators come on.

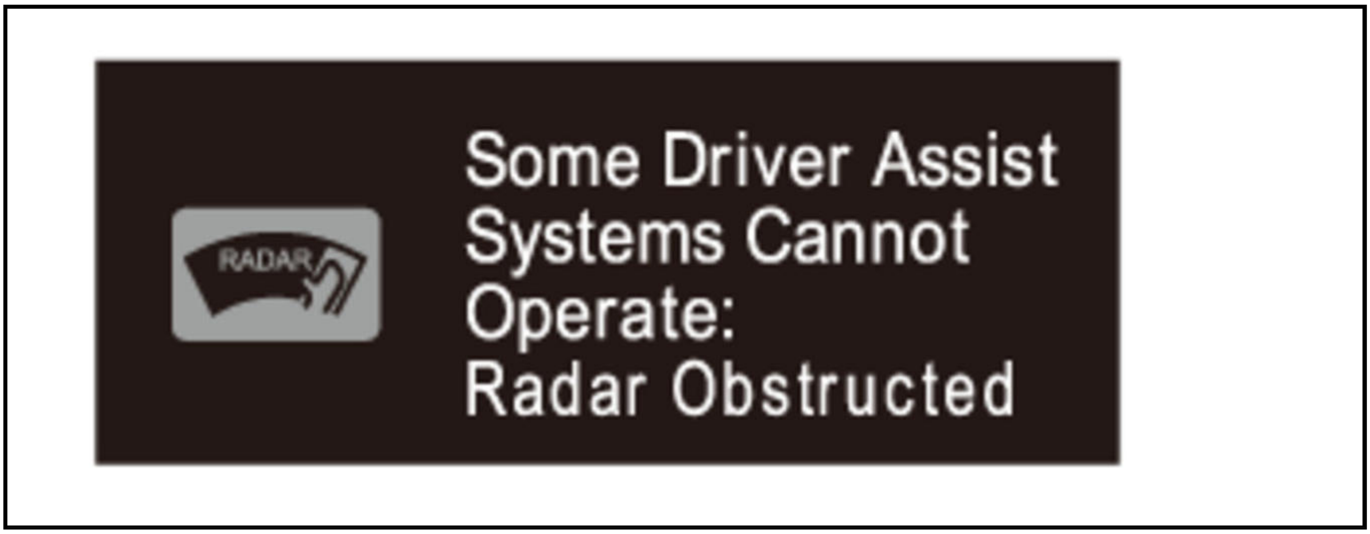

Some Driver Assist Systems Cannot Operate:
Radar Obstructed

Millimeter Wave Radar Aiming

If the millimeter wave radar is removed or replaced, you must do the millimeter wave radar aiming procedure, otherwise the ACC indicator blinks.

Multipurpose Camera Unit

The multipurpose camera unit uses inputs from the millimeter wave radar to maintain a constant distance between your vehicle and the vehicle directly ahead by accelerating and braking as needed.

The multipurpose camera unit also has an error detection function which sends a signal to the millimeter wave radar if an error is detected.

Multipurpose Camera Aiming Function

If the multipurpose camera unit is removed or replaced, you must do the multipurpose camera aiming procedure. If the aiming is incomplete, the ACC indicator blinks.

CAN Communication

The ACC system communicates with other control units via F-CAN. For ACC system diagram, **review the ACC System Diagram** .

If the multipurpose camera unit detects a communication error or a malfunction in another connected unit, the ACC system will not operate even though it is OK. In this case, both the ACC indicator and the related unit indicator will come on and stay on.

Intermittent Failures

The term "intermittent failure" means a system may have had a failure, but it checks OK now. If you cannot reproduce the condition, check for intermittent failure DTCs. If intermittent failure DTCs are not stored, check for loose connections and terminals. Also check ground and power connections related to the circuit that you are troubleshooting.

How to Troubleshoot DTCs

Check the DTCs with the HDS.

NOTE: For ACC system DTCs, **refer to the DTC troubleshooting index** .

Before troubleshooting, check and note these items:

- Ask the customer about the conditions when the problem occurred, and try to reproduce the same conditions for troubleshooting.
- If the symptom does not appear and the ACC indicator does not come on while test-driving, but if your troubleshooting was based on a DTC, check for poor connections or loose terminals at all connectors related to the circuit that you are troubleshooting.
- After the troubleshooting or repairs are done, clear the DTCs, and test-drive the vehicle under the same conditions as when the DTC was originally set. Make sure the ACC indicator does not come on.
- The ACC system sometimes stops operating because of certain environmental conditions (weather, road conditions, driving conditions, etc.). Intermittent failure DTCs or **ACC System Auto Stop Control Codes** may be stored in these cases.

How to Retrieve DTCs

NOTE: Make sure the 12 volt battery is fully charged before you begin.

1. **Connect the HDS**

2. Use the HDS to check for Integrated Driver Support System DTCs.

3. Read and record the DTC.

4. Turn the vehicle to the OFF (LOCK) mode.

5. Disconnect the HDS.

6. Do the troubleshooting procedure for the DTC.

How to Clear DTCs

NOTE: Make sure the 12 volt battery is fully charged before you begin.

1. **Connect the HDS**

2. In the Driving Support of the HDS, select Integrated Driver Support System, then DTCs, choose the clear DTCs icon, and follow the prompts.

3. Turn the vehicle to the OFF (LOCK) mode.

4. Disconnect the HDS.

HOW TO TROUBLESHOOT THE COLLISION MITIGATION BRAKING SYSTEM (CMBS)

CMBS Indicator (Amber)

When the CMBS detects a problem during operation, the CMBS stops operating, and the CMBS indicator and the brake system indicator (amber) turns on.

NOTE:

- For CMBS function, **review the Collision Mitigation Braking System (CMBS) Description** .
- The CMBS communicates with other control units via F-CAN. For CMBS diagram, **refer to the System Diagram for CMBS** . If a connected unit malfunctions, the CMBS will not operate. In this case, both CMBS indicator and connected unit indicator come on and stay on (except for the gauge control module).

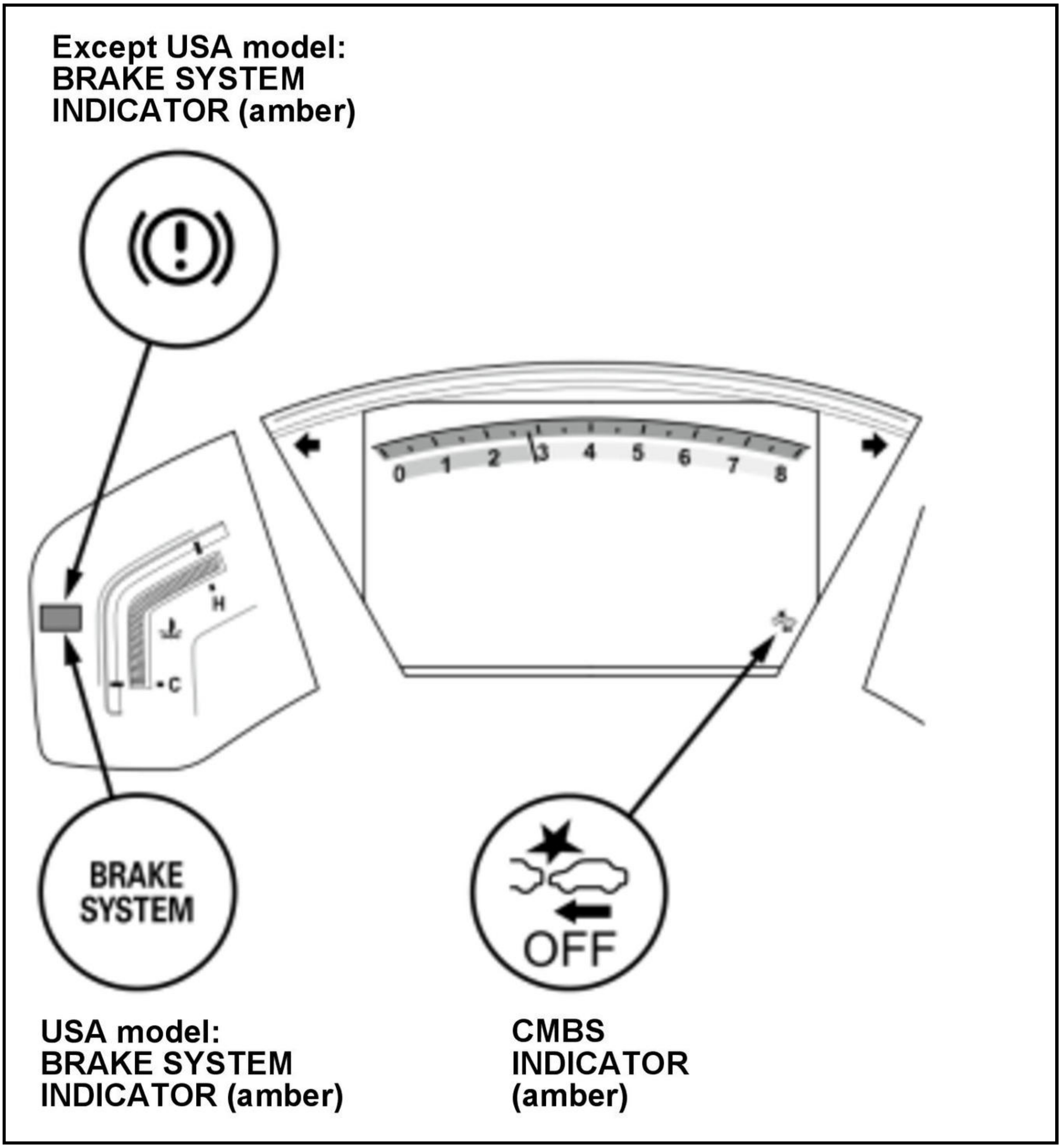
Except USA model:
BRAKE SYSTEM
INDICATOR (amber)
0
1
2
3
4
5
6
7
8
H
C
BRAKE
SYSTEM
OFF
USA model:
BRAKE SYSTEM
INDICATOR (amber)
CMBS
INDICATOR
(amber)

Self-Diagnostic Function

When a problem is detected by the self-diagnostic function, the CMBS stops operating, turns on the CMBS indicator, indicates the problem on the multi-information display (MID), and stores a DTC.

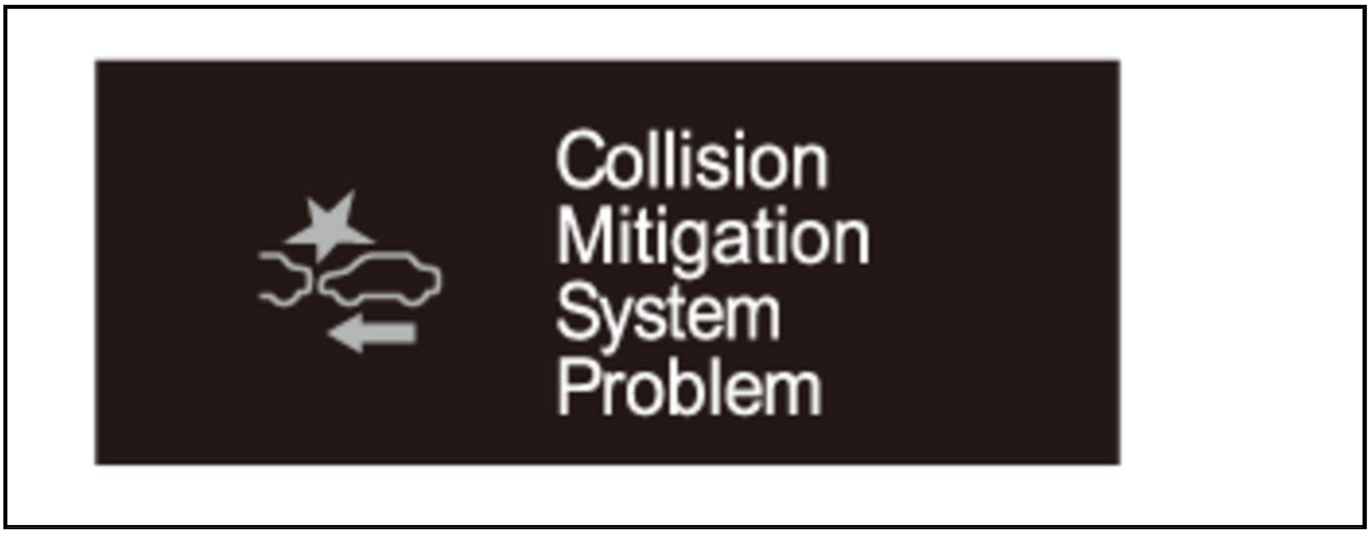

Collision Mitigation System Problem

CMBS OFF Switch

Press and hold the CMBS OFF switch for at least 1 second to turn the CMBS off and on.

CMBS Indication

- When the CMBS is OK, the CMBS indicator comes on for a few seconds, then goes off after turning the vehicle to the ON mode.
- When you set the CMBS to OFF, the multipurpose camera unit turns on the CMBS indicator.
- When the system is activated, the MID indicates a brake system warning indicator and a warning buzzer sounds.
- If the system stops operating because of a problem, the MID indicates the problem.

Millimeter Wave Radar

The millimeter wave radar measures the distance between your vehicle and the vehicle directly ahead to calculate the difference in speed between the vehicles.

The millimeter wave radar has a self-diagnostic function. If the system detects a problem, it disables the CMBS, and turns on the CMBS indicator.

Dirt or dust detective function (Clean Millimeter Wave Radar Indication)

If the millimeter wave radar or front grille gets dirty, the CMBS stops operating and the following message on the MID will appear. Clean the millimeter wave radar and the front grille surface. Once the millimeter wave radar and front grille surface are clean, the message on the MID disappears and the CMBS automatically turns on.

NOTE:

- The following MID message may come on temporarily when passing through an enclosed space, such as tunnel.
- Under the above conditions DTC P2583-97 is stored.
- When it is snowing, the radio waves transmitted and received by the millimeter wave radar may be refracted by the snow or ice attached around the millimeter wave radar such as the front grille. At this time, DTC P2583-76 is stored depending on the situation.
- After DTC P2583-76 is stored, the message (Radar Obstructed) is displayed on the MID at the initial stage in some models, and then the indicators come on.

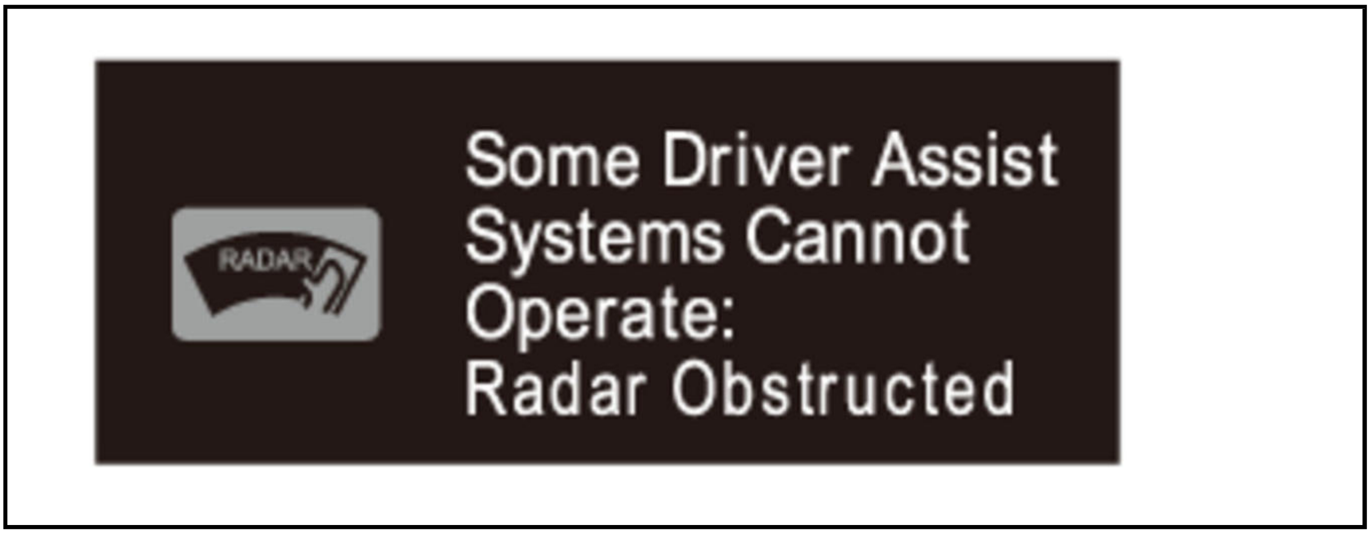
Some Driver Assist
Systems Cannot
Operate:
Radar Obstructed

Millimeter Wave Radar Aiming

If the millimeter wave radar is removed or replaced, you must do the millimeter wave radar aiming procedure, otherwise the CMBS indicator blinks.

Multipurpose Camera Unit

The multipurpose camera unit controls the brakes and the various driver warnings when the system recognizes the possibility of a collision.

The multipurpose camera unit also has an error detection function which sends a signal to the millimeter wave radar if an error is detected. The millimeter wave radar receives this information from the multipurpose camera unit.

Dirt or dust detective function (CLEAN FRONT WINDSHIELD Indication)

If the following message appears on the MID, the camera lens or the windshield has enough dirt so that the camera view is obstructed, the CMBS stops operating.

Clean any dirt or contamination on the camera lens or the windshield. Once the camera's view is unobstructed, the indicator on the MID turns off and the CMBS automatically turns back to ON.

NOTE: When millimeter wave radar detected dirt or dust on the multipurpose camera lens or the windshield surface, DTC B2A60-97 is stored as a past failure.

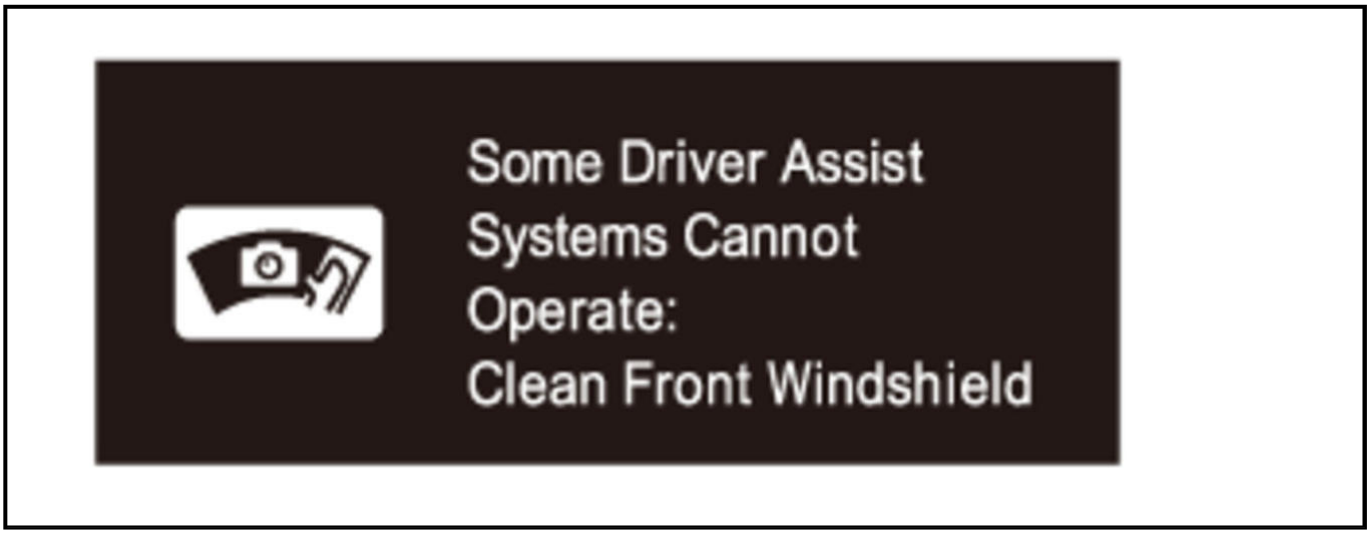
Some Driver Assist
Systems Cannot
Operate:
Clean Front Windshield

System Protect Function (High temperature) (MULTIPURPOSE CAMERA HOT Indication)

If the following message appears on the MID, the CMBS stops operating, and stores a DTC.

When the multipurpose camera temperature cools down to its proper operating temperature, the indicator on the MID turns off, and the CMBS automatically resumes operation.

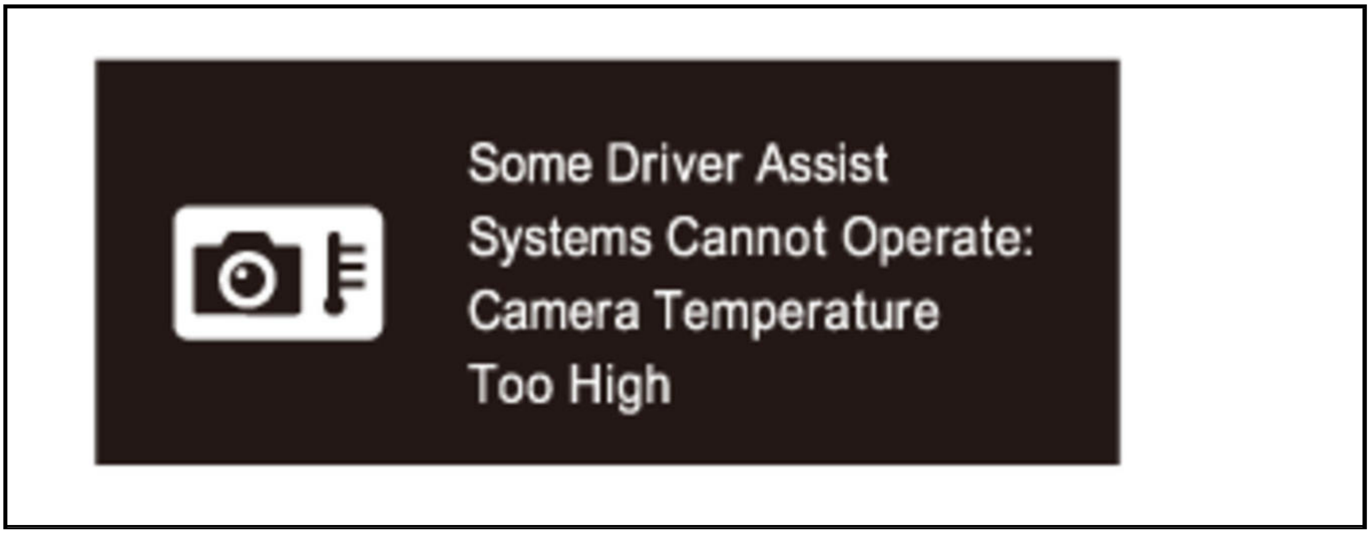
Some Driver Assist
Systems Cannot Operate:
Camera Temperature
Too High

Multipurpose Camera Aiming Function

If the multipurpose camera unit is removed or replaced, you must do the multipurpose camera aiming procedure. If the aiming is incomplete, the CMBS indicator blinks.

CAN Communication

The CMBS communicates with other control units via F-CAN. For CMBS diagram, **refer to the System Diagram for CMBS** .

If the millimeter wave radar and the multipurpose camera unit detects a communication error or a malfunction in another connected unit, the CMBS system will not operate even though it is OK. In this case, both the CMBS indicator and the related unit indicator will come on and stay on.

How to Troubleshoot DTCs

Check the DTCs with the HDS.

NOTE: For CMBS DTCs, **refer to the DTC troubleshooting index** .

Before troubleshooting, check and note these items:

- Ask the customer about the conditions when the problem occurred, and try to reproduce the same conditions for troubleshooting.
- If the symptom does not appear and the CMBS indicator does not come on while test-driving, but troubleshooting is done based on the DTC, check for poor connections or loose terminals at all connectors related to the circuit that you are troubleshooting.
- After the troubleshooting or repairs are done, clear the DTCs, and test-drive the vehicle under the same conditions as when the DTC was originally set. Make sure the CMBS indicator does not come on.
- The CMBS may sometimes stop control because of the environment (weather, road conditions, driving conditions, etc.). Intermittent failure DTCs may be stored in these cases.

Intermittent Failures

The term "intermittent failure" means a system may have had a failure, but it checks OK now. If you cannot reproduce the condition, check for intermittent failure DTCs. If intermittent failure DTCs are not stored, check for loose connections and terminals. Also check ground and power connections related to the circuit that you are troubleshooting.

How to Retrieve DTCs

NOTE: Make sure the 12 volt battery is fully charged before you begin.

1. **Connect the HDS**
2. Use the HDS to check for Integrated Driver Support System DTCs.
3. Read and record the DTC.
4. Turn the vehicle to the OFF (LOCK) mode.
5. Disconnect the HDS.
6. Do the troubleshooting procedure for the DTC.

How to Clear DTCs

NOTE: Make sure the 12 volt battery is fully charged before you begin.

1. **Connect the HDS**
2. In the Driving Support of the HDS, select Integrated Driver Support System, then DTCs, choose the clear DTCs icon, and follow the prompts.
3. Turn the vehicle to the OFF (LOCK) mode.
4. Disconnect the HDS.

REMOVAL & INSTALLATION TEST

ACC COMBINATION SWITCH REMOVAL, INSTALLATION, AND TEST

Removal and Installation

SRS components are located in this area. Review the SRS component locations , and the precautions and procedures before doing repairs or service.

1. ACC Combination Switch -Remove
2. All Removed Parts - Install

1. Install the parts in the reverse order of removal.

Test

1. ACC Combination Switch - Test

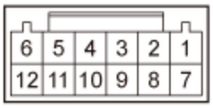	1. Measure the resistance between the ACC combination switch 12P connector (male terminals) terminals No. 5 and No. 6 according to the chart. - If there is no resistance in one or more positions, replace the ACC combination switch. 2. Measure the resistance between the ACC combination switch 12P connector (male terminals) terminals No. 5 and No. 12 according to the chart. - If there is no resistance in one or more positions, replace the ACC combination switch.

Position	Resistance
OFF (Released)	About 2.2 kΩ
DISTANCE (Pressed and held)	About 450 Ω

Position	Resistance
OFF (Released)	About 2.2 kΩ
MAIN (Pressed and held)	About 60 Ω
CANCEL (Pressed and held)	About 190 Ω
SET - (Pressed and held)	About 450 Ω
RES + (Pressed and held)	About 900 Ω

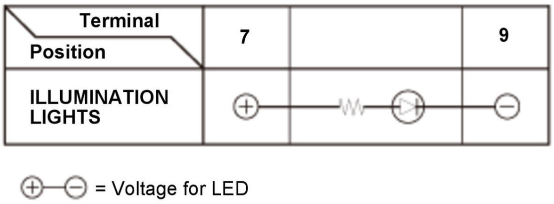 Terminal Position 7 9 ILLUMINATION LIGHTS = Voltage for LED	3. Check the LED for illumination when connecting battery power and ground to the switch terminals according to the chart. **NOTE:** **Note this important**

	operating characteristic; diode bias causes a diode to fully conduct electricity in one direction (forward), while not at all in the opposite direction (reverse).If the results are not as specified, replace the ACC combination switch.

CMBS OFF SWITCH REMOVAL, INSTALLATION, AND TEST

Removal and Installation

1. Driver's Dashboard Lower Cover - Remove
2. CMBS OFF Switch - Remove

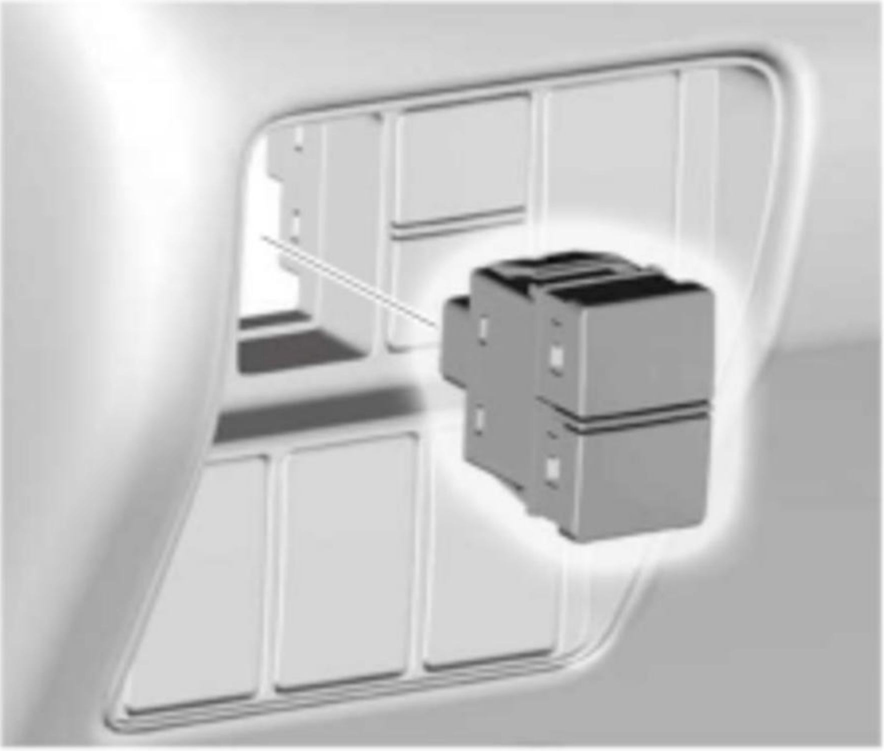

NOTE: Position of the switch is different depending on the model.

3. All Removed Parts - Install

1. Install the parts in the reverse order of removal.

Test

1. CMBS OFF Switch - Test

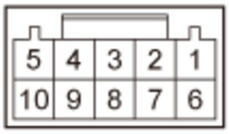

Terminal / Position	9	10
RELEASED		
PRESSED	○—	—○

1. Check for continuity between the CMBS OFF/RDM switch 10P connector (male terminals) terminals in each switch position according to the chart.

- If the continuity is not as specified, replace the CMBS OFF switch.

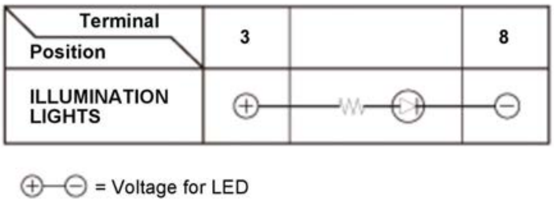 Terminal Position 3 8 ILLUMINATION LIGHTS ⊕—⊖ = Voltage for LED	2. Check the LED for illumination when connecting battery power and ground to the switch terminals according to the chart. **NOTE:** **Note this important operating characteristic; diode bias causes a diode to fully conduct electricity in one direction (forward), while not at all in the opposite direction (reverse).If the results are not as specified, replace the CMBS OFF switch.**

CRUISE CONTROL COMBINATION SWITCH REMOVAL, INSTALLATION, AND TEST

Removal and Installation

NOTE:

- 📖 Where icon is shown, further information shown below.
- SRS components are located in this area. Review the **SRS component locations** , and the **precautions and procedures** before doing repairs or service.

1

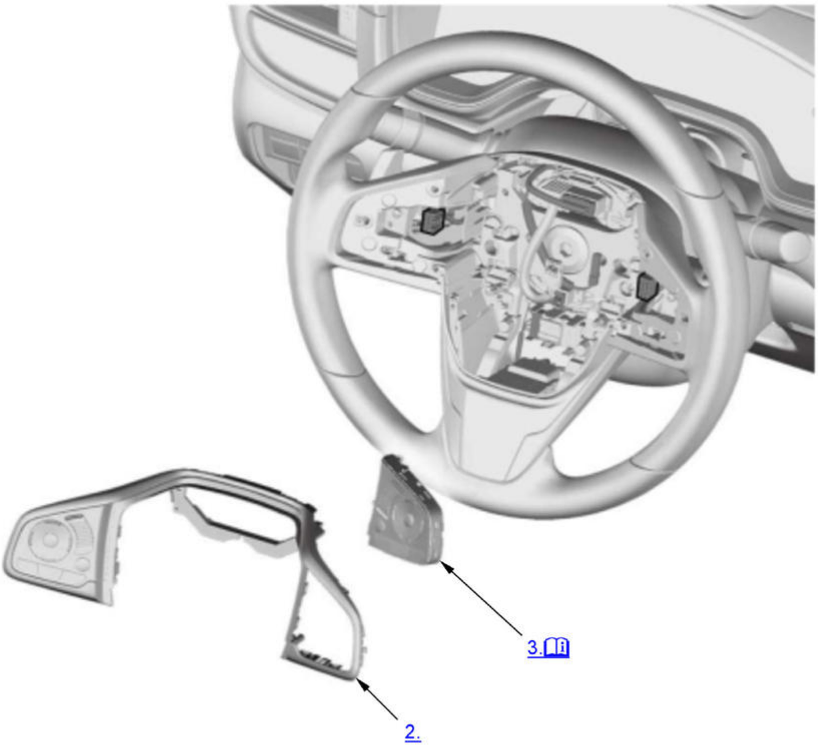

	Detailed information, notes and precautions

1. **Driver's Airbag - Remove**
2. Steering Wheel Trim - Remove
3. Cruise Control Combination Switch - Remove

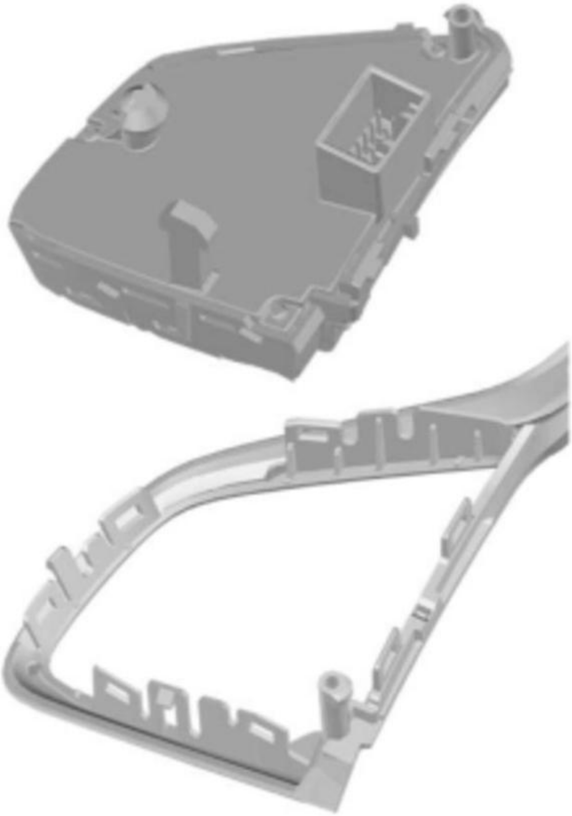

4. All Removed Parts - Install

1. Install the parts in the reverse order of removal.

Test

1. Cruise Control Combination Switch - Test

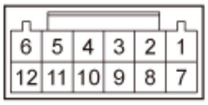

1. Measure the resistance between the cruise control combination switch 12P connector (male terminals) terminals No. 5 and No. 6 according to the chart.

- If there is no resistance in one or more positions, replace the cruise control combination switch.

Position	Resistance
OFF (Released)	About 2.2 kΩ
CRUISE/MAIN (Pressed and held)	About 60 Ω
CANCEL (Pressed and held)	About 190 Ω
SET - (Pressed and held)	About 450 Ω
RES + (Pressed and held)	About 900 Ω

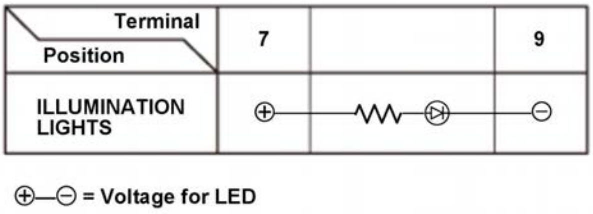

2. Check the LED for illumination by applying power and ground to the terminals according to the chart.

NOTE:

Important operating characteristic; diode bias causes a diode to fully conduct electricity in one direction (forward), while not at all in the opposite direction (reverse).If the results are not as specified, replace the cruise control combination switch.

LKAS SWITCH REMOVAL, INSTALLATION, AND TEST

Removal and Installation

SRS components are located in this area. Review the **SRS component locations** , and the **precautions and procedures** before doing repairs or service.

1. **ACC Combination Switch -Remove**
2. All Removed Parts - Install

1. Install the parts in the reverse order of removal.

Test

1. LKAS Switch - Test

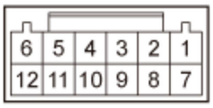

1. Measure the resistance between the ACC combination switch 12P connector (male terminals) terminals No. 5 and No. 12 according to the chart.

- If there is no resistance in one or more positions, replace the ACC combination switch.

Position	Resistance
OFF (Released)	About 2.2 kΩ
LKAS (Pressed and held)	About 60 Ω

2. Check the LED for illumination when connecting battery power and ground to the switch terminals according to the chart.

NOTE:

Note this important operating characteristic; diode bias causes a diode to fully conduct electricity in one direction (forward), while not at all in the opposite direction (reverse).If the results are not as specified, replace the ACC combination switch.

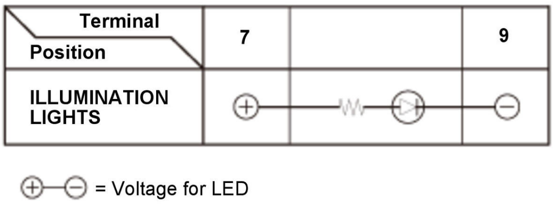

DESCRIPTION & OPERATION

ADAPTIVE CRUISE CONTROL (ACC) SYSTEM DESCRIPTION

Function

The ACC system with Low Speed Follow (LSF) uses the multipurpose camera and the millimeter radar to calculate and adjust the vehicle speed to maintain the appropr between your vehicle and the leading vehicle ahead based on your vehicle speed and driving conditions. When another vehicle cuts in between your vehicle and the leac the system switches the target vehicle to a new vehicle using the image information (vehicle and lane information) from the multipurpose camera. When the leading veh the lane or goes out of the detection range, the vehicle drives at the preset vehicle speed until detecting a new target vehicle. ACC system works with the cruise control s adjust the vehicle speed.

The cruise control mode can be entered by operating the distance switch while the ACC is working.

Control Block Diagram

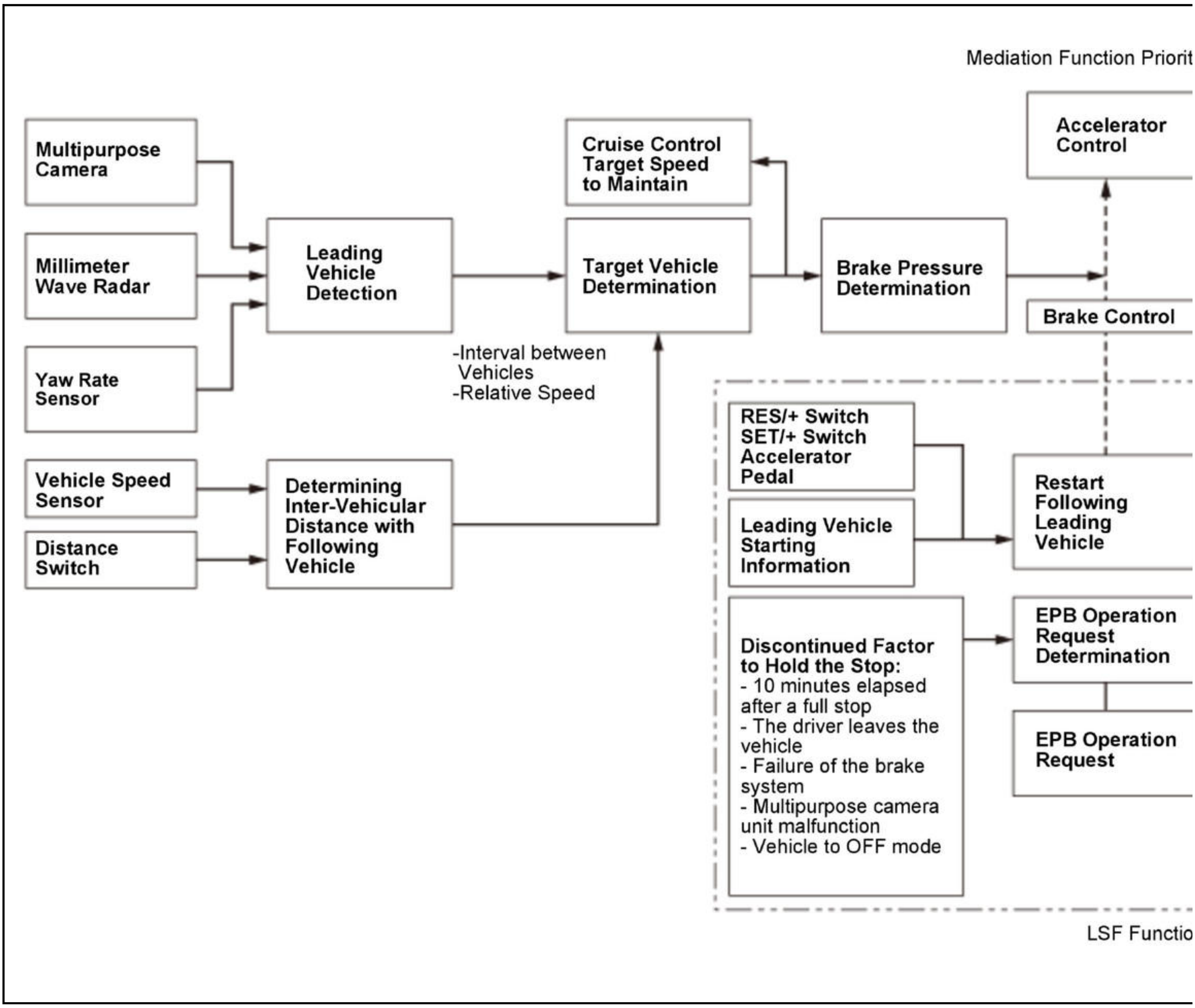
Mediation Function Priorit
Multipurpose Camera
Millimeter Wave Radar
Yaw Rate Sensor
Leading Vehicle Detection
Cruise Control Target Speed to Maintain
Target Vehicle Determination
Brake Pressure Determination
Accelerator Control
Brake Control
-Interval between Vehicles
-Relative Speed
Vehicle Speed Sensor
Distance Switch
Determining Inter-Vehicular Distance with Following Vehicle
RES/+ Switch
SET/+ Switch
Accelerator Pedal
Leading Vehicle Starting Information
Restart Following Leading Vehicle
Discontinued Factor to Hold the Stop:
- 10 minutes elapsed after a full stop
- The driver leaves the vehicle
- Failure of the brake system
- Multipurpose camera unit malfunction
- Vehicle to OFF mode
EPB Operation Request Determination
EPB Operation Request
LSF Functio

Operation Conditions

Control vehicle speed	Following function	0 - 90 mph (0 - 145 km/h)
	Set speed range	25 - 90 mph (40 - 145 km/h)
Maximum acceleration		0.2 G
Maximum deceleration		0.4 G (0.3 G for all speeds from 37 mph (60 km/h) up)
Left/right detection angle of millimeter wave radar		+/-42.6 degrees
Up/down detection angle of millimeter wave radar		-6 to +11.5 degrees
Road inclination		Less than 6%
Detection object		Vehicle only

Basic Controls of ACC and Low Speed Follow (LSF)

- The ACC system uses the millimeter wave radar to detect the leading vehicle, determines the target vehicle and measures the distance to the target vehicle and its speed. (the system also uses the multipurpose camera as needed to determine the target vehicle based on the lane and vehicle position information)
- When there is no leading vehicle, your vehicle drives at the preset speed. When there is a leading vehicle, your vehicle follows the vehicle and drives within the p

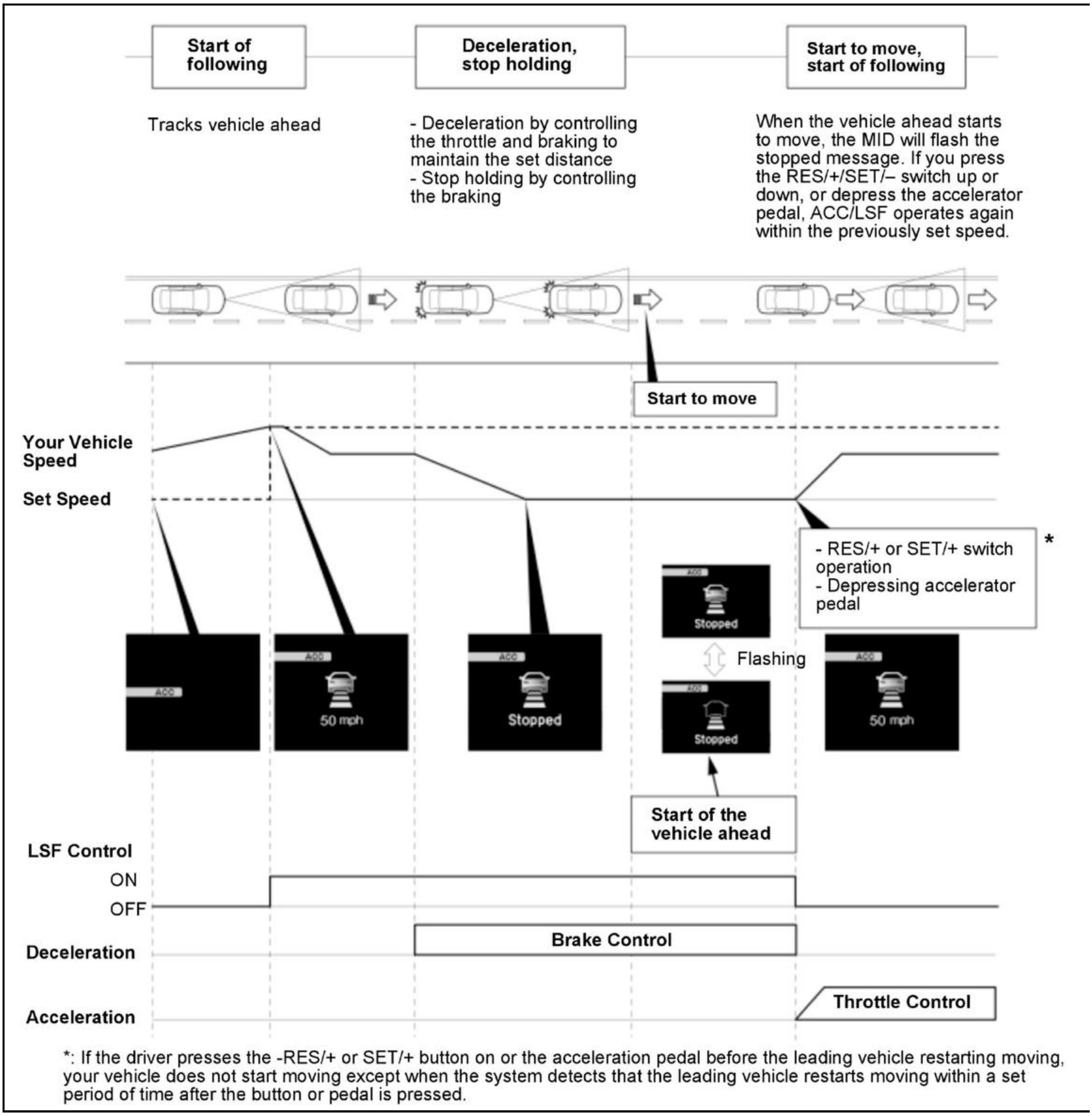
Start of following
Deceleration, stop holding
Start to move, start of following
Tracks vehicle ahead
- Deceleration by controlling the throttle and braking to maintain the set distance
- Stop holding by controlling the braking
When the vehicle ahead starts to move, the MID will flash the stopped message. If you press the RES/+/SET/– switch up or down, or depress the accelerator pedal, ACC/LSF operates again within the previously set speed.
Start to move
Your Vehicle Speed
Set Speed
- RES/+ or SET/+ switch operation
- Depressing accelerator pedal
*
ACC
ACC
50 mph
ACC
Stopped
ACC
Stopped
Flashing
ACC
Stopped
ACC
50 mph
Start of the vehicle ahead
LSF Control
ON
OFF
Deceleration
Brake Control
Acceleration
Throttle Control

*: If the driver presses the -RES/+ or SET/+ button on or the acceleration pedal before the leading vehicle restarting moving, your vehicle does not start moving except when the system detects that the leading vehicle restarts moving within a set period of time after the button or pedal is pressed.

When the ACC control stop factor occurs during the LSF operation

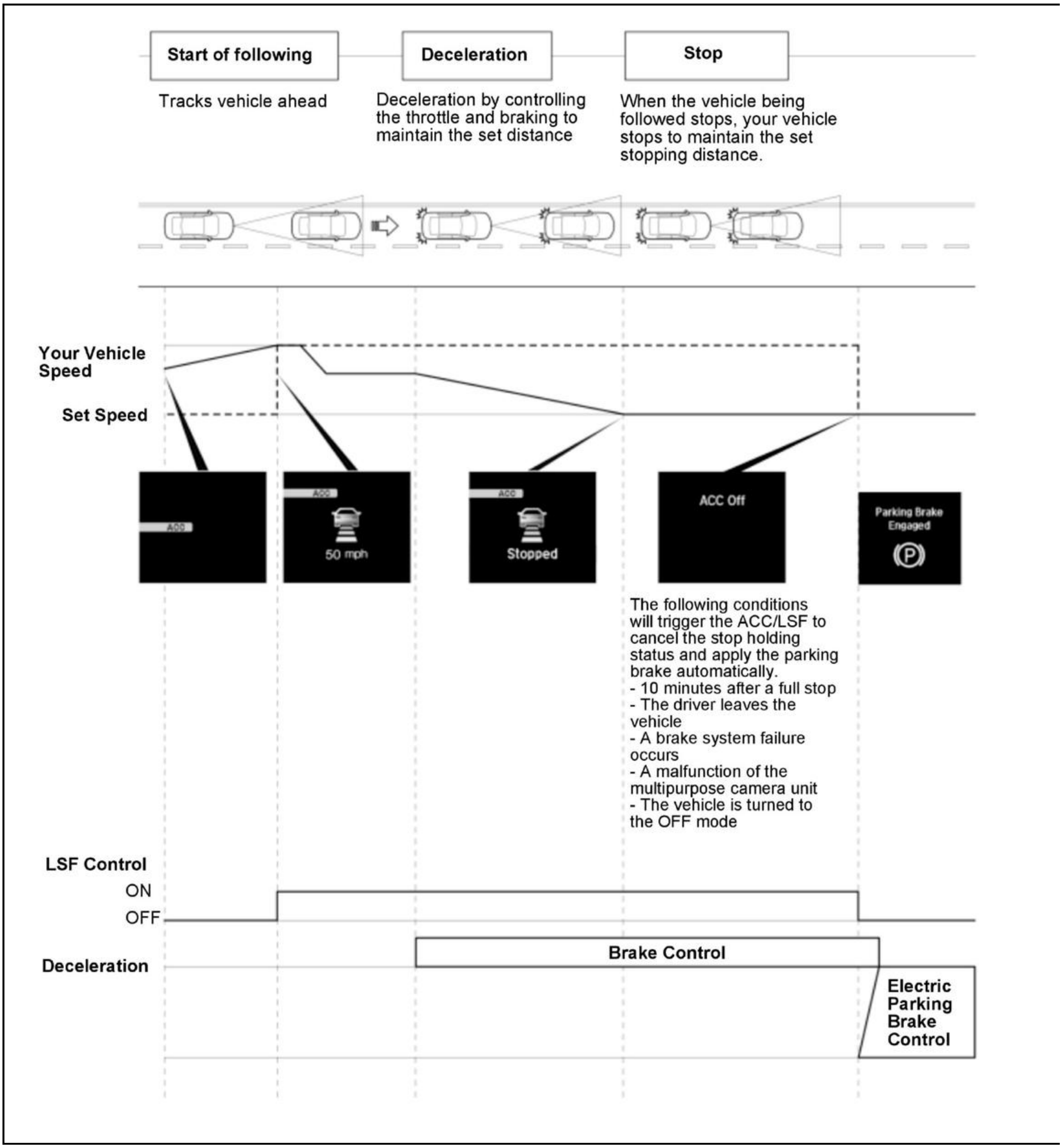
Start of following
Tracks vehicle ahead
Deceleration
Deceleration by controlling the throttle and braking to maintain the set distance
Stop
When the vehicle being followed stops, your vehicle stops to maintain the set stopping distance.
Your Vehicle Speed
Set Speed
ACC
ACC
50 mph
ACC
Stopped
ACC Off
Parking Brake Engaged
The following conditions will trigger the ACC/LSF to cancel the stop holding status and apply the parking brake automatically.
- 10 minutes after a full stop
- The driver leaves the vehicle
- A brake system failure occurs
- A malfunction of the multipurpose camera unit
- The vehicle is turned to the OFF mode
LSF Control
ON
OFF
Deceleration
Brake Control
Electric Parking Brake Control

Determination of the target vehicle

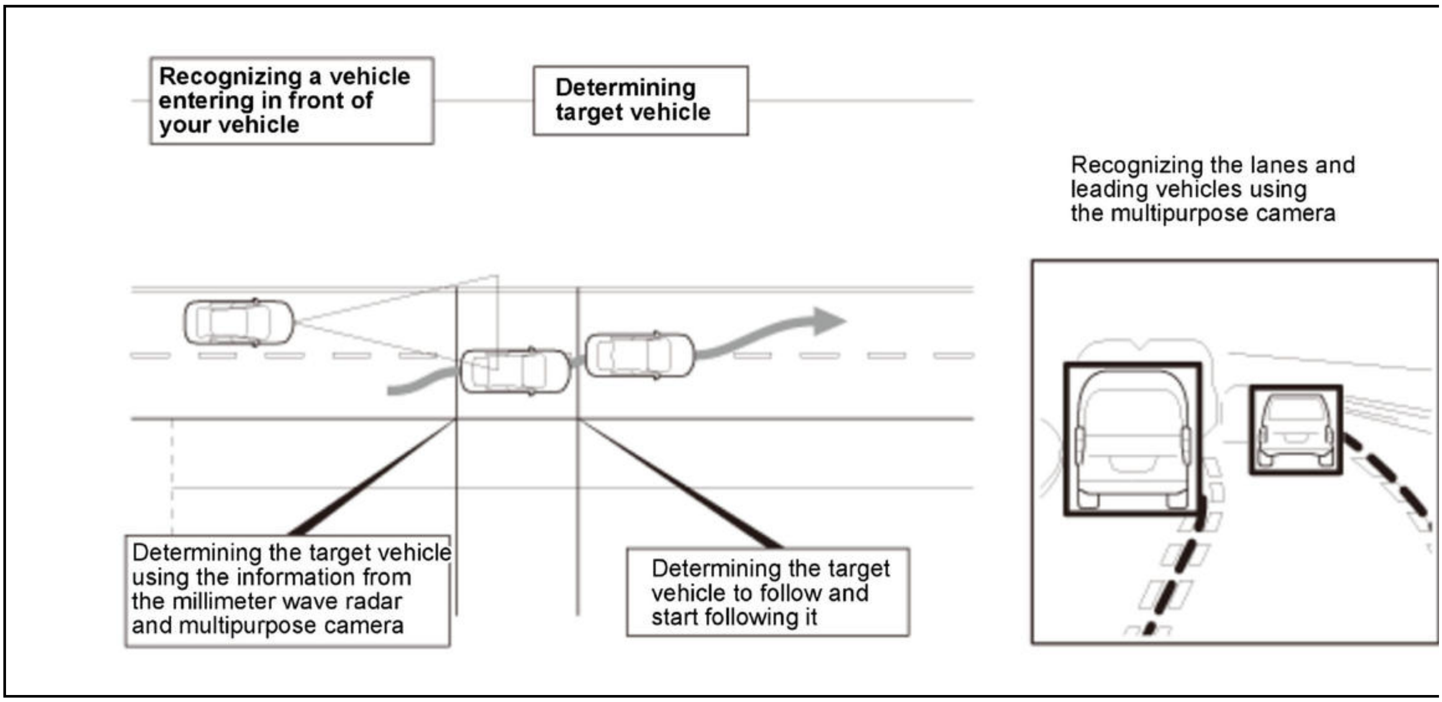
Recognizing a vehicle entering in front of your vehicle
Determining target vehicle
Recognizing the lanes and leading vehicles using the multipurpose camera
Determining the target vehicle using the information from the millimeter wave radar and multipurpose camera
Determining the target vehicle to follow and start following it

ADAPTIVE CRUISE CONTROL (ACC) SYSTEM DESCRIPTION - SYSTEM DIAGRAM

The system diagram of the ACC system is shown below.

For locations of each component on the vehicle, refer to Component Location Index:

- EPS motor/control unit
- Gauge control module
- Millimeter wave radar
- Multipurpose camera unit
- PCM
- SRS unit
- VSA modulator-control unit
- Transmission control module (TCM)

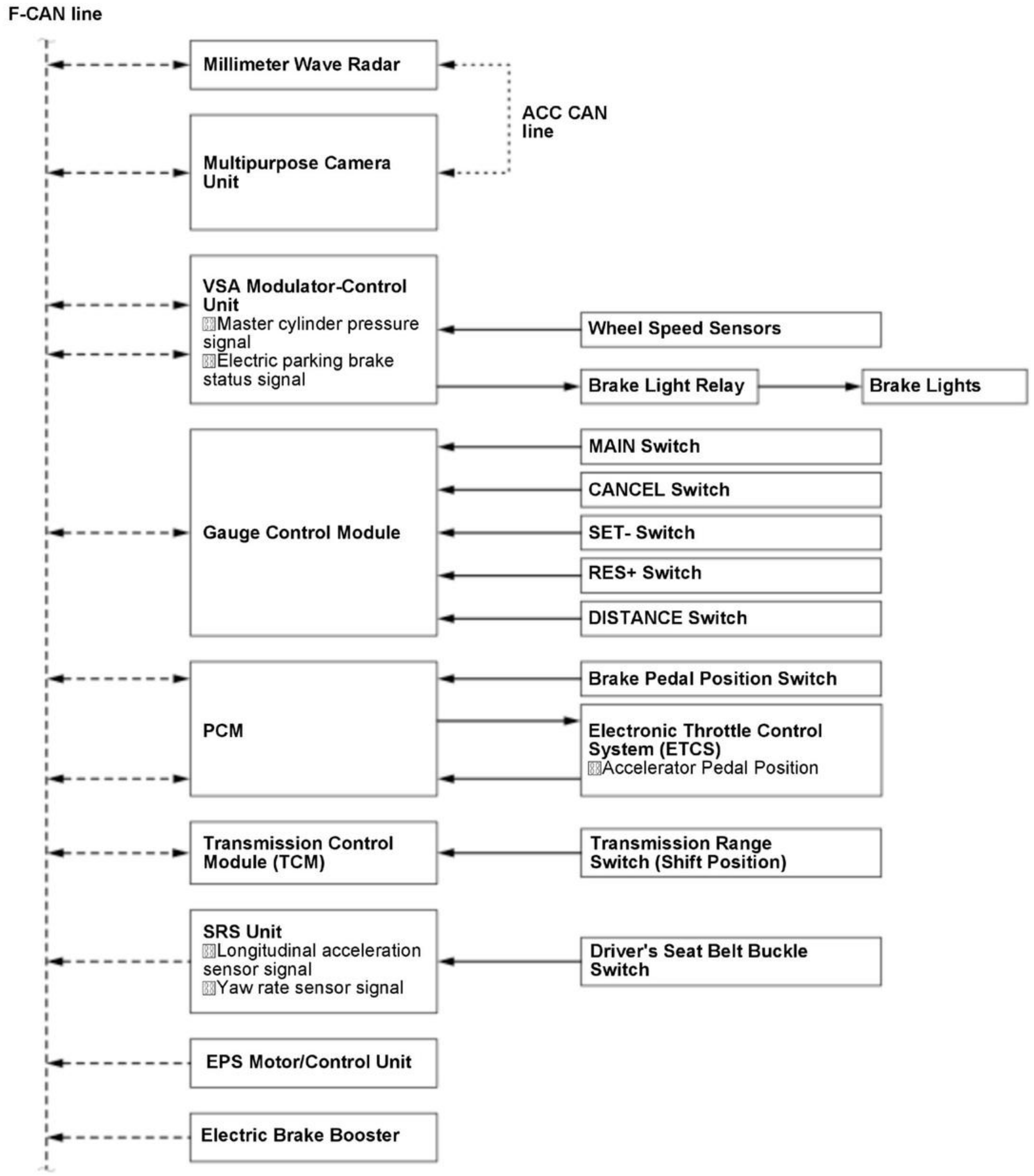
F-CAN line
Millimeter Wave Radar
ACC CAN line
Multipurpose Camera Unit
VSA Modulator-Control Unit
•Master cylinder pressure signal
•Electric parking brake status signal
Wheel Speed Sensors
Brake Light Relay
Brake Lights
Gauge Control Module
MAIN Switch
CANCEL Switch
SET- Switch
RES+ Switch
DISTANCE Switch
PCM
Brake Pedal Position Switch
Electronic Throttle Control System (ETCS)
•Accelerator Pedal Position
Transmission Control Module (TCM)
Transmission Range Switch (Shift Position)
SRS Unit
•Longitudinal acceleration sensor signal
•Yaw rate sensor signal
Driver's Seat Belt Buckle Switch
EPS Motor/Control Unit
Electric Brake Booster

F-CAN Communication Data

Millimeter Wave Radar Receiving Signal:

Originating Unit	Signal Name
EPS motor/control unit	• Steering angle signal • Steering angle neutral position learning information
Gauge control module	• ACC combination switch signal (switch failure information) • Customization signal
Multipurpose camera unit	• Object recognition information

Originating Unit	Signal Name
	• Multipurpose camera unit failure information • Traffic lane information

*: With Auto Idle Stop System

Originating Unit	Signal Name
PCM	• PCM failure information for ACC system • Accelerator pedal position (APP) sensor control state signal • Brake pedal position switch signal • Shift position status • Transmission failure information for ACC system • Vehicle speed signal for transmission • Auto idle stop operating information*
SRS unit	• Driver's seat belt buckle switch status, Driver's seat belt buckle switch failure information • Longitudinal acceleration sensor signal, Longitudinal acceleration sensor failure information • Yaw rate sensor signal, Yaw rate sensor failure information
VSA modulator-control unit	• Brake control state signal • Brake light relay failure information • Electric parking brake status signal, Electric parking brake system failure information • Master cylinder pressure signal, Master cylinder pressure sensor failure information • VSA system failure information for ACC system • Wheel speed sensor signals, Wheel speed sensor failure information
Electric brake booster	• Driver brake operation Information • Electric brake booster system failure information

*: With Auto Idle Stop System

Millimeter Wave Radar Transmitting Signal:

Destination Unit	Signal Name
EPS motor/control unit	---
Gauge control module	• ACC system failure information • Buzzer request signal • Customization information • Multi information display (MID) screen requirement: • • - ACC indicator • - ACC activation indicator • - ACC system indicates for self-diagnostic function
Multipurpose camera unit	Vehicle information
PCM	• ACC system failure information • Shift position down request signal • Engine torque request • Auto idle stop function disabling request signal*
SRS unit	---
VSA modulator-control unit	• Deceleration request • ACC system failure information • Electric parking brake actuation request signal • Stop hold request
Electric brake booster	---

*: With Auto Idle Stop System

COLLISION MITIGATION BRAKING SYSTEM (CMBS) DESCRIPTION

The CMBS can detect a possible collision and assist brake operation to reduce the impact on occupants and vehicle damage.

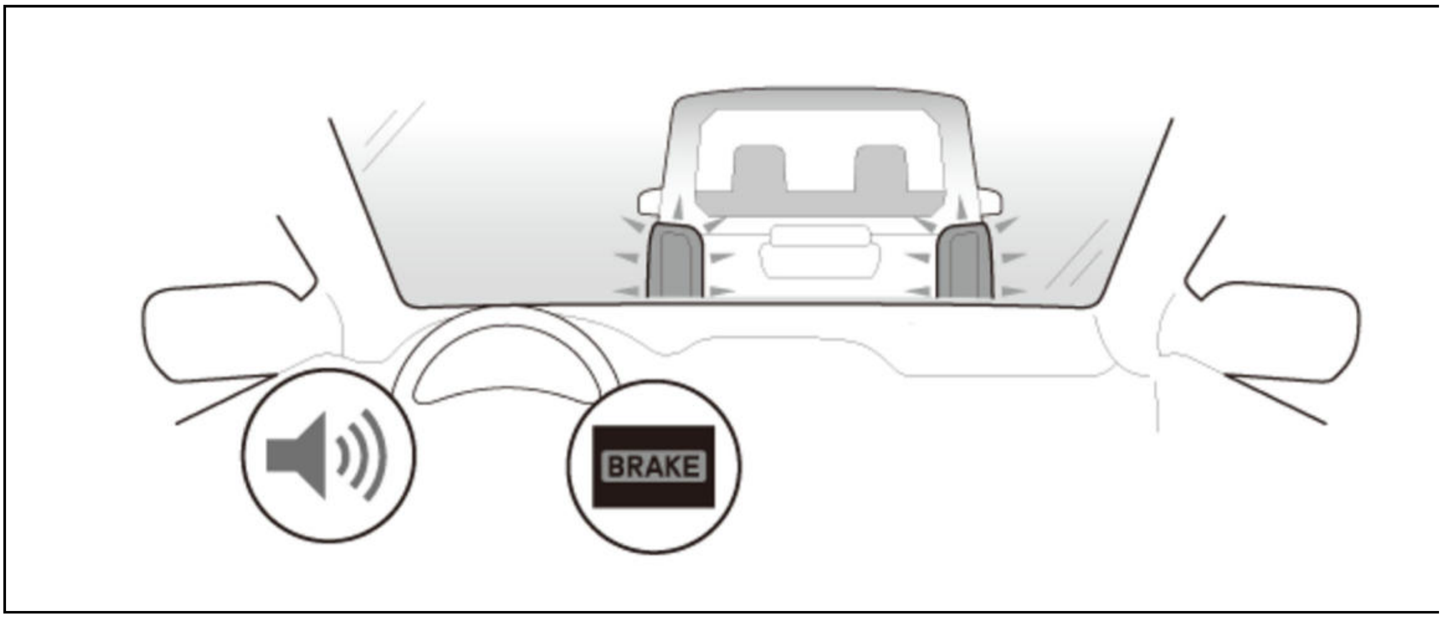

CMBS Operation Sequence

- When a speed difference between your vehicle and the vehicle ahead or pedestrian in front of your vehicle is greater than 3 mph (5 km/h) and the system detects a collision, the system issues a warning message on the Multi Information Display (MID) and sets an alarm off.
- When your vehicle is getting close to the vehicle ahead or the pedestrian ahead of your vehicle, the system issues a warning message on the MID and sets an alarr the warning to the driver that there is a possible collision (First step).
- When your vehicle gets even closer to the vehicle ahead or pedestrian ahead of your vehicle and the system anticipates a collision, CMBS applies light braking fo issuing the MID warning and setting an alarm off (Second step).
- When the system determines that a collision is inevitable, the CMBS applies strong brake force while issuing the MID warning and setting an alarm off (Third ste

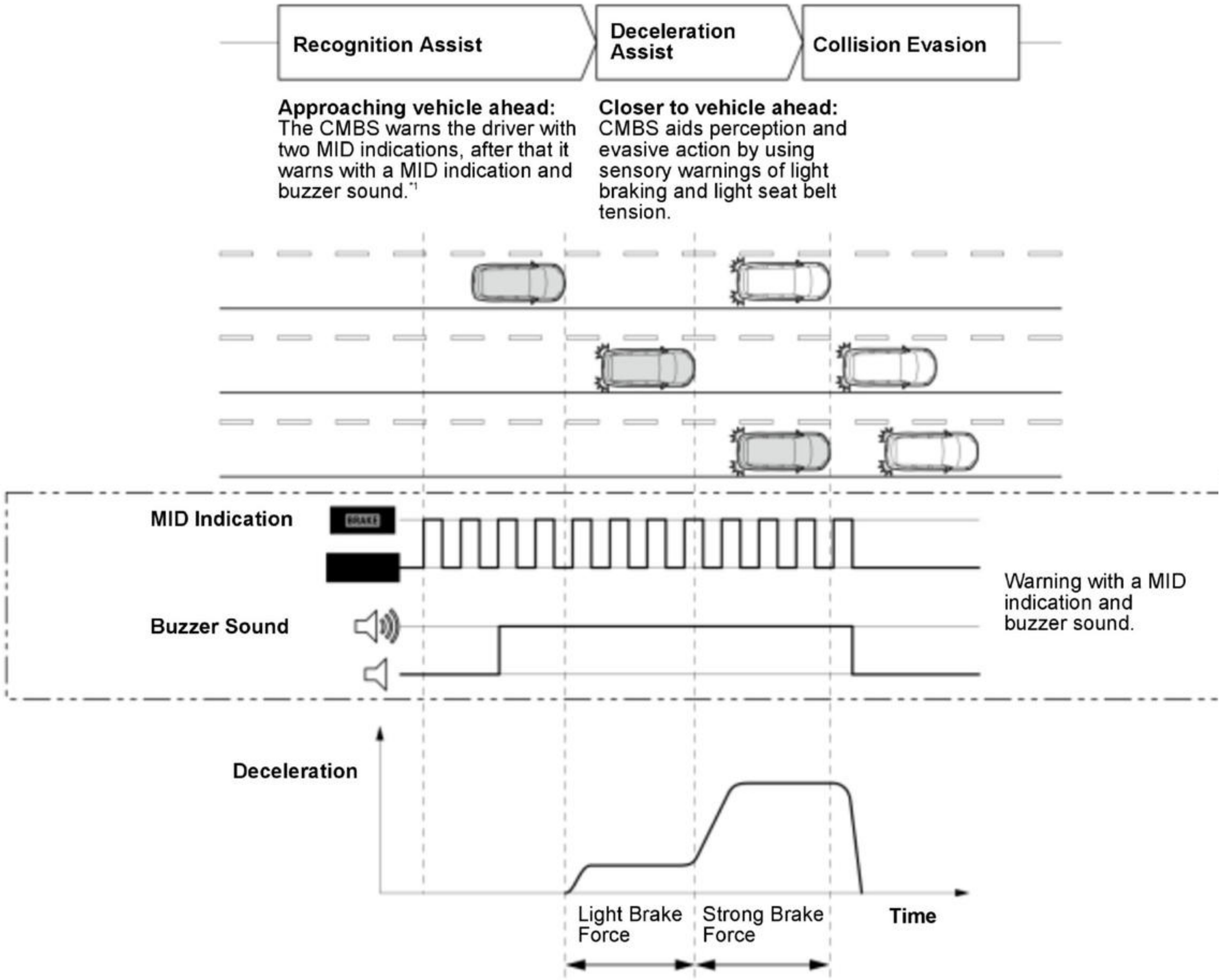
Recognition Assist
Deceleration Assist
Collision Evasion
Approaching vehicle ahead: The CMBS warns the driver with two MID indications, after that it warns with a MID indication and buzzer sound.*1
Closer to vehicle ahead: CMBS aids perception and evasive action by using sensory warnings of light braking and light seat belt tension.
MID Indication
BRAKE
Buzzer Sound
Warning with a MID indication and buzzer sound.
Deceleration
Light Brake Force
Strong Brake Force
Time

*1: Normally the alarm buzzer goes off after the MID warning message appears but they may be issued at the same time due to driving and weather conditions.

- The multipurpose camera unit records the number of operations from vehicle ON mode to OFF (LOCK) mode. When the limit for the number of operations is exc "excessive CMBS operation" is judged, the CMBS function is disabled, the warning indicator comes on and DTCs are stored. The limit for the number of operatic according to the CMBS operation conditions.
- When the multipurpose camera is malfunctioning (including a temporary function stop), CMBS does not function.

Operation Conditions

B	Vehicle Ahead	Opposite Vehicle	Pedestrian
Conditions for the object	Passenger vehicles, subcompact, or large vehicle (The system may have difficulty recognizing two wheeled vehicles, like motorcycles, or other unusual body styles. The system will function as designed if the vehicles are detected.)		The system uses analysis metho using preprogrammed human fig patterns to detect pedestrians. (heights needs to be approximat 1 to 2 meters for the system to recognize figures as pedestrians • Pedestrians behind the vehicle, and persons cross the road. • • -

B		Vehicle Ahead	Opposite Vehicle	Pedestrian
				In some cases, pers crossing the road m not be detected if th jump out onto the r or are running. - - Depending on shap and material, huma shaped posters or si along the road may detected.
System operation conditions	Operation vehicle speed	About 3 mph (5 km/h) or more	Between about 3 mph (5 km/h) and 62 mph (100 km/h).	
	Relative velocity	About 3 mph (5 km/h) or more	About 9 mph (15 km/h) or more	About 3 mph (5 km/h) or more
	Environment conditions*	• There is sufficient visibility and light available for the multipurpose camera to recognize objects • In environments where millimeter wave transmission/reception is not blocked (Some weather conditions such as fog, snowfall may have impact on system operation)		

*: For more details on environmental conditions and objects that are hard to be recognized, refer to the owner's manual.

COLLISION MITIGATION BRAKING SYSTEM (CMBS) DESCRIPTION - SYSTEM DIAGRAM

The system diagram of the CMBS is shown below.

For locations of each component on the vehicle, refer to Component Location Index:

- EPS motor/control unit
- Gauge control module
- Millimeter wave radar
- Multipurpose camera unit
- PCM
- SRS unit
- VSA modulator-control unit

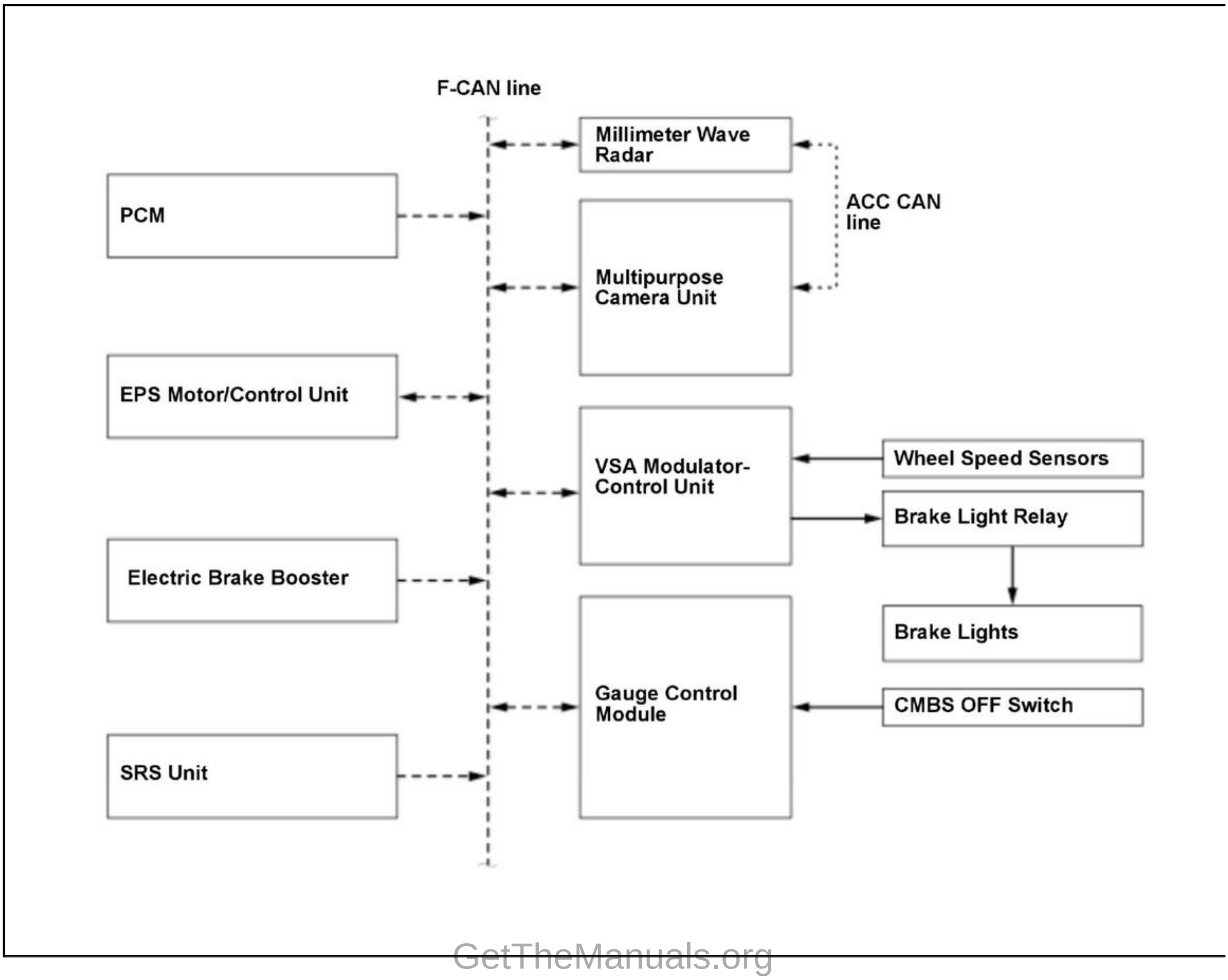
F-CAN line
Millimeter Wave Radar
PCM
ACC CAN line
Multipurpose Camera Unit
EPS Motor/Control Unit
VSA Modulator-Control Unit
Wheel Speed Sensors
Brake Light Relay
Electric Brake Booster
Brake Lights
Gauge Control Module
CMBS OFF Switch
SRS Unit

F-CAN Communication Data

Millimeter Wave Radar Receiving Signal:

Originating Unit	Signal Name
EPS motor/control unit	• EPS system failure information • Steering angle signal • Steering angle neutral position learning information
Gauge control module	• CMBS OFF switch status information • Gauge control module failure information • Customized information
Multipurpose camera unit	• Object recognition information • Multipurpose camera unit failure information

Originating Unit	Signal Name
PCM	• Accelerator pedal position (APP) sensor signal • Brake pedal position switch signal • Shift position status • Transmission failure information
SRS unit	• Yaw rate sensor signal • Yaw rate sensor failure information • Longitudinal acceleration sensor signal
VSA modulator-control unit	• Master cylinder pressure signal • VSA system actuation information • VSA system failure information • Wheel speed sensor signals
Electric brake booster	Electric brake booster system failure information

Millimeter Wave Radar Transmitting Signal:

Destination Unit	Signal Name
EPS motor/control unit	---
Gauge control module	• Buzzer request signal • CMBS status information • Multi information display (MID) screen requirement: • • - CMBS indicator • - CMBS indicates for self-diagnostic function • - Customized information
Multipurpose camera unit	Vehicle information
SRS unit	CMBS operating information
VSA modulator-control unit	• Automatic brake actuation request signal • Brake light lighting control request signal • CMBS failure information

CRUISE CONTROL SYSTEM DESCRIPTION

The cruise control system maintains a constant vehicle speed without operating the accelerator pedal.

Operation

To operate the cruise control system, the driver must first turn on the CRUISE/MAIN switch. With the CRUISE/MAIN switch on, the cruise main indicator appears in t control module, and the gauge control module will send cruise control commands to the PCM via the F-CAN line. The speed value is set at the moment a drive releases button on the combination switch. Once the speed is set, the cruise control system maintains this speed in the system memory until: a new speed replaces the current val CRUISE/MAIN switch is turned off, the brake pedal is depressed, or the CANCEL button is pressed.The driver can also increase and decrease the set speed by pressing and minus (-) buttons on the combination switch. To maintain the set speed, the PCM monitors the throttle actuator position using the throttle position sensor and contro by commanding the throttle actuator to open and close as needed.

The system changes throttle inputs depending on whether the vehicle's ECON mode is on or off. When the ECON mode is on, the system limits the throttle position to excessive throttle application to improve fuel economy when there is a change in vehicle load - for example, it will take longer for the vehicle to accelerate to the set spe applying throttle to maintain speed when climbing a hill. When the ECON mode is off, the vehicle will accelerate quicker to compensate for the change in vehicle load.

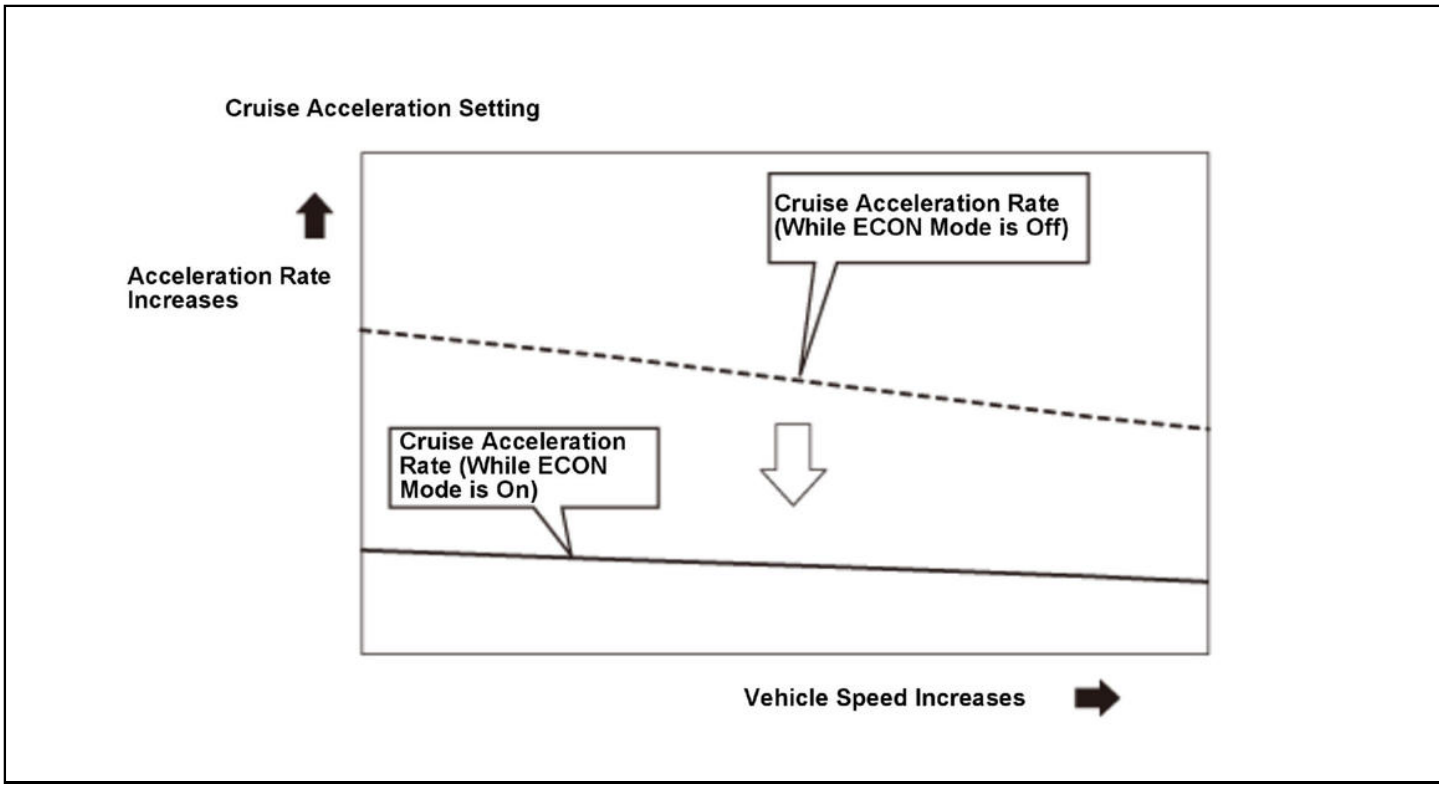

CRUISE CONTROL SYSTEM DESCRIPTION - SYSTEM DIAGRAM

The system diagram of the cruise control system is shown below.

For locations of each component on the vehicle, refer to Component Location Index:

- **Brake pedal position switch**
- **Cruise control combination switch**
- **Gauge control module**
- **PCM**
- **Throttle body (Throttle actuator, Throttle position (TP) sensor)**
- **Transmission range switch, CVT speed sensor**
- 1.5 L engine model: **Transmission control module (TCM)**

1.5 L engine model:

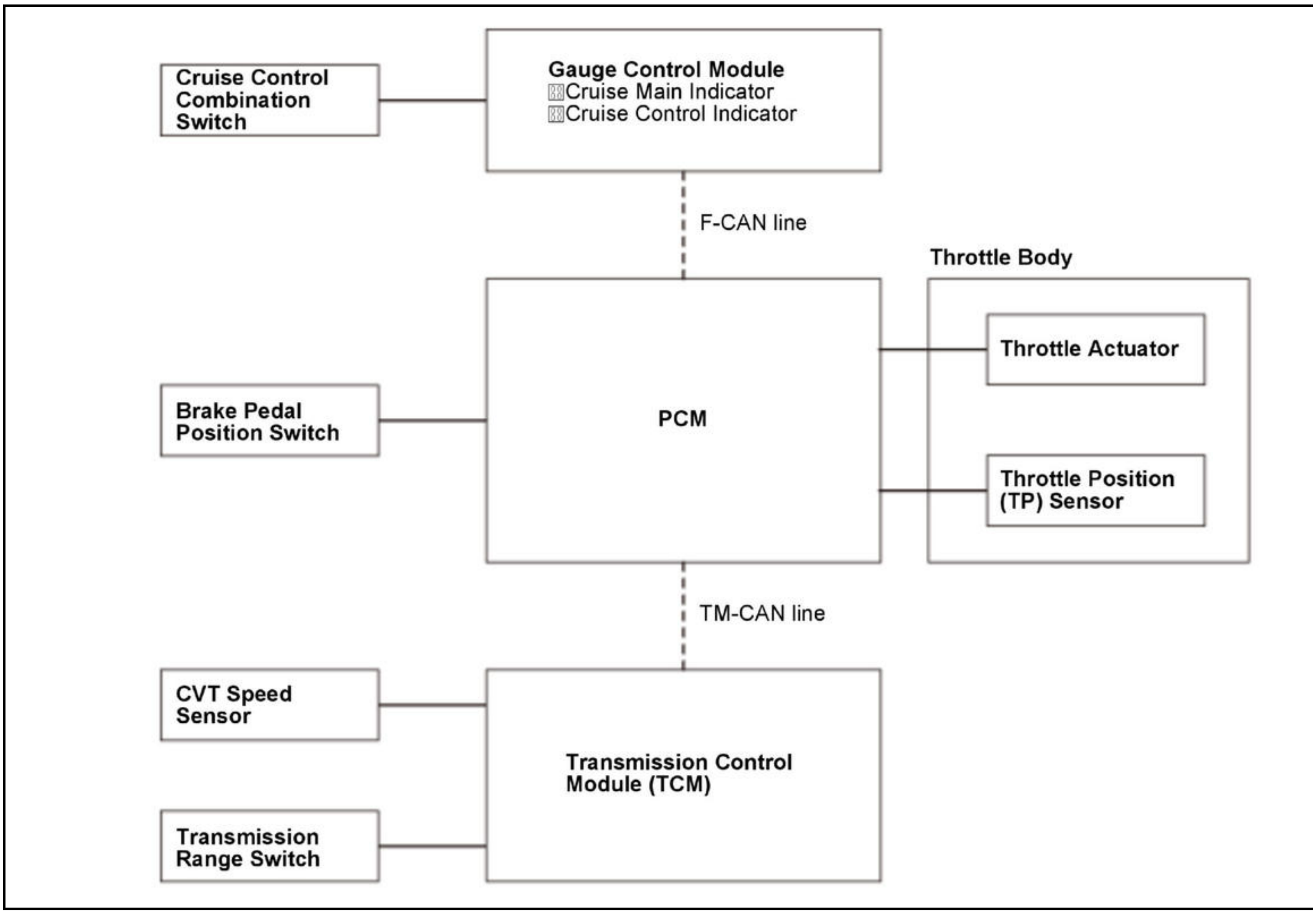
Cruise Control Combination Switch
Gauge Control Module
▨Cruise Main Indicator
▨Cruise Control Indicator
F-CAN line
Throttle Body
Throttle Actuator
Brake Pedal Position Switch
PCM
Throttle Position (TP) Sensor
TM-CAN line
CVT Speed Sensor
Transmission Control Module (TCM)
Transmission Range Switch

Except 1.5 L engine model:

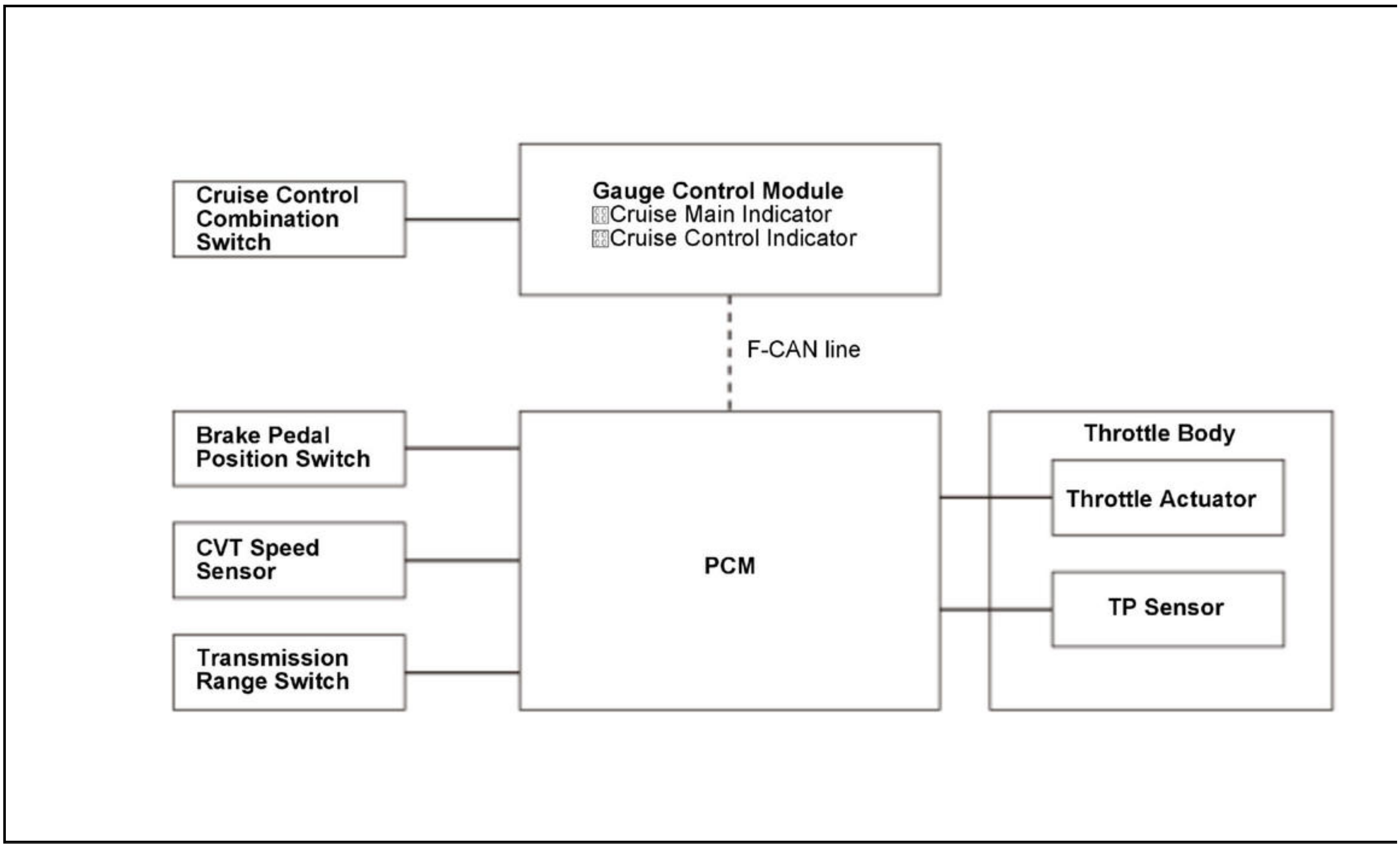
Cruise Control Combination Switch
Gauge Control Module
▨Cruise Main Indicator
▨Cruise Control Indicator
F-CAN line
Brake Pedal Position Switch
Throttle Body
Throttle Actuator
CVT Speed Sensor
PCM
TP Sensor
Transmission Range Switch

LANE KEEPING ASSIST SYSTEM (LKAS) DESCRIPTION

Lane Keeping Assist System (LKAS)

The LKAS uses the multipurpose camera to read the lane lines on both sides of the road. The multipurpose camera unit draws an imaginary line at the center between bo
and lane keeping assist control is performed by assisting the steering so that the vehicle is guided along this imaginary line near the center of the lane.The system gets su

when the system determines that the driver is not holding the steering wheel for a certain period of time while LKAS is in operation.

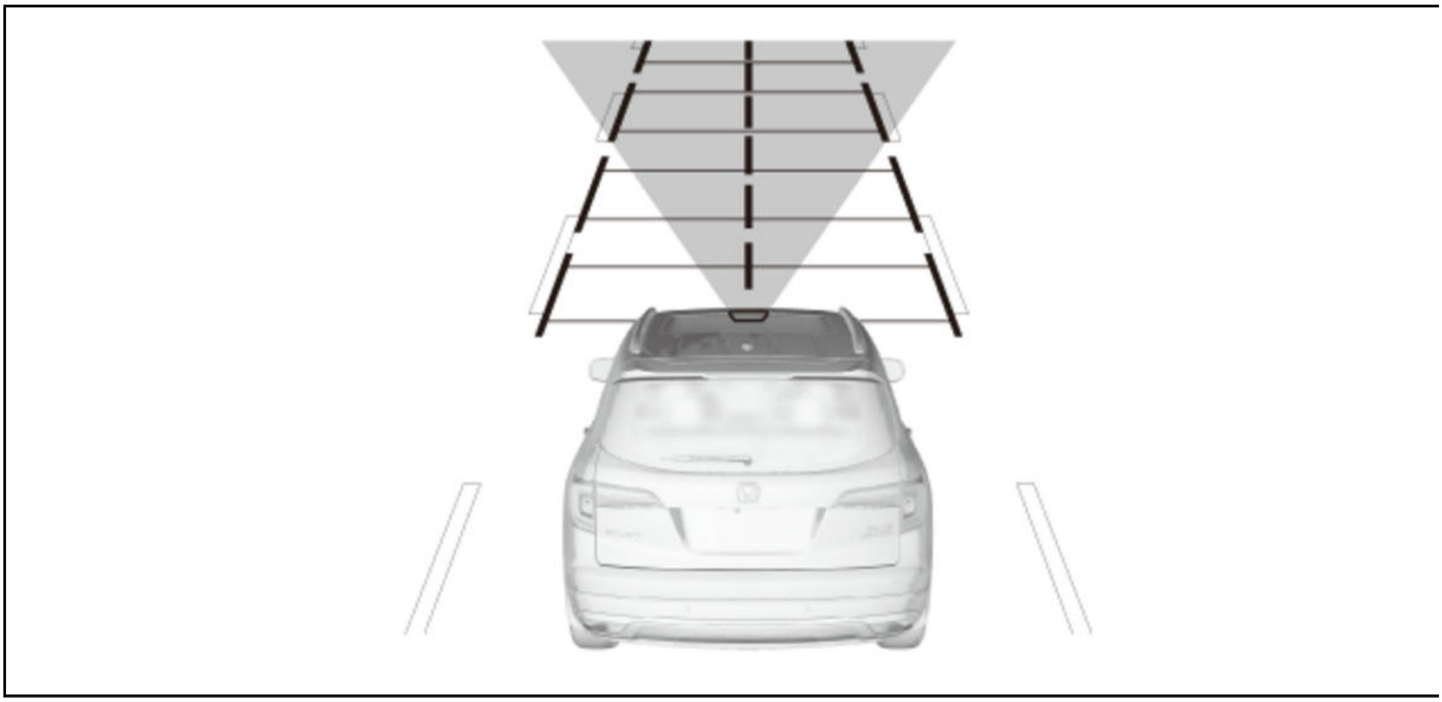

LKAS Inoperative Road Conditions

LKAS does not operate in the following road conditions (LKAS is inoperative while LDW continues to operate).

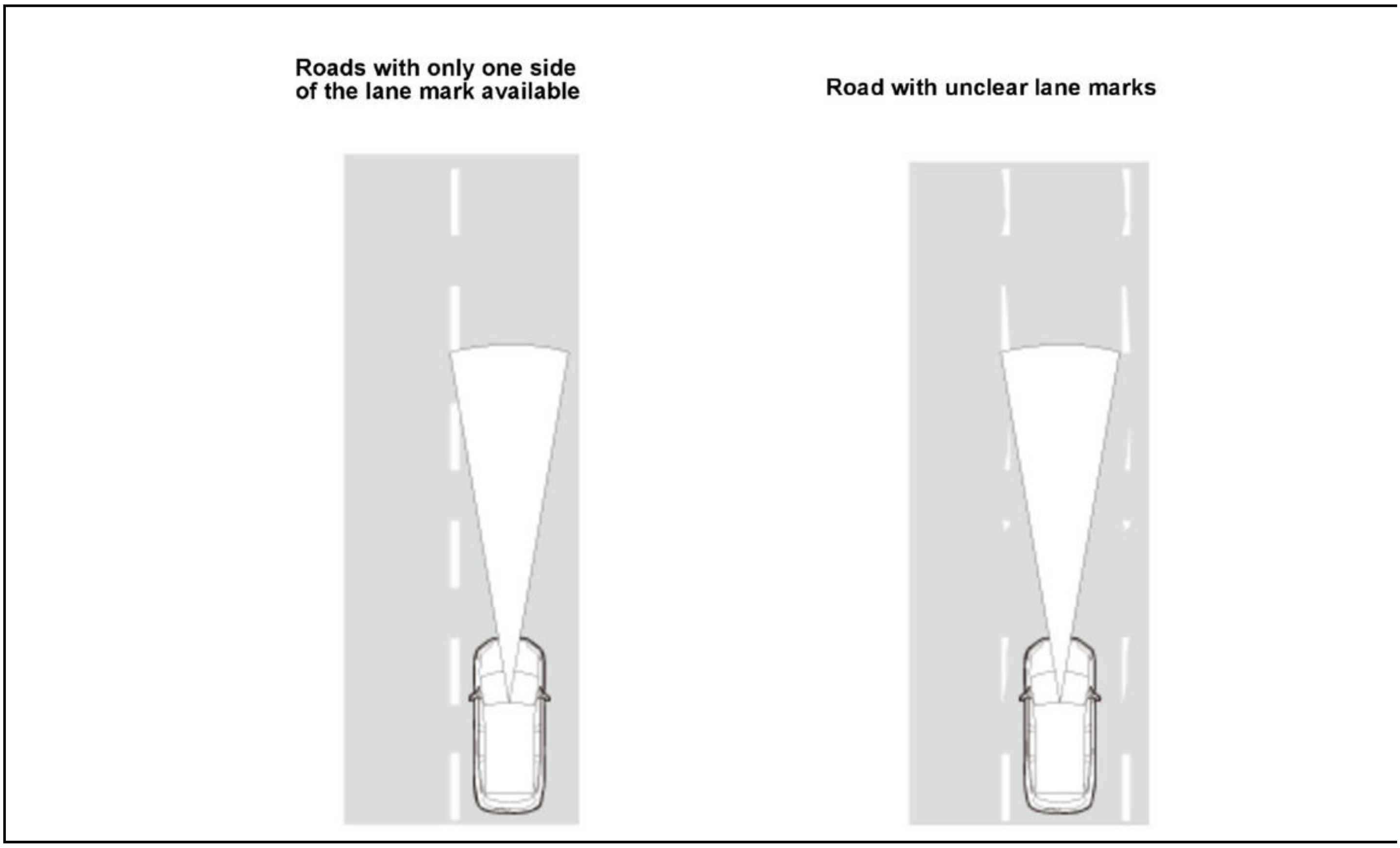
Roads with only one side of the lane mark available
Road with unclear lane marks

In case one side of lane mark is temporary missing (KA, KC models)

LKAS will continue to work even when one side of the lane mark is missing temporarily such as an intersection or a junction.

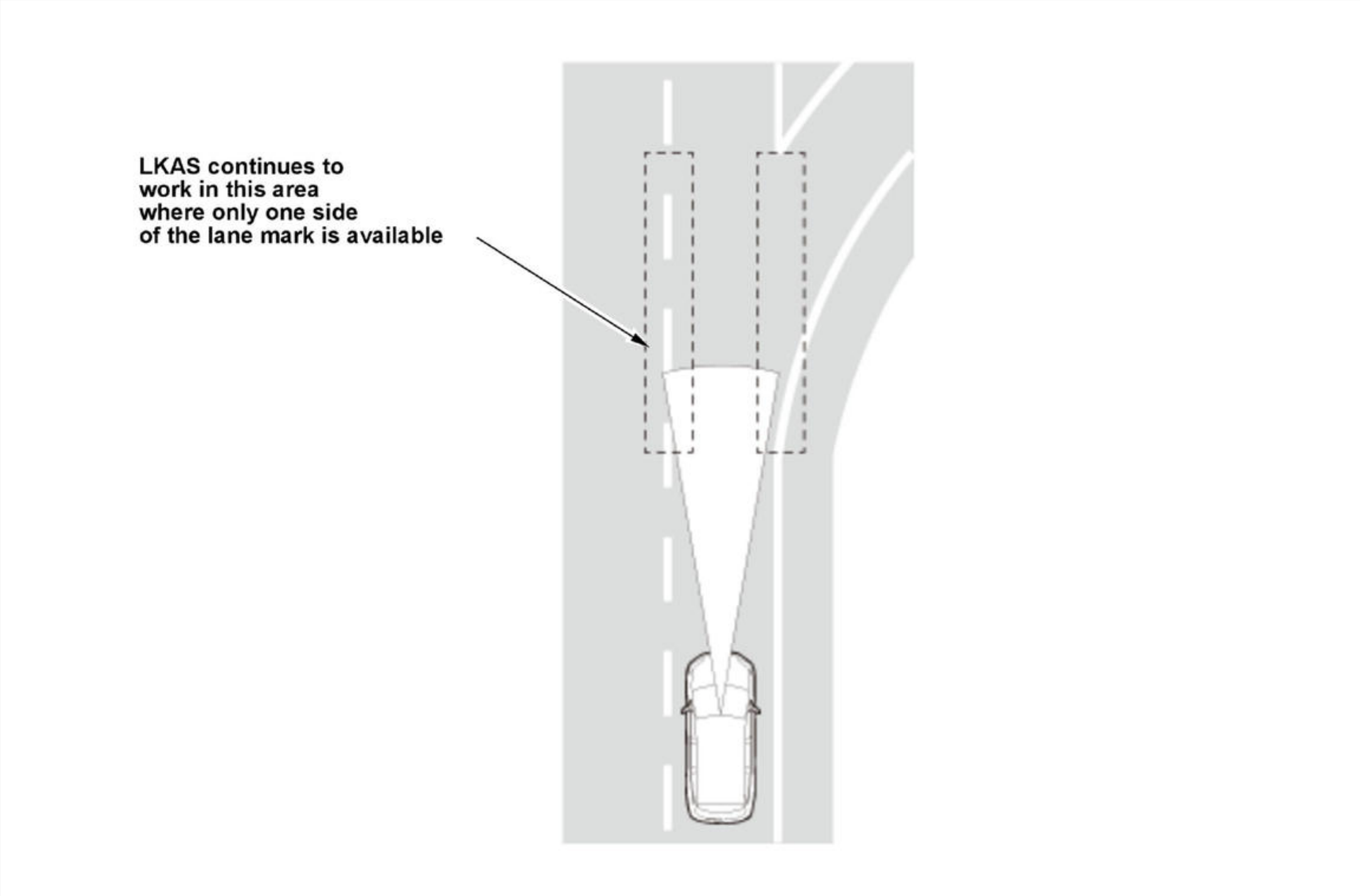

Operation Conditions

System Operation Conditions	Operation under conditions where lane line recognition is possible on both sides (Lane line recognition may not be possible in bad weather, snow-covered roads, or areas with backlight).	
	Operation vehicle speed	45 - 90 mph (72 - 145 km/h)
	Object lane line types	Broken lines or solid lines on the road (white and yellow)
	Driver operation	No operation when the driver's intent to act is recognized by movements of the steering wheel, brake pedal, turn signal switch, etc.
LKAS Cancel Alarm	When the LKAS system is canceled, a buzzer sounds ("beep") to warn the driver. The alarm can be set ON/OFF.	

LANE KEEPING ASSIST SYSTEM (LKAS) DESCRIPTION - SYSTEM DIAGRAM

The system diagram of the LKAS is shown below.

For locations of each component on the vehicle, refer to Component Location Index:

- **EPS motor/control unit**
- **Gauge control module**
- **Millimeter wave radar**
- **Multipurpose camera unit**
- **PCM**
- **SRS unit**
- **VSA modulator-control unit**

The LKAS for this vehicle uses the multipurpose camera unit to calculate camera image information, and sends the LKAS indicated value to the control unit via the mil radar.

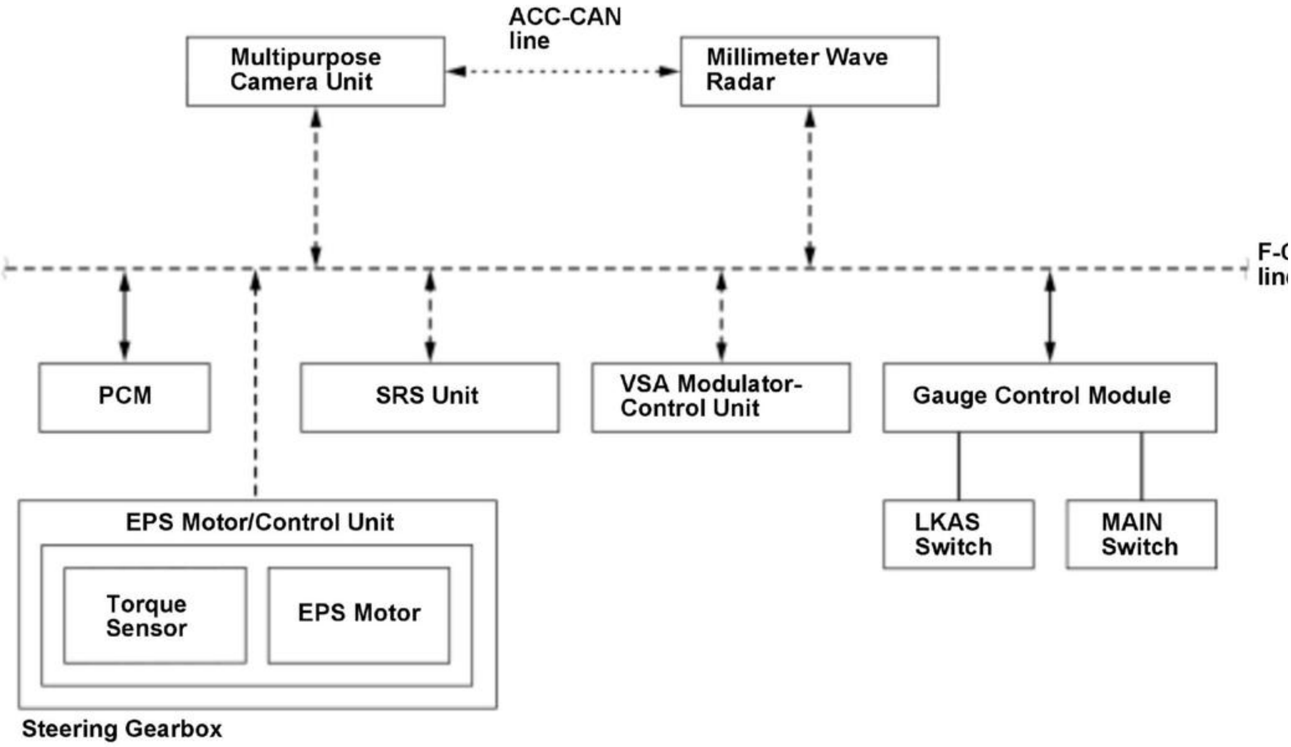
ACC-CAN line
Multipurpose Camera Unit
Millimeter Wave Radar
F-C
lin
PCM
SRS Unit
VSA Modulator-Control Unit
Gauge Control Module
LKAS Switch
MAIN Switch
EPS Motor/Control Unit
Torque Sensor
EPS Motor
Steering Gearbox

F-CAN Communication Data

Multipurpose Camera Unit Receiving Signal:

Originating Unit	Signal Name
EPS motor/control unit	• EPS system failure information • Steering angle neutral position learning information • Steering angle signal • Torque sensor signal

Originating Unit	Signal Name
Gauge control module	• Customization signal • MAIN switch signal • LKAS switch signal • Turn signal lights operating status • Wiper operating status
PCM	• Brake pedal position switch signal • PCM failure information • Vehicle speed signal
SRS unit	• Yaw rate sensor signal • Yaw rate sensor failure information
VSA modulator-control unit	• VSA system actuation information • VSA system failure information • Wheel speed sensor signals

Multipurpose Camera Unit Transmitting Signal:

Destination Unit	Signal Name
EPS motor/control unit	• Integrated driver support system failure information • LKAS control command

Destination Unit	Signal Name

Gauge control module	• Buzzer request signal
	• Customization information
	• Integrated driver support system failure information
	• Multi information display (MID) screen requirement:
	•
	  • -
	  LKAS indicator
	  • -
	  LKAS activation indicator
	  • -
	  LKAS indicates for self-diagnostic function

PCM	---
SRS unit	---
VSA modulator-control unit	---

INPUT TEST

CRUISE CONTROL (ECM/PCM) INPUT TEST

NOTE: Always make sure that you have the latest HDS software.

1. Connect the HDS

2. Select PGM-FI system and check the diagnostic trouble code (DTC) and note it. Also check the on-board snapshot data, and download any data found. Then refer to t DTC's troubleshooting, and begin the appropriate troubleshooting procedure.

3. If no DTCs are found, do the following tests while monitoring parameters in the DATA LIST with the HDS.If the input tests prove OK, replace the PCM

.**NOTE:** Intermittent failures are often caused by loose circuit connections. While monitoring cruise control inputs, flex the circuit wires, and note if any of the test resu

Signal to be tested	Test condition	Parameter: Desired result	Possible cause if result is not obtained
Cruise control system switch status	Cruise control combination switch buttons are not pressed	CRUISE CONTROL SYSTEM SWITCH STATUS in the HDS data list should indicate DEFAULT when the cruise control combination switch buttons are not pressed.	If the CRUISE CONTROL SYSTEM SWITCH STATUS in the HDS d list indicates SIGNAL LOST, check as shown: • Check for DTCs in the PGM-FI system and do the appropriate troubleshooting. • Faulty gauge control module • Faulty cruise control combination switch • An open in the wire between the gauge control module and the cruise control combination switch • A short to power in the wire between the gauge control module a the cruise control combination switch when the combination ligh switch is turned on If the CRUISE CONTROL SYSTEM SWITCH STATUS in the HDS d list indicates SIGNAL SHORT, check as shown: • Check for DTCs in the PGM-FI system and do the appropriate troubleshooting • Faulty gauge control module • Faulty cruise control combination switch • A short to ground in the wire between the gauge control module a the cruise control combination switch If the CRUISE CONTROL SYSTEM SWITCH STATUS in the HDS d list indicates a different status, check for a faulty cruise control combination switch.
	CRUISE switch is pressed	CRUISE CONTROL SYSTEM SWITCH STATUS in the HDS data list should indicate MAIN SW when the CRUISE switch is pressed.	
	CANCEL switch is pressed	CRUISE CONTROL SYSTEM SWITCH STATUS in the HDS data list should indicate CANCEL SW when the CANCEL switch is pressed.	
	SET- switch is pressed	CRUISE CONTROL SYSTEM SWITCH STATUS in the HDS data list should indicate SET SW when the SET- switch is pressed.	
	RES+ switch is pressed	CRUISE CONTROL SYSTEM SWITCH STATUS in the HDS data list should indicate RES SW when the RES+ switch is pressed.	

Signal to be tested	Test condition	Parameter: Desired result	Possible cause if result is not obtained
Cruise control indicator signal	Start the engine, press the CRUISE button on and drive the vehicle above 25 mph (40 km/h) with the cruise control set and cancel the cruise control	CRUISE INDICATOR should indicate ON when the cruise control is set and OFF when the cruise control is canceled.	• Faulty gauge control module • Faulty cruise control combination switch • An open in the wire between the gauge control module and the cruise control combination switch • A wire shorted to ground between the gauge control module and cruise control combination switch
Brake pedal position switch signal	Brake pedal is pressed, then released	CRUISE BRAKE SW should indicate OPEN when the brake pedal is pressed and CLOSE when the brake pedal is released.	• Faulty brake pedal position switch • Blown No. D21 (10 A) fuse in the under-dash fuse/relay box • An open in the wire between the PCM and the brake pedal positi switch • A wire shorted to ground or power between the PCM and the bra pedal position switch

CIRCUIT DIAGRAM

ADAPTIVE CRUISE CONTROL (ACC) CIRCUIT DIAGRAM (WITH AUTO IDLE STOP SYSTEM) (2020 2021)

With keyless access system

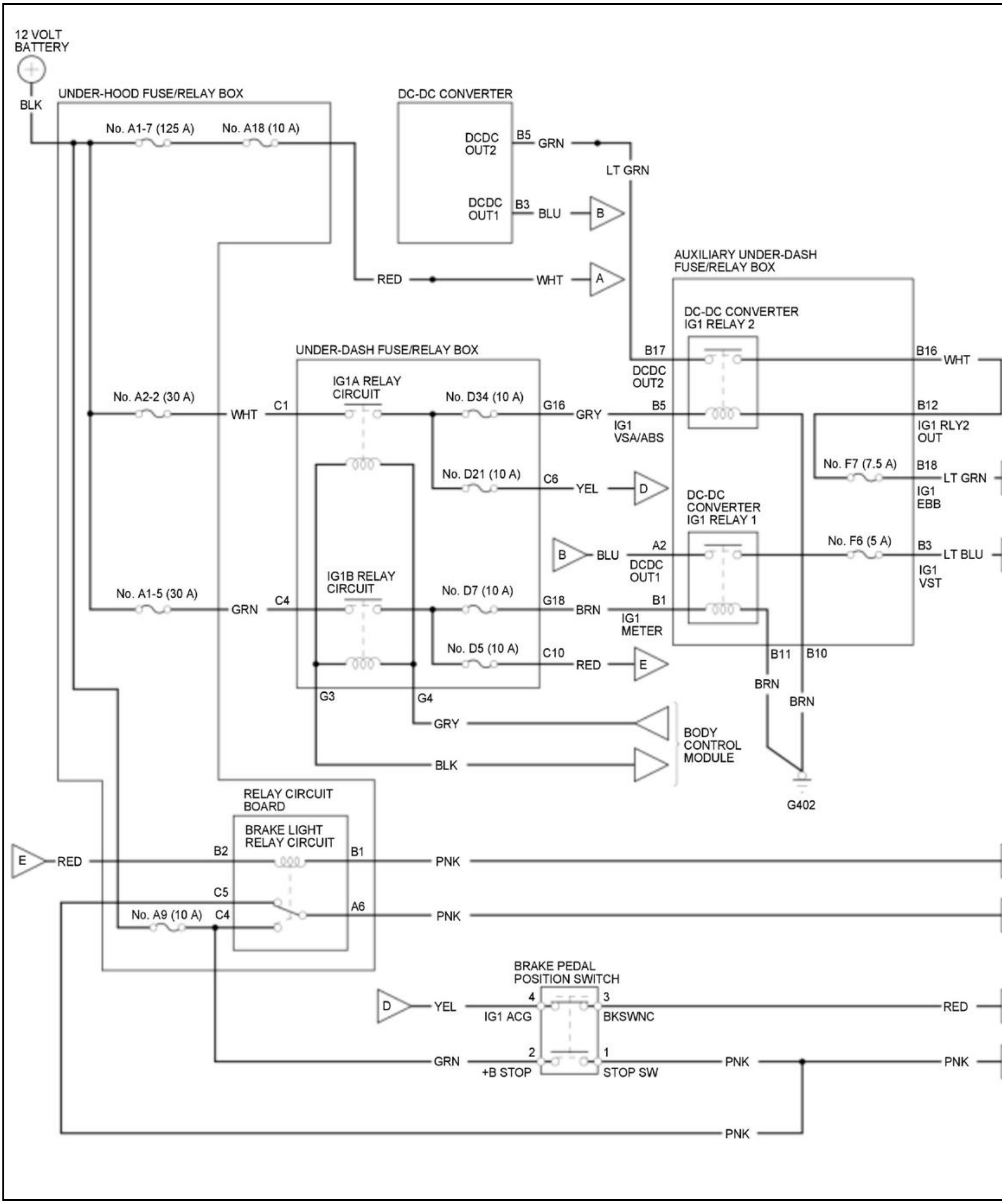

12 VOLT BATTERY
BLK
UNDER-HOOD FUSE/RELAY BOX
No. A1-7 (125 A)
No. A18 (10 A)
DC-DC CONVERTER
DCDC OUT2
B5
GRN
DCDC OUT1
B3
BLU
B
LT GRN
RED
WHT
A
AUXILIARY UNDER-DASH FUSE/RELAY BOX
DC-DC CONVERTER IG1 RELAY 2
B17
B16
WHT
DCDC OUT2
B5
B12
IG1 VSA/ABS
IG1 RLY2 OUT
UNDER-DASH FUSE/RELAY BOX
IG1A RELAY CIRCUIT
No. A2-2 (30 A)
WHT
C1
No. D34 (10 A)
G16
GRY
No. F7 (7.5 A)
B18
LT GRN
IG1 EBB
No. D21 (10 A)
C6
YEL
D
DC-DC CONVERTER IG1 RELAY 1
B
BLU
A2
No. F6 (5 A)
B3
LT BLU
DCDC OUT1
IG1 VST
IG1B RELAY CIRCUIT
No. A1-5 (30 A)
GRN
C4
No. D7 (10 A)
G18
BRN
B1
IG1 METER
No. D5 (10 A)
C10
RED
E
B11
B10
BRN
BRN
G3
G4
GRY
BLK
BODY CONTROL MODULE
G402
RELAY CIRCUIT BOARD
BRAKE LIGHT RELAY CIRCUIT
E
RED
B2
B1
PNK
C5
A6
No. A9 (10 A)
C4
PNK
BRAKE PEDAL POSITION SWITCH
D
YEL
4
IG1 ACG
3
BKSWNC
RED
GRN
2
+B STOP
1
STOP SW
PNK
PNK
PNK

Without keyless access system

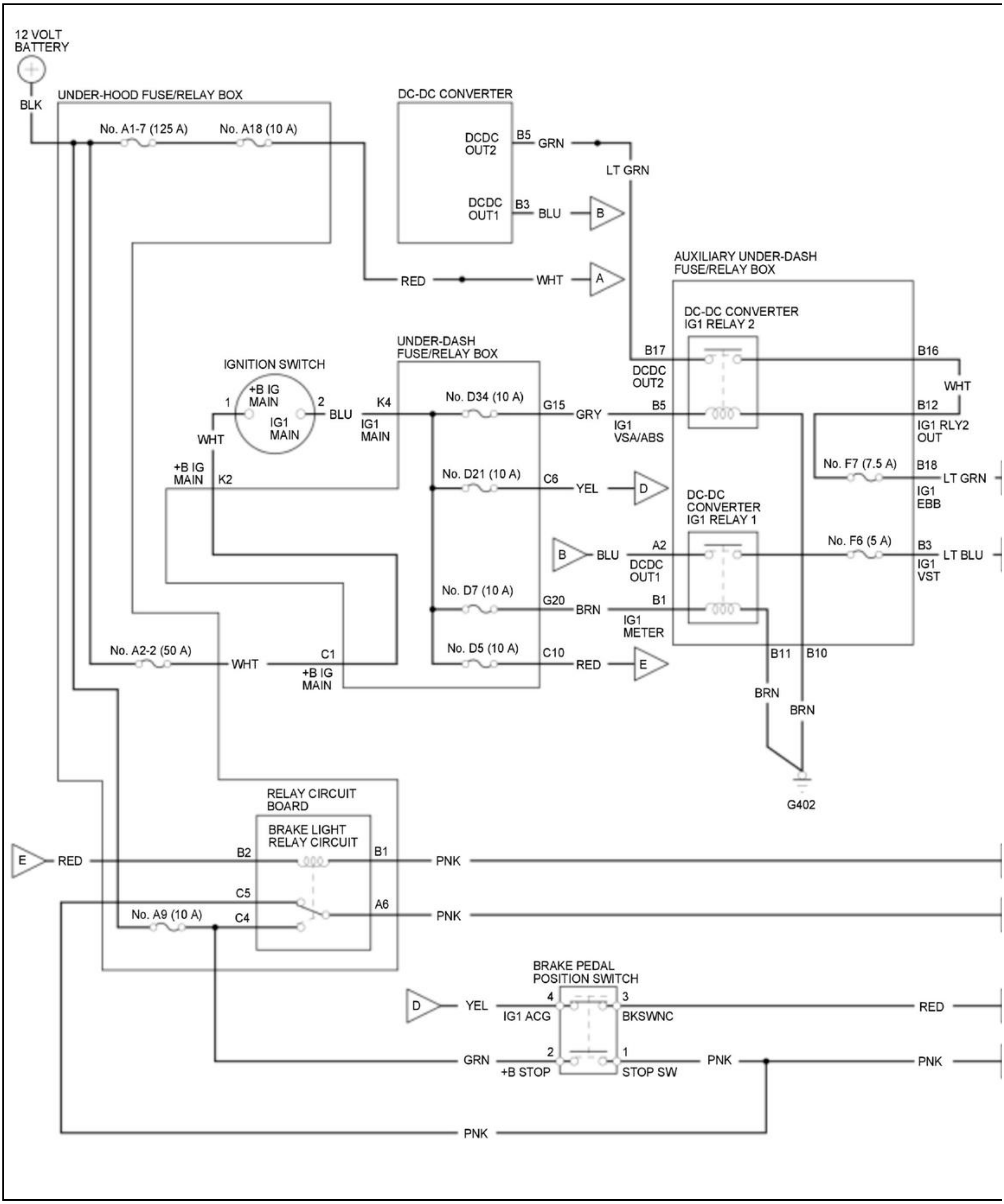
12 VOLT BATTERY
BLK
UNDER-HOOD FUSE/RELAY BOX
No. A1-7 (125 A)
No. A18 (10 A)
DC-DC CONVERTER
DCDC OUT2
B5
GRN
DCDC OUT1
B3
BLU
B
LT GRN
RED
WHT
A
AUXILIARY UNDER-DASH FUSE/RELAY BOX
DC-DC CONVERTER IG1 RELAY 2
B17
DCDC OUT2
B16
WHT
IGNITION SWITCH
UNDER-DASH FUSE/RELAY BOX
+B IG MAIN
IG1 MAIN
1
2
BLU
K4
IG1 MAIN
No. D34 (10 A)
G15
GRY
B5
IG1 VSA/ABS
B12
IG1 RLY2 OUT
WHT
+B IG MAIN
K2
No. D21 (10 A)
C6
YEL
D
No. F7 (7.5 A)
B18
LT GRN
IG1 EBB
DC-DC CONVERTER IG1 RELAY 1
B
BLU
A2
DCDC OUT1
No. F6 (5 A)
B3
LT BLU
IG1 VST
No. D7 (10 A)
G20
BRN
B1
IG1 METER
No. A2-2 (50 A)
WHT
C1
+B IG MAIN
No. D5 (10 A)
C10
RED
E
B11
B10
BRN
BRN
G402
RELAY CIRCUIT BOARD
BRAKE LIGHT RELAY CIRCUIT
E
RED
B2
B1
PNK
C5
No. A9 (10 A)
C4
A6
PNK
BRAKE PEDAL POSITION SWITCH
D
YEL
4
IG1 ACG
3
BKSWNC
RED
GRN
2
+B STOP
1
STOP SW
PNK
PNK
PNK

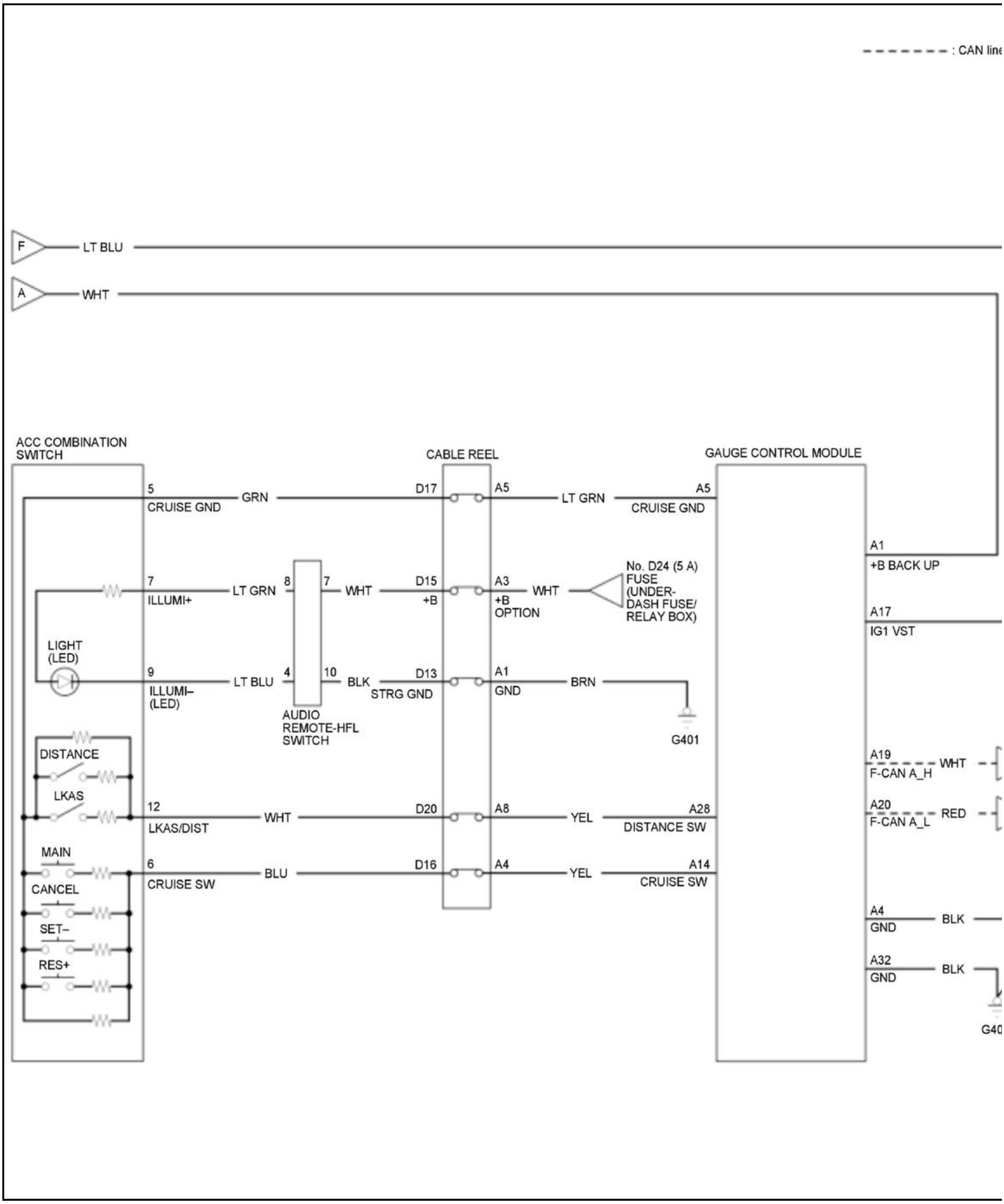
: CAN line
F
LT BLU
A
WHT
ACC COMBINATION SWITCH
CABLE REEL
GAUGE CONTROL MODULE
5
CRUISE GND
GRN
D17
A5
LT GRN
A5
CRUISE GND
A1
+B BACK UP
7
ILLUMI+
LT GRN
8
7
WHT
D15
+B
A3
+B OPTION
WHT
No. D24 (5 A) FUSE (UNDER-DASH FUSE/ RELAY BOX)
A17
IG1 VST
LIGHT (LED)
9
ILLUMI– (LED)
LT BLU
4
10
BLK
STRG GND
D13
A1
GND
BRN
G401
AUDIO REMOTE-HFL SWITCH
DISTANCE
LKAS
A19
F-CAN A_H
WHT
12
LKAS/DIST
WHT
D20
A8
YEL
A28
DISTANCE SW
A20
F-CAN A_L
RED
MAIN
6
CRUISE SW
BLU
D16
A4
YEL
A14
CRUISE SW
CANCEL
SET–
RES+
A4
GND
BLK
A32
GND
BLK
G40

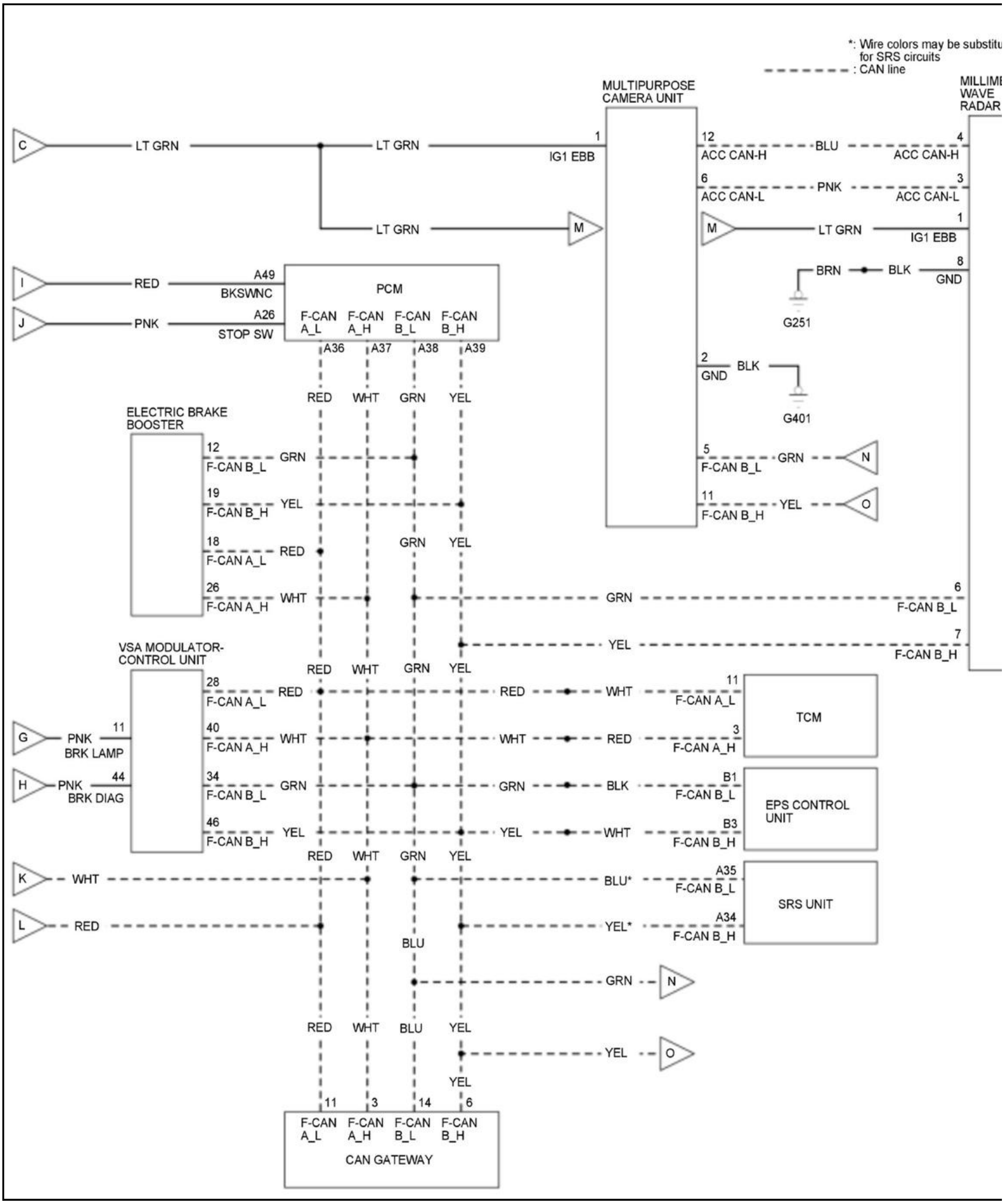
*: Wire colors may be substitu
for SRS circuits
: CAN line
MULTIPURPOSE CAMERA UNIT
MILLIME
WAVE
RADAR
C
LT GRN
LT GRN
1
IG1 EBB
12
ACC CAN-H
BLU
4
ACC CAN-H
6
ACC CAN-L
PNK
3
ACC CAN-L
LT GRN
M
M
LT GRN
1
IG1 EBB
BRN
BLK
8
GND
G251
I
RED
A49
BKSWNC
PCM
J
PNK
A26
STOP SW
F-CAN A_L
F-CAN A_H
F-CAN B_L
F-CAN B_H
A36
A37
A38
A39
RED
WHT
GRN
YEL
2
GND
BLK
G401
ELECTRIC BRAKE BOOSTER
12
F-CAN B_L
GRN
19
F-CAN B_H
YEL
18
F-CAN A_L
RED
26
F-CAN A_H
WHT
5
F-CAN B_L
GRN
N
11
F-CAN B_H
YEL
O
GRN
YEL
GRN
6
F-CAN B_L
YEL
7
F-CAN B_H
VSA MODULATOR-CONTROL UNIT
RED
WHT
GRN
YEL
28
F-CAN A_L
RED
RED
WHT
11
F-CAN A_L
TCM
G
PNK
BRK LAMP
11
40
F-CAN A_H
WHT
WHT
RED
3
F-CAN A_H
H
PNK
BRK DIAG
44
34
F-CAN B_L
GRN
GRN
BLK
B1
F-CAN B_L
EPS CONTROL UNIT
46
F-CAN B_H
YEL
YEL
WHT
B3
F-CAN B_H
RED
WHT
GRN
YEL
K
WHT
BLU*
A35
F-CAN B_L
SRS UNIT
L
RED
YEL*
A34
F-CAN B_H
BLU
GRN
N
RED
WHT
BLU
YEL
YEL
O
YEL
11
3
14
6
F-CAN A_L
F-CAN A_H
F-CAN B_L
F-CAN B_H
CAN GATEWAY

ADAPTIVE CRUISE CONTROL (ACC) CIRCUIT DIAGRAM (WITHOUT AUTO IDLE STOP SYSTEM)

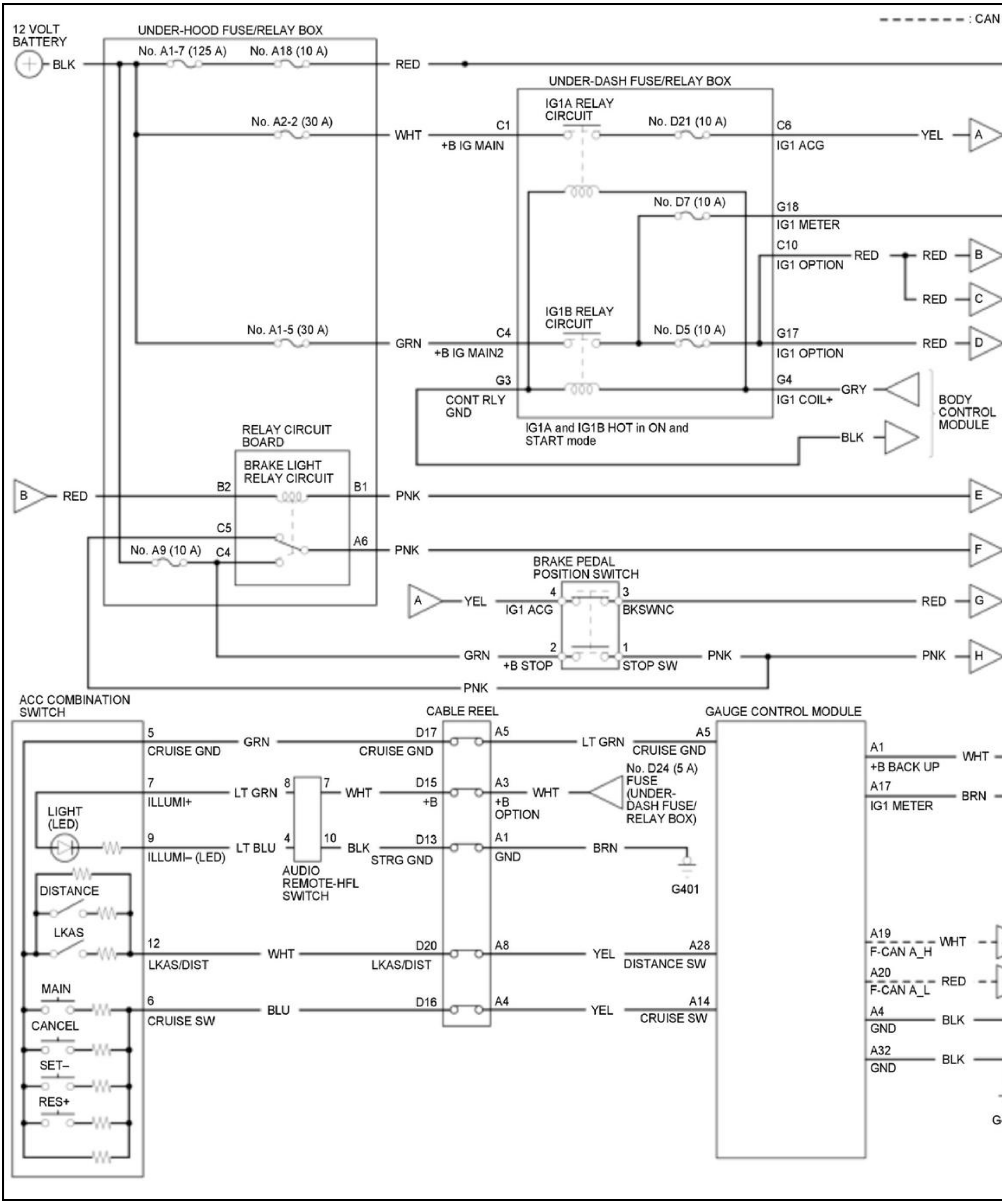

- - - - - - - : CAN
12 VOLT BATTERY
BLK
UNDER-HOOD FUSE/RELAY BOX
No. A1-7 (125 A)
No. A18 (10 A)
RED
No. A2-2 (30 A)
WHT
UNDER-DASH FUSE/RELAY BOX
IG1A RELAY CIRCUIT
C1
+B IG MAIN
No. D21 (10 A)
C6
IG1 ACG
YEL
A
No. D7 (10 A)
G18
IG1 METER
C10
IG1 OPTION
RED
RED
B
RED
C
IG1B RELAY CIRCUIT
No. A1-5 (30 A)
GRN
C4
+B IG MAIN2
No. D5 (10 A)
G17
IG1 OPTION
RED
D
G3
CONT RLY GND
G4
IG1 COIL+
GRY
BODY CONTROL MODULE
BLK
IG1A and IG1B HOT in ON and START mode
RELAY CIRCUIT BOARD
BRAKE LIGHT RELAY CIRCUIT
B
RED
B2
B1
PNK
E
C5
No. A9 (10 A)
C4
A6
PNK
F
BRAKE PEDAL POSITION SWITCH
A
YEL
4
IG1 ACG
3
BKSWNC
RED
G
GRN
2
+B STOP
1
STOP SW
PNK
PNK
H
PNK
ACC COMBINATION SWITCH
5
CRUISE GND
GRN
LIGHT (LED)
7
ILLUMI+
LT GRN
9
ILLUMI– (LED)
LT BLU
DISTANCE
LKAS
12
LKAS/DIST
WHT
MAIN
CANCEL
SET–
RES+
6
CRUISE SW
BLU
8
7
4
10
WHT
BLK
AUDIO REMOTE-HFL SWITCH
CABLE REEL
D17
CRUISE GND
D15
+B
D13
STRG GND
D20
LKAS/DIST
D16
A5
A3
+B OPTION
A1
GND
A8
A4
LT GRN
WHT
No. D24 (5 A) FUSE (UNDER-DASH FUSE/ RELAY BOX)
BRN
G401
YEL
YEL
GAUGE CONTROL MODULE
A5
CRUISE GND
A28
DISTANCE SW
A14
CRUISE SW
A1
+B BACK UP
WHT
A17
IG1 METER
BRN
A19
F-CAN A_H
WHT
A20
F-CAN A_L
RED
A4
GND
BLK
A32
GND
BLK
G

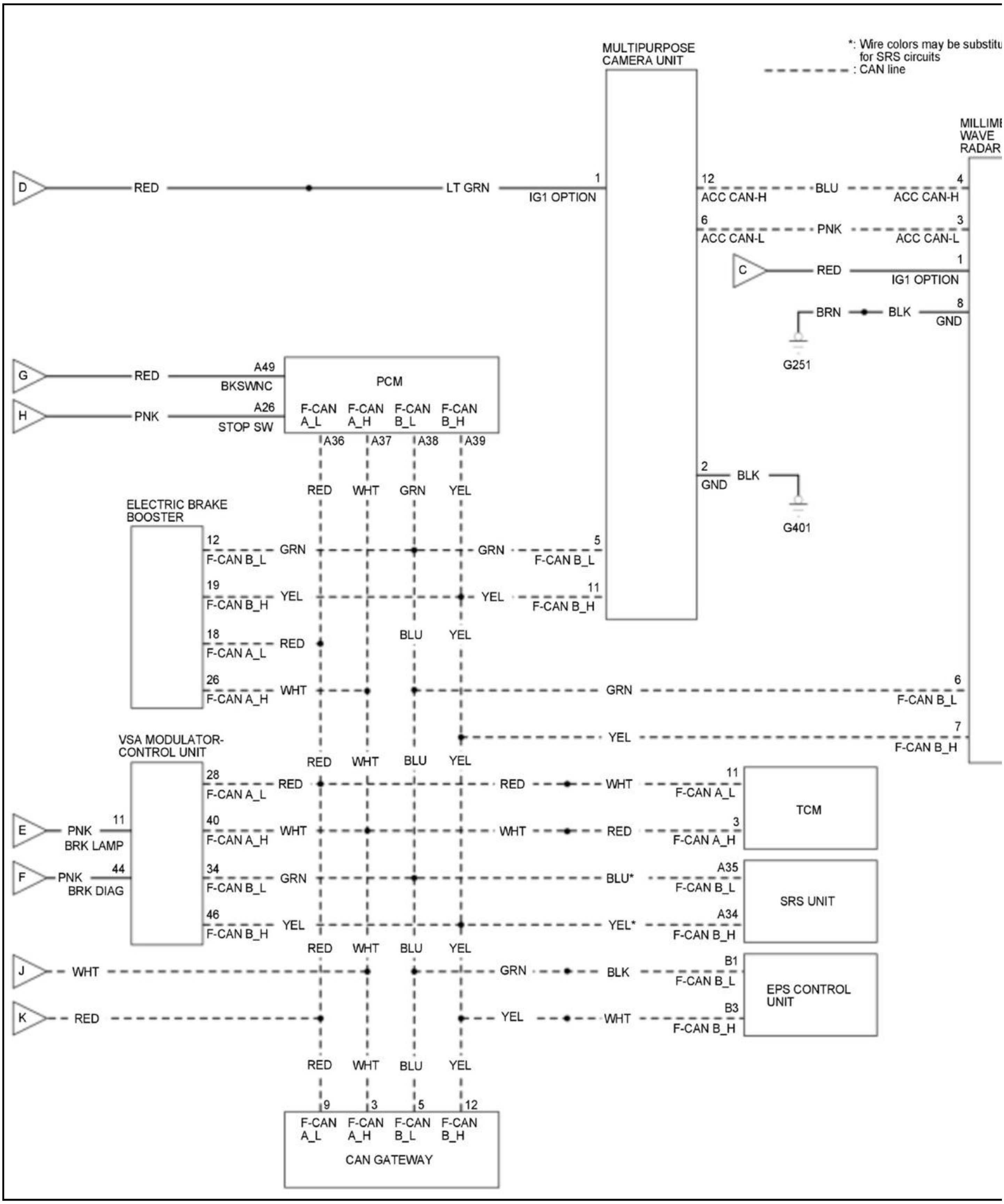

MULTIPURPOSE CAMERA UNIT
*: Wire colors may be substitu
for SRS circuits
: CAN line
MILLIME
WAVE
RADAR
D
RED
LT GRN
1
IG1 OPTION
12
ACC CAN-H
BLU
4
ACC CAN-H
6
ACC CAN-L
PNK
3
ACC CAN-L
C
RED
1
IG1 OPTION
BRN
BLK
8
GND
G251
G
RED
A49
BKSWNC
PCM
H
PNK
A26
STOP SW
F-CAN A_L
F-CAN A_H
F-CAN B_L
F-CAN B_H
A36
A37
A38
A39
RED
WHT
GRN
YEL
2
GND
BLK
G401
ELECTRIC BRAKE BOOSTER
12
F-CAN B_L
GRN
GRN
5
F-CAN B_L
19
F-CAN B_H
YEL
YEL
11
F-CAN B_H
18
F-CAN A_L
RED
BLU
YEL
26
F-CAN A_H
WHT
GRN
6
F-CAN B_L
YEL
7
F-CAN B_H
VSA MODULATOR-CONTROL UNIT
RED
WHT
BLU
YEL
28
F-CAN A_L
RED
RED
WHT
11
F-CAN A_L
TCM
E
PNK
11
BRK LAMP
40
F-CAN A_H
WHT
WHT
RED
3
F-CAN A_H
F
PNK
44
BRK DIAG
34
F-CAN B_L
GRN
BLU*
A35
F-CAN B_L
SRS UNIT
46
F-CAN B_H
YEL
YEL*
A34
F-CAN B_H
RED
WHT
BLU
YEL
J
WHT
GRN
BLK
B1
F-CAN B_L
EPS CONTROL UNIT
K
RED
YEL
WHT
B3
F-CAN B_H
RED
WHT
BLU
YEL
9
3
5
12
F-CAN A_L
F-CAN A_H
F-CAN B_L
F-CAN B_H
CAN GATEWAY

COLLISION MITIGATION BRAKING SYSTEM (CMBS) CIRCUIT DIAGRAM (WITH AUTO IDLE STOP SYSTEM) (2020 2021)

With keyless access system

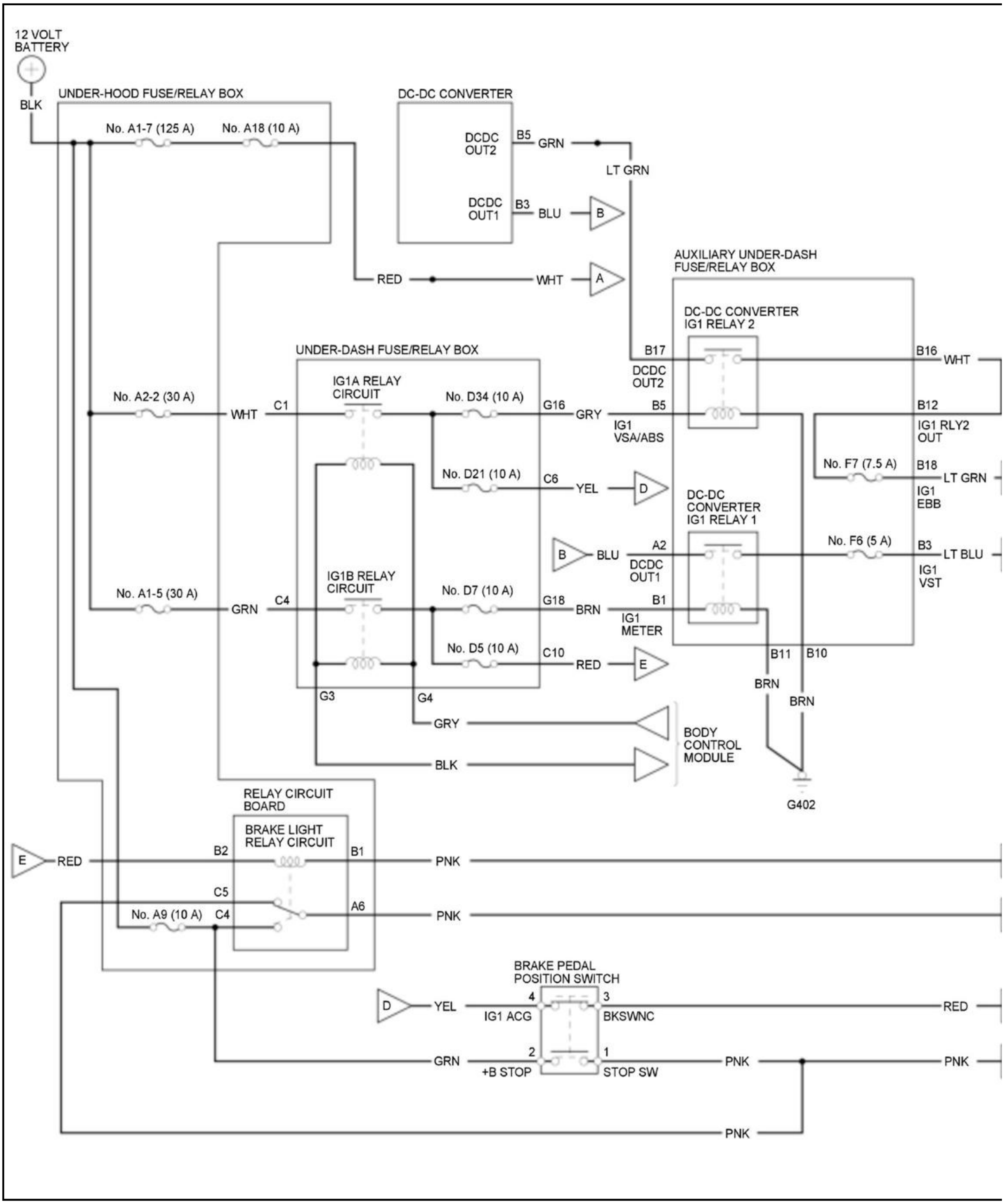
12 VOLT BATTERY
BLK
UNDER-HOOD FUSE/RELAY BOX
No. A1-7 (125 A)
No. A18 (10 A)
DC-DC CONVERTER
DCDC OUT2
B5
GRN
LT GRN
DCDC OUT1
B3
BLU
B
RED
WHT
A
AUXILIARY UNDER-DASH FUSE/RELAY BOX
DC-DC CONVERTER IG1 RELAY 2
B17
DCDC OUT2
B16
WHT
UNDER-DASH FUSE/RELAY BOX
IG1A RELAY CIRCUIT
No. A2-2 (30 A)
WHT
C1
No. D34 (10 A)
G16
GRY
B5
IG1 VSA/ABS
B12
IG1 RLY2 OUT
No. D21 (10 A)
C6
YEL
D
No. F7 (7.5 A)
B18
LT GRN
IG1 EBB
DC-DC CONVERTER IG1 RELAY 1
B
BLU
A2
DCDC OUT1
No. F6 (5 A)
B3
LT BLU
IG1 VST
IG1B RELAY CIRCUIT
No. A1-5 (30 A)
GRN
C4
No. D7 (10 A)
G18
BRN
B1
IG1 METER
No. D5 (10 A)
C10
RED
E
B11
B10
BRN
BRN
G3
G4
GRY
BLK
BODY CONTROL MODULE
G402
RELAY CIRCUIT BOARD
BRAKE LIGHT RELAY CIRCUIT
E
RED
B2
B1
PNK
C5
No. A9 (10 A)
C4
A6
PNK
BRAKE PEDAL POSITION SWITCH
D
YEL
4
IG1 ACG
3
BKSWNC
RED
GRN
2
+B STOP
1
STOP SW
PNK
PNK
PNK

Without keyless access system

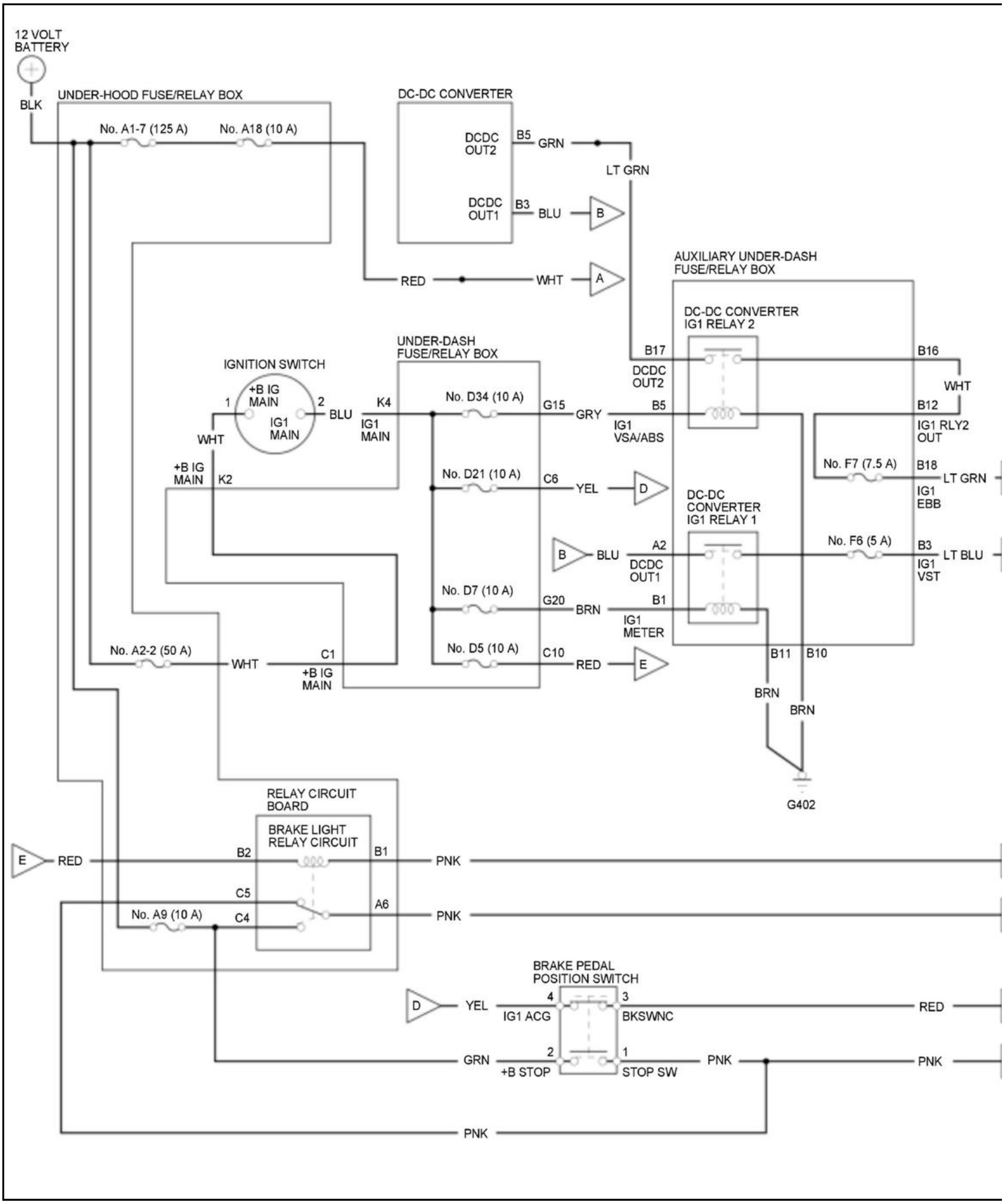
12 VOLT BATTERY
BLK
UNDER-HOOD FUSE/RELAY BOX
No. A1-7 (125 A)
No. A18 (10 A)
DC-DC CONVERTER
DCDC OUT2
B5
GRN
LT GRN
DCDC OUT1
B3
BLU
B
RED
WHT
A
AUXILIARY UNDER-DASH FUSE/RELAY BOX
DC-DC CONVERTER IG1 RELAY 2
B17
DCDC OUT2
B16
WHT
B12
IG1 RLY2 OUT
UNDER-DASH FUSE/RELAY BOX
IGNITION SWITCH
+B IG MAIN
IG1 MAIN
1
2
BLU
K4
IG1 MAIN
No. D34 (10 A)
G15
GRY
B5
IG1 VSA/ABS
WHT
+B IG MAIN
K2
No. D21 (10 A)
C6
YEL
D
No. F7 (7.5 A)
B18
LT GRN
IG1 EBB
DC-DC CONVERTER IG1 RELAY 1
B
BLU
A2
DCDC OUT1
No. F6 (5 A)
B3
LT BLU
IG1 VST
No. D7 (10 A)
G20
BRN
B1
IG1 METER
No. A2-2 (50 A)
WHT
C1
+B IG MAIN
No. D5 (10 A)
C10
RED
E
B11
B10
BRN
BRN
G402
RELAY CIRCUIT BOARD
BRAKE LIGHT RELAY CIRCUIT
E
RED
B2
B1
PNK
C5
A6
PNK
No. A9 (10 A)
C4
BRAKE PEDAL POSITION SWITCH
D
YEL
4
IG1 ACG
3
BKSWNC
RED
GRN
2
+B STOP
1
STOP SW
PNK
PNK
PNK

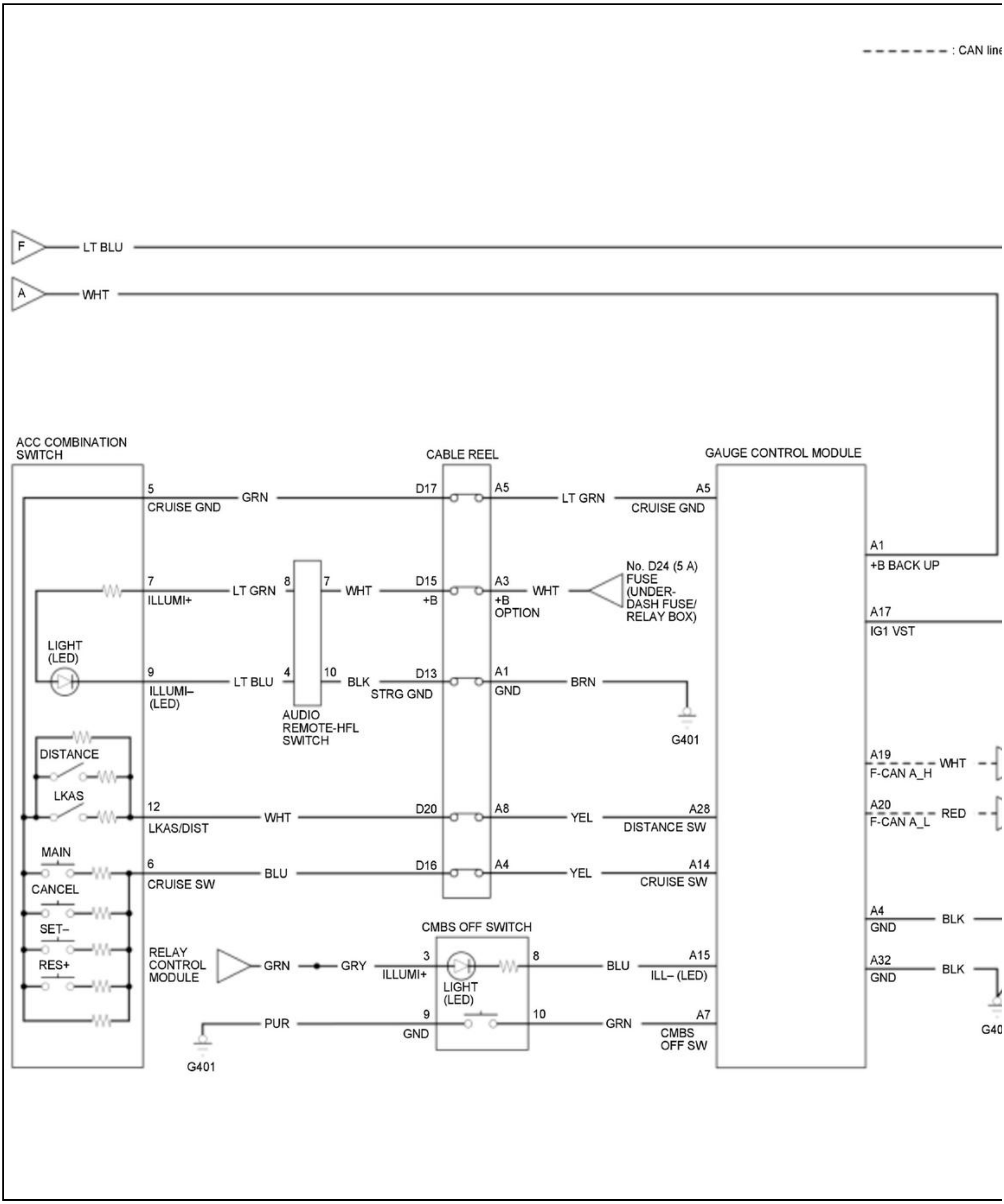
: CAN line
F
LT BLU
A
WHT
ACC COMBINATION SWITCH
CABLE REEL
GAUGE CONTROL MODULE
5
CRUISE GND
GRN
D17
A5
LT GRN
A5
CRUISE GND
A1
+B BACK UP
7
ILLUMI+
LT GRN
8
7
WHT
D15
+B
A3
+B OPTION
WHT
No. D24 (5 A) FUSE (UNDER-DASH FUSE/ RELAY BOX)
A17
IG1 VST
LIGHT (LED)
9
ILLUMI– (LED)
LT BLU
4
10
BLK
D13
STRG GND
A1
GND
BRN
AUDIO REMOTE-HFL SWITCH
G401
DISTANCE
LKAS
A19
F-CAN A_H
WHT
12
LKAS/DIST
WHT
D20
A8
YEL
A28
DISTANCE SW
A20
F-CAN A_L
RED
MAIN
6
CRUISE SW
BLU
D16
A4
YEL
A14
CRUISE SW
CANCEL
A4
GND
BLK
SET–
CMBS OFF SWITCH
RES+
RELAY CONTROL MODULE
GRN
GRY
3
ILLUMI+
LIGHT (LED)
8
BLU
A15
ILL– (LED)
A32
GND
BLK
9
GND
PUR
10
GRN
A7
CMBS OFF SW
G401
G40

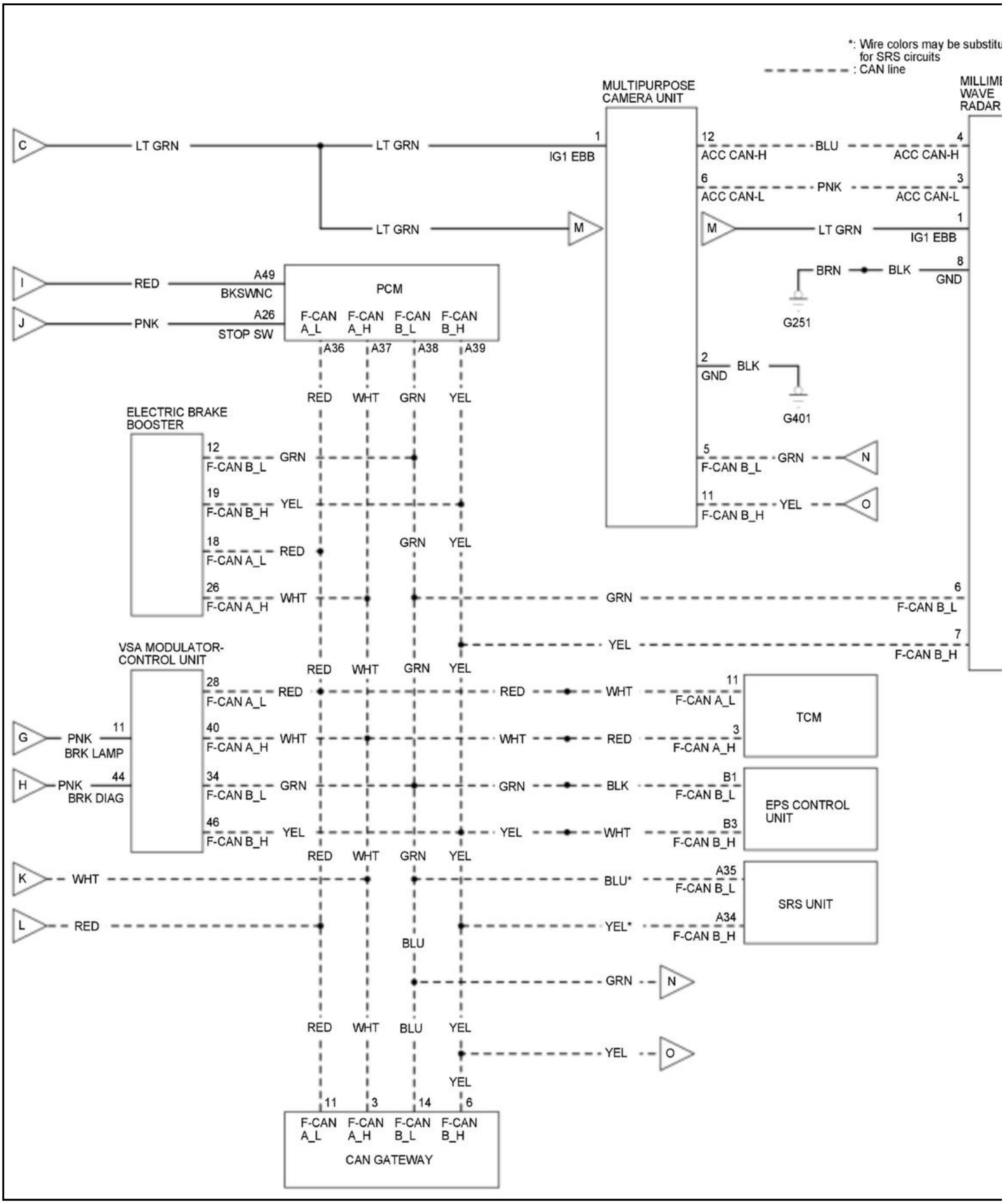
*: Wire colors may be substitu
for SRS circuits
: CAN line
MULTIPURPOSE CAMERA UNIT
MILLIME WAVE RADAR
C
LT GRN
LT GRN
1
IG1 EBB
12
ACC CAN-H
BLU
4
ACC CAN-H
6
ACC CAN-L
PNK
3
ACC CAN-L
LT GRN
M
M
LT GRN
1
IG1 EBB
BRN
BLK
8
GND
G251
I
RED
A49
BKSWNC
PCM
J
PNK
A26
STOP SW
F-CAN A_L
F-CAN A_H
F-CAN B_L
F-CAN B_H
A36
A37
A38
A39
RED
WHT
GRN
YEL
2
GND
BLK
G401
ELECTRIC BRAKE BOOSTER
12
F-CAN B_L
GRN
19
F-CAN B_H
YEL
18
F-CAN A_L
RED
26
F-CAN A_H
WHT
5
F-CAN B_L
GRN
N
11
F-CAN B_H
YEL
O
GRN
YEL
GRN
6
F-CAN B_L
YEL
7
F-CAN B_H
VSA MODULATOR-CONTROL UNIT
RED
WHT
GRN
YEL
28
F-CAN A_L
RED
RED
WHT
11
F-CAN A_L
TCM
G
PNK
11
BRK LAMP
40
F-CAN A_H
WHT
WHT
RED
3
F-CAN A_H
H
PNK
44
BRK DIAG
34
F-CAN B_L
GRN
GRN
BLK
B1
F-CAN B_L
EPS CONTROL UNIT
46
F-CAN B_H
YEL
YEL
WHT
B3
F-CAN B_H
RED
WHT
GRN
YEL
K
WHT
BLU*
A35
F-CAN B_L
SRS UNIT
L
RED
YEL*
A34
F-CAN B_H
BLU
GRN
N
RED
WHT
BLU
YEL
YEL
O
YEL
11
3
14
6
F-CAN A_L
F-CAN A_H
F-CAN B_L
F-CAN B_H
CAN GATEWAY

COLLISION MITIGATION BRAKING SYSTEM (CMBS) CIRCUIT DIAGRAM (WITHOUT AUTO IDLE STOP SYSTEM)

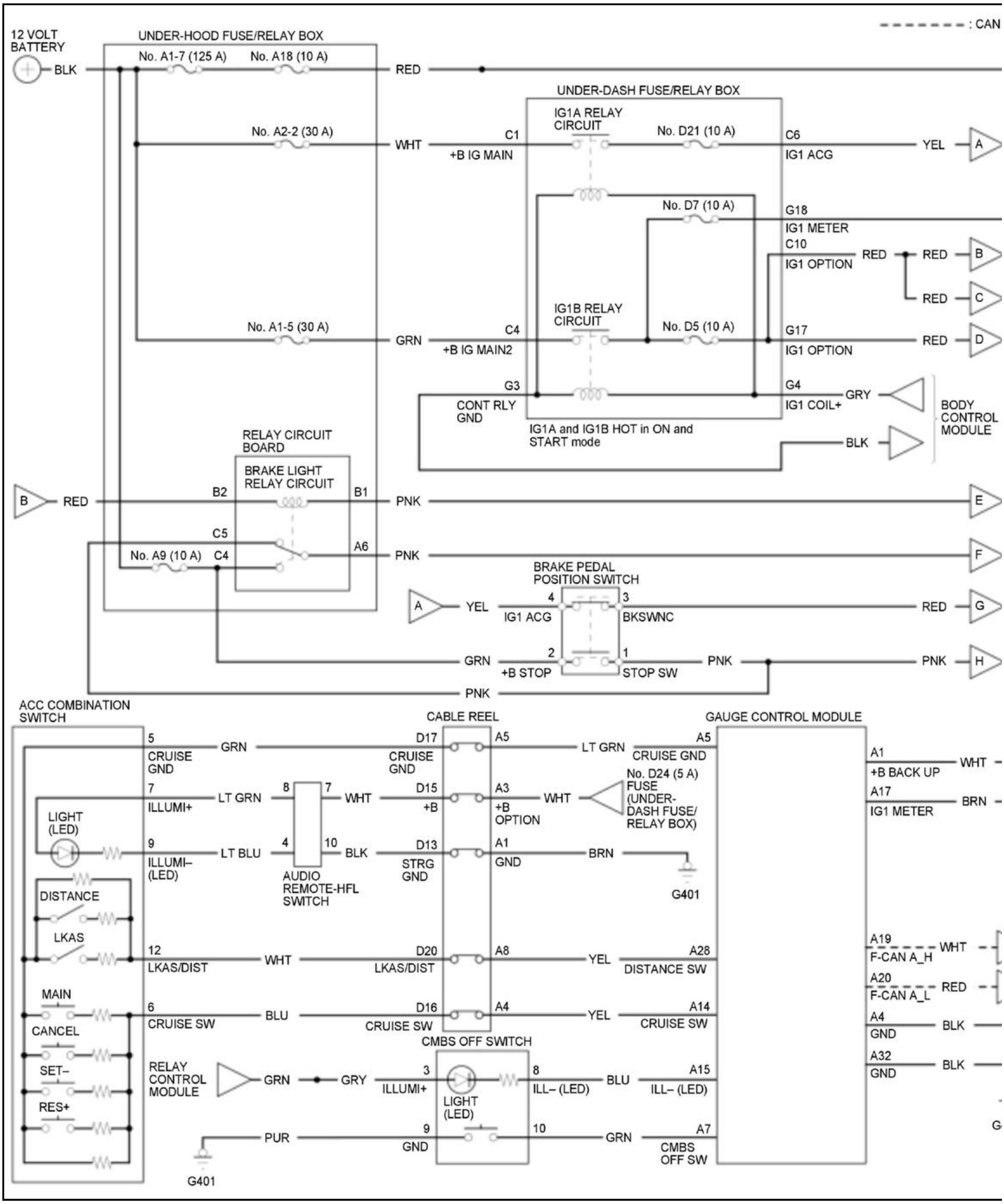
: CAN
12 VOLT BATTERY
BLK
UNDER-HOOD FUSE/RELAY BOX
No. A1-7 (125 A)
No. A18 (10 A)
RED
No. A2-2 (30 A)
WHT
No. A1-5 (30 A)
GRN
UNDER-DASH FUSE/RELAY BOX
IG1A RELAY CIRCUIT
C1
+B IG MAIN
No. D21 (10 A)
C6
IG1 ACG
YEL
A
No. D7 (10 A)
G18
IG1 METER
C10
IG1 OPTION
RED
RED
B
RED
C
IG1B RELAY CIRCUIT
C4
+B IG MAIN2
No. D5 (10 A)
G17
IG1 OPTION
RED
D
G3
CONT RLY GND
G4
IG1 COIL+
GRY
BLK
BODY CONTROL MODULE
IG1A and IG1B HOT in ON and START mode
RELAY CIRCUIT BOARD
BRAKE LIGHT RELAY CIRCUIT
B
RED
B2
B1
PNK
E
C5
No. A9 (10 A)
C4
A6
PNK
F
BRAKE PEDAL POSITION SWITCH
A
YEL
4
IG1 ACG
3
BKSWNC
RED
G
GRN
2
+B STOP
1
STOP SW
PNK
PNK
H
PNK
ACC COMBINATION SWITCH
LIGHT (LED)
DISTANCE
LKAS
MAIN
CANCEL
SET–
RES+
5
CRUISE GND
GRN
7
ILLUMI+
LT GRN
9
ILLUMI– (LED)
LT BLU
12
LKAS/DIST
WHT
6
CRUISE SW
BLU
AUDIO REMOTE-HFL SWITCH
8
7
WHT
4
10
BLK
CABLE REEL
D17
CRUISE GND
A5
D15
+B
A3
+B OPTION
D13
STRG GND
A1
GND
D20
LKAS/DIST
A8
D16
CRUISE SW
A4
LT GRN
WHT
No. D24 (5 A) FUSE (UNDER-DASH FUSE/ RELAY BOX)
BRN
G401
YEL
YEL
GAUGE CONTROL MODULE
A5
CRUISE GND
A28
DISTANCE SW
A14
CRUISE SW
A15
ILL– (LED)
A7
CMBS OFF SW
A1
+B BACK UP
WHT
A17
IG1 METER
BRN
A19
F-CAN A_H
WHT
A20
F-CAN A_L
RED
A4
GND
BLK
A32
GND
BLK
G
CMBS OFF SWITCH
RELAY CONTROL MODULE
GRN
GRY
3
ILLUMI+
LIGHT (LED)
8
ILL– (LED)
BLU
9
GND
10
GRN
PUR
G401

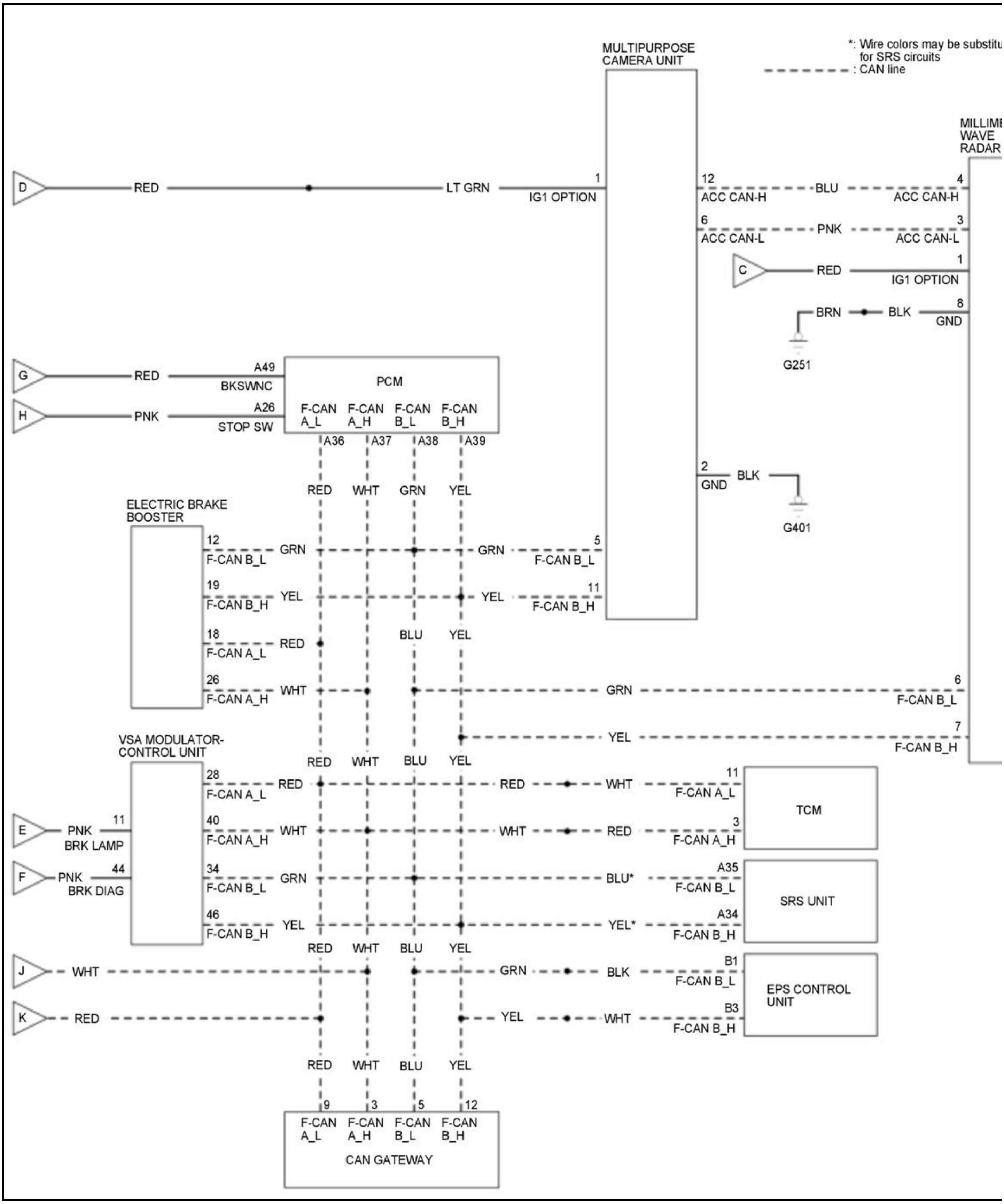
MULTIPURPOSE CAMERA UNIT
*: Wire colors may be substitu
for SRS circuits
: CAN line
MILLIME
WAVE
RADAR
D
RED
LT GRN
1
IG1 OPTION
12
ACC CAN-H
BLU
4
ACC CAN-H
6
ACC CAN-L
PNK
3
ACC CAN-L
C
RED
1
IG1 OPTION
BRN
BLK
8
GND
G251
G
RED
A49
BKSWNC
PCM
H
PNK
A26
STOP SW
F-CAN A_L
F-CAN A_H
F-CAN B_L
F-CAN B_H
A36
A37
A38
A39
2
GND
BLK
G401
RED
WHT
GRN
YEL
ELECTRIC BRAKE BOOSTER
12
F-CAN B_L
GRN
GRN
5
F-CAN B_L
19
F-CAN B_H
YEL
YEL
11
F-CAN B_H
18
F-CAN A_L
RED
BLU
YEL
26
F-CAN A_H
WHT
GRN
6
F-CAN B_L
YEL
7
F-CAN B_H
VSA MODULATOR-CONTROL UNIT
RED
WHT
BLU
YEL
28
F-CAN A_L
RED
RED
WHT
11
F-CAN A_L
TCM
E
PNK
11
BRK LAMP
40
F-CAN A_H
WHT
WHT
RED
3
F-CAN A_H
F
PNK
44
BRK DIAG
34
F-CAN B_L
GRN
BLU*
A35
F-CAN B_L
SRS UNIT
46
F-CAN B_H
YEL
YEL*
A34
F-CAN B_H
RED
WHT
BLU
YEL
J
WHT
GRN
BLK
B1
F-CAN B_L
EPS CONTROL UNIT
K
RED
YEL
WHT
B3
F-CAN B_H
RED
WHT
BLU
YEL
9
3
5
12
F-CAN A_L
F-CAN A_H
F-CAN B_L
F-CAN B_H
CAN GATEWAY

CRUISE CONTROL CIRCUIT DIAGRAM (1.5 L ENGINE) (2017 2018 2019)

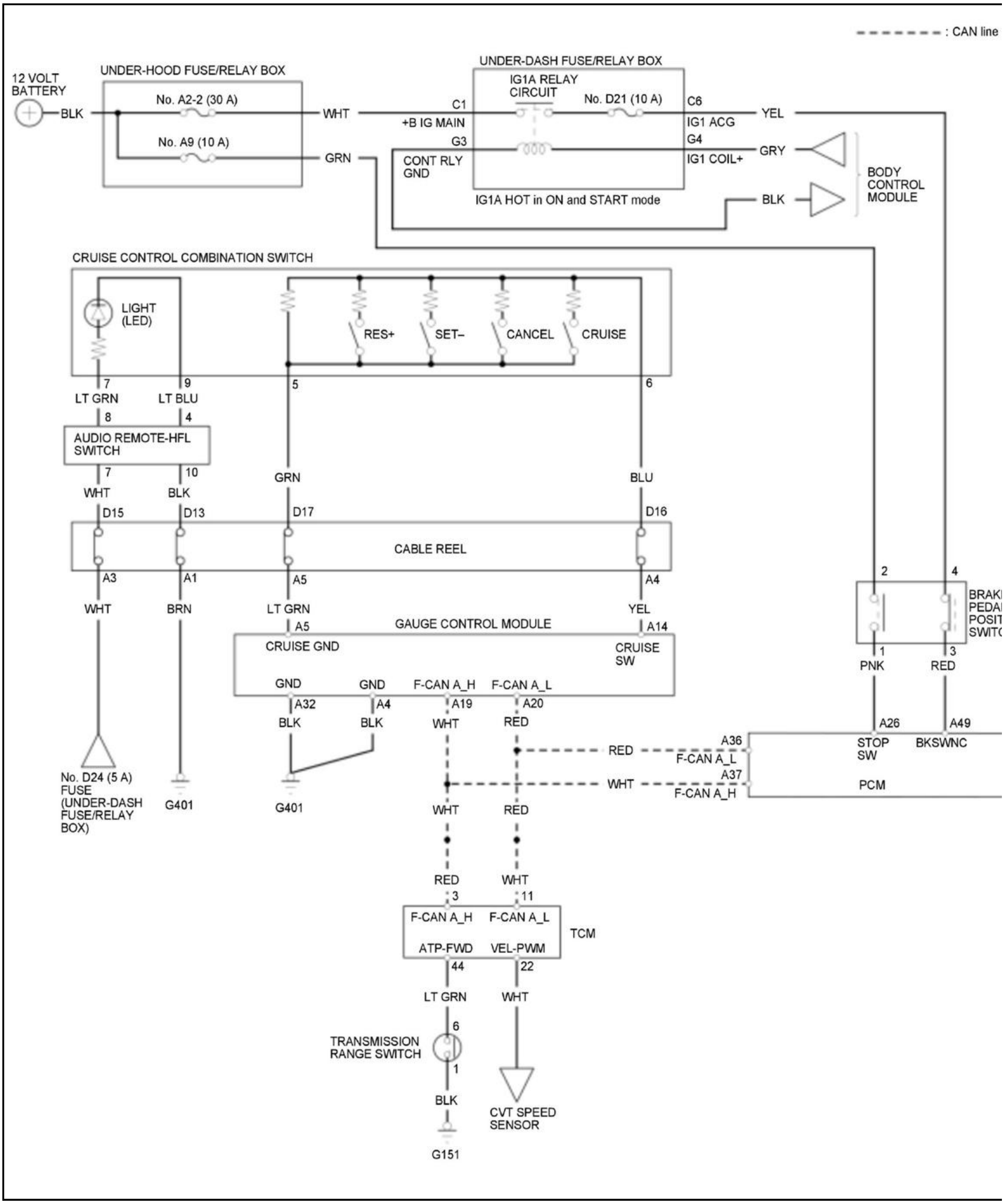
: CAN line
12 VOLT BATTERY
BLK
UNDER-HOOD FUSE/RELAY BOX
No. A2-2 (30 A)
No. A9 (10 A)
WHT
GRN
UNDER-DASH FUSE/RELAY BOX
IG1A RELAY CIRCUIT
No. D21 (10 A)
C1
+B IG MAIN
G3
CONT RLY GND
C6
IG1 ACG
G4
IG1 COIL+
IG1A HOT in ON and START mode
YEL
GRY
BLK
BODY CONTROL MODULE
CRUISE CONTROL COMBINATION SWITCH
LIGHT (LED)
RES+
SET–
CANCEL
CRUISE
7
9
5
6
LT GRN
LT BLU
8
4
AUDIO REMOTE-HFL SWITCH
7
10
WHT
BLK
GRN
BLU
D15
D13
D17
D16
CABLE REEL
A3
A1
A5
A4
WHT
BRN
LT GRN
YEL
A5
GAUGE CONTROL MODULE
A14
CRUISE GND
CRUISE SW
GND
GND
F-CAN A_H
F-CAN A_L
A32
A4
A19
A20
BLK
BLK
WHT
RED
No. D24 (5 A) FUSE (UNDER-DASH FUSE/RELAY BOX)
G401
G401
2
4
BRAKI PEDAI POSIT SWITC
1
3
PNK
RED
A26
A49
STOP SW
BKSWNC
A36
RED
F-CAN A_L
A37
WHT
F-CAN A_H
PCM
WHT
RED
RED
WHT
3
11
F-CAN A_H
F-CAN A_L
ATP-FWD
VEL-PWM
TCM
44
22
LT GRN
WHT
6
TRANSMISSION RANGE SWITCH
1
BLK
G151
CVT SPEED SENSOR

CRUISE CONTROL CIRCUIT DIAGRAM (1.5 L ENGINE) (2020 2021)

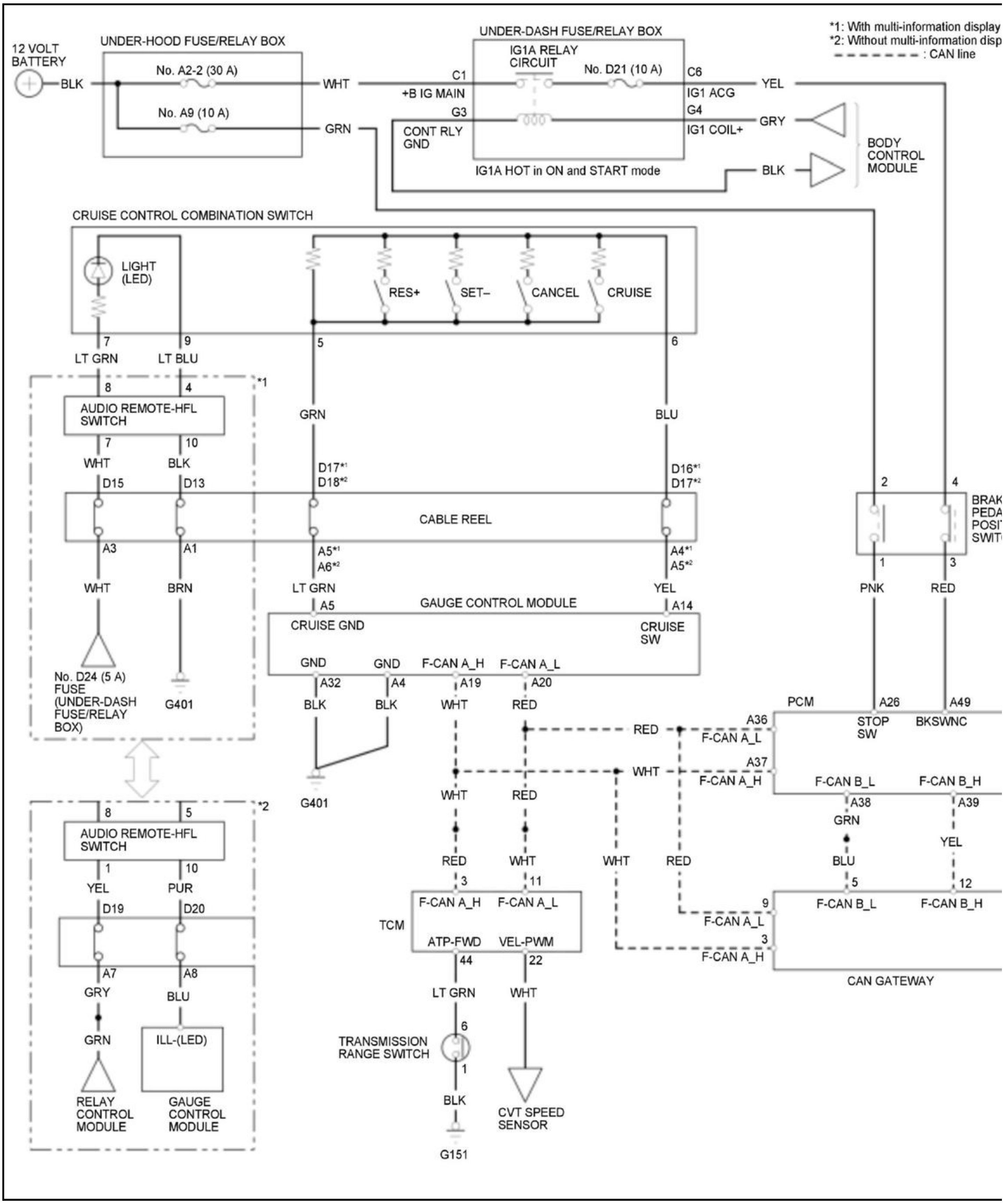
12 VOLT
BATTERY
BLK
UNDER-HOOD FUSE/RELAY BOX
No. A2-2 (30 A)
No. A9 (10 A)
WHT
GRN
UNDER-DASH FUSE/RELAY BOX
IG1A RELAY
CIRCUIT
No. D21 (10 A)
C1
+B IG MAIN
G3
CONT RLY
GND
C6
IG1 ACG
G4
IG1 COIL+
YEL
GRY
BLK
IG1A HOT in ON and START mode
*1: With multi-information display
*2: Without multi-information disp
: CAN line
BODY
CONTROL
MODULE
CRUISE CONTROL COMBINATION SWITCH
LIGHT
(LED)
RES+
SET–
CANCEL
CRUISE
7
9
5
6
LT GRN
LT BLU
8
4
*1
AUDIO REMOTE-HFL
SWITCH
7
10
WHT
BLK
D15
D13
GRN
BLU
D17*1
D18*2
D16*1
D17*2
CABLE REEL
A3
A1
A5*1
A6*2
A4*1
A5*2
WHT
BRN
LT GRN
YEL
No. D24 (5 A)
FUSE
(UNDER-DASH
FUSE/RELAY
BOX)
G401
A5
GAUGE CONTROL MODULE
A14
CRUISE GND
CRUISE
SW
GND
GND
F-CAN A_H
F-CAN A_L
A32
A4
A19
A20
BLK
BLK
WHT
RED
G401
RED
WHT
WHT
RED
RED
WHT
WHT
RED
3
11
TCM
F-CAN A_H
F-CAN A_L
ATP-FWD
VEL-PWM
44
22
LT GRN
WHT
6
TRANSMISSION
RANGE SWITCH
1
BLK
G151
CVT SPEED
SENSOR
*2
8
5
AUDIO REMOTE-HFL
SWITCH
1
10
YEL
PUR
D19
D20
A7
A8
GRY
BLU
GRN
ILL-(LED)
RELAY
CONTROL
MODULE
GAUGE
CONTROL
MODULE
2
4
BRAK
PEDA
POSI
SWIT
1
3
PNK
RED
PCM
A26
A49
A36
STOP
SW
BKSWNC
F-CAN A_L
A37
F-CAN A_H
F-CAN B_L
F-CAN B_H
A38
A39
GRN
YEL
BLU
5
12
9
F-CAN B_L
F-CAN B_H
F-CAN A_L
3
F-CAN A_H
CAN GATEWAY

CRUISE CONTROL CIRCUIT DIAGRAM (2.4 L ENGINE) (2017 2018 2019)

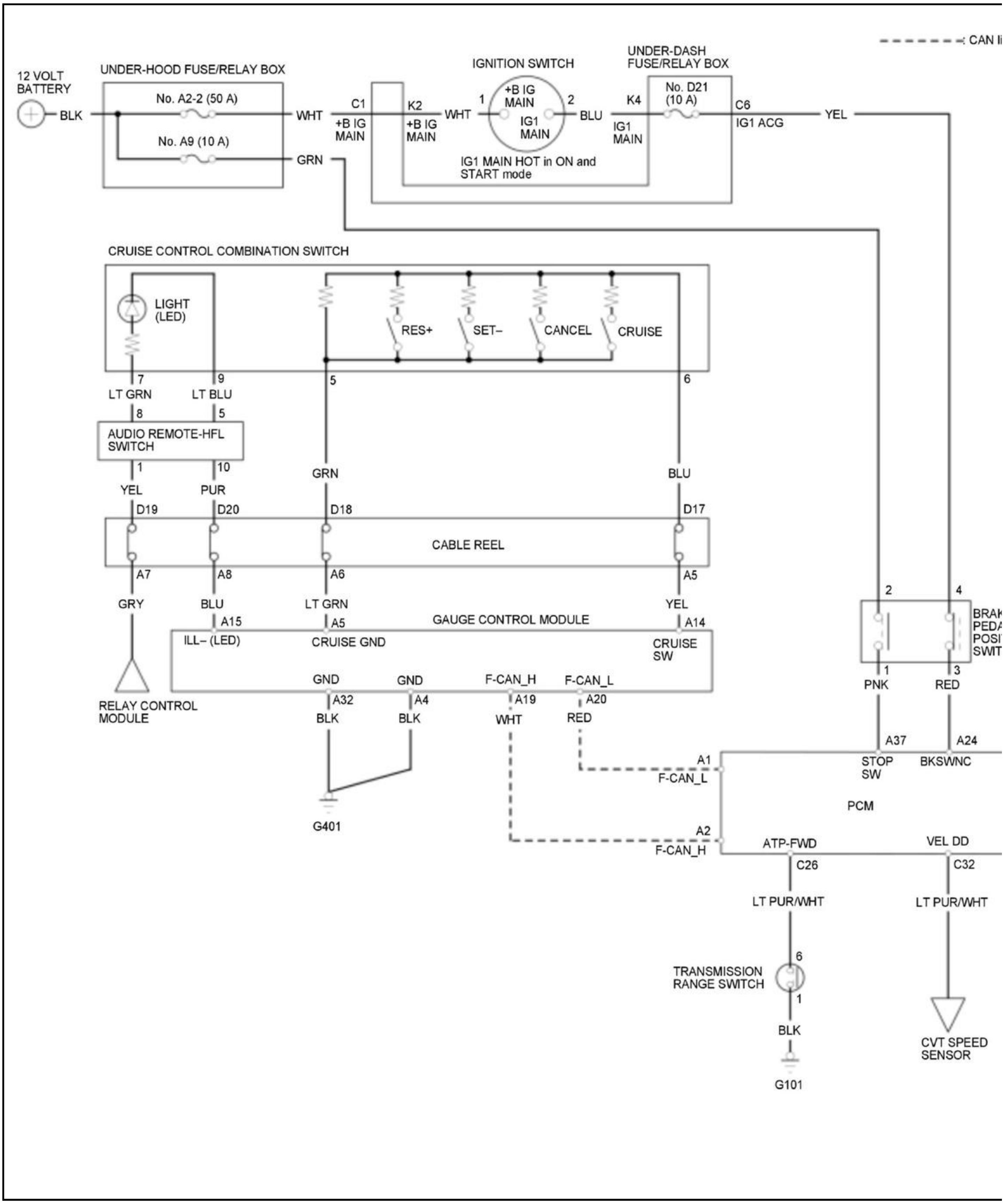
CAN li
12 VOLT BATTERY
BLK
UNDER-HOOD FUSE/RELAY BOX
No. A2-2 (50 A)
No. A9 (10 A)
WHT
GRN
C1
+B IG MAIN
K2
+B IG MAIN
WHT
IGNITION SWITCH
1
+B IG MAIN
IG1 MAIN
2
BLU
IG1 MAIN HOT in ON and START mode
UNDER-DASH FUSE/RELAY BOX
K4
IG1 MAIN
No. D21 (10 A)
C6
IG1 ACG
YEL
CRUISE CONTROL COMBINATION SWITCH
LIGHT (LED)
RES+
SET–
CANCEL
CRUISE
7
9
5
6
LT GRN
LT BLU
8
5
AUDIO REMOTE-HFL SWITCH
1
10
YEL
PUR
GRN
BLU
D19
D20
D18
D17
CABLE REEL
A7
A8
A6
A5
GRY
BLU
LT GRN
YEL
GAUGE CONTROL MODULE
A15
A5
A14
ILL– (LED)
CRUISE GND
CRUISE SW
GND
GND
F-CAN_H
F-CAN_L
A32
A4
A19
A20
BLK
BLK
WHT
RED
RELAY CONTROL MODULE
G401
2
4
BRAK PEDA POSI SWIT
1
3
PNK
RED
A37
A24
STOP SW
BKSWNC
A1
F-CAN_L
PCM
A2
F-CAN_H
ATP-FWD
VEL DD
C26
C32
LT PUR/WHT
LT PUR/WHT
6
TRANSMISSION RANGE SWITCH
1
BLK
G101
CVT SPEED SENSOR

LANE KEEPING ASSIST SYSTEM (LKAS) CIRCUIT DIAGRAM (WITH AUTO IDLE STOP SYSTEM) (2020 2021)

With keyless access system

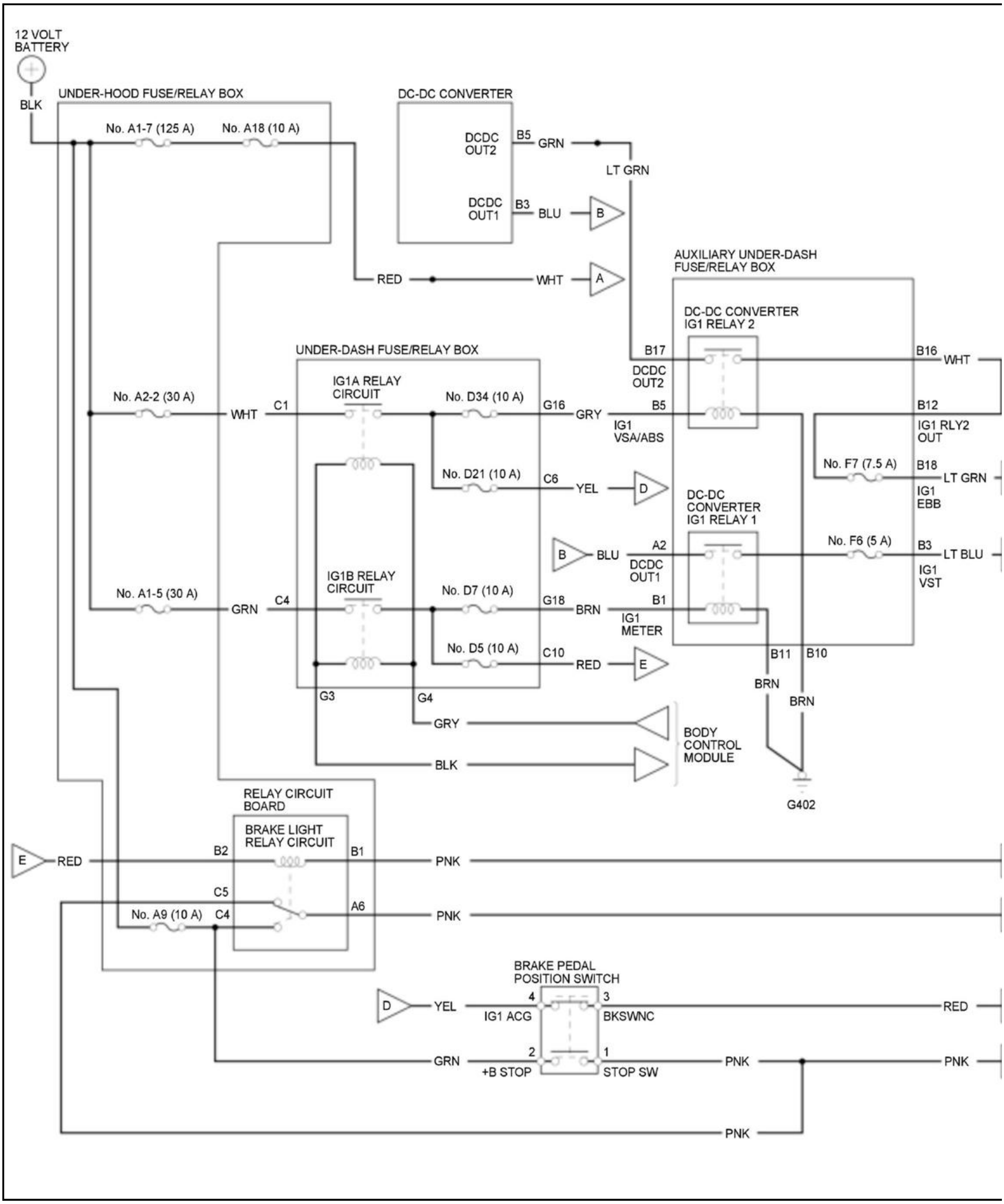
12 VOLT BATTERY
BLK
UNDER-HOOD FUSE/RELAY BOX
No. A1-7 (125 A)
No. A18 (10 A)
DC-DC CONVERTER
DCDC OUT2
B5
GRN
DCDC OUT1
B3
BLU
B
LT GRN
RED
WHT
A
AUXILIARY UNDER-DASH FUSE/RELAY BOX
DC-DC CONVERTER IG1 RELAY 2
B17
DCDC OUT2
B16
WHT
UNDER-DASH FUSE/RELAY BOX
IG1A RELAY CIRCUIT
No. A2-2 (30 A)
WHT
C1
No. D34 (10 A)
G16
GRY
B5
IG1 VSA/ABS
B12
IG1 RLY2 OUT
No. D21 (10 A)
C6
YEL
D
No. F7 (7.5 A)
B18
LT GRN
IG1 EBB
DC-DC CONVERTER IG1 RELAY 1
B
BLU
A2
DCDC OUT1
No. F6 (5 A)
B3
LT BLU
IG1 VST
IG1B RELAY CIRCUIT
No. A1-5 (30 A)
GRN
C4
No. D7 (10 A)
G18
BRN
B1
IG1 METER
No. D5 (10 A)
C10
RED
E
B11
B10
BRN
BRN
G3
G4
GRY
BLK
BODY CONTROL MODULE
G402
RELAY CIRCUIT BOARD
BRAKE LIGHT RELAY CIRCUIT
E
RED
B2
B1
PNK
C5
No. A9 (10 A)
C4
A6
PNK
BRAKE PEDAL POSITION SWITCH
D
YEL
4
IG1 ACG
3
BKSWNC
RED
GRN
2
+B STOP
1
STOP SW
PNK
PNK
PNK

Without keyless access system

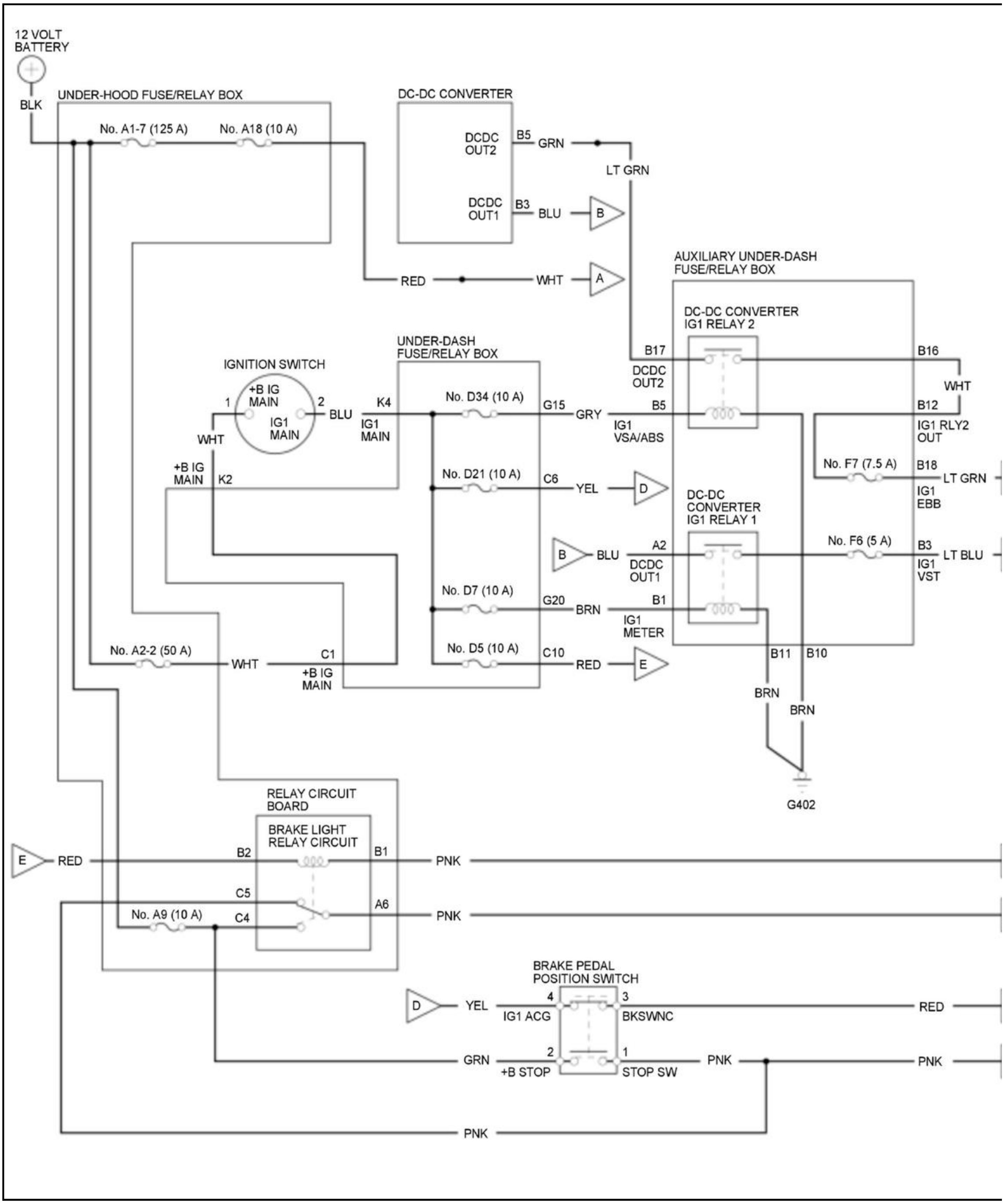
12 VOLT
BATTERY
BLK
UNDER-HOOD FUSE/RELAY BOX
No. A1-7 (125 A)
No. A18 (10 A)
DC-DC CONVERTER
DCDC
OUT2
B5
GRN
LT GRN
DCDC
OUT1
B3
BLU
B
RED
WHT
A
AUXILIARY UNDER-DASH
FUSE/RELAY BOX
DC-DC CONVERTER
IG1 RELAY 2
B17
DCDC
OUT2
B16
WHT
UNDER-DASH
FUSE/RELAY BOX
IGNITION SWITCH
+B IG
MAIN
IG1
MAIN
1
2
BLU
K4
IG1
MAIN
No. D34 (10 A)
G15
GRY
B5
IG1
VSA/ABS
B12
IG1 RLY2
OUT
WHT
+B IG
MAIN
K2
No. D21 (10 A)
C6
YEL
D
DC-DC
CONVERTER
IG1 RELAY 1
No. F7 (7.5 A)
B18
LT GRN
IG1
EBB
B
BLU
A2
DCDC
OUT1
No. F6 (5 A)
B3
LT BLU
IG1
VST
No. D7 (10 A)
G20
BRN
B1
IG1
METER
No. A2-2 (50 A)
WHT
C1
+B IG
MAIN
No. D5 (10 A)
C10
RED
E
B11
B10
BRN
BRN
G402
RELAY CIRCUIT
BOARD
BRAKE LIGHT
RELAY CIRCUIT
E
RED
B2
B1
PNK
C5
A6
PNK
No. A9 (10 A)
C4
BRAKE PEDAL
POSITION SWITCH
D
YEL
4
IG1 ACG
3
BKSWNC
RED
GRN
2
+B STOP
1
STOP SW
PNK
PNK
PNK

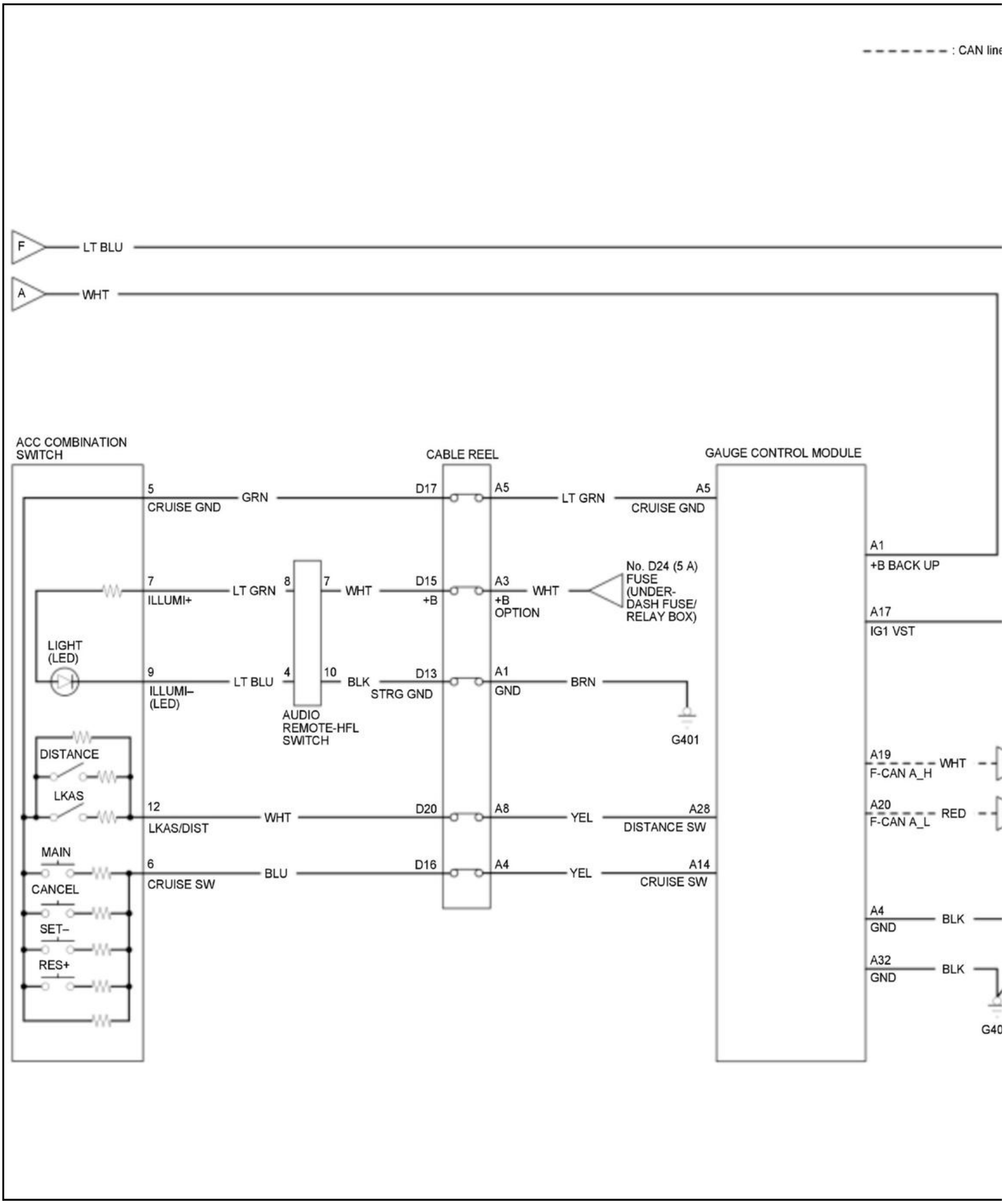
: CAN line
F
LT BLU
A
WHT
ACC COMBINATION SWITCH
CABLE REEL
GAUGE CONTROL MODULE
5
CRUISE GND
GRN
D17
A5
LT GRN
A5
CRUISE GND
A1
+B BACK UP
7
ILLUMI+
LT GRN
8
7
WHT
D15
+B
A3
+B OPTION
WHT
No. D24 (5 A) FUSE (UNDER-DASH FUSE/ RELAY BOX)
A17
IG1 VST
LIGHT (LED)
9
ILLUMI– (LED)
LT BLU
4
10
BLK
D13
STRG GND
A1
GND
BRN
G401
AUDIO REMOTE-HFL SWITCH
DISTANCE
LKAS
12
LKAS/DIST
WHT
D20
A8
YEL
A28
DISTANCE SW
A19
F-CAN A_H
WHT
A20
F-CAN A_L
RED
MAIN
6
CRUISE SW
BLU
D16
A4
YEL
A14
CRUISE SW
CANCEL
SET–
RES+
A4
GND
BLK
A32
GND
BLK
G40

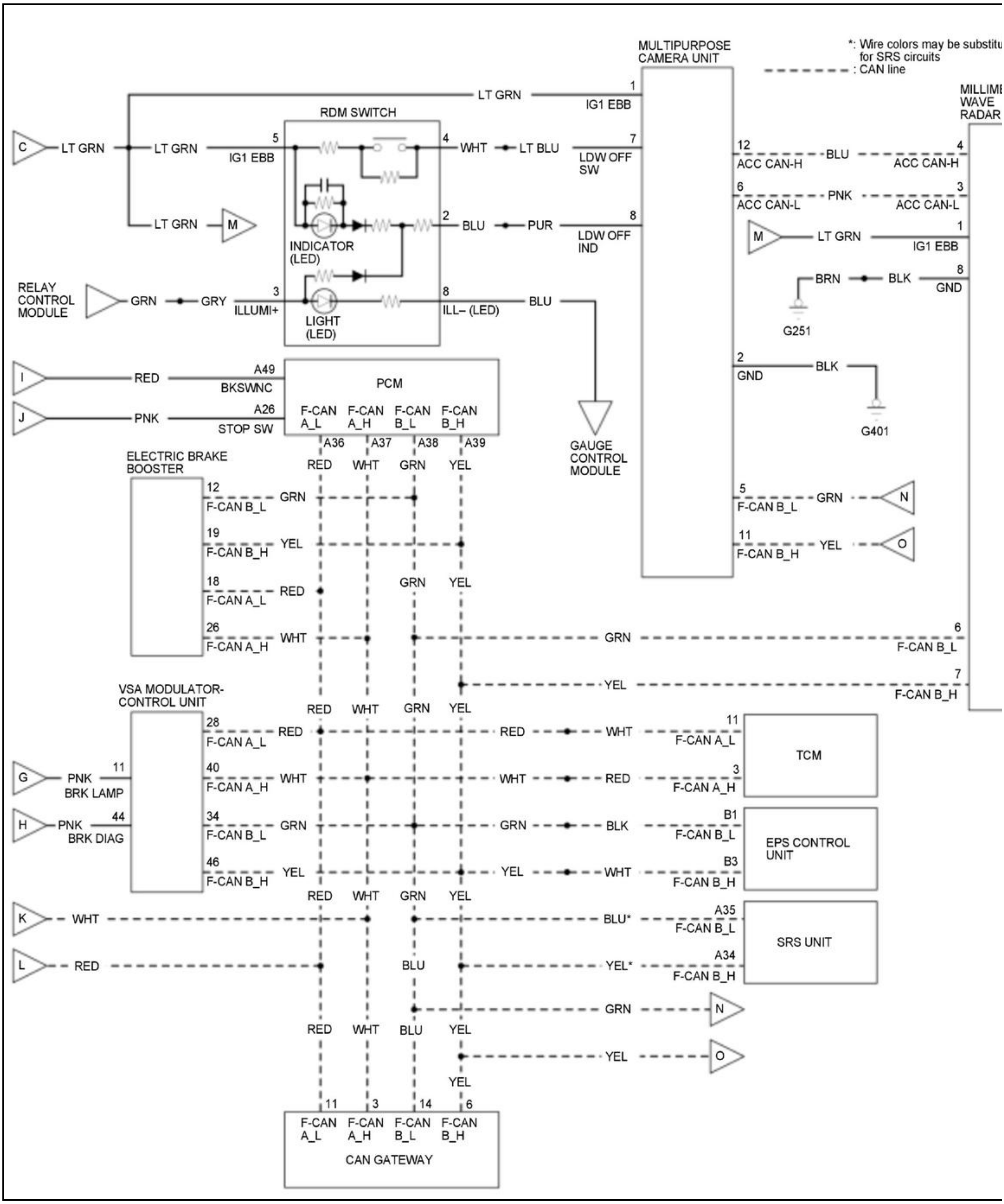
MULTIPURPOSE CAMERA UNIT
*: Wire colors may be substitu
for SRS circuits
: CAN line
MILLIME
WAVE
RADAR
RDM SWITCH
LT GRN
IG1 EBB
C
LT GRN
5
4
WHT
LT BLU
7
LDW OFF SW
12
ACC CAN-H
BLU
ACC CAN-H
6
ACC CAN-L
PNK
3
ACC CAN-L
M
INDICATOR (LED)
2
BLU
PUR
8
LDW OFF IND
1
IG1 EBB
BRN
BLK
GND
G251
RELAY CONTROL MODULE
GRN
GRY
ILLUMI+
LIGHT (LED)
ILL– (LED)
PCM
I
RED
A49
BKSWNC
J
PNK
A26
STOP SW
F-CAN A_L
F-CAN A_H
F-CAN B_L
F-CAN B_H
A36
A37
A38
A39
GND
G401
GAUGE CONTROL MODULE
ELECTRIC BRAKE BOOSTER
F-CAN B_L
19
F-CAN B_H
18
F-CAN A_L
26
F-CAN A_H
N
11
O
VSA MODULATOR-CONTROL UNIT
28
TCM
G
PNK
BRK LAMP
40
H
44
BRK DIAG
34
EPS CONTROL UNIT
B1
B3
46
K
BLU*
A35
SRS UNIT
L
YEL*
A34
CAN GATEWAY
14

LANE KEEPING ASSIST SYSTEM (LKAS) CIRCUIT DIAGRAM (WITHOUT AUTO IDLE STOP SYSTEM)

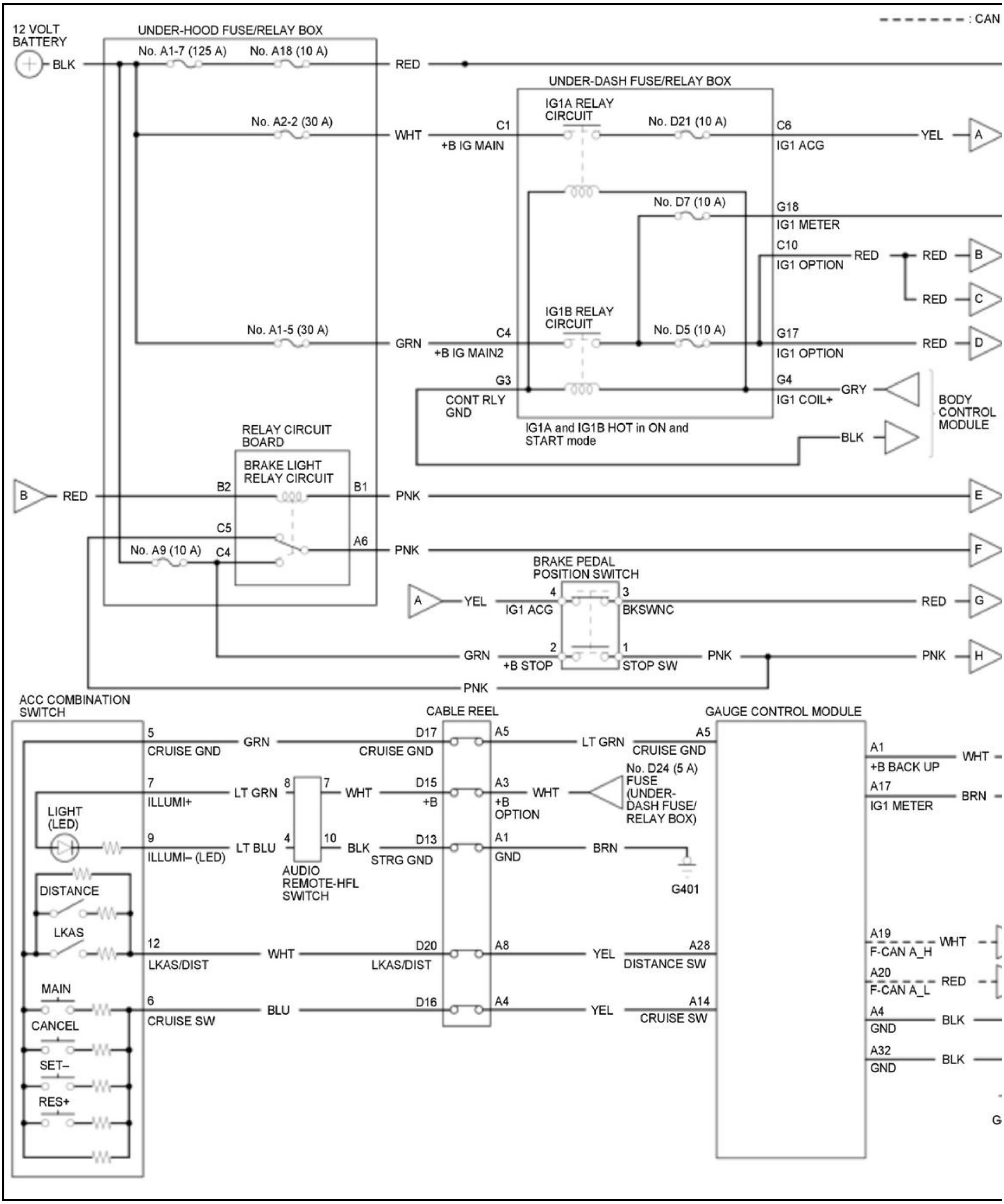
: CAN
12 VOLT BATTERY
BLK
UNDER-HOOD FUSE/RELAY BOX
No. A1-7 (125 A)
No. A18 (10 A)
RED
No. A2-2 (30 A)
WHT
No. A1-5 (30 A)
GRN
UNDER-DASH FUSE/RELAY BOX
IG1A RELAY CIRCUIT
C1
+B IG MAIN
No. D21 (10 A)
C6
IG1 ACG
YEL
A
No. D7 (10 A)
G18
IG1 METER
C10
IG1 OPTION
RED
RED
B
RED
C
IG1B RELAY CIRCUIT
C4
+B IG MAIN2
No. D5 (10 A)
G17
IG1 OPTION
RED
D
G3
CONT RLY GND
G4
IG1 COIL+
GRY
BLK
BODY CONTROL MODULE
IG1A and IG1B HOT in ON and START mode
RELAY CIRCUIT BOARD
BRAKE LIGHT RELAY CIRCUIT
B
RED
B2
B1
PNK
E
C5
No. A9 (10 A)
C4
A6
PNK
F
BRAKE PEDAL POSITION SWITCH
A
YEL
4
IG1 ACG
3
BKSWNC
RED
G
GRN
2
+B STOP
1
STOP SW
PNK
PNK
H
PNK
ACC COMBINATION SWITCH
5
CRUISE GND
GRN
7
ILLUMI+
LT GRN
LIGHT (LED)
9
ILLUMI– (LED)
LT BLU
DISTANCE
LKAS
12
LKAS/DIST
WHT
MAIN
CANCEL
SET–
RES+
6
CRUISE SW
BLU
8
7
WHT
4
10
BLK
AUDIO REMOTE-HFL SWITCH
CABLE REEL
D17
CRUISE GND
D15
+B
D13
STRG GND
D20
LKAS/DIST
D16
A5
LT GRN
A3
+B OPTION
WHT
No. D24 (5 A) FUSE (UNDER-DASH FUSE/ RELAY BOX)
A1
GND
BRN
G401
A8
YEL
A4
YEL
GAUGE CONTROL MODULE
A5
CRUISE GND
A28
DISTANCE SW
A14
CRUISE SW
A1
+B BACK UP
WHT
A17
IG1 METER
BRN
A19
F-CAN A_H
WHT
A20
F-CAN A_L
RED
A4
GND
BLK
A32
GND
BLK
G

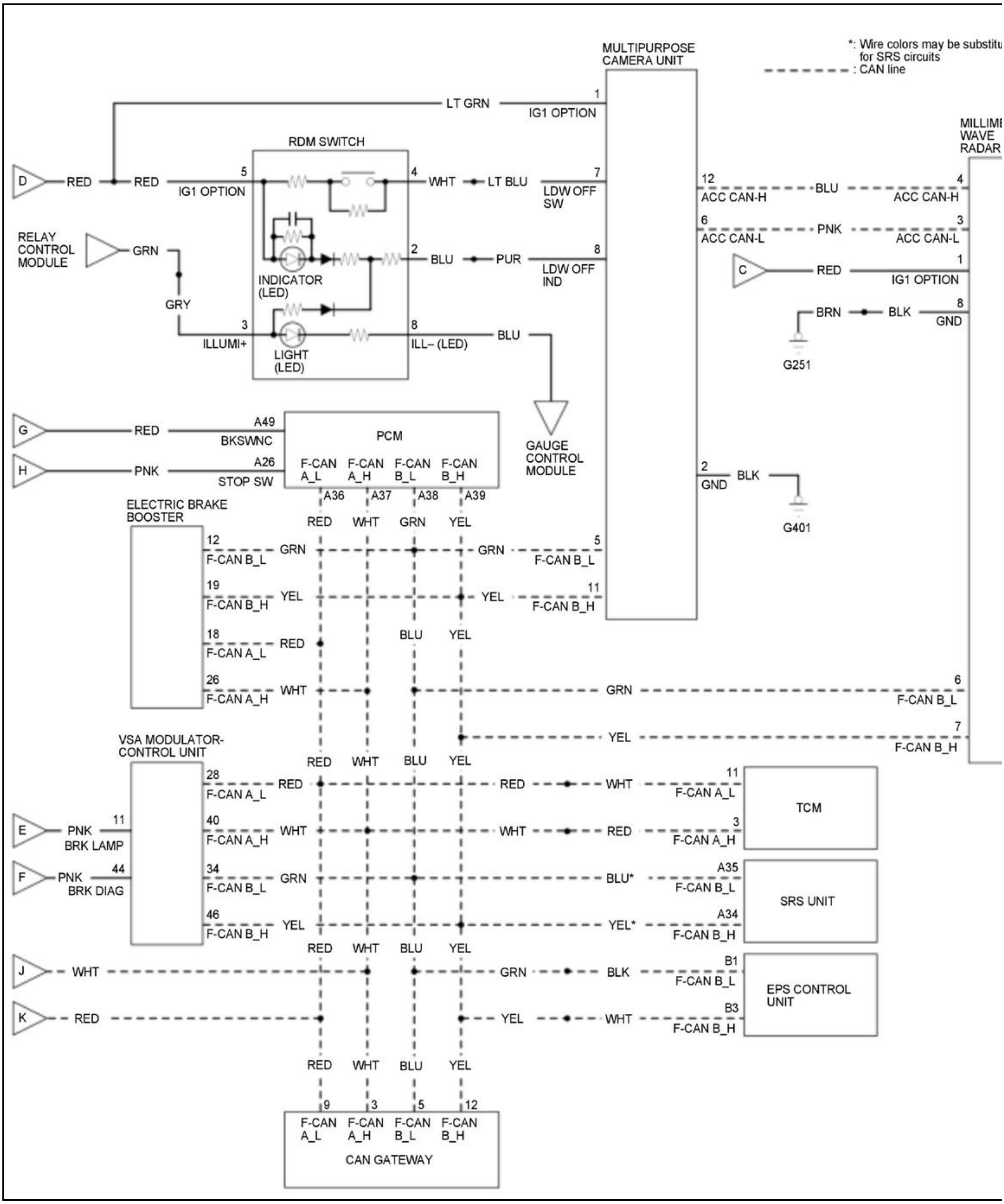
*: Wire colors may be substitu
for SRS circuits
: CAN line
MULTIPURPOSE
CAMERA UNIT
LT GRN
1
IG1 OPTION
MILLIME
WAVE
RADAR
RDM SWITCH
D
RED
RED
5
IG1 OPTION
4
WHT
LT BLU
7
LDW OFF
SW
12
ACC CAN-H
BLU
4
ACC CAN-H
6
ACC CAN-L
PNK
3
ACC CAN-L
RELAY
CONTROL
MODULE
GRN
GRY
INDICATOR
(LED)
2
BLU
PUR
8
LDW OFF
IND
C
RED
1
IG1 OPTION
BRN
BLK
8
GND
G251
3
ILLUMI+
LIGHT
(LED)
8
ILL– (LED)
BLU
G
RED
A49
BKSWNC
PCM
H
PNK
A26
STOP SW
F-CAN
A_L
F-CAN
A_H
F-CAN
B_L
F-CAN
B_H
A36
A37
A38
A39
GAUGE
CONTROL
MODULE
2
GND
BLK
G401
ELECTRIC BRAKE
BOOSTER
RED
WHT
GRN
YEL
12
F-CAN B_L
GRN
GRN
5
F-CAN B_L
19
F-CAN B_H
YEL
YEL
11
F-CAN B_H
18
F-CAN A_L
RED
BLU
YEL
26
F-CAN A_H
WHT
GRN
6
F-CAN B_L
YEL
7
F-CAN B_H
VSA MODULATOR-
CONTROL UNIT
RED
WHT
BLU
YEL
28
F-CAN A_L
RED
RED
WHT
11
F-CAN A_L
TCM
E
PNK
11
BRK LAMP
40
F-CAN A_H
WHT
WHT
RED
3
F-CAN A_H
F
PNK
44
BRK DIAG
34
F-CAN B_L
GRN
BLU*
A35
F-CAN B_L
SRS UNIT
46
F-CAN B_H
YEL
YEL*
A34
F-CAN B_H
RED
WHT
BLU
YEL
J
WHT
GRN
BLK
B1
F-CAN B_L
EPS CONTROL
UNIT
K
RED
YEL
WHT
B3
F-CAN B_H
RED
WHT
BLU
YEL
9
3
5
12
F-CAN
A_L
F-CAN
A_H
F-CAN
B_L
F-CAN
B_H
CAN GATEWAY

GENERAL INFORMATION

ACC SYSTEM AUTO STOP CONTROL HISTORY

When the ACC is activated, if the millimeter wave radar determines that the ACC is unable to operate normally due to an environmental factors (such as weather or roac condition and driving or vehicle condition) or other reasons even when the ACC system itself is normal, the millimeter wave radar automatically cancels the activation c and records the ACC system auto stop control code in it.

When the ACC is automatically cancelled, "ACC OFF" is displayed on the multi-information display (MID) to notify the driver of the cancellation. At this time, the AC (amber) does not come on.

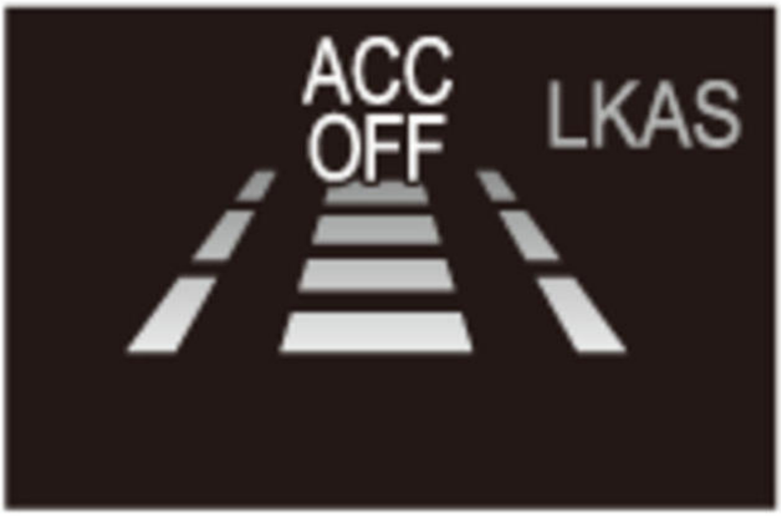

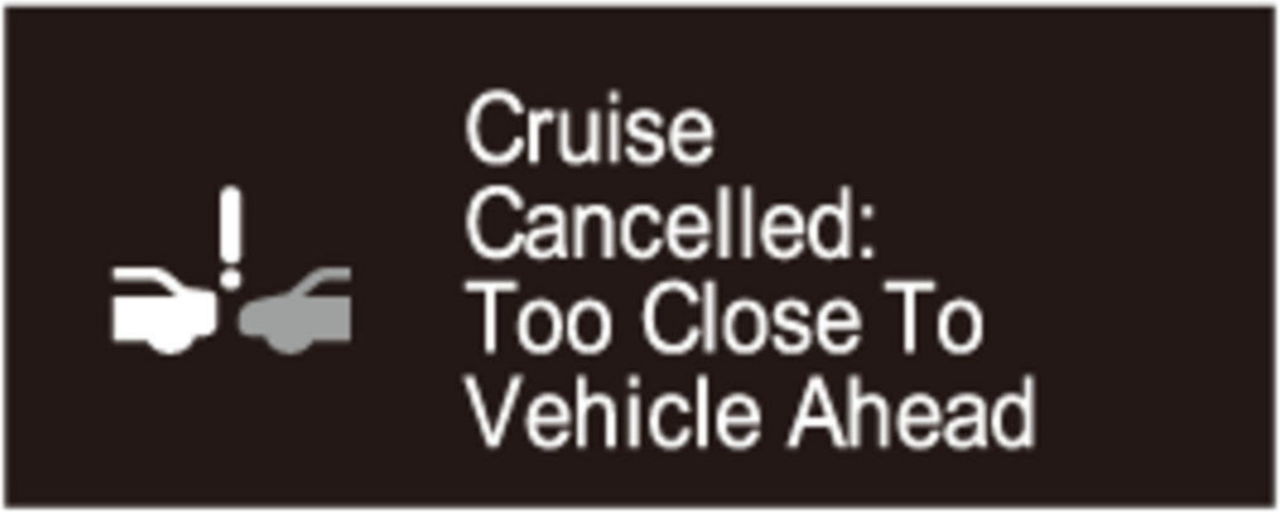
Cruise Cancelled: Too Close To Vehicle Ahead

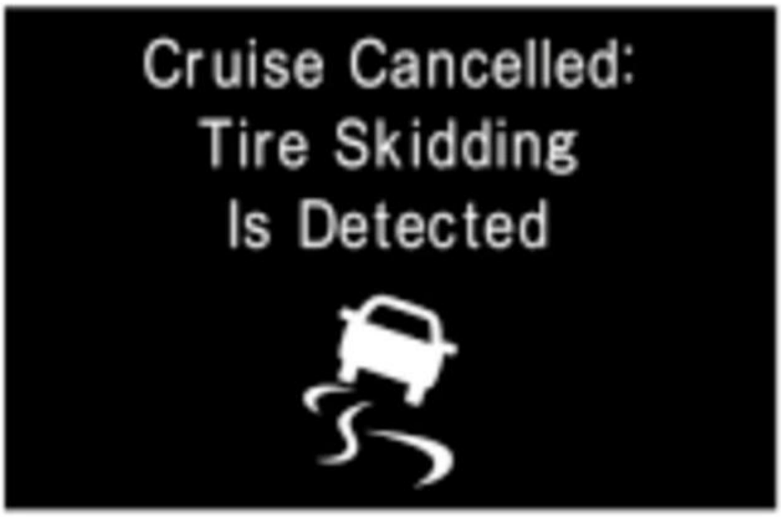
Cruise Cancelled: Tire Skidding Is Detected

Checking for ACC System Auto Stop Control Codes

The ACC system auto stop control codes recorded in the millimeter wave radar can be read out by the procedure below.

NOTE: Make sure the 12 volt battery is fully charged before you begin.

1. Connect the HDS .

2. In the Driving Support of the HDS, select Integrated Driver Support System, then select Data List on the HDS.Checking for ACC system auto stop control codes recc Data List.

NOTE:

- **ACC system auto stop control history is recorded from 1. When automatic cancellation takes place 11 times or more, the p records are held. In this case, history 10 is the latest record and the 10 latest records are held. When 0, no record is held.**
- **When DTCs are cleared with the HDS, the ACC system auto stop control history is cleared as well.**
- **Some of the following ACC system auto stop control codes may not be used for specific model specifications.**

ACC System Auto Stop Control Codes

Code	ACC System Auto Stops Operating	Examples	Detection Conditions	Restoration Conditions (Conditions under which ACC SET is possible)	Reasons for Control OFF
80	Engine Speed too high or too low	The vehicle decelerated because the leading vehicle decelerated, and the engine speed dropped below the mid-speed ranges.	The driver did not operate the clutch pedal within 10 seconds after the shift-down request was displayed.	The engine speed returned to the specified speed or higher.	Prevention of engine stall while the vehicle is decelerating beca the leading vehicle is decelerati
84	Target vehicle comes closer than the radar detecting limits	• The leading vehicle slowed down rapidly. • Another vehicle suddenly cut in front of the own vehicle.	The distance between the leading vehicle and your vehicle is less than the minimum allowable vehicle-to-vehicle distance. • Models with the low speed follow (LSF) feature: 1.5 m (4.9 ft) • Models without the low speed follow (LSF) feature: 5 m (16 ft)	The system returns to normal when the distance between the leading vehicle and your vehicle reaches or exceeds the minimum allowable vehicle-to-vehicle distance + 0.5 m (1.6 ft).	The control is prohibited at a cl distance to the leading vehicle where the ACC system is unavailable. If the leading vehi is too close to your vehicle, the millimeter wave radar may fail detect the leading vehicle.
89	Front wheel spin	• Driving on a low μ road • TCS control is executed.	A change in the wheel speed equivalent to 0.75 G occurs.	Other than those listed to the left	Prevention of use of ACC on a road where vehicle behavior is unstable

*: This value differs depending on whether or not the vehicle is equipped with Low Speed Follow (LSF).

Code	ACC System Auto Stops Operating	Examples	Detection Conditions	Restoration Conditions (Conditions under which ACC SET is possible)	Reasons for Control OFF
99	Acceleration/deceleration abnormality	• The inclination of the road changed significantly while the vehicle accelerates/decelerates at around the maximum acceleration/deceleration speed of the ACC system. • The powertrain or brake system is abnormal.	• While the ACC was operating, an acceleration of 0.4 G or more* continued for 1.0 second or more. • While the ACC was operating, a deceleration of -0.5 G or less* continued for 1.5 seconds or more.	Other than those listed to the left	Because the maximum acceleration/deceleration speed the ACC system is exceeded.
101	Rear wheel locked	The parking brake is not released or the vehicle is driven on a frozen road surface.	A signal of 5 mph (8 km/h) or more is inputted to the front wheel sensor and a signal of 0 mph (0 km/h) is inputted to the rear wheel sensor.	The front and rear wheel sensors detect a wheel speed.	Prevention of unstable vehicle behavior
109	Movement distance too short after initiation	When the millimeter wave radar detects an object that turns on low speed follow (LSF) control immediately after vehicle ON mode.	When the distance the vehicle travels after vehicle ON mode, which is calculated based on the vehicle speed, is less than 8 m (26 ft).	When the distance the vehicle travels is 8 m (26 ft) or more.	This is because an object other than a vehicle may be recognizi as the leading vehicle after veh ON mode in a parking lot etc.
110	Shift position 1st	• While driving in 1st gear. • Vehicle is driven at an extremely low speed.	1st gear shift position is detected.	Vehicle is driven in 2nd or higher gear (forward gear).	Inappropriate gear is selected fo ACC system.

*: This value differs depending on whether or not the vehicle is equipped with Low Speed Follow (LSF).

COMPONENT LOCATION INDEX

ADAPTIVE CRUISE CONTROL (ACC) COMPONENT LOCATION INDEX

For relationships between signals in a system, refer to System Diagram.

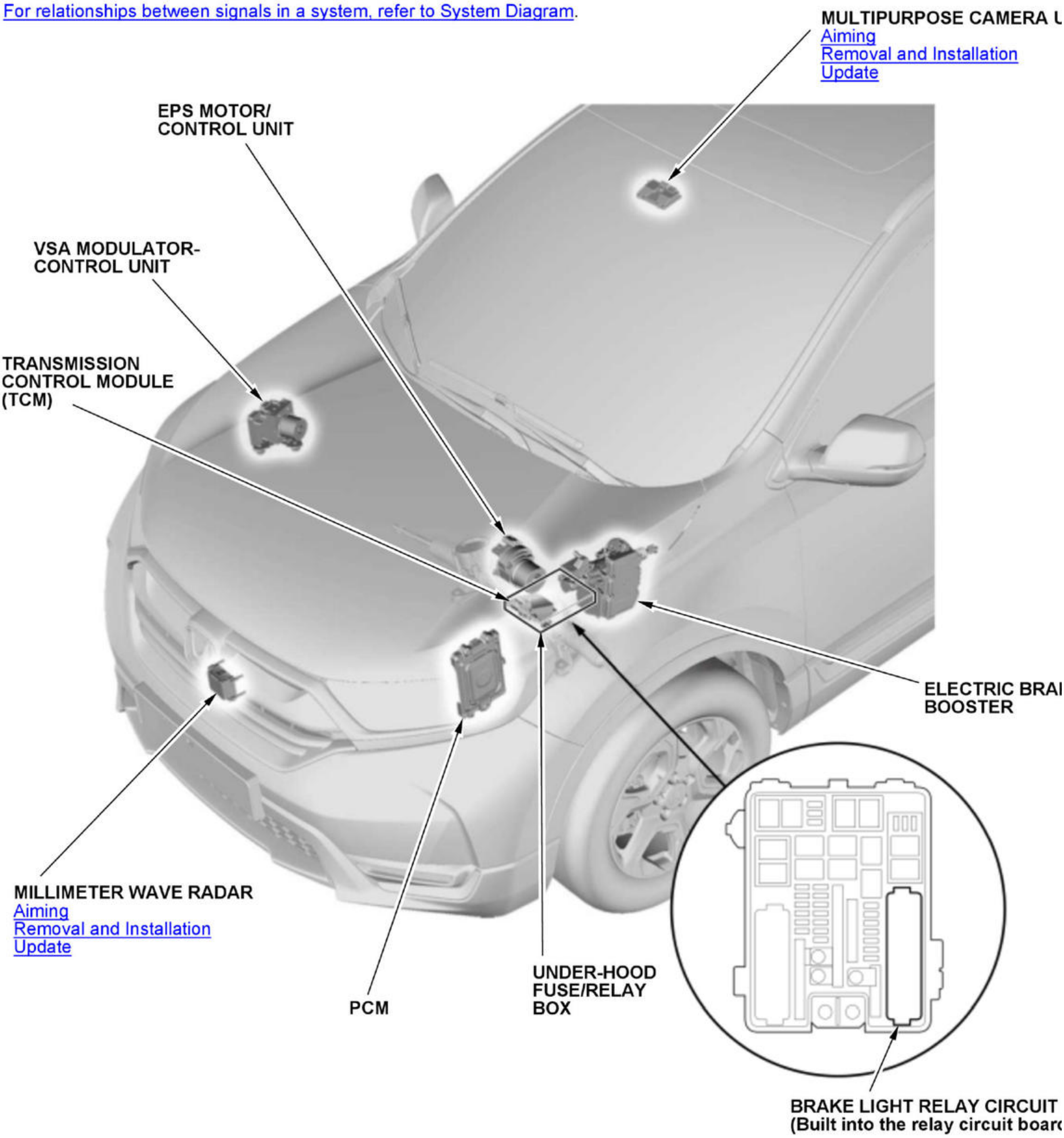
MULTIPURPOSE CAMERA U
Aiming
Removal and Installation
Update
EPS MOTOR/ CONTROL UNIT
VSA MODULATOR-CONTROL UNIT
TRANSMISSION CONTROL MODULE (TCM)
ELECTRIC BRA
BOOSTER
MILLIMETER WAVE RADAR
Aiming
Removal and Installation
Update
PCM
UNDER-HOOD FUSE/RELAY BOX
BRAKE LIGHT RELAY CIRCUIT
(Built into the relay circuit boar

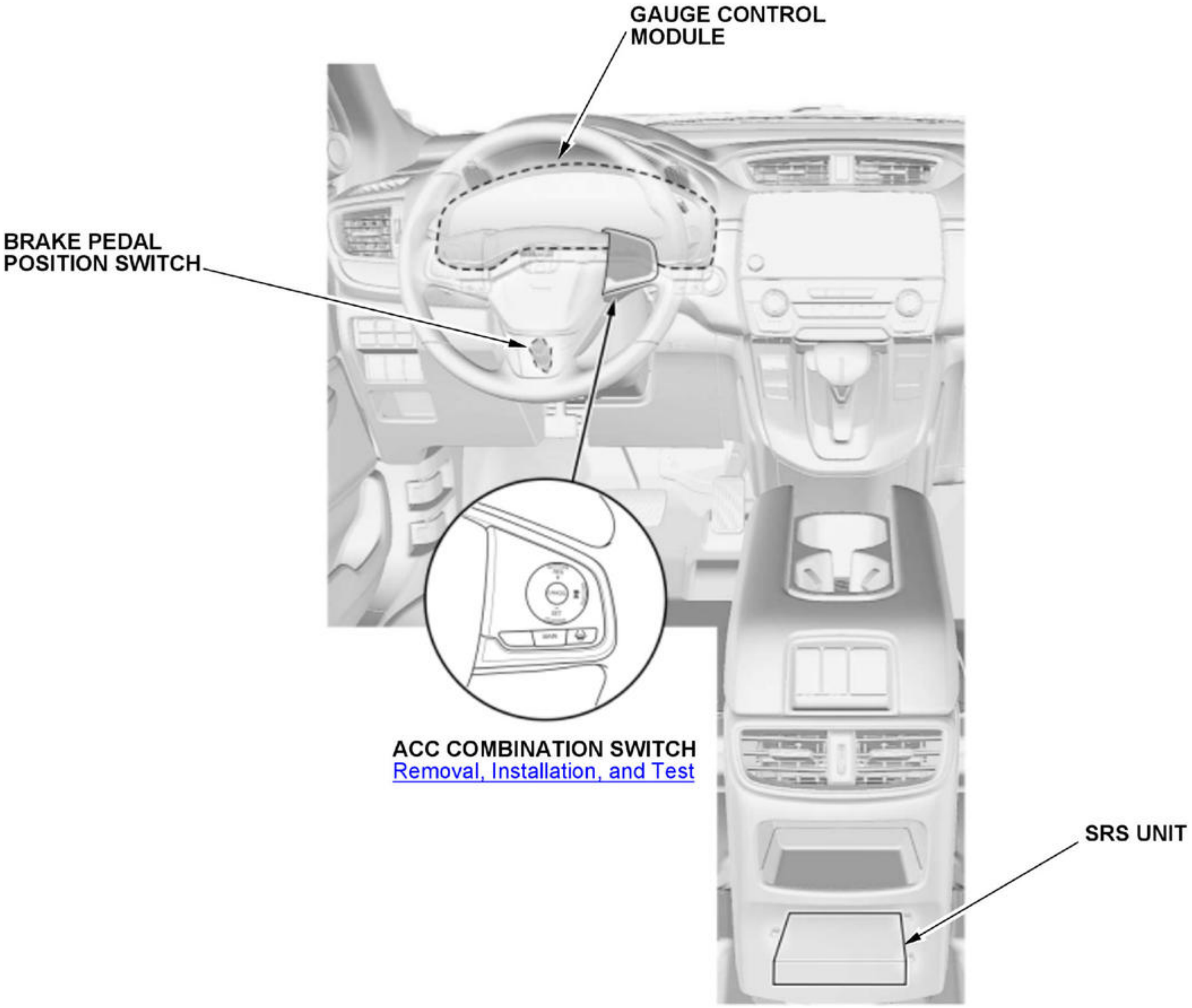
GAUGE CONTROL MODULE
BRAKE PEDAL POSITION SWITCH
ACC COMBINATION SWITCH
Removal, Installation, and Test
SRS UNIT

Position of the MAIN switch is different depending on the model.

COLLISION MITIGATION BRAKING SYSTEM (CMBS) COMPONENT LOCATION INDEX

For relationships between signals in a system, refer to System Diagram.

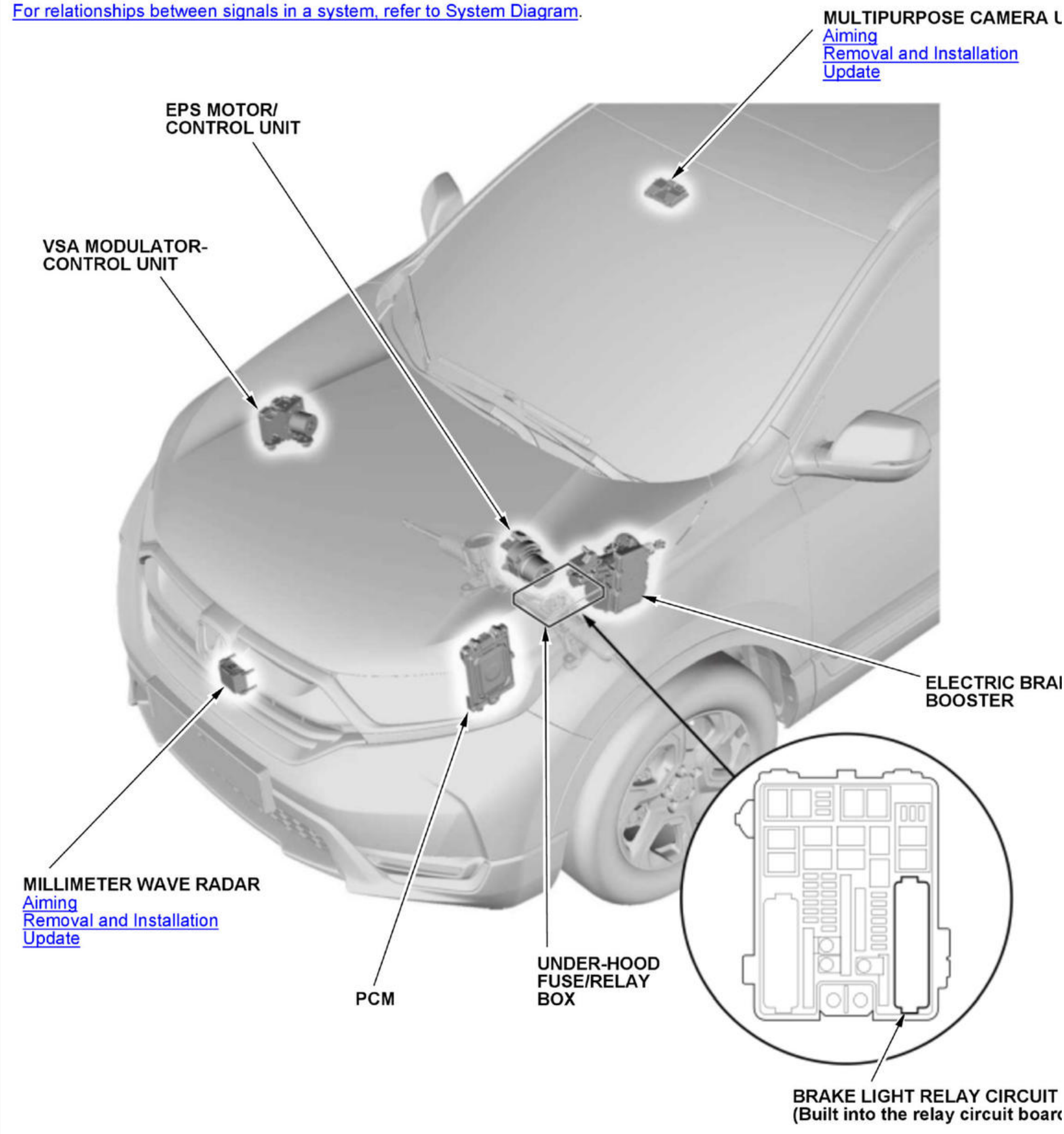
MULTIPURPOSE CAMERA U
Aiming
Removal and Installation
Update
EPS MOTOR/ CONTROL UNIT
VSA MODULATOR-CONTROL UNIT
ELECTRIC BRA
BOOSTER
MILLIMETER WAVE RADAR
Aiming
Removal and Installation
Update
PCM
UNDER-HOOD FUSE/RELAY BOX
BRAKE LIGHT RELAY CIRCUIT
(Built into the relay circuit boar

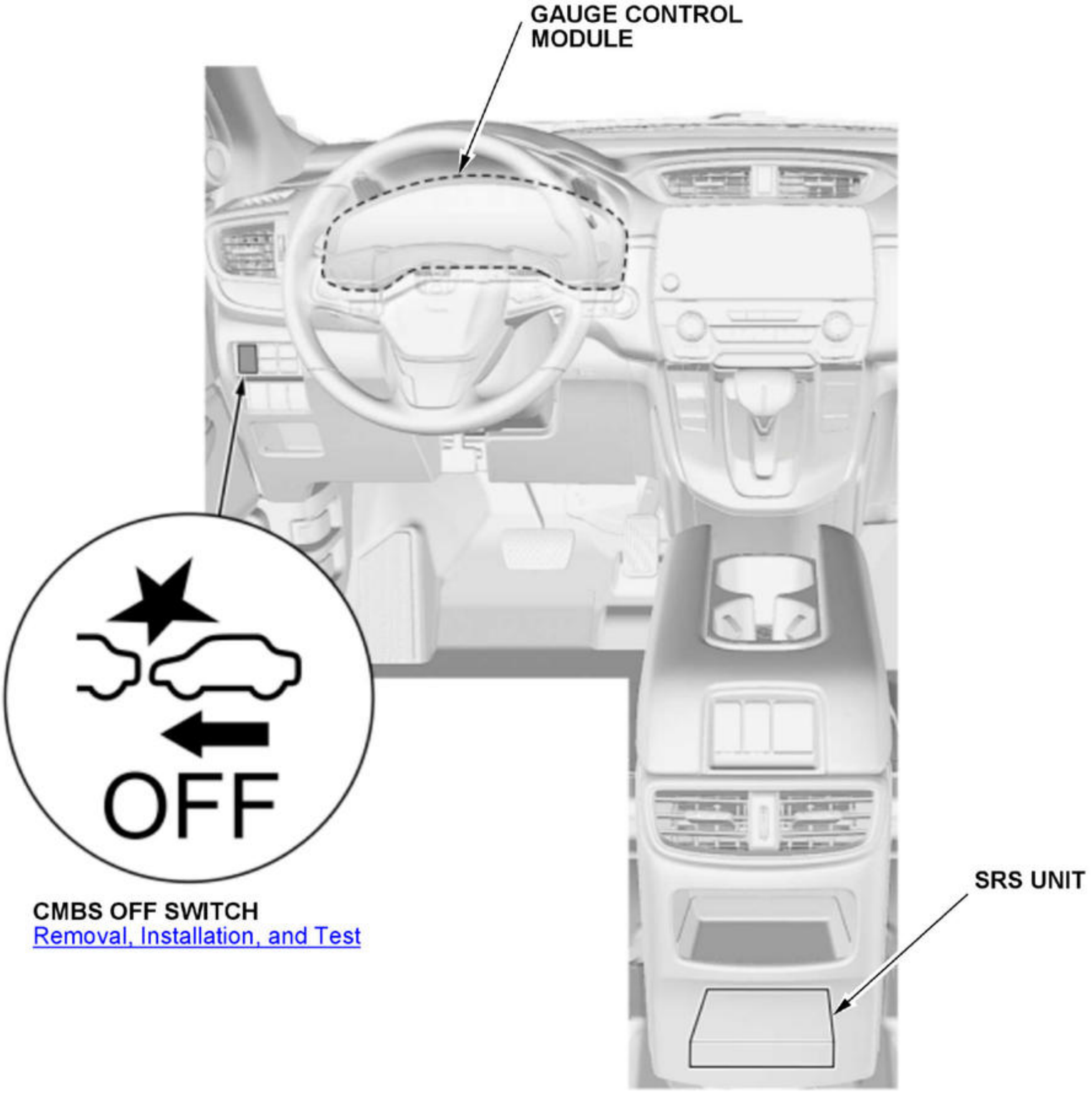
GAUGE CONTROL MODULE
OFF
CMBS OFF SWITCH
Removal, Installation, and Test
SRS UNIT

Position of the CMBS OFF switch is different depending on the model.

CRUISE CONTROL COMPONENT LOCATION INDEX

For relationships between signals in a system, refer to System Diagram.

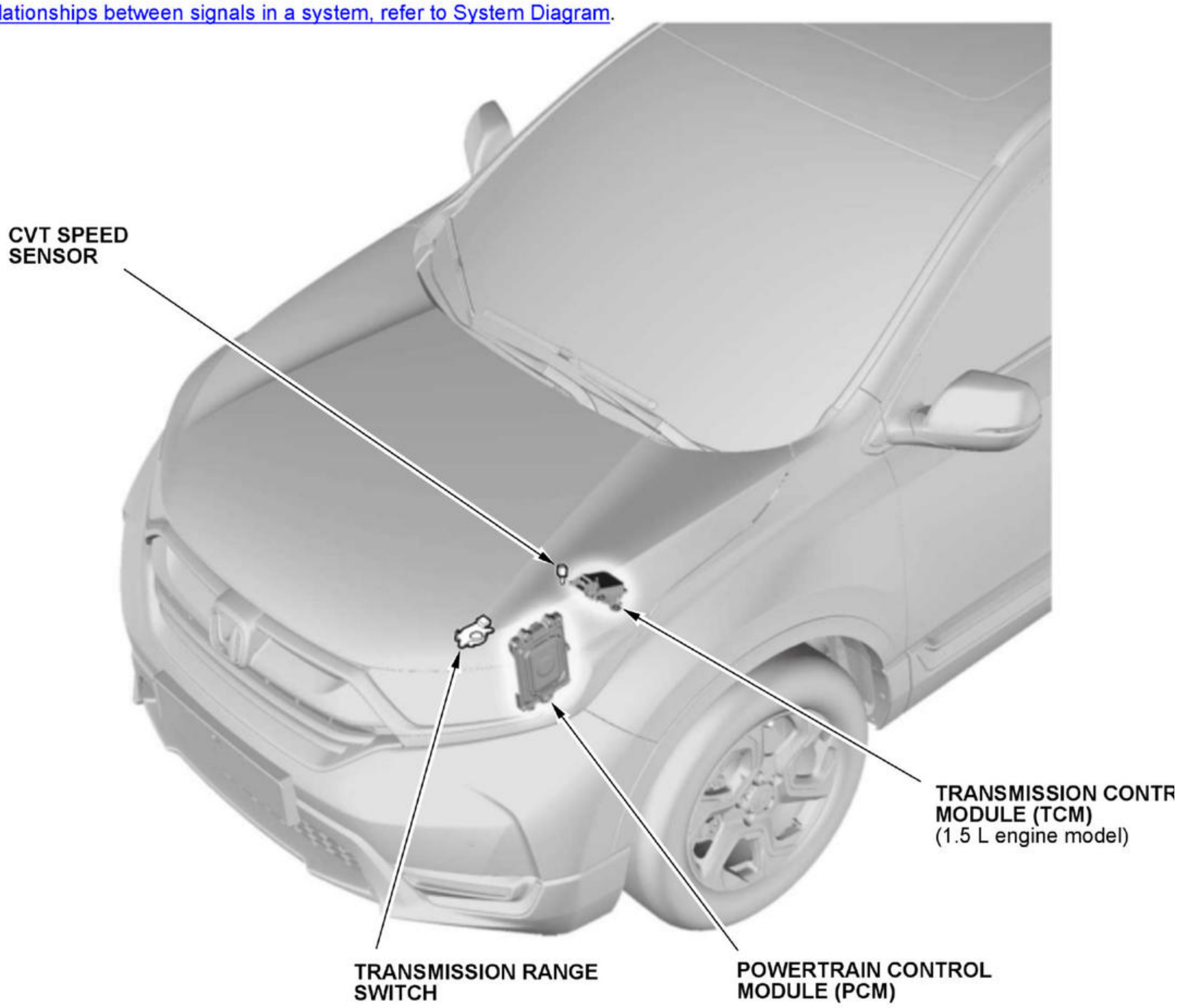
CVT SPEED SENSOR
TRANSMISSION CONTR
MODULE (TCM)
(1.5 L engine model)
TRANSMISSION RANGE SWITCH
POWERTRAIN CONTROL MODULE (PCM)

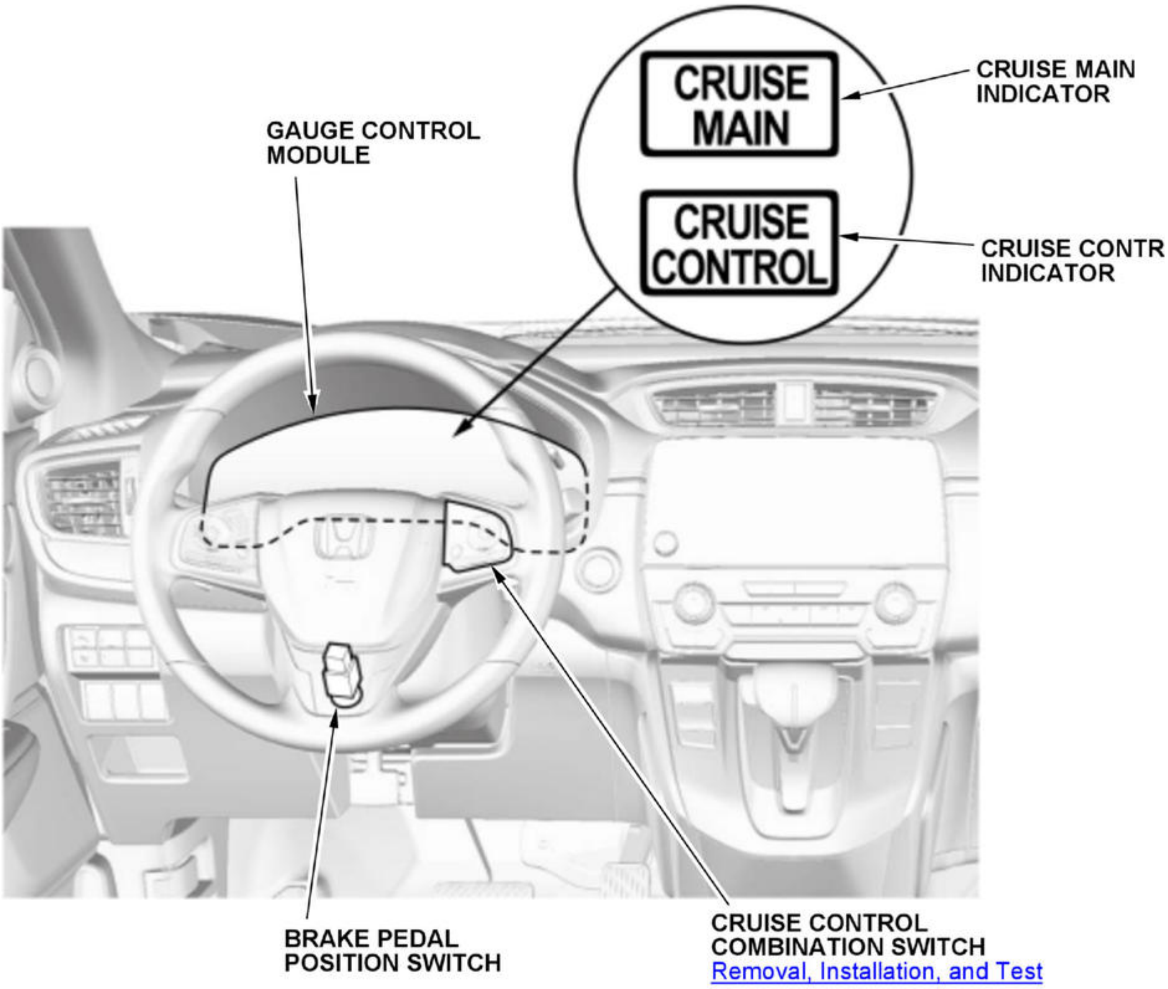
CRUISE MAIN INDICATOR
CRUISE MAIN
CRUISE CONTROL
GAUGE CONTROL MODULE
CRUISE CONTR INDICATOR
BRAKE PEDAL POSITION SWITCH
CRUISE CONTROL COMBINATION SWITCH
Removal, Installation, and Test

LANE KEEPING ASSIST SYSTEM (LKAS) COMPONENT LOCATION INDEX

For relationships between signals in a system, refer to System Diagram.

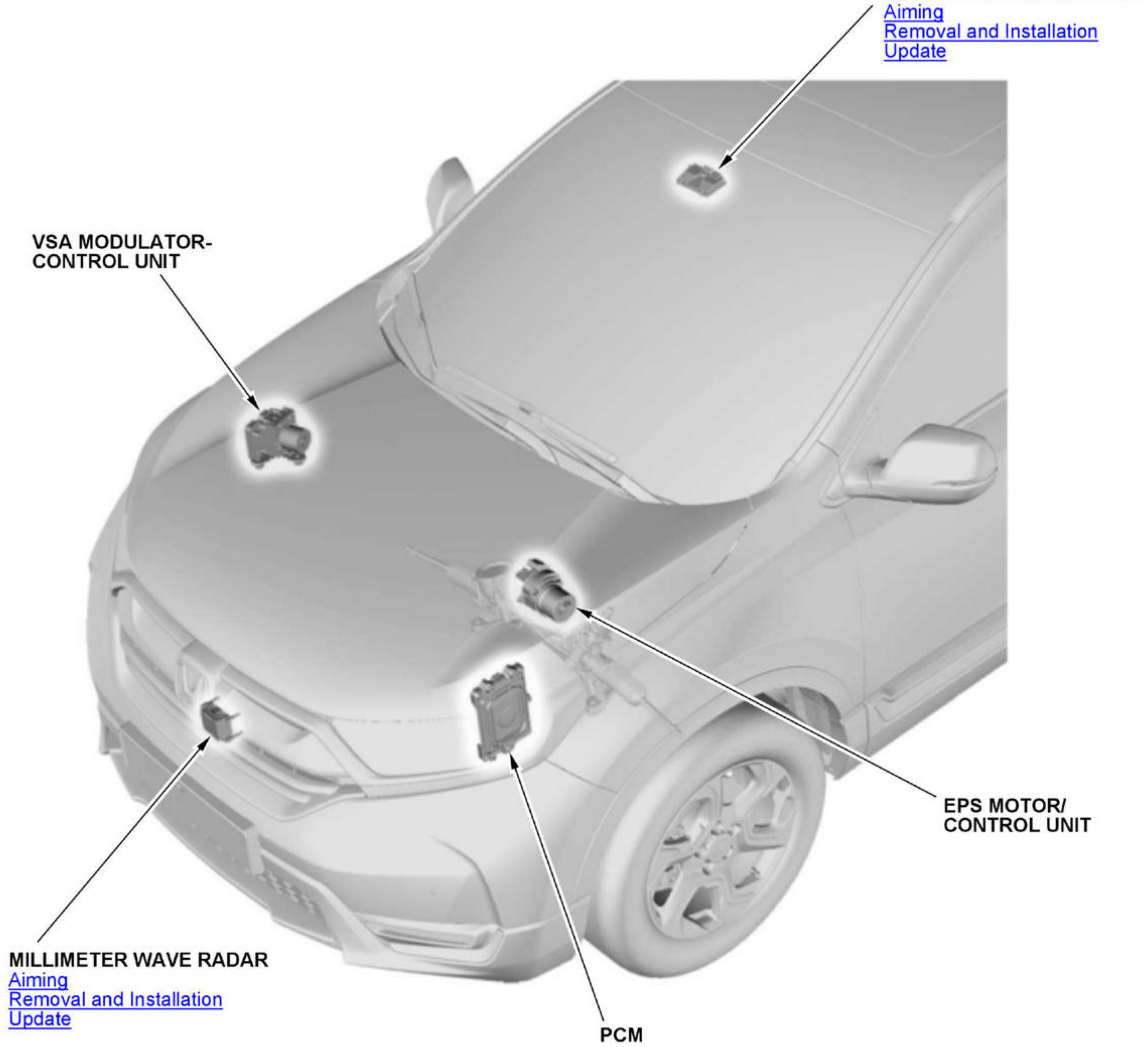
MULTIPURPOSE CAMERA U
Aiming
Removal and Installation
Update
VSA MODULATOR-CONTROL UNIT
EPS MOTOR/ CONTROL UNIT
MILLIMETER WAVE RADAR
Aiming
Removal and Installation
Update
PCM

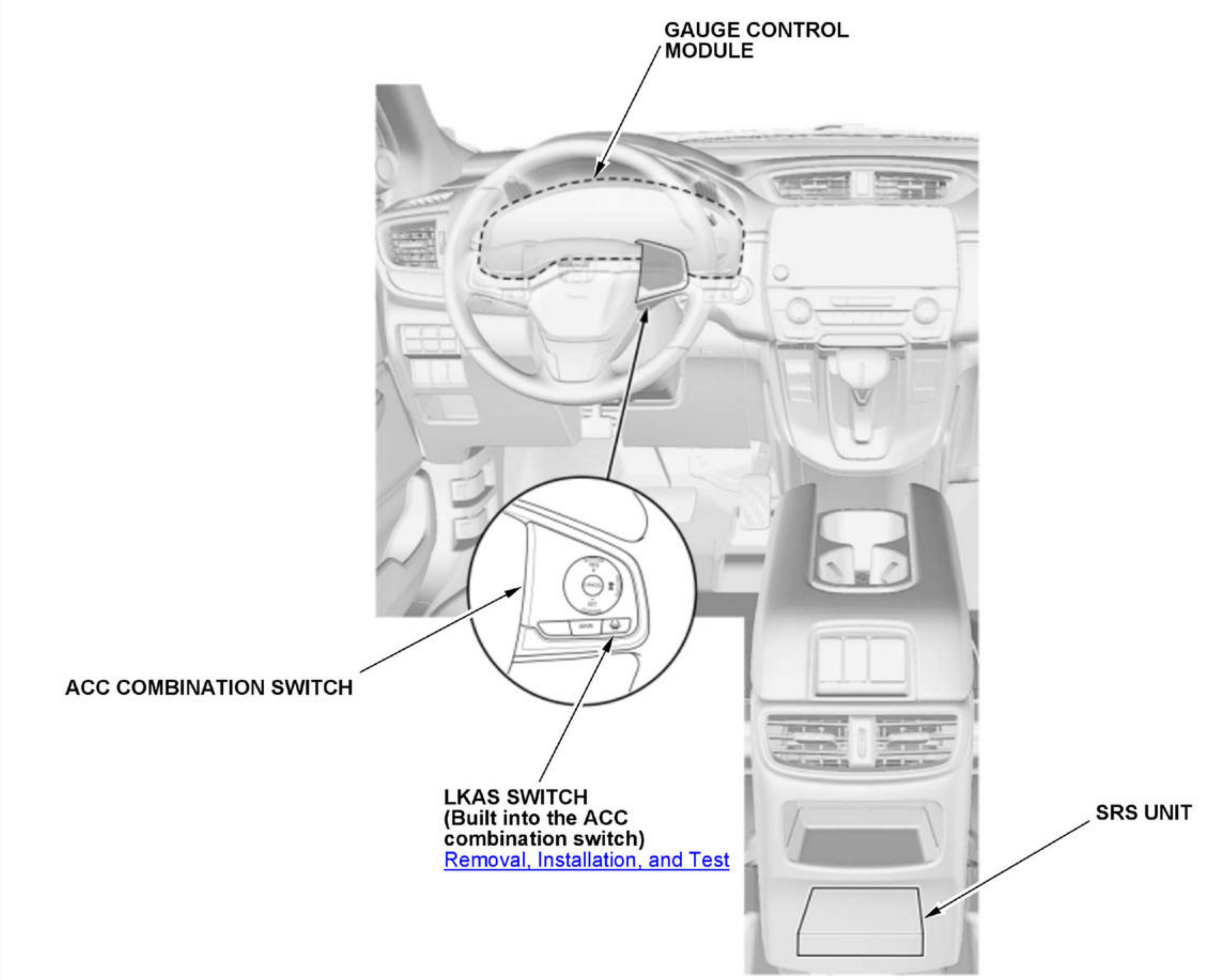
GAUGE CONTROL MODULE
ACC COMBINATION SWITCH
LKAS SWITCH (Built into the ACC combination switch)
Removal, Installation, and Test
SRS UNIT

Position of the MAIN switch is different depending on the model.

SYMPTOM TROUBLESHOOTING

ADAPTIVE CRUISE CONTROL (ACC) SYMPTOM TROUBLESHOOTING - ACC ACTIVATION INDICATOR (ON THE MID) DOES NOT COME ON

ACC activation indicator (on the MID) does not come on

1. Gauge control module operation check

   -1. Do the gauge control module self-diagnostic function .

   Is the gauge control module OK?

   YES

   Go to step 2.

   NO

   Replace the gauge control module .

2. ACC combination switch check

   -1. Turn the vehicle to the OFF (LOCK) mode.

   -2. Test the ACC combination switch .

   Is the switch OK?

   YES

   Go to step 3.

   NO

   Replace the ACC combination switch .

3. Open wire check (CRUISE SW line)

-1. Disconnect the following connector.

ACC combination switch 12P connector

-2. Turn the vehicle to the ON mode.

-3. Measure the voltage between test points 1 and 2.

Test condition	Vehicle ON mode
B	ACC combination switch 12P connector: disconnected
Test point 1	ACC combination switch 12P connector (female terminals) No. 6: ①
Test point 2	Body ground

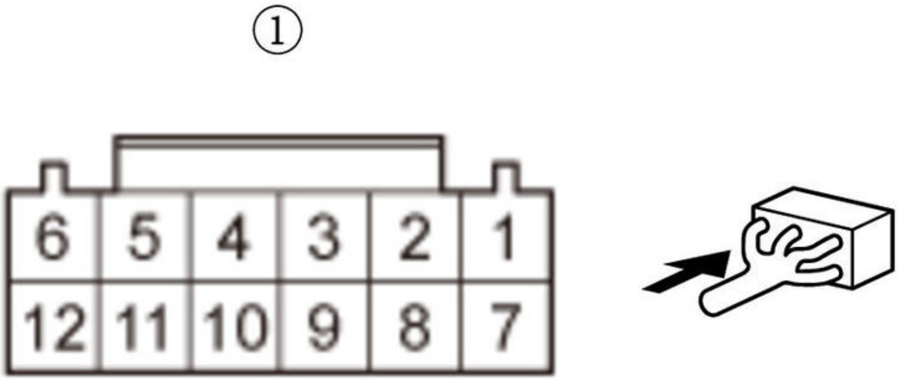

Is there about 5 V?

YES

Repair an open in the CRUISE GND wire between the ACC combination switch and the gauge control module.

NO

Repair an open in the CRUISE SW wire between the ACC combination switch and the gauge control module.

ADAPTIVE CRUISE CONTROL (ACC) SYMPTOM TROUBLESHOOTING - ACC ACTIVATION INDICATOR (ON THE MID) DOES NOT GO OFF

ACC activation indicator (on the MID) does not go off

1. Gauge control module operation check

-1. **Do the gauge control module self-diagnostic function** .

Is the gauge control module OK?

YES

Go to step 2.

NO

Replace the gauge control module .

2. ACC combination switch check

-1. Turn the vehicle to the OFF (LOCK) mode.

-2. **Test the ACC combination switch** .

Is the switch OK?

YES

Repair a short to ground in the CRUISE GND wire between the ACC combination switch and the gauge control module.

NO

Replace the ACC combination switch .

ADAPTIVE CRUISE CONTROL (ACC) SYMPTOM TROUBLESHOOTING - ACC INDICATOR (ON THE MID) DOES NOT COME ON

ACC indicator (on the MID) does not come on

NOTE: ***1: Without auto idle stop system**
***2: With auto idle stop system**

1. Gauge control module operation check

-1. Turn the vehicle to the ON mode.

Check the following indicators in the gauge control module:

- Malfunction indicator lamp (MIL)
- Brake system indicator
- 12 volt charging system indicator

Do the indicators come on?

YES

Go to the gauge control module self-diagnostic function .

NO

Go to step 2.

2. Fuse check

-1. Turn the vehicle to the OFF (LOCK) mode.

-2. Check the following fuse.

Fuse	No. D7 (10 A) *1No. F6 (5 A) *2
Location	Under-dash fuse/relay box *1Auxiliary under-dash fuse/relay box *2

Is the fuse OK?

YES

The fuse is OK. Reinstall the fuse, then go to step 3.

NO

Replace the fuse. Turn the vehicle to the ON mode, then the OFF (LOCK) mode. If the fuse blows again, repair the short to ground on the No. D7 (10 A) *1/F6 (5
circuit.

3. Open wire check (IG1 METER *1/IG1 VST *2 line):-1.

Disconnect the following connector.

Gauge control module connector A (32P)

-2. Turn the vehicle to the ON mode.

-3. Measure the voltage between test points 1 and 2.

Test condition	Vehicle ON mode
B	Gauge control module connector A (32P): disconnected
Test point 1	**Gauge control module connector A (32P) No. 17**
Test point 2	Body ground

Is there battery voltage?

YES

Replace the gauge control module .

NO

Repair an open in the IG1 METER *1/IG1 VST *2 wire between the under-dash fuse/relay box *1/auxiliary under-dash fuse/relay box *2 and the gauge control n

ADAPTIVE CRUISE CONTROL (ACC) SYMPTOM TROUBLESHOOTING - ACC INDICATOR (ON THE MID) DOES NOT GO OFF

ACC indicator (on the MID) does not go off

NOTE: ***1: Without auto idle stop system**
***2: With auto idle stop system**

***3: CAN gateway 12P connector type**

***4: CAN gateway 16P connector type**

1. DTCs check

   -1. Check for DTCs with the HDS.

DTC Description	DTC
B	B

   DTC (IDAS)

   Are any DTCs indicated?

   YES

   Go to the indicated DTC's troubleshooting .

   NO

   Go to step 2.

2. CAN gateway system DTC check

   -1. Turn the vehicle to the ON mode.

   -2. Check for DTCs with the HDS.

DTC Description	DTC
U0029-00 CAN Gateway F-CAN ch A Bus Off	B
U0047-00 CAN Gateway F-CAN ch B Bus Off	B
U3000-49 CAN Gateway Internal Failure	B

   Is DTC U0029-00, U0047-00, and/or U3000-49 indicated?

   YES

   Go to the indicated DTCs troubleshooting .

   NO

   Go to step 3.

3. Fuse check 1

   -1. Turn the vehicle to the OFF (LOCK) mode.

   -2. Check the following fuse.

Fuse	No. D5 (10 A) *1No. F7 (7.5 A) *2
Location	Under-dash fuse/relay box *1Auxiliary under-dash fuse/relay box *2

   Is the fuse OK?

   YES

   The fuse is OK. Reinstall the fuse, then go to step 4.

   NO

   Replace the fuse. Turn the vehicle to the ON mode, then to the OFF (LOCK) mode. If the fuse blows again, repair the short to ground on the No. D5 (10 A) *1/F7 fuse circuit.

4. Fuse check 2

   -1. Check the following fuse.

Fuse	No. D7 (10 A) *1No. F6 (5 A) *2
Location	Under-dash fuse/relay box *1Auxiliary under-dash fuse/relay box *2

   Is the fuse OK?

   YES

   The fuse is OK. Reinstall the fuse, then go to step 5.

   NO

   Replace the fuse. Turn the vehicle to the ON mode, then to the OFF (LOCK) mode. If the fuse blows again, repair the short to ground on the No. D7 (10 A) *1/F6 circuit.

5. Gauge control module operation check

   -1. Turn the vehicle to the ON mode.

   -2. Check if all of the gauge indicators come on for a few seconds.

Do all the gauge indicators on?

YES

Go to step 6.

NO

Go to the gauge control module self-diagnostic function .

6. Open wire check (IG1 OPTION *1/IG1 EBB *2 line):-1.

Turn the vehicle to the OFF (LOCK) mode.

-2. Disconnect the following connector.

Millimeter wave radar 8P connector

-3. Turn the vehicle to the ON mode.

-4. Measure the voltage between test points 1 and 2.

Test condition	Vehicle ON mode
B	Millimeter wave radar 8P connector: disconnected
Test point 1	**Millimeter wave radar 8P connector No. 1**
Test point 2	Body ground

Is there battery voltage?

YES

The IG1 OPTION *1/IG1 EBB *2 wire is OK. Go to step 7.

NO

Repair an open in the wire between the millimeter wave radar and the under-dash fuse/relay box *1/auxiliary under-dash fuse/relay box *2.

7. Open wire check (GND line)

-1. Turn the vehicle to the OFF (LOCK) mode.

-2. Check for continuity between the following test points and body ground individually.

Test condition	Vehicle OFF (LOCK) mode
B	Millimeter wave radar 8P connector: disconnected
Test point 1	**Millimeter wave radar 8P connector No. 8**
Test point 2	Body ground

Is there continuity?

YES

Go to step 8.

NO

Repair an open in the wire between the millimeter wave radar and body ground at G251.

8. F-CAN circuit communication check

-1. Reconnect the following connector.

Millimeter wave radar 8P connector

-2. Turn the vehicle to the ON mode.

-3. Select the FUNCTION TEST in the CAN gateway with the HDS, then select the F-CAN Bus Connected Unit Check.

F-CAN Bus Connected Unit Check

Which result is indicated?

Gauge control module (Bus A) is Not Available

Go to step 9.

Millimeter wave radar (Bus B) is Not Available

Go to step 10.

Millimeter wave radar and gauge control module are Detected

Intermittent failure, the system is OK at this time. **Refer to intermittent failures troubleshooting** .

9. Open wire check (F-CAN A_H, F-CAN A_L lines)

-1. Turn the vehicle to the OFF (LOCK) mode.

-2. Disconnect the following connectors.

CAN gateway 12P connector *3CAN gateway 16P connector *4
Gauge control module connector A (32P)

-3. Check for continuity between test points 1 and 2.

Test condition	Vehicle OFF (LOCK) mode
B	CAN gateway 12P connector *3: disconnectedCAN gateway 16P connector *4: disconnected
B	Gauge control module connector A (32P): disconnected
Test point 1	CAN gateway 12P connector *3 (female terminals) No. 3: ① CAN gateway 16P connector *4 (female terminals) No. 3: ②
Test point 2	**Gauge control module connector A (32P) No. 19**

Test point 1	CAN gateway 12P connector *3 (female terminals) No. 9: ① CAN gateway 16P connector *4 (female terminals) No. 11: ②
Test point 2	**Gauge control module connector A (32P) No. 20**

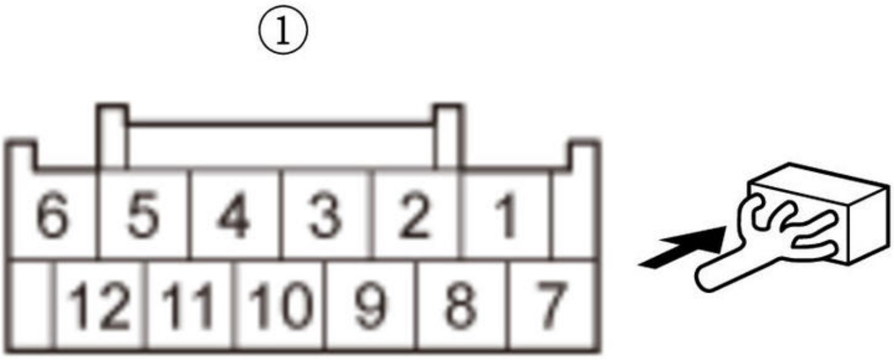

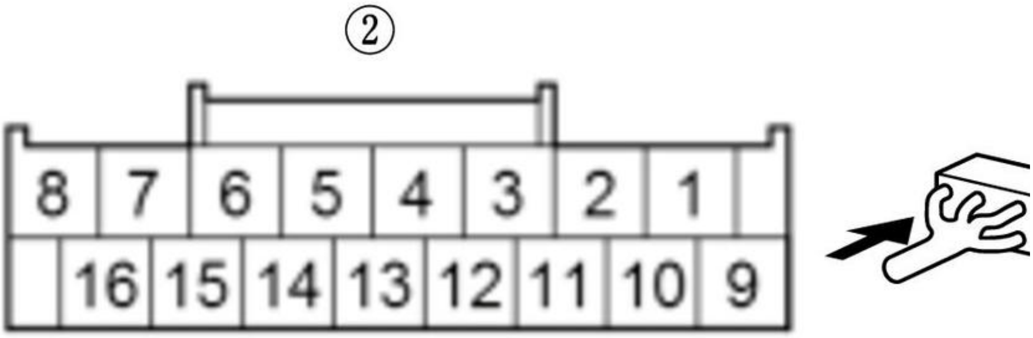

Is there continuity?

YES

Check for loose terminals in the CAN gateway 12P *3/16P *4 connector and gauge control module connector A (32P). If they are OK, **substitute a known-good control module** , then retest. If the indicators come on then go off after substitution, **replace the original gauge control module** .

NO

Repair an open in the wire between the gauge control module and the CAN gateway.

10. Open wire check (F-CAN B_H, F-CAN B_L lines)

-1. Turn the vehicle to the OFF (LOCK) mode.

-2. Disconnect the following connectors.

CAN gateway 12P connector *3CAN gateway 16P connector *4
Millimeter wave radar 8P connector

-3. Check for continuity between test points 1 and 2.

Test condition	Vehicle OFF (LOCK) mode
B	CAN gateway 12P connector *3: disconnectedCAN gateway 16P connector *4: disconnected
B	Millimeter wave radar 8P connector: disconnected
Test point 1	CAN gateway 12P connector *3 (female terminals) No. 12: ① CAN gateway 16P connector *4 (female terminals) No. 6: ②
Test point 2	**Millimeter wave radar 8P connector No. 7**

Test point 1	CAN gateway 12P connector *3 (female terminals) No. 5: ① CAN gateway 16P connector *4 (female terminals) No. 14: ②
Test point 2	**Millimeter wave radar 8P connector No. 6**

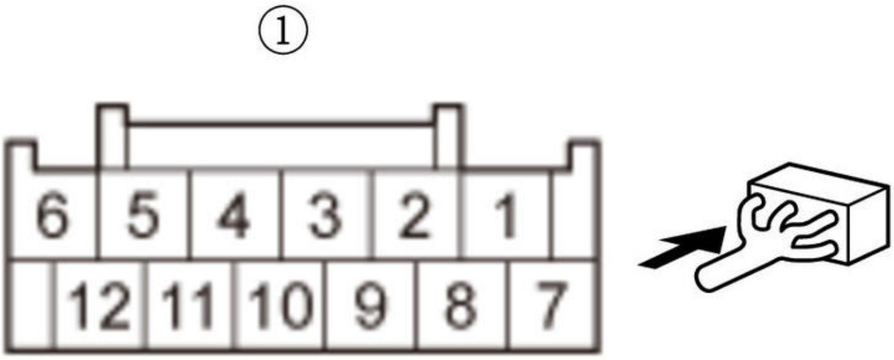

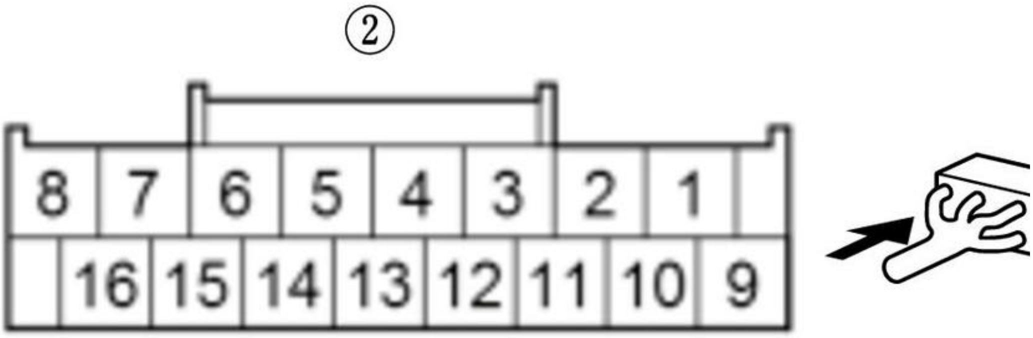

Is there continuity?

YES

Check for loose terminals and poor connections in the millimeter wave radar 8P connector. Check for any authorized service information related to the DTCs or s are troubleshooting. If they are OK, **replace millimeter wave radar** .

NO

Repair an open in the wire between the millimeter wave radar and the CAN gateway.

ADAPTIVE CRUISE CONTROL (ACC) SYMPTOM TROUBLESHOOTING - DOES NOT SENSE THE VEHICLE DRIVING AHEAD

Does not sense the vehicle driving ahead

1. All condition check

-1. Find out if the detection problem occurs under all conditions.

Does it occur under all conditions?

YES

The millimeter wave radar vertical aiming is incorrect. **Aim the millimeter wave radar** .

NO

Go to step 2.

2. Road condition check

   -1. Find out if the detection problem occurs only on a particular road such as a winding road, an entrance of a corner, an exit of a corner, a tight corner, or a bad ro

   Does it occur only on a particular road?

   YES

   Explain to the customer that the system sometimes cannot detect under certain road conditions.

   NO

   Go to step 3.

3. Weather condition check

   -1. Find out if the detection problem occurs only under poor weather conditions such as fog, snow, heavy rain, or gusty winds.

   Does it occur only under poor weather conditions?

   YES

   Explain to the customer that the system sometimes cannot detect under poor weather conditions.

   NO

   Go to step 4.

4. Driving condition check:

   Find out if the detection problem occurs only when the vehicle ahead drives under these conditions:

   - Merged into the lane suddenly.
   - Closing on a vehicle within 4 m (13 ft).

   Does it occur only under certain driving conditions?

   YES

   Explain to the customer that the system sometimes cannot detect under certain driving conditions.

   NO

   Go to step 5.

5. Millimeter wave radar aiming check

   -1. Confirm if the radar detects vehicles driving in another lane.

   Does it detect vehicles in other lanes?

   YES

   The millimeter wave radar horizontal aiming is incorrect. **Aim the millimeter wave radar** .

   NO

   Go to step 6.

6. Other component check

   -1. Confirm if the detection problem is caused by instability.

   NOTE: If the cause of the misdetection or undetectable problems is unclear, it is possible that the problem was caused by environmental conditions. Explain to th that intermittent failures are sometimes caused by environmental conditions.

   Is the vehicle unstable? (Compare it to a known-good, like vehicle.)

   YES

   Check other components such as VSA modulator-control unit or wheel speed sensors, etc.

   NO

   Go to step 7.

7. Heavy load check

   -1. Check if there is a heavy load on the vehicle.

   Is there a heavy load on the vehicle?

   YES

   Remove the heavy load from the vehicle. Advise the customer that this problem may occur temporarily when hauling heavy loads.

   NO

   Go to step 8.

8. Millimeter wave radar and front grille check

   -1. Check for dirt, dust, or snow on the surface of the millimeter wave radar and the front grille.

   Are the millimeter wave radar and front grille OK?

   YES

   Go to step 9.

   NO

   Clean the millimeter wave radar and the front grille.

9. Vehicle ride height check

   -1. Measure the front and rear vehicle ride height.

   Is the vehicle ride height equal?

   YES

   Intermittent failure, the system is OK at this time. **Refer to intermittent failures troubleshooting** .

   NO

   Inspect the suspension for damage, and compare ride height to a known-good vehicle. **Adjust the wheel alignment as needed** .

ADAPTIVE CRUISE CONTROL (ACC) SYMPTOM TROUBLESHOOTING - INTERMITTENTLY SENSES THE VEHICLE DRIVING AHEAD

Intermittently senses the vehicle driving ahead

1. Road condition check

   -1. Find out if the detection problem occurs only on a particular road such as a winding road, an entrance of a corner, an exit of a corner, a tight corner, or a bad ro

   Does it occur only on a particular road?

   YES

   Explain to the customer that the system sometimes cannot detect under certain road conditions.

   NO

   Go to step 2.

2. Weather condition check

   -1. Find out if the detection problem occurs only under poor weather conditions such as fog, snow, heavy rain, or gusty winds.

   Does it occur only under poor weather conditions?

   YES

   Explain to the customer that the system sometimes cannot detect under poor weather conditions.

   NO

   Go to step 3.

3. Driving condition check:

   Find out if the detection problem occurs only when the vehicle ahead drives under these conditions:

   - Merged into the lane suddenly.
   - Closing on a vehicle within 4 m (13 ft).

   Does it occur only under certain driving conditions?

   YES

   Explain to the customer that the system sometimes cannot detect under certain driving conditions.

   NO

   Go to step 4.

4. Millimeter wave radar aiming check

   -1. Confirm if the radar detects vehicles driving in another lane.

   Does it detect vehicles in other lanes?

   YES

   The millimeter wave radar horizontal aiming is incorrect. **Aim the millimeter wave radar aiming** .

   NO

   Go to step 5.

5. All condition check

   -1. Find out if the detection problem occurs under all conditions.

   Does it occur under all conditions?

   YES

   The millimeter wave radar vertical aiming is incorrect. **Aim the millimeter wave radar aiming** .

   NO

   Go to step 6.

6. Other component check

   -1. Confirm if the detection problem is caused by instability.

   NOTE: If the cause of the misdetection or undetectable problems is unclear, it is possible that the problem was caused by environmental conditions. Explain to th that intermittent failures are sometimes caused by environmental conditions.

   Is the vehicle unstable? (Compare it to a known-good, like vehicle.)

   YES

   Check other components such as VSA modulator-control unit or wheel speed sensors, etc.

   NO

   Go to step 7.

7. Heavy load check

   -1. Check if there is a heavy load on the vehicle.

   Was there a heavy load on the vehicle?

   YES

   Remove the heavy load from the vehicle. Advise the customer that this problem may occur temporarily when hauling heavy loads.

   NO

   Go to step 8.

8. Millimeter wave radar and front grille check

   -1. Check for dirt, dust, or snow on the surface of the millimeter wave radar and the front grille.

   Are the millimeter wave radar and front grille OK?

   YES

   Go to step 9.

   NO

   Clean the millimeter wave radar and the front grille.

9. Vehicle's history check

   -1. Check the vehicle's history for front end collision repairs.

   Has the vehicle been in a collision and repaired?

   YES

   Go to step 10.

   NO

   Go to step 12.

10. Millimeter wave radar installing check

   -1. Check if the millimeter wave radar and its bracket are installed correctly, and also check if the vehicle frame is straight.

   Are all parts installed correctly?

   YES

   Go to step 11.

   NO

   Reinstall the part correctly, or if damaged, replace the part, then **aim the millimeter wave radar** .

11. Vehicle ride height check

   -1. Measure the front and rear vehicle ride height.

   Is the vehicle ride height equal?

YES

Go to step 12.

NO

Inspect the suspension for damage, and compare ride height to a known-good vehicle. **Adjust the wheel alignment as needed** .

12. Wheel alignment check

    -1. **Check the wheel alignment** .

    Is the wheel alignment OK?

    YES

    Aim the millimeter wave radar .

    NO

    Adjust the wheel alignment .

ADAPTIVE CRUISE CONTROL (ACC) SYMPTOM TROUBLESHOOTING - SENSES A VEHICLE DRIVING IN ANOTHER LANE

Senses a vehicle driving in another lane

1. Problem verification 1

   -1. Find out when and under what conditions the system has misdetections.

   Do they occur within 20 minutes or less?

   YES

   Go to step 2.

   NO

   Explain to the customer that system misdetections are sometimes caused by the environment (weather, road conditions, driving conditions, etc.).

2. Problem verification 2

   -1. Find out if the detection problem occurs only with certain types of vehicles (dirty vehicle, tall vehicle, motorcycle, or special vehicle).

   Does it occur only with certain types of vehicles?

   YES

   Explain to the customer that the system sometimes cannot detect certain vehicle types.

   NO

   Go to step 3.

3. Vehicle's history check

   -1. Check the vehicle's history for front end collision repairs.

   Has the vehicle been in a collision and repaired?

   YES

   Go to step 4.

   NO

   Go to step 5.

4. Millimeter wave radar installing check

   -1. Check if the millimeter wave radar and its bracket are installed correctly, and also check if the vehicle frame is straight.

   Are all parts installed correctly?

   YES

   Go to step 5.

   NO

   Reinstall the part correctly, or if damaged, replace the part, then **aim the millimeter wave radar** .

5. Wheel alignment check

   -1. **Check the wheel alignment** .

   Is the wheel alignment OK?

   YES

   Aim the millimeter wave radar .

NO

Adjust the wheel alignment .

COLLISION MITIGATION BRAKING SYSTEM (CMBS) SYMPTOM TROUBLESHOOTING - CMBS INDICATOR (ON THE MID) DOES NOT GO OF

CMBS indicator (on the MID) does not go off

1. DTCs check

   -1. Turn the vehicle to the ON mode.

   -2. Check for DTCs with the HDS.

DTC Description	DTC
B	B

   DTC (IDAS)

   Are any DTCs indicated?

   YES

   Go to the indicated DTC's troubleshooting .

   NO

   Go to step 2.

2. VSA system DTCs check

   -1. Check for VSA system DTCs with the HDS.

DTC Description	DTC
B	B

   Are any DTCs indicated?

   YES

   Go to the indicated DTC's troubleshooting .

   NO

   Go to step 3.

3. PGM-FI system DTCs check

   -1. Check for PGM-FI system DTCs with the HDS.

DTC Description	Confirmed DTC	Pending DTC
B	B	B

   Are any DTCs indicated?

   YES

   Go to the indicated DTC's troubleshooting .

   NO

   Go to step 4.

4. Gauge control module operation check

   -1. **Do the gauge control module self-diagnostic function** .

   Is the gauge control module OK?

   YES

   Go to step 5.

   NO

   Replace the gauge control module .

5. CMBS OFF switch check

   -1. **Test the CMBS OFF switch** .

   Is the switch OK?

   YES

   Check for loose terminals and poor connections in the millimeter wave radar 8P connector. Check for any authorized service information related to the DTCs or s are troubleshooting. If they are OK, **replace millimeter wave radar** .

   NO

Replace the CMBS OFF switch .

LANE KEEPING ASSIST SYSTEM (LKAS) SYMPTOM TROUBLESHOOTING - LKAS ACTIVATION INDICATOR (ON THE MID) DOES NOT COME

1. Gauge control module operation check

-1. **Do the gauge control module self-diagnostic function** .

Is the gauge control module OK?

YES

Go to step 2.

NO

Replace the gauge control module .

2. ACC combination switch check

-1. Turn the vehicle to the OFF (LOCK) mode.

-2. **Test the ACC combination switch** .

Is the switch OK?

YES

Go to step 3.

NO

Replace the ACC combination switch .

3. Open wire check (CRUISE SW line)

-1. Disconnect the following connector.

ACC combination switch 12P connector

-2. Turn the vehicle to the ON mode.

-3. Measure the voltage between test points 1 and 2.

Test condition	Vehicle ON mode
B	ACC combination switch 12P connector: disconnected
Test point 1	ACC combination switch 12P connector (female terminals) No. 6: ①
Test point 2	Body ground

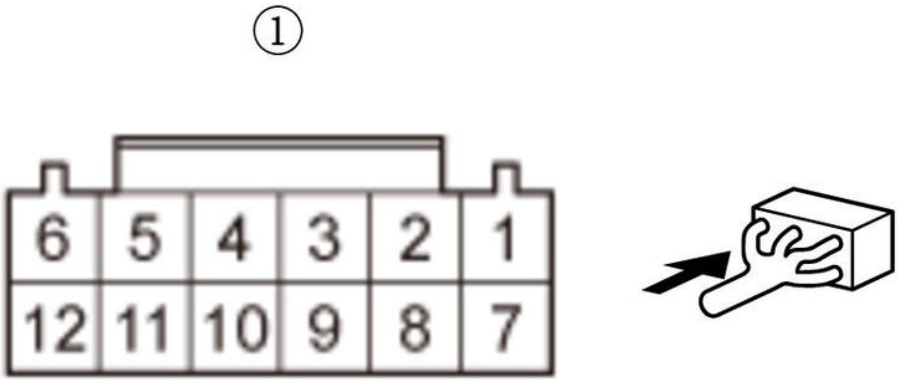

Is there about 5 V?

YES

Repair an open in the CRUISE GND wire between the ACC combination switch and the gauge control module.

NO

Repair an open in the CRUISE SW wire between the ACC combination switch and the gauge control module.

LANE KEEPING ASSIST SYSTEM (LKAS) SYMPTOM TROUBLESHOOTING - LKAS ACTIVATION INDICATOR (ON THE MID) DOES NOT GO OF

1. Gauge control module operation check

-1. Do the gauge control module self-diagnostic function .

Is the gauge control module OK?

YES

Go to step 2.

NO

Replace the gauge control module .

2. ACC combination switch check

-1. Turn the vehicle to the OFF (LOCK) mode.

-2. Test the ACC combination switch .

Is the switch OK?

YES

Repair a short to ground in the wire between the ACC combination switch and the gauge control module.

NO

Replace the ACC combination switch .

LANE KEEPING ASSIST SYSTEM (LKAS) SYMPTOM TROUBLESHOOTING - LKAS INDICATOR (ON THE MID) DOES NOT COME ON

*1: Without auto idle stop system
*2: With auto idle stop system

1. Gauge control module operation check

-1. Turn the vehicle to the ON mode.

Check the following indicators in the gauge control module:

- Malfunction indicator lamp (MIL)
- Brake system indicator
- 12 volt charging system indicator

Do the indicators come on?

YES

Go to the gauge control module self-diagnostic function .

NO

Go to step 2.

2. Fuse check

-1. Turn the vehicle to the OFF (LOCK) mode.

-2. Check the following fuse.

Fuse	No. D7 (10 A) *1No. F6 (5 A) *2
Location	Under-dash fuse/relay box *1Auxiliary under-dash fuse/relay box *2

Is the fuse OK?

YES

The fuse is OK. Reinstall the fuse, then go to step 3.

NO

Replace the fuse. Turn the vehicle to the ON mode then the OFF (LOCK) mode. If the fuse blows again, repair the short to ground on the No. D7 (10 A) *1/F6 (5 circuit.

3. Open wire check (IG1 METER *1/IG1 VST *2 line):-1.

Disconnect the following connector.

Gauge control module connector A (32P)

-2. Turn the vehicle to the ON mode.

-3. Measure the voltage between test points 1 and 2.

Test condition	Vehicle ON mode
B	Gauge control module connector A (32P): disconnected
Test point 1	**Gauge control module connector A (32P) No. 17**
Test point 2	Body ground

Is there battery voltage?

YES

Replace the gauge control module .

NO

Repair an open in the IG1 METER *1/IG1 VST *2 wire between the under-dash fuse/relay box *1/auxiliary under-dash fuse/relay box *2 and the gauge control m

LANE KEEPING ASSIST SYSTEM (LKAS) SYMPTOM TROUBLESHOOTING - LKAS INDICATOR (ON THE MID) DOES NOT GO OFF

NOTE:

***1: Without auto idle stop system**
***2: With auto idle stop system**
***3: CAN gateway 12P connector type**
***4: CAN gateway 16P connector type**

1. DTCs check

-1. Turn the vehicle to the ON mode.

-2. Check for DTCs with the HDS.

DTC Description	DTC
B	B

DTC (IDAS)

Are any DTCs indicated?

YES

Go to the indicated DTC's troubleshooting .

NO

Go to step 2.

2. CAN gateway system DTC check

-1. Check for DTCs with the HDS.

DTC Description	DTC
U0029-00 CAN Gateway F-CAN ch A Bus Off	B
U0047-00 CAN Gateway F-CAN ch B Bus Off	B
U3000-49 CAN Gateway Internal Failure	B

Is DTC U0029-00, U0047-00, and/or U3000-49 indicated?

YES

Go to the indicated DTCs troubleshooting .

NO

Go to step 3.

3. EPS system DTCs check

-1. Check for DTCs with the HDS.

DTC Description	DTC
B	B

Are any DTCs indicated?

YES

Go to the indicated DTC's troubleshooting .

NO

Go to step 4.

4. Fuse check 1

-1. Turn the vehicle to the OFF (LOCK) mode.

-2. Check the following fuse.

Fuse	No. D5 (10 A) *1No. F7 (7.5 A) *2

Location	Under-dash fuse/relay box *1Auxiliary under-dash fuse/relay box *2

Is the fuse OK?

YES

The fuse is OK. Reinstall the fuse, then go to step 5.

NO

Replace the fuse. Turn the vehicle to the ON mode, then to the OFF (LOCK) mode. If the fuse blows again, repair the short to ground on the No. D5 (10 A) *1/F7 fuse circuit.

5. Fuse check 2

-1. Check the following fuse.

Fuse	No. D7 (10 A) *1No. F6 (5 A) *2
Location	Under-dash fuse/relay box *1Auxiliary under-dash fuse/relay box *2

Is the fuse OK?

YES

The fuse is OK. Reinstall the fuse, then go to step 6.

NO

Replace the fuse. Turn the vehicle to the ON mode, then to the OFF (LOCK) mode. If the fuse blows again, repair the short to ground on the No. D7 (10 A) *1/F6 circuit.

6. Gauge control module operation check

-1. Turn the vehicle to the ON mode.

Do the indicators come on?

YES

Go to step 7.

NO

Go to the gauge control module self-diagnostic function .

7. Open wire check (IG1 OPTION *1/IG1 EBB *2 line):-1.

Turn the vehicle to the OFF (LOCK) mode.

-2. Disconnect the following connector.

Millimeter wave radar 8P connector

-3. Turn the vehicle to the ON mode.

-4. Measure the voltage between test points 1 and 2.

Test condition	Vehicle ON mode
B	Millimeter wave radar 8P connector: disconnected
Test point 1	**Millimeter wave radar 8P connector No. 1**
Test point 2	Body ground

Is there battery voltage?

YES

The IG1 OPTION *1/IG1 EBB *2 wire is OK. Go to step 8.

NO

Repair an open in the wire between the millimeter wave radar and the under-dash fuse/relay box *1/auxiliary under-dash fuse/relay box *2.

8. Open wire check (GND line)

-1. Turn the vehicle to the OFF (LOCK) mode.

-2. Check for continuity between test points 1 and 2.

Test condition	Vehicle OFF (LOCK) mode
B	Millimeter wave radar 8P connector: disconnected

Test point 1	**Millimeter wave radar 8P connector No. 8**
Test point 2	Body ground

Is there continuity?

YES

The GND wire is OK. Go to step 9.

NO

Repair an open in the wire between the millimeter wave radar and the body ground (G251).

9. F-CAN circuit communication check

-1. Reconnect the following connector.

Millimeter wave radar 8P connector

-2. Turn the vehicle to the ON mode.

-3. Select the FUNCTION TEST in the CAN gateway with the HDS, then select the F-CAN Bus Connected Unit Check.

F-CAN Bus Connected Unit Check

Which result is indicated?

Gauge control module (Bus A) is Not Available

Go to step 10.

Millimeter wave radar (Bus B) is Not Available

Go to step 11.

Millimeter wave radar and gauge control module are Detected

Intermittent failure, the system is OK at this time. **Refer to intermittent failures troubleshooting** .

10. Open wire check (F-CAN A_H, F-CAN A_L lines)

-1. Turn the vehicle to the OFF (LOCK) mode.

-2. Disconnect the following connectors.

CAN gateway 12P connector *3CAN gateway 16P connector *4
Gauge control module connector A (32P)

-3. Check for continuity between test points 1 and 2.

Test condition	Vehicle OFF (LOCK) mode
B	CAN gateway 12P connector *3: disconnectedCAN gateway 16P connector *4: disconnected
B	Gauge control module connector A (32P): disconnected
Test point 1	CAN gateway 12P connector *3 (female terminals) No. 3: ① CAN gateway 16P connector *4 (female terminals) No. 3: ②
Test point 2	**Gauge control module connector A (32P) No. 19**

Test point 1	CAN gateway 12P connector *3 (female terminals) No. 9: ① CAN gateway 16P connector *4 (female terminals) No. 11: ②

Test point 2	**Gauge control module connector A (32P) No. 20**

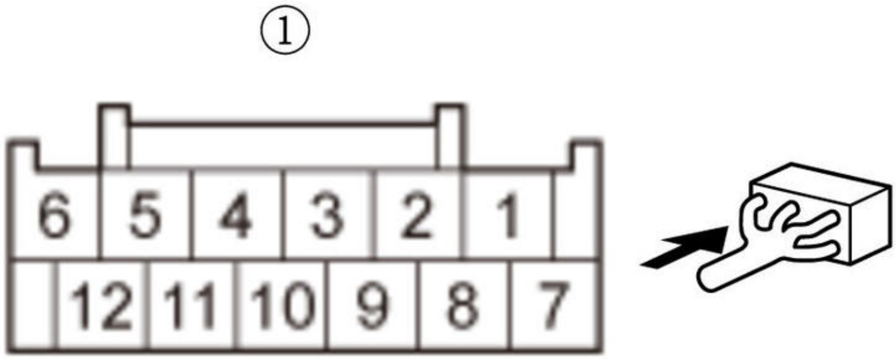

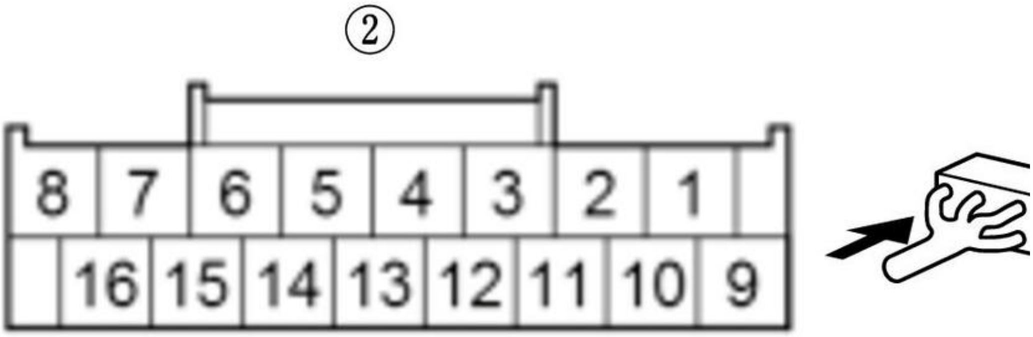

Is there continuity?

YES

Check for loose terminals in the CAN gateway 12P *3/16P *4 connector and gauge control module connector A (32P). If they are OK, **substitute a known-good control module** , then retest. If the indicators come on then go off after substitution, **replace the original gauge control module** .

NO

Repair an open in the wire between the gauge control module and the CAN gateway.

11. Open wire check (F-CAN B_H, F-CAN B_L lines)

-1. Turn the vehicle to the OFF (LOCK) mode.

-2. Disconnect the following connectors.

CAN gateway 12P connector *3CAN gateway 16P connector *4
Millimeter wave radar 8P connector

-3. Check for continuity between test points 1 and 2.

Test condition	Vehicle OFF (LOCK) mode
B	CAN gateway 12P connector *3: disconnectedCAN gateway 16P connector *4: disconnected
B	Millimeter wave radar 8P connector: disconnected
Test point 1	CAN gateway 12P connector *3 (female terminals) No. 12: ① CAN gateway 16P connector *4 (female terminals) No. 6: ②
Test point 2	**Millimeter wave radar 8P connector No. 7**

Test point 1	CAN gateway 12P connector *3 (female terminals) No. 5: ① CAN gateway 16P connector *4 (female terminals) No. 14: ②
Test point 2	**Millimeter wave radar 8P connector No. 6**

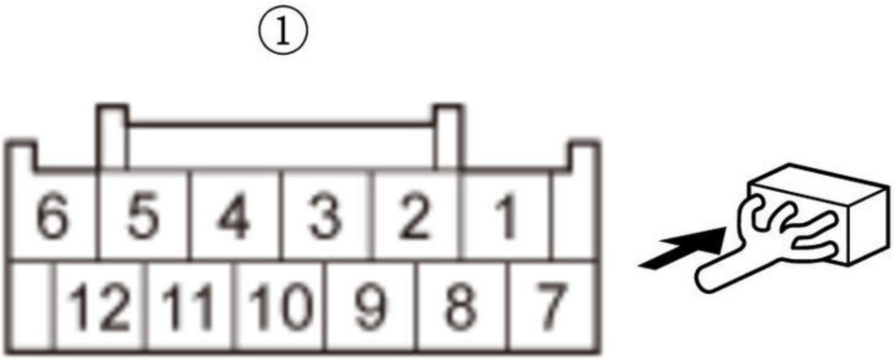

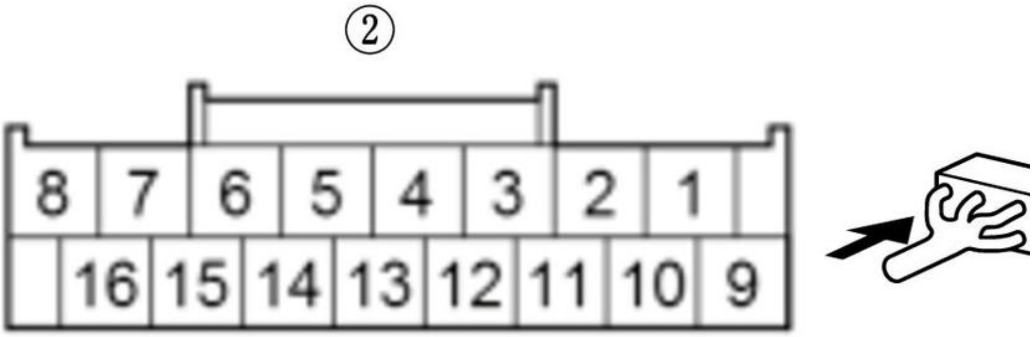

Is there continuity?

YES

Check for loose terminals and poor connections in the millimeter wave radar 8P connector. Check for any authorized service information related to the DTCs or s are troubleshooting. If they are OK, replace millimeter wave radar .

NO

Repair an open in the wire between the millimeter wave radar and the CAN gateway.

SYMPTOM TROUBLESHOOTING INDEX

ADAPTIVE CRUISE CONTROL (ACC) SYMPTOM TROUBLESHOOTING INDEX(ADAPTIVE CRUISE CONTROL (ACC))

NOTE: The ACC system is cancelled when the VSA system is activated.

Symptom	Diagnostic procedure	Also check for
Vehicle speed can be set, but there is no ACC indication on the MID	Do the gauge control module self-diagnostic function .	B
ACC OFF is displayed on the MID unexpectedly	Check the ACC system auto stop control history.	B
Vehicle speed cannot be set when the SET switch is pressed between 25 mph (40 km/h) and 90 mph (145 km/h)	- Test the ACC combination switch . - Test the brake pedal position switch .	- An open in the wire. - A short in the wire. - The system is in service mode.
Vehicle does not decelerate or accelerate accordingly when the SET or RES switch is pressed	Test the ACC combination switch .	An open in the wire.
Set speed does not cancel when the brake pedal is pressed	Test the brake pedal position switch .	An open in the wire.
Set speed does not cancel when the MAIN switch is turned off	Test the ACC combination switch .	An open in the wire.
Set distance cannot be adjusted with the distance switch	Test the ACC combination switch .	B
Vehicle speed can be set, but vehicle decelerates	Check for DTCs in the PGM-FI system with the HDS .	Faulty ETCS.
ACC activation indicator (on the MID) does not come on	Symptom troubleshooting.	B
ACC activation indicator (on the MID) does not go off	Symptom troubleshooting.	B
ACC indicator (on the MID) does not come on	Symptom troubleshooting.	B
ACC indicator (on the MID) does not go off	Symptom troubleshooting.	B
Senses a vehicle driving in another lane	Symptom troubleshooting.	- Incorrect millimeter wave rada installation. - Wheel alignment.
Does not sense the vehicle driving ahead	Symptom troubleshooting.	- Out of the performance limits. - Wheel alignment. - Undetectable environment.
Intermittently senses the vehicle driving ahead	Symptom troubleshooting.	- Incorrect millimeter wave rada installation. - Wheel alignment. - Undetectable environment.

COLLISION MITIGATION BRAKING SYSTEM (CMBS) SYMPTOM TROUBLESHOOTING INDEX(COLLISION MITIGATION BRAKING SYSTEM

Symptom	Diagnostic procedure	Also check for
CMBS OFF switch does not turn On/turn Off (CMBS indicator does not change)	- Do the gauge control module self-diagnostic function . - Test the CMBS OFF switch .	- An open or increased resistance in the wire. - A short in the wire.

Symptom	Diagnostic procedure	Also check for
The MID does not indicate when the CMBS OFF switch is operated	• **Do the gauge control module self-diagnostic function** . • **Test the CMBS OFF switch** .	• An open or increased resistance in the wire • A short in the wire.
The buzzer does not sound	**Do the gauge control module self-diagnostic function** .	B
The buzzer does not sound when the CMBS OFF switch is operated	**Do the gauge control module self-diagnostic function** .	B
The MID does not indicate with the CMBS operating	**Do the gauge control module self-diagnostic function** .	B
The CMBS operates frequently	• **Check the millimeter wave radar installation** . • Check the front grille for warpage. • **Check the wheel alignment** .	Driving conditions, weather environmental influence.
The CMBS operated without danger of collision	• **Check the millimeter wave radar installation** . • Check the front grille for warpage. • **Check the wheel alignment** .	Driving conditions, weather environmental influence.
The CMBS did not operate	• **Check the millimeter wave radar installation** . • Check the front grille for warpage. • **Check the wheel alignment** .	• Driving conditions, weather, environment influences. • Undetectable environment.
CMBS indicator (on the MID) does not come on	**Do the gauge control module self-diagnostic function** .	B
CMBS indicator (on the MID) does not go off	**Symptom troubleshooting**.	B

CRUISE CONTROL SYMPTOM TROUBLESHOOTING INDEX (CRUISE CONTROL)

Symptom	Diagnostic procedure	Also check for
Cruise control cannot be set	• **Check the PGM-FI system** . • Check the No. D21 (10 A) fuse in the under-dash fuse/relay box. • **Do the cruise control combination switch test** . • **Do the cruise control input test**.	• Open circuit, loose or disconne terminals: wires between the cr control combination switch and gauge control module • Faulty gauge control module • Faulty cable reel
Cruise control can be set, but the cruise main indicator does not come on	• **Do the gauge control module self-diagnostic function procedure** . • **Do the cruise control input test**. Test the cruise main indicator signal input. • **Check the PGM-FI system** .	Faulty gauge control module
Cruise control can be set, but the cruise control indicator does not come on	• **Do the gauge control module self-diagnostic function procedure** . • **Do the cruise control input test**. Test the cruise control indicator signal input. • **Check the PGM-FI system** .	Faulty gauge control module
Vehicle does not accelerate accordingly when the RES+ switch is pressed	• **Do the cruise control combination switch test** . • **Do the cruise control input test**. Test the RES+ switch signal input. • **Check the PGM-FI system** .	B
Vehicle does not decelerate accordingly when the SET- switch is pressed	• **Do the cruise control combination switch test** . • **Do the cruise control input test**. Test the RES- switch signal input. • **Check the PGM-FI system** .	B
Set speed does not cancel when the brake pedal is pressed	• **Do the brake pedal position switch test** . • **Do the cruise control input test**. Test the brake pedal position switch signal input. • **Check the PGM-FI system** .	• Faulty brake pedal position swi • An open in the wire between th PCM and the brake pedal positi switch • A wire shorted to ground or po between the PCM and the brak pedal position switch
Set speed does not cancel when the CRUISE switch is pressed	• **Do the cruise control combination switch test** . • **Do the cruise control input test**. Test the CRUISE switch signal input. • **Check the PGM-FI system** .	B
Set speed does not cancel when the CANCEL switch is pressed	• **Do the cruise control combination switch test** . • **Do the cruise control input test**. Test the CANCEL switch signal input. • **Check the PGM-FI system** .	B

Symptom	Diagnostic procedure	Also check for
Set speed does not resume when the RES+ switch is pressed (with the CRUISE button pressed on, and set speed temporarily canceled by pressing the brake pedal)	• **Check the PGM-FI system** . • **Do the cruise control combination switch test** . • **Do the cruise control input test**. Test the RES+ switch signal input.	B

Symptom	Diagnostic procedure	Also check for
Set speed does not resume when the RES+ switch is pressed (with the CRUISE switch pressed on, and set speed temporarily canceled by pressing the CANCEL switch)	- Check the PGM-FI system . - Do the cruise control combination switch test . - Do the cruise control input test. Test the RES+ switch signal input.	B

LANE KEEPING ASSIST SYSTEM (LKAS) SYMPTOM TROUBLESHOOTING INDEX

Symptom	Diagnostic procedure	Also check for
LKAS indicator (on the MID) does not come on	Symptom troubleshooting.	B
LKAS indicator (on the MID) does not go off	Symptom troubleshooting.	B
LKAS activation indicator (on the MID) does not come on	Symptom troubleshooting.	B
LKAS activation indicator (on the MID) does not go off	Symptom troubleshooting.	B

SYMPTOM TROUBLESHOOTING INDEX FOR VIEWER

ACC OFF IS DISPLAYED ON THE MID UNEXPECTEDLY(ADAPTIVE CRUISE CONTROL (ACC))

Diagnostic procedure

- Check the ACC system auto stop control history.

ACC ACTIVATION INDICATOR (ON THE MID) DOES NOT COME ON (ADAPTIVE CRUISE CONTROL (ACC))

Diagnostic procedure

- Symptom troubleshooting.

ACC ACTIVATION INDICATOR (ON THE MID) DOES NOT GO OFF (ADAPTIVE CRUISE CONTROL (ACC))

Diagnostic procedure

- Symptom troubleshooting.

ACC INDICATOR (ON THE MID) DOES NOT COME ON (ADAPTIVE CRUISE CONTROL (ACC))

Diagnostic procedure

- Symptom troubleshooting.

ACC INDICATOR (ON THE MID) DOES NOT GO OFF (ADAPTIVE CRUISE CONTROL (ACC))

Diagnostic procedure

- Symptom troubleshooting.

CMBS OFF SWITCH DOES NOT TURN ON/TURN OFF (CMBS INDICATOR DOES NOT CHANGE) (COLLISION MITIGATION BRAKING SYSTEM

Diagnostic procedure

- Do the gauge control module self-diagnostic function .
- Test the CMBS OFF switch .

Also check for

- An open or increased resistance in the wire.
- A short in the wire.

CMBS INDICATOR (ON THE MID) DOES NOT COME ON (COLLISION MITIGATION BRAKING SYSTEM (CMBS))

Diagnostic procedure

- Do the gauge control module self-diagnostic function .

CMBS INDICATOR (ON THE MID) DOES NOT GO OFF (COLLISION MITIGATION BRAKING SYSTEM (CMBS))

Diagnostic procedure

- Symptom troubleshooting.

CRUISE CONTROL CAN BE SET, BUT THE CRUISE CONTROL INDICATOR DOES NOT COME ON (CRUISE CONTROL)

Diagnostic procedure

- Do the gauge control module self-diagnostic function procedure .
- Do the cruise control input test. Test the cruise control indicator signal input.
- Check the PGM-FI system .

Also check for

Faulty gauge control module

CRUISE CONTROL CAN BE SET, BUT THE CRUISE MAIN INDICATOR DOES NOT COME ON (CRUISE CONTROL)

Diagnostic procedure

- Do the gauge control module self-diagnostic function procedure .

- Do the cruise control input test. Test the cruise main indicator signal input.
- Check the PGM-FI system .

Also check for

Faulty gauge control module

CRUISE CONTROL CANNOT BE SET (CRUISE CONTROL)

Diagnostic procedure

- Check the PGM-FI system .
- Check the No. D21 (10 A) fuse in the under-dash fuse/relay box.
- Do the cruise control combination switch test .
- Do the cruise control input test.

Also check for

- Open circuit, loose or disconnected terminals: wires between the cruise control combination switch and the gauge control module
- Faulty gauge control module
- Faulty cable reel

DOES NOT SENSE THE VEHICLE DRIVING AHEAD (ADAPTIVE CRUISE CONTROL (ACC))

Diagnostic procedure

- Symptom troubleshooting.

Also check for

- Out of the performance limits.
- Wheel alignment.
- Undetectable environment.

INTERMITTENTLY SENSES THE VEHICLE DRIVING AHEAD (ADAPTIVE CRUISE CONTROL (ACC))

Diagnostic procedure

- Symptom troubleshooting.

Also check for

- Incorrect millimeter wave radar installation.
- Wheel alignment.
- Undetectable environment.

LKAS ACTIVATION INDICATOR (ON THE MID) DOES NOT COME ON

Diagnostic procedure

- Symptom troubleshooting.

LKAS ACTIVATION INDICATOR (ON THE MID) DOES NOT GO OFF

Diagnostic procedure

- Symptom troubleshooting.

LKAS INDICATOR (ON THE MID) DOES NOT COME ON

Diagnostic procedure

- Symptom troubleshooting.

LKAS INDICATOR (ON THE MID) DOES NOT GO OFF

Diagnostic procedure

- Symptom troubleshooting.

SENSES A VEHICLE DRIVING IN ANOTHER LANE (ADAPTIVE CRUISE CONTROL (ACC))

Diagnostic procedure

- Symptom troubleshooting.

Also check for

- Incorrect millimeter wave radar installation.
- Wheel alignment.

SET DISTANCE CANNOT BE ADJUSTED WITH THE DISTANCE SWITCH (ADAPTIVE CRUISE CONTROL (ACC))

Diagnostic procedure

- Test the ACC combination switch .

SET SPEED DOES NOT CANCEL WHEN THE CANCEL SWITCH IS PRESSED (CRUISE CONTROL)

Diagnostic procedure

- Do the cruise control combination switch test .
- Do the cruise control input test. Test the CANCEL switch signal input.
- Check the PGM-FI system .

SET SPEED DOES NOT CANCEL WHEN THE CRUISE SWITCH IS PRESSED (CRUISE CONTROL)

Diagnostic procedure

- Do the cruise control combination switch test .
- Do the cruise control input test. Test the CRUISE switch signal input.
- Check the PGM-FI system .

SET SPEED DOES NOT CANCEL WHEN THE MAIN SWITCH IS TURNED OFF(ADAPTIVE CRUISE CONTROL (ACC))

Diagnostic procedure

- Test the ACC combination switch .

Also check for

An open in the wire.

SET SPEED DOES NOT CANCEL WHEN THE BRAKE PEDAL IS PRESSED (ADAPTIVE CRUISE CONTROL (ACC))

Diagnostic procedure

- Test the brake pedal position switch .

Also check for

An open in the wire.

SET SPEED DOES NOT CANCEL WHEN THE BRAKE PEDAL IS PRESSED (CRUISE CONTROL)

Diagnostic procedure

- Do the brake pedal position switch test .
- Do the cruise control input test. Test the brake pedal position switch signal input.
- Check the PGM-FI system .

Also check for

- Faulty brake pedal position switch
- An open in the wire between the PCM and the brake pedal position switch
- A wire shorted to ground or power between the PCM and the brake pedal position switch

SET SPEED DOES NOT RESUME WHEN THE RES+ SWITCH IS PRESSED (WITH THE CRUISE BUTTON PRESSED ON, AND SET SPEED TEMPO CANCELED BY PRESSING THE BRAKE PEDAL) (CRUISE CONTROL)

Diagnostic procedure

- Check the PGM-FI system .
- Do the cruise control combination switch test .
- Do the cruise control input test. Test the RES+ switch signal input.

SET SPEED DOES NOT RESUME WHEN THE RES+ SWITCH IS PRESSED (WITH THE CRUISE SWITCH PRESSED ON, AND SET SPEED TEMPO CANCELED BY PRESSING THE CANCEL SWITCH) (CRUISE CONTROL)

Diagnostic procedure

- Check the PGM-FI system .
- Do the cruise control combination switch test .
- Do the cruise control input test. Test the RES+ switch signal input.

THE CMBS DID NOT OPERATE (COLLISION MITIGATION BRAKING SYSTEM (CMBS))

Diagnostic procedure

- Check the millimeter wave radar installation .
- Check the front grille for warpage.
- Check the wheel alignment .

Also check for

- Driving conditions, weather, environmental influences.
- Undetectable environment.

THE CMBS OPERATED WITHOUT DANGER OF COLLISION (COLLISION MITIGATION BRAKING SYSTEM (CMBS))

Diagnostic procedure

- Check the millimeter wave radar installation .
- Check the front grille for warpage.

- Check the wheel alignment .

Also check for

Driving conditions, weather, environmental influence.

THE CMBS OPERATES FREQUENTLY (COLLISION MITIGATION BRAKING SYSTEM (CMBS))

Diagnostic procedure

- Check the millimeter wave radar installation .
- Check the front grille for warpage.
- Check the wheel alignment .

Also check for

Driving conditions, weather, environmental influence.

THE MID DOES NOT INDICATE WHEN THE CMBS OFF SWITCH IS OPERATED (COLLISION MITIGATION BRAKING SYSTEM (CMBS))

Diagnostic procedure

- Do the gauge control module self-diagnostic function .
- Test the CMBS OFF switch .

Also check for

- An open or increased resistance in the wire.
- A short in the wire.

THE MID DOES NOT INDICATE WITH THE CMBS OPERATING (COLLISION MITIGATION BRAKING SYSTEM (CMBS))

Diagnostic procedure

- Do the gauge control module self-diagnostic function .

THE BUZZER DOES NOT SOUND WHEN THE CMBS OFF SWITCH IS OPERATED (COLLISION MITIGATION BRAKING SYSTEM (CMBS))

Diagnostic procedure

- Do the gauge control module self-diagnostic function .

THE BUZZER DOES NOT SOUND(COLLISION MITIGATION BRAKING SYSTEM (CMBS))

Diagnostic procedure

- Do the gauge control module self-diagnostic function .

VEHICLE DOES NOT ACCELERATE ACCORDINGLY WHEN THE RES+ SWITCH IS PRESSED (CRUISE CONTROL)

Diagnostic procedure

- Do the cruise control combination switch test .
- Do the cruise control input test. Test the RES+ switch signal input.
- Check the PGM-FI system .

VEHICLE DOES NOT DECELERATE ACCORDINGLY WHEN THE SET- SWITCH IS PRESSED (CRUISE CONTROL)

Diagnostic procedure

- Do the cruise control combination switch test .
- Do the cruise control input test. Test the RES- switch signal input.
- Check the PGM-FI system .

VEHICLE DOES NOT DECELERATE OR ACCELERATE ACCORDINGLY WHEN THE SET OR RES SWITCH IS PRESSED (ADAPTIVE CRUISE CO (ACC))

Diagnostic procedure

- Test the ACC combination switch .

Also check for

An open in the wire.

VEHICLE SPEED CAN BE SET, BUT THERE IS NO ACC INDICATION ON THE MID (ADAPTIVE CRUISE CONTROL (ACC))

Diagnostic procedure

- Do the gauge control module self-diagnostic function .

VEHICLE SPEED CAN BE SET, BUT VEHICLE DECELERATES (ADAPTIVE CRUISE CONTROL (ACC))

Diagnostic procedure

- Check for DTCs in the PGM-FI system with the HDS .

Also check for

Faulty ETCS.

VEHICLE SPEED CANNOT BE SET WHEN THE SET SWITCH IS PRESSED BETWEEN 25 MPH (40 KM/H) AND 90 MPH (145 KM/H) (ADAPTIVE C CONTROL (ACC))

Diagnostic procedure

- **Test the ACC combination switch** .
- **Test the brake pedal position switch** .

Also check for

- An open in the wire.
- A short in the wire.
- The system is in service mode.

REPLACEMENT

FRONT DOOR OUTER MOLDING REPLACEMENT

Replacement

1

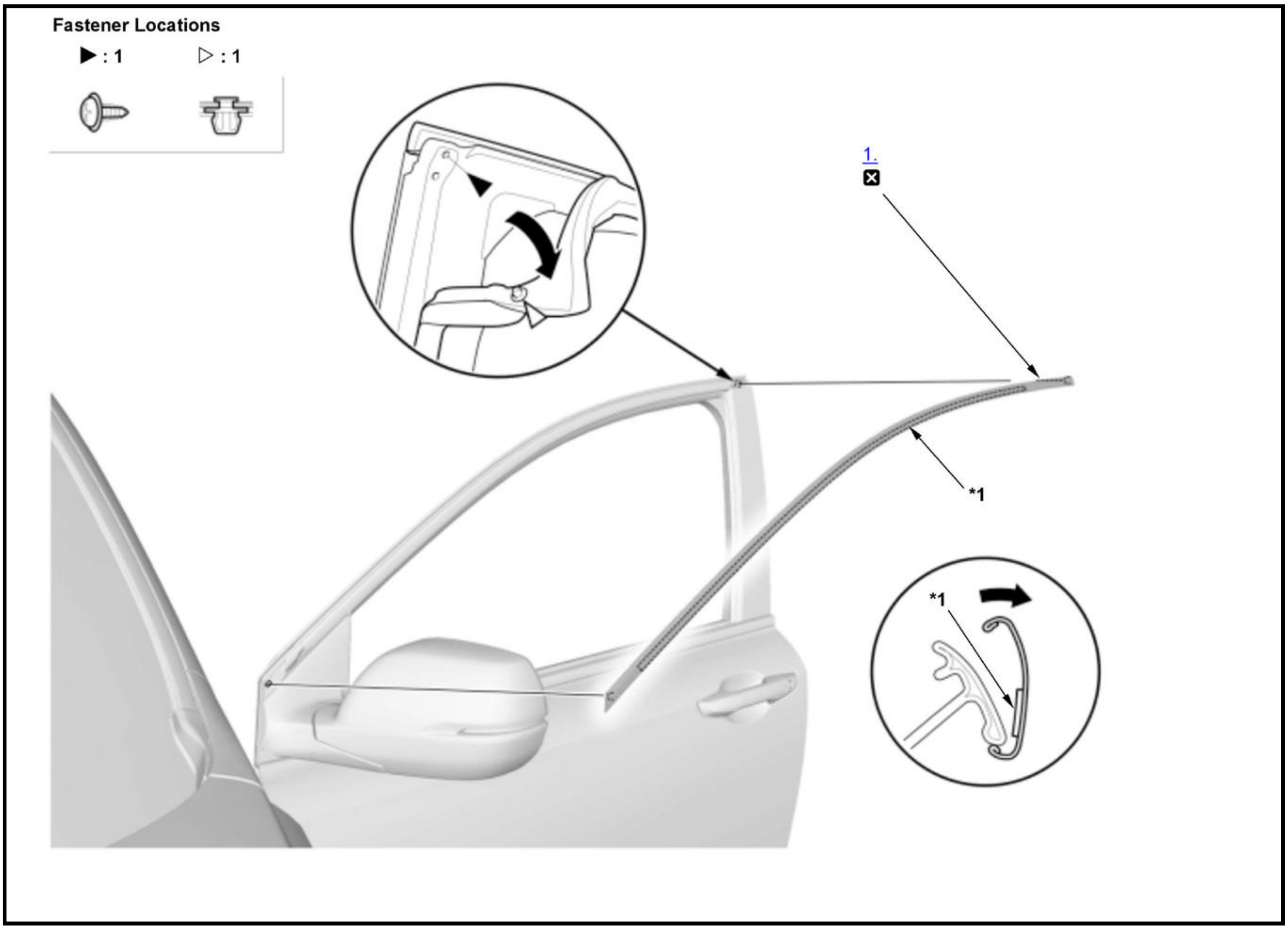

☒	Replace
*1	Double-sided adhesive tape

1. Front Door Outer Molding - Remove
2. All Removed Parts - Install

1. Install the parts in the reverse order of removal.

NOTE:

- **Scrape off the remaining double-sided adhesive tape from** the sash, then clean the surface with a sponge dampened in isopropyl alcohol. After cleaning, keep oil, grease, and water from getting on the surface.

- Install the new front door outer molding.

REAR DOOR OUTER MOLDING REPLACEMENT

Replacement

1

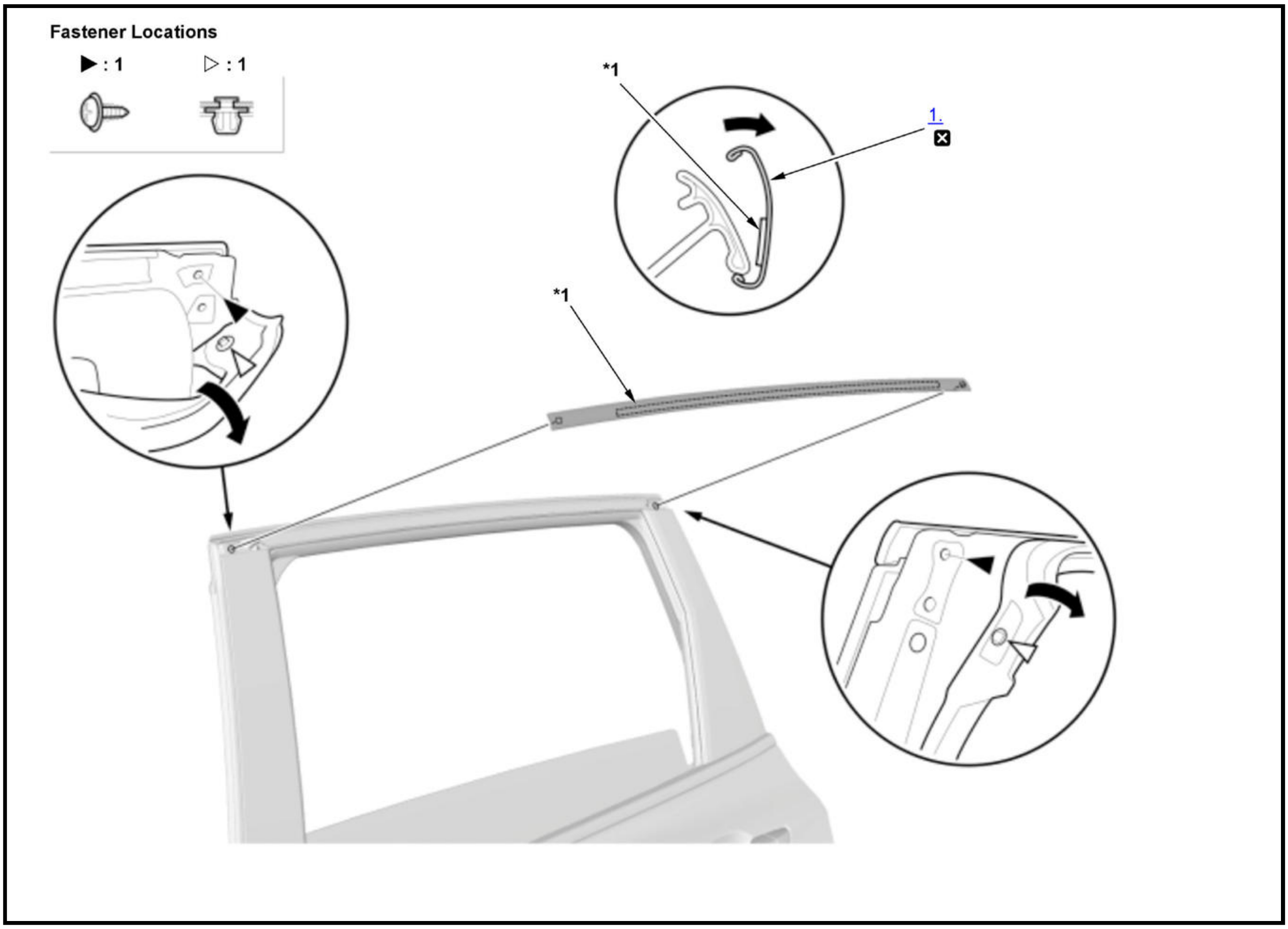
Fastener Locations
▶ : 1
▷ : 1
*1
1.
*1

✖	Replace
*1	Double-sided adhesive tape

1. Rear Door Outer Molding - Remove
2. All Removed Parts - Install

1. Install the parts in the reverse order of removal.

NOTE:

- **Scrape off the remaining double-sided adhesive tape from the sash, then clean the surface with a sponge dampened in isopropyl alcohol. After cleaning, keep oil, grease, and water from getting on the surface.**
- **Install the new rear door outer molding.**

ADJUSTMENT

DOOR POSITION ADJUSTMENT

Adjustment

NOTE: How to read the torque specifications

1. Front Fender Fairing - Remove
2. Door Position - Adjust

Front Door 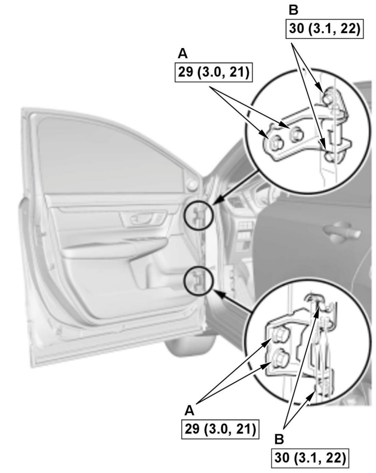 B 30 (3.1, 22) A 29 (3.0, 21) A 29 (3.0, 21) B 30 (3.1, 22) **Rear Door** 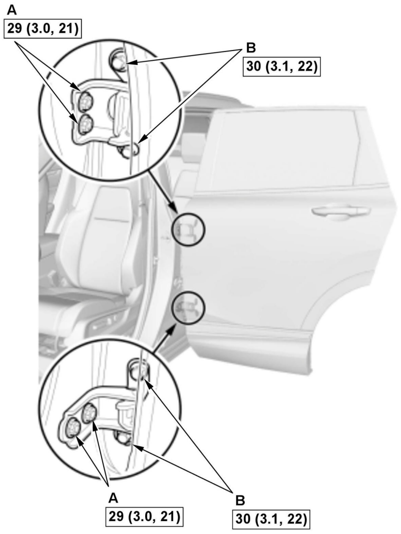 A 29 (3.0, 21) B 30 (3.1, 22) A 29 (3.0, 21) B 30 (3.1, 22)	**NOTE:** Place the vehicle on a firm, level surface when adjusting the doors. 1. Adjust at the hinges: • Have an assistant help you, when adjusting the door. • Loosen the hinge mounting bolts (A) slightly, and move the door backward or forward, up or down as necessary to equalize the gaps. 2. If necessary, replace the door mounting bolts (B) with the adjusting bolts made specifically for door adjustment, then adjust at the door: Loosen the door mounting bolts slightly, and move the door up or down as necessary to equalize the gaps, and move it in or out until it is flush with the body. **NOTE:** **Refer to the Parts Catalog if you need to use an adjusting bolt.**

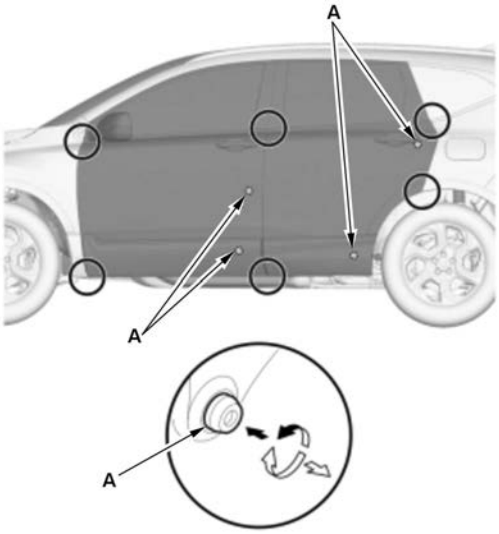	3. Check that the door and body edges are parallel. If necessary, adjust the door cushions (A) to make the rear of the doors flush fit with the body. 4. Make sure the door opens without popping or binding and latches securely without slamming. If not, adjust the door striker 5. Apply touch-up paint to the hinge mounting bolts and around the hinges.

3. All Removed Parts - Install

1. Install the parts in the reverse order of removal.

4. Water Leaks - Check
5. LaneWatch Camera - Aim (With LaneWatch)

DOOR STRIKER ADJUSTMENT

Adjustment

NOTE: How to read the torque specifications

1. Door Striker - Adjust

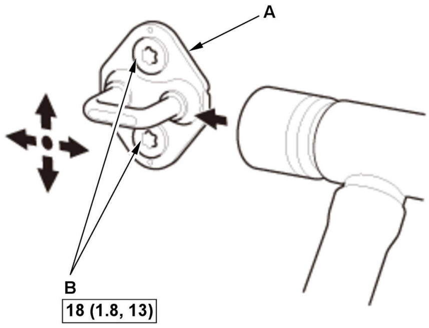	Make sure the door latches securely without slamming it. If necessary, adjust the striker (A): The striker screws are fixed, but the striker can be adjusted slightly up or down, and in or out. 1. Loosen the screws (B). 2. Wrap the striker with a shop towel, then adjust the striker by tapping it with a plastic hammer. Do not tap the striker too hard. 3. Lightly tighten the screws. 4. Hold the outer handle out, and push the door against the body to be sure the striker allows a flush fit. If the door latches properly, tighten the screws to the specified torque, and recheck.

COMPONENT LOCATION INDEX

FRONT DOOR COMPONENT LOCATION INDEX

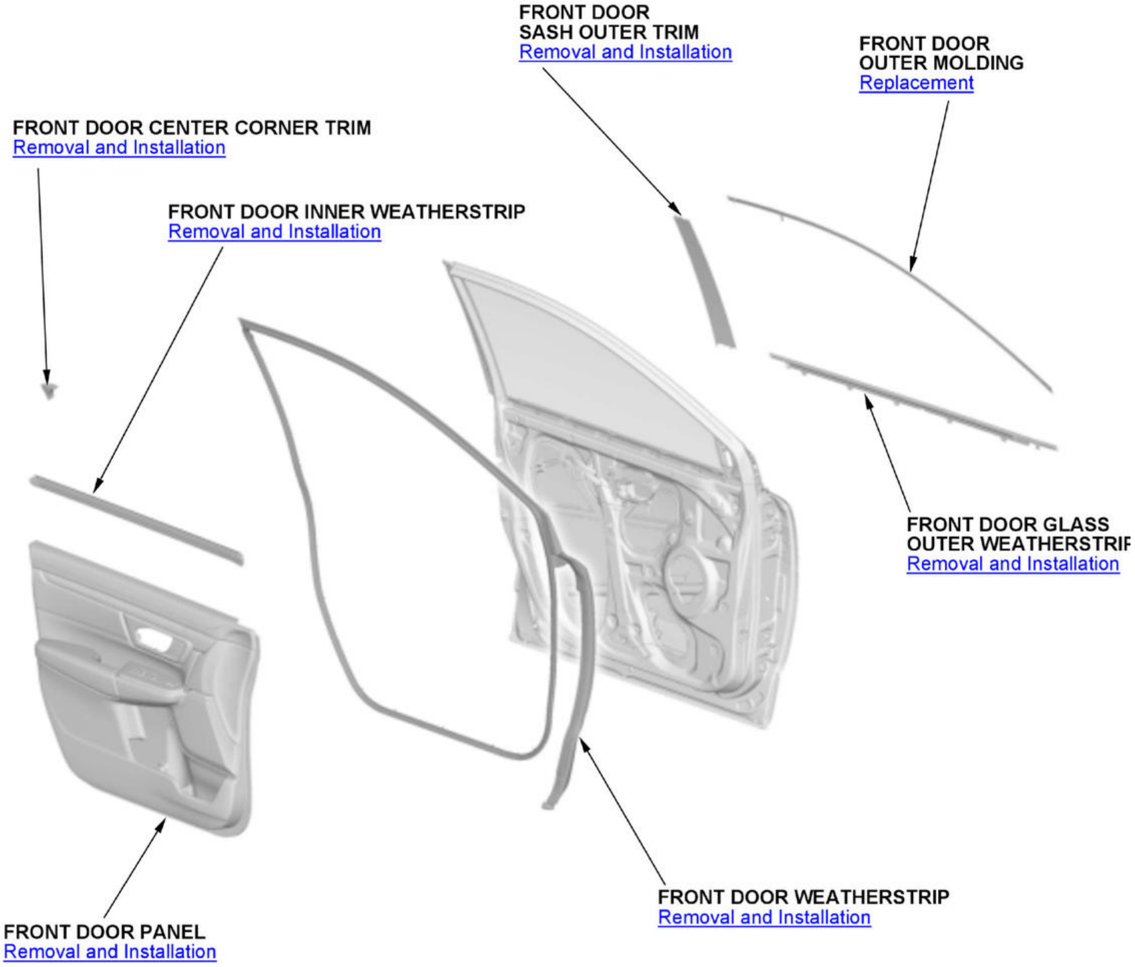
FRONT DOOR
SASH OUTER TRIM
Removal and Installation
FRONT DOOR
OUTER MOLDING
Replacement
FRONT DOOR CENTER CORNER TRIM
Removal and Installation
FRONT DOOR INNER WEATHERSTRIP
Removal and Installation
FRONT DOOR GLASS
OUTER WEATHERSTRIP
Removal and Installation
FRONT DOOR WEATHERSTRIP
Removal and Installation
FRONT DOOR PANEL
Removal and Installation

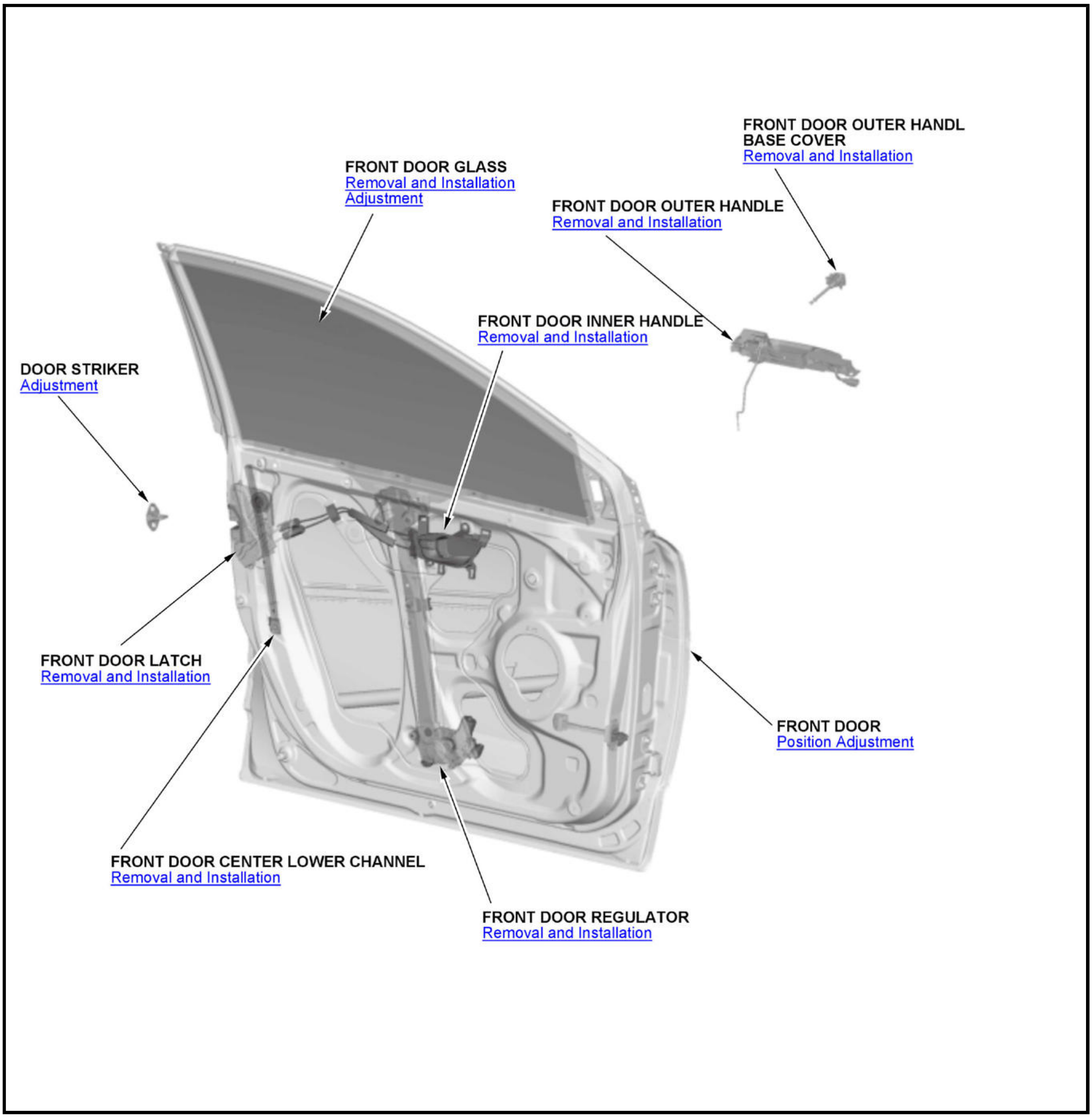
FRONT DOOR OUTER HANDL
BASE COVER
Removal and Installation
FRONT DOOR GLASS
Removal and Installation
Adjustment
FRONT DOOR OUTER HANDLE
Removal and Installation
FRONT DOOR INNER HANDLE
Removal and Installation
DOOR STRIKER
Adjustment
FRONT DOOR LATCH
Removal and Installation
FRONT DOOR
Position Adjustment
FRONT DOOR CENTER LOWER CHANNEL
Removal and Installation
FRONT DOOR REGULATOR
Removal and Installation

REAR DOOR COMPONENT LOCATION INDEX

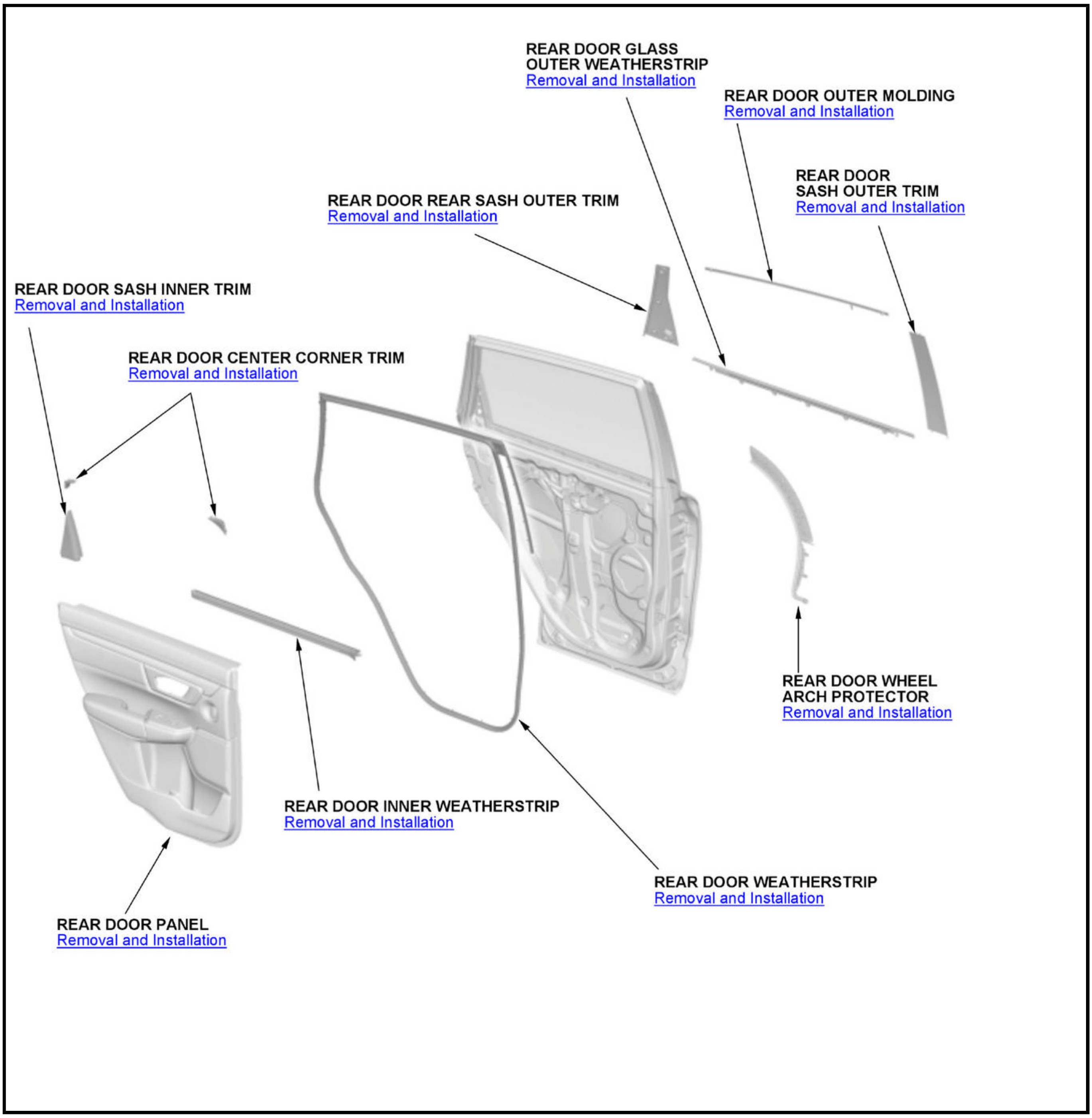
REAR DOOR GLASS OUTER WEATHERSTRIP
Removal and Installation
REAR DOOR OUTER MOLDING
Removal and Installation
REAR DOOR SASH OUTER TRIM
Removal and Installation
REAR DOOR REAR SASH OUTER TRIM
Removal and Installation
REAR DOOR SASH INNER TRIM
Removal and Installation
REAR DOOR CENTER CORNER TRIM
Removal and Installation
REAR DOOR WHEEL ARCH PROTECTOR
Removal and Installation
REAR DOOR INNER WEATHERSTRIP
Removal and Installation
REAR DOOR WEATHERSTRIP
Removal and Installation
REAR DOOR PANEL
Removal and Installation

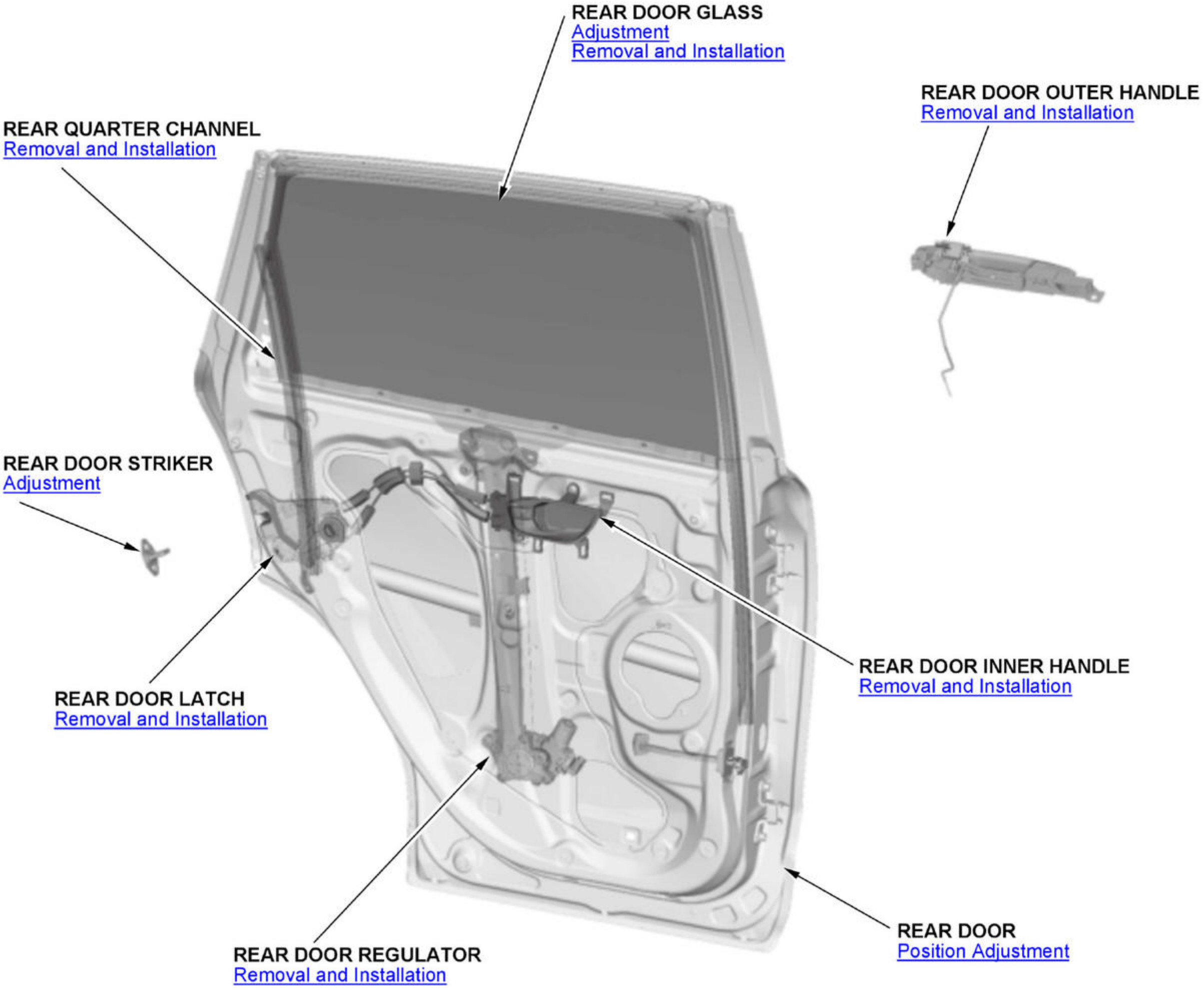
REAR DOOR GLASS
Adjustment
Removal and Installation
REAR DOOR OUTER HANDLE
Removal and Installation
REAR QUARTER CHANNEL
Removal and Installation
REAR DOOR STRIKER
Adjustment
REAR DOOR INNER HANDLE
Removal and Installation
REAR DOOR LATCH
Removal and Installation
REAR DOOR
Position Adjustment
REAR DOOR REGULATOR
Removal and Installation

REPLACEMENT

FRONT DOOR OUTER MOLDING REPLACEMENT

Replacement

NOTE: ℹ Where icon is shown, for further information see below.

Procedure

NOTE: **Numbered call-outs in figure pertain to list numbers in following procedure.**

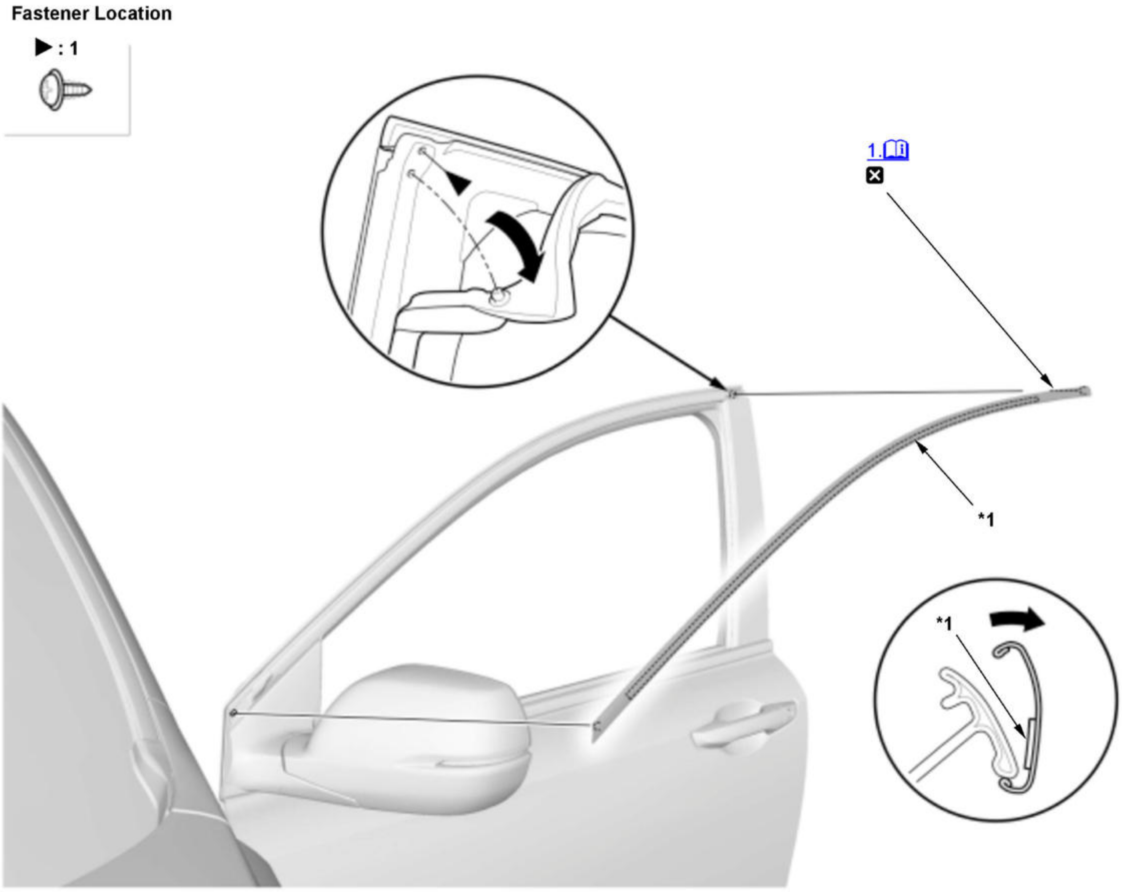

Fig. 1: Front Door Outer Molding Replacement Components

Courtesy of HONDA, U.S.A., INC.

ℹ	Detailed information, notes, and precautions
☒	Replace
*1	Double-sided adhesive tape

1. Front Door Outer Molding - Remove

   NOTE: Pull out the upper edge of the front door outer molding from the edge of the sash, and cut the double-sided adhesive tape with a utility knife, and then remove the molding from the sash.

Note for installation

- Scrape off the remaining double-sided adhesive tape from the sash, then clean the surface with a sponge dampened in isopropyl alcohol. After cleaning, keep oil, grease, and water from getting on the surface.
- Install the new front door outer molding.

2. All Removed Parts - Install

1. Install the parts in the reverse order of removal.

REAR DOOR OUTER MOLDING REPLACEMENT

Replacement

NOTE: ⓘ Where icon is shown, for further information see below.

Procedure

NOTE: Numbered call-outs in figure pertain to list numbers in following procedure.

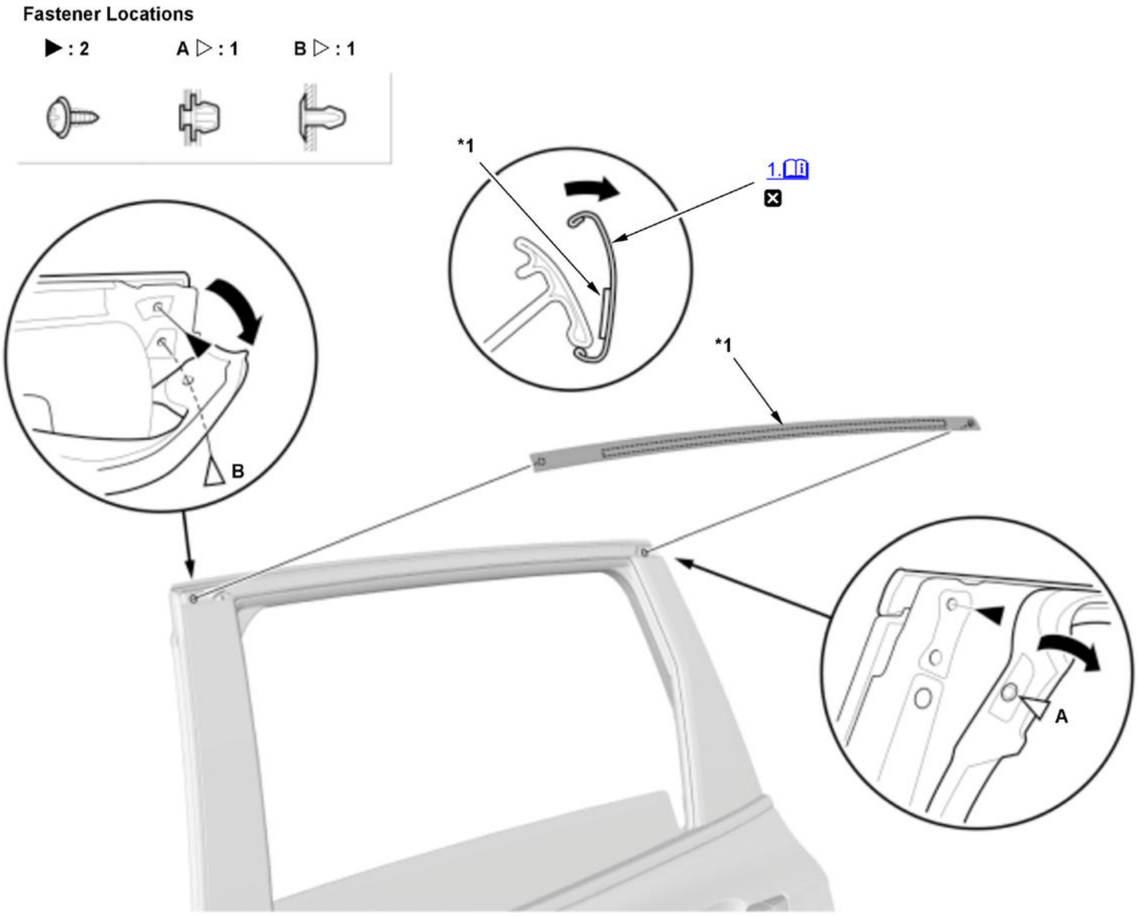

Fig. 2: Rear Door Outer Molding Replacement Components
Courtesy of HONDA, U.S.A., INC.

ⓘ	Detailed information, notes, and precautions
☒	Replace
*1	Double-sided adhesive tape

1. Rear Door Outer Molding - Remove

   Note for installation

   Scrape off the remaining double-sided adhesive tape from the sash, then clean the surface with a sponge dampened in isopropyl alcohol. After cleaning, keep oil, grease, and water from getting on the surface.

2. All Removed Parts - Install

   1. Install the parts in the reverse order of removal.

ADJUSTMENT

DOOR GLASS ADJUSTMENT

Adjustment

NOTE:

- **How to read the torque specifications**
- Check the door weatherstrip and the glass run channel for damage or deterioration, and replace them if necessary.

1. Door Panel - Remove
   - **Front**
   - **Rear**
2. Plastic Cover - Remove
   - **Front**
   - **Rear**
3. Door Glass - Adjustment

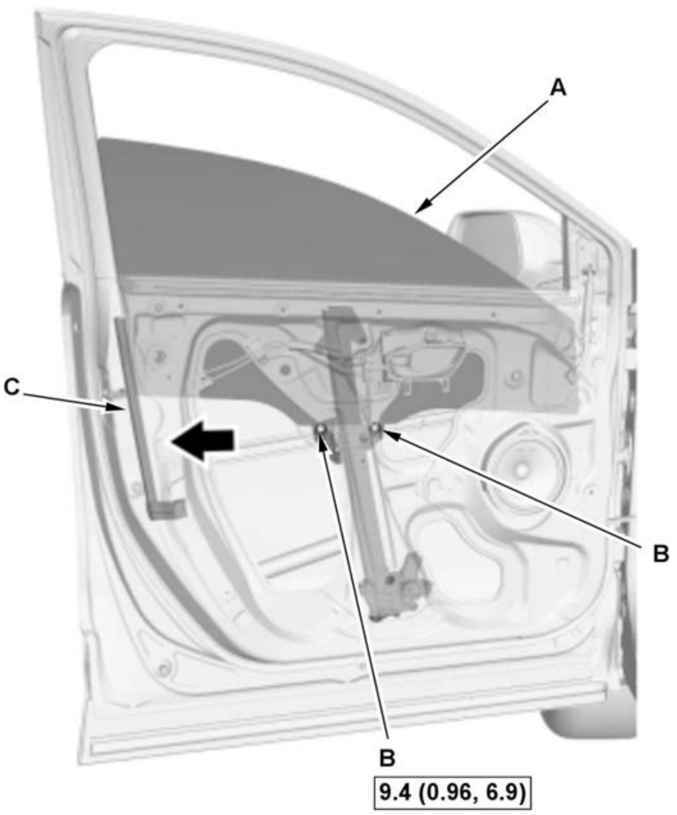 **Front Door**	**NOTE:** Place the vehicle on a firm, level surface when adjusting the door glass. 1. Carefully lower the glass (A) until you can see the glass mounting bolts (B), then loosen them. 2. Push the glass against the glass run channel (C), then tighten the glass mounting bolts. 3. Check that the glass moves smoothly.
Rear Door	

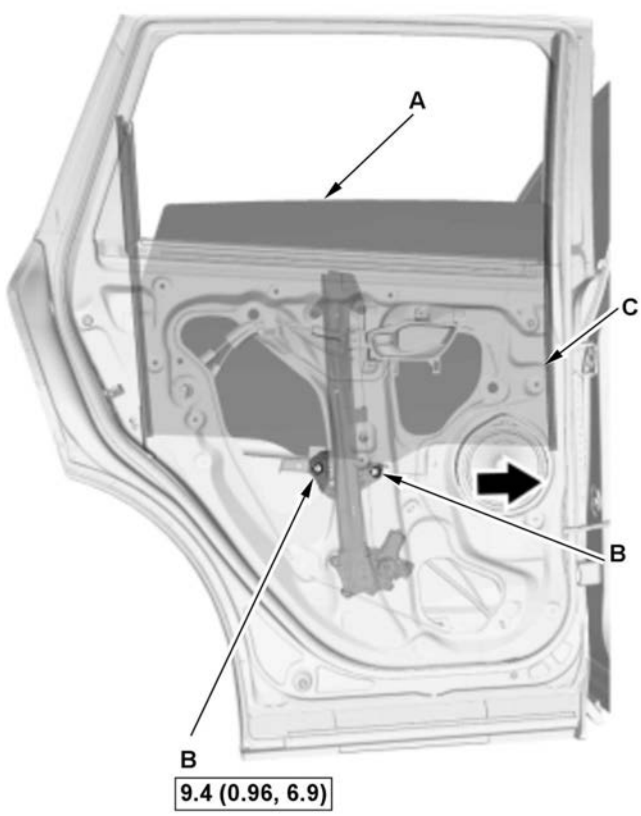	

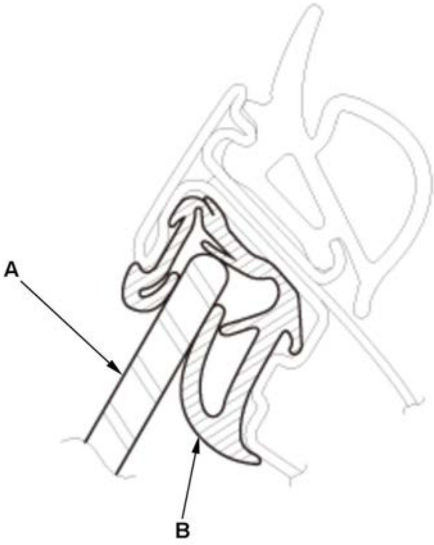	4. Raise the glass fully, and check for gaps. Also make sure that the glass (A) contacts the glass run channel (B) evenly.

4. Plastic Cover - Install
    - **Front**
    - **Rear**
5. Door Panel - Install
    - **Front**
    - **Rear**
6. Water Leaks - Check

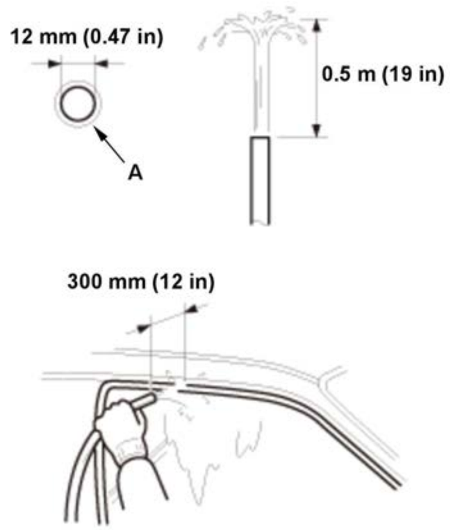	1. Check for water leaks. Run water over the roof and on the sealing area as shown, and note these items: • Use a 12 mm (0.47 in) diameter hose (A). • Adjust the rate of water flow as shown. • Do not use a nozzle. • Hold the hose about 300 mm (11.81 in) away from the door.

7. **Power Window Control Unit - Reset**

DOOR POSITION ADJUSTMENT

Adjustment

NOTE: **How to read the torque specifications**

1. **Front Fender Fairing - Remove**
2. Door Position - Adjust

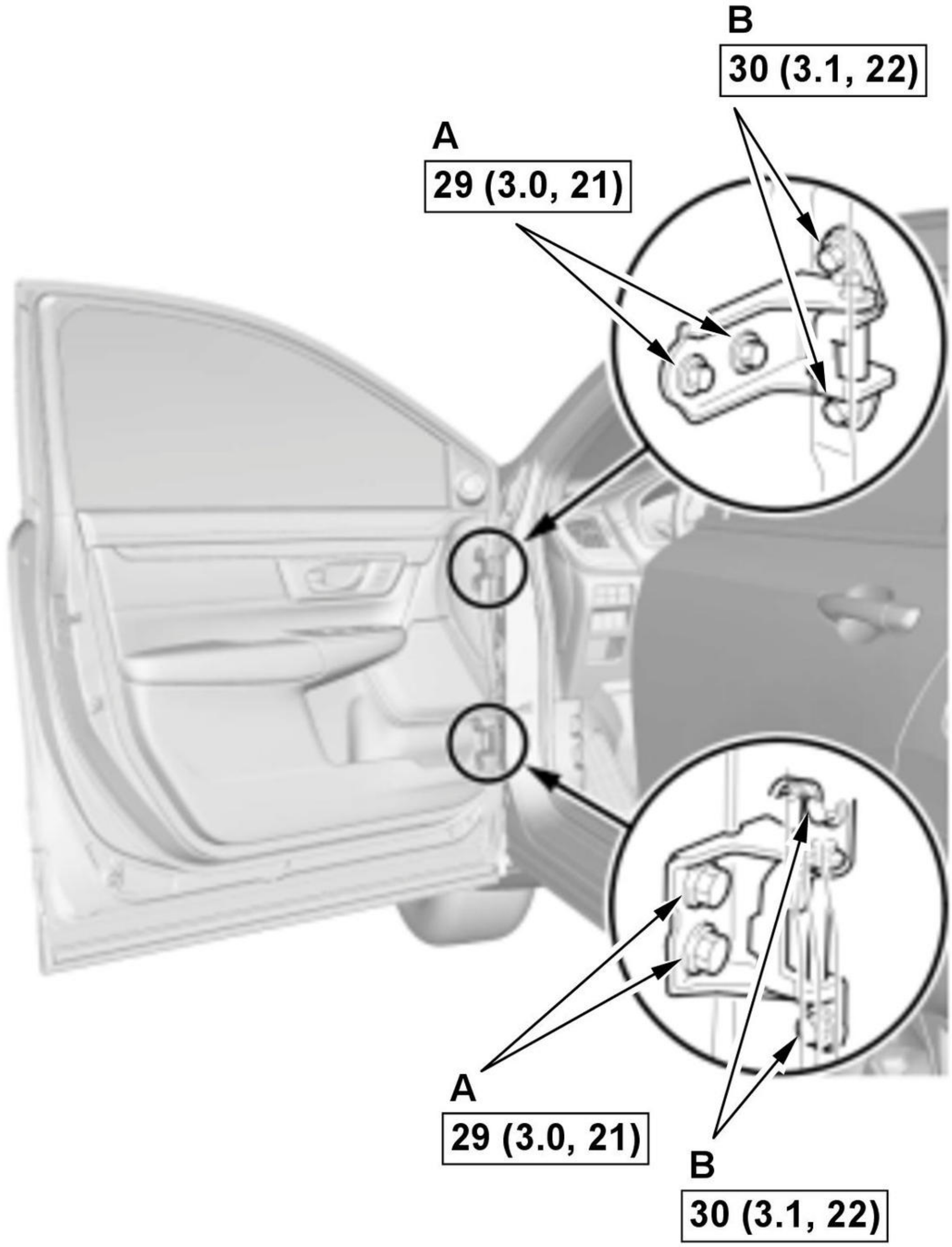
B
30 (3.1, 22)
A
29 (3.0, 21)
A
29 (3.0, 21)
B
30 (3.1, 22)

Fig. 3: Front Door Hinge Components With Torque Specifications
Courtesy of HONDA, U.S.A., INC.

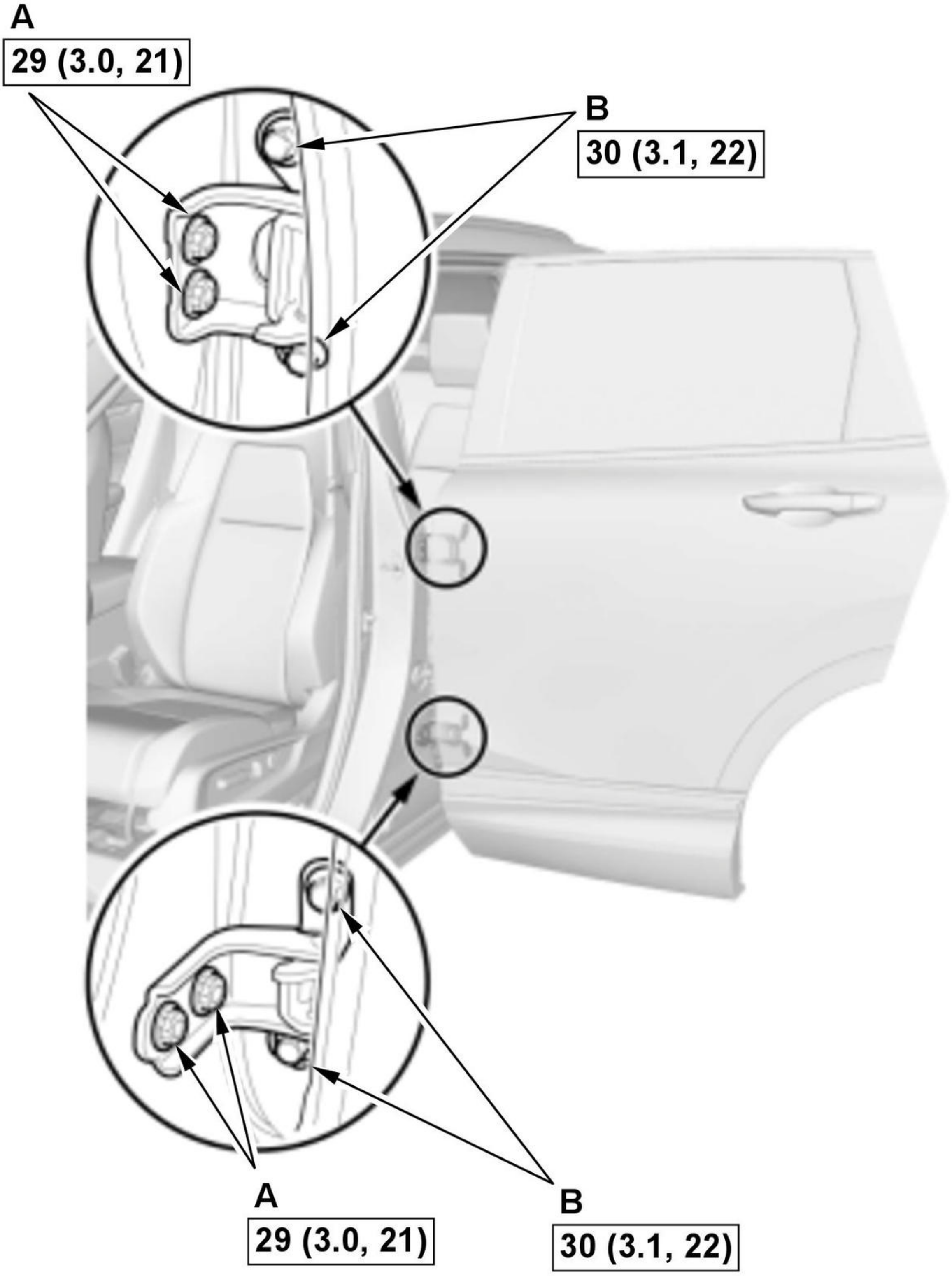

Fig. 4: Rear Door Hinge Components With Torque Specifications
Courtesy of HONDA, U.S.A., INC.

NOTE: Place the vehicle on a firm, level surface when adjusting the doors.

1. Adjust at the hinges:

- Have an assistant help you when adjusting the door.
- Loosen the hinge mounting bolts (A) slightly, and move the door backward or forward, up or down as necessary to equalize the gaps.

2. If necessary, replace the door mounting bolts (B) with the adjusting bolts made specifically for door adjustment, then adjust at the door: Loosen the door mounting bolts slightly, and move the door up or down as necessary to equalize the gaps, and move it in or out until it is flush with the body.

NOTE: Refer to the Parts Catalog if you need to use an adjusting bolt.

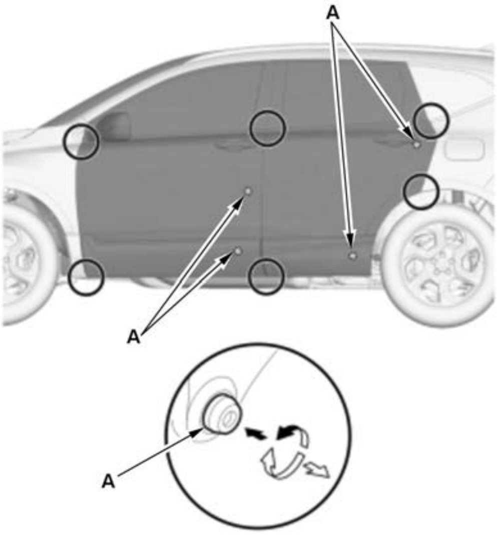

3. Check that the door and body edges are parallel. If necessary, adjust the door cushions (A) to make the rear of the doors flush fit with the body.

4. Make sure the door opens without popping or binding and latches securely without slamming. If not, **adjust the door striker**.

5. Apply touch-up paint to the hinge mounting bolts and around the hinges.

3. All Removed Parts - Install

1. Install the parts in the reverse order of removal.

4. **Water Leaks - Check**

DOOR STRIKER ADJUSTMENT

Adjustment

NOTE: **How to read the torque specifications**

1. Door Striker - Adjust

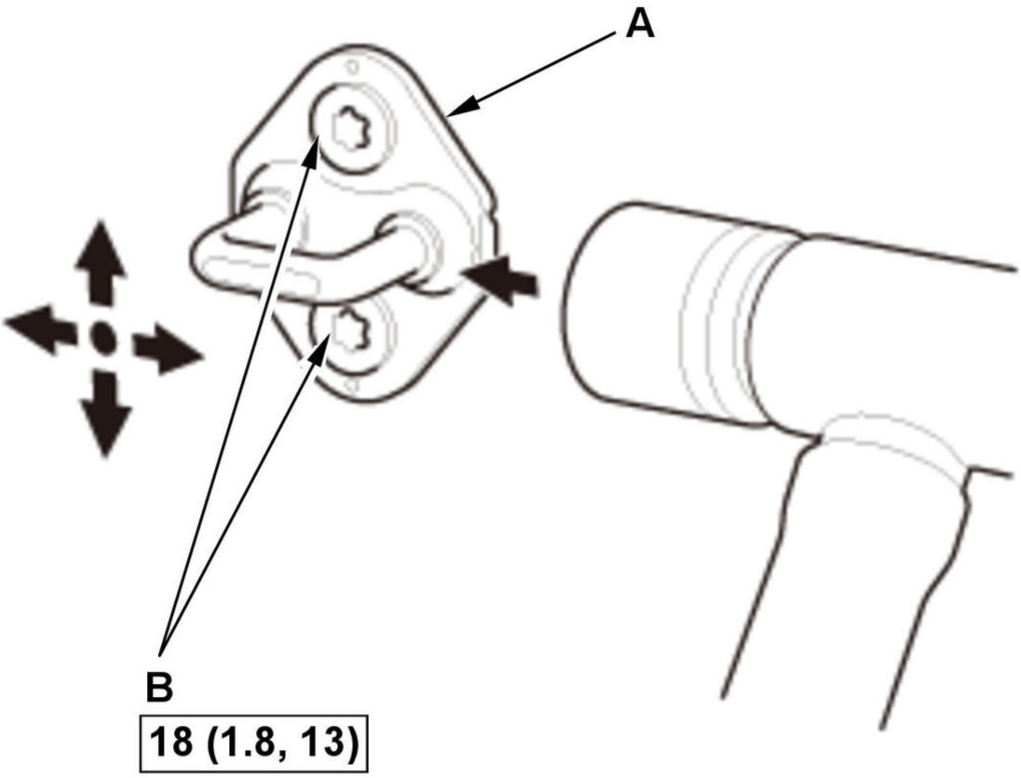

Fig. 5: Door Striker Adjustment Components With Torque Specifications
Courtesy of HONDA, U.S.A., INC.

Make sure the door latches securely without slamming it. If necessary, adjust the striker (A): The striker bolts are fixed, but the striker can be adjusted slightly up or down, and in or out.

1. Loosen the bolts (B).

2. Wrap the striker with a shop towel, then adjust the striker by tapping it with a plastic hammer. Do not tap the striker too hard.

3. Lightly tighten the bolts.

4. Hold the outer handle out, and push the door against the body to be sure the striker allows a flush fit. If the door latches properly, tighten the bolts to the specified torque, and recheck.

COMPONENT LOCATION INDEX

FRONT DOOR COMPONENT LOCATION INDEX

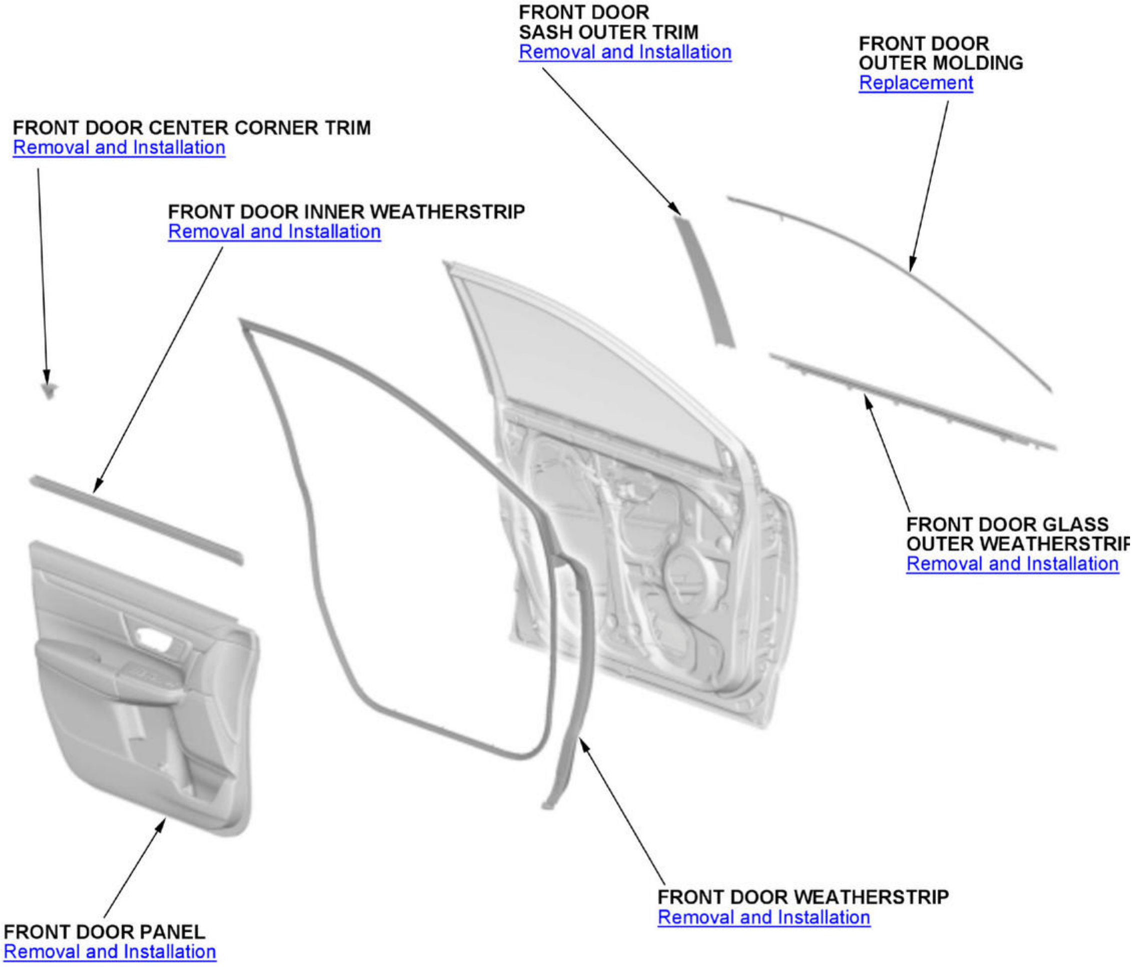
FRONT DOOR
SASH OUTER TRIM
Removal and Installation
FRONT DOOR
OUTER MOLDING
Replacement
FRONT DOOR CENTER CORNER TRIM
Removal and Installation
FRONT DOOR INNER WEATHERSTRIP
Removal and Installation
FRONT DOOR GLASS
OUTER WEATHERSTRI
Removal and Installation
FRONT DOOR WEATHERSTRIP
Removal and Installation
FRONT DOOR PANEL
Removal and Installation

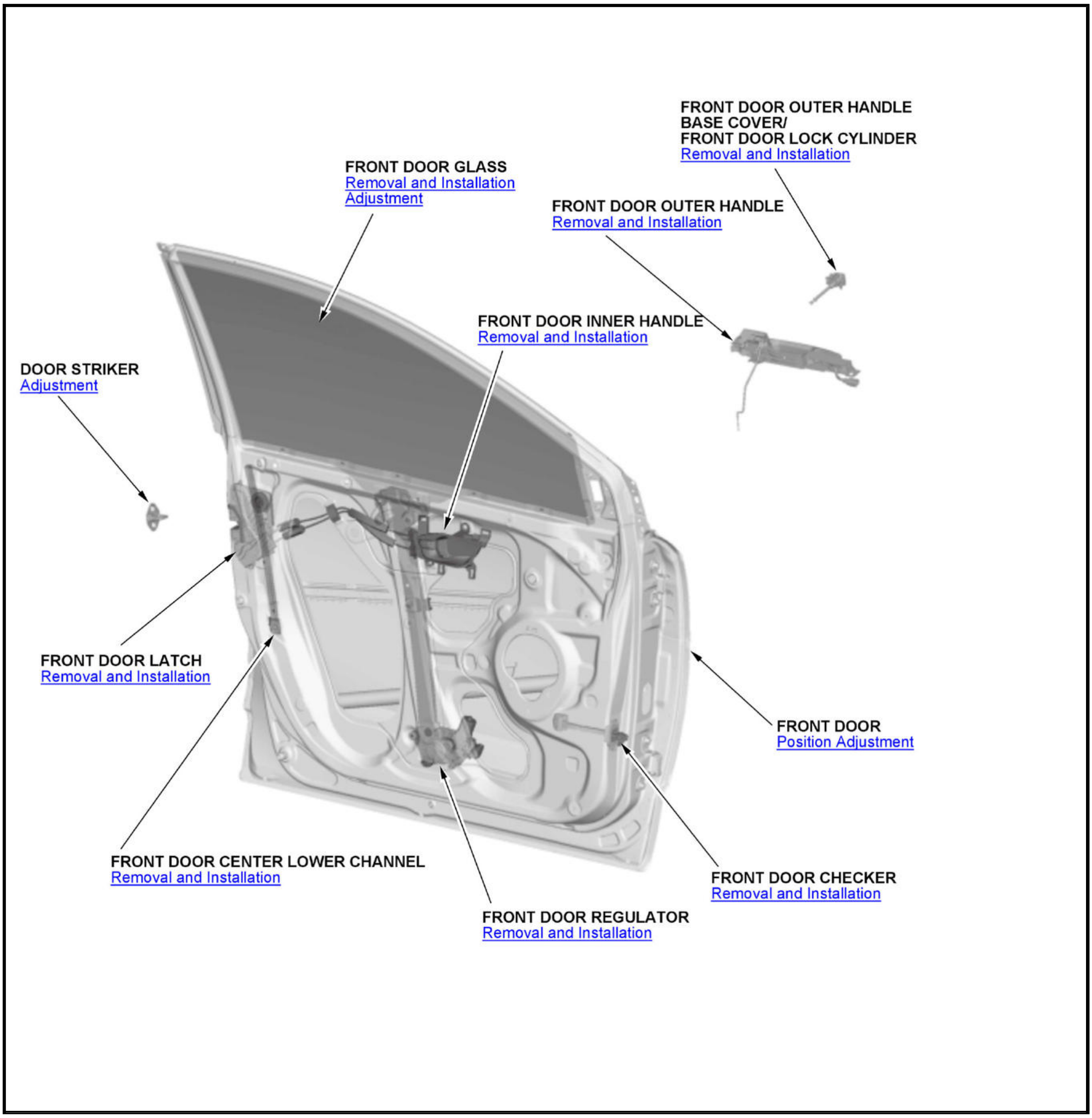
FRONT DOOR OUTER HANDLE BASE COVER/
FRONT DOOR LOCK CYLINDER
Removal and Installation
FRONT DOOR GLASS
Removal and Installation
Adjustment
FRONT DOOR OUTER HANDLE
Removal and Installation
FRONT DOOR INNER HANDLE
Removal and Installation
DOOR STRIKER
Adjustment
FRONT DOOR LATCH
Removal and Installation
FRONT DOOR
Position Adjustment
FRONT DOOR CENTER LOWER CHANNEL
Removal and Installation
FRONT DOOR CHECKER
Removal and Installation
FRONT DOOR REGULATOR
Removal and Installation

REAR DOOR COMPONENT LOCATION INDEX

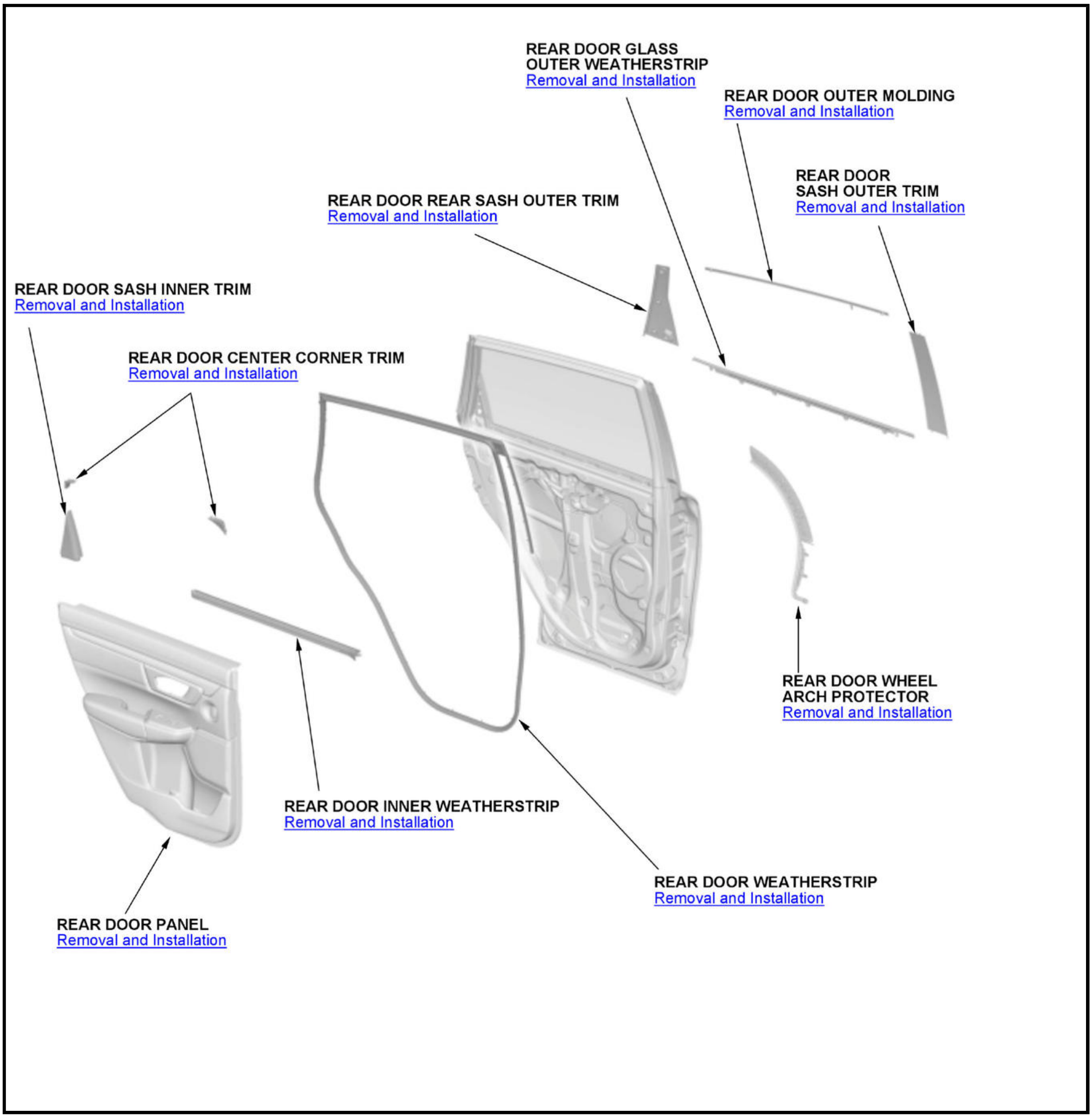
REAR DOOR GLASS OUTER WEATHERSTRIP
Removal and Installation
REAR DOOR OUTER MOLDING
Removal and Installation
REAR DOOR SASH OUTER TRIM
Removal and Installation
REAR DOOR REAR SASH OUTER TRIM
Removal and Installation
REAR DOOR SASH INNER TRIM
Removal and Installation
REAR DOOR CENTER CORNER TRIM
Removal and Installation
REAR DOOR WHEEL ARCH PROTECTOR
Removal and Installation
REAR DOOR INNER WEATHERSTRIP
Removal and Installation
REAR DOOR WEATHERSTRIP
Removal and Installation
REAR DOOR PANEL
Removal and Installation

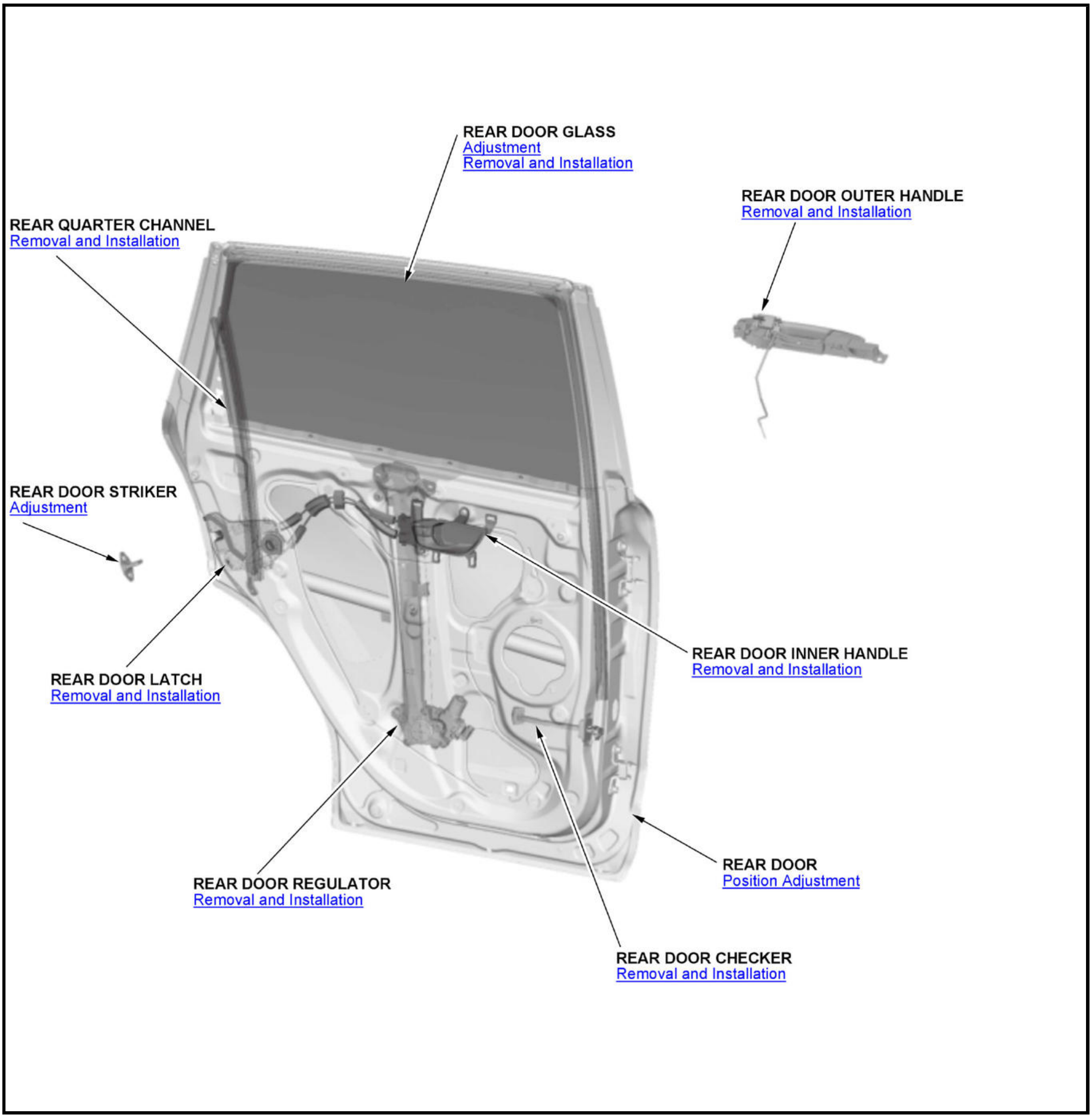
REAR DOOR GLASS
Adjustment
Removal and Installation
REAR DOOR OUTER HANDLE
Removal and Installation
REAR QUARTER CHANNEL
Removal and Installation
REAR DOOR STRIKER
Adjustment
REAR DOOR INNER HANDLE
Removal and Installation
REAR DOOR LATCH
Removal and Installation
REAR DOOR
Position Adjustment
REAR DOOR REGULATOR
Removal and Installation
REAR DOOR CHECKER
Removal and Installation

REMOVAL AND INSTALLATION

DOOR INNER HANDLE LIGHT REMOVAL AND INSTALLATION

Removal and Installation

1

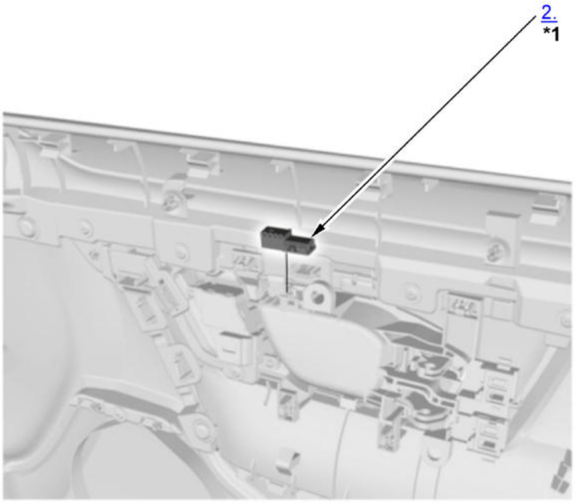

*1	Door Inner Handle Light: LED

1. Front Door Panel - Remove
2. Front Door Inner Handle Light - Remove
3. All Parts Removed - Install

1. Install the parts in the reverse order of removal.

FRONT DOOR CENTER CORNER TRIM REMOVAL AND INSTALLATION

Removal and Installation

1

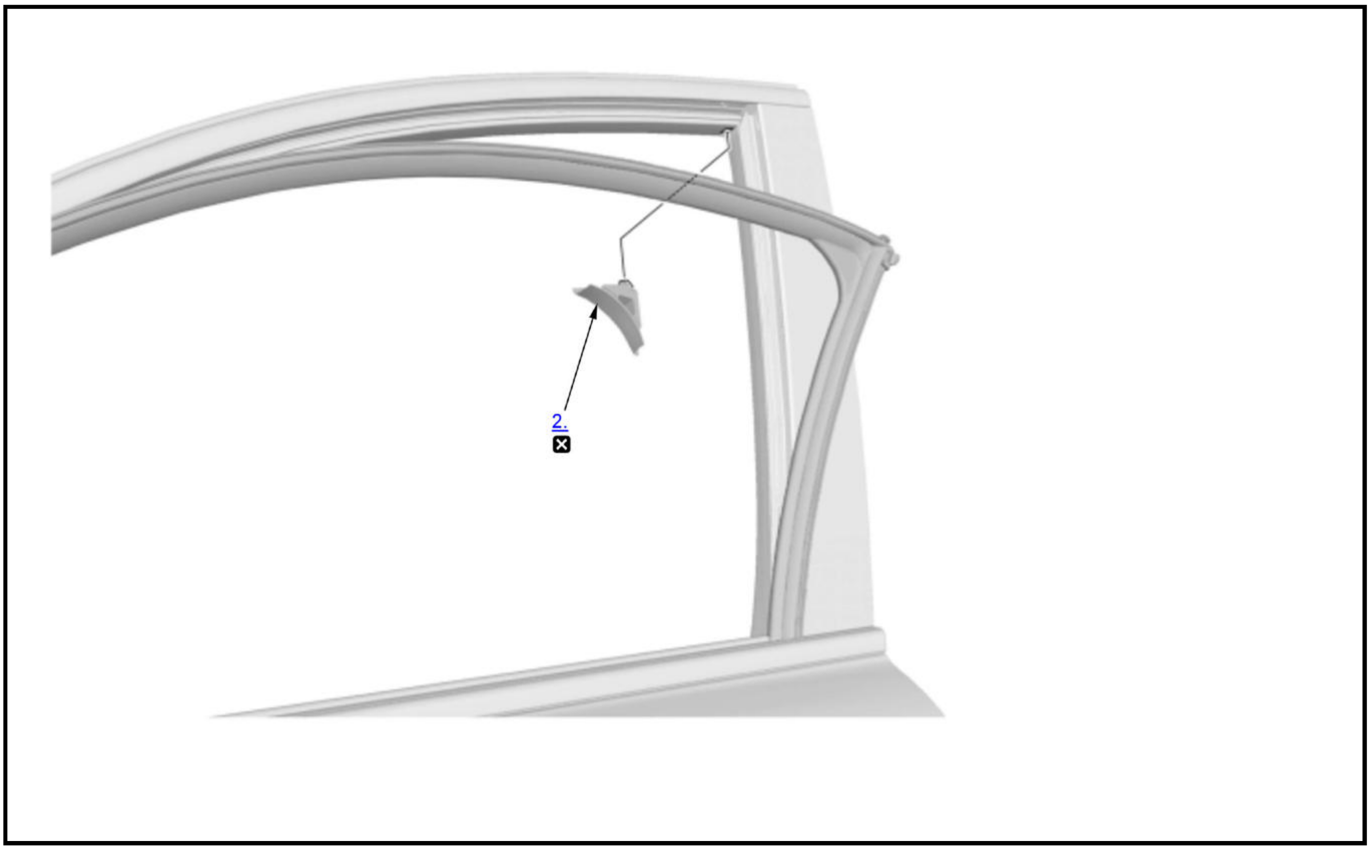

☒	Replace

1. Front Door Glass Run Channel - Remove
    1. **Remove the front door glass run channel as needed.**
2. Front Door Center Corner Trim - Remove
3. All Removed Parts - Install
    1. Install the parts in the reverse order of removal.

FRONT DOOR CHECKER REMOVAL AND INSTALLATION

Removal and Installation

NOTE: **How to read the torque specifications** .

1. **Front Door Panel - Remove**
2. Front Door Plastic Cover - Remove
    1. **Remove the front door plastic cover as needed** .
3. Front Door Checker - Remove

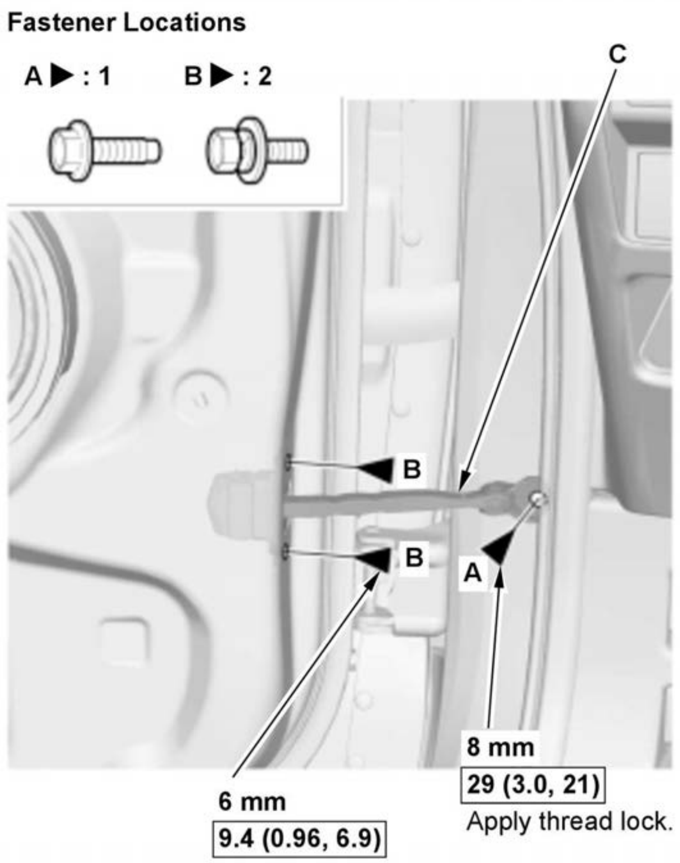
Fastener Locations
A▶ : 1
B▶ : 2
C
B
B
A
6 mm
9.4 (0.96, 6.9)
8 mm
29 (3.0, 21)
Apply thread lock.

1. While supporting the front door, remove the bolts (A, B).

2. Remove the front door checker (C).

4. All Removed Parts - Install

1. Install the parts in the reverse order of removal.

NOTE:

Apply medium strength liquid thread lock to the door checker mounting 8 mm bolt before reinstallation.

FRONT DOOR GLASS INNER WEATHERSTRIP REMOVAL AND INSTALLATION

Removal and Installation

1

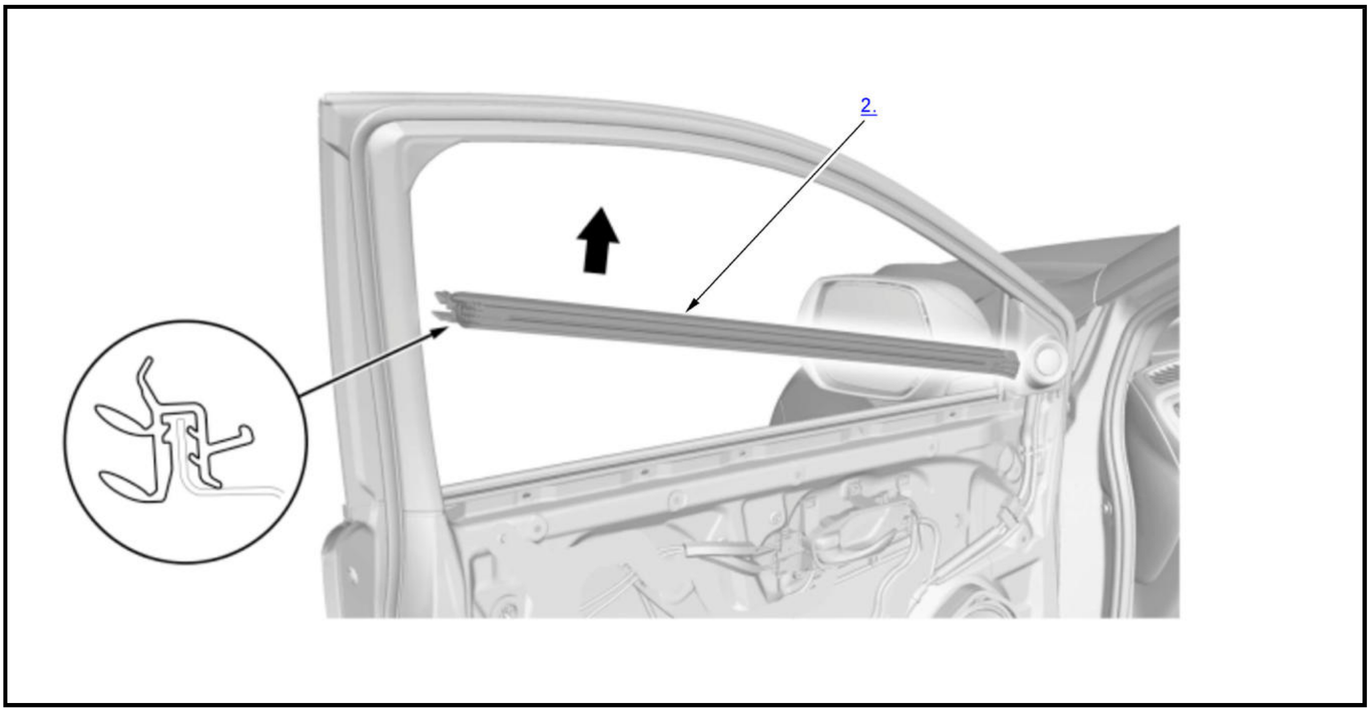

1. **Front Door Panel - Remove**
2. Front Door Glass Inner Weatherstrip - Remove
3. All Removed Parts - Install

1. Install the parts in the reverse order of removal.

FRONT DOOR GLASS OUTER WEATHERSTRIP REMOVAL AND INSTALLATION

Removal and Installation

1

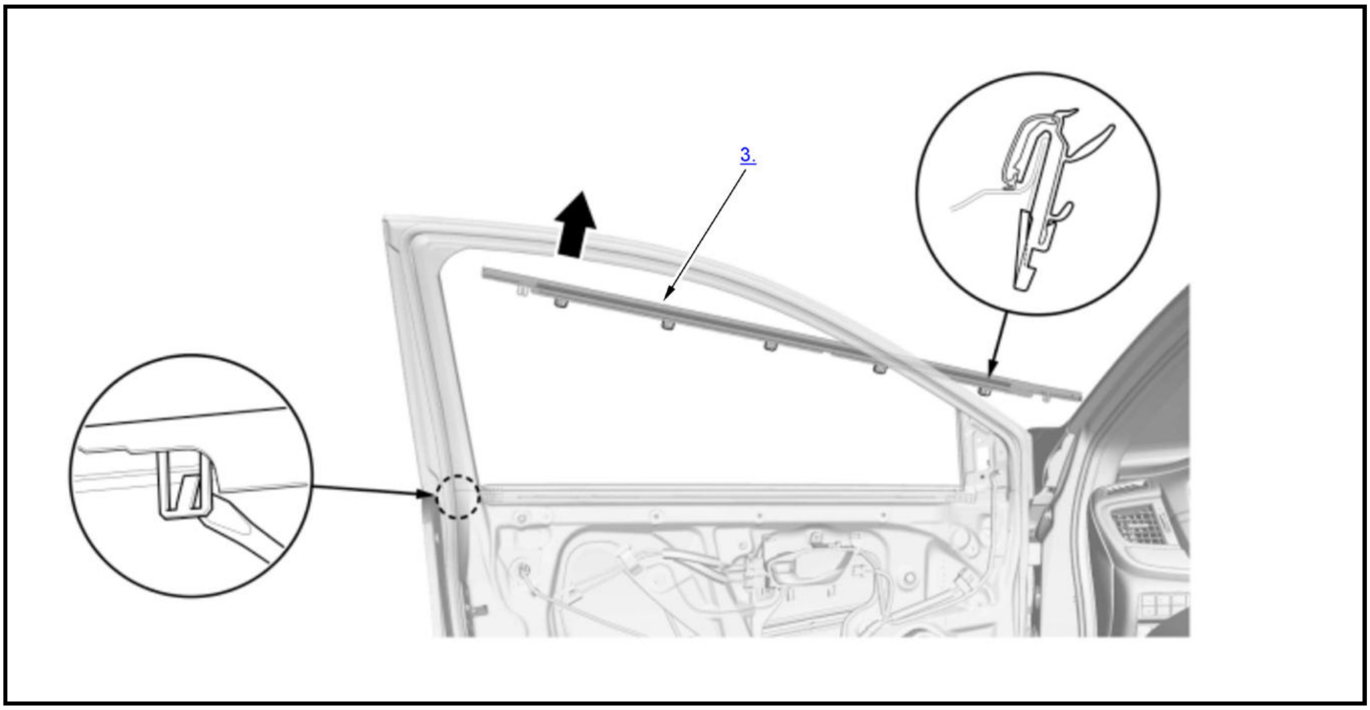

1. **Power Mirror - Remove**
2. Front Door Plastic Cover - Remove

1. **Remove the front door plastic cover as needed** .

3. Front Door Glass Outer Weatherstrip - Remove
4. All Removed Parts - Install

1. Install the parts in the reverse order of removal.

FRONT DOOR INNER HANDLE REMOVAL AND INSTALLATION

Removal and Installation

1. **Front Door Panel - Remove**
2. Front Door Inner Handle - Remove

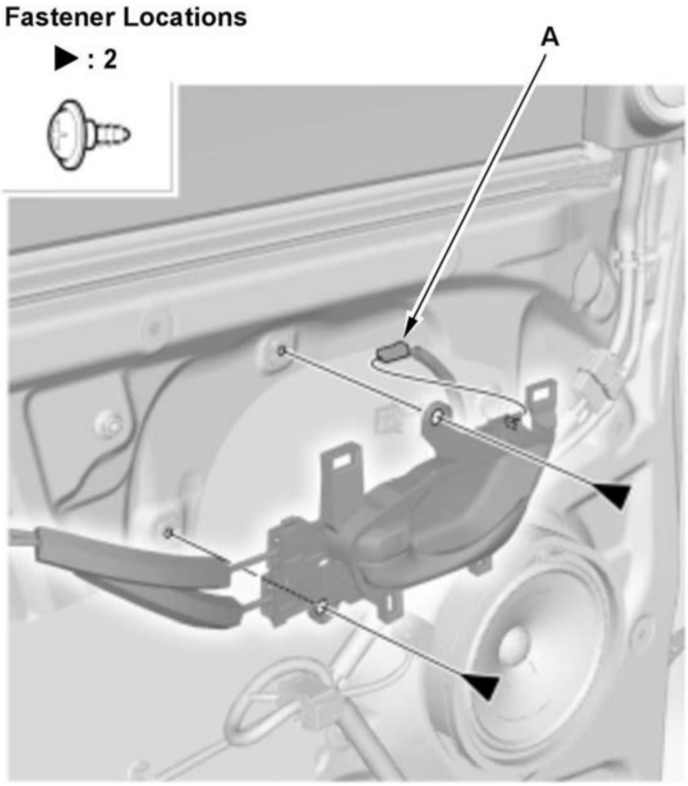	1. Remove the screws and disconnect the connector (A).

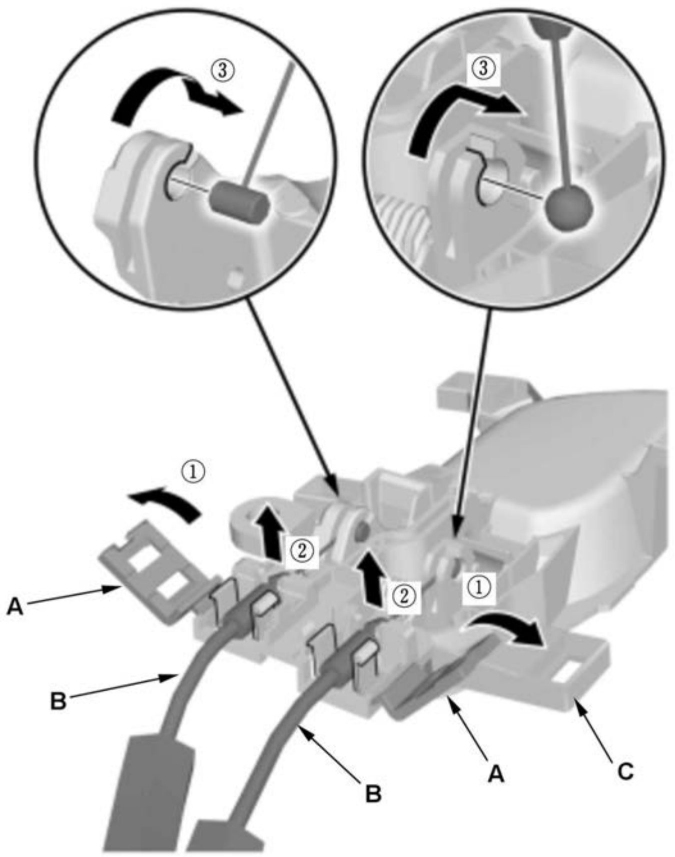	2. Open the covers (A) and disconnect the cables (B) from the inner handle (C).

3. All Removed Parts - Install

1. Install the parts in the reverse order of removal.

FRONT DOOR LATCH REMOVAL AND INSTALLATION

Removal and Installation

NOTE: How to read the torque specifications

1. Front Door Plastic Cover - Remove

1. **Remove the front door plastic cover as needed** .

2. Front Door Center Lower Channel - Remove

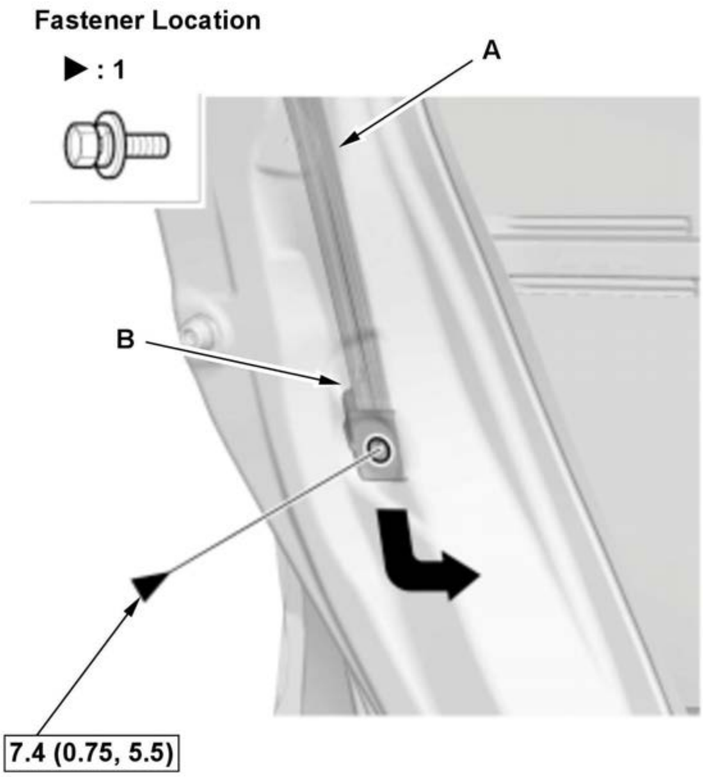 Fastener Location ▶ : 1 A B 7.4 (0.75, 5.5)	1. Pull the glass run channel (A) away as needed. 2. Remove the front door center lower channel (B) as needed.

3. Front Door Latch - Remove

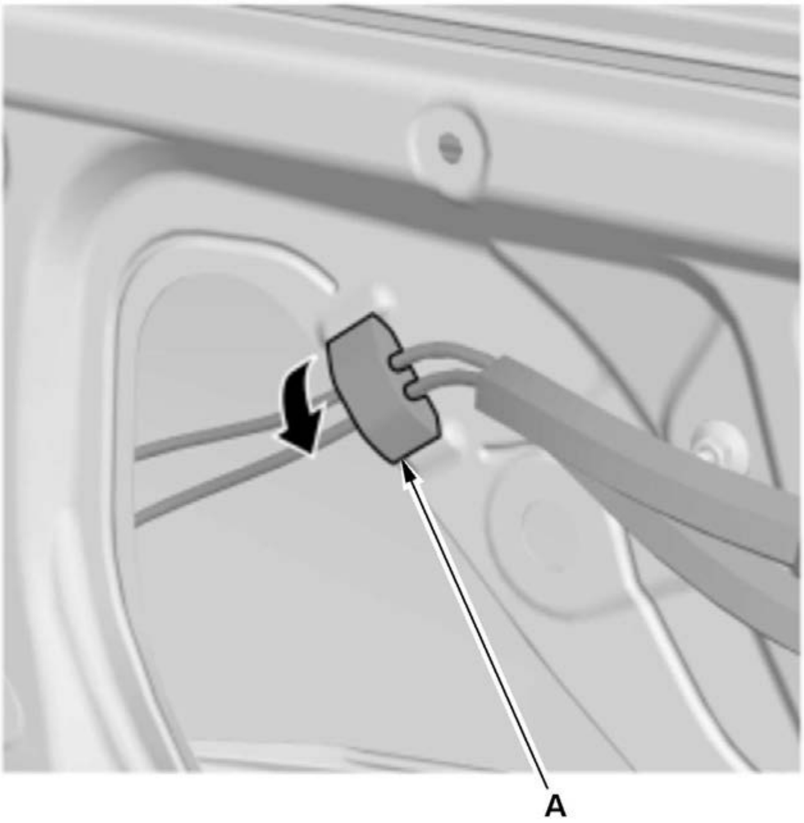	1. Open the cable clip (A).

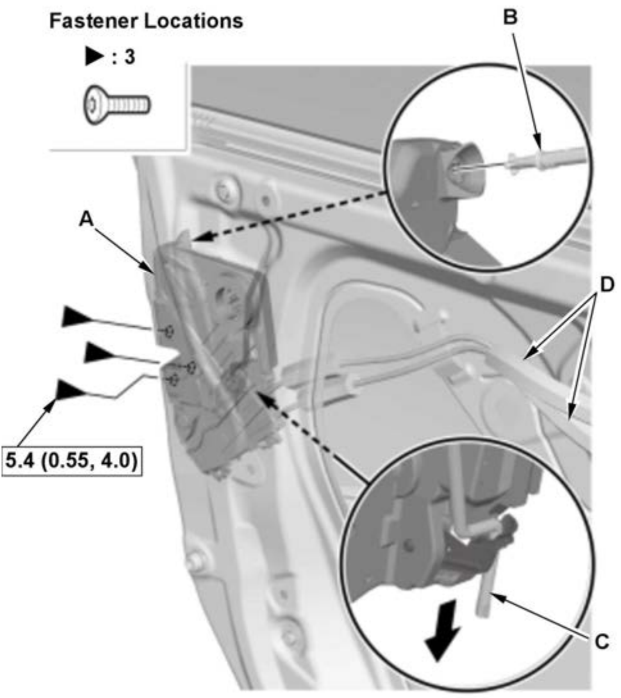
Fastener Locations
▶ : 3
B
A
D
5.4 (0.55, 4.0)
C

2. Remove the bolts.

3. Driver's side: Pull and rotate the front door latch (A) to disconnect the cylinder rod (B).

4. Pull the front door latch downward to disconnect the outer handle rod (C), and then remove the front door latch.

NOTE:

Be careful not to bend the cables (D).

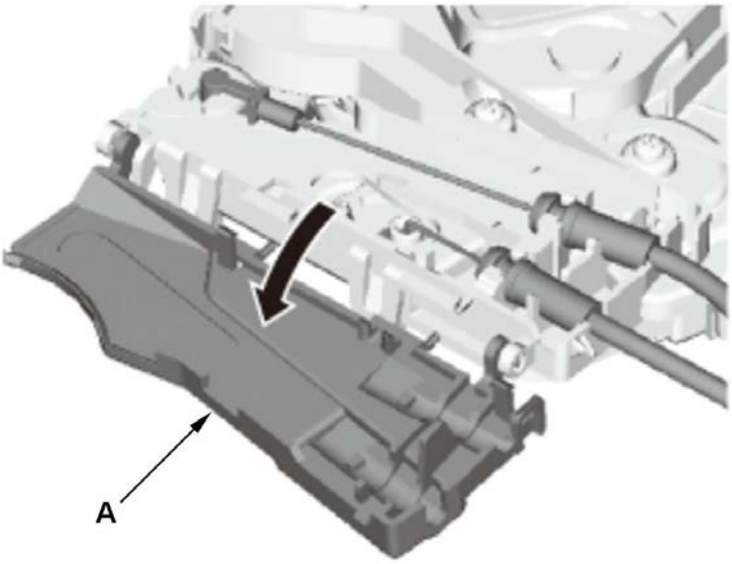

5. Open the latch protector cover (A).

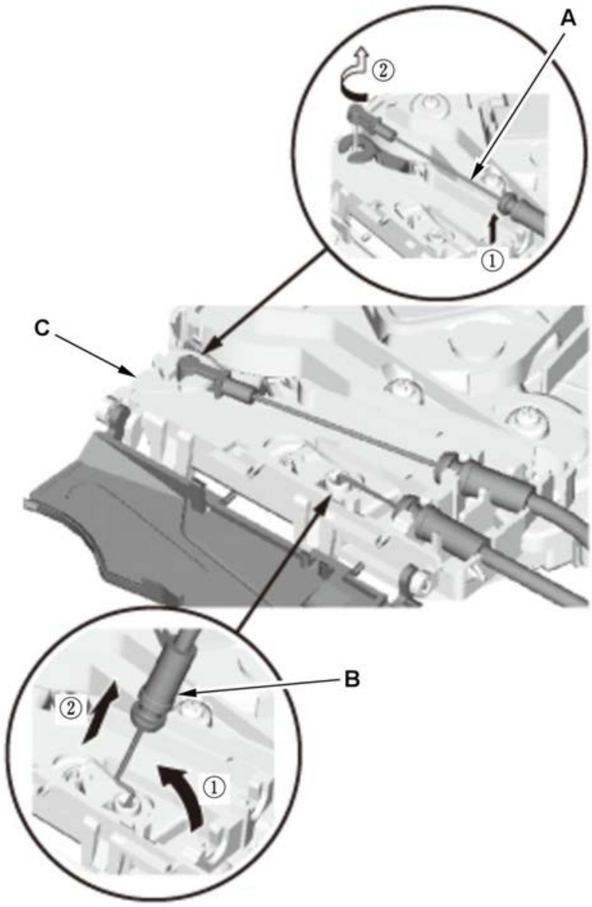	6. Disconnect the inner handle cable (A) and the latch cable (B) from the front door latch (C).

4. All Removed Parts - Install

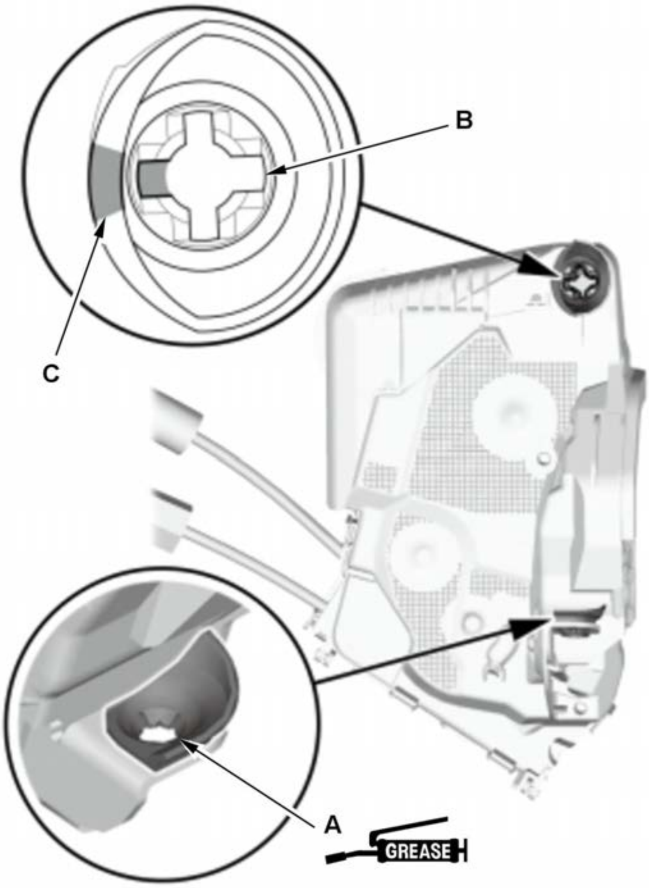	1. Install the parts in the reverse order of removal. **NOTE:** - **Apply multipurpose grease to the open lever clip (A).** - **Driver's side: Make sure the ditch (B) is within the range (C) as shown.**

5. **Power Window Control Unit - Reset**

FRONT DOOR LOWER TRIM REMOVAL AND INSTALLATION

Removal

1. Front Door Lower Trim - Remove

    1. Remove the cap (A), then remove the screw.

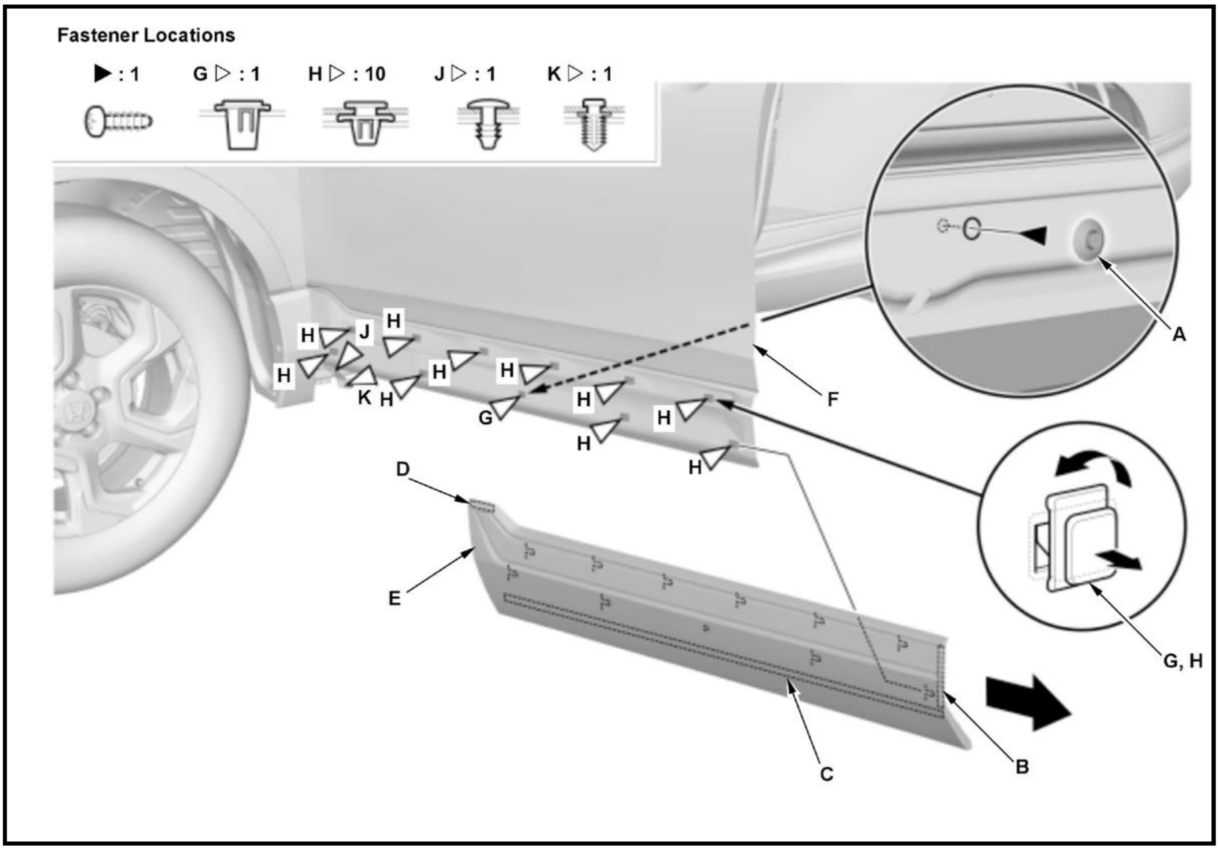

    2. Cut the adhesive tape (B, C, D) along the edge of the door lower trim (E) with a utility knife while separating the trim from the door (F) with a trim tool.

NOTE: **Apply protective tape around the cutting area.**

    3. Slide the door lower trim rearward and remove it.

NOTE: **The clips (G, H) will stay in the door.**

    4. Remove the clips by turning.

2. Front Door Lower Seal - Remove

    1. If necessary, remove the front door lower seal (A) with the clips and double-sided adhesive tape (B).

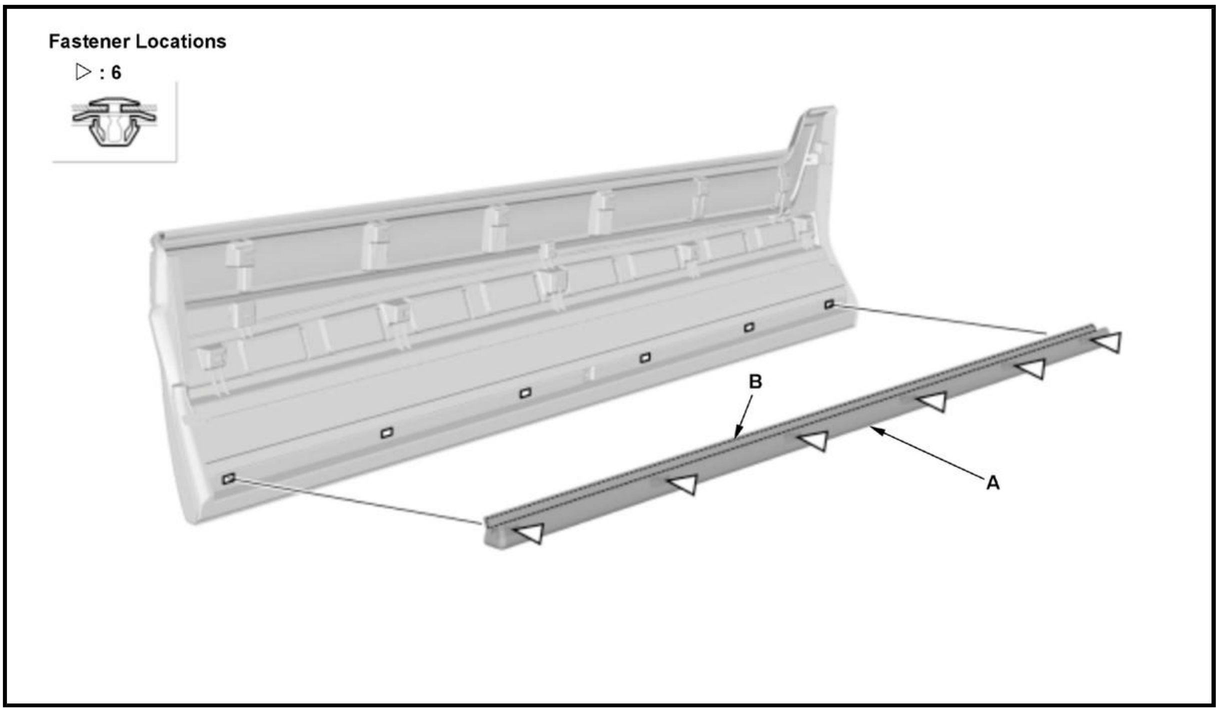

Fastener Locations
▷ : 6
B
A

Installation

1. Front Door Lower Seal - Install

    1. Install the front door lower seal (A).

NOTE: **Apply adhesive primer to the areas where the new double-sided adhesive tape (B) will be applied.**

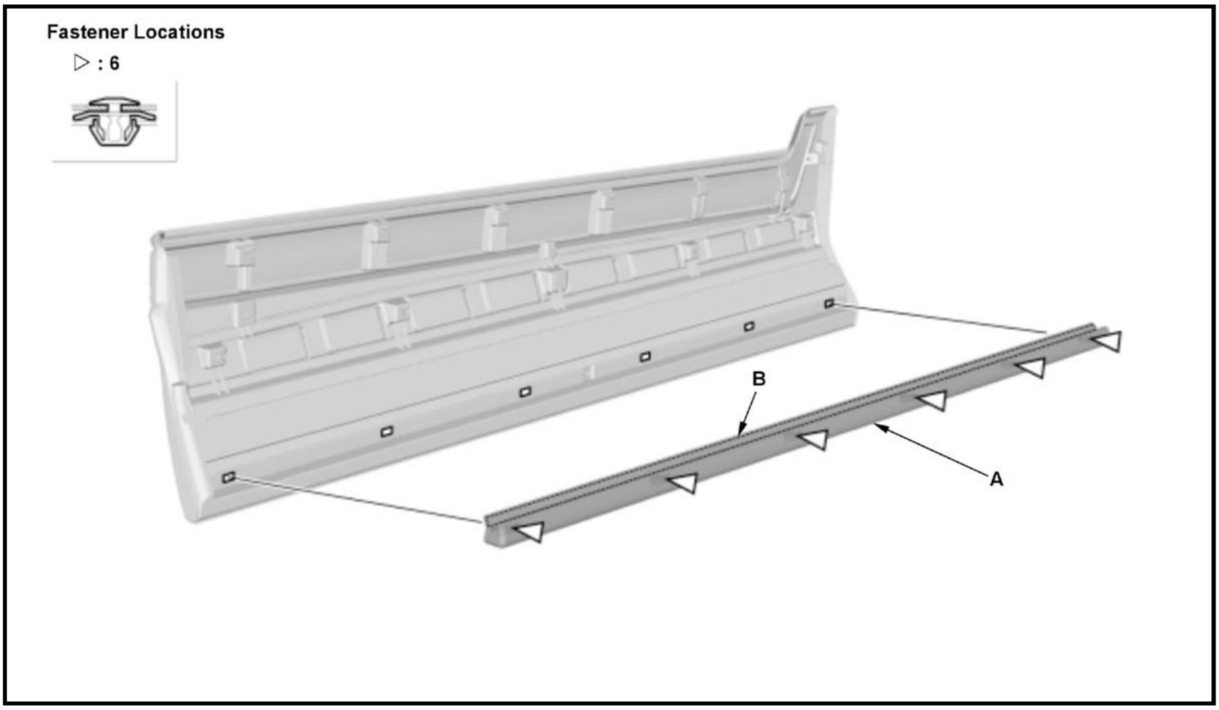

Fastener Locations
▷ : 6
B
A

2. Front Door Lower Trim - Install

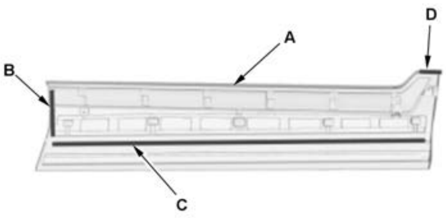	1. If you are reusing the original door lower trim (A), apply primer to the areas where new double-sided adhesive tapes (B, C, D) will be applied, then attach the new double-sided adhesive tapes to the trim as shown. **Double-sided adhesive tape (B)** **Double-sided adhesive tape (C)** **Double-sided adhesive tape (D)**

Thickness	1.0 mm (0.039 in)
Width	6 mm (0.24 in)
Length	50 mm (1.97 in)

Thickness	1.2 mm (0.047 in)
Width	8 mm (0.31 in)
Length	1000 mm (39.37 in)

Thickness	1.0 mm (0.039 in)
Width	8 mm (0.31 in)
Length	95 mm (3.74 in)

2. Install the clips (A, B) on the door lower trim (C) or door (D).

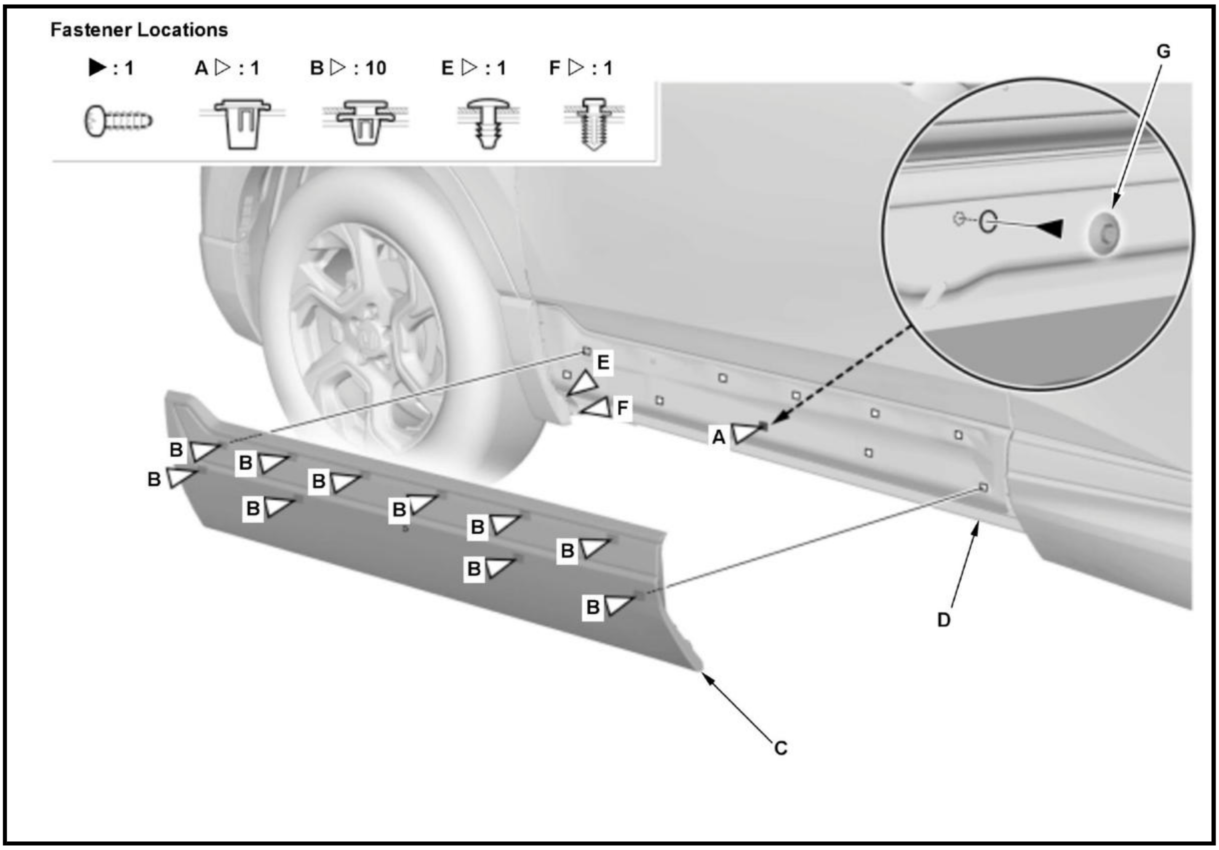

3. Install the door lower trim.

NOTE: **Scrape off the remaining double-sided adhesive tape from the door, then clean the surface with a sponge dampened in isopropyl alcohol. After cleaning, keep oil, grease, and water from getting on the surface.**

4. Install the screw and the clips (E, F) to the door lower trim.

5. Install the cap (G).

FRONT DOOR OUTER HANDLE REMOVAL AND INSTALLATION

Removal and Installation

NOTE: How to read the torque specifications

Front Door Handle Base Cover/Front Door Lock Cylinder

1. Front Door Handle Base Cover - Remove

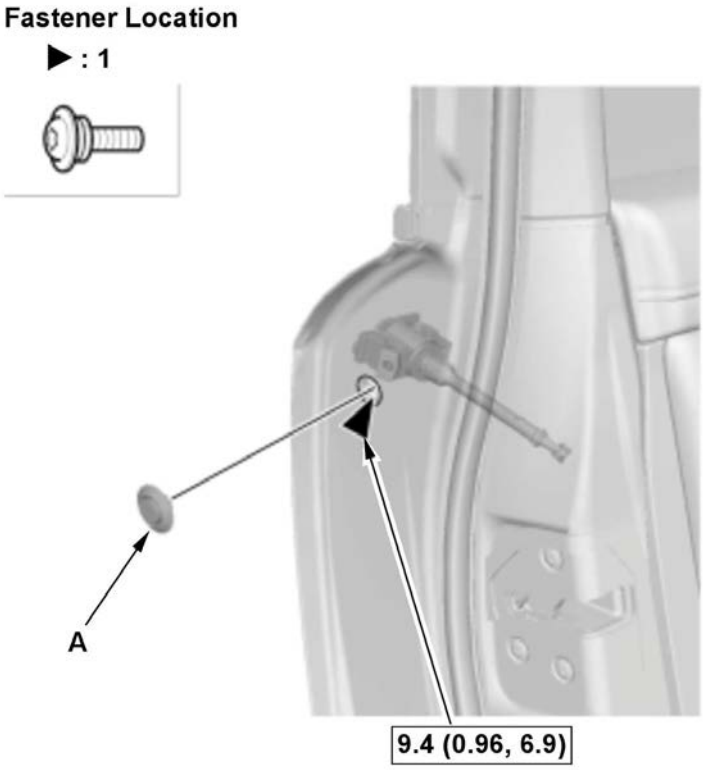	1. Remove the plug cap (A), and then remove the bolt.

Driver's side 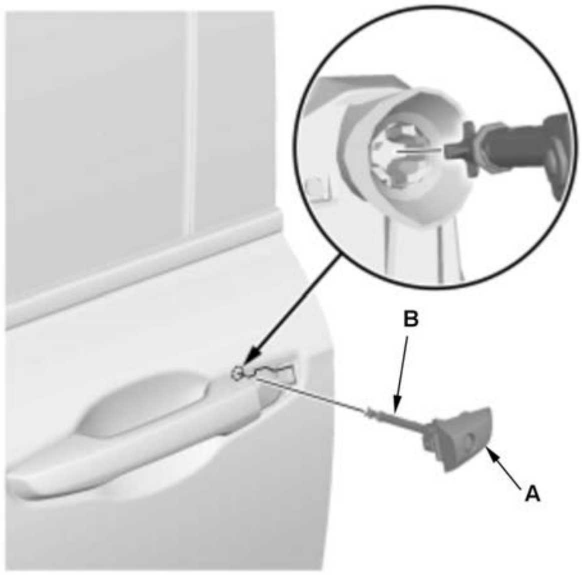 **Passenger's side**	2. Remove the front door handle base cover (A), together with the front door lock cylinder (B) as an assembly (driver's side).

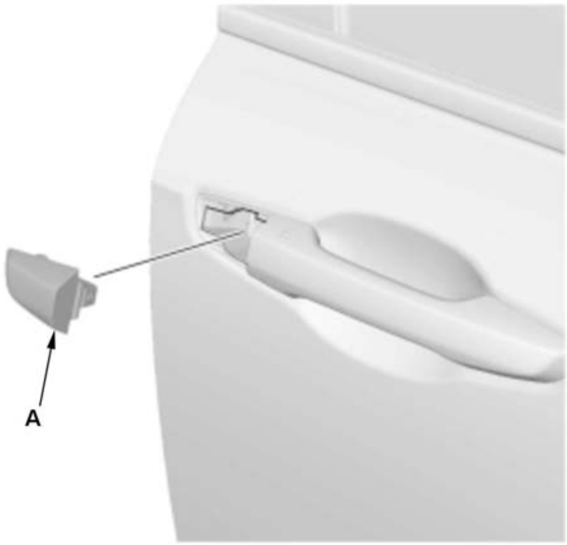	

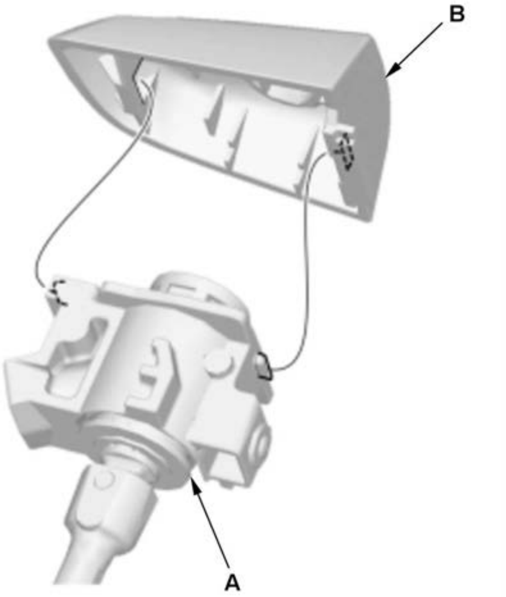	3. Driver's side: Remove the front door lock cylinder (A) from the front door handle base cover (B).

2. Front Door Plastic Cover - Remove

1. **Remove the front door plastic cover as needed.**

Front Door Outer Handle

3. Front Door Outer Handle - Remove

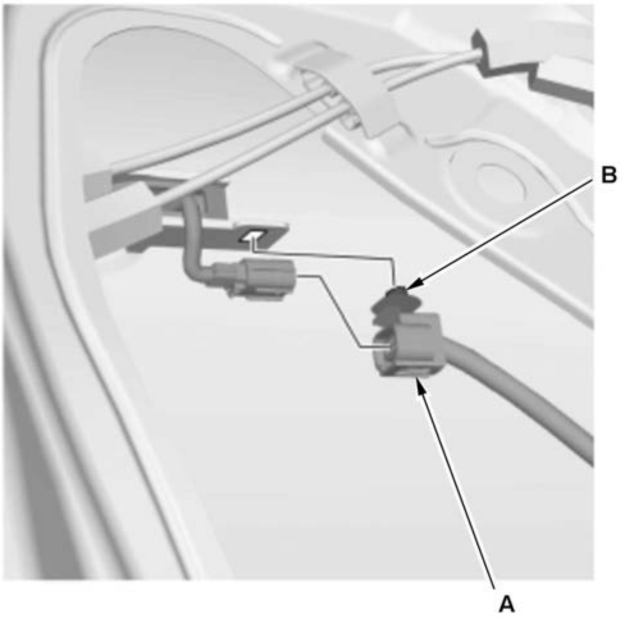	1. For some models: Disconnect the connector (A), and then remove the harness clip (B).

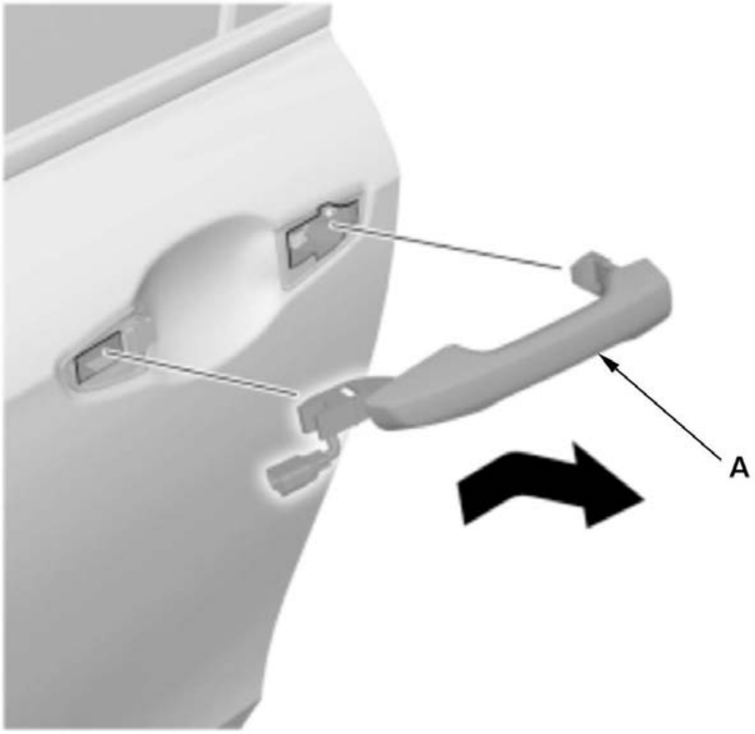	2. Remove the front door outer handle (A).

4. Front Door Outer Handle Seals - Remove

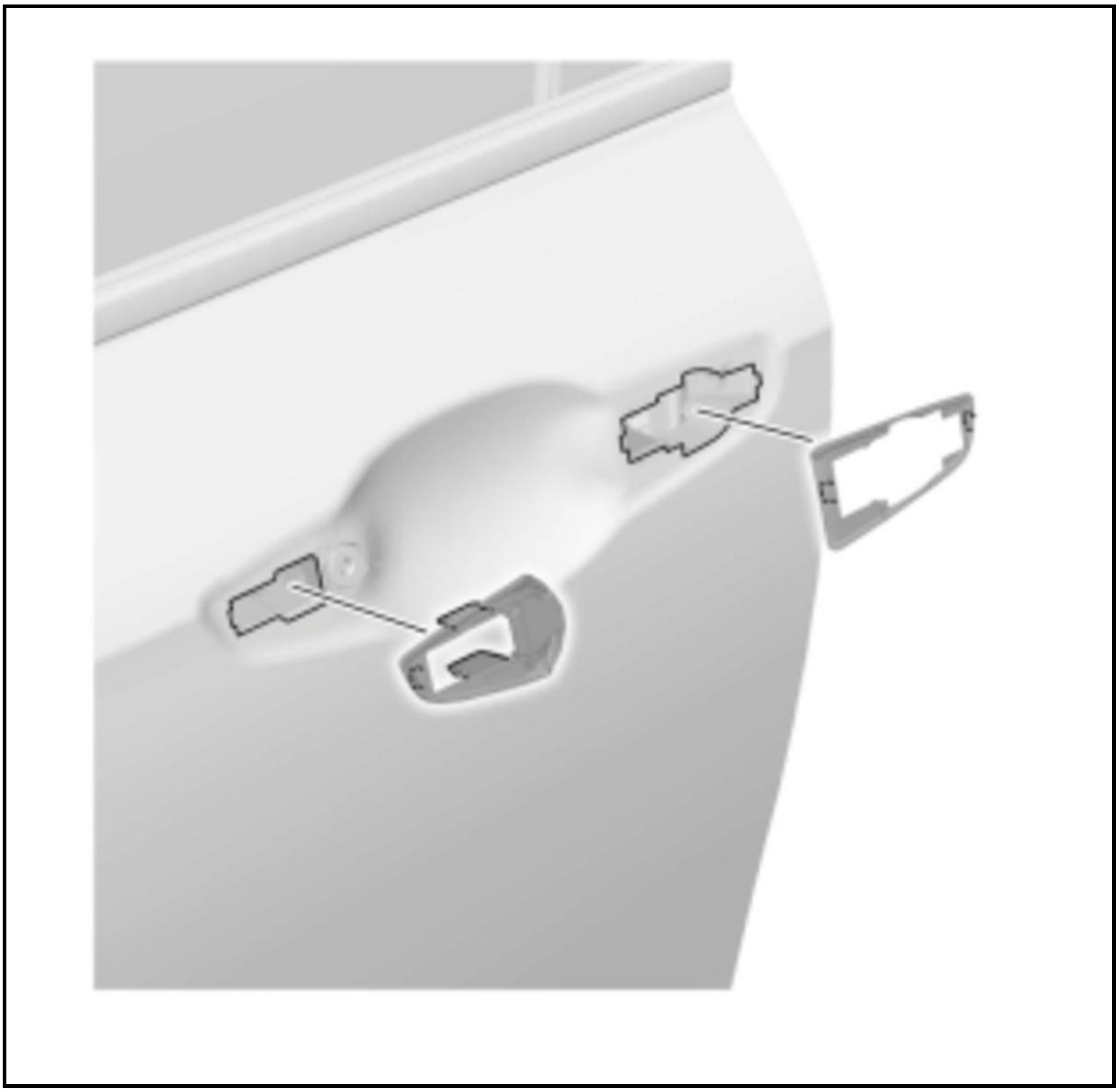

Front Door Outer Handle Base

5. Front Door Outer Handle Base - Remove

Fastener Location

▶ : 1

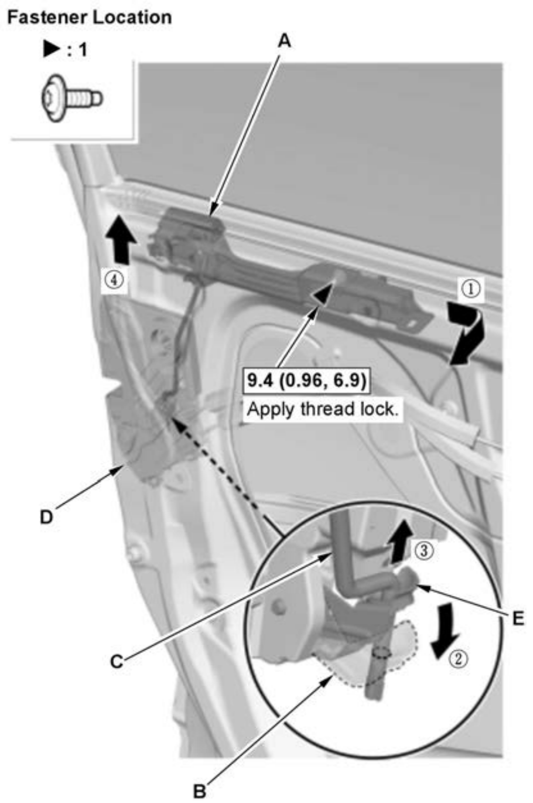

9.4 (0.96, 6.9)

Apply thread lock.

1. Loosen the bolt.

2. Move the rear area of the outer handle base (A) inward.

3. While pushing down the open lever (B), pull the outer handle base upward to disconnect the outer handle rod (C) from the front door latch (D).

4. If necessary, remove the open lever clip (E).

Fastener Location

▶ : 1

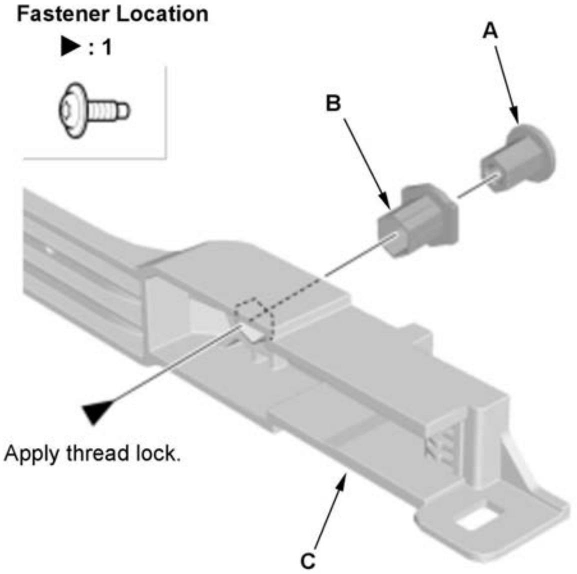

Apply thread lock.

5. If necessary, remove the bolt, the special nut (A) and the collar (B) from the outer handle base (C).

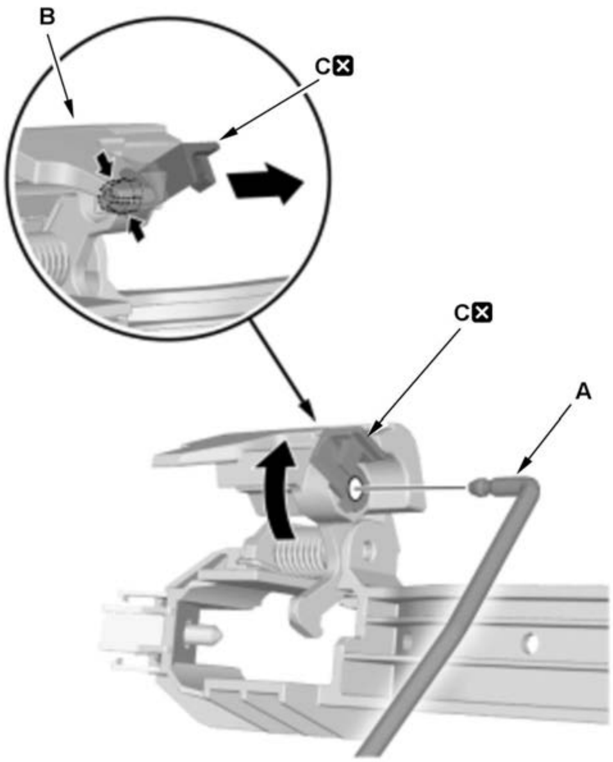	6. Disconnect the outer handle rod (A) from the front door outer handle base (B). 7. Remove the rod fastener (C) from the outer handle base, then replace it with a new one.

6. All Removed Parts - Install

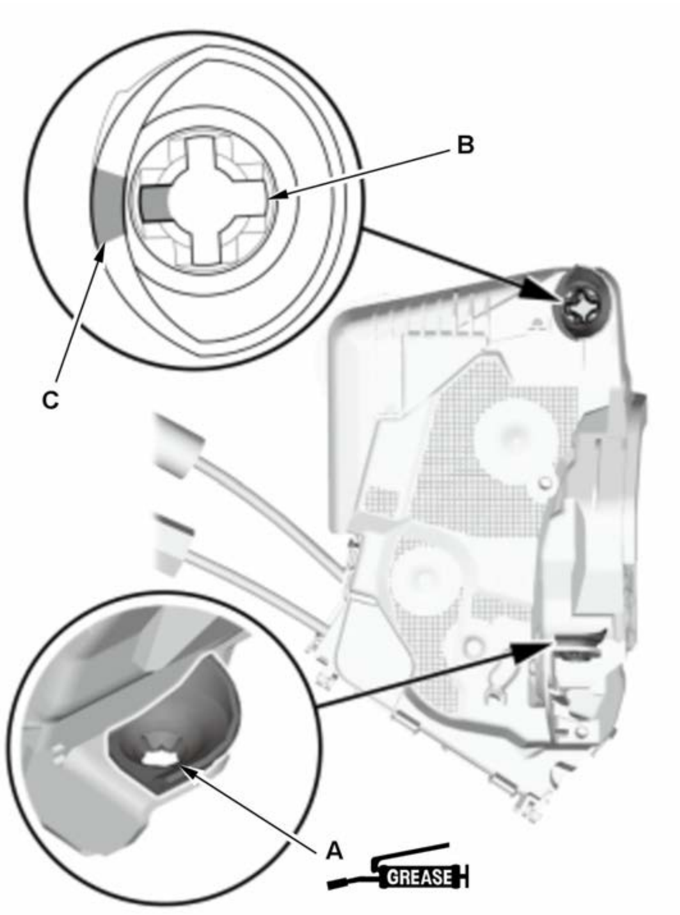	1. Install the parts in the reverse order of removal. **NOTE:** - **Apply multipurpose grease to the open lever clip (A).** - **Driver's side: Make sure the ditch (B) is within the range (C) as shown in illustration.** - **Apply medium strength liquid thread lock to the front door outer handle base bolt before reinstallation.**

FRONT DOOR PANEL REMOVAL AND INSTALLATION

Removal and Installation

1. Front Door Power Window Switch Panel - Remove

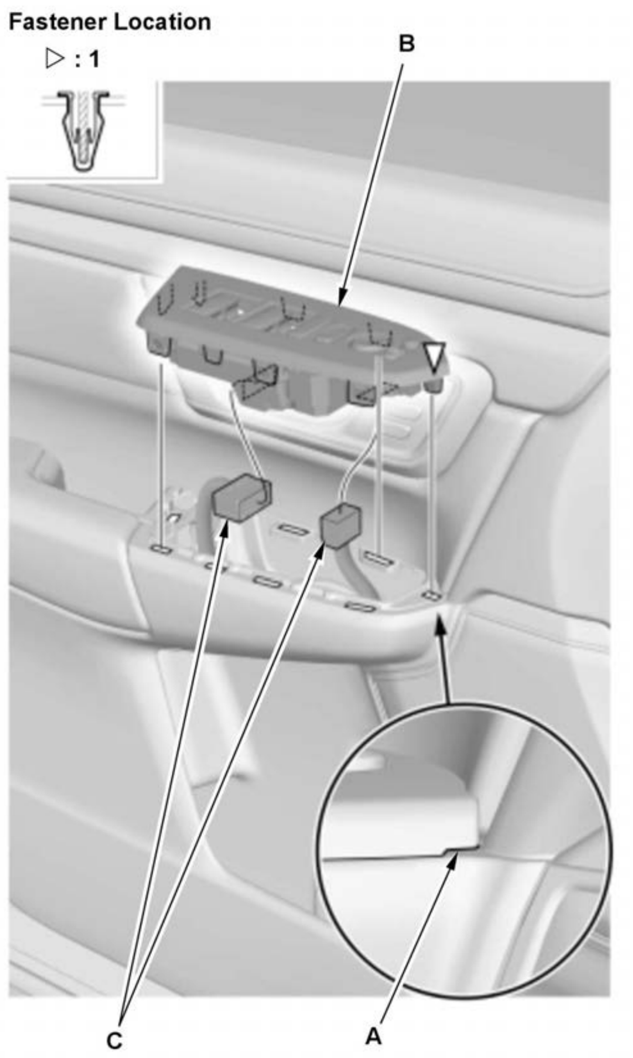 Fastener Location ▷ : 1 B C A	1. Pry out on the notch (A) in the power window switch panel (B) with the trim tool. 2. Disconnect the connectors (C), then remove the power window switch panel.

2. Front Door Panel - Remove

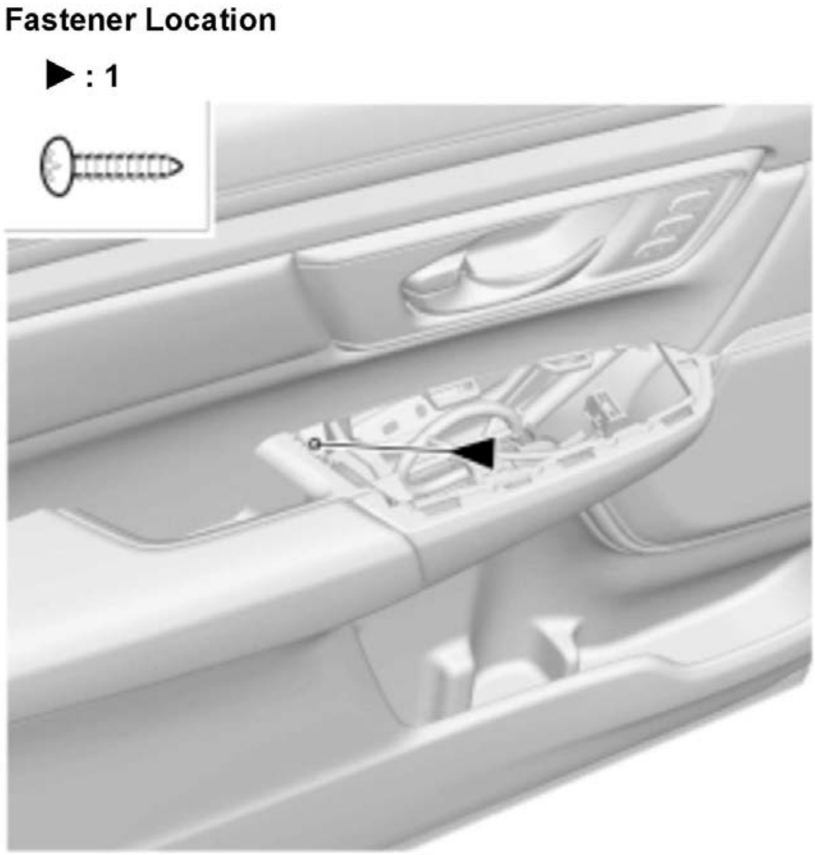
Fastener Location
▶ : 1

1. Remove the screw.

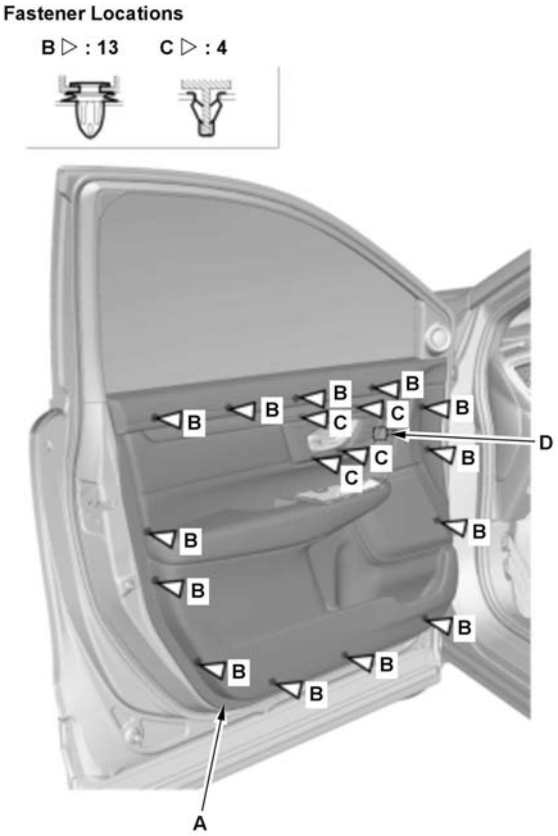
Fastener Locations
B ▷ : 13
C ▷ : 4
B
C
D
A

2. Starting at the bottom edge of the front door panel (A), remove the clips (B, C) with a commercially available trim pad remover.

3. Starting at the rear, pull the door panel upward.

4. For some models: Disconnect the connector (D).

3. All Removed Parts - Install

1. Install the parts in the reverse order of removal.

4. Power Window Control Unit - Reset

FRONT DOOR REGULATOR REMOVAL AND INSTALLATION

Removal and Installation

1

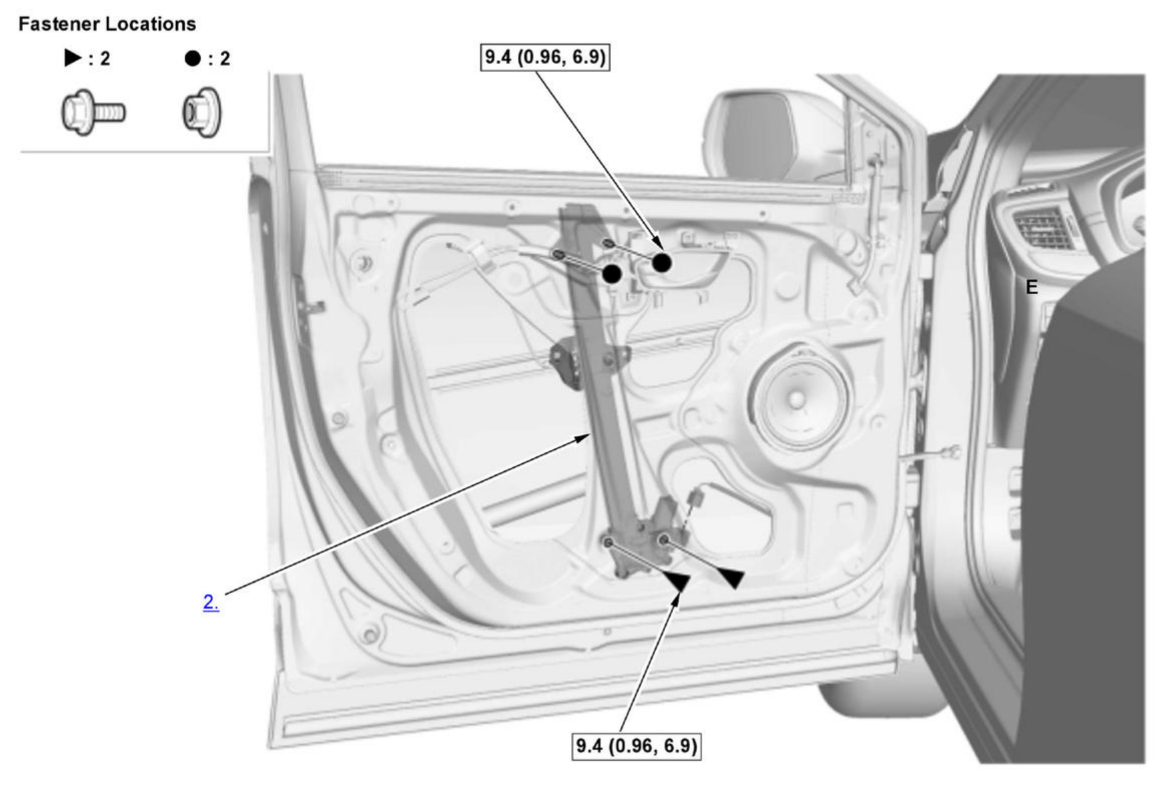

Fastener Locations
▶ : 2
● : 2
9.4 (0.96, 6.9)
E
2.
9.4 (0.96, 6.9)

☐	Torque: N.m (kgf.m, lbf.ft)

1. Front Door Glass - Remove
2. Front Door Regulator - Remove
3. All Removed Parts - Install

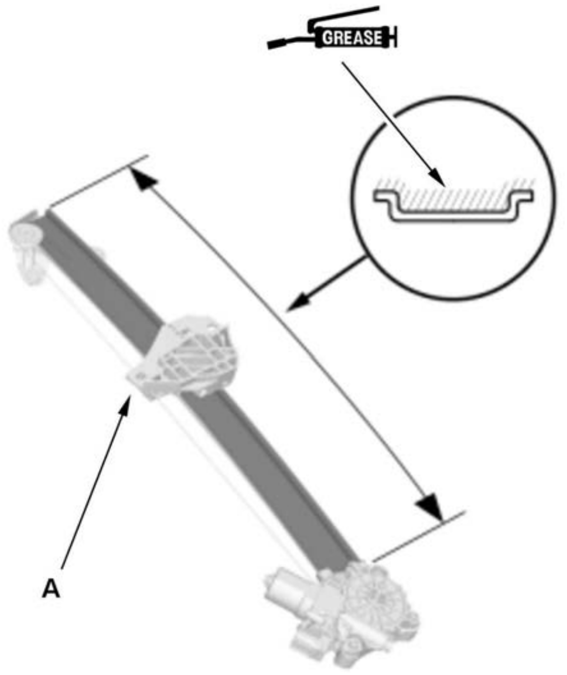	1. Install the parts in the reverse order of removal. **NOTE:** **Apply multipurpose grease to all sliding surfaces of the front door regulator (A) where shown.**

4. Power Window Control Unit - Reset
5. Door Glass - Adjustment

FRONT DOOR SASH OUTER TRIM REMOVAL AND INSTALLATION

Removal and Installation

1

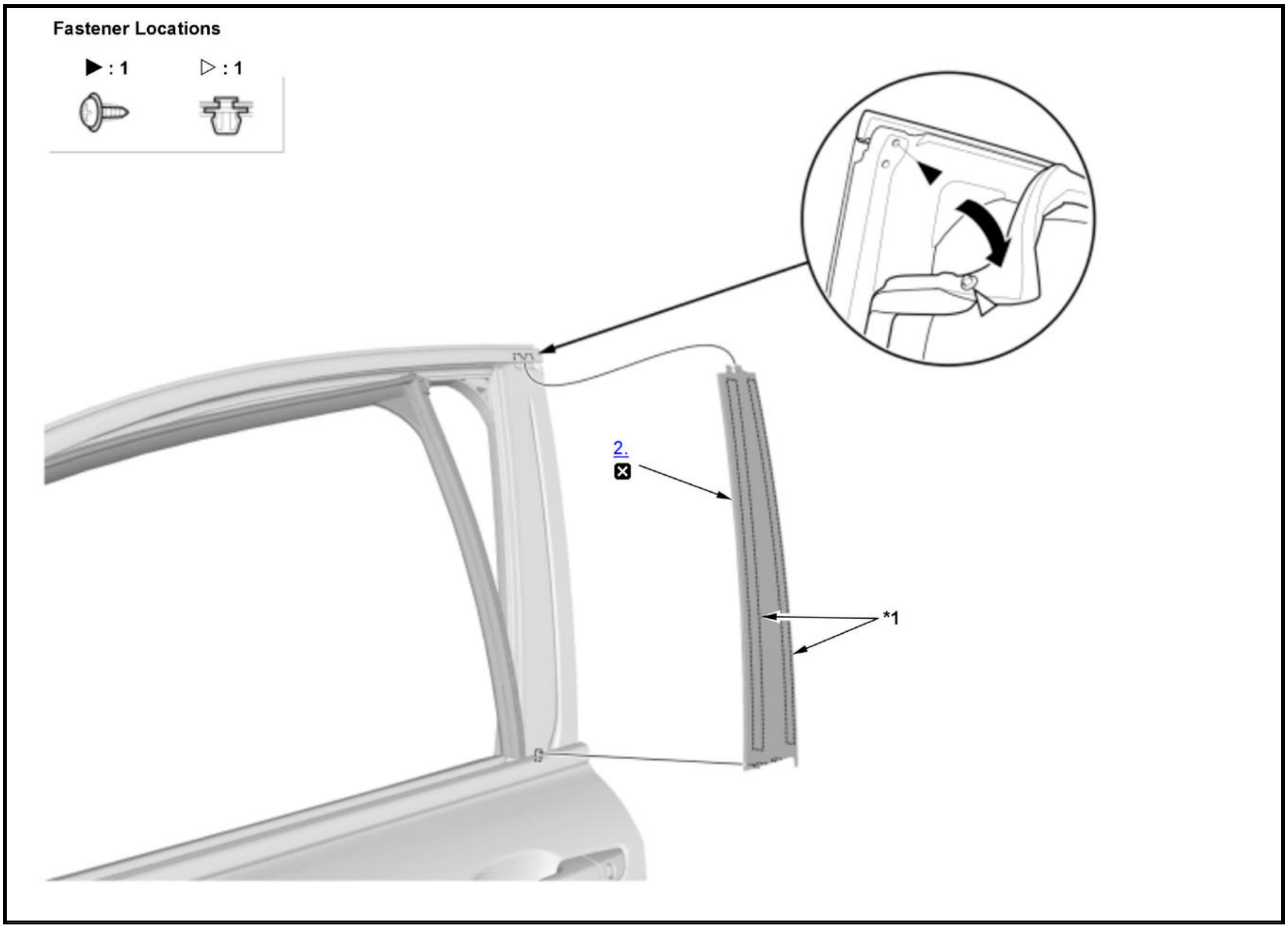
Fastener Locations
▶ : 1
▷ : 1
2.
*1

✖	Replace
*1	Double-sided adhesive tape

1. Front Door Glass Run Channel - Remove

1. **Remove the front door glass run channel as needed.**

2. Front Door Sash Outer Trim - Remove
3. All Removed Parts - Install

1. Install the parts in the reverse order of removal.

FRONT DOOR WEATHERSTRIP REMOVAL AND INSTALLATION

Removal and Installation

1

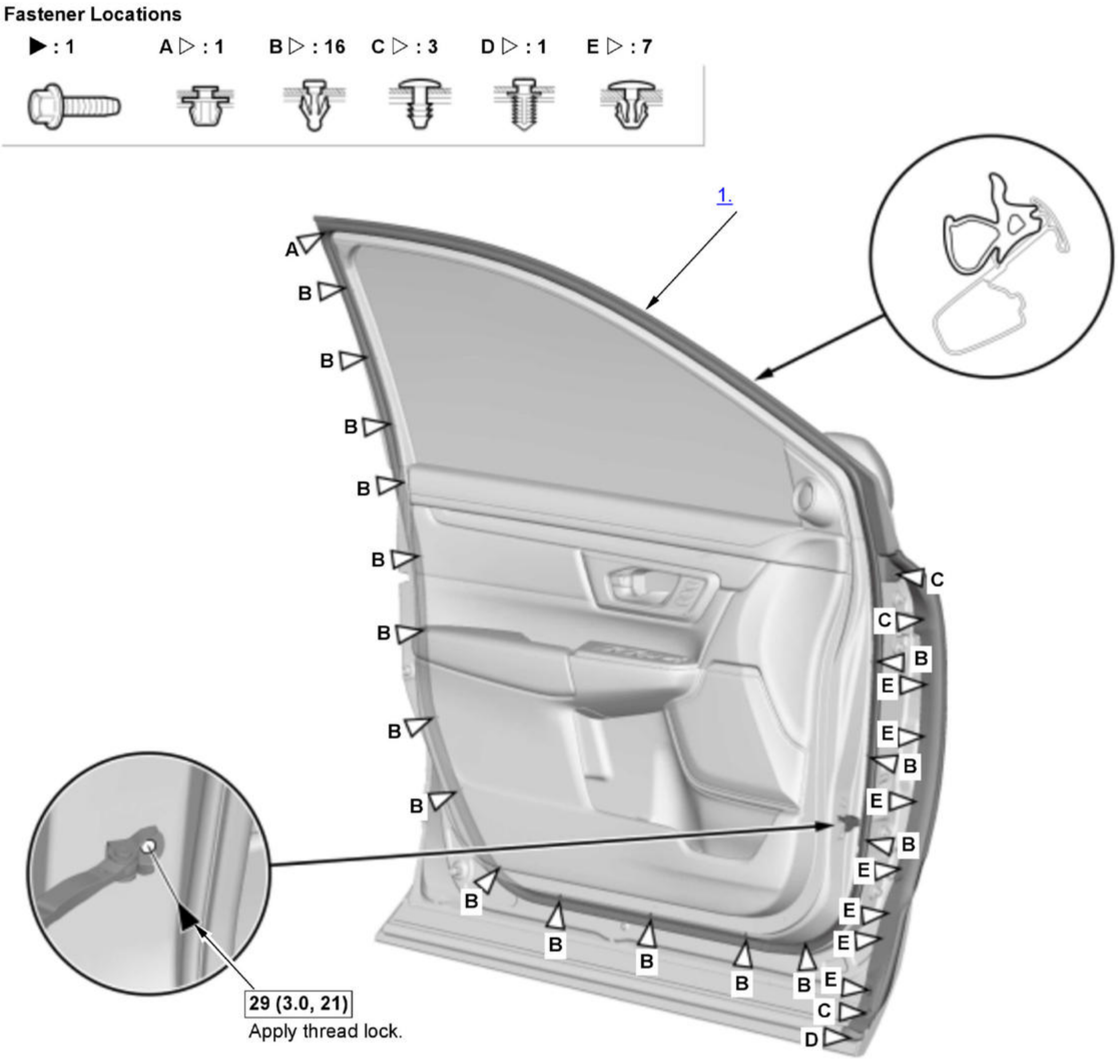
Fastener Locations
▶ : 1
A ▷ : 1
B ▷ : 16
C ▷ : 3
D ▷ : 1
E ▷ : 7
1.
A
B
C
D
E
29 (3.0, 21)
Apply thread lock.

▭	Torque: N.m (kgf.m, lbf.ft)

1. Front Door Weatherstrip - Remove
2. All Removed Parts - Install

1. Install the parts in the reverse order of removal.

NOTE:
Apply medium strength liquid thread lock to the door checker mounting bolt before reinstallation.

3. Water Leaks - Check

REAR DOOR CHECKER REMOVAL AND INSTALLATION

Removal and Installation

NOTE: How to read the torque specifications .

1. Rear Door Panel - Remove
2. Rear Door Plastic Cover - Remove

   1. Remove the rear door plastic cover as needed.

3. Rear Door Checker - Remove

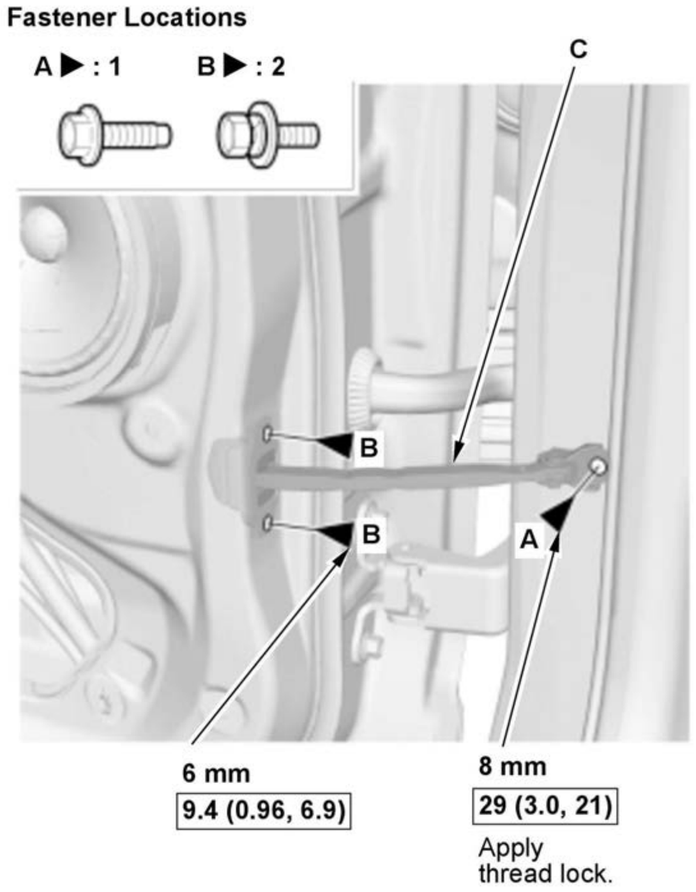
Fastener Locations
A ▶ : 1
B ▶ : 2
C
B
B
A
6 mm
9.4 (0.96, 6.9)
8 mm
29 (3.0, 21)
Apply thread lock.

1. While supporting the rear door, remove the bolts (A, B).

2. Remove the rear door checker (C).

4. All Removed Parts - Install

   1. Install the parts in the reverse order of removal.

NOTE:

Apply medium strength liquid thread lock to the door checker mounting 8 mm bolt before reinstallation.

REAR DOOR CORNER TRIM REMOVAL AND INSTALLATION

Removal and Installation

1

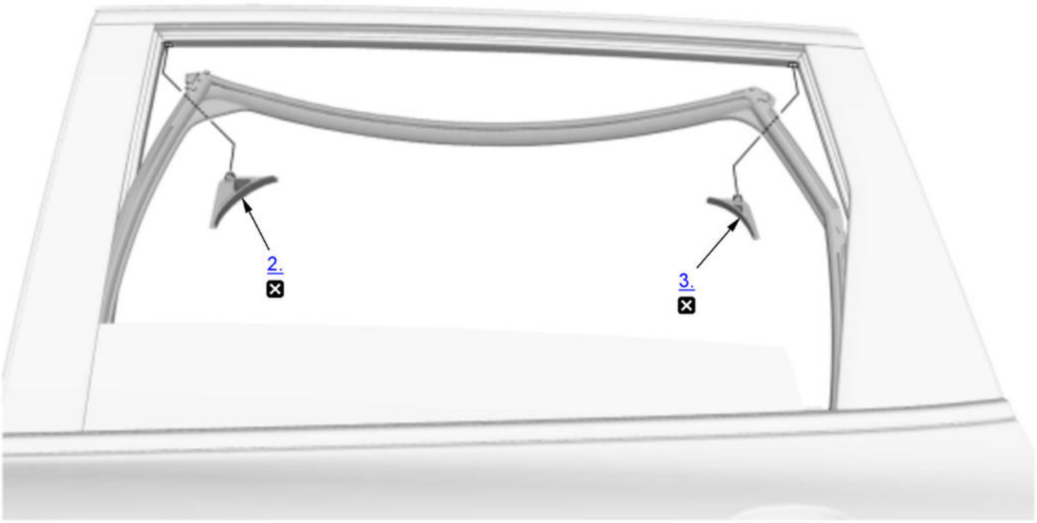

☒	Replace

1. Glass Run Channel - Remove

   1. **Remove the glass run channel as needed**.

2. Rear Door Center Corner Trim - Remove
3. Rear Door Center Rear Trim - Remove
4. All Removed Parts - Install

   1. Install the parts in the reverse order of removal.

REAR DOOR GLASS INNER WEATHERSTRIP REMOVAL AND INSTALLATION

Removal and Installation

1

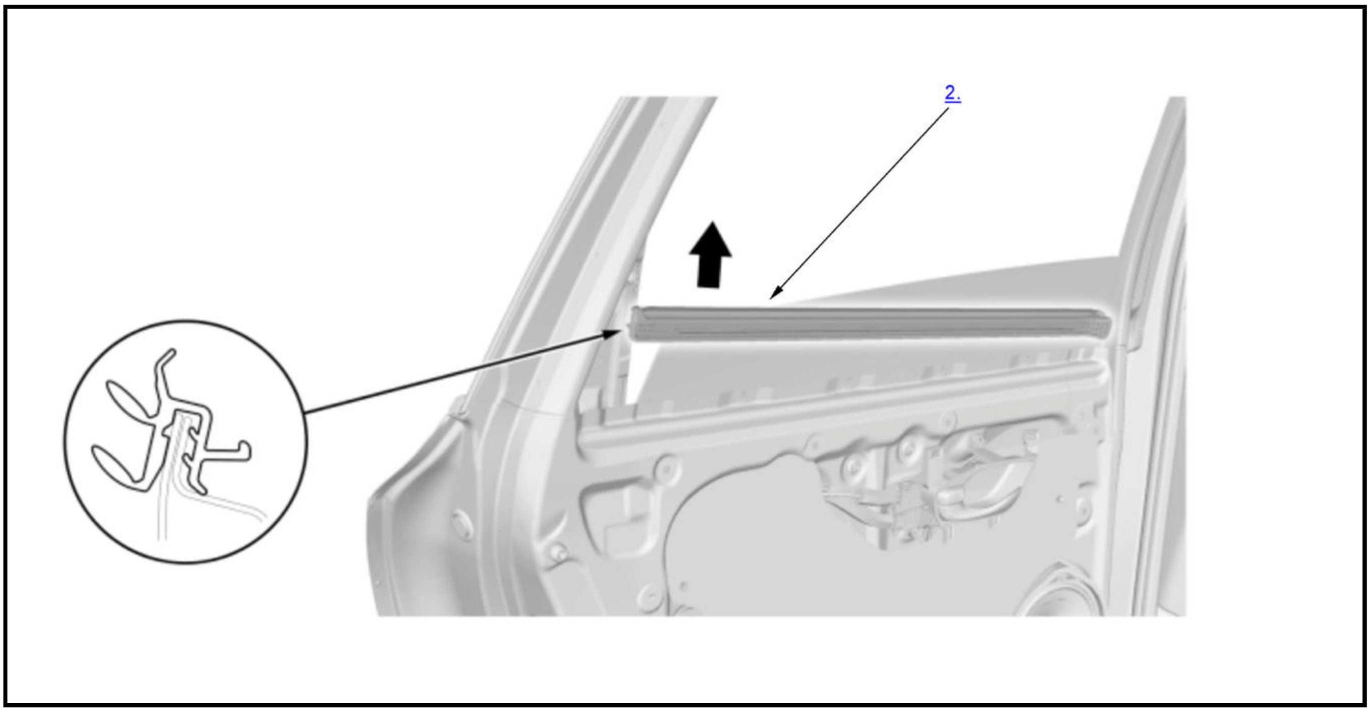

1. **Rear Door Panel - Remove**
2. Rear Door Glass Inner Weatherstrip - Remove
3. All Removed Parts - Install

1. Install the parts in the reverse order of removal.

REAR DOOR GLASS OUTER WEATHERSTRIP REMOVAL AND INSTALLATION

Removal and Installation

1

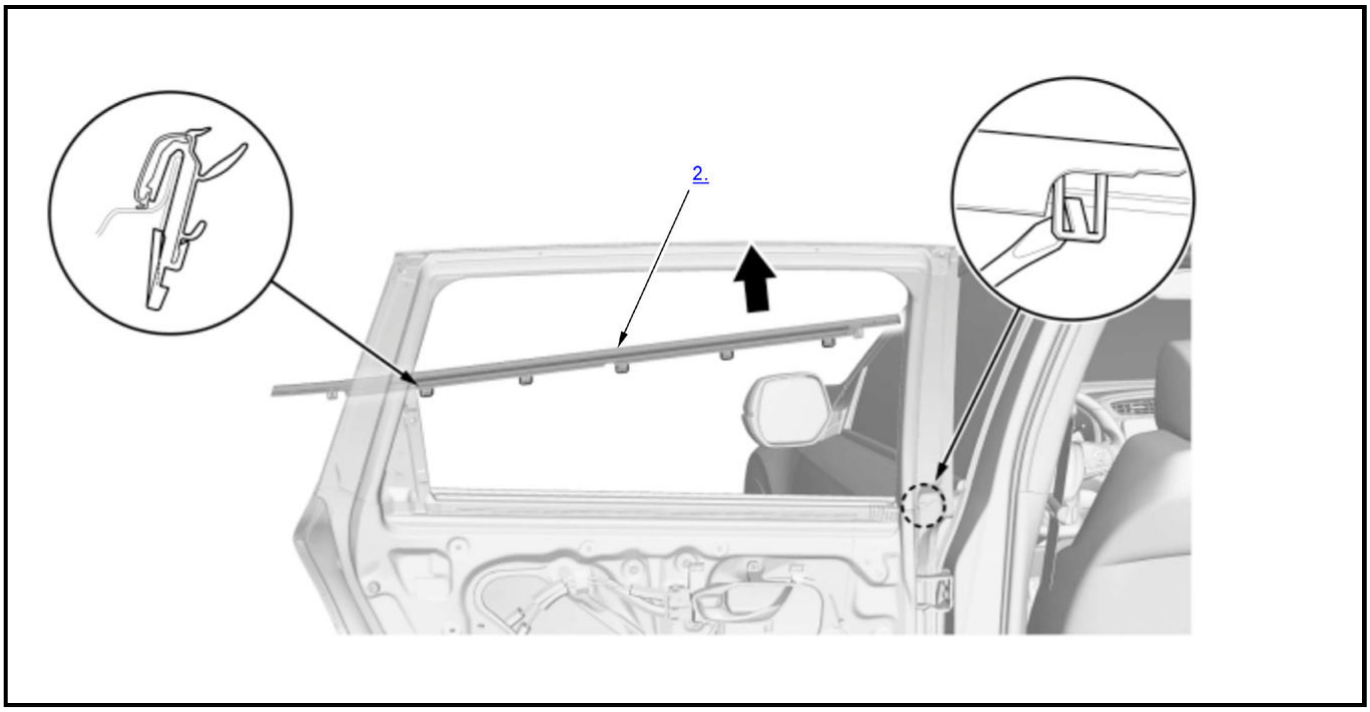

1. Rear Door Plastic Cover - Remove

1. **Remove the rear door plastic cover as needed**.

2. Rear Door Glass Outer Weatherstrip - Remove

3. All Removed Parts - Install

1. Install the parts in the reverse order of removal.

REAR DOOR GLASS REMOVAL AND INSTALLATION

Removal and Installation

NOTE: How to read the torque specifications

1. Rear Door Panel - Remove
2. Rear Door Inner Handle - Remove

1. Remove the rear door inner handle as needed.

3. Rear Door Plastic Cover - Remove

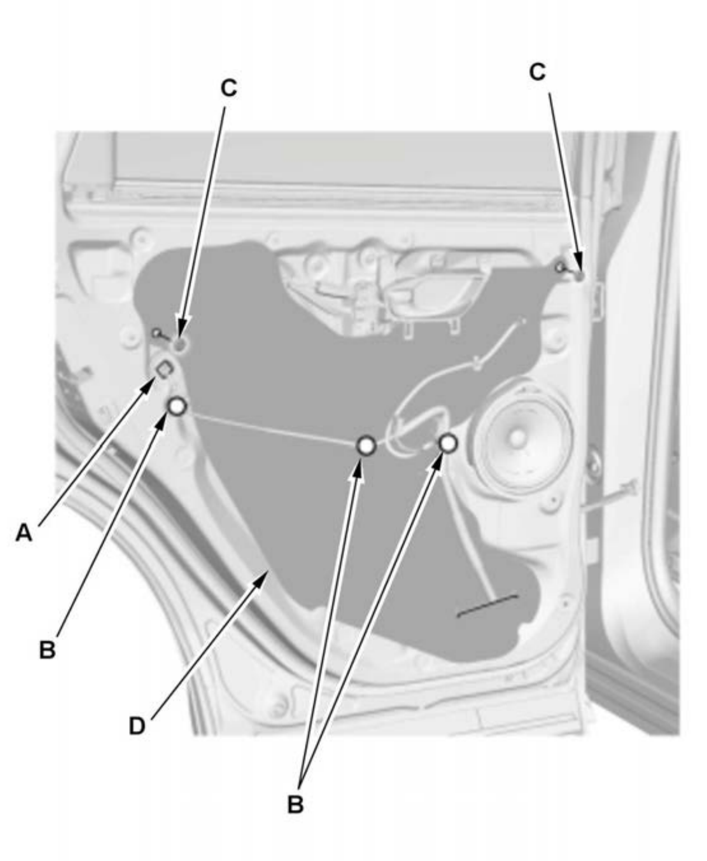	1. Disconnect the connector (A), and remove the harness clips (B). 2. Remove the plug caps (C), then carefully remove the plastic cover (D). **NOTE:** **If the plastic cover is damaged or torn, replace it with a new one.**

4. Rear Quarter Channel - Remove

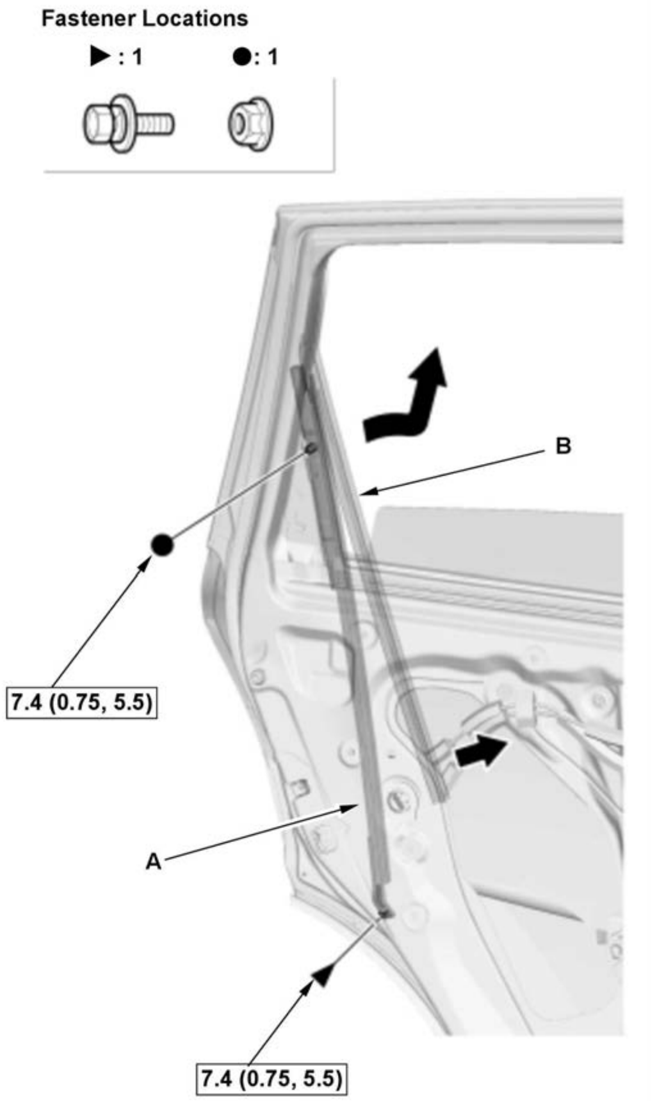 Fastener Locations ▶ : 1 ●: 1 B 7.4 (0.75, 5.5) A 7.4 (0.75, 5.5)	1. Remove the bolt and nut, from the rear quarter channel (A). 2. Remove the rear quarter channel, and pull out the glass run channel (B) as needed. **NOTE:** **Be careful not to scratch the door, or damage the door glass outer weatherstrip.**

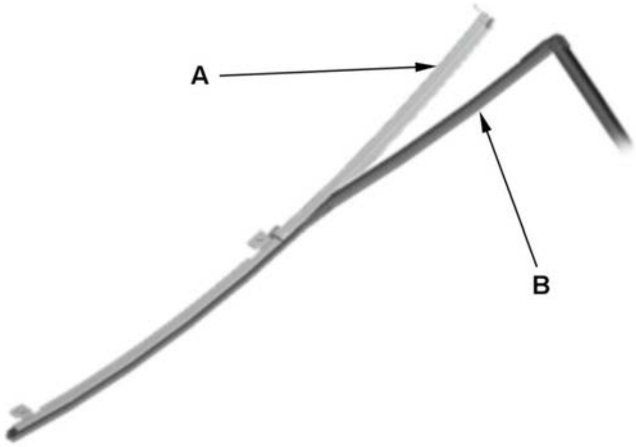	3. Remove the rear quarter channel (A) from the glass run channel (B).

5. Rear Door Glass - Remove

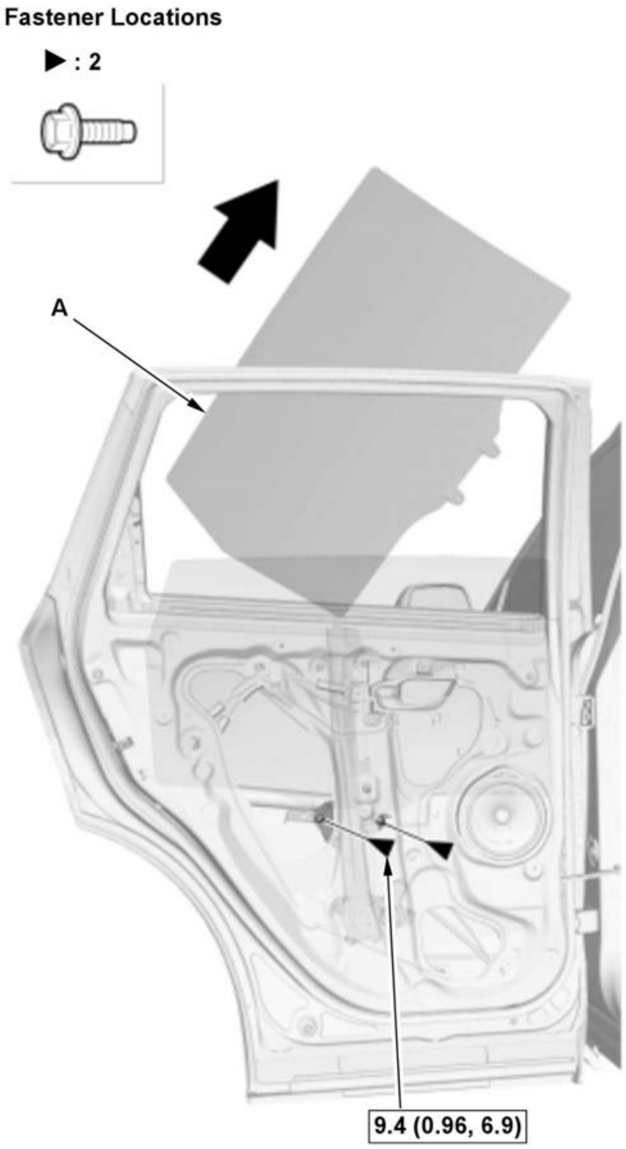 Fastener Locations ▶ : 2 A 9.4 (0.96, 6.9)	1. Lower the glass (A) until you can see the glass mounting bolts, then remove them. 2. Carefully pull out the glass through the window slot. **NOTE:** **Take care not to drop the glass inside the door.**

6. Rear Door Glass Run Channel - Remove

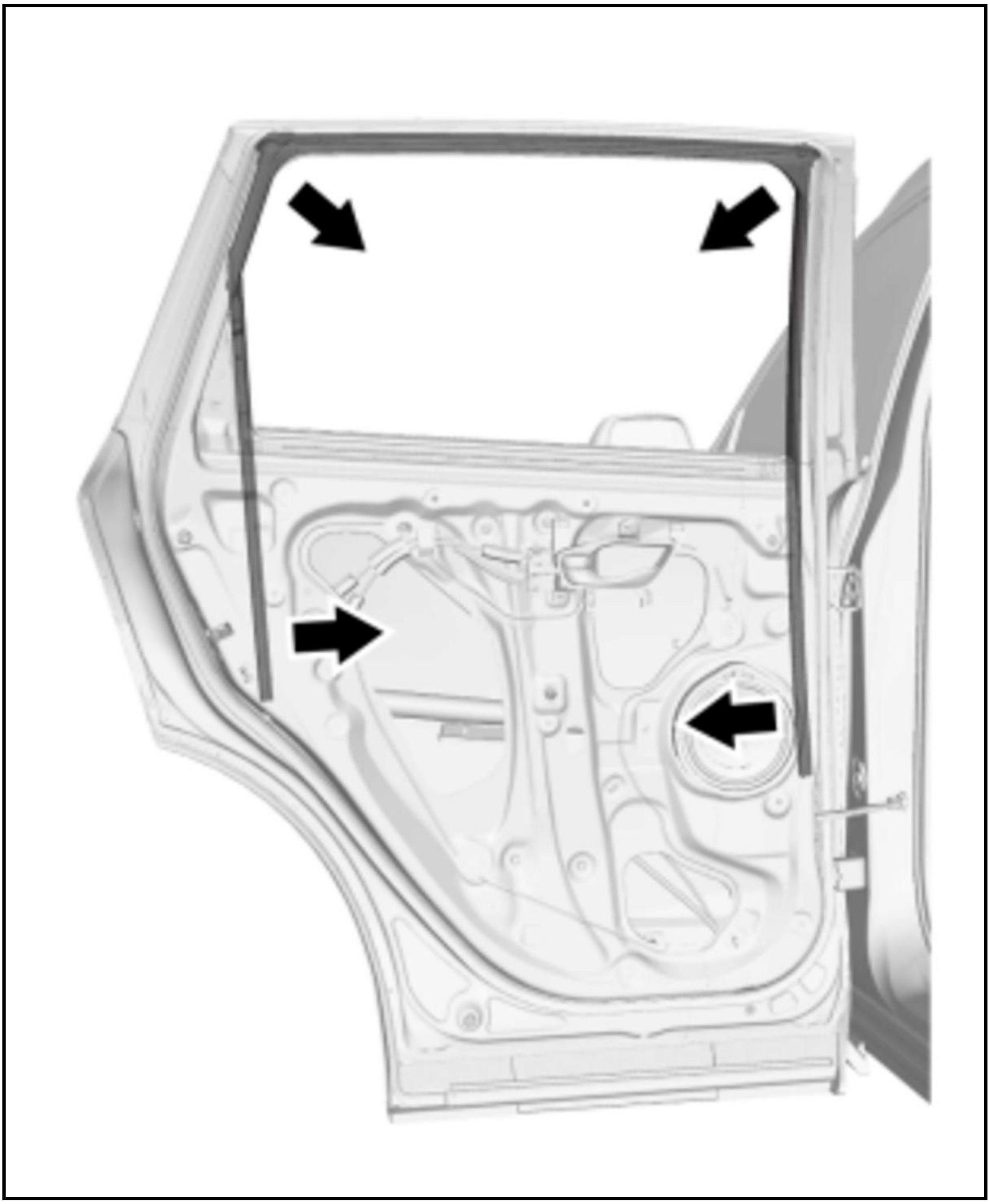

7. **Door Glass - Adjustment**
8. **Power Window Control Unit - Reset**

REAR DOOR INNER HANDLE REMOVAL AND INSTALLATION

Removal and Installation

1. **Rear Door Panel - Remove**
2. Rear Door Inner Handle - Remove

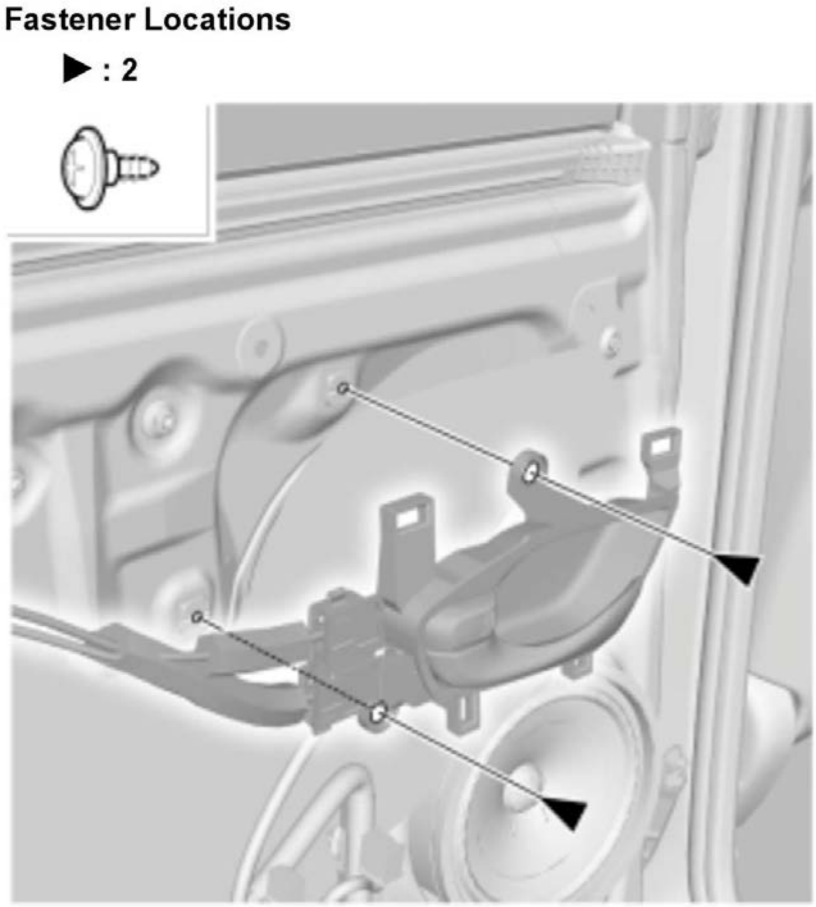 Fastener Locations ▶ : 2	1. Remove the screws.

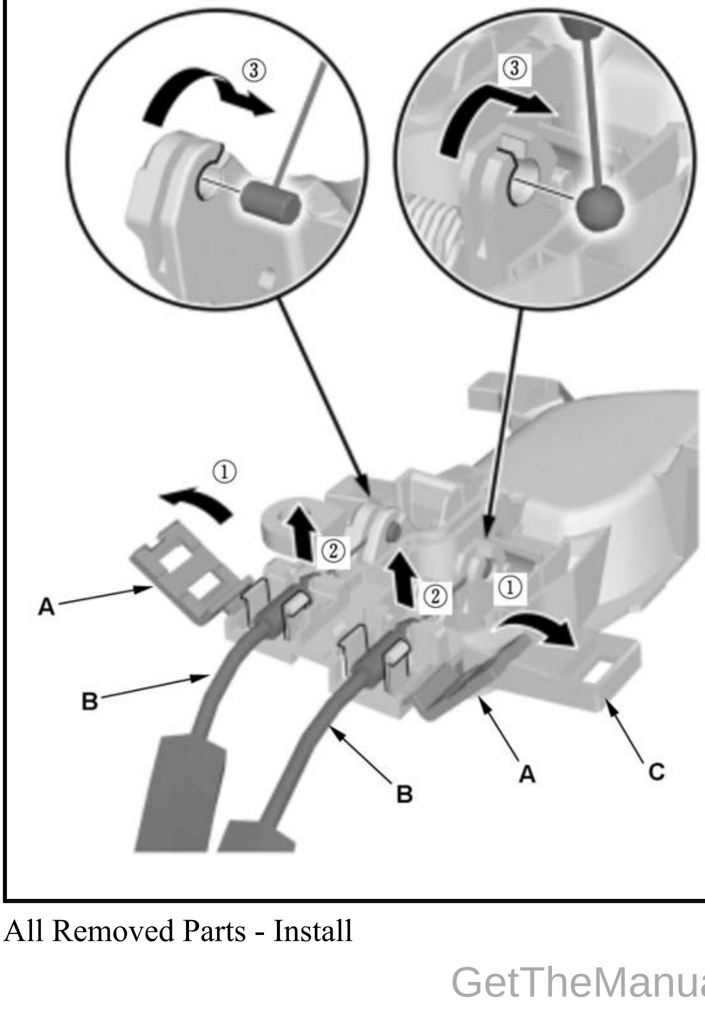 ③ ③ ① ② ② ① A B B A C	2. Open the covers (A) and disconnect the cables (B) from the inner handle (C).

3. All Removed Parts - Install

1. Install the parts in the reverse order of removal.

REAR DOOR LATCH REMOVAL AND INSTALLATION

Removal and Installation

NOTE: How to read the torque specifications

1. Front Door Plastic Cover - Remove

   1. Remove the rear door plastic cover as needed.

2. Rear Door Latch - Remove

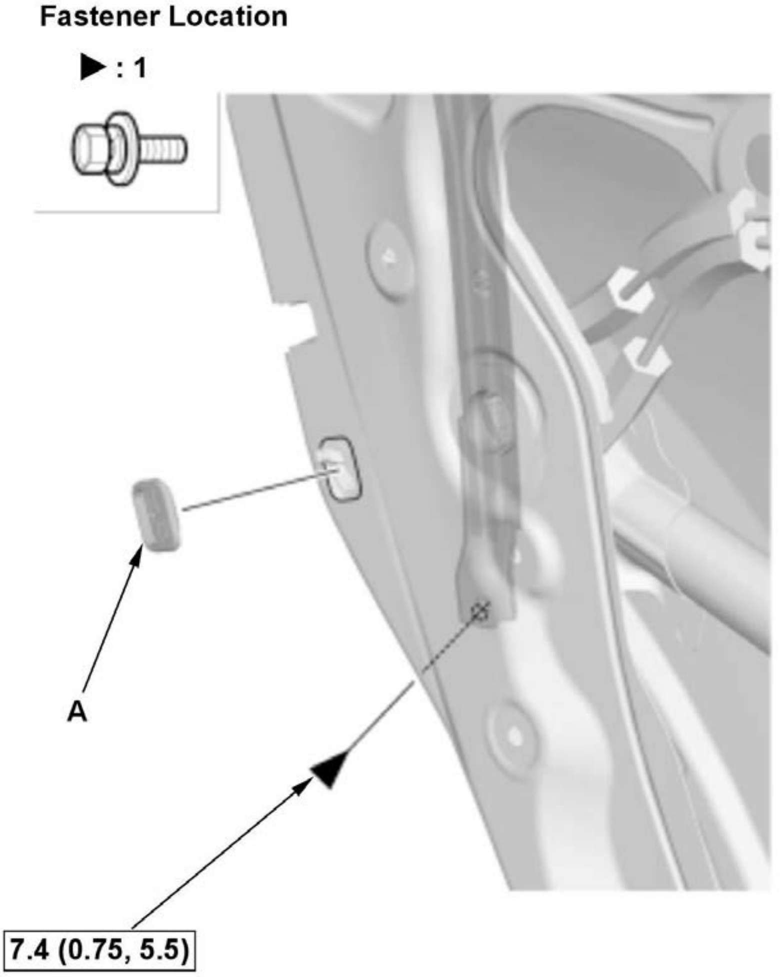	1. Remove the rear quarter channel bolt. 2. Remove the child lock cap (A).

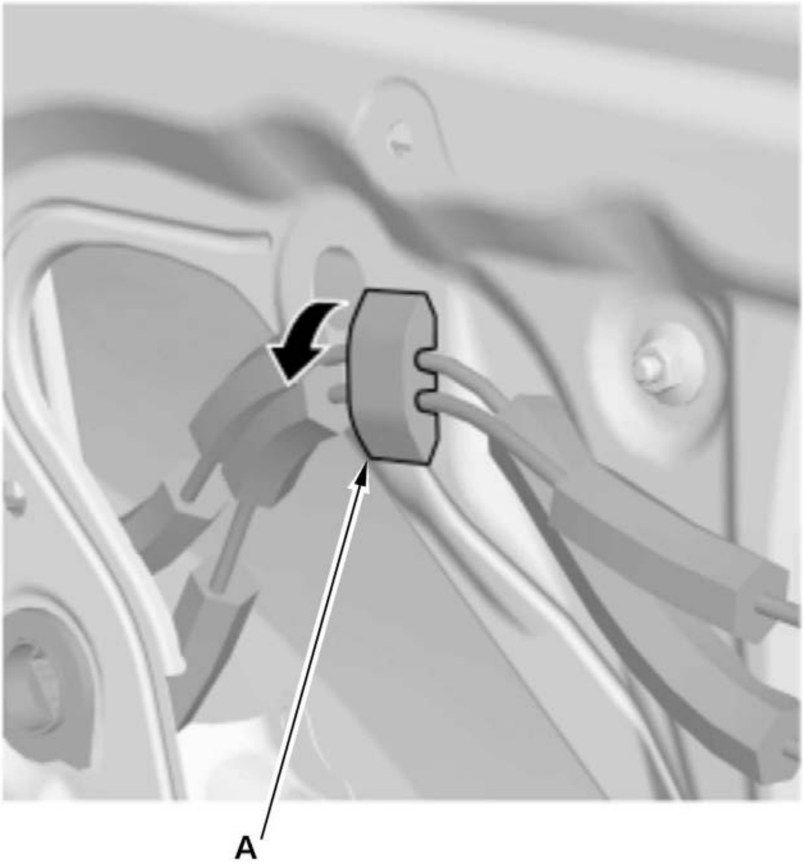	3. Open the cable clip (A).

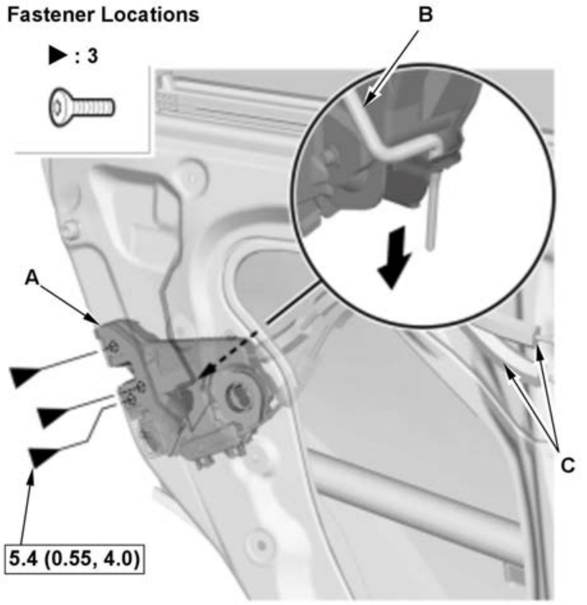 Fastener Locations ▶ : 3 B A C 5.4 (0.55, 4.0)	4. Remove the bolts. 5. Pull the rear door latch (A) downward to disconnect the outer handle rod (B), and then remove the rear door latch. **NOTE:** **Be careful not to bend the cables (C).**

3. Rear Door Inner Handle Cable and Latch Cable - Remove

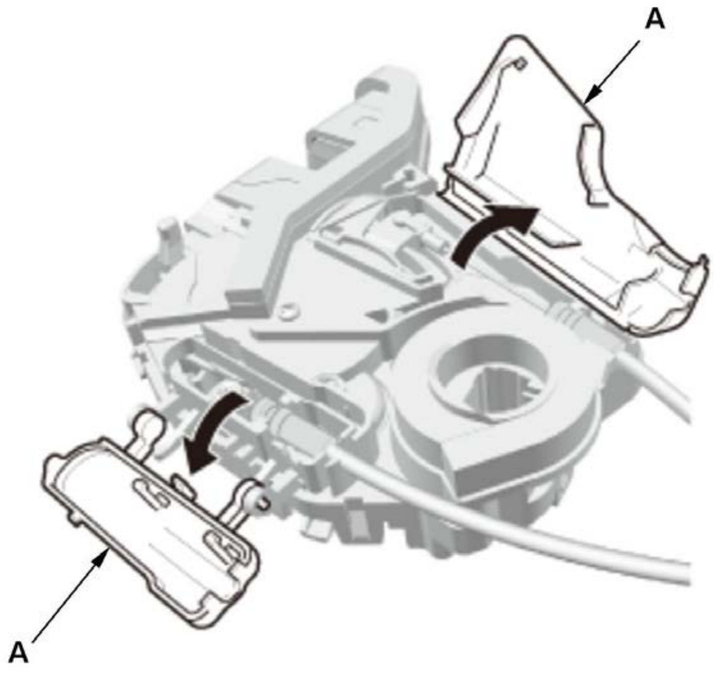	1. Open the latch protector covers (A).

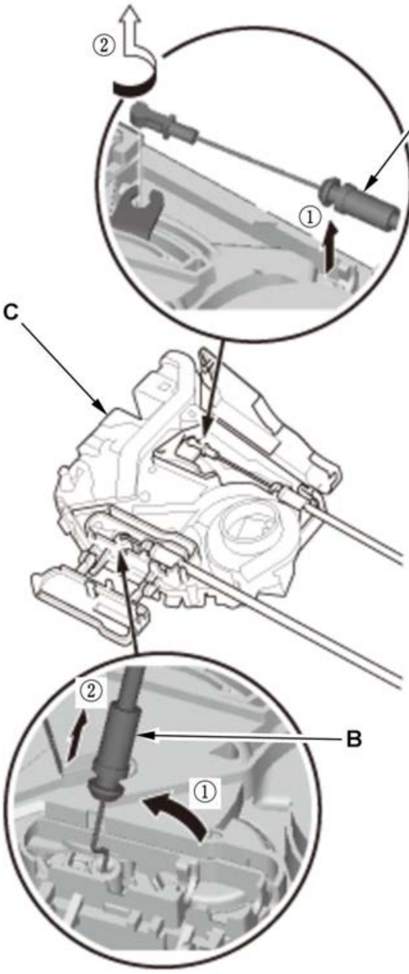	2. Disconnect the inner handle cable (A) and the latch cable (B) from the rear door latch (C).

4. All Removed Parts - Install

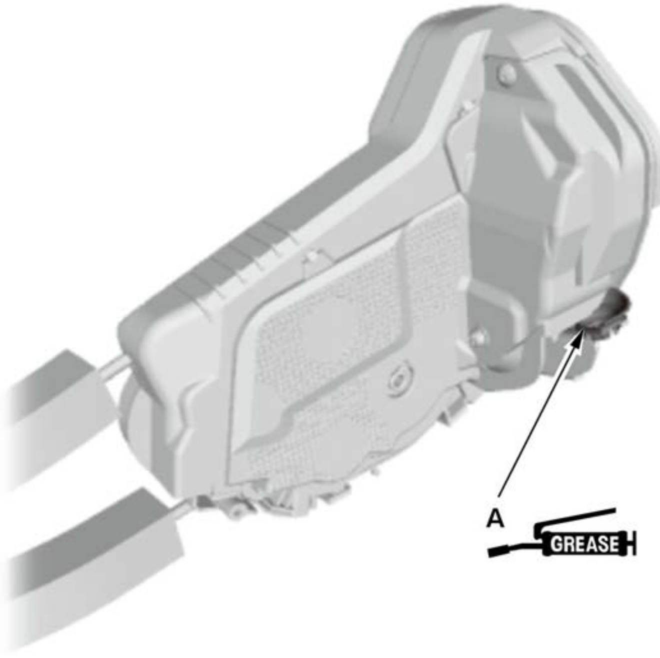	1. Install the parts in the reverse order of removal. **NOTE:** **Apply multipurpose grease to the open lever clip (A).**

5. Door Glass - Adjustment

REAR DOOR LOWER TRIM REMOVAL AND INSTALLATION

Removal

1. Rear Door Lower Trim - Remove

   1. Remove the cap (A), then remove the screw.

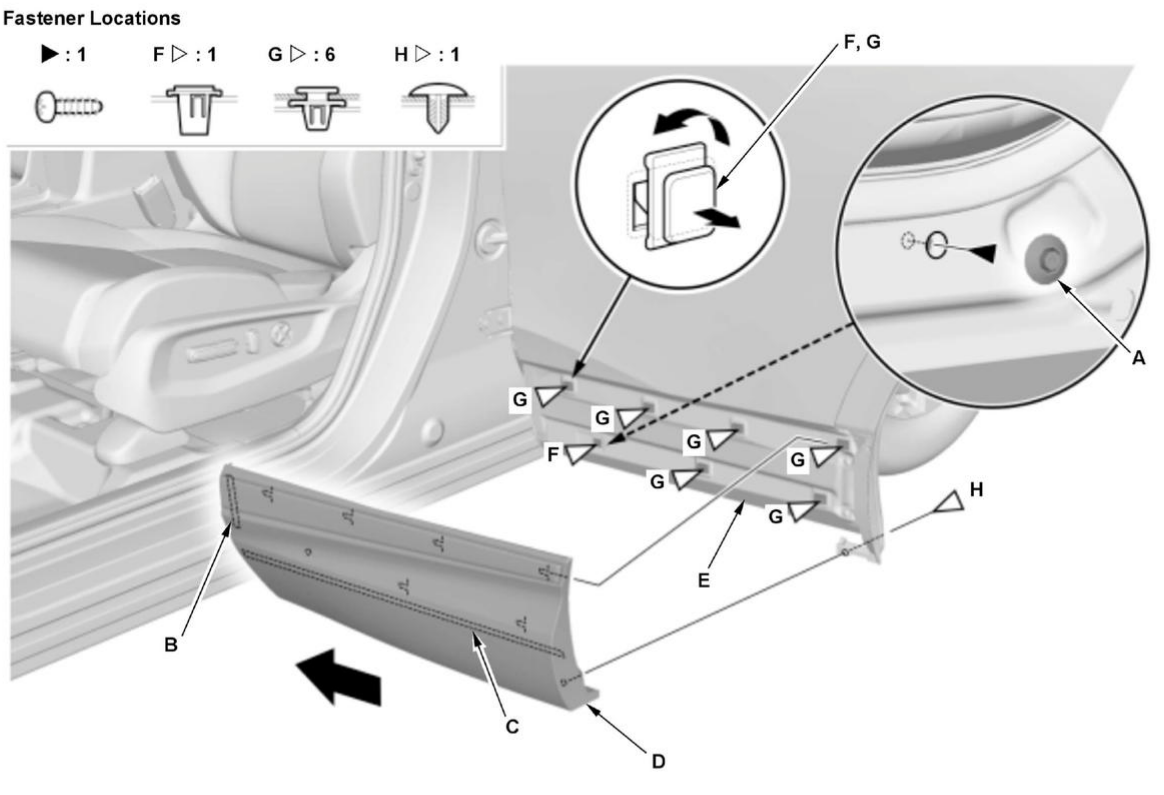
Fastener Locations
▶ : 1
F ▷ : 1
G ▷ : 6
H ▷ : 1
F, G
A
G
G
G
F
G
G
G
H
E
B
C
D

   2. Cut the adhesive tape (B, C) along the edge of the door lower trim (D) with a utility knife while separating the trim from the door (E) with a trim tool.

NOTE: **Apply protective tape around the cutting area.**

3. Slide the door lower trim forward and remove it.

NOTE: **The clips (F, G) will stay in the door.**

4. Remove the clips by turning.

2. Rear Door Lower Seal - Remove

1. If necessary, remove the rear door lower seal (A) with the clips and double-sided adhesive tape (B).

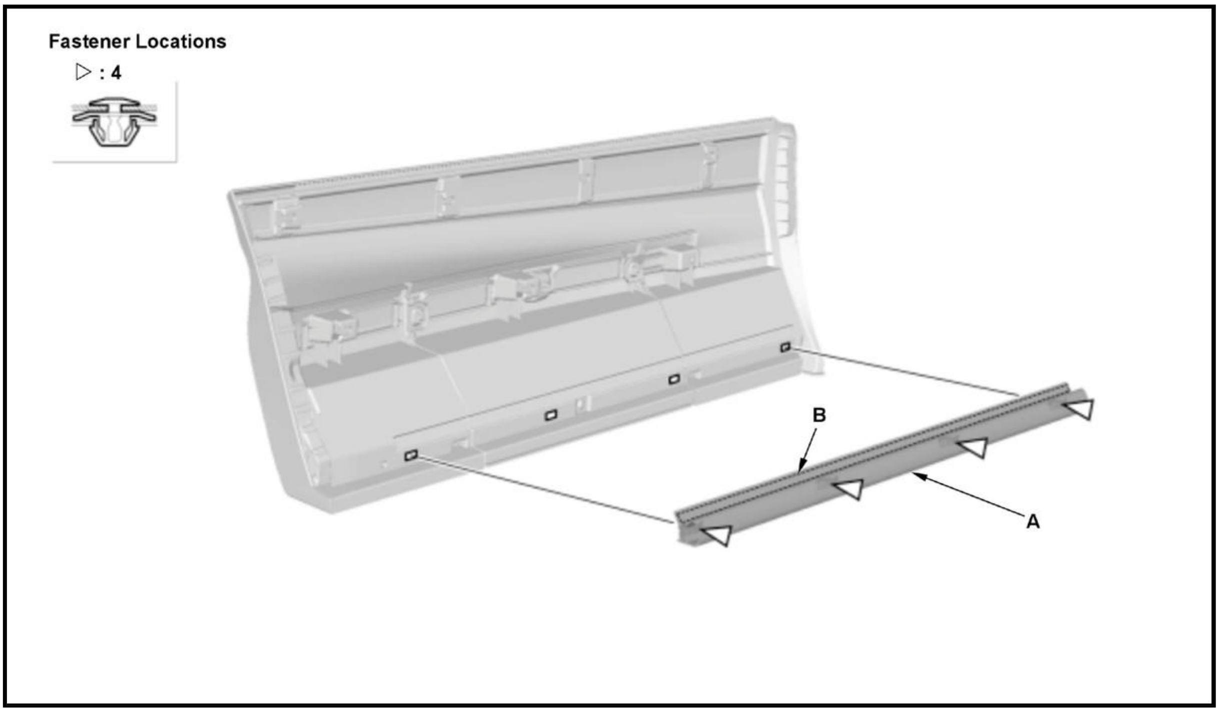

Installation

1. Rear Door Lower Seal - Install

1. Install the rear door lower seal (A).

NOTE: **Apply adhesive primer to the areas where the new double-sided adhesive tape (B) will be applied.**

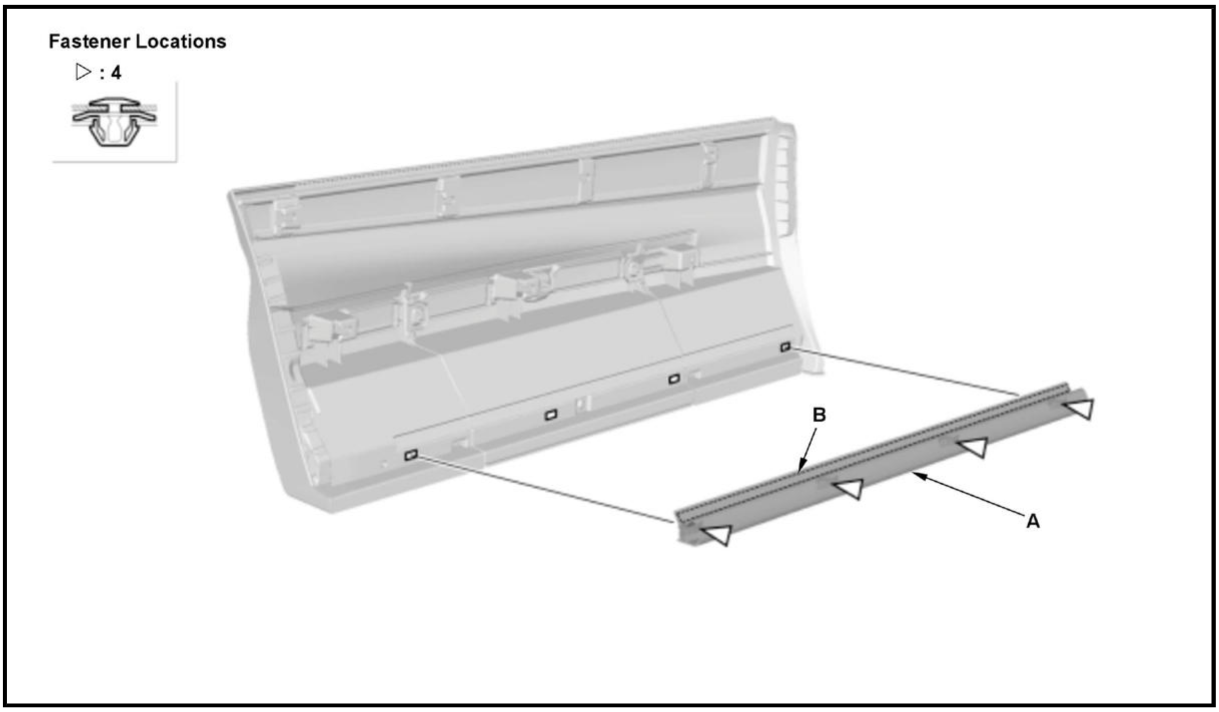

2. Rear Door Lower Trim - Install

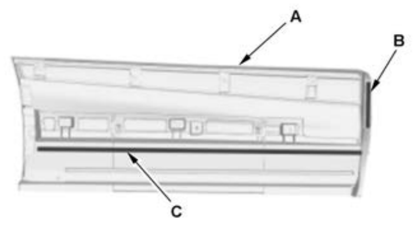	1. If you are reusing the original door lower trim (A), apply primer to the areas where new double-sided adhesive tapes (B, C) will be applied, then attach the new double-sided adhesive tapes to the trim as shown. **Double-sided adhesive tape (B)** **Double-sided adhesive tape (C)**

Thickness	1.2 mm (0.047 in)
Width	8 mm (0.31 in)
Length	600 mm (23.62 in)

Thickness	1.0 mm (0.039 in)
Width	8 mm (0.31 in)
Length	85 mm (3.35 in)

2. Install the clips (A, B) on the door lower trim (C) or door (D).

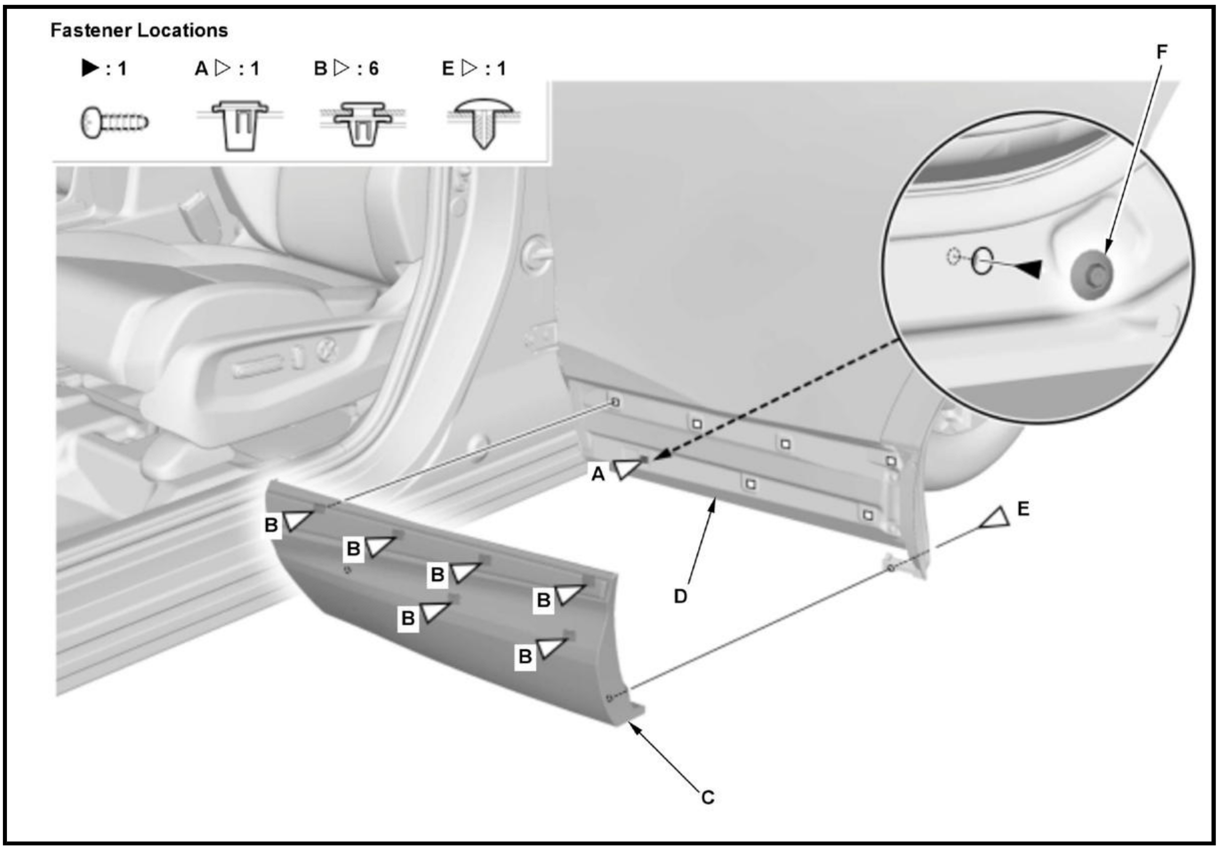

3. Install the door lower trim.

NOTE: **Scrape off the remaining double-sided adhesive tape from the door, then clean the surface with a sponge dampened in isopropyl alcohol. After cleaning, keep oil, grease, and water from getting on the surface.**

4. Install the screw and the clips (E) to the door lower trim.

5. Install the cap (F).

REAR DOOR OUTER HANDLE REMOVAL AND INSTALLATION

Removal and Installation

NOTE: How to read the torque specifications

Rear Door Handle Base Cover

1. Rear Door Handle Base Cover - Remove

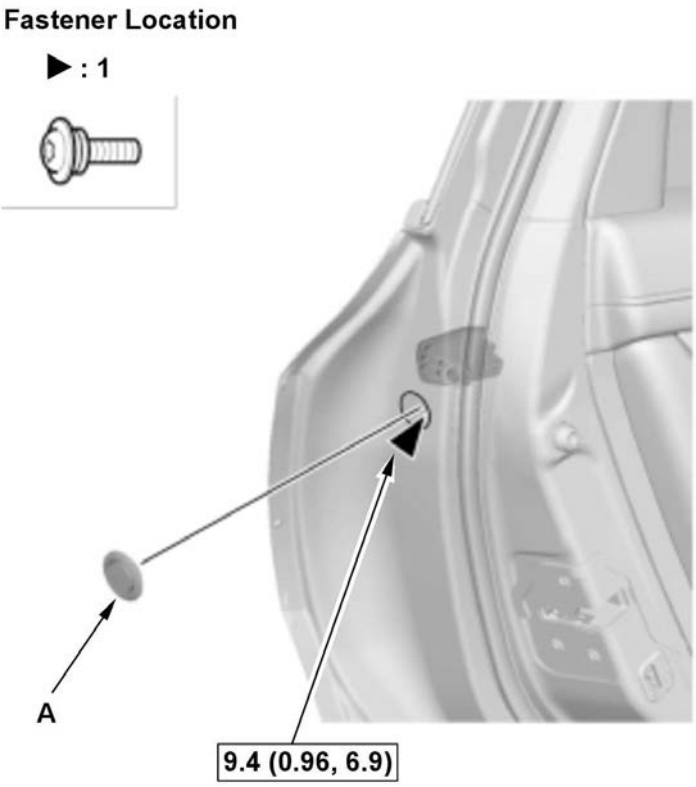
Fastener Location
▶ : 1
A
9.4 (0.96, 6.9)

1. Remove the plug cap (A), and then remove the bolt.

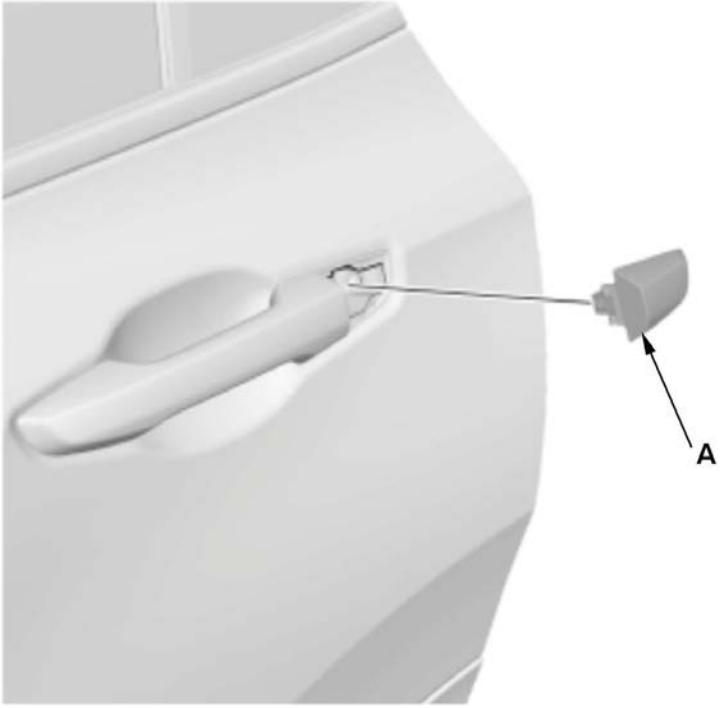

2. Remove the rear door handle base cover (A).

Rear Door Outer Handle

2. Rear Door Plastic Cover - Remove

   1. **Remove the rear door plastic cover as needed.**

3. Rear Door Outer Handle - Remove

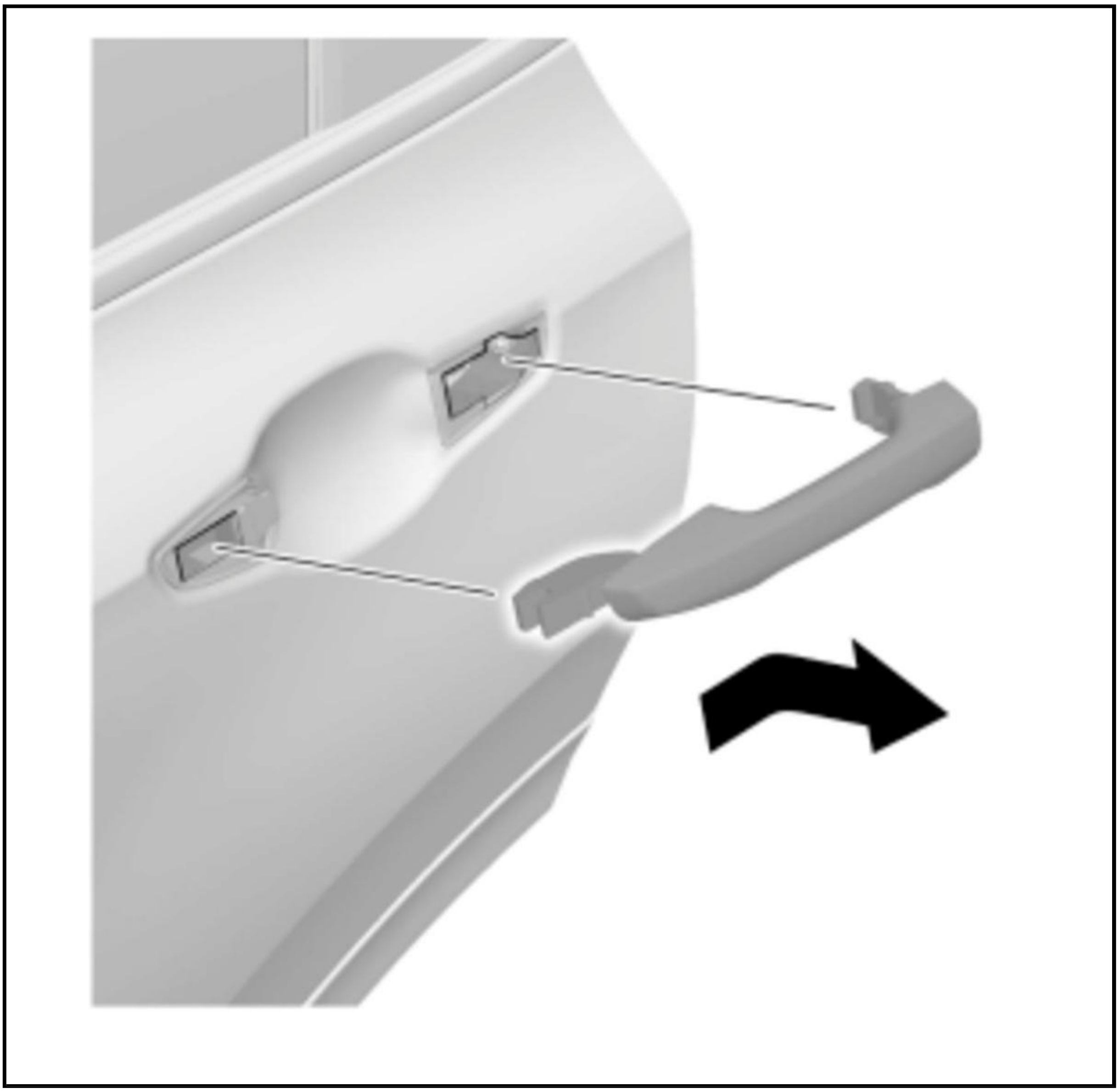

4. Rear Door Outer Handle Seals - Remove

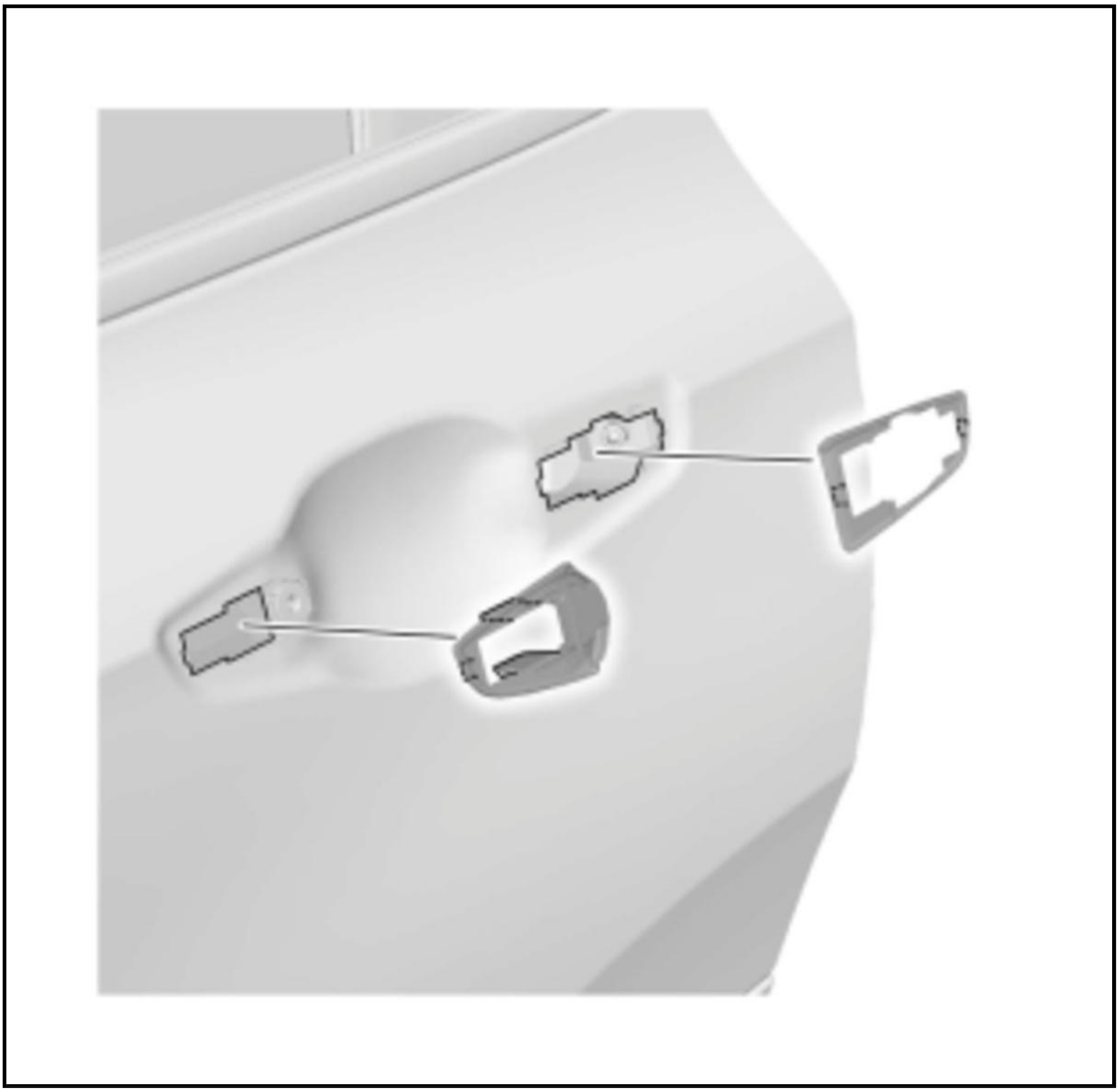

Rear Door Outer Handle Base

5. Rear Door Outer Handle Base - Remove

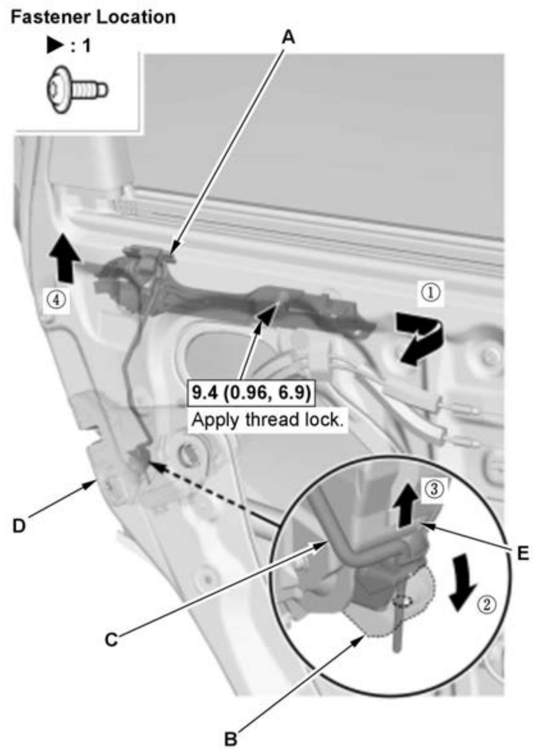
Fastener Location
▶ : 1
A
①
④
D
③
E
②
C
B

9.4 (0.96, 6.9)

Apply thread lock.

1. Loosen the bolt.

2. Move the rear area of the outer handle base (A) inward.

3. While pushing down the open lever (B), pull the outer handle base upward to disconnect the outer handle rod (C) from the rear door latch (D).

4. If necessary, remove the open lever clip (E).

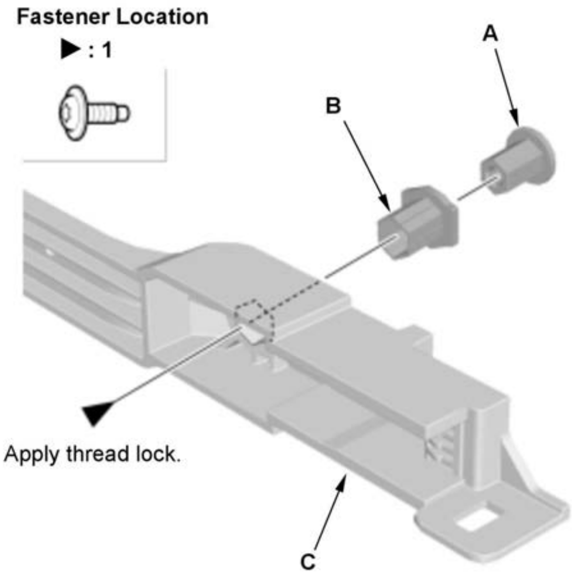
Fastener Location
▶ : 1
A
B
C

Apply thread lock.

5. If necessary, remove the bolt, the special nut (A) and the collar (B) from the outer handle base (C).

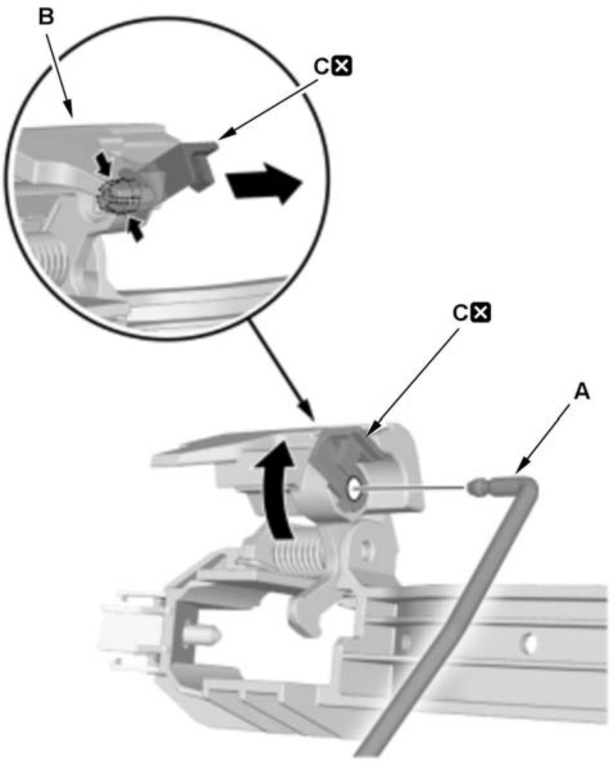	6. Disconnect the outer handle rod (A) from the rear door outer handle base (B). 7. Remove the rod fastener (C) from the outer handle base, then replace it with a new one.

6. All Removed Parts - Install

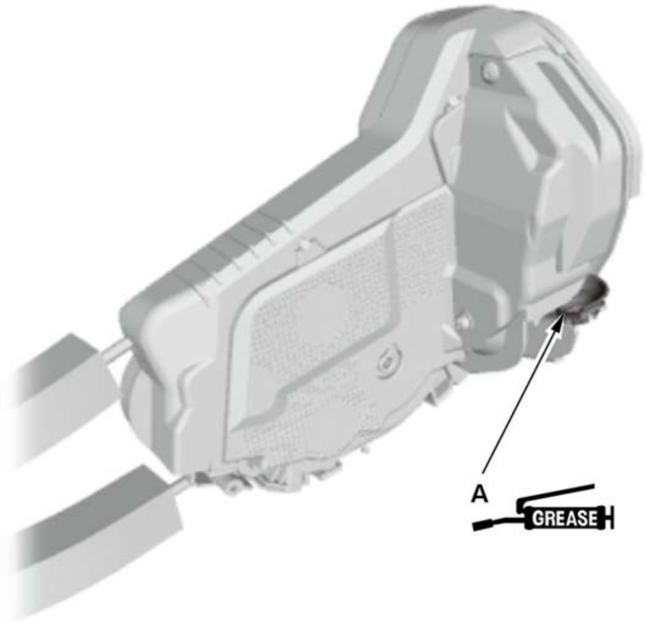	1. Install the parts in the reverse order of removal. **NOTE:** - **Apply multipurpose grease to the open lever clip (A).** - **Apply medium strength liquid thread lock to the rear door outer handle base bolt on the outer handle base before reinstallation.**

REAR DOOR PANEL REMOVAL AND INSTALLATION

Removal and Installation

1. Rear Door Power Window Switch Panel - Remove

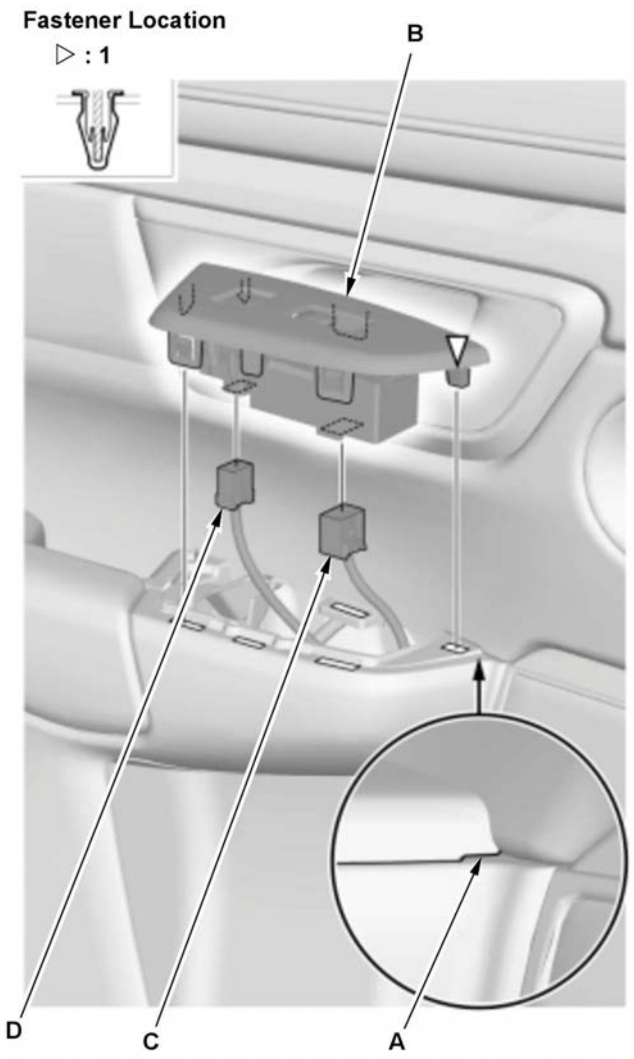
Fastener Location
▷ : 1
B
D
C
A

1. Pry out on the notch (A) in the power window switch panel (B) with the trim tool.

2. Disconnect the connectors (C).

3. For some models: Disconnect the connectors (D).

4. Remove the power window switch panel.

2. Rear Door Panel - Remove

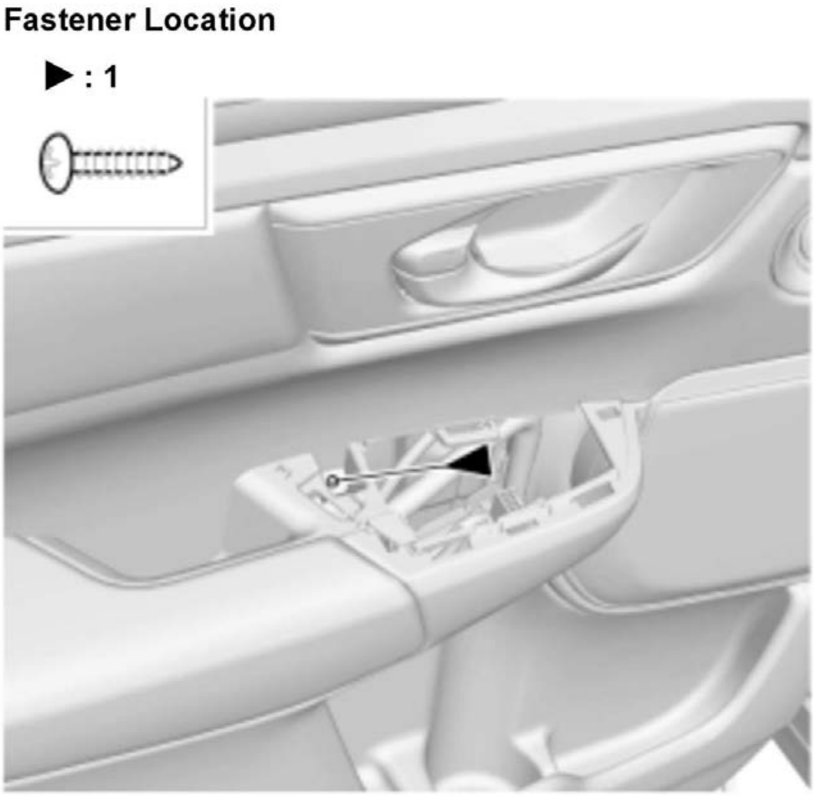 Fastener Location ▶ : 1	1. Remove the screw.

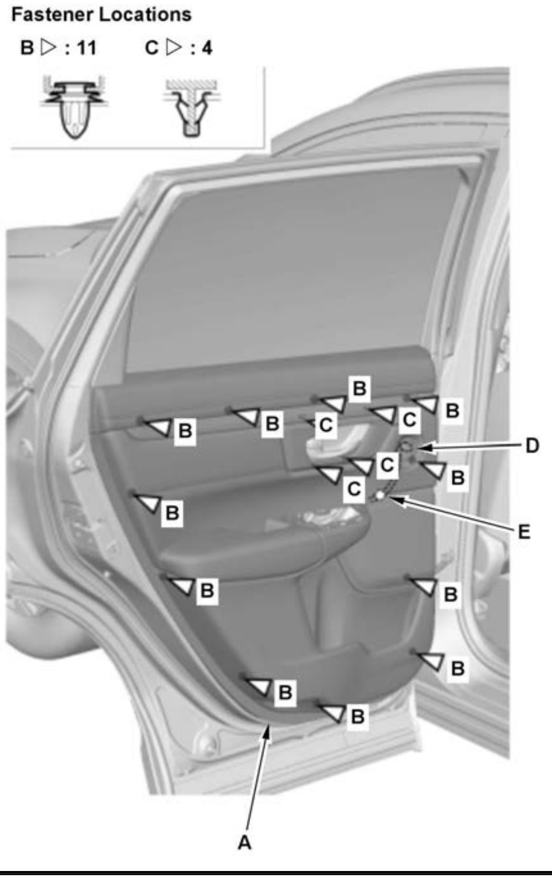 Fastener Locations B ▷ : 11 C ▷ : 4 B C D E A	2. Starting at the bottom edge of the rear door panel (A), remove the clips (B, C) with a commercially available trim pad remover. 3. For some models: Disconnect the connector (D) and harness clip (E).

3. All Removed Parts - Install

1. Install the parts in the reverse order of removal.

REAR DOOR REAR SASH OUTER TRIM REMOVAL AND INSTALLATION

Removal and Installation

1

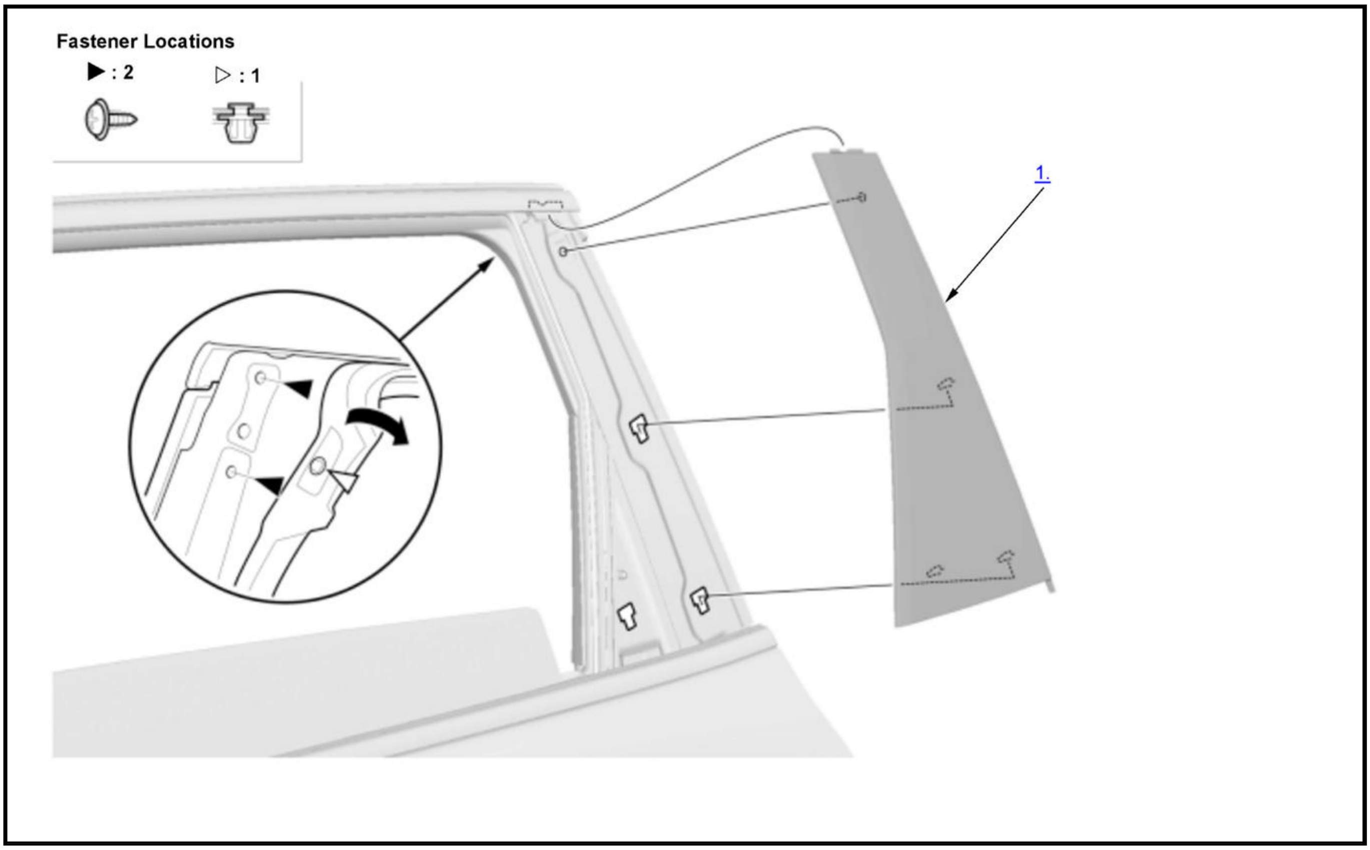

1. Rear Door Rear Sash Outer Trim - Remove
2. All Removed Parts - Install

1. Install the parts in the reverse order of removal.

REAR DOOR REGULATOR REMOVAL AND INSTALLATION

Removal and Installation

1

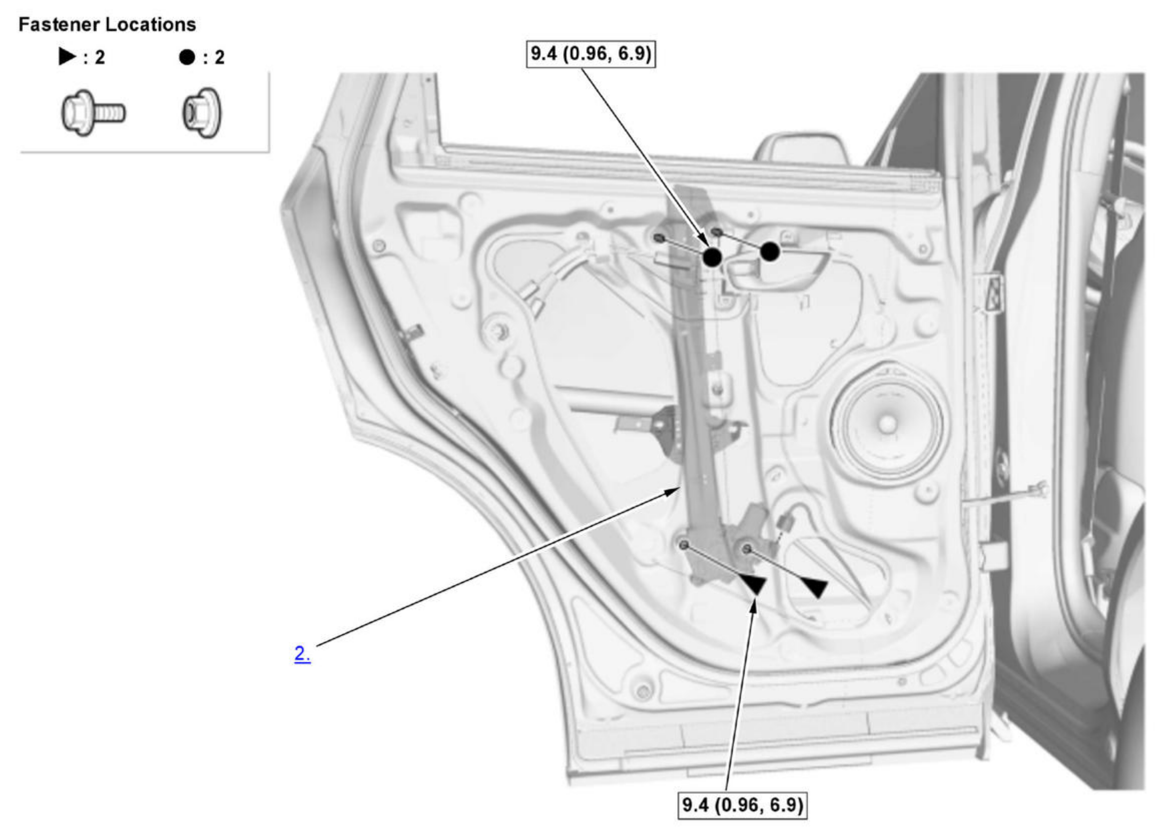
Fastener Locations
▶ : 2
● : 2
9.4 (0.96, 6.9)
2.
9.4 (0.96, 6.9)

☐	Torque: N.m (kgf.m, lbf.ft)

1. Rear Door Glass - Remove
2. Rear Door Regulator - Remove
3. All Removed Parts - Install

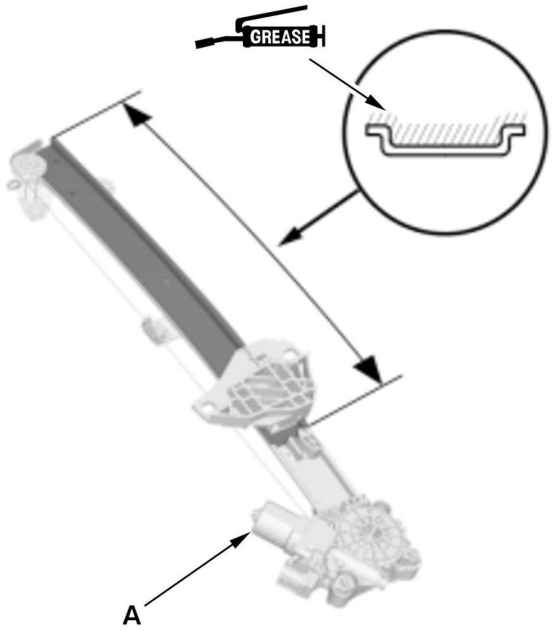 	1. Install the parts in the reverse order of removal. **NOTE:** **Apply multipurpose grease to all sliding surfaces of the rear door regulator (A) where shown.**

4. Door Glass - Adjustment
5. Power Window Control Unit - Reset

REAR DOOR SASH INNER TRIM REMOVAL AND INSTALLATION

Removal and Installation

1

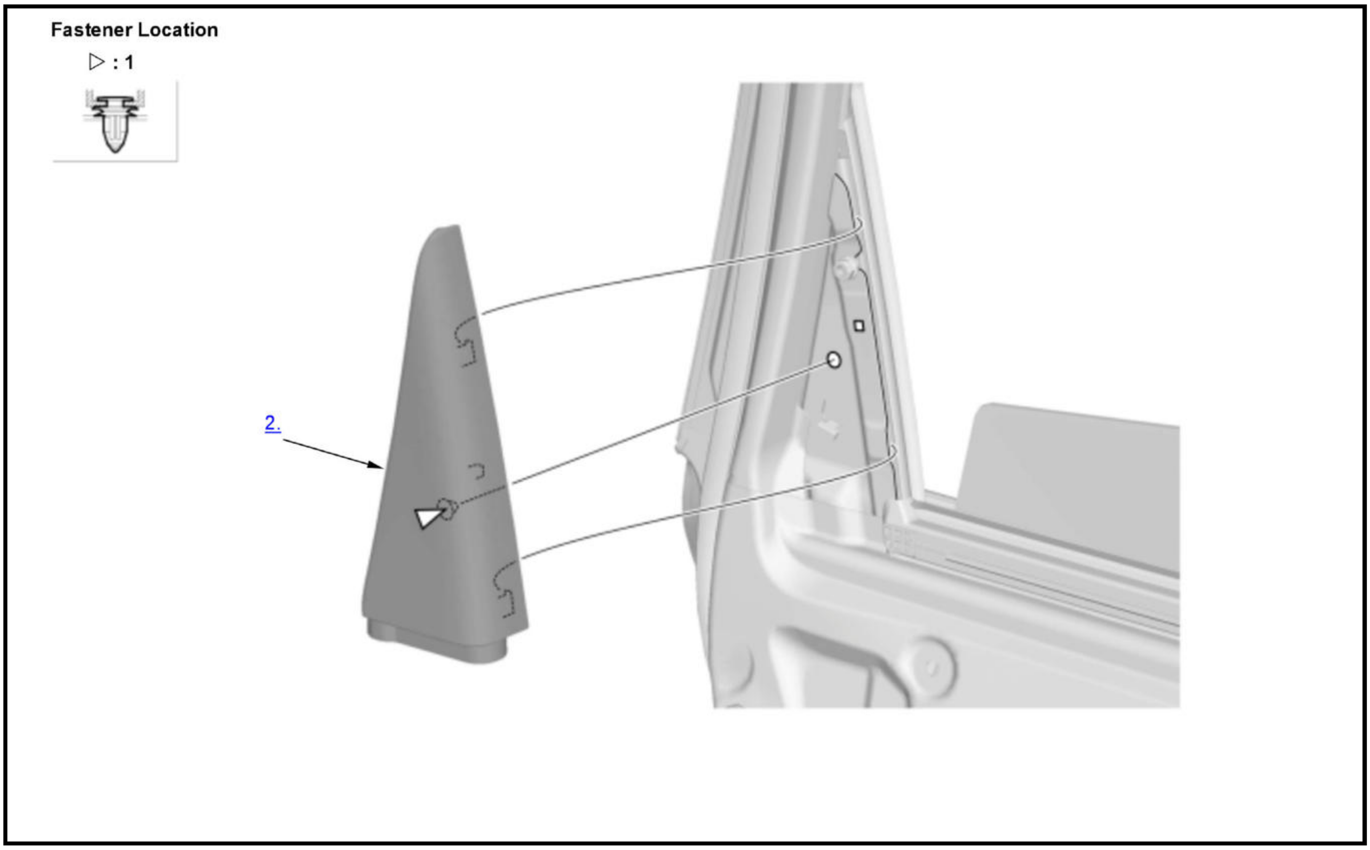

1. **Rear Door Panel - Remove**
2. Rear Door Sash Inner Trim - Remove
3. All Removed Parts - Install

    1. Install the parts in the reverse order of removal.

REAR DOOR SASH OUTER TRIM REMOVAL AND INSTALLATION

Removal and Installation

1

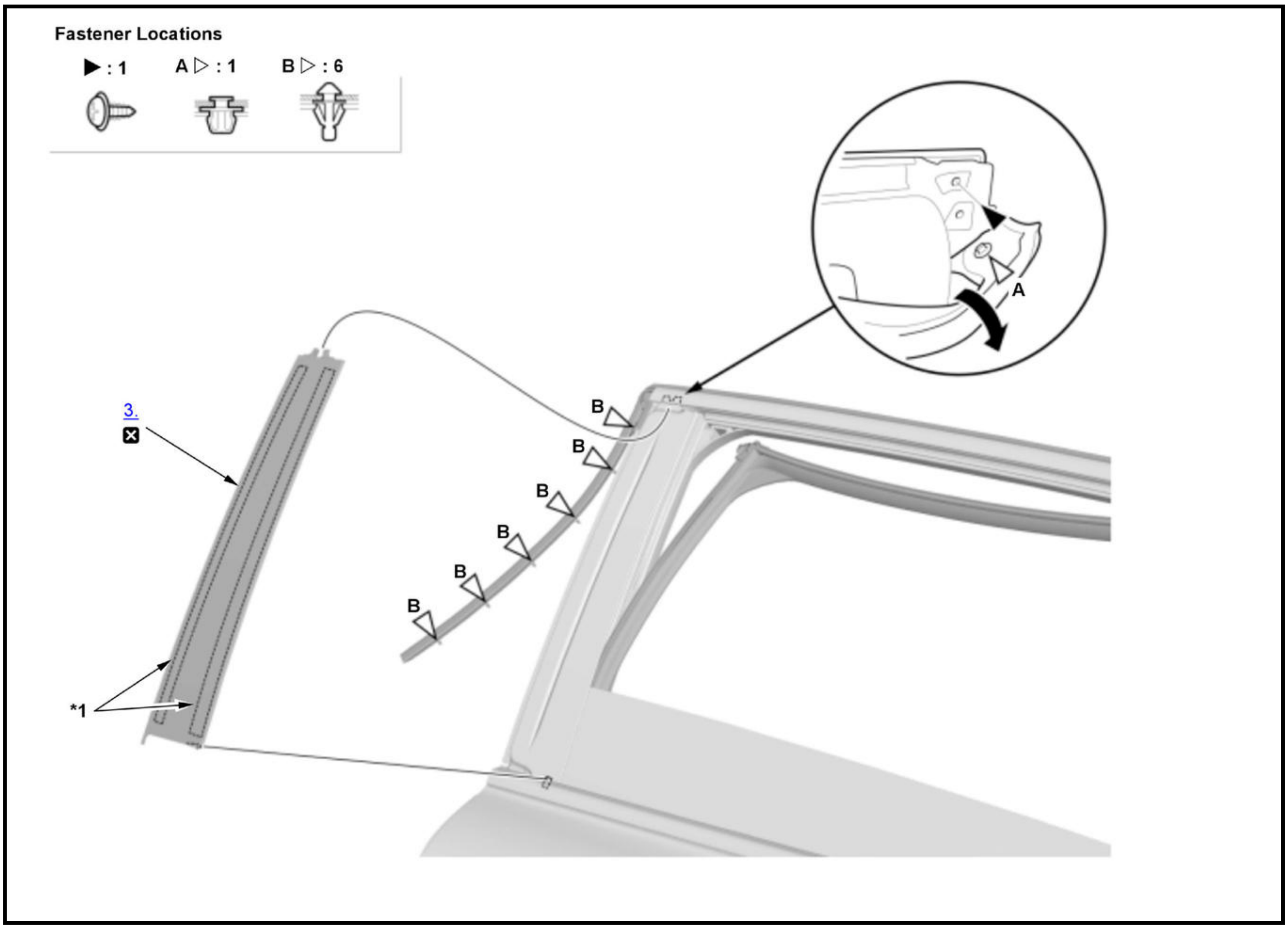

☒	Replace
*1	Double-sided adhesive tape

1. Rear Door Glass Run Channel - Remove
    1. **Remove the rear door glass run channel as needed.**
2. Rear Door Weatherstrip - Remove
    1. **Remove the rear door weatherstrip as needed.**
3. Rear Door Sash Outer Trim - Remove
4. All Removed Parts - Install
    1. Install the parts in the reverse order of removal.

REAR DOOR WEATHERSTRIP REMOVAL AND INSTALLATION

Removal and Installation

1

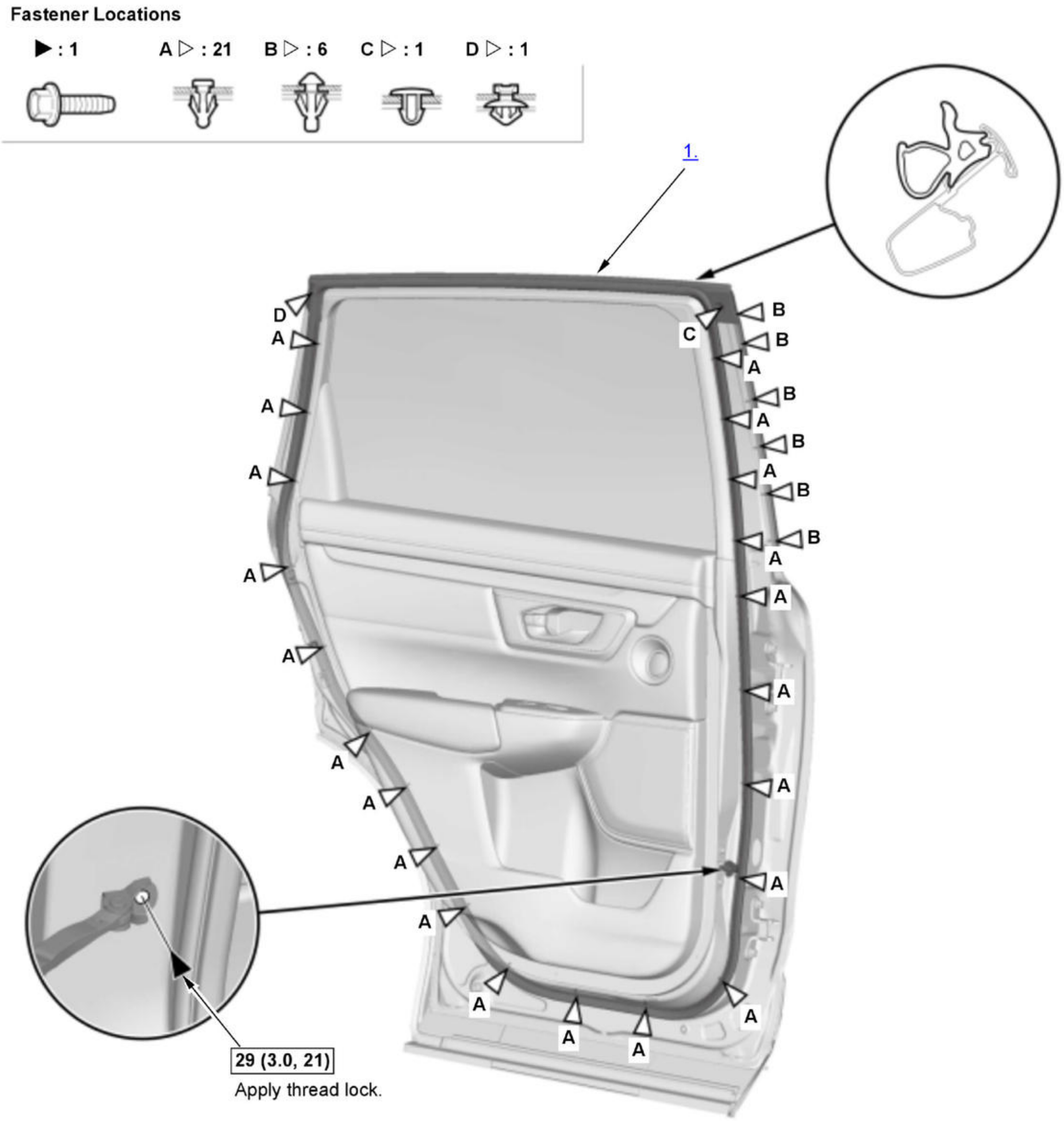
Fastener Locations
▶ : 1
A ▷ : 21
B ▷ : 6
C ▷ : 1
D ▷ : 1
1.
D
A
C
B
29 (3.0, 21)
Apply thread lock.

☐	Torque: N.m (kgf.m, lbf.ft)

1. Rear Door Weatherstrip - Remove
2. All Removed Parts - Install

   1. Install the parts in the reverse order of removal.

3. **Water Leaks - Check**

REAR DOOR WHEEL ARCH PROTECTOR REMOVAL AND INSTALLATION

Removal

1. **Rear Door Lower Trim - Remove**
2. Rear Door Wheel Arch Protector - Remove

   1. Remove the screws and the clips (A, B).

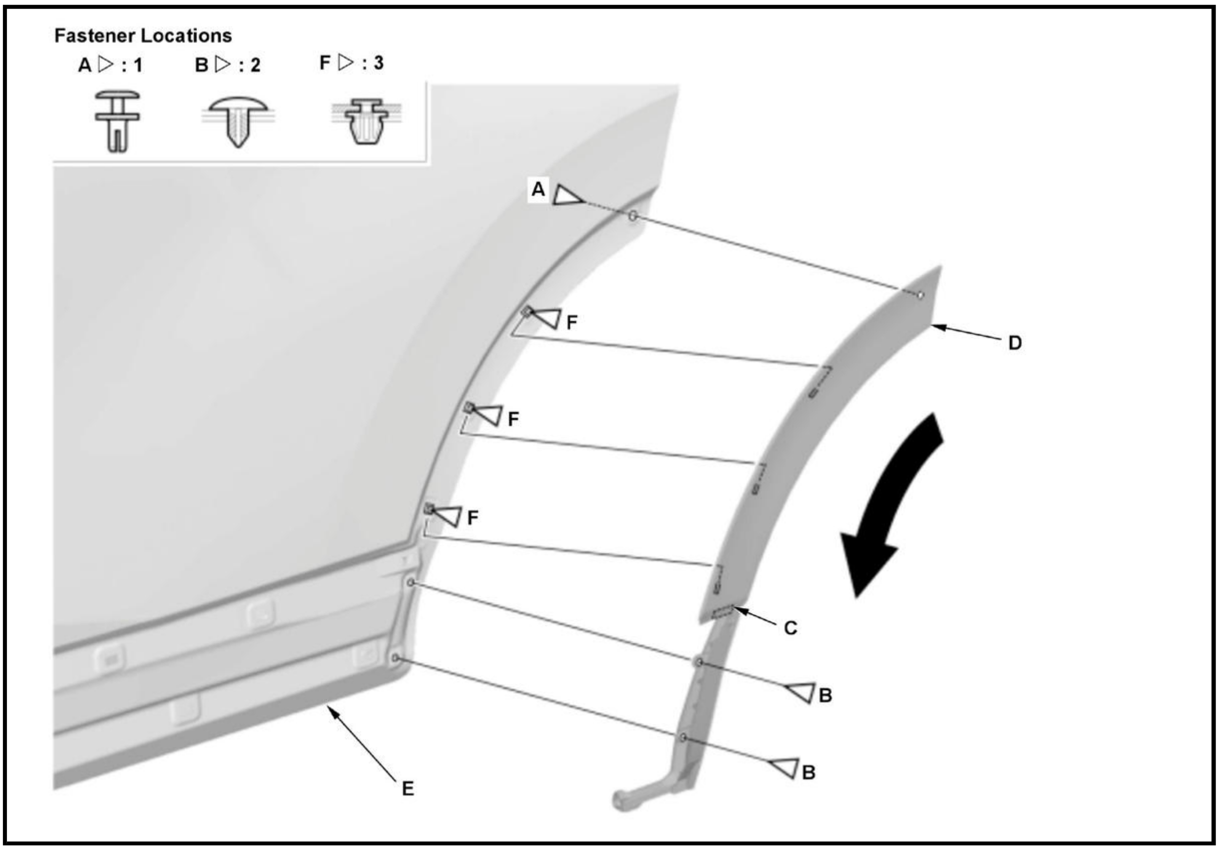

2. Cut the adhesive tape (C) along the edge of the rear door wheel arch protector (D) with a utility knife while separating the trim from the rear door (E) with a trim tool.

NOTE: **Apply protective tape around the cutting area.**

3. Slide the rear door wheel arch protector downward and remove it.

NOTE: **The clips (F) will stay in the door.**

Installation

1. Rear Door Wheel Arch Protector - Install

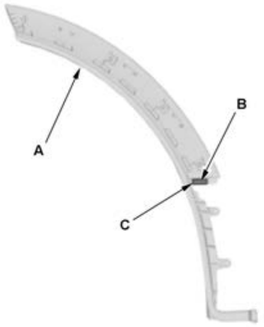	1. If you are reusing the original rear door wheel arch protector (A), apply primer to the areas where new double-sided adhesive tapes (B) will be applied, then attach the new double-sided adhesive tapes to the rear door wheel arch protector on the scribes (C) as shown. **Double-sided adhesive tape (B)**

Thickness	1.0 mm (0.04 in)
Width	6 mm (0.24 in)
Length	23 mm (0.91 in)

2. Install the clips (C) on the rear door wheel arch protector (D).

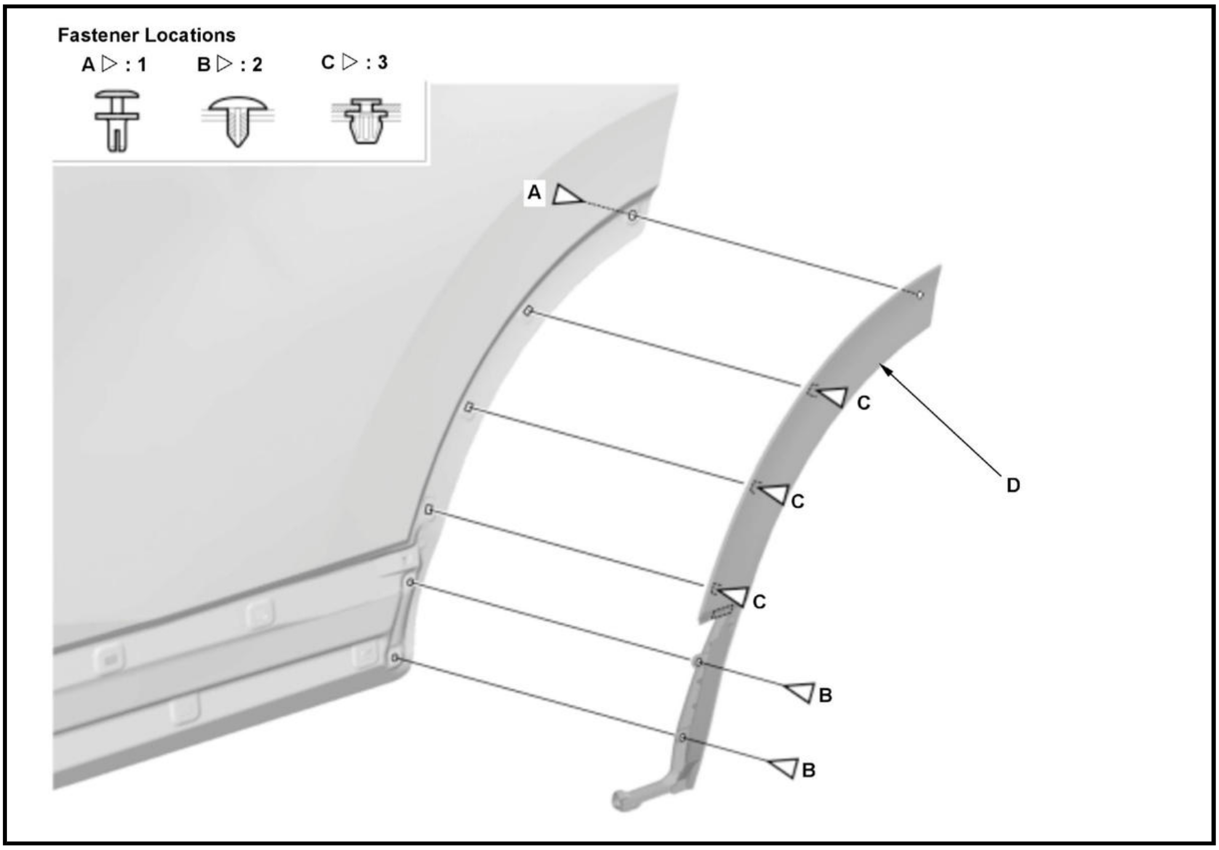
Fastener Locations
A ▷ : 1
B ▷ : 2
C ▷ : 3
A
C
D
C
C
B
B

3. Hold the rear door wheel arch protector up, and fit all the clips into the holes in the rear door. Push on the panel until the clips snap into place.

4. Install the clips (A, B).

2. **Rear Door Lower Trim - Install**

REMOVAL AND INSTALLATION

DOOR INNER HANDLE LIGHT REMOVAL AND INSTALLATION

Removal and Installation

Procedure

NOTE: **Numbered call-outs in figure pertain to list numbers in following procedure.**

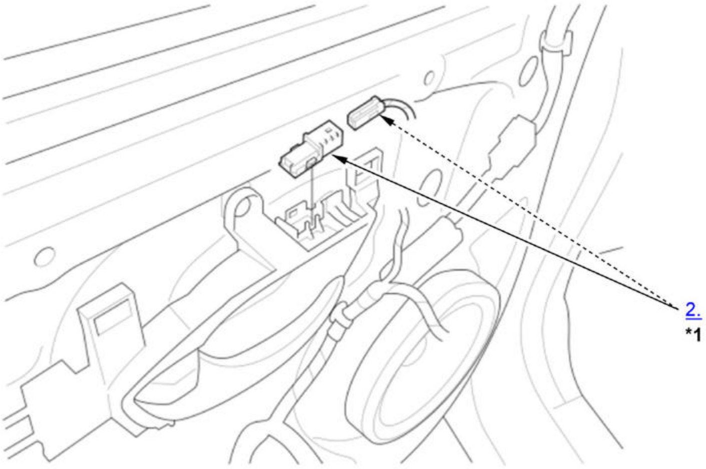

Fig. 1: Door Inner Handle Light Components
Courtesy of HONDA, U.S.A., INC.

*1	Door Inner Handle Light: LED

1. Front Door Panel - Remove
2. Door Inner Handle Light - Remove
3. All Parts Removed - Install

    1. Install the parts in the reverse order of removal.

FRONT DOOR CENTER CORNER TRIM REMOVAL AND INSTALLATION

Removal and Installation

Procedure

NOTE: **Numbered call-outs in figure pertain to list numbers in following procedure.**

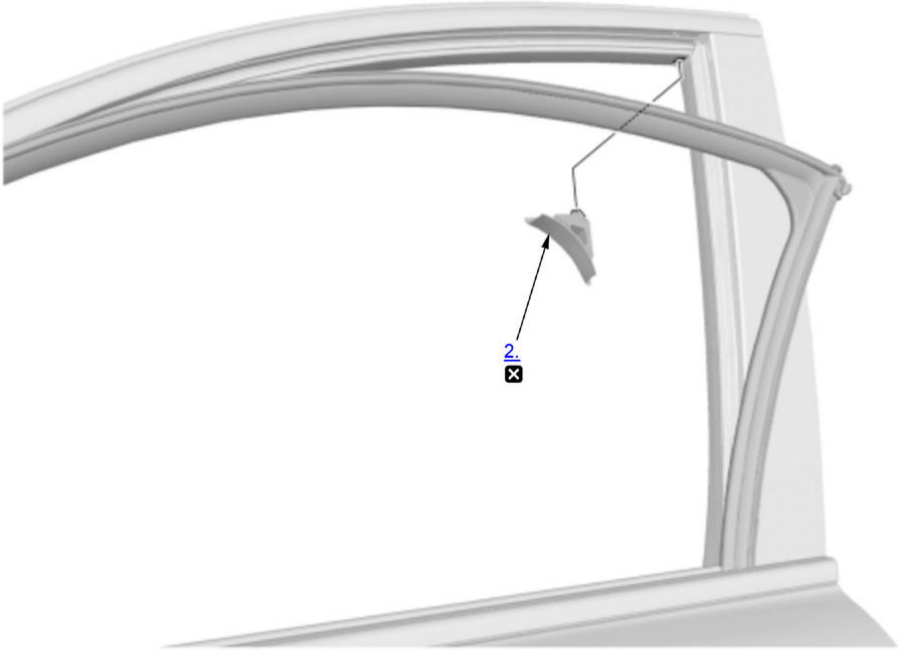

Fig. 2: Front Door Center Corner Trim Components
Courtesy of HONDA, U.S.A., INC.

☒	Replace

1. Front Door Glass Run Channel - Remove
    1. **Remove the front door glass run channel as needed.**
2. Front Door Center Corner Trim - Remove
3. All Removed Parts - Install
    1. Install the parts in the reverse order of removal.

FRONT DOOR CHECKER REMOVAL AND INSTALLATION

Removal and Installation

Procedure

NOTE: **Numbered call-outs in figure pertain to list numbers in following procedure.**

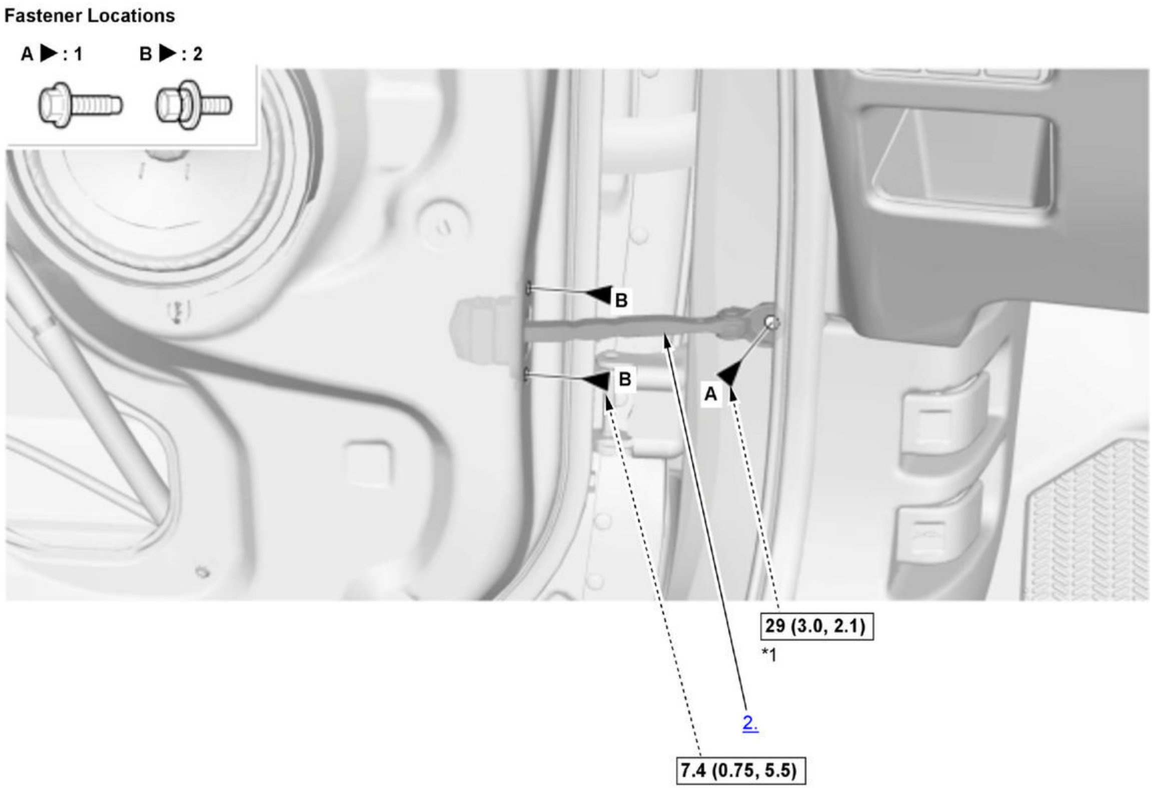

Fig. 3: Front Door Checker Components With Torque Specifications
Courtesy of HONDA, U.S.A., INC.

▭	Torque: N.m (kgf.m, lbf.ft)
*1	Apply thread lock.

1. Front Door Plastic Cover - Remove

1. **Remove the front door plastic cover as needed**.

2. Front Door Checker - Remove
3. All Removed Parts - Install

1. Install the parts in the reverse order of removal. **NOTE:** Apply medium strength liquid thread lock to the door checker 8 mm mounting bolt before reinstallation.

FRONT DOOR GLASS INNER WEATHERSTRIP REMOVAL AND INSTALLATION

Removal and Installation

Procedure

NOTE: **Numbered call-outs in figure pertain to list numbers in following procedure.**

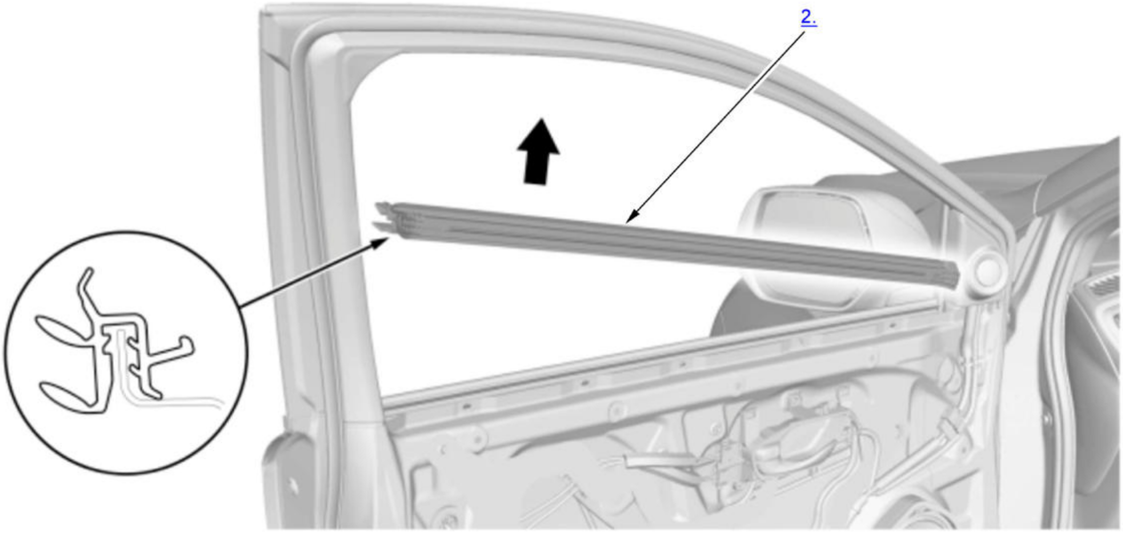

Fig. 4: Front Door Glass Inner Weatherstrip Components
Courtesy of HONDA, U.S.A., INC.

1. Front Door Panel - Remove
2. Front Door Glass Inner Weatherstrip - Remove
3. All Removed Parts - Install

1. Install the parts in the reverse order of removal.

FRONT DOOR GLASS OUTER WEATHERSTRIP REMOVAL AND INSTALLATION

Removal and Installation

Procedure

NOTE: **Numbered call-outs in figure pertain to list numbers in following procedure.**

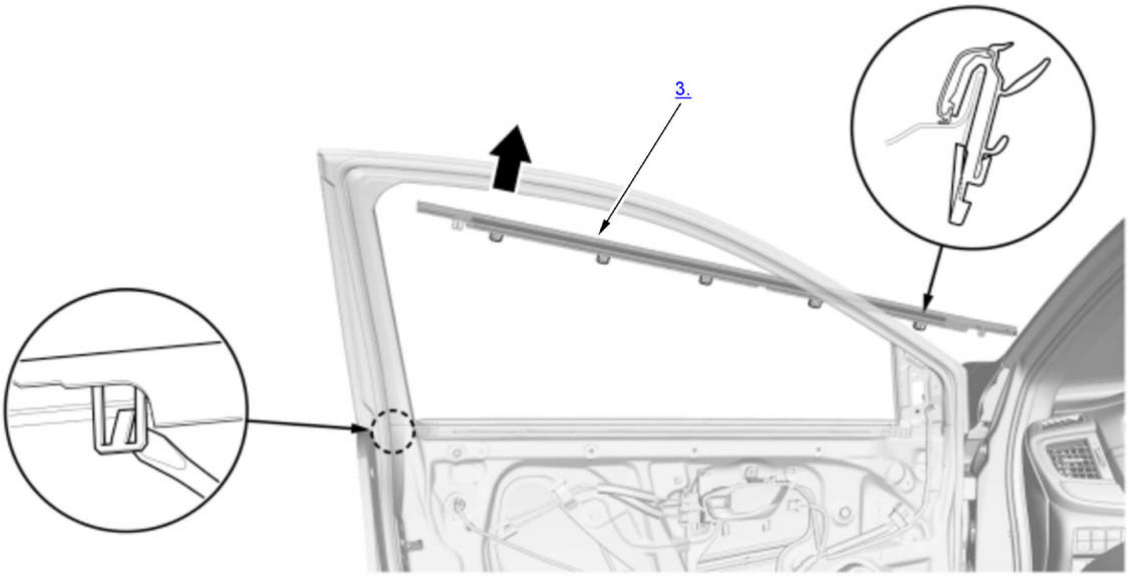

Fig. 5: Front Door Glass Outer Weatherstrip Components
Courtesy of HONDA, U.S.A., INC.

1. Power Mirror - Remove
2. Front Door Plastic Cover - Remove

    1. Remove the front door plastic cover as needed.

3. Front Door Glass Outer Weatherstrip - Remove
4. All Removed Parts - Install

    1. Install the parts in the reverse order of removal.

FRONT DOOR GLASS REMOVAL AND INSTALLATION

Removal and Installation

NOTE: How to read the torque specifications

1. Front Door Panel - Remove
2. Mirror Housing Cover - Remove (For Some Models)
3. Front Door Inner Handle - Remove

    1. Remove the front door inner handle as needed.

4. Front Door Plastic Cover - Remove

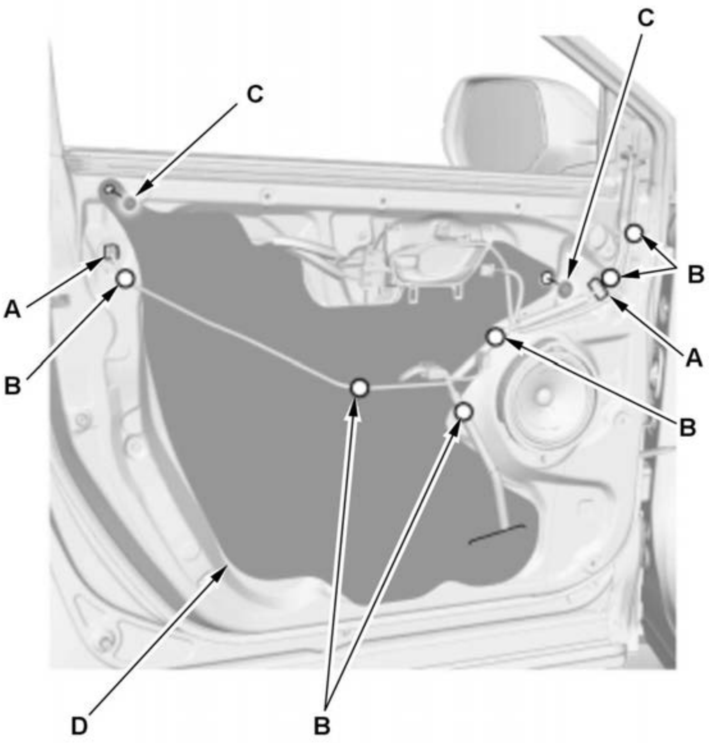	1. Disconnect the connectors (A), and remove the harness clips (B). 2. Remove the plug caps (C), then carefully remove the plastic cover (D). **NOTE:** If the plastic cover is damaged or torn, replace it with a new one.

5. Front Door Glass - Remove

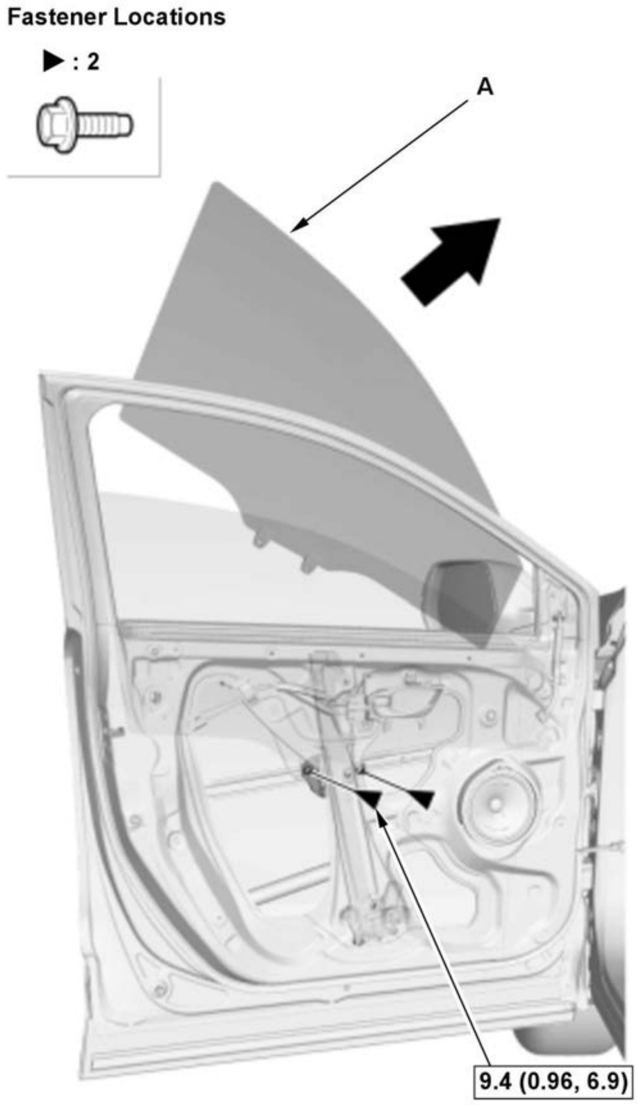 Fastener Locations ▶ : 2 A 9.4 (0.96, 6.9)	1. Lower the front door glass (A) until you can see the bolts, and then remove them. 2. Carefully pull out the front door glass through the window slot. **NOTE:** Be careful not to drop the front door glass inside the door.

6. Front Door Center Lower Channel - Remove

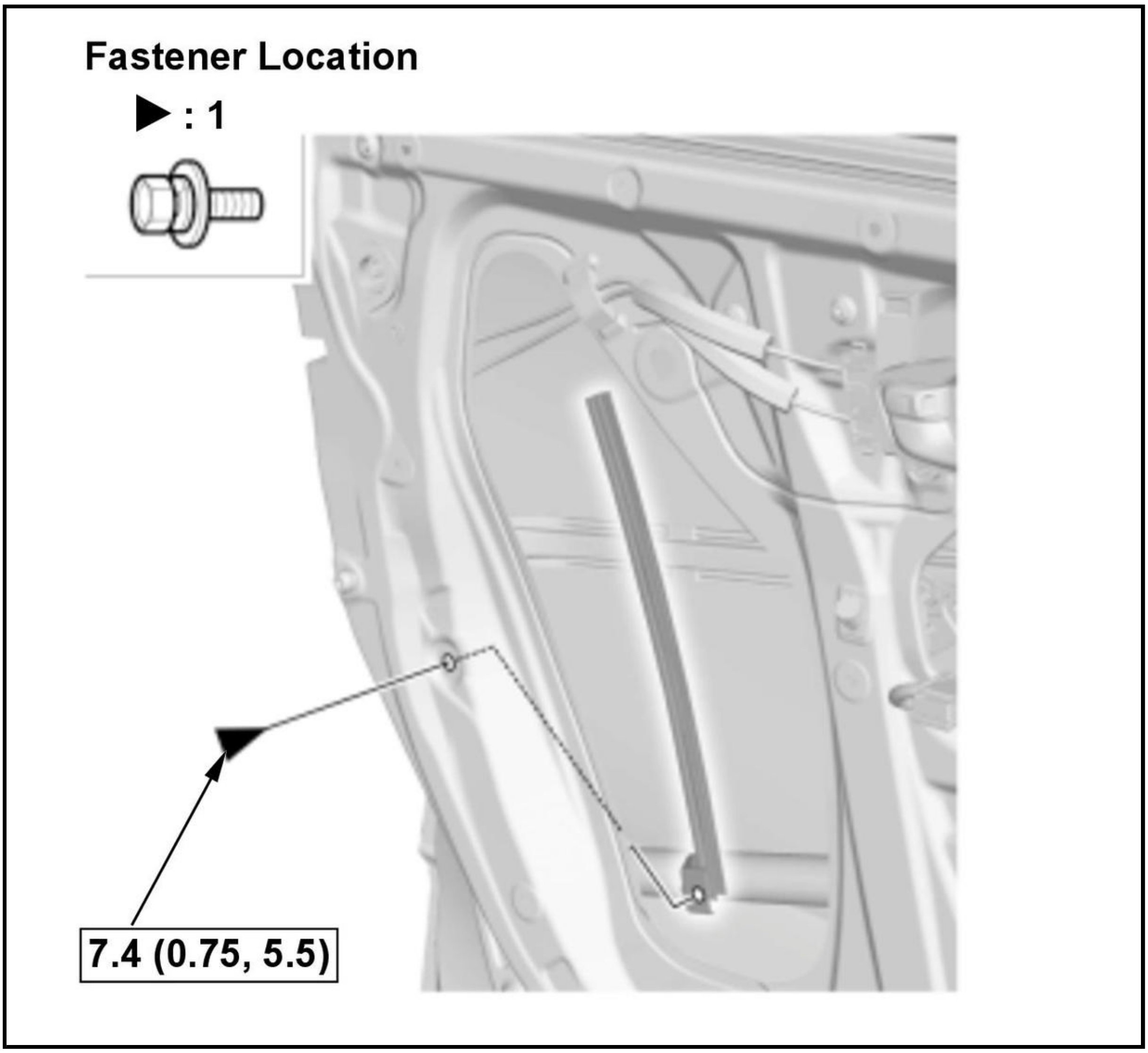
Fastener Location
▶ : 1
7.4 (0.75, 5.5)

7. Front Door Glass Run Channel - Remove

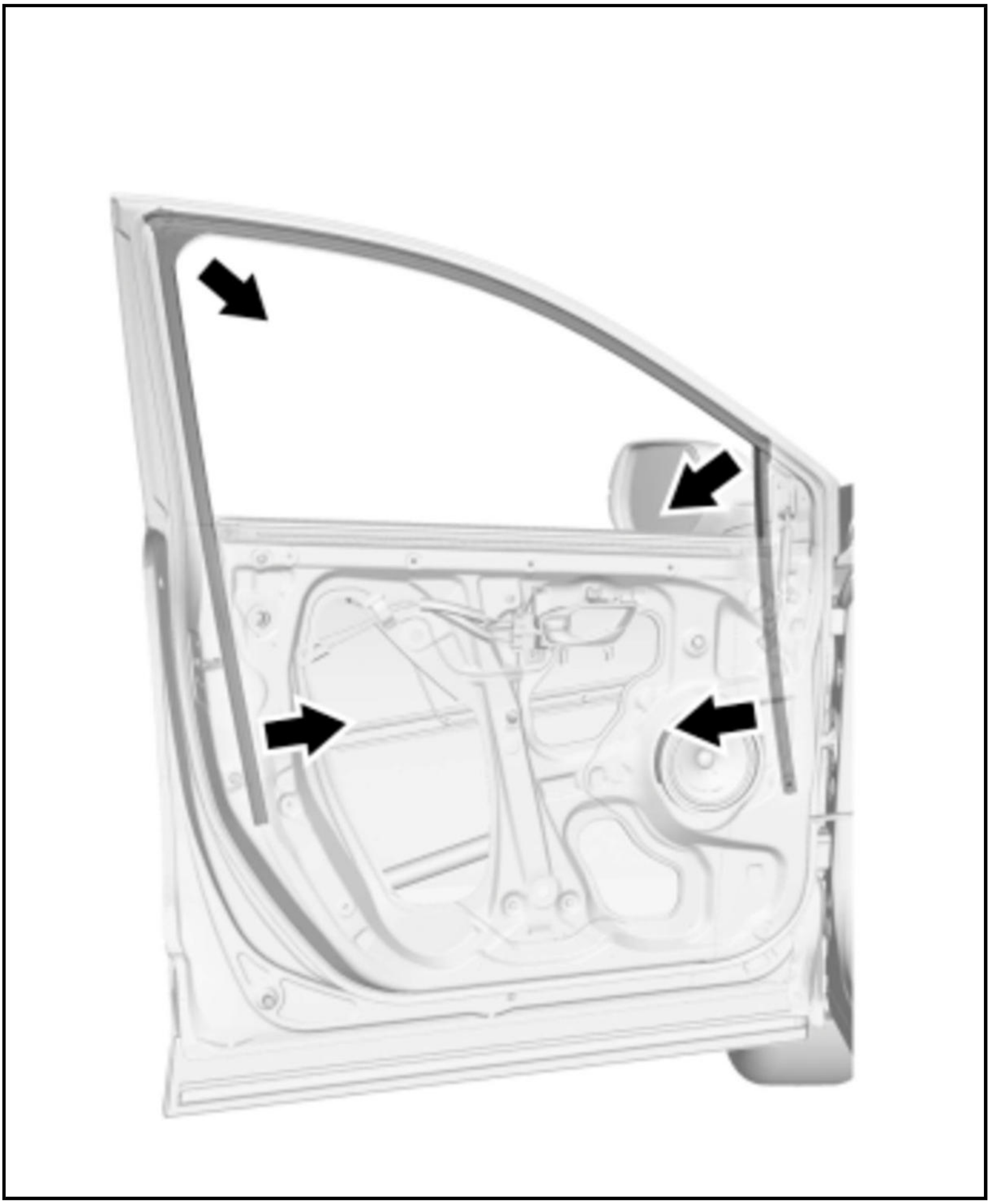

8. All Removed Parts - Install

   1. Install the parts in the reverse order of removal.

9. **Door Glass - Adjustment**
10. **Power Window Control Unit - Reset**

FRONT DOOR INNER HANDLE REMOVAL AND INSTALLATION

Removal and Installation

1. **Front Door Panel - Remove**
2. Front Door Inner Handle - Remove

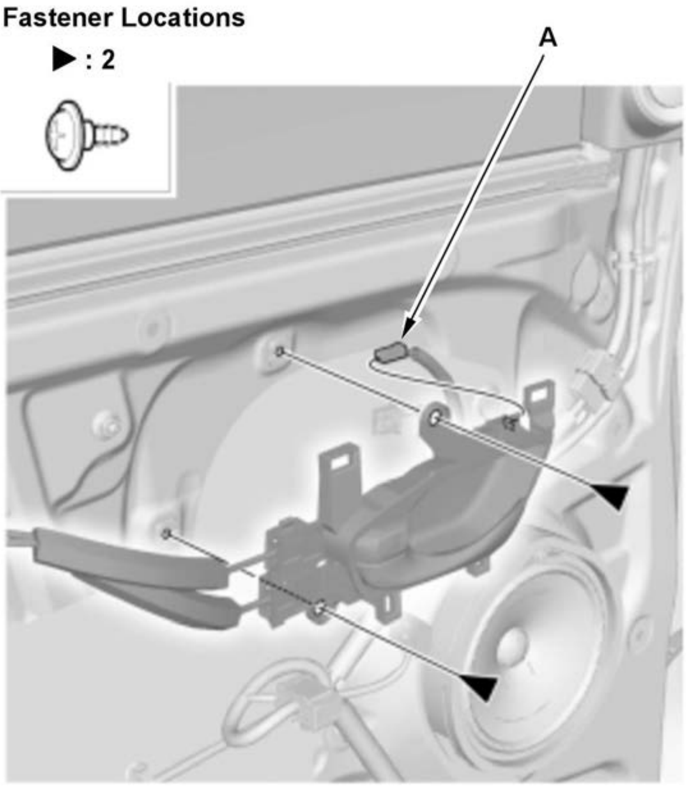
Fastener Locations
▶ : 2
A

1. Remove the screws and disconnect the connector (A).

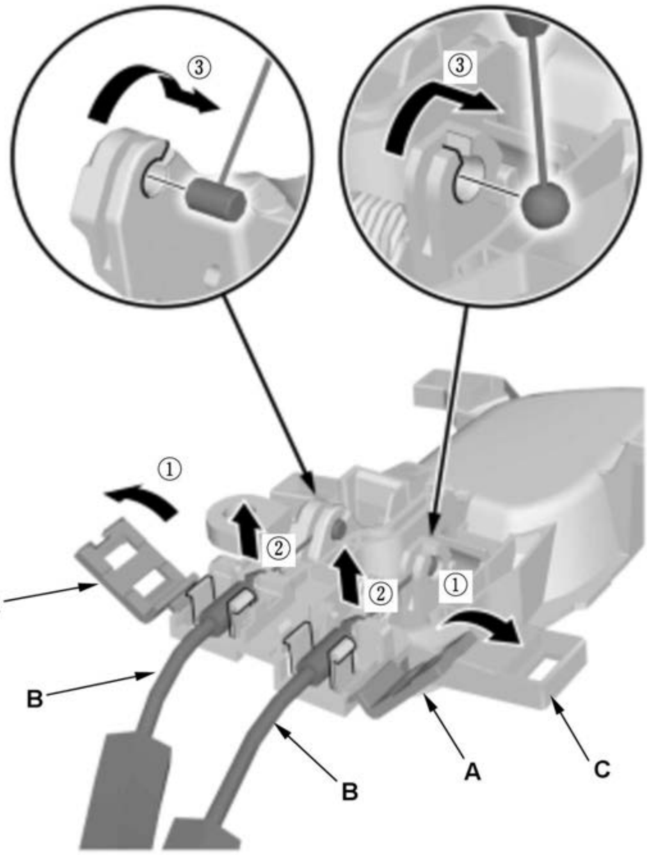
③
③
①
②
②
①
A
B
B
A
C

2. Open the covers (A) and disconnect the cables (B) from the inner handle (C).

3. All Removed Parts - Install

1. Install the parts in the reverse order of removal.

FRONT DOOR LATCH REMOVAL AND INSTALLATION

Removal and Installation

NOTE: How to read the torque specifications

1. Front Door Plastic Cover - Remove

   1. Remove the front door plastic cover as needed.

2. Front Door Center Lower Channel - Remove

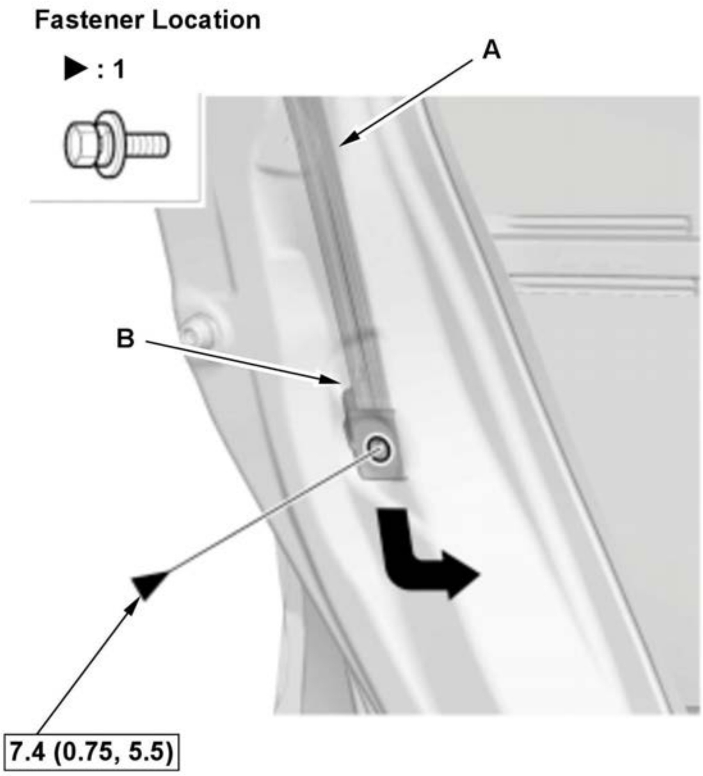	1. Pull the glass run channel (A) away as needed. 2. Remove the front door center lower channel (B) as needed.

3. Front Door Latch - Remove

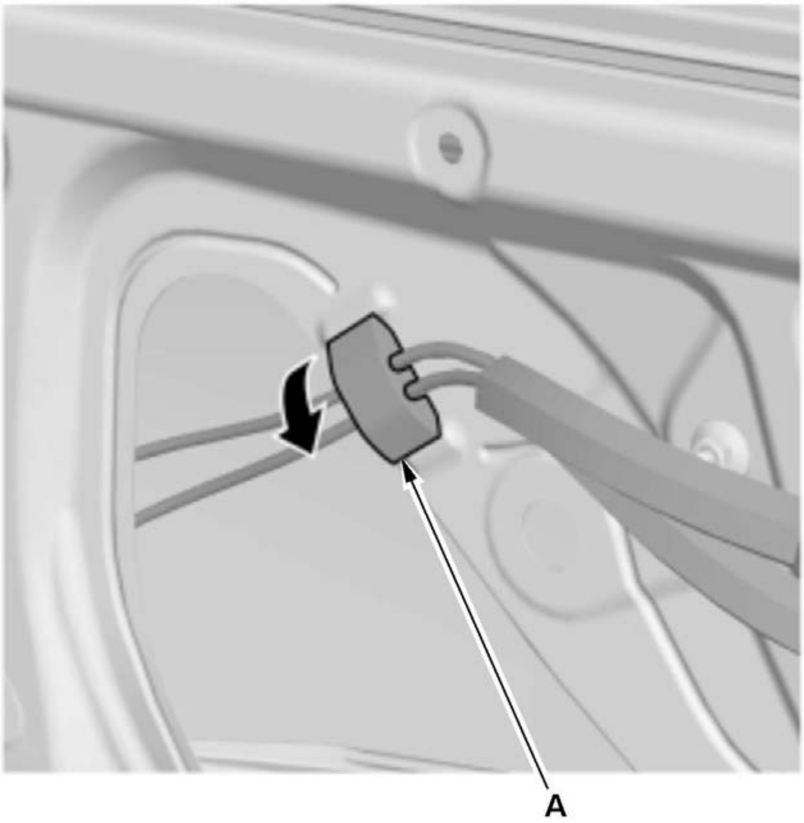

1. Open the cable clip (A).

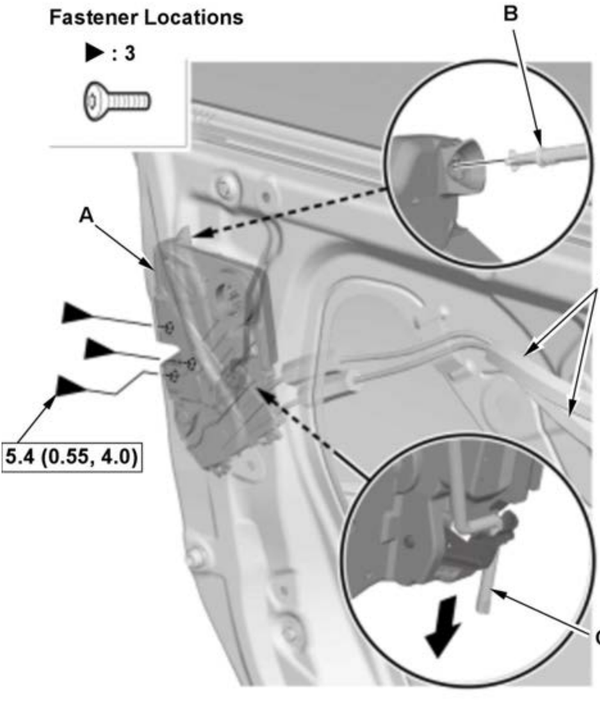
Fastener Locations
▶ : 3
B
A
D
5.4 (0.55, 4.0)
C

2. Remove the bolts.

3. Driver's side: Pull and rotate the front door latch (A) to disconnect the cylinder rod (B).

4. Pull the front door latch downward to disconnect the outer handle rod (C), and then remove the front door latch.

NOTE: Be careful not to bend the cables (D).

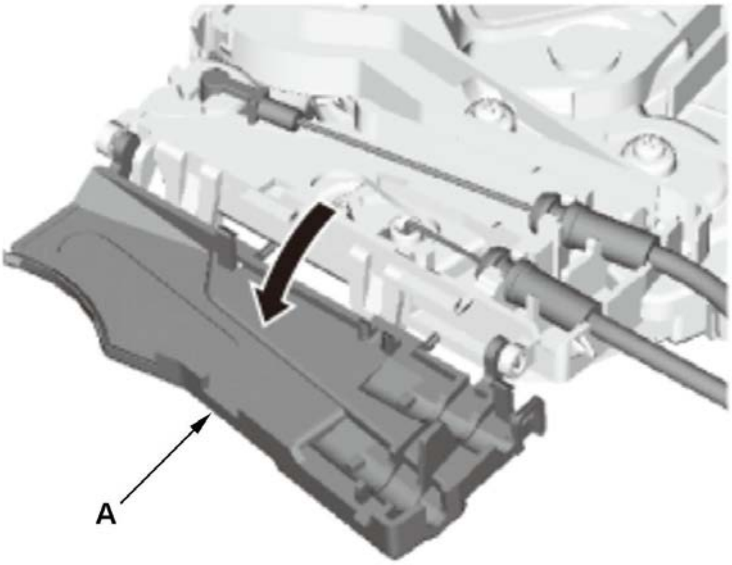	5. Open the latch protector cover (A).
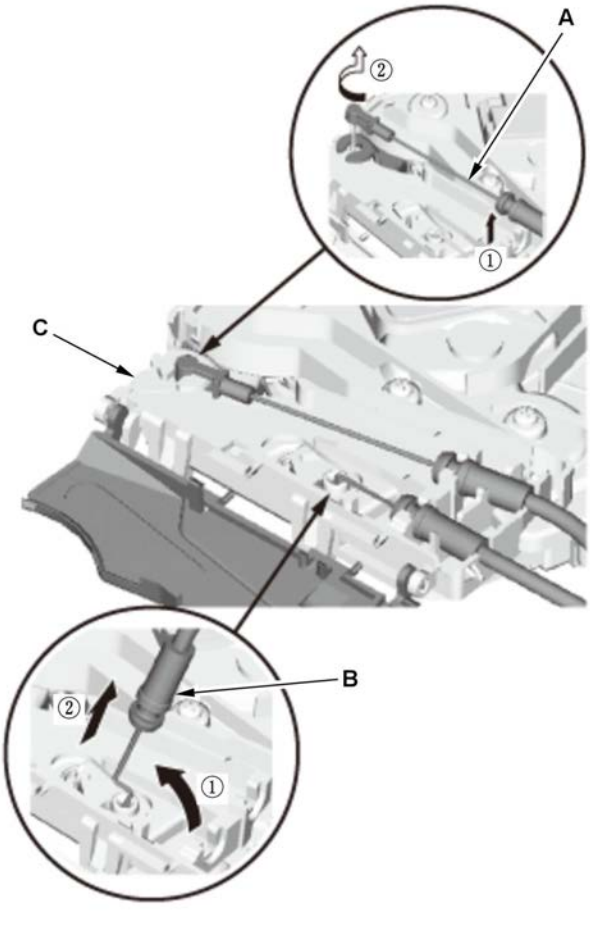	6. Disconnect the inner handle cable (A) and the latch cable (B) from the front door latch (C).

4. All Removed Parts - Install

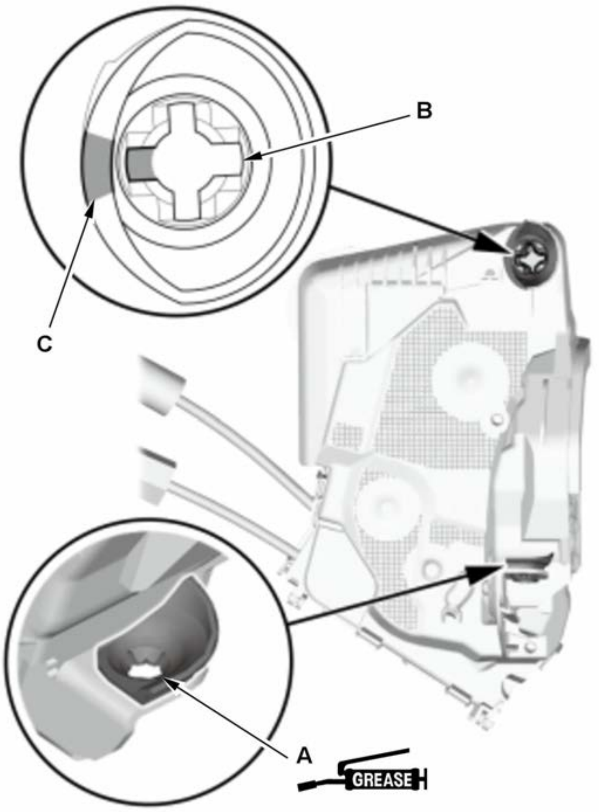

1. Install the parts in the reverse order of removal.

NOTE:

- Apply multipurpose grease to the open lever clip (A).
- Driver's side: Make sure the ditch (B) is within the range (C) as shown.

5. **Power Window Control Unit - Reset**

FRONT DOOR LOWER TRIM REMOVAL AND INSTALLATION

Removal

1. Front Door Lower Trim - Remove

   1. Remove the cap (A), then remove the screw.

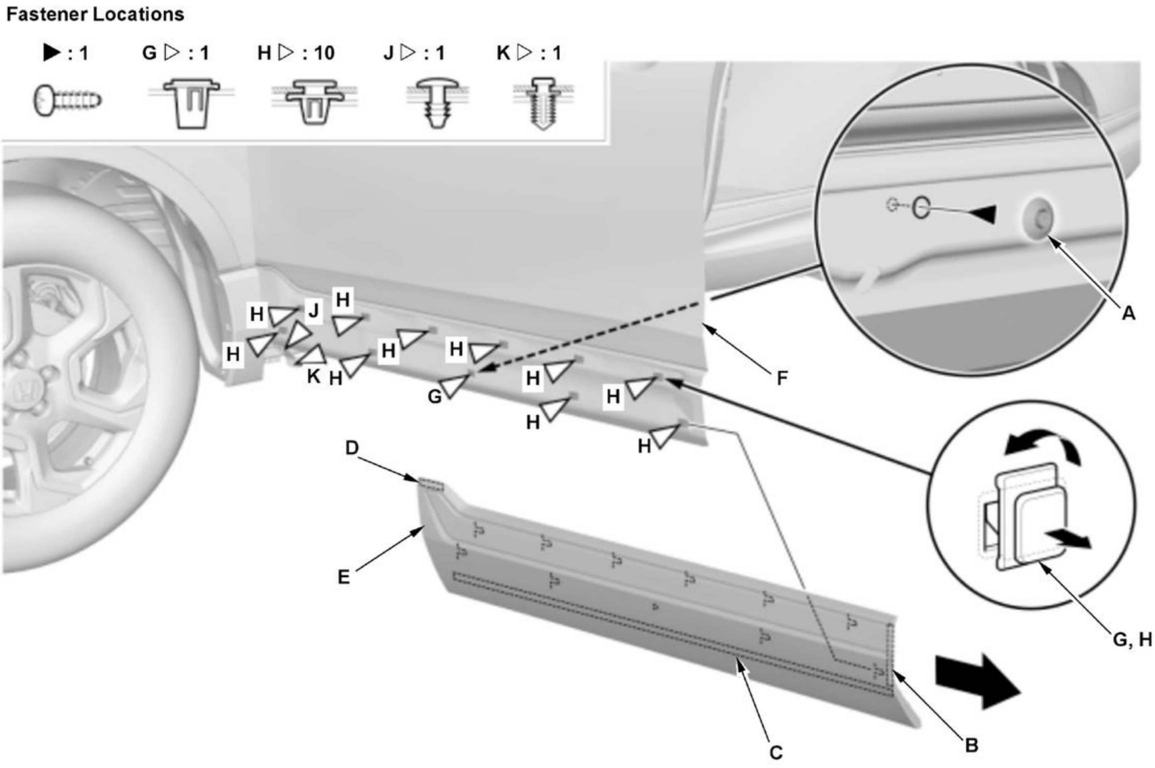
Fastener Locations
▶ : 1
G ▷ : 1
H ▷ : 10
J ▷ : 1
K ▷ : 1
A
F
H
J
K
G
D
E
G, H
C
B

2. Cut the adhesive tape (B, C, D) along the edge of the door lower trim (E) with a utility knife while separating the trim from the door (F) with a trim tool.

NOTE: Apply protective tape around the cutting area.

3. Slide the door lower trim rearward and remove it.

NOTE: The clips (G, H) will stay in the door.

4. Remove the clips by turning.

2. Front Door Lower Seal - Remove

1. If necessary, remove the front door lower seal (A) with the clips and double-sided adhesive tape (B).

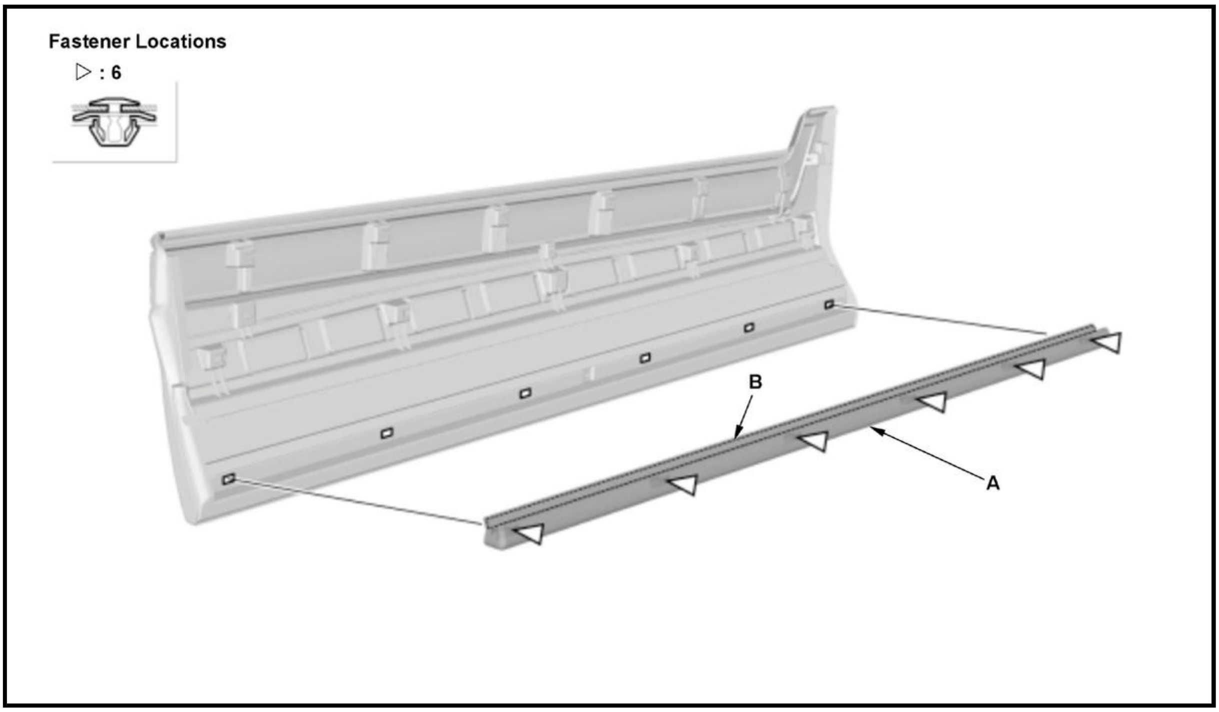

Installation

1. Front Door Lower Seal - Install

1. Install the front door lower seal (A).

NOTE: Apply adhesive primer to the areas where the new double-sided adhesive tape (B) will be applied.

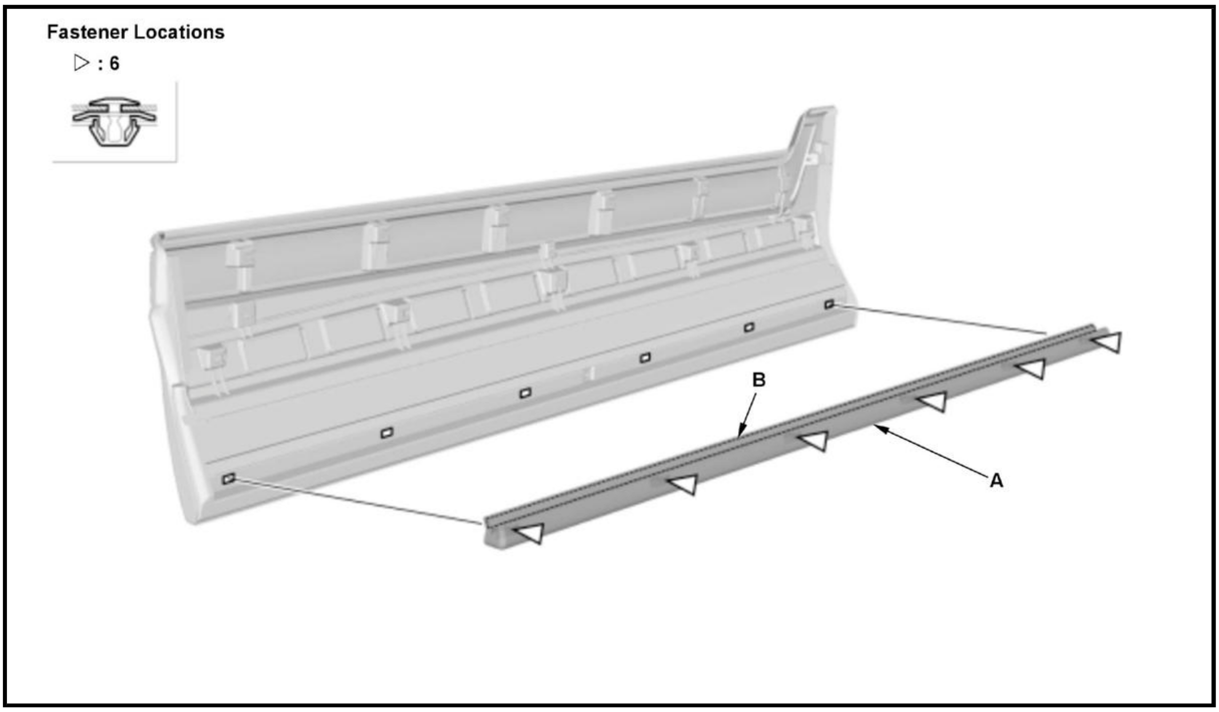

2. Front Door Lower Trim - Install

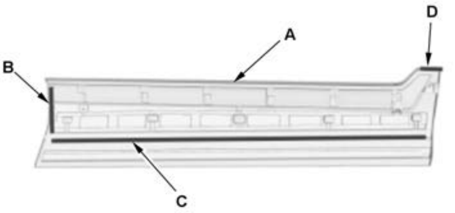	1. If you are reusing the original door lower trim (A), apply primer to the areas where new double-sided adhesive tapes (B, C, D) will be applied, then attach the new double-sided adhesive tapes to the trim as shown.

Double-sided adhesive tape (B)

Thickness	1.0 mm (0.039 in)
Width	8 mm (0.31 in)
Length	95 mm (3.74 in)

Double-sided adhesive tape (C)

Thickness	1.2 mm (0.047 in)
Width	8 mm (0.31 in)
Length	1000 mm (39.37 in)

Double-sided adhesive tape (D)

Thickness	1.0 mm (0.039 in)
Width	6 mm (0.24 in)
Length	50 mm (1.97 in)

2. Install the clips (A, B) on the door lower trim (C) or door (D).

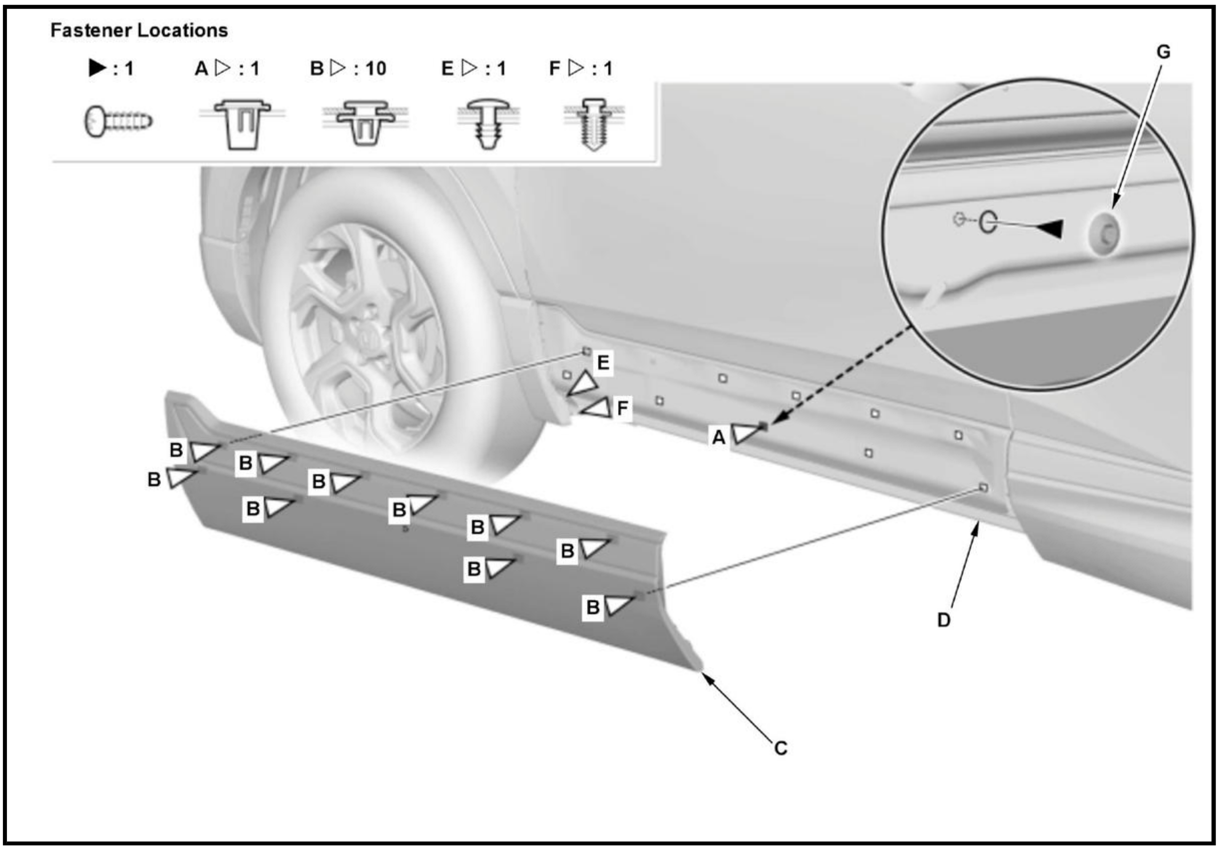

3. Install the door lower trim.

NOTE: Scrape off the remaining double-sided adhesive tape from the door, then clean the surface with a sponge dampened in isopropyl alcohol. After cleaning, keep oil, grease, and water from getting on the surface.

4. Install the screw and the clips (E, F) to the door lower trim.

5. Install the cap (G).

FRONT DOOR OUTER HANDLE REMOVAL AND INSTALLATION

Removal and Installation

NOTE: How to read the torque specifications

Front Door Handle Base Cover/Front Door Lock Cylinder

1. Front Door Handle Base Cover - Remove

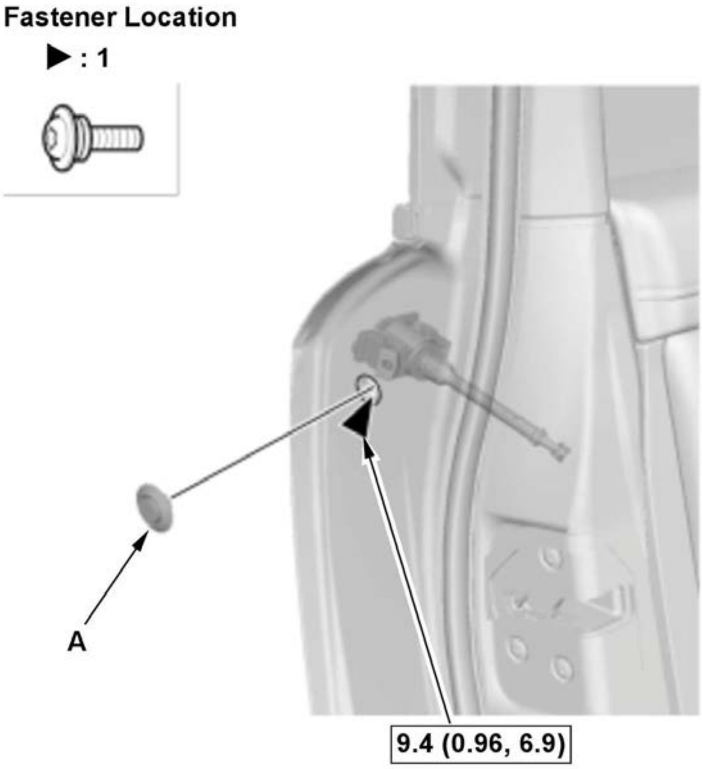 Fastener Location ▶ : 1 A 9.4 (0.96, 6.9)	1. Remove the plug cap (A), and then remove the bolt.

Driver's side 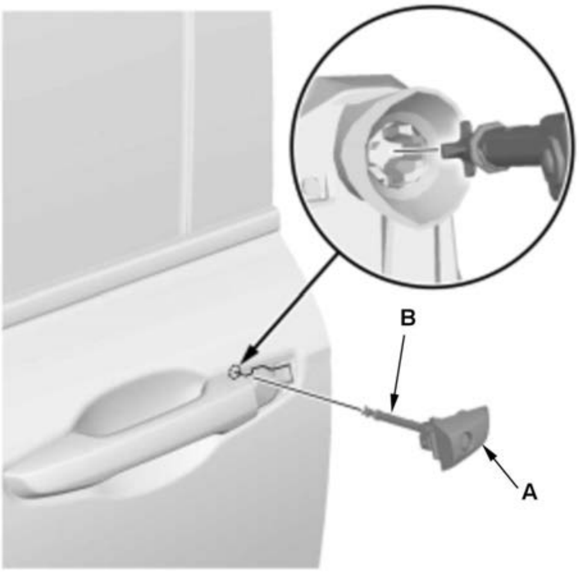 **Passenger's side**	2. Remove the front door handle base cover (A), together with the front door lock cylinder (B) as an assembly (driver's side).

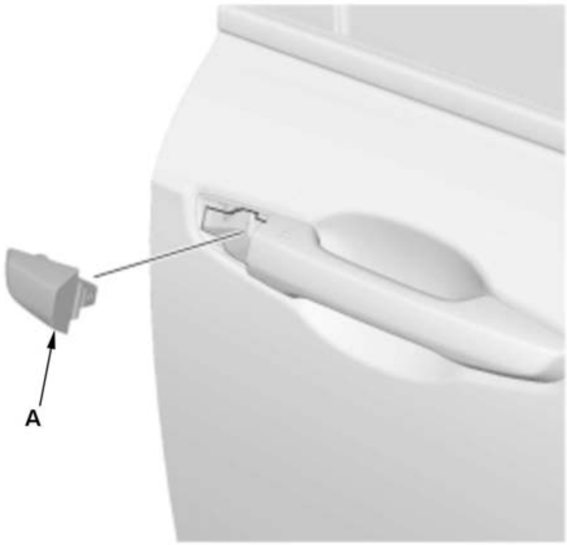	

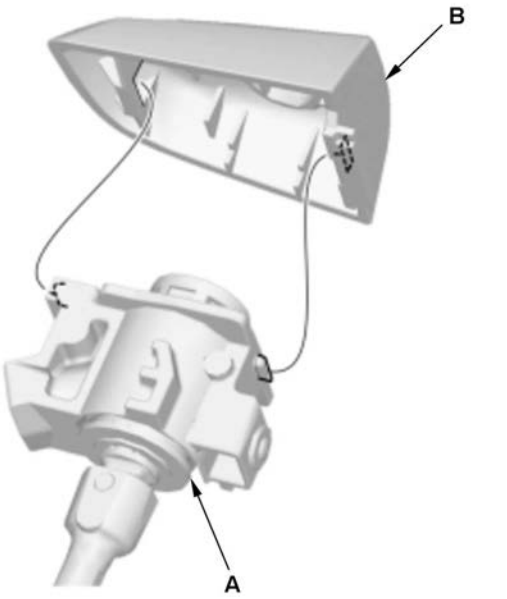	3. Driver's side: Remove the front door lock cylinder (A) from the front door handle base cover (B).

2. Front Door Plastic Cover - Remove

1. **Remove the front door plastic cover as needed.**

Front Door Outer Handle

3. Front Door Outer Handle - Remove

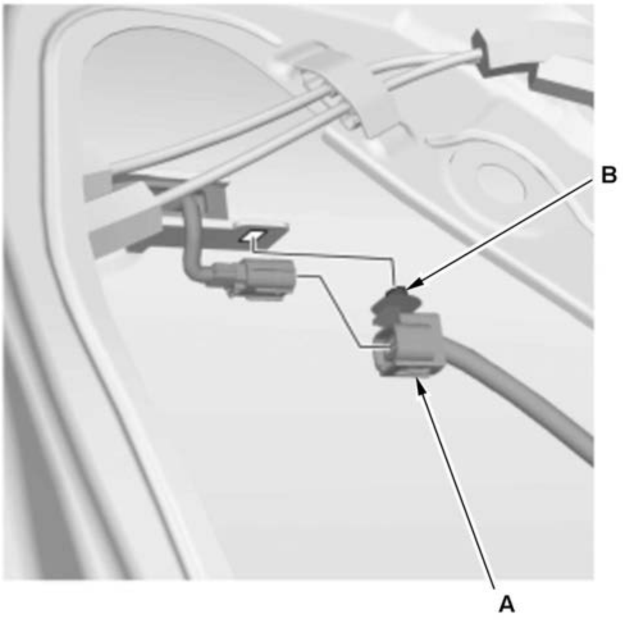	1. For some models: Disconnect the connector (A), and then remove the harness clip (B).
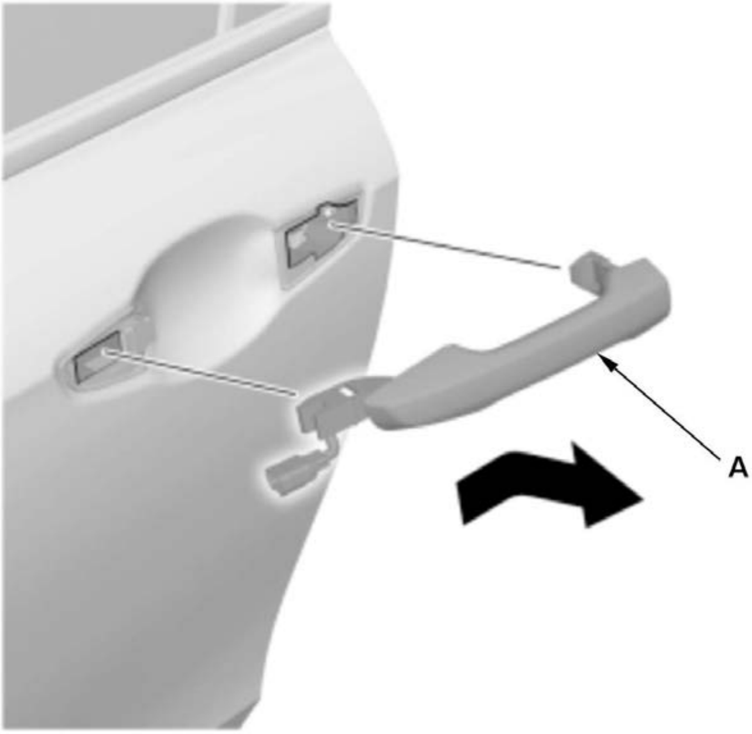	2. Remove the front door outer handle (A).

4. Front Door Outer Handle Seals - Remove

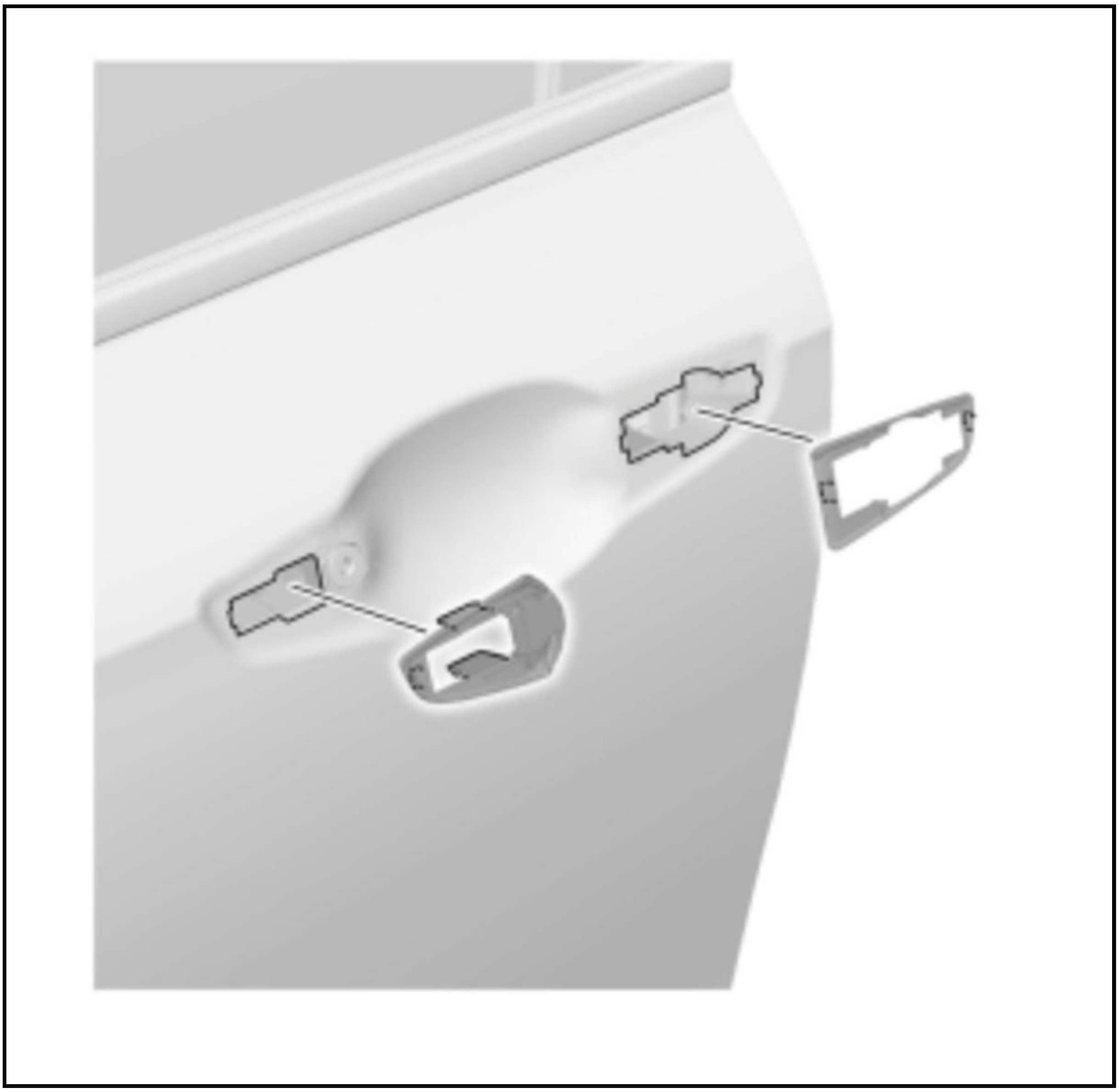

Front Door Outer Handle Base

5. Front Door Outer Handle Base - Remove

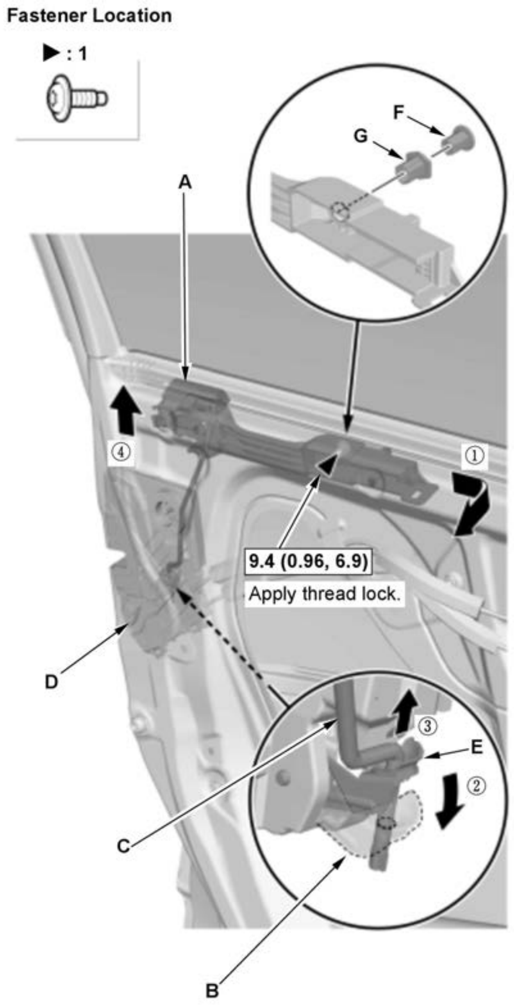
Fastener Location
▶: 1
F
G
A
④
①
9.4 (0.96, 6.9)
Apply thread lock.
D
③
E
②
C
B

1. Loosen the bolt.

2. Move the rear area of the outer handle base (A) inward.

3. While pushing down the open lever (B), pull the outer handle base upward to disconnect the outer handle rod (C) from the front door latch (D).

4. If necessary, remove the open lever clip (E).

5. If necessary, remove the bolt, the special nut (F) and the collar (G) from the outer handle base.

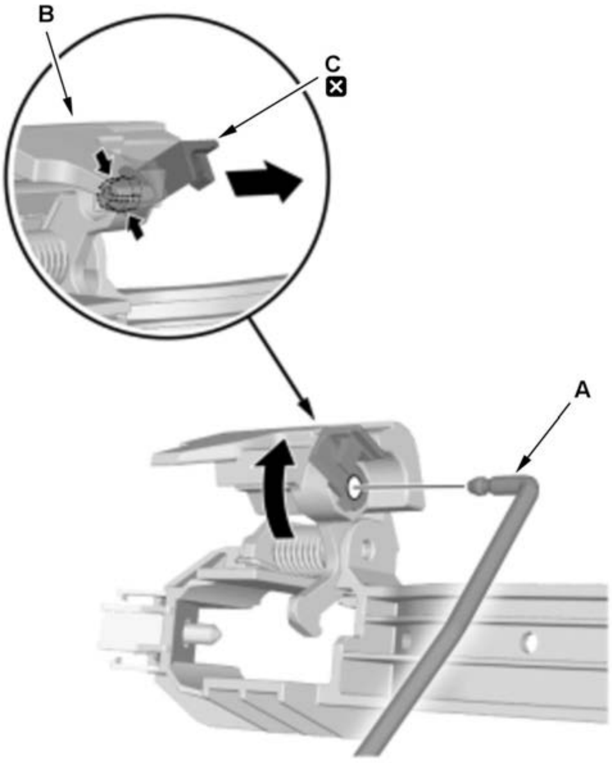

6. Disconnect the outer handle rod (A) from the front door outer handle base (B).

7. Remove the rod fastener (C) from the outer handle base, then replace it with a new one.

6. All Removed Parts - Install

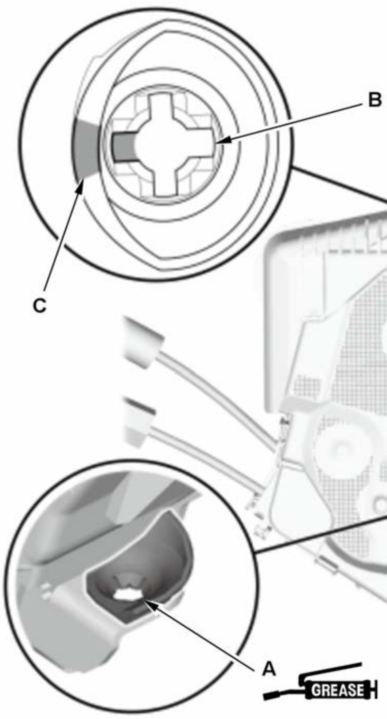	1. Install the parts in the reverse order of removal. **NOTE:** - Apply multipurpose grease to the open lever clip (A). - Driver's side: Make sure the ditch (B) is within the range (C) as shown. - Apply medium strength liquid thread lock to the front door outer handle base bolt before reinstallation.

FRONT DOOR PANEL REMOVAL AND INSTALLATION

Removal and Installation

1. Front Door Power Window Switch Panel - Remove

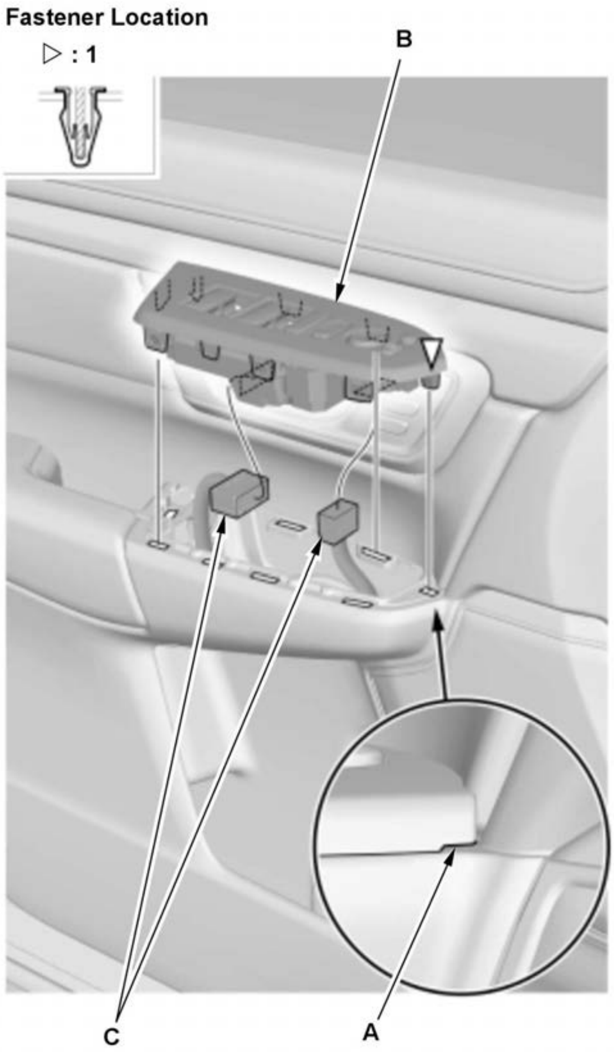 Fastener Location ▷ : 1 B C A	1. Pry out on the notch (A) in the power window switch panel (B) with the trim tool. 2. Disconnect the connectors (C), then remove the power window switch panel.

2. Front Door Panel - Remove

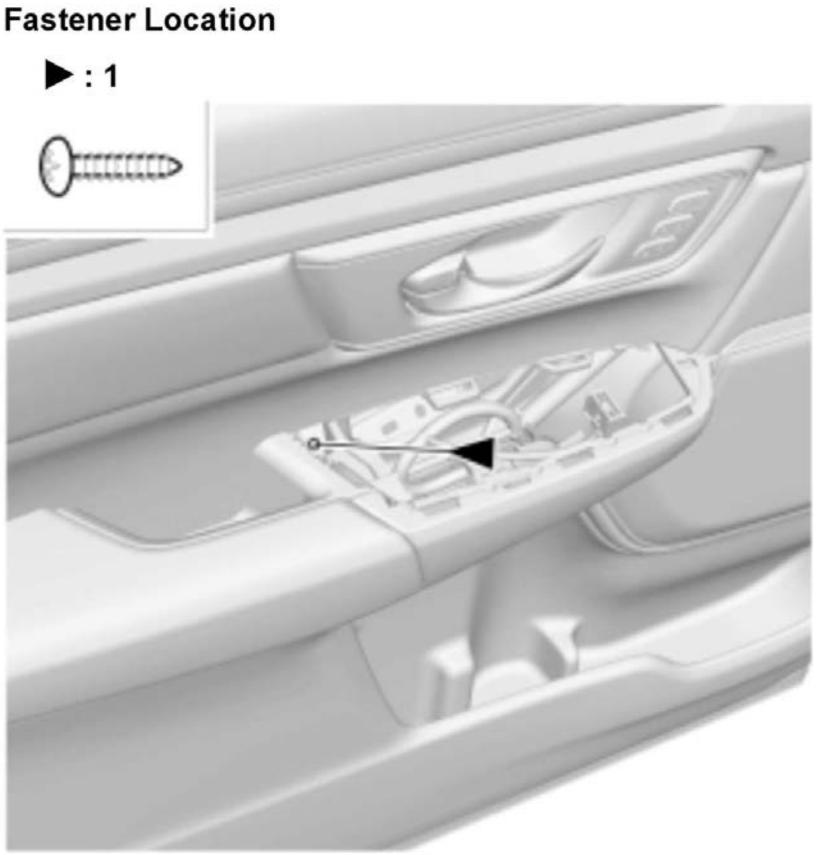
Fastener Location
▶ : 1

1. Remove the screw.

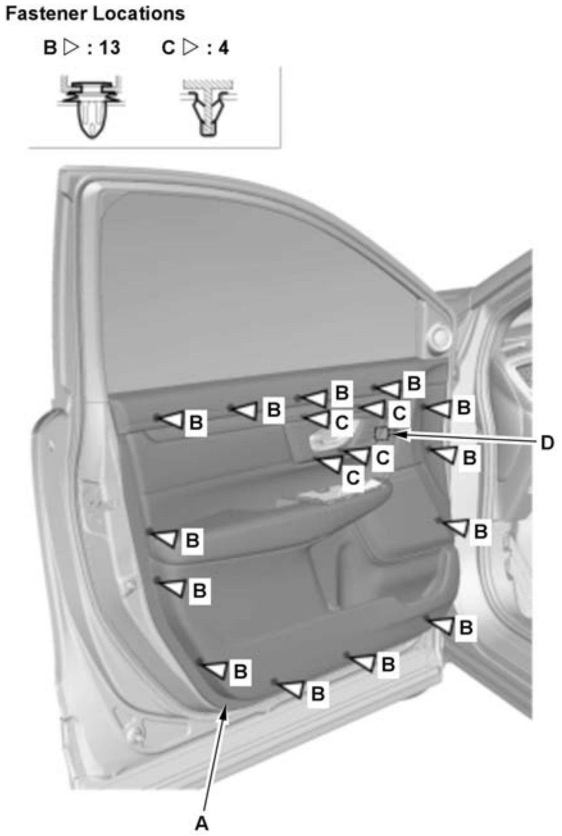
Fastener Locations
B ▷ : 13
C ▷ : 4
B
B
B
B
B
C
C
B
D
C
B
C
B
B
B
B
B
B
A

2. Starting at the bottom edge of the front door panel (A), remove the clips (B, C) with a commercially available trim pad remover.

3. Starting at the rear, pull the door panel upward.

4. For some models: Disconnect the connector (D).

3. All Removed Parts - Install

   1. Install the parts in the reverse order of removal.
4. Power Window Control Unit - Reset

FRONT DOOR REGULATOR REMOVAL AND INSTALLATION

Removal and Installation

NOTE: 📖 Where icon is shown, for further information see below.

Procedure

NOTE: **Numbered call-outs in figure pertain to list numbers in following procedure.**

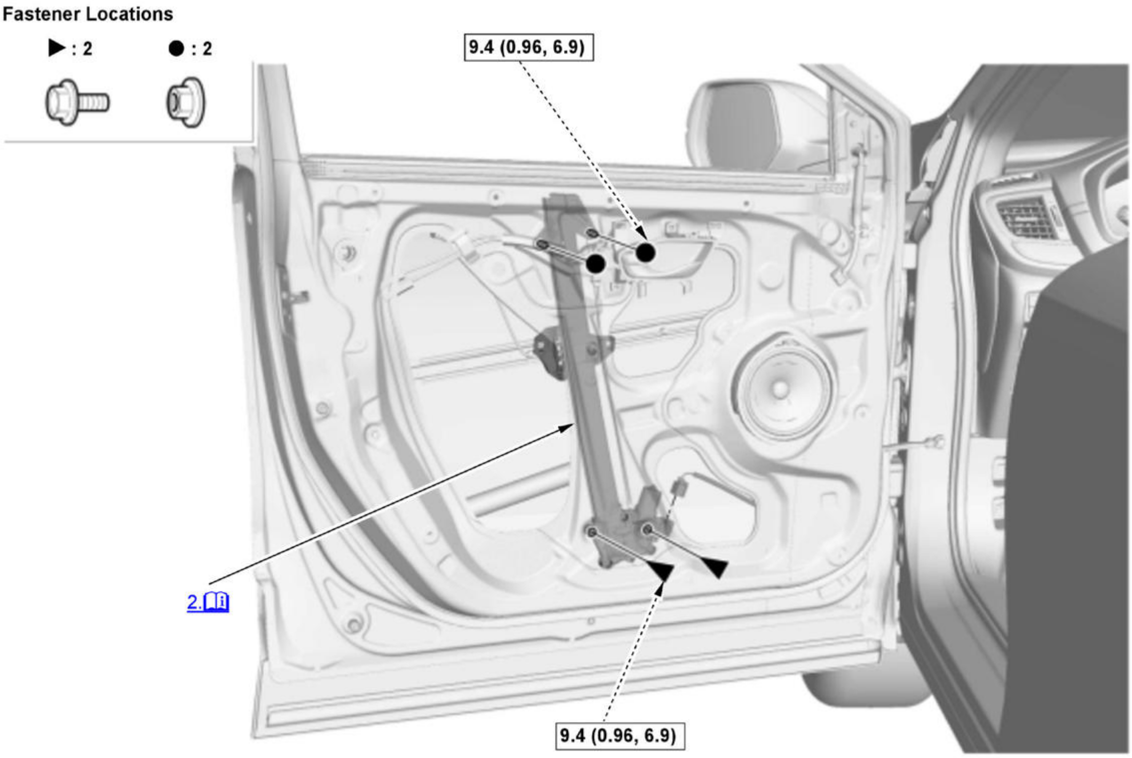

Fig. 6: Front Door Regulator Components
Courtesy of HONDA, U.S.A., INC.

📖	Detailed information, notes, and precautions
☐	Torque: N.m (kgf.m, lbf.ft)

1. Front Door Glass - Remove
2. Front Door Regulator - Remove

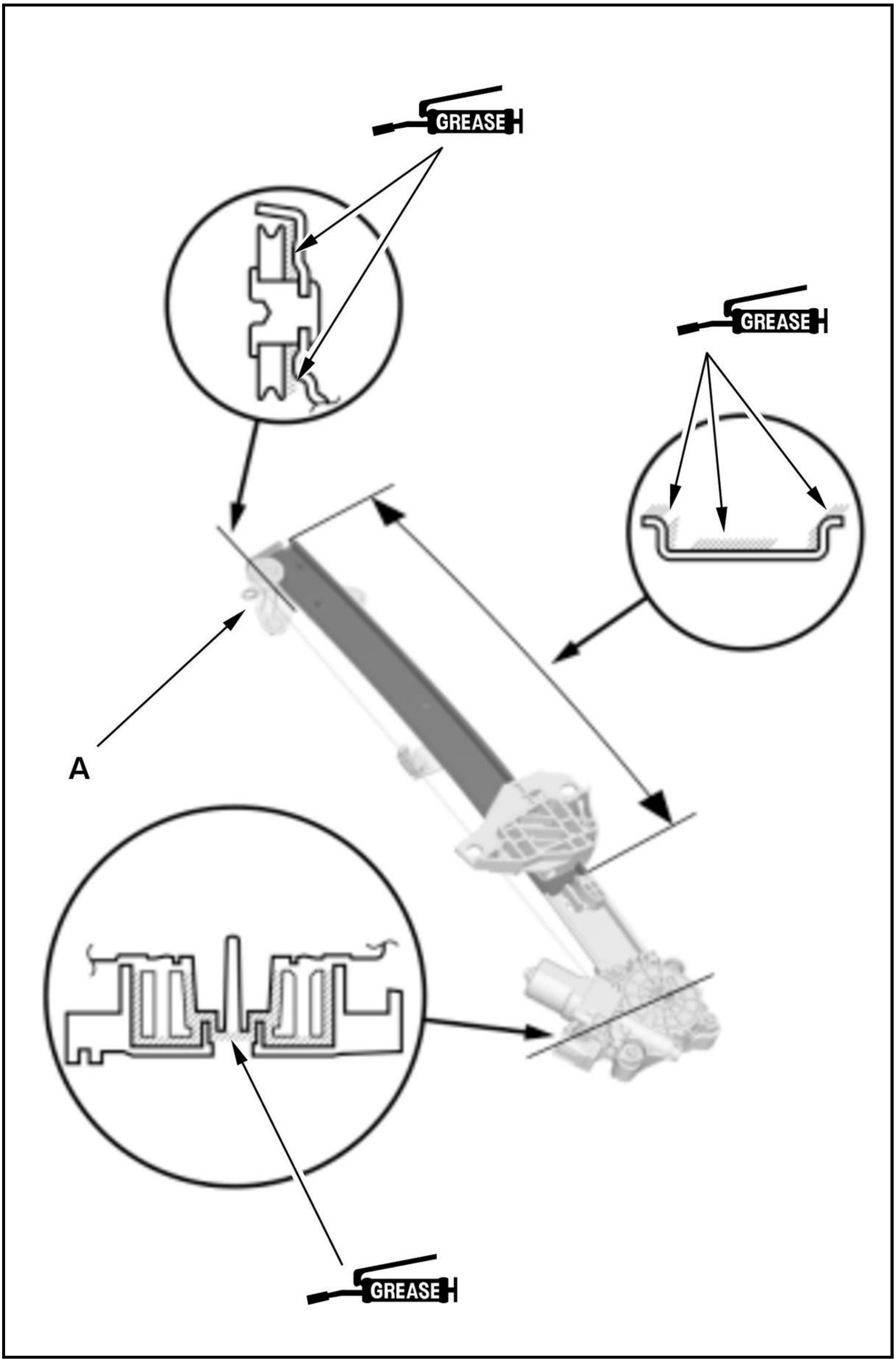
GREASE
GREASE
A
GREASE

Note for installation

Apply multipurpose grease to all sliding surfaces of the front door regulator (A) where shown.

3. All Removed Parts - Install

   1. Install the parts in the reverse order of removal.

4. **Door Glass - Adjust**
5. **Power Window Control Unit - Reset**

FRONT DOOR SASH OUTER TRIM REMOVAL AND INSTALLATION

Replacement

NOTE: 📖 Where icon is shown, for further information see below.

Procedure

NOTE: **Numbered call-outs in figure pertain to list numbers in following procedure.**

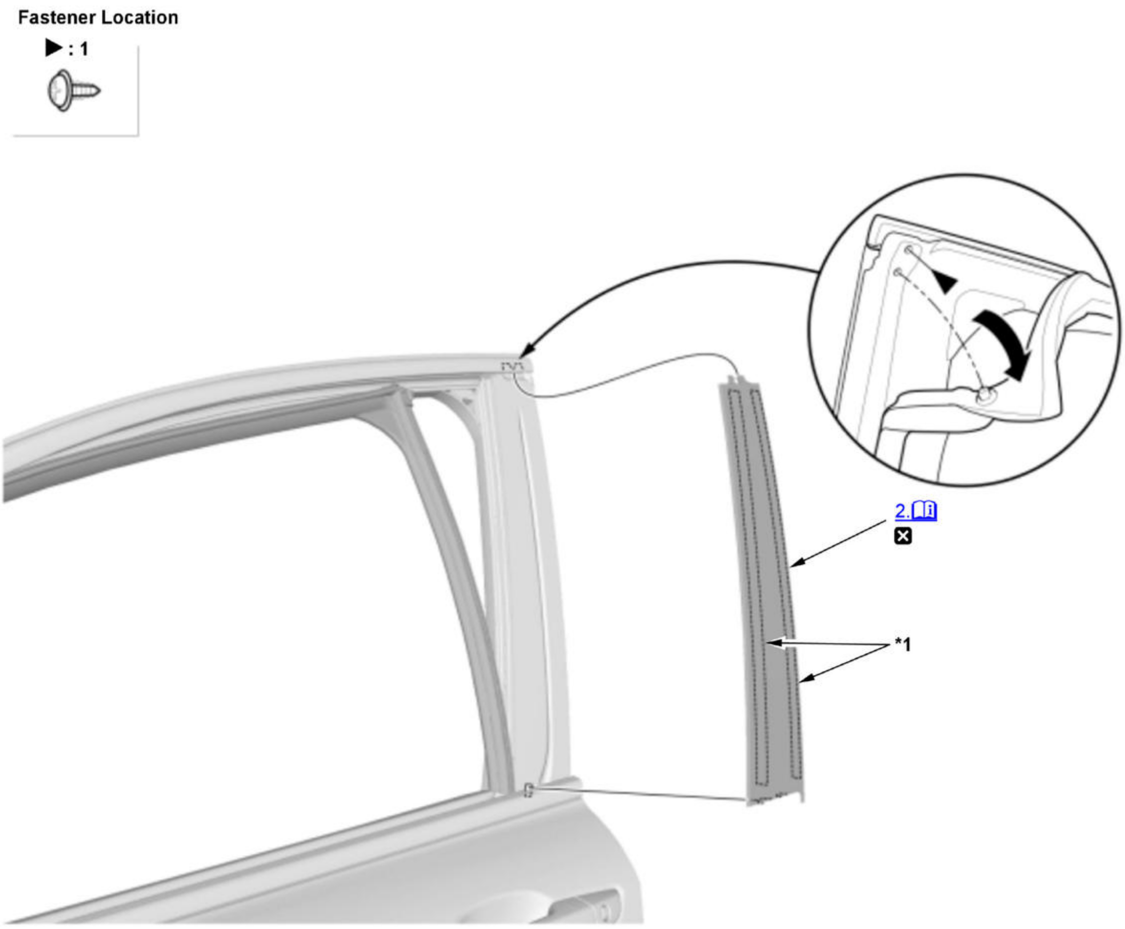

Fig. 7: Front Door Sash Outer Trim Components
Courtesy of HONDA, U.S.A., INC.

📖	Detailed information, notes, and precautions
☒	Replace
*1	Double-sided adhesive tape

1. **Front Door Glass Run Channel - Remove (as needed)**
2. Front Door Sash Outer Trim - Remove

   NOTE: Pull out the upper edge of the front door sash outer trim from the edge of the sash, and cut the double-sided adhesive tape with a utility knife.

Note for installation

- Scrape off the remaining double-sided adhesive tape from the sash, then clean the surface with a sponge dampened in isopropyl alcohol. After cleaning, keep oil, grease, and water from getting on the surface.
- Install the new front door sash outer trim.

3. All Removed Parts - Install

1. Install the parts in the reverse order of removal.

FRONT DOOR WEATHERSTRIP REMOVAL AND INSTALLATION

Removal and Installation

Procedure

NOTE: **Numbered call-outs in figure pertain to list numbers in following procedure.**

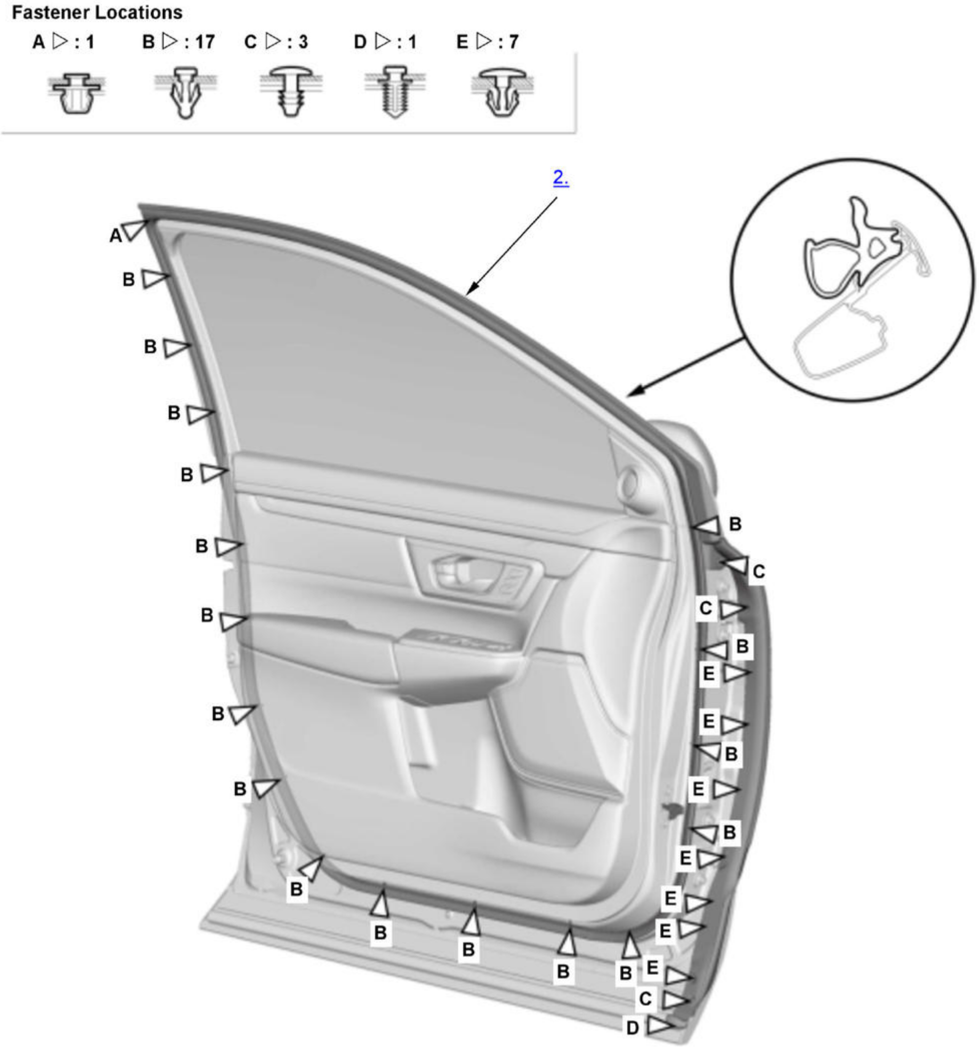

Fig. 8: Front Door Weatherstrip Components
Courtesy of HONDA, U.S.A., INC.

1. Front Door Checker - Remove

1. Remove the front door checker bolt. (Body side)

2. Front Door Weatherstrip - Remove

3. All Removed Parts - Install

   1. Install the parts in the reverse order of removal.

4. Water Leaks - Check

REAR DOOR CHECKER REMOVAL AND INSTALLATION

Removal and Installation

Procedure

NOTE: **Numbered call-outs in figure pertain to list numbers in following procedure.**

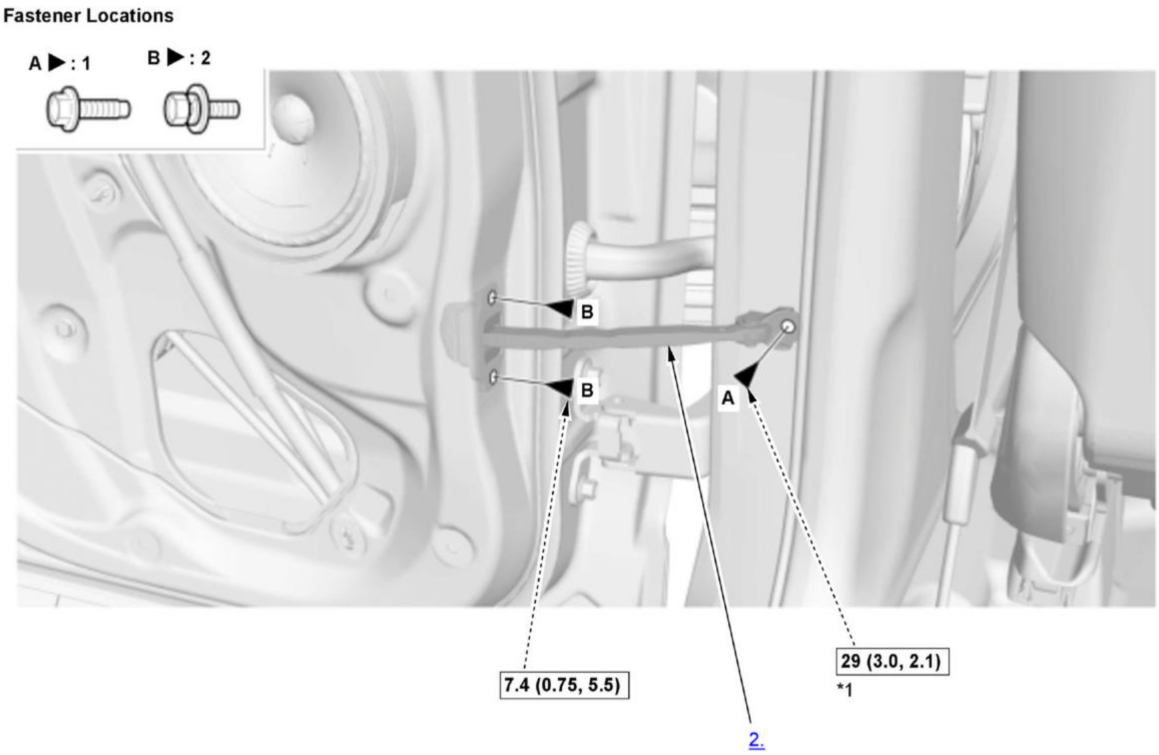

Fig. 9: Rear Door Checker Components With Torque Specifications
Courtesy of HONDA, U.S.A., INC.

☐	Torque: N.m (kgf.m, lbf.ft)
*1	Apply thread lock.

1. Rear Door Plastic Cover - Remove

   1. Remove the rear door plastic cover as needed.

2. Rear Door Checker - Remove
3. All Removed Parts - Install

   1. Install the parts in the reverse order of removal.
   NOTE: Apply medium strength liquid thread lock to the door checker 8 mm mounting bolt before reinstallation.

REAR DOOR CORNER TRIM REMOVAL AND INSTALLATION

Removal and Installation

Procedure

NOTE: **Numbered call-outs in figure pertain to list numbers in following procedure.**

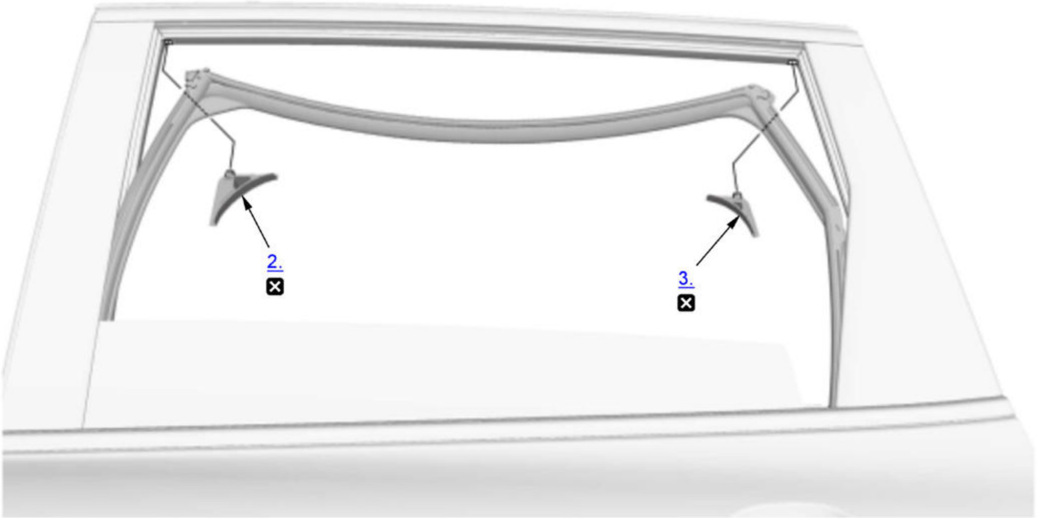

Fig. 10: Rear Door Corner Trim Components
Courtesy of HONDA, U.S.A., INC.

☒	Replace

1. Glass Run Channel - Remove

   1. **Remove the glass run channel as needed**.

2. Rear Door Center Corner Trim - Remove
3. Rear Door Center Rear Trim - Remove
4. All Removed Parts - Install

   1. Install the parts in the reverse order of removal.

REAR DOOR GLASS INNER WEATHERSTRIP REMOVAL AND INSTALLATION

Removal and Installation

Procedure

NOTE: **Numbered call-outs in figure pertain to list numbers in following procedure.**

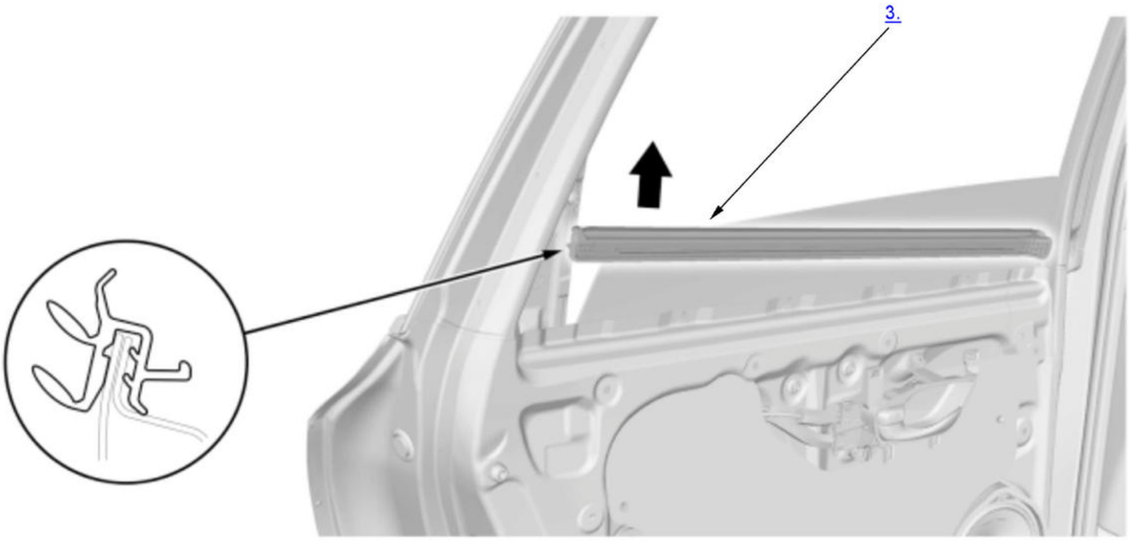

Fig. 11: Rear Door Glass Inner Weatherstrip Components
Courtesy of HONDA, U.S.A., INC.

1. Rear Door Panel - Remove
2. Rear Door Sash Inner Trim - Remove
3. Rear Door Glass Inner Weatherstrip - Remove
4. All Removed Parts - Install

    1. Install the parts in the reverse order of removal.

REAR DOOR GLASS OUTER WEATHERSTRIP REMOVAL AND INSTALLATION

Removal and Installation

Procedure

NOTE: **Numbered call-outs in figure pertain to list numbers in following procedure.**

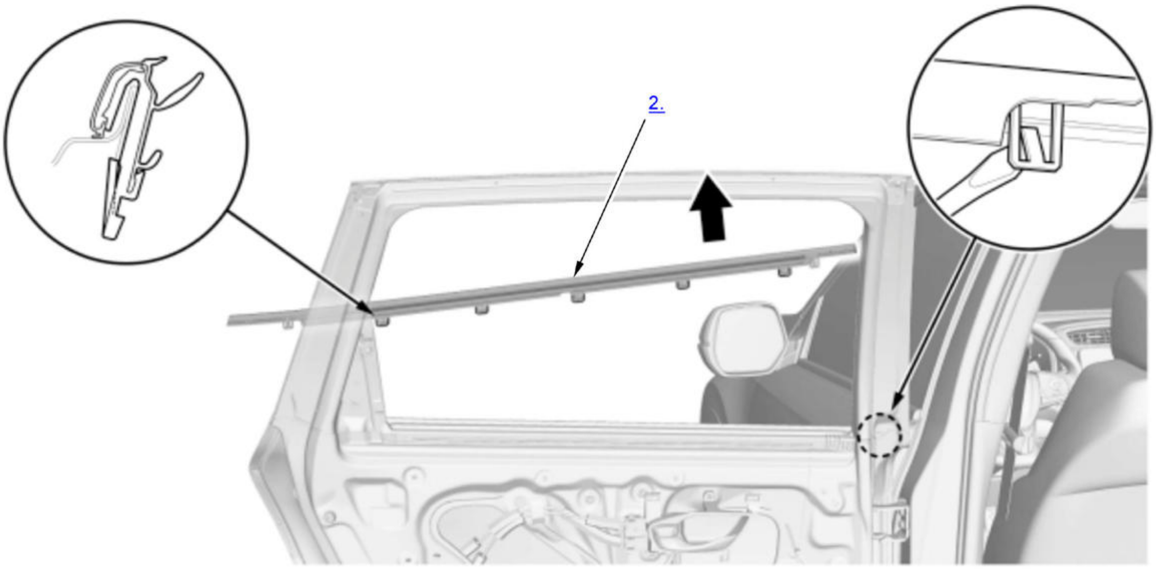

Fig. 12: Rear Door Glass Outer Weatherstrip Components
Courtesy of HONDA, U.S.A., INC.

1. Rear Door Plastic Cover - Remove

   1. **Remove the rear door plastic cover as needed**.

2. Rear Door Glass Outer Weatherstrip - Remove
3. All Removed Parts - Install

   1. Install the parts in the reverse order of removal.

REAR DOOR GLASS REMOVAL AND INSTALLATION

Removal and Installation

NOTE: **How to read the torque specifications** .

1. **Rear Door Panel - Remove**
2. **Rear Door Sash Inner Trim - Remove**
3. **Rear Door Inner Handle - Remove (as needed)**
4. Rear Door Plastic Cover - Remove

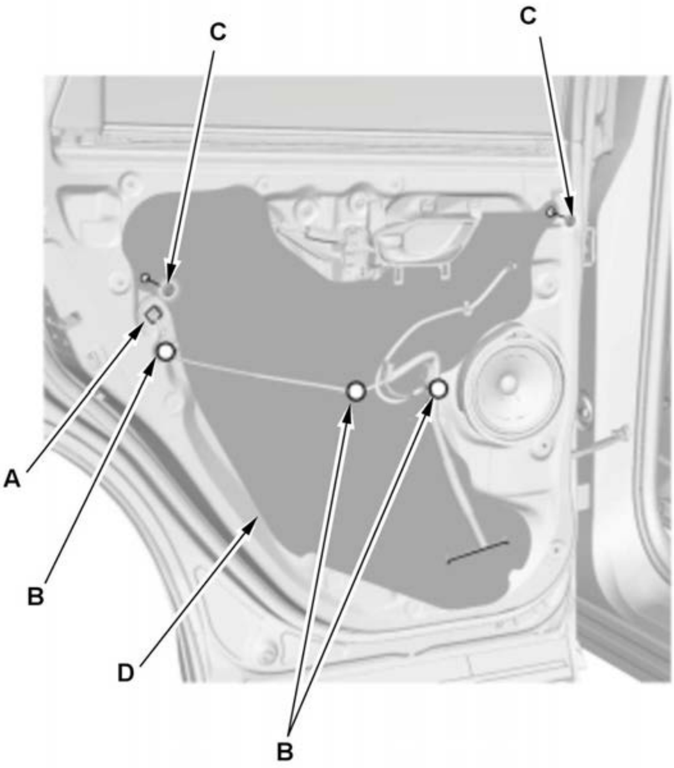	1. Disconnect the connector (A), and remove the harness clips (B). 2. Remove the plug caps (C), then carefully remove the plastic cover (D). **NOTE:** If the plastic cover is damaged or torn, replace it with a new one.

5. Rear Quarter Channel - Remove

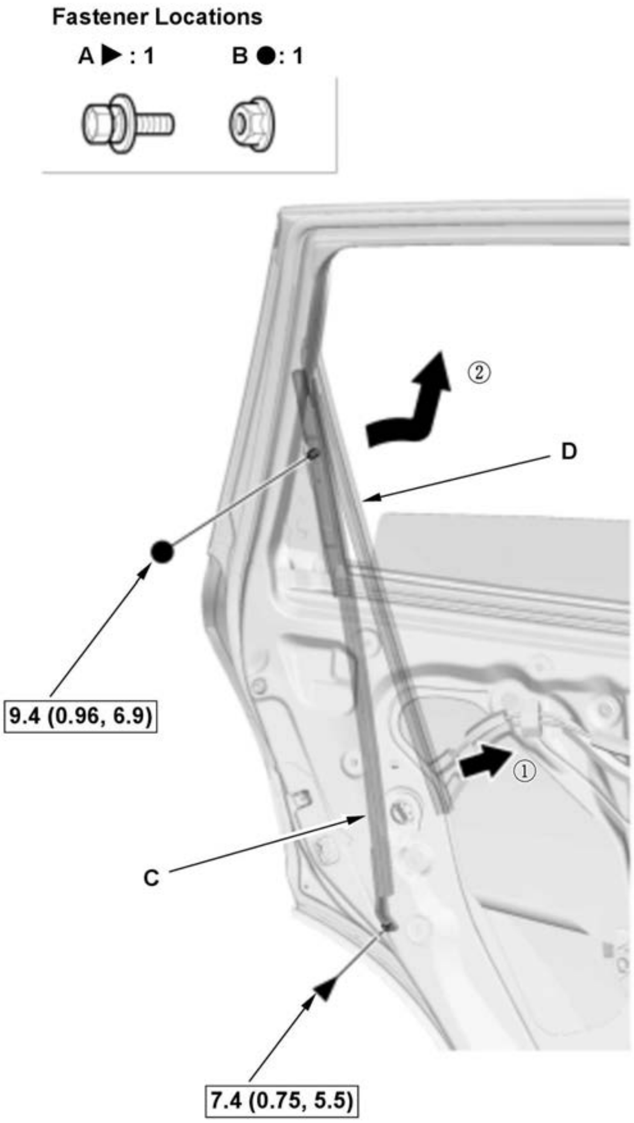 Fastener Locations A ▶: 1 B ●: 1 ② D 9.4 (0.96, 6.9) ① C 7.4 (0.75, 5.5)	1. Remove the bolt (A) and nut (B), from the rear quarter channel (C). 2. Remove the rear quarter channel, and pull out the glass run channel (D) as needed. **NOTE:** Be careful not to scratch the door, or damage the door glass outer weatherstrip.

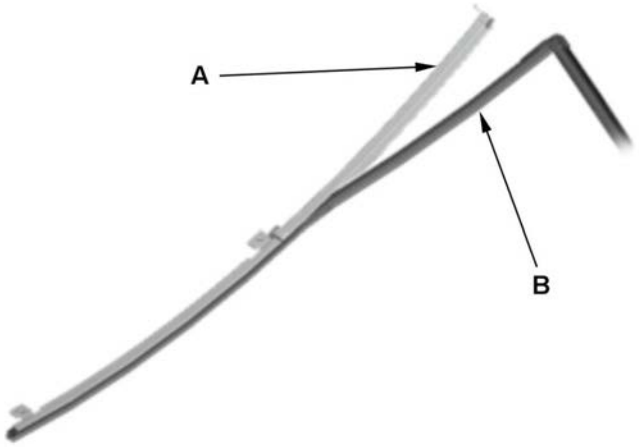	3. Remove the rear quarter channel (A) from the glass run channel (B).

6. Rear Door Glass - Remove

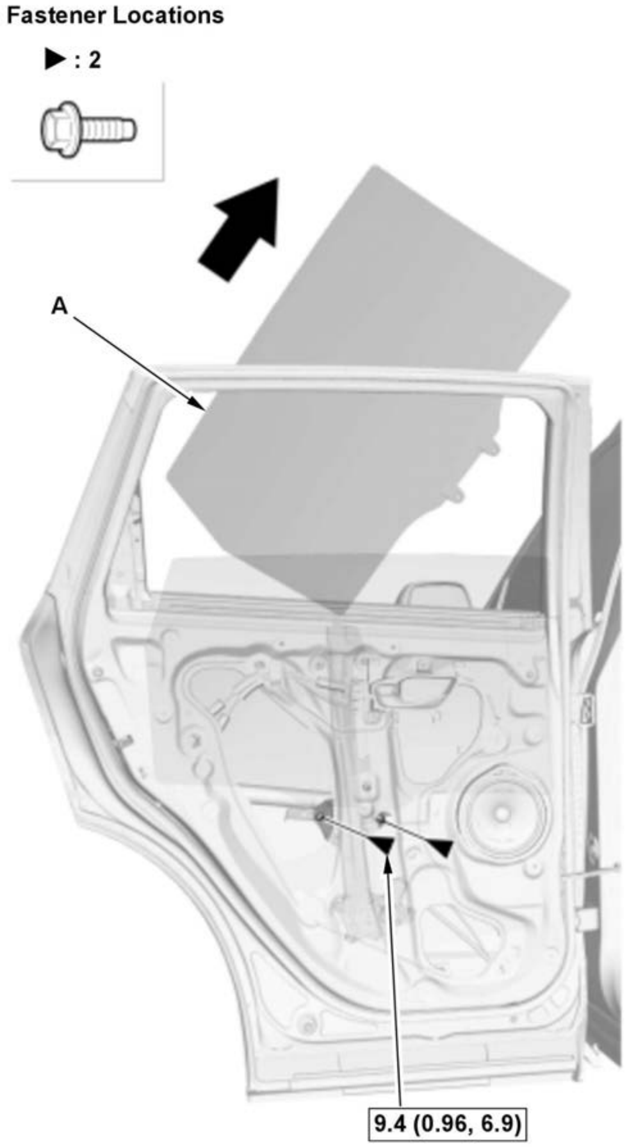 Fastener Locations ▶ : 2 A 9.4 (0.96, 6.9)	1. Lower the glass (A) until you can see the glass mounting bolts, then remove them. 2. Carefully pull out the glass through the window slot. **NOTE:** Take care not to drop the glass inside the door.

7. Rear Door Glass Run Channel - Remove

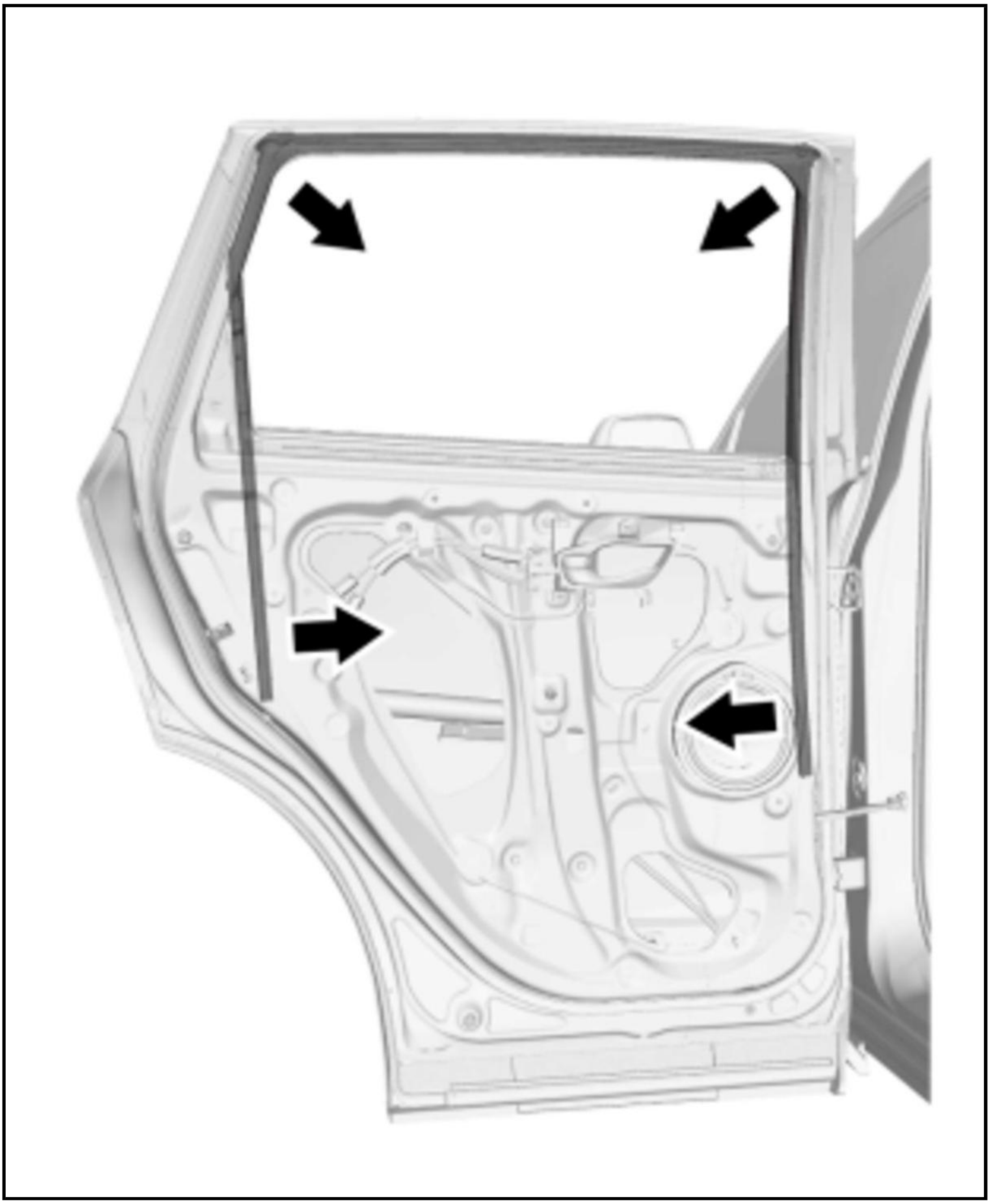

8. All Removed Parts - Install

1. Install the parts in the reverse order of removal.

9. **Door Glass - Adjust**
10. **Power Window Control Unit - Reset**

REAR DOOR INNER HANDLE REMOVAL AND INSTALLATION

Removal and Installation

1. **Rear Door Panel - Remove**
2. Rear Door Inner Handle - Remove

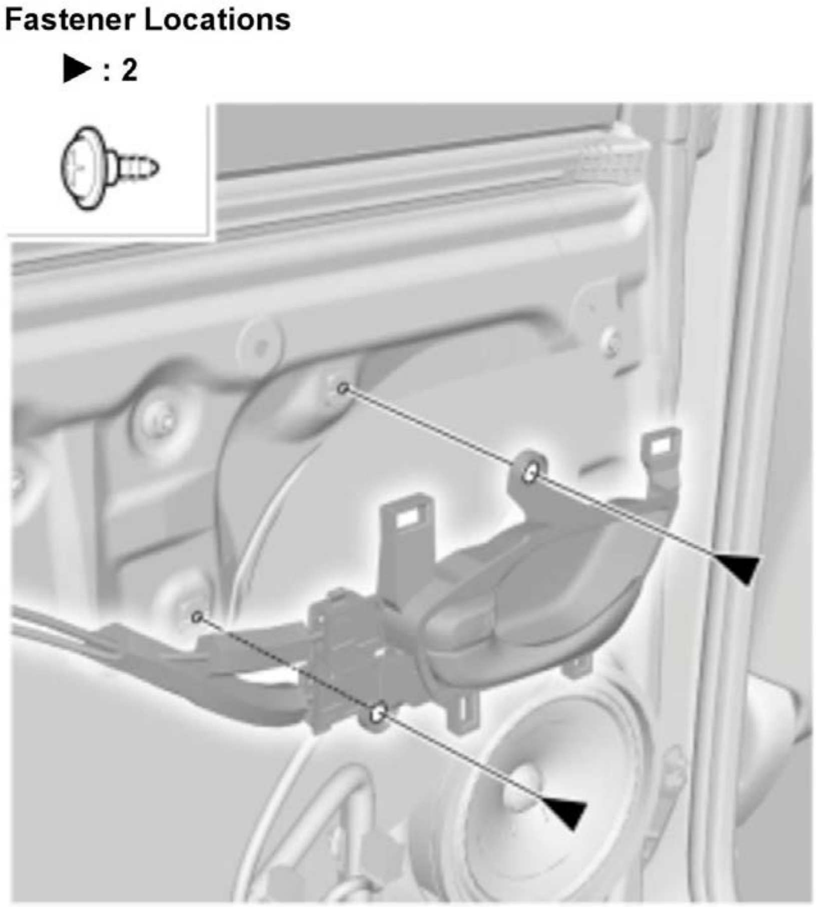 Fastener Locations ▶ : 2	1. Remove the screws.

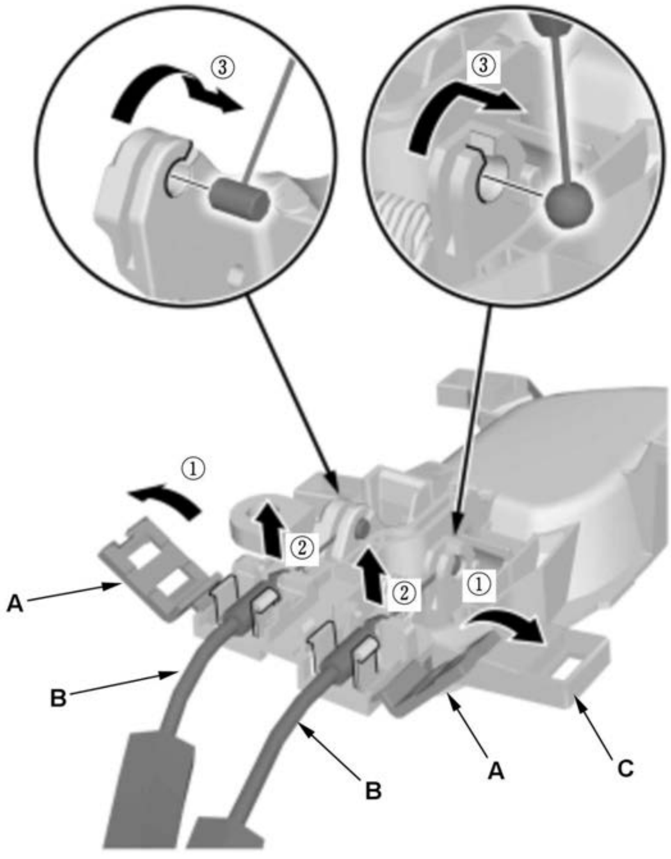 ③ ③ ① ② ② ① A B B A C	2. Open the covers (A) and disconnect the cables (B) from the inner handle (C).

3. All Removed Parts - Install

1. Install the parts in the reverse order of removal.

REAR DOOR LATCH REMOVAL AND INSTALLATION

Removal and Installation

NOTE: How to read the torque specifications

1. Front Door Plastic Cover - Remove

    1. Remove the rear door plastic cover as needed.

2. Rear Door Latch - Remove

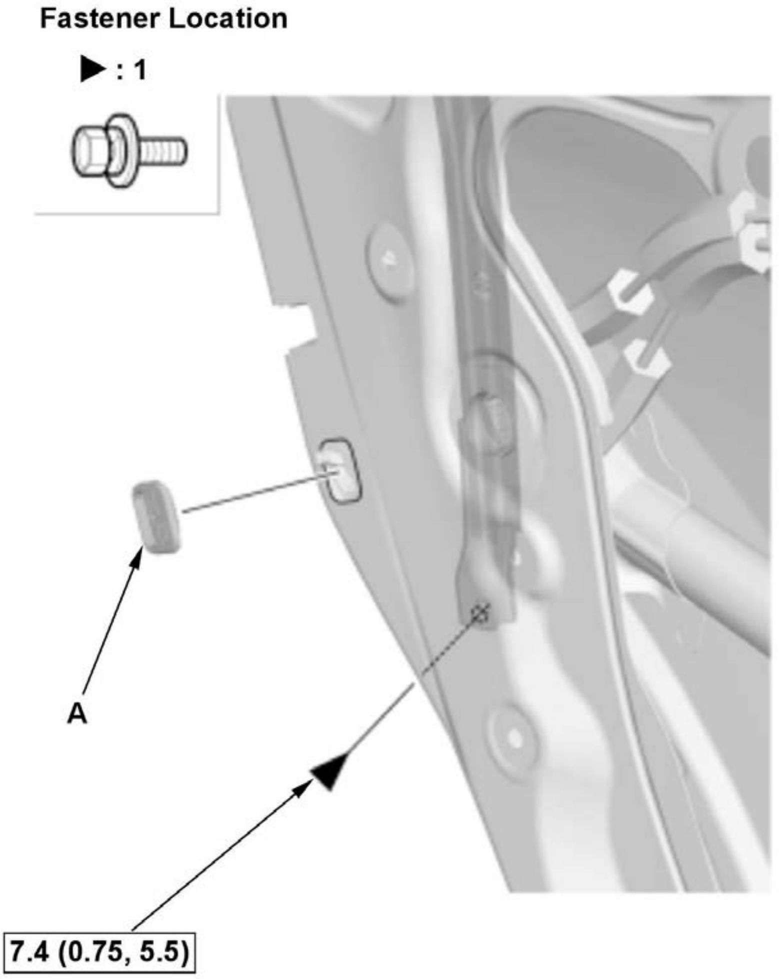	1. Remove the rear quarter channel bolt. 2. Remove the child lock cap (A).

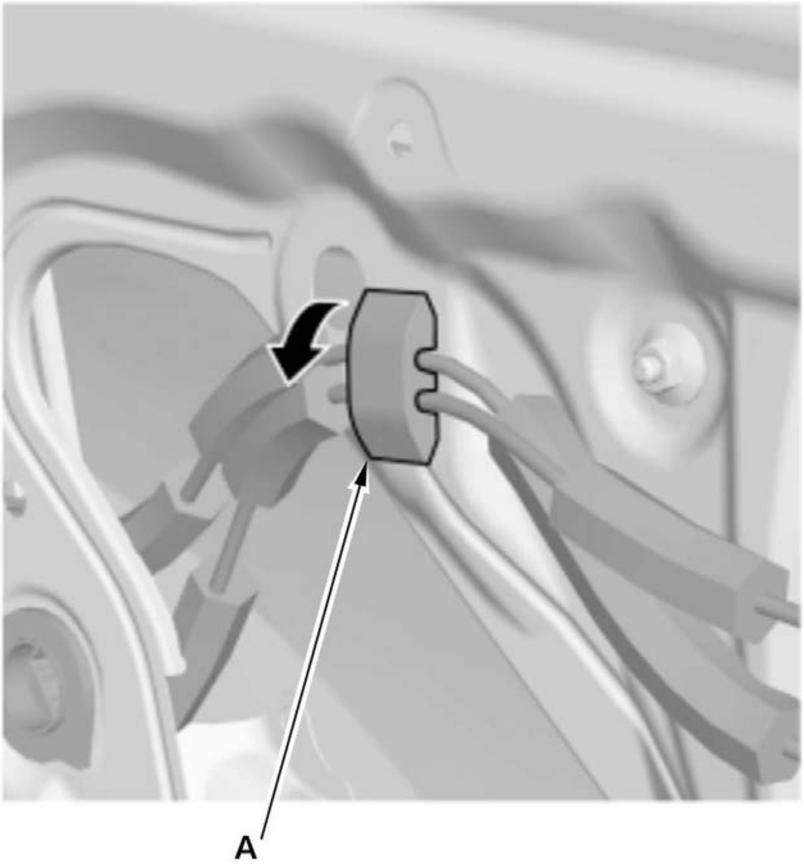	3. Open the cable clip (A).

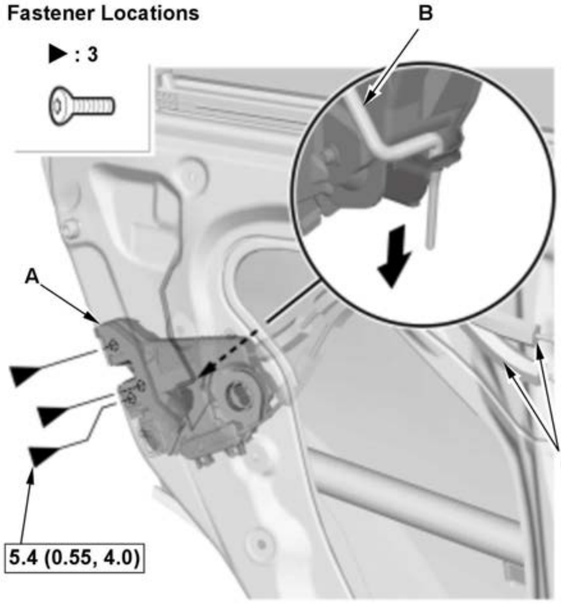 Fastener Locations ▶ : 3 B A C 5.4 (0.55, 4.0)	4. Remove the bolts. 5. Pull the rear door latch (A) downward to disconnect the outer handle rod (B), and then remove the rear door latch. **NOTE:** Be careful not to bend the cables (C).

3. Rear Door Inner Handle Cable and Latch Cable - Remove

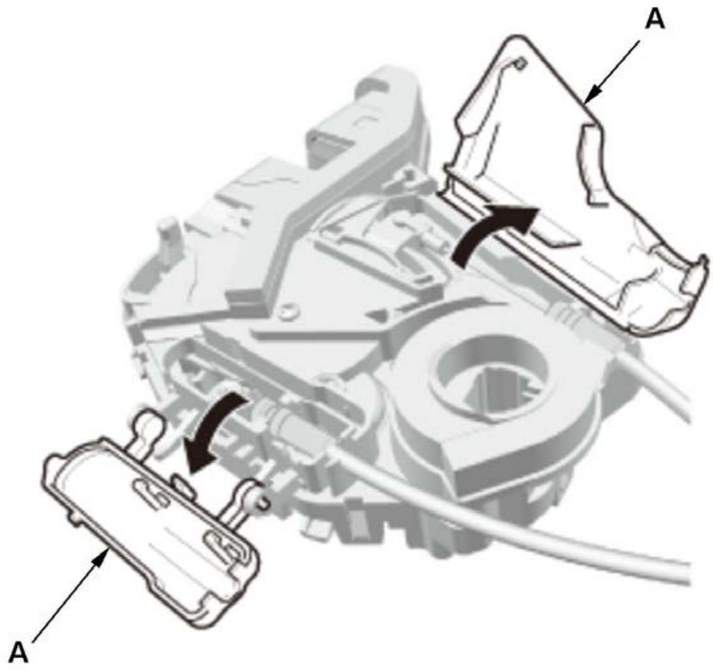	1. Open the latch protector covers (A).
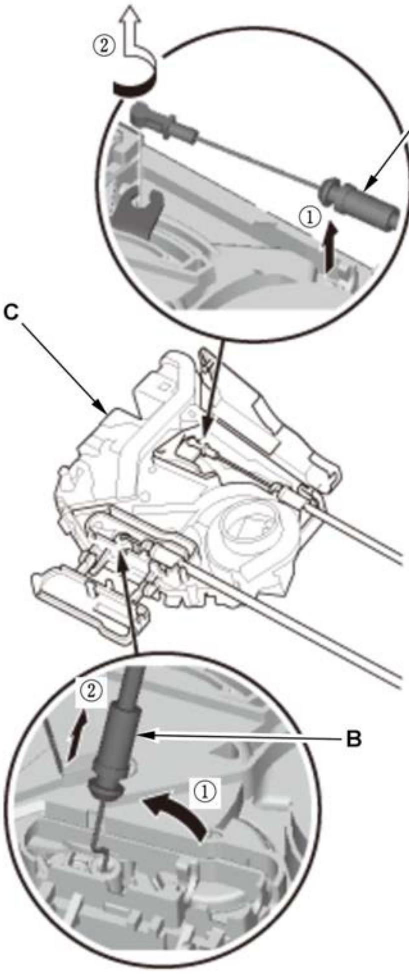	2. Disconnect the inner handle cable (A) and the latch cable (B) from the rear door latch (C).

4. All Removed Parts - Install

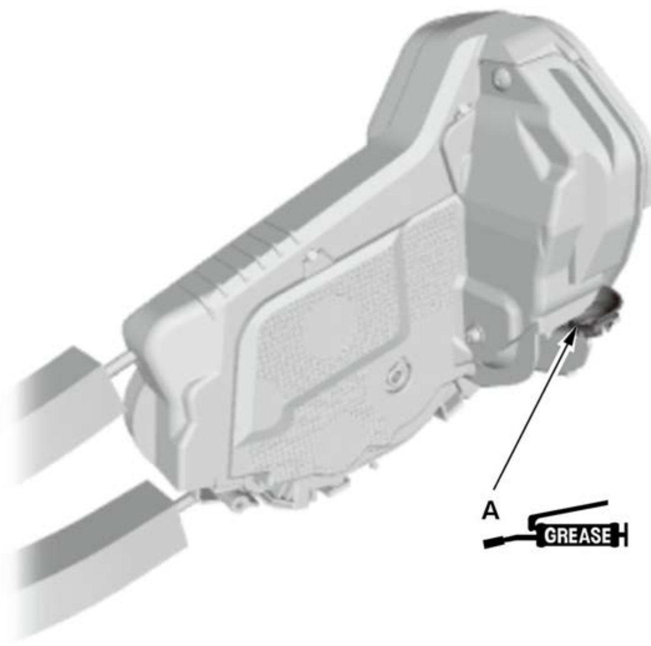	1. Install the parts in the reverse order of removal. **NOTE:** Apply multipurpose grease to the open lever clip (A).

5. Door Glass - Adjustment

REAR DOOR LOWER TRIM REMOVAL AND INSTALLATION

Removal

1. Rear Door Lower Trim - Remove

   1. Remove the cap (A), then remove the screw.

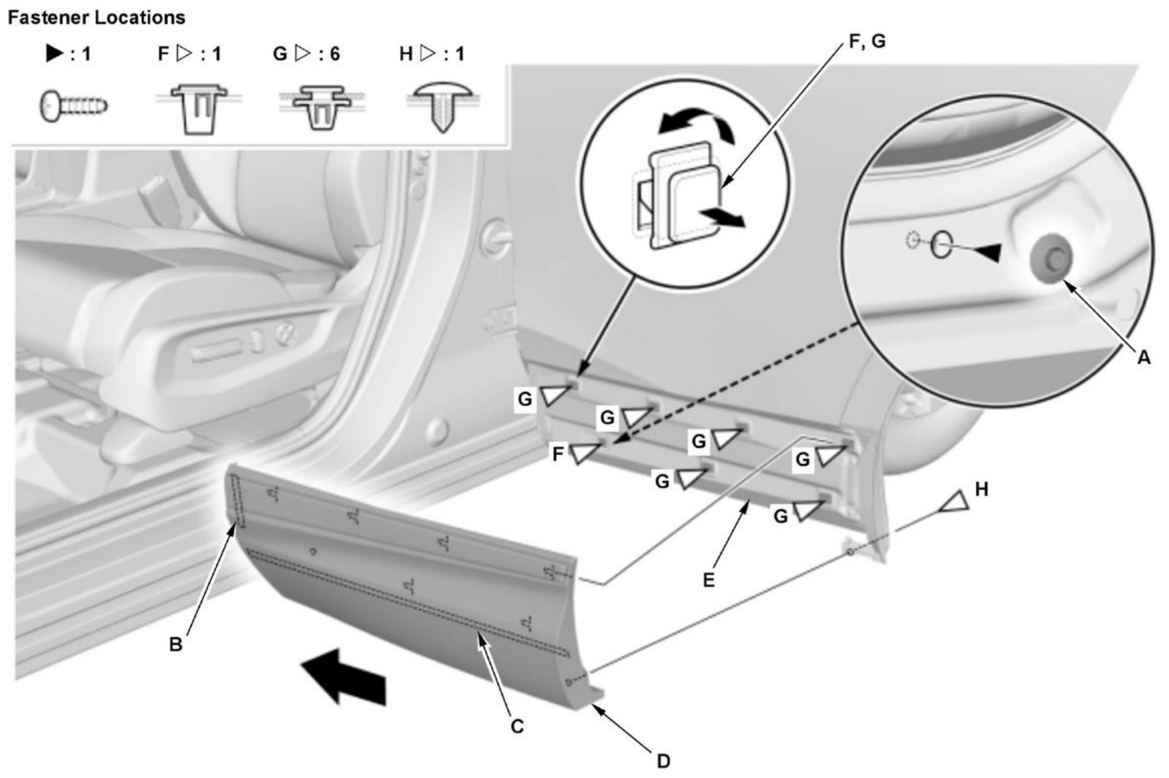
Fastener Locations
▶ : 1
F ▷ : 1
G ▷ : 6
H ▷ : 1
F, G
A
G
G
G
F
G
G
G
H
E
B
C
D

2. Cut the adhesive tape (B, C) along the edge of the door lower trim (D) with a utility knife while separating the trim from the door (E) with a trim tool.

NOTE: Apply protective tape around the cutting area.

3. Slide the door lower trim forward and remove it.

NOTE: The clips (F, G) will stay in the door.

4. Remove the clips by turning.

2. Rear Door Lower Seal - Remove

1. If necessary, remove the rear door lower seal (A) with the clips and double-sided adhesive tape (B).

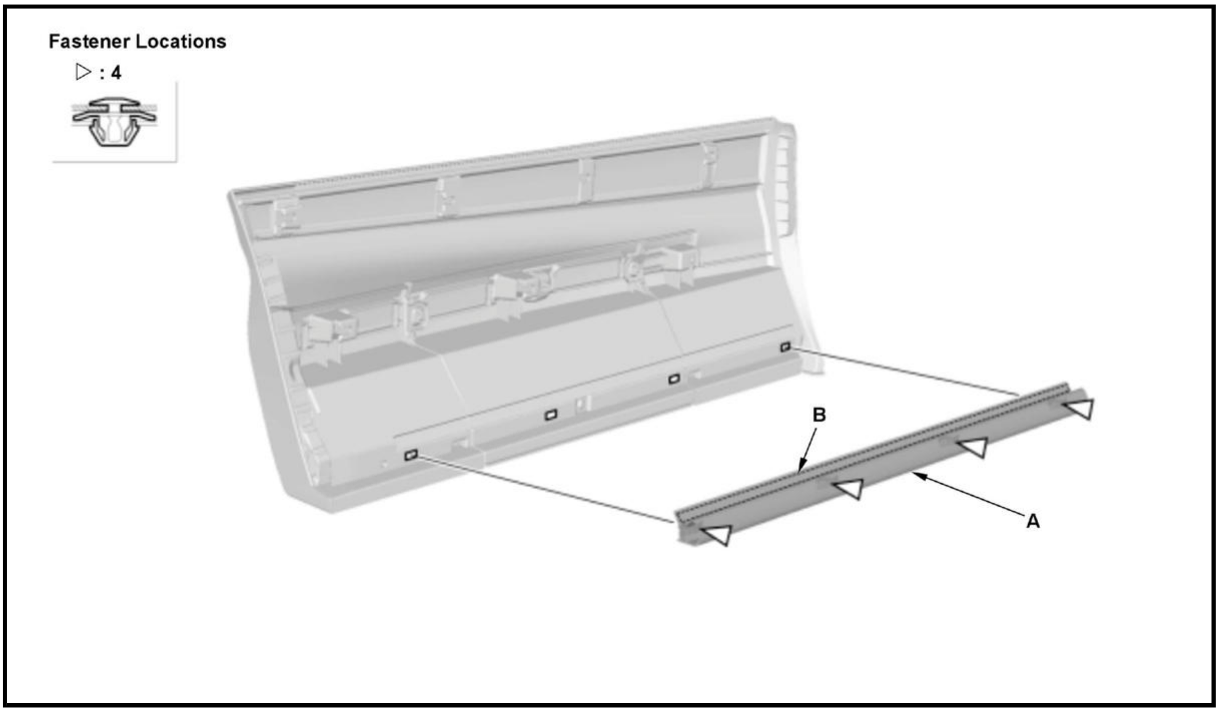
Fastener Locations
▷ : 4
B
A

Installation

1. Rear Door Lower Seal - Install

1. Install the rear door lower seal (A).

NOTE: Apply adhesive primer to the areas where the new double-sided adhesive tape (B) will be applied.

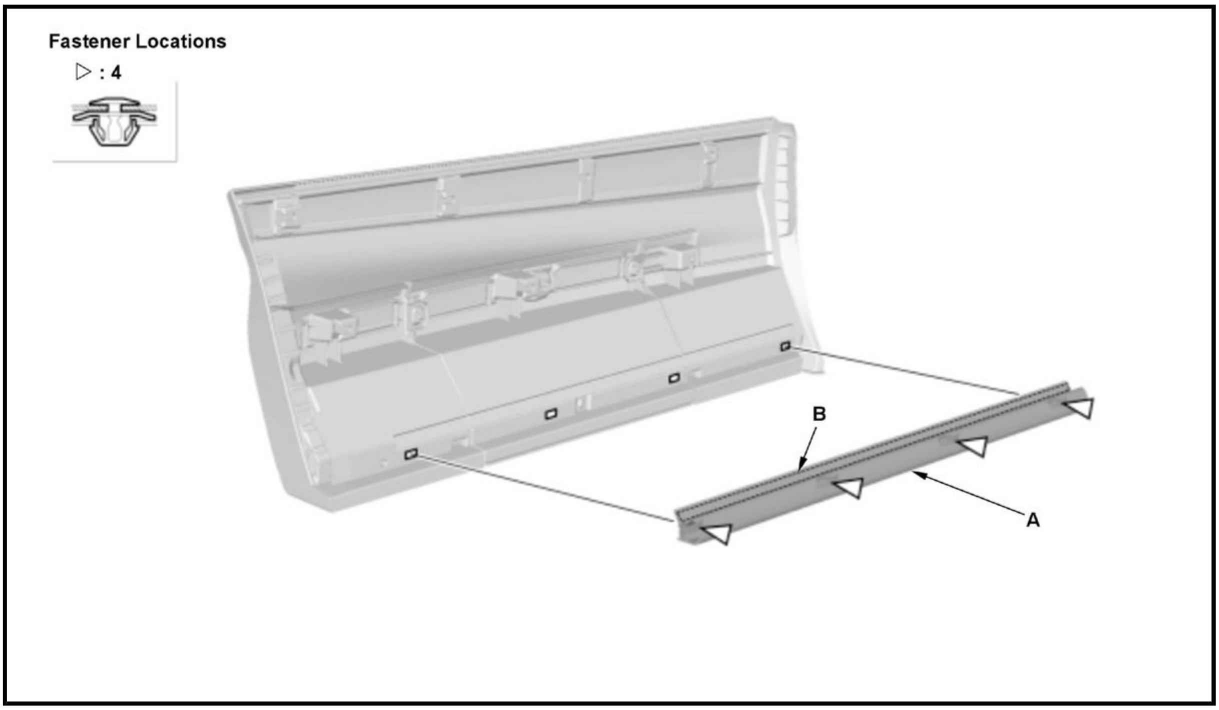
Fastener Locations
▷ : 4
B
A

2. Rear Door Lower Trim - Install

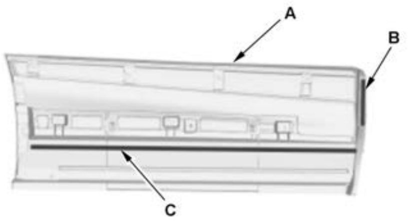	1. If you are reusing the original door lower trim (A), apply primer to the areas where new double-sided adhesive tapes (B, C) will be applied, then attach the new double-sided adhesive tapes to the trim as shown.

Double-sided adhesive tape (B)

Thickness	1.0 mm (0.039 in)
Width	8 mm (0.31 in)
Length	85 mm (3.35 in)

Double-sided adhesive tape (C)

Thickness	1.2 mm (0.047 in)
Width	8 mm (0.31 in)
Length	600 mm (23.62 in)

2. Install the clips (A, B) on the door lower trim (C) or door (D).

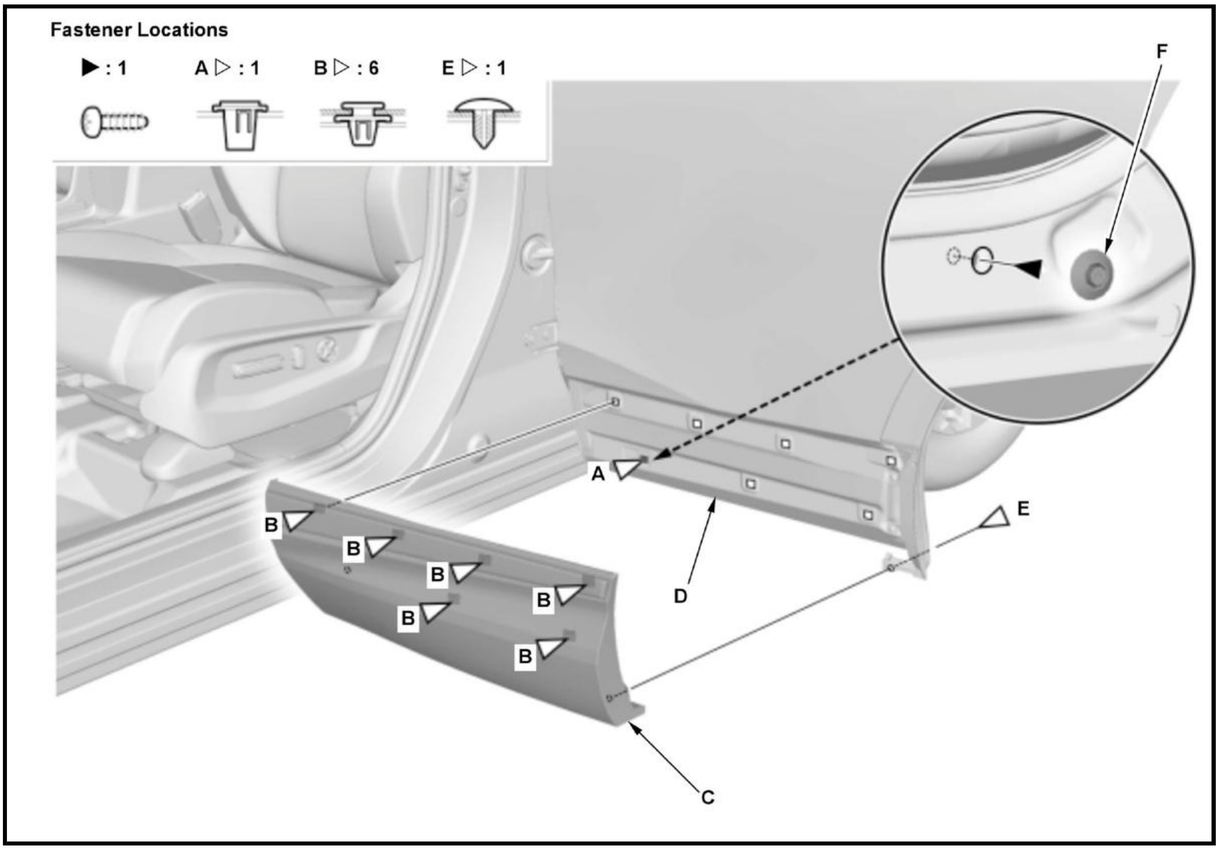

3. Install the door lower trim.

NOTE: Scrape off the remaining double-sided adhesive tape from the door, then clean the surface with a sponge dampened in isopropyl alcohol. After cleaning, keep oil, grease, and water from getting on the surface.

4. Install the screw and the clip (E) to the door lower trim.

5. Install the cap (F).

REAR DOOR OUTER HANDLE REMOVAL AND INSTALLATION

Removal and Installation

NOTE: How to read the torque specifications

Rear Door Handle Base Cover

1. Rear Door Handle Base Cover - Remove

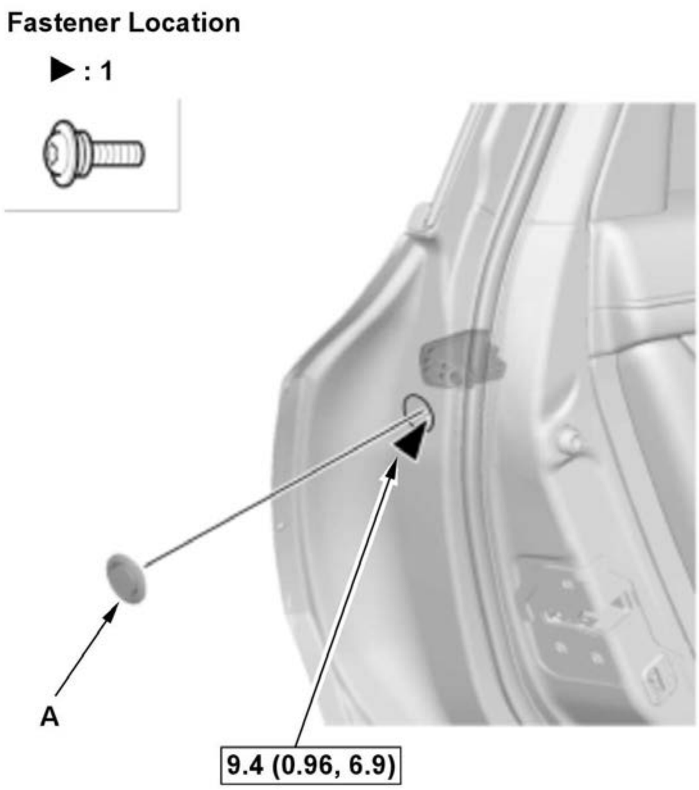 Fastener Location ▶ : 1 A 9.4 (0.96, 6.9)	1. Remove the plug cap (A), and then remove the bolt.

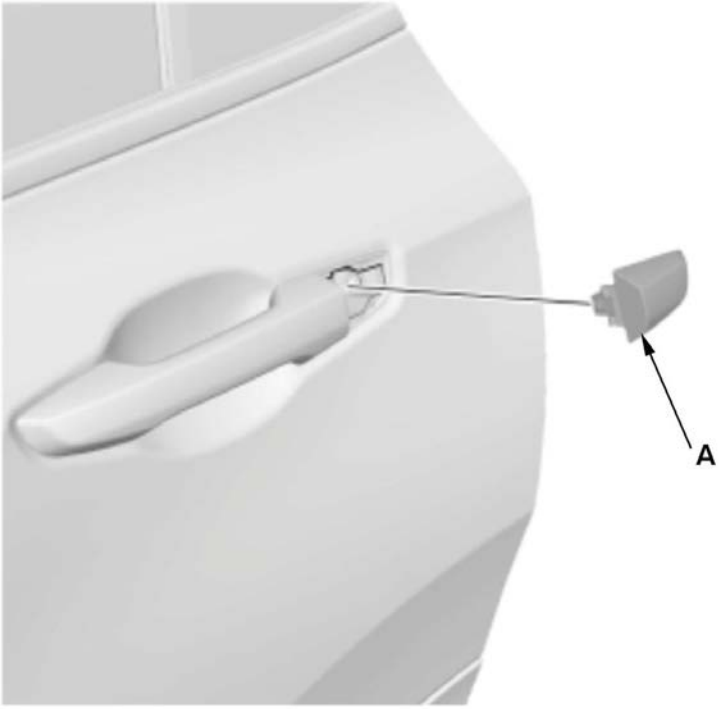	2. Remove the rear door handle base cover (A).

Rear Door Outer Handle

2. Rear Door Plastic Cover - Remove

1. **Remove the rear door plastic cover as needed.**

3. Rear Door Outer Handle - Remove

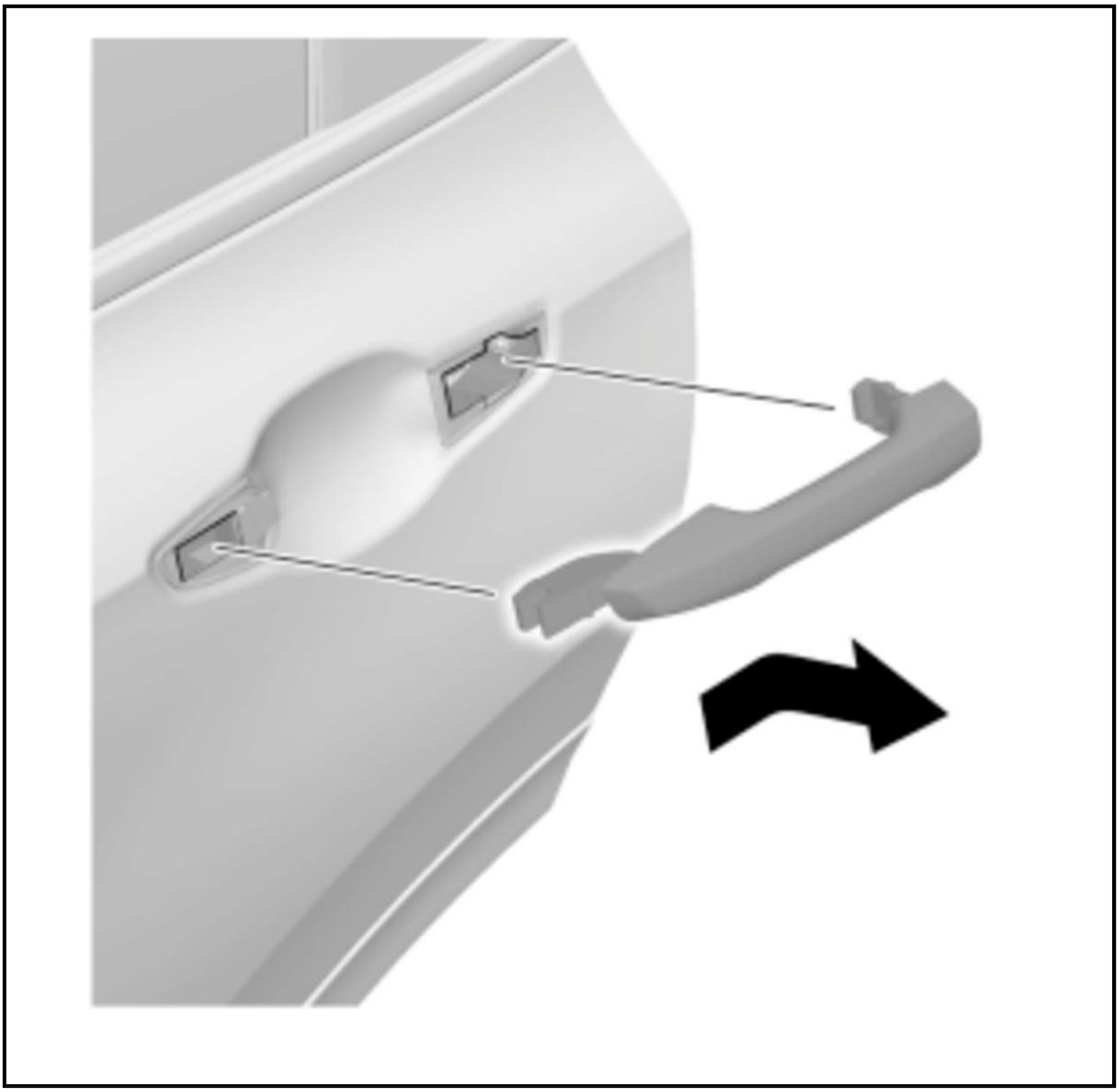

4. Rear Door Outer Handle Seals - Remove

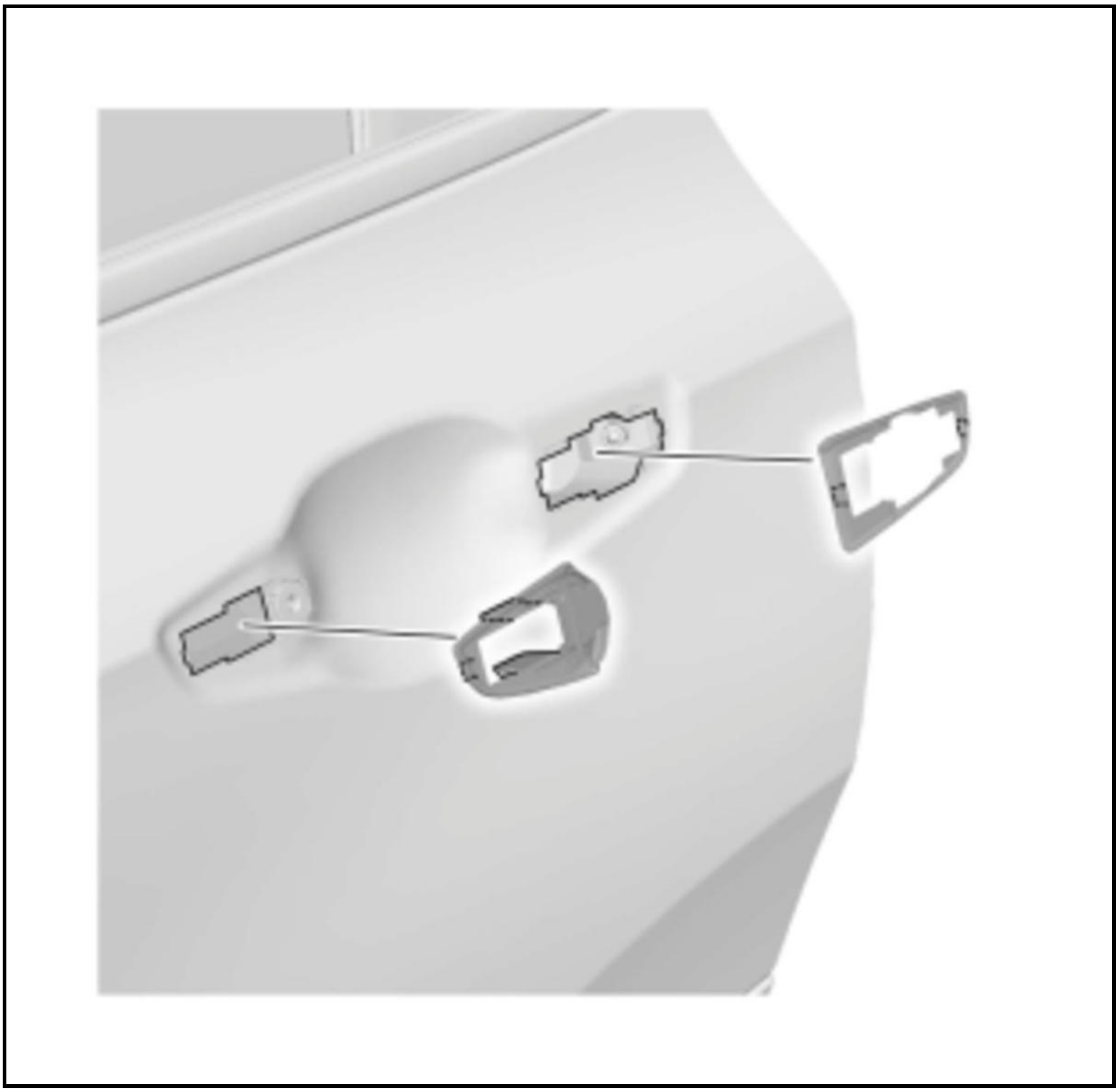

Rear Door Outer Handle Base

5. Rear Door Outer Handle Base - Remove

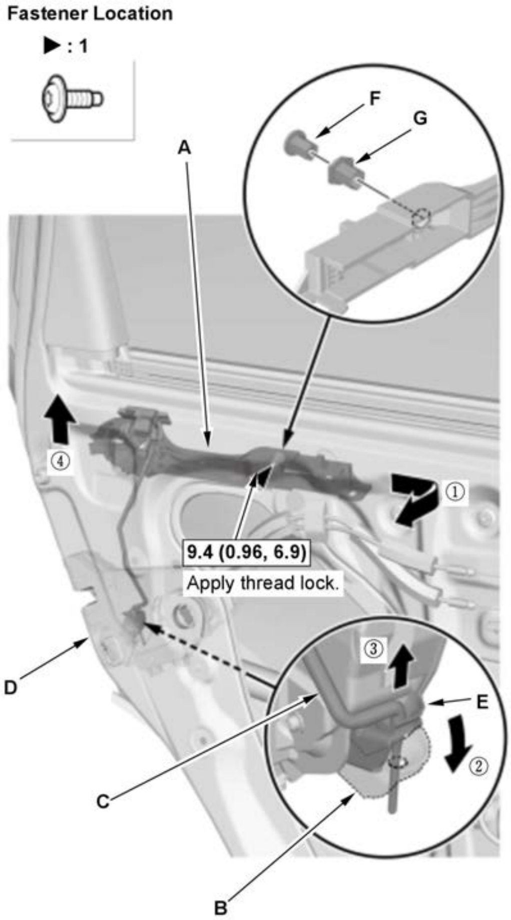
Fastener Location
▶ : 1
A
F
G
④
①
9.4 (0.96, 6.9)
Apply thread lock.
③
E
②
D
C
B

1. Loosen the bolt.

2. Move the rear area of the outer handle base (A) inward.

3. While pushing down the open lever (B), pull the outer handle base upward to disconnect the outer handle rod (C) from the rear door latch (D).

4. If necessary, remove the open lever clip (E).

5. If necessary, remove the bolt, the special nut (F) and the collar (G) from the outer handle base.

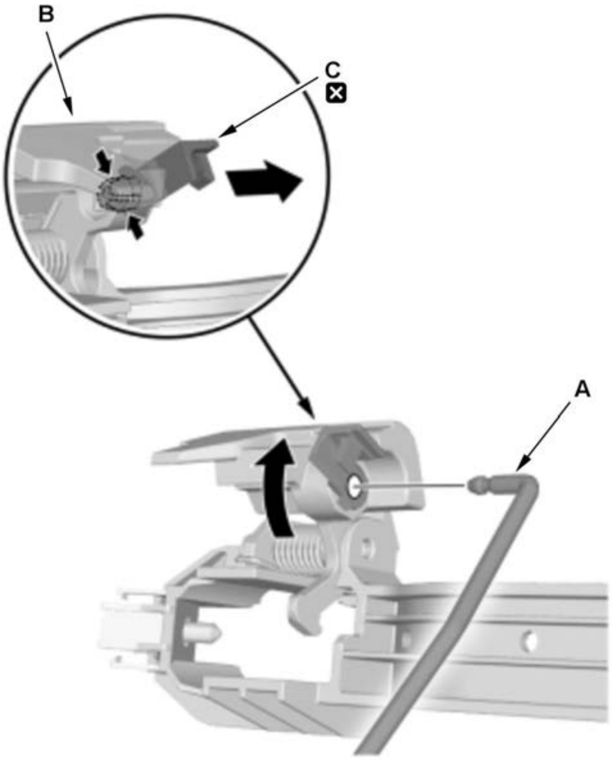

6. Disconnect the outer handle rod (A) from the rear door outer handle base (B).

7. Remove the rod fastener (C) from the outer handle base, then replace it with a new one.

6. All Removed Parts - Install

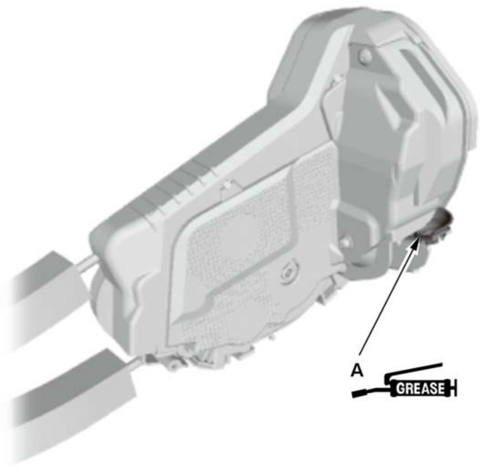	1. Install the parts in the reverse order of removal. **NOTE:** • Apply multipurpose grease to the open lever clip (A). • Apply medium strength liquid thread lock to the rear door outer handle base bolt on the outer handle base before reinstallation.

REAR DOOR PANEL REMOVAL AND INSTALLATION

Removal and Installation

1. Rear Door Power Window Switch Panel - Remove

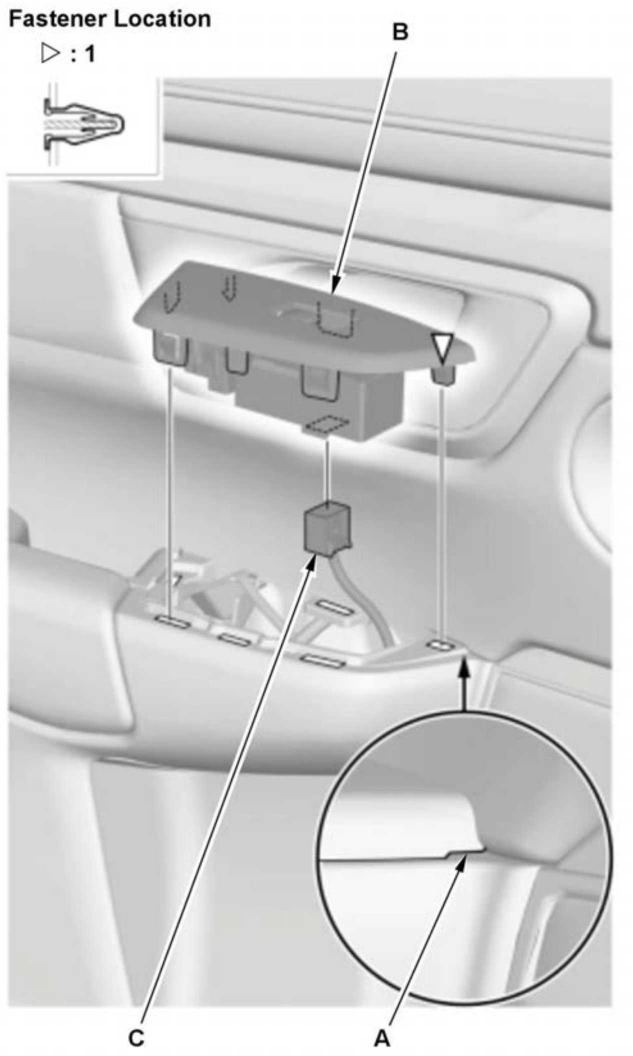	1. Pry out on the notch (A) in the power window switch panel (B) with the trim tool. 2. Disconnect the connectors (C). 3. Remove the power window switch panel.

2. Rear Door Panel - Remove

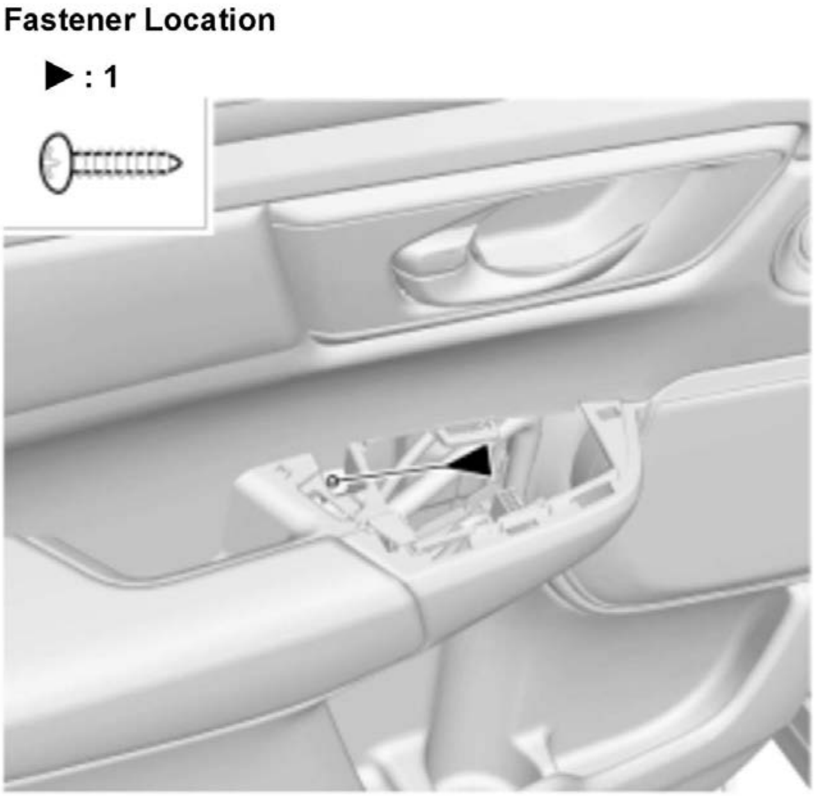 Fastener Location ▶ : 1	1. Remove the screw.

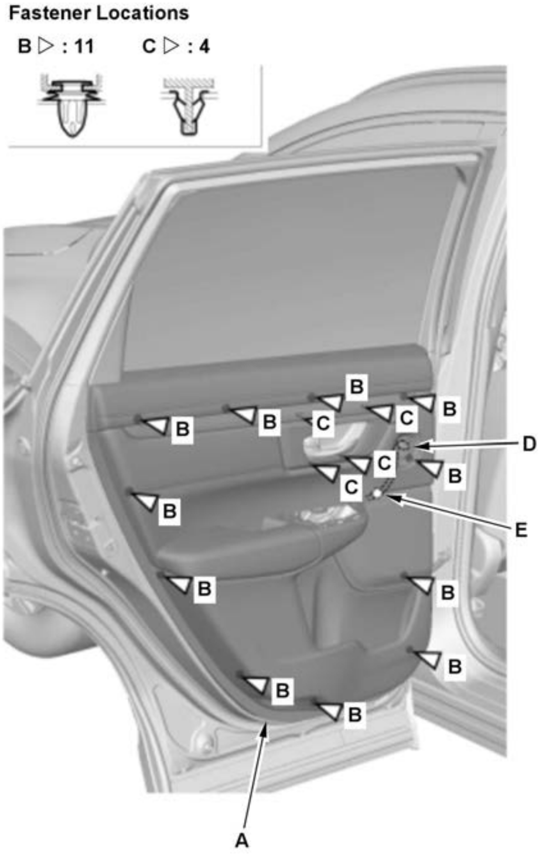 Fastener Locations B ▷ : 11 C ▷ : 4 B C D E A	2. Starting at the bottom edge of the rear door panel (A), remove the clips (B, C) with a commercially available trim pad remover. 3. For some models: Disconnect the connector (D) and harness clip (E).

3. All Removed Parts - Install

1. Install the parts in the reverse order of removal.

REAR DOOR REAR SASH OUTER TRIM REMOVAL AND INSTALLATION

Removal and Installation

Procedure

NOTE: **Numbered call-outs in figure pertain to list numbers in following procedure.**

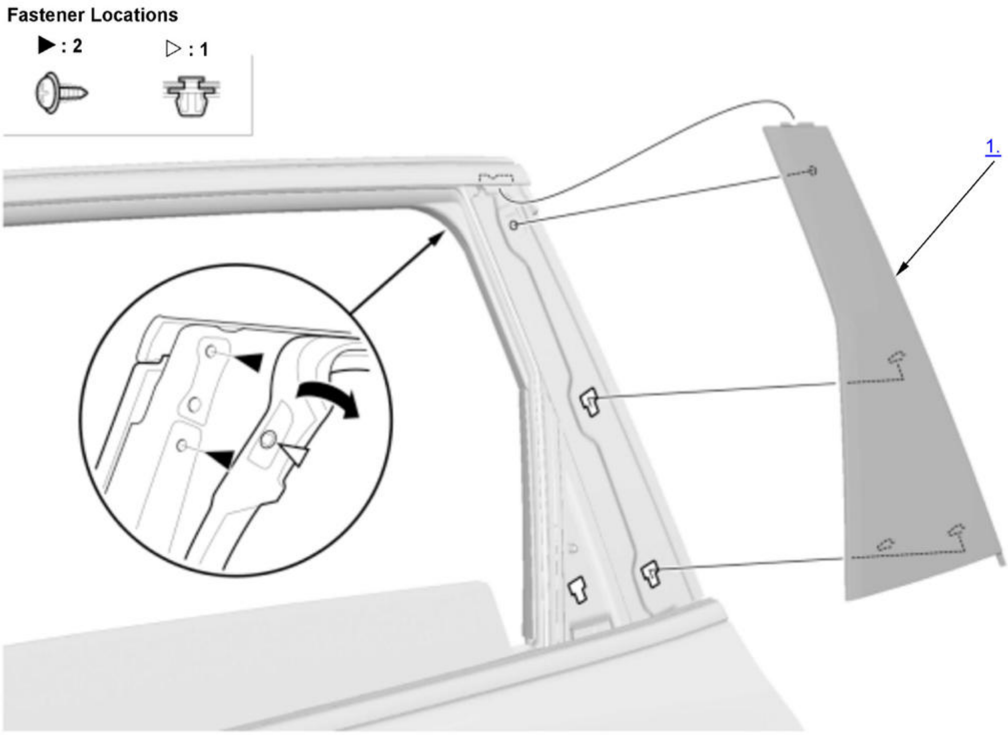

Fig. 13: Rear Door Rear Sash Outer Trim Components
Courtesy of HONDA, U.S.A., INC.

1. Rear Door Rear Sash Outer Trim - Remove
2. All Removed Parts - Install

1. Install the parts in the reverse order of removal.

REAR DOOR REGULATOR REMOVAL AND INSTALLATION

Removal and Installation

NOTE: ℹ Where icon is shown, for further information see below.

Procedure

NOTE: **Numbered call-outs in figure pertain to list numbers in following procedure.**

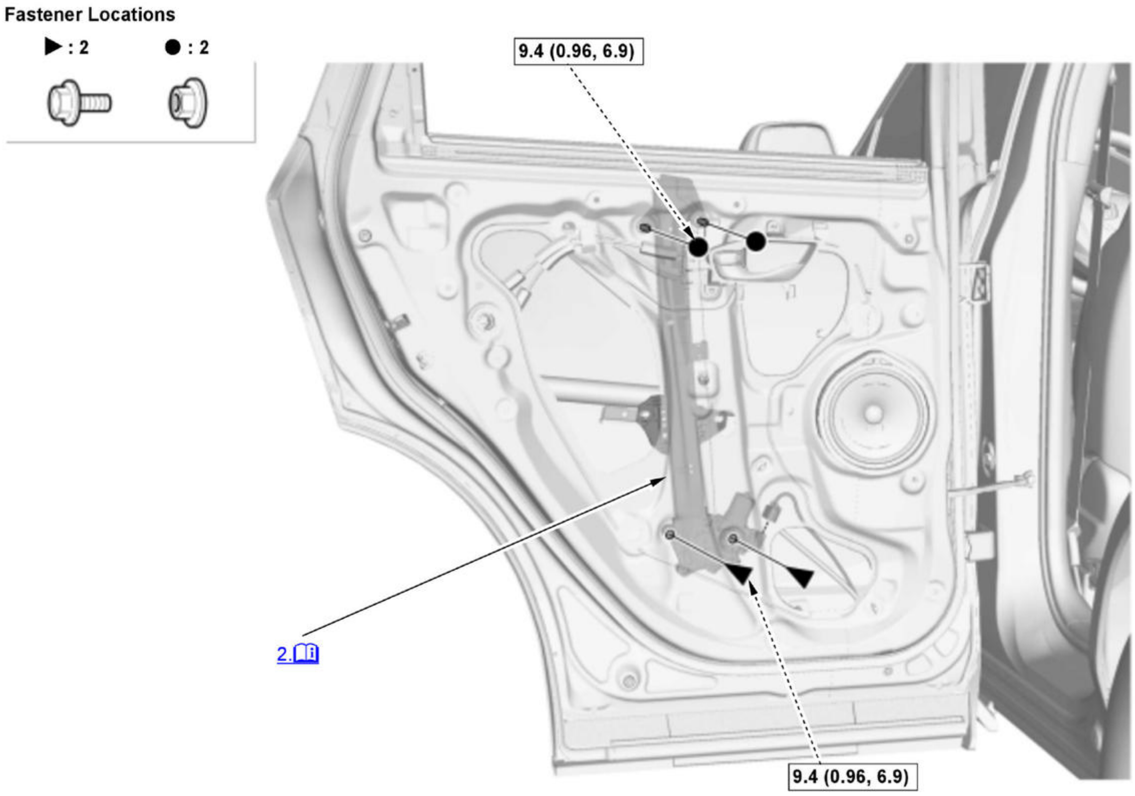
Fastener Locations
▶ : 2
● : 2
9.4 (0.96, 6.9)
2.
9.4 (0.96, 6.9)

Fig. 14: Rear Door Regulator Components
Courtesy of HONDA, U.S.A., INC.

ℹ	Detailed information, notes, and precautions
☐	Torque: N.m (kgf.m, lbf.ft)

1. Rear Door Glass - Remove
2. Rear Door Regulator - Remove

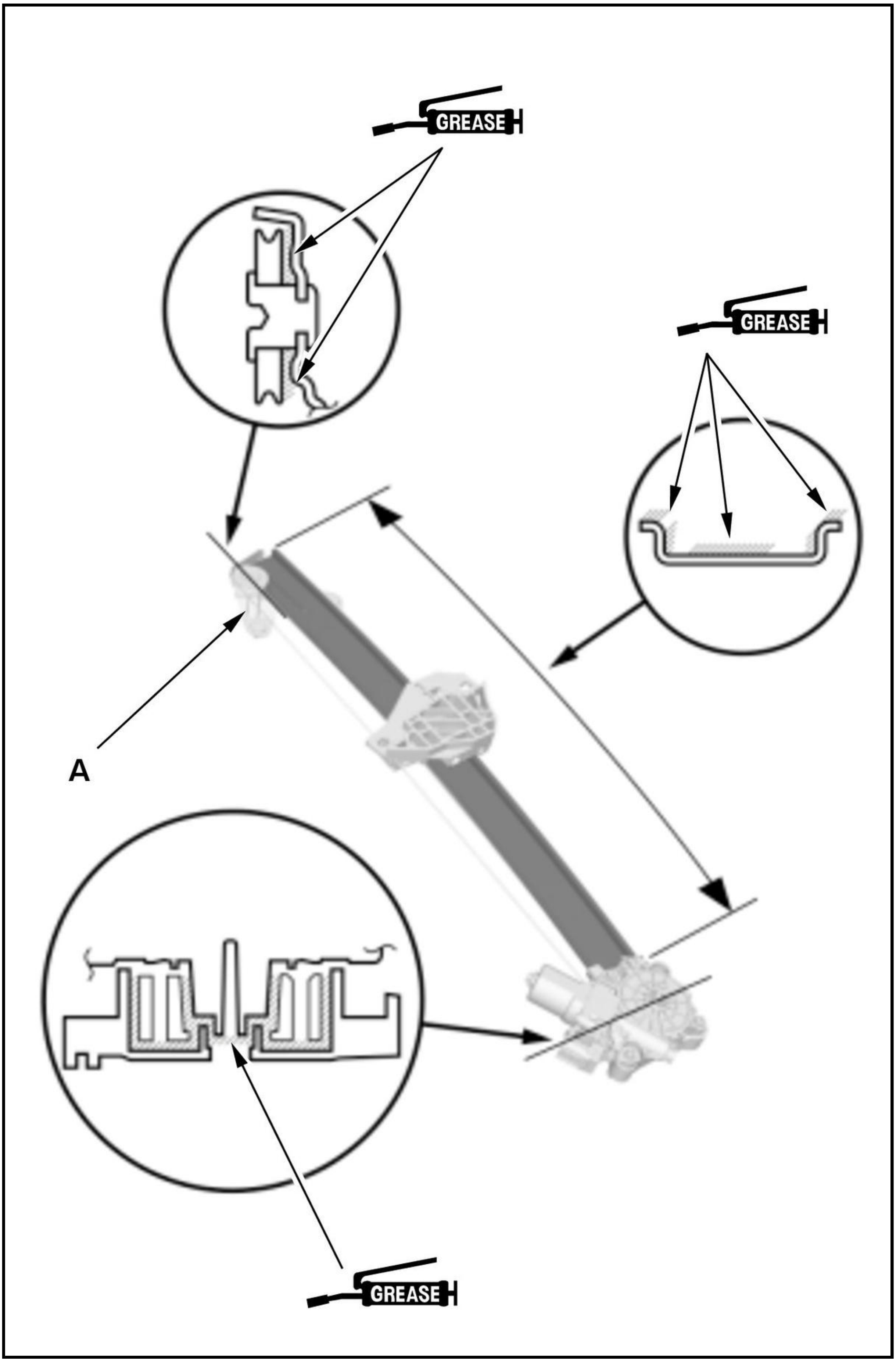
GREASE
GREASE
GREASE
A

Note for installation

NOTE: Apply multipurpose grease to all sliding surfaces of the rear door regulator (A) where shown.

3. All Removed Parts - Install

1. Install the parts in the reverse order of removal.

4. Door Glass - Adjustment
5. Power Window Control Unit - Reset

REAR DOOR SASH INNER TRIM REMOVAL AND INSTALLATION

Removal and Installation

Procedure

NOTE: **Numbered call-outs in figure pertain to list numbers in following procedure.**

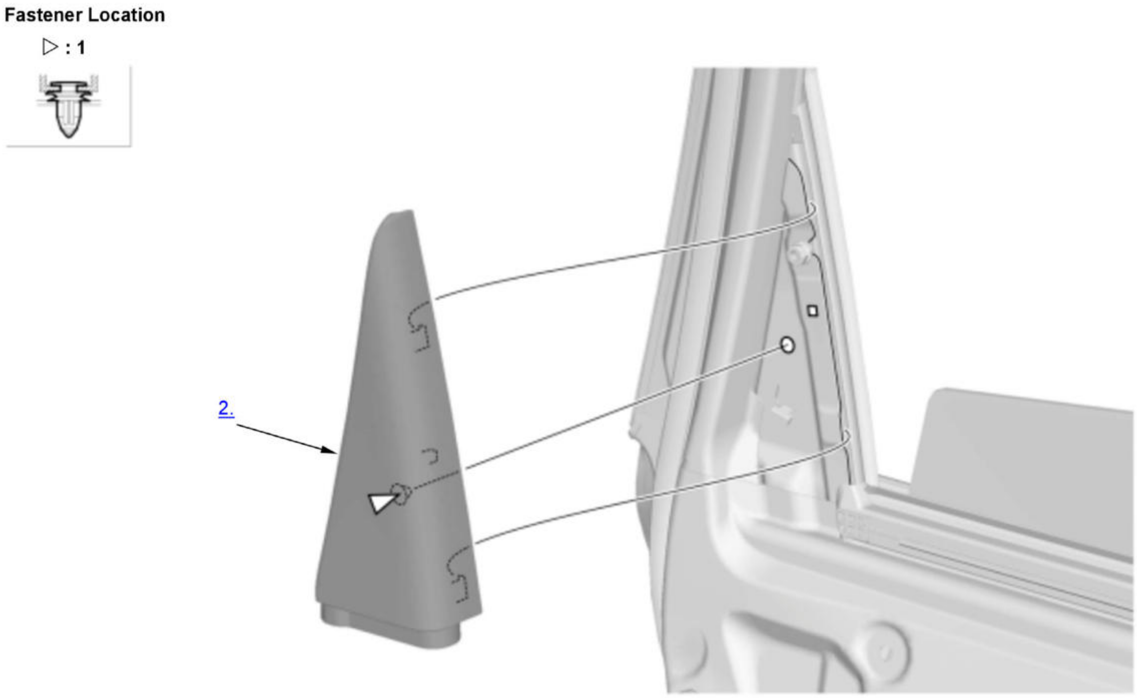

Fig. 15: Rear Door Sash Inner Trim Components
Courtesy of HONDA, U.S.A., INC.

1. Rear Door Panel - Remove
2. Rear Door Sash Inner Trim - Remove
3. All Removed Parts - Install

1. Install the parts in the reverse order of removal.

REAR DOOR SASH OUTER TRIM REMOVAL AND INSTALLATION

Replacement

NOTE: 🕮 Where icon is shown, for further information see below.

Procedure

NOTE: **Numbered call-outs in figure pertain to list numbers in following procedure.**

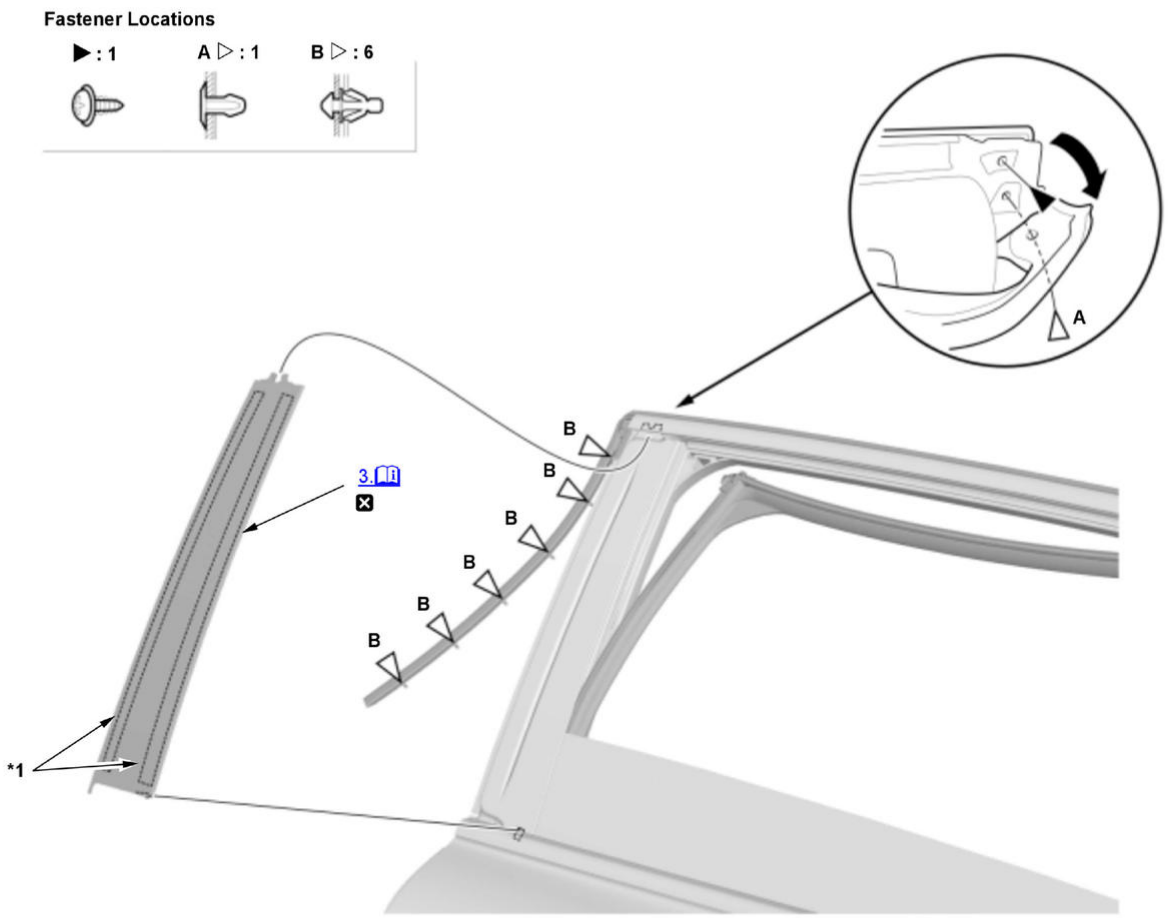

Fig. 16: Rear Door Sash Outer Trim Components
Courtesy of HONDA, U.S.A., INC.

ℹ	Detailed information, notes, and precautions
☒	Replace
*1	Double-sided adhesive tape

1. **Rear Door Glass Run Channel - Remove (as needed)**
2. **Rear Door Weatherstrip - Remove (as needed)**
3. Rear Door Sash Outer Trim - Remove

   NOTE: Pull out the upper edge of the rear door sash outer trim from the edge of the sash, and cut the double-sided adhesive tape with a utility knife.

   Note for installation

   - Scrape off the remaining double-sided adhesive tape from the sash, then clean the surface with a sponge dampened in isopropyl alcohol. After cleaning, keep oil, grease, and water from getting on the surface.
   - Install the new rear door sash outer trim.
4. All Removed Parts - Install

   1. Install the parts in the reverse order of removal.

REAR DOOR WEATHERSTRIP REMOVAL AND INSTALLATION

Removal and Installation

Procedure

NOTE: **Numbered call-outs in figure pertain to list numbers in following procedure.**

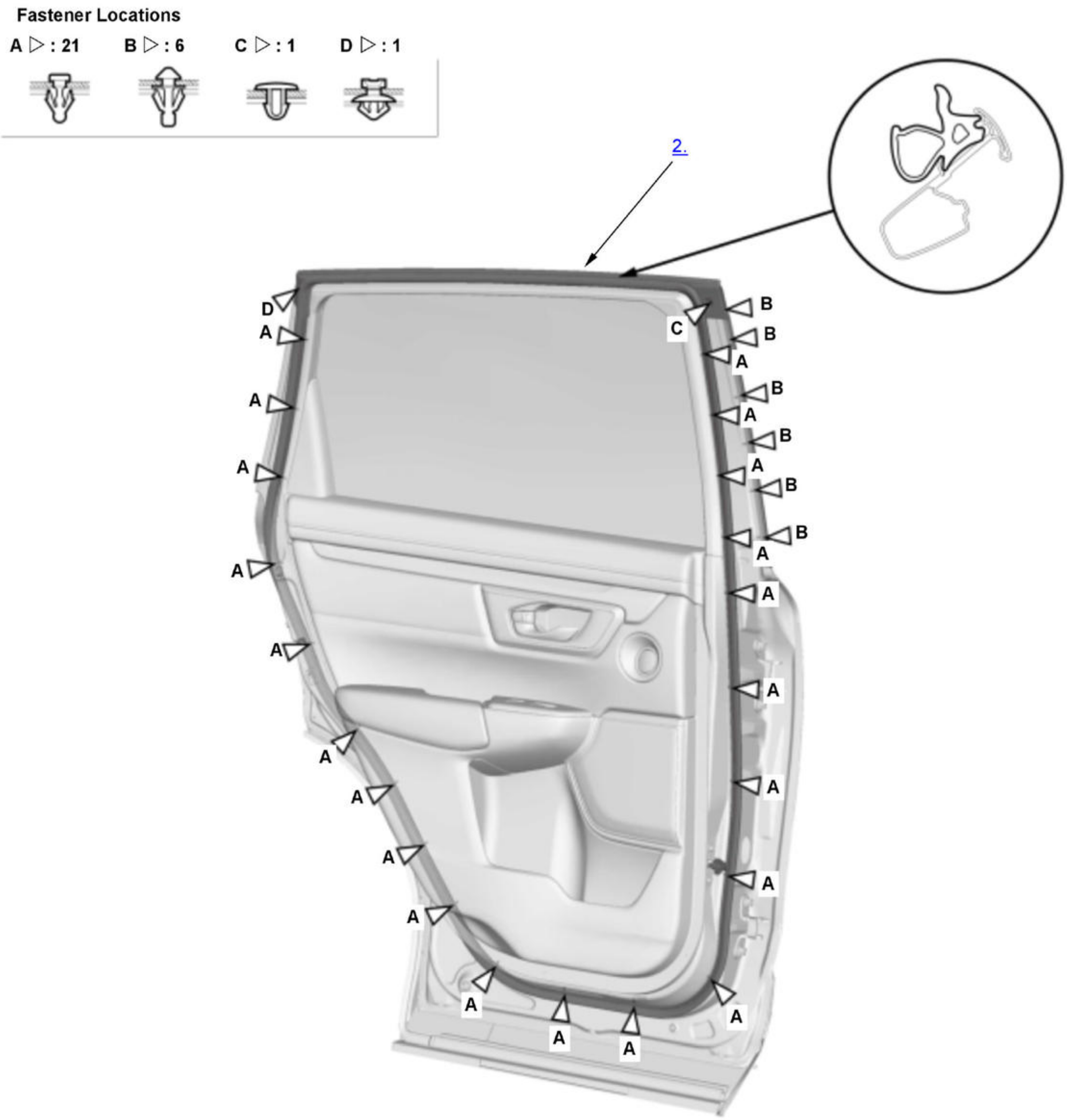
Fastener Locations
A ▷ : 21
B ▷ : 6
C ▷ : 1
D ▷ : 1
2.
D
A
A
A
A
A
A
A
A
A
A
A
A
A
C
B
B
A
B
A
B
A
B
B
A
A
A
A
A
A

Fig. 17: Rear Door Weatherstrip Components
Courtesy of HONDA, U.S.A., INC.

1. Rear Door Checker - Remove

   1. **Remove the rear door checker bolt. (Body side)**

2. Rear Door Weatherstrip - Remove
3. All Removed Parts - Install

   1. Install the parts in the reverse order of removal.

4. **Water Leaks - Check**

REAR DOOR WHEEL ARCH PROTECTOR REMOVAL AND INSTALLATION

Removal

1. Rear Door Lower Trim - Remove
2. Rear Door Wheel Arch Protector - Remove

   1. Remove the screws and the clips (A, B).

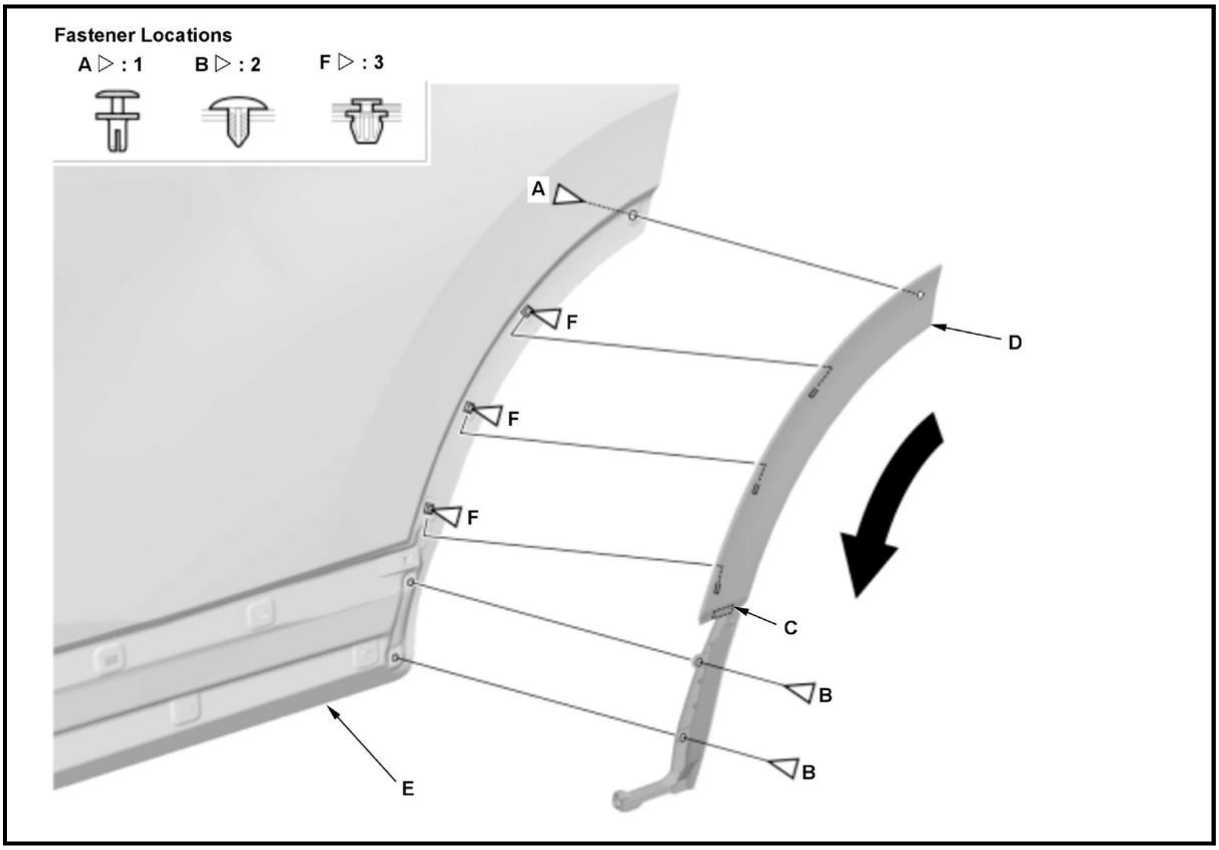

   2. Cut the adhesive tape (C) along the edge of the rear door wheel arch protector (D) with a utility knife while separating the trim from the rear door (E) with a trim tool.

   NOTE: Apply protective tape around the cutting area.

   3. Slide the rear door wheel arch protector downward and remove it.

   NOTE: The clips (F) will stay in the door.

Installation

1. Rear Door Wheel Arch Protector - Install

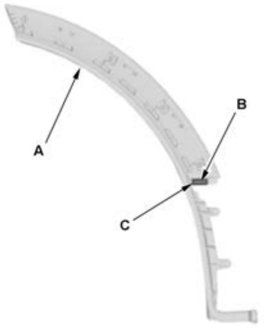	1. If you are reusing the original rear door wheel arch protector (A), apply primer to the areas where new double-sided adhesive tapes (B) will be applied, then attach the new double-sided adhesive tapes to the rear door wheel arch protector on the scribes (C) as shown. **Double-sided adhesive tape (B)**

Thickness	1.0 mm (0.04 in)
Width	6 mm (0.24 in)
Length	23 mm (0.91 in)

2. Install the clips (C) on the rear door wheel arch protector (D).

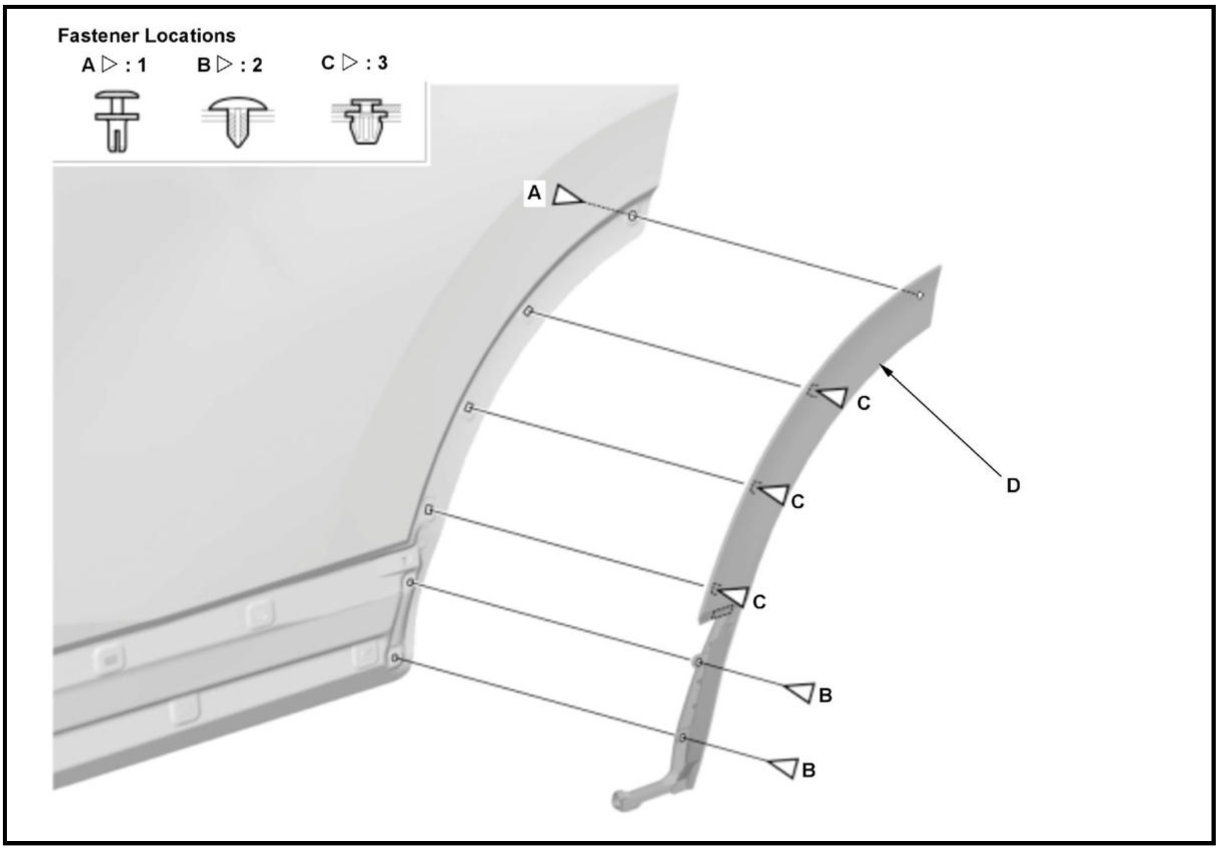
Fastener Locations
A ▷ : 1
B ▷ : 2
C ▷ : 3
A
C
C
C
D
B
B

3. Hold the rear door wheel arch protector up, and fit all the clips into the holes in the rear door. Push on the panel until the clips snap into place.

4. Install the clips (A, B).

2. **Rear Door Lower Trim - Install**

REMOVAL, INSTALLATION & TEST

ACC COMBINATION SWITCH REMOVAL, INSTALLATION, AND TEST

Removal and Installation

NOTE: SRS components are located in this area. Review the SRS component locations , and the precautions and procedures before doing repairs or service.

Procedure

NOTE: **Numbered call-outs in figure pertain to list numbers in following procedure.**

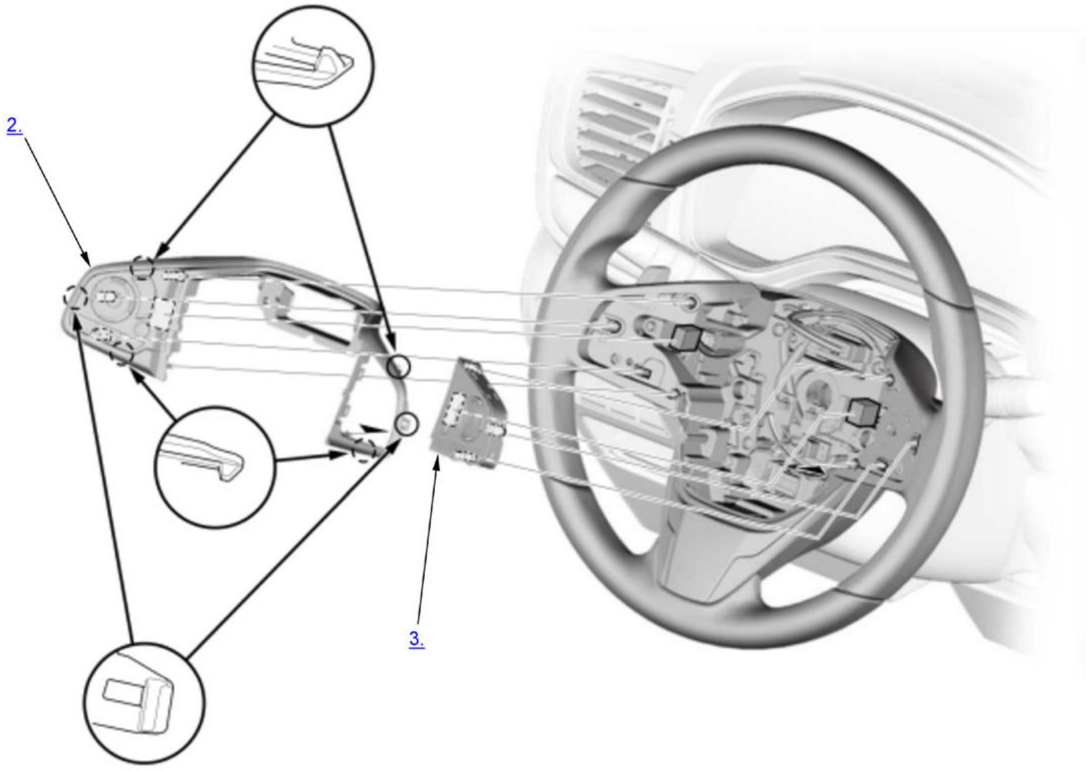

Fig. 1: Exploded View Of ACC Combination Switch Components
Courtesy of HONDA, U.S.A., INC.

1. Driver's Airbag - Remove
2. Steering Wheel Trim - Remove
3. ACC Combination Switch - Remove
4. All Removed Parts - Install

1. Install the parts in the reverse order of removal.

Test

1. ACC Combination Switch - Test

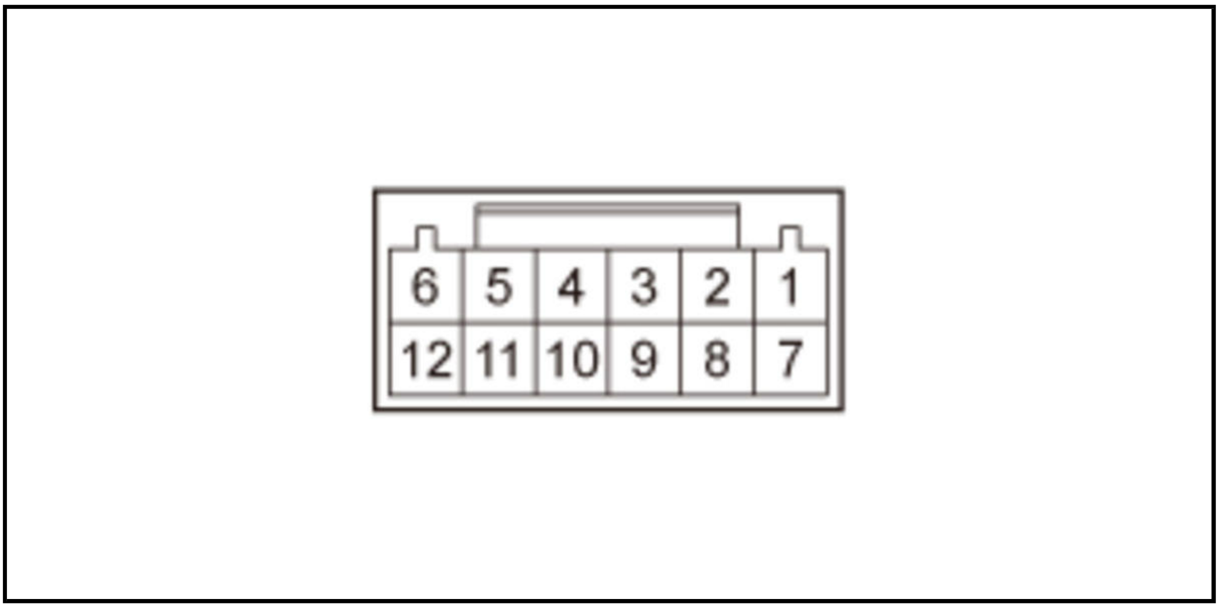

ACC Combination Switch Internal Resistance Check:

1. Measure the resistance between the ACC combination switch 12P connector (male terminals) terminals No. 5 and No. 6 according to the table.

- If there is no resistance in one or more positions, replace the ACC combination switch.

Position	Resistance at normal ambient temperature
OFF (Released)	2.0-2.4 kΩ
MAIN (Pressed and held)	54.3-66.3 Ω
CANCEL (Pressed and held)	165.0-201.7 Ω
SET - (Pressed and held)	401.7-491.0 Ω
RES + (Pressed and held)	802.7-981.1 Ω

Distance Switch Internal Resistance Check:

1. Measure the resistance between the ACC combination switch 12P connector (male terminals) terminals No. 5 and No. 12 according to the table.

- If there is no resistance in one or more positions, replace the ACC combination switch.

Position	Resistance
OFF (Released)	2.0-2.4 kΩ
DISTANCE (Pressed and held)	401.7-491.0 Ω

LKAS Switch Internal Resistance Check:

1. Measure the resistance between the ACC combination switch 12P connector (male terminals) terminals No. 5 and No. 12 according to the table.

- If there is no resistance in one or more positions, replace the ACC combination switch.

Position	Resistance
OFF (Released)	2.0-2.4 kΩ
LKAS (Pressed and held)	54.3-66.3 Ω

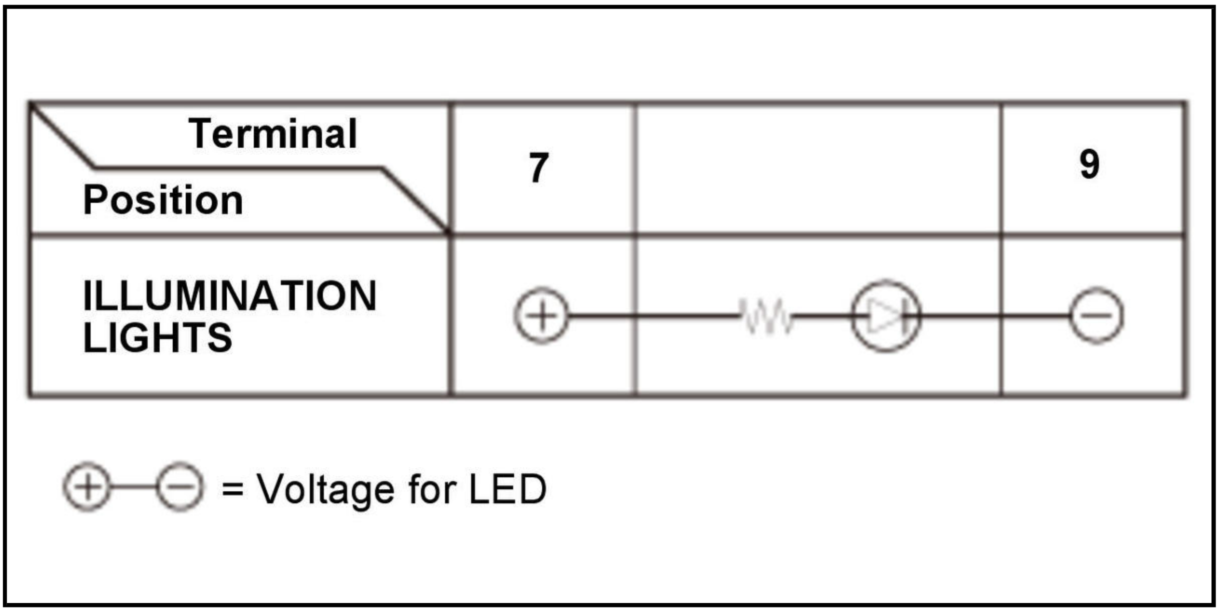

Terminal Position	7		9
ILLUMINATION LIGHTS	⊕		⊖

⊕—⊖ = Voltage for LED

Switch Illumination Circuit Check:

1. Check the LED for illumination by applying power and ground to the terminals according to the table.

NOTE: Note this important operating characteristic; diode bias causes a diode to fully conduct electricity in one direction (forward), while not at all in the opposite direction (reverse).

If the results are not as specified, replace the ACC combination switch.

CMBS OFF SWITCH REMOVAL, INSTALLATION, AND TEST

Removal and Installation

1. Driver's Dashboard Lower Cover - Remove
2. CMBS OFF Switch - Remove

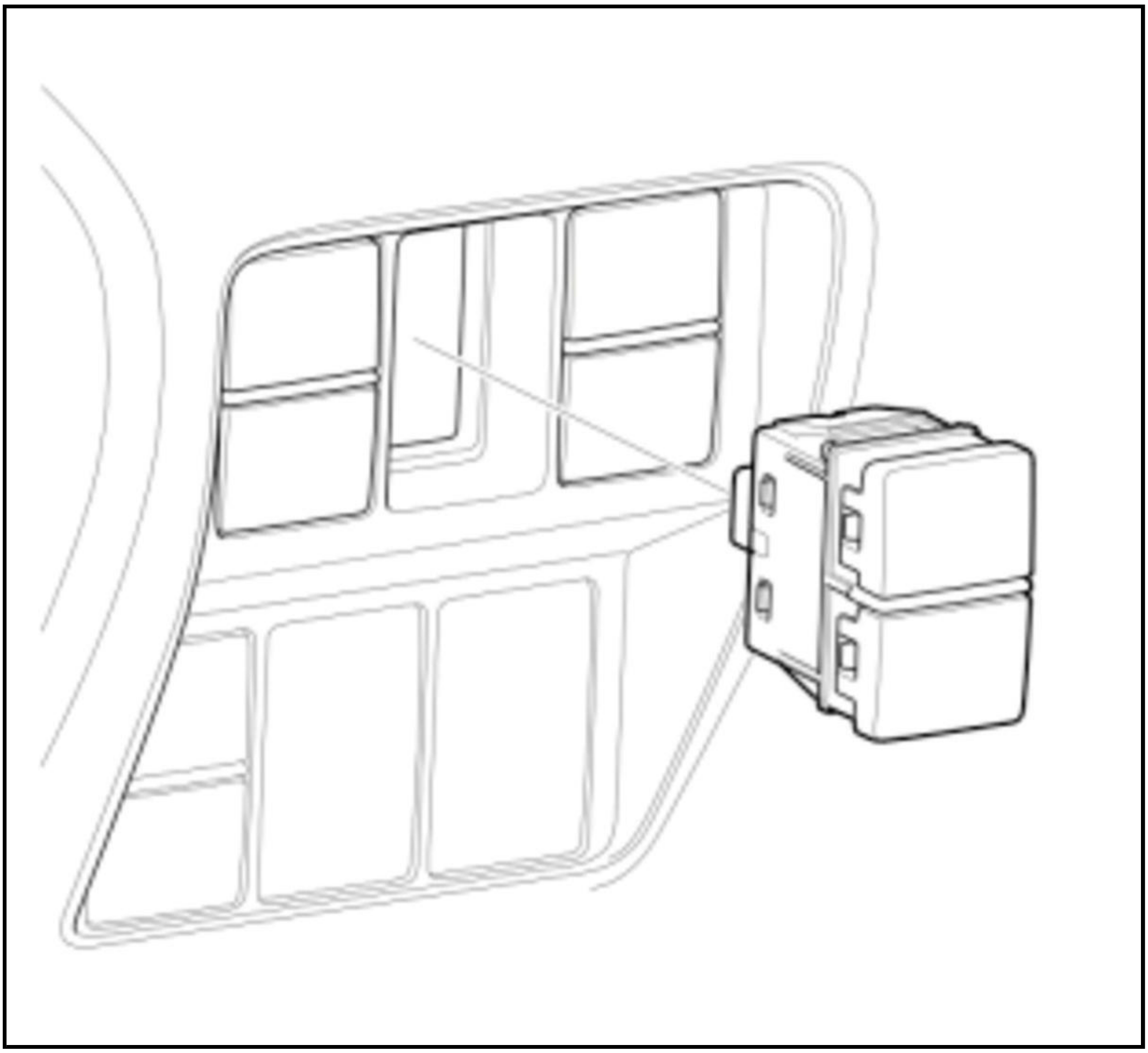

NOTE: Position of the switch is different depending on the model.

3. All Removed Parts - Install

1. Install the parts in the reverse order of removal.

Test

1. CMBS OFF Switch - Test

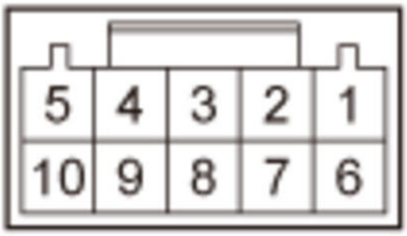

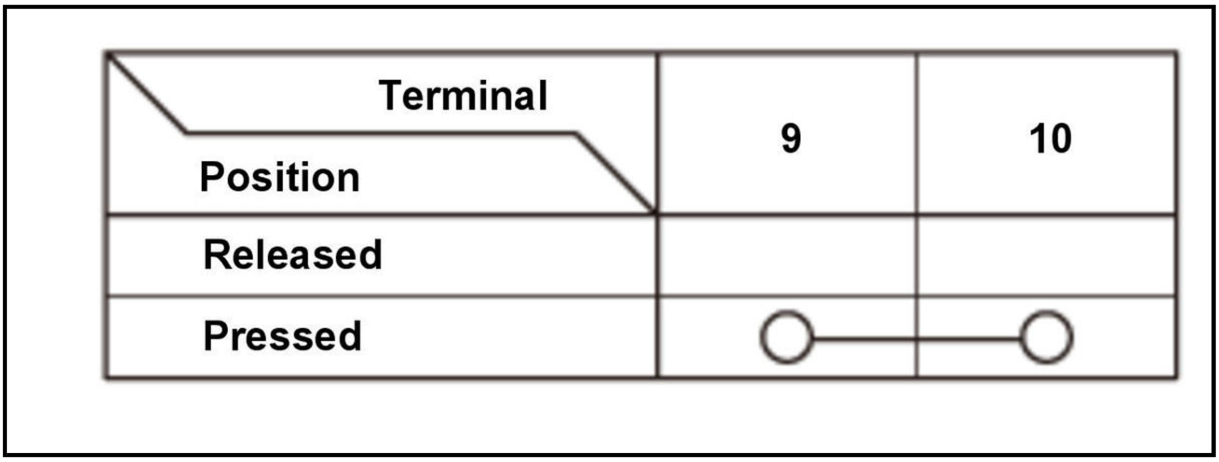

Terminal / Position	9	10
Released		
Pressed	○	○

CMBS OFF Switch Continuity Check:

1. Check for continuity between the CMBS OFF switch/RDM switch 10P connector (male terminals) terminals in each switch position according to the table.

If the switch does not work as described in the table, replace the CMBS OFF switch/RDM switch.

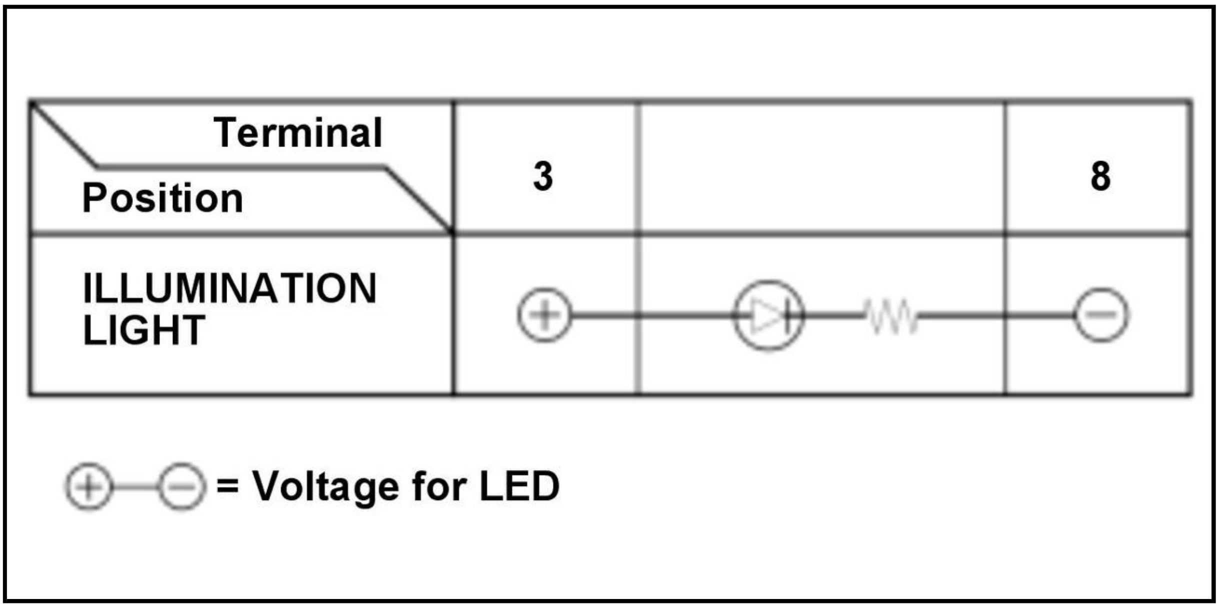

Terminal / Position	3		8
ILLUMINATION LIGHT	⊕		⊖

⊕—⊖ = Voltage for LED

CMBS OFF Switch Illumination Circuit Check:

1. Check the LED for illumination by applying power and ground to the terminals according to the table.

NOTE: Note this important operating characteristic; diode bias causes a diode to fully conduct electricity in one direction (forward), while not at all in the opposite direction (reverse).

If the results are not as specified, replace the CMBS OFF switch/RDM switch.

LKAS SWITCH REMOVAL, INSTALLATION, AND TEST

Removal and Installation

NOTE:

- SRS components are located in this area. Review the **SRS component locations** , and the **precautions and procedures** before doing repairs or service.
- The LKAS switch is contained in the ACC combination switch.

1. **ACC Combination Switch - Remove**
2. All Removed Parts - Install

1. Install the parts in the reverse order of removal.

Test

1. **LKAS Switch - Test**

REMOVAL AND INSTALLATION

MILLIMETER WAVE RADAR REMOVAL AND INSTALLATION

Special Tools Required

Image	Description/Tool Number
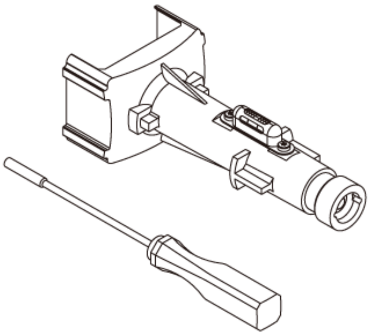	Adaptive Speed Control Alignment Tool SPX 10243
	ADJUSTER, RADAR 3.5 MM 07AAA-TGVA100*

* (SPX 10243/07AAA-TGVA100): Adaptive Speed Control Alignment Tool SPX 10243 or ADJUSTER, RADAR 3.5 MM 07AAA-TGVA100 can be used.

Removal

1. Front Bumper - Remove
2. Millimeter Wave Radar - Remove

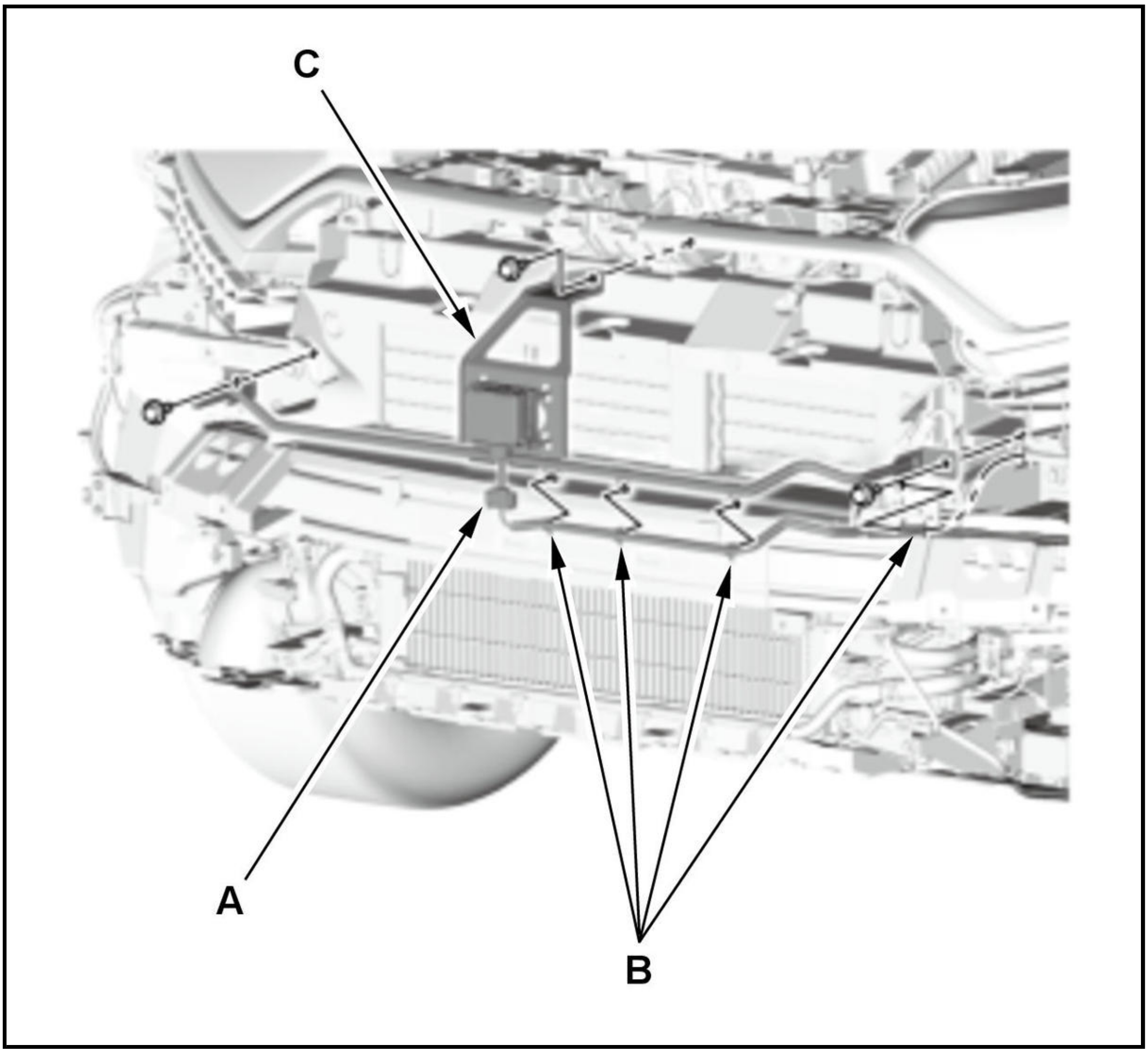

Millimeter Wave Radar Assembly Removal

1. Disconnect the connector (A).

2. Remove the harness clips (B).

3. Remove the millimeter wave radar assembly (C).

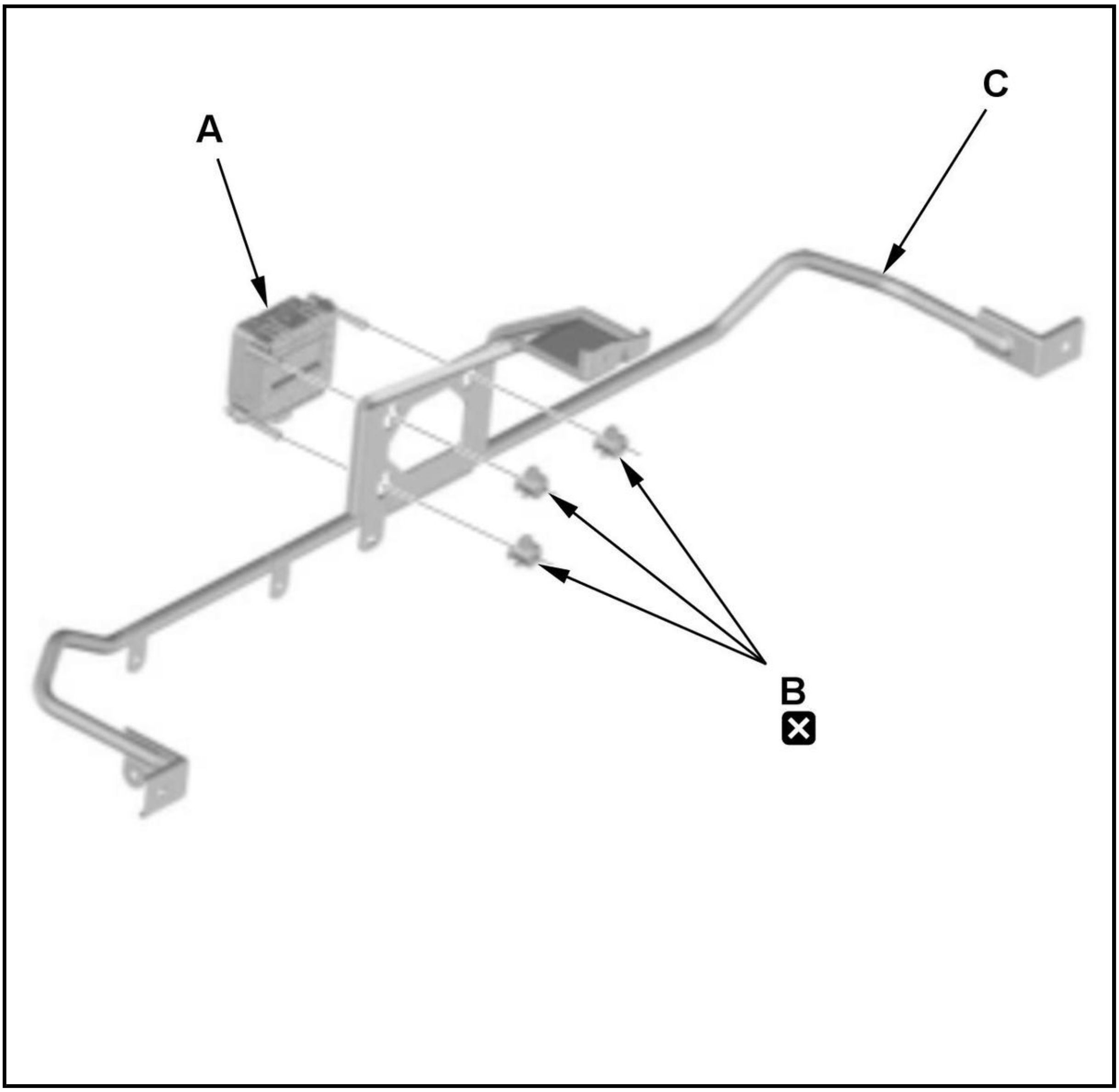

Millimeter Wave Radar Subassembly Removal

NOTE: The millimeter wave radar subassembly (A) cannot be disassembled.

1. Rotate the three clips (B) counterclockwise.

2. Remove the millimeter wave radar subassembly from the clips.

3. Remove the clips from the radar bracket (C).

Installation

NOTE: How to read the torque specifications .

1. Millimeter Wave Radar - Install

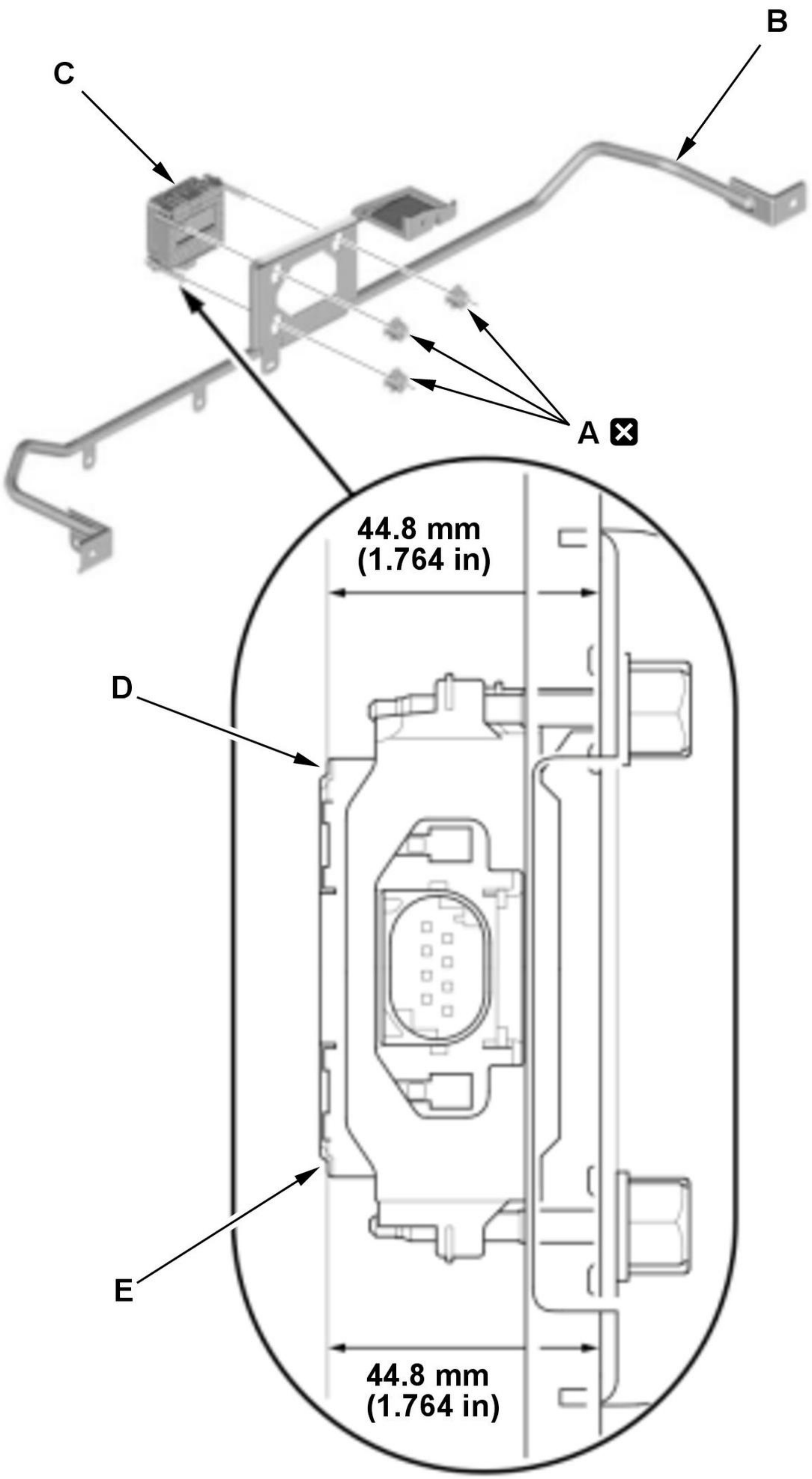
B
C
A ☒
44.8 mm
(1.764 in)
D
E
44.8 mm
(1.764 in)

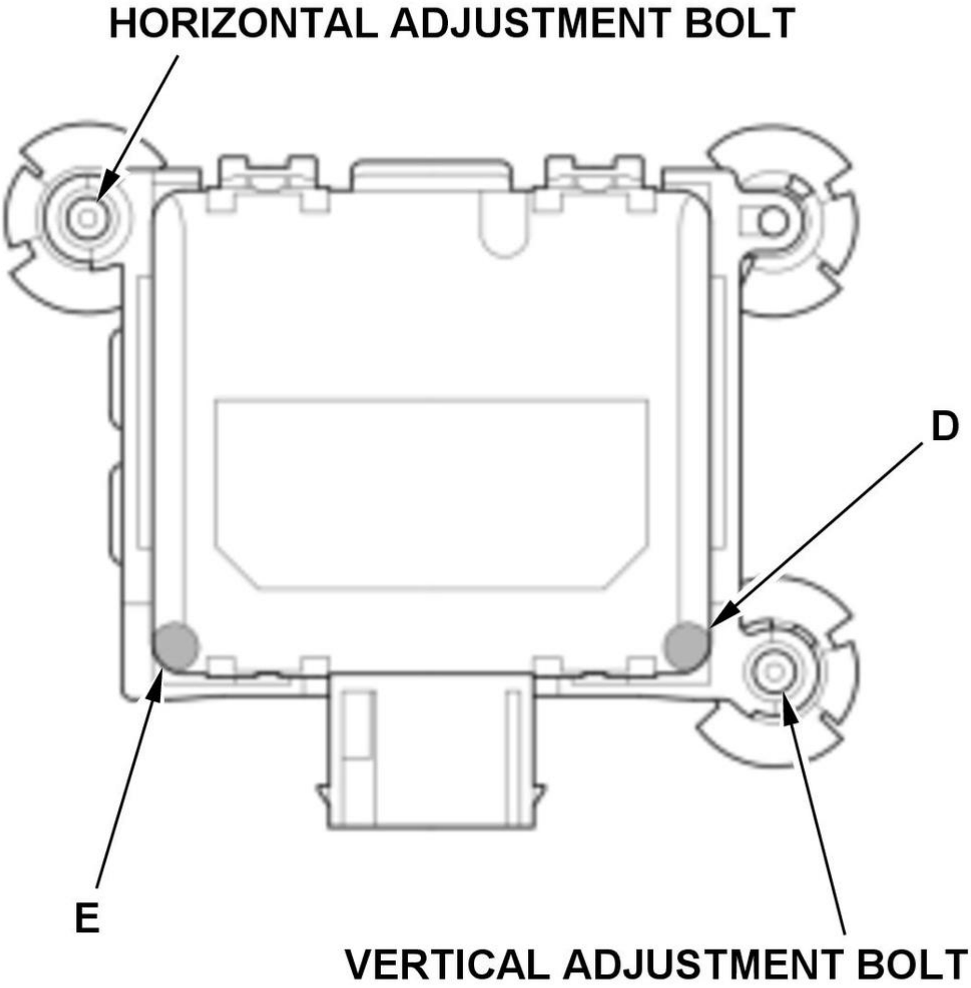
HORIZONTAL ADJUSTMENT BOLT
D
E
VERTICAL ADJUSTMENT BOLT

Millimeter Wave Radar Subassembly Installation

1. Install new clips (A) on the radar bracket (B).

2. Install the millimeter wave radar subassembly (C) on the clips.

3. Rotate the three clips clockwise to secure the millimeter wave radar subassembly to the radar bracket.

4. Measure the distance from D to the radar bracket and E to the radar bracket. Both measured values should be within the range of the standard value.

Standard :	**approximately 44.8 mm (1.764 in)**

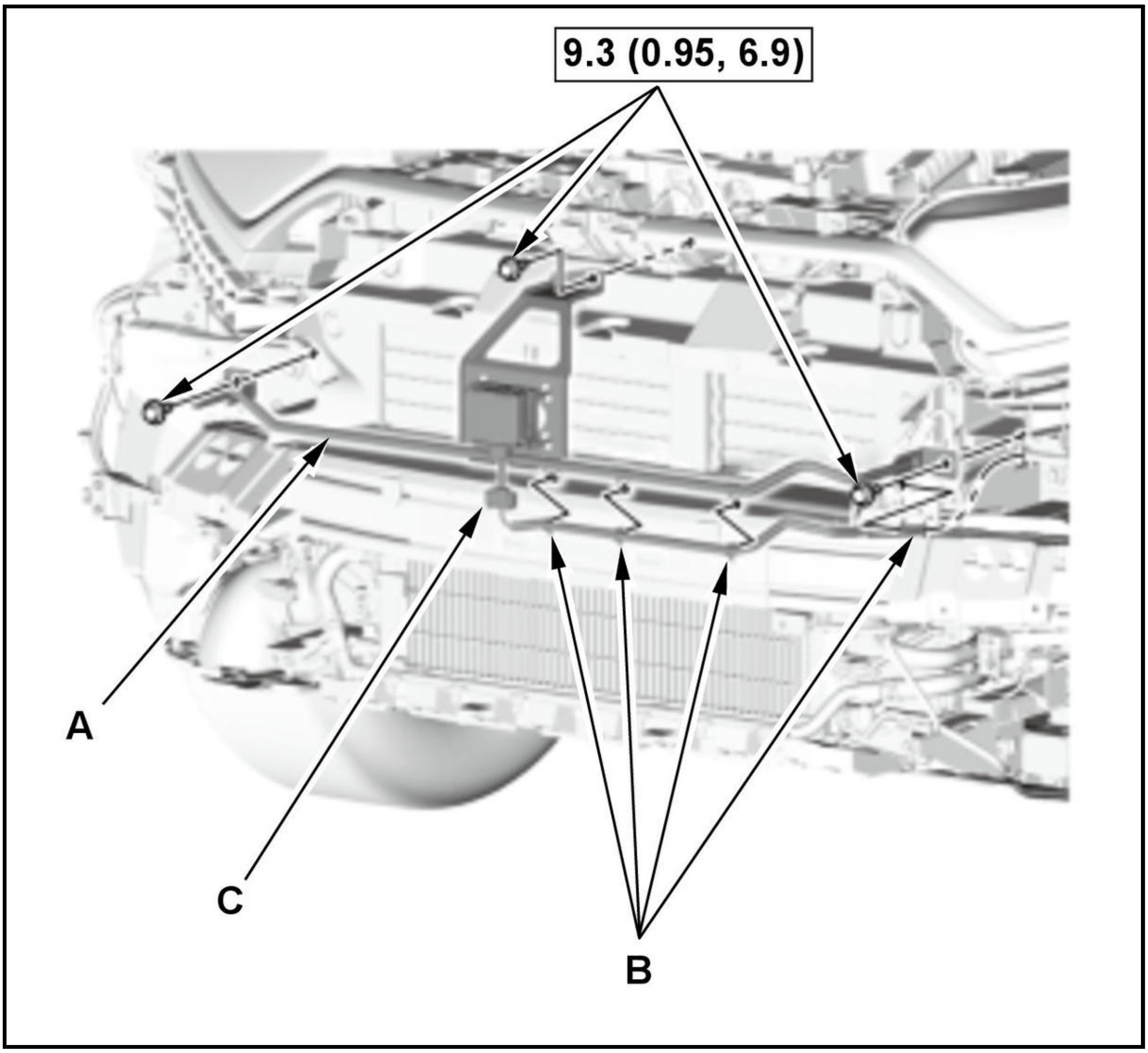

Millimeter Wave Radar Assembly Installation

1. Install the millimeter wave radar assembly (A).
2. Install the harness clips (B).
3. Connect the connector (C) while holding the millimeter wave radar assembly.

NOTE: Applying excessive force may deform the radar bracket.

2. **Front Bumper - Install**
3. **Millimeter Wave Radar - Update**
4. **Millimeter Wave Radar - Aim**

MULTIPURPOSE CAMERA UNIT REMOVAL AND INSTALLATION

Removal

NOTE: Unless otherwise indicated, illustrations used in the procedure are for a model with automatic wiper.

1. Sensor Cover - Remove

NOTE: When removing the sensor cover, take care not to break the sensor cover base (A).

1. Remove the sensor cover lid (B).

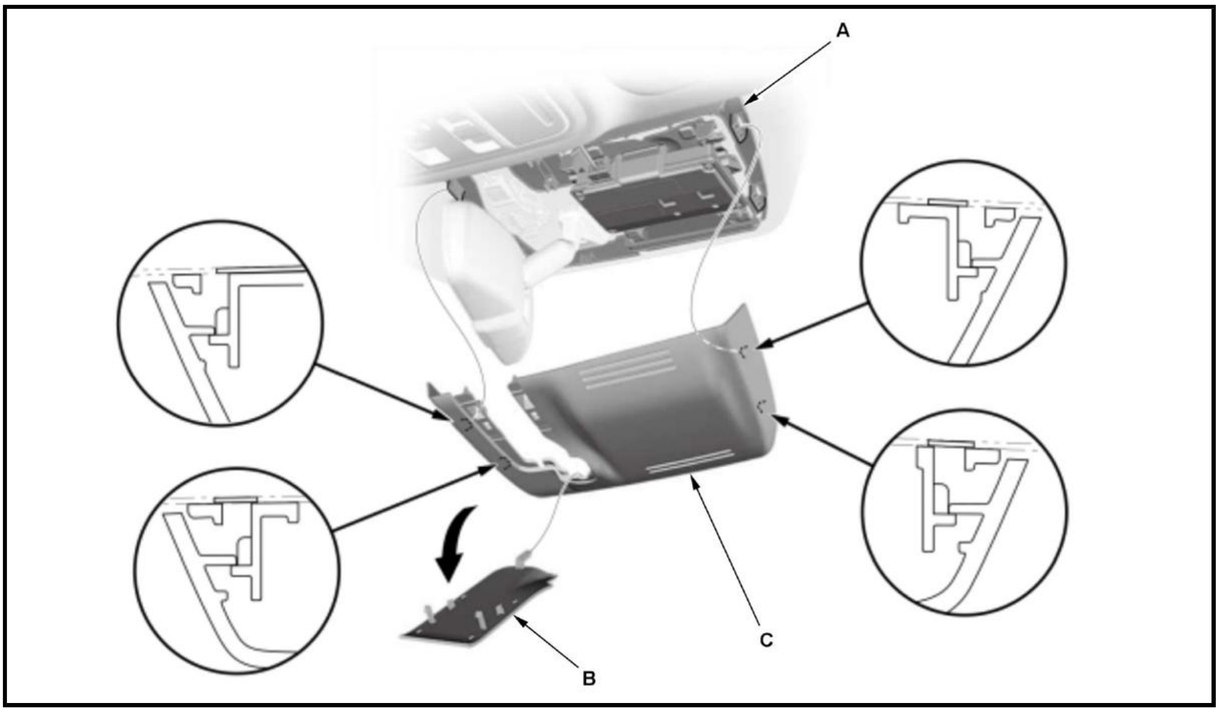

2. Remove the sensor cover (C).

2. Multipurpose Camera Unit - Remove

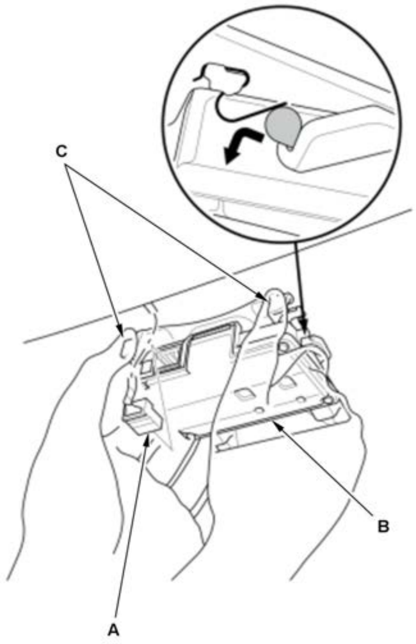	**NOTE:** Do not touch the lens part of the multipurpose camera unit. 1. Disconnect the connector (A). 2. Pull back the multipurpose camera unit (B) to remove it while supporting the camera bracket rib (C) and the front part of the multipurpose camera unit by hand as shown in the figure.

3. **Automatic Lighting/Rain Sensor Connector (With Automatic Wiper) - Disconnect**
4. **Rearview Mirror - Remove**
5. Sensor Cover Base - Remove

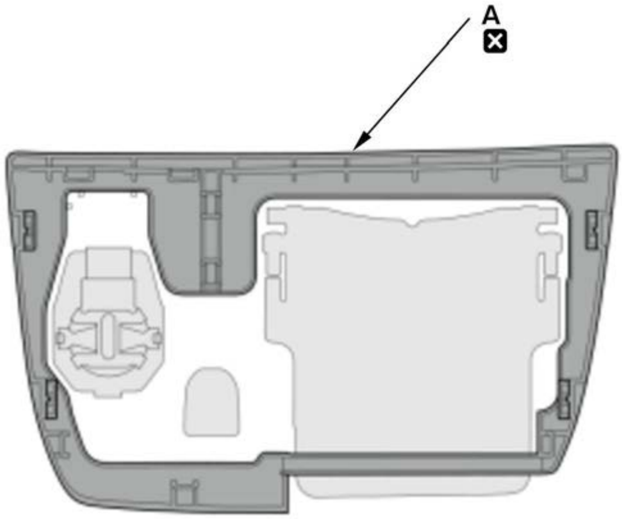 	**NOTE:** If necessary, remove the sensor cover base (A). 1. Remove the sensor cover base. 2. Scrape off the adhesive from the windshield.

Installation

1. Sensor Cover Base - Install

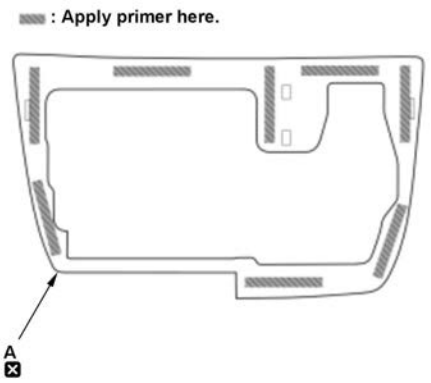 	1. Clean the windshield surface. 2. Peel the adhesive backing on the sensor cover base (A), then apply the primer. **NOTE:** Must use the primer G-200 of 3M or equivalent. Using other commercially available primers may prevent the sensor cover base from attaching properly.

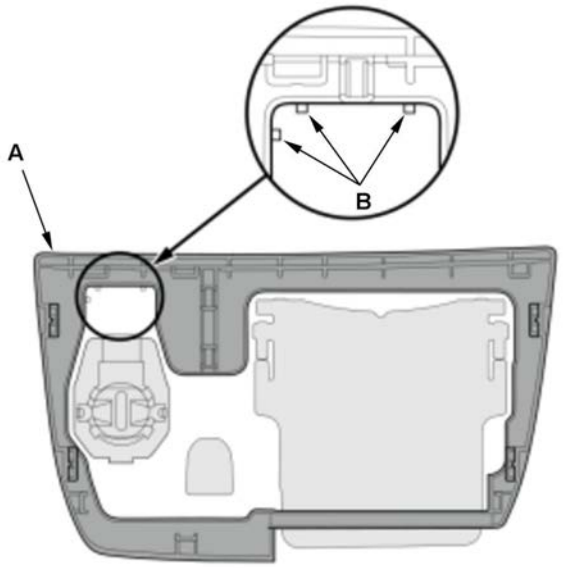 	3. Align the sensor cover base (A) with the alignment marks (B), then install the sensor cover base.

2. **Rearview Mirror - Install**

3. Automatic Lighting/Rain Sensor Connector (With Automatic Wiper) - Connect

4. Multipurpose Camera Unit - Install

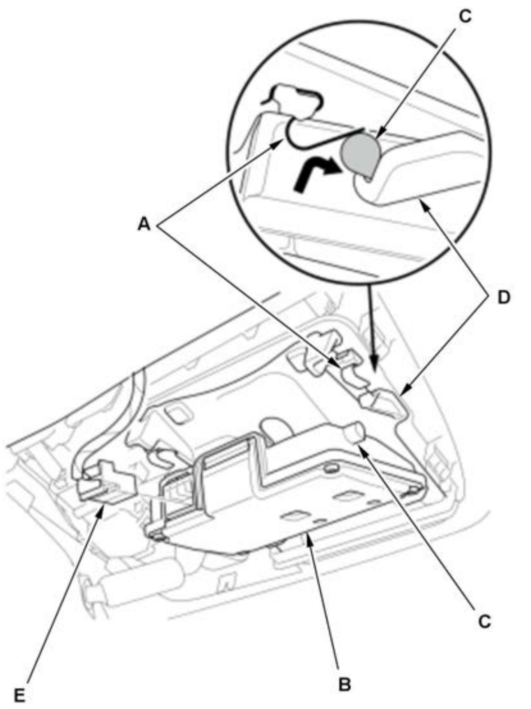	1. Install the multipurpose camera unit (B). **NOTE:** Visually check that the tabs (C) on both sides of the multipurpose camera unit are inserted into between the camera bracket (D) and spring A. 2. Connect the connector (E).

5. Sensor Cover - Install

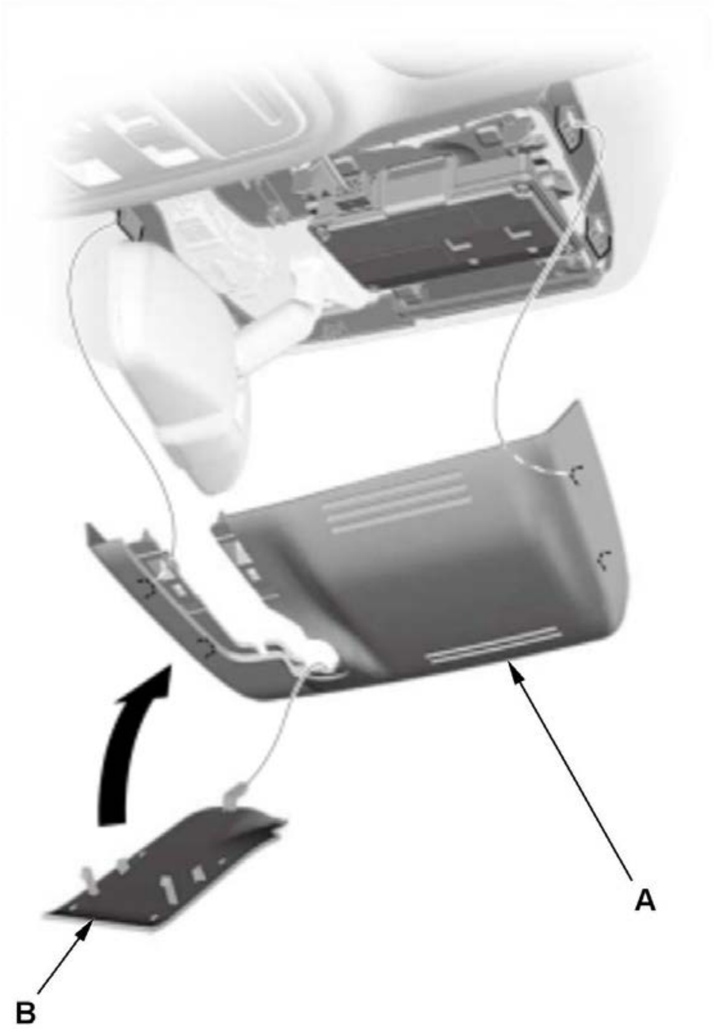	1. Install the sensor cover (A). 2. Install the sensor cover lid (B).

6. Multipurpose Camera Unit - Update
7. Multipurpose Camera Unit - Aim

REMOVAL, INSTALLATION & TEST

RDM SWITCH REMOVAL, INSTALLATION, AND TEST

Removal and Installation

1. Driver's Dashboard Lower Cover - Remove
2. RDM Switch - Remove

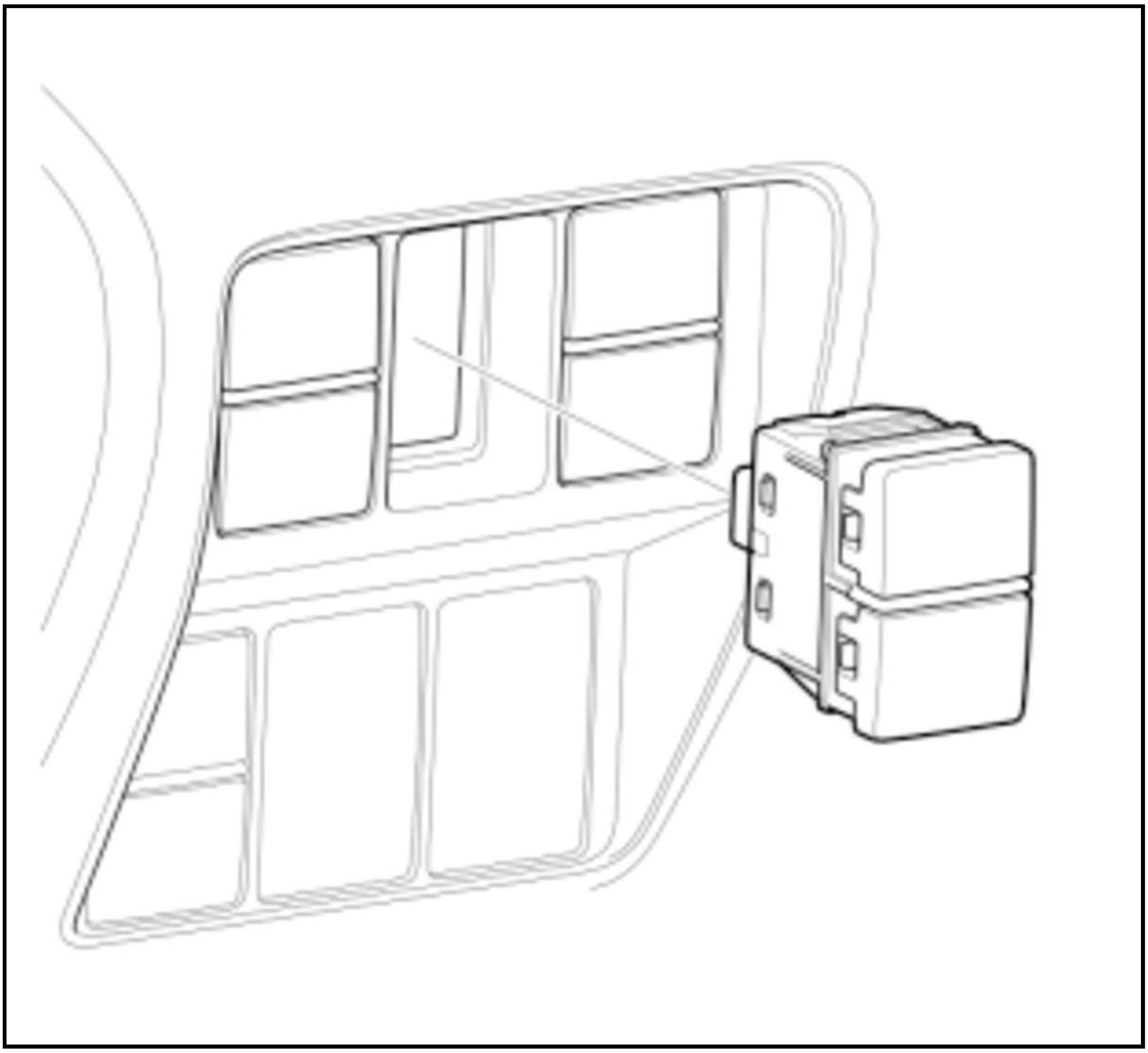

NOTE: Position of the switch is different depending on the model.

3. All Removed Parts - Install

1. Install the parts in the reverse order of removal.

Test

1. RDM Switch - Test

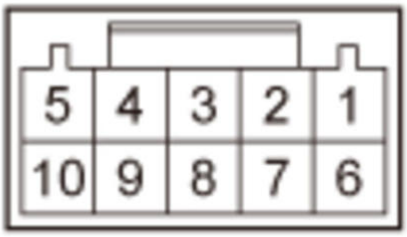

RDM Switch Internal Resistance Check:

1. Measure the resistance between the CMBS OFF/RDM switch 10P connector (male terminals) terminals No. 4 and No. 5 according to the table.

- If there is no resistance in one or more positions, replace the CMBS OFF switch/RDM switch.

Position	Resistance at normal ambient temperature
Released	12.1-14.8 kΩ
Pressed and held	3.1-3.8 kΩ

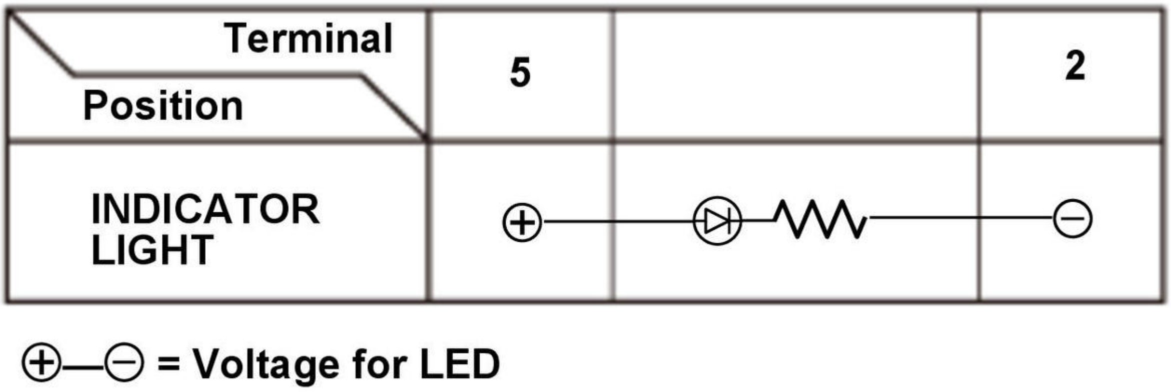

RDM Switch Indicator Drive Circuit Check:

1. Check the LED for illumination by applying power and ground to the terminals according to the table.

NOTE: Note this important operating characteristic; diode bias causes a diode to fully conduct electricity in one direction (forward), while not at all in the opposite direction (reverse).

If the results are not as specified, replace the CMBS OFF switch/RDM switch.

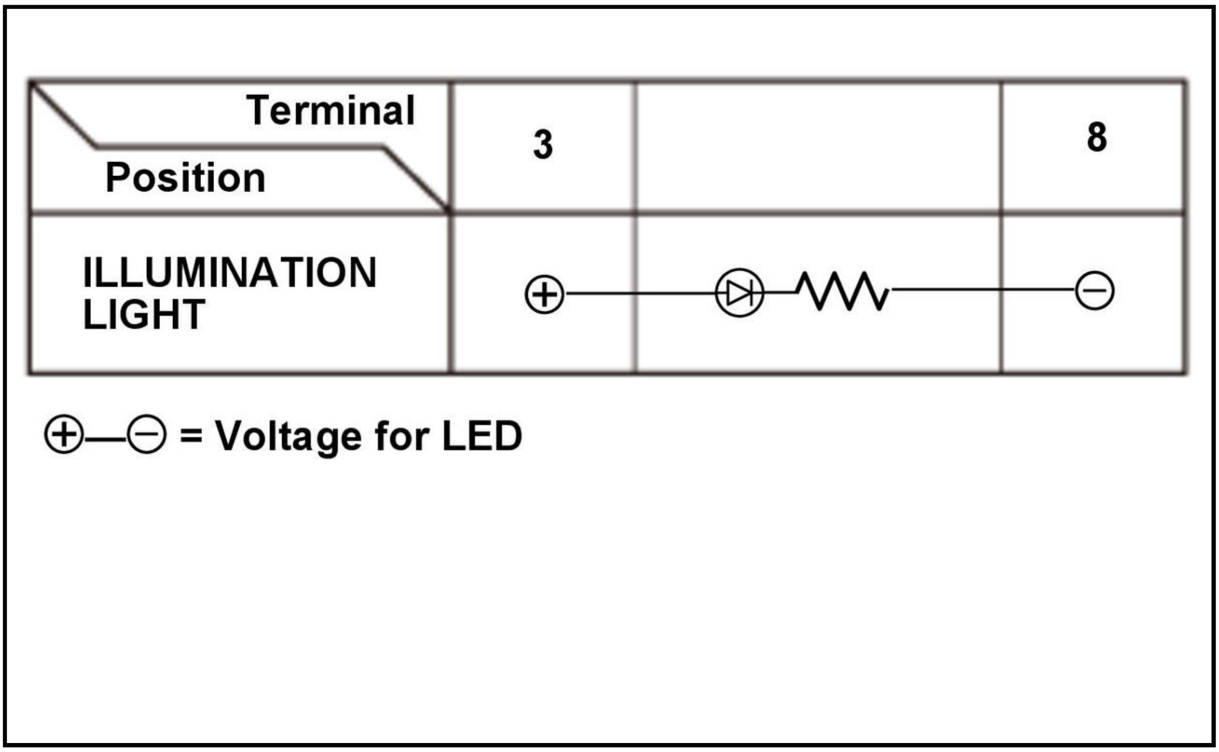

Terminal / Position	3		8
ILLUMINATION LIGHT	⊕		⊖

⊕—⊖ = Voltage for LED

RDM Switch Illumination Circuit Check:

1. Check the LED for illumination by applying power and ground to the terminals according to the table.

NOTE: Note this important operating characteristic; diode bias causes a diode to fully conduct electricity in one direction (forward), while not at all in the opposite direction (reverse).

If the results are not as specified, replace the CMBS OFF switch/RDM switch.

REMOVAL & INSTALLATION TEST

RDM SWITCH REMOVAL, INSTALLATION, AND TEST

Removal and Installation

1. Driver's Dashboard Lower Cover - Remove
2. RDM Switch - Remove

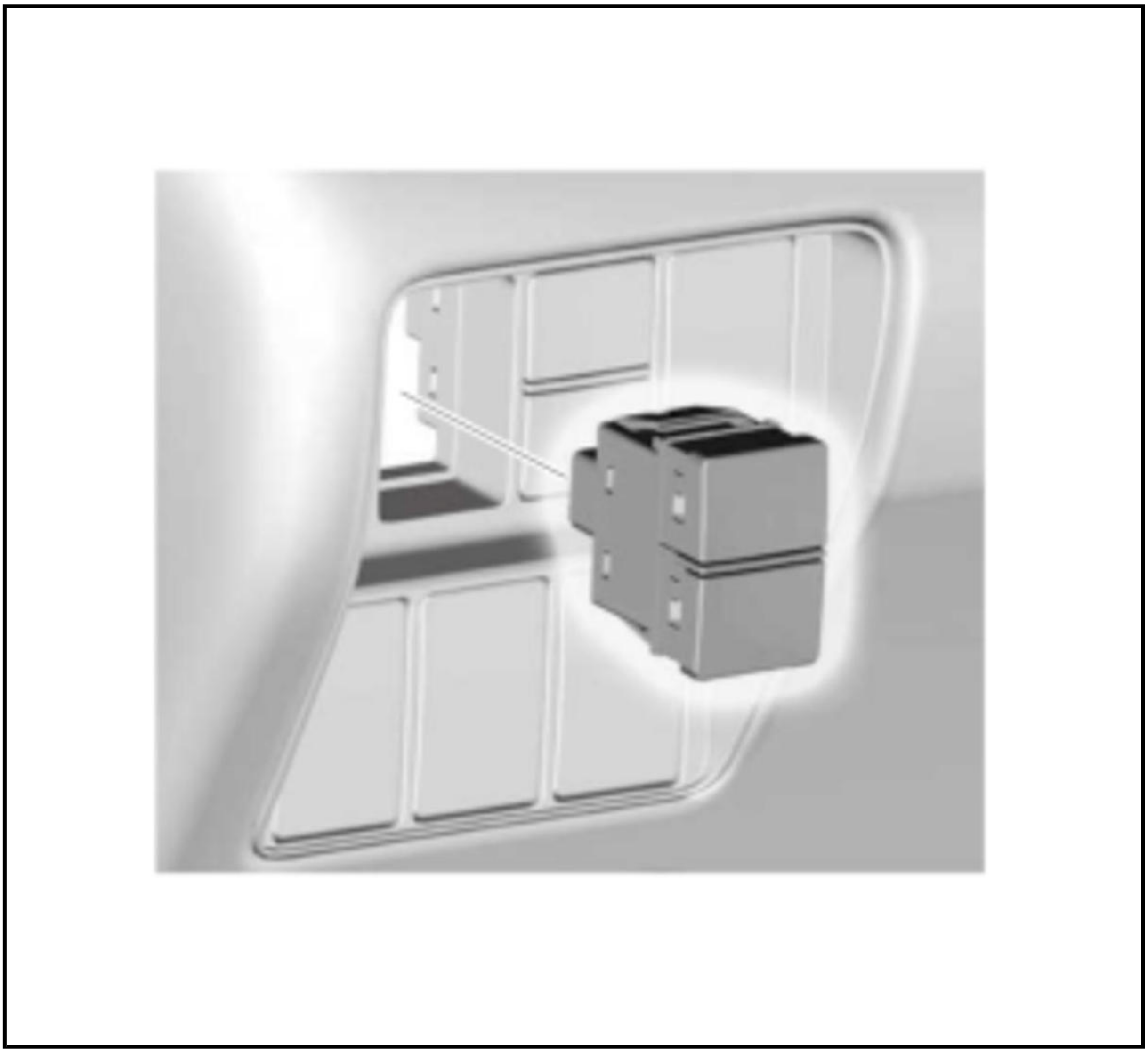

NOTE: Position of the switch is different depending on the model.

3. All Removed Parts - Install

1. Install the parts in the reverse order of removal.

Test

1. RDM Switch - Test

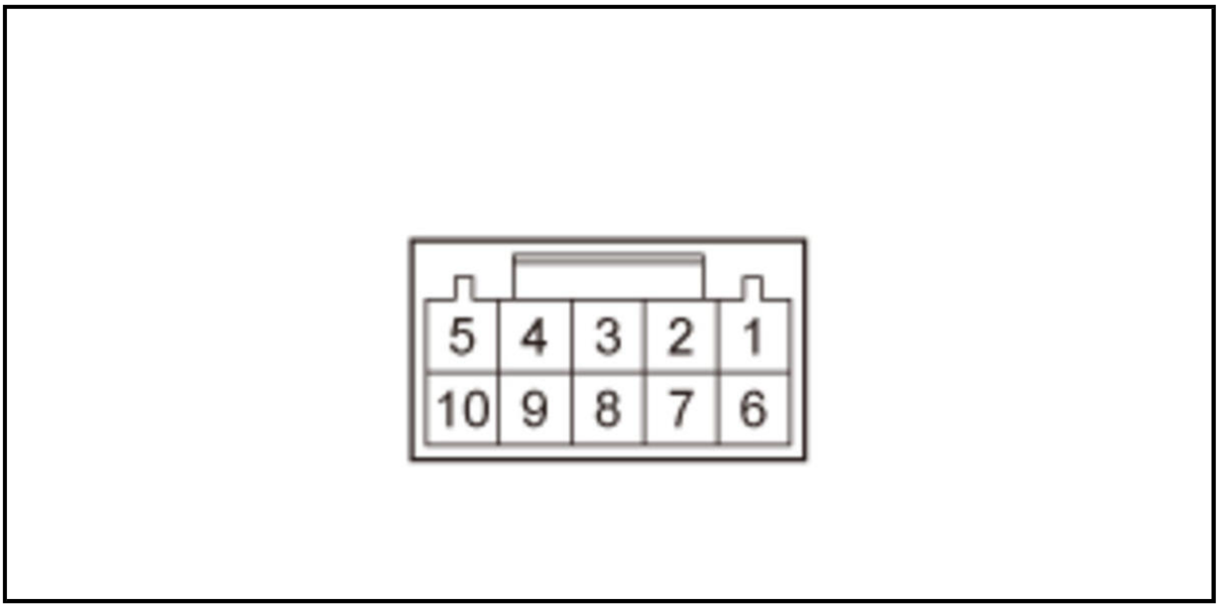
5
4
3
2
1
10
9
8
7
6

RDM Switch Internal Resistance Check:

1. Measure the resistance between the CMBS OFF/RDM switch 10P connector (male terminals) terminals No. 4 and No. 5 according to the table.

- If there is no resistance in one or more positions, replace the RDM switch.

Position	Resistance
Released	About 13.5 kΩ
Pressed and held	About 3.5 kΩ

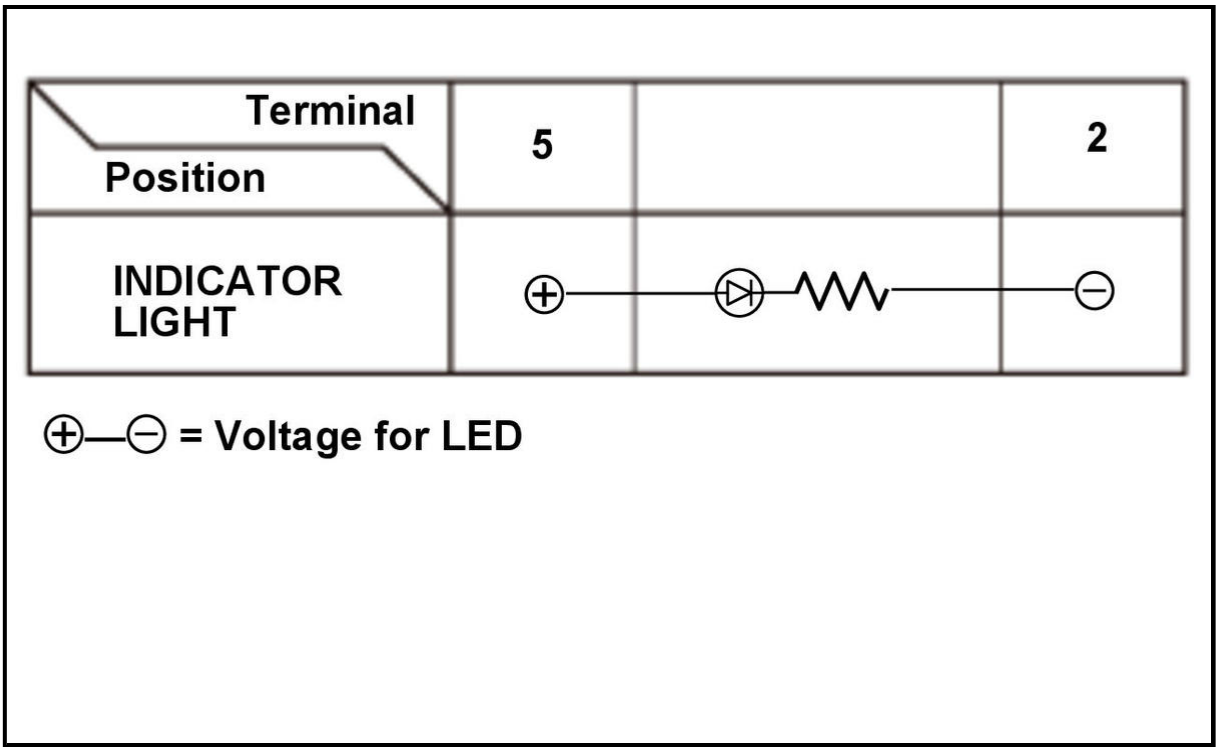
Terminal
Position
5
2
INDICATOR LIGHT
⊕—⊖ = Voltage for LED

RDM Switch Indicator Drive Circuit Check:

1. Check the LED for illumination by applying power and ground to the terminals according to the table.

NOTE: **Important operating characteristic; diode bias cause a diode to fully conduct electricity in one direction (forward), while not at all in the**

opposite direction (reverse). If the results are not as specified, replace the RDM switch.

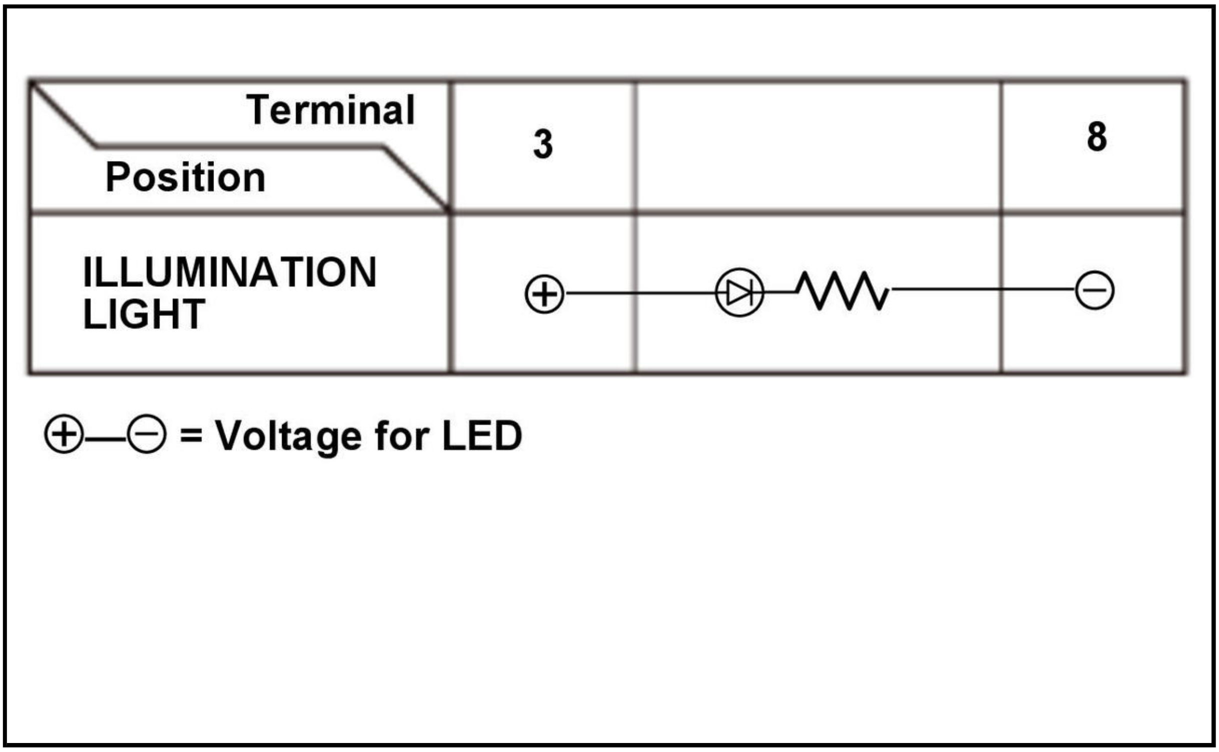

Terminal / Position	3		8
ILLUMINATION LIGHT	⊕		⊖

⊕—⊖ = Voltage for LED

RDM Switch Illumination Circuit Check:

1. Check the LED for illumination by applying power and ground to the terminals according to the table.

NOTE: **Important operating characteristic; diode bias cause a diode to fully conduct electricity in one direction (forward), while not at all in the opposite direction (reverse). If the results are not as specified, replace the RDM switch.**

REMOVAL AND INSTALLATION

MILLIMETER WAVE RADAR REMOVAL AND INSTALLATION

Special Tools Required

Image	Description/Tool Number
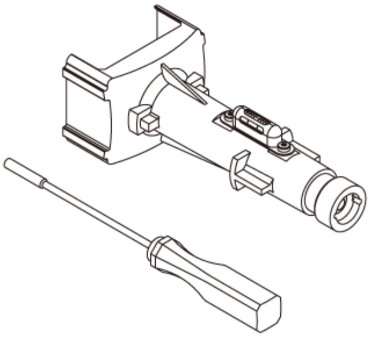	Adaptive Speed Control Alignment Tool SPX 10243

Image	Description/Tool Number
	ADJUSTER, RADAR 3.5MM 07AAA-TGVA100*

* (SPX 10243/07AAA-TGVA100): Adaptive Speed Control Alignment Tool SPX 10243 or ADJUSTER, RADAR 3.5MM 07AAA-TGVA100 can be used.

Removal

1. **Front Bumper - Remove**
2. Millimeter Wave Radar - Remove

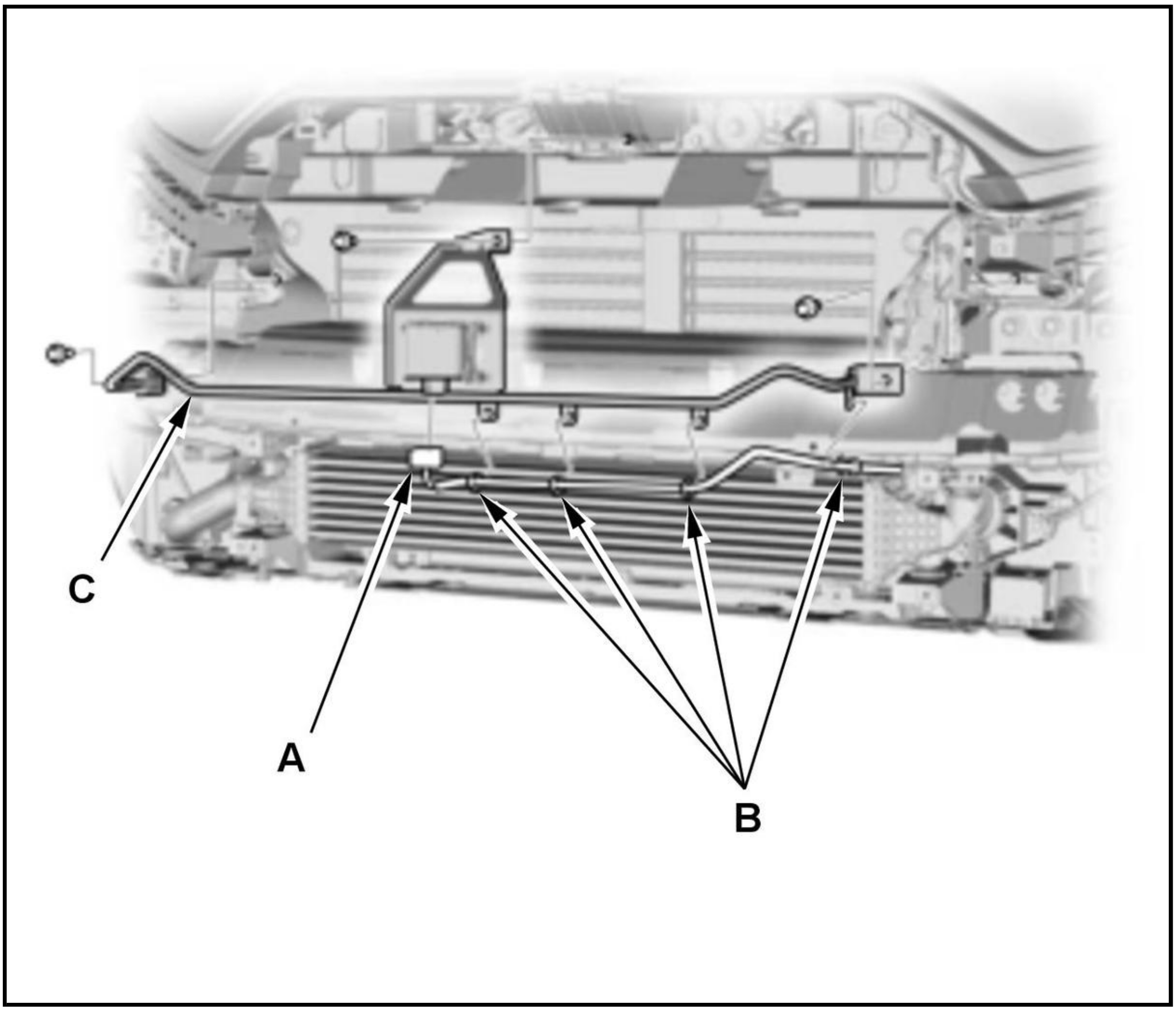

Millimeter Wave Radar Assembly Removal

1. Disconnect the connector (A).

2. Remove the harness clips (B).

3. Remove the millimeter wave radar assembly (C).

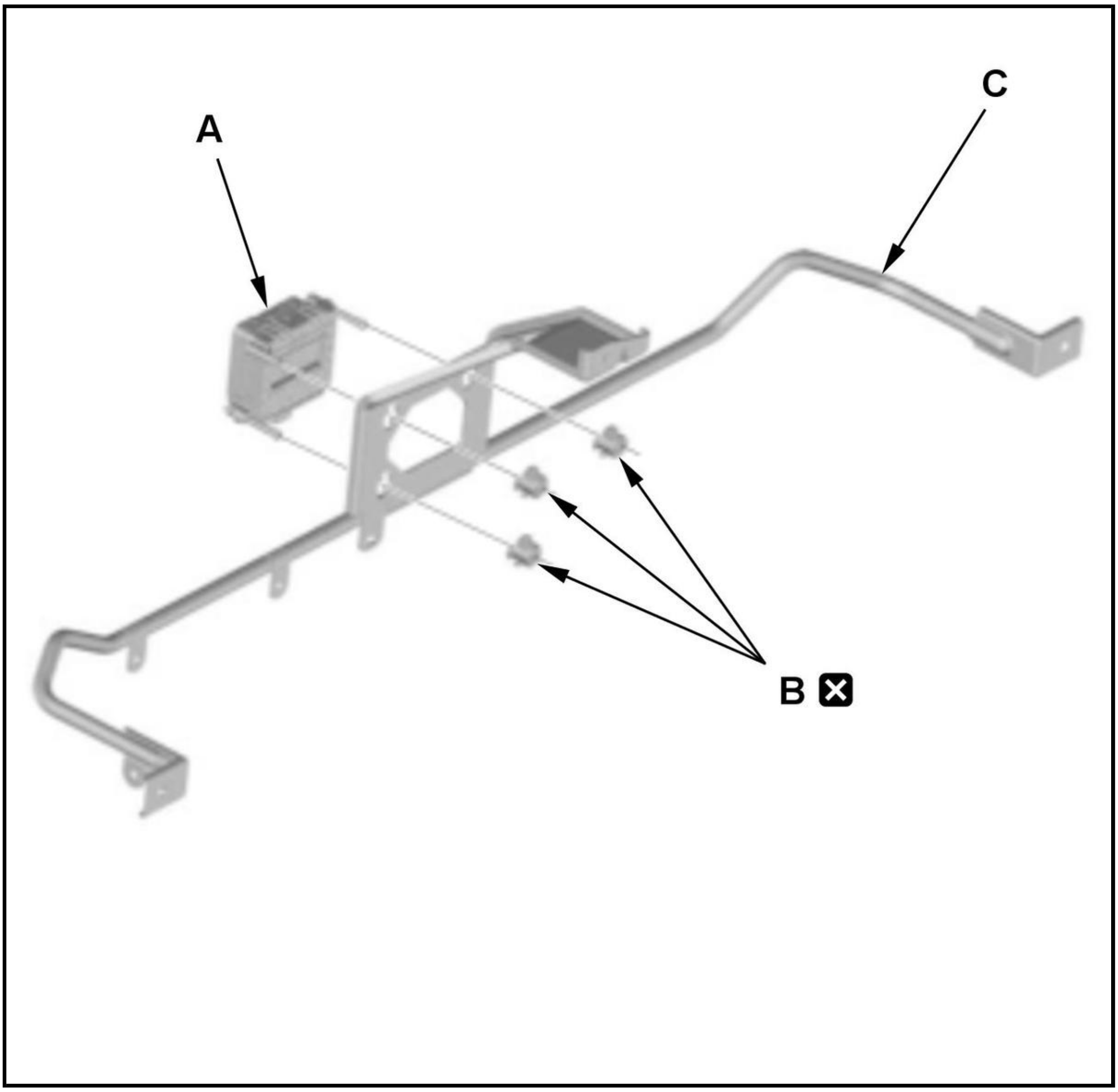

Millimeter Wave Radar Subassembly Removal

NOTE: The millimeter wave radar subassembly (A) cannot be disassembled.

1. Rotate the three clips (B) counterclockwise.

2. Remove the millimeter wave radar subassembly from the clips.

3. Remove the clips from the radar bracket (C).

Installation

NOTE: **How to read the torque specifications** .

1. Millimeter Wave Radar - Install

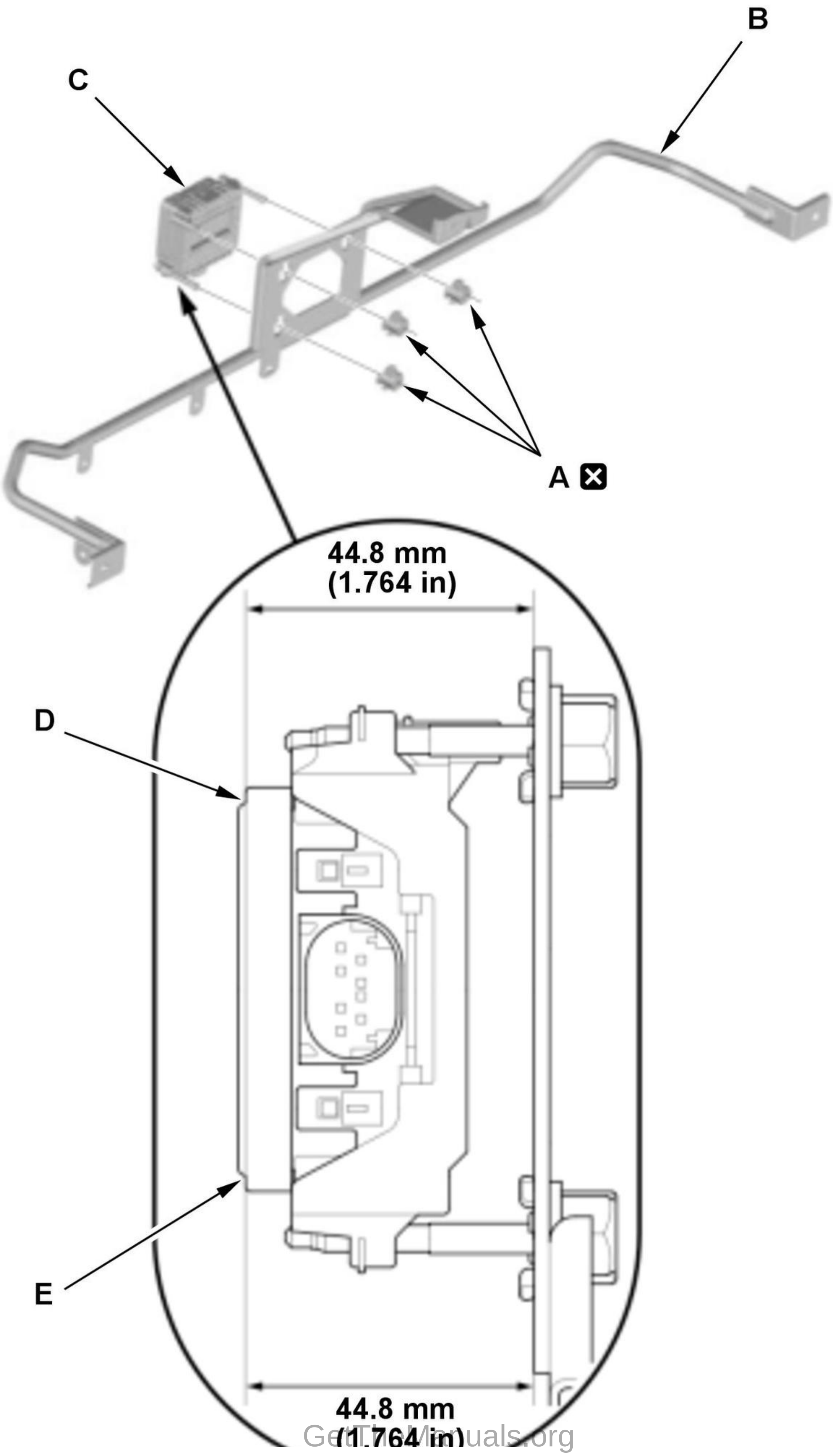
B
C
A ☒
44.8 mm
(1.764 in)
D
E
44.8 mm
(1.764 in)

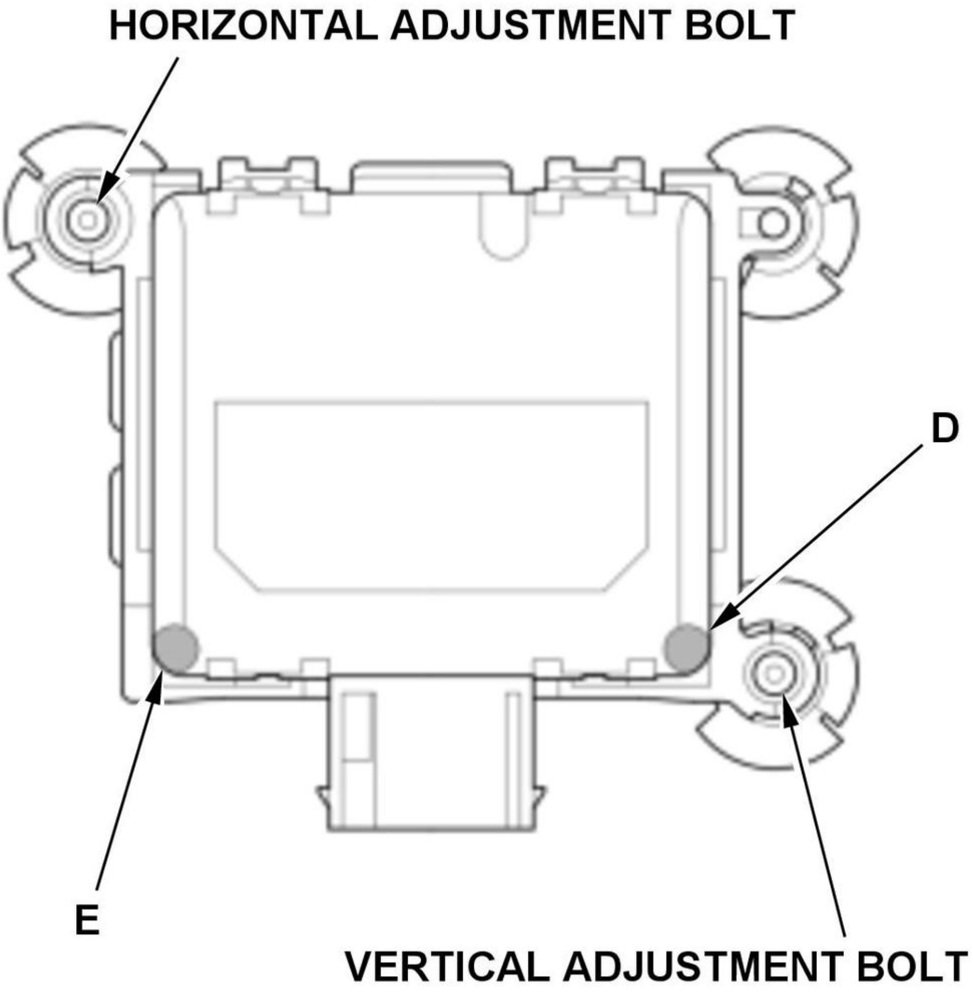

HORIZONTAL ADJUSTMENT BOLT
D
E
VERTICAL ADJUSTMENT BOLT

Millimeter Wave Radar Subassembly Installation

1. Install new clips (A) on the radar bracket (B).

2. Install the millimeter wave radar subassembly (C) on the clips.

3. Rotate the three clips clockwise to secure the millimeter wave radar subassembly to the radar bracket.

4. Measure the distance from D to the radar bracket and E to the radar bracket. Both measured values should be within the range of the standard value.

Standard :	**approximately 44.8 mm (1.764 in)**

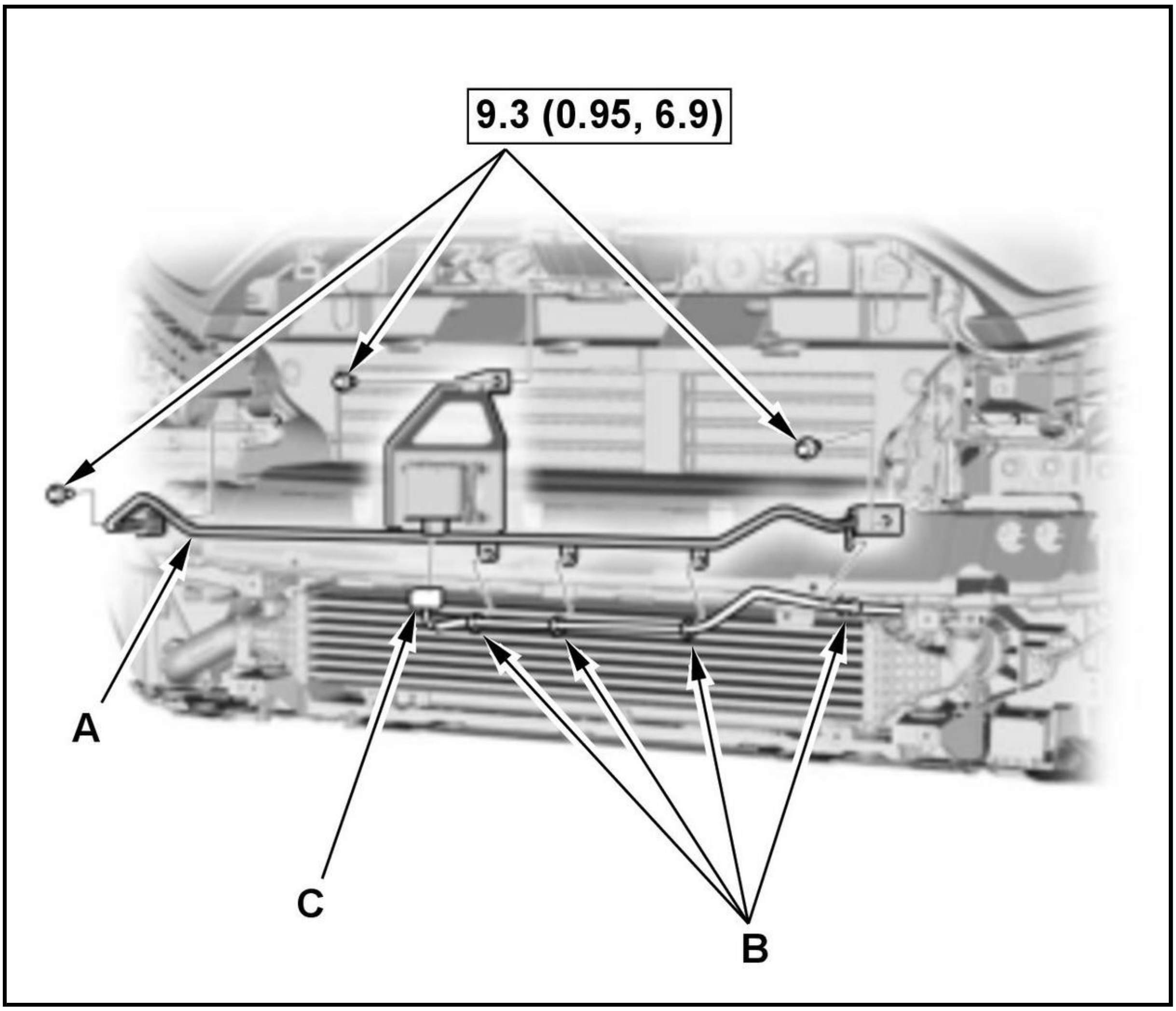

Millimeter Wave Radar Assembly Installation

1. Install the millimeter wave radar assembly (A).

2. Install the harness clips (B).

3. Connect the connector (C) while holding the millimeter wave radar assembly.

NOTE: **Applying excessive force may deform the radar bracket.**

2. Front Bumper - Install
3. Millimeter Wave Radar - Update
4. Millimeter Wave Radar - Aim

MULTIPURPOSE CAMERA UNIT REMOVAL AND INSTALLATION

Removal

NOTE: Unless otherwise indicated, illustrations used in the procedure are for a model with automatic wiper.

1. Sensor Cover - Remove

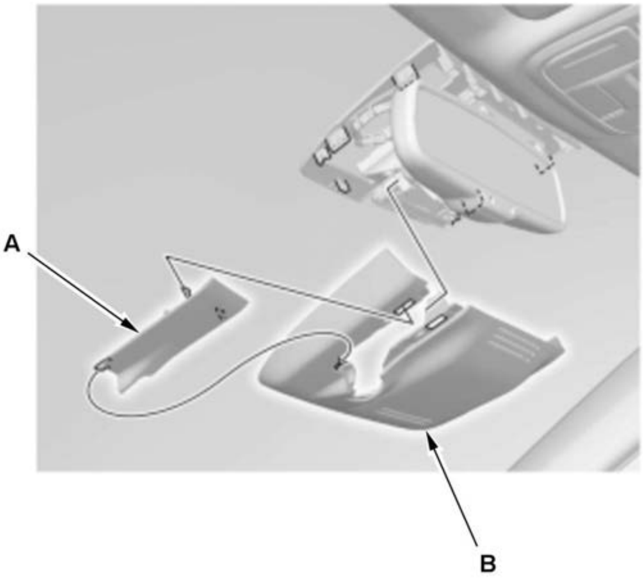	**NOTE:** When removing the sensor cover, take care not to break the sensor cover base. 1. Remove the sensor cover lid (A). 2. Remove the sensor cover (B).

2. Multipurpose Camera Unit - Remove

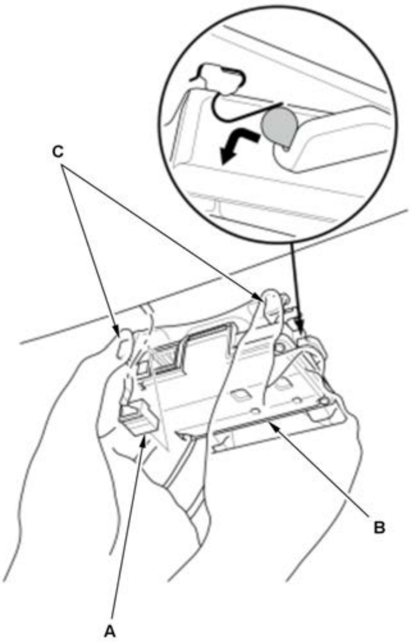	**NOTE:** Do not touch the lens part of the multipurpose camera unit. 1. Disconnect the connector (A). 2. Pull back the multipurpose camera unit (B) to remove it while supporting the camera bracket rib (C) and the front part of the multipurpose camera unit by hand as shown in the figure.

3. **Automatic Lighting/Rain Sensor Connector (With Automatic Wiper) - Disconnect**
4. **Rearview Mirror - Remove**
5. Sensor Cover Base - Remove

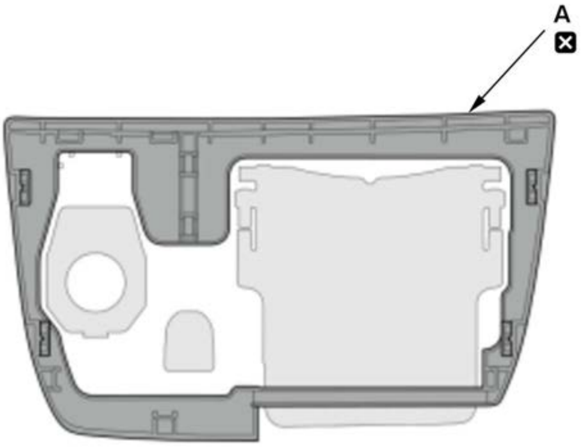	**NOTE:** - If necessary, replace the sensor cover base (A). - When replacing the cover base, follow the installation procedure. 1. Remove the sensor cover base. 2. Scrape off the adhesive from the windshield.

Installation

1. Sensor Cover Base - Install

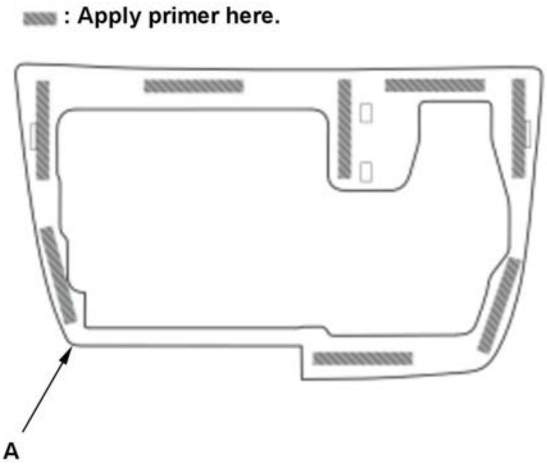	1. Clean the windshield surface. 2. Peel the adhesive backing on the sensor cover base (A), then apply the primer. **NOTE:** **Must use the primer G-200 of 3M or equivalent. Using other commercially available primers may prevent the sensor cover base from attaching properly.**

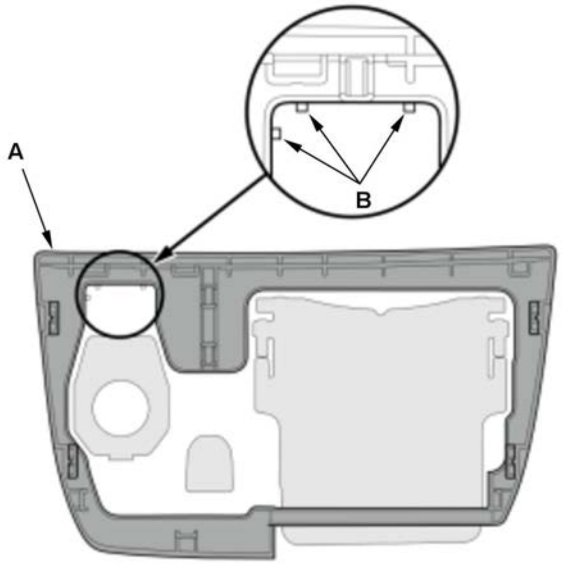	3. Align the sensor cover base (A) with the alignment marks (B), then install the sensor cover base.

2. Rearview Mirror - Install
3. Automatic Lighting/Rain Sensor Connector (With Automatic Wiper) - Connect
4. Multipurpose Camera Unit - Install

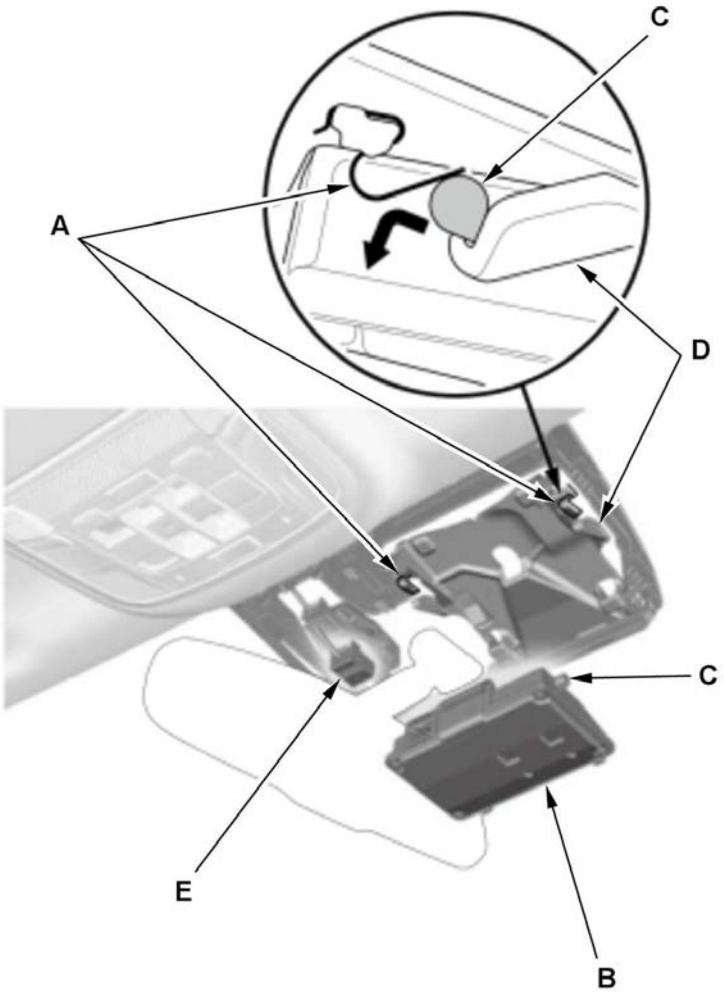	1. Install the multipurpose camera unit (B). **NOTE:** **Visually check that the tabs (C) on both sides of the multipurpose camera unit are inserted into between the camera bracket (D) and spring A.** 2. Connect the connector (E).

5. Sensor Cover - Install

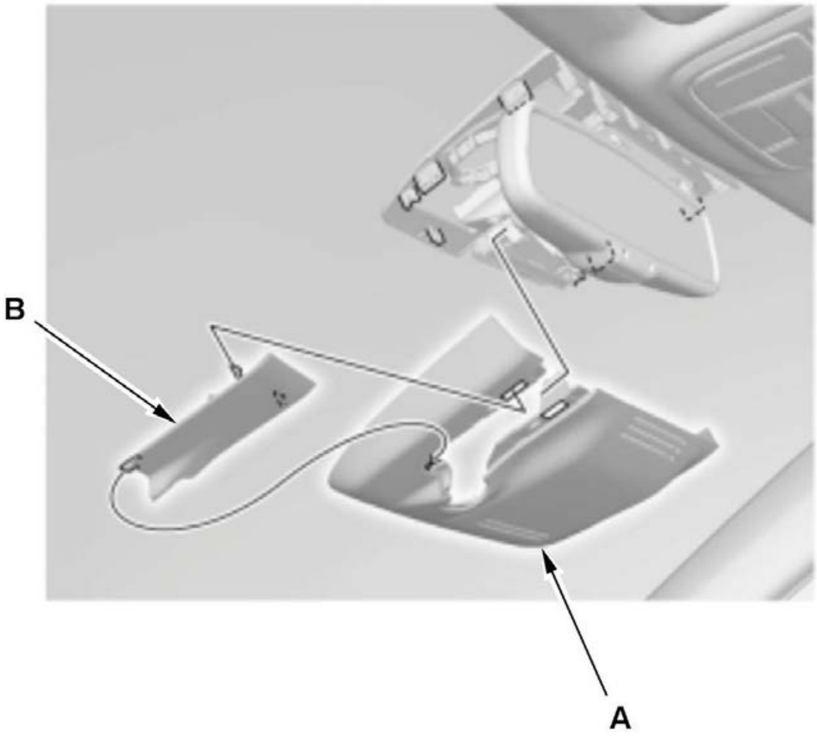	1. Install the sensor cover (A). 2. Install the sensor cover lid (B).

6. **Multipurpose Camera Unit - Update**
7. **Multipurpose Camera Unit - Aim**

ADJUSTMENT

BEFORE AIMING SETTING

Special Tools Required

Image	Description/Tool Number
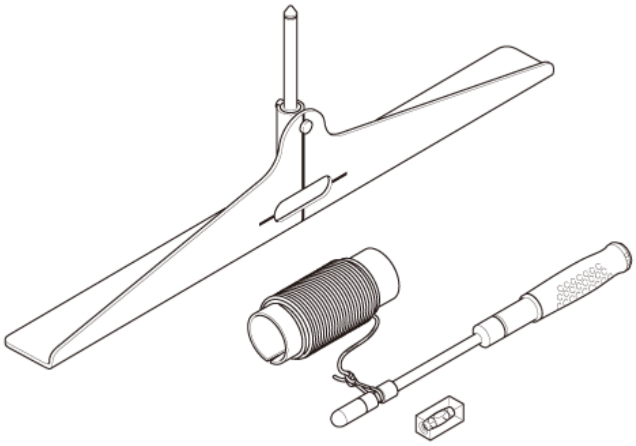	Alignment Set 07AAJ-STKA210

Adjustment

1. Before Aiming - Set

   NOTE:

   - Aiming should be done in a well-lighted area.
   - There should be no bright objects at the back of the target (sunlight, windows, illumination, or reflectors) or designs similar to the target pattern.
   - Make sure the suspension has not been modified.
   - Make sure all the tire sizes are correct and that their pressure is correct.
   - Make sure the fuel tank is full.
   - Remove all cargo from the vehicle except the tool kit and the spare tire.
   - Make sure the steering wheel is pointed straight ahead, and do not turn it after setting the vehicle.
   - Shift the transmission to P position/mode, and apply the parking brake.
   - When marking on the floor surface, use suitable tape to mark the exact locations.

   Prepare these items:

   - Tape measure and ruler
   - Felt-tip pen
   - Tape
   - String
   - Plumb bob

   Measure the Lines along the Sides of the Vehicle

   1. Find the center of one wheel (A) using the centering stand and mark it.

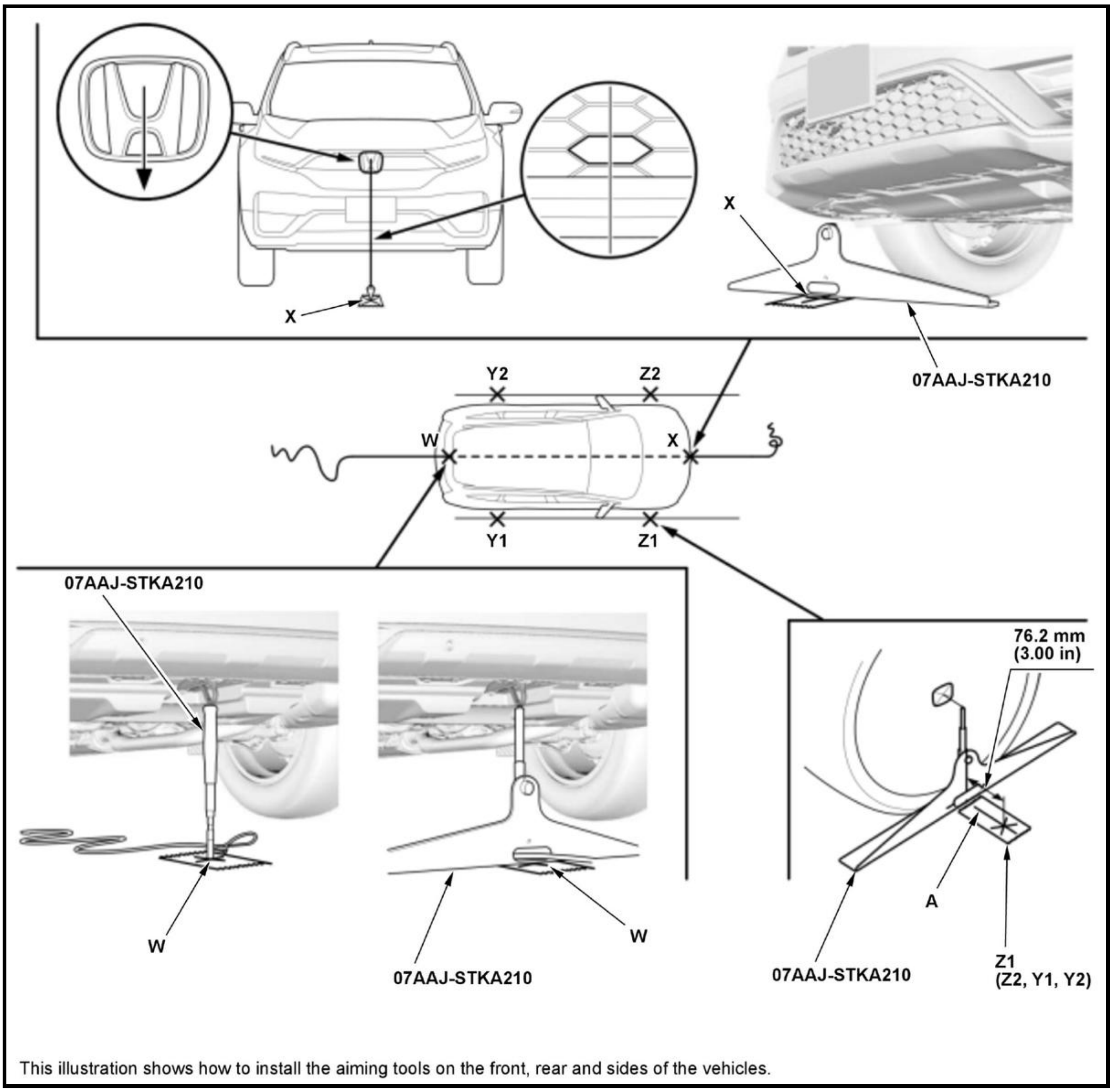
X
X
07AAJ-STKA210
Y2
Z2
W
X
Y1
Z1
07AAJ-STKA210
76.2 mm
(3.00 in)
W
07AAJ-STKA210
W
A
07AAJ-STKA210
Z1
(Z2, Y1, Y2)

This illustration shows how to install the aiming tools on the front, rear and sides of the vehicles.

2. Measure 76.2 mm (3.00 in) from the edge of the centering stand and mark a new point Z1 that intersects the wheel's center-line.

NOTE: Repeat this step for each wheel (Z2, Y1, and Y2).

Set the Cord along the Center-Line of the Vehicle

NOTE:

- When installing a cord along the center-line of the vehicle, install the cord using these items as reference points.
- The reference items may vary by vehicle.
-
    - -

      Front and rear jacking brackets
    - -

      Rear towing hook
    - -

      Front emblem

- -

  Scribe lines of the front subframe part
- When installing an aiming target at the rear of the vehicle, use the centering stand in the rear.
- When installing an aiming target at the front of the vehicle, use the centering stand in the front.

3. Hang the plumb bob from the center of the front emblem, and mark a new point X on the floor where the tip of the plumb bob touches the floor.

4. Place the centering stand under the rear jacking bracket, then mark a new point W at the center-line of the centering stand.

For targets at the front of the vehicle

5. Position the gas strut holder of the alignment set between the floor and the rear jack-up bracket at mark W.

6. Place the center-line of the centering stand at mark X and run the cord through it.

7. Attach the cord to the collar of the alignment set, then place the alignment set about 2.0 m (6.6 ft) in front of the vehicle.

NOTE: Make sure the cord is tight and not lying on the floor surface, then align the cord in the center of the alignment set.

For targets at the rear of the vehicle

8. Place one end of the cord on mark X and firmly tape it to the floor.

NOTE: Lightly pull on the cord to make sure that it is secured and apply additional tape as necessary.

9. Place the center-line of the centering stand at mark W and run the cord through it.

10. Attach the cord to the collar of the alignment set, then place the alignment set about 2.0 m (6.6 ft) behind the vehicle.

NOTE: Make sure the cord is tight and not lying on the floor surface, then align the cord in the center of the alignment set.

MILLIMETER WAVE RADAR AIMING

Special Tools Required

Image	Description/Tool Number
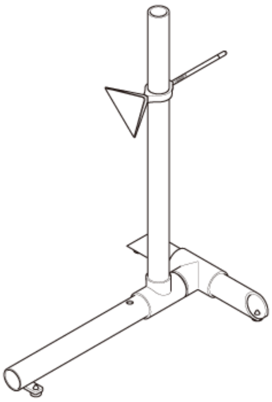	Stand Set 07AAJ-STKA220*

Image	Description/Tool Number
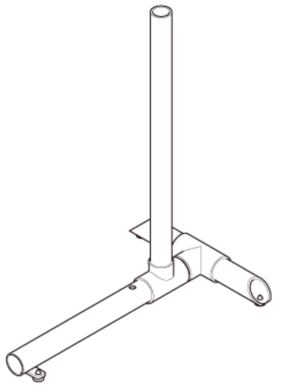	Stand 07AAJ-TK8A100*
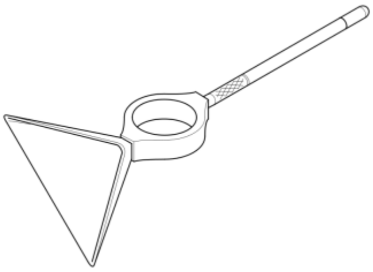	Reflector Set 07AAJ-STKA200*
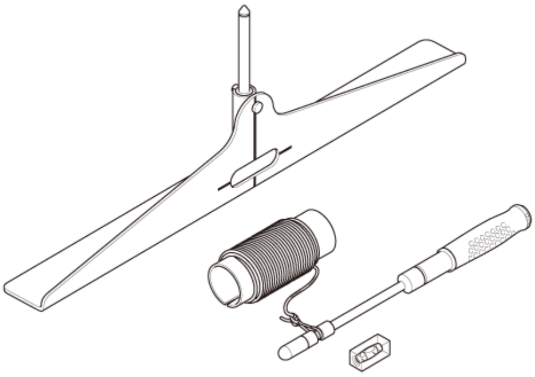	Alignment Set 07AAJ-STKA210
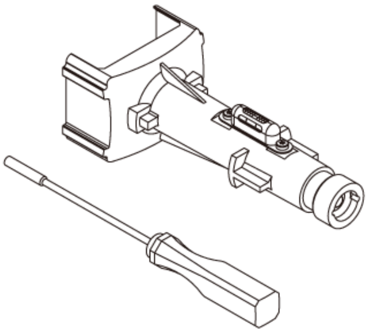	Adaptive Speed Control Alignment Tool SPX 10243*

Image	Description/Tool Number
	ADJUSTER, RADAR 3.5MM 07AAA-TGVA100*

* (07AAJ-STKA220/07AAJ-TK8A100/07AAJ-STKA200): Stand 07AAJ-TK8A100 with Reflector Set 07AAJ-STKA200 or Stand Set 07AAJ-STKA220 can be used for aiming.* (SPX 10243/07AAA-TGVA100): Adaptive Speed Control Alignment Tool SPX 10243 or ADJUSTER, RADAR 3.5MM 07AAA-TGVA100 can be used for aiming.

Adjustment

NOTE:

- The millimeter wave radar must be re-aimed if the millimeter wave radar is removed or replaced. The ACC indicator comes on if the aiming process is not completed correctly.
-
    - -

      The millimeter wave radar has a self-diagnosis function and if the mounting angle of the millimeter wave radar is outside of the horizontal auto-aiming range, it stores the failure information.
- If DTCs are indicated, do the indicated DTCs first. If the DTCs are not repaired, you cannot complete the millimeter wave radar aiming procedure. However, if you have the following DTC, proceed with the aiming procedure.
-
    - -

      Millimeter Wave Radar Aiming Incomplete: **DTC P2583-54**
- If the vehicle you are aiming was involved in a collision or if you suspect the alignment is out of specifications, you must perform a wheel alignment prior to aiming the millimeter wave radar.
- Conditions for the aiming environment:
-
    - -

      Aiming should be on level ground in a wide open space to avoid errors caused by reflecting objects.
    - -

      Amount of space require in front of the vehicle: 10 m (33 ft) measured from the front bumper 5 m (16 ft) in width 3 m (10 ft) in height, measured from the floor.
- The vehicle must be parked on a horizontal floor in order to adjust the vertical radar aiming correctly. Check the levelness of the floor surface, but if there is a continuous slope, then adjust the angle of the millimeter wave radar so it is parallel to the floor surface. Lay a ruler or other flat straight object on the floor surface and put the level on top to confirm the levelness of the floor surface.

- When marking on the floor surface, use suitable tape to mark the exact locations.

Prepare these items:

- HDS
- Tape measure and ruler
- Felt-tip pen
- Tape
- String
- Plumb bob

1. Before Aiming - Set

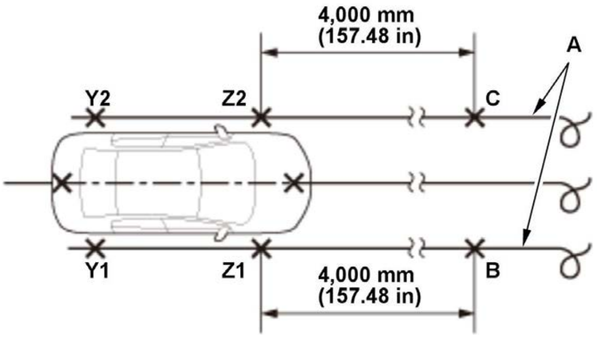

NOTE: Make sure the steering wheel is pointed straight ahead, and do not turn it after setting up the vehicle.

Marking of the Target Position

1. **Make points (Z1, Y1, Z2, Y2) and set the cord along the center-Line of the vehicle.**

2. Place a string (A) between point Z1 and point Y1, and tape both ends of the string on the floor surface.

NOTE: Repeat this step for the opposite side for points Z2 and Y2.

3. Measure and make a new point B on the floor surface in front of the vehicle, 4, 000 mm (157.48 in) from point Z1.

4. Pull one end of the string to point B and tape it to the floor surface.

NOTE: Repeat these steps for the opposite side, and mark a new point C.

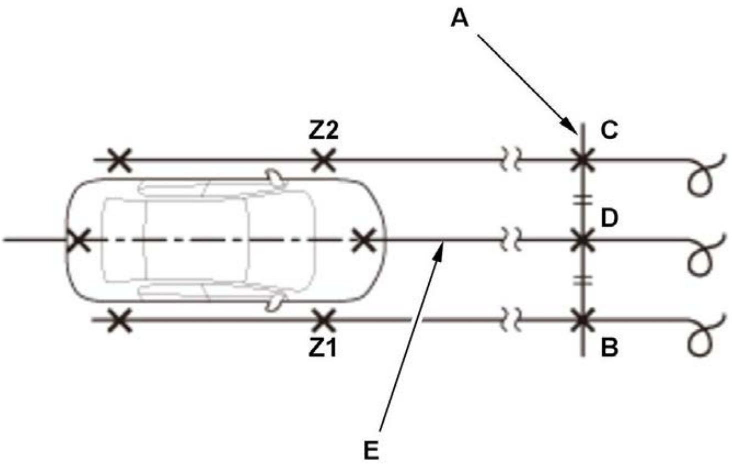

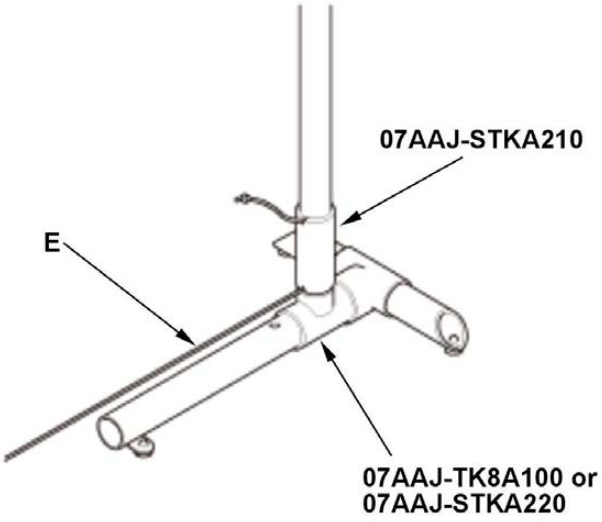
07AAJ-STKA210
E
07AAJ-TK8A100 or
07AAJ-STKA220

5. Set the string (A) between point B and point C, and tape both ends of the string on the floor surface.

6. Route the cord (E) through the collar and place it on the stand set.

7. Use the stand set to stretch the cord of the center-line, and mark a new point D where the string crosses with the cord.

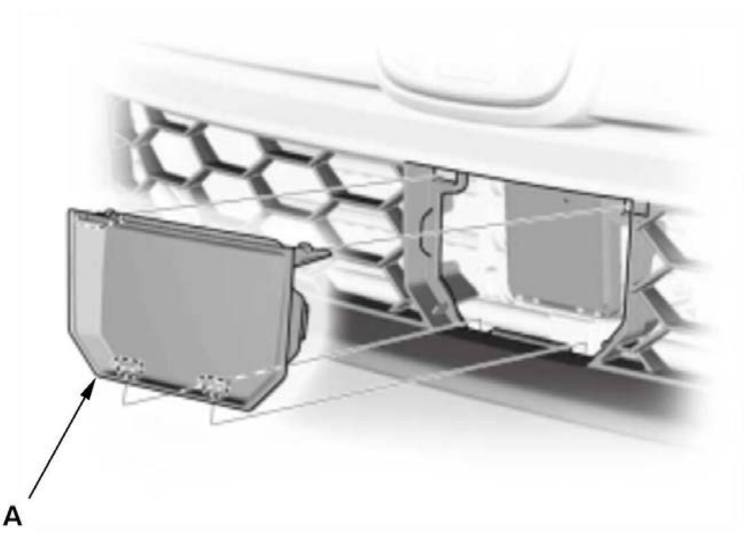

8. Remove the radar cover (A).

NOTE:

- **Clean the surface of the millimeter wave radar.**
- **If the radar cover is damaged or cracked, replace the cover and inspect the millimeter wave radar assembly and subassembly for any damages before proceeding.**

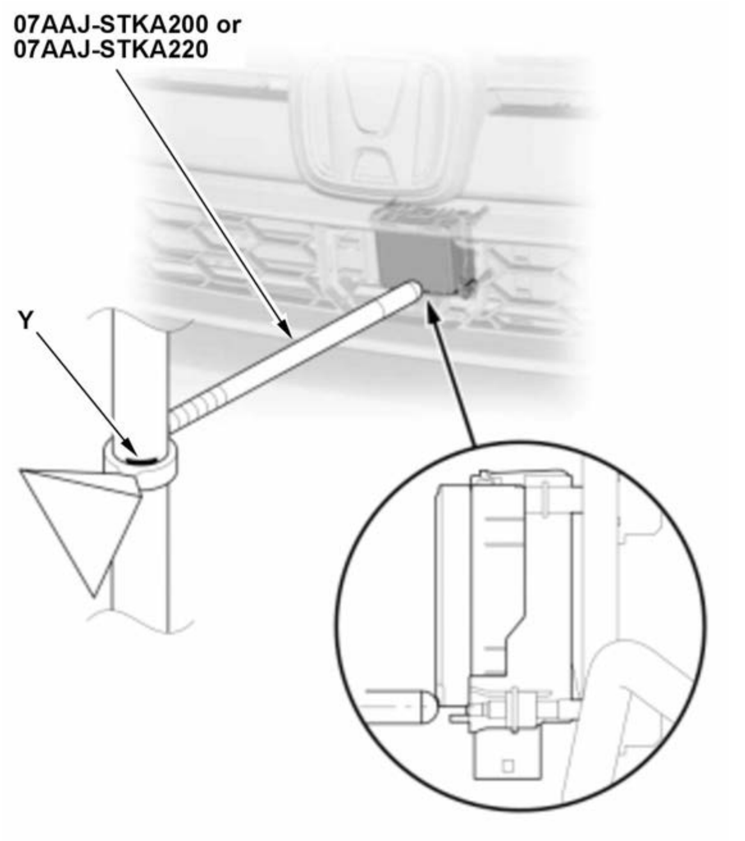 07AAJ-STKA200 or 07AAJ-STKA220 Y	9. Align the lower edge of the millimeter wave radar with the shaft end. 10. Draw a line (Y) on the pole of the stand set as shown.

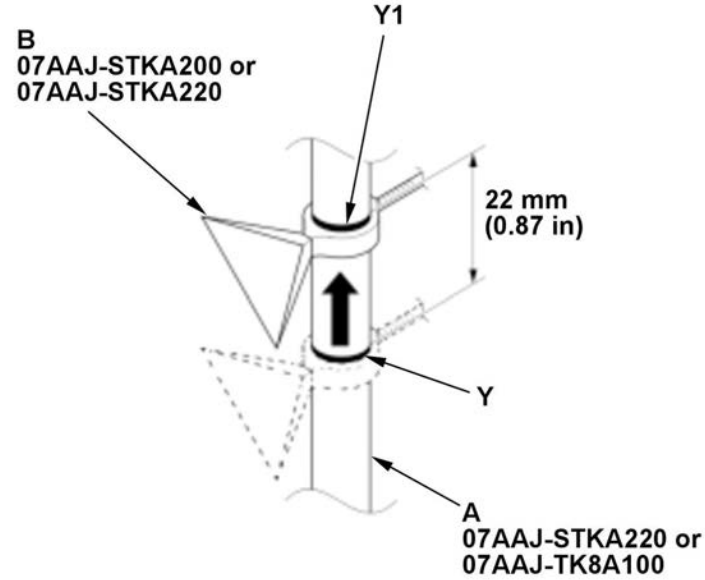 Y1 B 07AAJ-STKA200 or 07AAJ-STKA220 22 mm (0.87 in) Y A 07AAJ-STKA220 or 07AAJ-TK8A100	11. Draw a line (Y1) on the pole (A) of the stand set as shown. 12. Slide the corner reflector (B) upward to position Y1.

2. Millimeter Wave Radar - Aim

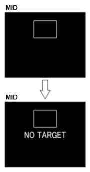 MID MID NO TARGET	1. **Connect the HDS** . **NOTE:** Keep the aiming target away from the vehicle until you are instructed in a later step. 2. Check for DTCs with the HDS. **NOTE:** Troubleshoot any DTCs first before proceeding. If DTC P2583-54 is indicated, proceed with the aiming procedure. 3. In the DRIVING SUPPORT menu, select INTEGRATED DRIVER SUPPORT SYSTEM, ADJUSTMENT, then Radar Aiming and follow the screen prompts.

	4. Press ENTER on the HDS to enter the aiming mode. **NOTE:** ACC, LKAS, CMBS and RDM indicators (amber) blink when aiming mode is activated. 5. The MID will display NO TARGET. 6. Make sure the MID indicates NO TARGET on the display. **NOTE:** If NO TARGET is not indicated, the stand set is placed in front of the vehicle or there is an unwanted radar reflection in front of the vehicle in the range of the radar. Make sure the stand set is set aside away from the range of the radar until you are instructed to place it in front of the vehicle. If you are still getting an unwanted radar reflection, stack tires about 1.5 m (4.9 ft) in height in front of either the immovable object, such as a pole, or in front of any object causing the unwanted reflections. The tires will block the radar reflections. Make sure NO TARGET appears on the MID. If it still does not appear, move the vehicle to a different location until NO TARGET appears on the MID.

7. Place the stand set (A) on the mark (D).

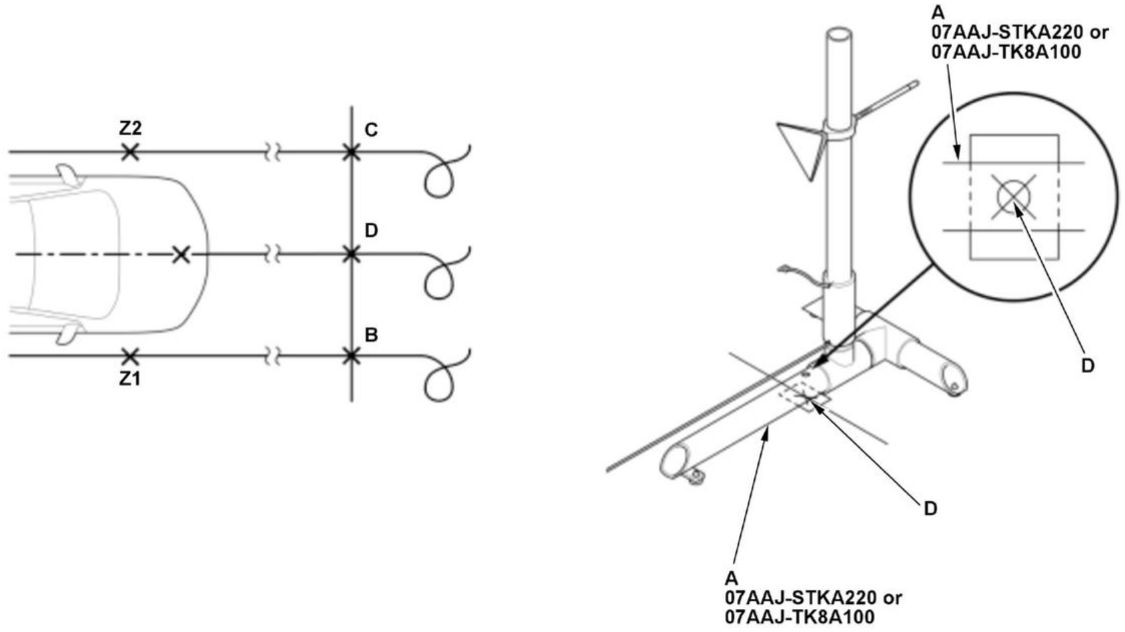

8. Press ENTER on the HDS to calculate the alignment angles.

9. Check the vertical and horizontal alignment angles on the HDS display. If the angles displayed on the HDS are out of the specified angle range, turn the adjustment bolt using the 3.5 mm hex socket driver (from the Adaptive Speed Control Alignment Tool SPX 10243 or 07AAA-TGVA100)) as necessary (counterclockwise or clockwise) to bring the displayed angle to the specified angle range. Watch the HDS display while performing the adjustment as the values will change.

Specified Angle:

Millimeter wave angle	Specified angle range
Horizontal	0 ± 0.1 deg.
Vertical	0 ± 0.1 deg.

Adjustment Method:

Angle shown on the HDS display	Rotate the screwdriver as follows
More than +0.1 deg.	Counterclockwise
Less than -0.1 deg.	Clockwise

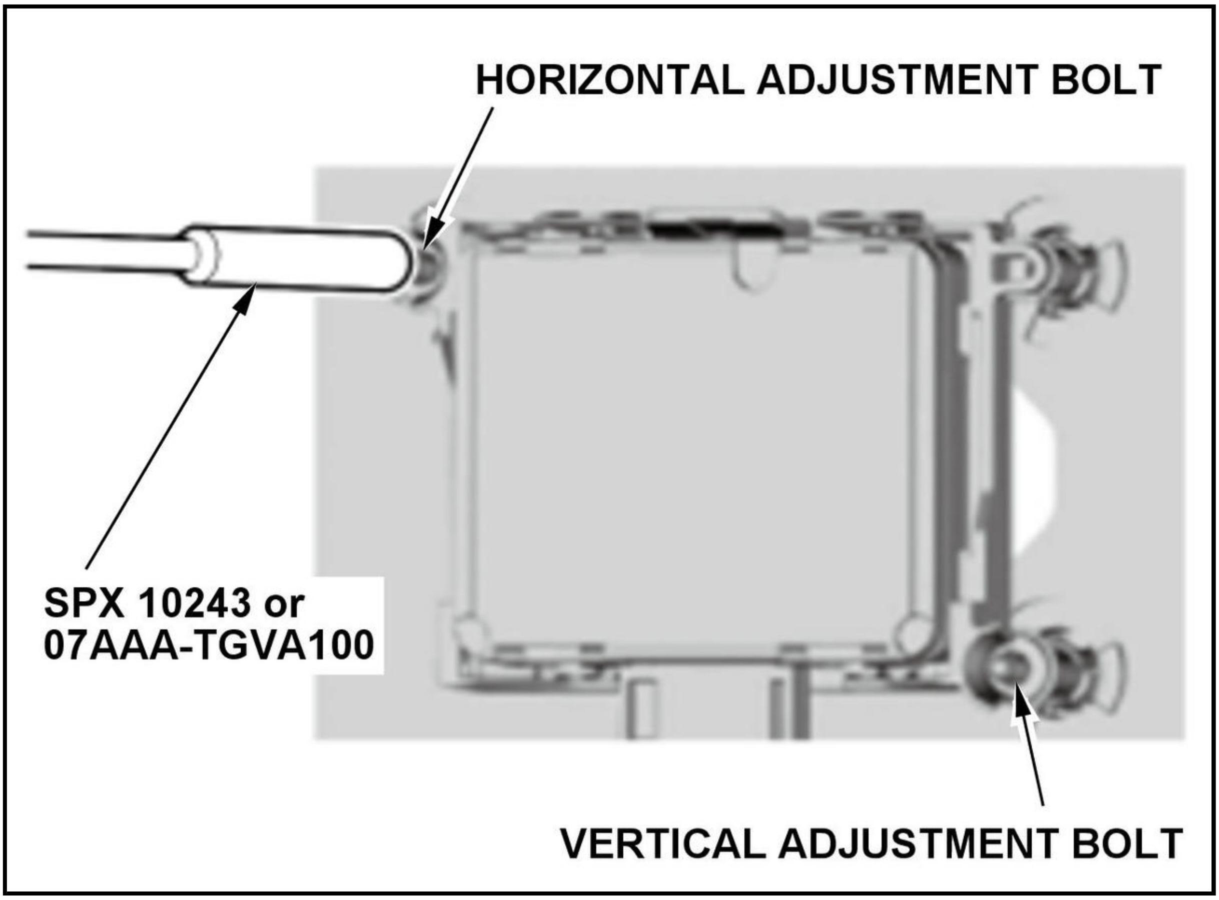
HORIZONTAL ADJUSTMENT BOLT
SPX 10243 or
07AAA-TGVA100
VERTICAL ADJUSTMENT BOLT

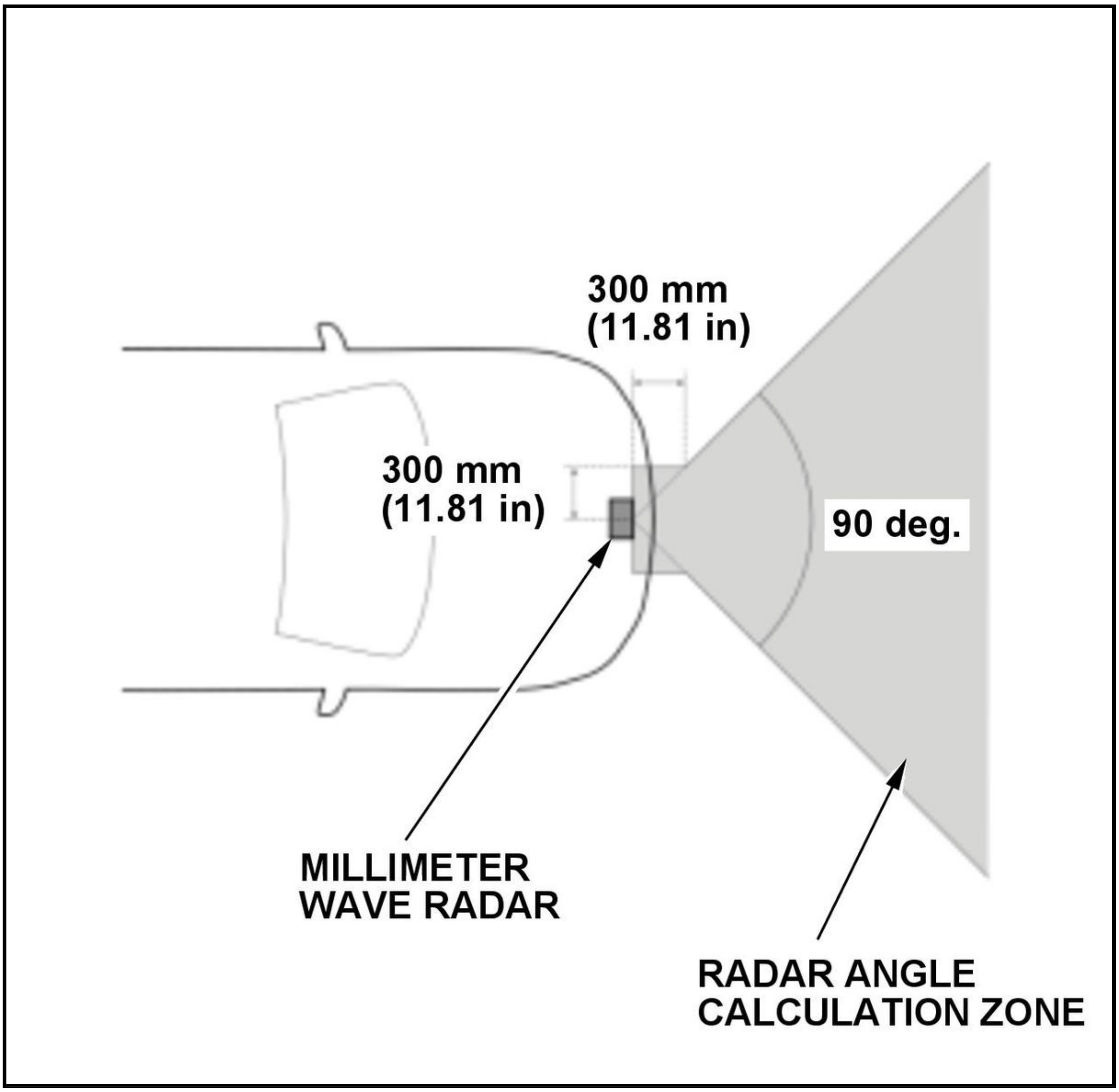

NOTE:

- The values on the HDS display will fluctuate as the adjustment is being performed. Wait until the values stabilize to confirm the adjustment.
- When checking the angle and recording the calculated angle on the HDS screen, do not enter or obstruct the radar wave zone.
- A value of 12.8 degrees on the HDS display indicates that the millimeter wave radar is being obstructed and cannot receive the radar wave.
- If the value of 12.8 degrees remains on the HDS screen for 15 seconds continuously, the aiming will stop.
- If the specified angle cannot be obtained with the adjustment bolts, confirm the millimeter wave radar mounting position.

NOTE: If the failure code and the message in the following list are displayed, solve the problem, and then perform the millimeter wave radar aiming again.

Failure codes and messages:

Failure code (on the MID)	Failure message (on the HDS)	How to solve
120	Multiple Aiming Target Detected	Remove all reflective objects except the correct special tools.

Failure code (on the MID)	Failure message (on the HDS)	How to solve
122	The Distance between Radar and Aiming Target is Out of Specification.	Set the specified distance to the aiming target.
124	Detected Some Obstacles	Remove all obstacles.
125	There is no Aiming Target	Set the aiming target at the correct position.
129	A Vehicle Speed is not 0 km/h.	Stop the vehicle completely.

Failure code (on the MID)	Failure message (on the HDS)	How to solve
132	Internal Software Error	Update the millimeter wave radar.
134	High Temperature Error	Cool down the millimeter wave radar to the proper operating temperature.
135	Internal Hardware Error	Replace the millimeter wave radar.

10. When the angle is at the specified value, press ENTER to record the angle.

NOTE: The aiming information obtained is stored in the millimeter wave radar.

11. Confirm THE RADAR AIMING HAS BEEN COMPLETED on the HDS.

12. Press ENTER on the HDS, and turn the vehicle to the OFF (LOCK) mode.

13. Reinstall the radar cover.

NOTE: If the radar cover is damaged or cracked, replace it.

MULTIPURPOSE CAMERA AIMING

Special Tools Required

Image	Description/Tool Number
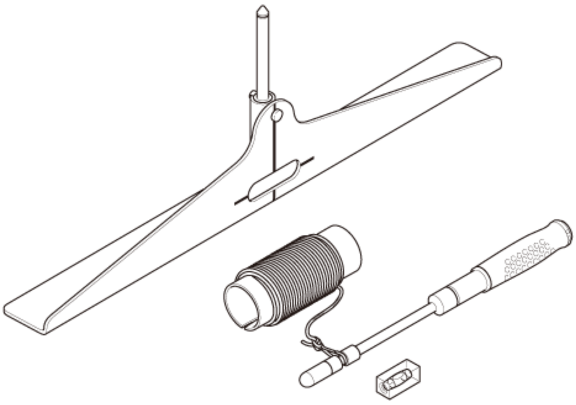	Alignment Set 07AAJ-STKA210

Image	Description/Tool Number
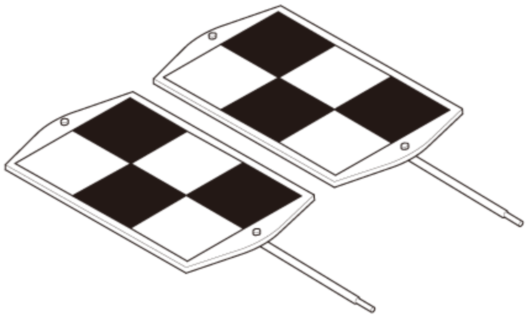	Target Set 07AAK-5K0A100
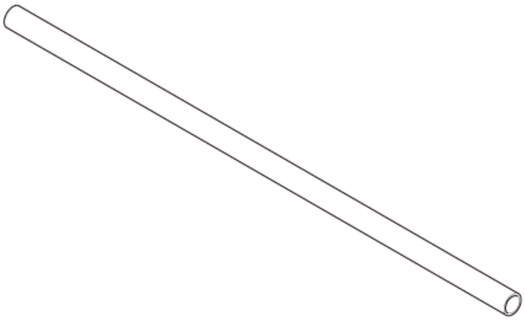	Stand Pole (Aluminum) 07AAK-5K0A120*
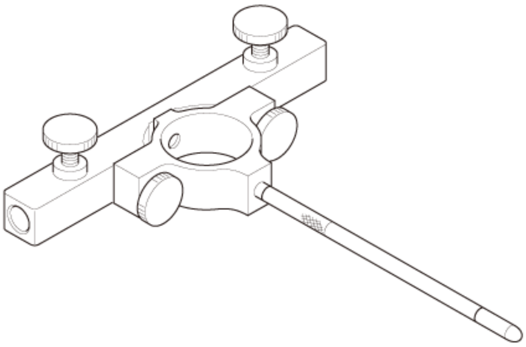	Target Adjuster 07AAK-5K0A110
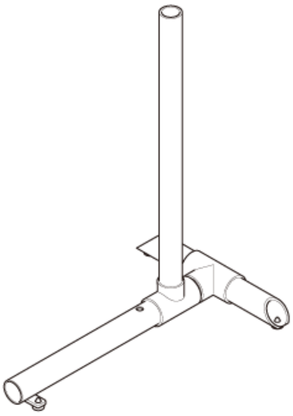	Stand 07AAJ-TK8A100*

Image	Description/Tool Number
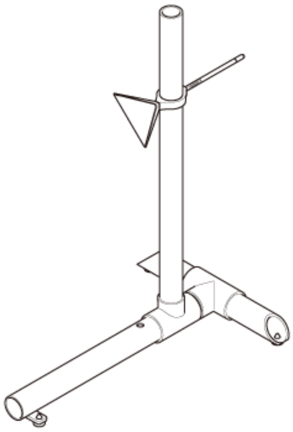	Stand Set 07AAJ-STKA220*

*: Switch out the included PVC pole for the 07AAK-5K0A120 Aluminum Stand Pole, and use Stand 07AAJ-TK8A100 or Stand Set 07AAJ-STKA220 for aiming.

Adjustment

NOTE:

- The multipurpose camera unit must be re-aimed if the multipurpose camera unit or windshield is removed or replaced. The LKAS and ACC indicators (amber) will blink if the aiming process is not completed correctly. If DTCs are indicated, do the indicated DTC troubleshooting first. If the DTCs are not repaired, you cannot complete the multipurpose camera aiming procedure. However, if you have the following DTC, proceed with the aiming procedure:
-
    - -

      Static Camera Aiming Incomplete: **DTC B2A60-54**
- If the vehicle you are aiming was involved in a collision or if you suspect the alignment is out of specifications, you must perform a wheel alignment prior to aiming the multipurpose camera unit.
- Conditions for the aiming environment:
-
    - -

      Aiming should be done on a flat space.
    - -

      Amount of space required in front of the vehicle: 7 m (23 ft) measured from the front bumper 4 m (13 ft) in width 1.5 m (4.9 ft) in height, measured from the floor
    - -

      Make sure the vehicle is not facing any direct light sources as this will affect the static camera aiming.
    - -

      Make sure there are no black and white checkered or dark and light alternating patterns directly behind the targets as this will affect the static camera aiming.
- Set up the vehicle:
-

  - -

    Do not put any objects on the dashboard.

  - -

    Remove all cargo from the vehicle except the tool kit and the spare tire.

  - -

    Make sure that there are no stains, dust, or dirt on the lens of the multipurpose camera unit and the windshield area where the camera is mounted.

  - -

    Make sure that all doors are closed.

  - -

    Make sure the suspension has not been modified.

  - -

    Make sure all the tire sizes are correct and that their pressure is correct.

  - -

    Make sure the fuel tank is full.

  - -

    Make sure the steering wheel is pointed straight ahead, and do not turn it after setting the vehicle.

  - -

    Shift the transmission to P position/mode, and apply the parking brake.

- When marking on the floor surface, use suitable tape to mark the exact locations.

Prepare these items:

- HDS
- Tape measure and ruler
- Felt-tip pen
- Tape
- String
- Plumb bob

1. Before Aiming - Set

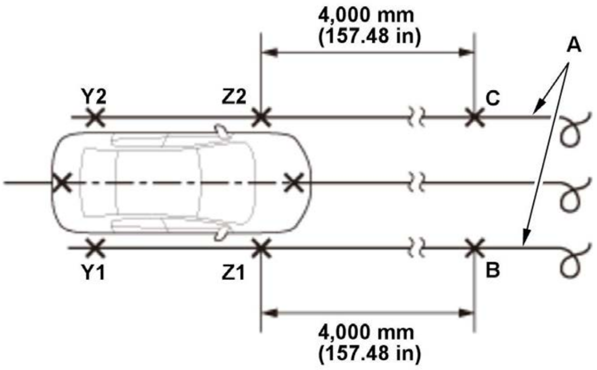
4,000 mm
(157.48 in)
A
Y2
Z2
C
Y1
Z1
B
4,000 mm
(157.48 in)

Marking of the Target Position

1. **Make points (Z1, Y1, Z2, Y2) and set the cord along the center-Line of the vehicle.**

2. Place a string (A) between point Z1 and point Y1, and tape both ends of the string on the floor surface.

NOTE: Repeat this step for the opposite side for points Z2 and Y2.

3. Measure and make a new point B on the floor surface in front of the vehicle, 4, 000 mm (157.48 in) from point Z1.

4. Pull one end of the string to point B and tape it to the floor surface.

NOTE: Repeat these steps for the opposite side, and mark a new point C.

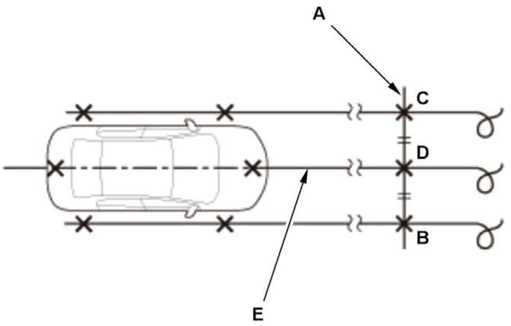

5. Set the string (A) between point B and point C, and tape both ends of the string on the floor surface. Mark a new point D where the string crosses with the center-line (E).

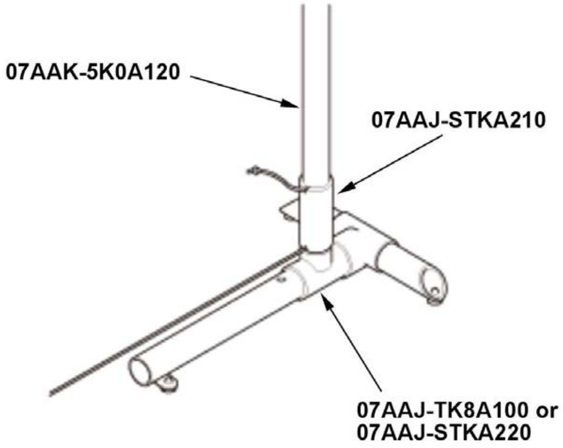
07AAK-5K0A120
07AAJ-STKA210
07AAJ-TK8A100 or
07AAJ-STKA220

Special Tools Set-Up, Target Pattern Surface Height Adjustment, and Positioning:

NOTE: Switch out the included PVC stand pole for 07AAK-5K0A120 Aluminum Stand Pole.

6. Use the stand pole (aluminum).

NOTE: The PVC stand pole is too low to align the camera.

7. Route the cord through the collar and place it on the aiming stand.

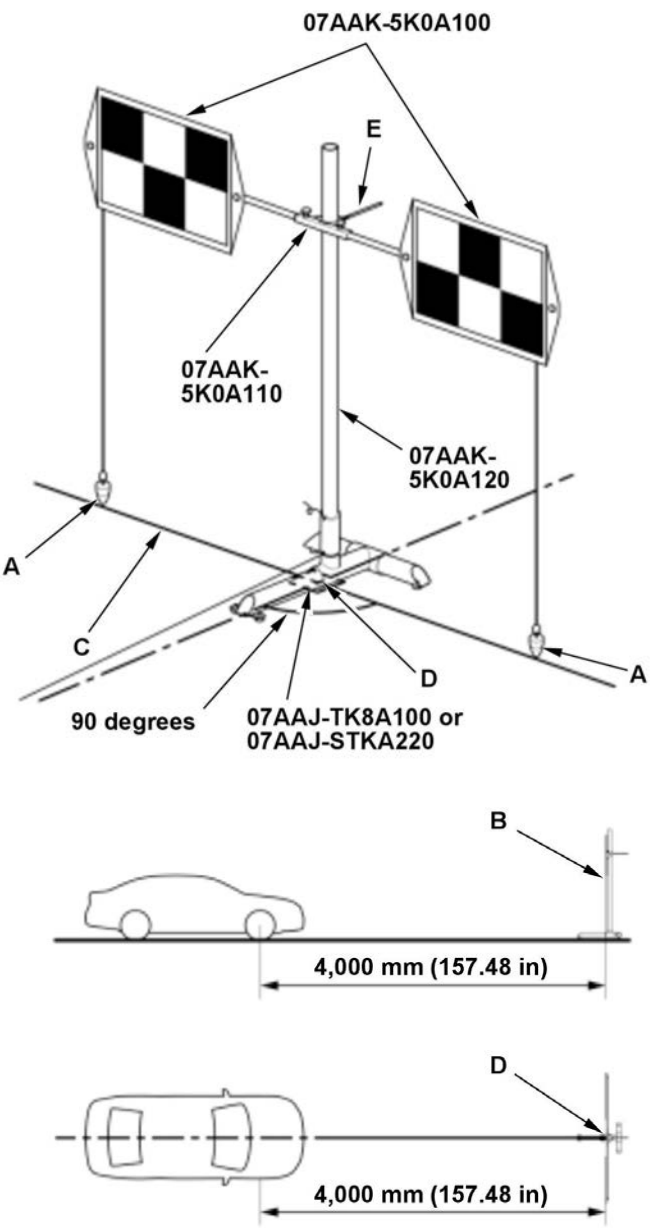
07AAK-5K0A100
E
07AAK-5K0A110
07AAK-5K0A120
A
C
D
A
90 degrees
07AAJ-TK8A100 or 07AAJ-STKA220
B
4,000 mm (157.48 in)
D
4,000 mm (157.48 in)

8. Assemble the aiming target.

NOTE: For correct orientation of the aiming target panels, make sure the target patterns match the illustration.

9. Dangle two plumb bobs (A) from the lower corners of the target to the floor and secure the plumb bob string to the target with tape.

10. Position the aiming target assembly (B) at point D.

11. Make sure that both plumb bobs touch directly on the line (C). If they do not, loosen the pointer (E) and rotate the target assembly as necessary.

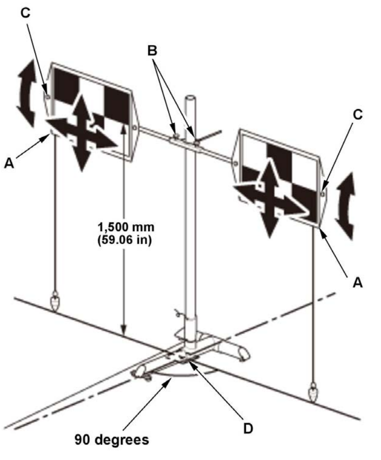
C
B
C
A
1,500 mm (59.06 in)
A
90 degrees
D

12. Adjust the aiming target panel (A).

-1. Put the level on the target panel surface. Loosen the adjustable screws (B), and adjust the vertical angle of the target panel surface so that the air bubble in the level is centered. Tighten the adjustable screw once the adjustment is completed.

-2. Put the level on the top edge of the target panel. Loosen the adjustable screws (C), and adjust the horizontal angle of the target panel surface so that the air bubble in the level is centered. Tighten the adjustable screw once the adjustment is completed.

-3. Adjust the height of the target panel and make sure to have 1, 500 mm (59.06 in) between the floor surface and the horizontal center line of the panel.

NOTE: The horizontal center line is a horizontal division line on the panel where the black and white boxes meet.

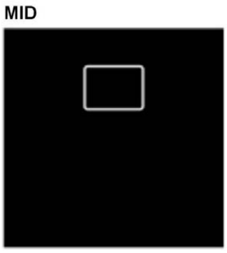	1. Apply the parking brake. 2. Connect the HDS 3. Check for DTCs with the HDS. **NOTE:** Troubleshoot any DTCs first before proceeding. If DTC B2A60-54 is indicated, proceed with the aiming procedure. 4. In the DRIVING SUPPORT MENU, select INTEGRATED DRIVER SUPPORT SYSTEM, ADJUSTMENT, then STATIC CAMERA AIMING. 5. Press ENTER on the HDS to enter the aiming mode. **NOTE:** A "□" will be displayed on the MID, then the ACC and LKAS indicators will flash alternately during camera aiming. 6. Confirm STATIC CAMERA AIMING IS COMPLETE on the HDS and then press ENTER. **NOTE:** If the aiming has failed, you must start the static camera aiming procedure again. 7. Turn the vehicle to the OFF (LOCK) mode.

DESCRIPTION & OPERATION

DRIVING SUPPORT SYSTEM DESCRIPTION

Integrated Driver Support System

This vehicle is equipped with the integrated driver support system, which analyzes information from the monocular camera (multipurpose camera) and millimeter wave radar in a comprehensive manner to recognize an object.

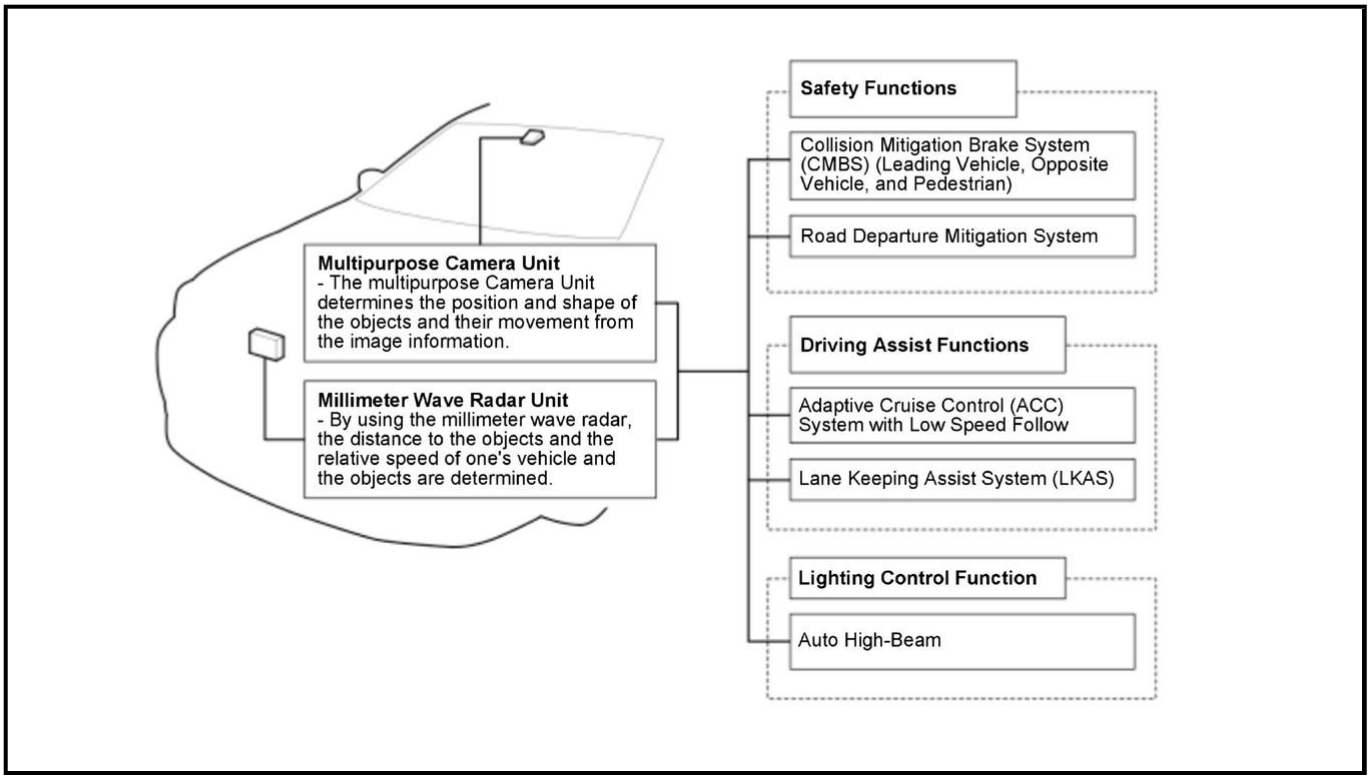
Safety Functions
Collision Mitigation Brake System (CMBS) (Leading Vehicle, Opposite Vehicle, and Pedestrian)
Road Departure Mitigation System
Multipurpose Camera Unit
- The multipurpose Camera Unit determines the position and shape of the objects and their movement from the image information.
Millimeter Wave Radar Unit
- By using the millimeter wave radar, the distance to the objects and the relative speed of one's vehicle and the objects are determined.
Driving Assist Functions
Adaptive Cruise Control (ACC) System with Low Speed Follow
Lane Keeping Assist System (LKAS)
Lighting Control Function
Auto High-Beam

Roles of Each Function

The Integrated Driver Support System has three main categories of functions: Safety, Driving Assist and Lighting control functions. When the integrated driver support system detects a hazard, an alarm and/or warning notification is triggered. The system provides safety functions that perform a hazard evasion assistance if the driver does not (or cannot) respond to the warning notification or alarm. The system also provides driving assist and lighting control functions controlling the vehicle behavior according to the road conditions to assist the driver.

Safety Functions	Driving Assist Functions	Lighting Control Function
CMBS, Road Departure Mitigation (RDM)	ACC with Low Speed Follow, LKAS	Auto High-Beam
The driver can turn on and off these functions using the switch*	The function is selectable by the driver	The function is ON by turning the combination light switch to the AUTO position

*: The status of these functions will be kept even after the vehicle is turned to OFF (LOCK) and ON mode again.

Operational priority of each function

Operation priority of each function is set among systems. The CMBS gets activated when a risk of collision becomes greater while the ACC control is in operation. Once the CMBS becomes active, the ACC will be cancelled. When the RDM System is activated, its operation has higher priority than LKAS. Between CMBS and RDM System, the brake control of the CMBS has higher priority.

Operation of the Millimeter Wave Radar

The millimeter wave radar uses millimeter wave bands to detect vehicles and pedestrians (vehicle ahead, opposite vehicles and pedestrian) in front of the vehicle. The radar also calculates the relative speed of the objects and the distance between the objects and the vehicle by transmitting and receiving the millimeter waves.

Operation Conditions

Item	Leading Vehicle
Target Detection Range	0.5 - 120 m (1.6 - 394 ft)

Millimeter waves are emitted within an angle range of 40 degrees in the vertical direction and an angle of 90 degrees in the horizontal direction.

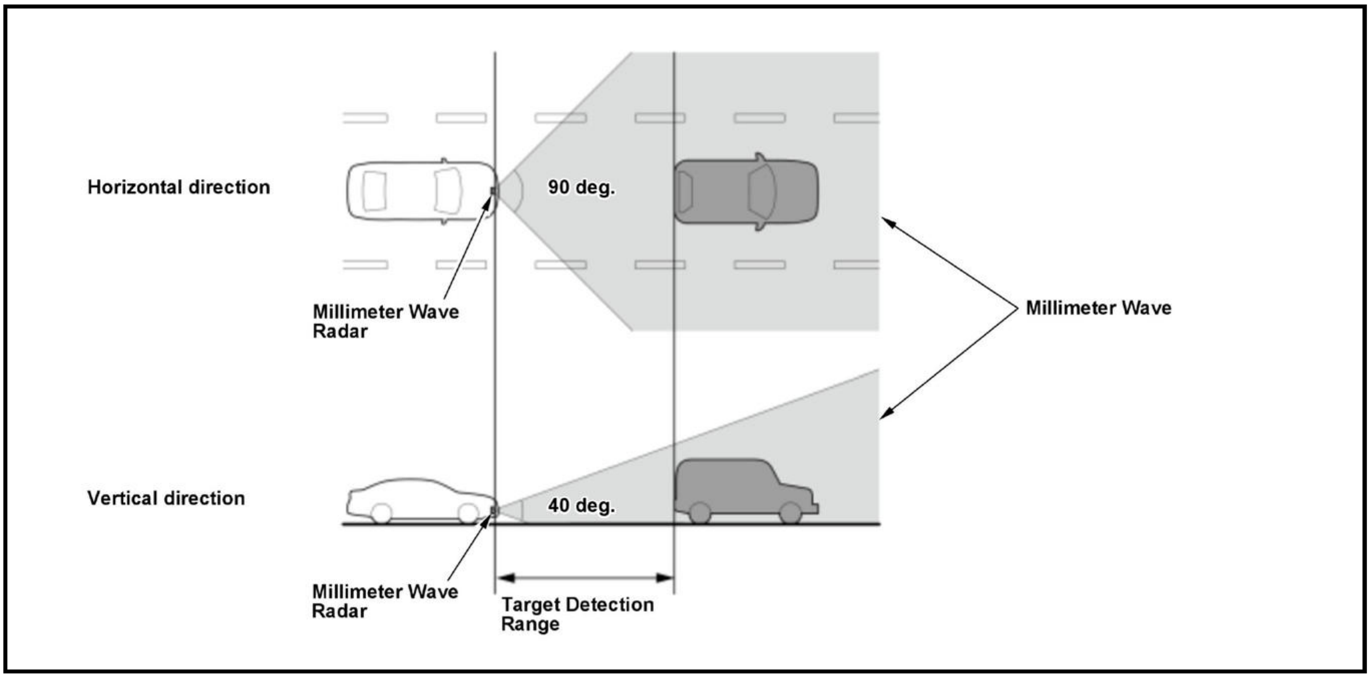
Horizontal direction
90 deg.
Millimeter Wave Radar
Millimeter Wave
Vertical direction
40 deg.
Millimeter Wave Radar
Target Detection Range

Vehicle/Object Detection Process

- The multipurpose camera unit determines if there is any leading vehicle and/or detected objects that are moving based on the outlines of the objects, relative position and speed of the objects. In order to distinguish between leading vehicles and pedestrians, the system uses the recognition result received from both the millimeter wave radar and the multipurpose camera as follows.
- The lane lines are recognized by managing the width, length, continuity of the line from the image captured by the multipurpose camera.
- The road sign is recognized by comparing the image captured by the multipurpose camera with the sign information registered in the system.

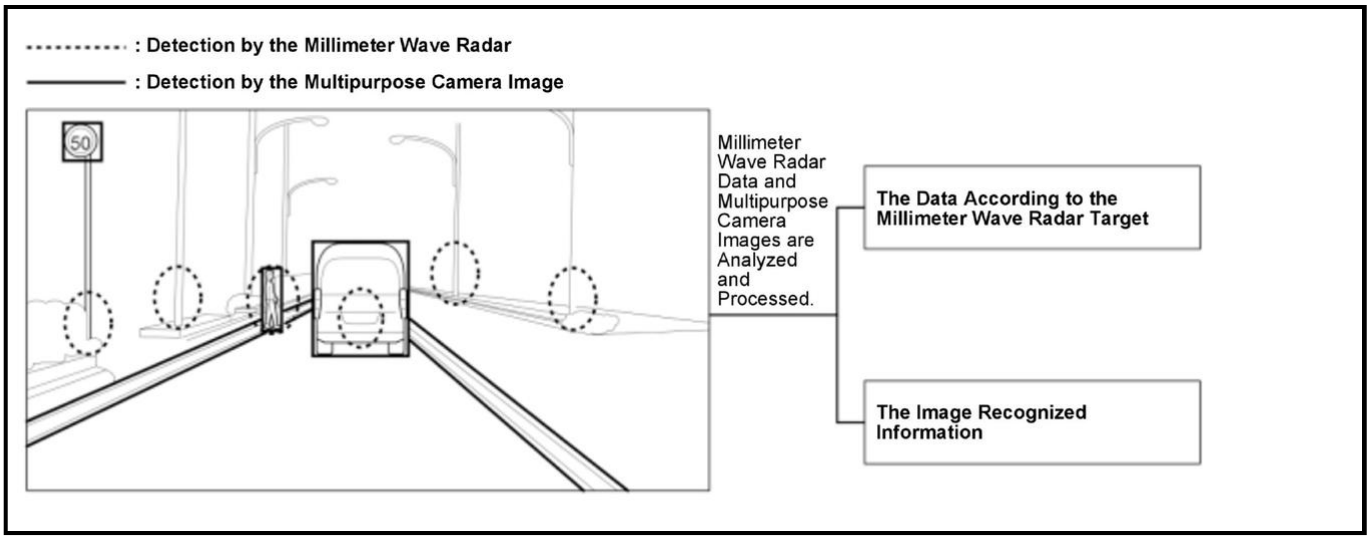
: Detection by the Millimeter Wave Radar
: Detection by the Multipurpose Camera Image
50
Millimeter Wave Radar Data and Multipurpose Camera Images are Analyzed and Processed.
The Data According to the Millimeter Wave Radar Target
The Image Recognized Information

Pedestrian Image Processing

When the system detects an object that could be a pedestrian, the system compares the object's characteristics against programmed characteristics for the system to determine if the object is likely a pedestrian or other object.

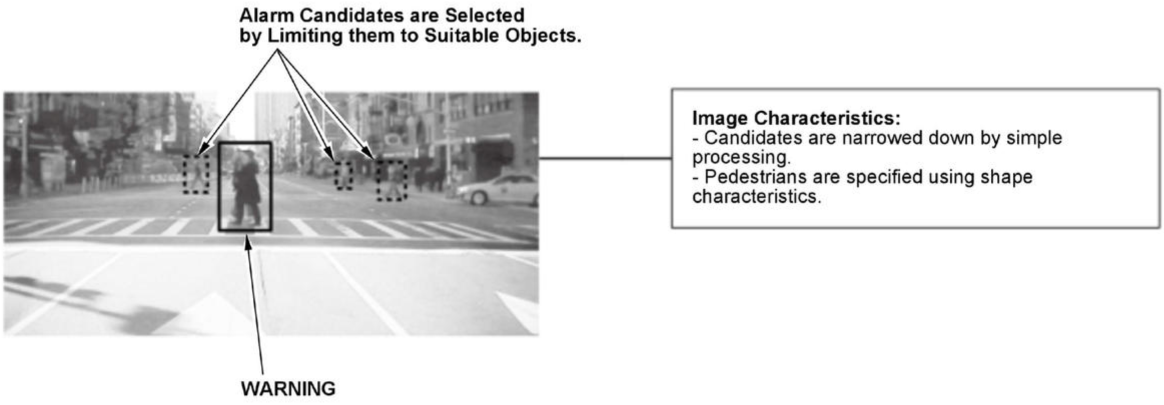
Alarm Candidates are Selected by Limiting them to Suitable Objects.
WARNING
Image Characteristics:
- Candidates are narrowed down by simple processing.
- Pedestrians are specified using shape characteristics.

Function Failure Indication

System Temporary Stop	The system detects that the electric wave of the millimeter wave radar is blocked (such as dirt attached on the radar surface/radar cover)	ACC with LSF, CMBS, and RDM stop functioning, CMBS indicator (amber) and RDM indicator (amber) come on, and a fault indication is triggered on the MID. After the dirt has been removed, the system recovers and the indicators turn off.	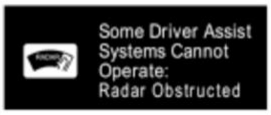 Some Driver Assist Systems Cannot Operate: Radar Obstructed
	The system detects the image of the multipurpose camera is covered (foggy/dirty windshield)	LKAS, CMBS, RDM, and Auto High-Beam stop functioning, CMBS indicator (amber) and RDM indicator (amber) come on, and a fault indication is triggered on the MID. After the obstruction has been removed, the system recovers and the indicators turn off.	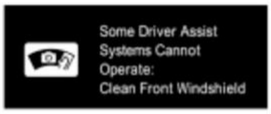 Some Driver Assist Systems Cannot Operate: Clean Front Windshield
	The temperature in the multipurpose camera unit becomes upper limit of the operating temperature or higher because of a temperature increase in the vehicle interior.(temperature rise caused by sunlight)	LKAS, CMBS, RDM, and Auto High-Beam stop functioning, CMBS indicator (amber) and RDM indicator (amber) come on, and a fault indication is triggered on the MID. When the inside temperature drops, the system recovers and the indicators turn off.	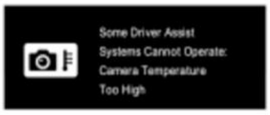 Some Driver Assist Systems Cannot Operate: Camera Temperature Too High

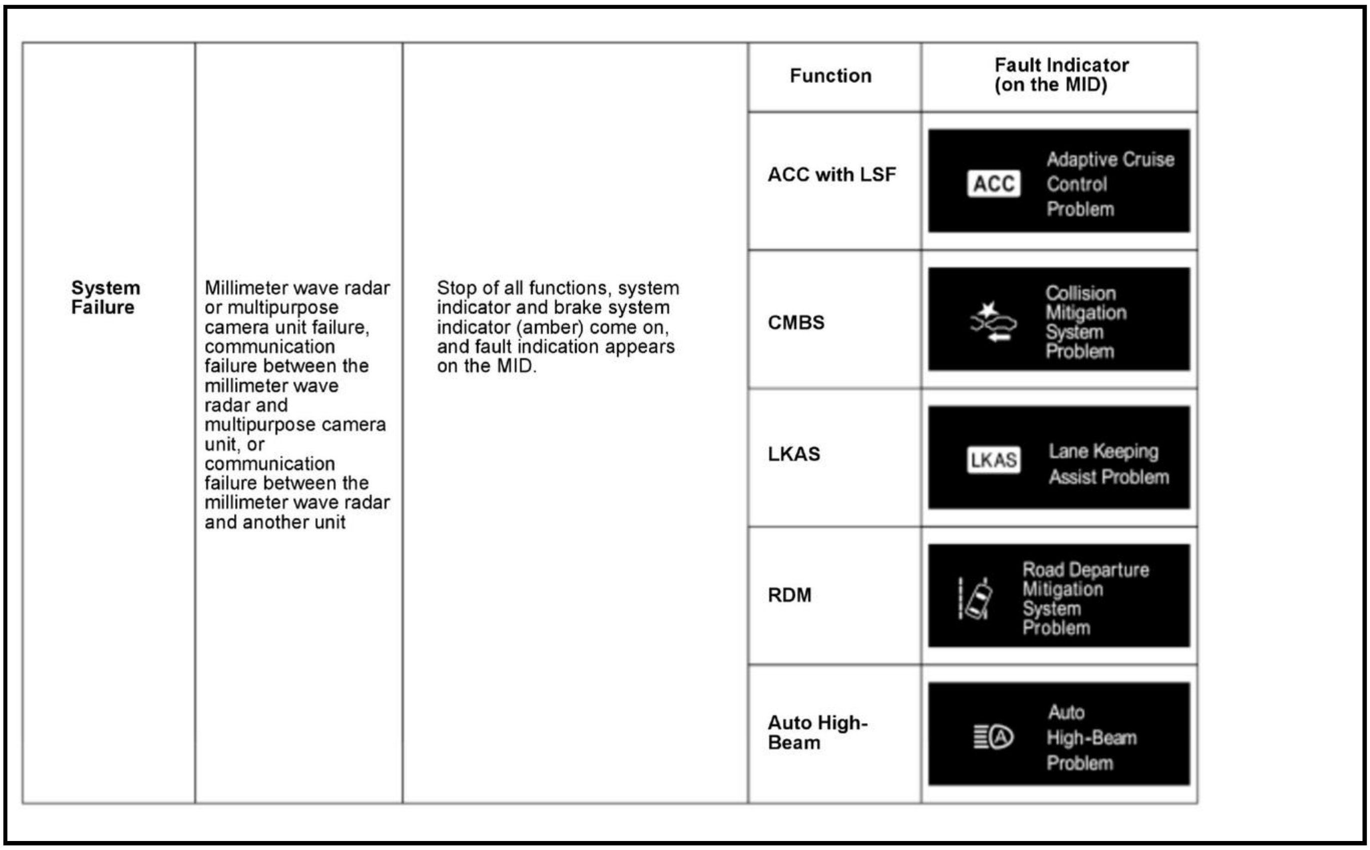

			Function	Fault Indicator (on the MID)
System Failure	Millimeter wave radar or multipurpose camera unit failure, communication failure between the millimeter wave radar and multipurpose camera unit, or communication failure between the millimeter wave radar and another unit	Stop of all functions, system indicator and brake system indicator (amber) come on, and fault indication appears on the MID.	**ACC with LSF**	ACC Adaptive Cruise Control Problem
			CMBS	Collision Mitigation System Problem
			LKAS	LKAS Lane Keeping Assist Problem
			RDM	Road Departure Mitigation System Problem
			Auto High-Beam	Auto High-Beam Problem

ROAD DEPARTURE MITIGATION SYSTEM DESCRIPTION

The Road Departure Mitigation (RDM) system uses image information from the multipurpose camera to recognize the lane markings on the road. The multipurpose camera unit monitors the lane markings and detects risks of the vehicle moving out of its lane. When the unit determines that the vehicle begins to move out of its lane, the unit warns the driver by vibrating the steering wheel, showing a road-departure warning image on the multi information display (MID) and also provides a steering control to assist steering the vehicle back in its lane to prevent the vehicle from moving out of its lane. When the multipurpose camera unit determines that a steering control is not sufficient to prevent the vehicle moving out if its lane and the approaching lane marking on the road is indicated as a solid line, the unit also provides a brake control to assist decelerating the vehicle. When the vehicle goes out of a lane or the multipurpose camera unit determines that the vehicle begins to move out of its lanes for the third time after moving out of its lane twice in a row without the driver's steering action, the unit warns the driver with only an MID warning image and a buzzer sound without providing steering control.

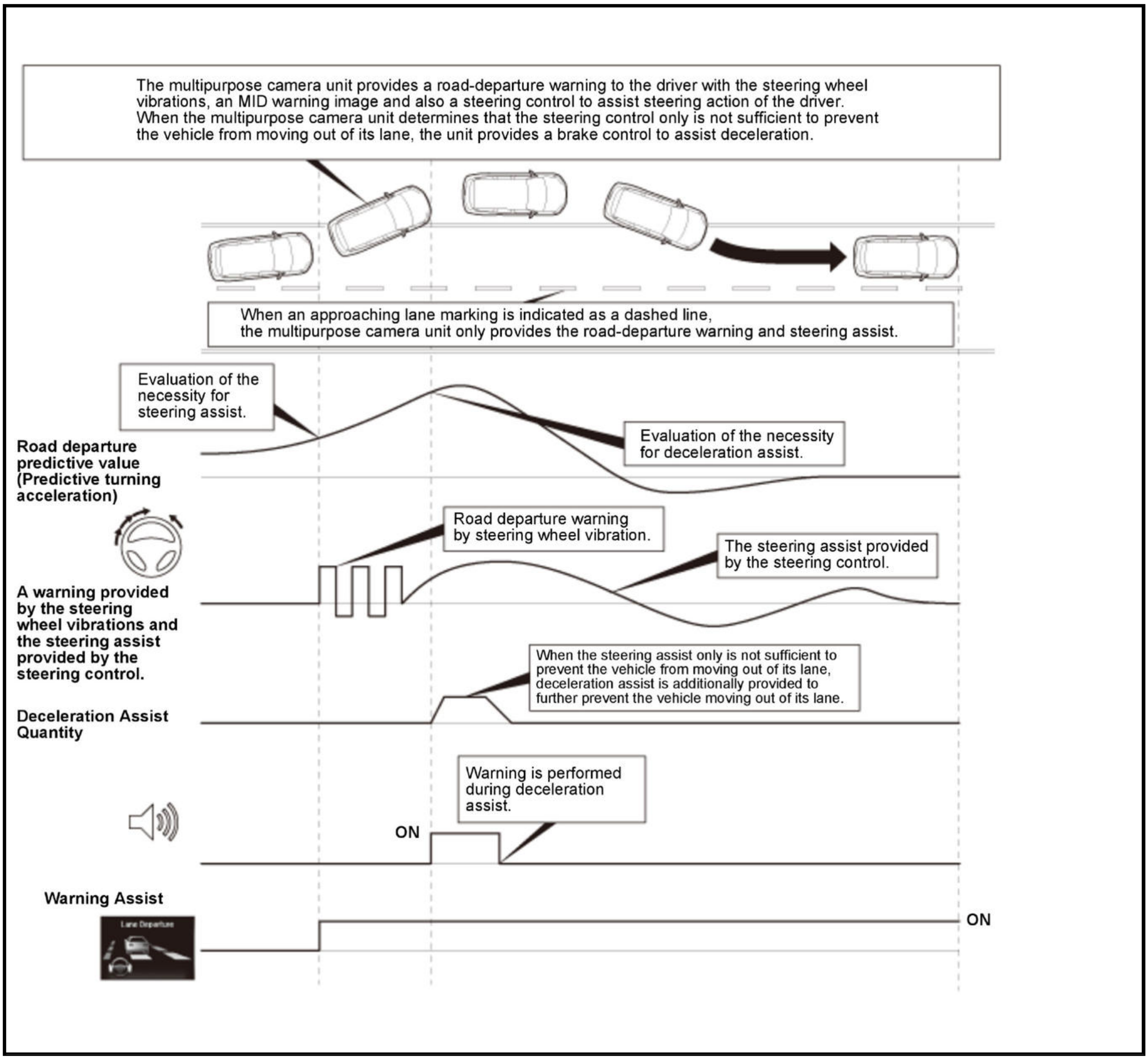
The multipurpose camera unit provides a road-departure warning to the driver with the steering wheel vibrations, an MID warning image and also a steering control to assist steering action of the driver. When the multipurpose camera unit determines that the steering control only is not sufficient to prevent the vehicle from moving out of its lane, the unit provides a brake control to assist deceleration.
When an approaching lane marking is indicated as a dashed line, the multipurpose camera unit only provides the road-departure warning and steering assist.
Evaluation of the necessity for steering assist.
Road departure predictive value (Predictive turning acceleration)
Evaluation of the necessity for deceleration assist.
Road departure warning by steering wheel vibration.
The steering assist provided by the steering control.
A warning provided by the steering wheel vibrations and the steering assist provided by the steering control.
When the steering assist only is not sufficient to prevent the vehicle from moving out of its lane, deceleration assist is additionally provided to further prevent the vehicle moving out of its lane.
Deceleration Assist Quantity
Warning is performed during deceleration assist.
ON
Warning Assist
Lane Departure
ON

Operation Conditions

System Operation Conditions	The Road Departure Mitigation (RDM) system works as long as an approaching lane marking is recognizable (lane markings may not be recognizable under some conditions such as bad weather, backlit, and on snowy roads).		
	Operation vehicle speed	45 - 90 mph (72 - 145 km/h)	
	Object lane line types	Broken lines on the road	The road-departure warning image on the multi information display (MID) and steering wheel assist control.
		Solid lines on the road	The road-departure warning image on the multi information display (MID), steering wheel assist control and brake control to assist decelerating the vehicle.
	Driver operation	The RDM system does not operate when the driver's intention to control the vehicle, such as intentional steering wheel operation, acceleration pedal operation, brake pedal	

		operation, high speed wiper operation, and turn signal operation, is recognized.

ROAD DEPARTURE MITIGATION SYSTEM DESCRIPTION - SYSTEM DIAGRAM

The system diagram of the RDM system is shown below.

For locations of each component on the vehicle, refer to Component Location Index:

- **Millimeter wave radar**
- **Multipurpose camera unit**
- **Gauge control module**
- **PCM**
- **VSA modulator-control unit**
- **EPS control unit**
- **SRS unit**
- **Electric servo brake control unit/pedal feel simulator**

The RDM system for this vehicle uses the multipurpose camera unit to calculate camera image information, and sends the RDM system indicated value to the control unit via the millimeter wave radar.

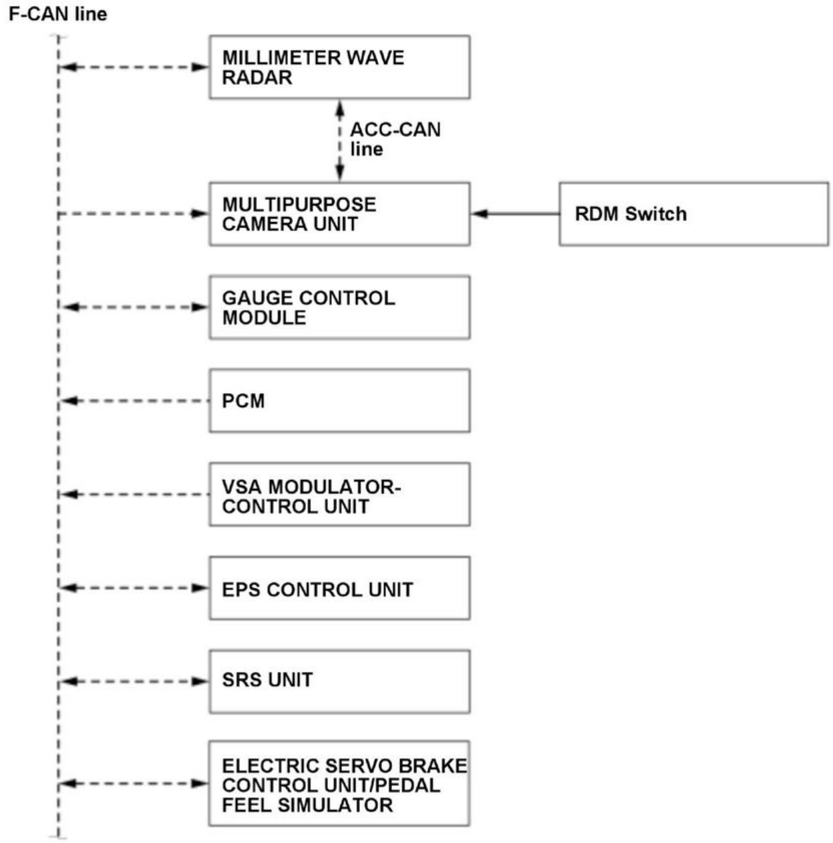
F-CAN line
MILLIMETER WAVE RADAR
ACC-CAN line
MULTIPURPOSE CAMERA UNIT
RDM Switch
GAUGE CONTROL MODULE
PCM
VSA MODULATOR-CONTROL UNIT
EPS CONTROL UNIT
SRS UNIT
ELECTRIC SERVO BRAKE CONTROL UNIT/PEDAL FEEL SIMULATOR

F-CAN Communication Data

Millimeter Wave Radar Receiving Signal:

Originating Unit	Signal Name
EPS control unit	• EPS failure information

Originating Unit	Signal Name
	• Steering angle neutral position learning information • Steering angle signal • Torque sensor signal
Gauge control module	• Customization signal • Gauge control module failure information • Turn signal lights operating status • Wiper operating status
Multipurpose camera unit*	RDM switch status information
PCM	• Accelerator pedal position (APP) sensor signal • Brake pedal position switch signal • PCM failure information • Vehicle speed signal
SRS unit	• Yaw rate sensor signal • Yaw rate sensor failure information
VSA modulator-control unit	• Master cylinder pressure signal • VSA system actuation information • VSA system failure information • Wheel speed sensor signals
Electric servo brake control unit/pedal feel simulator	• Electric servo brake system failure information • Brake control status signal • Brake light relay circuit failure information

*: With the multipurpose camera unit via ACC-CAN line.

Millimeter Wave Radar Transmitting Signal:

Destination Unit	Signal Name
EPS control unit	• RDM failure information • RDM control instruction
Gauge control module	• Buzzer request signal • Customization information • RDM failure information • Multi information display (MID) screen requirement: • • - RDM indicator • - RDM system indicates for self-diagnostic function

Destination Unit	Signal Name
Multipurpose camera unit*	---
PCM	---
SRS unit	RDM operating information
VSA modulator-control unit	---
Electric servo brake control unit/pedal feel simulator	• Automatic brake actuation request signal • RDM failure information

*: With the multipurpose camera unit via ACC-CAN line.

CIRCUIT DIAGRAM

ROAD DEPARTURE MITIGATION CIRCUIT DIAGRAM

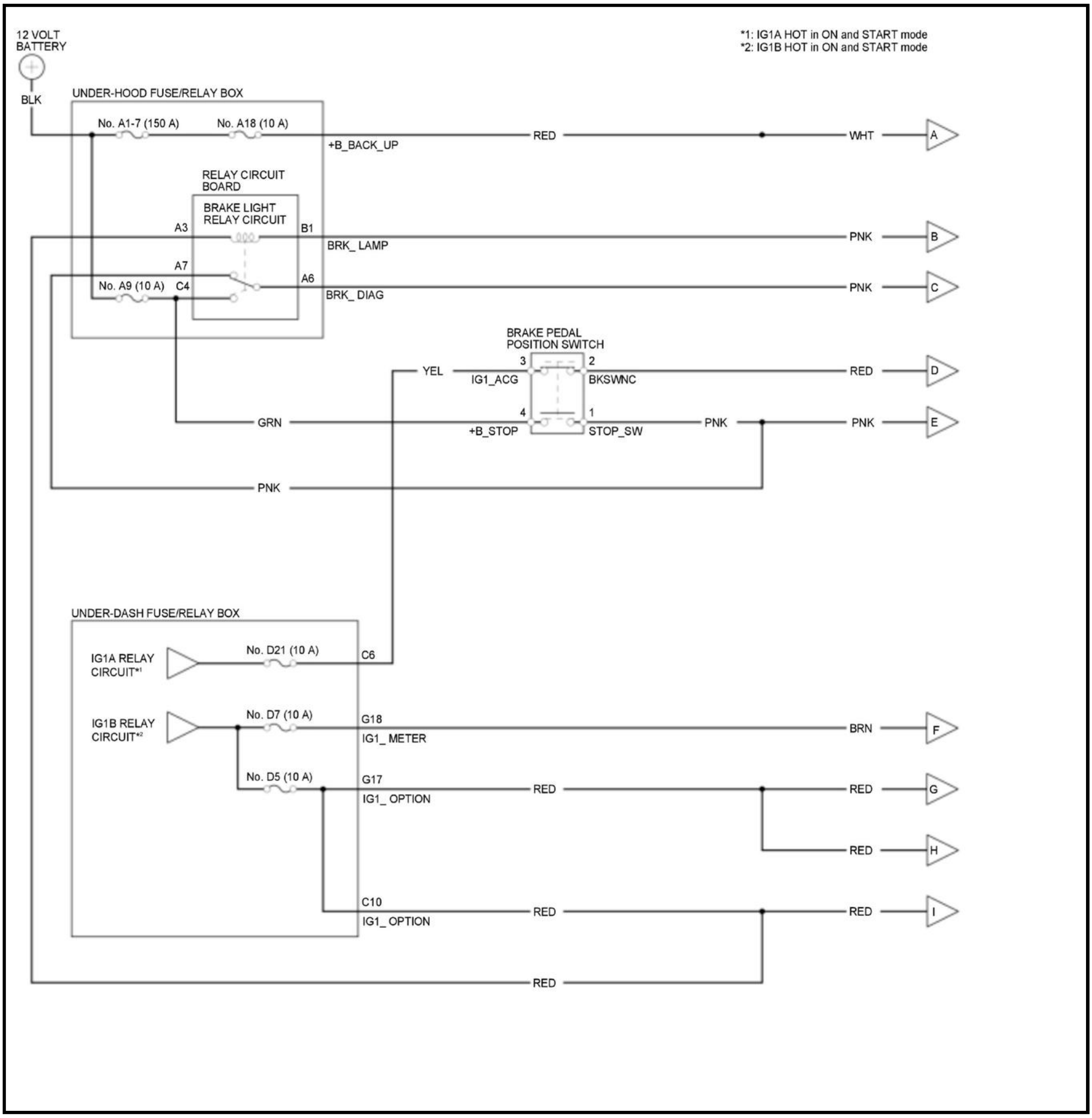
12 VOLT BATTERY
BLK
UNDER-HOOD FUSE/RELAY BOX
No. A1-7 (150 A)
No. A18 (10 A)
+B_BACK_UP
RED
WHT
A
RELAY CIRCUIT BOARD
BRAKE LIGHT RELAY CIRCUIT
A3
B1
BRK_ LAMP
PNK
B
A7
A6
No. A9 (10 A)
C4
BRK_ DIAG
PNK
C
BRAKE PEDAL POSITION SWITCH
3
2
YEL
IG1_ACG
BKSWNC
RED
D
4
1
GRN
+B_STOP
STOP_SW
PNK
PNK
E
PNK
*1: IG1A HOT in ON and START mode
*2: IG1B HOT in ON and START mode
UNDER-DASH FUSE/RELAY BOX
IG1A RELAY CIRCUIT*1
No. D21 (10 A)
C6
IG1B RELAY CIRCUIT*2
No. D7 (10 A)
G18
IG1_ METER
BRN
F
No. D5 (10 A)
G17
IG1_ OPTION
RED
RED
G
RED
H
C10
IG1_ OPTION
RED
RED
I
RED

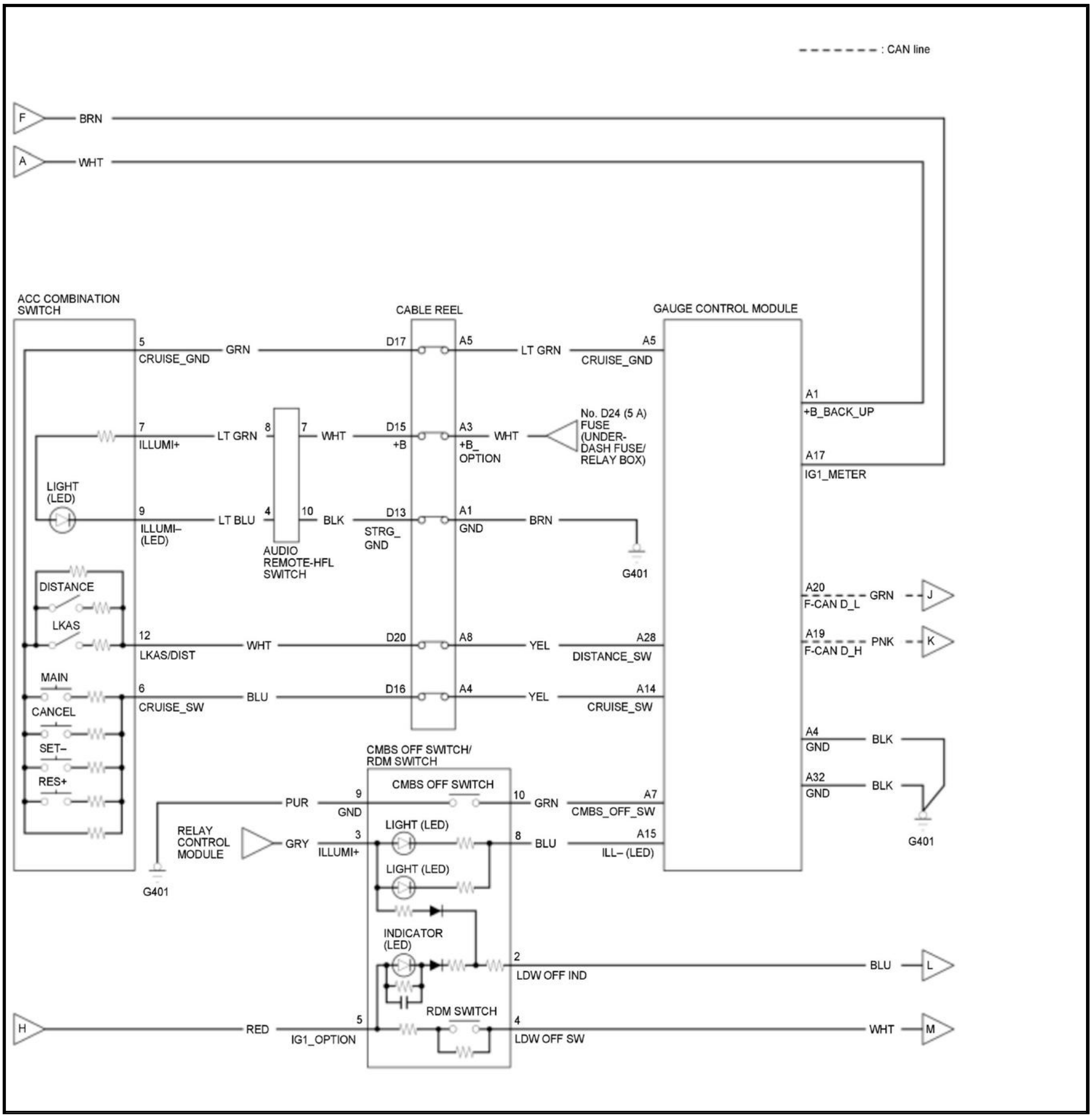
: CAN line
F
BRN
A
WHT
ACC COMBINATION SWITCH
CABLE REEL
GAUGE CONTROL MODULE
5
CRUISE_GND
GRN
D17
A5
LT GRN
A5
CRUISE_GND
A1
+B_BACK_UP
7
ILLUMI+
LT GRN
8
7
WHT
D15
+B
A3
+B_ OPTION
WHT
No. D24 (5 A) FUSE (UNDER-DASH FUSE/ RELAY BOX)
A17
IG1_METER
LIGHT (LED)
9
ILLUMI– (LED)
LT BLU
4
10
BLK
D13
STRG_ GND
A1
GND
BRN
AUDIO REMOTE-HFL SWITCH
G401
DISTANCE
LKAS
A20
F-CAN D_L
GRN
J
A19
F-CAN D_H
PNK
K
12
LKAS/DIST
WHT
D20
A8
YEL
A28
DISTANCE_SW
MAIN
6
CRUISE_SW
BLU
D16
A4
YEL
A14
CRUISE_SW
CANCEL
SET–
RES+
A4
GND
BLK
A32
GND
BLK
G401
CMBS OFF SWITCH/ RDM SWITCH
CMBS OFF SWITCH
PUR
9
GND
10
GRN
A7
CMBS_OFF_SW
RELAY CONTROL MODULE
GRY
3
ILLUMI+
LIGHT (LED)
8
BLU
A15
ILL– (LED)
G401
LIGHT (LED)
INDICATOR (LED)
2
LDW OFF IND
BLU
L
H
RED
5
IG1_OPTION
RDM SWITCH
4
LDW OFF SW
WHT
M

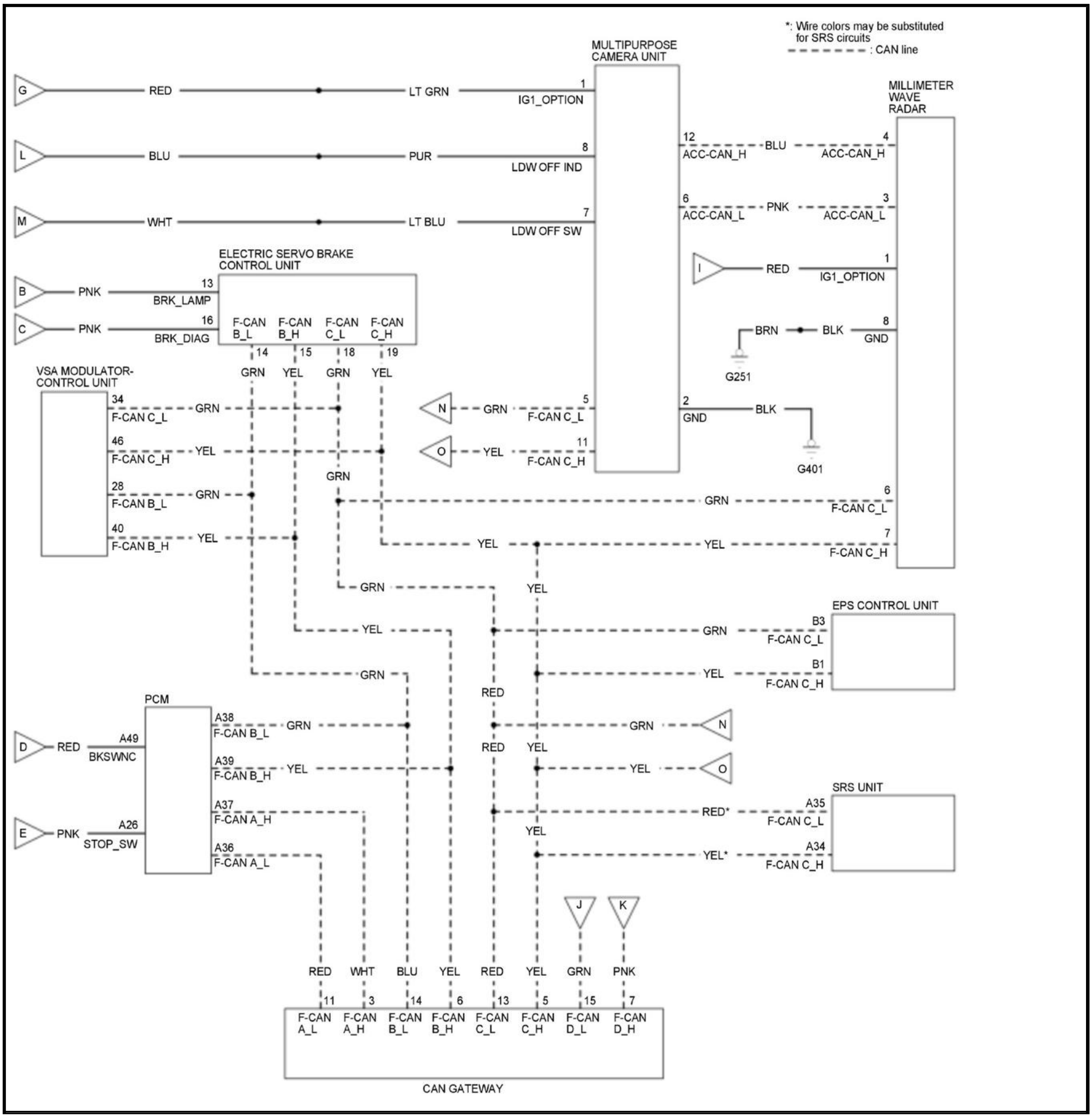
*: Wire colors may be substituted for SRS circuits
: CAN line
MULTIPURPOSE CAMERA UNIT
MILLIMETER WAVE RADAR
G
RED
LT GRN
1
IG1_OPTION
L
BLU
PUR
8
LDW OFF IND
M
WHT
LT BLU
7
LDW OFF SW
12
ACC-CAN_H
BLU
4
ACC-CAN_H
6
ACC-CAN_L
PNK
3
ACC-CAN_L
I
RED
1
IG1_OPTION
BRN
BLK
8
GND
G251
ELECTRIC SERVO BRAKE CONTROL UNIT
B
PNK
13
BRK_LAMP
C
PNK
16
BRK_DIAG
F-CAN B_L
F-CAN B_H
F-CAN C_L
F-CAN C_H
14
15
18
19
GRN
YEL
GRN
YEL
VSA MODULATOR-CONTROL UNIT
34
F-CAN C_L
GRN
46
F-CAN C_H
YEL
28
F-CAN B_L
GRN
40
F-CAN B_H
YEL
N
GRN
5
F-CAN C_L
O
YEL
11
F-CAN C_H
2
GND
BLK
G401
GRN
GRN
6
F-CAN C_L
YEL
YEL
7
F-CAN C_H
GRN
YEL
EPS CONTROL UNIT
YEL
GRN
B3
F-CAN C_L
B1
F-CAN C_H
GRN
RED
PCM
D
RED
A49
BKSWNC
E
PNK
A26
STOP_SW
A38
F-CAN B_L
GRN
A39
F-CAN B_H
YEL
A37
F-CAN A_H
A36
F-CAN A_L
GRN
N
RED
YEL
YEL
O
SRS UNIT
RED*
A35
F-CAN C_L
YEL
YEL*
A34
F-CAN C_H
J
K
RED
WHT
BLU
YEL
RED
YEL
GRN
PNK
11
3
14
6
13
5
15
7
F-CAN A_L
F-CAN A_H
F-CAN B_L
F-CAN B_H
F-CAN C_L
F-CAN C_H
F-CAN D_L
F-CAN D_H
CAN GATEWAY

COMPONENT LOCATION INDEX

ROAD DEPARTURE MITIGATION COMPONENT LOCATION INDEX

For relationships between signals in a system, refer to System Diagram.

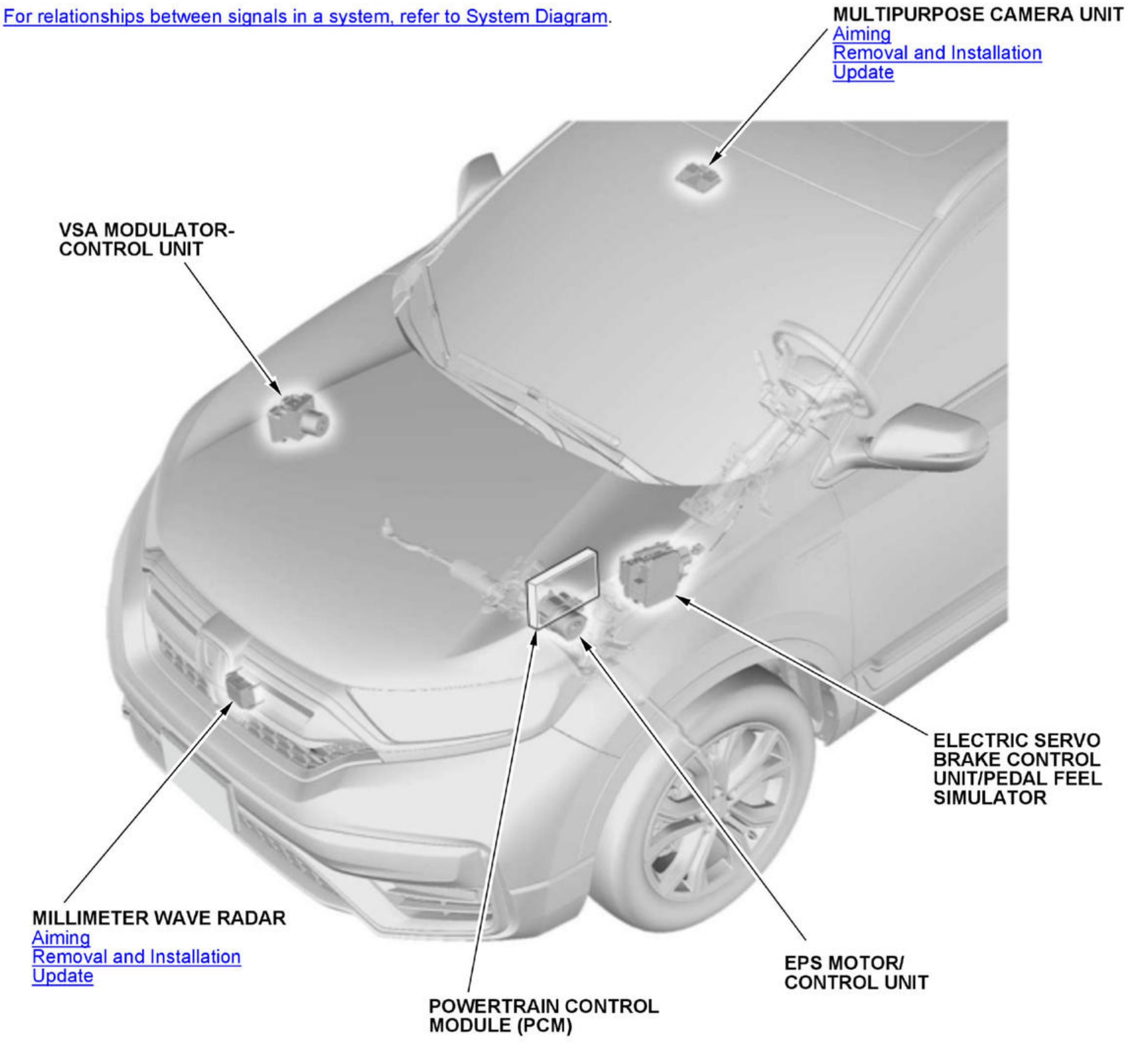
MULTIPURPOSE CAMERA UNIT
Aiming
Removal and Installation
Update
VSA MODULATOR-CONTROL UNIT
ELECTRIC SERVO BRAKE CONTROL UNIT/PEDAL FEEL SIMULATOR
MILLIMETER WAVE RADAR
Aiming
Removal and Installation
Update
EPS MOTOR/ CONTROL UNIT
POWERTRAIN CONTROL MODULE (PCM)

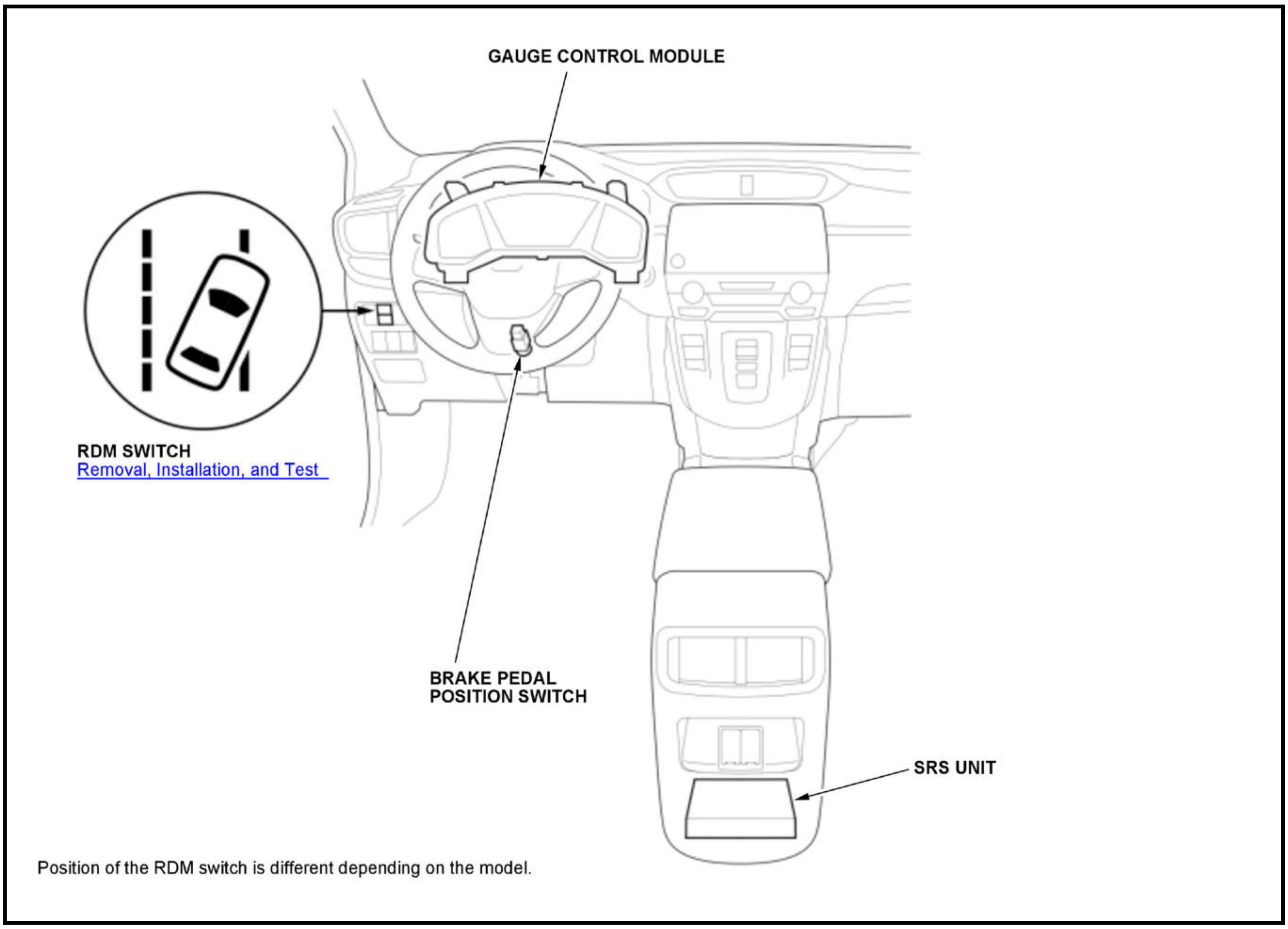
GAUGE CONTROL MODULE
RDM SWITCH
Removal, Installation, and Test
BRAKE PEDAL POSITION SWITCH
SRS UNIT

Position of the RDM switch is different depending on the model.

CONNECTOR VIEW

MILLIMETER WAVE RADAR CONNECTOR FOR INPUTS AND OUTPUTS

Millimeter Wave Radar 8P Connector (female terminals)

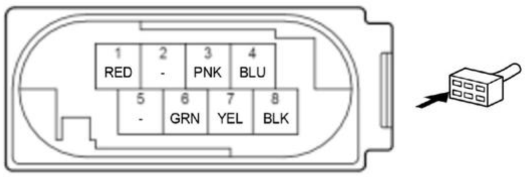
1
RED
2
-
3
PNK
4
BLU
5
-
6
GRN
7
YEL
8
BLK

Terminal number	Terminal name	Description
1	IG1_OPTION	Power source for the millimeter wave radar
2	Not used	-
3	ACC-CAN_L	ACC-CAN communication (low) circuit
4	ACC-CAN_H	ACC-CAN communication (high) circuit
5	Not used	-
6	F-CAN C_L	F-CAN communication (low) circuit
7	F-CAN C_H	F-CAN communication (high) circuit
8	GND	Ground circuit for the millimeter wave radar

MULTIPURPOSE CAMERA UNIT CONNECTOR FOR INPUTS AND OUTPUTS

Multipurpose Camera Unit 12P Connector (female terminals)

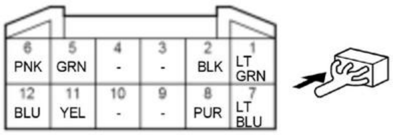

Terminal number	Terminal name	Description
1	IG1_OPTION	Power source for the multipurpose camera unit
2	GND	Ground circuit for the multipurpose camera unit
3	Not used	-
4	Not used	-
5	F-CAN C_L	F-CAN communication (low) circuit
6	ACC-CAN_L	ACC-CAN communication (low) circuit
7	LDW OFF SW	Detects RDM switch signal
8	LDW OFF IND	Drive RDM switch circuit
9	Not used	-
10	Not used	-
11	F-CAN C_H	F-CAN communication (high) circuit
12	ACC-CAN_H	ACC-CAN communication (high) circuit

INSPECTION

MILLIMETER WAVE RADAR MOUNTING POSITION INSPECTION

Special Tools Required

Image	Description/Tool Number
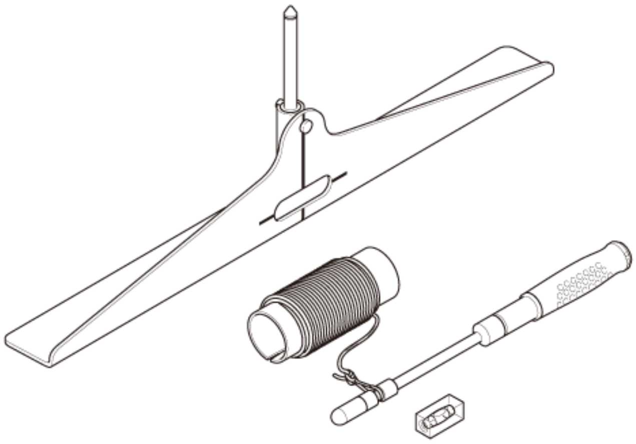	Alignment Set 07AAJ-STKA210

Inspection

NOTE: If millimeter wave radar aiming cannot be completed, follow the procedure below to check that the millimeter wave radar is installed properly and the radar bracket is not deformed. Based on the check results, replace the faulty parts and perform the millimeter wave radar aiming again.

1. **Front Bumper - Remove**
2. Millimeter Wave Radar Mounting Position - Inspect

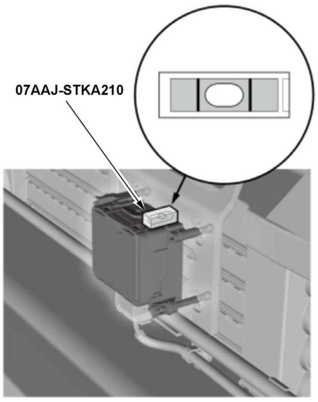

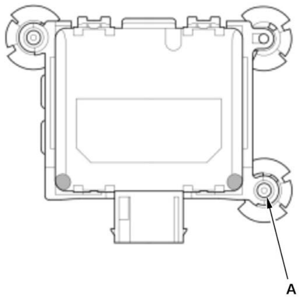

NOTE:

- When the millimeter wave radar is adjusted on a floor surface that has more than one degree of horizontal slope (drainage slope), the vertical radar aiming cannot be adjusted correctly. Check the levelness of the floor surface, but if there is a continuous slope, then adjust the angle of millimeter wave radar so it is parallel to the floor surface. Lay a ruler or other flat straight object on the floor surface and put the level on top to confirm the levelness of the floor surface.
- Make sure the steering wheel is pointed straight ahead, and do not turn it after setting up the vehicle.

1. Put the level on the millimeter wave radar.

NOTE: Use the level included in the alignment set.

2. Confirm if the bubble in the level is between the lines.

NOTE: If the bubble is not within the lines, adjust the mounting position using the vertical adjustment bolt (A).

3. Remove the level.

3. Millimeter Wave Radar Bracket - Inspect

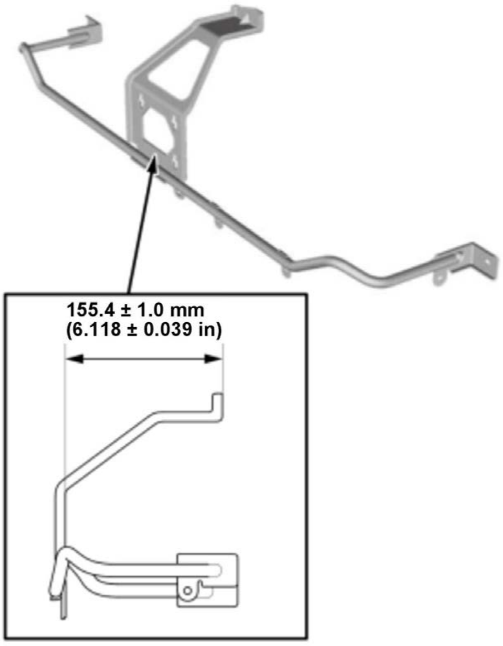

1. **Remove the millimeter wave radar assembly** .

2. **Measure the distance between the millimeter wave radar and the radar bracket, and adjust the distance to the standard value** .

3. Measure the distance of the radar bracket as shown. The distance should be 155.4 +/- 1.0 mm (6.118 +/- 0.039 in):

NOTE: If the distance is out of the standard value, replace the radar bracket.

4. **Install the millimeter wave radar assembly** .

4. **Front Bumper - Install**
5. **Millimeter Wave Radar - Update**
6. **Millimeter Wave Radar - Aim**

REWRITE

MILLIMETER WAVE RADAR UPDATE

Procedure

1. Millimeter Wave Radar - Update

NOTE: When updating control units, use the most current version of the HDS software and interface device. Check any official service information website for more information about updating control units.

MULTIPURPOSE CAMERA UNIT UPDATE

Procedure

1. Multipurpose Camera Unit - Update

   NOTE: When updating control units, use the most current version of the HDS software and interface device. Check any official service information website for more information about updating control units.

SYMPTOM TROUBLESHOOTING INDEX

ROAD DEPARTURE MITIGATION SYMPTOM TROUBLESHOOTING INDEX

Symptom	Diagnostic procedure	Also check for
RDM indicator (on the MID) does not go off, and no DTCs are stored	**NOTE:** If any of the CAN communication failure DTC is indicated in another system, troubleshoot the DTC first. - Check for an open or a short in the F-CAN circuit; - - Between the gauge control module and the CAN gateway (F-CAN D_H, F-CAN D_L) - - Between the millimeter wave radar and the CAN gateway (F-CAN C_H, F-CAN C_L) - Check the millimeter wave radar power circuit (IG1_OPTION). - Check the millimeter wave radar ground circuit (GND). - Do to the gauge control module self-diagnostic function .	Refer to the followings about the indicator operating condition; - General troubleshooting information Refer to the followings about the circuit troubleshooting; - Gauge control Module connector for inputs and outputs - Millimeter wave radar connector for inputs and outputs - Road Departure Mitigation Circuit Diagram - Fuse to components index - Ground to components index
RDM indicator (on the MID) does not come on	Symptom troubleshooting	Â
RDM warning buzzer does not sound	Do the gauge control module self-diagnostic function .	Â
RDM system warns when warning is unnecessary	Aim the multipurpose camera.	- Weather condition - Road condition - Driving condition
RDM system does not warn when warning is necessary	Aim the multipurpose camera.	- Weather condition - Road condition - Driving condition

SYMPTOM TROUBLESHOOTING

ROAD DEPARTURE MITIGATION SYMPTOM TROUBLESHOOTING - RDM INDICATOR (ON THE MID) DOES NOT COME ON

1. Gauge control module operation check

   -1. Turn the vehicle to the ON mode.

   Check the following indicators in the gauge control module:

   - Malfunction indicator lamp (MIL)
   - Brake system indicator
   - 12 volt charging system indicator

   Do the indicators come on?

   YES

   Go to the gauge control module self-diagnostic function .

   NO

   Go to step 2.

2. Fuse check

   -1. Turn the vehicle to the OFF (LOCK) mode.

   -2. Check the following fuse.

Fuse	**No. D7**

   Is the fuse OK?

   YES

   The fuse is OK. Reinstall the fuse, then go to step 3.

   NO

   Replace the fuse. Turn the vehicle to the ON mode then the OFF (LOCK) mode. If the fuse blows again, repair the short to ground on the No. D7 fuse circuit.

3. Open wire check (IG1_METER line)

   -1. Disconnect the following connector.

Gauge control module connector A (32P)

   -2. Turn the vehicle to the ON mode.

   -3. Measure the voltage between test points 1 and 2.

Test condition	Vehicle ON mode
Â	Gauge control module connector A (32P): disconnected
Test point 1	**Gauge control module connector A (32P) No. 17**
Test point 2	Body ground

Is there battery voltage?

YES

Replace the gauge control module .

NO

Repair an open in the wire between the under-dash fuse/relay box and the gauge control module.

SYMPTOM TROUBLESHOOTING INDEX FOR VIEWER

RDM INDICATOR (ON THE MID) DOES NOT COME ON

Diagnostic procedure

- Symptom troubleshooting

RDM INDICATOR (ON THE MID) DOES NOT GO OFF, AND NO DTCS ARE STORED

Diagnostic procedure

NOTE: If any of the CAN communication failure DTC is indicated in another system, troubleshoot the DTC first.

- Check for an open or a short in the F-CAN circuit;
-
    - -

      Between the gauge control module and the CAN gateway (F-CAN D_H, F-CAN D_L)
    - -

      Between the millimeter wave radar and the CAN gateway (F-CAN C_H, F-CAN C_L)
- Check the millimeter wave radar power circuit (IG1_OPTION).
- Check the millimeter wave radar ground circuit (GND).
- Do to the gauge control module self-diagnostic function .

Also check for

Refer to the followings about the indicator operating condition;

- General troubleshooting information

Refer to the followings about the circuit troubleshooting;

- Gauge control Module connector for inputs and outputs
- Millimeter wave radar connector for inputs and outputs
- Road Departure Mitigation Circuit Diagram
- Fuse to components index
- Ground to components index

RDM SYSTEM DOES NOT WARN WHEN WARNING IS NECESSARY

Diagnostic procedure

- Aim the multipurpose camera.

Also check for

- Weather condition
- Road condition
- Driving condition

RDM SYSTEM WARNS WHEN WARNING IS UNNECESSARY

Diagnostic procedure

- **Aim the multipurpose camera**.

Also check for

- Weather condition
- Road condition
- Driving condition

RDM WARNING BUZZER DOES NOT SOUND

Diagnostic procedure

- **Do the gauge control module self-diagnostic function** .

ADJUSTMENT

BEFORE AIMING SETTING

Special Tools Required

Image	Description/Tool Number
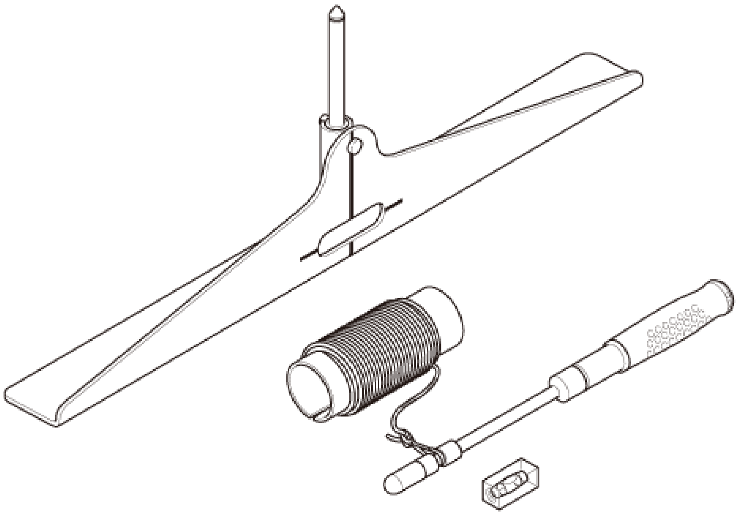	Alignment Set 07AAJ-STKA210

Adjustment

1. Before Aiming - Set

   NOTE:

   - Aiming should be done in a well-lighted area.
   - There should be no bright objects at the back of the target (sunlight, windows, illumination, or reflectors) or designs similar to the target pattern.
   - Make sure the suspension has not been modified.
   - Make sure all the tire sizes are correct and that their pressure is correct.
   - Make sure the fuel tank is full.
   - Remove all cargo from the vehicle except the tool kit and the spare tire.
   - Make sure the steering wheel is pointed straight ahead, and do not turn it after setting the vehicle.
   - Shift the shift lever to P, and apply the parking brake.
   - When marking on the floor surface, use suitable tape to mark the exact locations.

   Prepare these items:

   - Tape measure and ruler
   - Felt-tip pen
   - Tape
   - String
   - Plumb bob

   Measure the Lines along the Sides of the Vehicle

   1. Find the center of one wheel (A) using the centering stand and mark it.

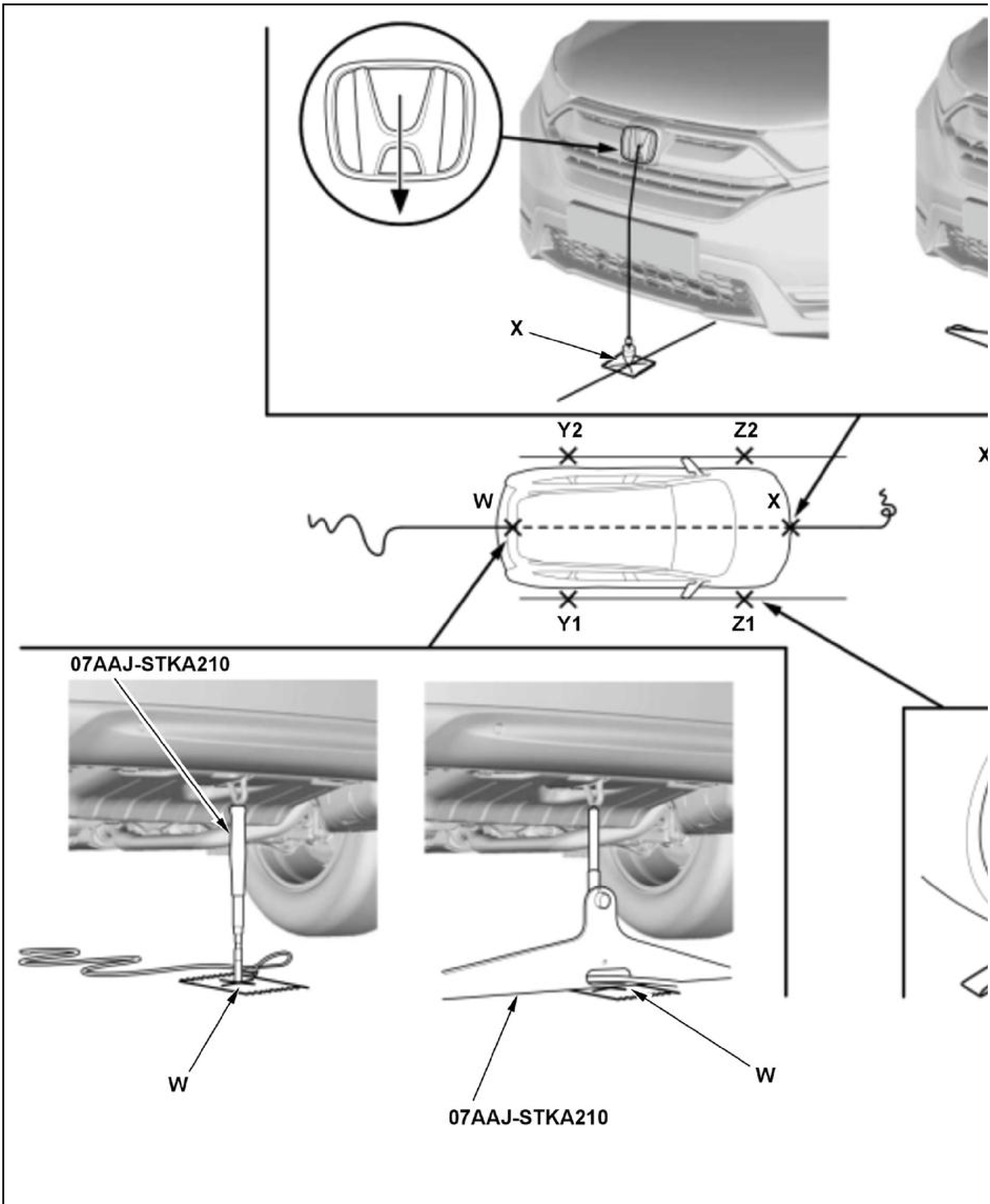

This illustration shows how to install the aiming tools on the front, rear and sides of the vehicles.

2. Measure 76.2 mm (3.00 in) from the edge of the centering stand and mark a new spot, Z1 that intersects the wheel's center-line.

NOTE: Repeat this step for each wheel (Z2, Y1, and Y2).

Set the Cord along the Center-Line of the Vehicle

NOTE:

- When installing a cord along the center-line of the vehicle, install the cord using these items as reference points.
- The reference items may vary by vehicle.
-
    - -

    Front and rear jack-up brackets

  - -

    Towing hook

  - -

    Front emblem

  - -

    Scribe lines of the front subframe part

  - -

    Center bumper clip on the bulkhead

- When installing an aiming target at the rear of the vehicle, use the centering stand in the rear.
- When installing an aiming target at the front of the vehicle, use the centering stand in the front.

3. Hang the plumb bob from the center of the front emblem, and mark a new spot X on the floor where the tip of the plumb bob touches the floor.

4. Place the centering stand under the rear jack-up bracket, then mark a new spot W at the center-line of the centering stand.

For targets at the front of the vehicle

5. Position the gas strut holder of the alignment set between the floor and the rear jack-up bracket at mark W.

6. Place the center-line of the centering stand at mark X and run the cord through it.

7. Attach the cord to the collar of the alignment set, then place the alignment set about 2.0 m (6.6 ft) in front of the vehicle.

NOTE: Make sure the cord is tight and not lying on the floor surface, then align the cord in the center of the alignment set.

For targets at the rear of the vehicle

8. Place one end of the cord on mark X and firmly tape it to the floor.

NOTE: Lightly pull on the cord to make sure that it is secured and apply additional tape as necessary.

9. Place the center-line of the centering stand at mark W and run the cord through it.

10. Attach the cord to the collar of the alignment set, then place the alignment set about 2.0 m (6.6 ft) behind the vehicle.

NOTE: Make sure the cord is tight and not lying on the floor surface, then align the cord in the center of the alignment set.

MILLIMETER WAVE RADAR AIMING

Special Tools Required

Image	Description/Tool Number
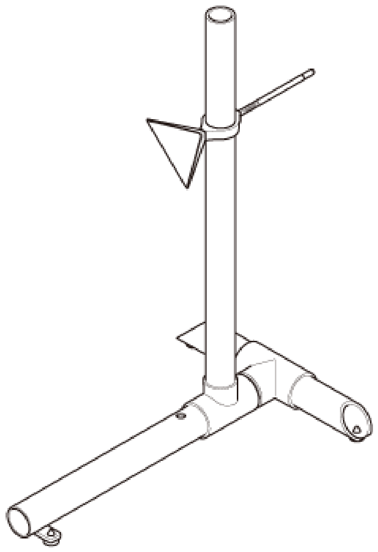	Stand Set 07AAJ-STKA220*

Image	Description/Tool Number
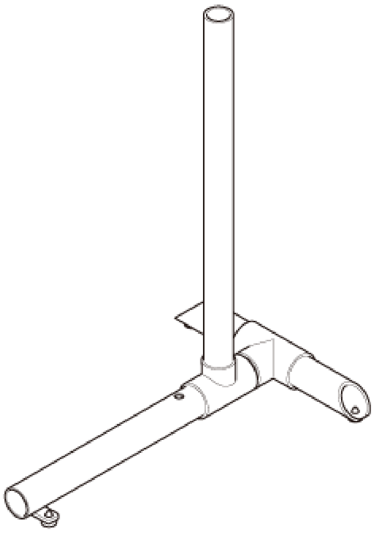	Stand 07AAJ-TK8A100*
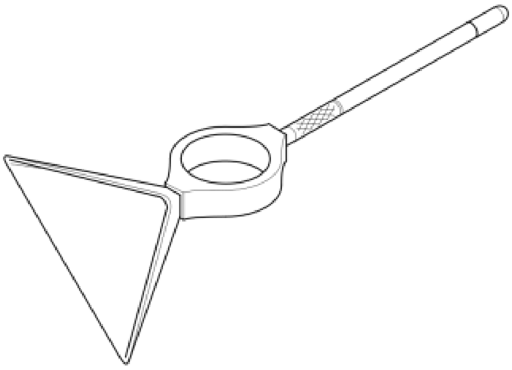	Reflector Set 07AAJ-STKA200*
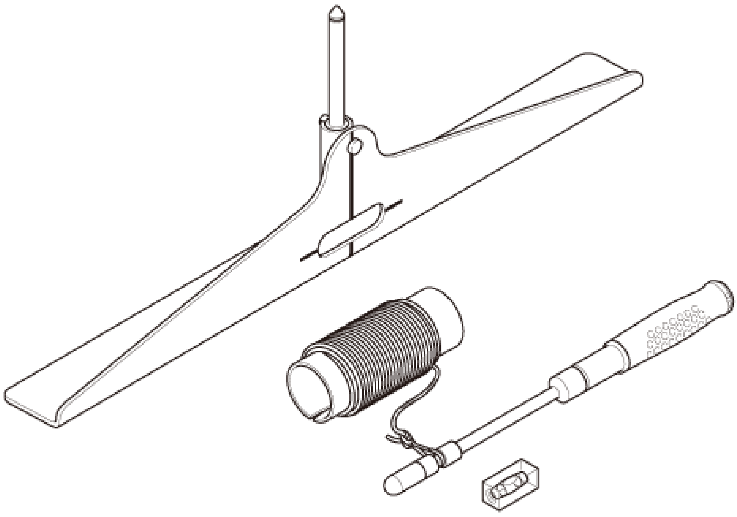	Alignment Set 07AAJ-STKA210

Image	Description/Tool Number
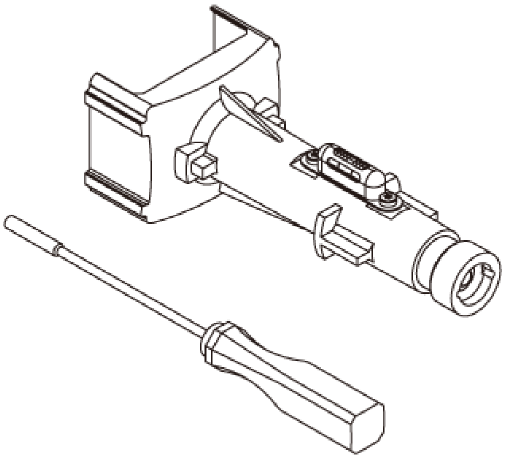	Adaptive Speed Control Alignment Tool SPX 10243*
	ADJUSTER, RADAR 3.5MM 07AAA-TGVA100*

* (07AAJ-STKA220/07AAJ-TK8A100/07AAJ-STKA200): Stand 07AAJ-TK8A100 with Reflector Set 07AAJ-STKA200 or Stand Set 07AAJ-STKA220 can be used f Control Alignment Tool SPX 10243 or ADJUSTER, RADAR 3.5MM 07AAA-TGVA100 can be used for aiming.

Adjustment

NOTE:

- The millimeter wave radar must be re-aimed if the millimeter wave radar is removed or replaced. The ACC indicator comes on if the aiming process is not compl
-
    - The millimeter wave radar has a self-diagnosis function and if the mounting angle of the millimeter wave radar is outside of the horizontal auto-aiming rang
- If DTCs are indicated, do the indicated DTCs first. If the DTCs are not repaired, you cannot complete the millimeter wave radar aiming procedure. However, if y
-
    - -

      Millimeter Wave Radar Aiming Incomplete: DTC P2583-54
- If the vehicle you are aiming was involved in a collision or if you suspect the alignment is out of specifications, you must perform a wheel alignment prior to aimi
- Conditions for the aiming environment:
-
    - -

      Aiming should be on level ground in a wide open space to avoid errors caused by reflecting objects.
    - -

      Amount of space require in front of the vehicle:

      10 m (33 ft) measured from the front bumper

      5 m (16 ft) in width

      3 m (10 ft) in height, measured from the floor

- The vehicle must be parked on a horizontal floor in order to adjust the vertical radar aiming correctly. Check the levelness of the floor surface, but if there is a con it is parallel to the floor surface. Lay a ruler or other flat straight object on the floor surface and put the level on top to confirm the levelness of the floor surface.
- When marking on the floor surface, use suitable tape to mark the exact locations.

Prepare these items:

- HDS
- Tape measure and ruler
- Felt-tip pen
- Tape
- String

1. Before Aiming - Set

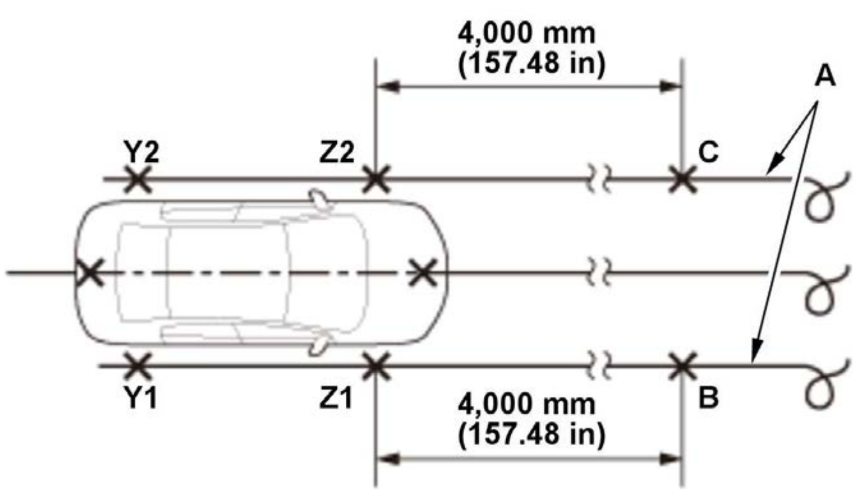

NOTE: Make sure the steering wheel is pointed straight a vehicle.

Marking of the Target Position

1. **Make points (Z1, Y1, Z2, Y2) and set the cord along**

2. Place a string (A) between point Z1 and point Y1, and surface.

NOTE: Repeat this step for the opposite side for points Z

3. Measure and make a new point B on the floor surface i from point Z1.

4. Pull one end of the string to point B and tape it to the f

NOTE: Repeat these steps for the opposite side, and mar

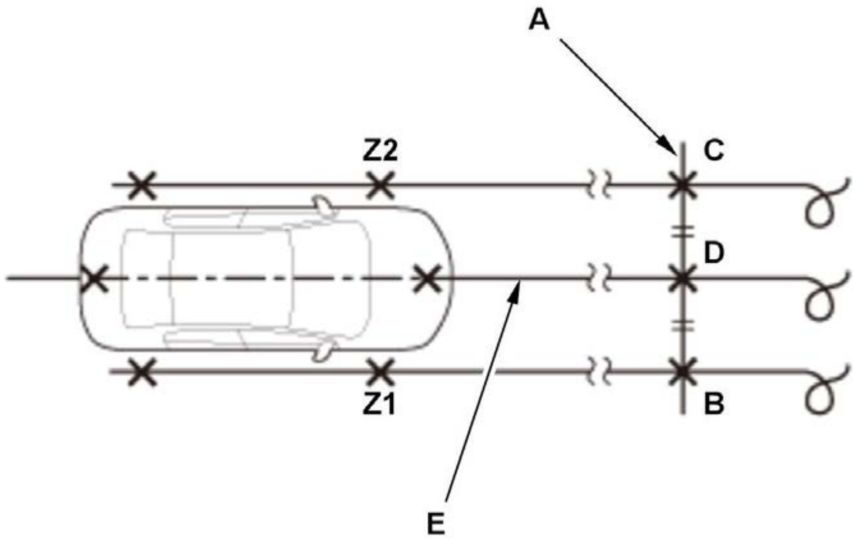

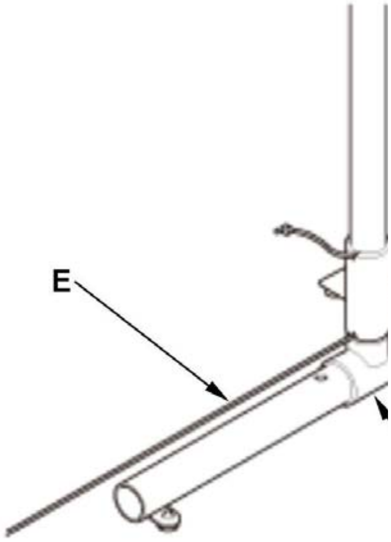

Type A

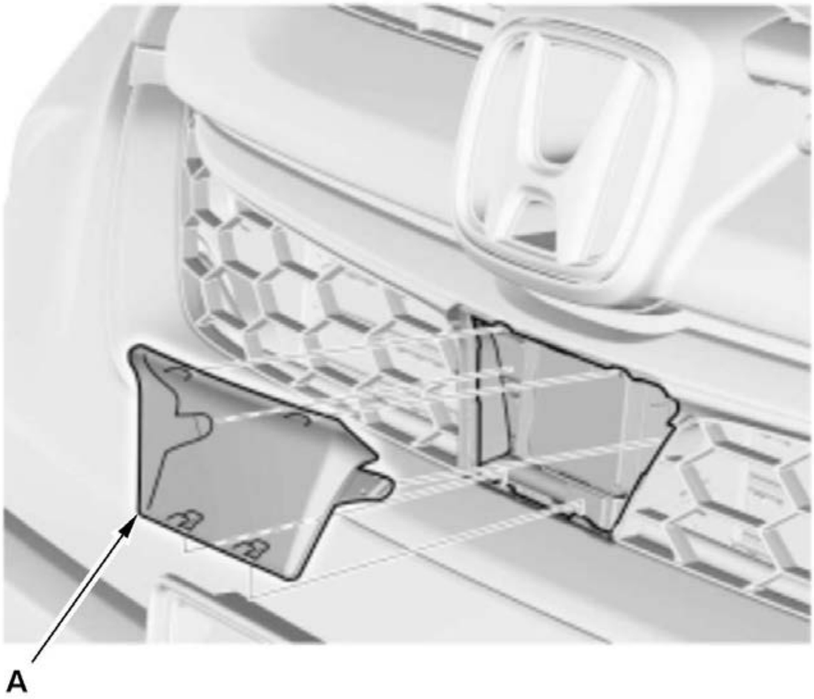

Type B

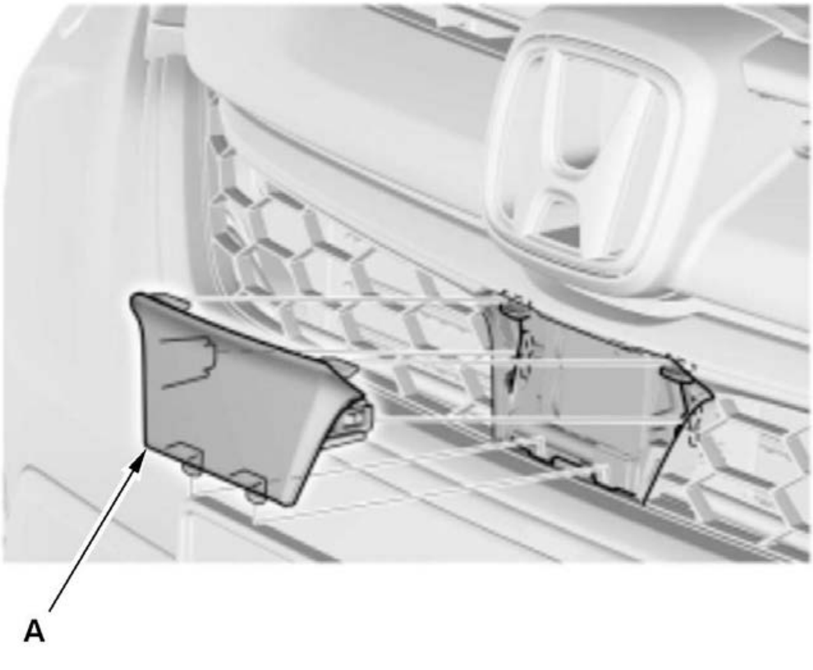

Type C

8. Remove the radar cover (A).

NOTE:

- Clean the surface of the millimeter wave radar.
- If the radar cover is damaged or cracked, replace th radar assembly and subassembly for any damages b

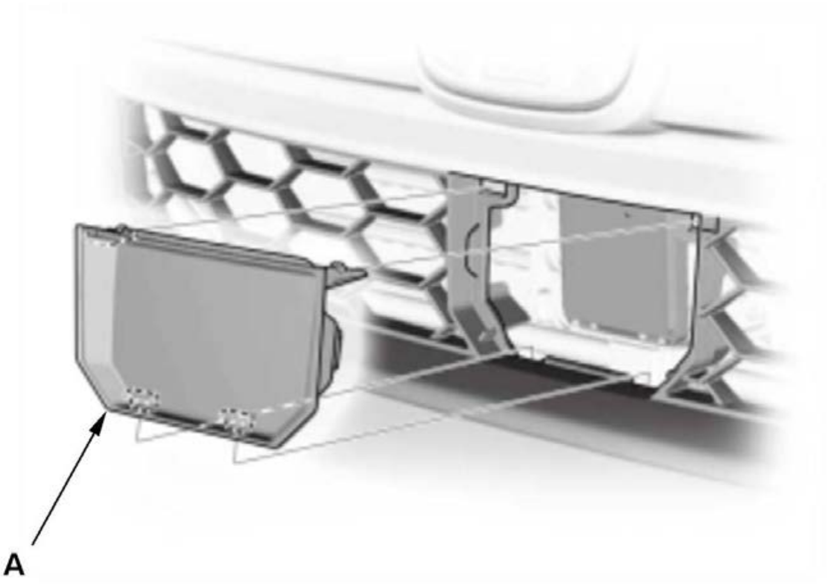

9. Align the lower edge of the millimeter wave radar with

10. Draw a line (Y) on the pole of the stand set as shown.

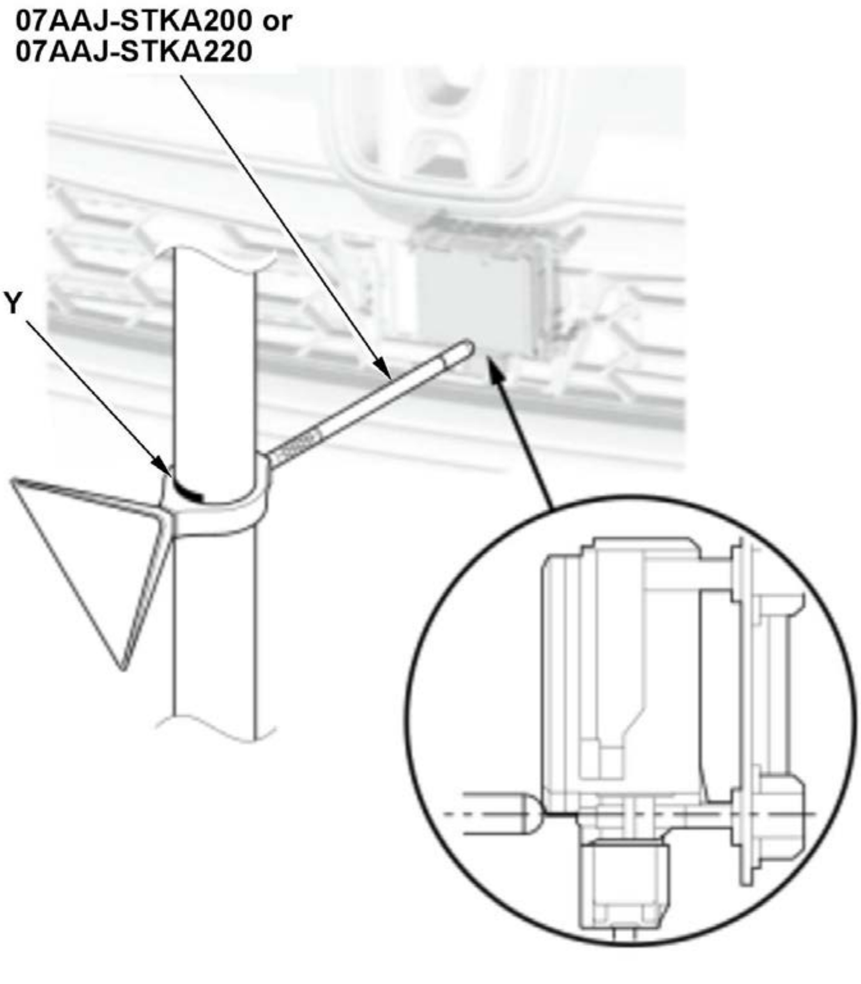
07AAJ-STKA200 or
07AAJ-STKA220
Y

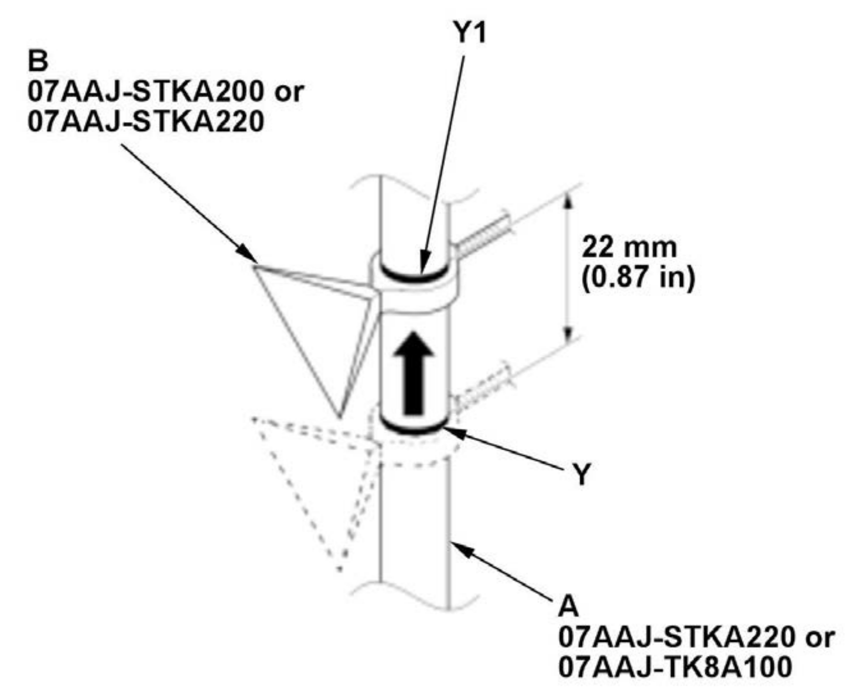

11. Draw line (Y1) on the pole (A) of the stand set as sho

12. Slide the corner reflector (B) upward to position Y1.

2. Millimeter Wave Radar - Aim

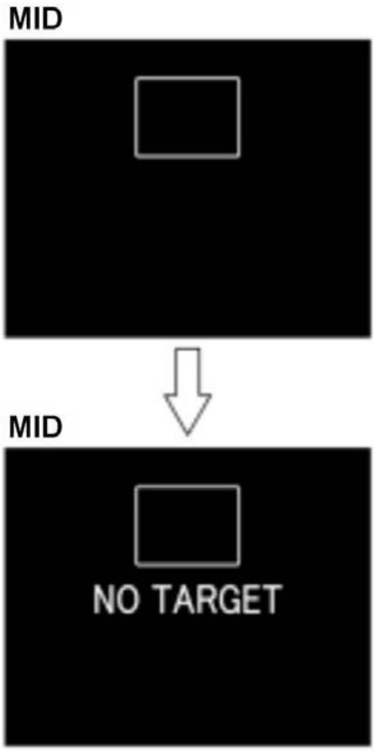

1. Connect the HDS .

NOTE: Keep the aiming target away from the vehicle un

2. Check for DTCs with the HDS.

NOTE: Troubleshoot any DTCs first before proceeding. the aiming procedure.

3. In the DRIVING SUPPORT menu, select INTEGRATI ADJUSTMENT, then Radar Aiming and follow the scree

4. Press ENTER on the HDS to enter the aiming mode.

NOTE: ACC, LKAS and RDM indicators (amber) blink

5. The MID will display NO TARGET.

NOTE: Some early 2017 models may not indicate NO T indicates "Detected Some Obstacles", refer to the note un up the target, go to step 7.

6. Make sure the MID indicates NO TARGET on the disp

NOTE: If NO TARGET is not indicated, the stand set is unwanted radar reflection in front of the vehicle in the ra aside away from the range of the radar until you are instru are still getting an unwanted radar reflection, stack tires a the immovable object, such as a pole, or in front of any o tires will block the radar reflections. Make sure NO TAR appear, move the vehicle to a different location until NO

7. Place the stand set (A) on the mark (D).

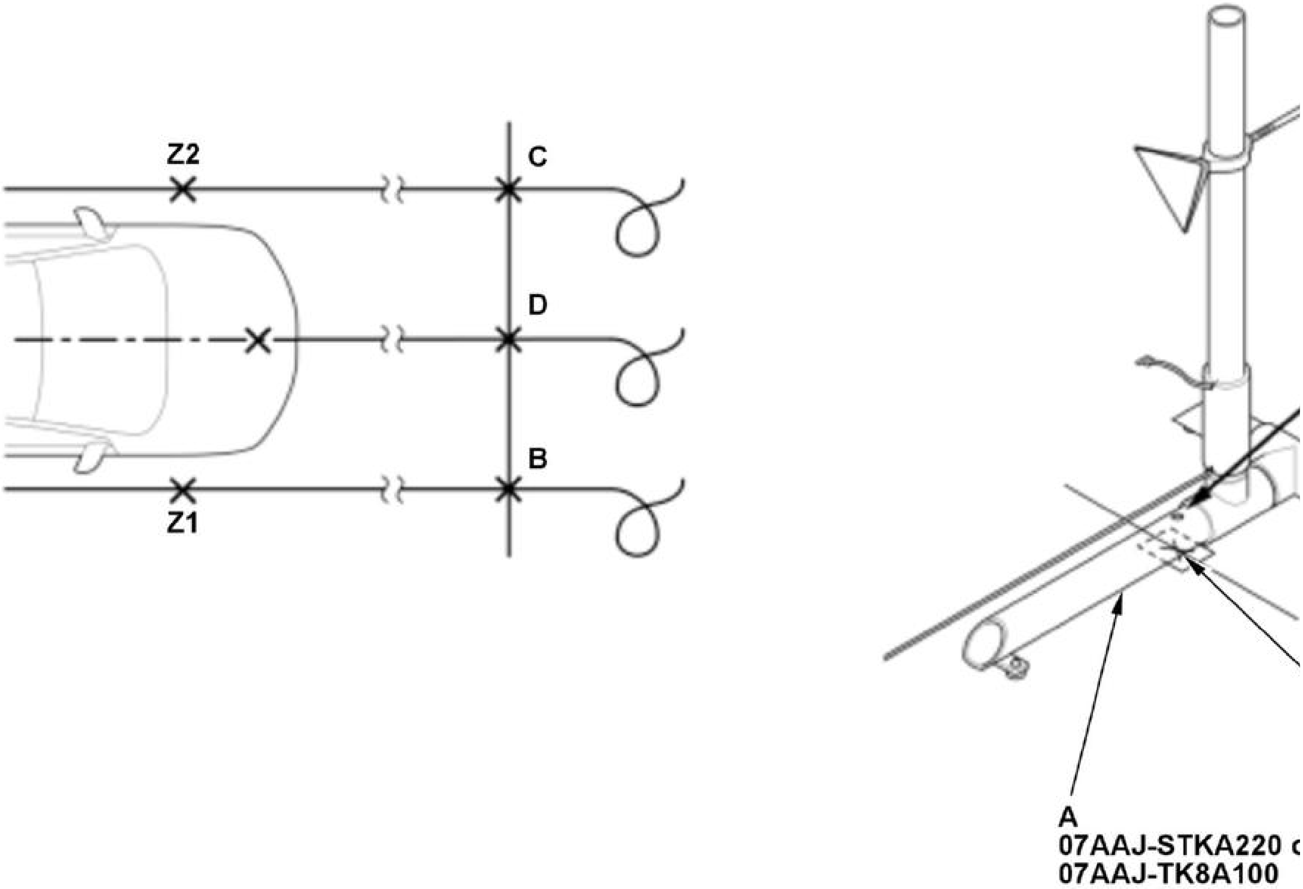

8. Press ENTER on the HDS to calculate the alignment angles.

NOTE: Some early 2017 models may indicate a message of "Some Driver Assist Systems Cannot Operate: Radar Obstructed" on the MID throughout this proced

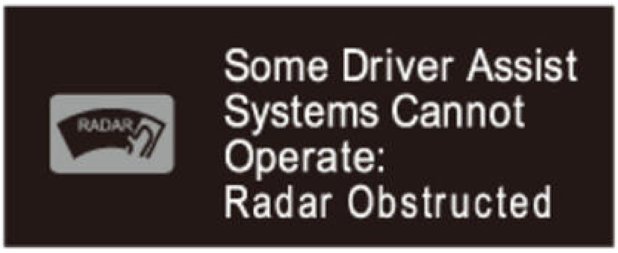

Some Driver Assist
Systems Cannot
Operate:
Radar Obstructed

9. Check the vertical and horizontal alignment angles on the HDS display. If the angles displayed on the HDS are out of the specified angle range, turn the adjustr Adaptive Speed Control Alignment Tool SPX 10243 or 07AAA-TGVA100)) as necessary (counterclockwise or clockwise) to bring the displayed angle to the spec the adjustment as the values will change.

Specified Angle:

Millimeter wave angle	Specified angle range
Horizontal	0 ± 0.1 deg.
Vertical	0 ± 0.1 deg.

Adjustment Method:

Angle shown on the HDS display	Rotate the screwdriver as follows
More than +0.1 deg.	Counterclockwise

Angle shown on the HDS display	Rotate the screwdriver as follows
Less than -0.1 deg.	Clockwise

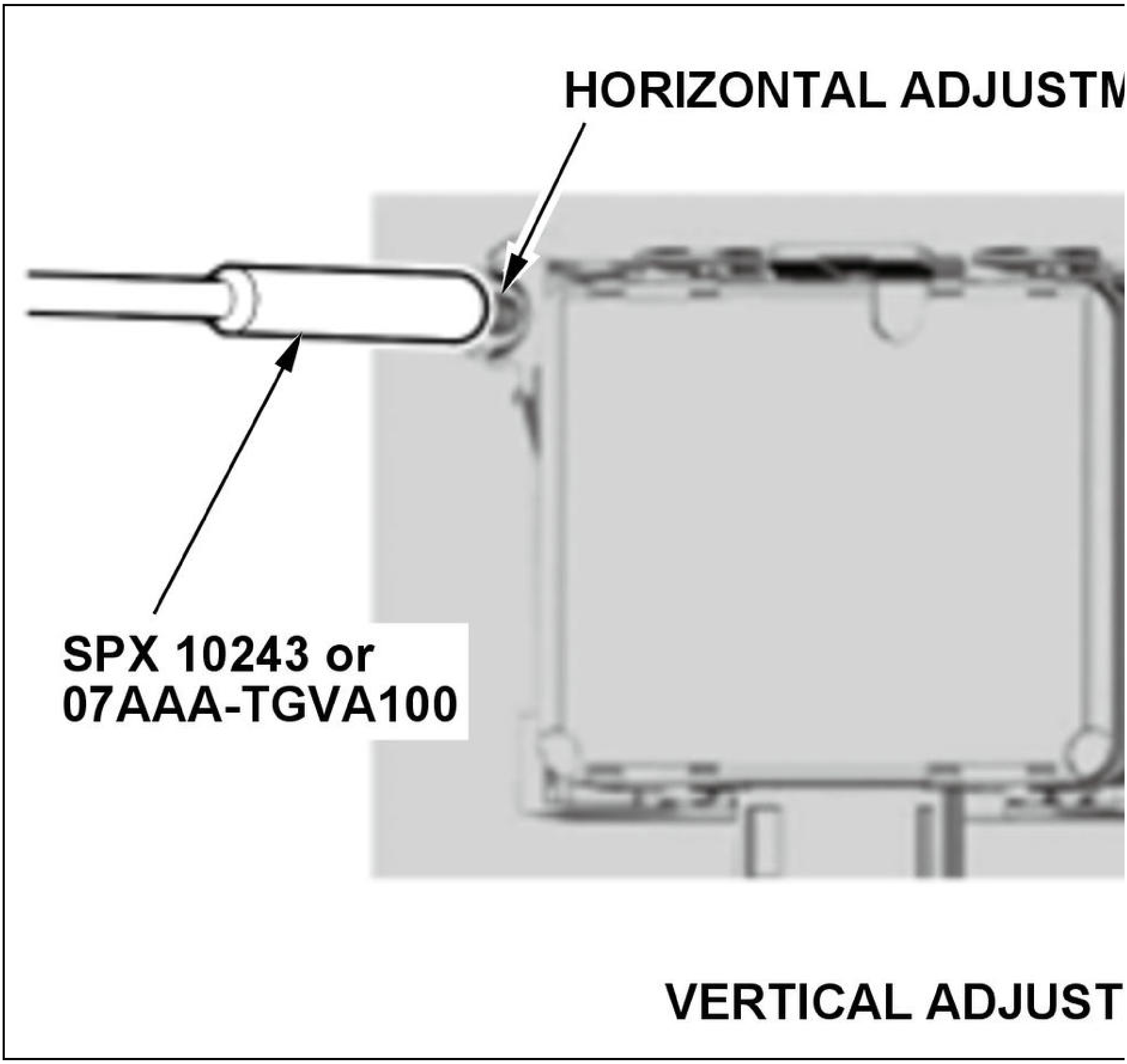
HORIZONTAL ADJUSTM
SPX 10243 or
07AAA-TGVA100
VERTICAL ADJUST

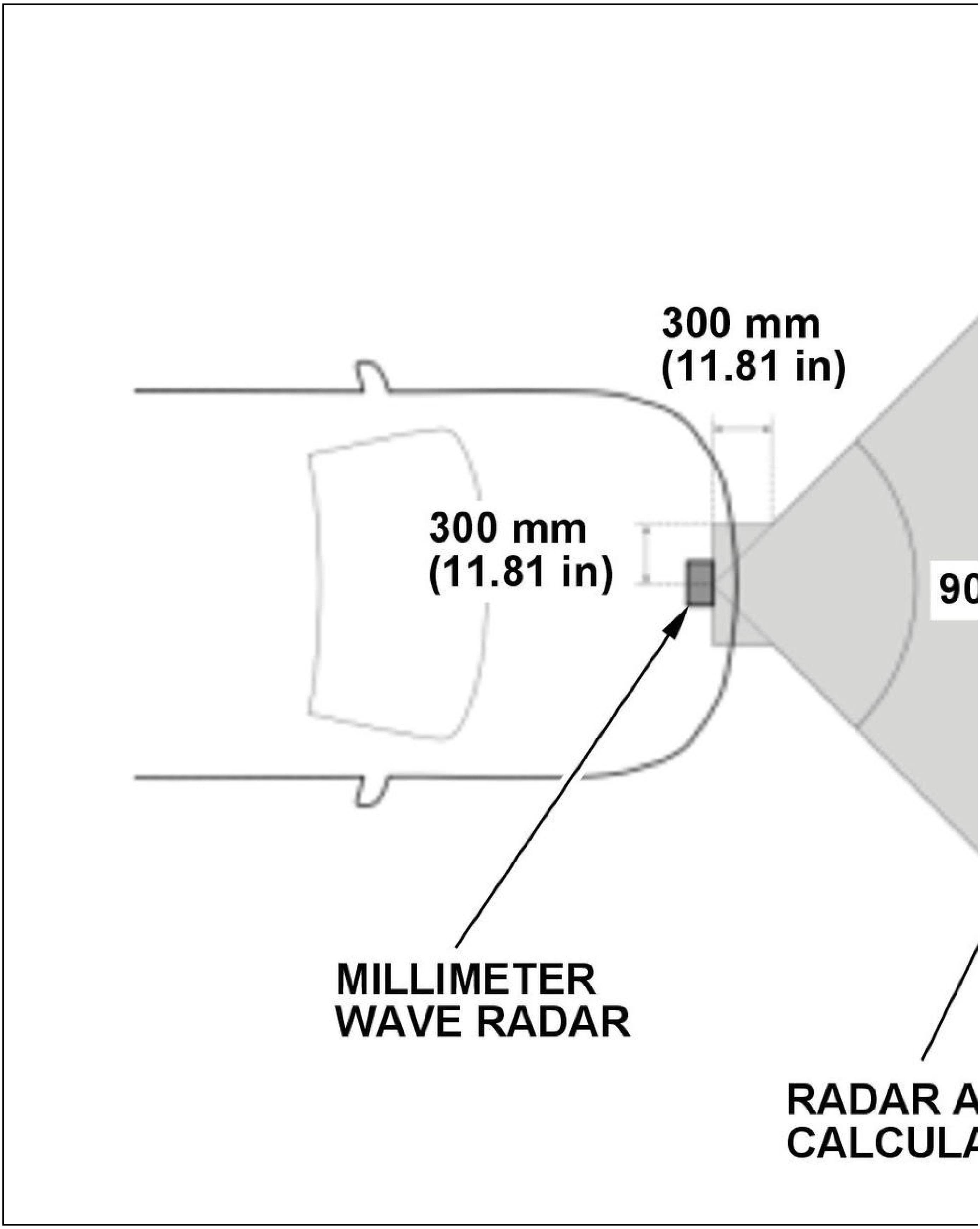

NOTE:

- The values on the HDS display will fluctuate as the adjustment is being performed. Wait until the values stabilize to confirm the adjustment.
- When checking the angle and recording the calculated angle on the HDS screen, do not enter or obstruct the radar wave zone.
- A value of 12.8 degrees on the HDS display indicates that the millimeter wave radar is being obstructed and cannot receive the radar wave.
- If the value of 12.8 degrees remains on the HDS screen for 15 seconds continuously, the aiming will stop.
- If the specified angle cannot be obtained with the adjustment bolts, **confirm the millimeter wave radar mounting position**.

NOTE: If the failure code and the message in the following list are displayed, solve the problem, and then perform the millimeter wave radar aiming again.

Failure codes and messages:

Failure code (on the MID)	Failure message (on the HDS)	How to solve
120	Multiple Aiming Target Detected	Remove all reflective objects except the correc

Failure code (on the MID)	Failure message (on the HDS)	How to solve
122	The Distance between Radar and Aiming Target is Out of Specification.	Set the specified distance to the aiming target.
124	Detected Some Obstacles	Remove all obstacles.
125	There is no Aiming Target	Set the aiming target at the correct position.
129	A Vehicle Speed is not 0 km/h.	Stop the vehicle completely.
132	Internal Software Error	Update the millimeter wave radar.
134	High Temperature Error	Cool down the millimeter wave radar to the pr
135	Internal Hardware Error	Replace the millimeter wave radar.

10. When the angle is at the specified value, press ENTER to record the angle.

NOTE: The aiming information obtained is stored in the millimeter wave radar.

11. Confirm THE RADAR AIMING HAS BEEN COMPLETED on the HDS.

12. Press ENTER on the HDS, and turn the vehicle to the OFF (LOCK) mode.

13. Reinstall the radar cover.

NOTE: If the radar cover is damaged or cracked, replace it.

MULTIPURPOSE CAMERA AIMING

Special Tools Required

Image	Description/Tool Number
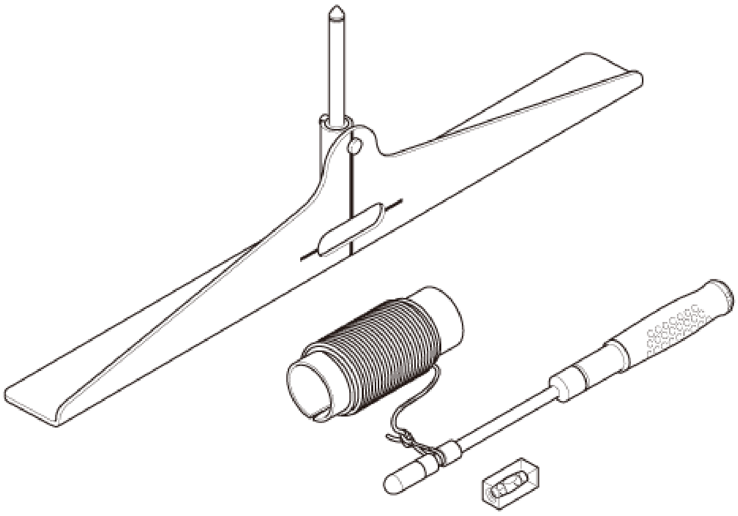	Alignment Set 07AAJ-STKA210
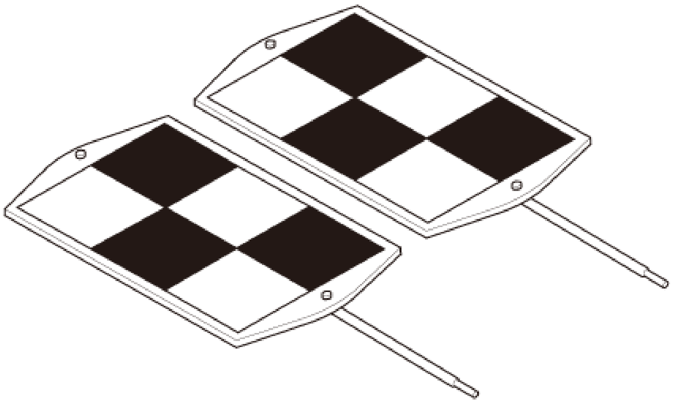	Target Set 07AAK-5K0A100

Image	Description/Tool Number
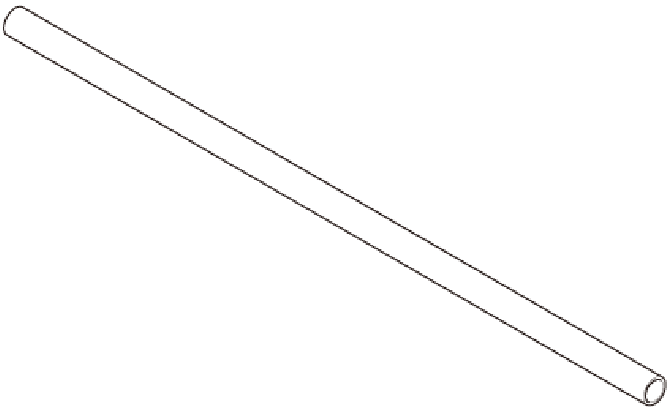	Stand Pole (Aluminum) 07AAK-5K0A120*
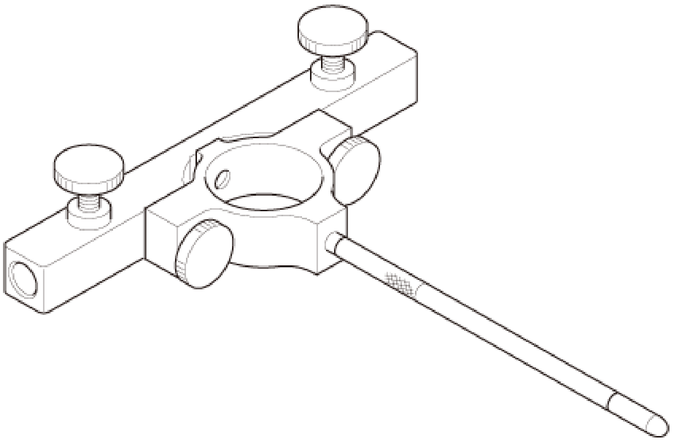	Target Adjuster 07AAK-5K0A110
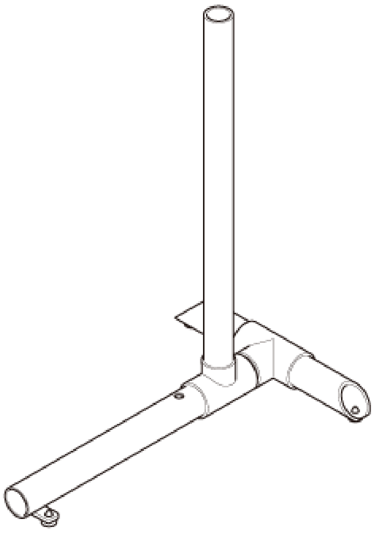	Stand 07AAJ-TK8A100*

Image	Description/Tool Number
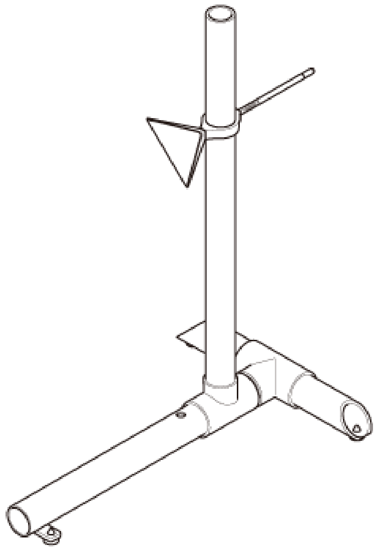	Stand Set 07AAJ-STKA220*

*: Switch out the included plastic pole for 07AAK-5K0A120 Aluminum Stand Pole, and use Stand 07AAJ-TK8A100 or Stand Set 07AAJ-STKA220 for aiming.

Adjustment

NOTE:

- The multipurpose camera unit must be re-aimed if the multipurpose camera unit or windshield is removed or replaced. The LKAS and ACC indicators (amber) wi DTCs are indicated, do the indicated DTC troubleshooting first. If the DTCs are not repaired, you cannot complete the multipurpose camera aiming procedure. H aiming procedure:
-
    - Static Camera Aiming Incomplete: **DTC B2A60-54**
- If the vehicle you are aiming was involved in a collision or if you suspect the alignment is out of specifications, you must perform a wheel alignment prior to aimi
- Cautions for the operation environment:
-
    - Multipurpose camera aiming should be done on a flat place.
    - To aim the multipurpose camera, you need the following amount of open space in front of the vehicle: 7 m (23 ft) measured from the front bumper, 4 m (13
    - Make sure the vehicle is not facing any direct light sources as this will affect the static camera aiming.
    - Make sure there are no black and white checkered or dark and light alternating patterns directly behind the targets as this will affect the static camera aimin
- Set up the vehicle:
-
    - Aiming the multipurpose camera requires the HDS.
    - Do not put any objects on the instrument panel.
    - Remove all cargo from the vehicle except the tool kit and the spare tire.
    - Make sure that there are no stains, dust, or dirt on the lens of the multipurpose camera unit and the windshield area where the camera is mounted.
    - Make sure that all doors are closed.
    - Make sure the suspension has not been modified.
    - Make sure all the tire sizes are correct and that their pressure is correct.
    - Make sure the fuel tank is full.
    - Make sure the steering wheel is pointed straight ahead, and do not turn it after setting the vehicle.
    - Shift the shift lever to P position, and apply the parking brake.
- When marking on the floor surface, use suitable tape to mark the exact locations.

1. Before Aiming - Set

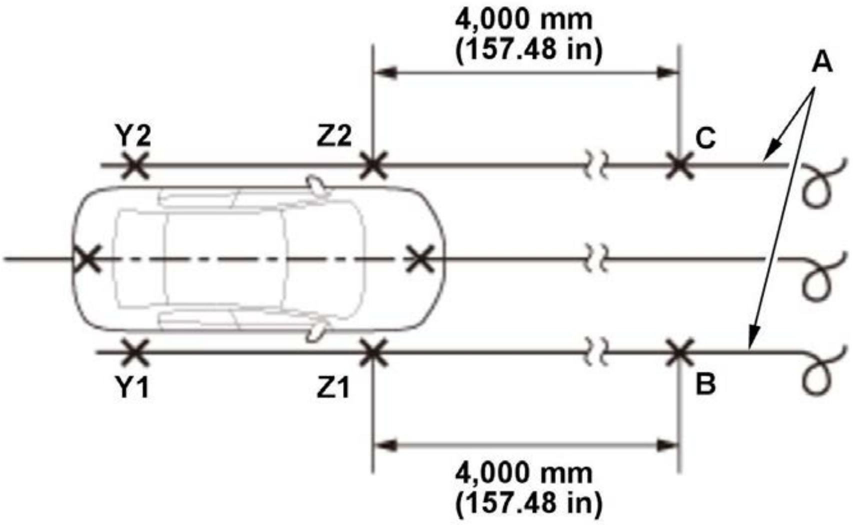
4,000 mm
(157.48 in)
A
Y2
Z2
C
Y1
Z1
B
4,000 mm
(157.48 in)

Marking of the Target Position

1. **Make spots (Z1, Y1, Z2, Y2) and set the cord along**

2. Pull a string (A) between point Z1 and point Y1, and ta surface.

NOTE: Repeat this step for the opposite wheels.

3. Measure and make a new spot B on the floor surface in from the point Z1.

NOTE: Repeat this step for the opposite front wheel, and

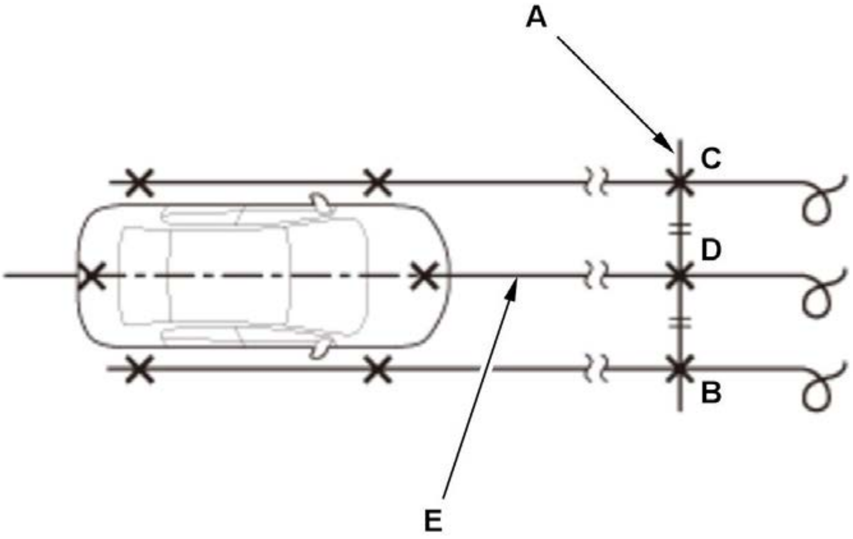

4. Stretch a string (A) between point B and point C, and t surface. Mark a new point D where the string crosses witl

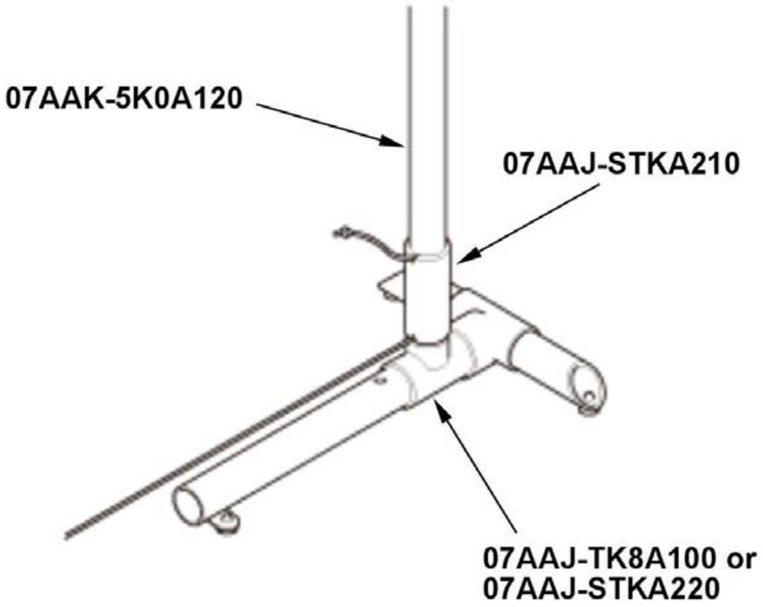
07AAK-5K0A120
07AAJ-STKA210
07AAJ-TK8A100 or
07AAJ-STKA220

Special Tools Set-Up, Target Pattern Surface Height A

NOTE: Switch out the included plastic pole for 07AAK-

5. Use the stand pole (aluminum).

NOTE: The plastic pole is too low to align the camera.

6. Route the cord through the collar and place it on the ai

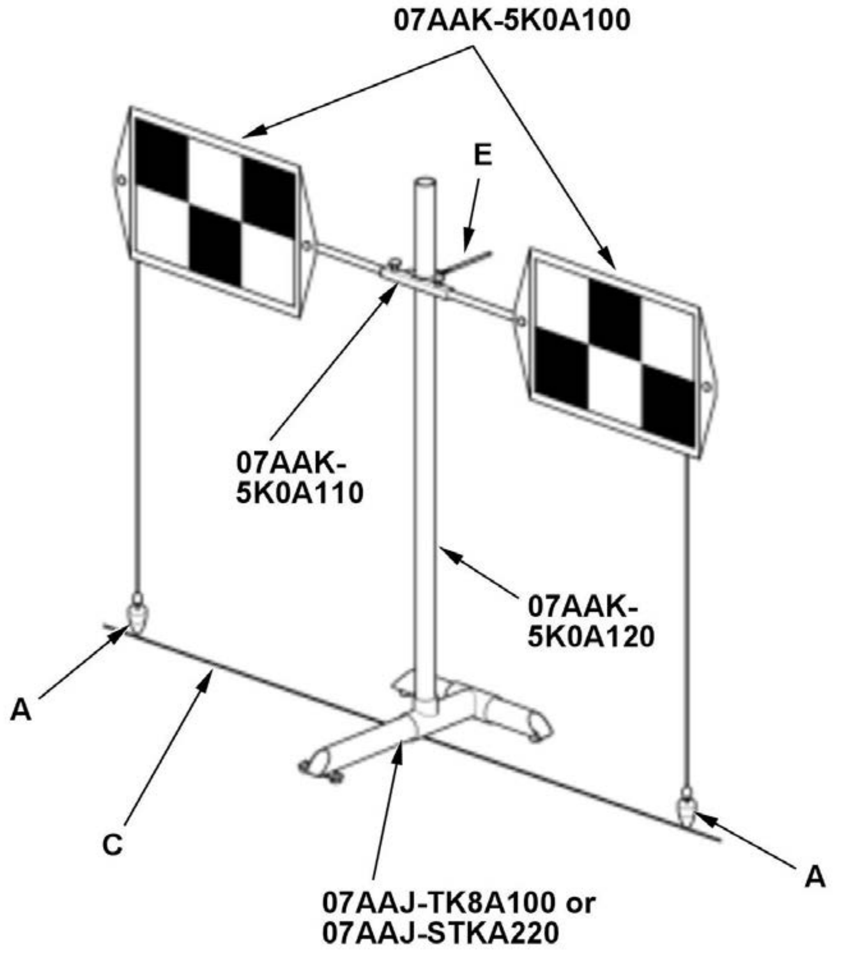
07AAK-5K0A100
E
07AAK-5K0A110
07AAK-5K0A120
A
C
A
07AAJ-TK8A100 or
07AAJ-STKA220

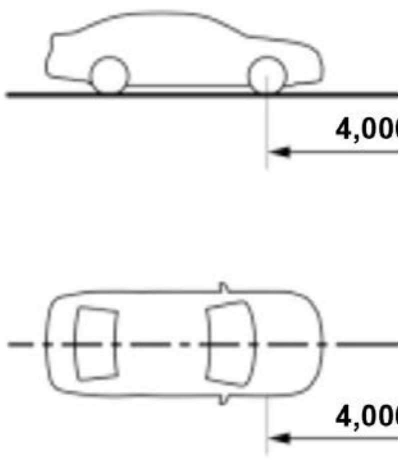

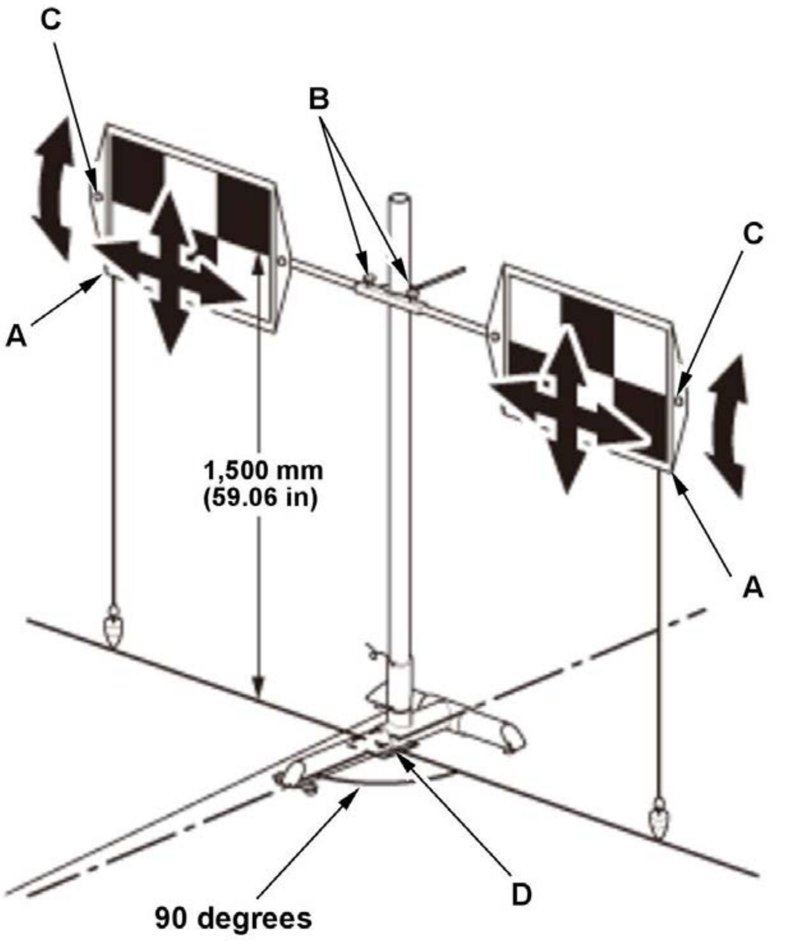
C
B
C
A
1,500 mm
(59.06 in)
A
90 degrees
D

11. Adjust the aiming target panel (A).

-1. Put the level on the target panel surface. Turn the adju
angle of target panel surface so that the air bubble in the l

-2. Put the level on the target panel. Turn the adjustable s
target panel surface so that the air bubble in the level is c

-3. Adjust the height of the target panel and make sure to
surface and the horizontal center line of the panel.

NOTE: The horizontal center line is a horizontal division
boxes meet.

2. Multipurpose Camera - Static Camera Aim

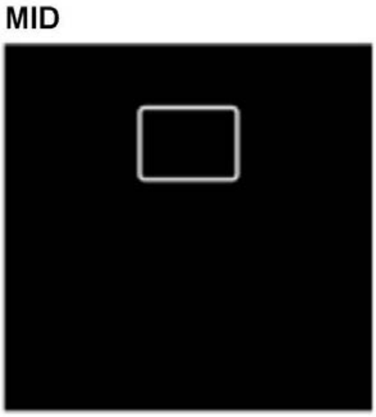	1. Apply the parking brake. 2. **Connect the HDS** 3. Check for DTCs with the HDS. **NOTE:** If DTC B2A60-54 is indicated, troubleshoot the 4. In the DRIVING SUPPORT MENU, then INTEGRAT ADJUSTMENT, then select STATIC CAMERA AIMING 5. Press ENTER on the HDS to enter the aiming mode **NOTE:** A "□" will be displayed on the MID during came 6. Confirm STATIC CAMERA AIMING IS COMPLETE **NOTE:** If the aiming has failed, you must start the static 7. Turn the vehicle to the OFF (LOCK) mode.

DESCRIPTION AND OPERATION

DRIVING SUPPORT SYSTEM DESCRIPTION

Integrated Driver Support System

This vehicle is equipped with the integrated driver support system, which analyzes information from the monocular camera (multipurpose camera) and millimeter wave millimeter wave radar analyzes and processes the image of the monocular camera and information for control.

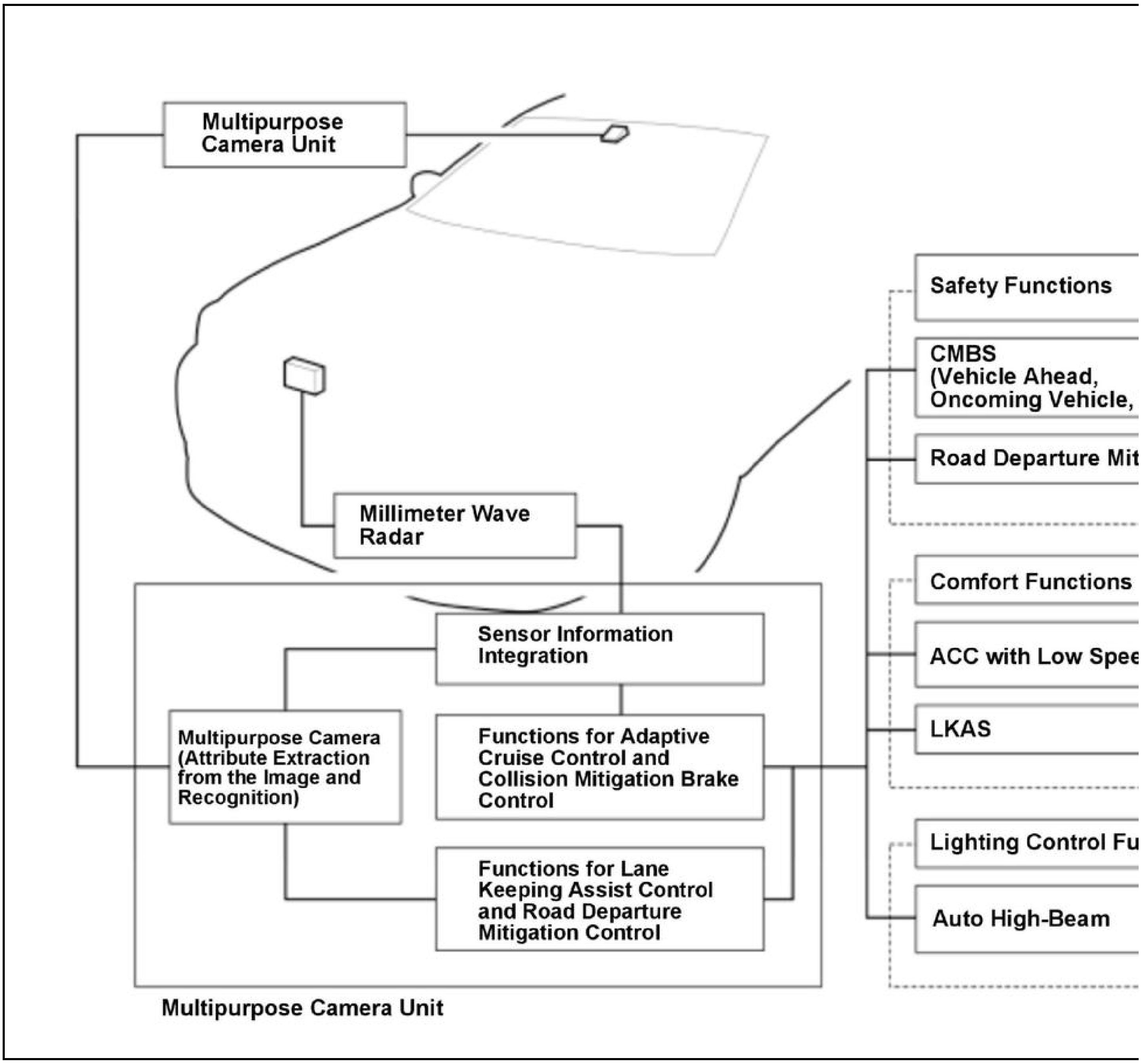
Multipurpose Camera Unit
Safety Functions
CMBS (Vehicle Ahead, Oncoming Vehicle,
Road Departure Mit
Millimeter Wave Radar
Comfort Functions
Sensor Information Integration
ACC with Low Spee
Multipurpose Camera (Attribute Extraction from the Image and Recognition)
Functions for Adaptive Cruise Control and Collision Mitigation Brake Control
LKAS
Lighting Control Fu
Functions for Lane Keeping Assist Control and Road Departure Mitigation Control
Auto High-Beam
Multipurpose Camera Unit

Roles of Each Function

The integrated Driver Support System has three main categories of functions: Safety, Comfort and Lighting control functions. When the Integrated Driver Support Syste triggered. The system provides safety functions that perform a hazard evasion assistance if the driver does not (or cannot) respond to the warning notification or alarm. controlling the vehicle behavior according to the road conditions to assist the driver.

Safety Functions	Comfort Functions	Lighting Control Fu
CMBS, Road Departure Mitigation (RDM)	ACC with Low Speed Follow, LKAS	Auto High-Beam
The function is basically ON all the time (can be turned off by switch operation)	The function is selectable by the users	The function is ON AUTO position

Operational priority of each function

Operation priority of each function is set among systems. The CMBS gets activated when a risk of collision becomes greater while the ACC control is in operation. Onc the RDM System is activated, its operation has higher priority than LKAS. Between CMBS and RDM System, the brake control of the CMBS has higher priority.

Operation of the Millimeter Wave Radar

The millimeter wave radar uses millimeter wave bands to detect vehicles and pedestrians (vehicle ahead, oncoming vehicles and pedestrian) in front of the vehicle. The distance between the objects and the vehicle by transmitting and receiving the millimeter waves.

Operation Conditions

Item	Leading Vehicle
Target Detection Range	0.5 - 120 m (1.6 - 394 ft)

Millimeter waves are emitted within an angle range of 40 degrees in the vertical direction and an angle of 90 degrees in the horizontal direction.

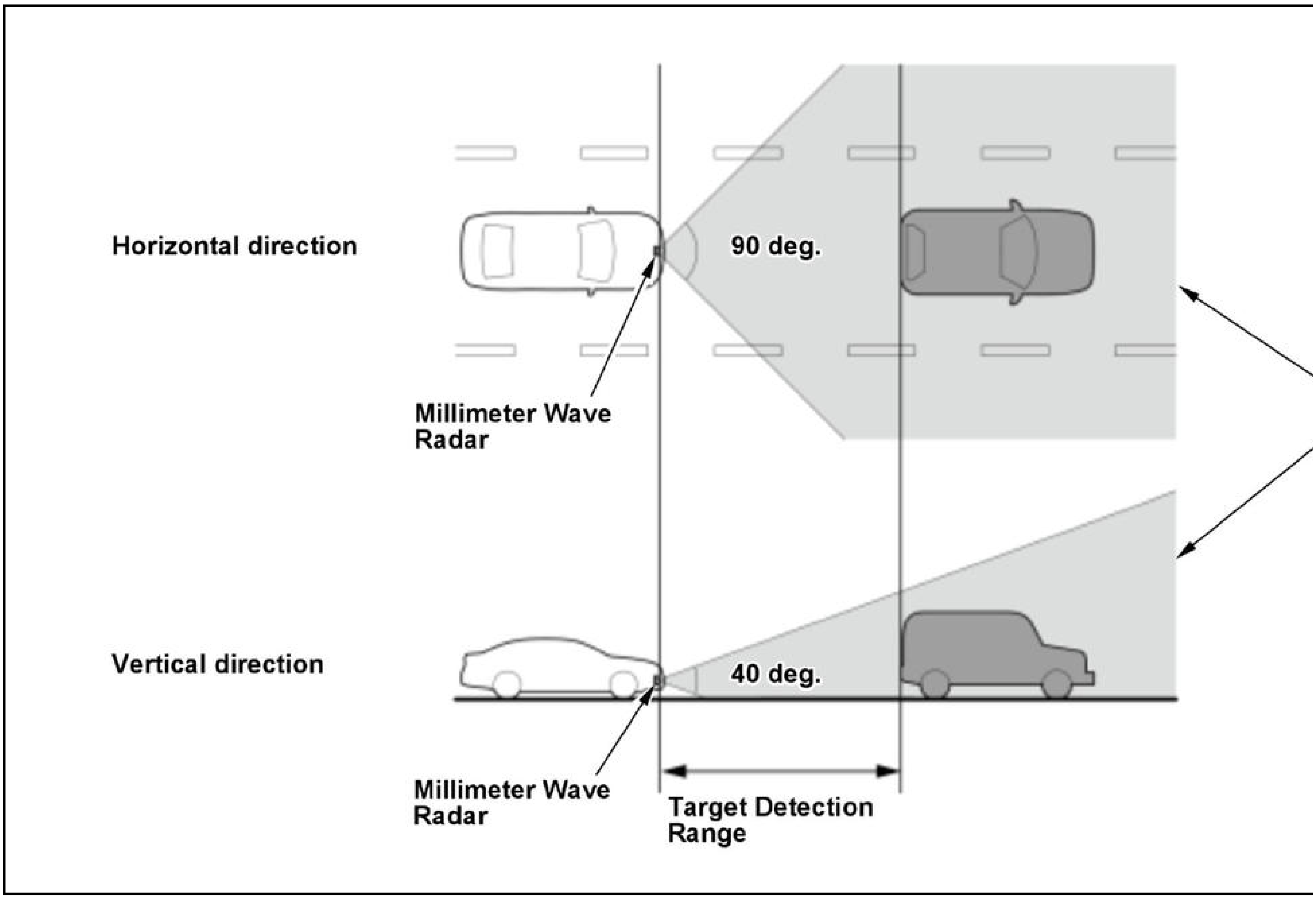
Horizontal direction
90 deg.
Millimeter Wave Radar
Vertical direction
40 deg.
Millimeter Wave Radar
Target Detection Range

Vehicle/Object Detection Process

The multipurpose camera unit determines if there is any leading vehicle and/or detected objects that are moving based on the outlines of the objects, relative position an vehicles and pedestrians, the system uses the recognition result received from both the millimeter wave radar and the multipurpose camera as follows.

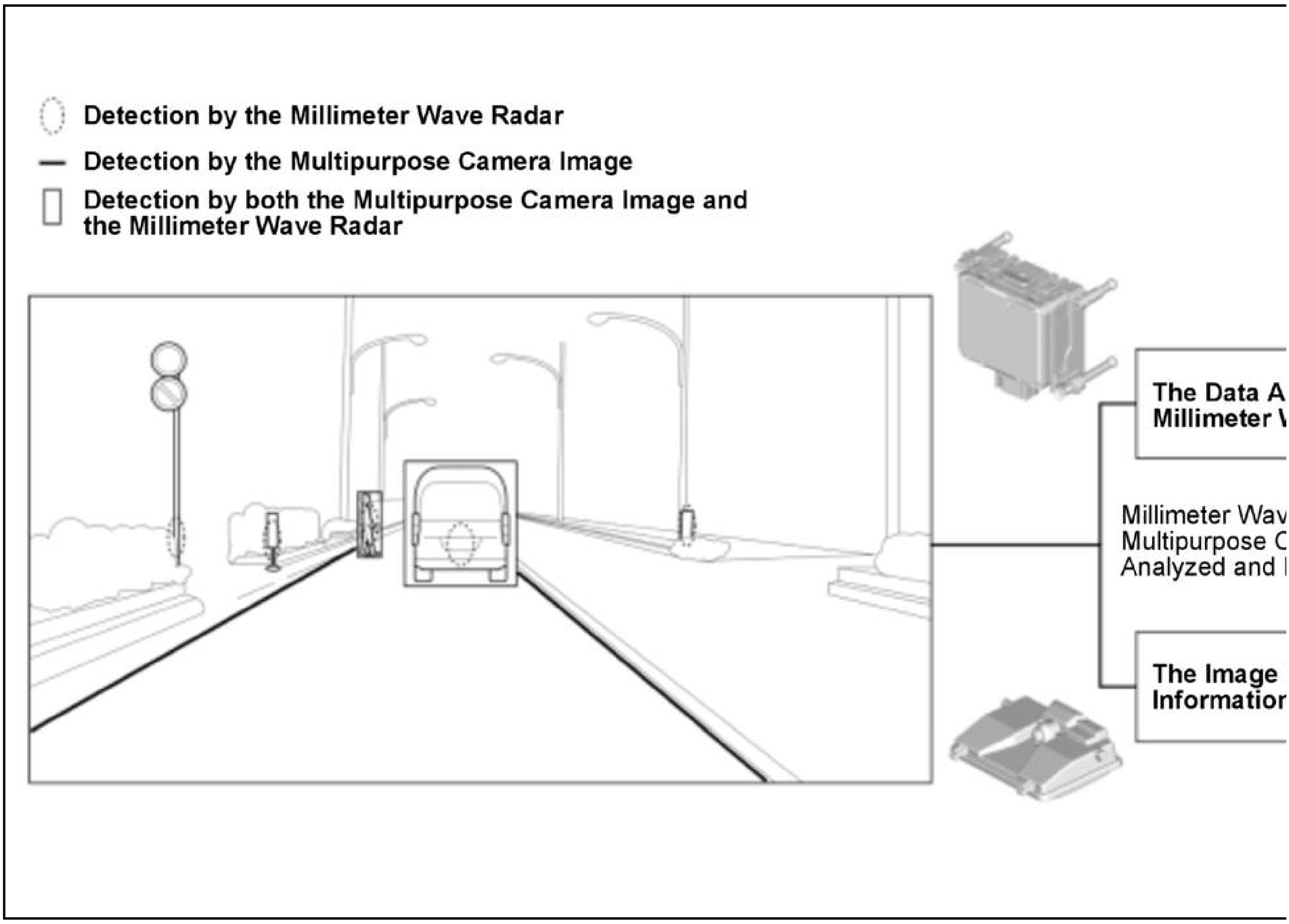
Detection by the Millimeter Wave Radar
Detection by the Multipurpose Camera Image
Detection by both the Multipurpose Camera Image and the Millimeter Wave Radar
The Data A
Millimeter V
Millimeter Wav
Multipurpose C
Analyzed and I
The Image
Informatior

Pedestrian Image Processing

When the system detects an object that could be a pedestrian, the system compares the object's characteristics against programmed characteristics for the system to deter

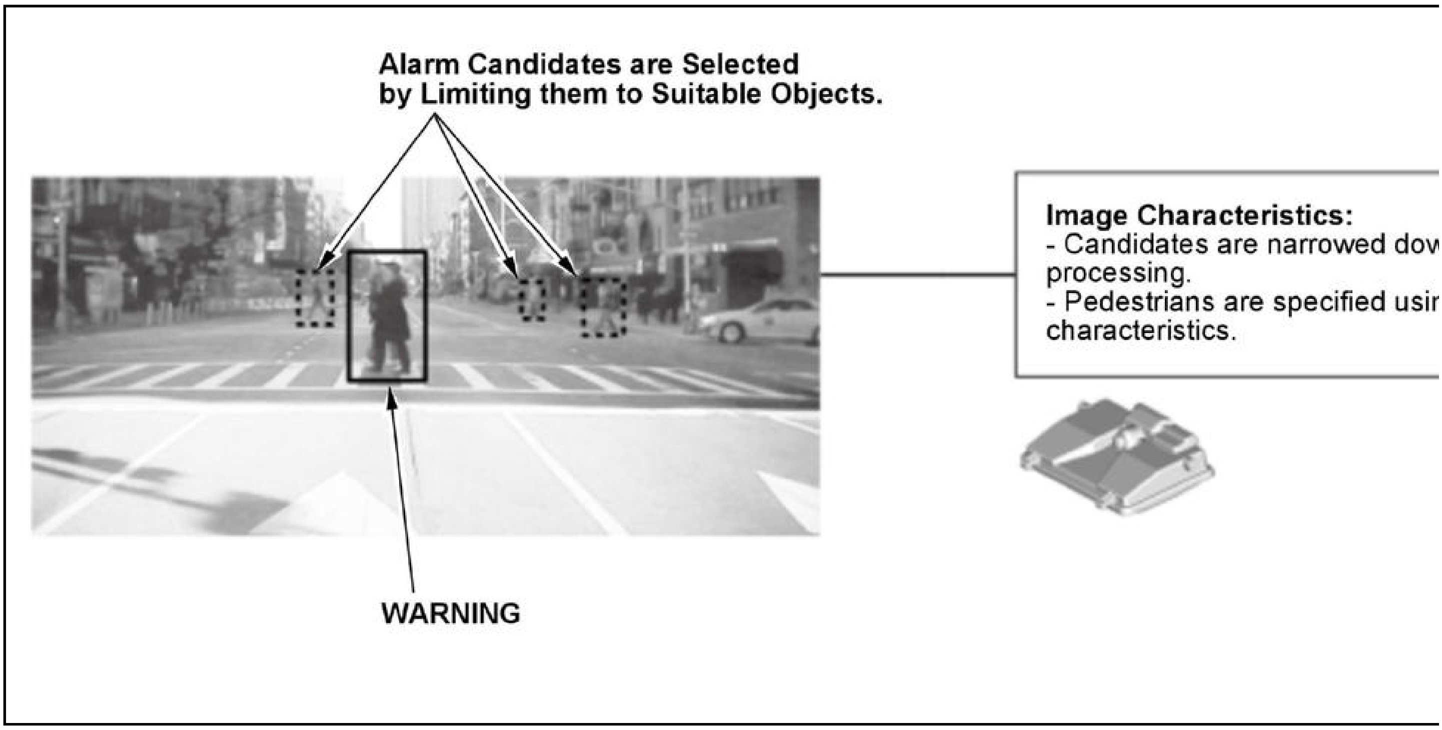
Alarm Candidates are Selected by Limiting them to Suitable Objects.
WARNING
Image Characteristics:
- Candidates are narrowed dov
processing.
- Pedestrians are specified usir
characteristics.

Function Failure Indication

System Temporary Stop	The system detects that the electric wave of the millimeter wave radar is blocked (such as dirt attached on the radar surface/radar cover)	ACC with LSF, CMBS, and RDM stop functioning, CMBS indicator (amber) and RDM indicator (amber) come on, and a fault indication is triggered on the MID. After the dirt has been removed, the system recovers and the indicators turn off.	
	The system detects the image of the multipurpose camera is covered (foggy/dirty windshield)	LKAS, CMBS, RDM, and Auto High-Beam stop functioning, CMBS indicator (amber) and RDM indicator (amber) come on, and a fault indication is triggered on the MID. After the obstruction has been removed, the system recovers and the indicators turn off.	
	The temperature in the multipurpose camera unit becomes upper limit of the operating temperature or higher because of a temperature increase in the vehicle interior.(temperature rise caused by sunlight)	LKAS, CMBS, RDM, and Auto High-Beam stop functioning, CMBS indicator (amber) and RDM indicator (amber) come on, and a fault indication is triggered on the MID. When the inside temperature drops, the system recovers and the indicators turn off.	

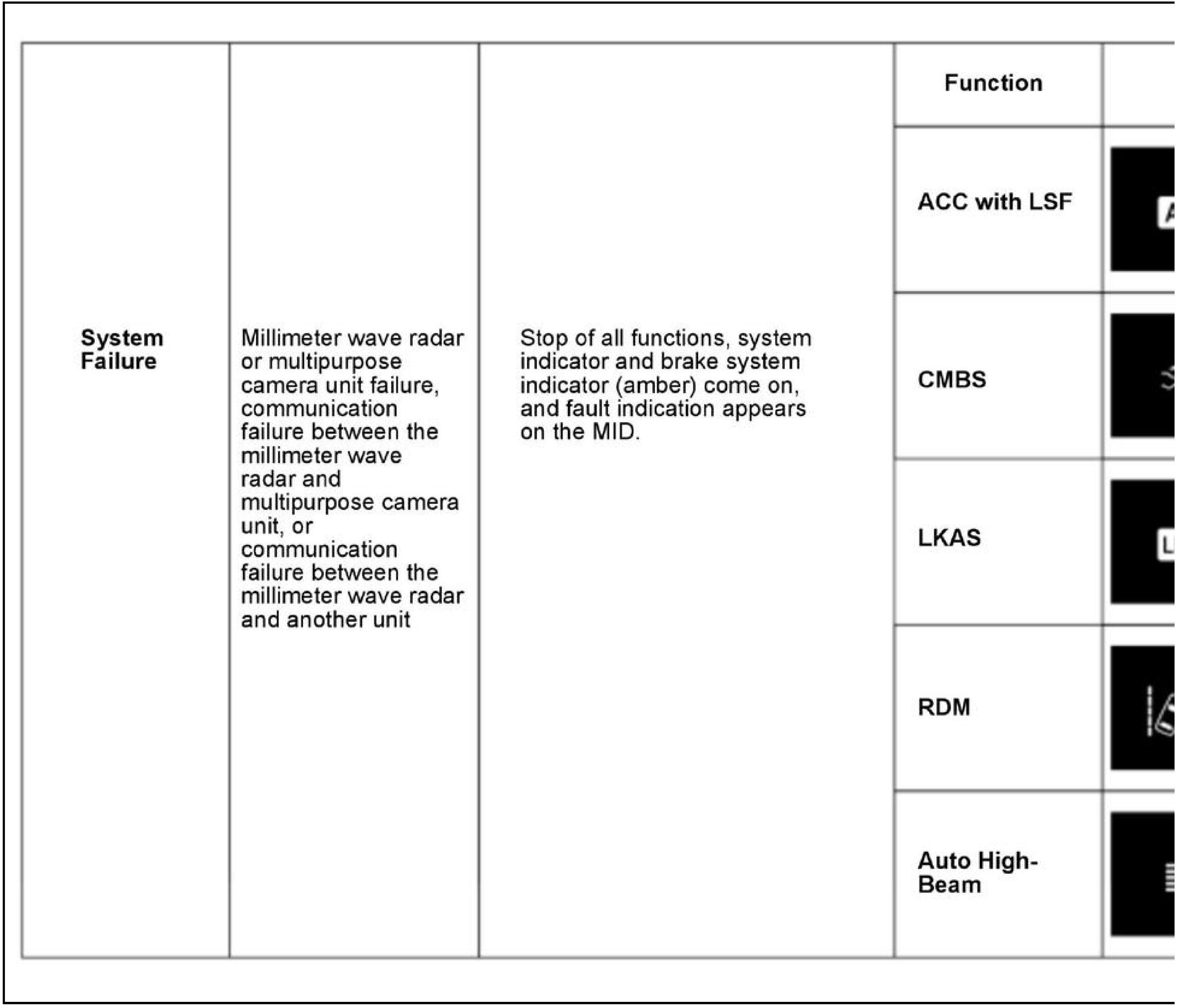

			Function	
System Failure	Millimeter wave radar or multipurpose camera unit failure, communication failure between the millimeter wave radar and multipurpose camera unit, or communication failure between the millimeter wave radar and another unit	Stop of all functions, system indicator and brake system indicator (amber) come on, and fault indication appears on the MID.	**ACC with LSF**	
			CMBS	
			LKAS	
			RDM	
			Auto High-Beam	

ROAD DEPARTURE MITIGATION SYSTEM DESCRIPTION

The Road Departure Mitigation (RDM) system uses image information from the multipurpose camera to recognize the lane markings on the road. The multipurpose ca
vehicle moving out of its lane. When the unit determines that the vehicle begins to move out of its lane, the unit warns the driver by vibrating the steering wheel, showi
display (MID) and also provides steering control to assist steering the vehicle back in its lane to prevent the vehicle from moving out of its lane. When the multipurpose
prevent the vehicle moving out if its lane and the approaching lane marking on the road is indicated as a solid line, the unit also provides a brake control to assist decele
multipurpose camera unit determines that the vehicle begins to move out of its lanes for the third time after moving out of its lane twice in a row without the driver's ste
warning image and a buzzer sound without providing steering control.

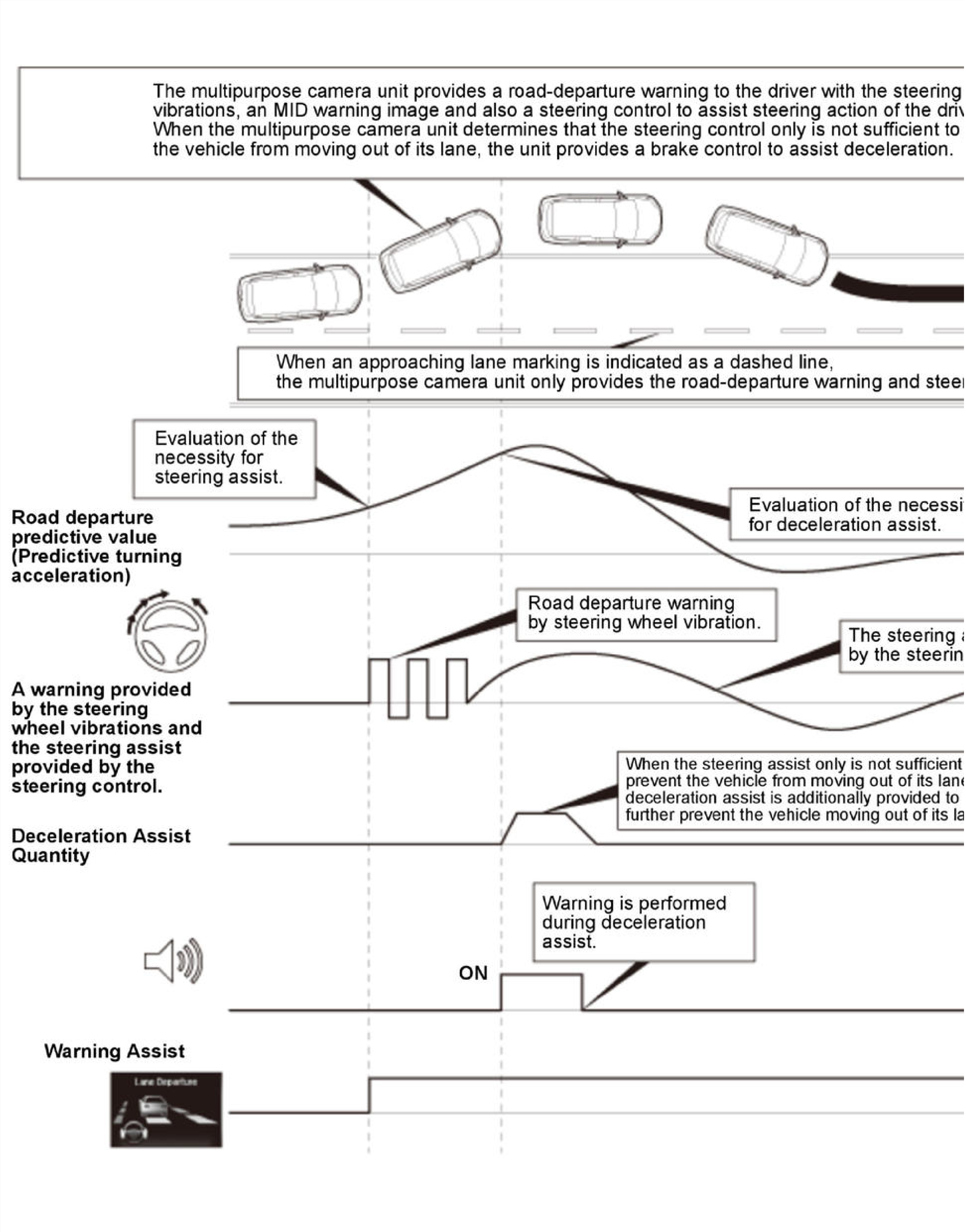
The multipurpose camera unit provides a road-departure warning to the driver with the steering
vibrations, an MID warning image and also a steering control to assist steering action of the driv
When the multipurpose camera unit determines that the steering control only is not sufficient to
the vehicle from moving out of its lane, the unit provides a brake control to assist deceleration.
When an approaching lane marking is indicated as a dashed line,
the multipurpose camera unit only provides the road-departure warning and stee
Evaluation of the necessity for steering assist.
Evaluation of the necessi for deceleration assist.
Road departure predictive value (Predictive turning acceleration)
Road departure warning by steering wheel vibration.
The steering a by the steerin
A warning provided by the steering wheel vibrations and the steering assist provided by the steering control.
When the steering assist only is not sufficient prevent the vehicle from moving out of its lane deceleration assist is additionally provided to further prevent the vehicle moving out of its la
Deceleration Assist Quantity
Warning is performed during deceleration assist.
ON
Warning Assist
Lane Departure

Operation Conditions

System Operation Conditions	The Road Departure Mitigation (RDM) system works as long as an approaching lane marking is recognizable (lane markings may not bad weather, backlit, and on snowy roads).		
	Operation vehicle speed	45 - 90 mph (72 - 145 km/h)	
	Object lane line types	Broken lines on the road	The road-departu (MID) and steeri
		Solid lines on the road	The road-departu (MID), steering

		decelerating the
	Driver operation	The RDM system does not operate when the driver's intention to control the vehicle, acceleration pedal operation, brake pedal operation, and turn signal operation, is reco

ROAD DEPARTURE MITIGATION SYSTEM DESCRIPTION - SYSTEM DIAGRAM

The system diagram of the RDM system is shown below.

For locations of each component on the vehicle, refer to Component Location Index:

- **EPS motor/control unit**
- **Gauge control module**
- **Millimeter wave radar**
- **Multipurpose camera unit**
- **PCM**
- **SRS unit**
- **VSA modulator-control unit**

The RDM system for this vehicle uses the multipurpose camera unit to calculate camera image information, and sends the RDM system indicated value to the control ur

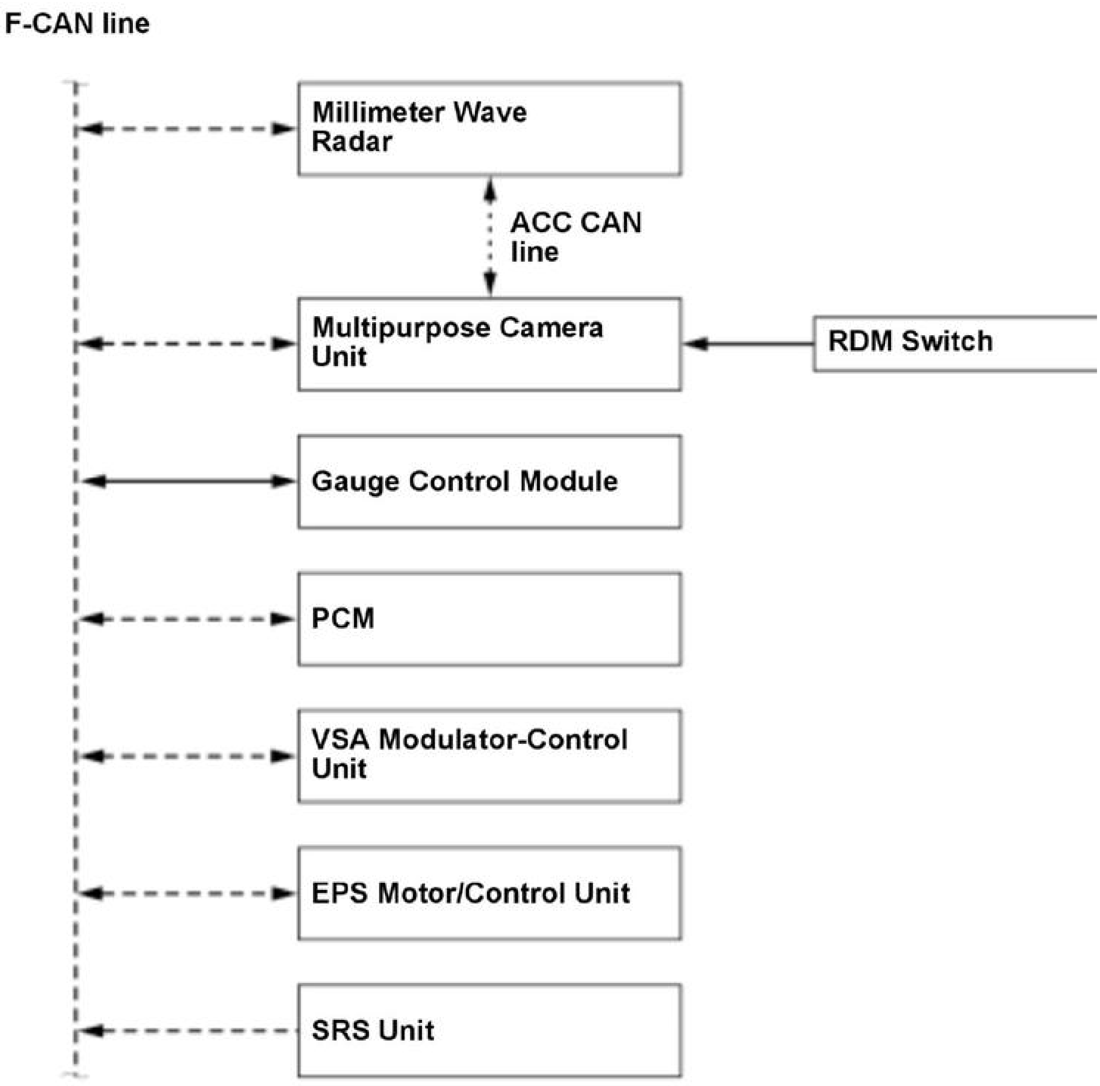
F-CAN line
Millimeter Wave Radar
ACC CAN line
Multipurpose Camera Unit
RDM Switch
Gauge Control Module
PCM
VSA Modulator-Control Unit
EPS Motor/Control Unit
SRS Unit

F-CAN Communication Data

Millimeter Wave Radar Receiving Signal:

Originating Unit	Signal Name
EPS motor/control unit	• EPS system failure information • Steering angle neutral position learning information • Steering angle signal • Torque sensor signal

Originating Unit	Signal Name
Gauge control module	• Customization signal • Gauge control module failure information • Turn signal lights operating status • Wiper operating status
PCM	• Accelerator pedal position (APP) sensor signal • Brake pedal position switch signal • PCM failure information • Vehicle speed signal
SRS unit	• Yaw rate sensor signal • Yaw rate sensor failure information
VSA modulator-control unit	• Master cylinder pressure signal • VSA system actuation information • VSA system failure information • Wheel speed sensor signals

Millimeter Wave Radar Transmitting Signal:

Destination Unit	Signal Name
EPS motor/control unit	• Integrated driver support system failure information • RDM control instruction
Gauge control module	• Buzzer request signal • Customization information • Integrated driver support system failure information • Multi information display (MID) screen requirement: • • - RDM indicator • - RDM system indicates for self-diagnostic function
PCM	---
SRS unit	RDM operating information
VSA modulator-control unit	• Automatic brake actuation request signal • Brake light relay actuation request signal • Integrated driver support system failure information

CIRCUIT DIAGRAM

ROAD DEPARTURE MITIGATION CIRCUIT DIAGRAM(WITH AUTO IDLE STOP SYSTEM) (2020 2021)

With keyless access system

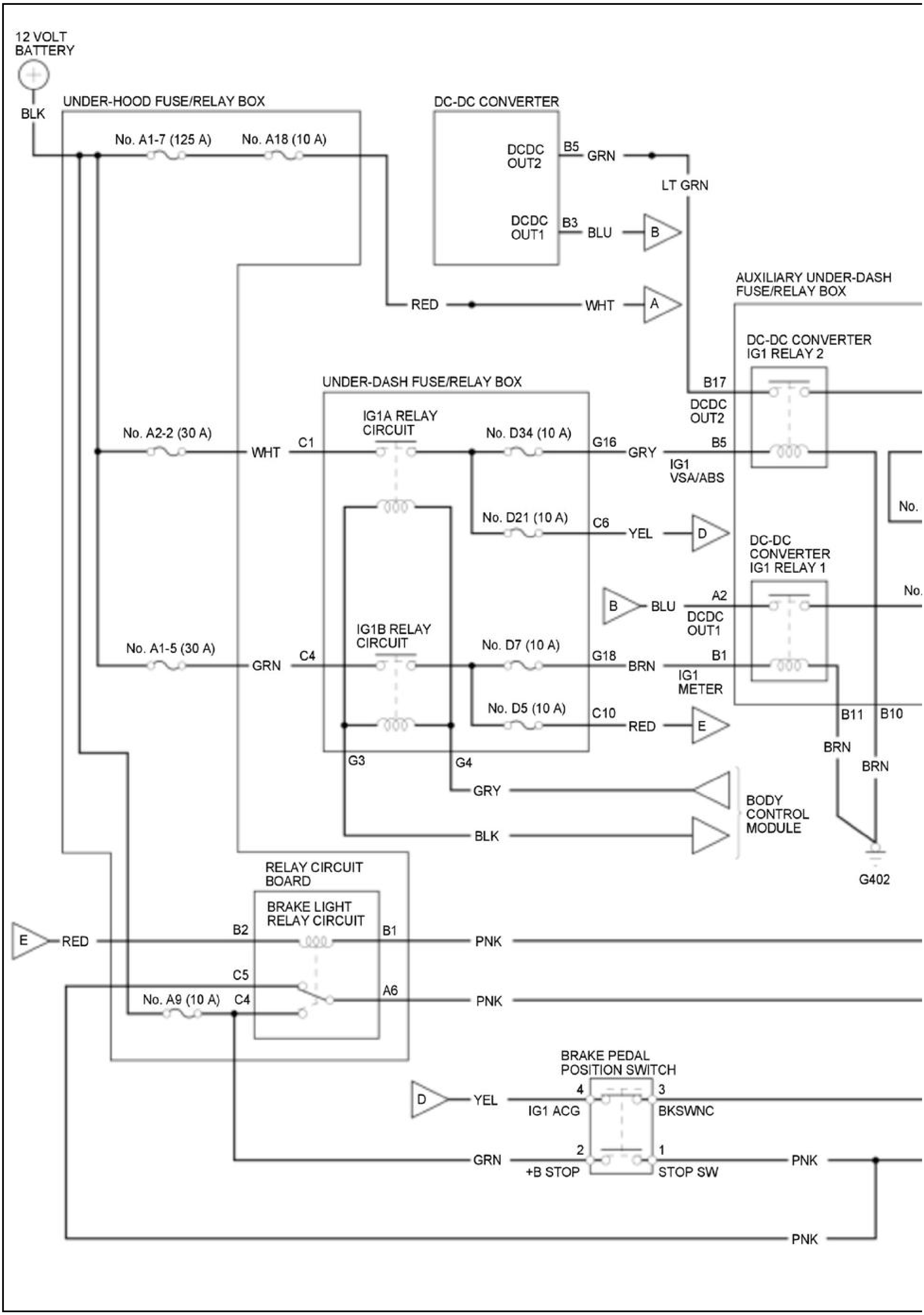
12 VOLT BATTERY
BLK
UNDER-HOOD FUSE/RELAY BOX
No. A1-7 (125 A)
No. A18 (10 A)
DC-DC CONVERTER
DCDC OUT2
B5
GRN
LT GRN
DCDC OUT1
B3
BLU
B
RED
WHT
A
AUXILIARY UNDER-DASH FUSE/RELAY BOX
DC-DC CONVERTER IG1 RELAY 2
B17
DCDC OUT2
UNDER-DASH FUSE/RELAY BOX
IG1A RELAY CIRCUIT
No. A2-2 (30 A)
WHT
C1
No. D34 (10 A)
G16
GRY
B5
IG1 VSA/ABS
No.
No. D21 (10 A)
C6
YEL
D
DC-DC CONVERTER IG1 RELAY 1
B
BLU
A2
DCDC OUT1
No.
IG1B RELAY CIRCUIT
No. A1-5 (30 A)
GRN
C4
No. D7 (10 A)
G18
BRN
B1
IG1 METER
No. D5 (10 A)
C10
RED
E
B11
B10
BRN
BRN
G3
G4
GRY
BLK
BODY CONTROL MODULE
G402
RELAY CIRCUIT BOARD
BRAKE LIGHT RELAY CIRCUIT
E
RED
B2
B1
PNK
C5
A6
No. A9 (10 A)
C4
PNK
BRAKE PEDAL POSITION SWITCH
D
YEL
4
IG1 ACG
3
BKSWNC
GRN
2
+B STOP
1
STOP SW
PNK
PNK

Without keyless access system

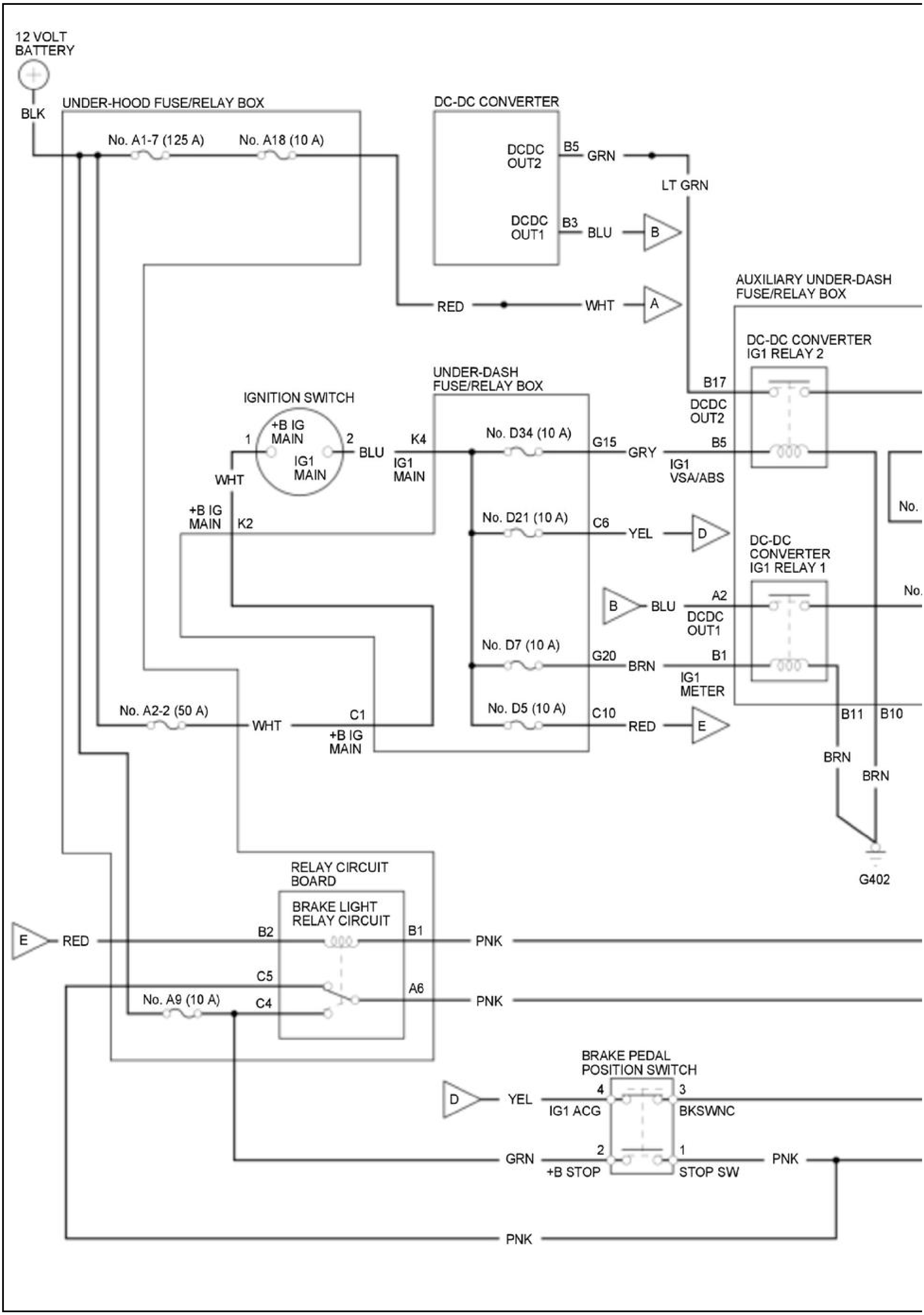
12 VOLT BATTERY
BLK
UNDER-HOOD FUSE/RELAY BOX
No. A1-7 (125 A)
No. A18 (10 A)
DC-DC CONVERTER
DCDC OUT2
B5
GRN
LT GRN
DCDC OUT1
B3
BLU
B
RED
WHT
A
AUXILIARY UNDER-DASH FUSE/RELAY BOX
DC-DC CONVERTER IG1 RELAY 2
B17
DCDC OUT2
UNDER-DASH FUSE/RELAY BOX
IGNITION SWITCH
+B IG MAIN
IG1 MAIN
1
2
BLU
K4
IG1 MAIN
No. D34 (10 A)
G15
GRY
B5
IG1 VSA/ABS
WHT
+B IG MAIN
K2
No. D21 (10 A)
C6
YEL
D
No.
DC-DC CONVERTER IG1 RELAY 1
B
BLU
A2
DCDC OUT1
No.
No. D7 (10 A)
G20
BRN
B1
IG1 METER
No. D5 (10 A)
C10
RED
E
No. A2-2 (50 A)
WHT
C1
+B IG MAIN
B11
B10
BRN
BRN
G402
RELAY CIRCUIT BOARD
BRAKE LIGHT RELAY CIRCUIT
E
RED
B2
B1
PNK
C5
A6
PNK
No. A9 (10 A)
C4
BRAKE PEDAL POSITION SWITCH
D
YEL
4
IG1 ACG
3
BKSWNC
GRN
2
+B STOP
1
STOP SW
PNK
PNK

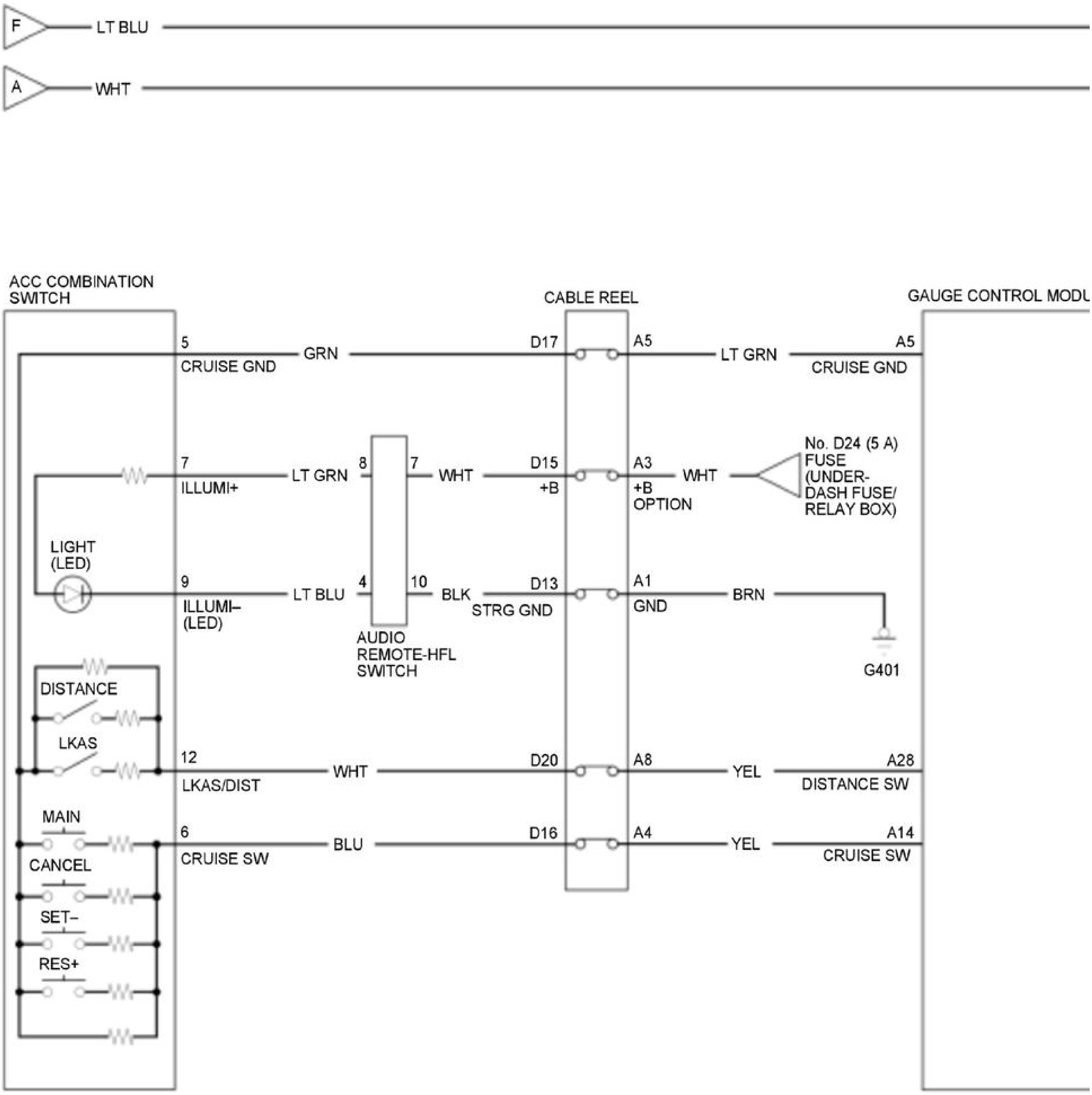
F
LT BLU
A
WHT
ACC COMBINATION SWITCH
CABLE REEL
GAUGE CONTROL MODU
5
CRUISE GND
GRN
D17
A5
LT GRN
A5
CRUISE GND
7
ILLUMI+
LT GRN
8
7
WHT
D15
+B
A3
+B OPTION
WHT
No. D24 (5 A) FUSE (UNDER-DASH FUSE/ RELAY BOX)
LIGHT (LED)
9
ILLUMI– (LED)
LT BLU
4
10
BLK
D13
STRG GND
A1
GND
BRN
AUDIO REMOTE-HFL SWITCH
G401
DISTANCE
LKAS
12
LKAS/DIST
WHT
D20
A8
YEL
A28
DISTANCE SW
MAIN
6
CRUISE SW
BLU
D16
A4
YEL
A14
CRUISE SW
CANCEL
SET–
RES+

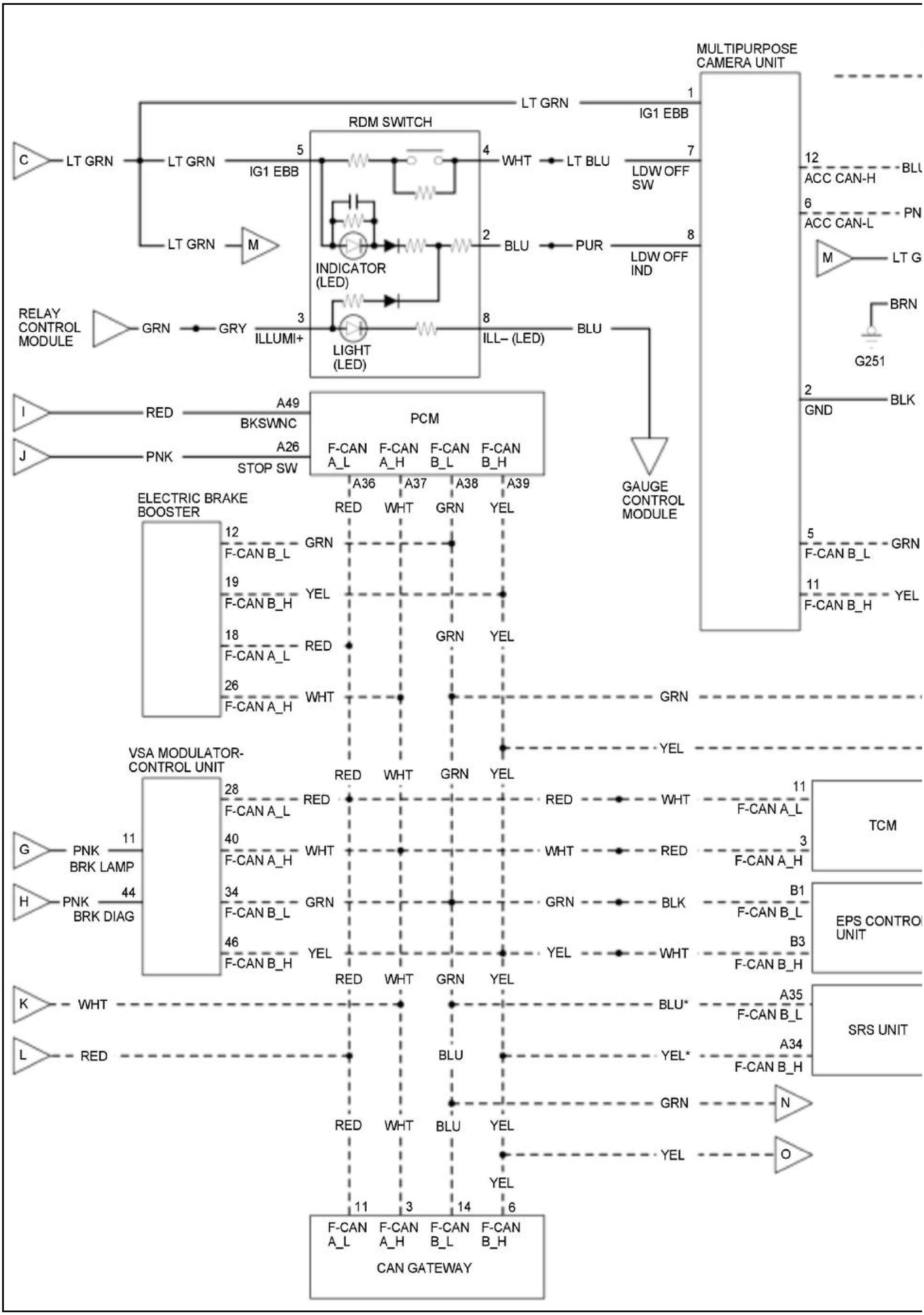
MULTIPURPOSE CAMERA UNIT
LT GRN
1
IG1 EBB
RDM SWITCH
C
LT GRN
LT GRN
5
IG1 EBB
4
WHT
LT BLU
7
LDW OFF SW
12
ACC CAN-H
BLU
6
ACC CAN-L
PN
LT GRN
M
INDICATOR (LED)
2
BLU
PUR
8
LDW OFF IND
M
LT G
BRN
G251
RELAY CONTROL MODULE
GRN
GRY
3
ILLUMI+
LIGHT (LED)
8
ILL– (LED)
BLU
2
GND
BLK
I
RED
A49
BKSWNC
PCM
J
PNK
A26
STOP SW
F-CAN A_L
F-CAN A_H
F-CAN B_L
F-CAN B_H
A36
A37
A38
A39
GAUGE CONTROL MODULE
ELECTRIC BRAKE BOOSTER
RED
WHT
GRN
YEL
12
F-CAN B_L
GRN
5
F-CAN B_L
GRN
19
F-CAN B_H
YEL
11
F-CAN B_H
YEL
18
F-CAN A_L
RED
GRN
YEL
26
F-CAN A_H
WHT
GRN
YEL
VSA MODULATOR-CONTROL UNIT
RED
WHT
GRN
YEL
28
F-CAN A_L
RED
RED
WHT
11
F-CAN A_L
TCM
G
PNK
11
BRK LAMP
40
F-CAN A_H
WHT
WHT
RED
3
F-CAN A_H
H
PNK
44
BRK DIAG
34
F-CAN B_L
GRN
GRN
BLK
B1
F-CAN B_L
EPS CONTROI UNIT
46
F-CAN B_H
YEL
YEL
WHT
B3
F-CAN B_H
RED
WHT
GRN
YEL
K
WHT
BLU*
A35
F-CAN B_L
SRS UNIT
L
RED
BLU
YEL*
A34
F-CAN B_H
GRN
N
RED
WHT
BLU
YEL
YEL
O
YEL
11
3
14
6
F-CAN A_L
F-CAN A_H
F-CAN B_L
F-CAN B_H
CAN GATEWAY

ROAD DEPARTURE MITIGATION CIRCUIT DIAGRAM(WITHOUT AUTO IDLE STOP SYSTEM)

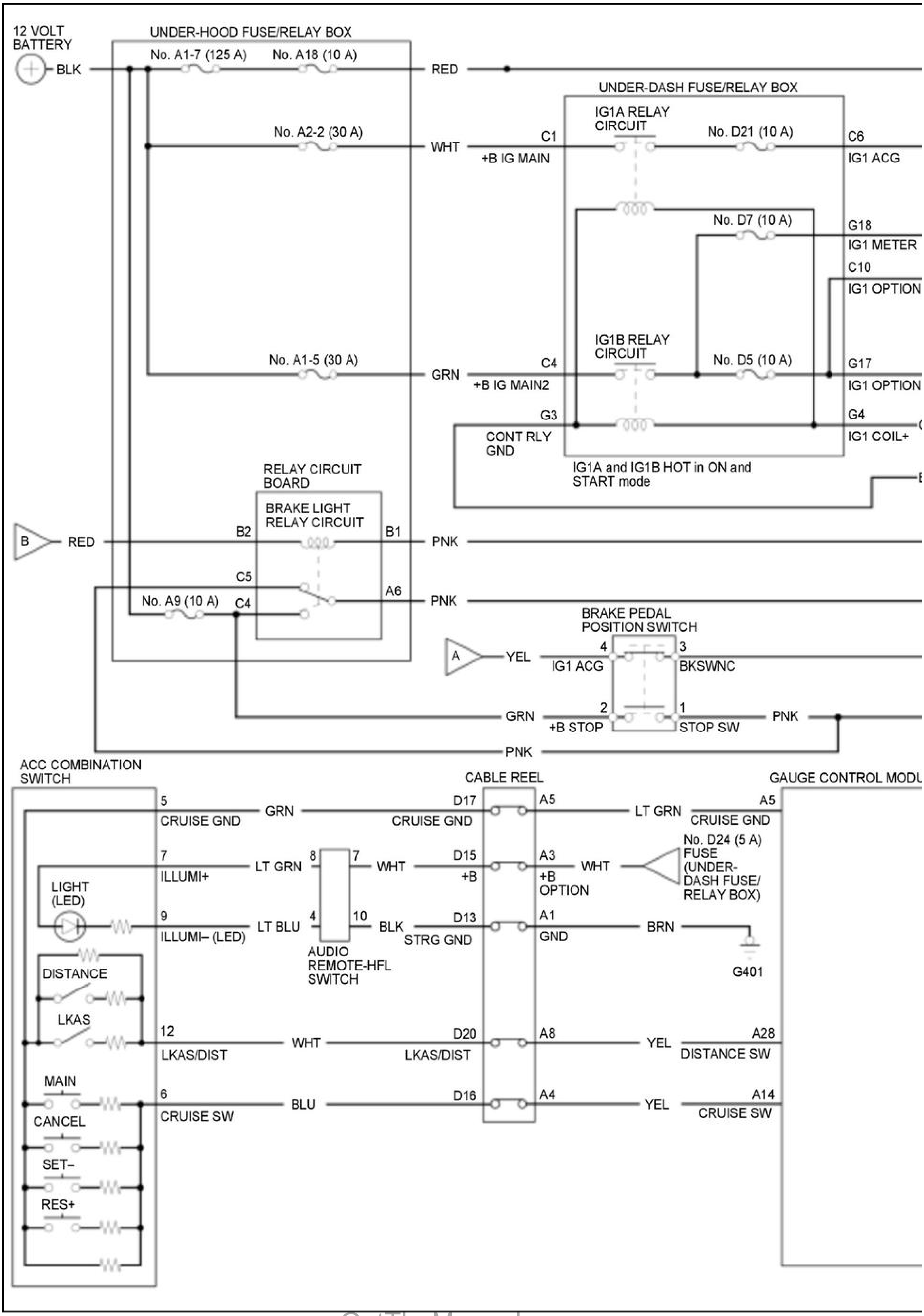
12 VOLT BATTERY
BLK
UNDER-HOOD FUSE/RELAY BOX
No. A1-7 (125 A)
No. A18 (10 A)
RED
No. A2-2 (30 A)
WHT
No. A1-5 (30 A)
GRN
UNDER-DASH FUSE/RELAY BOX
IG1A RELAY CIRCUIT
C1
+B IG MAIN
No. D21 (10 A)
C6
IG1 ACG
No. D7 (10 A)
G18
IG1 METER
C10
IG1 OPTION
IG1B RELAY CIRCUIT
C4
+B IG MAIN2
No. D5 (10 A)
G17
IG1 OPTION
G3
CONT RLY GND
G4
IG1 COIL+
IG1A and IG1B HOT in ON and START mode
RELAY CIRCUIT BOARD
BRAKE LIGHT RELAY CIRCUIT
B
RED
B2
B1
PNK
C5
No. A9 (10 A)
C4
A6
PNK
BRAKE PEDAL POSITION SWITCH
A
YEL
4
IG1 ACG
3
BKSWNC
GRN
2
+B STOP
1
STOP SW
PNK
PNK
ACC COMBINATION SWITCH
CABLE REEL
GAUGE CONTROL MODU
5
CRUISE GND
GRN
D17
CRUISE GND
A5
LT GRN
A5
CRUISE GND
7
ILLUMI+
LT GRN
8
7
WHT
D15
+B
A3
+B OPTION
WHT
No. D24 (5 A) FUSE (UNDER-DASH FUSE/ RELAY BOX)
LIGHT (LED)
9
ILLUMI– (LED)
LT BLU
4
10
BLK
D13
STRG GND
A1
GND
BRN
AUDIO REMOTE-HFL SWITCH
G401
DISTANCE
LKAS
12
LKAS/DIST
WHT
D20
LKAS/DIST
A8
YEL
A28
DISTANCE SW
MAIN
CANCEL
SET–
RES+
6
CRUISE SW
BLU
D16
A4
YEL
A14
CRUISE SW

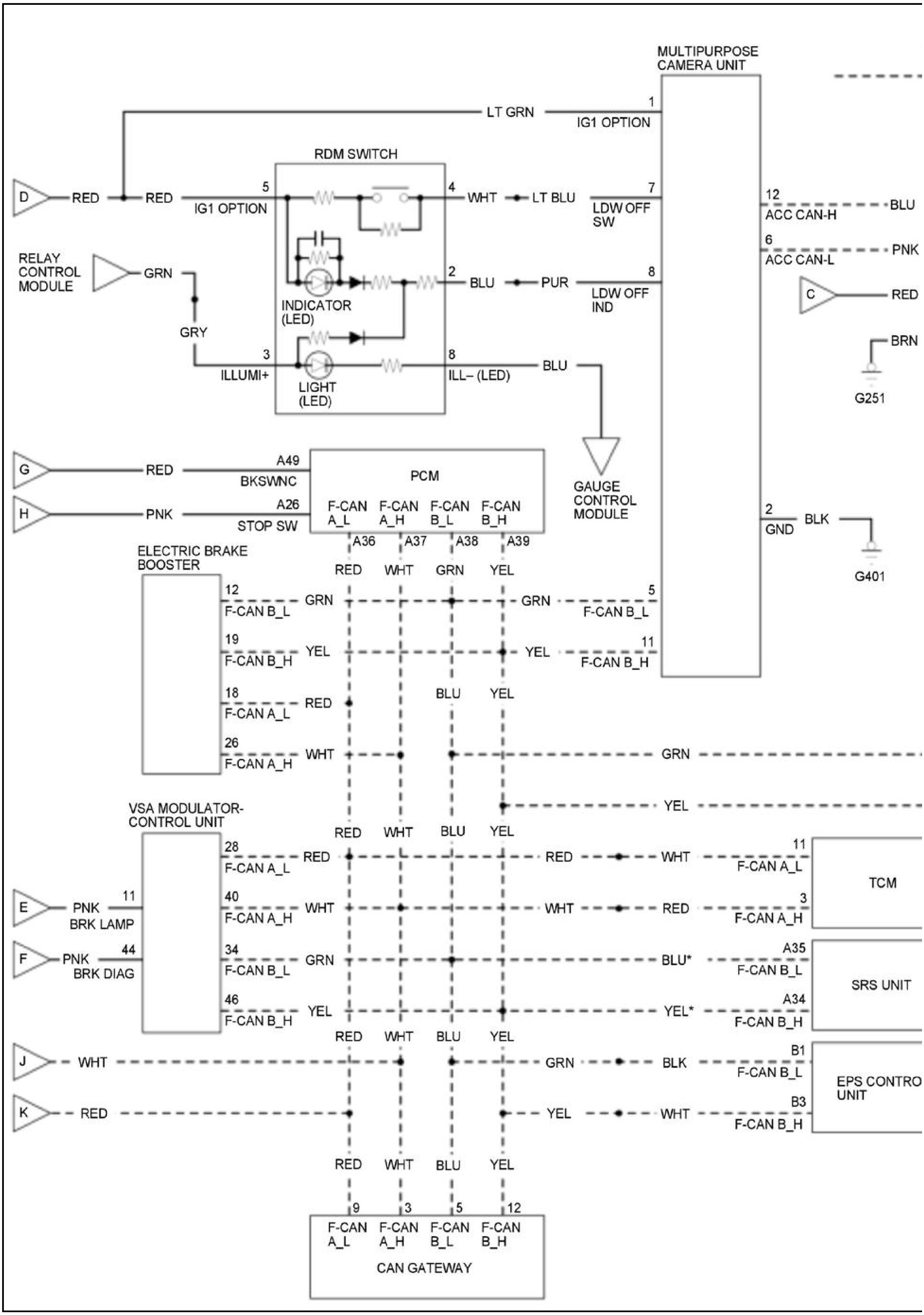
MULTIPURPOSE CAMERA UNIT
1
LT GRN
IG1 OPTION
RDM SWITCH
D
RED
RED
5
IG1 OPTION
4
WHT
LT BLU
7
LDW OFF SW
12
ACC CAN-H
BLU
6
ACC CAN-L
PNK
RELAY CONTROL MODULE
GRN
2
BLU
PUR
8
LDW OFF IND
C
RED
INDICATOR (LED)
GRY
BRN
G251
3
ILLUMI+
8
ILL– (LED)
BLU
LIGHT (LED)
GAUGE CONTROL MODULE
G
RED
A49
BKSWNC
PCM
H
PNK
A26
STOP SW
F-CAN A_L
F-CAN A_H
F-CAN B_L
F-CAN B_H
A36
A37
A38
A39
2
GND
BLK
G401
ELECTRIC BRAKE BOOSTER
RED
WHT
GRN
YEL
12
F-CAN B_L
GRN
GRN
5
F-CAN B_L
19
F-CAN B_H
YEL
YEL
11
F-CAN B_H
18
F-CAN A_L
RED
BLU
YEL
26
F-CAN A_H
WHT
GRN
YEL
VSA MODULATOR-CONTROL UNIT
RED
WHT
BLU
YEL
28
F-CAN A_L
RED
RED
WHT
11
F-CAN A_L
TCM
E
PNK
BRK LAMP
11
40
F-CAN A_H
WHT
WHT
RED
3
F-CAN A_H
F
PNK
BRK DIAG
44
34
F-CAN B_L
GRN
BLU*
A35
F-CAN B_L
SRS UNIT
46
F-CAN B_H
YEL
YEL*
A34
F-CAN B_H
RED
WHT
BLU
YEL
J
WHT
GRN
BLK
B1
F-CAN B_L
EPS CONTRO UNIT
K
RED
YEL
WHT
B3
F-CAN B_H
RED
WHT
BLU
YEL
9
3
5
12
F-CAN A_L
F-CAN A_H
F-CAN B_L
F-CAN B_H
CAN GATEWAY

COMPONENT LOCATION INDEX

ROAD DEPARTURE MITIGATION COMPONENT LOCATION INDEX

For relationships between signals in a system, refer to System Diagram.

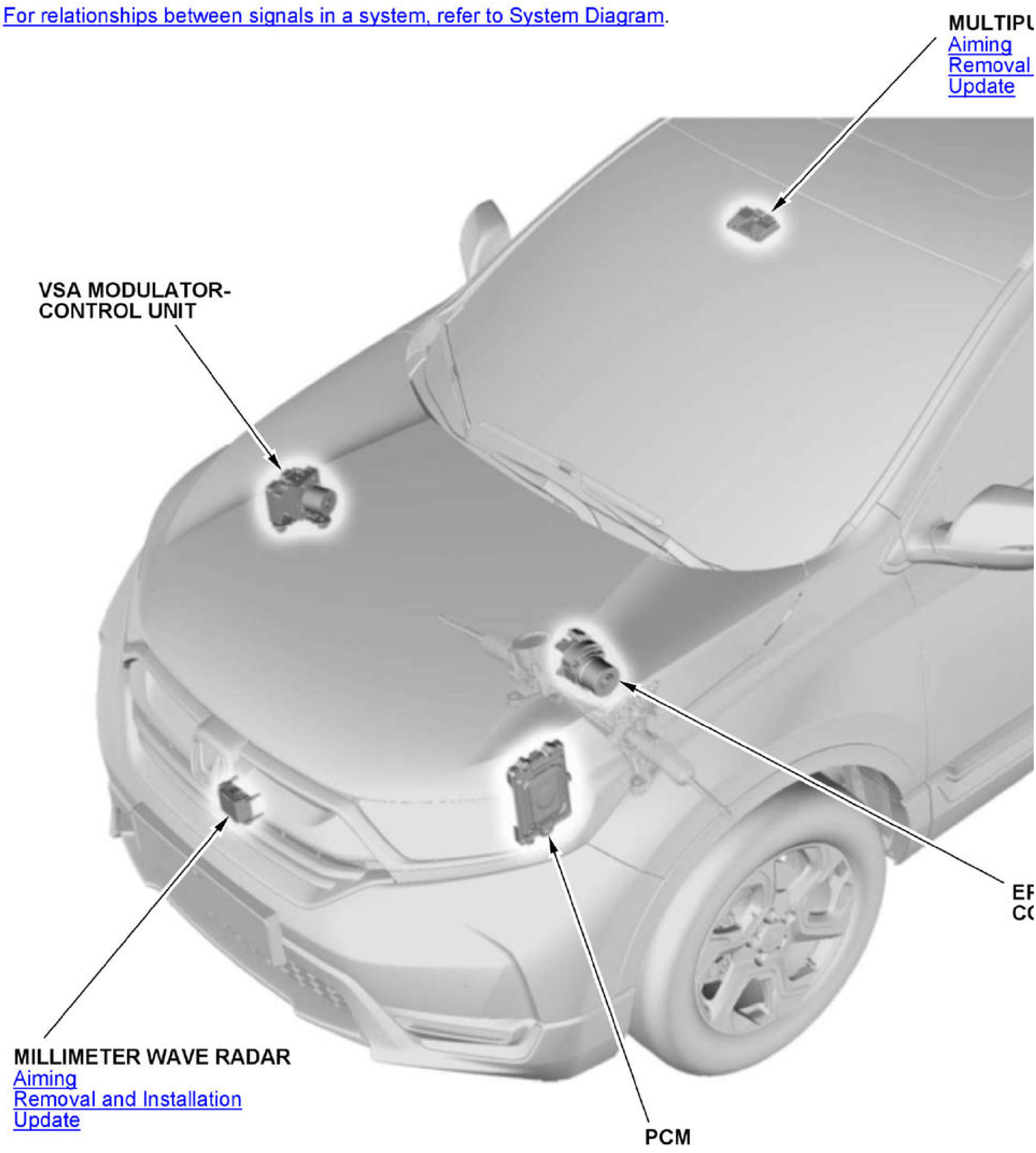
MULTIP
Aiming
Removal
Update
VSA MODULATOR-CONTROL UNIT
E
C
MILLIMETER WAVE RADAR
Aiming
Removal and Installation
Update
PCM

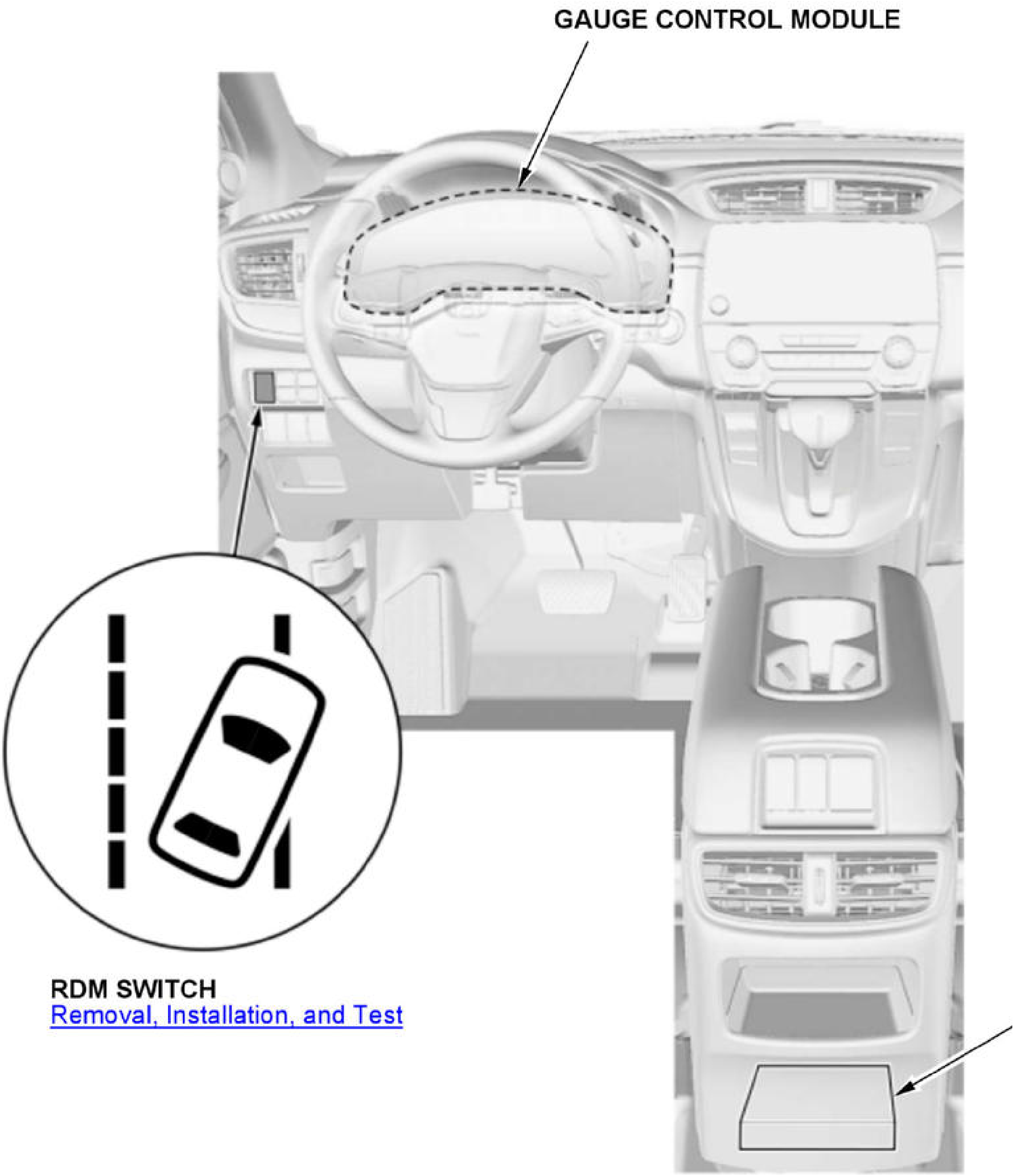
GAUGE CONTROL MODULE
RDM SWITCH
Removal, Installation, and Test

Position of the RDM switch is different depending on the model.

CONNECTOR VIEW

MILLIMETER WAVE RADAR CONNECTOR FOR INPUTS AND OUTPUTS

Millimeter Wave Radar 8P Connector (female terminals)

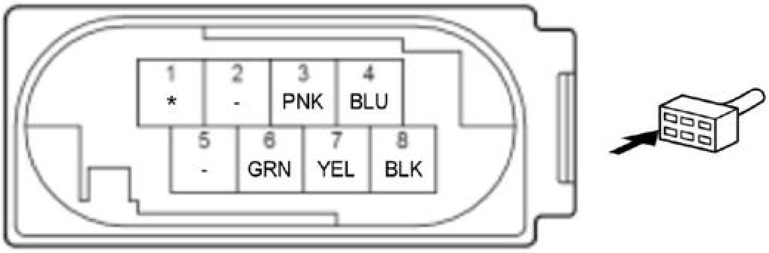
1
*
2
-
3
PNK
4
BLU
5
-
6
GRN
7
YEL
8
BLK

*: RED (Without auto idle stop system)
LT GRN (With auto idle stop system)

Terminal number	Terminal name	Description
1	IG1 OPTION *1IG1 EBB *2	Power source for the millimeter wave radar
2	Not used	-
3	ACC CAN-L	ACC CAN communication (low) circuit
4	ACC CAN-H	ACC CAN communication (high) circuit

5	Not used	-
6	F-CAN B_L	F-CAN B communication (low) circuit
7	F-CAN B_H	F-CAN B communication (high) circuit
8	GND	Ground circuit for the millimeter wave radar

*1: Without auto idle stop system*2: With auto idle stop system

MULTIPURPOSE CAMERA UNIT CONNECTOR FOR INPUTS AND OUTPUTS

Multipurpose Camera Unit 12P Connector (female terminals)

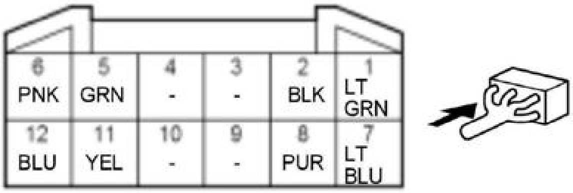

Terminal number	Terminal name	Description
1	IG1 OPTION *1IG1 EBB *2	Power source for the multipurpose camera unit
2	GND	Ground circuit for the multipurpose camera unit
3	Not used	-
4	Not used	-
5	F-CAN B_L	F-CAN B communication (low) circuit
6	ACC CAN-L	ACC CAN communication (low) circuit
7	LDW OFF SW	Detects RDM switch signal
8	LDW OFF IND	Drive RDM switch circuit
9	Not used	-
10	Not used	-
11	F-CAN B_H	F-CAN B communication (high) circuit
12	ACC CAN-H	ACC CAN communication (high) circuit

*1: Without auto idle stop system*2: With auto idle stop system

DTC TROUBLESHOOTING INDEX

DRIVING SUPPORT DTC TROUBLESHOOTING INDEX

NOTE:

- The DTC troubleshooting index shows DTCs that is stored in the integrated driver support system. Each function of the integrated driver support system operates the integrated driver support system that operate in condition when these DTCs are stored can be confirmed with the table below:

  O: Indicator ON, and operation stop

  o: Operation stop

  Δ: Indicator blink, and operation stop

- For the millimeter wave radar, different indicators may be lit for the same DTCs depending on which functions are in operation at the time of DTC stores. Make s them.

NOTE: For details on the functions of indicator, and operation stop, refer to "How to Troubleshooting Information."

- How to Troubleshoot the Adaptive Cruise Control (ACC)
- How to Troubleshoot the Collision Mitigation Braking System (CMBS)
- How to Troubleshoot the Lane Keeping Assist System (LKAS)
- How to Troubleshoot the Road Departure Mitigation
- Brake System (How to Troubleshoot the VSA System)
- How to Troubleshoot the Auto High-Beam

		Indicator Illumination/Opera		
DTC	Detection Item	ACC System	CMBS	LK
B0050-F0	Driver's Seat Belt Buckle Switch (Subfault) Fault Detection By SRS Unit	O	-	-
B2A00-92	Temporary stop of Integrated Driver Support System (Detected Abnormal Signals)	O	O	-
B2A60-49	Multipurpose Camera Unit Internal Electronic Failure	O	O	O
B2A60-54	Static Camera Aiming Incomplete	Δ	Δ	Δ
B2A60-57	Multipurpose Camera Unit Software Failure	O	O	O
B2A60-96	Multipurpose Camera Unit Hardware Malfunction	O	O	O
B2A60-97	Dust or Dirt On The Camera	-	O	o
B2A60-98	Multipurpose Camera Unit Temperature Too High	-	O	o
B2A60-99	Out of automatic correction range for Misalignment of Multipurpose Camera Unit image	o	O	O
B2A60-A2	Power Supply Voltage Too Low (Multipurpose Camera Unit)	o	O	O

		Indicator Illumination/Opera		
DTC	Detection Item	ACC System	CMBS	LK
B2A60-A3	Power Supply Voltage Too High (Multipurpose Camera Unit)	o	O	O
B2A70-12	LDW/RDM Switch Signal Circuit Short	-	-	-
B2A70-14	LDW/RDM Switch Signal Circuit Short to Power	-	-	-

		Indicator Illumination/Opera		
DTC	Detection Item	ACC System	CMBS	LK
C0023-F0	Brake Light Drive Relay Circuit Malfunction	O	O	-
C0031-62	Left Front Wheel Speed Sensor Signal Error	O	O	O
C0034-62	Right Front Wheel Speed Sensor Signal Error	O	O	O
C0037-62	Left Rear Wheel Speed Sensor Signal Error	O	O	O
C003A-62	Right Rear Wheel Speed Sensor Signal Error	O	O	O
C0044-F0	Master Cylinder Pressure Sensor Failure	O	O	o
C0051-54	Steering Angle Neutral Position Learning Incomplete	O	O	o
C0051-96	Steering Angle Sensor Malfunction	O	O	o
C0061-9A	Temporary stop of Integrated Driver Support System (Unstable Lateral Acceleration Sensor Signal)	-	-	-
C0061-F0	Lateral Acceleration Sensor(Subfault) Fault Detection By Source Module	-	-	-
C0062-9A	Temporary stop of Integrated Driver Support System (Unstable Longitudinal Acceleration Sensor Signal)	o	O	-
C0062-F0	Longitudinal Acceleration Sensor (Subfault) Fault Detection By Source Module	O	O	-
C0063-9A	Temporary stop of Integrated Driver Support System (Unstable Yaw Rate Sensor Signal)	o	O	o
C0063-F0	Yaw Rate Sensor (Subfault) Fault Detection By Source Module	O	O	o
C1040-00	Wheel Speed Signal Error	O	O	-
C1C00-F0	APP Sensor Signal Failure	-	-	-
P0564-11	ACC/LKAS Switch Signal Circuit Short	O	-	O
P0564-15	ACC/LKAS Switch Signal Circuit Open	O	-	O
P0589-11	Main Switch Signal Circuit Short	O	-	O
P0589-15	Main Switch Signal Circuit Open	O	-	O
P2583-49	Millimeter Wave Radar Internal Electronic Failure	O	O	O
P2583-54	Millimeter Wave Radar Aiming Incomplete	Δ	Δ	Δ

		Indicator Illumination/Opera		
DTC	Detection Item	ACC System	CMBS	LK
P2583-76 *5	Temporary stop of Integrated Driver Support System (Misalignment Millimeter Wave Radar)	O	O	-
P2583-92	CMBS or FCW Over Working	-	O	-
P2583-97	Dust or Dirt On The Millimeter Wave Radar	o	O	-
P2583-98	Millimeter Wave Radar Temperature Too High	O	O	O
P2583-9A	Temporary stop of Integrated Driver Support System (Jammed Millimeter Wave Radar)	O	O	O
U0029-00	Millimeter Wave Radar F-CAN Malfunction (BUS-OFF)	O	O	O
U0029-F1	F-CAN Malfunction (BUS-OFF) (Multipurpose Camera Unit)	O	O	O
U0047-00	Millimeter Wave Radar Local-CAN Malfunction (BUS-OFF)	O	O	O
U0047-F1	Multipurpose Camera Unit Local-CAN Malfunction	O	O	O
U0100-00	Lost Communication With The PCM (PGM-FI System) (Millimeter Wave Radar)	O	O	-
U0100-F1	Lost Communication With The PCM (PGM-FI System) (Multipurpose Camera Unit)	O	O	O
U0101-00	Lost Communication With The PCM/TCM (Millimeter Wave Radar)	O	O	-
U0101-F1	Lost Communication With The PCM/TCM (Multipurpose Camera Unit)	O	O	O
U0122-00	Lost Communication With The VSA Modulator-Control Unit (Millimeter Wave Radar)	O	O	-
U0122-F1	Lost Communication With The VSA Modulator-Control Unit (Multipurpose Camera Unit)	O	O	O
U0128-00	Lost Communication With The Electric Parking Brake Control Unit (Millimeter Wave Radar)	O	-	-
U0129-00	Lost Communication With The Electric Servo Brake Control Unit or Electric Brake Booster Control Unit (Millimeter Wave Radar)	O	O	-
U0129-F1	Lost Communication With The Electric Servo Brake Control Unit/Electric Brake Booster Control Unit (Multipurpose Camera Unit)	O	O	O
U0131-00	Lost Communication With The EPS Control Unit (Millimeter Wave Radar)	O	O	-

		Indicator Illumination/Opera		
DTC	Detection Item	ACC System	CMBS	LK
U0131-F1	Lost Communication With The EPS Control Unit (Multipurpose Camera Unit)	O	O	O
U0151-00	Lost Communication With The SRS Unit (Millimeter Wave Radar)	O	O	-
U0151-F1	Lost Communication With The SRS Unit (Multipurpose Camera Unit)	O	O	O
U0155-00	Lost Communication With The Gauge Control Module (Millimeter Wave Radar)	O	O	-
U0155-F1	Lost Communication With The Gauge Control Module (Multipurpose Camera Unit)	O	O	O
U0401-53	Temporary stop of Integrated Driver Support System (Received stop request by PGM-FI System)	-	O	-
U0401-68	PCM (PGM-FI System) Malfunction	O	O	o
U0401-92	Temporary stop of Integrated Driver Support System (Rejected control request by PGM-FI System)	o	O	o
U0402-68	PCM/TCM Malfunction	O	O	-
U0416-68	Brake Actuator Malfunction	O	O	o

		Indicator Illumination/Opera		
DTC	Detection Item	ACC System	CMBS	LK
U0416-92 *1	Temporary stop of Integrated Driver Support System (Rejected control request by VSA System)	o	-	-
U0416-92 *2	Temporary stop of Integrated Driver Support System (Rejected control request by VSA System)	-	O	-
U0416-9A	Temporary stop of Integrated Driver Support System (Unstable Wheel Speed Sensor Signal)	o	O	o
U0416-F8	VSA Modulator-Control Unit Malfunction	-	O	-
U0417-68	Electric Parking Brake Control Unit Malfunction	O	-	-
U0418-68	Electric Servo Brake System/Electric Brake Booster System Malfunction	O	O	O
U0418-9A	Temporary stop of Integrated Driver Support System (Not Start-Up Electric Brake Booster Control Unit)	o	O	-
U0420-68	EPS Control Unit Malfunction	-	O	O
U0423-68 *3	Gauge Control Module Malfunction	O	O	O
U0423-68 *4	Gauge Control Module Malfunction	O	O	O
U1280-00	Lost Communication With The B-CAN Systems	-	-	O

		Indicator Illumination/Opera		
DTC	Detection Item	ACC System	CMBS	LK
U1281-00	Lost Communication with The MICU (Body Control Module)	-	-	-
U128C-00	Lost Communication with The Wiper Control Unit	-	-	O
U12B7-00	Millimeter Wave Radar Local-CAN Malfunction	O	O	O
U1387-4A	Unmatch Combination of Millimeter Wave Radar-Multipurpose Camera Unit	O	O	O
U1387-55	Multipurpose Camera Unit Variant Incomplete	O	O	O
U3000-49	Millimeter Wave Radar Internal Electronic Failure	O	O	O
U3000-51	Millimeter Wave Radar Update Incomplete	-	-	-
U3000-55	Millimeter Wave Radar Variant Incomplete	O	O	O
U3000-57	Millimeter Wave Radar Software Failure	O	O	O
U3006-16	Power Supply Voltage Too Low (Millimeter Wave Radar)	o	O	O
U3006-17	Power Supply Voltage Too High (Millimeter Wave Radar)	o	O	O

*1: When the system detects the ACC and the RDM failure while operating.

*2: When the system detects the CMBS failure while operating.

*3: When the millimeter wave radar receives gauge control module failure information.

*4: When related B-CAN system or switch failure information (judged by the gauge control module) is received.

*5: After the DTC is stored, the message (Radar Obstructed) is displayed on the MID at the initial stage in some models, and then the indicators come on.

INSPECTION

MILLIMETER WAVE RADAR MOUNTING POSITION INSPECTION

Special Tools Required

Image	Description/Tool Number
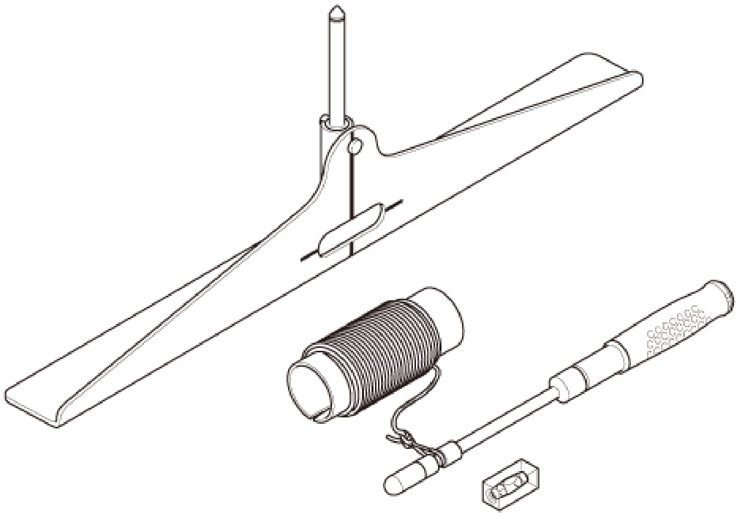	Alignment Set 07AAJ-STKA210

Inspection

NOTE: If millimeter wave radar aiming cannot be completed, follow the procedure below to check that the millimeter wave radar is installed properly and the radar bra faulty parts and perform the millimeter wave radar aiming again.

1. Front Bumper - Remove
2. Millimeter Wave Radar Mounting Position - Inspect

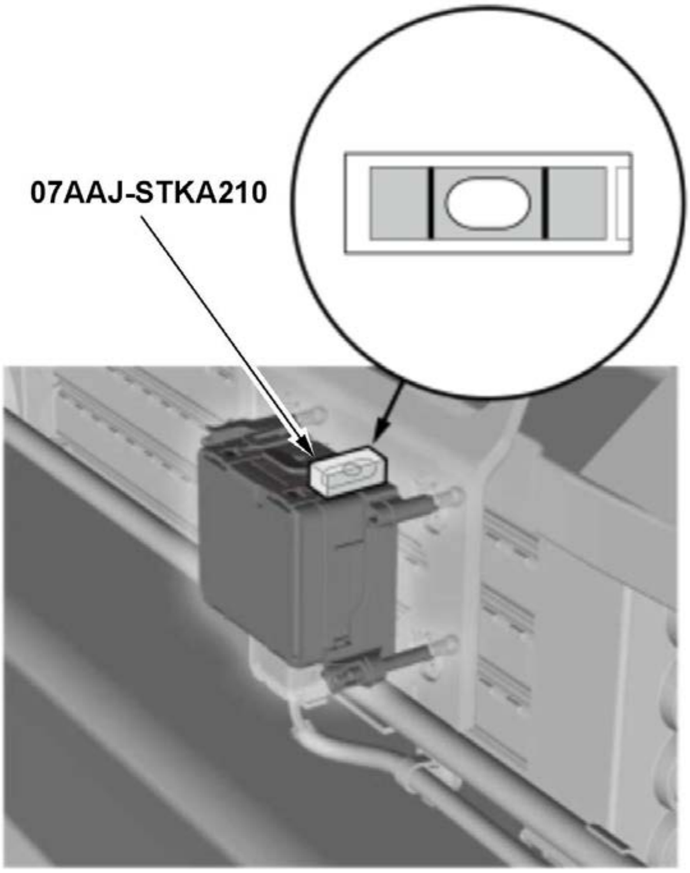
07AAJ-STKA210

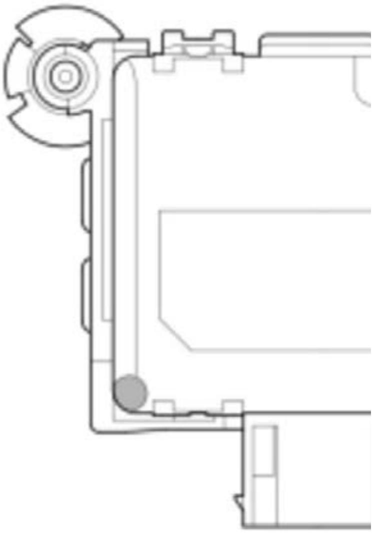

3. Millimeter Wave Radar Bracket - Inspect

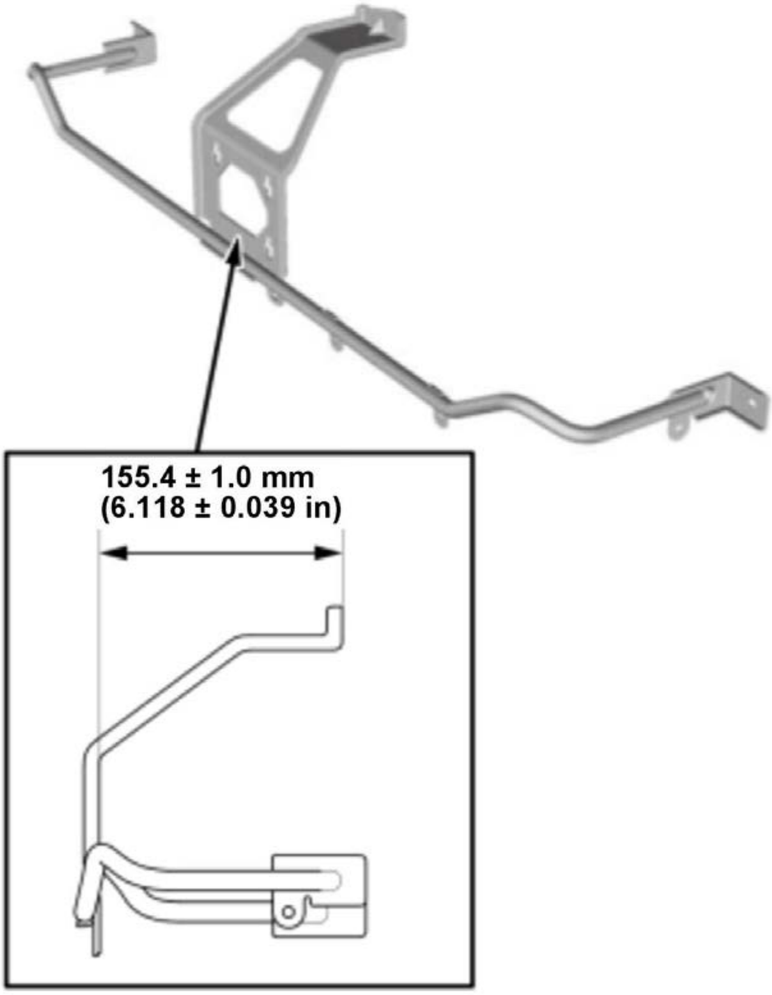	1. **Remove the millimeter wave radar assembly** . 2. **Measure the distance between the millimeter wave the distance to the standard value** . 3. Measure the distance of the radar bracket as shown. Th +/- 0.039 in): **NOTE:** If the distance is out of the standard value, replac 4. **Install the millimeter wave radar assembly** .

4. **Front Bumper - Install**
5. **Millimeter Wave Radar - Aim**

REWRITE

MILLIMETER WAVE RADAR UPDATE

Procedure

1. Millimeter Wave Radar - Update

NOTE: When updating control units, use the most current version of the HDS software and interface device. Check any official service information website for n

MULTIPURPOSE CAMERA UNIT UPDATE

Procedure

1. Multipurpose Camera Unit - Update

NOTE: When updating control units, use the most current version of the HDS software and interface device. Check any official service information website for n

SYMPTOM TROUBLESHOOTING

ROAD DEPARTURE MITIGATION SYMPTOM TROUBLESHOOTING

RDM indicator (on the MID) does not come on

NOTE:

*1: Without auto idle stop system

*2: With auto idle stop system

1. Gauge control module operation check

   -1. Turn the vehicle to the ON mode.

   Check the following indicators in the gauge control module:

   - Malfunction indicator lamp (MIL)
   - Brake system indicator
   - 12 volt charging system indicator

   Do the indicators come on?

   YES

   Go to the gauge control module self-diagnostic function .

   NO

   Go to step 2.

2. Fuse check

   -1. Turn the vehicle to the OFF (LOCK) mode.

   -2. Check the following fuse.

Fuse	No. D7 (10 A) *1No. F6 (5 A) *2
Location	Under-dash fuse/relay box *1Auxiliary under-dash fuse/relay box *2

   Is the fuse OK?

   YES

   The fuse is OK. Reinstall the fuse, then go to step 3.

   NO

   Replace the fuse. Turn the vehicle to the ON mode, then the OFF (LOCK) mode. If the fuse blows again, repair the short to ground on the No. D7 (10 A) *1/F6 (5

3. Open wire check (IG1 METER *1/IG1 VST *2 line):-1.

   Disconnect the following connector.

Gauge control module connector A (32P)

   -2. Turn the vehicle to the ON mode.

   -3. Measure the voltage between test points 1 and 2.

Test condition	Vehicle ON mode
Â	Gauge control module connector A (32P): disconnected
Test point 1	**Gauge control module connector A (32P) No. 17**
Test point 2	Body ground

   Is there battery voltage?

   YES

   Replace the gauge control module .

   NO

   Repair an open in the IG1 METER *1/IG1 VST *2 wire between the under-dash fuse/relay box *1/auxiliary under-dash fuse/relay box *2 and the gauge control m

RDM indicator (on the MID) does not go off

NOTE: *1: Without auto idle stop system *2: With auto idle stop system *3: CAN gateway 12P connector type *4: CAN gateway 16P connector type

1. DTCs check

   -1. Turn the vehicle to the ON mode.

   -2. Check for DTCs with the HDS.

DTC Description	DTC
Â	Â

   DTC (IDAS)

   Are any DTCs indicated?

   YES

   Go to the indicated DTC's troubleshooting .

   NO

Go to step 2.

2. CAN gateway system DTC check

-1. Turn the vehicle to the ON mode.

-2. Check for DTCs with the HDS.

DTC Description	**DTC**
U0029-00 CAN Gateway F-CAN ch A Bus Off	Â
U0047-00 CAN Gateway F-CAN ch B Bus Off	Â
U3000-49 CAN Gateway Internal Failure	Â

Is DTC U0029-00, U0047-00, and/or U3000-49 indicated?

YES

Go to the indicated DTCs troubleshooting .

NO

Go to step 3.

3. Fuse check1

-1. Turn the vehicle to the OFF (LOCK) mode.

-2. Check the following fuse.

Fuse	No. D5 (10 A) *1No. F7 (7.5 A) *2
Location	Under-dash fuse/relay box *1Auxiliary under-dash fuse/relay box *2

Is the fuse OK?

YES

The fuse is OK. Reinstall the fuse, then go to step 4.

NO

Replace the fuse. Turn the vehicle to the ON mode, then to the OFF (LOCK) mode. If the fuse blows again, repair the short to ground on the No. D5 (10 A) *1/F7

4. Fuse check 2

-1. Check the following fuse.

Fuse	No. D7 (10 A) *1No. F6 (5 A) *2
Location	Under-dash fuse/relay box *1Auxiliary under-dash fuse/relay box *2

Is the fuse OK?

YES

The fuse is OK. Reinstall the fuse, then go to step 5.

NO

Replace the fuse. Turn the vehicle to the ON mode, then to the OFF (LOCK) mode. If the fuse blows again, repair the short to ground on the No. D7 (10 A) *1/F6

5. Gauge control module operation check

-1. Turn the vehicle to the ON mode.

-2. Check if all of the gauge indicators come on for a few seconds.

Do the indicators come on?

YES

Go to step 6.

NO

Go to the gauge control module self-diagnostic function .

6. Open wire check (IG1 OPTION *1/IG1 EBB *2 line):-1.

Turn the vehicle to the OFF (LOCK) mode.

-2. Disconnect the following connector.

Millimeter wave radar 8P connector

-3. Turn the vehicle to the ON mode.

-4. Measure the voltage between test points 1 and 2.

Test condition	Vehicle ON mode
Â	Millimeter wave radar 8P connector: disconnected

Test point 1	**Millimeter wave radar 8P connector No. 1**
Test point 2	Body ground

Is there battery voltage?

YES

The IG1 OPTION *1/IG1 EBB *2 wire is OK. Go to step 7.

NO

Repair an open in the wire between the millimeter wave radar and the under-dash fuse/relay box *1/auxiliary under-dash fuse/relay box *2.

7. Open wire check (GND line)

-1. Turn the vehicle to the OFF (LOCK) mode.

-2. Check for continuity between test points 1 and 2.

Test condition	Vehicle OFF (LOCK) mode
Â	Millimeter wave radar 8P connector: disconnected
Test point 1	**Millimeter wave radar 8P connector No. 8**
Test point 2	Body ground

Is there continuity?

YES

The GND wire is OK. Go to step 8.

NO

Repair an open in the wire between the millimeter wave radar and the body ground (G251).

8. F-CAN circuit communication check

-1. Reconnect the following connector.

Millimeter wave radar 8P connector

-2. Turn the vehicle to the ON mode.

-3. Select the FUNCTION TEST in the CAN gateway with the HDS, then select the F-CAN Bus Connected Unit Check.

F-CAN Bus Connected Unit Check

Which result is indicated?

Gauge control module (Bus A) is Not Available

Go to step 9.

Millimeter wave radar (Bus B) is Not Available

Go to step 10.

Millimeter wave radar and gauge control module are Detected

Intermittent failure, the system is OK at this time. **Refer to intermittent failures troubleshooting** .

9. Open wire check (F-CAN A_H, F-CAN A_L lines)

-1. Turn the vehicle to the OFF (LOCK) mode.

-2. Disconnect the following connectors.

CAN gateway 12P connector *3CAN gateway 16P connector *4
Gauge control module connector A (32P)

-3. Check for continuity between test points 1 and 2.

Test condition	Vehicle OFF (LOCK) mode
Â	CAN gateway 12P connector *3: disconnectedCAN gateway 16P connector *4: disconnected
Â	Gauge control module connector A (32P): disconnected
Test point 1	CAN gateway 12P connector *3 (female terminals) No. 3: ① CAN gateway 16P connector *4 (female terminals) No. 3:
Test point 2	**Gauge control module connector A (32P) No. 19**

Test point 1	CAN gateway 12P connector *3 (female terminals) No. 9: ① CAN gateway 16P connector *4 (female terminals) No. 11:
Test point 2	**Gauge control module connector A (32P) No. 20**

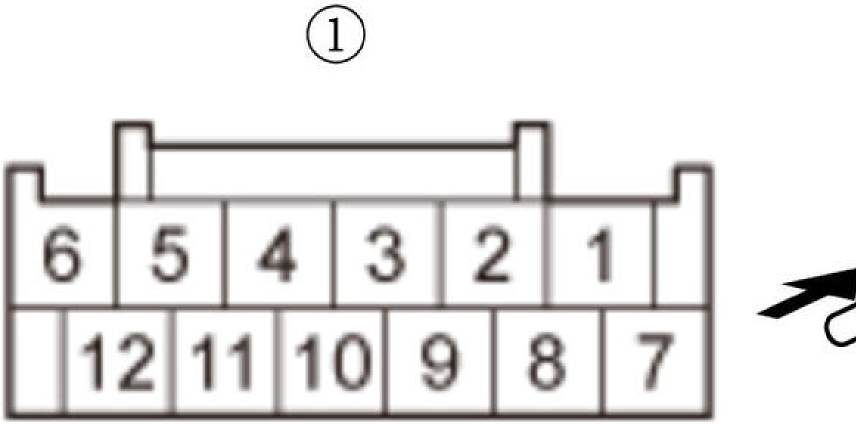

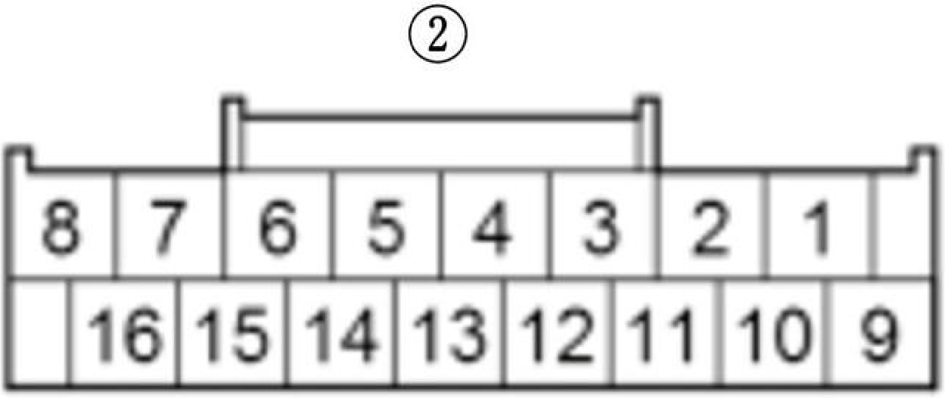

Is there continuity?

YES

Check for loose terminals in the CAN gateway 12P *3/16P *4 connector and gauge control module connector A (32P). If they are OK, **substitute a known-good** then go off after substitution, **replace the original gauge control module** .

NO

Repair an open in the wire between the gauge control module and the CAN gateway.

10. Open wire check (F-CAN B_H, F-CAN B_L lines)

-1. Turn the vehicle to the OFF (LOCK) mode.

-2. Disconnect the following connectors.

CAN gateway 12P connector *3CAN gateway 16P connector *4
Millimeter wave radar 8P connector

-3. Check for continuity between test points 1 and 2.

Test condition	Vehicle OFF (LOCK) mode
Â	CAN gateway 12P connector *3: disconnectedCAN gateway 16P connector *4: disconnected
Â	Millimeter wave radar 8P connector: disconnected
Test point 1	CAN gateway 12P connector *3 (female terminals) No. 12: ① CAN gateway 16P connector *4 (female terminals) No. 6:
Test point 2	**Millimeter wave radar 8P connector No. 7**

Test point 1	CAN gateway 12P connector *3 (female terminals) No. 5: ① CAN gateway 16P connector *4 (female terminals) No. 14:
Test point 2	**Millimeter wave radar 8P connector No. 6**

①

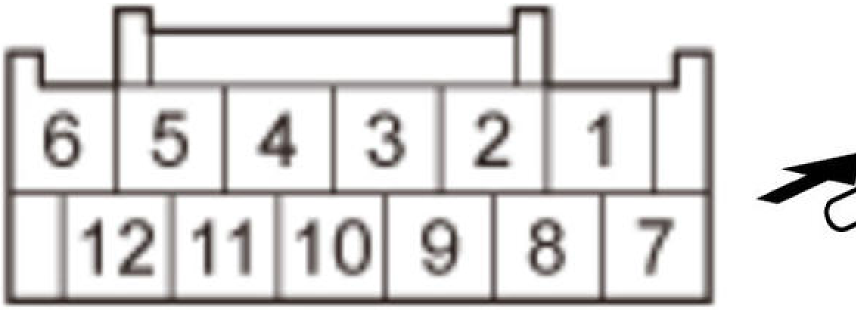

②

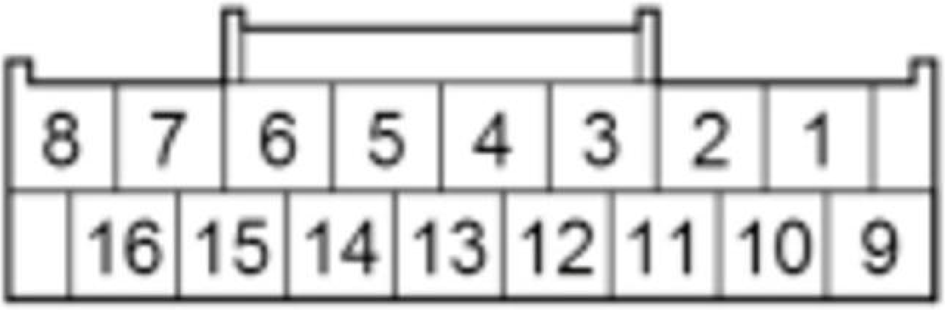

Is there continuity?

YES

Check for loose terminals and poor connections in the millimeter wave radar 8P connector. Check for any authorized service information related to the DTCs or s **millimeter wave radar** .

NO

Repair an open in the wire between the millimeter wave radar and the CAN gateway.

SYMPTOM TROUBLESHOOTING INDEX

DRIVING SUPPORT SYMPTOM TROUBLESHOOTING INDEX

Symptom	Diagnostic procedure	A
HDS does not communicate with the millimeter wave radar	**Troubleshoot the DLC circuit** .	A

ROAD DEPARTURE MITIGATION SYMPTOM TROUBLESHOOTING INDEX

Symptom	Diagnostic procedure
RDM indicator (on the MID) does not go off	**Symptom troubleshooting**.
RDM indicator (on the MID) does not come on	**Symptom troubleshooting**
RDM warning buzzer does not sound	**Gauge control module self-diagnostic function**
RDM system warns when warning is unnecessary	**Aim the multipurpose camera**.

Symptom	Diagnostic procedure
RDM system does not warn when warning is necessary	**Aim the multipurpose camera**.

SYMPTOM TROUBLESHOOTING INDEX FOR VIEWER

HDS DOES NOT COMMUNICATE WITH THE MILLIMETER WAVE RADAR

Diagnostic procedure

- **Troubleshoot the DLC circuit** .

RDM INDICATOR (ON THE MID) DOES NOT COME ON

Diagnostic procedure

- **Symptom troubleshooting**

RDM INDICATOR (ON THE MID) DOES NOT GO OFF

Diagnostic procedure

- **Symptom troubleshooting**.

RDM SYSTEM DOES NOT WARN WHEN WARNING IS NECESSARY

Diagnostic procedure

- **Aim the multipurpose camera**.

Also check for

- Weather condition
- Road condition
- Driving condition

RDM SYSTEM WARNS WHEN WARNING IS UNNECESSARY

Diagnostic procedure

- **Aim the multipurpose camera**.

Also check for

- Weather condition
- Road condition
- Driving condition

RDM WARNING BUZZER DOES NOT SOUND

Diagnostic procedure

- **Gauge control module self-diagnostic function**

TEST

AUTO HIGH-BEAM (HIGH-BEAM SUPPORT SYSTEM) FUNCTION TEST

NOTE:

- This test is only used to confirm if the auto high-beam system is operating correctly.
- Certain vehicle and environmental conditions will affect how the auto high-beam system operates. Refer to the owner's manual or **Auto High-Beam (High-Beam**

1. Turn the vehicle to the ON mode and confirm there are no auto high-beam messages on the multi-information display (MID). If a message is present, check for DTC' **the How to Troubleshoot the Auto High-Beam (High-Beam Support System)** .

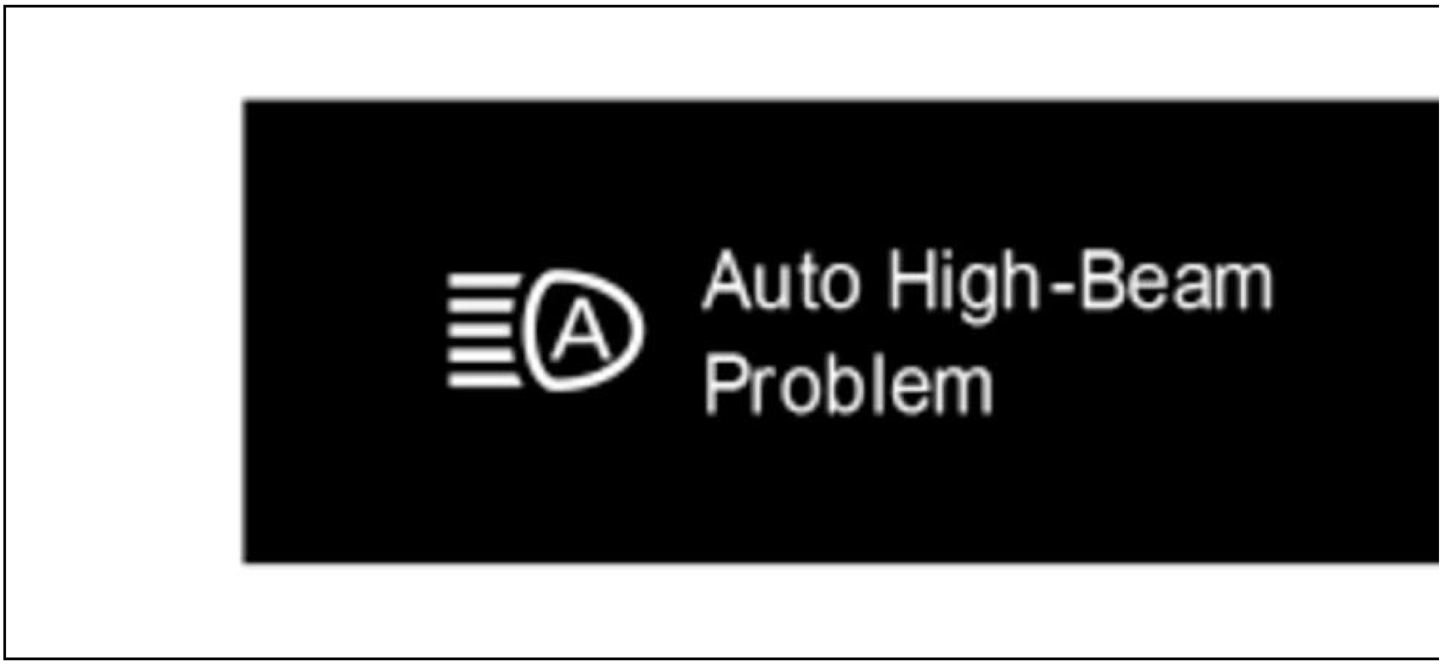

Auto High-Beam Problem

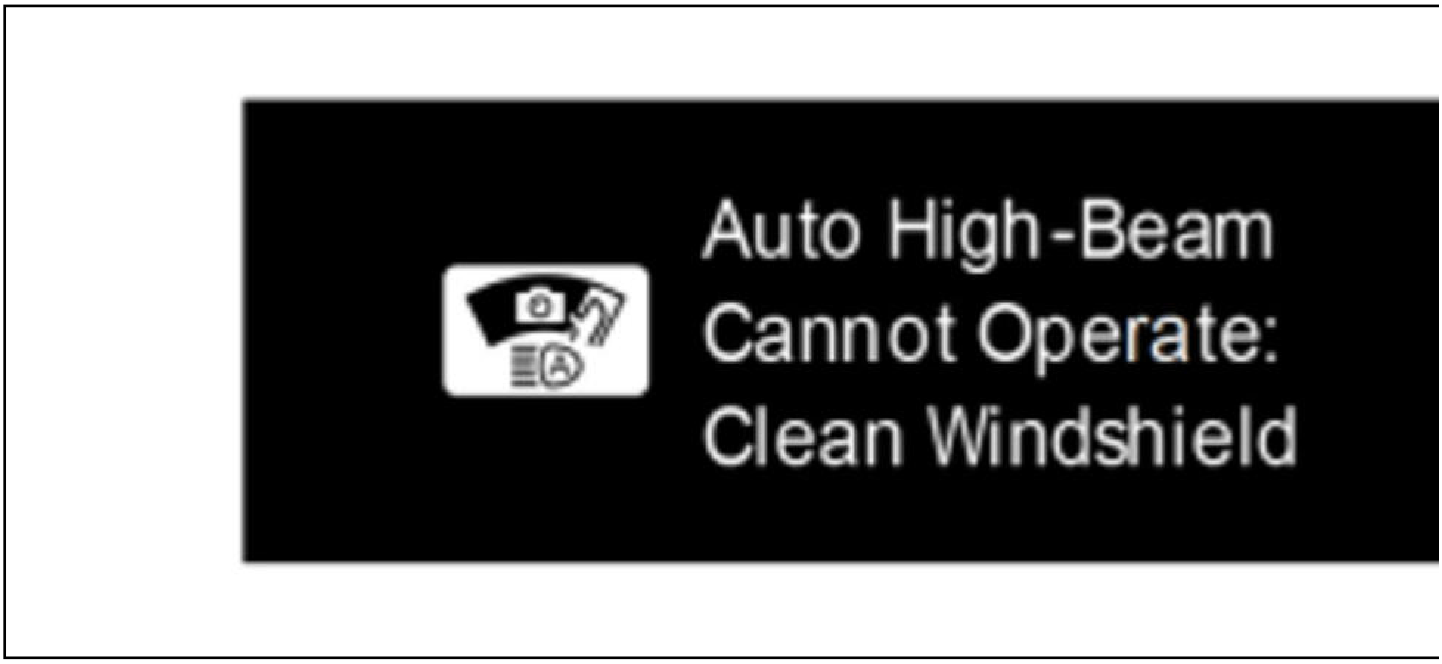

Auto High-Beam Cannot Operate: Clean Windshield

Cover the following areas with masking tape:

NOTE:

- The images shown are examples and may not match your vehicle.
- Apply two layers of masking tape to insure that the sensor and camera is blocked.

Multipurpose Camera (opening on the front windshield)

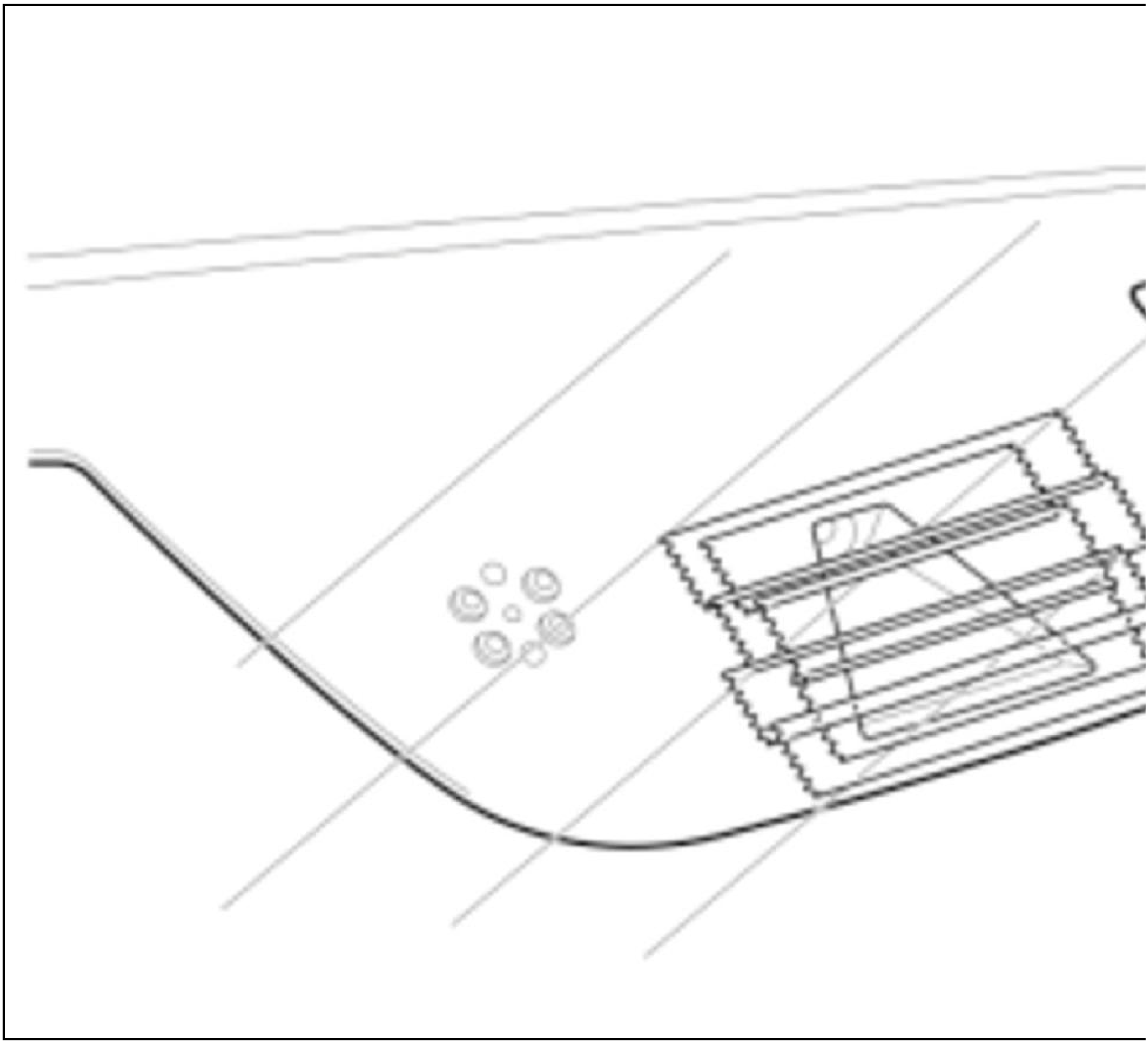

Automatic Lighting Control Unit-Sensor / Sunlight Sensor (entire sensor)

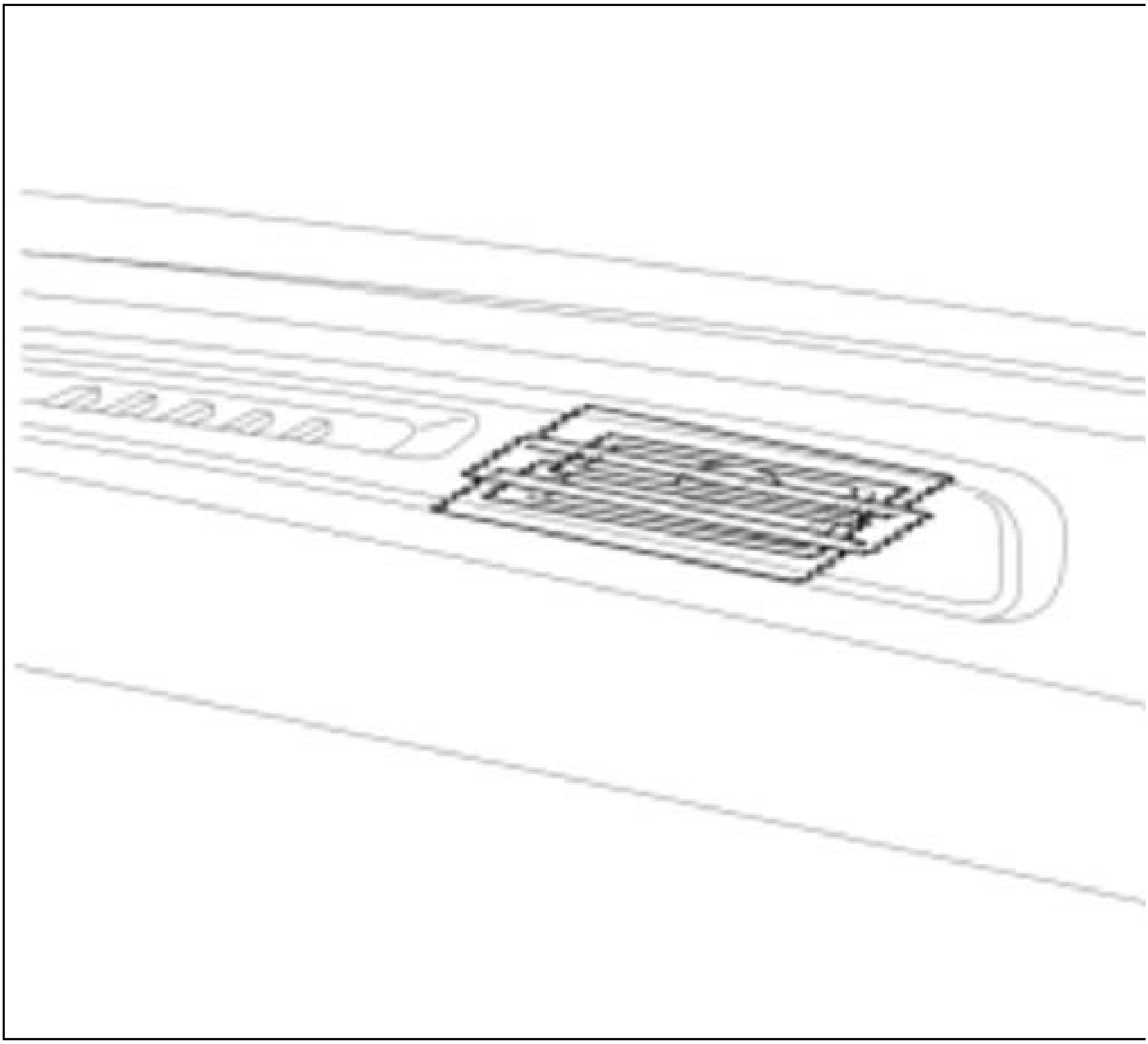

Automatic Lighting / Rain Sensor (opening on the front windshield)

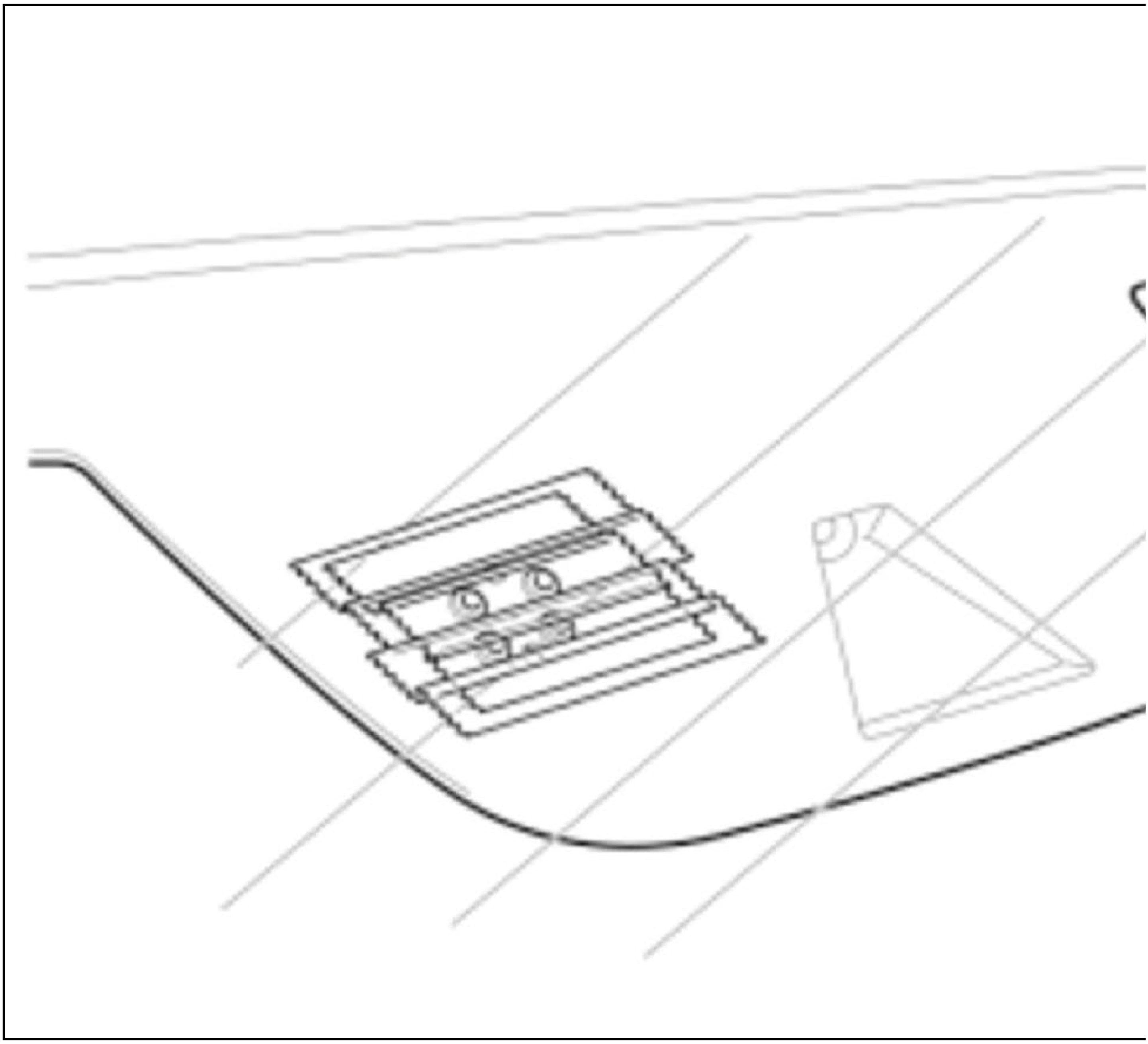

3. Set the headlight switch to the low beam and AUTO positions.

4. Start the engine and confirm that the headlight low beam is on.Check the gauge control assembly.

- If the auto high-beam activation indicator is on, the system is normal and the test is complete.
- If the auto high-beam activation indicator is off, pull back the headlight switch lever back for at least 30 seconds until the auto high-beam activation indicator blin

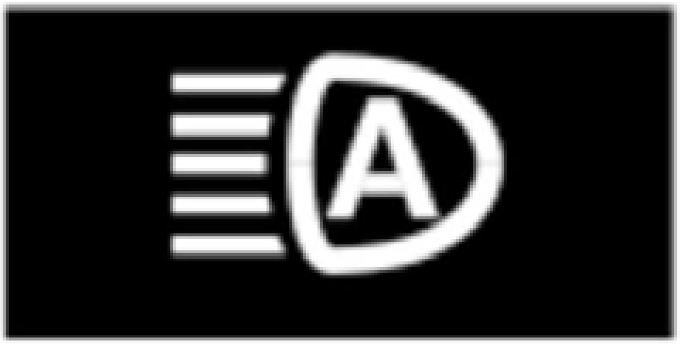
A

DESCRIPTION & OPERATION

DRIVING POSITION MEMORY SYSTEM DESCRIPTION

Overview

The driving position memory system (DPMS) can automatically store the driver's seat position to one of two memorized presets. Drivers can activate the system using the driving position memory switch or the remote.

Along with the seat, the power door lock settings will also be memorized based on which remote (Driver 1 or Driver 2) is used.

Memorizing a Seat Position

Turn the vehicle to the ON mode, and then move the seat to the desired position. Press the SET button on the driving position memory switch, then both of the green LED will begin to flash. Press No. 1 or No. 2 to match the remote that is to be used. There will be two more beeps confirming that the seat position have been memorized. The LED will remain lit, unless the seat is moved from the memorized position.

Memorized Position Recall with the Remotes

After the seat position is memorized, the seat moves to the memorized position when the appropriate remote UNLOCK button is pressed and the driver's door is opened. When the seat moves to the memorized position, the green LED corresponding with that remote stays lit until the position is changed or the vehicle is turned to the OFF (LOCK) mode.

Memorized Customized Setting Recall with the Remotes

Customize settings are controlled independently between the Driver 1 and 2 remotes.

Failsafe Function

If a failure occurs related to the power supply and B-CAN inputs, the control unit detects an abnormal condition and enters a failsafe mode stopping control of the functions.

DRIVING POSITION MEMORY SYSTEM DESCRIPTION - COMPONENTS

Power Seat Control Unit/Power Seat Adjustment Switch

The power seat adjustment switch is located in the recline cover and combines the slide, recline, and the height switch.

Power Seat Motors/Seat Position Sensors

Each motor has a sensor that detects motor rotation and sends a pulse to the power seat control unit when the motor rotates. The control unit stores the number of pulses in its memory and uses it to memorize the seat position.

DRIVING POSITION MEMORY SYSTEM DESCRIPTION - SYSTEM DIAGRAM

For locations of each component on vehicle, refer to Component Location Index

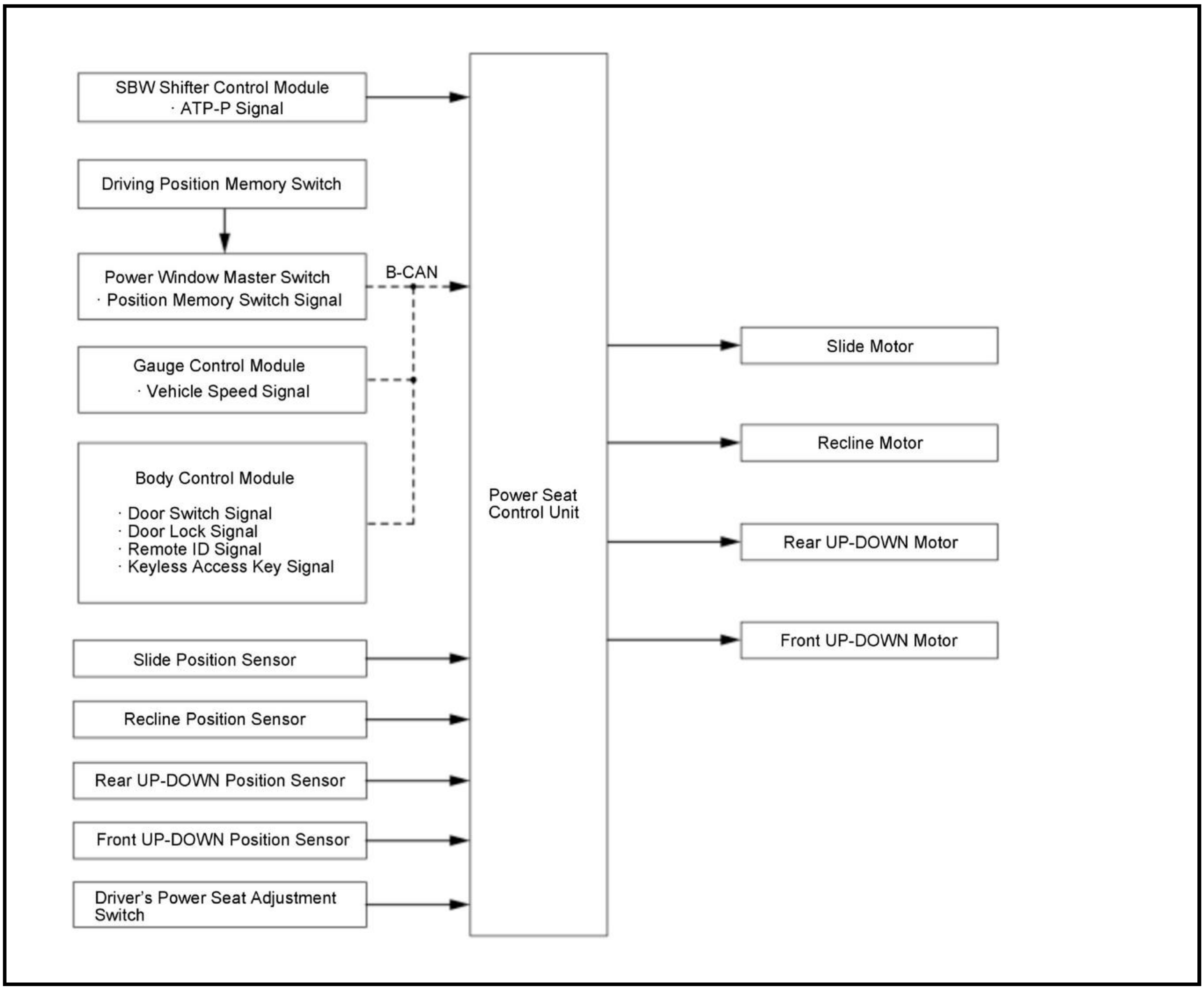
SBW Shifter Control Module
· ATP-P Signal
Driving Position Memory Switch
Power Window Master Switch
· Position Memory Switch Signal
B-CAN
Gauge Control Module
· Vehicle Speed Signal
Body Control Module
· Door Switch Signal
· Door Lock Signal
· Remote ID Signal
· Keyless Access Key Signal
Slide Position Sensor
Recline Position Sensor
Rear UP-DOWN Position Sensor
Front UP-DOWN Position Sensor
Driver's Power Seat Adjustment Switch
Power Seat Control Unit
Slide Motor
Recline Motor
Rear UP-DOWN Motor
Front UP-DOWN Motor

MULTIPLEX INTEGRATED CONTROL SYSTEM DESCRIPTION

Overview

The body control module is one of the F-CAN and the B-CAN components. The body control module controls many systems related to the body controller area and security system, and also works as a gateway to diagnose the other B-CAN connected ECUs with the HDS.

Self-Diagnostic Function

The body control module provides the self-diagnostic function for checking the communication and input systems.

Communication Check (Test Mode 1):

When the B-CAN BUS or the connection to the gauge control module is disconnected, an error code is shown with the number of blinks of the individual map light.

Switch Input Check (Test Mode 2):

When the input of a switch or a sensor to the body control module has changed, diagnosis of the input system can be performed on the basis of the individual map light flashing count.

HDS Diagnostics

The HDS connects to the data link connector (DLC) to communicate with the vehicle's control units. This allows the HDS to retrieve DTCs, diagnostic data, or transmit forced commands during output function tests.

Customize Memory Function

The body control module has a feature that allows the settings of certain outputs to be customized to user preferences with the HDS.

Failsafe Function

Hardware Failsafe Control

When a CPU problem or an abnormal power supply voltage is detected, the body control module moves to the hardware failsafe mode, and each system output load is set to the pre-programmed failsafe value.

Software Failsafe Control

When any of the data from the B-CAN circuit cannot be received within a specified time, or an unusual combination of the data is recognized, the body control module moves to the software failsafe mode. The data that cannot be received is forced to a pre-programmed value.

REWRITE

BODY CONTROL MODULE UPDATE

Procedure

1. Body Control Module - Update

   NOTE: When updating control units, use the most current version of the HDS software and interface device. Refer to available service information for the latest information on update devices.

TEST

DRIVER'S POWER SEAT MOTOR TEST

Test

SRS components are located in this area. Review the **SRS component locations** and the **precautions and procedures** before doing repairs or service.

NOTE: After checking or replacing the power seat motors, **clear the driving position memory**.

1. **Driver's Seat Recline Cover - Remove**

   NOTE: When removing the driver's seat recline cover, you do not need to remove the driver's seat.

2. Driver's Power Seat Motor - Test

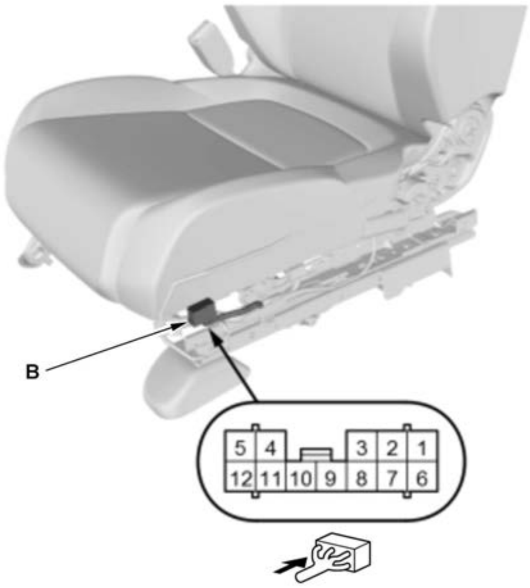

Terminal Direction		1	3
SLIDE MOTOR	Forward	⊖	⊕
	Backward	⊕	⊖

Terminal Direction		11	8
RECLINE MOTOR	Forward	⊖	⊕
	Backward	⊕	⊖

Terminal Direction		7	10
FRONT UP-DOWN MOTOR	UP	⊖	⊕
	DOWN	⊕	⊖

Terminal Direction		9	4
REAR UP-DOWN MOTOR	UP	⊕	⊖
	DOWN	⊖	⊕

NOTE: Before testing, make sure not to short the power seat circuit.

1. Test the motor by applying power and ground at the power seat control unit/power seat adjustment switch connector B (12P) on the seat harness according to the table. When the motor stops running, disconnect 12 volt battery power immediately.

2. If the motor does not run or fails to run smoothly, **remove the driver's seat**

, go to step 3.

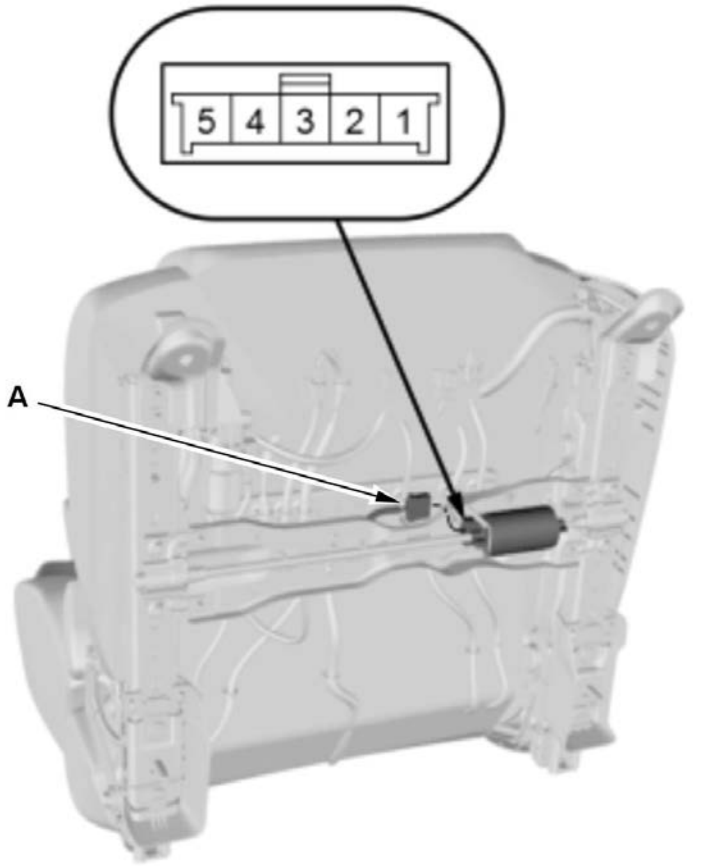

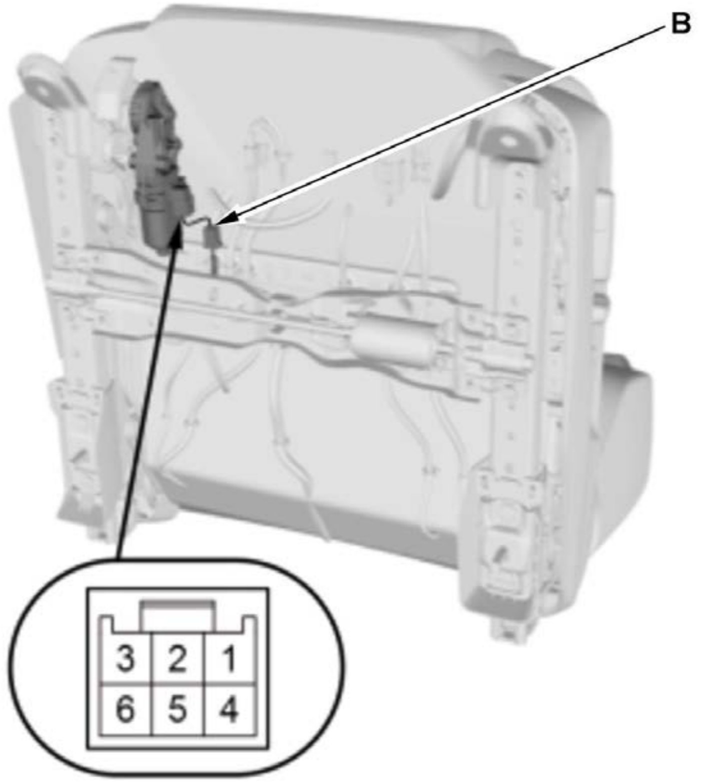

3. **Remove the driver's seat-back cover/pad as needed** .

4. Disconnect the following connectors:

- Slide motor 5P connector (A)
- Front up-down motor 6P connector (B)
- Rear up-down motor 6P connector (C)
- Recline motor 6P connector (D)

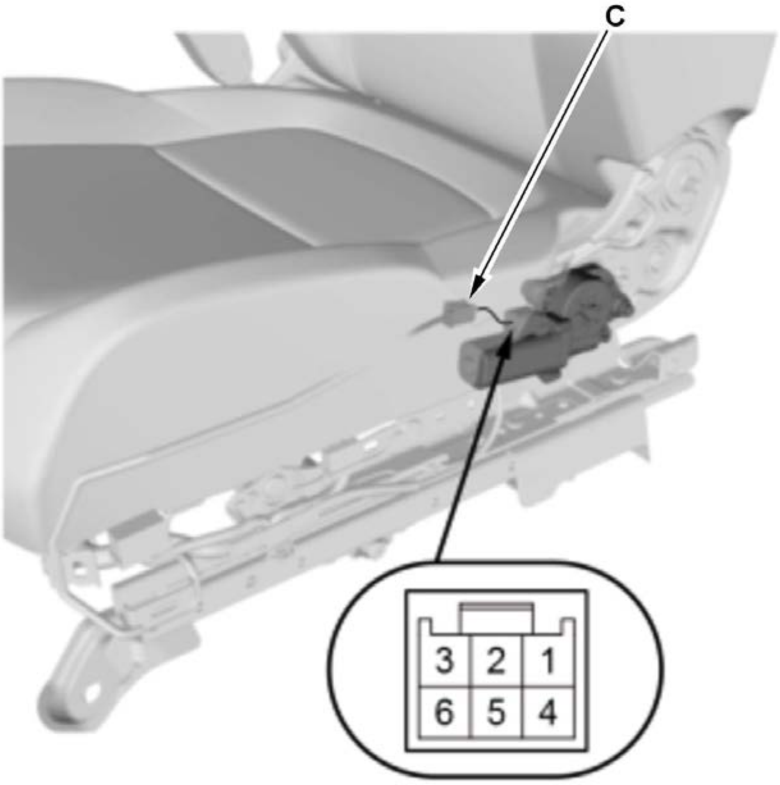
C

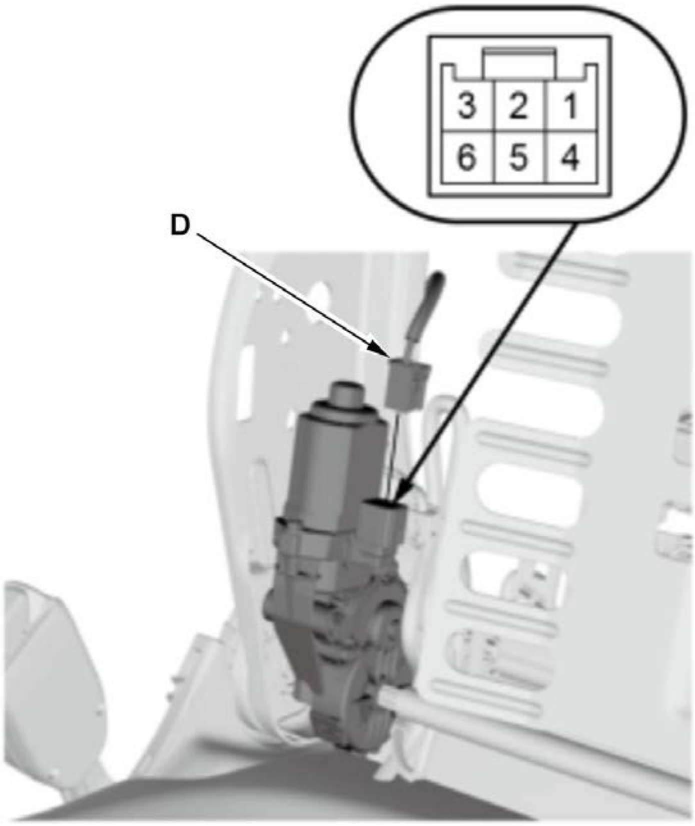
D

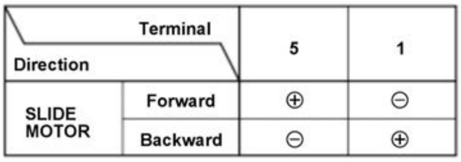

Terminal Direction		5	1
SLIDE MOTOR	Forward	⊕	⊖
	Backward	⊖	⊕

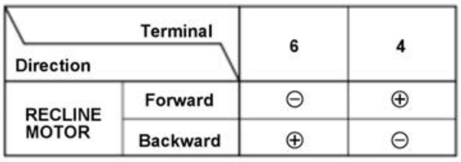

Terminal Direction		6	4
RECLINE MOTOR	Forward	⊖	⊕
	Backward	⊕	⊖

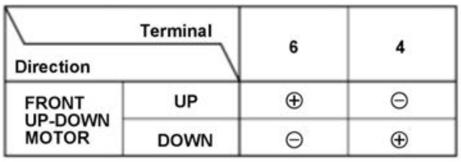

Terminal Direction		6	4
FRONT UP-DOWN MOTOR	UP	⊕	⊖
	DOWN	⊖	⊕

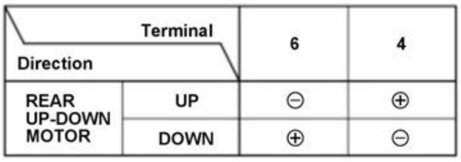

Terminal Direction		6	4
REAR UP-DOWN MOTOR	UP	⊖	⊕
	DOWN	⊕	⊖

5. Test each motor in each direction by connecting power and ground according to the table. When the motor stops running, disconnect 12 volt battery power immediately.

6. **If any motor fails to run or run smoothly, replace the seat frame** .

If the motor runs smoothly, replace the driver's seat wire harness.

3. All Removed Parts - Install

1. Install the parts in the reverse order of removal.

4. Driving Position Memory - Clear

1. After testing, **clear the driving position memory**.

MULTIPLEX INTEGRATED CONTROL SYSTEM SLEEP AND WAKE-UP MODE TEST

Shift to the sleep mode: Close all doors. Turn the vehicle to the OFF (LOCK) mode, then open and close the driver's door. If the body control module receives no signals from the inputs listed below, it will go into sleep mode in less than 40 seconds.

- IG1 power supply
- IG2 power supply
- B-CAN data
- Hazard warning switch (ON)

2. Confirm sleep mode:

NOTE: Check the official Honda service website for more service information about parasitic draw at the 12 volt battery. Check the parasitic draw at the 12 volt battery while entering sleep mode; amperage should change from about 200 mA to less than 35 mA in less than 40 seconds. Shift to wake-up mode: When turning the vehicle to the ON mode, the body control module, the gauge control module, the power window master switch, and the PCM will wake-up at the same time without "talking" to each other through the communication lines. When any switch in the multiplex integrated control system is turned on, it wakes up its related control unit which, in turn, wakes up the other units. After confirming the sleep mode, look in the following table for the switch most related to the problem. Operate that switch and see if its control unit wakes up.

NOTE: If any control unit is faulty and does not wake up, several circuits in the system malfunction at the same time. Below is a list of the switches and input signals that wake them up.

- IG1 power supply
- IG2 power supply
- ACC power supply
- B-CAN data
- F-CAN data
- Driver's door lock switch (LOCK/UNLOCK)
- Front passenger's door lock switch (LOCK/UNLOCK)
- Driver's door switch (door open)
- Front passenger's door switch (door open)
- Left rear door switch (door open)
- Right rear door switch (door open)
- Tailgate latch switch (tailgate open)
- Tailgate opener switch (ON)
- Tailgate outer handle switch (ON)
- Hood latch switch (hood closed)
- Driver's door key cylinder switch (LOCK/UNLOCK)
- Driver's door lock knob switch (LOCK/UNLOCK)
- Front passenger's door lock knob switch (LOCK/UNLOCK)
- Left rear door lock knob switch (UNLOCK)
- Right rear door lock knob switch (UNLOCK)
- Hazard warning switch (ON)
- Combination light switch (Parking, Headlight, Dimmer, Passing, Fog ON)
- SBW shifter control module (P)
- Audio security switch (ON)

CONNECTOR VIEW

BODY CONTROL MODULE CONNECTOR FOR INPUTS AND OUTPUTS

Connector Index
Body Control Module Connector A (14P)
Body Control Module Connector B (36P)
Body Control Module Connector C (28P)
Body Control Module Connector D (40P)
Body Control Module Connector E (24P)
Body Control Module Connector F (36P)
Body Control Module Connector G (32P)

Body Control Module Connector A (14P) (female terminals)

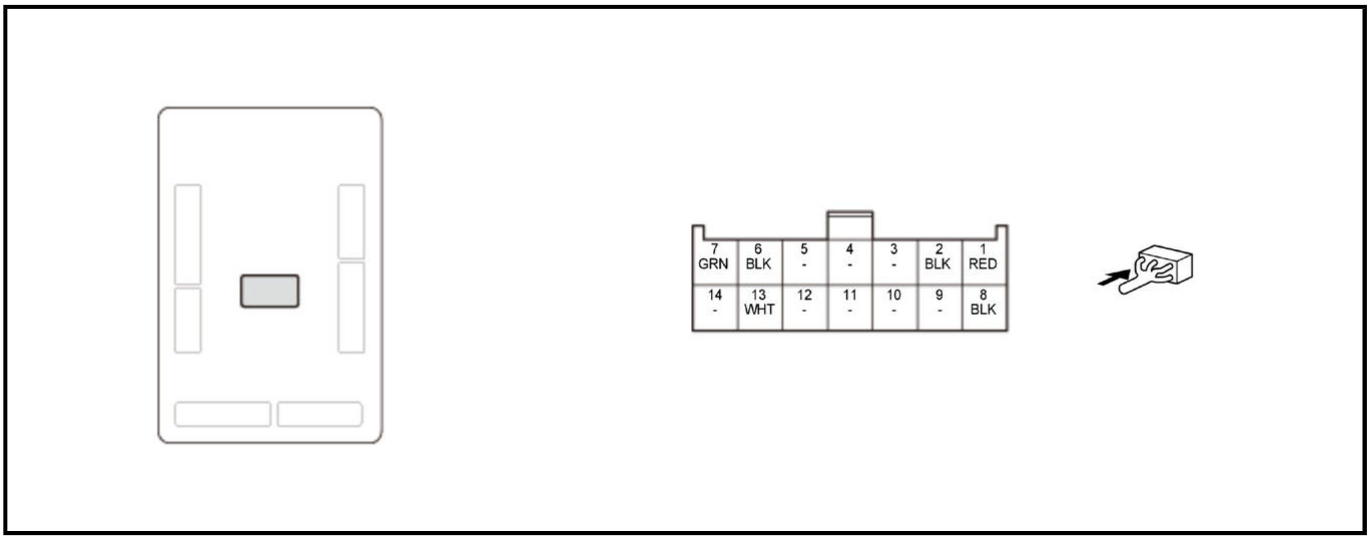
7 GRN
6 BLK
5 -
4 -
3 -
2 BLK
1 RED
14 -
13 WHT
12 -
11 -
10 -
9 -
8 BLK

Terminal number	Terminal name	Description	Signal
1	+B_HAZARD	+B power supply	About battery voltage at all times
2	GND	Body control module ground	Less than 0.2 V at all times
3	---	Not used	---
4	---	Not used	---
5	---	Not used	---
6	GND	Body control module ground	Less than 0.2 V at all times
7	RR_WIPER_MTR	Outputs rear window wiper motor signal	---
8	GND	Body control module ground	Less than 0.2 V at all times
9	---	Not used	---
10	---	Not used	---
11	---	Not used	---
12	---	Not used	---
13	INTR_LIGHT-	Detects interior lights signal	---
14	---	Not used	---

Body Control Module Connector B (36P) (female terminals)

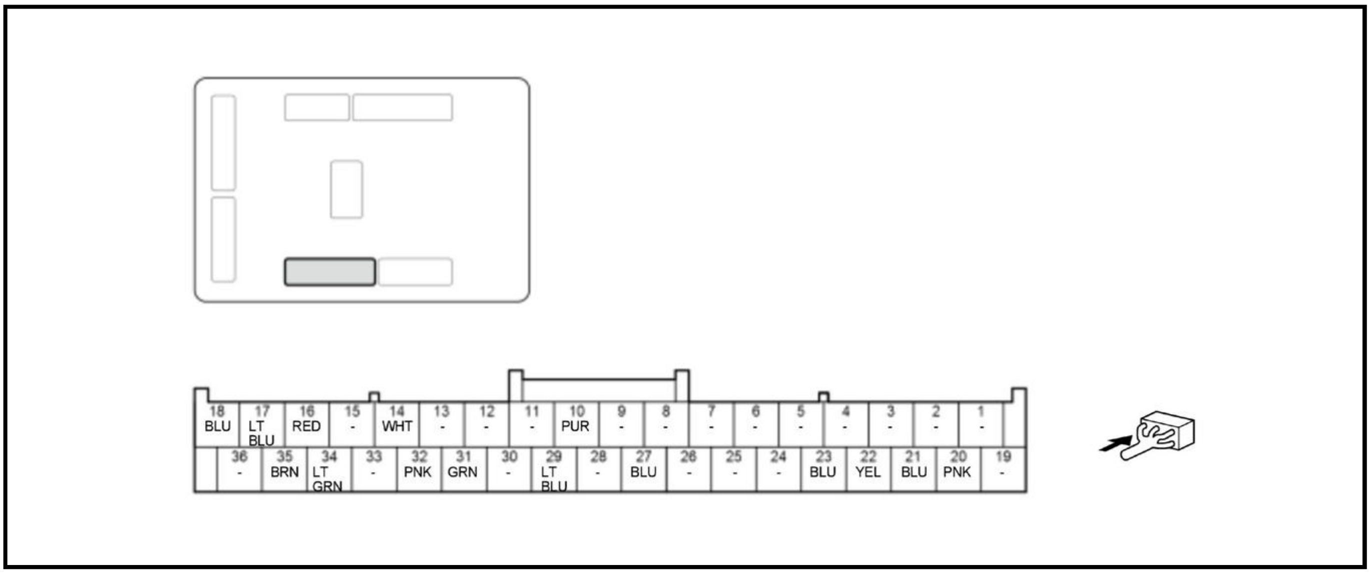
18 BLU
17 LT BLU
16 RED
15 -
14 WHT
13 -
12 -
11 -
10 PUR
9 -
8 -
7 -
6 -
5 -
4 -
3 -
2 -
1 -
36 -
35 BRN
34 LT GRN
33 -
32 PNK
31 GRN
30 -
29 LT BLU
28 -
27 BLU
26 -
25 -
24 -
23 BLU
22 YEL
21 BLU
20 PNK
19 -

Terminal number	Terminal name	Description	Signal
1	---	Not used	---
2	---	Not used	---
3	---	Not used	---
4	---	Not used	---
5	---	Not used	---
6	---	Not used	---
7	---	Not used	---
8	---	Not used	---
9	---	Not used	---
10	BACK_UP (WIPER)	Outputs windshield wiper control unit/motor (wiper HI/LO) signal	With wiper HI or LO operation: about battery voltage If none of above conditions are met: less than 0.2 V
11	---	Not used	---
12	---	Not used	---
13	---	Not used	---
14	P/W_TIMER	Drives power window relay	Without vehicle off operation: about battery voltage With vehicle off operation: less than 0.2 V
15	---	Not used	---
16	+B_SMART	+B power source	About battery voltage at all times
17	RR_L_TURN	Outputs left turn signal light signal	With left turn signal lights are ON: about battery voltage
18	FR_L_TURN	Outputs left turn signal light signal	With left turn signal lights are ON: about battery voltage
19	---	Not used	---
20	B-CAN_H	Communication line	---
21	B-CAN_L	Communication line	---
22	F-CAN B_H	Communication line	---
23	F-CAN B_L	Communication line	---
24	---	Not used	---
25	---	Not used	---

*: Without power tailgate

Terminal number	Terminal name	Description	Signal
26	---	Not used	---
27	DOOR_LOCK_RELAY_CL-	Drives power door lock relay circuit (LOCK) signal	With door lock actuators in locking operation: less than 0.2 V
28	---	Not used	---
29*	TRUNK_ACT_RLY_CL-	Drives tailgate release actuator relay circuit	With tailgate release actuator operation: less than 0.2 V
30	---	Not used	---
31	DR_DOOR_UNLOCK_RELAY_CL-	Drives power door lock relay circuit (DR UNLOCK)	With driver's door lock actuator in unlocking operation: less than 0.2 V

Terminal number	Terminal name	Description	Signal
32	DOOR_UNLOCK_RELAY_CL-	Drives power door lock relay circuit (UNLOCK)	With door lock actuators in unlocking operation: less than 0.2 V
33	---	Not used	---
34	RR_R_TURN	Outputs right turn signal light signal	With right turn signal lights are ON: about battery voltage
35	FR_R_TURN	Outputs right turn signal light signal	With right turn signal lights are ON: about battery voltage
36	---	Not used	---

*: Without power tailgate

Body Control Module Connector C (28P) (female terminals)

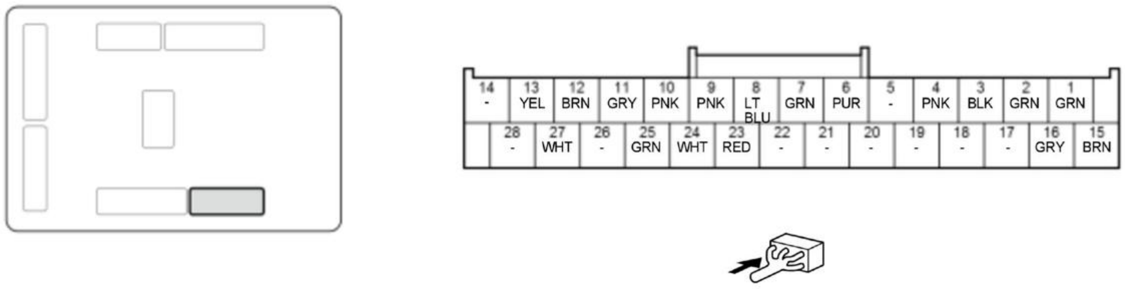
14
-
13
YEL
12
BRN
11
GRY
10
PNK
9
PNK
8
LT BLU
7
GRN
6
PUR
5
-
4
PNK
3
BLK
2
GRN
1
GRN
28
-
27
WHT
26
-
25
GRN
24
WHT
23
RED
22
-
21
-
20
-
19
-
18
-
17
-
16
GRY
15
BRN

Terminal number	Terminal name	Description	Signal
1	ATP-P	Detects transmission in P position/mode signal	With P position/mode: less than 0.2 V With out of P position/mode and body control module is wakeup mode: about battery voltage With out of P position/mode and body control module is sleep mode: pulse
2	HAZARD_SW	Detects hazard warning switch signal	With hazard warning switch OFF: about battery voltage With hazard warning switch ON: less than 0.2 V
3	COMBI_SW_GND(LT)	Ground for combination light switch	Less than 0.2 V at all times

*: With front fog light

Terminal number	Terminal name	Description	Signal
4	T/G_OPEN_SW	Detects tailgate outer handle switch signal	With tailgate outer handle switch ON: less than 0.2 V With tailgate outer handle switch OFF and body control module is wakeup mode: about battery voltage With tailgate outer handle switch OFF and body control module is sleep mode: pulse
5	---	Not used	---
6*	FR_FOG_SW	Detects front fog light switch signal	With front fog light switch ON: less than 0.2 V With front fog light switch OFF and body control module is wakeup mode: about battery voltage With front fog light switch OFF and body control module is sleep mode: pulse
7	PASSING_SW	Detects combination light switch PASSING signal	With combination light switch PASSING: less than 0.2 V With combination light switch OFF and body control module is wakeup mode: about battery voltage With combination light switch OFF and body control module is sleep mode: pulse
8	H/L_HI_SW	Detects combination light switch HI signal	With combination light switch HI: less than 0.2 V With combination light switch OFF and body control module is wakeup mode: about battery voltage With combination light switch OFF and body control module is sleep mode: pulse
9	H/L_ON_SW	Detects combination light switch ON signal	With combination light switch ON: less than 0.2 V With combination light switch OFF and body control module is wakeup mode: about battery voltage With combination light switch OFF and body control module is sleep mode: pulse
10	H/L_OFF_SW	Detects combination light switch OFF signal	With combination light switch OFF: less than 0.2 V With combination light switch ON and body control module is wakeup mode: about battery voltage With combination light switch

Terminal number	Terminal name	Description	Signal
			ON and body control module is sleep mode: pulse
11	PARKING_LT_SW	Detects combination light switch PARKING signal	With combination light switch PARKING: less than 0.2 V With combination light switch OFF and body control module is wakeup mode: about battery voltage With combination light switch OFF and body control module is sleep mode: pulse
12	IG2_DRL	IG2 power source	With vehicle in ON mode: about battery voltage
13	LIN(FR_WIPER)	Communication line	---
14	---	Not used	---

*: With front fog light

Terminal number	Terminal name	Description	Signal
15	RR_L_SILCON_UNLOCK	Detects left rear door lock knob switch signal	With left rear door lock knob switch UNLOCK: less than 0.2 V With left rear door lock knob switch LOCK and body control module is wakeup mode: about battery voltage With left rear door lock knob switch LOCK and body control module is sleep mode: pulse
16	RR_R_SILCON_UNLOCK	Detects right rear door lock knob switch signal	With right rear door lock knob switch UNLOCK: less than 0.2 V With right rear door lock knob switch LOCK and body control module is wakeup mode: about battery voltage With right rear door lock knob switch LOCK and body control module is sleep mode: pulse
17	---	Not used	---
18	---	Not used	---
19	---	Not used	---
20	---	Not used	---
21	---	Not used	---
22	---	Not used	---
23	ACC_KEYLOCK	ACC power source	With vehicle in ACCESSORY or ON mode: about battery voltage
24	BACK_LT	Detects back-up light signal	With vehicle in ON mode and R position/mode: about battery voltage If none of above conditions are met: less than 0.2 V

Terminal number	Terminal name	Description	Signal
25	STOP_SW	Detects brake pedal position switch signal	With brake pedal pressed: about battery voltage With brake pedal released: less than 0.2 V
26	---	Not used	---
27	+B_BACK_UP	+B power source	About battery voltage at all times
28	---	Not used	---

*: With front fog light

Body Control Module Connector D (40P) (female terminals)

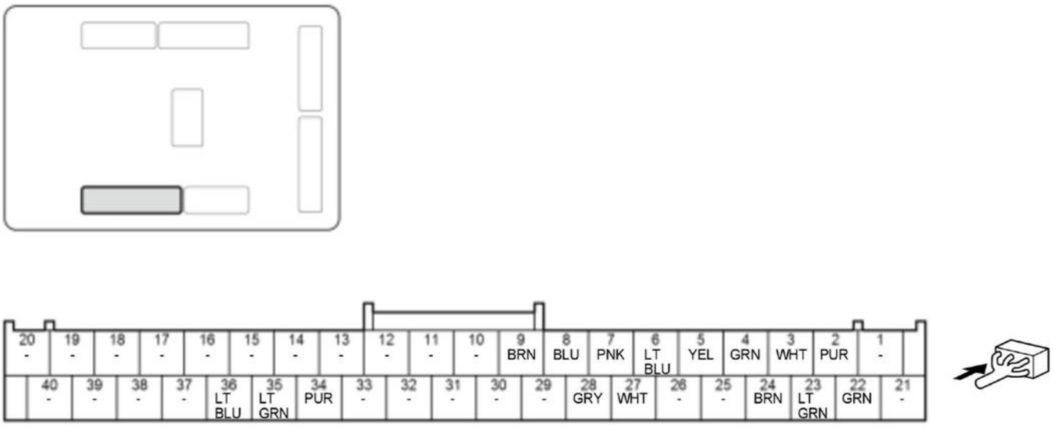
20 -
19 -
18 -
17 -
16 -
15 -
14 -
13 -
12 -
11 -
10 -
9 BRN
8 BLU
7 PNK
6 LT BLU
5 YEL
4 GRN
3 WHT
2 PUR
1 -
40 -
39 -
38 -
37 -
36 LT BLU
35 LT GRN
34 PUR
33 -
32 -
31 -
30 -
29 -
28 GRY
27 WHT
26 -
25 -
24 BRN
23 LT GRN
22 GRN
21 -

Terminal number	Terminal name	Description	Signal
1	---	Not used	---
2	FR_WIPER_INT_SW	Detects windshield wiper switch INT or LO signal	With windshield wiper switch INT or LO: less than 0.2 V With out of windshield wiper switch INT or LO and body control module is wakeup mode: about battery voltage With out of windshield wiper switch INT or LO and body control module is sleep mode: less than 0.2 V
3	FR_WIPER_HI_SW	Detects windshield wiper switch HI or LO signal	With windshield wiper switch HI or LO: less than 0.2 V With out of windshield wiper switch HI or LO and body control module is wakeup mode: about battery voltage With out of windshield wiper switch HI or LO and body control module is sleep mode: less than 0.2 V
4	FR_WIPER_MIST_SW	Detects windshield washer switch MIST signal	With windshield washer switch MIST: less than 0.2 V

Terminal number	Terminal name	Description	Signal
			With out of windshield wiper switch MIST and body control module is wakeup mode: about battery voltage With out of windshield wiper switch MIST and body control module is sleep mode: less than 0.2 V
5	FR_WASHER_SW	Detects windshield washer switch ON signal	With windshield washer switch ON: less than 0.2 V With windshield washer switch OFF and body control module is wakeup mode: about battery voltage With windshield washer switch OFF and body control module is sleep mode: less than 0.2 V
6	RR_WIPER_INT_SW	Detects rear window wiper switch INT signal	With rear window wiper switch INT: less than 0.2 V With out of rear window wiper switch INT and body control module is wakeup mode: about battery voltage With out of rear window wiper switch INT and body control module is sleep mode: less than 0.2 V
7	RR_WIPER_SW	Detects rear window wiper switch ON signal	With rear window wiper switch ON: less than 0.2 V With out of rear window wiper switch ON and body control module is wakeup mode: about battery voltage With out of rear window wiper switch ON and body control module is sleep mode: less than 0.2 V
8	RR_WASHER_SW	Detects rear window washer switch signal	With rear window washer switch ON: less than 0.2 V With rear window washer switch OFF and body control module is wakeup mode: about battery voltage With rear window washer switch OFF and body control module is sleep mode: less than 0.2 V
9	COMBI_SW_GND(WIP)	Ground for wiper/washer switch	Less than 0.2 V at all times
10	---	Not used	---

*: Without power tailgate

Terminal number	Terminal name	Description	Signal
11	---	Not used	---
12	---	Not used	---
13	---	Not used	---
14	---	Not used	---
15	---	Not used	---
16	---	Not used	---
17	---	Not used	---
18	---	Not used	---
19	---	Not used	---
20	---	Not used	---
21	---	Not used	---
22	FL_DOOR_SW	Detects driver's door switch signal	With driver's door switch ON: less than 0.2 Vs sleep mode: pulse With driver's door switch OFF and body control module is wakeup mode: about battery voltage With driver's door switch OFF and body control module is sleep mode: pulse
23	FR_DOOR_SW	Detects front passenger's door switch signal	With front passenger's door switch ON: less than 0.2 V With front passenger's door switch OFF and body control module is wakeup mode: about battery voltage With front passenger's door switch OFF and body control module is sleep mode: pulse
24	RL_DOOR_SW	Detects left rear door switch signal	With left rear door switch ON: less than 0.2 V With left rear door switch OFF and body control module is wakeup mode: about battery voltage With left rear door switch OFF and body control module is sleep mode: pulse
25	---	Not used	---
26	---	Not used	---
27	T/G_SW	Detects tailgate latch switch signal	With tailgate latch switch ON: less than 0.2 V With tailgate latch switch OFF and body control module is wakeup mode: about battery voltage With tailgate latch switch OFF and body control module is sleep mode: pulse
28	RR_DOOR_SW	Detects right rear door switch signal	With right rear door switch ON: less than 0.2 V With right rear door switch OFF and body control module is wakeup mode: about battery voltage

Terminal number	Terminal name	Description	Signal
			With right rear door switch OFF and body control module is sleep mode: pulse
29	---	Not used	---
30	---	Not used	---
31	---	Not used	---
32	---	Not used	---
33	---	Not used	---

*: Without power tailgate

Terminal number	Terminal name	Description	Signal
34*	CDS	Detects SRS unit collision detection signal	With SRS unit collision detection: less than 0.2 V With SRS unit non-collision detection and body control module is wakeup mode: about battery voltage With body control module is sleep mode: less than 0.2 V at all time
35	S-NET	Communication line	---
36	K-LINE	Communication line	---
37	---	Not used	---
38	---	Not used	---
39	---	Not used	---
40	---	Not used	---

*: Without power tailgate

Body Control Module Connector E (24P) (female terminals)

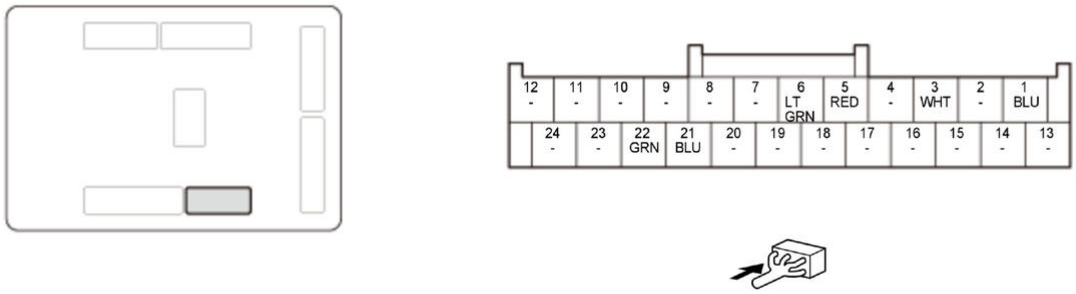

Terminal number	Terminal name	Description	Signal
1	IG1_FUEL_PUMP	IG1 power source	With vehicle in ON or START mode: about battery voltage
2	---	Not used	---

Terminal number	Terminal name	Description	Signal
3	TRUNK_LT	Outputs cargo area light signal	With cargo area light ON: less than 0.2 V
4	---	Not used	---
5	R_TURN_SW	Detects right turn signal switch signal	With right turn signal switch ON: less than 0.2 V With right turn signal switch OFF and body control module is wakeup mode: about battery voltage With right turn signal switch OFF and body control module is sleep mode: less than 0.2 V

*: With intermittent dwell time controller

Terminal number	Terminal name	Description	Signal
6	L_TURN_SW	Detects left turn signal switch signal	With left turn signal switch ON: less than 0.2 V With left turn signal switch OFF and body control module is wakeup mode: about battery voltage With left turn signal switch OFF and body control module is sleep mode: less than 0.2 V
7	---	Not used	---
8	---	Not used	---
9	---	Not used	---
10	---	Not used	---
11	---	Not used	---
12	---	Not used	---
13	---	Not used	---
14	---	Not used	---
15	---	Not used	---
16	---	Not used	---
17	---	Not used	---
18	---	Not used	---
19	---	Not used	---
20	---	Not used	---
21*	FR_WIPER_INT_VOL	Detects windshield wiper/washer switch intermittent dwell time controller signal	With vehicle in ON mode: about 0-5 V (depending on intermittent dwell time controller)
22	SMART_BUZZER	Outputs keyless buzzer signal	---
23	---	Not used	---
24	---	Not used	---

*: With intermittent dwell time controller

Body Control Module Connector F (36P) (female terminals)

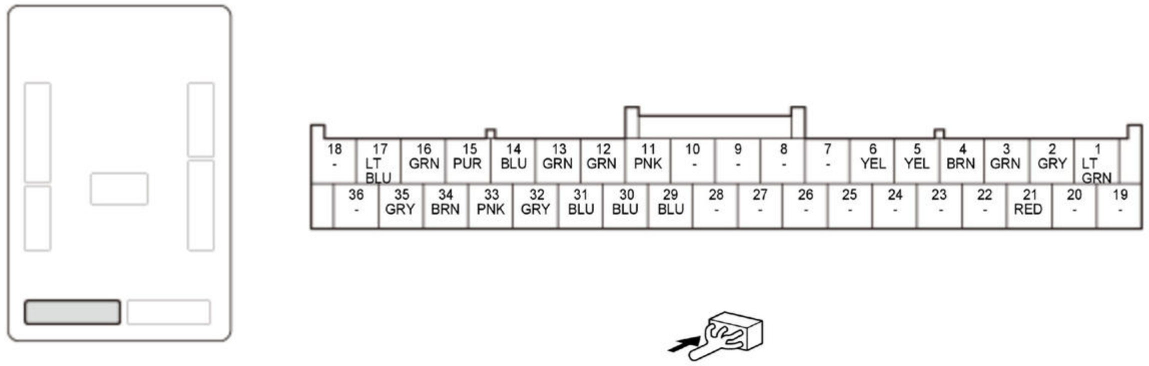
18 -
17 LT BLU
16 GRN
15 PUR
14 BLU
13 GRN
12 GRN
11 PNK
10 -
9 -
8 -
7 -
6 YEL
5 YEL
4 BRN
3 GRN
2 GRY
1 LT GRN
36 -
35 GRY
34 BRN
33 PNK
32 GRY
31 BLU
30 BLU
29 BLU
28 -
27 -
26 -
25 -
24 -
23 -
22 -
21 RED
20 -
19 -

Terminal number	Terminal name	Description	Signal
1	---	Not used	---

Terminal number	Terminal name	Description	Signal
2	IG1_COIL+	Drives IG1A and IG1B relay circuit	With vehicle in ON or START mode: about battery voltage With vehicle in OFF (LOCK) mode: less than 0.2 V
3	START_SW_IND1	Drives power switch light (RED)	With power switch light (RED) OFF: about battery voltage With power switch light (RED) ON: less than 0.2 V
4	START_SW_ILL	Drives power switch light (WHITE)	With power switch light (WHITE) OFF: about battery voltage With power switch light (WHITE) ON: less than 0.2 V
5	ESL_PWR	Outputs for park pawl actuator drive unit (ESL_PWR) signal	---
6	STS	Outputs engine starting request signal	With engine starting request: about battery voltage
7	---	Not used	---
8	---	Not used	---
9	---	Not used	---
10	---	Not used	---
11	SSSW_LF_ANT+	Outputs power switch LF antenna signal	---
12	EXT_FR_AS+	Outputs front passenger's door outer handle LF antenna signal	---
13	EXT_FR_DR+	Outputs driver's door outer handle LF antenna signal	---
14	EXT_TR+	Outputs rear bumper LF antenna signal	---
15	EXT_M+	Outputs middle interior LF antenna signal	---

Terminal number	Terminal name	Description	Signal
16	EXT_F+	Outputs front interior LF antenna signal	---
17	EXT_R+	Outputs rear interior LF antenna signal	---
18	---	Not used	---
19	---	Not used	---
20	---	Not used	---
21	L-LINE	Communication line	---
22	---	Not used	---
23	---	Not used	---
24	---	Not used	---
25	---	Not used	---
26	---	Not used	---
27	---	Not used	---
28	---	Not used	---
29	SSSW_LF_ANT-	Outputs power switch LF antenna signal	---
30	EXT_FR_AS-	Outputs front passenger's door outer handle LF antenna signal	---
31	EXT_FR_DR-	Outputs driver's door outer handle LF antenna signal	---
32	EXT_TR-	Outputs rear bumper LF antenna signal	---

Terminal number	Terminal name	Description	Signal
33	EXT_M-	Outputs middle interior LF antenna signal	---
34	EXT_F-	Outputs front interior LF antenna signal	---
35	EXT_R-	Outputs rear interior LF antenna signal	---
36	---	Not used	---

Body Control Module Connector G (32P) (female terminals)

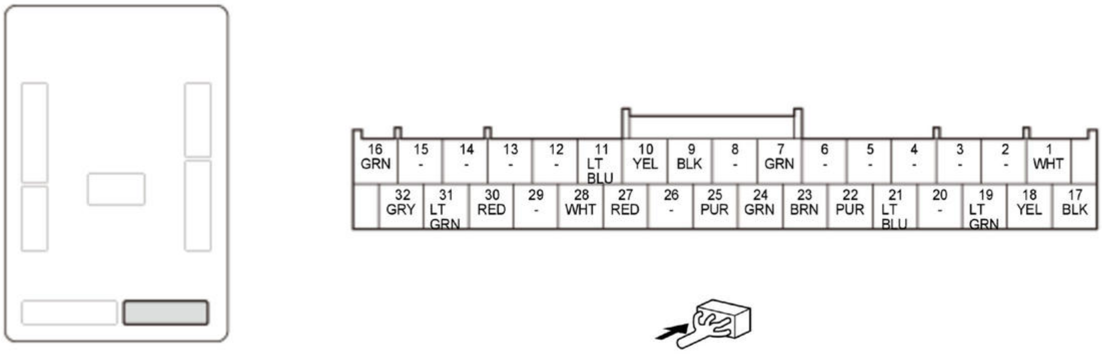
16 GRN
15 -
14 -
13 -
12 -
11 LT BLU
10 YEL
9 BLK
8 -
7 GRN
6 -
5 -
4 -
3 -
2 -
1 WHT
32 GRY
31 LT GRN
30 RED
29 -
28 WHT
27 RED
26 -
25 PUR
24 GRN
23 BRN
22 PUR
21 LT BLU
20 -
19 LT GRN
18 YEL
17 BLK

Terminal number	Terminal name	Description	Signal
1	DL_FR_AS	Detects front passenger's door outer handle touch sensor (LOCK) signal	---
2	---	Not used	---
3	---	Not used	---
4	---	Not used	---
5	---	Not used	---
6	---	Not used	---
7	MTR_CUT2(IG1)	Detects for SBW shifter control module (MTR_CUT2(IG1)) signal	---
8	---	Not used	---
9	SS2(-)	Detects power switch (SS2(-)) signal	---
10	IG1-B_SIG	IG1 power source	With vehicle in ON or START mode: about battery voltage
11	IG2_SIG	IG2 power source	With vehicle in ON mode: about battery voltage
12	---	Not used	---
13	---	Not used	---
14	---	Not used	---
15	---	Not used	---

*: With hands free access power tailgate

Terminal number	Terminal name	Description	Signal
16	ACC_RLY_CL+	Drives ACC relay circuit	With vehicle in ACCESSORY or ON mode: about battery voltage With vehicle in OFF (LOCK) mode: less than 0.2 V
17	CONT_RLY_GND	Ground for IG1A/IG1B/IG2/ACC relay circuits	Less than 0.2 V at all times
18	SS1(+)	Detects power switch (SS1(+)) signal	Power switch pressed: about battery voltage Power switch released: less than 0.2 V
19	DL_FR_DR	Detects driver's door outer handle touch sensor (LOCK) signal	---
20	---	Not used	---
21	T/G_CLOSE_SW	Detects tailgate lock switch signal	With tailgate lock switch ON: less than 0.2 V With tailgate lock switch OFF and body control module is wakeup mode: about battery voltage With tailgate lock switch OFF and body control module is sleep mode: pulse

Terminal number	Terminal name	Description	Signal
22	TS_FR_DR	Detects driver's door outer handle touch sensor (UNLOCK) signal	---
23	PARK_BUSY	Detects parking brake switch signal	---
24*	KICK_SNSR	Detects hands free access power tailgate control unit/sensor signal	---
25	TS_FR_AS	Detects front passenger's door outer handle touch sensor (UNLOCK) signal	---
26	---	Not used	---
27	IG1-A_SIG	IG1 power source	With vehicle in ON or START mode: about battery voltage
28	IGN_TRX	Communication line	---
29	---	Not used	---
30	VOUT_FR_AS	Drives front passenger's door outer handle touch sensor	---
31	VOUT_FR_DR	Drives driver's door outer handle touch sensor	---
32	IG2_COIL+	Drives IG2 relay circuit	With vehicle in ON mode: about battery voltage With vehicle in OFF (LOCK) mode: less than 0.2 V

*: With hands free access power tailgate

POWER SEAT CONTROL UNIT CONNECTOR FOR INPUTS AND OUTPUTS

Connector Index
Power Seat Control Unit Connector A (20P)
Power Seat Control Unit Connector B (12P)

Power Seat Control Unit Connector A (20P) (female terminals)

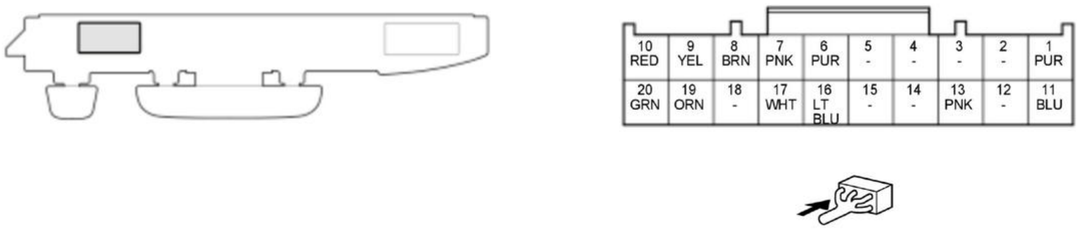

Terminal number	Terminal name	Description	Signal
1	ATP-PBK	Detects transmission in P position/mode signal	With P position/mode: less than 0.2 V With P Without P position/mode: about battery voltage

Terminal number	Terminal name	Description	Signal
2	---	Not used	---
3	---	Not used	---
4	---	Not used	---
5	---	Not used	---
6	VCC	Drives position sensors	With power seat control unit in wake-up mode: about 5 V
7	TISE	Detects front up-down position sensor signal	About 0.5 - 4.5 V (depending on front up-down position)
8	SLSE	Detects slide position sensor signal	About 0.5 - 4.5 V (depending on slide position)
9	HESE	Detects rear up-down position sensor signal	About 0.5 - 4.5 V (depending on rear up-down position)
10	RESE	Detects recline position sensor signal	About 0.5 - 4.5 V (depending on recline position)
11	+B BACK UP	+B power source	About battery voltage at all times
12	---	Not used	---
13	IG METER	IG1 power source	With vehicle in ON or START mode: about battery voltage
14	---	Not used	---
15	---	Not used	---
16	B-CAN_H	Communication line	---
17	B-CAN_L	Communication line	---
18	---	Not used	---
19	SEG	Ground for position sensors	Less than 0.2 V at all times
20	S GND	Power seat control unit ground	Less than 0.2 V at all times

Power Seat Control Unit Connector B (12P) (female terminals)

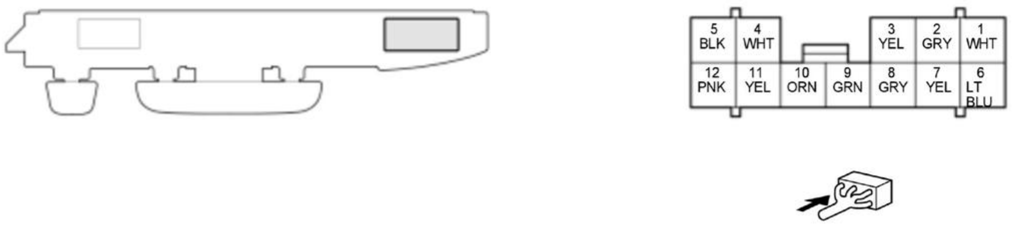

Terminal number	Terminal name	Description	Signal
1	SLIDE RR	Drives slide motor	With slide motor operation (rear side): about battery voltage
2	GND/P-SEAT1	Power seat control unit ground	Less than 0.2 V at all times
3	SLIDE FR	Drives slide motor	With slide motor operation (front side): about battery voltage
4	HEIGHT DOWN	Drives rear up-down motor	With rear up-down motor operation (down): about battery voltage

Terminal number	Terminal name	Description	Signal
5	GND/P-SEAT2	Power seat control unit ground	Less than 0.2 V at all times
6	+B/P-SEAT1	+B power source	About battery voltage at all times
7	TILT DOWN	Drives front up-down motor	With front up-down motor operation (down): about battery voltage
8	REC FR	Drives recline motor	With recline motor operation (front side): about battery voltage
9	HEIGHT UP	Drives rear up-down motor	With rear up-down motor operation (up): about battery voltage
10	TILT UP	Drives front up-down motor	With front up-down motor operation (up): about battery voltage
11	REC RR	Drives recline motor	With recline motor operation (rear side): about battery voltage
12	+B/P-SEAT1	+B power source	About battery voltage at all times

CIRCUIT DIAGRAM

DRIVING POSITION MEMORY SYSTEM (DPMS) CIRCUIT DIAGRAM

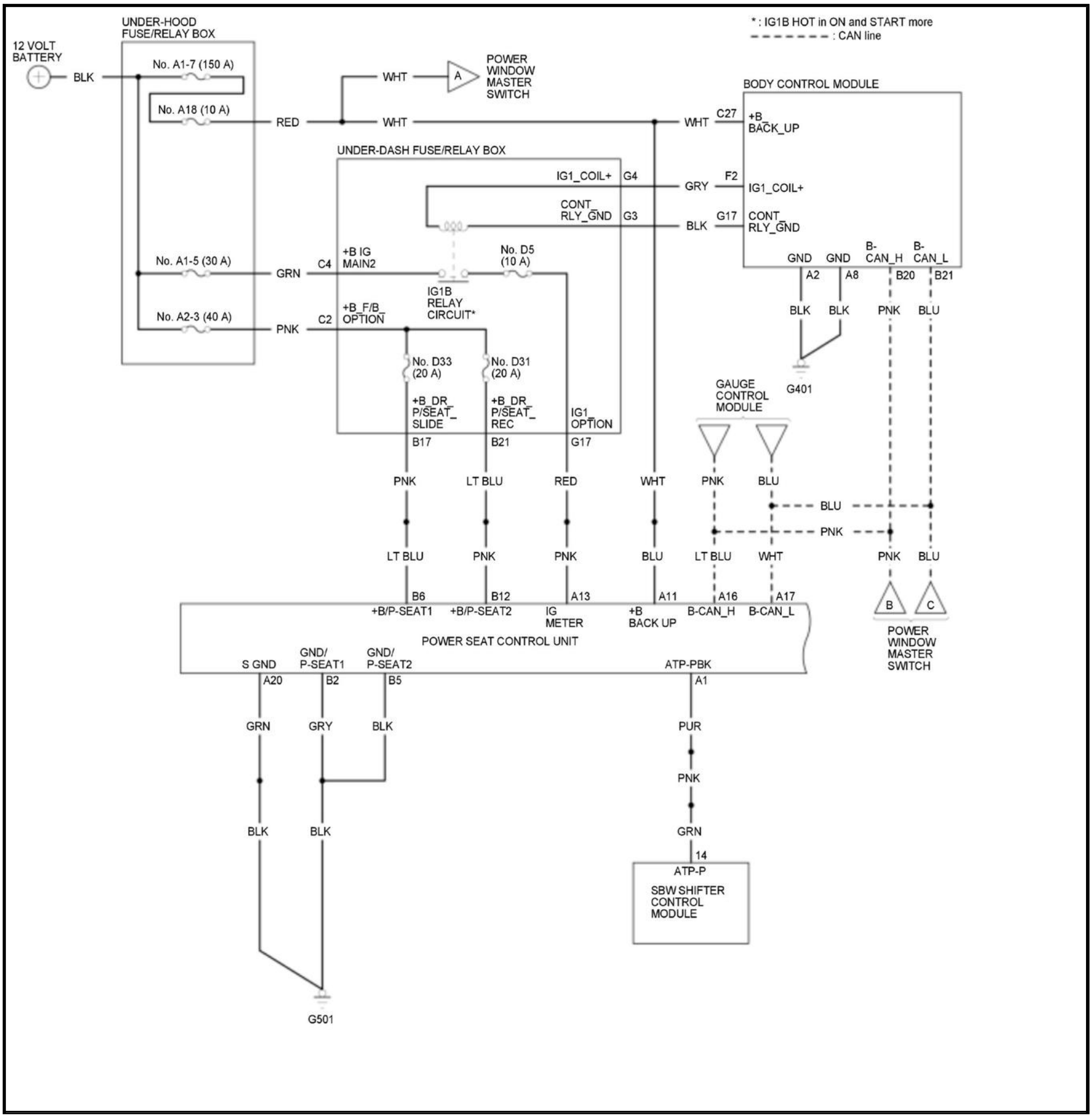
* : IG1B HOT in ON and START more
: CAN line
UNDER-HOOD FUSE/RELAY BOX
12 VOLT BATTERY
BLK
No. A1-7 (150 A)
No. A18 (10 A)
RED
WHT
A
POWER WINDOW MASTER SWITCH
WHT
WHT
C27
BODY CONTROL MODULE
+B_BACK_UP
UNDER-DASH FUSE/RELAY BOX
IG1_COIL+
G4
GRY
F2
IG1_COIL+
CONT_RLY_GND
G3
BLK
G17
CONT_RLY_GND
GND
GND
B-CAN_H
B-CAN_L
A2
A8
B20
B21
No. A1-5 (30 A)
GRN
C4
+B IG MAIN2
No. D5 (10 A)
IG1B RELAY CIRCUIT*
BLK
BLK
PNK
BLU
No. A2-3 (40 A)
PNK
C2
+B_F/B_OPTION
G401
No. D33 (20 A)
No. D31 (20 A)
GAUGE CONTROL MODULE
+B_DR_P/SEAT_SLIDE
+B_DR_P/SEAT_REC
IG1_OPTION
B17
B21
G17
PNK
LT BLU
RED
WHT
PNK
BLU
BLU
PNK
LT BLU
PNK
PNK
BLU
LT BLU
WHT
PNK
BLU
B6
B12
A13
A11
A16
A17
+B/P-SEAT1
+B/P-SEAT2
IG METER
+B BACK UP
B-CAN_H
B-CAN_L
B
C
POWER SEAT CONTROL UNIT
POWER WINDOW MASTER SWITCH
S GND
GND/P-SEAT1
GND/P-SEAT2
ATP-PBK
A20
B2
B5
A1
GRN
GRY
BLK
PUR
PNK
BLK
BLK
GRN
14
ATP-P
SBW SHIFTER CONTROL MODULE
G501

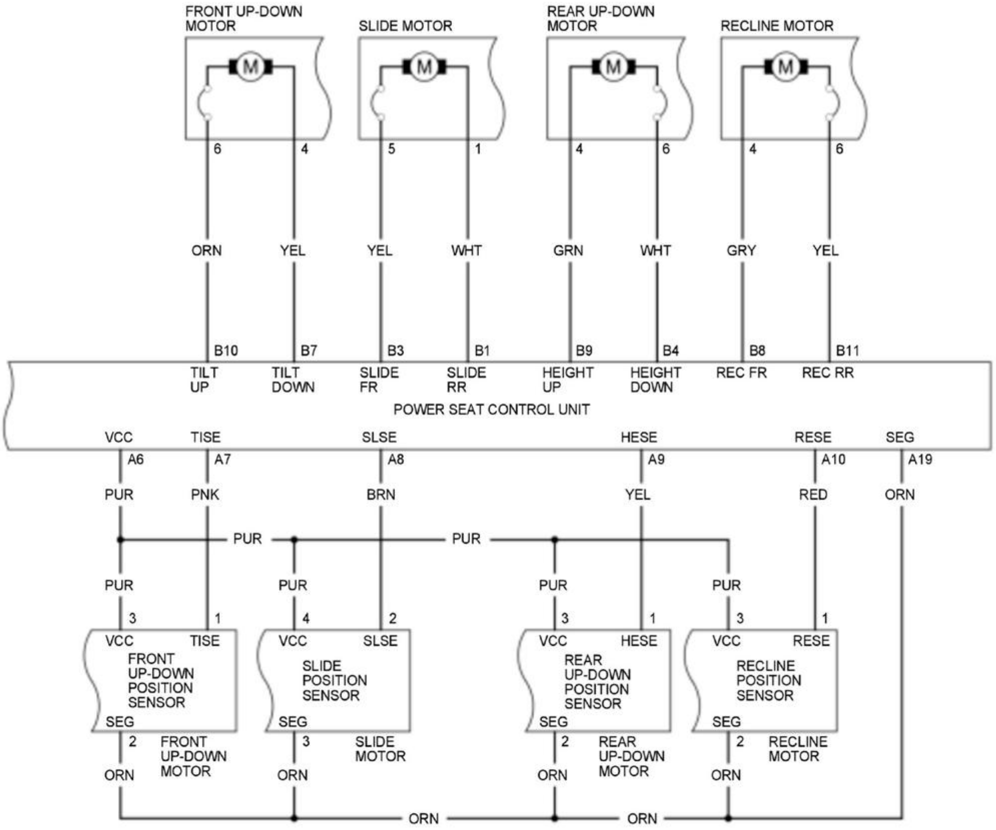
FRONT UP-DOWN MOTOR
SLIDE MOTOR
REAR UP-DOWN MOTOR
RECLINE MOTOR
M
6
4
5
1
4
6
4
6
ORN
YEL
YEL
WHT
GRN
WHT
GRY
YEL
B10
B7
B3
B1
B9
B4
B8
B11
TILT UP
TILT DOWN
SLIDE FR
SLIDE RR
HEIGHT UP
HEIGHT DOWN
REC FR
REC RR
POWER SEAT CONTROL UNIT
VCC
TISE
SLSE
HESE
RESE
SEG
A6
A7
A8
A9
A10
A19
PUR
PNK
BRN
YEL
RED
ORN
PUR
PUR
PUR
PUR
PUR
PUR
3
1
4
2
3
1
3
1
VCC
TISE
FRONT UP-DOWN POSITION SENSOR
VCC
SLSE
SLIDE POSITION SENSOR
VCC
HESE
REAR UP-DOWN POSITION SENSOR
VCC
RESE
RECLINE POSITION SENSOR
SEG
SEG
SEG
SEG
2
FRONT UP-DOWN MOTOR
3
SLIDE MOTOR
2
REAR UP-DOWN MOTOR
2
RECLINE MOTOR
ORN
ORN
ORN
ORN
ORN
ORN

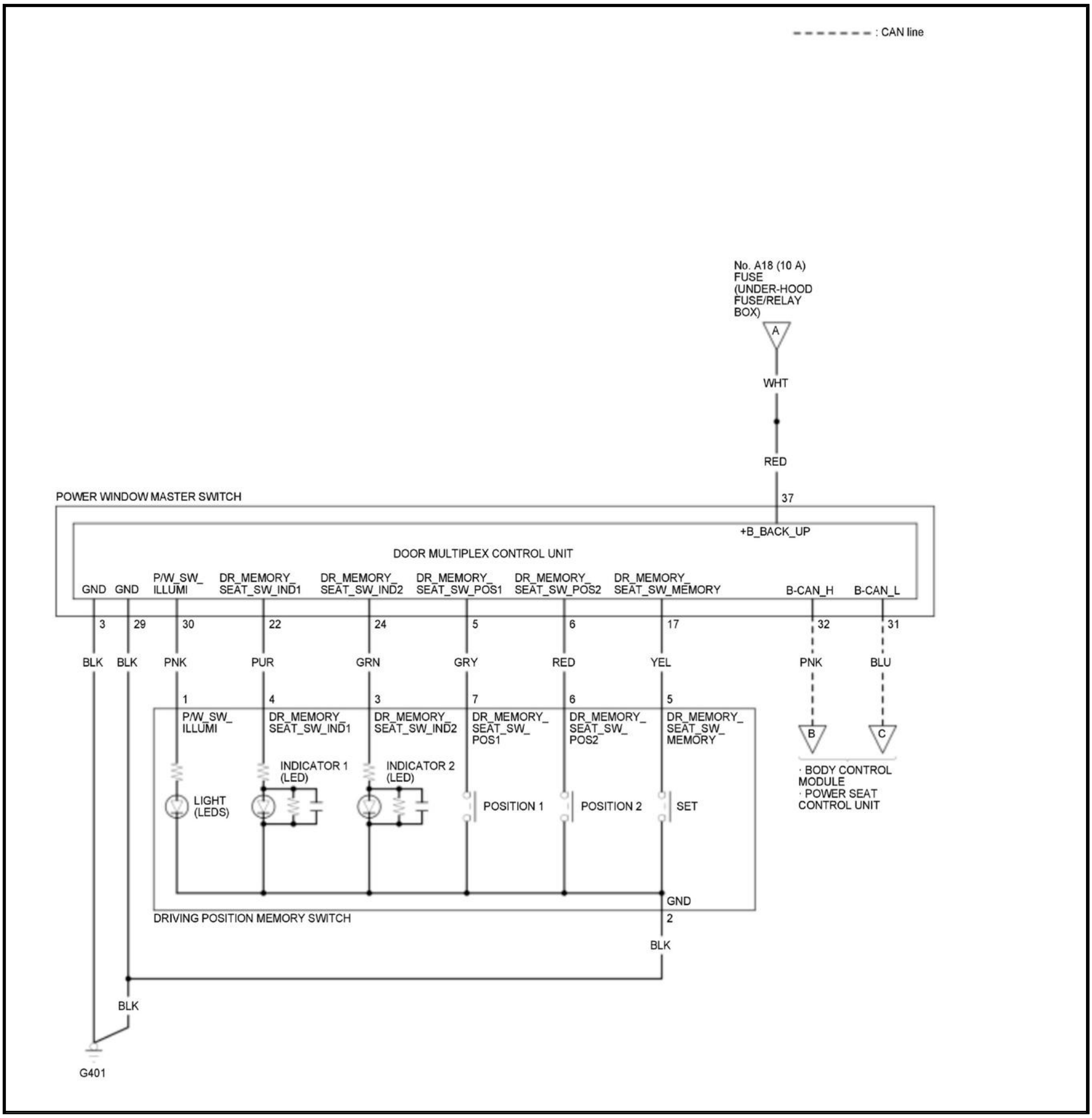
-------- : CAN line
No. A18 (10 A) FUSE (UNDER-HOOD FUSE/RELAY BOX)
A
WHT
RED
37
POWER WINDOW MASTER SWITCH
+B_BACK_UP
DOOR MULTIPLEX CONTROL UNIT
GND
GND
P/W_SW_ ILLUMI
DR_MEMORY_ SEAT_SW_IND1
DR_MEMORY_ SEAT_SW_IND2
DR_MEMORY_ SEAT_SW_POS1
DR_MEMORY_ SEAT_SW_POS2
DR_MEMORY_ SEAT_SW_MEMORY
B-CAN_H
B-CAN_L
3
29
30
22
24
5
6
17
32
31
BLK
BLK
PNK
PUR
GRN
GRY
RED
YEL
PNK
BLU
1
4
3
7
6
5
P/W_SW_ ILLUMI
DR_MEMORY_ SEAT_SW_IND1
DR_MEMORY_ SEAT_SW_IND2
DR_MEMORY_ SEAT_SW_ POS1
DR_MEMORY_ SEAT_SW_ POS2
DR_MEMORY_ SEAT_SW_ MEMORY
B
C
· BODY CONTROL MODULE
· POWER SEAT CONTROL UNIT
INDICATOR 1 (LED)
INDICATOR 2 (LED)
LIGHT (LEDS)
POSITION 1
POSITION 2
SET
GND
2
DRIVING POSITION MEMORY SWITCH
BLK
BLK
G401

COMPONENT LOCATION INDEX

DRIVING POSITION MEMORY SYSTEM (DPMS) COMPONENT LOCATION INDEX

For relationships between signals in a system,

refer to System Diagram.With power tailgate

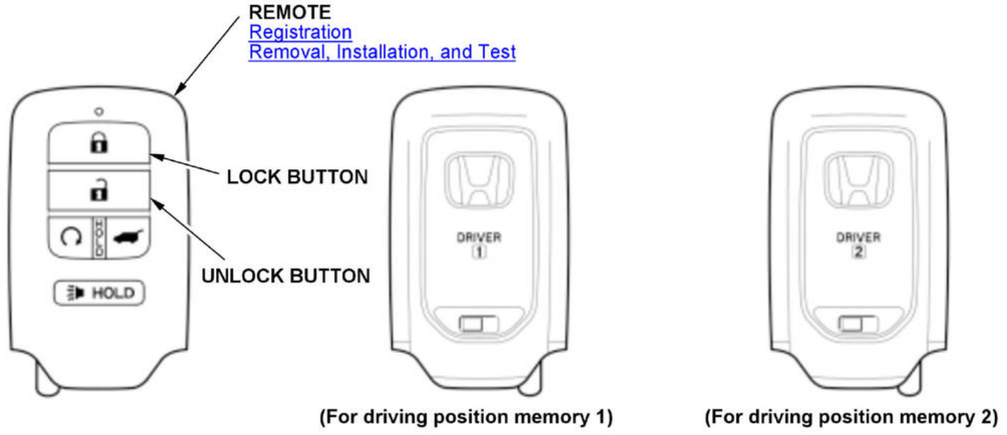
REMOTE
Registration
Removal, Installation, and Test
LOCK BUTTON
UNLOCK BUTTON
HOLD
DRIVER 1
DRIVER 2
(For driving position memory 1)
(For driving position memory 2)

Without power tailgate

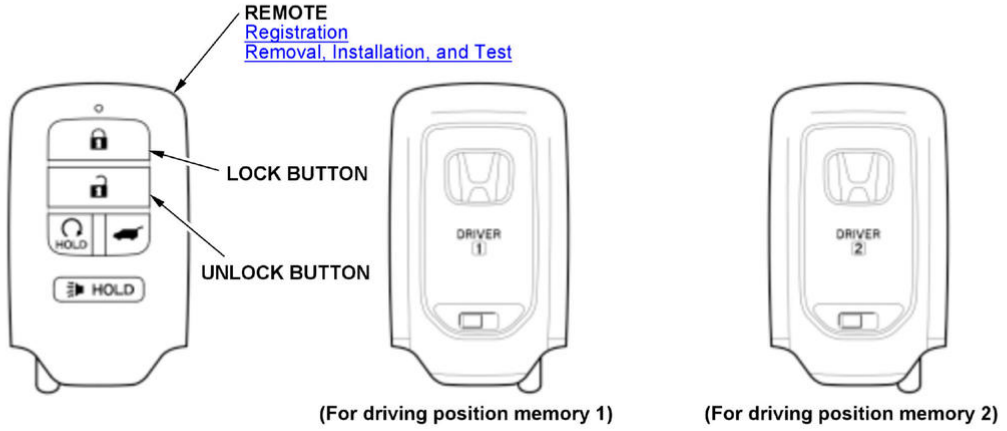
REMOTE
Registration
Removal, Installation, and Test
LOCK BUTTON
UNLOCK BUTTON
HOLD
DRIVER 1
DRIVER 2
(For driving position memory 1)
(For driving position memory 2)

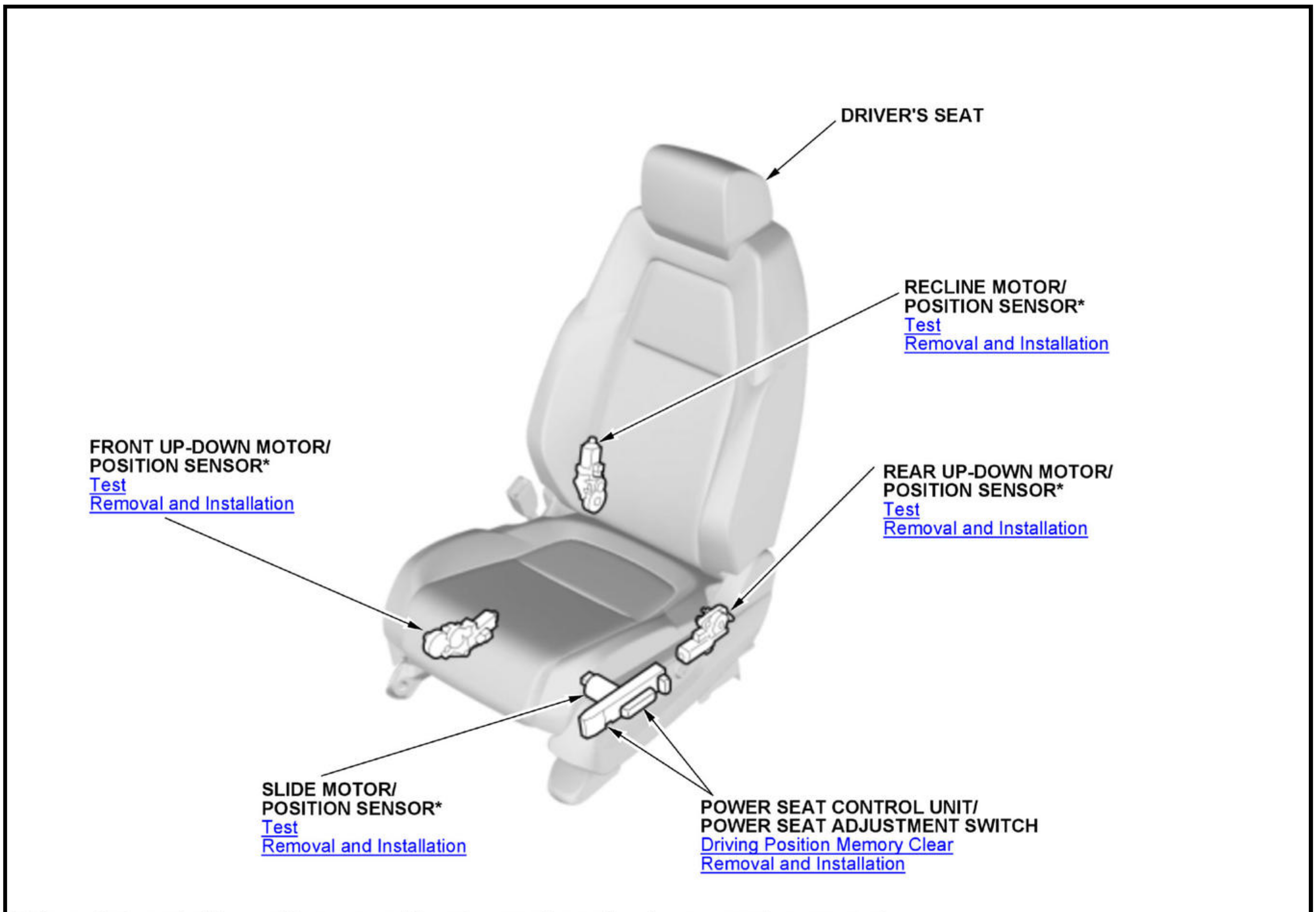
DRIVER'S SEAT
RECLINE MOTOR/
POSITION SENSOR*
Test
Removal and Installation
FRONT UP-DOWN MOTOR/
POSITION SENSOR*
Test
Removal and Installation
REAR UP-DOWN MOTOR/
POSITION SENSOR*
Test
Removal and Installation
SLIDE MOTOR/
POSITION SENSOR*
Test
Removal and Installation
POWER SEAT CONTROL UNIT/
POWER SEAT ADJUSTMENT SWITCH
Driving Position Memory Clear
Removal and Installation

*: The motor is part of the seat frame assembly and cannot be replaced as a separate component.

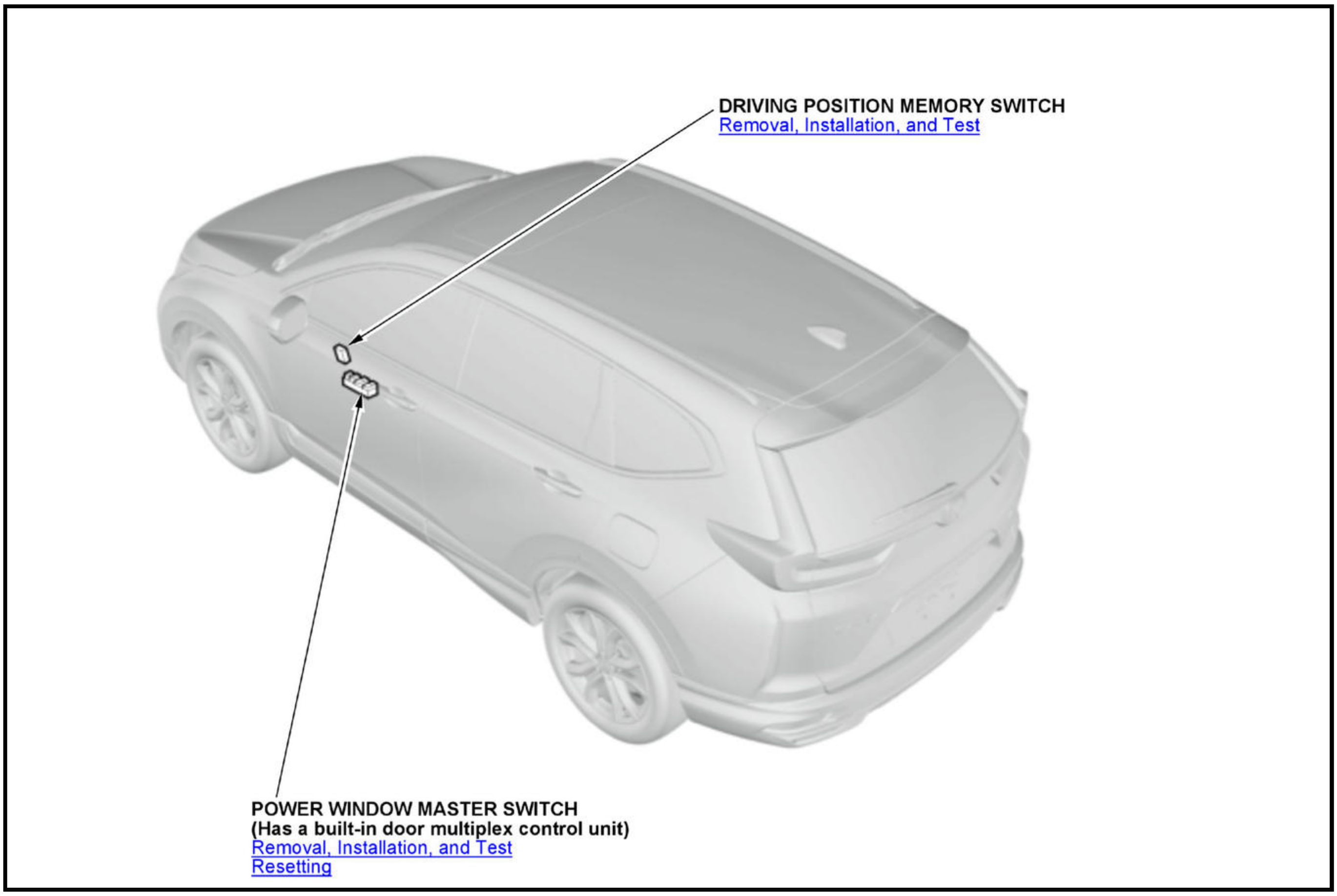
DRIVING POSITION MEMORY SWITCH
Removal, Installation, and Test
POWER WINDOW MASTER SWITCH
(Has a built-in door multiplex control unit)
Removal, Installation, and Test
Resetting

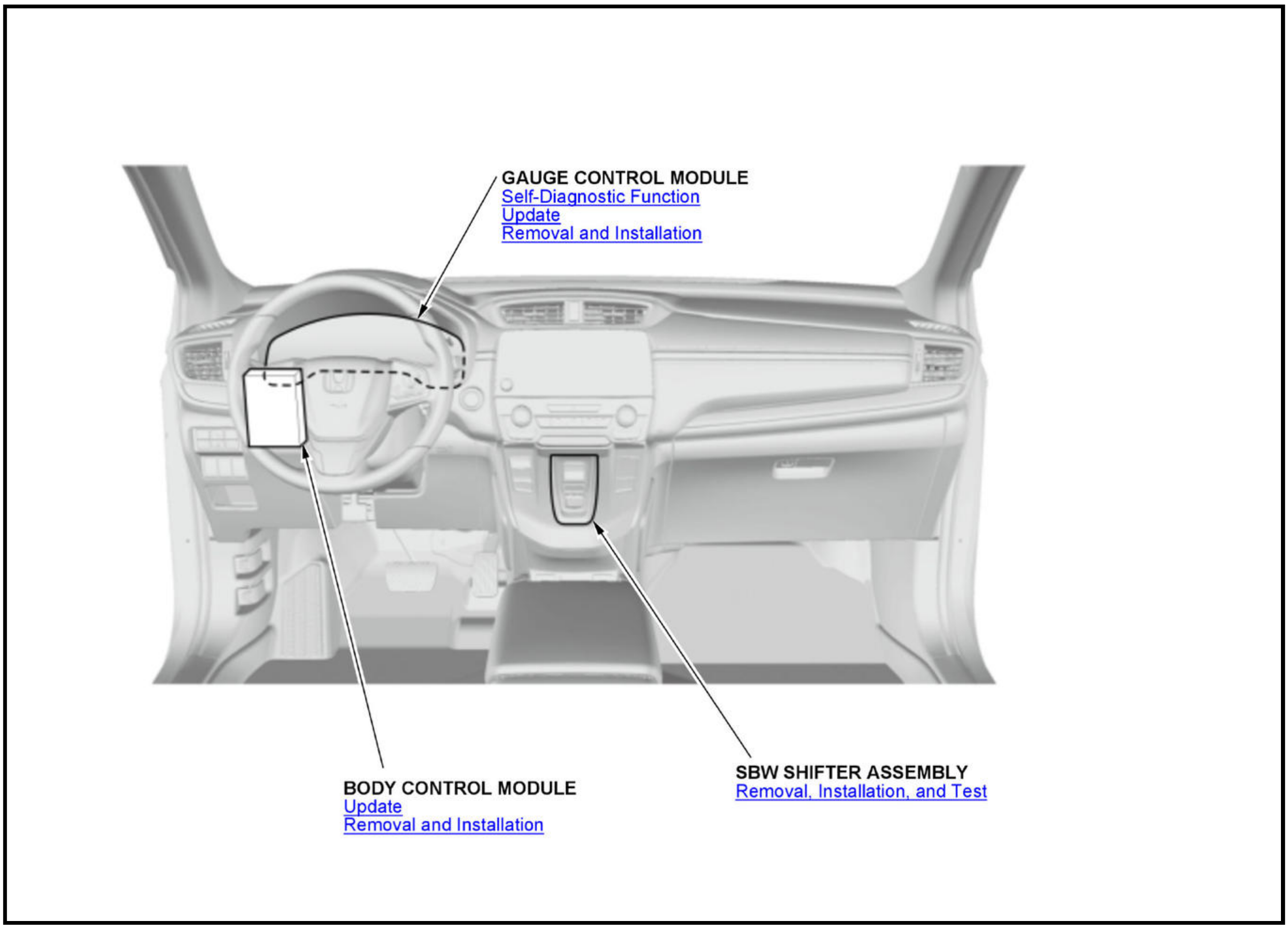
GAUGE CONTROL MODULE
Self-Diagnostic Function
Update
Removal and Installation
BODY CONTROL MODULE
Update
Removal and Installation
SBW SHIFTER ASSEMBLY
Removal, Installation, and Test

LEARNING RESET CLEAR

DRIVING POSITION MEMORY CLEAR

Procedure

Clear the driving position memory after doing any of the following actions:

- Power seat motor test or replacement.
- Substituting a known-good power seat control unit.

NOTE: When the driving position is cleared from the power seat control unit, the driving positions for both Position 1 and 2 are also cleared.

1. Driving Position Memory - Clear
    1. Turn the vehicle to the OFF (LOCK) mode.

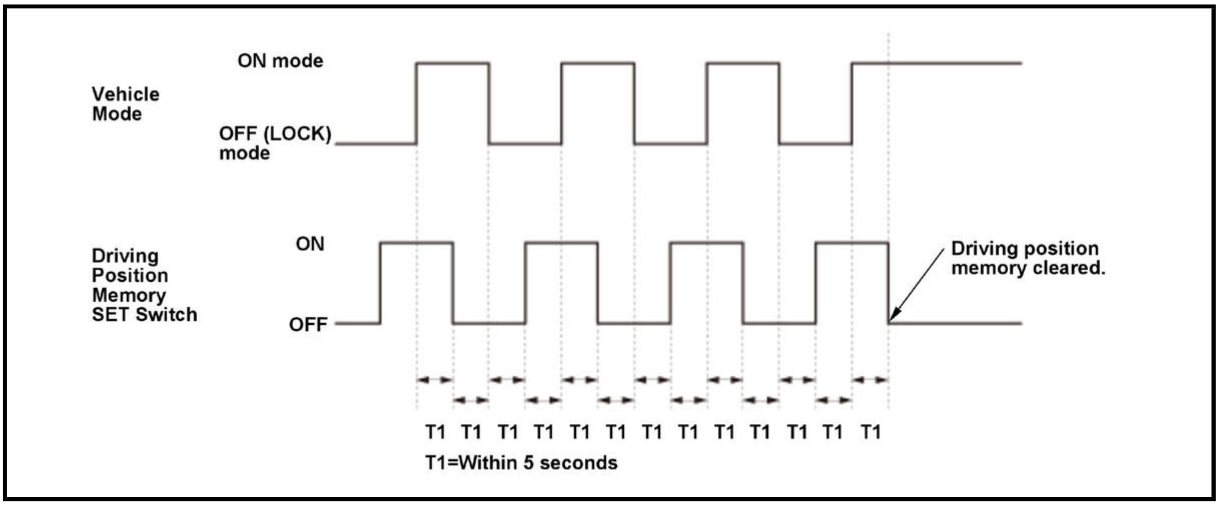
Vehicle Mode
ON mode
OFF (LOCK) mode
Driving Position Memory SET Switch
ON
OFF
Driving position memory cleared.
T1 T1 T1 T1 T1 T1 T1 T1 T1 T1 T1 T1 T1
T1=Within 5 seconds

2. Press and hold the SET button of the driving position memory switch.

3. Turn the vehicle to the ON mode.

4. Release the SET button of the driving position memory switch.

5. Repeat steps 1-4 three more times.

NOTE:

- Once the memory is successfully cleared, the driving position memory switch indicator 1 and 2 turn on for 3 seconds.
- If the indicators do not turn on, go back to step 1 and repeat the procedure.

DTC TROUBLESHOOTING INDEX

DRIVING SUPPORT DTC TROUBLESHOOTING INDEX

NOTE:

- The DTC troubleshooting index shows DTCs that is stored in the integrated driver support system. Each function of the integrated driver support system operates differently according to which DTC is stored. The functions of the integrated driver support system that operate in condition when these DTCs are stored can be confirmed with the table below:

  x: Indicator ON, and operation stop

  o: Operation stop

  Δ: Indicator blink, and operation stop

- For the millimeter wave radar, different indicators may be lit for the same DTCs depending on which functions are in operation at the time of DTC stores. Make sure to check following DTCs with asterisks before troubleshoot them.

NOTE: For details on the functions of indicator, and operation stop, refer to "How to Troubleshooting Information".

- **How to Troubleshoot the Adaptive Cruise Control (ACC)**
- **How to Troubleshoot the Collision Mitigation Braking System (CMBS)**
- **How to Troubleshoot the Lane Keeping Assist System (LKAS)**
- **How to Troubleshoot the Road Departure Mitigation**
- **Brake System (How to Troubleshoot the VSA System)**
- **How to Troubleshoot the Auto High-Beam**

DTC	Detection Item	Indicator Illumination/Operation in Case of a Failure					
		ACC System	CMBS	LKAS	RDM System	Brake System (Amber)	Auto High-Beam
B0050-F0	(Driver's Seat Belt Buckle Switch (Subfault) Fault Detection By SRS Unit)	x	-	-	-	x	-
B2A00-92	Temporary stop of Integrated Driver Support System (Detected Abnormal Signals)	x	x	-	x	x	-
B2A60-49	Multipurpose Camera Unit Internal Electronic Failure	x	x	x	x	x	o
B2A60-54	Static Camera Aiming Incomplete	Δ	Δ	Δ	Δ	-	o
B2A60-57	Multipurpose Camera Unit Software Failure	x	x	x	x	x	o
B2A60-96	Multipurpose Camera Unit Hardware Malfunction	x	x	x	x	x	o
B2A60-97	Dust or Dirt On The Camera	o	x	o	x	-	o

DTC	Detection Item	Indicator Illumination/Operation in Case of a Failure					
		ACC System	**CMBS**	**LKAS**	**RDM System**	**Brake System (Amber)**	**Auto High-Beam**
B2A60-98	Multipurpose Camera Unit Temperature Too High	o	x	o	x	-	o
B2A60-99	Out of automatic correction range for Misalignment of Multipurpose Camera Unit image	o	x	x	x	-	o
B2A60-A2	Power Supply Voltage Too Low (Multipurpose Camera Unit)	o	x	x	x	-	o
B2A60-A3	Power Supply Voltage Too High (Multipurpose Camera Unit)	o	x	x	x	-	o
B2A70-12	LDW/RDM Switch Signal Circuit Short	-	-	-	x	x	-
B2A70-14	LDW/RDM Switch Signal Circuit Short to Power	-	-	-	x	x	-

*1: When the system detects the ACC failure while operating.

*2: When the system detects the CMBS failure while operating.

*3: When the millimeter wave radar receives gauge control module failure information.

*4: When related B-CAN system or switch failure information (judged by the gauge control module) is received.

*5: After the DTC is stored, the message (Radar Obstructed) is displayed on the MID at the initial stage, and then the indicators come on.

DTC	Detection Item	Indicator Illumination/Operation in Case of a Failure					
		ACC System	**CMBS**	**LKAS**	**RDM System**	**Brake System (Amber)**	**Auto High-Beam**
C0023-F0	Brake Light Drive Relay Circuit Malfunction	x	x	-	x	x	-
C0031-62	(Left Front Wheel Speed Sensor Signal Error)	x	x	x	x	x	-
C0034-62	(Right Front Wheel Speed Sensor Signal Error)	x	x	x	x	x	-
C0037-62	(Left Rear Wheel Speed Sensor Signal Error)	x	x	x	x	x	o
C003A-62	(Right Rear Wheel Speed Sensor Signal Error)	x	x	x	x	x	o
C0041-14	Brake Switch Signal Circuit Error	x	x	-	x	x	-
C0044-F0	(Master Cylinder Pressure Sensor Failure)	x	x	o	x	x	-
C0051-54	Steering Angle Neutral Position Learning Incomplete	x	x	o	x	-	o
C0051-96	Steering Angle Sensor Malfunction	x	x	o	x	x	o
C0061-9A	Temporary stop of Integrated Driver Support System (Unstable	-	-	-	-	-	o

DTC	Detection Item	Indicator Illumination/Operation in Case of a Failure					
		ACC System	CMBS	LKAS	RDM System	Brake System (Amber)	Auto High-Beam
	Lateral Acceleration Sensor Signal)						
C0061-F0	Lateral Acceleration Sensor (Subfault) Fault Detection By Source Module	-	-	-	-	-	o
C0062-9A	Temporary stop of Integrated Driver Support System (Unstable Longitudinal Acceleration Sensor Signal)	o	x	-	x	-	-
C0062-F0	Longitudinal Acceleration Sensor (Subfault) Fault Detection By Source Module	x	x	-	x	x	-
C0063-9A	Temporary stop of Integrated Driver Support System (Unstable Yaw Rate Sensor Signal)	o	x	o	x	-	o
C0063-F0	Yaw Rate Sensor (Subfault) Fault Detection By Source Module	x	x	o	x	x	o
C1040-00	Wheel Speed Signal Error	x	x	-	x	x	-
C1C00-F0	(APP Sensor Signal Failure)	-	-	-	x	x	-
P0564-11	ACC/LKAS Switch Signal Circuit Short	x	-	x	-	x	-
P0564-15	ACC/LKAS Switch Signal Circuit Open	x	-	x	-	x	-
P0589-11	Main Switch Signal Circuit Short	x	-	x	-	x	-
P0589-15	Main Switch Signal Circuit Open	x	-	x	-	x	-
P2583-49	Millimeter Wave Radar Internal Electronic Failure	x	x	x	x	x	-
P2583-54	Millimeter Wave Radar Aiming Incomplete	Δ	Δ	Δ	Δ	-	-

*1: When the system detects the ACC failure while operating.

*2: When the system detects the CMBS failure while operating.

*3: When the millimeter wave radar receives gauge control module failure information.

*4: When related B-CAN system or switch failure information (judged by the gauge control module) is received.

*5: After the DTC is stored, the message (Radar Obstructed) is displayed on the MID at the initial stage, and then the indicators come on.

DTC	Detection Item	Indicator Illumination/Operation in Case of a Failure					
		ACC System	CMBS	LKAS	RDM System	Brake System (Amber)	Auto High-Beam
P2583-76 *5	Temporary stop of Integrated Driver Support System (Misalignment Millimeter Wave Radar)	x	x	-	x	x	-

DTC	Detection Item	Indicator Illumination/Operation in Case of a Failure					
		ACC System	CMBS	LKAS	RDM System	Brake System (Amber)	Auto High-Beam
P2583-92	CMBS or FCW Over Working	-	x	-	-	x	-
P2583-97	Dust or Dirt On The Millimeter Wave Radar	o	x	-	x	-	-
P2583-98	Millimeter Wave Radar Temperature Too High	x	x	x	x	-	-
P2583-9A	Temporary stop of Integrated Driver Support System (Jammed Millimeter Wave Radar)	x	x	x	x	x	-
U0029-00	F-CAN Malfunction (BUS-OFF)	x	x	x	x	x	o
U0029-F1	F-CAN Malfunction (BUS-OFF) (Multipurpose Camera Unit)	x	x	x	x	x	o
U0047-00	Millimeter Wave Radar Local-CAN Malfunction (BUS-OFF)	x	x	x	x	x	o
U0047-F1	Multipurpose Camera Unit Local-CAN Malfunction	x	x	x	x	x	o
U0100-00	Lost Communication With The PCM (PGM-FI System)	x	x	-	x	x	-
U0100-F1	Lost Communication With The PCM (PGM-FI System) (Multipurpose Camera Unit)	x	x	x	x	x	o
U0101-00	Lost Communication With The PCM/TCM	x	x	-	x	x	-
U0101-F1	Lost Communication With The PCM/TCM (Multipurpose Camera Unit)	x	x	x	x	x	o
U0122-00	Lost Communication With The VSA Modulator-Control Unit	x	x	-	x	x	-
U0122-F1	Lost Communication With The VSA Modulator-Control Unit (Multipurpose Camera Unit)	x	x	x	x	x	o
U0128-00	Lost Communication With The Electric Parking Brake Control Unit	x	-	-	-	x	-
U0129-00	Lost Communication With The Electric Servo Brake Control Unit	x	x	-	x	x	-
U0129-F1	Lost Communication With The Electric Servo Brake Control Unit (Multipurpose Camera Unit)	x	x	x	x	x	-
U0131-00	Lost Communication With The EPS Control Unit	x	x	-	x	x	-
U0131-F1	Lost Communication With The EPS Control Unit (Multipurpose Camera Unit)	x	x	x	x	x	o
U0151-00	Lost Communication With The SRS Unit	x	x	-	x	x	-

*1: When the system detects the ACC failure while operating.

*2: When the system detects the CMBS failure while operating.

*3: When the millimeter wave radar receives gauge control module failure information.

*4: When related B-CAN system or switch failure information (judged by the gauge control module) is received.

*5: After the DTC is stored, the message (Radar Obstructed) is displayed on the MID at the initial stage, and then the indicators come on.

DTC	**Detection Item**	**Indicator Illumination/Operation in Case of a Failure**					
		ACC System	**CMBS**	**LKAS**	**RDM System**	**Brake System (Amber)**	**Auto High-Beam**
U0151-F1	Lost Communication With The SRS Unit (Multipurpose Camera Unit)	x	x	x	x	x	o
U0155-00	Lost Communication With The Gauge Control Module	x	x	-	x	x	-
U0155-F1	Lost Communication With The Gauge Control Module (Multipurpose Camera Unit)	x	x	x	x	x	o
U0401-53	Temporary stop of Integrated Driver Support System (Received stop request by PGM-FI System)	-	x	-	o	-	-
U0401-68	(PCM (PGM-FI System) Malfunction)	x	x	o	x	x	o
U0401-92	Temporary stop of Integrated Driver Support System (Rejected control request by PGM-FI System)	o	x	o	-	-	-
U0415-68	(ABS Brake Actuator Malfunction)	x	x	o	x	x	-
U0416-68	(VSA Brake Actuator Malfunction)	x	x	o	x	x	-
U0416-9A	Temporary stop of Integrated Driver Support System (Unstable Wheel Speed Sensor Signal)	o	x	o	x	-	o
U0417-68	(Electric Parking Brake Control Unit Malfunction)	x	-	-	-	x	-
U0418-68	(Electric Servo Brake System Malfunction)	x	x	-	x	x	-
U0418-92 *1	Temporary stop of Integrated Driver Support System (Rejected control request by ESB/EBB System)	o	-	-	-	-	-
U0418-92 *2	Temporary stop of Integrated Driver Support System (Rejected control request by ESB/EBB System)	-	x	-	-	-	-
U0418-9A	Temporary stop of Integrated Driver Support System (Not Start-Up ESB/EBB Control Unit)	o	x	-	-	-	-
U0420-68	(EPS Control Unit Malfunction)	-	x	x	x	x	-
U0423-68 *3	Gauge Control Module Malfunction/B-CAN Malfunction (BUS-OFF) Detection By Source Module	x	x	x	x	x	-
U0423-68 *4	Gauge Control Module Malfunction/B-CAN Malfunction	x	x	x	x	x	o

DTC	Detection Item	Indicator Illumination/Operation in Case of a Failure					
		ACC System	CMBS	LKAS	RDM System	Brake System (Amber)	Auto High-Beam
	(BUS-OFF) Detection By Source Module						
U1280-00	Lost Communication With The B-CAN Systems	-	-	x	x	x	o
U1281-00	Lost Communication with The MICU (Body Control Module)	-	-	-	-	-	o
U128C-00	Lost Communication with The Wiper Control Unit	-	-	x	x	x	o

*1: When the system detects the ACC failure while operating.

*2: When the system detects the CMBS failure while operating.

*3: When the millimeter wave radar receives gauge control module failure information.

*4: When related B-CAN system or switch failure information (judged by the gauge control module) is received.

*5: After the DTC is stored, the message (Radar Obstructed) is displayed on the MID at the initial stage, and then the indicators come on.

DTC	Detection Item	Indicator Illumination/Operation in Case of a Failure					
		ACC System	CMBS	LKAS	RDM System	Brake System (Amber)	Auto High-Beam
U12B7-00	Millimeter Wave Radar Local-CAN Malfunction	x	x	x	x	x	-
U1387-4A	Unmatch Combination of Millimeter Wave Radar-Multipurpose Camera Unit	x	x	x	x	x	o
U1387-55	Multipurpose Camera Unit Variant Incomplete	x	x	x	x	-	o
U3000-49	Millimeter Wave Radar Internal Electronic Failure	x	x	x	x	x	-
U3000-51	Millimeter Wave Radar Update Incomplete	x	x	x	x	x	-
U3000-55	Millimeter Wave Radar Variant Incomplete	x	x	x	x	-	o
U3000-57	Millimeter Wave Radar Software Failure	x	x	x	x	B	-
U3006-16	Power Supply Voltage Too Low (Millimeter Wave Radar)	o	x	x	x	-	-
U3006-17	Power Supply Voltage Too High (Millimeter Wave Radar)	o	x	x	x	-	-

*1: When the system detects the ACC failure while operating.

*2: When the system detects the CMBS failure while operating.

*3: When the millimeter wave radar receives gauge control module failure information.

*4: When related B-CAN system or switch failure information (judged by the gauge control module) is received.

*5: After the DTC is stored, the message (Radar Obstructed) is displayed on the MID at the initial stage, and then the indicators come on.

HOW TO INFORMATION

HOW TO TROUBLESHOOT THE ADAPTIVE CRUISE CONTROL (ACC)

ACC Indicator (Amber)

When the ACC system detects a problem, the ACC system stops working, then the ACC indicator and the brake system indicator (amber) stay on.

NOTE:

- For locations of each indicator, **refer to System Warning/Indicator Index** .
- For ACC function, **review the Adaptive Cruise Control (ACC) Description** .
- The ACC system communicates with other control units via F-CAN. For ACC system diagram, **review the ACC System Diagram** . If a connected unit malfunctions, the ACC system will not operate. In this case, both ACC indicator and connected unit indicator come on and stay on (except for the gauge control module).
- Some detected abnormalities may not turn on the brake system indicator.

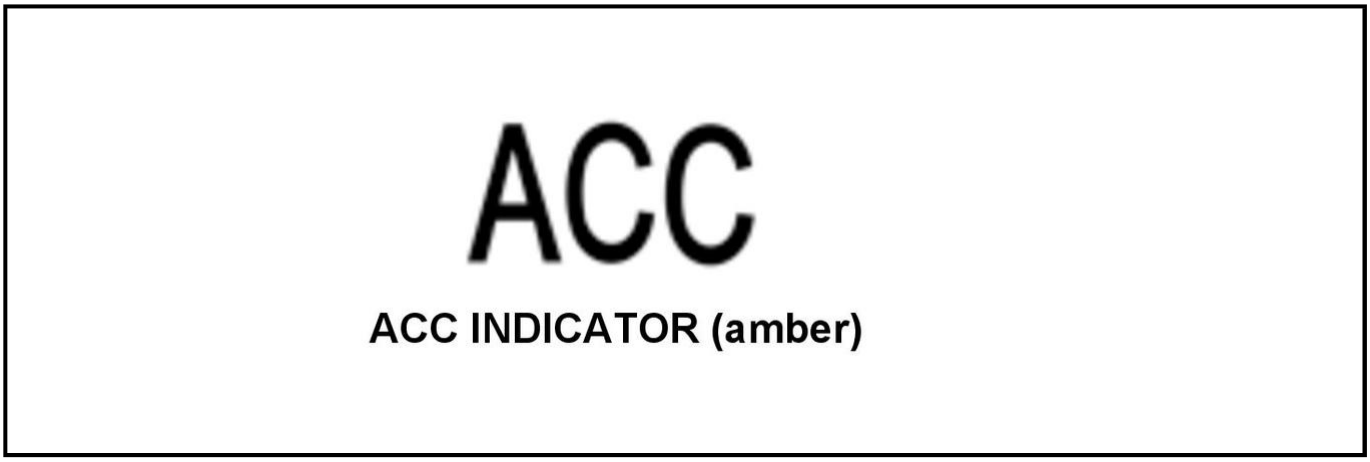

ACC INDICATOR (amber)

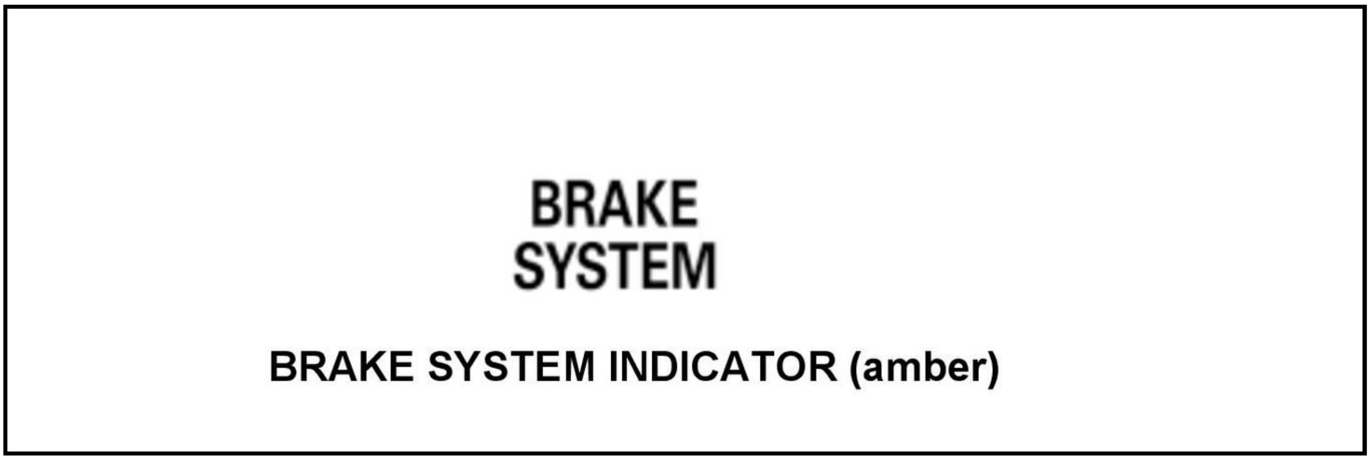

BRAKE SYSTEM INDICATOR (amber)

ACC Activation Indicator (Green)

If the ACC system is normal, the ACC activation indicator comes on when the function is on, and goes off when the function is off. If the system malfunctions, the indicator color changes from green to amber, and stays on.

Self-Diagnostic Function

The ACC system has a self-diagnostic function. When a problem is detected by the self-diagnostic function, the ACC system stops operating, turns on the ACC indicator, indicates the problem on the multi-information display (MID), and stores a DTC.

MID

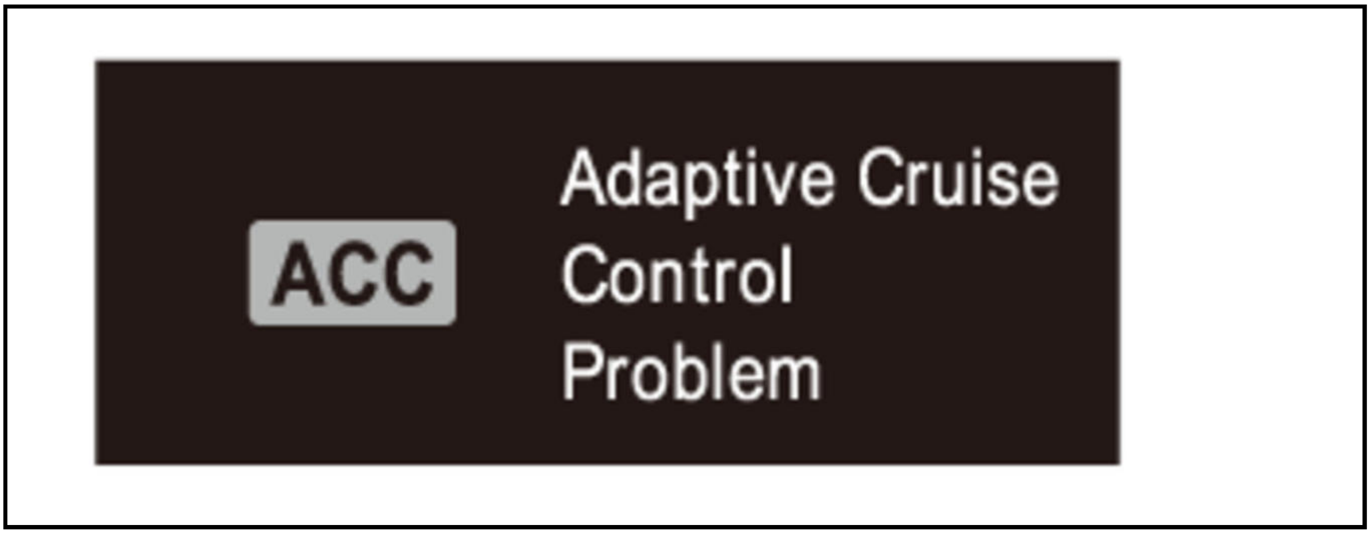

Adaptive Cruise Control Problem

Millimeter Wave Radar

The millimeter wave radar measures the distance between your vehicle and the vehicle directly ahead to calculate the difference in speed between the vehicles.

The millimeter wave radar has a self-diagnostic function. If the system detects a problem, it disables the ACC, and turns on the ACC indicator.

Dirt or Dust Detective Function (Clean Millimeter Wave Radar Indication)

If the millimeter wave radar or front grille gets dirty, the ACC system stops operating and the following message on the MID will appear. Clean the millimeter wave radar and the front grille surface. Once the millimeter wave radar and front grille surface are clean, the message on the MID disappears and the ACC system automatically turns on.

NOTE:

- The following MID message may come on temporarily when passing through an enclosed space, such as tunnel.
- Under the above conditions DTC P2583-97 is stored.
- When it is snowing, the radio waves transmitted and received by the millimeter wave radar may be refracted by the snow or ice attached around the millimeter wave radar such as the front grille. At this time, DTC P2583-76 is stored depending on the situation.
- After DTC P2583-76 is stored, the message (Radar Obstructed) is displayed on the MID at the initial stage, and then the indicators come on.

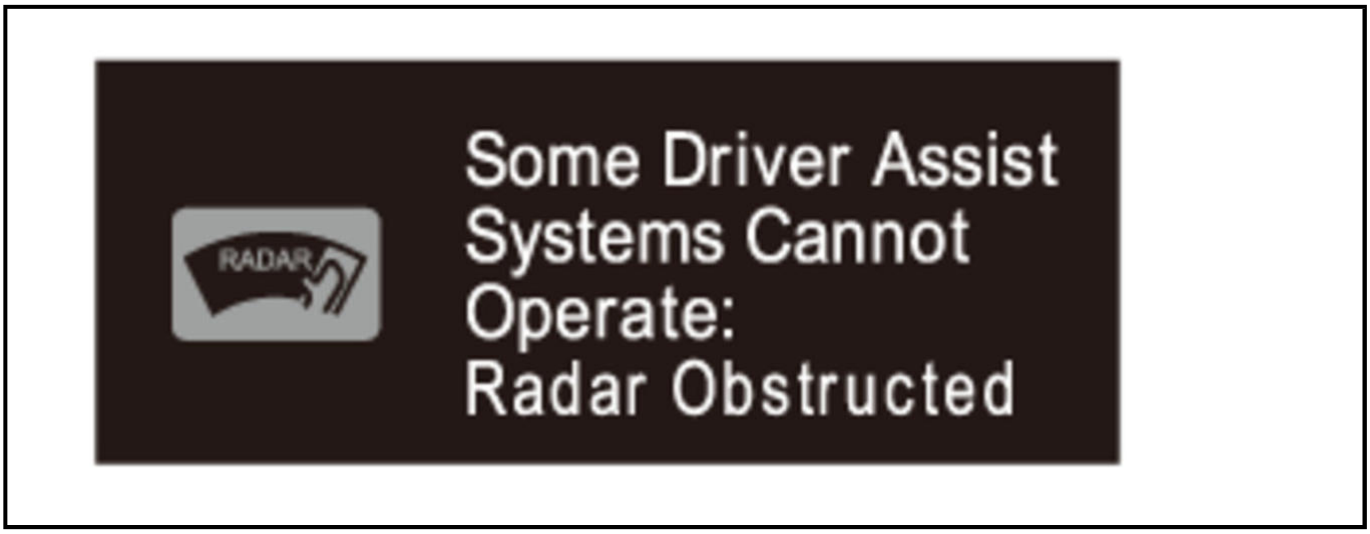

Some Driver Assist Systems Cannot Operate:
Radar Obstructed

Millimeter Wave Radar Aiming

If the millimeter wave radar is removed or replaced, you must do the millimeter wave radar aiming procedure, otherwise the ACC indicator blinks.

Multipurpose Camera Unit

The multipurpose camera unit uses inputs from the millimeter wave radar to maintain a constant distance between your vehicle and the vehicle directly ahead by accelerating and braking as needed.

The multipurpose camera unit also has an error detection function which sends a signal to the millimeter wave radar if an error is detected.

Multipurpose Camera Aiming Function

If the multipurpose camera unit is removed or replaced, you must do the multipurpose camera aiming procedure. If the aiming is incomplete, the ACC indicator blinks.

CAN Communication

The ACC system communicates with other control units via F-CAN. For ACC system diagram, **review the ACC System Diagram** .

If the multipurpose camera unit detects a communication error or a malfunction in another connected unit, the ACC system will not operate even though it is OK. In this case, both the ACC indicator and the related unit indicator will come on and stay on.

Intermittent Failures

The term "intermittent failure" means a system may have had a failure, but it checks OK now. If you cannot reproduce the condition, check for intermittent failure DTCs. If intermittent failure DTCs are not stored, check for loose connections and terminals. Also check ground and power connections related to the circuit that you are troubleshooting.

How to Troubleshoot DTCs

Check for DTCs with the HDS, then clear the DTC.

NOTE: For ACC system DTCs, **refer to the DTC troubleshooting index**.

Before troubleshooting, check and note these items:

- Ask the customer about the conditions when the problem occurred, and try to reproduce the same conditions for troubleshooting.

- If the symptom does not appear and the ACC indicator does not come on while test-driving, but if your troubleshooting was based on a DTC, check for poor connections or loose terminals at all connectors related to the circuit that you are troubleshooting.
- After the troubleshooting or repairs are done, clear the DTCs, and test-drive the vehicle under the same conditions as when the DTC was originally set. Make sure the ACC indicator does not come on.
- The ACC system sometimes stops operating because of certain environmental conditions (weather, road conditions, driving conditions, etc.). Intermittent failure DTCs or **ACC System Auto Stop Control Codes** may be stored in these cases.

How to Retrieve DTCs

NOTE: Make sure the 12 volt battery is fully charged before you begin.

1. **Connect the HDS**

2. Use the HDS to check for Integrated Driver Support System DTCs.

3. Read and record the DTC.

4. Turn the vehicle to the OFF (LOCK) mode.

5. Disconnect the HDS.

6. Do the troubleshooting procedure for the DTC.

How to Clear DTCs

NOTE: Make sure the 12 volt battery is fully charged before you begin.

1. **Connect the HDS**

2. In the Driving Support of the HDS, select Integrated Driver Support System, then DTCs, choose the clear DTCs icon, and follow the prompts.

3. Turn the vehicle to the OFF (LOCK) mode.

4. Disconnect the HDS.

HOW TO TROUBLESHOOT THE COLLISION MITIGATION BRAKING SYSTEM (CMBS)

CMBS Indicator (Amber)

When the CMBS detects a problem, the CMBS stops working, then the CMBS indicator and the brake system indicator (amber) stay on.

NOTE:

- For locations of each indicator, **refer to System Warning/Indicator Index** .
- For CMBS function, **review the Collision Mitigation Braking System (CMBS) Description** .
- The CMBS communicates with other control units via F-CAN. For CMBS diagram, **refer to the System Diagram for CMBS** . If a connected unit malfunctions, the CMBS will not operate. In this case, both CMBS indicator and connected unit indicator come on and stay on (except for the gauge control module).
- Some detected abnormalities may not turn on the brake system indicator.

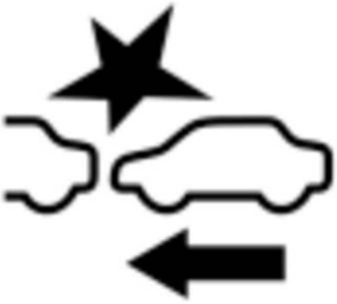

CMBS INDICATOR (amber)

BRAKE
SYSTEM

BRAKE SYSTEM INDICATOR (amber)

Self-Diagnostic Function

The CMBS has a self-diagnostic function. When a problem is detected by the self-diagnostic function, the CMBS stops operating, turns on the CMBS indicator, indicates the problem on the multi-information display (MID), and stores a DTC.

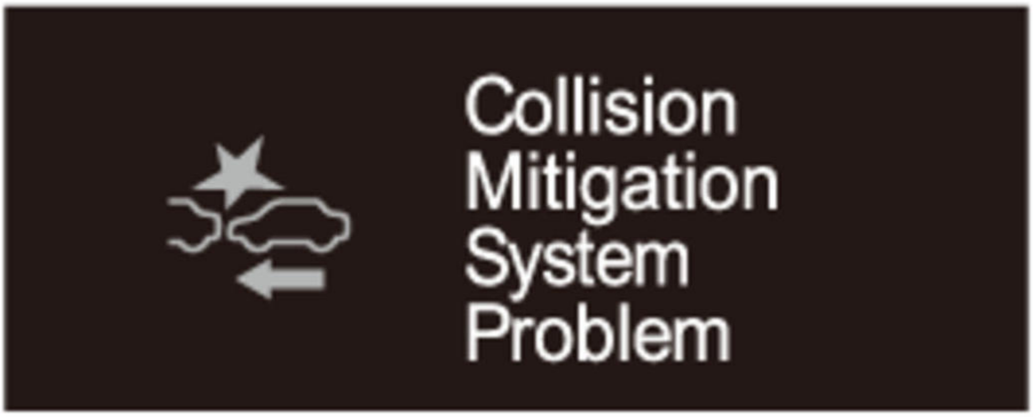

Collision
Mitigation
System
Problem

CMBS OFF Switch

Press and hold the CMBS OFF switch for at least 1 second to turn the CMBS off and on.

CMBS Indication

- When the CMBS is OK, the CMBS indicator comes on for a few seconds, then goes off after turning the vehicle to the ON mode.
- When you set the CMBS to OFF, the multipurpose camera unit turns on the CMBS indicator.

- When the system is activated, the MID indicates a brake system warning indicator and a warning buzzer sounds.
- If the system stops operating because of a problem, the MID indicates the problem.

Millimeter Wave Radar

The millimeter wave radar measures the distance between your vehicle and the vehicle directly ahead to calculate the difference in speed between the vehicles.

The millimeter wave radar has a self-diagnostic function. If the system detects a problem, it disables the CMBS, and turns on the CMBS indicator.

Dirt or Dust Detective Function (Clean Millimeter Wave Radar Indication)

If the millimeter wave radar or front grille gets dirty, the CMBS stops operating and the following message on the MID will appear. Clean the millimeter wave radar and the front grille surface. Once the millimeter wave radar and front grille surface are clean, the message on the MID disappears and the CMBS automatically turns on.

NOTE:

- The following MID message may come on temporarily when passing through an enclosed space, such as tunnel.
- Under the above conditions DTC P2583-97 is stored.
- When it is snowing, the radio waves transmitted and received by the millimeter wave radar may be refracted by the snow or ice attached around the millimeter wave radar such as the front grille. At this time, DTC P2583-76 is stored depending on the situation.
- After DTC P2583-76 is stored, the message (Radar Obstructed) is displayed on the MID at the initial stage, and then the indicators come on.

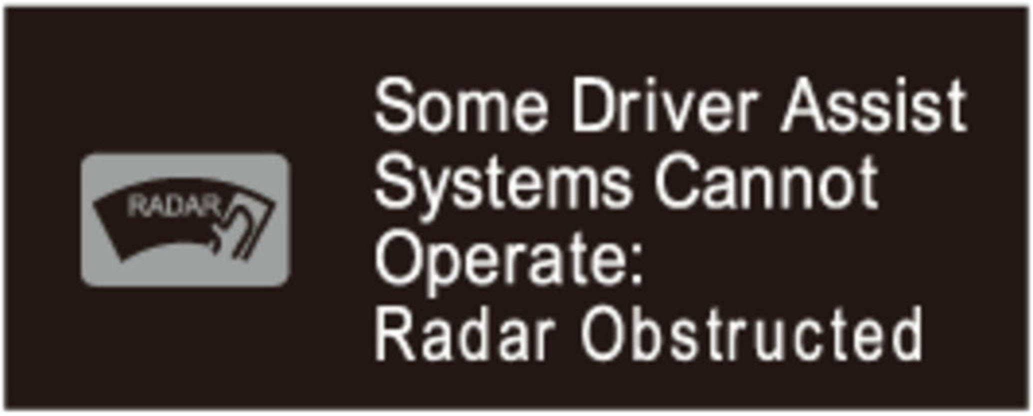

Some Driver Assist Systems Cannot Operate:
Radar Obstructed

Millimeter Wave Radar Aiming

If the millimeter wave radar is removed or replaced, you must do the millimeter wave radar aiming procedure, otherwise the CMBS indicator blinks.

Multipurpose Camera Unit

The multipurpose camera unit controls the brakes and the various driver warnings when the system recognizes the possibility of a collision.

The multipurpose camera unit also has an error detection function which sends a signal to the millimeter wave radar if an error is detected. The millimeter wave radar receives this information from the multipurpose camera unit.

Dirt or Dust Detective Function (CLEAN FRONT WINDSHIELD Indication)

If the following message appears on the MID, the camera lens or the windshield has enough dirt so that the camera view is obstructed, the CMBS stops operating.

Clean any dirt or contamination on the camera lens or the windshield. Once the camera's view is unobstructed, the indicator on the MID turns off and the CMBS automatically turns back to ON.

NOTE: When millimeter wave radar detected dirt or dust on the multipurpose camera lens or the windshield surface, DTC B2A60-97 is stored as a past failure.

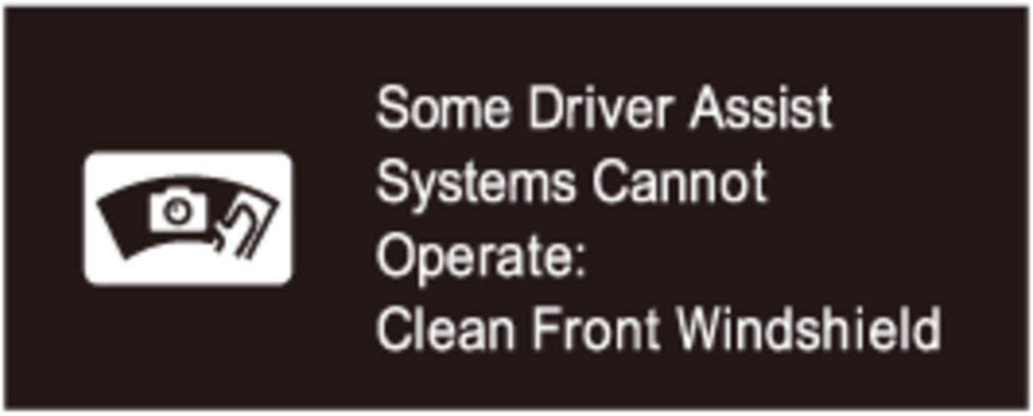

Some Driver Assist
Systems Cannot
Operate:
Clean Front Windshield

System Protect Function (High temperature) (MULTIPURPOSE CAMERA HOT Indication)

If the following message appears on the MID, the CMBS stops operating, and stores a DTC.

When the multipurpose camera temperature cools down to its proper operating temperature, the indicator on the MID turns off, and the CMBS automatically resumes operation.

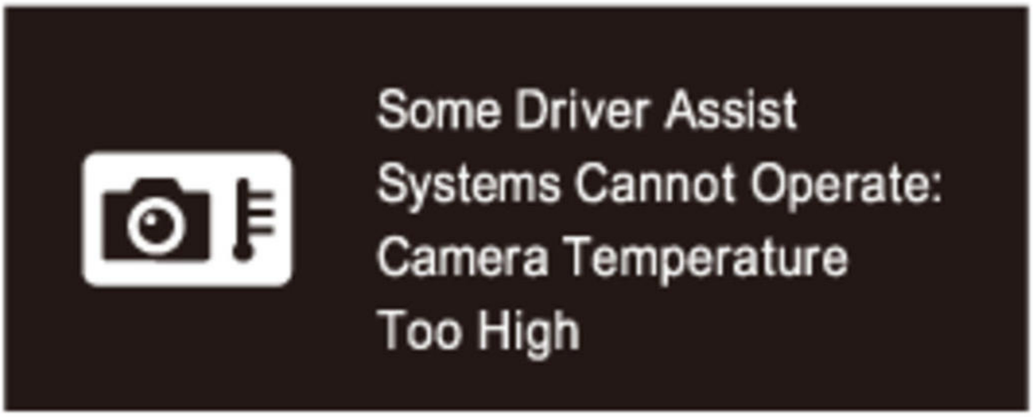

Some Driver Assist
Systems Cannot Operate:
Camera Temperature
Too High

Multipurpose Camera Aiming Function

If the multipurpose camera unit is removed or replaced, you must do the multipurpose camera aiming procedure. If the aiming is incomplete, the CMBS indicator blinks.

CAN Communication

The CMBS communicates with other control units via F-CAN. For CMBS diagram, refer to the System Diagram for CMBS .

If the millimeter wave radar and the multipurpose camera unit detects a communication error or a malfunction in another connected unit, the CMBS system will not operate even though it is OK. In this case, both the CMBS indicator and the related unit indicator will come on and stay on.

How to Troubleshoot DTCs

Check for DTCs with the HDS, then clear the DTC.

NOTE: For CMBS DTCs, **refer to the DTC troubleshooting index**.

Before troubleshooting, check and note these items:

- Ask the customer about the conditions when the problem occurred, and try to reproduce the same conditions for troubleshooting.
- If the symptom does not appear and the CMBS indicator does not come on while test-driving, but troubleshooting is done based on the DTC, check for poor connections or loose terminals at all connectors related to the circuit that you are troubleshooting.
- After the troubleshooting or repairs are done, clear the DTCs, and test-drive the vehicle under the same conditions as when the DTC was originally set. Make sure the CMBS indicator does not come on.
- The CMBS may sometimes stop control because of the environment (weather, road conditions, driving conditions, etc.). Intermittent failure DTCs may be stored in these cases.

Intermittent Failures

The term "intermittent failure" means a system may have had a failure, but it checks OK now. If you cannot reproduce the condition, check for intermittent failure DTCs. If intermittent failure DTCs are not stored, check for loose connections and terminals. Also check ground and power connections related to the circuit that you are troubleshooting.

How to Retrieve DTCs

NOTE: Make sure the 12 volt battery is fully charged before you begin.

1. **Connect the HDS**

2. Use the HDS to check for Integrated Driver Support System DTCs.

3. Read and record the DTC.

4. Turn the vehicle to the OFF (LOCK) mode.

5. Disconnect the HDS.

6. Do the troubleshooting procedure for the DTC.

How to Clear DTCs

NOTE: Make sure the 12 volt battery is fully charged before you begin.

1. **Connect the HDS**

2. In the Driving Support of the HDS, select Integrated Driver Support System, then DTCs, choose the clear DTCs icon, and follow the prompts.

3. Turn the vehicle to the OFF (LOCK) mode.

4. Disconnect the HDS.

HOW TO TROUBLESHOOT THE LANE KEEPING ASSIST SYSTEM (LKAS)

LKAS Indicator (Amber)

When the LKAS detects a problem, the LKAS stops working, then the LKAS indicator stays on.

NOTE:

- For locations of the indicator, refer to System Warning/Indicator Index .
- For LKAS function, review the Lane Keeping Assist System (LKAS) Description .
- The LKAS communicates with other control units via F-CAN. For LKAS diagram, refer to the System Diagram for LKAS . If a connected unit malfunctions, the LKAS will not operate. In this case, both LKAS indicator and connected unit indicator come on and stay on (except for the gauge control module).

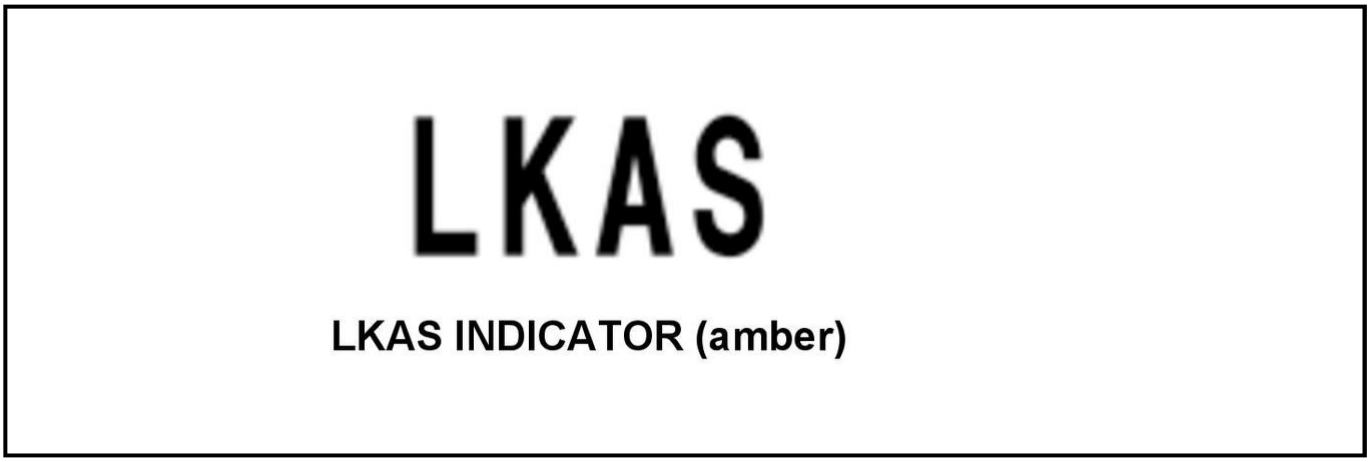

LKAS Activation Indicator (Green)

If the LKAS is normal, the LKAS activation indicator comes on when the function is on, and goes off when the function is off. If the system malfunctions, the indicator color changes from green to amber, and stays on.

Self-Diagnostic Function

The LKAS has a self-diagnostic function. When a problem is detected by the self-diagnostic function, the LKAS stops operating, turns on the LKAS indicator, indicates the problem on the multi-information display (MID), and stores a DTC.

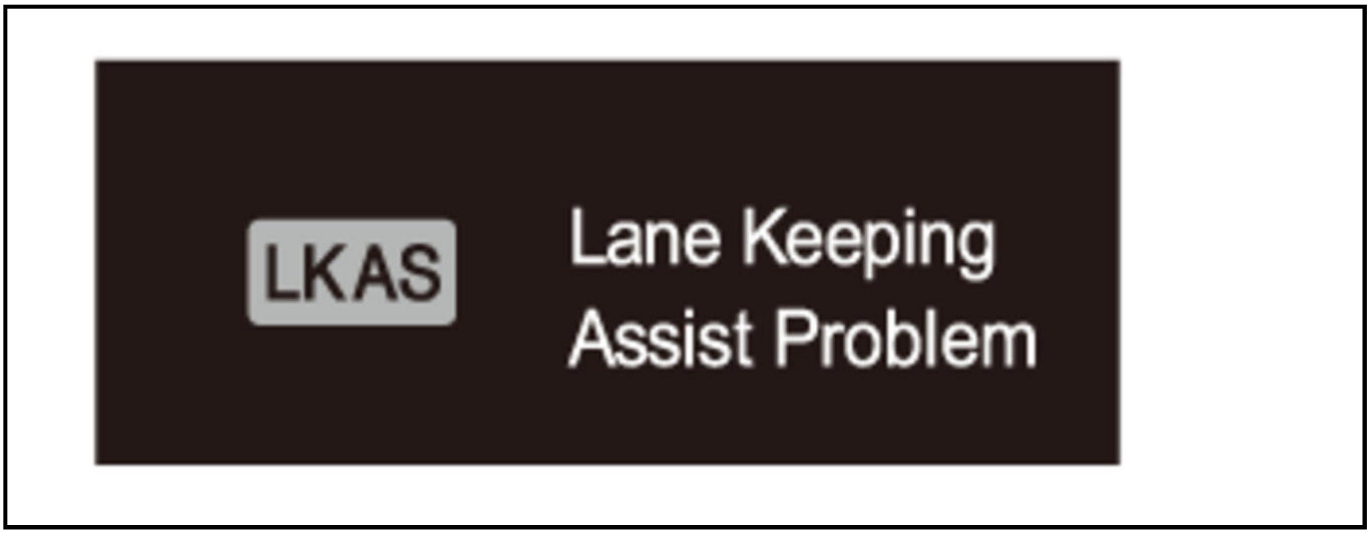
LKAS

Lane Keeping Assist Problem

Millimeter Wave Radar

The millimeter wave radar measures the distance between your vehicle and the vehicle directly ahead to calculate the difference in speed between the vehicles.

The millimeter wave radar has a self-diagnostic function. If the system detects a problem, it disables the LKAS, and turns on the LKAS indicator.

Multipurpose Camera Unit

Multipurpose camera unit function sends the lane image which was received by the multipurpose camera to the multipurpose camera unit. Also, it is equipped with an error detection feature which sends error data to the multipurpose camera unit when a malfunction is detected.

The multipurpose camera unit communicates with the gauge control module to send a warning signal.

The multipurpose camera unit also has an error detection function which sends a signal to the millimeter wave radar if an error is detected. The millimeter wave radar receives this information from the multipurpose camera unit.

Dirt or Dust Detective Function (CLEAN FRONT WINDSHIELD Indication)

If the following message appears on the MID, the camera lens or the windshield has enough dirt so that the camera view is obstructed, the LKAS stops operating.

Clean any dirt or contamination on the camera lens or the windshield. Once the camera's view is unobstructed, the indicator on the MID turns off and the LKAS automatically turns back to ON.

NOTE: When millimeter wave radar detected dirt or dust on the multipurpose camera lens or the windshield surface, DTC B2A60-97 is stored as a past failure.

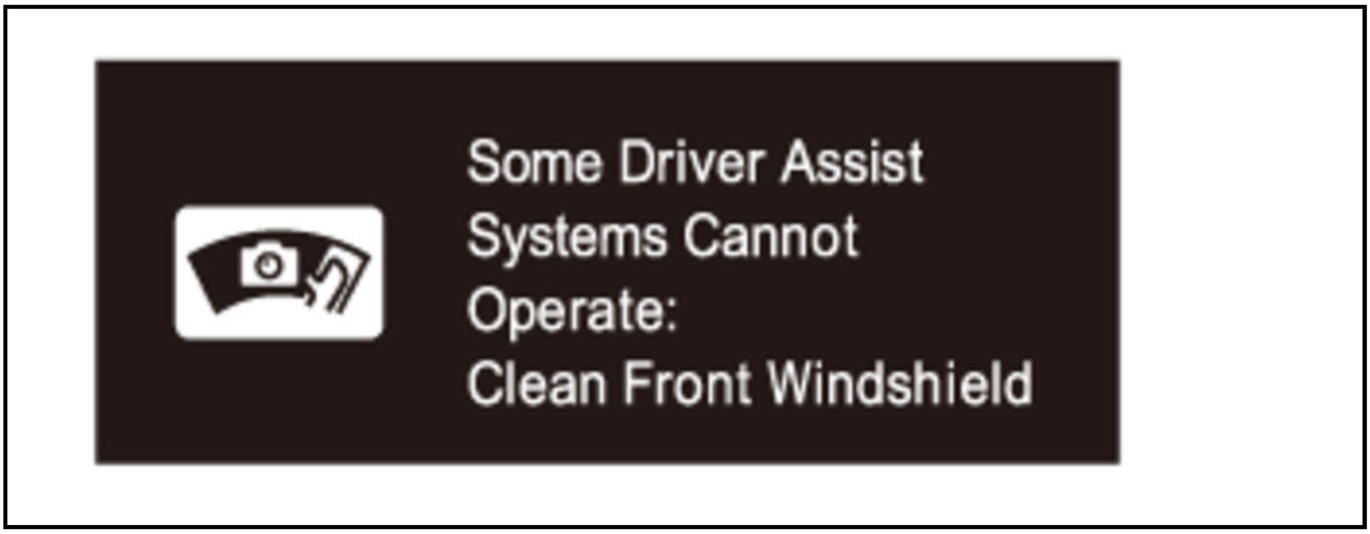

Some Driver Assist
Systems Cannot
Operate:
Clean Front Windshield

System Protect Function (High temperature) (MULTIPURPOSE CAMERA HOT Indication)

If the following message appears on the MID, the LKAS stops operating, and stores a DTC.

When the multipurpose camera temperature cools down to its proper operating temperature, the indicator on the MID turns off, and the LKAS automatically resumes operation.

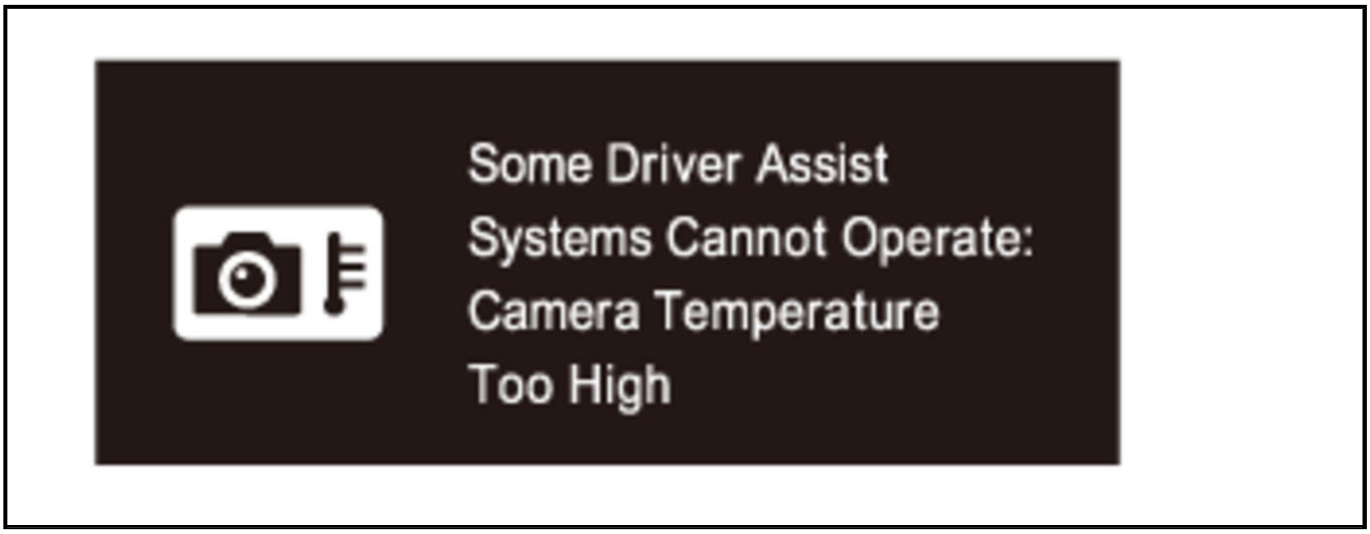

Some Driver Assist Systems Cannot Operate: Camera Temperature Too High

Multipurpose Camera Aiming Function

If the multipurpose camera unit is removed or replaced, you must do the multipurpose camera aiming procedure. If the aiming is incomplete, the LKAS indicator blinks.

CAN Communication

The LKAS communicates with other control units via F-CAN. For LKAS diagram, **refer to the System Diagram for LKAS** .

If the millimeter wave radar and the multipurpose camera unit detects a communication error or a malfunction in another connected unit, the LKAS system will not operate even though it is OK. In this case, both the LKAS indicator and the related unit indicator will come on and stay on.

Intermittent Failures

The term "intermittent failure" means a system may have had a failure, but it checks OK now. If you cannot reproduce the condition, check for intermittent failure DTCs. If intermittent failure DTCs are not stored, check for loose connections and terminals. Also check ground and power connections related to the circuit that you are troubleshooting.

How to Troubleshoot DTCs

Check for DTCs with the HDS, then clear the DTC.

NOTE: For LKAS DTCs, **refer to the DTC troubleshooting index**.

Before troubleshooting, check and note these items:

- Ask the customer about the conditions when the problem occurred, and try to reproduce the same conditions for troubleshooting.
- If the symptom does not appear and the LKAS indicator does not come on while test-driving and if your troubleshooting was based on a DTC, check for poor connections or loose terminals at all connectors related to the circuit that you are troubleshooting.
- After the troubleshooting or repairs are done, clear the DTCs, and test-drive the vehicle under the same conditions as when the DTC was originally set. Make sure the LKAS indicator does not come on.
- The LKAS sometimes stops operating because of the environment (weather, road conditions, driving conditions, etc.). A code may be stored in these cases.

How to Retrieve DTCs

NOTE: Make sure the 12 volt battery is fully charged before you begin.

1. Connect the HDS

2. Use the HDS to check for Integrated Driver Support System DTCs.

3. Read and record the DTC.

4. Turn the vehicle to the OFF (LOCK) mode.

5. Disconnect the HDS.

6. Do the troubleshooting procedure for the DTC.

How to Clear DTCs

NOTE: Make sure the 12 volt battery is fully charged before you begin.

1. Connect the HDS

2. In the Driving Support of the HDS, select Integrated Driver Support System, then DTCs, choose the clear DTCs icon, and follow the prompts.

3. Turn the vehicle to the OFF (LOCK) mode.

4. Disconnect the HDS.

HOW TO TROUBLESHOOT THE ROAD DEPARTURE MITIGATION

RDM Indicator (Amber)

When the RDM system detects a problem, the RDM system stops working, then the RDM indicator and the brake system indicator (amber) stay on.

NOTE:

- For locations of each indicator, refer to System Warning/Indicator Index .
- For RDM system function, review the Road Departure Mitigation System Description .
- The RDM system communicates with other control units via F-CAN. For RDM system diagram, refer to the System Diagram for RDM . If a connected unit malfunctions, the RDM system will not operate. In this case, both RDM indicator and connected unit indicator come on and stay on (except for the gauge control module).
- Some detected abnormalities may not turn on the brake system indicator.

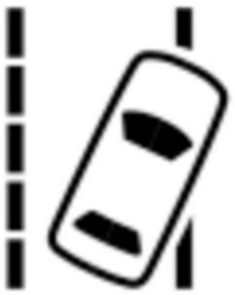

RDM INDICATOR (amber)

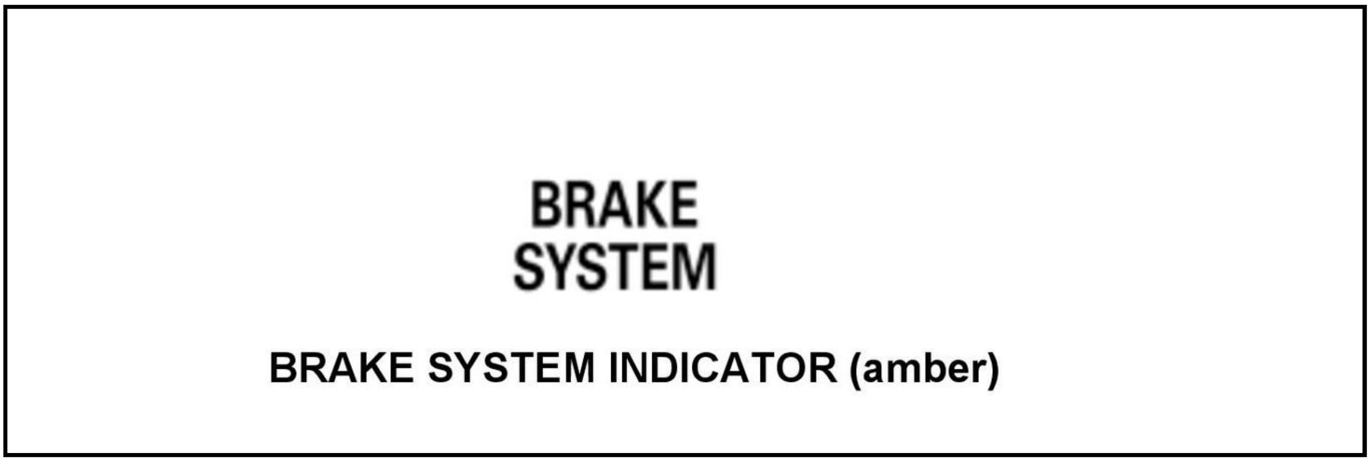

Self-Diagnostic Function

The RDM system has a self-diagnostic function. When a problem is detected by the self-diagnostic function, the RDM system stops operating, turns on the RDM indicator, indicates the problem on the multi-information display (MID), and stores a DTC.

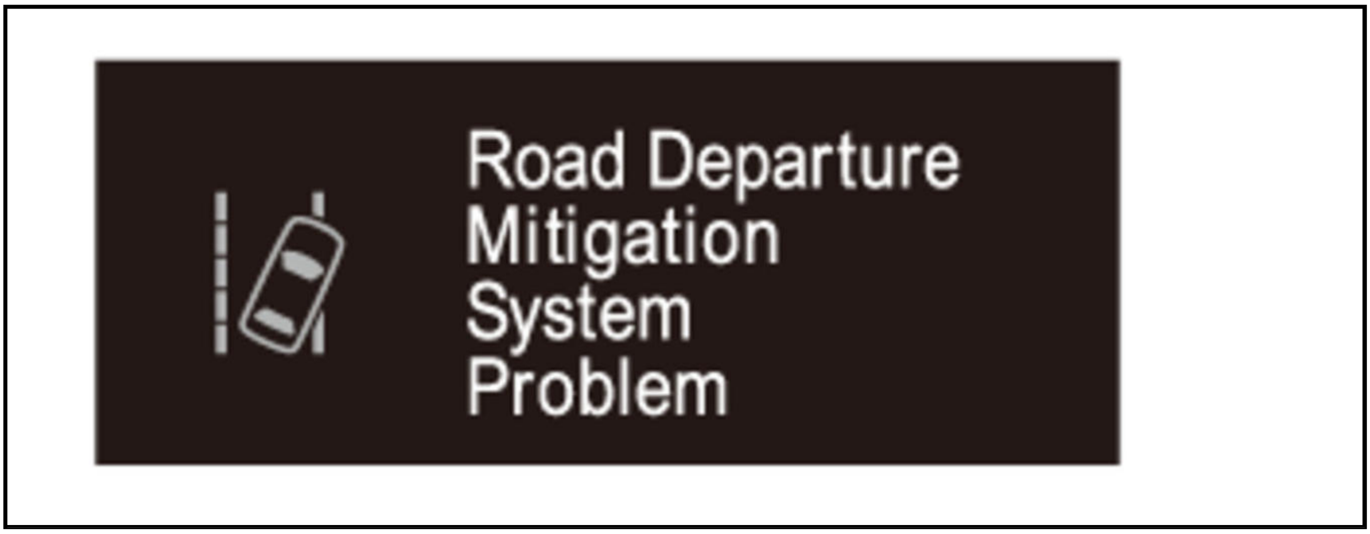

RDM Switch

Press and hold the RDM switch for at least 1 second to turn the RDM system off and on.

Millimeter Wave Radar

The millimeter wave radar measures the distance between your vehicle and the vehicle directly ahead to calculate the difference in speed between the vehicles.

The millimeter wave radar has a self-diagnostic function. If the system detects a problem, it disables the RDM, and turns on the RDM indicator.

Dirt or Dust Detective Function (Clean Millimeter Wave Radar Indication)

If the millimeter wave radar or front grille gets dirty, the RDM system stops operating and the following message on the MID will appear. Clean the millimeter wave radar and the front grille surface. Once the millimeter wave radar and front grille surface are clean, the message on the MID disappears and the RDM system automatically turns on.

NOTE:

- The following MID message may come on temporarily when passing through an enclosed space, such as tunnel.
- Under the above conditions DTC P2583-97 is stored.

- When it is snowing, the radio waves transmitted and received by the millimeter wave radar may be refracted by the snow or ice attached around the millimeter wave radar such as the front grille. At this time, DTC P2583-76 is stored depending on the situation.
- After DTC P2583-76 is stored, the message (Radar Obstructed) is displayed on the MID at the initial stage, and then the indicators come on.

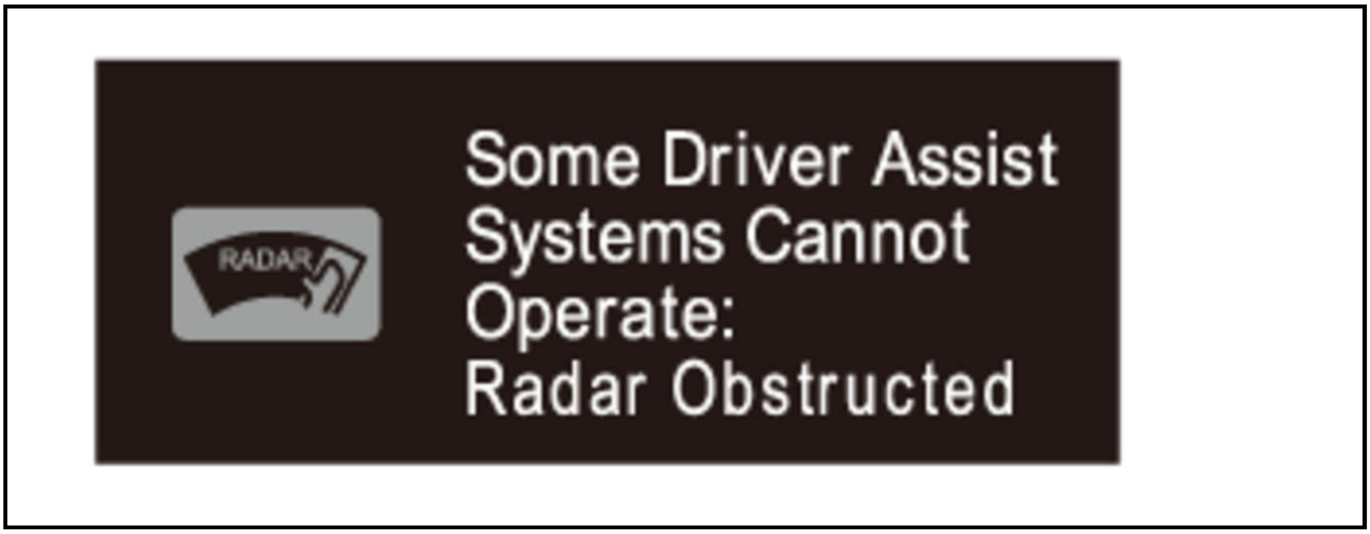

Some Driver Assist
Systems Cannot
Operate:
Radar Obstructed

Millimeter Wave Radar Aiming

If the millimeter wave radar is removed or replaced, you must do the millimeter wave radar aiming procedure, otherwise the RDM indicator blinks.

Multipurpose Camera Unit

The multipurpose camera unit uses input from the EPS control unit, the SRS unit, the PCM, and the VSA modulator-control unit to warn the driver when approaching the vehicle ahead. The multipurpose camera unit communicates with the gauge control module to send the warning signal.

The multipurpose camera unit also has an error detection function which sends a signal to the millimeter wave radar if an error is detected. The millimeter wave radar receives this information from the multipurpose camera unit.

Dirt or Dust Detective Function (CLEAN FRONT WINDSHIELD Indication)

If the following message appears on the MID, the camera lens or the windshield has enough dirt so that the camera view is obstructed, the RDM system stops operating.

Clean any dirt or contamination on the camera lens or the windshield. Once the camera's view is unobstructed, the indicator on the MID turns off and the RDM system automatically turns back to ON.

NOTE: When millimeter wave radar detected dirt or dust on the multipurpose camera lens or the windshield surface, DTC B2A60-97 is stored as a past failure.

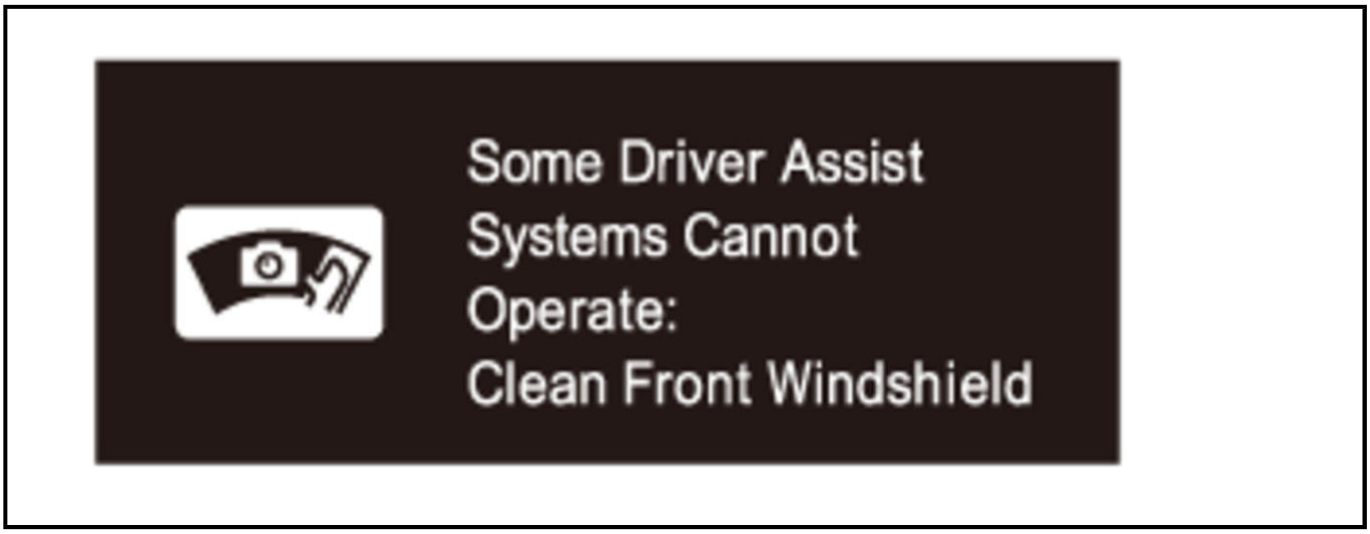

Some Driver Assist
Systems Cannot
Operate:
Clean Front Windshield

System Protect Function (High temperature) (MULTIPURPOSE CAMERA HOT Indication)

If the following message appears on the MID, the RDM system stops operating, and stores a DTC.

When the multipurpose camera temperature cools down to its proper operating temperature, the indicator on the MID turns off, and the RDM system automatically resumes operation.

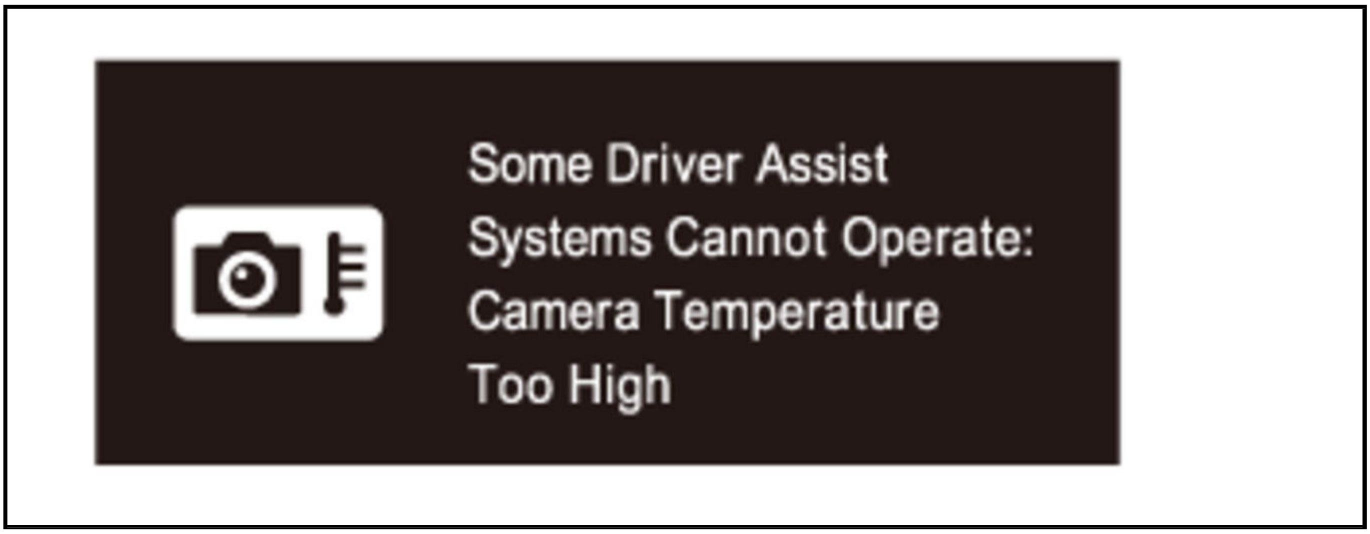

Some Driver Assist
Systems Cannot Operate:
Camera Temperature
Too High

Multipurpose Camera Aiming Function

If the multipurpose camera unit is removed or replaced, you must do the multipurpose camera aiming procedure. If the aiming is incomplete, the RDM indicator blinks.

CAN Communication

The RDM system communicates with other control units via F-CAN. For RDM system diagram, refer to the System Diagram for RDM .

If the millimeter wave radar and the multipurpose camera unit detects a communication error or a malfunction in another connected unit, the RDM system will not operate even though it is OK. In this case, both the RDM indicator and the related unit indicator will come on and stay on.

Intermittent Failures

The term "intermittent failure" means a system may have had a failure, but it checks OK now. If you cannot reproduce the condition, check for intermittent failure DTCs. If intermittent failure DTCs are not stored, check for loose connections and terminals. Also check ground and power connections related to the circuit that you are troubleshooting.

How to Troubleshoot DTCs

Check for DTCs with the HDS, then clear the DTC.

NOTE: For RDM system DTCs, **refer to the DTC troubleshooting index**.

Before troubleshooting, check and note these items:

- Ask the customer about the conditions when the problem occurred, and try to reproduce the same conditions for troubleshooting.
- If the symptom does not appear and the RDM indicator does not come on while test-driving, but your troubleshooting was based on the DTC, check for poor connections or loose terminals at all connectors related to the circuit that you are troubleshooting.
- After the troubleshooting or repairs are done, clear the DTCs, and test-drive the vehicle under the same conditions as when the DTC was originally set. Make sure the RDM indicator does not come on.
- The RDM system sometimes stops operating because of the environment (weather, road conditions, driving conditions, etc.). Intermittent failure DTCs may be stored in these cases.

How to Retrieve DTCs

NOTE: Make sure the 12 volt battery is fully charged before you begin.

1. **Connect the HDS**

2. Use the HDS to check for Integrated Driver Support System DTCs.

3. Read and record the DTC.

4. Turn the vehicle to the OFF (LOCK) mode.

5. Disconnect the HDS.

6. Do the troubleshooting procedure for the DTC.

How to Clear DTCs

NOTE: Make sure the 12 volt battery is fully charged before you begin.

1. **Connect the HDS**

2. In the Driving Support of the HDS, select Integrated Driver Support System, then DTCs, choose the clear DTCs icon, and follow the prompts.

3. Turn the vehicle to the OFF (LOCK) mode.

4. Disconnect the HDS.

DTC TROUBLESHOOTING

DTC B0050-F0, C0061-F0, C0062-F0 (MILLIMETER WAVE RADAR)

DTC B0050-F0 : (Driver's Seat Belt Buckle Switch (Subfault) Fault Detection By SRS Unit)

DTC C0061-F0 : Lateral Acceleration Sensor (Subfault) Fault Detection By Source Module

DTC C0062-F0 : Longitudinal Acceleration Sensor (Subfault) Fault Detection By Source Module

NOTE:

- Before you troubleshoot, **review the general troubleshooting information**.

- These DTCs are recorded when the millimeter wave radar receives the SRS unit failure information via the F-CAN.
- If a DTC is recorded again after it is cleared with the HDS, **refer to the DTC troubleshoot for the SRS system** .
- The functions of the integrated driver support system that will be temporarily canceled when this DTC is recorded can be confirmed with the **DTC troubleshooting index**.

DTC Description	DTC
B0050-F0 (Driver's Seat Belt Buckle Switch (Subfault) Fault Detection By SRS Unit)	B
C0061-F0 Lateral Acceleration Sensor (Subfault) Fault Detection By Source Module	B
C0062-F0 Longitudinal Acceleration Sensor (Subfault) Fault Detection By Source Module	B

DTC (IDAS)

1. Problem verification

   -1. Turn the vehicle to the ON mode.

   -2. Clear the DTC with the HDS.

   -3. Turn the vehicle to the OFF (LOCK) mode.

   -4. Turn the vehicle to the ON mode, then wait for at least 6 seconds.

   -5. Check for DTCs with the HDS.

DTC Description	DTC
B0050-F0 (Driver's Seat Belt Buckle Switch (Subfault) Fault Detection By SRS Unit)	B

DTC Description	DTC
C0061-F0 Lateral Acceleration Sensor (Subfault) Fault Detection By Source Module	B
C0062-F0 Longitudinal Acceleration Sensor (Subfault) Fault Detection By Source Module	B

Is DTC B0050-F0, C0061-F0, or C0062-F0 indicated?

YES

The failure is duplicated. **Go to the SRS troubleshooting** .

NO

Intermittent failure, the system is OK at this time. **Refer to intermittent failures troubleshooting**.

DTC B2A00-92

DTC B2A00-92 : Temporary stop of Integrated Driver Support System (Detected Abnormal Signals)

NOTE:

- Before you troubleshoot, **review the general troubleshooting information**.

- This DTC is recorded when the millimeter wave radar and multipurpose camera receive an unexpected or out of range yaw rate, steering angle, or wheel speed sensor signal via F-CAN.
- The specific driving conditions that may cause this DTC to be recorded are as follows:
-
    - The vehicle is being driven in a manner that exceeds the capabilities and control of the driving support system. Question the customer about how and where the vehicle was being driven at the time of the warning.
    - Sharp turn, sudden steering, rapid acceleration or deceleration.
    - When the vehicle is driven in mountains or rough roads.
    - When the vehicle loses traction while driving (wheel spin or lock up).
- If input data from another system on F-CAN is out of range or incorrect. Inspect these systems for DTCs and/or OBS data and troubleshoot as needed.
- If this DTC is recorded, the integrated driver support system temporarily cancels its control.
- If this DTC is recorded, turn the vehicle OFF mode and ON mode again on the flat place or then test-drive for 10 minutes stably at 25 mph (40 km/h) or more to restore the vehicle to normal.
- The functions of the integrated driver support system that will be temporarily canceled when this DTC is recorded can be confirmed with the **DTC troubleshooting index**.

DTC Description	DTC
B2A00-92 Temporary stop of Integrated Driver Support System (Detected Abnormal Signals)	B

DTC (IDAS)

1. DTC check

-1. Turn the vehicle to the ON mode, then wait for at least 6 seconds.

-2. Check for DTCs with the HDS.

DTC Description	DTC
B	B

Is there any DTC(s) other than DTC B2A00-92?

YES

Perform a troubleshooting for the recorded DTC.

NO

Clear the DTC with the HDS and explain to the customer that it is not a failure.

DTC B2A60-49, B2A60-96

DTC B2A60-49 : Multipurpose Camera Unit Internal Electronic Failure

DTC B2A60-96 : Multipurpose Camera Unit Hardware Malfunction

NOTE:

- Before you troubleshoot, **review the general troubleshooting information**.
- The functions of the integrated driver support system that will be temporarily canceled when this DTC is recorded can be confirmed with the **DTC troubleshooting index**.

DTC Description	DTC
B2A60-49 Multipurpose Camera Unit Internal Electronic Failure	B
B2A60-96 Multipurpose Camera Unit Hardware Malfunction	B

DTC (IDAS)

1. Problem verification

    -1. Turn the vehicle to the ON mode.

    -2. Clear the DTC with the HDS.

    -3. Turn the vehicle to OFF (LOCK) mode and then ON mode repeatedly at least 3 times.

    -4. Check for DTCs with the HDS.

DTC Description	DTC
B2A60-49 Multipurpose Camera Unit Internal Electronic Failure	B
B2A60-96 Multipurpose Camera Unit Hardware Malfunction	B

    Is DTC B2A60-49 or B2A60-96 indicated?

    YES

    The failure is duplicated. **Replace the multipurpose camera unit** .

    NO

    Intermittent failure, the system is OK at this time. **Refer to intermittent failures troubleshooting**.

DTC B2A60-54, P2583-54

DTC B2A60-54 : Static Camera Aiming Incomplete

DTC P2583-54 : Millimeter Wave Radar Aiming Incomplete

NOTE:

- Before you troubleshoot, **review the general troubleshooting information**.
- These DTCs are recorded when aiming is not performed or aiming is not successfully completed.
- If a DTC is recorded again after it is cleared with the HDS, perform the aiming procedure below:
-
    - B2A60-54: **Aim the multipurpose camera** .
    - P2583-54: **Aim the millimeter wave radar** .
- The functions of the integrated driver support system that will be temporarily canceled when this DTC is recorded can be confirmed with the **DTC troubleshooting index**.

DTC Description	DTC
B2A60-54 Static Camera Aiming Incomplete	B
P2583-54 Millimeter Wave Radar Aiming Incomplete	B

DTC (IDAS)

1. Problem verification

    -1. Turn the vehicle to the ON mode.

-2. Clear the DTC with the HDS.

-3. Turn the vehicle to the OFF (LOCK) mode.

-4. Turn the vehicle to the ON mode, then wait for at least 6 seconds.

-5. Check for DTCs with the HDS.

DTC Description	DTC
B2A60-54 Static Camera Aiming Incomplete	B
P2583-54 Millimeter Wave Radar Aiming Incomplete	B

Is DTC B2A60-54 or P2583-54 indicated?

YES

The failure is duplicated. Aiming is incomplete. Aim **the millimeter wave radar** or **the multipurpose camera** .

NO

Intermittent failure, the system is OK at this time. **Refer to intermittent failures troubleshooting**.

DTC B2A60-57, U1387-4A, U1387-55, U3000-55 (MILLIMETER WAVE RADAR)

DTC B2A60-57 : Multipurpose Camera Unit Software Failure

DTC U1387-4A : Unmatch Combination of Millimeter Wave Radar-Multipurpose Camera Unit

DTC U1387-55 : Multipurpose Camera Unit Variant Incomplete

DTC U3000-55 : Millimeter Wave Radar Variant Incomplete

NOTE:

- Before you troubleshoot, **review the general troubleshooting information**.
- If a DTC is recorded again after it is cleared with the HDS, confirm the part numbers compatible with the vehicle with the parts catalogue and replace the relevant parts.
- If DTC U1387-4A is recorded, confirm the part numbers of the multipurpose camera unit and the millimeter wave radar currently installed to the vehicle and replace the parts not compatible with the vehicle.
-
  - B2A60-57: **Replace the multipurpose camera unit** .
  - U1387-4A: **Replace the multipurpose camera unit** or **the millimeter wave radar** .
  - U1387-55: **Replace the multipurpose camera unit** .
  - U3000-55: **Replace the millimeter wave radar** .
- The functions of the integrated driver support system that will be temporarily canceled when this DTC is recorded can be confirmed with the **DTC troubleshooting index**.

DTC Description	DTC
B2A60-57 Multipurpose Camera Unit Software Failure	B
U1387-4A Unmatch Combination of Millimeter Wave Radar-Multipurpose Camera Unit	B
U1387-55 Multipurpose Camera Unit Variant Incomplete	B
U3000-55 Millimeter Wave Radar Variant Incomplete	B

DTC (IDAS)

1. Problem verification

   -1. Turn the vehicle to the ON mode.

   -2. Clear the DTC with the HDS.

   -3. Turn the vehicle to the OFF (LOCK) mode.

   -4. Turn the vehicle to the ON mode, then wait for at least 6 seconds.

   -5. Check for DTCs with the HDS.

DTC Description	DTC
B2A60-57 Multipurpose Camera Unit Software Failure	B
U1387-4A Unmatch Combination of Millimeter Wave Radar-Multipurpose Camera Unit	B
U1387-55 Multipurpose Camera Unit Variant Incomplete	B
U3000-55 Millimeter Wave Radar Variant Incomplete	B

   Is DTC B2A60-57, U1387-4A, U1387-55, or U3000-55 indicated?

   YES

   The failure is duplicated. Confirm the parts catalogue and replace the parts related to the DTC with compatible ones.

   NO

   Intermittent failure, the system is OK at this time. **Refer to intermittent failures troubleshooting**.

DTC B2A60-97

DTC B2A60-97 : Dust or Dirt On The Camera

NOTE:

- Before you troubleshoot, **review the general troubleshooting information**.
- The functions of the integrated driver support system that will be temporarily canceled when this DTC is recorded can be confirmed with the **DTC troubleshooting index**.

DTC Description	DTC
B2A60-97 Dust or Dirt On The Camera	B

DTC (IDAS)

1. Multipurpose camera unit visual check

   -1. Check for dust or dirt at the multipurpose camera lens, and crack, dust, or interference at the windshield surface.

   Are the multipurpose camera lens and the windshield surface OK?

   YES

   Go to step 2.

   NO

Clean the multipurpose camera lens, or both sides of the windshield surface. If necessary, replace or repair the windshield.

2. Problem verification

   -1. Turn the vehicle to the ON mode.

   -2. Clear the DTC with the HDS.

   -3. Turn the vehicle to the OFF (LOCK) mode.

   -4. Test-drive the vehicle at 3 mph (5 km/h) or more.

   -5. Check for DTCs with the HDS.

DTC Description	DTC
B2A60-97 Dust or Dirt On The Camera	B

Is DTC B2A60-97 indicated?

YES

The failure is duplicated. Check for loose terminals and poor connections in the multipurpose camera unit 12P connector. Check for any authorized service information related to the DTCs or symptoms you are troubleshooting. If they are OK, **replace the multipurpose camera unit** .

NO

Intermittent failure, the system is OK at this time. **Refer to intermittent failures troubleshooting**.

DTC B2A60-98, P2583-98

DTC B2A60-98 : Multipurpose Camera Unit Temperature Too High

DTC P2583-98 : Millimeter Wave Radar Temperature Too High

NOTE:

- Before you troubleshoot, **review the general troubleshooting information**.
- These DTC are recorded when the vehicle is left in the scorching heat, is in a traffic jam at high temperature, or is driving uphill continuously and the millimeter wave radar and the multipurpose camera unit gets extremely hot.
- The function automatically returns to normal when the internal temperatures of the millimeter wave radar and the multipurpose camera unit drop.
- The functions of the integrated driver support system that will be temporarily canceled when this DTC is recorded can be confirmed with the **DTC troubleshooting index**.

DTC Description	DTC
B2A60-98 Multipurpose Camera Unit Temperature Too High	B
P2583-98 Millimeter Wave Radar Temperature Too High	B

DTC (IDAS)

1. Inspecting the temperature in the control unit

   -1. Turn the vehicle to the ON mode.

   -2. Check the parameter(s) of the internal temperatures of the millimeter wave radar and the multipurpose camera unit with the HDS.

Signal	Current conditions	
	Values	Unit
Radar temperature	B	B
Camera temperature	B	B

Is the temperature 185B°F (85B°C) or less?

YES

Go to step 2.

NO

Cool the control unit until the internal temperature is 167B°F (75B°C) or less. Clear the DTC with the HDS.

2. Problem verification:

NOTE: If the control unit has an internal temperature of 167B°F (75B°C) or more, cool the control unit until the internal temperature is 167B°F (75B°C) or less.

-1. Clear the DTC with the HDS.

-2. Turn the vehicle to the OFF (LOCK) mode.

-3. Turn the vehicle to the ON mode, then wait for at least 6 seconds.

-4. Check for DTCs with the HDS.

DTC Description	DTC
B2A60-98 Multipurpose Camera Unit Temperature Too High	B
P2583-98 Millimeter Wave Radar Temperature Too High	B

Is DTC B2A60-98 or P2583-98 indicated?

YES

The failure is duplicated. Faulty a control unit, replace the control unit related to the DTC.

NO

Intermittent failure, the system is OK at this time. The control unit was temporarily in a high temperature state.

DTC B2A60-99

DTC B2A60-99 : Out of automatic correction range for Misalignment of Multipurpose Camera Unit image

NOTE:

- Before you troubleshoot, **review the general troubleshooting information**.
- If this DTC is recorded, the following is suspected:
-
    - Improper installation of the multipurpose camera unit (aging of vehicle, incorrect assembly, etc.).
    - The multipurpose camera unit installing portion is deformed by a minor collision or strong impact.
    - The axis of the multipurpose camera unit is out of alignment due to abnormal wheel alignment, abnormal tire pressure, etc.

  - Altered suspension
- After inspecting, repairing, or adjusting a possible cause of the failure, be sure to **perform multipurpose camera unit aiming** . If the DTC cannot be deleted after multipurpose camera unit aiming, **replace the multipurpose camera unit** .
- The functions of the integrated driver support system that will be temporarily canceled when this DTC is recorded can be confirmed with the **DTC troubleshooting index**.

DTC Description	DTC
B2A60-99 Out of automatic correction range for Misalignment of Multipurpose Camera Unit image	B

DTC (IDAS)

1. Problem verification 1

   -1. Turn the vehicle to the ON mode.

   -2. Clear the DTC with the HDS.

   -3. Turn the vehicle to the OFF (LOCK) mode.

   -4. Test-drive the vehicle on a straight road at speeds 25 mph (40 km/h) or more for 15 minutes or more.

   -5. Check for DTCs with the HDS.

DTC Description	DTC
B2A60-99 Out of automatic correction range for Misalignment of Multipurpose Camera Unit image	B

   Is DTC B2A60-99 indicated?

   YES

   The failure is duplicated. Go to step 2.

   NO

   Intermittent failure, the system is OK at this time. **Refer to intermittent failures troubleshooting**.

2. Multipurpose camera unit visual check

   -1. Turn the vehicle to the OFF (LOCK) mode.

   -2. Check that the multipurpose camera unit and camera bracket are installed properly and check them for deformation and damage.

   Are the multipurpose camera unit and the camera bracket installed properly, and/or is there any no damage?

   YES

   Go to step 3.

   NO

   Repair or replace faulty parts, then **aim the multipurpose camera unit** .

3. Problem verification 2

-1. **Aim the multipurpose camera unit** .

-2. Test-drive the vehicle on a straight road at speeds 25 mph (40 km/h) or more for 15 minutes or more.

-3. Check for DTCs with the HDS.

DTC Description	DTC
B2A60-99 Out of automatic correction range for Misalignment of Multipurpose Camera Unit image	B

Is DTC B2A60-99 indicated?

YES

If the multipurpose camera unit is installed properly but the DTC is recorded again after multipurpose camera unit aiming, **replace the multipurpose camera unit** .

NO

The system is OK at this time.

DTC B2A60-A2, U3006-16 (MILLIMETER WAVE RADAR)

DTC B2A60-A2 : Power Supply Voltage Too Low (Multipurpose Camera Unit)

DTC U3006-16 : Power Supply Voltage Too Low (Millimeter Wave Radar)

NOTE:

- Before you troubleshoot, **review the general troubleshooting information**.
- Before performing a troubleshooting, check the 12 volt battery voltage. If the voltage is less than 12 volt, charge the battery.
- These DTCs are recorded when the voltage supplied to the millimeter wave radar or the multipurpose camera unit drops below 9.5 volt while the vehicle is driving.
- The functions of the integrated driver support system that will be temporarily canceled when this DTC is recorded can be confirmed with the **DTC troubleshooting index**.

DTC Description	DTC
B2A60-A2 Power Supply Voltage Too Low (Multipurpose Camera Unit)	B
U3006-16 Power Supply Voltage Too Low (Millimeter Wave Radar)	B

DTC (IDAS)

1. Problem verification

-1. Turn the vehicle to the ON mode.

-2. Clear the DTC with the HDS.

-3. Turn the vehicle to the OFF (LOCK) mode, then to the ON mode.

-4. Test-drive the vehicle at speeds 5 mph (8 km/h) or more for at least 5 minutes.

-5. Check for DTCs with the HDS.

DTC Description	DTC
B2A60-A2 Power Supply Voltage Too Low (Multipurpose Camera Unit)	B

DTC Description	DTC
U3006-16 Power Supply Voltage Too Low (Millimeter Wave Radar)	B

Is DTC B2A60-A2 or U3006-16 indicated?

YES

The failure is duplicated. Go to step 2.

NO

Intermittent failure, the system is OK at this time. **Refer to intermittent failures troubleshooting**.

2. PGM-FI system DTC check

-1. Turn the vehicle to the ON mode.

-2. Check for DTCs with the HDS.

DTC Description	Confirmed DTC	Pending DTC
B	B	B

Are any DTCs indicated?

YES

Go to the indicated DTC's troubleshooting in the PGM-FI system . After performing a DTC troubleshooting for the PGM-FI system, clear the DTC again.

NO

Check the control unit related to the DTC for loose terminals and poor connections. If no problem is found, replace the control unit related to the DTC.

DTC B2A60-A3, U3006-17 (MILLIMETER WAVE RADAR)

DTC B2A60-A3 : Power Supply Voltage Too High (Multipurpose Camera Unit)

DTC U3006-17 : Power Supply Voltage Too High (Millimeter Wave Radar)

NOTE:

- Before you troubleshoot, **review the general troubleshooting information**.
- Before starting a troubleshooting, check that a 12 volt battery of a capacity compatible with the vehicle is installed.
- These DTCs are recorded when a voltage of 17 volt or more is supplied to the millimeter wave radar or the multipurpose camera unit.
- The functions of the integrated driver support system that will be temporarily canceled when this DTC is recorded can be confirmed with the **DTC troubleshooting index**.

DTC Description	DTC
B2A60-A3 Power Supply Voltage Too High (Multipurpose Camera Unit)	B
U3006-17 Power Supply Voltage Too High (Millimeter Wave Radar)	B

DTC (IDAS)

1. Problem verification

-1. Turn the vehicle to the ON mode.

-2. Clear the DTC with the HDS.

-3. Turn the vehicle to the OFF (LOCK) mode.

-4. Turn the vehicle to the ON mode, then wait for at least 6 seconds.

-5. Check for DTCs with the HDS.

DTC Description	DTC
B2A60-A3 Power Supply Voltage Too High (Multipurpose Camera Unit)	B
U3006-17 Power Supply Voltage Too High (Millimeter Wave Radar)	B

Is DTC B2A60-A3 or U3006-17 indicated?

YES

The failure is duplicated. Go to step 2.

NO

Intermittent failure, the system is OK at this time. **Refer to intermittent failures troubleshooting**.

2. PGM-FI system DTC check

-1. Turn the vehicle to the ON mode.

-2. Check for DTCs with the HDS.

DTC Description	Confirmed DTC	Pending DTC
B	B	B

Are any DTCs indicated?

YES

Go to the indicated DTC's troubleshooting in the PGM-FI system . After performing a DTC troubleshooting for the PGM-FI system, clear the DTC again.

NO

Faulty a control unit, replace the control unit related to the DTC.

DTC B2A70-12

DTC B2A70-12 : LDW/RDM Switch Signal Circuit Short

NOTE:

- Before you troubleshoot, **review the general troubleshooting information**.
- The functions of the integrated driver support system that will be temporarily canceled when this DTC is recorded can be confirmed with the **DTC troubleshooting index**.

DTC Description	DTC
B2A70-12 LDW/RDM Switch Signal Circuit Short	B

DTC (IDAS)

1. Problem verification

   -1. Turn the vehicle to the ON mode.

   -2. Clear the DTC with the HDS.

   -3. Turn the vehicle to the OFF (LOCK) mode.

   -4. Turn the vehicle to the ON mode, then wait for at least 6 seconds.

   -5. Press the RDM switch.

   -6. Check for DTCs with the HDS.

DTC Description	DTC
B2A70-12 LDW/RDM Switch Signal Circuit Short	B

   Is DTC B2A70-12 indicated?

   YES

   The failure is duplicated. Go to step 2.

   NO

   Intermittent failure, the system is OK at this time. **Refer to intermittent failures troubleshooting**.

2. RDM switch internal resistance check

   -1. Turn the vehicle to the OFF (LOCK) mode.

   -2. **Remove and test the RDM switch** .

   Is the RDM switch OK?

   YES

   RDM switch is OK. Go to step 3.

   NO

   Replace the RDM switch .

3. Fuse check

   -1. Turn the vehicle to the OFF (LOCK) mode.

   -2. Check the following fuse.

Fuse	**No. D5**

   Is the fuse OK?

   YES

   The fuse is OK. Reinstall the fuse, then go to step 4.

   NO

Replace the fuse. Turn the vehicle to the ON mode, then the OFF (LOCK) mode. If the fuse blows again, repair the short to ground on the No. D5 fuse circuit.

4. Open wire check (IG1_OPTION line)

-1. Disconnect the following connector.

CMBS OFF/RDM switch 10P connector

-2. Turn the vehicle to the ON mode.

-3. Measure the voltage between test points 1 and 2.

Test condition	Vehicle ON mode
B	CMBS OFF/RDM switch 10P connector: disconnected
Test point 1	CMBS OFF/RDM switch 10P connector (female terminals) No. 5: ①
Test point 2	Body ground

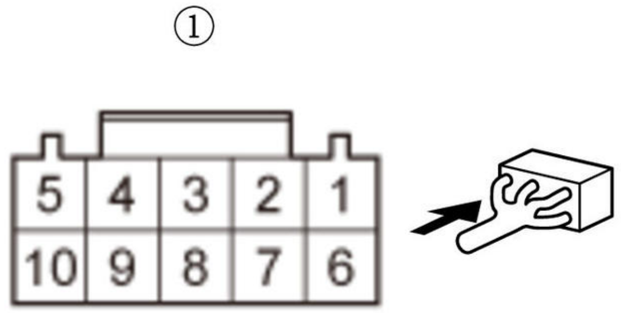

Is there battery voltage?

YES

IG1_OPTION wire is OK. Go to step 5.

NO

Repair an open in the IG1_OPTION wire between the RDM switch and **No. D5** fuse.

5. Open wire check (LDW OFF SW line)

-1. Turn the vehicle to the vehicle OFF (LOCK) mode.

-2. Disconnect the following connector.

Multipurpose camera unit 12P connector

-3. Measure the resistance between test points 1 and 2.

Test condition	Vehicle OFF (LOCK) mode
B	Multipurpose camera unit 12P connector: disconnected
Test point 1	**Multipurpose camera unit 12P connector No. 7**
Test point 2	CMBS OFF/RDM switch 10P connector (female terminals) No. 4: ①

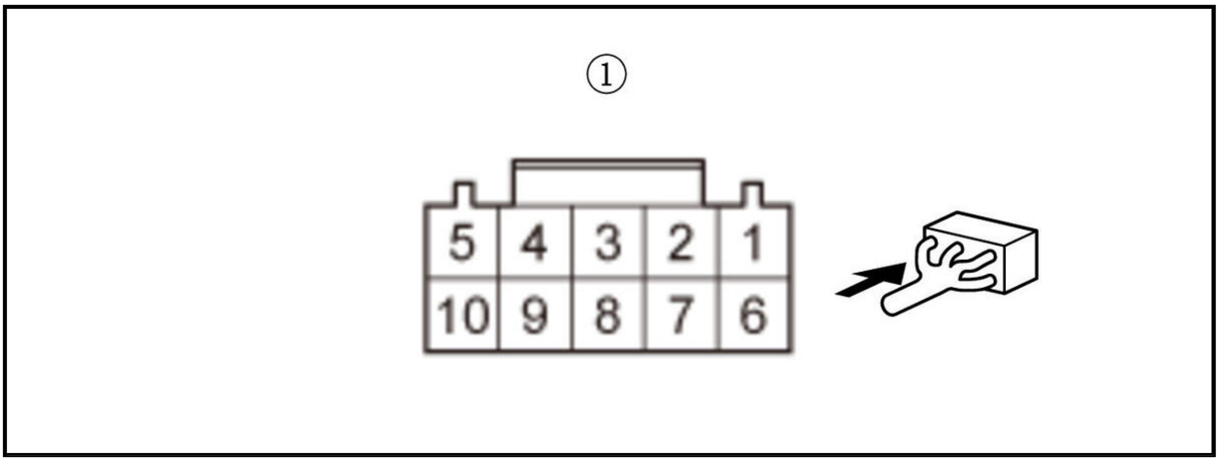

Is there 1.0 Ω or less?

YES

Go to step 6.

NO

Repair an open in the LDW OFF SW wire between the RDM switch and the multipurpose camera unit.

6. Open wire check (LDW OFF IND line)

-1. Measure the resistance between test points 1 and 2.

Test condition	Vehicle OFF (LOCK) mode
B	Multipurpose camera unit 12P connector: disconnected
Test point 1	**Multipurpose camera unit 12P connector No. 8**
Test point 2	CMBS OFF/RDM switch 10P connector (female terminals) No. 2: ①

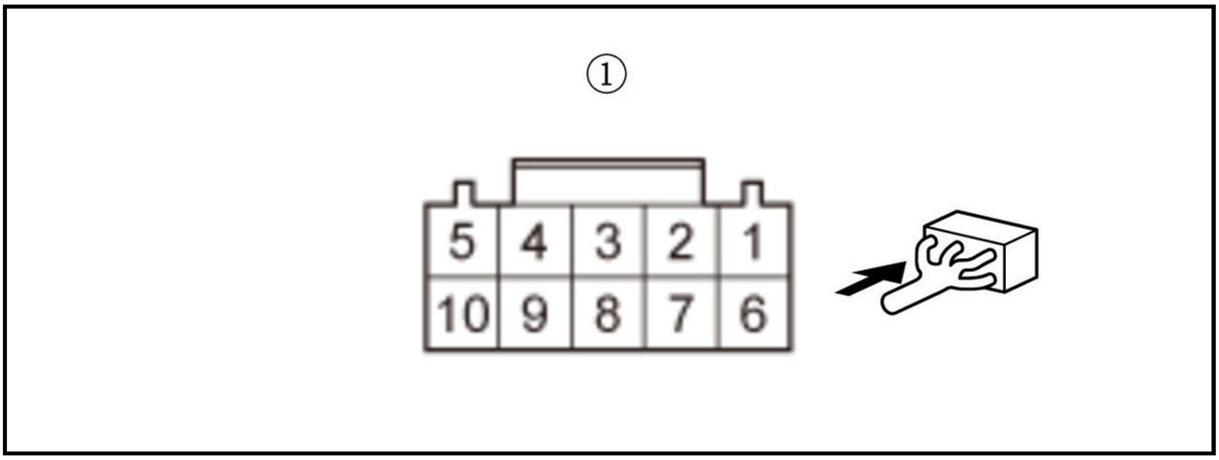

Is there 1.0 Ω or less?

YES

Replace the multipurpose camera unit .

NO

Repair an open in the LDW OFF IND wire between the RDM switch and the multipurpose camera unit.

DTC B2A70-14

DTC B2A70-14 : LDW/RDM Switch Signal Circuit Short to Power

NOTE:

- Before you troubleshoot, **review the general troubleshooting information**.
- The functions of the integrated driver support system that will be temporarily canceled when this DTC is recorded can be confirmed with the **DTC troubleshooting index**.

DTC Description	DTC
B2A70-14 LDW/RDM Switch Signal Circuit Short to Power	B

DTC (IDAS)

1. Problem verification

   -1. Turn the vehicle to the ON mode.

   -2. Clear the DTC with the HDS.

   -3. Turn the vehicle to the OFF (LOCK) mode.

   -4. Turn the vehicle to the ON mode, then wait for at least 6 seconds.

   -5. Check for DTCs with the HDS.

DTC Description	DTC
B2A70-14 LDW/RDM Switch Signal Circuit Short to Power	B

   Is DTC B2A70-14 indicated?

   YES

   The failure is duplicated. Go to step 2.

   NO

   Intermittent failure, the system is OK at this time. **Refer to intermittent failures troubleshooting**.

2. RDM switch internal resistance check

   -1. Turn the vehicle to the OFF (LOCK) mode.

   -2. **Remove and test the RDM switch** .

   Is the RDM switch OK?

   YES

   RDM switch is OK. Go to step 3.

   NO

   Replace the RDM switch .

3. Shorted wire check (LDW OFF SW line to power)

   -1. Disconnect the following connector.

Multipurpose camera unit 12P connector

CMBS OFF/RDM switch 10P connector

-2. Turn the vehicle to the ON mode.

-3. Measure the voltage between test points 1 and 2.

Test condition	Vehicle ON mode
B	Multipurpose camera unit 12P connector: disconnected
B	CMBS OFF/RDM switch 10P connector: disconnected
Test point 1	**Multipurpose camera unit 12P connector No. 7**
Test point 2	Body ground

Is there battery voltage?

YES

Repair a short to power in the LDW OFF SW wire between the RDM switch and the multipurpose camera unit.

NO

Check for loose terminals and poor connections in the multipurpose camera unit 12P connector. Check for any authorized service information related to the DTCs or symptoms you are troubleshooting. If they are OK, **replace the multipurpose camera unit** .

DTC C0023-F0, U0418-68 (MILLIMETER WAVE RADAR)

DTC C0023-F0 : Brake Light Drive Relay Circuit Malfunction

DTC U0418-68 : (Electric Servo Brake System Malfunction)

NOTE:

- Before you troubleshoot, **review the general troubleshooting information**.
- This DTC is recorded when the millimeter wave radar receives electric servo brake system failure information via the F-CAN.
- If a DTC is recorded again after it is cleared with the HDS, **perform a troubleshooting for the electric servo brake system** .
- The functions of the integrated driver support system that will be temporarily canceled when this DTC is recorded can be confirmed with the **DTC troubleshooting index**.

DTC Description	DTC
C0023-F0 Brake Light Drive Relay Circuit Malfunction	B
U0418-68 (Electric Servo Brake System Malfunction)	B

DTC (IDAS)

1. Problem verification

-1. Turn the vehicle to the ON mode.

-2. Clear the DTC with the HDS.

-3. Turn the vehicle to the OFF (LOCK) mode.

-4. Turn the vehicle to the ON mode, then wait for at least 6 seconds.

-5. Check for DTCs with the HDS.

DTC Description	DTC
C0023-F0 Brake Light Drive Relay Circuit Malfunction	B
U0418-68 (Electric Servo Brake System Malfunction)	B

Is DTC C0023-F0 or U0418-68 indicated?

YES

The failure is duplicated. **Go to the indicated DTC's troubleshooting in the electric servo brake system** .

NO

Intermittent failure, the system is OK at this time. **Refer to intermittent failures troubleshooting**.

DTC C0031-62, C0034-62, C0037-62, C003A-62 (MILLIMETER WAVE RADAR)

DTC C0031-62 : (Left Front Wheel Speed Sensor Signal Error)

DTC C0034-62 : (Right Front Wheel Speed Sensor Signal Error)

DTC C0037-62 : (Left Rear Wheel Speed Sensor Signal Error)

DTC C003A-62 : (Right Rear Wheel Speed Sensor Signal Error)

NOTE:

- Before you troubleshoot, **review the general troubleshooting information**.
- These DTCs are recorded when the millimeter wave radar receives wheel speed sensor failure information from the VSA modulator-control unit via the F-CAN.
- If a DTC is recorded again after it is cleared with the HDS, **perform a troubleshooting for the VSA system** .
- The functions of the integrated driver support system that will be temporarily canceled when these DTC are recorded can be confirmed with the **DTC troubleshooting index**.

DTC Description	DTC
C0031-62 (Left Front Wheel Speed Sensor Signal Error)	B
C0034-62 (Right Front Wheel Speed Sensor Signal Error)	B
C0037-62 (Left Rear Wheel Speed Sensor Signal Error)	B
C003A-62 (Right Rear Wheel Speed Sensor Signal Error)	B

DTC (IDAS)

1. Problem verification

-1. Turn the vehicle to the ON mode.

-2. Clear the DTC with the HDS.

-3. Turn the vehicle to the OFF (LOCK) mode.

-4. Test-drive the vehicle on a straight road at speeds 25 mph (40 km/h) or more for 5 minutes.

NOTE: Check for abnormal tire diameter (low tire pressure, uneven wear, and spare tire) before test-driving.

-5. Check for DTCs with the HDS.

DTC Description	DTC
C0031-62 (Left Front Wheel Speed Sensor Signal Error)	B

DTC Description	DTC
C0034-62 (Right Front Wheel Speed Sensor Signal Error)	B
C0037-62 (Left Rear Wheel Speed Sensor Signal Error)	B
C003A-62 (Right Rear Wheel Speed Sensor Signal Error)	B

Is DTC C0031-62, C0034-62, C0037-62, or C003A-62 indicated?

YES

The failure is duplicated. **Go to the VSA system troubleshooting** .

NO

Intermittent failure, the system is OK at this time. **Refer to intermittent failures troubleshooting**.

DTC C0041-14

DTC C0041-14 : Brake Switch Signal Circuit Error

NOTE:

- Before you troubleshoot, **review the general troubleshooting information**.
- The specific conditions under which this DTC is recorded are as follows:
-
    - Brake switch signal is ON, but brake fluid pressure does not rise when vehicle running.
    - Brake switch signal is OFF, but brake fluid pressure rises when vehicle running.
- This vehicle obtains the brake operation information used for the control of the integrated driver support system from the PCM via the F-CAN.
- If the DTC is recorded again after problem verification, **perform a troubleshooting for the PGM-FI system** .
- The functions of the integrated driver support system that will be temporarily canceled when this DTC is recorded can be confirmed with the **DTC troubleshooting index**.

DTC Description	DTC
C0041-14 Brake Switch Signal Circuit Error	B

DTC (IDAS)

1. Problem verification

-1. Turn the vehicle to the ON mode.

-2. Clear the DTC with the HDS.

-3. Turn the vehicle to the OFF (LOCK) mode.

-4. Test-drive the vehicle at speeds 6 mph (10 km/h) for at least 30 seconds.

-5. Press the brake pedal for at least 2 seconds.

-6. Check for DTCs with the HDS.

DTC Description	DTC
C0041-14 Brake Switch Signal Circuit Error	B

Is DTC C0041-14 indicated?

YES

The failure is duplicated. **Go to the PGM-FI system troubleshooting** .

NO

Intermittent failure, the system is OK at this time. **Refer to intermittent failures troubleshooting**.

DTC C0044-F0, U0415-68, U0416-68 (MILLIMETER WAVE RADAR)

DTC C0044-F0 : (Master Cylinder Pressure Sensor Failure)

DTC U0415-68 : (ABS Brake Actuator Malfunction)

DTC U0416-68 : (VSA Brake Actuator Malfunction)

NOTE:

- Before you troubleshoot, **review the general troubleshooting information**.
- These DTCs are recorded when the millimeter wave radar receives failure information from the VSA modulator-control unit via the F-CAN.
- If a DTC is recorded again after it is cleared with the HDS, perform a troubleshooting for the VSA system.
- The functions of the integrated driver support system that will be temporarily canceled when this DTC is recorded can be confirmed with the **DTC troubleshooting index**.

DTC Description	DTC
C0044-F0 (Master Cylinder Pressure Sensor Failure)	B
U0415-68 (ABS Brake Actuator Malfunction)	B
U0416-68 (VSA Brake Actuator Malfunction)	B

DTC (IDAS)

1. Problem verification

-1. Turn the vehicle to the ON mode.

-2. Clear the DTC with the HDS.

-3. Turn the vehicle to the OFF (LOCK) mode.

-4. Turn the vehicle to the ON mode, then wait for at least 6 seconds.

-5. Check for DTCs with the HDS.

DTC Description	DTC
C0044-F0 (Master Cylinder Pressure Sensor Failure)	B
U0415-68 (ABS Brake Actuator Malfunction)	B
U0416-68 (VSA Brake Actuator Malfunction)	B

Is C0044-F0, U0415-68, or U0416-68 indicated?

YES

The failure is duplicated. **Go to VSA system troubleshooting** .

NO

Intermittent failure, the system is OK at this time. **Refer to intermittent failures troubleshooting**.

DTC C0051-54 (MILLIMETER WAVE RADAR)

DTC C0051-54 : Steering Angle Neutral Position Learning Incomplete

NOTE:

- Before you troubleshoot, **review the general troubleshooting information**.
- This DTC is recorded if VSA sensor neutral position memorization is not completed.
- This DTC is automatically deleted without using the HDS when VSA sensor neutral position memorization is successfully completed.
- The functions of the integrated driver support system that will be temporarily canceled when this DTC is recorded can be confirmed with the **DTC troubleshooting index**.

DTC Description	DTC
C0051-54 Steering Angle Neutral Position Learning Incomplete	B

DTC (IDAS)

1. Problem verification

-1. Turn the vehicle to the ON mode.

-2. Clear the DTC with the HDS.

-3. Turn the vehicle to the OFF (LOCK).

-4. Turn the vehicle to the ON mode, then wait for at least 6 seconds.

-5. Check for DTCs with the HDS.

DTC Description	DTC
C0051-54 Steering Angle Neutral Position Learning Incomplete	B

Is DTC C0051-54 indicated?

YES

The failure is duplicated. **Perform the VSA sensor neutral position memorization** .

NO

Intermittent failure, the system is OK at this time. **Refer to intermittent failures troubleshooting**.

DTC C0051-96 (MILLIMETER WAVE RADAR)

DTC C0051-96 : Steering Angle Sensor Malfunction

NOTE:

- Before you troubleshoot, **review the general troubleshooting information**.

- This DTC is recorded when the millimeter wave radar receives the EPS control unit failure information via the F-CAN.
- If a DTC is recorded again after it is cleared with the HDS, **perform a troubleshooting for the EPS system** .
- The functions of the integrated driver support system that will be temporarily canceled when this DTC is recorded can be confirmed with the **DTC troubleshooting index**.

DTC Description	DTC
C0051-96 Steering Angle Sensor Malfunction	B

DTC (IDAS)

1. Problem verification

   -1. Turn the vehicle to the ON mode.

   -2. Clear the DTC with the HDS.

   -3. Turn the vehicle to the OFF (LOCK) mode.

   -4. Turn the vehicle to the ON mode, then wait for at least 6 seconds.

   -5. Check for DTCs with the HDS.

DTC Description	DTC
C0051-96 Steering Angle Sensor Malfunction	B

   Is DTC C0051-96 indicated?

   YES

   The failure is duplicated. **Go to the EPS system troubleshooting** .

   NO

   Intermittent failure, the system is OK at this time. **Refer to intermittent failures troubleshooting**.

DTC C0061-9A, C0062-9A, C0063-9A

DTC C0061-9A : Temporary stop of Integrated Driver Support System (Unstable Lateral Acceleration Sensor Signal)

DTC C0062-9A : Temporary stop of Integrated Driver Support System (Unstable Longitudinal Acceleration Sensor Signal)

DTC C0063-9A : Temporary stop of Integrated Driver Support System (Unstable Yaw Rate Sensor Signal)

NOTE:

- Before you troubleshoot, **review the general troubleshooting information**.
- These DTCs are recorded when the sensor signal reliability temporarily decreases due to a drop in the power supply voltage supplied to the yaw rate sensor and lateral acceleration sensor built in the SRS unit or for other reason.
- If this DTC is recorded, some of the integrated driver support system functions are temporarily canceled but it is not a failure.
- When the power supply voltage supplied to the yaw rate sensor and lateral acceleration sensor built in the SRS unit return to normal, the temporarily cancelled integrated driver support system functions are re-

activated.

- The functions of the integrated driver support system that will be temporarily canceled when this DTC is recorded can be confirmed with the **DTC troubleshooting index**.

DTC Description	DTC
C0061-9A Temporary stop of Integrated Driver Support System (Unstable Lateral Acceleration Sensor Signal)	B
C0062-9A Temporary stop of Integrated Driver Support System (Unstable Longitudinal Acceleration Sensor Signal)	B
C0063-9A Temporary stop of Integrated Driver Support System (Unstable Yaw Rate Sensor Signal)	B

DTC (IDAS)

1. DTC check

-1. Turn the vehicle to the ON mode, then wait for at least 6 seconds.

-2. Check for DTCs with the HDS.

DTC Description	DTC
B	B

Is there any DTC(s) other than DTC C0061-9A, C0062-9A, or C0063-9A?

YES

Perform a troubleshooting for the recorded DTC.

NO

Clear the DTC with the HDS and explain to the customer that it is not a failure.

DTC C0063-F0 (MILLIMETER WAVE RADAR)

DTC C0063-F0 : Yaw Rate Sensor (Subfault) Fault Detection By Source Module

NOTE:

- Before you troubleshoot, **review the general troubleshooting information**.
- This vehicle's millimeter wave radar receives the failure information of the yaw rate sensor from the SRS unit. The SRS unit does not uses the yaw rate sensor for airbag deployment control, so the SRS system indicator does not come on even if the yaw rate sensor is faulty. If this DTC is stored, clear the DTC and then perform problem verification according to the troubleshooting flow. If this DTC is stored again, replace the SRS unit.
- If the DTC is recorded after it is cleared with the HDS, **replace the SRS unit** .
- The functions of the integrated driver support system that will be temporarily canceled when this DTC is recorded can be confirmed with the **DTC troubleshooting index**.

DTC Description	DTC
C0063-F0 Yaw Rate Sensor (Subfault) Fault Detection By Source Module	B

DTC (IDAS)

1. Problem verification

-1. Turn the vehicle to the ON mode.

-2. Clear the DTC with the HDS.

-3. Turn the vehicle to the OFF (LOCK) mode.

-4. Turn the vehicle to the ON mode, then wait for at least 6 seconds.

-5. Check for DTCs with the HDS.

DTC Description	DTC
C0063-F0 Yaw Rate Sensor (Subfault) Fault Detection By Source Module	B

Is DTC C0063-F0 indicated?

YES

The failure is duplicated. **Replace the SRS unit** .

NO

Intermittent failure, the system is OK at this time. **Refer to intermittent failures troubleshooting**.

DTC C1040-00 (MILLIMETER WAVE RADAR)

DTC C1040-00 : Wheel Speed Signal Error

NOTE:

- Before you troubleshoot, **review the general troubleshooting information**.
- This DTC is recorded when the estimated yaw rate calculated based on the wheel speeds of the right and left wheels differs between the front and rear wheels.
- The specific conditions under which this DTC are as follows:
-
    - Abnormal tire diameter (low tire pressure, uneven wear, etc.)
    - Driving on a road having different road conditions on the right and left sides
- If this DTC is recorded, the integrated driver support system temporarily cancels its control to prevent the system from selecting an incorrect leading vehicle.
- When the difference in the estimated yaw rate between the front and rear wheels returns to normal, the integrated driver support system resumes its control.
- The functions of the integrated driver support system that will be temporarily canceled when this DTC is recorded can be confirmed with the **DTC troubleshooting index**.

DTC Description	DTC
C1040-00 Wheel Speed Signal Error	B

DTC (IDAS)

1. Problem verification

-1. Turn the vehicle to the ON mode.

-2. Clear the DTC with the HDS.

-3. Turn the vehicle to the OFF (LOCK) mode.

-4. Test-drive the vehicle on a straight road at speeds 25 mph (40 km/h) or more for 10 minutes or more.

-5. Check for DTCs with the HDS.

DTC Description	DTC
C1040-00 Wheel Speed Signal Error	B

Is DTC C1040-00 indicated?

YES

The failure is duplicated. Check the tire pressure and inspect for uneven wear.

NO

Intermittent failure, the system is OK at this time. **Refer to intermittent failures troubleshooting**.

DTC C1C00-F0, U0401-68 (MILLIMETER WAVE RADAR)

DTC C1C00-F0 : (APP Sensor Signal Failure)

DTC U0401-68 : (PCM (PGM-FI System) Malfunction)

NOTE:

- Before you troubleshoot, **review the general troubleshooting information**.
- This DTC is recorded when the millimeter wave radar receives failure information for the PCM via the F-CAN.
- If a DTC is recorded again after it is cleared with the HDS, **perform a troubleshooting for the PGM-FI system** .
- The functions of the integrated driver support system that will be temporarily canceled when this DTC is recorded can be confirmed with the **DTC troubleshooting index**.

DTC Description	DTC
C1C00-F0 (APP Sensor Signal Failure)	B
U0401-68 (PCM (PGM-FI System) Malfunction)	B

DTC (IDAS)

1. Problem verification

-1. Turn the vehicle to the ON mode.

-2. Clear the DTC with the HDS.

-3. Turn the vehicle to the OFF (LOCK) mode.

-4. Turn the vehicle to the ON mode, then wait for at least 6 seconds.

-5. Check for DTCs with the HDS.

DTC Description	DTC
C1C00-F0 (APP Sensor Signal Failure)	B
U0401-68 (PCM (PGM-FI System) Malfunction)	B

Is DTC C1C00-F0 or U0401-68 indicated?

YES

The failure is duplicated, **go to the PGM-FI system troubleshooting** .

NO

Intermittent failure, the system is OK at this time. **Refer to intermittent failures troubleshooting**.

DTC P0564-11

DTC P0564-11 : ACC/LKAS Switch Signal Circuit Short

NOTE:

- Before you troubleshoot, **review the general troubleshooting information**.
- The functions of the integrated driver support system that will be temporarily canceled when this DTC is recorded can be confirmed with the **DTC troubleshooting index**.

DTC Description	DTC
P0564-11 ACC/LKAS Switch Signal Circuit Short	B

DTC (IDAS)

1. Problem verification

-1. Turn the vehicle to the ON mode.

-2. Clear the DTC with the HDS.

-3. Turn the vehicle to the OFF (LOCK) mode.

-4. Turn the vehicle to the ON mode, then wait for at least 6 seconds.

-5. Check for DTCs with the HDS.

DTC Description	DTC
P0564-11 ACC/LKAS Switch Signal Circuit Short	B

Is DTC P0564-11 indicated?

YES

The failure is duplicated. Go to step 2.

NO

Intermittent failure, the system is OK at this time. **Refer to intermittent failures troubleshooting**.

2. Shorted wire check (LKAS/DIST line) 1

-1. Turn the vehicle to the OFF (LOCK) mode.

-2. Disconnect the following connector.

ACC combination switch 12P connector

-3. Turn the vehicle to the ON mode.

-4. Measure the voltage between test points 1 and 2.

Test condition	Vehicle ON mode
B	ACC combination switch 12P connector: disconnected
Test point 1	ACC combination switch 12P connector (female terminals) No. 12: ①

Test point 2	Body ground

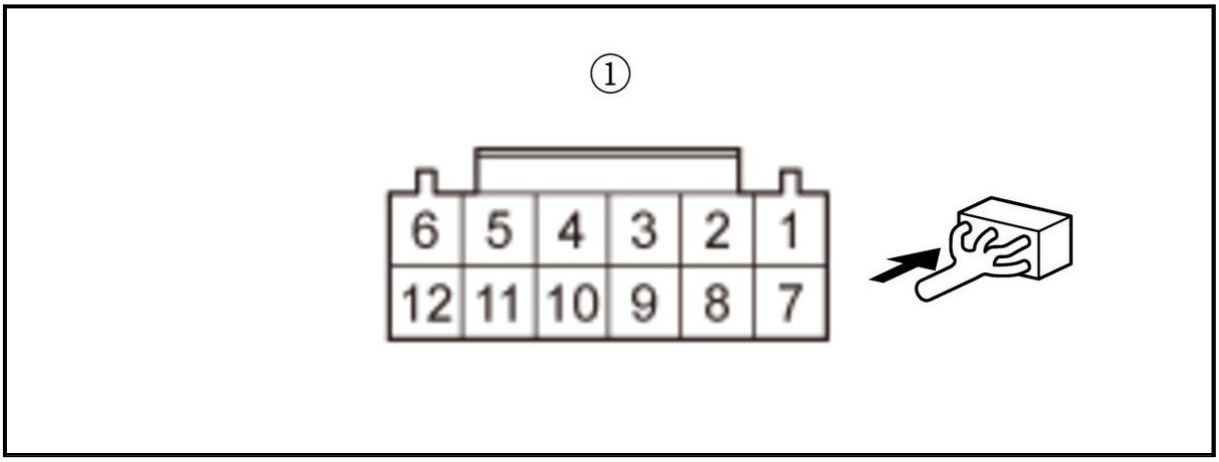

Is there about 5 V?

YES

Replace the ACC combination switch .

NO

Go to step 3.

3. Shorted wire check (LKAS/DIST line) 2

-1. Turn the vehicle to the OFF (LOCK) mode.

-2. Disconnect the following connector.

Cable reel connector D (20P)

-3. Check for continuity between test points 1 and 2.

Test condition	Vehicle OFF (LOCK) mode
B	ACC combination switch 12P connector: disconnected
B	Cable reel connector D (20P): disconnected
Test point 1	Cable reel connector D (20P) (male terminals) No. 20: ①
Test point 2	Body ground

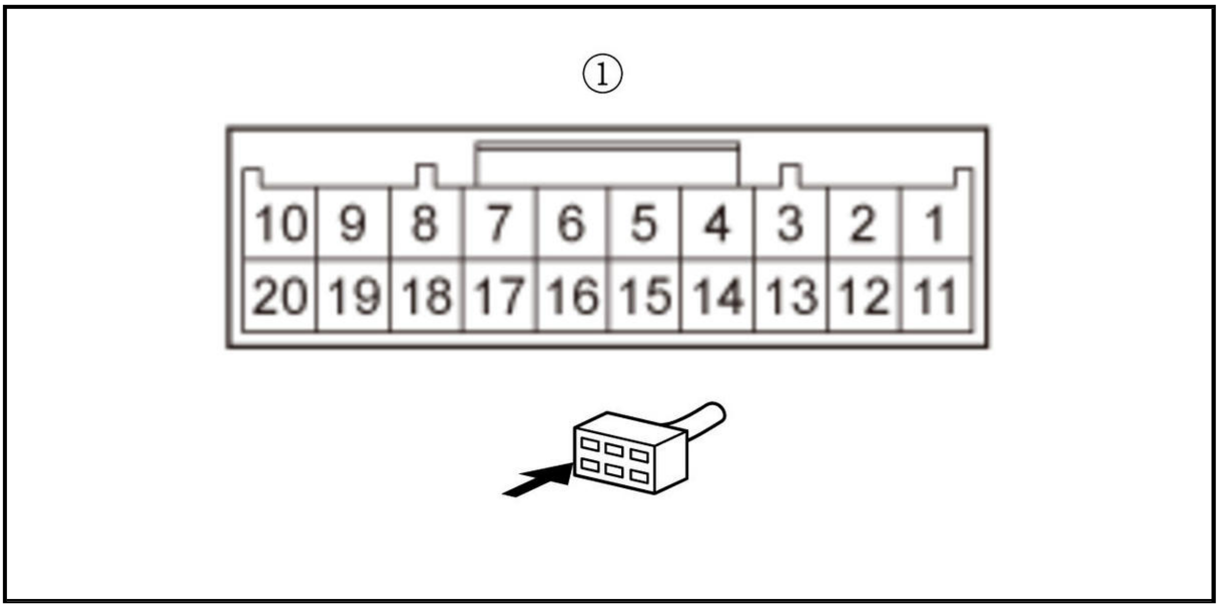

Is there continuity?

YES

Go to step 4.

NO

Repair a short to ground in the LKAS/DIST wire between the ACC combination switch and the cable reel.

4. Shorted wire check (DISTANCE_SW line) 1

-1. Disconnect the following connector.

Cable reel connector A (20P)

-2. Check for continuity between test points 1 and 2.

Test condition	Vehicle OFF (LOCK) mode
B	ACC combination switch 12P connector: disconnected
B	Cable reel connector A (20P): disconnected
B	Cable reel connector D (20P): disconnected
Test point 1	Cable reel connector A (20P) (female terminals) No. 8: ①
Test point 2	Body ground

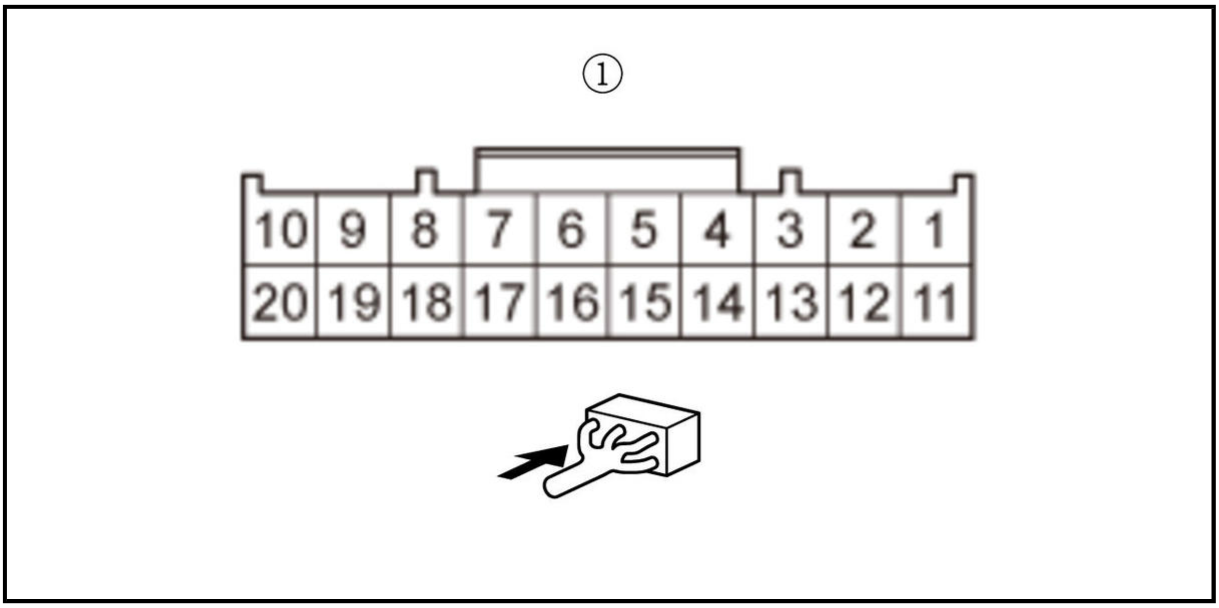

Is there continuity?

YES

Go to step 5.

NO

Replace the cable reel .

5. Shorted wire check (DISTANCE_SW line) 2

-1. Disconnect the following connector.

Gauge control module connector A (32P)

-2. Measure the resistance between test points 1 and 2.

Test condition	Vehicle OFF (LOCK) mode
B	ACC combination switch 12P connector: disconnected
B	Cable reel connector A (20P): disconnected
B	Cable reel connector D (20P): disconnected
B	Gauge control module connector A (32P): disconnected
Test point 1	**Gauge control module connector A (32P) No. 28**

Test point 2	Body ground

Is there 1.0 MΩ or more?

YES

Replace the gauge control module .

NO

Repair a short to ground in the DISTANCE_SW wire between the gauge control module and the cable reel.

DTC P0564-15

DTC P0564-15 : ACC/LKAS Switch Signal Circuit Open

NOTE:

- Before you troubleshoot, **review the general troubleshooting information**.
- The functions of the integrated driver support system that will be temporarily canceled when this DTC is recorded can be confirmed with the **DTC troubleshooting index**.

DTC Description	DTC
P0564-15 ACC/LKAS Switch Signal Circuit Open	B

DTC (IDAS)

1. Problem verification

   -1. Turn the vehicle to the ON mode.

   -2. Clear the DTC with the HDS.

   -3. Turn the vehicle to the OFF (LOCK) mode.

   -4. Turn the vehicle to the ON mode, then wait for at least 6 seconds.

   -5. Check for DTCs with the HDS.

DTC Description	DTC
P0564-15 ACC/LKAS Switch Signal Circuit Open	B

   Is DTC P0564-15 indicated?

   YES

   The failure is duplicated. Go to step 2.

   NO

   Intermittent failure, the system is OK at this time. **Refer to intermittent failures troubleshooting**.

2. Open wire check (LKAS/DIST line) 1

   -1. Turn the vehicle to the OFF (LOCK) mode.

   -2. Disconnect the following connector.

ACC combination switch 12P connector

   -3. Turn the vehicle to the ON mode.

   -4. Measure the voltage between test points 1 and 2.

Test condition	Vehicle ON mode
B	ACC combination switch 12P connector: disconnected
Test point 1	ACC combination switch 12P connector (female terminals) No. 12: ①
Test point 2	Body ground

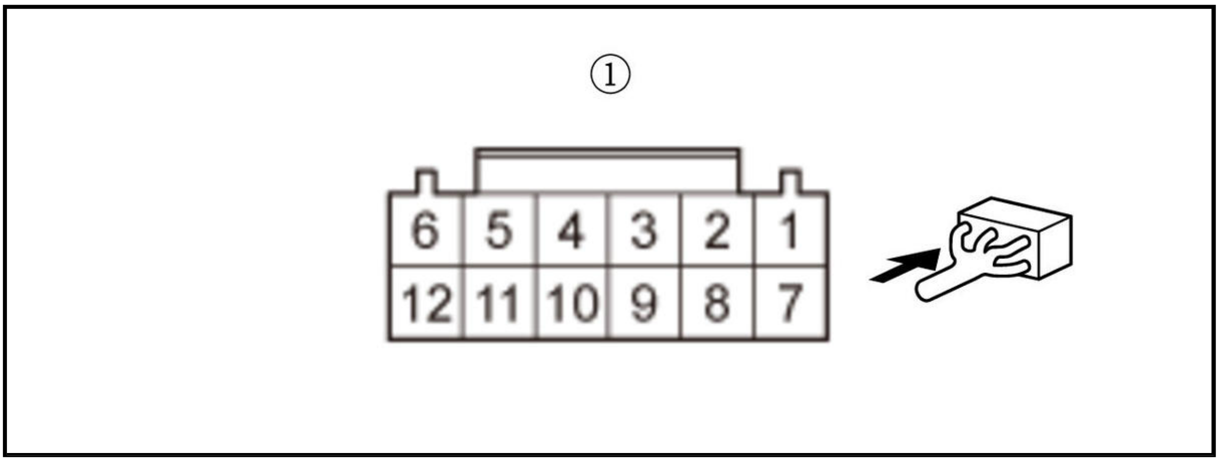

Is there about 5 V?

YES

Go to step 3.

NO

Go to step 7.

3. Determine possible failure area (ACC combination switch, others)

-1. Measure the voltage between test points 1 and 2.

Test condition	Vehicle ON mode
B	ACC combination switch 12P connector: disconnected
Test point 1	ACC combination switch 12P connector (female terminals) No. 12: ①
Test point 2	ACC combination switch 12P connector (female terminals) No. 5: ①

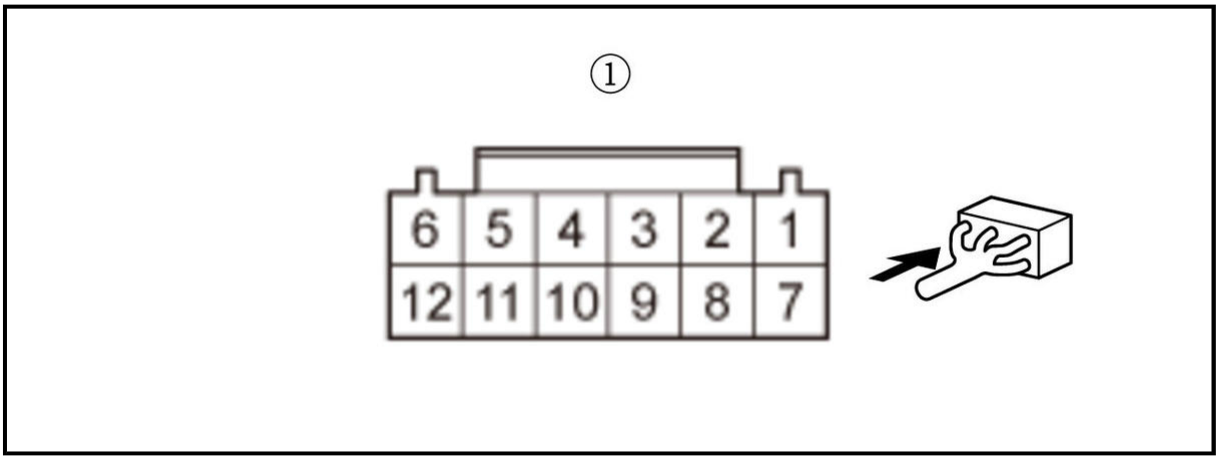

Is there about 5 V?

YES

Replace the ACC combination switch .

NO

Go to step 4.

4. Open wire check (CRUISE_GND line) 1

-1. Turn the vehicle to the OFF (LOCK) mode.

-2. Disconnect the following connector.

Cable reel connector D (20P)

-3. Measure the resistance between test points 1 and 2.

Test condition	Vehicle OFF (LOCK) mode
B	ACC combination switch 12P connector: disconnected
B	Cable reel connector D (20P): disconnected
Test point 1	ACC combination switch 12P connector (female terminals) No. 5: ①
Test point 2	Cable reel connector D (20P) (female terminals) No. 17: ②

①

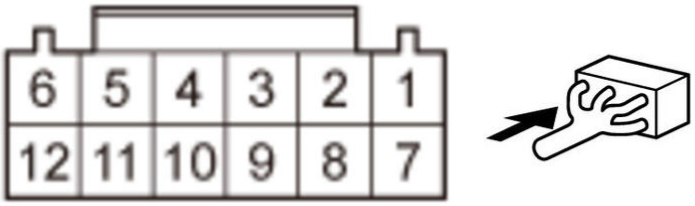

②

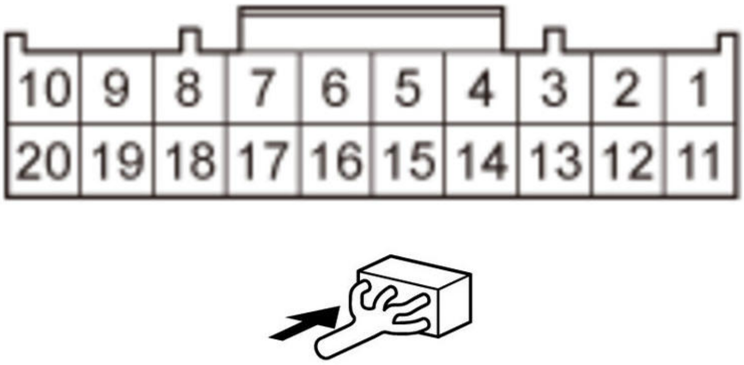

Is there 1.0 Ω or less?

YES

Go to step 5.

NO

Repair an open in the CRUISE_GND wire between the ACC combination switch and the cable reel.

5. Cable reel check

-1. **Remove the cable reel** .

-2. On the cable reel side, measure the resistance between test points 1 and 2.

Test condition	Vehicle OFF (LOCK) mode
B	ACC combination switch 12P connector: disconnected
B	Cable reel connector A (20P): disconnected
B	Cable reel connector D (20P): disconnected
Test point 1	Cable reel connector A (20P) (male terminals) No. 5: ①
Test point 2	Cable reel connector D (20P) (male terminals) No. 17: ②

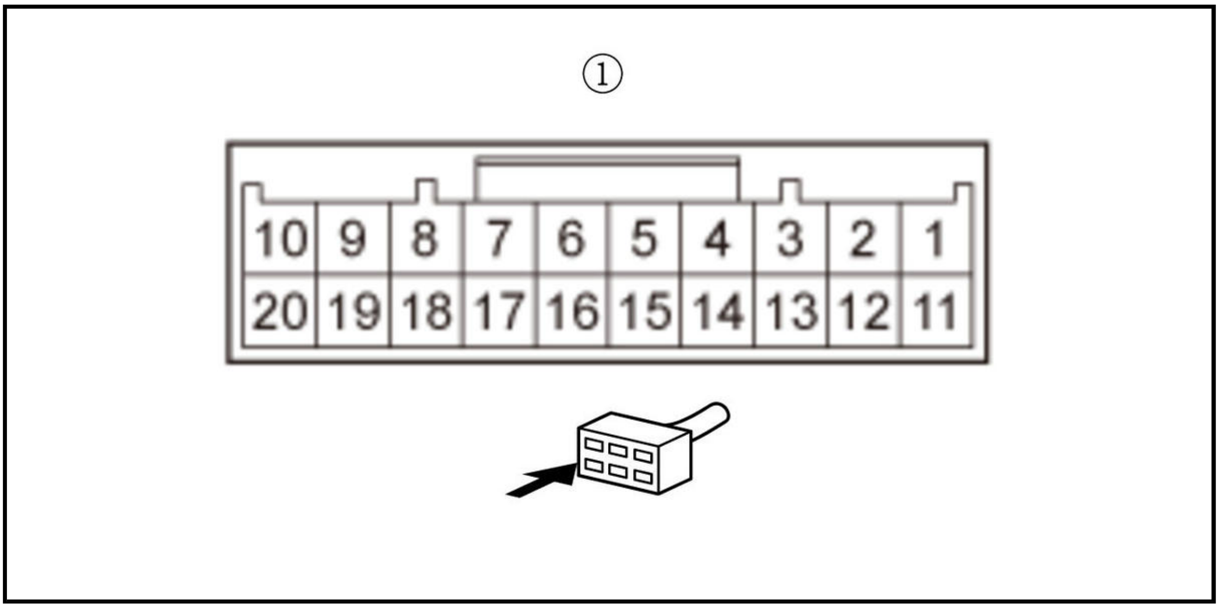
①
10 9 8 7 6 5 4 3 2 1
20 19 18 17 16 15 14 13 12 11

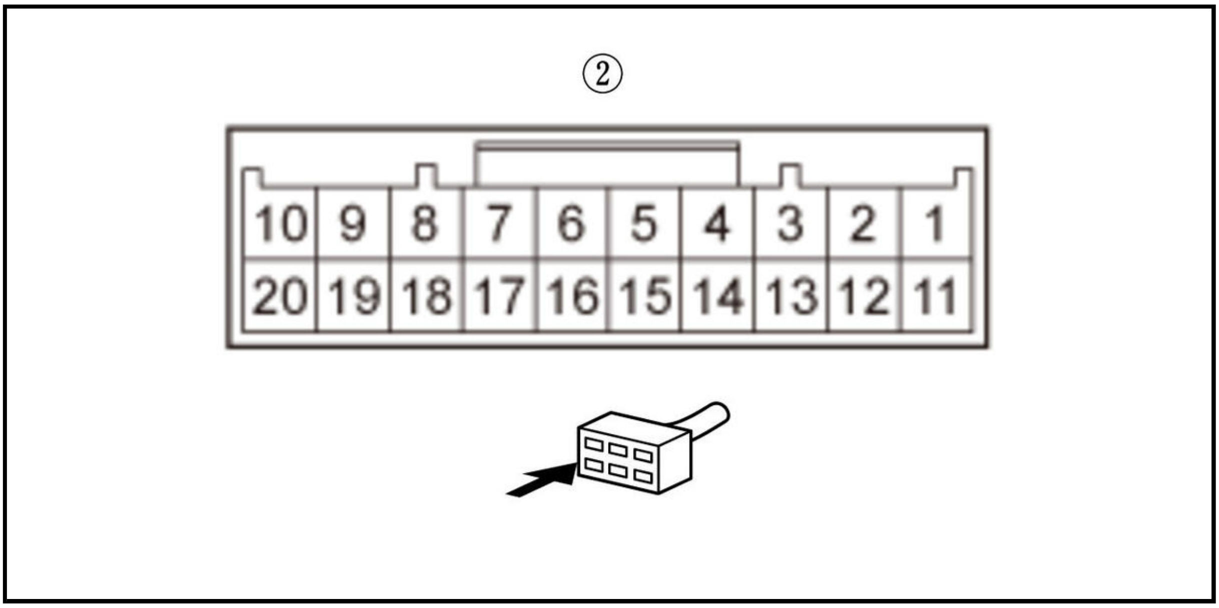
②
10 9 8 7 6 5 4 3 2 1
20 19 18 17 16 15 14 13 12 11

Is there 1.0 Ω or less?

YES

Go to step 6.

NO

Replace the cable reel .

6. Open wire check (CRUISE_GND line) 2

-1. Disconnect the following connector.

Gauge control module connector A (32P)

-2. Measure the resistance between test points 1 and 2.

Test condition	Vehicle OFF (LOCK) mode
B	ACC combination switch 12P connector: disconnected
B	Cable reel connector A (20P): disconnected
B	Cable reel connector D (20P): disconnected
B	Gauge control module connector A (32P): disconnected
Test point 1	Gauge control module connector A (32P) No. 5

Test point 2	Cable reel connector A (20P) (female terminals) No. 5: ①

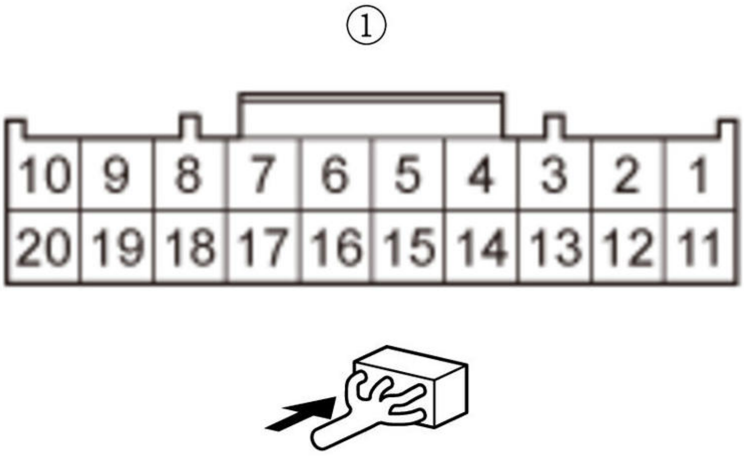

Is there 1.0 Ω or less?

YES

Replace the gauge control module .

NO

Repair an open in the CRUISE_GND wire between the gauge control module and the cable reel.

7. Open wire check (LKAS/DIST line) 2

-1. Turn the vehicle to the OFF (LOCK) mode.

-2. Disconnect the following connector.

Cable reel connector D (20P)

-3. Turn the vehicle to the ON mode.

-4. On the cable reel side, measure the voltage between test points 1 and 2.

Test condition	Vehicle ON mode
B	ACC combination switch 12P connector: disconnected
B	Cable reel connector D (20P): disconnected
Test point 1	Cable reel connector D (20P) (male terminals) No. 20: ①
Test point 2	Body ground

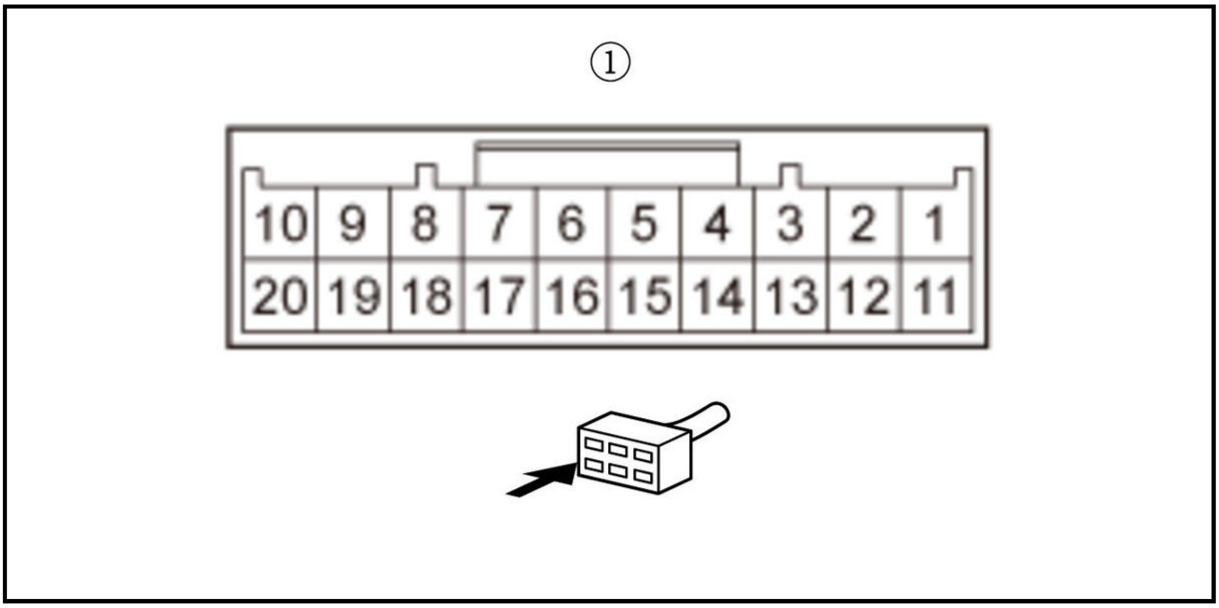

Is there about 5 V?

YES

Repair an open in the LKAS/DIST wire between the ACC combination switch and the cable reel.

NO

Go to step 8.

8. Cable reel check

-1. Turn the vehicle to the OFF (LOCK) mode.

-2. Disconnect the following connector.

Cable reel connector A (20P)

-3. Turn the vehicle to the ON mode.

-4. Measure the voltage between test points 1 and 2.

Test condition	Vehicle ON mode
B	ACC combination switch 12P connector: disconnected
B	Cable reel connector A (20P): disconnected
B	Cable reel connector D (20P): disconnected
Test point 1	Cable reel connector A (20P) (female terminals) No. 8: ①
Test point 2	Body ground

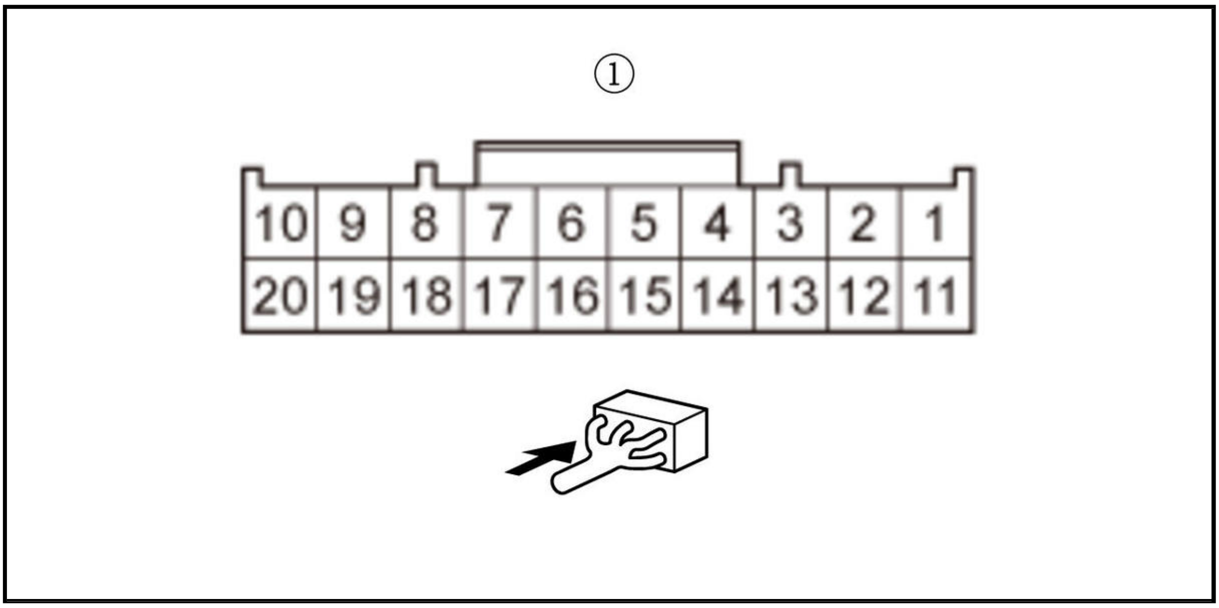

Is there about 5 V?

YES

Replace the cable reel .

NO

Go to step 9.

9. Open wire check (DISTANCE_SW line)

-1. Turn the vehicle to the OFF (LOCK) mode.

-2. Disconnect the following connector.

Gauge control module connector A (32P)

-3. Measure the resistance between test points 1 and 2.

Test condition	Vehicle OFF mode
B	ACC combination switch 12P connector: disconnected
B	Cable reel connector D (20P): disconnected
B	Cable reel connector A (20P): disconnected
B	Gauge control module connector A (32P): disconnected
Test point 1	**Gauge control module connector A (32P) No. 28**
Test point 2	Cable reel connector A (20P) (female terminals) No. 8: ①

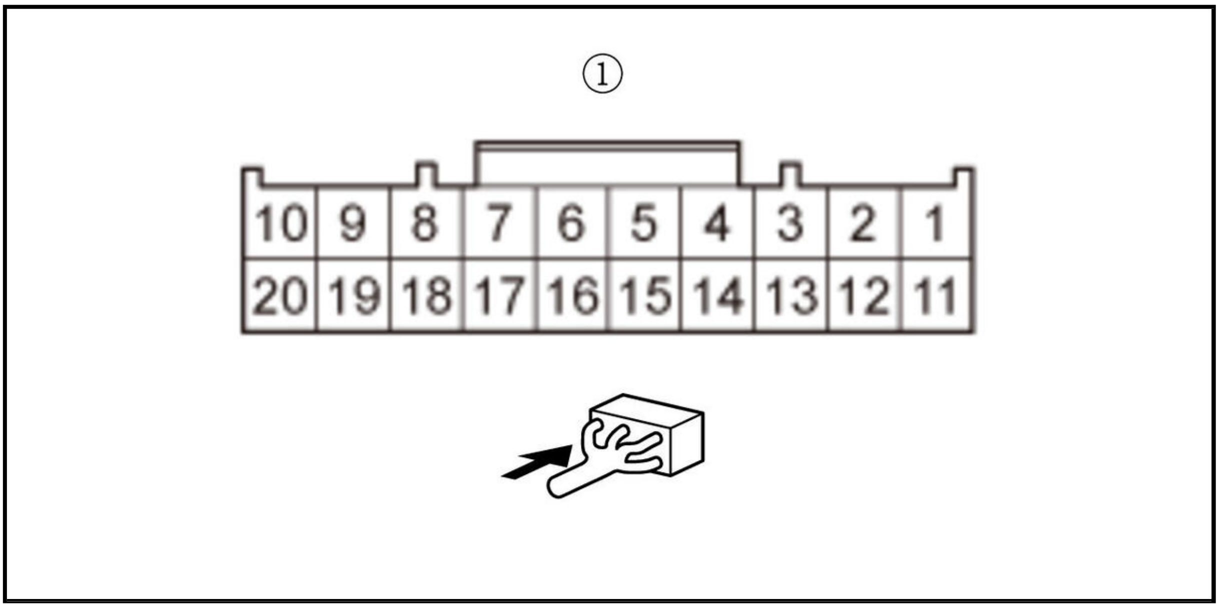

Is there 1.0 Ω or less?

YES

Replace the gauge control module .

NO

Repair an open in the DISTANCE_SW wire between the gauge control module and the cable reel.

DTC P0589-11

DTC P0589-11 : Main Switch Signal Circuit Short

NOTE:

- Before you troubleshoot, **review the general troubleshooting information**.
- The functions of the integrated driver support system that will be temporarily canceled when this DTC is recorded can be confirmed with the **DTC troubleshooting index**.

DTC Description	DTC
P0589-11 Main Switch Signal Circuit Short	B

DTC (IDAS)

1. Problem verification

-1. Turn the vehicle to the ON mode.

-2. Clear the DTC with the HDS.

-3. Turn the vehicle to the OFF (LOCK) mode.

-4. Turn the vehicle to the ON mode, then wait for at least 6 seconds.

-5. Check for DTCs with the HDS.

DTC Description	DTC
P0589-11 Main Switch Signal Circuit Short	B

Is DTC P0589-11 indicated?

YES

The failure is duplicated. Go to step 2.

NO

Intermittent failure, the system is OK at this time. **Refer to intermittent failures troubleshooting**.

2. Shorted wire check (CRUISE_SW line) 1

-1. Turn the vehicle to the OFF (LOCK) mode.

-2. Disconnect the following connector.

ACC combination switch 12P connector

-3. Turn the vehicle to the ON mode.

-4. Measure the voltage between test points 1 and 2.

Test condition	Vehicle ON mode
B	ACC combination switch 12P connector: disconnected
Test point 1	ACC combination switch 12P connector (female terminals) No. 6: ①
Test point 2	Body ground

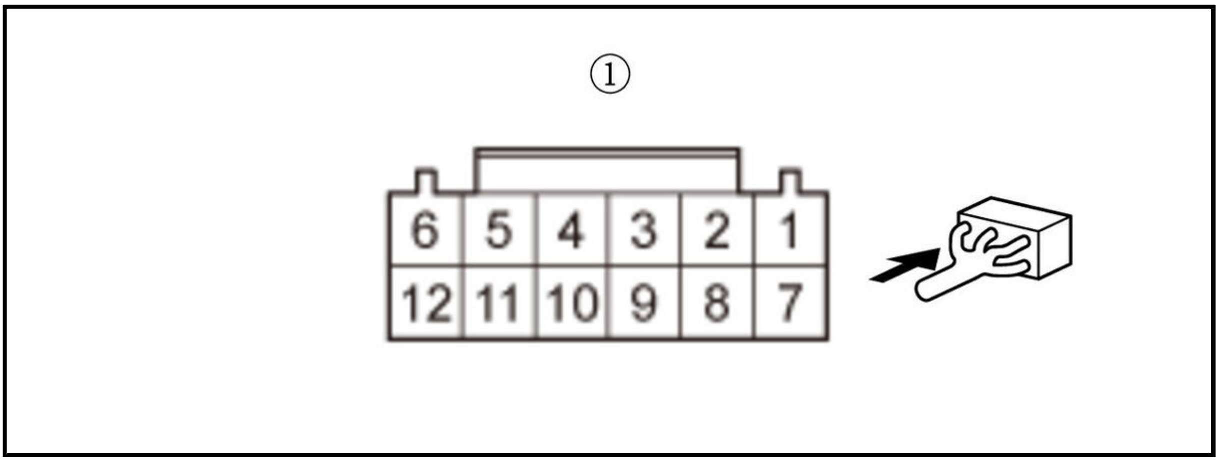

Is there about 5 V?

YES

Replace the ACC combination switch .

NO

Go to step 3.

3. Shorted wire check (CRUISE_SW line) 2

-1. Turn the vehicle to the OFF (LOCK) mode.

-2. Disconnect the following connector.

Cable reel connector D (20P)

-3. On the cable reel side, check for continuity between test points 1 and 2.

Test condition	Vehicle OFF (LOCK) mode
B	ACC combination switch 12P connector: disconnected
B	Cable reel connector D (20P): disconnected
Test point 1	Cable reel connector D (20P) (male terminals) No. 16: ①
Test point 2	Body ground

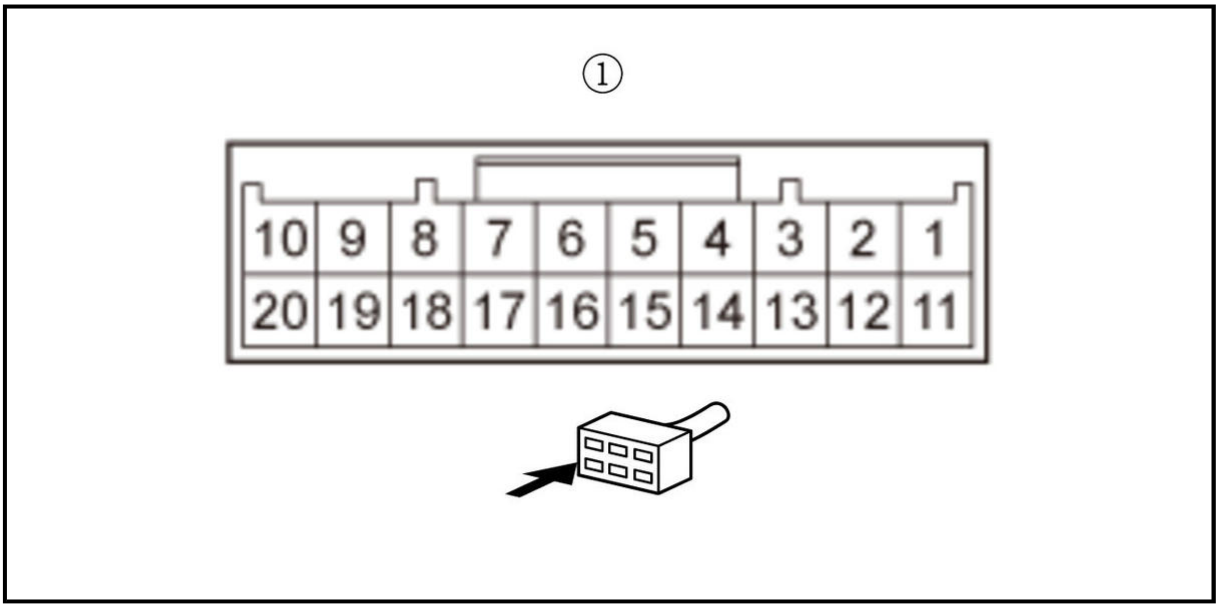

Is there continuity?

YES

Go to step 4.

NO

Repair a short to ground in the CRUISE_SW wire between the ACC combination switch and the cable reel.

4. Shorted wire check (CRUISE_SW line) 3

-1. Disconnect the following connector.

Cable reel connector A (20P)

-2. Check for continuity between test points 1 and 2.

Test condition	Vehicle OFF (LOCK) mode
B	ACC combination switch 12P connector: disconnected
B	Cable reel connector A (20P): disconnected
B	Cable reel connector D (20P): disconnected
Test point 1	Cable reel connector A (20P) (female terminals) No. 4: ①
Test point 2	Body ground

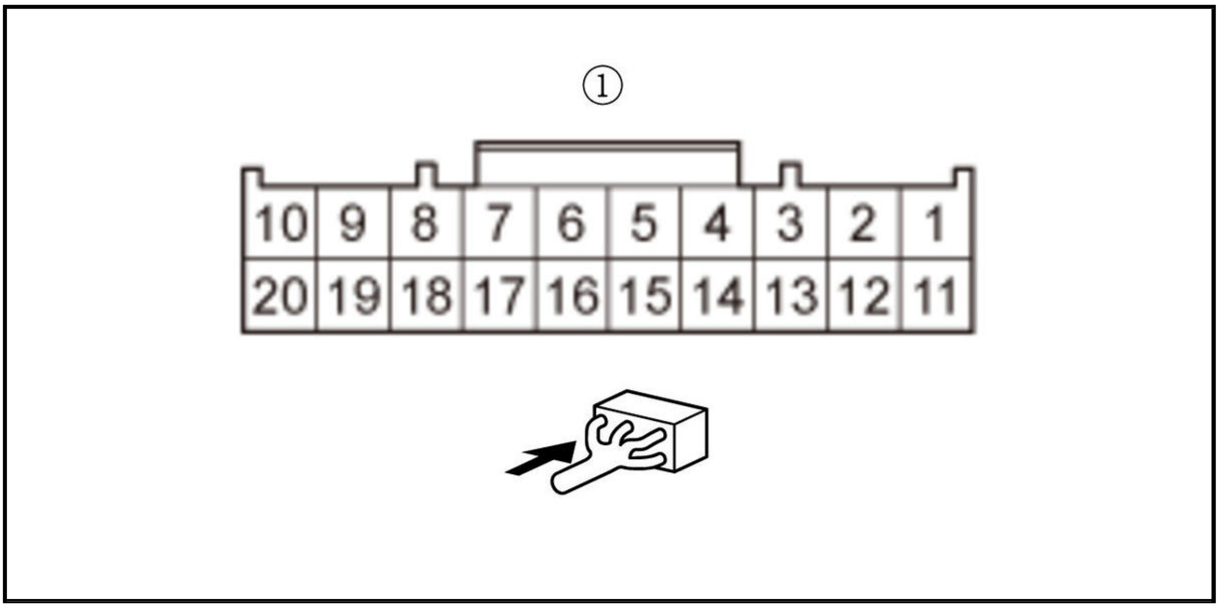

Is there continuity?

YES

Go to step 5.

NO

Replace the cable reel .

5. Shorted wire check (CRUISE_SW line) 4

-1. Disconnect the following connector.

Gauge control module connector A (32P)

-2. Measure the resistance between test points 1 and 2.

Test condition	Vehicle OFF (LOCK) mode
B	ACC combination switch 12P connector: disconnected
B	Cable reel connector A (20P): disconnected
B	Cable reel connector D (20P): disconnected
B	Gauge control module connector A (32P): disconnected
Test point 1	**Gauge control module connector A (32P) No. 14**

Test point 2	Body ground

Is there 1.0 MΩ or more?

YES

Replace the gauge control module .

NO

Repair a short to ground in the CRUISE_SW wire between the gauge control module and the cable reel.

DTC P0589-15

DTC P0589-15 : Main Switch Signal Circuit Open

NOTE:

- Before you troubleshoot, **review the general troubleshooting information**.
- The functions of the integrated driver support system that will be temporarily canceled when this DTC is recorded can be confirmed with the **DTC troubleshooting index**.

DTC Description	DTC
P0589-15 Main Switch Signal Circuit Open	B

DTC (IDAS)

1. Problem verification

   -1. Turn the vehicle to the ON mode.

   -2. Clear the DTC with the HDS.

   -3. Turn the vehicle to the OFF (LOCK) mode.

   -4. Turn the vehicle to the ON mode, then wait for at least 6 seconds.

   -5. Check for DTCs with the HDS.

DTC Description	DTC
P0589-15 Main Switch Signal Circuit Open	B

   Is DTC P0589-15 indicated?

   YES

   The failure is duplicated. Go to step 2.

   NO

   Intermittent failure, the system is OK at this time. **Refer to intermittent failures troubleshooting**.

2. Open wire check (CRUISE_SW line) 1

   -1. Turn the vehicle to the OFF (LOCK) mode.

   -2. Disconnect the following connector.

ACC combination switch 12P connector

   -3. Turn the vehicle to the ON mode.

   -4. Measure the voltage between test points 1 and 2.

Test condition	Vehicle ON mode
B	ACC combination switch 12P connector: disconnected
Test point 1	ACC combination switch 12P connector (female terminals) No. 6: ①
Test point 2	Body ground

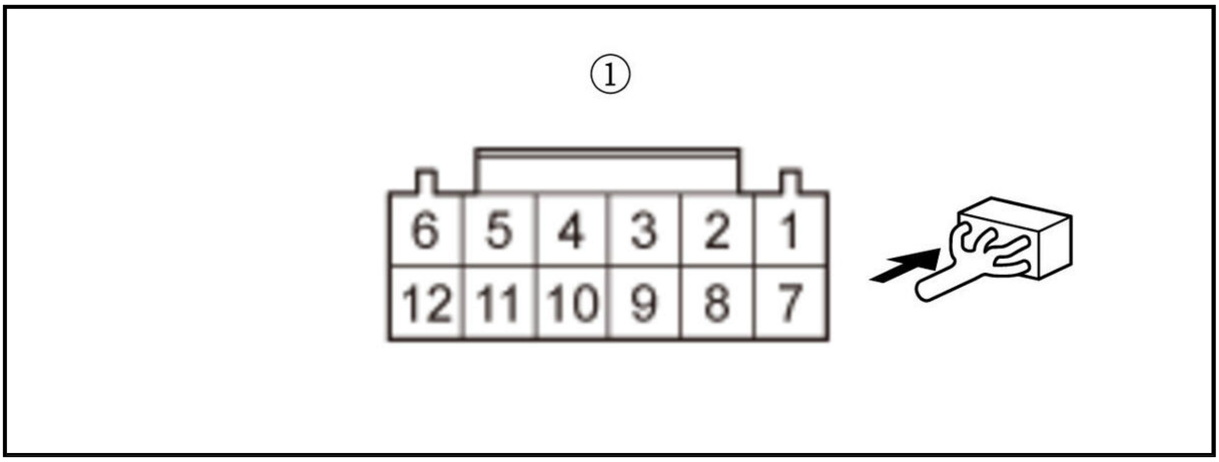

Is there about 5 V?

YES

Go to step 3.

NO

Go to step 7.

3. ACC combination switch circuit check

-1. Measure the voltage between test points 1 and 2.

Test condition	Vehicle ON mode
B	ACC combination switch 12P connector: disconnected
Test point 1	ACC combination switch 12P connector (female terminals) No. 6: ①
Test point 2	ACC combination switch 12P connector (female terminals) No. 5: ①

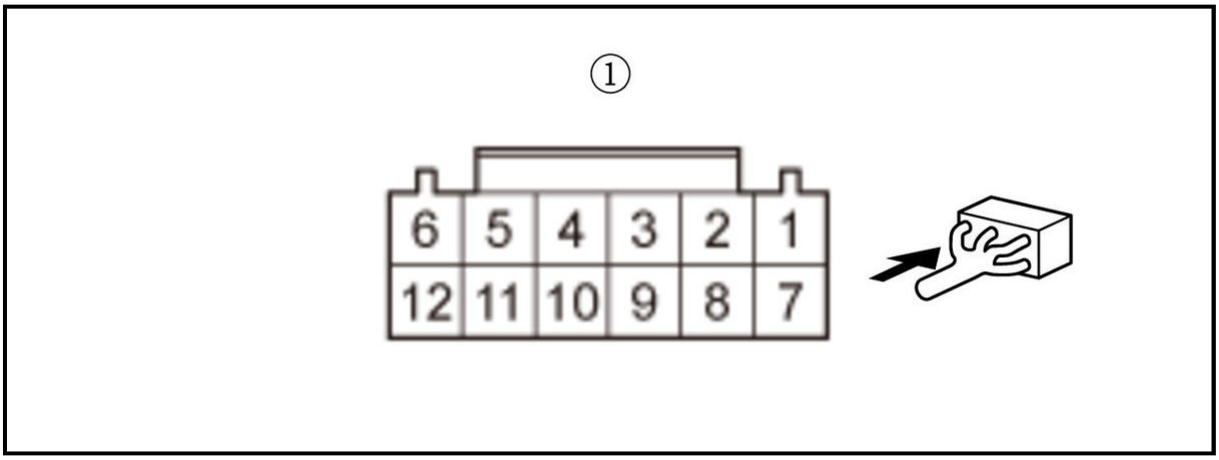

Is there about 5 V?

YES

Replace the ACC combination switch .

NO

Go to step 4.

4. Open wire check (CRUISE_GND line) 1

-1. Turn the vehicle to the OFF (LOCK) mode.

-2. Disconnect the following connector.

Cable reel connector D (20P)

-3. Measure the resistance between test points 1 and 2.

Test condition	Vehicle OFF (LOCK) mode
B	ACC combination switch 12P connector: disconnected
B	Cable reel connector D (20P) connector: disconnected
Test point 1	ACC combination switch 12P connector (female terminals) No. 5: ①
Test point 2	Cable reel connector D (20P) (female terminals) No. 17: ②

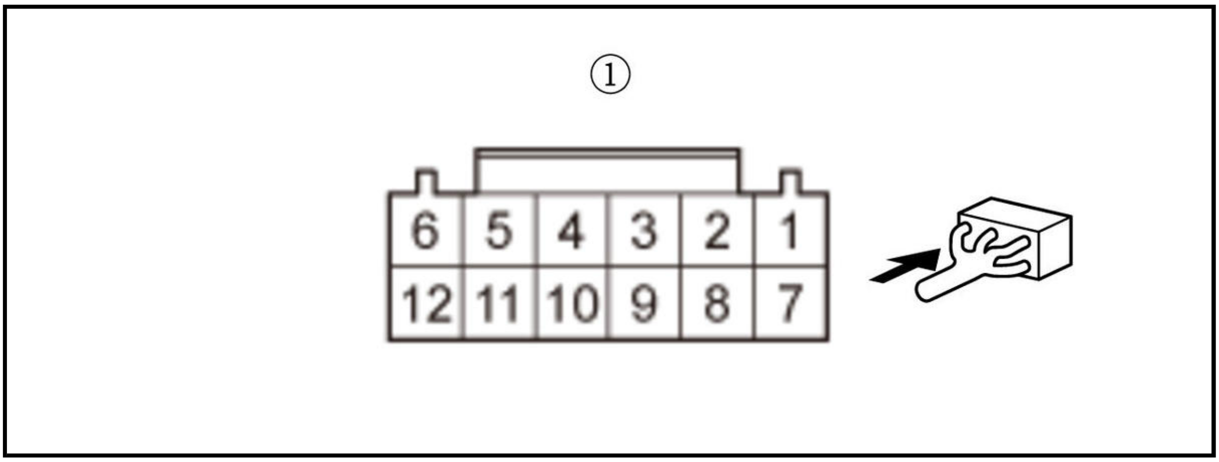

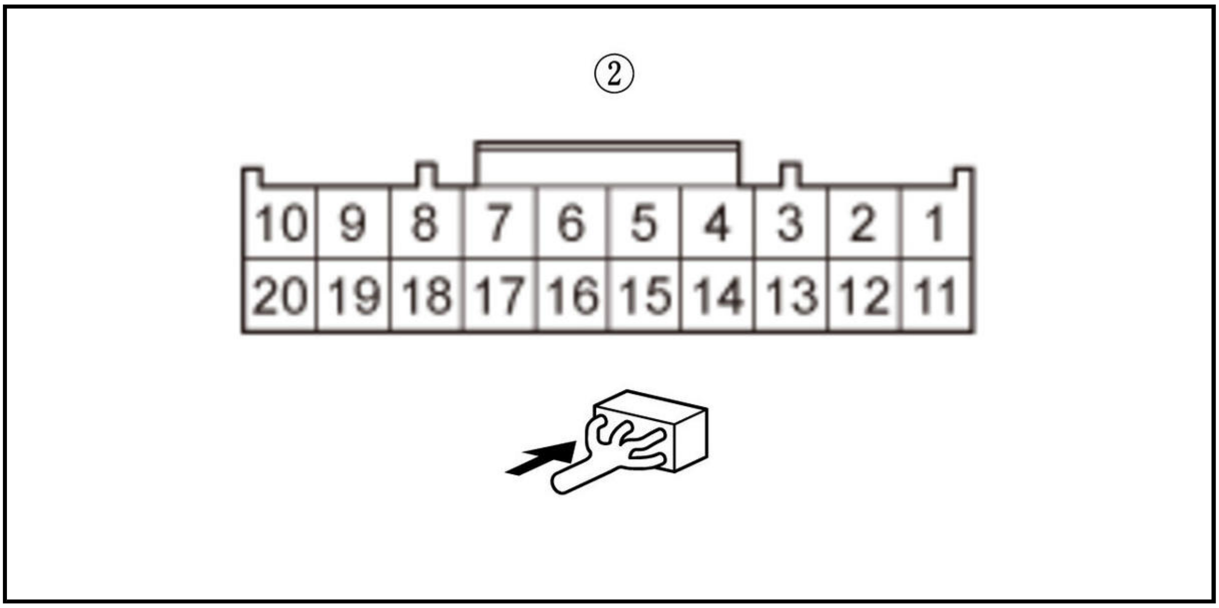

Is there 1.0 Ω or less?

YES

Go to step 5.

NO

Repair an open in the CRUISE_GND wire between the ACC combination switch and the cable reel.

5. Cable reel check

-1. **Remove the cable reel** .

-2. On the cable reel side, measure the resistance between test points 1 and 2.

Test condition	Vehicle OFF (LOCK) mode
B	ACC combination switch 12P connector: disconnected
B	Cable reel connector A (20P) connector: disconnected
B	Cable reel connector D (20P) connector: disconnected
Test point 1	Cable reel connector A (20P) (male terminals) No. 5: ①
Test point 2	Cable reel connector D (20P) (male terminals) No. 17: ②

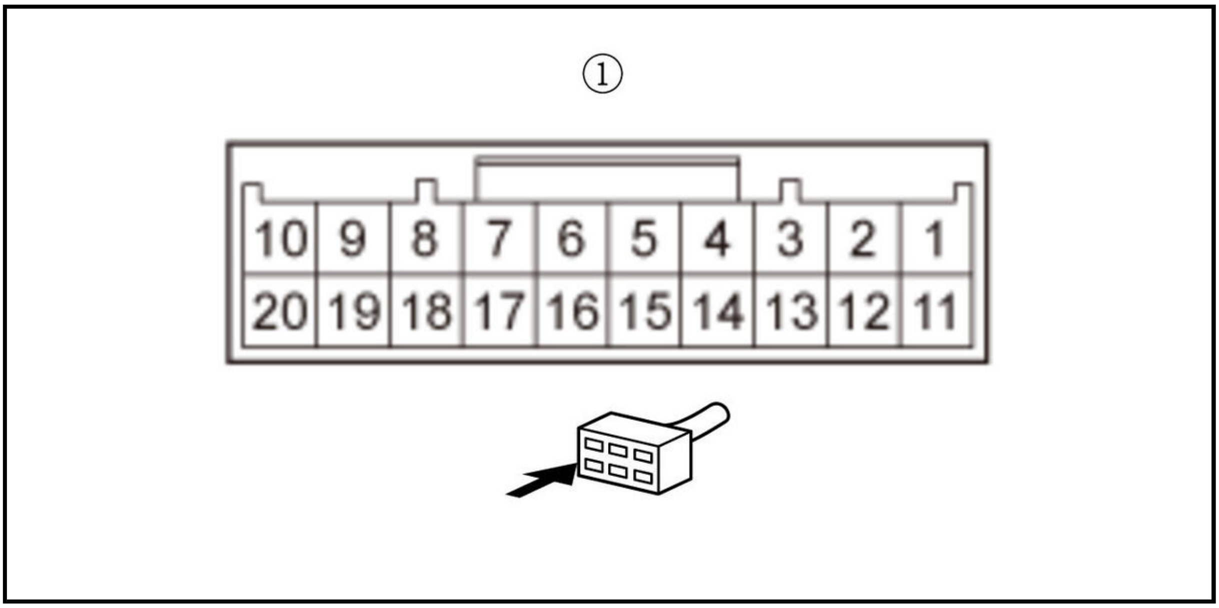
①
10 9 8 7 6 5 4 3 2 1
20 19 18 17 16 15 14 13 12 11

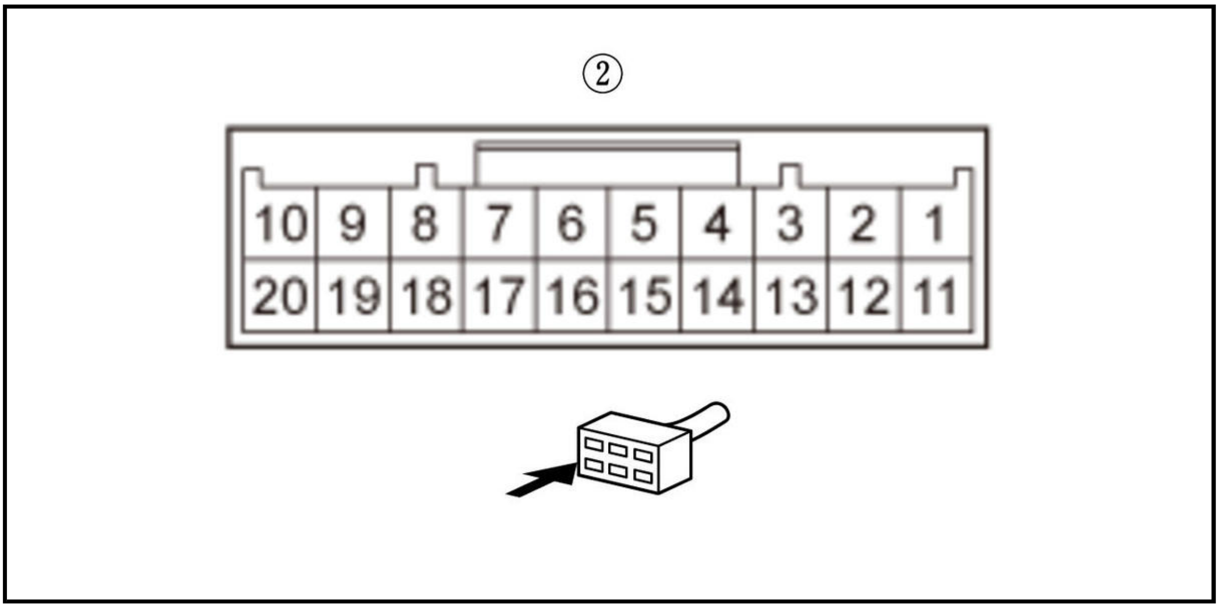
②
10 9 8 7 6 5 4 3 2 1
20 19 18 17 16 15 14 13 12 11

Is there 1.0 Ω or less?

YES

Go to step 6.

NO

Replace the cable reel .

6. Open wire check (CRUISE_GND line) 2

-1. Disconnect the following connector.

Gauge control module connector A (32P)

-2. Measure the resistance between test points 1 and 2.

Test condition	Vehicle OFF (LOCK) mode
B	ACC combination switch 12P connector: disconnected
B	Cable reel connector A (20P) connector: disconnected
B	Cable reel connector D (20P) connector: disconnected
B	Gauge control module connector A (32P): disconnected
Test point 1	**Gauge control module connector A (32P) No. 5**
Test point 2	Cable reel connector A (20P) (female terminals) No. 5: ①

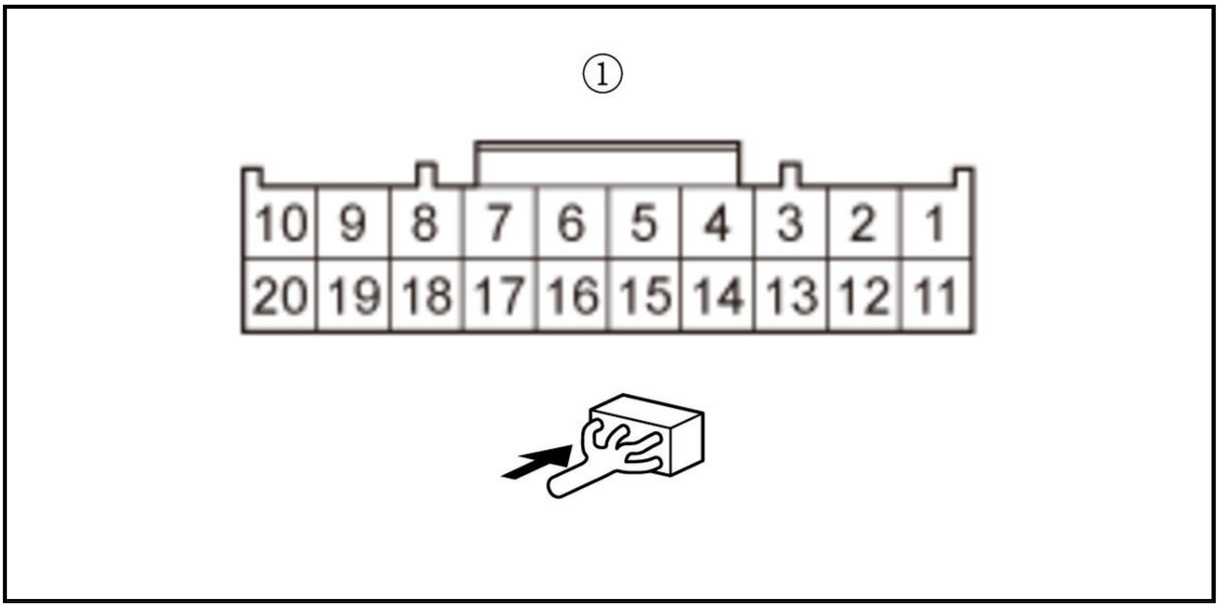

Is there 1.0 Ω or less?

YES

Replace the gauge control module .

NO

Repair an open in the CRUISE_GND wire between the gauge control module and the cable reel.

7. Open wire check (CRUISE_SW line) 2

-1. Turn the vehicle to the OFF (LOCK) mode.

-2. Disconnect the following connector.

Cable reel connector D (20P)

-3. Turn the vehicle to the ON mode.

-4. Measure the voltage between test points 1 and 2.

Test condition	Vehicle ON mode

B	ACC combination switch 12P connector: disconnected
B	Cable reel connector D (20P) connector: disconnected
Test point 1	Cable reel connector D (20P) (male terminals) No. 16: ①
Test point 2	Body ground

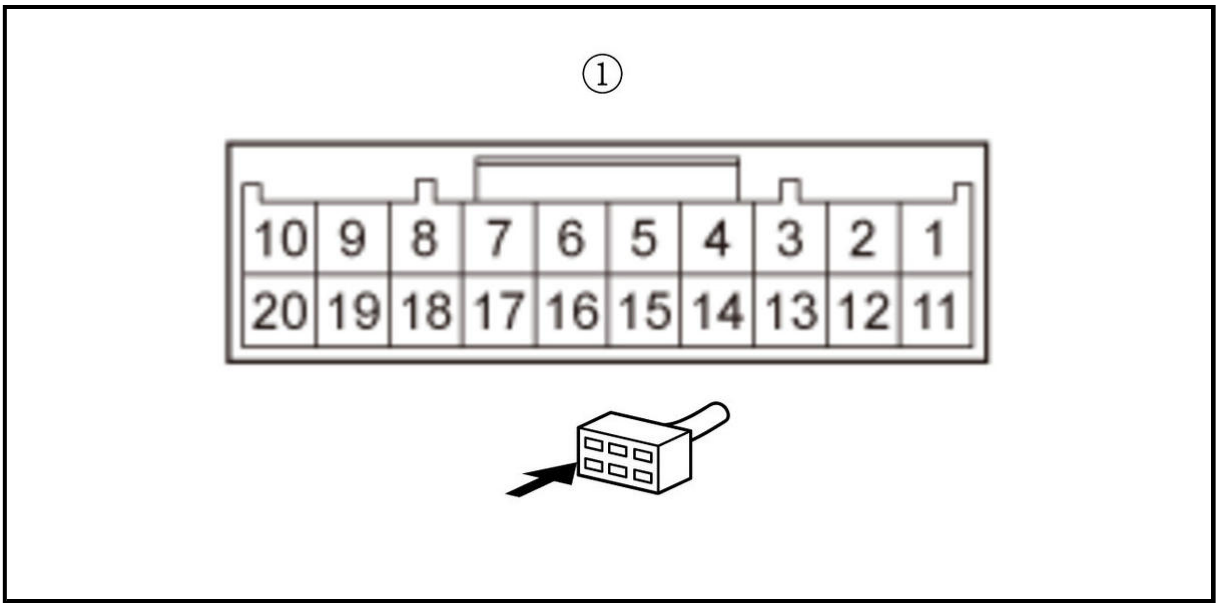

Is there about 5 V?

YES

Repair an open in the CRUISE_SW wire between the ACC combination switch and the cable reel.

NO

Go to step 8.

8. Open wire check (CRUISE_SW line) 3

-1. Turn the vehicle to the OFF (LOCK) mode.

-2. Disconnect the following connector.

Cable reel connector A (20P)

-3. Turn the vehicle to the ON mode.

-4. Measure the voltage between test points 1 and 2.

Test condition	Vehicle ON mode
B	ACC combination switch 12P connector: disconnected
B	Cable reel connector A (20P) connector: disconnected
B	Cable reel connector D (20P) connector: disconnected
Test point 1	Cable reel connector A (20P) (female terminals) No. 4: ①
Test point 2	Body ground

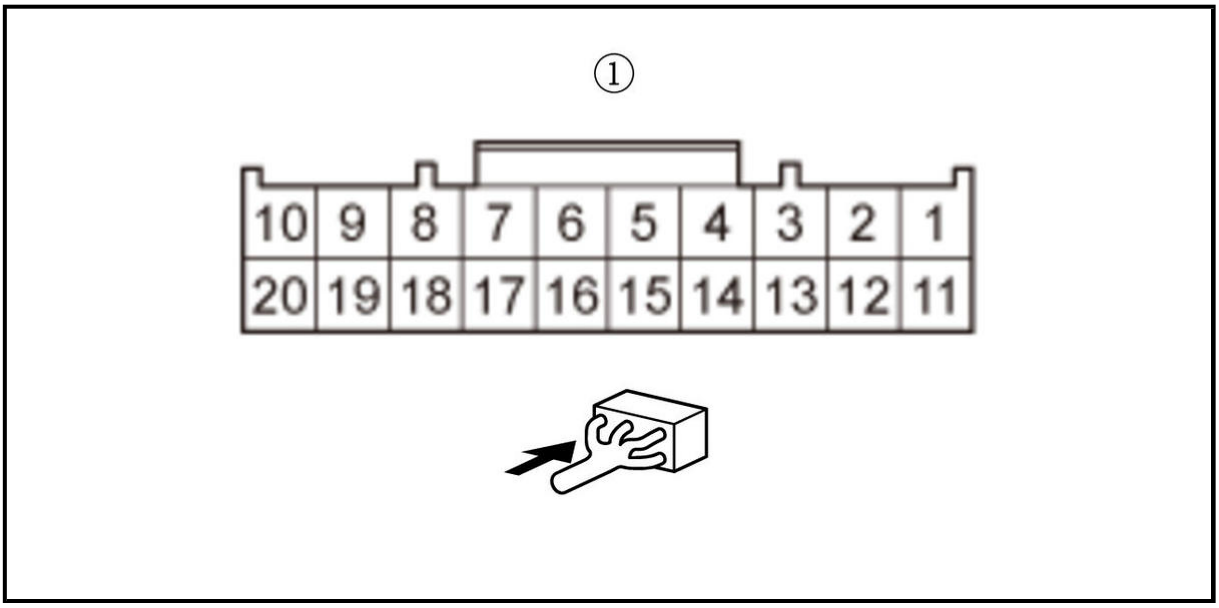

Is there about 5 V?

YES

Replace the cable reel .

NO

Go to step 9.

9. Open wire check (CRUISE_SW line) 4

-1. Turn the vehicle to the OFF (LOCK) mode.

-2. Disconnect the following connector.

Gauge control module connector A (32P)

-3. Measure the resistance between test points 1 and 2.

Test condition	Vehicle OFF mode
B	ACC combination switch 12P connector: disconnected
B	Cable reel connector A (20P) connector: disconnected
B	Cable reel connector D (20P) connector: disconnected
B	Gauge control module connector A (32P): disconnected
Test point 1	**Gauge control module connector A (32P) No. 14**
Test point 2	Cable reel connector A (20P) (female terminals) No. 4: ①

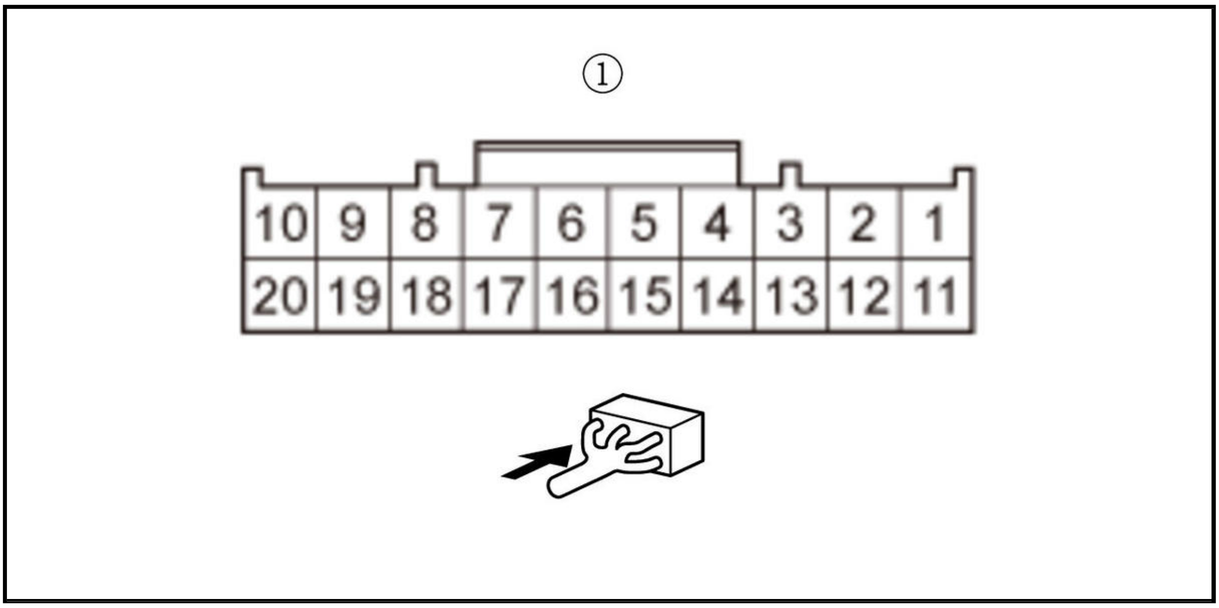

Is there 1.0 Ω or less?

YES

Replace the gauge control module .

NO

Repair an open in the CRUISE_SW wire between the gauge control module and the cable reel.

DTC P2583-49, U3000-49, U3000-57 (MILLIMETER WAVE RADAR)

DTC P2583-49 : Millimeter Wave Radar Internal Electronic Failure

DTC U3000-49 : Millimeter Wave Radar Internal Electronic Failure

DTC U3000-57 : Millimeter Wave Radar Software Failure

NOTE:

- Before you troubleshoot, **review the general troubleshooting information**.
- The functions of the integrated driver support system that will be temporarily canceled when this DTC is recorded can be confirmed with the **DTC troubleshooting index**.

DTC Description	DTC
P2583-49 Millimeter Wave Radar Internal Electronic Failure	B
U3000-49 Millimeter Wave Radar Internal Electronic Failure	B
U3000-57 Millimeter Wave Radar Software Failure	B

DTC (IDAS)

1. Problem verification

-1. Turn the vehicle to the ON mode.

-2. Clear the DTC with the HDS.

-3. Turn the vehicle to OFF (LOCK) mode and then ON mode repeatedly at least 3 times.

-4. Check for DTCs with the HDS.

DTC Description	DTC
P2583-49 Millimeter Wave Radar Internal Electronic Failure	B
U3000-49 Millimeter Wave Radar Internal Electronic Failure	B
U3000-57 Millimeter Wave Radar Software Failure	B

Is DTC P2583-49, U3000-49, or U3000-57 indicated?

YES

The failure is duplicated. **Replace the millimeter wave radar** .

NO

Intermittent failure, the system is OK at this time. **Refer to intermittent failures troubleshooting**.

DTC P2583-76

DTC P2583-76 : Temporary stop of Integrated Driver Support System (Misalignment Millimeter Wave Radar)

NOTE:

- Before you troubleshoot, **review the general troubleshooting information**.
- Before you troubleshoot, make sure all the tire pressures are correct, and remove all the cargo from the vehicle.
- This DTC is recorded if the beam axis of the millimeter wave radar gets out of alignment as follows while the vehicle is driving.
-
  - Vertical direction: 3.0 degrees or more
  - Horizontal direction: 2.5 degrees or more
- If this DTC is recorded, the following is suspected:
-
  - Change in the vehicle posture caused by an overload or the vehicle being towed.
  - It has been detected that the beam axis of the millimeter wave radar is out of alignment due to improper installation.
  - The millimeter wave radar installing portion is deformed by a minor collision or strong impact.
  - The beam axis of the millimeter wave radar is out of alignment due to abnormal wheel alignment, abnormal tire pressure, etc.
  - Altered suspension
  - When it is snowing, the radio waves transmitted and received by the millimeter wave radar may be refracted by the snow or ice attached around the millimeter wave radar such as the front grille, and are detected as a misalignment.
- If this DTC is recorded, the integrated drive support system temporarily cancels its control to prevent excessive operation or malfunction.
- Even when this DTC is recorded, the vehicle returns to normal if the misalignment of the detection axis of the millimeter wave radar is 1.5 degrees or less.
- The functions of the integrated driver support system that will be temporarily canceled when this DTC is recorded can be confirmed with the **DTC troubleshooting index**.

DTC Description	DTC
P2583-76 Temporary stop of Integrated Driver Support System (Misalignment Millimeter Wave Radar)	B

1. Check the vehicle condition

   -1. Turn the vehicle to the ON mode.

   -2. Check if any integrated driver support system related indicator comes on in the gauge control module.

   Is any indicator currently comes on?

   YES

   The failure is duplicated. Go to step 2.

   NO

   The system is OK at this time. Clear the DTC with the HDS. If the indicator is turned off, and axis misalignment has been recorded, explain to the customer that the system detected a temporarily misaligned millimeter wave axis and stopped functioning.

2. Millimeter wave radar installation check

   -1. Turn the vehicle to the OFF (LOCK) mode.

   -2. **Remove the front bumper** .

   -3. Check that the millimeter wave radar and radar bracket are installed properly and check them for deformation and damage.

   Are the millimeter wave radar and the radar bracket installed properly, and/or is there any no damage?

   YES

   Aim the millimeter wave radar . After the millimeter wave radar aiming is complete, clear the DTC with the HDS.

   NO

   Repair or replace faulty parts, then **aim the millimeter wave radar** .

DTC P2583-92

DTC P2583-92 : CMBS or FCW Over Working

NOTE:

- Before you troubleshoot, **review the general troubleshooting information**.
- This DTC is recorded when the CMBS is activated five times in a single vehicle ON mode cycle.
- If this DTC is recorded, the CMBS function does not return to normal until the DTC is cleared with the HDS.
- If this DTC is recorded, the following is suspected:
-
    - The vehicle is responding to road signs, sign boards, guardrail, etc. installed along the road frequently depending on the surrounding environment.
    - The millimeter wave radar is installed improperly and close-range obstacles are detected frequently.
    - The millimeter wave radar installing portion is deformed by a minor collision or strong impact.
    - The beam axis of the millimeter wave radar is out of alignment due to abnormal wheel alignment, abnormal tire pressure, etc.

  - The CMBS is activated several times in a row intentionally by the driver.
- After inspecting, repairing, or adjusting a possible cause of the failure, be sure to **perform millimeter wave radar aiming** . If the DTC cannot be deleted after millimeter wave radar aiming, **replace the millimeter wave radar** .
- The functions of the integrated driver support system that will be temporarily canceled when this DTC is recorded can be confirmed with the **DTC troubleshooting index**.

DTC Description	DTC
P2583-92 CMBS or FCW Over Working	B

DTC (IDAS)

1. Millimeter wave radar installation check

   -1. **Remove the front bumper** .

   -2. Check that the millimeter wave radar and radar bracket are installed properly and check them for deformation and damage.

   Are the millimeter wave radar and the radar bracket installed properly, and/or is there any no damage?

   YES

   Go to step 2.

   NO

   Repair or replace faulty parts, then **aim the millimeter wave radar** .

2. Millimeter wave radar check (aiming)

   -1. **Install the front bumper** .

   -2. **Aim the millimeter wave radar** .

   -3. Turn the vehicle to the ON mode.

   -4. Clear the DTC with the HDS.

   -5. Check for DTCs with the HDS.

DTC Description	DTC
P2583-92 CMBS or FCW Over Working	B

   Is DTC P2583-92 indicated?

   YES

   If the millimeter wave radar is installed properly but the DTC is recorded again after millimeter wave radar aiming, **replace the millimeter wave radar** .

   NO

   The system is OK at this time.

DTC P2583-97

DTC P2583-97 : Dust or Dirt On The Millimeter Wave Radar

NOTE:

- Before you troubleshoot, **review the general troubleshooting information**.
- This DTC is stored when the millimeter wave radar determines that the detection capability (sensitivity) has decreased. A decrease in the detection capability (sensitivity) of the millimeter wave radar does not always mean a there is an obstruction on the radar surface.
- This DTC may be stored when passing through an enclosed space such as a tunnel.
- Wipe off any dirt or dust off the millimeter wave radar surface and radar cover, and test drive the vehicle. If the DTC disappears, the millimeter wave radar is OK.
- The functions of the integrated driver support system that will be temporarily canceled when this DTC is recorded can be confirmed with the **DTC troubleshooting index**.

DTC Description	DTC
P2583-97 Dust or Dirt On The Millimeter Wave Radar	B

DTC (IDAS)

1. Millimeter wave radar and radar cover visual check

   -1. Check for dirt and dust on the radar cover surface.

   -2. Remove the radar cover, and check for dirt and dust on the inner side of the radar cover.

   -3. Check for dirt and dust on the millimeter wave radar surface.

   Is it surface dirty?

   YES

   Clean the millimeter wave radar and/or the radar cover. After cleaning, install the radar cover, then go to step 2.

   NO

   Go to step 2.

2. Problem verification

   -1. Turn the vehicle to the ON mode.

   -2. Clear the DTC with the HDS.

   -3. Turn the vehicle to the OFF (LOCK) mode.

   -4. Test-drive the vehicle at speeds 25 mph (40 km/h) or more for 2 minutes.

   -5. Check for DTCs with the HDS.

DTC Description	DTC
P2583-97 Dust or Dirt On The Millimeter Wave Radar	B

   Is DTC P2583-97 indicated?

   YES

   The failure is duplicated. **Replace the millimeter wave radar** .

   NO

Intermittent failure, the system is OK at this time. **Refer to intermittent failures troubleshooting**.

DTC P2583-9A

DTC P2583-9A : Temporary stop of Integrated Driver Support System (Jammed Millimeter Wave Radar)

NOTE:

- Before you troubleshoot, **review the general troubleshooting information**.
- This DTC is recorded when the millimeter wave radar malfunctions due to the impact of external radio waves.
- If this DTC is recorded, the integrated driver support system temporarily cancels its control.
- If this DTC is recorded, the vehicle returns to normal if the factor causing the failure has disappeared when the vehicle is stopped (vehicle OFF mode) and is turned to the ON mode again.
- The functions of the integrated driver support system that will be temporarily canceled when this DTC is recorded can be confirmed with the **DTC troubleshooting index**.

DTC Description	DTC
P2583-9A Temporary stop of Integrated Driver Support System (Jammed Millimeter Wave Radar)	B

DTC (IDAS)

1. DTC check

   -1. Turn the vehicle to the ON mode, then wait for at least 6 seconds.

   -2. Check for DTCs with the HDS.

DTC Description	DTC
B	B

   Is there any DTC(s) other than DTC P2583-9A?

   YES

   Perform a troubleshooting for the recorded DTC.

   NO

   Clear the DTC with the HDS and explain to the customer that it is not a failure.

DTC U0029-00 (MILLIMETER WAVE RADAR)

DTC U0029-00 : F-CAN Malfunction (BUS-OFF)

NOTE:

- Before you troubleshoot, **review the how to troubleshooting information**.
- This DTC is stored by communication failure between the F-CAN line and the millimeter wave radar. When DTC U0029-00 is indicated, the F-CAN line has already returned to normal. Check for loose terminals and poor connections at the connectors. If the connectors are OK, clear the DTC and following this troubleshooting.
- The functions of the integrated driver support system that will be temporarily canceled when this DTC is recorded can be confirmed with the **DTC troubleshooting index**.

DTC Description	DTC
U0029-00 F-CAN Malfunction (BUS-OFF)	B

DTC (IDAS)

1. CAN gateway system DTC check

   -1. Turn the vehicle to the ON mode.

   -2. Check for DTCs with the HDS.

DTC Description	DTC
B	B

   Are any DTCs indicated?

   YES

   Go to the indicated DTC's troubleshooting in the CAN gateway system .

   NO

   Intermittent failure, the system is OK at this time. **Refer to intermittent failures troubleshooting**.

DTC U0029-F1 (MILLIMETER WAVE RADAR)

DTC U0029-F1 : F-CAN Malfunction (BUS-OFF) (Multipurpose Camera Unit)

NOTE:

- Before you troubleshoot, **review the how to troubleshooting information**.
- This DTC is stored by communication failure between the F-CAN line and the multipurpose camera unit. When DTC U0029-F1 is indicated, the F-CAN line has already returned to normal. Check for loose terminals and poor connections at the connectors. If the connectors are OK, clear the DTC and following this troubleshooting.
- The functions of the integrated driver support system that will be temporarily canceled when this DTC is recorded can be confirmed with the **DTC troubleshooting index**.

DTC Description	DTC
U0029-F1 F-CAN Malfunction (BUS-OFF) (Multipurpose Camera Unit)	B

DTC (IDAS)

1. CAN gateway system DTC check

   -1. Turn the vehicle to the ON mode.

   -2. Check for DTCs with the HDS.

DTC Description	DTC
B	B

   Are any DTCs indicated?

   YES

   Go to the indicated DTC's troubleshooting in the CAN gateway system .

NO

Intermittent failure, the system is OK at this time. **Refer to intermittent failures troubleshooting**.

DTC U0047-00, U0047-F1, U12B7-00 (MILLIMETER WAVE RADAR)

DTC U0047-00 : Millimeter Wave Radar Local-CAN Malfunction (BUS-OFF)

DTC U0047-F1 : Multipurpose Camera Unit Local-CAN Malfunction

DTC U12B7-00 : Millimeter Wave Radar Local-CAN Malfunction

NOTE:

- Before you troubleshoot, **review the general troubleshooting information**.
- If the transmitting control unit is malfunctioning, a DTC may be recorded. According to the recorded DTC, inspect the power circuits and ground circuits of the millimeter wave radar or the multipurpose camera unit.
- The functions of the integrated driver support system that will be temporarily canceled when this DTC is recorded can be confirmed with the **DTC troubleshooting index**.

DTC Description	DTC
U0047-00 Millimeter Wave Radar Local-CAN Malfunction (BUS-OFF)	B
U0047-F1 Multipurpose Camera Unit Local-CAN Malfunction	B
U12B7-00 Millimeter Wave Radar Local-CAN Malfunction	B

DTC (IDAS)

1. Problem verification

-1. Turn the vehicle to the ON mode.

-2. Clear the DTC with the HDS.

-3. Turn the vehicle to the OFF (LOCK) mode.

-4. Turn the vehicle to the ON mode, then wait for at least 6 seconds.

-5. Check for DTCs with the HDS.

DTC Description	DTC
U0047-00 Millimeter Wave Radar Local-CAN Malfunction (BUS-OFF)	B

DTC Description	DTC
U0047-F1 Multipurpose Camera Unit Local-CAN Malfunction	B
U12B7-00 Millimeter Wave Radar Local-CAN Malfunction	B

Is DTC U0047-00, U0047-F1, or U12B7-00 indicated?

YES

The failure is duplicated. Go to step 2.

NO

Intermittent failure, the system is OK at this time. Check for poor connections or loose terminals at the millimeter wave radar and the multipurpose camera unit.

2. Open wire check (ACC-CAN_H line, ACC-CAN_L line)

-1. Turn the vehicle to the OFF (LOCK) mode.

-2. Disconnect the following connectors.

Millimeter wave radar 8P connector
Multipurpose camera unit 12P connector

-3. Measure the resistance between test points 1 and 2.

Test condition	Vehicle OFF (LOCK) mode
B	Millimeter wave radar 8P connector: disconnected
B	Multipurpose camera unit 12P connector: disconnected

DTC	**Circuit name**	**Test point 1 (Receiving control unit)**		**Test point 2 (Transmitting control unit)**	
		Connector	**Terminal**	**Connector**	**Terminal**
U0047-00	ACC-CAN_H	**Millimeter wave radar 8P connector**	No. 4	**Multipurpose camera unit 12P connector**	No. 12
	ACC-CAN_L		No. 3		No. 6
U0047-F1	ACC-CAN_H	**Multipurpose camera unit 12P connector**	No. 12	**Millimeter wave radar 8P connector**	No. 4
	ACC-CAN_L		No. 6		No. 3
U12B7-00	ACC-CAN_H	**Millimeter wave radar 8P connector**	No. 4	**Multipurpose camera unit 12P connector**	No. 12
	ACC-CAN_L		No. 3		No. 6

Is there 1.0 Ω or less?

YES

Check for poor connections or loose terminals at the millimeter wave radar and the multipurpose camera unit. Check for any authorized service information related to the DTCs or symptoms you are troubleshooting. If they are OK, replace **the millimeter wave radar** or **the multipurpose camera unit** .

NO

Repair an open in the ACC-CAN_H wire or the ACC-CAN_L wire between the millimeter wave radar and the multipurpose camera unit.

DTC U0100-00, U0101-00, U0122-00, U0128-00, U0129-00, U0131-00, U0151-00, U0155-00 (MILLIMETER WAVE RADAR)

DTC U0100-00 : Lost Communication With The PCM (PGM-FI System)

DTC U0101-00 : Lost Communication With The PCM/TCM

DTC U0122-00 : Lost Communication With The VSA Modulator-Control Unit

DTC U0128-00 : Lost Communication With The Electric Parking Brake Control Unit

DTC U0129-00 : Lost Communication With The Electric Servo Brake Control Unit

DTC U0131-00 : Lost Communication With The EPS Control Unit

DTC U0151-00 : Lost Communication With The SRS Unit

DTC U0155-00 : Lost Communication With The Gauge Control Module

NOTE:

- Before you troubleshoot, **review the general troubleshooting information**.
- If the transmitting control unit is malfunctioning, a DTC may be recorded. According to the recorded DTC, inspect the power circuits and ground circuits of the units with which the millimeter wave radar does not communicate.
- The functions of the integrated driver support system that will be temporarily canceled when this DTC is recorded can be confirmed with the **DTC troubleshooting index**.

DTC Description	DTC
U0100-00 Lost Communication With The PCM (PGM-FI System)	B
U0101-00 Lost Communication With The PCM/TCM	B
U0122-00 Lost Communication With The VSA Modulator-Control Unit	B
U0128-00 Lost Communication With The Electric Parking Brake Control Unit	B
U0129-00 Lost Communication With The Electric Servo Brake Control Unit	B
U0131-00 Lost Communication With The EPS Control Unit	B
U0151-00 Lost Communication With The SRS Unit	B
U0155-00 Lost Communication With The Gauge Control Module	B

DTC (IDAS)

1. CAN gateway system DTC check

   -1. Turn the vehicle to the ON mode.

   -2. Check for CAN gateway system DTCs with the HDS.

DTC Description	DTC
B	B

   Is any DTC indicated?

   YES

   Go to the indicated DTCs troubleshooting .

   NO

   Go to step 2.

2. F-CAN circuit communication check (Receiving control unit)

   -1. Select the FUNCTION TEST in the CAN gateway with the HDS, then select the F-CAN Bus Connected Unit Check.

   F-CAN Bus Connected Unit Check

   Does the millimeter wave radar detect the CAN gateway Bus channels C?

   Bus C is Not Available

   Go to step 3.

   Bus C is Available

Go to step 4.

3. Open wire check (F-CAN C_H line, F-CAN C_L line)

-1. Turn the vehicle to the OFF (LOCK) mode.

-2. Disconnect the following connectors.

CAN gateway 16P connector
Millimeter wave radar 8P connector

-3. Measure the resistance between test points 1 and 2.

Test condition	Vehicle OFF (LOCK) mode
B	CAN gateway 16P connector: disconnected
B	Millimeter wave radar 8P connector: disconnected
Test point 1	CAN gateway 16P connector (female terminals) No. 5: ①
Test point 2	**Millimeter wave radar 8P connector No. 7**

Test point 1	CAN gateway 16P connector (female terminals) No. 13: ①
Test point 2	**Millimeter wave radar 8P connector No. 6**

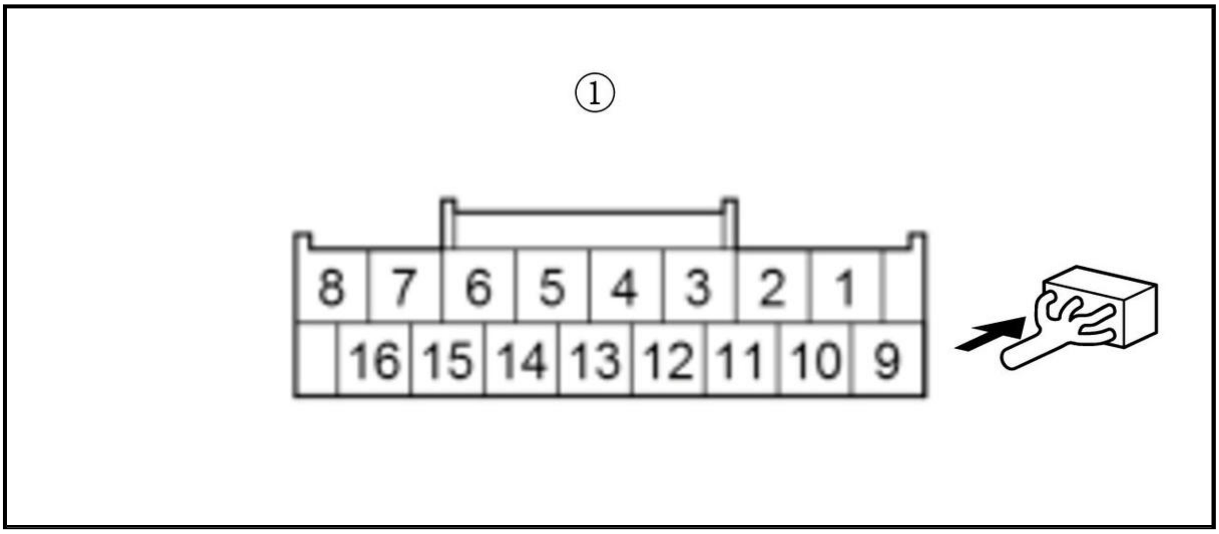

Is there 1.0 Ω or less?

YES

Check for poor connections or loose terminals at the CAN gateway and the millimeter wave radar. Check for any authorized service information related to the DTCs or symptoms you are troubleshooting. If they are OK, **replace the millimeter wave radar** .

NO

Repair an open in the F-CAN C_H wire or the F-CAN C_L wire between the millimeter wave radar and the CAN gateway.

4. F-CAN circuit communication check (Transmitting control unit)

-1. Select the FUNCTION TEST in the CAN gateway with the HDS, then select the F-CAN Bus Connected Unit Check.

F-CAN Bus Connected Unit Check

According to the detected DTC on the following table, make sure that the transmitting control unit detects the CAN gateway Bus channel(s) normally.

DTC	Transmitting control unit	Detected CAN gateway Bus channel(s) at normal
U0100-00	PCM	A, B

DTC	Transmitting control unit	Detected CAN gateway Bus channel(s) at normal
U0101-00	PCM	A, B
U0122-00	VSA modulator-control unit	B, C
U0128-00	VSA modulator-control unit	B, C
U0129-00	Electric servo brake control unit	B, C
U0131-00	EPS control unit	C
U0151-00	SRS unit	C
U0155-00	Gauge control module	D

Is it detected normally?

Detected normal

Intermittent failure, the system is OK at this time. Check for poor connections or loose terminals at the transmitting control unit and the CAN gateway.

U0100-00: PCM is Not Available for Bus A

Go to step 5.

U0100-00: PCM is Not Available for Bus B

Go to step 6.

U0101-00: PCM is Not Available for Bus A

Go to step 5.

U0101-00: PCM is Not Available for Bus B

Go to step 6.

U0122-00: VSA modulator-control unit is Not Available for Bus B

Go to step 6.

U0122-00: VSA modulator-control unit is Not Available for Bus C

Go to step 7.

U0128-00: VSA modulator-control unit is Not Available for Bus B

Go to step 6.

U0128-00: VSA modulator-control unit is Not Available for Bus C

Go to step 7.

U0129-00: Electric servo brake control unit is Not Available for Bus B

Go to step 6.

U0129-00: Electric servo brake control unit is Not Available for Bus C

Go to step 7.

U0131-00: EPS control unit is Not Available for Bus C

Go to step 7.

U0151-00: SRS unit is Not Available for Bus C

Go to step 7.

U0155-00: Gauge control module is Not Available for Bus D

Go to step 8.

5. Open wire check (F-CAN A_H line, F-CAN A_L line)

-1. Turn the vehicle to the OFF (LOCK) mode.

-2. According to the detected DTC on the following table, disconnect the transmitting control unit connector(s).

DTC	Connector
B	CAN gateway 16P connector

DTC	Connector
U0100-00	PCM connector A (50P)
U0101-00	PCM connector A (50P)

NOTE: Before disconnecting the PCM connector, jump the SCS line with the HDS, and wait more than 1 minute.

-3. Measure the resistance between test points 1 and 2.

Test condition	Vehicle OFF (LOCK) mode
B	CAN gateway 16P connector: disconnected
B	Transmitting control unit connector(s) for indicated DTCs: disconnected

DTC	Circuit name	Test point 1 (Receiving control unit)		Test point 2 (Transmitting control unit)	
		Connector	Terminal	Connector	Terminal
U0100-00	F-CAN A_H	CAN gateway 16P connector (female terminals): ①	No. 3	PCM connector A (50P)	No. 37
	F-CAN A_L		No. 11		No. 36
U0101-00	F-CAN A_H	CAN gateway 16P connector (female terminals): ①	No. 3	PCM connector A (50P)	No. 37
	F-CAN A_L		No. 11		No. 36

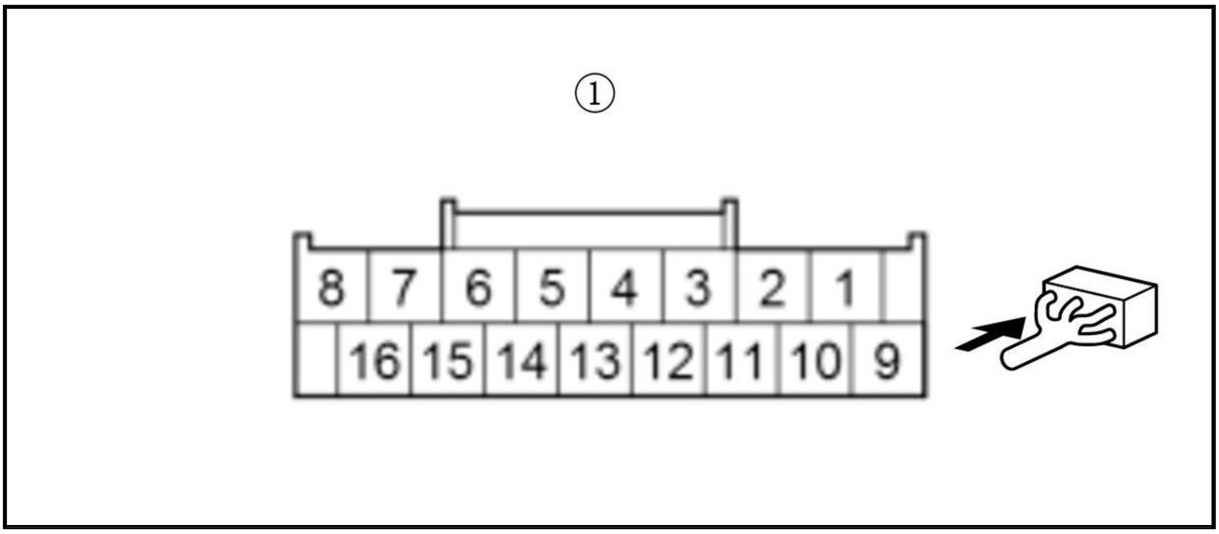

Is there 1.0 Ω or less?

YES

According to the detected DTC on the following table, substitute or replace the correspond control unit.

DTC	Operation for transmitting control unit
U0100-00	Check for poor connections or loose terminals at the CAN gateway and the PCM. Check for any authorized service information related to the DTCs or symptoms you are troubleshooting, or **substitute a good-known PCM** , then recheck. If they are OK, **replace the original PCM** .
U0101-00	Check for poor connections or loose terminals at the CAN gateway and the PCM. Check for any authorized service information related to the DTCs or symptoms you are troubleshooting, or **substitute a good-known PCM** , then recheck. If they are OK, **replace the original PCM** .

NO

Repair an open in the F-CAN A_H wire or the F-CAN A_L wire between the transmitting control unit and the CAN gateway.

6. Open wire check (F-CAN B_H line, F-CAN B_L line)

-1. Turn the vehicle to the OFF (LOCK) mode.

-2. According to the detected DTC on the following table, disconnect the transmitting control unit connector(s).

DTC	Connector
B	CAN gateway 16P connector
U0100-00	PCM connector A (50P)
U0101-00	PCM connector A (50P)
U0122-00	VSA modulator-control unit 46P connector
U0128-00	VSA modulator-control unit 46P connector
U0129-00	Electric servo brake control unit 22P connector

NOTE: Before disconnecting the PCM connector, jump the SCS line with the HDS, and wait more than 1 minute.

-3. Measure the resistance between test points 1 and 2.

Test condition	Vehicle OFF (LOCK) mode

B	CAN gateway 16P connector: disconnected
B	Transmitting control unit connector(s) for indicated DTCs: disconnected

DTC	Circuit name	Test point 1 (Receiving control unit)		Test point 2 (Transmitting control unit)	
		Connector	Terminal	Connector	Terminal
U0100-00	F-CAN B_H	CAN gateway 16P connector (female terminals): ①	No. 6	**PCM connector A (50P)**	No. 39
	F-CAN B_L		No. 14		No. 38
U0101-00	F-CAN B_H	CAN gateway 16P connector (female terminals): ①	No. 6	**PCM connector A (50P)**	No. 39
	F-CAN B_L		No. 14		No. 38
U0122-00	F-CAN B_H	CAN gateway 16P connector (female terminals): ①	No. 6	**VSA modulator-control unit 46P connector**	No. 40
	F-CAN B_L		No. 14		No. 28
U0128-00	F-CAN B_H	CAN gateway 16P connector (female terminals): ①	No. 6	**VSA modulator-control unit 46P connector**	No. 40
	F-CAN B_L		No. 14		No. 28
U0129-00	F-CAN B_H	CAN gateway 16P connector (female terminals): ①	No. 6	**Electric servo brake control unit 22P connector**	No. 15
	F-CAN B_L		No. 14		No. 14

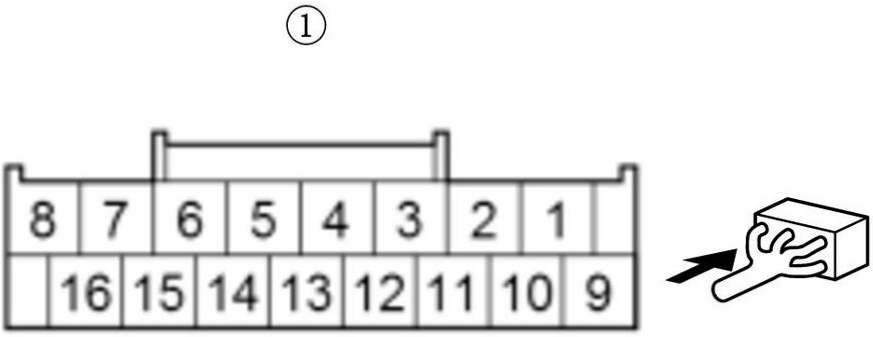

Is there 1.0 Ω or less?

YES

According to the detected DTC on the following table, substitute or replace the correspond control unit.

DTC	Operation for transmitting control unit
U0100-00	Check for poor connections or loose terminals at the CAN gateway and the PCM. Check for any authorized service information related to the DTCs or symptoms you are troubleshooting, or **substitute a good-known PCM** , then recheck. If they are OK, **replace the original PCM** .
U0101-00	Check for poor connections or loose terminals at the CAN gateway and the PCM. Check for any authorized service information related to the DTCs or symptoms you are

DTC	Operation for transmitting control unit
	troubleshooting, or **substitute a good-known PCM** , then recheck. If they are OK, **replace the original PCM** .
U0122-00	Check for poor connections or loose terminals at the CAN gateway and the VSA modulator-control unit. Check for any authorized service information related to the DTCs or symptoms you are troubleshooting. If they are OK, **replace the VSA modulator-control unit** .
U0128-00	Check for poor connections or loose terminals at the CAN gateway and the VSA modulator-control unit. Check for any authorized service information related to the DTCs or symptoms you are troubleshooting. If they are OK, **replace the VSA modulator-control unit** .

DTC	Operation for transmitting control unit
U0129-00	Check for poor connections or loose terminals at the CAN gateway and the electric servo brake control unit. Check for any authorized service information related to the DTCs or symptoms you are troubleshooting. If they are OK, **replace the electric servo brake control unit/pedal feel simulator** .

NO

Repair an open in the F-CAN B_H wire or the F-CAN B_L wire between the transmitting control unit and the CAN gateway.

7. Open wire check (F-CAN C_H line, F-CAN C_L line)

-1. Turn the vehicle to the OFF (LOCK) mode.

-2. According to the detected DTC on the following table, disconnect the transmitting control unit connector(s).

DTC	Connector
B	CAN gateway 16P connector
U0122-00	VSA modulator-control unit 46P connector
U0128-00	VSA modulator-control unit 46P connector
U0129-00	Electric servo brake control unit 22P connector
U0131-00	EPS control unit connector B (6P)
U0151-00	SRS unit connector A (39P)

NOTE: Before disconnecting the SRS unit connector, **do the 12 volt battery terminal disconnection procedure** and wait for at least 3 minutes.

-3. Measure the resistance between test points 1 and 2.

Test condition	Vehicle OFF (LOCK) mode
B	CAN gateway 16P connector: disconnected
B	Transmitting control unit connector(s) for indicated DTCs: disconnected

DTC	Circuit name	Test point 1 (Receiving control unit)		Test point 2 (Transmitting control unit)	
		Connector	Terminal	Connector	Terminal
U0122-00	F-CAN C_H	CAN gateway 16P connector (female terminals): ①	No. 5	**VSA modulator-control unit 46P connector**	No. 46
	F-CAN C_L		No. 13		No. 34
U0128-00	F-CAN C_H	CAN gateway 16P connector (female terminals): ①	No. 5	**VSA modulator-control unit 46P connector**	No. 46
	F-CAN C_L		No. 13		No. 34

DTC	Circuit name	Test point 1 (Receiving control unit)		Test point 2 (Transmitting control unit)	
		Connector	Terminal	Connector	Terminal
U0129-00	F-CAN C_H	CAN gateway 16P connector (female terminals): ①	No. 5	**Electric servo brake control unit 22P connector**	No. 19
	F-CAN C_L		No. 13		No. 18
U0131-00	F-CAN C_H	CAN gateway 16P connector (female terminals): ①	No. 5	**EPS control unit connector B (6P)**	No. 1
	F-CAN C_L		No. 13		No. 3
U0151-00	F-CAN C_H	CAN gateway 16P connector (female terminals): ①	No. 5	**SRS unit connector A (39P)**	No. 34
	F-CAN C_L		No. 13		No. 35

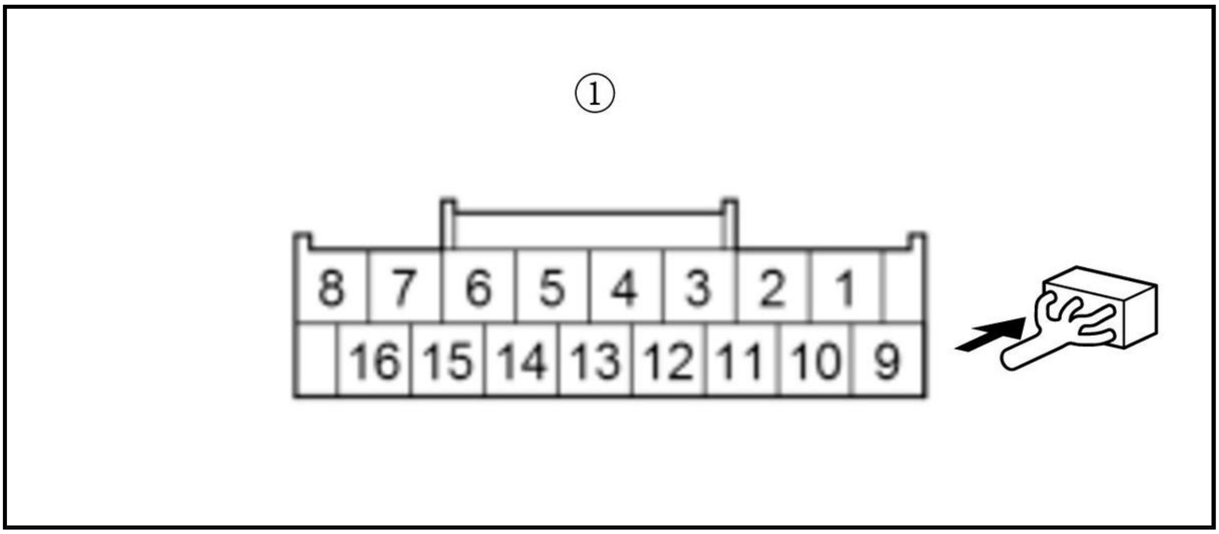

Is there 1.0 Ω or less?

YES

According to the detected DTC on the following table, substitute or replace the correspond control unit.

DTC	Operation for transmitting control unit
U0122-00	Check for poor connections or loose terminals at the CAN gateway and the VSA modulator-control unit. Check for any authorized service information related to the DTCs or symptoms you are troubleshooting. If they are OK, **replace the VSA modulator-control unit** .
U0128-00	Check for poor connections or loose terminals at the CAN gateway and the VSA modulator-control unit. Check for any authorized service information related to the DTCs or symptoms you are troubleshooting. If they are OK, **replace the VSA modulator-control unit** .
U0129-00	Check for poor connections or loose terminals at the CAN gateway and the electric servo brake control unit. Check for any authorized service information related to the DTCs or symptoms you are troubleshooting. If they are OK, **replace the electric servo brake control unit/pedal feel simulator** .
U0131-00	Check for poor connections or loose terminals at the CAN gateway and the EPS control unit. Check for any authorized service information related to the DTCs or symptoms you are troubleshooting or **substitute a known-good EPS motor/control unit** , then recheck. If the symptom/indication goes away with a known-good EPS motor/control unit, **replace the original EPS motor/control unit** .
U0151-00	Check for poor connections or loose terminals at the CAN gateway and the SRS unit. Check for any authorized service information related to the DTCs or symptoms you are troubleshooting. If they are OK, **replace the SRS unit** .

NO

Repair an open in the F-CAN C_H wire or the F-CAN C_L wire between the transmitting control unit and the CAN gateway.

8. Open wire check (F-CAN D_H line, F-CAN D_L line)

-1. Turn the vehicle to the OFF (LOCK) mode.

-2. According to the detected DTC on the following table, disconnect the transmitting control unit connector(s).

DTC	Connector
B	CAN gateway 16P connector
U0155-00	Gauge control module connector A (32P)

-3. Measure the resistance between test points 1 and 2.

Test condition	Vehicle OFF (LOCK) mode
B	CAN gateway 16P connector: disconnected
B	Transmitting control unit connector(s) for indicated DTCs: disconnected

DTC	Circuit name	Test point 1 (Receiving control unit)		Test point 2 (Transmitting control unit)	
		Connector	Terminal	Connector	Terminal
U0155-00	F-CAN D_H	CAN gateway 16P connector (female terminals): ①	No. 7	**Gauge control module connector A (32P)**	No. 19
	F-CAN D_L		No. 15		No. 20

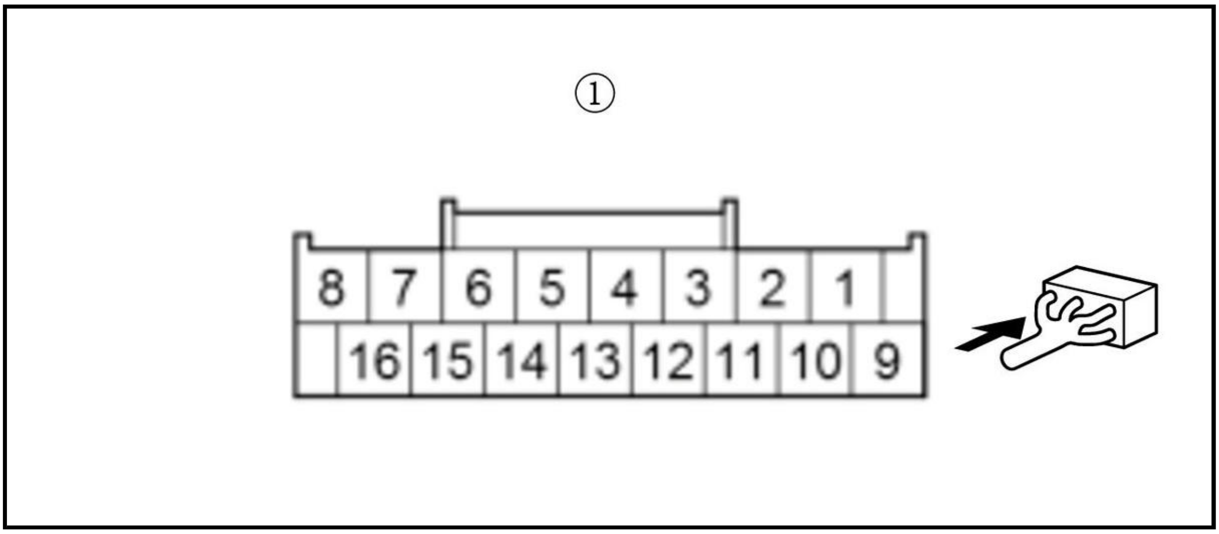

Is there 1.0 Ω or less?

YES

According to the detected DTC on the following table, substitute or replace the correspond control unit.

DTC	Operation for transmitting control unit
U0155-00	Check for poor connections or loose terminals at the CAN gateway and the gauge control module. Check for any authorized service information related to the DTCs or symptoms you are troubleshooting, or **substitute a known-good gauge control module** , then recheck. If they are OK, **replace the original gauge control module** .

NO

Repair an open in the F-CAN D_H wire or the F-CAN D_L wire between the transmitting control unit and the CAN gateway.

DTC U0100-F1, U0101-F1, U0122-F1, U0129-F1, U0131-F1, U0151-F1, U0155-F1 (MILLIMETER WAVE RADAR)

DTC U0100-F1 : Lost Communication With The PCM (PGM-FI System) (Multipurpose Camera Unit)

DTC U0101-F1 : Lost Communication With The PCM/TCM (Multipurpose Camera Unit)

DTC U0122-F1 : Lost Communication With The VSA Modulator-Control Unit (Multipurpose Camera Unit)

DTC U0129-F1 : Lost Communication With The Electric Servo Brake Control Unit (Multipurpose Camera Unit)

DTC U0131-F1 : Lost Communication With The EPS Control Unit (Multipurpose Camera Unit)

DTC U0151-F1 : Lost Communication With The SRS Unit (Multipurpose Camera Unit)

DTC U0155-F1 : Lost Communication With The Gauge Control Module (Multipurpose Camera Unit)

NOTE:

- Before you troubleshoot, **review the general troubleshooting information**.
- If the transmitting control unit is malfunctioning, a DTC may be recorded. According to the recorded DTC, inspect the power circuits and ground circuits of the units with which the multipurpose camera unit does not communicate.
- The functions of the integrated driver support system that will be temporarily canceled when this DTC is recorded can be confirmed with the **DTC troubleshooting index**.

DTC Description	DTC
U0100-F1 Lost Communication With The PCM (PGM-FI System) (Multipurpose Camera Unit)	B
U0101-F1 Lost Communication With The PCM/TCM (Multipurpose Camera Unit)	B
U0122-F1 Lost Communication With The VSA Modulator-Control Unit (Multipurpose Camera Unit)	B
U0129-F1 Lost Communication With The Electric Servo Brake Control Unit (Multipurpose Camera Unit)	B
U0131-F1 Lost Communication With The EPS Control Unit (Multipurpose Camera Unit)	B
U0151-F1 Lost Communication With The SRS Unit (Multipurpose Camera Unit)	B
U0155-F1 Lost Communication With The Gauge Control Module (Multipurpose Camera Unit)	B

DTC (IDAS)

1. CAN gateway system DTC check

   -1. Turn the vehicle to the ON mode.

   -2. Check for CAN gateway system DTCs with the HDS.

DTC Description	DTC
B	B

Is any DTC indicated?

YES

Go to the indicated DTCs troubleshooting .

NO

Go to step 2.

2. F-CAN circuit communication check (Receiving control unit)

-1. Select the FUNCTION TEST in the CAN gateway with the HDS, then select the F-CAN Bus Connected Unit Check.

F-CAN Bus Connected Unit Check

Does the multipurpose camera unit detect the CAN gateway Bus channels C?

Bus C is Not Available

Go to step 3.

Bus C is Available

Go to step 4.

3. Open wire check (F-CAN C_H line, F-CAN C_L line)

-1. Turn the vehicle to the OFF (LOCK) mode.

-2. Disconnect the following connectors.

CAN gateway 16P connector
Multipurpose camera unit 12P connector

-3. Measure the resistance between test points 1 and 2.

Test condition	Vehicle OFF (LOCK) mode
B	CAN gateway 16P connector: disconnected
B	Multipurpose camera unit 12P connector: disconnected
Test point 1	CAN gateway 16P connector (female terminals) No. 5: ①
Test point 2	**Multipurpose camera unit 12P connector No. 11**

Test point 1	CAN gateway 16P connector (female terminals) No. 13: ①
Test point 2	**Multipurpose camera unit 12P connector No. 5**

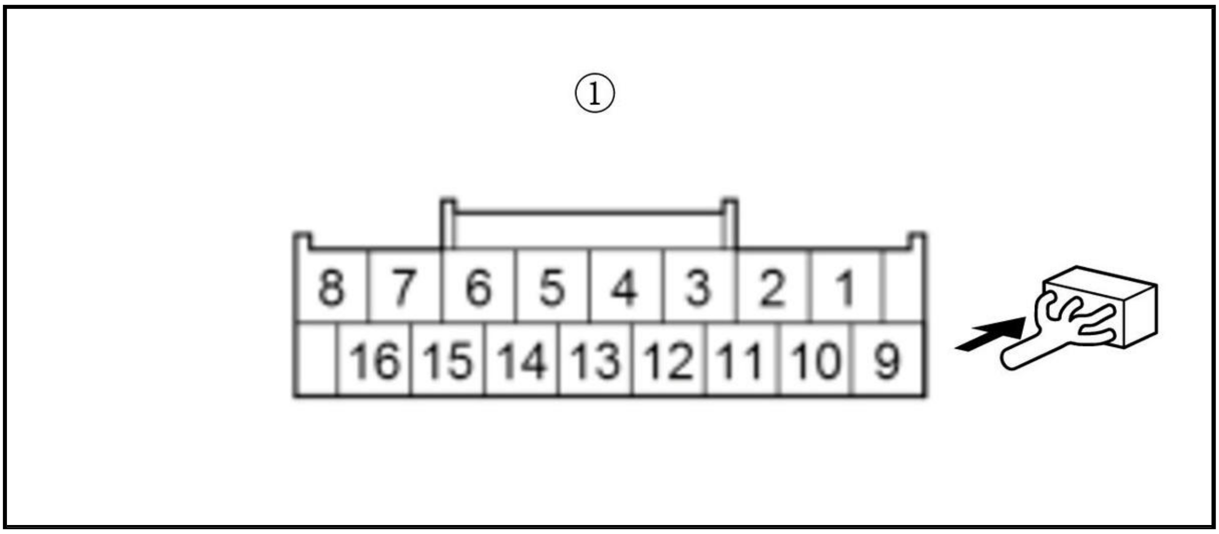

Is there 1.0 Ω or less?

YES

Check for poor connections or loose terminals at the CAN gateway and the multipurpose camera unit. Check for any authorized service information related to the DTCs or symptoms you are troubleshooting. If they are OK, **replace the multipurpose camera unit** .

NO

Repair an open in the F-CAN C_H wire or the F-CAN C_L wire between the multipurpose camera unit and the CAN gateway.

4. F-CAN circuit communication check (Transmitting control unit)

-1. Select the FUNCTION TEST in the CAN gateway with the HDS, then select the F-CAN Bus Connected Unit Check.

-2. According to the detected DTC on the following table, make sure that the transmitting control unit detects the CAN gateway Bus channel(s) normally.

DTC	Transmitting control unit	Detected CAN gateway Bus channel(s) at normal
U0100-F1	PCM	A, B
U0101-F1	PCM	A, B
U0122-F1	VSA modulator-control unit	B, C
U0129-F1	Electric servo brake control unit	B, C
U0131-F1	EPS control unit	C
U0151-F1	SRS unit	C
U0155-F1	Gauge control module	D

Is it detected normally?

Detected normal

Intermittent failure, the system is OK at this time. Check for poor connections or loose terminals at the transmitting control unit and the CAN gateway.

U0100-F1: PCM is Not Available for Bus A

Go to step 5.

U0100-F1: PCM is Not Available for Bus B

Go to step 6.

U0101-F1: PCM is Not Available for Bus A

Go to step 5.

U0101-F1: PCM is Not Available for Bus B

Go to step 6.

U0122-F1: VSA modulator-control unit is Not Available for Bus B

Go to step 6.

U0122-F1: VSA modulator-control unit is Not Available for Bus C

Go to step 7.

U0129-F1: Electric servo brake control unit is Not Available for Bus B

Go to step 6.

U0129-F1: Electric servo brake control unit is Not Available for Bus C

Go to step 7.

U0131-F1: EPS control unit is Not Available for Bus C

Go to step 7.

U0151-F1: SRS unit is Not Available for Bus C

Go to step 7.

U0155-F1: Gauge control module is Not Available for Bus D

Go to step 8.

5. Open wire check (F-CAN A_H line, F-CAN A_L line)

-1. Turn the vehicle to the OFF (LOCK) mode.

-2. According to the detected DTC on the following table, disconnect the transmitting control unit connector(s).

DTC	Connector
B	CAN gateway 16P connector
U0100-F1	PCM connector A (50P)

DTC	Connector
U0101-F1	PCM connector A (50P)

NOTE: Before disconnecting the PCM connector, jump the SCS line with the HDS, and wait more than 1 minute.

-3. Measure the resistance between test points 1 and 2.

Test condition	Vehicle OFF (LOCK) mode
B	CAN gateway 16P connector: disconnected

B	Transmitting control unit connector(s) for indicated DTCs: disconnected

DTC	Circuit name	Test point 1 (Receiving control unit)		Test point 2 (Transmitting control unit)	
		Connector	Terminal	Connector	Terminal
U0100-F1	F-CAN A_H	CAN gateway 16P connector (female terminals): ①	No. 3	**PCM connector A (50P)**	No. 37
	F-CAN A_L		No. 11		No. 36
U0101-F1	F-CAN A_H	CAN gateway 16P connector (female terminals): ①	No. 3	**PCM connector A (50P)**	No. 37
	F-CAN A_L		No. 11		No. 36

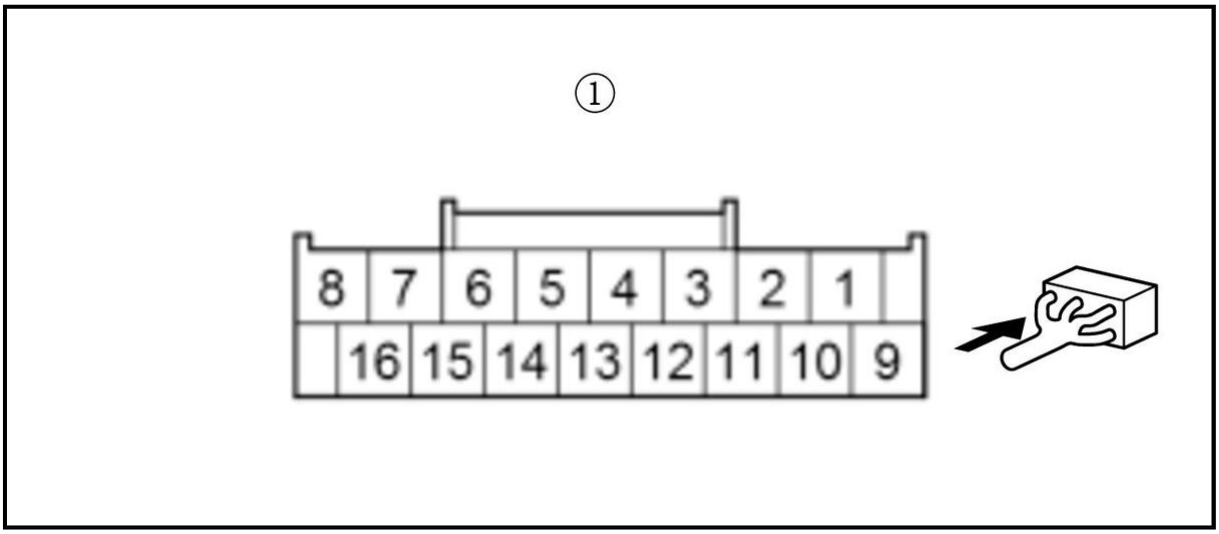

Is there 1.0 Ω or less?

YES

According to the detected DTC on the following table, substitute or replace the correspond control unit.

DTC	Operation for transmitting control unit
U0100-F1	Check for poor connections or loose terminals at the CAN gateway and the PCM. Check for any authorized service information related to the DTCs or symptoms you are troubleshooting, or **substitute a good-known PCM** , then recheck. If they are OK, **replace the original PCM** .
U0101-F1	Check for poor connections or loose terminals at the CAN gateway and the PCM. Check for any authorized service information related to the DTCs or symptoms you are troubleshooting, or **substitute a good-known PCM** , then recheck. If they are OK, **replace the original PCM** .

NO

Repair an open in the F-CAN A_H wire or the F-CAN A_L wire between the transmitting control unit and the CAN gateway.

6. Open wire check (F-CAN B_H line, F-CAN B_L line)

-1. Turn the vehicle to the OFF (LOCK) mode.

-2. According to the detected DTC on the following table, disconnect the transmitting control unit connector(s).

DTC	Connector
B	CAN gateway 16P connector
U0100-F1	PCM connector A (50P)
U0101-F1	PCM connector A (50P)
U0122-F1	VSA modulator-control unit 46P connector
U0129-F1	Electric servo brake control unit 22P connector

NOTE: Before disconnecting the PCM connector, jump the SCS line with the HDS, and wait more than 1 minute.

-3. Measure the resistance between test points 1 and 2.

Test condition	Vehicle OFF (LOCK) mode
B	CAN gateway 16P connector: disconnected
B	Transmitting control unit connector(s) for indicated DTCs: disconnected

DTC	**Circuit name**	**Test point 1 (Receiving control unit)**		**Test point 2 (Transmitting control unit)**	
		Connector	**Terminal**	**Connector**	**Terminal**
U0100-F1	F-CAN B_H	CAN gateway 16P connector (female terminals): ①	No. 6	**PCM connector A (50P)**	No. 39
	F-CAN B_L		No. 14		No. 38
U0101-F1	F-CAN B_H	CAN gateway 16P connector (female terminals): ①	No. 6	**PCM connector A (50P)**	No. 39
	F-CAN B_L		No. 14		No. 38
U0122-F1	F-CAN B_H	CAN gateway 16P connector (female terminals): ①	No. 6	**VSA modulator-control unit 46P connector**	No. 40
	F-CAN B_L		No. 14		No. 28
U0129-F1	F-CAN B_H	CAN gateway 16P connector (female terminals): ①	No. 6	**Electric servo brake control unit 22P connector**	No. 15
	F-CAN B_L		No. 14		No. 14

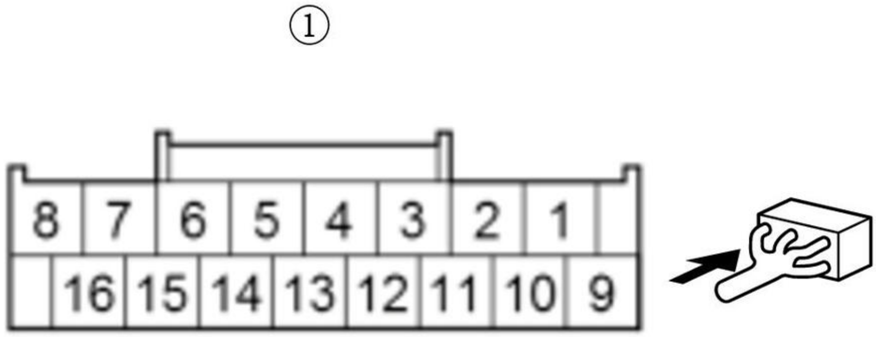

Is there 1.0 Ω or less?

YES

According to the detected DTC on the following table, substitute or replace the correspond control unit.

DTC	Operation for transmitting control unit
U0100-F1	Check for poor connections or loose terminals at the CAN gateway and the PCM. Check for any authorized service information related to the DTCs or symptoms you are troubleshooting, or **substitute a good-known PCM** , then recheck. If they are OK, **replace the original PCM** .
U0101-F1	Check for poor connections or loose terminals at the CAN gateway and the PCM. Check for any authorized service information related to the DTCs or symptoms you are troubleshooting, or **substitute a good-known PCM** , then recheck. If they are OK, **replace the original PCM** .
U0122-F1	Check for poor connections or loose terminals at the CAN gateway and the VSA modulator-control unit. Check for any authorized service information related to the DTCs or symptoms you are troubleshooting. If they are OK, **replace the VSA modulator-control unit** .
U0129-F1	Check for poor connections or loose terminals at the CAN gateway and the electric servo brake control unit. Check for any authorized service information related to the DTCs or symptoms you are troubleshooting. If they are OK, **replace the electric servo brake control unit/pedal feel simulator** .

NO

Repair an open in the F-CAN B_H wire or the F-CAN B_L wire between the transmitting control unit and the CAN gateway.

7. Open wire check (F-CAN C_H line, F-CAN C_L line)

-1. Turn the vehicle to the OFF (LOCK) mode.

-2. According to the detected DTC on the following table, disconnect the transmitting control unit connector(s).

DTC	Connector
B	CAN gateway 16P connector
U0122-F1	VSA modulator-control unit 46P connector
U0129-F1	Electric servo brake control unit 22P connector
U0131-F1	EPS control unit connector B (6P)
U0151-F1	SRS unit connector A (39P)

NOTE: Before disconnecting the SRS unit connector, **do the 12 volt battery terminal disconnection procedure** and wait for at least 3 minutes.

-3. Measure the resistance between test points 1 and 2.

Test condition	Vehicle OFF (LOCK) mode
B	CAN gateway 16P connector: disconnected
B	Transmitting control unit connector(s) for indicated DTCs: disconnected

DTC	Circuit name	Test point 1 (Receiving control unit)		Test point 2 (Transmitting control unit)	
		Connector	Terminal	Connector	Terminal
U0122-F1	F-CAN C_H	CAN gateway 16P connector (female terminals): ①	No. 5	**VSA modulator-control unit 46P connector**	No. 46
	F-CAN C_L		No. 13		No. 34
U0129-F1	F-CAN C_H	CAN gateway 16P connector (female	No. 5	**Electric servo brake control unit 22P**	No. 19

DTC	Circuit name	Test point 1 (Receiving control unit)		Test point 2 (Transmitting control unit)	
		Connector	Terminal	Connector	Terminal
	F-CAN C_L	terminals): ①	No. 13	connector	No. 18
U0131-F1	F-CAN C_H	CAN gateway 16P connector (female terminals): ①	No. 5	EPS control unit connector B (6P)	No. 1
	F-CAN C_L		No. 13		No. 3
U0151-F1	F-CAN C_H	CAN gateway 16P connector (female terminals): ①	No. 5	SRS unit connector A (39P)	No. 34
	F-CAN C_L		No. 13		No. 35

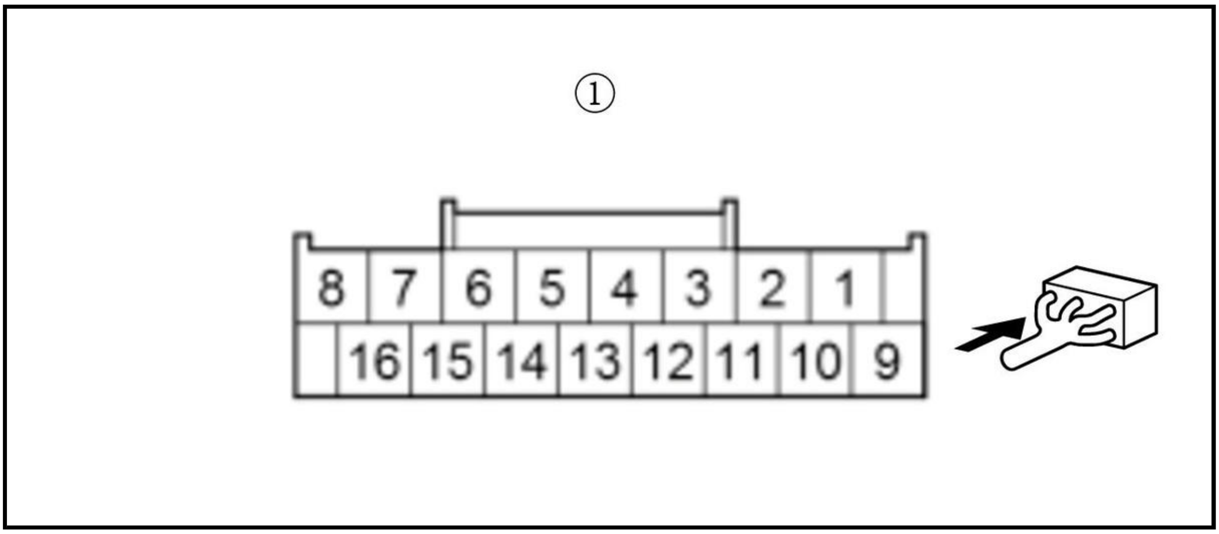

Is there 1.0 Ω or less?

YES

According to the detected DTC on the following table, substitute or replace the correspond control unit.

DTC	Operation for transmitting control unit
U0122-F1	Check for poor connections or loose terminals at the CAN gateway and the VSA modulator-control unit. Check for any authorized service information related to the DTCs or symptoms you are troubleshooting. If they are OK, **replace the VSA modulator-control unit** .
U0129-F1	Check for poor connections or loose terminals at the CAN gateway and the electric servo brake control unit. Check for any authorized service information related to the DTCs or symptoms you are troubleshooting. If they are OK, **replace the electric servo brake control unit/pedal feel simulator** .
U0131-F1	Check for poor connections or loose terminals at the CAN gateway and the EPS control unit. Check for any authorized service information related to the DTCs or symptoms you are troubleshooting or **substitute a known-good EPS motor/control unit** , then recheck. If the symptom/indication goes away with a known-good EPS motor/control unit, **replace the original EPS motor/control unit** .

DTC	Operation for transmitting control unit
U0151-F1	Check for poor connections or loose terminals at the CAN gateway and the SRS unit. Check for any authorized service information related to the DTCs or symptoms you are troubleshooting. If they are OK, **replace the SRS unit** .

NO

Repair an open in the F-CAN C_H wire or the F-CAN C_L wire between the transmitting control unit and the CAN gateway.

8. Open wire check (F-CAN D_H line, F-CAN D_L line)

-1. Turn the vehicle to the OFF (LOCK) mode.

-2. According to the detected DTC on the following table, disconnect the transmitting control unit connector(s).

DTC	Connector
B	CAN gateway 16P connector
U0155-F1	Gauge control module connector A (32P)

-3. Measure the resistance between test points 1 and 2.

Test condition	Vehicle OFF (LOCK) mode
B	CAN gateway 16P connector: disconnected
B	Transmitting control unit connector(s) for indicated DTCs: disconnected

DTC	**Circuit name**	**Test point 1 (Receiving control unit)**		**Test point 2 (Transmitting control unit)**	
		Connector	**Terminal**	**Connector**	**Terminal**
U0155-F1	F-CAN D_H	CAN gateway 16P connector (female terminals): ①	No. 7	**Gauge control module connector A (32P)**	No. 19
	F-CAN D_L		No. 15		No. 20

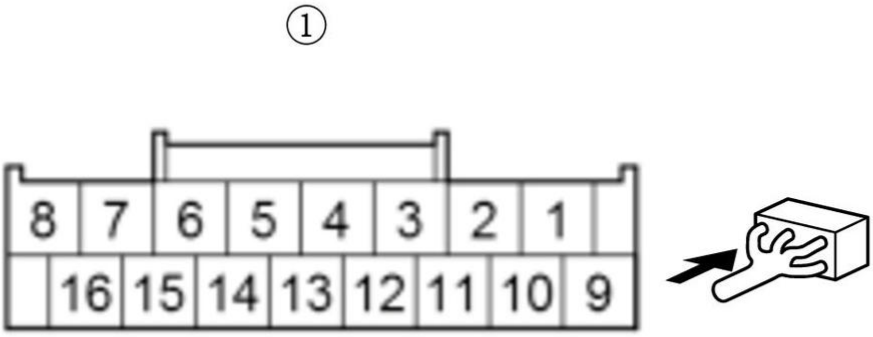

Is there 1.0 Ω or less?

YES

According to the detected DTC on the following table, substitute or replace the correspond control unit.

DTC	Operation for transmitting control unit
U0155-F1	Check for poor connections or loose terminals at the CAN gateway and the gauge control module. Check for any authorized service information related to the DTCs or symptoms you are troubleshooting, or **substitute a known-good gauge control module** , then recheck. If they are OK, **replace the original gauge control module** .

NO

Repair an open in the F-CAN D_H wire or the F-CAN D_L wire between the transmitting control unit and the CAN gateway.

DTC U0401-53, U0401-92 (MILLIMETER WAVE RADAR)

DTC U0401-53 : Temporary stop of Integrated Driver Support System (Received stop request by PGM-FI System)

DTC U0401-92 : Temporary stop of Integrated Driver Support System (Rejected control request by PGM-FI System)

NOTE:

- Before you troubleshoot, **review the general troubleshooting information**.
- If these DTC are recorded, the following is suspected:
-
    - ACC operation is inhibited this way when there is a transmission malfunction, transmission and transmission fluid temperatures are too high, or if the PCM determines ACC is still active when the brake pedal is pressed.
    - The brake pedal position switch is failed or out of adjustment, or the brake pedal was pressed lightly while driving. (electric brake booster equipped models)
    - If this sets due to transmission fluid temperature, a warning will also be displayed in the MID.
- If these DTC are recorded, some of the integrated driver support system functions are temporarily canceled but it is not a failure.
- When the PCM becomes ready to receive a control request from the millimeter wave radar and the multipurpose camera unit, the temporarily cancelled integrated driver support system functions are re-activated.
- The functions of the integrated driver support system that will be temporarily canceled when these DTC are recorded can be confirmed with the **DTC troubleshooting index**.

DTC Description	DTC
U0401-53 Temporary stop of Integrated Driver Support System (Received stop request by PGM-FI System)	B
U0401-92 Temporary stop of Integrated Driver Support System (Rejected control request by PGM-FI System)	B

DTC (IDAS)

1. DTC check

    -1. Turn the vehicle to the ON mode, then wait for at least 6 seconds.

    -2. Check for DTCs with the HDS.

DTC Description	DTC
B	B

    Is there any DTC(s) other than DTC U0401-53 or U0401-92?

    YES

    Perform a troubleshooting for the recorded DTC.

    NO

    Clear the DTC with the HDS and explain to the customer that it is not a failure.

DTC U0416-9A (MILLIMETER WAVE RADAR)

DTC U0416-9A : Temporary stop of Integrated Driver Support System (Unstable Wheel Speed Sensor Signal)

NOTE:

- Before you troubleshoot, **review the general troubleshooting information**.
- If this DTC is recorded, some of the integrated driver support system functions are temporarily canceled but it is not a failure.
- When the VSA modulator-control unit returns to normal, the temporarily cancelled integrated driver support system functions are re-activated.
- The functions of the integrated driver support system that will be temporarily canceled when this DTC is recorded can be confirmed with the **DTC troubleshooting index**.

DTC Description	DTC
U0416-9A Temporary stop of Integrated Driver Support System (Unstable Wheel Speed Sensor Signal)	B

DTC (IDAS)

1. DTC check

   -1. Turn the vehicle to the ON mode, then wait for at least 6 seconds.

   -2. Check for DTCs with the HDS.

DTC Description	DTC
B	B

   Is there any DTC(s) other than U0416-9A?

   YES

   Perform a troubleshooting for the recorded DTC.

   NO

   Clear the DTC with the HDS and explain to the customer that it is not a failure.

DTC U0417-68 (MILLIMETER WAVE RADAR)

DTC U0417-68 : (Electric Parking Brake Control Unit Malfunction)

NOTE:

- Before you troubleshoot, **review the general troubleshooting information**.
- This DTCs are recorded when the millimeter wave radar receives electric parking brake control unit failure information via the F-CAN.
- If a DTC is recorded again after it is cleared with the HDS, **perform a troubleshooting for the electric parking brake system** .
- The functions of the integrated driver support system that will be temporarily canceled when this DTC is recorded can be confirmed with the **DTC troubleshooting index**.

DTC Description	DTC
U0417-68 (Electric Parking Brake Control Unit Malfunction)	B

DTC (IDAS)

1. Problem verification

   -1. Turn the vehicle to the ON mode.

   -2. Clear the DTC with the HDS.

   -3. Turn the vehicle to the OFF (LOCK) mode.

   -4. Turn the vehicle to the ON mode, then wait for at least 6 seconds.

   -5. Check for DTCs with the HDS.

DTC Description	DTC
U0417-68 (Electric Parking Brake Control Unit Malfunction)	B

Is DTC U0417-68 indicated?

YES

The failure is duplicated. **Go to the electric parking brake system troubleshooting** .

NO

Intermittent failure, the system is OK at this time. **Refer to intermittent failures troubleshooting**.

DTC U0418-92, U0418-9A (MILLIMETER WAVE RADAR)

DTC U0418-92 : Temporary stop of Integrated Driver Support System (Rejected control request by ESB/EBB System)

DTC U0418-9A : Temporary stop of Integrated Driver Support System (Not Start-Up ESB/EBB Control Unit)

NOTE:

- Before you troubleshoot, **review the general troubleshooting information**.
- These DTCs are recorded when the electric servo brake control unit cannot temporarily accept brake request from the integrated driver support system.
- Examples of the situation where DTCs are recorded are as follows:
-
  - Reduction of the electric servo brake control unit power supply voltage.
  - The electric servo brake control unit cannot accept ACC brake request because the VSA system sets the brake pad high temperature information.
- If this DTC is recorded, some of the integrated driver support system functions are temporarily canceled but it is not a failure.
- When the electric servo brake control unit returns to normal, the temporarily cancelled integrated driver support system functions are re-activated.
- The functions of the integrated driver support system that will be temporarily canceled when this DTC is recorded can be confirmed with the **DTC troubleshooting index**.

DTC Description	DTC
U0418-92 Temporary stop of Integrated Driver Support System (Rejected control request by ESB/EBB System)	B
U0418-9A Temporary stop of Integrated Driver Support System (Not Start-Up ESB/EBB Control Unit)	B

DTC (IDAS)

1. DTC check

   -1. Turn the vehicle to the ON mode, then wait for at least 6 seconds.

   -2. Check for DTCs with the HDS.

DTC Description	DTC
B	B

   Is there any DTC(s) other than U0418-92 or U0418-9A?

   YES

   Perform a troubleshooting for the recorded DTC.

   NO

   Clear the DTC with the HDS and explain to the customer that it is not a failure.

DTC U0420-68 (MILLIMETER WAVE RADAR)

DTC U0420-68 : (EPS Control Unit Malfunction)

NOTE:

- Before you troubleshoot, **review the general troubleshooting information**.
- This DTC is recorded when the millimeter wave radar receives the EPS control unit failure information via the F-CAN.
- If a DTC is recorded again after it is cleared with the HDS, **perform a troubleshooting for the EPS system** .
- The functions of the integrated driver support system that will be temporarily canceled when this DTC is recorded can be confirmed with the **DTC troubleshooting index**.

DTC Description	DTC
U0420-68 (EPS Control Unit Malfunction)	B

DTC (IDAS)

1. Problem verification

   -1. Turn the vehicle to the ON mode.

   -2. Clear the DTC with the HDS.

   -3. Turn the vehicle to the OFF (LOCK) mode.

   -4. Turn the vehicle to the ON mode, then wait for at least 6 seconds.

   -5. Check for DTCs with the HDS.

DTC Description	DTC
U0420-68 (EPS Control Unit Malfunction)	B

   Is DTC U0420-68 indicated?

   YES

   The failure is duplicated. **Go to the EPS system troubleshooting** .

NO

Intermittent failure, the system is OK at this time. **Refer to intermittent failures troubleshooting**.

DTC U0423-68, U1280-00, U1281-00, U128C-00 (MILLIMETER WAVE RADAR)

DTC U0423-68 : Gauge Control Module Malfunction/B-CAN Malfunction (BUS-OFF) Detection By Source Module

DTC U1280-00 : Lost Communication With The B-CAN Systems

DTC U1281-00 : Lost Communication with The MICU (Body Control Module)

DTC U128C-00 : Lost Communication with The Wiper Control Unit

NOTE:

- Before you troubleshoot, **review the general troubleshooting information**.
- These DTCs are recorded when the millimeter wave radar receives failure information for relevant B-CAN systems or switches judged by the gauge control module.
- B-CAN system information used to control the integrated driver support system of this vehicle is obtained from the gauge control module via the F-CAN.
- If a DTC is recorded after it is cleared with the HDS, **perform a troubleshooting for the gauge control module** .
- The functions of the integrated driver support system that will be temporarily canceled when this DTC is recorded can be confirmed with the **DTC troubleshooting index**.

DTC Description	DTC
U0423-68 Gauge Control Module Malfunction/B-CAN Malfunction (BUS-OFF) Detection By Source Module	B
U1280-00 Lost Communication With The B-CAN Systems	B
U1281-00 Lost Communication with The MICU (Body Control Module)	B
U128C-00 Lost Communication with The Wiper Control Unit	B

DTC (IDAS)

1. Problem verification

-1. Turn the vehicle to the ON mode.

-2. Clear the DTC with the HDS.

-3. Turn the vehicle to the OFF (LOCK) mode.

-4. Turn the vehicle to the ON mode, then wait for at least 6 seconds.

-5. Check for DTCs with the HDS.

DTC Description	DTC
U0423-68 Gauge Control Module Malfunction	B
U1280-00 Lost Communication With The B-CAN Systems	B
U1281-00 Lost Communication with The MICU (Body Control Module)	B
U128C-00 Lost Communication with The Wiper Control Unit	B

Is DTC U0423-68, U1280-00, U1281-00, or U128C-00 indicated?

YES

The failure is duplicated. **Go to the gauge control module troubleshooting** .

NO

Intermittent failure, the system is OK at this time. **Refer to intermittent failures troubleshooting**.

DTC U3000-51 (MILLIMETER WAVE RADAR)

DTC U3000-51 : Millimeter Wave Radar Update Incomplete

NOTE:

- Before you troubleshoot, **review the general troubleshooting information**.
- This DTC is indicated when a millimeter wave radar update is not completed properly.
- This DTC is not deleted until the millimeter wave radar is updated.
- After the update is successfully completed, these DTCs are automatically deleted without using the HDS.
- The functions of the integrated driver support system that will be temporarily canceled when this DTC is recorded can be confirmed with the **DTC troubleshooting index**.

DTC Description	DTC
U3000-51 Millimeter Wave Radar Update Incomplete	B

DTC (IDAS)

1. Millimeter wave radar (update)

-1. **Update the millimeter wave radar** .

NOTE: When updating control units, use the most current version of the HDS software and interface device. Check any official service information website for more information about updating control units.

-2. Check for DTCs with the HDS.

DTC Description	DTC
U3000-51 Millimeter Wave Radar Update Incomplete	B

Is DTC U3000-51 indicated?

YES

The failure is duplicated. **Replace the millimeter wave radar** .

NO

Update is complete.

DTC TROUBLESHOOTING

DTC B1175

DTC B1175 : Fuel level sensor (Fuel gauge sending unit) circuit malfunction

NOTE: If you are troubleshooting multiple DTCs, be sure to follow the instructions in B-CAN System Diagnosis Test Mode A .

DTC Description	DTC
B1175 Fuel level sensor (Fuel gauge sending unit) circuit malfunction	B

DTC (Gauge Control Module)

1. Problem verification

   -1. Clear the DTCs with the HDS.

   -2. Turn the vehicle to the OFF (LOCK) mode and then the ON mode.

   -3. Wait for at least 30 seconds.

   -4. Check for DTCs with the HDS.

DTC Description	DTC
B1175 Fuel level sensor (Fuel gauge sending unit) circuit malfunction	B

   Is DTC B1175 indicated?

   YES

   Go to step 2.

   NO

   Intermittent failure, the system is OK at this time. Check for poor connections or loose terminals.

2. Open wire check (FUEL_GAUGE+, FUEL_GAUGE- lines)

   -1. Turn the vehicle to the OFF (LOCK) mode.

   -2. Disconnect the following connector.

Gauge control module connector A (32P) Fuel tank unit 4P connector

   -3. Measure the resistance between test points 1 and 2.

Test condition	Vehicle OFF (LOCK) mode Gauge control module connector A (32P): disconnected Fuel tank unit 4P connector: disconnected
Test point 1	Gauge control module connector A (32P) No. 22
Test point 2	Fuel tank unit 4P connector (female terminals) No. 2: ①

Test point 1	Gauge control module connector A (32P) No. 21
Test point 2	Fuel tank unit 4P connector (female terminals) No. 4: ①

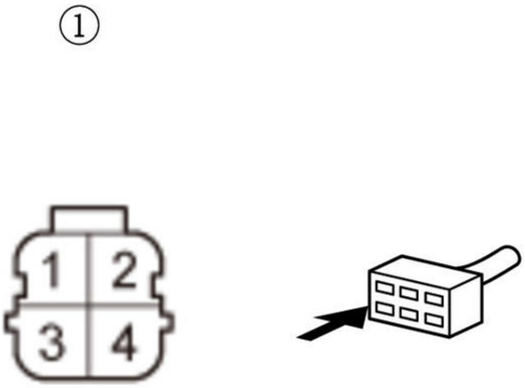

Is there 1.0 Ω or less?

YES

The FUEL_GAUGE+ and FUEL_GAUGE- wires are OK. Go to step 3.

NO

Repair an open or high resistance in the wire(s).

3. Fuel gauge sending unit check

-1. Do the fuel gauge sending unit test .

Is the unit OK?

YES

Replace the gauge control module .

NO

Replace the fuel gauge sending unit .

DTC B1176

DTC B1176 : Fuel level sensor (Fuel gauge sending unit) circuit short

NOTE: If you are troubleshooting multiple DTCs, be sure to follow the instructions in B-CAN System Diagnosis Test Mode A .

DTC Description	DTC
B1176 Fuel level sensor (Fuel gauge sending unit) circuit short	B

DTC (Gauge Control Module)

1. Problem verification

-1. Clear the DTCs with the HDS.

-2. Turn the vehicle to the OFF (LOCK) mode and then the ON mode.

-3. Wait for at least 30 seconds.

-4. Check for DTCs with the HDS.

DTC Description	DTC
B1176 Fuel level sensor (Fuel gauge sending unit) circuit short	B

Is DTC B1176 indicated?

YES

Go to step 2.

NO

Intermittent failure, the system is OK at this time. Check for poor connections or loose terminals.

2. Short wire check (FUEL_GAUGE+ line)

-1. Turn the vehicle to the OFF (LOCK) mode.

-2. Disconnect the following connector.

Gauge control module connector A (32P) Fuel tank unit 4P connector

-3. Measure the resistance between test points 1 and 2.

Test condition	Vehicle OFF (LOCK) mode Gauge control module connector A (32P): disconnected Fuel tank unit 4P connector: disconnected
Test point 1	**Gauge control module connector A (32P) No. 22**
Test point 2	Body ground

Is there 1.0 MΩ or more?

YES

The FUEL_GAUGE+ wire is OK. Go to step 3.

NO

Repair a short to ground in the wire.

3. Fuel gauge sending unit check

-1. **Do the fuel gauge sending unit test** .

Is the unit OK?

YES

Replace the gauge control module .

NO

Replace the fuel gauge sending unit .

DTC B1195

DTC B1195 : Gauge control module lost communication with Audio Remote Switch (LIN bus connected)

NOTE:

- If you are troubleshooting multiple DTCs, be sure to follow the instructions in B-CAN System Diagnosis Test Mode A .
- Before troubleshooting, make sure the fuses and relays associated with the system is OK.

DTC Description	DTC
B1195 Gauge control module lost communication with Audio Remote Switch (LIN bus connected)	B

DTC (Gauge Control Module)

1. Problem verification

   -1. Clear the DTCs with the HDS.

   -2. Turn the vehicle to the OFF (LOCK) mode and then the ON mode.

   -3. Wait for at least 4 seconds.

   -4. Check for DTCs with the HDS.

DTC Description	DTC
B1195 Gauge control module lost communication with Audio Remote Switch (LIN bus connected)	B

   Is DTC B1195 indicated?

   YES

   Go to step 2.

   NO

   Intermittent failure, the system is OK at this time. Check for loose or poor connections.

2. Determine possible failure area (audio remote-HFL switch power and ground, LIN (START_SW) / STRG_SW_LIN line)

   -1. Turn the vehicle to the OFF (LOCK) mode.

   -2. Disconnect the following connector.

Audio remote-HFL switch 12P connector

   -3. Measure the voltage between test points 1 and 2.

Test condition	Vehicle OFF (LOCK) mode Audio remote-HFL switch 12P connector: disconnected

Test point 1	Audio remote-HFL switch 12P connector No. 7
Test point 2	Audio remote-HFL switch 12P connector No. 10

Is there battery voltage?

YES

Go to step 4.

NO

Go to step 3.

3. Open wire check (+B line)

-1. Measure the voltage between test points 1 and 2.

Test condition	Vehicle OFF (LOCK) mode Audio remote-HFL switch 12P connector: disconnected
Test point 1	Audio remote-HFL switch 12P connector No. 7
Test point 2	Body ground

Is there battery voltage?

YES

Repair an open or high resistance in the ground wire or poor ground (G401).

NO

Repair an open or high resistance in the wire.

4. Shorted wire check (LIN (START_SW) / STRG_SW_LIN line)

-1. Disconnect the following connector.

Gauge control module connector A (32P)

-2. Measure the resistance between test points 1 and 2.

Test condition	Vehicle OFF (LOCK) mode Gauge control module connector A (32P): disconnected Audio remote-HFL switch 12P connector: disconnected
Test point 1	Audio remote-HFL switch 12P connector No. 12
Test point 2	Body ground

Is there 1.0 MΩ or more?

YES

The LIN (START_SW) / STRG_SW_LIN wire is not shorted. Go to step 5.

NO

Repair a short to ground in the wire.

5. Open wire check (LIN (START_SW) / STRG_SW_LIN line)

-1. Measure the resistance between test points 1 and 2.

Test condition	Vehicle OFF (LOCK) mode Gauge control module connector A (32P): disconnected Audio remote-HFL switch 12P connector: disconnected
Test point 1	Gauge control module connector A (32P) No. 23
Test point 2	Audio remote-HFL switch 12P connector No. 12

Is there 1.0 Ω or less?

YES

The LIN (START_SW) / STRG_SW_LIN wire is OK. Replace the audio remote-HFL switch . If the DTC is still present, replace the gauge control module .

NO

An open or poor connection in the wire.

DTC U0029 (GAUGE CONTROL MODULE)

DTC U0029 : F-CAN communication line error

NOTE: If you are troubleshooting multiple DTCs, be sure to follow the instructions in B-CAN System Diagnosis Test Mode A .

DTC Description	DTC
U0029 F-CAN communication line error	B

DTC (Gauge Control Module)

1. Problem verification

-1. Clear the DTCs with the HDS.

-2. Turn the vehicle to the OFF (LOCK) mode and then the ON mode.

-3. Wait for at least 6 seconds.

-4. Check for DTCs with the HDS.

DTC Description	DTC
U0029 F-CAN communication line error	B

Is DTC U0029 indicated?

YES

Go to the troubleshooting for CAN gateway system DTC(s) .

NO

Intermittent failure, the system is OK at this time.

DTC U0100, U0101, U0104, U0111, U0114, U0122, U0128, U0131, U0151, U129C, U12A0 (GAUGE CONTROL MODULE)

DTC U0100 : Gauge control module lost communication with ENG/AT

DTC U0101 : Gauge control module lost communication with AT

DTC U0104 : Gauge Control Module Lost Communication With Driving Support System Control Unit

DTC U0111 : Gauge control module lost communication with Battery Condition Monitor Module

DTC U0114 : Gauge control module lost communication with All Wheel Drive Control Module

DTC U0122 : Gauge control module lost communication with VSA modulator-control unit

DTC U0128 : Gauge control module lost communication with EPB

DTC U0131 : Gauge control module lost communication with EPS Unit

DTC U0151 : Gauge control module lost communication with SRS unit

DTC U129C : Gauge control module lost communication with multi purpose camera unit

DTC U12A0 : Gauge control module lost communication with Acoustic Vehicle Alert System (AVAS)

NOTE:

- If you are troubleshooting multiple DTCs, be sure to follow the instructions in **B-CAN System Diagnosis Test Mode A** .
- Refer to the DTC code shown on the display, and then inspect the connectors and terminals based on the instructions in the table below.
- The DTC may be stored due to the grounding failure or the power source failure at the transmitting control unit (the grounding inspection and the power source inspection on each control unit are required prior to this checking process).

DTC Description	DTC
U0100 Gauge control module lost communication with ENG/AT	B
U0101 Gauge control module lost communication with AT	B
U0104 Gauge Control Module Lost Communication With Driving Support System Control Unit	B
U0111 Gauge control module lost communication with Battery Condition Monitor Module	B
U0114 Gauge control module lost communication with All Wheel Drive Control Module	B
U0122 Gauge control module lost communication with VSA modulator-control unit	B
U0128 Gauge control module lost communication with EPB	B
U0131 Gauge control module lost communication with EPS Unit	B
U0151 Gauge control module lost communication with SRS unit	B
U129C Gauge control module lost communication with multi purpose camera unit	B
U12A0 Gauge control module lost communication with Acoustic Vehicle Alert System (AVAS)	B

DTC (Gauge Control Module)

1. Problem verification

   -1. Clear the DTCs with the HDS.

   -2. Turn the vehicle to the OFF (LOCK) mode and then the ON mode.

   -3. Wait for at least 6 seconds.

-4. Check for DTCs with the HDS.

DTC Description	DTC
U0100 Gauge control module lost communication with ENG/AT	B
U0101 Gauge control module lost communication with AT	B
U0104 Gauge Control Module Lost Communication With Driving Support System Control Unit	B
U0111 Gauge control module lost communication with Battery Condition Monitor Module	B
U0114 Gauge control module lost communication with All Wheel Drive Control Module	B
U0122 Gauge control module lost communication with VSA modulator-control unit	B
U0128 Gauge control module lost communication with EPB	B
U0131 Gauge control module lost communication with EPS Unit	B
U0151 Gauge control module lost communication with SRS unit	B
U129C Gauge control module lost communication with multi purpose camera unit	B
U12A0 Gauge control module lost communication with Acoustic Vehicle Alert System (AVAS)	B

Are any DTCs indicated?

YES

Go to step 2.

NO

Intermittent failure, the system is OK at this time. Check for poor connections or loose terminals.

2. CAN gateway system DTC check

-1. Check for CAN gateway system DTCs with the HDS.

DTC Description	DTC
U0029-00 CAN Gateway F-CAN ch A Bus Off	B
U0047-00 CAN Gateway F-CAN ch B Bus Off	B
U0056-00 CAN Gateway F-CAN ch C Bus Off	B
U0065-00 CAN Gateway F-CAN ch D Bus Off	B

DTC Description	DTC
U0038-00 CAN Gateway F-CAN ch E Bus Off	B
U3000-49 CAN Gateway Internal Failure	B

Is DTC U0029-00, U0047-00, U0056-00, U0038-00, and/or U3000-49 indicated?

YES

Go to the troubleshooting for CAN gateway system DTC(s) .

NO

Go to step 3.

3. F-CAN circuit communication check

-1. Select the FUNCTION TEST in the CAN gateway with the HDS, then select the F-CAN Bus Connected Unit Check.

F-CAN Bus Connected Unit Check

Does the gauge control module detect the CAN gateway Bus channels D?

Bus D is Not Available

Go to step 4.

Bus D is Available

Go to step 5.

4. Open wire check (F-CAN D lines)

-1. Turn the vehicle to the OFF (LOCK) mode.

-2. Disconnect the following connectors.

CAN gateway 16P connector Gauge control module connector A (32P)

-3. Measure the resistance between test points 1 and 2.

Test condition	Vehicle OFF (LOCK) mode CAN gateway 16P connector: disconnected Gauge control module connector A (32P): disconnected
Test point 1	CAN gateway 16P connector (female terminals) No. 7: ①
Test point 2	**Gauge control module connector A (32P) No. 19**

Test point 1	CAN gateway 16P connector (female terminals) No. 15: ①
Test point 2	**Gauge control module connector A (32P) No. 20**

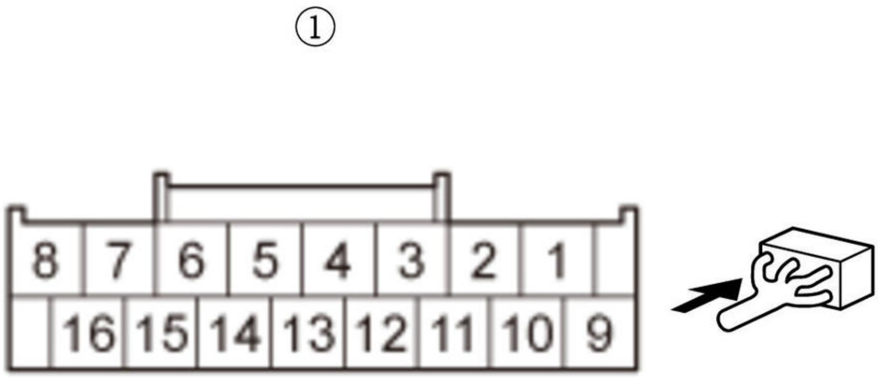

Is there 1.0 Ω or less?

YES

The F-CAN D_H and F-CAN D_L wires are OK. **Replace the gauge control module** .

NO

Repair an open in F-CAN D_H or F-CAN D_L wire.

5. F-CAN circuit communication check (Transmitting control unit)

-1. Select the FUNCTION TEST in the CAN gateway with the HDS, then select the F-CAN Bus Connected Unit Check.

F-CAN Bus Connected Unit Check

According to the detected DTC on the following table, make sure that the transmitting control unit detects the CAN gateway Bus channel(s) normally.

DTC	Transmitting control unit	Detected CAN gateway Bus channel(s) at normal
U0100	PCM	A, B, E
U0101	PCM	A, B, E
U0104	Millimeter wave radar	C
U0111	Battery condition monitor module	A, E
U0114	Real time AWD control unit	D
U0122	VSA modulator-control unit	B, C
U0128	VSA modulator-control unit	B, C
U0131	EPS control unit	C
U0151	SRS unit	C
U129C	Multipurpose camera unit	C
U12A0	Acoustic vehicle alerting control unit	B

Is it detected normally?

Detected normal

Intermittent failure, the system is OK at this time. Check for poor connections or loose terminals at the transmitting control unit and the CAN gateway.

U0100: PCM is Not Available for Bus A

Go to step 6.

U0100: PCM is Not Available for Bus B

Go to step 7.

U0100: PCM is Not Available for Bus E

Go to step 10.

U0101: PCM is Not Available for Bus A

Go to step 6.

U0101: PCM is Not Available for Bus B

Go to step 7.

U0101: PCM is Not Available for Bus E

Go to step 10.

U0104: Millimeter wave radar is Not Available for Bus C

Go to step 8.

U0111: Battery condition monitor module is Not Available for Bus A

Go to step 6.

U0111: Battery condition monitor module is Not Available for Bus E

Go to step 10.

U0114: Real time AWD control unit is Not Available for Bus D

Go to step 9.

U0122: VSA modulator-control unit is Not Available for Bus B

Go to step 7.

U0122: VSA modulator-control unit is Not Available for Bus C

Go to step 8.

U0128: VSA modulator-control unit is Not Available for Bus B

Go to step 7.

U0128: VSA modulator-control unit is Not Available for Bus C

Go to step 8.

U0131: EPS control unit is Not Available for Bus C

Go to step 8.

U0151: SRS unit is Not Available for Bus C

Go to step 8.

U129C: Multipurpose camera unit is Not Available for Bus C

Go to step 8.

U12A0: Acoustic vehicle alerting control unit is Not Available for Bus B

Go to step 7.

6. Open wire check (F-CAN A lines)

-1. Turn the vehicle to the OFF (LOCK) mode.

-2. U0100, U0101: Jump the SCS line with the HDS, and wait more than 1 minute.

SCS short

-3. According to the detected DTC on the following table, disconnect the transmitting control unit connector(s).

DTC	Connector
-	CAN gateway 16P connector
U0100	PCM connector A (50P)
U0101	PCM connector A (50P)
U0111	Battery condition monitor module E (32P)

-4. Measure the resistance between test points 1 and 2.

Test condition	Vehicle OFF (LOCK) mode CAN gateway 16P connector: disconnected Transmitting control unit connector(s) for indicated DTCs: disconnected

DTC	Circuit name	Test point 1 (Receiving control unit)		Test point 2 (Transmitting control unit)	
		Connector	Terminal	Connector	Terminal
U0100	F-CAN A_H	CAN gateway 16P connector (female terminals): ①	No. 3	PCM connector A (50P)	No. 37
	F-CAN A_L		No. 11		No. 36
U0101	F-CAN A_H	CAN gateway 16P connector (female terminals): ①	No. 3	PCM connector A (50P)	No. 37
	F-CAN A_L		No. 11		No. 36
U0111	F-CAN A_H	CAN gateway 16P connector (female terminals): ①	No. 3	Battery condition monitor module E (32P)	No. 9
	F-CAN A_L		No. 11		No. 8

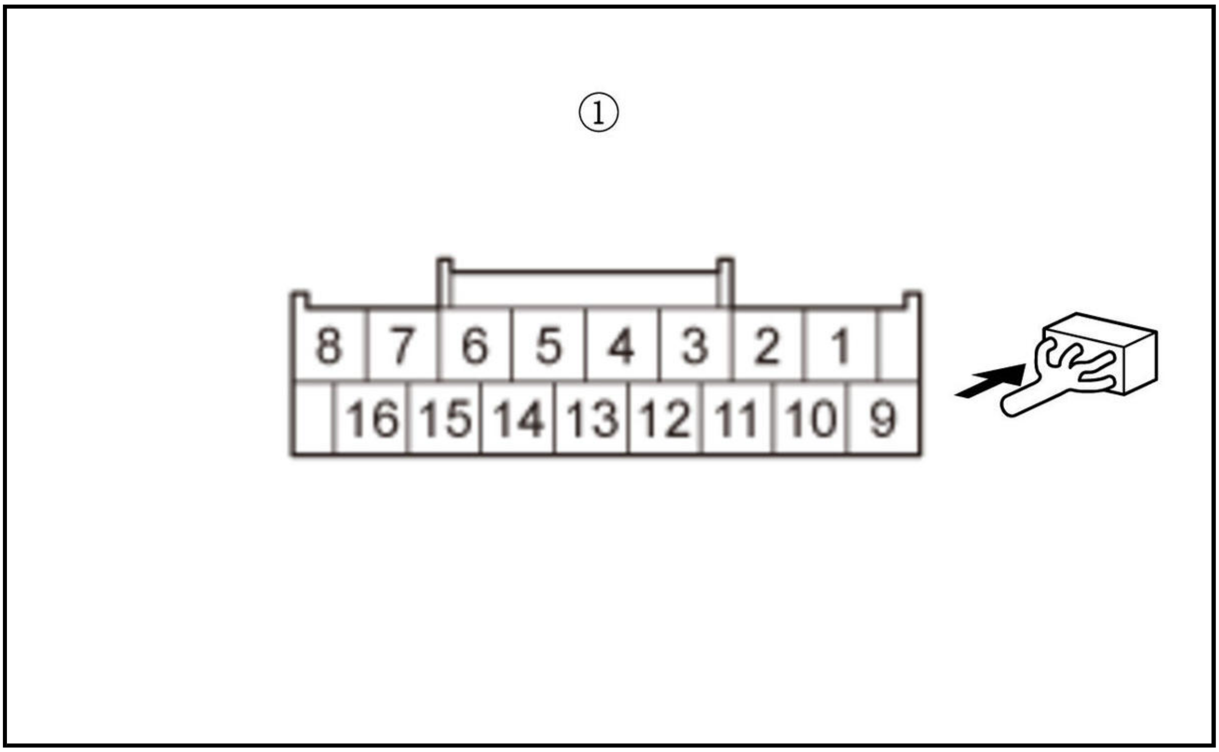

Is there 1.0 Ω or less?

YES

The F-CAN A_H wire and the F-CAN A_L wire are OK.

According to the detected DTC on the following table replace the correspond control unit.

DTC	Operation for transmitting control unit
U0100	**PCM**
U0101	**PCM**
U0111	**Battery condition monitor module**

NO

Repair an open in F-CAN A_H or F-CAN A_L wire.

7. Open wire check (F-CAN B lines)

-1. Turn the vehicle to the OFF (LOCK) mode.

-2. U0100, U0101: Jump the SCS line with the HDS, and wait more than 1 minute.

SCS short

-3. According to the detected DTC on the following table, disconnect the transmitting control unit connector(s).

DTC	Connector
-	CAN gateway 16P connector
U0100	PCM connector A (50P)
U0101	PCM connector A (50P)
U0122	VSA modulator-control unit 46P connector
U0128	VSA modulator-control unit 46P connector
U12A0	Acoustic vehicle alerting control unit 12P connector

-4. Measure the resistance between test points 1 and 2.

Test condition	Vehicle OFF (LOCK) mode CAN gateway 16P connector: disconnected Transmitting control unit connector(s) for indicated DTCs: disconnected

DTC	Circuit name	Test point 1 (Receiving control unit)		Test point 2 (Transmitting control unit)	
		Connector	Terminal	Connector	Terminal
U0100	F-CAN B_H	CAN gateway 16P connector (female terminals): ①	No. 6	**PCM connector A (50P)**	No. 39
	F-CAN B_L		No. 14		No. 38
U0101	F-CAN B_H	CAN gateway 16P connector (female terminals): ①	No. 6	**PCM connector A (50P)**	No. 39
	F-CAN B_L		No. 14		No. 38
U0122	F-CAN B_H	CAN gateway 16P connector (female terminals): ①	No. 6	**VSA modulator-control unit 46P connector**	No. 40
	F-CAN B_L		No. 14		No. 28
U0128	F-CAN B_H	CAN gateway 16P connector (female	No. 6	**VSA modulator-control unit 46P connector**	No. 40
	F-CAN B_L		No. 14		No. 28

DTC	Circuit name	Test point 1 (Receiving control unit)		Test point 2 (Transmitting control unit)	
		Connector	Terminal	Connector	Terminal
U12A0	F-CAN B_H	CAN gateway 16P connector (female terminals): ① terminals): ①	No. 6	**Acoustic vehicle alerting control unit 12P connector**	No. 5
	F-CAN B_L		No. 14		No. 6

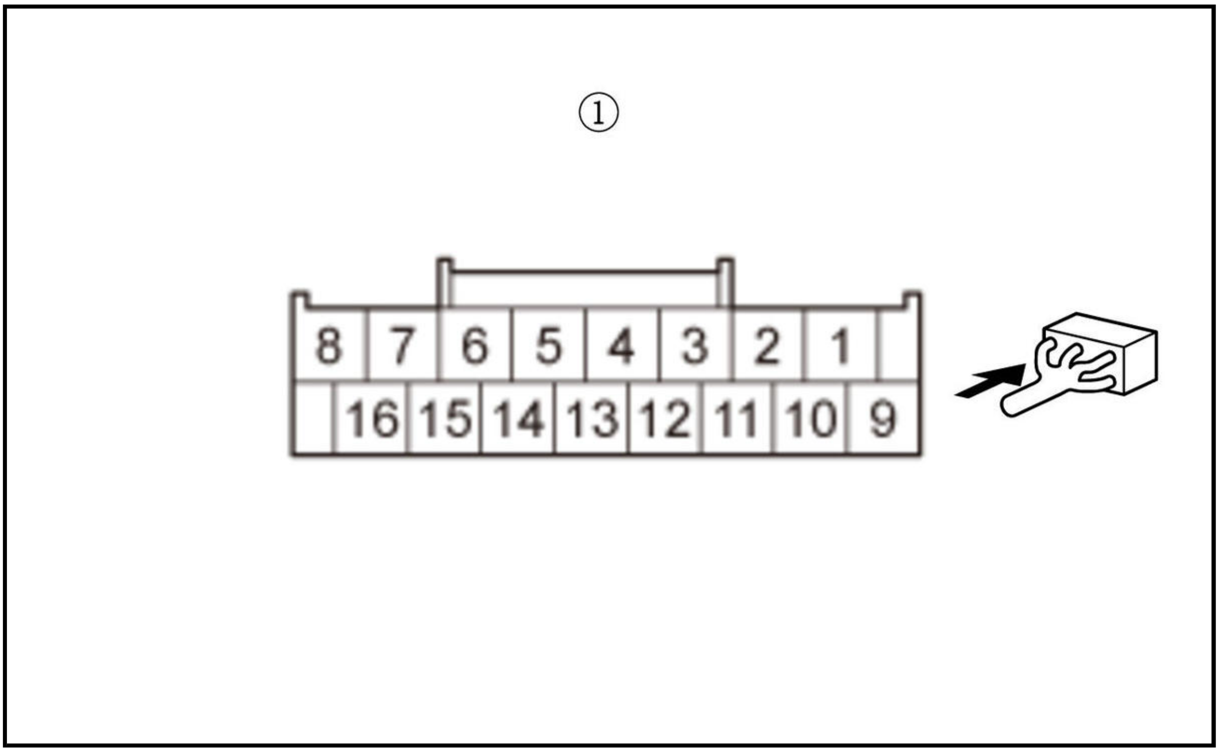

Is there 1.0 Ω or less?

YES

The F-CAN B_H wire and the F-CAN B_L wire are OK.

According to the detected DTC on the following table replace the correspond control unit.

DTC	Operation for transmitting control unit
U0100	**PCM**
U0101	**PCM**
U0122	**VSA modulator-control unit**
U0128	**VSA modulator-control unit**
U12A0	**Acoustic vehicle alerting control unit**

NO

Repair an open in F-CAN B_H or F-CAN B_L wire.

8. Open wire check (F-CAN C lines)

-1. Turn the vehicle to the OFF (LOCK) mode.

-2. According to the detected DTC on the following table, disconnect the transmitting control unit connector(s).

DTC	Connector
-	CAN gateway 16P connector
U0104	Millimeter wave radar 8P connector
U0122	VSA modulator-control unit 46P connector
U0128	VSA modulator-control unit 46P connector
U0131	EPS control unit connector B (6P)

DTC	Connector
U0151	SRS unit connector A (39P)
U129C	Multipurpose camera unit 12P connector

-3. Measure the resistance between test points 1 and 2.

Test condition	Vehicle OFF (LOCK) mode CAN gateway 16P connector: disconnected Transmitting control unit connector(s) for indicated DTCs: disconnected

DTC	Circuit name	Test point 1 (Receiving control unit)		Test point 2 (Transmitting control unit)	
		Connector	Terminal	Connector	Terminal
U0104	F-CAN C_H	CAN gateway 16P connector (female terminals): ①	No. 5	Millimeter wave radar 8P connector	No. 7
	F-CAN C_L		No. 13		No. 6
U0122	F-CAN C_H	CAN gateway 16P connector (female terminals): ①	No. 5	VSA modulator-control unit 46P connector	No. 46
	F-CAN C_L		No. 13		No. 34
U0128	F-CAN C_H	CAN gateway 16P connector (female terminals): ①	No. 5	VSA modulator-control unit 46P connector	No. 46
	F-CAN C_L		No. 13		No. 34
U0131	F-CAN C_H	CAN gateway 16P connector (female terminals): ①	No. 5	EPS control unit connector B (6P)	No. 1
	F-CAN C_L		No. 13		No. 3
U0151	F-CAN C_H	CAN gateway 16P connector (female terminals): ①	No. 5	SRS unit connector A (39P)	No. 34
	F-CAN C_L		No. 13		No. 35
U129C	F-CAN C_H	CAN gateway 16P connector (female terminals): ①	No. 5	Multipurpose camera unit 12P connector	No. 11
	F-CAN C_L		No. 13		No. 5

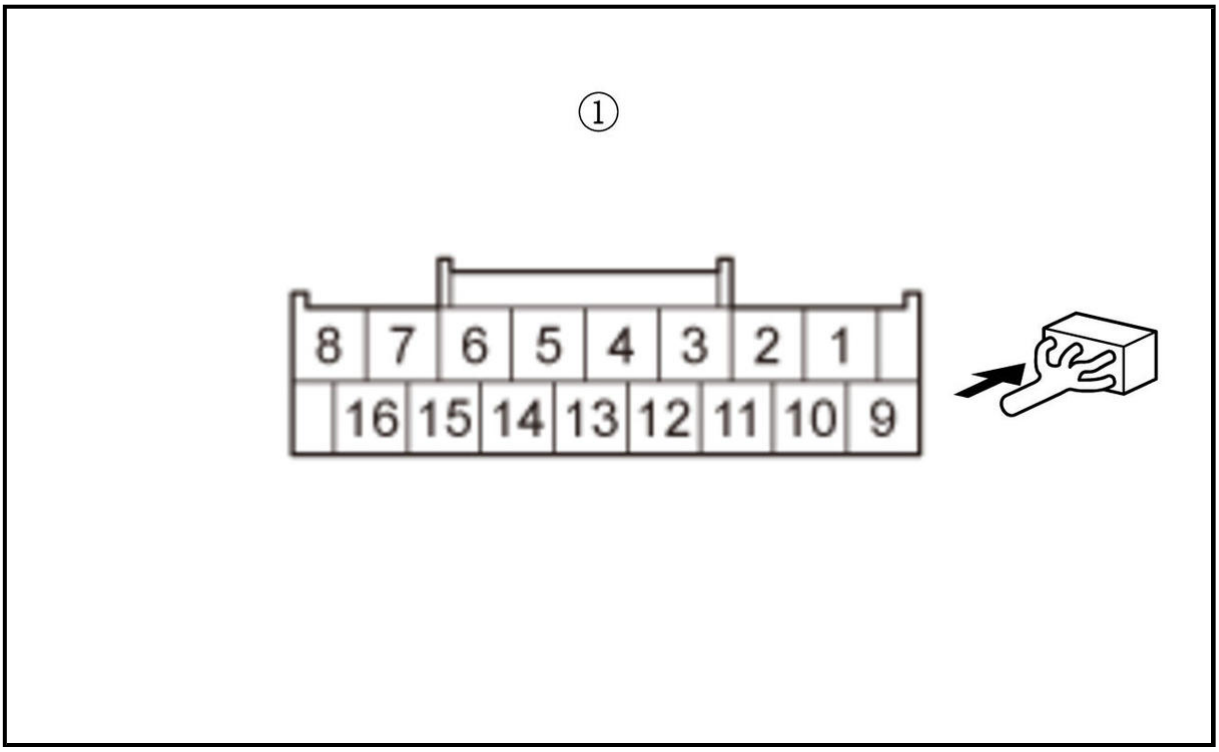

Is there 1.0 Ω or less?

YES

The F-CAN C_H wire and the F-CAN C_L wire are OK.

According to the detected DTC on the following table replace the correspond control unit.

DTC	Operation for transmitting control unit
U0104	**Millimeter wave radar**
U0122	**VSA modulator-control unit**
U0128	**VSA modulator-control unit**
U0131	**EPS control unit**
U0151	**SRS unit**
U129C	**Multipurpose camera unit**

NO

Repair an open in F-CAN C_H or F-CAN C_L wire.

9. Open wire check (F-CAN D lines)

-1. Turn the vehicle to the OFF (LOCK) mode.

-2. According to the detected DTC on the following table, disconnect the transmitting control unit connector(s).

DTC	Connector
-	CAN gateway 16P connector
U0114	Real time AWD control unit 24P connector

-3. Measure the resistance between test points 1 and 2.

Test condition	Vehicle OFF (LOCK) mode CAN gateway 16P connector: disconnected Transmitting control unit connector(s) for indicated DTCs: disconnected

DTC	Circuit name	Test point 1 (Receiving control unit)		Test point 2 (Transmitting control unit)	
		Connector	Terminal	Connector	Terminal
U0114	F-CAN D_H	CAN gateway 16P connector (female terminals): ①	No. 7	**Real time AWD control unit 24P connector**	No. 14
	F-CAN D_L		No. 15		No. 24

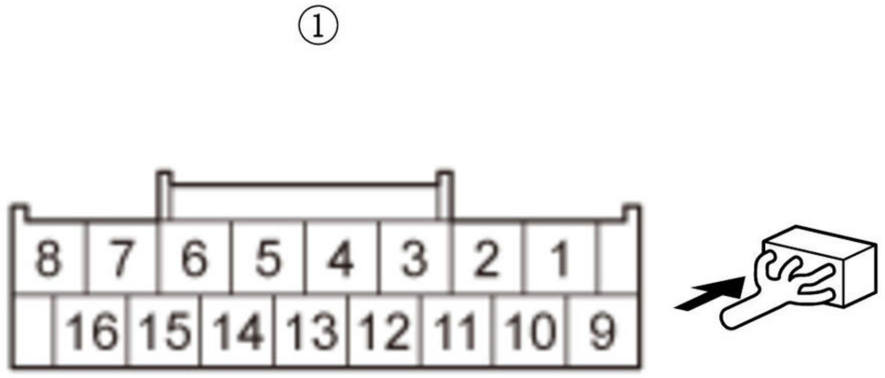

Is there 1.0 Ω or less?

YES

The F-CAN D_H wire and the F-CAN D_L wire are OK.

According to the detected DTC on the following table replace the correspond control unit.

DTC	Operation for transmitting control unit
U0114	**Real time AWD control unit**

NO

Repair an open in F-CAN D_H or F-CAN D_L wire.

10. Open wire check (EP-CAN A lines)

-1. Turn the vehicle to the OFF (LOCK) mode.

-2. U0100, U0101: Jump the SCS line with the HDS, and wait more than 1 minute.

SCS short

-3. According to the detected DTC on the following table, disconnect the transmitting control unit connector(s).

DTC	Connector
-	CAN gateway 16P connector

DTC	Connector
U0100	PCM connector A (50P)
U0101	PCM connector A (50P)
U0111	Battery condition monitor module E (32P)

-4. Measure the resistance between test points 1 and 2.

Test condition	Vehicle OFF (LOCK) mode CAN gateway 16P connector: disconnected Transmitting control unit connector(s) for indicated DTCs: disconnected

DTC	Circuit name	Test point 1 (Receiving control unit)		Test point 2 (Transmitting control unit)	
		Connector	**Terminal**	**Connector**	**Terminal**
U0100	EP-CAN A_H	CAN gateway 16P connector (female terminals): ①	No. 16	**PCM connector A (50P)**	No. 21
	EP-CAN A_L		No. 8		No. 20
U0101	EP-CAN A_H	CAN gateway 16P connector (female terminals): ①	No. 16	**PCM connector A (50P)**	No. 21
	EP-CAN A_L		No. 8		No. 20
U0111	EP-CAN A_H	CAN gateway 16P connector (female terminals): ①	No. 16	**Battery condition monitor module E (32P)**	No. 11
	EP-CAN A_L		No. 8		No. 10

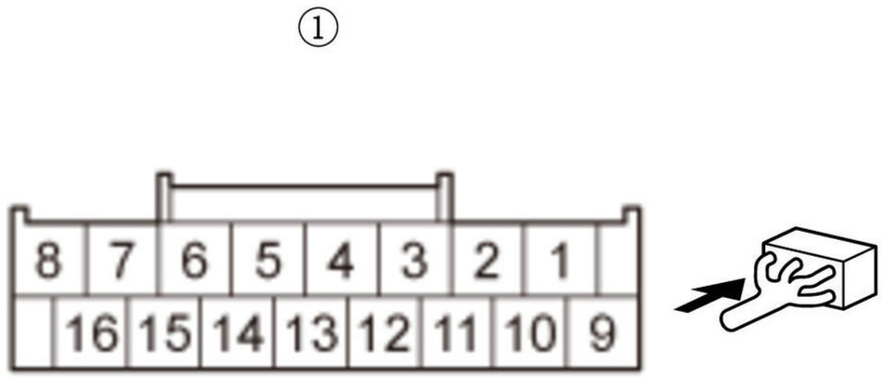

Is there 1.0 Ω or less?

YES

The EP-CAN A_H wire and the EP-CAN A_L wire are OK.

According to the detected DTC on the following table replace the correspond control unit.

DTC	Operation for transmitting control unit
U0100	PCM
U0101	PCM
U0111	Battery condition monitor module

NO

Repair an open in EP-CAN A_H or EP-CAN A_L wire.

DTC U1280 (GAUGE CONTROL MODULE)

DTC U1280 : Communication bus line error (BUS-OFF)

NOTE: If you are troubleshooting multiple DTCs, be sure to follow the instructions in B-CAN System Diagnosis Test Mode A .

DTC Description	DTC
U1280 Communication bus line error (BUS-OFF)	B

DTC (Gauge Control Module)

1. Problem verification

   -1. Clear the DTCs with the HDS.

   -2. Turn the vehicle to the OFF (LOCK) mode and then the ON mode.

   -3. Wait for at least 6 seconds.

   -4. Check for DTCs with the HDS.

DTC Description	DTC
U1280-00 Communication bus line error (BUS-OFF)	B

   Is DTC U1280 indicated?

   YES

   Go to body control module DTC U1280 troubleshooting .

   NO

   Intermittent failure, the system is OK at this time.

DTC U1281, U1288, U128F (GAUGE CONTROL MODULE)

DTC U1281 : Gauge control module lost communication with MICU (body control module) (MICU frame)

DTC U1288 : Gauge control module lost communication with PARKSR

DTC U128F : Gauge control module lost communication with BSI unit

NOTE:

- If you are troubleshooting multiple DTCs, be sure to follow the instructions in B-CAN System Diagnosis Test Mode A .
- Refer to the DTC code shown on the display, and then inspect the connectors and terminals based on the instructions in the table below.

- The DTC may be stored due to the grounding failure or the power source failure at the transmitting control unit (the grounding inspection and the power source inspection on each control unit are required prior to this checking process).

DTC Description	DTC
U1281 Gauge control module lost communication with MICU (body control module) (MICU frame)	B
U1288 Gauge control module lost communication with PARKSR	B
U128F Gauge control module lost communication with BSI unit	B

DTC (Gauge Control Module)

1. Problem verification

   -1. Clear the DTC with the HDS.

   -2. Turn the vehicle to the OFF (LOCK) mode and then the ON mode.

   -3. Wait for at least 6 seconds.

   -4. Check for DTCs with the HDS.

DTC Description	DTC
U1281 Gauge control module lost communication with MICU (body control module) (MICU frame)	B
U1288 Gauge control module lost communication with PARKSR	B
U128F Gauge control module lost communication with BSI unit	B

   Are any DTCs indicated?

   YES

   Go to step 2.

   NO

   Intermittent failure, the system is OK at this time. Check for poor connections or loose terminals.

2. Open wire check (B-CAN_H line, B-CAN_L line)

   -1. Turn the vehicle to the OFF (LOCK) mode.

   -2. Disconnect the receiving control unit connector.

Gauge control module connector A (32P)

   -3. Disconnect the transmitting control unit connector(s).

   Refer to the DTC shown on the display, then disconnect the connector(s) based on the instructions (see table).

DTC	Connector
U1281	Body control module connector B (36P)
U1288	Parking and back-up sensor control unit 16P connector
U128F	Left side BSI radar unit 6P connector

-4. Measure the resistance between the receiving control unit and the transmitting control unit on the B-CAN_H circuit and the B-CAN_L circuit.

Test condition	Vehicle OFF (LOCK) mode Gauge control module connector A (32P): disconnected Transmitting control unit connector(s) for indicated DTCs: disconnected

DTC	Circuit name	Receiving control unit		Transmitting control unit	
		Connector	Terminal	Connector	Terminal
U1281	B-CAN_H	Gauge control module connector A (32P)	No. 30	Body control module connector B (36P)	No. 20
	B-CAN_L		No. 31		No. 21
U1288	B-CAN_H	Gauge control module connector A (32P)	No. 30	Parking and back-up sensor control unit 16P connector	No. 9
	B-CAN_L		No. 31		No. 2
U128F	B-CAN_H	Gauge control module connector A (32P)	No. 30	Left side BSI radar unit 6P connector	No. 3
	B-CAN_L		No. 31		No. 5

Is there 1.0 Ω or less?

YES

The B-CAN_H wire and the B-CAN_L wire are OK.

Refer to the DTC shown on the display, then replace the control unit based on the instructions (see table).

DTC	Operation for transmitting control unit
U1281	Body control module
U128D	Parking and back-up sensor control unit

DTC	Operation for transmitting control unit
U128F	BSI radar unit

NO

Repair an open in the B-CAN_H wire and/or the B-CAN_L wire.

DTC U3000-49 (GAUGE CONTROL MODULE)

DTC U3000-49 : ECU internal circuit malfunction

NOTE: If you are troubleshooting multiple DTCs, be sure to follow the instructions in B-CAN System Diagnosis Test Mode A .

DTC Description	DTC
U3000-49 ECU internal circuit malfunction	B

DTC (Gauge Control Module)

1. Problem verification

-1. Clear the DTCs with the HDS.

-2. Turn the vehicle to the OFF (LOCK) mode and then the ON mode.

-3. Check for DTCs with the HDS.

DTC Description	DTC
U3000-49 ECU internal circuit malfunction	B

Is DTC U3000-49 indicated?

YES

Replace the gauge control module .

NO

Intermittent failure, the system is OK at this time.

DTC U3000-51 (GAUGE CONTROL MODULE)

DTC U3000-51 : Reprogramming error

NOTE:

- If you are troubleshooting multiple DTCs, be sure to follow the instructions in **B-CAN System Diagnosis Test Mode A** .
- Before reprogramming the gauge control module, make sure the 12 volt battery in the vehicle is fully charged, and connect a 12 volt jumper battery (not a 12 volt battery charger) to maintain system voltage.
- Never turn the vehicle to the ACCESSORY mode or OFF (LOCK) mode, during the reprogramming. If there is a problem with the reprogramming, turn the vehicle to the ON mode.

DTC Description	DTC
U3000-51 Reprogramming error	B

DTC (Gauge Control Module)

1. Problem verification

-1. Clear the DTCs with the HDS.

-2. Turn the vehicle to the OFF (LOCK) mode and then the ON mode.

-3. Check for DTCs with the HDS.

DTC Description	DTC
U3000-51 Reprogramming error	B

Is DTC U3000-51 indicated?

YES

Reprogramming the gauge control module.

NO

Intermittent failure, the system is OK at this time.

REMOVAL & INSTALLATION TEST

BRAKE PEDAL POSITION SWITCH REMOVAL, INSTALLATION, AND TEST

Removal and Installation

NOTE: 📖 Where icon is shown, further information shown below.

1

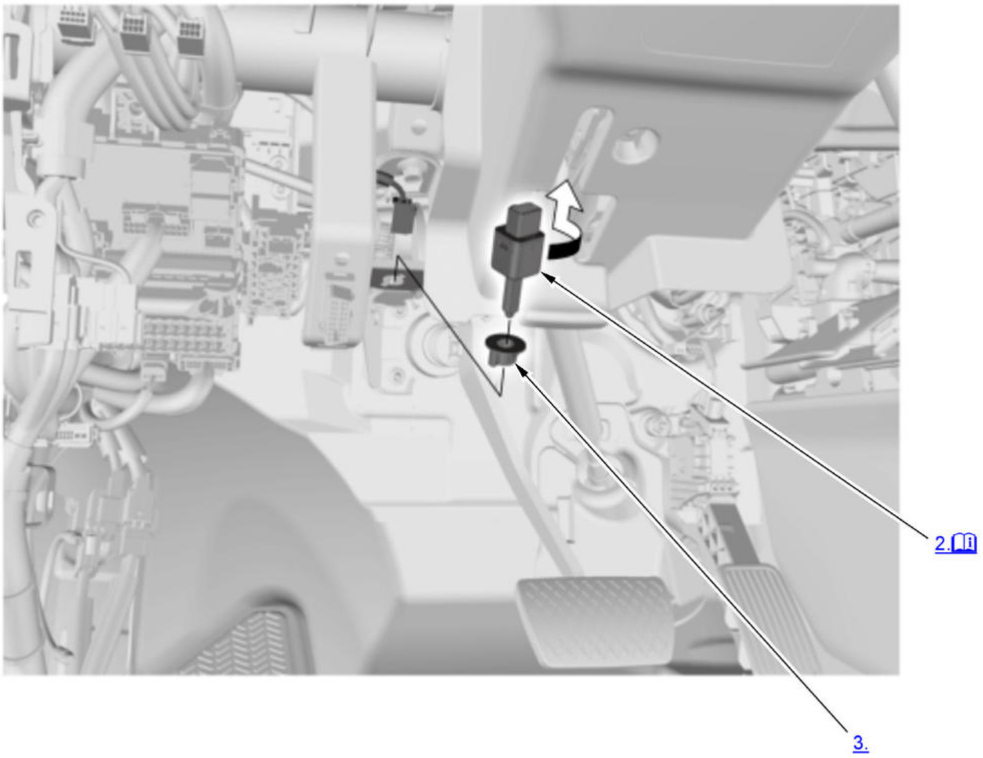

📖	Detailed information, notes, and precautions

1. Driver's Dashboard Lower Cover - Remove
2. Brake Pedal Position Switch - Remove

   WARNING:

   Do not connect the brake pedal position switch connector with the brake pedal position switch removed. The engine may start if the start/stop button is pressed as the system interprets that the brake pedal is depressed. Unintended starting of the engine is dangerous.

3. Attaching Piece - Remove
4. All Removed Parts - Install

1. Install the parts in the reverse order of removal.

5. **Brake Pedal and Brake Pedal Position Switch - Adjust**

Test

1. Brake Pedal Position Switch - Test

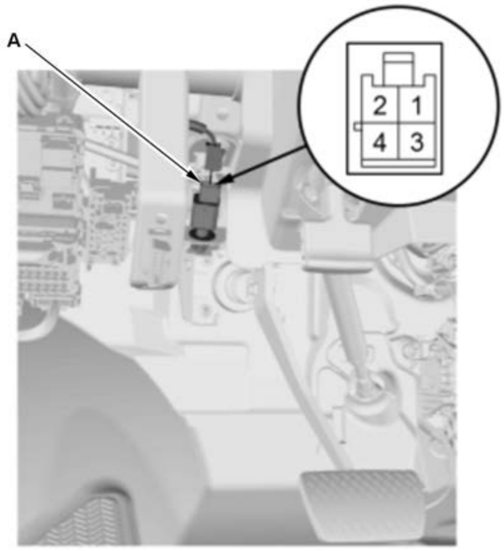

Terminal / Position	1	2	3	4
Pressed	○	—○		
Released			○	—○

WARNING:

Do not connect the brake pedal position switch connector with the brake pedal position switch removed. The engine may start if the start/stop button is pressed as the system interprets that the brake pedal is depressed. Unintended starting of the engine is dangerous.

1. Check for continuity between the terminals in the brake pedal position switch position according to the chart.

2. If the test results are not as specified, **adjust the brake pedal position switch**

(A), then recheck. If the results are still not as specified, replace the brake pedal position switch.

COMBINATION LIGHT SWITCH REMOVAL, INSTALLATION, AND TEST

Removal and Installation

NOTE: SRS components are located in this area. Review the **SRS component locations** and the **precautions and procedures** before doing repairs or service.

1

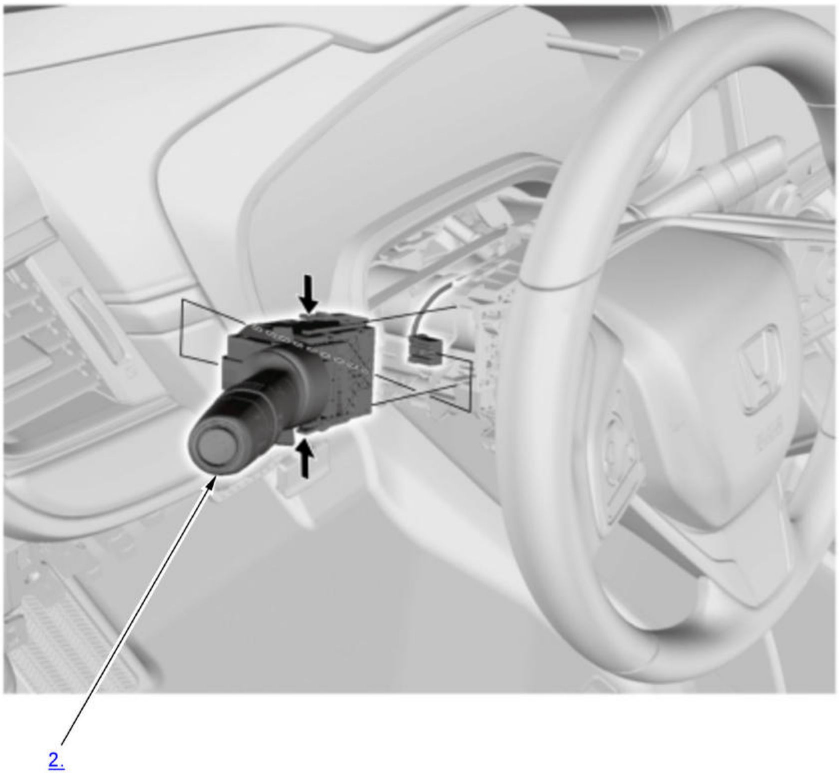

1. **Column Cover - Remove**
2. Combination Light Switch - Remove
3. All Removed Parts - Install

1. Install the parts in the reverse order of removal.

Test

1. Combination Light Switch - Test

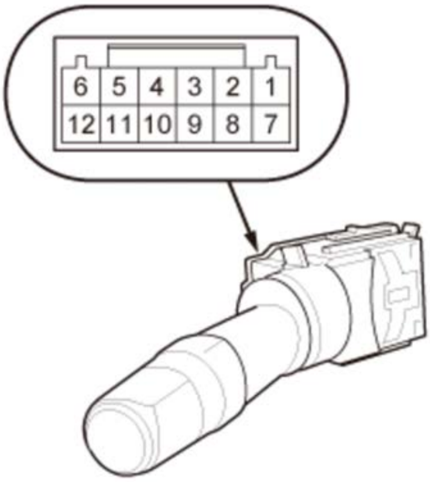	1. Inspect the connector terminals to be sure they are all making good contact. - If the terminals are bent, loose or corroded, repair them as necessary, and recheck the system. - If the terminals are OK, go to step 2.

2. Check for continuity between the terminals in each switch position according to the charts.

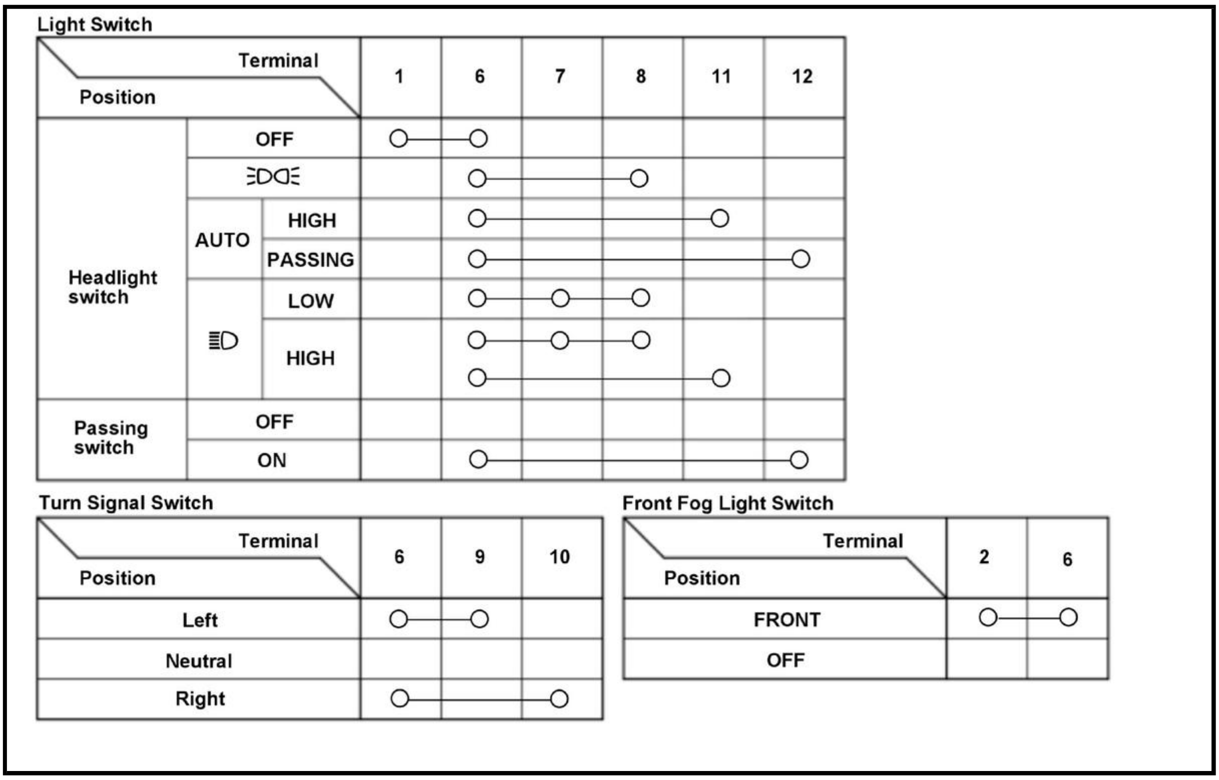

Light Switch

Position			1	6	7	8	11	12
Headlight switch	OFF		○	○				
	ƎDŒ			○		○		
	AUTO	HIGH		○			○	
		PASSING		○				○
	≣D	LOW		○	○	○		
		HIGH		○ ○	○	○	○	
Passing switch	OFF							
	ON			○				○

Turn Signal Switch

Position	6	9	10
Left	○	○	
Neutral			
Right	○		○

Front Fog Light Switch

Position	2	6
FRONT	○	○
OFF		

3. If the continuity is not as specified, replace the combination light switch.

HAZARD WARNING SWITCH REMOVAL, INSTALLATION, AND TEST

Removal and Installation

1

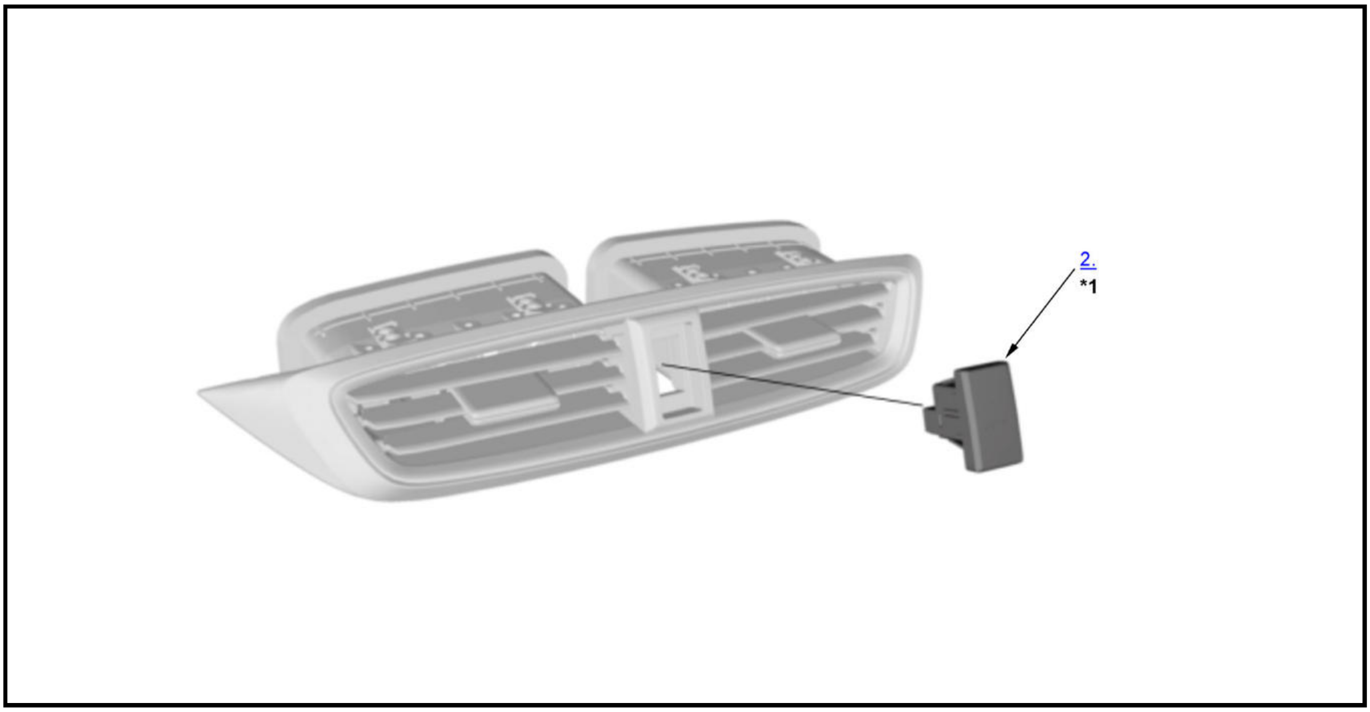

*1	Hazard Warning Switch: LED

1. Center Outlet - Remove
2. Hazard Warning Switch - Remove
3. All Removed Parts - Install

1. Install the parts in the reverse order of removal.

Test

1. Hazard Warning Switch - Test

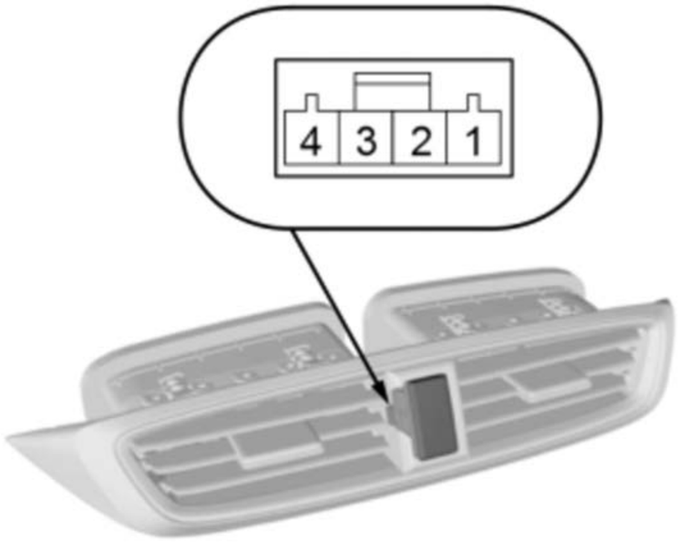

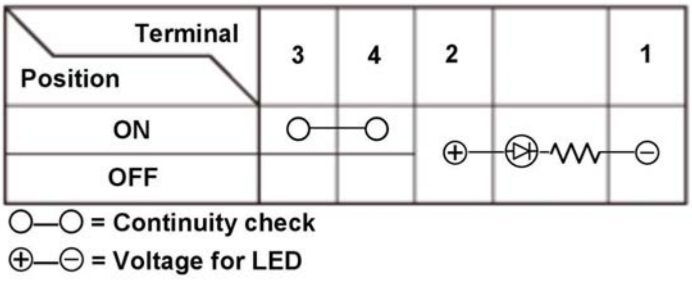

Terminal / Position	3	4	2		1
ON	○—	—○	⊕—	—⊳|—ʌʌʌ—	—⊖
OFF					

○—○ = Continuity check

⊕—⊖ = Voltage for LED

1. Check the hazard warning switch according to the chart.

NOTE:

- **Before testing, make sure not to short the hazard warning switch circuit.**
- **When an LED is located between terminals, check if the LED illuminates by connecting power and ground to the LED.**
- **Note this important operating characteristic; diode bias causes a diode to fully conduct electricity in one direction (forward), while not at all in the opposite direction (reverse).**

2. If the result is not as specified, replace the hazard warning switch.

REMOVAL AND INSTALLATION

AUTOMATIC LIGHTING CONTROL UNIT-SENSOR REMOVAL AND INSTALLATION

Removal and Installation

1. Automatic Lighting Control Unit-Sensor - Remove
2. All Removed Parts - Install

1. Install the parts in the reverse order of removal.

EXTERIOR LIGHTS BULB REMOVAL AND INSTALLATION

Removal and Installation

NOTE: 🕮 Where icon is shown, further information shown below.

1

Headlight Low Beam (bulb type)

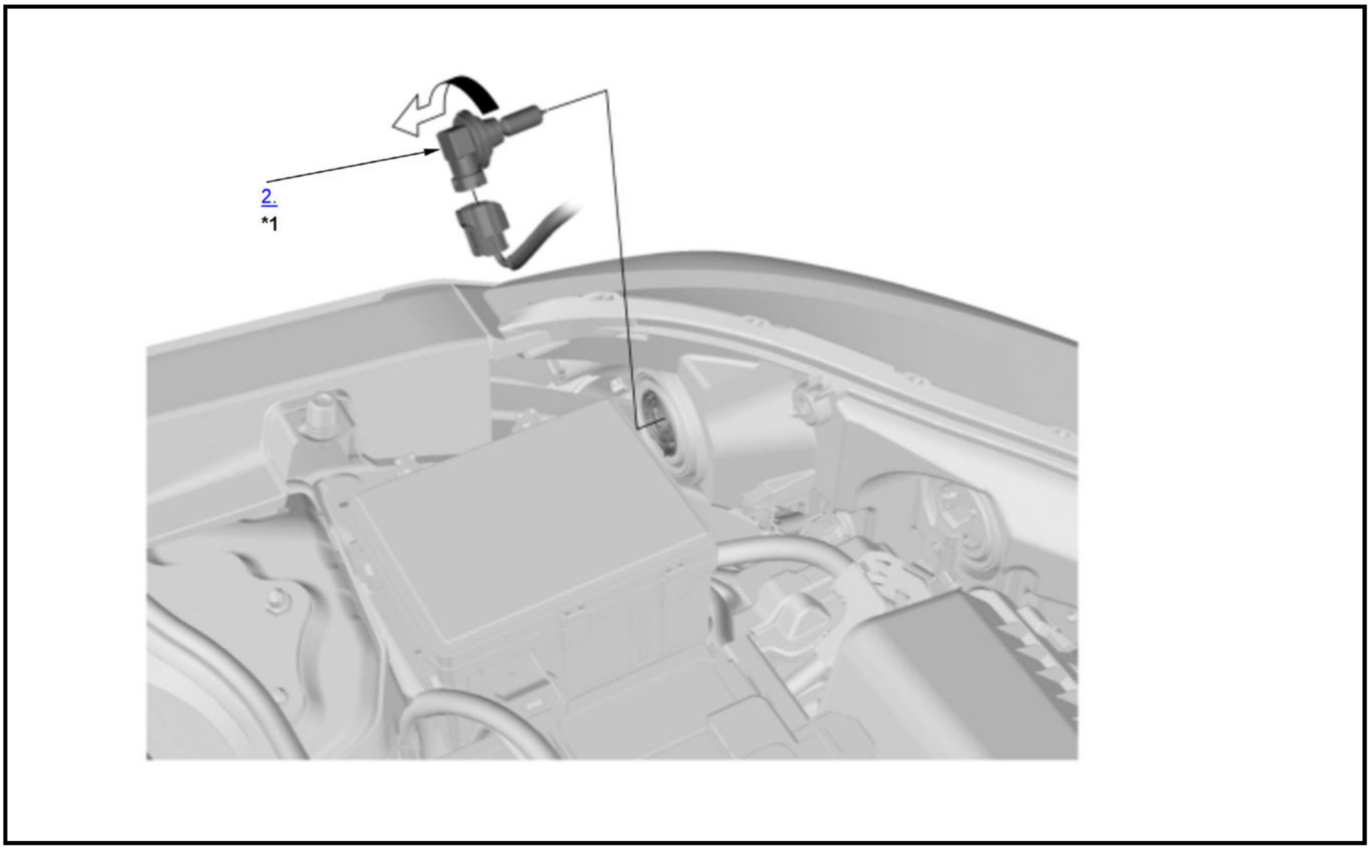

*1	Low beam: 55W

2

Headlight High Beam (bulb type)

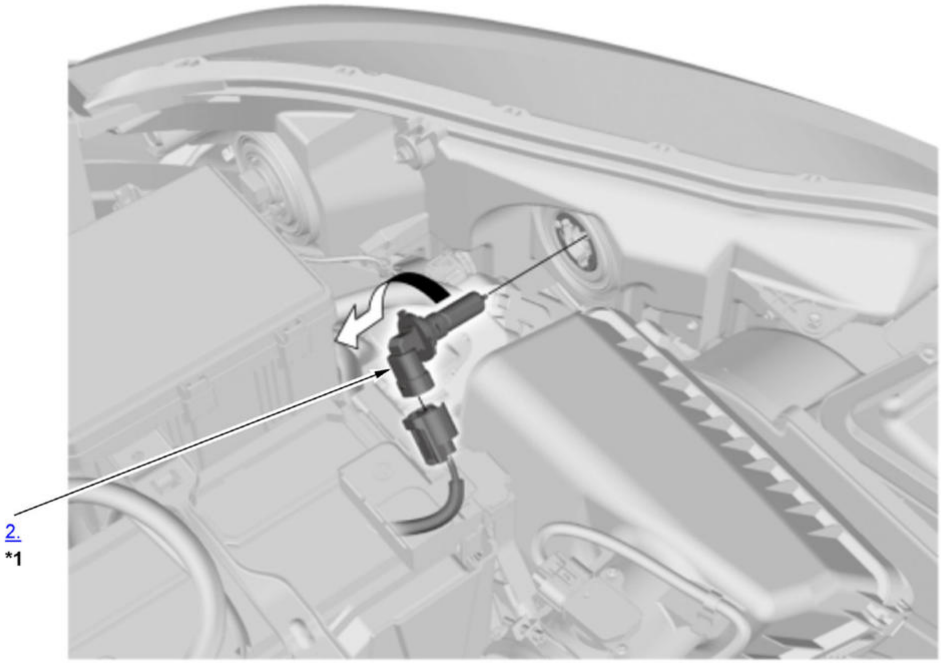

*1	High beam : 60W

3

Back-Up Light

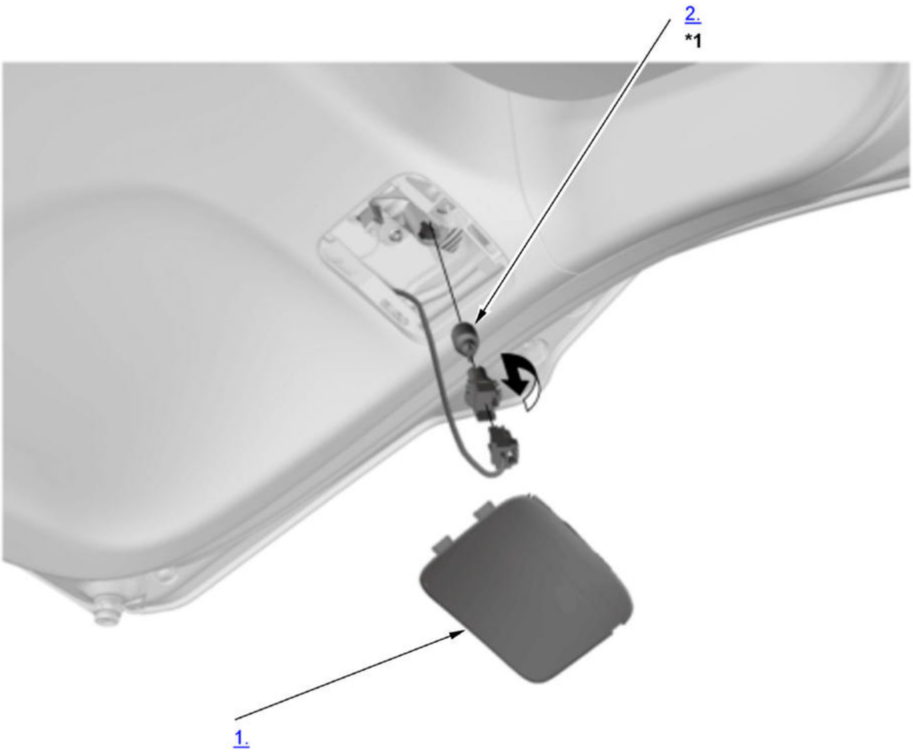

*1	Back-Up Light: 16W

4

Front Fog Light (With Front Fog Light (non-LED Type))

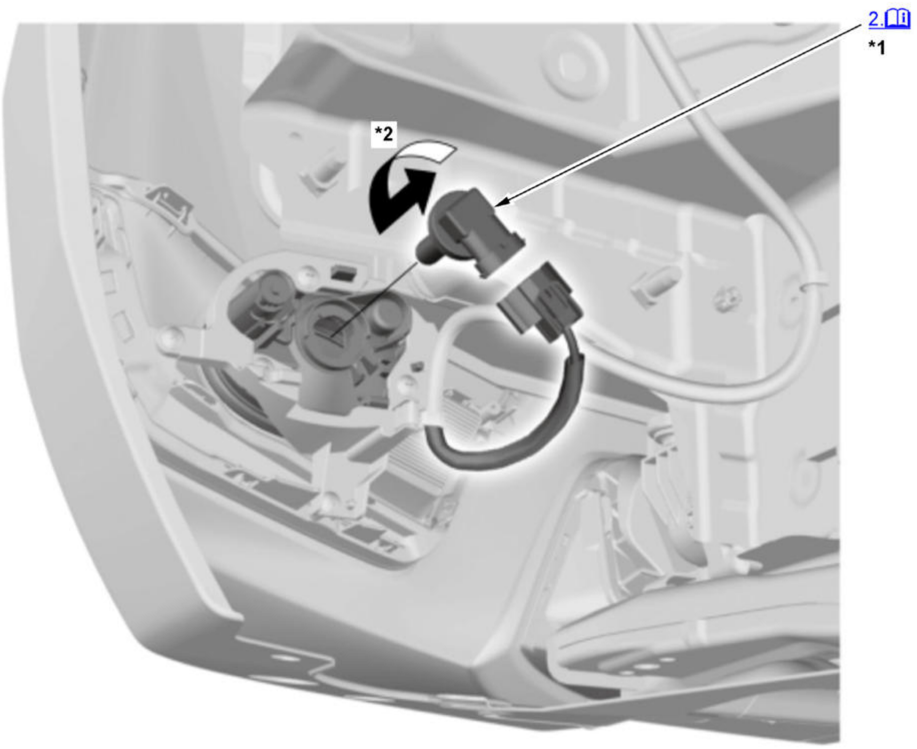

📖	Detailed information, notes, and precautions
*1	Front Fog Light: 35W
*2	Right side: Clockwise

Headlight (HIGH/LOW beam (bulb type))

1. **Washer Filler Neck - Remove** (Right Side Low Beam)
2. Headlight Bulb - Remove
3. All Removed Parts - Install

   1. Install the parts in the reverse order of removal.

   Back-Up Light

4. Tailgate Maintenance Side Lid - Remove
5. Back-Up Light Bulb - Remove
6. All Removed Parts - Install

   1. Install the parts in the reverse order of removal.

   Front Fog Light (With Front Fog Light (Non-LED Type))

7. Front Inner Fender - Remove

   1. **Remove the front inner fender as needed** .

8. Front Fog Light Bulb - Remove

   1. Turn the bulb counterclockwise (clockwise*) to remove it from the housing.*: Right side

9. All Removed Parts - Install

1. Install the parts in the reverse order of removal.

FRONT FOG LIGHT REMOVAL AND INSTALLATION

Removal and Installation

1

With Front Fog Light (non-LED Type)

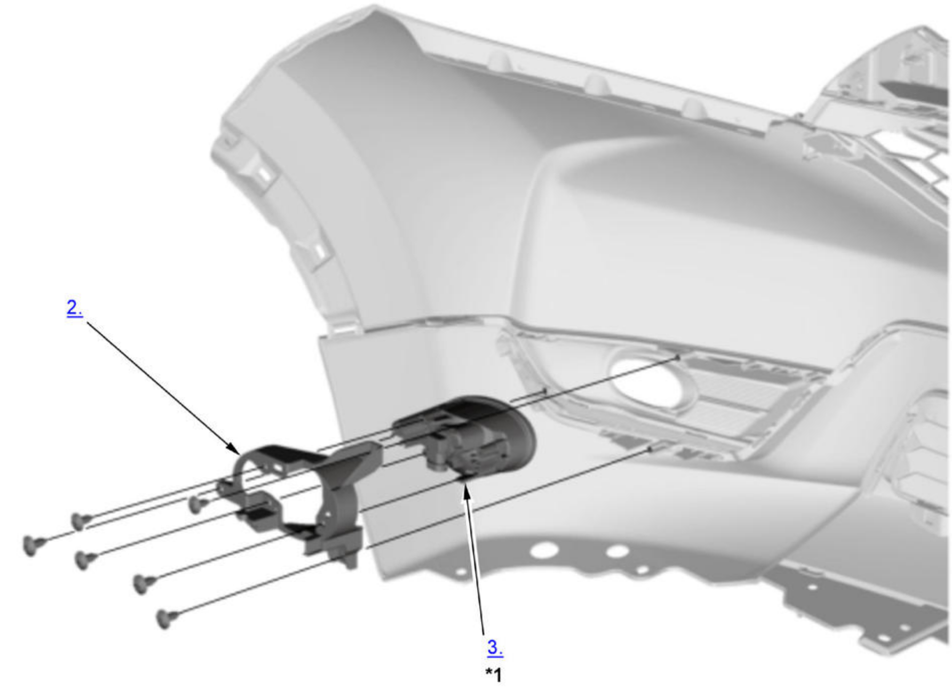

*1	Front Fog Light: 35W

2

With Front Fog Light (Circle LED Type)

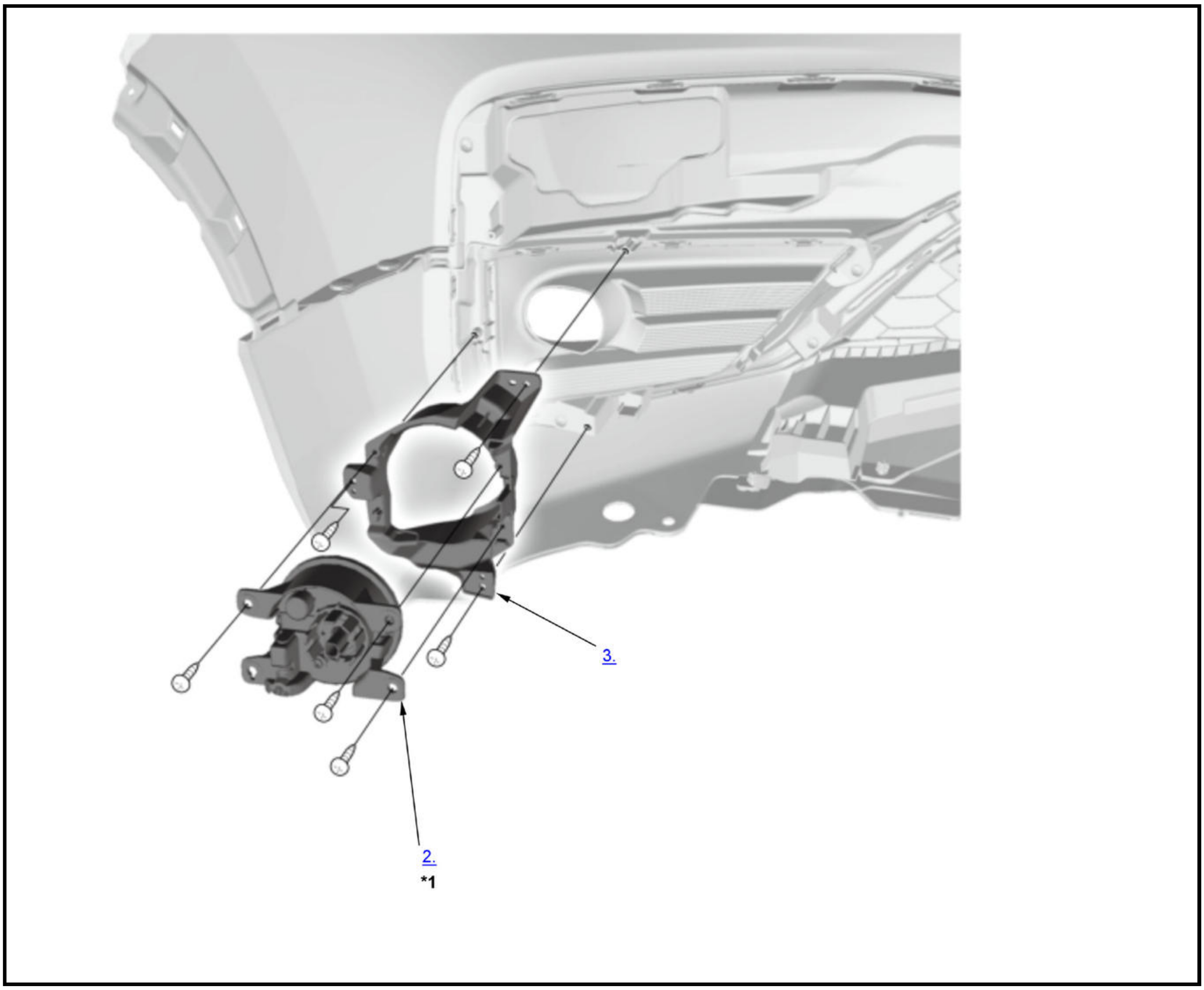

*1	Front Fog Light: LED

3

With Front Fog Light (5-LED type)

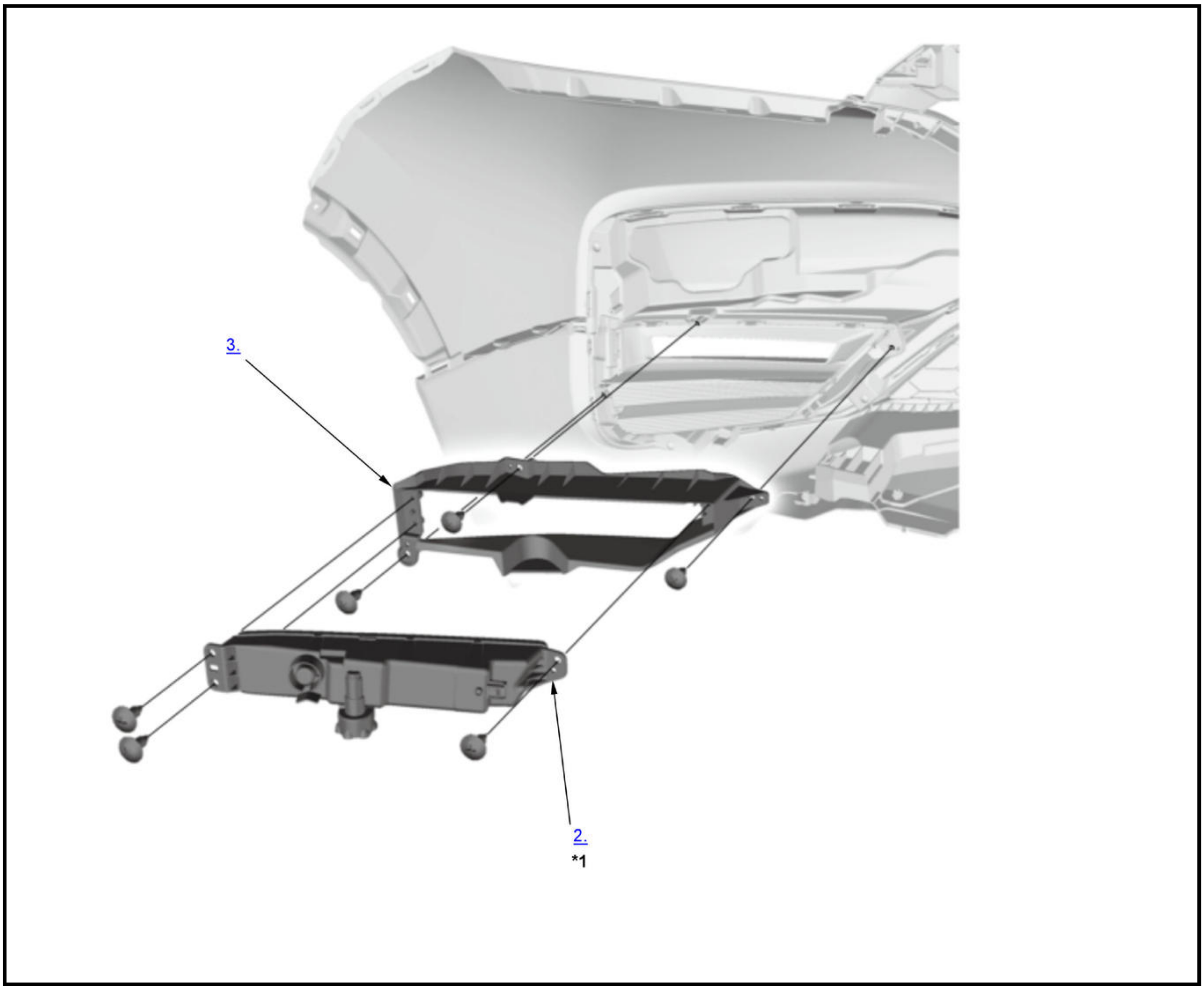

*1	Front Fog Light: LED

With Front Fog Light (Non-LED Type)

1. Front Bumper - Remove
2. Front Fog Light Trim - Remove
3. Front Fog Light - Remove
4. All Removed Parts - Install

> 1. Install the parts in the reverse order of removal.

With Front Fog Light (Circle LED Type and 5-LED type)

5. Front Bumper - Remove
6. Front Fog Light - Remove
7. Front Fog Light Trim - Remove
8. All Removed Parts - Install

> 1. Install the parts in the reverse order of removal.

HEADLIGHT REMOVAL AND INSTALLATION

Removal and Installation

1

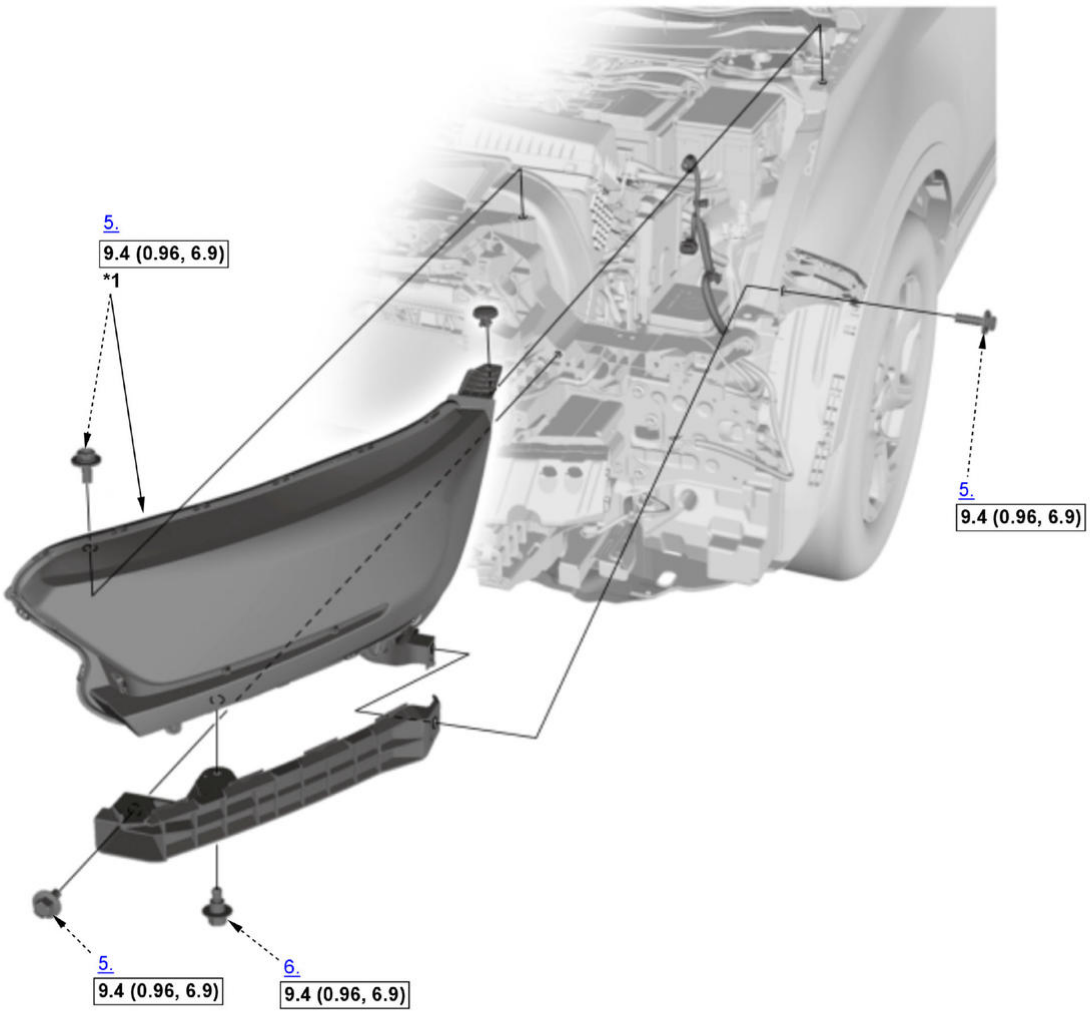

▭	Torque: N.m (kgf.m, lbf.ft)
*1	Headlight (high beam): LED (LED type) Headlight (high beam): 60W (bulb type) Headlight (low beam): LED (LED type) Headlight (low beam): 55W (bulb type) Front Parking Light/Daytime Running Light: LEDFront Turn Signal Light: LED Side Marker Light: LED

1. **Front Bulkhead Cover - Remove**
2. **Front Bumper - Remove**
3. **Front Grille Trim - Remove**
4. **Front Fender Trim - Remove**
5. Headlight - Remove
6. Corner Upper Beam - Remove
7. All Removed Parts - Install

    1. Install the parts in the reverse order of removal.

8. **Headlight - Adjust**

HIGH MOUNT BRAKE LIGHT REMOVAL AND INSTALLATION

Removal and Installation

NOTE: 📖 Where icon is shown, further information shown below.

1

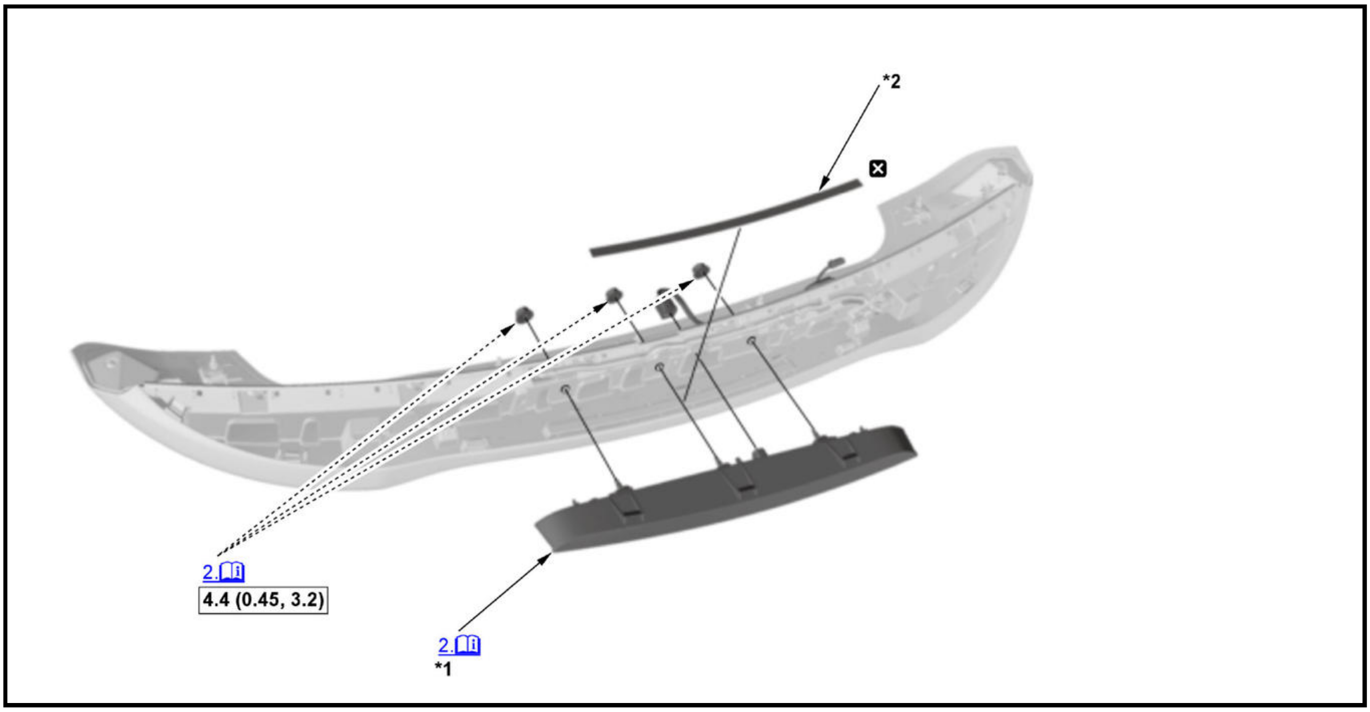

📖	Detailed information, notes, and precautions
▭	Torque: N.m (kgf.m, lbf.ft)
☒	Replace
*1	High Mount Brake Light: LED
*2	Double-sided adhesive tape

1. **Tailgate Spoiler Trim - Remove**
2. High Mount Brake Light - Remove

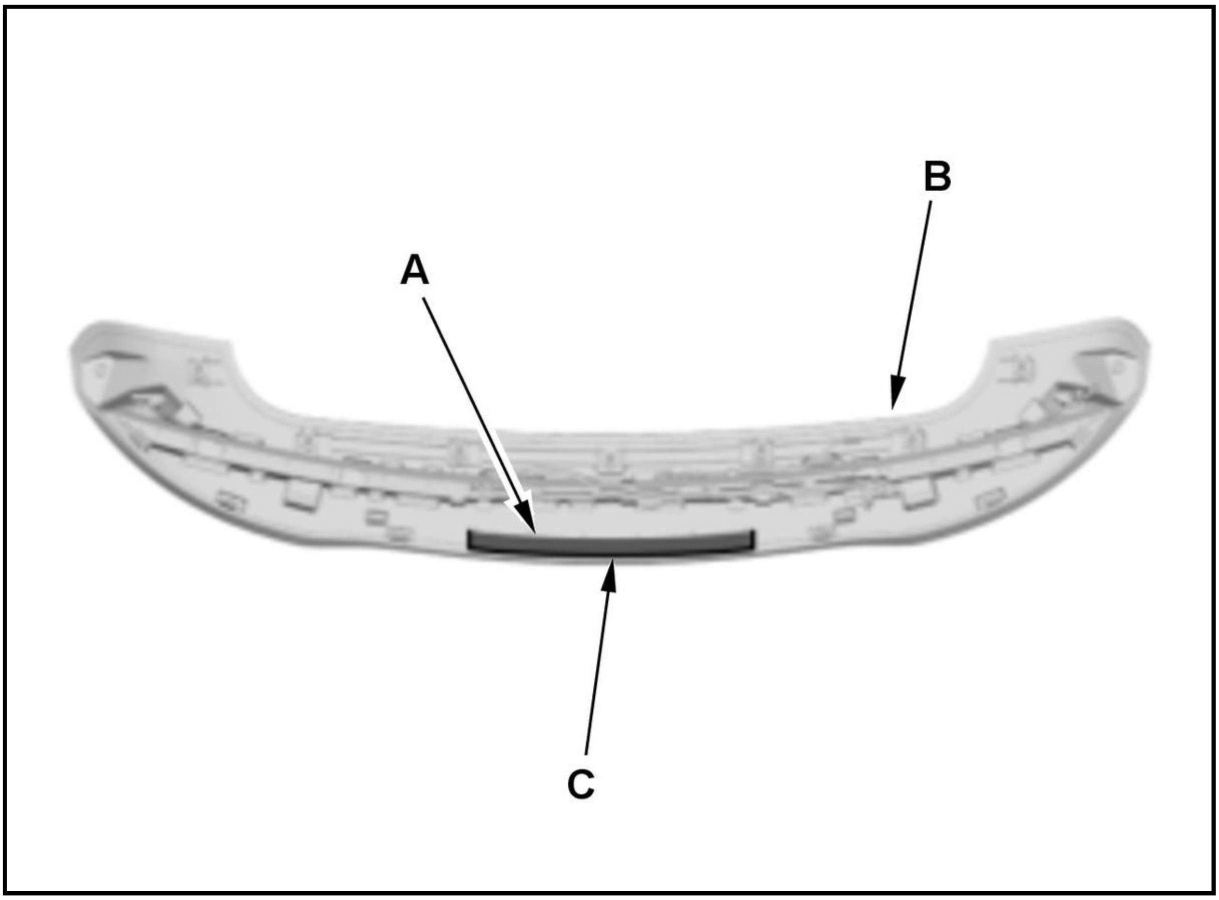

NOTE : If you going to reinstall the original high mount brake light, apply adhesive primer to the areas where the new double-sided adhesive tapes (A) will be applied, then attach the new double-sided adhesive tapes to the tailgate spoiler trim (B) on the scribes (C) as shown.

Double-sided adhesive tape (A)

Thickness	1.0 mm (0.039 in)

Width	10 mm (0.39 in)
Length	300 mm (11.8 in)

3. All Removed Parts - Install

1. Install the parts in the reverse order of removal.

INNER TAILLIGHT REMOVAL AND INSTALLATION

Removal and Installation

NOTE: 🕮 Where icon is shown, further information shown below.

1

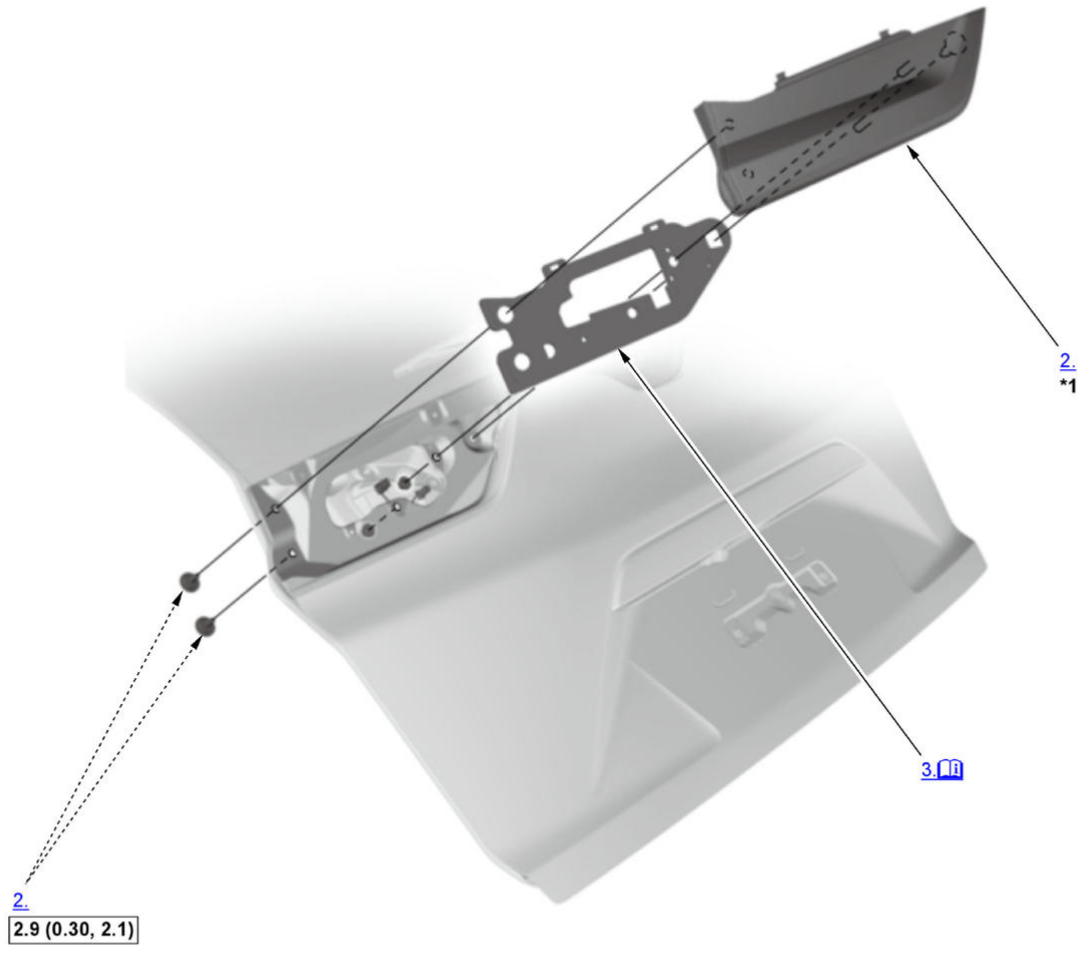

ℹ	Detailed information, notes, and precautions
▭	Torque: N.m (kgf.m, lbf.ft)
*1	Inner Taillight: LED

1. Tailgate Trim - Remove
2. Inner Taillight - Remove
3. Gasket - Remove

   NOTE: Inspect the gasket and replace it if it is distorted or stays compressed.

4. All Removed Parts - Install

   1. Install the parts in the reverse order of removal.

LICENSE PLATE LIGHT REMOVAL AND INSTALLATION

Removal and Installation

1

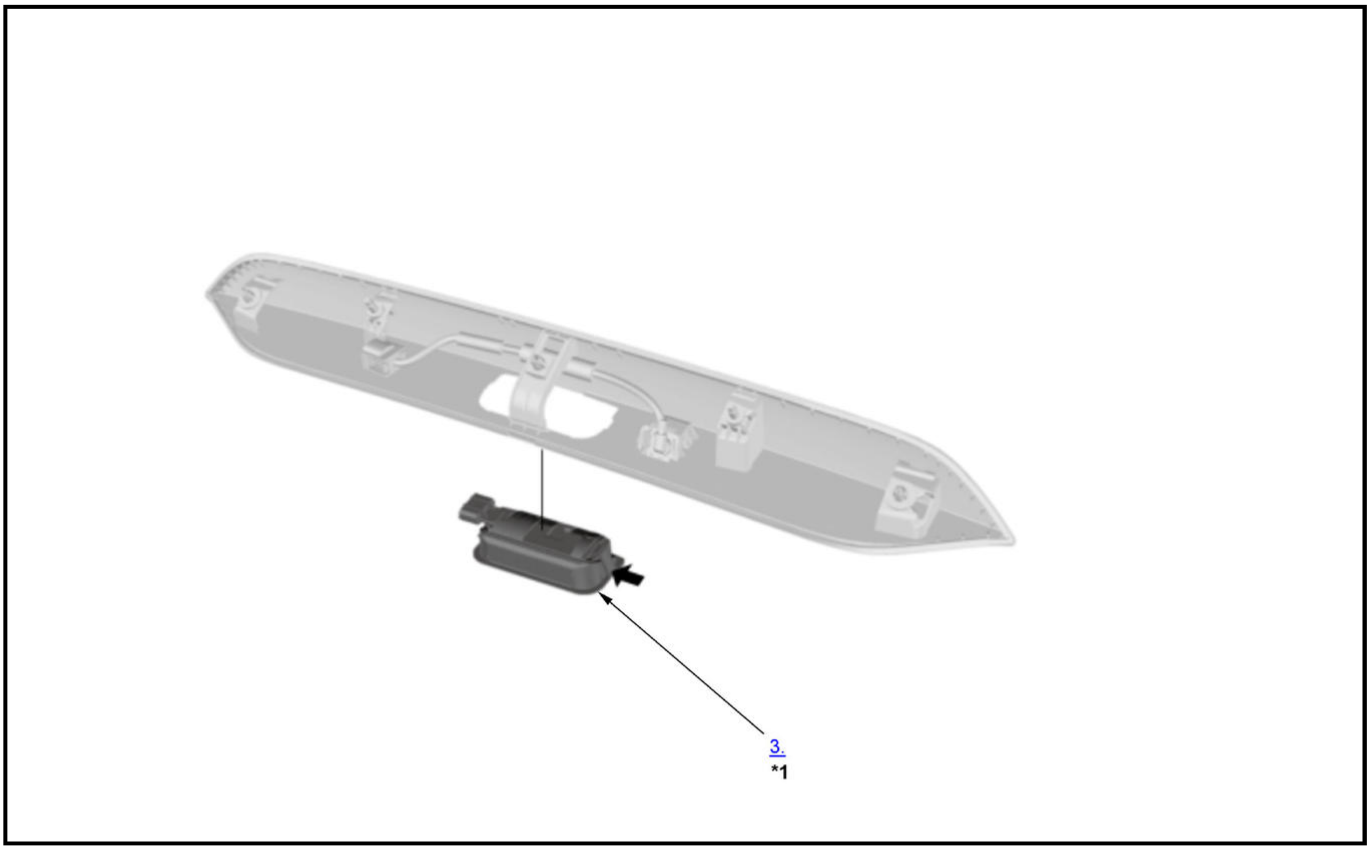

*1	License Plate Light: LED

1. Tailgate Lower Trim Panel - Remove
2. Rear License Trim - Remove
3. License Plate Light - Remove
4. All Removed Parts - Install

1. Install the parts in the reverse order of removal.

SIDE TURN SIGNAL LIGHT REMOVAL AND INSTALLATION

Removal and Installation

1

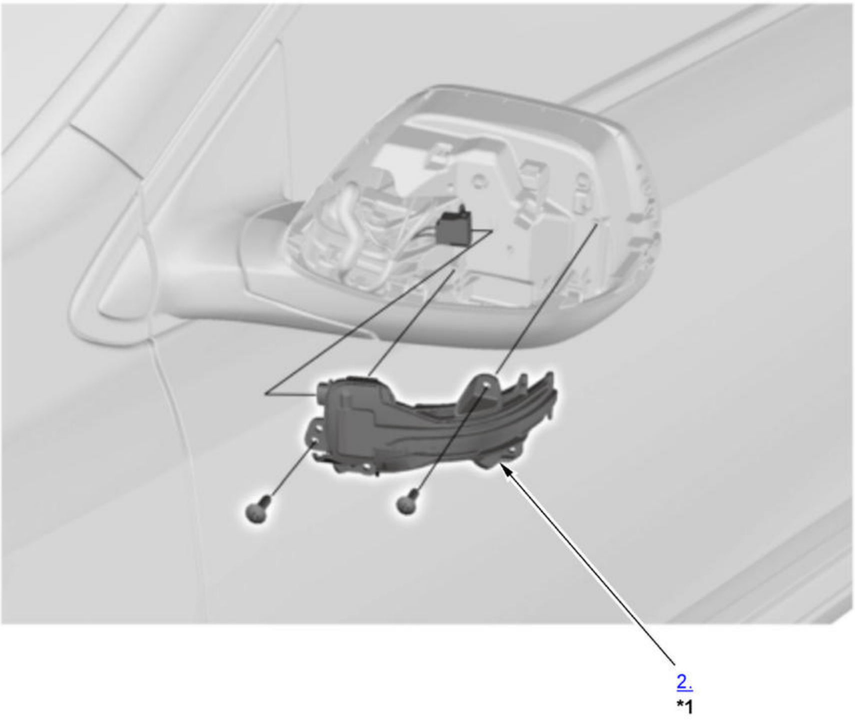

*1	Side Turn Signal Light: LED

1. Mirror Housing Upper Cover - Remove
2. Side Turn Signal Light - Remove
3. All Removed Parts - Install

1. Install the parts in the reverse order of removal.

TAILLIGHT REMOVAL AND INSTALLATION

Removal and Installation

NOTE: 📖 Where icon is shown, further information shown below.

1

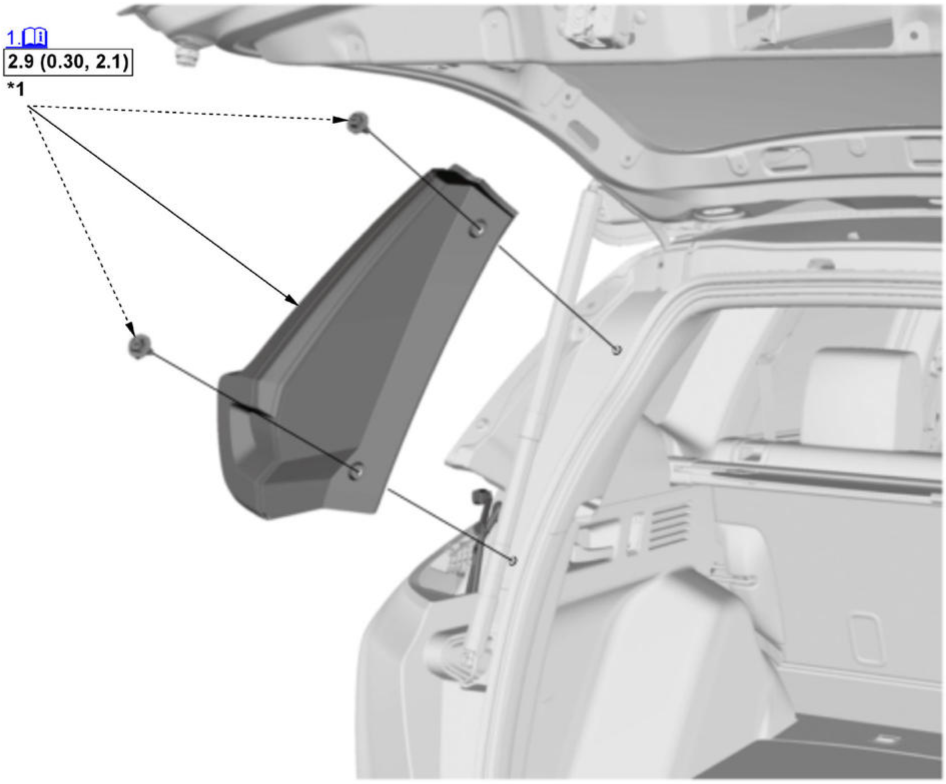

ℹ	Detailed information, notes, and precautions
▭	Torque: N.m (kgf.m, lbf.ft)
*1	Taillight: LED Brake Light: LED Rear Side marker Light: LED Rear Turn Signal Light: LED

1. Taillight - Remove

   NOTE: Apply protective tape to the rear bumper.

2. All Removed Parts - Install

   1. Install the parts in the reverse order of removal.

REMOVAL AND INSTALLATION

AUTOMATIC LIGHTING CONTROL UNIT-SENSOR REMOVAL AND INSTALLATION

Removal and Installation

1. Automatic Lighting Control Unit-Sensor - Remove
2. All Removed Parts - Install

   1. Install the parts in the reverse order of removal.

EXTERIOR LIGHTS BULB REMOVAL AND INSTALLATION

Removal and Installation

NOTE: ℹ Where icon is shown, for further information see below.

Back-Up Light

NOTE: **Numbered call-outs in figure pertain to list numbers in following procedure.**

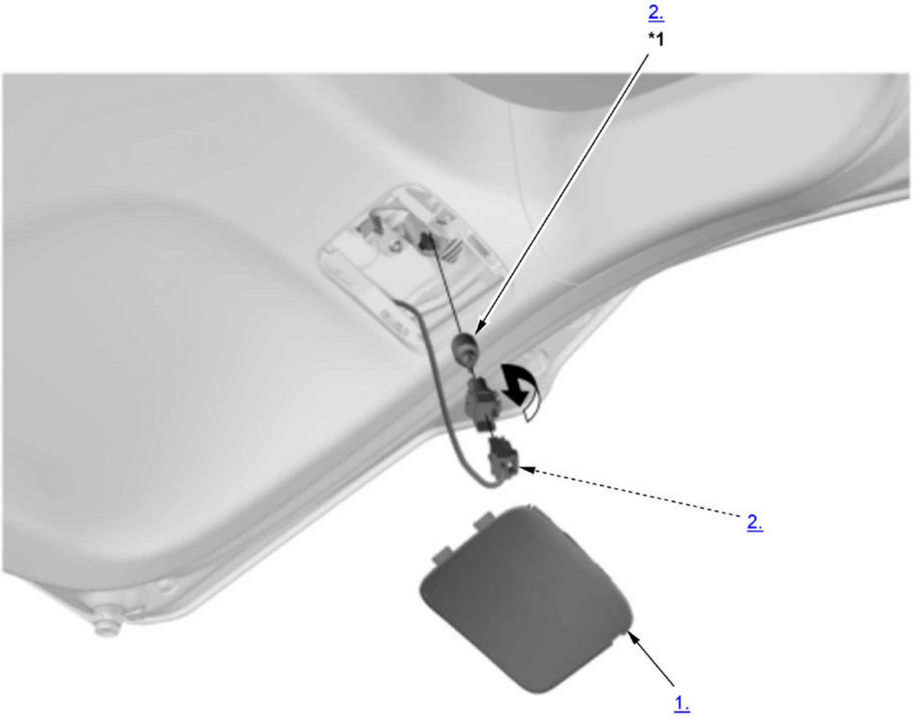

Fig. 1: Back-Up Light Components
Courtesy of HONDA, U.S.A., INC.

*1	Back-Up Light: 16W

Back-Up Light

1. Tailgate Maintenance Side Lid - Remove

2. Back-Up Light Bulb - Remove
3. All Removed Parts - Install

1. Install the parts in the reverse order of removal.

FRONT FOG LIGHT REMOVAL AND INSTALLATION

Removal and Installation

Procedure

NOTE: **Numbered call-outs in figure pertain to list numbers in following procedure.**

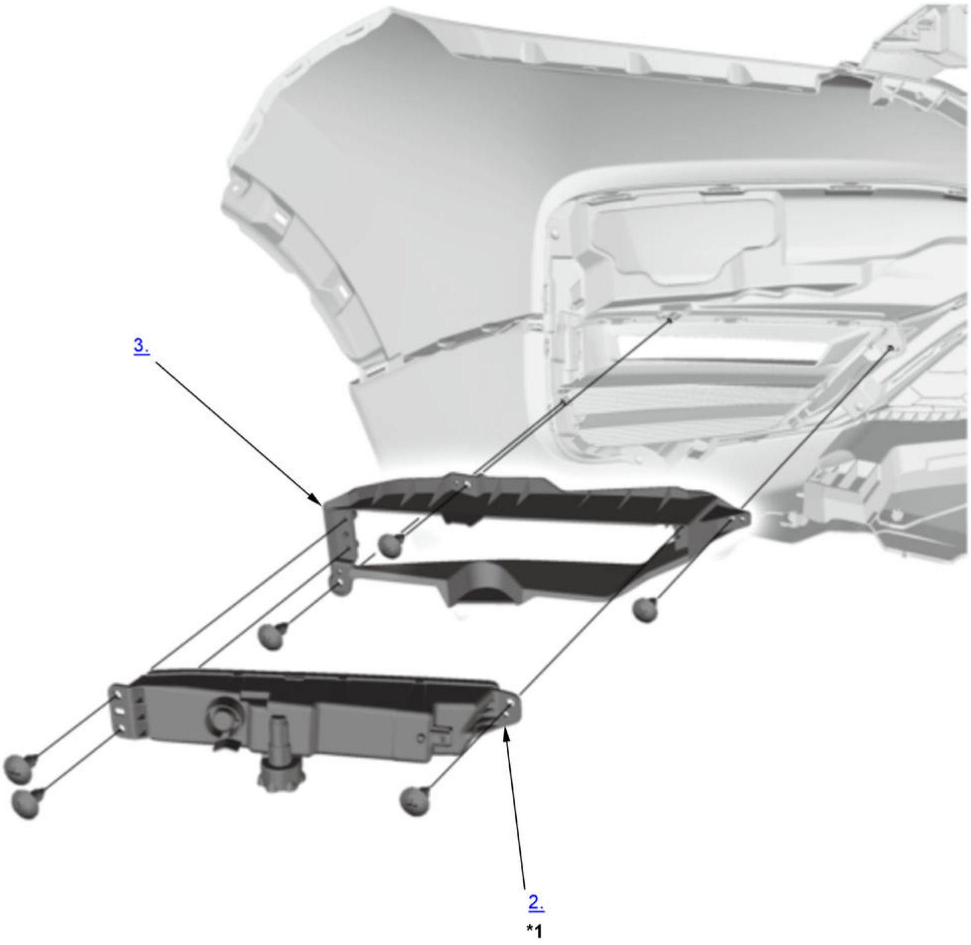

Fig. 2: Exploded View Of Front Fog Light Components
Courtesy of HONDA, U.S.A., INC.

*1	Front Fog Light: LED

1. Front Bumper - Remove
2. Front Fog Light - Remove
3. Front Fog Light Trim - Remove
4. All Removed Parts - Install

1. Install the parts in the reverse order of removal.

5. Front Fog Light - Adjust

HEADLIGHT REMOVAL AND INSTALLATION

Removal and Installation

Procedure

NOTE: Numbered call-outs in figure pertain to list numbers in following procedure.

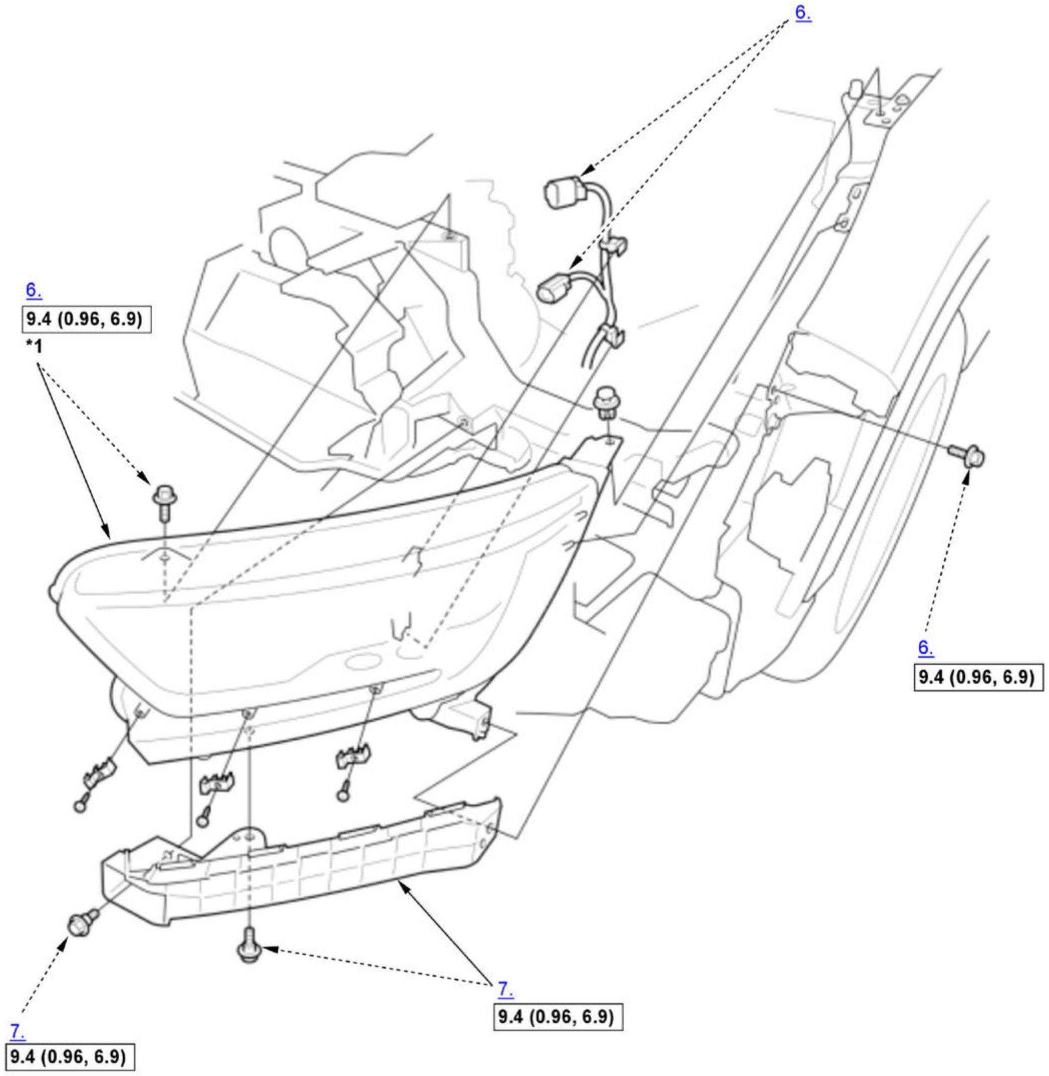

Fig. 3: Exploded View Of Headlight Components
Courtesy of HONDA, U.S.A., INC.

▭	Torque: N.m (kgf.m, lbf.ft)
*1	Headlight (high beam): LED Headlight (low beam): LED Front Parking Light/Daytime Running Light: LED Front Turn Signal Light: LED Side Marker Light: LED

1. Front Bulkhead Cover - Remove
2. Front Bumper - Remove
3. Front Grille Trim - Remove
4. Front Grille Trim Holder - Remove
5. Front Fender Trim - Remove

6. Headlight - Remove
7. Corner Upper Beam - Remove
8. All Removed Parts - Install

1. Install the parts in the reverse order of removal.

9. **Headlight - Adjust**

HIGH MOUNT BRAKE LIGHT REMOVAL AND INSTALLATION

Removal and Installation

NOTE: 🕮 Where icon is shown, for further information see below.

Procedure

NOTE: **Numbered call-outs in figure pertain to list numbers in following procedure.**

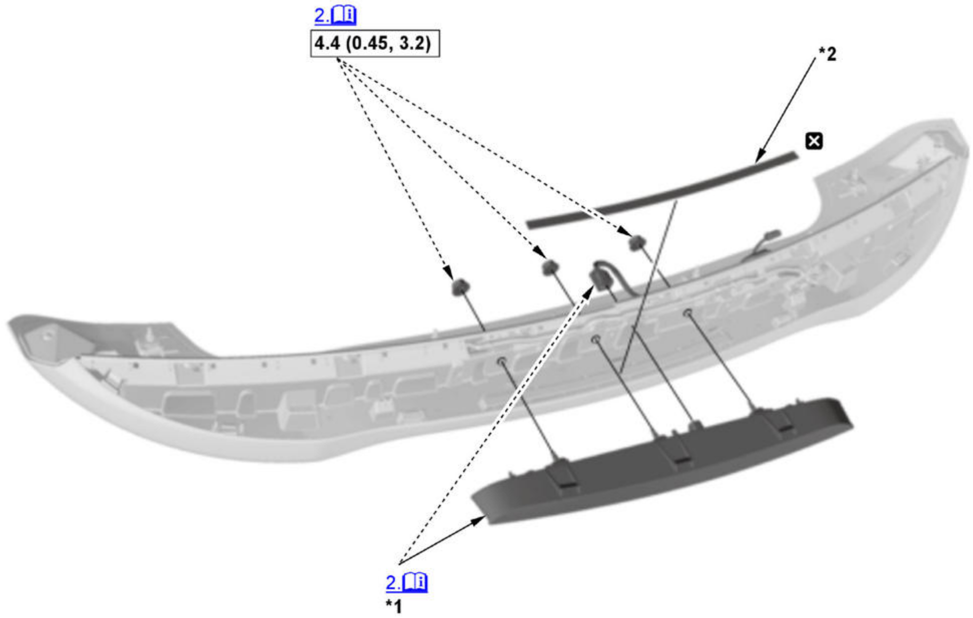

Fig. 4: Exploded View Of High Mount Brake Light Components
Courtesy of HONDA, U.S.A., INC.

🕮	Detailed information, notes, and precautions
☐	Torque: N.m (kgf.m, lbf.ft)
☒	Replace
*1	High Mount Brake Light: LED
*2	Double-sided adhesive tape

1. **Tailgate Spoiler Trim Cover - Remove**
2. High Mount Brake Light - Remove

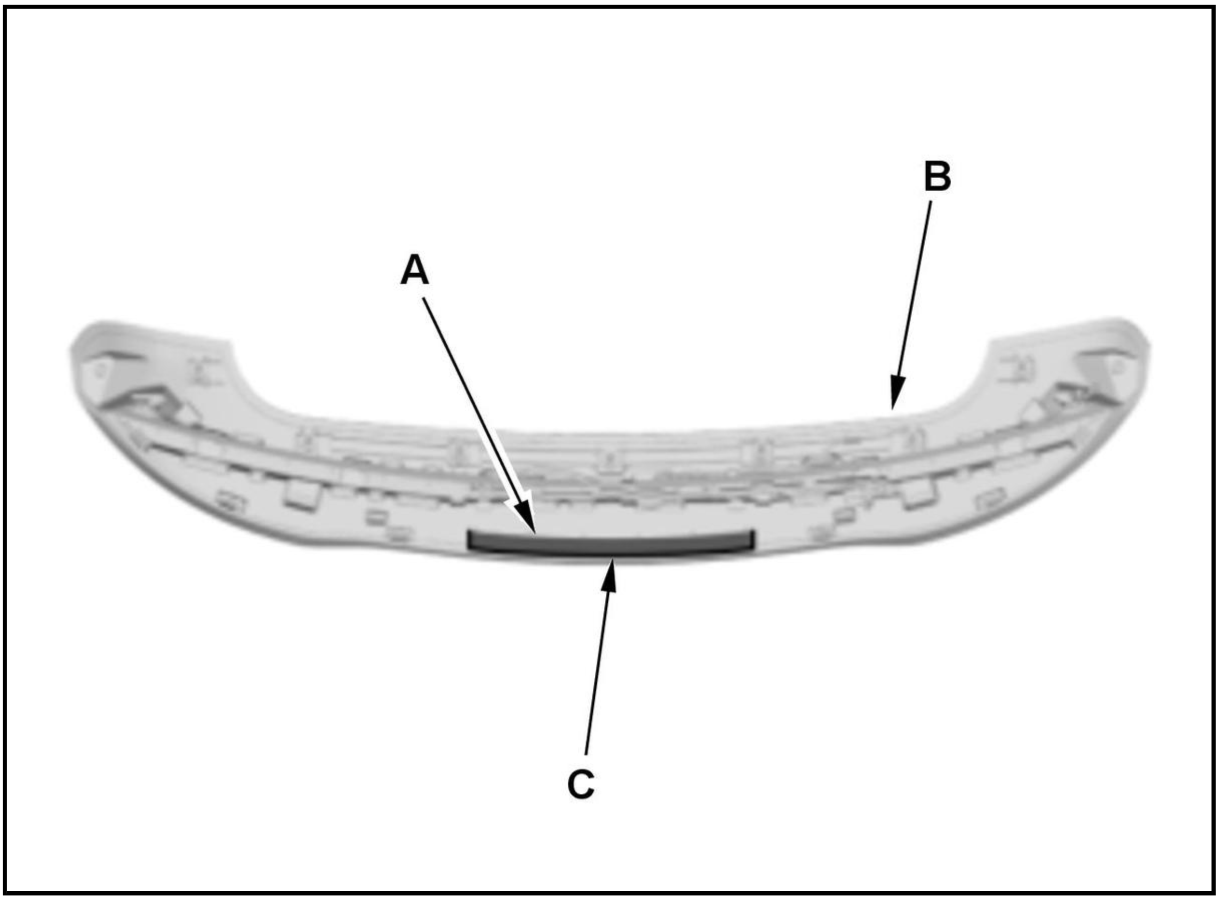

NOTE : If you going to reinstall the original high mount brake light, apply adhesive primer to the areas where the new double-sided adhesive tapes (A) will be applied, then attach the new double-sided adhesive tapes to the tailgate spoiler trim (B) on the scribes (C) as shown.

Double-sided adhesive tape (A)

Thickness	1.0 mm (0.039 in)

Width	10 mm (0.39 in)
Length	300 mm (11.8 in)

3. All Removed Parts - Install

1. Install the parts in the reverse order of removal.

INNER TAILLIGHT REMOVAL AND INSTALLATION

Removal and Installation

NOTE: 🕮 Where icon is shown, for further information see below.

Procedure

NOTE: **Numbered call-outs in figure pertain to list numbers in following procedure.**

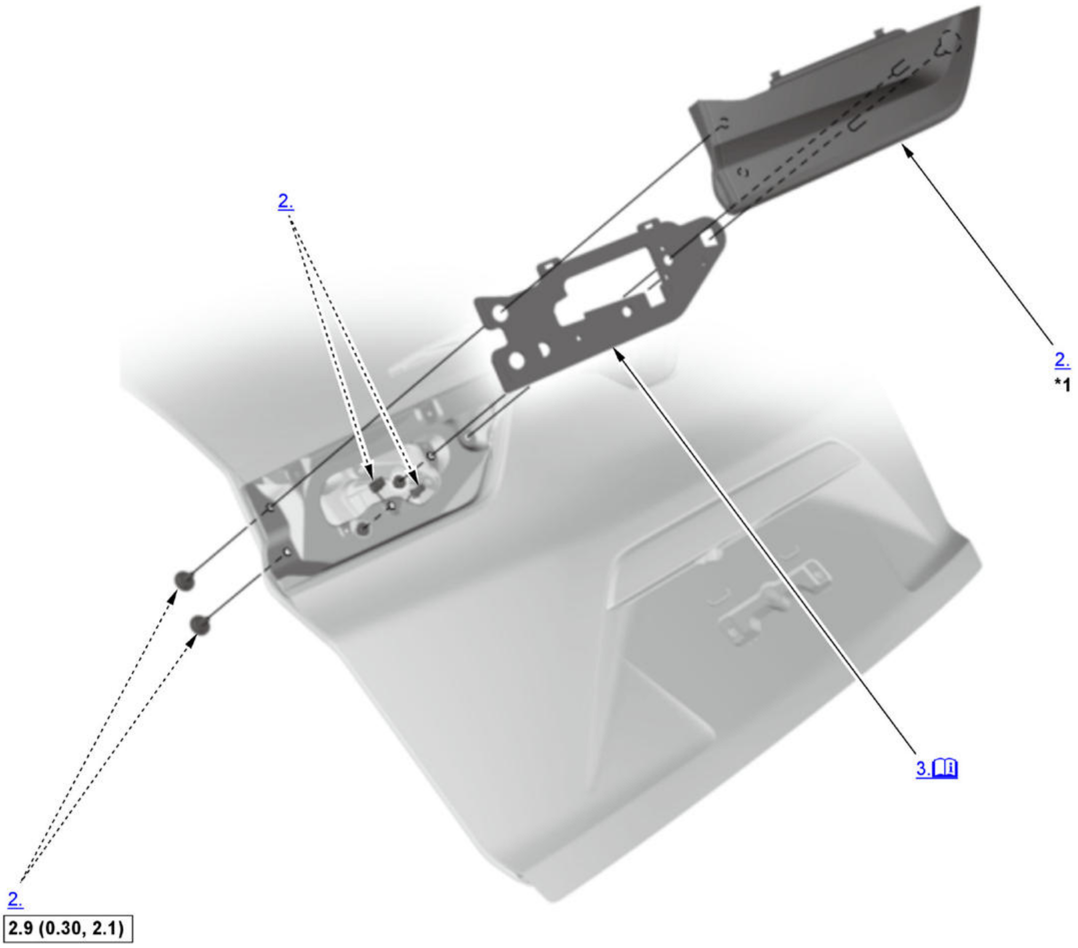

Fig. 5: Exploded View Of Inner Taillight Components
Courtesy of HONDA, U.S.A., INC.

ℹ	Detailed information, notes, and precautions
▭	Torque: N.m (kgf.m, lbf.ft)
*1	Inner Taillight: LED

1. Tailgate Trim - Remove
2. Inner Taillight - Remove
3. Gasket - Remove

   NOTE: Inspect the gasket and replace it if it is distorted or stays compressed.

4. All Removed Parts - Install

   1. Install the parts in the reverse order of removal.

LICENSE PLATE LIGHT REMOVAL AND INSTALLATION

Removal and Installation

Procedure

NOTE: **Numbered call-outs in figure pertain to list numbers in following procedure.**

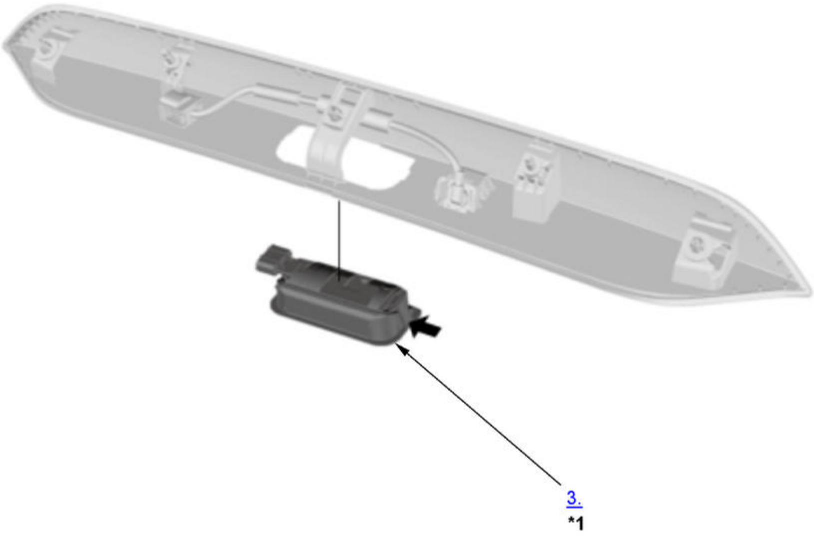

Fig. 6: License Plate Light Components
Courtesy of HONDA, U.S.A., INC.

*1	License Plate Light: LED

1. Tailgate Lower Trim Panel - Remove
2. Rear License Trim - Remove
3. License Plate Light - Remove
4. All Removed Parts - Install

1. Install the parts in the reverse order of removal.

SIDE TURN SIGNAL LIGHT REMOVAL AND INSTALLATION

Removal and Installation

Procedure

NOTE: **Numbered call-outs in figure pertain to list numbers in following procedure.**

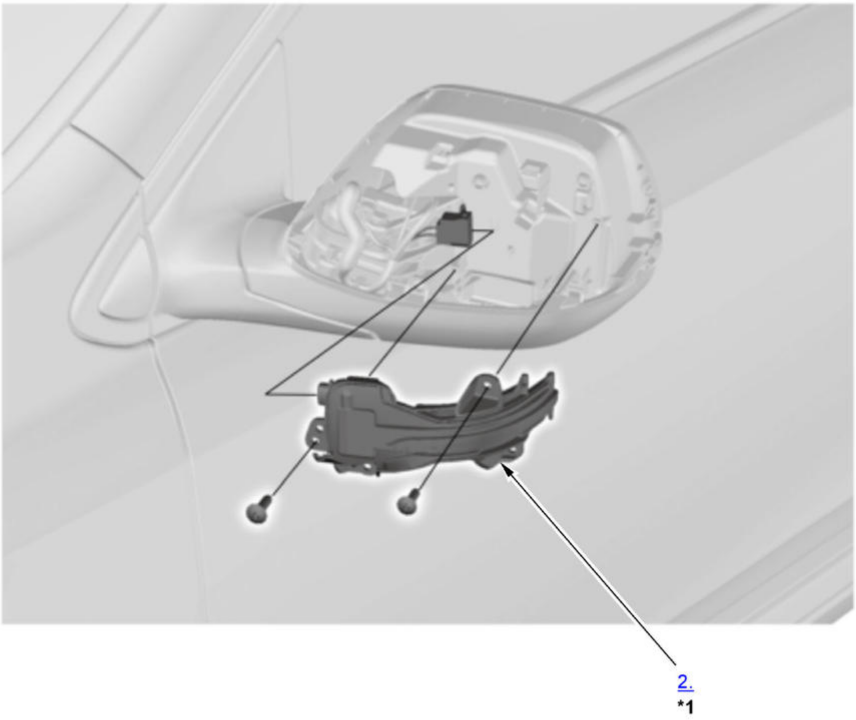

Fig. 7: Exploded View Of Side Turn Signal Light Components
Courtesy of HONDA, U.S.A., INC.

*1	Side Turn Signal Light: LED

1. Mirror Housing Upper Cover - Remove
2. Side Turn Signal Light - Remove
3. All Removed Parts - Install

1. Install the parts in the reverse order of removal.

TAILLIGHT REMOVAL AND INSTALLATION

Removal and Installation

NOTE: 🛈 Where icon is shown, for further information see below.

Procedure

NOTE: **Numbered call-outs in figure pertain to list numbers in following procedure.**

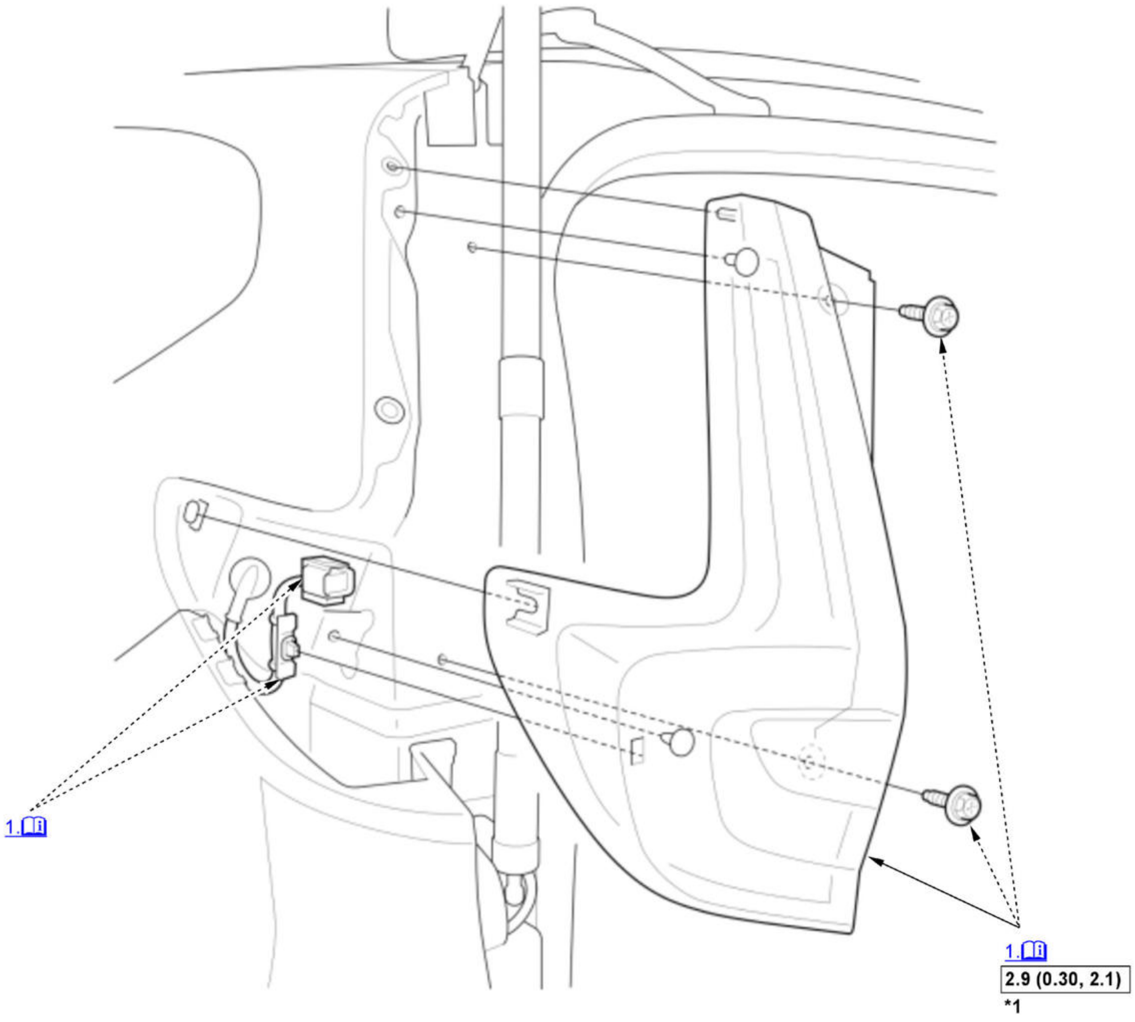

Fig. 8: Exploded View Of Taillight Components
Courtesy of HONDA, U.S.A., INC.

📖	Detailed information, notes, and precautions
☐	Torque: N.m (kgf.m, lbf.ft)
*1	Taillight: LED Brake Light: LED Rear Side Marker Light: LED Rear Turn Signal Light: LED

1. Taillight - Remove

   NOTE: Apply protective tape to the rear bumper.

2. All Removed Parts - Install

   1. Install the parts in the reverse order of removal.

REMOVAL, INSTALLATION & TEST

BRAKE PEDAL POSITION SWITCH REMOVAL, INSTALLATION, AND TEST

Removal and Installation

WARNING:

Do not connect the brake pedal position switch connector with the brake pedal position switch removed. The engine may start if the power button is pressed as the system interprets that the brake pedal is depressed. Unintended starting of the engine is dangerous.

Procedure

NOTE: **Numbered call-outs in figure pertain to list numbers in following procedure.**

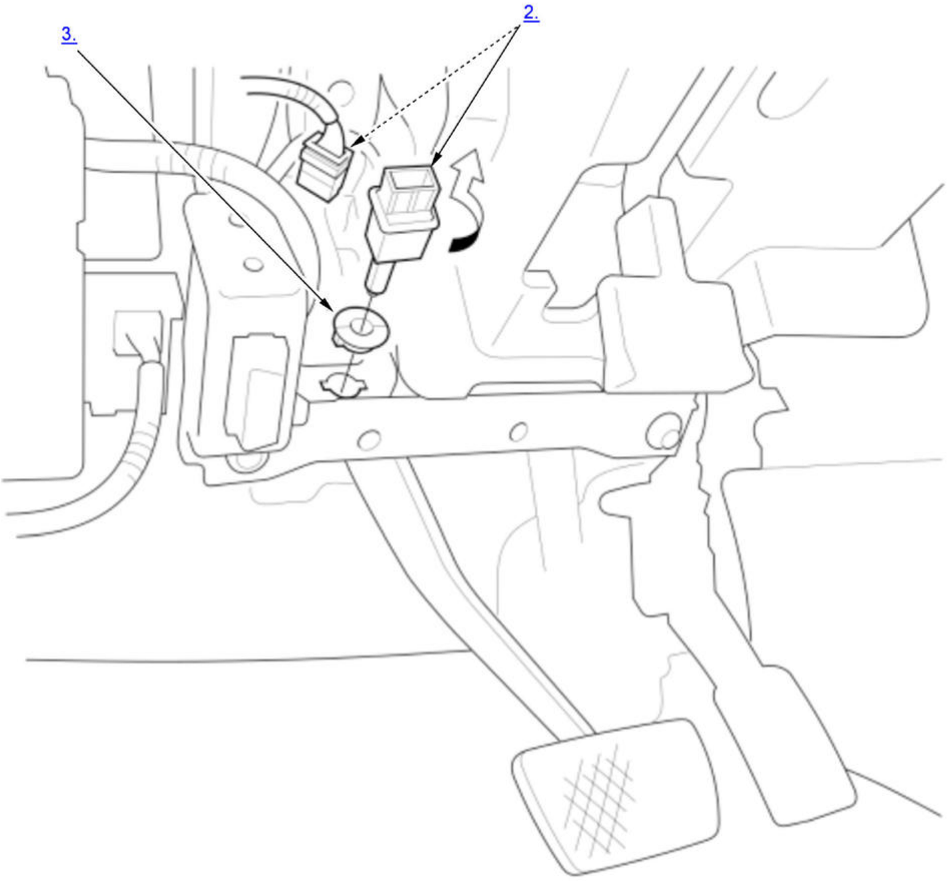

Fig. 9: Exploded View Of Brake Pedal Position Switch Components
Courtesy of HONDA, U.S.A., INC.

1. **Driver's Dashboard Lower Cover - Remove**
2. Brake Pedal Position Switch - Remove
3. Attaching Piece - Remove
4. All Removed Parts - Install

   1. Install the parts in the reverse order of removal.

5. **Brake Pedal and Brake Pedal Position Switch - Adjust**

Test

WARNING:

Do not connect the brake pedal position switch connector with the brake pedal position switch removed. The engine may start if the power button is pressed as the system interprets that the brake pedal is depressed. Unintended starting of the engine is dangerous.

1. Brake Pedal Position Switch - Test

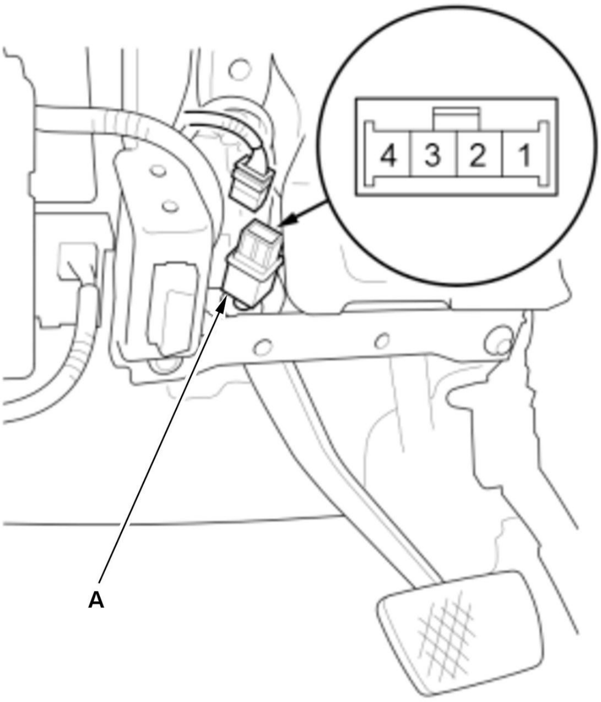

Terminal / Position	1	2	3	4
Pressed	○	—	—	○
Released		○	○	

1. Disconnect the connector.

2. Check for continuity between the terminals in the brake pedal position switch position according to the table.

3. If the test results are not as specified, **adjust the brake pedal position switch** (A), then recheck. If the results are still not as specified, replace the brake pedal position switch.

COMBINATION LIGHT SWITCH REMOVAL, INSTALLATION, AND TEST

Removal and Installation

SRS components are located in this area. Review the **SRS component locations** and the **precautions and procedures** before doing repairs or service.

Procedure

NOTE: **Numbered call-outs in figure pertain to list numbers in following procedure.**

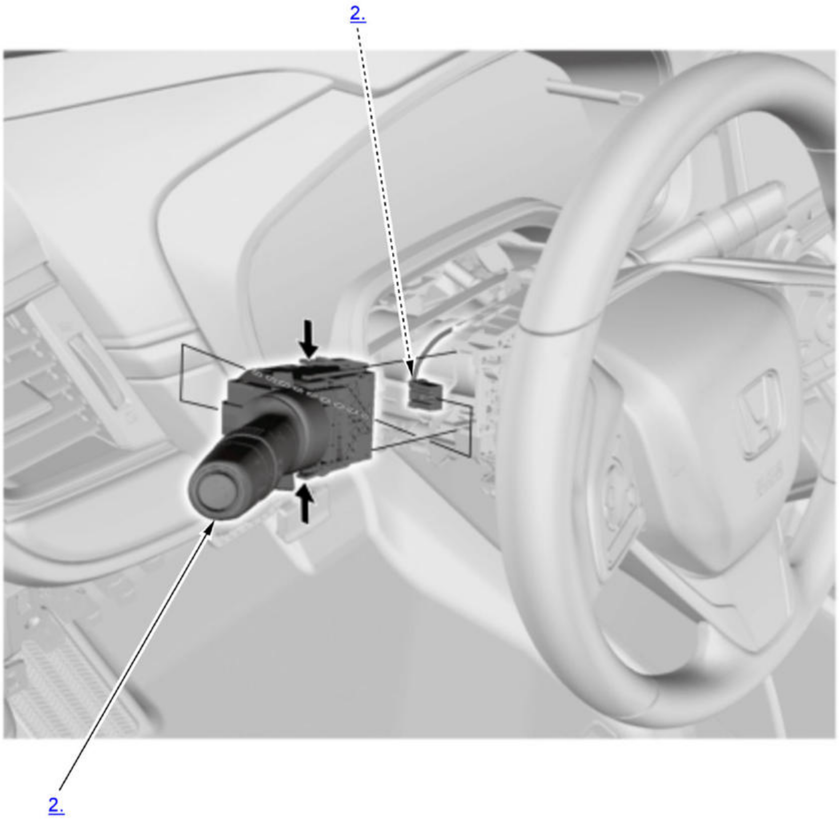

Fig. 10: Combination Light Switch Components
Courtesy of HONDA, U.S.A., INC.

1. Column Cover - Remove
2. Combination Light Switch - Remove
3. All Removed Parts - Install

1. Install the parts in the reverse order of removal.

Test

1. Combination Light Switch - Test

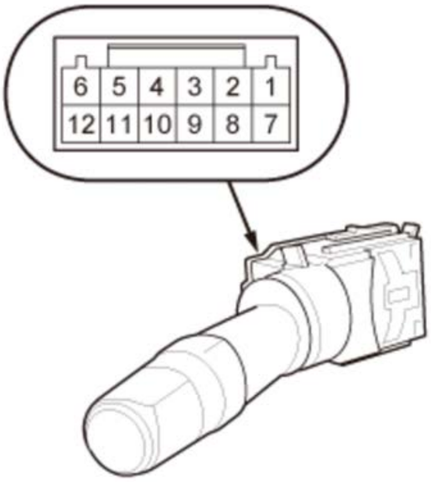	1. Inspect the connector terminals to be sure they are all making good contact. - If the terminals are bent, loose or corroded, repair them as necessary, and recheck the system. - If the terminals are OK, go to step 2.

2. Check for continuity between the terminals in each switch position according to the tables.

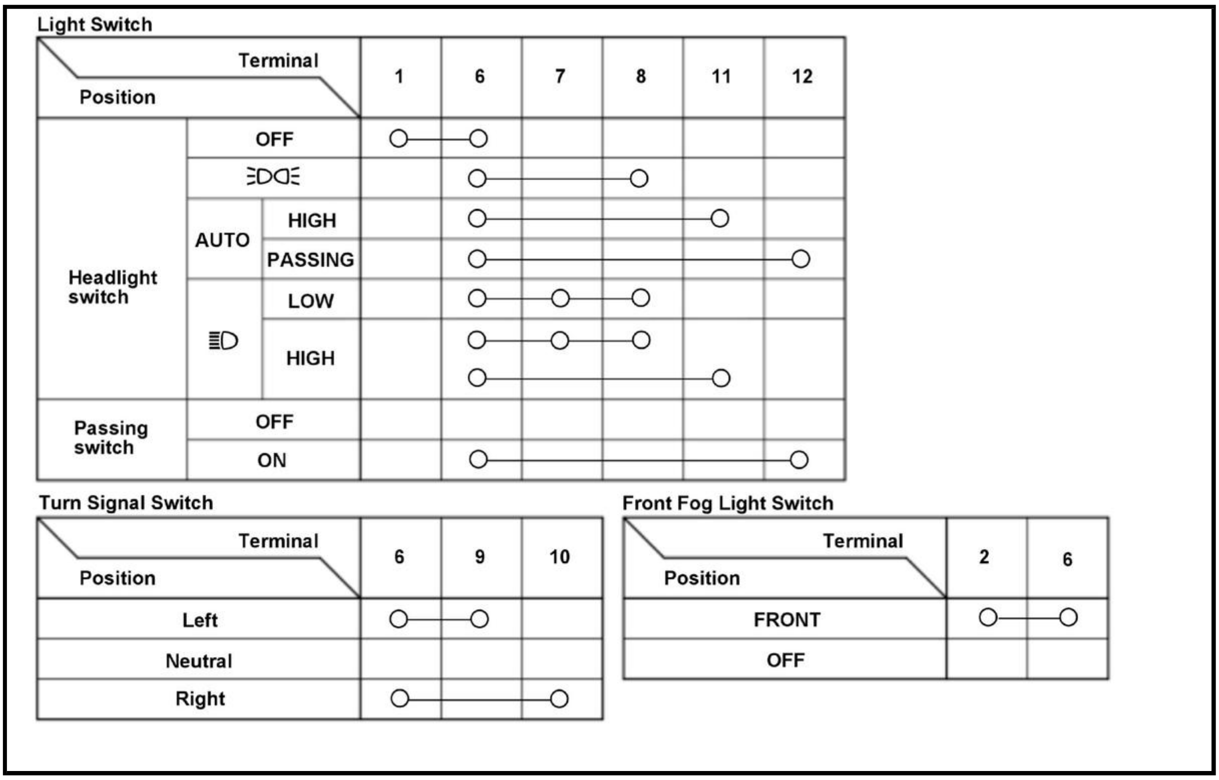

Light Switch

Position			1	6	7	8	11	12
Headlight switch	OFF		○	○				
	ƎDƆƐ			○	—	○		
	AUTO	HIGH		○	—	—	○	
		PASSING		○	—	—	—	○
	≣D	LOW		○	○	○		
		HIGH		○	○	○		
				○	—	—	○	
Passing switch	OFF							
	ON			○	—	—	—	○

Turn Signal Switch

Position \ Terminal	6	9	10
Left	○	○	
Neutral			
Right	○	—	○

Front Fog Light Switch

Position \ Terminal	2	6
FRONT	○	○
OFF		

3. If the continuity is not as specified, replace the combination light switch.

HAZARD WARNING SWITCH REMOVAL, INSTALLATION, AND TEST

Removal and Installation

Procedure

NOTE: **Numbered call-outs in figure pertain to list numbers in following procedure.**

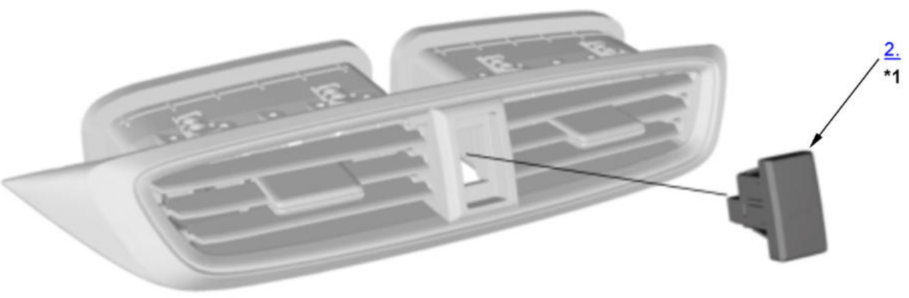

Fig. 11: Hazard Warning Switch Components

Courtesy of HONDA, U.S.A., INC.

*1	Hazard Warning Switch Light : LED

1. Center Outlet - Remove

2. Hazard Warning Switch - Remove
3. All Removed Parts - Install

1. Install the parts in the reverse order of removal.

Test

1. Hazard Warning Switch - Test

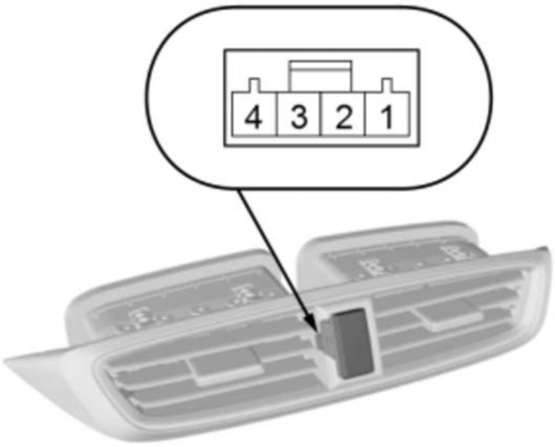

Terminal / Position/Light	3	4	2		1
Released					
Pressed	○—	—○			
Switch light			⊕—	—▷|—ʌʌʌ—	⊖

○—○ = Continuity check
⊕—⊖ = Voltage for LED

1. Check the hazard warning switch according to the table.

NOTE:

- When an LED is located between terminals, check if the LED illuminates by connecting power and ground to the LED.
- Note this important operating characteristic; diode bias causes a diode to fully conduct electricity in one direction (forward), while not at all in the opposite direction (reverse).

2. If the result is not as specified, replace the hazard warning switch.

DESCRIPTION & OPERATION

AUTO HIGH-BEAM (HIGH-BEAM SUPPORT SYSTEM) DESCRIPTION - OVERVIEW

Overview

The system operates by switching the high beam and low beam automatically depending on the road condition of vehicles running ahead and opposite vehicles, using th camera unit.

Operating Conditions

NOTE: The auto high-beam indicator does not come on until the following conditions are met.

- The combination light switch is in the AUTO position.
- The headlight low beam is illuminated.
- White and red light sources are not detected ahead.
- 2 or more streetlights have not been detected.
- The vehicle speed is above 25 mph (40 km/h).
- There is no refracted light due to fog or other weather conditions.
- There is no manual operation input of the combination light switch.

NOTE: Weather and road conditions (undulation, curve, or environment illuminance etc.) may affect system operation.

Conditions When the System Stops Operating

The system stops operation under the following conditions.

- When the combination light switch is turned to other than the AUTO position.
- If the high beam or pass position of the combination switch was operated.
- When the vehicle speed is low:
-
    - -

      Less than 6 mph (10 km/h)
    - -

      Less than 15 mph (24 km/h) condition continues more than four seconds.

Conditions that the System Switches to Low Beam

- When there are objects that are emitting lights such as streetlights, house lights, advertising display lighting, signages, vending machines, or other reflecting light.
- When there are objects emitting lights on the road similar to the taillights of vehicles driving ahead or headlights of opposing vehicles.
- When the red lights of the traffic signals are detected.
- When the front wiper motor operates at HIGH for 5 seconds.

NOTE: There is no refracted light due to fog or other weather conditions.

Conditions that Switching Timing to Low Beam is Changed

- When the taillights of the vehicle driving ahead are excessively bright or dim.
- When the headlights of the opposite vehicle are excessively bright or dim.
- In rainy, snowy, and foggy weather.

Detection Range and Limits

The multipurpose camera unit recognizes and reacts within the range of 25 degrees horizontally (total 50 degrees).

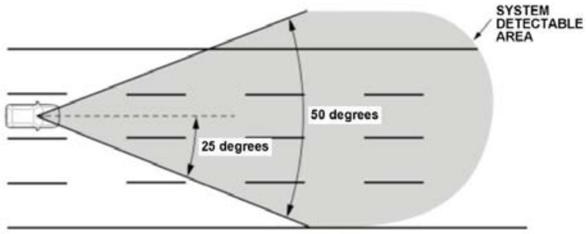

Auto High-Beam Operation Indicator

When a system malfunction occurs, or when the camera lens or the windshield gets dirty, the warning message is shown on the multi-information display (MID). If the shown, the system stops operating.

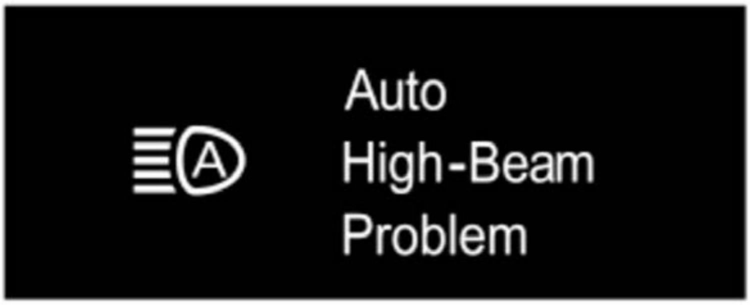 Auto High-Beam Problem	Some Driver Assis Systems Cannot Operate: Clean Front Winds
NOTE: The actual message may be different depending on your market.	

AUTO HIGH-BEAM (HIGH-BEAM SUPPORT SYSTEM) DESCRIPTION - SYSTEM DIAGRAM

The system diagram of the Auto High-Beam is shown below.

For locations of each component on vehicle, refer to Component Location Index:

- Without automatic wiper: **Automatic lighting control unit-sensor**
- With automatic wiper: **Automatic lighting/rain sensor**
- **Body control module**
- **Gauge control module**
- **Relay control module**
- **Multipurpose camera unit**
- **SRS unit**
- **Transmission control module (TCM)**

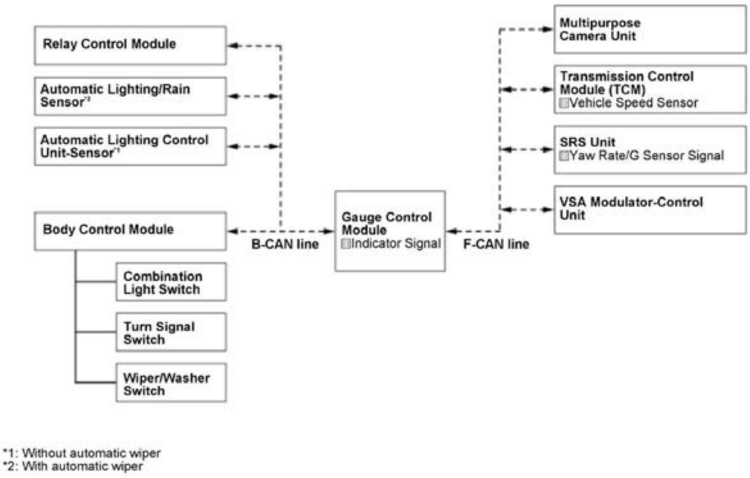
Relay Control Module
Automatic Lighting/Rain Sensor*2
Automatic Lighting Control Unit-Sensor*1
Body Control Module
Combination Light Switch
Turn Signal Switch
Wiper/Washer Switch
B-CAN line
Gauge Control Module
▨Indicator Signal
F-CAN line
Multipurpose Camera Unit
Transmission Control Module (TCM)
▨Vehicle Speed Sensor
SRS Unit
▨Yaw Rate/G Sensor Signal
VSA Modulator-Control Unit
*1: Without automatic wiper
*2: With automatic wiper

EXTERIOR LIGHTS SYSTEM DESCRIPTION

Headlights Function

The headlights are controlled by the relay control module, based on combination light switch input signals from the body control module.

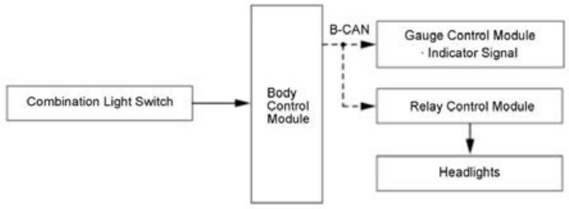
Combination Light Switch
Body Control Module
B-CAN
Gauge Control Module
· Indicator Signal
Relay Control Module
Headlights

Headlights Auto-OFF Function

When the headlights auto-off function is selected, the exterior lights automatically turn off when the vehicle is turned to the OFF (LOCK) mode, and the driver's door is
The timing for turning off the exterior lights can be customized to suit the customer needs.

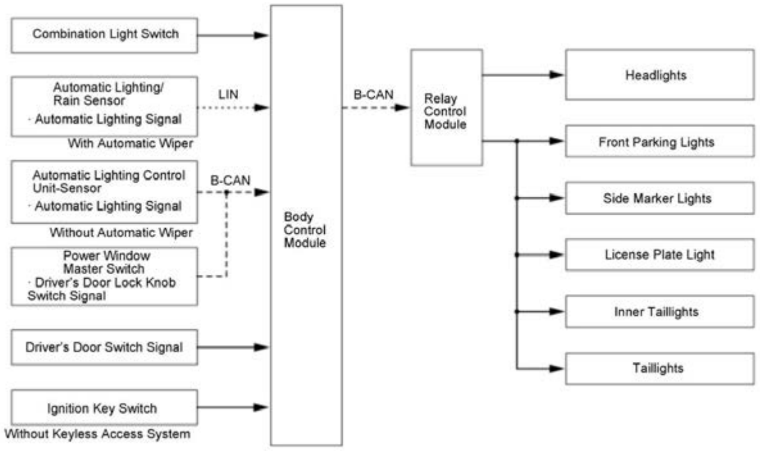
Combination Light Switch
Automatic Lighting/ Rain Sensor
· Automatic Lighting Signal
With Automatic Wiper
LIN
Automatic Lighting Control Unit-Sensor
· Automatic Lighting Signal
Without Automatic Wiper
B-CAN
Power Window Master Switch
· Driver's Door Lock Knob Switch Signal
Driver's Door Switch Signal
Ignition Key Switch
Without Keyless Access System
Body Control Module
B-CAN
Relay Control Module
Headlights
Front Parking Lights
Side Marker Lights
License Plate Light
Inner Taillights
Taillights

Headlight Fault Detection Function (With LED Headlight)

When a low beam error is detected, the headlights send an error signal to the relay control module. When the relay control module receives the error signal, it sends an I system indicator signal to the gauge control module via B-CAN.

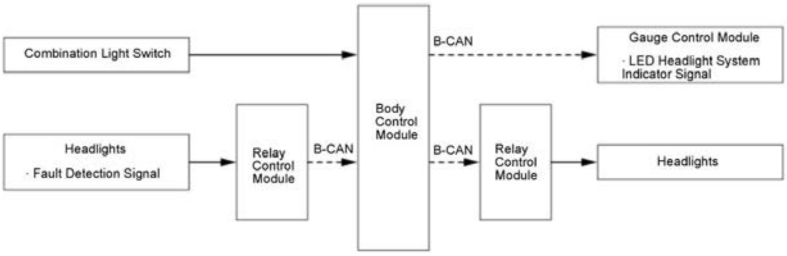
Combination Light Switch
Headlights
· Fault Detection Signal
Relay Control Module
B-CAN
Body Control Module
B-CAN
Gauge Control Module
· LED Headlight System Indicator Signal
B-CAN
Relay Control Module
Headlights

Turn Signal/Hazard Light Function

The turn signal/hazard warning lights are controlled by the body control module, using input from the combination light switch or hazard warning switch signal. When t module receives a left turn or right turn command from the combination light switch, it blinks the front and rear turn signal lights for the left or right side of the vehicle. control module receives a hazard warning command from the hazard warning switch, it blinks the front and rear turn signal lights for both sides of the vehicle. The syste wire break detection by monitoring the current values using the body control module. An abnormal value is registered as a wire break (open) or faulty LED. When this c control module increases the turn signal lighting frequency. If the break detection shows that the current value has returned to the correct value, the body control module normal frequency.

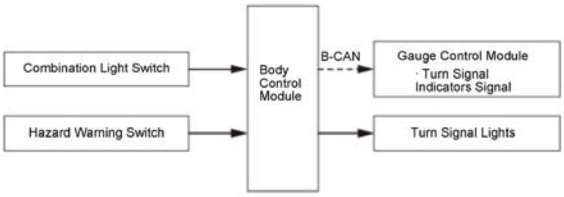
Combination Light Switch
Hazard Warning Switch
Body Control Module
B-CAN
Gauge Control Module
· Turn Signal Indicators Signal
Turn Signal Lights

One-Push Turn Signal Light

With the vehicle in the ON mode, and when there is a brief input from the turn signal switch, the body control module flashes the left or right turn signal three times in s

Fog Light Function (With Fog Light)

The front fog light is controlled by the relay control module and body control module, based on the switch input from the combination light switch.

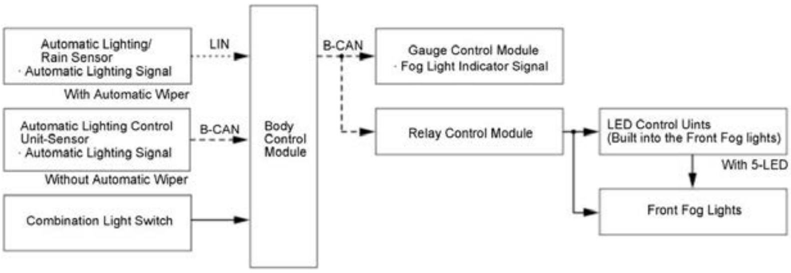
Automatic Lighting/ Rain Sensor
· Automatic Lighting Signal
With Automatic Wiper
LIN
Automatic Lighting Control Unit-Sensor
· Automatic Lighting Signal
Without Automatic Wiper
B-CAN
Combination Light Switch
Body Control Module
B-CAN
Gauge Control Module
· Fog Light Indicator Signal
Relay Control Module
LED Control Uints (Built into the Front Fog lights)
With 5-LED
Front Fog Lights

Daytime Running Lights Function

For daytime running light control, the relay control module controls the daytime running light control circuit based on the combination light switch signal, the parking b automatic lighting signal, and then turns on the light. When the combination light switch is in the OFF position or the AUTO position with the vehicle in the ON mode a brake released, the relay control module controls the daytime running light control circuit. When the combination light switch is in the ON position or the AUTO positic output signal from the automatic lighting control unit-sensor or the automatic lighting/rain sensor are inputted to the body control module, daytime running light control

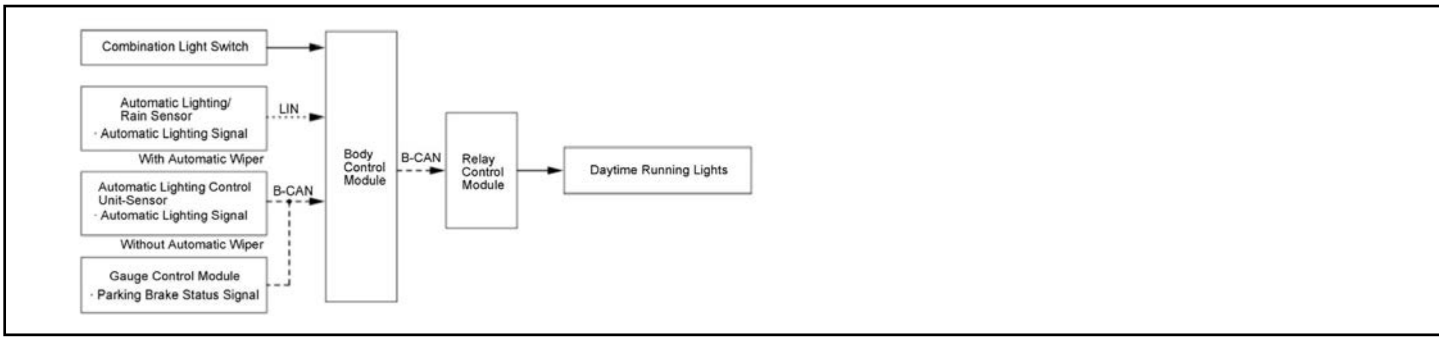
Combination Light Switch
Automatic Lighting/
Rain Sensor
· Automatic Lighting Signal
LIN
With Automatic Wiper
Automatic Lighting Control
Unit-Sensor
· Automatic Lighting Signal
B-CAN
Without Automatic Wiper
Gauge Control Module
· Parking Brake Status Signal
Body
Control
Module
B-CAN
Relay
Control
Module
Daytime Running Lights

Automatic Lighting ON/OFF Control

When the light ON delay time elapses after the automatic lighting control unit-sensor *1 or the automatic lighting/rain sensor *2 output voltage drops to the light ON lu parking lights, the side marker lights, the taillights, the license plate light, daytime running lights, and the headlights turn on. When the light OFF delay time elapses afte lighting control unit-sensor *1 or automatic lighting/rain sensor *2 output voltage rises to the light OFF luminance, the front parking lights, the side marker lights, the ta plate light, and the headlights turn off.

*1: Without automatic wiper

*2: With automatic wiper

Without Automatic Wiper

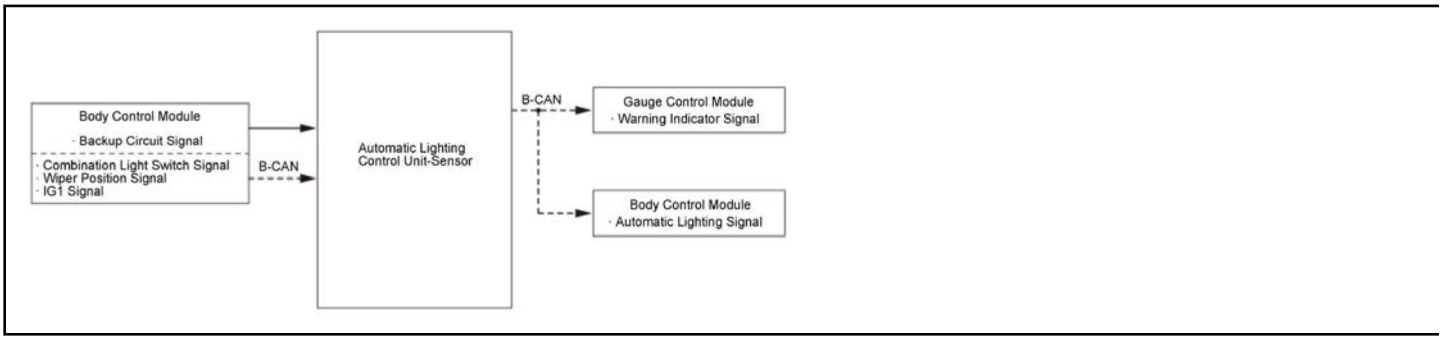
Body Control Module
· Backup Circuit Signal
· Combination Light Switch Signal
· Wiper Position Signal
· IG1 Signal
B-CAN
Automatic Lighting
Control Unit-Sensor
B-CAN
Gauge Control Module
· Warning Indicator Signal
Body Control Module
· Automatic Lighting Signal

With Automatic Wiper

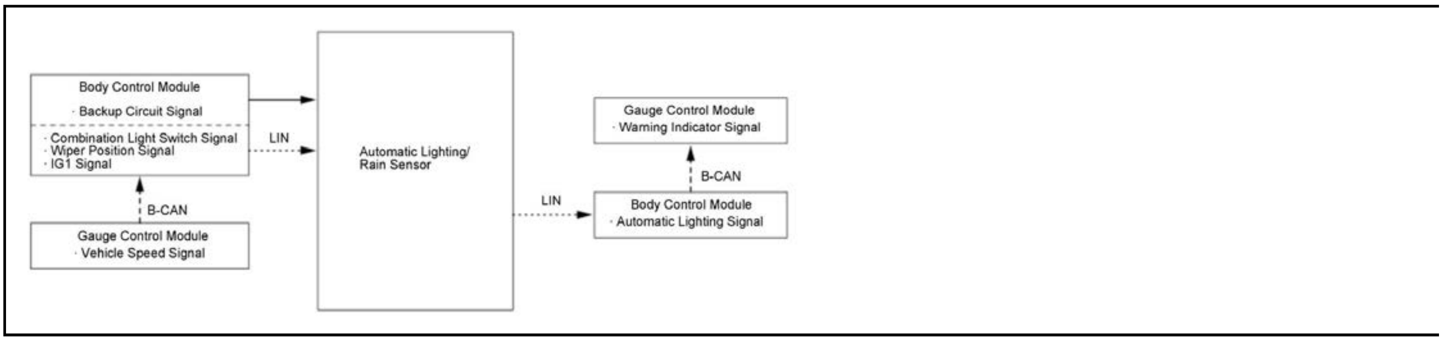
Body Control Module
· Backup Circuit Signal
· Combination Light Switch Signal
· Wiper Position Signal
· IG1 Signal
LIN
B-CAN
Gauge Control Module
· Vehicle Speed Signal
Automatic Lighting/
Rain Sensor
LIN
Gauge Control Module
· Warning Indicator Signal
B-CAN
Body Control Module
· Automatic Lighting Signal

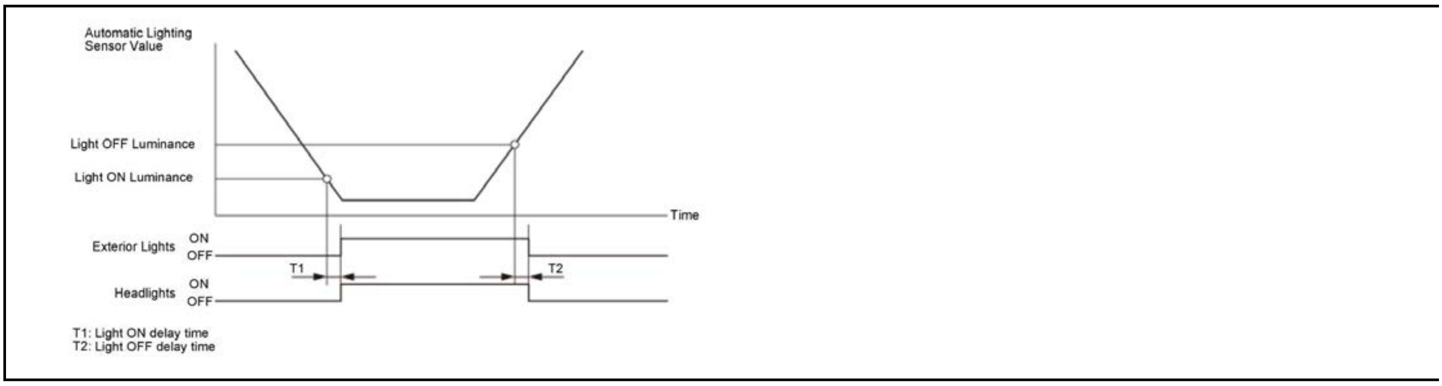

Wiper Linked Mode

When the wiper switch is in a position other than OFF, the automatic lighting control unit-sensor *1 or automatic lighting/rain sensor *2 counts and records the windshi WIPER AS signal (ON to OFF count within 20 seconds) from the body control module via B-CAN. After a total of 5 counts, it switches to wiper linked mode and turns the front parking lights, the taillights, inner taillights, daytime running lights, and the side marker lights. The ON/OFF signals at the time of windshield washer operatio

When a count is not received for 30 seconds or more, the count is reduced by 1, and shifting to normal mode is done when the count reaches 0. The wipers return to nor vehicle is stopped, or when the respective switch is set to OFF.

*1: Without automatic wiper

*2: With automatic wiper

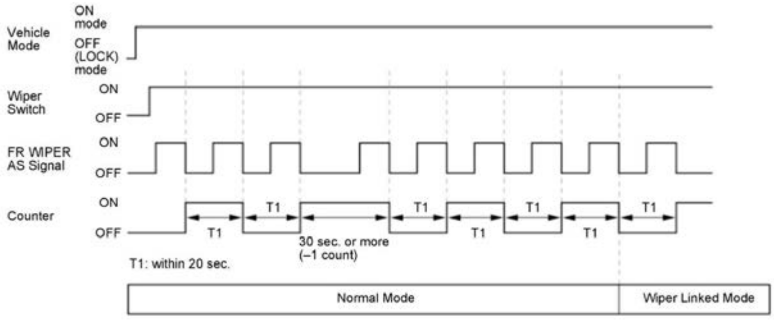

Warning Function

The automatic lighting control unit-sensor *1 or the automatic lighting/rain sensor *2 sends an indicator signal to the gauge control module in case of a failure of the aut sensor or when the signal sent from the relay control module by B-CAN signal is abnormal.

*1: Without automatic wiper

*2: With automatic wiper

Interior Lights Brightness Change Control

Regardless of the combination light switch in the AUTO position, the body control module *1 or the automatic lighting/rain sensor *2 controls the brightness for daytim brightness. The body control module *1 or the automatic lighting/rain sensor *2 sends the signal to the gauge control module using B-CAN.

*1: Without automatic wiper

*2: With automatic wiper

Sensitivity Adjustment Function (For Some Models)

Sensitivity adjustment of the automatic lighting system can be customized with the gauge control module. You can select the customized timing from 5 types (Min, Lo, sensitivity.

Failsafe Function

Automatic Lighting System

When an automatic lighting sensor failure occurs, the system maintains the state before the failure, and a warning is displayed in the multi-information display (MID).

EXTERIOR LIGHTS SYSTEM DESCRIPTION - COMPONENTS

Headlights

The headlight assembly consists of the headlights (low/high beam lights), front parking lights, daytime running lights and the front turn signal lights.

Front Fog Lights

The front fog lights are installed on the front bumper.

Rear Combination Lights

The taillights consist of the taillights, the brake lights, and the rear turn signal lights. The back-up lights and the inner taillights are built into the inner taillights.

High Mount Brake Light

The high mount brake light is located at the top of the rear window.

Side Turn Signal Lights

The side turn signal light is built into the power mirror.

EXTERIOR LIGHTS SYSTEM DESCRIPTION - SYSTEM DIAGRAM

For locations of each component on vehicle, refer to Component Location Index

- Exterior Lights
- Turn Signal/Hazard Warning Lights

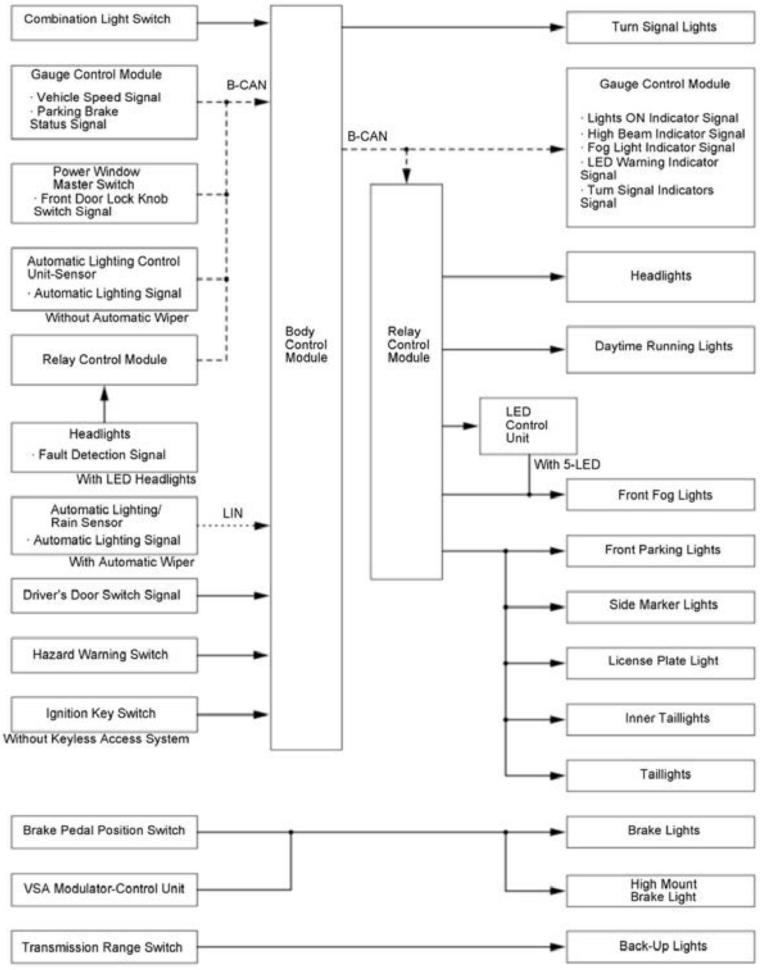
Combination Light Switch
Gauge Control Module
· Vehicle Speed Signal
· Parking Brake Status Signal
Power Window Master Switch
· Front Door Lock Knob Switch Signal
Automatic Lighting Control Unit-Sensor
· Automatic Lighting Signal
Without Automatic Wiper
Relay Control Module
Headlights
· Fault Detection Signal
With LED Headlights
Automatic Lighting/ Rain Sensor
· Automatic Lighting Signal
With Automatic Wiper
Driver's Door Switch Signal
Hazard Warning Switch
Ignition Key Switch
Without Keyless Access System
B-CAN
LIN
Body Control Module
B-CAN
Relay Control Module
LED Control Unit
With 5-LED
Turn Signal Lights
Gauge Control Module
· Lights ON Indicator Signal
· High Beam Indicator Signal
· Fog Light Indicator Signal
· LED Warning Indicator Signal
· Turn Signal Indicators Signal
Headlights
Daytime Running Lights
Front Fog Lights
Front Parking Lights
Side Marker Lights
License Plate Light
Inner Taillights
Taillights
Brake Pedal Position Switch
VSA Modulator-Control Unit
Transmission Range Switch
Brake Lights
High Mount Brake Light
Back-Up Lights

CONNECTOR VIEW

AUTOMATIC LIGHTING CONTROL UNIT-SENSOR CONNECTOR FOR INPUTS AND OUTPUTS

Connector Index
Automatic Lighting Control Unit-Sensor 5P Connector (with auto idle stop system)
Automatic Lighting Control Unit-Sensor 5P Connector (without auto idle stop system)

Automatic Lighting Control Unit-Sensor 5P Connector (female terminals) (with auto idle stop system)

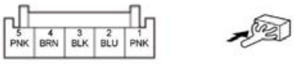
5 PNK
4 BRN
3 BLK
2 BLU
1 PNK

Automatic Lighting Control Unit-Sensor 5P Connector (female terminals) (without auto idle stop system)

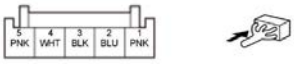
5 PNK
4 WHT
3 BLK
2 BLU
1 PNK

Terminal number	Terminal name	Description	Signal
1	B-CAN_H	Communication line	---
2	B-CAN_L	Communication line	---
3	GND	Automatic lighting control unit-sensor ground	Less than 0.2 V at all times

Terminal number	Terminal name	Description	Signal
4	+B BACKUP2 SUB* 1+B BACK UP* 2	+B power source	About battery voltage at all times
5	H/L ON SW	Outputs H/L ON SW signal	With combination light switch is in ON position: less than VWith combination light switch is in AUTO position and conditions for the headlight to be ON: less than 0.2 VIf no above conditions are met: about battery voltage

*1: With auto idle stop system

*2: Without auto idle stop system

AUTOMATIC LIGHTING/RAIN SENSOR CONNECTOR FOR INPUTS AND OUTPUTS

Automatic Lighting/Rain Sensor 5P Connector (female terminals)

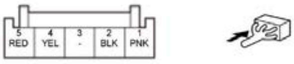

Terminal number	Terminal name	Description	Signal
1	H/L ON SW	Outputs H/L ON SW signal	With combination light switch is in ON position: less than combination light switch is in AUTO position and the conc the headlight to be ON: less than 0.2 VIf none of above co are met: about battery voltage
2	GND	Automatic lighting/rain sensor ground	Less than 0.2 V at all times
3	---	Not used	---
4	LIN(FR WIPER)	Communication line	---
5	+B BACK UP	+B power source	About battery voltage at all times

INPUT TEST

EXTERIOR LIGHTS (BODY CONTROL MODULE AND RELAY CONTROL MODULE) INPUT TEST

NOTE:

- Make sure the fuses associated with the system is OK.
- If you are troubleshooting multiple DTCs, be sure to follow the instructions in B-CAN System Diagnosis Test Mode A .

Body Control Module

1. Turn the vehicle to the OFF (LOCK) mode.

2. Disconnect body control module connectors.

Body Control Module Connector A (14P) (female terminals): ① Body Control Module Connector C (28P) (female terminals): ② Body Control Module Connect terminals): ③

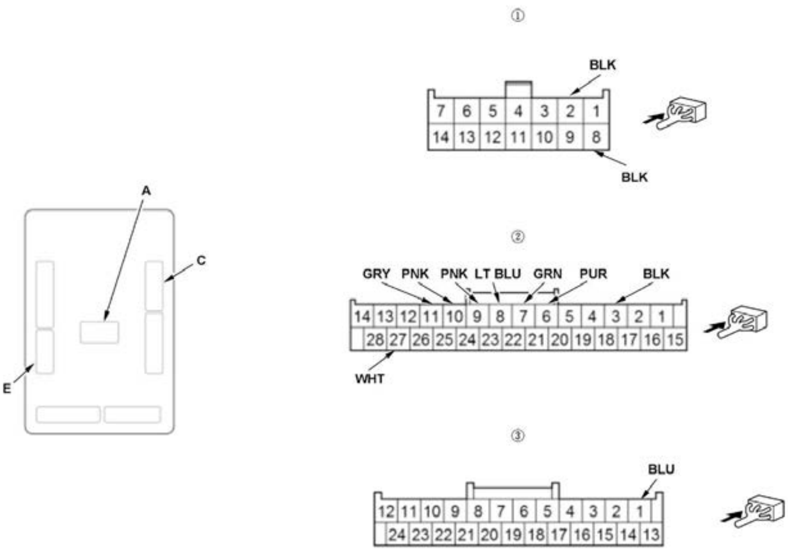

Inspect the connector and socket terminals to be sure they are all making good contact:

- If the terminals are bent, loose, or corroded, repair them as necessary, and recheck the system.
- If the terminals are OK, go to step 4.

Reconnect the connectors to the body control module, do the following input tests:

- If any test indicates a problem, find and correct the cause, then recheck the system.
- If all the input tests prove OK, go to step 5.

Cavity	Wire	Test condition	Test: Desired result	Possible cause if desired result is not
C27	WHT	Under all conditions	Measure the voltage to ground:There should be battery voltage.	An open or high resistance in the wire
E1	BLU	Vehicle ON mode	Measure the voltage to ground:There should be battery voltage.	An open or high resistance in the wire
A2	BLK	In all power modes	Measure the voltage to ground:There should be less than 0.2 V.	• Poor ground (G401) • An open or high resistance in the
A8	BLK	In all power modes	Measure the voltage to ground:There should be less than 0.2 V.	• Poor ground (G401) • An open or high resistance in the wire
C10*C3	PNK*BLK	Combination light switch OFF	Measure the voltage between terminals C10 and C3:There should be less than 0.2 V.	• Faulty combination light switch • An open or high resistance in the
		Combination light switch in any position other than OFF	Measure the voltage between terminals C10 and C3:There should be battery voltage.	• Faulty combination light switch • A short to ground in the wire
C11*C3	GRY*BLK	Combination light switch (PARKING position) ON	Measure the voltage between terminals C11 and C3:There should be less than 0.2 V.	• Faulty combination light switch • An open or high resistance in the
		Combination light switch OFF	Measure the voltage between terminals C11 and C3:There should be battery voltage.	• Faulty combination light switch • A short to ground in the wire
C9*C3	PNK*BLK	Combination light switch (headlight) ON	Measure the voltage between terminals C9 and C3:There should be less than 0.2 V.	• Faulty combination light switch • An open or high resistance in the
		Combination light switch OFF	Measure the voltage between terminals C9 and C3:There should be battery voltage.	• Faulty combination light switch • A short to ground in the wire
C7*C3	GRN*BLK	Combination light switch lever pulled (Passing)	Measure the voltage between terminals C7 and C3:There should be less than 0.2 V.	• Faulty combination light switch • An open or high resistance in the
		Combination light switch lever released (OFF)	Measure the voltage between terminals C7 and C3:There should be battery voltage.	• Faulty combination light switch • A short to ground in the wire

*: With front fog light

Cavity	Wire	Test condition	Test: Desired result	Possible cause if desired result is not
C8*C3	LT BLU*BLK	Combination light switch (Dimmer) in high beam position	Measure the voltage between terminals C8 and C3:There should be less than 0.2 V.	- Faulty combination light switch - An open or high resistance in the v
		Combination light switch (Dimmer) in low beam position	Measure the voltage between terminals C8 and C3:There should be battery voltage.	- Faulty combination light switch - A short to ground in the wire
C6**C3	PUR*BLK	Front fog light switch ON	Measure the voltage between terminals C6 and C3:There should be less than 0.2 V.	- Faulty combination light switch - An open or high resistance in the v
		Front fog light switch OFF	Measure the voltage between terminals C6 and C3:There should be battery voltage.	- Faulty combination light switch - A short to ground in the wire

*: With front fog light

Relay Control Module

5. Turn the vehicle to the OFF (LOCK) mode.

6. Disconnect relay control module connectors.

Relay Control Module Connector A (6P) (female terminals): ① Relay Control Module Connector B (10P) (female terminals): ② Relay Control Module Connect

terminals): ③

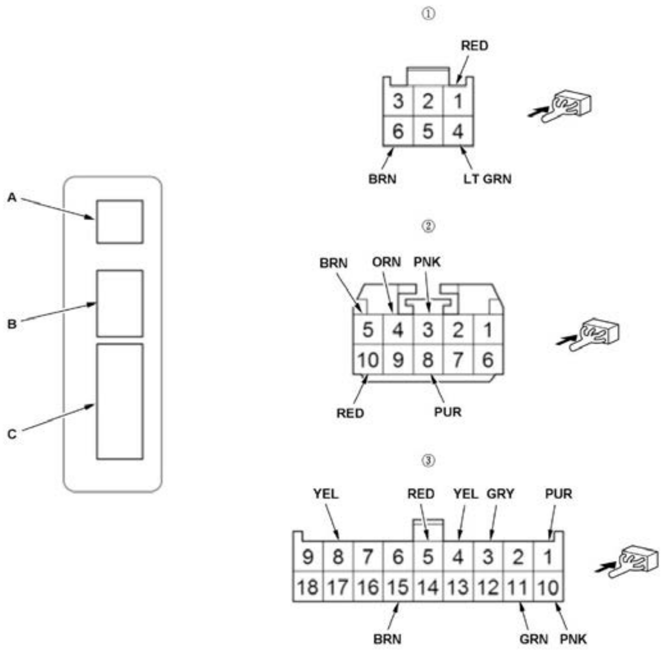

Inspect the connector and socket terminals to be sure they are all making good contact:

- If the terminals are bent, loose, or corroded, repair them as necessary, and recheck the system.
- If the terminals are OK, go to step 8.

With the connectors still disconnected, do the following input tests:

- If any test indicates a problem, find and correct the cause, then recheck the system.
- If all the input tests prove OK, go to step 9.

Cavity	Wire	Test condition	Test: Desired result	Possible cause if desired result is not
B4*B8	ORN*PUR	Under all conditions	Connect terminal B4 and B8 with a jumper wire:The left headlight (low beam) should come on.	- Blown bulb or faulty LED - Poor ground (G351) or an open in ground wire - An open or high resistance in the

Cavity	Wire	Test condition	Test: Desired result	Possible cause if desired result is not
C5*C11	RED*GRN	Under all conditions	Connect terminal C5 and C11 with a jumper wire:The right headlight (low beam) should come on.	- Blown bulb or faulty LED - Poor ground (G251) or an open in ground wire - An open or high resistance in the

Cavity	Wire	Test condition	Test: Desired result	Possible cause if desired result is not
B4*B5	ORN*BRN	Under all conditions	Connect terminal B4 and B5 with a jumper wire:The left headlight (high beam) should come on.	• Blown bulb or faulty LED • Poor ground (G351) or an open in ground wire • An open or high resistance in the
C5*C3	RED*GRY	Under all conditions	Connect terminal C5 and C3 with a jumper wire:The right headlight (high beam) should come on.	• Blown bulb or faulty LED • Poor ground (G251) or an open in ground wire • An open or high resistance in the
C5*C1	RED*PUR	Under all conditions	Connect terminal C5 and C1 with a jumper wire:The left front parking light, left taillight, left inner taillight, and license plate lights should come on.	• Faulty LED • Poor ground (G351, G505) or an ground wire • An open or high resistance in the
B4*B10	ORN*RED	Under all conditions	Connect terminal B4 and B10 with a jumper wire:The right front parking light, right taillight, and right inner taillight should come on.	• Faulty LED • Poor ground (G251, G504) or an ground wire • An open or high resistance in the
C5*C8	RED*YEL	Under all conditions	Connect terminal C5 and C8 with a jumper wire:The left daytime running light should come on.	• Faulty LED • Poor ground (G351) or an open in ground wire • An open or high resistance in the
B4*B3	ORN*PNK	Under all conditions	Connect terminal B4 and B3 with a jumper wire:The right daytime running light should come on.	• Faulty LED • Poor ground (G251) or an open in ground wire • An open or high resistance in the
C4	YEL	Under all conditions	Connect terminal to ground with a jumper wire:The front fog lights should come on.	• Faulty front fog light relay • Blown bulb • Poor ground (G251) or an open in ground wire • An open or high resistance in the

Reconnect the connectors to the relay control module, do the following input tests:

- If any test indicates a problem, find and correct the cause, then recheck the system.
- If all the input tests prove OK, go to step 10.

Cavity	Wire	Test condition	Test: Desired result	Possible cause if desired result is no
A1	RED	Under all conditions	Measure the voltage to ground:There should be battery voltage.	An open or high resistance in the wire

Cavity	Wire	Test condition	Test: Desired result	Possible cause if desired result is not
A4	LT GRN	Vehicle ON mode	Measure the voltage to ground:There should be battery voltage.	An open or high resistance in the wire
A6	BRN	In all power modes	Measure the voltage to ground:There should be less than 0.2 V.	• Poor ground (G251) • An open or high resistance in the w
C15	BRN	In all power modes	Measure the voltage to ground:There should be less than 0.2 V.	• Poor ground (G251) • An open or high resistance in the g wire
C10	PNK	Combination light switch (headlight) ON	Measure the voltage to ground:There should be less than 0.2 V.	• Faulty combination light switch • An open or high resistance in the g wire
		Combination light switch OFF	Measure the voltage to ground:There should be battery voltage.	• Faulty combination light switch • A short to ground in the wire

10. If multiple failures are found on more than one control unit, **replace the body control module** . If input failures are related to a particular control unit, replace the c

TURN SIGNAL/HAZARD WARNING LIGHTS (BODY CONTROL MODULE) INPUT TEST

NOTE:

- Make sure the fuses associated with the system is OK.
- If you are troubleshooting multiple DTCs, be sure to follow the instructions in **B-CAN System Diagnosis Test Mode A** .

1. Turn the vehicle to the OFF (LOCK) mode.

2. Disconnect body control module connectors.

Body Control Module Connector A (14P) (female terminals): ① Body Control Module Connector B (36P) (female terminals): ② Body Control Module Connect

terminals): ③ Body Control Module Connector E (24P) (female terminals): ④

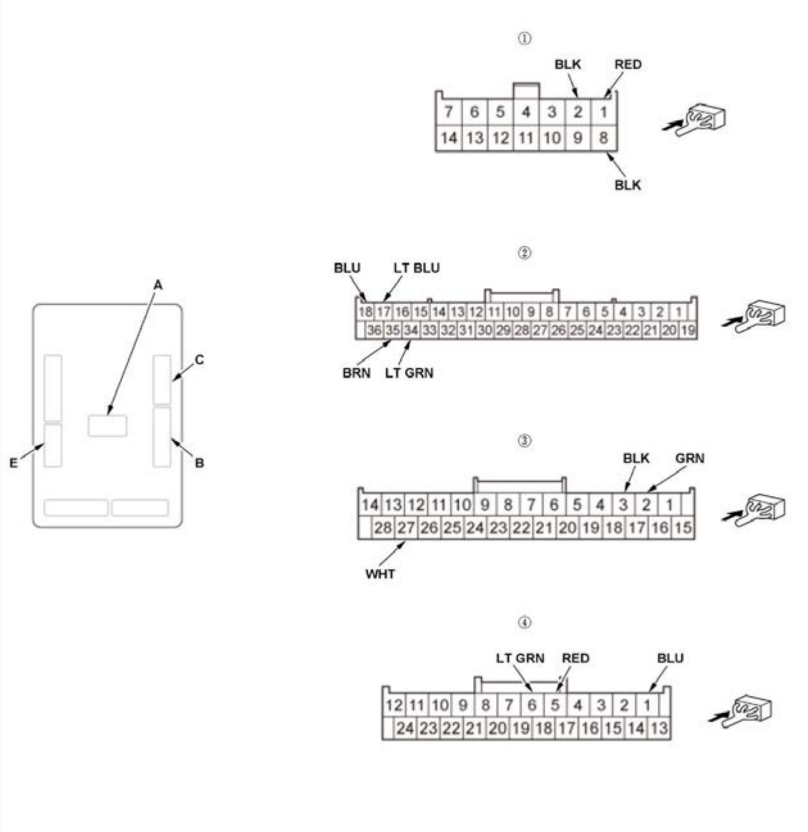

①
BLK
RED
7 6 5 4 3 2 1
14 13 12 11 10 9 8
BLK
②
BLU
LT BLU
18 17 16 15 14 13 12 11 10 9 8 7 6 5 4 3 2 1
36 35 34 33 32 31 30 29 28 27 26 25 24 23 22 21 20 19
BRN
LT GRN
A
C
E
B
③
BLK
GRN
14 13 12 11 10 9 8 7 6 5 4 3 2 1
28 27 26 25 24 23 22 21 20 19 18 17 16 15
WHT
④
LT GRN
RED
BLU
12 11 10 9 8 7 6 5 4 3 2 1
24 23 22 21 20 19 18 17 16 15 14 13

Inspect the connectors and socket terminals to be sure they are all making good contact:

- If the terminals are bent, loose, or corroded, repair them as necessary, and recheck the system.
- If the terminals are OK, go to step 4.

Reconnect the connectors to the body control module, do the following input tests:

- If any test indicates a problem, find and correct the cause, then recheck the system.
- If all the input tests prove OK, go to step 5.

Cavity	Wire	Test condition	Test: Desired result	Possible cause if desired result is not
A1	RED	Under all conditions	Measure the voltage to ground:There should be battery voltage.	An open or high resistance in the wire
C27	WHT	Under all conditions	Measure the voltage to ground:There should be battery voltage.	An open or high resistance in the wire
E1	BLU	Vehicle ON mode	Measure the voltage to ground:There should be battery voltage.	An open or high resistance in the wire
A2	BLK	In all power modes	Measure the voltage to ground:There should be less than 0.2 V.	• Poor ground (G401) • An open or high resistance in the wire
A8	BLK	In all power modes	Measure the voltage to ground:There should be less than 0.2 V.	• Poor ground (G401) • An open or high resistance in the wire
C2	GRN	Hazard warning switch pressed	Measure the voltage to ground:There should be less than 0.2 V.	• Faulty hazard warning switch • Poor ground (G402) • An open or high resistance in the wire
		Hazard warning switch released	Measure the voltage to ground:There should be battery voltage.	• Faulty hazard warning switch • A short to ground in the wire
E6*C3	LT GRN*BLK	Turn signal switch in left position	Measure the voltage between terminals E6 and C3:There should be less than 0.2 V.	• Faulty turn signal switch • An open or high resistance in the
		Turn signal switch in right or neutral position	Measure the voltage between terminals E6 and C3:There should be battery voltage.	• Faulty turn signal switch • A short to ground in the wire
E5*C3	RED*BLK	Turn signal switch in right position	Measure the voltage between terminals E5 and C3:There should be less than 0.2 V.	• Faulty turn signal switch

Cavity	Wire	Test condition	Test: Desired result	Possible cause if desired result is not
				- An open or high resistance in the wire
		Turn signal switch in left or neutral position	Measure the voltage between terminals E5 and C3:There should be battery voltage.	- Faulty turn signal switch - A short to ground in the wire

5. Turn the vehicle to the OFF (LOCK) mode.Disconnect the connectors to the body control module, and do the following input tests:

- If any test indicates a problem, find and correct the cause, then recheck the system.
- If all the input tests prove OK, **replace the body control module** .

Cavity	Wire	Test condition	Test: Desired result	Possible cause if desired result is not
B17	LT BLU	Under all conditions	Connect terminal B17 and A1 with a jumper wire:The left rear turn signal light should come on.	- Faulty LED - Poor ground (G505) or an open in wire - An open or high resistance in the w
B18	BLU	Under all conditions	Connect terminal B17 and A1 with a jumper wire:The left front turn signal light and left side turn signal light* should come on.	- Faulty LED - Poor ground (G351, G401*) or an ground wire - An open or high resistance in the w
B34	LT GRN	Under all conditions	Connect terminal B17 and A1 with a jumper wire:The right rear turn signal light should come on.	- Faulty LED - Poor ground (G504) or an open in wire - An open or high resistance in the w
B35	BRN	Under all conditions	Connect terminal B17 and A1 with a jumper wire:The right front turn signal light and right side turn signal light* should come on.	- Faulty LED - Poor ground (G251, G402*) or an ground wire - An open or high resistance in the w

*: With side turn signal light

ADJUSTMENT

BRAKE PEDAL AND BRAKE PEDAL POSITION SWITCH ADJUSTMENT

Adjustment

NOTE: There are two types of electric brake boosters (type A or B) that can be differentiated visually. **Make sure which booster type is equipped before doing any r**

1. **Steering Joint Cover - Remove**
2. Brake Pedal Height - Inspect

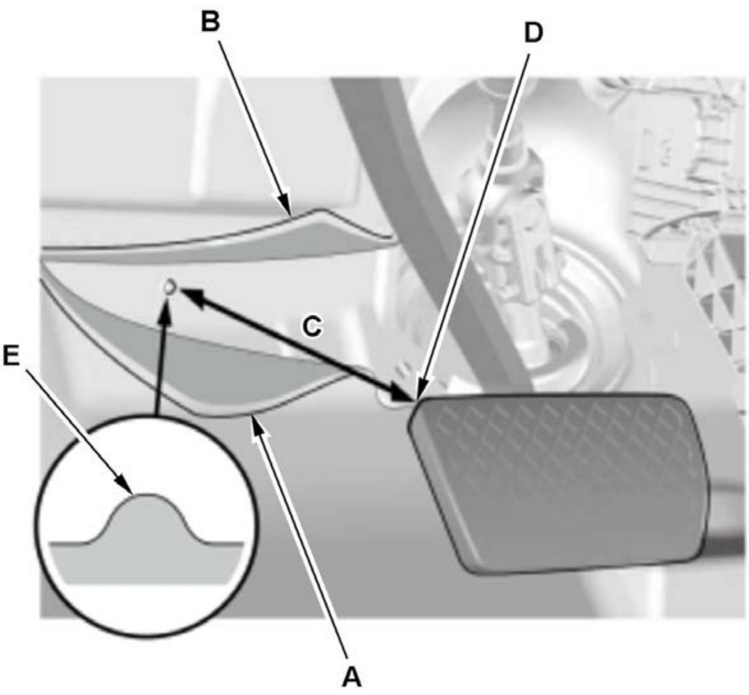

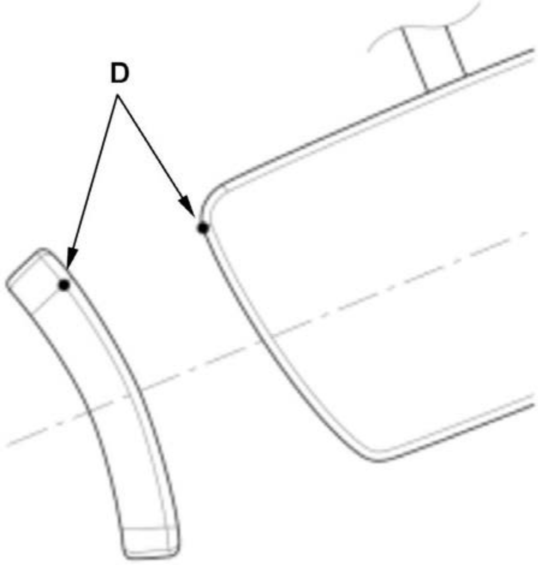

1. Pull back the carpet (A) and the insul

2. Measure the pedal height (C) from th point (D) of the pedal pad to the tab (E) without the insulation.**NOTE:**

If the standard pedal height is out of spe for body damage around the brake peda on the brake pedal assembly.

Standard pedal height:	**215 +/- 5 mm (8.46 +/- 0.20 in)**

3. Brake Pedal Position Switch - Adjust

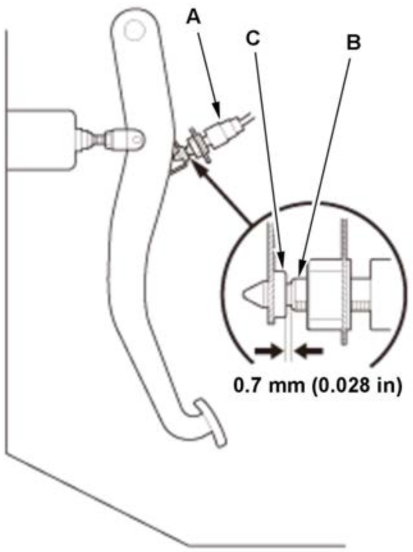

1. **Remove the brake pedal position switch**

2. Lift up on the brake pedal by hand.

3. Push in the brake pedal position switch (A) until its plunger is fully p
end (B) touching the pad (C) on the pedal arm).

4. Turn the switch 45 deg. clockwise to lock it. The gap between the bra
switch and the pad is automatically adjusted to 0.7 mm (0.028 in) by lo

5. Make sure the brake lights go off when the pedal is released.

4. Brake Pedal Free Play - Check

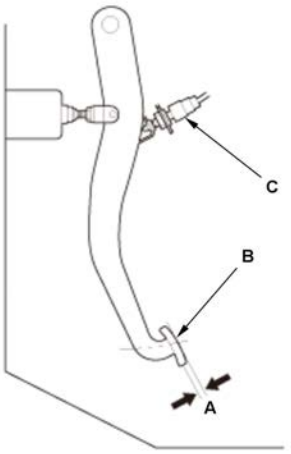

1. Inspect the free play (A) at the brake pedal pad (B) by pushing the brake pedal by ha
pedal free play is out of specification, adjust the brake pedal position switch (C). If the
play is insufficient, it may result in brake drag.

Free play:	**2.7-8.2 mm (0.106-0.323 in)**

5. All Removed Parts - Install

1. Install all removed parts in the reverse order of removal.

FRONT FOG LIGHT ADJUSTMENT

Adjustment

1. Front Fog Light - Adjust

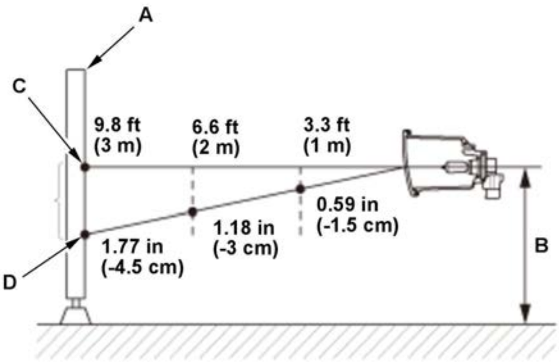

Before adjusting the front fog lights:

- Park the vehicle on a level surface.
- Make sure the tire pressures are correct.
- The driver or someone who weighs the same should sit in the driver's
- Unload the vehicle.

The front fog lights should aim down slightly. To check for proper adjustm

1. Park the vehicle in front of a wall or screen (A).

2. Turn the front fog lights on.

3. Determine if the front fog lights are aimed properly:

- Measure the height (B) of the front fog lights.
- On the wall or screen, mark the height of the front fog lights with a p
- Check each front fog light beam's height. Adjust them both so they a
  1.77 in (4.5 cm) lower (D) than the height of the front fog lights at a
  m).

For example, if the vehicle is parked 9.8 ft (3 m) from the wall or screen, th
fog light beam should be 1.77 in (4.5 cm) below the tape mark.

With front fog light (non-LED type)

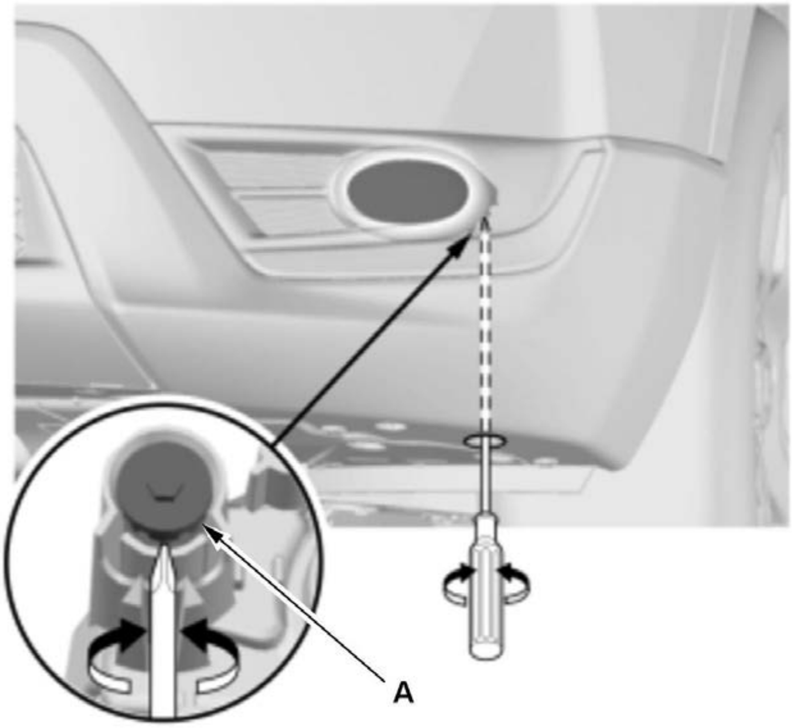

With front fog light (circle LED type)

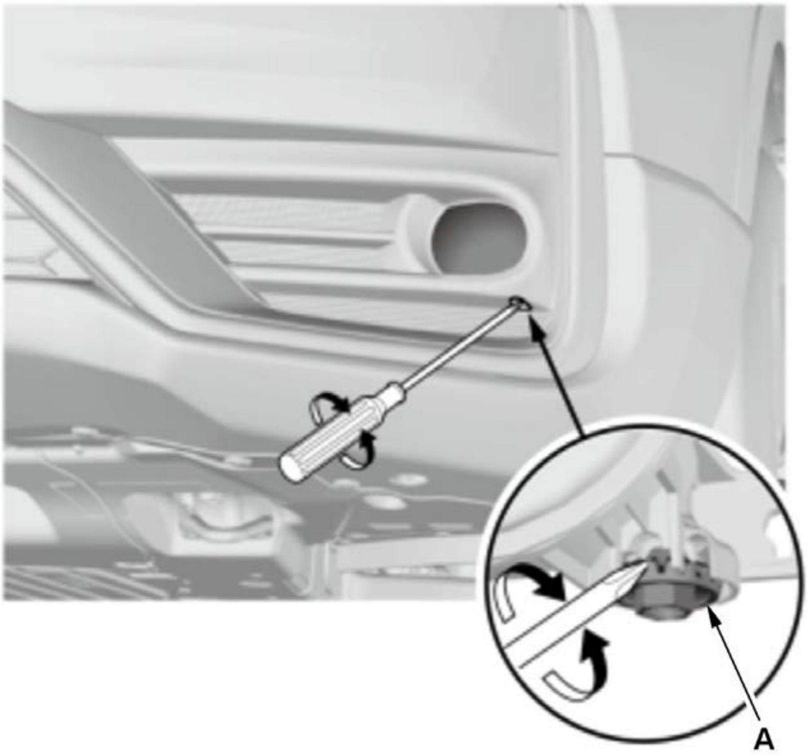

With front fog light (5-LED type)

4. If necessary, adjust each front fo specified height by turning the adj

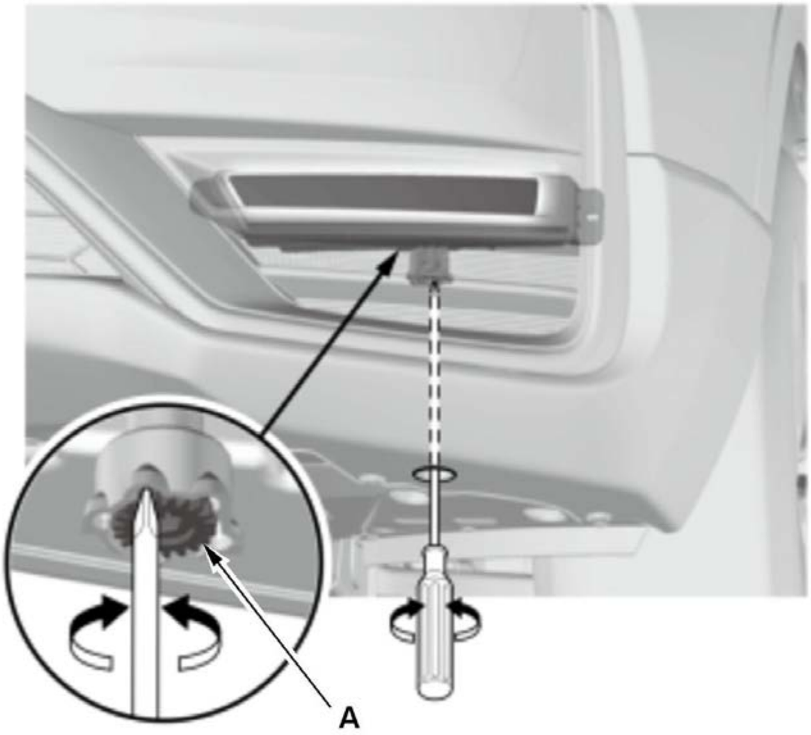

HEADLIGHT ADJUSTMENT

Adjustment

1. Low Beam Headlight - Adjust

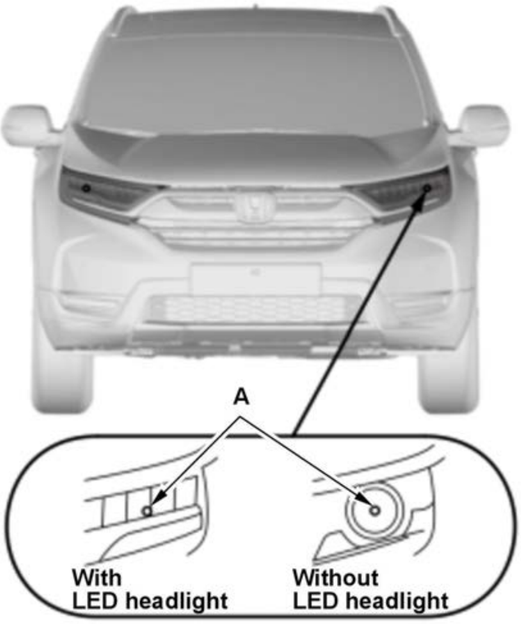

Low beam

High beam

WARNING:

Headlights become very hot during use; do not touch them or such items like fender covers immediately after they have bee

Before adjusting the headlights:

- Park the vehicle on a level surface.
- Make sure the tire pressures are correct.
- The driver or someone who weighs the same should sit (or use an equivalent weight).
- Unload the vehicle.

1. Clean the outer lens so that you can see the center (A) of th

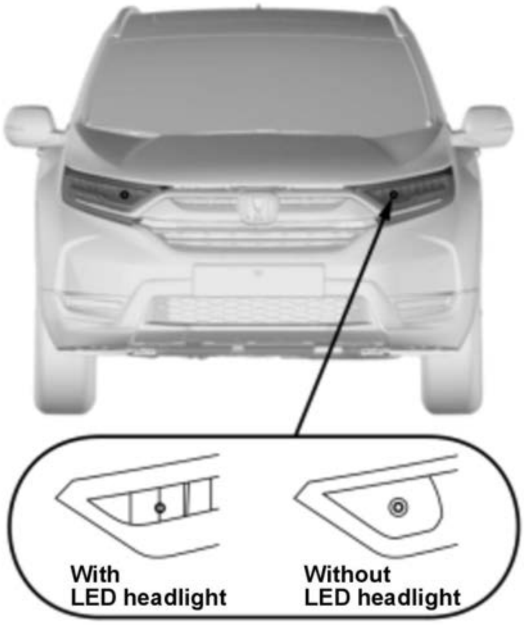 With LED headlight Without LED headlight	
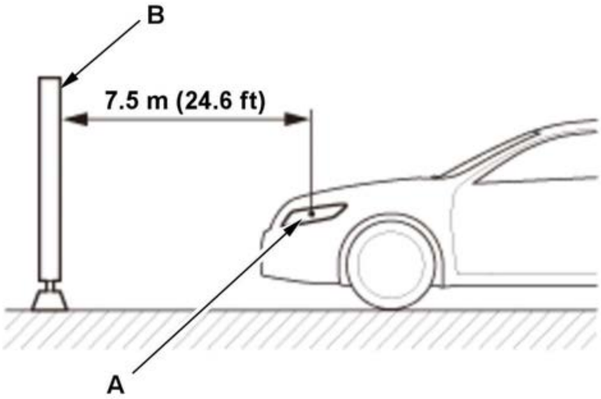 B 7.5 m (24.6 ft) A	**Low beam** 2. Park the vehicle so that the center mark of the low is 7.5 m (24.6 ft) away from a wall or screen (B).
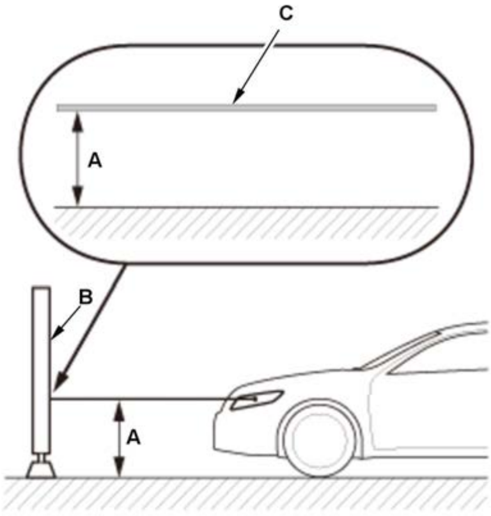	3. Measure the height of the low beam headlight's center mark (A), then (B), mark the same height of the headlights with masking tape in a straig (C).

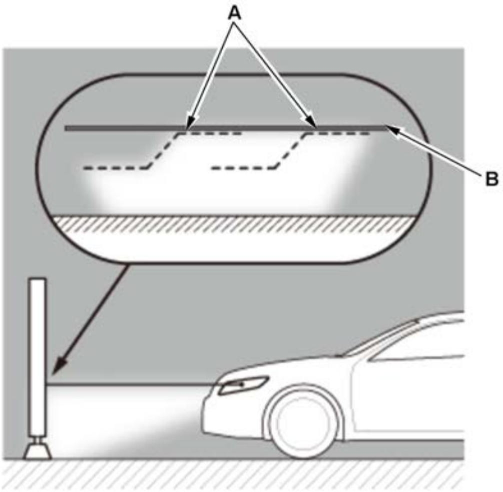	4. Turn on the low beam headlights. 5. To see if the headlights are adjusted properly, observe the beams of light pr or screen. The highest edge or "cut line" (A) of the headlights should be equal tape (B). **NOTE:** **To help determine if a headlight is out of adjustment, block one of the beams with a large piece of cardboard or equivalent, and observe the other beam on the wall or screen. Repeat this for the other headlight.**

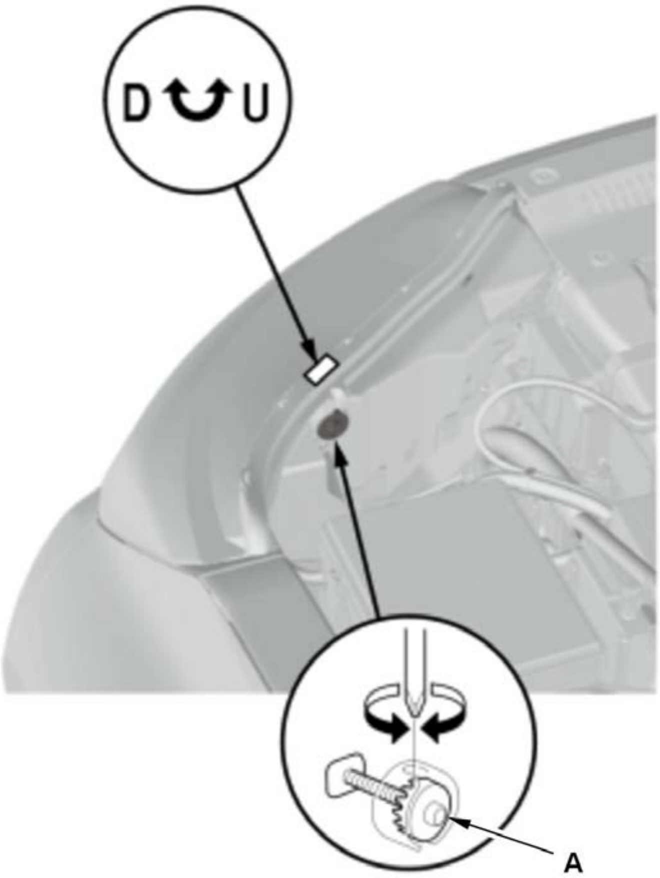

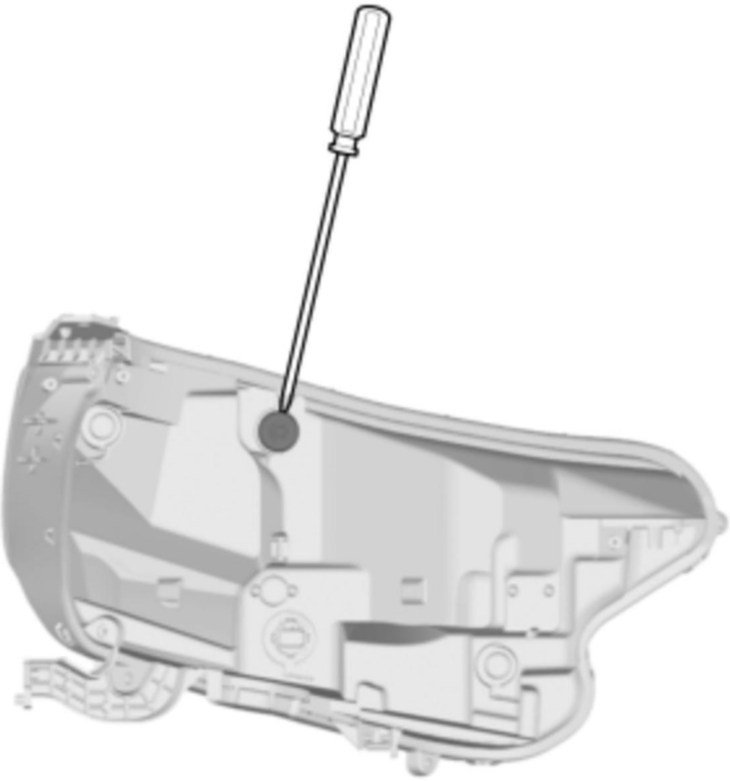

6. If adjustment is necessary, open the hood headlights to local requirements by turning (A).**NOTE:** The headlights can only be adju

TEST

POWER RELAY TEST

Special Tools Required

Image	Description/Tool Numbe
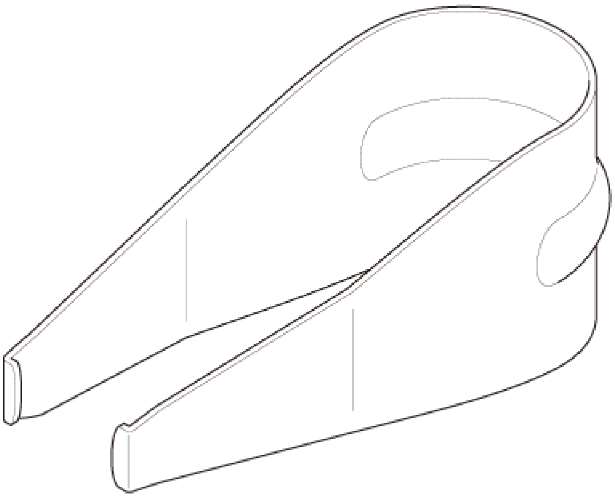	Relay Puller 07AAC-000A2A1

Test

1. Power Relay - Test

   Use this chart to identify the types of the relay, then do the test listed for it.

Relay	Test
A/C compressor clutch relay	Normally-open four-terminals type
A/C condenser fan relay	
Auxiliary transmission fluid pump relay	
Cargo area accessory power socket relay	
Console accessory power socket relay	
DC-DC converter ACC relay	
DC-DC converter IG1 relay 1	
DC-DC converter IG1 relay 2	
Front accessory power socket relay	
Front blower motor relay	
Front fog light relay	
Heated steering wheel relay	
Heated windshield wiper area relay	
Horn relay	
Injector relay	
PGM-FI main relay 2	
Power window relay	
Radiator fan relay	
Rear seat heater relay	
Rear window defogger relay	

ACC cut relay	Five-terminal type
Fan control relay	
IG2 cut relay	

Normally-Open Four-Terminal Type

Check for continuity between the terminals:

- There should be continuity between terminals No. 1 and No. 2 when battery power is connected to terminal No. 3, and battery ground is connected to termi
- There should be no continuity between terminals No. 1 and No. 2 when battery power is disconnected.

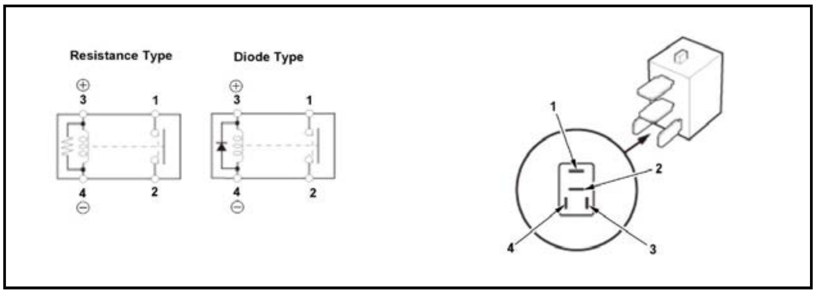

Five-Terminal Type

Check for continuity between the terminals:

- There should be continuity between terminals No. 1 and No. 2 when battery power is connected to terminal No. 3, and battery ground is connected to termi
- There should be continuity between terminals No. 1 and No. 4 when battery power is disconnected.

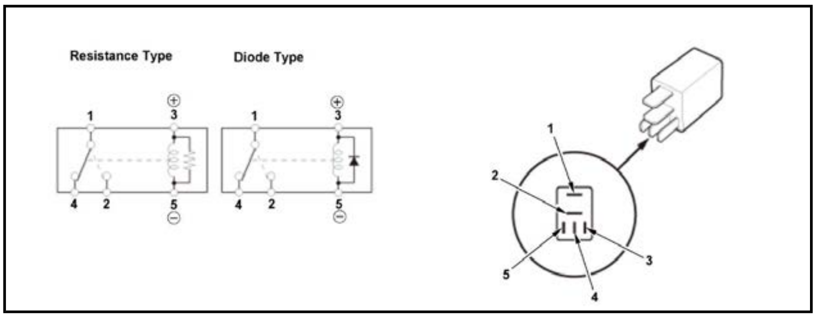
Resistance Type
Diode Type
1
3
4
2
5
1
3
4
2
5
1
2
3
4
5

CIRCUIT DIAGRAM

AUTO HIGH-BEAM (HIGH-BEAM SUPPORT SYSTEM) CIRCUIT DIAGRAM(WITH AUTO IDLE STOP SYSTEM) (2020 2021)

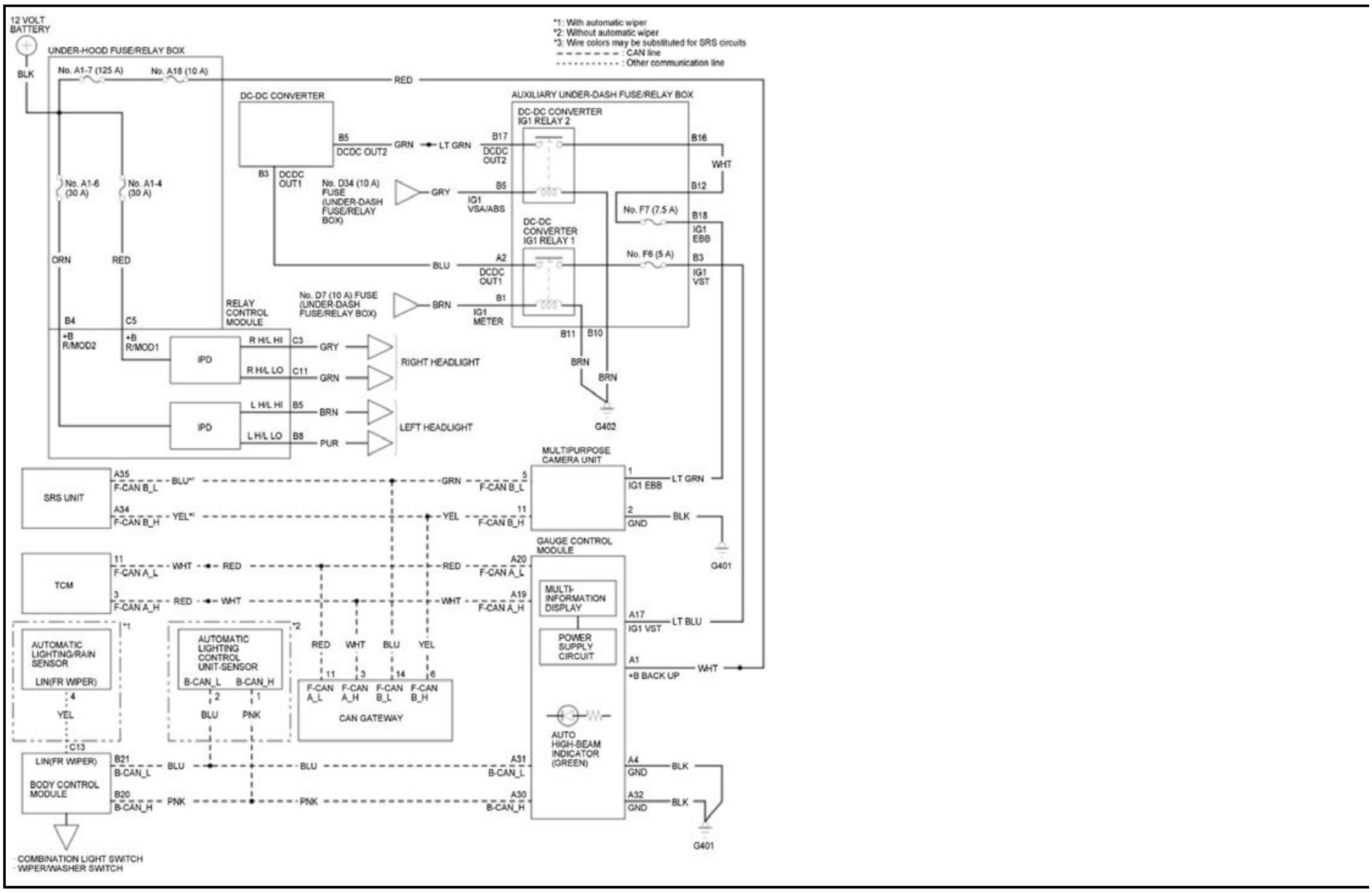
12 VOLT BATTERY
BLK
UNDER-HOOD FUSE/RELAY BOX
No. A1-7 (125 A)
No. A18 (10 A)
RED
*1: With automatic wiper
*2: Without automatic wiper
*3: Wire colors may be substituted for SRS circuits
: CAN line
: Other communication line
DC-DC CONVERTER
B5
DCDC OUT2
GRN
LT GRN
B3
DCDC OUT1
No. A1-6 (30 A)
No. A1-4 (30 A)
No. D34 (10 A) FUSE (UNDER-DASH FUSE/RELAY BOX)
GRY
AUXILIARY UNDER-DASH FUSE/RELAY BOX
DC-DC CONVERTER IG1 RELAY 2
B17
DCDC OUT2
B16
WHT
B5
IG1 VSA/ABS
B12
No. F7 (7.5 A)
B18
IG1 EBB
DC-DC CONVERTER IG1 RELAY 1
No. F6 (5 A)
B3
IG1 VST
ORN
RED
BLU
A2
DCDC OUT1
No. D7 (10 A) FUSE (UNDER-DASH FUSE/RELAY BOX)
BRN
B1
IG1 METER
RELAY CONTROL MODULE
B4
C5
+B R/MOD2
+B R/MOD1
IPD
R H/L HI
C3
GRY
R H/L LO
C11
GRN
RIGHT HEADLIGHT
B11
B10
BRN
BRN
IPD
L H/L HI
B5
BRN
L H/L LO
B8
PUR
LEFT HEADLIGHT
G402
SRS UNIT
A35
F-CAN B_L
BLU*3
A34
F-CAN B_H
YEL*3
MULTIPURPOSE CAMERA UNIT
GRN
5
F-CAN B_L
YEL
11
F-CAN B_H
1
IG1 EBB
LT GRN
2
GND
BLK
G401
TCM
11
F-CAN A_L
WHT
RED
3
F-CAN A_H
RED
WHT
GAUGE CONTROL MODULE
RED
A20
F-CAN A_L
WHT
A19
F-CAN A_H
MULTI-INFORMATION DISPLAY
A17
IG1 VST
LT BLU
POWER SUPPLY CIRCUIT
A1
+B BACK UP
WHT
*1
AUTOMATIC LIGHTING/RAIN SENSOR
LIN(FR WIPER)
4
YEL
*2
AUTOMATIC LIGHTING CONTROL UNIT-SENSOR
B-CAN_L
B-CAN_H
2
1
BLU
PNK
RED
WHT
BLU
YEL
11
3
14
6
F-CAN A_L
F-CAN A_H
F-CAN B_L
F-CAN B_H
CAN GATEWAY
AUTO HIGH-BEAM INDICATOR (GREEN)
C13
LIN(FR WIPER)
BODY CONTROL MODULE
B21
B-CAN_L
BLU
BLU
A31
B-CAN_L
A4
GND
BLK
B20
B-CAN_H
PNK
PNK
A30
B-CAN_H
A32
GND
BLK
G401
COMBINATION LIGHT SWITCH
WIPER/WASHER SWITCH

AUTO HIGH-BEAM (HIGH-BEAM SUPPORT SYSTEM) CIRCUIT DIAGRAM(WITHOUT AUTO IDLE STOP SYSTEM)

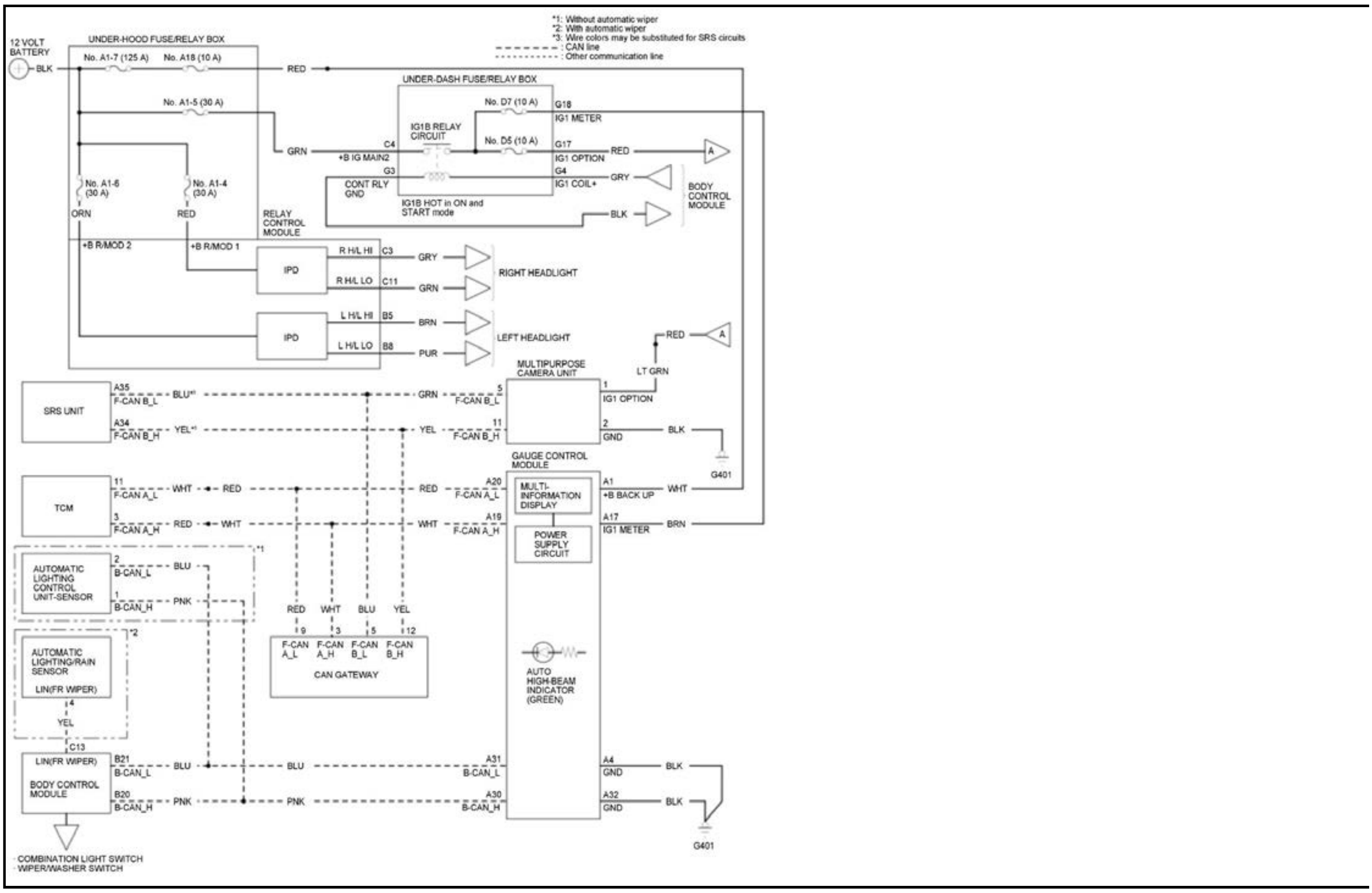
*1: Without automatic wiper
*2: With automatic wiper
*3: Wire colors may be substituted for SRS circuits
CAN line
Other communication line
12 VOLT BATTERY
BLK
UNDER-HOOD FUSE/RELAY BOX
No. A1-7 (125 A)
No. A18 (10 A)
RED
No. A1-5 (30 A)
GRN
UNDER-DASH FUSE/RELAY BOX
No. D7 (10 A)
G18
IG1 METER
IG1B RELAY CIRCUIT
C4
+B IG MAIN2
No. D5 (10 A)
G17
IG1 OPTION
RED
A
G3
CONT RLY GND
G4
IG1 COIL+
GRY
BODY CONTROL MODULE
IG1B HOT in ON and START mode
BLK
No. A1-6 (30 A)
No. A1-4 (30 A)
ORN
RED
RELAY CONTROL MODULE
+B R/MOD 2
+B R/MOD 1
IPD
R H/L HI
C3
GRY
R H/L LO
C11
GRN
RIGHT HEADLIGHT
IPD
L H/L HI
B5
BRN
L H/L LO
B8
PUR
LEFT HEADLIGHT
RED
A
MULTIPURPOSE CAMERA UNIT
LT GRN
SRS UNIT
A35
F-CAN B_L
BLU*3
GRN
5
F-CAN B_L
1
IG1 OPTION
A34
F-CAN B_H
YEL*3
YEL
11
F-CAN B_H
2
GND
BLK
G401
GAUGE CONTROL MODULE
TCM
11
F-CAN A_L
WHT
RED
RED
A20
F-CAN A_L
MULTI-INFORMATION DISPLAY
A1
+B BACK UP
WHT
3
F-CAN A_H
RED
WHT
WHT
A19
F-CAN A_H
A17
IG1 METER
BRN
POWER SUPPLY CIRCUIT
*1
AUTOMATIC LIGHTING CONTROL UNIT-SENSOR
2
B-CAN_L
BLU
1
B-CAN_H
PNK
*2
AUTOMATIC LIGHTING/RAIN SENSOR
LIN(FR WIPER)
4
YEL
C13
RED
WHT
BLU
YEL
9
3
5
12
F-CAN A_L
F-CAN A_H
F-CAN B_L
F-CAN B_H
CAN GATEWAY
AUTO HIGH-BEAM INDICATOR (GREEN)
LIN(FR WIPER)
BODY CONTROL MODULE
B21
B-CAN_L
BLU
BLU
A31
B-CAN_L
A4
GND
BLK
B20
B-CAN_H
PNK
PNK
A30
B-CAN_H
A32
GND
BLK
G401
COMBINATION LIGHT SWITCH
WIPER/WASHER SWITCH

EXTERIOR LIGHTS CIRCUIT DIAGRAM

Headlights/Parking Lights/Daytime Running Lights/Side Marker Lights/Taillights/License Plate Light

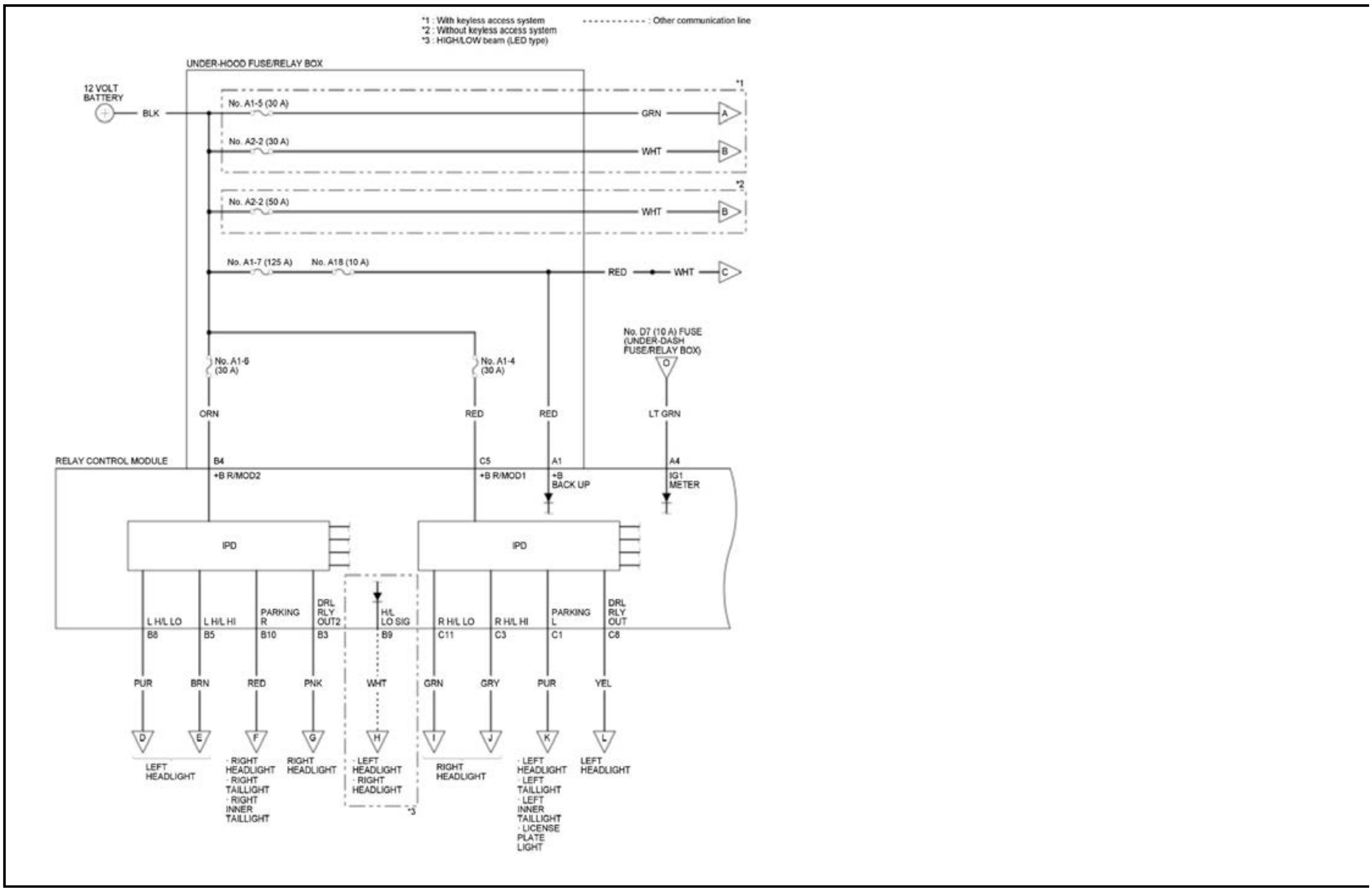
*1 : With keyless access system
*2 : Without keyless access system
*3 : HIGH/LOW beam (LED type)
Other communication line
UNDER-HOOD FUSE/RELAY BOX
12 VOLT BATTERY
BLK
*1
No. A1-5 (30 A)
GRN
A
No. A2-2 (30 A)
WHT
B
*2
No. A2-2 (50 A)
WHT
B
No. A1-7 (125 A)
No. A18 (10 A)
RED
WHT
C
No. D7 (10 A) FUSE (UNDER-DASH FUSE/RELAY BOX)
O
No. A1-6 (30 A)
No. A1-4 (30 A)
ORN
RED
RED
LT GRN
RELAY CONTROL MODULE
B4
+B R/MOD2
C5
+B R/MOD1
A1
+B BACK UP
A4
IG1 METER
IPD
IPD
L H/L LO
B8
L H/L HI
B5
PARKING R
B10
DRL RLY OUT2
B3
H/L LO SIG
B9
R H/L LO
C11
R H/L HI
C3
PARKING L
C1
DRL RLY OUT
C8
PUR
BRN
RED
PNK
WHT
GRN
GRY
PUR
YEL
D
E
F
G
H
I
J
K
L
LEFT HEADLIGHT
· RIGHT HEADLIGHT
· RIGHT TAILLIGHT
· RIGHT INNER TAILLIGHT
RIGHT HEADLIGHT
· LEFT HEADLIGHT
· RIGHT HEADLIGHT
*3
RIGHT HEADLIGHT
· LEFT HEADLIGHT
· LEFT TAILLIGHT
· LEFT INNER TAILLIGHT
· LICENSE PLATE LIGHT
LEFT HEADLIGHT

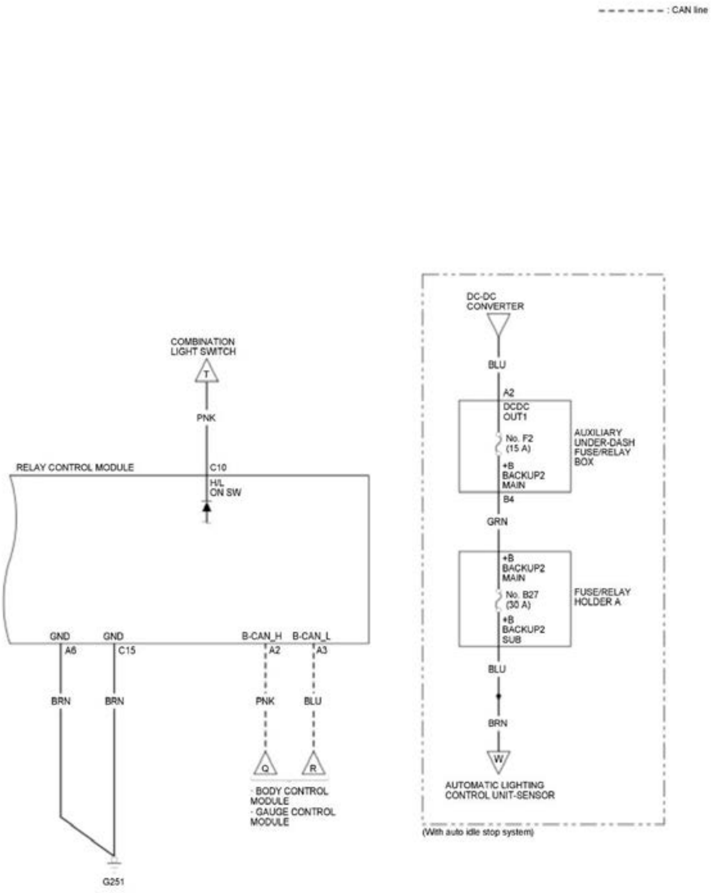
- - - - - - - : CAN line
COMBINATION LIGHT SWITCH
T
PNK
C10
RELAY CONTROL MODULE
H/L ON SW
GND
GND
B-CAN_H
B-CAN_L
A6
C15
A2
A3
BRN
BRN
PNK
BLU
Q
R
· BODY CONTROL MODULE
· GAUGE CONTROL MODULE
G251
DC-DC CONVERTER
BLU
A2
DCDC OUT1
No. F2 (15 A)
+B BACKUP2 MAIN
B4
AUXILIARY UNDER-DASH FUSE/RELAY BOX
GRN
+B BACKUP2 MAIN
No. B27 (30 A)
+B BACKUP2 SUB
FUSE/RELAY HOLDER A
BLU
BRN
W
AUTOMATIC LIGHTING CONTROL UNIT-SENSOR
(With auto idle stop system)

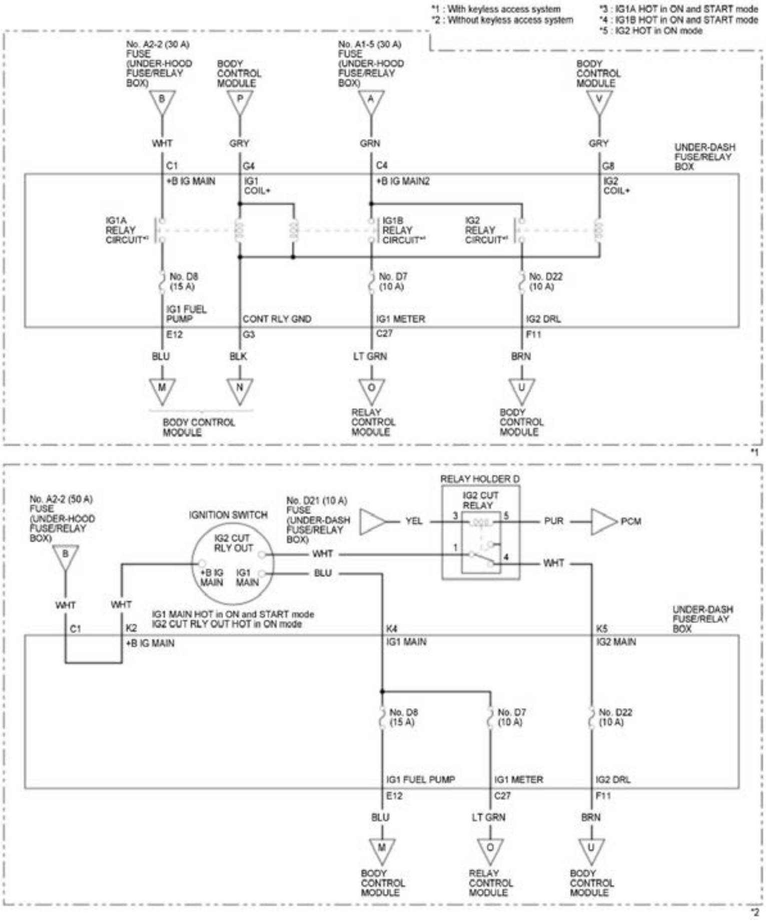
*1 : With keyless access system
*2 : Without keyless access system
*3 : IG1A HOT in ON and START mode
*4 : IG1B HOT in ON and START mode
*5 : IG2 HOT in ON mode
No. A2-2 (30 A) FUSE (UNDER-HOOD FUSE/RELAY BOX)
BODY CONTROL MODULE
No. A1-5 (30 A) FUSE (UNDER-HOOD FUSE/RELAY BOX)
BODY CONTROL MODULE
B
P
A
V
WHT
GRY
GRN
GRY
UNDER-DASH FUSE/RELAY BOX
C1
G4
C4
G8
+B IG MAIN
IG1 COIL+
+B IG MAIN2
IG2 COIL+
IG1A RELAY CIRCUIT*3
IG1B RELAY CIRCUIT*4
IG2 RELAY CIRCUIT*5
No. D8 (15 A)
No. D7 (10 A)
No. D22 (10 A)
IG1 FUEL PUMP
CONT RLY GND
IG1 METER
IG2 DRL
E12
G3
C27
F11
BLU
BLK
LT GRN
BRN
M
N
O
U
BODY CONTROL MODULE
RELAY CONTROL MODULE
BODY CONTROL MODULE
*1
No. A2-2 (50 A) FUSE (UNDER-HOOD FUSE/RELAY BOX)
IGNITION SWITCH
IG2 CUT RLY OUT
+B IG MAIN
IG1 MAIN
No. D21 (10 A) FUSE (UNDER-DASH FUSE/RELAY BOX)
RELAY HOLDER D
IG2 CUT RELAY
YEL
3
5
1
4
PUR
PCM
WHT
BLU
WHT
B
WHT
WHT
IG1 MAIN HOT in ON and START mode
IG2 CUT RLY OUT HOT in ON mode
C1
K2
+B IG MAIN
K4
IG1 MAIN
K5
IG2 MAIN
UNDER-DASH FUSE/RELAY BOX
No. D8 (15 A)
No. D7 (10 A)
No. D22 (10 A)
IG1 FUEL PUMP
IG1 METER
IG2 DRL
E12
C27
F11
BLU
LT GRN
BRN
M
O
U
BODY CONTROL MODULE
RELAY CONTROL MODULE
BODY CONTROL MODULE
*2

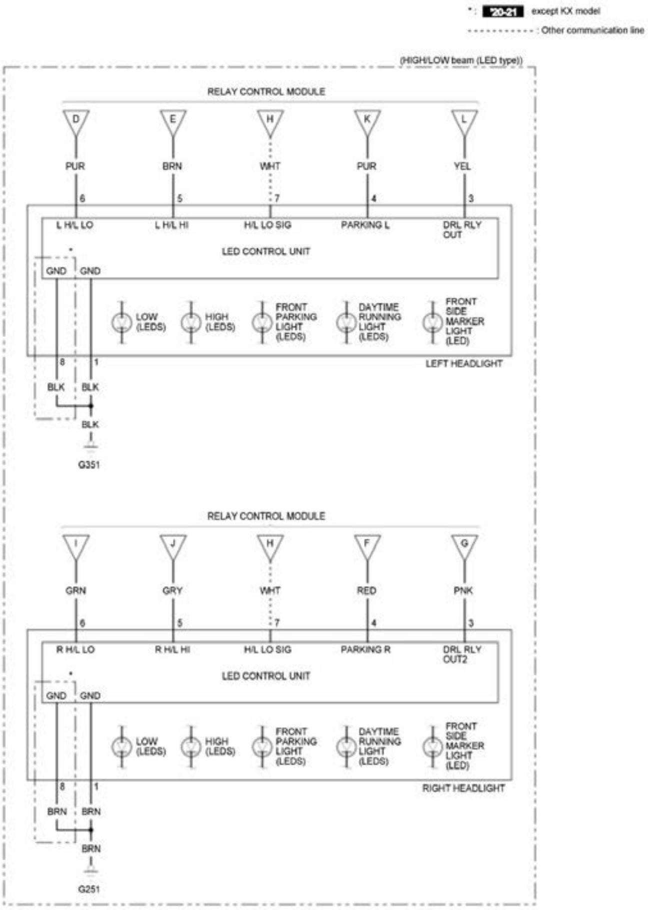

*: '20-21 except KX model
- - - - - - - - - - - : Other communication line
(HIGH/LOW beam (LED type))
RELAY CONTROL MODULE
D
E
H
K
L
PUR
BRN
WHT
PUR
YEL
6
5
7
4
3
L H/L LO
L H/L HI
H/L LO SIG
PARKING L
DRL RLY OUT
LED CONTROL UNIT
*
GND
GND
LOW (LEDS)
HIGH (LEDS)
FRONT PARKING LIGHT (LEDS)
DAYTIME RUNNING LIGHT (LEDS)
FRONT SIDE MARKER LIGHT (LED)
8
1
LEFT HEADLIGHT
BLK
BLK
BLK
G351
RELAY CONTROL MODULE
I
J
H
F
G
GRN
GRY
WHT
RED
PNK
6
5
7
4
3
R H/L LO
R H/L HI
H/L LO SIG
PARKING R
DRL RLY OUT2
LED CONTROL UNIT
*
GND
GND
LOW (LEDS)
HIGH (LEDS)
FRONT PARKING LIGHT (LEDS)
DAYTIME RUNNING LIGHT (LEDS)
FRONT SIDE MARKER LIGHT (LED)
8
1
RIGHT HEADLIGHT
BRN
BRN
BRN
G251

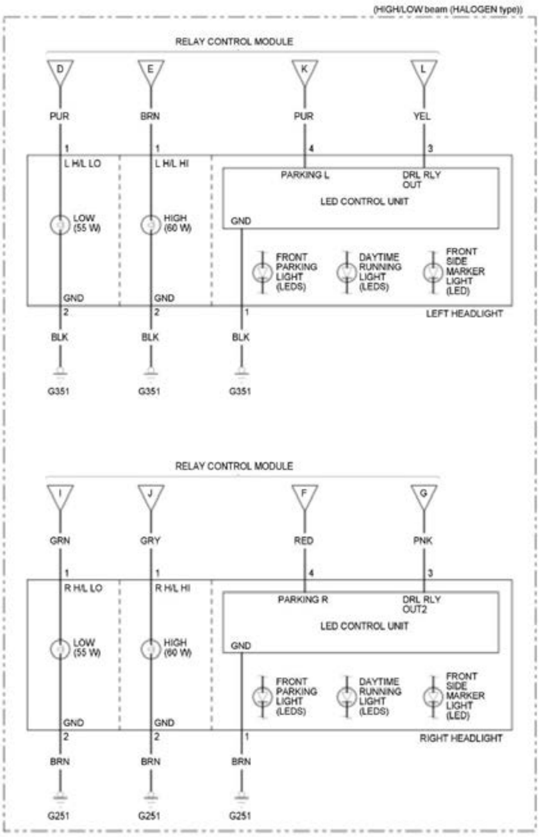

(HIGH/LOW beam (HALOGEN type))
RELAY CONTROL MODULE
D
E
K
L
PUR
BRN
PUR
YEL
1
1
4
3
L H/L LO
L H/L HI
PARKING L
DRL RLY OUT
LED CONTROL UNIT
GND
LOW (55 W)
HIGH (60 W)
FRONT PARKING LIGHT (LEDS)
DAYTIME RUNNING LIGHT (LEDS)
FRONT SIDE MARKER LIGHT (LED)
GND
GND
2
2
1
LEFT HEADLIGHT
BLK
BLK
BLK
G351
G351
G351
RELAY CONTROL MODULE
I
J
F
G
GRN
GRY
RED
PNK
1
1
4
3
R H/L LO
R H/L HI
PARKING R
DRL RLY OUT2
LED CONTROL UNIT
GND
LOW (55 W)
HIGH (60 W)
FRONT PARKING LIGHT (LEDS)
DAYTIME RUNNING LIGHT (LEDS)
FRONT SIDE MARKER LIGHT (LED)
GND
GND
2
2
1
RIGHT HEADLIGHT
BRN
BRN
BRN
G251
G251
G251

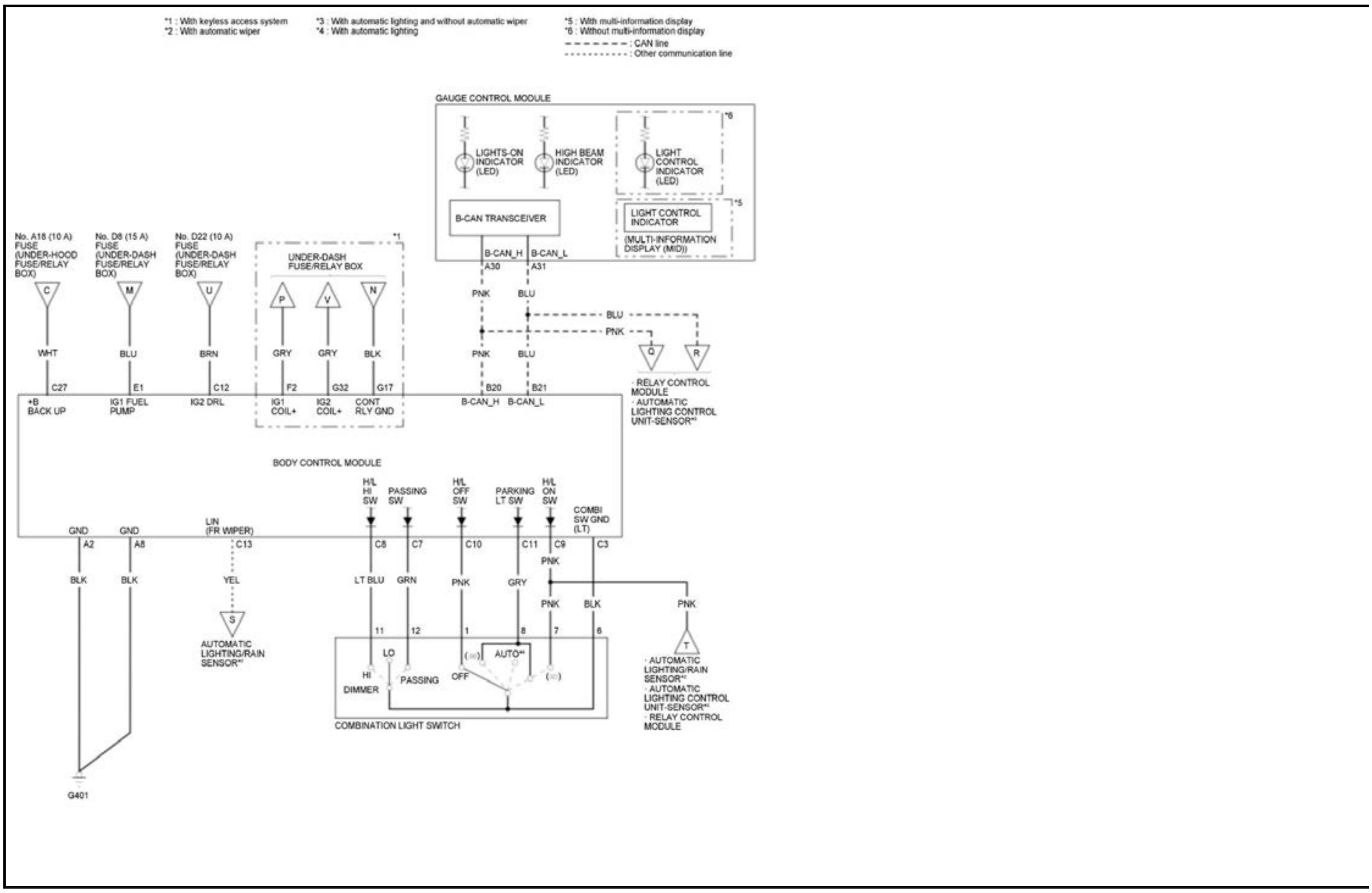
*1 : With keyless access system
*2 : With automatic wiper
*3 : With automatic lighting and without automatic wiper
*4 : With automatic lighting
*5 : With multi-information display
*6 : Without multi-information display
CAN line
Other communication line
GAUGE CONTROL MODULE
LIGHTS-ON INDICATOR (LED)
HIGH BEAM INDICATOR (LED)
LIGHT CONTROL INDICATOR (LED)
*6
B-CAN TRANSCEIVER
LIGHT CONTROL INDICATOR
(MULTI-INFORMATION DISPLAY (MID))
*5
B-CAN_H
B-CAN_L
A30
A31
PNK
BLU
BLU
PNK
PNK
BLU
Q
R
· RELAY CONTROL MODULE
· AUTOMATIC LIGHTING CONTROL UNIT-SENSOR*4
No. A18 (10 A) FUSE (UNDER-HOOD FUSE/RELAY BOX)
No. D8 (15 A) FUSE (UNDER-DASH FUSE/RELAY BOX)
No. D22 (10 A) FUSE (UNDER-DASH FUSE/RELAY BOX)
UNDER-DASH FUSE/RELAY BOX
*1
C
M
U
P
V
N
WHT
BLU
BRN
GRY
GRY
BLK
C27
E1
C12
F2
G32
G17
B20
B21
+B BACK UP
IG1 FUEL PUMP
IG2 DRL
IG1 COIL+
IG2 COIL+
CONT RLY GND
B-CAN_H
B-CAN_L
BODY CONTROL MODULE
H/L HI SW
PASSING SW
H/L OFF SW
PARKING LT SW
H/L ON SW
COMBI SW GND (LT)
GND
GND
LIN (FR WIPER)
A2
A8
C13
C8
C7
C10
C11
C9
C3
BLK
BLK
YEL
LT BLU
GRN
PNK
GRY
PNK
PNK
BLK
PNK
S
AUTOMATIC LIGHTING/RAIN SENSOR*2
11
12
1
8
7
6
LO
HI
DIMMER
PASSING
OFF
AUTO*4
COMBINATION LIGHT SWITCH
T
· AUTOMATIC LIGHTING/RAIN SENSOR*2
· AUTOMATIC LIGHTING CONTROL UNIT-SENSOR*3
· RELAY CONTROL MODULE
G401

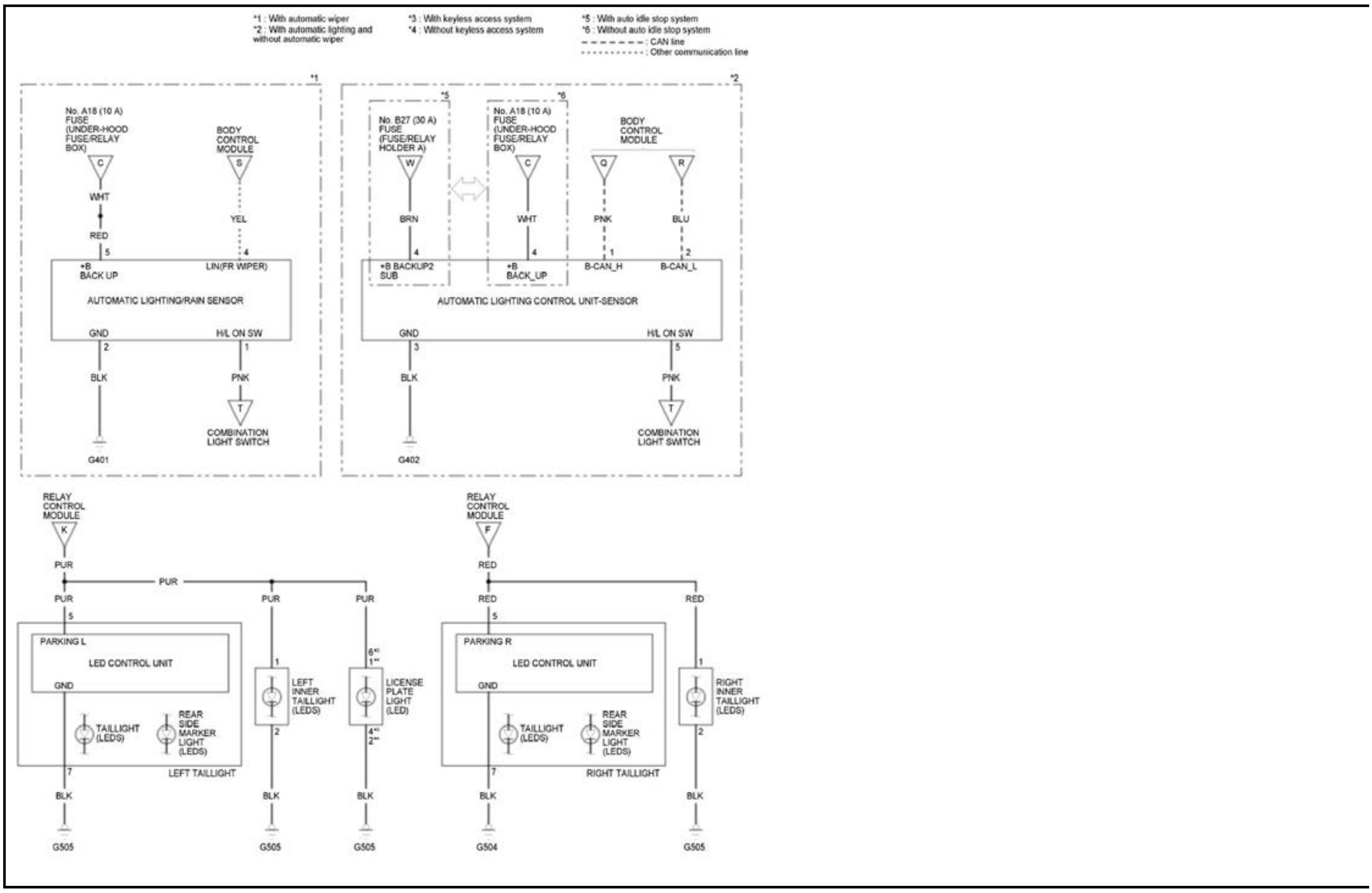
*1 : With automatic wiper
*2 : With automatic lighting and without automatic wiper
*3 : With keyless access system
*4 : Without keyless access system
*5 : With auto idle stop system
*6 : Without auto idle stop system
CAN line
Other communication line
*1
*2
No. A18 (10 A) FUSE (UNDER-HOOD FUSE/RELAY BOX)
BODY CONTROL MODULE
C
S
WHT
RED
YEL
5
4
+B BACK UP
LIN(FR WIPER)
AUTOMATIC LIGHTING/RAIN SENSOR
GND
H/L ON SW
2
1
BLK
PNK
T
COMBINATION LIGHT SWITCH
G401
*5
*6
No. B27 (30 A) FUSE (FUSE/RELAY HOLDER A)
No. A18 (10 A) FUSE (UNDER-HOOD FUSE/RELAY BOX)
BODY CONTROL MODULE
W
C
Q
R
BRN
WHT
PNK
BLU
4
4
1
2
+B BACKUP2 SUB
+B BACK_UP
B-CAN_H
B-CAN_L
AUTOMATIC LIGHTING CONTROL UNIT-SENSOR
GND
H/L ON SW
3
5
BLK
PNK
T
COMBINATION LIGHT SWITCH
G402
RELAY CONTROL MODULE
K
PUR
PUR
PUR
PUR
PUR
5
PARKING L
LED CONTROL UNIT
GND
TAILLIGHT (LEDS)
REAR SIDE MARKER LIGHT (LEDS)
LEFT TAILLIGHT
7
1
2
LEFT INNER TAILLIGHT (LEDS)
6*3
1*4
LICENSE PLATE LIGHT (LED)
4*3
2*4
BLK
BLK
BLK
G505
G505
G505
RELAY CONTROL MODULE
F
RED
RED
RED
5
PARKING R
LED CONTROL UNIT
GND
TAILLIGHT (LEDS)
REAR SIDE MARKER LIGHT (LEDS)
RIGHT TAILLIGHT
7
1
2
RIGHT INNER TAILLIGHT (LEDS)
BLK
BLK
G504
G505

Back-Up Lights

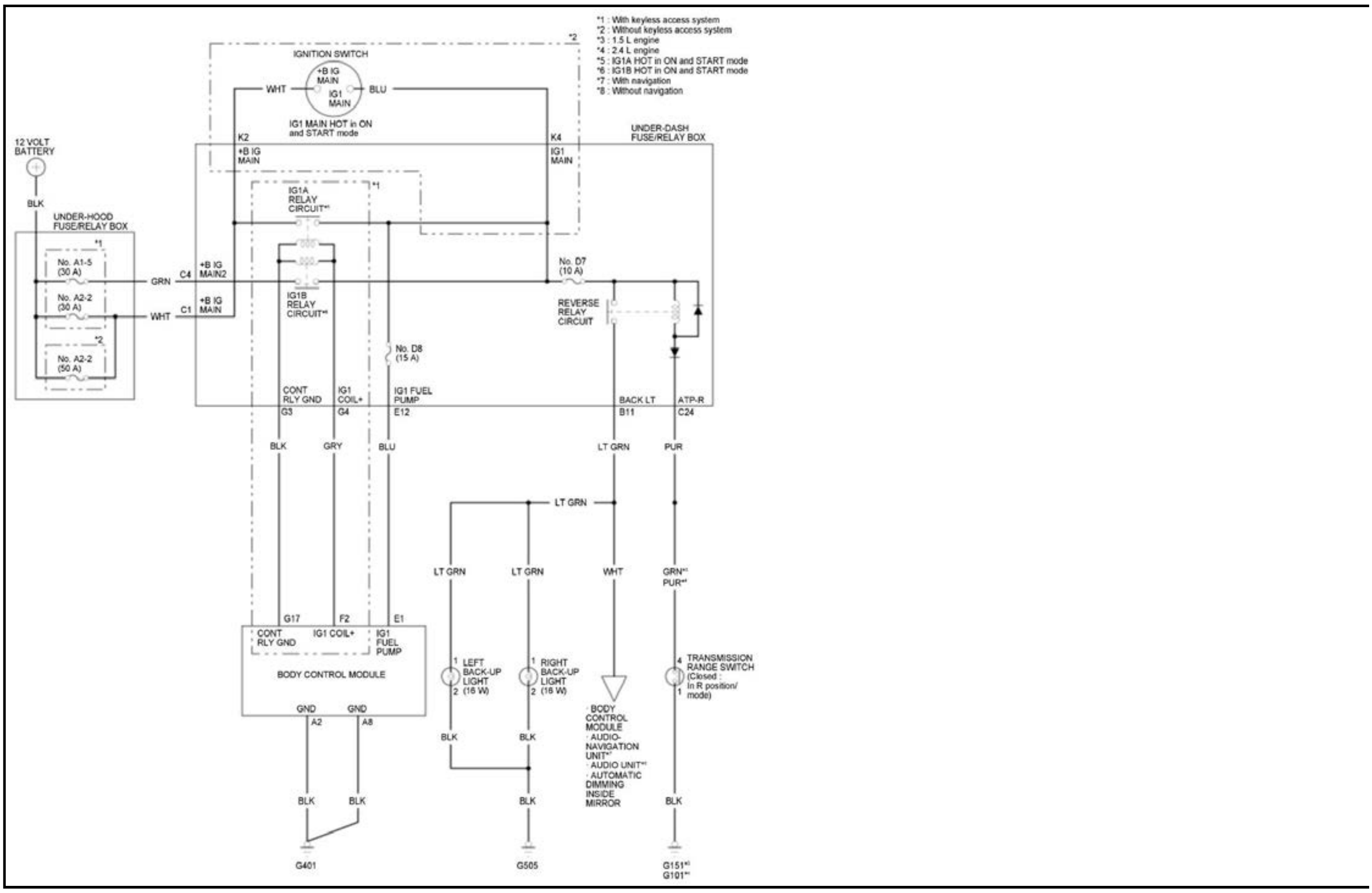
*1 : With keyless access system
*2 : Without keyless access system
*3 : 1.5 L engine
*4 : 2.4 L engine
*5 : IG1A HOT in ON and START mode
*6 : IG1B HOT in ON and START mode
*7 : With navigation
*8 : Without navigation
IGNITION SWITCH
+B IG MAIN
IG1 MAIN
WHT
BLU
IG1 MAIN HOT in ON and START mode
K2
+B IG MAIN
K4
IG1 MAIN
UNDER-DASH FUSE/RELAY BOX
12 VOLT BATTERY
BLK
UNDER-HOOD FUSE/RELAY BOX
No. A1-5 (30 A)
No. A2-2 (30 A)
No. A2-2 (50 A)
GRN
WHT
C4
+B IG MAIN2
C1
+B IG MAIN
IG1A RELAY CIRCUIT*5
IG1B RELAY CIRCUIT*6
No. D7 (10 A)
REVERSE RELAY CIRCUIT
No. D8 (15 A)
CONT RLY GND
IG1 COIL+
IG1 FUEL PUMP
BACK LT
ATP-R
G3
G4
E12
B11
C24
BLK
GRY
BLU
LT GRN
PUR
LT GRN
WHT
GRN*3
PUR*4
G17
F2
E1
CONT RLY GND
IG1 COIL+
IG1 FUEL PUMP
BODY CONTROL MODULE
GND
GND
A2
A8
LEFT BACK-UP LIGHT (16 W)
RIGHT BACK-UP LIGHT (16 W)
· BODY CONTROL MODULE
· AUDIO-NAVIGATION UNIT*7
· AUDIO UNIT*8
· AUTOMATIC DIMMING INSIDE MIRROR
TRANSMISSION RANGE SWITCH (Closed : In R position/ mode)
G401
G505
G151*3
G101*4

Brake Lights

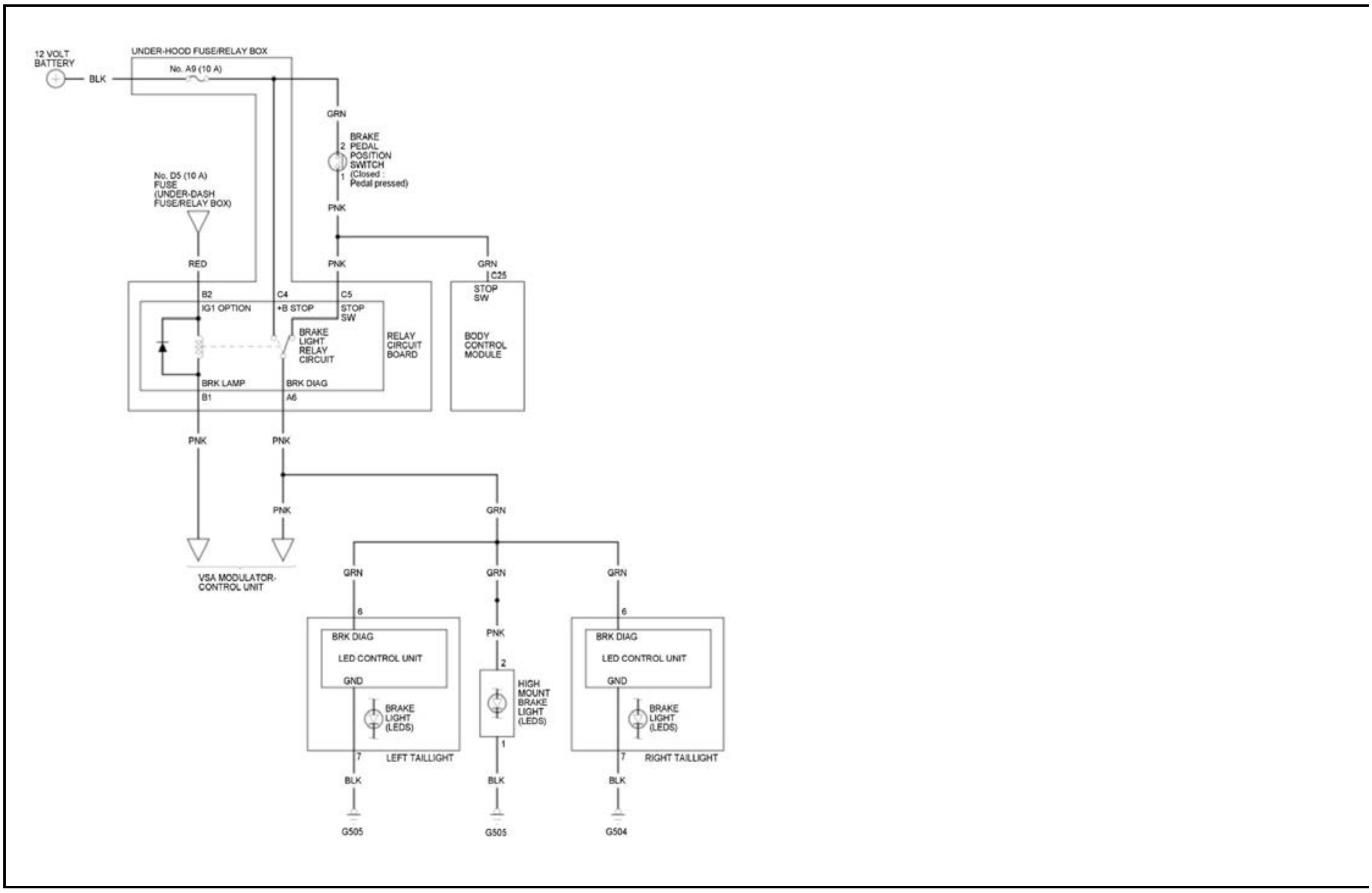
12 VOLT BATTERY
BLK
UNDER-HOOD FUSE/RELAY BOX
No. A9 (10 A)
GRN
BRAKE PEDAL POSITION SWITCH (Closed : Pedal pressed)
PNK
No. D5 (10 A) FUSE (UNDER-DASH FUSE/RELAY BOX)
RED
PNK
GRN
C25
B2
C4
C5
IG1 OPTION
+B STOP
STOP SW
BRAKE LIGHT RELAY CIRCUIT
RELAY CIRCUIT BOARD
STOP SW
BODY CONTROL MODULE
BRK LAMP
BRK DIAG
B1
A6
PNK
PNK
PNK
GRN
VSA MODULATOR-CONTROL UNIT
GRN
GRN
GRN
6
BRK DIAG
LED CONTROL UNIT
GND
BRAKE LIGHT (LEDS)
7
LEFT TAILLIGHT
PNK
2
HIGH MOUNT BRAKE LIGHT (LEDS)
1
6
BRK DIAG
LED CONTROL UNIT
GND
BRAKE LIGHT (LEDS)
7
RIGHT TAILLIGHT
BLK
BLK
BLK
G505
G505
G504

Fog Lights

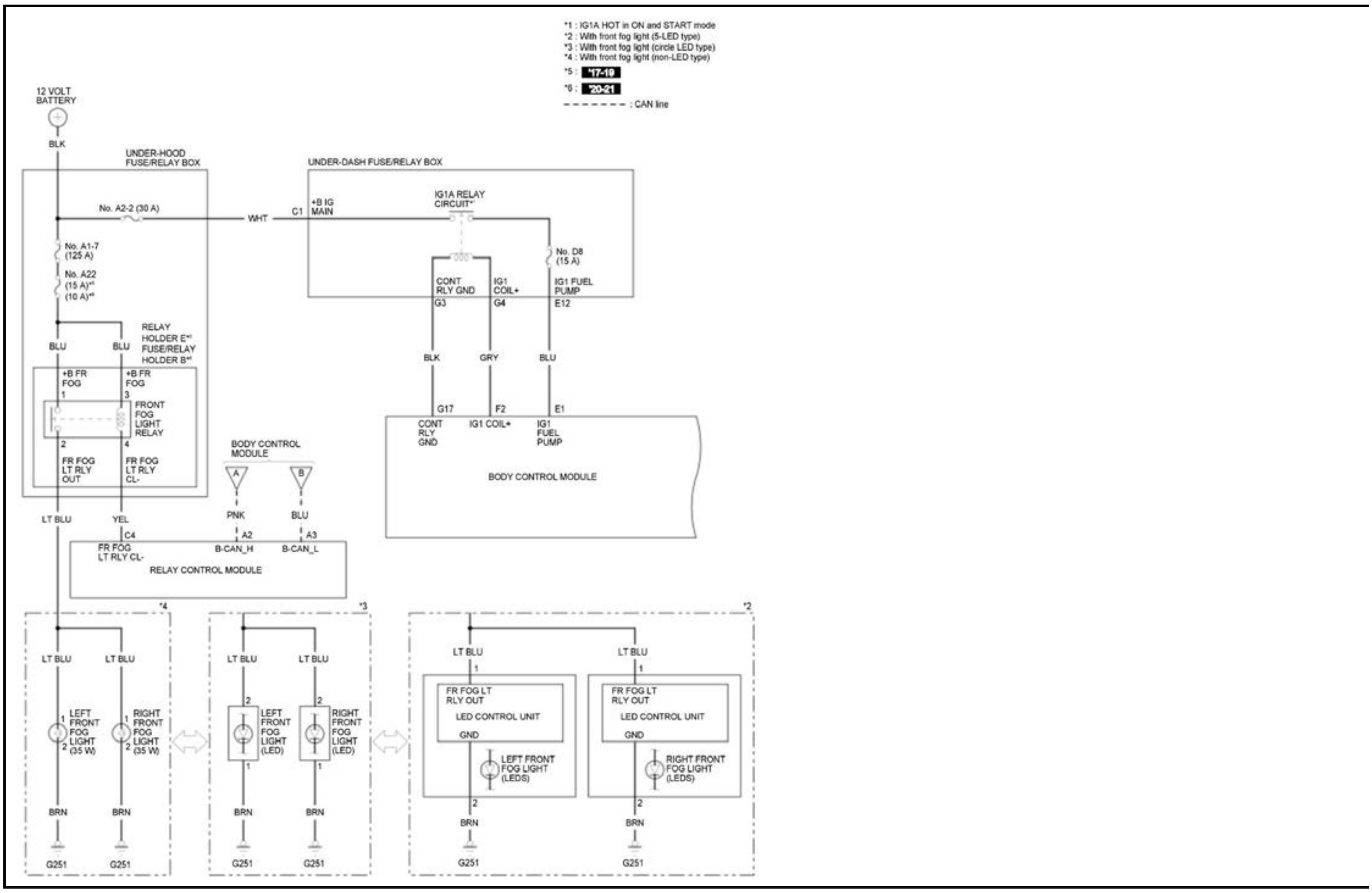
*1 : IG1A HOT in ON and START mode
*2 : With front fog light (5-LED type)
*3 : With front fog light (circle LED type)
*4 : With front fog light (non-LED type)
*5 : '17-19
*6 : '20-21
: CAN line
12 VOLT BATTERY
BLK
UNDER-HOOD FUSE/RELAY BOX
No. A2-2 (30 A)
No. A1-7 (125 A)
No. A22 (15 A)*5 (10 A)*6
WHT
C1
+B IG MAIN
UNDER-DASH FUSE/RELAY BOX
IG1A RELAY CIRCUIT*1
CONT RLY GND
IG1 COIL+
No. D8 (15 A)
IG1 FUEL PUMP
G3
G4
E12
BLK
GRY
BLU
G17
F2
E1
CONT RLY GND
IG1 COIL+
IG1 FUEL PUMP
BODY CONTROL MODULE
RELAY HOLDER E*5 FUSE/RELAY HOLDER B*6
BLU
BLU
+B FR FOG
+B FR FOG
1
3
FRONT FOG LIGHT RELAY
2
4
FR FOG LT RLY OUT
FR FOG LT RLY CL-
BODY CONTROL MODULE
A
B
PNK
BLU
LT BLU
YEL
C4
A2
A3
FR FOG LT RLY CL-
B-CAN_H
B-CAN_L
RELAY CONTROL MODULE
*4
*3
*2
LT BLU
LT BLU
LT BLU
LT BLU
LT BLU
LT BLU
LEFT FRONT FOG LIGHT (35 W)
RIGHT FRONT FOG LIGHT (35 W)
LEFT FRONT FOG LIGHT (LED)
RIGHT FRONT FOG LIGHT (LED)
FR FOG LT RLY OUT
LED CONTROL UNIT
GND
LEFT FRONT FOG LIGHT (LEDS)
FR FOG LT RLY OUT
LED CONTROL UNIT
GND
RIGHT FRONT FOG LIGHT (LEDS)
1
2
BRN
BRN
BRN
BRN
BRN
BRN
G251
G251
G251
G251
G251
G251

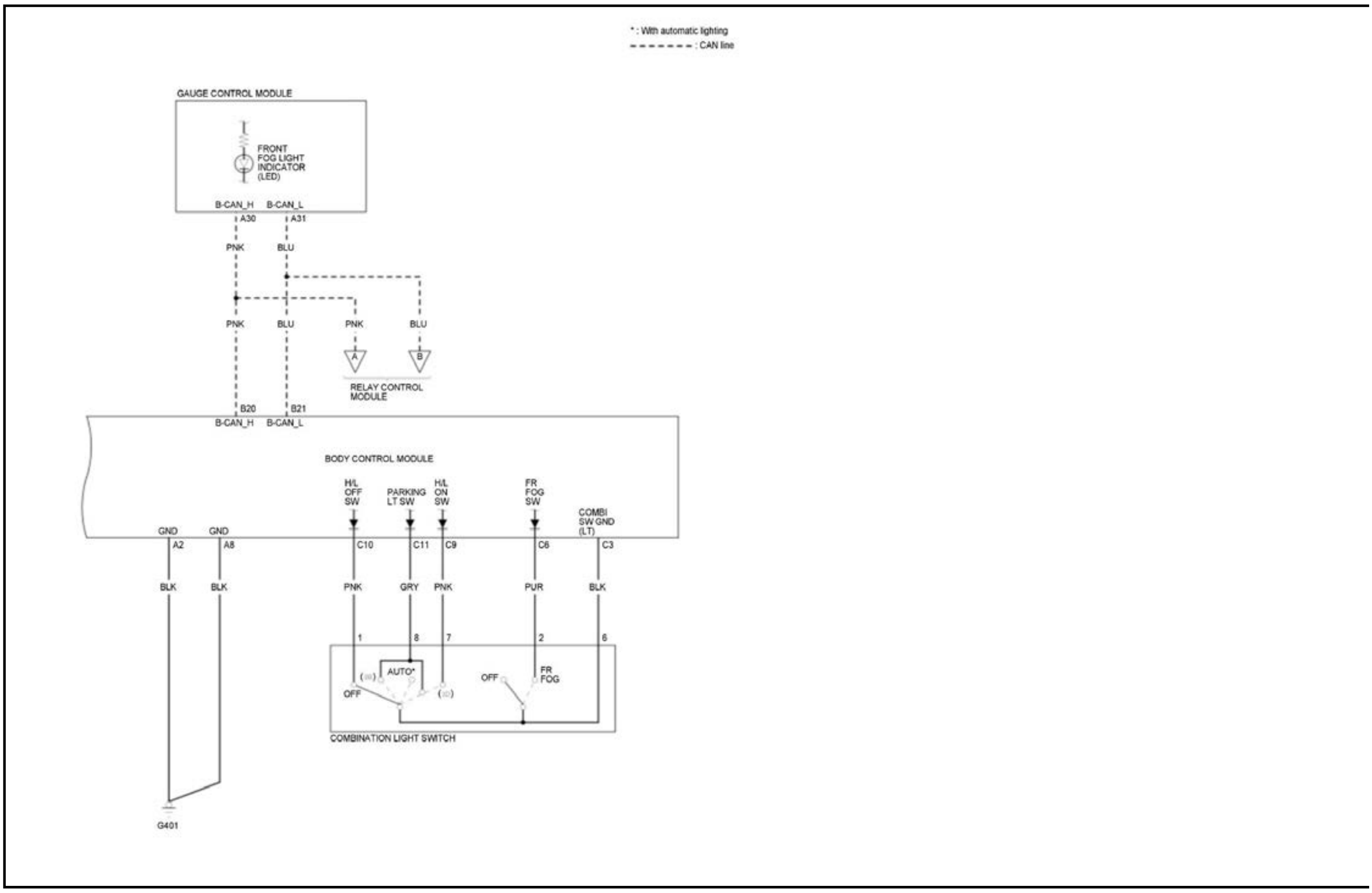
* : With automatic lighting
: CAN line
GAUGE CONTROL MODULE
FRONT FOG LIGHT INDICATOR (LED)
B-CAN_H
B-CAN_L
A30
A31
PNK
BLU
PNK
BLU
PNK
BLU
A
B
RELAY CONTROL MODULE
B20
B21
B-CAN_H
B-CAN_L
BODY CONTROL MODULE
H/L OFF SW
PARKING LT SW
H/L ON SW
FR FOG SW
COMBI SW GND (LT)
GND
GND
A2
A8
C10
C11
C9
C6
C3
BLK
BLK
PNK
GRY
PNK
PUR
BLK
1
8
7
2
6
AUTO*
OFF
OFF
FR FOG
COMBINATION LIGHT SWITCH
G401

TURN SIGNAL/HAZARD WARNING LIGHTS CIRCUIT DIAGRAM

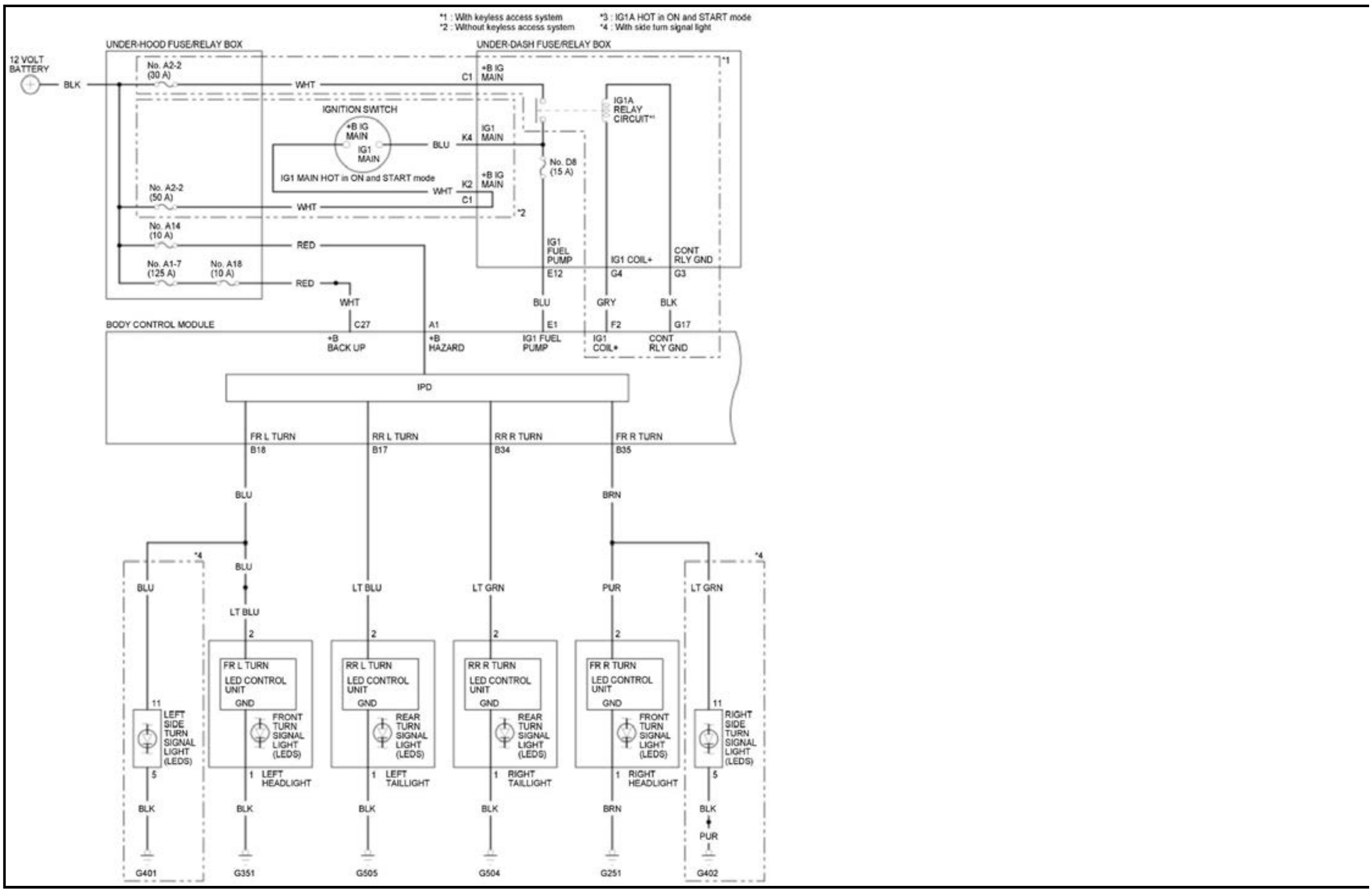
*1 : With keyless access system
*2 : Without keyless access system
*3 : IG1A HOT in ON and START mode
*4 : With side turn signal light
UNDER-HOOD FUSE/RELAY BOX
UNDER-DASH FUSE/RELAY BOX
12 VOLT BATTERY
BLK
No. A2-2 (30 A)
WHT
C1
+B IG MAIN
IG1A RELAY CIRCUIT*3
IGNITION SWITCH
+B IG MAIN
IG1 MAIN
BLU
K4
IG1 MAIN
No. D8 (15 A)
IG1 MAIN HOT in ON and START mode
WHT
K2
+B IG MAIN
C1
No. A2-2 (50 A)
WHT
*2
No. A14 (10 A)
RED
No. A1-7 (125 A)
No. A18 (10 A)
RED
IG1 FUEL PUMP
E12
IG1 COIL+
G4
CONT RLY GND
G3
WHT
BLU
GRY
BLK
BODY CONTROL MODULE
C27
+B BACK UP
A1
+B HAZARD
E1
IG1 FUEL PUMP
F2
IG1 COIL+
G17
CONT RLY GND
IPD
FR L TURN
B18
RR L TURN
B17
RR R TURN
B34
FR R TURN
B35
BLU
BRN
*4
BLU
BLU
LT BLU
LT BLU
LT GRN
PUR
LT GRN
2
FR L TURN LED CONTROL UNIT
GND
RR L TURN LED CONTROL UNIT
GND
RR R TURN LED CONTROL UNIT
GND
FR R TURN LED CONTROL UNIT
GND
11
LEFT SIDE TURN SIGNAL LIGHT (LEDS)
5
FRONT TURN SIGNAL LIGHT (LEDS)
1
LEFT HEADLIGHT
REAR TURN SIGNAL LIGHT (LEDS)
LEFT TAILLIGHT
REAR TURN SIGNAL LIGHT (LEDS)
RIGHT TAILLIGHT
FRONT TURN SIGNAL LIGHT (LEDS)
RIGHT HEADLIGHT
RIGHT SIDE TURN SIGNAL LIGHT (LEDS)
BLK
BLK
BLK
BLK
BRN
BLK
PUR
G401
G351
G505
G504
G251
G402

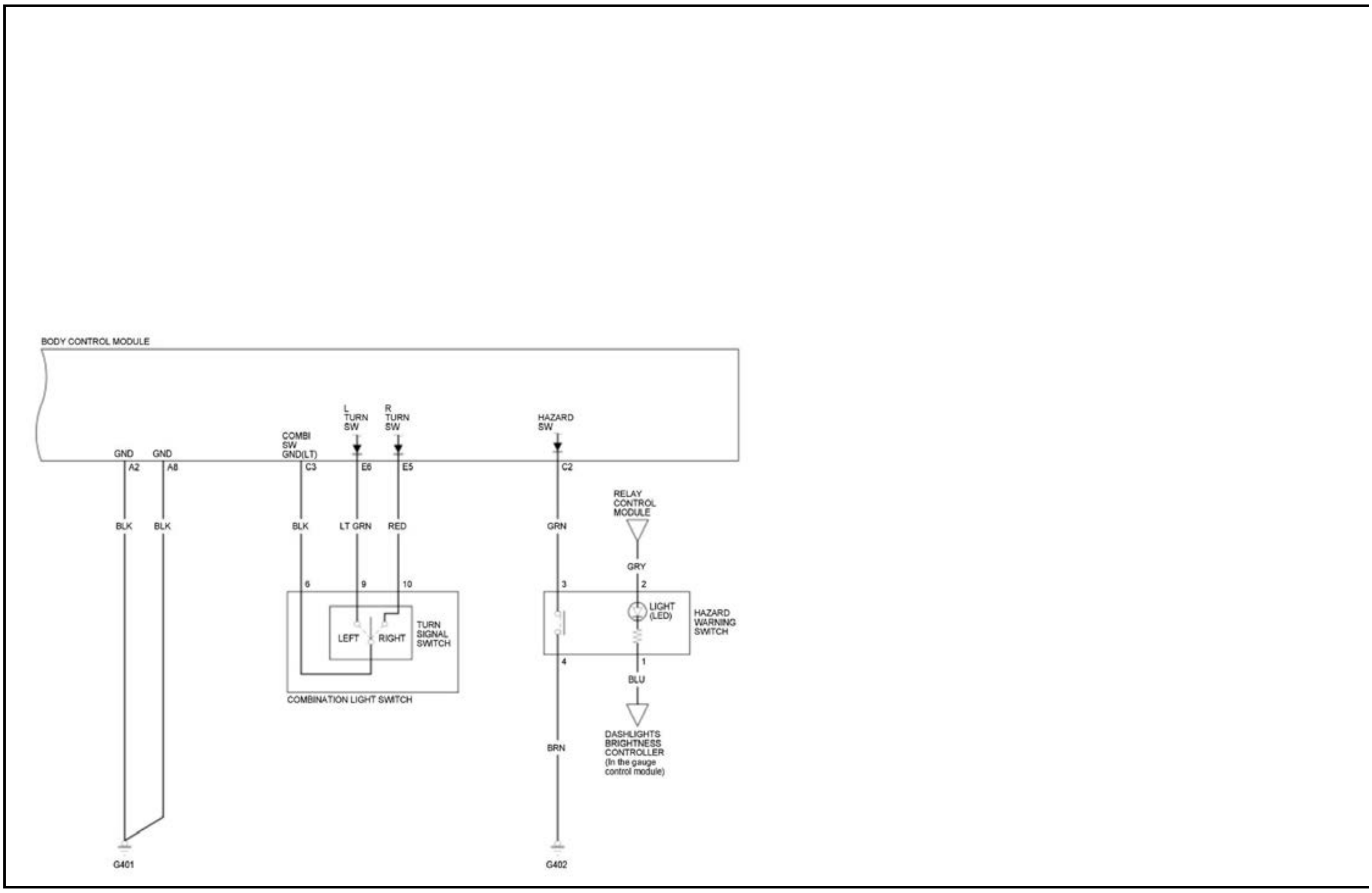
BODY CONTROL MODULE
GND
GND
A2
A8
COMBI SW GND(LT)
C3
L TURN SW
E6
R TURN SW
E5
HAZARD SW
C2
BLK
BLK
BLK
LT GRN
RED
GRN
RELAY CONTROL MODULE
GRY
6
9
10
LEFT
RIGHT
TURN SIGNAL SWITCH
COMBINATION LIGHT SWITCH
3
2
LIGHT (LED)
HAZARD WARNING SWITCH
4
1
BLU
DASHLIGHTS BRIGHTNESS CONTROLLER (In the gauge control module)
BRN
G401
G402

COMPONENT LOCATION INDEX

AUTO HIGH-BEAM (HIGH-BEAM SUPPORT SYSTEM) COMPONENT LOCATION INDEX

For relationships between signals in a system, refer to System Diagram.

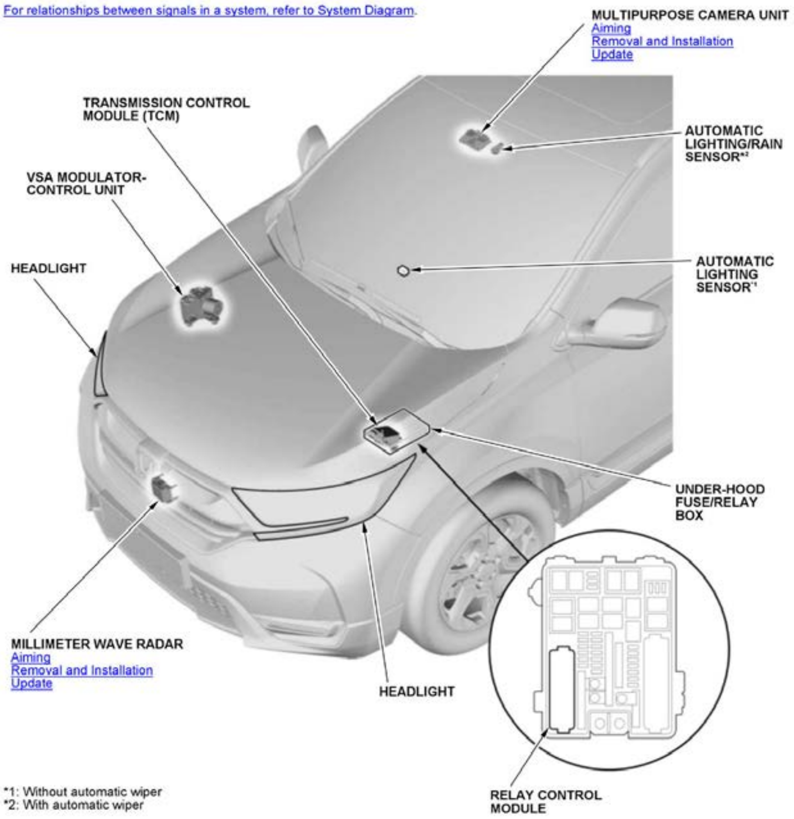
MULTIPURPOSE CAMERA UNIT
Aiming
Removal and Installation
Update
TRANSMISSION CONTROL MODULE (TCM)
AUTOMATIC LIGHTING/RAIN SENSOR*2
VSA MODULATOR-CONTROL UNIT
HEADLIGHT
AUTOMATIC LIGHTING SENSOR*1
UNDER-HOOD FUSE/RELAY BOX
MILLIMETER WAVE RADAR
Aiming
Removal and Installation
Update
HEADLIGHT
RELAY CONTROL MODULE

*1: Without automatic wiper
*2: With automatic wiper

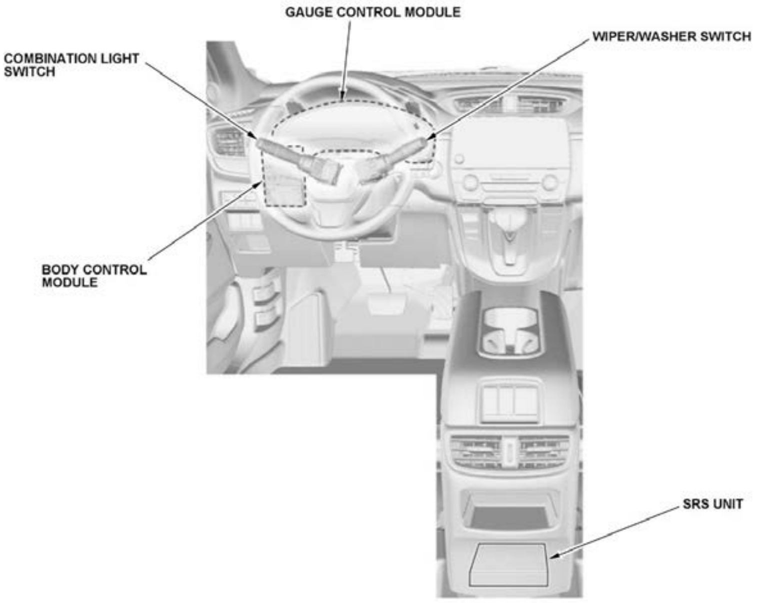
GAUGE CONTROL MODULE
COMBINATION LIGHT SWITCH
WIPER/WASHER SWITCH
BODY CONTROL MODULE
SRS UNIT

EXTERIOR LIGHTS COMPONENT LOCATION INDEX

For relationships between signals in a system, refer to System Diagram.

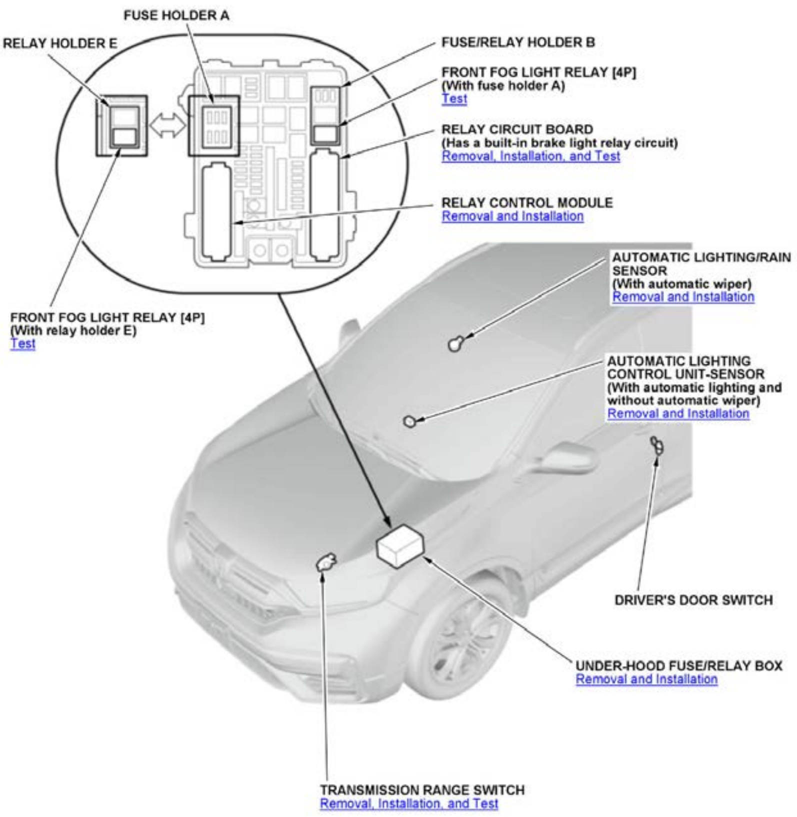
FUSE HOLDER A
RELAY HOLDER E
FUSE/RELAY HOLDER B
FRONT FOG LIGHT RELAY [4P] (With fuse holder A) Test
RELAY CIRCUIT BOARD (Has a built-in brake light relay circuit) Removal, Installation, and Test
RELAY CONTROL MODULE Removal and Installation
AUTOMATIC LIGHTING/RAIN SENSOR (With automatic wiper) Removal and Installation
FRONT FOG LIGHT RELAY [4P] (With relay holder E) Test
AUTOMATIC LIGHTING CONTROL UNIT-SENSOR (With automatic lighting and without automatic wiper) Removal and Installation
DRIVER'S DOOR SWITCH
UNDER-HOOD FUSE/RELAY BOX Removal and Installation
TRANSMISSION RANGE SWITCH Removal, Installation, and Test

Headlight (HIGH/LOW) (bulb type)

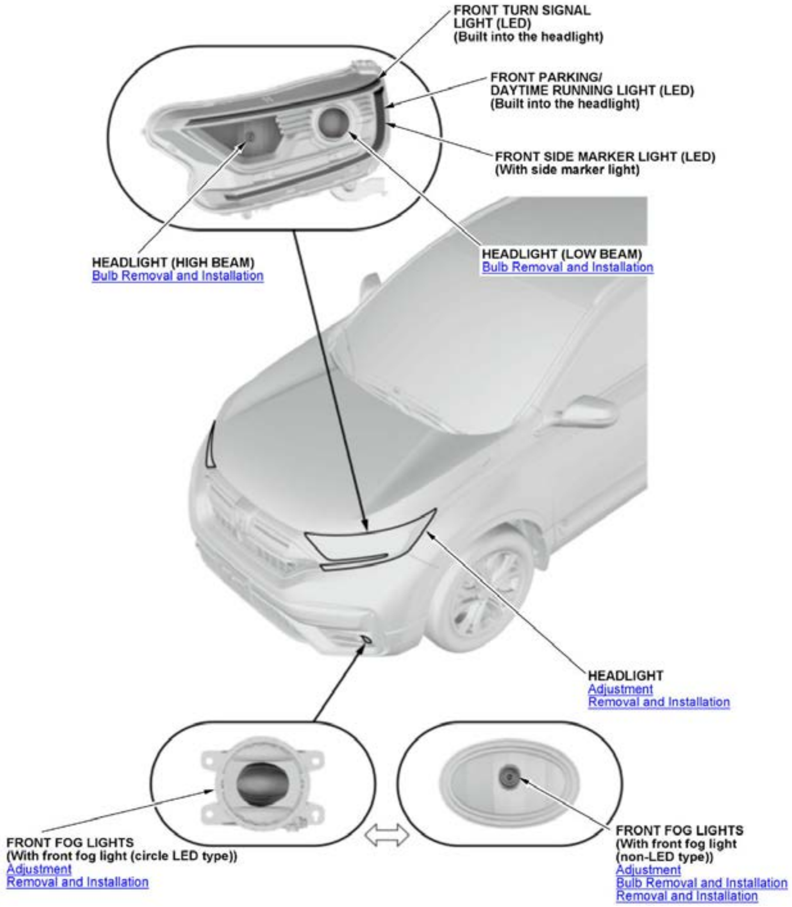
FRONT TURN SIGNAL LIGHT (LED) (Built into the headlight)
FRONT PARKING/ DAYTIME RUNNING LIGHT (LED) (Built into the headlight)
FRONT SIDE MARKER LIGHT (LED) (With side marker light)
HEADLIGHT (HIGH BEAM) Bulb Removal and Installation
HEADLIGHT (LOW BEAM) Bulb Removal and Installation
HEADLIGHT Adjustment Removal and Installation
FRONT FOG LIGHTS (With front fog light (circle LED type)) Adjustment Removal and Installation
FRONT FOG LIGHTS (With front fog light (non-LED type)) Adjustment Bulb Removal and Installation Removal and Installation

Headlight (HIGH/LOW) (LED type)

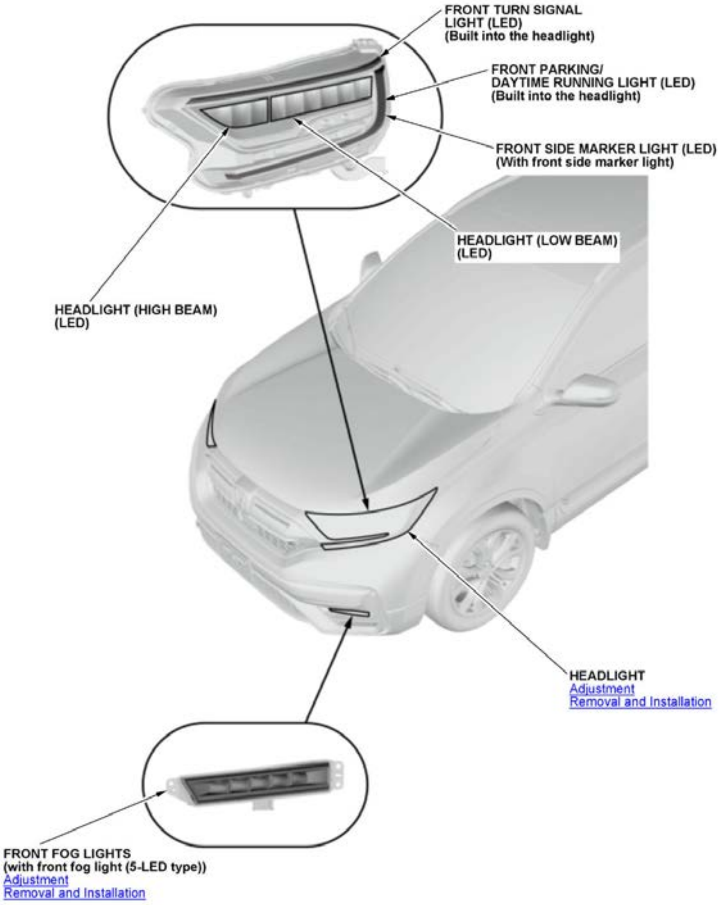
FRONT TURN SIGNAL LIGHT (LED) (Built into the headlight)
FRONT PARKING/ DAYTIME RUNNING LIGHT (LED) (Built into the headlight)
FRONT SIDE MARKER LIGHT (LED) (With front side marker light)
HEADLIGHT (LOW BEAM) (LED)
HEADLIGHT (HIGH BEAM) (LED)
HEADLIGHT
Adjustment
Removal and Installation
FRONT FOG LIGHTS (with front fog light (5-LED type))
Adjustment
Removal and Installation

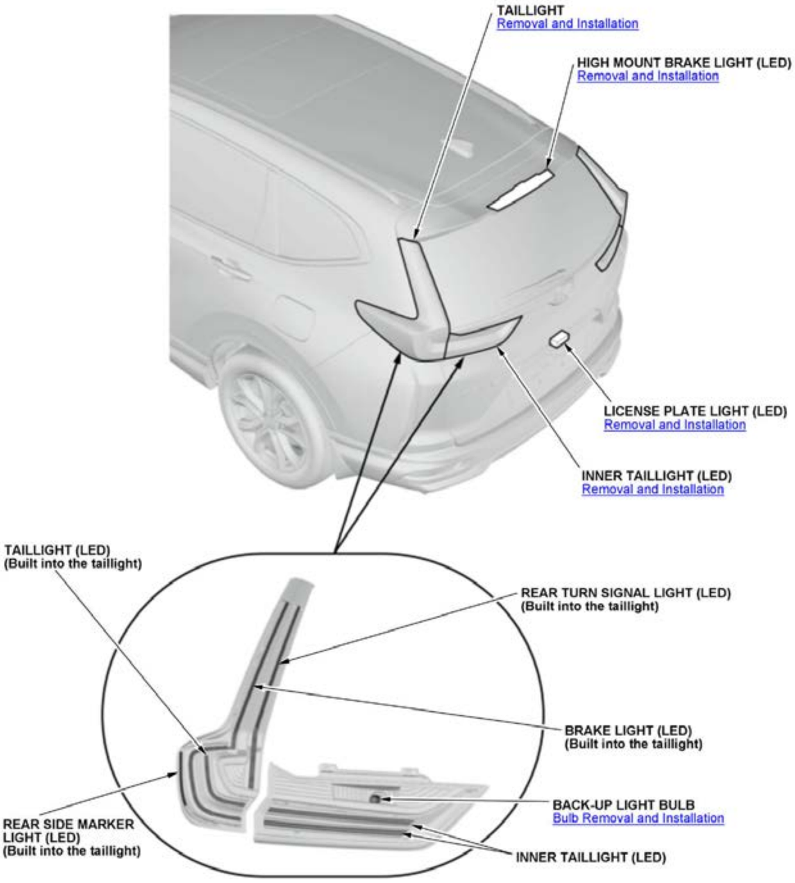
TAILLIGHT
Removal and Installation
HIGH MOUNT BRAKE LIGHT (LED)
Removal and Installation
LICENSE PLATE LIGHT (LED)
Removal and Installation
INNER TAILLIGHT (LED)
Removal and Installation
TAILLIGHT (LED) (Built into the taillight)
REAR TURN SIGNAL LIGHT (LED) (Built into the taillight)
BRAKE LIGHT (LED) (Built into the taillight)
BACK-UP LIGHT BULB
Bulb Removal and Installation
REAR SIDE MARKER LIGHT (LED) (Built into the taillight)
INNER TAILLIGHT (LED)

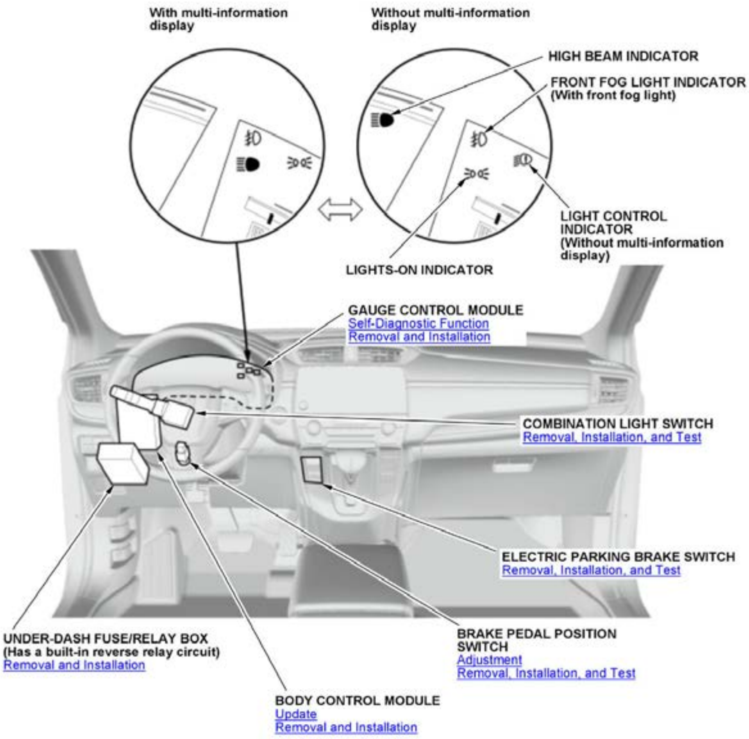
With multi-information display
Without multi-information display
HIGH BEAM INDICATOR
FRONT FOG LIGHT INDICATOR (With front fog light)
LIGHT CONTROL INDICATOR (Without multi-information display)
LIGHTS-ON INDICATOR
GAUGE CONTROL MODULE
Self-Diagnostic Function
Removal and Installation
COMBINATION LIGHT SWITCH
Removal, Installation, and Test
ELECTRIC PARKING BRAKE SWITCH
Removal, Installation, and Test
UNDER-DASH FUSE/RELAY BOX (Has a built-in reverse relay circuit)
Removal and Installation
BRAKE PEDAL POSITION SWITCH
Adjustment
Removal, Installation, and Test
BODY CONTROL MODULE
Update
Removal and Installation

TURN SIGNAL/HAZARD WARNING LIGHTS COMPONENT LOCATION INDEX

HIGH/LOW beam (Halogen type)

For relationships between signals in a system, refer to System Diagram.

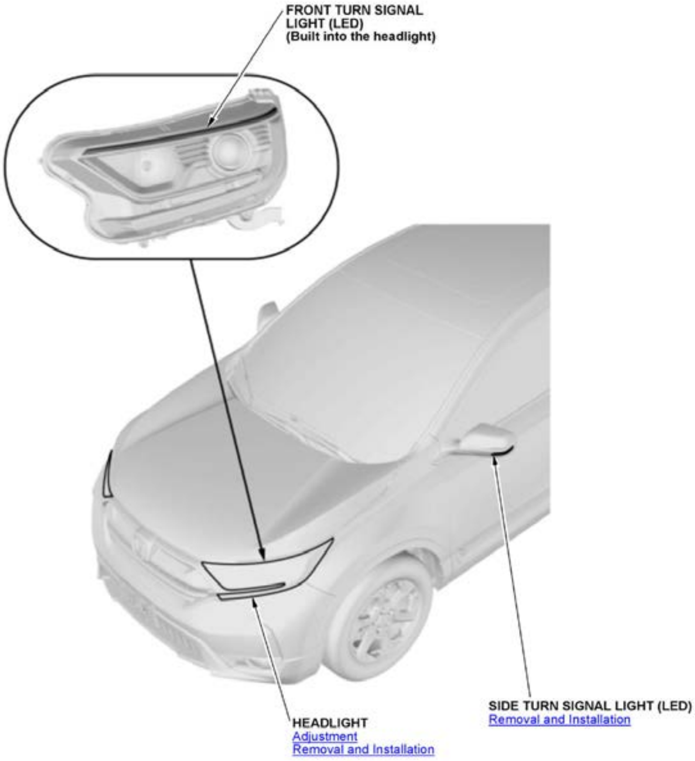
FRONT TURN SIGNAL LIGHT (LED) (Built into the headlight)
SIDE TURN SIGNAL LIGHT (LED)
Removal and Installation
HEADLIGHT
Adjustment
Removal and Installation

HIGH/LOW beam (LED type)

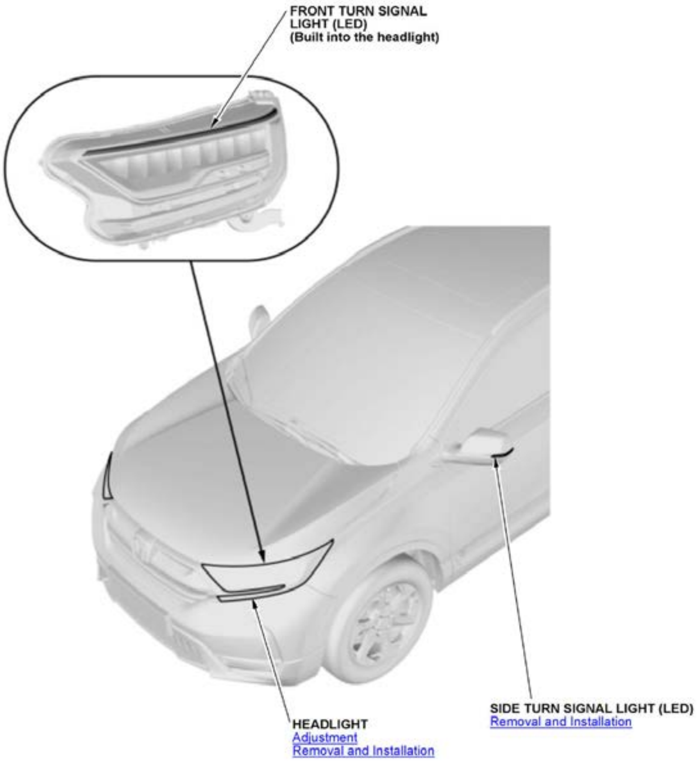
FRONT TURN SIGNAL LIGHT (LED) (Built into the headlight)
SIDE TURN SIGNAL LIGHT (LED)
Removal and Installation
HEADLIGHT
Adjustment
Removal and Installation

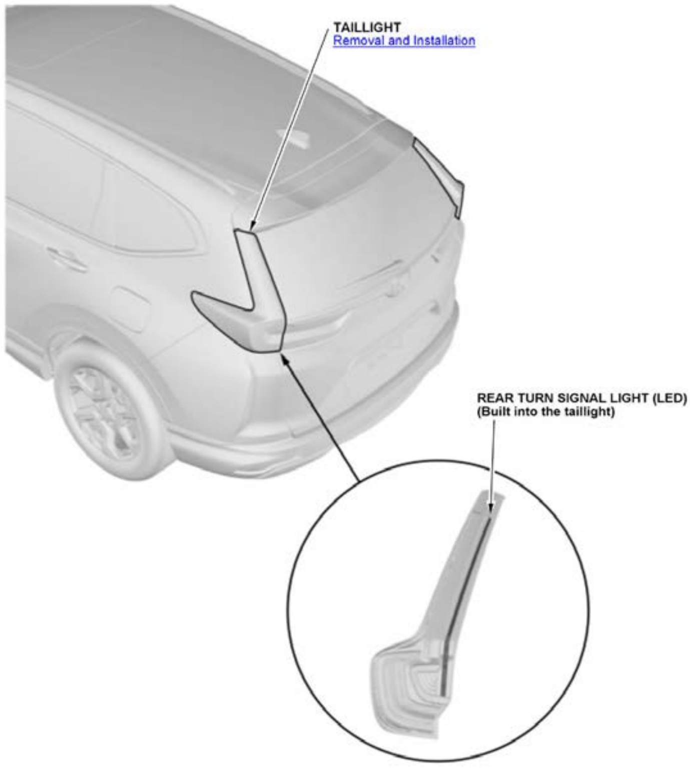
TAILLIGHT
Removal and Installation
REAR TURN SIGNAL LIGHT (LED) (Built into the taillight)

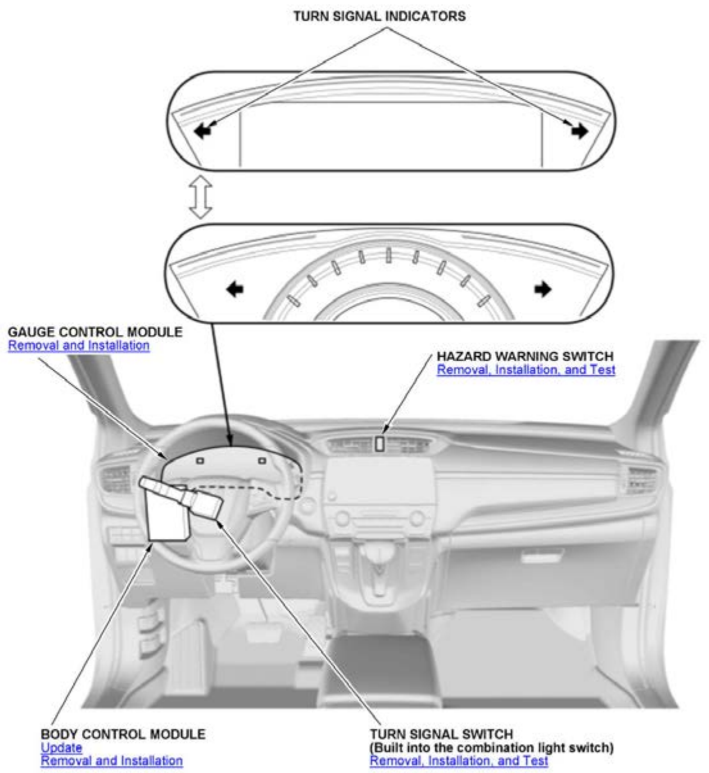
TURN SIGNAL INDICATORS
GAUGE CONTROL MODULE
Removal and Installation
HAZARD WARNING SWITCH
Removal, Installation, and Test
BODY CONTROL MODULE
Update
Removal and Installation
TURN SIGNAL SWITCH
(Built into the combination light switch)
Removal, Installation, and Test

SYMPTOM TROUBLESHOOTING

EXTERIOR LIGHTS SYMPTOM TROUBLESHOOTING - LED HEADLIGHT DOES NOT COME ON

LED headlight does not come on

1. DTC check 1

   -1. Clear the DTCs with the HDS.

   -2. Turn the vehicle to the OFF (LOCK) mode then the ON mode.

   -3. Wait for at least 10 seconds.

   -4. Check for Relay Control Module DTCs with the HDS.

   DTC (Relay Control Module)

DTC Description	DTC
Â	Â

   Are any DTCs indicated?

   YES

   Go to the indicated DTC's troubleshooting .

   NO

   Go to step 2.

2. DTC check 2

   -1. Connect the HDS to the data link connector (DLC) .

   -2. Check for Body Control Module DTCs with the HDS.

DTC Description	DTC
Â	Â

   Are any DTCs indicated?

   YES

   Go to the indicated DTC's troubleshooting .

   NO

   Go to step 3.

3. Combination light switch HEADLIGHT position check

-1. Turn the combination light switch ON.

-2. Check the parameter(s) below with the HDS.

Signal	Threshold		Current conditio	
	Values	Unit	Values	
Headlight Switch (HEADLIGHT)	ON	Â	Â	Â

Is data list values correct?

YES

Intermittent failure, the system is OK at this time. Check for loose or poor connections.

NO

Go to step 4.

4. Combination light switch check

-1. Turn the vehicle to the OFF (LOCK) mode.

-2. **Do the combination light switch test** .

Is the switch OK?

YES

Go to step 5.

NO

Replace the combination light switch .

5. Open wire check (H/L ON SW line) 1

-1. Measure the voltage between test points 1 and 2.

Test condition	Vehicle OFF (LOCK) modeCombination light switch 12P connector: disconnected
Test point 1	Combination light switch 12P connector (female terminals) No. 7: ①

Test point 2	Body ground

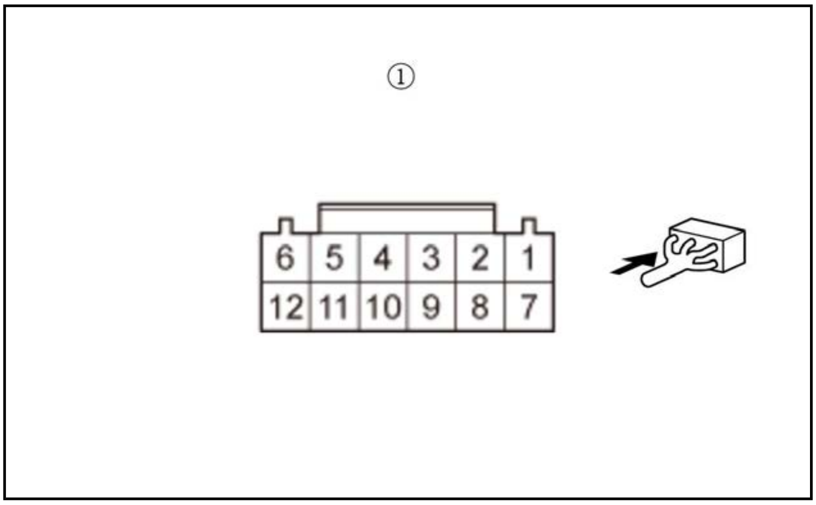

Is there battery voltage?

YES

Go to step 6.

NO

Go to step 7.

6. Open wire check (COMBI SW GND(LT) line)

-1. Check for continuity between test points 1 and 2.

Test condition	Vehicle OFF (LOCK) modeCombination light switch 12P connector: disconnected
Test point 1	Combination light switch 12P connector (female terminals) No. 6: ①
Test point 2	Body ground

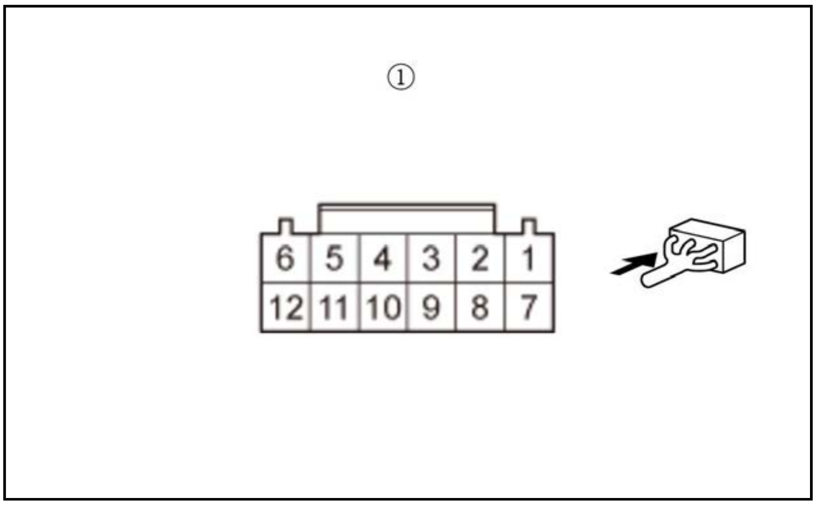

Is there continuity?

YES

The COMBI SW GND(LT) wire is OK. Faulty combination light switch; **replace the combination light switch** .

NO

Repair an open or high resistance in the wire.

7. Open wire check (H/L ON SW line) 2

   -1. Disconnect the following connector.

Body control module connector C (28P)

   -2. Check for continuity between test points 1 and 2.

Test condition	Vehicle OFF (LOCK) modeCombination light switch 12P connector: disconnectedBody control module connector C (28P): disconnected
Test point 1	Combination light switch 12P connector (female terminals) No. 7: ①
Test point 2	**Body control module connector C (28P) No. 9**

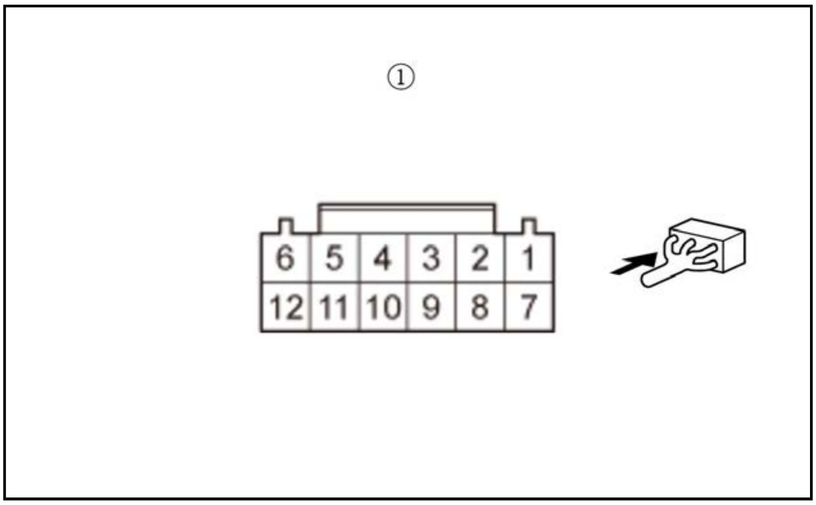

Is there continuity?

YES

The H/L ON SW wire is OK. **Replace the body control module** .

NO

Repair an open or high resistance in the wire.

EXTERIOR LIGHTS SYMPTOM TROUBLESHOOTING - LED HEADLIGHT DOES NOT GO OFF

LED headlight does not go off

1. Combination light switch OFF position check

   -1. **Connect the HDS to the data link connector (DLC)** .

   -2. Turn the combination light switch OFF.

   -3. Check the parameter(s) below with the HDS.

Signal	Threshold		Current conditio	
	Values	Unit	Values	
Headlight Switch (HEADLIGHT)	OFF	Â	Â	Â

Is data list values correct?

YES

Go to step 4.

NO

Go to step 2.

2. Combination light switch check

-1. Turn the vehicle to the OFF (LOCK) mode.

-2. **Do the combination light switch test** .

Is the switch OK?

YES

Go to step 3.

NO

Replace the combination light switch .

3. Shorted wire check (H/L ON SW line)

-1. Disconnect the following connectors.

Body control module connector C (28P)Automatic lighting/rain sensor 5P connector (with automatic wiper)Automatic lighting control unit-sensor 5P connector (with automatic lighting and without automatic wiper)

-2. Check for continuity between test points 1 and 2.

Test condition	Vehicle OFF (LOCK) modeCombination light switch 12P connector: disconnectedBody control module connector C (28P): disconnectedAutomatic lighting/rain sensor 5P connector (with automatic wiper): disconnectedAutomatic lighting control unit-sensor 5P connector (with automatic lighting and without automatic wiper): disconnected
Test point 1	Combination light switch 12P connector (female terminals) No. 7: ①
Test point 2	Body ground

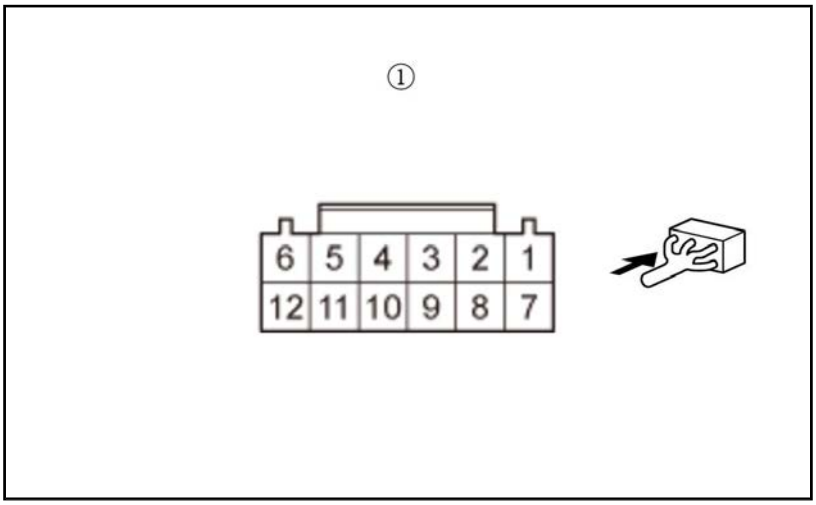

Is there continuity?

YES

Repair a short to ground in the wire.

NO

The H/L ON SW wire is OK. **Replace the body control module** .

4. DTC check

-1. Clear the DTCs with the HDS.

-2. Turn the vehicle to the OFF (LOCK) mode then the ON mode.

-3. Wait for at least 10 seconds.

-4. Check for Relay Control Module DTCs with the HDS.

DTC (Relay Control Module)

DTC Description	DTC
Â	Â

Are any DTCs indicated?

YES

Go to the indicated DTC's troubleshooting .

NO

Repair a short to power in the H/L HI or H/L LO wire.

HOW TO INFORMATION

HOW TO TROUBLESHOOT THE AUTO HIGH-BEAM (HIGH-BEAM SUPPORT SYSTEM)

Auto High-Beam Indicator (Green)

When the Auto High-Beam is OK, the Auto High-Beam indicates its operation on the gauge control module as below.

NOTE:

- For Auto High-Beam function, review the Auto High-Beam Description.
- The Auto High-Beam communication with other control units via F-CAN. For Auto High-Beam diagram, review the Auto High-Beam Diagram. If a connected the Auto High-Beam will not operate. In this case, both Auto High-Beam indicator and connected unit indicator come on and stay on (except for the gauge contro

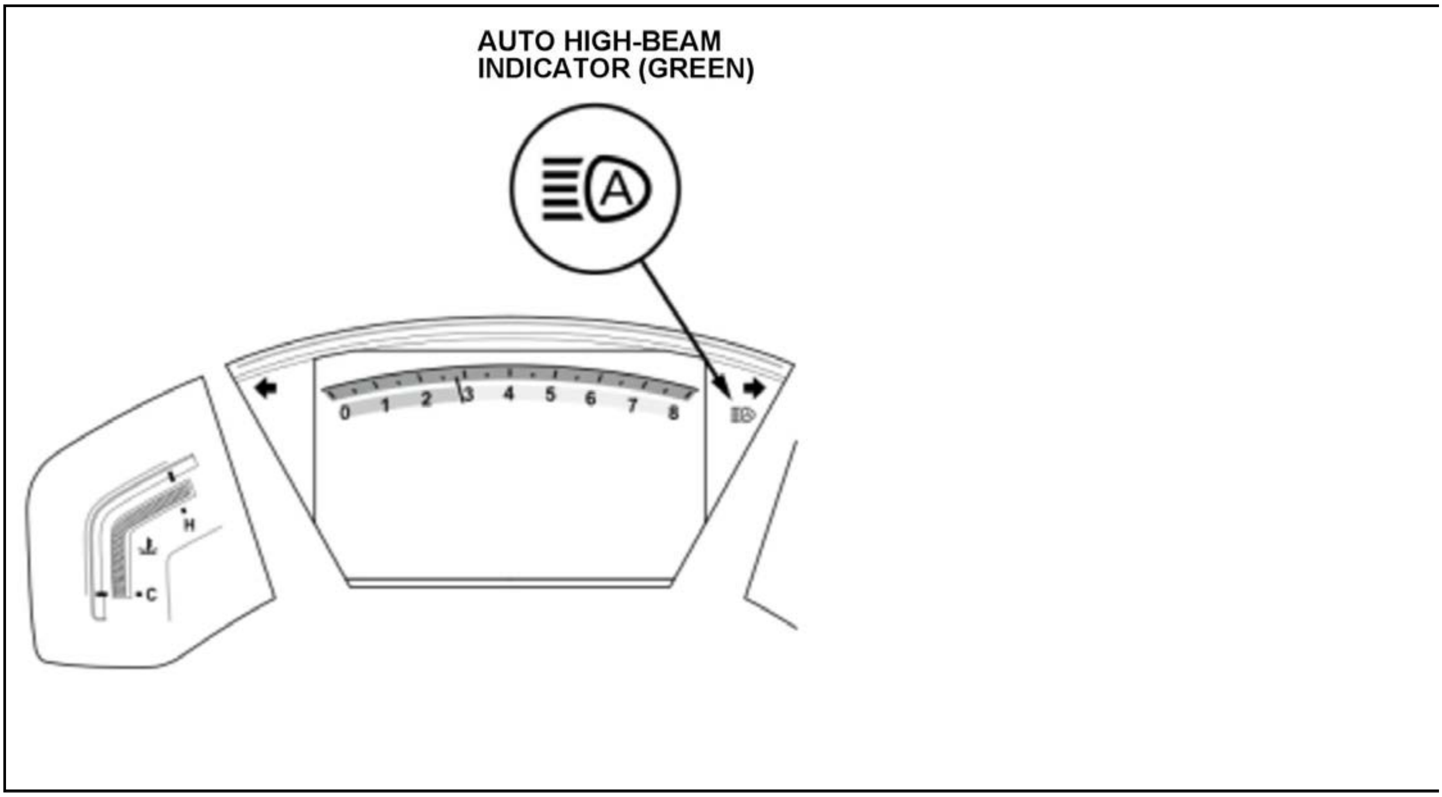

Self-Diagnostic Function

The Auto High-Beam has a self-diagnostic function. If a malfunction of the Auto High-Beam detects a problem while in operation, a warning message is displayed on th display (MID), the Auto High-Beam stops operating, and stores DTCs.

NOTE: The Auto High-Beam operates while maintaining a mutual connection between the multipurpose camera unit at the control origin and the other control units (re body control unit, gauge control module, automatic lighting/rain sensor, etc.). If malfunctions occur in these control unit systems, the Auto High-Beam does not operate warning indicator of the related control unit turn on and a warning message is displayed on the multi-information display (MID).

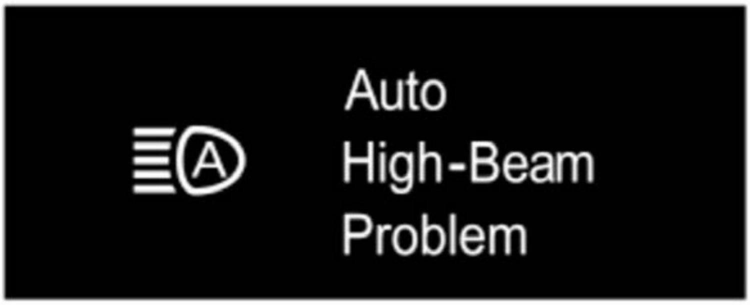
Auto
High-Beam
Problem

Dirt or dust detective function (CLEAN FRONT WINDSHIELD Indication)

If the message appears on the MID, the camera lens or the windshield has enough dirt so that the camera view is obstructed. The Auto High-Beam stops operating.

Clean any dirt or contamination on the camera lens or the windshield. Once the camera's view is unobstructed, the MID turns off and the Auto High-Beam automatically

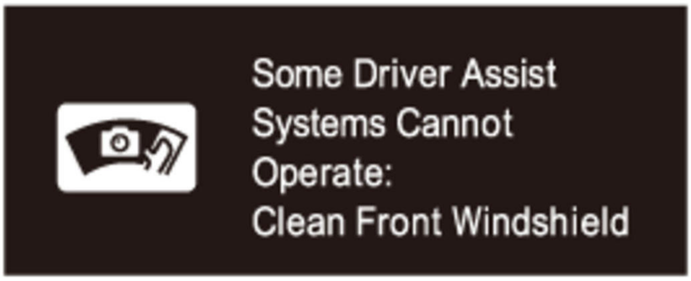
Some Driver Assist
Systems Cannot
Operate:
Clean Front Windshield

Multipurpose Camera unit

The Auto High-Beam of this vehicle is controlled by the multipurpose camera unit. If an error or malfunction of the multipurpose camera unit occurs, the Auto High-Be
At this time, a warning message is displayed on the multi-information display (MID). The operations of the Auto High-Beam corresponding to the multipurpose camera
can be checked in the **DTC troubleshooting index** .

The multipurpose camera unit also has an error detection function which sends a signal to the millimeter wave radar if an error is detected. The millimeter wave radar re
information from the multipurpose camera unit.

System Protect Function (High temperature) (MULTIPURPOSE CAMERA HOT Indication)

If the message Some Driver Assist Systems Cannot Operate: Camera Temperature Too High appears on the MID, the Auto High-Beam stops operating, and stores a DT

When the multipurpose camera temperature cools down to its proper operating temperature, the indicator on the MID turns off, and the Auto High-Beam automatically

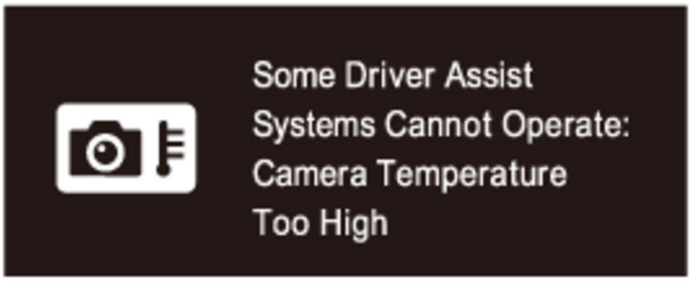
Some Driver Assist
Systems Cannot Operate:
Camera Temperature
Too High

Multipurpose Camera Aiming Function

If the multipurpose camera unit is removed or replaced, you must do the multipurpose camera aiming procedure. If the aiming is incomplete, the Auto High-Beam indic

CAN communication

The Auto High-Beam communicates with other control units via F-CAN. For Auto High-Beam diagram, **review the Auto High-Beam Diagram**.

If the multipurpose camera unit detects a communication error or a malfunction in another connected unit, the Auto High-Beam will not operate even though it is OK. I
Auto High-Beam indicator and the related unit indicator will come on and stay on.

Intermittent Failures

The term "intermittent failure" means a system may have had a failure, but it checks OK now. If you cannot reproduce the condition, check for intermittent failure DTC
failure DTCs are not stored, check for loose connections and terminals. Also check ground and power connections related to the circuit that you are troubleshooting.

How to Troubleshoot DTCs

Check the DTCs with the HDS.

NOTE: For Auto High-Beam DTCs, **refer to the DTC troubleshooting index** .

Before troubleshooting, check and note these items:

- Ask the customer about the conditions when the problem occurred, and try to reproduce the same conditions for troubleshooting.
- If the symptom does not appear and the Auto High-Beam indicator does not come on while test-driving, but your troubleshooting was based on the DTC, check f or loose terminals at all connectors related to the circuit that you are troubleshooting.
- After the troubleshooting or repairs are done, clear the DTCs, and test-drive the vehicle under the same conditions as when the DTC was originally set. Make sure Beam warning message does not come on.
- The Auto High-Beam sometimes stops operating because of the environment (weather, road conditions, driving conditions, etc.). Intermittent failure DTCs may b cases.

How to Retrieve DTCs

NOTE:

- Make sure the 12 volt battery is fully charged before you begin.
- The Auto High-Beam of this vehicle is controlled by the multipurpose camera unit. For this reason, the Auto High-Beam may not operate normally depending on status of the multipurpose camera unit. The operations of the Auto High-Beam related to the multipurpose camera unit malfunctions can be checked in the trouble **DTC for the millimeter wave radar** .

1. **Connect the HDS**

2. Use the HDS to check for Integrated Driver Support System for DTCs.

3. Read and record the DTC:4. Turn the vehicle to the OFF (LOCK) mode.

5. Disconnect the HDS.

6. Do the troubleshooting procedure for the DTC.

How to Clear DTCs

NOTE: Make sure the 12 volt battery is fully charged before you begin.

1. **Connect the HDS**

2. In the DRIVING SUPPORT MENU of the HDS, select Integrated Driver Support System, then choose the clear DTCs icon, and follow the prompts.

3. Turn the vehicle to the OFF (LOCK) mode.

4. Disconnect the HDS.

DESCRIPTION & OPERATION

AUTO HIGH-BEAM (HIGH-BEAM SUPPORT SYSTEM) DESCRIPTION

Overview

The system operates by switching the high beam and low beam automatically depending on the road condition of vehicles running ahead and opposite vehicles, using th camera unit.

Operating Conditions

- The combination light switch is in the AUTO position.
- The headlight low beam is turned on.
- White and red light sources are not detected ahead.
- 2 or more streetlights have not been detected.
- The vehicle speed is above 25 mph (40 km/h).
- There is no halation state in front of the vehicle.
- There is no manual operation input of the combination light switch.

NOTE: Weather and road conditions (undulation, curve, or environment illuminance etc.) may affect system operation.

Stopping Condition

The system stops operation under the following conditions.

- When the combination light switch is turned to other than the AUTO position.
- When the dimmer switch is operated.
- When the vehicle speed is low:
-
  - -

    Less than 6 mph (10 km/h)
  - -

    Less than 15 mph (24 km/h) condition continues more than four seconds.

Conditions that the System Switches to Low Beam

- When there are objects that are emitting lights such as streetlights, house lights, advertising display lighting, signages, vending machines, or other reflecting light.
- When there are objects emitting lights on the road similar to the taillights of vehicles driving ahead or headlights of opposing vehicles.
- When the red lights of the traffic signals are detected.
- When the front wiper motor operates at HIGH for 5 seconds.

Conditions that Switching Timing to Low Beam is Changed

- When the taillights of the vehicle driving ahead are bright or dark.
- When the headlights of the opposite vehicle are bright or dark.
- In rainy, snowy, and foggy weather.

Detection Range and Limits

The multipurpose camera unit recognizes and reacts within the range of 25 degrees horizontally (total 50 degrees).

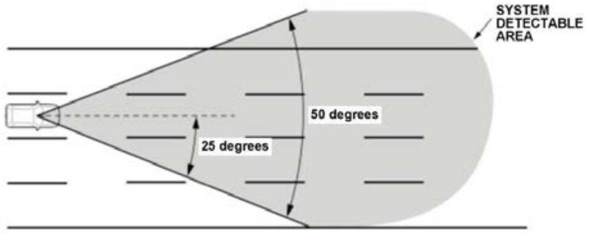

Auto High-Beam Operation Indicator

When a system malfunction occurs, or when the camera lens or the windshield gets dirty, the warning message is shown on the multi-information display (MID). If the shown, the system stops operating.

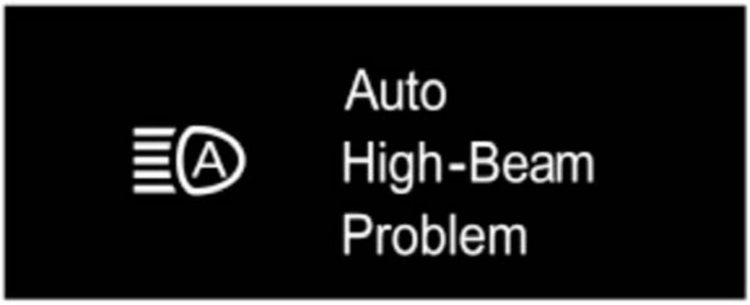 Auto High-Beam Problem	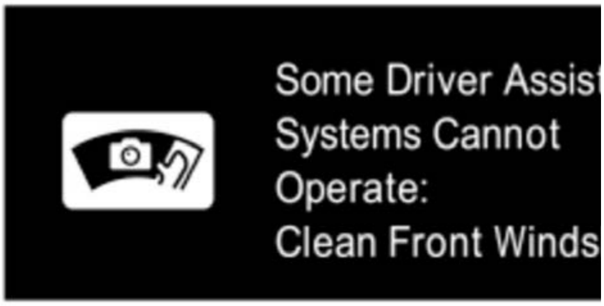 Some Driver Assis Systems Cannot Operate: Clean Front Winds
NOTE: The actual message may be different depending on your market.	

AUTO HIGH-BEAM (HIGH-BEAM SUPPORT SYSTEM) DESCRIPTION - SYSTEM DIAGRAM

The system diagram of the Auto High-Beam is shown below.

For locations of each component on vehicle, refer to Component Location Index:

- **Multipurpose camera unit**
- **PCM**
- **VSA modulator-control unit**
- **Gauge control module**
- Without automatic wiper: **Automatic lighting control unit-sensor**
- With automatic wiper: **Automatic lighting/rain sensor**
- **Body control module**
- **SRS unit**

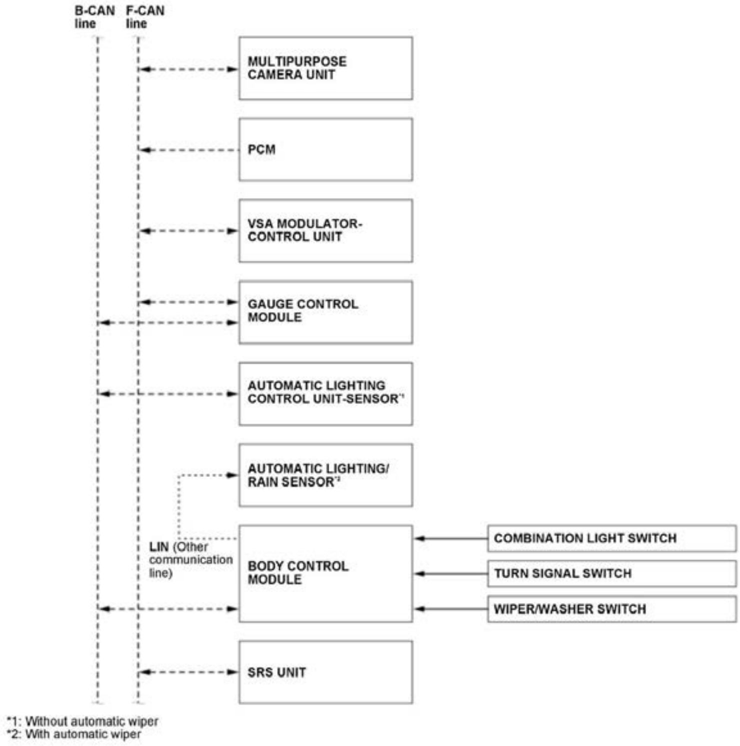
B-CAN line
F-CAN line
MULTIPURPOSE CAMERA UNIT
PCM
VSA MODULATOR-CONTROL UNIT
GAUGE CONTROL MODULE
AUTOMATIC LIGHTING CONTROL UNIT-SENSOR*1
AUTOMATIC LIGHTING/ RAIN SENSOR*2
LIN (Other communication line)
BODY CONTROL MODULE
COMBINATION LIGHT SWITCH
TURN SIGNAL SWITCH
WIPER/WASHER SWITCH
SRS UNIT
*1: Without automatic wiper
*2: With automatic wiper

EXTERIOR LIGHTS SYSTEM DESCRIPTION

Headlights Function

The headlights are controlled by the relay control module, based on combination light switch input signals from the body control module.

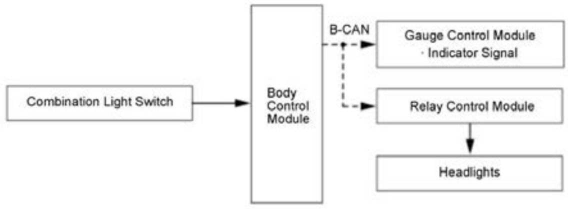
Combination Light Switch
Body Control Module
B-CAN
Gauge Control Module
· Indicator Signal
Relay Control Module
Headlights

Headlights Auto-OFF Function

When the headlights auto-off function is selected, the exterior lights automatically turn off when the vehicle is in to the OFF (LOCK) mode, and the driver's door is oper timing for turning off the exterior lights can be customized to suit the customer needs.

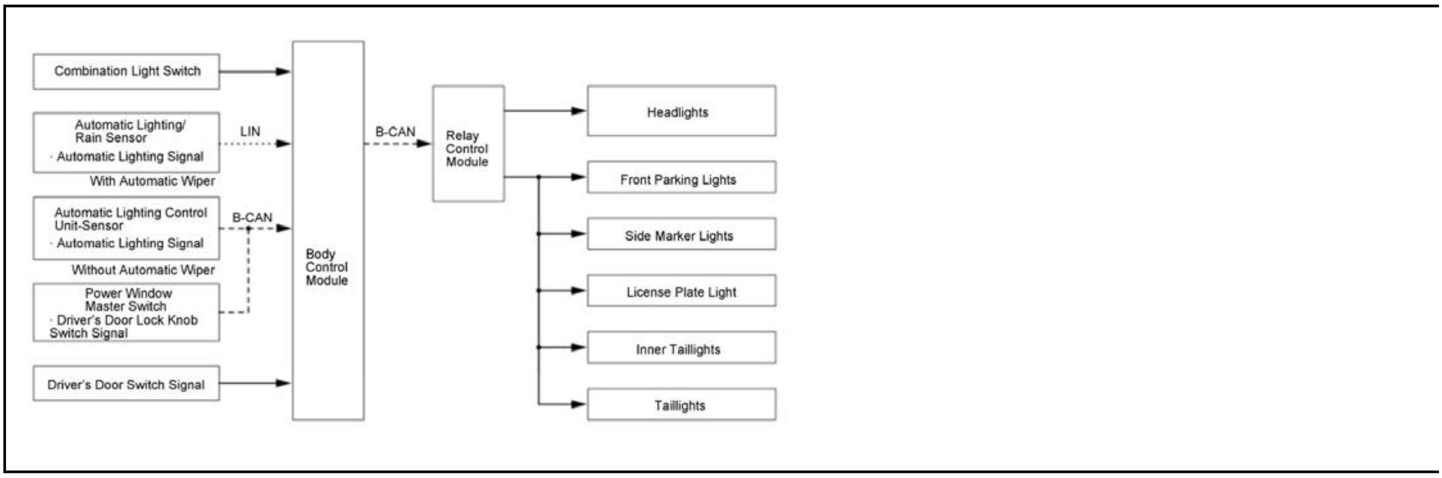
Combination Light Switch
Automatic Lighting/ Rain Sensor
· Automatic Lighting Signal
With Automatic Wiper
LIN
Automatic Lighting Control Unit-Sensor
· Automatic Lighting Signal
Without Automatic Wiper
B-CAN
Power Window Master Switch
· Driver's Door Lock Knob Switch Signal
Driver's Door Switch Signal
Body Control Module
B-CAN
Relay Control Module
Headlights
Front Parking Lights
Side Marker Lights
License Plate Light
Inner Taillights
Taillights

Headlight Fault Detection Function

When a low beam error is detected, the headlights send an error signal to the relay control module. When the relay control module receives the error signal, it sends an I system indicator signal to the gauge control module via B-CAN.

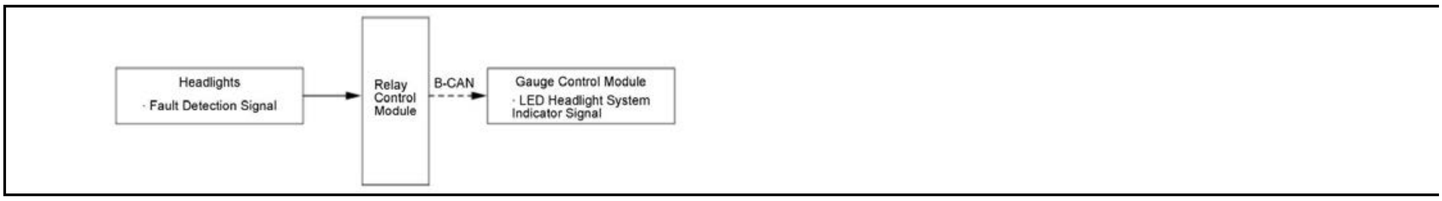
Headlights
· Fault Detection Signal
Relay Control Module
B-CAN
Gauge Control Module
· LED Headlight System Indicator Signal

Turn Signal/Hazard Light Function

The turn signal/hazard warning lights are controlled by the body control module, using input from the combination light switch or hazard warning switch signal. When t module receives a left turn or right turn command from the combination light switch, it blinks the front, side*, and rear turn signal lights for the left or right side of the v body control module receives a hazard warning command from the hazard warning switch, it blinks the front and rear turn signal lights for both sides of the vehicle. The includes wire break detection by monitoring the current values using the body control module. An abnormal value is registered as a wire break (open) or faulty LED. W body control module increases the turn signal lighting frequency. If the break detection shows that the current value has returned to the correct value, the body control m normal frequency.

*: With side turn signal light

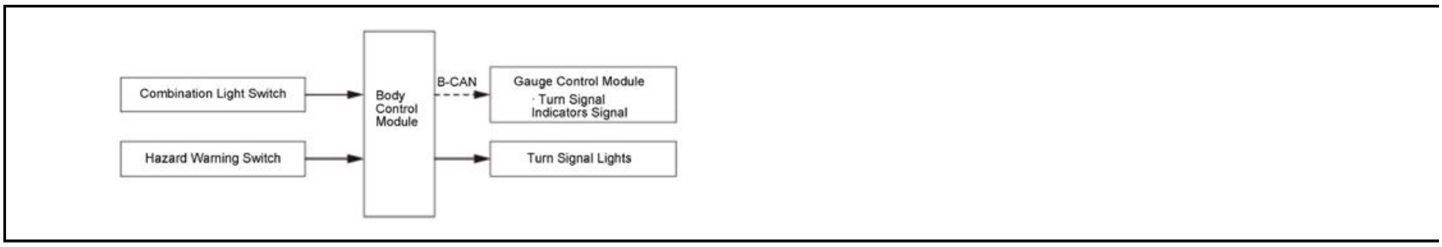
Combination Light Switch
Hazard Warning Switch
Body Control Module
B-CAN
Gauge Control Module
· Turn Signal Indicators Signal
Turn Signal Lights

One-Push Turn Signal Light

With the vehicle in the ON mode, and when there is a brief input from the turn signal switch, the body control module flashes the left or right turn signal three times in s

Fog Light Function (With Fog Light)

The front fog light is controlled by the relay control module and body control module, based on the switch input from the combination light switch.

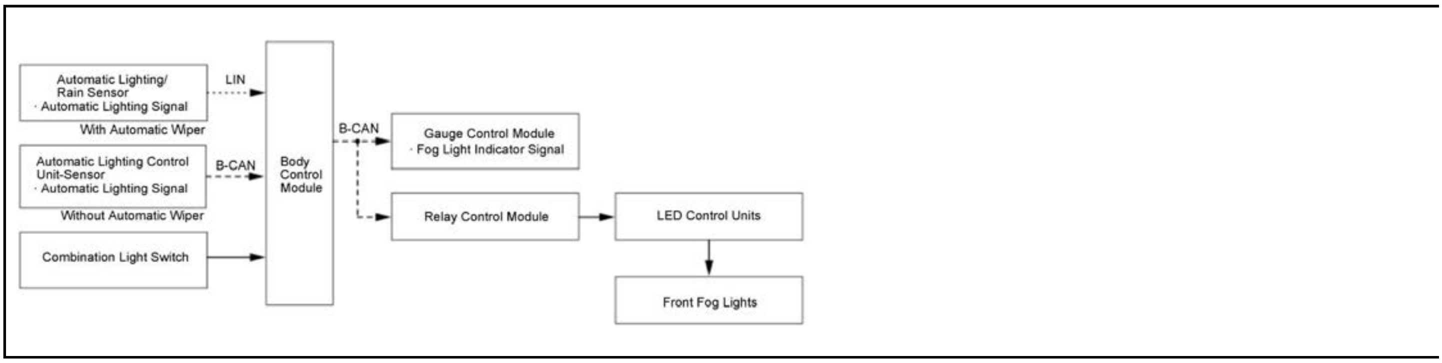
Automatic Lighting/ Rain Sensor
· Automatic Lighting Signal
With Automatic Wiper
LIN
Automatic Lighting Control Unit-Sensor
· Automatic Lighting Signal
Without Automatic Wiper
B-CAN
Combination Light Switch
Body Control Module
B-CAN
Gauge Control Module
· Fog Light Indicator Signal
Relay Control Module
LED Control Units
Front Fog Lights

Daytime Running Lights Function

For daytime running light control, the relay control module controls the daytime running light control circuit based on the combination light switch signal, the parking b automatic lighting signal, and then turns on the light. When the combination light switch is in the OFF position or the AUTO position with the vehicle in the ON mode a brake released, the relay control module controls the daytime running light control circuit. When the combination light switch is in the ON position or the AUTO positic output signal from the automatic lighting control unit-sensor or the automatic lighting/rain sensor are inputted to the body control module, daytime running light control

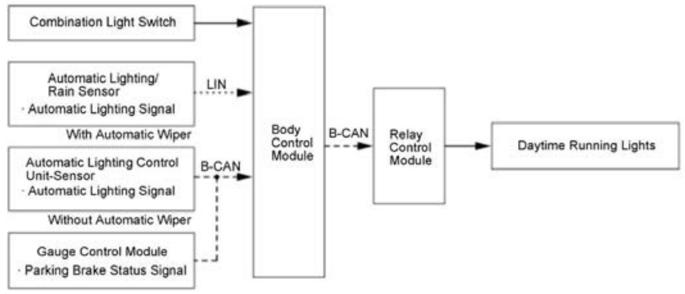
Combination Light Switch
Automatic Lighting/ Rain Sensor
· Automatic Lighting Signal
With Automatic Wiper
LIN
Automatic Lighting Control Unit-Sensor
· Automatic Lighting Signal
Without Automatic Wiper
B-CAN
Gauge Control Module
· Parking Brake Status Signal
Body Control Module
B-CAN
Relay Control Module
Daytime Running Lights

Automatic Lighting ON/OFF Control

When the light ON delay time elapses after the automatic lighting control unit-sensor *1 or the automatic lighting/rain sensor *2 output voltage drops to the light ON lu parking lights, the side marker lights, the taillights, the license plate light, daytime running lights, and the headlights turn on. When the light OFF delay time elapses aft lighting control unit-sensor *1 or automatic lighting/rain sensor *2 output voltage rises to the light OFF luminance, the front parking lights, the side marker lights, the ta plate light, daytime running lights, and the headlights turn off.

*1: Without automatic wiper

*2: With automatic wiper

Without Automatic Wiper

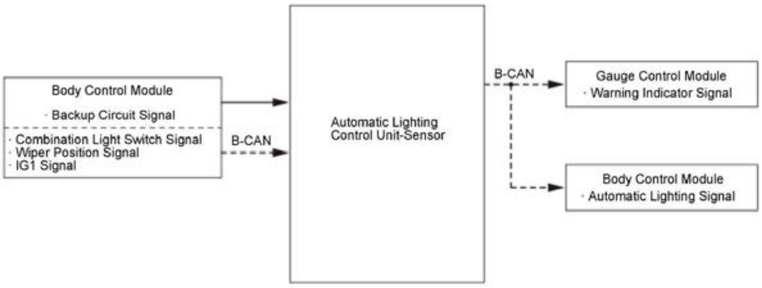
Body Control Module
· Backup Circuit Signal
· Combination Light Switch Signal
· Wiper Position Signal
· IG1 Signal
B-CAN
Automatic Lighting Control Unit-Sensor
B-CAN
Gauge Control Module
· Warning Indicator Signal
Body Control Module
· Automatic Lighting Signal

With Automatic Wiper

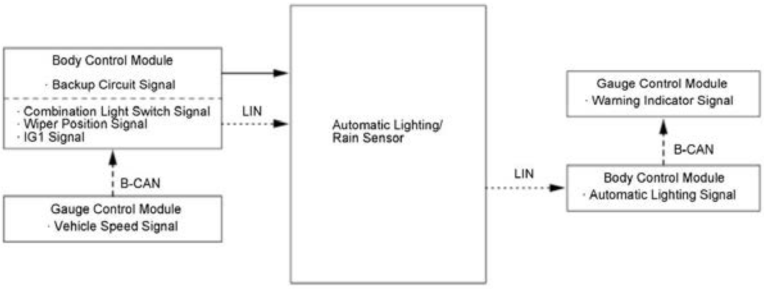
Body Control Module
· Backup Circuit Signal
· Combination Light Switch Signal
· Wiper Position Signal
· IG1 Signal
LIN
B-CAN
Gauge Control Module
· Vehicle Speed Signal
Automatic Lighting/ Rain Sensor
Gauge Control Module
· Warning Indicator Signal
B-CAN
LIN
Body Control Module
· Automatic Lighting Signal

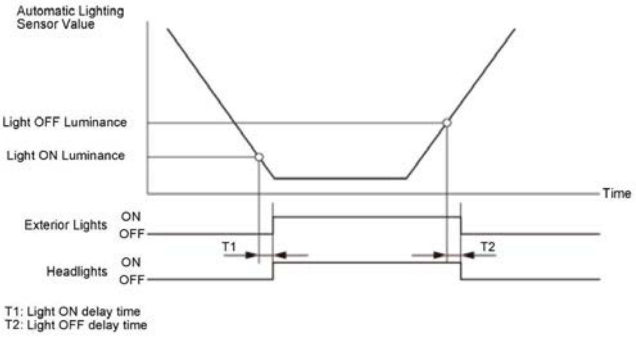

Wiper Linked Mode

When the wiper switch is in a position other than OFF, the automatic lighting control unit-sensor *1 or automatic lighting/rain sensor *2 counts and records the windshi WIPER AS signal (ON to OFF count within 20 seconds) from the body control module via B-CAN. After a total of 5 counts, it switches to wiper linked mode and turns the front parking lights, the taillights, inner taillights, daytime running light, and the side marker lights. The ON/OFF signals at the time of windshield washer operation When a count is not received for 30 seconds or more, the count is reduced by 1, and shifting to normal mode is done when the count reaches 0. The wipers return to nor vehicle is stopped, or when the respective switch is set to OFF.

*1: Without automatic wiper

*2: With automatic wiper

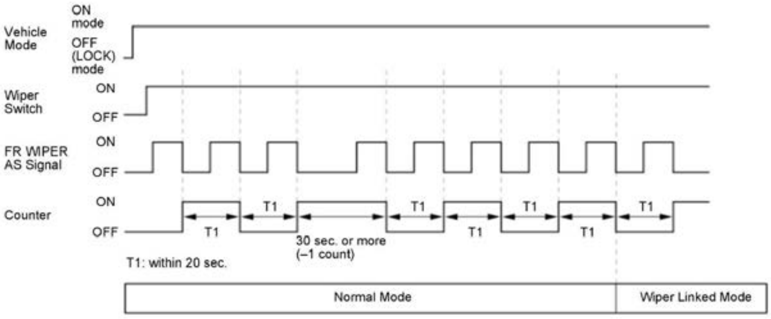

Warning Function

The automatic lighting control unit-sensor *1 or the automatic lighting/rain sensor *2 sends an indicator signal to the gauge control module in case of a failure of the aut sensor or when the signal sent from the relay control module by B-CAN signal is abnormal.

*1: Without automatic wiper

*2: With automatic wiper

Interior Lights Brightness Change Control

Regardless of the combination light switch in the AUTO position, the body control module *1 or the automatic lighting/rain sensor *2 controls the brightness for daytim brightness. The body control module *1 or the automatic lighting/rain sensor *2 sends the signal to the gauge control module using B-CAN.

*1: Without automatic wiper

2: With automatic wiper

Sensitivity Adjustment Function (For Some Models)

Sensitivity adjustment of the automatic lighting system can be customized with the gauge control module. You can select the customized timing from 5 types (Min, Lo, sensitivity.

Failsafe Function

Automatic Lighting System

When an automatic lighting sensor failure occurs, the system maintains the state before the failure, and a warning is displayed in the multi-information display (MID).

EXTERIOR LIGHTS SYSTEM DESCRIPTION - COMPONENTS

Headlights

The headlight assembly consists of the headlights (low/high beam lights), front parking lights, daytime running lights, side marker lights, and the front turn signal lights

Front Fog Lights

The front fog lights are installed on the front bumper.

Taillights/Inner Taillights

The taillights consist of the taillights, the brake lights, and rear side marker lights, and the rear turn signal lights. The back-up lights and the inner taillights are built into

High Mount Brake Light

The high mount brake light is located at the top of the rear window.

Side Turn Signal Lights (With Side Turn Signal Light)

The side turn signal light is built into the power mirror.

EXTERIOR LIGHTS SYSTEM DESCRIPTION - SYSTEM DIAGRAM

For locations of each component on vehicle, refer to Component Location Index

- Exterior Lights
- Turn Signal/Hazard Warning Lights

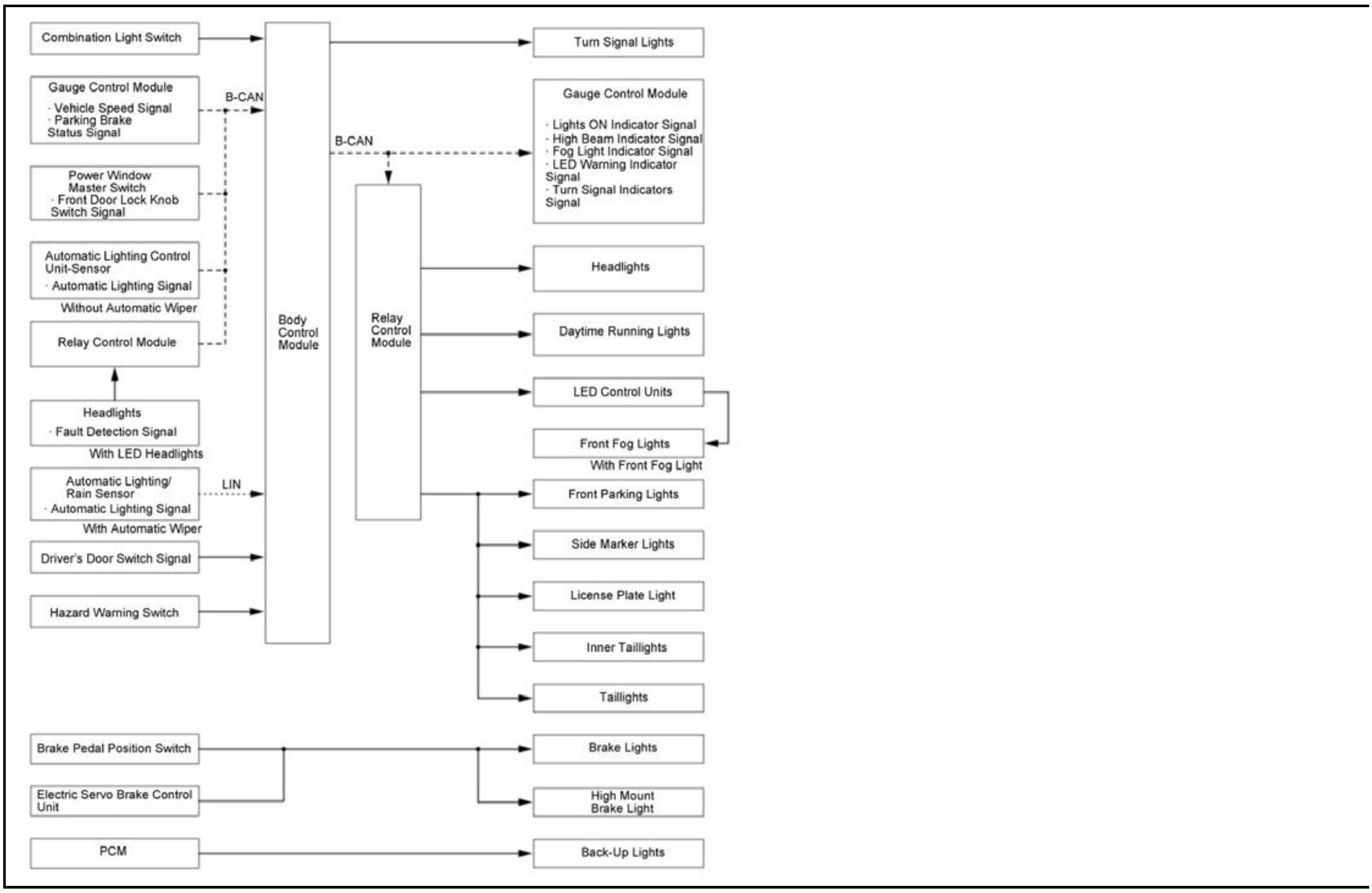
Combination Light Switch
Gauge Control Module
· Vehicle Speed Signal
· Parking Brake Status Signal
B-CAN
Power Window Master Switch
· Front Door Lock Knob Switch Signal
Automatic Lighting Control Unit-Sensor
· Automatic Lighting Signal
Without Automatic Wiper
Relay Control Module
Headlights
· Fault Detection Signal
With LED Headlights
Automatic Lighting/ Rain Sensor
· Automatic Lighting Signal
With Automatic Wiper
LIN
Driver's Door Switch Signal
Hazard Warning Switch
Body Control Module
B-CAN
Relay Control Module
Turn Signal Lights
Gauge Control Module
· Lights ON Indicator Signal
· High Beam Indicator Signal
· Fog Light Indicator Signal
· LED Warning Indicator Signal
· Turn Signal Indicators Signal
Headlights
Daytime Running Lights
LED Control Units
Front Fog Lights
With Front Fog Light
Front Parking Lights
Side Marker Lights
License Plate Light
Inner Taillights
Taillights
Brake Pedal Position Switch
Electric Servo Brake Control Unit
PCM
Brake Lights
High Mount Brake Light
Back-Up Lights

SYMPTOM TROUBLESHOOTING

EXTERIOR LIGHTS SYMPTOM TROUBLESHOOTING - LED HEADLIGHT DOES NOT COME ON

1. DTC check 1

-1. Clear the DTCs with the HDS.

-2. Turn the vehicle to the OFF (LOCK) mode then the ON mode.

-3. Wait for at least 10 seconds.

-4. Check for Relay Control Module DTCs with the HDS.

DTC (Relay Control Module)

DTC Description	DTC
B	B

Are any DTCs indicated?

YES

Go to the indicated DTC's troubleshooting .

NO

Go to step 2.

2. DTC check 2

-1. **Connect the HDS to the data link connector (DLC)** .

-2. Check for Body Control Module DTCs with the HDS.

DTC Description	DTC
B	B

Are any DTCs indicated?

YES

Go to the indicated DTC's troubleshooting .

NO

Go to step 3.

3. Combination light switch HEADLIGHT position check

-1. Turn the combination light switch ON.

-2. Check the parameter(s) below with the HDS.

Signal	**Threshold**		**Current conditio**	
	Values	**Unit**	**Values**	
Headlight Switch (HEADLIGHT)	ON	B	B	B

Is data list values correct?

YES

Intermittent failure, the system is OK at this time. Check for loose or poor connections.

NO

Go to step 4.

4. Combination light switch check

-1. Turn the vehicle to the OFF (LOCK) mode.

-2. **Do the combination light switch test** .

Is the switch OK?

YES

Go to step 5.

NO

Replace the combination light switch .

5. Open wire check (H/L_ON_SW line) 1

-1. Measure the voltage between test points 1 and 2.

Test condition	Vehicle OFF (LOCK) mode Combination light switch 12P connector: disconnected
Test point 1	Combination light switch 12P connector (female terminals) No. 7: ①

Test point 2	Body ground

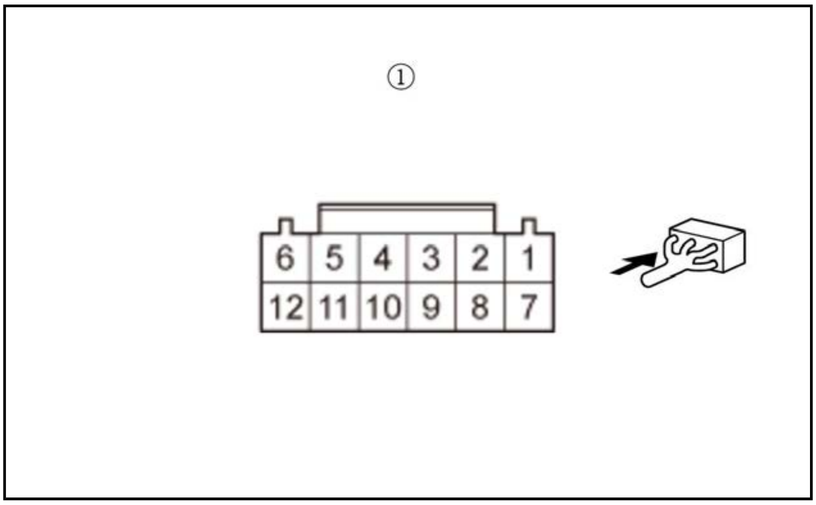

Is there battery voltage?

YES

Go to step 6.

NO

Go to step 7.

6. Open wire check (COMBI_SW_GND(LT) line)

-1. Measure the resistance between test points 1 and 2.

Test condition	Vehicle OFF (LOCK) mode Combination light switch 12P connector: disconnected
Test point 1	Combination light switch 12P connector (female terminals) No. 6: ①
Test point 2	Body ground

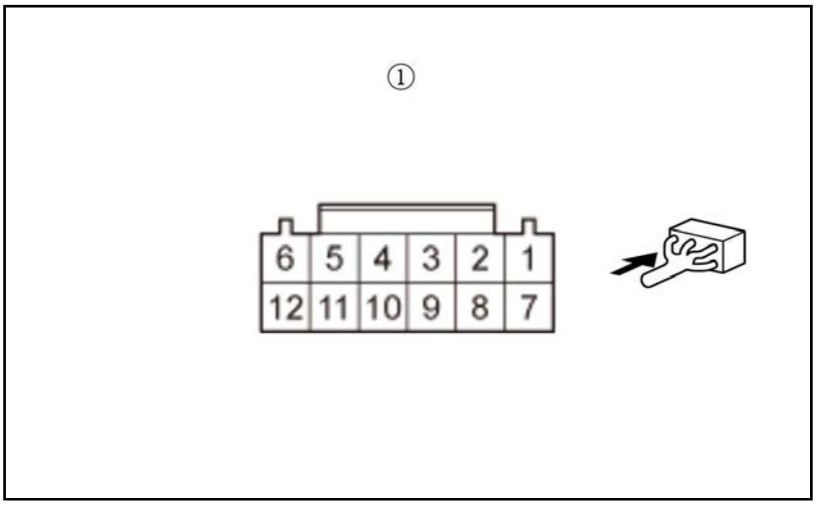

Is there 1.0 Ω or less?

YES

The COMBI_SW_GND(LT) wire is OK. Faulty combination light switch; **replace the combination light switch** .

NO

Repair an open or high resistance in the wire.

7. Open wire check (H/L_ON_SW line) 2

-1. Disconnect the following connector.

Body control module connector C (28P)

-2. Measure the resistance between test points 1 and 2.

Test condition	Vehicle OFF (LOCK) mode Combination light switch 12P connector: disconnected Body control module connector C (28P): disconnected
Test point 1	Combination light switch 12P connector (female terminals) No. 7: ①
Test point 2	**Body control module connector C (28P) No. 9**

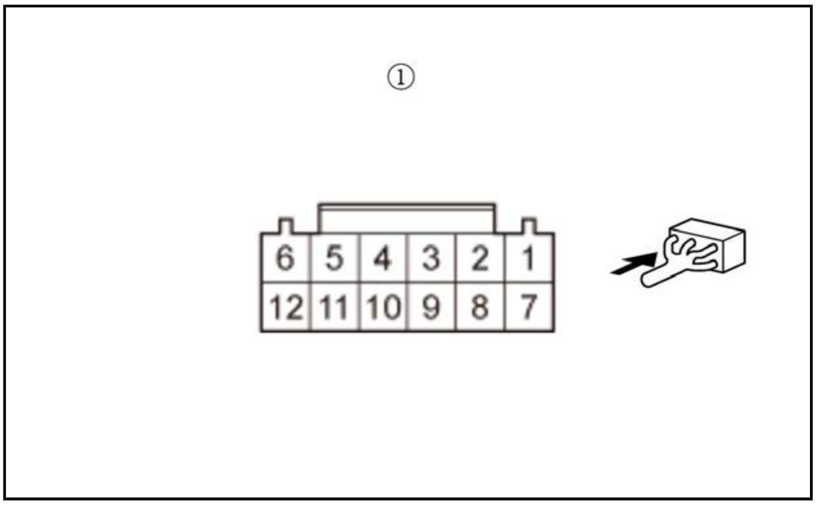

Is there 1.0 Ω or less?

YES

The H/L_ON_SW wire is OK. **Replace the body control module** .

NO

Repair an open or high resistance in the wire.

EXTERIOR LIGHTS SYMPTOM TROUBLESHOOTING - LED HEADLIGHT DOES NOT GO OFF

1. Combination light switch OFF position check

-1. **Connect the HDS to the data link connector (DLC)** .

-2. Turn the combination light switch OFF.

-3. Check the parameter(s) below with the HDS.

Signal	Threshold		Current conditio	
	Values	Unit	Values	
Headlight Switch (HEADLIGHT)	OFF	B	B	B

Is data list values correct?

YES

Go to step 4.

NO

Go to step 2.

2. Combination light switch check

   -1. Turn the vehicle to the OFF (LOCK) mode.

   -2. **Do the combination light switch test** .

   Is the switch OK?

   YES

   Go to step 3.

   NO

   Replace the combination light switch .

3. Shorted wire check (H/L_ON_SW line)

   -1. Disconnect the following connectors.

Body control module connector C (28P) Automatic lighting/rain sensor 5P connector (with automatic wiper) Automatic lighting control unit-sensor 5P connector (without automatic wiper)

-2. Measure the resistance between test points 1 and 2.

Test condition	Vehicle OFF (LOCK) mode Combination light switch 12P connector: disconnected Body control module connector C (28P): disconnected Automatic lighting/rain sensor 5P connector (with automatic wiper): disconnected Automatic lighting control unit-sensor 5P connector (without automatic wiper): disconnected
Test point 1	Combination light switch 12P connector (female terminals) No. 7: ①
Test point 2	Body ground

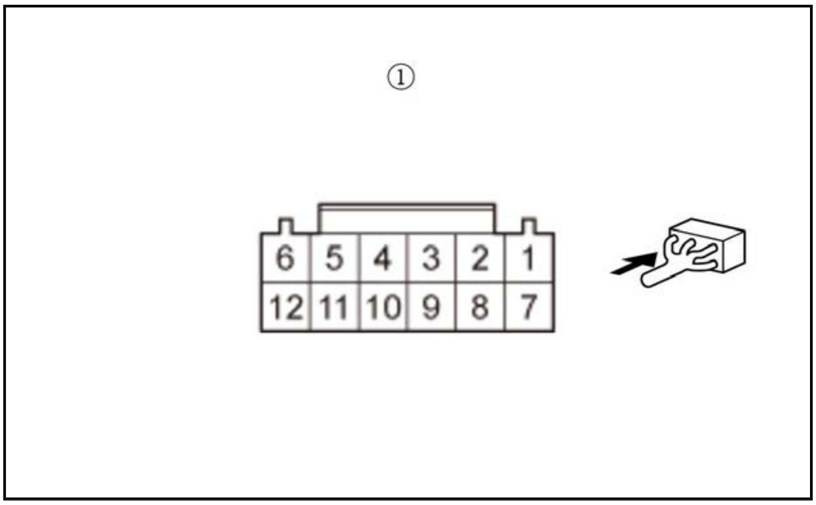

Is there 1.0 MΩ or more?

YES

The H/L_ON_SW wire is OK. **Replace the body control module** .

NO

Repair a short to ground in the wire.

4. DTC check

   -1. Clear the DTCs with the HDS.

   -2. Turn the vehicle to the OFF (LOCK) mode then the ON mode.

   -3. Wait for at least 10 seconds.

-4. Check for Relay Control Module DTCs with the HDS.

DTC (Relay Control Module)

DTC Description	DTC
B	B

Are any DTCs indicated?

YES

Go to the indicated DTC's troubleshooting .

NO

Repair a short to power in the H/L HI or H/L LO wire.

HOW TO INFORMATION

HOW TO TROUBLESHOOT THE AUTO HIGH-BEAM (HIGH-BEAM SUPPORT SYSTEM)

Auto High-Beam Activation Indicator (Green)

If the Auto High-Beam system is normal, the Auto High-Beam activation indicator comes on when the function is on, and goes off when the function is off. If the syster turns off the Auto High-Beam activation indicator, indicates the problem on the multi-information display (MID).

NOTE:

- For locations of the indicator, refer to Gauges Component Location Index .
- For Auto High-Beam function, review the Auto High-Beam Description.
- The Auto High-Beam communicates with other control units via F-CAN. For Auto High-Beam system diagram, review the Auto High-Beam System Diagram.

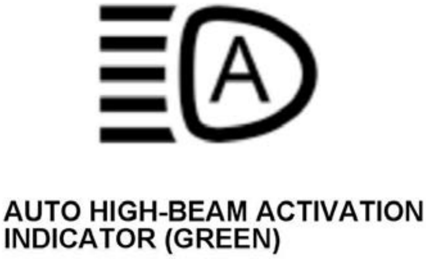

Self-Diagnostic Function

The Auto High-Beam system has a self-diagnostic function. When a problem is detected by the self-diagnostic function, the Auto High-Beam stops operating, indicates multi-information display (MID), and stores a DTC.

NOTE: The Auto High-Beam operates while maintaining a mutual connection between the multipurpose camera unit at the control origin and the other control units (re body control unit, gauge control module, automatic lighting/rain sensor, etc.). If malfunctions occur in these control unit systems, the Auto High-Beam does not operate warning indicator of the related control unit turn on and a warning message is displayed on the multi-information display (MID).

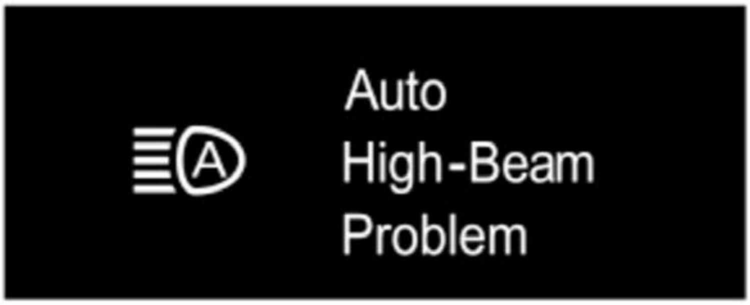

Dirt or dust detective function (CLEAN FRONT WINDSHIELD Indication)

If the message appears on the MID, the camera lens or the windshield has enough dirt so that the camera view is obstructed. The Auto High-Beam stops operating.

Clean any dirt or contamination on the camera lens or the windshield. Once the camera's view is unobstructed, the MID turns off and the Auto High-Beam automaticall

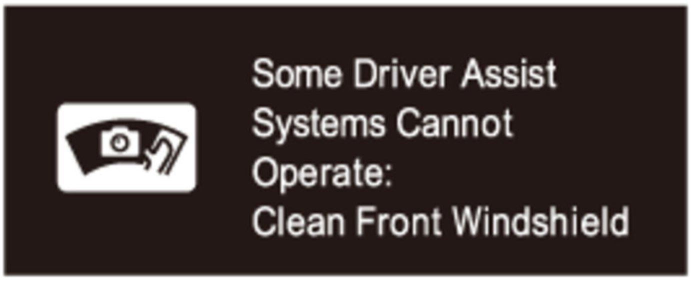

Some Driver Assist
Systems Cannot
Operate:
Clean Front Windshield

Multipurpose Camera unit

The Auto High-Beam of this vehicle is controlled by the multipurpose camera unit. If an error or malfunction of the multipurpose camera unit occurs, the Auto High-Be
At this time, a warning message is displayed on the multi-information display (MID). The operations of the Auto High-Beam corresponding to the multipurpose camera
can be checked in the DTC troubleshooting index .

The multipurpose camera unit also has an error detection function which sends a signal to the millimeter wave radar if an error is detected. The millimeter wave radar re
information from the multipurpose camera unit.

System Protect Function (High temperature) (MULTIPURPOSE CAMERA HOT Indication)

If the message Some Driver Assist Systems Cannot Operate: Camera Temperature Too High appears on the MID, the Auto High-Beam stops operating, and stores a DT

When the multipurpose camera temperature cools down to its proper operating temperature, the indicator on the MID turns off, and the Auto High-Beam automatically

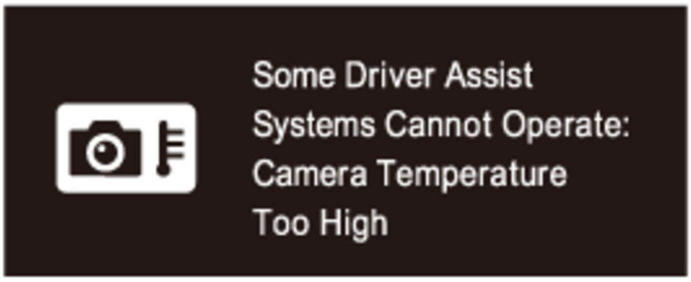

Some Driver Assist
Systems Cannot Operate:
Camera Temperature
Too High

Multipurpose Camera Aiming Function

If the multipurpose camera unit is removed or replaced, you must do the multipurpose camera aiming procedure. If the aiming is incomplete, the Auto High-Beam indic

CAN communication

The Auto High-Beam communicates with other control units via F-CAN. For Auto High-Beam system diagram, review the Auto High-Beam System Diagram.

If the multipurpose camera unit detects a communication error or a malfunction in another connected unit, the Auto High-Beam will not operate even though it is OK. I
Auto High-Beam indicator and the related unit indicator will come on and stay on.

Intermittent Failures

The term "intermittent failure" means a system may have had a failure, but it checks OK now. If you cannot reproduce the condition, check for intermittent failure DTC
failure DTCs are not stored, check for loose connections and terminals. Also check ground and power connections related to the circuit that you are troubleshooting.

How to Troubleshoot DTCs

Check for DTCs with the HDS, then clear the DTC.

NOTE: For Auto High-Beam DTCs, refer to the DTC troubleshooting index .

Before troubleshooting, check and note these items:

- Ask the customer about the conditions when the problem occurred, and try to reproduce the same conditions for troubleshooting.
- If the symptom does not appear and the Auto High-Beam indicator does not come on while test-driving, but your troubleshooting was based on the DTC, check f
or loose terminals at all connectors related to the circuit that you are troubleshooting.
- After the troubleshooting or repairs are done, clear the DTCs, and test-drive the vehicle under the same conditions as when the DTC was originally set. Make sure
Beam warning message does not come on.
- The Auto High-Beam sometimes stops operating because of the environment (weather, road conditions, driving conditions, etc.). Intermittent failure DTCs may b
cases.

How to Retrieve DTCs

NOTE:

- Make sure the 12 volt battery is fully charged before you begin.
- The Auto High-Beam of this vehicle is controlled by the multipurpose camera unit. For this reason, the Auto High-Beam may not operate normally depending on
status of the multipurpose camera unit. The operations of the Auto High-Beam related to the multipurpose camera unit malfunctions can be checked in the trouble
DTC for the millimeter wave radar .

1. Connect the HDS

2. Use the HDS to check for Integrated Driver Support System for DTCs.

3. Read and record the DTC.

4. Turn the vehicle to the OFF (LOCK) mode.

5. Disconnect the HDS.

6. Do the troubleshooting procedure for the DTC.

How to Clear DTCs

NOTE: Make sure the 12 volt battery is fully charged before you begin.

1. Connect the HDS

2. In the DRIVING SUPPORT MENU of the HDS, select Integrated Driver Support System, then choose the clear DTCs icon, and follow the prompts.

3. Turn the vehicle to the OFF (LOCK) mode.

4. Disconnect the HDS.

TEST

AUTO HIGH-BEAM (HIGH-BEAM SUPPORT SYSTEM) FUNCTION TEST

NOTE:

- This test is only used to confirm if the auto high-beam system is operating correctly.
- Certain vehicle and environmental conditions will affect how the auto high-beam system operates. Refer to the owner's manual or Auto High-Beam (High-Beam Description for additional information.

1. Turn the vehicle to the ON mode and confirm there are no auto high-beam messages on the multi-information display (MID). If a message is present, check for DTC' them first before doing this test. Refer to the How to Troubleshoot the Auto High-Beam (High-Beam Support System).

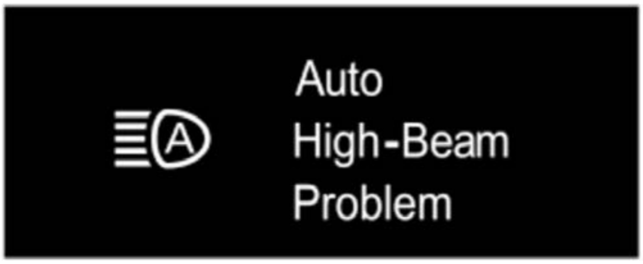

Auto
High-Beam
Problem

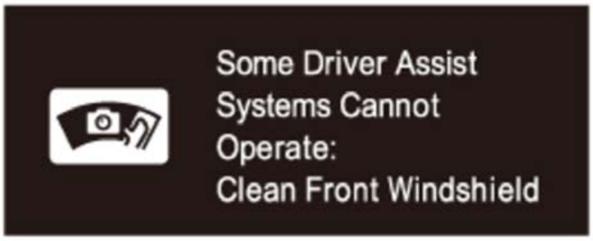

Some Driver Assist
Systems Cannot
Operate:
Clean Front Windshield

Cover the following areas with masking tape:

NOTE:

- **The images shown are examples and may not match your vehicle.**
- **Apply two layers of masking tape to insure that the sensor and camera is blocked.**

Multipurpose Camera (opening on the front windshield)

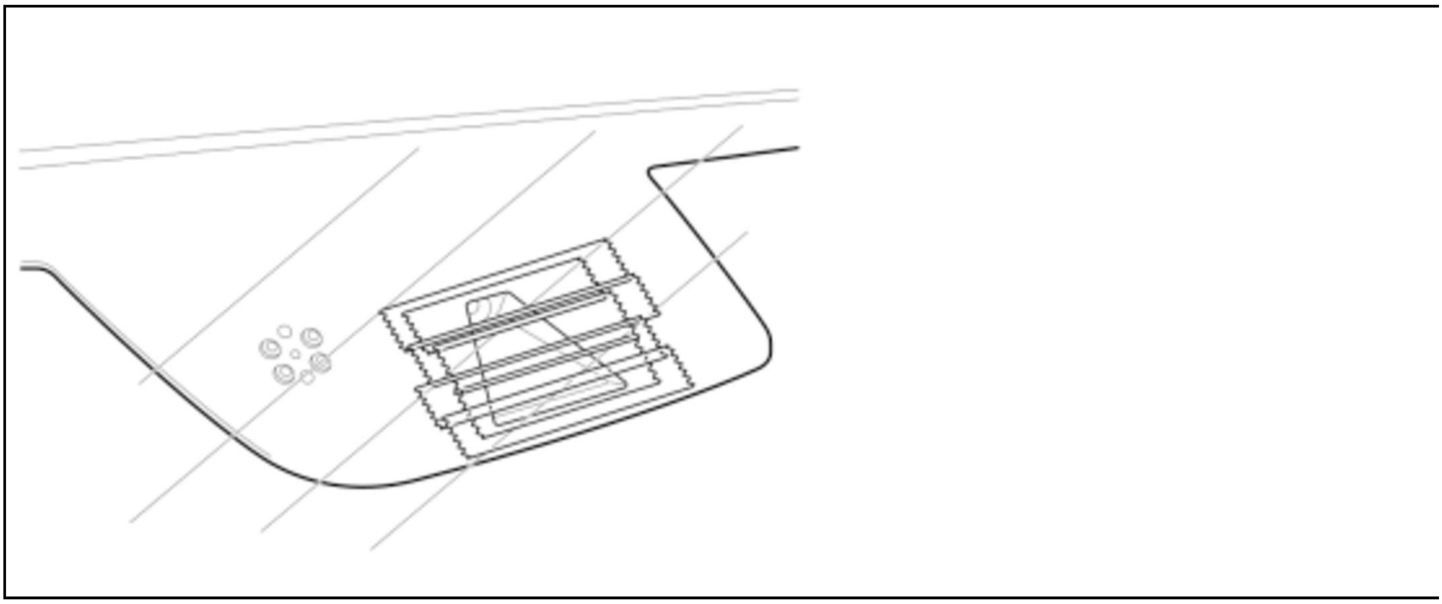

Automatic Lighting Control Unit-Sensor / Sunlight Sensor (entire sensor)

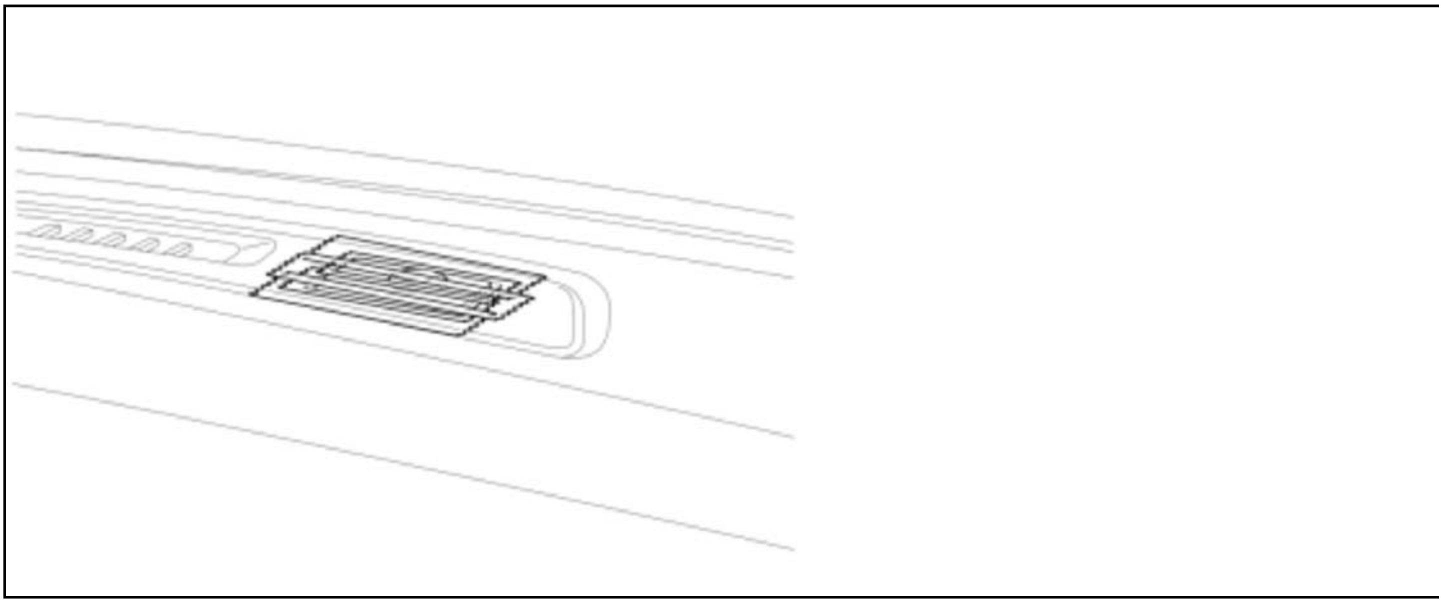

Automatic Lighting / Rain Sensor (opening on the front windshield)

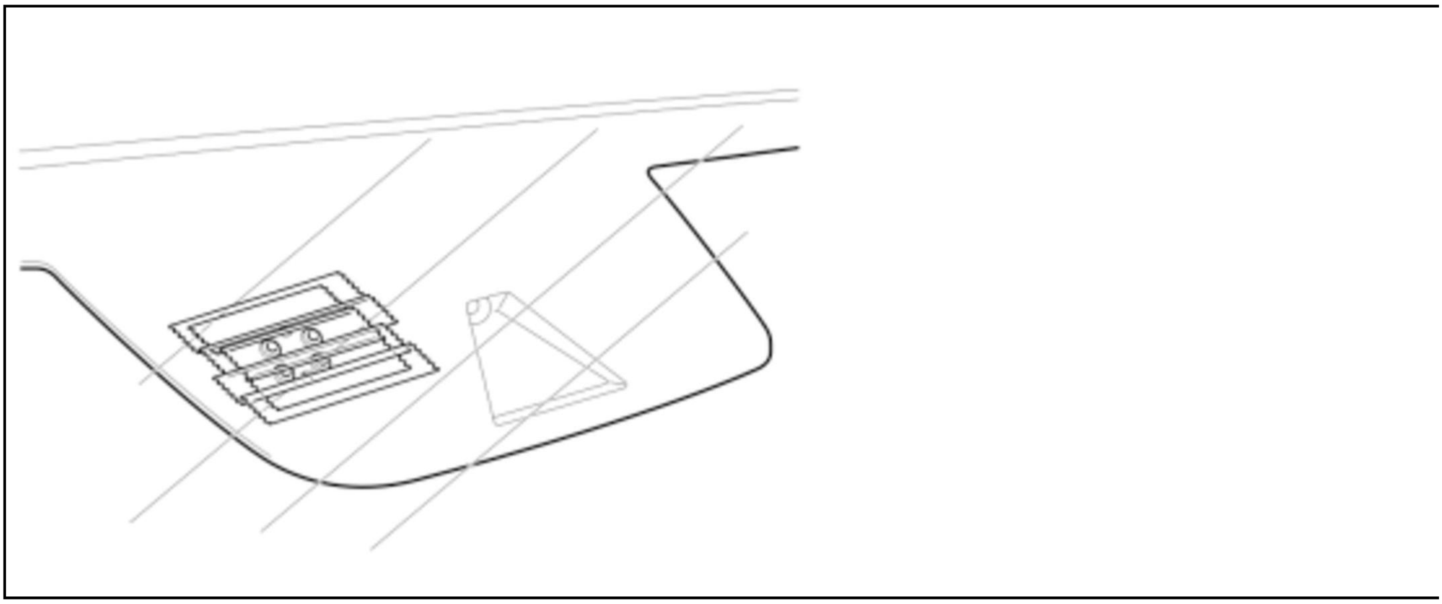

3. Set the headlight switch to the low beam and AUTO positions.

4. Start the engine and confirm that the headlight low beam is on. Check the gauge control assembly.

- If the auto high-beam activation indicator is on, the system is normal and the test is complete.

- If the auto high-beam activation indicator is off, pull back the headlight switch lever back for at least 30 seconds until the auto high-beam activation indicator blin repeat steps 1

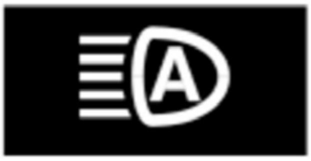

CONNECTOR VIEW

AUTOMATIC LIGHTING CONTROL UNIT-SENSOR CONNECTOR FOR INPUTS AND OUTPUTS

Automatic Lighting Control Unit-Sensor 5P Connector (female terminals)

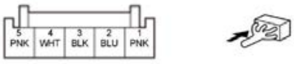

Terminal number	Terminal name	Description	Signal
1	B-CAN_H	Communication line	---
2	B-CAN_L	Communication line	---
3	GND	Automatic lighting control unit-sensor ground	Less than 0.2 V at all times
4	+B_BACK_UP	+B power source	About battery voltage at all times
5	H/L_ON_SW	Detects combination light switch (ON) signal	With combination light switch is in ON position: less tha With combination light switch is in AUTO position and t conditions for the headlight to be ON: less than 0.2 V If none of above conditions are met: about battery voltage

CIRCUIT DIAGRAM

AUTO HIGH-BEAM (HIGH-BEAM SUPPORT SYSTEM) CIRCUIT DIAGRAM

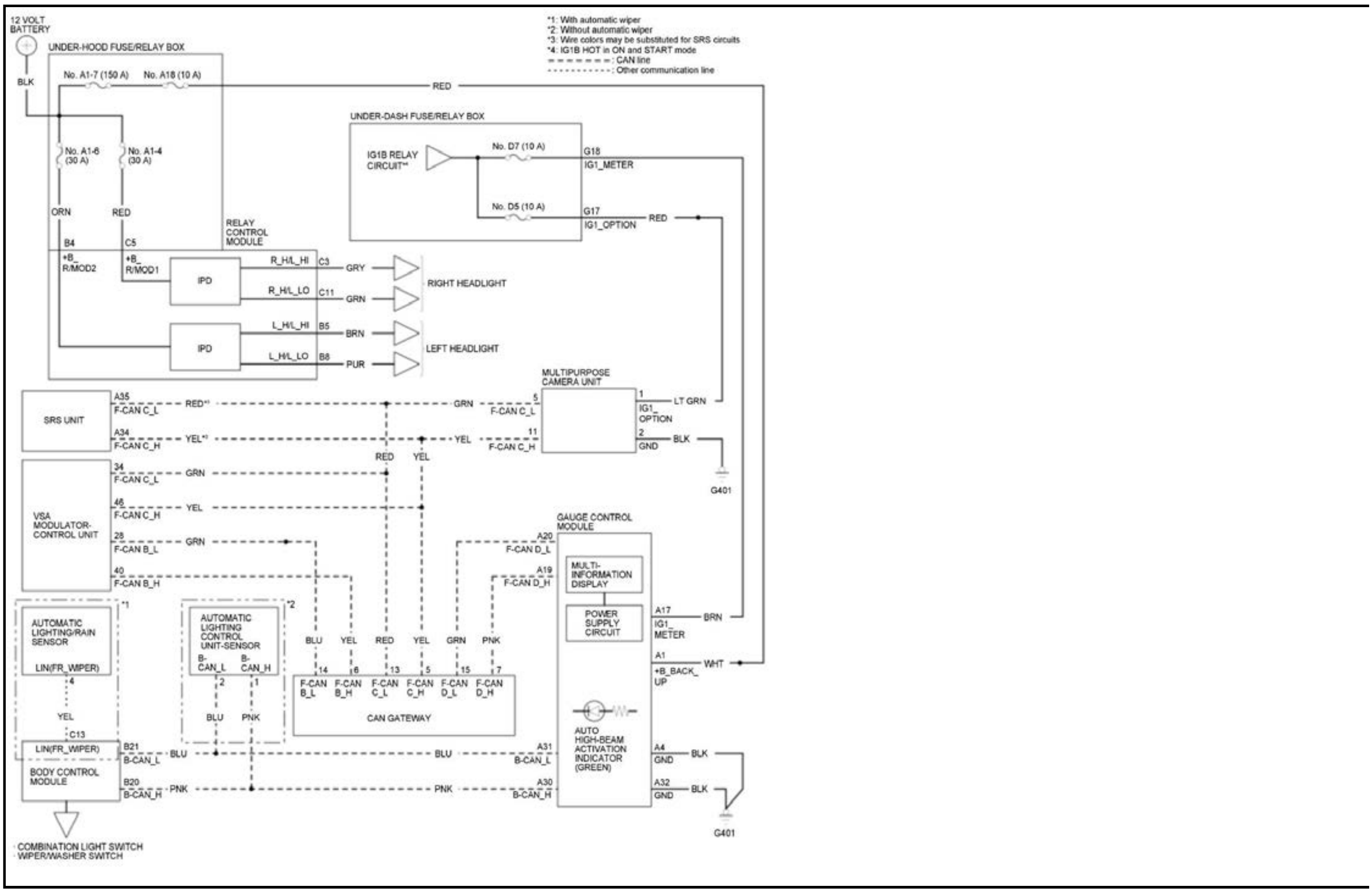
*1: With automatic wiper
*2: Without automatic wiper
*3: Wire colors may be substituted for SRS circuits
*4: IG1B HOT in ON and START mode
CAN line
Other communication line
12 VOLT BATTERY
UNDER-HOOD FUSE/RELAY BOX
BLK
No. A1-7 (150 A)
No. A18 (10 A)
RED
UNDER-DASH FUSE/RELAY BOX
IG1B RELAY CIRCUIT*4
No. D7 (10 A)
No. D5 (10 A)
G18
IG1_METER
G17
IG1_OPTION
No. A1-6 (30 A)
No. A1-4 (30 A)
ORN
RED
RELAY CONTROL MODULE
B4
+B_R/MOD2
C5
+B_R/MOD1
IPD
R_H/L_HI
C3
GRY
R_H/L_LO
C11
GRN
RIGHT HEADLIGHT
L_H/L_HI
B5
BRN
L_H/L_LO
B8
PUR
LEFT HEADLIGHT
MULTIPURPOSE CAMERA UNIT
SRS UNIT
A35
F-CAN C_L
RED*3
A34
F-CAN C_H
YEL*3
F-CAN C_L
F-CAN C_H
IG1_OPTION
GND
LT GRN
BLK
G401
VSA MODULATOR-CONTROL UNIT
34
F-CAN C_L
46
F-CAN C_H
28
F-CAN B_L
40
F-CAN B_H
GAUGE CONTROL MODULE
A20
F-CAN D_L
A19
F-CAN D_H
MULTI-INFORMATION DISPLAY
POWER SUPPLY CIRCUIT
A17
IG1_METER
A1
+B_BACK_UP
WHT
AUTOMATIC LIGHTING/RAIN SENSOR
LIN(FR_WIPER)
AUTOMATIC LIGHTING CONTROL UNIT-SENSOR
B-CAN_L
B-CAN_H
BLU
YEL
RED
YEL
GRN
PNK
F-CAN B_L
F-CAN B_H
F-CAN C_L
F-CAN C_H
F-CAN D_L
F-CAN D_H
CAN GATEWAY
AUTO HIGH-BEAM ACTIVATION INDICATOR (GREEN)
C13
BODY CONTROL MODULE
B21
B-CAN_L
B20
B-CAN_H
A31
B-CAN_L
A30
B-CAN_H
A4
GND
A32
GND
G401
COMBINATION LIGHT SWITCH
WIPER/WASHER SWITCH

EXTERIOR LIGHTS CIRCUIT DIAGRAM

Headlights/Parking Lights/Daytime Running Lights/Side Marker Lights/Taillights/License Plate Light

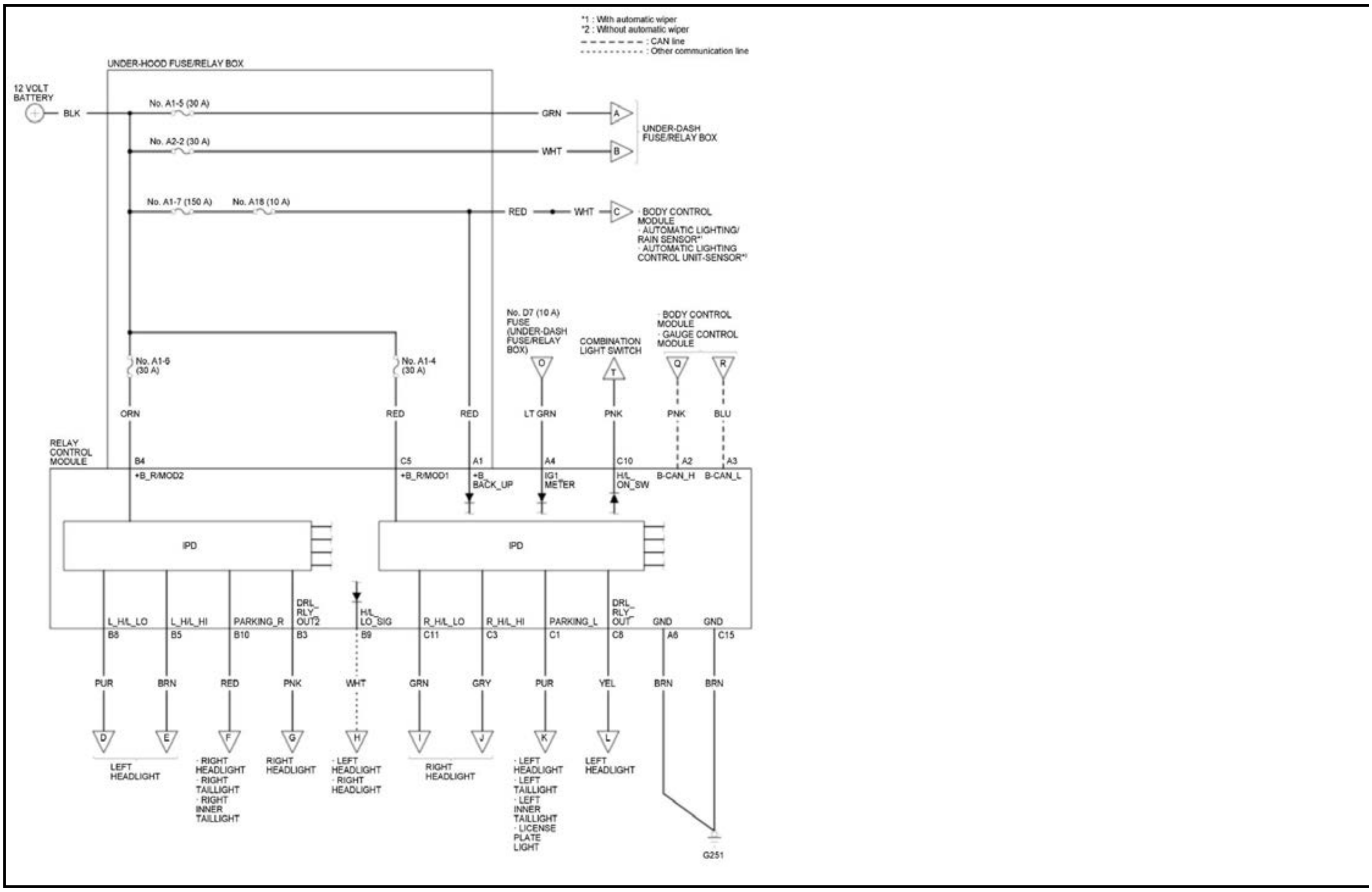
*1 : With automatic wiper
*2 : Without automatic wiper
CAN line
Other communication line
UNDER-HOOD FUSE/RELAY BOX
12 VOLT BATTERY
BLK
No. A1-5 (30 A)
GRN
No. A2-2 (30 A)
WHT
UNDER-DASH FUSE/RELAY BOX
No. A1-7 (150 A)
No. A18 (10 A)
RED
WHT
BODY CONTROL MODULE
· AUTOMATIC LIGHTING/RAIN SENSOR*1
· AUTOMATIC LIGHTING CONTROL UNIT-SENSOR*2
No. D7 (10 A) FUSE (UNDER-DASH FUSE/RELAY BOX)
COMBINATION LIGHT SWITCH
· BODY CONTROL MODULE
· GAUGE CONTROL MODULE
No. A1-6 (30 A)
No. A1-4 (30 A)
ORN
RED
RED
LT GRN
PNK
PNK
BLU
RELAY CONTROL MODULE
B4
+B_R/MOD2
C5
+B_R/MOD1
A1
+B_BACK_UP
A4
IG1_METER
C10
H/L_ON_SW
A2
B-CAN_H
A3
B-CAN_L
IPD
IPD
L_H/L_LO
B8
L_H/L_HI
B5
PARKING_R
B10
DRL_RLY_OUT2
B3
H/L_LO_SIG
B9
R_H/L_LO
C11
R_H/L_HI
C3
PARKING_L
C1
DRL_RLY_OUT
C8
GND
A6
GND
C15
PUR
BRN
RED
PNK
WHT
GRN
GRY
PUR
YEL
BRN
BRN
LEFT HEADLIGHT
· RIGHT HEADLIGHT
· RIGHT TAILLIGHT
· RIGHT INNER TAILLIGHT
RIGHT HEADLIGHT
· LEFT HEADLIGHT
· RIGHT HEADLIGHT
RIGHT HEADLIGHT
· LEFT HEADLIGHT
· LEFT TAILLIGHT
· LEFT INNER TAILLIGHT
· LICENSE PLATE LIGHT
LEFT HEADLIGHT
G251

*1 : IG1A HOT in ON and START mode
*2 : IG1B HOT in ON and START mode
*3 : IG2 HOT in ON mode

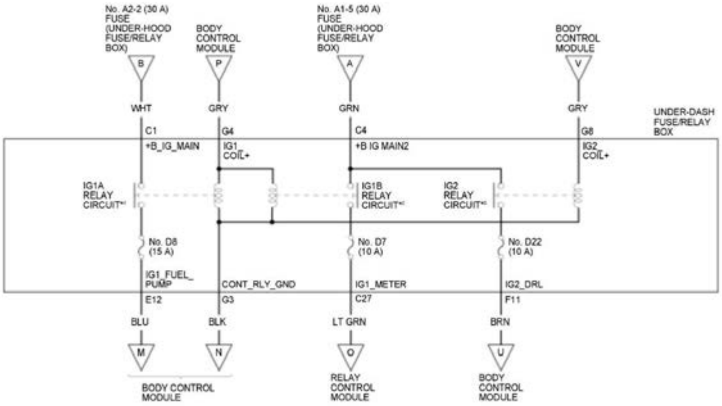
No. A2-2 (30 A) FUSE (UNDER-HOOD FUSE/RELAY BOX)
BODY CONTROL MODULE
No. A1-5 (30 A) FUSE (UNDER-HOOD FUSE/RELAY BOX)
BODY CONTROL MODULE
B
P
A
V
WHT
GRY
GRN
GRY
UNDER-DASH FUSE/RELAY BOX
C1
G4
C4
G8
+B_IG_MAIN
IG1_COIL+
+B IG MAIN2
IG2_COIL+
IG1A RELAY CIRCUIT*1
IG1B RELAY CIRCUIT*2
IG2 RELAY CIRCUIT*3
No. D8 (15 A)
No. D7 (10 A)
No. D22 (10 A)
IG1_FUEL_PUMP
CONT_RLY_GND
IG1_METER
IG2_DRL
E12
G3
C27
F11
BLU
BLK
LT GRN
BRN
M
N
O
U
BODY CONTROL MODULE
RELAY CONTROL MODULE
BODY CONTROL MODULE

------------ : Other communication line

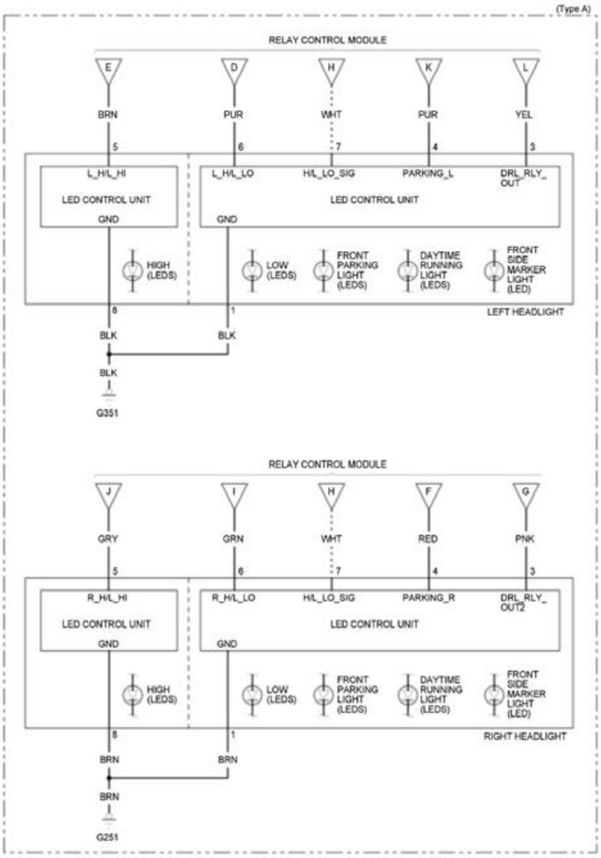
(Type A)
RELAY CONTROL MODULE
E
D
H
K
L
BRN
PUR
WHT
PUR
YEL
5
6
7
4
3
L_H/L_HI
LED CONTROL UNIT
GND
L_H/L_LO
H/L_LO_SIG
PARKING_L
DRL_RLY_OUT
LED CONTROL UNIT
GND
HIGH (LEDS)
LOW (LEDS)
FRONT PARKING LIGHT (LEDS)
DAYTIME RUNNING LIGHT (LEDS)
FRONT SIDE MARKER LIGHT (LED)
LEFT HEADLIGHT
8
1
BLK
BLK
BLK
G351
RELAY CONTROL MODULE
J
I
H
F
G
GRY
GRN
WHT
RED
PNK
5
6
7
4
3
R_H/L_HI
LED CONTROL UNIT
GND
R_H/L_LO
H/L_LO_SIG
PARKING_R
DRL_RLY_OUT2
LED CONTROL UNIT
GND
HIGH (LEDS)
LOW (LEDS)
FRONT PARKING LIGHT (LEDS)
DAYTIME RUNNING LIGHT (LEDS)
FRONT SIDE MARKER LIGHT (LED)
RIGHT HEADLIGHT
8
1
BRN
BRN
BRN
G251

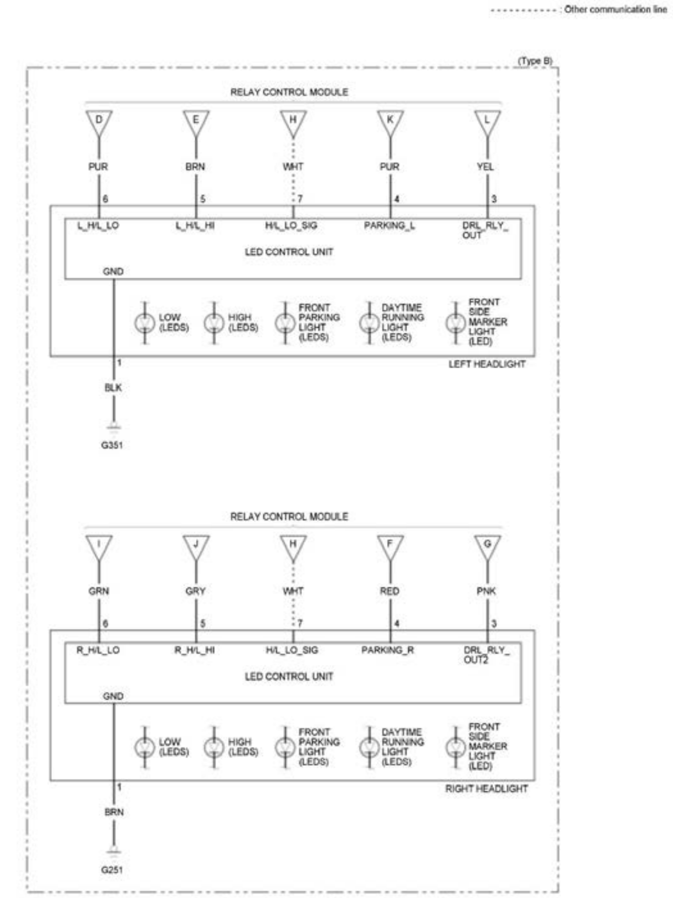

··········· : Other communication line
(Type B)
RELAY CONTROL MODULE
D
E
H
K
L
PUR
BRN
WHT
PUR
YEL
6
5
7
4
3
L_H/L_LO
L_H/L_HI
H/L_LO_SIG
PARKING_L
DRL_RLY_OUT
LED CONTROL UNIT
GND
LOW (LEDS)
HIGH (LEDS)
FRONT PARKING LIGHT (LEDS)
DAYTIME RUNNING LIGHT (LEDS)
FRONT SIDE MARKER LIGHT (LED)
LEFT HEADLIGHT
1
BLK
G351
RELAY CONTROL MODULE
I
J
H
F
G
GRN
GRY
WHT
RED
PNK
6
5
7
4
3
R_H/L_LO
R_H/L_HI
H/L_LO_SIG
PARKING_R
DRL_RLY_OUT2
LED CONTROL UNIT
GND
LOW (LEDS)
HIGH (LEDS)
FRONT PARKING LIGHT (LEDS)
DAYTIME RUNNING LIGHT (LEDS)
FRONT SIDE MARKER LIGHT (LED)
RIGHT HEADLIGHT
1
BRN
G251

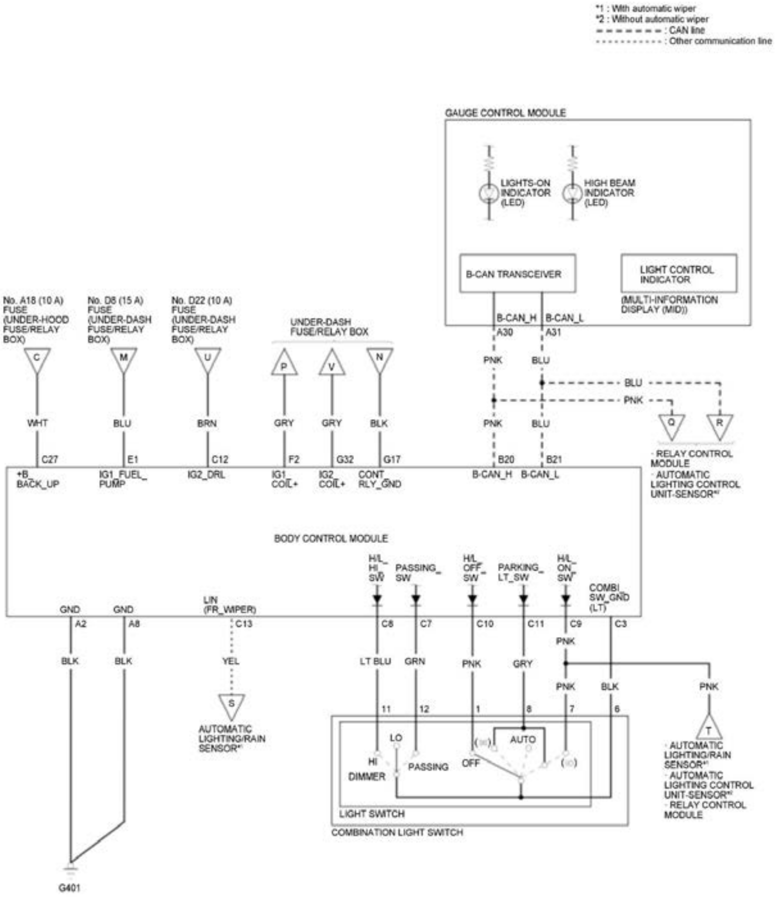

*1 : With automatic wiper
*2 : Without automatic wiper
– – – – – – – : CAN line
··········· : Other communication line
GAUGE CONTROL MODULE
LIGHTS-ON INDICATOR (LED)
HIGH BEAM INDICATOR (LED)
B-CAN TRANSCEIVER
LIGHT CONTROL INDICATOR
(MULTI-INFORMATION DISPLAY (MID))
B-CAN_H
B-CAN_L
A30
A31
PNK
BLU
BLU
PNK
PNK
BLU
Q
R
· RELAY CONTROL MODULE
· AUTOMATIC LIGHTING CONTROL UNIT-SENSOR*2
No. A18 (10 A) FUSE (UNDER-HOOD FUSE/RELAY BOX)
No. D8 (15 A) FUSE (UNDER-DASH FUSE/RELAY BOX)
No. D22 (10 A) FUSE (UNDER-DASH FUSE/RELAY BOX)
UNDER-DASH FUSE/RELAY BOX
C
M
U
P
V
N
WHT
BLU
BRN
GRY
GRY
BLK
C27
E1
C12
F2
G32
G17
B20
B21
+B_BACK_UP
IG1_FUEL_PUMP
IG2_DRL
IG1_COIL+
IG2_COIL+
CONT_RLY_GND
B-CAN_H
B-CAN_L
BODY CONTROL MODULE
H/L_HI_SW
PASSING_SW
H/L_OFF_SW
PARKING_LT_SW
H/L_ON_SW
COMBI_SW_GND (LT)
GND
GND
LIN (FR_WIPER)
A2
A8
C13
C8
C7
C10
C11
C9
C3
BLK
BLK
YEL
LT BLU
GRN
PNK
GRY
PNK
PNK
BLK
PNK
S
AUTOMATIC LIGHTING/RAIN SENSOR*1
11
12
1
8
7
6
LO
HI
DIMMER
PASSING
OFF
AUTO
LIGHT SWITCH
COMBINATION LIGHT SWITCH
T
· AUTOMATIC LIGHTING/RAIN SENSOR*1
· AUTOMATIC LIGHTING CONTROL UNIT-SENSOR*2
· RELAY CONTROL MODULE
G401

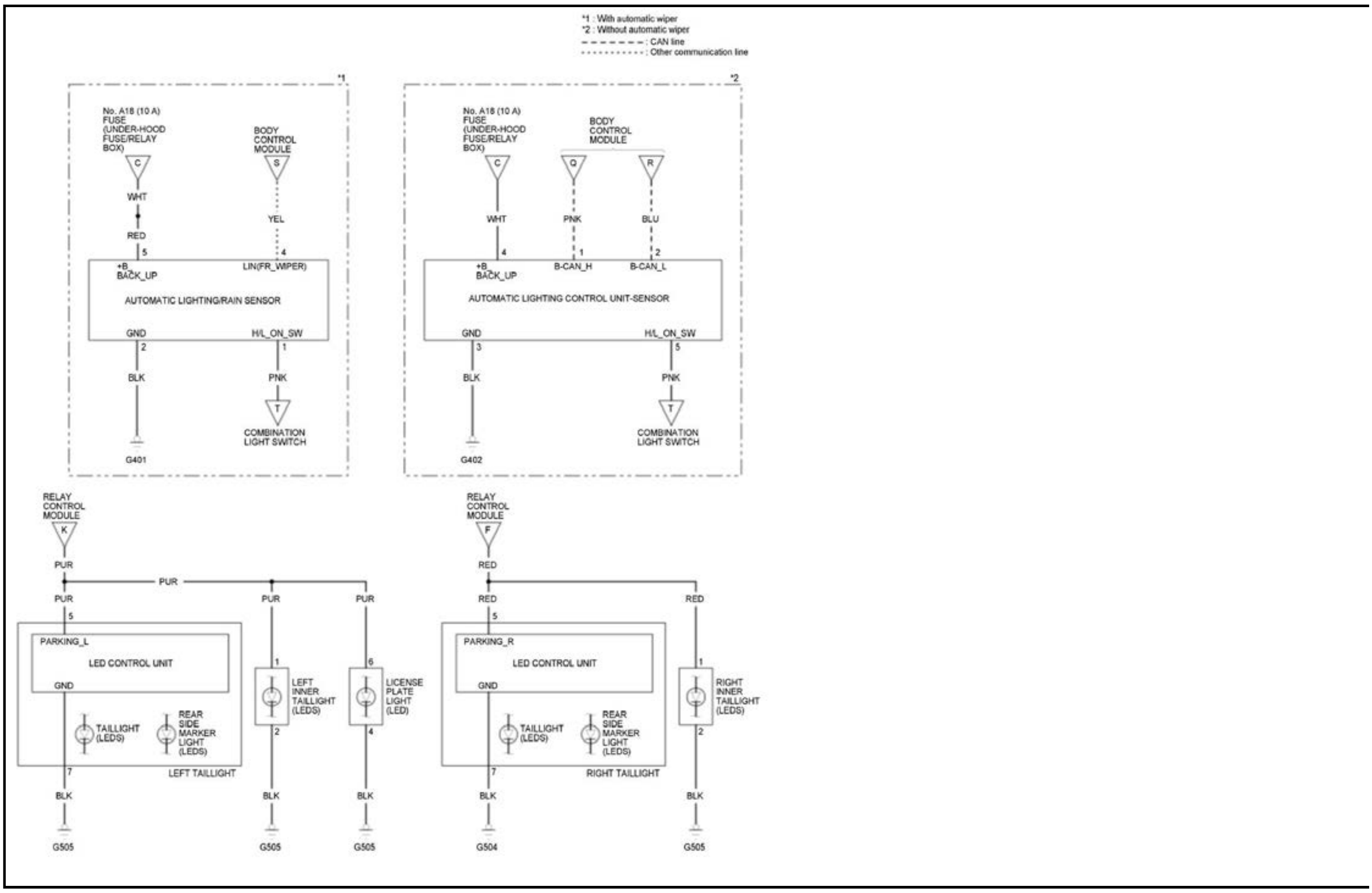
*1 : With automatic wiper
*2 : Without automatic wiper
CAN line
Other communication line
*1
No. A18 (10 A) FUSE (UNDER-HOOD FUSE/RELAY BOX)
C
WHT
RED
5
+B_BACK_UP
BODY CONTROL MODULE
S
YEL
4
LIN(FR_WIPER)
AUTOMATIC LIGHTING/RAIN SENSOR
GND
2
BLK
G401
H/L_ON_SW
1
PNK
T
COMBINATION LIGHT SWITCH
*2
No. A18 (10 A) FUSE (UNDER-HOOD FUSE/RELAY BOX)
C
WHT
4
+B_BACK_UP
BODY CONTROL MODULE
Q
R
PNK
BLU
1
2
B-CAN_H
B-CAN_L
AUTOMATIC LIGHTING CONTROL UNIT-SENSOR
GND
3
BLK
G402
H/L_ON_SW
5
PNK
T
COMBINATION LIGHT SWITCH
RELAY CONTROL MODULE
K
PUR
PUR
PUR
PUR
PUR
5
PARKING_L
LED CONTROL UNIT
GND
TAILLIGHT (LEDS)
REAR SIDE MARKER LIGHT (LEDS)
LEFT TAILLIGHT
7
BLK
G505
1
LEFT INNER TAILLIGHT (LEDS)
2
BLK
G505
6
LICENSE PLATE LIGHT (LED)
4
BLK
G505
RELAY CONTROL MODULE
F
RED
RED
RED
5
PARKING_R
LED CONTROL UNIT
GND
TAILLIGHT (LEDS)
REAR SIDE MARKER LIGHT (LEDS)
RIGHT TAILLIGHT
7
BLK
G504
1
RIGHT INNER TAILLIGHT (LEDS)
2
BLK
G505

Back-Up Lights

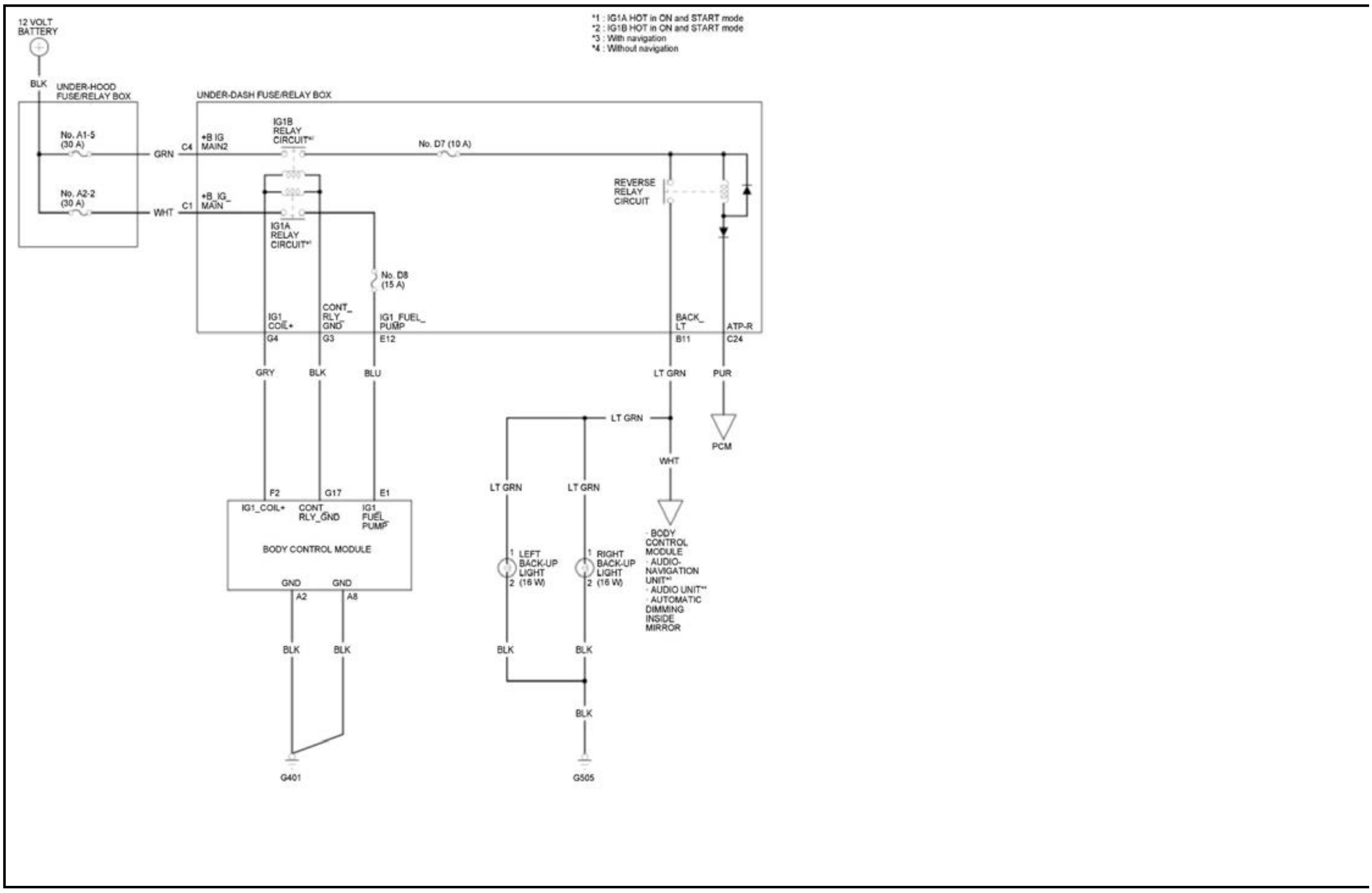
12 VOLT BATTERY
BLK
UNDER-HOOD FUSE/RELAY BOX
No. A1-5 (30 A)
No. A2-2 (30 A)
GRN
WHT
C4
C1
UNDER-DASH FUSE/RELAY BOX
+B_IG_MAIN2
+B_IG_MAIN
IG1B RELAY CIRCUIT*2
IG1A RELAY CIRCUIT*1
No. D7 (10 A)
No. D8 (15 A)
REVERSE RELAY CIRCUIT
*1 : IG1A HOT in ON and START mode
*2 : IG1B HOT in ON and START mode
*3 : With navigation
*4 : Without navigation
IG1_COIL+
G4
CONT_RLY_GND
G3
IG1_FUEL_PUMP
E12
BACK_LT
B11
ATP-R
C24
GRY
BLK
BLU
LT GRN
PUR
PCM
LT GRN
WHT
F2
G17
E1
IG1_COIL+
CONT_RLY_GND
IG1_FUEL_PUMP
BODY CONTROL MODULE
GND
GND
A2
A8
BLK
BLK
G401
LT GRN
LT GRN
1
LEFT BACK-UP LIGHT (16 W)
2
1
RIGHT BACK-UP LIGHT (16 W)
2
BLK
BLK
BLK
G505
· BODY CONTROL MODULE
· AUDIO-NAVIGATION UNIT*3
· AUDIO UNIT*4
· AUTOMATIC DIMMING INSIDE MIRROR

Brake Lights

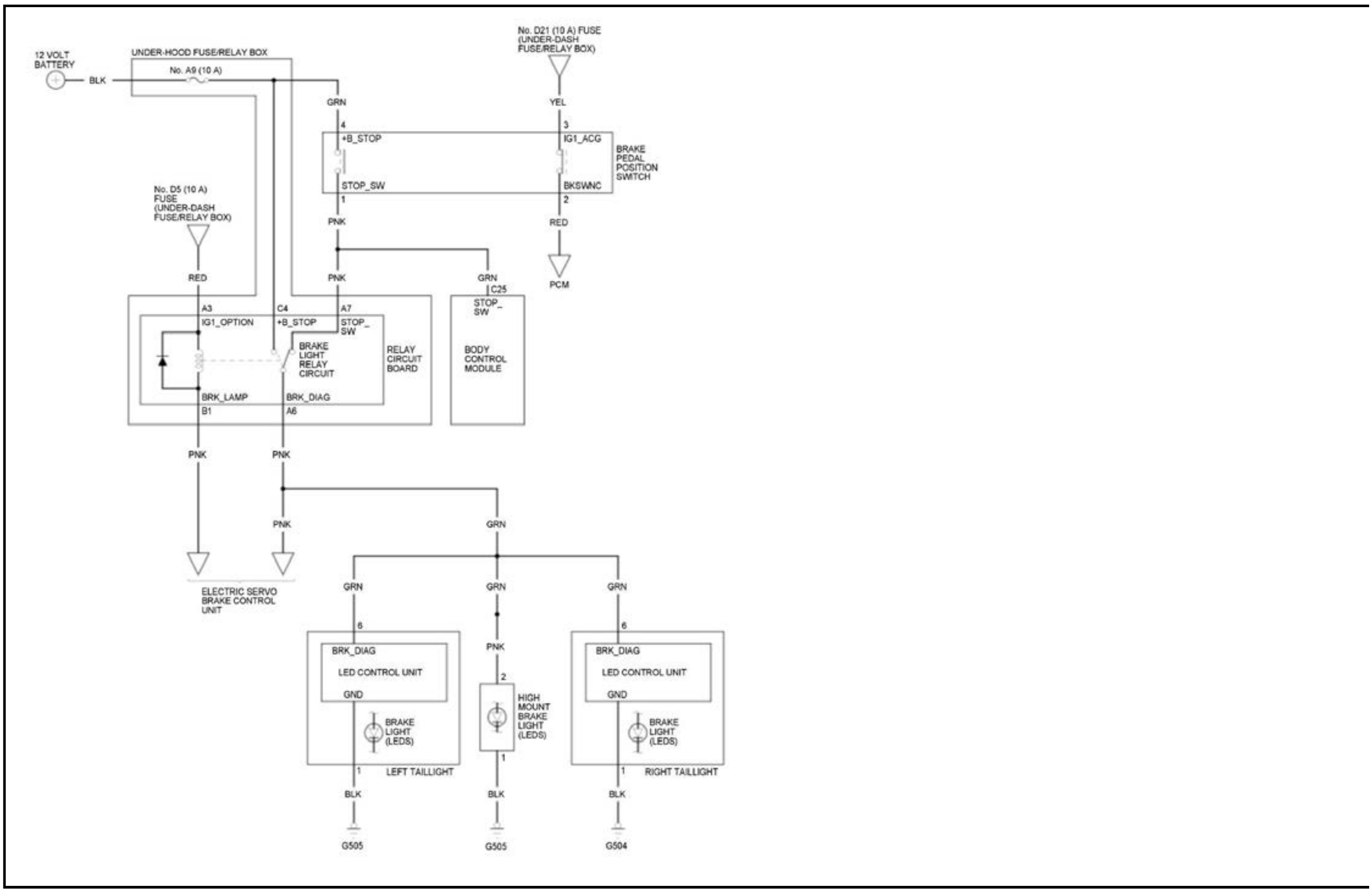
12 VOLT BATTERY
BLK
UNDER-HOOD FUSE/RELAY BOX
No. A9 (10 A)
GRN
4
+B_STOP
STOP_SW
1
PNK
No. D21 (10 A) FUSE (UNDER-DASH FUSE/RELAY BOX)
YEL
3
IG1_ACG
BKSWNC
2
RED
PCM
BRAKE PEDAL POSITION SWITCH
No. D5 (10 A) FUSE (UNDER-DASH FUSE/RELAY BOX)
RED
PNK
GRN
C25
STOP_ SW
BODY CONTROL MODULE
A3
C4
A7
IG1_OPTION
+B_STOP
STOP_ SW
BRAKE LIGHT RELAY CIRCUIT
RELAY CIRCUIT BOARD
BRK_LAMP
BRK_DIAG
B1
A6
PNK
PNK
PNK
GRN
ELECTRIC SERVO BRAKE CONTROL UNIT
GRN
GRN
GRN
6
BRK_DIAG
LED CONTROL UNIT
GND
BRAKE LIGHT (LEDS)
1
LEFT TAILLIGHT
BLK
G505
PNK
2
HIGH MOUNT BRAKE LIGHT (LEDS)
1
BLK
G505
6
BRK_DIAG
LED CONTROL UNIT
GND
BRAKE LIGHT (LEDS)
1
RIGHT TAILLIGHT
BLK
G504

Fog Lights

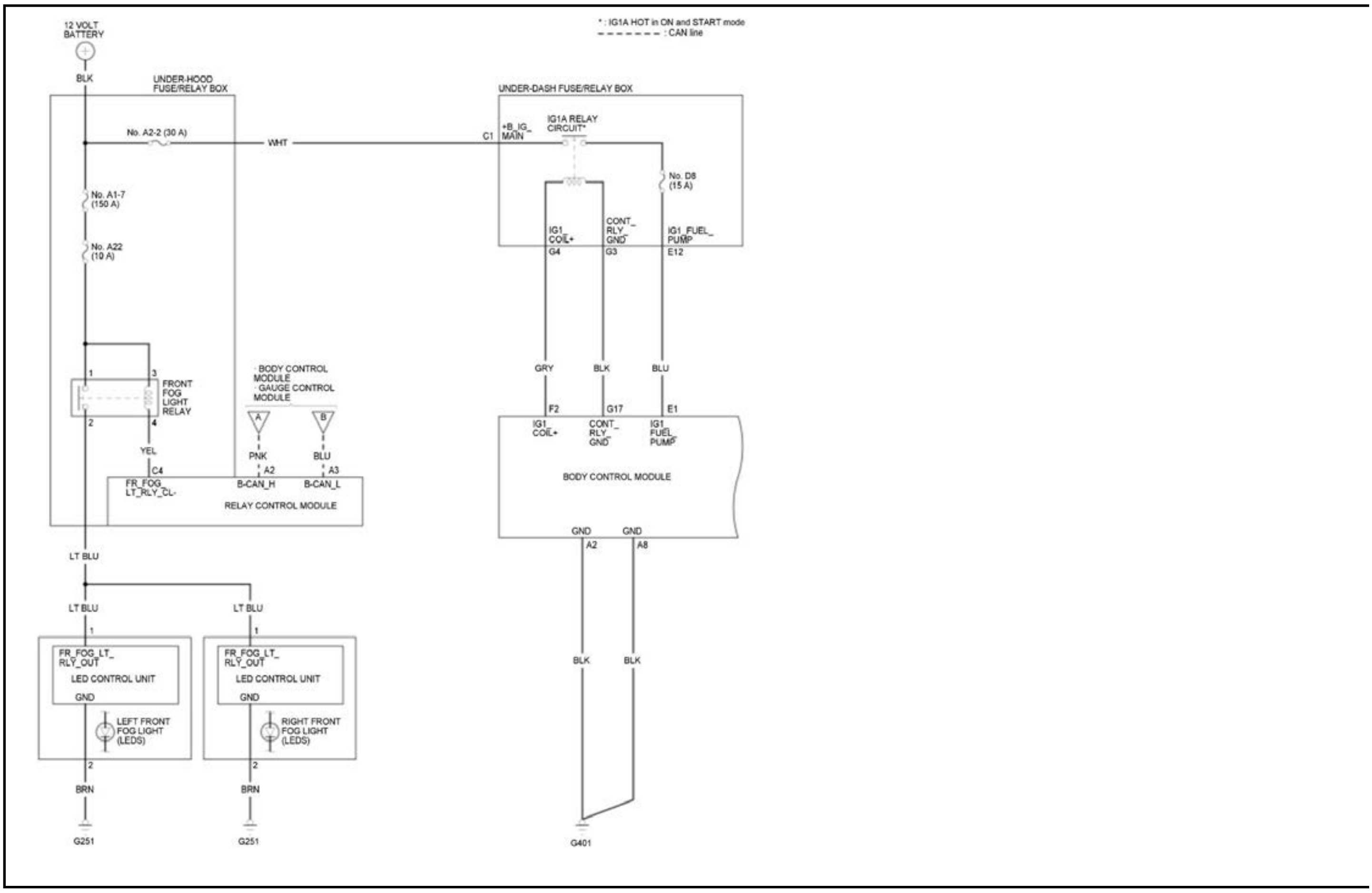
12 VOLT BATTERY
BLK
UNDER-HOOD FUSE/RELAY BOX
* : IG1A HOT in ON and START mode
- - - - - - - : CAN line
No. A2-2 (30 A)
WHT
No. A1-7 (150 A)
No. A22 (10 A)
1
3
2
4
FRONT FOG LIGHT RELAY
YEL
C4
FR_FOG_ LT_RLY_CL-
· BODY CONTROL MODULE
· GAUGE CONTROL MODULE
A
B
PNK
BLU
A2
A3
B-CAN_H
B-CAN_L
RELAY CONTROL MODULE
LT BLU
LT BLU
LT BLU
1
1
FR_FOG_LT_ RLY_OUT
LED CONTROL UNIT
GND
LEFT FRONT FOG LIGHT (LEDS)
RIGHT FRONT FOG LIGHT (LEDS)
2
BRN
G251
G251
UNDER-DASH FUSE/RELAY BOX
C1
+B_IG_ MAIN
IG1A RELAY CIRCUIT*
No. D8 (15 A)
IG1_ COIL+
CONT_ RLY_ GND
IG1_FUEL_ PUMP
G4
G3
E12
GRY
BLK
BLU
F2
G17
E1
IG1_ COIL+
CONT_ RLY_ GND
IG1_ FUEL_ PUMP
BODY CONTROL MODULE
GND
GND
A2
A8
BLK
BLK
G401

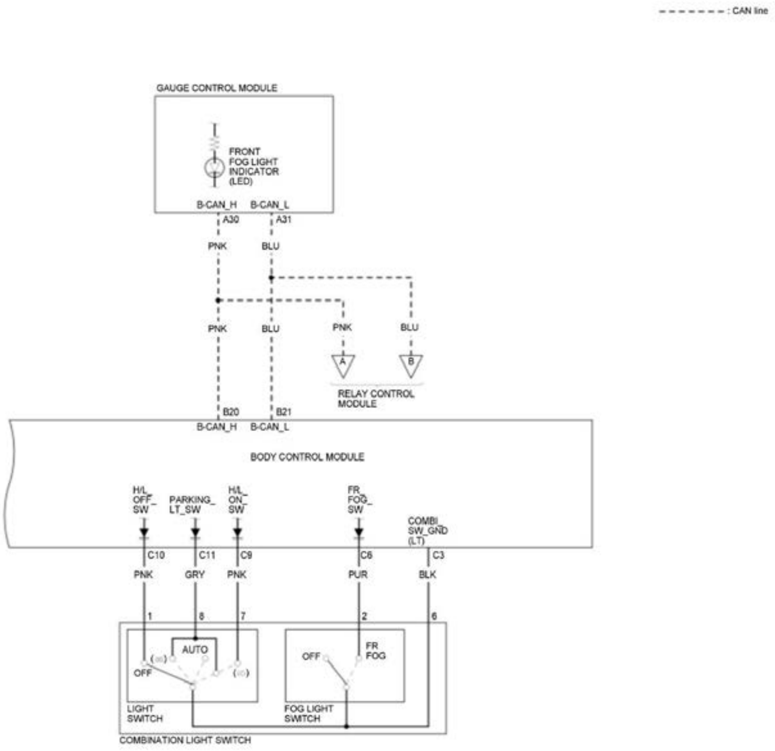
- - - - - - - : CAN line
GAUGE CONTROL MODULE
FRONT FOG LIGHT INDICATOR (LED)
B-CAN_H
B-CAN_L
A30
A31
PNK
BLU
PNK
BLU
PNK
BLU
A
B
RELAY CONTROL MODULE
B20
B21
B-CAN_H
B-CAN_L
BODY CONTROL MODULE
H/L_OFF_SW
PARKING_LT_SW
H/L_ON_SW
FR_FOG_SW
COMBI_SW_GND (LT)
C10
C11
C9
C6
C3
PNK
GRY
PNK
PUR
BLK
1
8
7
2
6
AUTO
OFF
FR FOG
OFF
LIGHT SWITCH
FOG LIGHT SWITCH
COMBINATION LIGHT SWITCH

TURN SIGNAL/HAZARD WARNING LIGHTS CIRCUIT DIAGRAM

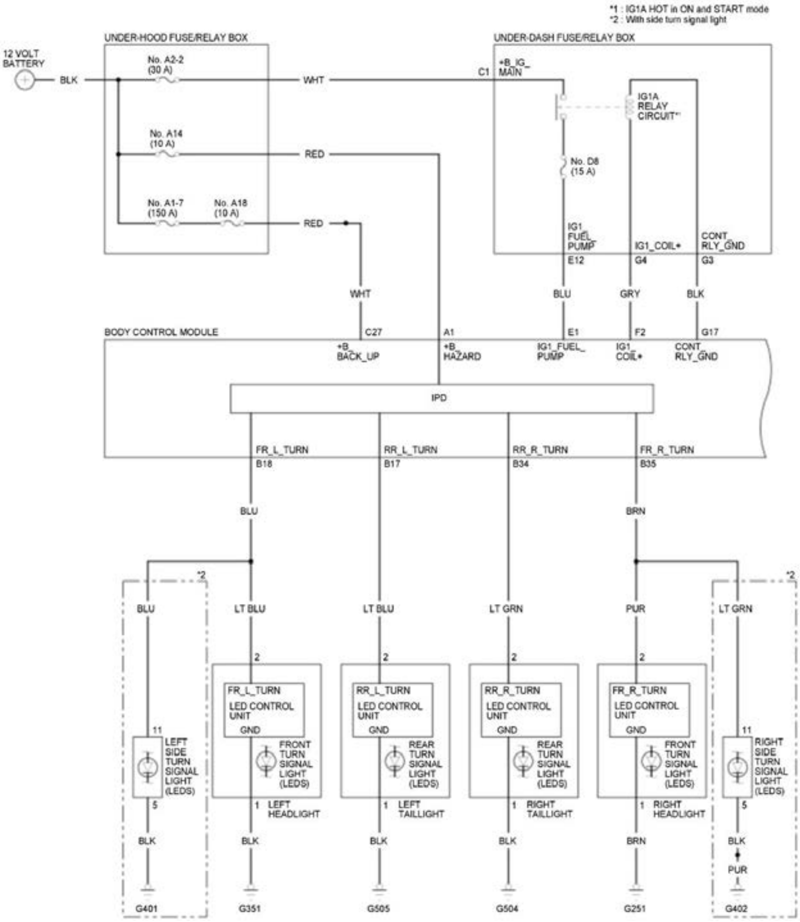
*1 : IG1A HOT in ON and START mode
*2 : With side turn signal light
UNDER-HOOD FUSE/RELAY BOX
UNDER-DASH FUSE/RELAY BOX
12 VOLT BATTERY
BLK
No. A2-2 (30 A)
WHT
C1
+B_IG_MAIN
IG1A RELAY CIRCUIT*1
No. A14 (10 A)
RED
No. D8 (15 A)
No. A1-7 (150 A)
No. A18 (10 A)
RED
IG1_FUEL_PUMP
IG1_COIL+
CONT_RLY_GND
E12
G4
G3
WHT
BLU
GRY
BLK
BODY CONTROL MODULE
C27
A1
E1
F2
G17
+B_BACK_UP
+B_HAZARD
IG1_FUEL_PUMP
IG1_COIL+
CONT_RLY_GND
IPD
FR_L_TURN
RR_L_TURN
RR_R_TURN
FR_R_TURN
B18
B17
B34
B35
BLU
BRN
*2
*2
BLU
LT BLU
LT BLU
LT GRN
PUR
LT GRN
2
2
2
2
FR_L_TURN LED CONTROL UNIT
RR_L_TURN LED CONTROL UNIT
RR_R_TURN LED CONTROL UNIT
FR_R_TURN LED CONTROL UNIT
GND
GND
GND
GND
11
11
LEFT SIDE TURN SIGNAL LIGHT (LEDS)
FRONT TURN SIGNAL LIGHT (LEDS)
REAR TURN SIGNAL LIGHT (LEDS)
REAR TURN SIGNAL LIGHT (LEDS)
FRONT TURN SIGNAL LIGHT (LEDS)
RIGHT SIDE TURN SIGNAL LIGHT (LEDS)
5
1
1
1
1
5
LEFT HEADLIGHT
LEFT TAILLIGHT
RIGHT TAILLIGHT
RIGHT HEADLIGHT
BLK
BLK
BLK
BLK
BRN
BLK
PUR
G401
G351
G505
G504
G251
G402

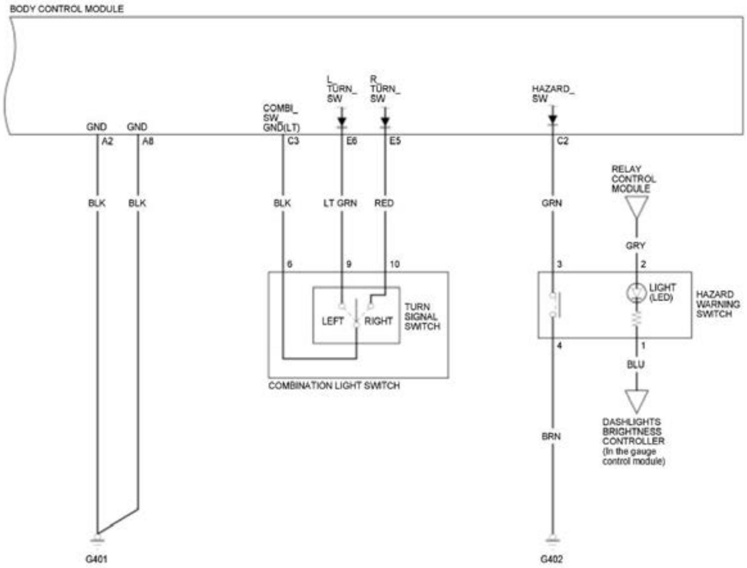
BODY CONTROL MODULE
GND
A2
GND
A8
COMBI_SW_GND(LT)
C3
L_TURN_SW
E6
R_TURN_SW
E5
HAZARD_SW
C2
BLK
BLK
BLK
LT GRN
RED
GRN
RELAY CONTROL MODULE
GRY
6
9
10
3
2
LEFT
RIGHT
TURN SIGNAL SWITCH
COMBINATION LIGHT SWITCH
LIGHT (LED)
HAZARD WARNING SWITCH
4
1
BLU
DASHLIGHTS BRIGHTNESS CONTROLLER (In the gauge control module)
BRN
G401
G402

ADJUSTMENT

BRAKE PEDAL AND BRAKE PEDAL POSITION SWITCH ADJUSTMENT

Adjustment

NOTE: How to read the torque specifications .

1. Steering Joint Cover - Remove
2. Brake Pedal Height - Inspect

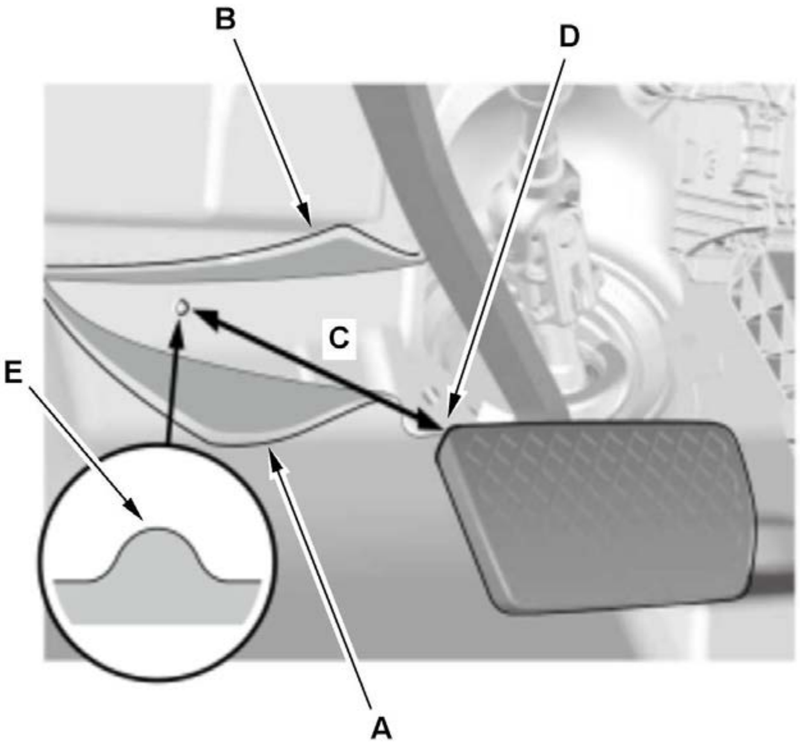 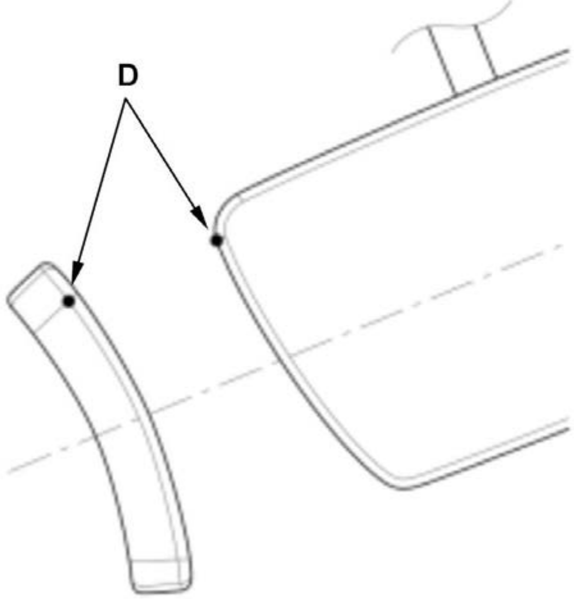	1. Pull back the carpet (A) and t 2. Measure the pedal height (C) upper point (D) of the pedal pac the floor without the insulation.

Standard pedal height:	**215 +/- 5 mm (8.46 +/- 0.20 in)**

3. Brake Pedal - Adjust

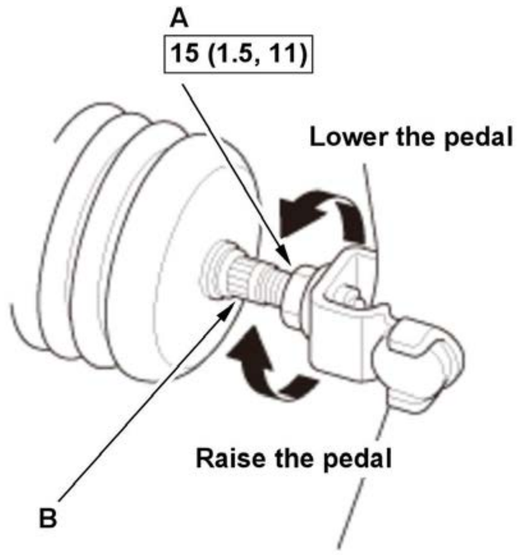

1. **Remove the brake pedal position switch** .

NOTE: Do not disconnect the connector.

2. Loosen the pushrod locknut (A).

3. Screw the pushrod (B) in or out with pliers
pedal height from the floor is reached.

4. Tighten the locknut firmly.

NOTE: Do not adjust the pedal height with th

4. Brake Pedal Position Switch - Adjust

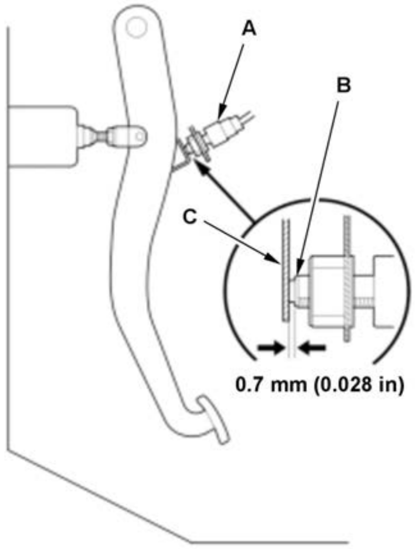

1. Lift up on the brake pedal by hand.

2. Push in the brake pedal position switch (A) until its plunger is fully p
end (B) touching the pedal arm (C)).

3. Turn the switch 45 deg. clockwise to lock it. The gap between the bra
switch and the pad is automatically adjusted to 0.7 mm (0.028 in) by lo

4. Make sure the brake lights go off when the pedal is released.

5. Brake Pedal Free Play - Check

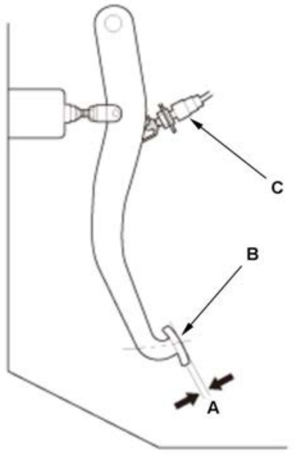

1. Inspect the free play (A) at the brake pedal pad (B) by pushing the brake pedal by ha
pedal free play is out of specification, adjust the brake pedal position switch (C). If the
play is insufficient, it may result in brake drag.

Free play:	**8.1-15.8 mm (0.319-0.622 in)**

6. All Removed Parts - Install

1. Install all removed parts in the reverse order of removal.

7. **Sensor 0 (Zero) Position - Memorize**

FRONT FOG LIGHT ADJUSTMENT

Adjustment

1. Front Fog Light - Adjust

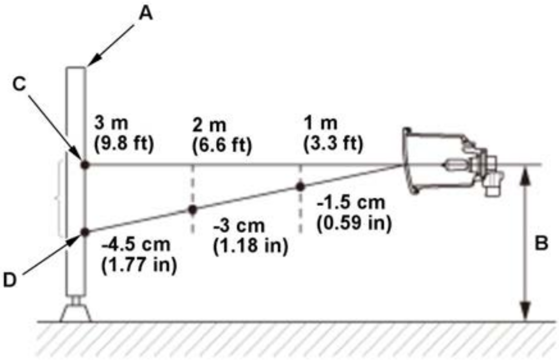 A C 3 m (9.8 ft) 2 m (6.6 ft) 1 m (3.3 ft) -1.5 cm (0.59 in) -3 cm (1.18 in) -4.5 cm (1.77 in) B D	Before adjusting the front fog lights: - Park the vehicle on a level surface. - Make sure the tire pressures are correct. - The driver or someone who weighs the same should sit in the driver's - Unload the vehicle. The front fog lights should aim down slightly. To check for proper adjustm 1. Park the vehicle in front of a wall or screen (A). 2. Turn the front fog lights on. 3. Determine if the front fog lights are aimed properly: - Measure the height (B) of the front fog lights. - On the wall or screen, mark the height of the front fog lights with a p - Check each front fog light beam's height. Adjust them both so they a cm (1.77 in) lower (D) than the height of the front fog lights at a dist For example, if the vehicle is parked 3 m (9.8 ft) from the wall or screen, th fog light beam should be 4.5 cm (1.77 in) below the tape mark.

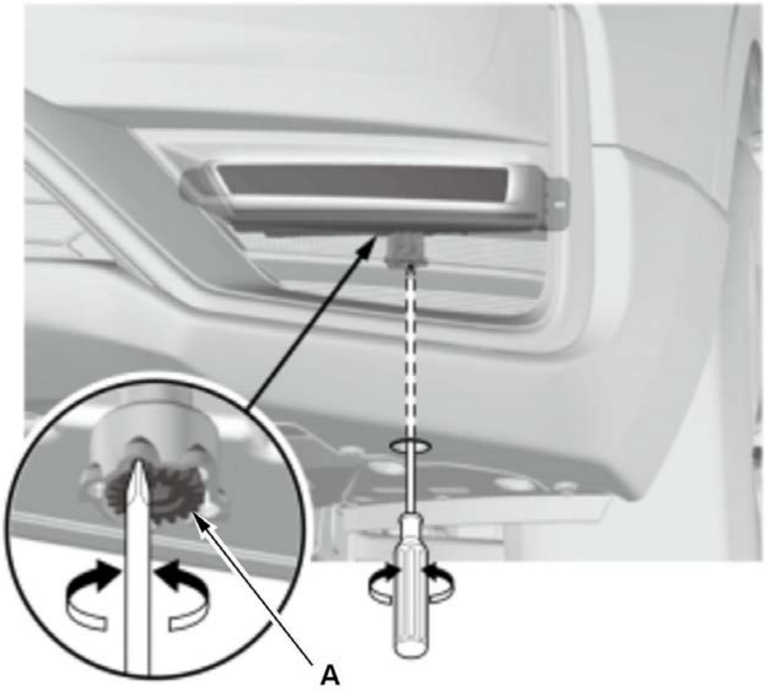	4. If necessary, adjust each front fog light height by turning the adjuster (A).

HEADLIGHT ADJUSTMENT

Adjustment

1. Low Beam Headlight - Adjust

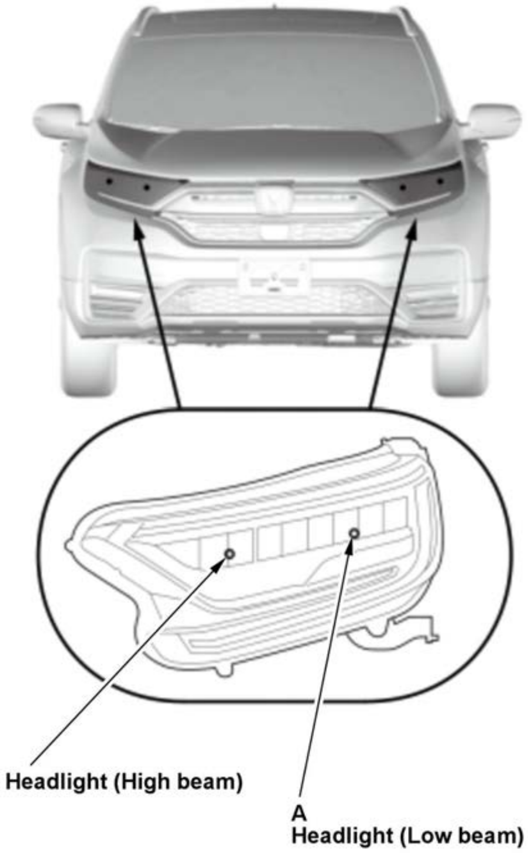

WARNING:

Headlights become very hot during use; do not touch them or cov
items like fender covers immediately after they have been turned

Before adjusting the headlights:

- Park the vehicle on a level surface.
- Make sure the tire pressures are correct.
- The driver or someone who weighs the same should sit in t
  use an equivalent weight).
- Unload the vehicle.

1. Clean the outer lens so that you can see the center (A) of the he

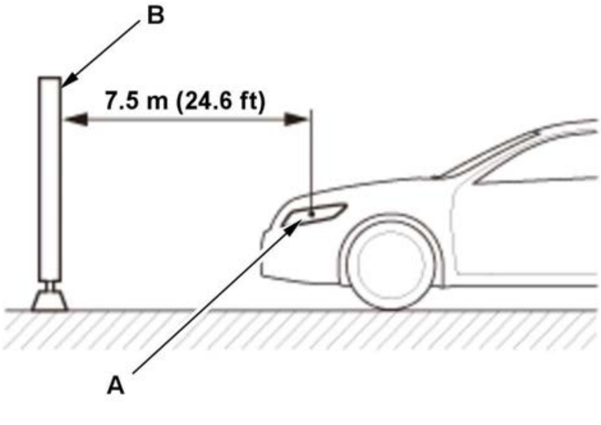

Low beam

2. Park the vehicle so that the center mark of the low
is 7.5 m (24.6 ft) away from a wall or screen (B).

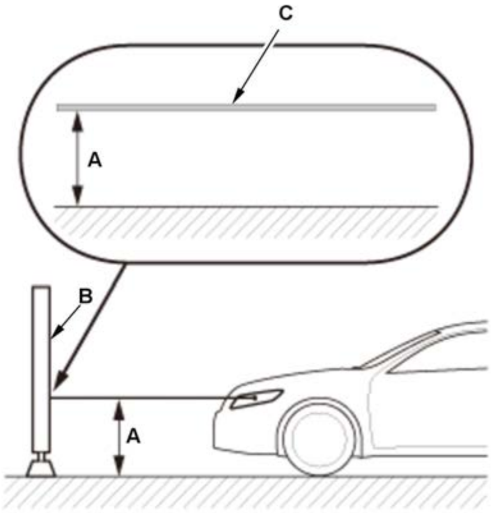

3. Measure the height of the low beam headlight's center mark (A), then
(B), mark the same height of the headlights with masking tape in a straig
(C).

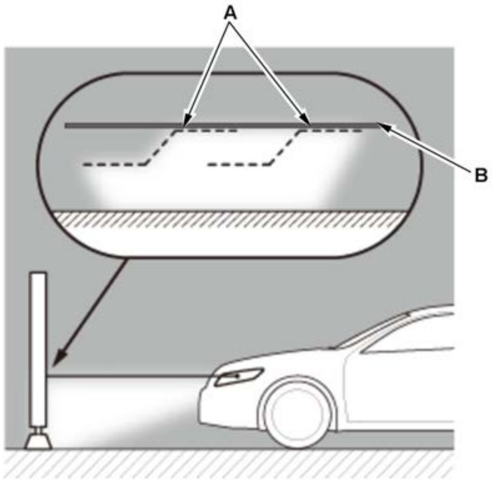 	4. Turn on the low beam headlights. 5. To see if the headlights are adjusted properly, observe the beams of light proj screen. The highest edge or "cut line" (A) of the headlights should be equal with (B). **NOTE:** To help determine if a headlight is out of adjustment, block one of the b piece of cardboard or equivalent, and observe the other beam on the wall or scre the other headlight.

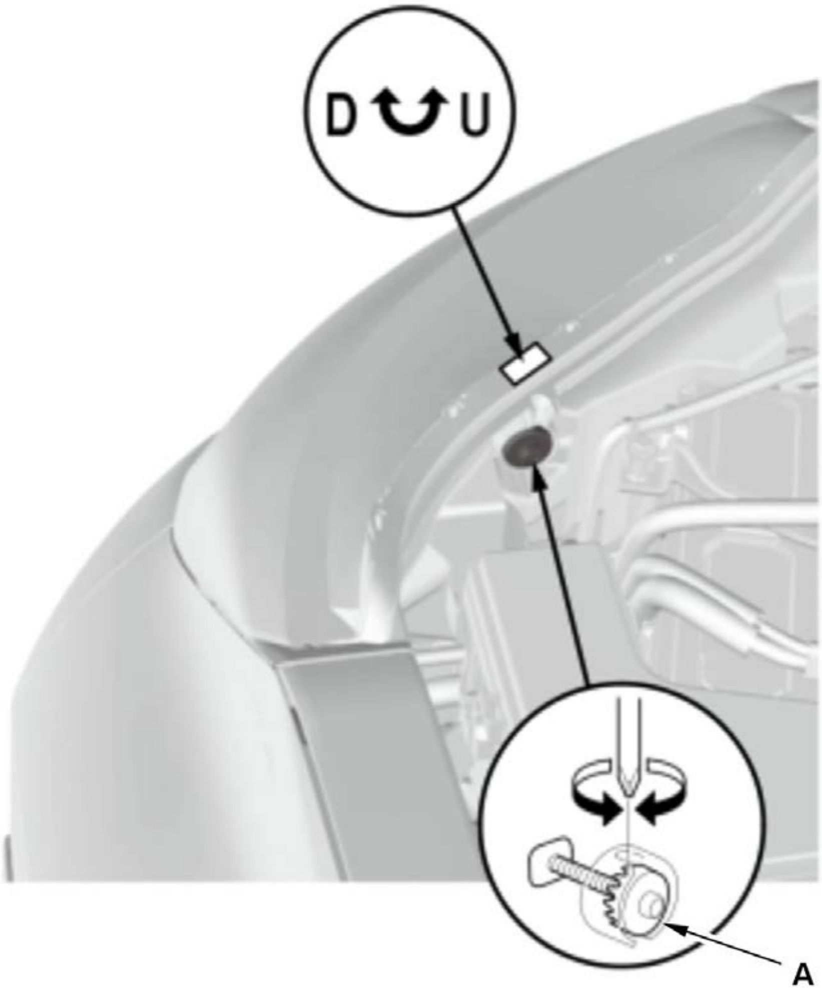

6. If adjustment is necessary, adjust the headlights to local turning the adjuster (A).

NOTE: The headlights can o and down.

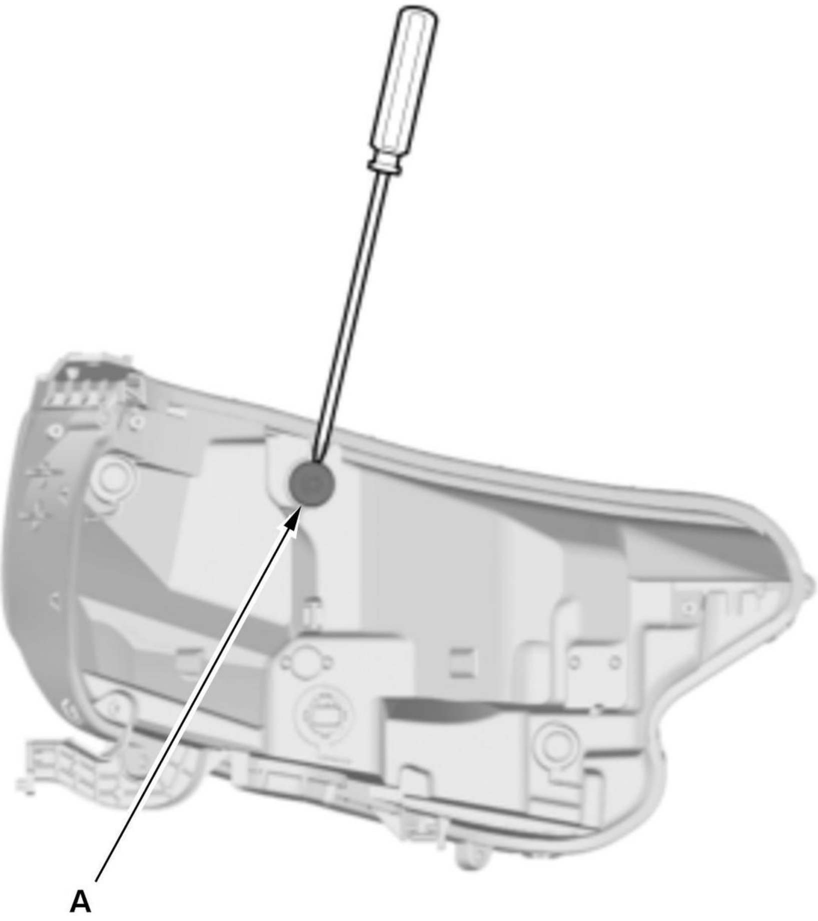

COMPONENT LOCATION INDEX

AUTO HIGH-BEAM (HIGH-BEAM SUPPORT SYSTEM) COMPONENT LOCATION INDEX

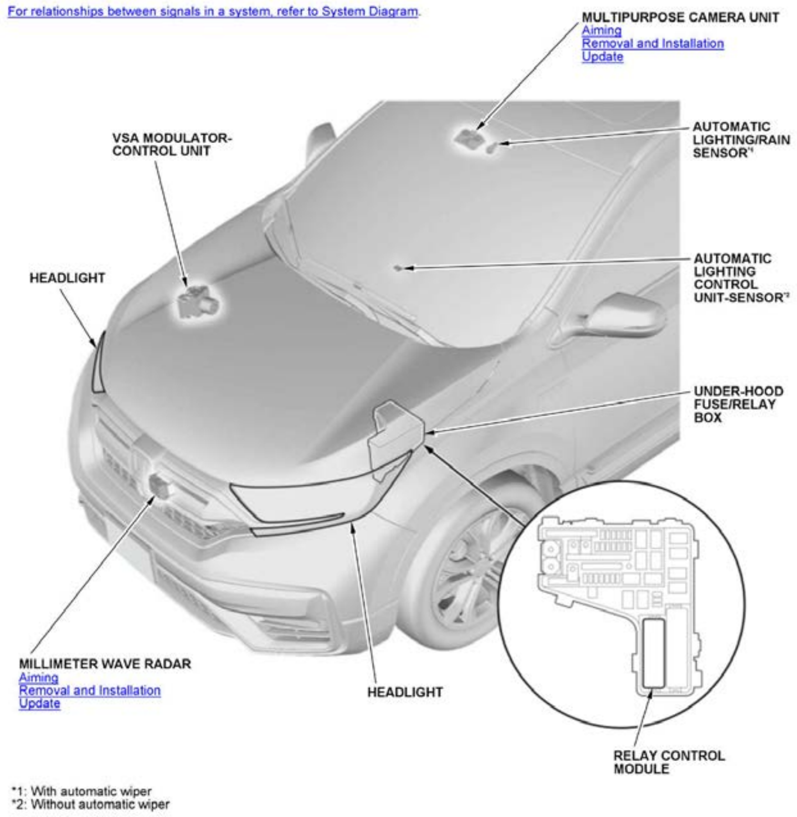
For relationships between signals in a system, refer to System Diagram.
MULTIPURPOSE CAMERA UNIT
Aiming
Removal and Installation
Update
VSA MODULATOR-CONTROL UNIT
AUTOMATIC LIGHTING/RAIN SENSOR*1
HEADLIGHT
AUTOMATIC LIGHTING CONTROL UNIT-SENSOR*2
UNDER-HOOD FUSE/RELAY BOX
MILLIMETER WAVE RADAR
Aiming
Removal and Installation
Update
HEADLIGHT
RELAY CONTROL MODULE
*1: With automatic wiper
*2: Without automatic wiper

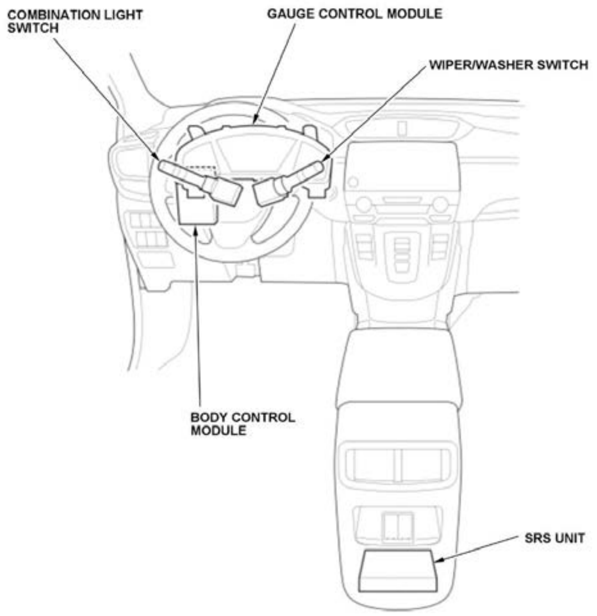
COMBINATION LIGHT SWITCH
GAUGE CONTROL MODULE
WIPER/WASHER SWITCH
BODY CONTROL MODULE
SRS UNIT

EXTERIOR LIGHTS COMPONENT LOCATION INDEX

For relationships between signals in a system, refer to System Diagram.

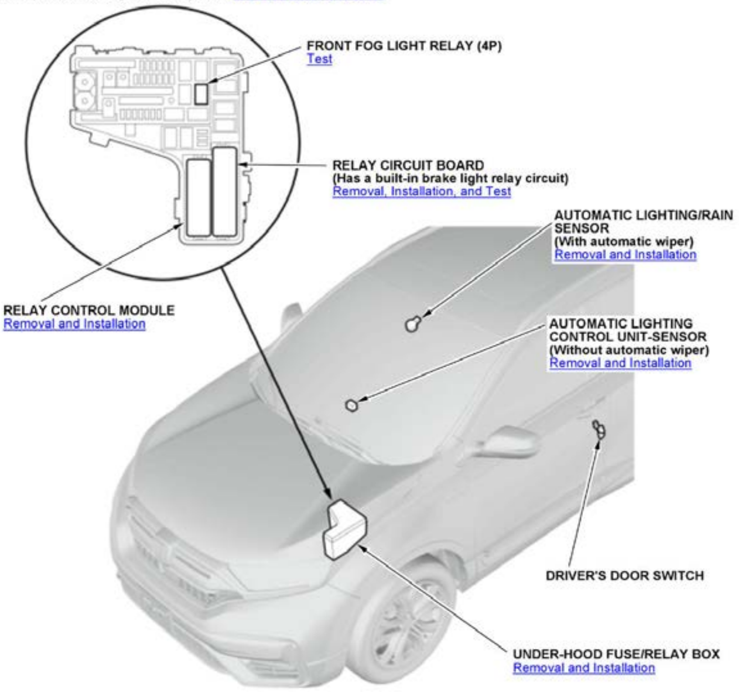
FRONT FOG LIGHT RELAY (4P)
Test
RELAY CIRCUIT BOARD
(Has a built-in brake light relay circuit)
Removal, Installation, and Test
AUTOMATIC LIGHTING/RAIN SENSOR
(With automatic wiper)
Removal and Installation
RELAY CONTROL MODULE
Removal and Installation
AUTOMATIC LIGHTING CONTROL UNIT-SENSOR
(Without automatic wiper)
Removal and Installation
DRIVER'S DOOR SWITCH
UNDER-HOOD FUSE/RELAY BOX
Removal and Installation

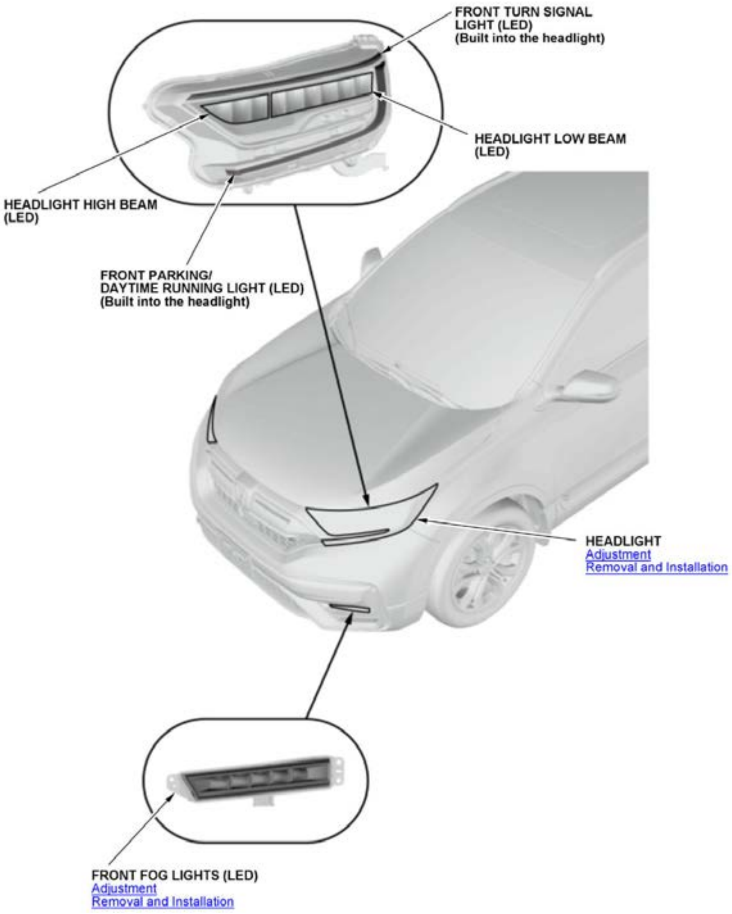
FRONT TURN SIGNAL LIGHT (LED) (Built into the headlight)
HEADLIGHT LOW BEAM (LED)
HEADLIGHT HIGH BEAM (LED)
FRONT PARKING/ DAYTIME RUNNING LIGHT (LED) (Built into the headlight)
HEADLIGHT
Adjustment
Removal and Installation
FRONT FOG LIGHTS (LED)
Adjustment
Removal and Installation

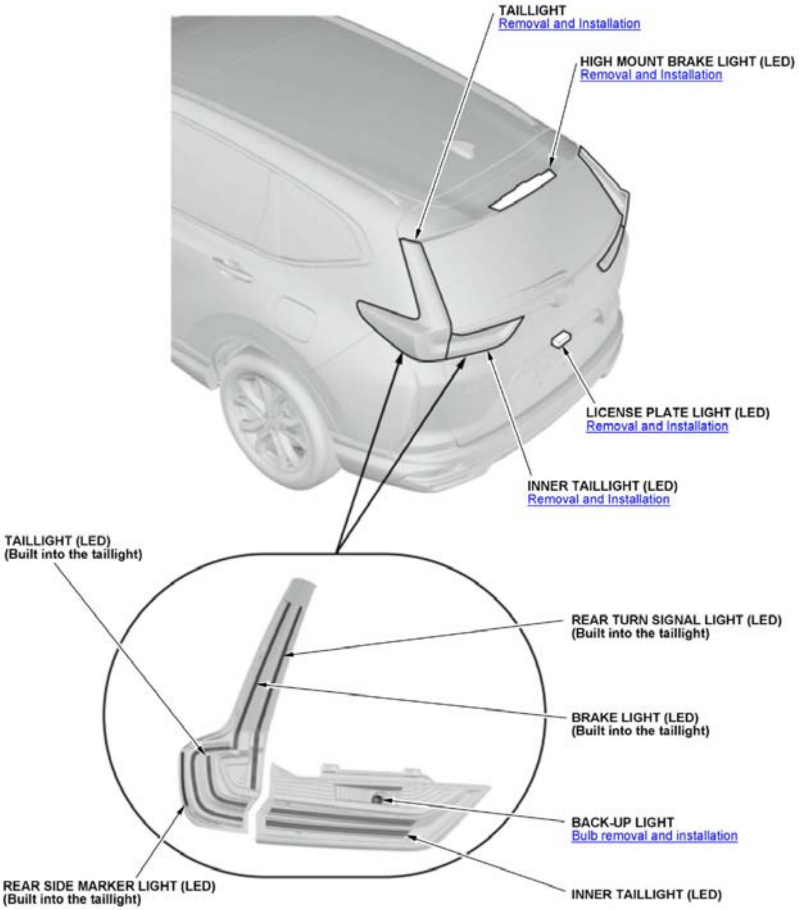
TAILLIGHT
Removal and Installation
HIGH MOUNT BRAKE LIGHT (LED)
Removal and Installation
LICENSE PLATE LIGHT (LED)
Removal and Installation
INNER TAILLIGHT (LED)
Removal and Installation
TAILLIGHT (LED) (Built into the taillight)
REAR TURN SIGNAL LIGHT (LED) (Built into the taillight)
BRAKE LIGHT (LED) (Built into the taillight)
BACK-UP LIGHT
Bulb removal and installation
INNER TAILLIGHT (LED)
REAR SIDE MARKER LIGHT (LED) (Built into the taillight)

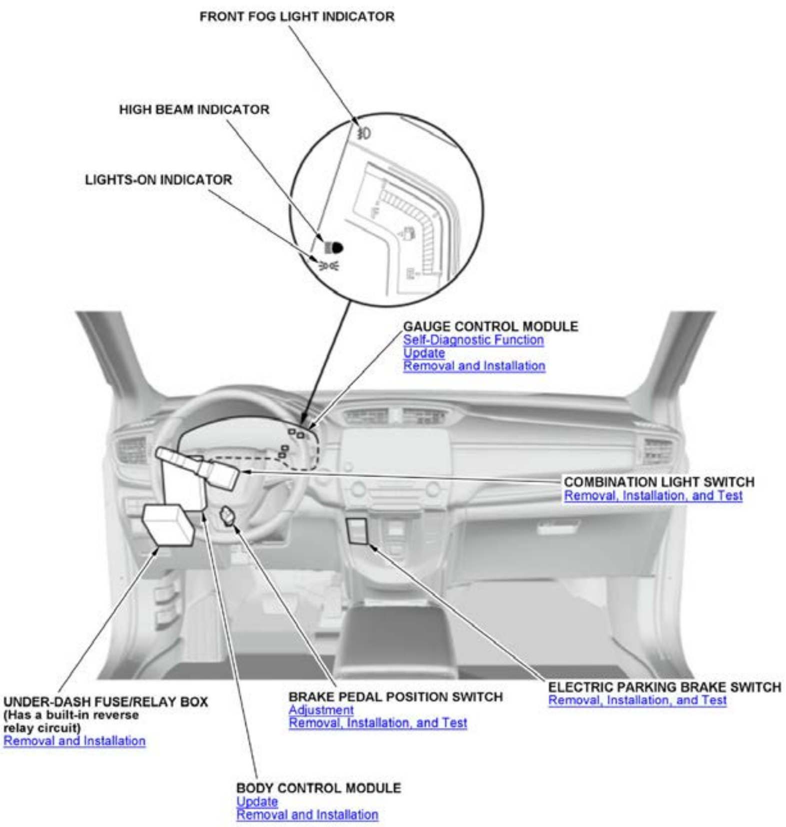
FRONT FOG LIGHT INDICATOR
HIGH BEAM INDICATOR
LIGHTS-ON INDICATOR
GAUGE CONTROL MODULE
Self-Diagnostic Function
Update
Removal and Installation
COMBINATION LIGHT SWITCH
Removal, Installation, and Test
UNDER-DASH FUSE/RELAY BOX
(Has a built-in reverse
relay circuit)
Removal and Installation
BRAKE PEDAL POSITION SWITCH
Adjustment
Removal, Installation, and Test
ELECTRIC PARKING BRAKE SWITCH
Removal, Installation, and Test
BODY CONTROL MODULE
Update
Removal and Installation

TURN SIGNAL/HAZARD WARNING LIGHTS COMPONENT LOCATION INDEX

For relationships between signals in a system, refer to System Diagram.

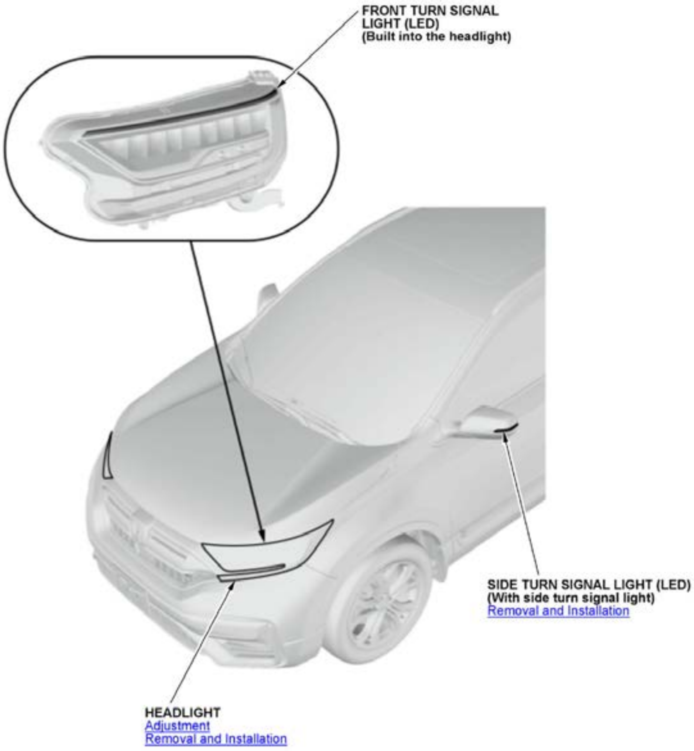
FRONT TURN SIGNAL
LIGHT (LED)
(Built into the headlight)
SIDE TURN SIGNAL LIGHT (LED)
(With side turn signal light)
Removal and Installation
HEADLIGHT
Adjustment
Removal and Installation

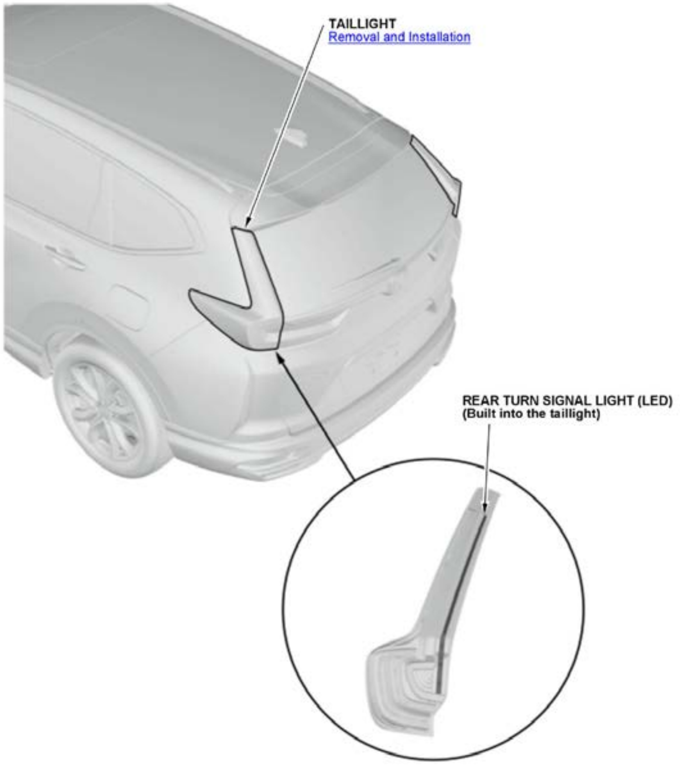
TAILLIGHT
Removal and Installation
REAR TURN SIGNAL LIGHT (LED)
(Built into the taillight)

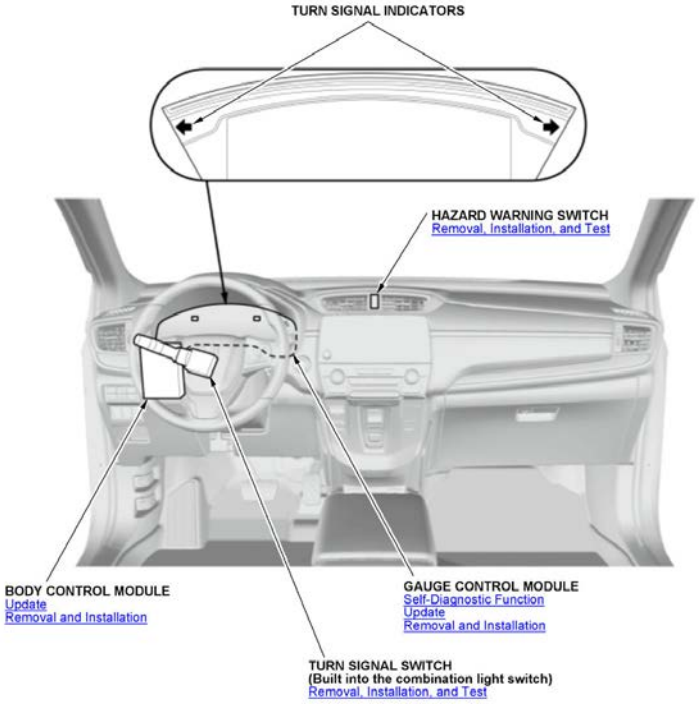
TURN SIGNAL INDICATORS
HAZARD WARNING SWITCH
Removal, Installation, and Test
BODY CONTROL MODULE
Update
Removal and Installation
GAUGE CONTROL MODULE
Self-Diagnostic Function
Update
Removal and Installation
TURN SIGNAL SWITCH
(Built into the combination light switch)
Removal, Installation, and Test

REMOVAL INSTALLATION TEST

DRIVER'S POWER TAILGATE SWITCH REMOVAL, INSTALLATION, AND TEST

Removal and Installation

NOTE: The switch location of the driver's power tailgate switch is different depending on the model.

1

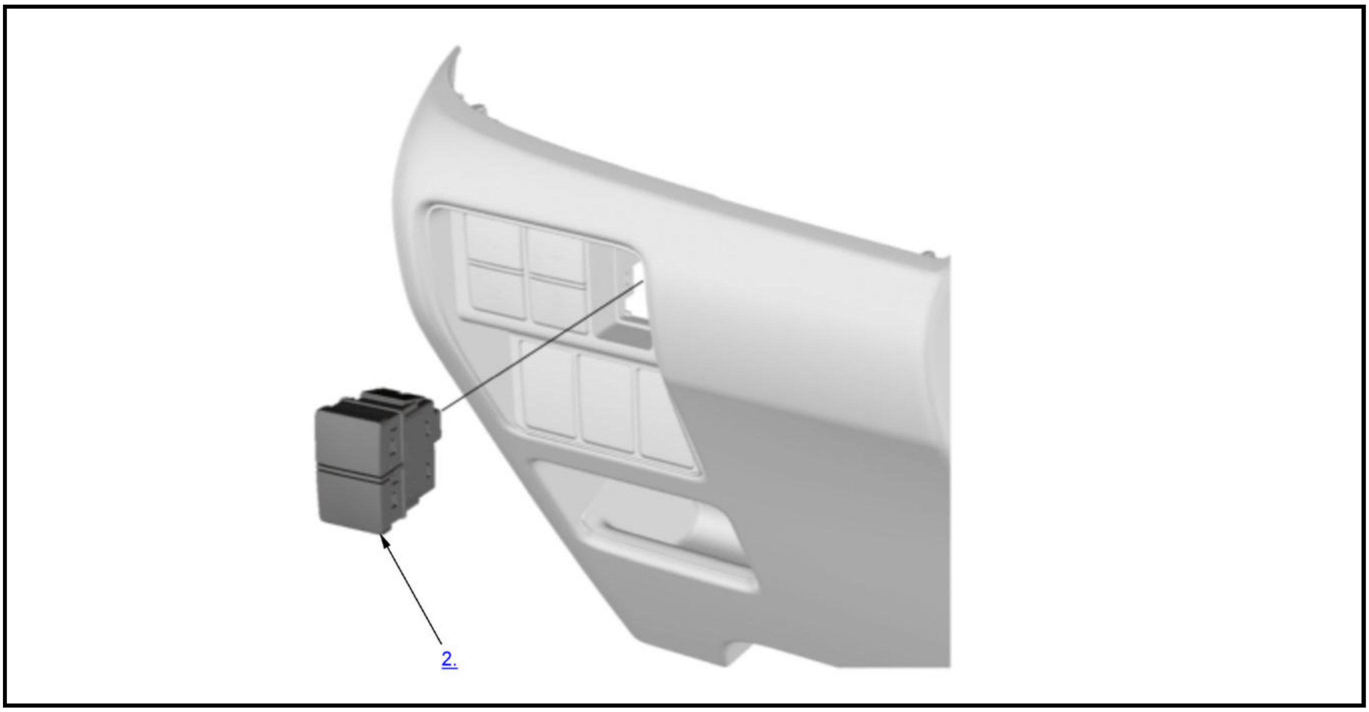

1. Driver's Dashboard Lower Cover - Remove
2. Driver's Power Tailgate Switch - Remove
3. All Removed Parts - Install

   1. Install the parts in the reverse order of removal.

Test

1. Driver's Power Tailgate Switch - Test

12P connector type

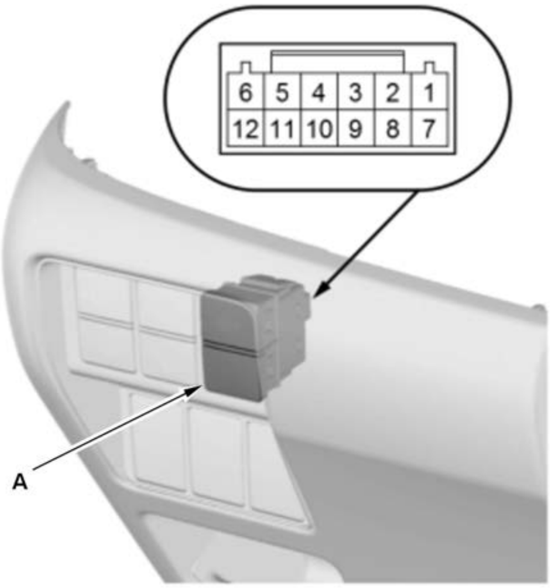

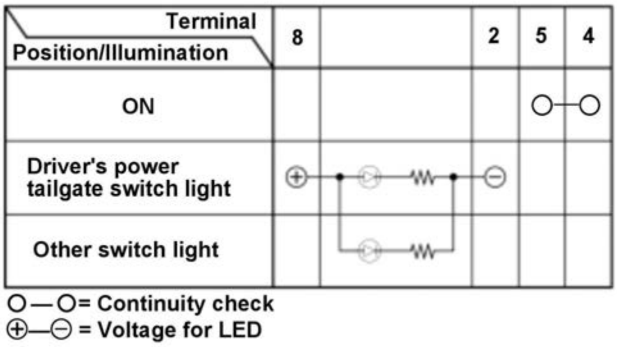

Terminal Position/Illumination	8		2	5	4
ON				○	○
Driver's power tailgate switch light	⊕		⊖		
Other switch light					

○—○= Continuity check
⊕—⊖ = Voltage for LED

4P connector type

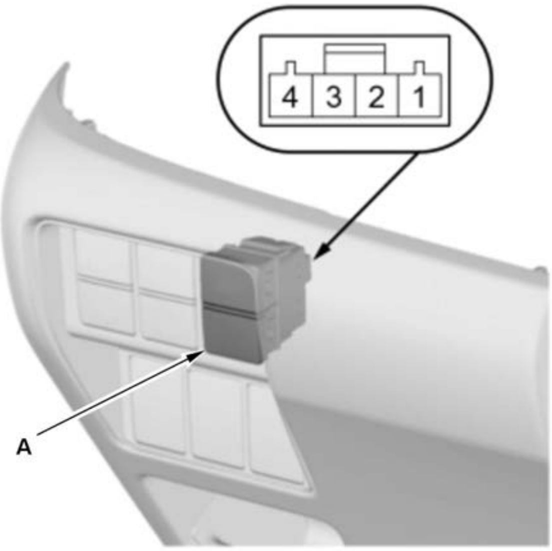

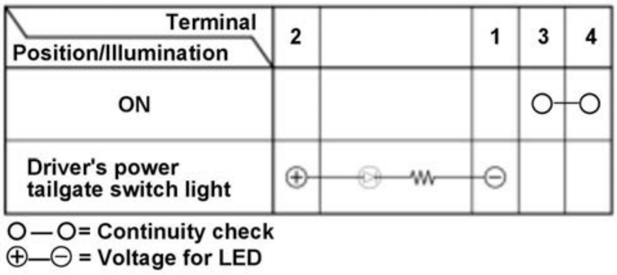

Terminal Position/Illumination	2		1	3	4
ON				○	○
Driver's power tailgate switch light	⊕		⊖		

○—○= Continuity check
⊕—⊖ = Voltage for LED

The switch location of the driver's power tailgate switch (A) is different depending on the model.

1. Check the driver's power tailgate switch for continuity and voltage according to the table.

NOTE:

- Before testing, make sure not to short the driver's power tailgate switch circuit.
- When an LED is located between terminals, check if the LED lights up by connecting power and ground to the LED.
- Note this important operating characteristic; diode bias causes a diode to fully conduct electricity in one direction (forward), while not at all in the opposite direction (reverse).

2. If the continuity is not as specified, replace the driver's power tailgate switch.

HEATED WINDSHIELD WIPER AREA SWITCH REMOVAL, INSTALLATION, AND TEST

Removal and Installation

NOTE: The mounting position of the heated windshield wiper area switch is different depending on the model.

1

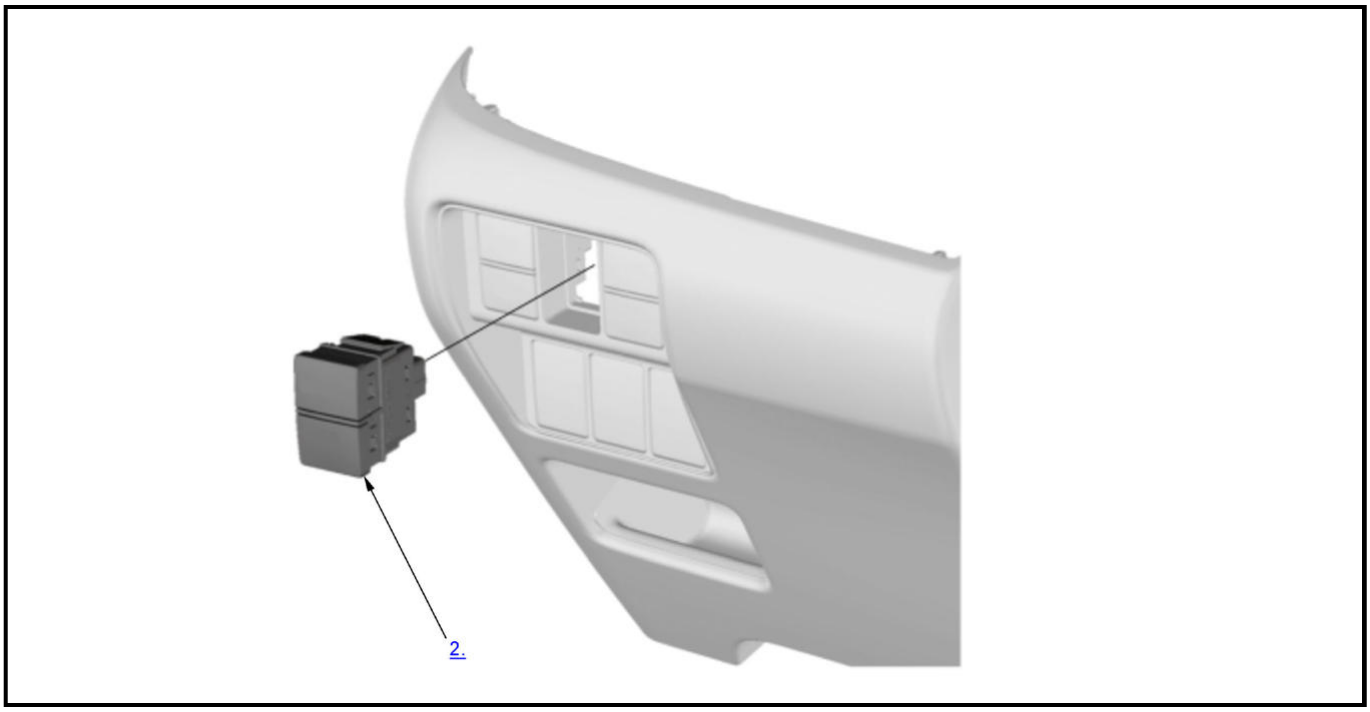

1. **Driver's Dashboard Lower Cover - Remove**
2. Heated Windshield Wiper Area Switch - Remove
3. All Parts Removed - Install

    1. Install the parts in the reverse order of removal.

Test

1. Heated Windshield Wiper Area Switch - Test

    NOTE: The mounting position of the heated windshield wiper area switch is different depending on the model.

    1. Check the heated windshield wiper area switch according to the table.

    NOTE:

    - When an LED is located between terminals, check if the LED illuminates by connecting power and ground to the LED.
    - Note this important operating characteristic; diode bias causes a diode to fully conduct electricity in one direction (forward), while not at all in the opposite direction (reverse).

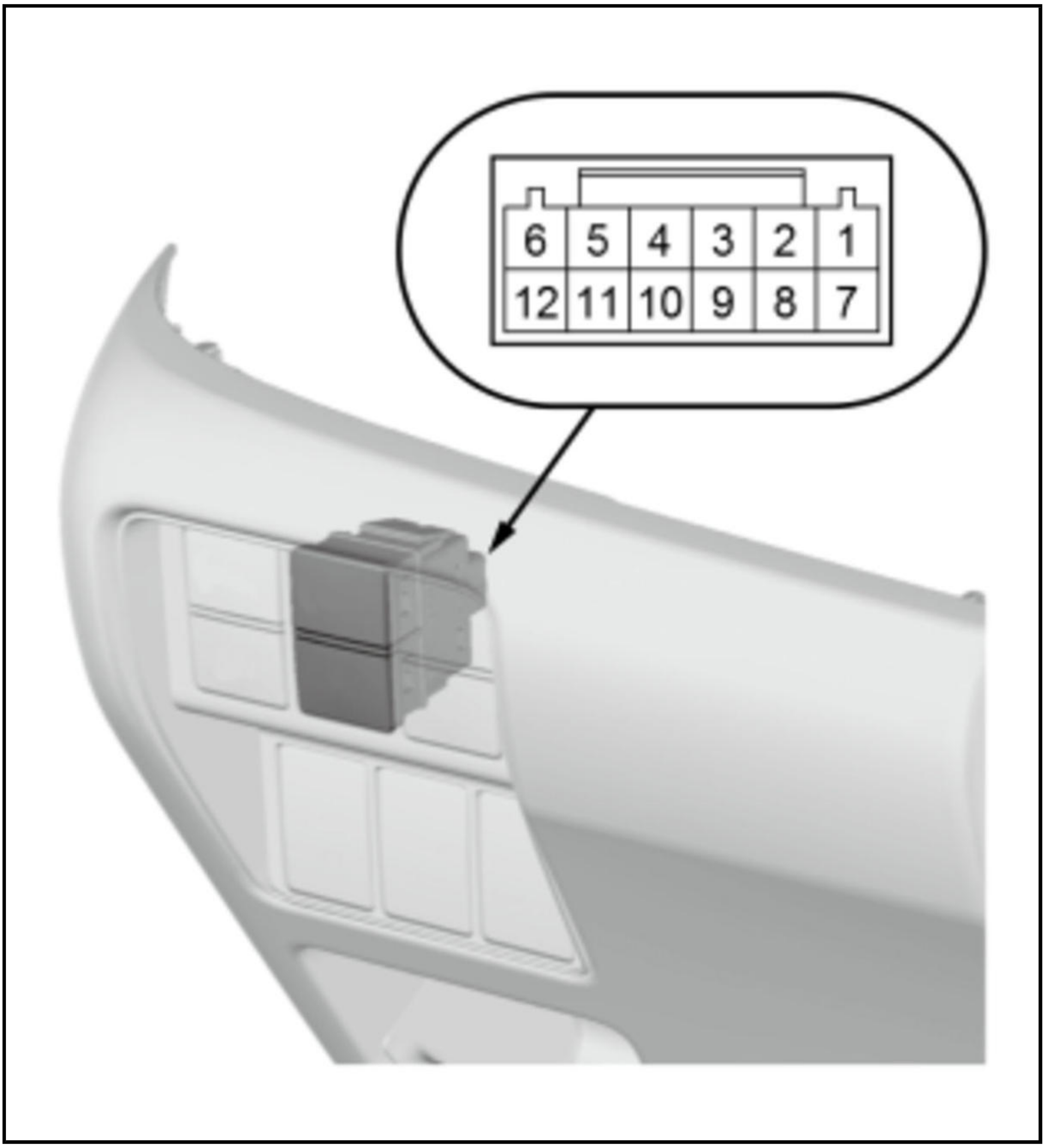

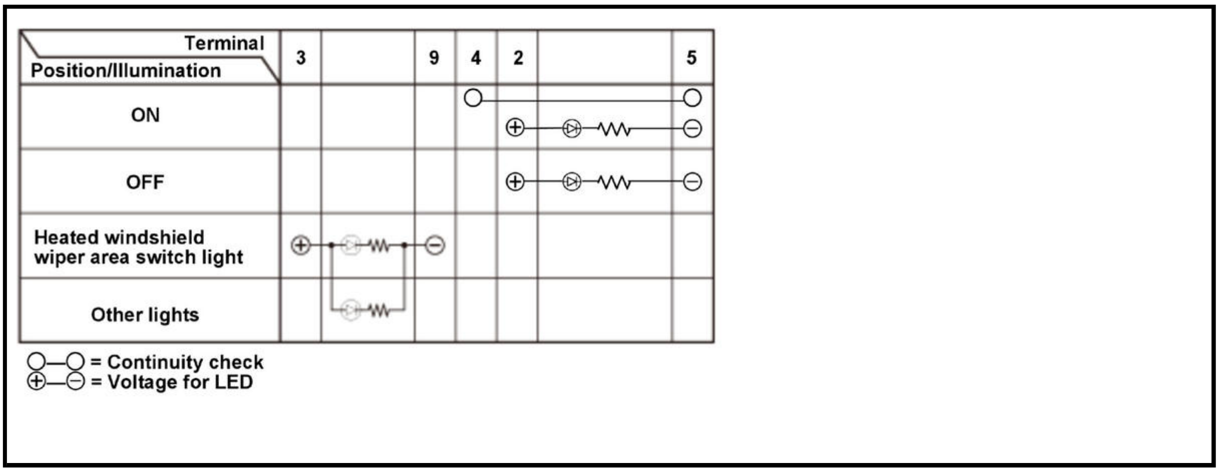

Terminal / Position/Illumination	3		9	4	2		5
ON				○			○
					⊕		⊖
OFF					⊕		⊖
Heated windshield wiper area switch light	⊕		⊖				
Other lights							

○—○ = Continuity check
⊕—⊖ = Voltage for LED

2. If the result is not as specified, replace the heated windshield wiper area switch.

HORN REMOVAL, INSTALLATION, AND TEST

Removal and Installation

Type A

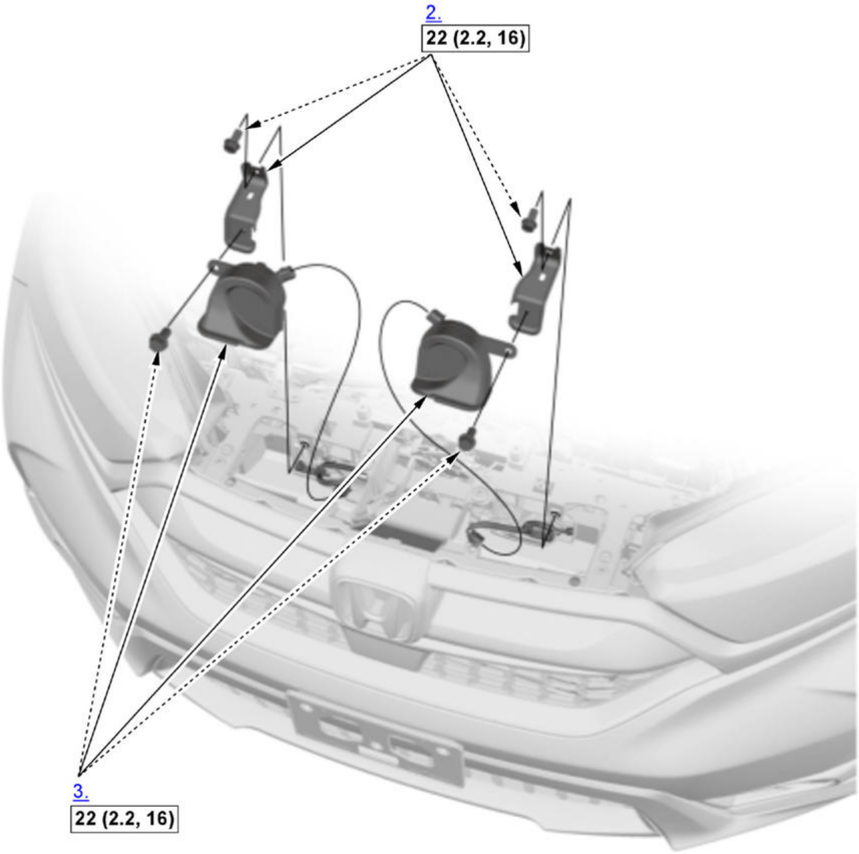
2.
22 (2.2, 16)
3.
22 (2.2, 16)

☐	Torque: N.m (kgf.m, lbf.ft)

2

Type B

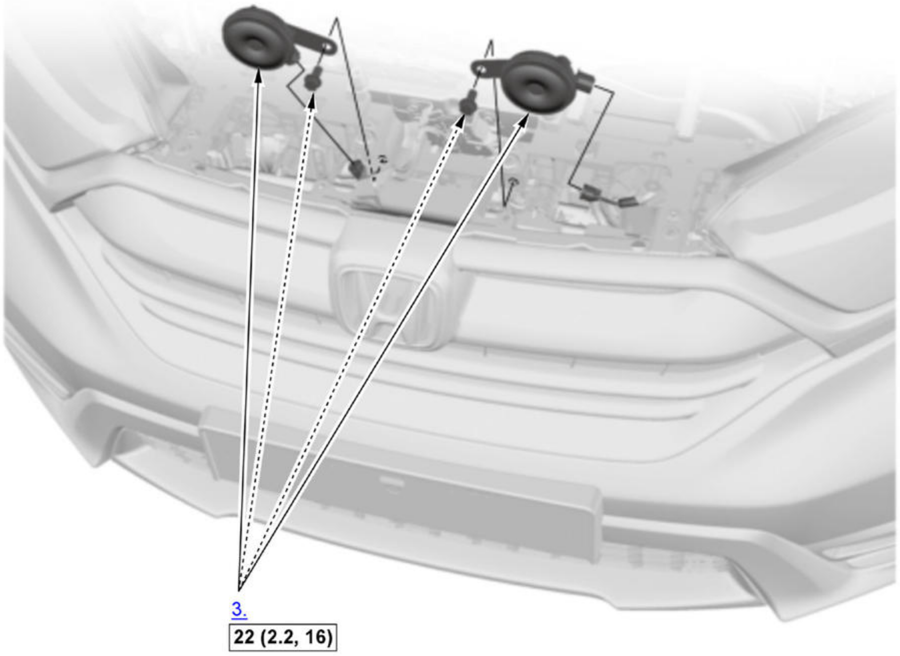

▭	Torque: N.m (kgf.m, lbf.ft)

1. **Front Bulkhead Cover - Remove**
2. Bracket - Remove (For some model)
3. Horns - Remove
4. All Removed Parts - Install

    1. Install the parts in the reverse order of removal.

Test

1. Horn - Test

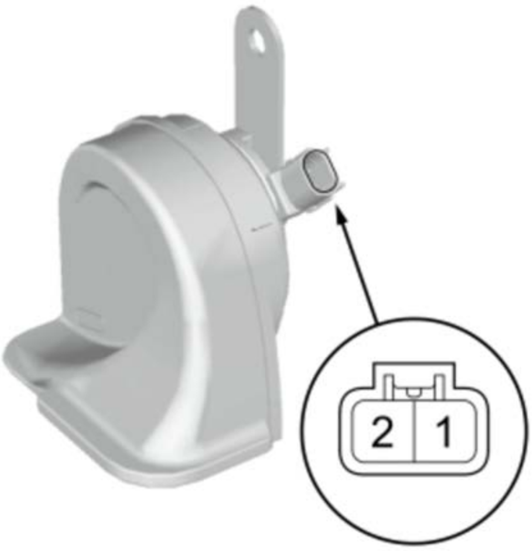 **Type A** **Type B** 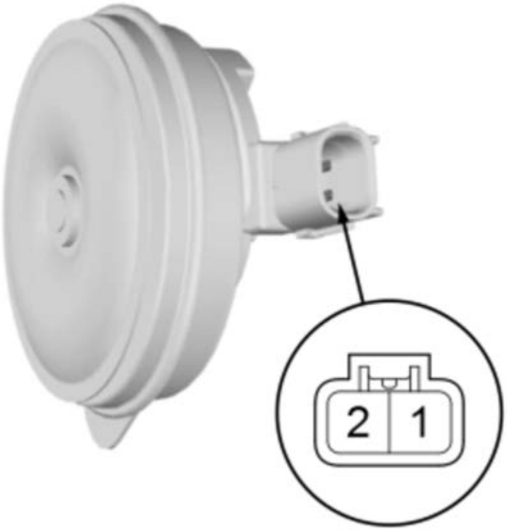	**NOTE:** Before testing, make sure not to short the horn circuit. 1. Test the horn by connecting battery power to terminal No. 1 and ground to terminal No. 2 of the horn. The horn should sound. 2. If it fails to sound, replace the horn.

POWER TAILGATE INSIDE SWITCH REMOVAL, INSTALLATION, AND TEST

Removal and Installation

1

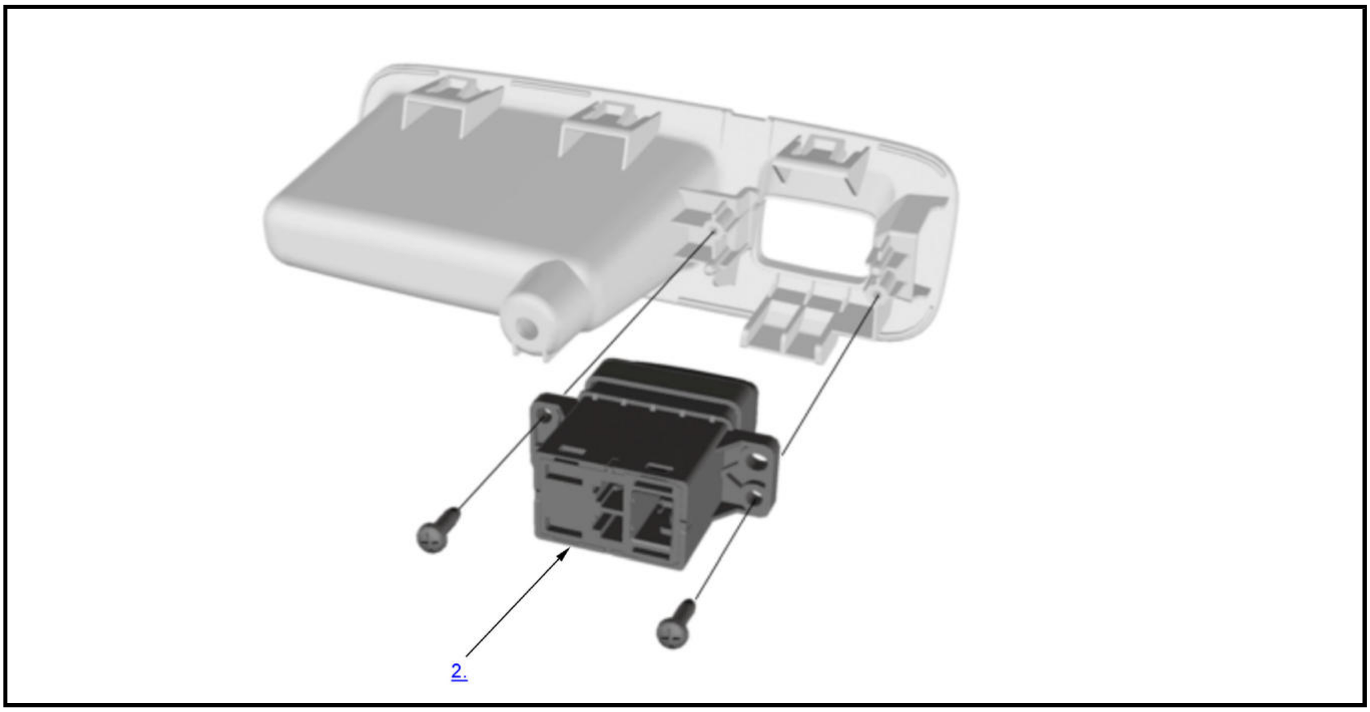

1. **Tailgate Pull Pocket - Remove**
2. Power Tailgate Inside Switch - Remove
3. All Removed Parts - Install

   1. Install the parts in the reverse order of removal.

Test

1. Power Tailgate Inside Switch - Test

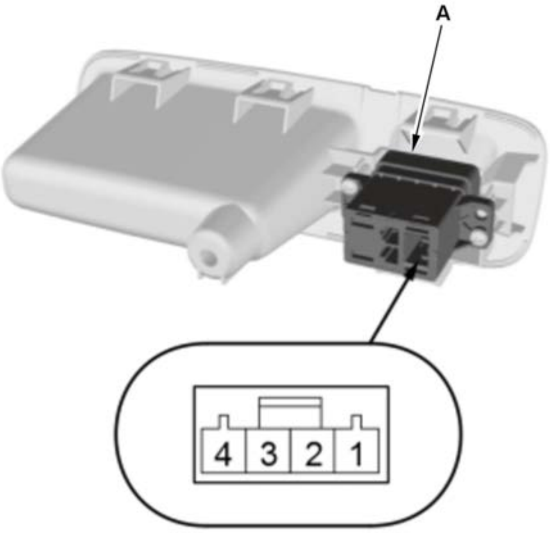

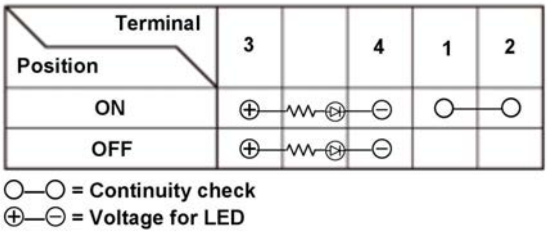

Terminal / Position	3		4	1	2
ON	⊕	—	⊖	○	○
OFF	⊕	—	⊖		

○—○ = Continuity check
⊕—⊖ = Voltage for LED

1. Check the power tailgate inside switch (A) for continuity and voltage according to the table.

NOTE:

- Before testing, make sure not to short the power tailgate inside switch circuit.
- When an LED is located between terminals, check if the LED lights up by connecting power and ground to the LED.
- Note this important operating characteristic; diode bias causes a diode to fully conduct electricity in one direction (forward), while not at all in the opposite direction (reverse).

2. If the continuity is not as specified, replace the power tailgate inside switch.

POWER TAILGATE PINCH SENSOR REMOVAL, INSTALLATION, AND TEST

Removal and Installation

NOTE: The left side is as shown; the right side is similar.

1

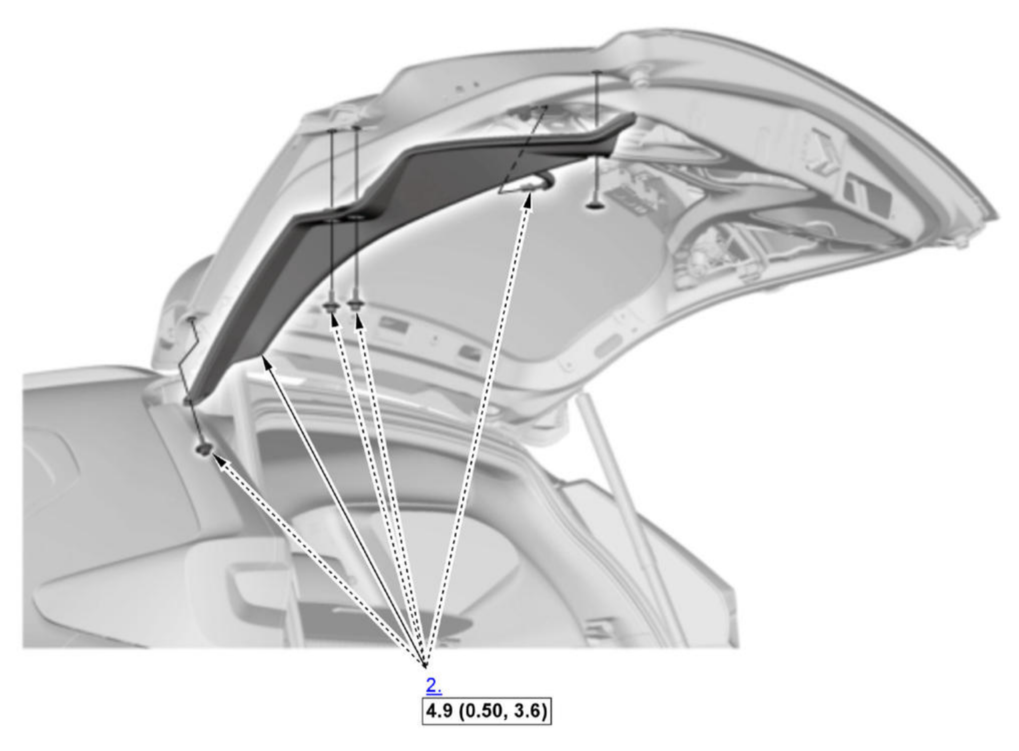

▭	Torque: N.m (kgf.m, lbf.ft)

1. **Tailgate Lower Trim Panel - Remove**
2. Power Tailgate Pinch Sensor - Remove
3. All Removed Parts - Install

> 1. Install the parts in the reverse order of removal.

Test

1. Power Tailgate Pinch Sensor - Test

Left Side 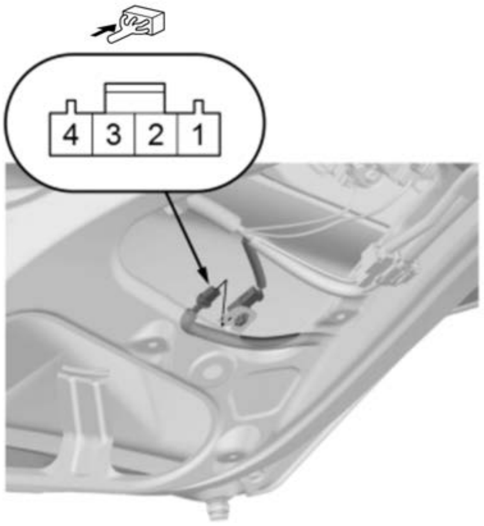 	1. Measure the resistance between the pinch sensor connector terminals No. 1 and No. 2. The resistance value should be about 5 kΩ when the sensor is not pressed, and less than 2 kΩ when pressed. 2. If the resistance is not as specified, replace the pinch sensor.

Right Side 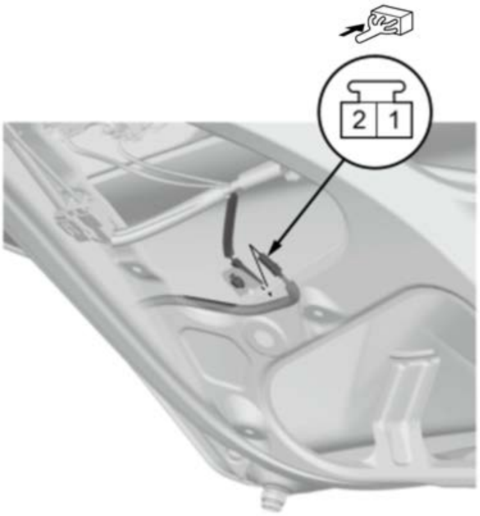 	

TAILGATE LOCK SWITCH REMOVAL, INSTALLATION, AND TEST

Removal and Installation

NOTE: The tailgate lock switch is a part of the license plate light, and it cannot be replaced by itself.

1. Tailgate Lock Switch - Remove
2. All Removed Parts - Install

1. Install the parts in the reverse order of removal.

Test

1. Tailgate Lock Switch - Test

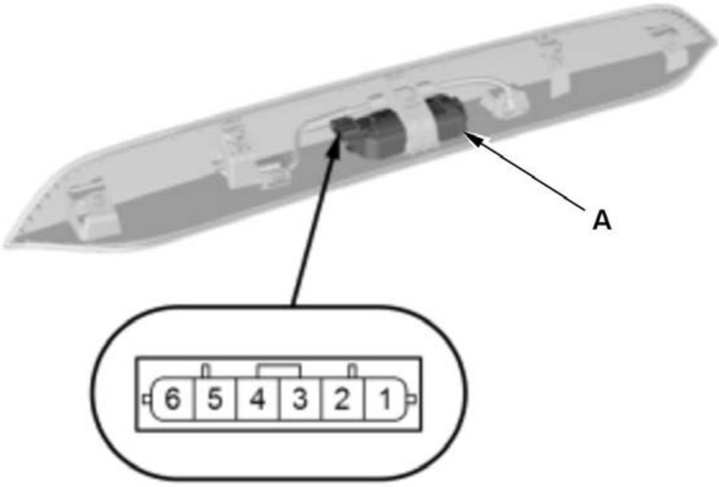

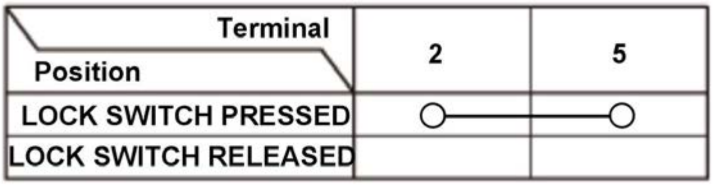

Terminal Position	2	5
LOCK SWITCH PRESSED	○—	—○
LOCK SWITCH RELEASED		

1. Check for continuity between the terminals in each switch position according to the table.

2. If the continuity is not as specified, replace the tailgate lock switch (A).

TAILGATE OUTER HANDLE SWITCH REMOVAL, INSTALLATION, AND TEST

Removal and Installation

NOTE: The tailgate outer handle switch is a part of the license plate light, and it cannot be replaced by itself.

1. License Plate Light - Remove
2. All Removed Parts - Install

1. Install the parts in the reverse order of removal.

Test

1. Rear License Trim - Remove
2. Tailgate Outer Handle Switch - Test

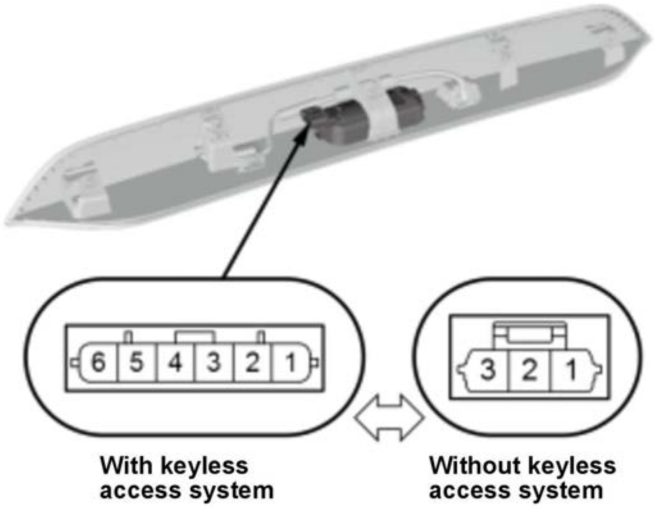

With keyless access system

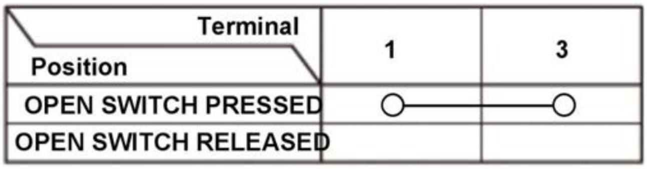

Position \ Terminal	1	3
OPEN SWITCH PRESSED	○	○
OPEN SWITCH RELEASED		

Without keyless access system

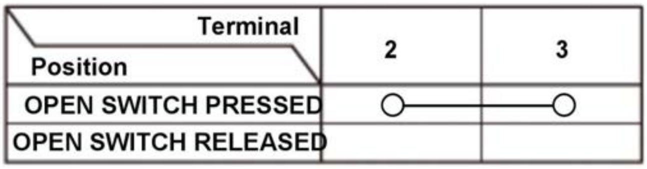

Position \ Terminal	2	3
OPEN SWITCH PRESSED	○	○
OPEN SWITCH RELEASED		

1. Check for continuity between the terminals in each switch position according to the table.

2. If the continuity is not as specified, replace the tailgate outer handle switch.

WASHER ASSEMBLY REMOVAL, INSTALLATION, AND TEST

Removal and Installation

NOTE:

- Fluid may flow out of the opening.
- Although a numbered sequence is shown, " *1 " indicated parts are separate components. If removal or replacement of one of the components is needed, it is not necessary to remove the other.
- Washer Reservoir Capacity:
-
    - 2.5 L (2.6 Us qt) (Without washer fluid level switch)
    - 4.5 L (4.8 Us qt) (With washer fluid level switch)

1

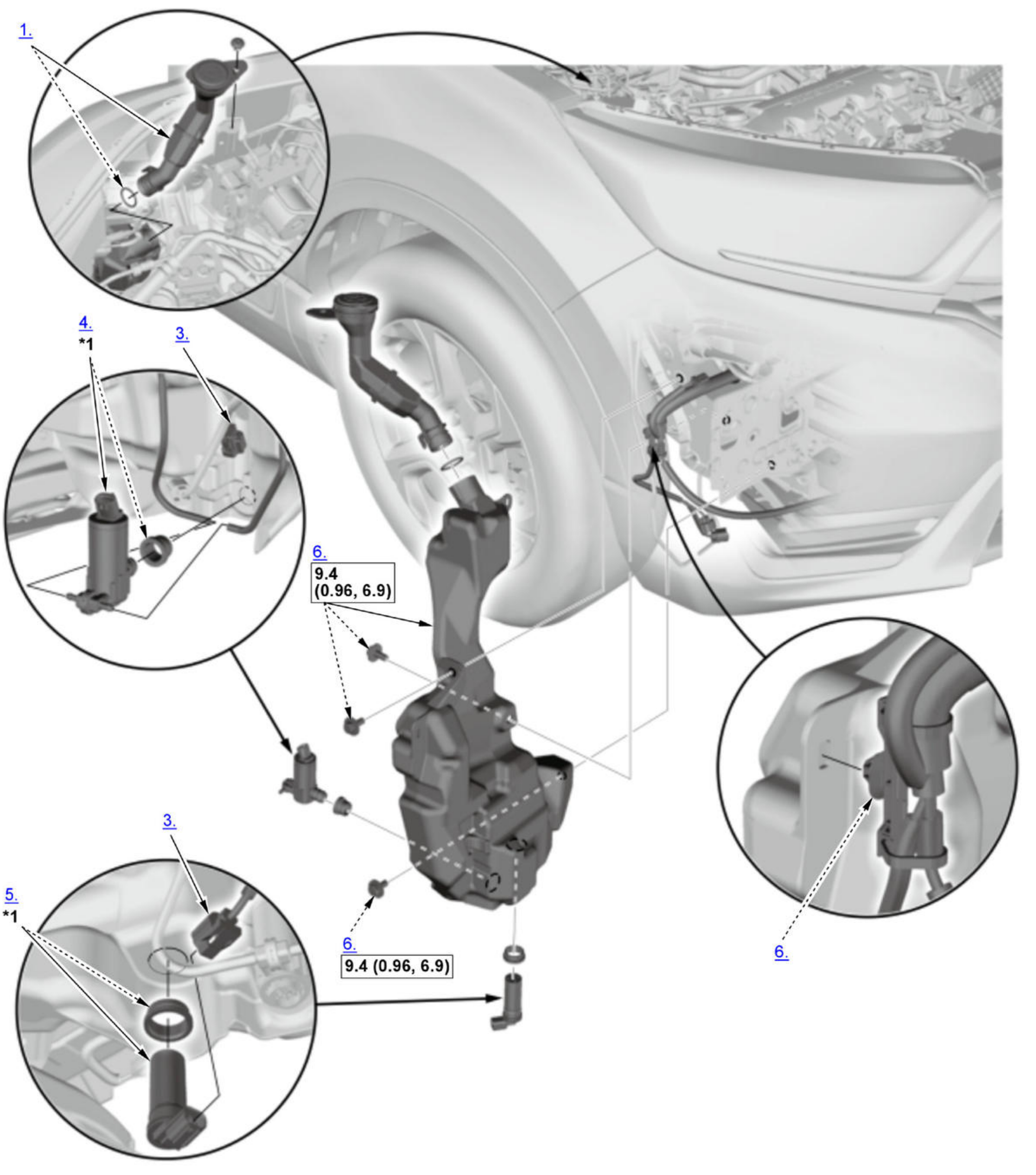

▭	Torque: N.m (kgf.m, lbf.ft)

1. Washer Filler Neck - Remove
2. Front Inner Fender - Remove

   1. **Remove the front inner fender as needed**.

3. Connector - Disconnect
4. Windshield/Rear Window Washer Motor - Remove
5. Washer fluid level switch - Remove
6. Washer Reservoir - Remove
7. All Removed Parts - Install

   1. Install the parts in the reverse order of removal.

Test

Windshield/Rear Window Washer Motor

1. Windshield/Rear Window Washer Motor - Test

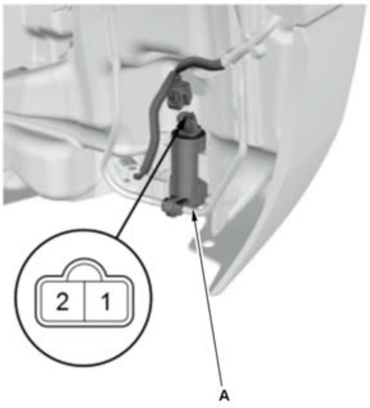

1. Test the washer motor by connecting battery power to terminal No. 1 (No. 2)* and ground to terminal No. 2 (No. 1)* of the washer motor. The motor should run.*: Rear window washer motor operation.

- If the washer motor does not run or fails to run smoothly, replace the windshield/rear window washer motor (A).
- If the washer motor runs smoothly, but little or no washer fluid is pumped, check for a disconnected or blocked washer hose, or a clogged washer motor outlet.

Washer Fluid Level Switch

2. Washer Fluid Level Switch - Test

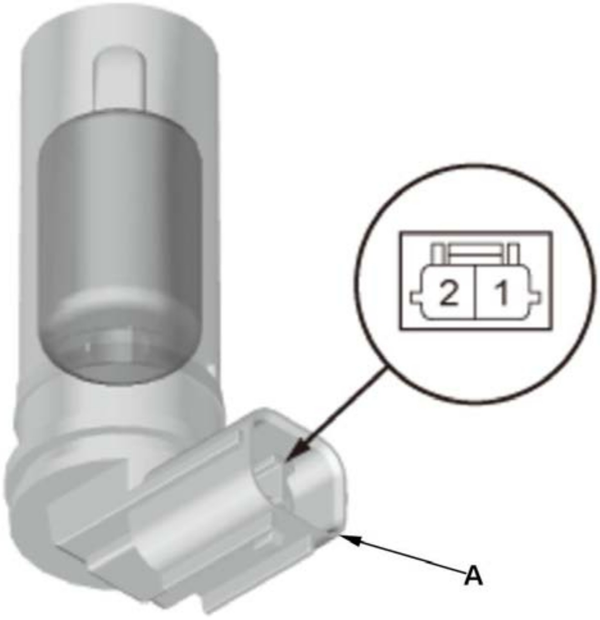

Position \ Terminal	1	2
FLOAT UP		
FLOAT DOWN	○	○

1. Check for continuity between the terminals in each switch position according to the table.

2. If the continuity is not as specified, replace the washer fluid level switch (A).

WIPER ASSEMBLY REMOVAL, INSTALLATION, AND TEST

Removal

NOTE: 🛈 Where icon is shown information.

1

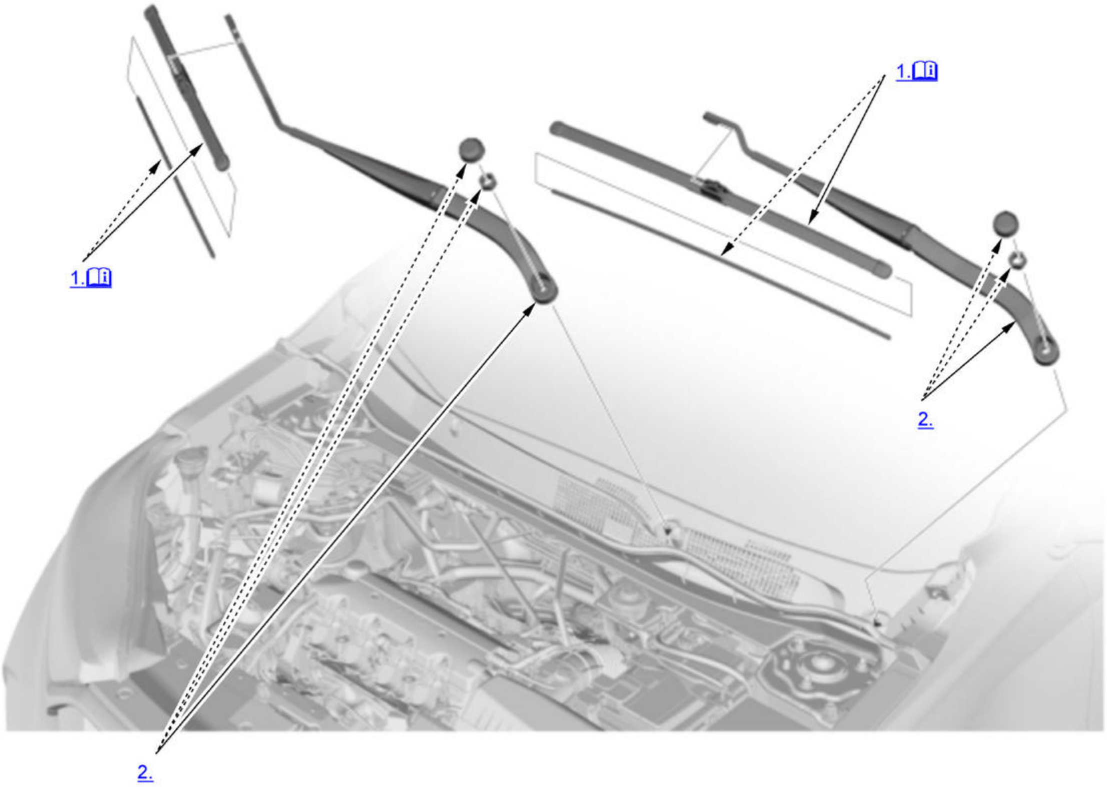

🛈	Detailed information, notes, and precautions

2

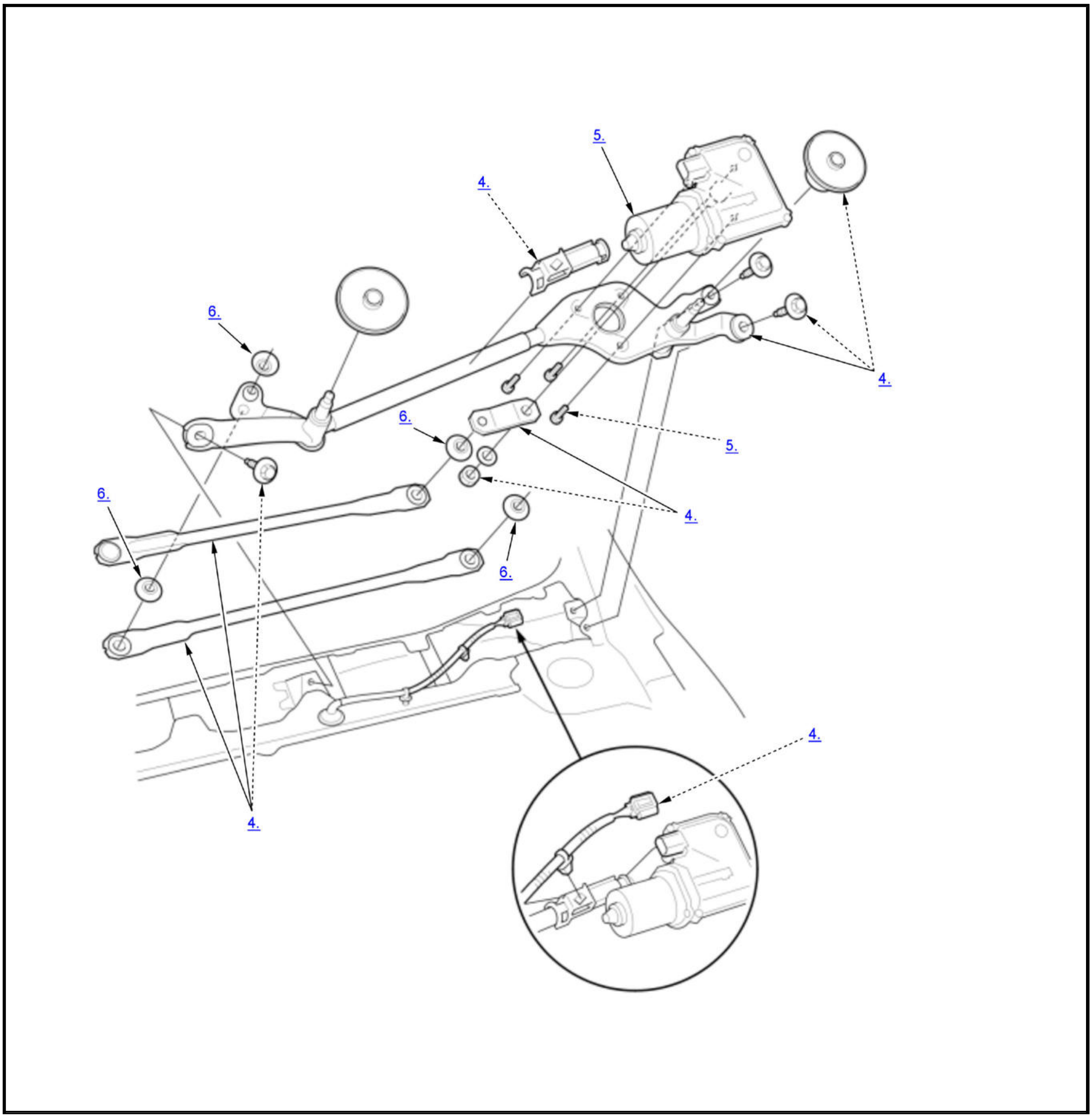
5.
4.
6.
4.
5.
6.
4.
6.
6.
4.
4.

3

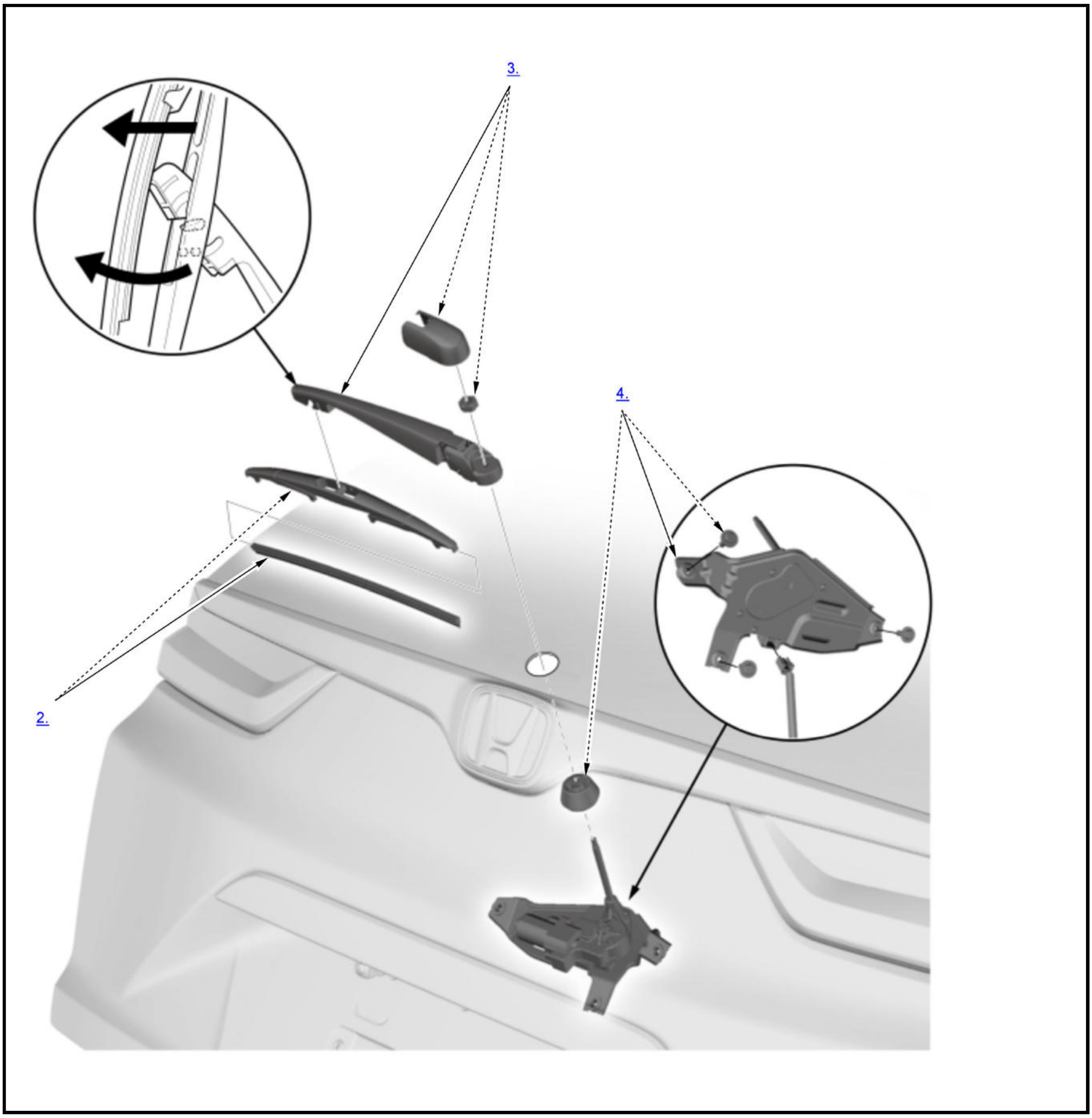

	Detailed information, notes, and precautions

Windshield

1. Windshield Wiper Blade - Remove

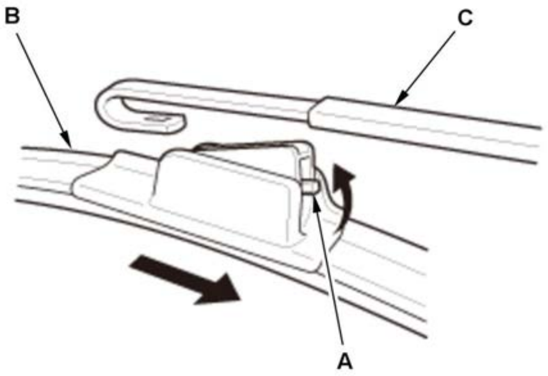 	1. Lift the wiper arm(s) off the windshield, raising the driver's side first, then the passenger's side. 2. Pull up the tab (A). 3. Slide the windshield wiper blade assembly (B) off the windshield wiper arm (C).

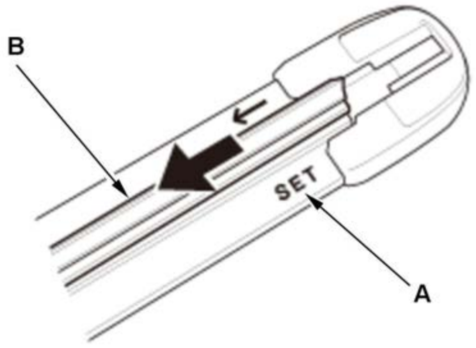 	4. Find the blade holder labeled "SET" (A), and then pull back the wiper blade (B).

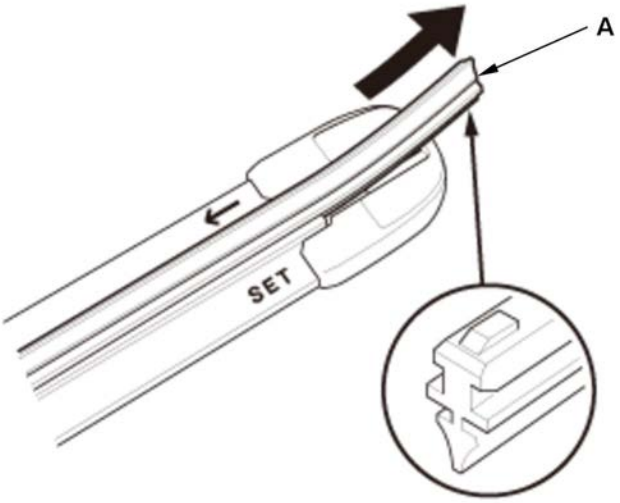 	5. Pull out the wiper blade (A) through the wiper blade replacing opening.

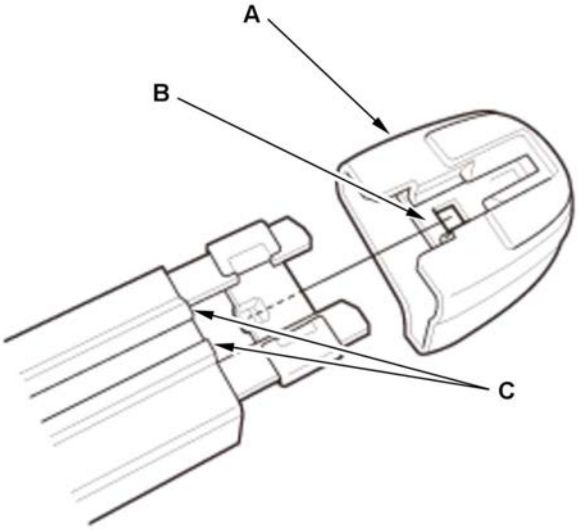	6. If necessary, remove the end cap (A) by pressing tab (B). **NOTE:** • When removing it, take care not to damage the rubber holder (C).

2. Windshield Wiper Arm - Remove
3. Center Cowl Cover - Remove
4. Linkage Assembly - Remove
5. Windshield Wiper Control Unit/Motor - Remove
6. Dust Seal - Remove

Rear Window

7. Tailgate Lower Trim Panel - Remove
8. Rear Window Wiper Blade - Remove
9. Rear Window Wiper Arm - Remove
10. Rear Window Wiper Motor - Remove

Installation

NOTE:

- ℹ Where icon is shown further information.
- Do not use the wiper/washer switch (AUTO) or (INT) position.

1

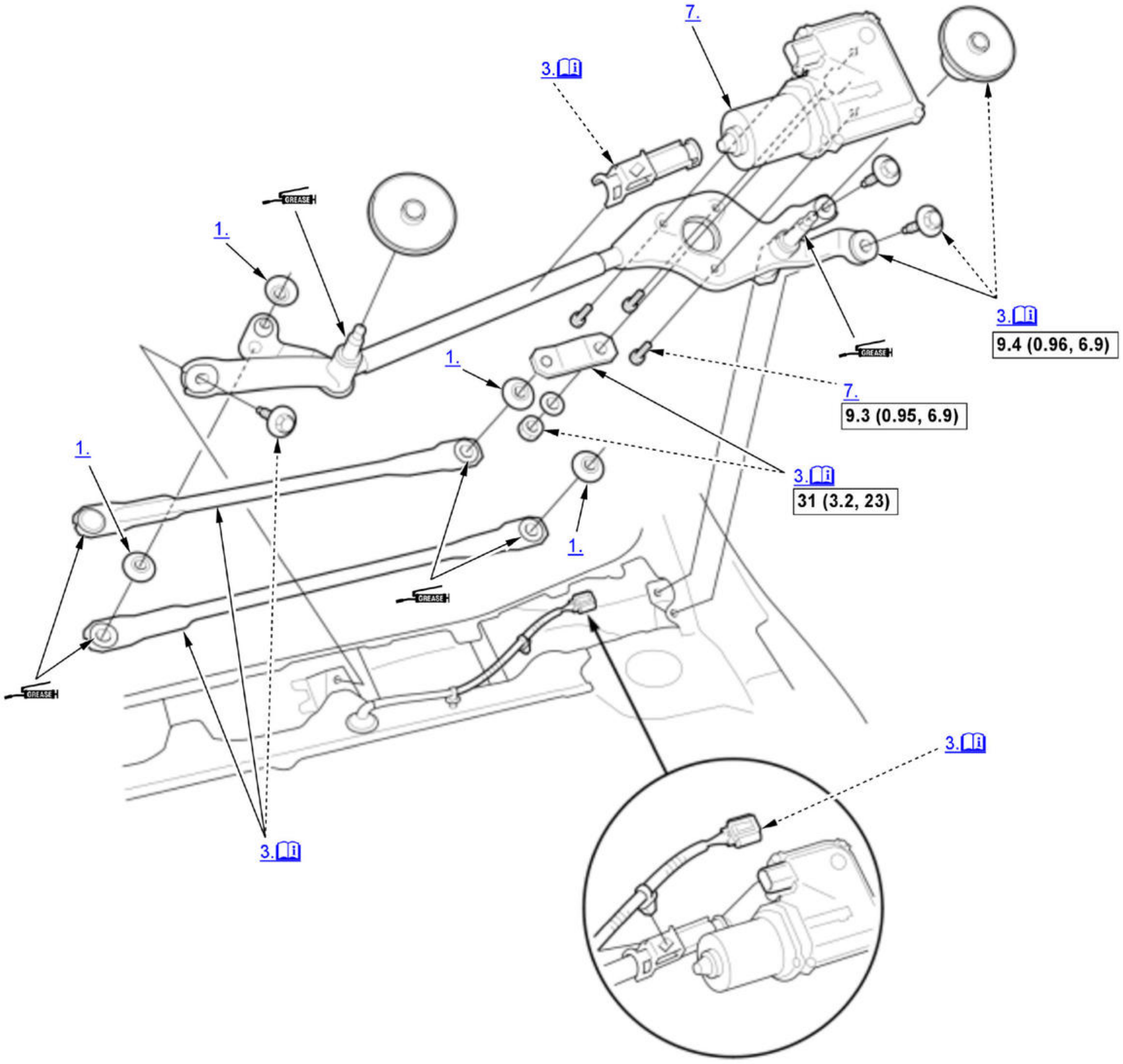
7.
3.
1.
GREASE
1.
1.
7.
9.3 (0.95, 6.9)
3.
9.4 (0.96, 6.9)
3.
31 (3.2, 23)
1.
1.
GREASE
GREASE
GREASE
3.
3.

ⓘ	Detailed information, notes, and precautions
☐	Torque: N.m (kgf.m, lbf.ft)
GREASE	Apply grease

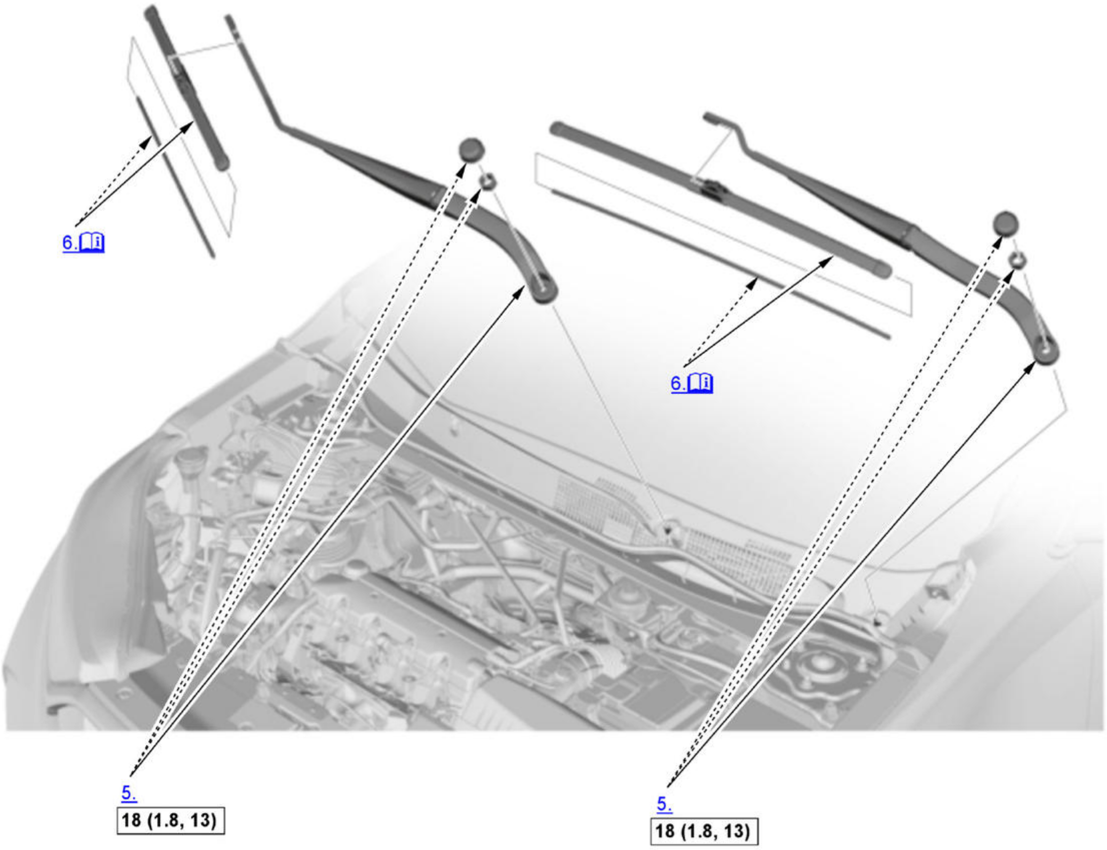
6.
6.
5.
18 (1.8, 13)
5.
18 (1.8, 13)

ℹ	Detailed information, notes, and precautions
☐	Torque: N.m (kgf.m, lbf.ft)

3

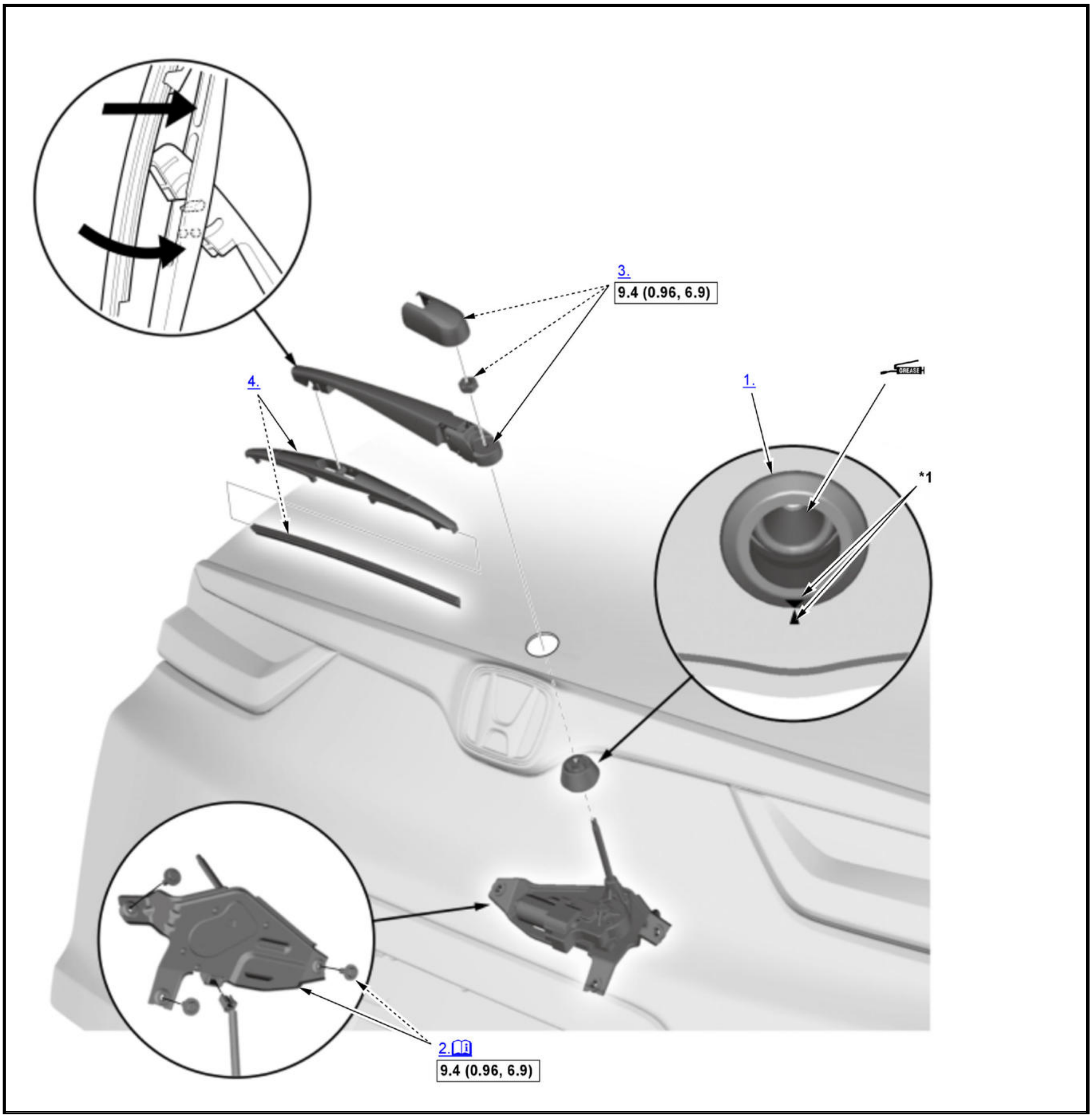
3.
9.4 (0.96, 6.9)
4.
1.
GREASE
*1
2.
9.4 (0.96, 6.9)

📖	Detailed information, notes, and precautions
▭	Torque: N.m (kgf.m, lbf.ft)
GREASE	Apply grease
*1	Position Mark

Windshield

1. Dust Seal - Install
2. Windshield Wiper Control Unit/Motor - Install

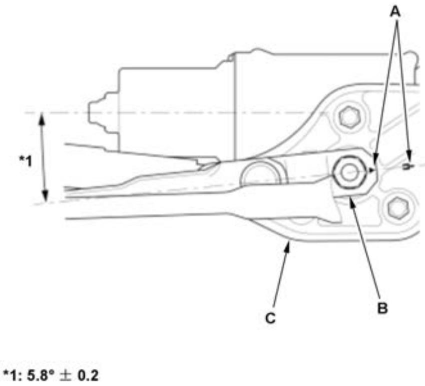	**NOTE:** Bolt threads are not provided on the new wiper motor. Install the wiper motor to the linkage as follows: 1. Before installing the wiper motor, connect the wiper motor connector, and turn the wiper/washer switch ON to (LO) or (HI) position, then OFF to return the wiper motor shaft to the park position. **NOTE:** • Do not use the windshield wiper/washer switch (AUTO) or (INT) position in this step. • Apply multipurpose grease to the moving parts. • Check the wiper motor operation. 2. Set the motor onto the wiper linkage assembly, and using the provided new self-tapping bolts, tighten them until the bolt head comes in contact with the linkage. **NOTE:** • Keep the bolts perfectly straight while bolting them in. • Do not use air tools and impact wrenches. 3. Loosen the bolts, then retighten the bolts to the specified torque. 4. Align the marks (A) on the link (B) and the wiper linkage assembly (C), and install the link.

3. Linkage Assembly - Install

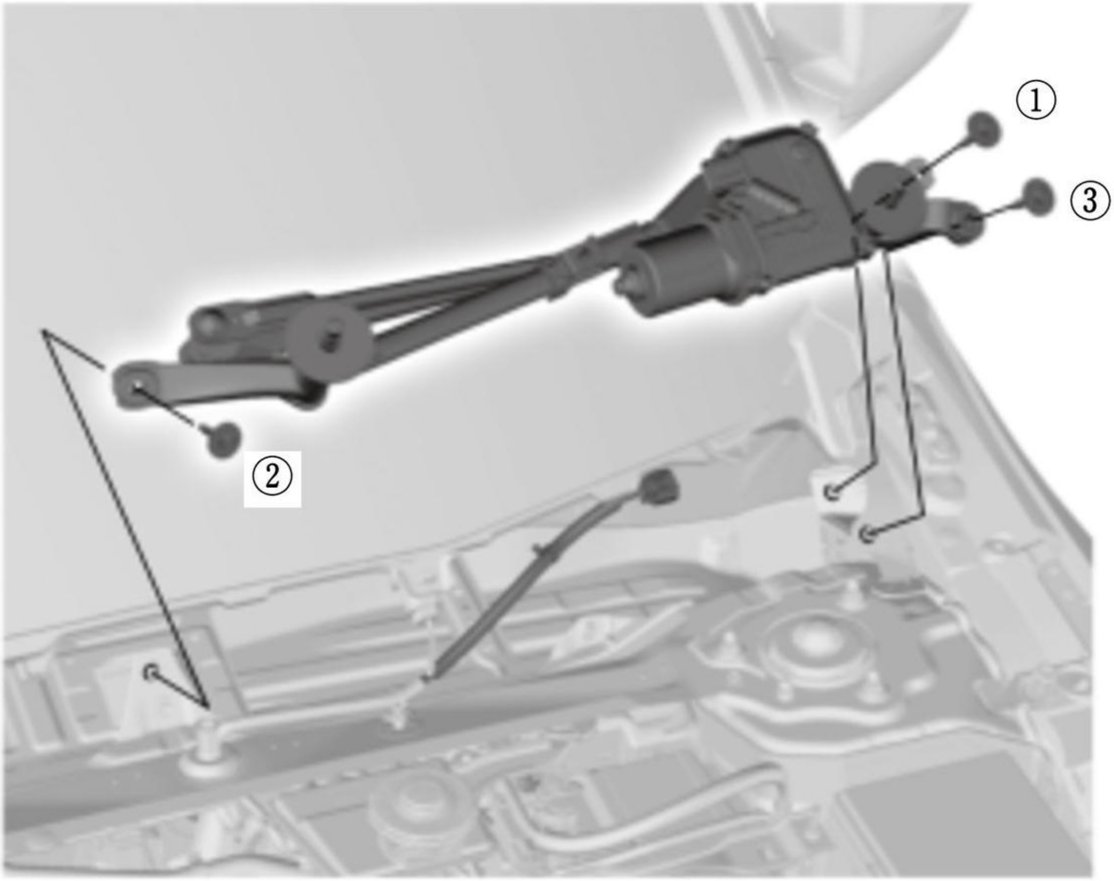

Fig. 1: Motor Wiper Linkage Assembly Bolts Tightening Sequence
Courtesy of HONDA, U.S.A., INC.

NOTE: Tighten the bolts in the sequence shown.

4. Center Cowl Cover - Install
5. Windshield Wiper Arm - Install
6. Windshield Wiper Blade - Install

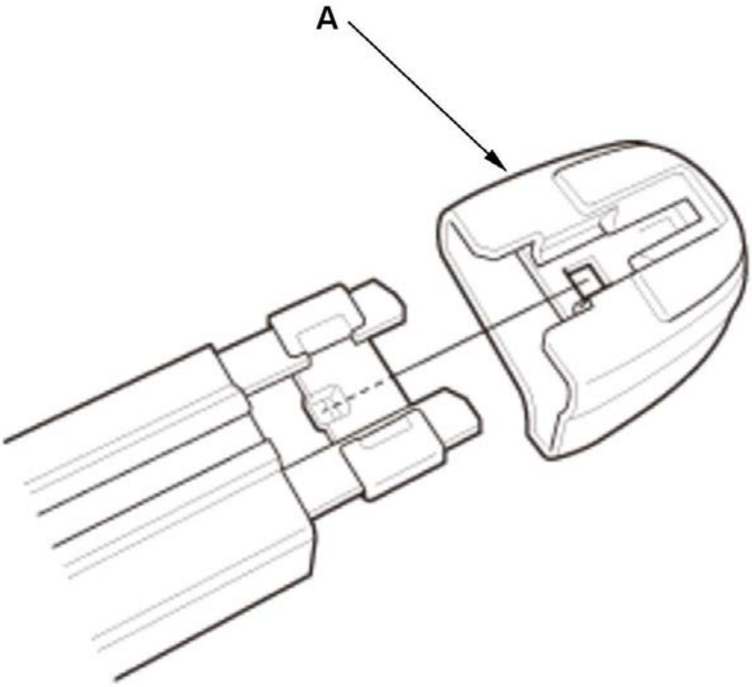

1. Install the end cap (A).

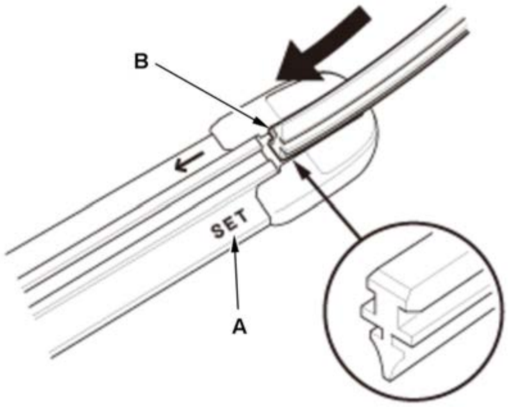

2. Find the end of the blade holder labeled "SET" (A), and install the wiper starting with the tip that has no projection.

NOTE: The wiper end with the projection should not be installed first.

3. Install the new windshield wiper blade (B).

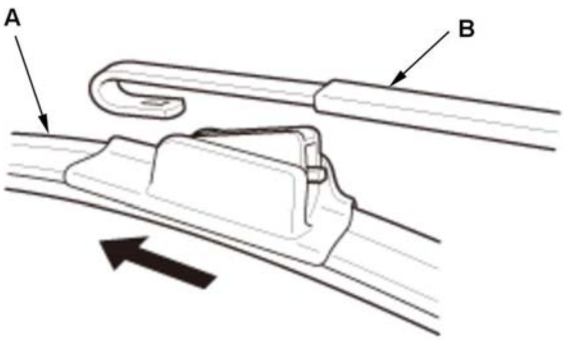

4. Install the windshield wiper blade assembly (A) on the windshield wiper arm (B).

7. Windshield Wiper Arm/Nozzle - Adjustment

Rear Window

8. Seal - Install

9. Rear Window Wiper Motor - Install

1. Before reinstalling the rear window wiper arm, connect the rear window wiper motor connector, and turn the rear window wiper switch ON, then OFF to return the rear window wiper motor shaft to the park position. **NOTE:** • Apply multipurpose grease to the moving parts. • Check the rear window wiper motor operation.

10. Rear Window Wiper Arm - Install
11. Rear Window Wiper Blade - Install
12. **Tailgate Lower Trim Panel - Install**
13. **Rear Wiper Arm/Nozzle - Adjustment**

Test

Rear Window

1. Rear Window Wiper Motor - Test

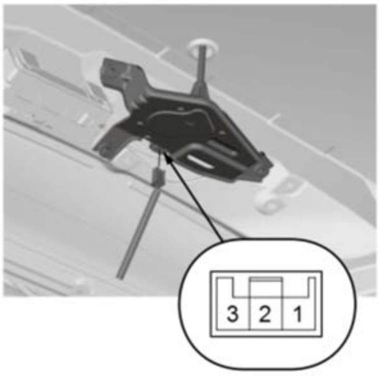	1. Test the rear window wiper motor by connecting 12 volt battery power to terminal No. 1 and ground to terminal No. 3 of the rear window wiper motor. The rear window wiper motor should run. 2. Connect an analog ohmmeter to terminals No. 2 and No. 3. The ohmmeter should indicate continuity and no continuity alternately. If the rear window wiper motor does not run or fails to run smoothly, or there is no pulse, replace the rear window wiper motor.

WIPER/WASHER SWITCH REMOVAL, INSTALLATION, AND TEST

Removal and Installation

NOTE: SRS components are located in this area. Review the **SRS component locations** and the **precautions and procedures** before doing repairs or service.

1

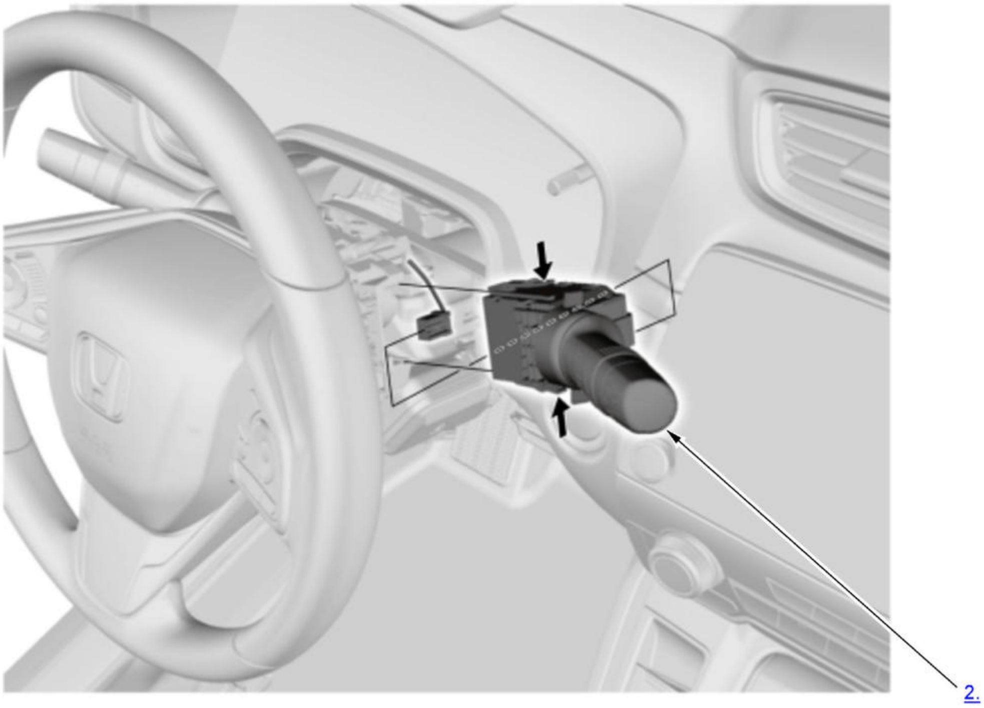

1. Column Cover - Remove
2. Wiper/Washer Switch - Remove
3. All Removed Parts - Install

    1. Install the parts in the reverse order of removal.

Test

1. Wiper/Washer Switch - Test

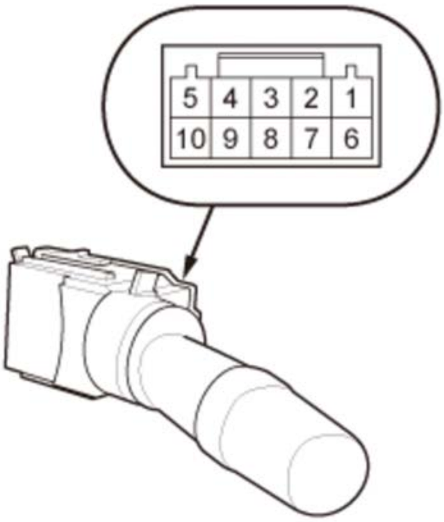

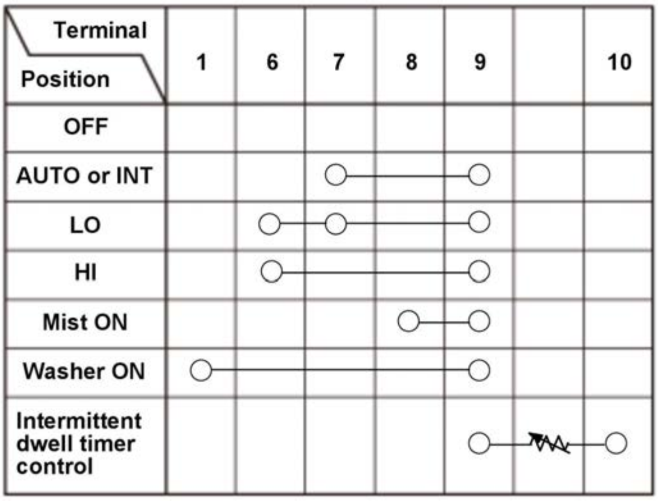

Terminal / Position	1	6	7	8	9		10
OFF							
AUTO or INT			○		○		
LO		○	○		○		
HI		○			○		
Mist ON				○	○		
Washer ON	○				○		
Intermittent dwell timer control					○		○

Windshield

Rear window

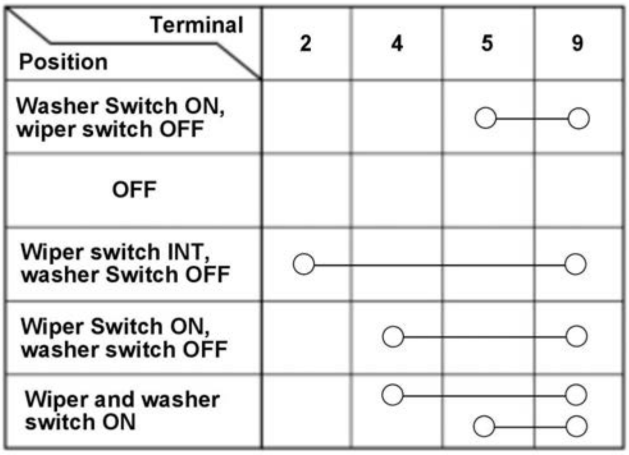

Terminal / Position	2	4	5	9
Washer Switch ON, wiper switch OFF			○	○
OFF				
Wiper switch INT, washer Switch OFF	○			○
Wiper Switch ON, washer switch OFF		○		○
Wiper and washer switch ON		○	○	○ ○

1. Inspect the connector terminals to be sure they are all making good contact.

- If the terminals are bent, loose or corroded, repair them as necessary, and recheck the system.
- If the terminals are OK, go to step 2.

2. Check for continuity between the terminals in each switch position according to the table.

3. If the continuity is not as specified, replace the wiper/washer switch.

DISASSEMBLY AND REASSEMBLY

FRONT BUMPER DISASSEMBLY AND REASSEMBLY

Exploded View

1

'17-19

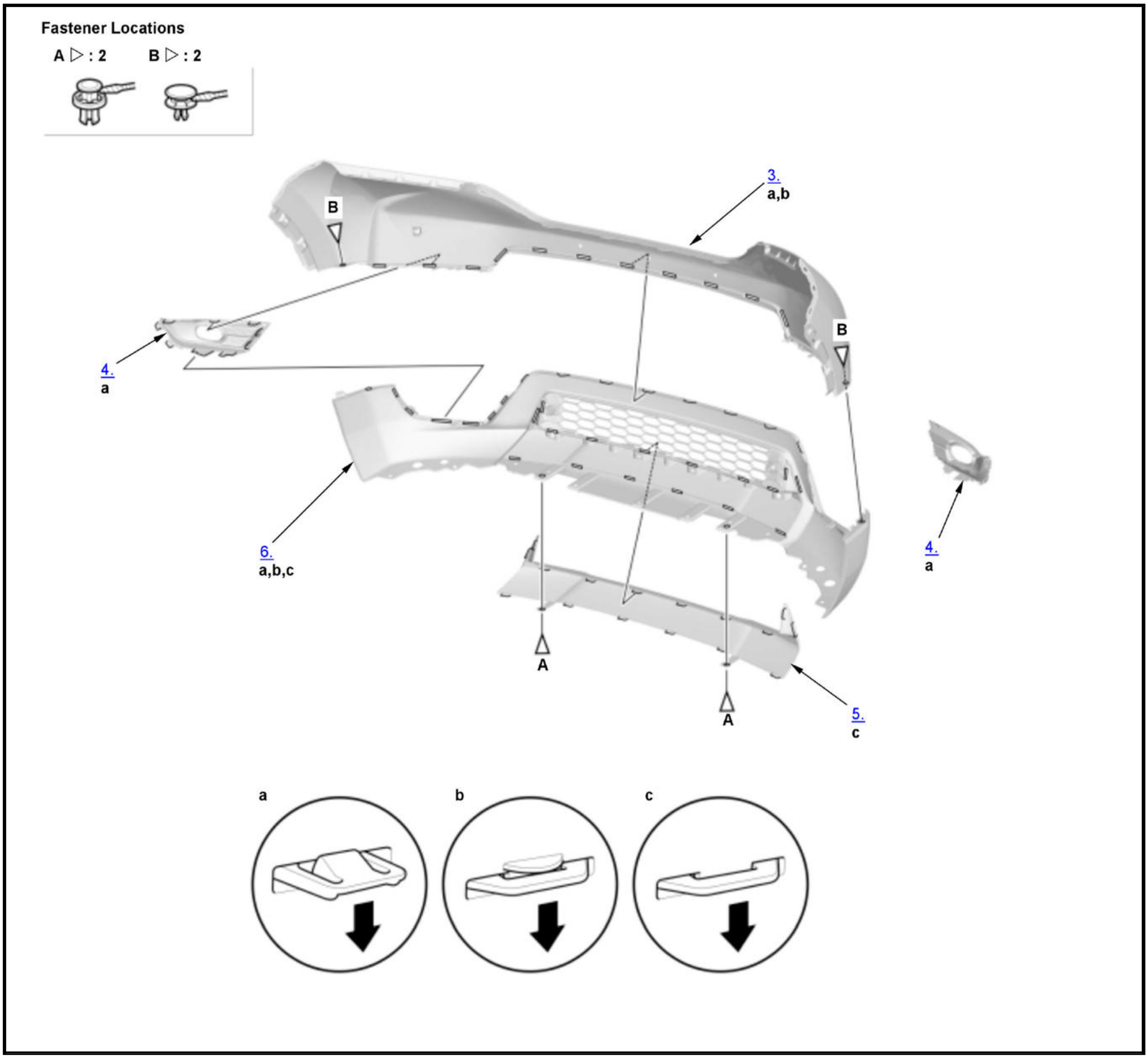

Fastener Locations
A ▷ : 2
B ▷ : 2
3.
a,b
B
4.
a
6.
a,b,c
B
4.
a
A
A
5.
c
a
b
c

2

'20-21

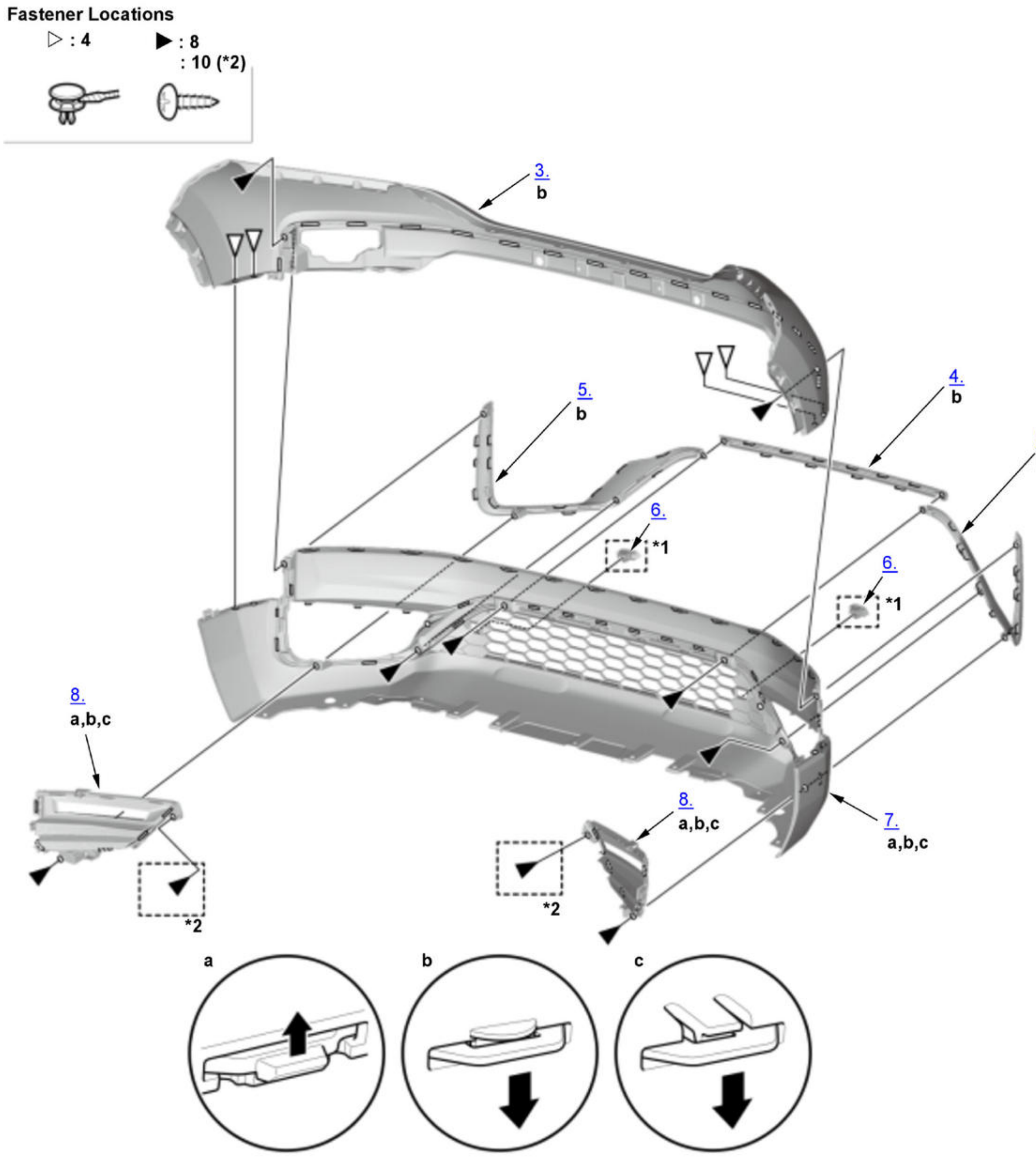
Fastener Locations
▷ : 4
▶ : 8
: 10 (*2)
3.
b
5.
b
4.
b
5.
b
6.
*1
6.
*1
8.
a,b,c
8.
a,b,c
7.
a,b,c
*2
*2
a
b
c

ℹ	Detailed information, notes, and precautions
*1	Without front center sensor
*2	With front fog light (5-LED type)

'17-19

1. **Front Bumper - Remove**
2. **Front Grille - Remove**
3. Front Bumper Face - Remove
4. Front Bumper Fog Covers - Remove
5. Front Bumper Lower Trim - Remove
6. Front Bumper Lower Face - Remove
7. All Disassembled Parts - Reassemble

1. Reassemble the parts in the reverse order of disassembly.

'20-21

8. **Front Bumper - Remove**
9. **Front Grille - Remove**
10. Front Bumper Face - Remove
11. Front Bumper Center Lower Molding - Remove
12. Front Bumper Side Lower Molding - Remove
13. Front Bumper Parking Sensor Cover - Remove
14. Front Bumper Lower Face - Remove
15. Front Bumper Fog Covers - Remove
16. All Disassembled Parts - Reassemble

1. Reassemble the parts in the reverse order of disassembly.

FRONT GRILLE DISASSEMBLY AND REASSEMBLY

Exploded View

1

'17-19With Millimeter Wave Rader

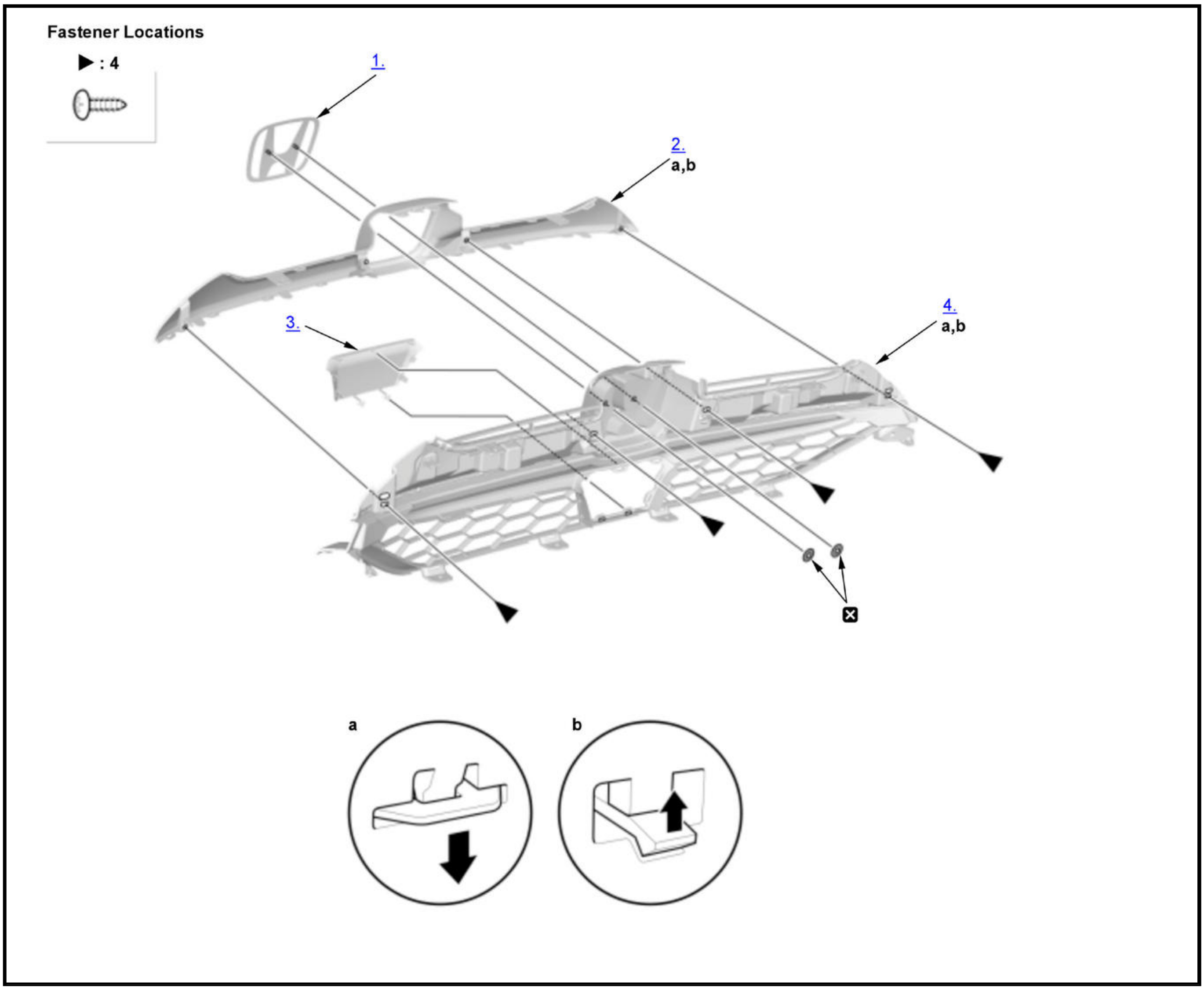

☒	Replace

2

'17-19Without Millimeter Wave Rader

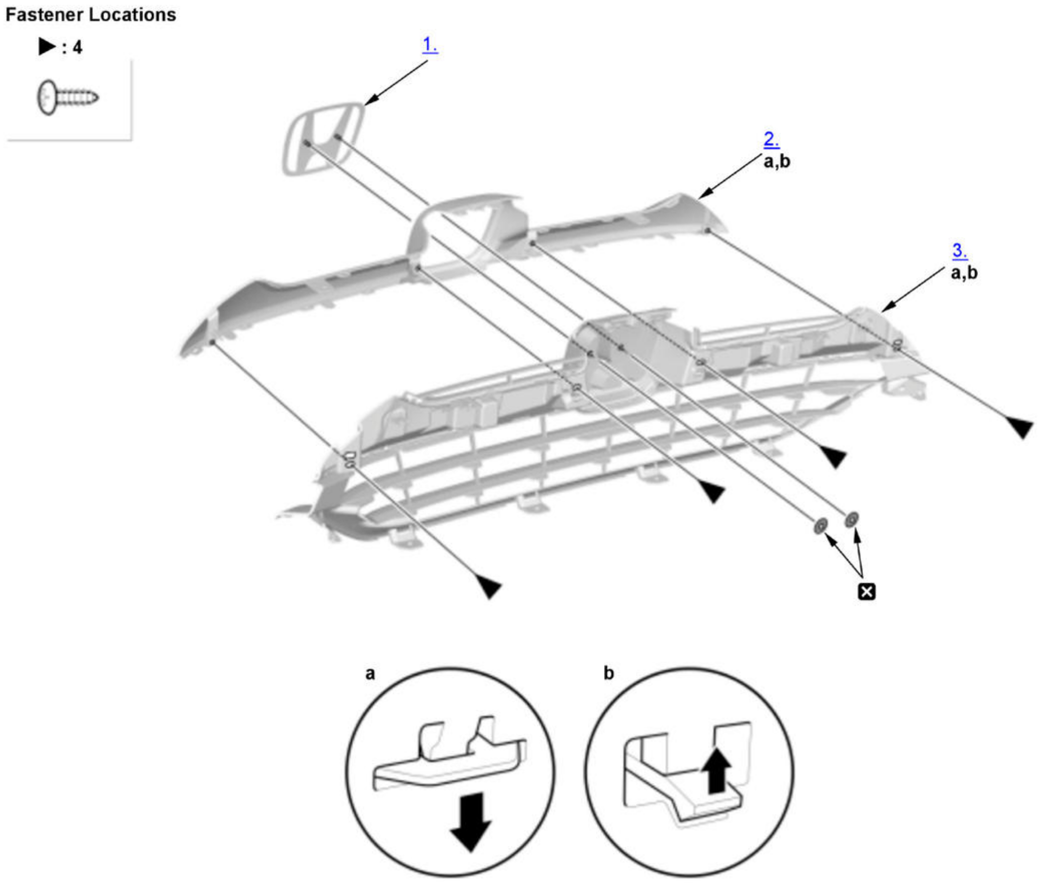
Fastener Locations
▶ : 4
1.
2.
a,b
3.
a,b
☒
a
b

☒	Replace

3

'20-21

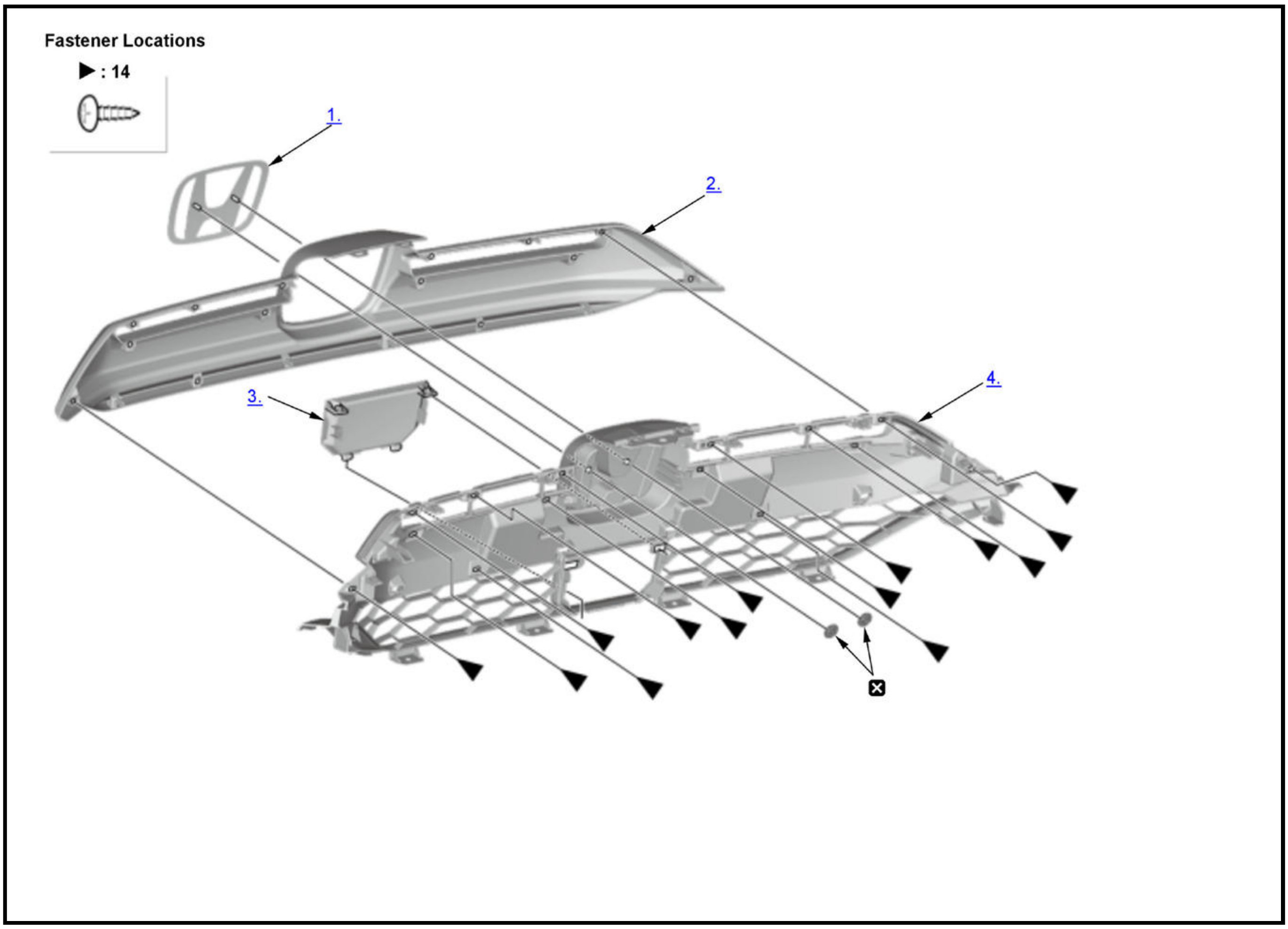

☒	Replace

'17-19With Millimeter Wave Rader

1. Emblem - Remove
2. Front Grille Molding - Remove
3. Front Grille Rader Cover - Remove
4. Front Grille Base - Remove
5. All Disassembled Parts - Reassemble

1. Reassemble the parts in the reverse order of disassembly.

'17-19Without Millimeter Wave Rader

6. Emblem - Remove
7. Front Grille Molding - Remove
8. Front Grille Base - Remove
9. All Disassembled Parts - Reassemble

1. Reassemble the parts in the reverse order of disassembly.

'20-21

10. Emblem - Remove
11. Front Grille Molding - Remove
12. Front Grille Rader Cover - Remove

13. Front Grille Base - Remove

14. All Disassembled Parts - Reassemble

1. Reassemble the parts in the reverse order of disassembly.

REAR BUMPER DISASSEMBLY AND REASSEMBLY

Exploded View

1

'17-19

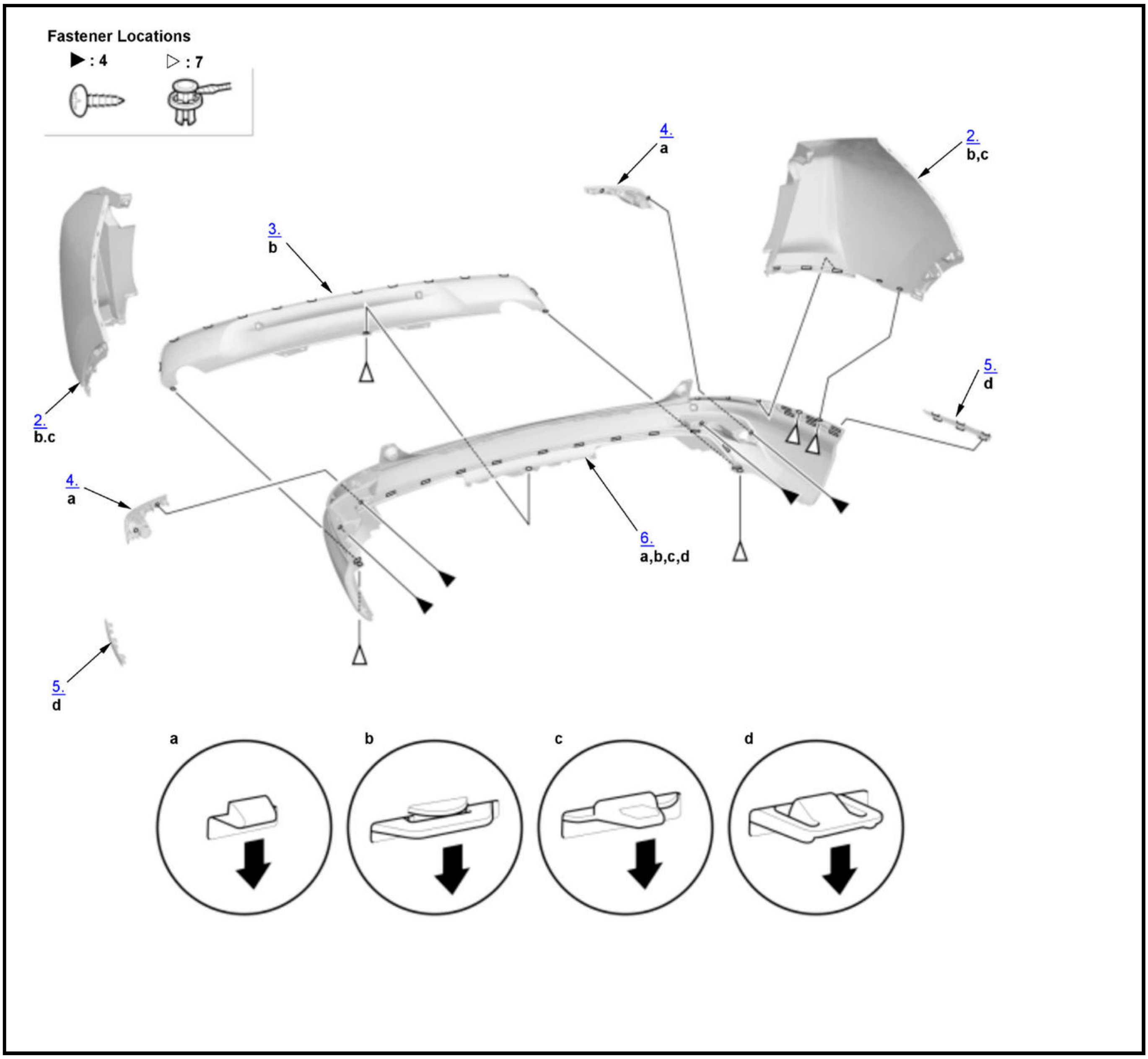
Fastener Locations
▶ : 4
▷ : 7
4.
a
2.
b,c
3.
b
2.
b.c
5.
d
4.
a
6.
a,b,c,d
5.
d
a
b
c
d

2

'20-21

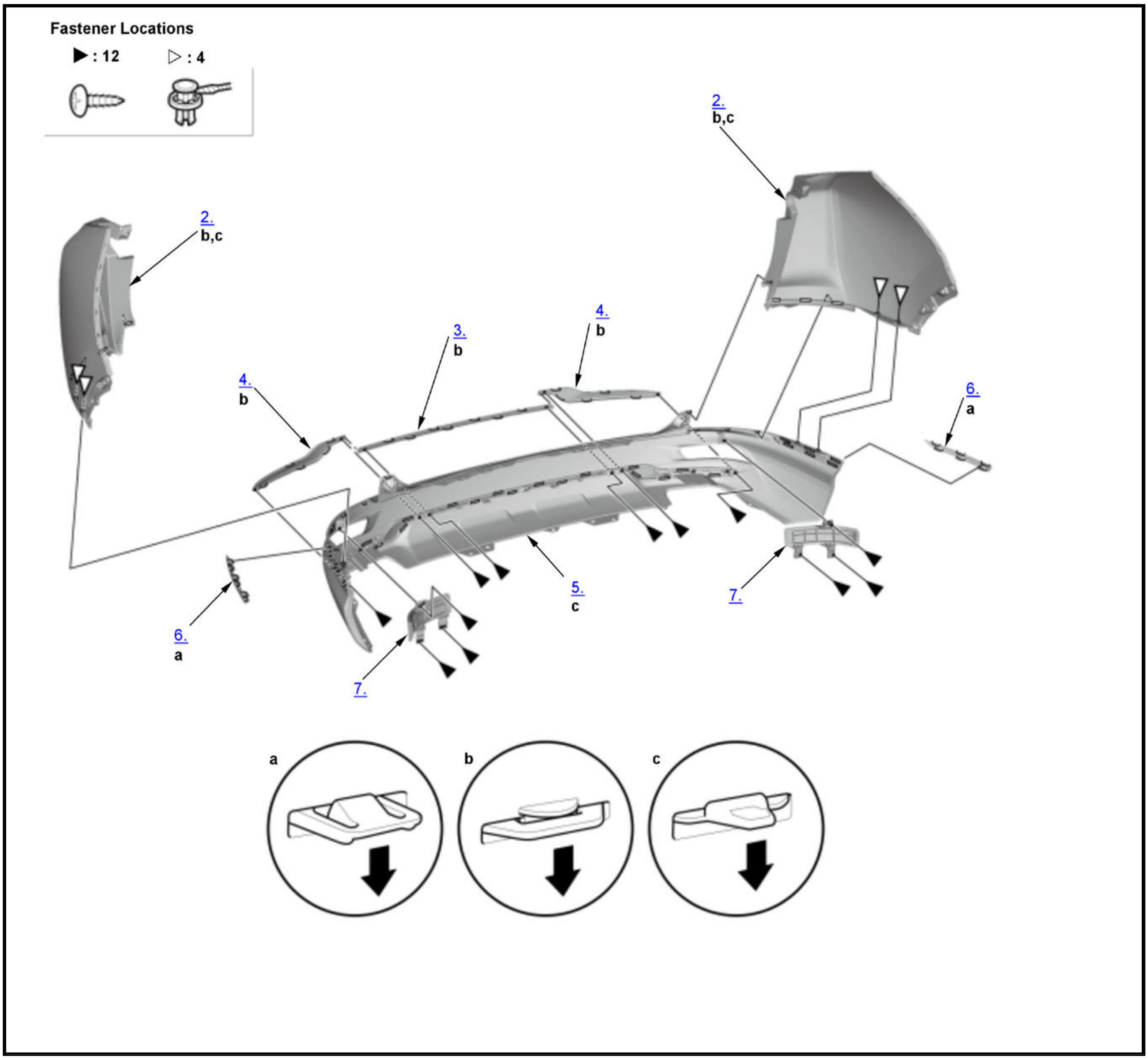
Fastener Locations
▶ : 12
▷ : 4
2.
b,c
2.
b,c
3.
b
4.
b
4.
b
5.
c
6.
a
6.
a
7.
7.
a
b
c

'17-19

1. **Rear Bumper - Remove**
2. Rear Bumper Side Face - Remove
3. Rear Bumper Lower Trim - Remove
4. Rear Bumper Reflector - Remove
5. Rear Bumper Side Molding - Remove
6. Rear Bumper Lower Face - Remove
7. All Disassembled Parts - Reassemble

1. Reassemble the parts in the reverse order of disassembly.

'20-21

8. **Rear Bumper - Remove**
9. Rear Bumper Side Face - Remove
10. Rear Bumper Center Lower Molding - Remove
11. Rear Bumper Side Lower Molding - Remove
12. Rear Bumper Lower Face - Remove

13. Rear Bumper Side Molding - Remove
14. Rear Bumper Reflector - Remove
15. All Disassembled Parts - Reassemble

1. Reassemble the parts in the reverse order of disassembly.

REMOVAL AND INSTALLATION

A-PILLAR CORNER TRIM REMOVAL AND INSTALLATION

Removal and Installation

1

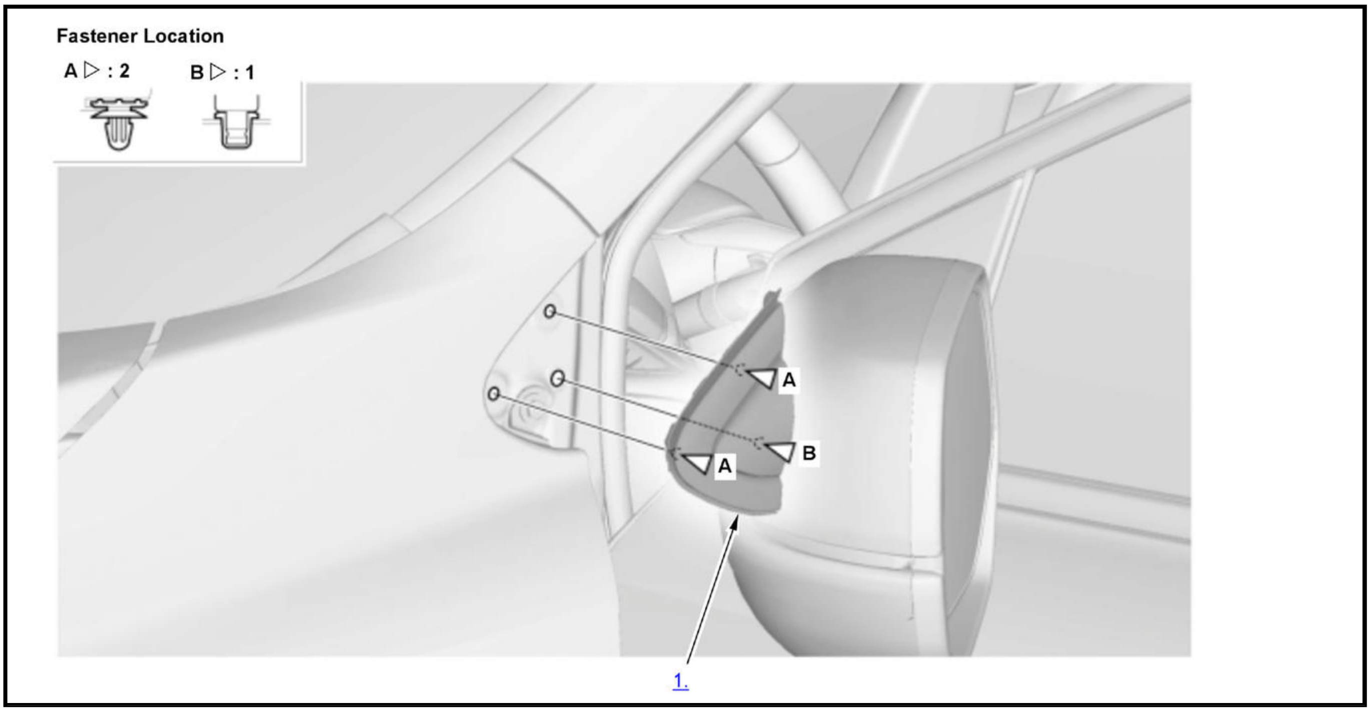

1. A-Pillar Corner Trim - Remove
2. All Removed Parts - Install

1. Install the parts in the reverse order of removal.

AUTOMATIC LIGHTING/RAIN SENSOR REMOVAL AND INSTALLATION

Removal and Installation

NOTE: 🛈 Where icon is shown further information.

1

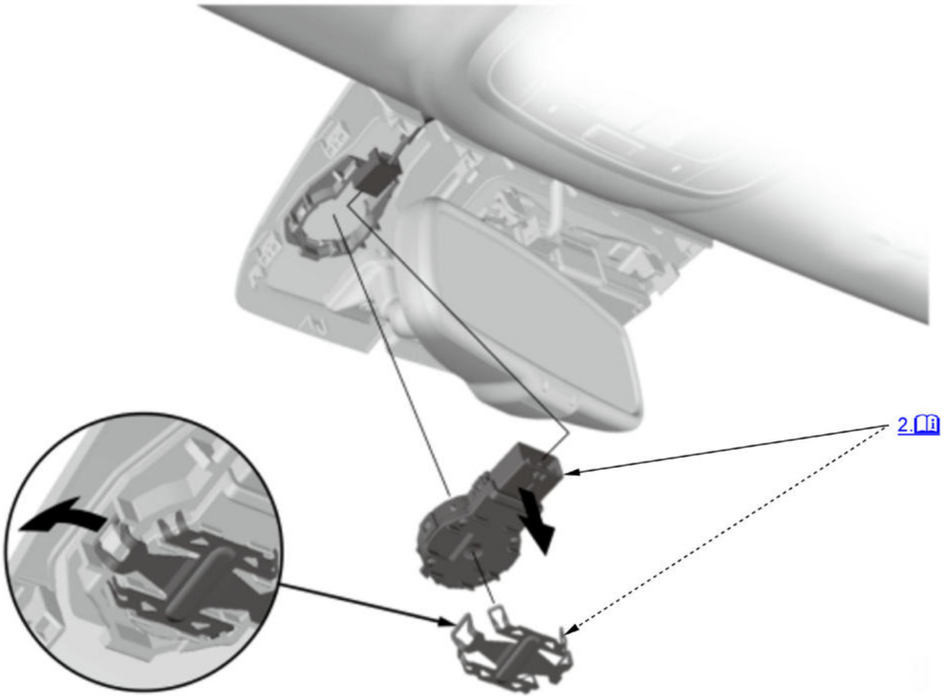

ℹ	Detailed information, notes, and precautions

1. **Sensor Cover - Remove**
2. Automatic Lighting/Rain Sensor - Remove

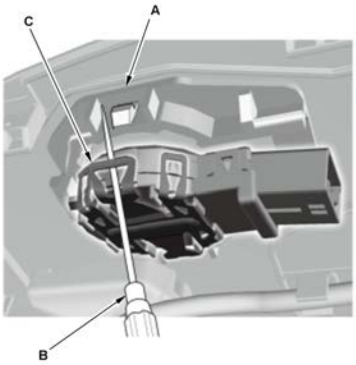	1. Prying on the automatic lighting/rain sensor bracket (A) may cause damage to the bracket. Insert a pick tool (B) from inside the clip (C) as shown, and carefully remove the clip. Be careful not to damage the windshield with the tip of the pick tool while working. **NOTE:** Hold the connector portion, and carefully remove the automatic lighting/rain sensor and silicon sheet together from the glass surface. **Note for installation** • Make sure that there are no air bubbles between the windshield glass and silicon sheet during installation. • If the automatic lighting/rain sensor connector is connected after the 12 volt battery terminal is connected, the automatic lighting/rain sensor is not confirmed by the body control module. • If the body control module does not confirm the automatic lighting/rain sensor, the automatic wiper system does not

	work.

3. All Removed Parts - Install

    1. Install the parts in the reverse order of removal.

CENTER COWL COVER REMOVAL AND INSTALLATION

Removal and Installation

1. Both Side Cowl Covers - Remove

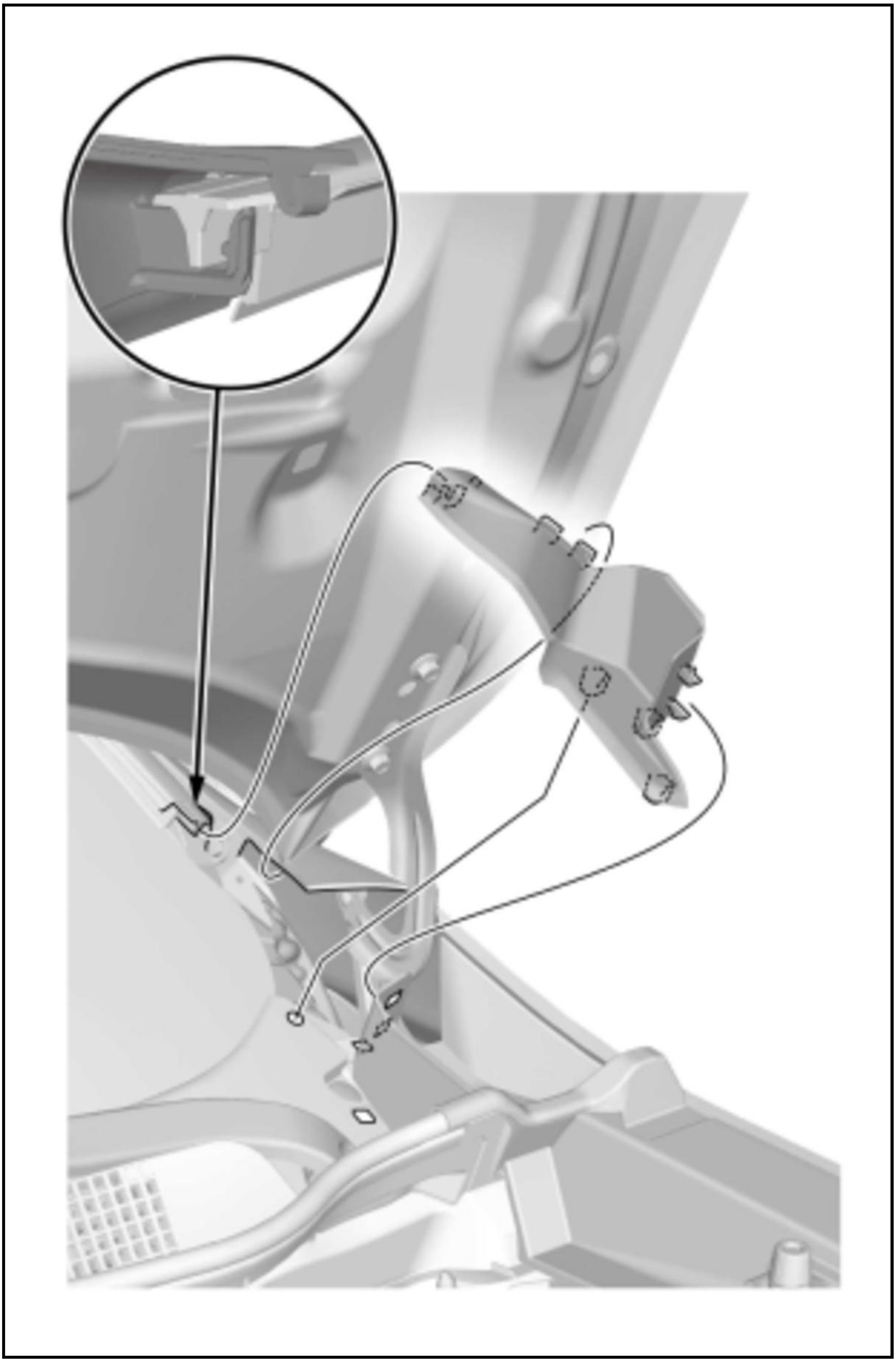

NOTE: Repeat this procedure on the opposite side.

2. **Both Front Fender Trims - Remove**
3. Center Cowl Cover - Remove

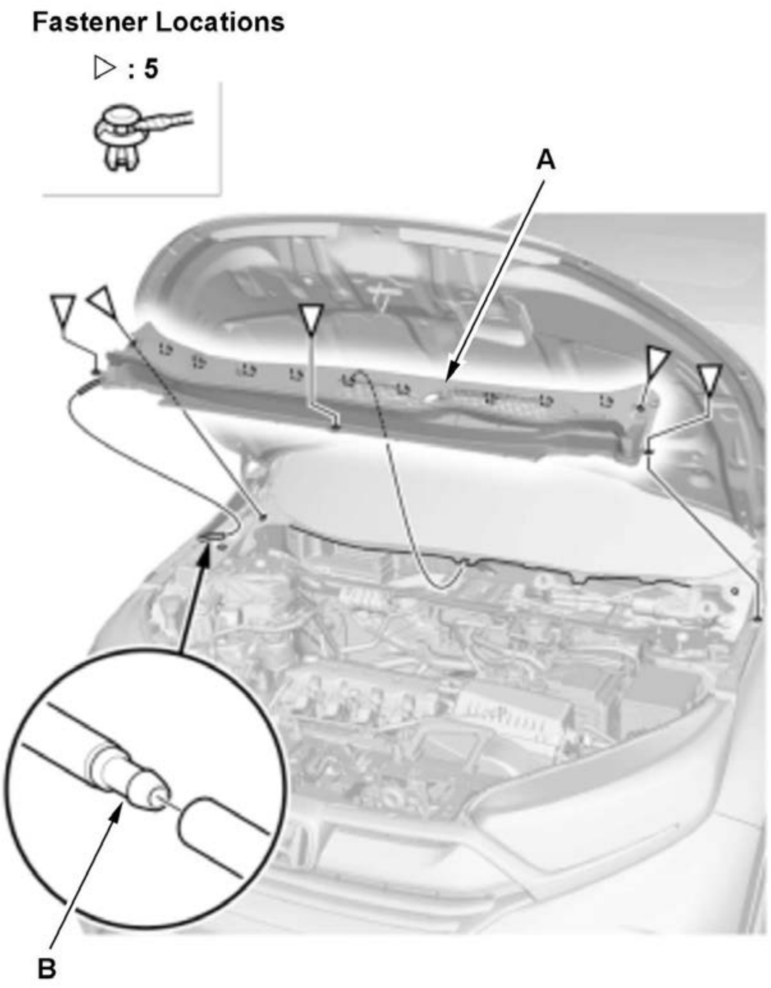 	1. Remove the center cowl cover (A). 2. Disconnect the windshield washer tube (B).

4. Rear Hood Seal - Remove

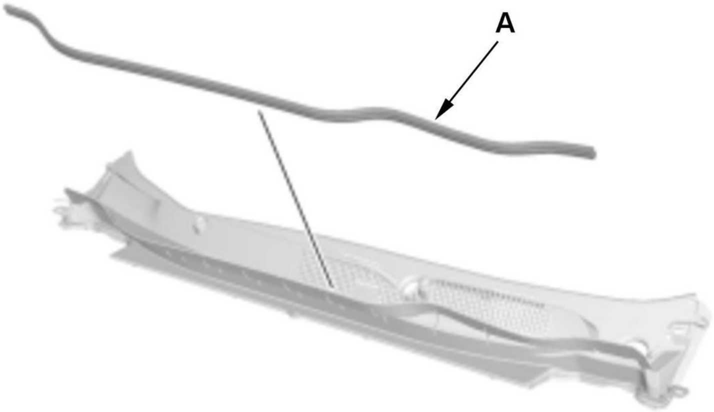 	1. If necessary, remove the rear hood seal (A).

5. All Removed Parts - Install

1. Install the parts in the reverse order of removal.

DRAIN TRIM REMOVAL AND INSTALLATION

Removal and Installation

1

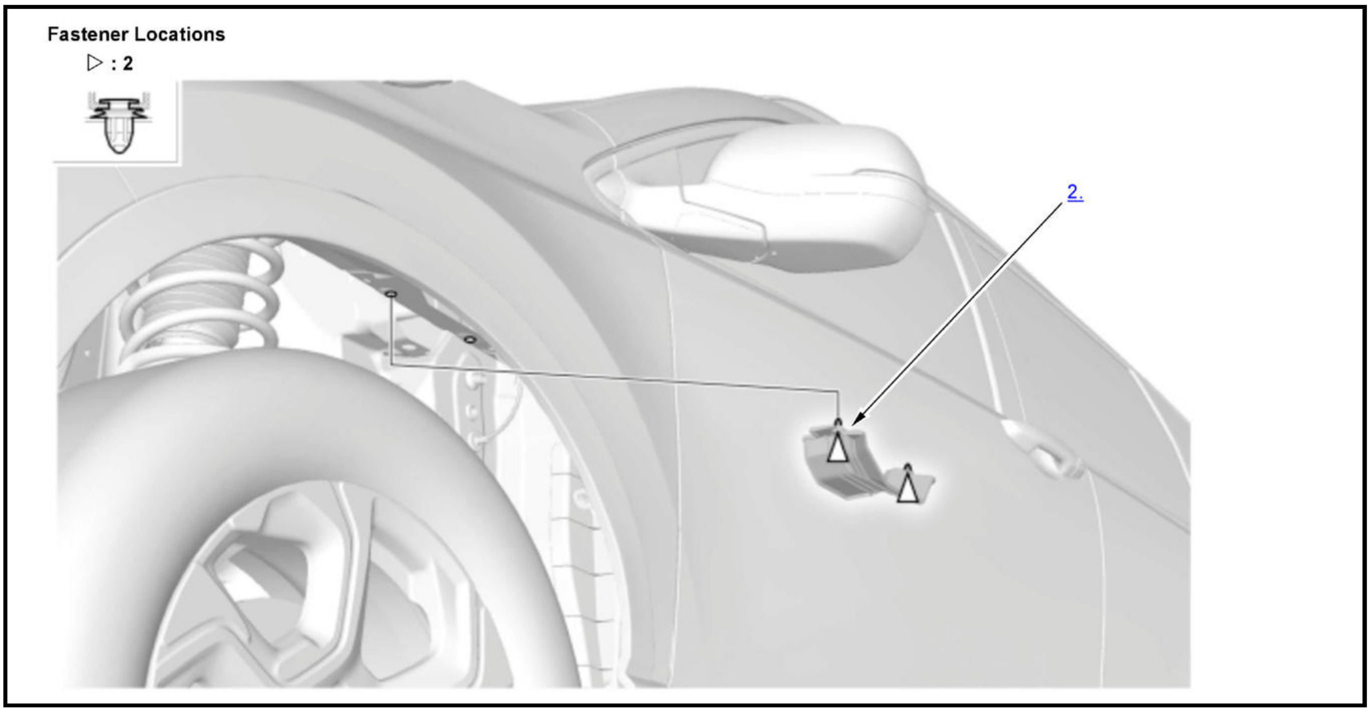
Fastener Locations
▷ : 2
2.

1. **Front Inner Fender - Remove**
2. Side Drain Trim - Remove
3. All Removed Parts - Install

1. Install the parts in the reverse order of removal.

ENGINE UNDERCOVER REMOVAL AND INSTALLATION

Removal and Installation

1

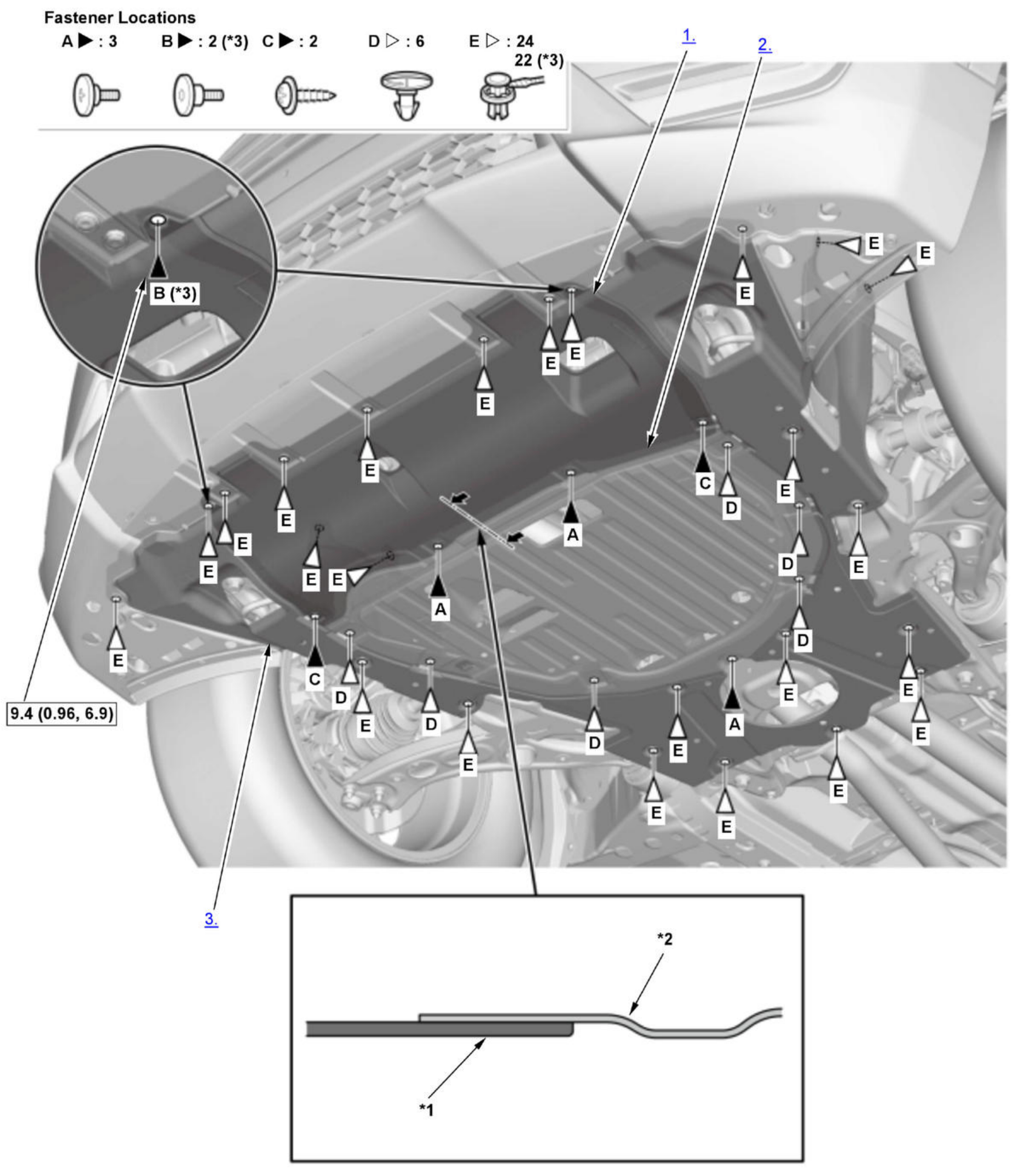
Fastener Locations
A ▶ : 3
B ▶ : 2 (*3)
C ▶ : 2
D ▷ : 6
E ▷ : 24
22 (*3)
1.
2.
3.
B (*3)
9.4 (0.96, 6.9)
A
C
D
E
*1
*2

▭	Torque: N.m (kgf.m, lbf.ft)
*1	Front Engine Undercover Lid
*2	Engine Undercover Lid

*3	For some models

1. Front Engine Undercover Lid - Remove
2. Engine Undercover Lid - Remove (For Some models)
3. Engine Undercover - Remove
4. All Removed Parts - Install

1. Install the parts in the reverse order of removal.
NOTE: Make sure the front edge of the engine undercover lid sits above the front engine undercover lid.

FRONT BULKHEAD COVER REMOVAL AND INSTALLATION

Removal and Installation

1

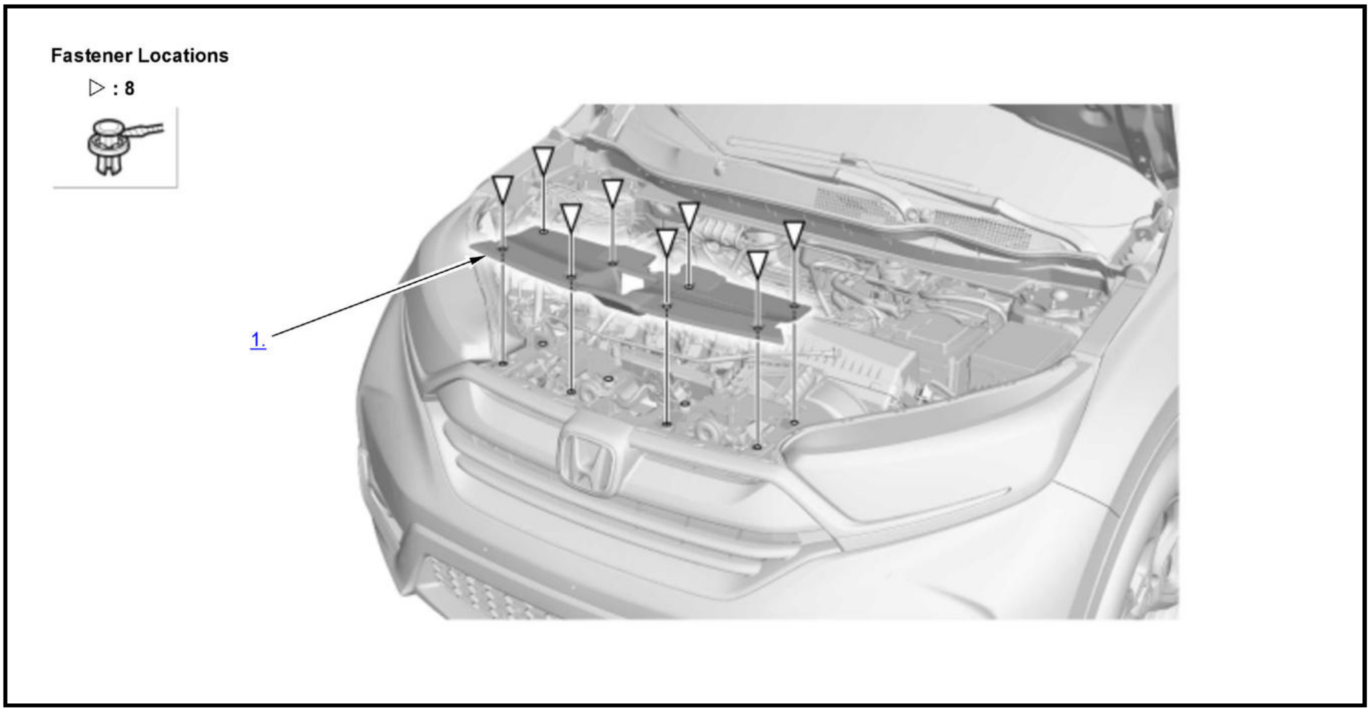

1. Front Bulkhead Cover - Remove
2. All Removed Parts - Install

1. Install the parts in the reverse order of removal.

FRONT BUMPER REMOVAL AND INSTALLATION

Removal and Installation

NOTE: 🛈 Where icon is shown further information.

1

'17-19

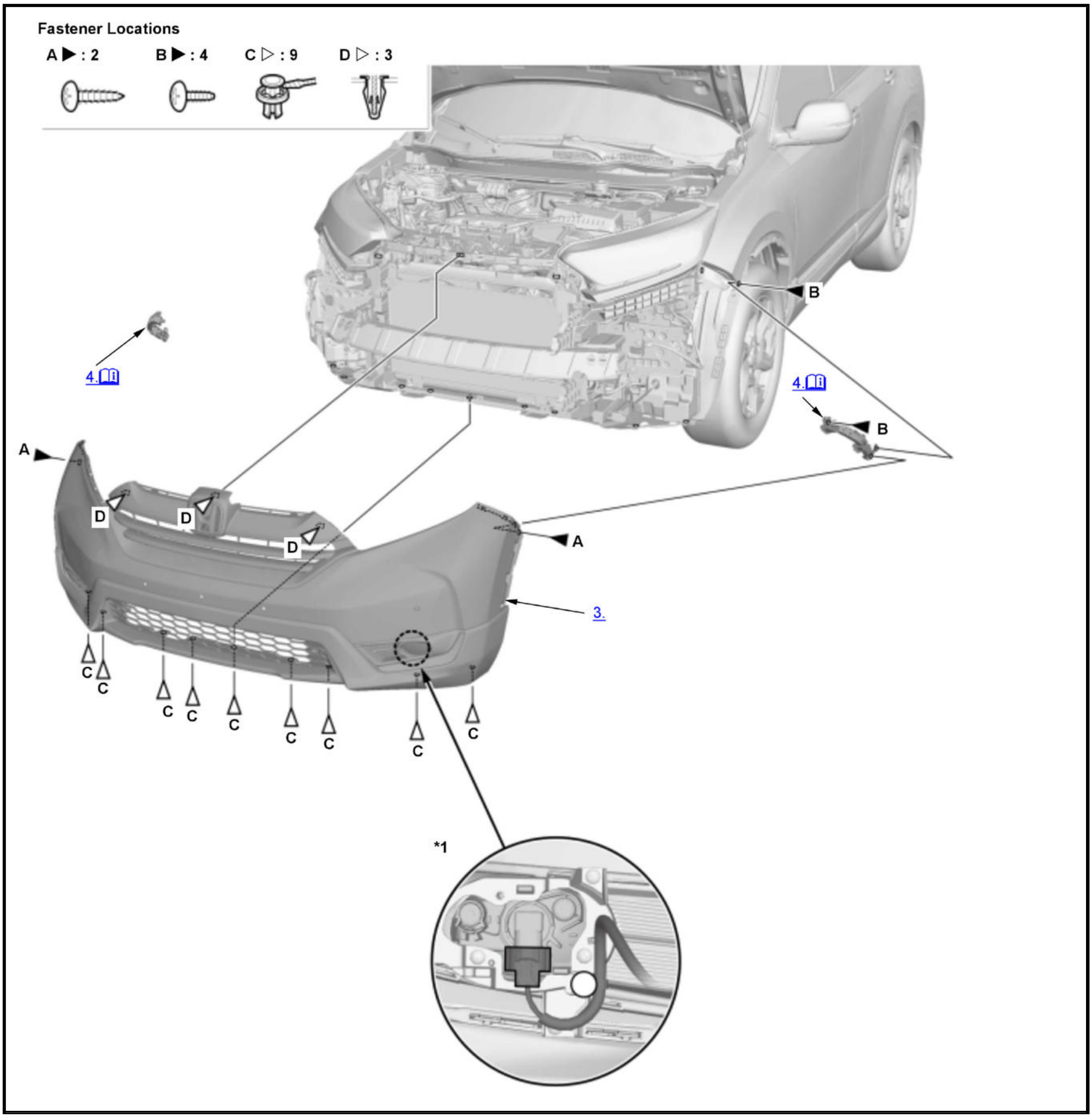
Fastener Locations
A ▶ : 2
B ▶ : 4
C ▷ : 9
D ▷ : 3
B
4.
4.
B
A
D
D
D
A
3.
C
C
C
C
C
C
C
C
C
*1

📖	Detailed information, notes, and precautions
*1	With front fog light

2

'20-21

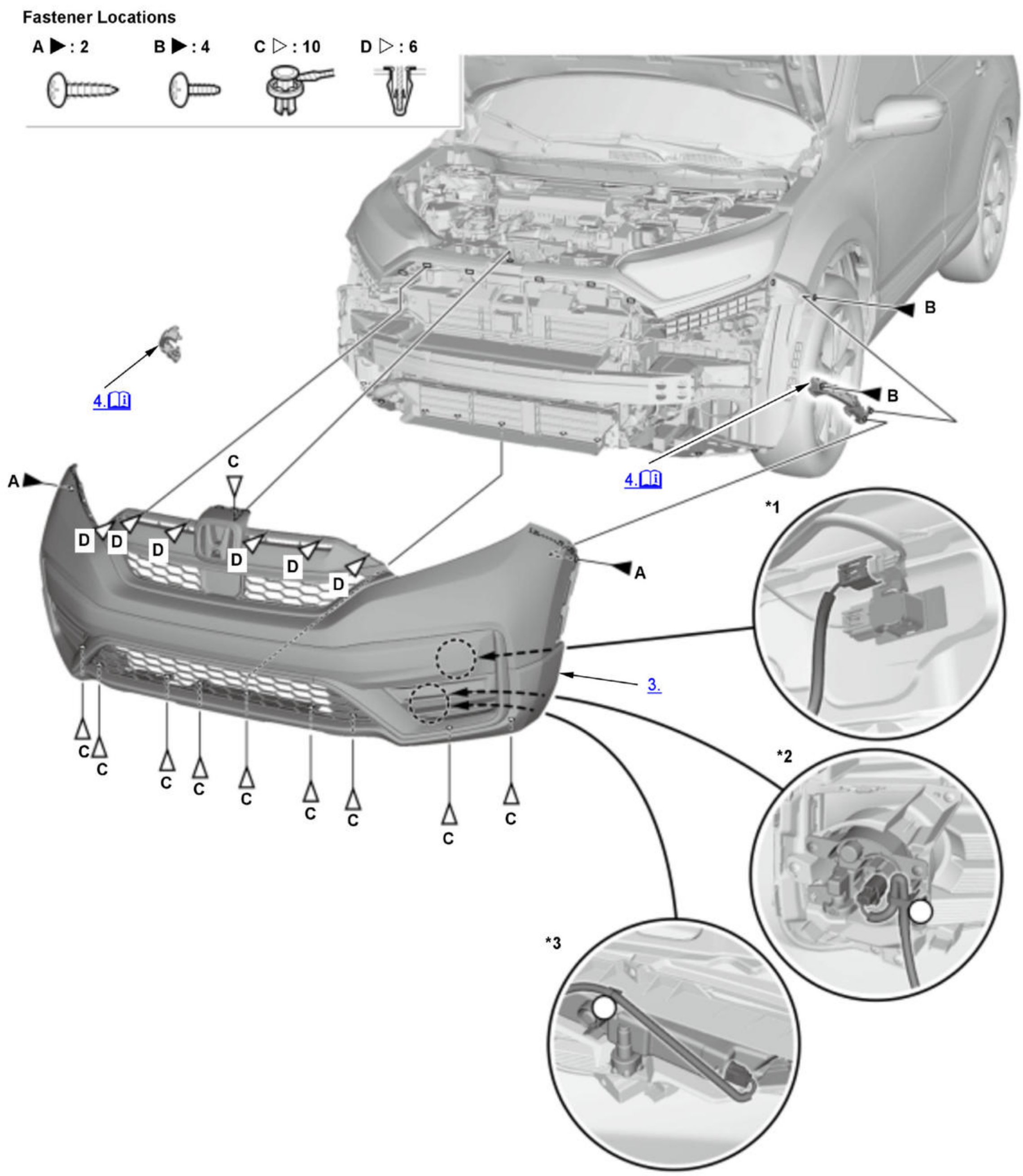
Fastener Locations
A ▶ : 2
B ▶ : 4
C ▷ : 10
D ▷ : 6
B
4.
B
4.
A
C
D
D
D
D
D
D
A
3.
*1
*2
*3
C
C
C
C
C
C
C
C
C
C

ℹ	Detailed information, notes, and precautions
*1	With front corner sensor

*2	With front fog light (Circle LED Type)
*3	With front fog light (5-LED type)

1. **Front Bulkhead Cover - Remove**
2. **Front Wheel Arch Protector - Remove**
3. Front Bumper - Remove
4. Front Bumper Side Spacers - Remove

   1. If necessary, remove the front bumper side spacers.

5. All Removed Parts - Install

1. Install the parts in the reverse order of removal.

FRONT FENDER FAIRING REMOVAL AND INSTALLATION

Removal and Installation

1

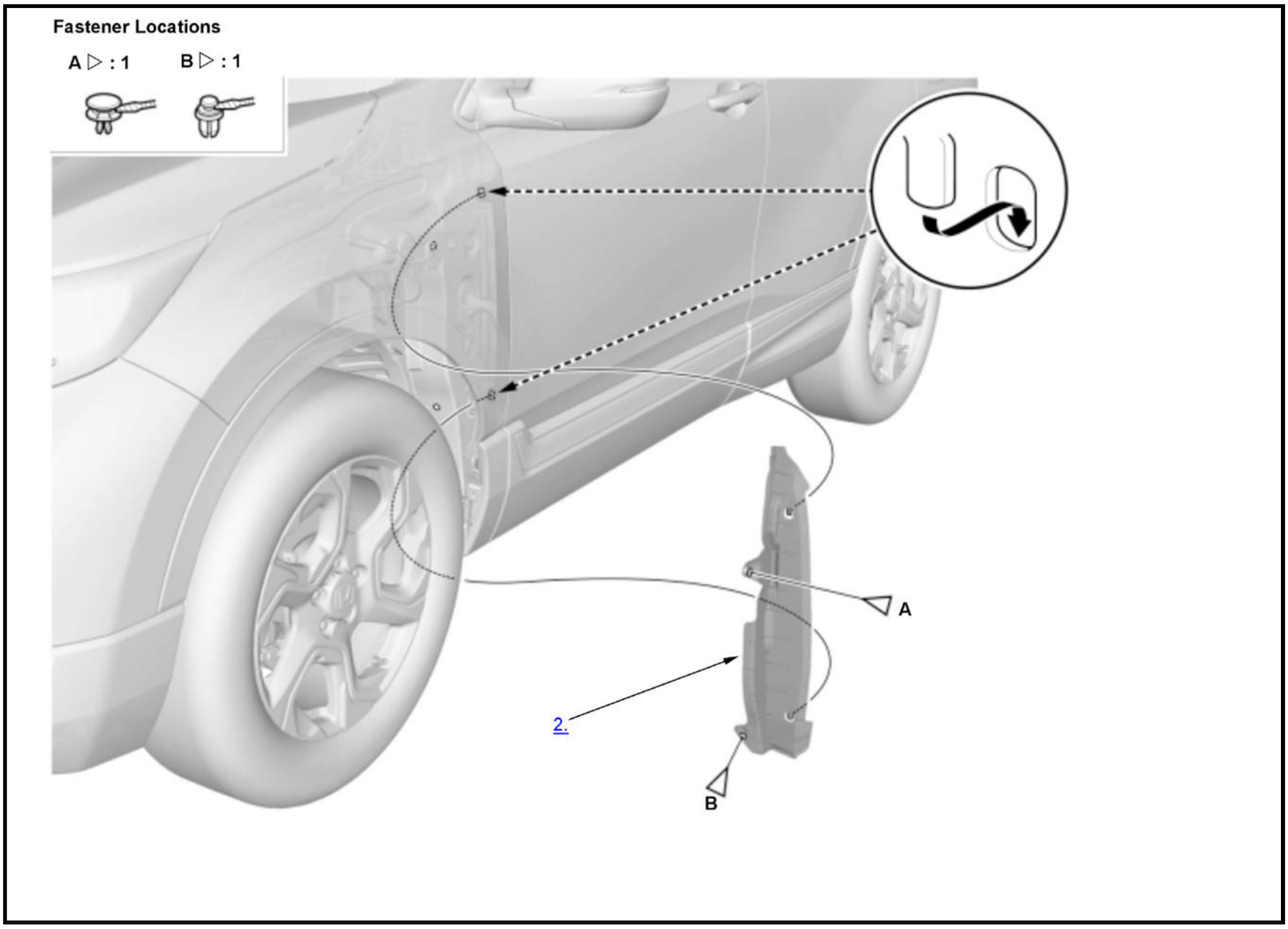

1. Front Inner Fender - Remove

   1. Remove the front inner fender as needed.

2. Front Fender Fairing - Remove
3. All Removed Parts - Install

   1. Install the parts in the reverse order of removal.

FRONT FENDER TRIM REMOVAL AND INSTALLATION

Removal and Installation

1

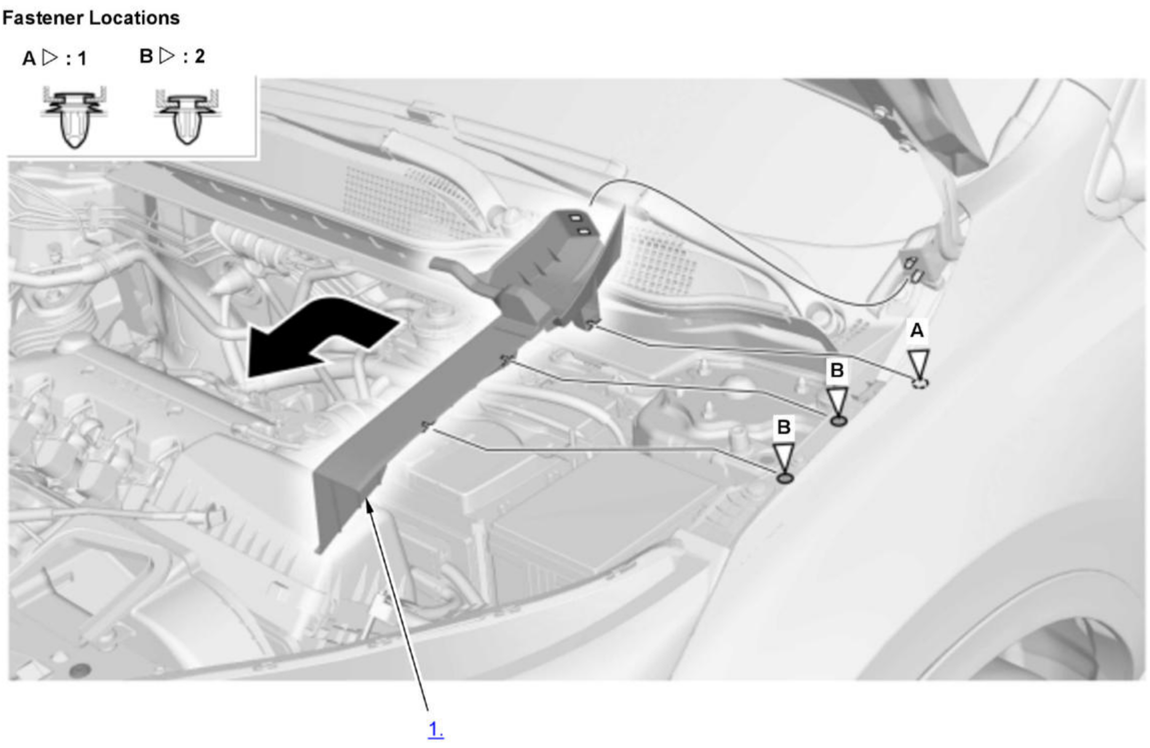
Fastener Locations
A ▷ : 1
B ▷ : 2
A
B
B
1.

1. Front Fender Trim - Remove
2. All Removed Parts - Install

    1. Install the parts in the reverse order of removal.

NOTE: Install the clips (A, B) on the front fender trim (C)

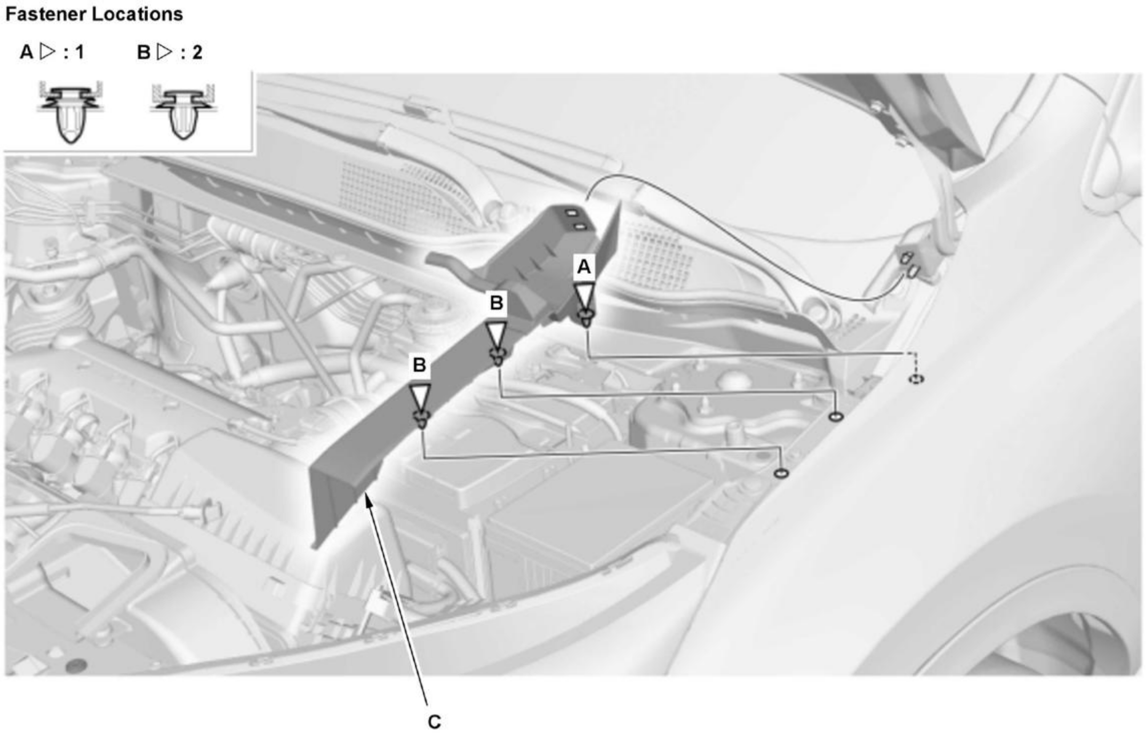
Fastener Locations
A ▷ : 1
B ▷ : 2
A
B
B
C

FRONT GRILLE REMOVAL AND INSTALLATION

Removal and Installation

1

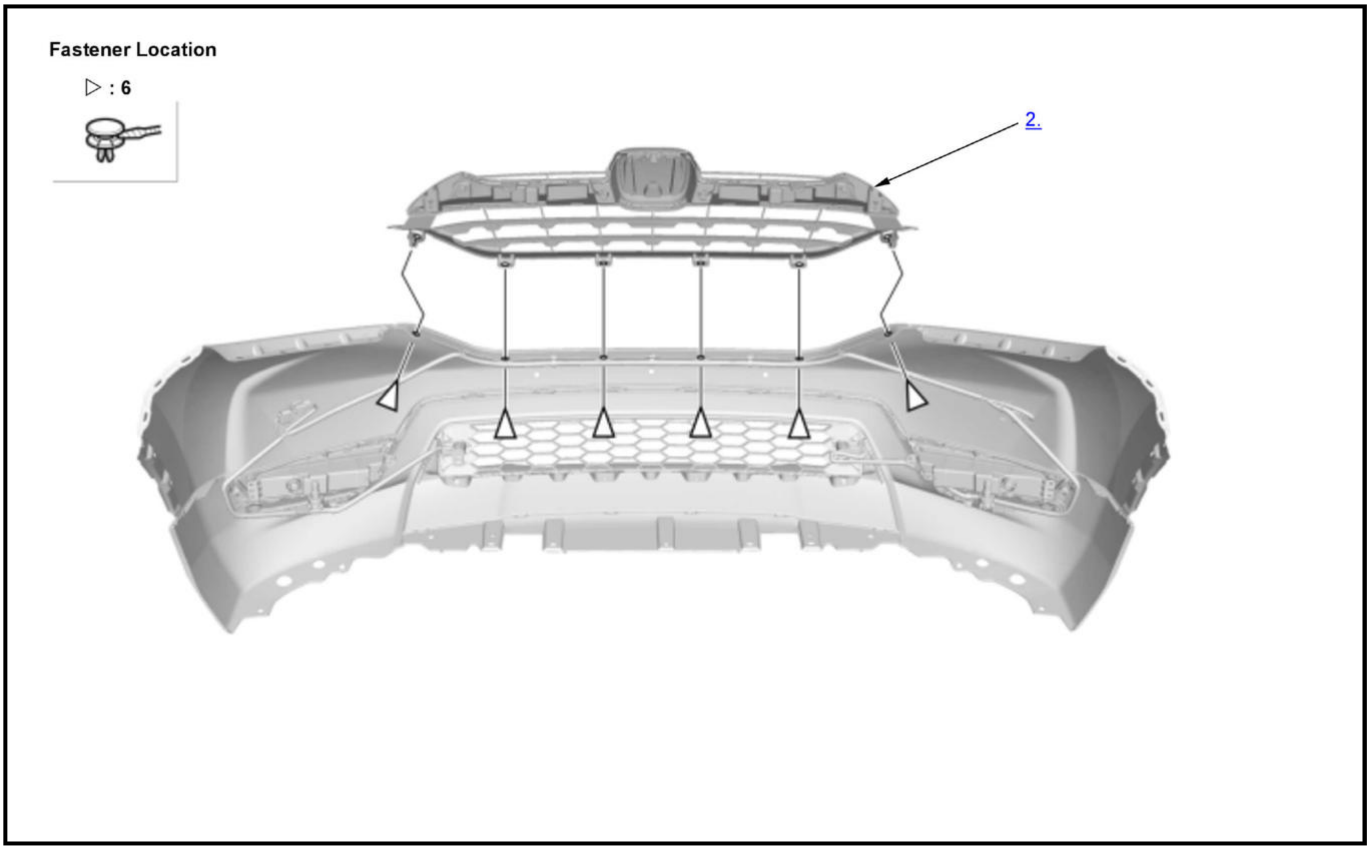

1. **Front Bumper - Remove**
2. Front Grille - Remove
3. All Removed Parts - Install

> 1. Install the parts in the reverse order of removal.

FRONT GRILLE STAY REMOVAL AND INSTALLATION

Removal and Installation

1

'17-19

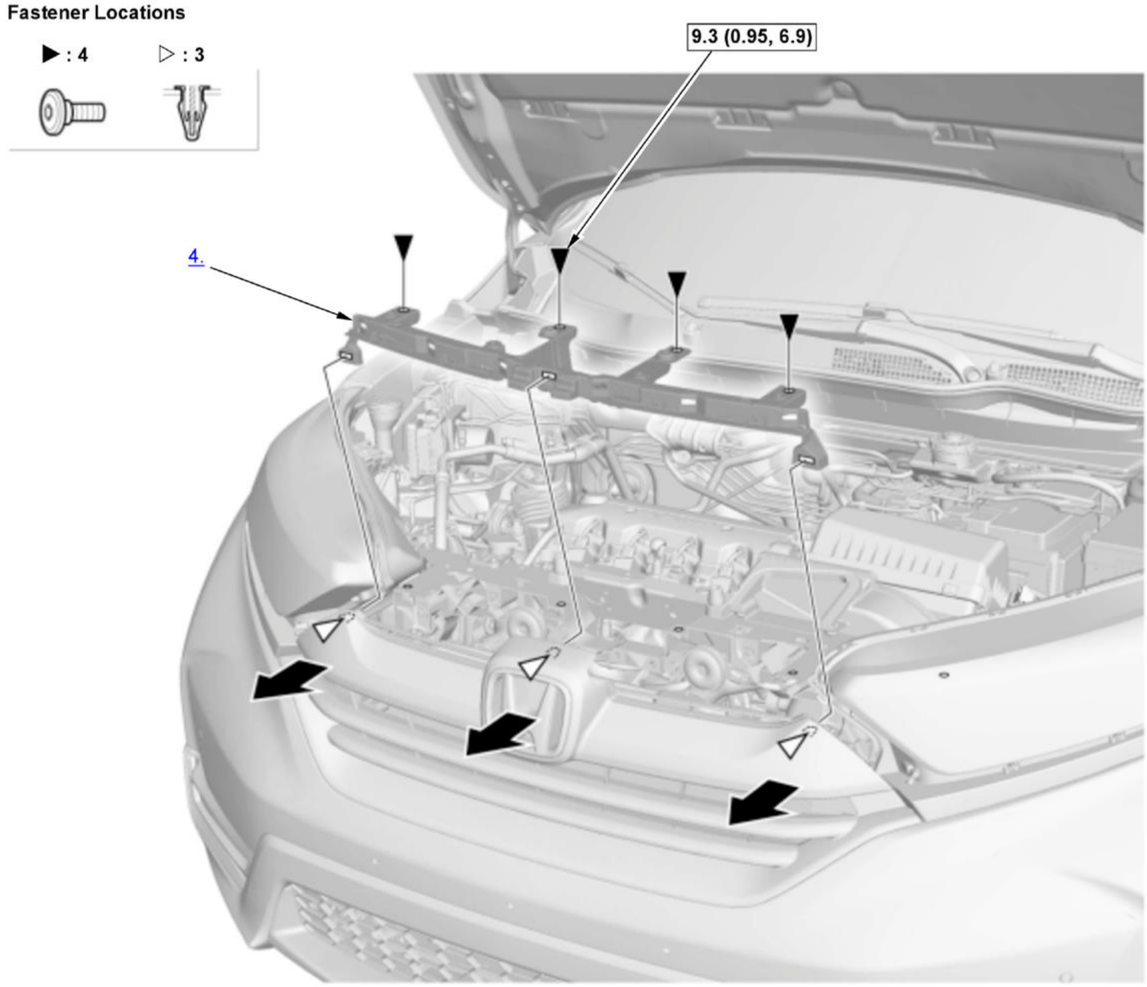
Fastener Locations
▶ : 4
▷ : 3
9.3 (0.95, 6.9)
4.

☐	Torque: N.m (kgf.m, lbf.ft)

2

'20-21

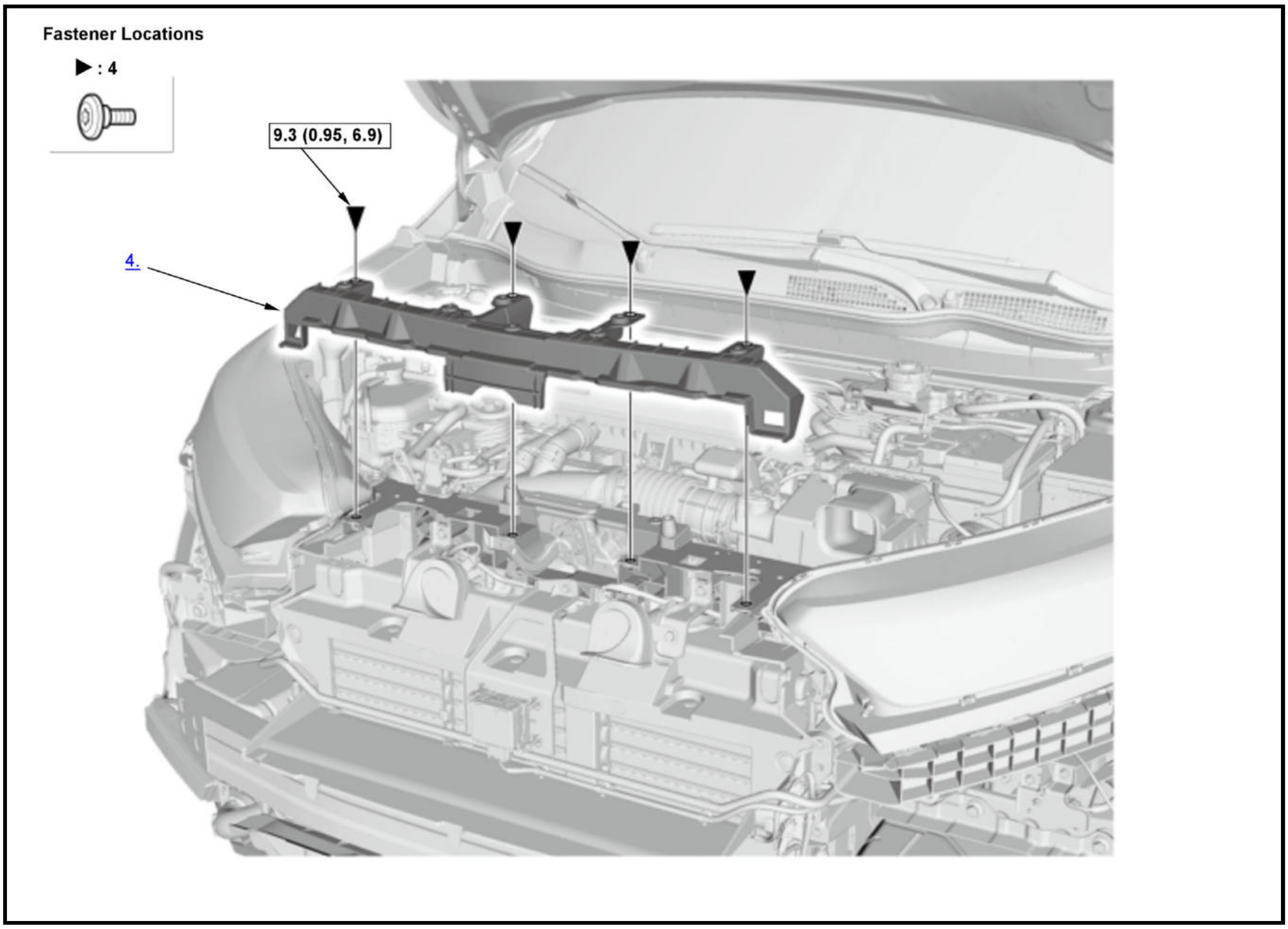

☐	Torque: N.m (kgf.m, lbf.ft)

1. **Front Bulkhead Cover - Remove**
2. '20-21Front Bumper - Remove
3. **Front Grille Trim - Remove**
4. Front Grille Stay - Remove
5. All Removed Parts - Install

1. Install the parts in the reverse order of removal.

FRONT GRILLE TRIM REMOVAL AND INSTALLATION

Removal and Installation

1

'17-19

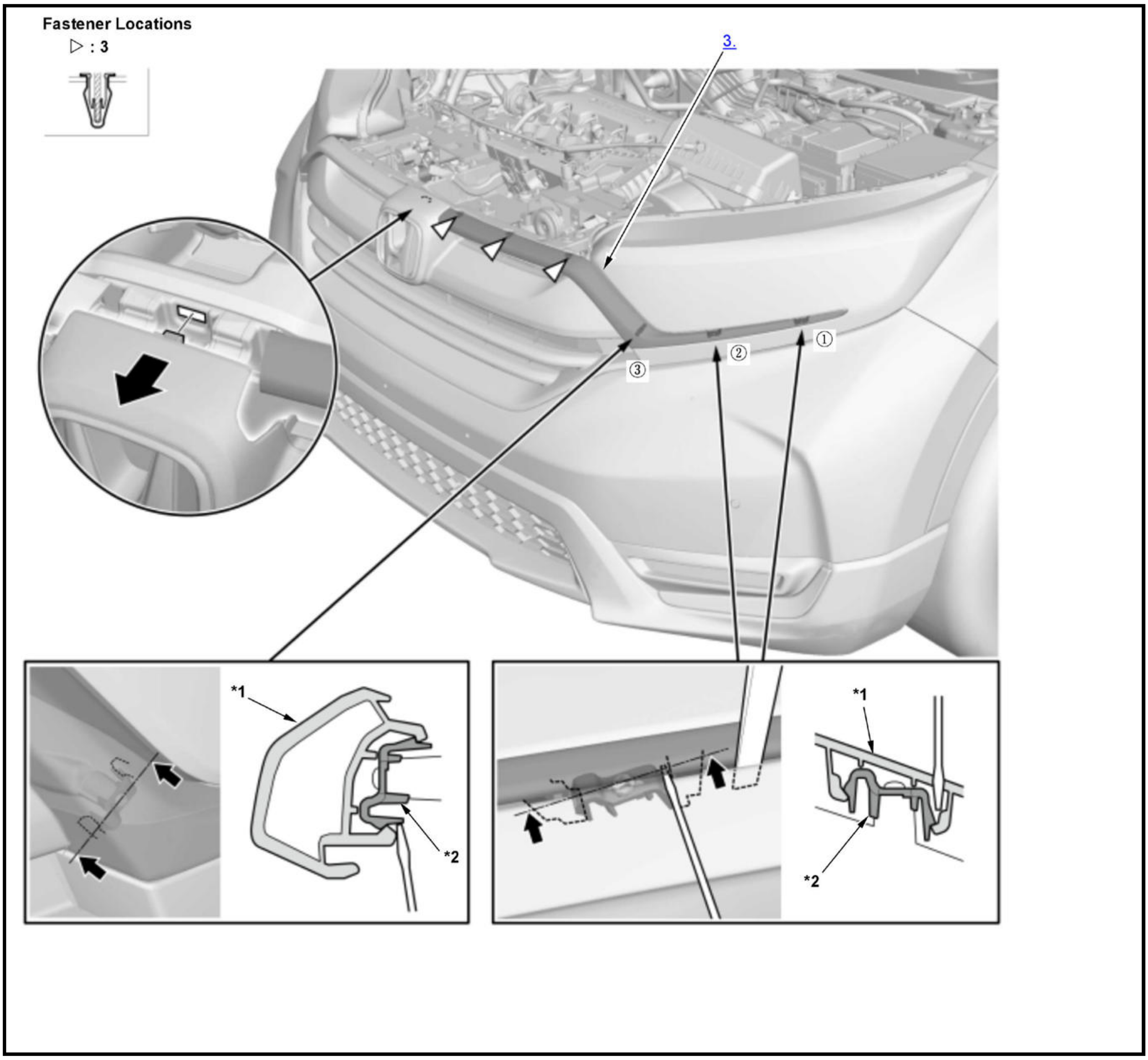
Fastener Locations
▷ : 3
3.
①
②
③
*1
*2
*1
*2

*1	Front Grille Trim
*2	Front Grille Trim Holder

2

'20-21

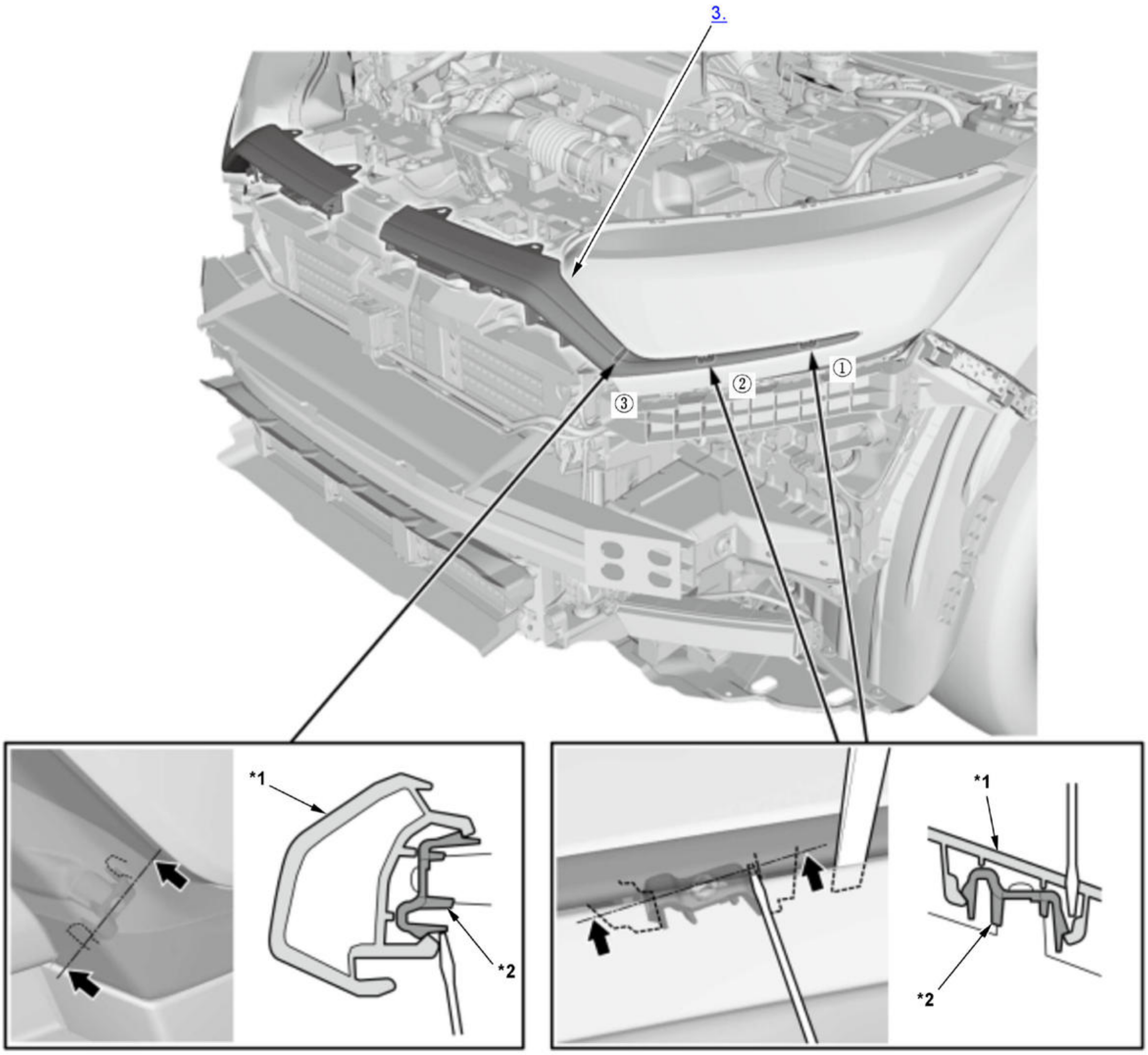

*1	Front Grille Trim
*2	Front Grille Trim Holder

3

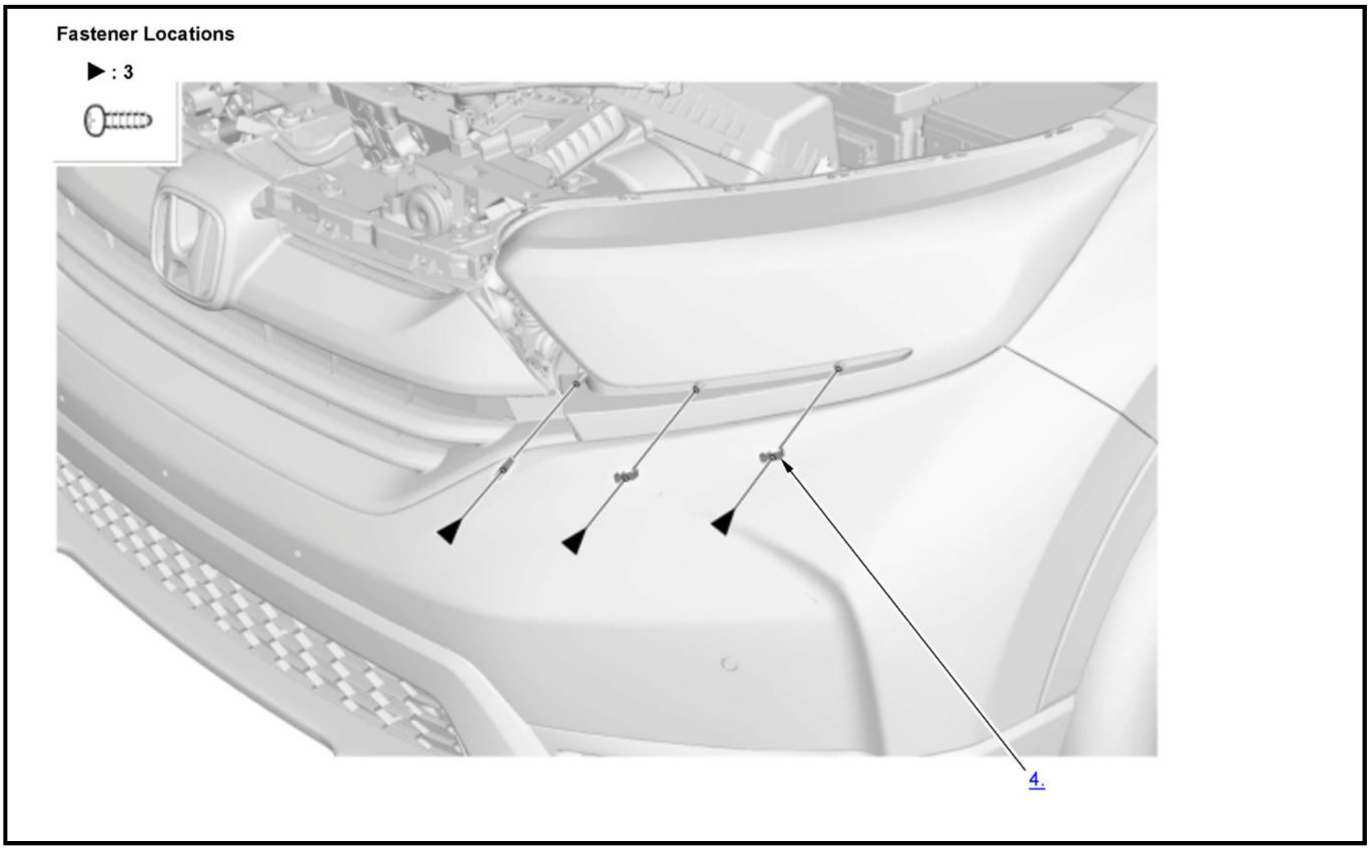

1. **Front Bulkhead Cover - Remove**
2. '20-21Front Bumper - Remove
3. Front Grille Trim - Remove
4. Front Grille Trim Holder - Remove
5. All Removed Parts - Install

1. Install the parts in the reverse order of removal.

FRONT INNER FENDER REMOVAL AND INSTALLATION

Removal and Installation

1

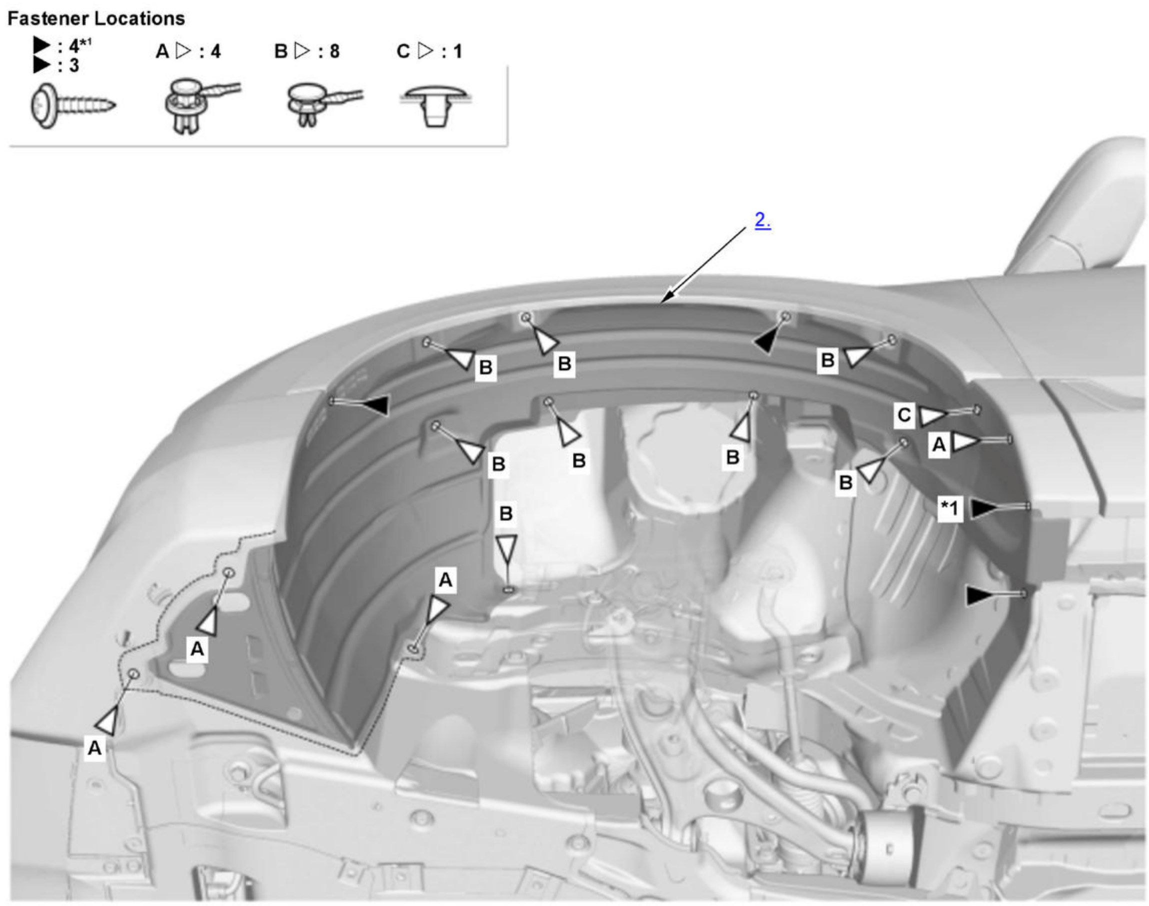
Fastener Locations
▶ : 4*1
▶ : 3
A ▷ : 4
B ▷ : 8
C ▷ : 1
2.
B
B
B
B
B
B
B
B
C
A
A
A
A
*1

*1	Without splash guard

1. Front Splash Guard - Remove (For Some Models)
2. Front Inner Fender - Remove
3. All Removed Parts - Install

1. Install the parts in the reverse order of removal.

FRONT SPLASH GUARD REMOVAL AND INSTALLATION

Removal and Installation

1

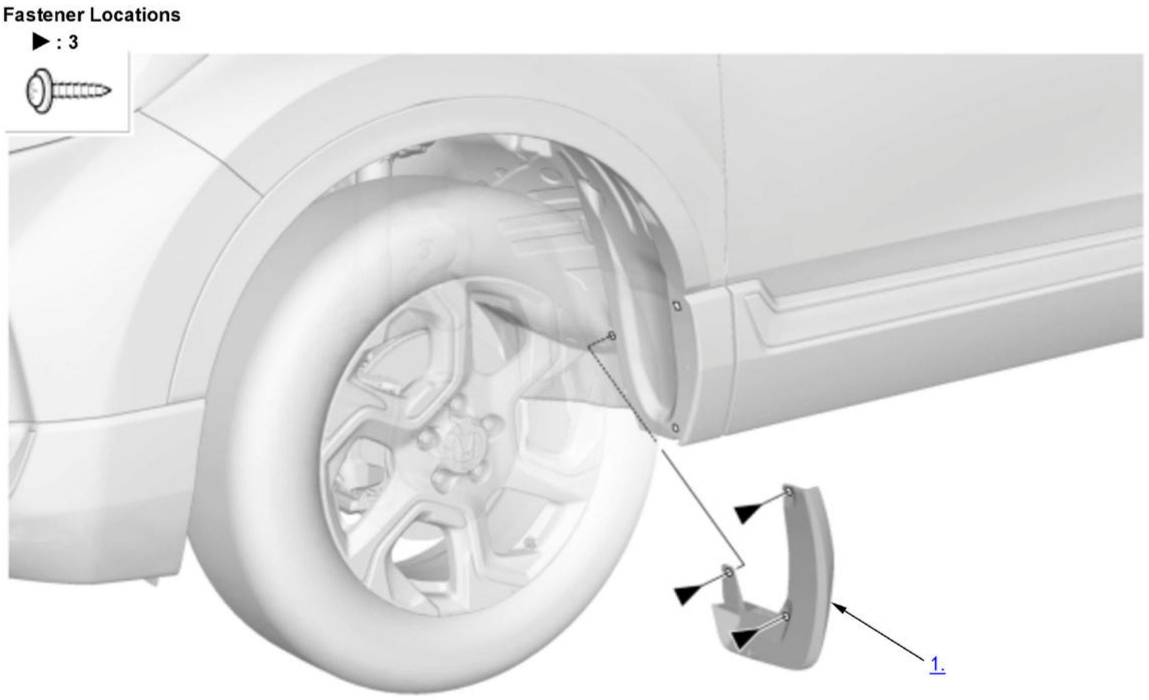

1. Front Splash Guard - Remove
2. All Removed Parts - Install

1. Install the parts in the reverse order of removal.

FRONT WHEEL ARCH PROTECTOR REMOVAL AND INSTALLATION

Removal and Installation

NOTE: 🕮 Where icon is shown further information.

1

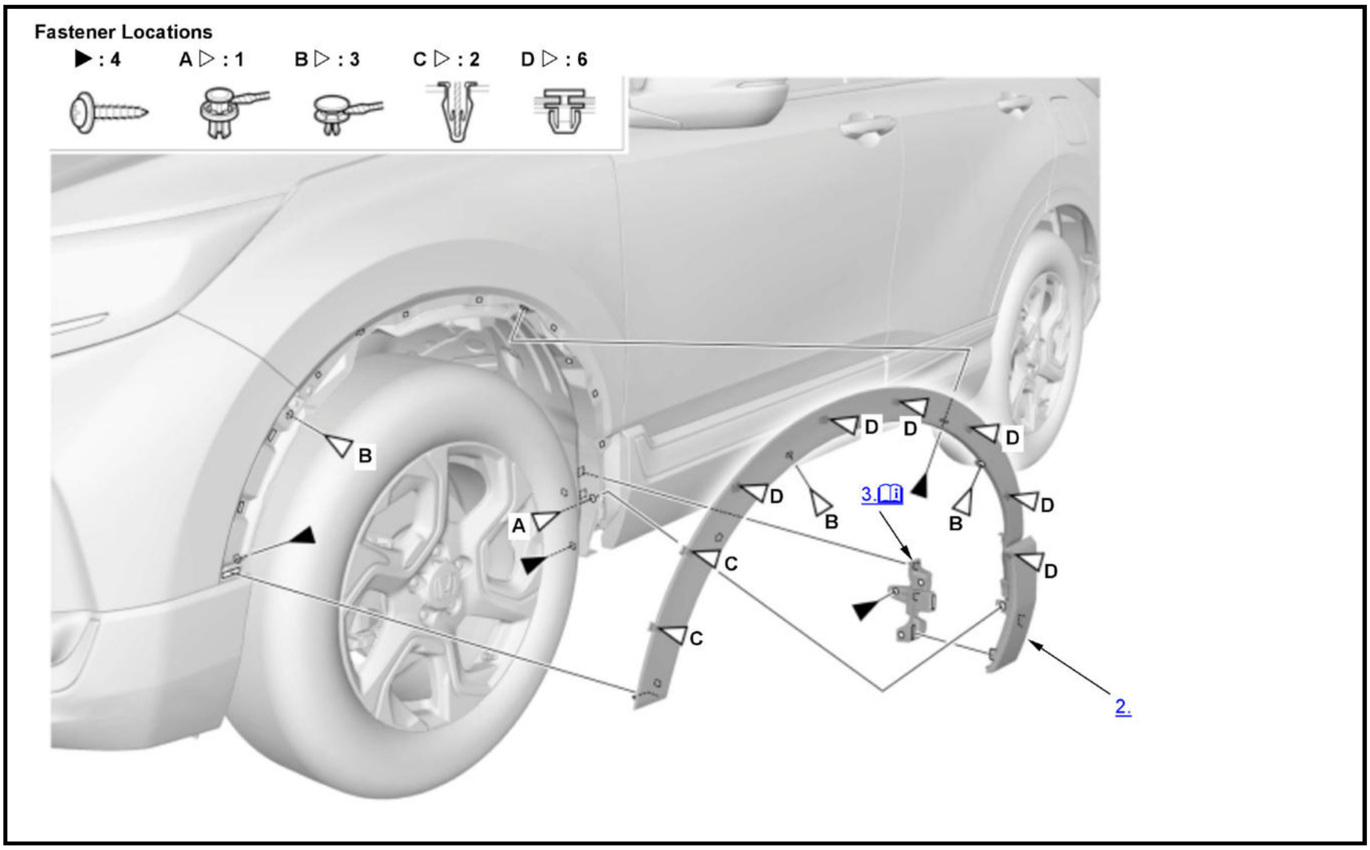
Fastener Locations
▶ : 4
A ▷ : 1
B ▷ : 3
C ▷ : 2
D ▷ : 6
B
A
D
D
D
D
B
3.
B
D
C
D
C
2.

🕮	Detailed information, notes, and precautions

1. **Front Splash Guard - Remove (For Some Models)**
2. Front Wheel Arch Protector - Remove
3. Front Wheel Arch Protector Bracket - Remove

   1. If necessary, remove the front wheel arch protector bracket.

4. All Removed Parts - Install

   1. Install the parts in the reverse order of removal.

FUEL CAP ADAPTER REMOVAL AND INSTALLATION

Removal and Installation

1

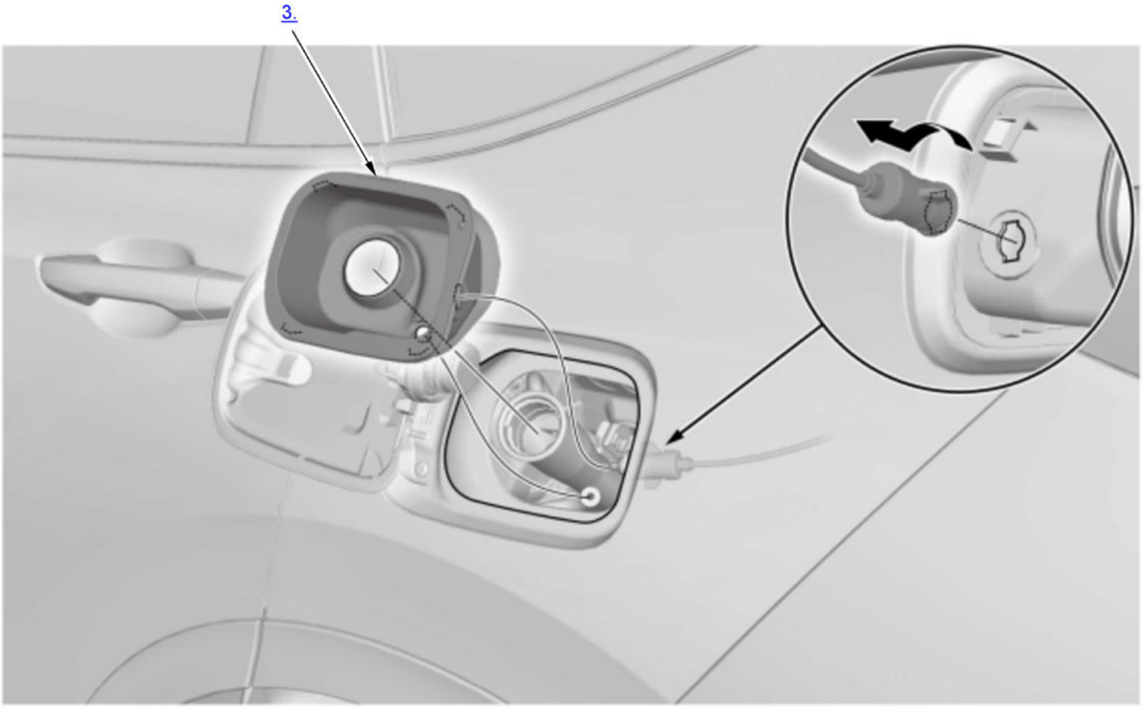

1. Rear Side Trim Panel - Remove
2. Rear Inner Fender - Remove

1. Remove the rear inner fender as needed.

3. Fuel Cap Adapter - Remove
4. All Removed Parts - Install

1. Install the parts in the reverse order of removal.

FUEL FILL DOOR OPENER CABLE REMOVAL AND INSTALLATION

Removal and Installation

1

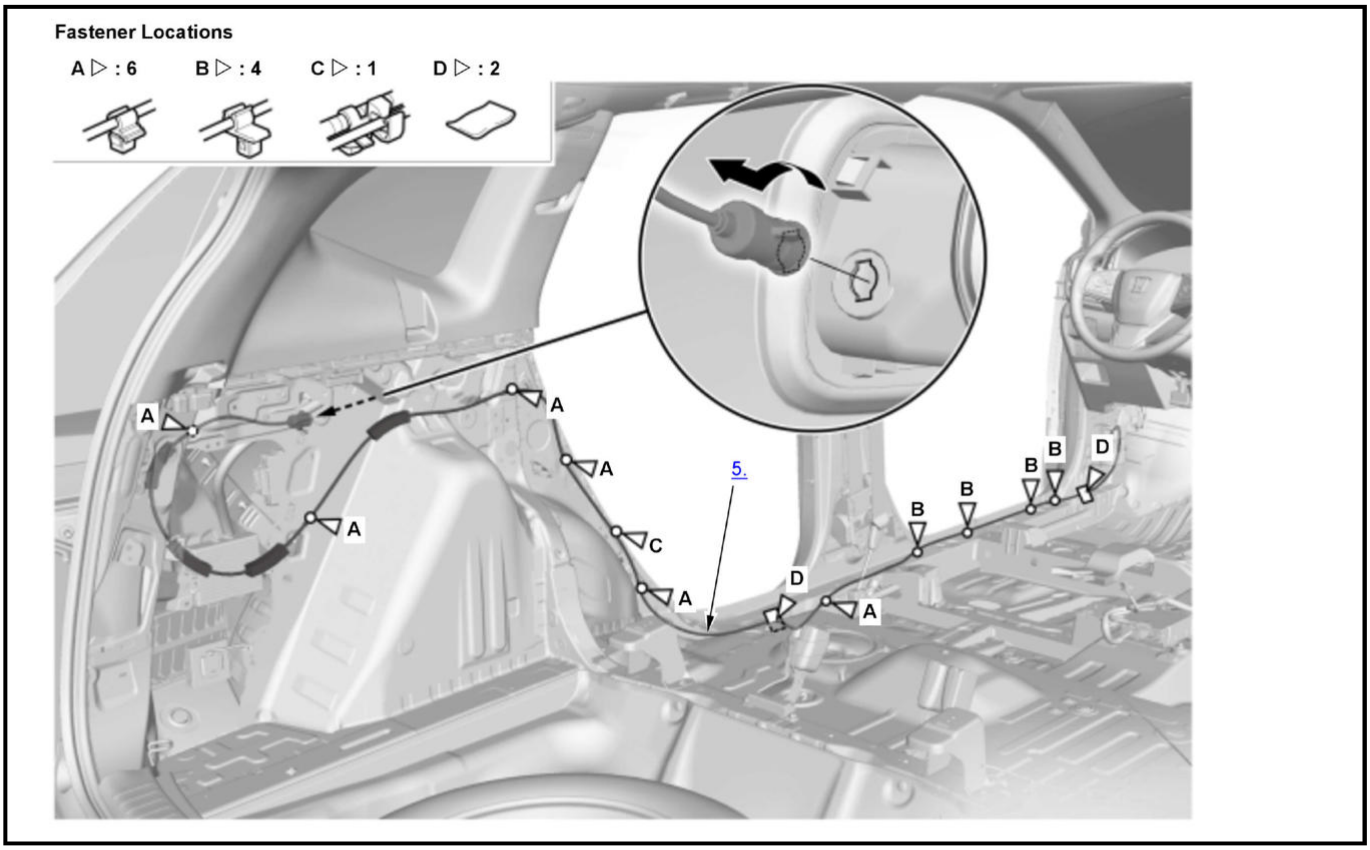
Fastener Locations
A ▷ : 6
B ▷ : 4
C ▷ : 1
D ▷ : 2
A
A
A
A
C
A
A
5.
D
B
B
B
B
D

1. [Fuel Fill Door Opener - Remove]
2. [Driver's Side B-pillar Lower Trim - Remove]
3. [Left Rear Side Trim Panel - Remove]
4. Floor Carpet - Remove

   1. **Remove the floor carpet as needed.**

5. Fuel Fill Door Opener Cable - Remove
6. All Removed Parts - Install

   1. Install the parts in the reverse order of removal.

   NOTE:

   - Align the marks (A) on the fuel fill door opener cable (B) with the clips as shown.
   - Take care not to kink the cable.

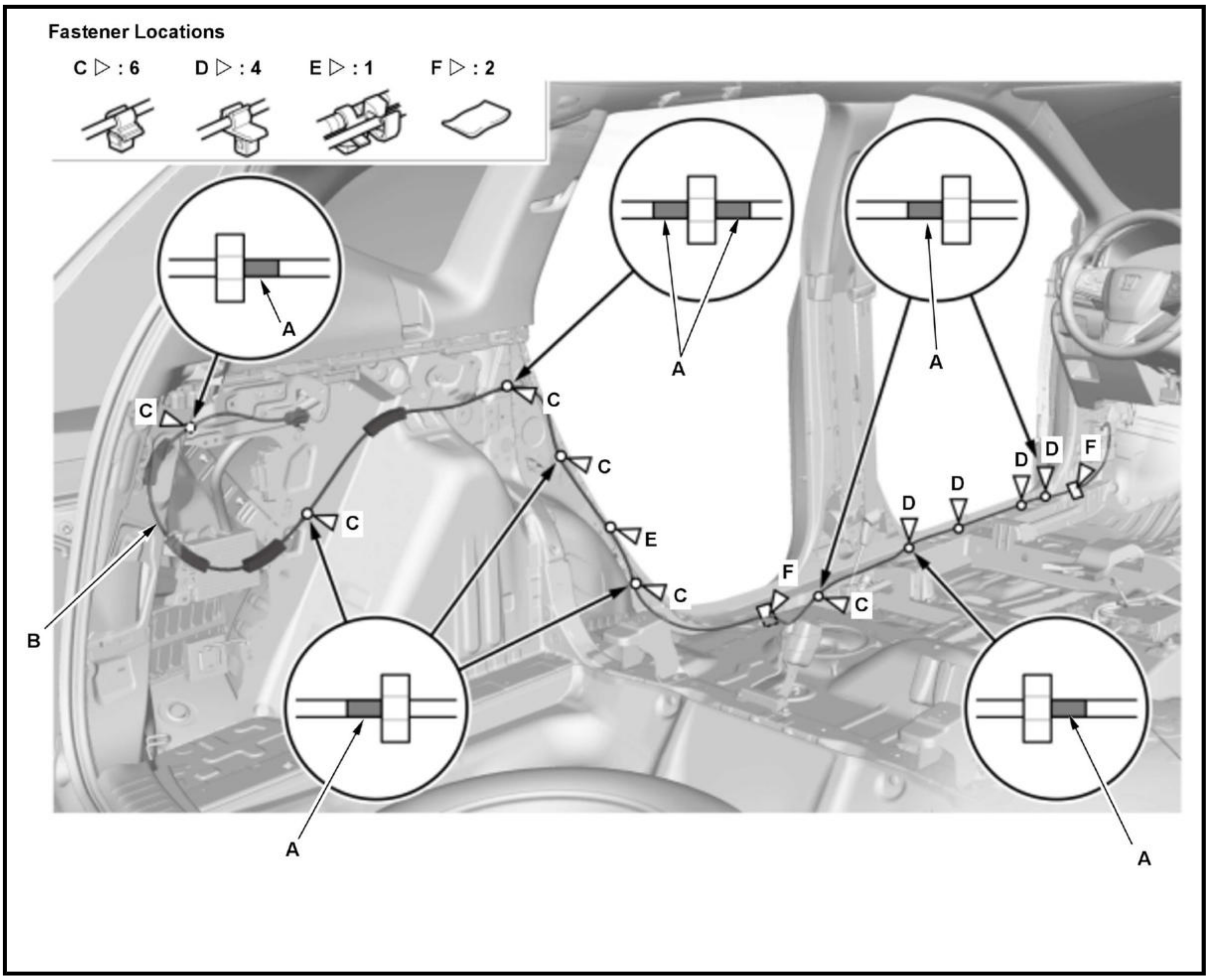
Fastener Locations
C ▷ : 6
D ▷ : 4
E ▷ : 1
F ▷ : 2
A
C
A
C
A
C
D
D
F
D
D
B
C
C
E
C
F
C
A
A

FUEL FILL DOOR OPENER REMOVAL AND INSTALLATION

Removal and Installation

1

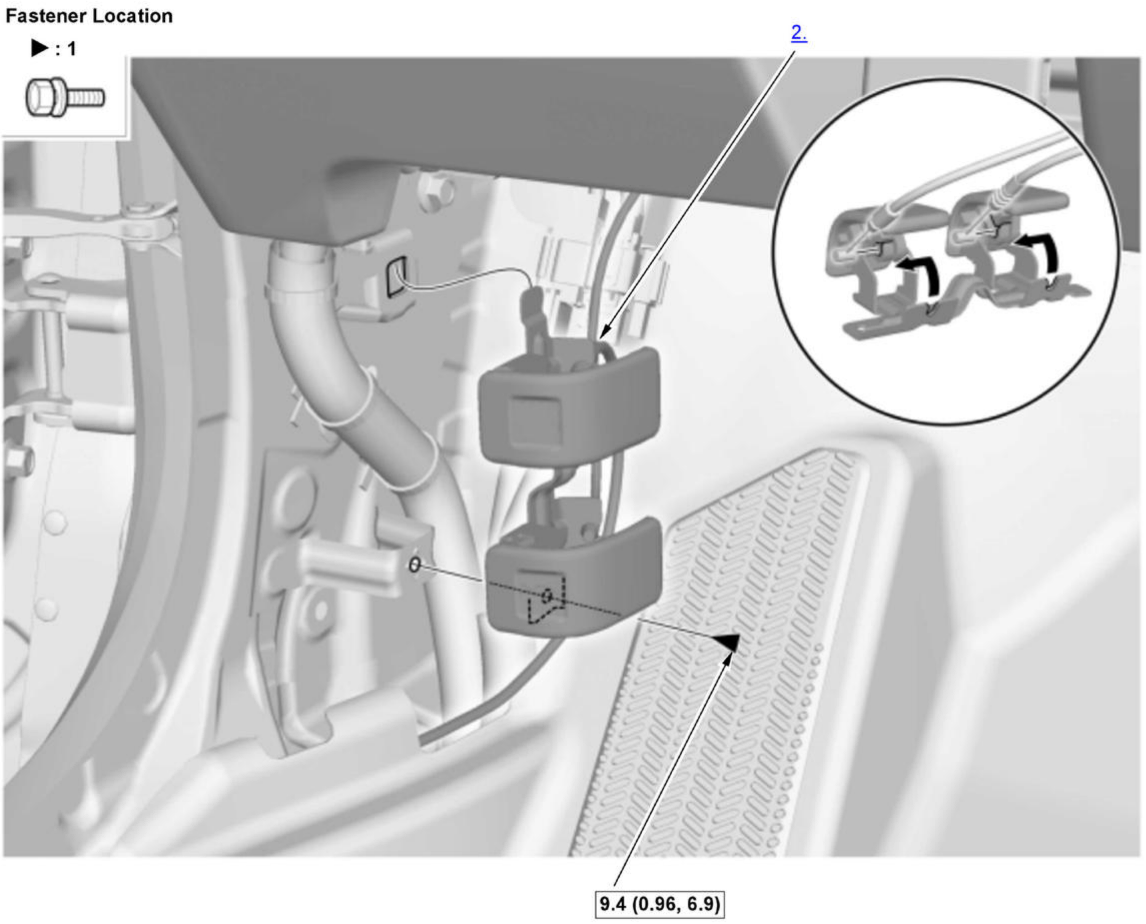

▭	Torque: N.m (kgf.m, lbf.ft)

1. Driver's Side Kick Panel - Remove
2. Fuel Fill Door Opener - Remove
3. All Removed Parts - Install

1. Install the parts in the reverse order of removal.

HANDS FREE ACCESS POWER TAILGATE CONTROL UNIT/SENSOR REMOVAL AND INSTALLATION

Removal and Installation

1

Type A

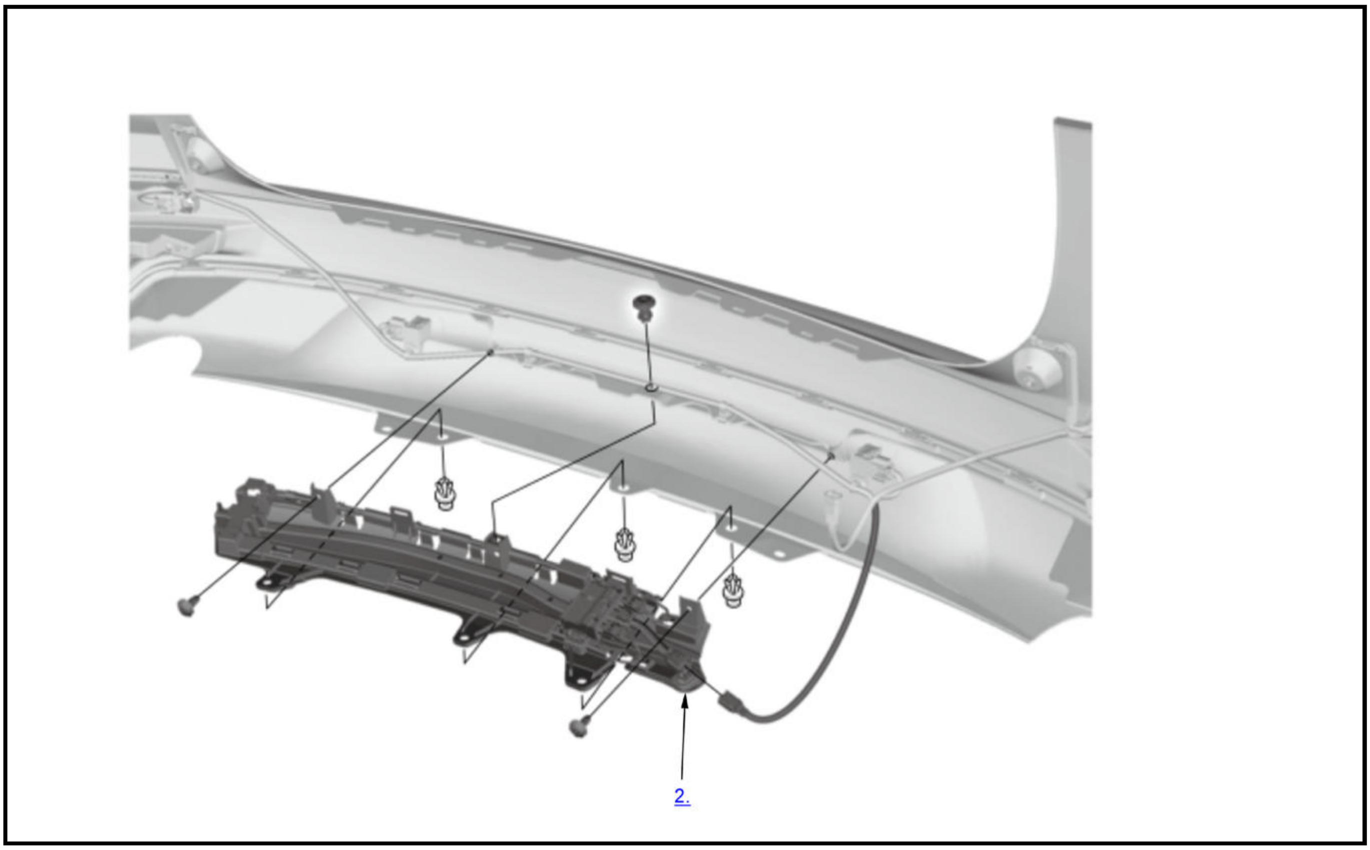

2

Type B

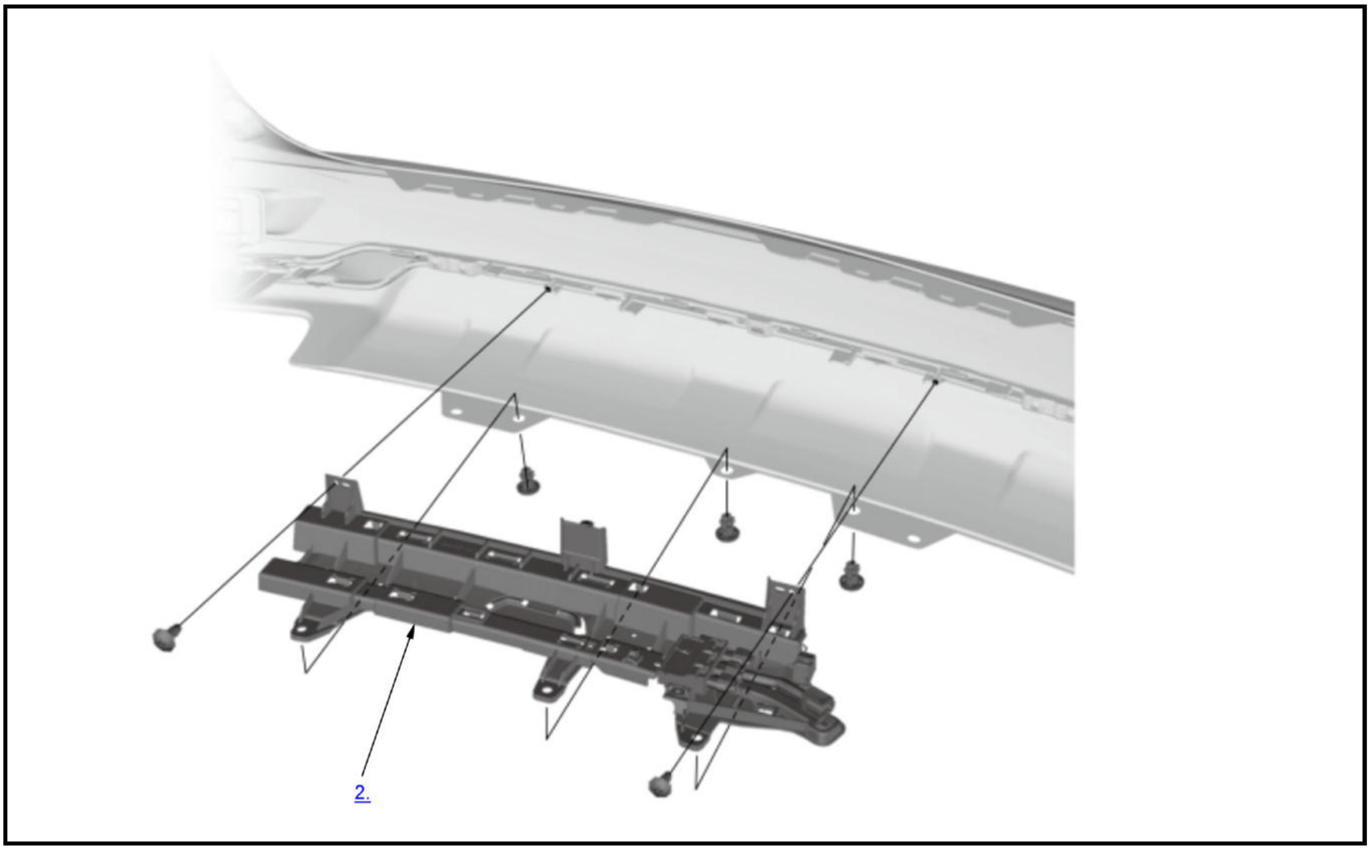

1. **Rear Bumper - Remove**
2. Hands Free Access Power Tailgate Control Unit/Sensor - Remove
3. All Removed Parts - Install

1. Install the parts in the reverse order of removal.

HOOD COOLING DUCT REMOVAL AND INSTALLATION

Removal and Installation

1

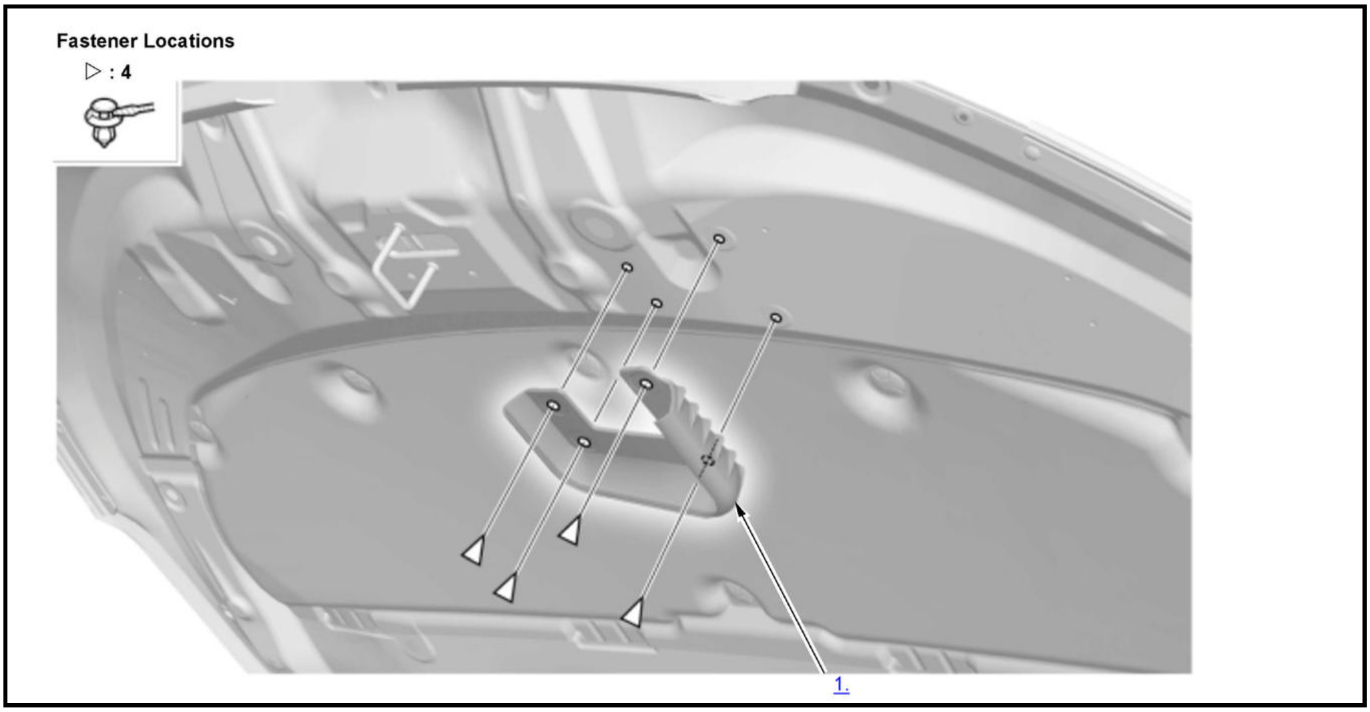
Fastener Locations
▷ : 4
1.

1. Hood Cooling Duct - Remove
2. All Removed Parts - Install

1. Install the parts in the reverse order of removal.

HOOD INSULATOR REMOVAL AND INSTALLATION

Removal and Installation

1

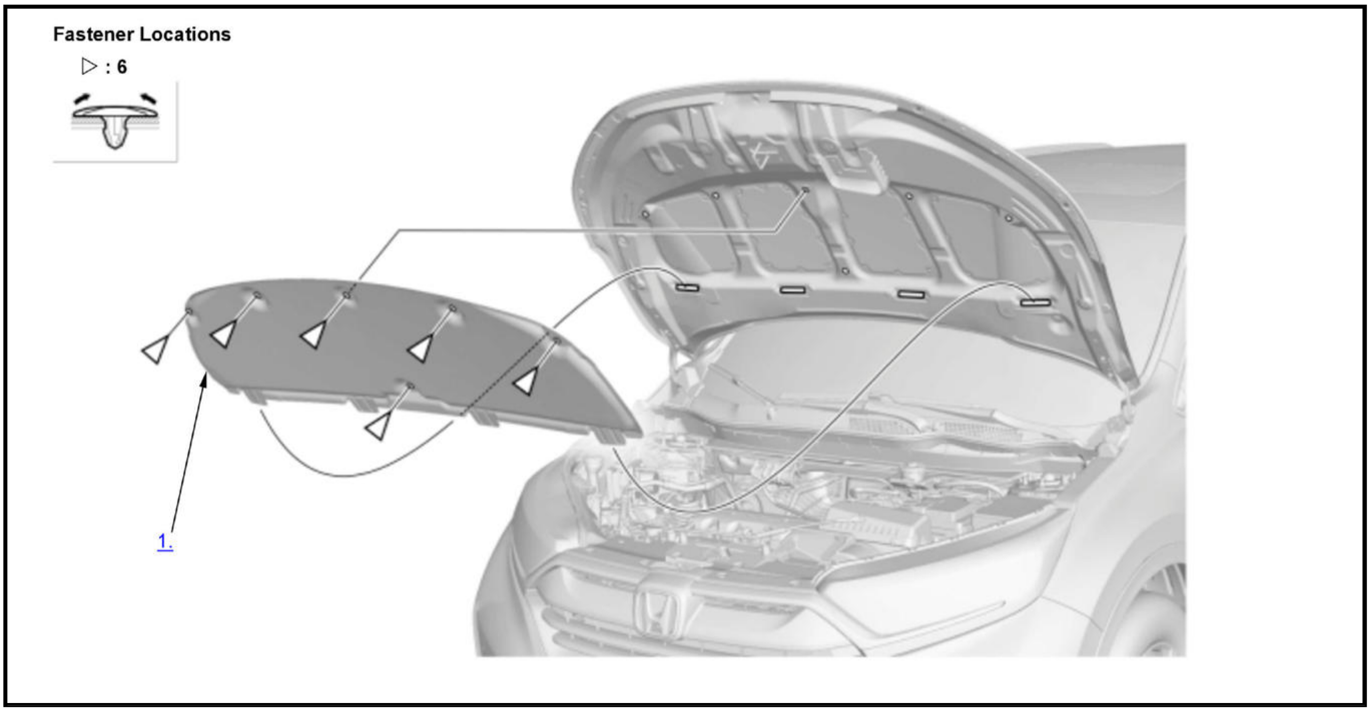
Fastener Locations
▷ : 6
1.

1. Hood Insulator - Remove

2. All Removed Parts - Install

    1. Install the parts in the reverse order of removal.

HOOD LATCH REMOVAL AND INSTALLATION

Removal and Installation

1

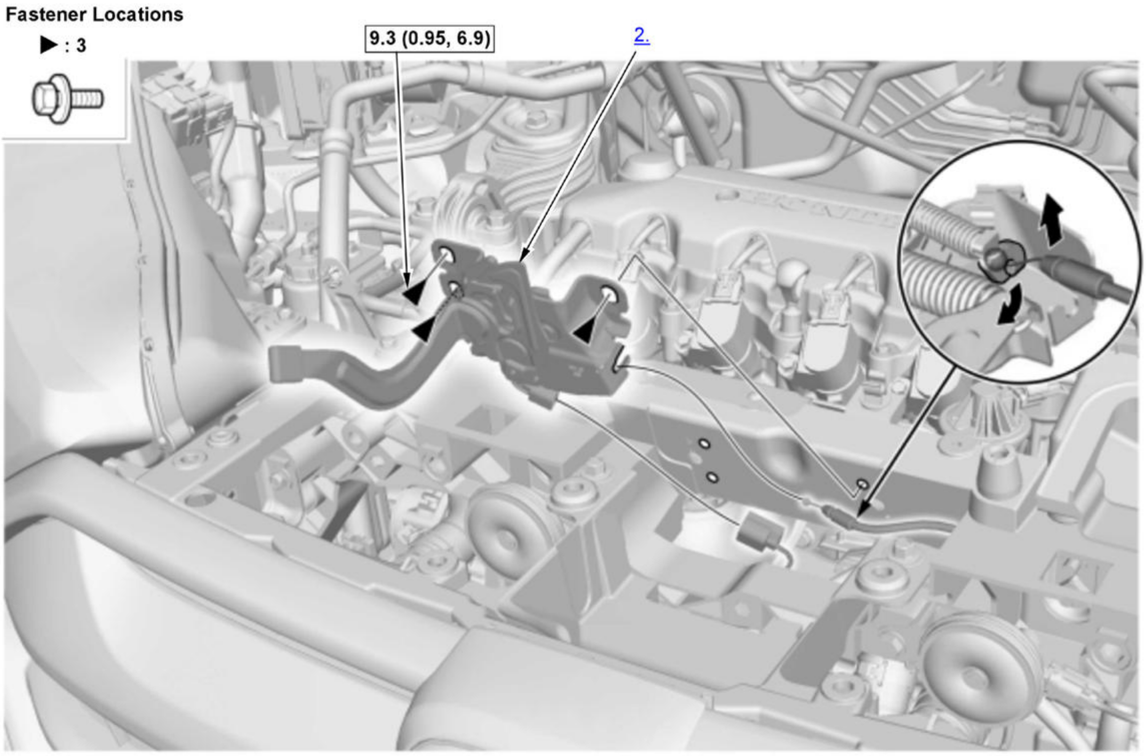
Fastener Locations
▶ : 3
9.3 (0.95, 6.9)
2.

☐	Torque: N.m (kgf.m, lbf.ft)

1. Front Bulkhead Cover - Remove
2. Hood Latch - Remove
3. All Removed Parts - Install

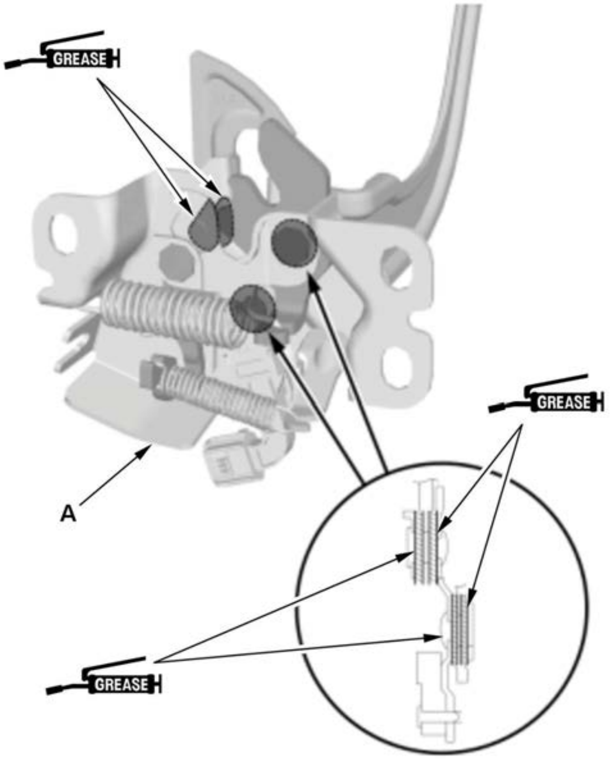 GREASE GREASE GREASE A	1. Install the parts in the reverse order of removal. **NOTE:** Apply multipurpose grease to the hood latch (A) as indicated by the arrows.

4. Hood Latch - Adjustment

HOOD OPENER CABLE REMOVAL AND INSTALLATION

Removal and Installation

1

Front

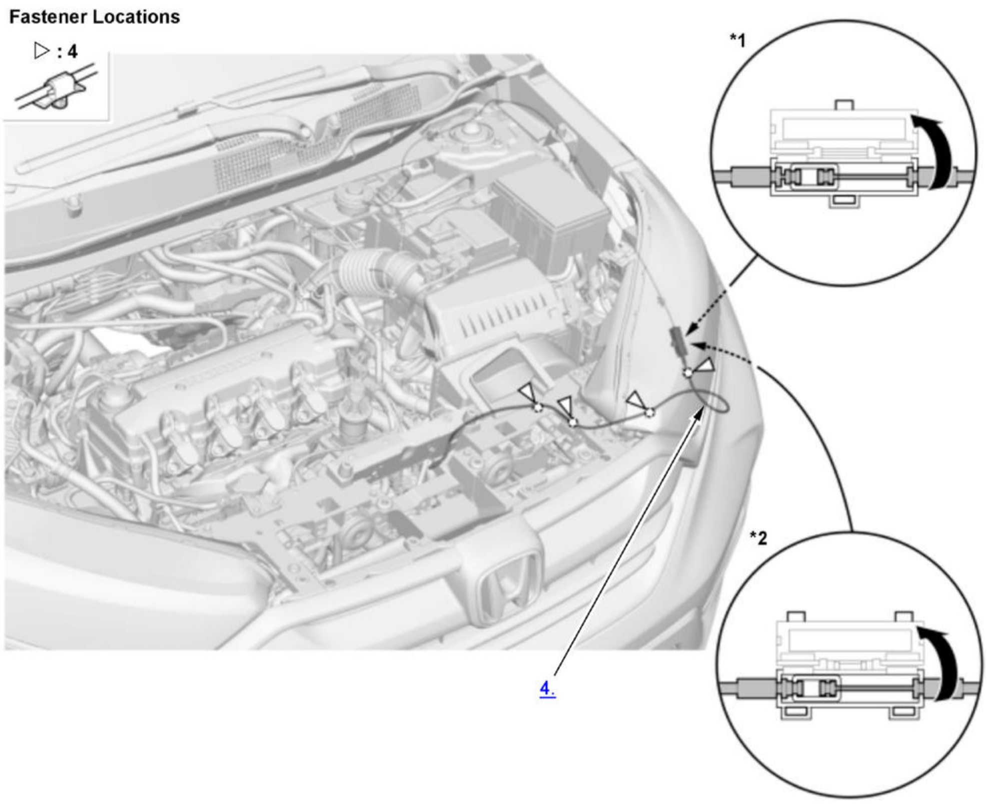

Fastener Locations
▷ : 4
*1
*2
4.

ℹ	Detailed information, notes, and precautions
*1	Type 1
*2	Type 2

2

Rear

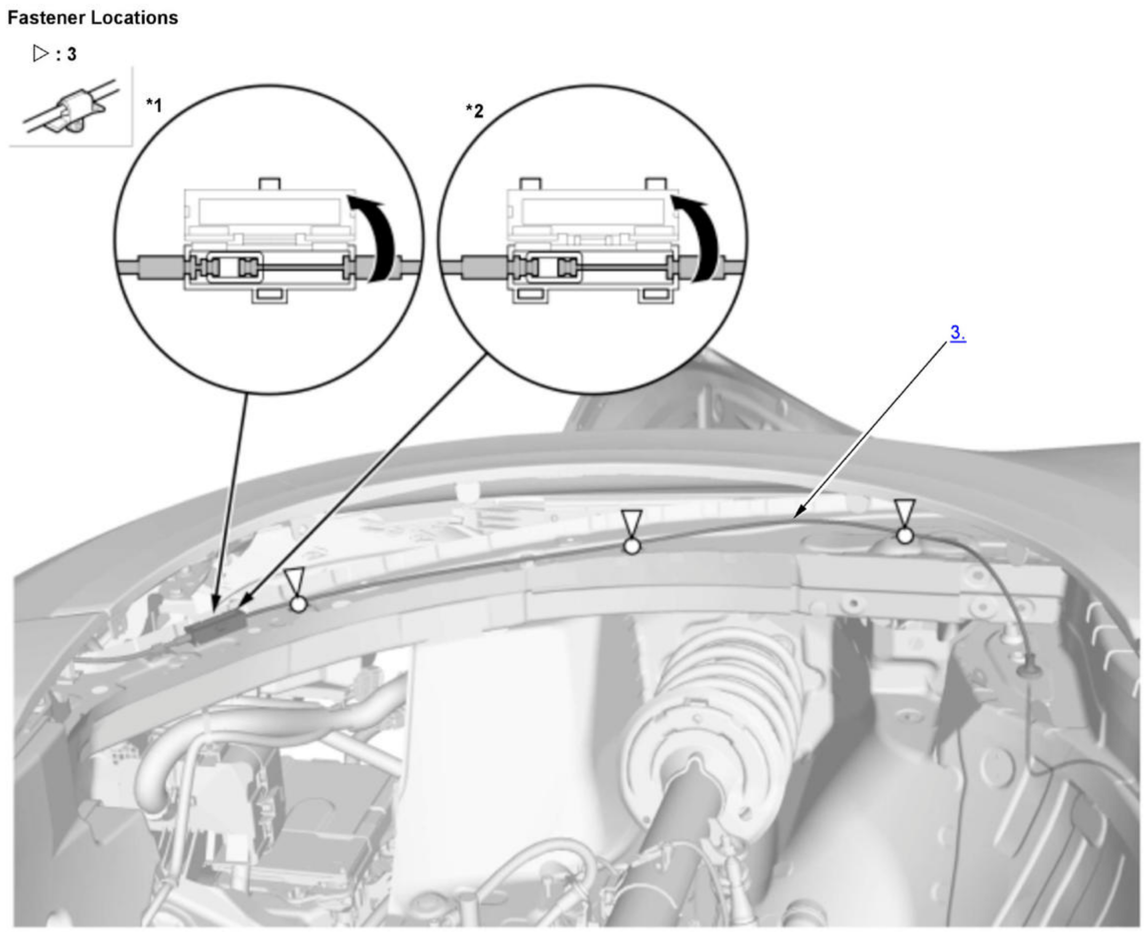

ℹ	Detailed information, notes, and precautions
*1	Type 1
*2	Type 2

Front

1. Driver's Side Front Inner Fender - Remove

   1. **Remove the front inner fender as needed**.

2. **Front Bulkhead Cover - Remove**
3. **Hood Latch - Remove**
4. Front Hood Opener Cable - Remove
5. All Removed Parts - Install

   1. Install the parts in the reverse order of removal.
   Note: Take care not to kink the cable.

Rear

6. Driver's Side Front Inner Fender - Remove

    1. Remove the front inner fender as needed.

7. Hood Release Handle - Remove
8. Rear Hood Opener Cable - Remove
9. All Removed Parts - Install

    1. Install the parts in the reverse order of removal.

    NOTE:

    - Align the marks (A) on the fuel fill door opener cable (B) with the clips as shown.
    - Take care not to kink the cable.

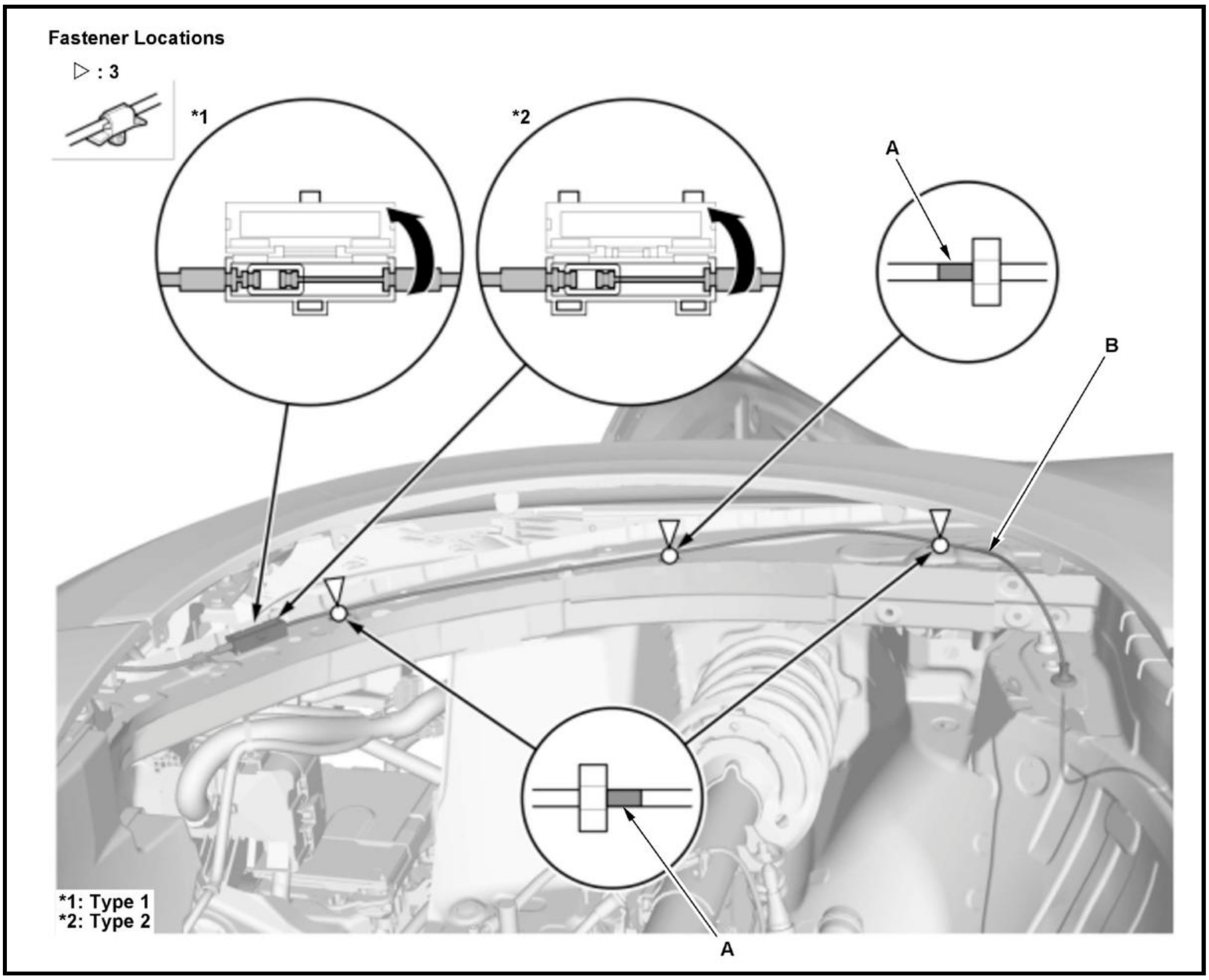

HOOD RELEASE HANDLE REMOVAL AND INSTALLATION

Removal and Installation

1. Driver's Side Kick Panel - Remove
2. Hood Release Handle - Remove
3. All Removed Parts - Install

    1. Install the parts in the reverse order of removal.

HOOD SEAL REMOVAL AND INSTALLATION

Removal and Installation

1

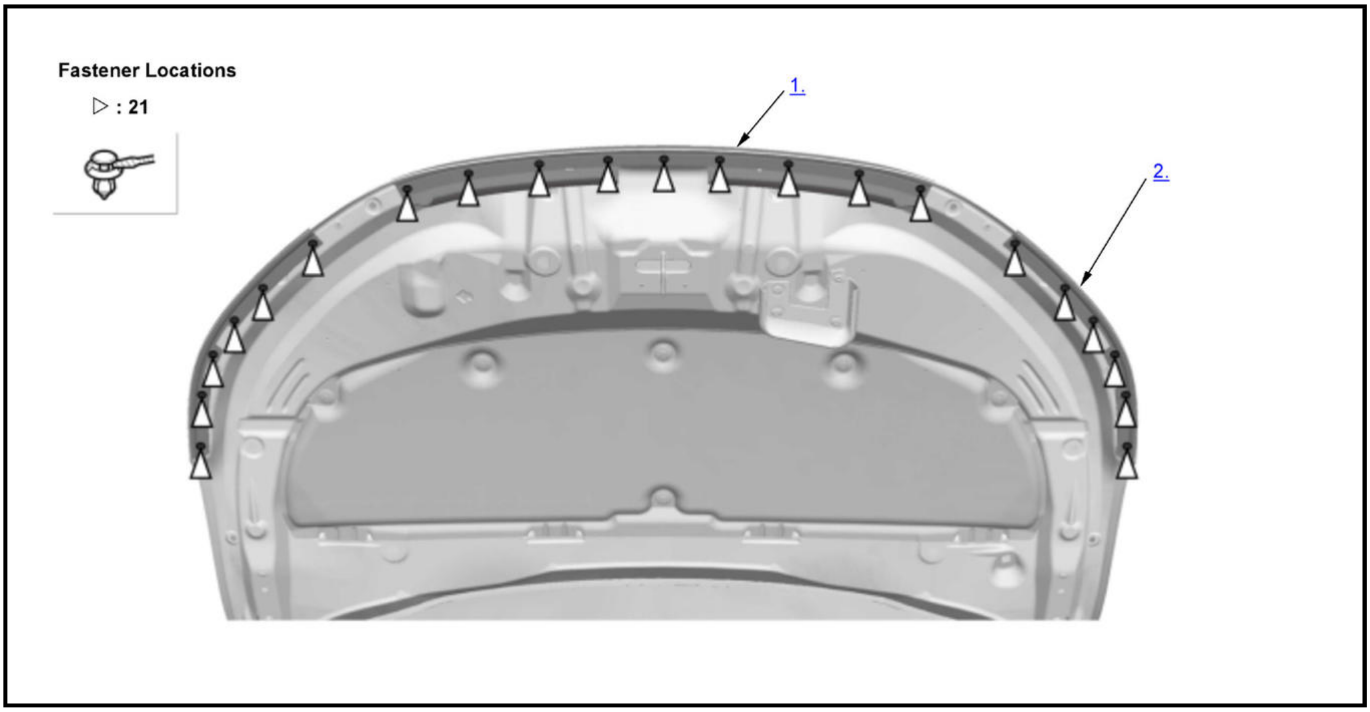

1. Center Hood Seal - Remove
2. Side Hood Seal - Remove
3. All Removed Parts - Install

   1. Install the parts in the reverse order of removal.

MIDDLE FLOOR UNDERCOVER REMOVAL AND INSTALLATION

Removal and Installation

1

Middle Floor Undercover Type1

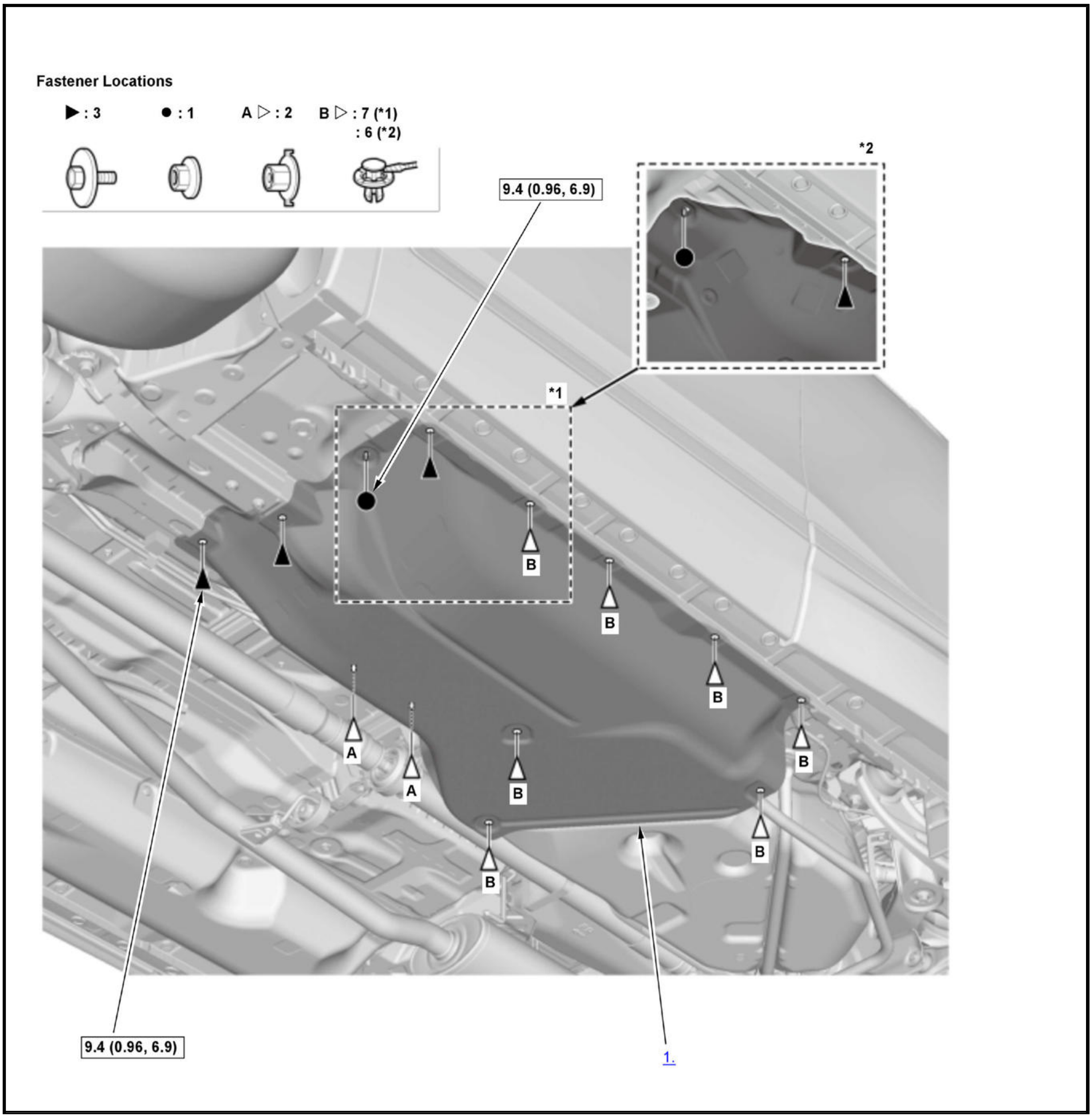
Fastener Locations
▶ : 3
● : 1
A ▷ : 2
B ▷ : 7 (*1)
: 6 (*2)
*2
9.4 (0.96, 6.9)
*1
B
B
B
A
A
B
B
B
B
9.4 (0.96, 6.9)
1.

▭	Torque: N.m (kgf.m, lbf.ft)
*1	Without Front Floor Brace
*2	With Front Floor Brace

2

Middle Floor Undercover Type1

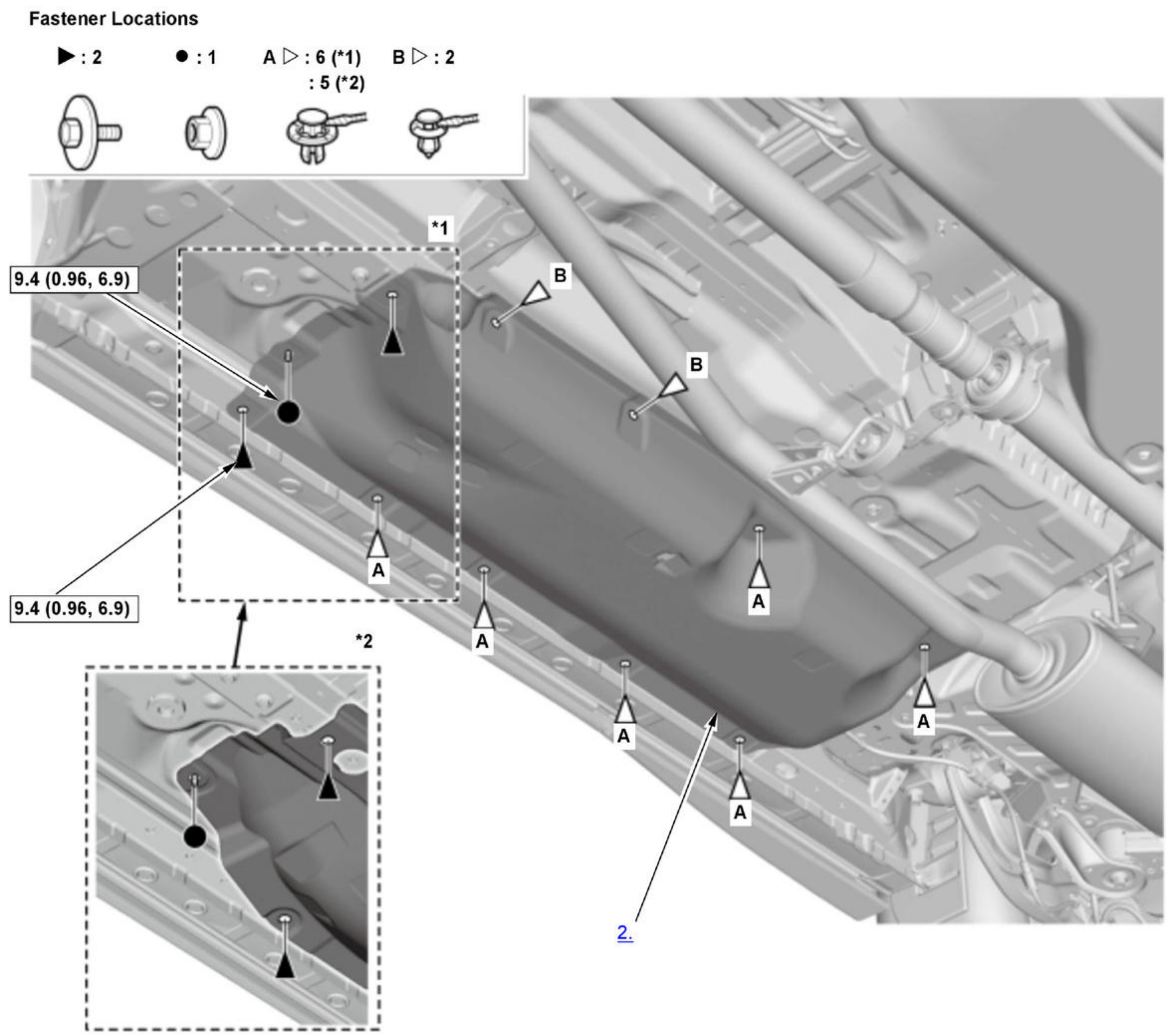
Fastener Locations
▶ : 2
● : 1
A ▷ : 6 (*1)
: 5 (*2)
B ▷ : 2
*1
9.4 (0.96, 6.9)
B
B
9.4 (0.96, 6.9)
A
A
A
A
A
A
*2
2.

▭	Torque: N.m (kgf.m, lbf.ft)
*1	Without Front Floor Brace
*2	With Front Floor Brace

3

Middle Floor Undercover Type2

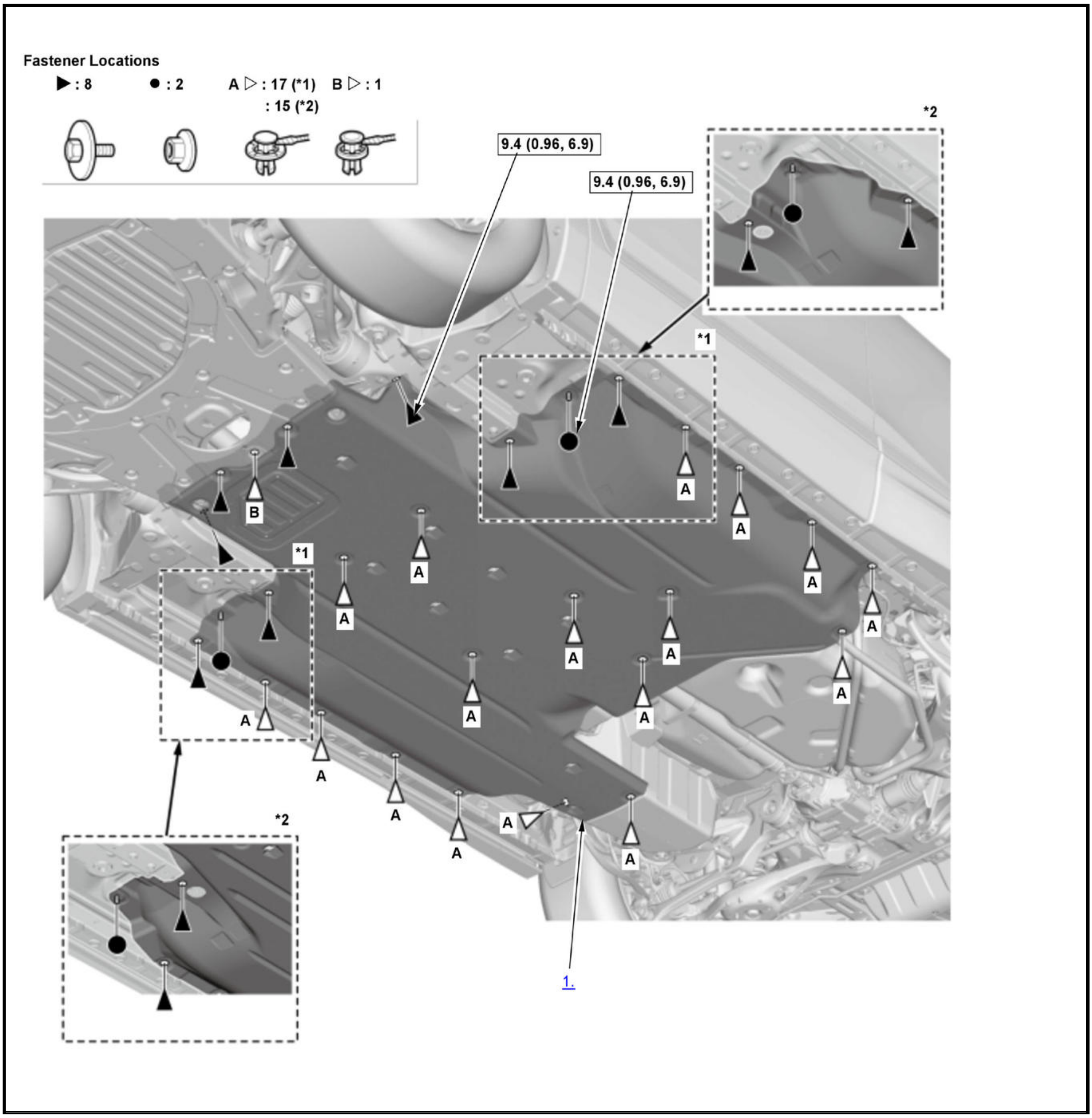
Fastener Locations
▶ : 8
● : 2
A ▷ : 17 (*1)
: 15 (*2)
B ▷ : 1
9.4 (0.96, 6.9)
9.4 (0.96, 6.9)
*2
*1
*1
*2
A
B
1.

□	Torque: N.m (kgf.m, lbf.ft)
*1	Without Front Floor Brace
*2	With Front Floor Brace

4

Middle Floor Undercover Type2

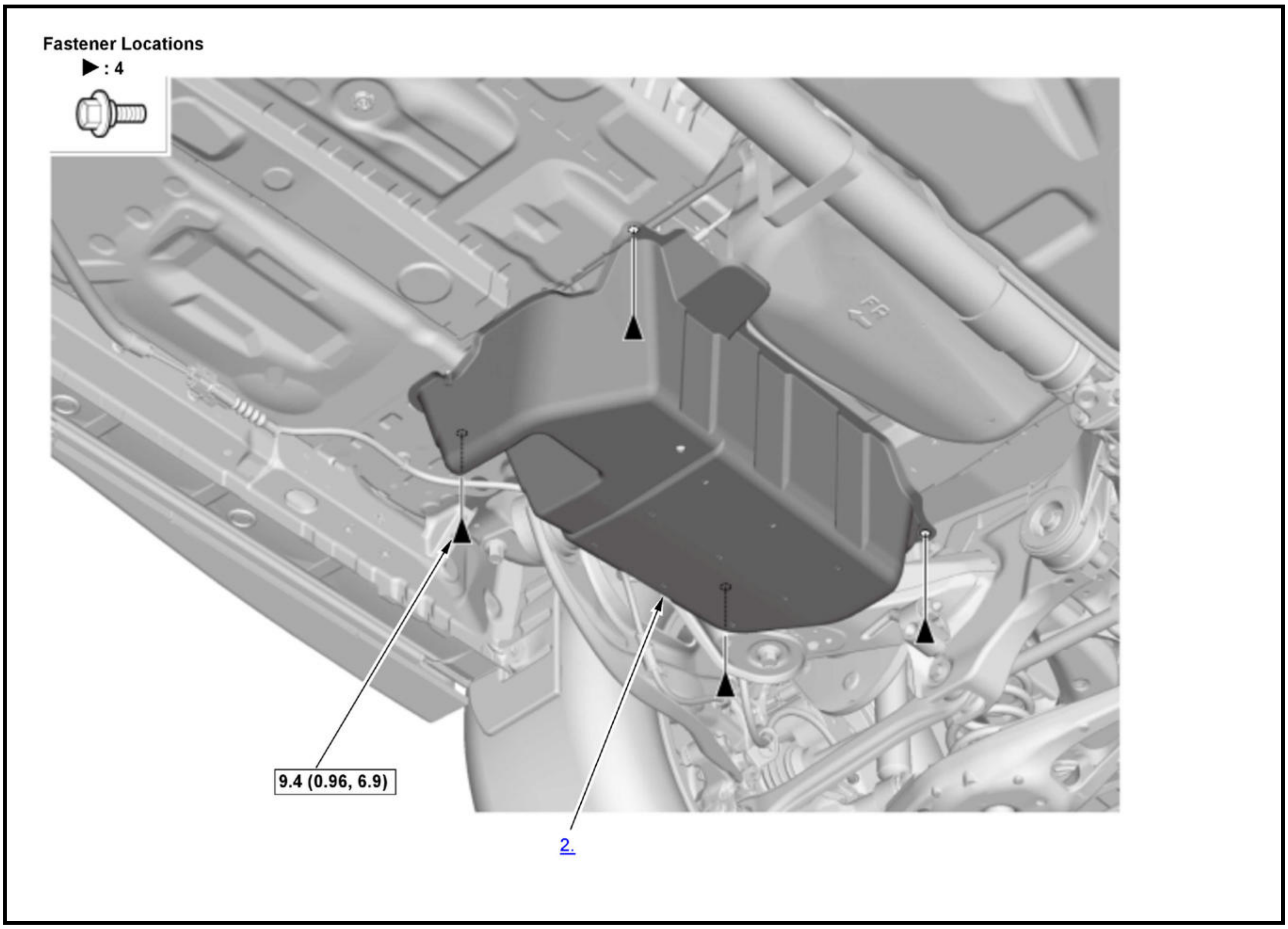

☐	Torque: N.m (kgf.m, lbf.ft)
*1	Without Front Floor Brace
*2	With Front Floor Brace

Middle Floor Undercover Type 1

1. Left Middle Floor Undercover - Remove
2. Right Middle Floor Undercover - Remove
3. All Removed Parts - Install

1. Install the parts in the reverse order of removal.

Middle Floor Undercover Type 2

4. Middle Floor Undercover - Remove
5. Rear Middle Floor Undercover - Remove
6. All Removed Parts - Install

1. Install the parts in the reverse order of removal.

POWER TAILGATE CONTROL UNIT REMOVAL AND INSTALLATION

Removal and Installation

1

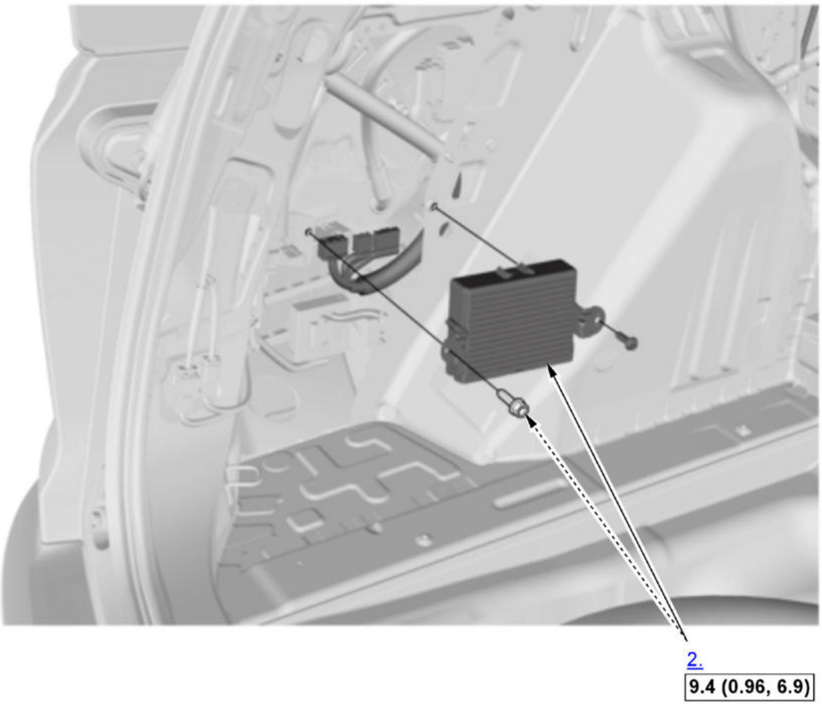

☐	Torque: N.m (kgf.m, lbf.ft)

1. **Left Rear Side Trim Panel - Remove**
2. Power Tailgate Control Unit - Remove
3. All Removed Parts - Install

   1. Install the parts in the reverse order of removal.

REAR AIR OUTLET REMOVAL AND INSTALLATION

Removal and Installation

1

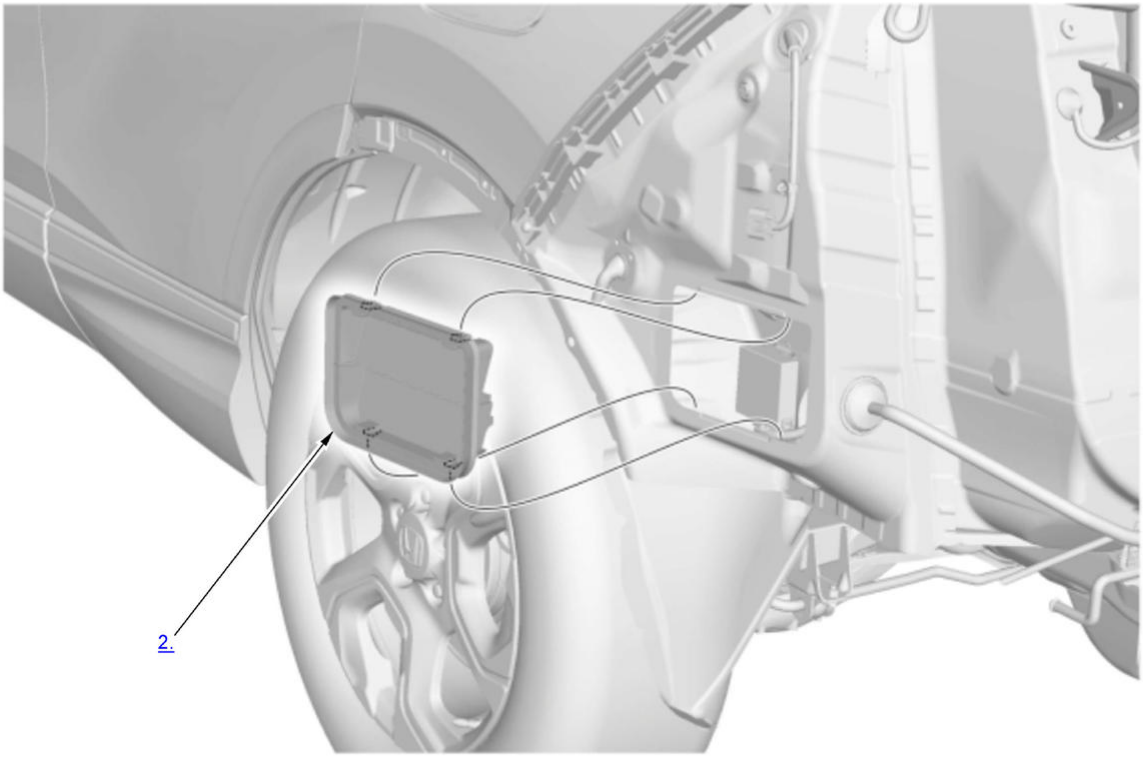

1. **Rear Bumper - Remove**
2. Rear Air Outlet - Remove
3. All Removed Parts - Install

1. Install the parts in the reverse order of removal.

REAR BUMPER REMOVAL AND INSTALLATION

Removal and Installation

NOTE: 🛈 Where icon is shown further information.

1

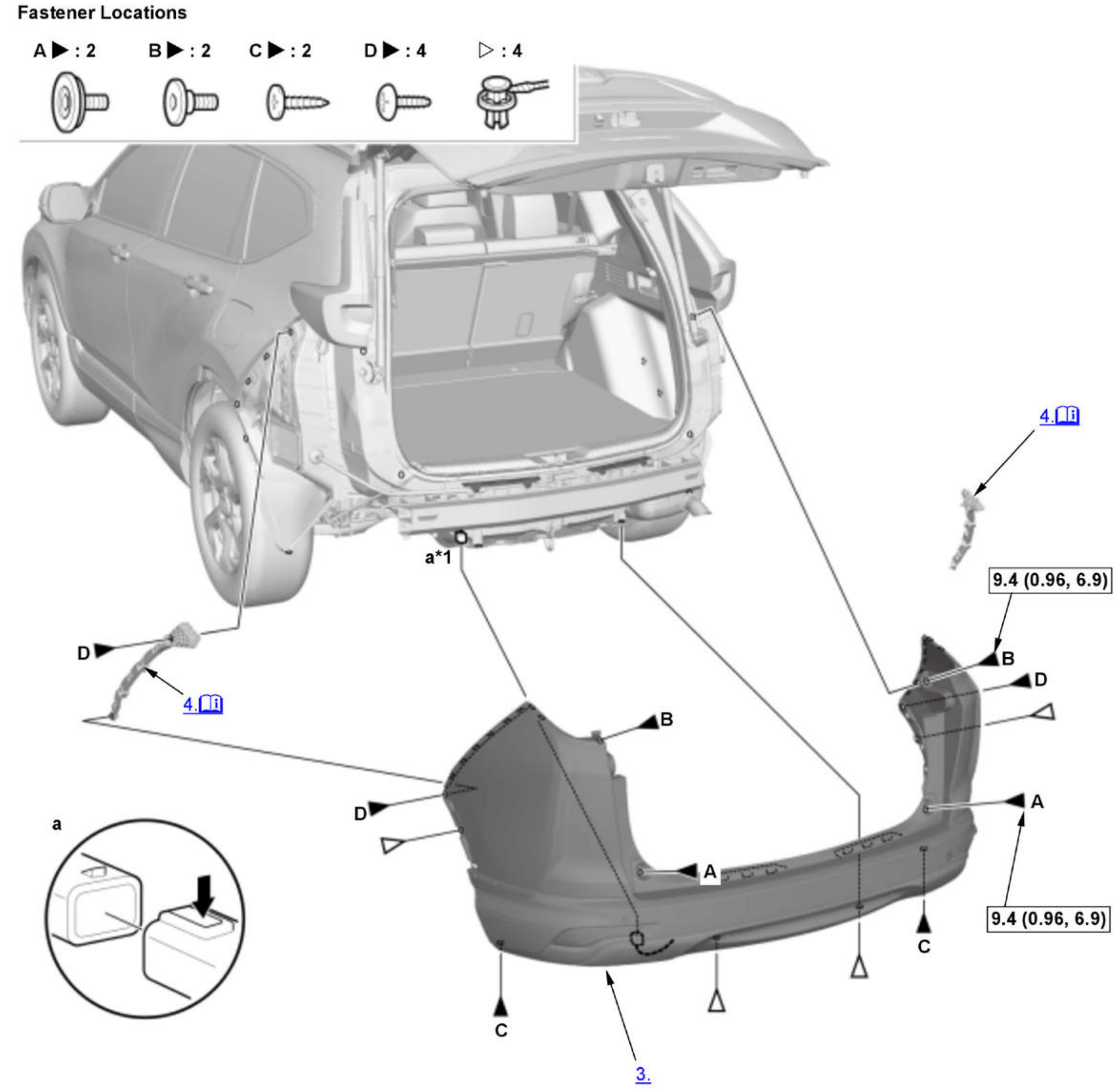
Fastener Locations
A ▶ : 2
B ▶ : 2
C ▶ : 2
D ▶ : 4
▷ : 4
4.
9.4 (0.96, 6.9)
B
D
a*1
D
4.
B
D
A
A
a
9.4 (0.96, 6.9)
C
C
3.

ℹ	Detailed information, notes, and precautions
▭	Torque: N.m (kgf.m, lbf.ft)
*1	With hands free access power tailgate

1. Tailgate Weatherstrip - Remove

   1. **Remove the tailgate weatherstrip as needed.**

2. **Rear Wheel Arch Rear Protector - Remove**
3. Rear Bumper - Remove
4. Rear Bumper Side Spacers - Remove

   1. If necessary, remove the rear bumper side spacers.

5. All Removed Parts - Install

   1. Install the parts in the reverse order of removal.

REAR FLOOR UNDERCOVER REMOVAL AND INSTALLATION

Removal and Installation

1

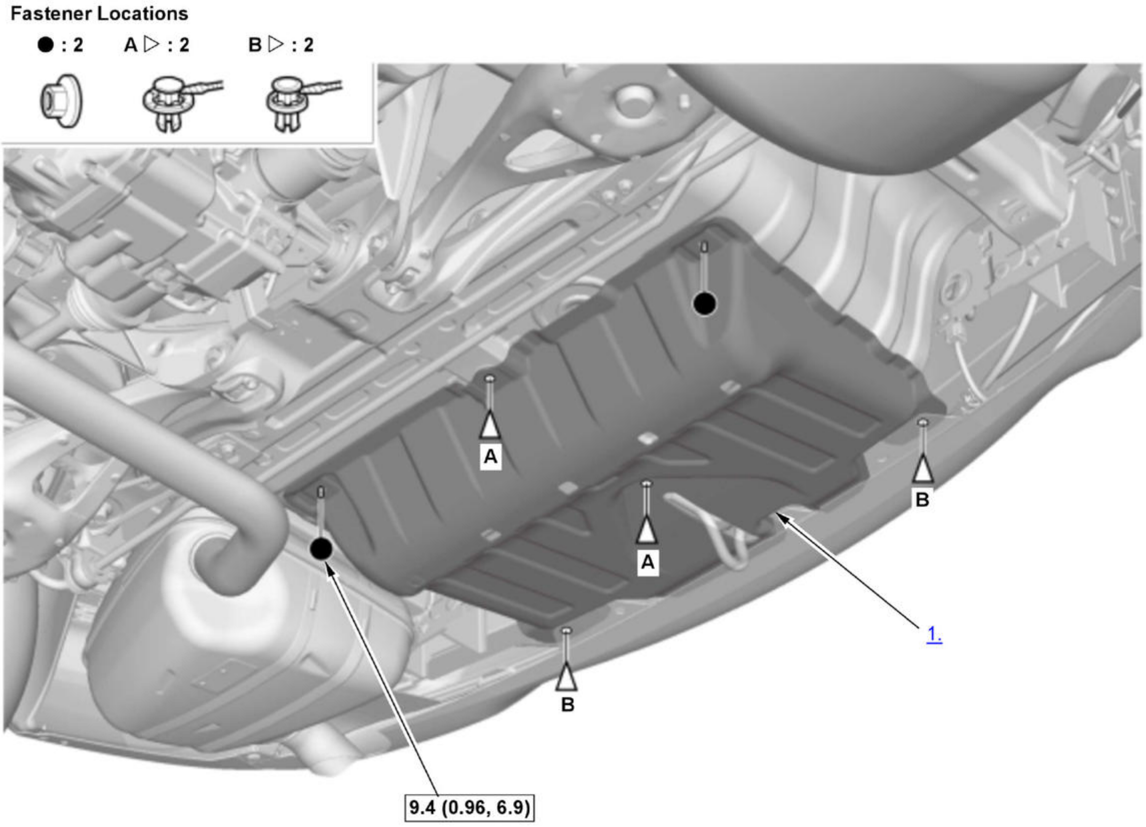
Fastener Locations
●: 2
A▷: 2
B▷: 2
A
A
B
B
1.
9.4 (0.96, 6.9)

☐	Torque: N.m (kgf.m, lbf.ft)

1. Rear Floor Undercover - Remove
2. All Removed Parts - Install

> 1. Install the parts in the reverse order of removal.

REAR INNER FENDER REMOVAL AND INSTALLATION

Removal and Installation

1

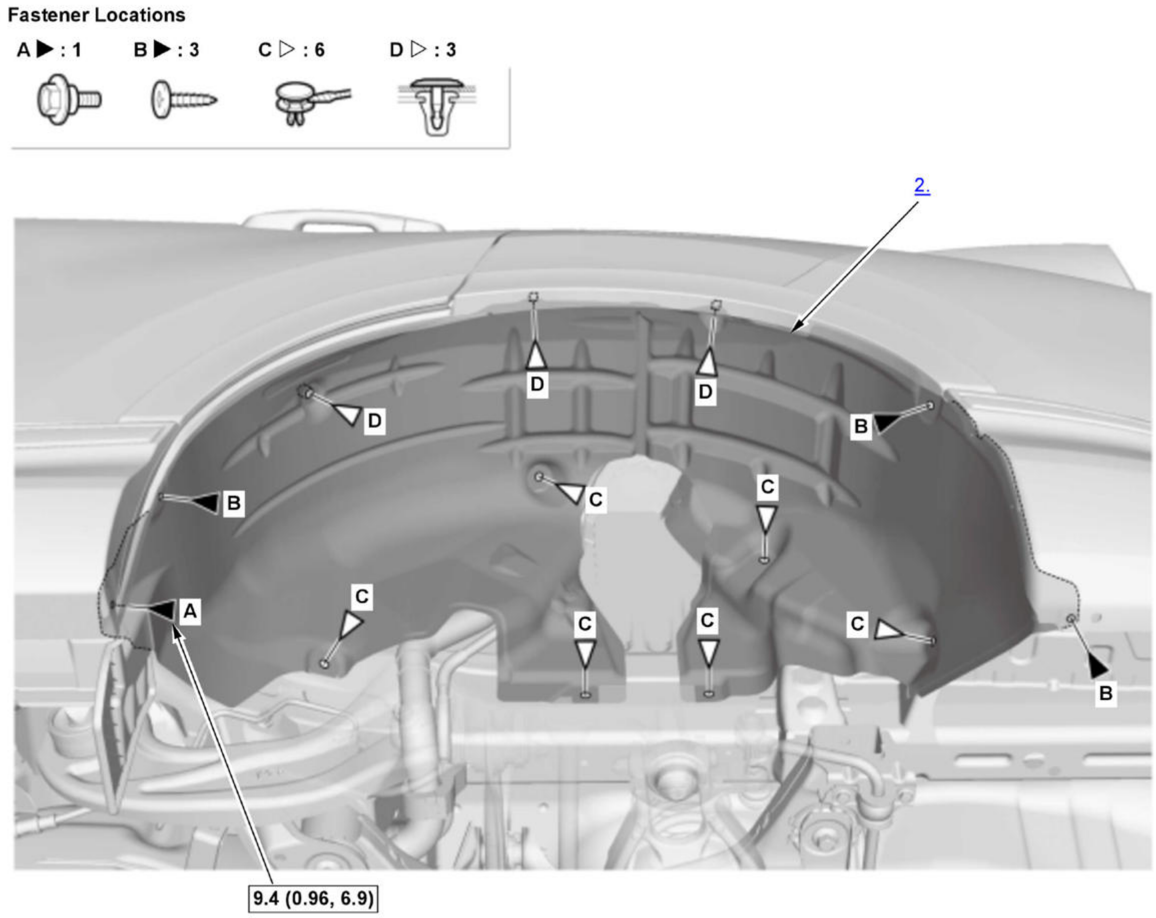
Fastener Locations
A ▶ : 1
B ▶ : 3
C ▷ : 6
D ▷ : 3
2.
D
D
D
B
B
C
C
A
C
C
C
C
B
9.4 (0.96, 6.9)

▭	Torque: N.m (kgf.m, lbf.ft)

1. **Rear Splash Guard - Remove (For Some Models)**
2. Rear Inner Fender - Remove
3. All Removed Parts - Install

1. Install the parts in the reverse order of removal.

REAR LICENSE TRIM REMOVAL AND INSTALLATION

Removal and Installation

1

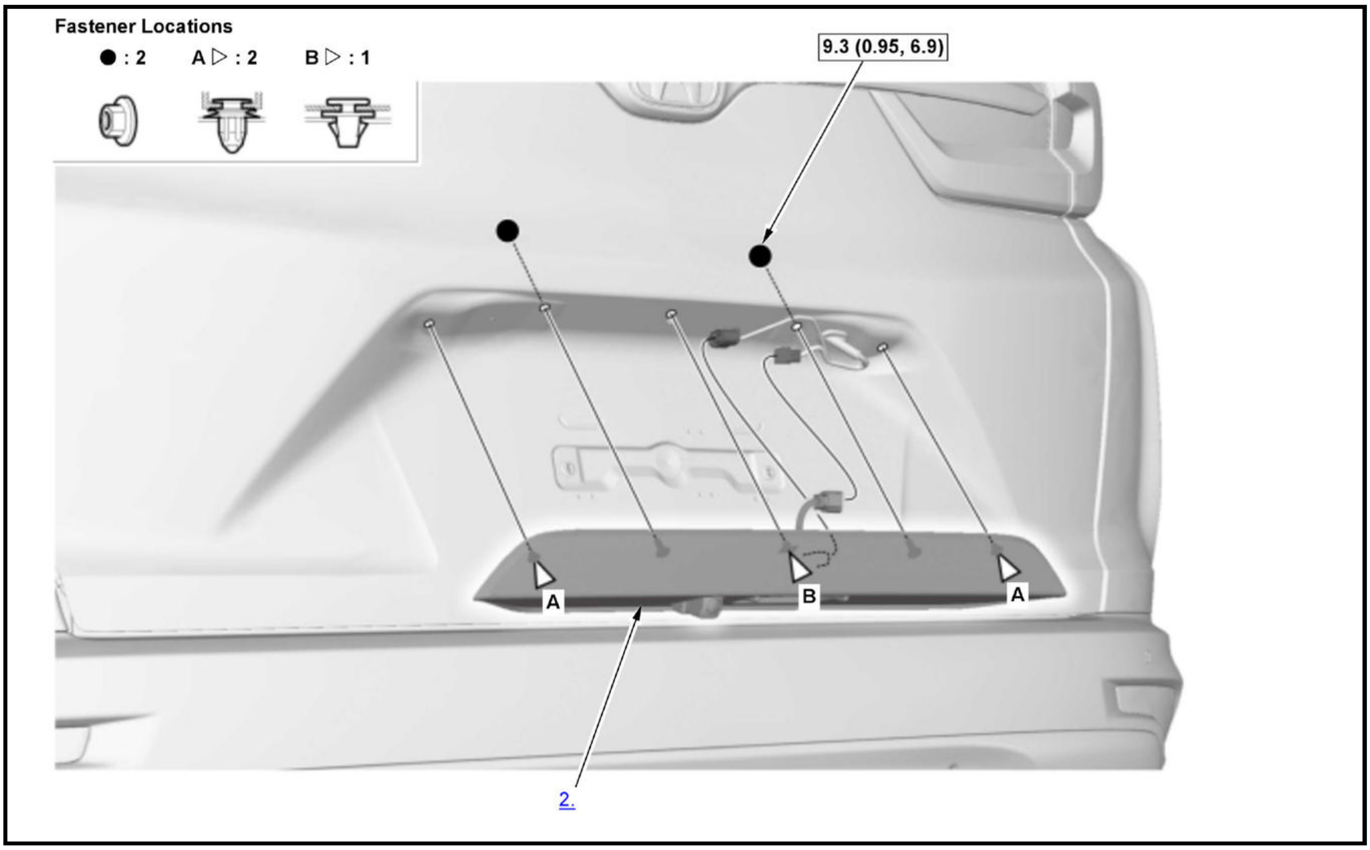
Fastener Locations
● : 2
A ▷ : 2
B ▷ : 1
9.3 (0.95, 6.9)
A
B
A
2.

▭	Torque: N.m (kgf.m, lbf.ft)

1. Tailgate Lower Trim Panel - Remove
2. Rear License Trim - Remove
3. All Removed Parts - Install

1. Install the parts in the reverse order of removal.

REAR SPLASH GUARD REMOVAL AND INSTALLATION

Removal and Installation

1

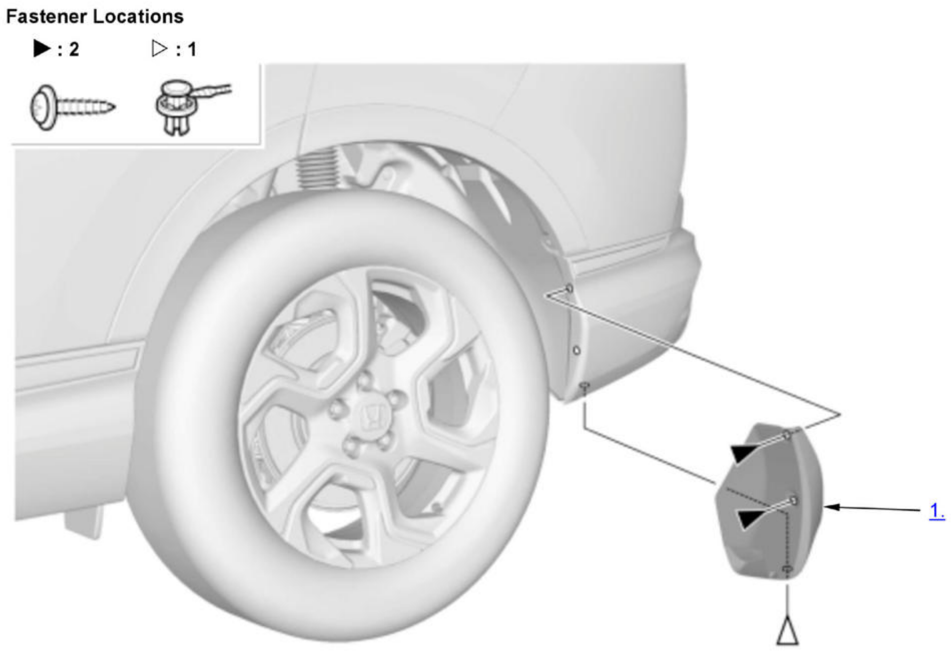
Fastener Locations
▶ : 2
▷ : 1
1.

1. Rear Splash Guard - Remove
2. All Removed Parts - Install

1. Install the parts in the reverse order of removal.

REAR STRAKE REMOVAL AND INSTALLATION

Removal and Installation

1

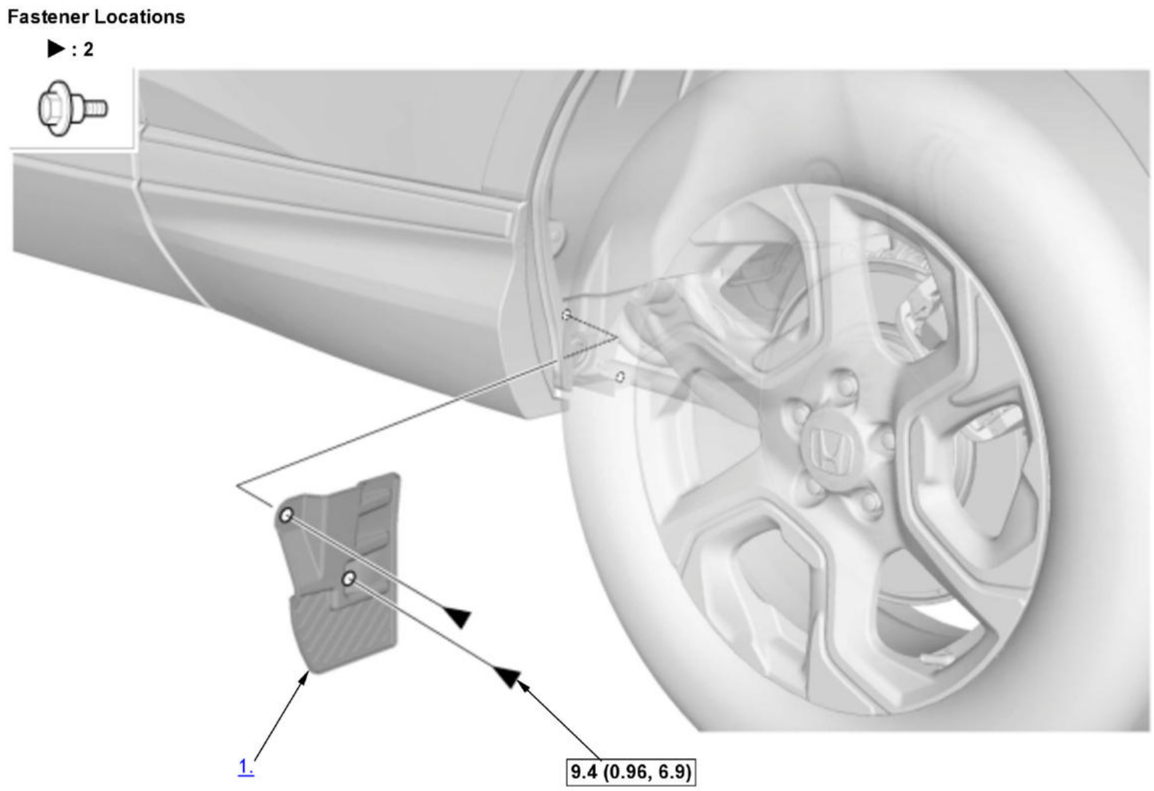
Fastener Locations
▶ : 2
1.
9.4 (0.96, 6.9)

▭	Torque: N.m (kgf.m, lbf.ft)

1. Rear Strake - Remove
2. All Removed Parts - Install

> 1. Install the parts in the reverse order of removal.

REAR WHEEL ARCH PROTECTOR REMOVAL AND INSTALLATION

Removal and Installation

1

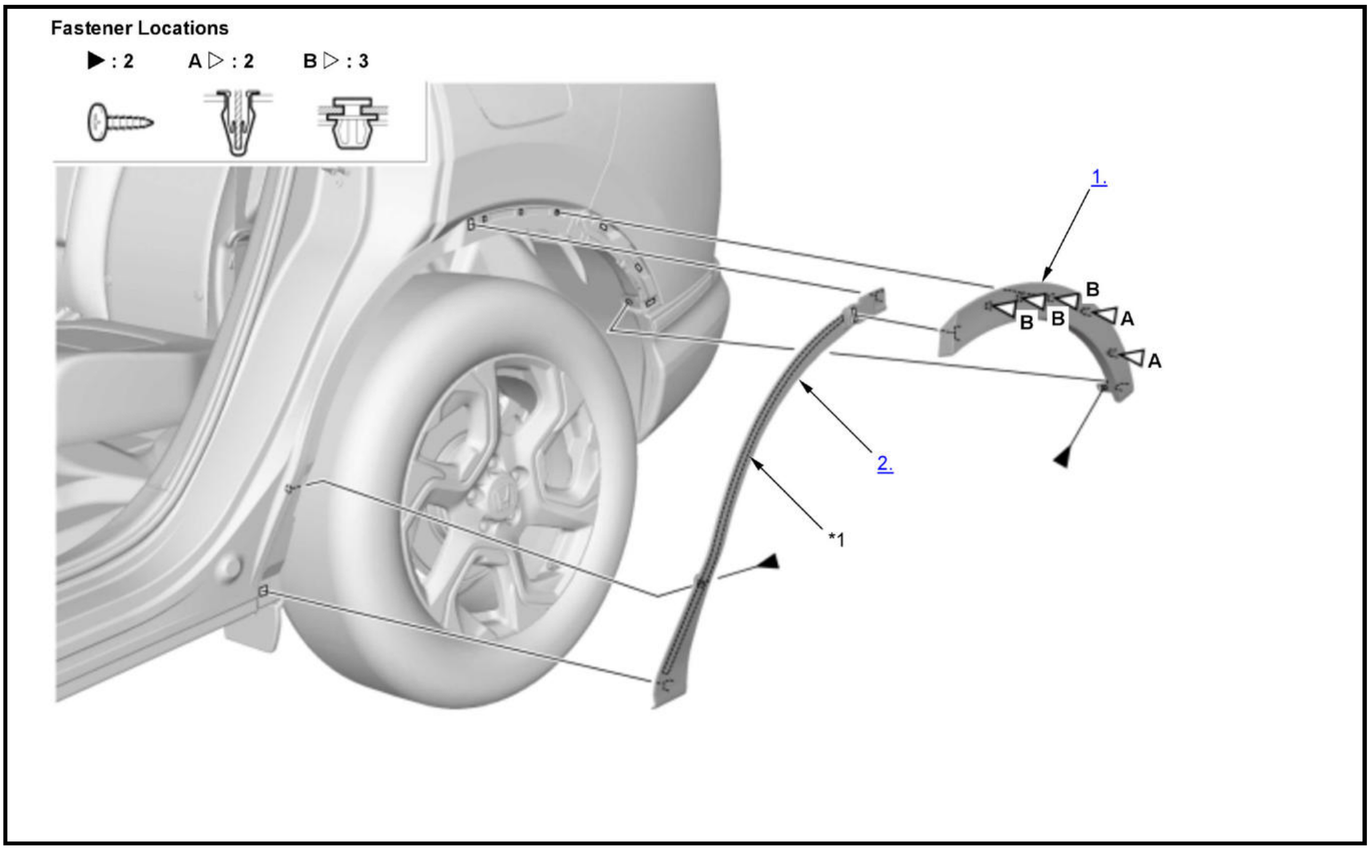

*1	Double-sided adhesive tape

1. Rear Wheel Arch Rear Protector - Remove
2. Rear Wheel Arch Front Protector - Remove
3. All Removed Parts - Install

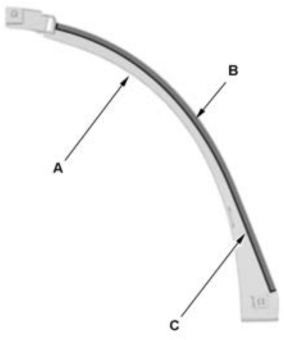	1. Install the parts in the reverse order of removal. **NOTE:** If you are reusing the original rear wheel arch front protector (A), apply primer to the areas where new double-sided adhesive tapes (B) will be applied, then attach the new double-sided adhesive tapes to the rear wheel arch front protector on the scribes (C) as shown. **Double-sided adhesive tape (B)**

Thickness	1.14 mm (0.0449 in)
Width	10 mm (0.39 in)
Length	620 mm (24.41 in)

ROOF RAIL REMOVAL AND INSTALLATION

Removal and Installation

1

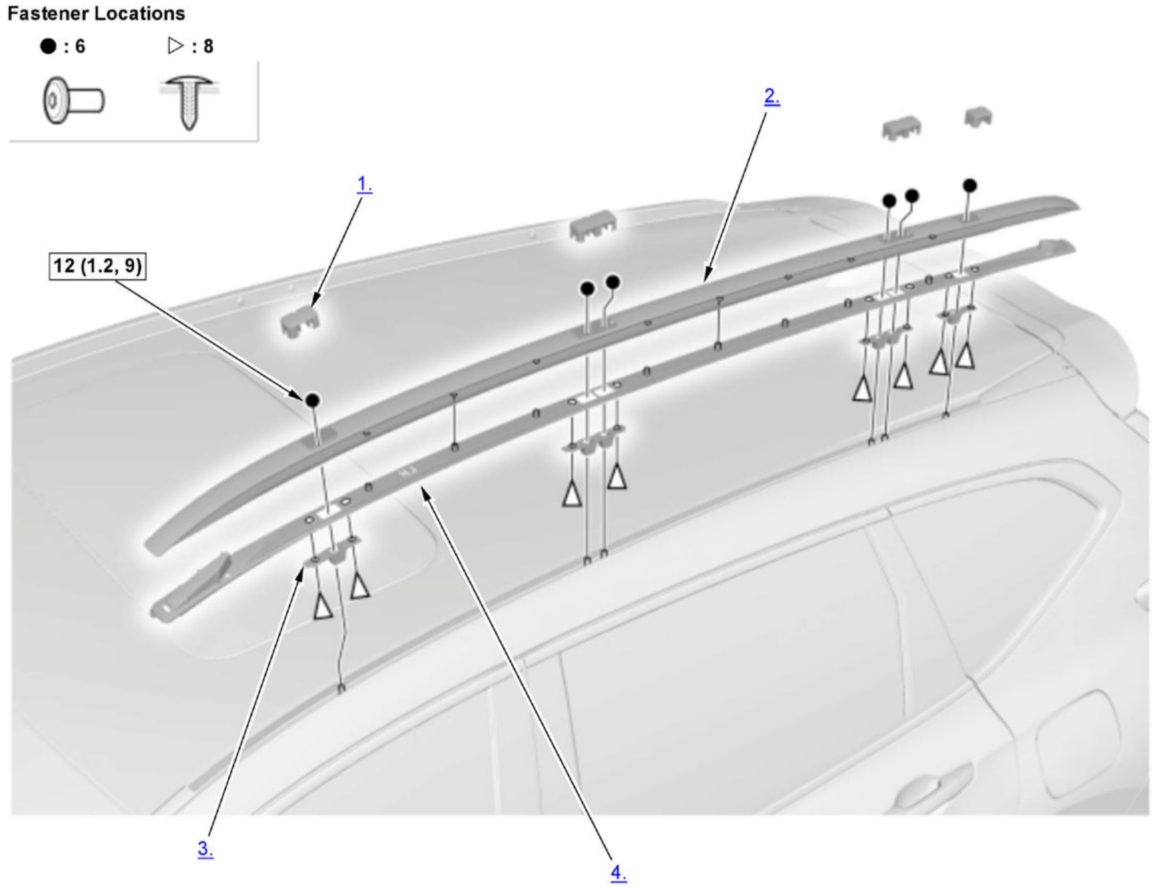
Fastener Locations
●: 6
▷: 8
1.
2.
12 (1.2, 9)
3.
4.

▭	Torque: N.m (kgf.m, lbf.ft)

1. Roof Rail Cap - Remove
2. Roof Rail Bar - Remove
3. Roof Rail Stay - Remove
4. Roof Rail Pad - Remove
5. All Removed Parts - Install

1. Install the parts in the reverse order of removal.

TAILGATE DYNAMIC DAMPER REMOVAL AND INSTALLATION

Removal and Installation

1

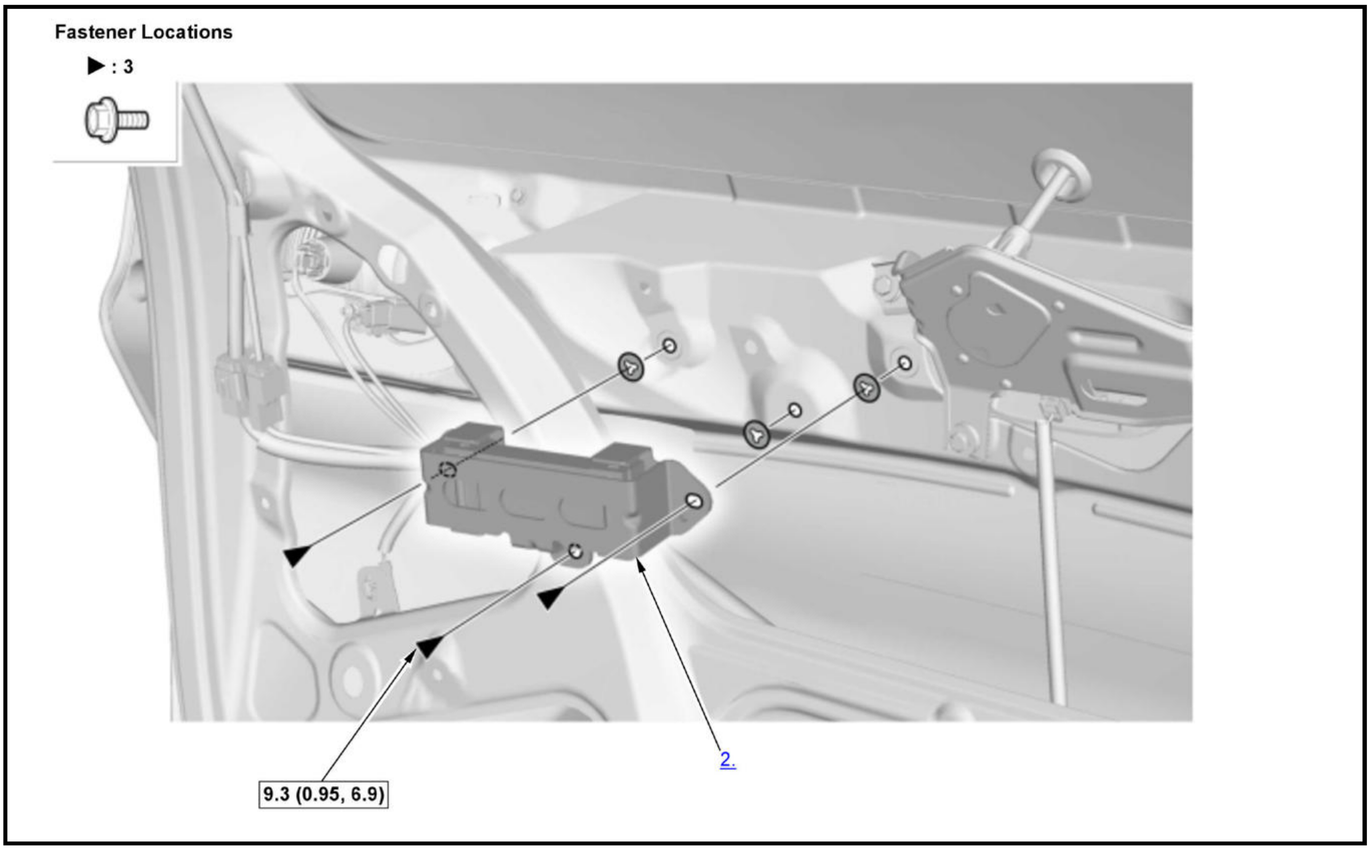
Fastener Locations
▶ : 3
9.3 (0.95, 6.9)
2.

▭	Torque: N.m (kgf.m, lbf.ft)

1. Tailgate Lower Trim Panel - Remove
2. Tailgate Dynamic Damper - Remove
3. All Removed Parts - Install

1. Install the parts in the reverse order of removal.

TAILGATE HINGE COVER REMOVAL AND INSTALLATION

Removal and Installation

1

With Roof Rail

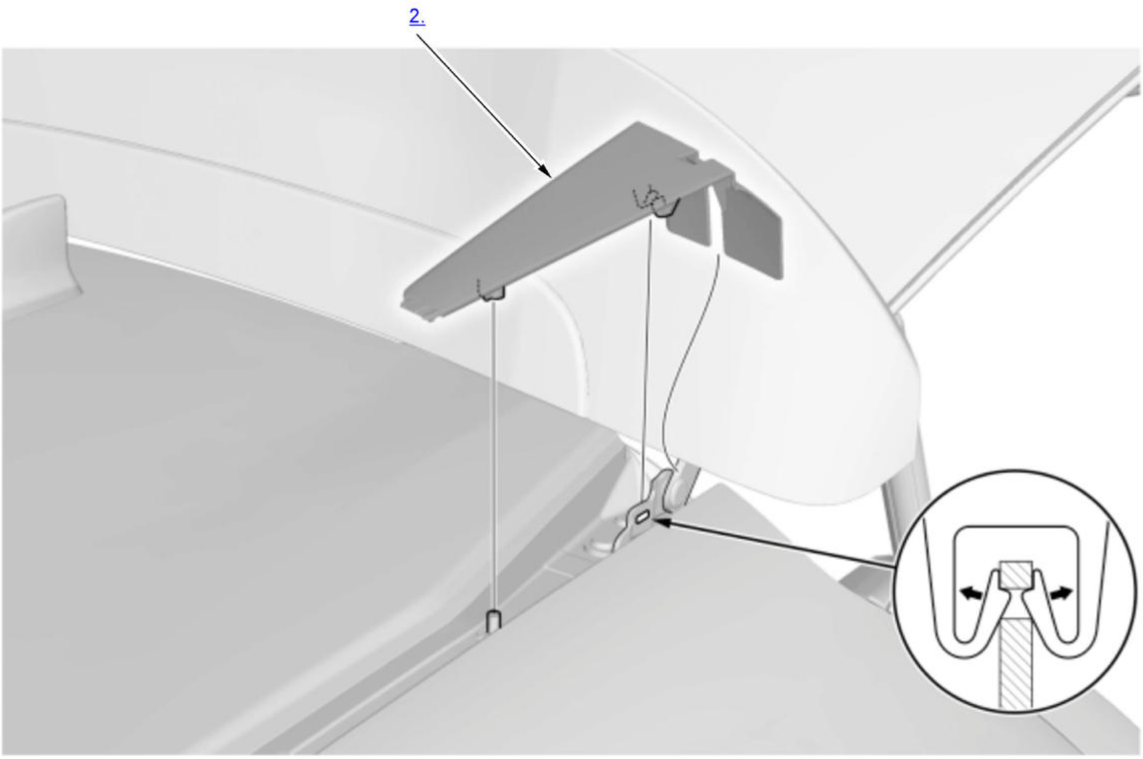

2

Without Roof Rail

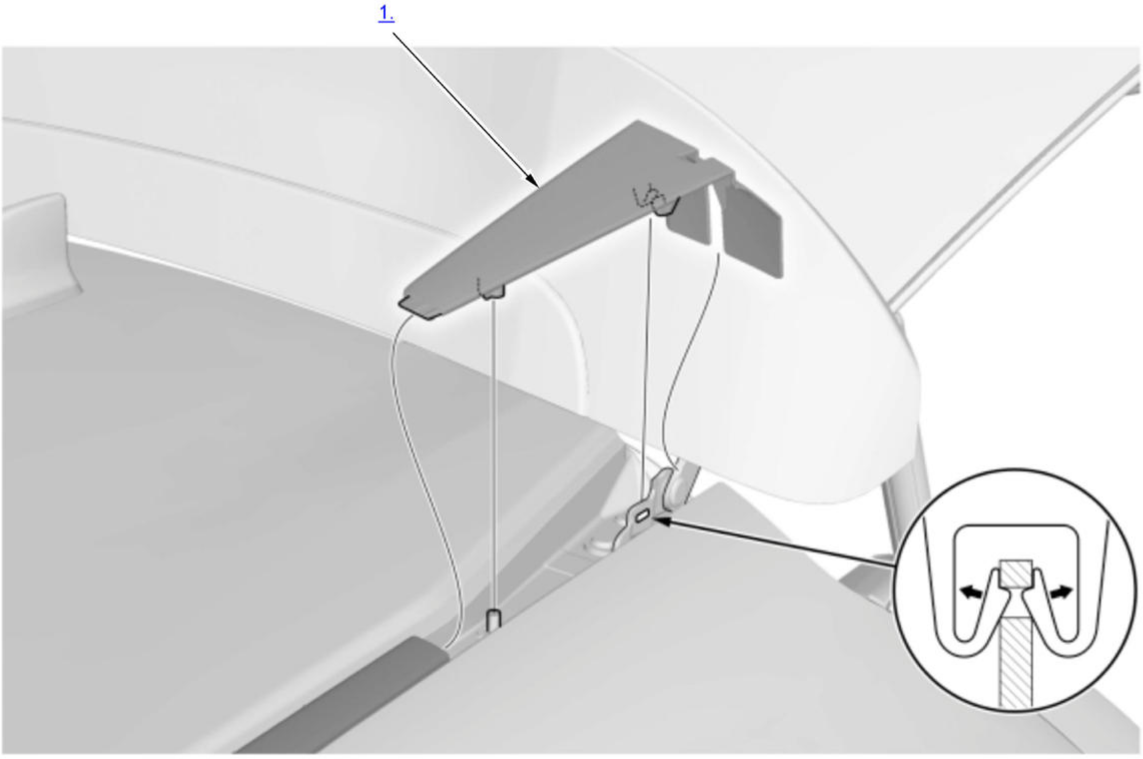

With Roof Rail

1. **Roof Rail - Remove**
2. Tailgate Hinge Cover - Remove
3. All Removed Parts - Install

1. Install the parts in the reverse order of removal.

Without Roof Rail

4. Tailgate Hinge Cover - Remove
5. All Removed Parts - Install

1. Install the parts in the reverse order of removal.

TAILGATE LATCH REMOVAL AND INSTALLATION

Removal and Installation

NOTE:

- If the tailgate latch does not open by the tailgate open switch, remove the maintenance cover (A) from the tailgate lower trim panel, then turn the emergency lever (B) clockwise as shown.
- With power tailgate: When the motor (C) fails, remove the bolts and push the motor up.

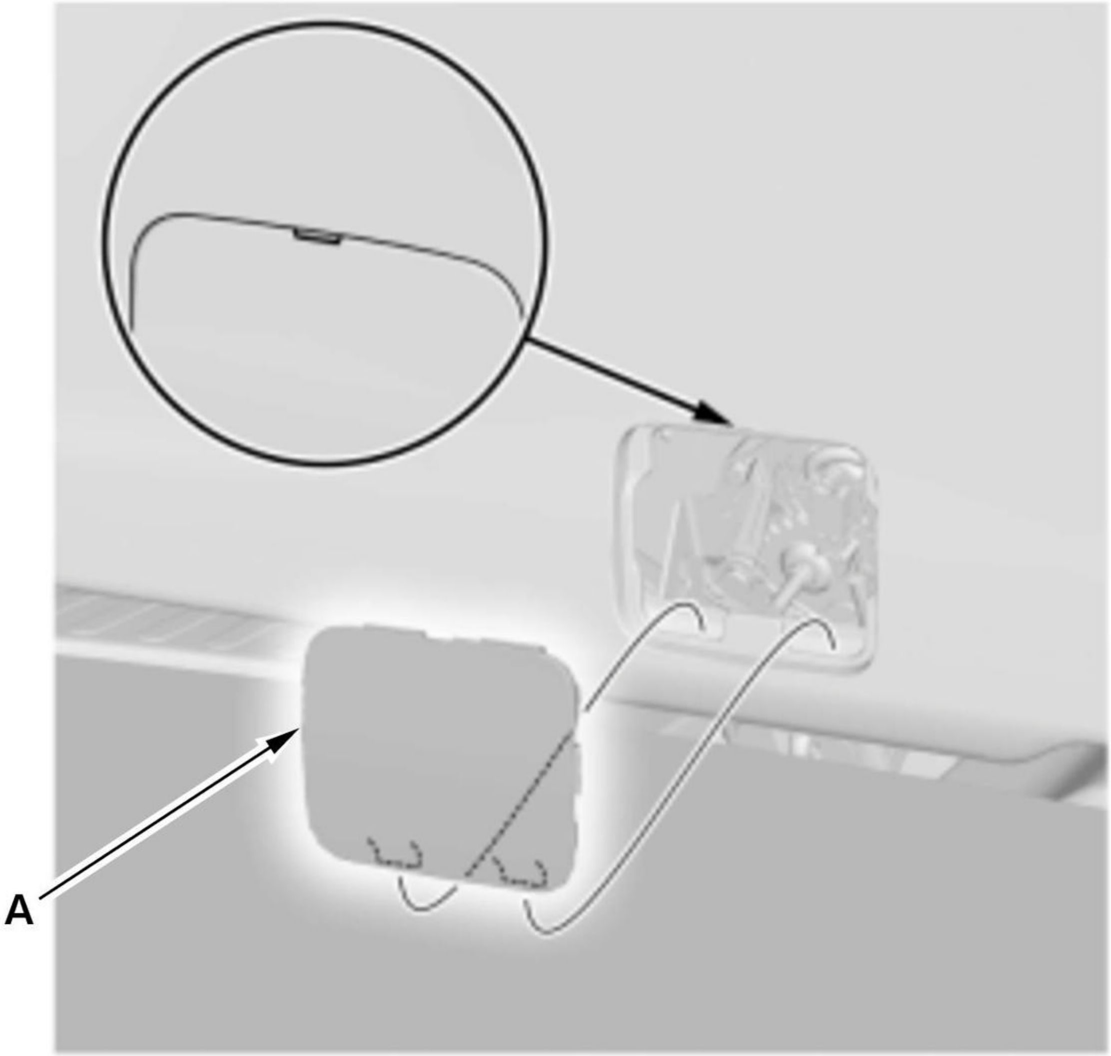

Without Power Tailgate

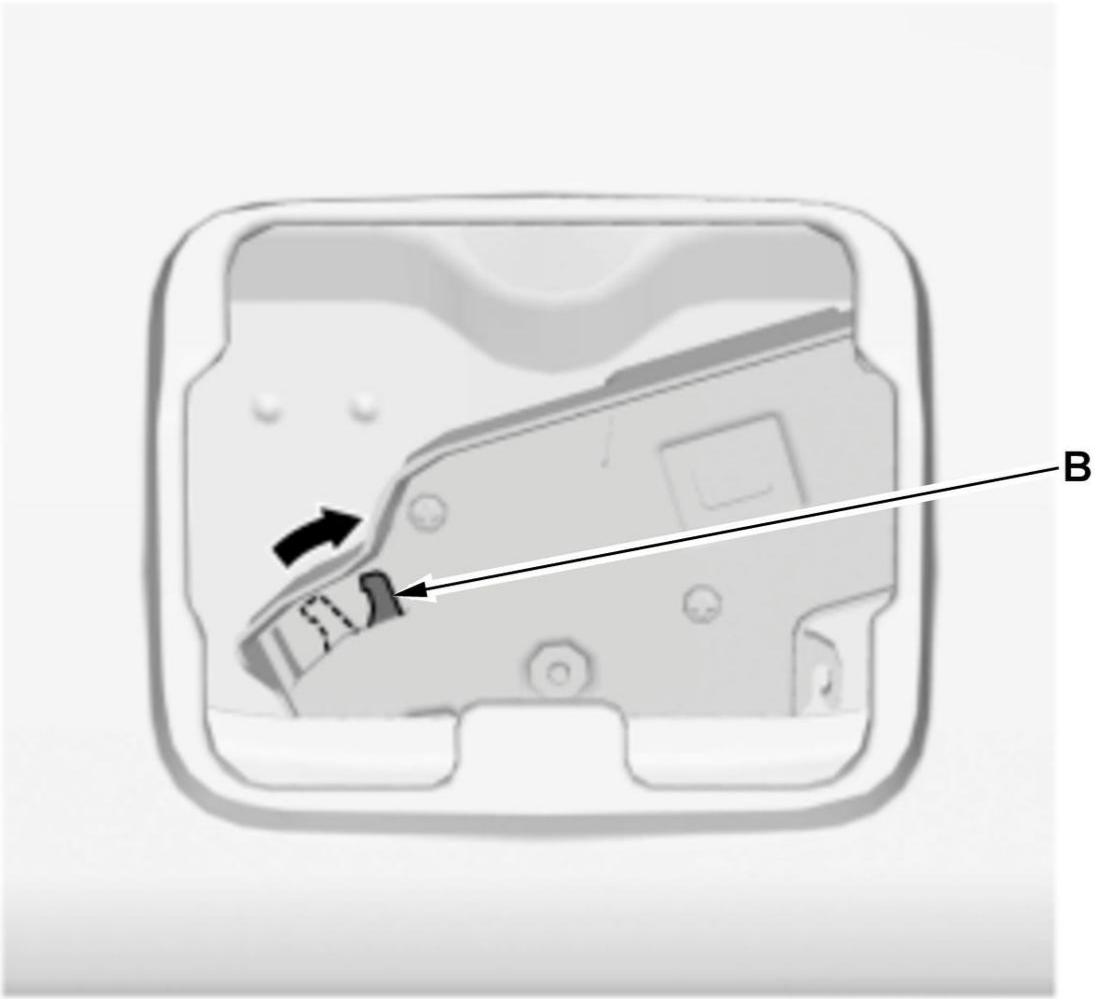

With Power Tailgate

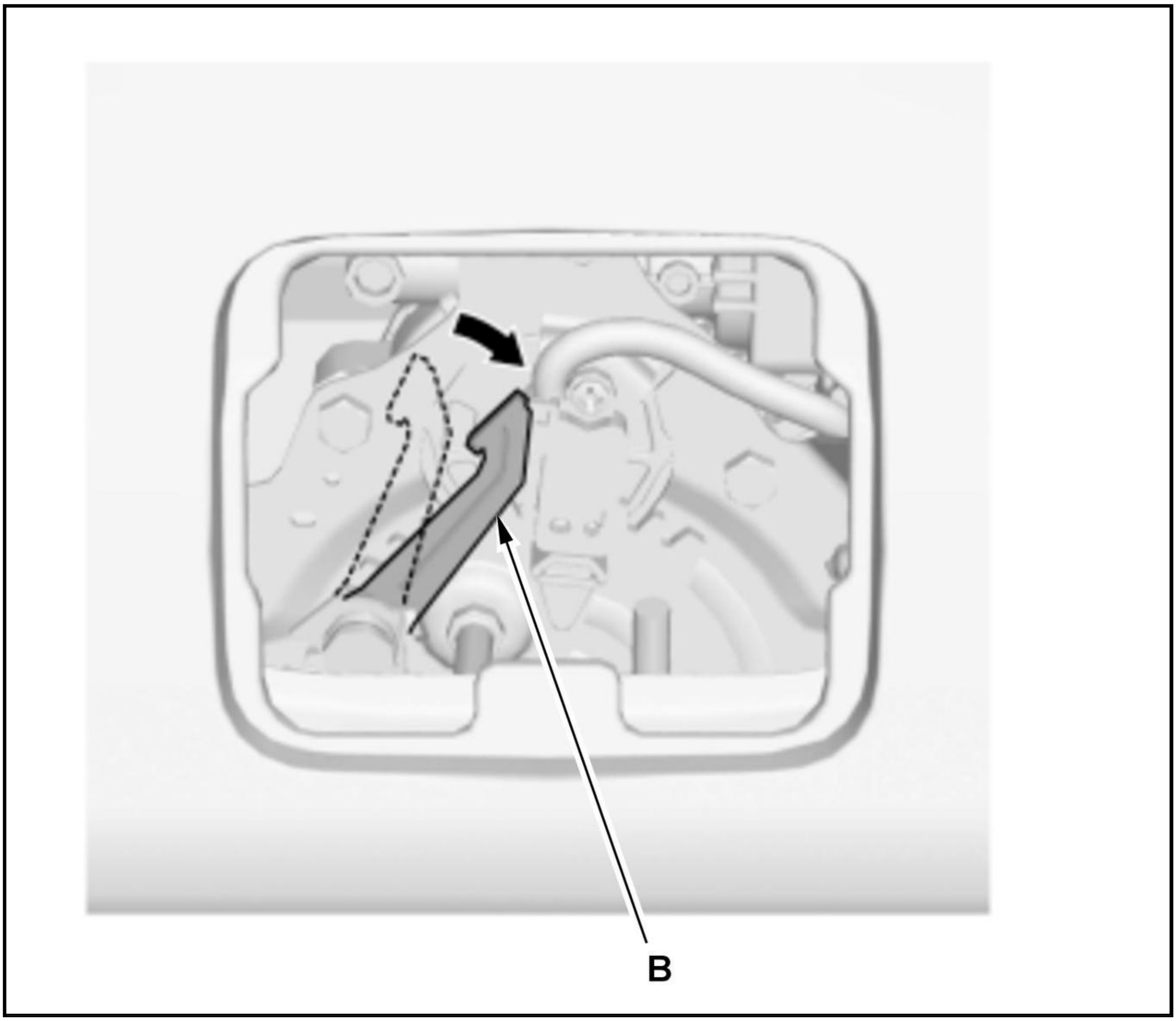

With Power Tailgate (Motor Failure)

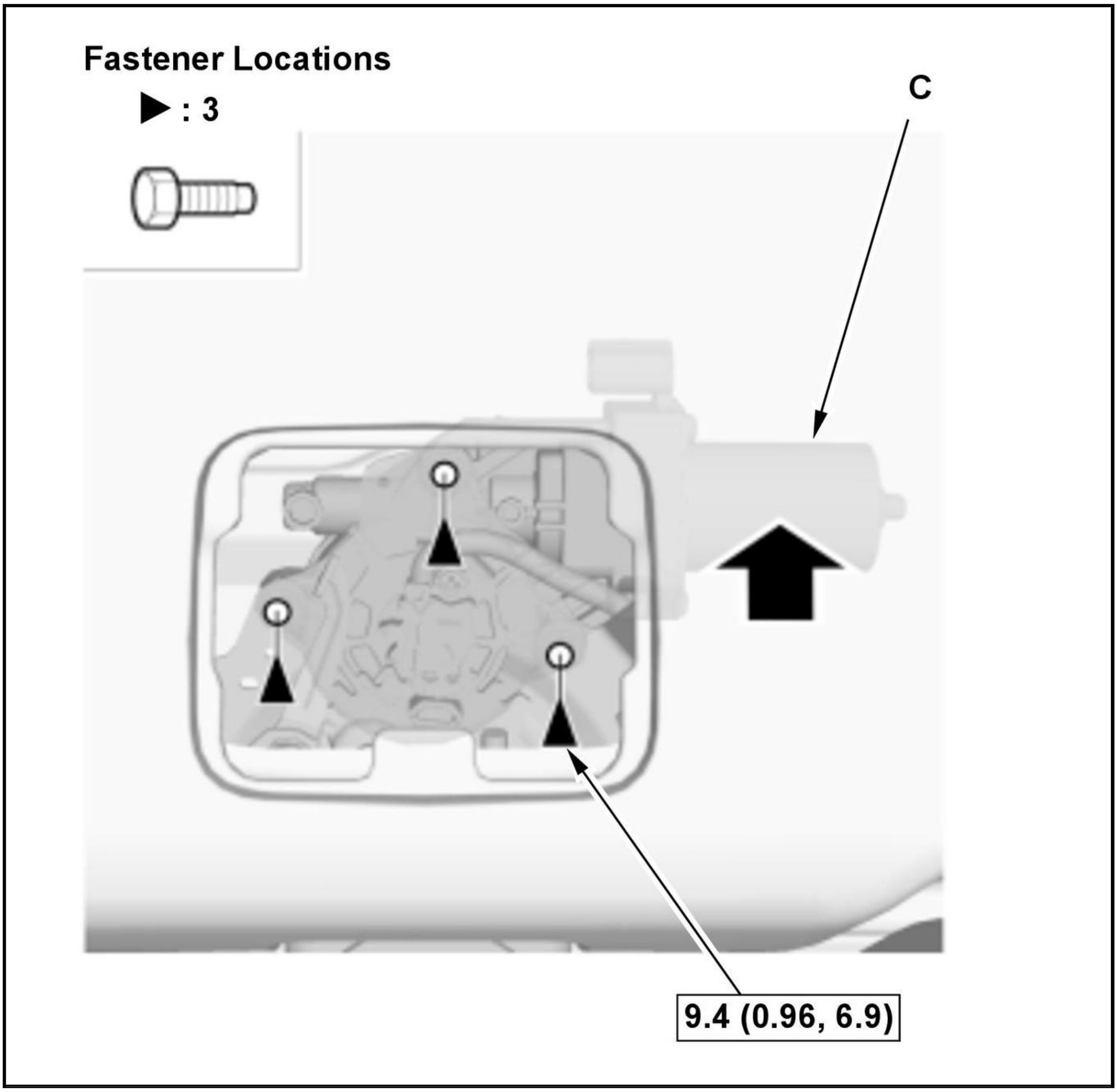
Fastener Locations
▶ : 3
C
9.4 (0.96, 6.9)

▭	Torque: N.m (kgf.m, lbf.ft)

1

Without Power Tailgate

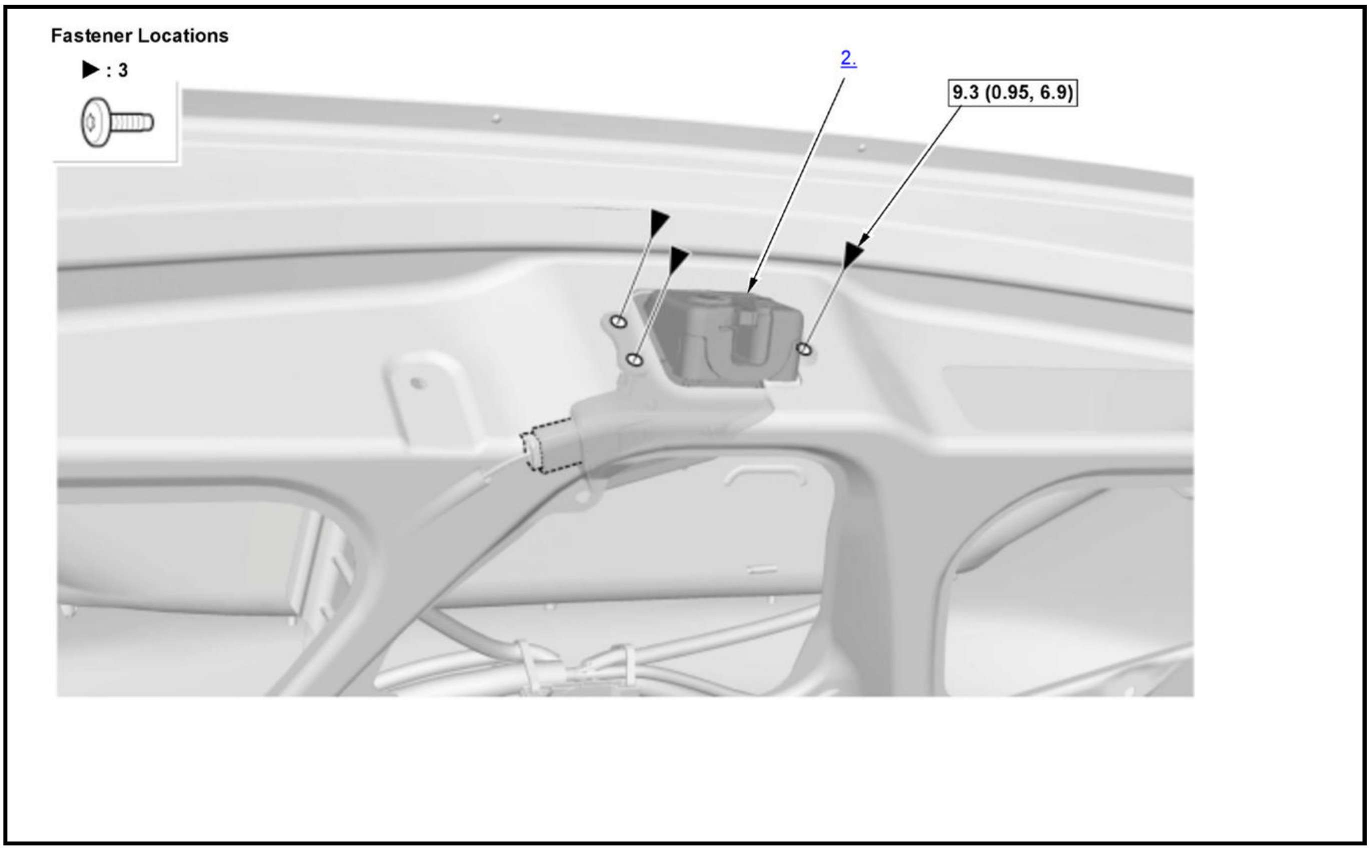
Fastener Locations
▶ : 3
2.
9.3 (0.95, 6.9)

With Power Tailgate

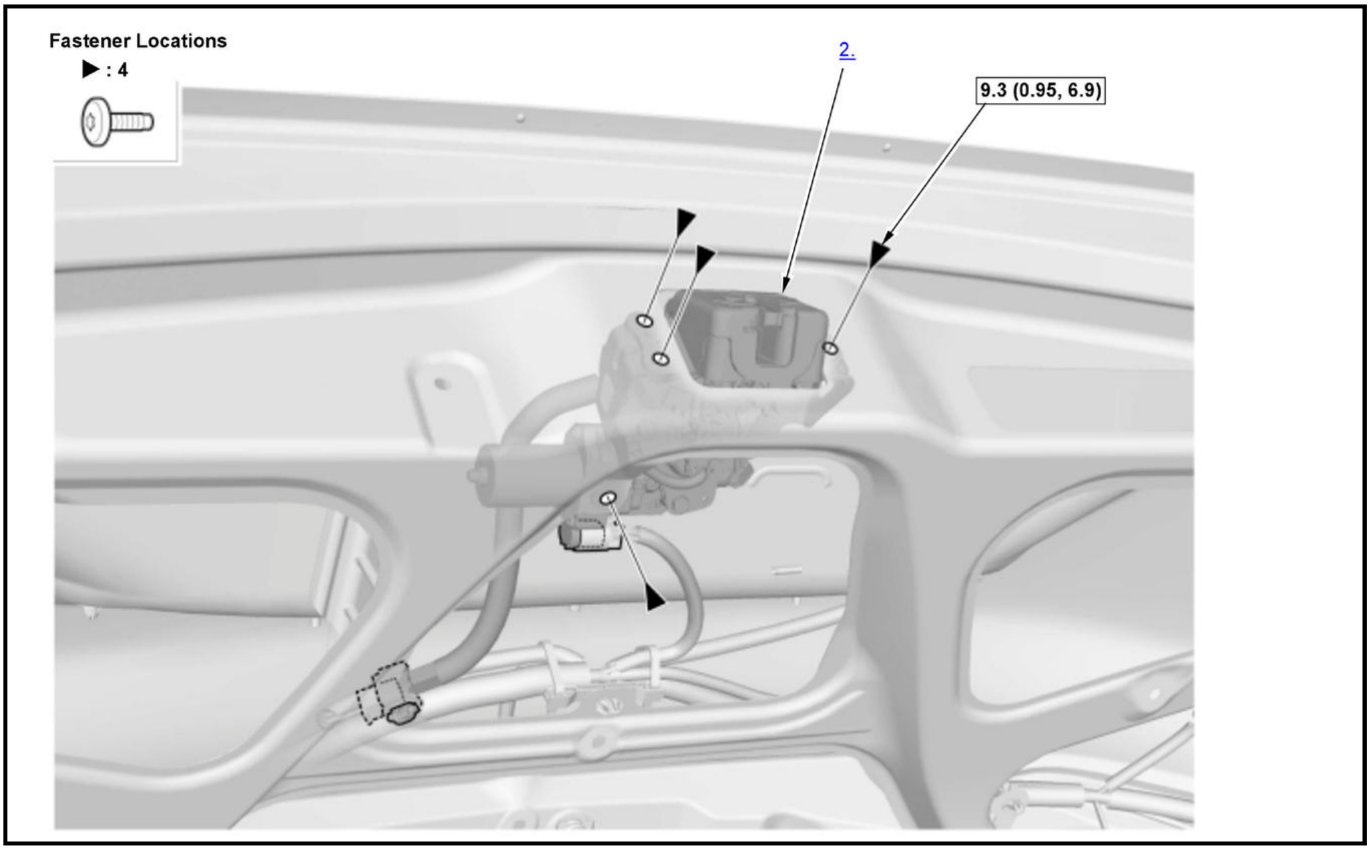
Fastener Locations
▶ : 4
2.
9.3 (0.95, 6.9)

☐	Torque: N.m (kgf.m, lbf.ft)

1. Tailgate Lower Trim Panel - Remove
2. Tailgate Latch - Remove
3. All Removed Parts - Install

1. Install the parts in the reverse order of removal.

TAILGATE SPOILER TRIM REMOVAL AND INSTALLATION

Removal and Installation

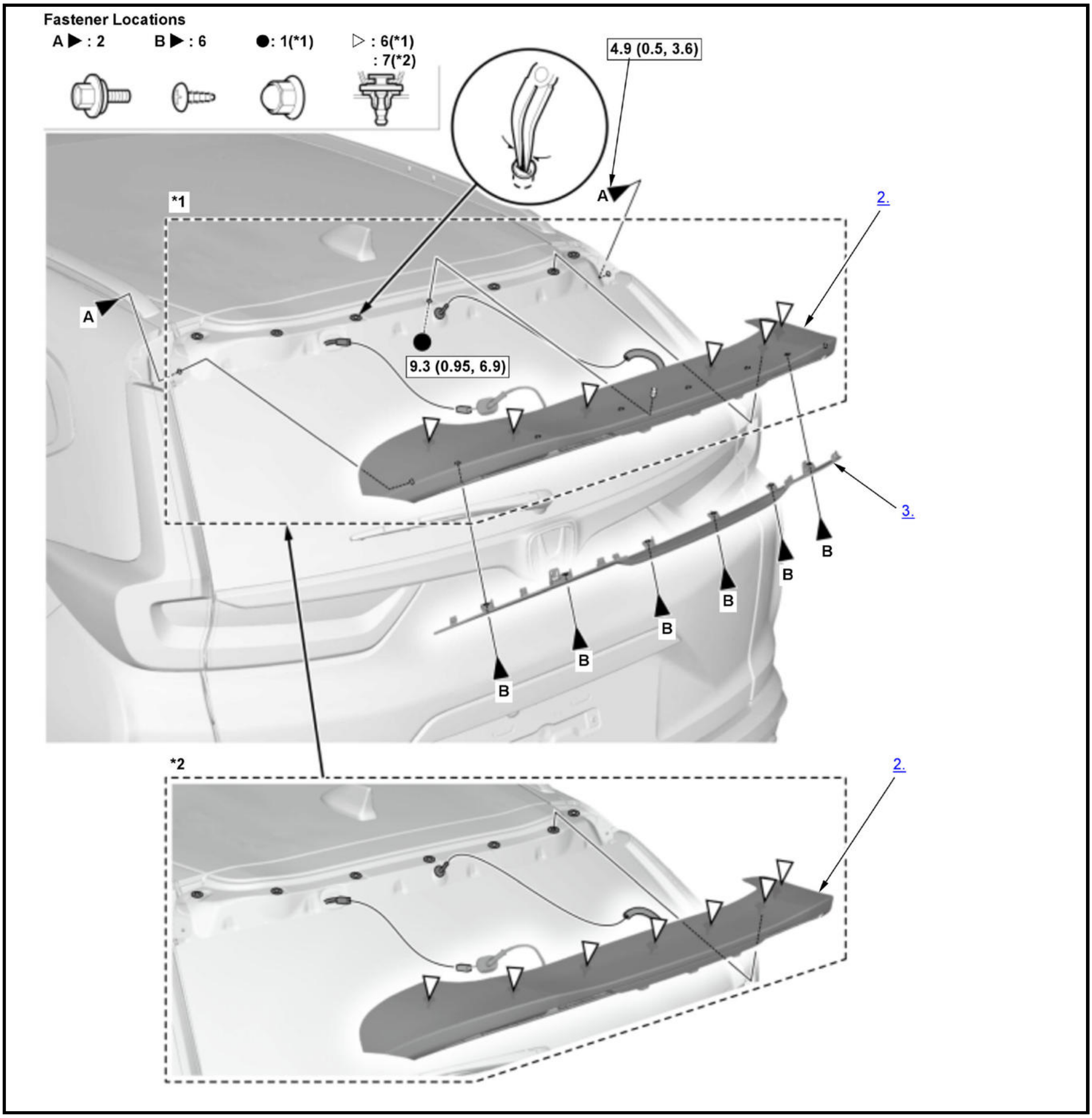
Fastener Locations
A ▶ : 2
B ▶ : 6
●: 1(*1)
▷ : 6(*1)
: 7(*2)
4.9 (0.5, 3.6)
9.3 (0.95, 6.9)
*1
*2
2.
3.
A
B

▭	Torque: N.m (kgf.m, lbf.ft)
*1	Tailgate Spoiler Trim Type1
*2	Tailgate Spoiler Trim Type2

1. **Tailgate Upper Trim Panel - Remove**

   NOTE: After removing the trim panel, check the mounting structure at the center of the tailgate spoiler and identify the spoiler type.

2. Tailgate Spoiler Trim - Remove
3. Tailgate Spoiler Trim Cover - Remove

4. All Removed Parts - Install

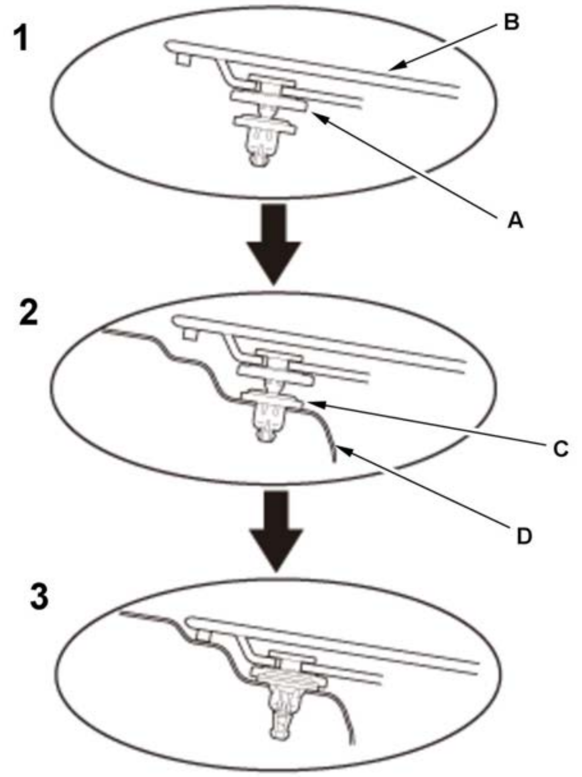	1. Install the parts in the reverse order of removal. **NOTE:** Install the clip onto the tailgate spoiler using the following procedures. • Install the clip (A) onto the tailgate spoiler (B) at the half-lock position. • Then, install the grommet (C) onto the tailgate (D) also at the half-lock position. • Push the tailgate spoiler onto the tailgate until a click is heard.

TAILGATE SUPPORT STRUT REMOVAL AND INSTALLATION

Removal and Installation

NOTE:

- Have an assistant help you when removing and installing the tailgate support strut.
- Use eye protection when prying the support strut clips.
- Do not handle the tailgate support strut by its harness.
- Do not twist or apply transverse force to the tailgate support strut.
- Support the tailgate with a prop to the vehicle, not to the ground.
- Do not remove the support strut from the pivot bracket. If you do, you will have to replace it with new one.
- Take care when handling the tailgate support strut. If it is dropped, you must replace it.

1

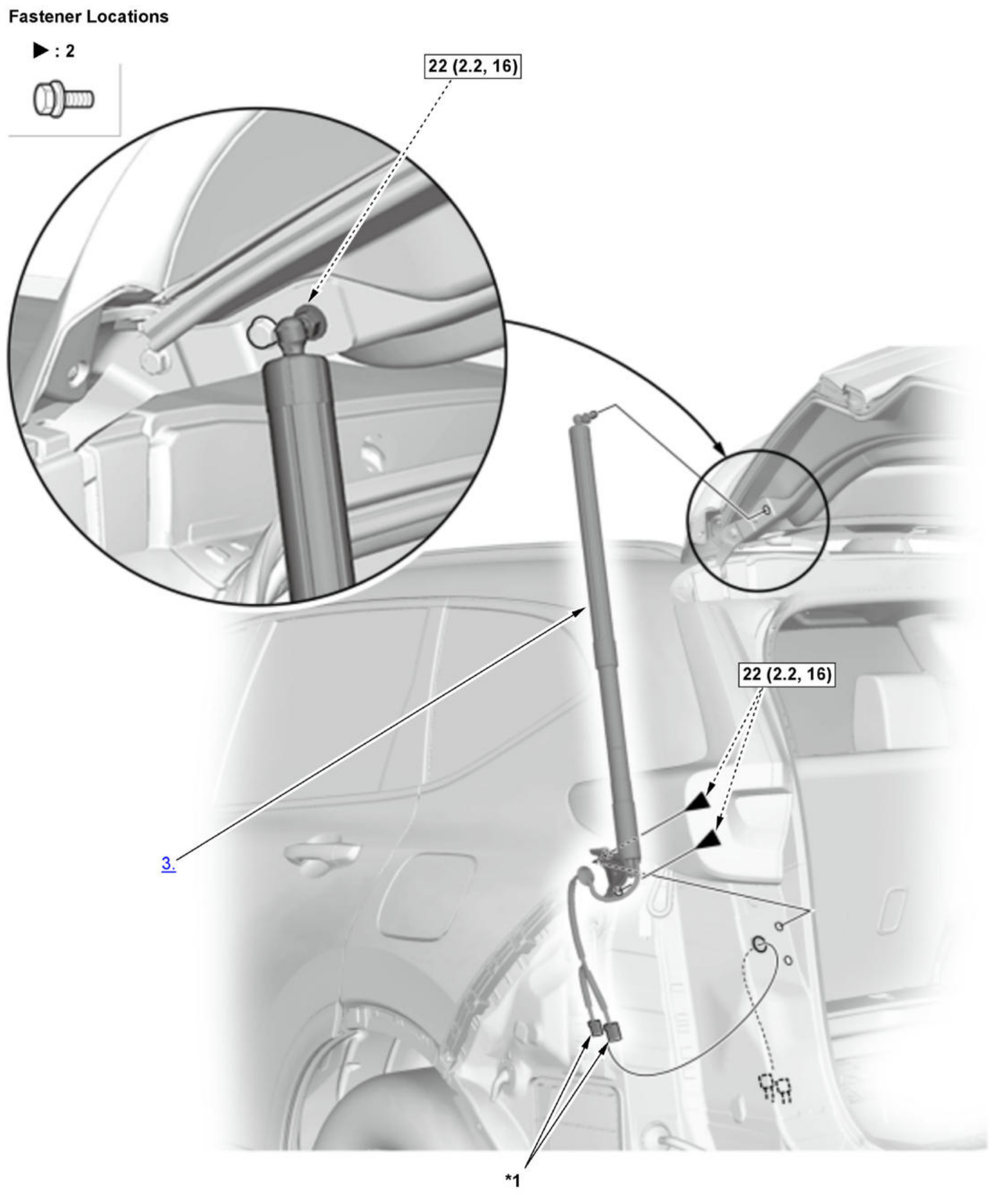

☐	Torque: N.m (kgf.m, lbf.ft)
*1	With power tailgate

1. Rear Bumper - Remove (With Power Tailgate)
2. Rear Side Trim Panel - Remove (With Power Tailgate)
3. Tailgate Support Strut - Remove
4. All Removed Parts - Install

1. Install the parts in the reverse order of removal.

TAILGATE TRIM REMOVAL AND INSTALLATION

Removal and Installation

NOTE: ℹ Where icon is shown further information.

1

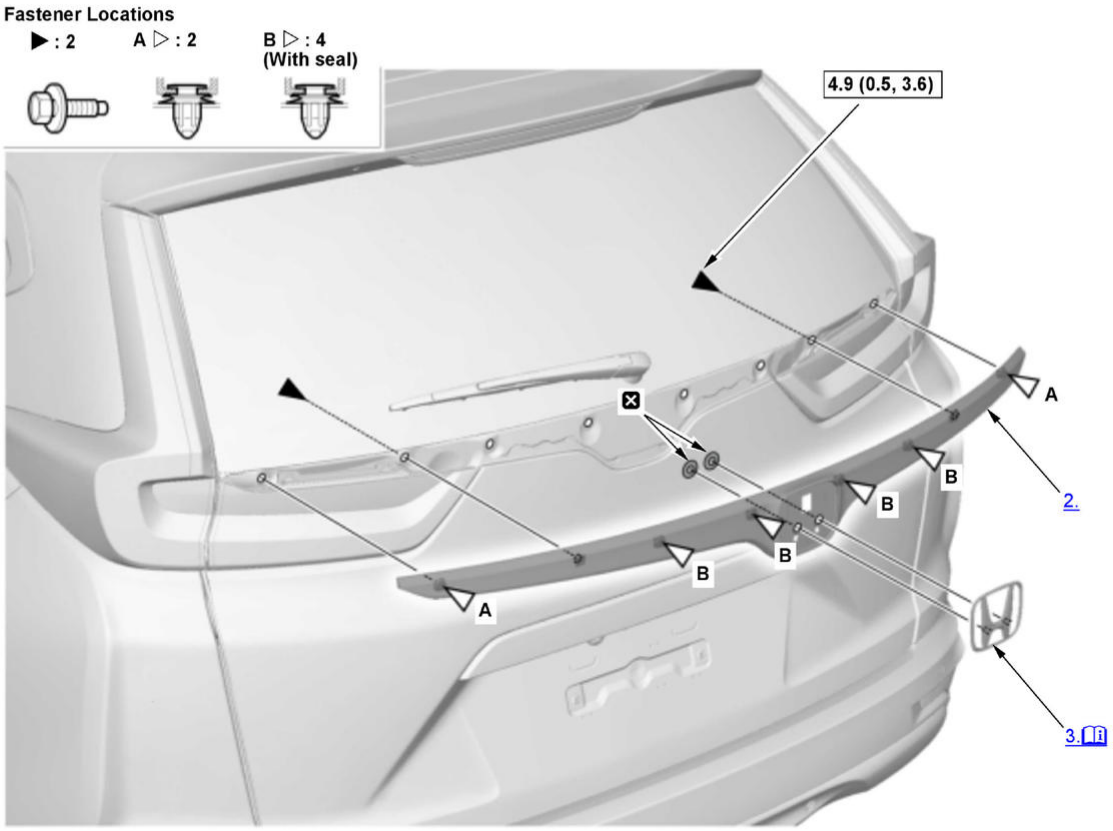
Fastener Locations
▶ : 2
A ▷ : 2
B ▷ : 4
(With seal)
4.9 (0.5, 3.6)
☒
A
B
B
B
B
A
2.
3.

ℹ	Detailed information, notes, and precautions
☐	Torque: N.m (kgf.m, lbf.ft)
☒	Replace

1. Tailgate Lower Trim Panel - Remove
2. Tailgate Trim - Remove
3. Rear Emblem -Remove

    1. If necessary, remove the rear emblem.

4. All Removed Parts - Install

    1. Install the parts in the reverse order of removal.

TAILGATE WEATHERSTRIP REMOVAL AND INSTALLATION

Removal and Installation

1

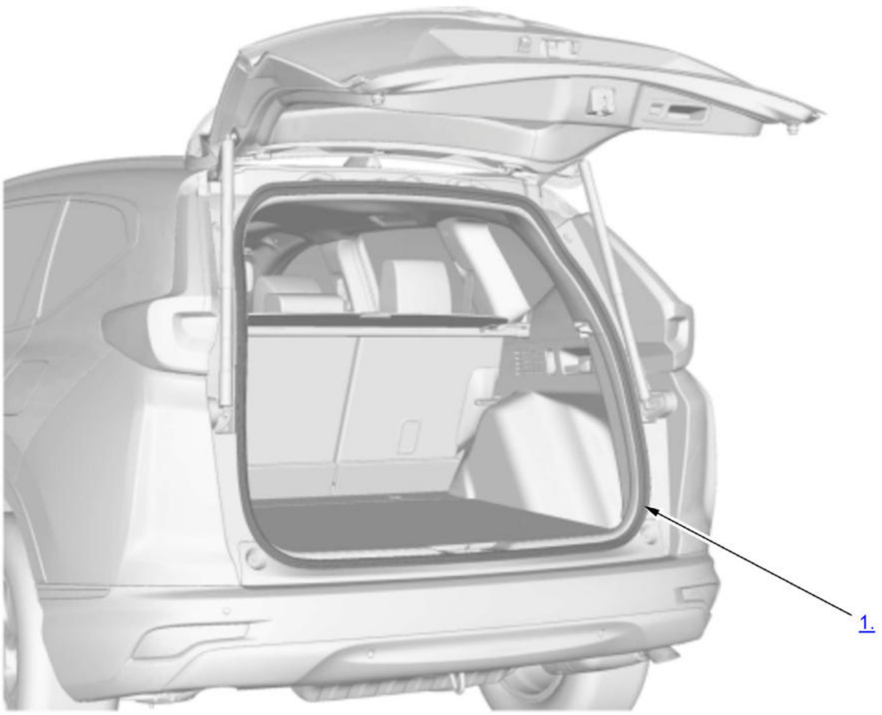

1. Tailgate Weatherstrip - Remove
2. All Removed Parts - Install

1. Install the tailgate weatherstrip (A).

NOTE:

- Align the center marking (B) and the combining part (C) on the tailgate weatherstrip onto each center of the tailgate opening area.
- Make sure the weatherstrip is not twisted or have gaps.

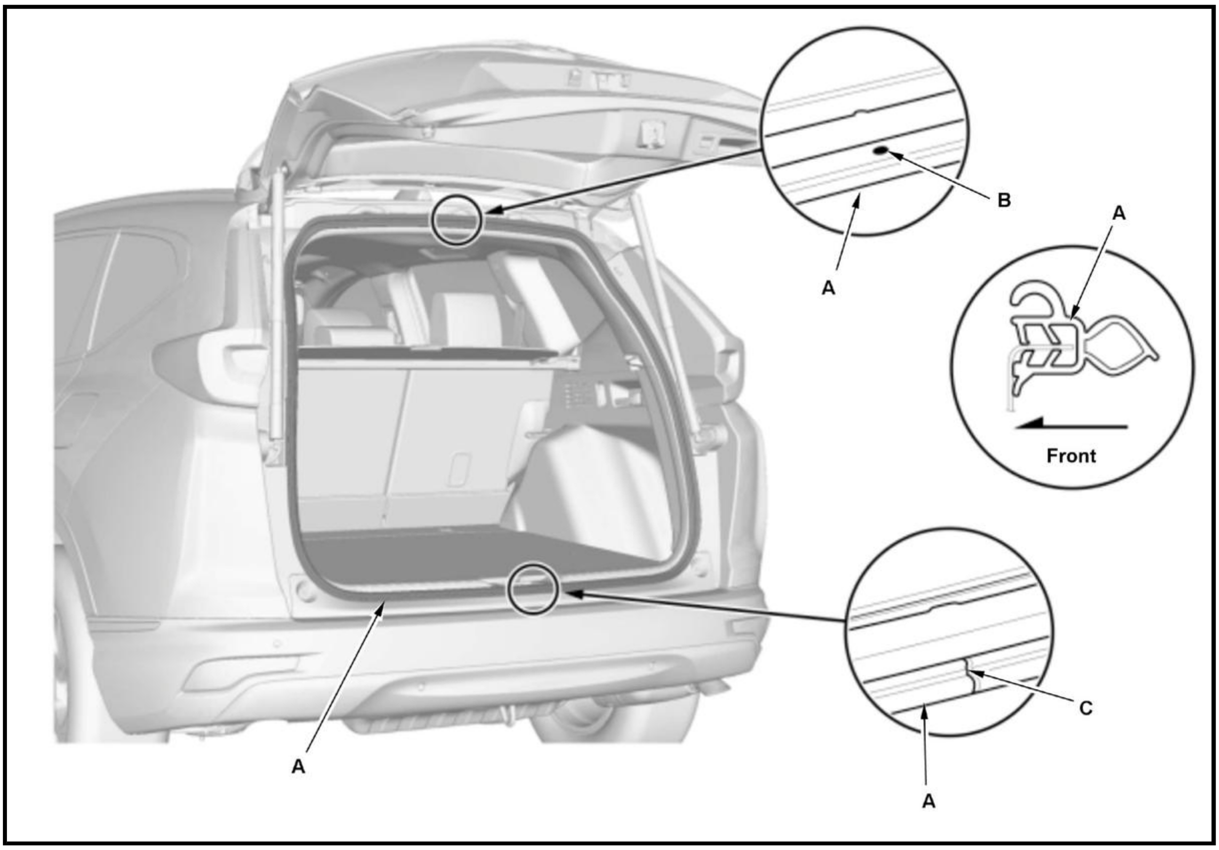

3. **Water Leaks - Check**

WASHER TUBE REMOVAL AND INSTALLATION

Removal and Installation

NOTE:

- SRS components are located in this area. Review the **SRS component locations** and the **precautions and procedures** before doing repairs or service.
- Take care not to pinch the washer tubes.

Front Side Washer

1. **Front Bumper - Remove**
2. **Center Cowl Cover - Remove**
3. **Right Front Inner Fender - Remove**
4. **Front Door Sill Trim - Remove**
5. **Kick Panel - Remove**
6. Washer Tube - Remove

   1. Remove the washer tube(s).

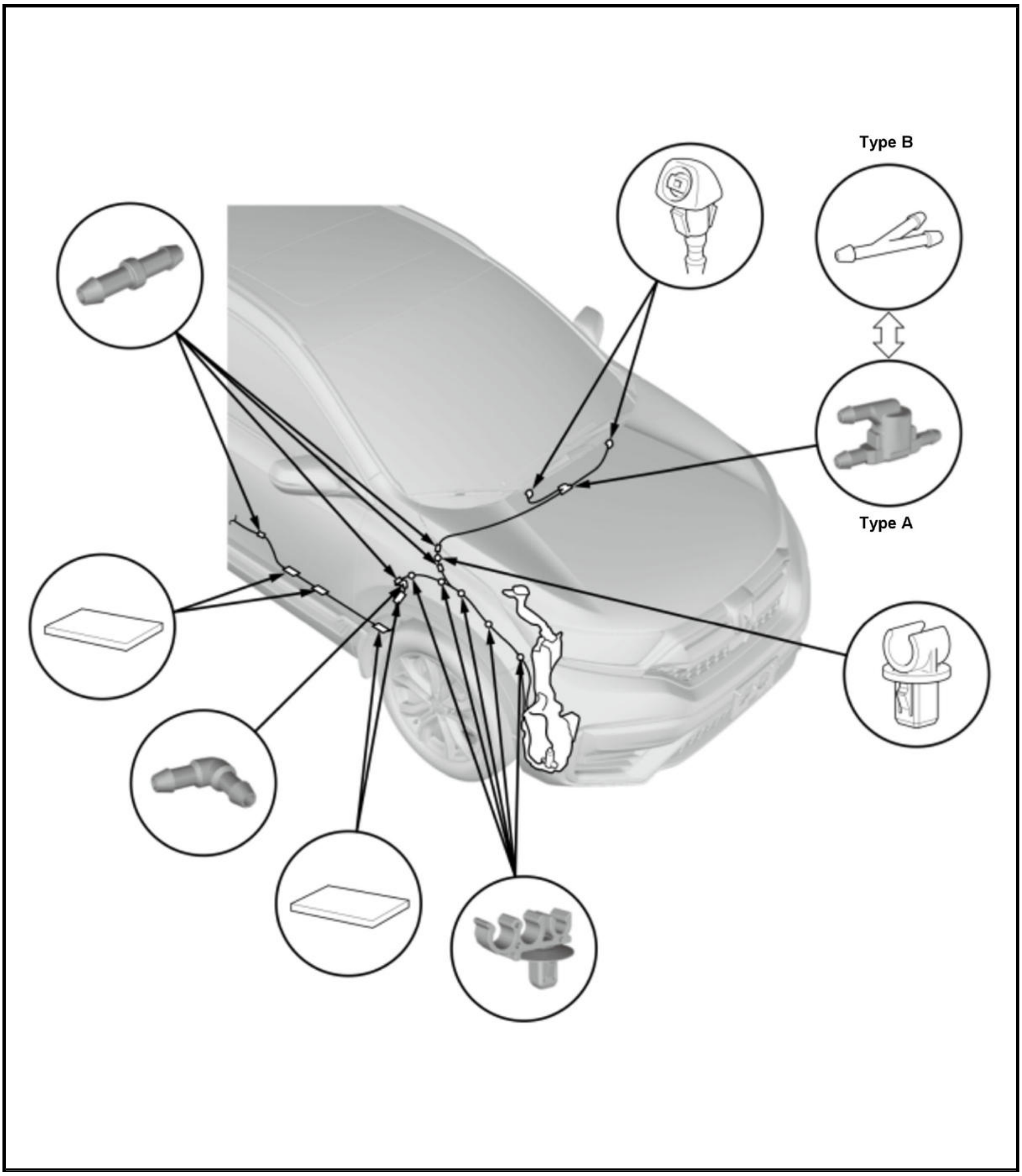

7. All Removed Parts - Install

1. Install the parts in the reverse order of removal.

Rear Side Washer

8. Right Rear Door Sill Trim - Remove
9. Right Center Pillar Lower Trim - Remove
10. Right Rear Side Trim Panel - Remove
11. Right Quarter Pillar Trim - Remove
12. Headliner - Remove

1. Remove the headliner as needed .

13. Tailgate Upper Trim Panel - Remove
14. Tailgate Spoiler Trim - Remove
15. Washer Tube - Remove

1. Remove the washer tube(s).

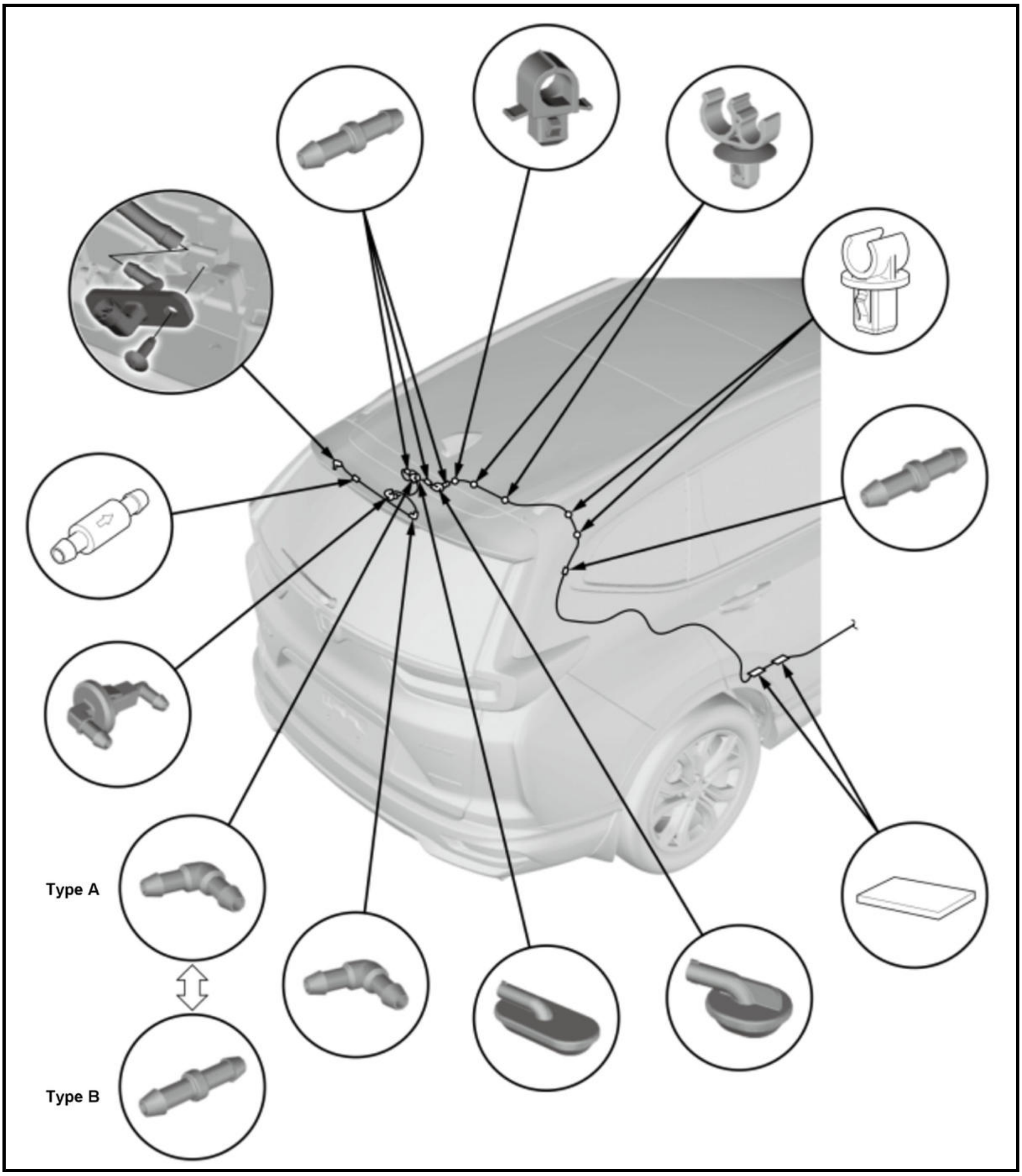
Type A
Type B

16. All Removed Parts - Install

1. Install the parts in the reverse order of removal.

TIGHTENING

FRAME TIGHTENING TORQUE

Exploded View

Procedure

NOTE: **Numbered call-outs in figure pertain to list numbers in following procedure.**

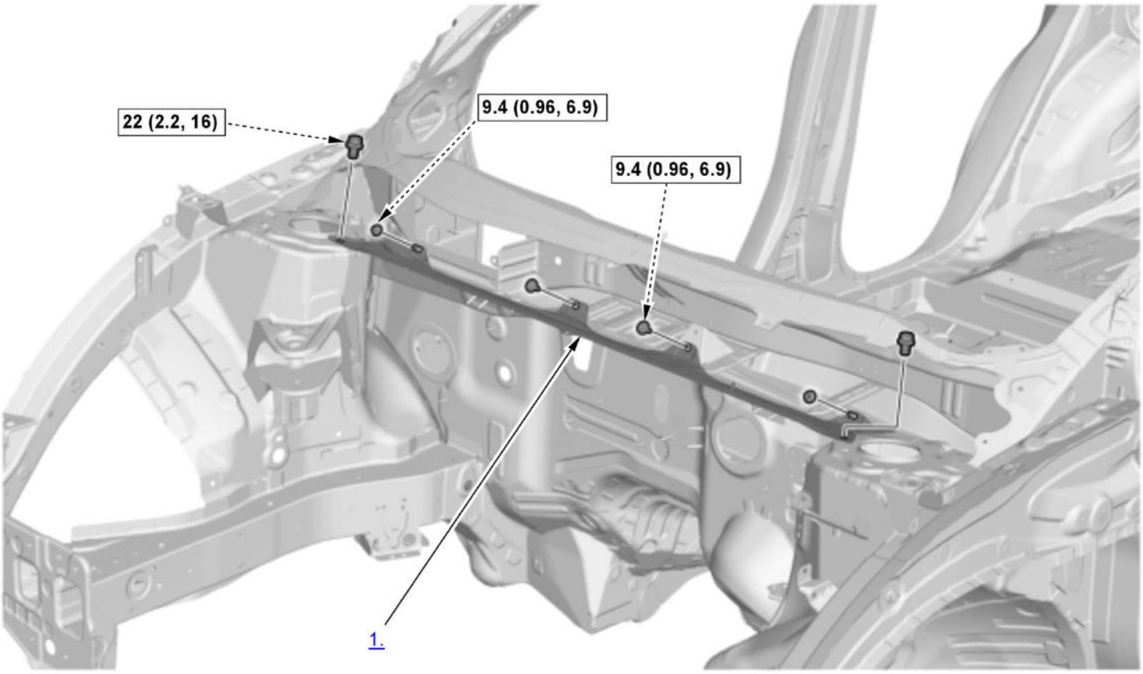

Fig. 1: Frame Components With Torque Specifications (1 Of 5)
Courtesy of HONDA, U.S.A., INC.

▭	Torque: N.m (kgf.m, lbf.ft)

NOTE: **Numbered call-outs in figure pertain to list numbers in following procedure.**

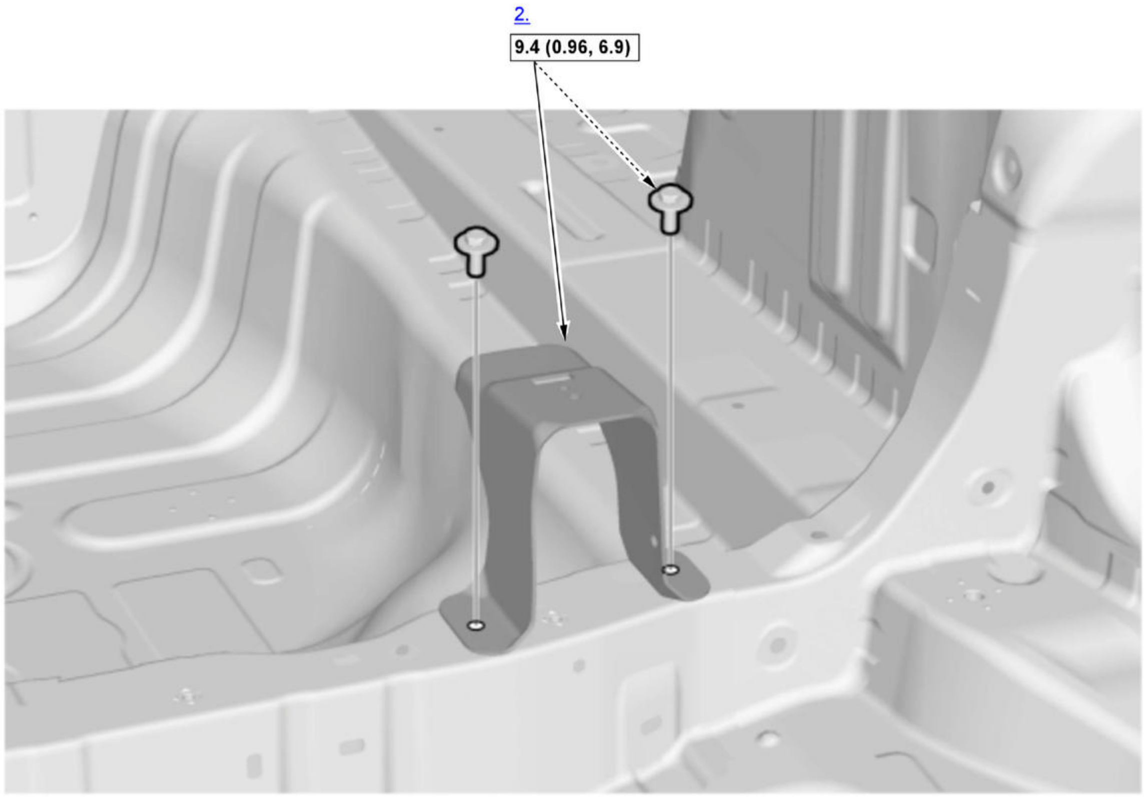

Fig. 2: Frame Components With Torque Specifications (2 Of 5)
Courtesy of HONDA, U.S.A., INC.

▭	Torque: N.m (kgf.m, lbf.ft)

NOTE: **Numbered call-outs in figure pertain to list numbers in following procedure.**

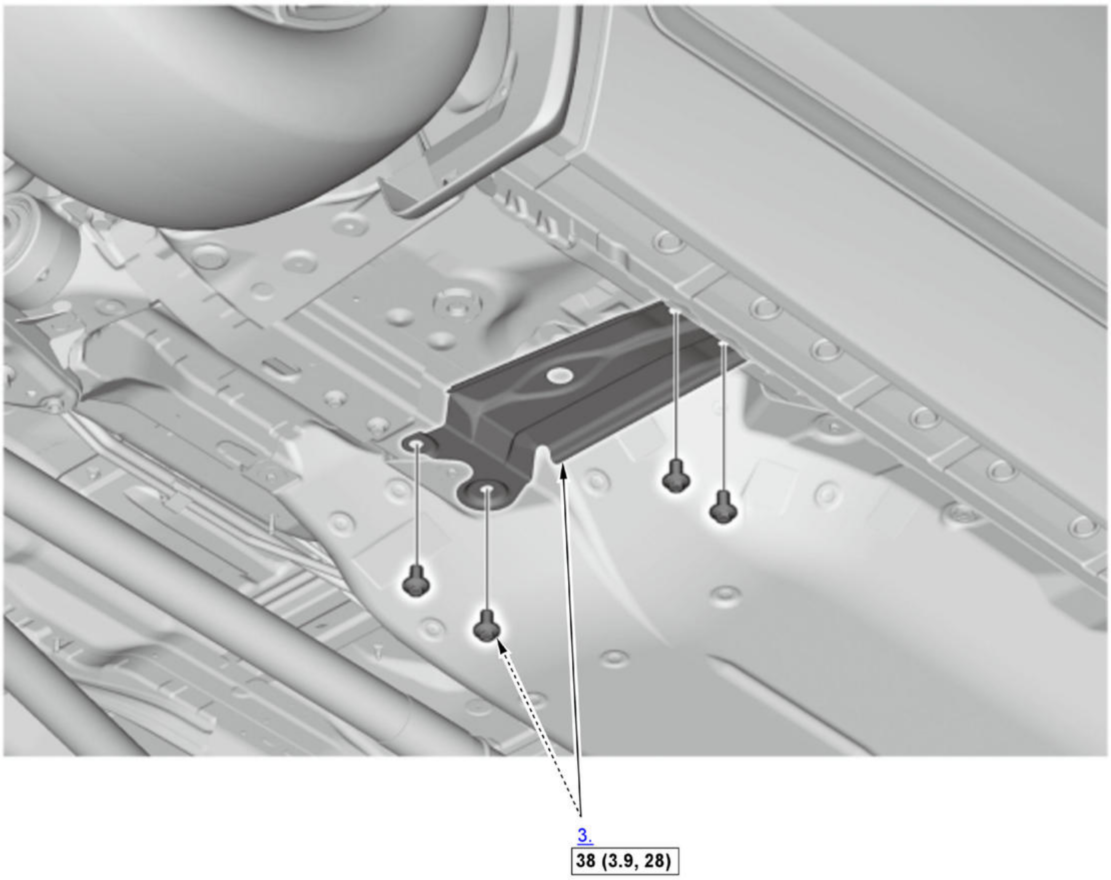

Fig. 3: Frame Components With Torque Specifications (3 Of 5)
Courtesy of HONDA, U.S.A., INC.

▭	Torque: N.m (kgf.m, lbf.ft)

NOTE: **Numbered call-outs in figure pertain to list numbers in following procedure.**

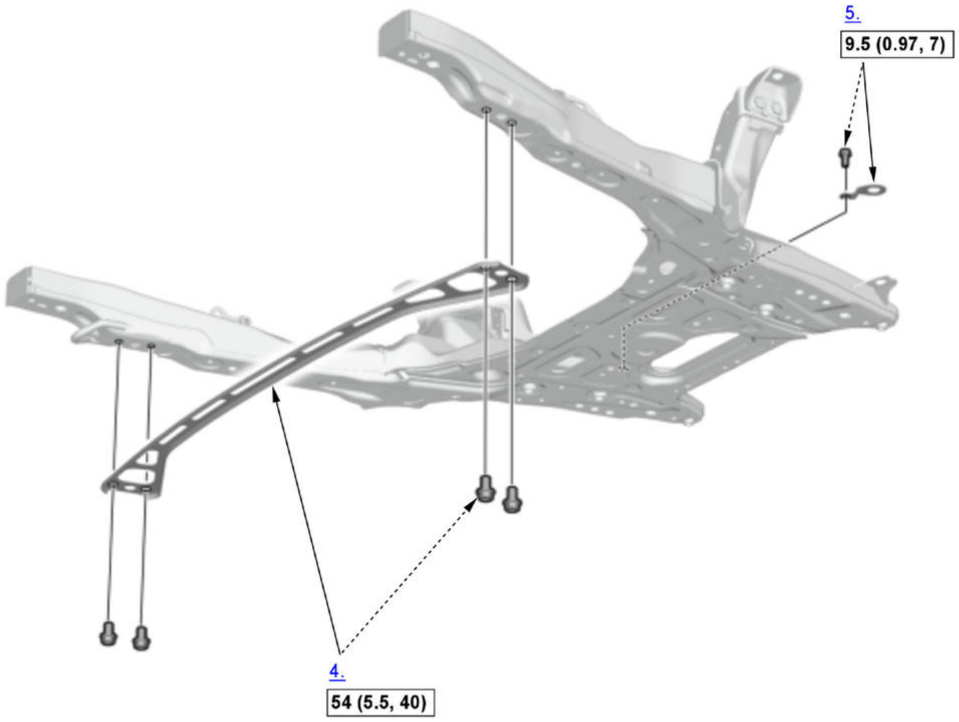

Fig. 4: Frame Components With Torque Specifications (4 Of 5)
Courtesy of HONDA, U.S.A., INC.

▭	Torque: N.m (kgf.m, lbf.ft)

NOTE: **Numbered call-outs in figure pertain to list numbers in following procedure.**

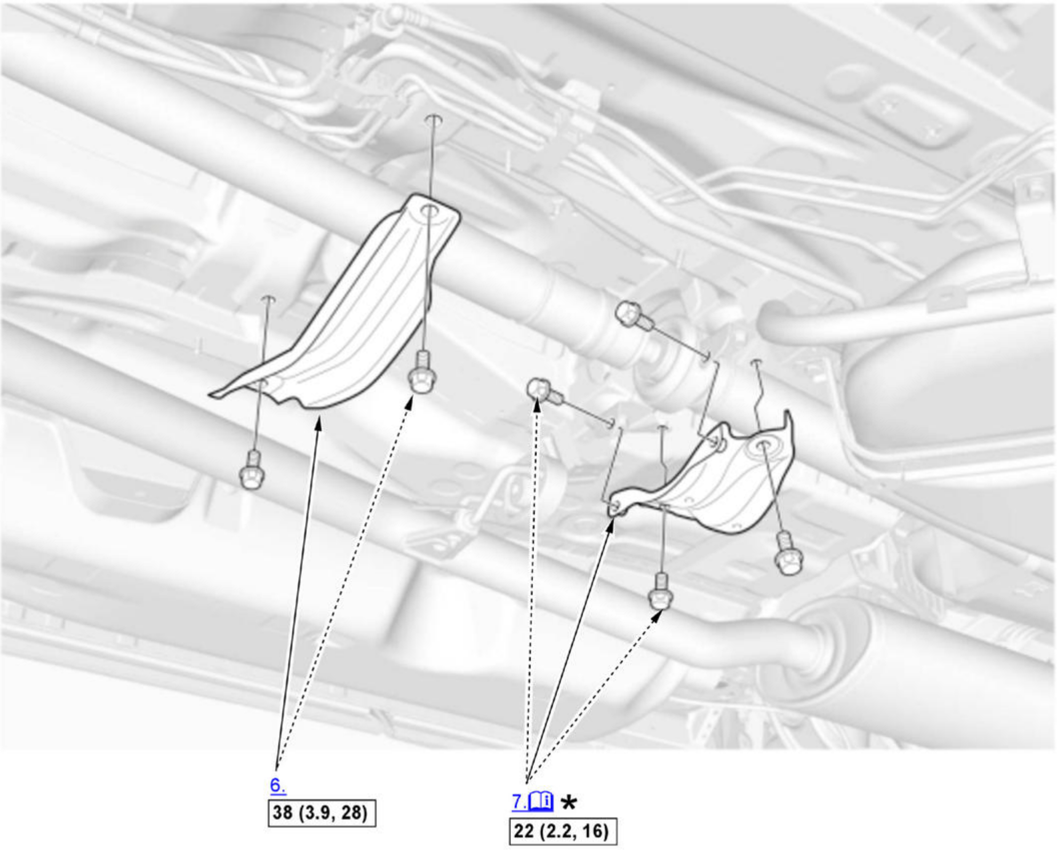

Fig. 5: Frame Components With Torque Specifications (5 Of 5)
Courtesy of HONDA, U.S.A., INC.

ℹ	Detailed information, notes, and precautions
▭	Torque: N.m (kgf.m, lbf.ft)
*	Do not remove when removing/installing the propeller shaft assy.

1. Under Cowl Panel - Remove
2. Rear Carpet Trim Bracket - Remove
3. Front Floor Brace - Remove
4. Front subframe brace - Remove
5. Front Subframe Washer - Remove
6. Front floor front brace - Remove
7. Front floor rear brace - Remove

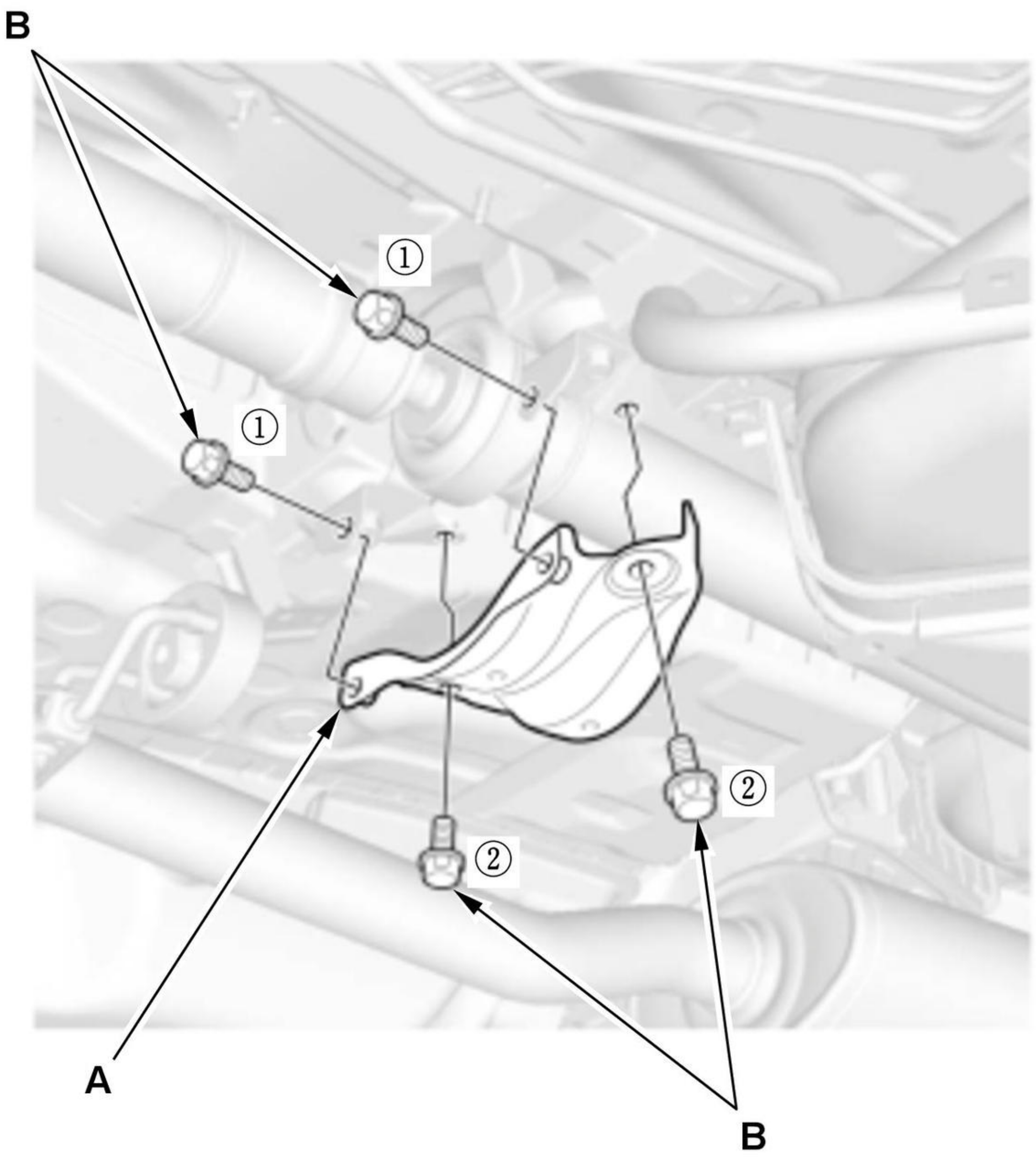

Fig. 6: Front Floor Rear Brace And Bolts With Tightening Sequence
Courtesy of HONDA, U.S.A., INC.

1. Install the front floor rear brace (A).

2. Loosely install the attaching bolts (B).

3. Tighten the attaching bolts to the specified torque in the numbered sequence shown.

SUBFRAME TIGHTENING TORQUE

Special Tools Required

Image	Description/Tool Number
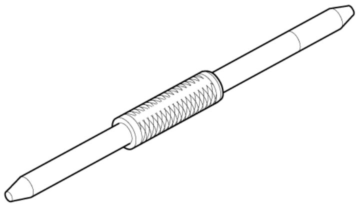	Subframe Alignment Pin 070AG-SJAA10S

Removal

NOTE: How to read the torque specifications

1. Front Subframe - Remove

   NOTE: After removing the front subframe mounting bolts, be sure to replace them with new ones.

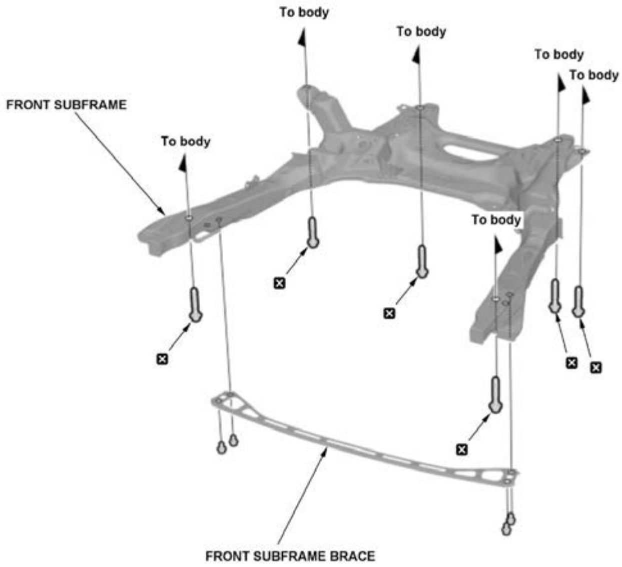
To body
To body
To body
To body
FRONT SUBFRAME
To body
To body
FRONT SUBFRAME BRACE

2. Rear Subframe - Remove

   NOTE: After removing the rear subframe mounting bolts, be sure to replace them with new ones.

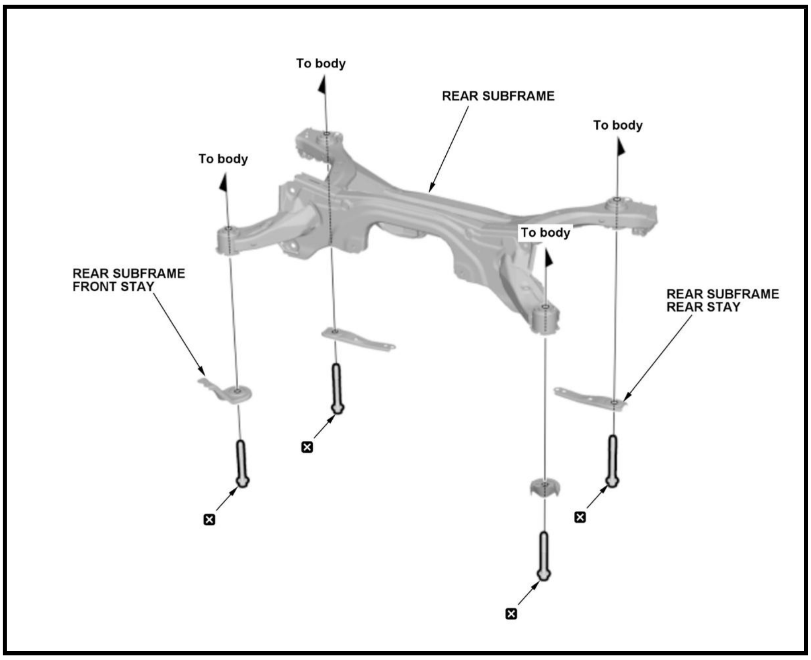

Installation

NOTE: **How to read the torque specifications**

1. Front Subframe - Tightening Torque

NOTE:

- Align the front subframe with the subframe alignment pin.
- Align the front subframe in the following sequence.

1. Align the front subframe (A) in the following sequence.

-1. Lift the front subframe up to the body, and loosely install the new subframe mounting bolts (B, C).

-2. Insert the subframe alignment pin (D) through the positioning hole (E) on the right rear subframe, and into the positioning hole (F) on the body, then loosely tighten the subframe right rear mounting bolt.

-3. Insert the subframe alignment pin through the positioning hole on the left rear subframe, and into the positioning hole on the body, then loosely tighten the subframe left rear mounting bolt.

-4. Tighten the subframe mounting bolts to the specified torque in the sequence shown. Use the subframe alignment pin when tightening the rear side subframe mounting bolts.

-5. Check all of the subframe mounting bolts, and retighten if necessary.

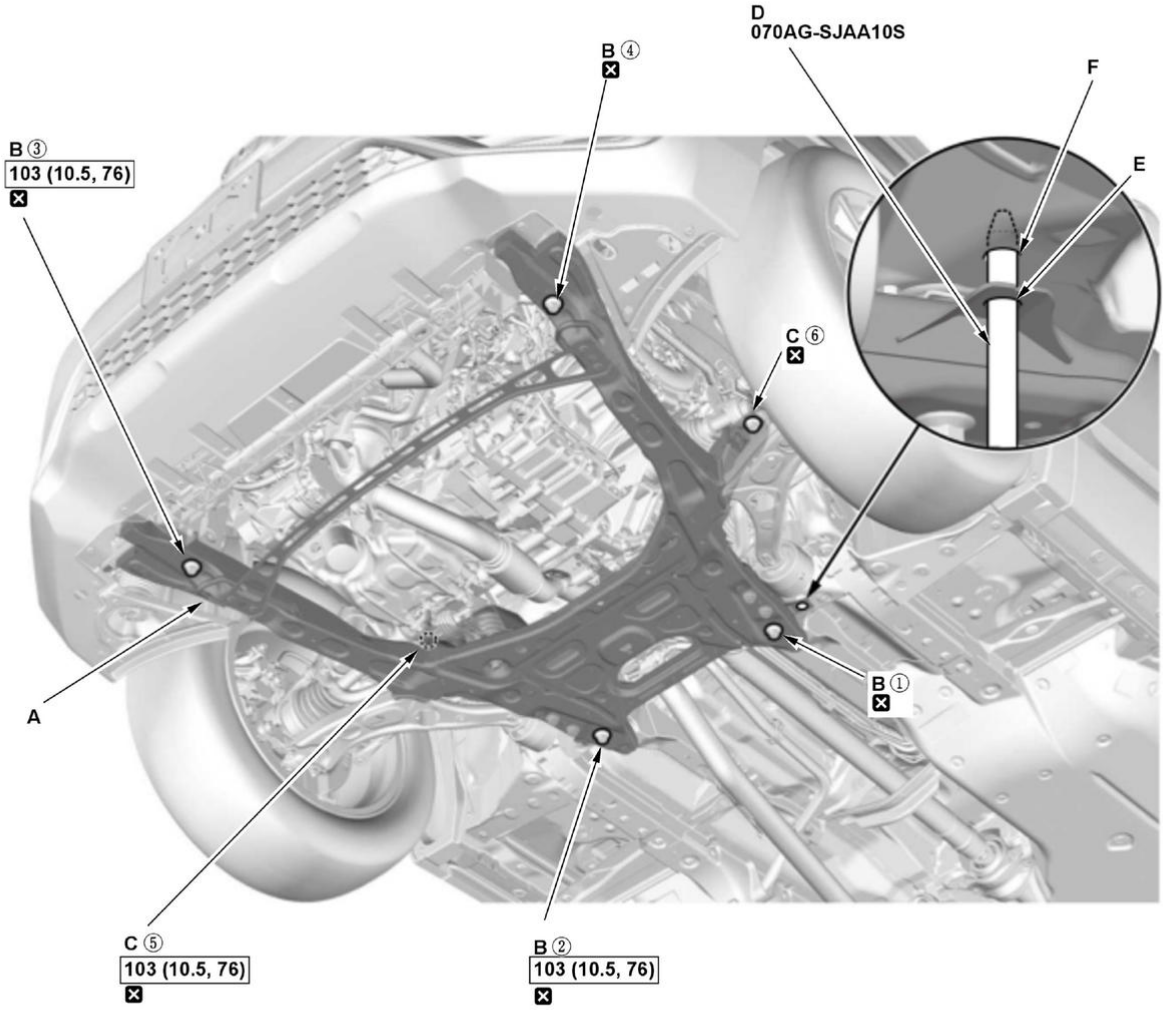
D
070AG-SJAA10S
B ④
☒
F
E
B ③
103 (10.5, 76)
☒
C ⑥
☒
A
B ①
☒
C ⑤
103 (10.5, 76)
☒
B ②
103 (10.5, 76)
☒

Fig. 7: Front Subframe Components With Tightening Sequence And Torque Specifications
Courtesy of HONDA, U.S.A., INC.

  2. After reinstalling all removed parts, **check and adjust the front wheel alignment** .

2. Rear Subframe - Tightening Torque

   NOTE: When installing, align both positioning holes on the rear subframe with the positioning holes on the body using the subframe alignment pin as a guide. First align the right positioning hole, and next align the left positioning hole.

   1. Install the rear subframe (A).

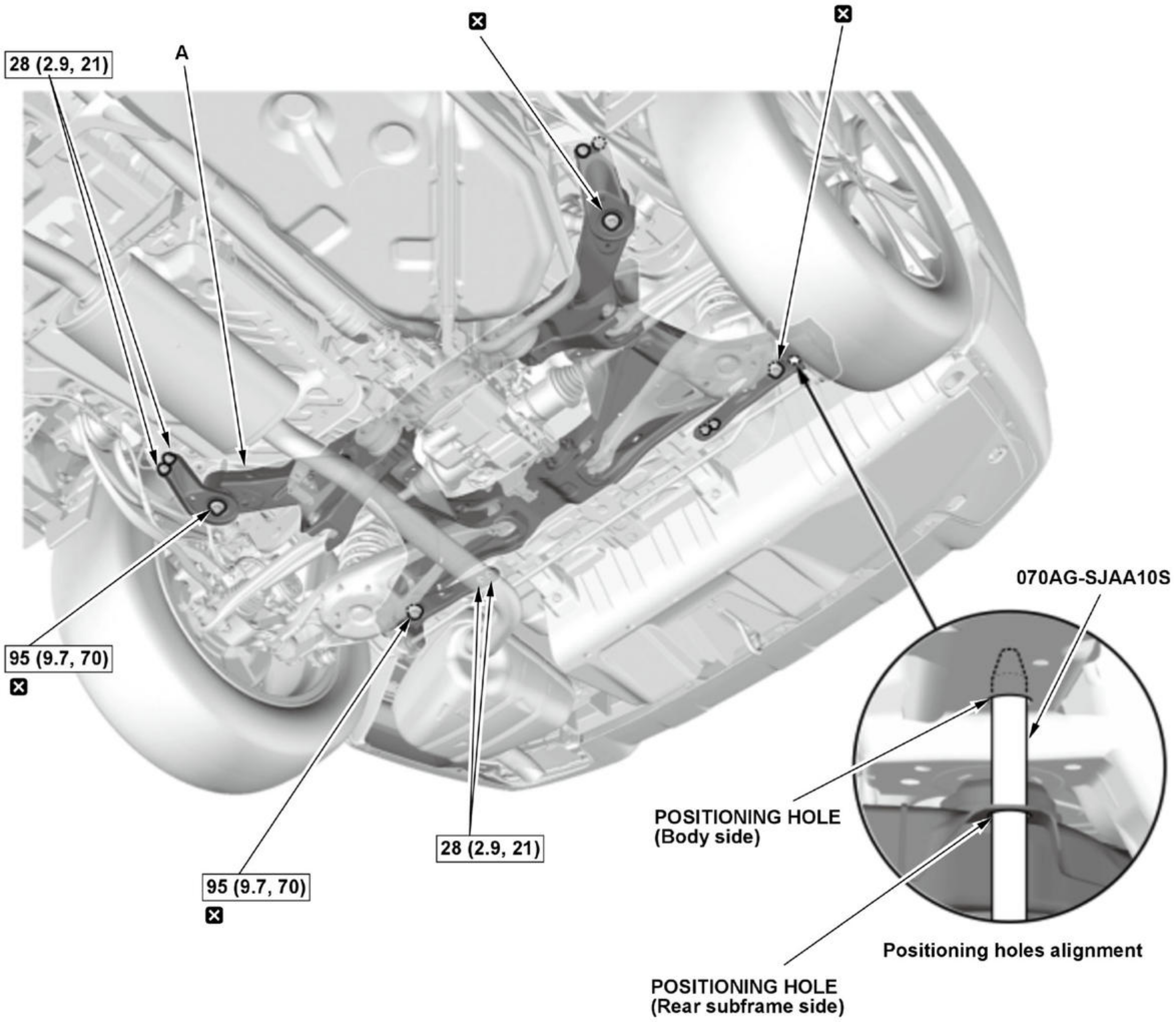
28 (2.9, 21)
A
☒
☒
95 (9.7, 70)
☒
070AG-SJAA10S
POSITIONING HOLE (Body side)
28 (2.9, 21)
95 (9.7, 70)
☒
Positioning holes alignment
POSITIONING HOLE (Rear subframe side)

Fig. 8: Rear Subframe Components With Torque Specifications
Courtesy of HONDA, U.S.A., INC.

2. After reinstalling all removed parts, **check and adjust the rear wheel alignment** .

COMPONENT LOCATION INDEX

FRAME COMPONENT LOCATION INDEX

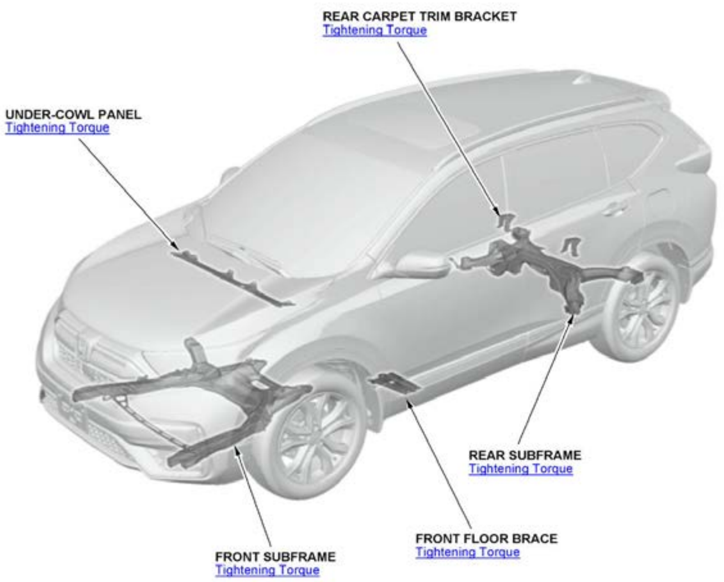
REAR CARPET TRIM BRACKET
Tightening Torque
UNDER-COWL PANEL
Tightening Torque
REAR SUBFRAME
Tightening Torque
FRONT FLOOR BRACE
Tightening Torque
FRONT SUBFRAME
Tightening Torque

SPECIFICATIONS

FRAME TIGHTENING TORQUE

Exploded View

1

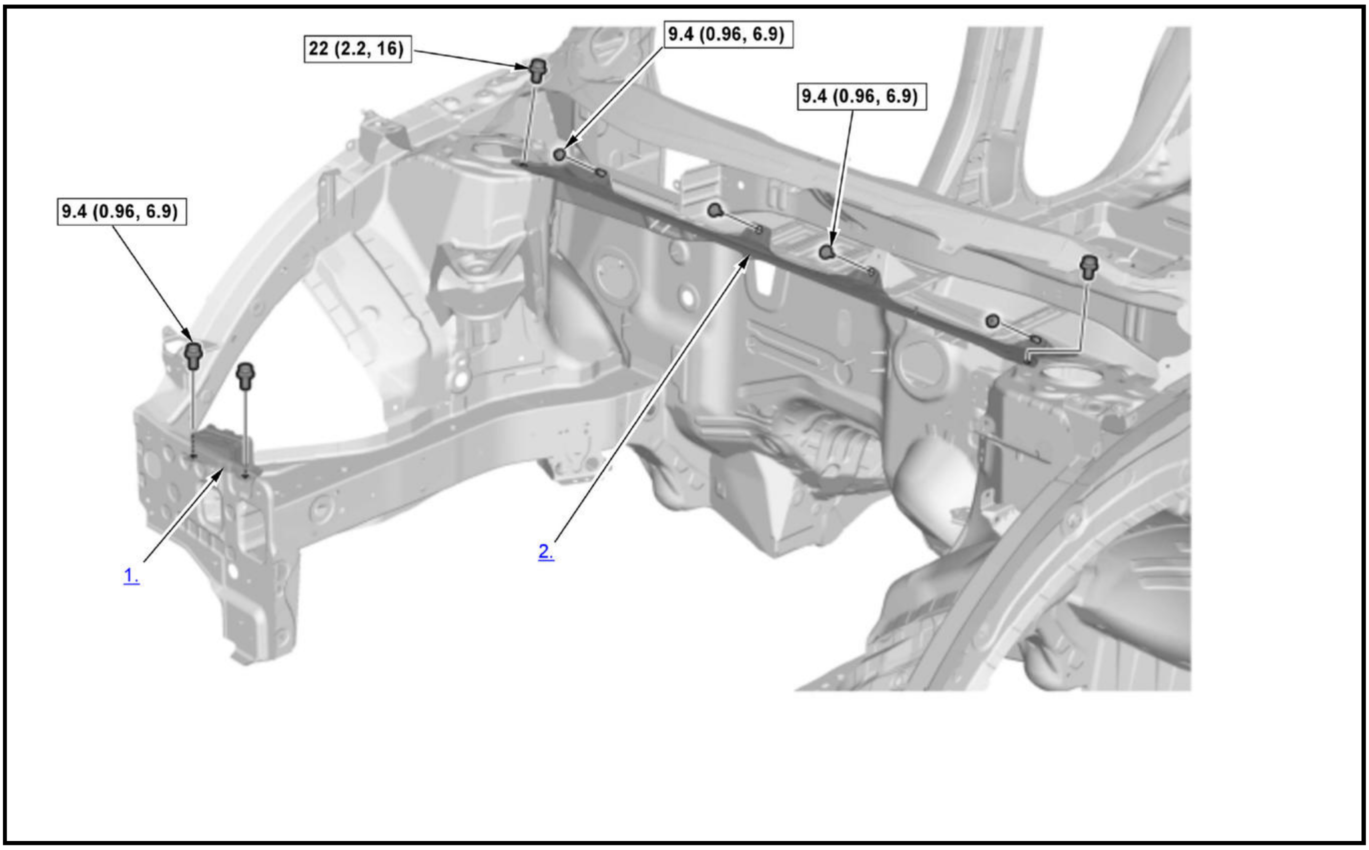
22 (2.2, 16)
9.4 (0.96, 6.9)
9.4 (0.96, 6.9)
9.4 (0.96, 6.9)
1.
2.

☐	Torque: N.m (kgf.m, lbf.ft)

2

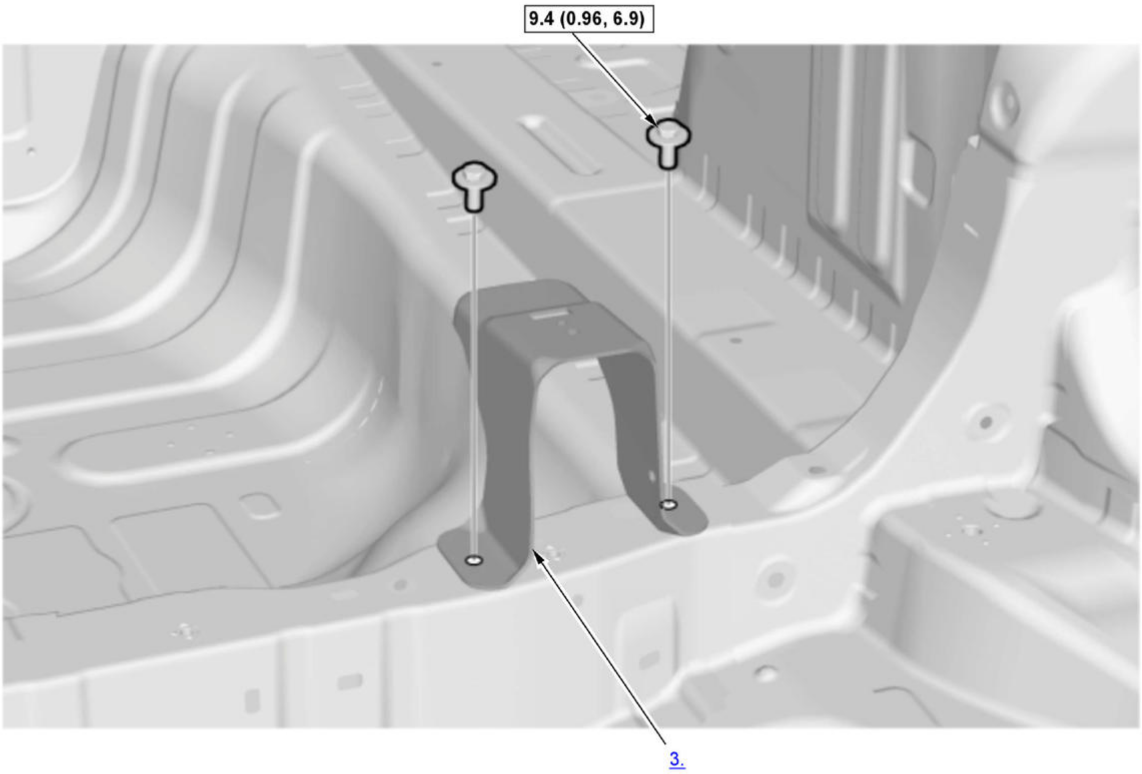

☐	Torque: N.m (kgf.m, lbf.ft)

3

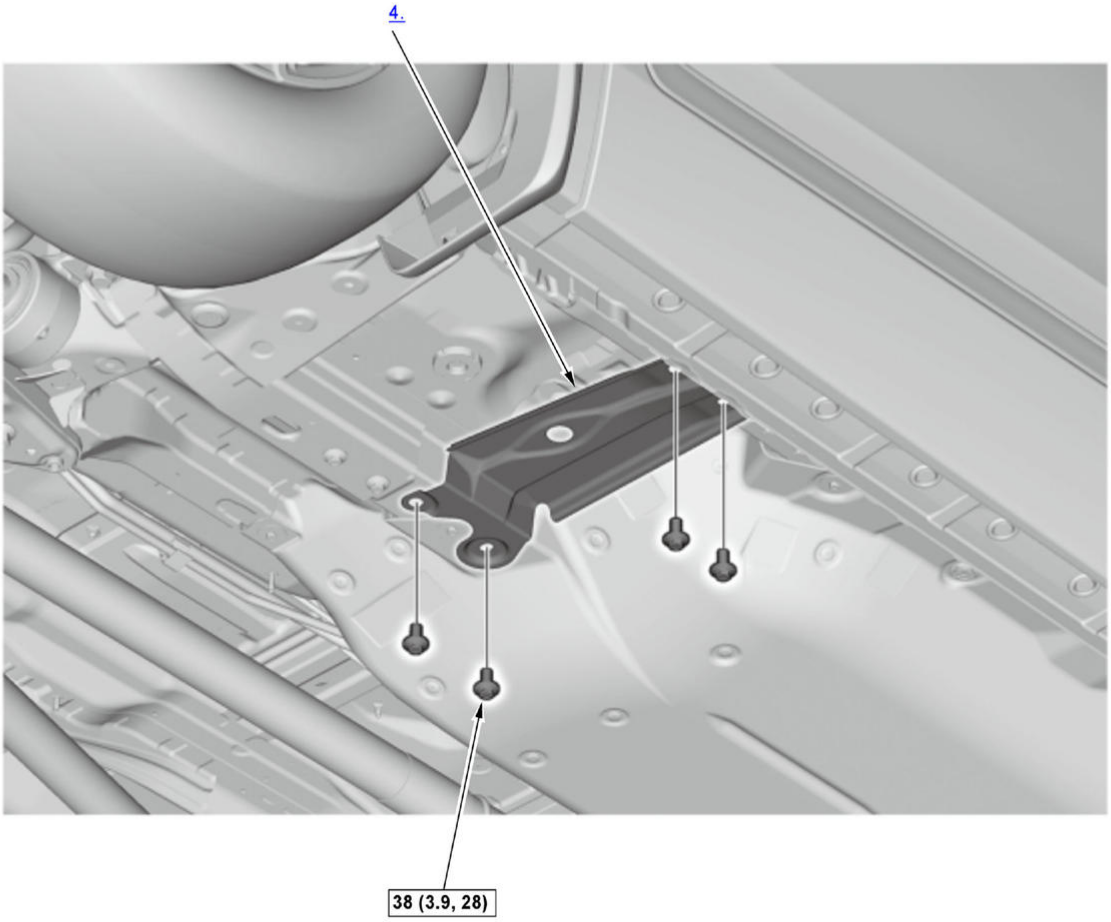

	Torque: N.m (kgf.m, lbf.ft)

1. Front Side Frame Dynamic Damper - Remove (For Some Models)
2. Under Cowl Panel - Remove
3. Rear Carpet Trim Bracket - Remove
4. Front Floor Brace - Remove

COMPONENT LOCATION INDEX

FRAME COMPONENT LOCATION INDEX

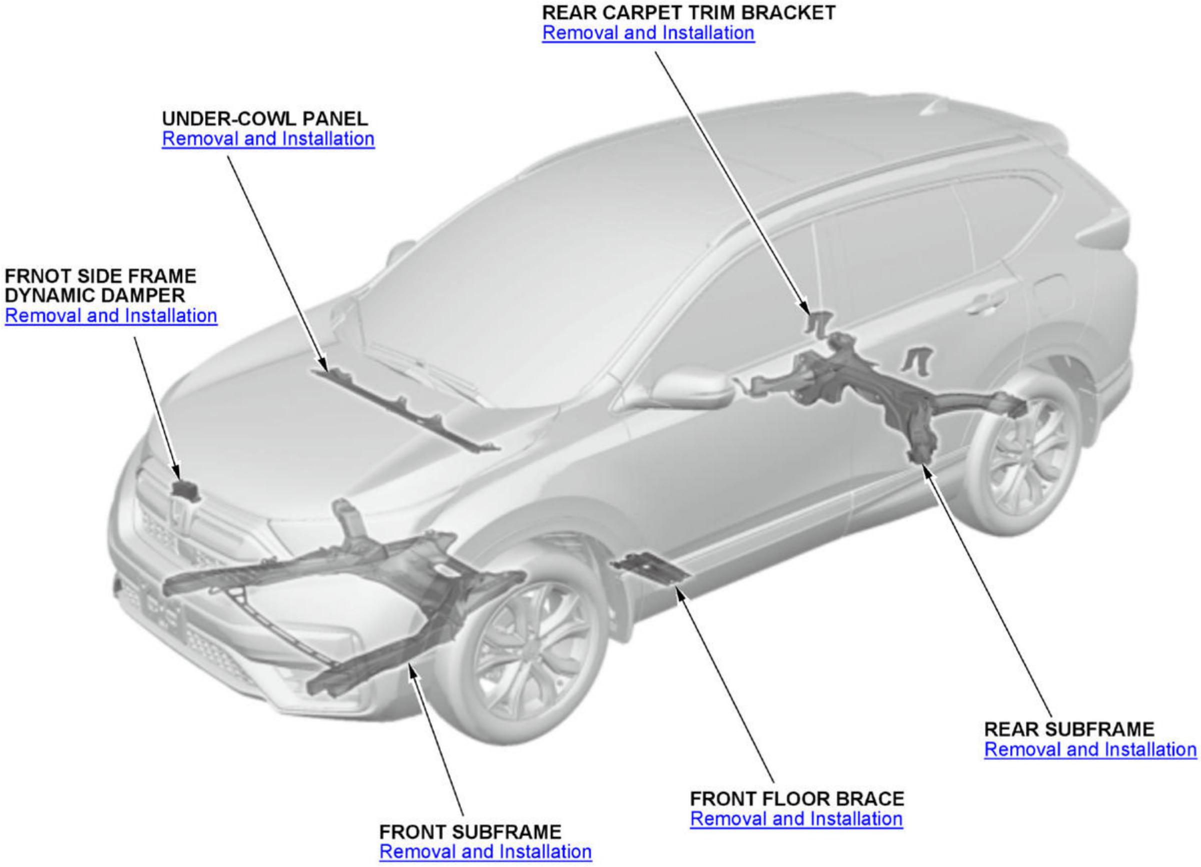
REAR CARPET TRIM BRACKET
Removal and Installation
UNDER-COWL PANEL
Removal and Installation
FRNOT SIDE FRAME
DYNAMIC DAMPER
Removal and Installation
REAR SUBFRAME
Removal and Installation
FRONT FLOOR BRACE
Removal and Installation
FRONT SUBFRAME
Removal and Installation

REMOVAL AND INSTALLATION

SUBFRAME REMOVAL AND INSTALLATION

Special Tools Required

Image	Description/Tool Number
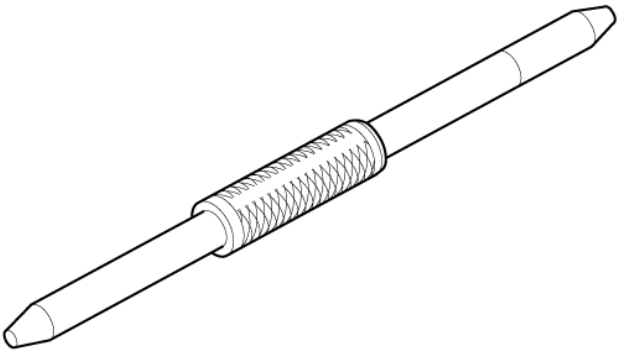	Subframe Alignment Pin 070AG-SJAA10S

Removal

NOTE: How to read the torque specifications

1. Front Subframe - Remove

   NOTE: After removing the front subframe mounting bolts, be sure to replace them with new ones.

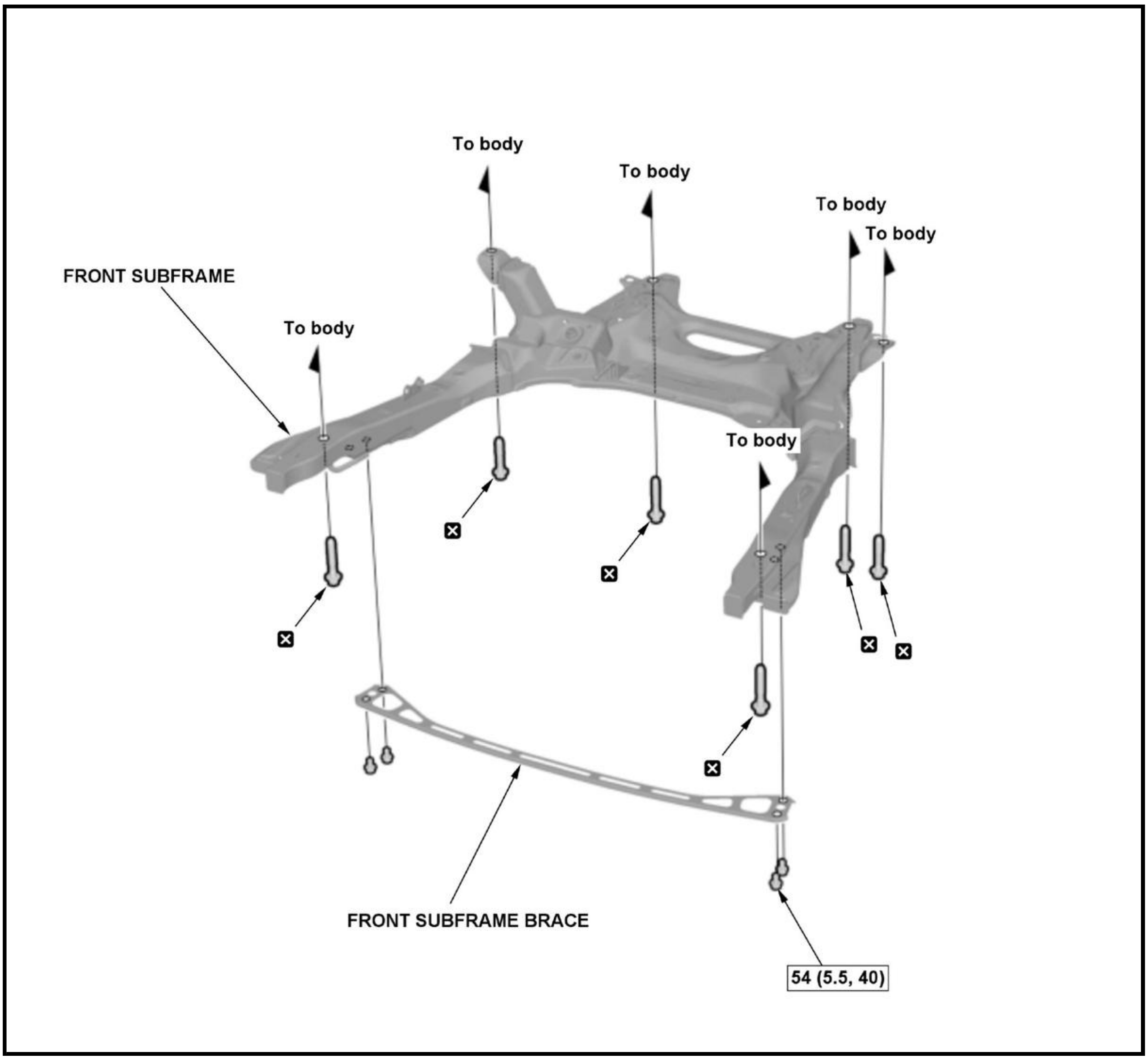
To body
To body
To body
To body
FRONT SUBFRAME
To body
To body
FRONT SUBFRAME BRACE
54 (5.5, 40)

2. Rear Subframe - Remove

NOTE: After removing the rear subframe mounting bolts, be sure to replace them with new ones.

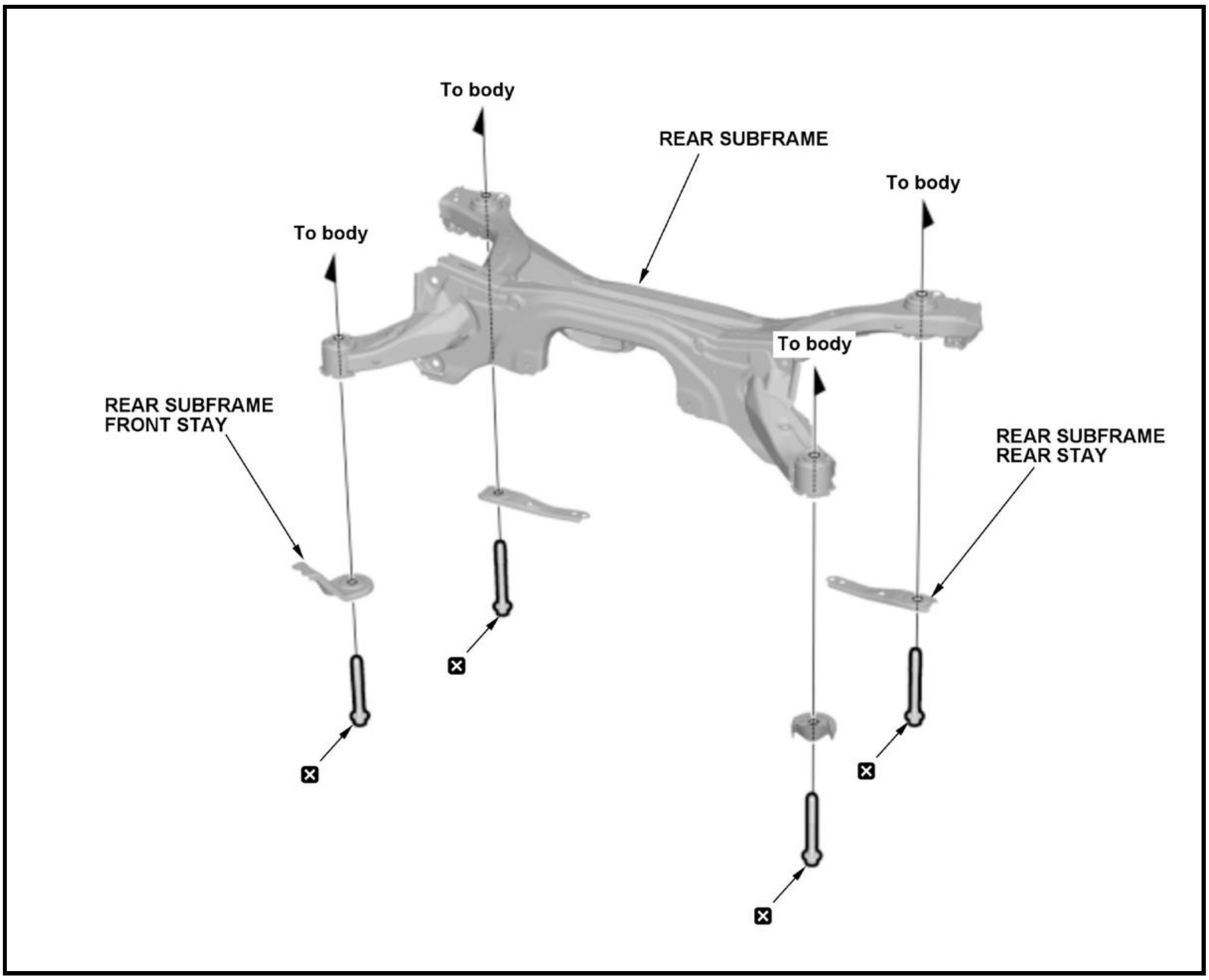

Installation

NOTE: How to read the torque specifications

1. Front Subframe - Tightening Torque

NOTE:

- Align the front subframe with the subframe alignment pin.
- Align the front subframe in the following sequence.

1. Align the front subframe (A) in the following sequence.

Lift the front subframe up to the body, and loosely install the new subframe mounting bolts (B, C).

-2. Insert the subframe alignment pin (D) through the positioning hole (E) on the right rear subframe, and into the positioning hole (F) on the body, then loosely tighten the subframe right rear mounting bolt.

-3. Insert the subframe alignment pin through the positioning hole on the left rear subframe, and into the positioning hole on the body, then loosely tighten the subframe left rear mounting bolt.

-4. Tighten the subframe mounting bolts to the specified torque in the sequence shown in illustration. Use the subframe alignment pin when tightening the rear side subframe mounting bolts.

-5. Check all of the subframe mounting bolts, and retighten if necessary.

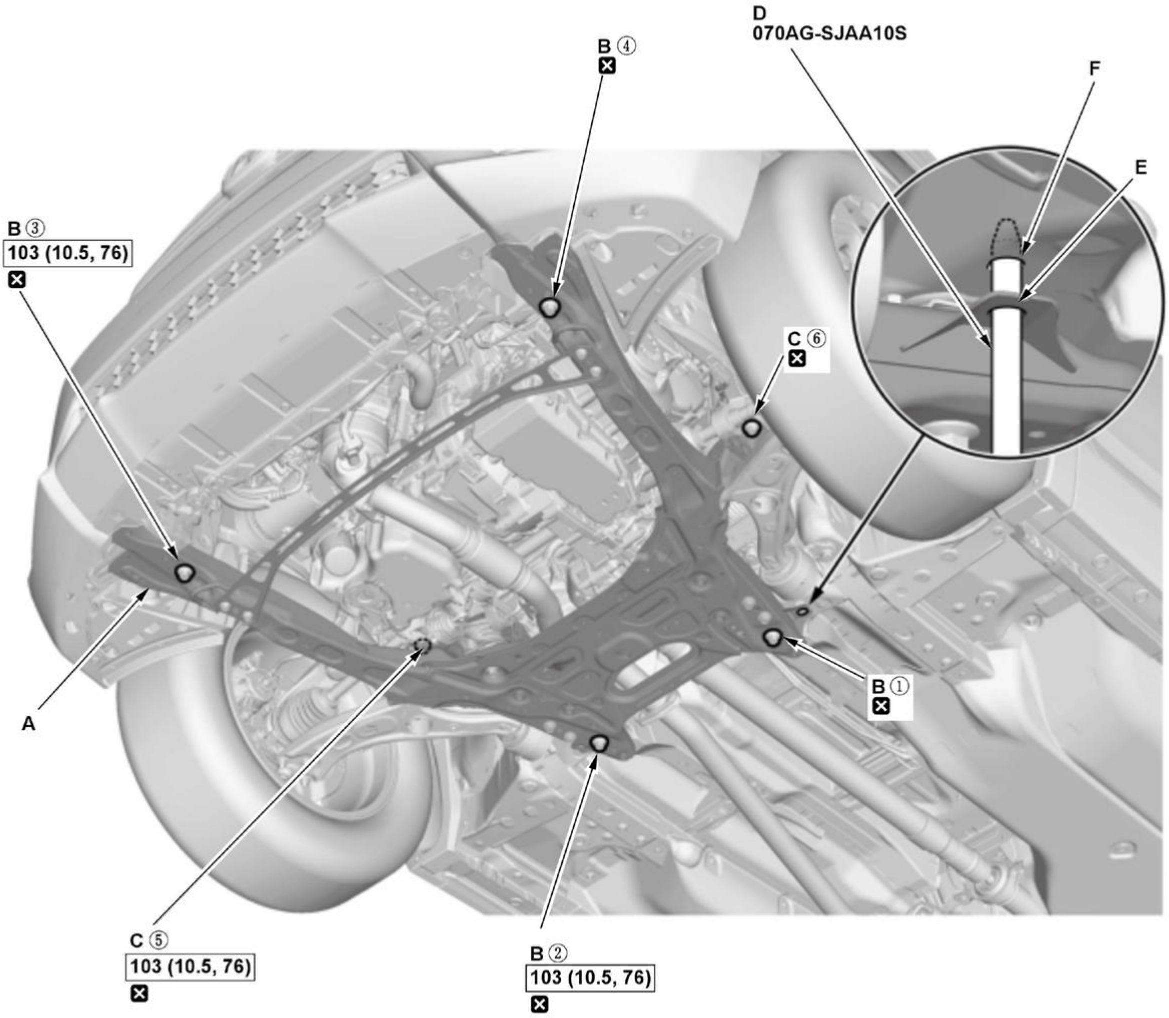
B ④
☒
D
070AG-SJAA10S
F
E
B ③
103 (10.5, 76)
☒
C ⑥
☒
A
B ①
☒
C ⑤
103 (10.5, 76)
☒
B ②
103 (10.5, 76)
☒

Fig. 1: Tightening Subframe Mounting Bolts In Sequence With Torque Specifications
Courtesy of HONDA, U.S.A., INC.

   2. After reinstalling all removed parts, **check and adjust the front wheel alignment** .

2. Rear Subframe - Tightening Torque

   NOTE: When installing, align both positioning holes on the rear subframe with the positioning holes on the body using the subframe alignment pin as a guide. First align the right positioning hole, and next align the left positioning hole.

   1. Install the rear subframe (A).

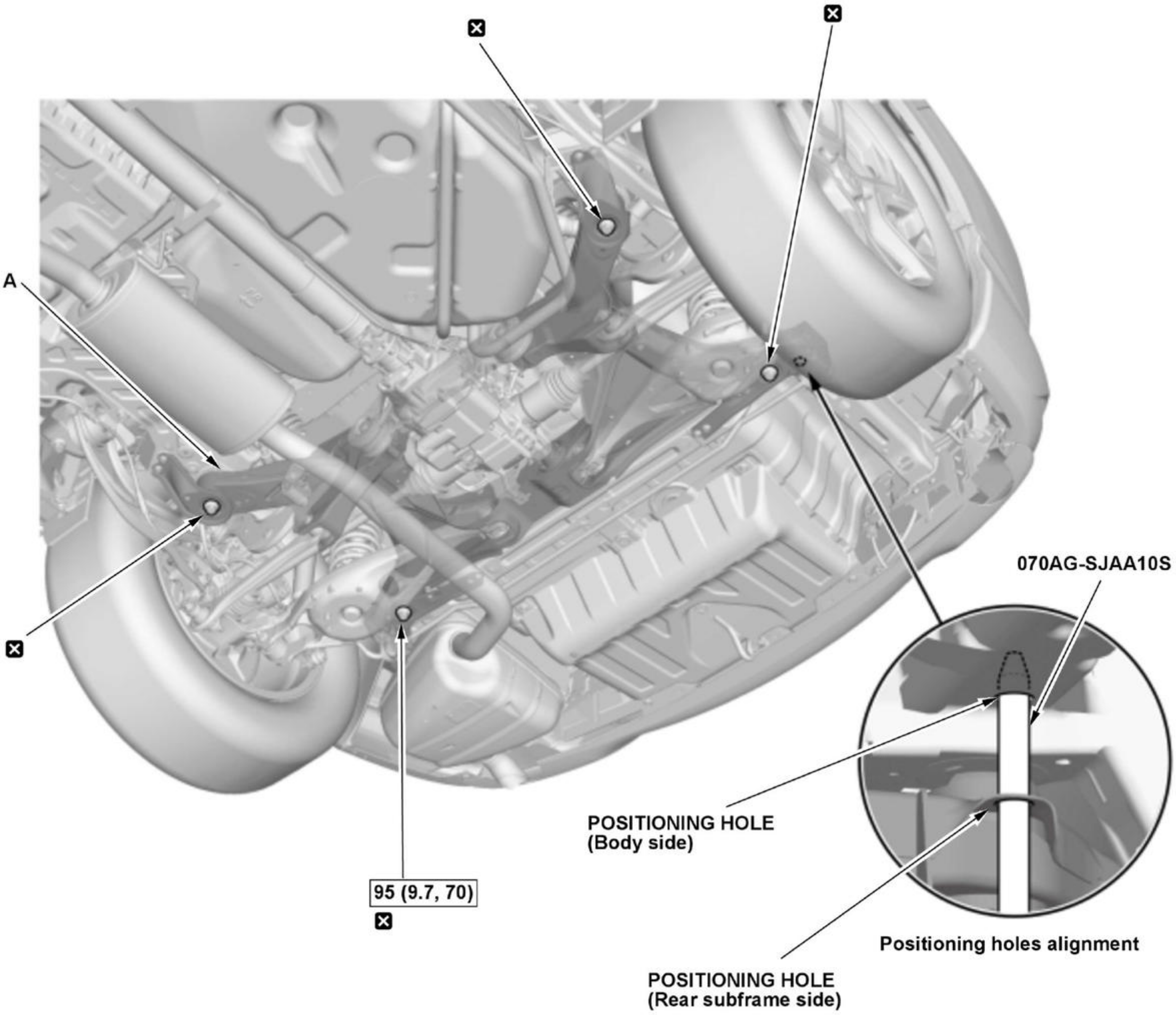
☒
☒
A
☒
95 (9.7, 70)
☒
070AG-SJAA10S
POSITIONING HOLE
(Body side)
Positioning holes alignment
POSITIONING HOLE
(Rear subframe side)

Fig. 2: Tightening Rear Subframe Bolts With Torque Specifications
Courtesy of HONDA, U.S.A., INC.

2. After reinstalling all removed parts, **check and adjust the rear wheel alignment** .

TROUBLESHOOTING

DTC B1175

DTC B1175 : Fuel level sensor (Fuel gauge sending unit) circuit malfunction

NOTE: If you are troubleshooting multiple DTCs, be sure to follow the instructions in B-CAN System Diagnosis Test Mode A .

DTC Description	DTC
B1175 Fuel level sensor (Fuel gauge sending unit) circuit malfunction	B

DTC (Gauge Control Module)

1. Problem verification

   -1. Clear the DTCs with the HDS.

   -2. Turn the vehicle to the OFF (LOCK) mode and then the ON mode.

   -3. Wait for at least 30 seconds.

   -4. Check for DTCs with the HDS.

DTC Description	DTC
B1175 Fuel level sensor (Fuel gauge sending unit) circuit malfunction	B

   Is DTC B1175 indicated?

   YES

   Go to step 2.

   NO

   Intermittent failure, the system is OK at this time. Check for poor connections or loose terminals.

2. Open wire check (FUEL GAUGE lines)

   -1. Turn the vehicle to the OFF (LOCK) mode.

   -2. Disconnect the following connector.

Gauge control module connector A (32P) Fuel tank unit 4P connector

   -3. Check for continuity between test points 1 and 2.

Test condition	Vehicle OFF (LOCK) mode Gauge control module connector A (32P): disconnected Fuel tank unit 4P connector: disconnected
Test point 1	Gauge control module connector A (32P) No. 22
Test point 2	Fuel tank unit 4P connector (female terminals) No. 2: ①

Test point 1	Gauge control module connector A (32P) No. 21
Test point 2	Fuel tank unit 4P connector (female terminals) No. 4: ①

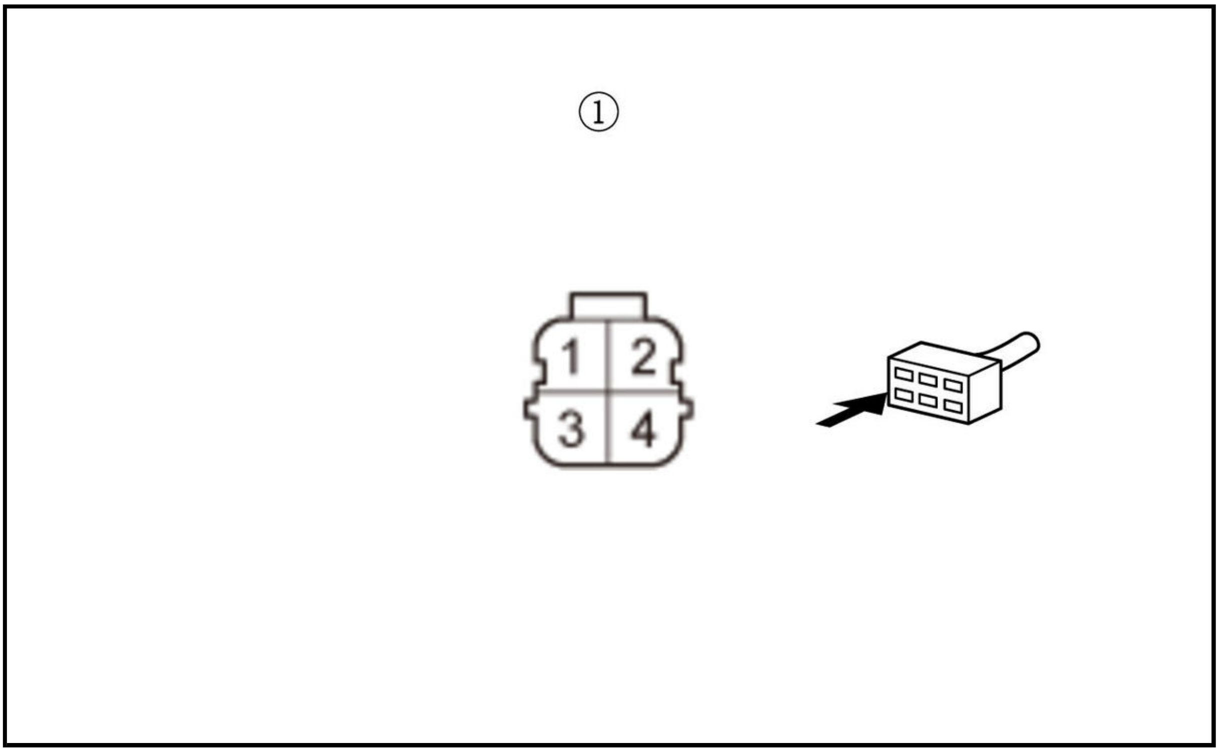

Is there continuity?

YES

The FUEL GAUGE wires are OK. Go to step 3.

NO

Repair an open or high resistance in the wire(s).

3. Fuel gauge sending unit check

-1. **Do the fuel gauge sending unit test** .

Is the unit OK?

YES

Replace the gauge control module .

NO

Replace the fuel gauge sending unit .

DTC B1176

DTC B1176 : Fuel level sensor (Fuel gauge sending unit) circuit short

NOTE: If you are troubleshooting multiple DTCs, be sure to follow the instructions in **B-CAN System Diagnosis Test Mode A** .

DTC Description	DTC
B1176 Fuel level sensor (Fuel gauge sending unit) circuit short	B

DTC (Gauge Control Module)

1. Problem verification

   -1. Clear the DTCs with the HDS.

   -2. Turn the vehicle to the OFF (LOCK) mode and then the ON mode.

   -3. Wait for at least 30 seconds.

   -4. Check for DTCs with the HDS.

DTC Description	DTC
B1176 Fuel level sensor (Fuel gauge sending unit) circuit short	B

   Is DTC B1176 indicated?

   YES

   Go to step 2.

   NO

   Intermittent failure, the system is OK at this time. Check for poor connections or loose terminals.

2. Short wire check (FUEL GAUGE+ line)

   -1. Turn the vehicle to the OFF (LOCK) mode.

   -2. Disconnect the following connector.

Gauge control module connector A (32P) Fuel tank unit 4P connector

   -3. Check for continuity between test points 1 and 2.

Test condition	Vehicle OFF (LOCK) mode Gauge control module connector A (32P): disconnected Fuel tank unit 4P connector: disconnected
Test point 1	Gauge control module connector A (32P) No. 22
Test point 2	Body ground

   Is there continuity?

   YES

   Repair a short to ground in the wire.

   NO

   The FUEL GAUGE+ wire is OK. Go to step 3.

3. Fuel gauge sending unit check

   -1. Do the fuel gauge sending unit test .

   Is the unit OK?

   YES

   Replace the gauge control module .

NO

Replace the fuel gauge sending unit .

DTC B1195

DTC B1195 : Gauge control module lost communication with Audio Remote Switch (LIN bus connected)

NOTE: If you are troubleshooting multiple DTCs, be sure to follow the instructions in B-CAN System Diagnosis Test Mode A .

DTC Description	DTC
B1195 Gauge control module lost communication with Audio Remote Switch (LIN bus connected)	B

DTC (Gauge Control Module)

1. Problem verification

   -1. Clear the DTCs with the HDS.

   -2. Turn the vehicle to the OFF (LOCK) mode and then the ON mode.

   -3. Wait for at least 4 seconds.

   -4. Check for DTCs with the HDS.

DTC Description	DTC
B1195 Gauge control module lost communication with Audio Remote Switch (LIN bus connected)	B

   Is DTC B1195 indicated?

   YES

   Go to step 2.

   NO

   Intermittent failure, the system is OK at this time. Check for loose or poor connections.

2. Fuse check

   -1. Check the following fuse.

Fuse	No. D24 (5 A)
Location	Under-dash fuse/relay box

   Is the fuse OK?

   YES

   Go to step 3.

   NO

   Replace the fuse. If the fuse blows again, repair a short to ground in the +B wire.

3. Determine possible failure area (audio remote-HFL switch power and ground, LIN (START SW)/STRG SW LIN line)

   -1. Turn the vehicle to the OFF (LOCK) mode.

   -2. Disconnect the following connector.

Audio remote-HFL switch 12P connector

   -3. Measure the voltage between test points 1 and 2.

Test condition	Vehicle OFF (LOCK) mode Audio remote-HFL switch 12P connector: disconnected
Test point 1	**Audio remote-HFL switch 12P connector No. 7**
Test point 2	**Audio remote-HFL switch 12P connector No. 10**

   Is there battery voltage?

   YES

   Go to step 5.

   NO

   Go to step 4.

4. Open wire check (+B line)

   -1. Check for continuity between test points 1 and 2.

Test condition	Vehicle OFF (LOCK) mode Audio remote-HFL switch 12P connector: disconnected

Test point 1	**Audio remote-HFL switch 12P connector No. 7**
Test point 2	Body ground

   Is there battery voltage?

   YES

   Repair an open or high resistance in the ground wire or poor ground (G401).

   NO

   Repair an open or high resistance in the wire.

5. Shorted wire check (LIN (START SW)/STRG SW LIN line)

   -1. Disconnect the following connector.

Gauge control module connector A (32P)

   -2. Check for continuity between test points 1 and 2.

Test condition	Vehicle OFF (LOCK) mode Gauge control module connector A (32P): disconnected Audio remote-HFL switch 12P connector: disconnected
Test point 1	**Audio remote-HFL switch 12P connector No. 12**
Test point 2	Body ground

   Is there continuity?

YES

Repair a short to ground in the wire.

NO

The LIN (START SW)/STRG SW LIN wire is not shorted. Go to step 6.

6. Open wire check (LIN (START SW)/STRG SW LIN line)

-1. Check for continuity between test points 1 and 2.

Test condition	Vehicle OFF (LOCK) mode Gauge control module connector A (32P): disconnected Audio remote-HFL switch 12P connector: disconnected
Test point 1	**Gauge control module connector A (32P) No. 23**
Test point 2	**Audio remote-HFL switch 12P connector No. 12**

Is there continuity?

YES

The LIN (START SW)/STRG SW LIN wire is OK. **Replace the audio remote-HFL switch** . If the DTC is still present, **replace the gauge control module** .

NO

An open or poor connection in the wire.

DTC U0029 (GAUGE CONTROL MODULE)

DTC U0029 : F-CAN communication line error

NOTE: If you are troubleshooting multiple DTCs, be sure to follow the instructions in **B-CAN System Diagnosis Test Mode A** .

DTC Description	DTC
U0029 F-CAN communication line error	B

DTC (Gauge Control Module)

1. Problem verification

-1. Clear the DTCs with the HDS.

-2. Turn the vehicle to the OFF (LOCK) mode and then the ON mode.

-3. Wait for at least 6 seconds.

-4. Check for DTCs with the HDS.

DTC Description	DTC
U0029 F-CAN communication line error	B

Is DTC U0029 indicated?

YES: with CAN gateway

Go to the troubleshooting for CAN gateway system DTC(s) .

YES: without CAN gateway

Go to F-CAN Circuit Troubleshooting .

NO

Intermittent failure, the system is OK at this time.

DTC U0100, U0101, U0104, U0114, U0122, U0128, U0131, U0151, U129C (GAUGE CONTROL MODULE)

DTC U0100 : Gauge control module lost communication with ENG/AT **DTC U0101** : Gauge control module lost communication with AT **DTC U0104** : Gauge Control Module Lost Communication With Driving Support System Control Unit **DTC U0114** : Gauge control module lost communication with All Wheel Drive Control Module **DTC U0122** : Gauge control module lost communication with VSA modulator-control unit **DTC U0128** : Gauge control module lost communication with EPB **DTC U0131** : Gauge control module lost communication with EPS Unit **DTC U0151** : Gauge control module lost communication with SRS unit **DTC U129C** : Gauge control module lost communication with multi purpose camera unit

NOTE:

- If you are troubleshooting multiple DTCs, be sure to follow the instructions in B-CAN System Diagnosis Test Mode A .
- Refer to the DTC code shown on the display, and then inspect the connectors and terminals based on the instructions in the table below.
- The DTC may be stored due to the grounding failure or the power source failure at the transmitting control unit (the grounding inspection and the power source inspection on each control unit are required prior to this checking process).

DTC Description	DTC
U0100 Gauge control module lost communication with ENG/AT	B
U0101 Gauge control module lost communication with AT	B
U0104 Gauge Control Module Lost Communication With Driving Support System Control Unit	B
U0114 Gauge control module lost communication with All Wheel Drive Control Module	B
U0122 Gauge control module lost communication with VSA modulator-control unit	B
U0128 Gauge control module lost communication with EPB	B
U0131 Gauge control module lost communication with EPS Unit	B
U0151 Gauge control module lost communication with SRS unit	B
U129C Gauge control module lost communication with multi purpose camera unit	B

DTC (Gauge Control Module)

1. Problem verification

-1. Clear the DTCs with the HDS.

-2. Turn the vehicle to the OFF (LOCK) mode and then the ON mode.

-3. Wait for at least 6 seconds.

-4. Check for DTCs with the HDS.

DTC Description	DTC
U0100 Gauge control module lost communication with ENG/AT	B
U0101 Gauge control module lost communication with AT	B
U0104 Gauge Control Module Lost Communication With Driving Support System Control Unit	B
U0114 Gauge control module lost communication with All Wheel Drive Control Module	B
U0122 Gauge control module lost communication with VSA modulator-control unit	B
U0128 Gauge control module lost communication with EPB	B
U0131 Gauge control module lost communication with EPS Unit	B
U0151 Gauge control module lost communication with SRS unit	B
U129C Gauge control module lost communication with multi purpose camera unit	B

Are any DTCs indicated?

YES: with CAN gateway

Go to step 2.

YES: without CAN gateway

Go to step 8.

NO

Intermittent failure, the system is OK at this time. Check for poor connections or loose terminals.

2. CAN gateway system DTC check

-1. Check for CAN gateway system DTCs with the HDS.

DTC Description	DTC
U0029-00 CAN Gateway F-CAN ch A Bus Off	B
U0047-00 CAN Gateway F-CAN ch B Bus Off	B
U3000-49 CAN Gateway Internal Failure	B

Is DTC U0029-00, U0047-00, and/or U3000-49 indicated?

YES

Go to the troubleshooting for CAN gateway system DTC(s) .

NO

Go to step 3.

3. F-CAN circuit communication check

-1. Select the FUNCTION TEST in the CAN gateway with the HDS, then select the F-CAN Bus Connected Unit Check.

F-CAN Bus Connected Unit Check

Does the gauge control module detect the CAN gateway Bus channels A?

Bus A is Not Available

Go to step 4.

Bus A is Available

Go to step 5.

4. Open wire check (F-CAN A lines)

-1. Turn the vehicle to the OFF (LOCK) mode.

-2. Disconnect the following connectors.

CAN gateway 12P connector (12P connector type) CAN gateway 16P connector (16P connector type) Gauge control module connector A (32P)

-3. Measure the resistance between test points 1 and 2.

Test condition	Vehicle OFF (LOCK) mode CAN gateway 12P connector (12P connector type): disconnected CAN gateway 16P connector (16P connector type): disconnected Gauge control module connector A (32P): disconnected
Test point 1	CAN gateway 12P connector (female terminals) (12P connector type) No. 3: ① CAN gateway 16P connector (female terminals) (16P connector type) No. 3: ②
Test point 2	**Gauge control module connector A (32P) No. 19**

Test point 1	CAN gateway 12P connector (female terminals) (12P connector type) No. 9: ① CAN gateway 16P connector (female terminals) (16P connector type) No. 11: ②
Test point 2	**Gauge control module connector A (32P) No. 20**

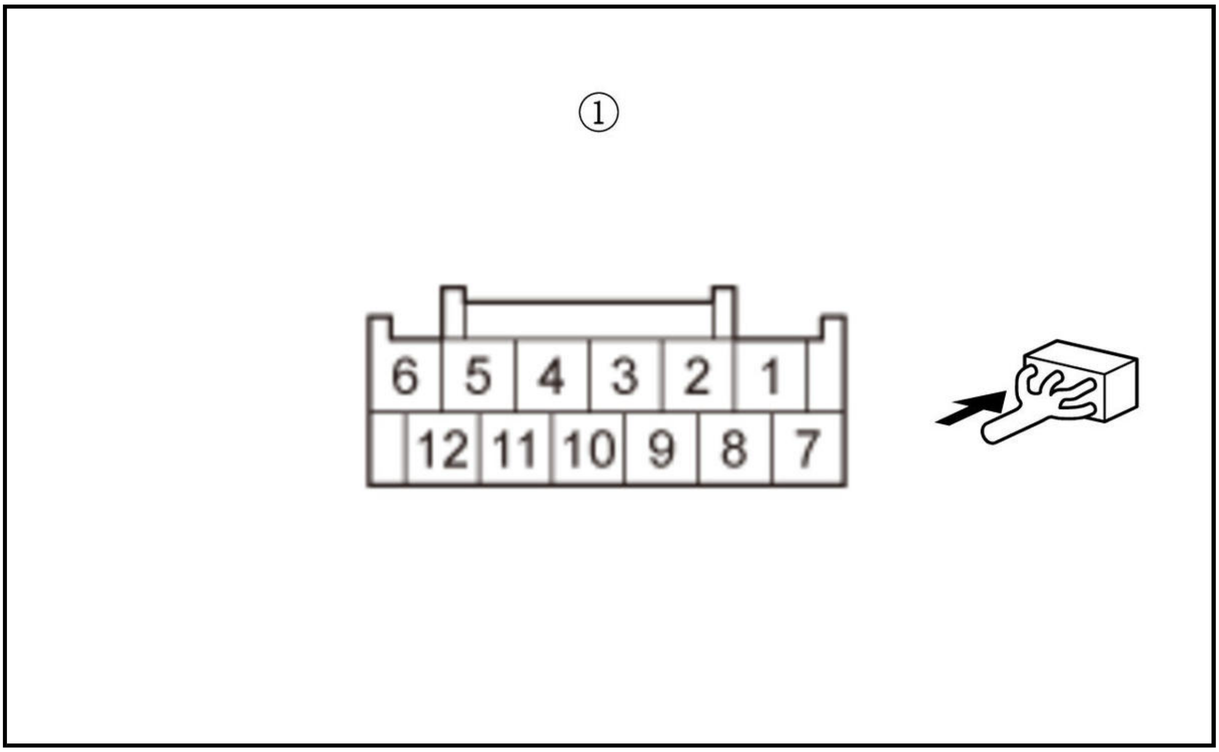

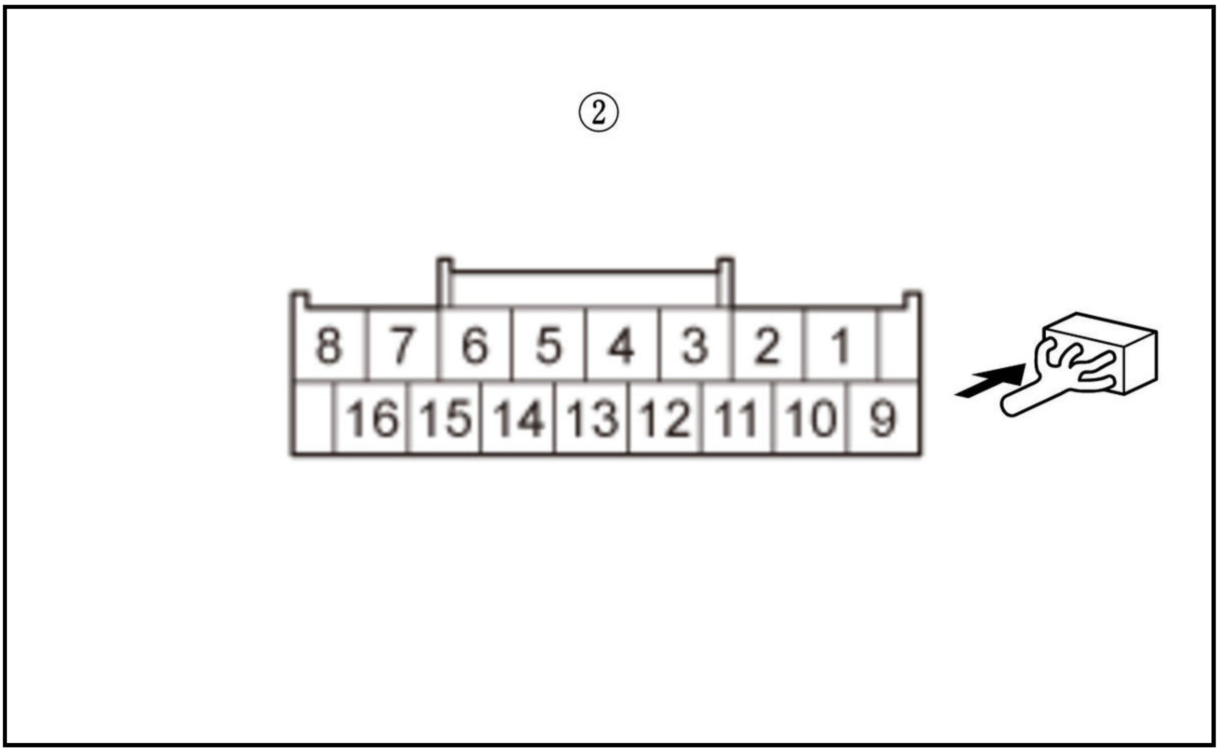

Is there 1.0 Ω or less?

YES

The F-CAN A_H and F-CAN A_L wires are OK. **Replace the gauge control module** .

NO

Repair an open in F-CAN A_H or F-CAN A_L wire.

5. F-CAN circuit communication check (Transmitting control unit)

-1. Select the FUNCTION TEST in the CAN gateway with the HDS, then select the F-CAN Bus Connected Unit Check.

F-CAN Bus Connected Unit Check

According to the detected DTC on the following table, make sure that the transmitting control unit detects the CAN gateway Bus channel(s) normally.

DTC	Transmitting control unit	Detected CAN gateway Bus channel(s) at normal
U0100	PCM	A, B
U0101	TCM	A
U0104	Millimeter wave radar	B
U0114	Real time AWD control unit	B
U0122	VSA modulator-control unit	A, B
U0128	VSA modulator-control unit	A, B
U0131	EPS control unit	B
U0151	SRS unit	B
U129C	Multipurpose camera unit	B

Is it detected normally?

Detected normal

Intermittent failure, the system is OK at this time. Check for poor connections or loose terminals at the transmitting control unit and the CAN gateway.

U0100: PCM is Not Available for Bus A

Go to step 6.

U0100: PCM is Not Available for Bus B

Go to step 7.

U0101: TCM is Not Available for Bus A

Go to step 6.

U0104: Millimeter wave radar is Not Available for Bus B

Go to step 7.

U0114: Real time AWD control unit is Not Available for Bus B

Go to step 7.

U0122: VSA modulator-control unit is Not Available for Bus A

Go to step 6.

U0122: VSA modulator-control unit is Not Available for Bus B

Go to step 7.

U0128: VSA modulator-control unit is Not Available for Bus A

Go to step 6.

U0128: VSA modulator-control unit is Not Available for Bus B

Go to step 7.

U0131: EPS control unit is Not Available for Bus B

Go to step 7.

U0151: SRS unit is Not Available for Bus B

Go to step 7.

U129C: Multipurpose camera unit is Not Available for Bus B

Go to step 7.

6. Open wire check (F-CAN A lines)

-1. Turn the vehicle to the OFF (LOCK) mode.

-2. U0100, U0101: Jump the SCS line with the HDS, and wait more than 1 minute.

SCS short

-3. According to the detected DTC on the following table, disconnect the transmitting control unit connector(s).

DTC	Connector
-	CAN gateway 12P connector (12P connector type) CAN gateway 16P connector (16P connector type)
U0100	PCM connector A (50P)
U0101	TCM 50P connector
U0122	VSA modulator-control unit 46P connector
U0128	VSA modulator-control unit 46P connector

-4. Measure the resistance between test points 1 and 2.

Test condition	Vehicle OFF (LOCK) mode CAN gateway 12P connector (12P connector type): disconnected CAN gateway 16P connector (16P connector type): disconnected Transmitting control unit connector(s) for indicated DTCs: disconnected

CAN gateway 12P connector type

DTC	Circuit name	Test point 1 (Receiving control unit)		Test point 2 (Transmitting control unit)	
		Connector	Terminal	Connector	Terminal
U0100	F-CAN A_H	CAN gateway 12P connector (female terminals): ①	No. 3	PCM connector A (50P)	No. 37
	F-CAN A_L		No. 9		No. 36
U0101	F-CAN A_H	CAN gateway 12P connector (female terminals): ①	No. 3	TCM 50P connector	No. 3
	F-CAN A_L		No. 9		No. 11
U0122	F-CAN A_H	CAN gateway 12P connector (female terminals): ①	No. 3	VSA modulator-control unit 46P connector	No. 40
	F-CAN A_L		No. 9		No. 28
U0128	F-CAN A_H	CAN gateway 12P connector (female terminals): ①	No. 3	VSA modulator-control unit 46P connector	No. 40
	F-CAN A_L		No. 9		No. 28

CAN gateway 16P connector type

DTC	Circuit name	Test point 1 (Receiving control unit)		Test point 2 (Transmitting control unit)	
		Connector	Terminal	Connector	Terminal
U0100	F-CAN A_H	CAN gateway 16P connector (female terminals): ②	No. 3	PCM connector A (50P)	No. 37
	F-CAN A_L		No. 11		No. 36
U0101	F-CAN A_H	CAN gateway 16P connector (female terminals): ②	No. 3	TCM 50P connector	No. 3
	F-CAN A_L		No. 11		No. 11
U0122	F-CAN A_H	CAN gateway 16P connector (female terminals): ②	No. 3	VSA modulator-control unit 46P connector	No. 40
	F-CAN A_L		No. 11		No. 28
U0128	F-CAN A_H	CAN gateway 16P connector (female	No. 3	VSA modulator-control unit 46P	No. 40

DTC	Circuit name	Test point 1 (Receiving control unit)		Test point 2 (Transmitting control unit)	
		Connector	Terminal	Connector	Terminal
	F-CAN A_L	terminals): ②	No. 11	connector	No. 28

①

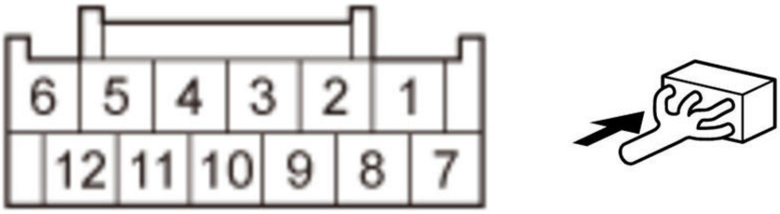
6
5
4
3
2
1
12
11
10
9
8
7

②

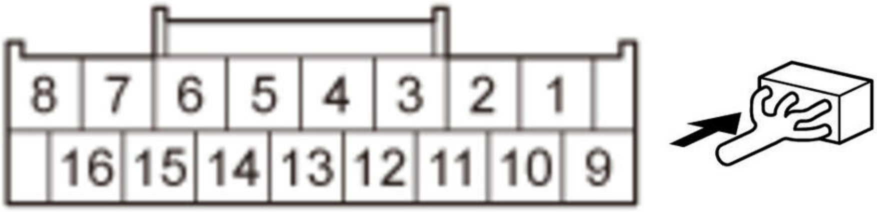
8
7
6
5
4
3
2
1
16
15
14
13
12
11
10
9

Is there 1.0 Ω or less?

YES

The F-CAN A_H wire and the F-CAN A_L wire are OK. According to the detected DTC on the following chart replace the correspond control unit.

DTC	Operation for transmitting control unit
U0100	PCM
U0101	TCM
U0122	VSA modulator-control unit
U0128	VSA modulator-control unit

NO

Repair an open in F-CAN A_H or F-CAN A_L wire.

7. Open wire check (F-CAN B lines)

-1. Turn the vehicle to the OFF (LOCK) mode.

-2. U0100: Jump the SCS line with the HDS, and wait more than 1 minute.

SCS short

U0151: Do the 12 volt battery terminal disconnection procedure , and wait for at least 3 minutes.

-3. According to the detected DTC on the following table, disconnect the transmitting control unit connector(s).

DTC	Connector
-	CAN gateway 12P connector (12P connector type) CAN gateway 16P connector (16P connector type)
U0100	PCM connector A (50P)
U0104	Millimeter wave radar 8P connector
U0114	Real time AWD control unit 24P connector
U0122	VSA modulator-control unit 46P connector
U0128	VSA modulator-control unit 46P connector
U0131	EPS control unit connector B (6P)
U0151	SRS unit connector A (39P)

DTC	Connector
U129C	Multipurpose camera unit 12P connector

-4. Measure the resistance between test points 1 and 2.

Test condition	Vehicle OFF (LOCK) mode CAN gateway 12P connector (12P connector type): disconnected CAN gateway 16P connector (16P connector type): disconnected Transmitting control unit connector(s) for indicated DTCs: disconnected

CAN gateway 12P connector type

DTC	Circuit name	Test point 1 (Receiving control unit)		Test point 2 (Transmitting control unit)	
		Connector	Terminal	Connector	Terminal
U0100	F-CAN B_H	CAN gateway 12P connector (female terminals): ①	No. 12	PCM connector A (50P)	No. 39
	F-CAN B_L		No. 5		No. 38
U0104	F-CAN B_H	CAN gateway 12P connector (female terminals): ①	No. 12	Millimeter wave radar 8P connector	No. 7
	F-CAN B_L		No. 5		No. 6

DTC	Circuit name	Test point 1 (Receiving control unit)		Test point 2 (Transmitting control unit)	
		Connector	Terminal	Connector	Terminal
U0114	F-CAN B_H	CAN gateway 12P connector (female terminals): ①	No. 12	Real time AWD control unit 24P connector	No. 14
	F-CAN B_L		No. 5		No. 24
U0122	F-CAN B_H	CAN gateway 12P connector (female terminals): ①	No. 12	VSA modulator-control unit 46P connector	No. 46
	F-CAN B_L		No. 5		No. 34
U0128	F-CAN B_H	CAN gateway 12P connector (female terminals): ①	No. 12	VSA modulator-control unit 46P connector	No. 46
	F-CAN B_L		No. 5		No. 34
U0131	F-CAN B_H	CAN gateway 12P connector (female terminals): ①	No. 12	EPS control unit connector B (6P)	No. 3
	F-CAN B_L		No. 5		No. 1
U0151	F-CAN B_H	CAN gateway 12P connector (female terminals): ①	No. 12	SRS unit connector A (39P)	No. 34
	F-CAN B_L		No. 5		No. 35
U129C	F-CAN B_H	CAN gateway 12P connector (female terminals): ①	No. 12	Multipurpose camera unit 12P connector	No. 11
	F-CAN B_L		No. 5		No. 5

CAN gateway 12P connector type

DTC	Circuit name	Test point 1 (Receiving control unit)		Test point 2 (Transmitting control unit)	
		Connector	Terminal	Connector	Terminal
U0100	F-CAN B_H	CAN gateway 16P connector (female terminals): ②	No. 6	PCM connector A (50P)	No. 39
	F-CAN B_L		No. 14		No. 38
U0104	F-CAN B_H	CAN gateway 16P connector (female terminals): ②	No. 6	Millimeter wave radar 8P connector	No. 7
	F-CAN B_L		No. 14		No. 6
U0114	F-CAN B_H	CAN gateway 16P connector (female terminals): ②	No. 6	Real time AWD control unit 24P connector	No. 14
	F-CAN B_L		No. 14		No. 24
U0122	F-CAN B_H	CAN gateway 16P connector (female terminals): ②	No. 6	VSA modulator-control unit 46P connector	No. 46
	F-CAN B_L		No. 14		No. 34
U0128	F-CAN B_H	CAN gateway 16P connector (female terminals): ②	No. 6	VSA modulator-control unit 46P connector	No. 46
	F-CAN B_L		No. 14		No. 34
U0131	F-CAN B_H	CAN gateway 16P connector (female	No. 6	EPS control unit connector B (6P)	No. 3

DTC	Circuit name	Test point 1 (Receiving control unit)		Test point 2 (Transmitting control unit)	
		Connector	Terminal	Connector	Terminal
	F-CAN B_L	terminals): ②	No. 14		No. 1
U0151	F-CAN B_H	CAN gateway 16P connector (female terminals): ②	No. 6	SRS unit connector A (39P)	No. 34
	F-CAN B_L		No. 14		No. 35
U129C	F-CAN B_H	CAN gateway 16P connector (female terminals): ②	No. 6	Multipurpose camera unit 12P connector	No. 11
	F-CAN B_L		No. 14		No. 5

①

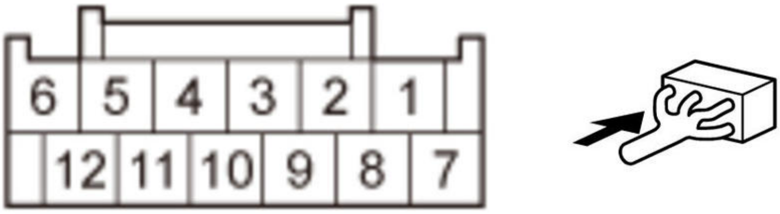
6
5
4
3
2
1
12
11
10
9
8
7

②

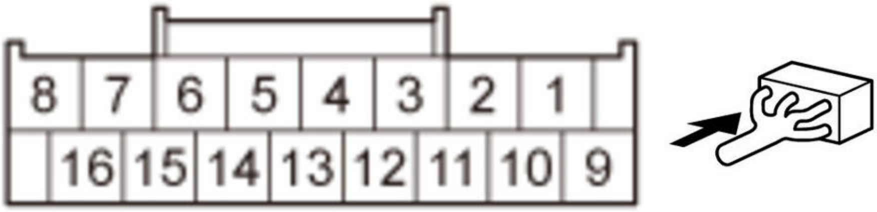
8
7
6
5
4
3
2
1
16
15
14
13
12
11
10
9

Is there 1.0 Ω or less?

YES

The F-CAN B_H wire and the F-CAN B_L wire are OK.According to the detected DTC on the following table replace the correspond control unit.

DTC	Operation for transmitting control unit
U0100	**PCM**
U0104	**Millimeter wave radar**
U0114	**Real time AWD control unit**
U0122	**VSA modulator-control unit**
U0128	**VSA modulator-control unit**
U0131	**EPS control unit**
U0151	**SRS unit**
U129C	**Multipurpose camera unit**

NO

Repair an open in F-CAN B_H or F-CAN B_L wire.

8. Open wire check (F-CAN lines)

-1. Turn the vehicle to the OFF (LOCK) mode.

-2. U0100: Jump the SCS line with the HDS, and wait more than 1 minute.

SCS short

U0151: **Do the 12 volt battery terminal disconnection procedure** , and wait for at least 3 minutes.

-3. According to the detected DTC on the following table, disconnect the transmitting control unit connector(s).

DTC	Connector
-	CAN gateway 12P connector
U0100	PCM connector A (51P)
U0114	Real time AWD control unit 24P connector
U0122	VSA modulator-control unit 46P connector

DTC	Connector
U0128	VSA modulator-control unit 46P connector
U0131	EPS control unit connector B (6P)
U0151	SRS unit connector A (39P)

-4. Measure the resistance between test points 1 and 2.

Test condition	Vehicle OFF (LOCK) mode Gauge control module connector A (32P): disconnected Transmitting control unit connector(s) for indicated DTCs: disconnected

DTC	Circuit name	Test point 1 (Receiving control unit)		Test point 2 (Transmitting control unit)	
		Connector	Terminal	Connector	Terminal
U0100	F-CAN_H	**Gauge control module connector A**	No. 19	**PCM connector A (51P)**	No. 2

DTC	Circuit name	Test point 1 (Receiving control unit)		Test point 2 (Transmitting control unit)	
		Connector	Terminal	Connector	Terminal
	F-CAN_L	(32P)	No. 20		No. 1
U0114	F-CAN_H	Gauge control module connector A (32P)	No. 19	Real time AWD control unit 24P connector	No. 14
	F-CAN_L		No. 20		No. 24
U0122	F-CAN_H	Gauge control module connector A (32P)	No. 19	VSA modulator-control unit 46P connector	No. 40
	F-CAN_L		No. 20		No. 28
U0128	F-CAN_H	Gauge control module connector A (32P)	No. 19	VSA modulator-control unit 46P connector	No. 40
	F-CAN_L		No. 20		No. 28
U0131	F-CAN_H	Gauge control module connector A (32P)	No. 19	EPS control unit connector B (6P)	No. 3
	F-CAN_L		No. 20		No. 1
U0151	F-CAN_H	Gauge control module connector A (32P)	No. 19	SRS unit connector A (39P)	No. 34
	F-CAN_L		No. 20		No. 35

Is there 1.0 Ω or less?

YES

The F-CAN_H wire and the F-CAN_L wire are OK.According to the detected DTC on the following table replace the correspond control unit.

DTC	Operation for transmitting control unit
U0100	PCM
U0114	Real time AWD control unit
U0122	VSA modulator-control unit
U0128	VSA modulator-control unit
U0131	EPS control unit
U0151	SRS unit

NO

Repair an open in F-CAN_H or F-CAN_L wire.

DTC U1280 (GAUGE CONTROL MODULE)

DTC U1280 : Communication bus line error (BUS-OFF)

NOTE: If you are troubleshooting multiple DTCs, be sure to follow the instructions in B-CAN System Diagnosis Test Mode A .

DTC Description	DTC
U1280 Communication bus line error (BUS-OFF)	B

DTC (Gauge Control Module)

1. Problem verification

   -1. Clear the DTCs with the HDS.

   -2. Turn the vehicle to the OFF (LOCK) mode and then the ON mode.

-3. Wait for at least 6 seconds.

-4. Check for DTCs with the HDS.

DTC Description	DTC
U1280-00 Communication bus line error (BUS-OFF)	B

Is DTC U1280 indicated?

YES

Go to body control module DTC U1280 troubleshooting .

NO

Intermittent failure, the system is OK at this time.

DTC U1281, U1288, U128F (GAUGE CONTROL MODULE)

DTC U1281 : Gauge control module lost communication with MICU (MICU frame)**DTC U1288** : Gauge control module lost communication with PARKSR **DTC U128F** : Gauge control module lost communication with BSI unit

NOTE:

- If you are troubleshooting multiple DTCs, be sure to follow the instructions in **B-CAN System Diagnosis Test Mode A** .
- Refer to the DTC code shown on the display, and then inspect the connectors and terminals based on the instructions in the table below.
- The DTC may be stored due to the grounding failure or the power source failure at the transmitting control unit (the grounding inspection and the power source inspection on each control unit are required prior to this checking process).

DTC Description	DTC
U1281 Gauge control module lost communication with MICU (MICU frame)	B
U1288 Gauge control module lost communication with PARKSR	B
U128F Gauge control module lost communication with BSI unit	B

DTC (Gauge Control Module)

1. Problem verification

-1. Clear the DTC with the HDS.

-2. Turn the vehicle to the OFF (LOCK) mode and then the ON mode.

-3. Wait for at least 6 seconds.

-4. Check for DTCs with the HDS.

DTC Description	DTC
U1281 Gauge control module lost communication with MICU (MICU frame)	B

DTC Description	DTC
U1288 Gauge control module lost communication with PARKSR	B
U128F Gauge control module lost communication with BSI unit	B

Are any DTCs indicated?

YES

Go to step 2.

NO

Intermittent failure, the system is OK at this time. Check for poor connections or loose terminals.

2. Open wire check (B-CAN_H line, B-CAN_L line)

-1. Turn the vehicle to the OFF (LOCK) mode.

-2. Disconnect the receiving control unit connector.

Gauge control module connector A (32P)

-3. Disconnect the transmitting control unit connector(s).

Refer to the DTC shown on the display, then disconnect the connector(s) based on the instructions (see table).

DTC	Connector
U1281	Body control module connector B (36P)
U1288	Parking and back-up sensor control unit 16P connector
U128F	Left side BSI radar unit 6P connector

-4. Measure the resistance between the receiving control unit and the transmitting control unit on the B-CAN_H circuit and the B-CAN_L circuit.

Test condition	Vehicle OFF (LOCK) mode Gauge control module connector A (32P): disconnected Transmitting control unit connector(s) for indicated DTCs: disconnected

DTC	Circuit name	Receiving control unit		Transmitting control unit	
		Connector	Terminal	Connector	Terminal
U1281	B-CAN_H	Gauge control module connector A (32P)	No. 30	Body control module connector B (36P)	No. 20
	B-CAN_L		No. 31		No. 21
U1288	B-CAN_H	Gauge control module connector A (32P)	No. 30	Parking and back-up sensor control unit 16P connector	No. 9
	B-CAN_L		No. 31		No. 2
U128F	B-CAN_H	Gauge control module connector A (32P)	No. 30	Left side BSI radar unit 6P connector	No. 3
	B-CAN_L		No. 31		No. 5

Is there 1.0 Ω or less?

YES

The B-CAN_H wire and the B-CAN_L wire are OK.Refer to the DTC shown on the display, then replace the control unit based on the instructions (see table).

DTC	Operation for transmitting control unit
U1281	Body control module
U128D	Parking and back-up sensor control unit
U128F	BSI radar unit

NO

Repair an open in the B-CAN_H wire and/or the B-CAN_L wire.

DTC U3000-49 (GAUGE CONTROL MODULE)

DTC U3000-49 : ECU internal circuit malfunction

NOTE: If you are troubleshooting multiple DTCs, be sure to follow the instructions in **B-CAN System Diagnosis Test Mode A** .

DTC Description	DTC
U3000-49 ECU internal circuit malfunction	B

DTC (Gauge Control Module)

1. Problem verification

   -1. Clear the DTCs with the HDS.

   -2. Turn the vehicle to the OFF (LOCK) mode and then the ON mode.

   -3. Check for DTCs with the HDS.

DTC Description	DTC
U3000-49 ECU internal circuit malfunction	B

Is DTC U3000-49 indicated?

YES

Replace the gauge control module .

NO

Intermittent failure, the system is OK at this time.

DTC U3000-51 (GAUGE CONTROL MODULE)

DTC U3000-51 : Reprogramming error

NOTE:

- If you are troubleshooting multiple DTCs, be sure to follow the instructions in **B-CAN System Diagnosis Test Mode A** .
- Before reprogramming the gauge control module, make sure the 12 volt battery in the vehicle is fully charged, and connect a 12 volt jumper battery (not a 12 volt battery charger) to maintain system voltage.
- Never turn the vehicle to the ACCESSORY mode or OFF (LOCK) mode, during the reprogramming. If there is a problem with the reprogramming, turn the vehicle to the ON mode.

DTC Description	DTC
U3000-51 Reprogramming error	B

DTC (Gauge Control Module)

1. Problem verification

   -1. Clear the DTCs with the HDS.

-2. Turn the vehicle to the OFF (LOCK) mode and then the ON mode.

-3. Check for DTCs with the HDS.

DTC Description	DTC
U3000-51 Reprogramming error	B

Is DTC U3000-51 indicated?

YES

Reprogramming the gauge control module.

NO

Intermittent failure, the system is OK at this time.

HOW TO INFORMATION

HOW TO TROUBLESHOOT THE BODY ELECTRICAL

Tips and Precautions

Special Tools Required

Back Probe Adapter, 17 mm 07TAZ-001020A

Before Troubleshooting

1. Check applicable fuses in the appropriate fuse/relay box. Check the 12 volt battery for damage, state of charge, and clean and tight connections.

NOTE:

- **Do not quick-charge a 12 volt battery unless the 12 volt battery ground cable has been disconnected; otherwise you will damage the alternator diodes.**
- **Do not attempt to crank the engine with the 12 volt battery ground cable loosely connected, or you will severely damage the wiring.**

Handling Connectors

- Make sure the connectors are clean and have no loose wire terminals.
- Make sure multiple cavity connectors are packed with dielectric grease (except waterproof connectors).
- All connectors have press-down release type locks (A).

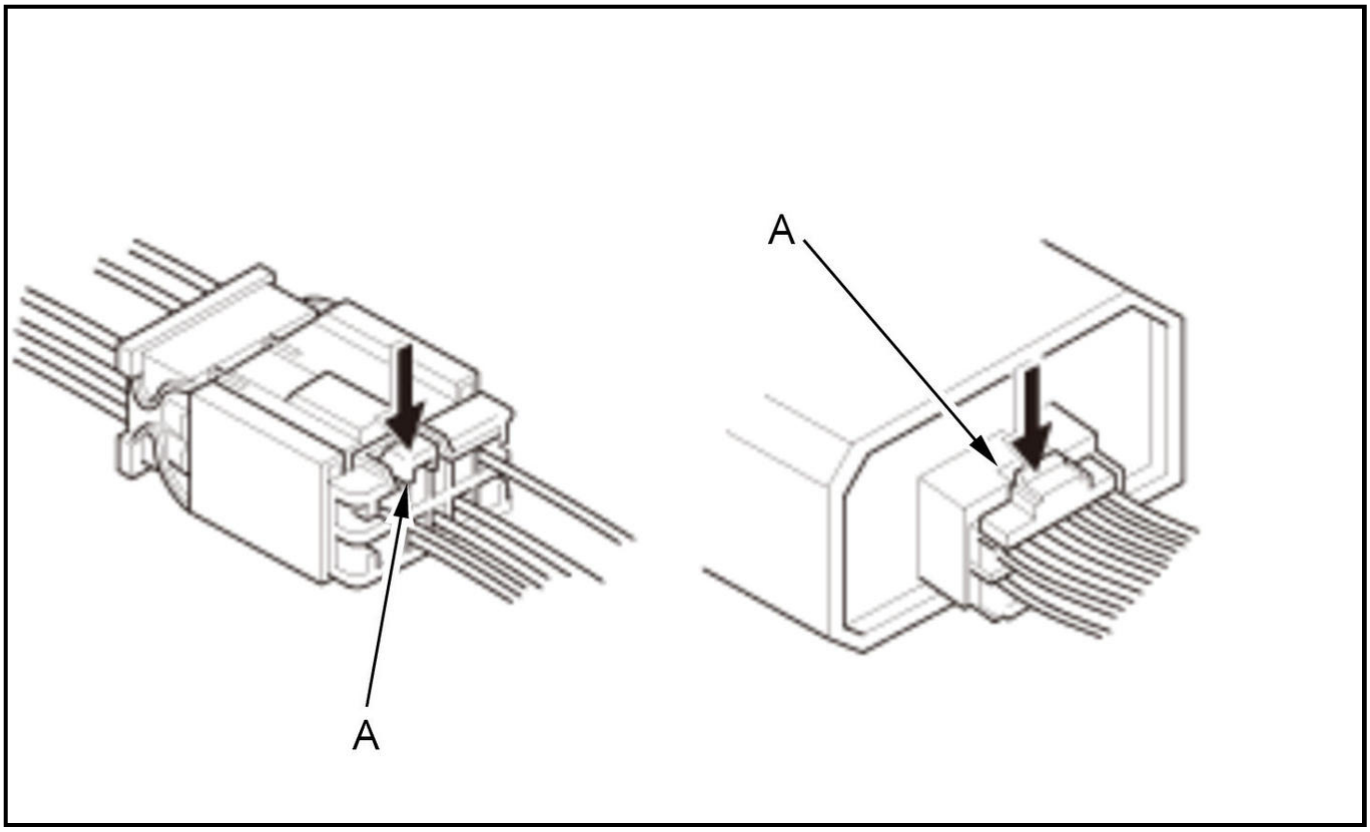

- Some connectors have a clip on their side used to attach them to a mount bracket on the body or on another component. This clip has a pull type lock.
- Some mounted connectors cannot be disconnected unless you first release the lock and remove the connector from its mount bracket (A).

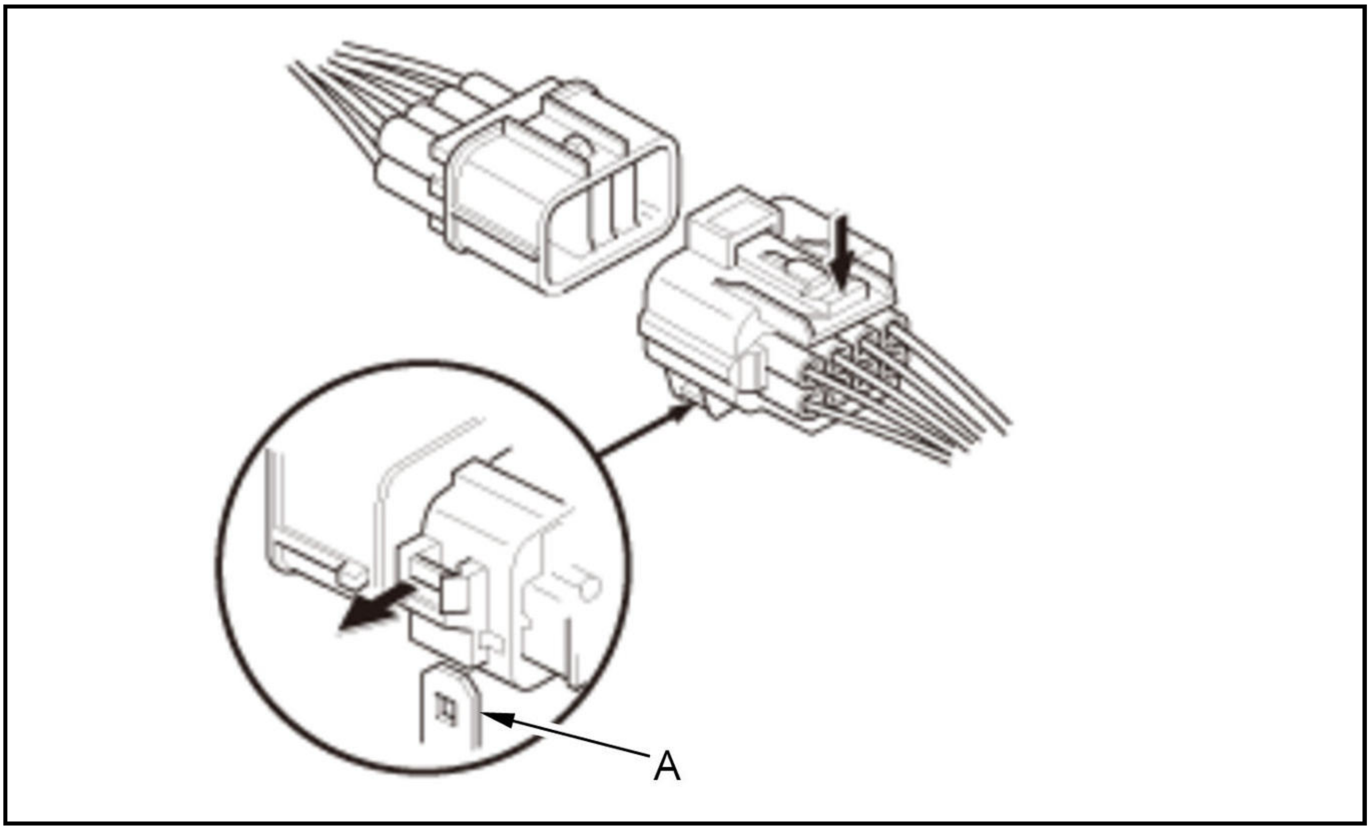

- Never try to disconnect connectors by pulling on their wires; pull on the connector halves instead.
- Always reinstall plastic covers.

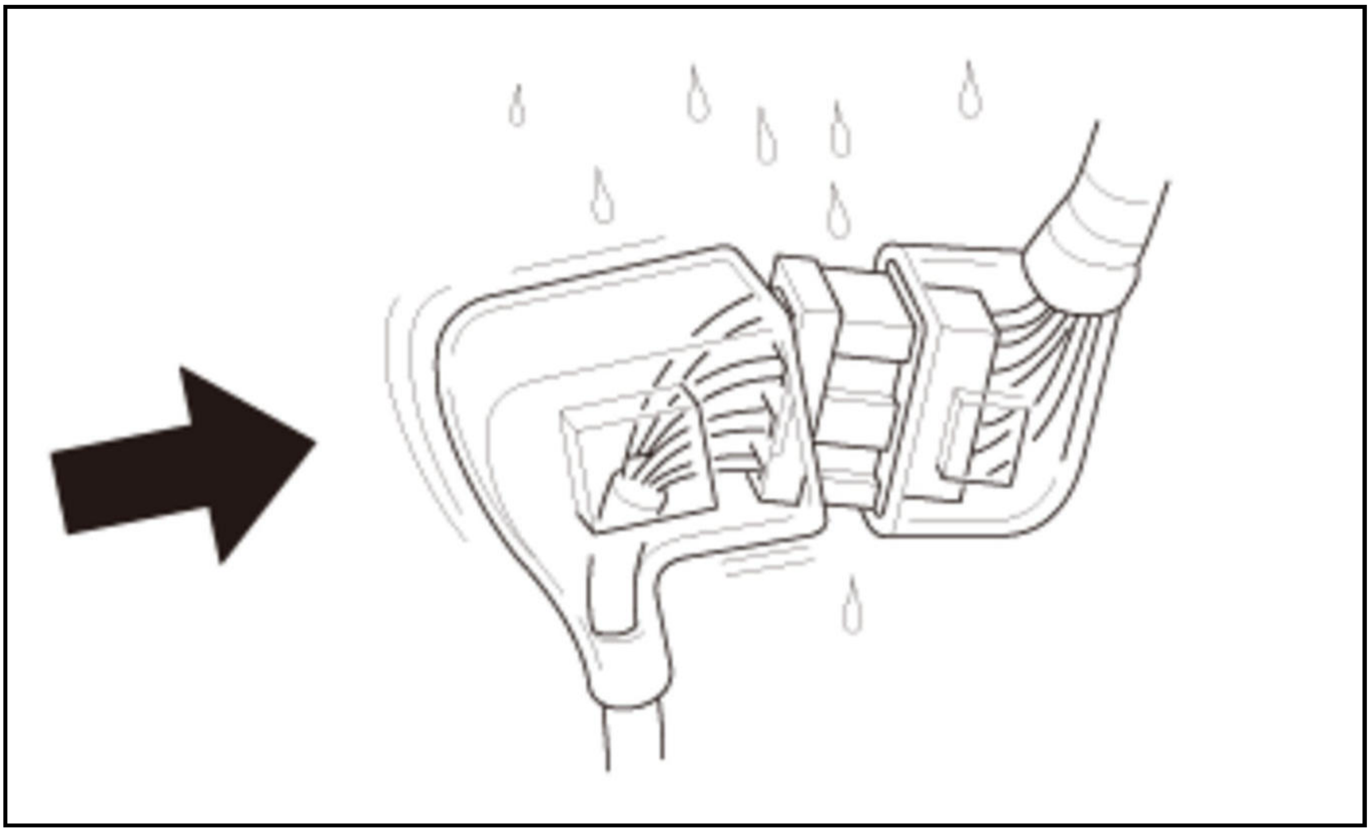

- Before connecting connectors, make sure the terminals are in place and not bent (A).

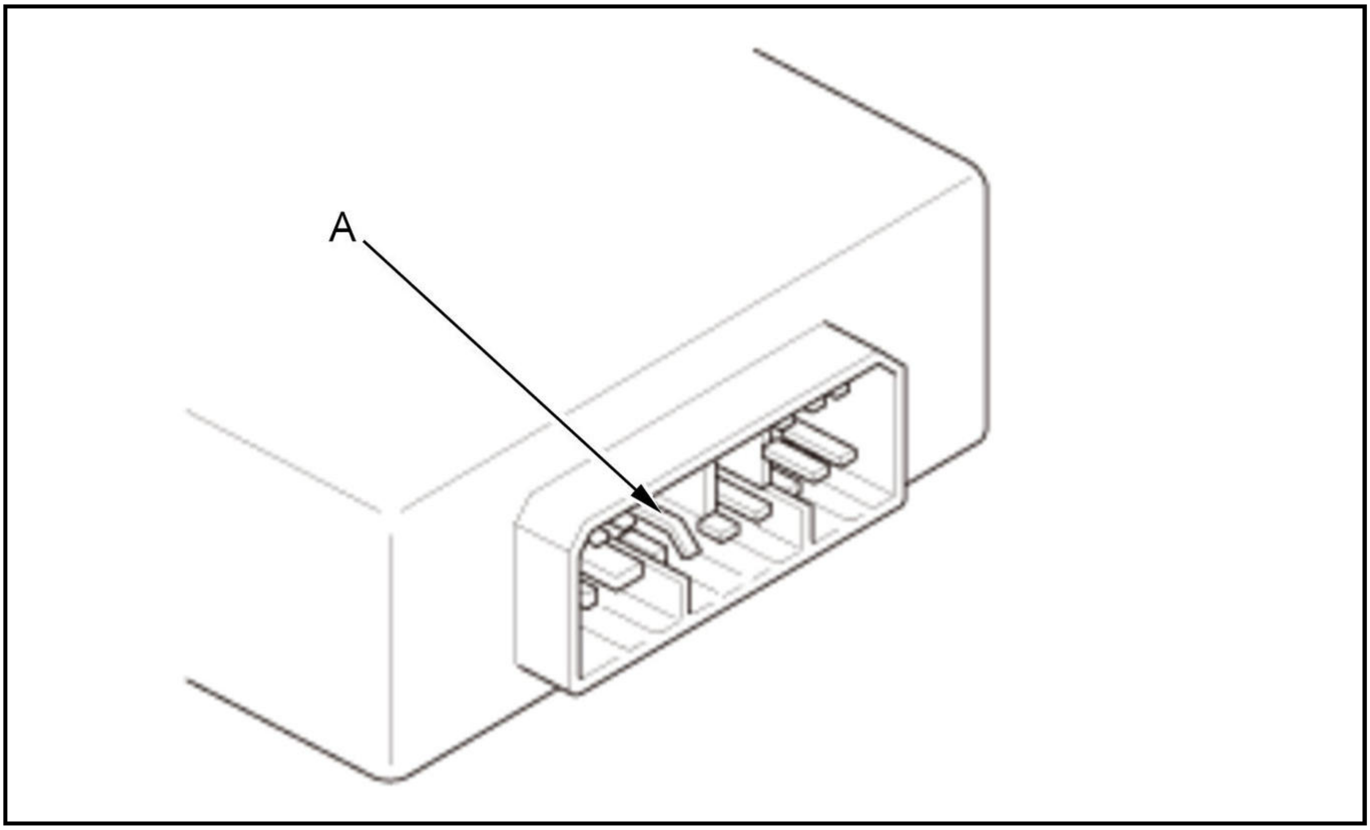

- Check for loose retainers (A) and rubber seals (B).

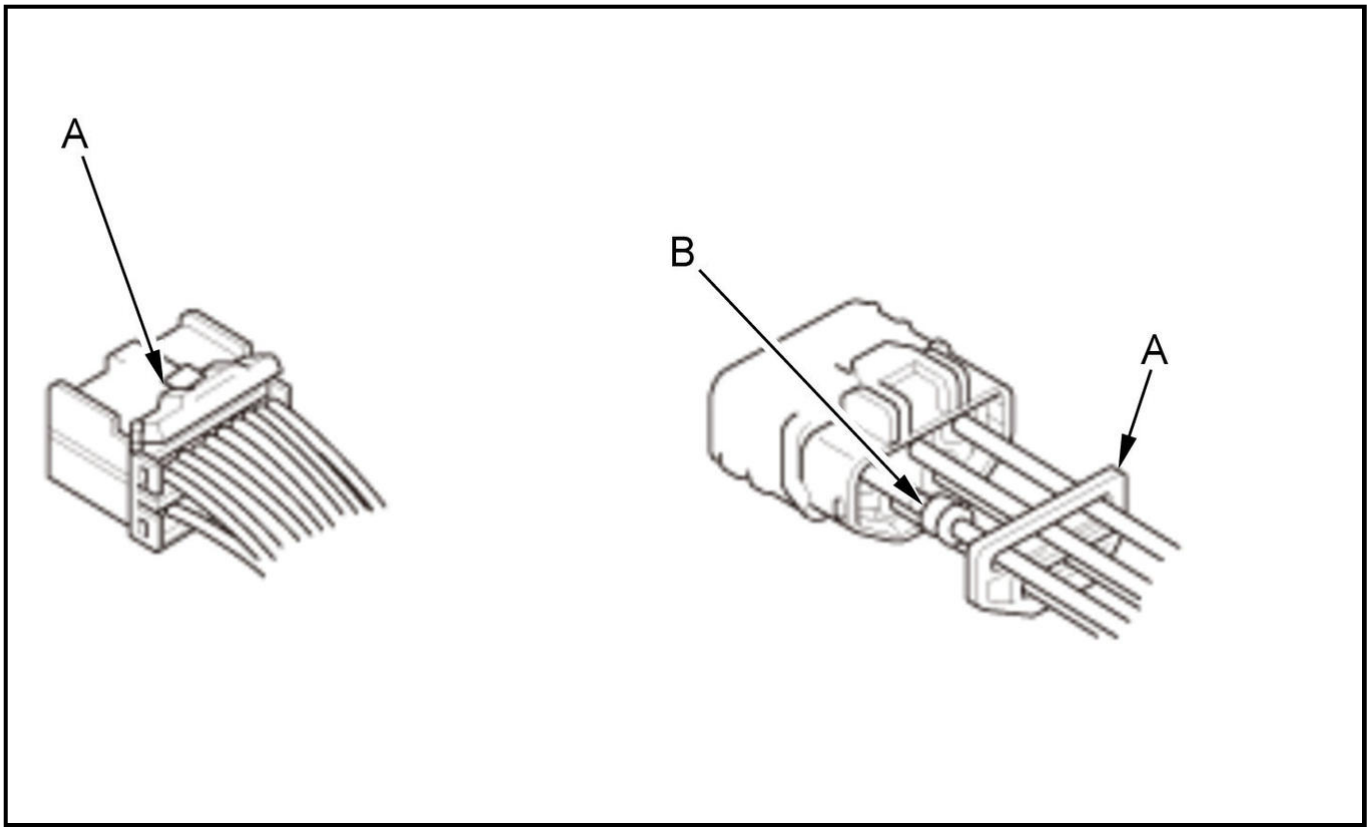

- The backs of some connectors are packed with dielectric grease. Add grease if necessary. If the grease is contaminated, replace it.

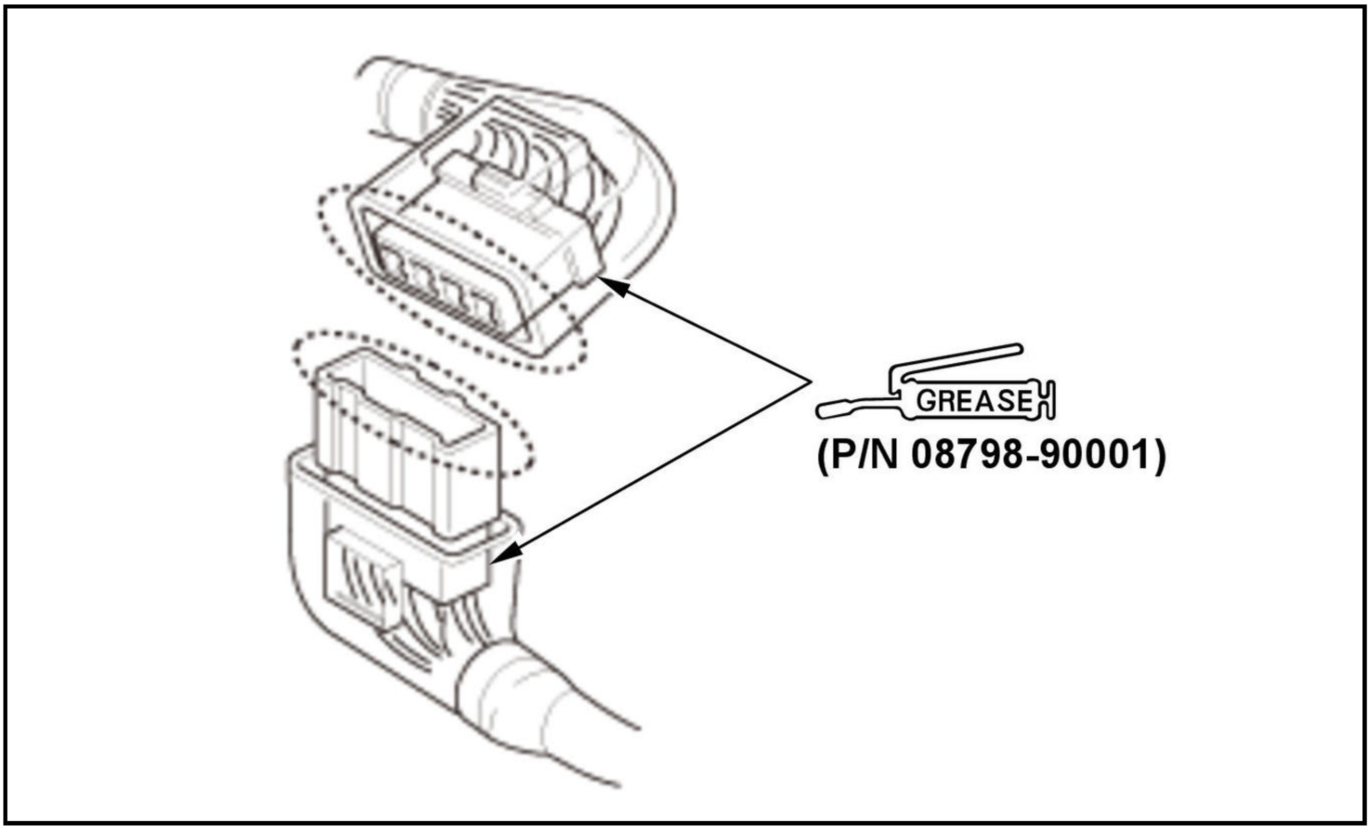

- Insert the connector all the way and make sure it is securely locked.
- Position wires so that the open end of the cover faces down.

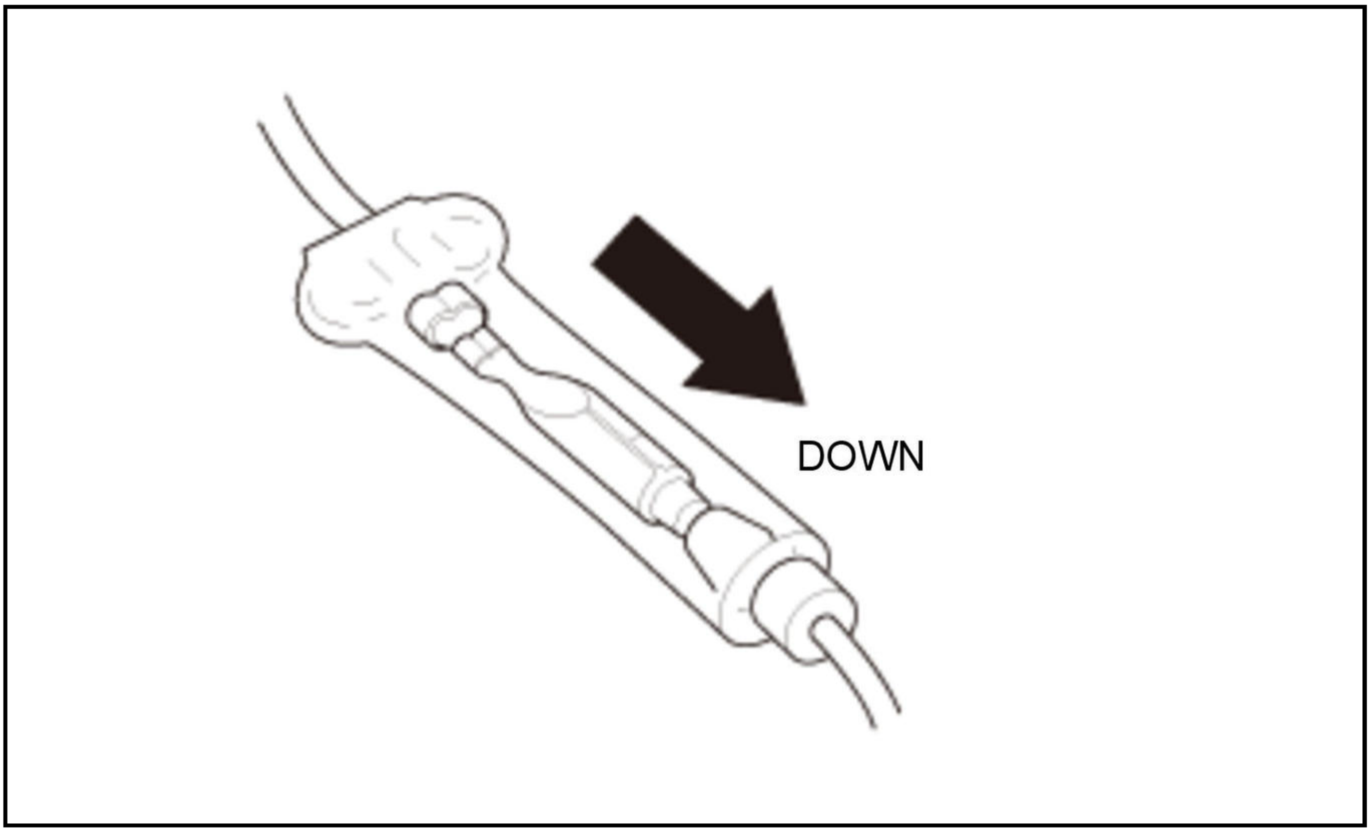

Handling Wires and Harnesses

- Secure wires and wire harnesses to the frame with their respective wire ties at the designated locations.
- Remove clips carefully; do not damage their locks (A).

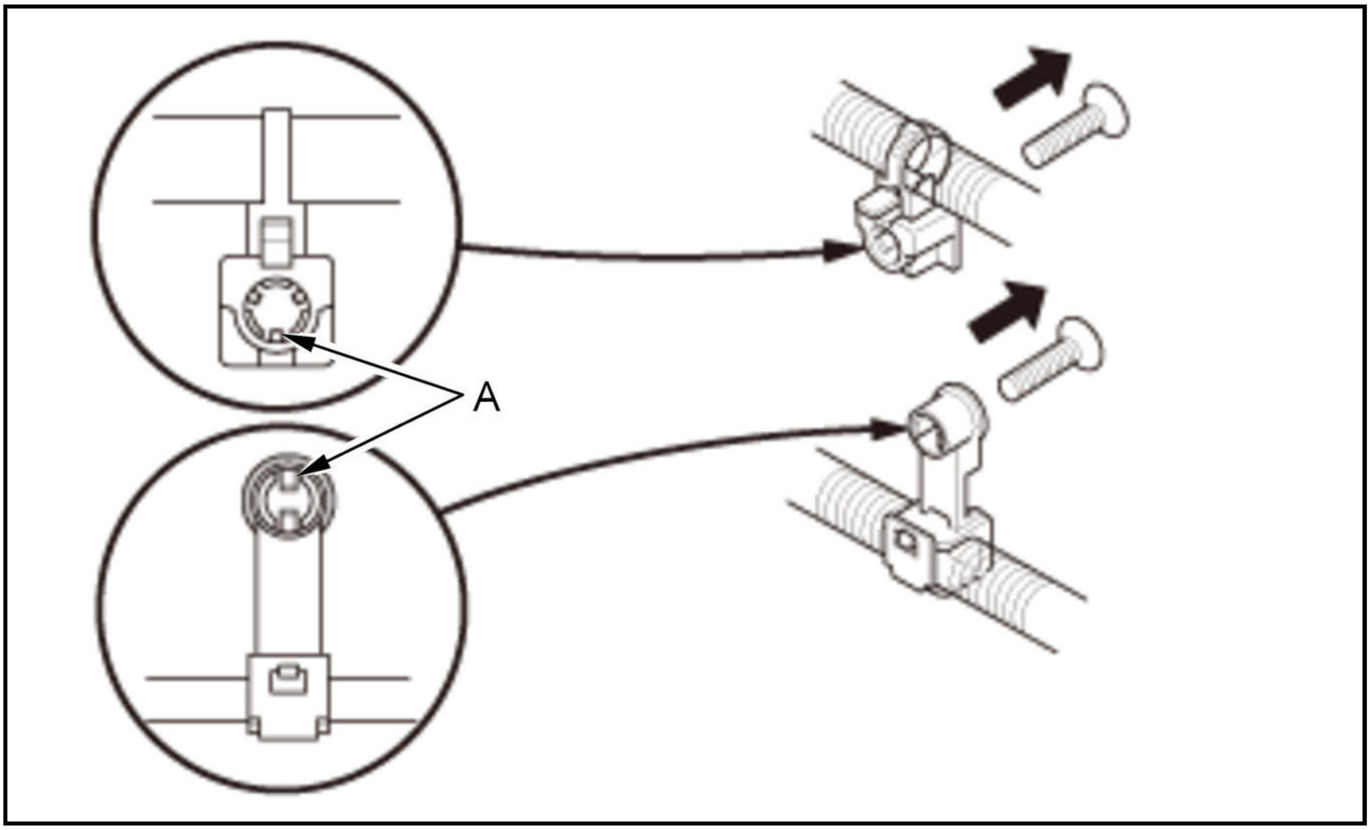

- After installing harness clips, make sure the harness does not interfere with any moving parts.
- Keep wire harnesses away from exhaust components and other hot parts, from sharp edges of brackets and holes, and from exposed screws and bolts.
- Seat grommets in their grooves properly (A). Do not leave grommets distorted (B).

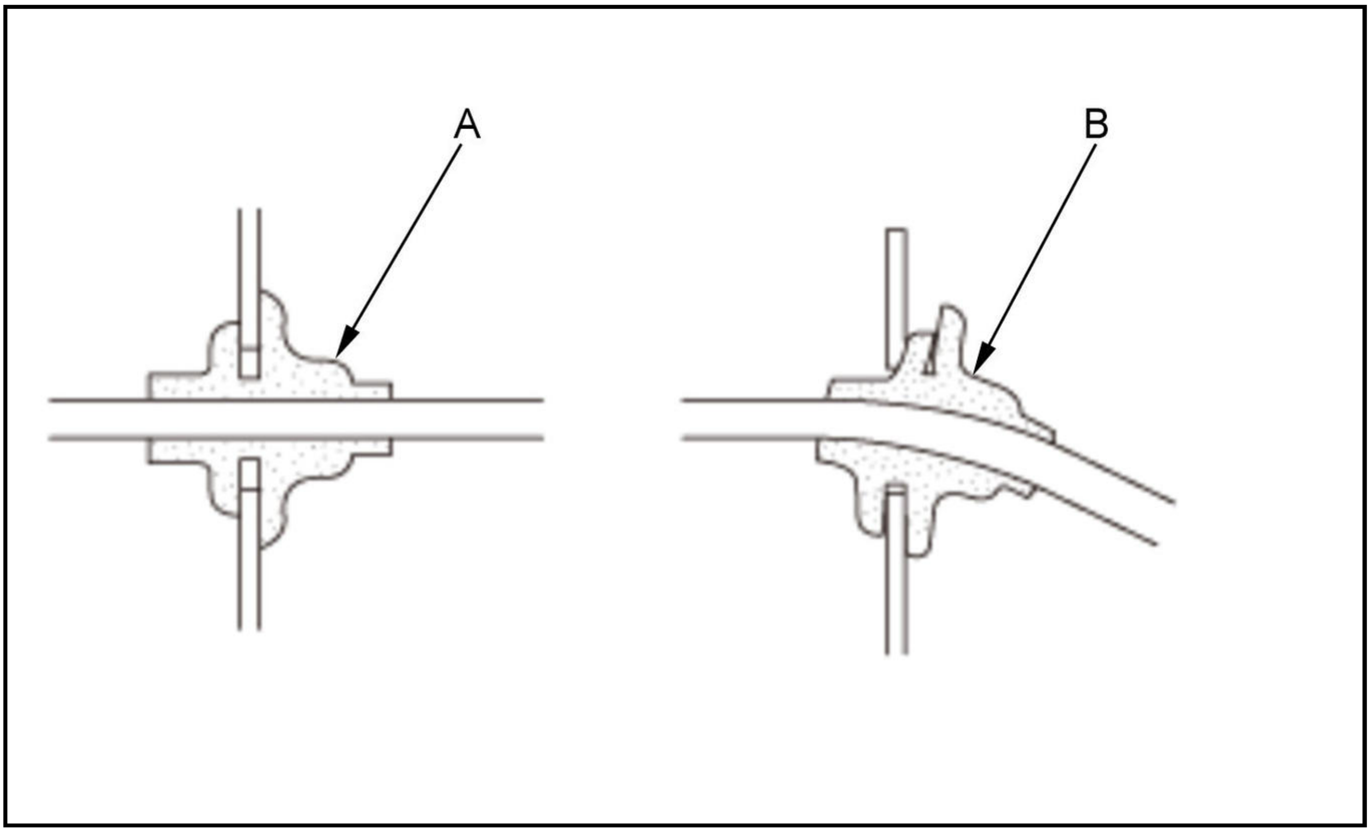

Testing and Repairs

- Do not use wires or harnesses with broken insulation. Replace them or repair them by wrapping the break with electrical tape or shrink tubing.
- Never attempt to modify, splice, or repair SRS wiring. If there is an open or damage to the SRS wiring or terminals, replace the harness.
- After installing parts, make sure that no wires are pinched under them.
- When using electrical test equipment, follow the manufacturer's instructions and those described in this manual.
- If possible, insert the probe of the tester from the wire side (except waterproof connectors).

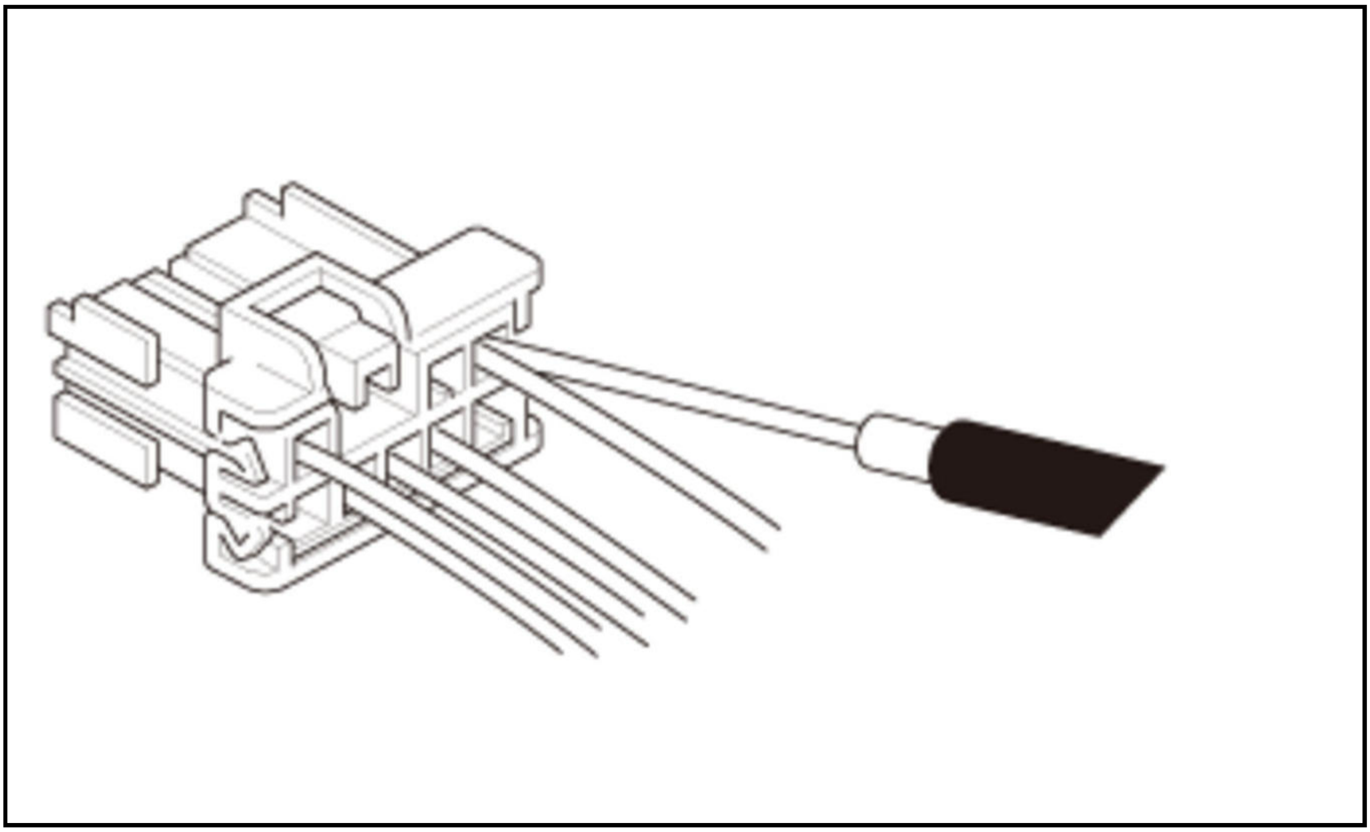

- Use back probe adapter, 17mm 07TAZ-001020A.

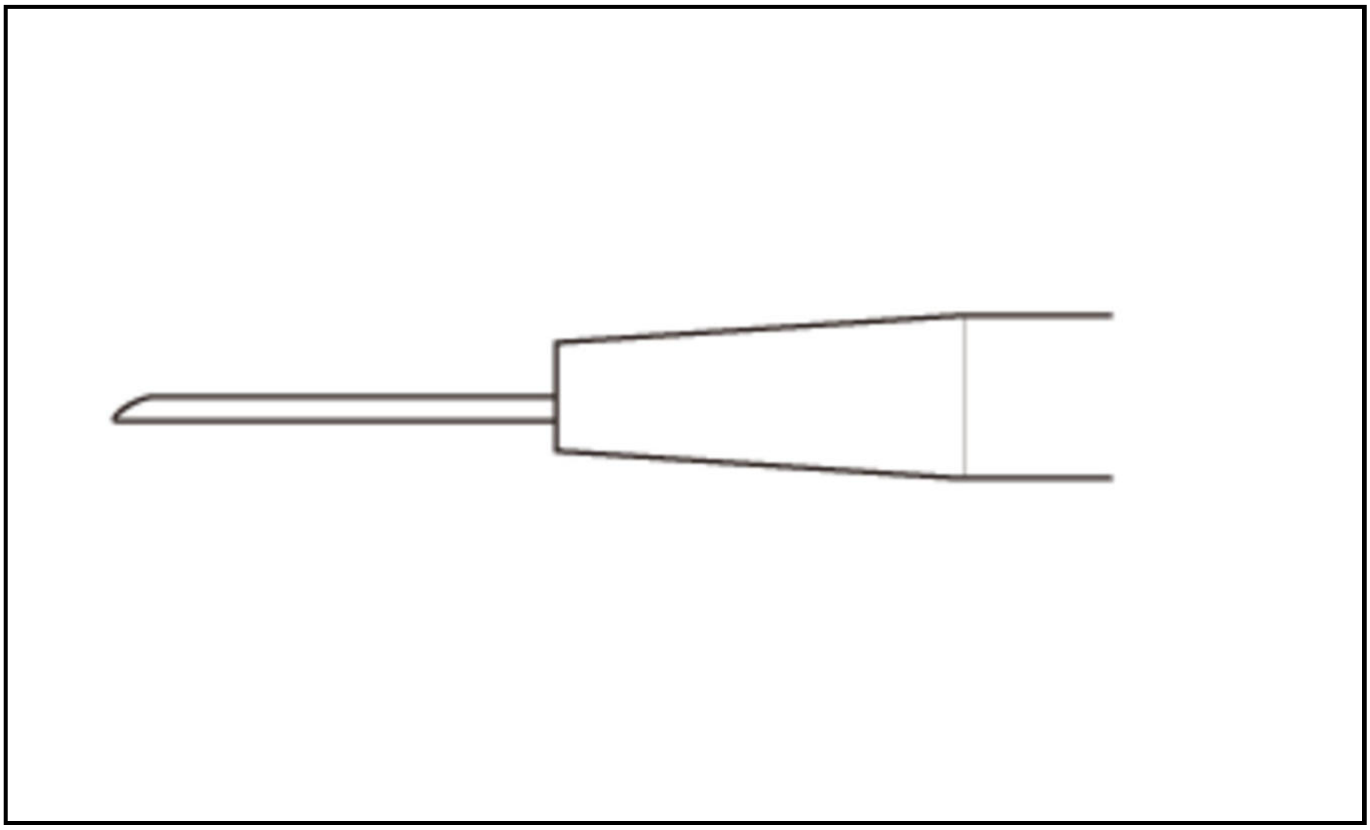

- Refer to the instructions in the Honda Terminal Kit for identification and replacement of connector terminals.

Five-Step Troubleshooting

1. Verify The Complaint: Turn on all the components in the problem circuit to verify the customer complaint. Note the symptoms. Do not begin disassembly or testing until you have narrowed down the problem area.

2. Analyze The Schematic: Look up the schematic for the problem circuit. Determine how the circuit is supposed to work by tracing the current paths from the power feed through the circuit components to ground. If several circuits fail at the same time, the fuse or a ground is a likely cause. Based on the symptoms and your understanding of the circuit operation, identify one or more possible causes of the problem.

3. Isolate The Problem By Testing The Circuit: Make circuit tests to check the diagnosis you made in step 2. Keep in mind that a logical, simple procedure is the key to efficient troubleshooting. Test for the most likely cause of failure first. Try to make tests at points that are easily accessible.

4. Fix The Problem: Once the specific problem is identified, make the repair. Be sure to use proper tools and safe procedures.

5. Make Sure The Circuit Works: Turn on all components in the repaired circuit in all modes to make sure you've fixed the entire problem. If the problem was a blown fuse, be sure to test all of the circuits on the fuse. Make sure no new problems turn up and the original problem does not recur.

Wire Color Codes

The following abbreviations are used to identify wire colors in the circuit schematics:

WHT..	White
YEL..	Yellow
BLK..	Black
BLU..	Blue
GRN...	Green
RED...	Red
ORN...	Orange
PNK...	Pink
BRN...	Brown
GRY...	Gray
PUR...	Purple
TAN..	Tan
LT BLU...	Light Blue
LT GRN..	Light Green
LT PUR..	Light Purple

The wire insulation has one color or one color with another color stripe. The second color is the stripe.

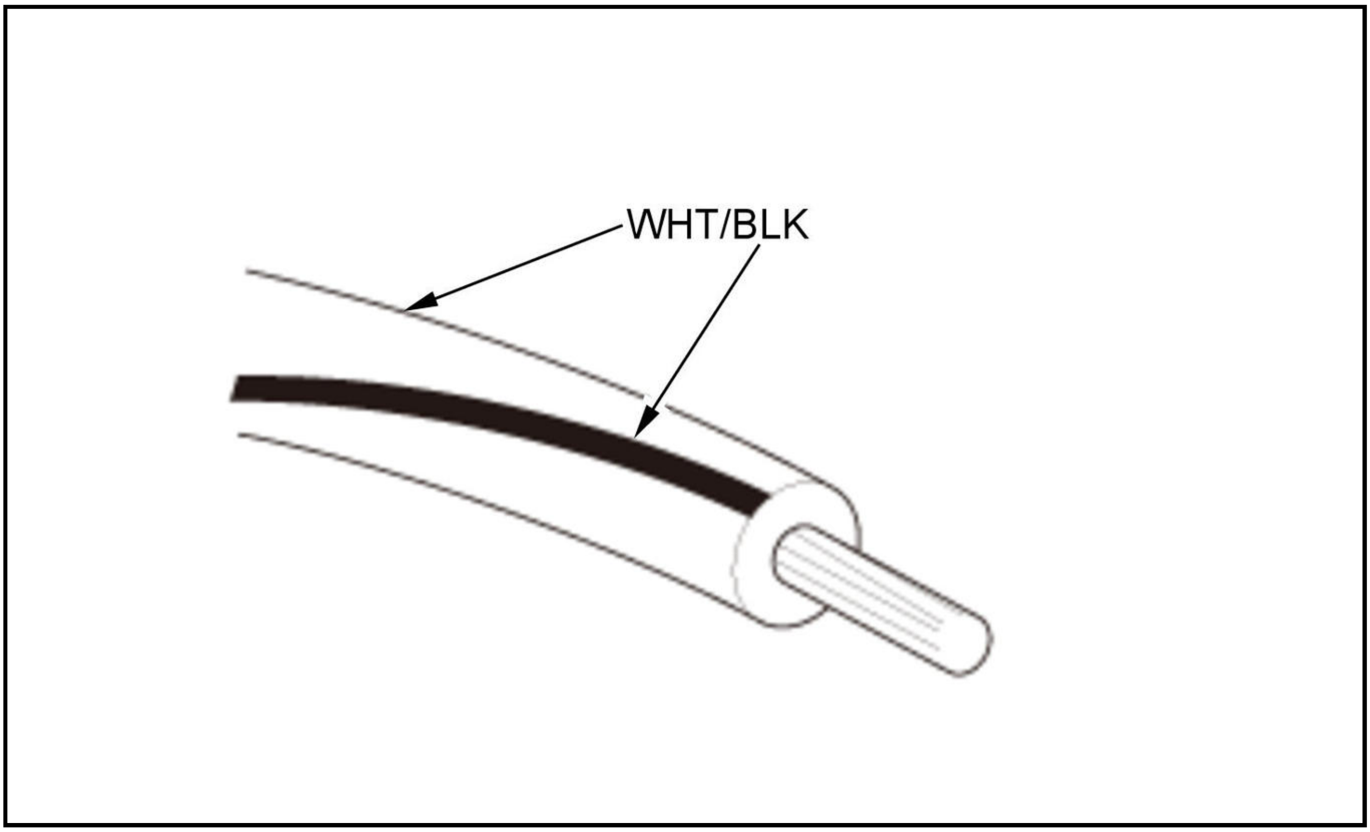

Troubleshoot the B-CAN Circuit Related Problems

Check the PCM for DTCs and troubleshoot PCM or F-CAN loss of communication errors first.

How to check for DTCs with the HDS (preferred method)

The HDS can check F-CAN and B-CAN communication status, read and clear DTCs, display data list, and perform function tests.

Check for DTCs

1. Connect the HDS to the data link connector (DLC) .

2. Select BODY ELECTRICAL, then select the desired MODE TEL, and check for DTCs. If the DTCs do not pertain to the select menu, select the ALL DTC Check icon to view all Body Electrical DTCs.

NOTE: **For specific operations, refer to the HDS user's manual.**

3. If any DTCs are indicated, go to the indicated DTCs troubleshooting.

NOTE: **If DTC U1280 is stored, troubleshoot DTC U1280 first.**

How to Clear DTCs with the HDS

1. Connect the HDS to the data link connector (DLC)

2. Clear the DTCs with the HDS.

3. Turn the vehicle to the OFF (LOCK) mode, and disconnect the HDS from the DLC.

B-CAN Circuit Troubleshooting Information

1. Connect the HDS to the data link connector (DLC) .2. From the BODY ELECTRICAL SYSTEM SELECT menu, select B-CAN CONTROL UNITS INFORMATION, and then select CHECK CONNECTED CONTROL UNITS. Check that the electronic control units (ECU) are communicating with the HDS.

NOTE:

- **If an ECU is communicating with the HDS, "DETECT" will be displayed.**
- **If an ECU is not communicating, or the vehicle is not equipped with that ECU, "NOT AVAILABLE" will be displayed.**

4. If a control unit is not communicating, confirm which ECUs are communicating, then refer to the B-CAN Communication Line from the Electrical Wiring Diagrams to find the malfunction point. For example, when unit "K" is communicating, but units "G", "M", and "N" are not communicating, that will direct you to the malfunction point (A).

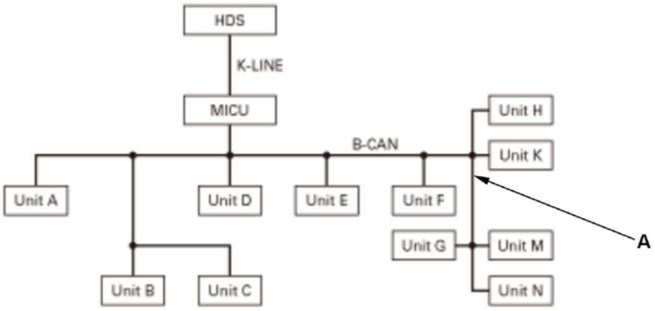

Loss of Communication DTC Cross-ence Chart

When an ECU on the CAN circuit is unable to communicate with other ECUs on the CAN circuit, the other control units will set loss of communication DTCs. Use this chart to find the ECU that is not communicating with the other ECUs on the CAN circuit.

1. Find the Transmitting Control Unit that is in the same row as all of the loss of communication DTCs that you retrieved.

2. Do the input test for the transmitting control unit.

BUS OFF and Internal Error Codes

DTC Type	**Related Unit**							
	Body Control Module	Gauge Control Module	Climate Control Unit / HVAC Control Unit	Front Seat Heater Control Unit	Multiplex Control Unit, Door (Power Window Master Switch)	Keyless Access Control Unit	Keyless Access Power Control Unit	Keyless Access Backup Control Unit
BUS OFF	U1280	U1280	U1280	U1280	U1280	U1280	U1280	U1280
ECU (EEPROM) Error	B1002	B	B	B	B	B1602	B	B

DTC Type	**Related Unit**							
	Immobilizer-Keyless Control Unit	Automatic Lighting Control Unit-Sensor	Power Seat Control Unit	Power Tailgate Control Unit	Relay Control Module	Parking and Back-Up Sensor Control Unit	Wireless Charger	BSI Radar Unit
BUS OFF	U1280	U1280	U1280	U1280	U1280	U1280	U1280	U1280
ECU (EEPROM)	B1902	B	B1802	B1352	B1052	B2602	B	B

Error								

Loss of Communication

Transmitting Control Unit	Receiving Unit/Loss of Communication DTC							
	Body Control Module	Gauge Control Module	Climate Control Unit / HVAC Control Unit	Front Seat Heater Control Unit	Multiplex Control Unit, Door (Power Window Master Switch)	Keyless Access Control Unit	Keyless Access Power Control Unit	Keyless Access Backup Control Unit
Body Control Module	TX	U1281	U1281	B	U1281	U1281	U1281	U1281
Gauge Control Module	U128D	TX	U128D	B	U128D	U128D	U128D	U128D
Climate Control Unit / HVAC Control Unit	B	B	TX	U1064	U1299	B	B	B
Front Seat Heater Control Unit	B	B	U1290	TX	B	B	B	B
Relay Control Module	U1291	B	B	B	B	B	B	B
Parking and Back-Up Sensor Control Unit	B	U1288	B	B	B	B	B	B
BSI Radar Unit	B	U128F	B	B	B	B	B	B
PCM	U0100	U0100	B	B	B	B	U0100	B
TCM	B	U0101	B	B	B	B	B	B
Millimeter Wave Radar	B	U0104	B	B	B	B	B	B
Real Time AWD Control Unit	B	U0114	B	B	B	B	B	B
VSA Modulator-Control Unit	U0122	U0122	B	B	B	B	U0122	B
Electric Parking Brake Control Unit	B	U0128	B	B	B	B	B	B
EPS Control Unit	B	U0131	B	B	B	B	B	B
SRS Unit	B	U0151	B	B	B	B	B	B
Multipurpose Camera Unit	B	U129C	B	B	B	B	B	B

Transmitting Control Unit	Receiving Unit/Loss of Communication DTC							
	Immobilizer-Keyless Control Unit	Automatic Lighting Control Unit-Sensor	Power Seat Control Unit	Power Tailgate Control Unit	Relay Control Module	Parking and Back-Up Sensor Control Unit	Wireless Charger	BSI Radar Unit
Body Control Module	U1281	U1281	U1281	U1281	U1281	U1281	U1281	U1281

Keyless Access Control Unit	B	B	B	B	B	B	U1286	B
Gauge Control Module	U0155U128D	U128D	U128D	U128D	U128D	U0155	U128D	U128D
Audio Unit / Audio-Navigation Unit	B	B	B	B	B	B	U128E	B
Multiplex Control Unit, Door (Power Window Master Switch)	U0199	B	U0199	U0199	B	B	B	B

TX: Transmitting units do not set loss of communication DTCs.

REMOVAL & INSTALLATION TEST

ECON SWITCH REMOVAL, INSTALLATION, AND TEST

Removal and Installation

1

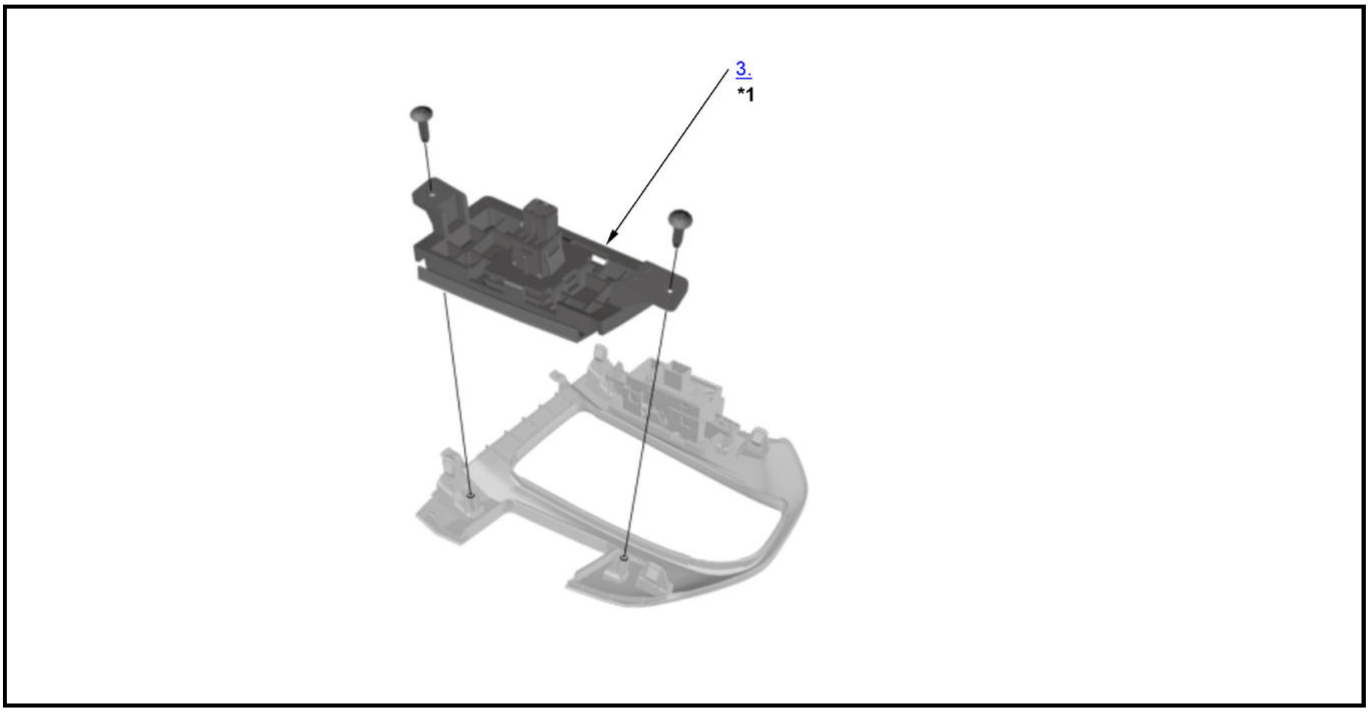

*1	ECON Switch Light: LED

1. Climate Control Panel - Remove
2. Shift Lever Panel - Remove
3. ECON Switch - Remove
4. All Removed Parts - Install

1. Install the parts in the reverse order of removal.

Test

1. ECON Switch - Test

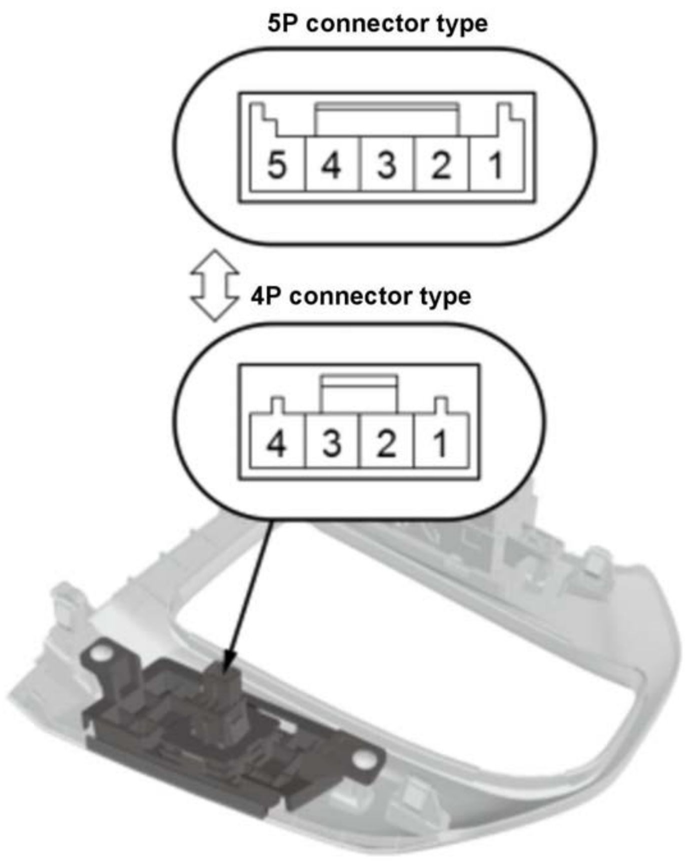

Terminal / Position/Illumination	1 [2]	2 [3]	3 [4]		4 [5]
Pressed	○	○			
ECON switch light			⊕		⊖

○—○ = Continuity check
⊕—⊖ = Voltage for LED
[ ]: 5P connector type

1. Check the ECON switch according to the table in illustration.

NOTE:

- **When an LED is located between terminals, check if the LED illuminates by connecting power and ground to the LED.**
- **Note this important operating characteristic; diode bias causes a diode to fully conduct electricity in one direction (forward), while not at all in the opposite direction (reverse).**

2. If the result is not as specified, replace the ECON switch.

2. All Removed Parts - Install

1. Install the parts in the reverse order of removal.

PARKING AND BACK-UP SENSOR SWITCH REMOVAL, INSTALLATION, AND TEST (2020 2021)

Removal and Installation

NOTE: The switch location of the parking and back-up sensor switch is different depending on the model.

1

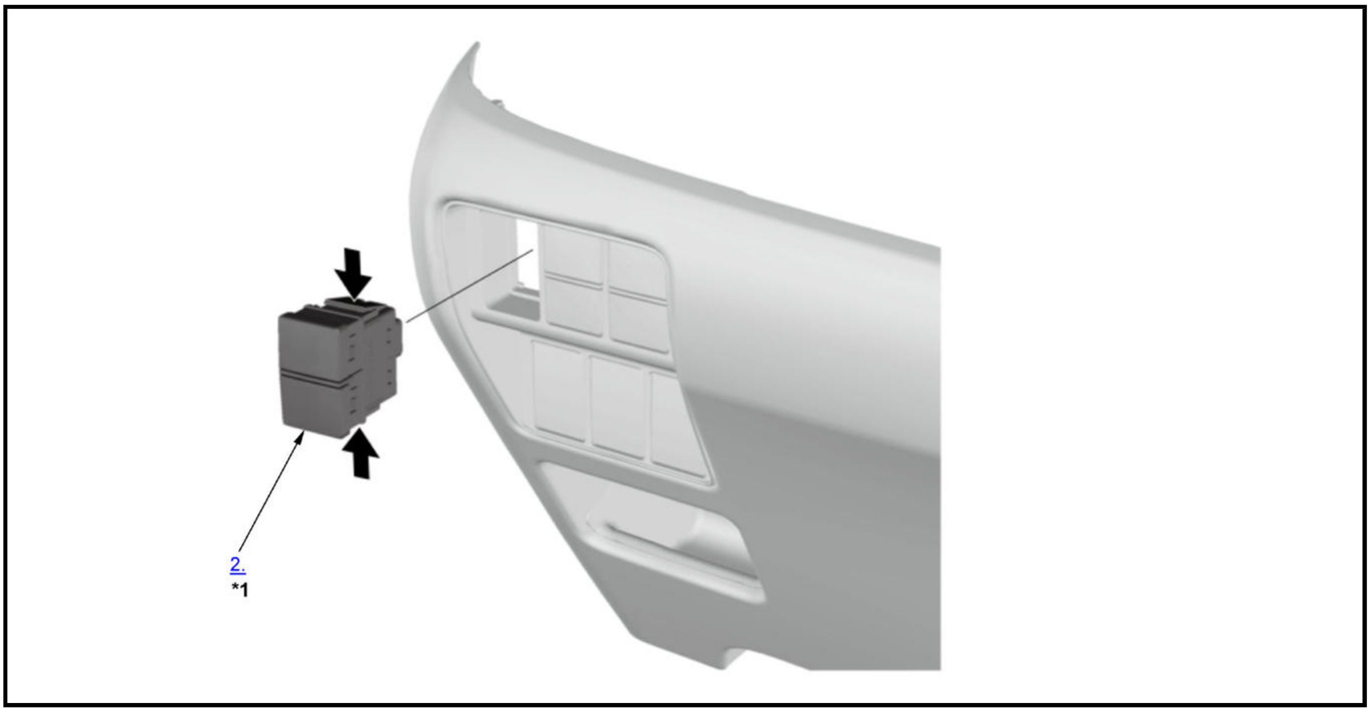

*1	Parking and Back-Up Sensor Switch Light: LED

1. **Driver's Dashboard Lower Cover - Remove**
2. Parking and Back-Up Sensor Switch - Remove
3. All Removed Parts - Install

1. Install the parts in the reverse order of removal.

Test

1. Parking and Back-Up Sensor Switch - Test

The switch location of the parking and back-up sensor switch (A) is different depending on the model.

1. Check the parking and back-up sensor switch according to the table in illustration.

NOTE:

- **When an LED is located between terminals, check if the LED illuminates by connecting power and ground to the LED.**
- **Note this important operating characteristic; diode bias causes a diode to fully conduct electricity in one direction (forward), while not at all in the opposite direction (reverse).**
- **Make sure the correct test lead (+or -) is placed on the terminal.**

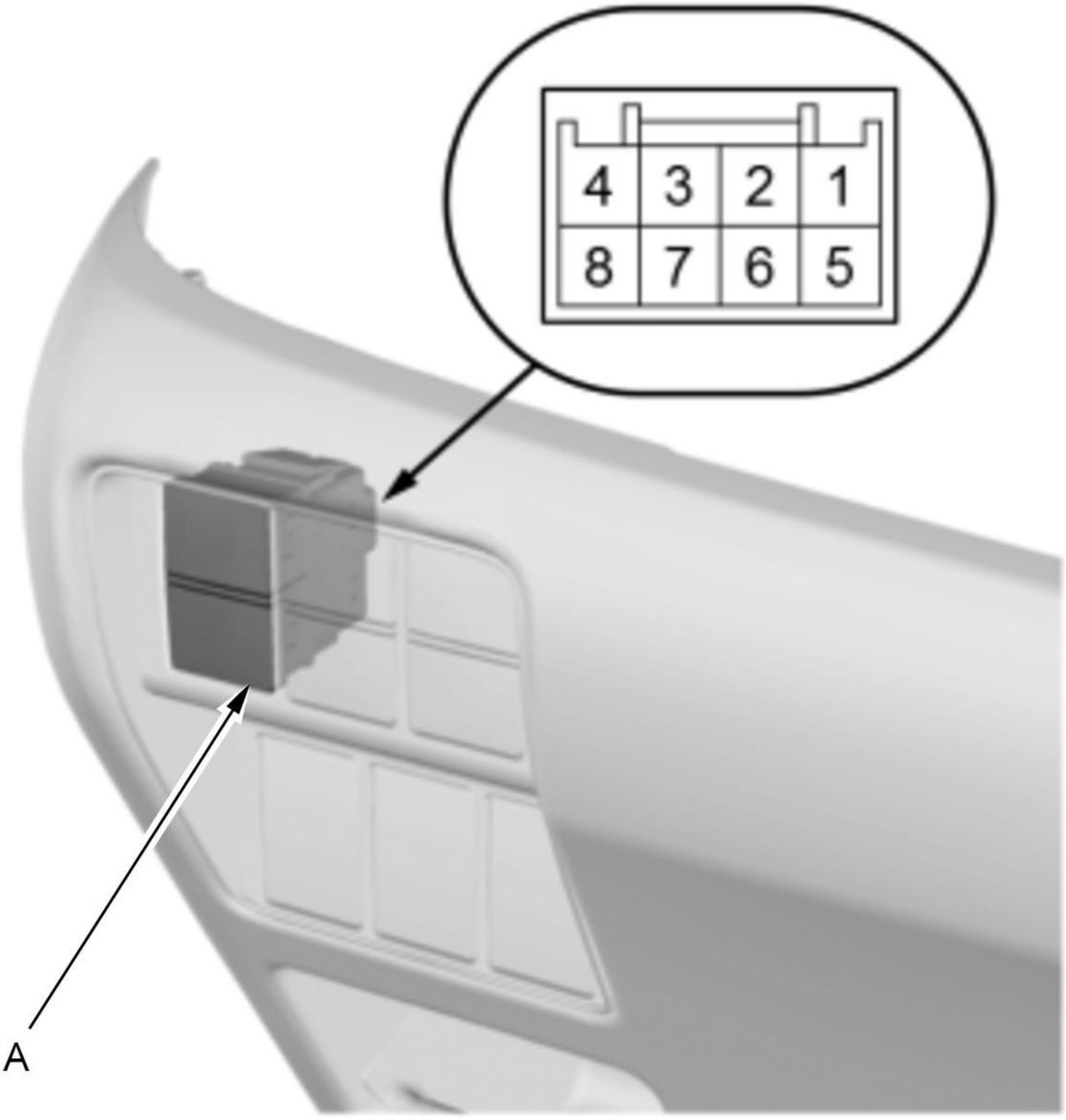

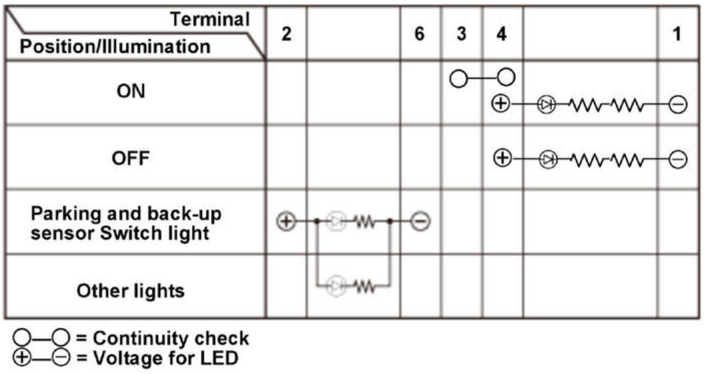

Terminal / Position/Illumination	2		6	3	4		1
ON				○—	○ ⊕	—⊳|—WW—WW—	⊖
OFF					⊕	—⊳|—WW—WW—	⊖
Parking and back-up sensor Switch light	⊕	—⊳|—WW—	⊖				
Other lights		—⊳|—WW—					

○—○ = Continuity check
⊕—⊖ = Voltage for LED

2. If the result is not as specified, replace the parking and back-up sensor switch.

REMOVAL AND INSTALLATION

ELECTRICAL COMPASS UNIT REMOVAL AND INSTALLATION

Removal and Installation

SRS components are located in this area. Review the **SRS component locations** and the **precautions and procedures** before doing repairs or service.

NOTE: Where icon is shown, further information shown below.

1

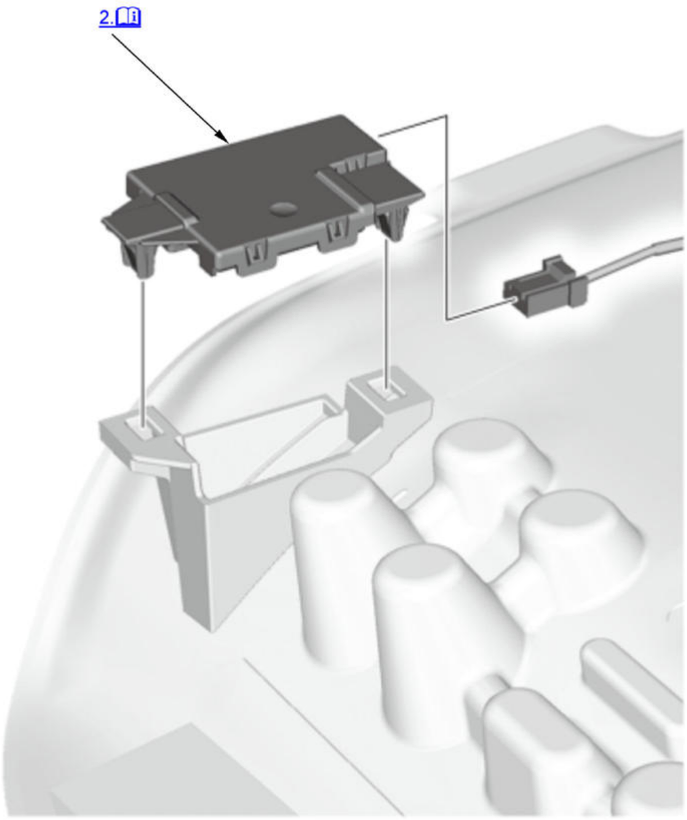

1. **Headliner - Remove**
2. Electrical Compass Unit - Remove

   NOTE: If you replaced the electrical compass unit, **set the compass zone calibrate** .

3. All Removed Parts - Install

   Install the parts in the reverse order of removal.

FRONT CENTER SENSOR REMOVAL AND INSTALLATION (2020 2021)

Removal and Installation

NOTE: Where icon is shown, further information shown below.

Reset the parking and back-up sensor control unit after doing any of the following actions:

- When you replace the parking and back-up sensor.
- When you change the parking and back-up sensor mounting location from the original location.

1

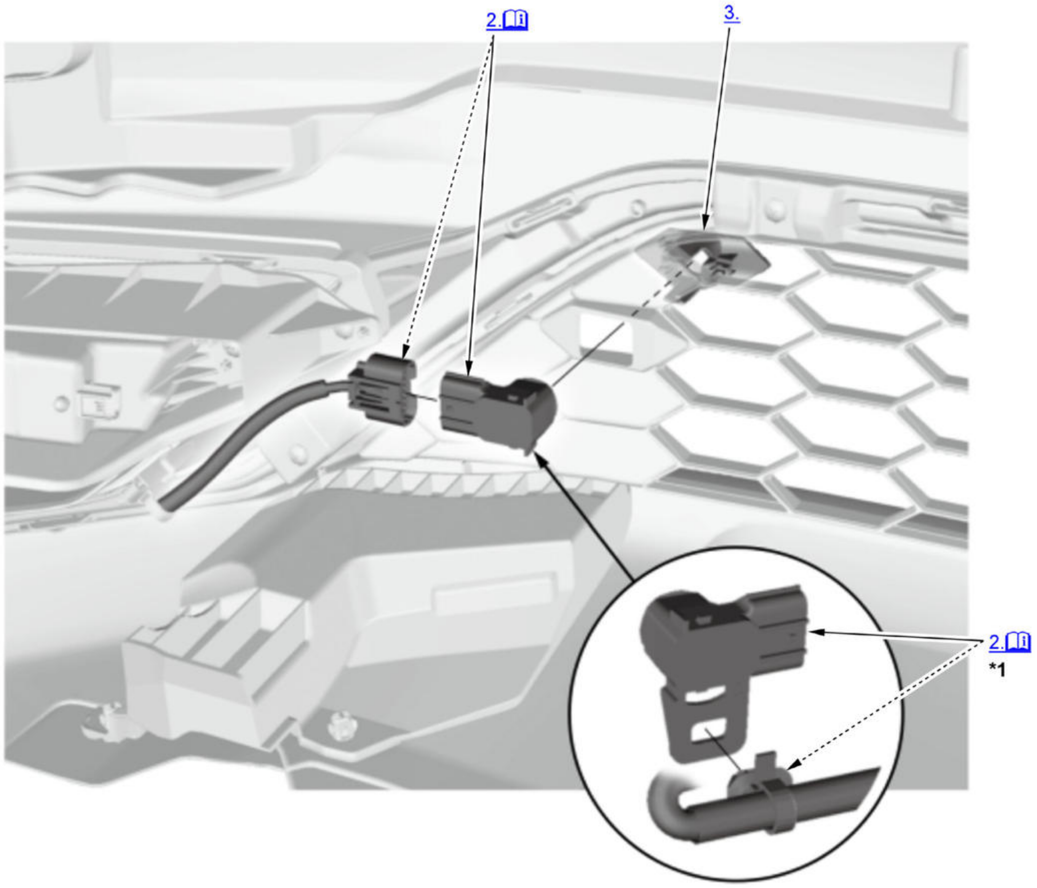

ℹ	Detailed information, notes, and precautions
*1	Right side

1. **Front Bumper - Remove**
2. Front Center Sensor - Remove

   1. Right side: Remove the harness clip.

3. Retainer - Remove
4. All Removed Parts - Install

   1. Install the parts in the reverse order of removal.

5. **Parking and Back-Up Sensor Control Unit - Reset**

FRONT CORNER SENSOR REMOVAL AND INSTALLATION (2020 2021)

Removal and Installation

NOTE: ℹ Where icon is shown, further information shown below.

Reset the parking and back-up sensor control unit after doing any of the following actions:

- When you replace the parking and back-up sensor.
- When you change the parking and back-up sensor mounting location from the original location.

1

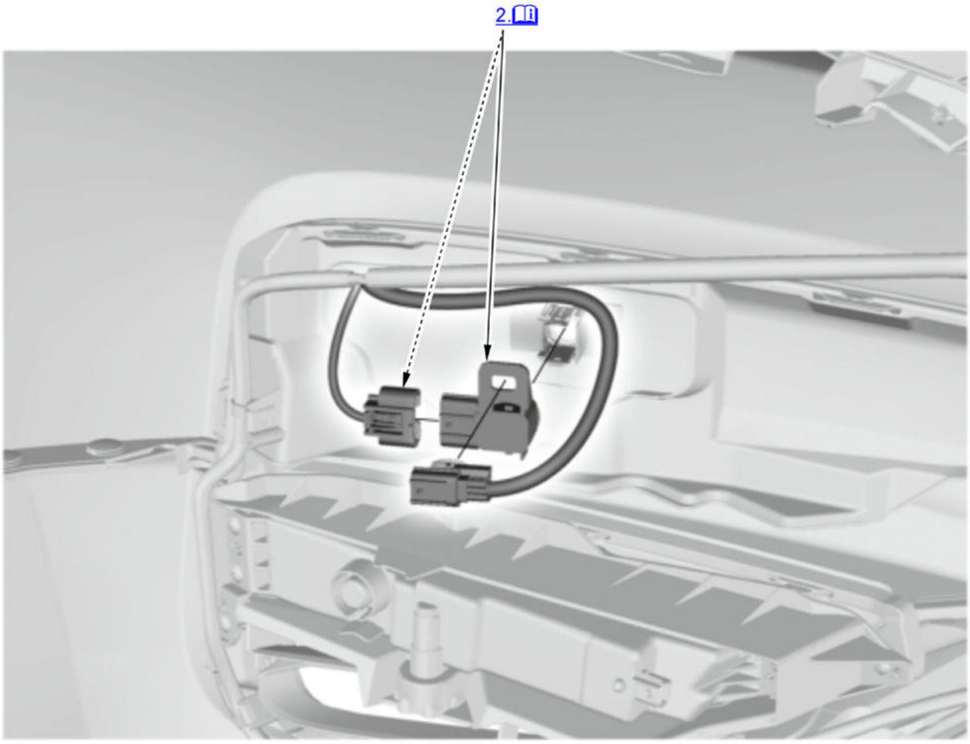

📖	Detailed information, notes, and precautions

1. **Front Bumper - Remove**
2. Front Corner Sensor - Remove

   1. Remove the connector clip as needed.

3. All Removed Parts - Install

   1. Install the parts in the reverse order of removal.

4. **Parking and Back-Up Sensor Control Unit - Reset**

GAUGE CONTROL MODULE REMOVAL AND INSTALLATION

Removal and Installation

NOTE:

- 📖 Where icon is shown, further information shown below.
- Before replacing the gauge control module, **retrieve the ODO data from the gauge control module with the HDS** .
- After the gauge control module is removed or reinstalled, **do the Gauge Self-Diagnostic Function procedure** .

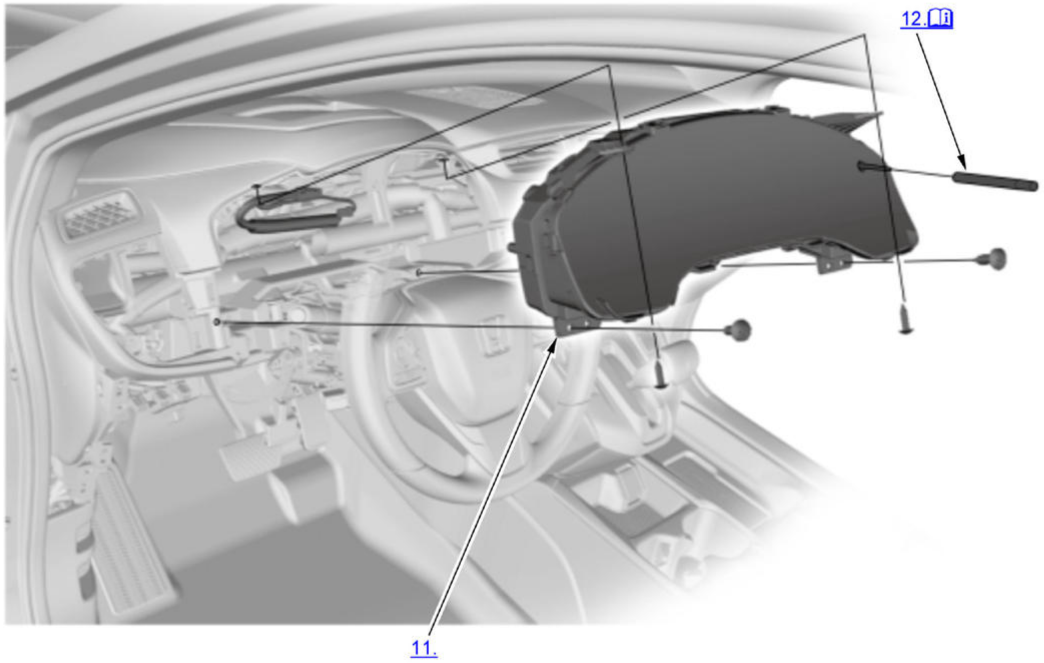

ℹ	Detailed information, notes, and precautions

1. Gauge Control Module - Retrieve

NOTE:

- Obtain a new gauge control module before starting the rewriting process. Only new gauges can be rewritten.
- Do not operate anything electrical (headlights, audio system, A/C, power window, door locks etc.) during the process.
- Rewriting is not possible on a gauge control module that will not communicate with the HDS.
- Make sure that the HDS shows the correct VIN for the vehicle you are working on.
- Once you have started this procedure, you must complete it before removing the HDS from the data link connector.
- Connect a 12 volt battery charger to insure that the 12 volt battery voltage is maintained during the process.

1. **Connect the HDS to the data link connector**

2. Select GAUGES from the BODY ELECTRICAL SYSTEM SELECT menu with the HDS.

3. Select GAUGE CONTROL MODULE REPLACEMENT (ODO Rewrite) from the ADJUSTMENT menu, and follow the instructions on the display to retrieve the ODO value.

2. **Meter Visor - Remove**
3. **Driver's Lower Ornament Panel - Remove**
4. **Driver's Outlet - Remove**
5. **Driver's Dashboard Lower Cover - Remove**
6. **Driver's Dashboard Outer Panel - Remove**

7. **Climate Control Panel - Remove**
8. **Audio Unit - Remove (Without Audio-Navigation Unit)**
9. **Audio-Navigation Unit -Remove (With Audio-Navigation Unit)**
10. **Driver's Dashboard Inner Panel - Remove**
11. Gauge Control Module - Remove
12. Select/Reset Knob - Remove

1. Pull out the select/reset knob.

13. All Removed Parts - Install

1. Install the parts in the reverse order of removal. **NOTE:** **If the original gauge control module was installed, confirm that all systems are working properly.**

14. Gauge Control Module - Rewrite

1. Select WRITE DATA and following the instructions on the HDS display, install the ODO value data onto a new gauge control module. If the data transfer fails, **refer to the instructions below to release the locked ODO value** .

15. Gauge Control Module - Update

NOTE: If replacing the gauge control module, do the gauge control module update procedure.

PARKING AND BACK-UP SENSOR CONTROL UNIT REMOVAL AND INSTALLATION (2020 2021)

Removal and Installation

1

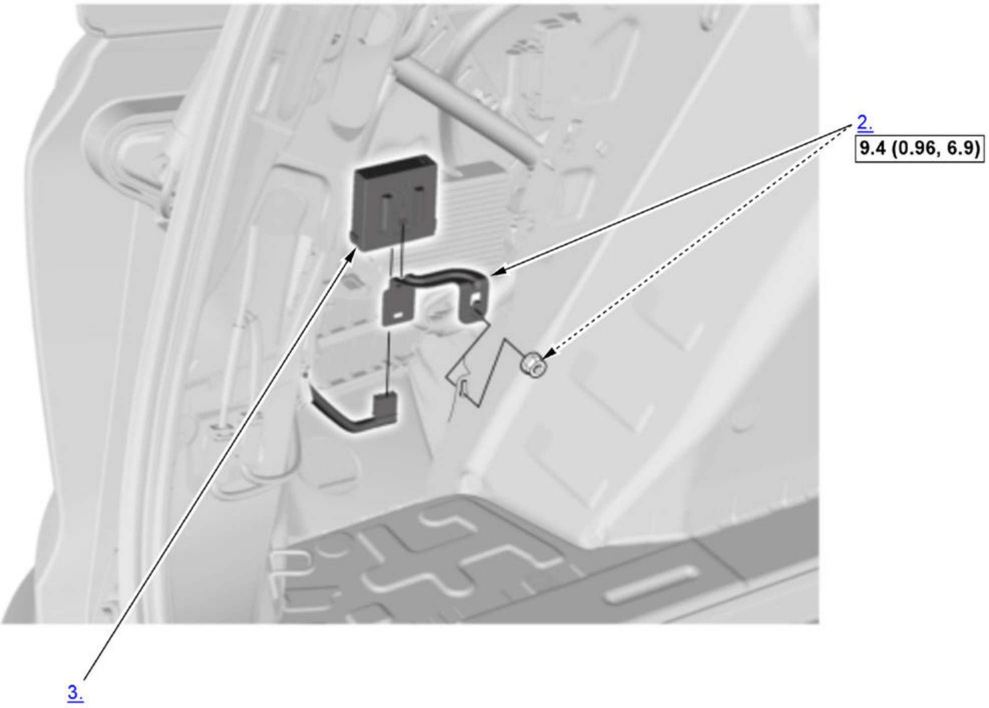

▭	Torque: N.m (kgf.m, lbf.ft)

1. **Left Rear Side Trim Panel - Remove**
2. Bracket - Remove
3. Parking and Back-Up Sensor Control Unit - Remove
4. All Removed Parts - Install

   1. Install the parts in the reverse order of removal.

REAR CENTER SENSOR REMOVAL AND INSTALLATION (2020 2021)

Removal and Installation

NOTE: ℹ Where icon is shown, further information shown below.

Reset the parking and back-up sensor control unit after doing any of the following actions:

- When you replace the parking and back-up sensor.
- When you change the parking and back-up sensor mounting location from the original location.

1

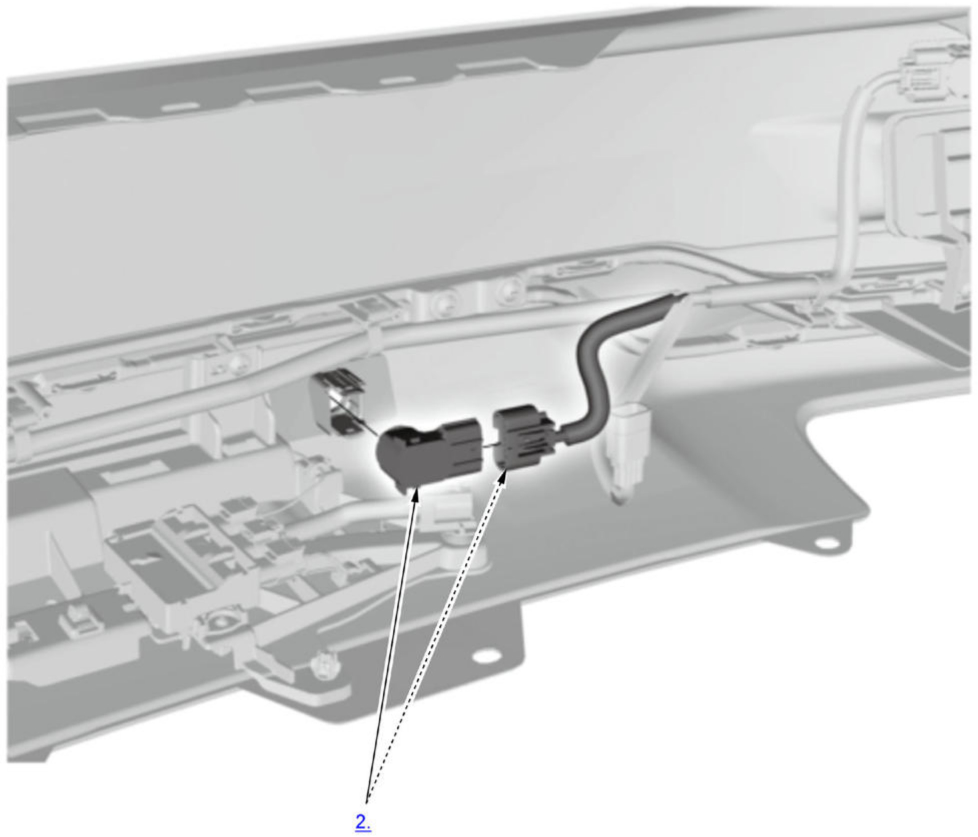

1. **Rear Bumper - Remove**
2. Rear Center Sensor - Remove
3. All Removed Parts - Install

   1. Install the parts in the reverse order of removal.

4. **Parking and Back-Up Sensor Control Unit - Reset**

REAR CORNER SENSOR REMOVAL AND INSTALLATION (2020 2021)

Removal and Installation

NOTE: Where icon is shown, further information shown below.

Reset the parking and back-up sensor control unit after doing any of the following actions:

- When you replace the parking and back-up sensor.
- When you change the parking and back-up sensor mounting location from the original location.

1

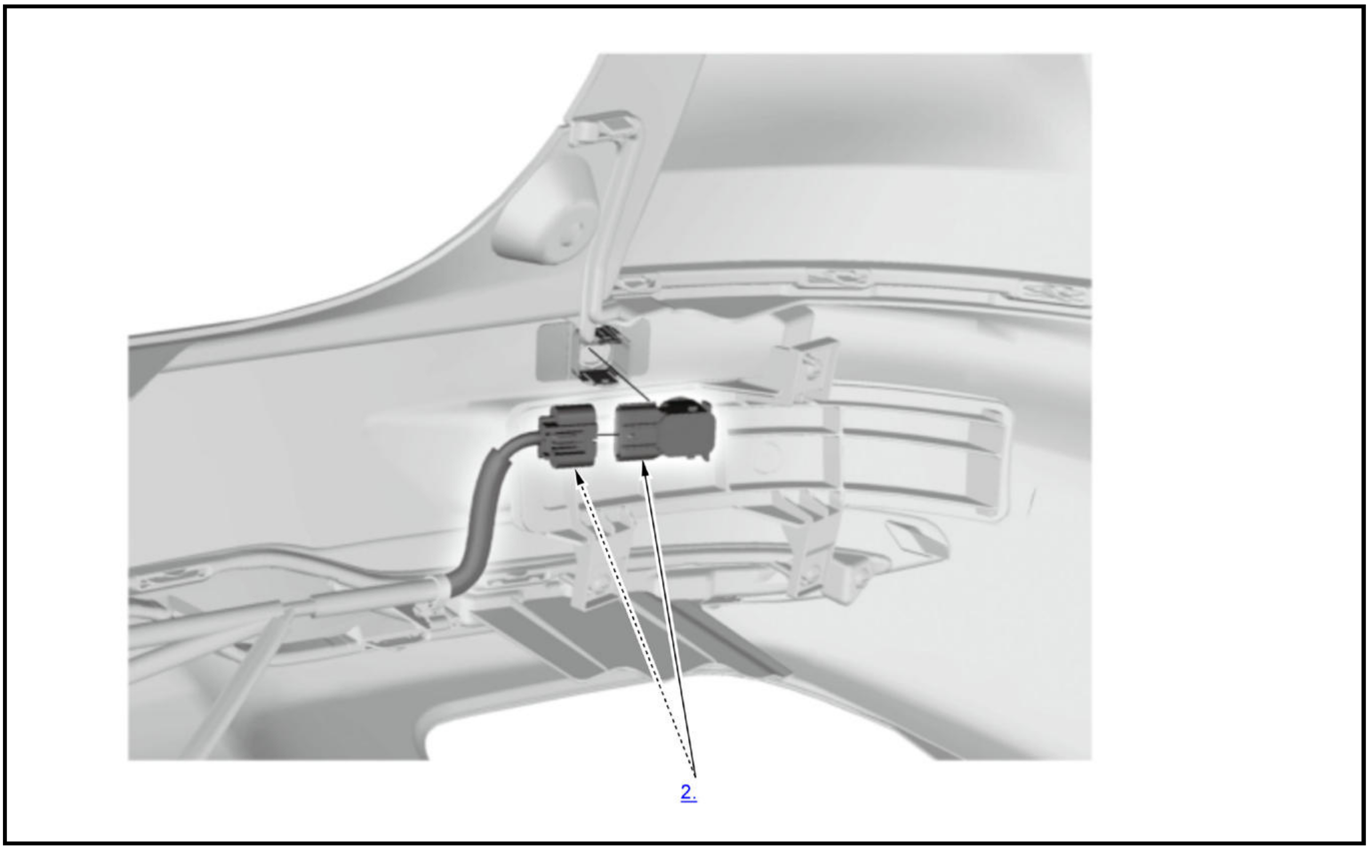

1. **Rear Bumper - Remove**
2. Rear Corner Sensor - Remove
3. All Removed Parts - Install

   1. Install the parts in the reverse order of removal.

4. **Parking and Back-Up Sensor Control Unit - Reset**

REMOVAL AND INSTALLATION

ACOUSTIC VEHICLE ALERTING CONTROL UNIT REMOVAL AND INSTALLATION

Removal and Installation

Procedure

NOTE: Numbered call-outs in figure pertain to list numbers in following procedure.

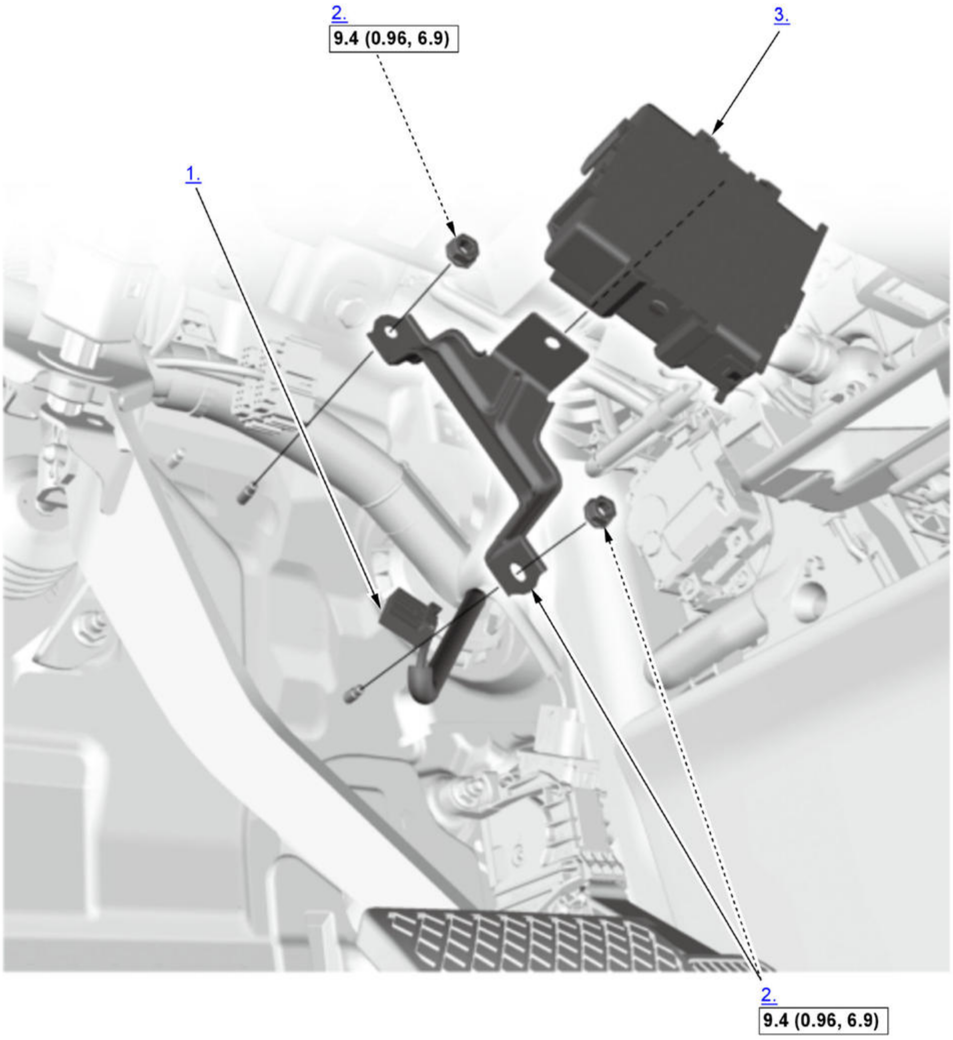

Fig. 1: Exploded View Of Acoustic Vehicle Alerting Control Unit Components
Courtesy of HONDA, U.S.A., INC.

☐	Torque: N.m (kgf.m, lbf.ft)

1. Connector - Disconnect
2. Bracket - Remove
3. Acoustic Vehicle Alerting Control Unit - Remove
4. All Removed Parts - Install

1. Install the parts in the reverse order of removal.

ACOUSTIC VEHICLE ALERTING SPEAKER REMOVAL AND INSTALLATION

Removal and Installation

Procedure

NOTE: **Numbered call-outs in figure pertain to list numbers in following procedure.**

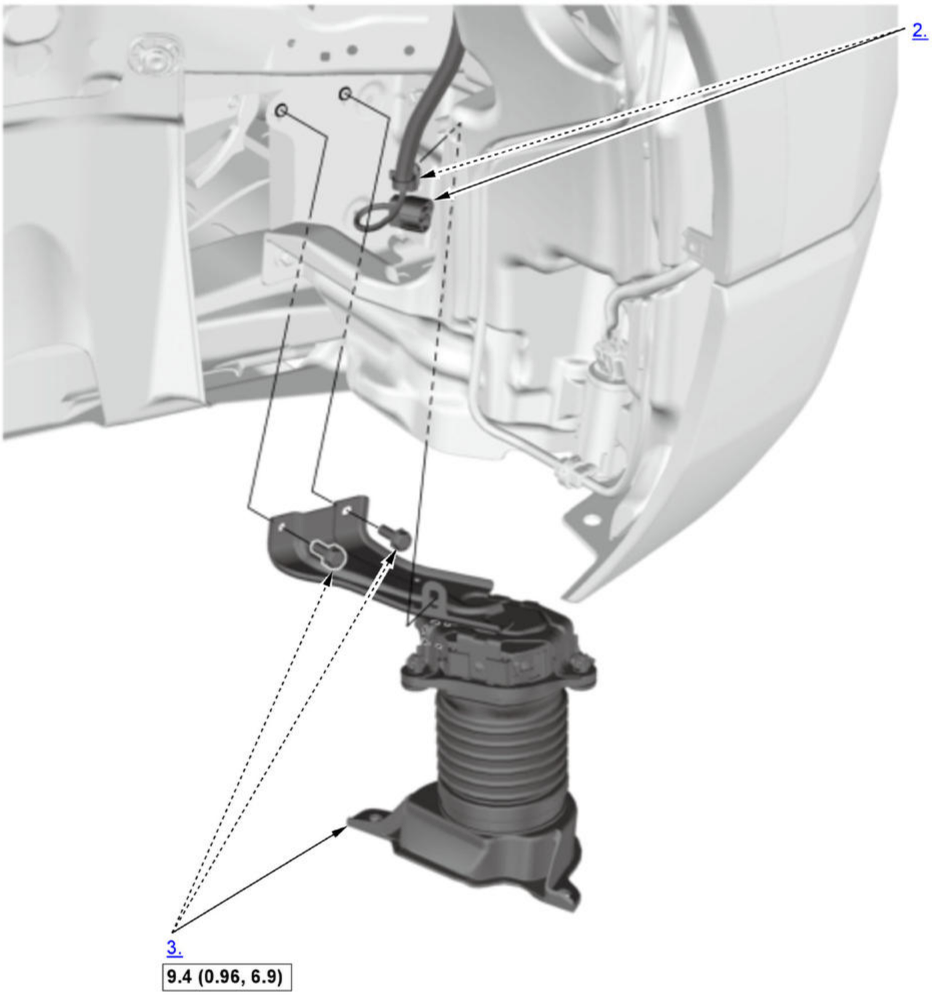

Fig. 2: Exploded View Of Acoustic Vehicle Alerting Speaker Components (1 Of 2)
Courtesy of HONDA, U.S.A., INC.

▭	Torque: N.m (kgf.m, lbf.ft)

NOTE: **Numbered call-outs in figure pertain to list numbers in following procedure.**

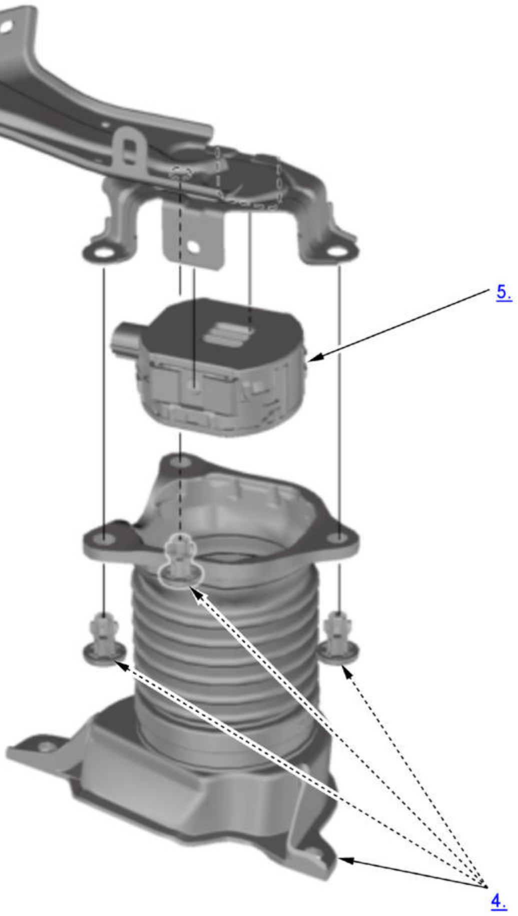

Fig. 3: Exploded View Of Acoustic Vehicle Alerting Speaker Components (2 Of 2)
Courtesy of HONDA, U.S.A., INC.

1. Front Inner Fender - Remove

   1. Remove the front inner fender as needed.

2. Connector - Disconnect
3. Acoustic Vehicle Alerting Speaker Assembly - Remove
4. Acoustic Vehicle Alerting Speaker Duct - Remove
5. Acoustic Vehicle Alerting Speaker - Remove
6. All Removed Parts - Install

   1. Install the parts in the reverse order of removal.

ELECTRICAL COMPASS UNIT REMOVAL AND INSTALLATION

Removal and Installation

SRS components are located in this area. Review the SRS component locations and the precautions and procedures before doing repairs or service.

NOTE: 🛈 Where icon is shown, for further information see below.

Procedure

NOTE: **Numbered call-outs in figure pertain to list numbers in following procedure.**

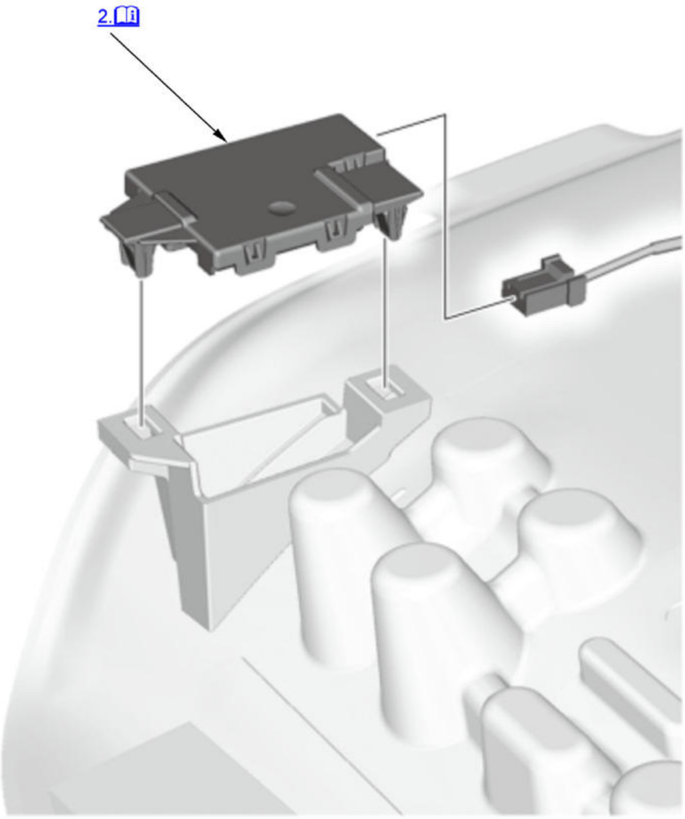

Fig. 4: Electrical Compass Unit Components
Courtesy of HONDA, U.S.A., INC.

1. Headliner - Remove
2. Electrical Compass Unit - Remove

   Note for installation

   If you replaced the electrical compass unit, set the compass zone calibrate .

3. All Removed Parts - Install

   Install the parts in the reverse order of removal.

ENGINE OIL PRESSURE SENSOR REMOVAL AND INSTALLATION

Removal and Installation

NOTE: 🕮 Where icon is shown, for further information see below.

Procedure

NOTE: **Numbered call-outs in figure pertain to list numbers in following procedure.**

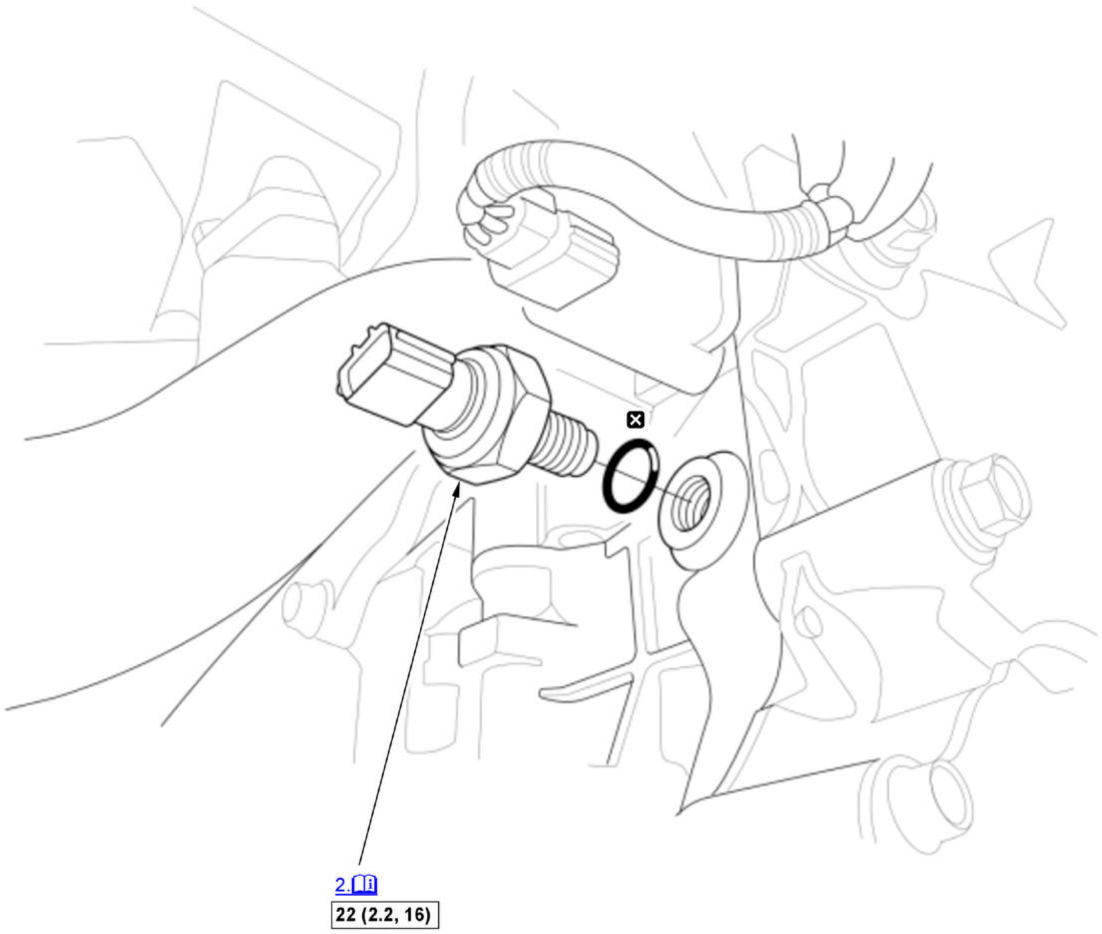

Fig. 5: Engine Oil Pressure Sensor Components With Torque Specifications
Courtesy of HONDA, U.S.A., INC.

ℹ	Detailed information, notes, and precautions
☐	Torque: N.m (kgf.m, lbf.ft)
☒	Replace

1. Right Front Wheel - Remove
2. Engine Oil Pressure Sensor - Remove

   Note for installation

   1. Install the engine oil pressure sensor by finger-tight until the O-ring sits on the engine block.

   2. Tighten the engine oil pressure sensor to the specified torque.

3. All Removed Parts - Install

   1. Install the parts in the reverse order of removal.

FRONT CENTER SENSOR REMOVAL AND INSTALLATION

Removal and Installation

NOTE: 🕮 Where icon is shown, for further information see below.

Reset the parking and back-up sensor control unit after doing any of the following actions:

- When you replace the parking and back-up sensor.
- When you change the parking and back-up sensor mounting location from the original location.

Procedure

NOTE: Numbered call-outs in figure pertain to list numbers in following procedure.

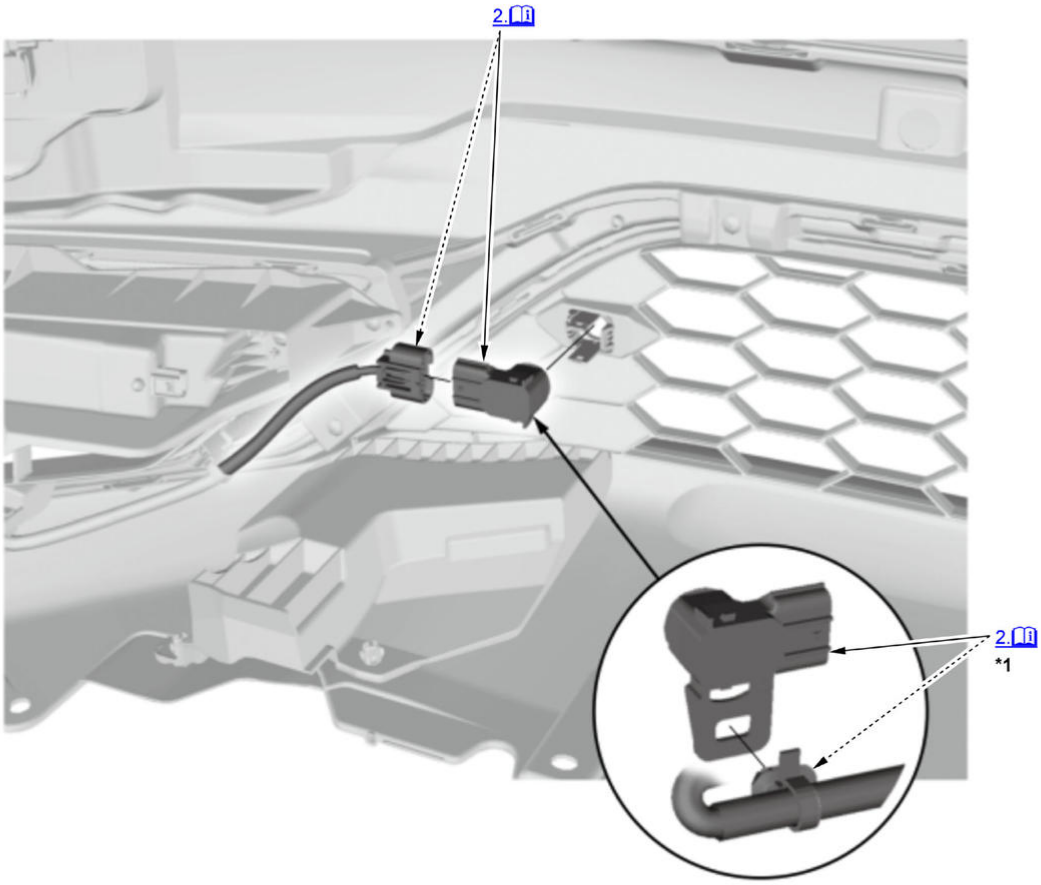

Fig. 6: Front Center Sensor Components
Courtesy of HONDA, U.S.A., INC.

🕮	Detailed information, notes, and precautions
*1	Right side

1. **Front Bumper - Remove**
2. Front Center Sensor - Remove

   1. Right side: Remove the harness clip.

3. All Removed Parts - Install

   1. Install the parts in the reverse order of removal.

4. **Parking and Back-Up Sensor Control Unit - Reset**

FRONT CORNER SENSOR REMOVAL AND INSTALLATION

Removal and Installation

NOTE: 📖 Where icon is shown, for further information see below.

Reset the parking and back-up sensor control unit after doing any of the following actions:

- When you replace the parking and back-up sensor.
- When you change the parking and back-up sensor mounting location from the original location.

Procedure

NOTE: **Numbered call-outs in figure pertain to list numbers in following procedure.**

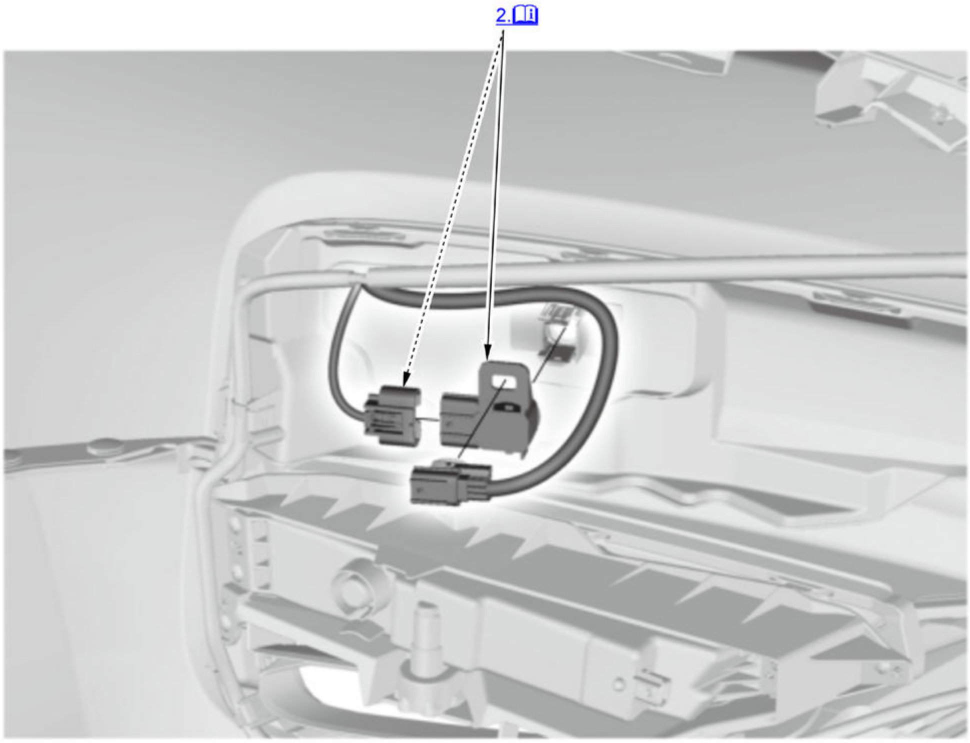

Fig. 7: Front Corner Sensor Components
Courtesy of HONDA, U.S.A., INC.

📖	Detailed information, notes, and precautions

1. Front Bumper - Remove
2. Front Corner Sensor - Remove

    1. Remove the connector clip as needed.

3. All Removed Parts - Install

    1. Install the parts in the reverse order of removal.

4. **Parking and Back-Up Sensor Control Unit - Reset**

GAUGE CONTROL MODULE REMOVAL AND INSTALLATION

Removal and Installation

NOTE:

- ℹ Where icon is shown, for further information see below.
- Before replacing the gauge control module, **retrieve the ODO data from the gauge control module with the HDS** .
- After the gauge control module is removed or reinstalled, **do the Gauge Self-Diagnostic Function procedure** .

Procedure

NOTE: **Numbered call-outs in figure pertain to list numbers in following procedure.**

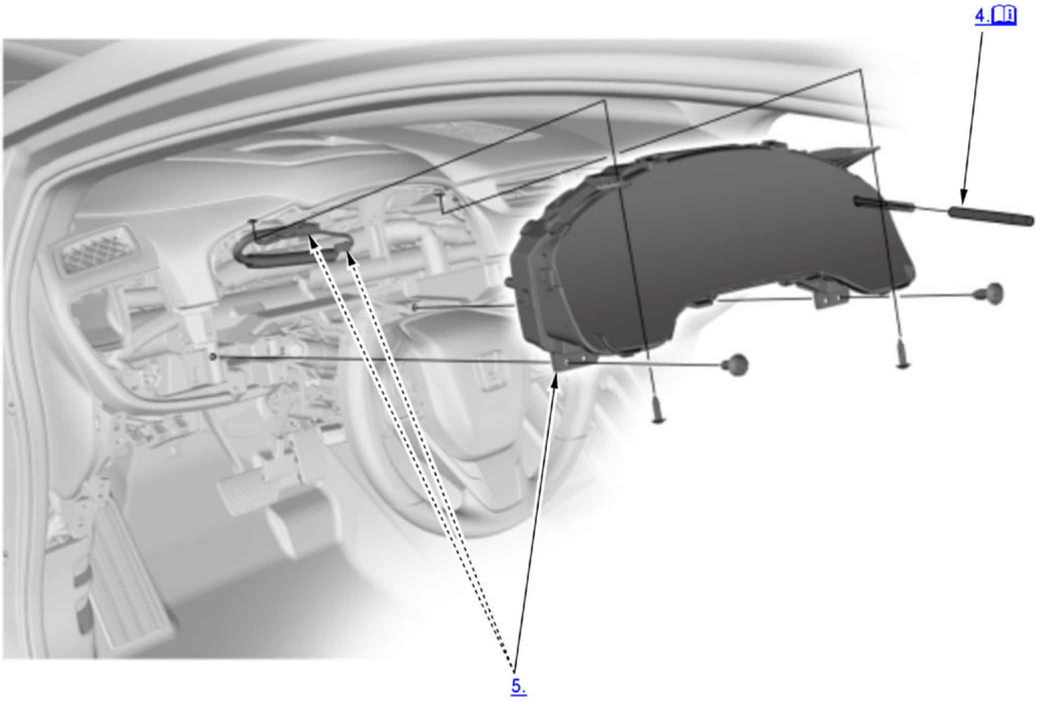

Fig. 8: Exploded View Of Gauge Control Module Components
Courtesy of HONDA, U.S.A., INC.

ℹ	Detailed information, notes, and precautions

1. Gauge Control Module - Retrieve

   NOTE: If replacing the gauge control module, **refer to Rewriting the ODO Data on a New Gauge Control Module Procedure (Rewriting)** .

2. **Driver's Dashboard Outer Panel - Remove**
3. **Driver's Dashboard Inner Panel - Remove**
4. Select/Reset Knob - Remove

    1. Pull out the select/reset knob.

5. Gauge Control Module - Remove
6. All Removed Parts - Install

    1. Install the parts in the reverse order of removal.

7. Gauge Control Module - Transfer

    NOTE:

    - After replacing, install the ODO value data onto a new gauge control module, **refer to Rewriting the ODO Data on a New Gauge Control Module Procedure (Transferring)** .
    - If the data transfer fails, **refer to the instructions to release the locked ODO value** .

8. Gauge Control Module - Update

    NOTE: If you are replacing the gauge control module, **do the gauge control module update procedure** .

PARKING AND BACK-UP SENSOR CONTROL UNIT REMOVAL AND INSTALLATION

Removal and Installation

Procedure

NOTE: **Numbered call-outs in figure pertain to list numbers in following procedure.**

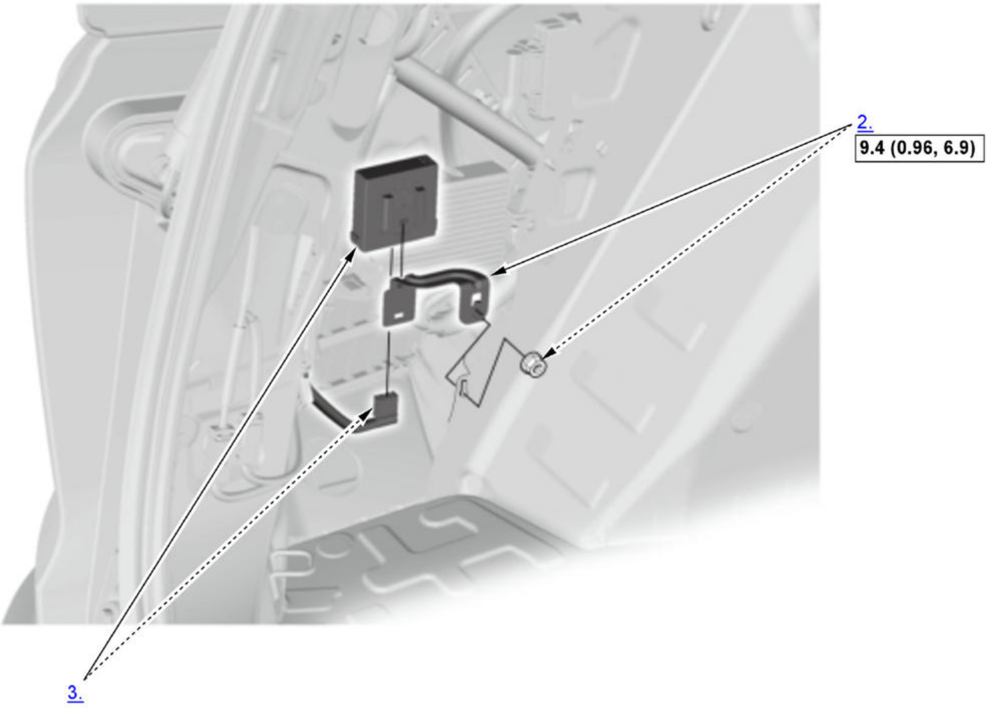

Fig. 9: Parking And Back-Up Sensor Control Unit Components
Courtesy of HONDA, U.S.A., INC.

☐	Torque: N.m (kgf.m, lbf.ft)

1. **Left Rear Side Trim Panel - Remove**

2. Bracket - Remove
3. Parking and Back-Up Sensor Control Unit - Remove
4. All Removed Parts - Install

    1. Install the parts in the reverse order of removal.

5. Parking and Back-Up Sensor Control Unit - Reset

    NOTE: If you are substituting a known-good parking and back-up sensor control unit, **reset the parking and back-up sensor control unit** .

REAR CENTER SENSOR REMOVAL AND INSTALLATION

Removal and Installation

NOTE: ℹ Where icon is shown, for further information see below.

Reset the parking and back-up sensor control unit after doing any of the following actions:

- When you replace the parking and back-up sensor.
- When you change the parking and back-up sensor mounting location from the original location.

Procedure

NOTE: **Numbered call-outs in figure pertain to list numbers in following procedure.**

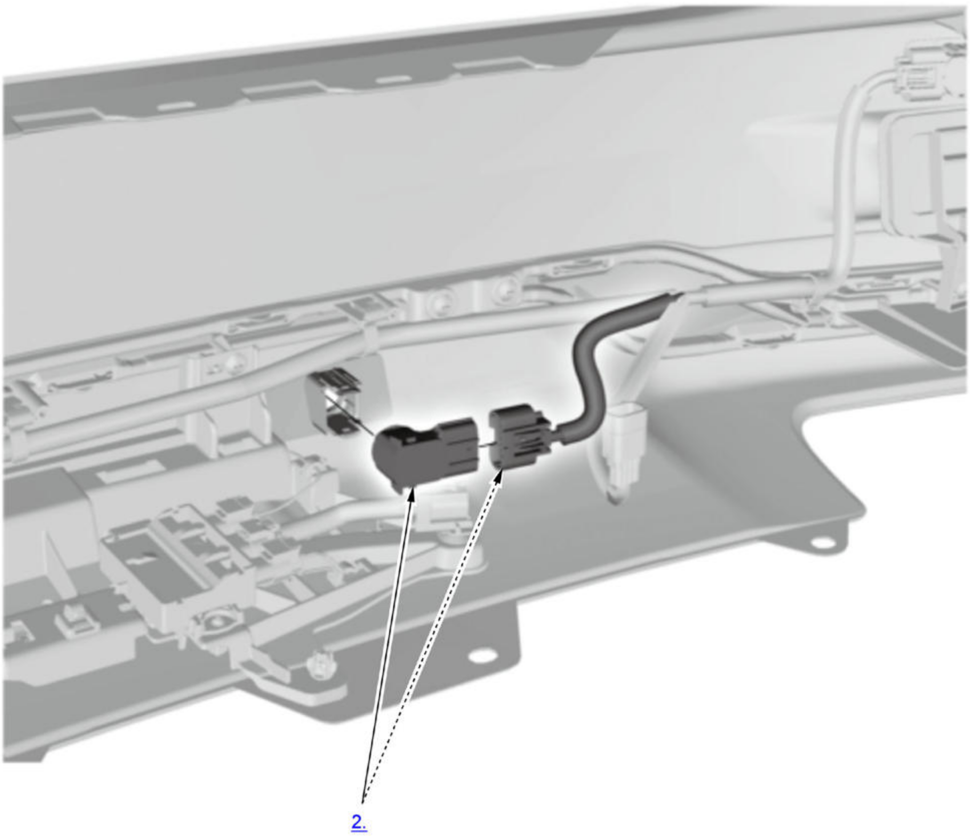

Fig. 10: Rear Center Sensor Components
Courtesy of HONDA, U.S.A., INC.

1. **Rear Bumper - Remove**
2. Rear Center Sensor - Remove

3. All Removed Parts - Install

   1. Install the parts in the reverse order of removal.

4. Parking and Back-Up Sensor Control Unit - Reset

REAR CORNER SENSOR REMOVAL AND INSTALLATION

Removal and Installation

NOTE: 🕮 Where icon is shown, for further information see below.

Reset the parking and back-up sensor control unit after doing any of the following actions:

- When you replace the parking and back-up sensor.
- When you change the parking and back-up sensor mounting location from the original location.

Procedure

NOTE: **Numbered call-outs in figure pertain to list numbers in following procedure.**

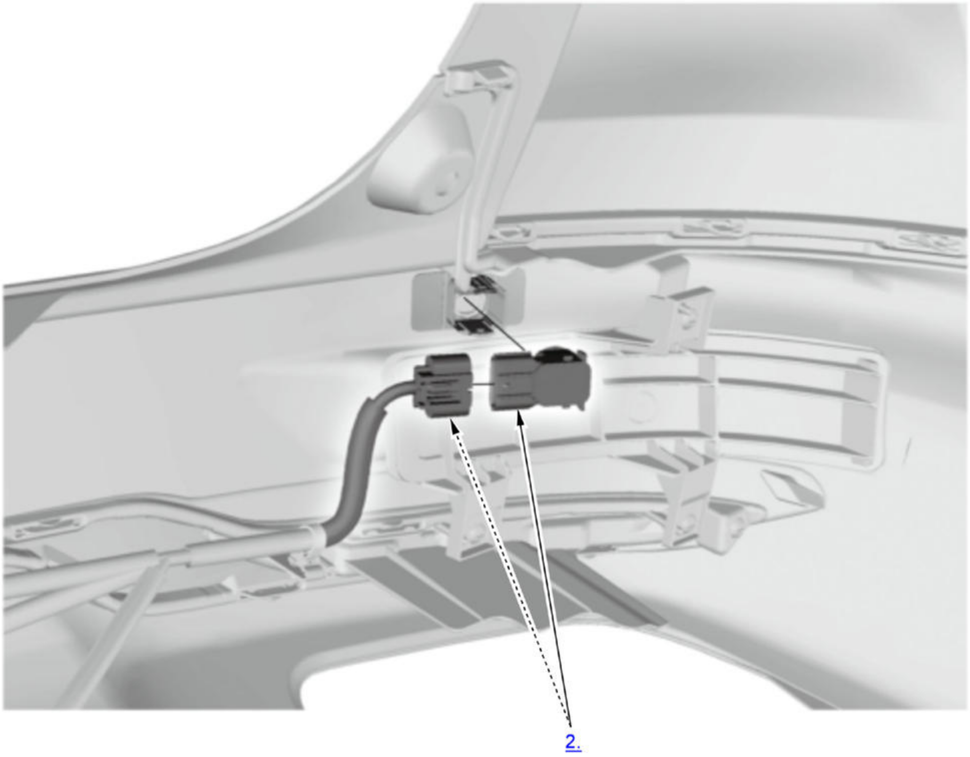

Fig. 11: Rear Corner Sensor Components
Courtesy of HONDA, U.S.A., INC.

1. Rear Bumper - Remove
2. Rear Corner Sensor - Remove
3. All Removed Parts - Install

   1. Install the parts in the reverse order of removal.

4. Parking and Back-Up Sensor Control Unit - Reset

REMOVAL, INSTALLATION & TEST

ECON SWITCH REMOVAL, INSTALLATION, AND TEST

Removal and Installation

Procedure

NOTE: **Numbered call-outs in figure pertain to list numbers in following procedure.**

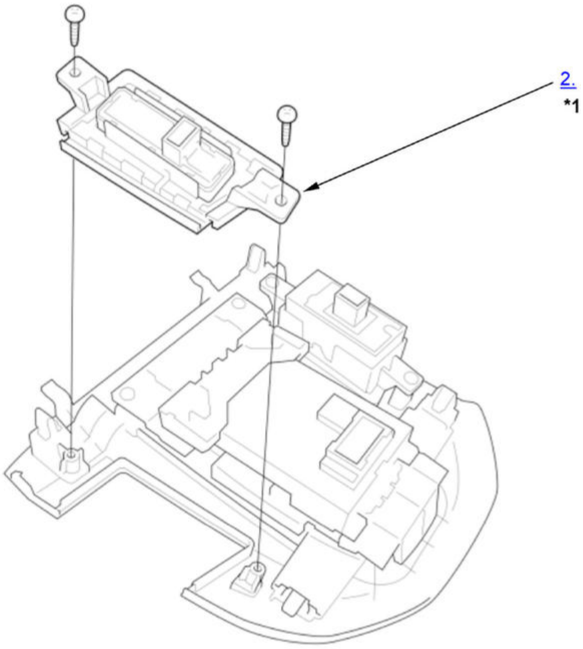

Fig. 12: ECON Switch Components
Courtesy of HONDA, U.S.A., INC.

*1	ECON Switch Light: LED

1. Escutcheon Panel - Remove
2. ECON Switch - Remove
3. All Removed Parts - Install

   1. Install the parts in the reverse order of removal.

Test

1. ECON Switch - Test

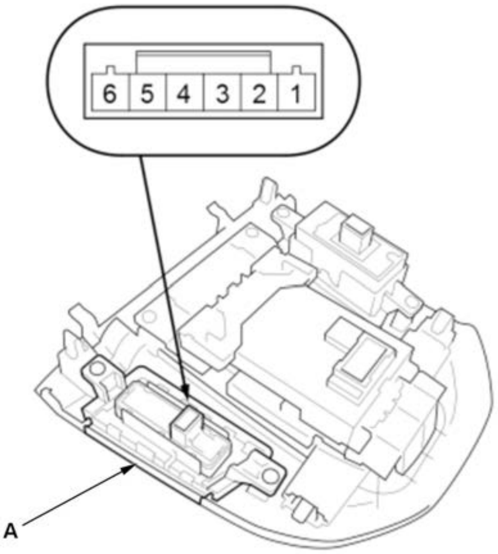

Terminal / Position/Illumination	2	4	5		6
Pressed	○	○			
ECON switch lights			⊕	—▷|—ʍʍ—	⊖

○—○ = Continuity check
⊕—⊖ = Voltage for LED

1. Check the switch according to the table.

NOTE:

- When an LED is located between terminals, check if the LED illuminates by connecting power and ground to the LED.
- Note this important operating characteristic; diode bias causes a diode to fully conduct electricity in one direction (forward), while not at all in the opposite direction (reverse).

2. If the result is not as specified, replace the ECON switch (A).

2. All Removed Parts - Install

1. Install the parts in the reverse order of removal.

PADDLE SHIFTER REMOVAL, INSTALLATION, AND TEST

Removal and Installation

SRS components are located in this area. Review **the SRS component locations** and **the precautions and procedures** before doing repair or service.

Procedure

NOTE: **Numbered call-outs in figure pertain to list numbers in following procedure.**

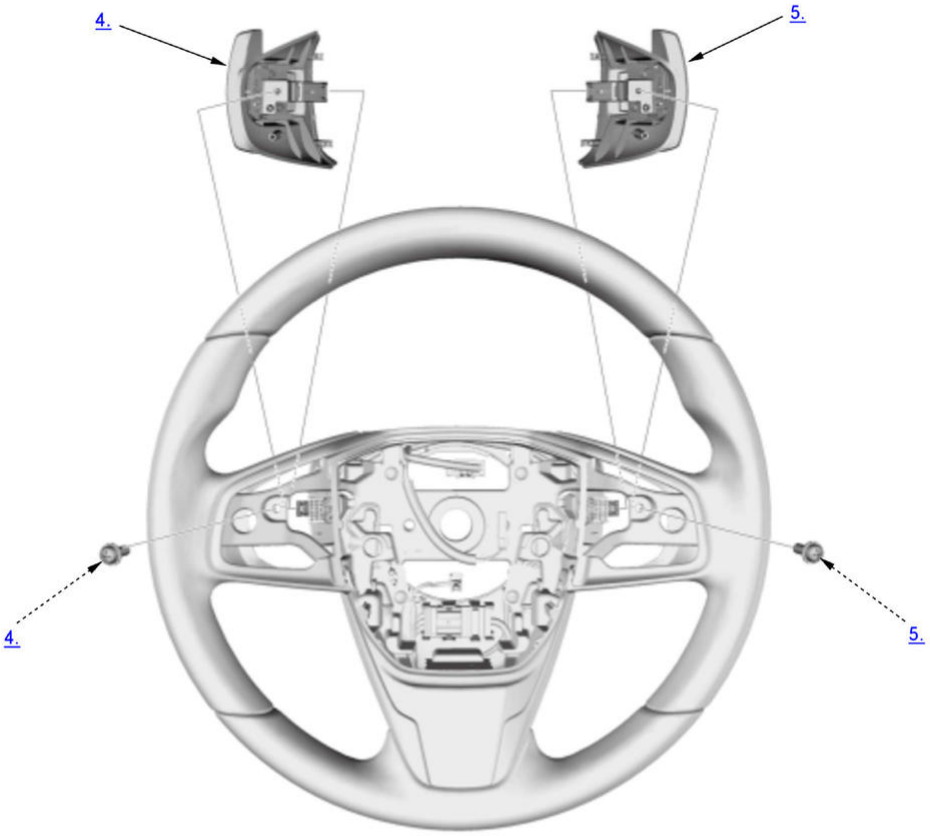

Fig. 13: Exploded View Of Paddle Shifter Components
Courtesy of HONDA, U.S.A., INC.

1. Steering Wheel - Remove
2. Steering Wheel Rear Cover - Remove
3. Steering Wheel Trim - Remove
4. Paddle Shifter - - Remove
5. Paddle Shifter + - Remove
6. All Removed Parts - Install

    1. Install the parts in the reverse order of removal.

7. VSA Sensor Neutral Position - Memorize

Test

SRS components are located in this area. Review the SRS component locations and the precautions and procedures before doing repair or service.

1. Paddle Shifter - Remove
2. Paddle Shifter - Test

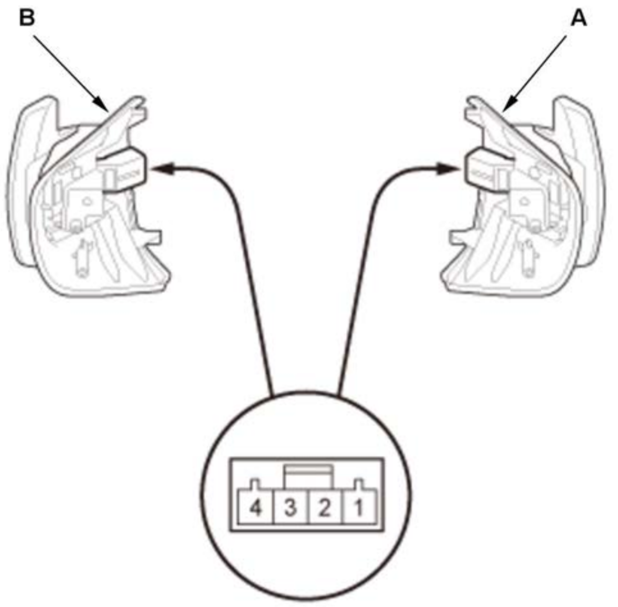	1. Test the paddle shifter + (A) and the paddle shifter - (B) according to the table. 2. If the result is not as specified, replace the paddle shifter + and/or the paddle shifter -.

Paddle Shifter +

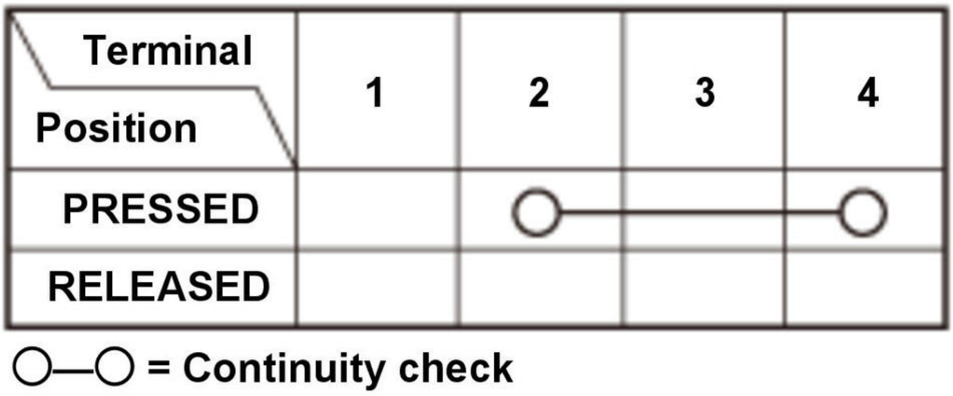

Terminal / Position	1	2	3	4
PRESSED		○	—	○
RELEASED				

○—○ = Continuity check

Paddle Shifter -

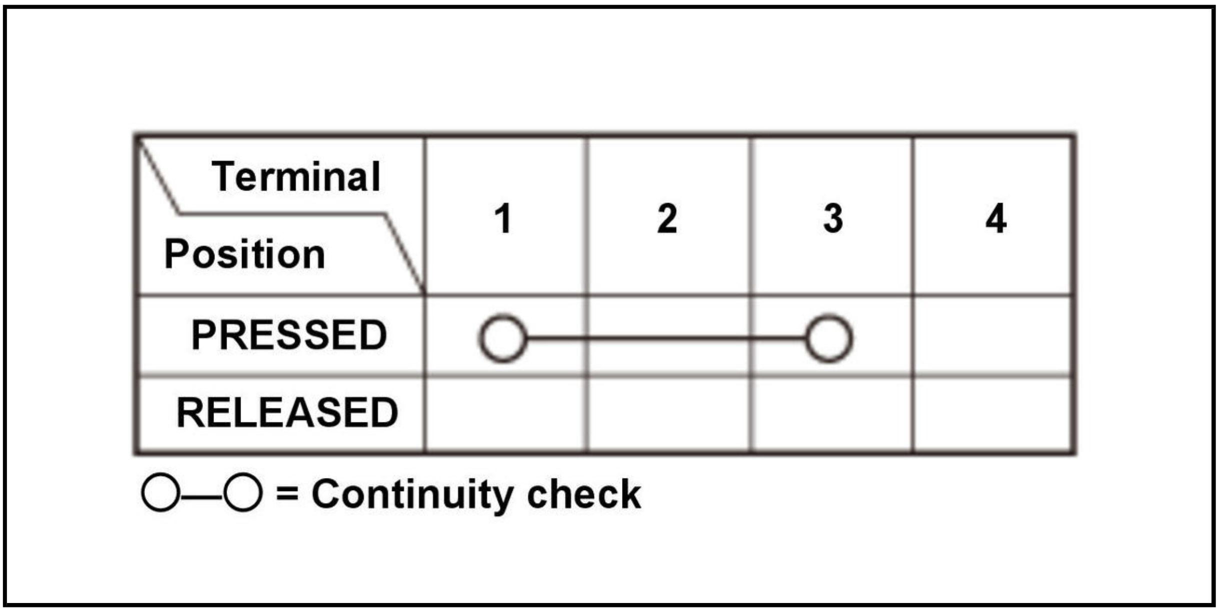

Terminal / Position	1	2	3	4
PRESSED	○—	—	—○	
RELEASED				

○—○ = Continuity check

PARKING AND BACK-UP SENSOR SWITCH REMOVAL, INSTALLATION, AND TEST

Removal and Installation

NOTE: The switch location of the parking and back-up sensor switch is different depending on the model.

Procedure

NOTE: **Numbered call-outs in figure pertain to list numbers in following procedure.**

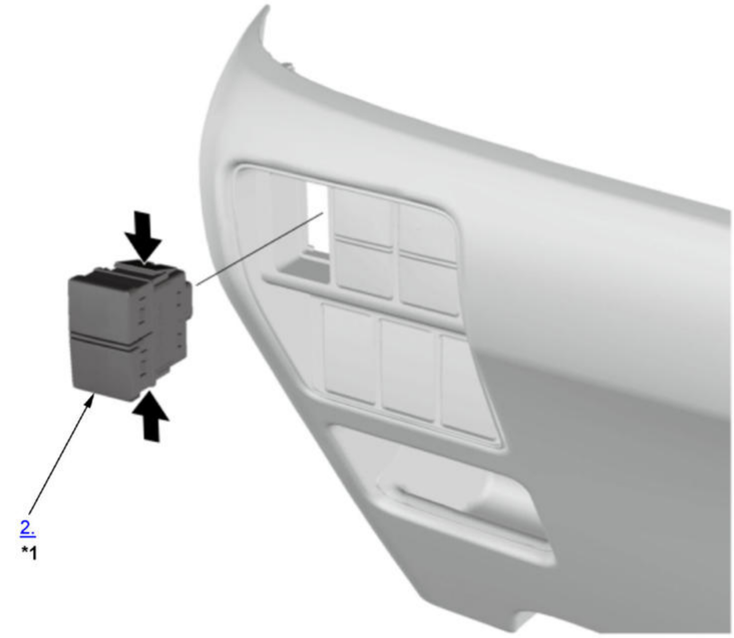

Fig. 14: Parking And Back-Up Sensor Switch Components
Courtesy of HONDA, U.S.A., INC.

*1	Parking and Back-Up Sensor Switch Light: LED

1. Driver's Dashboard Lower Cover - Remove
2. Parking and Back-Up Sensor Switch - Remove
3. All Removed Parts - Install
    1. Install the parts in the reverse order of removal.

Test

1. Parking and Back-Up Sensor Switch - Test

The switch location of the parking and back-up sensor switch (A) is different depending on the model.

1. Check the parking and back-up sensor switch according to the table.

NOTE:

- When an LED is located between terminals, check if the LED illuminates by connecting power and ground to the LED.
- Note this important operating characteristic; diode bias causes a diode to fully conduct electricity in one direction (forward), while not at all in the opposite direction (reverse).
- Make sure the correct test lead (+ or -) is placed on the terminal.

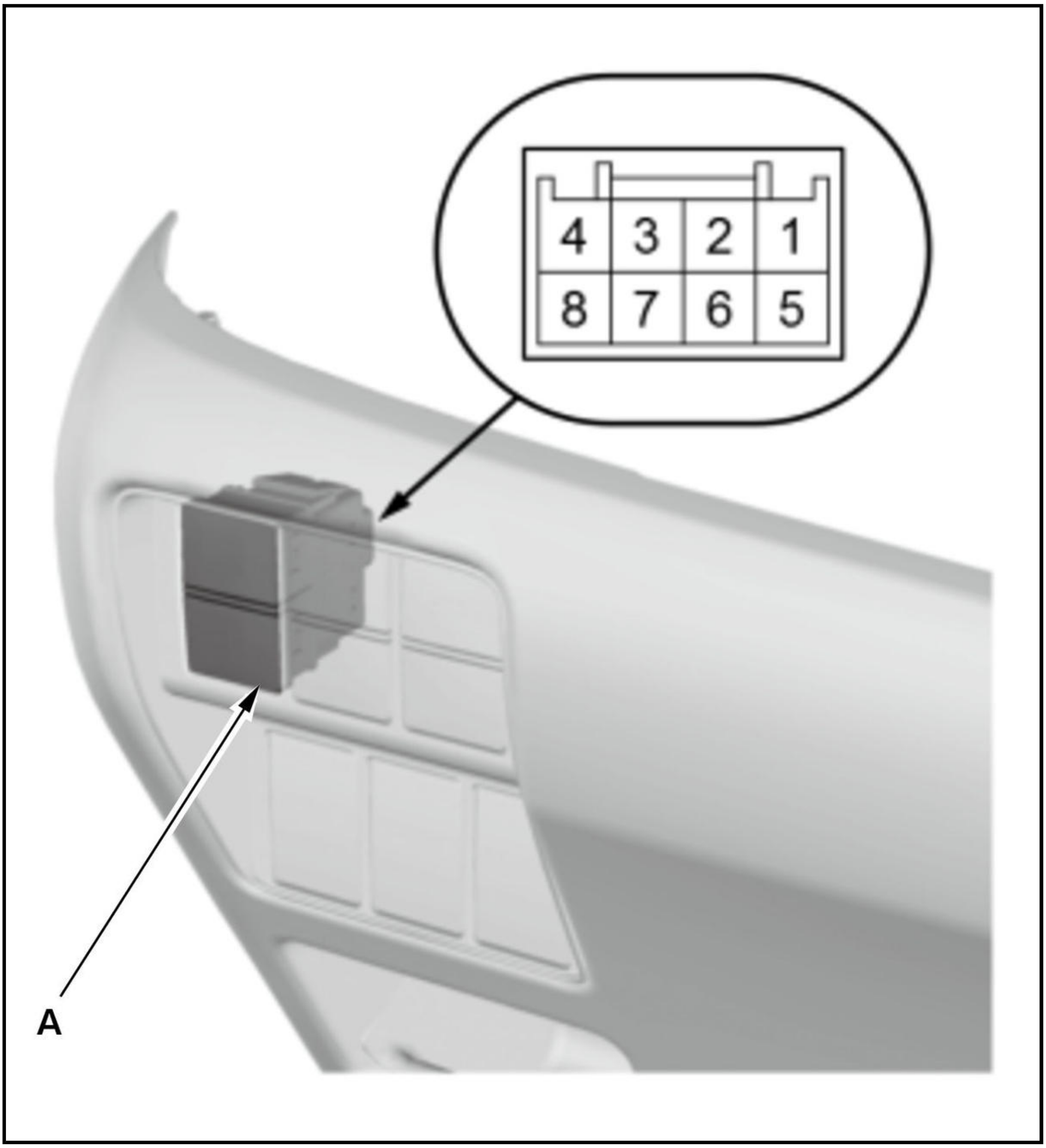

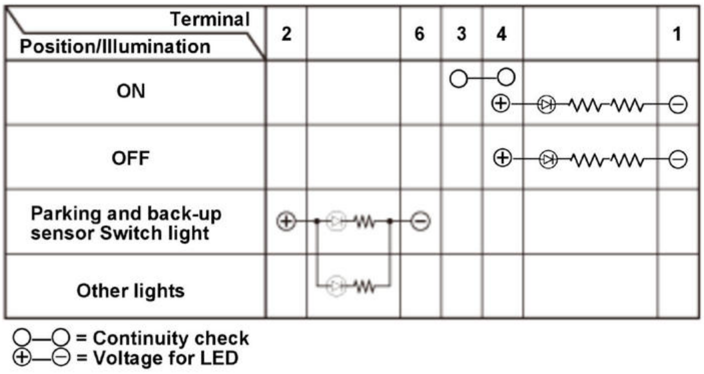

Terminal / Position/Illumination	2		6	3	4		1
ON				○	○ ⊕		⊖
OFF					⊕		⊖
Parking and back-up sensor Switch light	⊕		⊖				
Other lights							

○—○ = Continuity check
⊕—⊖ = Voltage for LED

2. If the result is not as specified, replace the parking and back-up sensor switch.

Gauges - Testing & Troubleshooting (Except Hybrid) - CR-V

DESCRIPTION AND OPERATION

ELECTRICAL COMPASS SYSTEM DESCRIPTION

Electrical Compass Unit

The electrical compass unit sends the azimuth (direction) information in the 8-directions (N, NE, E, SE, S, SW, W, NW) to the audio unit. The electrical compass unit receives the VSP signal from the gauge control module via the audio unit. The azimuth information is fixed while parked.

Starting Operation

When the vehicle is turned to the ON mode, the electrical compass unit communicates with the audio unit, and the self-test mode begins automatically.

The self-test function checks for the current voltage, non-volatile memory (NVM), and ROM status in the electrical compass unit. If the unit detects a malfunction during the self-test, it indicates a malfunction by flashing the compass information segments (CAL and NW) in the audio unit.

Basic Operation

The electrical compass unit uses the noise filter to the raw magnetic data. The noise filter switches on/off depending on the intensity of surrounding magnetic noise. In the filter mode, the calculation may delay several seconds. After processing the compass data, the unit sends the azimuth (direction) information to the audio unit

The electrical compass unit also receives following signals via the audio unit:

- The electrical compass unit receives the vehicle speed information from the gauge control module via the audio unit. The azimuth information is fixed while the vehicle is parked.
- The electrical compass unit receives the RR DEF on/off information from the climate control unit. The electrical compass unit compensates for magnetic anomalies when the rear window defogger is on.

Self-Calibration

The electrical compass unit has a self-calibration function. It detects and compensates for magnetic anomalies caused by bridges, subways and large steel structures. When the vehicle leaves the area with a strong magnetic interference (2, 400 mG or more), the electrical compass unit automatically begins calibrating. If needed, you can manually calibrate the compass.

Zone Selection

The zone selection is required to compensate for the difference between the magnetic north and the geographic north. This deviation is referred to as a declination. The compass compensates for the declination when you select the zone where the vehicle is located.

GAUGES SYSTEM DESCRIPTION

Self-diagnostic function

The gauge control module is equipped with a function to self-diagnose the inside circuits in the gauge control module.

Speedometer and Tachometer

The PCM provides a vehicle speed signal to the gauge control module using F-CAN and displays the vehicle speed in the speedometer. The PCM provides an engine speed signal to the gauge control module using F-CAN and displays the engine speed in the tachometer.

Fuel Gauge and Fuel Indicator

The gauge control module displays the fuel gauge based on input value from the fuel gauge sending unit. The low fuel indicator turn on in the event that indication of the fuel gauge becomes lower than the minimum tank fill threshold.

Multi-Information Display (MID) (With Multi-Information Display)

The multi-information display (MID) provides the shift position/mode indicator, tachometer, speedometer, average fuel efficiency, instant fuel economy, ODO/trip meter, outside air temperature, instant fuel economy, elapsed time, seat belt reminder, oil life, average speed, eco guide, driver attention monitor, and the status of the keyless access system. In addition, the diagnostic system displays communication errors and the DTCs.

Information Display (Without Multi-Information Display)

The information display provides the ODO/trip meter, outside air temperature, average fuel economy, instant fuel economy, oil life, and seat belt reminder, and the status of keyless access system. In addition, the diagnostic system displays communication errors and DTCs

ODO Meter and Trip Meter

The PCM provides a vehicle speed signal to the gauge control module using the F-CAN. Based on this input, the gauge control module tracks mileage for the odometer and trip meters. The mileage values are displayed in the information display or multi-information display (MID).

Ambient Meter

The ambient meter shows real-time driving information by color on the both sides of the tachometer which promote fuel efficient driving. When the color is close to green, it means low fuel consumption driving. When the color is close to white, it means high fuel consumption driving.

Engine Coolant Temperature Gauge

The PCM provides an engine coolant temperature signal to the gauge control module using the F-CAN. When the engine coolant temperature is high, the gauge control module displays the warning in the multi-information display (MID) or indicator.

Outside Air Temperature

The gauge control module uses measurements from the outside air temperature sensor or the outside air temperature sensor signal from climate control unit via B-CAN. The outside air temperature indicator's displayed temperature can be recalibrated ± 5 deg.F (± 3 deg.C) to meet the customer's expectations.

Average Fuel Economy/Instant Fuel Economy, Range, Elapsed Time Display

The gauge control module receives signals such as fuel consumption, driving distance, vehicle speed, and engine speed from the PCM via F-CAN. It calculates average/instant fuel economy, elapsed time *, average speed *, and range to display the results.

*: With multi-information display (MID)

Select Position

The TCM or PCM sends the transmission shift position/mode to the gauge control module, using the F-CAN.

Gauge Control Module Receives Information

The gauge control module receives information from each control unit via F-CAN and B-CAN to light or flash the indicators. The VSA modulator-control unit (indicator signal), ECON switch, CMBS off switch, cruise control/ACC combination switch, electric parking brake/automatic brake hold switch, VSA OFF switch, washer fluid level switch, TPMS switch and brake fluid level switch are connect directly to the gauge control module. The audio remote-HFL switch signal is transmitted to the gauge control module via LIN.

Keyless Access System Information (With Keyless Access System)

The gauge control module receives information from the body control module the B-CAN to display status of the keyless access system.

Buzzer

The gauge control module includes a buzzer to provide the driver with audible warnings.

Illumination Control

The illumination brightness can be adjusted using the SEL/RESET knob. When the exterior lights are off, the system is off.

GAUGES SYSTEM DESCRIPTION - SYSTEM DIAGRAM

For locations of each component on vehicle, refer to Component Location Index

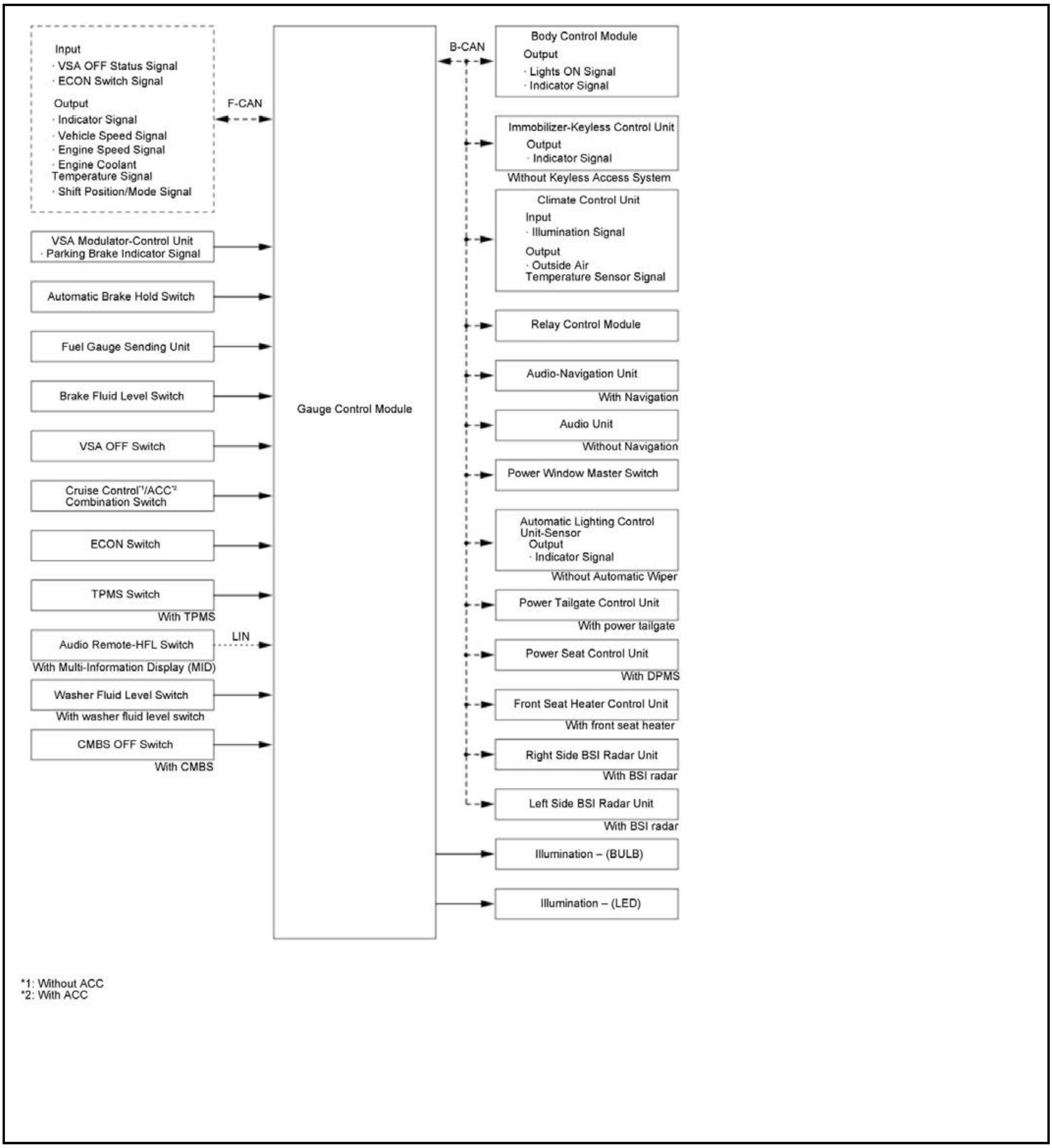

Input
· VSA OFF Status Signal
· ECON Switch Signal
Output
· Indicator Signal
· Vehicle Speed Signal
· Engine Speed Signal
· Engine Coolant Temperature Signal
· Shift Position/Mode Signal
F-CAN
VSA Modulator-Control Unit
· Parking Brake Indicator Signal
Automatic Brake Hold Switch
Fuel Gauge Sending Unit
Brake Fluid Level Switch
VSA OFF Switch
Cruise Control*1/ACC*2 Combination Switch
ECON Switch
TPMS Switch
With TPMS
Audio Remote-HFL Switch
With Multi-Information Display (MID)
LIN
Washer Fluid Level Switch
With washer fluid level switch
CMBS OFF Switch
With CMBS
Gauge Control Module
B-CAN
Body Control Module
Output
· Lights ON Signal
· Indicator Signal
Immobilizer-Keyless Control Unit
Output
· Indicator Signal
Without Keyless Access System
Climate Control Unit
Input
· Illumination Signal
Output
· Outside Air Temperature Sensor Signal
Relay Control Module
Audio-Navigation Unit
With Navigation
Audio Unit
Without Navigation
Power Window Master Switch
Automatic Lighting Control Unit-Sensor
Output
· Indicator Signal
Without Automatic Wiper
Power Tailgate Control Unit
With power tailgate
Power Seat Control Unit
With DPMS
Front Seat Heater Control Unit
With front seat heater
Right Side BSI Radar Unit
With BSI radar
Left Side BSI Radar Unit
With BSI radar
Illumination – (BULB)
Illumination – (LED)
*1: Without ACC
*2: With ACC

PARKING AND BACK-UP SENSOR SYSTEM DESCRIPTION (2020 2021)

Overview

The parking and back-up sensor system measures distances to objects by transmitting ultrasonic waves and receiving the echo from sound waves bouncing off nearby objects. It informs drivers of nearby objects with audible warning signals as well as visual signs through the multi-information display (MID) in the gauge control module.

Parking and Back-Up Sensor System Operation

The sensors send out ultrasonic waves, receive waves reflected by an obstacle, determine the distance, and use the buzzer and/or multi-information display (MID) to tell the driver that an obstacle is near.

- The front center and front corner sensors work any time the shift lever is shifted out of P position/mode, until the vehicle reaches about 14 km/h (8.7 mph). They do not come back on until slowing down to about 9 km/h (5.6 mph) or less.
- The rear corner and rear center sensors are only activated in shift to R position/mode.
- With parking and back-up sensor switch: The parking and back-up sensor system is in active with its switch ON.
- The system check is performed each time the parking and back-up sensor switch is turned on with the vehicle in the ON mode.
- The sensors must be free of debris, snow, and ice to work correctly.

Sound Pattern of the Parking and Back-Up Sensor Beeper

Intermittent/continuous alarm sounding is performed by obstacle detection indication requests and alarm sounding requests from the parking sensor system, according to the distance and the display of the obstacle detection location. A magnified warning display is generated in case of a failure of the parking sensor system.

Front

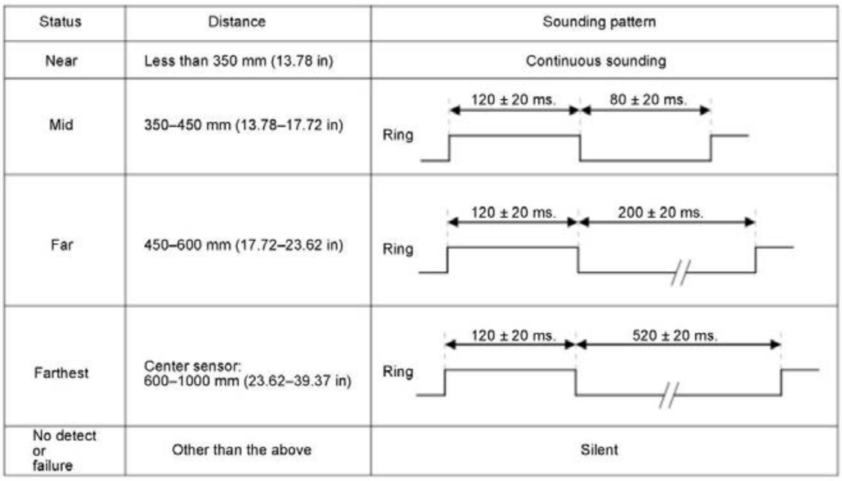

Alarm Sounding Patterns for Forward Detection

Status	Distance	Sounding pattern
Near	Less than 350 mm (13.78 in)	Continuous sounding
Mid	350–450 mm (13.78–17.72 in)	Ring 120 ± 20 ms. 80 ± 20 ms.
Far	450–600 mm (17.72–23.62 in)	Ring 120 ± 20 ms. 200 ± 20 ms.
Farthest	Center sensor: 600–1000 mm (23.62–39.37 in)	Ring 120 ± 20 ms. 520 ± 20 ms.
No detect or failure	Other than the above	Silent

Rear

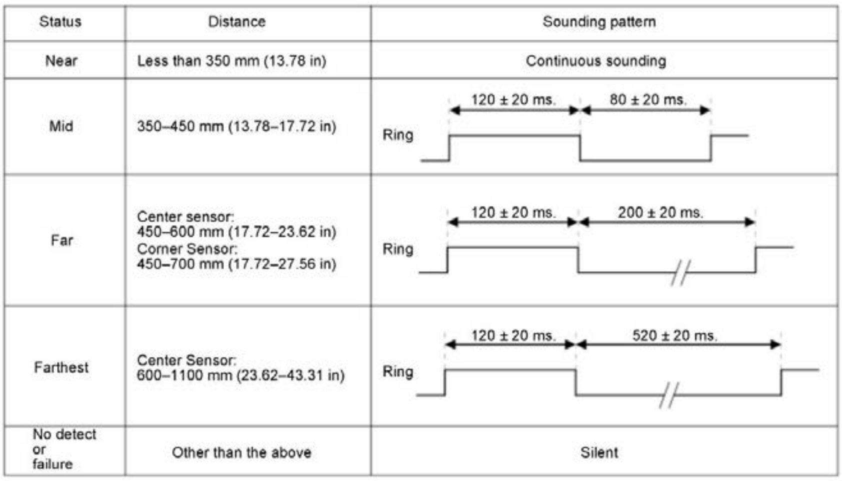

Alarm Sounding Patterns for Rearward Detection

Status	Distance	Sounding pattern
Near	Less than 350 mm (13.78 in)	Continuous sounding
Mid	350–450 mm (13.78–17.72 in)	Ring 120 ± 20 ms. 80 ± 20 ms.
Far	Center sensor: 450–600 mm (17.72–23.62 in) Corner Sensor: 450–700 mm (17.72–27.56 in)	Ring 120 ± 20 ms. 200 ± 20 ms.
Farthest	Center Sensor: 600–1100 mm (23.62–43.31 in)	Ring 120 ± 20 ms. 520 ± 20 ms.
No detect or failure	Other than the above	Silent

PARKING AND BACK-UP SENSOR SYSTEM DESCRIPTION - COMPONENTS (2020 2021)

Parking and Back-Up Sensor Switch

Input to the parking and back-up sensor control unit is performed by operating the parking and back-up sensor switch. The parking and back-up sensor indicator is activated by the parking and back-up sensor control unit.

Parking and Back-Up Sensors

The parking and back-up sensors emit ultrasonic waves, which are reflected by obstacles and then detected by the sensors. The detected ultrasonic waves are converted to digital signals after amplification, and are then transmitted to the parking and back-up sensor control unit.

PARKING AND BACK-UP SENSOR SYSTEM DESCRIPTION - SYSTEM DIAGRAM (2020 2021)

For locations of each component on the vehicle, refer to Component Location Index

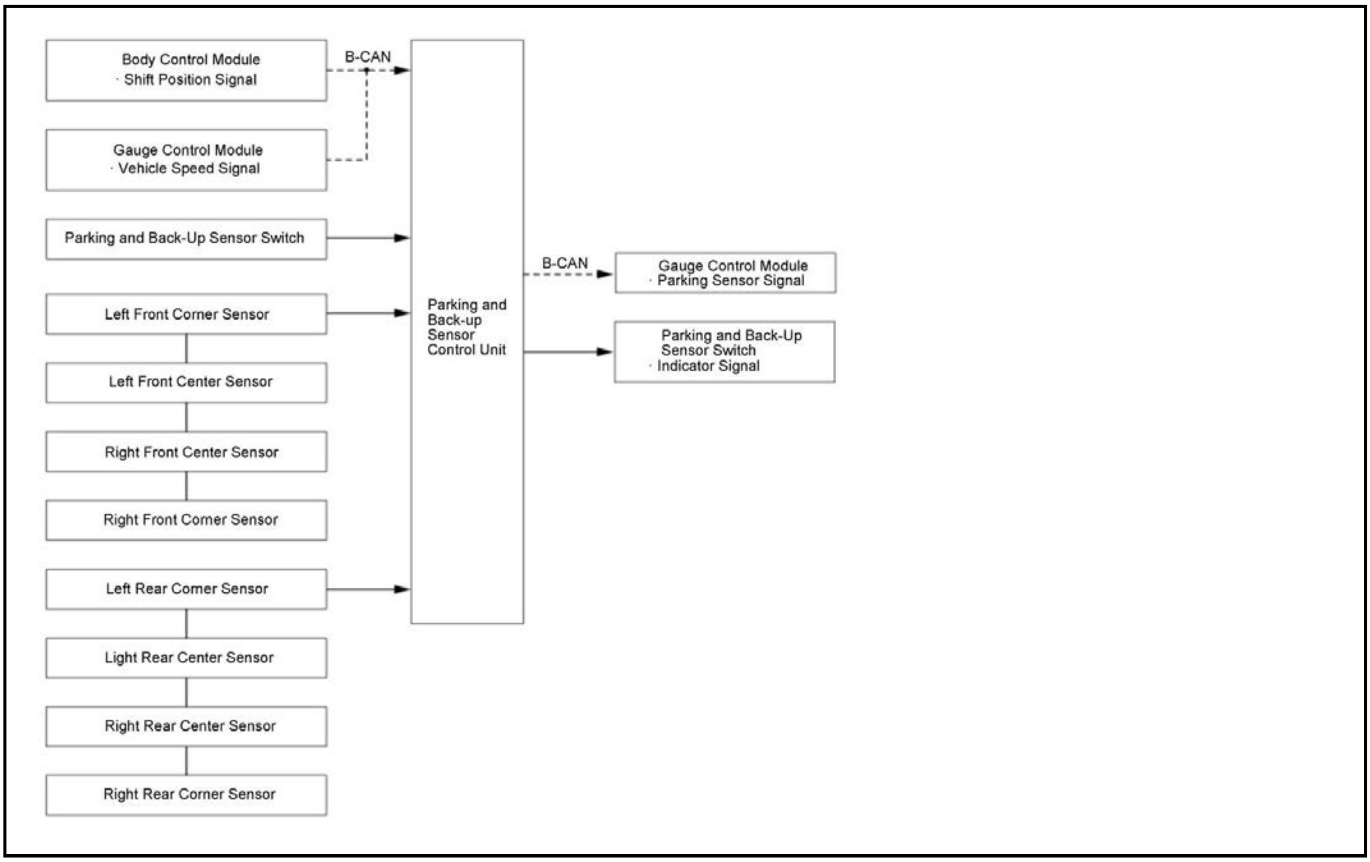
Body Control Module
· Shift Position Signal
B-CAN
Gauge Control Module
· Vehicle Speed Signal
Parking and Back-Up Sensor Switch
Left Front Corner Sensor
Left Front Center Sensor
Right Front Center Sensor
Right Front Corner Sensor
Left Rear Corner Sensor
Light Rear Center Sensor
Right Rear Center Sensor
Right Rear Corner Sensor
Parking and Back-up Sensor Control Unit
B-CAN
Gauge Control Module
· Parking Sensor Signal
Parking and Back-Up Sensor Switch
· Indicator Signal

CALIBRATION CORRECTION

ELECTRICAL COMPASS ZONE SELECTION AND CALIBRATION

Procedure

NOTE:

- **Check the vehicle 12 volt battery condition first** .
- You should do this procedure any time the electrical compass unit is replaced.
- You should do this procedure in an open area away from buildings, power lines, other vehicles, and any other sources of strong magnetic fields.
- If you see "--" and the CAL indicator is shown in the audio display, the electrical compass unit is self-calibrating.
- In most areas, there is a variation between magnetic north and true north. The compass zone needs to be set to your geographic zone to compensate for this variation.
- The electrical compass unit may need to be manually calibrated after exposure to a strong magnetic field. If the electrical compass unit seems to be continually showing the wrong direction, and is not self-calibrating, do the following.

1. Electrical Compass Zone Selection and Calibration

   Zone Selection

   1. Turn the vehicle to the ON mode.

   2. Press and hold the DISPLAY MODE (

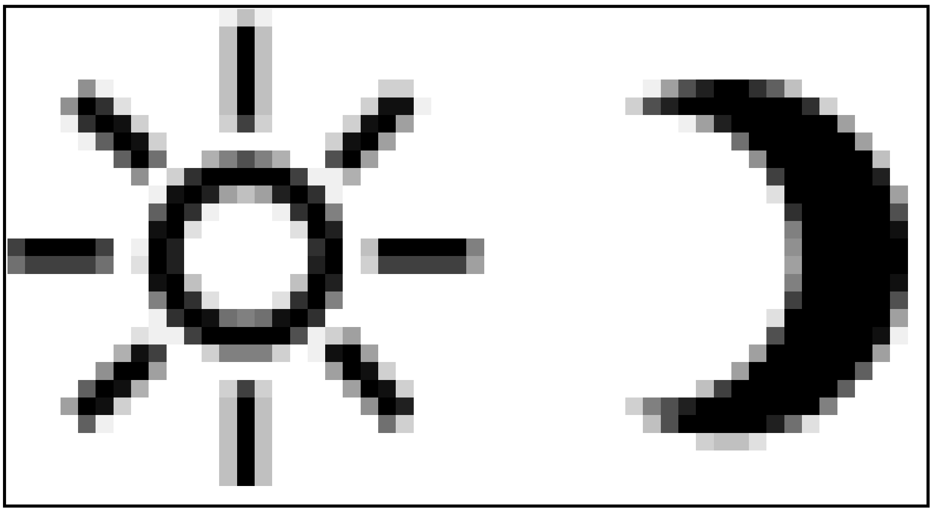

) button until you hear a beep (about 5 seconds). The display shows the electrical compass setting menu items.

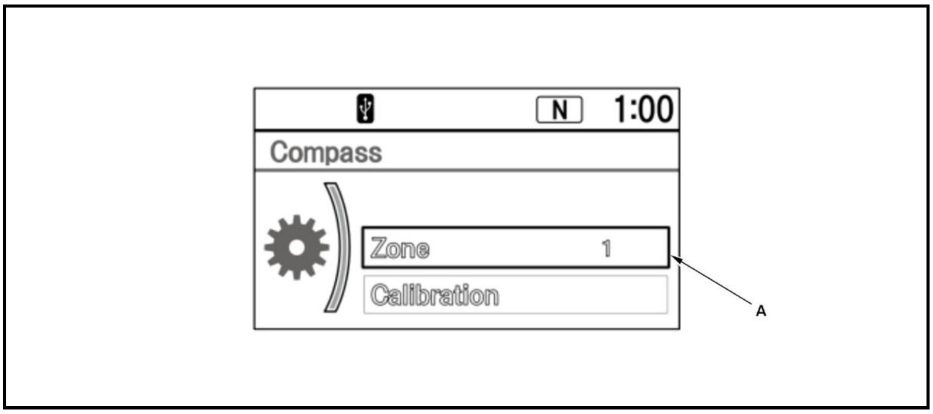
N
1:00
Compass
Zone 1
Calibration
A

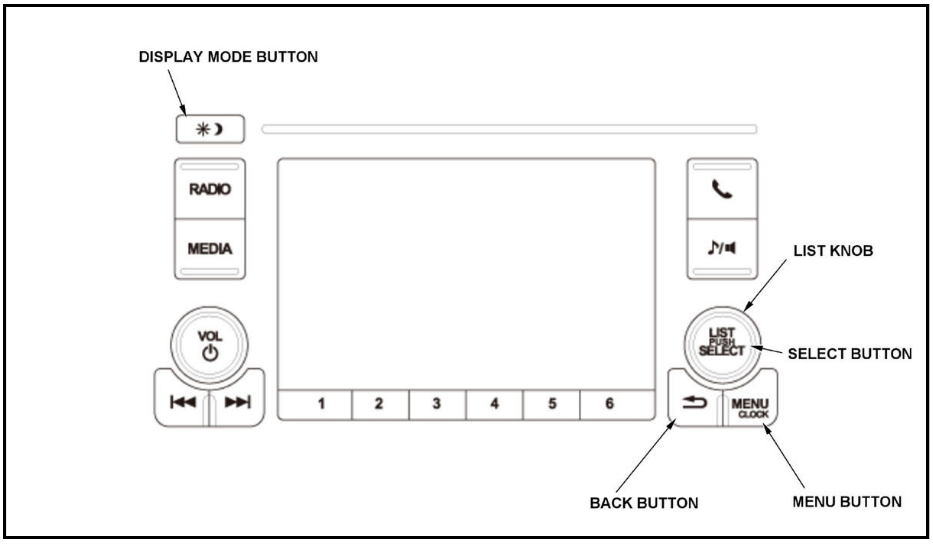
DISPLAY MODE BUTTON
RADIO
MEDIA
VOL
1
2
3
4
5
6
LIST PUSH SELECT
MENU CLOCK
LIST KNOB
SELECT BUTTON
BACK BUTTON
MENU BUTTON

3. Rotate the LIST knob to select Zone (A), and press the SELECT button to enter the selection.

NOTE: If necessary, press the BACK button to return to the previous display. Pressing the MENU button cancels the electrical compass setting mode.

4. The display shows the currently selected zone number between from 1 to 15. Find the zone for your area on the zone map. If the correct zone is not shown, turn the LIST knob to cycle the zone lists up or down.

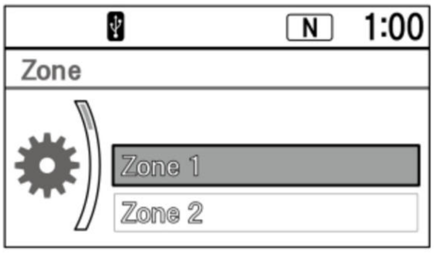

Zone Map

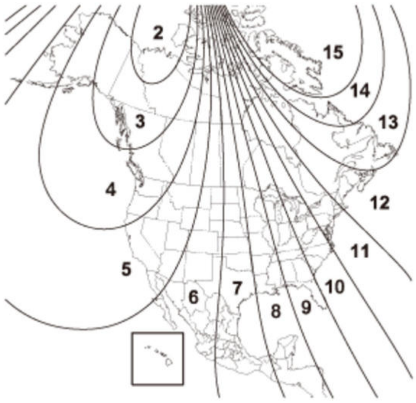

5. Press the SELECT button to decide the selected zone. Returning to the normal display, the zone selection mode ends.

Calibration

Although the compass is self-calibrating, it may need to be manually calibrated after exposure to a strong magnetic field. If the compass is blinking and CAL is shown on the display, do this to calibrate the compass:

1. Start the engine.

2. Press and hold the DISPLAY MODE (☼☾) button until you hear a beep (about 5 seconds). The display shows the electrical compass setting menu items.

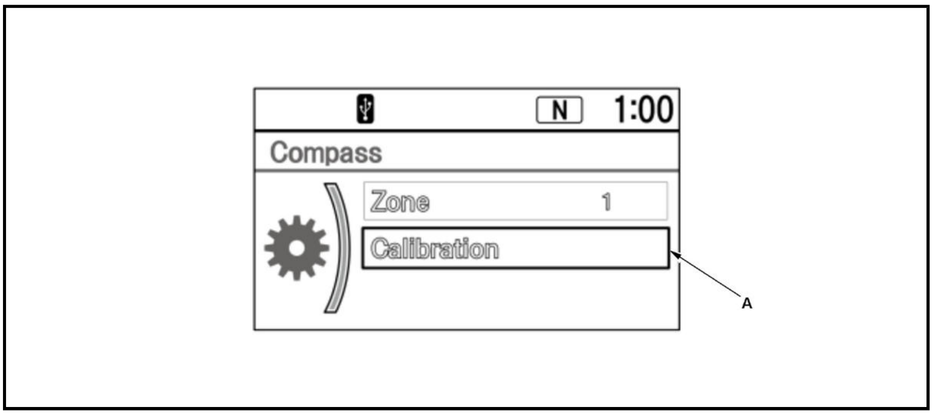
N
1:00
Compass
Zone
1
Calibration
A

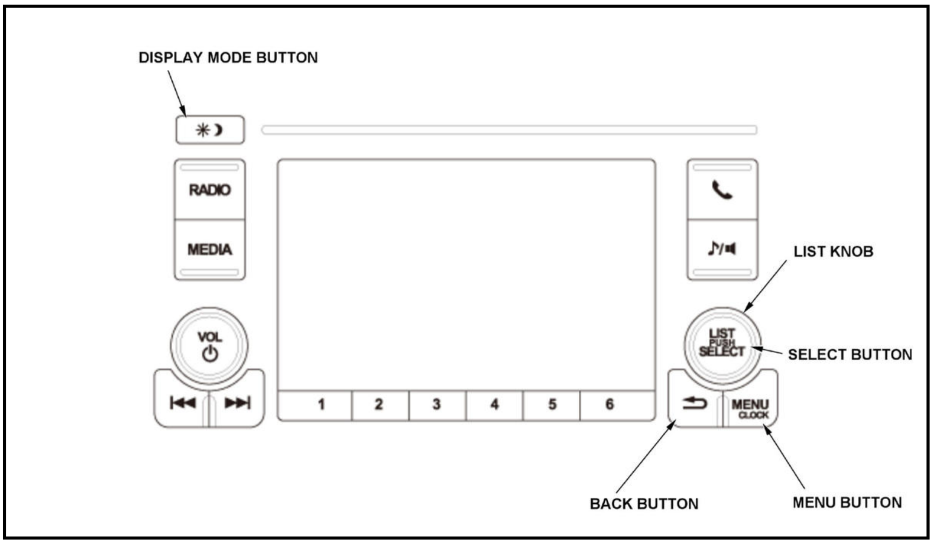
DISPLAY MODE BUTTON
RADIO
MEDIA
VOL
1
2
3
4
5
6
LIST KNOB
LIST PUSH SELECT
SELECT BUTTON
MENU CLOCK
BACK BUTTON
MENU BUTTON

3. Rotate the LIST knob to select Calibration (A) and press the SELECT button to enter the selection.

NOTE: If necessary, press the BACK button to return to the previous display. Pressing the MENU button cancels the electrical compass setting mode.

4. The display shows the Push CAL Start (A). Press the SELECT button to enter the selection.

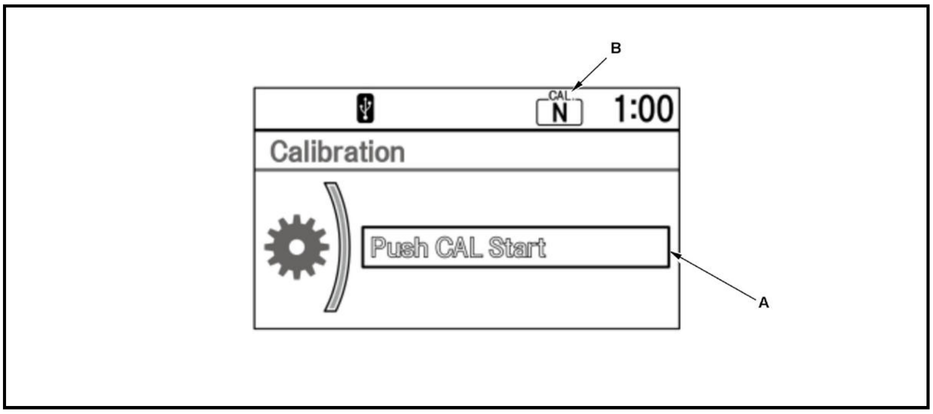
B
CAL
N
1:00
Calibration
Push CAL Start
A

5. When the display shows Push CAL Start, press the SELECT button. The compass display blinks and the CAL indicator (B) comes on.

6. Drive the vehicle slowly in three complete circles (20 seconds or more per a circle). When the calibration is successfully completed, the compass display stops blinking and the CAL indicator goes off.

NOTE:

- The audio system is not related to the electrical compass system. Even if the electrical compass system is calibrating, the display returns to the normal display which was last selected.
- If the calibration fails, try another location (an open area away from buildings, power lines, other vehicles, and any other sources of strong magnetic fields) and do the calibration procedure again.

OUTSIDE AIR TEMPERATURE INDICATOR CALIBRATION(WITH MULTI-INFORMATION DISPLAY)

Procedure

NOTE: To test the outside air temperature sensor, refer to the outside air temperature sensor test procedure .

1. Outside Air Temperature Indicator - Calibrate

Description

The outside air temperature sensor is located behind the center of the front bumper. The gauge control module uses measurements from this sensor to display the outside air temperature.

Because of the location of the sensor, it may be affected by heat reflection from the road, engine and radiator heat, or hot exhaust from surrounding traffic.

These conditions can heat soak the outside air temperature sensor and cause inaccurate readings. Logic has been written into the gauge control module to help prevent abnormal or fluctuating outside air temperature indicator readings.

Outside Air Temperature Indicator Logic

Engine coolant temperature 140 deg.F (60 deg.C) or higher:

If the engine coolant temperature is 140 deg.F (60 deg.C) or higher when the vehicle is turned to the ON mode, the outside air temperature indicates the last temperature it displayed with the vehicle was turned to the OFF (LOCK) mode regardless of the current temperature measured by the outside air temperature sensor.

Engine coolant temperature less than 140 deg.F (60 deg.C):

If the engine coolant temperature is less than 140 deg.F (60 deg.C) or lower when the vehicle is turned to the ON mode, the current temperature measured by the outside air temperature sensor is indicated.

Information Update to the Outside Air Temperature Indicator While Driving

Engine coolant temperature 140 deg.F (60 deg.C) or higher:

If the temperature measured by the outside air temperature sensor is greater than the temperature on the outside air temperature indicator, the outside temperature indicator will increase by 1 deg.F (1 deg.C) per minute after the vehicle speed is greater than 19 mph (30 km/h) for more than 1 minute and 30 seconds. It continues to increase until the current outside air temperature is indicated. So, the first change to the outside air temperature indicator is 1 minute and 30 seconds after the vehicle speed exceeds 19 mph (30 km/h). If the vehicle speed drops below 19 mph (30 km/h), the indicator does not update again until the vehicle speed has increased to 19 mph (30 km/h) or more for more than 1 minute and 30 seconds again.

Engine coolant temperature less than 140 deg.F (60 deg.C):

If the outside air temperature is less than the indicated temperature, the temperature decreases 1 deg.F (1 deg.C) every 2 seconds until the current outside air temperature indicated regardless of vehicle speed.

Celsius:

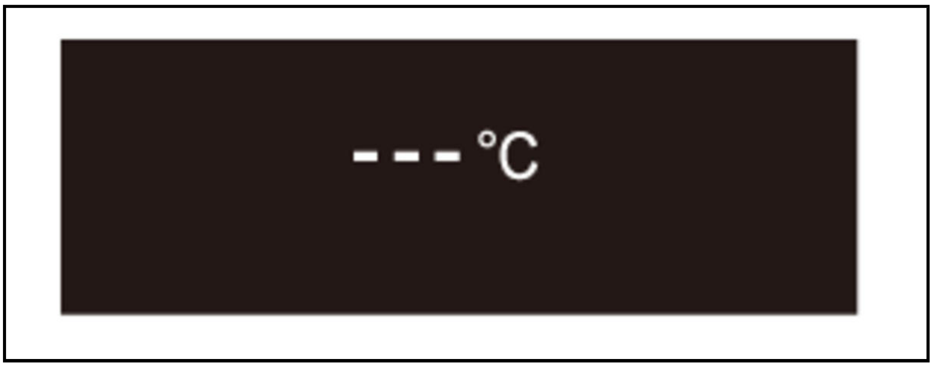

Fahrenheit:

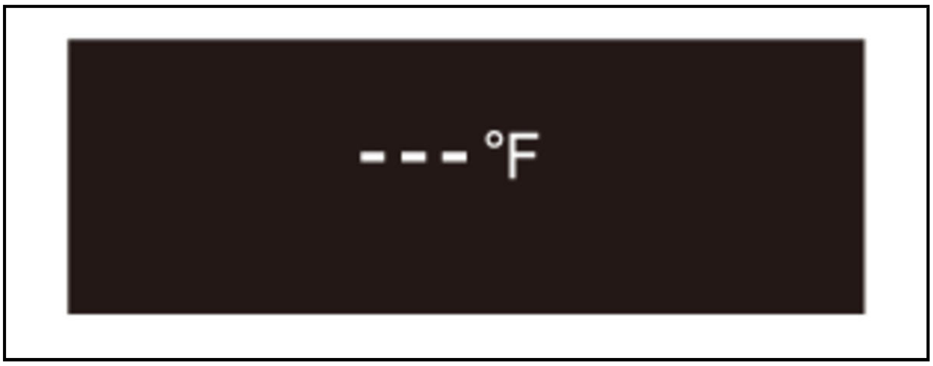

Troubleshooting

If the indicator displays - - - deg.F (- - - deg.C) for more than 2 seconds after selecting the outside air temperature display mode, the gauge is not receiving the outside temperature data from the climate control unit over the B-CAN. Check the climate control system or multiplex integrated control system for DTCs.

Calibration

NOTE:

- The outside air temperature indicator's displayed temperature can be calibrated +/- 5 deg.F (+/- 3 deg.C) to meet the customer's expectations.
- The outside air temperature can be calibrated by audio unit* 1 or audio-navigation unit* 2.

*1: Without navigation

*2: With navigation

1. Turn the vehicle to the ON mode.

2. Select the POWER (⏻) button.

3. Select the HOME button.

4. Select the following icons in turn.

- Settings
- Vehicle
- Meter Setup
- Adjust Outside Temp. Displ

5. When the desired correction value appears on the display, release the button, and the recalibrated outside air temperature will be displayed.

NOTE: The recalibration temperature is not the value the sensor sees. Therefore the temperature can only be adjusted +/- 5 deg.F (+/- 3 deg.C) from the sensors.

Example:

Incorrect value	=	68 deg.F (20 deg.C)

Desired correction value	=	+2 deg.F (+1 deg.C)
Correct value	=	70 deg.F (21 deg.C)

Desired correction value	=	-2 deg.F (-1 deg.C)
Correct value	=	66 deg.F (19 deg.C)

NOTE: To recalibrate the display to the true temperature, remove the outside air temperature sensor (A), but leave it connected. Submerge the sensor and a thermometer (B) in a container of ice water (C). Select the calibration mode as described above, then recalibrate the display to the true temperature.

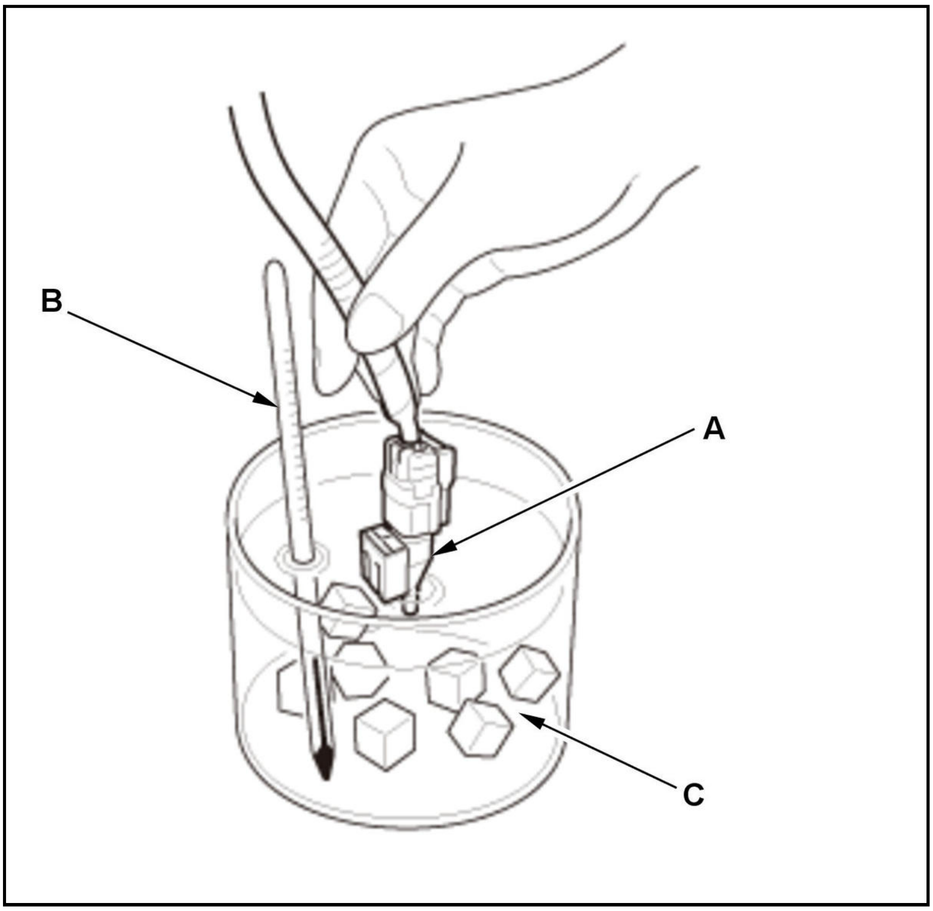

6. The snow mark is displayed when the temperature is 37 deg.F (3 deg.C) or less the first time you turn the vehicle to the ON mode.

OUTSIDE AIR TEMPERATURE INDICATOR CALIBRATION (WITHOUT MULTI-INFORMATION DISPLAY)

Procedure

NOTE: To test the outside air temperature sensor, refer to the outside air temperature sensor test procedure .

1. Outside Air Temperature Indicator - Calibrate

Description

The outside air temperature sensor is located behind the center of the front bumper. The gauge control module uses measurements from this sensor to display the outside air temperature.

Because of the location of the sensor, it may be affected by heat reflection from the road, engine and radiator heat, or hot exhaust from the surrounding traffic.

These conditions can heat soak the outside air temperature sensor and cause inaccurate readings. Logic has been written into the gauge control module to help prevent abnormal or fluctuating outside air temperature indicator readings.

Outside Air Temperature Indicator Logic

Engine coolant temperature 140 deg.F (60 deg.C) or higher:

If the engine coolant temperature is 140 deg.F (60 deg.C) or higher when the vehicle is turned to the ON mode, the outside air temperature indicates the last temperature it displayed with the vehicle was turned to the OFF (LOCK) mode regardless of the current temperature measured by the outside air temperature sensor.

Engine coolant temperature less than 140 deg.F (60 deg.C):

If the engine coolant temperature is less than 140 deg.F (60 deg.C) or lower when the vehicle is turned to the ON mode, the current temperature measured by the outside air temperature sensor is indicated.

Information Update to the Outside Air Temperature Indicator While Driving

Engine coolant temperature 140 deg.F (60 deg.C) or higher:

If the temperature measured by the outside air temperature sensor is greater than the temperature on the outside air temperature indicator, the outside temperature indicator will increase by 1 deg.F (1 deg.C) per minute after the vehicle speed is greater than 19 mph (30 km/h) for more than 1 minute and 30 seconds. It continues to increase until the current outside air temperature is indicated. So, the first change to the outside air temperature indicator is 1 minute and 30 seconds after the vehicle speed exceeds 19 mph (30 km/h). If the vehicle speed drops below 19 mph (30 km/h), the indicator does not update again until the vehicle speed has increased to 19 mph (30 km/h) or more for more than 1 minute and 30 seconds again.

Engine coolant temperature less than 140 deg.F (60 deg.C):

If the outside air temperature is less than the indicated temperature, the temperature decreases 1 deg.F (1 deg.C) every 2 seconds until the current outside air temperature indicated regardless of vehicle speed.

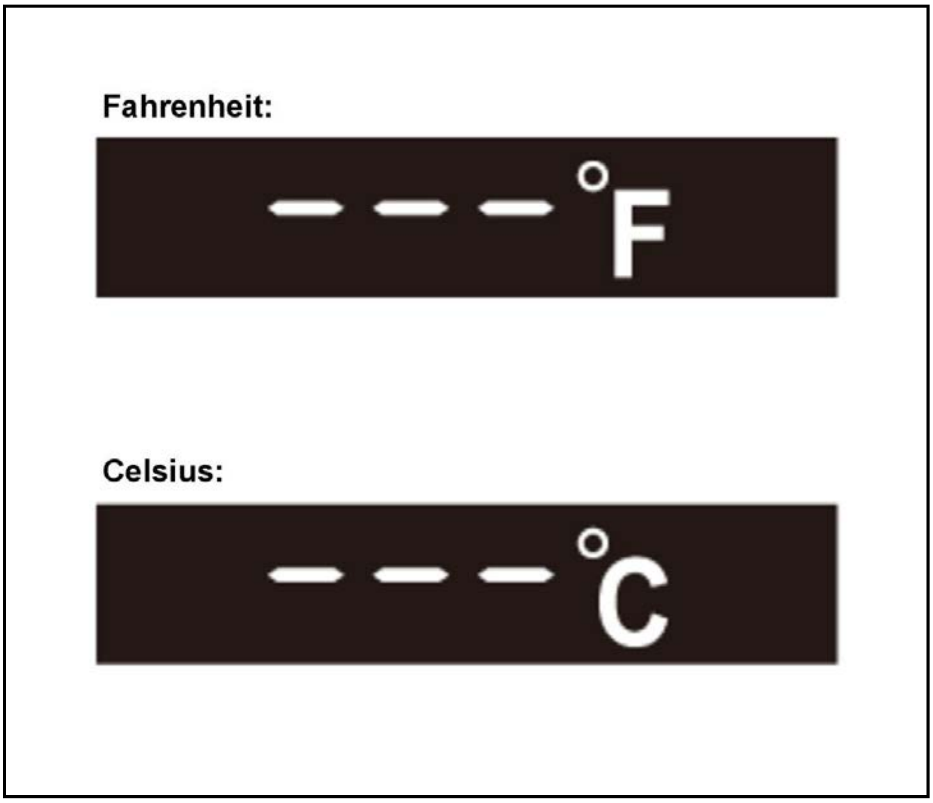

Troubleshooting

If the indicator displays - - - deg.F (- - - deg.C) for more than 2 seconds after selecting the outside air temperature display mode, the gauge is not receiving the outside temperature data from the climate control unit over the B-CAN. Check the climate control system or multiplex integrated control system for DTCs.

Calibration

NOTE: The outside air temperature indicator's displayed temperature can be recalibrated +/- 5 deg.F (+/- 3 deg.C) to meet the customer's expectations.

1. Turn the vehicle to the ON mode.

2. Select the odometer/trip A or odometer/trip B display.

3. Select the outside air temperature display and press and hold the SELECT/RESET knob for 10 seconds. While you continue to hold the button, the display will scroll through temperature setting from +5 deg.F (+3 deg.C) to -5 deg.F (-3 deg.C) as shown.

4. When the desired correction value appears on the display, release the button, and the recalibrated outside air temperature will be displayed.

NOTE: The recalibration temperature is not the value the sensor sees. Therefore the temperature can only be adjusted +/- 5 deg.F (+/- 3 deg.C) from the sensors.

Example:

Incorrect value	=	68 deg.F (20 deg.C)

Desired correction value	=	+2 deg.F (+1 deg.C)
Correct value	=	70 deg.F (21 deg.C)

Desired correction value	=	-2 deg.F (-1 deg.C)
Correct value	=	66 deg.F (19 deg.C)

NOTE: To recalibrate the display to the true temperature, remove the outside air temperature sensor (A), but leave it connected. Submerge the sensor and a thermometer (B) in a container of ice water (C). Select the calibration mode as described above, then recalibrate the display to the true temperature.

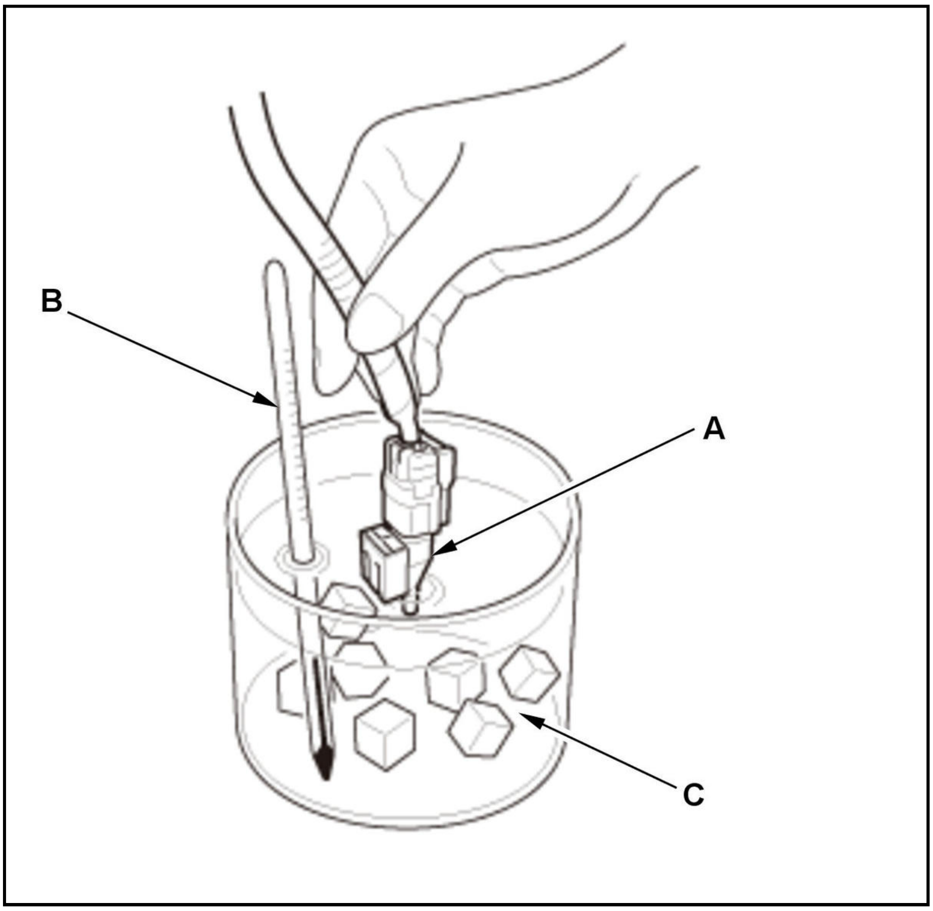

CONNECTOR VIEW

ELECTRICAL COMPASS UNIT CONNECTOR FOR INPUTS AND OUTPUTS

Electrical Compass Unit 6P Connector (female terminals)

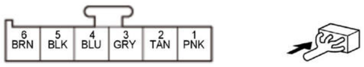

Cavity	Terminal Name	Description
1	COMPASS 4	Communication signal
2	COMPASS 3	Communication signal
3	COMPASS 2	Communication signal
4	COMPASS 1	Communication signal
5	GND	Electrical compass unit ground
6	IG1 METER	IG1 power source

GAUGE CONTROL MODULE CONNECTOR FOR INPUTS AND OUTPUTS

Connector Index
Gauge Control Module Connector A (32P) (with multi-information display and with auto idle stop system)
Gauge Control Module Connector A (32P) (with multi-information display and without auto idle stop system)
Gauge Control Module Connector A (32P) (without multi-information display)
Gauge Control Module Connector B (12P) (not used)
Gauge Control Module Connector C (3P) (display audio type)

Gauge Control Module Connector A (32P) (female terminals) (with multi-information display and with auto idle stop system)

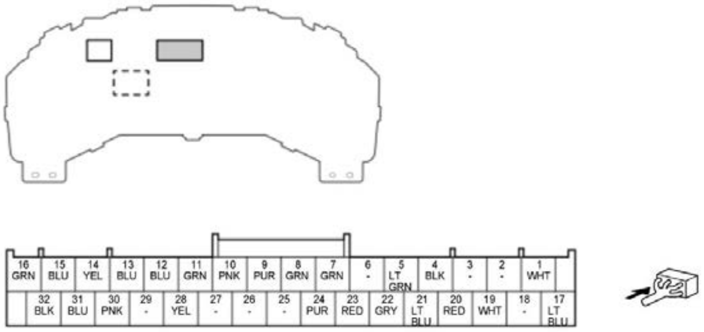
16 GRN
15 BLU
14 YEL
13 BLU
12 BLU
11 GRN
10 PNK
9 PUR
8 GRN
7 GRN
6 -
5 LT GRN
4 BLK
3 -
2 -
1 WHT
32 BLK
31 BLU
30 PNK
29 -
28 YEL
27 -
26 -
25 -
24 PUR
23 RED
22 GRY
21 LT BLU
20 RED
19 WHT
18 -
17 LT BLU

Gauge Control Module Connector A (32P) (female terminals) (with multi-information display and without auto idle stop system)

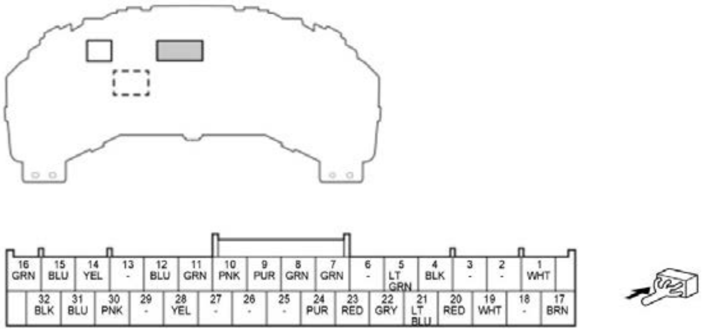
16 GRN
15 BLU
14 YEL
13 -
12 BLU
11 GRN
10 PNK
9 PUR
8 GRN
7 GRN
6 -
5 LT GRN
4 BLK
3 -
2 -
1 WHT
32 BLK
31 BLU
30 PNK
29 -
28 YEL
27 -
26 -
25 -
24 PUR
23 RED
22 GRY
21 LT BLU
20 RED
19 WHT
18 -
17 BRN

Gauge Control Module Connector A (32P) (female terminals) (without multi-information display)

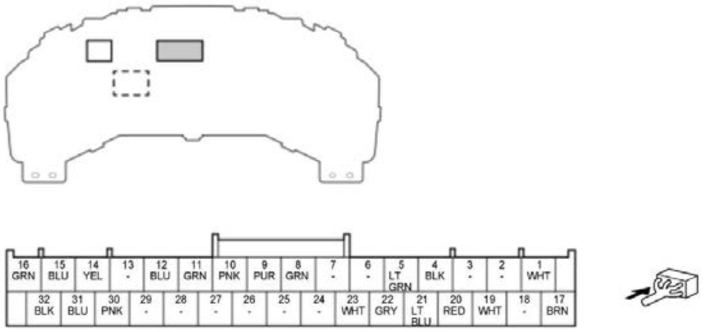
16 GRN
15 BLU
14 YEL
13 -
12 BLU
11 GRN
10 PNK
9 PUR
8 GRN
7 -
6 -
5 LT GRN
4 BLK
3 -
2 -
1 WHT
32 BLK
31 BLU
30 PNK
29 -
28 -
27 -
26 -
25 -
24 -
23 WHT
22 GRY
21 LT BLU
20 RED
19 WHT
18 -
17 BRN

Terminal number	Terminal name	Description	Signal
1	+B BACK UP	+B power source	About battery voltage at all times
2	---	Not used	---
3	---	Not used	---
4	GND	Gauge control module ground	Less than 0.2 V at all times
5	CRUISE GND	Ground for cruise control* 7 / ACC* 6 combination switch	Less than 0.2 V at all times
6	---	Not used	---
7* 8	CMBS OFF SW	Detects CMBS OFF switch signal	With vehicle in ON mode and CMBS OFF switch OFF: about battery voltage With vehicle in ON mode and CMBS OFF switch ON: less than 0.2 V
8	ECON SW	Detects ECON switch signal	With vehicle in ON mode and ECON switch OFF: about battery voltage With vehicle in ON mode and ECON switch ON: less than 0.2 V

Terminal number	Terminal name	Description	Signal
9	VSA OFF SW	Detects VSA off switch signal	With vehicle in ON mode and VSA off switch OFF: about battery voltage With vehicle in ON mode and VSA off switch ON: less than 0.2 V
10	PARK LAMP	Detects VSA modulator-control unit (PARK LAMP) signal	---
11	BRAKE LEVEL SW	Detects brake fluid level switch signal	With vehicle in ON mode and brake fluid level switch OFF: about battery voltage With vehicle in ON mode and brake fluid level switch ON: less than 0.2 V
12	BRAKE HOLD	Detects electric parking brake/automatic brake hold switch signal	---
13* 9	IDLE STOP OFF	Detects idle stop OFF switch signal	With vehicle in ON mode and idle stop OFF switch OFF: about battery voltage With vehicle in ON mode and idle stop OFF switch ON: less than 0.2 V
14	CRUISE SW	Detects cruise control* 7 / ACC* 6 combination switch	With vehicle in ON mode: about 0.8-4.4 V (depending on cruise control combination switch)
15	ILL-(LED)	Detects illumination signal	---

*1: With CAN gateway*2: Without CAN gateway*3: With multi-information display*4: With TPMS*5: With washer fluid level switch*6: With ACC*7: Without ACC*8: With CMBS*9: With auto idle stop system*10: Without auto idle stop system

Terminal number	Terminal name	Description	Signal
16	ILLUMI-(BULB)	Detects illumination signal	---
17	IG1 VST* 9IG1 METER* 10	IG1 power source	With vehicle in ON or START mode: about battery voltage
18	---	Not used	---
19	F-CAN A_H* 1	Communication line	---
	F-CAN_H* 2		
20	F-CAN A_L* 1	Communication line	---
	F-CAN_L* 2		
21	FUEL GAUGE-	Ground for fuel gauge sending unit	---
22	FUEL GAUGE+	Detects fuel gauge sending unit signal	---
23	LIN(START SW)* 3	Communication line	---
	TPMS SW* 4	Detects TPMS switch signal	---
24* 5	WASHER LEVEL SNSR	Detects washer fluid level switch signal	With vehicle in ON mode and washer fluid level switch OFF: about battery voltage With vehicle in ON mode and washer fluid level switch ON: less than 0.2 V
25	---	Not used	---
26	---	Not used	---
27	---	Not used	---
28* 6	DISTANCE SW	Detects ACC combination switch signal	With vehicle in ON mode: about 0.8-4.4 V (depending on cruise control combination switch)
29	---	Not used	---
30	B-CAN_H	Communication line	---
31	B-CAN_L	Communication line	---
32	GND	Gauge control module ground	Less than 0.2 V at all times

*1: With CAN gateway*2: Without CAN gateway*3: With multi-information display*4: With TPMS*5: With washer fluid level switch*6: With ACC*7: Without ACC*8: With CMBS*9: With auto idle stop system*10: Without auto idle stop system

Gauge Control Module Connector C (3P) (female terminals) (display audio type)

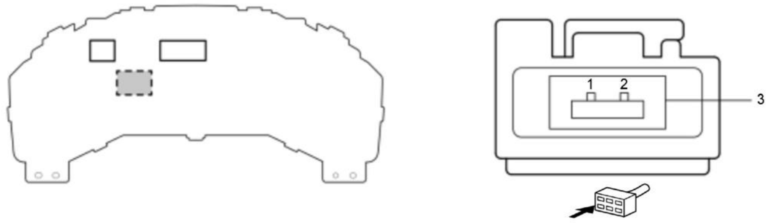

Terminal number	Terminal name	Description	Signal
1	LVDS2+	Communication line	---
2	LVDS2-	Communication line	---
3	LVDS2 SH	Shield for terminals No. 1 and No. 2	Less than 0.2 V at all times

PARKING AND BACK-UP SENSOR CONTROL UNIT CONNECTOR FOR INPUTS AND OUTPUTS (2020 2021)

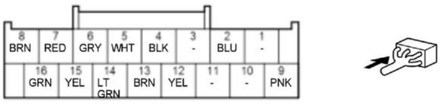

Terminal number	Terminal name	Description	Signal
1	---	Not used	---
2	B-CAN_L	Communication line	---
3	---	Not used	---
4	GND	Parking and back-up sensor control unit ground	Less than 0.2 V at all times
5	C/SNSR IND	Outputs parking and back-up sensor switch indicator signal	Parking and back-up sensor switch indicator OFF: about battery voltageParking and back-up sensor switch indicator ON: less than 0.2 V
6	SOF SIDE L	Detects front sensor signal	---
7	BOF SIDE L	Detects front sensor signal	---
8	IG1 METER	IG1 power source	With vehicle in ON mode: about battery voltage
9	B-CAN_H	Communication line	---
10	---	Not used	---
11	---	Not used	---
12	E2 SIDE L	Detects rear sensor signal	---
13	E1 SIDE L	Detects front sensor signal	---
14	SOR SIDE L	Detects rear sensor signal	---
15	C/SNSR SW	Detects parking and back-up sensor switch signal	With vehicle in ON mode and parking and back-up sensor switch ON: about battery voltage With parking and back-up sensor switch OFF: less than 0.2 V
16	BOR SIDE L	Detects rear sensor signal	---

INPUT TEST

GAUGE CONTROL MODULE INPUT TEST

NOTE:

- Make sure the fuses associated with the system are OK.
- If you are troubleshooting multiple DTCs, be sure to follow the instructions in B-CAN System Diagnosis Test Mode A .
- Before testing, do the gauge control module self-diagnostic function, and make sure the B-CAN communication lines are OK.

1. Turn the vehicle to the OFF (LOCK) mode.

2. Disconnect the gauge control module connector A (32P).

Gauge Control Module Connector A (32P) (female terminals)

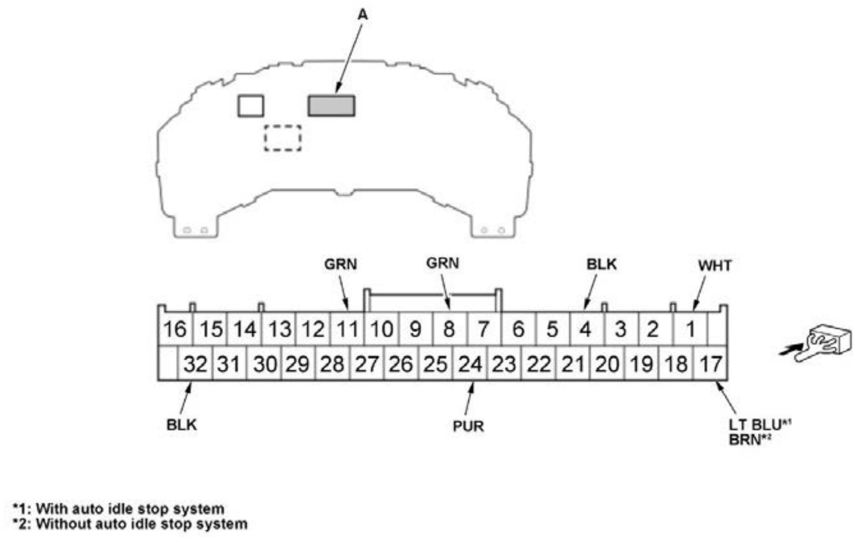
A
GRN
GRN
BLK
WHT
16 15 14 13 12 11 10 9 8 7 6 5 4 3 2 1
32 31 30 29 28 27 26 25 24 23 22 21 20 19 18 17
BLK
PUR
LT BLU*1
BRN*2
*1: With auto idle stop system
*2: Without auto idle stop system

3. Inspect the connector and socket terminals to be sure they are all making good contact:

- If the terminals are bent, loose, or corroded, repair them as necessary, and recheck the system.
- If the terminals are OK, go to step 4.

4. Reconnect the connector, and do the following input tests:

- If any test indicates a problem, find and correct the cause, then recheck the system.
- If all the input tests prove OK, **replace the gauge control module** .

Cavity	Wire	Test condition	Test: Desired result	Possible cause if desired result is not obtained
A1	WHT	Under all conditions	Measure the voltage to ground:There should be battery voltage.	An open or high resistance in the wire

*1: With auto idle stop system

*2: Without auto idle stop system

*3: With washer fluid level switch

Cavity	Wire	Test condition	Test: Desired result	Possible cause if desired result is not obtained
A17	LT BLU* 1BRN* 2	Vehicle ON mode	Measure the voltage to ground:There should be battery voltage.	An open or high resistance in the wire
A4	BLK	In all power modes	Measure the voltage to ground:There should be less than 0.2 V.	• Poor ground (G401) • An open or high resistance in the ground wire
A32	BLK	In all power modes	Measure the voltage to ground:There should be less than 0.2 V.	• Poor ground (G401) • An open or high resistance in the ground wire
A11	GRN	Vehicle ON mode, brake fluid is at full level in the reservoir	Measure the voltage to ground:There should be battery voltage.	• Faulty brake fluid level switch • A short to ground in the wire
		Vehicle ON mode, brake fluid is at lower level in the reservoir	Measure the voltage to ground:There should be less than 0.2 V.	• Faulty brake fluid level switch • Poor ground (G251) or an open in the ground wire • An open or high resistance in the wire
A8	GRN	Vehicle ON mode, ECON switch pressed	Measure the voltage to ground:There should be less than 0.2 V.	• Faulty ECON switch • Poor ground (G402) or an open in the ground wire • An open or high resistance in the wire
		Vehicle ON mode, ECON switch released	Measure the voltage to ground:There should be battery voltage.	• Faulty ECON switch • A short to ground in the wire
A24* 3	PUR	Vehicle ON mode, washer fluid is half or more in the washer reservoir	Measure the voltage to ground:There should be battery voltage.	• Faulty washer fluid level switch • A short to ground in the wire
		Vehicle ON mode, washer fluid is empty in the washer reservoir	Measure the voltage to ground:There should be less than 0.2 V.	• Faulty washer fluid level switch • Poor ground (G251) or an open in the ground wire • An open or high resistance in the wire

*1: With auto idle stop system

*2: Without auto idle stop system

*3: With washer fluid level switch

PARKING AND BACK-UP SENSOR CONTROL UNIT INPUT TEST (2020 2021)

NOTE:

- Make sure the fuses associated with the system are OK.
- Before testing, check for DTCs. If any DTCs are indicated, troubleshoot those DTCs first.
- If you are troubleshooting multiple DTCs, be sure to follow the instructions in B-CAN System Diagnosis Test Mode A .

1. Turn the vehicle to the OFF (LOCK) mode.

2. Disconnect the parking and back-up sensor control unit 16P connector.

Parking and Back-Up Sensor Control Unit 16P Connector (female terminals)

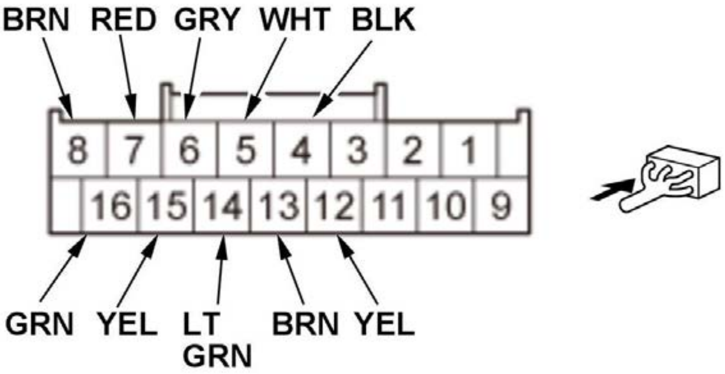

Inspect the connector and socket terminals to be sure they are all making good contact:

- If the terminals are bent, loose, or corroded, repair them as necessary, and recheck the system.
- If the terminals are OK, go to step 4.

With the connector still disconnected, do the following input tests:

- If any test indicates a problem, find and correct the cause, then recheck the system.
- If all the input tests prove OK, go to step 5.

Cavity	Wire	Test condition	Test: Desired result	Possible cause if desired result is not obtained
5	WHT	Vehicle ON mode	Connect to ground with a jumper wire:The parking and back-up sensor switch indicator should come on.	Faulty LED Faulty parking and back-up sensor switch An open or high resistance in the wire
7	RED	Disconnect the right front corner sensor 6P connector	Check for continuity between terminal No. 7 and right front corner sensor 6P connector terminal No. 6: There should be continuity.	An open or high resistance in the wire
			Check for continuity between the terminal No. 7 and body ground: There should be no continuity.	A short to ground in the wire

Cavity	Wire	Test condition	Test: Desired result	Possible cause if desired result is not obtained
6	GRY	Disconnect the right front corner sensor 6P connector	Check for continuity between terminal No. 6 and right front corner sensor 6P connector terminal No. 4: There should be continuity.	An open or high resistance in the wire
			Check for continuity between the terminal No. 6 and body ground: There should be no continuity.	A short to ground in the wire
13	BRN	Disconnect the right front corner sensor 6P connector	Check for continuity between terminal No. 13 and right front corner sensor 6P connector terminal No. 2: There should be continuity.	An open or high resistance in the wire
			Check for continuity between the terminal No. 13 and body ground: There should be no continuity.	A short to ground in the wire
16	GRN	Disconnect the left rear corner sensor 6P connector	Check for continuity between terminal No. 16 and left rear corner sensor 6P connector terminal No. 6: There should be continuity.	An open or high resistance in the wire
			Check for continuity between the terminal No. 16 and body ground: There should be no continuity.	A short to ground in the wire

Cavity	Wire	Test condition	Test: Desired result	Possible cause if desired result is not obtained
12	YEL	Disconnect the left rear corner sensor 6P connector	Check for continuity between terminal No. 12 and left rear corner sensor 6P connector terminal No. 2: There should be continuity.	An open or high resistance in the wire
			Check for continuity between the terminal No. 12 and body ground: There should be no continuity.	A short to ground in the wire
14	LT GRN	Disconnect the left rear corner sensor 6P connector	Check for continuity between terminal No. 14 and left rear corner sensor 6P connector terminal No. 4: There should be continuity.	An open or high resistance in the wire
			Check for continuity between the terminal No. 14 and body ground: There should be no continuity.	A short to ground in the wire

Reconnect the connector, and do the following input tests:

- If any test indicates a problem, find and correct the cause, then recheck the system.
- If all the input tests prove OK, replace the parking and back-up sensor control unit .

Cavity	Wire	Test condition	Test: Desired result	Possible cause if desired result is not obtained
8	BRN	Vehicle ON mode	Measure the voltage to ground: There should be battery voltage.	• An open or high resistance in the wire

Cavity	Wire	Test condition	Test: Desired result	Possible cause if desired result is not obtained
4	BLK	In all power modes	Measure the voltage to ground:There should be less than 0.2 V.	• Poor ground (G505) • An open or high resistance in the ground wire
15	YEL	Vehicle ON mode, and parking and back-up sensor switch ON	Measure the voltage to ground: There should be battery voltage.	• Faulty parking and back-up sensor switch • An open or high resistance in the wire

REMINDER SYSTEMS (BODY CONTROL MODULE AND GAUGE CONTROL MODULE) INPUT TEST

NOTE:

- Make sure the fuses associated with the system are OK.
- If you are troubleshooting multiple DTCs, be sure to follow the instructions in B-CAN System Diagnosis Test Mode A .
- Before testing, do the gauge control module self-diagnostic function to make sure the beeper and the indicators in the gauge control module work properly and the F-CAN line are OK.

Body Control Module

1. Turn the vehicle to the OFF (LOCK) mode.

2. Disconnect body control module connectors.

Body Control Module Connector A (14P) (female terminals): ① Body Control Module Connector C (28P) (female terminals): ② Body Control Module Connector D (40P) (female terminals): ③ Body Control Module Connector E (24P) (female terminals): ④

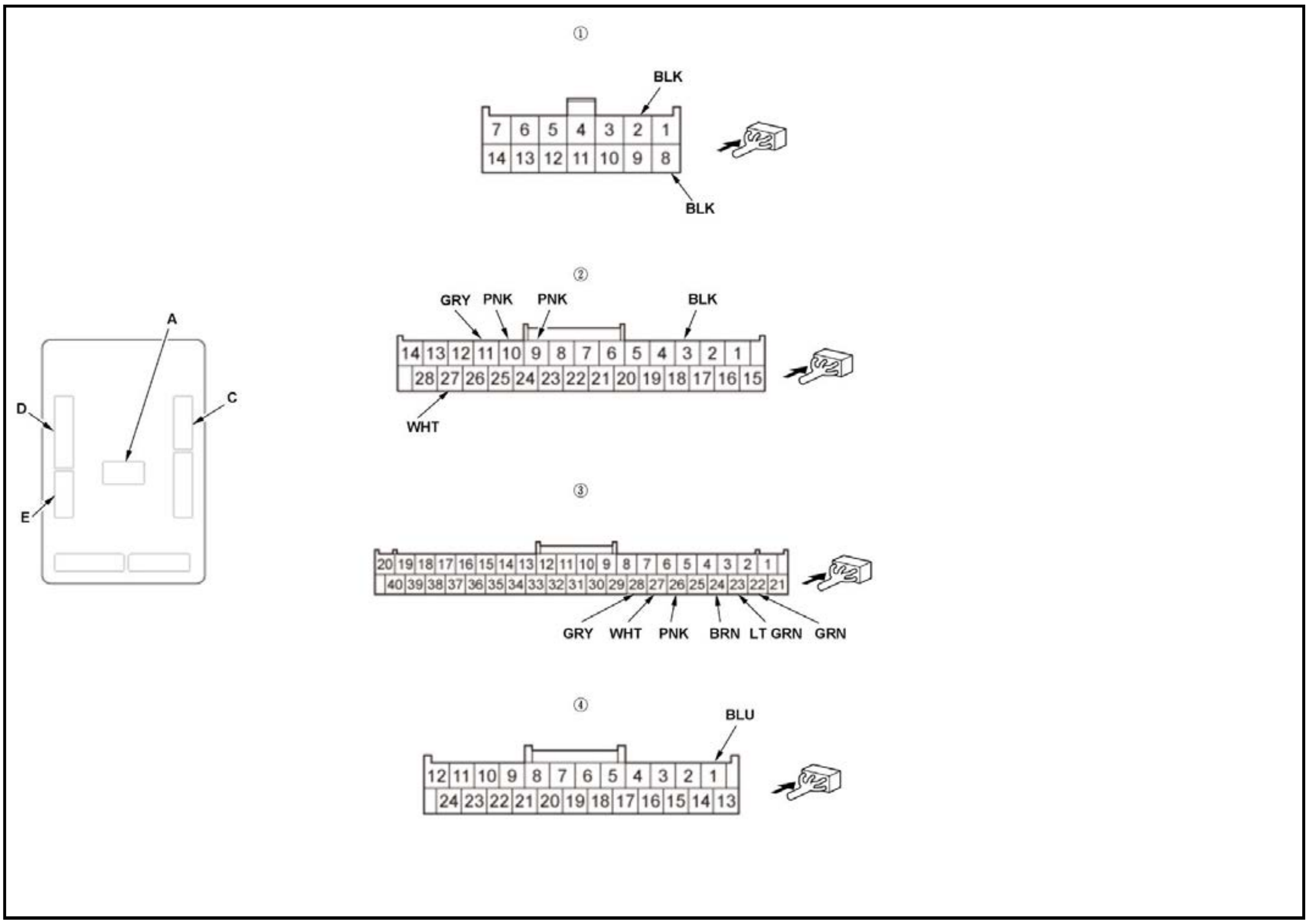
①
BLK
7 6 5 4 3 2 1
14 13 12 11 10 9 8
BLK
②
GRY PNK PNK BLK
14 13 12 11 10 9 8 7 6 5 4 3 2 1
28 27 26 25 24 23 22 21 20 19 18 17 16 15
WHT
③
20 19 18 17 16 15 14 13 12 11 10 9 8 7 6 5 4 3 2 1
40 39 38 37 36 35 34 33 32 31 30 29 28 27 26 25 24 23 22 21
GRY WHT PNK BRN LT GRN GRN
④
BLU
12 11 10 9 8 7 6 5 4 3 2 1
24 23 22 21 20 19 18 17 16 15 14 13
A
B
C
D
E

3. Inspect the connectors and socket terminals to be sure they are all making good contact:

- If the terminals are bent, loose, or corroded, repair them as necessary, and recheck the system.
- If the terminals are OK, go to step 4.

4. Reconnect the connectors to the body control module, and do the following input tests:

- If any test indicates a problem, find and correct the cause, then recheck the system.
- If all the input tests prove OK, go to step 5.

Cavity	Wire	Test condition	Test: Desired result	Possible cause if desired result is not obtained
C27	WHT	Under all conditions	Measure the voltage to ground:There should be battery voltage.	An open or high resistance in the wire

*: Without keyless access system

Cavity	Wire	Test condition	Test: Desired result	Possible cause if desired result is not obtained
E1	BLU	Vehicle ON mode	Measure the voltage to ground:There should be battery voltage.	An open or high resistance in the wire
A2	BLK	In all power modes	Measure the voltage to ground:There should be less than 0.2 V.	Poor ground (G401) An open or high resistance in the ground wire
A8	BLK	In all power modes	Measure the voltage to ground:There should be less than 0.2 V.	Poor ground (G401) An open or high resistance in the ground wire
D22	GRN	Driver's door open	Measure the voltage to ground:There should be less than 0.2 V.	Faulty driver's door switch Faulty driver's door switch ground An open or high resistance in the wire
		Driver's door closed	Measure the voltage to ground:There should be battery voltage.	Faulty driver's door switch

Cavity	Wire	Test condition	Test: Desired result	Possible cause if desired result is not obtained
				- A short to ground in the wire
D23	LT GRN	Front passenger's door open	Measure the voltage to ground:There should be less than 0.2 V.	- Faulty front passenger's door switch - Faulty front passenger's door switch ground - An open or high resistance in the wire
		Front passenger's door closed	Measure the voltage to ground:There should be battery voltage.	- Faulty front passenger's door switch - A short to ground in the wire
D24	BRN	Left rear door open	Measure the voltage to ground:There should be less than 0.2 V.	- Faulty left rear door switch - Faulty left rear door switch ground - An open or high resistance in the wire
		Left rear door closed	Measure the voltage to ground:There should be battery voltage.	- Faulty left rear door switch - A short to ground in the wire
D28	GRY	Right rear door open	Measure the voltage to ground:There should be less than 0.2 V.	- Faulty right rear door switch - Faulty right rear door switch ground - An open or high resistance in the wire
		Right rear door closed	Measure the voltage to ground:There should be battery voltage.	- Faulty right rear door switch - A short to ground in the wire

*: Without keyless access system

Cavity	Wire	Test condition	Test: Desired result	Possible cause if desired result is not obtained
D27	WHT	Tailgate open	Measure the voltage to ground:There should be less than 0.2 V.	• Faulty power tailgate closer unit or faulty tailgate latch switch • Poor ground (G505) or an open in the ground wire • An open or high resistance in the wire
		Tailgate closed	Measure the voltage to ground:There should be battery voltage.	• Faulty power tailgate closer unit or faulty tailgate latch switch • A short to ground in the wire
D26*	PNK	Ignition key inserted into the ignition key switch	Measure the voltage to ground:There should be less than 0.2 V.	• Faulty ignition key switch • An open or high resistance in the wire
		Ignition key removed from the ignition key switch	Measure the voltage to ground:There should be battery voltage.	• Faulty ignition key switch • A short to ground in the wire
C10*C3	PNK*BLK	Combination light switch OFF	Measure the voltage between terminals C10 and C3:There should be less than 0.2 V.	• Faulty combination light switch • An open or high resistance in the wire
		Combination light switch in any position other than OFF	Measure the voltage between terminals C10 and C3:There should be battery voltage.	• Faulty combination light switch • A short to ground in the wire
C11*C3	GRY*BLK	Combination light switch (PARKING position) ON	Measure the voltage between terminals C11 and C3:There should be less than 0.2 V.	• Faulty combination light switch • An open or high resistance in the wire
		Combination light switch OFF	Measure the voltage between terminals C11 and C3:There should be battery voltage.	• Faulty combination light switch • A short to ground in the wire
C9*C3	PNK*BLK	Combination light switch (headlight) ON	Measure the voltage between terminals C9 and C3:There should be less than 0.2 V.	• Faulty combination light switch • An open or high resistance in the wire
		Combination light switch OFF	Measure the voltage between terminals C9 and C3:There should be battery voltage.	• Faulty combination light switch • A short to ground in the wire

*: Without keyless access system

Gauge Control Module

5. Turn the vehicle to the OFF (LOCK) mode.

6. Disconnect the gauge control module connector A (32P).

Gauge Control Module Connector A (32P) (female terminals)

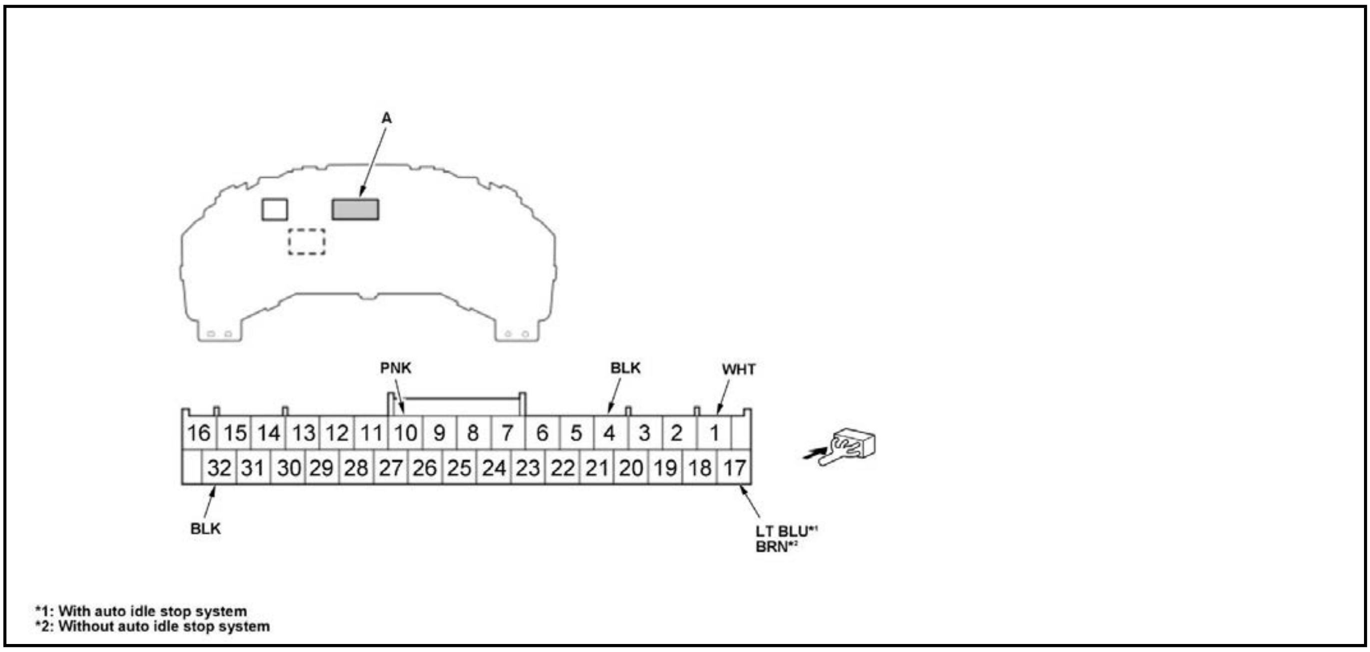

7. Inspect the connector and socket terminals to be sure they are all making good contact:

- If the terminals are bent, loose, or corroded, repair them as necessary, and recheck the system.
- If the terminals are OK, go to step 8.

8. With the connector still disconnected, do the following input tests:

- If any test indicates a problem, find and correct the cause, then recheck the system.
- If the input tests prove OK, go to step 9.

Cavity	Wire	Test condition	Test: Desired result	Possible cause if desired result is not obtained
A10	PNK	Disconnect the VSA modulator-control unit 46P connector	Check for continuity between terminal No. A10 and VSA modulator-control unit 46P connector terminal No. 29: There should be continuity.	An open or high resistance in the wire

9. Reconnect the connector, and do the following input tests:

- If any test indicates a problem, find and correct the cause, then recheck the system.
- If all the input tests prove OK, go to step 10.

Cavity	Wire	Test condition	Test: Desired result	Possible cause if desired result is not obtained
A1	WHT	Under all conditions	Measure the voltage to ground:There should be battery voltage.	An open or high resistance in the wire
A17	LT BLU* 1BRN* 2	Vehicle ON mode	Measure the voltage to ground:There should be battery voltage.	An open or high resistance in the wire

*1: With auto idle stop system

*2: Without auto idle stop system

Cavity	Wire	Test condition	Test: Desired result	Possible cause if desired result is not obtained
A4	BLK	In all power modes	Measure the voltage to ground:There should be less than 0.2 V.	Poor ground (G401) An open or high resistance in the ground wire
A32	BLK	In all power modes	Measure the voltage to ground:There should be less than 0.2 V.	Poor ground (G401) An open or high resistance in the ground wire

*1: With auto idle stop system

*2: Without auto idle stop system

10. If multiple failures are found on more than one control unit, replace the body control module . If input failures are related to a particular control unit, replace the control unit.

SAFETY INDICATOR SYSTEM (BODY CONTROL MODULE AND GAUGE CONTROL MODULE) INPUT TEST

NOTE:

- Make sure the fuses associated with the system are OK.
- If you are troubleshooting multiple DTCs, be sure to follow the instructions in B-CAN System Diagnosis Test Mode A .
- Before testing, do the gauge control module self-diagnostic function to make sure the beeper and the indicators in the gauge control module work properly and the F-CAN line are OK.

Body Control Module

1. Turn the vehicle to the OFF (LOCK) mode.

2. Disconnect body control module connectors.

Body Control Module Connector A (14P) (female terminals): ① Body Control Module Connector C (28P) (female terminals): ② Body Control Module Connector D (40P) (female terminals): ③ Body Control Module Connector E (24P) (female terminals): ④

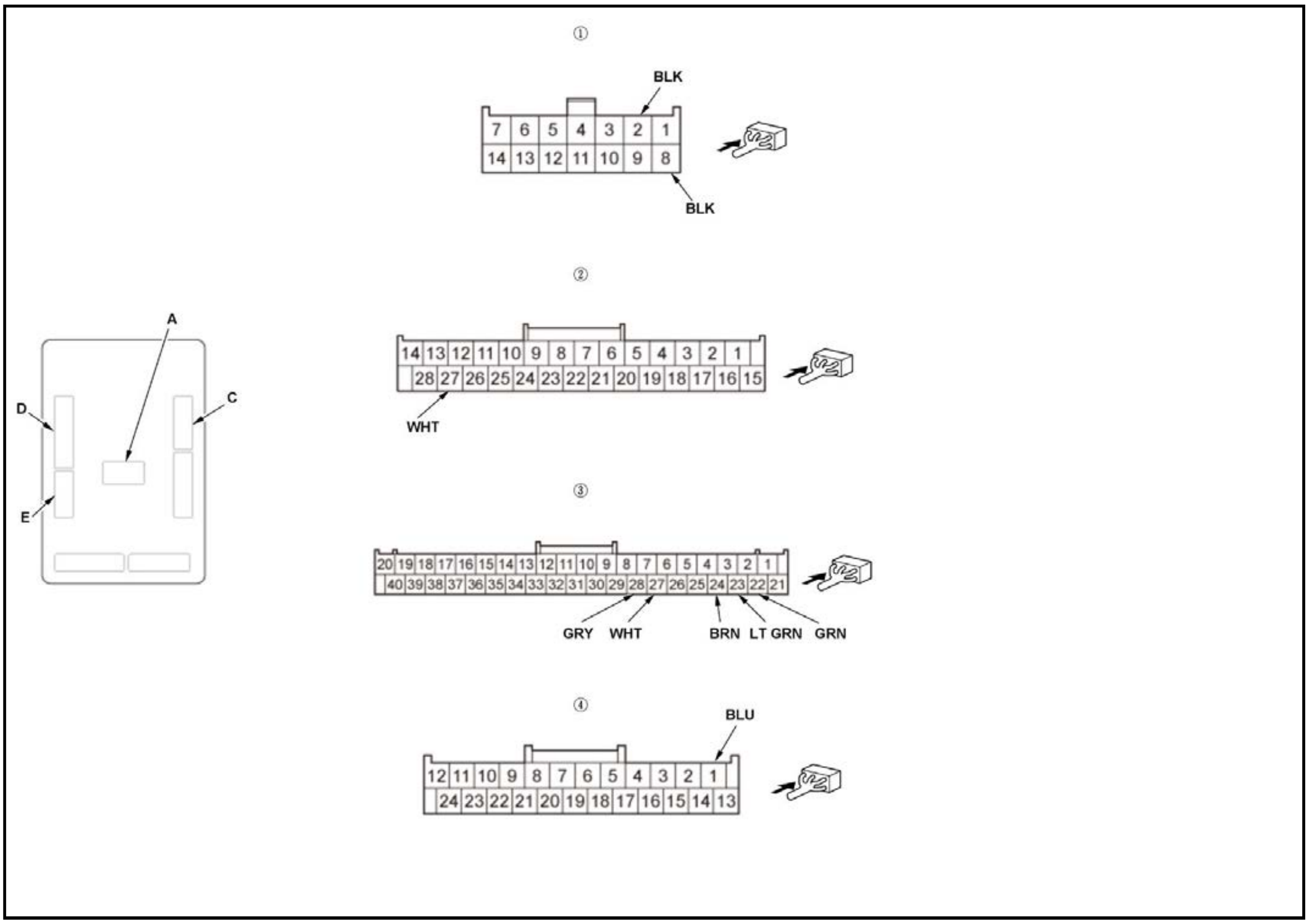

3. Inspect the connectors and socket terminals to be sure they are all making good contact:

- If the terminals are bent, loose, or corroded, repair them as necessary, and recheck the system.
- If the terminals are OK, go to step 4.

4. Reconnect the connectors to the body control module, and do the following input tests:

- If any test indicates a problem, find and correct the cause, then recheck the system.
- If all the input tests prove OK, go to step 5.

Cavity	Wire	Test condition	Test: Desired result	Possible cause if desired result is not obtained
C27	WHT	Under all conditions	Measure the voltage to ground:There should be battery voltage.	An open or high resistance in the wire

Cavity	Wire	Test condition	Test: Desired result	Possible cause if desired result is not obtained
E1	BLU	Vehicle ON mode	Measure the voltage to ground:There should be battery voltage.	An open or high resistance in the wire
A2	BLK	In all power modes	Measure the voltage to ground:There should be less than 0.2 V.	• Poor ground (G401) • An open or high resistance in the ground wire
A8	BLK	In all power modes	Measure the voltage to ground:There should be less than 0.2 V.	• Poor ground (G401) • An open or high resistance in the ground wire
D22	GRN	Driver's door open	Measure the voltage to ground:There should be less than 0.2 V.	• Faulty driver's door switch • Faulty driver's door switch ground • An open or high resistance in the wire
		Driver's door closed	Measure the voltage to ground:There should be battery voltage.	• Faulty driver's door switch • A short to ground in the wire
D23	LT GRN	Front passenger's door open	Measure the voltage to ground:There should be less than 0.2 V.	• Faulty front passenger's door switch • Faulty front passenger's door switch ground • An open or high resistance in the wire
		Front passenger's door closed	Measure the voltage to ground:There should be battery voltage.	• Faulty front passenger's door switch • A short to ground in the wire
D24	BRN	Left rear door open	Measure the voltage to ground:There should be less than 0.2 V.	• Faulty left rear door switch • Faulty left rear door switch ground • An open or high resistance in the wire
		Left rear door closed	Measure the voltage to ground:There should be battery voltage.	• Faulty left rear door switch • A short to ground in the wire
D28	GRY	Right rear door open	Measure the voltage to ground:There should be less than 0.2 V.	• Faulty right rear door switch • Faulty right rear door switch ground • An open or high resistance in the wire
		Right rear door closed	Measure the voltage to ground:There should be battery voltage.	• Faulty right rear door switch • A short to ground in the wire

Cavity	Wire	Test condition	Test: Desired result	Possible cause if desired result is not obtained
D27	WHT	Tailgate open	Measure the voltage to ground:There should be less than 0.2 V.	• Faulty power tailgate closer unit or faulty tailgate latch switch • Poor ground (G505) or an open in the ground wire • An open or high resistance in the wire
		Tailgate closed	Measure the voltage to ground:There should be battery voltage.	• Faulty power tailgate closer unit or faulty tailgate latch switch • A short to ground in the wire

Gauge Control Module

5. Turn the vehicle to the OFF (LOCK) mode.

6. Disconnect the gauge control module connector A (32P).

Gauge Control Module Connector A (32P) (female terminals)

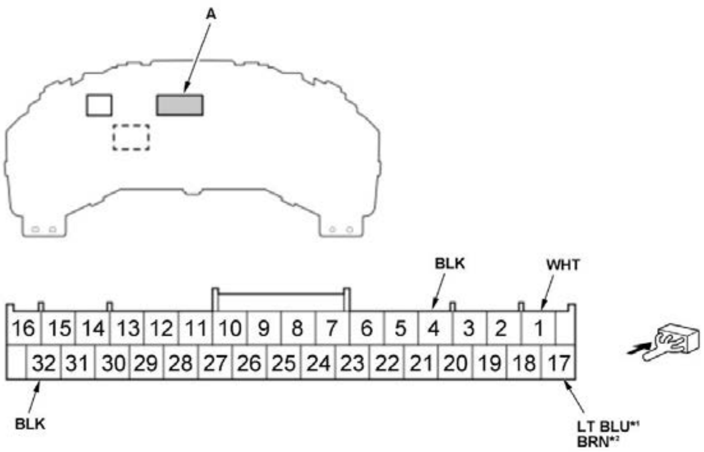

*1: With auto idle stop system
*2: Without auto idle stop system

7. Inspect the connector and socket terminals to be sure they are all making good contact:

- If the terminals are bent, loose, or corroded, repair them as necessary, and recheck the system.
- If the terminals are OK, go to step 8.

8. Reconnect the connector, and do the following input tests:

- If any test indicates a problem, find and correct the cause, then recheck the system.
- If all the input tests prove OK, go to step 9.

Cavity	Wire	Test condition	Test: Desired result	Possible cause if desired result is not obtained
A1	WHT	Under all conditions	Measure the voltage to ground:There should be battery voltage.	An open or high resistance in the wire
A17	LT BLU* 1BRN* 2	Vehicle ON mode	Measure the voltage to ground:There should be battery voltage.	An open or high resistance in the wire
A4	BLK	In all power modes	Measure the voltage to ground:There should be less than 0.2 V.	• Poor ground (G401) • An open or high resistance in the ground wire
A32	BLK	In all power modes	Measure the voltage to ground:There should be less than 0.2 V.	• Poor ground (G401) • An open or high resistance in the ground wire

*1: With auto idle stop system

*2: Without auto idle stop system

9. If multiple failures are found on more than one control unit, replace the body control module . If input failures are related to a particular control unit, replace the control unit.

SYSTEM WARNING/INDICATOR INDEX

SYSTEM WARNING/INDICATOR INDEX

With Multi-Information Display (MID)

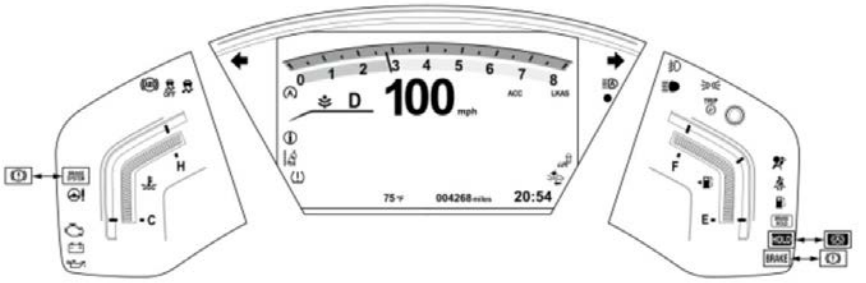
0
1
2
3
4
5
6
7
8
D
100
mph
ACC
LKAS
75
004268 miles
20:54
H
C
F
E
HOLD
BRAKE

Without Multi-Information Display (MID)

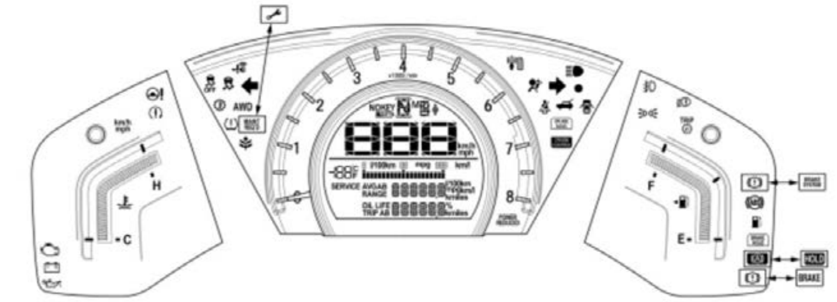
1
2
3
4
5
6
7
8
AWD
888
km/h
mph
SERVICE
OIL LIFE
H
C
F
E
HOLD
BRAKE

NOTE:

- Check the diagnostic trouble code (DTC) with the HDS, then refer to the indicated DTC's troubleshooting.
- There are some indicators displayed on the multi-information display (MID).

Indicator	Indicator Name	Fault Detection Unit	HDS System Menu (DTC Check)	Diagnostic Procedure
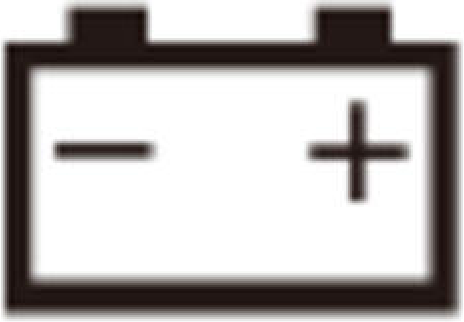	12 VOLT CHARGING SYSTEM INDICATOR(Red)	PCM	PGM-FI ⇨ DTCs/Freeze Data	- PGM-FI system general troubleshooting information - PGM-FI system DTC troubleshooting index - PGM-FI system symptom troubleshooting index - Charging system symptom troubleshooting index

Indicator	Indicator Name	Fault Detection Unit	HDS System Menu (DTC Check)	Diagnostic Procedure
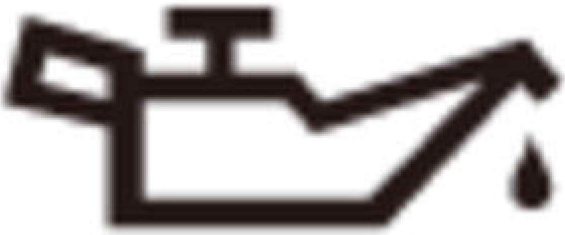	LOW OIL PRESSURE INDICATOR (Red)	PCM	PGM-FI ⇨ DTCs/Freeze Data	- PGM-FI system general troubleshooting information - PGM-FI system symptom troubleshooting index - Engine lubrication system symptom troubleshooting index
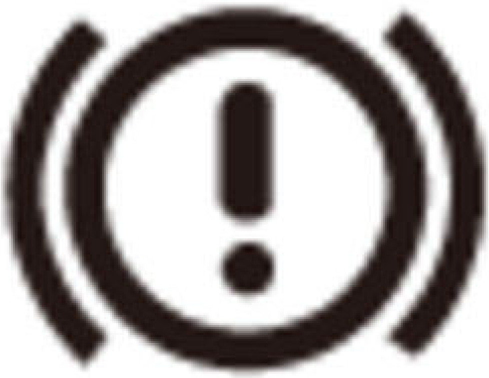 BRAKE	BRAKE SYSTEM INDICATOR(Red)	VSA modulator-control unit	ABS/TCS/VSA ⇨ DTCs	- VSA system general troubleshooting information - VSA system DTC troubleshooting index - VSA system symptom troubleshooting index
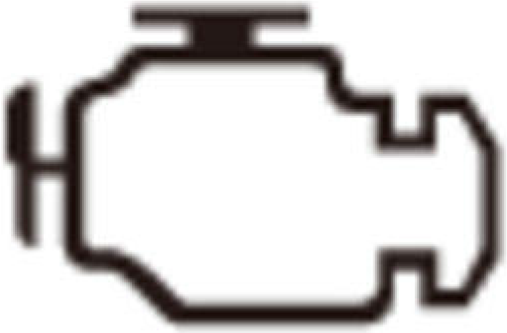	MALFUNCTION INDICATOR LAMP (MIL) (Amber)	PCM	PGM-FI ⇨ DTCs/Freeze Data	- PGM-FI system general troubleshooting information - PGM-FI system DTC troubleshooting index - PGM-FI system symptom troubleshooting index

Indicator	**Indicator Name**	**Fault Detection Unit**	**HDS System Menu (DTC Check)**	**Diagnostic Procedure**
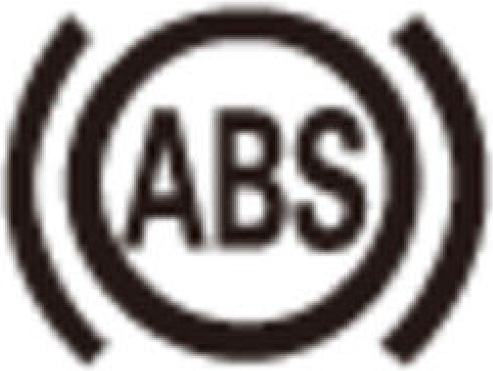	ABS INDICATOR(Amber)	VSA modulator-control unit	ABS/TCS/VSA ⇨ DTCs	- VSA system general troubleshooting information - VSA system DTC troubleshooting index - VSA system symptom troubleshooting index
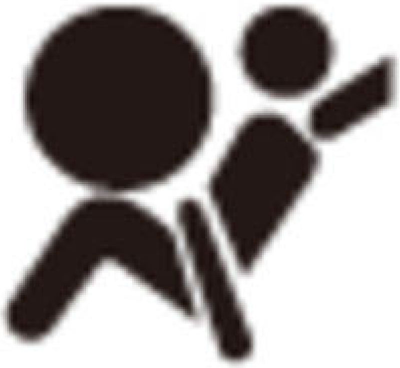	SRS INDICATOR(Red)	SRS Unit	SRS ⇨ SRS/SWS ⇨ DTCs	- SRS general troubleshooting information - SRS DTC troubleshooting index - SRS symptom troubleshooting index
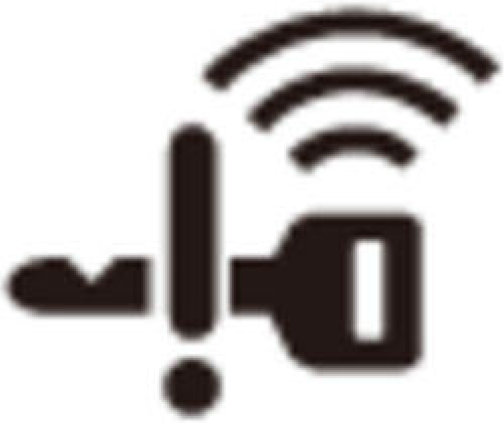	KEYLESS ACCESS INDICATOR	Body control module	ONE-PUSH START ⇨ PCU ⇨ DTCs ONE-PUSH START ⇨ Backup Control Unit ⇨ DTCs ONE-PUSH START ⇨ KEYLESS ACCESS CONTROL Unit ⇨ DTCs	- Body electrical general troubleshooting information - Body control module DTC troubleshooting index - Keyless access system symptom troubleshooting information - Keyless access system symptom troubleshooting index

Indicator	Indicator Name	Fault Detection Unit	HDS System Menu (DTC Check)	Diagnostic Procedure
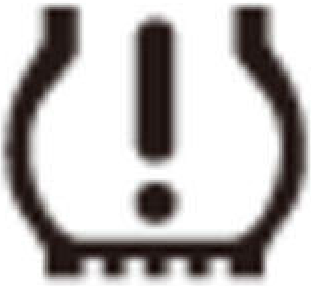	LOW TIRE PRESSURE/TPMS INDICATOR(Amber)	VSA modulator-control unit	ABS/TCS/VSA ⇨ DTCs	- TPMS general troubleshooting information - TPMS DTC troubleshooting index - TPMS symptom troubleshooting index
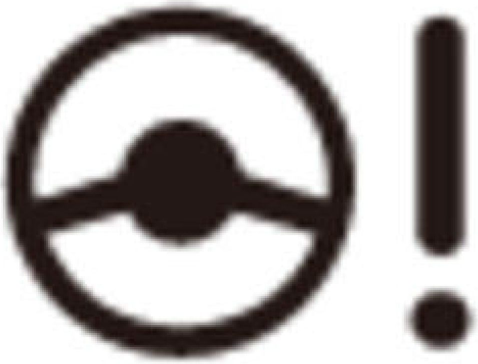	EPS INDICATOR(Amber)	EPS control unit	EPS ⇨ DTCs/Freeze Data	- EPS system general troubleshooting information - EPS system DTC troubleshooting index - EPS system symptom troubleshooting index
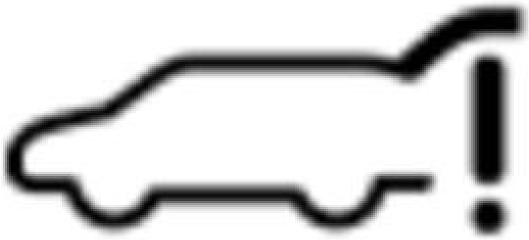 TAIL GATE	POWER TAILGATE INDICATOR	Power tailgate control unit	BODY ELECTRICAL ⇨ Power tailgate ⇨ DTCs	- Body electrical general troubleshooting information - Power tailgate system DTC troubleshooting index

Indicator	Indicator Name	Fault Detection Unit	HDS System Menu (DTC Check)	Diagnostic Procedure
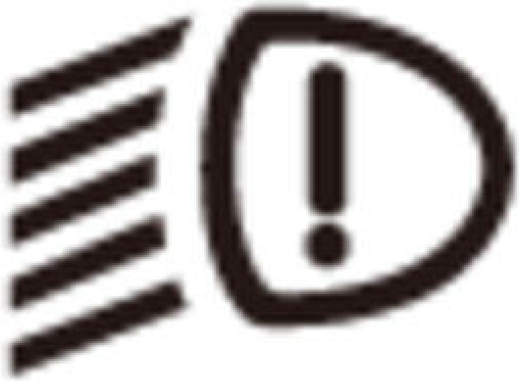	LIGHT CONTROL INDICATOR	Body control module	BODY ELECTRICAL ⇨ Lighting ⇨ DTCs	- Body electrical general troubleshooting information - Body control module DTC troubleshooting index
ACC	ACC INDICATOR	Multipurpose camera unit	DRIVING SUPPORT ⇨ Integrated Driver Support System ⇨ DTCs	- Driving support system DTC troubleshooting index - Driving support system symptom troubleshooting index - ACC system general troubleshooting information - ACC system symptom troubleshooting index
LKAS	LKAS INDICATOR	Multipurpose camera unit	DRIVING SUPPORT ⇨ Integrated Driver Support System ⇨ DTCs	- Driving support system DTC troubleshooting index - Driving support system symptom troubleshooting index - LKAS general troubleshooting information - LKAS symptom troubleshooting index

Indicator	Indicator Name	Fault Detection Unit	HDS System Menu (DTC Check)	Diagnostic Procedure
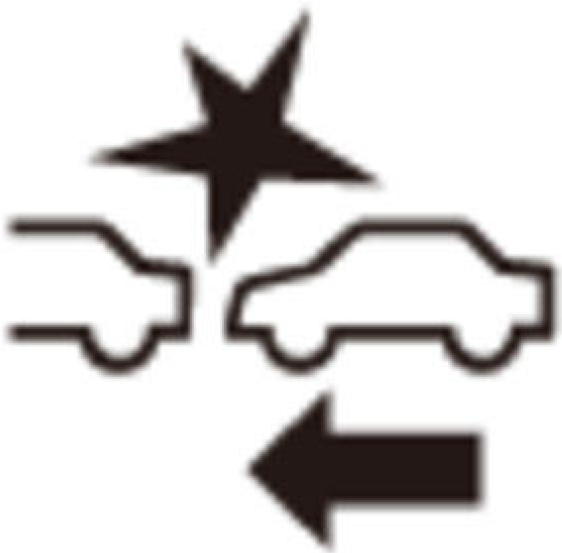	CMBS INDICATOR	Multipurpose camera unit	DRIVING ⇨ SUPPORT Integrated Driver Support ⇨ System DTCs	- Driving support system DTC troubleshooting index - Driving support system symptom troubleshooting index - CMBS general troubleshooting information - CMBS symptom troubleshooting index
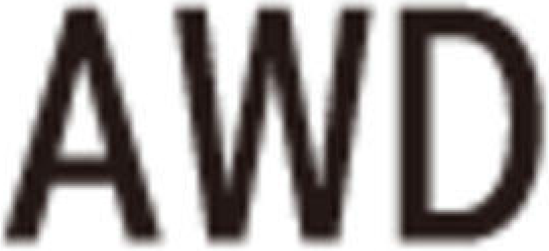	AWD SYSTEM INDICATOR	Real time AWD control unit	SH-AWD ⇨ DTC/Freeze Data	- AWD system general troubleshooting information - AWD system DTC troubleshooting index - AWD system symptom troubleshooting index
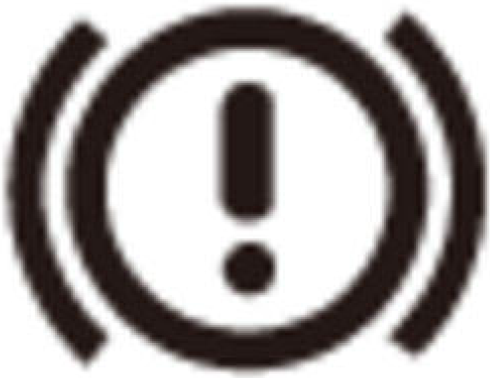	BRAKE SYSTEM INDICATOR(Amber)	- VSA modulator-control unit - PCM	ABS/TCS/VSA ⇨ DTCs DRIVING ⇨ SUPPORT Integrated Driver Support ⇨ System DTCs PGM-FI ⇨ DTCs/Freeze Data	- VSA system general troubleshooting information - VSA system DTC troubleshooting index - VSA system symptom troubleshooting index - Brake system symptom troubleshooting index - PGM-FI system general troubleshooting information - PGM-FI system DTC troubleshooting index - PGM-FI system symptom troubleshooting index

Indicator	Indicator Name	Fault Detection Unit	HDS System Menu (DTC Check)	Diagnostic Procedure
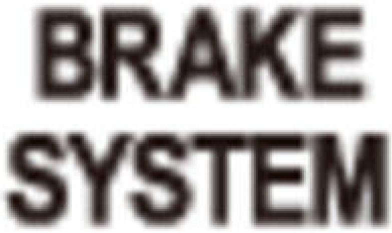				

Indicator	Indicator Name	Fault Detection Unit	HDS System Menu (DTC Check)	Diagnostic Procedure
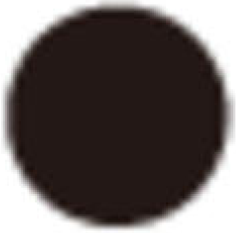	SECURITY INDICATOR(Red)	Body control module	Without keyless access system:IMMOBI ⇨ Immobilizer setup ⇨ Immobilizer Info ⇨ System Check	- **Body electrical general troubleshooting information** - **Immobilizer system symptom troubleshooting information** - **Immobilizer system check** - **Immobilizer system symptom troubleshooting index**
			With keyless access system:ONE-PUSH START ⇨ Backup Control Unit ⇨ System Information ⇨ System Check ONE-PUSH START ⇨ Backup Control Unit ⇨ System Information ⇨ Status Log ONE-PUSH START ⇨ KEYLESS ACCESS CONTROL Unit ⇨ KEYLESS ACCESS System Information ⇨ System Check 1 ONE-PUSH START ⇨ KEYLESS	- **Body electrical general troubleshooting information** - **Keyless access system symptom troubleshooting information** - **Keyless access system system check** - **Keyless access system symptom troubleshooting index**

Indicator	Indicator Name	Fault Detection Unit	HDS System Menu (DTC Check)	Diagnostic Procedure
			ACCESS CONTROL Unit ⇨ KEYLESS ACCESS System Information ⇨ System Check 2	
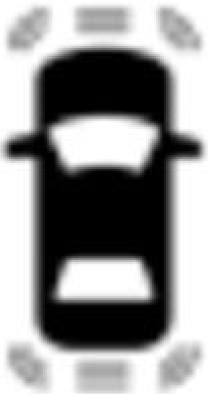	PARKING and BACK-UP SENSOR INDICATOR	Parking and back-up sensor control unit	BODY ELECTRICAL ⇨ Parking Sensor ⇨ DTCs	• Body electrical general troubleshooting information • Parking and back-up sensor system DTC troubleshooting index
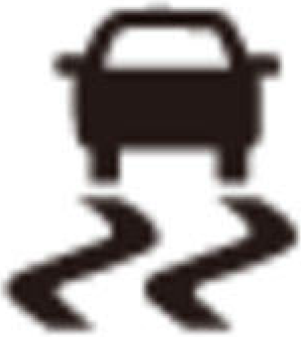	VSA INDICATOR(Amber)	VSA modulator-control unit	ABS/TCS/VSA ⇨ DTCs	• VSA system general troubleshooting information • VSA system DTC troubleshooting index • VSA system symptom troubleshooting index
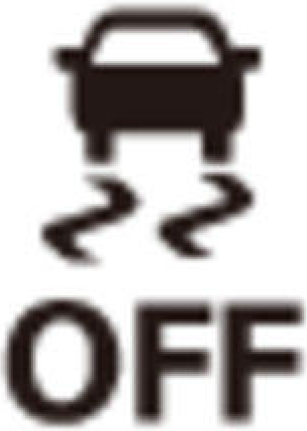	VSA OFF INDICATOR(Amber)	VSA modulator-control unit	ABS/TCS/VSA ⇨ DTCs	• VSA system general troubleshooting information • VSA system DTC troubleshooting index • VSA system symptom troubleshooting index

Indicator	Indicator Name	Fault Detection Unit	HDS System Menu (DTC Check)	Diagnostic Procedure
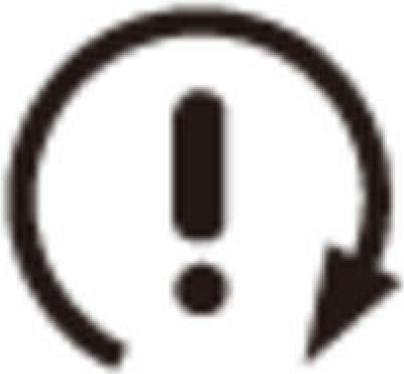 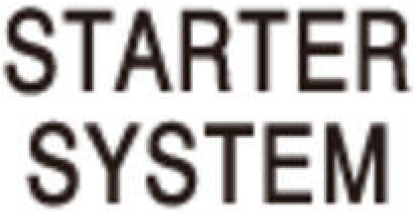	STARTER SYSTEM INDICATOR	PCM	PGM-FI ⇨ DTCs/Freeze Data	- PGM-FI system general troubleshooting information - PGM-FI system DTC troubleshooting index - PGM-FI system symptom troubleshooting index - Starting system symptom troubleshooting index
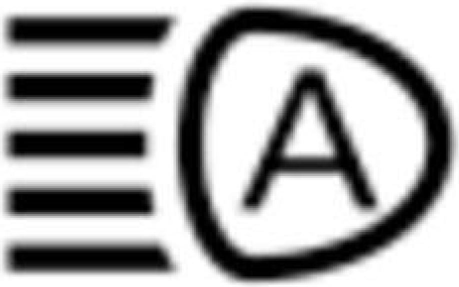	AUTO HIGH-BEAM INDICATOR	Multipurpose camera unit	DRIVING SUPPORT ⇨ Integrated Driver Support System ⇨ DTCs	- Driving support system DTC troubleshooting index - Driving support system symptom troubleshooting index - Auto high-beam (High-beam support system) general troubleshooting information
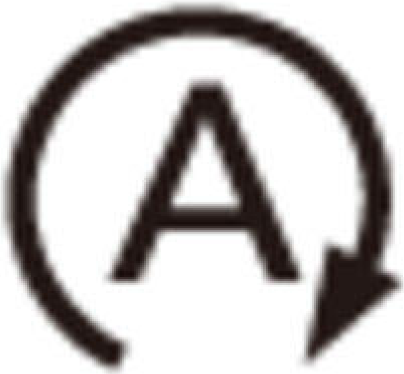	AUTO IDLE STOP SYSTEM INDICATOR	PCM	PGM-FI ⇨ DTCs/Freeze Data	- PGM-FI system general troubleshooting information - PGM-FI system DTC troubleshooting index - PGM-FI system symptom troubleshooting index

Indicator	Indicator Name	Fault Detection Unit	HDS System Menu (DTC Check)	Diagnostic Procedure
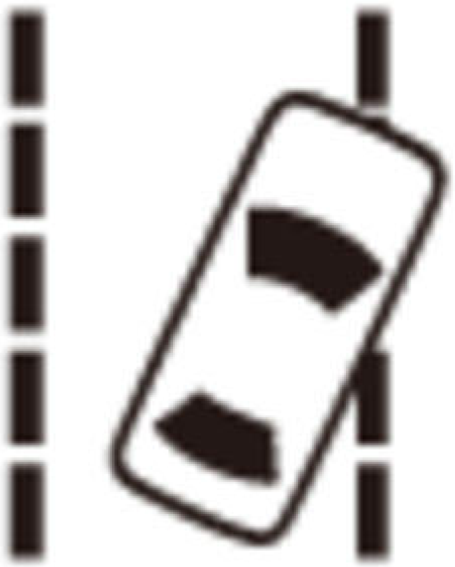	RDM INDICATOR	Multipurpose camera unit	DRIVING SUPPORT ⇨ Integrated Driver Support System ⇨ DTCs	- Driving support system DTC troubleshooting index - Driving support system symptom troubleshooting index - RDM system general troubleshooting information - RDM system symptom troubleshooting index
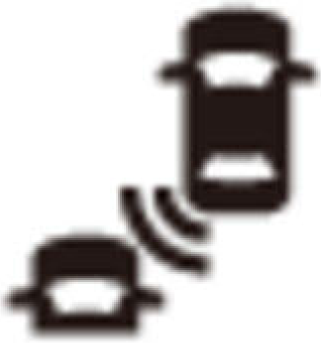	BSI INDICATOR	- Left side BSI radar unit - Right side BSI radar unit	DRIVING SUPPORT ⇨ Blind Spot Information/Cross Traffic Monitor ⇨ DTCs	- Driving support system DTC troubleshooting index - Driving support system symptom troubleshooting index - BSI general troubleshooting information - BSI DTC troubleshooting index - BSI symptom troubleshooting index - CTM general troubleshooting information

Indicator	Indicator Name	Fault Detection Unit	HDS System Menu (DTC Check)	Diagnostic Procedure
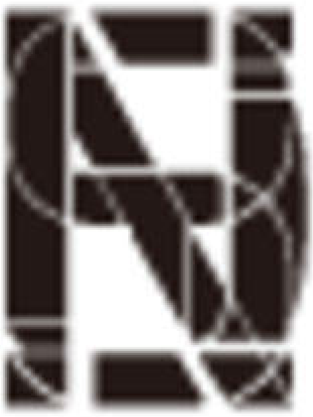	SHIFT POSITION INDICATOR	- TCM (1.5 L engine) - PCM (2.4 L engine)	AT ⇨ DTCs/Freeze Data	- CVT system general troubleshooting information - CVT system DTC troubleshooting index - CVT system symptom troubleshooting index

REWRITE

REWRITING THE ODO DATA AND TRANSFERRING THE SERVICE REMINDER SYSTEM DATA TO A NEW GAUGE CONTROL MODULE

Procedure

NOTE:

- Obtain a new gauge control module before starting the rewriting process. Only new gauges can be rewritten.
- Do not operate anything electrical (headlights, audio system, A/C, power window, door locks etc.) during the process.
- Rewriting is not possible on a gauge control module that will not communicate with the HDS.
- Make sure that the HDS shows the correct VIN for the vehicle you are working on.
- Once you have started this procedure, you must complete it before removing the HDS from the data link connector.
- Connect a 12 volt battery charger to insure that the 12 volt battery voltage is maintained during the process.

1. Rewriting the ODO Data on a New Gauge Control Module - Procedure

   Rewriting and Transferring

   1. Before replacing the gauge control module, **connect the HDS**

   2. Select GAUGES from the BODY ELECTRICAL SYSTEM SELECT MENU with the HDS.

   3. Select GAUGE CONTROL MODULE REPLACEMENT (ODO Rewrite) from the ADJUSTMENT menu, and follow the instructions on the display to retrieve the ODO value4. **Replace the gauge control module**

   5. Select GAUGE CONTROL MODULE REPLACEMENT (ODO Rewrite) from the ADJUSTMENT menu, and select READ OUT DATA and save ODO value data into HDS.

   6. Connect a 12 volt battery charger to insure that the 12 volt battery voltage is maintained during the process.

   How to Release Locked Odometer Mileage to the Original Gauge Control module.

   If, after you attempt to transfer mileage to a new gauge assembly, the odometer display has dashes (---), is garbled, or shows an incorrect value, the original gauge control module can be unlocked and restored to its original state. In this way, it can be used again for additional attempts to transfer the mileage:

   1. Confirm that you have the latest HDS version of software.

   2. Make sure that the HDS shows the correct VIN for the vehicle you are working on.

   3. With the vehicle in the OFF (LOCK) mode, connect the original gauge control module.

   4. Completely re-boot the HDS.

   5. Clear any stored DTCs.

   6. Navigate to BODY ELECTRIC/GAUGES/GAUGE CONTROL MODULE REPLACEMENT (ODO Rewrite, etc.).

   7. Select 3. RELEASING LOCKED ODO VALUE.

   8. Follow the prompts and the odometer mileage will be restored.

   9. Start over the Rewriting and Transferring procedure from step 2.

CIRCUIT DIAGRAM

GAUGES CIRCUIT DIAGRAM

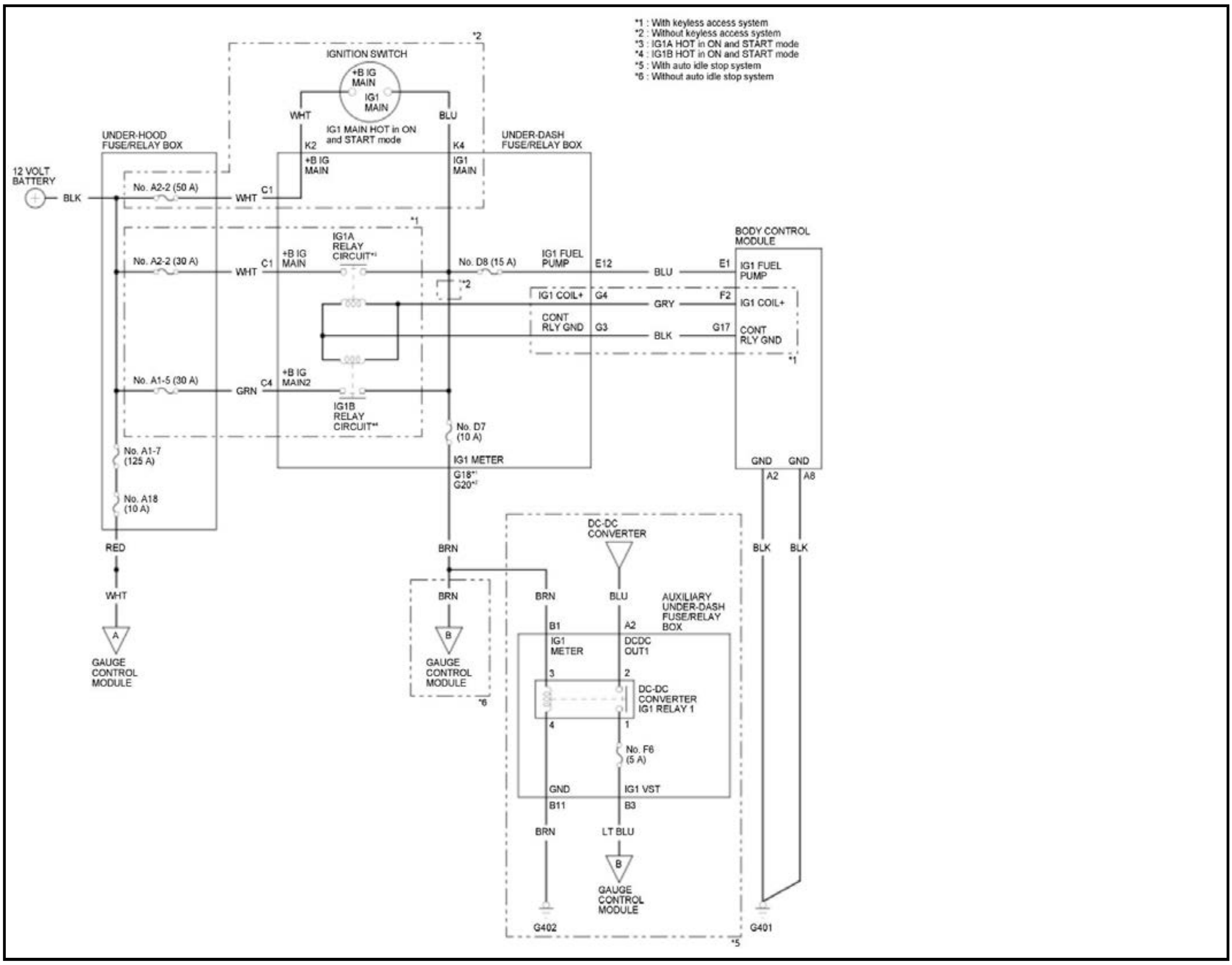

*1 : With keyless access system
*2 : Without keyless access system
*3 : IG1A HOT in ON and START mode
*4 : IG1B HOT in ON and START mode
*5 : With auto idle stop system
*6 : Without auto idle stop system

IGNITION SWITCH
+B IG MAIN
IG1 MAIN
WHT
BLU
IG1 MAIN HOT in ON and START mode
*2
UNDER-HOOD FUSE/RELAY BOX
UNDER-DASH FUSE/RELAY BOX
K2
+B IG MAIN
K4
IG1 MAIN
12 VOLT BATTERY
BLK
No. A2-2 (50 A)
WHT
C1
*1
No. A2-2 (30 A)
WHT
C1
+B IG MAIN
IG1A RELAY CIRCUIT*3
No. D8 (15 A)
IG1 FUEL PUMP
E12
BLU
E1
BODY CONTROL MODULE
IG1 FUEL PUMP
*2
IG1 COIL+
G4
GRY
F2
IG1 COIL+
CONT RLY GND
G3
BLK
G17
CONT RLY GND
*1
No. A1-5 (30 A)
GRN
C4
+B IG MAIN2
IG1B RELAY CIRCUIT*4
No. D7 (10 A)
IG1 METER
G18*1
G20*2
No. A1-7 (125 A)
No. A18 (10 A)
GND
GND
A2
A8
RED
BRN
BLK
BLK
WHT
A
GAUGE CONTROL MODULE
BRN
B
GAUGE CONTROL MODULE
*6
DC-DC CONVERTER
BRN
BLU
AUXILIARY UNDER-DASH FUSE/RELAY BOX
B1
IG1 METER
A2
DCDC OUT1
3
2
DC-DC CONVERTER IG1 RELAY 1
4
1
No. F6 (5 A)
GND
IG1 VST
B11
B3
BRN
LT BLU
B
GAUGE CONTROL MODULE
G402
G401
*5

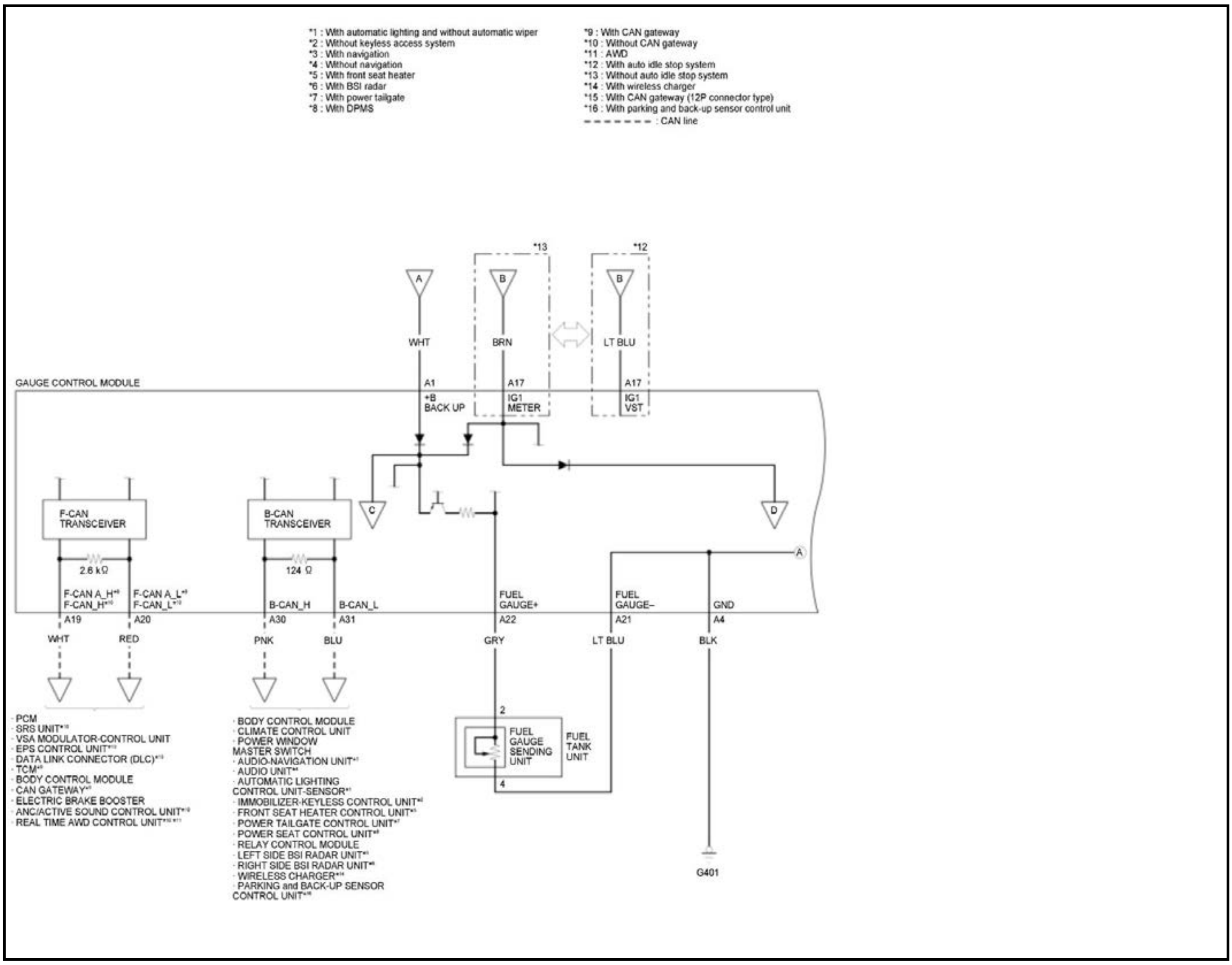
*1 : With automatic lighting and without automatic wiper
*2 : Without keyless access system
*3 : With navigation
*4 : Without navigation
*5 : With front seat heater
*6 : With BSI radar
*7 : With power tailgate
*8 : With DPMS
*9 : With CAN gateway
*10 : Without CAN gateway
*11 : AWD
*12 : With auto idle stop system
*13 : Without auto idle stop system
*14 : With wireless charger
*15 : With CAN gateway (12P connector type)
*16 : With parking and back-up sensor control unit
- - - - - - - : CAN line
*13
*12
A
B
B
WHT
BRN
LT BLU
GAUGE CONTROL MODULE
A1
+B
BACK UP
A17
IG1
METER
A17
IG1
VST
C
D
F-CAN
TRANSCEIVER
B-CAN
TRANSCEIVER
2.6 kΩ
124 Ω
A
F-CAN A_H*9
F-CAN_H*10
F-CAN A_L*9
F-CAN_L*10
B-CAN_H
B-CAN_L
FUEL
GAUGE+
FUEL
GAUGE−
GND
A19
A20
A30
A31
A22
A21
A4
WHT
RED
PNK
BLU
GRY
LT BLU
BLK
2
FUEL
GAUGE
SENDING
UNIT
FUEL
TANK
UNIT
4
· PCM
· SRS UNIT*10
· VSA MODULATOR-CONTROL UNIT
· EPS CONTROL UNIT*10
· DATA LINK CONNECTOR (DLC)*10
· TCM*9
· BODY CONTROL MODULE
· CAN GATEWAY*9
· ELECTRIC BRAKE BOOSTER
· ANC/ACTIVE SOUND CONTROL UNIT*10
· REAL TIME AWD CONTROL UNIT*10 *11
· BODY CONTROL MODULE
· CLIMATE CONTROL UNIT
· POWER WINDOW
MASTER SWITCH
· AUDIO-NAVIGATION UNIT*3
· AUDIO UNIT*4
· AUTOMATIC LIGHTING
CONTROL UNIT-SENSOR*1
· IMMOBILIZER-KEYLESS CONTROL UNIT*2
· FRONT SEAT HEATER CONTROL UNIT*5
· POWER TAILGATE CONTROL UNIT*7
· POWER SEAT CONTROL UNIT*8
· RELAY CONTROL MODULE
· LEFT SIDE BSI RADAR UNIT*6
· RIGHT SIDE BSI RADAR UNIT*6
· WIRELESS CHARGER*14
· PARKING and BACK-UP SENSOR
CONTROL UNIT*16
G401

*1 : With washer fluid level switch
*2 : With ACC
*3 : Without ACC
*4 : With CMBS
*5 : With auto idle stop system
*6 : Without auto idle stop system

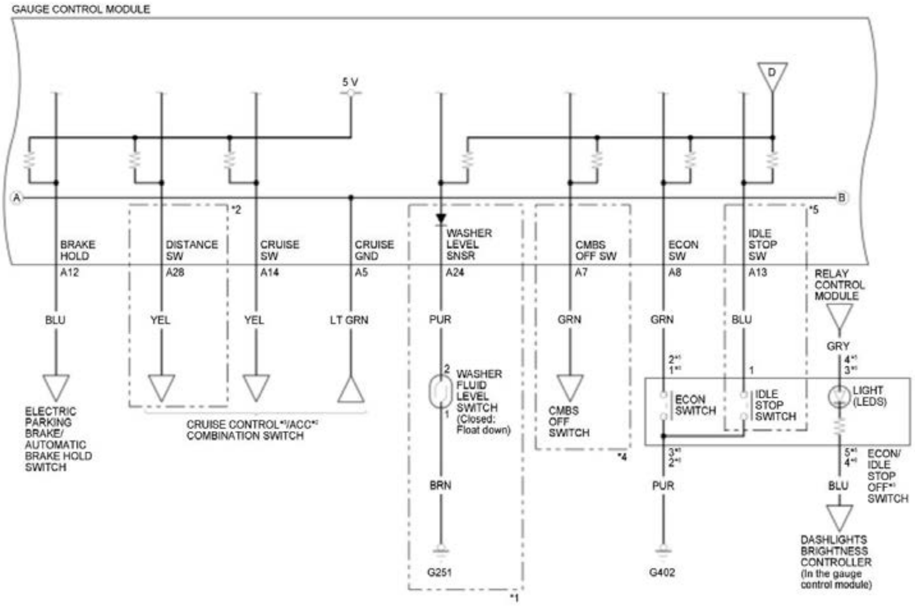
GAUGE CONTROL MODULE
5 V
D
A
B
BRAKE HOLD
A12
BLU
DISTANCE SW
A28
YEL
CRUISE SW
A14
YEL
CRUISE GND
A5
LT GRN
WASHER LEVEL SNSR
A24
PUR
CMBS OFF SW
A7
GRN
ECON SW
A8
GRN
IDLE STOP SW
A13
BLU
*2
*5
RELAY CONTROL MODULE
GRY
ELECTRIC PARKING BRAKE/ AUTOMATIC BRAKE HOLD SWITCH
CRUISE CONTROL*3/ACC*2 COMBINATION SWITCH
2
WASHER FLUID LEVEL SWITCH (Closed: Float down)
1
BRN
G251
*1
CMBS OFF SWITCH
*4
2*5
1*6
1
4*5
3*6
ECON SWITCH
IDLE STOP SWITCH
LIGHT (LEDS)
3*5
2*6
5*5
4*6
ECON/ IDLE STOP OFF*5 SWITCH
PUR
G402
BLU
DASHLIGHTS BRIGHTNESS CONTROLLER (In the gauge control module)

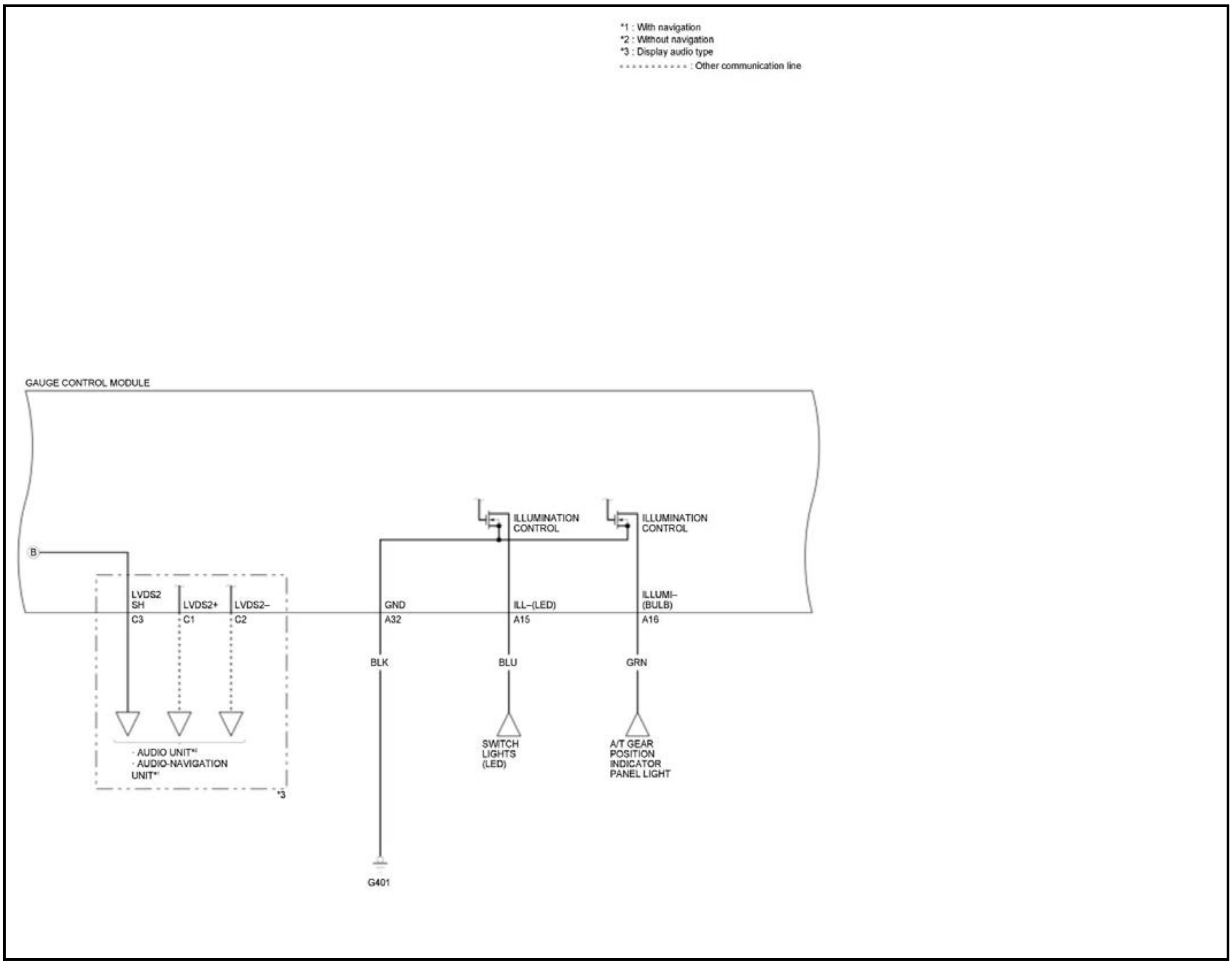
*1 : With navigation
*2 : Without navigation
*3 : Display audio type
: Other communication line
GAUGE CONTROL MODULE
ILLUMINATION CONTROL
ILLUMINATION CONTROL
B
LVDS2 SH
C3
LVDS2+
C1
LVDS2–
C2
GND
A32
ILL–(LED)
A15
ILLUMI– (BULB)
A16
BLK
BLU
GRN
· AUDIO UNIT*2
· AUDIO-NAVIGATION UNIT*1
*3
SWITCH LIGHTS (LED)
A/T GEAR POSITION INDICATOR PANEL LIGHT
G401

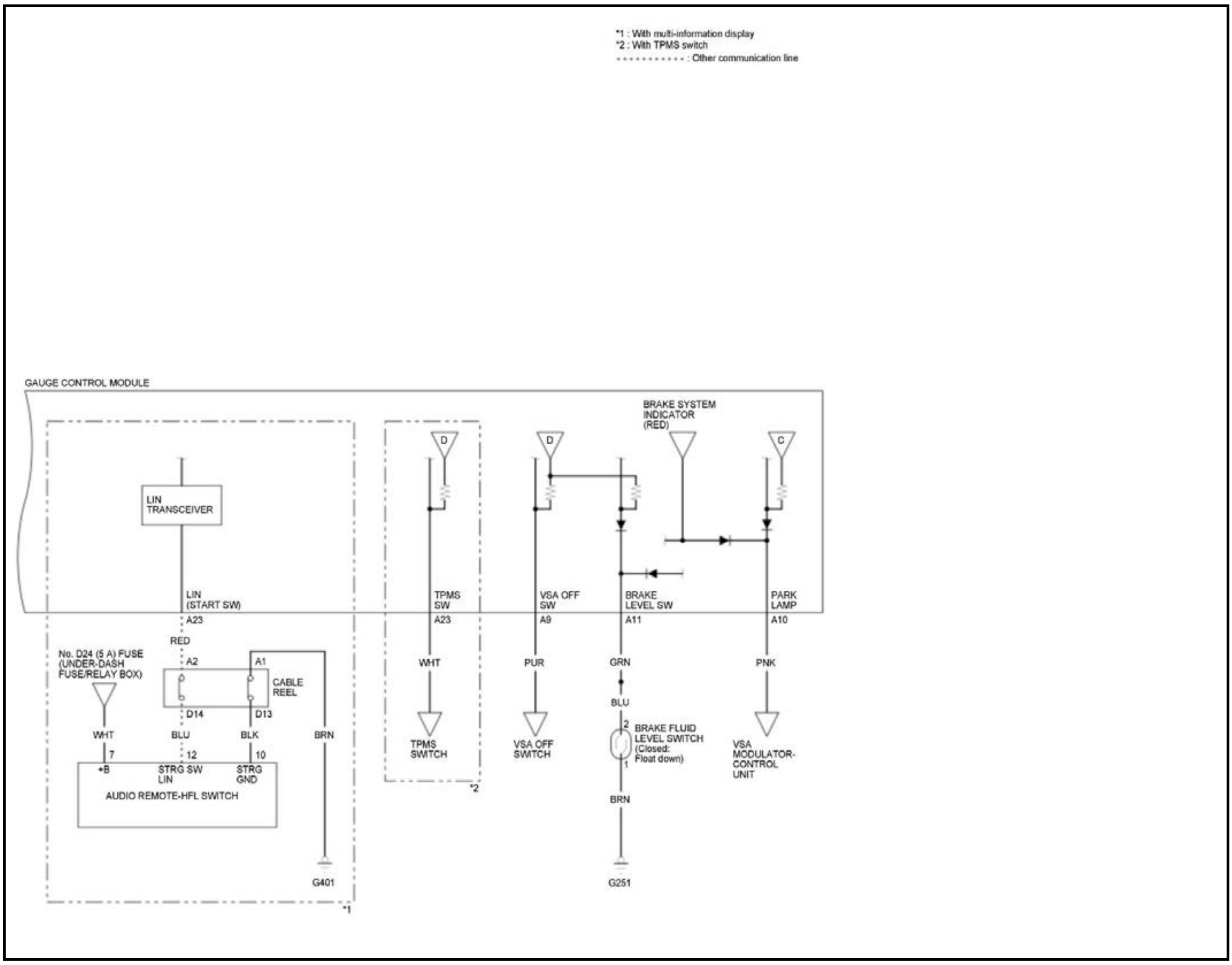
*1 : With multi-information display
*2 : With TPMS switch
··········· : Other communication line
GAUGE CONTROL MODULE
LIN TRANSCEIVER
LIN (START SW)
A23
RED
No. D24 (5 A) FUSE (UNDER-DASH FUSE/RELAY BOX)
A2
A1
CABLE REEL
D14
D13
WHT
BLU
BLK
BRN
7
12
10
+B
STRG SW LIN
STRG GND
AUDIO REMOTE-HFL SWITCH
G401
*1
D
TPMS SW
A23
WHT
TPMS SWITCH
*2
D
VSA OFF SW
A9
PUR
VSA OFF SWITCH
BRAKE SYSTEM INDICATOR (RED)
BRAKE LEVEL SW
A11
GRN
BLU
2
BRAKE FLUID LEVEL SWITCH (Closed: Float down)
1
BRN
G251
C
PARK LAMP
A10
PNK
VSA MODULATOR-CONTROL UNIT

PARKING AND BACK-UP SENSOR SYSTEM CIRCUIT DIAGRAM (2020 2021)

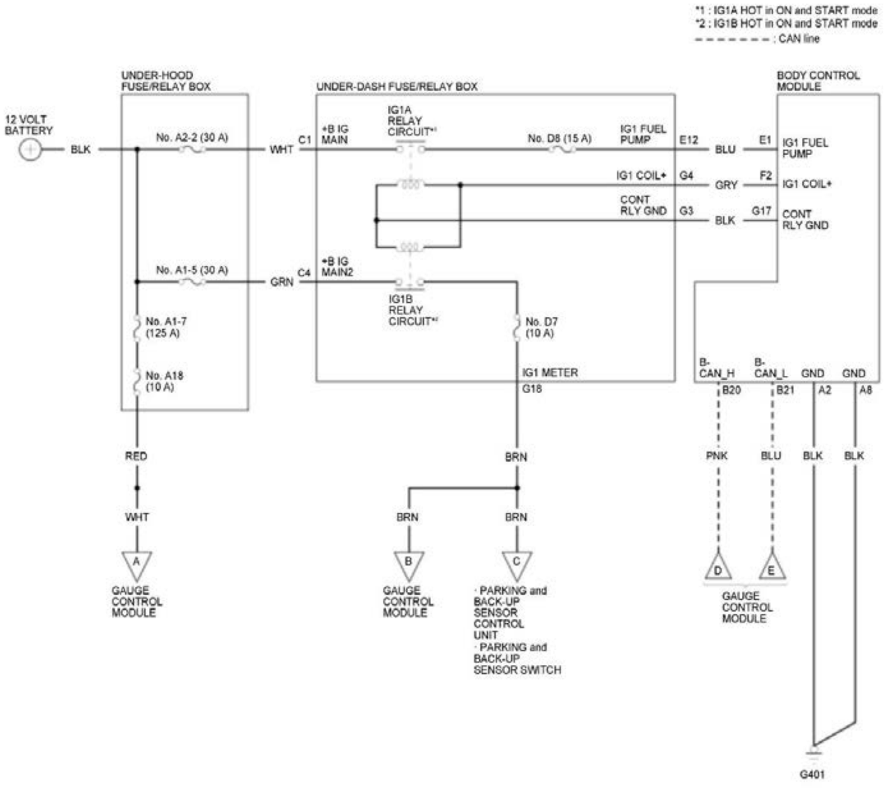
*1 : IG1A HOT in ON and START mode
*2 : IG1B HOT in ON and START mode
- - - - - - - : CAN line
12 VOLT BATTERY
BLK
UNDER-HOOD FUSE/RELAY BOX
No. A2-2 (30 A)
No. A1-5 (30 A)
No. A1-7 (125 A)
No. A18 (10 A)
WHT
GRN
UNDER-DASH FUSE/RELAY BOX
C1
+B IG MAIN
C4
+B IG MAIN2
IG1A RELAY CIRCUIT*1
IG1B RELAY CIRCUIT*2
No. D8 (15 A)
IG1 FUEL PUMP
IG1 COIL+
CONT RLY GND
No. D7 (10 A)
IG1 METER
G18
E12
G4
G3
BLU
GRY
BLK
E1
F2
G17
BODY CONTROL MODULE
IG1 FUEL PUMP
IG1 COIL+
CONT RLY GND
B-CAN_H
B-CAN_L
GND
GND
B20
B21
A2
A8
RED
WHT
A
GAUGE CONTROL MODULE
BRN
BRN
BRN
B
GAUGE CONTROL MODULE
C
· PARKING and BACK-UP SENSOR CONTROL UNIT
· PARKING and BACK-UP SENSOR SWITCH
PNK
BLU
BLK
BLK
D
E
GAUGE CONTROL MODULE
G401

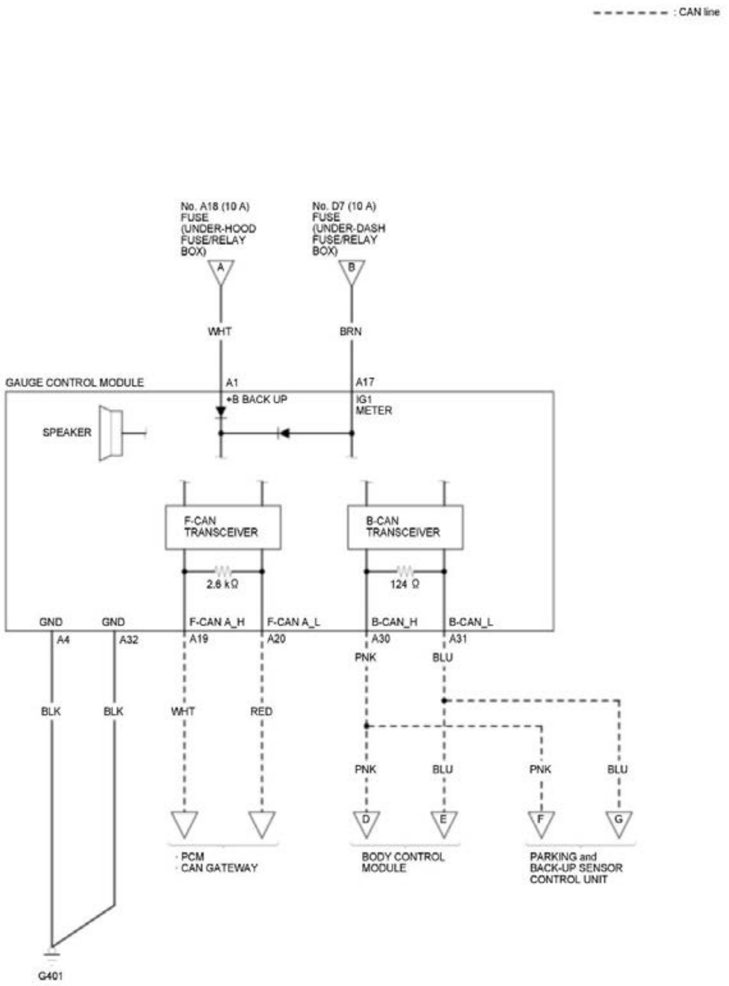
- - - - - - - : CAN line
No. A18 (10 A) FUSE (UNDER-HOOD FUSE/RELAY BOX)
No. D7 (10 A) FUSE (UNDER-DASH FUSE/RELAY BOX)
A
B
WHT
BRN
GAUGE CONTROL MODULE
A1
+B BACK UP
A17
IG1 METER
SPEAKER
F-CAN TRANSCEIVER
B-CAN TRANSCEIVER
2.6 kΩ
124 Ω
GND
GND
F-CAN A_H
F-CAN A_L
B-CAN_H
B-CAN_L
A4
A32
A19
A20
A30
A31
PNK
BLU
BLK
BLK
WHT
RED
PNK
BLU
PNK
BLU
D
E
F
G
· PCM
· CAN GATEWAY
BODY CONTROL MODULE
PARKING and BACK-UP SENSOR CONTROL UNIT
G401

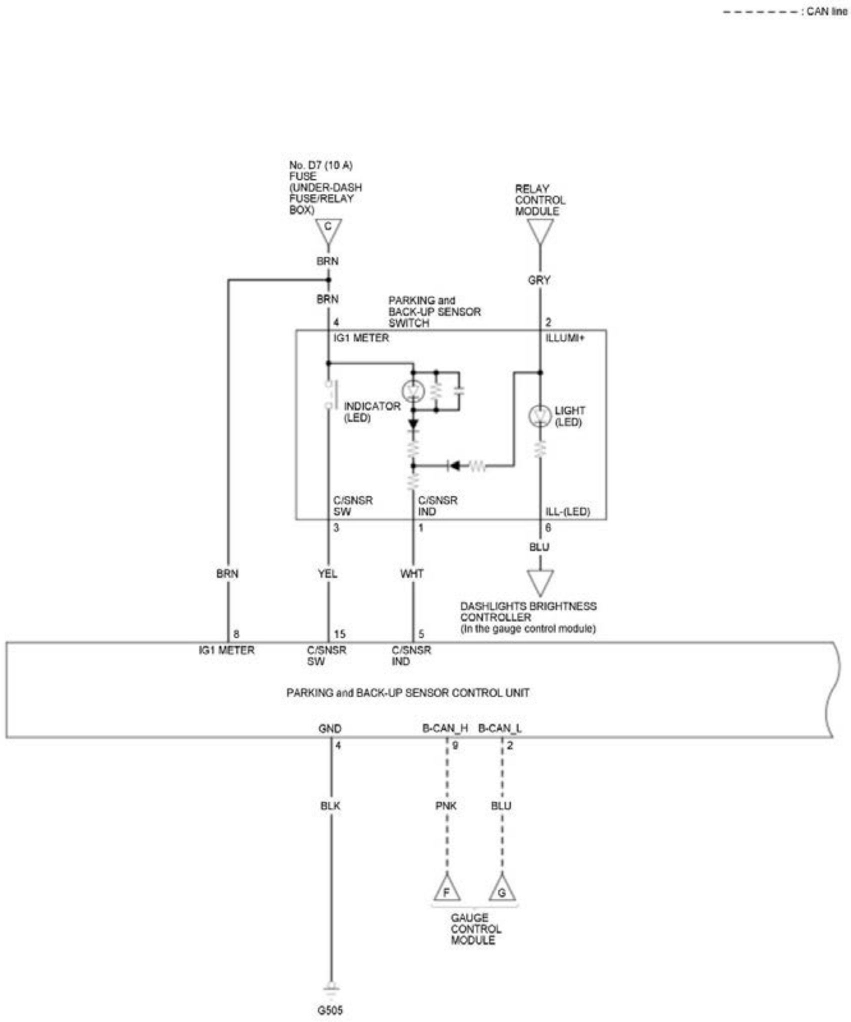
- - - - - - - : CAN line
No. D7 (10 A) FUSE (UNDER-DASH FUSE/RELAY BOX)
C
BRN
BRN
4
IG1 METER
RELAY CONTROL MODULE
GRY
2
ILLUMI+
PARKING and BACK-UP SENSOR SWITCH
INDICATOR (LED)
LIGHT (LED)
C/SNSR SW
3
C/SNSR IND
1
ILL-(LED)
6
BLU
DASHLIGHTS BRIGHTNESS CONTROLLER (In the gauge control module)
BRN
YEL
WHT
8
IG1 METER
15
C/SNSR SW
5
C/SNSR IND
PARKING and BACK-UP SENSOR CONTROL UNIT
GND
4
B-CAN_H
9
B-CAN_L
2
BLK
PNK
BLU
F
G
GAUGE CONTROL MODULE
G505

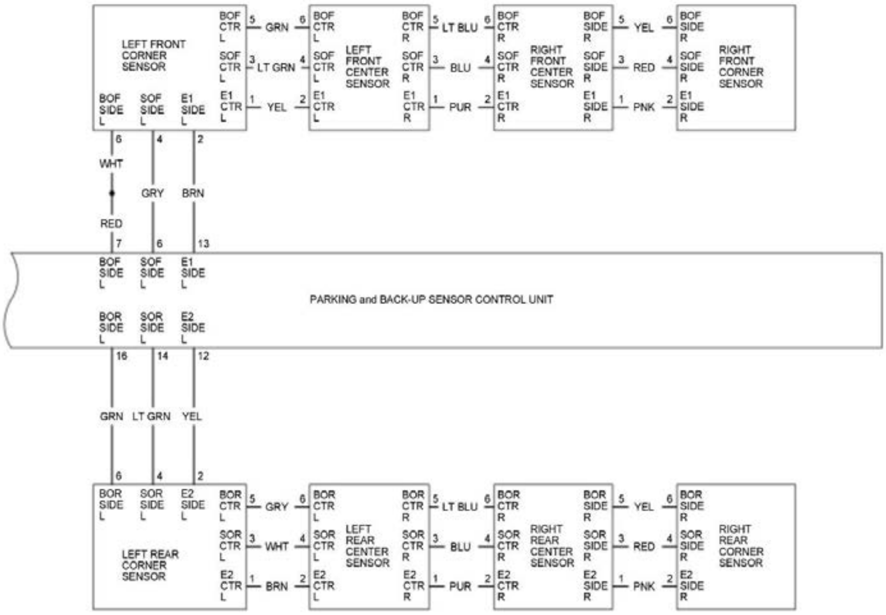
LEFT FRONT CORNER SENSOR
LEFT FRONT CENTER SENSOR
RIGHT FRONT CENTER SENSOR
RIGHT FRONT CORNER SENSOR
BOF CTR L
SOF CTR L
E1 CTR L
BOF CTR R
SOF CTR R
E1 CTR R
BOF SIDE R
SOF SIDE R
E1 SIDE R
BOF SIDE L
SOF SIDE L
E1 SIDE L
GRN
LT GRN
YEL
LT BLU
BLU
PUR
RED
PNK
WHT
GRY
BRN
PARKING and BACK-UP SENSOR CONTROL UNIT
BOR SIDE L
SOR SIDE L
E2 SIDE L
LEFT REAR CORNER SENSOR
LEFT REAR CENTER SENSOR
RIGHT REAR CENTER SENSOR
RIGHT REAR CORNER SENSOR
BOR CTR L
SOR CTR L
E2 CTR L
BOR CTR R
SOR CTR R
E2 CTR R
BOR SIDE R
SOR SIDE R
E2 SIDE R
16
14
12
13
7
6
4
2
5
3
1

REMINDER SYSTEMS CIRCUIT DIAGRAM

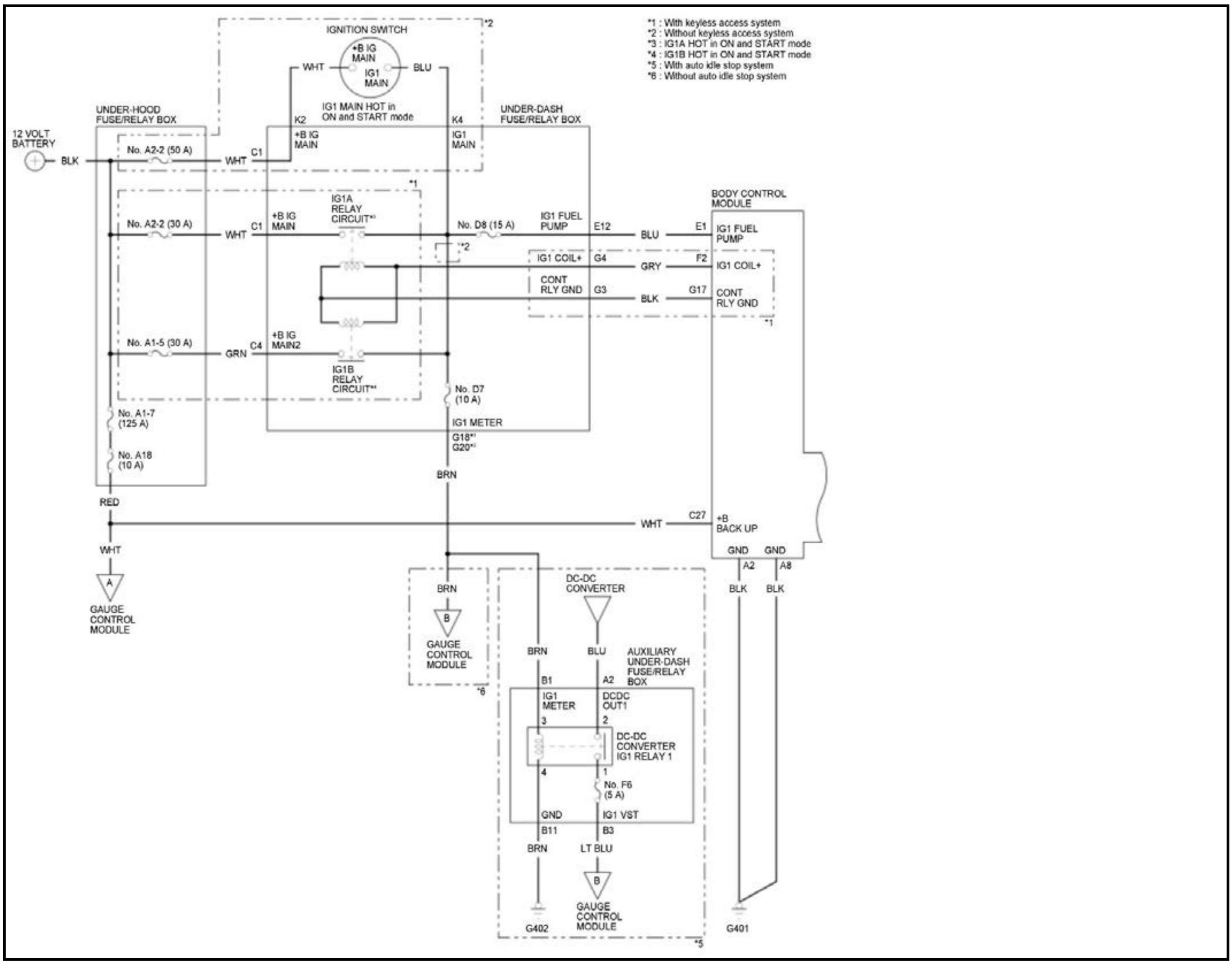
*1 : With keyless access system
*2 : Without keyless access system
*3 : IG1A HOT in ON and START mode
*4 : IG1B HOT in ON and START mode
*5 : With auto idle stop system
*6 : Without auto idle stop system
IGNITION SWITCH
+B IG MAIN
IG1 MAIN
WHT
BLU
IG1 MAIN HOT in ON and START mode
UNDER-HOOD FUSE/RELAY BOX
UNDER-DASH FUSE/RELAY BOX
12 VOLT BATTERY
BLK
No. A2-2 (50 A)
WHT
C1
K2
+B IG MAIN
K4
IG1 MAIN
No. A2-2 (30 A)
WHT
C1
+B IG MAIN
IG1A RELAY CIRCUIT*3
No. D8 (15 A)
IG1 FUEL PUMP
E12
BLU
E1
IG1 FUEL PUMP
BODY CONTROL MODULE
IG1 COIL+
G4
GRY
F2
IG1 COIL+
CONT RLY GND
G3
BLK
G17
CONT RLY GND
No. A1-5 (30 A)
GRN
C4
+B IG MAIN2
IG1B RELAY CIRCUIT*4
No. D7 (10 A)
IG1 METER
G18*1
G20*2
No. A1-7 (125 A)
No. A18 (10 A)
BRN
RED
WHT
C27
+B BACK UP
GND
GND
A2
A8
BLK
BLK
WHT
A
GAUGE CONTROL MODULE
BRN
B
GAUGE CONTROL MODULE
DC-DC CONVERTER
BRN
BLU
AUXILIARY UNDER-DASH FUSE/RELAY BOX
B1
A2
IG1 METER
DCDC OUT1
3
2
DC-DC CONVERTER IG1 RELAY 1
4
1
No. F6 (5 A)
GND
IG1 VST
B11
B3
BRN
LT BLU
B
GAUGE CONTROL MODULE
G402
G401

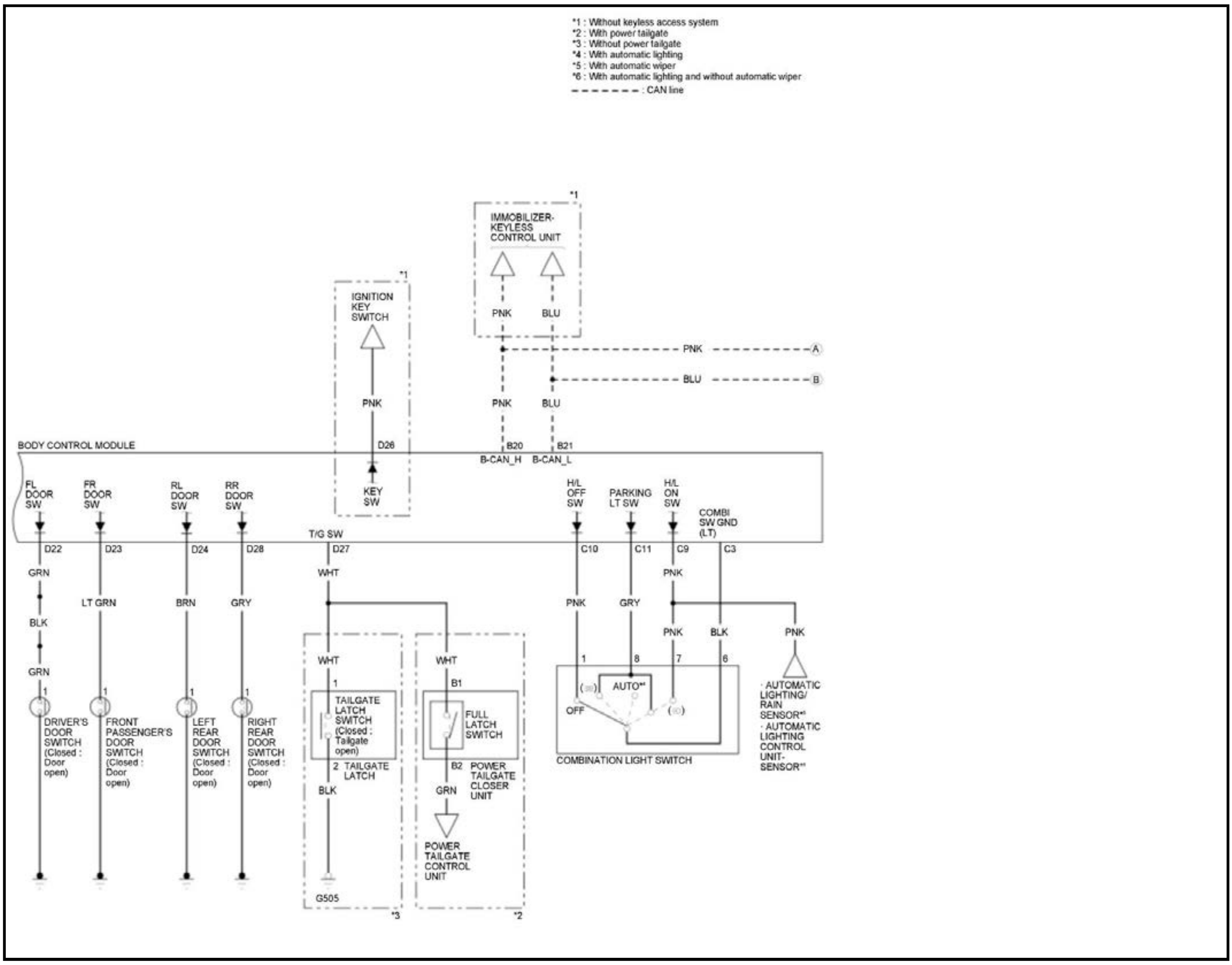
*1 : Without keyless access system
*2 : With power tailgate
*3 : Without power tailgate
*4 : With automatic lighting
*5 : With automatic wiper
*6 : With automatic lighting and without automatic wiper
CAN line
*1
IMMOBILIZER-KEYLESS CONTROL UNIT
PNK
BLU
PNK
BLU
A
B
PNK
BLU
*1
IGNITION KEY SWITCH
PNK
D26
KEY SW
BODY CONTROL MODULE
B20
B21
B-CAN_H
B-CAN_L
FL DOOR SW
FR DOOR SW
RL DOOR SW
RR DOOR SW
T/G SW
H/L OFF SW
PARKING LT SW
H/L ON SW
COMBI SW GND (LT)
D22
D23
D24
D28
D27
C10
C11
C9
C3
GRN
BLK
GRN
LT GRN
BRN
GRY
WHT
PNK
GRY
PNK
PNK
BLK
PNK
1
1
1
1
DRIVER'S DOOR SWITCH (Closed : Door open)
FRONT PASSENGER'S DOOR SWITCH (Closed : Door open)
LEFT REAR DOOR SWITCH (Closed : Door open)
RIGHT REAR DOOR SWITCH (Closed : Door open)
WHT
1
TAILGATE LATCH SWITCH (Closed : Tailgate open)
2 TAILGATE LATCH
BLK
G505
*3
WHT
B1
FULL LATCH SWITCH
B2 POWER TAILGATE CLOSER UNIT
GRN
POWER TAILGATE CONTROL UNIT
*2
1
8
7
6
AUTO*4
OFF
COMBINATION LIGHT SWITCH
· AUTOMATIC LIGHTING/ RAIN SENSOR*5
· AUTOMATIC LIGHTING CONTROL UNIT-SENSOR*6

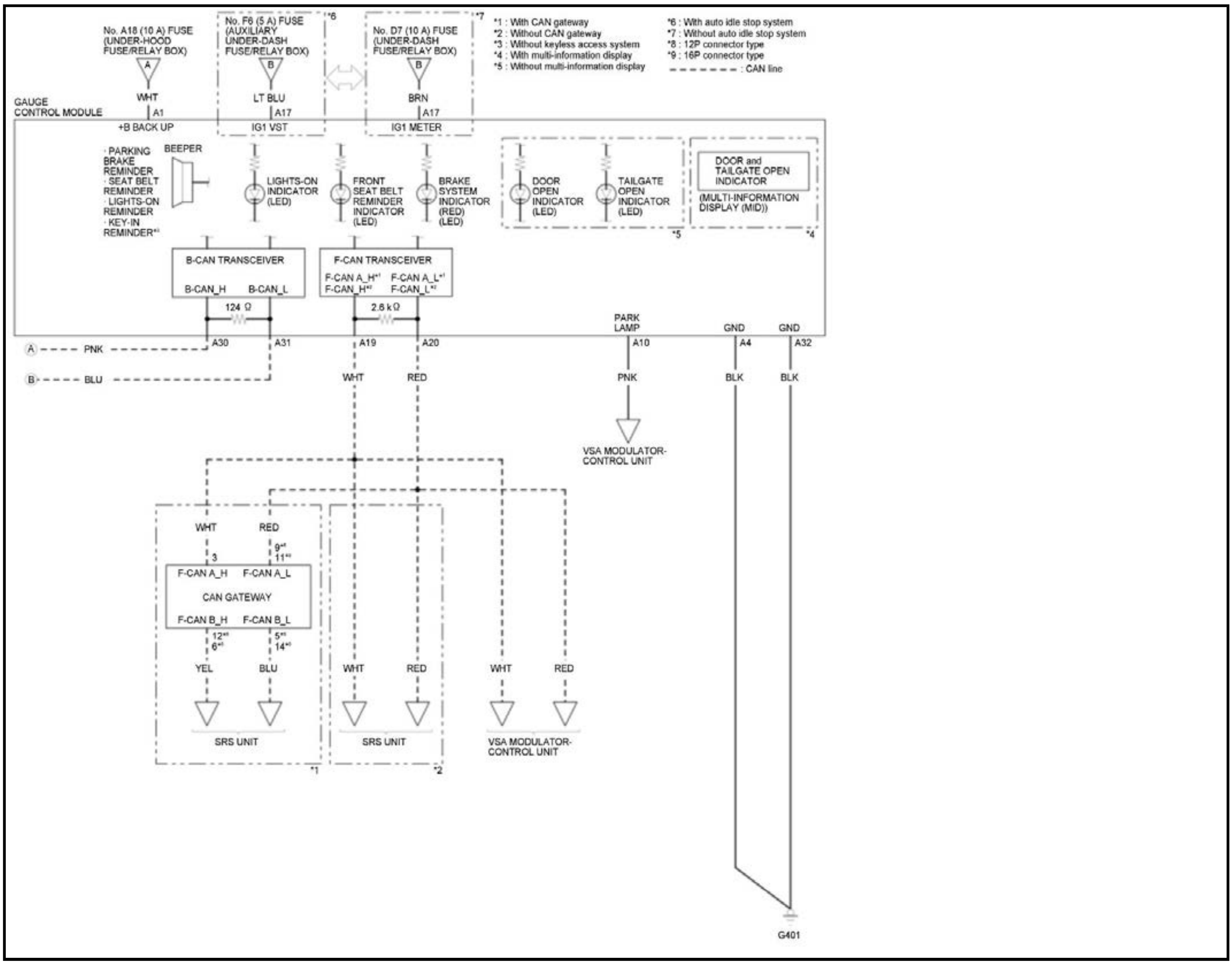
No. A18 (10 A) FUSE (UNDER-HOOD FUSE/RELAY BOX)
A
No. F6 (5 A) FUSE (AUXILIARY UNDER-DASH FUSE/RELAY BOX)
B
*6
No. D7 (10 A) FUSE (UNDER-DASH FUSE/RELAY BOX)
B
*7
*1 : With CAN gateway
*2 : Without CAN gateway
*3 : Without keyless access system
*4 : With multi-information display
*5 : Without multi-information display
*6 : With auto idle stop system
*7 : Without auto idle stop system
*8 : 12P connector type
*9 : 16P connector type
CAN line
WHT
LT BLU
BRN
GAUGE CONTROL MODULE
A1
A17
A17
+B BACK UP
IG1 VST
IG1 METER
· PARKING BRAKE REMINDER
· SEAT BELT REMINDER
· LIGHTS-ON REMINDER
· KEY-IN REMINDER*3
BEEPER
LIGHTS-ON INDICATOR (LED)
FRONT SEAT BELT REMINDER INDICATOR (LED)
BRAKE SYSTEM INDICATOR (RED) (LED)
DOOR OPEN INDICATOR (LED)
TAILGATE OPEN INDICATOR (LED)
*5
DOOR and TAILGATE OPEN INDICATOR
(MULTI-INFORMATION DISPLAY (MID))
*4
B-CAN TRANSCEIVER
B-CAN_H
B-CAN_L
124 Ω
F-CAN TRANSCEIVER
F-CAN A_H*1
F-CAN_H*2
F-CAN A_L*1
F-CAN_L*2
2.6 kΩ
PARK LAMP
GND
GND
A
PNK
A30
B
BLU
A31
A19
A20
A10
A4
A32
WHT
RED
PNK
BLK
BLK
VSA MODULATOR-CONTROL UNIT
WHT
RED
3
9*8
11*9
F-CAN A_H
F-CAN A_L
CAN GATEWAY
F-CAN B_H
F-CAN B_L
12*8
6*9
5*8
14*9
YEL
BLU
SRS UNIT
*1
WHT
RED
SRS UNIT
*2
WHT
RED
VSA MODULATOR-CONTROL UNIT
G401

SAFETY INDICATOR SYSTEM CIRCUIT DIAGRAM

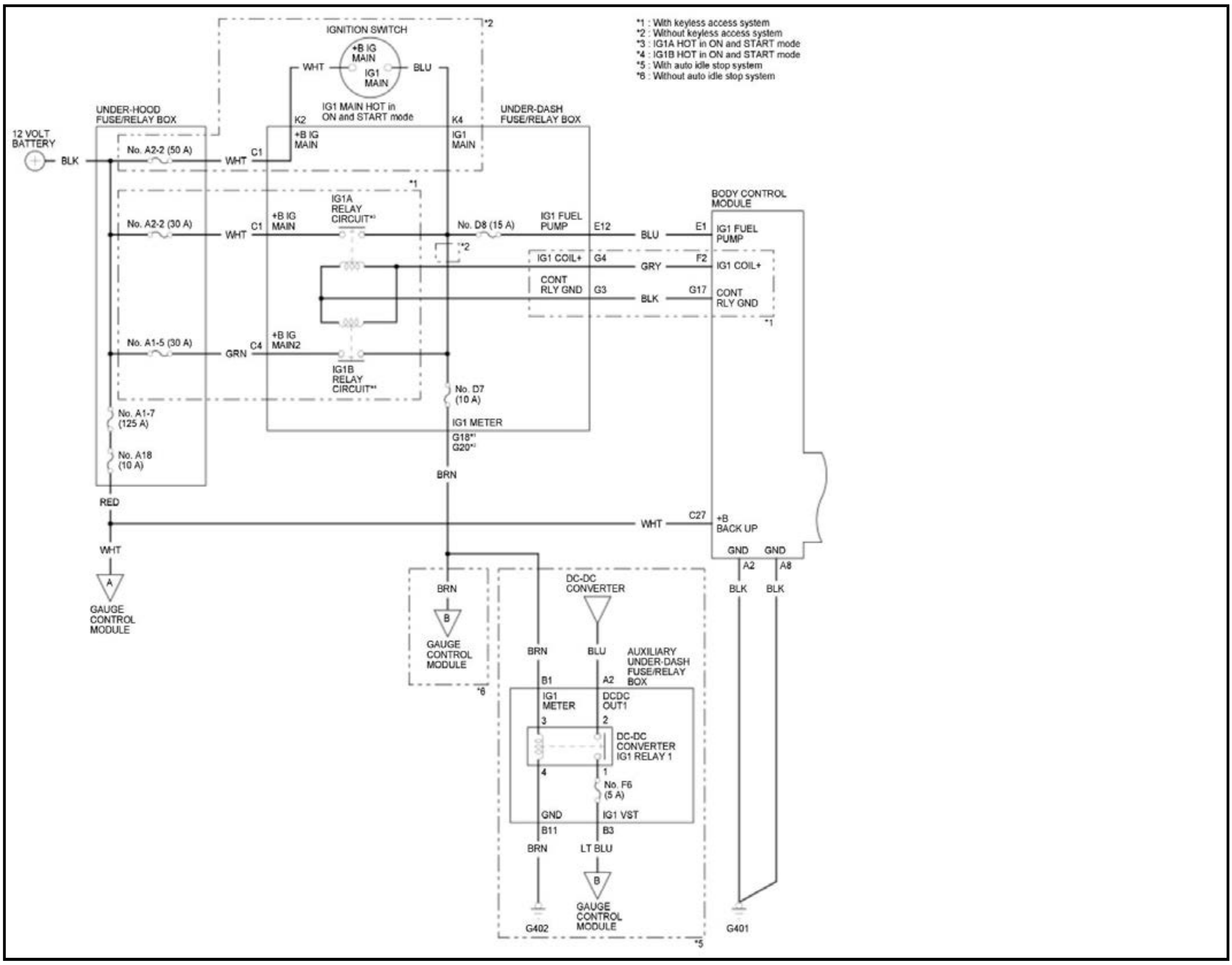
*1 : With keyless access system
*2 : Without keyless access system
*3 : IG1A HOT in ON and START mode
*4 : IG1B HOT in ON and START mode
*5 : With auto idle stop system
*6 : Without auto idle stop system
IGNITION SWITCH
*2
+B IG MAIN
IG1 MAIN
WHT
BLU
IG1 MAIN HOT in ON and START mode
UNDER-HOOD FUSE/RELAY BOX
UNDER-DASH FUSE/RELAY BOX
12 VOLT BATTERY
BLK
No. A2-2 (50 A)
WHT
C1
K2
+B IG MAIN
K4
IG1 MAIN
*1
IG1A RELAY CIRCUIT*3
No. A2-2 (30 A)
WHT
C1
+B IG MAIN
No. D8 (15 A)
IG1 FUEL PUMP
E12
BLU
E1
BODY CONTROL MODULE
IG1 FUEL PUMP
*2
IG1 COIL+
G4
GRY
F2
IG1 COIL+
CONT RLY GND
G3
BLK
G17
CONT RLY GND
*1
No. A1-5 (30 A)
GRN
C4
+B IG MAIN2
IG1B RELAY CIRCUIT*4
No. D7 (10 A)
IG1 METER
G18*1
G20*2
No. A1-7 (125 A)
No. A18 (10 A)
BRN
RED
WHT
C27
+B BACK UP
WHT
GND
GND
A2
A8
BLK
BLK
A
GAUGE CONTROL MODULE
BRN
B
GAUGE CONTROL MODULE
*6
DC-DC CONVERTER
BRN
BLU
AUXILIARY UNDER-DASH FUSE/RELAY BOX
B1
A2
IG1 METER
DCDC OUT1
3
2
DC-DC CONVERTER IG1 RELAY 1
4
1
No. F6 (5 A)
GND
IG1 VST
B11
B3
BRN
LT BLU
B
GAUGE CONTROL MODULE
G402
*5
G401

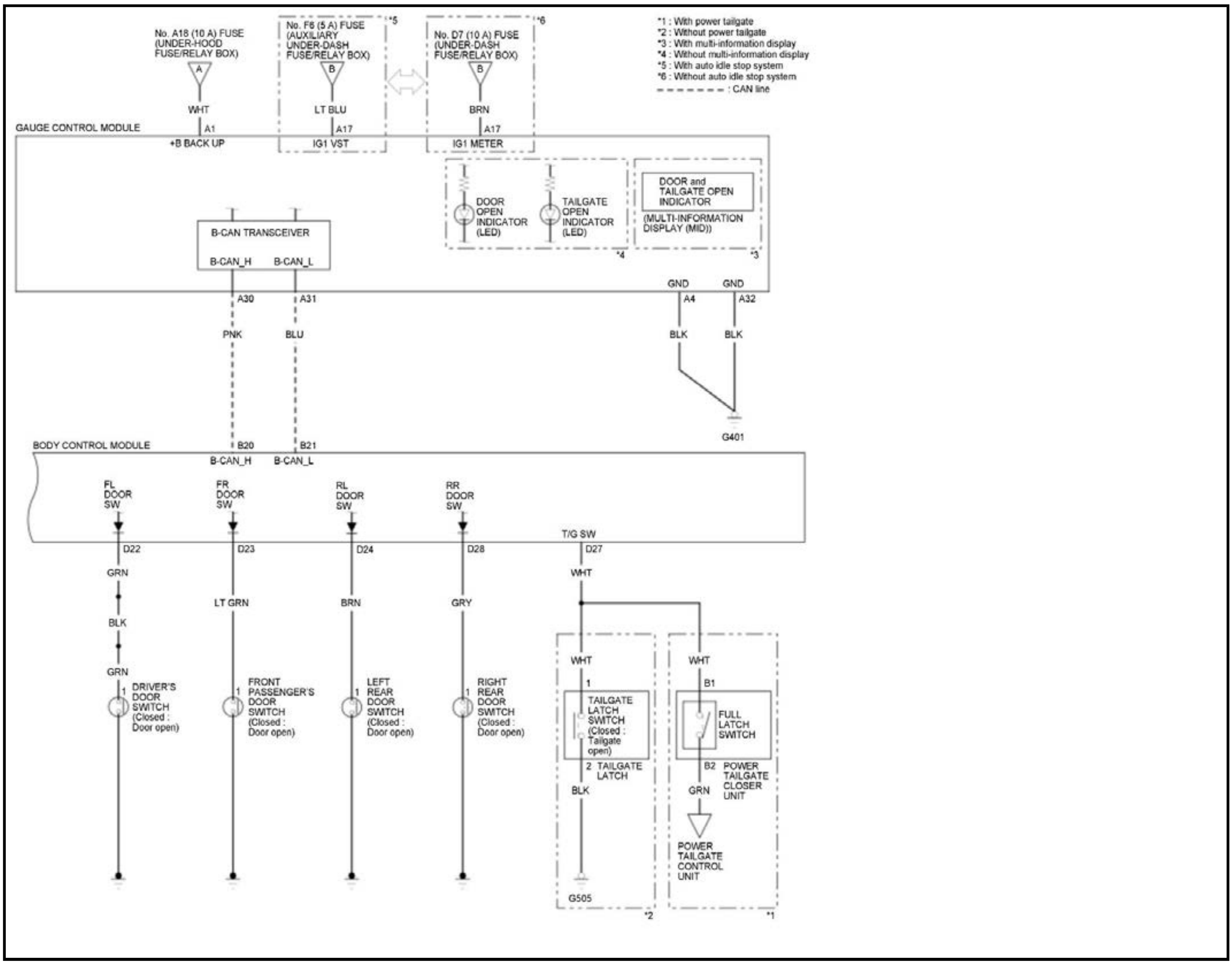
*1 : With power tailgate
*2 : Without power tailgate
*3 : With multi-information display
*4 : Without multi-information display
*5 : With auto idle stop system
*6 : Without auto idle stop system
CAN line
No. A18 (10 A) FUSE (UNDER-HOOD FUSE/RELAY BOX)
A
WHT
A1
+B BACK UP
No. F6 (5 A) FUSE (AUXILIARY UNDER-DASH FUSE/RELAY BOX)
B
LT BLU
A17
IG1 VST
No. D7 (10 A) FUSE (UNDER-DASH FUSE/RELAY BOX)
B
BRN
A17
IG1 METER
GAUGE CONTROL MODULE
B-CAN TRANSCEIVER
B-CAN_H
B-CAN_L
DOOR OPEN INDICATOR (LED)
TAILGATE OPEN INDICATOR (LED)
DOOR and TAILGATE OPEN INDICATOR
(MULTI-INFORMATION DISPLAY (MID))
*4
*3
GND
GND
A30
A31
A4
A32
PNK
BLU
BLK
BLK
G401
BODY CONTROL MODULE
B20
B21
B-CAN_H
B-CAN_L
FL DOOR SW
FR DOOR SW
RL DOOR SW
RR DOOR SW
T/G SW
D22
D23
D24
D28
D27
GRN
LT GRN
BRN
GRY
WHT
BLK
GRN
1
DRIVER'S DOOR SWITCH (Closed : Door open)
1
FRONT PASSENGER'S DOOR SWITCH (Closed : Door open)
1
LEFT REAR DOOR SWITCH (Closed : Door open)
1
RIGHT REAR DOOR SWITCH (Closed : Door open)
WHT
1
TAILGATE LATCH SWITCH (Closed : Tailgate open)
2
TAILGATE LATCH
BLK
G505
*2
WHT
B1
FULL LATCH SWITCH
B2
POWER TAILGATE CLOSER UNIT
GRN
POWER TAILGATE CONTROL UNIT
*1

LEARNING RESET CLEAR

RESETTING THE PARKING AND BACK-UP SENSOR CONTROL UNIT (2020 2021)

Procedure

1. Parking and Back-Up Sensor Control Unit - Reset

   Reset the parking and back-up sensor control unit after doing any of the following actions:

   - When you replace the parking and back-up sensor.
   - When you change the parking and back-up sensor mounting location from the original location.

   NOTE: Before performing the resetting procedure, make sure that each the parking and back-up sensor is connected.

   Resetting Procedure

   1. Turn the vehicle to the ON mode.

   2. Press the parking and back-up sensor switch 10 times, within 10 seconds.

   NOTE: The parking and back-up sensor switch indicator will blinks.

   3. Turn the vehicle to the OFF (LOCK) mode.

   4. Press and hold the parking and back-up sensor switch.

   5. Turn the vehicle to the ON mode.

   6. Wait about 10 seconds.

   NOTE: When the resetting of the parking and back-up sensor control unit is successful, the buzzer sounds for 2 seconds.

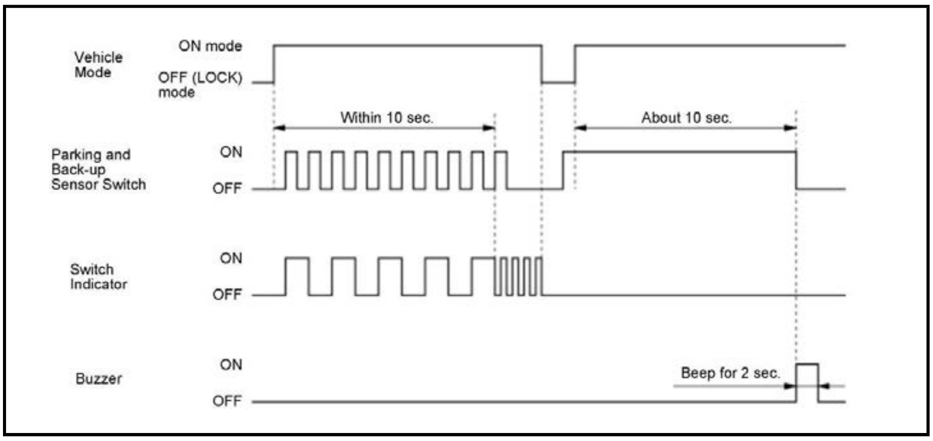

7. Press the parking and back-up sensor switch.

8. Make sure that the system works normally.

GENERAL INFORMATION

GAUGES SELF-DIAGNOSTIC FUNCTION

The gauge control module has a self-diagnostic function which consists of the following checks:

- The indicator drive circuit check.
- The switch input check.
- The beeper drive circuit check.
- The LCD/MID segment check.
- The gauge drive circuit check (engine coolant temperature gauge, fuel gauge, and tachometer (without multi-information display)).
- The communication line check (of the body controller area network (B-CAN) communication line and the fast controller area network (F-CAN) communication line between the gauges).

NOTE: Indicators are also controlled via the communication lines.

Entering the Self-Diagnostic Function With the HDS

Using the HDS, select BODY ELECTRICAL, GAUGES, then FUNCTIONAL TESTS and do the self-diagnostic function.

Entering the Self-Diagnostic Function (Manual Method)

Before doing the self-diagnostic function, make sure the fuses and relays associated with the system, and check for a short in the related lines.

1. Press and hold the SEL/RESET knob.

2. Turn the combination light switch to the PARKING position.

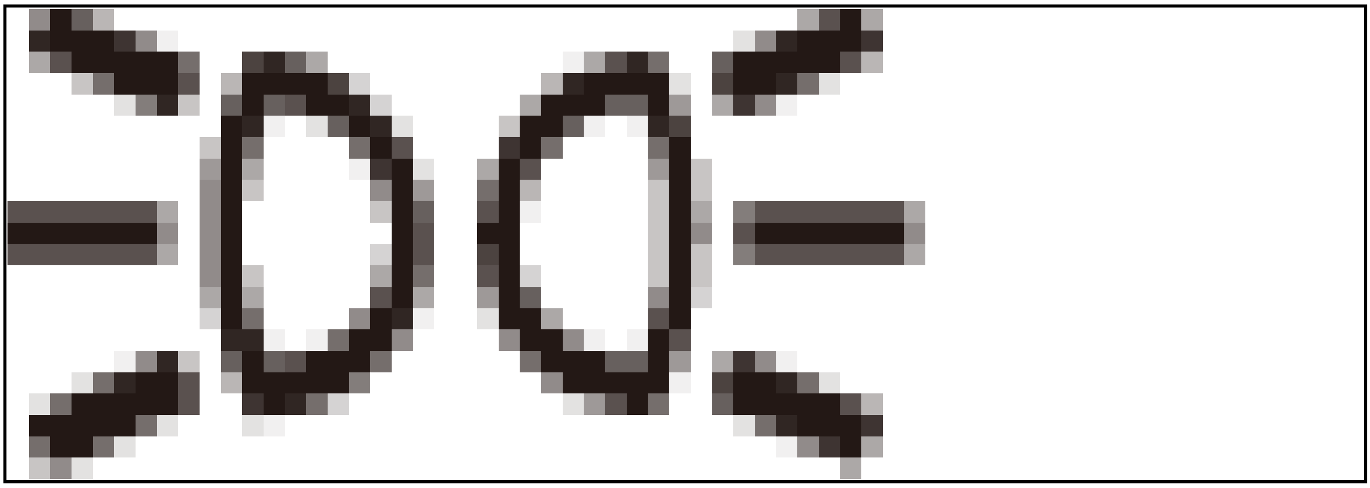

3. Turn the vehicle to the ON mode.

4. Within 5 sec., turn the combination light switch to OFF, then to the PARKING position and OFF again.

5. Within 5 sec., release the SEL/RESET knob, and then repeatedly press and release the knob three times.

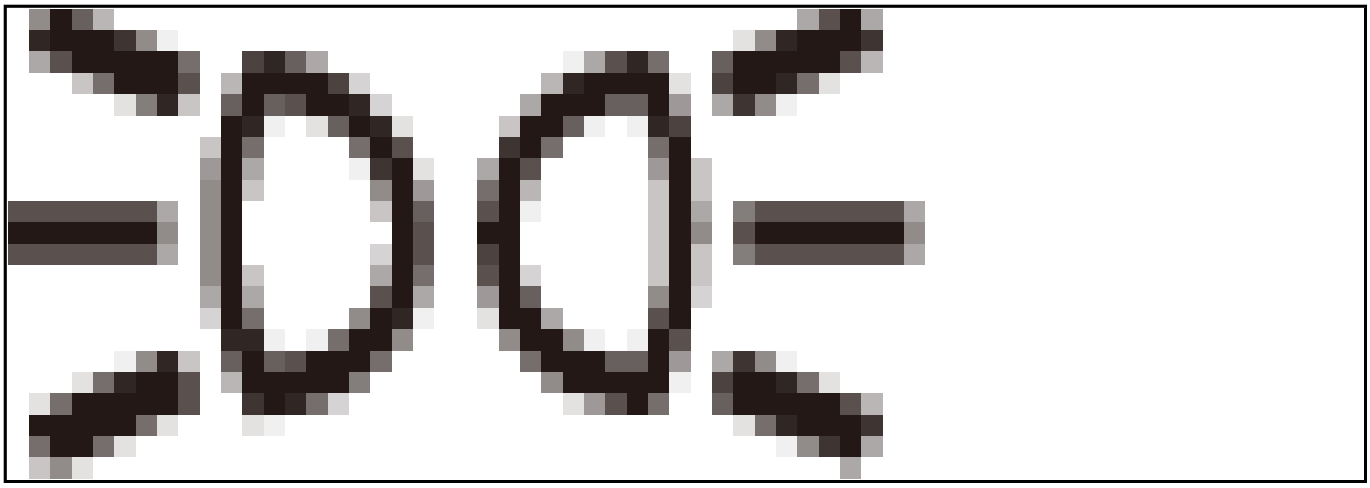

NOTE:

- While in the self-diagnostic mode, the dashlights brightness controller operates normally.
- While in the self-diagnostic mode, the SEL/RESET knob is used to start the Beeper Drive Circuit Test and the Gauge Drive Circuit Check.
- If the vehicle speed exceeds 1.2 mph (2 km/h), or turn the vehicle to the OFF (LOCK) mode, the self-diagnostic mode ends.

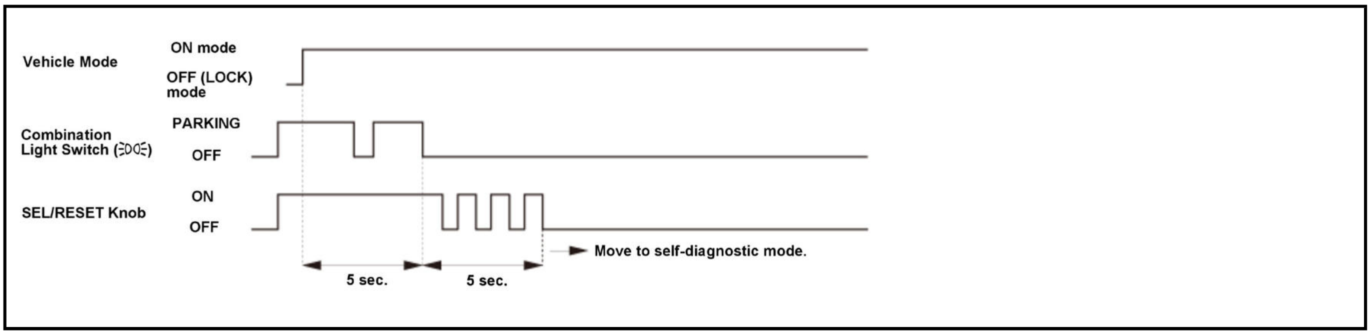

The Indicator Drive Circuit Check

When entering the self-diagnostic mode, the following indicators (if equipped) blink, **refer to the Gauges Component Index**.

Switch Input Check

At the initial stage of the self-diagnostic function, the beeper sounds intermittently. The beeper sounds continuously when any of the following switch inputs are switched from OFF to ON:ACC combination switch, audio remote-HFL switch, brake fluid level switch, CMBS OFF switch, cruise control combination switch, ECON switch, electric parking brake/automatic brake hold switch, idle stop OFF switch, TPMS switch, VSA OFF switch, and washer fluid level switch.

The Beeper Drive Circuit Check

When entering the self-diagnostic mode, the beeper sounds five times.

The LCD/MID Segment Check

Without multi-information display: When entering the self-diagnostic mode, all the segments blink five times.

With multi-information display: When entering the self-diagnostic mode, the word "CHECKING NOW" shows on the multi-information display, and blinks five times.

The Gauge Drive Circuit Check

When entering the self-diagnostic mode, the tachometer (without multi-information display), the fuel gauge, and the engine coolant temperature gauge sweep from the minimum position to the maximum position, then return to the minimum position.

NOTE: After the beeper stops sounding and the gauge needles return to the minimum position, pressing the SEL/RESET knob starts the Beeper Drive Circuit Check (one beep) and the Gauge Drive Circuit Check again. The check cannot be started again until the gauge needles return to the minimum position.

With Multi-Information Display

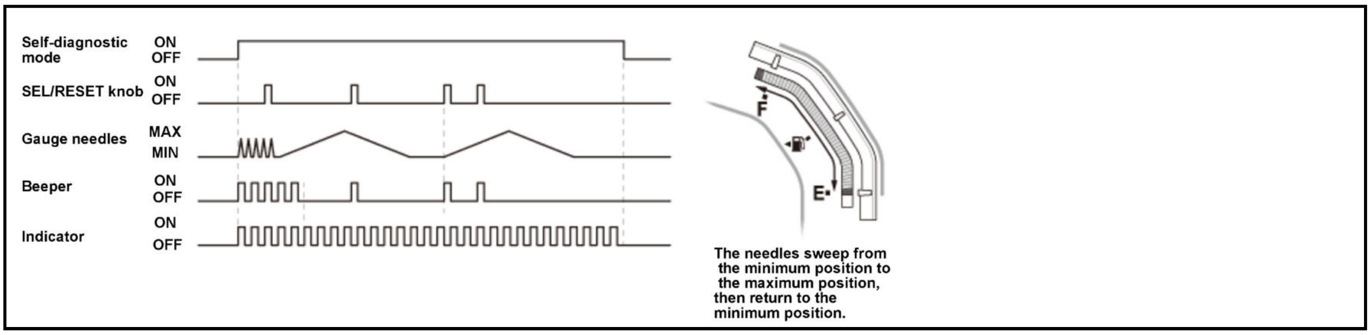
Self-diagnostic mode
ON
OFF
SEL/RESET knob
ON
OFF
Gauge needles
MAX
MIN
Beeper
ON
OFF
Indicator
ON
OFF
F
E

The needles sweep from the minimum position to the maximum position, then return to the minimum position.

Without Multi-Information Display

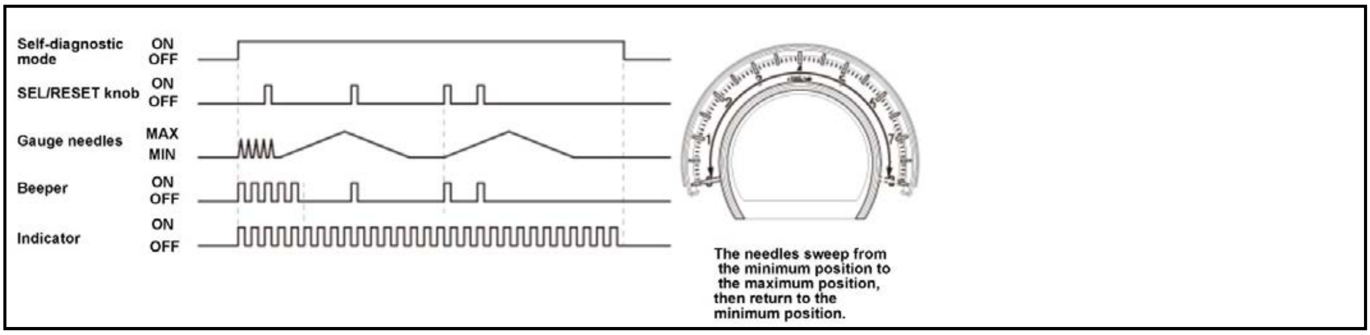
Self-diagnostic mode
ON
OFF
SEL/RESET knob
ON
OFF
Gauge needles
MAX
MIN
Beeper
ON
OFF
Indicator
ON
OFF

The needles sweep from the minimum position to the maximum position, then return to the minimum position.

The Communication Line Check (With multi-information display)

While in the self-diagnostic mode, the Communication Line Check starts after the MID Segments Check.

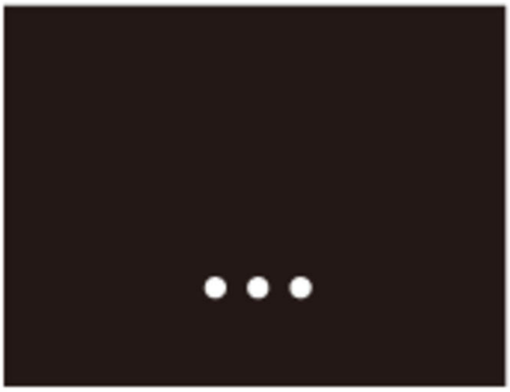

If "..." comes on, the communication line is OK. If there is a communication line error, the word "ERROR" will be indicated on the multi-information display.

Error Code List

Error code	Type of communication line(s) error
ERROR 1	F-CAN communication
ERROR 2	B-CAN communication
ERROR 1, 2	F-CAN and B-CAN communication

Indication Example

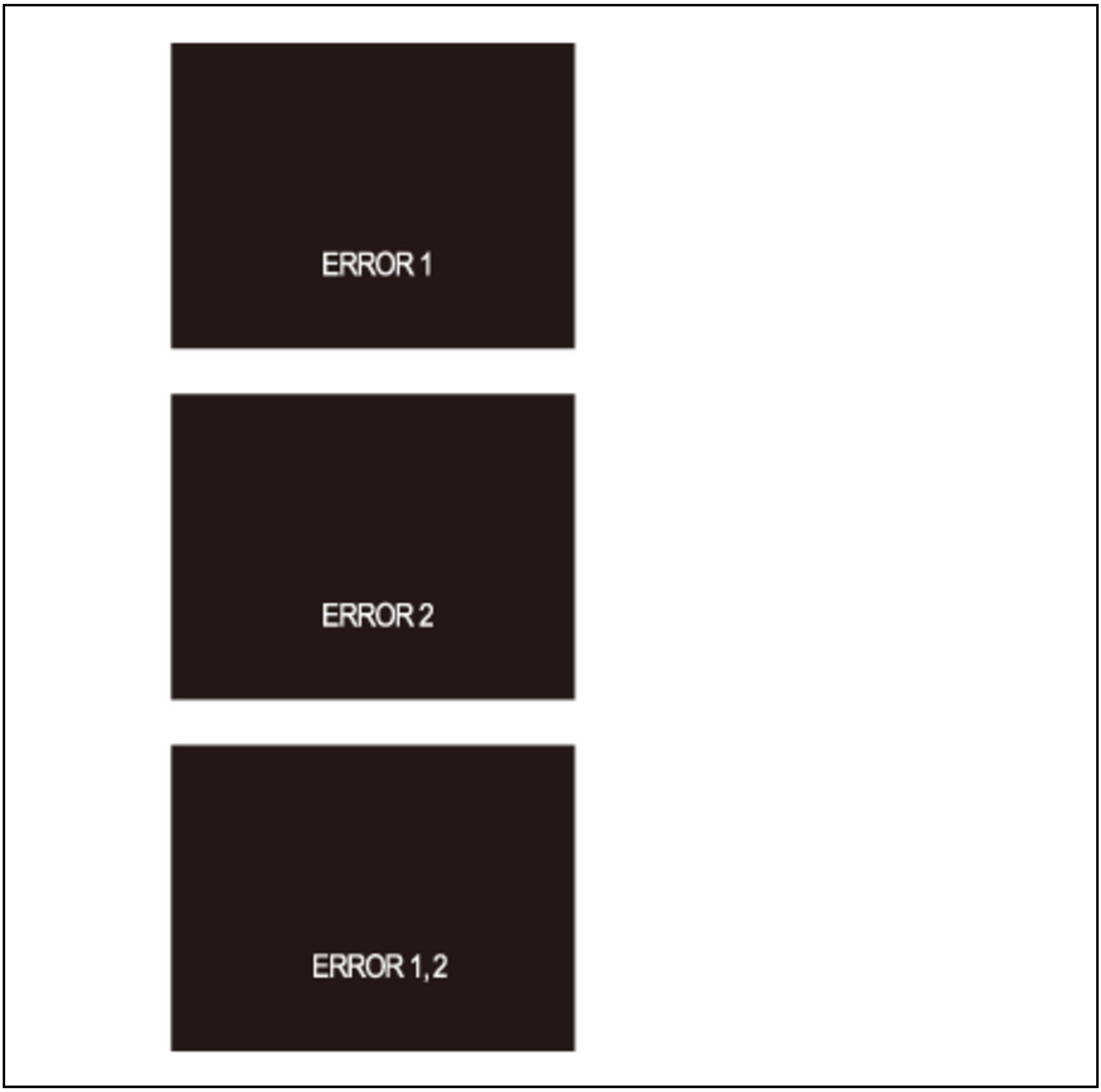

- If ERROR 1 is indicated, there is a malfunction in the communication line between the F-CAN and the gauge control module. The B-CAN line is OK at this time. Check for DTCs in the F-CAN connected units and troubleshoot any DTCs.
- If ERROR 2 is indicated, there is a malfunction in the communication line between the B-CAN and the gauge control module. The F-CAN line is OK at this time. Check for DTCs in the B-CAN connected units and troubleshoot any DTCs.
- If ERROR 1, 2 is indicated, there is a malfunction in the communication line between the gauge control module, the F-CAN, and the B-CAN. Check the DTCs in the F-CAN connected units and troubleshoot any DTCs.

The Communication Line Check (Without multi-information display)

While in the self-diagnostic mode, the Communication Line Check starts after the LCD Segments Check.

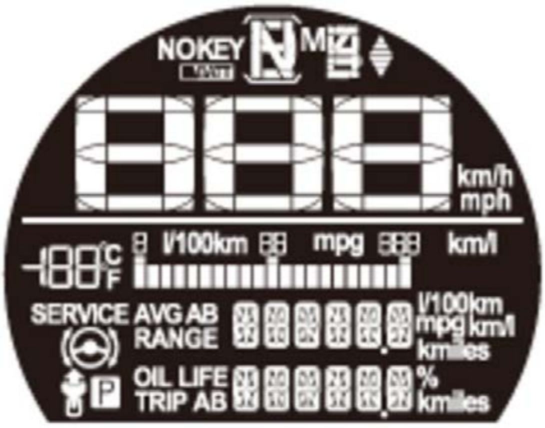
NOKEY
M
km/h
mph
°C
F
l/100km
mpg
km/l
SERVICE
AVG AB
RANGE
l/100km
mpg
km/l
kmiles
P
OIL LIFE
TRIP AB
%
kmiles

If the communication line is OK, all segments will be indicated on the information display. If there is a communication line error, the word "Error" will be indicated on the information display.

Error Code List

Error code	Type of communication line(s) error
Error 1	F-CAN communication
Error 2	B-CAN communication
Error 12	F-CAN and B-CAN communication

Indication Example

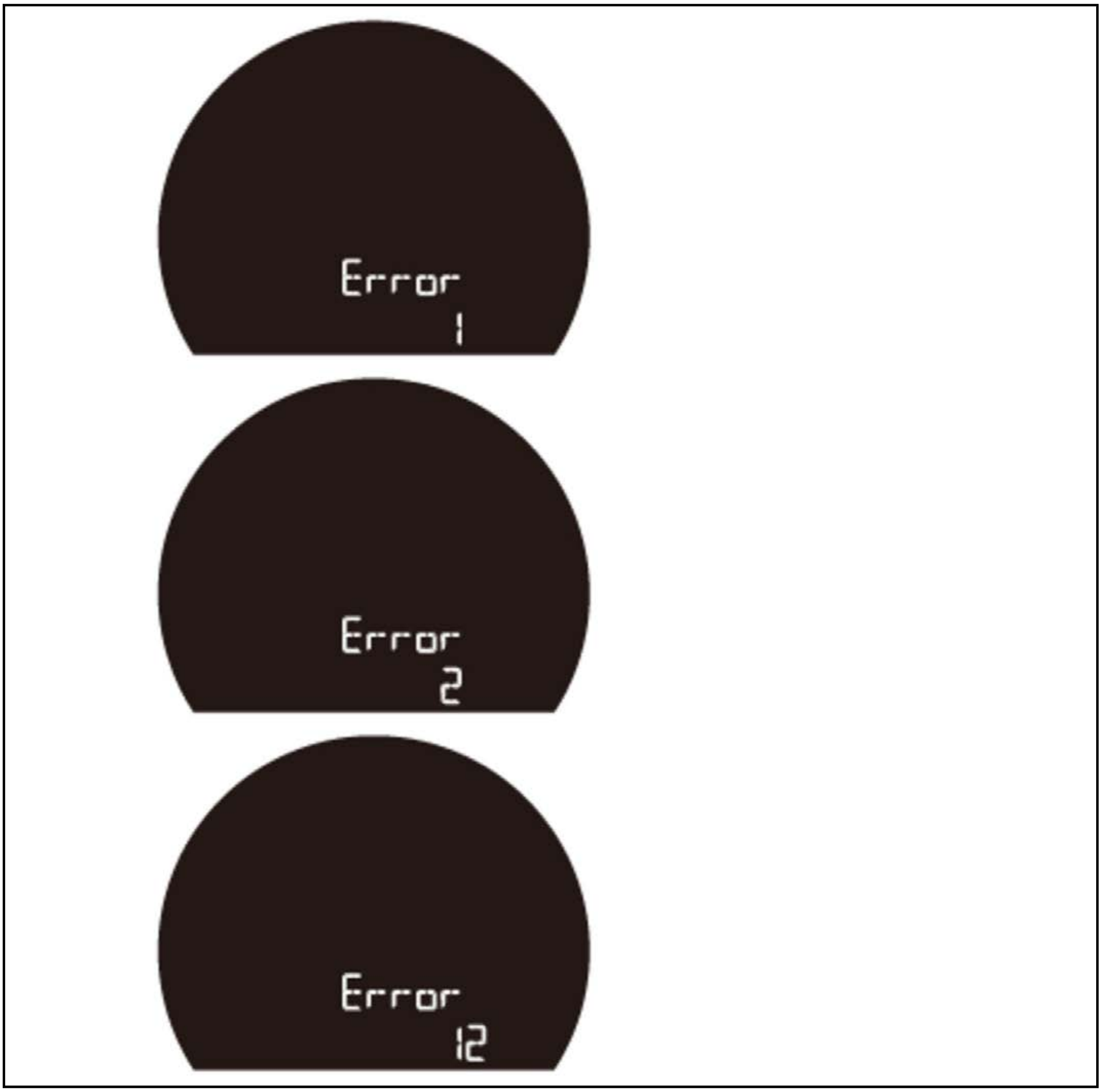

- If Error 1 is indicated, there is a malfunction in the communication line between the F-CAN and the gauge control module. The B-CAN line is OK at this time. Check for DTCs in the F-CAN connected units and troubleshoot any DTCs.
- If Error 2 is indicated, there is a malfunction in the communication line between the B-CAN and the gauge control module. The F-CAN line is OK at this time. Check for DTCs in the B-CAN connected units and troubleshoot any DTCs.
- If Error 12 is indicated, there is a malfunction in the communication line between the gauge control module, the F-CAN, and the B-CAN. Check the DTCs in the F-CAN connected units and troubleshoot any DTCs.

Ending the Self-Diagnostic Function

Turn the vehicle to the OFF (LOCK) mode.

NOTE: If the vehicle speed exceeds 1.2 mph (2 km/h), the self-diagnostic function ends.

COMPONENT LOCATION INDEX

ELECTRICAL COMPASS COMPONENT LOCATION INDEX

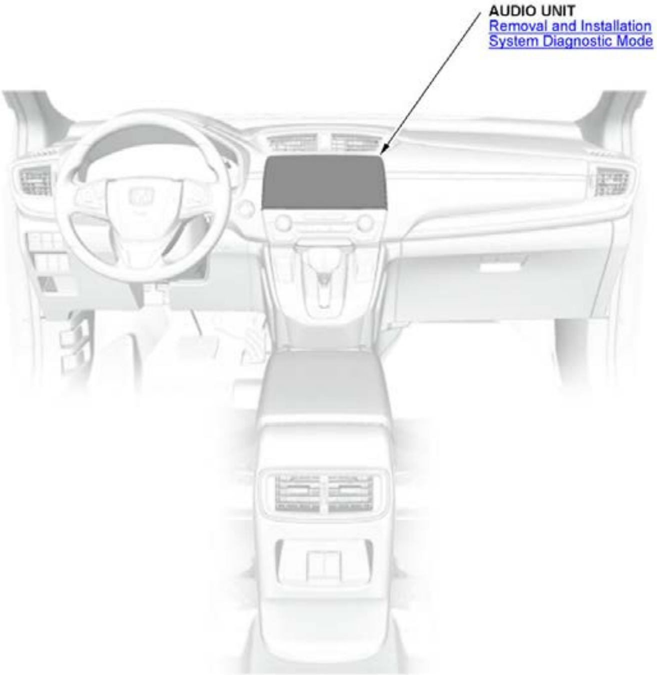
AUDIO UNIT
Removal and Installation
System Diagnostic Mode

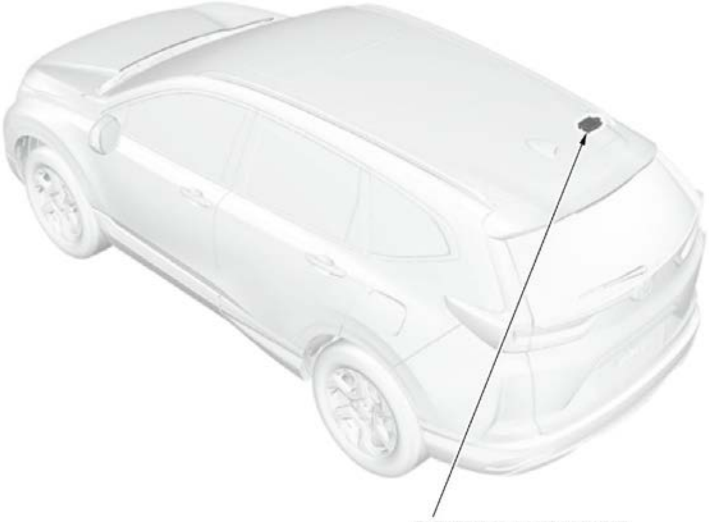
ELECTRICAL COMPASS UNIT
Zone Selection and Calibration
Removal and Installation

GAUGES COMPONENT LOCATION INDEX(WITH AUTO IDLE STOP SYSTEM)

For relationships between signals in a system, refer to System Diagram.

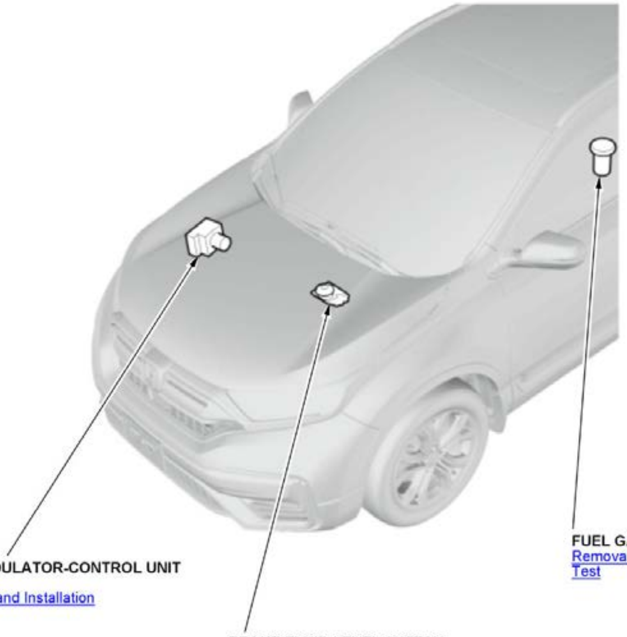

VSA MODULATOR-CONTROL UNIT
Update
Removal and Installation

BRAKE FLUID LEVEL SWITCH
Test

FUEL GAUGE SENDING UNIT
Removal and Installation
Test

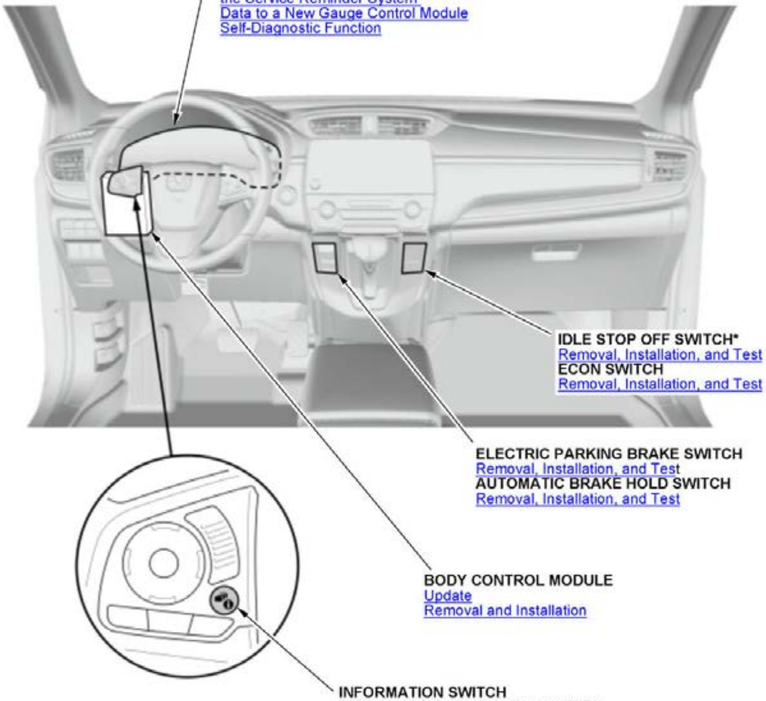

GAUGE CONTROL MODULE
Outside Air Temperature Indicator Calibration
Removal and Installation
Rewriting the ODO Data and Transferring the Service Reminder System Data to a New Gauge Control Module
Self-Diagnostic Function

IDLE STOP OFF SWITCH*
Removal, Installation, and Test
ECON SWITCH
Removal, Installation, and Test

ELECTRIC PARKING BRAKE SWITCH
Removal, Installation, and Test
AUTOMATIC BRAKE HOLD SWITCH
Removal, Installation, and Test

BODY CONTROL MODULE
Update
Removal and Installation

INFORMATION SWITCH
(With multi-information display (MID))
Removal and Installation

*: With auto idle stop system

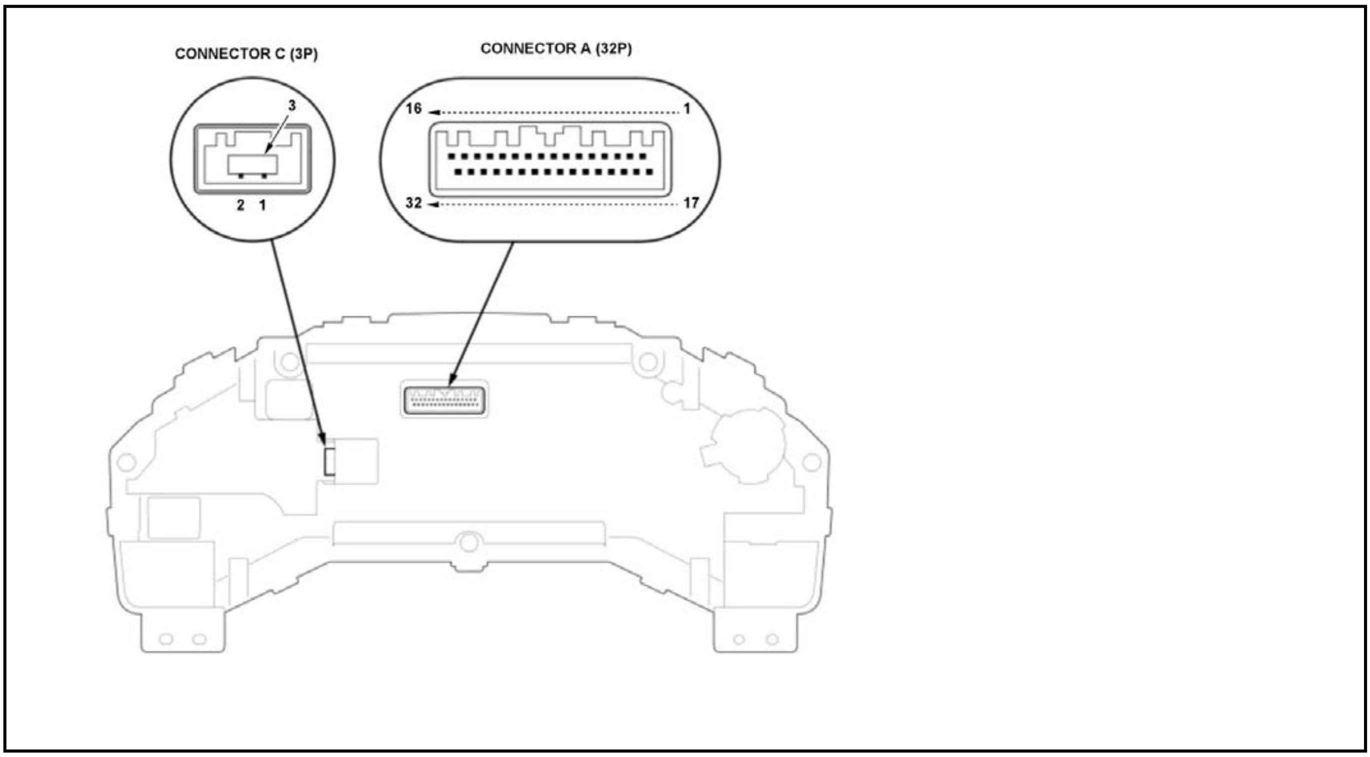
CONNECTOR C (3P)
3
2 1
CONNECTOR A (32P)
16
1
32
17

1/3 (With Multi-information display (MID))

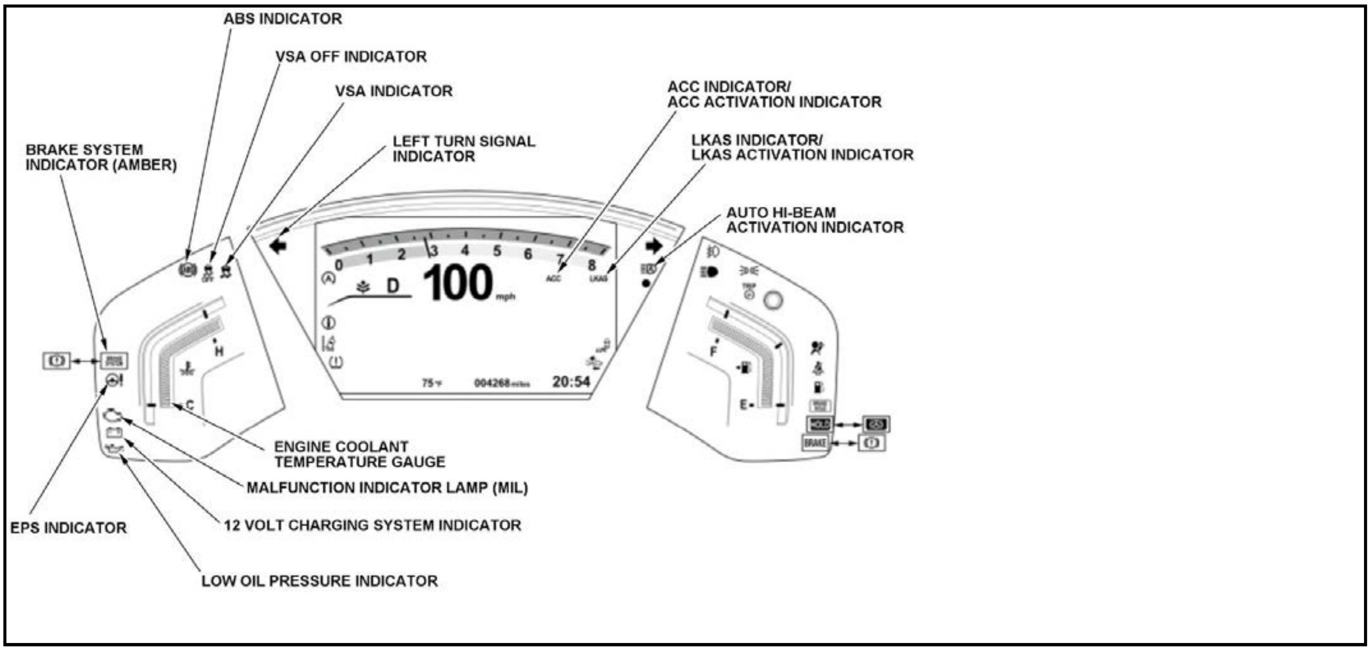
ABS INDICATOR
VSA OFF INDICATOR
VSA INDICATOR
LEFT TURN SIGNAL INDICATOR
ACC INDICATOR/ ACC ACTIVATION INDICATOR
LKAS INDICATOR/ LKAS ACTIVATION INDICATOR
AUTO HI-BEAM ACTIVATION INDICATOR
BRAKE SYSTEM INDICATOR (AMBER)
0
1
2
3
4
5
6
7
8
ACC
LKAS
D
100
mph
H
C
F
E
75°F
004268 miles
20:54
HOLD
BRAKE
ENGINE COOLANT TEMPERATURE GAUGE
MALFUNCTION INDICATOR LAMP (MIL)
EPS INDICATOR
12 VOLT CHARGING SYSTEM INDICATOR
LOW OIL PRESSURE INDICATOR

2/3 (With Multi-information display (MID))

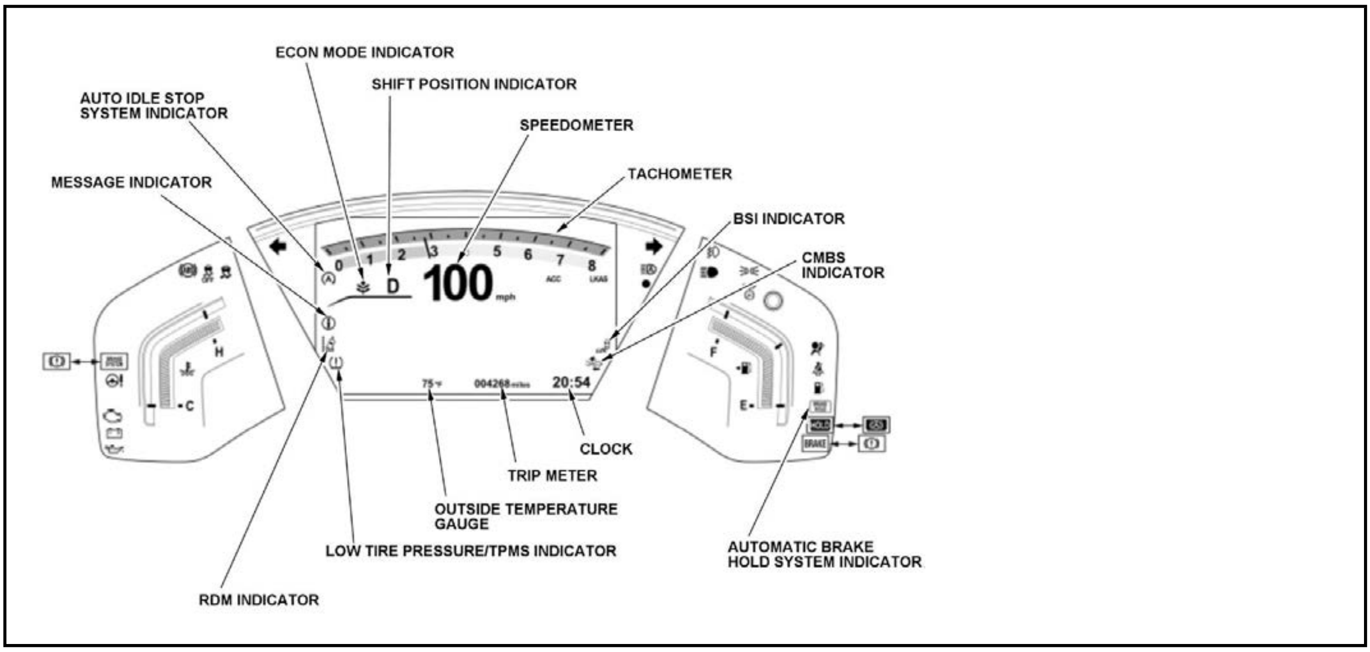
ECON MODE INDICATOR
SHIFT POSITION INDICATOR
AUTO IDLE STOP SYSTEM INDICATOR
SPEEDOMETER
TACHOMETER
MESSAGE INDICATOR
BSI INDICATOR
CMBS INDICATOR
CLOCK
TRIP METER
OUTSIDE TEMPERATURE GAUGE
LOW TIRE PRESSURE/TPMS INDICATOR
AUTOMATIC BRAKE HOLD SYSTEM INDICATOR
RDM INDICATOR
100
mph
20:54
004268 miles
75°F

3/3 (With Multi-information display (MID))

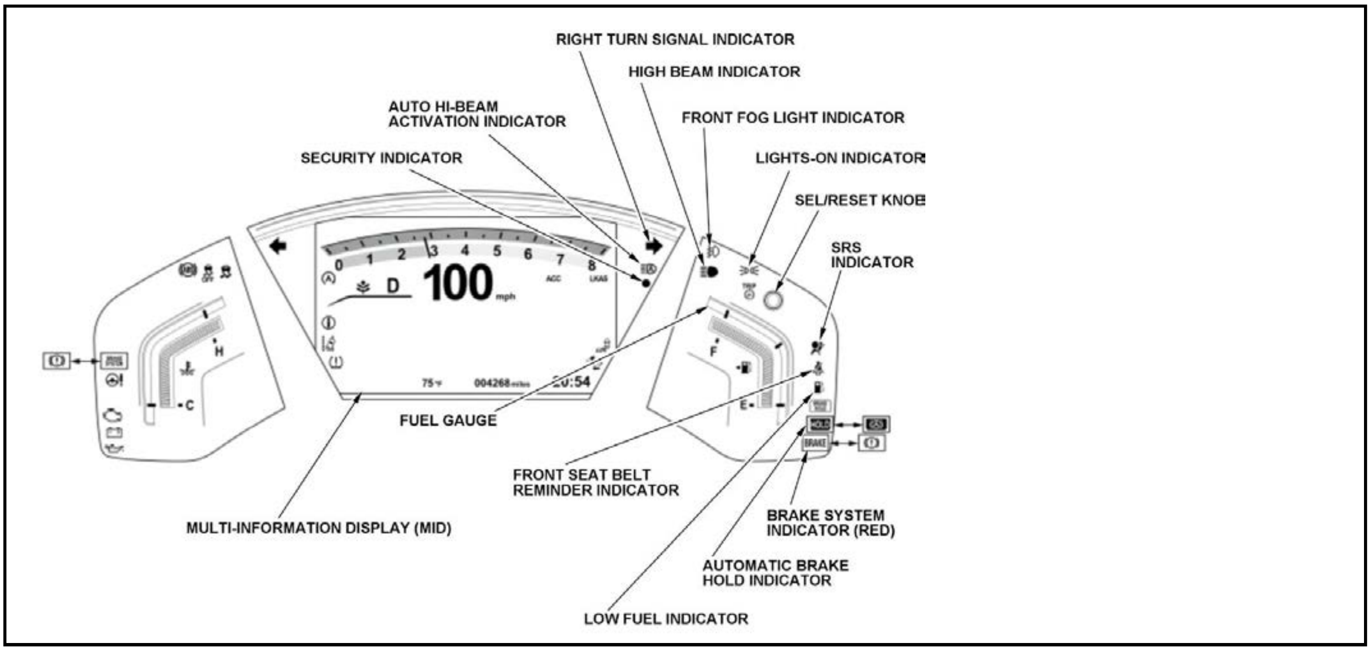
RIGHT TURN SIGNAL INDICATOR
HIGH BEAM INDICATOR
AUTO HI-BEAM ACTIVATION INDICATOR
FRONT FOG LIGHT INDICATOR
SECURITY INDICATOR
LIGHTS-ON INDICATOR
SEL/RESET KNOB
SRS INDICATOR
FUEL GAUGE
FRONT SEAT BELT REMINDER INDICATOR
BRAKE SYSTEM INDICATOR (RED)
MULTI-INFORMATION DISPLAY (MID)
AUTOMATIC BRAKE HOLD INDICATOR
LOW FUEL INDICATOR

1/4 (Without Multi-information display (MID))

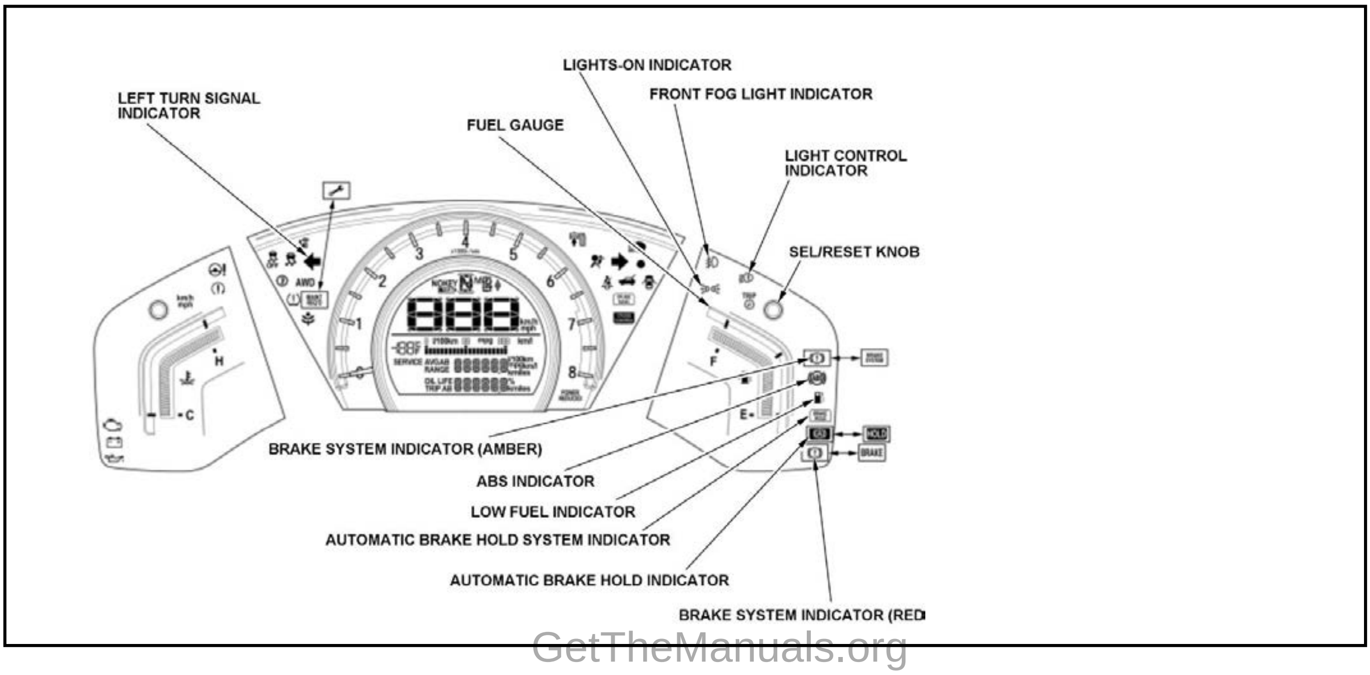
LIGHTS-ON INDICATOR
FRONT FOG LIGHT INDICATOR
LEFT TURN SIGNAL INDICATOR
FUEL GAUGE
LIGHT CONTROL INDICATOR
SEL/RESET KNOB
BRAKE SYSTEM INDICATOR (AMBER)
ABS INDICATOR
LOW FUEL INDICATOR
AUTOMATIC BRAKE HOLD SYSTEM INDICATOR
AUTOMATIC BRAKE HOLD INDICATOR
BRAKE SYSTEM INDICATOR (RED

2/4 (Without Multi-information display (MID))

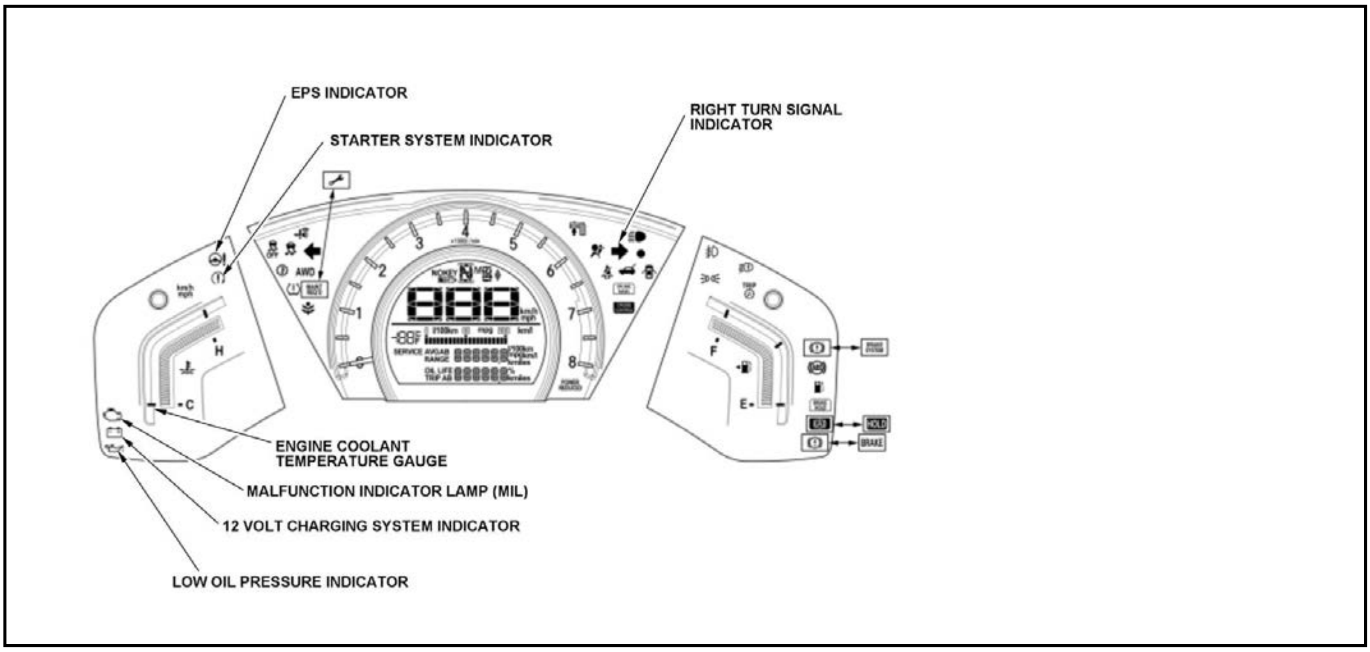
EPS INDICATOR
STARTER SYSTEM INDICATOR
RIGHT TURN SIGNAL INDICATOR
ENGINE COOLANT TEMPERATURE GAUGE
MALFUNCTION INDICATOR LAMP (MIL)
12 VOLT CHARGING SYSTEM INDICATOR
LOW OIL PRESSURE INDICATOR
AWD
H
C
F
E
HOLD
BRAKE

3/4 (Without Multi-information display (MID))

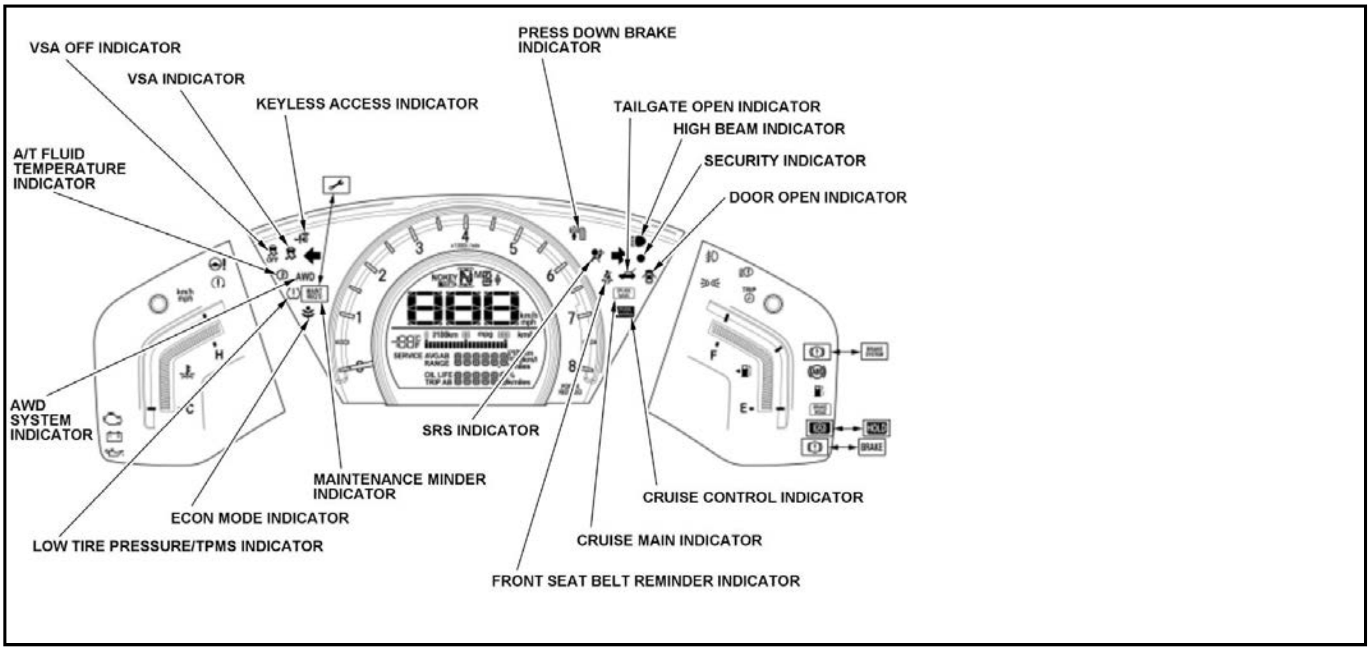
VSA OFF INDICATOR
VSA INDICATOR
KEYLESS ACCESS INDICATOR
A/T FLUID TEMPERATURE INDICATOR
PRESS DOWN BRAKE INDICATOR
TAILGATE OPEN INDICATOR
HIGH BEAM INDICATOR
SECURITY INDICATOR
DOOR OPEN INDICATOR
AWD SYSTEM INDICATOR
SRS INDICATOR
MAINTENANCE MINDER INDICATOR
ECON MODE INDICATOR
LOW TIRE PRESSURE/TPMS INDICATOR
CRUISE CONTROL INDICATOR
CRUISE MAIN INDICATOR
FRONT SEAT BELT REMINDER INDICATOR
HOLD
BRAKE

4/4 (Without Multi-information display (MID))

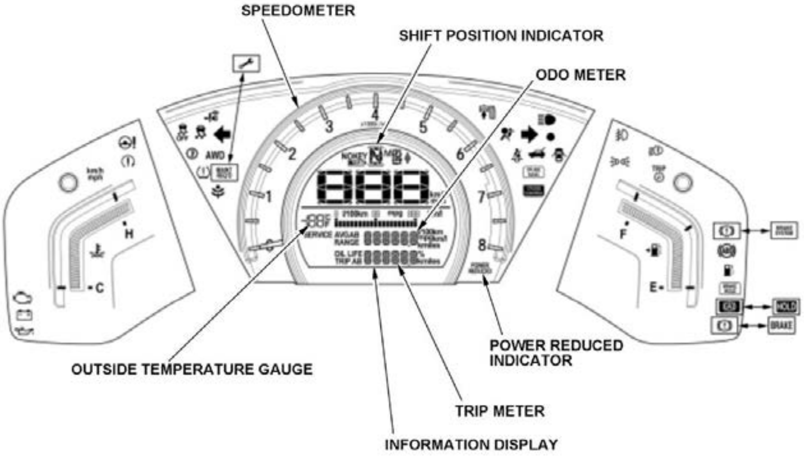
SPEEDOMETER
SHIFT POSITION INDICATOR
ODO METER
OUTSIDE TEMPERATURE GAUGE
POWER REDUCED INDICATOR
TRIP METER
INFORMATION DISPLAY

PARKING AND BACK-UP SENSOR SYSTEM COMPONENT LOCATION INDEX (2020 2021)

For relationships between signals in a system, refer to System Diagram.

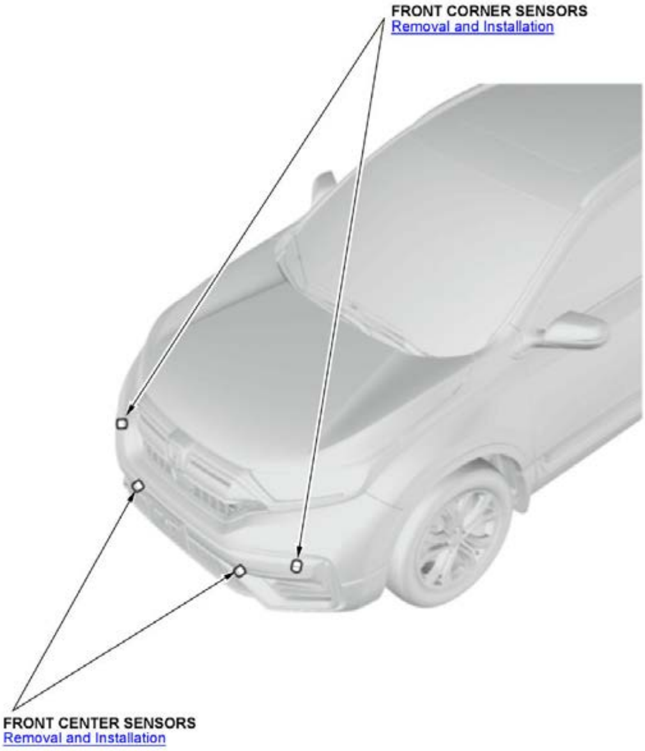
FRONT CORNER SENSORS
Removal and Installation
FRONT CENTER SENSORS
Removal and Installation

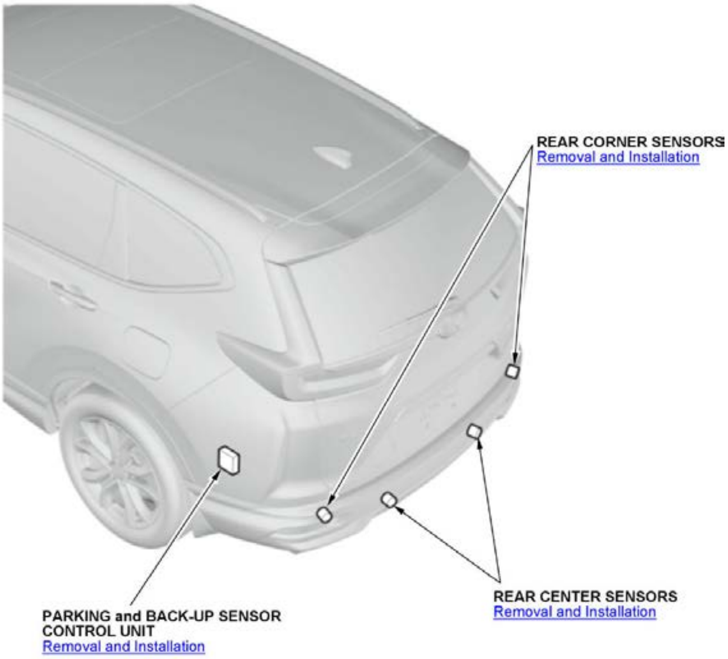
REAR CORNER SENSORS
Removal and Installation
REAR CENTER SENSORS
Removal and Installation
PARKING and BACK-UP SENSOR CONTROL UNIT
Removal and Installation

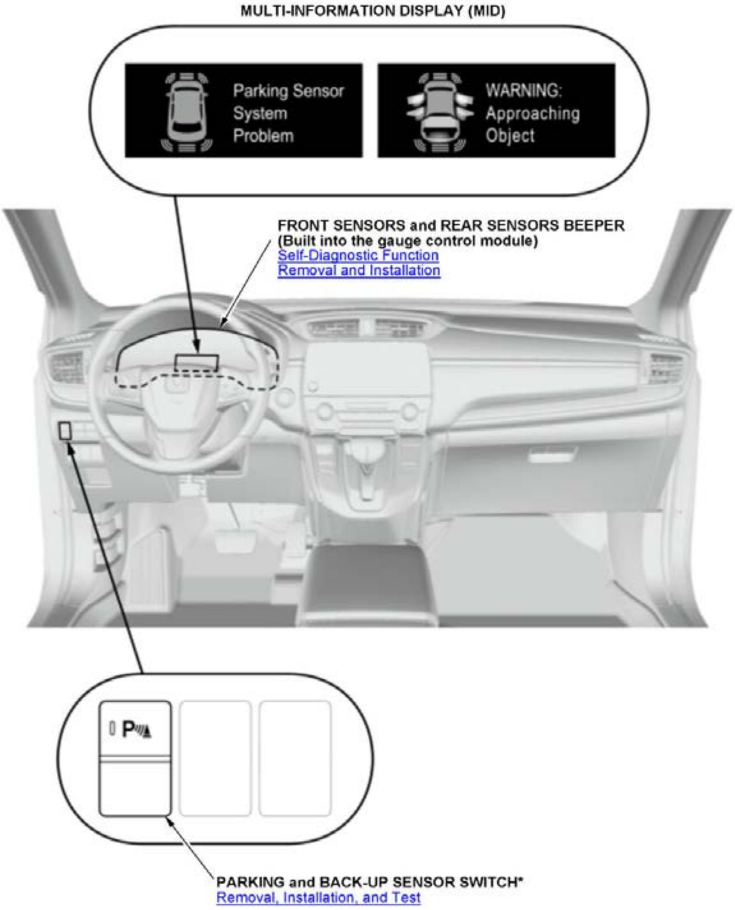
MULTI-INFORMATION DISPLAY (MID)
Parking Sensor System Problem
WARNING: Approaching Object
FRONT SENSORS and REAR SENSORS BEEPER
(Built into the gauge control module)
Self-Diagnostic Function
Removal and Installation
P
PARKING and BACK-UP SENSOR SWITCH*
Removal, Installation, and Test

*: Mounting position of the parking and back-up sensor switch is different depending on the model.

REMINDER SYSTEMS COMPONENT LOCATION INDEX

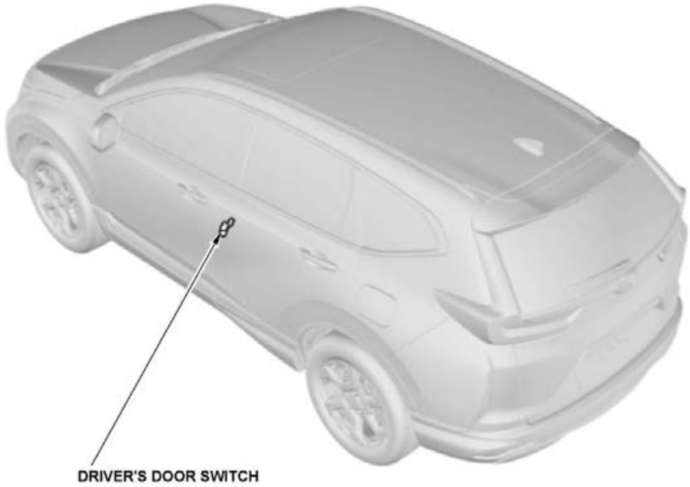
DRIVER'S DOOR SWITCH

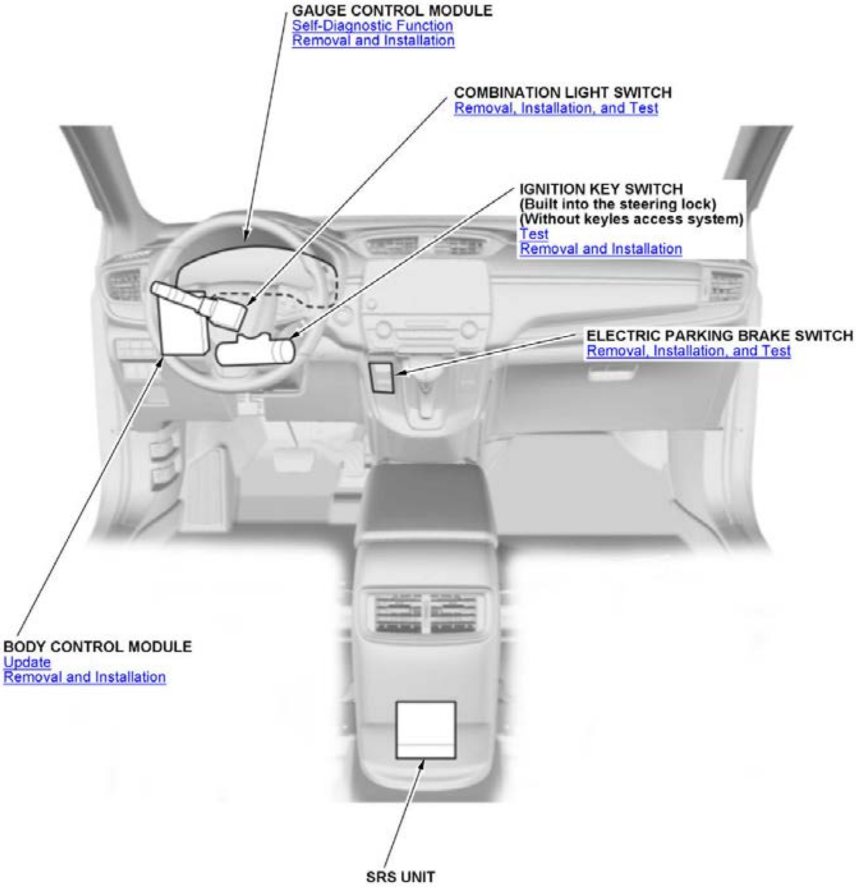
GAUGE CONTROL MODULE
Self-Diagnostic Function
Removal and Installation
COMBINATION LIGHT SWITCH
Removal, Installation, and Test
IGNITION KEY SWITCH
(Built into the steering lock)
(Without keyles access system)
Test
Removal and Installation
ELECTRIC PARKING BRAKE SWITCH
Removal, Installation, and Test
BODY CONTROL MODULE
Update
Removal and Installation
SRS UNIT

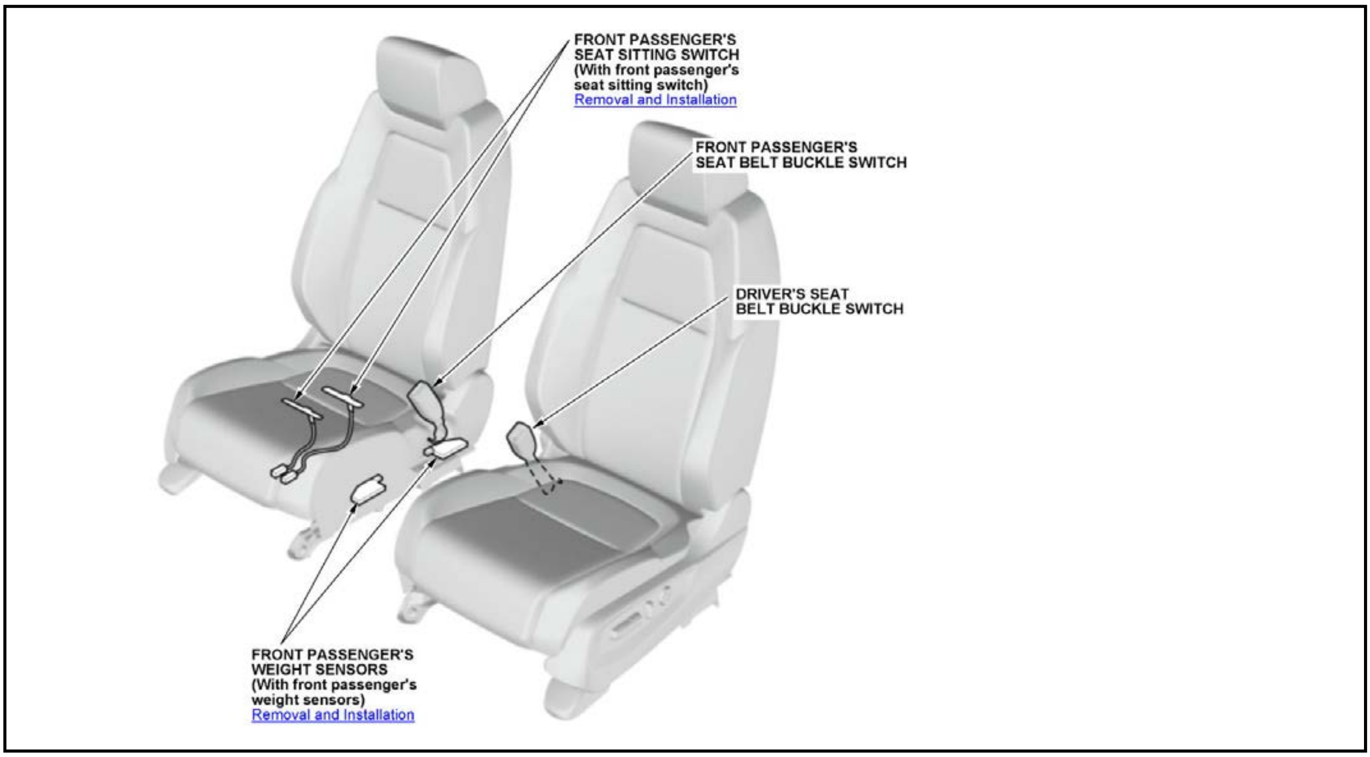
FRONT PASSENGER'S SEAT SITTING SWITCH (With front passenger's seat sitting switch)
Removal and Installation
FRONT PASSENGER'S SEAT BELT BUCKLE SWITCH
DRIVER'S SEAT BELT BUCKLE SWITCH
FRONT PASSENGER'S WEIGHT SENSORS (With front passenger's weight sensors)
Removal and Installation

SAFETY INDICATOR SYSTEM COMPONENT LOCATION INDEX

For relationships between signals in a system, refer to System Diagram.

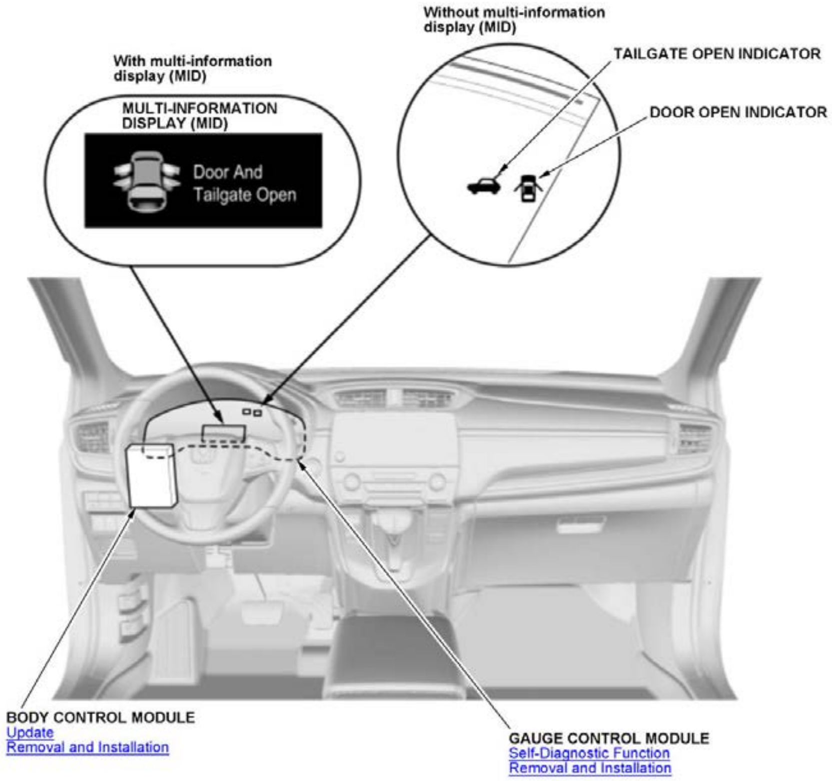
Without multi-information display (MID)
TAILGATE OPEN INDICATOR
DOOR OPEN INDICATOR
With multi-information display (MID)
MULTI-INFORMATION DISPLAY (MID)
Door And Tailgate Open
BODY CONTROL MODULE
Update
Removal and Installation
GAUGE CONTROL MODULE
Self-Diagnostic Function
Removal and Installation

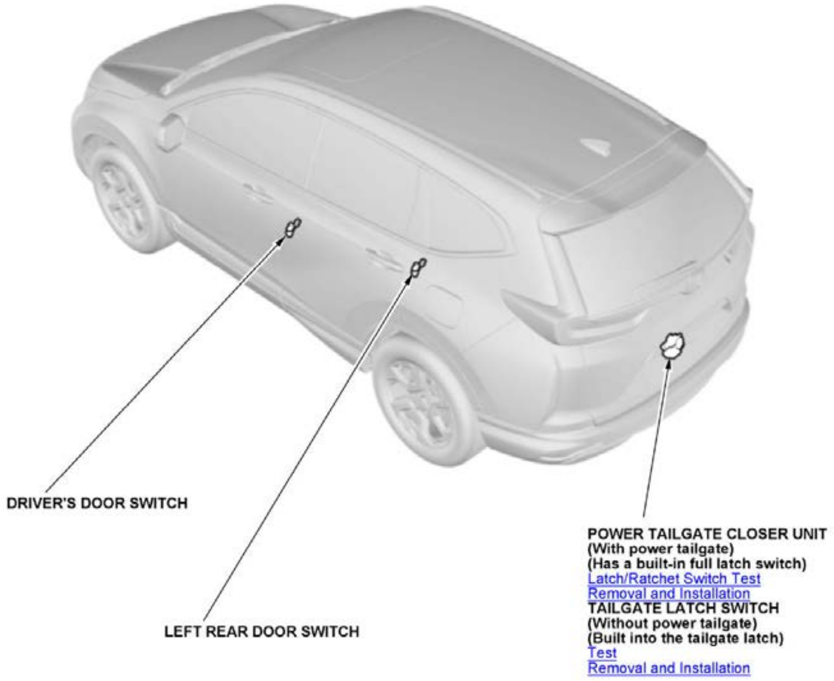
DRIVER'S DOOR SWITCH
LEFT REAR DOOR SWITCH
POWER TAILGATE CLOSER UNIT
(With power tailgate)
(Has a built-in full latch switch)
Latch/Ratchet Switch Test
Removal and Installation
TAILGATE LATCH SWITCH
(Without power tailgate)
(Built into the tailgate latch)
Test
Removal and Installation

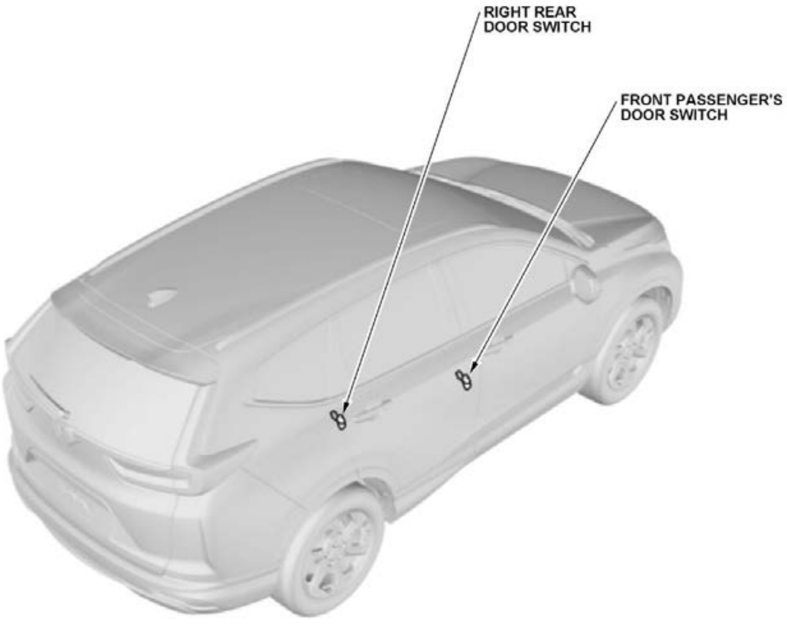
RIGHT REAR
DOOR SWITCH
FRONT PASSENGER'S
DOOR SWITCH

SYMPTOM TROUBLESHOOTING

GAUGES SYMPTOM TROUBLESHOOTING

Fuel gauge indication does not rise

NOTE:

- When refueling, the gauge control module shifts to the "refueling mode," moving the fuel gauge indicator only after it detects that 5 liters (approximately 1.25 U.S. gallon) of fuel have been added.
- The fuel gauge indication may not rise when refueling a small quantity of fuel and the control mode does not shift to refueling mode.

Shift to the Refueling Mode

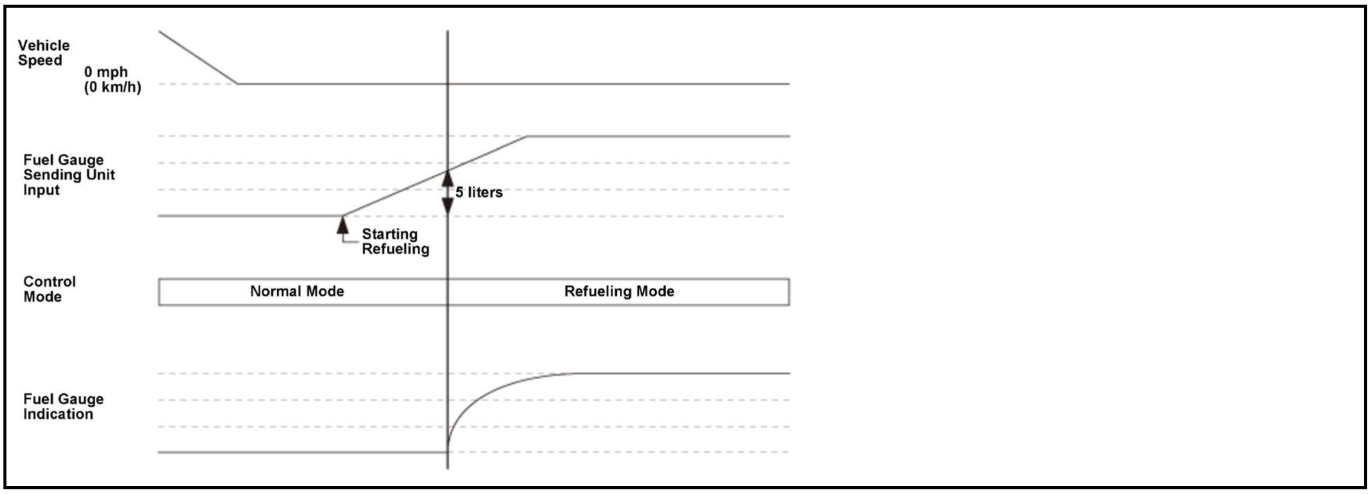

Vehicle Speed
0 mph (0 km/h)
Fuel Gauge Sending Unit Input
5 liters
Starting Refueling
Control Mode
Normal Mode
Refueling Mode
Fuel Gauge Indication

1. DTC check

   -1. Turn the vehicle to the ON mode.

   -2. Check the low fuel indicator.

   Does the low fuel indicator flash?

   YES

   Check for DTCs. If any DTCs are indicated, do the indicated DTC's troubleshooting. If no DTCs are indicated, **replace the gauge control module** .

   NO

   Go to step 2.

2. Fuel gauge operation check

   -1. Turn the vehicle to the OFF (LOCK) mode.

   -2. Do the **gauge self-diagnostic function**.

   Is the fuel gauge OK?

   YES

   Go to step 3.

   NO

   Replace the gauge control module .

3. Fuel tank visual check

   -1. Raise the vehicle on a lift.

   -2. Check the fuel tank for damage.

   Is the fuel tank OK?

   YES

   Go to step 4.

   NO

Replace the fuel tank .

4. Fuel gauge sending unit check

-1. Test the fuel gauge sending unit .

Is the fuel gauge sending unit OK?

YES

Confirm the operation of the fuel gauge.

NO

Replace the fuel gauge sending unit .

Outside air temperature indicator does not change

NOTE: Outside air temperature is indicated based on the measurement value of the outside air temperature sensor located behind the center of the front bumper. Because of the location of the sensor, it may be affected by heat reflection from the road, engine and radiator heat, or hot exhaust from surrounding traffic. To display the outside air temperature, the gauge control module has an indication mode based on engine coolant temperature and vehicle speed. Some modes do not raise the temperature indication, so the outside air temperature indication may not change when the mode continues.

Outside Air Temperature Indication Mode

Indication Mode	Indication Temperature Increase	Indication Temperature Decrease	Notes
Initial Indication	---	---	• If the current outside air temperature is higher than the indicated outside air temperature the last time the vehicle OFF (LOCK) mode, and the engine coolant temperature is higher than 140 deg.F(60 deg.C): The last outside air temperature that was indicated before the vehicle OFF (LOCK) mode is displayed. • If the current outside air temperature is higher than the indicated outside air temperature the last time the vehicle OFF (LOCK) mode, and the engine coolant temperature is less than 140 deg.F(60 deg.C): The current temperature measured by the outside air temperature sensor is indicated. • If the current outside air temperature is lower than the indicated outside air temperature the last time the vehicle OFF (LOCK) mode: The current temperature measured by the outside air temperature sensor is indicated.
Garage Mode	Increases 1 deg.F every 2 seconds (or 1 deg.C every 1 second) to the current outside air temperature.	Decreases 1 deg.F every 2 seconds (or 1 deg.C every 1 second) to the current outside air temperature.	If the engine coolant temperature is less than 140 deg.F(60 deg.C) when the vehicle is in the ON mode, the mode shifts to the garage mode.

Indication Mode	Indication Temperature Increase	Indication Temperature Decrease	Notes
Traffic Jam Mode	---	If the outside air temperature is less than the indicated temperature, the temperature decreases by 1 deg.F per 2 seconds (or 1 deg.C per 1 second).	• If the engine coolant temperature is more than 140 deg.F(60 deg.C), the mode shifts to the traffic jam mode. • At stable run mode, if the vehicle speed is less than 18.6 mph (30 km/h), the mode shifts to traffic jam mode. **NOTE:** Once entering to the traffic jam mode, the mode does not shift to the garage mode even after the engine coolant temperature goes below 140 deg.F(60 deg.C).
Stable Run Mode	Increases 1 deg.F every 30 seconds (or 1 deg.C every 17 seconds) to the current outside air temperature.	Decreases 1 deg.F every 2 seconds (or 1 deg.C every 1 second) to the current outside air temperature.	If the vehicle speed is at 18.6 mph (30 km/h) for more than 28 seconds, the mode shifts to stable run mode.

1. A/C system DTC check

   -1. Check for DTCs with the HDS.

DTC Description	DTC
B1227 An open in the outside air temperature sensor circuit	Â
B1228 A short in the outside air temperature sensor circuit	Â

   Is DTC B1227 or B1228 indicated?

   YES

   Go to the indicated DTC troubleshooting.

   NO

   Go to step 2.

2. Outside air temperature sensor check

   -1. **Test the outside air temperature sensor** .

   Is the outside air temperature sensor OK?

   YES

   Confirm the operation of the outside air temperature indicator.

   NO

   Replace the outside air temperature sensor .

The fuel gauge indication fluctuates

NOTE:

- The fuel sending unit float level changes frequently due to acceleration, deceleration, cornering, and slopes. As a result, the fuel gauge reading that is displayed is based on inputs it receives from the fuel sending unit, as well as inputs on fuel injector duration.
- The following conditions may cause fuel gauge fluctuations:
-
    - Driving uphill and downhill for long periods of time.
    - Stopping in a slanted position, such as on a grade.

1. DTC check

   -1. Turn the vehicle to the ON mode.

   -2. Check the low fuel indicator.

   Does the low fuel indicator flash?

   YES

   Check for DTCs. If any DTCs are indicated, do the indicated DTC's troubleshooting. If no DTCs are indicated, **replace the gauge control module** .

   NO

   Go to step 2.

2. Fuel gauge sending unit installation check

   -1. Turn the vehicle to the OFF (LOCK) mode.

   -2. **Check for poor connections and loose terminals** .

   Are the connections OK?

   YES

   Go to step 3.

   NO

   Reconnect the connectors.

3. Fuel gauge sending unit check

-1. **Test the fuel gauge sending unit** .

Is the fuel gauge sending unit OK?

YES

Confirm the operation of the fuel gauge.

NO

Replace the fuel gauge sending unit .

SYMPTOM TROUBLESHOOTING INDEX

ELECTRICAL COMPASS SYMPTOM TROUBLESHOOTING INDEX

Symptom	Diagnostic Procedure	Also Check for
Azimuth (direction) information is not shown on the display	**Electrical Compass Troubleshooting**	Blown the fuse associated with the system
Compass shows wrong direction	**Electrical Compass Troubleshooting**	• Check if the zone setting is correct for the vehicle geographical location • Check for sources of strong magnetic fields near the electrical compass unit (i.e. Non-OEM electronics including radar detectors, toll road transponders, and/or speakers, magnetized tires and body panels, etc.) • Audio unit (B-CAN)
Compass does not calibrate	**Electrical Compass Troubleshooting**	• Make sure the rear door and the tailgate are closed • Check for sources of strong magnetic fields near the electrical compass unit (i.e. Non-OEM electronics including radar detectors, toll road transponders, and/or speakers, magnetized tires and body panels, etc.) • Audio unit (B-CAN)
Self-test has failed (flashing the CAL and NW)	**Electrical Compass Troubleshooting**	Reboot the electrical compass unit

SYMPTOM TROUBLESHOOTING INDEX FOR VIEWER

AZIMUTH (DIRECTION) INFORMATION IS NOT SHOWN ON THE DISPLAY

Diagnostic Procedure

- **Electrical Compass Troubleshooting**

Also Check for

Blown the fuse associated with the system

COMPASS DOES NOT CALIBRATE

Diagnostic Procedure

- **Electrical Compass Troubleshooting**

Also Check for

- Make sure the rear door and the tailgate are closed
- Check for sources of strong magnetic fields near the electrical compass unit (i.e. Non-OEM electronics including radar detectors, toll road transponders, and/or speakers, magnetized tires and body panels, etc.)
- Audio unit (B-CAN)

COMPASS SHOWS WRONG DIRECTION

Diagnostic Procedure

- **Electrical Compass Troubleshooting**

Also Check for

- Check if the zone setting is correct for the vehicle geographical location

- Check for sources of strong magnetic fields near the electrical compass unit (i.e. Non-OEM electronics including radar detectors, toll road transponders, and/or speakers, magnetized tires and body panels, etc.)
- Audio unit (B-CAN)

SELF-TEST HAS FAILED (FLASHING THE CAL AND NW)

Diagnostic Procedure

- **Electrical Compass Troubleshooting**

Also Check for

Reboot the electrical compass unit

TROUBLESHOOTING

ELECTRICAL COMPASS TROUBLESHOOTING

NOTE:

- **Check the vehicle 12 volt battery condition first** .
- Check for B-CAN DTCs and resolve them before troubleshooting.
- Check the connectors for poor connections or loose terminals.

1. Problem verification 1

   -1. Turn the vehicle to the ON mode.

   -2. Check if the azimuth (direction) information is displayed in the audio display.

   Is the azimuth (direction) information displayed?

   YES

   Go to step 2.

   NO

   Go to step 6.

2. Problem verification 2

   -1. Check if the audio display is flashing the CAL and NW.

   Is the CAL and NW flashing?

   YES

   Replace the electrical compass unit .

   NO

   Go to step 3.

3. Problem verification 3

   -1. **Do the Electrical Compass Calibration**.

   Is the calibration completed?

   YES

   Intermittent failure, the system is OK at this time.

   NO

   Go to step 4.

4. Determine possible failure area (electrical compass unit, others)

   -1. **Go into the System Diagnostic Mode, and select the Vehicle Status in the System Links to check the vehicle speed pulse** .

   -2. With the help of an assistant, test-drive the vehicle and watch the VSP signal.

   Is the vehicle speed indicated?

   YES

   Replace the electrical compass unit .

NO

Go to step 5.

5. Open wire check (B-CAN_H line, B-CAN_L line)

-1. Turn the vehicle to the OFF (LOCK) mode.

-2. Disconnect the following connectors.

Audio unit connector A (24P)
Gauge control module connector A (32P)

-3. Check for continuity between test points 1 and 2.

Test condition	Vehicle OFF (LOCK) mode
Â	Audio unit connector A (24P): disconnected

Â	Gauge control module connector A (32P): disconnected
Test point 1	**Audio unit connector A (24P) No. 14**
Test point 2	**Gauge control module connector A (32P) No. 30**

Test point 1	**Audio unit connector A (24P) No. 24**
Test point 2	**Gauge control module connector A (32P) No. 31**

Is there continuity?

YES

Replace the audio unit .

NO

Repair an open in the wire(s).

6. Open wire check (IG1 METER line)

-1. Measure the voltage between test points 1 and 2.

Test condition	Vehicle ON mode
Test point 1	**Electrical compass unit 6P connector No. 6**
Test point 2	Body ground

Is there battery voltage?

YES

The IG1 METER wire is OK. Go to step 7.

NO

Repair an open or high resistance in the wire.

7. Open wire check (GND line)

-1. Measure the voltage between test points 1 and 2.

Test condition	Vehicle ON mode
Test point 1	**Electrical compass unit 6P connector No. 5**
Test point 2	Body ground

Is there less than 0.2 V?

YES

The GND wire is OK. Go to step 8.

NO

Repair an open or high resistance in the ground wire or poor ground (G401).

8. Shorted wire check (COMPASS lines)

-1. Turn the vehicle to the OFF (LOCK) mode.

-2. Disconnect the following connectors.

Audio unit connector C (32P)
Electrical compass unit 6P connector

-3. Check for continuity between these test points and body ground individually.

Test condition	Vehicle OFF (LOCK) mode
Â	Audio unit connector C (32P): disconnected
Â	Electrical compass unit 6P connector: disconnected

Connector	Terminal
Electrical compass unit 6P connector	No. 1
	No. 2
	No. 3
	No. 4

Is there continuity?

YES

Repair a short to body ground in the wire(s).

NO

The COMPASS wires are not shorted to ground. Go to step 9.

9. Open wire check (COMPASS lines)

-1. Check for continuity between test points 1 and 2.

Test condition	Vehicle OFF (LOCK) mode
Â	Audio unit connector C (32P): disconnected
Â	Electrical compass unit 6P connector: disconnected

Test point 1:Audio unit connector C (32P)	Test point 2:Electrical compass unit 6P connector
No. 12	No. 1
No. 11	No. 2
No. 4	No. 3
No. 3	No. 4

Is there continuity?

YES

The COMPASS wires are OK. Go to step 10.

NO

Repair an open in the wire(s).

10. Electrical compass unit check (substitution)

-1. **Substitute a known-good electrical compass unit** .

-2. Reconnect all the connectors, and recheck.

Does the symptom go away?

YES

Replace the original electrical compass unit .

NO

Replace the audio unit .

SYMPTOM TROUBLESHOOTING INDEX FOR VIEWER

AZIMUTH (DIRECTION) INFORMATION IS NOT SHOWN ON THE DISPLAY

Diagnostic Procedure

- Electrical Compass Troubleshooting

Also Check for

Blown the fuse associated with the system

COMPASS DOES NOT CALIBRATE

Diagnostic Procedure

- Electrical Compass Troubleshooting

Also Check for

- Make sure the rear door and the tailgate are closed
- Check for sources of strong magnetic fields near the electrical compass unit (i.e. Non-OEM electronics including radar detectors, toll road transponders, and/or speakers, magnetized tires and body panels, etc.)
- Audio unit (B-CAN)

COMPASS SHOWS WRONG DIRECTION

Diagnostic Procedure

- Electrical Compass Troubleshooting

Also Check for

- Check if the zone setting is correct for the vehicle geographical location
- Check for sources of strong magnetic fields near the electrical compass unit (i.e. Non-OEM electronics including radar detectors, toll road transponders, and/or speakers, magnetized tires and body panels, etc.)
- Audio unit (B-CAN)

SELF-TEST HAS FAILED (FLASHING THE CAL AND NW)

Diagnostic Procedure

- Electrical Compass Troubleshooting

Also Check for

Reboot the electrical compass unit

DESCRIPTION & OPERATION

ACOUSTIC VEHICLE ALERTING SYSTEM DESCRIPTION

Overview

The acoustic vehicle alerting system consists of the acoustic vehicle alerting control unit, and the acoustic vehicle alerting speaker. At low speeds, the normal operating sounds of this vehicle is low, so it is equipped with an acoustic vehicle alerting system to inform pedestrians and others of its approach. When the acoustic vehicle alerting system failure occurs, a warning message is displayed in the multi-information display (MID).

Sound Operation

The acoustic vehicle alerting system only functions under these conditions:

- Vehicle in the READY TO DRIVE mode.
- Transmission shifted to other than P position/mode.
- Vehicle driving forward and backward in EV driving mode.
- Vehicle speed above 0.3 mph (0.5 km/h).

If these conditions are not met, the system makes no sound. The pitch of the alert sound varies with the vehicle's speed.

The sound stops when the vehicle speed exceeds about 16 mph (25 km/h), or when the vehicle stops. The sound resumes when the vehicle speed falls below about 14 mph (22 km/h).

ACOUSTIC VEHICLE ALERTING SYSTEM DESCRIPTION - COMPONENTS

Acoustic Vehicle Alerting Speaker

The acoustic vehicle alerting speaker is located below the right headlight. The speaker sounds when it receives the signal from the acoustic vehicle alerting control unit.

ACOUSTIC VEHICLE ALERTING SYSTEM DESCRIPTION - SYSTEM DIAGRAM

For location of each component on the vehicle, refer to Component Location Index.

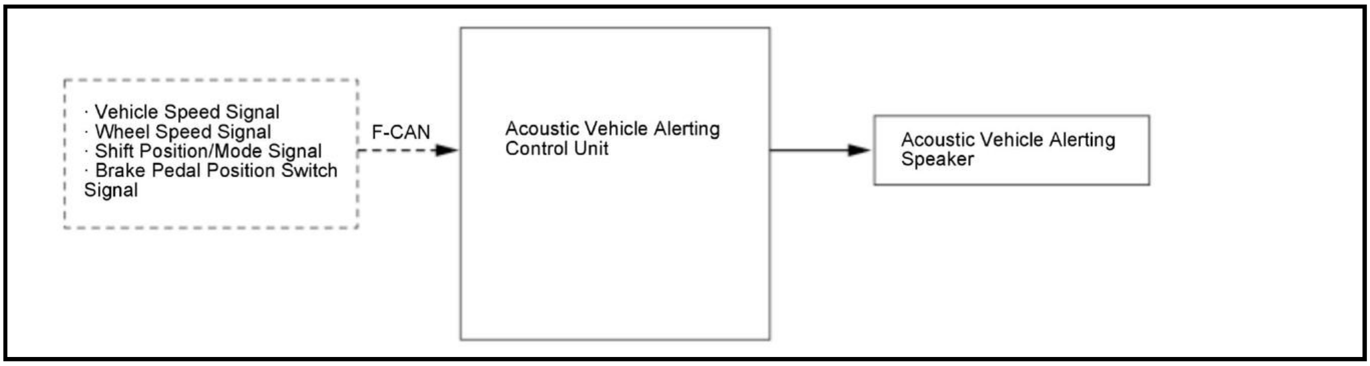
· Vehicle Speed Signal
· Wheel Speed Signal
· Shift Position/Mode Signal
· Brake Pedal Position Switch Signal
F-CAN
Acoustic Vehicle Alerting Control Unit
Acoustic Vehicle Alerting Speaker

ELECTRICAL COMPASS SYSTEM DESCRIPTION

Electrical Compass Unit

The electrical compass unit sends the azimuth (direction) information in the 8-directions (N, NE, E, SE, S, SW, W, NW) to the audio unit. The electrical compass unit receives the VSP signal from the gauge control module via the audio unit. The azimuth information is fixed while parked.

Starting Operation

When the vehicle is turned to the ON mode, the electrical compass unit communicates with the audio unit, and the self-test mode begins automatically.

The self-test function checks for the current voltage, non-volatile memory (NVM), and ROM status in the electrical compass unit. If the unit detects a malfunction during the self-test, it indicates a malfunction by flashing the compass information segments (CAL and NW) in the audio unit.

Basic Operation

The electrical compass unit uses the noise filter to the raw magnetic data. The noise filter switches on/off depending on the intensity of surrounding magnetic noise. In the filter mode, the calculation may delay several seconds. After processing the compass data, the unit sends the azimuth (direction) information to the audio unit

The electrical compass unit also receives following signals via the audio unit:

- The electrical compass unit receives the vehicle speed information from the gauge control module via the audio unit. The azimuth information is fixed while the vehicle is parked.
- The electrical compass unit receives the RR DEF on/off information from the climate control unit. The electrical compass unit compensates for magnetic anomalies when the rear window defogger is on.

Self-Calibration

The electrical compass unit has a self-calibration function. It detects and compensates for magnetic anomalies caused by bridges, subways and large steel structures. When the vehicle leaves the area with a strong magnetic interference (2, 400 mG or more), the electrical compass unit automatically begins calibrating. **If needed, you can manually calibrate the compass**.

Zone Selection

The zone selection is required to compensate for the difference between the magnetic north and the geographic north. This deviation is referred to as a declination. The compass compensates for the declination when you select the zone where the vehicle is located.

GAUGES SYSTEM DESCRIPTION

Self-Diagnostic Function

The gauge control module is equipped with a function to **self-diagnose** the internal circuits in the gauge control module.

Power/Charge Meter

The gauge control module receives information from motor via F-CAN, and displays charging and discharging state of high voltage battery.

State of Charge (SOC) Meter

The gauge control module displays the remaining high voltage battery charge level.

Speedometer

The PCM provides a vehicle speed signal to the gauge control module using the F-CAN. Based on this input, the gauge control module displays the current vehicle speed in the speedometer.

Fuel Gauge and Fuel Indicator

The gauge control module displays the fuel gauge based on input value from the fuel gauge sending unit (fuel tank unit). The low fuel indicator is turn on in the event that indication of the fuel gauge becomes lower than the minimum tank fill threshold.

Multi-Information Display (MID)

The multi-information display (MID) provides the shift position indicator, speedometer, average fuel efficiency, instant fuel economy, ODO/trip meter, outside air temperature, ACC, LKAS, CMBS, elapsed time, seat belt reminder, average speed, eco guide, driver attention monitor, range and the status of keyless access system. In addition, the diagnostic system displays the communication errors and the DTCs.

ODO Meter and Trip Meter

The PCM provides a vehicle speed signal to the gauge control module using the F-CAN. Based on this input, the gauge control module tracks mileage for the odometer and trip meters. The mileage values are displayed in the multi-information display (MID).

Ambient Meter

The ambient meter shows real-time driving information by color on the upper of the power/charge meter which promote fuel efficient driving. When the color is close to green, it means low fuel consumption driving. When the color is close to white, it means high fuel consumption driving. In case of sport mode set, it turns on red.

Outside Air Temperature

The gauge control module uses measurements from the outside air temperature sensor or provided by the outside air temperature sensor signal from the climate control unit via the B-CAN. The outside air temperature indicator's displayed temperature can be recalibrated ± 5 deg.F (± 3 deg.C) to meet the customer's expectations.

Average Fuel Economy/Instant Fuel Economy, Range, Elapsed Time Display, Average Speed Display

The gauge control module receives signals such as fuel consumption, driving distance, vehicle speed, and engine speed from the PCM via F-CAN. It calculates average/instant fuel economy, elapsed time, average speed, and range to display the results.

Select Position

The PCM provides transmission shift position to the gauge control module using the F-CAN. The shift position indicator indicates the shift position based on this data.

Gauge Control Module Receives Information

The gauge control module receives information from each control unit via the F-CAN and the B-CAN to light or flash the indicators. The VSA modulator-control unit (indicator signal), ECON switch, ACC combination switch, CMBS OFF switch, electric parking brake/automatic brake hold switch, VSA OFF switch, EV switch, sport mode switch, and brake fluid level switch are connect directly to the gauge control module. The audio remote-HFL switch signal is transmitted to the gauge control module via the LIN.

Keyless Access System Information

The gauge control module receives information from the body control module via the B-CAN to display status of the keyless access system.

Buzzer

The gauge control module includes a buzzer to provide the driver with audible warnings.

Illumination Control

The illumination brightness can be adjusted using the SEL/RESET knob. When the exterior lights are off, the system is off.

GAUGES SYSTEM DESCRIPTION - SYSTEM DIAGRAM

For locations of each component on vehicle, refer to Component Location Index

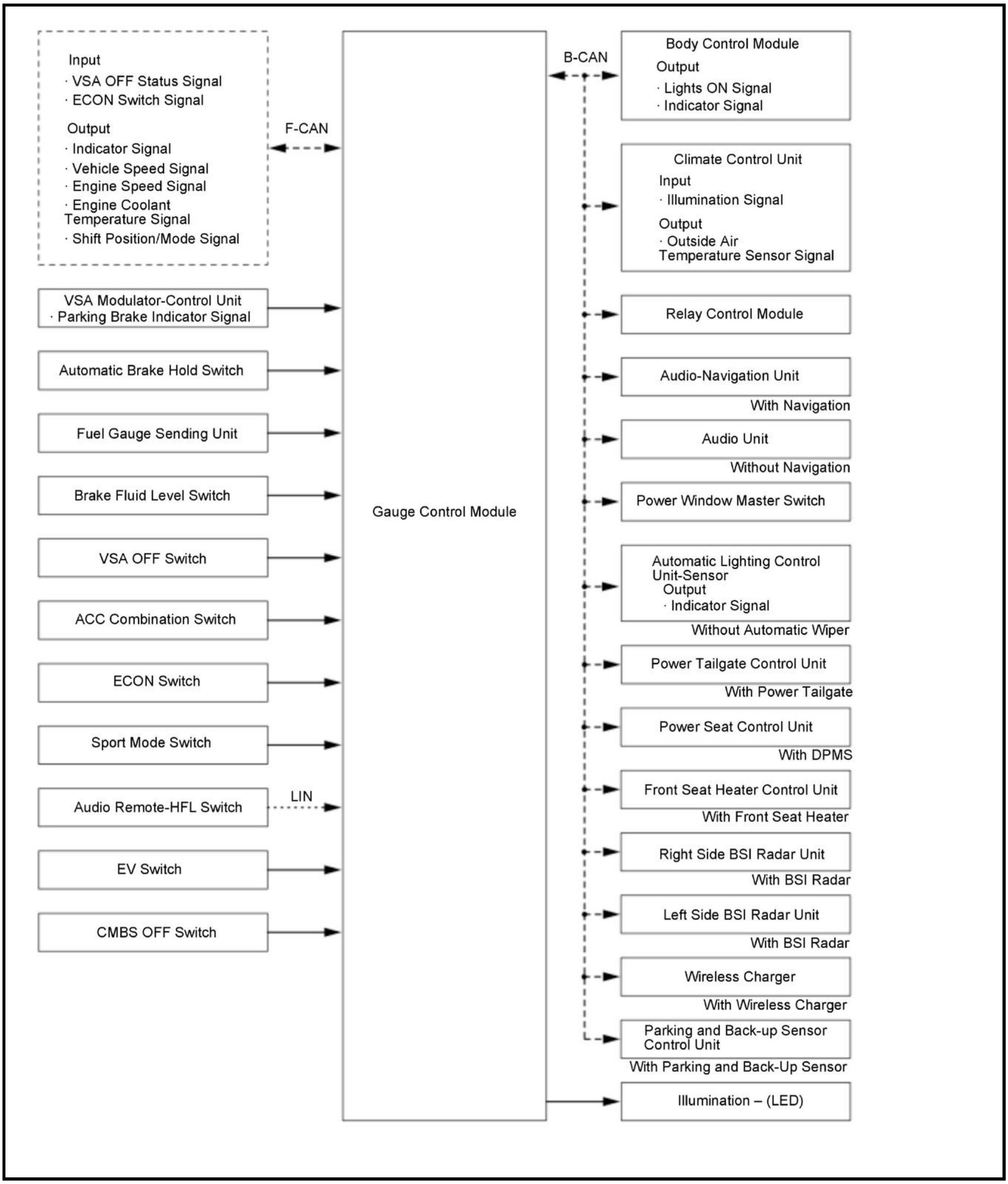
Input
· VSA OFF Status Signal
· ECON Switch Signal
Output
· Indicator Signal
· Vehicle Speed Signal
· Engine Speed Signal
· Engine Coolant Temperature Signal
· Shift Position/Mode Signal
F-CAN
VSA Modulator-Control Unit
· Parking Brake Indicator Signal
Automatic Brake Hold Switch
Fuel Gauge Sending Unit
Brake Fluid Level Switch
VSA OFF Switch
ACC Combination Switch
ECON Switch
Sport Mode Switch
Audio Remote-HFL Switch
LIN
EV Switch
CMBS OFF Switch
Gauge Control Module
B-CAN
Body Control Module
Output
· Lights ON Signal
· Indicator Signal
Climate Control Unit
Input
· Illumination Signal
Output
· Outside Air Temperature Sensor Signal
Relay Control Module
Audio-Navigation Unit
With Navigation
Audio Unit
Without Navigation
Power Window Master Switch
Automatic Lighting Control Unit-Sensor
Output
· Indicator Signal
Without Automatic Wiper
Power Tailgate Control Unit
With Power Tailgate
Power Seat Control Unit
With DPMS
Front Seat Heater Control Unit
With Front Seat Heater
Right Side BSI Radar Unit
With BSI Radar
Left Side BSI Radar Unit
With BSI Radar
Wireless Charger
With Wireless Charger
Parking and Back-up Sensor Control Unit
With Parking and Back-Up Sensor
Illumination – (LED)

PARKING AND BACK-UP SENSOR SYSTEM DESCRIPTION

Overview

The parking and back-up sensor system measures distances to objects by transmitting ultrasonic waves and receiving the echo from sound waves bouncing off nearby objects. It informs drivers of nearby objects with audible warning signals as well as visual signs through the multi-information display (MID) in the gauge control module.

Parking and Back-Up Sensor System Operation

The sensors send out ultrasonic waves, receive waves reflected by an obstacle, determine the distance, and use the buzzer and/or multi-information display (MID) to tell the driver that an obstacle is near.

- The front center and front corner sensors work any time the transmission is shifted out of P position/mode, until the vehicle reaches about 8.7 mph (14 km/h). They do not come back on until slowing down to about 5.6 mph (9 km/h) or less.
- The rear corner and rear center sensors are only activated in the R position/mode.
- The parking and back-up sensor system is active when its switch is ON.
- The system check is performed each time the parking and back-up sensor switch is turned on with the vehicle in the ON mode.
- The sensors must be free of debris, snow, and ice to work correctly.

Sound Pattern of the Parking and Back-Up Sensor Beeper

Intermittent/continuous alarm sounding is performed by obstacle detection indication requests and alarm sounding requests from the parking sensor system, according to the distance and the display of the obstacle detection location. A warning message is generated in case of a failure of the parking sensor system.

Front

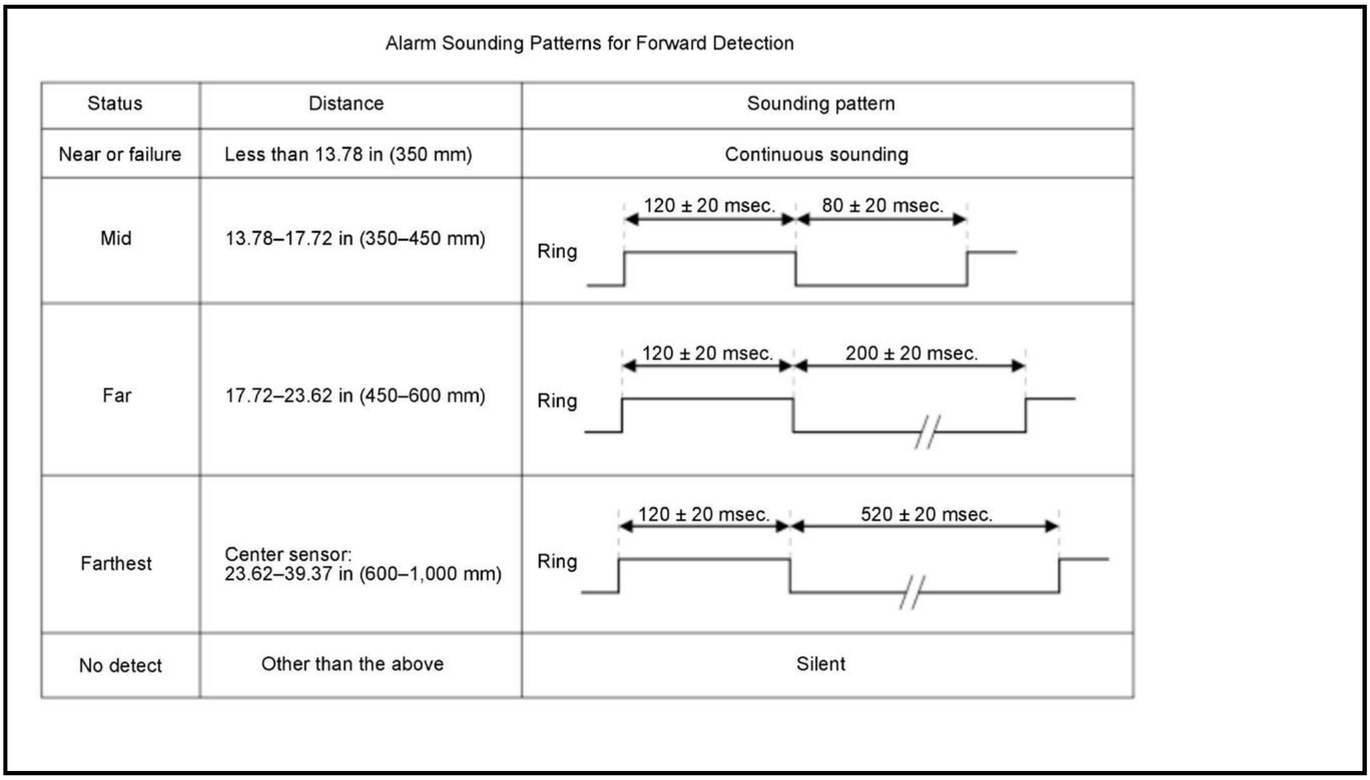

Alarm Sounding Patterns for Forward Detection

Status	Distance	Sounding pattern
Near or failure	Less than 13.78 in (350 mm)	Continuous sounding
Mid	13.78–17.72 in (350–450 mm)	Ring 120 ± 20 msec. 80 ± 20 msec.
Far	17.72–23.62 in (450–600 mm)	Ring 120 ± 20 msec. 200 ± 20 msec.
Farthest	Center sensor: 23.62–39.37 in (600–1,000 mm)	Ring 120 ± 20 msec. 520 ± 20 msec.
No detect	Other than the above	Silent

Rear

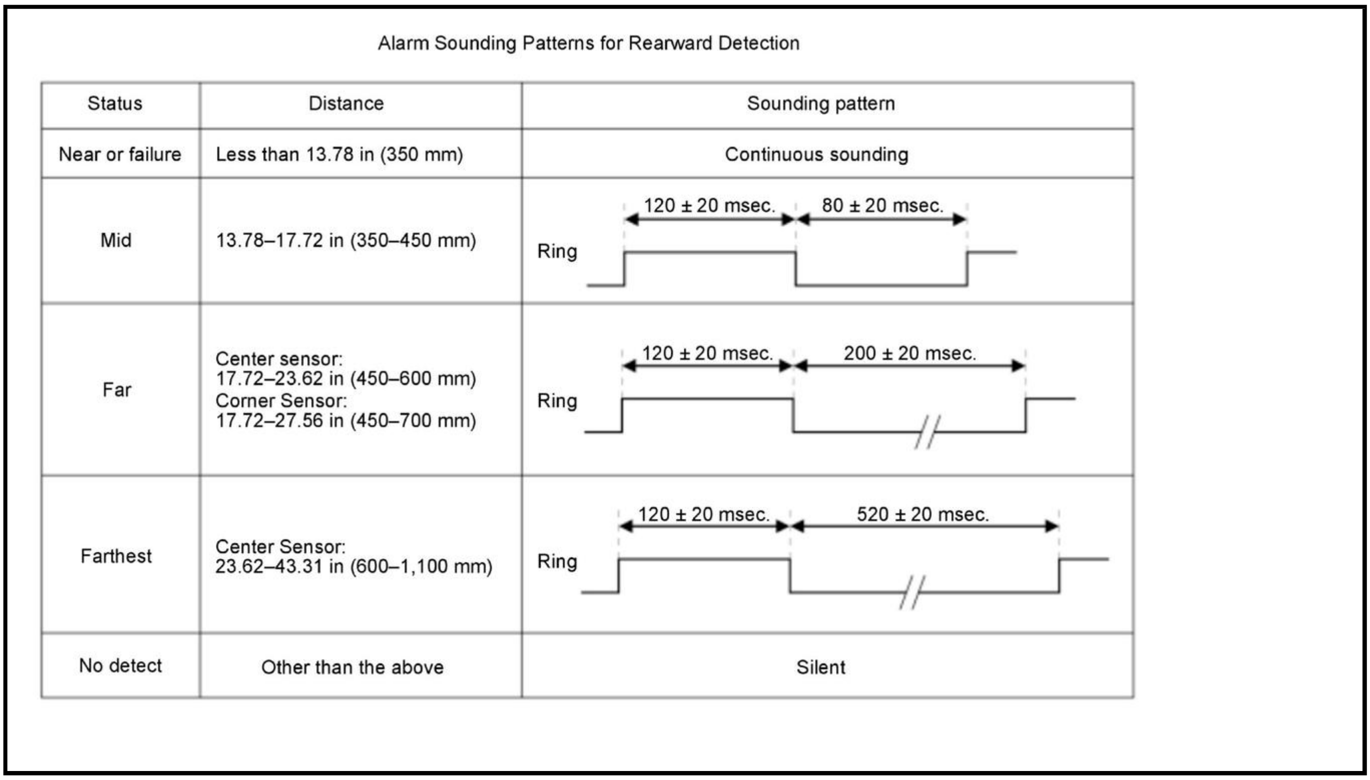

Alarm Sounding Patterns for Rearward Detection

Status	Distance	Sounding pattern
Near or failure	Less than 13.78 in (350 mm)	Continuous sounding
Mid	13.78–17.72 in (350–450 mm)	Ring 120 ± 20 msec. 80 ± 20 msec.
Far	Center sensor: 17.72–23.62 in (450–600 mm) Corner Sensor: 17.72–27.56 in (450–700 mm)	Ring 120 ± 20 msec. 200 ± 20 msec.
Farthest	Center Sensor: 23.62–43.31 in (600–1,100 mm)	Ring 120 ± 20 msec. 520 ± 20 msec.
No detect	Other than the above	Silent

PARKING AND BACK-UP SENSOR SYSTEM DESCRIPTION - COMPONENTS

Parking and Back-Up Sensor Switch

Input to the parking and back-up sensor control unit is performed by operating the parking and back-up sensor switch. The parking and back-up sensor indicator is activated by the parking and back-up sensor control unit.

Parking and Back-Up Sensors

The parking and back-up sensors emit ultrasonic waves, which are reflected by obstacles and then detected by the sensors. The detected ultrasonic waves are converted to digital signals after amplification, and are then transmitted to the parking and back-up sensor control unit.

PARKING AND BACK-UP SENSOR SYSTEM DESCRIPTION - SYSTEM DIAGRAM

For locations of each component on the vehicle, refer to Component Location Index

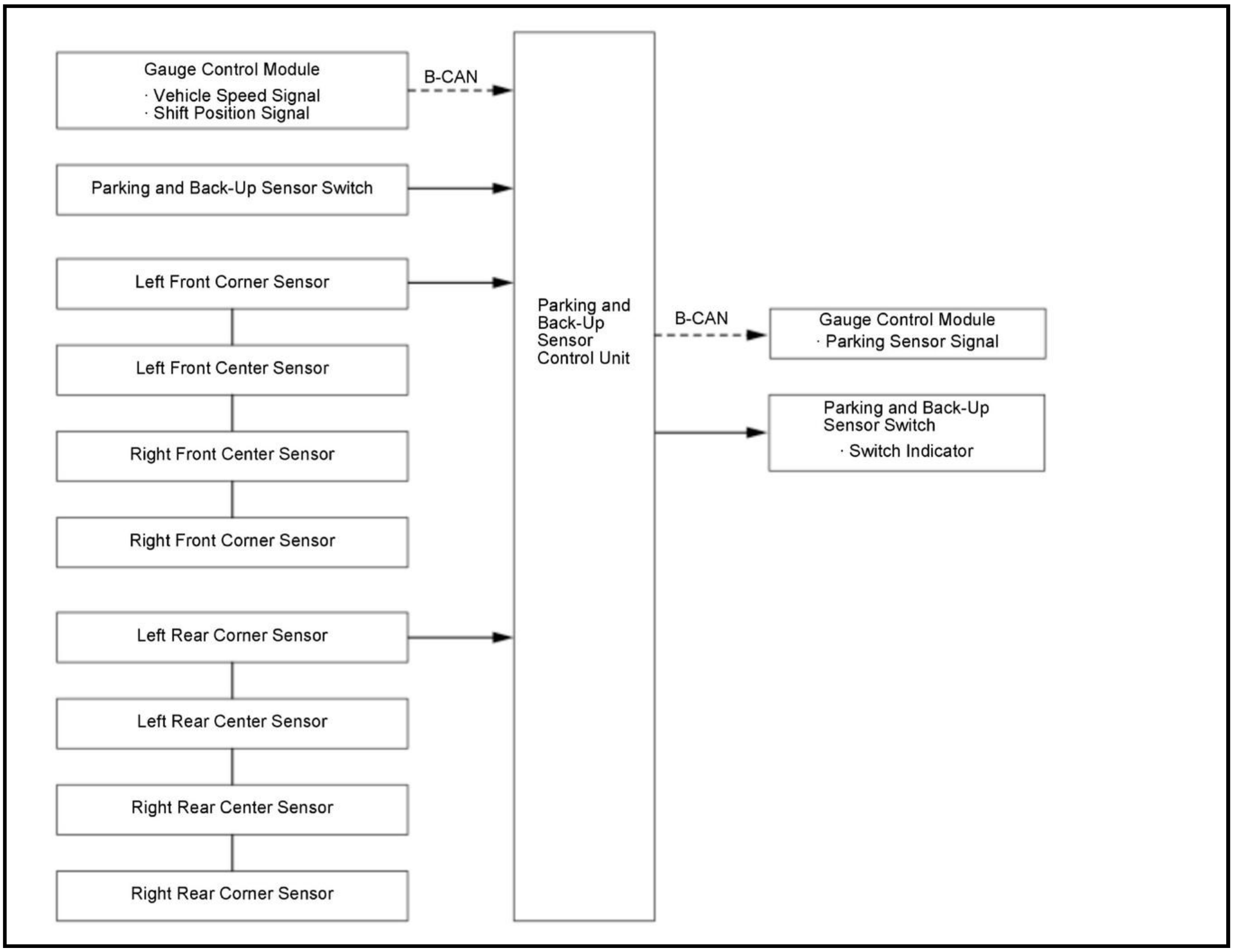
Gauge Control Module
· Vehicle Speed Signal
· Shift Position Signal
B-CAN
Parking and Back-Up Sensor Switch
Left Front Corner Sensor
Left Front Center Sensor
Right Front Center Sensor
Right Front Corner Sensor
Left Rear Corner Sensor
Left Rear Center Sensor
Right Rear Center Sensor
Right Rear Corner Sensor
Parking and Back-Up Sensor Control Unit
B-CAN
Gauge Control Module
· Parking Sensor Signal
Parking and Back-Up Sensor Switch
· Switch Indicator

GENERAL INFORMATION

GAUGES SELF-DIAGNOSTIC FUNCTION

The gauge control module has a self-diagnostic function which consists of the following checks:

- The indicator drive circuit check.
- The switch input check.
- The beeper drive circuit check.
- The LCD/MID segment check.
- The gauge drive circuit check (engine coolant temperature gauge, and fuel gauge).
- The communication line check (of the body controller area network (B-CAN) communication line and the fast controller area network (F-CAN) communication line between the gauges).

NOTE: Indicators are also controlled via the communication lines.

Entering the Self-Diagnostic Function With the HDS

Using the HDS, select BODY ELECTRICAL, GAUGES, then FUNCTIONAL TESTS and do the self-diagnostic function.

Entering the Self-Diagnostic Function (Manual Method)

Before doing the self-diagnostic function, make sure the fuses and relays associated with the Gauges System are OK.

1. Press and hold the SEL/RESET knob.

2. Turn the combination light switch to the PARKING position (

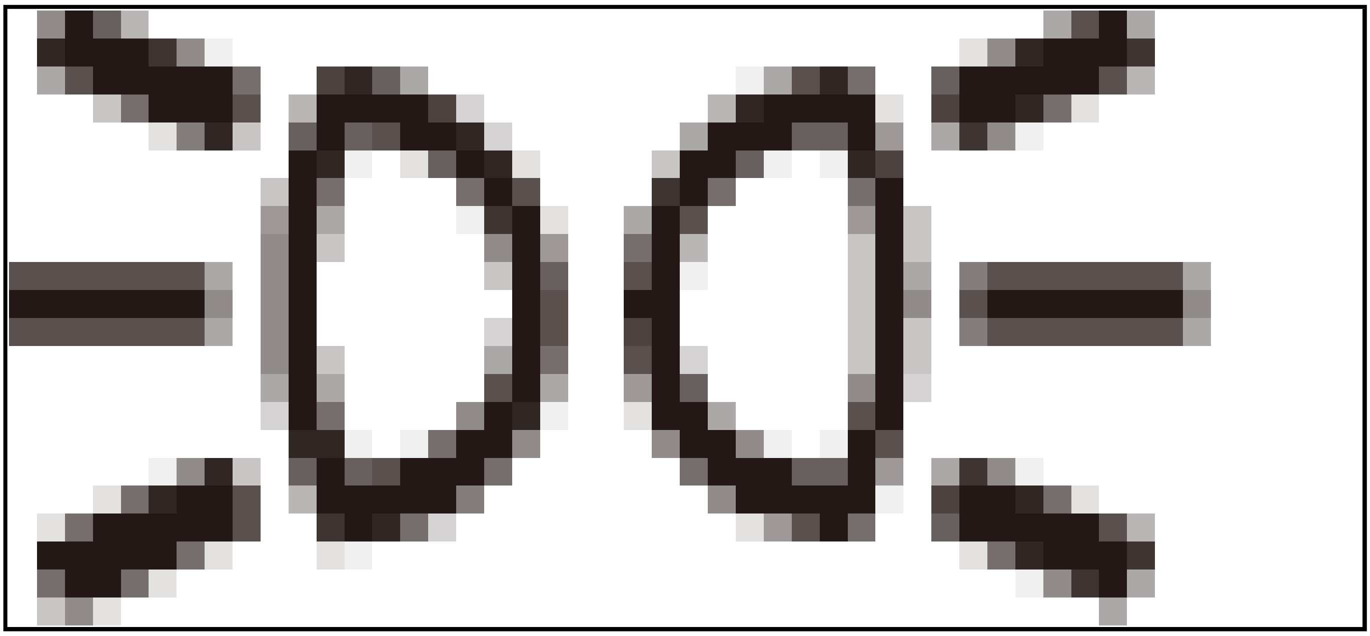

).

3. Turn the vehicle to the ON mode.

4. Within 5 sec., turn the combination light switch to OFF, then to the PARKING position (

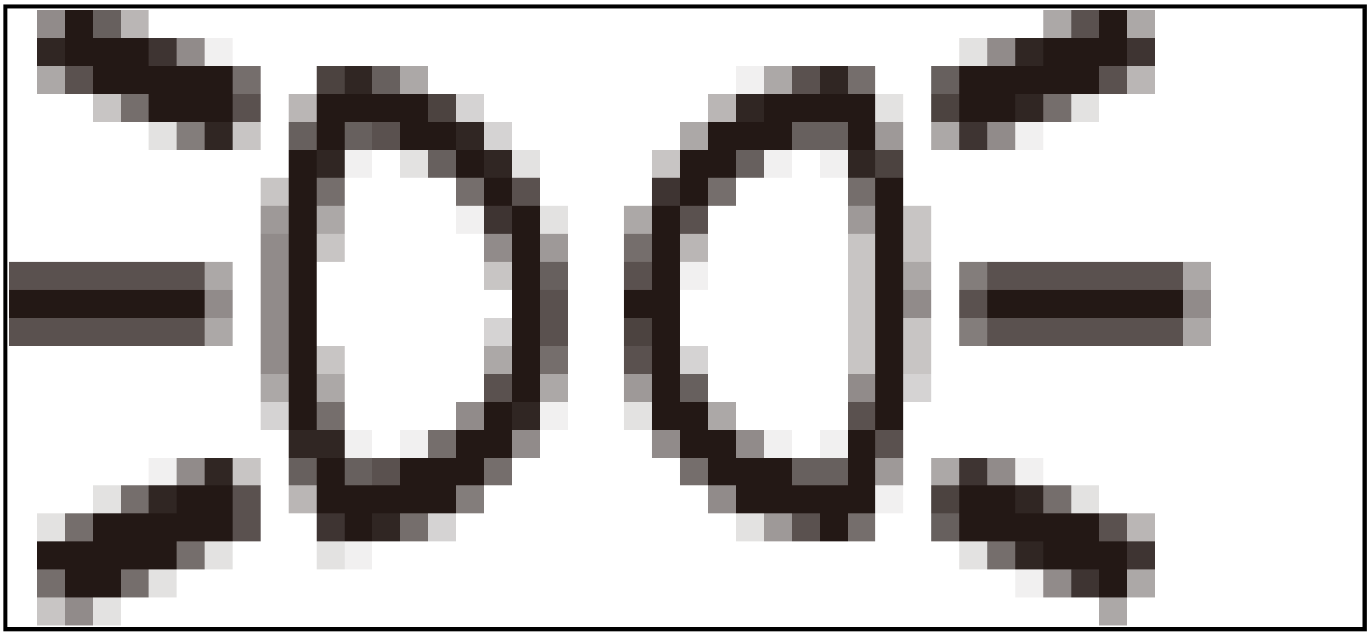

) and OFF again. Within 5 sec., release the SEL/RESET knob, and then repeatedly press and release the knob three times.

NOTE:

- **While in the self-diagnostic mode, the dashlights brightness controller operates normally.**
- **While in the self-diagnostic mode, the SEL/RESET knob is used to start the Beeper Drive Circuit Test and the Gauge Drive Circuit Check.**
- **If the vehicle speed exceeds 1.2 mph (2 km/h), or turn the vehicle to the OFF (LOCK) mode, the self-diagnostic mode ends.**

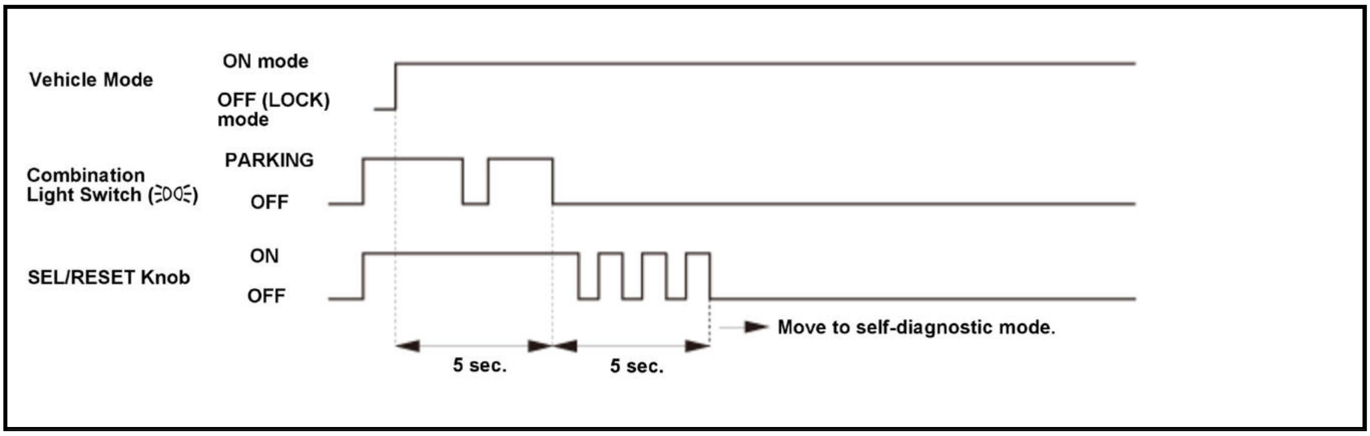
Vehicle Mode
ON mode
OFF (LOCK) mode
Combination Light Switch (⊐D0⊏)
PARKING
OFF
SEL/RESET Knob
ON
OFF
Move to self-diagnostic mode.
5 sec.
5 sec.

The Indicator Drive Circuit Check

When entering the self-diagnostic mode, the following indicators (if equipped) blink, refer to the Gauges Component Location Index.

Switch Input Check

At the initial stage of the self-diagnostic function, the beeper sounds intermittently. The beeper sounds continuously when any of the following switch (if equipped) inputs are switched from OFF to ON:ACC combination switch, audio remote-HFL switch, brake fluid level switch, CMBS OFF switch, ECON switch, electric parking brake/automatic brake hold switch, EV switch, SPORT switch, and VSA OFF switch.

The Beeper Drive Circuit Check

When entering the self-diagnostic mode, the beeper sounds five times.

The LCD/MID Segment Check

When entering the self-diagnostic mode, the word "CHECKING NOW" shows on the multi-information display, and blinks five times.

The Gauge Drive Circuit Check

When entering the self-diagnostic mode, the fuel gauge, and the engine coolant temperature gauge sweep from the minimum position to the maximum position, then return to the minimum position.

NOTE: After the beeper stops sounding and the gauge needles return to the minimum position, pressing the SEL/RESET knob starts the Beeper Drive Circuit Check (one beep) and the Gauge Drive Circuit Check again. The check cannot be started again until the gauge needles return to the minimum position.

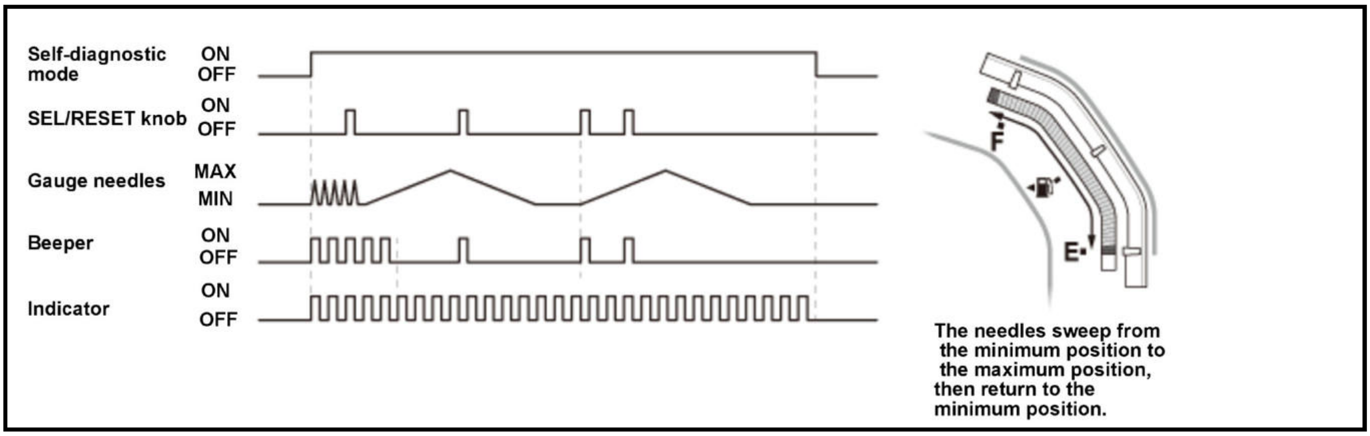
Self-diagnostic mode
ON
OFF
SEL/RESET knob
ON
OFF
Gauge needles
MAX
MIN
Beeper
ON
OFF
Indicator
ON
OFF
F
E
The needles sweep from the minimum position to the maximum position, then return to the minimum position.

The Communication Line Check

While in the self-diagnostic mode, the Communication Line Check starts after the MID Segments Check.

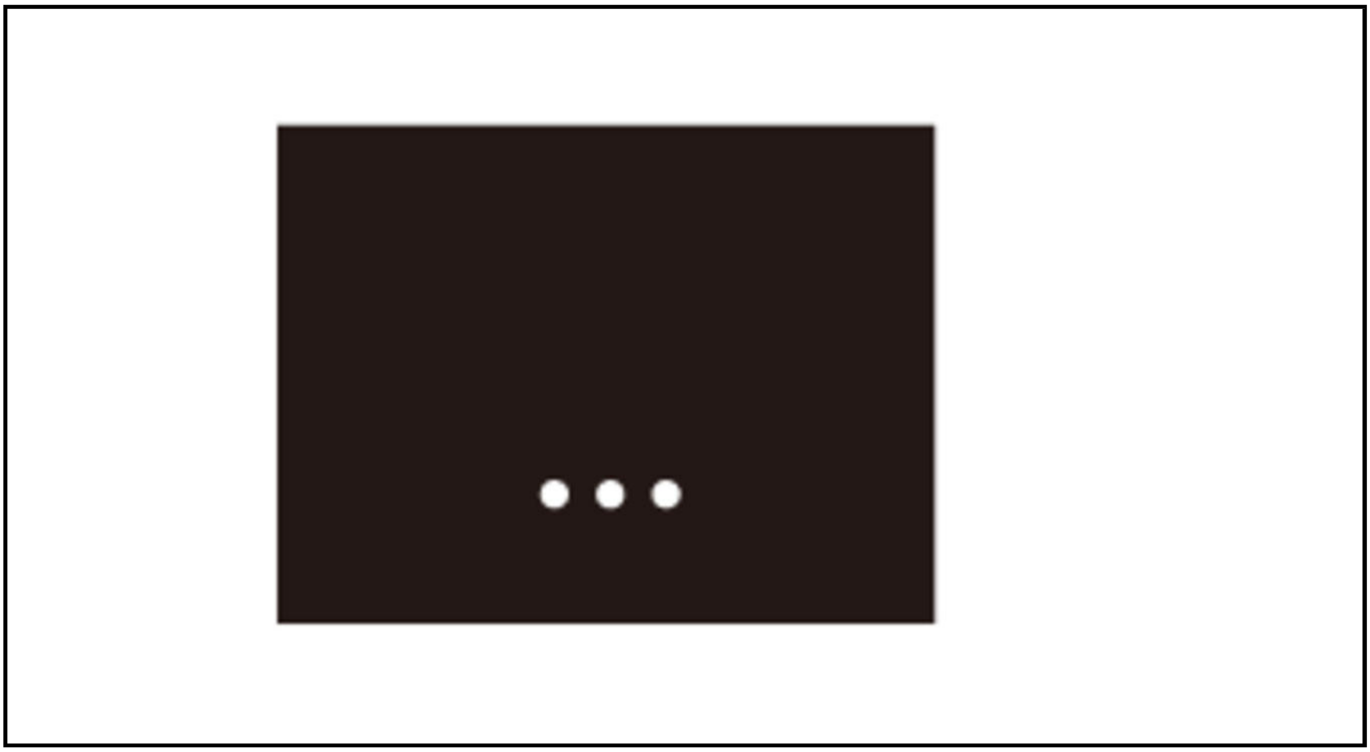

If "..." comes on, the communication line is OK. If there is a communication line error, the word "ERROR" will be indicated on the multi-information display.

Error Code List

Error code	Type of communication line(s) error
ERROR 1	F-CAN communication
ERROR 2	B-CAN communication
ERROR 1, 2	F-CAN and B-CAN communication

Indication Example

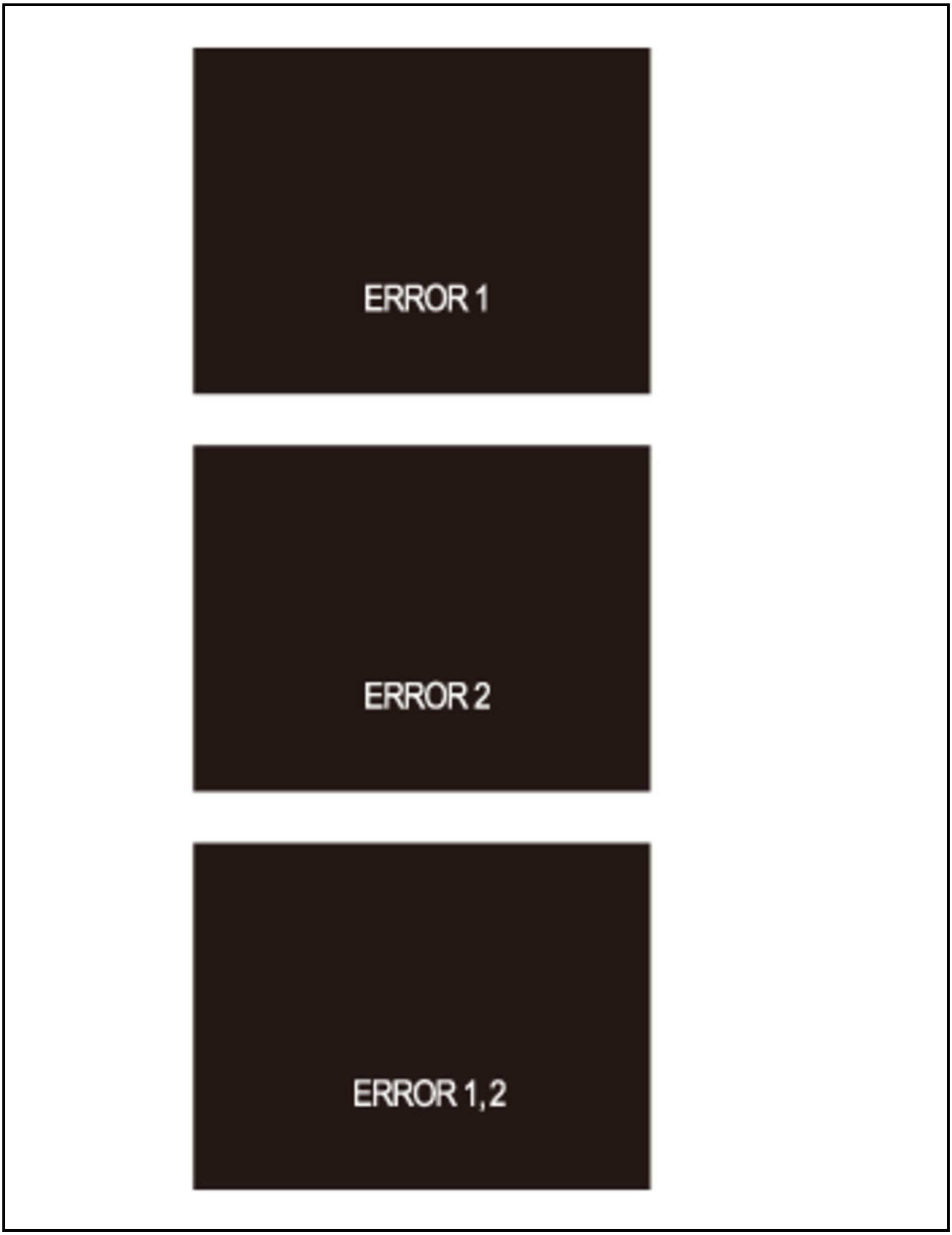

- If ERROR 1 is indicated, there is a malfunction in the communication line between the F-CAN and the gauge control module. The B-CAN line is OK at this time. Check for DTCs in the F-CAN connected units and troubleshoot any DTCs.
- If ERROR 2 is indicated, there is a malfunction in the communication line between the B-CAN and the gauge control module. The F-CAN line is OK at this time. Check for DTCs in the B-CAN connected units and troubleshoot any DTCs.

- If ERROR 1, 2 is indicated, there is a malfunction in the communication line between the gauge control module, the F-CAN, and the B-CAN. Check the DTCs in the F-CAN connected units and troubleshoot any DTCs.

Ending the Self-Diagnostic Function

Turn the vehicle to the OFF (LOCK) mode.

NOTE: If the vehicle speed exceeds 1.2 mph (2 km/h), the self-diagnostic function ends.

CALIBRATION CORRECTION

ELECTRICAL COMPASS ZONE SELECTION AND CALIBRATION

Procedure

NOTE:

- Check the vehicle 12 volt battery condition first .
- You should do this procedure any time the electrical compass unit is replaced.
- You should do this procedure in an open area away from buildings, power lines, other vehicles, and any other sources of strong magnetic fields.
- If you see "--" and the CAL indicator is shown in the audio display, the electrical compass unit is self-calibrating.
- In most areas, there is a variation between magnetic north and true north. The compass zone needs to be set to your geographic zone to compensate for this variation.
- The electrical compass unit may need to be manually calibrated after exposure to a strong magnetic field. If the electrical compass unit seems to be continually showing the wrong direction, and is not self-calibrating, do the following.

1. Electrical Compass Zone Selection and Calibration

   Zone Selection

   1. Turn the vehicle to the ON mode.

   2. Press and hold the DISPLAY MODE (

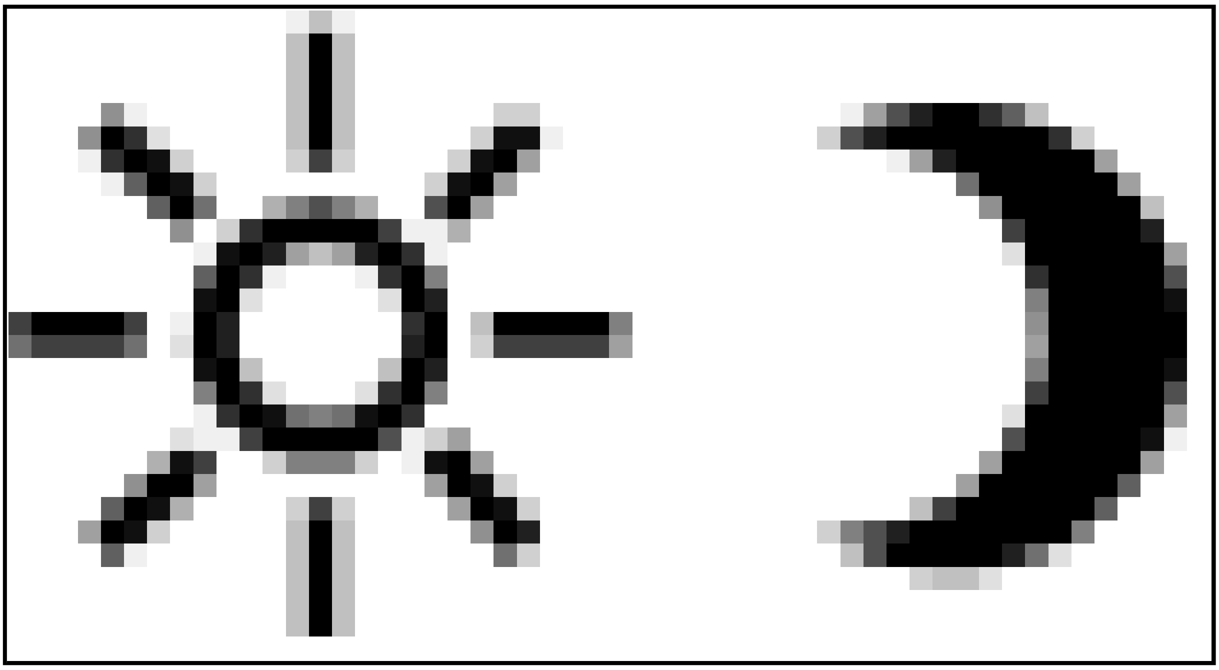

) button until you hear a beep (about 5 seconds). The display shows the electrical compass setting menu items.

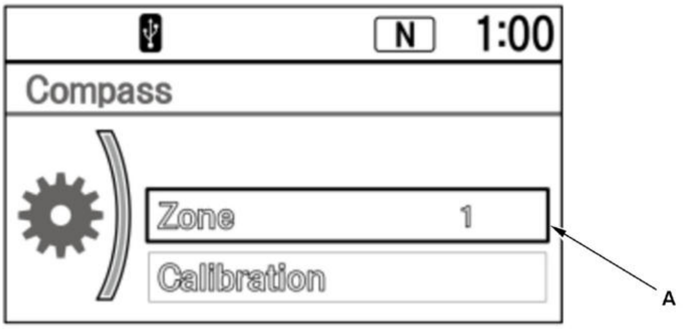
N
1:00
Compass
Zone 1
Calibration
A

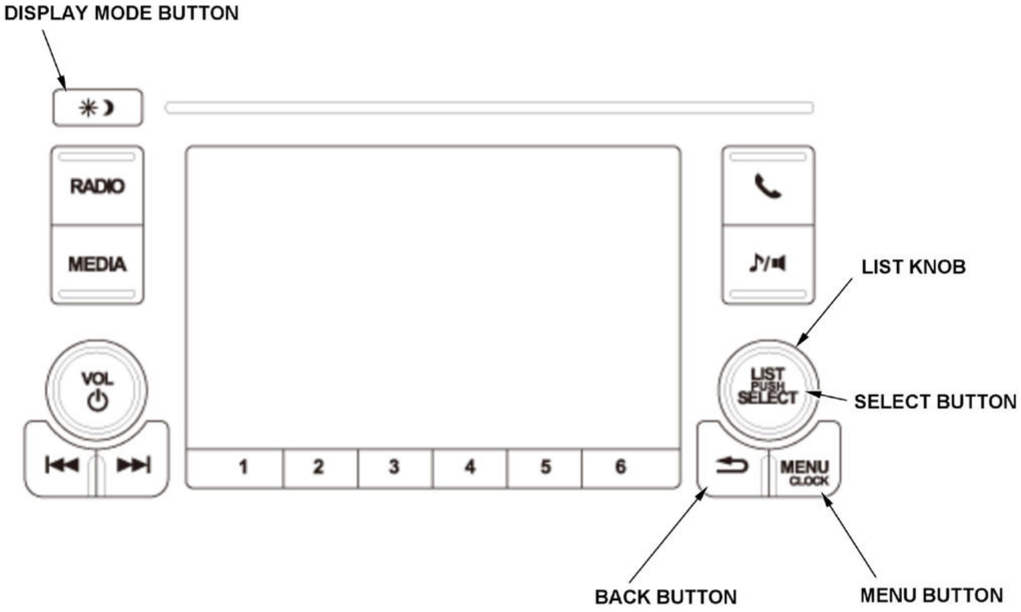
DISPLAY MODE BUTTON
RADIO
MEDIA
VOL
1
2
3
4
5
6
LIST KNOB
LIST PUSH SELECT
SELECT BUTTON
MENU CLOCK
BACK BUTTON
MENU BUTTON

3. Rotate the LIST knob to select Zone (A), and press the SELECT button to enter the selection.

NOTE: If necessary, press the BACK button to return to the previous display. Pressing the MENU button cancels the electrical compass setting mode.

4. The display shows the currently selected zone number between from 1 to 15. Find the zone for your area on the zone map. If the correct zone is not shown, turn the LIST knob to cycle the zone lists up or down.

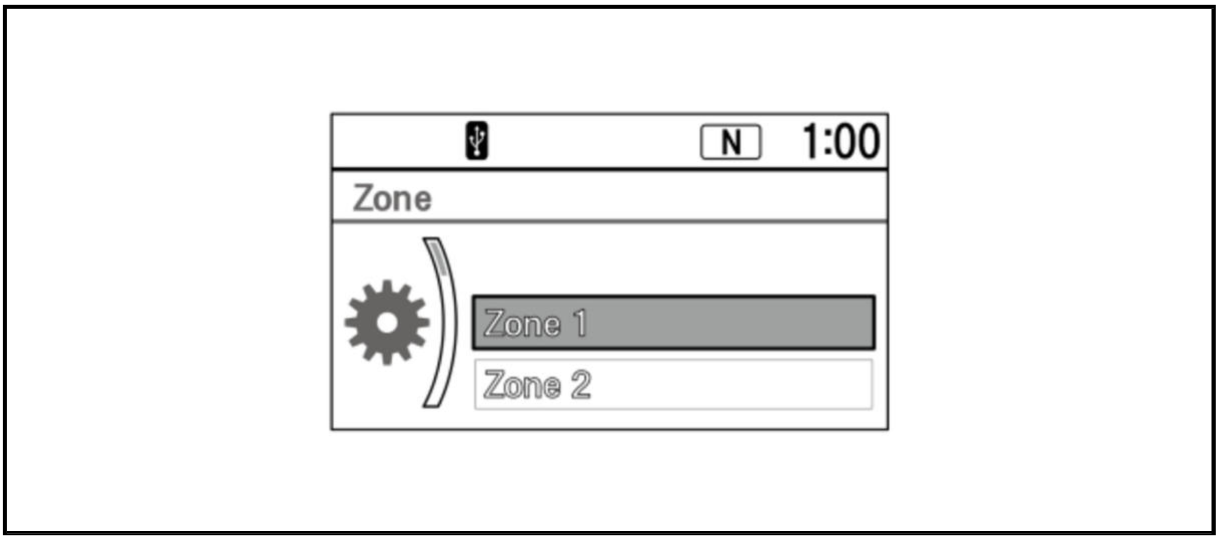

Zone Map

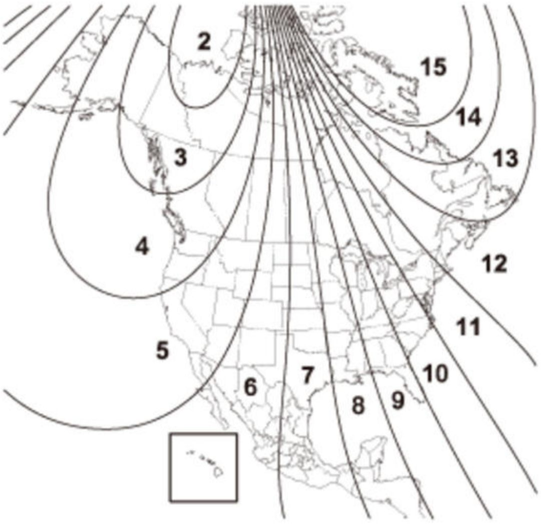

5. Press the SELECT button to decide the selected zone. Returning to the normal display, the zone selection mode ends.

Calibration

Although the compass is self-calibrating, it may need to be manually calibrated after exposure to a strong magnetic field. If the compass is blinking and CAL is shown on the display, do this to calibrate the compass:

1. Start the engine.

2. Press and hold the DISPLAY MODE (

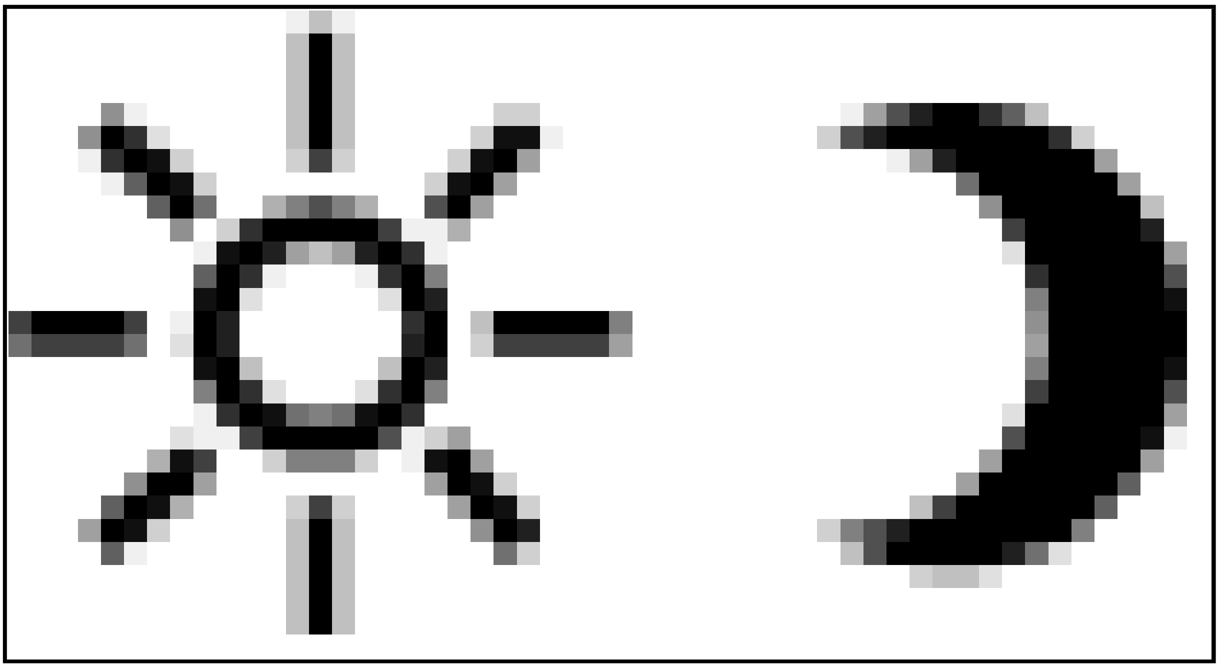

) button until you hear a beep (about 5 seconds). The display shows the electrical compass setting menu items.

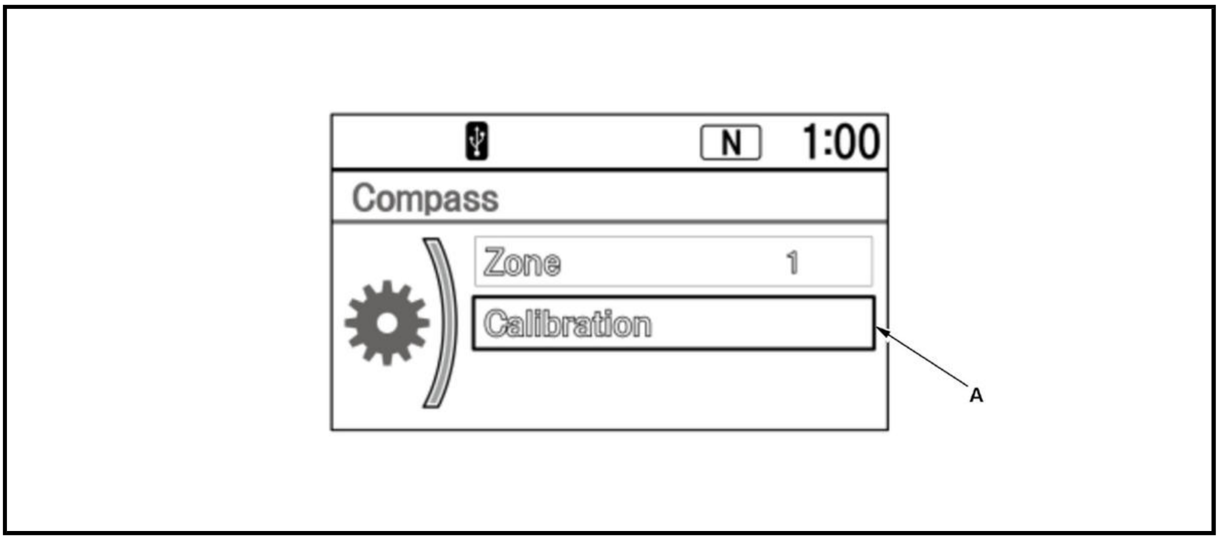
N
1:00
Compass
Zone
1
Calibration
A

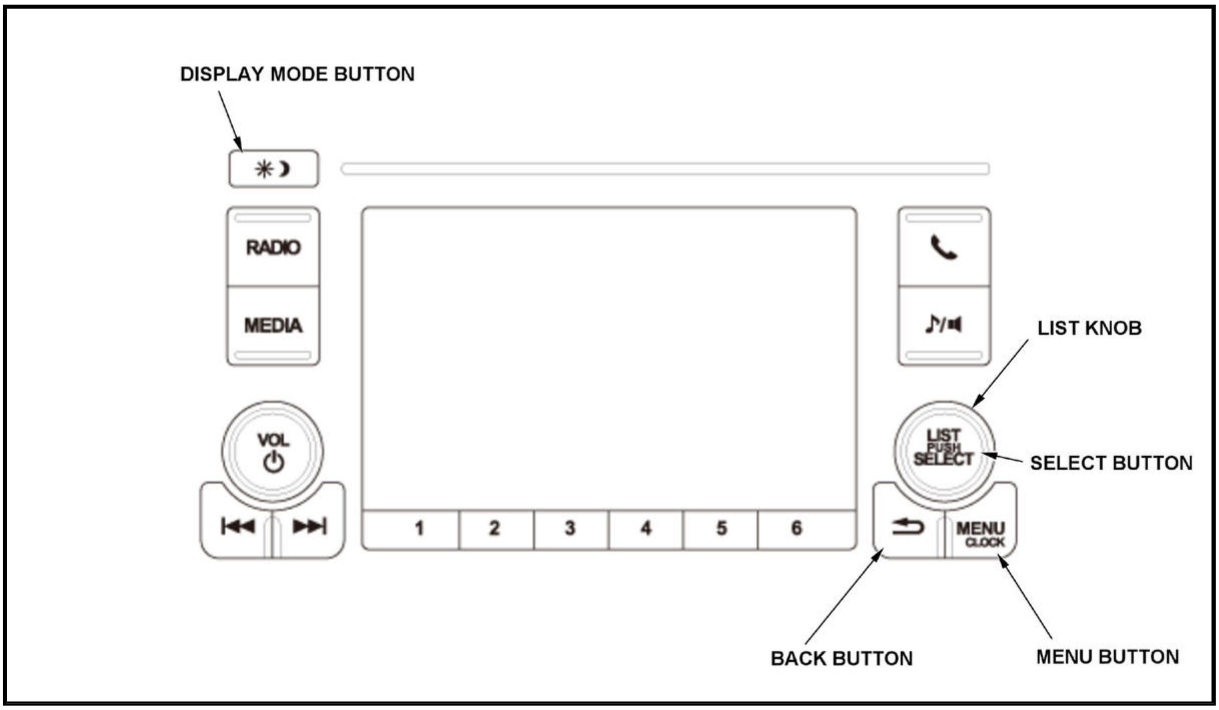
DISPLAY MODE BUTTON
RADIO
MEDIA
VOL
1
2
3
4
5
6
LIST KNOB
LIST PUSH SELECT
SELECT BUTTON
MENU CLOCK
BACK BUTTON
MENU BUTTON

3. Rotate the LIST knob to select Calibration (A) and press the SELECT button to enter the selection.

NOTE: If necessary, press the BACK button to return to the previous display. Pressing the MENU button cancels the electrical compass setting mode.

4. The display shows the Push CAL Start (A). Press the SELECT button to enter the selection.

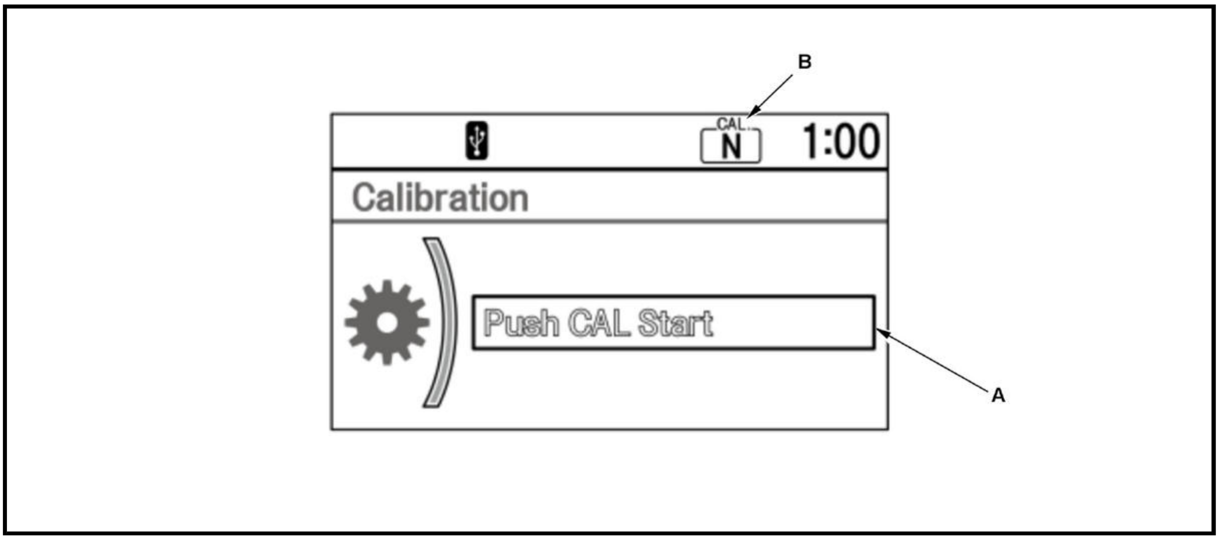

5. When the display shows Push CAL Start, press the SELECT button. The compass display blinks and the CAL indicator (B) comes on.

6. Drive the vehicle slowly in three complete circles (20 seconds or more per a circle). When the calibration is successfully completed, the compass display stops blinking and the CAL indicator goes off.

NOTE:

- The audio system is not related to the electrical compass system. Even if the electrical compass system is calibrating, the display returns to the normal display which was last selected.
- If the calibration fails, try another location (an open area away from buildings, power lines, other vehicles, and any other sources of strong magnetic fields) and do the calibration procedure again.

OUTSIDE AIR TEMPERATURE INDICATOR CALIBRATION (COLOR AUDIO TYPE)

Procedure

NOTE: To test the outside air temperature sensor, refer to the outside air temperature sensor test procedure .

1. Outside Air Temperature Indicator - Calibrate

Description

The outside air temperature sensor is located behind the center of the front bumper. The gauge control module uses measurements from this sensor to display the outside air temperature.

Because of the location of the sensor, it may be affected by heat reflection from the road, engine and radiator heat, or hot exhaust from the surrounding traffic.

These conditions can heat soak the outside air temperature sensor and cause inaccurate readings. Logic has been written into the gauge control module to help prevent abnormal or fluctuating outside air temperature indicator readings.

Outside Air Temperature Indicator Logic

Engine coolant temperature 140 deg.F (60 deg.C) or higher:

If the engine coolant temperature is 140 deg.F (60 deg.C) or higher when the vehicle is turned to the ON mode, the outside air temperature indicates the last temperature it displayed with the vehicle was turned to the OFF (LOCK) mode regardless of the current temperature measured by the outside air temperature sensor.

Engine coolant temperature less than 140 deg.F (60 deg.C) :

If the engine coolant temperature is less than 140 deg.F (60 deg.C) or lower when the vehicle is turned to the ON mode, the current temperature measured by the outside air temperature sensor is indicated.

Information Update to the Outside Air Temperature Indicator While Driving

Engine coolant temperature 140 deg.F (60 deg.C) or higher:

If the temperature measured by the outside air temperature sensor is greater than the indicated temperature, the indicated temperature will increase by 1 deg.F (1 deg.C) per minute after the vehicle speed is greater than 19 mph (30 km/h) for more than 1 minute and 30 seconds. It continues to increase until the current outside air temperature is indicated. If the vehicle speed drops below 19 mph (30 km/h), the indicator does not update again until the vehicle speed has increased to 19 mph (30 km/h) or more for more than 1 minute and 30 seconds again.

Engine coolant temperature less than 140 deg.F (60 deg.C) :

If the outside air temperature is less than the indicated temperature, the indicated temperature decreases by 1 deg.F (1 deg.C) every 2 seconds until the current outside air temperature indicated regardless of vehicle speed.

Fahrenheit:

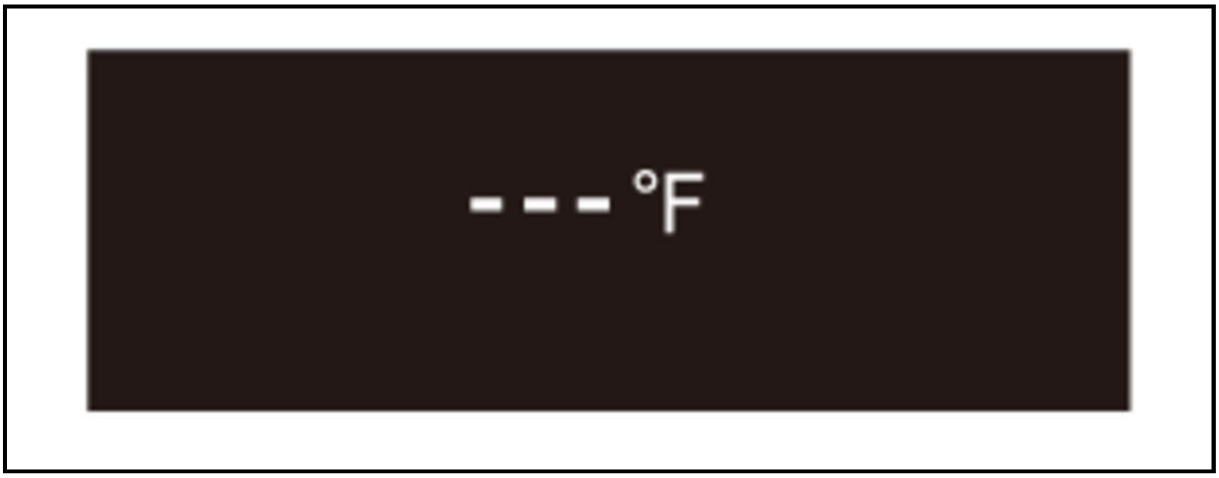

Celsius:

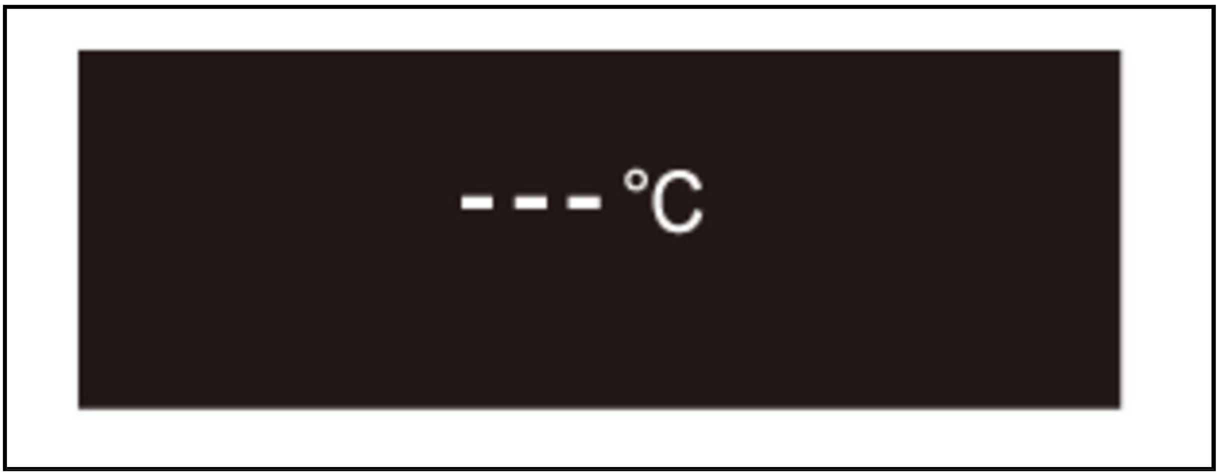

Troubleshooting

If the indicator displays - - - deg.F (- - - deg.C) for more than 2 seconds after selecting the outside air temperature display mode, the gauge control module is not receiving the outside temperature data from the climate control unit over the B-CAN. Check the climate control system or multiplex integrated control system for DTCs.

Calibration

NOTE:

- The outside air temperature indicator's displayed temperature can be calibrated +/- 5 deg.F (+/- 3 deg.C) to meet the customer's expectations.
- The outside air temperature can be calibrated by using the audio unit.

1. Turn the vehicle to the ON mode.

2. Select the AUDIO POWER (⏻

) button.

3. Select the HOME button.

4. Select the following icons in sequence.

- Settings
- Vehicle
- Meter Setup
- Adjust Outside Temp. Display

5. When the desired correction value appears on the display, release the button, and the recalibrated outside air temperature will be displayed.

NOTE: The recalibration temperature is not the value the sensor sees. Therefore the temperature can only be adjusted +/- 5 deg.F (+/- 3 deg.C).

Example:

Incorrect value	=	68 deg.F (20 deg.C)

Desired correction value	=	+2 deg.F (+1 deg.C)
Correct value	=	70 deg.F (21 deg.C)

Desired correction value	=	-2 deg.F (-1 deg.C)
Correct value	=	66 deg.F (19 deg.C)

NOTE: To recalibrate the display to the true temperature, remove the outside air temperature sensor (A), but leave it connected. Submerge the sensor and a thermometer (B) in a container of ice water (C). Select the calibration mode as described above, then recalibrate the display to the true temperature.

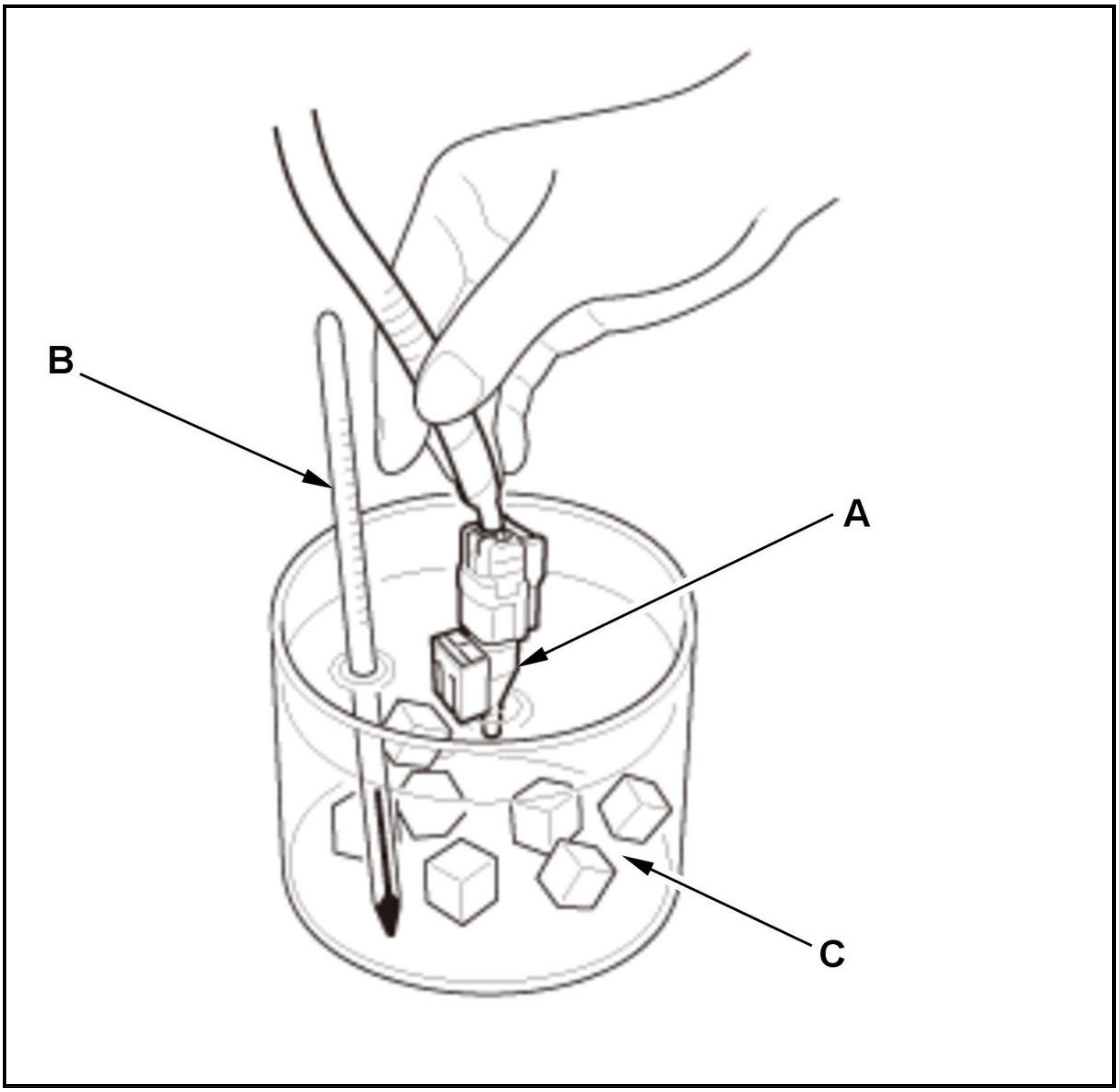

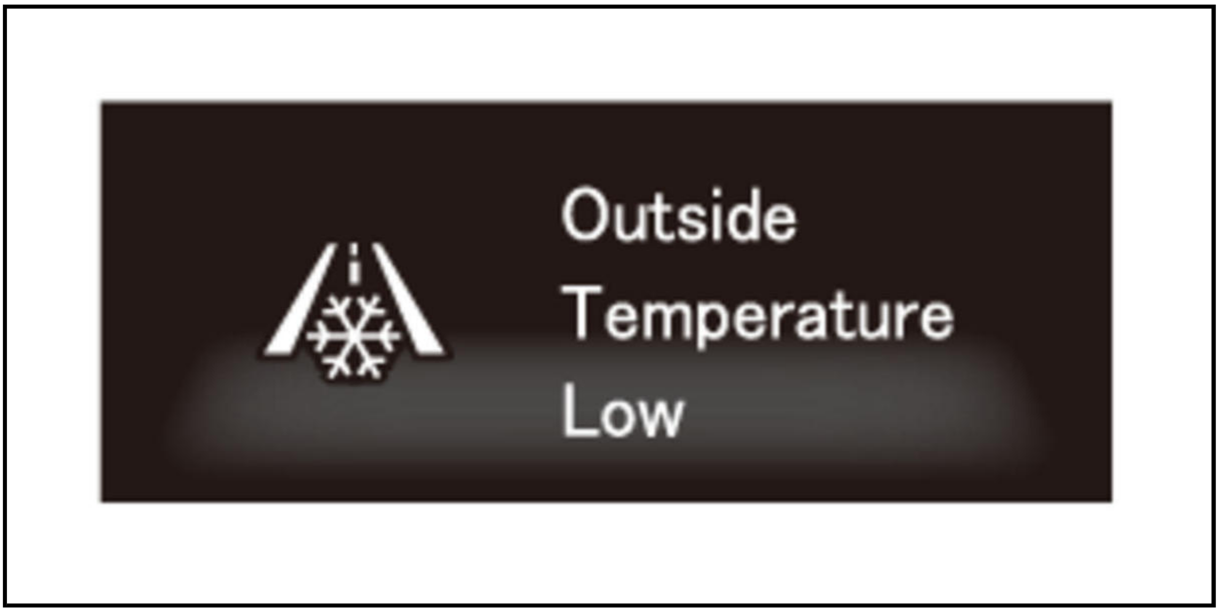
Outside
Temperature
Low

6. The snow mark is displayed when the temperature is 37 deg.F (3 deg.C) or less the first time you turn the vehicle to the ON mode.

OUTSIDE AIR TEMPERATURE INDICATOR CALIBRATION (DISPLAY AUDIO TYPE)

Procedure

NOTE: To test the outside air temperature sensor, **refer to the outside air temperature sensor test procedure** .

1. Outside Air Temperature Indicator - Calibrate

   Description

   The outside air temperature sensor is located behind the center of the front bumper. The gauge control module uses measurements from this sensor to display the outside air temperature.

   Because of the location of the sensor, it may be affected by heat reflection from the road, engine and radiator heat, or hot exhaust from the surrounding traffic.

   These conditions can heat soak the outside air temperature sensor and cause inaccurate readings. Logic has been written into the gauge control module to help prevent abnormal or fluctuating outside air temperature indicator readings.

   Outside Air Temperature Indicator Logic

   Engine coolant temperature 140 deg.F (60 deg.C) or higher:

   If the engine coolant temperature is 140 deg.F (60 deg.C) or higher when the vehicle is turned to the ON mode, the outside air temperature indicates the last temperature it displayed with the vehicle was turned to the OFF (LOCK) mode regardless of the current temperature measured by the outside air temperature sensor.

   Engine coolant temperature less than 140 deg.F (60 deg.C) :

   If the engine coolant temperature is less than 140 deg.F (60 deg.C) or lower when the vehicle is turned to the ON mode, the current temperature measured by the outside air temperature sensor is indicated.

   Information Update to the Outside Air Temperature Indicator While Driving

   Engine coolant temperature 140 deg.F (60 deg.C) or higher:

   If the temperature measured by the outside air temperature sensor is greater than the indicated temperature, the indicated temperature will increase by 1 deg.F (1 deg.C) per minute after the vehicle speed is greater than 19 mph (30 km/h) for more than 1 minute and 30 seconds. It continues to increase until the current outside air temperature is indicated. If the vehicle speed drops below 19 mph (30 km/h), the indicator does not update again until the vehicle speed has increased to 19 mph (30 km/h) or more for more than 1 minute and 30 seconds again.

   Engine coolant temperature less than 140 deg.F (60 deg.C) :

   If the outside air temperature is less than the indicated temperature, the indicated temperature decreases by 1 deg.F (1 deg.C) every 2 seconds until the current outside air temperature indicated regardless of vehicle speed.

   Fahrenheit:

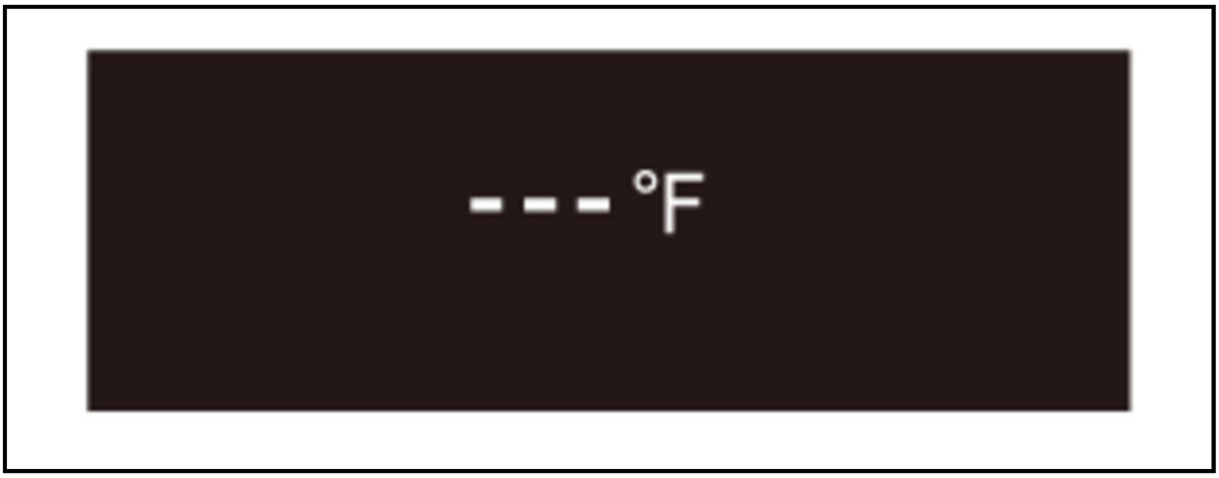

Celsius:

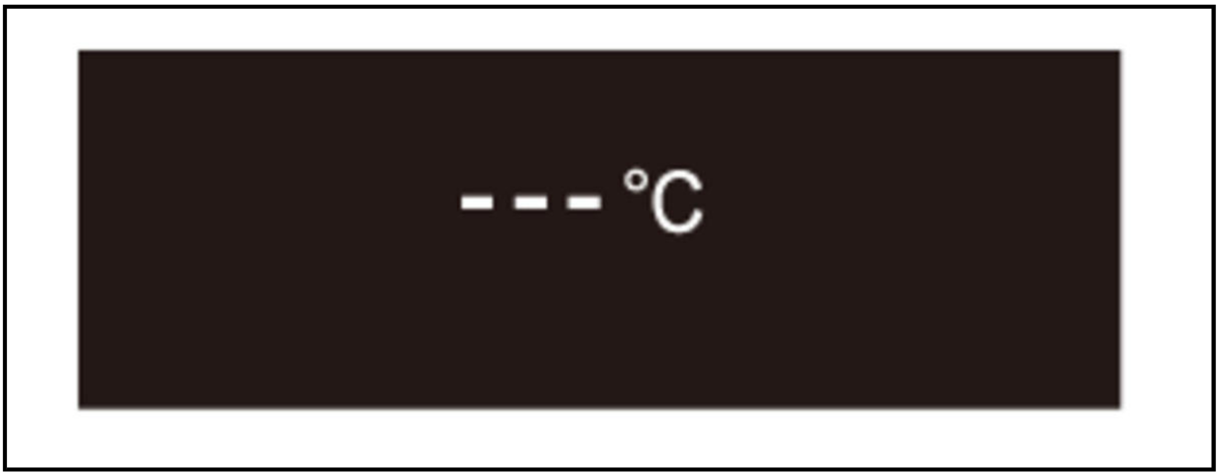

Troubleshooting

If the indicator displays - - - deg.F (- - - deg.C) for more than 2 seconds after selecting the outside air temperature display mode, the gauge control module is not receiving the outside temperature data from the climate control unit over the B-CAN. Check the climate control system or multiplex integrated control system for DTCs.

Calibration

NOTE: The outside air temperature indicator's displayed temperature can be recalibrated +/- 5 deg.F (+/- 3 deg.C) to meet the customer's expectations.

1. Turn the vehicle to the ON mode.

2. Press the INFORMATION button.

3. Select the following item in sequence.

- Vehicle Settings
- Meter Setup
- Adjust Outside Temp. Display

4. When the desired correction value appears on the display, release the button, and the recalibrated outside air temperature will be displayed.

NOTE: The recalibration temperature is not the value the sensor sees. Therefore the temperature can only be adjusted +/- 5 deg.F (+/- 3 deg.C).

Example:

Incorrect value	=	68 deg.F (20 deg.C)

Desired correction value	=	+2 deg.F (+1 deg.C)
Correct value	=	70 deg.F (21 deg.C)

Desired correction value	=	-2 deg.F (-1 deg.C)
Correct value	=	66 deg.F (19 deg.C)

NOTE : To recalibrate the display to the true temperature, remove the outside air temperature sensor (A), but leave it connected. Submerge the sensor and a thermometer (B) in a container of ice water (C). Select the calibration mode as described above, then recalibrate the display to the true temperature.

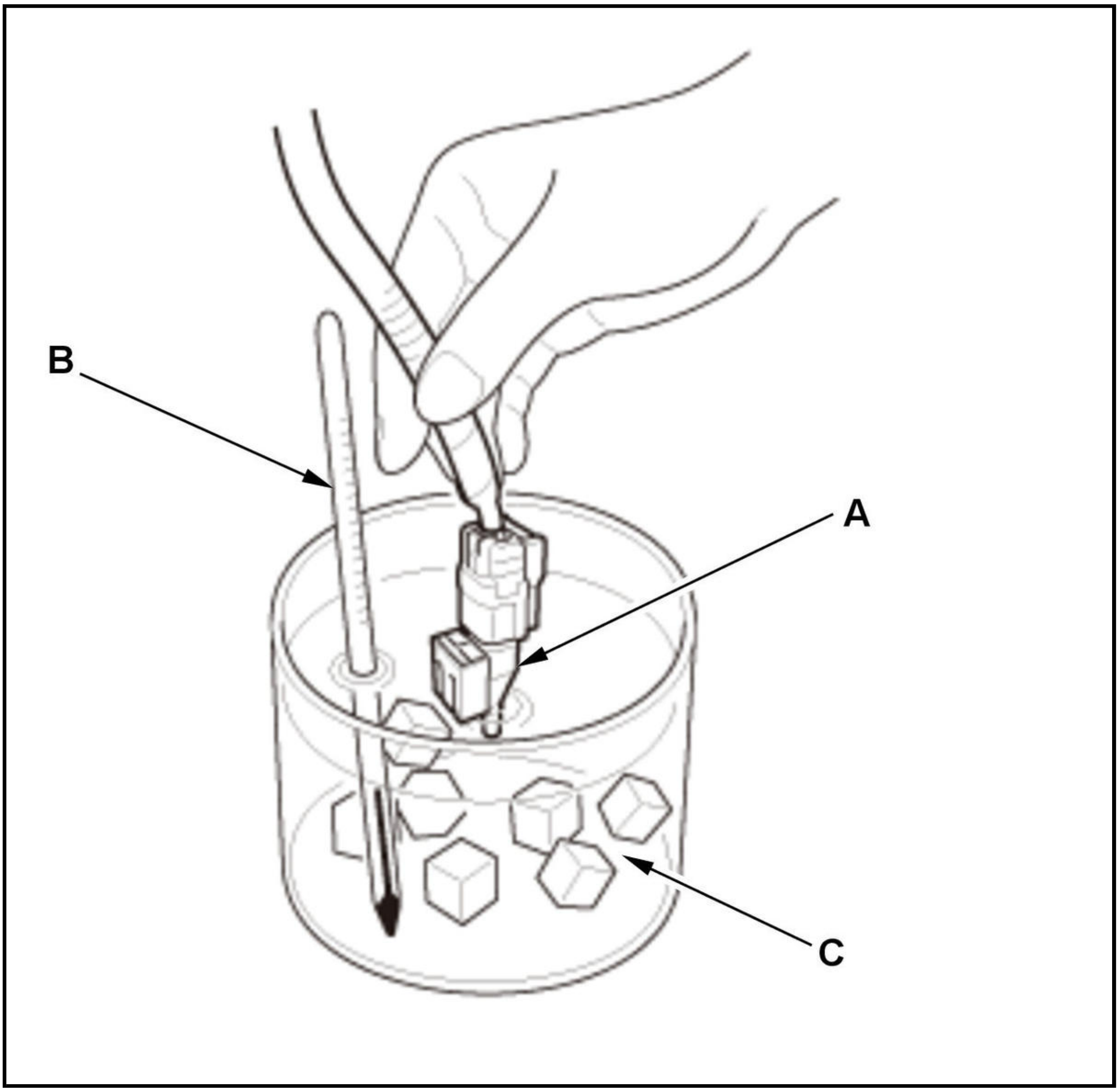

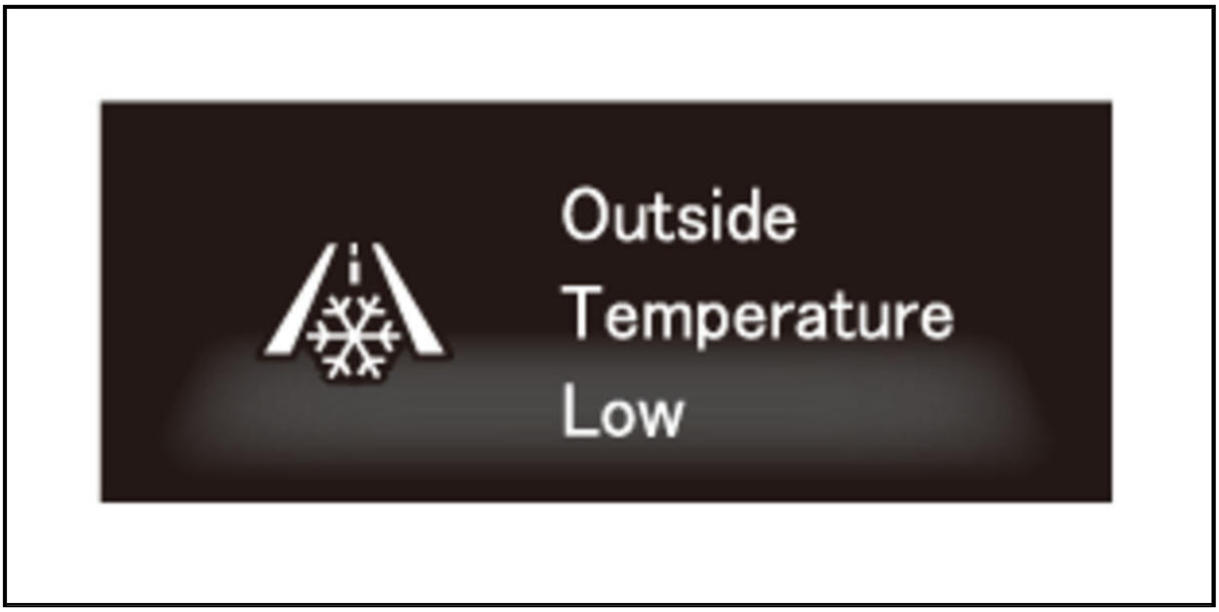

5. The snow mark is displayed when the temperature is 37 deg.F (3 deg.C) or less the first time you turn the vehicle to the ON mode.

SYMPTOM TROUBLESHOOTING INDEX

ELECTRICAL COMPASS SYMPTOM TROUBLESHOOTING INDEX

Symptom	Diagnostic Procedure	Also Check for
Azimuth (direction) information is not shown on the display	Electrical Compass Troubleshooting	Blown the fuse associated with the system
Compass shows wrong direction	Electrical Compass Troubleshooting	- Check if the zone setting is correct for the vehicle geographical location - Check for sources of strong magnetic fields near the electrical compass unit (i.e. Non-OEM electronics including radar detectors, toll road transponders, and/or speakers, magnetized tires and body panels, etc.) - Audio unit (B-CAN)
Compass does not calibrate	Electrical Compass Troubleshooting	- Make sure the rear door and the tailgate are closed - Check for sources of strong magnetic fields near the electrical compass unit (i.e. Non-OEM electronics including radar detectors, toll road transponders, and/or speakers, magnetized tires and body panels, etc.) - Audio unit (B-CAN)
Self-test has failed (flashing the CAL and NW)	Electrical Compass Troubleshooting	Reboot the electrical compass unit

REWRITE

GAUGE CONTROL MODULE UPDATE

Procedure

1. Gauge Control Module - Update

   NOTE: When updating control units, use the most current version of the HDS software and interface device. Refer to available service information for the latest information on update devices.

REWRITING THE ODO DATA AND TRANSFERRING THE MAINTENANCE MINDER? DATA TO A NEW GAUGE CONTROL MODULE

Procedure

NOTE:

- Obtain a new gauge control module before starting the rewriting process. Only new gauges can be rewritten.
- Do not operate anything electrical (headlights, audio system, A/C, power window, door locks etc.) during the process.
- Rewriting is not possible on a gauge control module that will not communicate with the HDS.
- Confirm that you have the latest HDS version of software.
- Make sure that the HDS shows the correct VIN for the vehicle you are working on.
- Once you have started this procedure, you must complete it before removing the HDS from the data link connector (DLC).
- Connect a 12 volt battery charger to insure that the battery voltage is maintained during the process.
- If a maintenance minder is equipped, when the ODO data is transferred, also the maintenance minder data would be transferred with the ODO one.

1. Rewriting the ODO Data on a New Gauge Control Module - Procedure

   Rewriting and Transferring

   1. Before replacing the gauge control module, **connect the HDS**

   2. Turn the vehicle to the ON mode.

   3. Select the following menu buttons on the HDS screen in sequence.

      - Body Electrical (System Selection Menu)
      - Gauges
      - Adjustment
      - Gauge Control Module Replacement

   4. Select "Read Out Data" and following the instructions on the HDS display and save value data into HDS.

   5. **Replace the gauge control module**

   6. Select "Write Data" and following the instructions on the HDS display and install the value into replaced gauge control module. If the data transfer fails, refer to the instructions below to release the locked value.

   How to Release Locked Odometer Mileage to the Original Gauge Control Module.

   If, after you attempt to transfer mileage to a new gauge assembly, the odometer display has dashes (---), is garbled, or shows an incorrect value, the original gauge control module can be unlocked and restored to its original state and can be used again for additional attempts to transfer the mileage:

1. With the vehicle in the OFF (LOCK) mode, connect the original gauge control module.

2. Turn the vehicle to the ON mode.

3. Completely re-boot the HDS.

4. Clear any stored DTCs.

5. Select the following menu buttons on the HDS screen in sequence.

    - Body Electrical (System Selection Menu)
    - Gauges
    - Adjustment
    - Gauge Control Module Replacement
    - Odo lock Release

6. Follow the prompts and the odometer mileage will be restored.

7. Start over the Rewriting and Transferring procedure from step 1.

SYMPTOM TROUBLESHOOTING

GAUGES SYMPTOM TROUBLESHOOTING - FUEL GAUGE INDICATION DOES NOT RISE

NOTE:

- When refueling, the gauge control module shifts to the "refueling mode," moving the fuel gauge indicator only after it detects that 5 liters (approximately 1.3 U.S. gallon) of fuel have been added.
- The fuel gauge indication may not rise when refueling a small quantity of fuel and the control mode does not shift to refueling mode.

Shift to the Refueling Mode

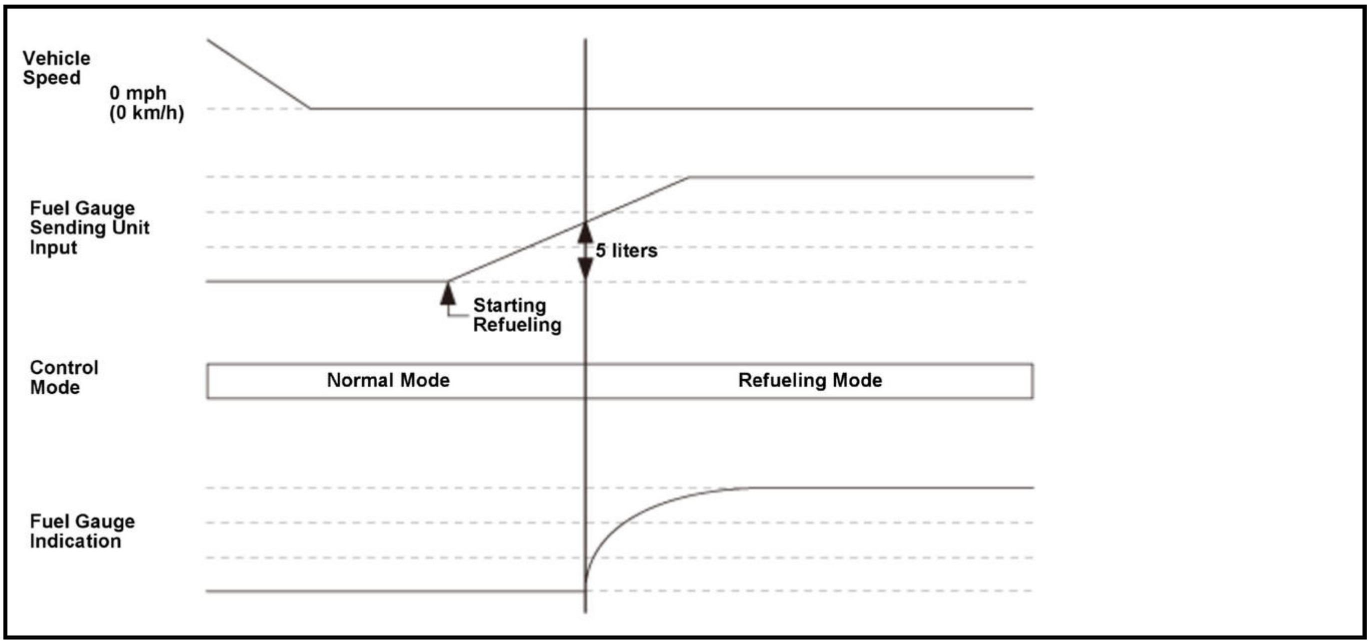
Vehicle Speed
0 mph (0 km/h)
Fuel Gauge Sending Unit Input
5 liters
Starting Refueling
Control Mode
Normal Mode
Refueling Mode
Fuel Gauge Indication

1. DTC check

-1. Turn the vehicle to the ON mode.

-2. Check the low fuel indicator.

Does the low fuel indicator flash?

YES

Check for DTCs. If any DTCs are indicated, do the indicated DTC's troubleshooting. If no DTCs are indicated, **replace the gauge control module** .

NO

Go to step 2.

2. Fuel gauge operation check

-1. Turn the vehicle to the OFF (LOCK) mode.

-2. Do the **gauge self-diagnostic function**.

Is the fuel gauge OK?

YES

Go to step 3.

NO

Replace the gauge control module .

3. Fuel tank visual check

-1. Raise the vehicle on a lift.

-2. Check the fuel tank for damage.

Is the fuel tank OK?

YES

Go to step 4.

NO

Replace the fuel tank .

4. Fuel gauge sending unit check

-1. **Test the fuel gauge sending unit**.

Is the fuel gauge sending unit OK?

YES

Confirm the operation of the fuel gauge.

NO

Replace the fuel gauge sending unit .

GAUGES SYMPTOM TROUBLESHOOTING - OUTSIDE AIR TEMPERATURE INDICATOR DOES NOT CHANGE

NOTE: Outside air temperature is indicated based on the measurement value of the outside air temperature sensor located behind the center of the front bumper. Because of the location of the sensor, it may be affected by heat reflection from the road, engine and radiator heat, or hot exhaust from surrounding traffic. To display the outside air temperature, the gauge control module has an indication mode based on engine coolant temperature and vehicle speed. Some modes do not raise the temperature indication, so the outside air temperature indication may not change when the mode continues.

Outside Air Temperature Indication Mode

Indication Mode	Indication Temperature Increase	Indication Temperature Decrease	Notes
Initial Indication	---	---	• If the current outside air temperature is higher than the indicated outside air temperature the last time the vehicle OFF (LOCK) mode, and the engine coolant temperature is higher than 140 deg.F(60 deg.C): The last outside air temperature that was indicated before the vehicle OFF (LOCK) mode is displayed. • If the current outside air temperature is higher than the indicated outside air temperature the last time the vehicle OFF (LOCK) mode, and the engine coolant temperature is less than 140 deg.F(60 deg.C): The current temperature measured by the outside air temperature sensor is indicated. • If the current outside air temperature is lower than the indicated outside air temperature the last time the vehicle OFF (LOCK) mode: The current temperature measured by the outside air temperature sensor is indicated.

Indication Mode	Indication Temperature Increase	Indication Temperature Decrease	Notes
Garage Mode	Increases 1 deg.F every 2 seconds (or 1 deg.C every 1 second) to the current outside air temperature.	Decreases 1 deg.F every 2 seconds (or 1 deg.C every 1 second) to the current outside air temperature.	• If the engine coolant temperature is less than 140 deg.F (60 deg.C) when the vehicle is in the ON mode, the mode shifts to the garage mode. • The garage mode continues until the engine coolant

Indication Mode	Indication Temperature Increase	Indication Temperature Decrease	Notes
			temperature reaches 140 deg.F (60 deg.C) or for about 3 minutes after the vehicle speed exceeds 1.2 mph (2 km/h).
Traffic Jam Mode	---	If the outside air temperature is less than the indicated temperature, the temperature decreases by 1 deg.F per 2 seconds (or 1 deg.C per 1 second).	• If the engine coolant temperature is more than 140 deg.F (60 deg.C), the mode shifts to the traffic jam mode. • At stable run mode, if the vehicle speed is less than 19 mph (30 km/h), the mode shifts to traffic jam mode. **NOTE:** Once entering to the traffic jam mode, the mode does not shift to the garage mode even after the engine coolant temperature goes below 140 deg.F (60 deg.C).
Stable Run Mode	Increases 1 deg.F every 30 seconds (or 1 deg.C every 17 seconds) to the current outside air temperature.	Decreases 1 deg.F every 2 seconds (or 1 deg.C every 1 second) to the current outside air temperature.	If the vehicle speed is at 19 mph (30 km/h) for more than 58 seconds, the mode shifts to stable run mode.

1. A/C system DTC check

-1. Check for DTCs with the HDS.

DTC Description	DTC
B1227 An open in the outside air temperature sensor circuit	B
B1228 A short in the outside air temperature sensor circuit	B

Is DTC B1227 or B1228 indicated?

YES

Go to the indicated DTC troubleshooting.

NO

Go to step 2.

2. Outside air temperature sensor check

-1. **Test the outside air temperature sensor** .

Is the outside air temperature sensor OK?

YES

Confirm the operation of the outside air temperature indicator.

NO

Replace the outside air temperature sensor .

GAUGES SYMPTOM TROUBLESHOOTING - THE FUEL GAUGE INDICATION FLUCTUATES

NOTE:

- The fuel sending unit float level changes frequently due to acceleration, deceleration, cornering, and slopes. As a result, the fuel gauge reading that is displayed is based on inputs it receives from the fuel sending unit, as well as inputs on fuel injector duration.
- The following conditions may cause fuel gauge fluctuations:
-
    - -

      Driving uphill and downhill for long periods of time.

    - -

      Stopping in a slanted position, such as on a grade.

1. DTC check

   -1. Turn the vehicle to the ON mode.

   -2. Check the low fuel indicator.

   Does the low fuel indicator flash?

   YES

   Check for DTCs. If any DTCs are indicated, do the indicated DTC's troubleshooting. If no DTCs are indicated, replace the gauge control module .

   NO

   Go to step 2.

2. Fuel gauge sending unit installation check

   -1. Turn the vehicle to the OFF (LOCK) mode.

   -2. Check for poor connections and loose terminals .

   Are the connections OK?

   YES

   Go to step 3.

   NO

   Reconnect the connectors.

3. Fuel gauge sending unit check

   -1. Test the fuel gauge sending unit.

   Is the fuel gauge sending unit OK?

YES

Confirm the operation of the fuel gauge.

NO

Replace the fuel gauge sending unit .

TEST

BRAKE FLUID LEVEL SWITCH TEST

Test

NOTE: If both the ABS/VSA indicator and the brake system indicator (red) come on at the same time, **check the VSA system first** .

1. Brake Fluid Level Switch - Test

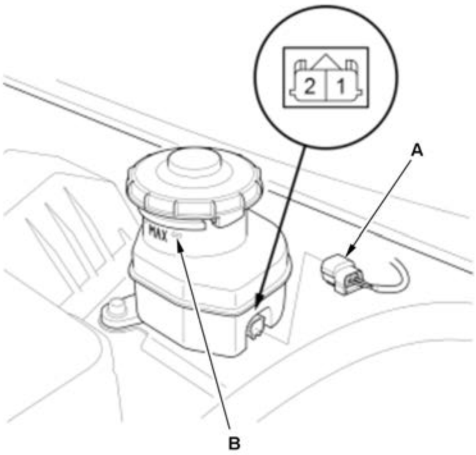	1. Disconnect the connector (A). 2. Check for continuity between the brake fluid level switch connector terminals No. 1 and No. 2 with the float in the down position and in the up position. • Remove the brake fluid completely from the reservoir. With the float down, there should be continuity. • Fill the reservoir with brake fluid to the MAX (upper) level (B). With the float up, there should be no continuity. **NOTE:** If the brake fluid level switch is OK, but the brake system indicator (red) does not function, **do the gauge control module self-diagnostic function**. 3. Connect the connector.

FUEL GAUGE SENDING UNIT TEST

Test

WARNING:

Flammable - Keep Fire Away

NOTE:

- Refer to the **Fuel and Emissions Systems Service Precautions** before disconnecting the fuel line.
- Fuel may cause flammable gas leaks and may result in fire. Keep sparks, flame and cigarettes away.

1. **HDS - Connect**
2. DTC - Check

1. Check for DTCs with the HDS. If any of the following DTCs are indicated, troubleshoot the indicated DTCs. **NOTE:** If PGM-FI and body electrical DTC(s) are indicated at the same time, troubleshoot the PGM-FI DTC(s) first.

- PGM-FI system: P0462, P0463
- Body electrical system: B1175, B1176

3. **Fuel Tank Unit - Remove**
4. Fuel Gauge Sending Unit - Test

1. Measure the resistance between the following terminals with the float at E (EMPTY), LOW (LOW FUEL INDICATOR), 1/2 (HALF FULL), and F (FULL) positions. If you do not get the following readings, **replace the fuel gauge sending unit** .

Test circuit	Connector	Terminal
FUEL_GAUGE+	Fuel tank unit 4P connector (male terminals): ①	No. 2
FUEL_GAUGE-		No. 4

Float Position	F8.815 in (223.9 mm)	1/23.929 in (99.8 mm)	LOW1.350 in (35.3 mm)	E0.642 in (16.3 mm)
Resistance (Ω)	19 to21	193 to 203	464.4 to 656.6	772 to788

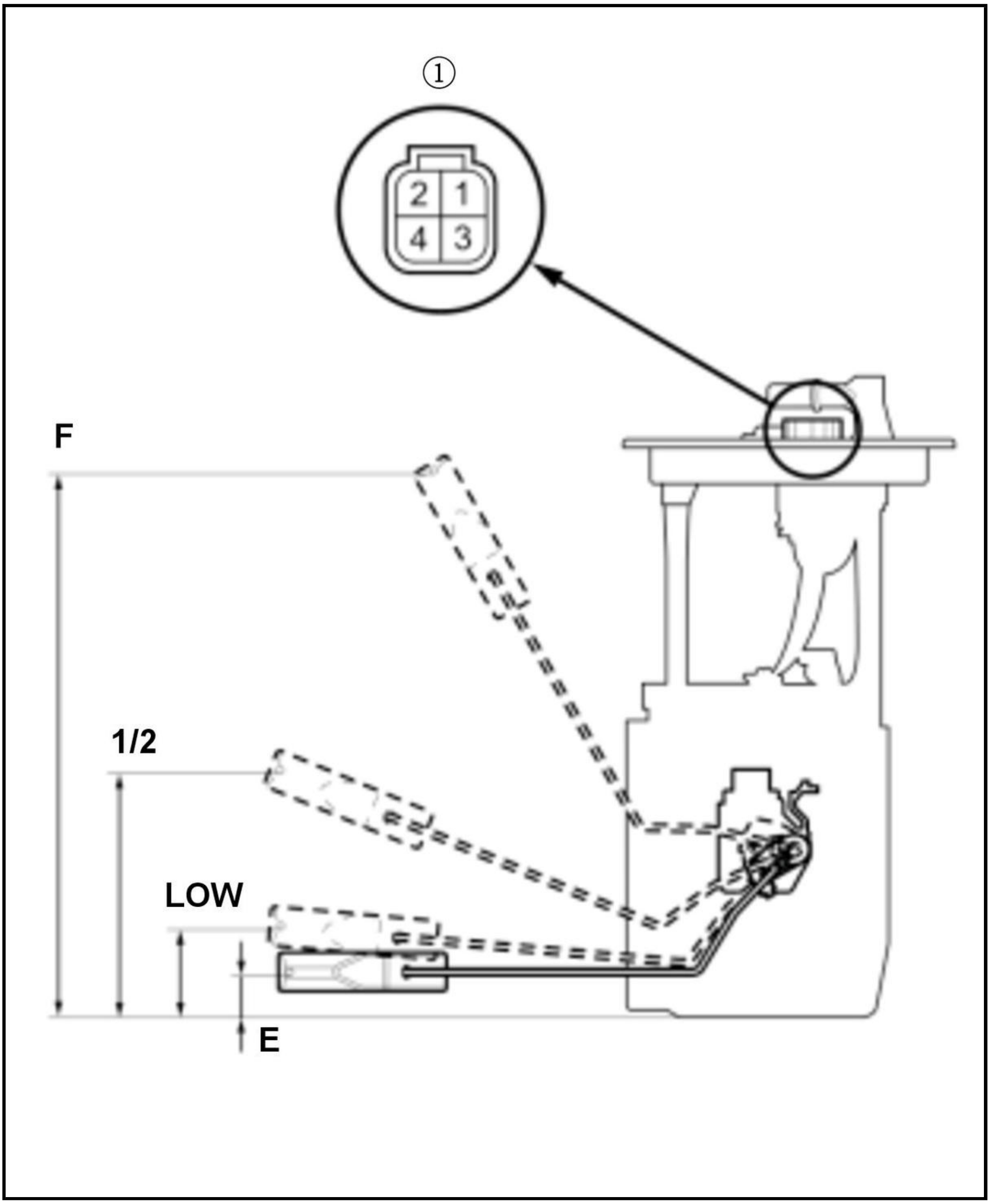

2. Reconnect the fuel tank unit connector.

3. Move the float to F, then turn the vehicle to the ON mode.

4. Check that the fuel gauge indicates F with the float at F.

- If the fuel gauge does not indicate F, **replace the gauge control module** .
- If the gauge is OK, the test is complete.

5. Turn the vehicle to the OFF mode and remove the **No. A18 fuse** and the **No. D7 fuse** for at least 10 seconds after completing the test, otherwise it may take up to 20 minutes for the fuel gauge to indicate the correct fuel level.

LOW FUEL INDICATOR TEST

Test

1. Low Fuel Indicator - Test

1. Do the gauge control module self-diagnostic function.
    - If the low fuel indicator flashes, go to step 2.
    - If the low fuel indicator does not flash, replace the gauge control module .
2. Check for body electrical system DTCs.
    - If any DTCs are indicated, do the indicated DTC's troubleshooting.
    - If no DTCs are indicated, go to step 3.
3. Do the fuel gauge sending unit test.

CONNECTOR VIEW

ACOUSTIC VEHICLE ALERTING CONTROL UNIT CONNECTOR FOR INPUTS AND OUTPUTS

Acoustic Vehicle Alerting Control Unit 12P Connector (female terminals)

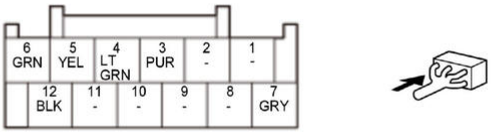

Terminal number	Terminal name	Description	Signal
1	---	Not used	---
2	---	Not used	---
3	AUDIBLE SPKR+	Outputs acoustic vehicle alerting speaker signal	---
4	AUDIBLE SPKR-	Outputs acoustic vehicle alerting speaker signal	---
5	F-CAN B_H	Communication line	---
6	F-CAN B_L	Communication line	---
7	IG1_VSA/ABS	IG1 power source	With vehicle in ON or START mode: about battery voltage
8	---	Not used	---
9	---	Not used	---
10	---	Not used	---
11	---	Not used	---
12	GND	Acoustic vehicle alerting control unit ground	Less than 0.2 V at all times

ELECTRICAL COMPASS UNIT CONNECTOR FOR INPUTS AND OUTPUTS

Electrical Compass Unit 6P Connector (female terminals)

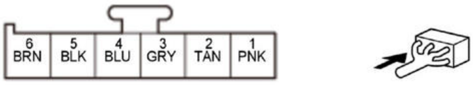
6
BRN
5
BLK
4
BLU
3
GRY
2
TAN
1
PNK

Cavity	Terminal Name	Description
1	COMPASS_4	Communication signal
2	COMPASS_3	Communication signal
3	COMPASS_2	Communication signal
4	COMPASS_1	Communication signal
5	GND	Electrical compass unit ground
6	IG1_METER	IG1 power source

GAUGE CONTROL MODULE CONNECTOR FOR INPUTS AND OUTPUTS

Connector Index
Gauge Control Module Connector A (32P)
Gauge Control Module Connector B (12P) (not used)
Gauge Control Module Connector C (3P) (display audio type)

Gauge Control Module Connector A (32P) (female terminals)

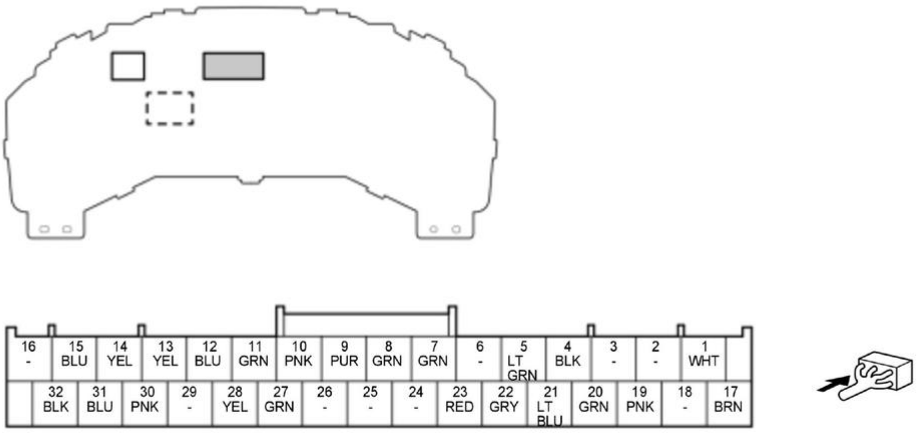
16
-
15
BLU
14
YEL
13
YEL
12
BLU
11
GRN
10
PNK
9
PUR
8
GRN
7
GRN
6
-
5
LT GRN
4
BLK
3
-
2
-
1
WHT
32
BLK
31
BLU
30
PNK
29
-
28
YEL
27
GRN
26
-
25
-
24
-
23
RED
22
GRY
21
LT BLU
20
GRN
19
PNK
18
-
17
BRN

Terminal number	Terminal name	Description	Signal
1	+B_BACK_UP	+B power source	About battery voltage at all times
2	---	Not used	---
3	---	Not used	---
4	GND	Gauge control module ground	Less than 0.2 V at all times
5	CRUISE_GND	Ground for ACC combination switch	Less than 0.2 V at all times

Terminal number	Terminal name	Description	Signal
6	---	Not used	---
7	CMBS_OFF_SW	Detects CMBS OFF switch signal	With vehicle in ON mode and CMBS OFF switch OFF: about battery voltage With vehicle in ON mode and CMBS OFF switch ON: less than 0.2 V
8	ECON_SW	Detects ECON switch signal	With vehicle in ON mode and ECON switch OFF: about battery voltage With vehicle in ON mode and ECON switch ON: less than 0.2 V
9	VSA_OFF_SW	Detects VSA OFF switch signal	With vehicle in ON mode and VSA OFF switch OFF: about battery voltage With vehicle in ON mode and VSA OFF switch ON: less than 0.2 V
10	PARK_LAMP	Detects VSA modulator-control unit (PARK_LAMP) signal	---
11	BRAKE_LEVEL_SW	Detects brake fluid level switch signal	With vehicle in ON mode and brake fluid level switch OFF: about battery voltage With vehicle in ON mode and brake fluid level switch ON: less than 0.2 V
12	BRAKE_HOLD	Detects electric parking brake/automatic brake hold switch signal	---

Terminal number	Terminal name	Description	Signal
13	EV SW	Detects EV switch signal	With vehicle in ON mode and EV switch OFF: about battery voltage With vehicle in ON mode and EV switch ON: less than 0.2 V
14	CRUISE SW	Detects ACC combination switch	With vehicle in ON mode: about 0.8-4.4 V (depending on ACC combination switch)
15	ILL-(LED)	Detects illumination signal	---
16	---	Not used	---
17	IG1_METER	IG1 power source	With vehicle in ON or START mode: about battery voltage
18	---	Not used	---
19	F-CAN D_H	Communication line	---
20	F-CAN D_L	Communication line	---
21	FUEL_GAUGE-	Ground for fuel gauge sending unit	Less than 0.2 V at all times
22	FUEL_GAUGE+	Detects fuel gauge sending	---

Terminal number	Terminal name	Description	Signal
		unit signal	
23	LIN(START_SW)	Communication line	---
24	---	Not used	---
25	---	Not used	---
26	---	Not used	---
27	SPORT_MODE_SW	Detects SPORT switch signal	With vehicle in ON mode and SPORT switch OFF: about battery voltage With vehicle in ON mode and SPORT switch ON: less than 0.2 V
28	DISTANCE SW	Detects ACC combination switch signal	With vehicle in ON mode: about 0.8-4.4 V (depending on ACC combination switch signal)
29	---	Not used	---
30	B-CAN_H	Communication line	---
31	B-CAN_L	Communication line	---
32	GND	Gauge control module ground	Less than 0.2 V at all times

Gauge Control Module Connector C (3P) (female terminals) (display audio type)

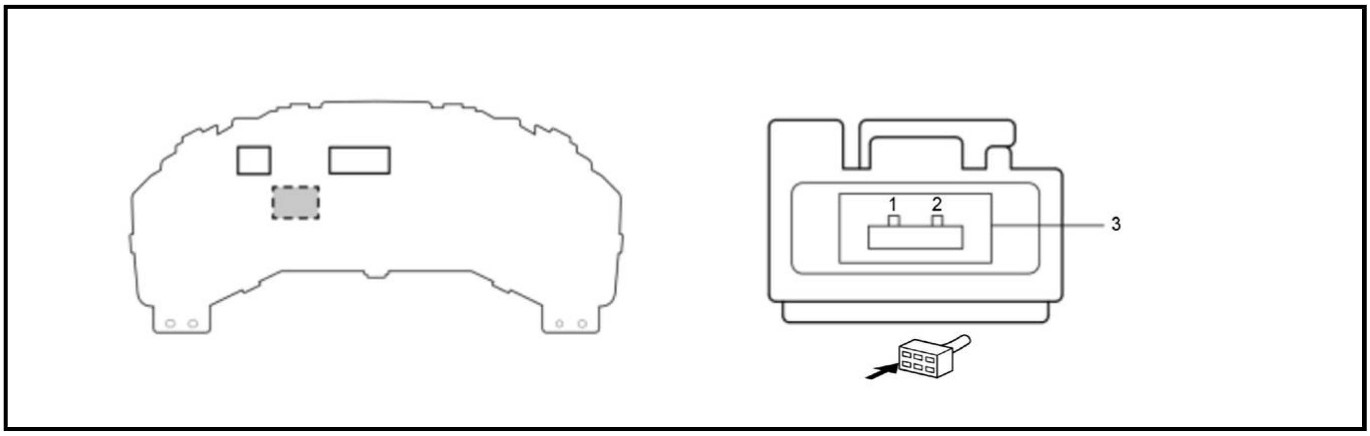

Terminal number	Terminal name	Description	Signal
1	LVDS2+	Communication line	---
2	LVDS2-	Communication line	---
3	LVDS2 SH	Shield for terminals No. 1 and No. 2	Less than 0.2 V at all times

PARKING AND BACK-UP SENSOR CONTROL UNIT CONNECTOR FOR INPUTS AND OUTPUTS

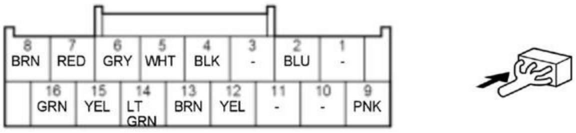

Terminal number	Terminal name	Description	Signal
1	---	Not used	---
2	B-CAN_L	Communication line	---
3	---	Not used	---
4	GND	Parking and back-up sensor control unit ground	Less than 0.2 V at all times
5	C/SNSR_IND	Outputs parking and back-up sensor switch indicator signal	Parking and back-up sensor switch indicator OFF: about battery voltage Parking and back-up sensor switch indicator ON: less than 0.2 V
6	SOF_SIDE_L	Detects front sensor signal	---
7	BOF_SIDE_L	Detects front sensor signal	---
8	IG1_METER	IG1 power source	With vehicle in ON mode: about battery voltage
9	B-CAN_H	Communication line	---
10	---	Not used	---
11	---	Not used	---
12	E2_SIDE_L	Detects rear sensor signal	---
13	E1_SIDE_L	Detects front sensor signal	---
14	SOR_SIDE_L	Detects rear sensor signal	---
15	C/SNSR_SW	Detects parking and back-up sensor switch signal	With vehicle in ON mode and parking and back-up sensor switch ON: about battery voltage With parking and back-up sensor switch OFF: less than 0.2 V
16	BOR_SIDE_L	Detects rear sensor signal	---

TROUBLESHOOTING

ELECTRICAL COMPASS TROUBLESHOOTING

NOTE:

- Check the vehicle 12 volt battery condition first .
- Check for B-CAN DTCs and resolve them before troubleshooting.
- Check the connectors for poor connections or loose terminals.

1. Problem verification 1

-1. Turn the vehicle to the ON mode.

-2. Check if the azimuth (direction) information is displayed in the audio display.

Is the azimuth (direction) information displayed?

YES

Go to step 2.

NO

Go to step 6.

2. Problem verification 2

   -1. Check if the audio display is flashing the CAL and NW.

   Are the CAL and NW flashing?

   YES

   Replace the electrical compass unit .

   NO

   Go to step 3.

3. Problem verification 3

   -1. **Do the Electrical Compass Calibration**.

   Is the calibration completed?

   YES

   Intermittent failure, the system is OK at this time.

   NO

   Go to step 4.

4. Determine possible failure area (electrical compass unit, others)

   -1. **Go into the System Diagnostic Mode, and select the Vehicle Status in the System Links to check the vehicle speed pulse** .

   -2. With the help of an assistant, test-drive the vehicle and watch the VSP signal.

   Is the vehicle speed indicated?

   YES

   Replace the electrical compass unit .

   NO

   Go to step 5.

5. Open wire check (B-CAN_H line, B-CAN_L line)

   -1. Turn the vehicle to the OFF (LOCK) mode.

-2. Disconnect the following connectors.

Audio unit connector A (24P)
Gauge control module connector A (32P)

-3. Measure the resistance between test points 1 and 2.

Test condition	Vehicle OFF (LOCK) mode
B	Audio unit connector A (24P): disconnected

B	Gauge control module connector A (32P): disconnected
Test point 1	**Audio unit connector A (24P) No. 14**
Test point 2	**Gauge control module connector A (32P) No. 30**

Test point 1	**Audio unit connector A (24P) No. 24**
Test point 2	**Gauge control module connector A (32P) No. 31**

Is there 1.0 Ω or less?

YES

Replace the audio unit .

NO

Repair an open in the wire(s).

6. Open wire check (IG1_METER line)

-1. Measure the voltage between test points 1 and 2.

Test condition	Vehicle ON mode
Test point 1	**Electrical compass unit 6P connector No. 6**
Test point 2	Body ground

Is there battery voltage?

YES

The IG1_METER wire is OK. Go to step 7.

NO

Repair an open or high resistance in the wire.

7. Open wire check (GND line)

-1. Measure the voltage between test points 1 and 2.

Test condition	Vehicle ON mode
Test point 1	**Electrical compass unit 6P connector No. 5**
Test point 2	Body ground

Is there less than 0.2 V?

YES

The GND wire is OK. Go to step 8.

NO

Repair an open or high resistance in the ground wire or poor ground (G401).

8. Shorted wire check (COMPASS lines)

-1. Turn the vehicle to the OFF (LOCK) mode.

-2. Disconnect the following connectors.

Audio unit connector C (32P)
Electrical compass unit 6P connector

-3. Measure the resistance between these test points and body ground individually.

Test condition	Vehicle OFF (LOCK) mode
B	Audio unit connector C (32P): disconnected
B	Electrical compass unit 6P connector: disconnected

Connector	**Terminal**
Electrical compass unit 6P connector	No. 1
	No. 2
	No. 3
	No. 4

Is there 1.0 MΩ or more?

YES

The COMPASS wires are not shorted to ground. Go to step 9.

NO

Repair a short to body ground in the wire(s).

9. Open wire check (COMPASS lines)

-1. Measure the resistance between test points 1 and 2.

Test condition	Vehicle OFF (LOCK) mode
B	Audio unit connector C (32P): disconnected
B	Electrical compass unit 6P connector: disconnected

Test point 1:Audio unit connector C (32P)	**Test point 2:Electrical compass unit 6P connector**
No. 12	No. 1
No. 11	No. 2
No. 4	No. 3
No. 3	No. 4

Is there 1.0 Ω or less?

YES

The COMPASS wires are OK. Go to step 10.

NO

Repair an open in the wire(s).

10. Electrical compass unit check (substitution)

    -1. **Substitute a known-good electrical compass unit** .

    -2. Reconnect all the connectors, and recheck.

    Does the symptom go away?

    YES

    Replace the original electrical compass unit .

    NO

    Replace the audio unit .

PADDLE SHIFTER CIRCUIT TROUBLESHOOTING

SRS components are located in this area. **Review the SRS component locations** and **the precautions and procedures** before doing repair or service.

NOTE: Information marked with an asterisk (*1) applies to the paddle shifter + line, and an asterisk (*2) applies to the paddle shifter - line.

1. Problem verification

    -1. **Connect the HDS to the DLC** .

    -2. Turn the vehicle to the ON mode.

    -3. Check the parameter(s) below with the HDS when repeatedly pressing and releasing the paddle shifter.

Signal	Current conditions	
	Values	Unit
Upshift Switch (ST)	B	B
Downshift Switch (ST)	B	B

    Is ON indicated when you are pressing the paddle shifter and OFF with the paddle shifter released?

    YES

    Intermittent failure, the system is OK at this time.

    NO

    The failure is duplicated. Go to step 2.

2. Paddle shifter check

    -1. Turn the vehicle to the OFF (LOCK) mode.

    -2. **Remove the paddle shifter** .

    -3. **Test the paddle shifter** .

Is the paddle shifter OK?

YES

The paddle shifter is OK. Go to step 3.

NO

Replace the paddle shifter .

3. Determine possible failure area (PADDLE_SW_UP line* 1/PADDLE_SW_DOWN line* 2, others):-1.

Temporarily install the steering wheel, then connect the following connector.

Cable reel connector D (20P)

-2. Turn the vehicle to the ON mode.

-3. Measure the voltage between test points 1 and 2.

Test condition	Vehicle ON mode
B	Paddle shifter + 4P connector* 1: disconnected
B	Paddle shifter - 4P connector* 2: disconnected
Test point 1	Paddle shifter + 4P connector (female terminals) No. 2* 1: ①
B	Paddle shifter - 4P connector (female terminals) No. 3* 2: ①
Test point 2	Body ground

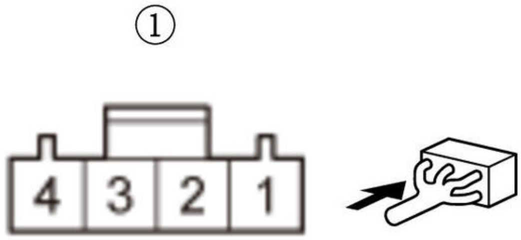

Is there battery voltage?

YES

Go to step 4.

NO

Go to step 5.

4. Open wire check (STRG_GND line)

-1. Turn the vehicle to the OFF (LOCK) mode.

-2. Measure the resistance between test points 1 and 2.

Test condition	Vehicle OFF (LOCK) mode
B	Paddle shifter + 4P connector* 1: disconnected
B	Paddle shifter - 4P connector* 2: disconnected
Test point 1	Paddle shifter + 4P connector (female terminals) No. 4* 1: ①
B	Paddle shifter - 4P connector (female terminals) No. 1* 2: ①
Test point 2	Body ground

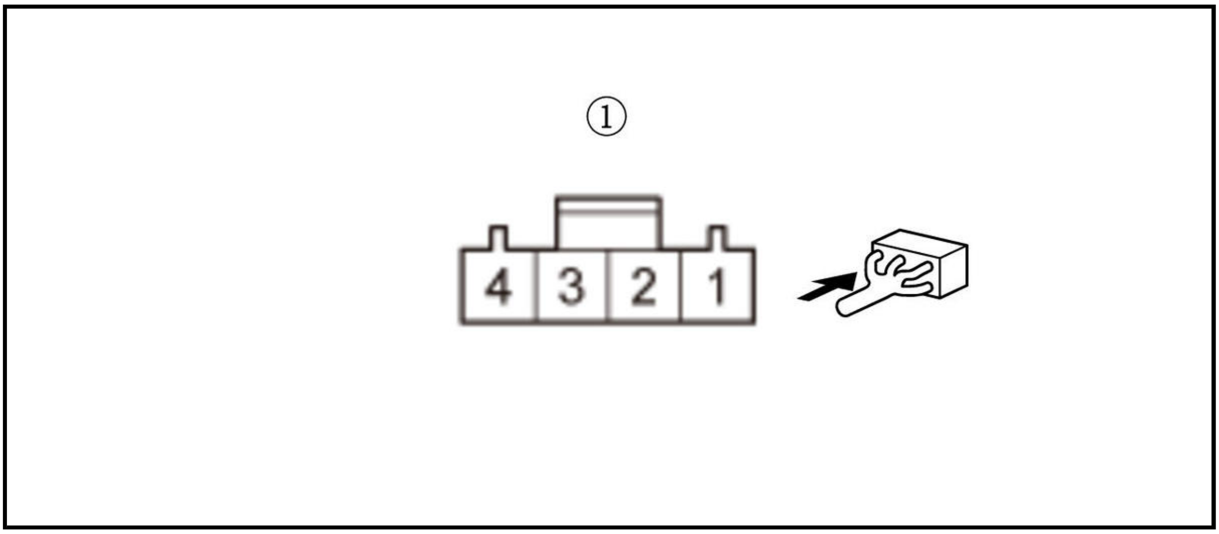

Is there 1.0 Ω or less?

YES

The STRG_GND wire is OK. Check for any authorized service information related to the DTCs or symptoms you are troubleshooting, or **replace the original PCM** .

NO

Repair an open in the STRG_GND wire between the paddle shifter and ground (G401), or repair poor ground (G401).

5. Shorted wire check (PADDLE_SW_UP line* 1/PADDLE_SW_DOWN line* 2):-1.

Turn the vehicle to the OFF (LOCK) mode.

-2. Jump the SCS line with the HDS, and wait more than 1 minute.

-3. Disconnect the following connector.

PCM connector A (50P)

-4. Measure the resistance between test points 1 and 2.

Test condition	Vehicle OFF (LOCK) mode
B	Paddle shifter + 4P connector* 1: disconnected
B	Paddle shifter - 4P connector* 2: disconnected
B	PCM connector A (50P): disconnected
Test point 1	Paddle shifter + 4P connector (female terminals) No. 2* 1: ①

B	Paddle shifter - 4P connector (female terminals) No. 3* 2: ①
Test point 2	Body ground

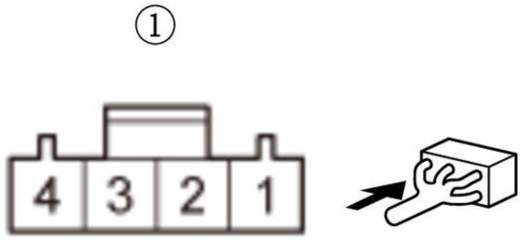

Is there 1 MΩ or more?

YES

The PADDLE_SW_UP wire* 1/PADDLE_SW_DOWN wire* 2 is not shorted. Go to step 6.

NO

Repair a short to ground in the PADDLE_SW_UP wire* 1/PADDLE_SW_DOWN wire* 2 between the paddle shifter and the PCM.

6. Open wire check (PADDLE_SW_UP line* 1/PADDLE_SW_DOWN line* 2):-1.

Measure the resistance between test points 1 and 2.

Test condition	Vehicle OFF (LOCK) mode
B	Paddle shifter + 4P connector* 1: disconnected
B	Paddle shifter - 4P connector* 2: disconnected
B	PCM connector A (50P): disconnected
Test point 1	Paddle shifter + 4P connector (female terminals) No. 2* 1: ①
Test point 2	**PCM connector A (50P) No. 12** * 1
B	B
Test point 1	Paddle shifter - 4P connector (female terminals) No. 3* 2: ①
Test point 2	**PCM connector A (50P) No. 29** * 2

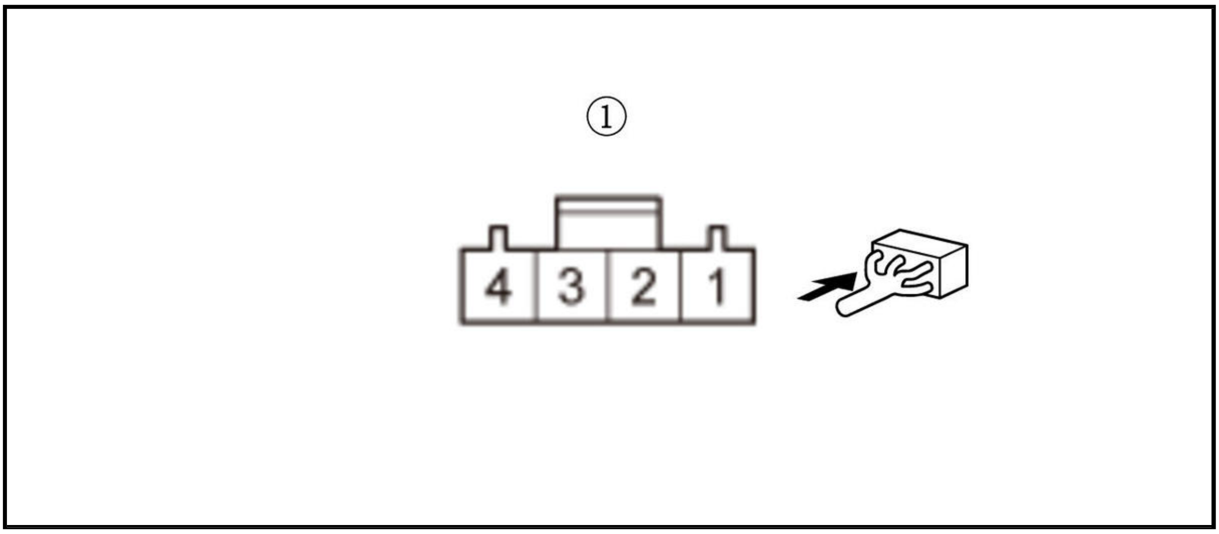

Is there 1.0 Ω or less?

YES

The PADDLE_SW_UP wire* 1/PADDLE_SW_DOWN wire* 2 is OK. Check for any authorized service information related to the DTCs or symptoms you are troubleshooting, or **replace the original PCM** .

NO

Repair an open in the PADDLE_SW_UP wire* 1/PADDLE_SW_DOWN wire* 2 between the paddle shifter and the PCM.

CIRCUIT DIAGRAM

ACOUSTIC VEHICLE ALERTING SYSTEM CIRCUIT DIAGRAM

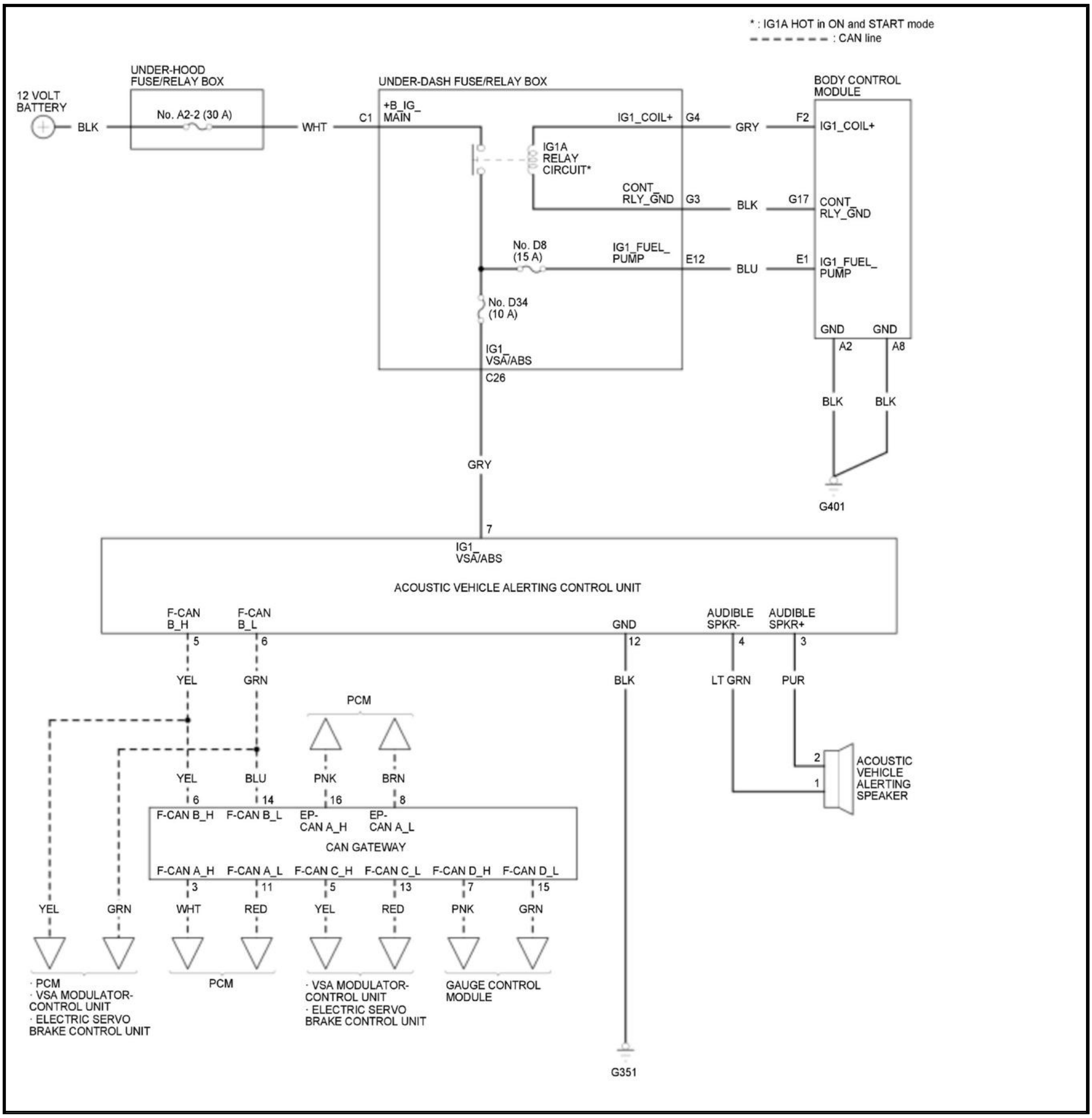
* : IG1A HOT in ON and START mode
: CAN line
12 VOLT BATTERY
BLK
UNDER-HOOD FUSE/RELAY BOX
No. A2-2 (30 A)
WHT
UNDER-DASH FUSE/RELAY BOX
C1
+B_IG_ MAIN
IG1_COIL+
G4
GRY
F2
BODY CONTROL MODULE
IG1_COIL+
IG1A RELAY CIRCUIT*
CONT_ RLY_GND
G3
BLK
G17
CONT_ RLY_GND
No. D8 (15 A)
IG1_FUEL_ PUMP
E12
BLU
E1
IG1_FUEL_ PUMP
No. D34 (10 A)
GND
GND
A2
A8
IG1_ VSA/ABS
C26
BLK
BLK
GRY
G401
7
IG1_ VSA/ABS
ACOUSTIC VEHICLE ALERTING CONTROL UNIT
F-CAN B_H
F-CAN B_L
GND
AUDIBLE SPKR-
AUDIBLE SPKR+
5
6
12
4
3
YEL
GRN
BLK
LT GRN
PUR
PCM
YEL
BLU
PNK
BRN
2
1
ACOUSTIC VEHICLE ALERTING SPEAKER
6
14
16
8
F-CAN B_H
F-CAN B_L
EP- CAN A_H
EP- CAN A_L
CAN GATEWAY
F-CAN A_H
F-CAN A_L
F-CAN C_H
F-CAN C_L
F-CAN D_H
F-CAN D_L
3
11
5
13
7
15
YEL
GRN
WHT
RED
YEL
RED
PNK
GRN
· PCM
· VSA MODULATOR-CONTROL UNIT
· ELECTRIC SERVO BRAKE CONTROL UNIT
PCM
· VSA MODULATOR-CONTROL UNIT
· ELECTRIC SERVO BRAKE CONTROL UNIT
GAUGE CONTROL MODULE
G351

GAUGES CIRCUIT DIAGRAM

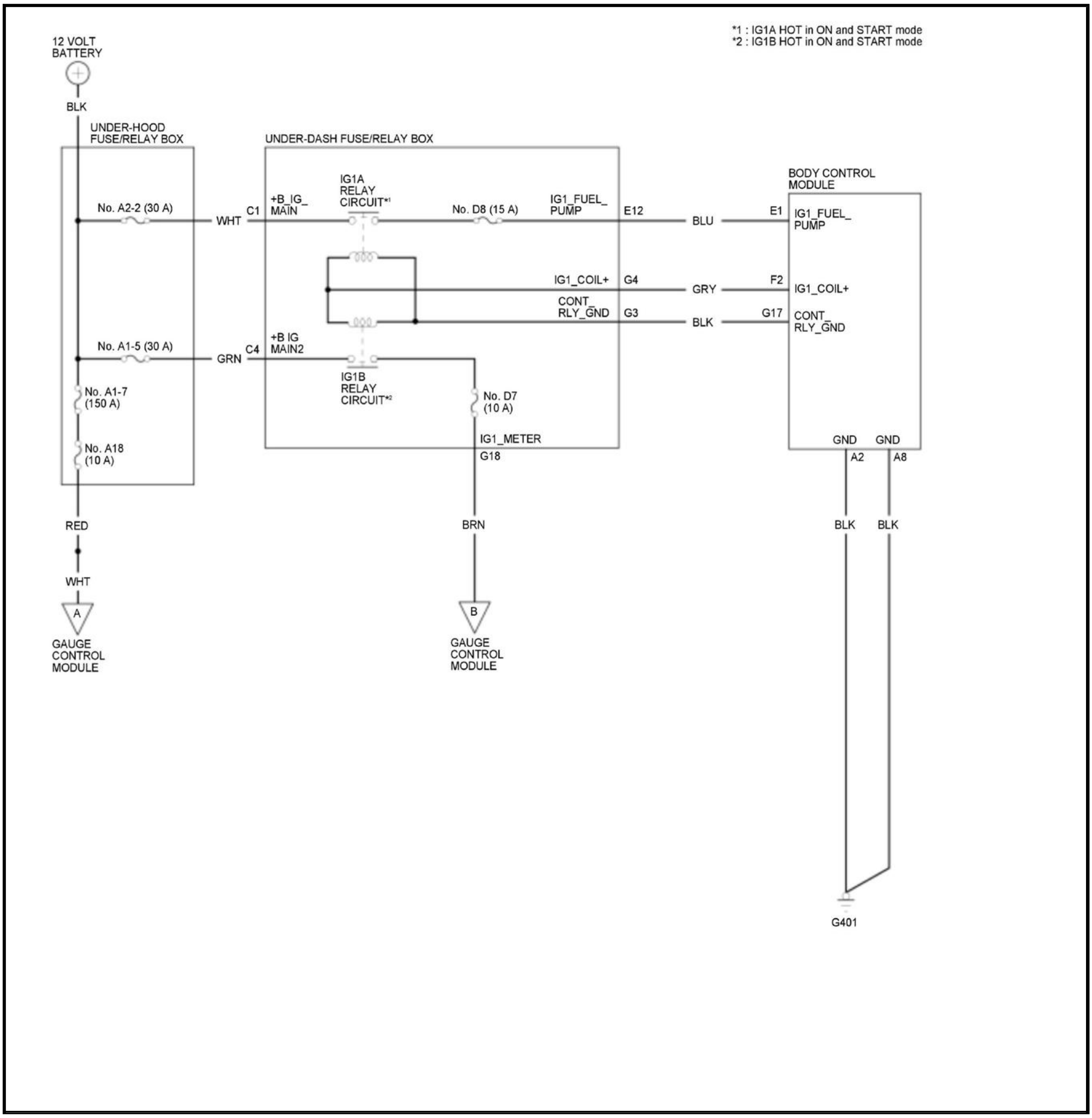
*1 : IG1A HOT in ON and START mode
*2 : IG1B HOT in ON and START mode
12 VOLT BATTERY
BLK
UNDER-HOOD FUSE/RELAY BOX
No. A2-2 (30 A)
No. A1-5 (30 A)
No. A1-7 (150 A)
No. A18 (10 A)
RED
WHT
A
GAUGE CONTROL MODULE
WHT
C1
GRN
C4
UNDER-DASH FUSE/RELAY BOX
+B_IG_MAIN
IG1A RELAY CIRCUIT*1
No. D8 (15 A)
IG1_FUEL_PUMP
E12
IG1_COIL+
G4
CONT_RLY_GND
G3
+B IG MAIN2
IG1B RELAY CIRCUIT*2
No. D7 (10 A)
IG1_METER
G18
BRN
B
GAUGE CONTROL MODULE
BLU
GRY
BLK
BODY CONTROL MODULE
E1
IG1_FUEL_PUMP
F2
IG1_COIL+
G17
CONT_RLY_GND
GND
GND
A2
A8
BLK
BLK
G401

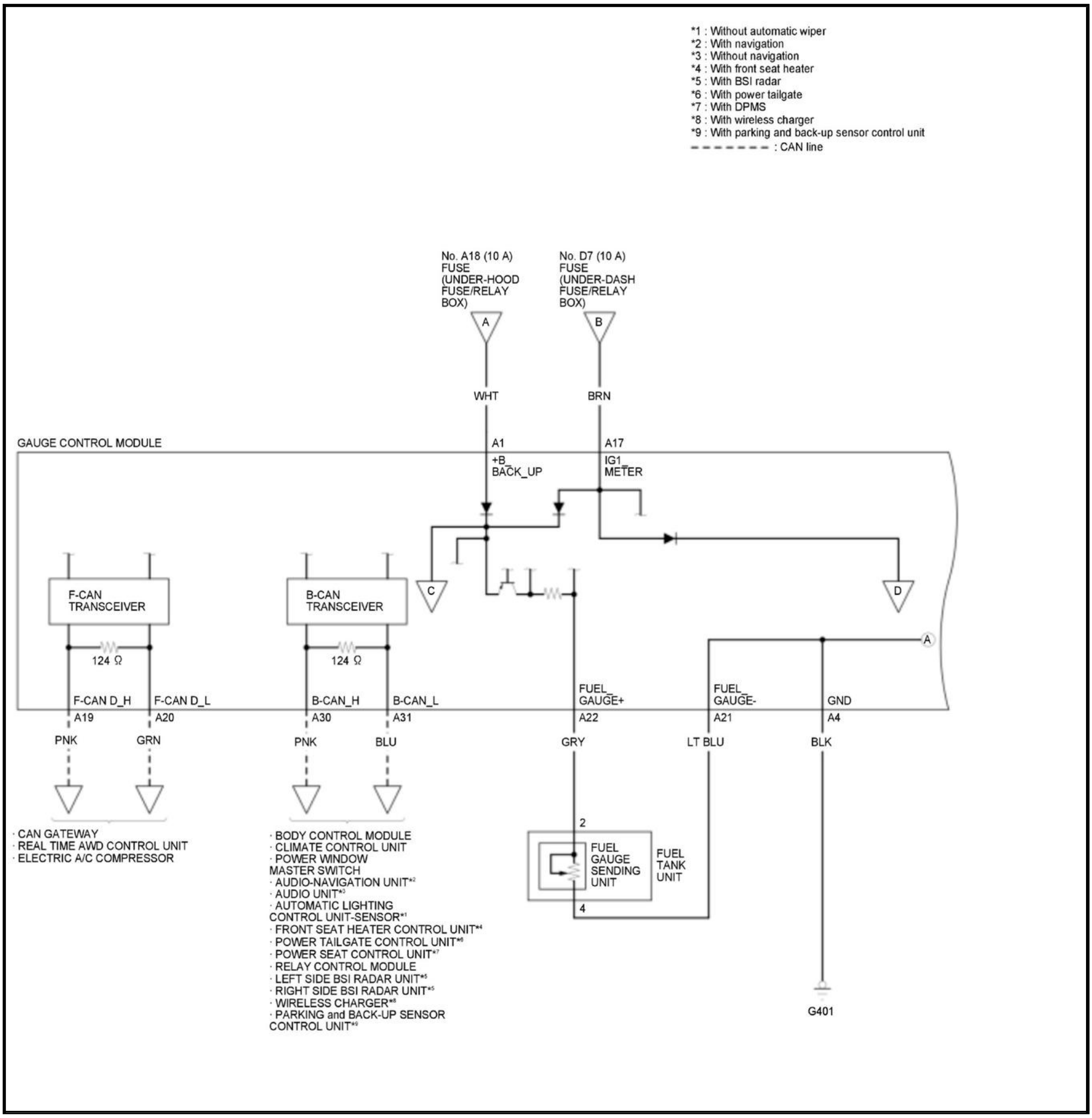
*1 : Without automatic wiper
*2 : With navigation
*3 : Without navigation
*4 : With front seat heater
*5 : With BSI radar
*6 : With power tailgate
*7 : With DPMS
*8 : With wireless charger
*9 : With parking and back-up sensor control unit
: CAN line
No. A18 (10 A) FUSE (UNDER-HOOD FUSE/RELAY BOX)
No. D7 (10 A) FUSE (UNDER-DASH FUSE/RELAY BOX)
A
B
WHT
BRN
GAUGE CONTROL MODULE
A1
+B_ BACK_UP
A17
IG1_ METER
C
D
F-CAN TRANSCEIVER
B-CAN TRANSCEIVER
124 Ω
124 Ω
A
F-CAN D_H
F-CAN D_L
B-CAN_H
B-CAN_L
FUEL_ GAUGE+
FUEL_ GAUGE-
GND
A19
A20
A30
A31
A22
A21
A4
PNK
GRN
PNK
BLU
GRY
LT BLU
BLK
· CAN GATEWAY
· REAL TIME AWD CONTROL UNIT
· ELECTRIC A/C COMPRESSOR
· BODY CONTROL MODULE
· CLIMATE CONTROL UNIT
· POWER WINDOW MASTER SWITCH
· AUDIO-NAVIGATION UNIT*2
· AUDIO UNIT*3
· AUTOMATIC LIGHTING CONTROL UNIT-SENSOR*1
· FRONT SEAT HEATER CONTROL UNIT*4
· POWER TAILGATE CONTROL UNIT*6
· POWER SEAT CONTROL UNIT*7
· RELAY CONTROL MODULE
· LEFT SIDE BSI RADAR UNIT*5
· RIGHT SIDE BSI RADAR UNIT*5
· WIRELESS CHARGER*8
· PARKING and BACK-UP SENSOR CONTROL UNIT*9
2
FUEL GAUGE SENDING UNIT
FUEL TANK UNIT
4
G401

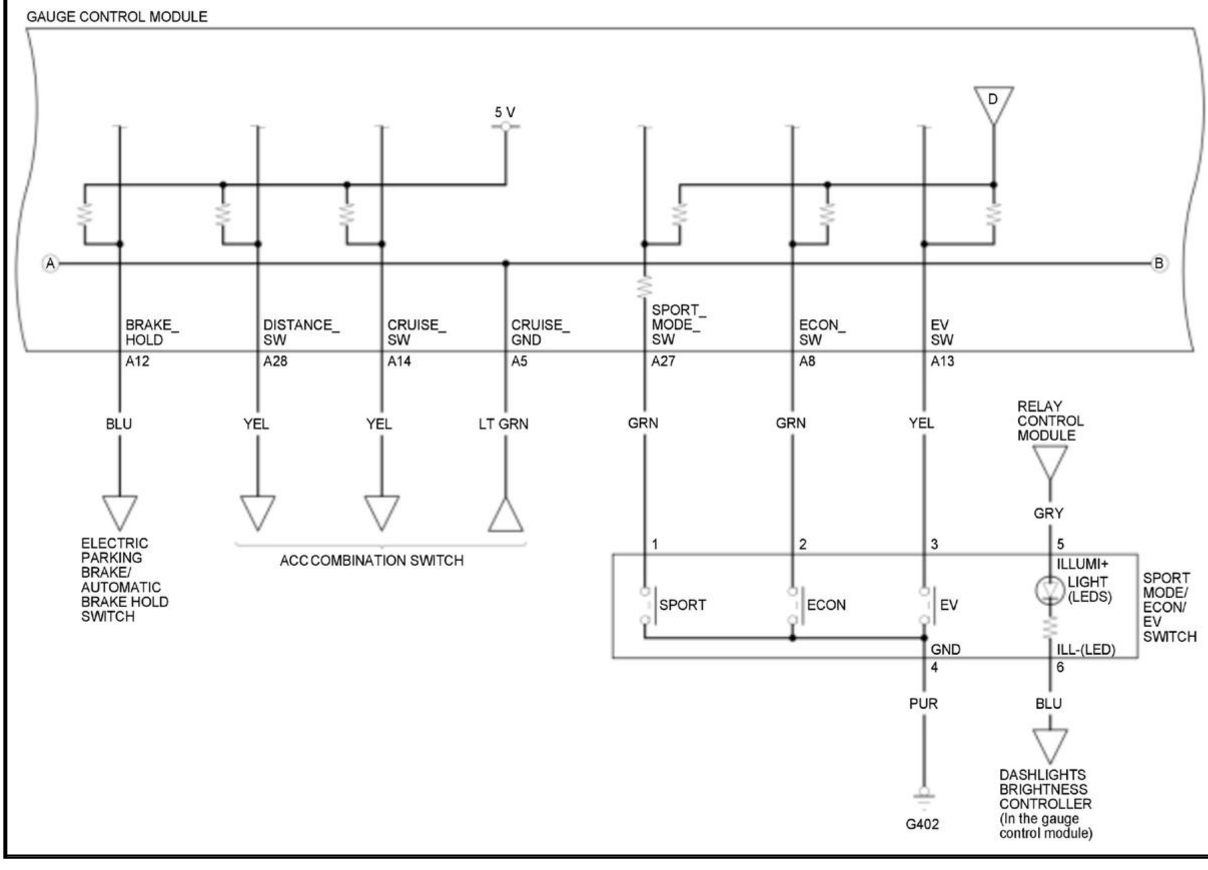
GAUGE CONTROL MODULE
5 V
D
A
B
BRAKE_ HOLD
A12
DISTANCE_ SW
A28
CRUISE_ SW
A14
CRUISE_ GND
A5
SPORT_ MODE_ SW
A27
ECON_ SW
A8
EV SW
A13
BLU
YEL
YEL
LT GRN
GRN
GRN
YEL
RELAY CONTROL MODULE
GRY
ELECTRIC PARKING BRAKE/ AUTOMATIC BRAKE HOLD SWITCH
ACC COMBINATION SWITCH
1
2
3
5
SPORT
ECON
EV
ILLUMI+
LIGHT (LEDS)
ILL-(LED)
GND
4
6
SPORT MODE/ ECON/ EV SWITCH
PUR
BLU
G402
DASHLIGHTS BRIGHTNESS CONTROLLER (In the gauge control module)

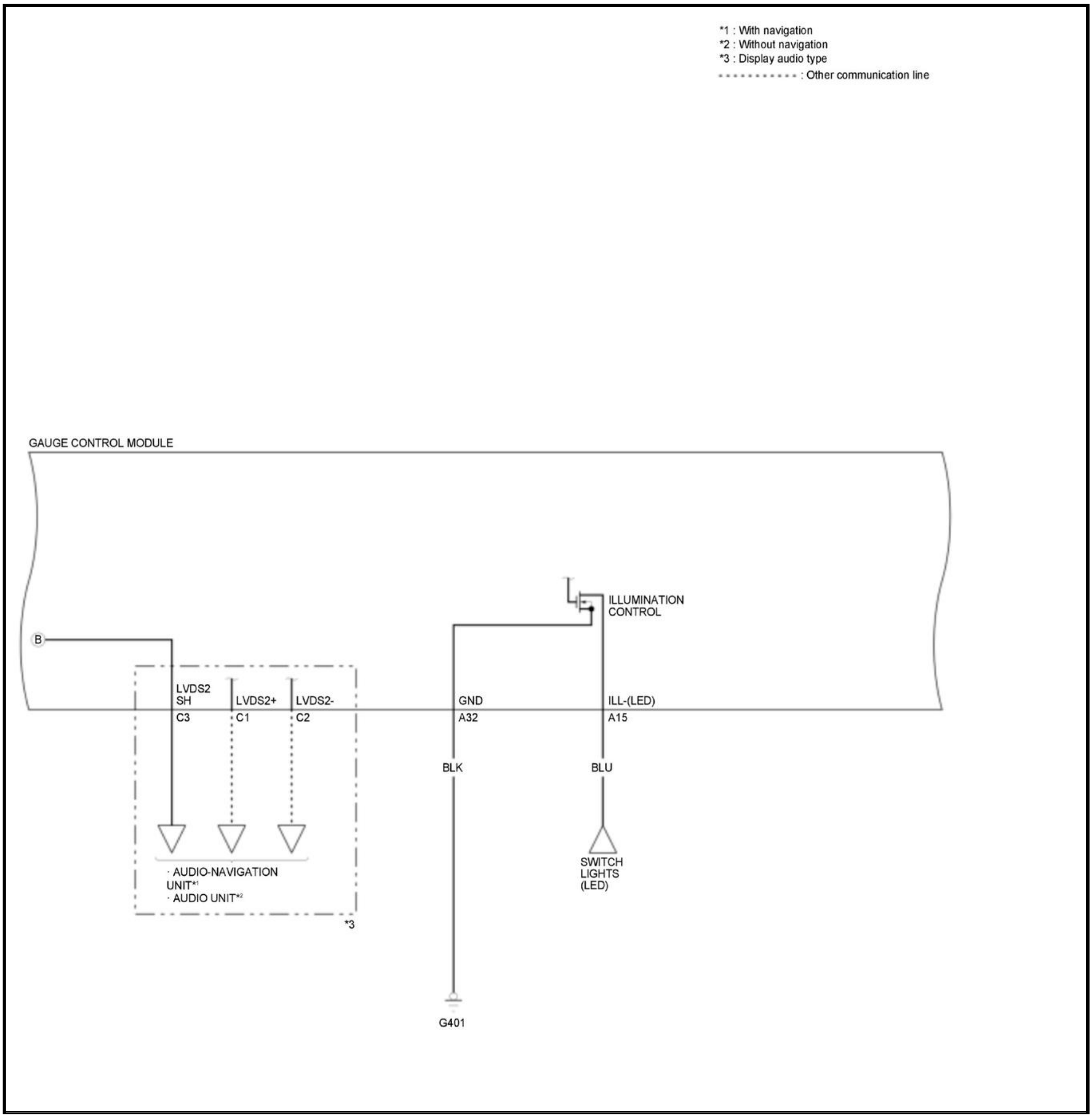
*1 : With navigation
*2 : Without navigation
*3 : Display audio type
: Other communication line
GAUGE CONTROL MODULE
ILLUMINATION CONTROL
B
LVDS2 SH
LVDS2+
LVDS2-
GND
ILL-(LED)
C3
C1
C2
A32
A15
BLK
BLU
SWITCH LIGHTS (LED)
· AUDIO-NAVIGATION UNIT*1
· AUDIO UNIT*2
*3
G401

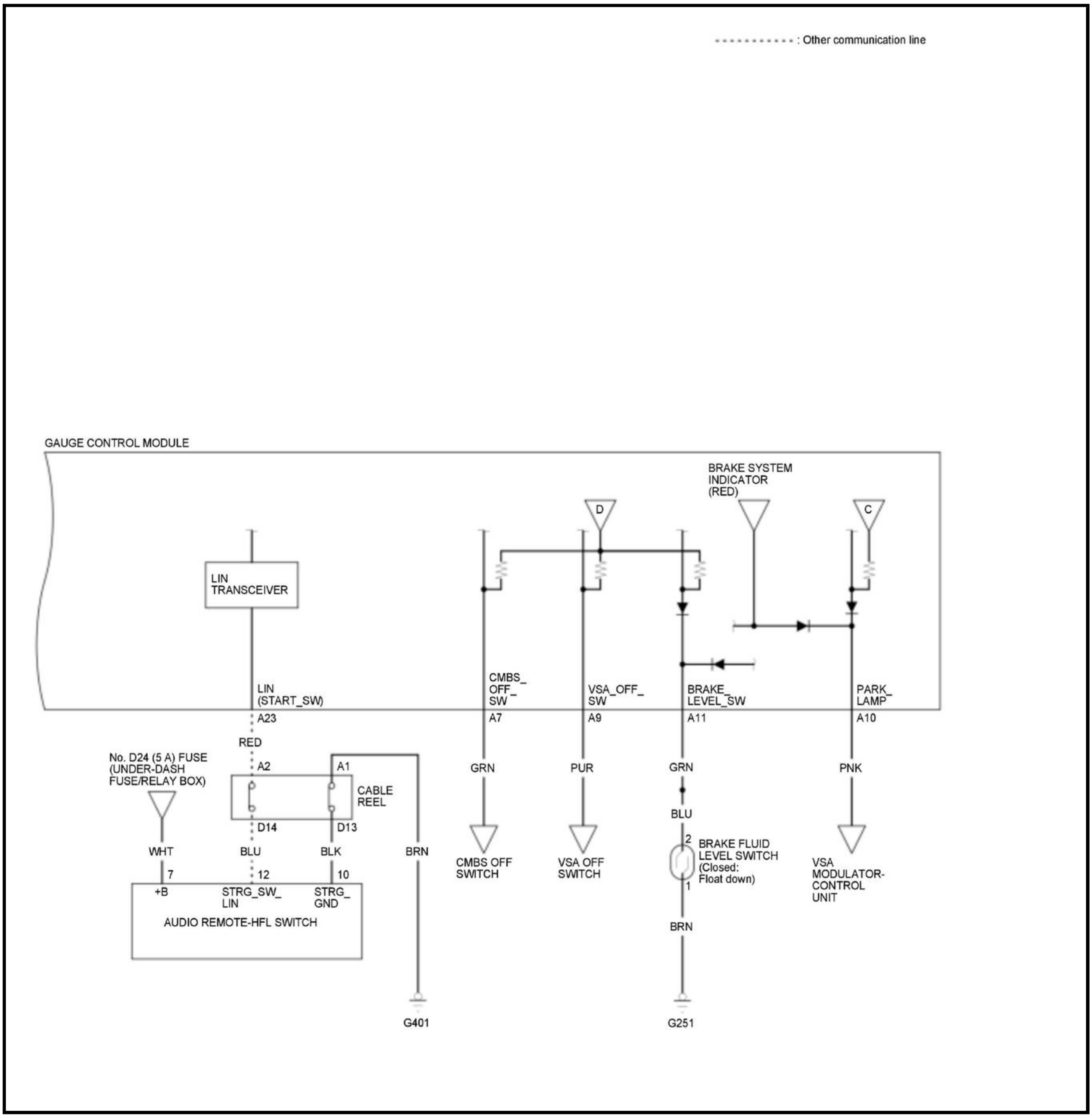
: Other communication line
GAUGE CONTROL MODULE
LIN TRANSCEIVER
LIN (START_SW)
A23
RED
A2
A1
CABLE REEL
D14
D13
No. D24 (5 A) FUSE (UNDER-DASH FUSE/RELAY BOX)
WHT
BLU
BLK
BRN
7
12
10
+B
STRG_SW_ LIN
STRG_ GND
AUDIO REMOTE-HFL SWITCH
G401
D
C
BRAKE SYSTEM INDICATOR (RED)
CMBS_ OFF_ SW
VSA_OFF_ SW
BRAKE_ LEVEL_SW
PARK_ LAMP
A7
A9
A11
A10
GRN
PUR
GRN
PNK
BLU
CMBS OFF SWITCH
VSA OFF SWITCH
2
BRAKE FLUID LEVEL SWITCH (Closed: Float down)
1
BRN
G251
VSA MODULATOR-CONTROL UNIT

PARKING AND BACK-UP SENSOR SYSTEM CIRCUIT DIAGRAM

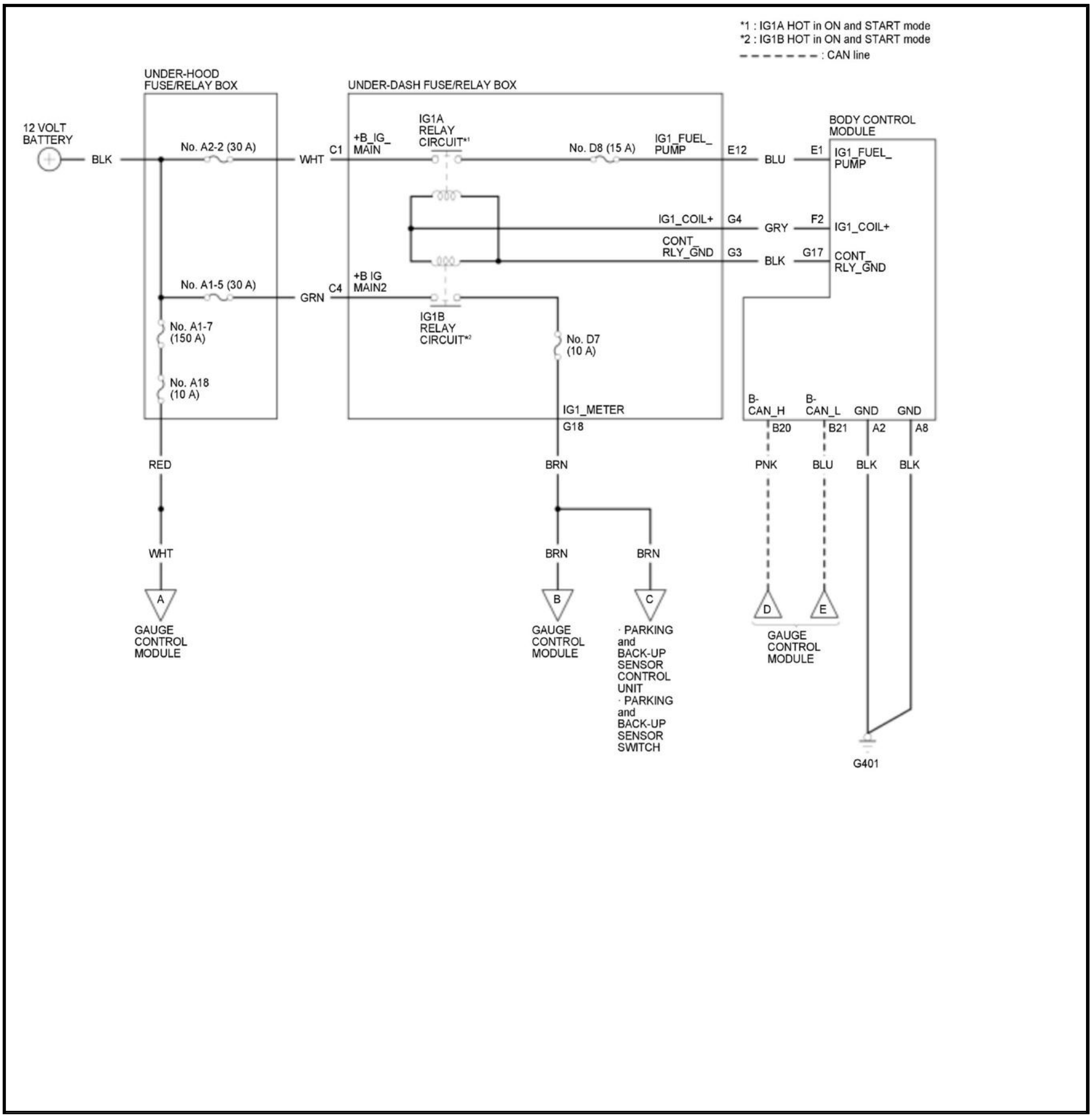
*1 : IG1A HOT in ON and START mode
*2 : IG1B HOT in ON and START mode
: CAN line
UNDER-HOOD FUSE/RELAY BOX
UNDER-DASH FUSE/RELAY BOX
12 VOLT BATTERY
BLK
No. A2-2 (30 A)
WHT
C1
+B_IG_MAIN
IG1A RELAY CIRCUIT*1
No. D8 (15 A)
IG1_FUEL_PUMP
E12
BLU
E1
BODY CONTROL MODULE
IG1_FUEL_PUMP
IG1_COIL+
G4
GRY
F2
IG1_COIL+
CONT_RLY_GND
G3
BLK
G17
CONT_RLY_GND
No. A1-5 (30 A)
GRN
C4
+B IG MAIN2
IG1B RELAY CIRCUIT*2
No. A1-7 (150 A)
No. A18 (10 A)
No. D7 (10 A)
IG1_METER
G18
B-CAN_H
B-CAN_L
GND
GND
B20
B21
A2
A8
RED
BRN
PNK
BLU
BLK
BLK
WHT
BRN
BRN
A
B
C
D
E
GAUGE CONTROL MODULE
GAUGE CONTROL MODULE
· PARKING and BACK-UP SENSOR CONTROL UNIT
· PARKING and BACK-UP SENSOR SWITCH
GAUGE CONTROL MODULE
G401

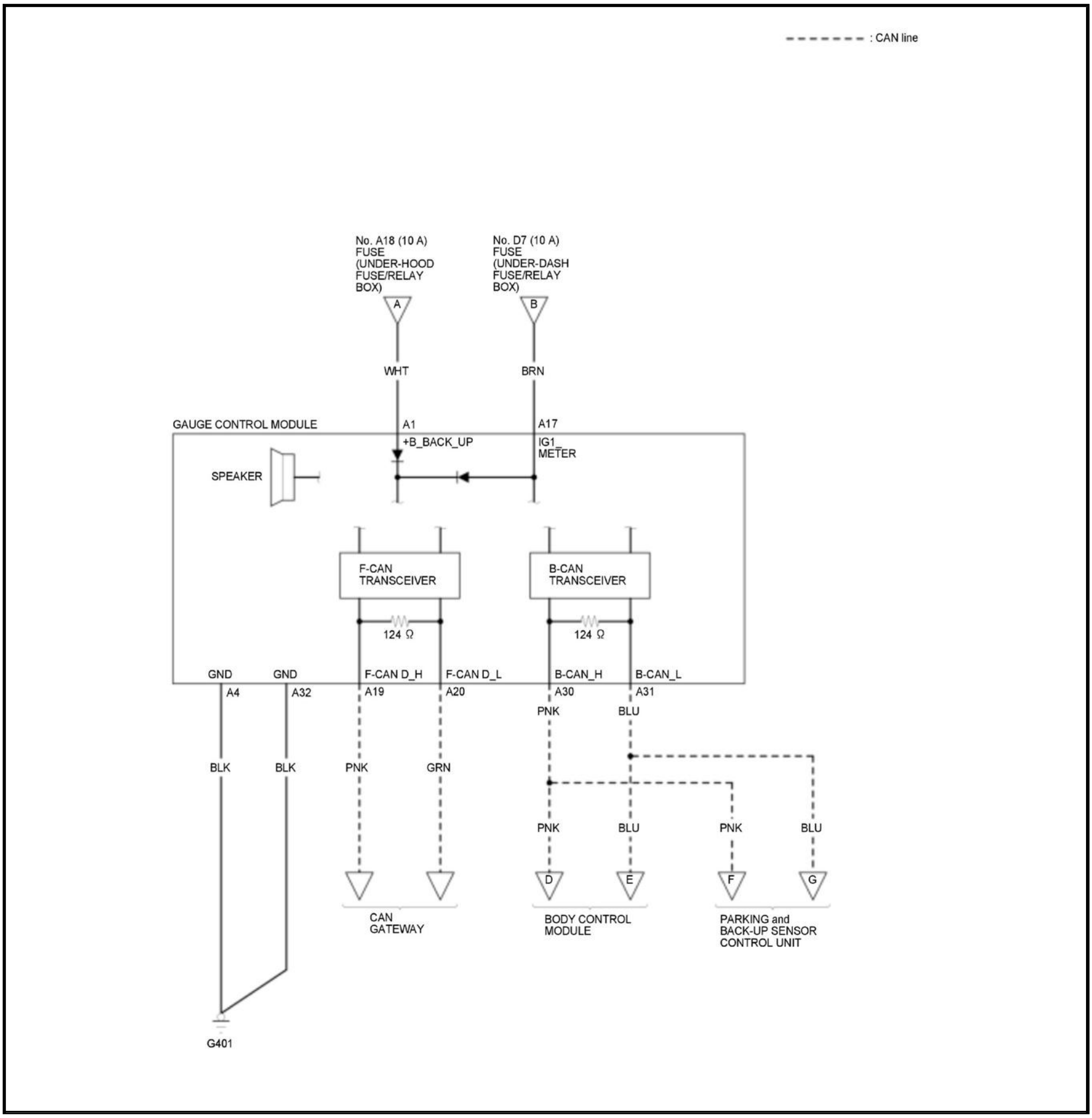
: CAN line
No. A18 (10 A) FUSE (UNDER-HOOD FUSE/RELAY BOX)
No. D7 (10 A) FUSE (UNDER-DASH FUSE/RELAY BOX)
A
B
WHT
BRN
GAUGE CONTROL MODULE
A1
+B_BACK_UP
A17
IG1_ METER
SPEAKER
F-CAN TRANSCEIVER
B-CAN TRANSCEIVER
124 Ω
124 Ω
GND
GND
F-CAN D_H
F-CAN D_L
B-CAN_H
B-CAN_L
A4
A32
A19
A20
A30
A31
PNK
BLU
BLK
BLK
PNK
GRN
PNK
BLU
PNK
BLU
D
E
F
G
CAN GATEWAY
BODY CONTROL MODULE
PARKING and BACK-UP SENSOR CONTROL UNIT
G401

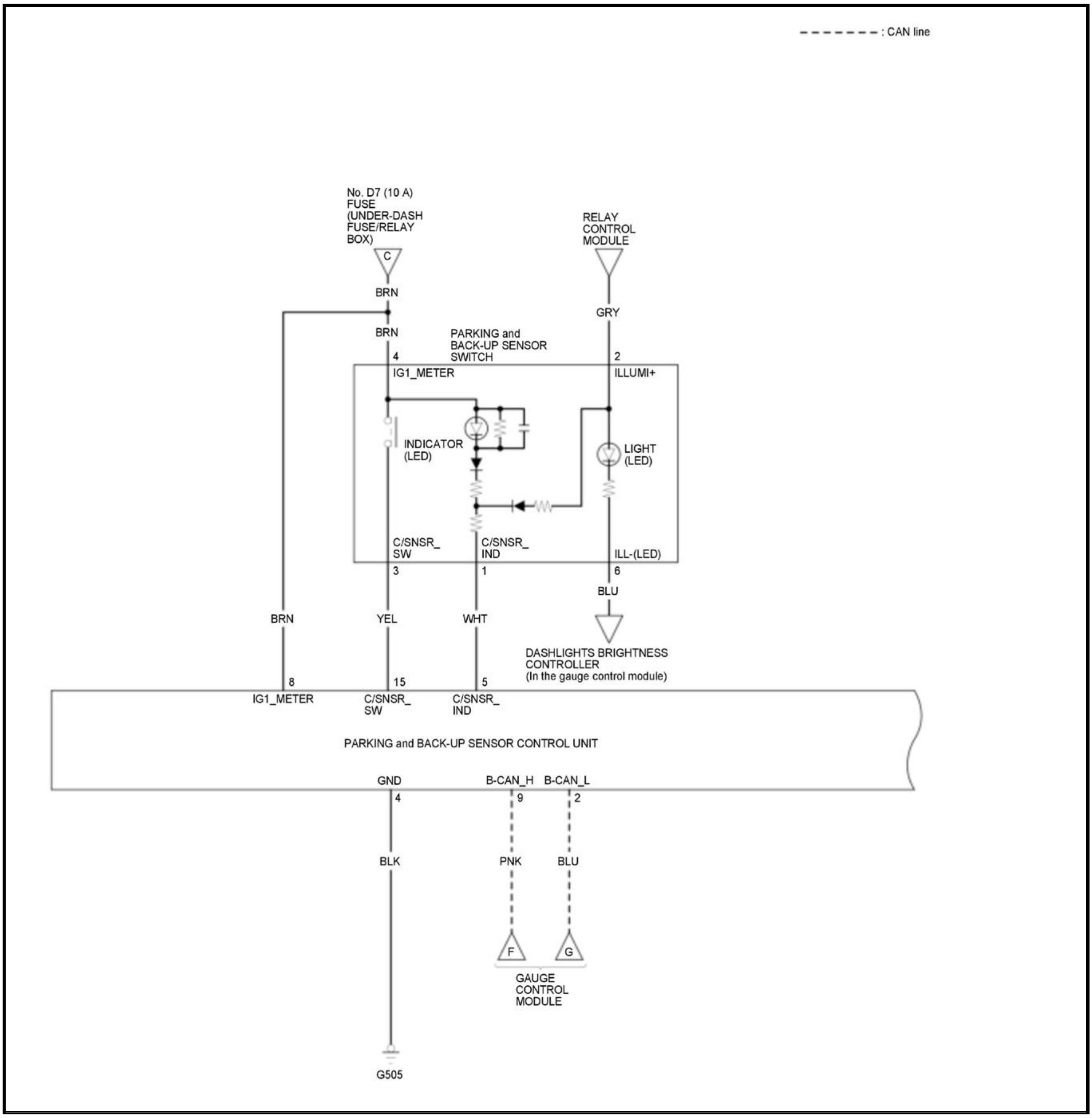
: CAN line
No. D7 (10 A) FUSE (UNDER-DASH FUSE/RELAY BOX)
C
BRN
BRN
RELAY CONTROL MODULE
GRY
PARKING and BACK-UP SENSOR SWITCH
4
IG1_METER
2
ILLUMI+
INDICATOR (LED)
LIGHT (LED)
C/SNSR_ SW
C/SNSR_ IND
ILL-(LED)
3
1
6
BLU
BRN
YEL
WHT
DASHLIGHTS BRIGHTNESS CONTROLLER (In the gauge control module)
8
15
5
IG1_METER
C/SNSR_ SW
C/SNSR_ IND
PARKING and BACK-UP SENSOR CONTROL UNIT
GND
B-CAN_H
B-CAN_L
4
9
2
BLK
PNK
BLU
F
G
GAUGE CONTROL MODULE
G505

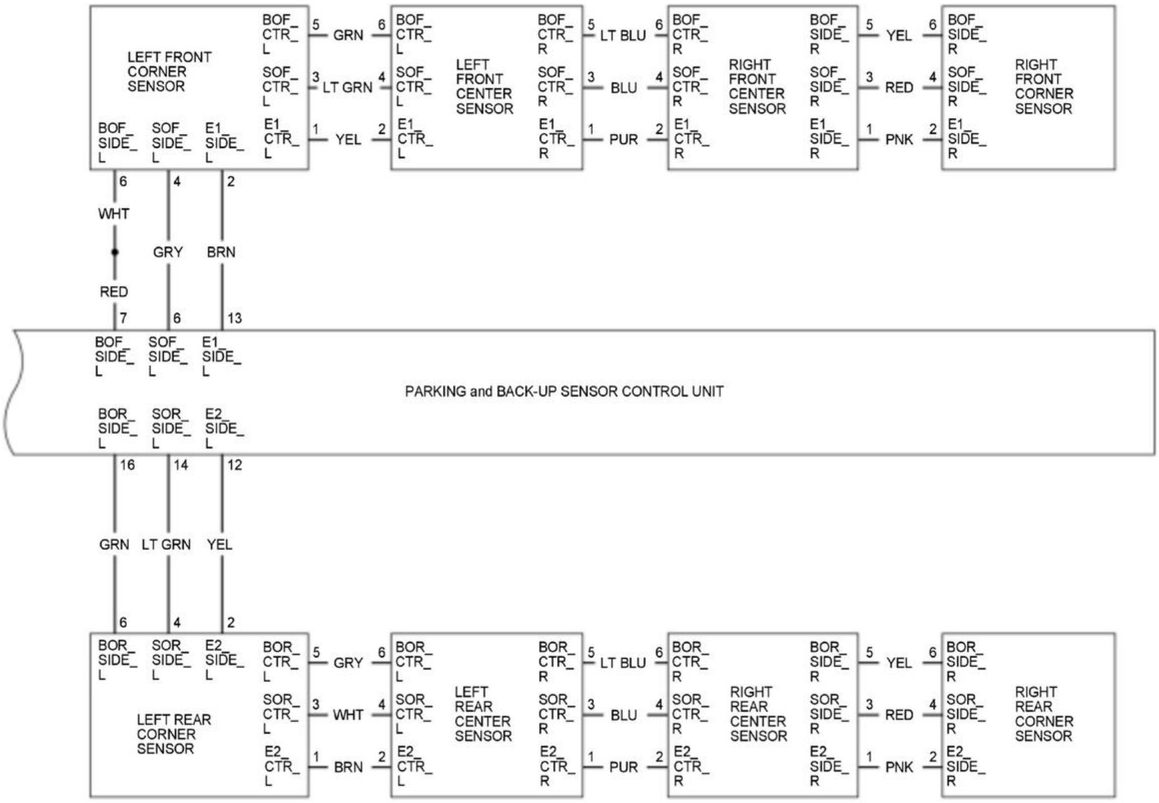
LEFT FRONT CORNER SENSOR
BOF_CTR_L
SOF_CTR_L
E1_CTR_L
BOF_SIDE_L
SOF_SIDE_L
E1_SIDE_L
5 GRN 6
3 LT GRN 4
1 YEL 2
LEFT FRONT CENTER SENSOR
BOF_CTR_L
SOF_CTR_L
E1_CTR_L
BOF_CTR_R
SOF_CTR_R
E1_CTR_R
5 LT BLU 6
3 BLU 4
1 PUR 2
RIGHT FRONT CENTER SENSOR
BOF_CTR_R
SOF_CTR_R
E1_CTR_R
BOF_SIDE_R
SOF_SIDE_R
E1_SIDE_R
5 YEL 6
3 RED 4
1 PNK 2
RIGHT FRONT CORNER SENSOR
BOF_SIDE_R
SOF_SIDE_R
E1_SIDE_R
6 WHT RED 7
4 GRY 6
2 BRN 13
PARKING and BACK-UP SENSOR CONTROL UNIT
BOF_SIDE_L
SOF_SIDE_L
E1_SIDE_L
BOR_SIDE_L
SOR_SIDE_L
E2_SIDE_L
16 GRN 6
14 LT GRN 4
12 YEL 2
LEFT REAR CORNER SENSOR
BOR_SIDE_L
SOR_SIDE_L
E2_SIDE_L
BOR_CTR_L
SOR_CTR_L
E2_CTR_L
5 GRY 6
3 WHT 4
1 BRN 2
LEFT REAR CENTER SENSOR
BOR_CTR_L
SOR_CTR_L
E2_CTR_L
BOR_CTR_R
SOR_CTR_R
E2_CTR_R
5 LT BLU 6
3 BLU 4
1 PUR 2
RIGHT REAR CENTER SENSOR
BOR_CTR_R
SOR_CTR_R
E2_CTR_R
BOR_SIDE_R
SOR_SIDE_R
E2_SIDE_R
5 YEL 6
3 RED 4
1 PNK 2
RIGHT REAR CORNER SENSOR
BOR_SIDE_R
SOR_SIDE_R
E2_SIDE_R

REMINDER SYSTEMS CIRCUIT DIAGRAM

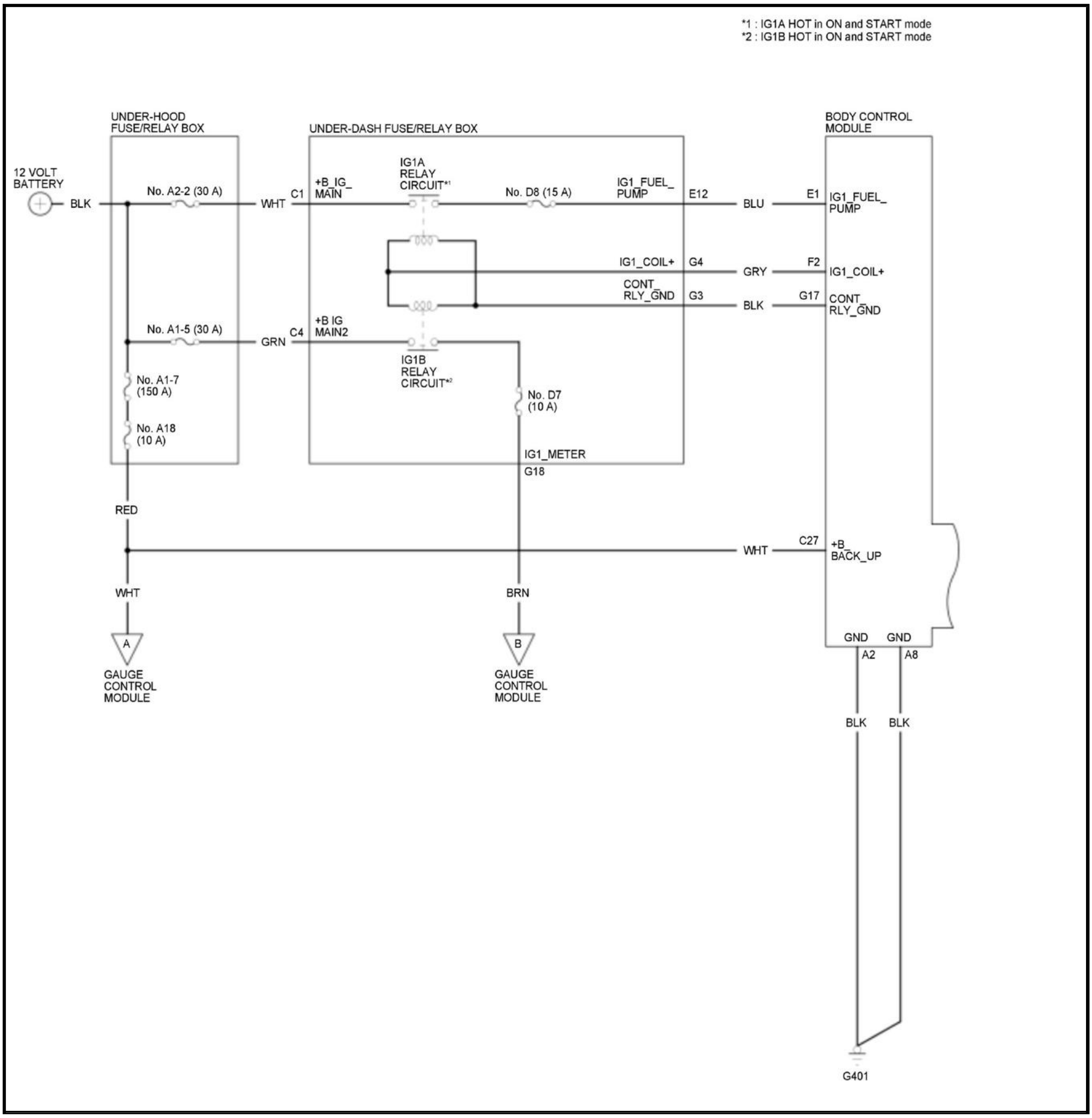
12 VOLT BATTERY
BLK
UNDER-HOOD FUSE/RELAY BOX
No. A2-2 (30 A)
No. A1-5 (30 A)
No. A1-7 (150 A)
No. A18 (10 A)
WHT
GRN
RED
WHT
A
GAUGE CONTROL MODULE
UNDER-DASH FUSE/RELAY BOX
C1
+B_IG_MAIN
C4
+B IG MAIN2
IG1A RELAY CIRCUIT*1
IG1B RELAY CIRCUIT*2
No. D8 (15 A)
No. D7 (10 A)
IG1_FUEL_PUMP
E12
IG1_COIL+
G4
CONT_RLY_GND
G3
IG1_METER
G18
BRN
B
GAUGE CONTROL MODULE
BLU
GRY
BLK
WHT
BODY CONTROL MODULE
E1
IG1_FUEL_PUMP
F2
IG1_COIL+
G17
CONT_RLY_GND
C27
+B_BACK_UP
GND
GND
A2
A8
BLK
BLK
G401

*1 : IG1A HOT in ON and START mode
*2 : IG1B HOT in ON and START mode

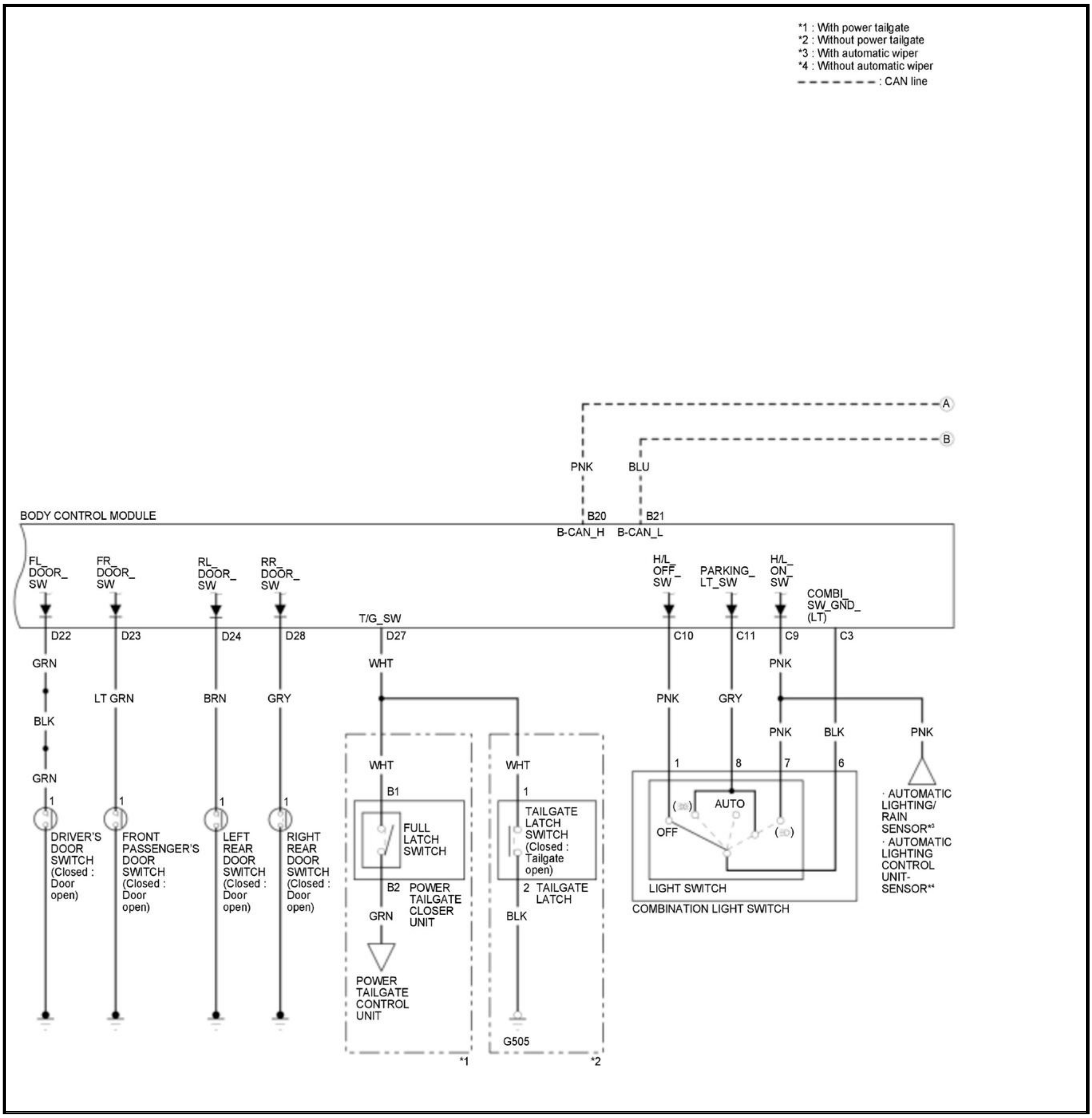
*1 : With power tailgate
*2 : Without power tailgate
*3 : With automatic wiper
*4 : Without automatic wiper
: CAN line
A
B
PNK
BLU
BODY CONTROL MODULE
B20
B21
B-CAN_H
B-CAN_L
FL_ DOOR_ SW
FR_ DOOR_ SW
RL_ DOOR_ SW
RR_ DOOR_ SW
T/G_SW
H/L_ OFF_ SW
PARKING_ LT_SW
H/L_ ON_ SW
COMBI_ SW_GND_ (LT)
D22
D23
D24
D28
D27
C10
C11
C9
C3
GRN
BLK
GRN
LT GRN
BRN
GRY
WHT
PNK
PNK
GRY
PNK
BLK
PNK
WHT
WHT
B1
1
FULL LATCH SWITCH
TAILGATE LATCH SWITCH (Closed : Tailgate open)
B2
POWER TAILGATE CLOSER UNIT
2
TAILGATE LATCH
GRN
BLK
POWER TAILGATE CONTROL UNIT
G505
*1
*2
1
1
1
1
DRIVER'S DOOR SWITCH (Closed : Door open)
FRONT PASSENGER'S DOOR SWITCH (Closed : Door open)
LEFT REAR DOOR SWITCH (Closed : Door open)
RIGHT REAR DOOR SWITCH (Closed : Door open)
1
8
7
6
AUTO
OFF
LIGHT SWITCH
COMBINATION LIGHT SWITCH
· AUTOMATIC LIGHTING/ RAIN SENSOR*3
· AUTOMATIC LIGHTING CONTROL UNIT- SENSOR*4

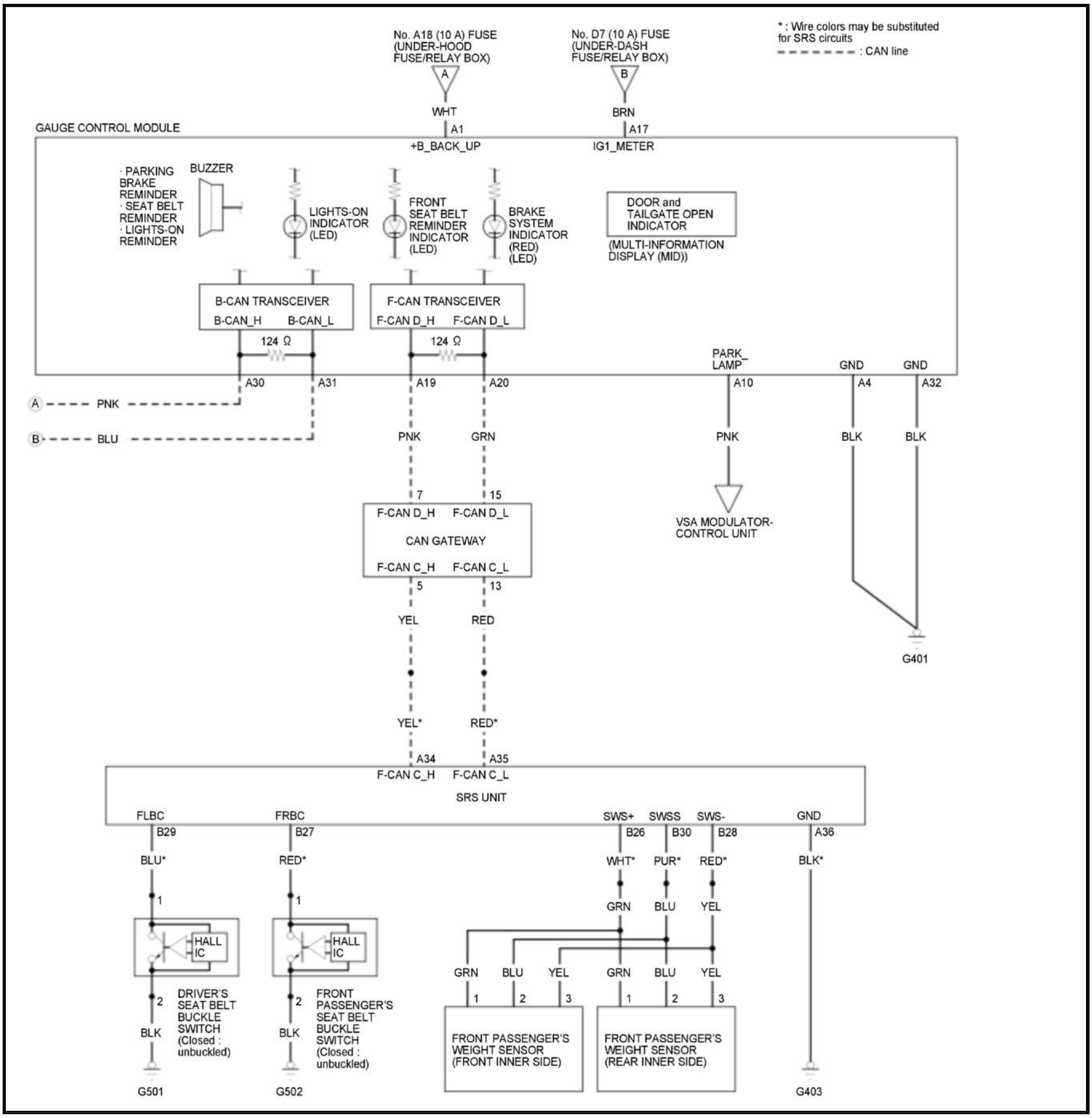
No. A18 (10 A) FUSE (UNDER-HOOD FUSE/RELAY BOX)
No. D7 (10 A) FUSE (UNDER-DASH FUSE/RELAY BOX)
* : Wire colors may be substituted for SRS circuits
: CAN line
A
B
WHT
BRN
GAUGE CONTROL MODULE
A1
A17
+B_BACK_UP
IG1_METER
· PARKING BRAKE REMINDER
· SEAT BELT REMINDER
· LIGHTS-ON REMINDER
BUZZER
LIGHTS-ON INDICATOR (LED)
FRONT SEAT BELT REMINDER INDICATOR (LED)
BRAKE SYSTEM INDICATOR (RED) (LED)
DOOR and TAILGATE OPEN INDICATOR
(MULTI-INFORMATION DISPLAY (MID))
B-CAN TRANSCEIVER
B-CAN_H
B-CAN_L
F-CAN TRANSCEIVER
F-CAN D_H
F-CAN D_L
124 Ω
124 Ω
PARK_ LAMP
GND
GND
A30
A31
A19
A20
A10
A4
A32
A
PNK
B
BLU
PNK
GRN
PNK
BLK
BLK
VSA MODULATOR-CONTROL UNIT
7
15
F-CAN D_H
F-CAN D_L
CAN GATEWAY
F-CAN C_H
F-CAN C_L
5
13
YEL
RED
G401
YEL*
RED*
A34
A35
F-CAN C_H
F-CAN C_L
SRS UNIT
FLBC
FRBC
SWS+
SWSS
SWS-
GND
B29
B27
B26
B30
B28
A36
BLU*
RED*
WHT*
PUR*
RED*
BLK*
1
1
GRN
BLU
YEL
HALL IC
HALL IC
GRN
BLU
YEL
GRN
BLU
YEL
2
2
1
2
3
1
2
3
BLK
BLK
DRIVER'S SEAT BELT BUCKLE SWITCH (Closed : unbuckled)
FRONT PASSENGER'S SEAT BELT BUCKLE SWITCH (Closed : unbuckled)
FRONT PASSENGER'S WEIGHT SENSOR (FRONT INNER SIDE)
FRONT PASSENGER'S WEIGHT SENSOR (REAR INNER SIDE)
G501
G502
G403

SAFETY INDICATOR SYSTEM CIRCUIT DIAGRAM

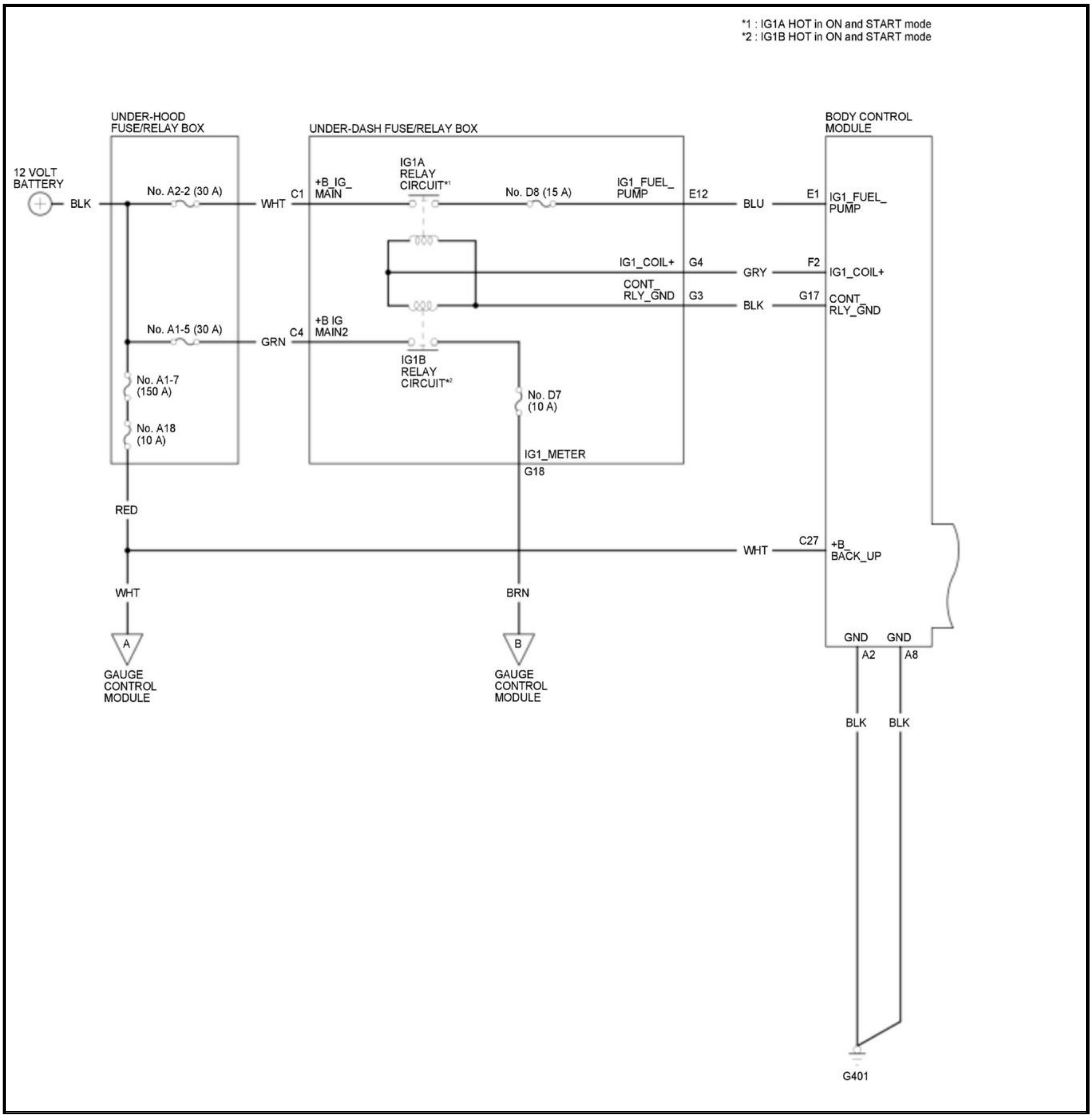
*1 : IG1A HOT in ON and START mode
*2 : IG1B HOT in ON and START mode
UNDER-HOOD FUSE/RELAY BOX
UNDER-DASH FUSE/RELAY BOX
BODY CONTROL MODULE
12 VOLT BATTERY
BLK
No. A2-2 (30 A)
WHT
C1
+B_IG_ MAIN
IG1A RELAY CIRCUIT*1
No. D8 (15 A)
IG1_FUEL_ PUMP
E12
BLU
E1
IG1_FUEL_ PUMP
IG1_COIL+
G4
GRY
F2
IG1_COIL+
CONT_ RLY_GND
G3
BLK
G17
CONT_ RLY_GND
No. A1-5 (30 A)
GRN
C4
+B IG MAIN2
IG1B RELAY CIRCUIT*2
No. D7 (10 A)
No. A1-7 (150 A)
No. A18 (10 A)
IG1_METER
G18
RED
WHT
C27
+B_ BACK_UP
WHT
BRN
A
B
GAUGE CONTROL MODULE
GAUGE CONTROL MODULE
GND
GND
A2
A8
BLK
BLK
G401

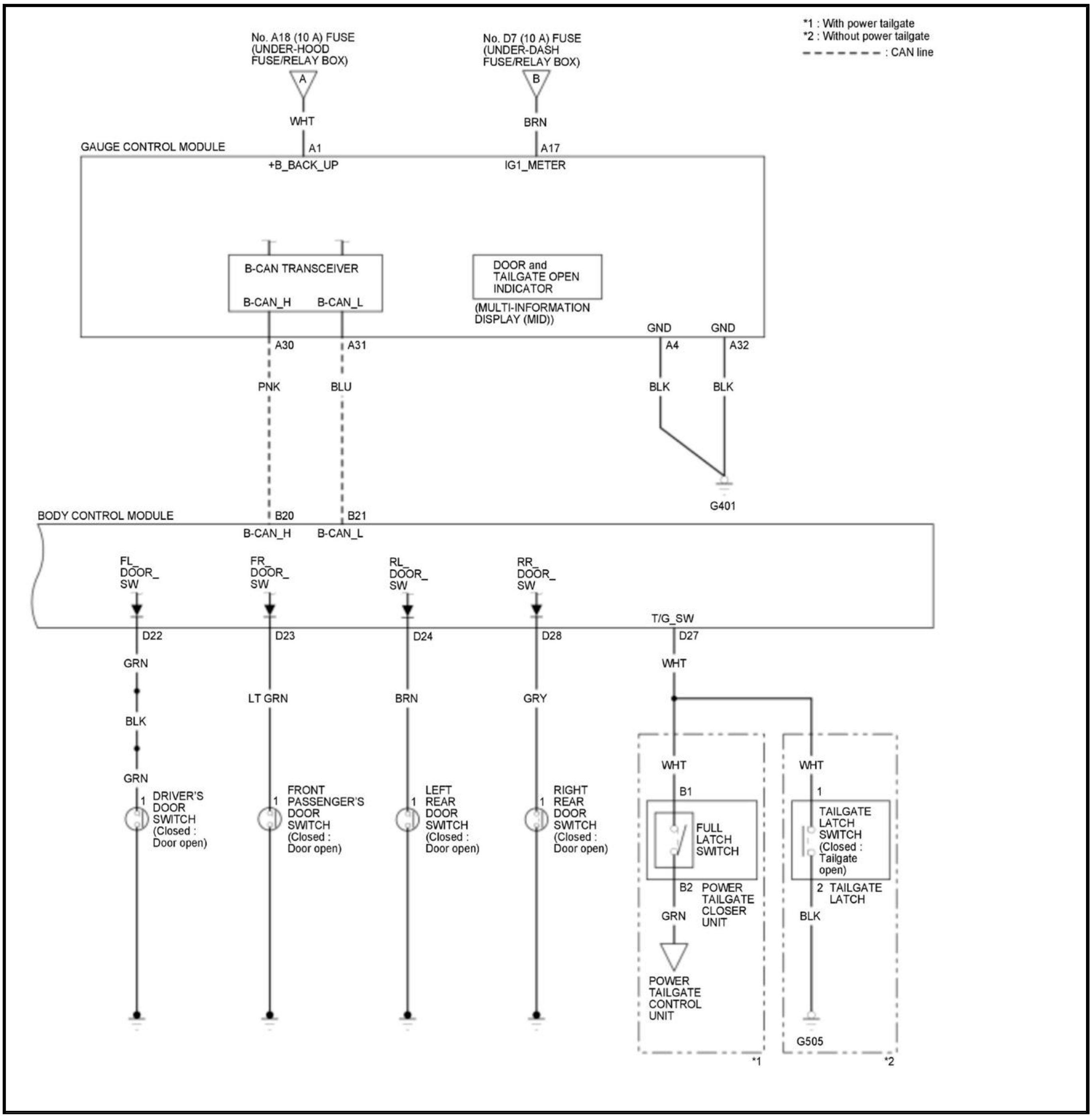
*1 : With power tailgate
*2 : Without power tailgate
: CAN line
No. A18 (10 A) FUSE (UNDER-HOOD FUSE/RELAY BOX)
A
No. D7 (10 A) FUSE (UNDER-DASH FUSE/RELAY BOX)
B
WHT
BRN
GAUGE CONTROL MODULE
A1
A17
+B_BACK_UP
IG1_METER
B-CAN TRANSCEIVER
B-CAN_H
B-CAN_L
DOOR and TAILGATE OPEN INDICATOR
(MULTI-INFORMATION DISPLAY (MID))
GND
GND
A30
A31
A4
A32
PNK
BLU
BLK
BLK
G401
BODY CONTROL MODULE
B20
B21
B-CAN_H
B-CAN_L
FL_DOOR_SW
FR_DOOR_SW
RL_DOOR_SW
RR_DOOR_SW
T/G_SW
D22
D23
D24
D28
D27
GRN
BLK
GRN
LT GRN
BRN
GRY
WHT
1 DRIVER'S DOOR SWITCH (Closed : Door open)
1 FRONT PASSENGER'S DOOR SWITCH (Closed : Door open)
1 LEFT REAR DOOR SWITCH (Closed : Door open)
1 RIGHT REAR DOOR SWITCH (Closed : Door open)
WHT
B1
FULL LATCH SWITCH
B2 POWER TAILGATE CLOSER UNIT
GRN
POWER TAILGATE CONTROL UNIT
*1
WHT
1
TAILGATE LATCH SWITCH (Closed : Tailgate open)
2 TAILGATE LATCH
BLK
G505
*2

COMPONENT LOCATION INDEX

ACOUSTIC VEHICLE ALERTING SYSTEM COMPONENT LOCATION INDEX

For relationships between signals in a system, refer to System Diagram.

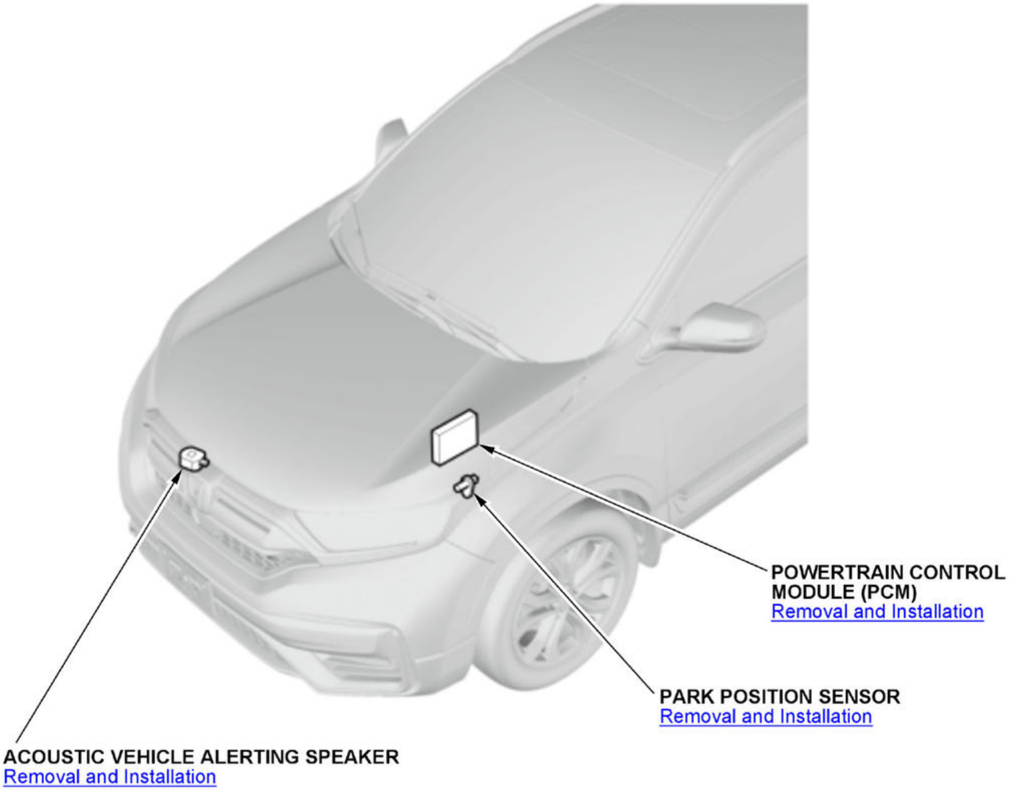
POWERTRAIN CONTROL MODULE (PCM)
Removal and Installation
PARK POSITION SENSOR
Removal and Installation
ACOUSTIC VEHICLE ALERTING SPEAKER
Removal and Installation

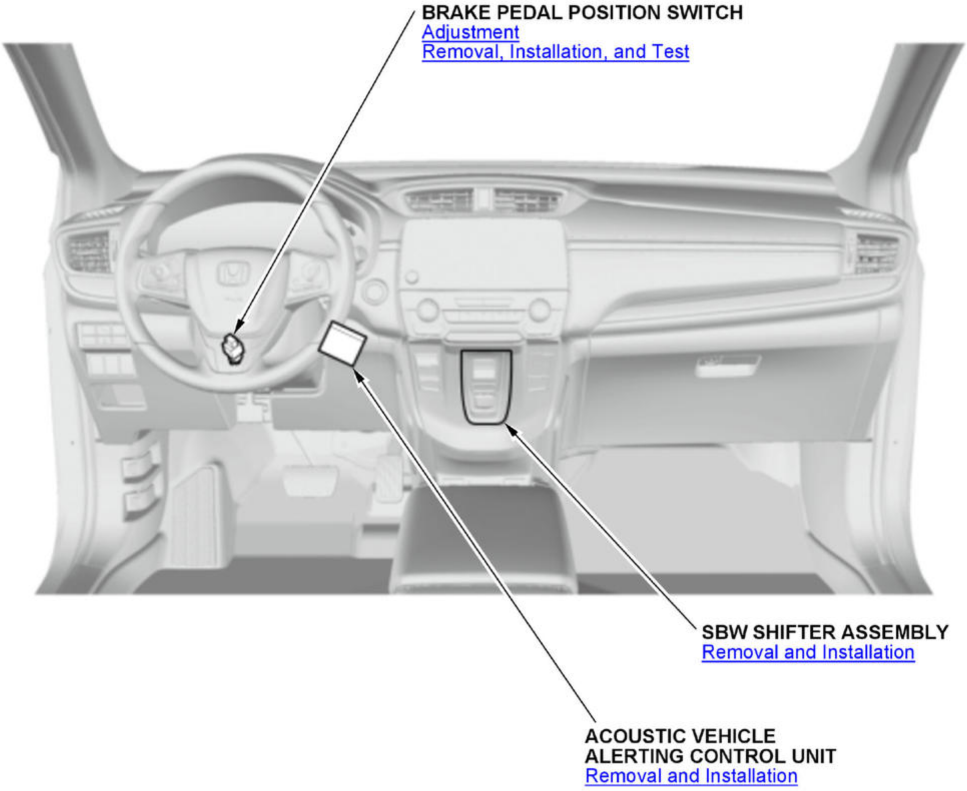
BRAKE PEDAL POSITION SWITCH
Adjustment
Removal, Installation, and Test
SBW SHIFTER ASSEMBLY
Removal and Installation
ACOUSTIC VEHICLE ALERTING CONTROL UNIT
Removal and Installation

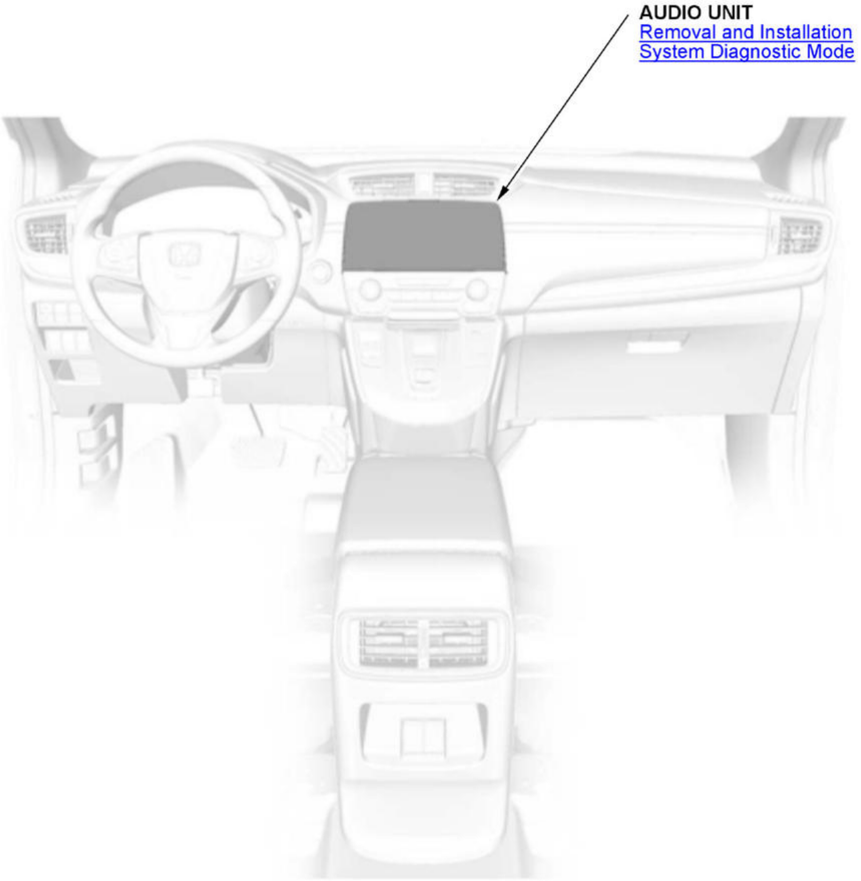
AUDIO UNIT
Removal and Installation
System Diagnostic Mode

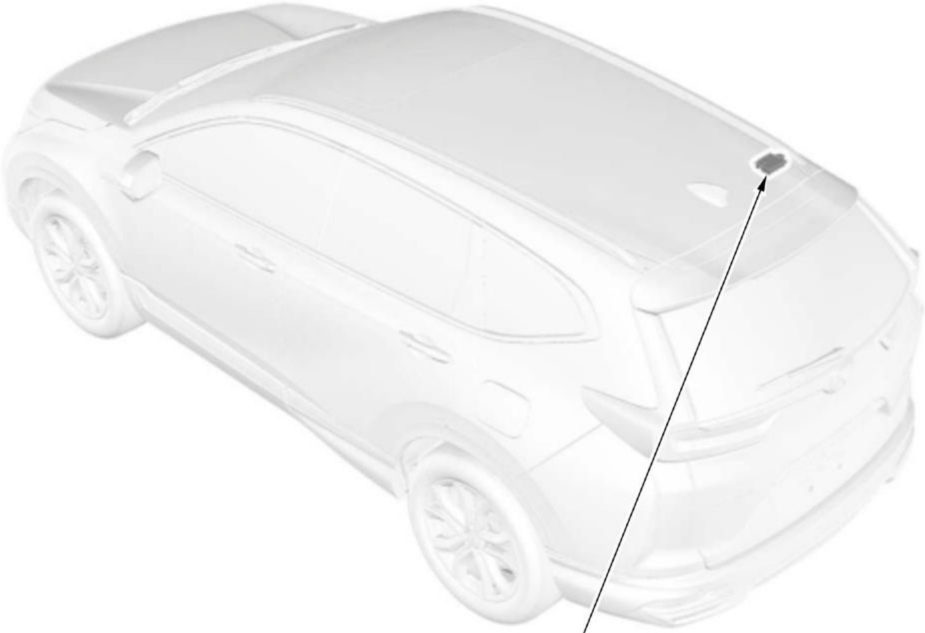
ELECTRICAL COMPASS UNIT
Zone Selection and Calibration
Removal and Installation

GAUGES COMPONENT LOCATION INDEX

For relationships between signals in a system, refer to System Diagram.

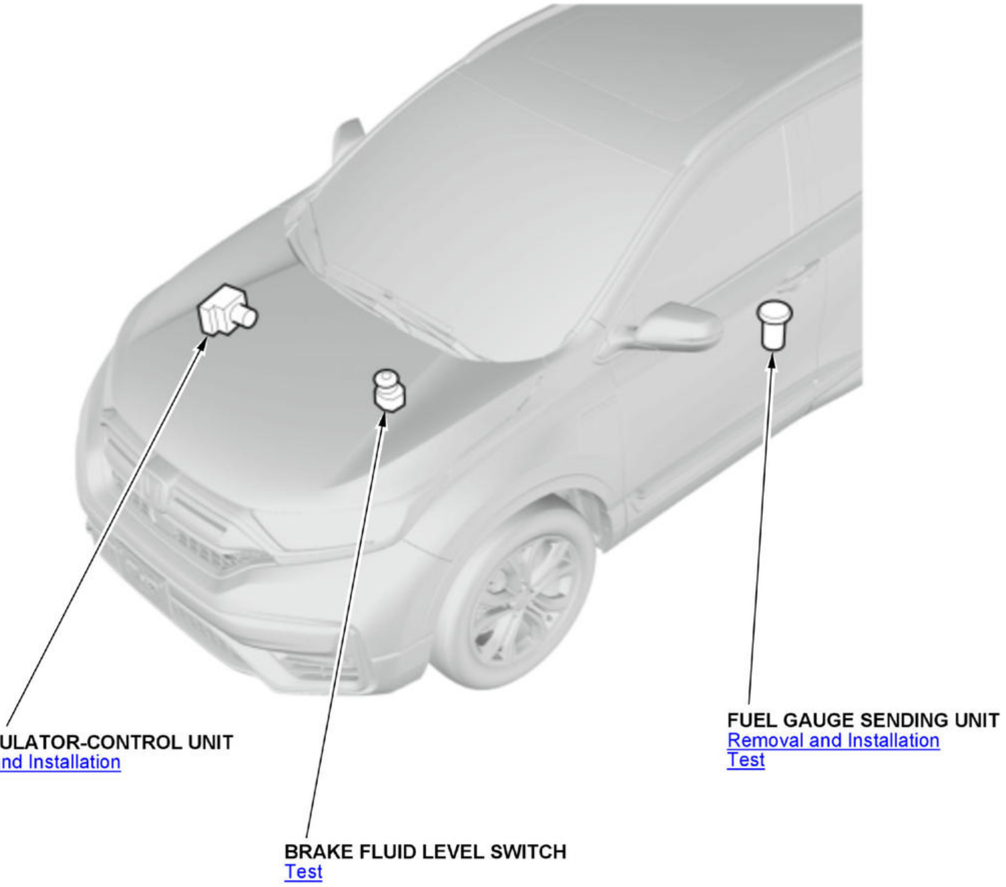
FUEL GAUGE SENDING UNIT
Removal and Installation
Test
VSA MODULATOR-CONTROL UNIT
Removal and Installation
BRAKE FLUID LEVEL SWITCH
Test

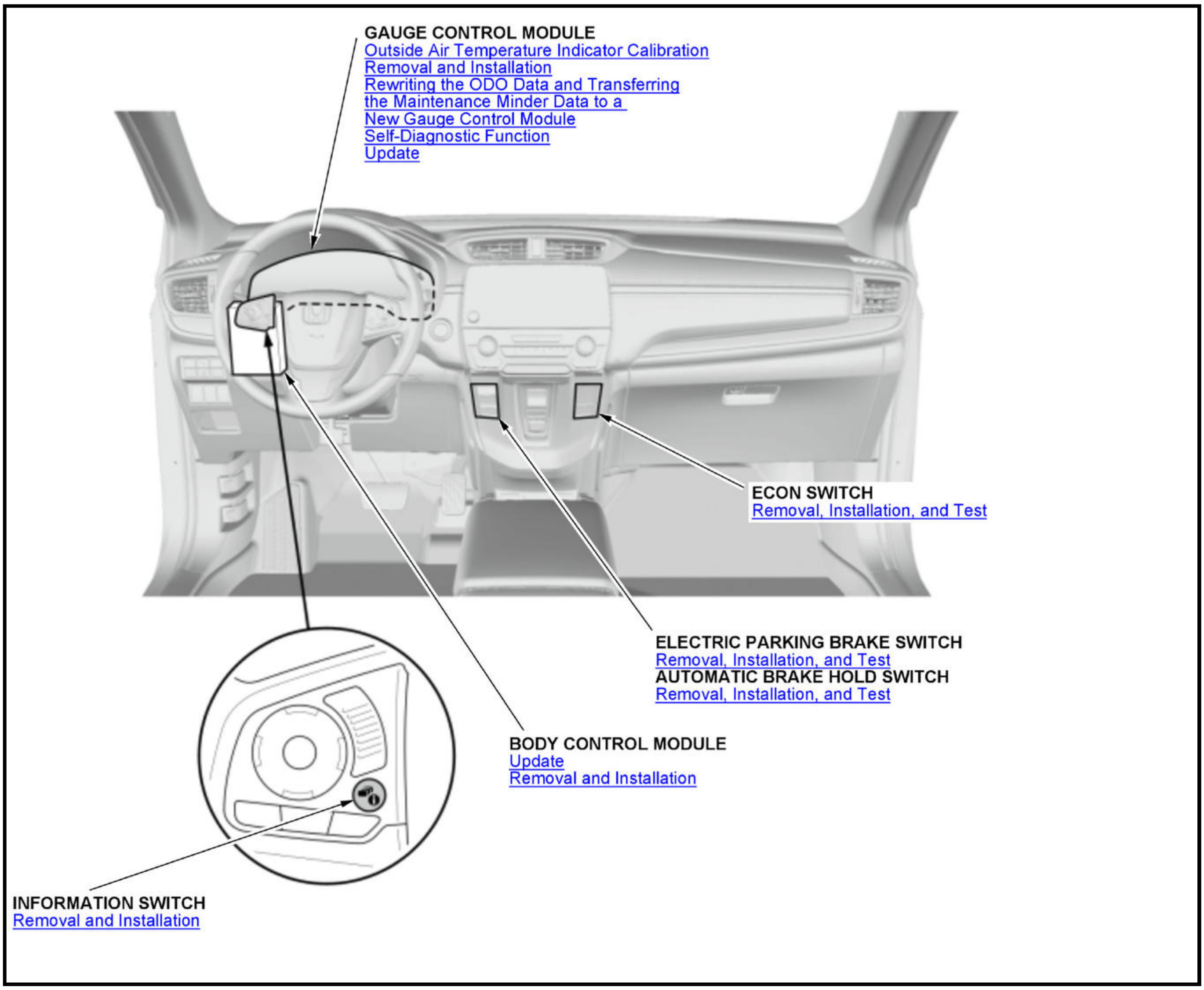
GAUGE CONTROL MODULE
Outside Air Temperature Indicator Calibration
Removal and Installation
Rewriting the ODO Data and Transferring the Maintenance Minder Data to a New Gauge Control Module
Self-Diagnostic Function
Update
ECON SWITCH
Removal, Installation, and Test
ELECTRIC PARKING BRAKE SWITCH
Removal, Installation, and Test
AUTOMATIC BRAKE HOLD SWITCH
Removal, Installation, and Test
BODY CONTROL MODULE
Update
Removal and Installation
INFORMATION SWITCH
Removal and Installation

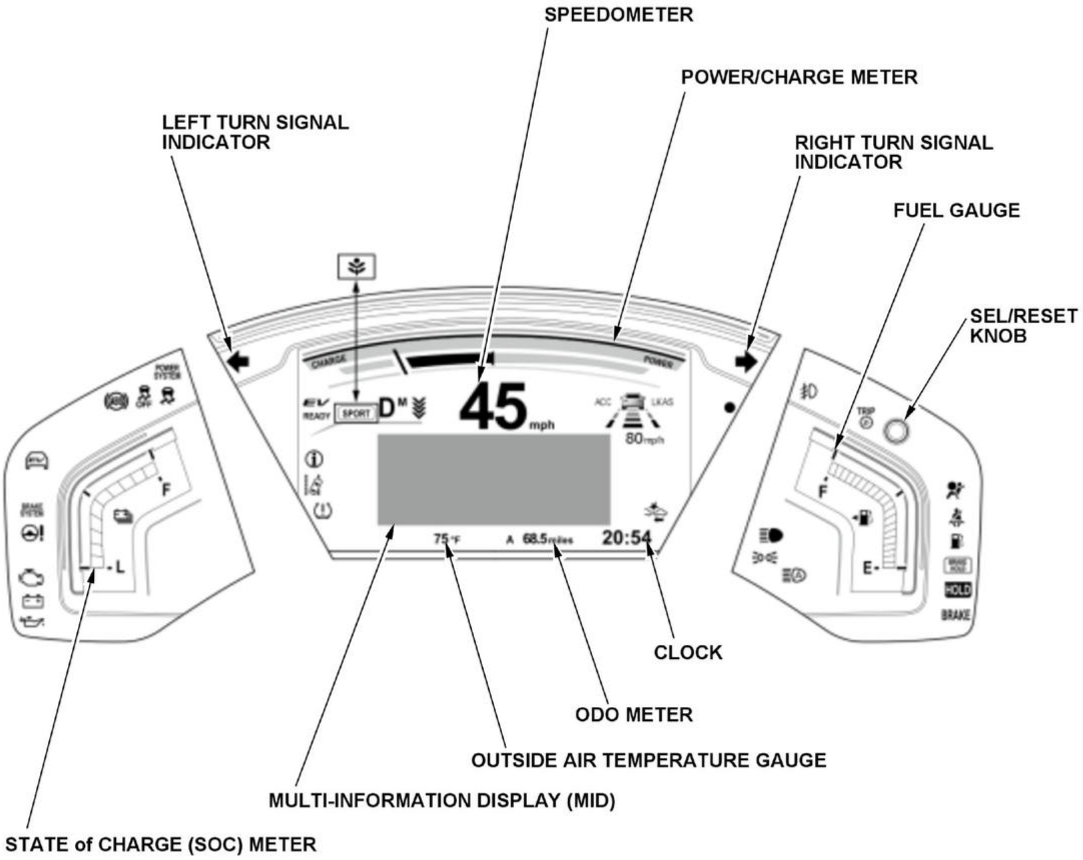
SPEEDOMETER
POWER/CHARGE METER
LEFT TURN SIGNAL INDICATOR
RIGHT TURN SIGNAL INDICATOR
FUEL GAUGE
SEL/RESET KNOB
CHARGE
POWER
EV READY
SPORT
D M
45 mph
ACC
LKAS
80 mph
TRIP
F
L
F
E
HOLD
BRAKE
75 °F
A 68.5 miles
20:54
CLOCK
ODO METER
OUTSIDE AIR TEMPERATURE GAUGE
MULTI-INFORMATION DISPLAY (MID)
STATE of CHARGE (SOC) METER

2/3

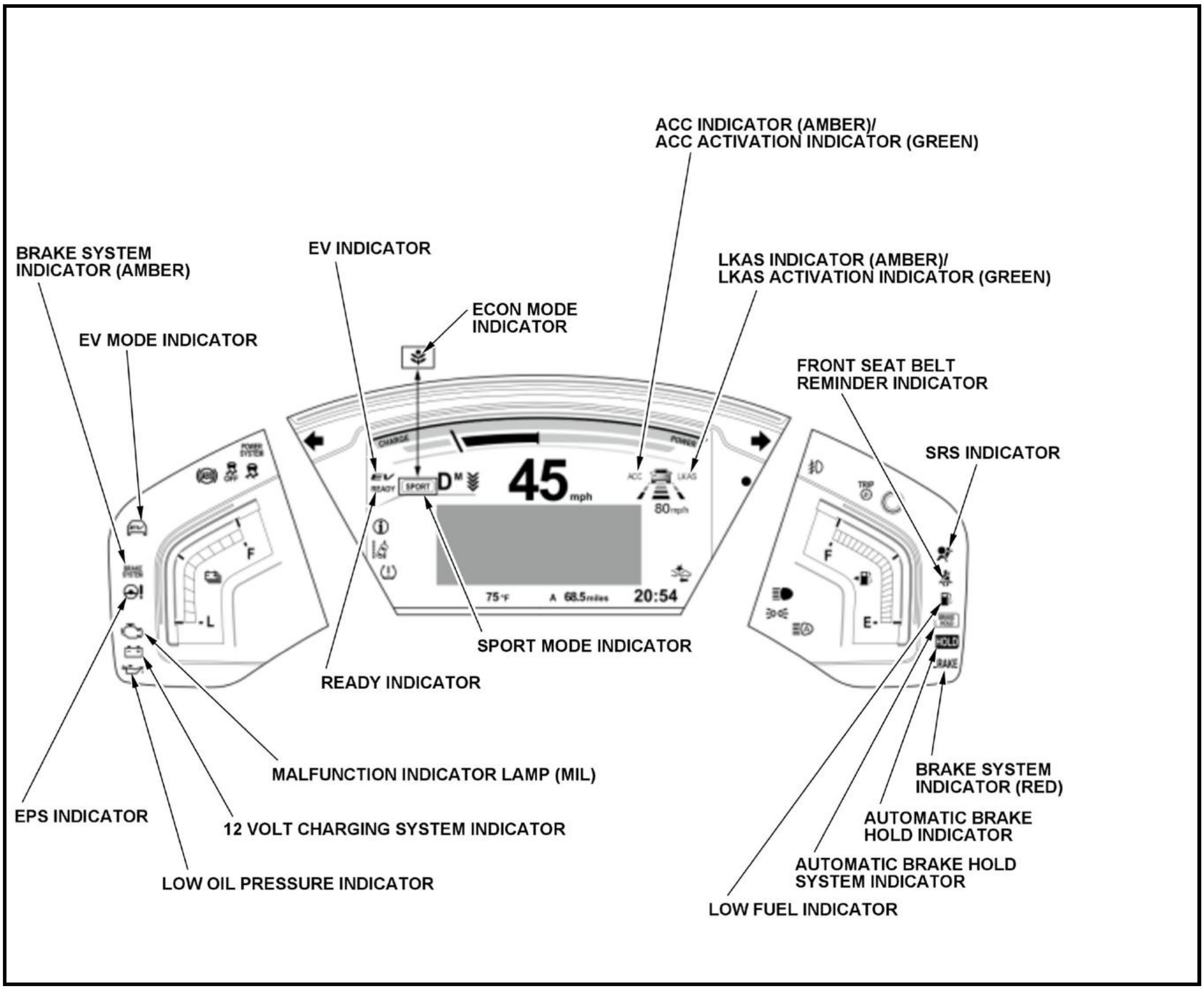
ACC INDICATOR (AMBER)/
ACC ACTIVATION INDICATOR (GREEN)
BRAKE SYSTEM INDICATOR (AMBER)
EV INDICATOR
LKAS INDICATOR (AMBER)/
LKAS ACTIVATION INDICATOR (GREEN)
ECON MODE INDICATOR
EV MODE INDICATOR
FRONT SEAT BELT REMINDER INDICATOR
SRS INDICATOR
SPORT MODE INDICATOR
READY INDICATOR
MALFUNCTION INDICATOR LAMP (MIL)
BRAKE SYSTEM INDICATOR (RED)
EPS INDICATOR
AUTOMATIC BRAKE HOLD INDICATOR
12 VOLT CHARGING SYSTEM INDICATOR
AUTOMATIC BRAKE HOLD SYSTEM INDICATOR
LOW OIL PRESSURE INDICATOR
LOW FUEL INDICATOR
45 mph
80 mph
75 °F
A 68.5 miles
20:54
SPORT
D M
CHARGE
POWER
ACC
LKAS
HOLD
BRAKE
F
L
E

3/3

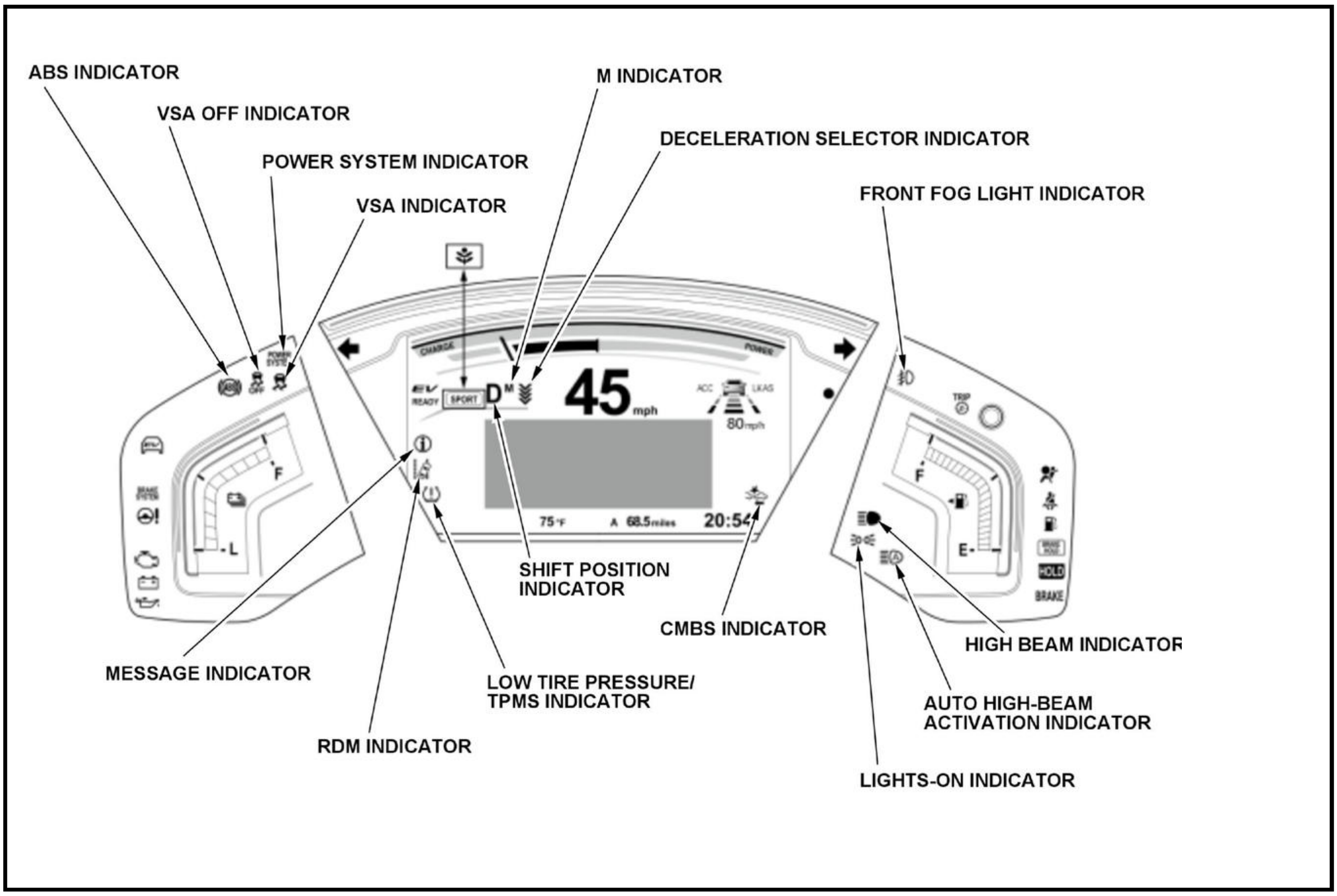
ABS INDICATOR
VSA OFF INDICATOR
POWER SYSTEM INDICATOR
VSA INDICATOR
M INDICATOR
DECELERATION SELECTOR INDICATOR
FRONT FOG LIGHT INDICATOR
CHARGE
POWER
EV READY
SPORT
D
M
45 mph
ACC
LKAS
80 mph
75 °F
A 68.5 miles
20:54
TRIP
F
L
E
HOLD
BRAKE
MESSAGE INDICATOR
RDM INDICATOR
LOW TIRE PRESSURE/ TPMS INDICATOR
SHIFT POSITION INDICATOR
CMBS INDICATOR
HIGH BEAM INDICATOR
AUTO HIGH-BEAM ACTIVATION INDICATOR
LIGHTS-ON INDICATOR

PARKING AND BACK-UP SENSOR SYSTEM COMPONENT LOCATION INDEX

For relationships between signals in a system, refer to System Diagram.

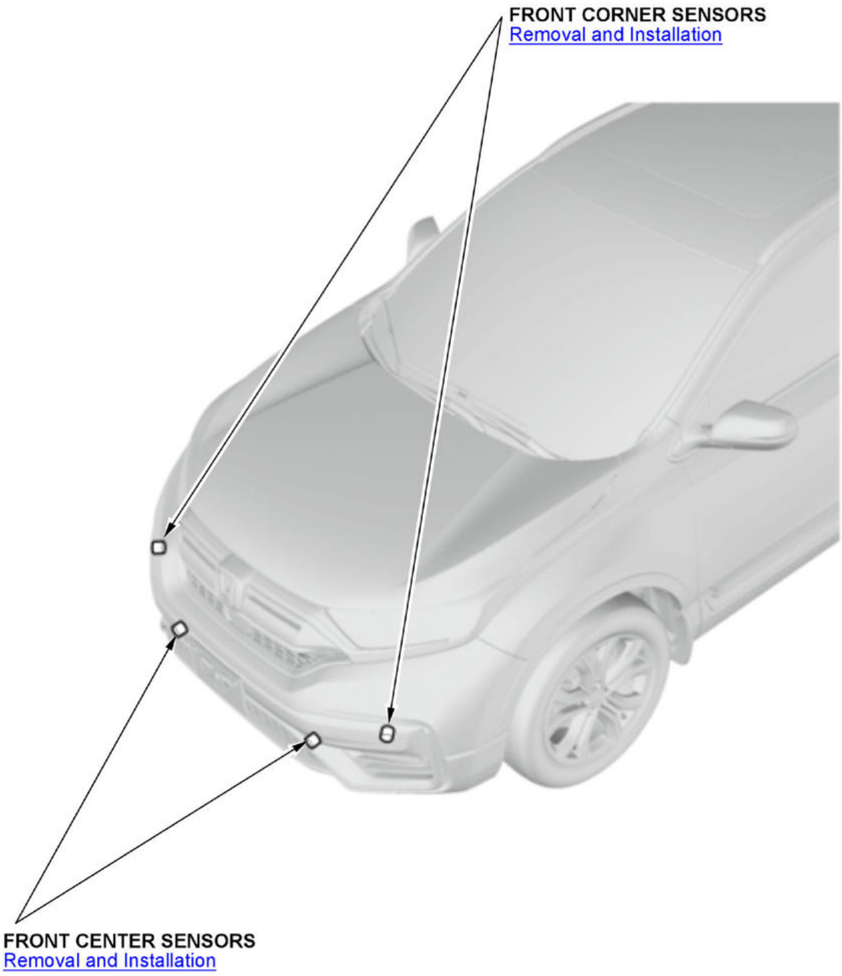
FRONT CORNER SENSORS
Removal and Installation
FRONT CENTER SENSORS
Removal and Installation

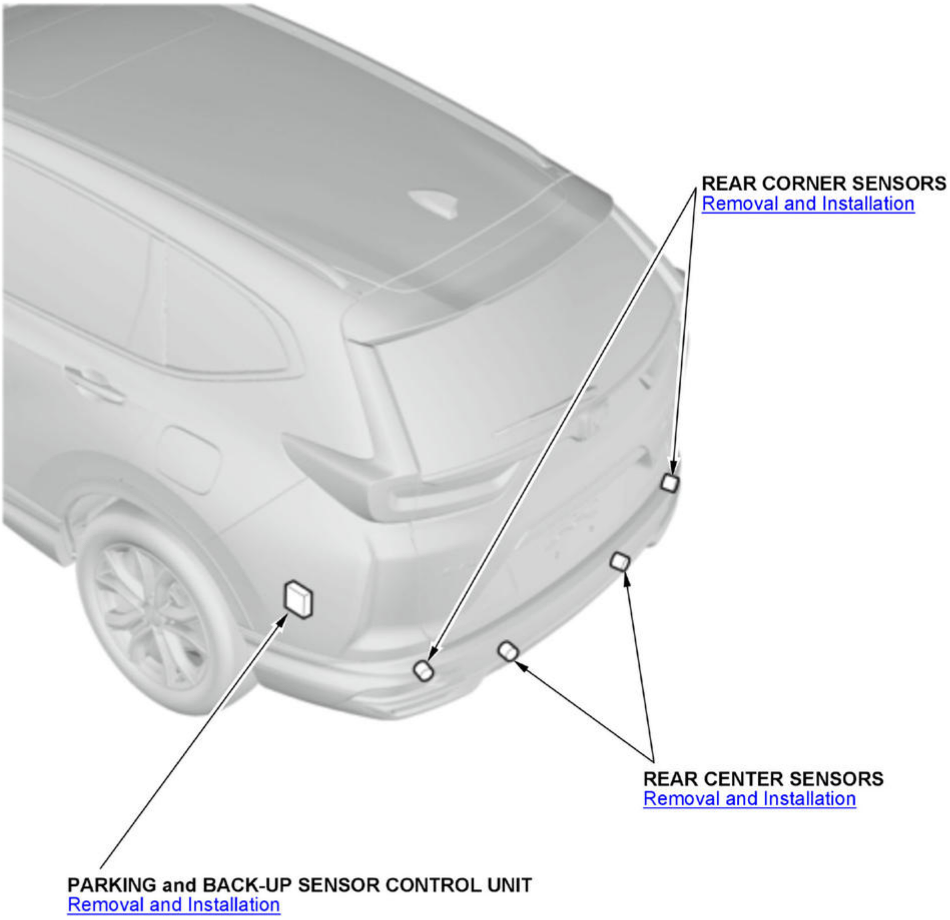
REAR CORNER SENSORS
Removal and Installation
REAR CENTER SENSORS
Removal and Installation
PARKING and BACK-UP SENSOR CONTROL UNIT
Removal and Installation

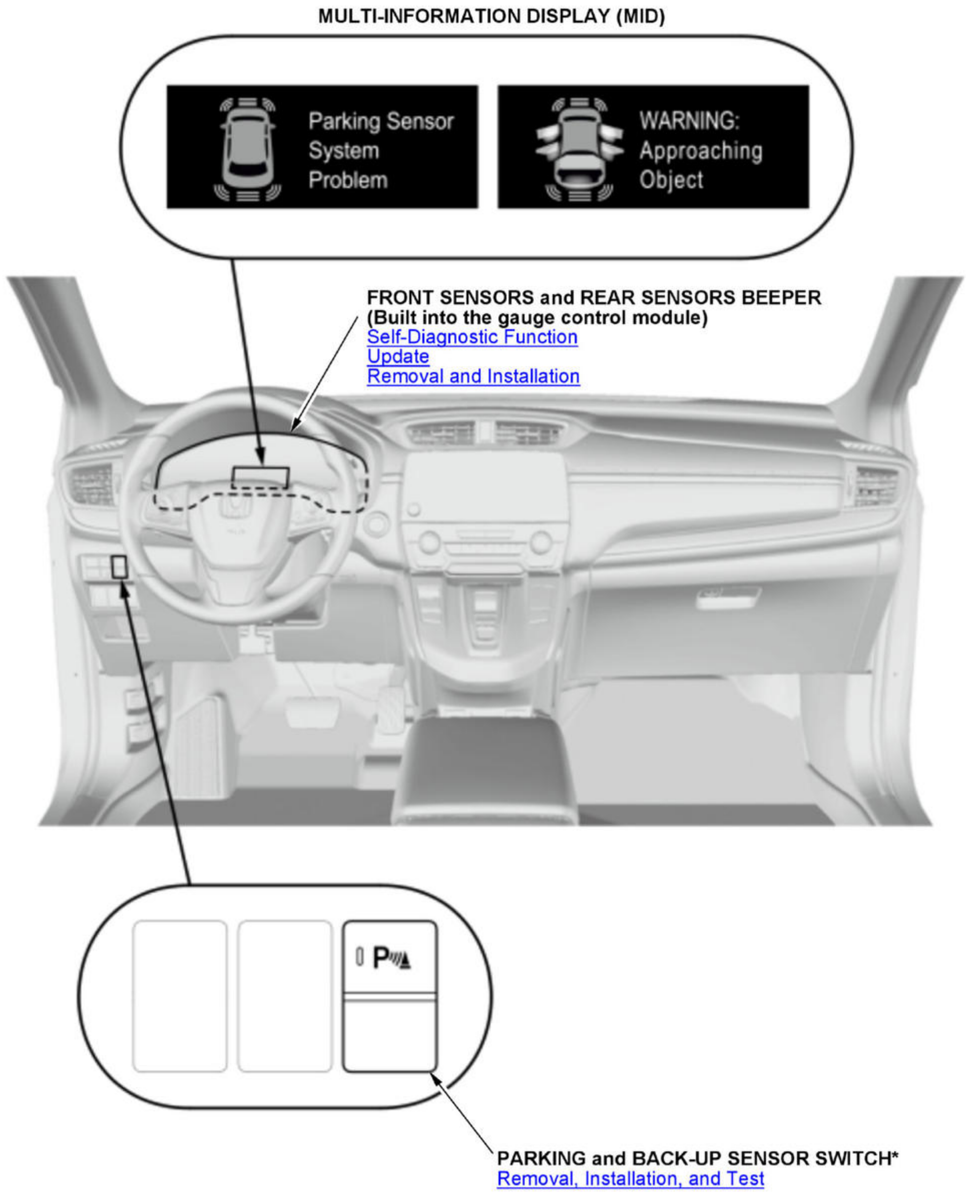
Parking Sensor
System
Problem
WARNING:
Approaching
Object
P

MULTI-INFORMATION DISPLAY (MID)

FRONT SENSORS and REAR SENSORS BEEPER
(Built into the gauge control module)
Self-Diagnostic Function
Update
Removal and Installation

PARKING and BACK-UP SENSOR SWITCH*
Removal, Installation, and Test

*: Mounting position of the parking and back-up sensor switch is different depending on the model.

REMINDER SYSTEMS COMPONENT LOCATION INDEX

For the Keyless Access System, refer to Keyless Access System, Component Location Index.

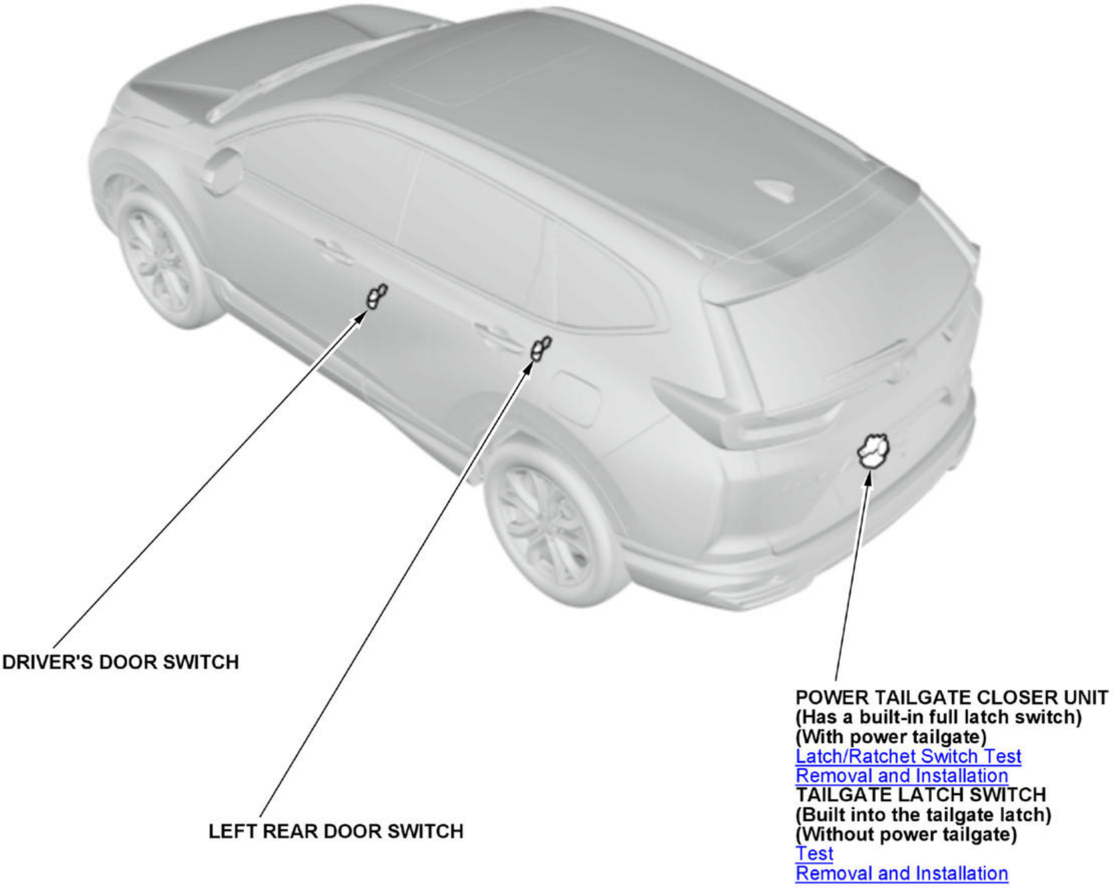
DRIVER'S DOOR SWITCH
LEFT REAR DOOR SWITCH
POWER TAILGATE CLOSER UNIT
(Has a built-in full latch switch)
(With power tailgate)
Latch/Ratchet Switch Test
Removal and Installation
TAILGATE LATCH SWITCH
(Built into the tailgate latch)
(Without power tailgate)
Test
Removal and Installation

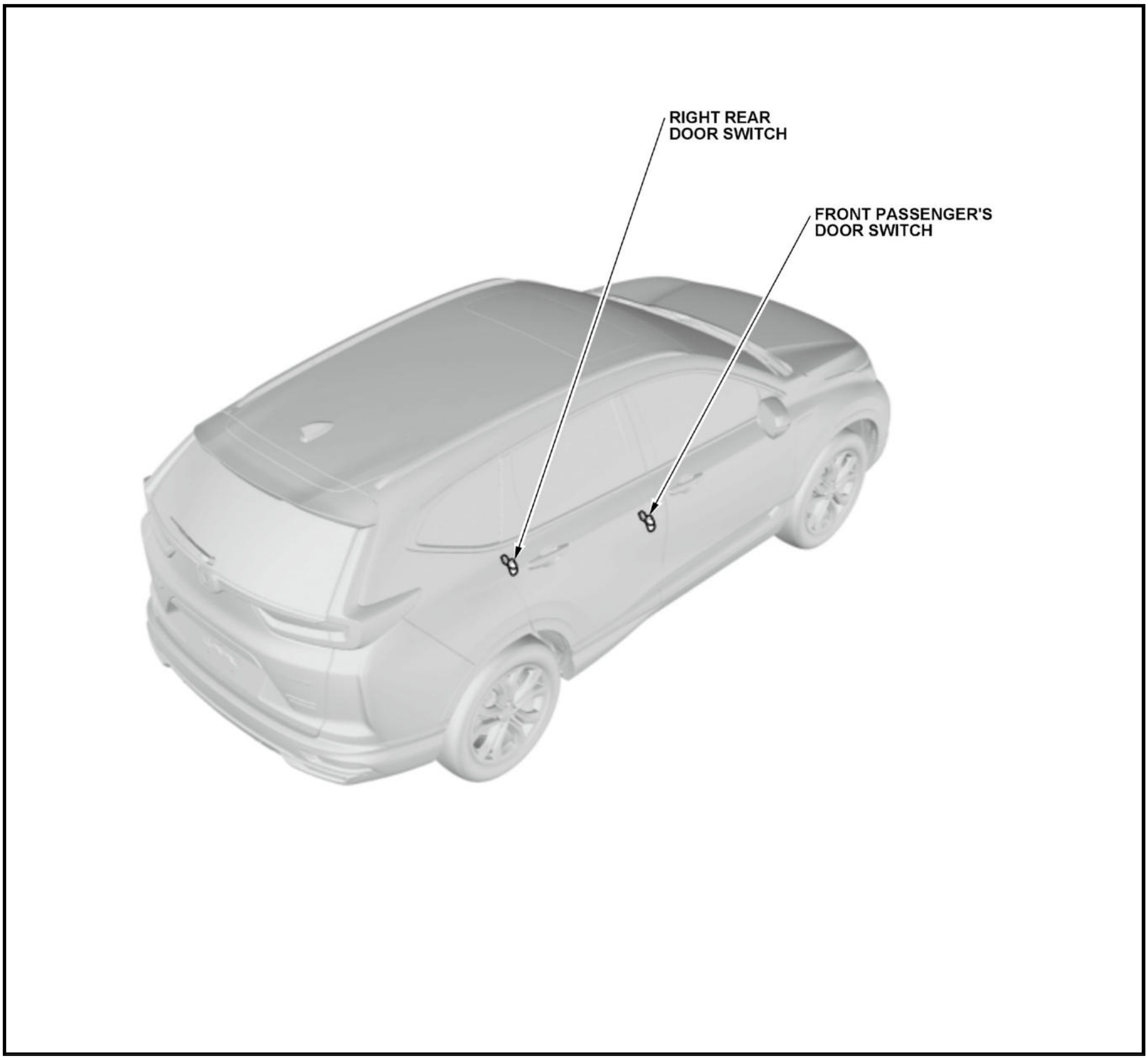
RIGHT REAR DOOR SWITCH
FRONT PASSENGER'S DOOR SWITCH

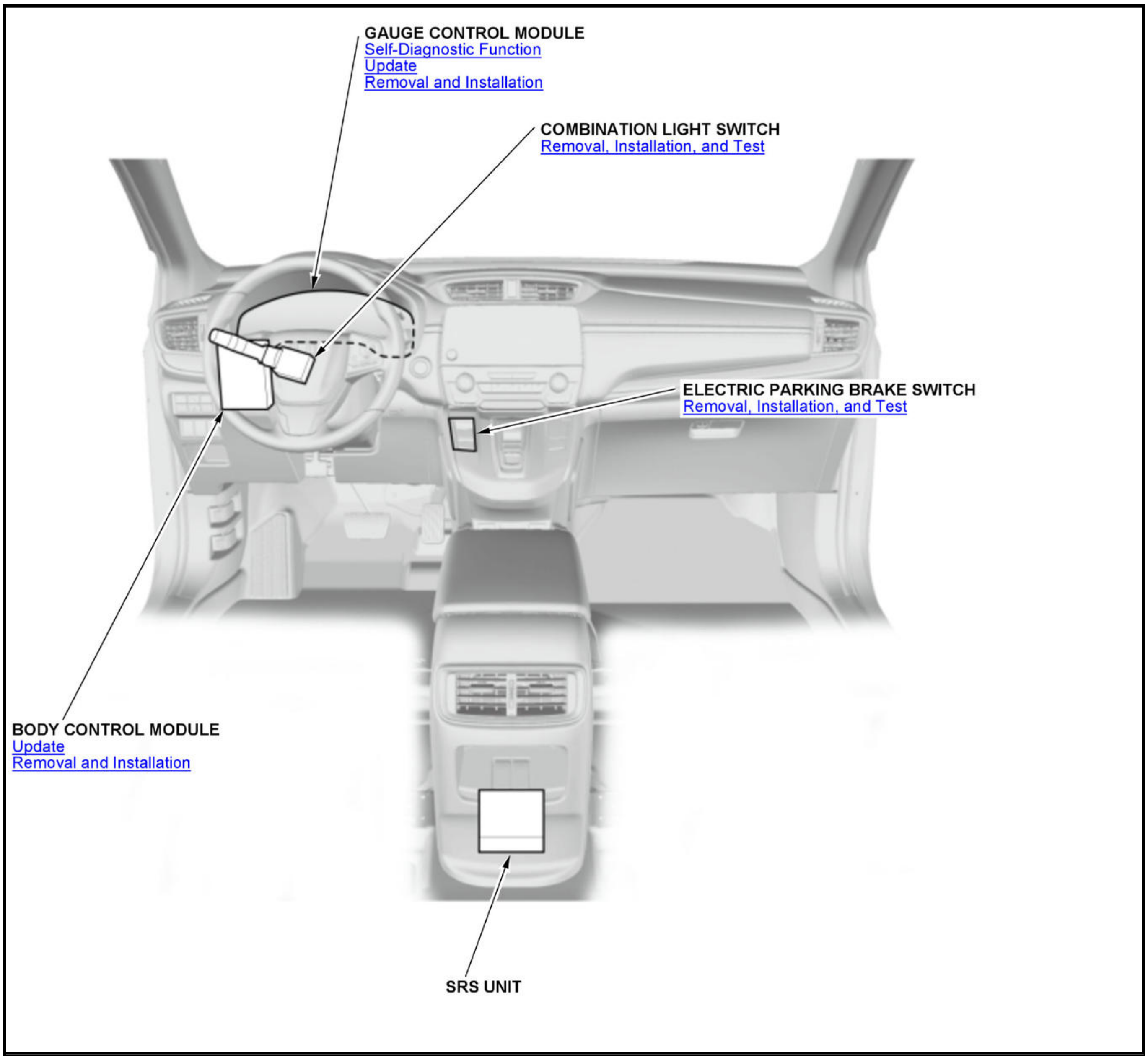
GAUGE CONTROL MODULE
Self-Diagnostic Function
Update
Removal and Installation
COMBINATION LIGHT SWITCH
Removal, Installation, and Test
ELECTRIC PARKING BRAKE SWITCH
Removal, Installation, and Test
BODY CONTROL MODULE
Update
Removal and Installation
SRS UNIT

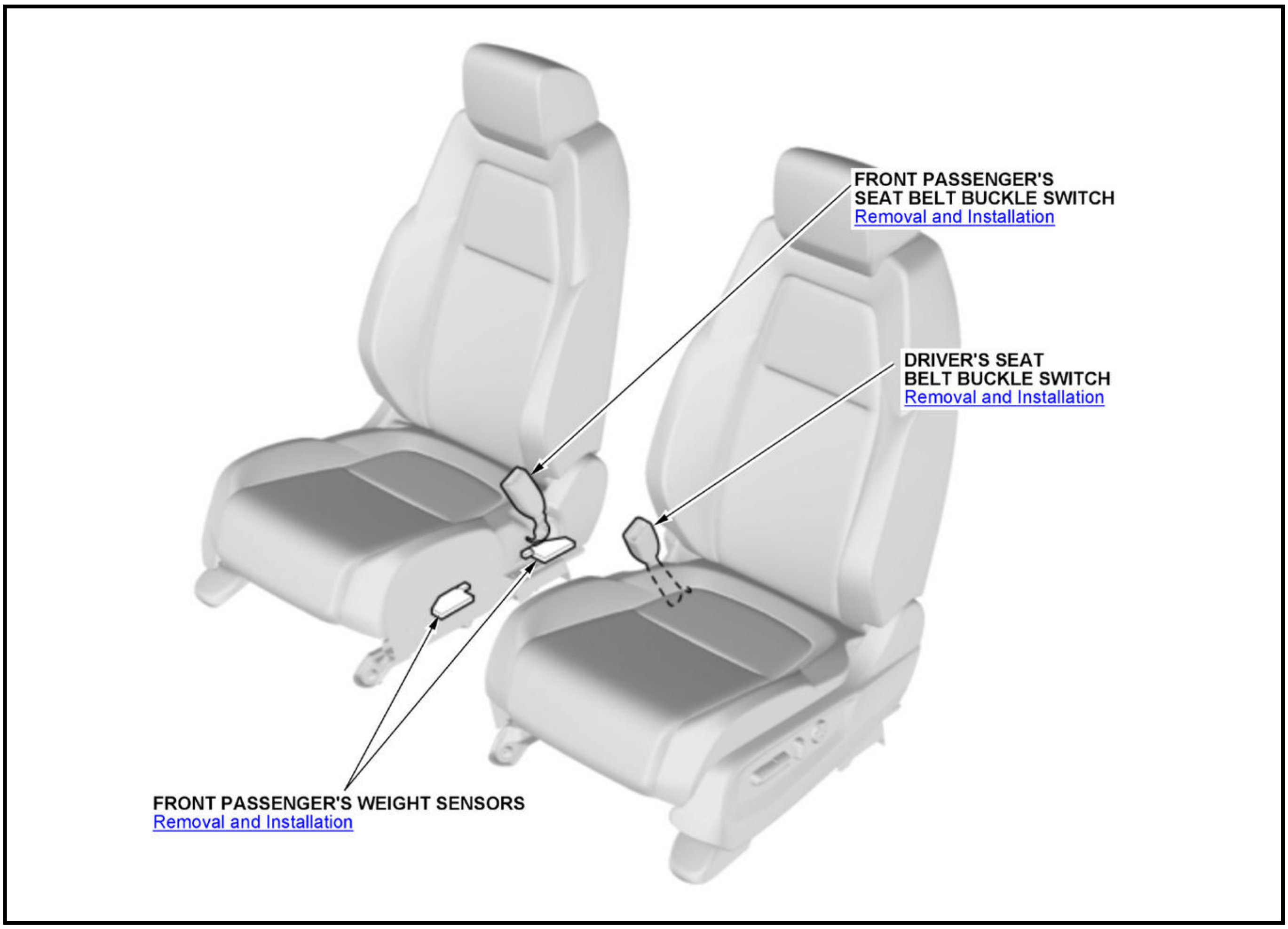
FRONT PASSENGER'S
SEAT BELT BUCKLE SWITCH
Removal and Installation
DRIVER'S SEAT
BELT BUCKLE SWITCH
Removal and Installation
FRONT PASSENGER'S WEIGHT SENSORS
Removal and Installation

SAFETY INDICATOR SYSTEM COMPONENT LOCATION INDEX

For the Keyless Access System, refer to Keyless Access System, Component Location Index.
For relationships between signals in a system, refer to System Diagram.

MULTI-INFORMATION DISPLAY (MID)

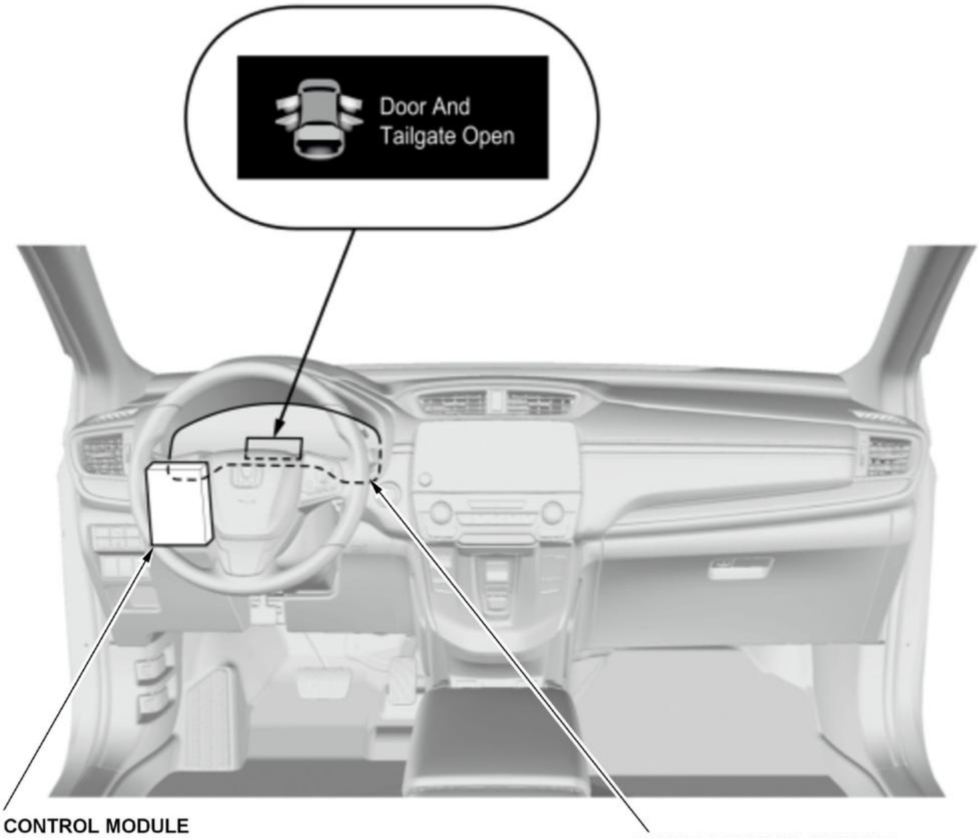

BODY CONTROL MODULE
Update
Removal and Installation

GAUGE CONTROL MODULE
Self-Diagnostic Function
Update
Removal and Installation

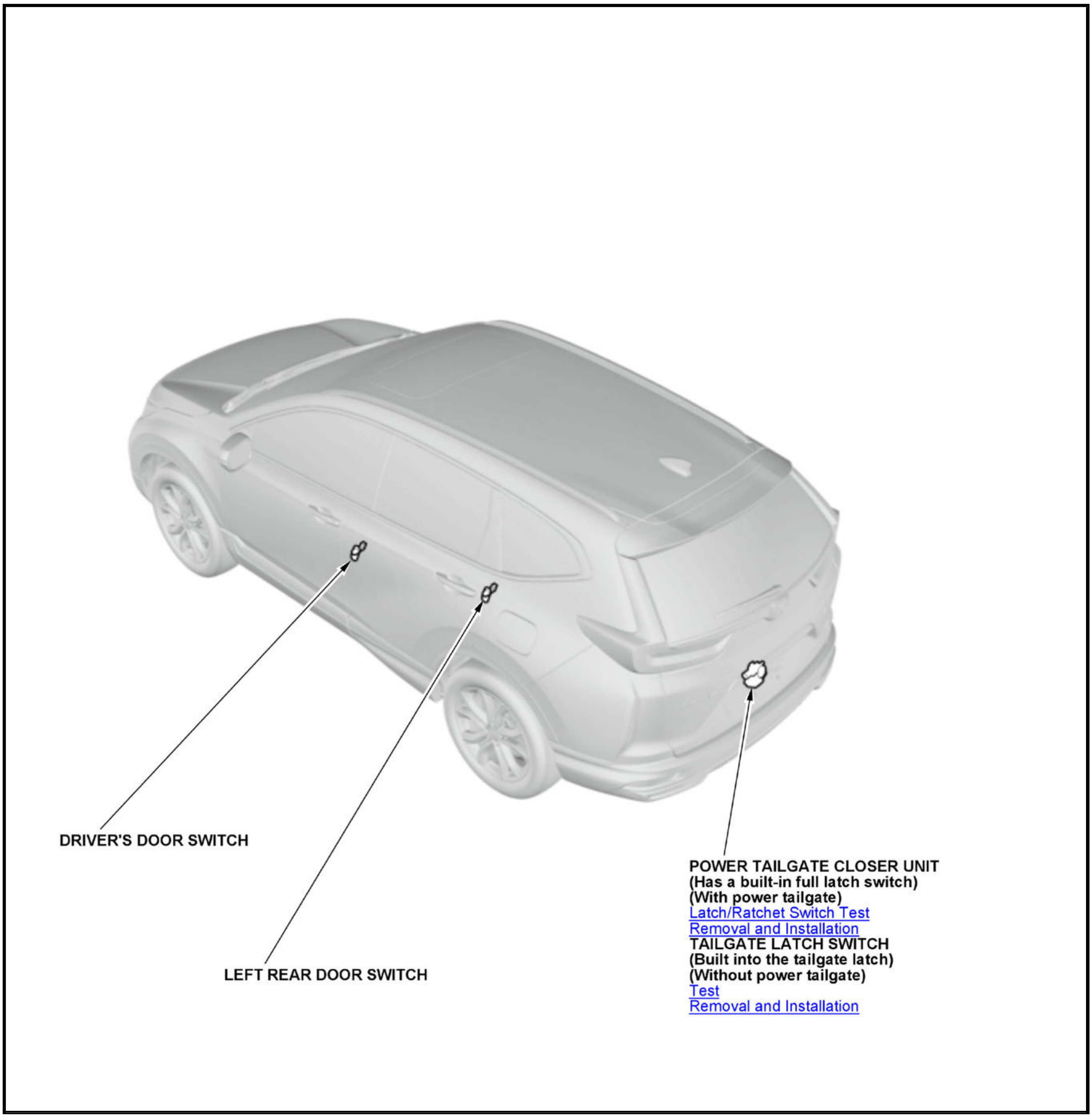
DRIVER'S DOOR SWITCH
LEFT REAR DOOR SWITCH
POWER TAILGATE CLOSER UNIT
(Has a built-in full latch switch)
(With power tailgate)
Latch/Ratchet Switch Test
Removal and Installation
TAILGATE LATCH SWITCH
(Built into the tailgate latch)
(Without power tailgate)
Test
Removal and Installation

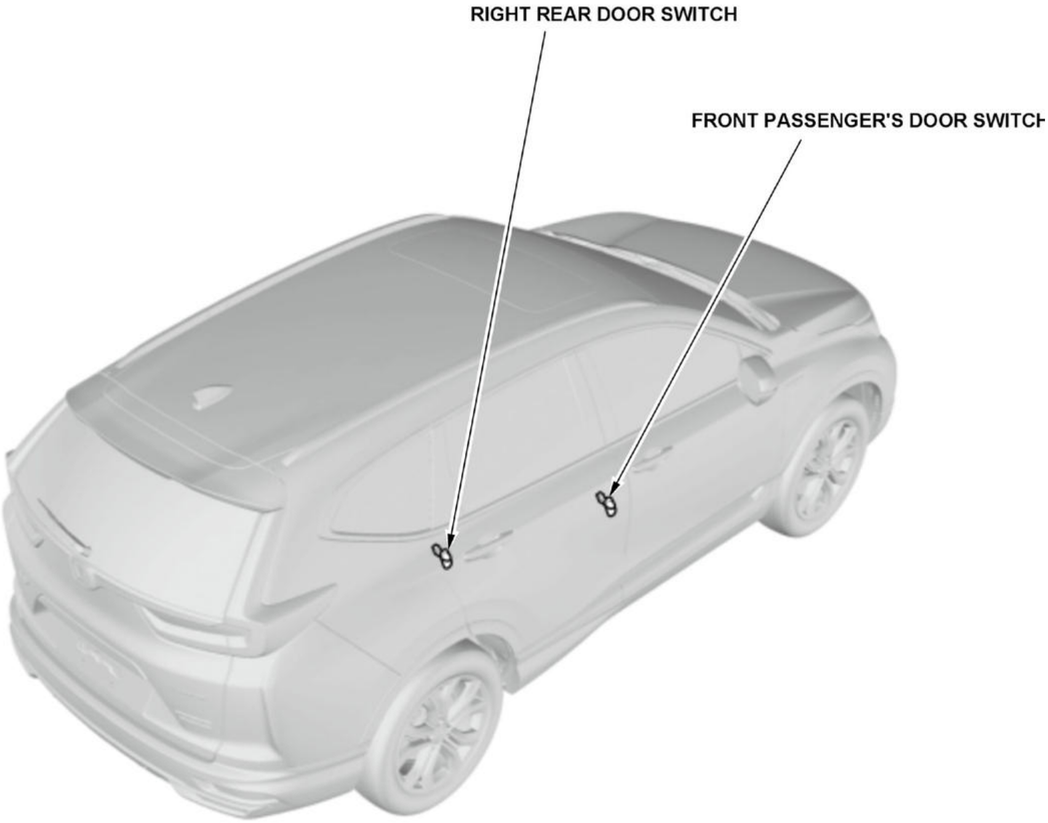

LEARNING RESET CLEAR

RESETTING THE LIFETIME POINTS

Procedure

NOTE:

- Do steps 1 through 5 within 30 seconds.
- If the "Fuel Efficiency Backlight" is "OFF" to "ON" in the custom setting, by following the instruction in the Owner's Manual.

1. Lifetime Points - Reset

1. Turn the vehicle to the ON mode.

2. Make sure that it is not the ECON mode by viewing the indicator.

NOTE: If the vehicle is in the ECON mode, turn off the ECON mode, then turn the vehicle to the OFF (LOCK) mode, then repeat this step again.

3. Press and release the brake pedal twice.

4. Press the ECON switch once, then press the ECON switch once again.

5. Confirm that the eco ambient meter color disappears.

6. Turn the vehicle to the OFF (LOCK) mode.

NOTE: The ECO score and the ECO stage indicator are not displayed unless idling for 3 minutes or driving for at least 656 ft (200 m) is done.

RESETTING THE PARKING AND BACK-UP SENSOR CONTROL UNIT

Procedure

1. Parking and Back-Up Sensor Control Unit - Reset

Reset the parking and back-up sensor control unit after doing any of the following actions:

- When you replace the parking and back-up sensor.
- When you change the parking and back-up sensor mounting location from the original location.

NOTE: Before performing the resetting procedure, make sure that each the parking and back-up sensor is connected.

Resetting Procedure

1. Turn the vehicle to the ON mode.

2. Press the parking and back-up sensor switch 10 times, within 10 seconds.

NOTE: The parking and back-up sensor switch indicator will blink.

3. Turn the vehicle to the OFF(LOCK) mode.

4. Press and hold the parking and back-up sensor switch.

5. Turn the vehicle to the ON mode.

6. Wait about 10 seconds.

NOTE: When the resetting of the parking and back-up sensor control unit is successful, the buzzer sounds for 2 seconds.

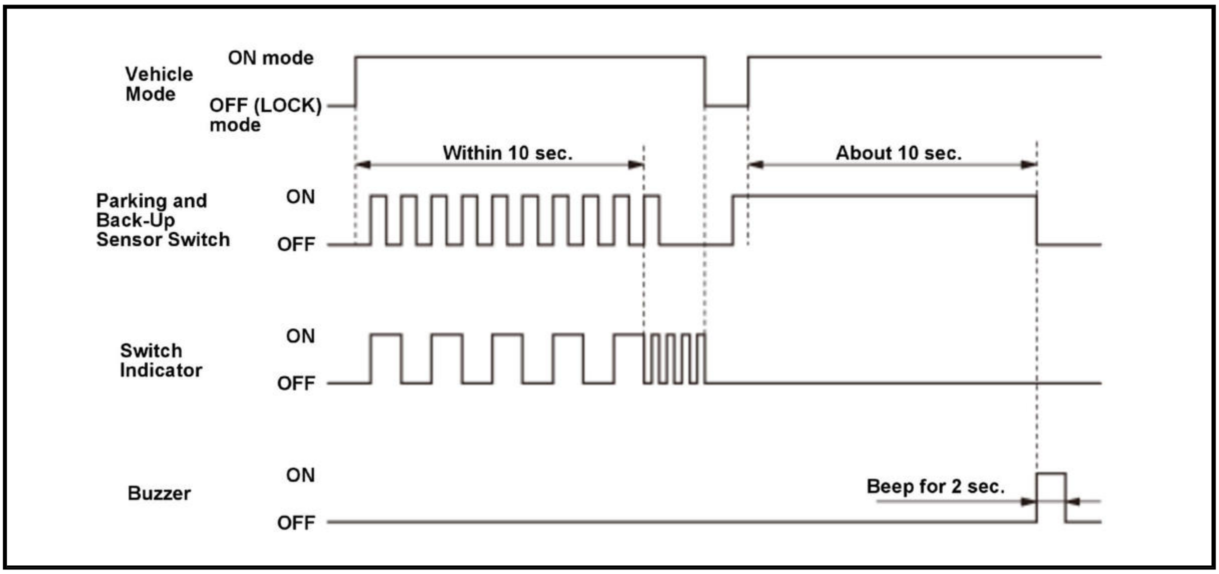
Vehicle Mode
ON mode
OFF (LOCK) mode
Within 10 sec.
About 10 sec.
Parking and Back-Up Sensor Switch
ON
OFF
Switch Indicator
ON
OFF
Buzzer
ON
OFF
Beep for 2 sec.

7. Press the parking and back-up sensor switch.

8. Make sure that the system works normally.

HandsFreeLink System - Diagnostics - Introduction - CR-V (Except Hybrid)

HOW TO INFORMATION

HOW TO TROUBLESHOOT THE HANDSFREELINK SYSTEM

Introduction

The HandsFreeLink (HFL) system works only with Honda approved BluetoothB®-enabled cell phones with a hands-free profile. If you are not sure if your cell phone is compatible with the HFL system or if it is configured correctly, Honda has a dedicated HandsFreeLink Customer Service and web site handsfreelink.honda.com (USA models) or handsfreelink.ca (Canada models) to answer your questions.

Always call the HandsFreeLink Customer Service first, not Tech Line because the HandsFreeLink Customer Service has the latest information about cell phone software versions, settings and other issues.

Most HFL complaints are due to pairing, configuration, or compatibility issues. Contact the HandsFreeLink Customer Service before replacing the audio-navigation unit or the audio unit.

General Operation

The HFL gives the user the convenience of hands free operation. It cannot control the cell phone's performance (call quality and signal strength). To avoid performance problems, do not put the cell phone in a metal briefcase or in a purse under the seat.

If you want a complete description of this system (how to pair a cell phone to the HFL and make and receive calls, and how to use simple voice tags), please refer to the Owner's Manual.

Checking Cell Phone Compatibility

The most important step in troubleshooting HFL issues is to identify the customer's cell phone model, the software version, and the cellular carrier that experiences the HFL problem. Not all cell phones with the Bluetooth feature and a hands-free profile are compatible with the Honda HFL system.

Go to handsfreelink.honda.com (USA models) or handsfreelink.ca (Canada models), or call the HandsFreeLink Customer Service (see web site), and check if the customer's cell phone is approved to work with the Honda HFL system.

NOTE:

- The approved cell phone list is constantly changing, so check them frequently.
- Cell Phones may be removed from the approved list if a software bug is discovered that makes the cell phone incompatible.

Pairing a Cell Phone (Display audio type)

NOTE:

- To pair a cell phone, the vehicle has to be parked by applying the parking brake.
- The screens detail indicated may change depending on equipment or specification.

1. Make sure the cell phone you are pairing is on and in its discovery mode.

2. Turn the vehicle to the ACCESSORY mode, and select OK on the disclaimer screen.

3. Press the HOME button, then select the Phone icon from the HOME screen.

NOTE: **Before pairing a cell phone, set the Automatic Phone Sync to ON or OFF.**

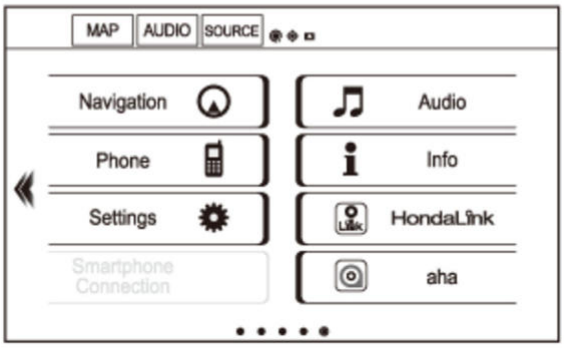
MAP
AUDIO
SOURCE
Navigation
Audio
Phone
Info
Settings
HondaLink
Smartphone Connection
aha

4. If the BluetoothB® power in the audio unit is off, a confirmation screen appears on the display. Select Yes to turn the BluetoothB® power on.

5. A cell phone connection confirmation screen appears on the display. Select Yes to add a new cell phone.

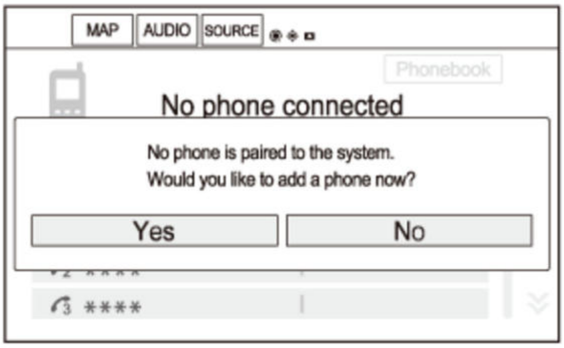
MAP
AUDIO
SOURCE
Phonebook
Yes
No
****
****

No phone connected

No phone is paired to the system.
Would you like to add a phone now?

6. Select the your BluetoothB® Device from the device list. If the device name is not found in the list, select Reflash to recheck the Bluetooth cell phone.

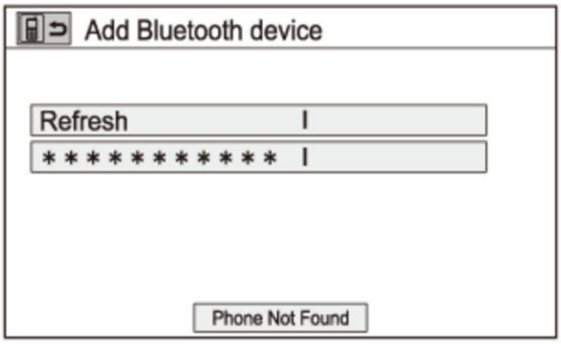
Add Bluetooth device
Refresh
****
Phone Not Found

7. If the HFL does not find the cell phone, select the Phone Not Found icon. When the 4-digit PIN appears on the display, enter the PIN into the cell phone.

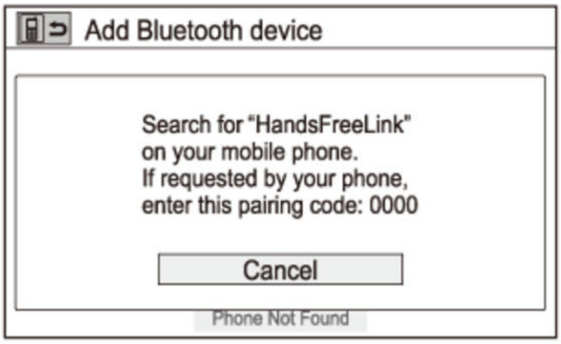
Add Bluetooth device

Search for "HandsFreeLink" on your mobile phone.
If requested by your phone, enter this pairing code: 0000

Cancel
Phone Not Found

8. Once the cell phone is discovered by the HFL, Confirm the connection on the cell phone.

NOTE: **The confirmation screen may vary by the cell phone. Depending on the BluetoothB® version of cell phone, it may be necessary to operate the cell phone.**

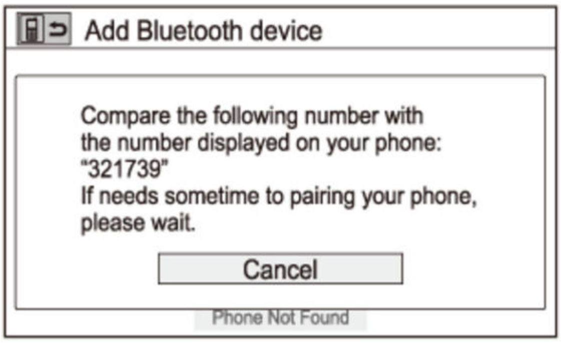
Add Bluetooth device

Compare the following number with the number displayed on your phone:
"321739"
If needs sometime to pairing your phone, please wait.

Cancel
Phone Not Found

9. Once the cell phone is successfully paired, the connected device is added on the screen.

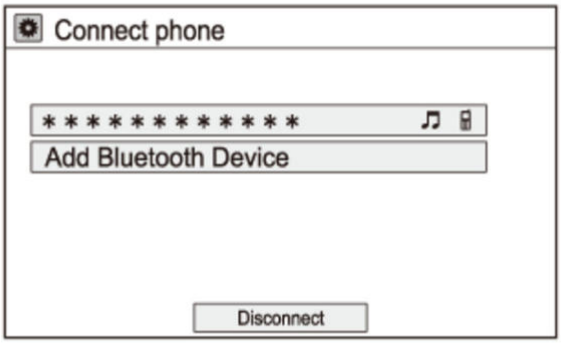
Connect phone
************ ♫
Add Bluetooth Device
Disconnect

10. If the HondaLink Assist Setting screen appears on the display, select On or Off, then press the BACK button to exit the screen.

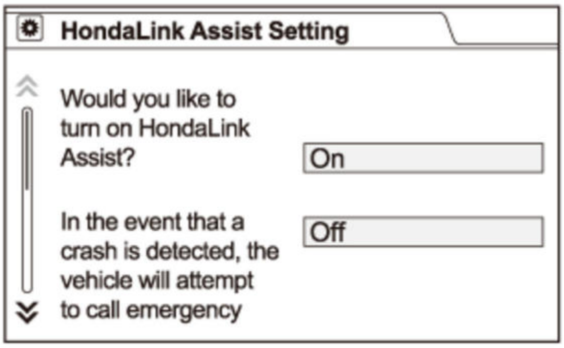
HondaLink Assist Setting

Would you like to turn on HondaLink Assist? On

In the event that a crash is detected, the vehicle will attempt to call emergency Off

Pairing Troubleshooting

Many pairing issues are resolved by altering the customer's cell phone settings.

If you cannot get an approved HFL phone to pair, go to handsfreelink.honda.com (USA models) or handsfreelink.ca (Canada models), or contact the HandsFreeLink Customer Service.

Dropped Calls

Customers may perceive dropped calls as being an HFL system fault, but most dropped calls are resultant from phone and cell phone carrier issues.

Always confirm with the customer if the number of dropped calls is higher while using the HFL system as opposed to using the cell phone only. Customers often confuse problems with their cell phone or carrier as a problem with the HFL system. The HFL system cannot control or determine the following issues:

- Cellular connection quality
- Signal strength
- Cellular coverage
- Ambient weather conditions that affect cellular signals

When a customer complains about dropped calls, ask questions about when or where the calls are dropped, such as:

- Do you drive the same route on a regular basis?
- Does the call drop in the same location?
- Where do you keep your cell phone?
- Have you compared the number of dropped calls using the HFL versus making calls from the handset?

There are many reasons for a dropped call that are not related to the HFL system. Here are some causes for dropped calls:

- If the quantity of dropped calls is about the same when the customer uses the HFL system versus the handset, the issue is likely due to the cellular phone or carrier.
- If the cell phone is equipped with a retractable antenna, it needs to be extended to maximize signal strength.
- If a customer also notices that the calls tend to drop in the same areas, the HFL system may be operating normally, but something about the area diminishes cellular coverage to a point where the call drops.
- Hills or mountains can block or interfere with cellular signals.
- High-rise buildings, bridges, or other large structures may block or interfere with cellular signals.
- Electrical storms, heavy rain, or overcast conditions interfere with signal strength.
- Placing the phone in a purse, in a metal briefcase, under the seat, in the glove box, or in the trunk can all affect signal reception.

- There are coverage gaps in the mobile service. When driving, a call is typically passed from one tower to another. If the customer drives through an area where there is a coverage gap between towers, the call drops.
- The cell phone battery's state of change can affect signal reception. A low battery may reduce the cell phone's ability to boost the antenna's power and function properly, especially in low signal strength areas. Some phone manufacturers trade off signal transmission and reception strength for battery life. As the battery weakens, the signal strength may also weaken. Some phones may operate more effectively than others in low signal strength areas especially with a partially charged battery.

DESCRIPTION & OPERATION

HANDSFREELINK SYSTEM DESCRIPTION

The HandsFreeLink (HFL) automatically connects (pairs) to a linked phone when the vehicle is in the ACCESSORY or ON mode. The HFL also synchronizes with the paired cell phone's phone book to automatically update any changes. Depending on the functions of the cell phone, the automatic update may not work.

HandsFreeLink Control Unit

The audio-navigation unit or the audio unit has the HFL circuit and the BluetoothB® transceiver. The HFL microphone in the roof console is connected directly to the audio-navigation unit or the audio unit. The HFL functions are controlled by the HFL switch.

Diagnostic Function

The audio-navigation unit or the audio unit can check the HFL system components by the System Diagnostic Mode:

- Display audio type: Checks the connection between the audio/navigation system and the internal BluetoothB® module.
- Display audio type: Checks the voice input level of the HFL microphone.
- Color audio type: Checks the connection between the audio unit and the HFL microphone.
- Checks the status of the HFL switch detection.

Pairing a Cell Phone

The audio-navigation unit or the audio unit can be paired with a Honda approved cell phone by BluetoothB® communication. Pairing procedures vary by the connection history and Bluetooth version of the cell phone. Refer to the Owner's Manual.

When the BluetoothB® cell phone that supports PBAP and AT Command is connected, the phone book data in the cell phone is transferred to the audio-navigation unit or the audio unit automatically. A function to delete an item in the phone book is not supported.

General Operation

The HFL switch on the steering wheel is used to answer incoming calls, to make outgoing calls, or to end a call.

- With multi-information display: The HFL switch signal is sent to the gauge control module using a serial bus (LIN), then the signal is sent to the audio-navigation unit or the audio unit using the B-CAN. The HFL information is sent to the gauge control module to display on the multi-information display (MID) using the dedicated digital signal line (LVDS2).
- Without multi-information display: The HFL switch signal from the resistor divider circuit is sent to the audio unit directly.

The HFL microphone picks up the driver's voice, and sends the signal to the audio-navigation unit or the audio unit. The signal is then sent from the BluetoothB® module to the cell phone.

The caller's voice signal is sent from the cell phone to the BluetoothB® transceiver. The audio-navigation unit or the audio unit outputs the voice signal through the front door speakers.

Muting Logic

When you are talking on the cell phone using the HFL system, the front speakers provide the HFL sound and the rear speakers are muted. **Refer to the Audio System Description** for muting signal logic with the audio-navigation unit or the audio unit.

Voice Tag Function (Display Audio type)

The audio-navigation unit or the audio unit can store voice tag on the memory for making a HFL call by voice recognition possible. The voice tag stored on the audio-navigation unit or the audio unit is related with Speed Dial.

Voice Control Function

The audio unit has voice recognition function about the HFL. Using the TALK button on the steering wheel to activate the voice control. The customer can make a call by talking a number or a contact name*. As for vehicles with navigation, the audio-navigation unit controls the HFL by the navigation voice control system.

*: Display audio type

Fan Mute Operation

When the voice recognition is in use, the audio-navigation unit or the audio unit sends the fan mute signal to the climate control unit using the B-CAN. The blower fan operating voltage may be reduced depending on the current fan speed.

Text/e-Mail (Display Audio Type)

The audio-navigation unit or the audio unit processes the short message service (SMS) data sent from the cell phone. When the BluetoothB® cell phone that supports Message Access Profile (MAP) is connected, the audio-navigation unit or the audio unit processes the Multimedia message service (MMS) and the e-Mail data sent from the cell phone.

The text message information is displayed on the center display unit. Also, the MID in the gauge control module displays the Text/e-Mail status by pop-up screen.

The audio-navigation unit or the audio unit can read out the text message using the Text-to-Speech (TTS) engine. The voice outputs to driver's and front passenger's speakers.

Operation Restriction

The audio-navigation unit or the audio unit has a function that restricts certain operation of HFL system that may affect safe driving.

HFL Switch

The HFL switch and the audio remote switch are integrated to the audio remote-HFL switch. **Refer to the Audio System Description** .

HFL Microphone

The HFL microphone receives voice command or HFL speech, and transmits them to the audio-navigation unit or the audio unit.

Array Microphone

The HFL microphone consist of two microphones. These microphones detects the driver's voice and the passenger's voice separately.

For display audio type, the microphone is switching the directivity by the voltage change on the HFT MUTE line.

B	Description	HFT MUTE Signal
HFL/NAVI voice recognition mode	When using the HFL voice tag function, HFL voice control function, or the navigation voice recognition function that is embedded into the audio-navigation unit or the audio unit, this mode suppresses noises from the passenger's side to achieve the voice recognition enhancement.	0 - 1.5 V
HFL telephone mode	When using the HandsFreeLink via the audio-navigation unit or the audio unit, this mode achieves low-latency using digital processing to voice signal from bidirectional microphones.	3 - 5 V
Server voice recognition mode	When using the voice recognition system via an external device (like smartphone), this mode suppresses background noise to achieve the voice recognition enhancement.	7 - 9.5 V

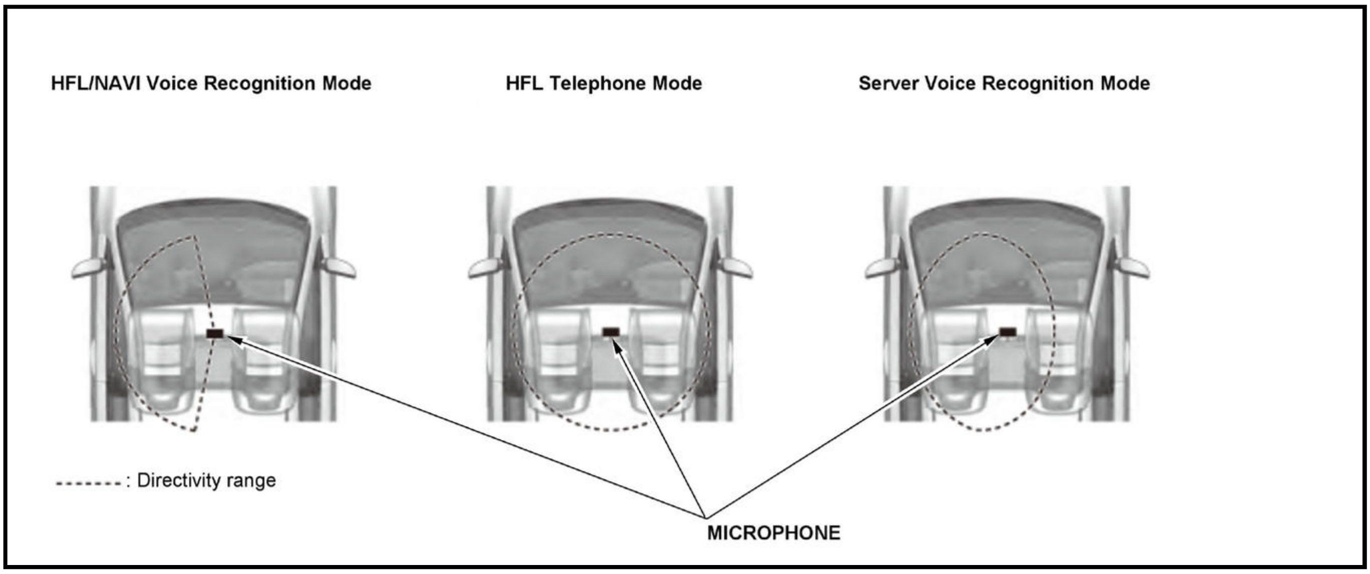
HFL/NAVI Voice Recognition Mode
HFL Telephone Mode
Server Voice Recognition Mode
-------: Directivity range
MICROPHONE

TROUBLESHOOTING

HANDSFREELINK SYSTEM TROUBLESHOOTING

NOTE:

- Check the vehicle 12 volt battery condition first .
- Before you troubleshoot, make sure to follow the General Troubleshooting Information .
- Make sure the Bluetooth cell phone is Honda approved and configured correctly. Online, go to handsfreelink.honda.com, or call the HandsFreeLink Customer Service at 888-528-7876.
- You must be able to duplicate the customer's concern to successfully diagnose the problem.
- Always use the customer's Bluetooth cell phone to successfully diagnose the problem.

1. Determine possible failure area (Bluetooth cell phone, others) 1

   -1. Make sure the Bluetooth cell phone is approved by checking handsfreelink.honda.com, or call the HandsFreeLink Customer Service at 888-528-7876.

   Is the Bluetooth cell phone approved?

   YES

The failure is duplicated, go to step 2.

NO

Explain to the customer that the Bluetooth cell phone is not approved. Recommend they get an approved Bluetooth cell phone. Go to handsfreelink.honda.com for a list of approved Bluetooth cell phones.

2. Determine possible failure area (Bluetooth cell phone, others) 2

   -1. Check if the Bluetooth cell phone has any special requirements (software version, configuration, etc.).

   Is the correct software version loaded and is the Bluetooth cell phone properly configured?

   YES

   Go to step 3.

   NO

   Explain to your customer that the Bluetooth cell phone software needs to be updated or the Bluetooth cell phone needs to be configured properly. If the HandsFreeLink Customer Service is able to help you configure the phone, explain the proper settings, otherwise direct your customer to contact their Bluetooth cell phone manufacturer or carrier.

3. Determine possible failure area (Bluetooth cell phone, others) 3

   -1. Check the features of the approved Bluetooth cell phone.

   Are all the features approved?

   YES

   Go to step 4.

   NO

   Check and see if the feature that is not approved is the same as the customer complaint. If the complaint is about the feature that is not approved, the vehicle is OK. Explain to the customer that the feature is not approved to work with the HFL.

4. Problem verification

   -1. Try to duplicate the problem or have the customer demonstrate the problem.

   Can you duplicate the problem?

   YES

   Go to step 5.

   NO

   Intermittent failure, the system is OK at this time.

5. HFL module check

   -1. Pair the Bluetooth cell phone to a known-good vehicle (same model, year, and trim), and try duplicate the problem.

   Does the Bluetooth cell phone have the same problem on the known-good vehicle?

YES

Call the HandsFreeLink Customer Service at 888-528-7876 to make sure the Bluetooth cell phone is configured correctly and has the correct software. If the Bluetooth cell phone is configured correctly, it is either a characteristic of the HFL system, or a characteristic of the particular approved Bluetooth cell phone being used. Explain to your customer that this is a system characteristic. Another Bluetooth cell phone from the approved Bluetooth cell phone list may give more favorable results.

NO: With navigation

Replace the audio-navigation unit .

NO: Without navigation

Replace the audio unit .

COMPONENT LOCATION INDEX

HANDSFREELINK SYSTEM COMPONENT LOCATION INDEX

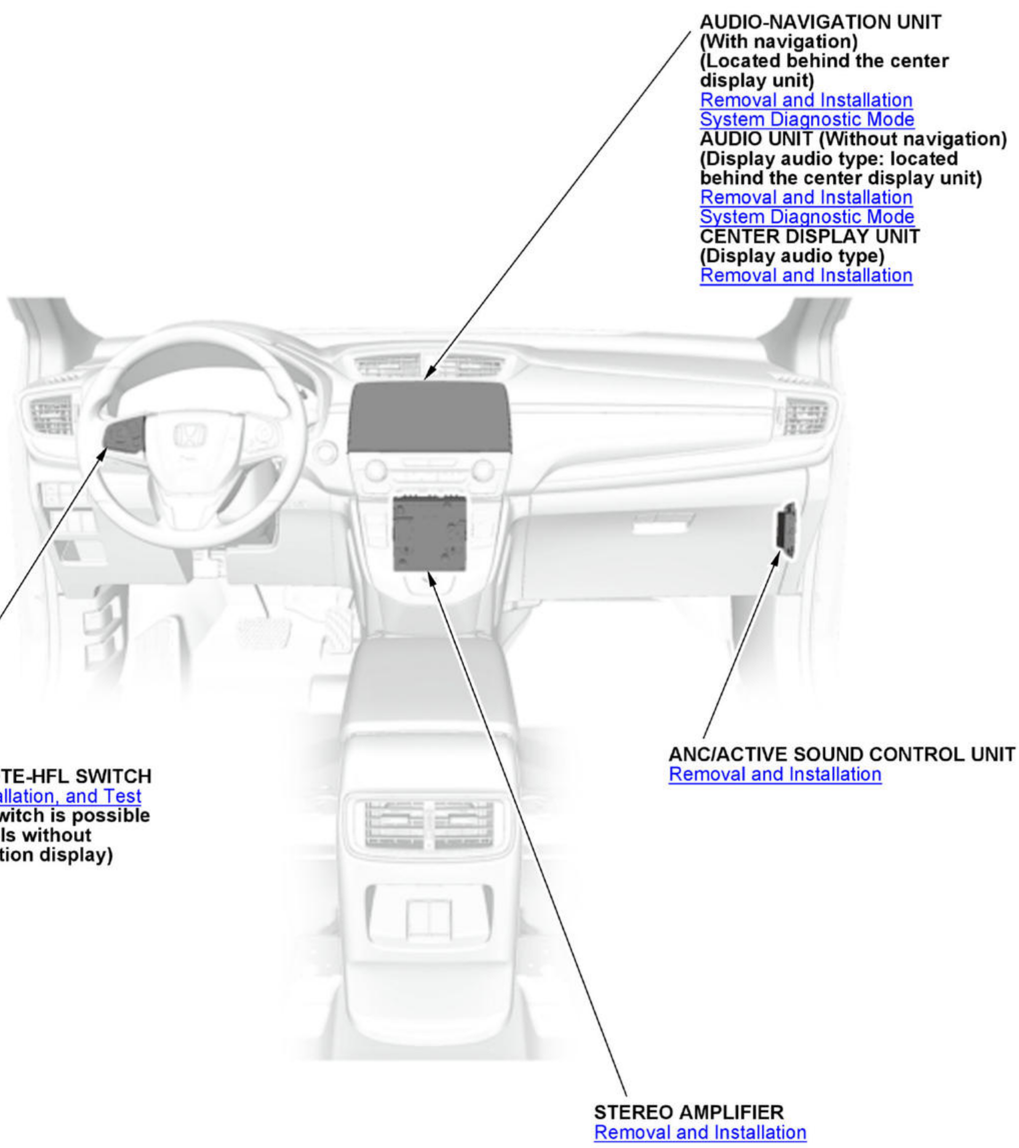
AUDIO-NAVIGATION UNIT
(With navigation)
(Located behind the center display unit)
Removal and Installation
System Diagnostic Mode
AUDIO UNIT (Without navigation)
(Display audio type: located behind the center display unit)
Removal and Installation
System Diagnostic Mode
CENTER DISPLAY UNIT
(Display audio type)
Removal and Installation
AUDIO REMOTE-HFL SWITCH
Removal, Installation, and Test
(Test of the switch is possible only on models without multi-information display)
ANC/ACTIVE SOUND CONTROL UNIT
Removal and Installation
STEREO AMPLIFIER
Removal and Installation

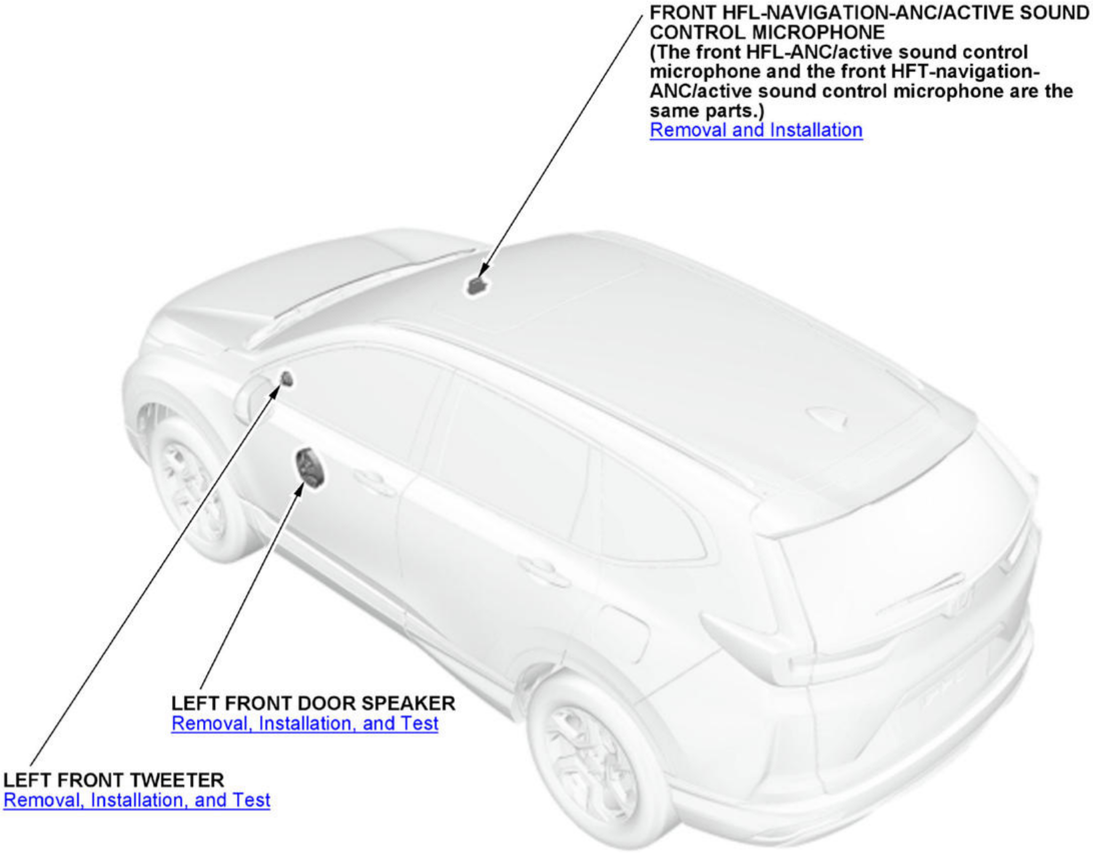
FRONT HFL-NAVIGATION-ANC/ACTIVE SOUND CONTROL MICROPHONE
(The front HFL-ANC/active sound control microphone and the front HFT-navigation-ANC/active sound control microphone are the same parts.)
Removal and Installation
LEFT FRONT DOOR SPEAKER
Removal, Installation, and Test
LEFT FRONT TWEETER
Removal, Installation, and Test

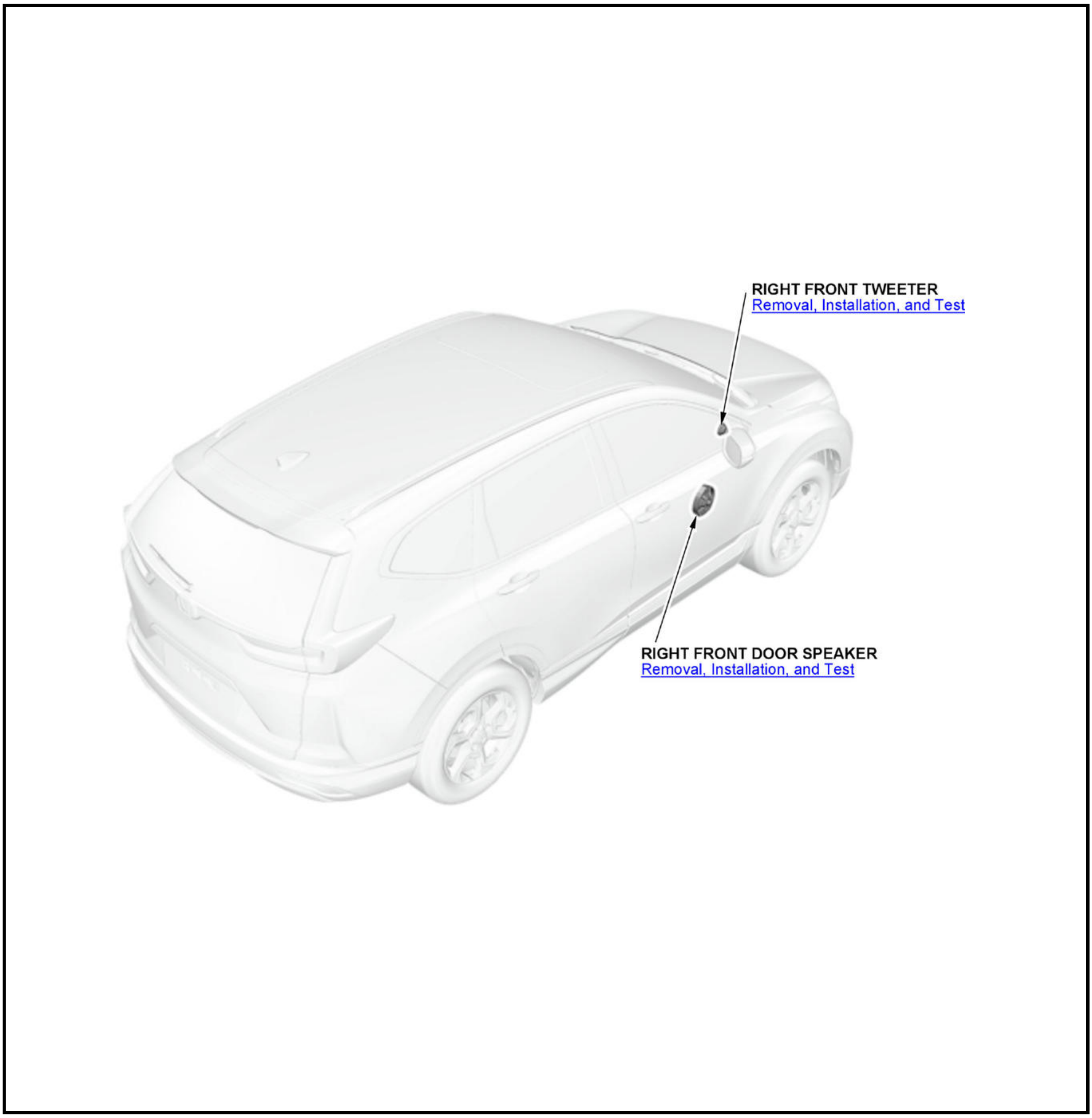
RIGHT FRONT TWEETER
Removal, Installation, and Test
RIGHT FRONT DOOR SPEAKER
Removal, Installation, and Test

SYMPTOM TROUBLESHOOTING

HANDSFREELINK SYSTEM SYMPTOM TROUBLESHOOTING - HFL DOES NOT WORK PROPERLY

NOTE:

- **Check the vehicle 12 volt battery condition first** .
- You must be able to duplicate the customer's concern to successfully diagnose the problem. If you cannot duplicate the issue, have the customer demonstrate it.
- Check the connectors for poor connections or loose terminals.
- The front HFL-navigation-ANC/active sound control microphone and the front HFL-ANC/active sound control microphone are the same parts.

1. HFL switch input check

   -1. Turn the vehicle to the ON mode.

Display audio type: Go into the System Diagnostic Mode, and use the Hard Key to check the HFL switch (PICK-UP button, HANG-UP/BACK button, TALK button);

- **With navigation**
- **Without navigation**

Color audio type: **Go into the System Diagnostic Mode, and use the Knob Check in the Version/System to check the HFL switch (PICK-UP button, HANG-UP/BACK button, TALK button)** .

Does all the HFL switch buttons respond?

YES

Go to step 2.

NO

Go to Audio remote-HFL switch does not work properly (audio unit buttons work) troubleshooting .

2. Bluetooth module check:

   Display audio type: Go into the System Diagnostic Mode, and use the HFL/Mic to check the Bluetooth Connection Diagnosis;

   - **With navigation**
   - **Without navigation**

   Color audio type: **Go into the System Diagnostic Mode, and use the Version Display in the Version/System to check the Bluetooth module** .

   Does the status indicate OK?

   YES: Display audio type

   Go to step 3.

   YES: Color audio type

   Go to step 4.

   NO: With navigation

   Replace the audio-navigation unit .

   NO: Without navigation

   Replace the audio unit .

3. Microphone input check (display audio type):

   Go into the System Diagnostic Mode, and use the HFL/Mic to check the microphone;

   - **With navigation**
   - **Without navigation**

   -2. Press the TALK button, then say "testing" in front of the microphone to check the Mic level.

   Is the microphone level OK?

YES

Go to step 5.

NO

Go to step 7.

4. In Line Diag check (color audio type)

   -1. **Go into the System Diagnostic Mode, and use the In Line Diag in the Version/System to check the microphone connection** .

   Does the HFL MIC indicate OK?

   YES

   Go to step 5.

   NO

   Go to step 7.

5. Mobile phone connection check (known-good phone)

   -1. Turn the vehicle to the OFF (LOCK) mode then the ON mode.

   -2. Pair a known-good cell phone with Bluetooth to the customer's vehicle.

   Can you pair the cell phone?

   YES

   Go to step 6.

   NO: With navigation

   Replace the audio-navigation unit .

   NO: Without navigation

   Replace the audio unit .

6. Problem verification

   -1. Pair the customer's cell phone with Bluetooth to the customer's vehicle.

   Can you pair the cell phone, and does it operate normally?

   YES

   The HFL system is OK at this time. Inquire if there are any known issues for the problem.

   NO

   The customer's cell phone is defective or not compatible.

7. Determine possible failure area (microphone signal circuit, others)

   -1. Turn the vehicle to the OFF (LOCK) mode.

   -2. Disconnect the following connector.

HFL microphone 8P connector

-3. Turn the vehicle to the ON mode.

-4. Measure the voltage between test points 1 and 2.

Test condition	Vehicle ON mode
B	HFL microphone 8P connector: disconnected
Test point 1	**HFL microphone 8P connector No. 1**
Test point 2	**HFL microphone 8P connector No. 2**

Is there about 8.0 V?

YES

Go to step 8.

NO

Go to step 11.

8. Determine possible failure area (MIC PWR line, others)

-1. Measure the voltage between test points 1 and 2.

Test condition	Vehicle ON mode
B	HFL microphone 8P connector: disconnected
Test point 1	**HFL microphone 8P connector No. 4**
Test point 2	Body ground

Is there about 8.0 V?

YES

Replace the HFL microphone .

NO

Go to step 9.

9. Open wire check (MIC PWR line)

-1. Measure the voltage between test points 1 and 2.

Test condition	Vehicle ON mode
B	HFL microphone 8P connector: disconnected
Test point 1	**Audio-navigation unit connector C (32P) (with navigation) No. 7**
B	**Audio unit connector C (32P) (without navigation) No. 7**
Test point 2	Body ground

Is there about 8.0 V?

YES

Repair an open in the wire.

NO

The MIC PWR wire is not open. Go to step 10.

10. Shorted wire check (MIC PWR line)

-1. Turn the vehicle to the OFF (LOCK) mode.

-2. Disconnect the following connector.

Audio-navigation unit connector C (32P) (with navigation)Audio unit connector C (32P) (without navigation)

-3. Check for continuity between test points 1 and 2.

Test condition	Vehicle OFF (LOCK) mode
B	HFL microphone 8P connector: disconnected
B	Audio-navigation unit connector C (32P) (with navigation): disconnectedAudio unit connector C (32P) (without navigation): disconnected
Test point 1	**Audio-navigation unit connector C (32P) (with navigation) No. 7**
B	**Audio unit connector C (32P) (without navigation) No. 7**
Test point 2	Body ground

Is there continuity?

YES

Repair a short to body ground in the wire.

NO: With navigation

Replace the audio-navigation unit .

NO: Without navigation

Replace the audio unit .

11. Determine possible failure area (MIC GND line, others)

-1. Measure the voltage between test points 1 and 2.

Test condition	Vehicle ON mode
B	HFL microphone 8P connector: disconnected

Test point 1	**HFL microphone 8P connector No. 2**
Test point 2	Body ground

Is there about 8.0 V?

YES

There is an open in the wire. Replace the affected shielded harness.

NO

Go to step 12.

12. Open wire check (MIC+ line)

-1. Measure the voltage between test points 1 and 2.

Test condition	Vehicle ON mode
B	HFL microphone 8P connector: disconnected
Test point 1	**Audio-navigation unit connector C (32P) (with navigation) No. 22**
B	**Audio unit connector C (32P) (without navigation) No. 22**
Test point 2	Body ground

Is there about 8.0 V?

YES

There is an open in the wire. Replace the affected shielded harness.

NO

The MIC+ wire is not open. Go to step 13.

13. Shorted wire check (MIC+ line)

-1. Turn the vehicle to the OFF (LOCK) mode.

-2. Disconnect the following connector.

Audio-navigation unit connector C (32P) (with navigation)Audio unit connector C (32P) (without navigation)

-3. Check for continuity between test points 1 and 2.

Test condition	Vehicle OFF (LOCK) mode
B	HFL microphone 8P connector: disconnected
B	Audio-navigation unit connector C (32P) (with navigation): disconnectedAudio unit connector C (32P) (without navigation): disconnected
Test point 1	**Audio-navigation unit connector C (32P) (with navigation) No. 22**
B	**Audio unit connector C (32P) (without navigation) No. 22**
Test point 2	Body ground

Is there continuity?

YES

There is a short to body ground in the wire. Replace the affected shielded harness.

NO

The MIC+ wire is not shorted to ground. Go to step 14.

14. Shorted wire check (MIC+ line to MIC GND line, SH MIC line)

-1. Check for continuity between test points 1 and 2.

Test condition	Vehicle OFF (LOCK) mode
B	HFL microphone 8P connector: disconnected
B	Audio-navigation unit connector C (32P): disconnected
Test point 1	**Audio-navigation unit connector C (32P) (with navigation) No. 6**
B	**Audio unit connector C (32P) (without navigation) No. 6**
Test point 2	**Audio-navigation unit connector C (32P) (with navigation) No. 22**
B	**Audio unit connector C (32P) (without navigation) No. 22**

Test point 1	Audio-navigation unit connector C (32P) (with navigation) No. 22
B	Audio unit connector C (32P) (without navigation) No. 22
Test point 2	Audio-navigation unit connector C (32P) (with navigation) No. 23
B	Audio unit connector C (32P) (without navigation) No. 23

Is there continuity?

YES

There is a short in the wires. Replace the affected shielded harness.

NO: With navigation

Replace the audio-navigation unit .

NO: Without navigation

Replace the audio unit .

SYMPTOM TROUBLESHOOTING INDEX

HANDSFREELINK SYSTEM SYMPTOM TROUBLESHOOTING INDEX

Symptom	Diagnostic Procedure	Also Check for
HFL does not work properly	**Symptom Troubleshooting**	Bluetooth phone compatibility (see the Owner's Manual)
Bluetooth audio does not work	Check the Bluetooth module: • With navigation: **Do the HFL/Mic in the System Diagnostic Mode** • Display audio type without navigation: **Do the HFL/Mic in the System Diagnostic Mode** • Color audio type: **Do the Version Display in the System Diagnostic Mode**	Bluetooth audio device compatibility (see the Owner's Manual)
The Honda approved Bluetooth cell phone is having problems pairing to the vehicle	**HFL System Troubleshooting**	B
The Honda approved Bluetooth cell phone cannot use all its functions	**HFL System Troubleshooting**	B
The Honda approved Bluetooth cell phone does not place or receive calls using the HFL system	**HFL System Troubleshooting**	B

DESCRIPTION & OPERATION

HANDSFREELINK SYSTEM DESCRIPTION

The HandsFreeLink (HFL) automatically connects (pairs) to a linked phone when the vehicle is in the ACCESSORY or ON mode. The HFL also synchronizes with the paired cell phone's phone book to automatically update any changes. Depending on the functions of the cell phone, the automatic update may not work.

HandsFreeLink Control Unit

The audio-navigation unit or the audio unit has the HFL circuit and the BluetoothB® transceiver. The HFL microphone in the roof console is connected directly to the audio-navigation unit or the audio unit. The HFL functions are controlled by the HFL switch.

Diagnostic Function

The audio-navigation unit or the audio unit can check the HFL system components by the System Diagnostic Mode:

- Display audio type: Checks the connection between the audio/navigation system and the internal BluetoothB® module.
- Display audio type: Checks the voice input level of the HFL microphone.
- Color audio type: Checks the connection between the audio unit and the HFL microphone.
- Checks the status of the HFL switch detection.

Pairing a Cell Phone

The audio-navigation unit or the audio unit can be paired with a Honda approved cell phone by BluetoothB® communication. Pairing procedures vary by the connection history and Bluetooth version of the cell phone. Refer to the Owner's Manual.

When the BluetoothB® cell phone that supports PBAP and AT Command is connected, the phone book data in the cell phone is transferred to the audio-navigation unit or the audio unit automatically. A function to delete an item in the phone book is not supported.

General Operation

The HFL switch on the steering wheel is used to answer incoming calls, to make outgoing calls, or to end a call.

The HFL switch signal is sent to the gauge control module using a serial bus (LIN), then the signal is sent to the audio-navigation unit or the audio unit using the B-CAN. The HFL information is sent to the gauge control module to display on the multi-information display (MID) using the dedicated digital signal line (LVDS2).

The HFL microphone picks up the driver's voice, and sends the signal to the audio-navigation unit or the audio unit. The signal is then sent from the BluetoothB® module to the cell phone.

The caller's voice signal is sent from the cell phone to the BluetoothB® transceiver. The audio-navigation unit or the audio unit outputs the voice signal through the front door speakers.

Muting Logic

When you are talking on the cell phone using the HFL system, the front speakers provide the HFL sound and the rear speakers are muted. **Refer to the Audio System Description** for muting signal logic with the audio-navigation unit or the audio unit.

Voice Tag Function (Display Audio type)

The audio-navigation unit or the audio unit can store voice tag on the memory for making a HFL call by voice recognition possible. The voice tag stored on the audio-navigation unit or the audio unit is related with Speed Dial.

Voice Control Function

The audio unit has voice recognition function about the HFL. Using the TALK button on the steering wheel to activate the voice control. The customer can make a call by talking a number or a contact name*. As for vehicles with navigation, the audio-navigation unit controls the HFL by the navigation voice control system.

*: Display audio type

Fan Mute Operation

When the voice recognition is in use, the audio-navigation unit or the audio unit sends the fan mute signal to the climate control unit using the B-CAN. The blower fan operating voltage may be reduced depending on the current fan speed.

Text/e-Mail (Display Audio Type)

The audio-navigation unit or the audio unit processes the short message service (SMS) data sent from the cell phone. When the BluetoothB® cell phone that supports Message Access Profile (MAP) is connected, the audio-navigation unit or the audio unit processes the Multimedia message service (MMS) and the e-Mail data sent from the cell phone.

The text message information is displayed on the center display unit. Also, the MID in the gauge control module displays the Text/e-Mail status by pop-up screen.

The audio-navigation unit or the audio unit can read out the text message using the Text-to-Speech (TTS) engine. The voice outputs to driver's and front passenger's speakers.

Operation Restriction

The audio-navigation unit or the audio unit has a function that restricts certain operation of HFL system that may affect safe driving.

HFL Switch

The HFL switch and the audio remote switch are integrated to the audio remote-HFL switch. **Refer to the Audio System Description** .

HFL Microphone

The HFL microphone receives voice command or HFL speech, and transmits them to the audio-navigation unit or the audio unit.

Array Microphone

The HFL microphone consist of two microphones. These microphones detects the driver's voice and the passenger's voice separately.

For display audio type, the microphone is switching the directivity by the voltage change on the HFT MUTE line.

B	Description	HFT MUTE Signal
HFL/NAVI voice recognition mode	When using the HFL voice tag function, HFL voice control function, or the navigation voice recognition function that is embedded into the audio-navigation unit or the audio unit, this mode suppresses noises from the passenger's side to achieve the voice recognition enhancement.	0 - 1.5 V
HFL telephone mode	When using the HandsFreeLink via the audio-navigation unit or the audio unit, this mode achieves low-latency using digital processing to voice signal from bidirectional microphones.	3 - 5 V
Server voice recognition mode	When using the voice recognition system via an external device (like smartphone), this mode suppresses background noise to achieve the voice recognition enhancement.	7 - 9.5 V

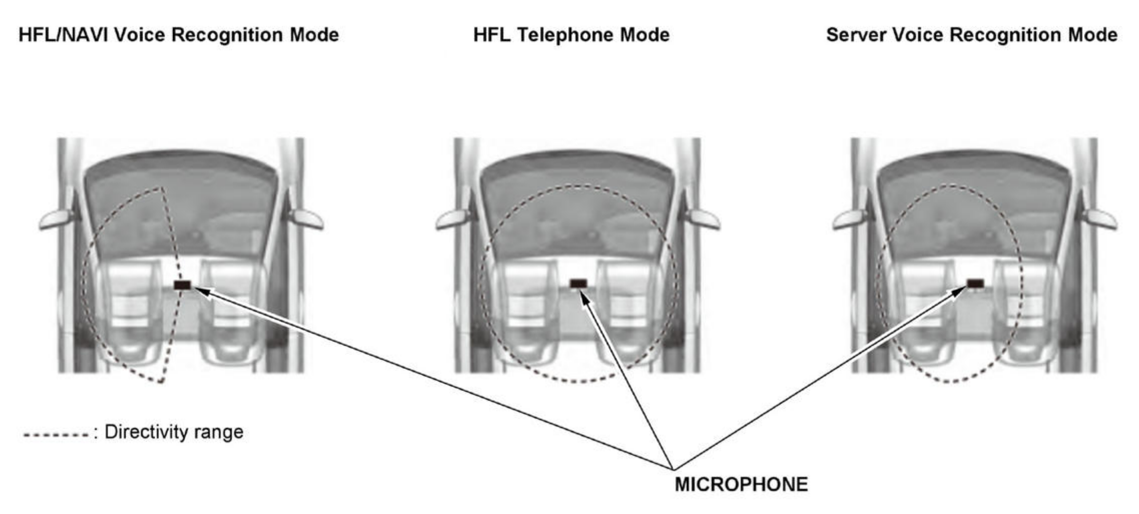
HFL/NAVI Voice Recognition Mode
HFL Telephone Mode
Server Voice Recognition Mode
-------: Directivity range
MICROPHONE

SYMPTOM TROUBLESHOOTING INDEX

HANDSFREELINK SYSTEM SYMPTOM TROUBLESHOOTING INDEX

Symptom	Diagnostic Procedure	Also Check for
HFL does not work properly	Symptom Troubleshooting	Bluetooth phone compatibility (see the Owner's Manual)
Bluetooth audio does not work	Check the Bluetooth module: • With navigation: Do the HFL/Mic in the System Diagnostic Mode • Display audio type without navigation: Do the HFL/Mic in the System Diagnostic Mode • Color audio type: Do the Version Display in	Bluetooth audio device compatibility (see the Owner's Manual)

Symptom	Diagnostic Procedure	Also Check for
	the System Diagnostic Mode	
The approved Bluetooth cell phone is having problems pairing to the vehicle	HFL System Troubleshooting	B
The approved Bluetooth cell phone cannot use all its functions	HFL System Troubleshooting	B
The approved Bluetooth cell phone does not place or receive calls using the HFL system	HFL System Troubleshooting	B

HANDSFREELINK SYSTEM SYMPTOM SYMPTOM TROUBLESHOOTING

HFL DOES NOT WORK PROPERLY

HFL does not work properly

NOTE:

- Check the vehicle 12 volt battery condition first .
- You must be able to duplicate the customer's concern to successfully diagnose the problem. If you cannot duplicate the issue, have the customer demonstrate it.
- Check the connectors for poor connections or loose terminals.
- The front HFL-navigation-ANC/active sound control microphone and the front HFL-ANC/active sound control microphone are the same parts.

1. HFL switch input check

   -1. Turn the vehicle to the ON mode.

   Display audio type: Go into the System Diagnostic Mode, and use the Hard Key to check the HFL switch (PICK-UP button, HANG-UP/BACK button, TALK button);

   - With navigation
   - Without navigation

   Color audio type: Go into the System Diagnostic Mode, and use the Knob Check in the Version/System to check the HFL switch (PICK-UP button, HANG-UP/BACK button, TALK button) .

   Do the all HFL switch buttons respond?

   YES

   Go to step 2.

   NO

   Go to Audio remote-HFL switch does not work properly (audio unit buttons work) troubleshooting .

2. Bluetooth module check:

   Display audio type: Go into the System Diagnostic Mode, and use the HFL/Mic to check the Bluetooth Connection Diagnosis;

- **With navigation**
- **Without navigation**

Color audio type: **Go into the System Diagnostic Mode, and use the Version Display in the Version/System to check the Bluetooth module** .

Does the status indicate OK?

YES: Display audio type

Go to step 3.

YES: Color audio type

Go to step 4.

NO: With navigation

Replace the audio-navigation unit .

NO: Without navigation

Replace the audio unit .

3. Microphone input check (display audio type):

   Go into the System Diagnostic Mode, and use the HFL/Mic to check the microphone;

   - **With navigation**
   - **Without navigation**

   -2. Press the TALK button, then say "testing" in front of the microphone to check the Mic level.

   Is the microphone level OK?

   YES

   Go to step 5.

   NO

   Go to step 7.

4. In Line Diag check (color audio type)

   -1. **Go into the System Diagnostic Mode, and use the In Line Diag in the Version/System to check the microphone connection** .

   Does the HFL MIC indicate OK?

   YES

   Go to step 5.

   NO

   Go to step 7.

5. Mobile phone connection check (known-good phone)

   -1. Turn the vehicle to the OFF (LOCK) mode then the ON mode.

-2. Pair a known-good cell phone with Bluetooth to the customer's vehicle.

Can you pair the cell phone?

YES

Go to step 6.

NO: With navigation

Replace the audio-navigation unit .

NO: Without navigation

Replace the audio unit .

6. Problem verification

-1. Pair the customer's cell phone with Bluetooth to the customer's vehicle.

Can you pair the cell phone, and does it operate normally?

YES

The HFL system is OK at this time. Inquire if there are any known issues for the problem.

NO

The customer's cell phone is defective or not compatible.

7. Determine possible failure area (microphone signal circuit, others)

-1. Turn the vehicle to the OFF (LOCK) mode.

-2. Disconnect the following connector.

HFL microphone 8P connector

-3. Turn the vehicle to the ON mode.

-4. Measure the voltage between test points 1 and 2.

Test condition	Vehicle ON mode
B	HFL microphone 8P connector: disconnected
Test point 1	**HFL microphone 8P connector No. 1**
Test point 2	**HFL microphone 8P connector No. 2**

Is there about 8.0 V?

YES

Go to step 8.

NO

Go to step 11.

8. Determine possible failure area (MIC_PWR line, others)

-1. Measure the voltage between test points 1 and 2.

Test condition	Vehicle ON mode
B	HFL microphone 8P connector: disconnected
Test point 1	**HFL microphone 8P connector No. 4**
Test point 2	Body ground

Is there about 8.0 V?

YES

Replace the HFL microphone .

NO

Go to step 9.

9. Open wire check (MIC_PWR line)

-1. Measure the voltage between test points 1 and 2.

Test condition	Vehicle ON mode
B	HFL microphone 8P connector: disconnected
Test point 1	**Audio-navigation unit connector C (32P) (with navigation) No. 7**
B	**Audio unit connector C (32P) (without navigation) No. 7**
Test point 2	Body ground

Is there about 8.0 V?

YES

Repair an open in the wire.

NO

The MIC_PWR wire is not open. Go to step 10.

10. Shorted wire check (MIC_PWR line)

-1. Turn the vehicle to the OFF (LOCK) mode.

-2. Disconnect the following connector.

Audio-navigation unit connector C (32P) (with navigation) Audio unit connector C (32P) (without navigation)

-3. Measure the resistance between test points 1 and 2.

Test condition	Vehicle OFF (LOCK) mode
B	HFL microphone 8P connector: disconnected
B	Audio-navigation unit connector C (32P) (with navigation): disconnected Audio unit connector C (32P) (without navigation): disconnected
Test point 1	**Audio-navigation unit connector C (32P) (with navigation) No. 7**
B	**Audio unit connector C (32P) (without navigation) No. 7**
Test point 2	Body ground

Is there 1.0 MΩ or more?

YES: With navigation

Replace the audio-navigation unit .

YES: Without navigation

Replace the audio unit .

NO

Repair a short to body ground in the wire.

11. Determine possible failure area (MIC_GND line, others)

-1. Measure the voltage between test points 1 and 2.

Test condition	Vehicle ON mode
B	HFL microphone 8P connector: disconnected

Test point 1	**HFL microphone 8P connector No. 1**
Test point 2	Body ground

Is there about 8.0 V?

YES

There is an open in the wire. Replace the affected shielded harness.

NO

Go to step 12.

12. Open wire check (MIC+ line)

-1. Measure the voltage between test points 1 and 2.

Test condition	Vehicle ON mode
B	HFL microphone 8P connector: disconnected
Test point 1	**Audio-navigation unit connector C (32P) (with navigation) No. 22**
B	**Audio unit connector C (32P) (without navigation) No. 22**
Test point 2	Body ground

Is there about 8.0 V?

YES

There is an open in the wire. Replace the affected shielded harness.

NO

The MIC+ wire is not open. Go to step 13.

13. Shorted wire check (MIC+ line)

-1. Turn the vehicle to the OFF (LOCK) mode.

-2. Disconnect the following connector.

Audio-navigation unit connector C (32P) (with navigation) Audio unit connector C (32P) (without navigation)

-3. Measure the resistance between test points 1 and 2.

Test condition	Vehicle OFF (LOCK) mode
B	HFL microphone 8P connector: disconnected
B	Audio-navigation unit connector C (32P) (with navigation): disconnected Audio unit connector C (32P) (without navigation): disconnected
Test point 1	**Audio-navigation unit connector C (32P) (with navigation) No. 22**
B	**Audio unit connector C (32P) (without navigation) No. 22**
Test point 2	Body ground

Is there 1.0 MΩ or more?

YES

The MIC+ wire is not shorted to ground. Go to step 14.

NO

There is a short to body ground in the wire. Replace the affected shielded harness.

14. Shorted wire check (MIC+ line to MIC_GND line, SH_MIC line)

-1. Measure the resistance between test points 1 and 2.

Test condition	Vehicle OFF (LOCK) mode
B	HFL microphone 8P connector: disconnected
B	Audio-navigation unit connector C (32P): disconnected
Test point 1	**Audio-navigation unit connector C (32P) (with navigation) No. 6**
B	**Audio unit connector C (32P) (without navigation) No. 6**
Test point 2	**Audio-navigation unit connector C (32P) (with navigation) No. 22**
B	**Audio unit connector C (32P) (without navigation) No. 22**

Test point 1	**Audio-navigation unit connector C (32P) (with navigation) No. 22**
B	**Audio unit connector C (32P) (without navigation) No. 22**
Test point 2	**Audio-navigation unit connector C (32P) (with navigation) No. 23**
B	**Audio unit connector C (32P) (without navigation) No. 23**

Is there 1.0 MΩ or more?

YES: With navigation

Replace the audio-navigation unit .

YES: Without navigation

Replace the audio unit .

NO

There is a short in the wires. Replace the affected shielded harness.

HOW TO INFORMATION

HOW TO TROUBLESHOOT THE HANDSFREELINK SYSTEM

Introduction

The HandsFreeLink (HFL) system works only with approved BluetoothB®-enabled cell phones with a hands-free profile. If you are not sure if your cell phone is compatible with the HFL system or if it is configured correctly, Honda has a dedicated HandsFreeLink Customer Service and web site handsfreelink.honda.com (USA models) or handsfreelink.ca (Canada models) to answer your questions.

Always call the HandsFreeLink Customer Service first, not Tech Line because the HandsFreeLink Customer Service has the latest information about cell phone software versions, settings and other issues.

Most HFL complaints are due to pairing, configuration, or compatibility issues. Contact the HandsFreeLink Customer Service before replacing the audio-navigation unit or the audio unit.

General Operation

The HFL gives the user the convenience of hands free operation. It cannot control the cell phone's performance (call quality and signal strength). To avoid performance problems, do not put the cell phone in a metal briefcase or in a purse under the seat.

If you want a complete description of this system (how to pair a cell phone to the HFL and make and receive calls, and how to use simple voice tags), please refer to the Owner's Manual.

Checking Cell Phone Compatibility

The most important step in troubleshooting HFL issues is to identify the customer's cell phone model, the software version, and the cellular carrier that experiences the HFL problem. Not all cell phones with the Bluetooth feature and a hands-free profile are compatible with the Honda HFL system.

Go to handsfreelink.honda.com (USA models) or handsfreelink.ca (Canada models), or call the HandsFreeLink Customer Service (see web site), and check if the customer's cell phone is approved to work with the Honda HFL system.

NOTE:

- The approved cell phone list is constantly changing, so check them frequently.
- Cell Phones may be removed from the approved list if a software bug is discovered that makes the cell phone incompatible.

Pairing a Cell Phone (Display audio type)

NOTE:

- To pair a cell phone, the vehicle has to be parked by applying the parking brake.
- The screens detail indicated may change depending on equipment or specification.

1. Make sure the cell phone you are pairing is on and in its discovery mode.

2. Turn the vehicle to the ACCESSORY mode, and select OK on the disclaimer screen.

3. Press the HOME button, then select the Phone icon from the HOME screen.

NOTE: Before pairing a cell phone, set the Automatic Phone Sync to ON or OFF.

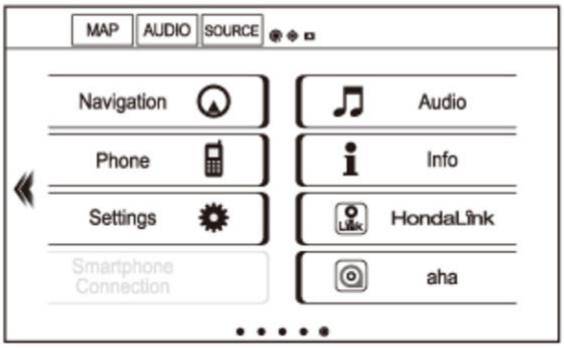
MAP
AUDIO
SOURCE
Navigation
Audio
Phone
Info
Settings
HondaLink
Smartphone Connection
aha

4. If the BluetoothB® power in the audio unit is off, a confirmation screen appears on the display. Select Yes to turn the BluetoothB® power on.

5. A cell phone connection confirmation screen appears on the display. Select Yes to add a new cell phone.

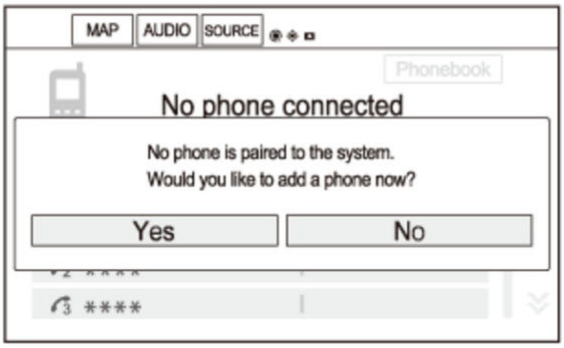
MAP
AUDIO
SOURCE
Phonebook
Yes
No
3 ****

No phone connected

No phone is paired to the system.
Would you like to add a phone now?

6. Select the your BluetoothB® Device from the device list. If the device name is not found in the list, select Reflash to recheck the Bluetooth cell phone.

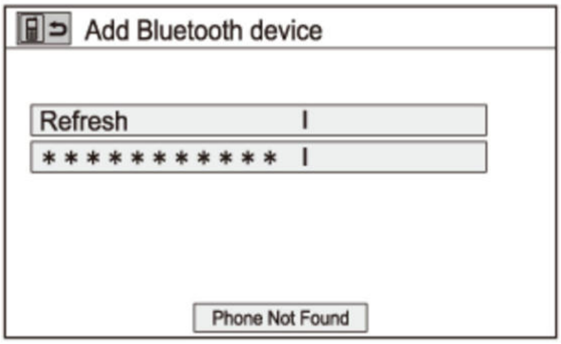
Add Bluetooth device
Refresh
****
Phone Not Found

7. If the HFL does not find the cell phone, select the Phone Not Found icon. When the 4-digit PIN appears on the display, enter the PIN into the cell phone.

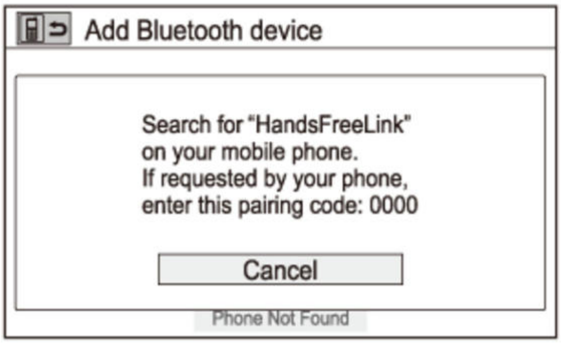
Add Bluetooth device
Cancel
Phone Not Found

Search for "HandsFreeLink"
on your mobile phone.
If requested by your phone,
enter this pairing code: 0000

8. Once the cell phone is discovered by the HFL, Confirm the connection on the cell phone.

NOTE: The confirmation screen may vary by the cell phone. Depending on the BluetoothB® version of cell phone, it may be necessary to operate the cell phone.

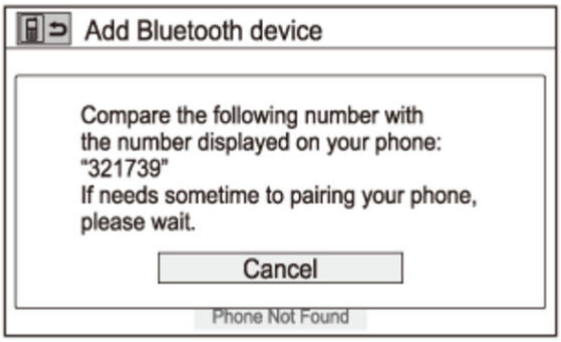
Add Bluetooth device
Cancel
Phone Not Found

Compare the following number with
the number displayed on your phone:
"321739"
If needs sometime to pairing your phone,
please wait.

9. Once the cell phone is successfully paired, the connected device is added on the screen.

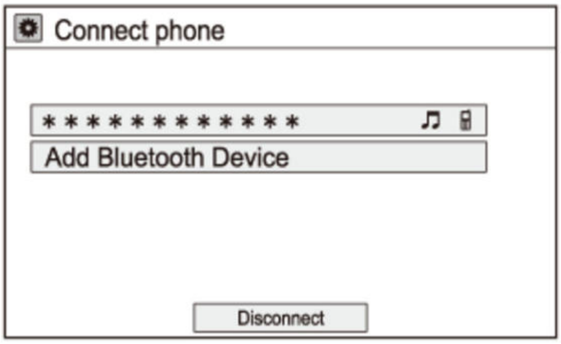
Connect phone
****
Add Bluetooth Device
Disconnect

10. If the HondaLink Assist Setting screen appears on the display, select On or Off, then press the BACK button to exit the screen.

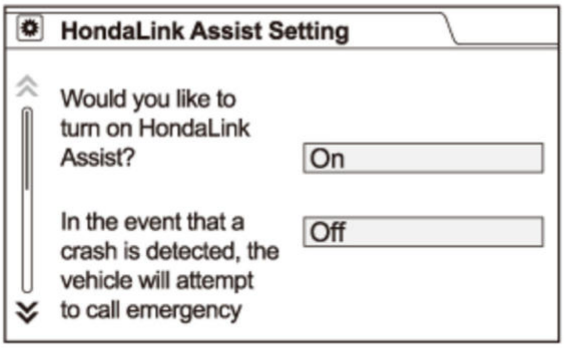
HondaLink Assist Setting
On
Off

Would you like to
turn on HondaLink
Assist?

In the event that a
crash is detected, the
vehicle will attempt
to call emergency

Pairing Troubleshooting

Many pairing issues are resolved by altering the customer's cell phone settings.

If you cannot get an approved HFL phone to pair, go to handsfreelink.honda.com (USA models) or handsfreelink.ca (Canada models), or contact the HandsFreeLink Customer Service.

Dropped Calls

Customers may perceive dropped calls as being an HFL system fault, but most dropped calls are resultant from phone and cell phone carrier issues.

Always confirm with the customer if the number of dropped calls is higher while using the HFL system as opposed to using the cell phone only. Customers often confuse problems with their cell phone or carrier as a problem with the HFL system. The HFL system cannot control or determine the following issues:

- Cellular connection quality
- Signal strength
- Cellular coverage
- Ambient weather conditions that affect cellular signals

When a customer complains about dropped calls, ask questions about when or where the calls are dropped, such as:

- Do you drive the same route on a regular basis?
- Does the call drop in the same location?
- Where do you keep your cell phone?
- Have you compared the number of dropped calls using the HFL versus making calls from the handset?

There are many reasons for a dropped call that are not related to the HFL system. Here are some causes for dropped calls:

- If the quantity of dropped calls is about the same when the customer uses the HFL system versus the handset, the issue is likely due to the cellular phone or carrier.
- If the cell phone is equipped with a retractable antenna, it needs to be extended to maximize signal strength.
- If a customer also notices that the calls tend to drop in the same areas, the HFL system may be operating normally, but something about the area diminishes cellular coverage to a point where the call drops.
- Hills or mountains can block or interfere with cellular signals.
- High-rise buildings, bridges, or other large structures may block or interfere with cellular signals.
- Electrical storms, heavy rain, or overcast conditions interfere with signal strength.
- Placing the phone in a purse, in a metal briefcase, under the seat, in the glove box, or in the trunk can all affect signal reception.
- There are coverage gaps in the mobile service. When driving, a call is typically passed from one tower to another. If the customer drives through an area where there is a coverage gap between towers, the call drops.
- The cell phone battery's state of change can affect signal reception. A low battery may reduce the cell phone's ability to boost the antenna's power and function properly, especially in low signal strength areas. Some phone manufacturers trade off signal transmission and reception strength for battery life. As the battery weakens, the signal strength may also weaken. Some phones may operate more effectively than others in low signal strength areas especially with a partially charged battery.

HANDSFREELINK SYSTEM TROUBLESHOOTING

TROUBLESHOOTING

HandsFreeLink System Troubleshooting

NOTE:

- **Check the vehicle 12 volt battery condition first** .
- **Before you troubleshoot, make sure to follow the General Troubleshooting Information**.
- Make sure the Bluetooth cell phone is approved and configured correctly. Online, go to handsfreelink.honda.com, or call the HandsFreeLink Customer Service at 888-528-7876.
- You must be able to duplicate the customer's concern to successfully diagnose the problem.
- Always use the customer's Bluetooth cell phone to successfully diagnose the problem.

1. Determine possible failure area (Bluetooth cell phone, others) 1

   -1. Make sure the Bluetooth cell phone is approved by checking handsfreelink.honda.com, or call the HandsFreeLink Customer Service at 888-528-7876.

   Is the Bluetooth cell phone approved?

   YES

   The failure is duplicated, go to step 2.

   NO

   Explain to the customer that the Bluetooth cell phone is not approved. Recommend they get an approved Bluetooth cell phone. Go to handsfreelink.honda.com for a list of approved Bluetooth cell phones.

2. Determine possible failure area (Bluetooth cell phone, others) 2

   -1. Check if the Bluetooth cell phone has any special requirements (software version, configuration, etc.).

   Is the correct software version loaded and is the Bluetooth cell phone properly configured?

   YES

   Go to step 3.

   NO

   Explain to your customer that the Bluetooth cell phone software needs to be updated or the Bluetooth cell phone needs to be configured properly. If the HandsFreeLink Customer Service is able to help you configure the phone, explain the proper settings, otherwise direct your customer to contact their Bluetooth cell phone manufacturer or carrier.

3. Determine possible failure area (Bluetooth cell phone, others) 3

   -1. Check the features of the approved Bluetooth cell phone.

   Are all the features approved?

   YES

   Go to step 4.

   NO

Check and see if the feature that is not approved is the same as the customer complaint. If the complaint is about the feature that is not approved, the vehicle is OK. Explain to the customer that the feature is not approved to work with the HFL.

4. Problem verification

   -1. Try to duplicate the problem or have the customer demonstrate the problem.

   Can you duplicate the problem?

   YES

   Go to step 5.

   NO

   Intermittent failure, the system is OK at this time.

5. HFL module check

   -1. Pair the Bluetooth cell phone to a known-good vehicle (same model, year, and trim), and try duplicate the problem.

   Does the Bluetooth cell phone have the same problem on the known-good vehicle?

   YES

   Call the HandsFreeLink Customer Service at 888-528-7876 to make sure the Bluetooth cell phone is configured correctly and has the correct software. If the Bluetooth cell phone is configured correctly, it is either a characteristic of the HFL system, or a characteristic of the particular approved Bluetooth cell phone being used. Explain to your customer that this is a system characteristic. Another Bluetooth cell phone from the approved Bluetooth cell phone list may give more favorable results.

   NO: With navigation

   Replace the audio-navigation unit .

   NO: Without navigation

   Replace the audio unit .

COMPONENT LOCATION INDEX

HANDSFREELINK SYSTEM COMPONENT LOCATION INDEX

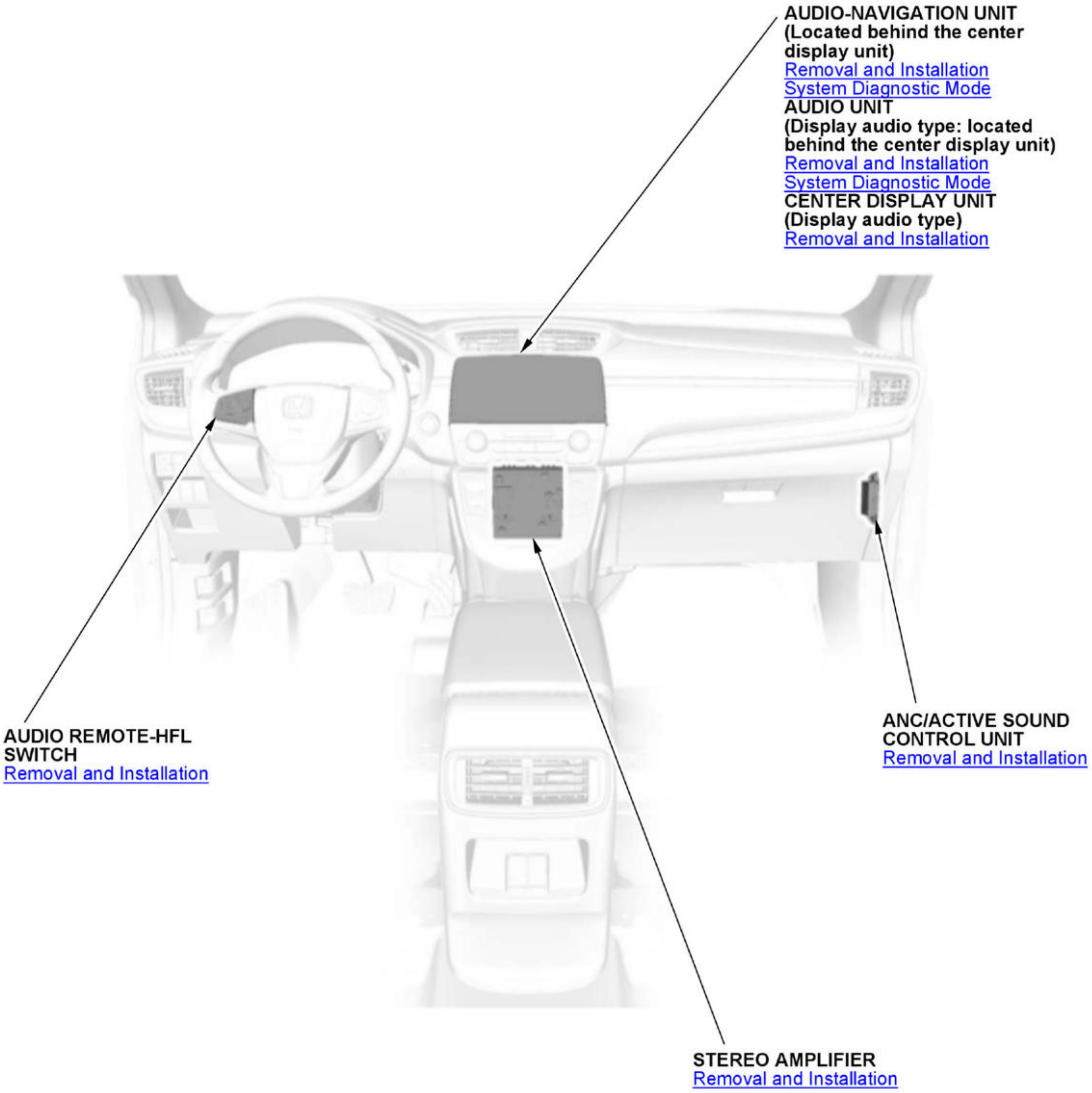
AUDIO-NAVIGATION UNIT
(Located behind the center display unit)
Removal and Installation
System Diagnostic Mode
AUDIO UNIT
(Display audio type: located behind the center display unit)
Removal and Installation
System Diagnostic Mode
CENTER DISPLAY UNIT
(Display audio type)
Removal and Installation
AUDIO REMOTE-HFL SWITCH
Removal and Installation
ANC/ACTIVE SOUND CONTROL UNIT
Removal and Installation
STEREO AMPLIFIER
Removal and Installation

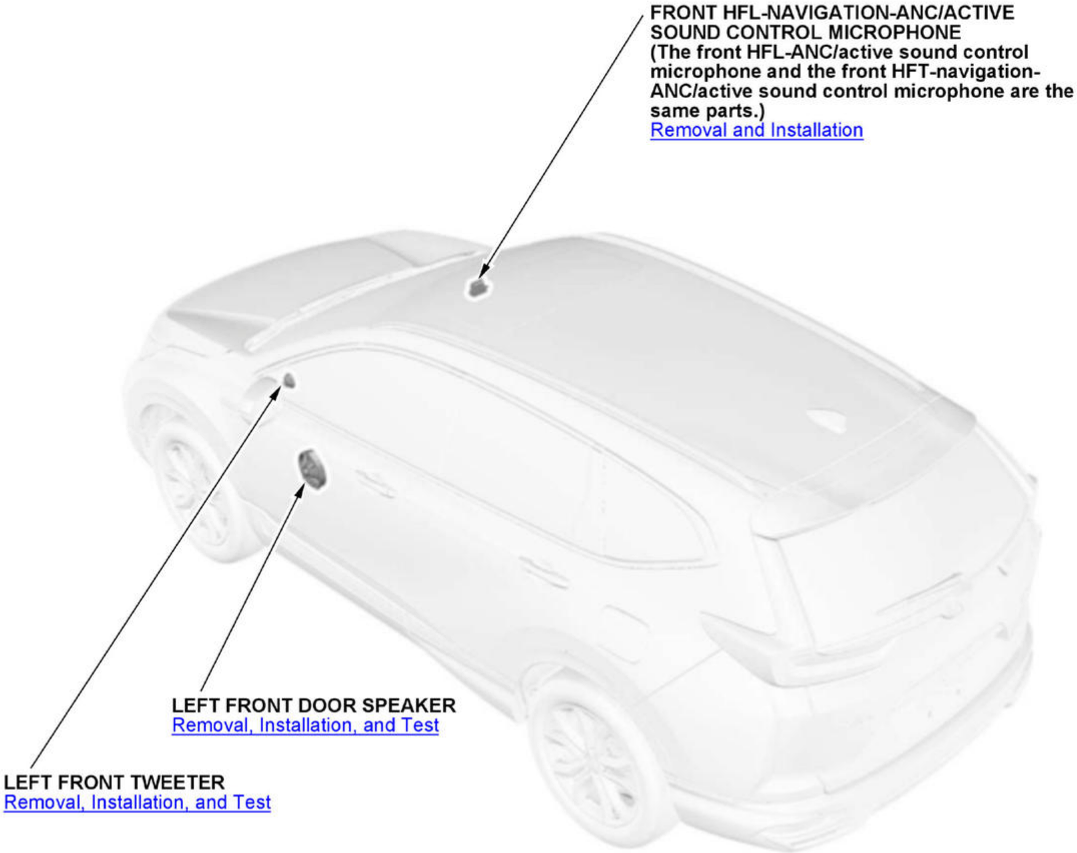
FRONT HFL-NAVIGATION-ANC/ACTIVE SOUND CONTROL MICROPHONE
(The front HFL-ANC/active sound control microphone and the front HFT-navigation-ANC/active sound control microphone are the same parts.)
Removal and Installation
LEFT FRONT DOOR SPEAKER
Removal, Installation, and Test
LEFT FRONT TWEETER
Removal, Installation, and Test

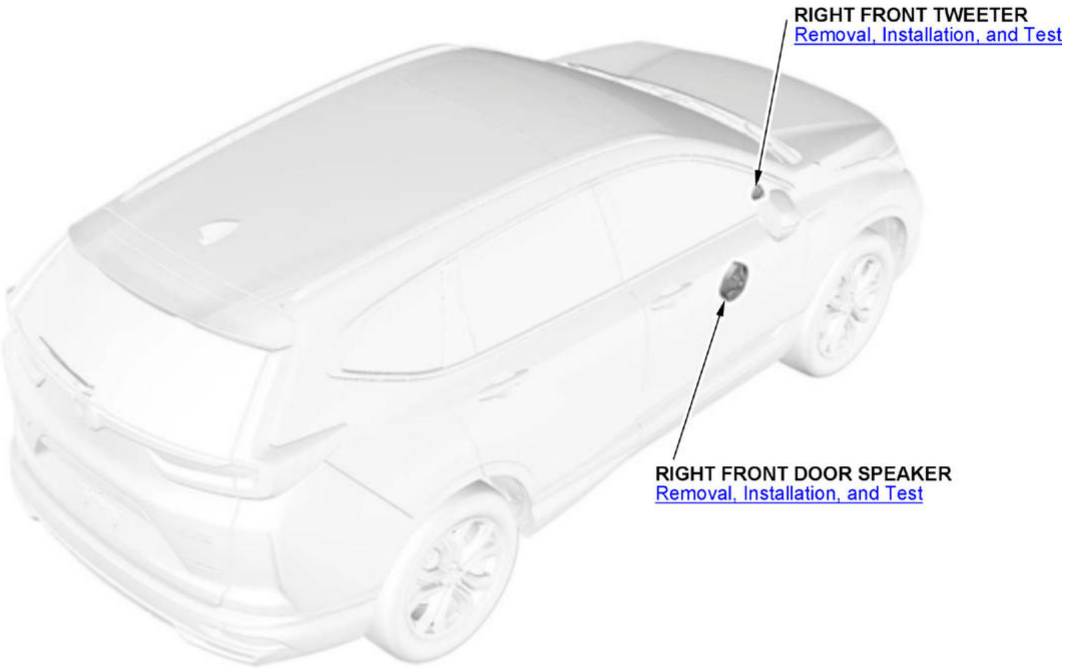
RIGHT FRONT TWEETER
Removal, Installation, and Test
RIGHT FRONT DOOR SPEAKER
Removal, Installation, and Test

DTC TROUBLESHOOTING

DTC B1901

DTC B1901 : Immobilizer Unit Internal error (CPU error)

NOTE: If you are troubleshooting multiple DTCs, be sure to follow the instructions in B-CAN System Diagnosis Test Mode A .

DTC Description	DTC
B1901 Immobilizer Unit Internal error (CPU error)	B

DTC (Immobilizer-Keyless Control Unit)

1. Problem verification

   -1. Clear the DTCs with the HDS.

   -2. Turn the vehicle to the OFF (LOCK) mode and then the ON mode.

   -3. Check for DTCs with the HDS.

DTC Description	DTC
B1901 Immobilizer Unit Internal error (CPU error)	B

   Is DTC B1901 indicated?

   YES

   Replace the immobilizer-keyless control unit .

   NO

   Intermittent failure, the system is OK at this time.

DTC B1902

DTC B1902 : Immobilizer Unit Internal error (EEPROM error)

NOTE: If you are troubleshooting multiple DTCs, be sure to follow the instructions in B-CAN System Diagnosis Test Mode A .

DTC Description	DTC
B1902 Immobilizer Unit Internal error (EEPROM error)	B

DTC (Immobilizer-Keyless Control Unit)

1. Problem verification

   -1. Clear the DTCs with the HDS.

   -2. Turn the vehicle to the OFF (LOCK) mode and then the ON mode.

   -3. Check for DTCs with the HDS.

DTC Description	DTC
B1902 Immobilizer Unit Internal error (EEPROM error)	B

Is DTC B1902 indicated?

YES

Replace the immobilizer-keyless control unit .

NO

Intermittent failure, the system is OK at this time.

DTC U0155, U0199, U1281, U128D (IMMOBILIZER-KEYLESS CONTROL UNIT)

DTC U0155 : Immobilizer-keyless control unit lost communication with gauge control module

DTC U0199 : Immobilizer-keyless control unit lost communication with door multiplex control unit

DTC U1281 : Lost communication with MICU (MICU frame)

DTC U128D : Lost communication with METER

NOTE:

- If you are troubleshooting multiple DTCs, be sure to follow the instructions in **B-CAN System Diagnosis Test Mode A** .
- Refer to the DTC code shown on the display, and then inspect the connectors and terminals based on the instructions in the table below.
- The DTC may be stored due to the grounding failure or the power source failure at the transmitting control unit (the grounding inspection and the power source inspection on each control unit are required prior to this checking process).

DTC Description	DTC
U0155 Immobilizer-keyless control unit lost communication with gauge control module	B
U0199 Immobilizer-keyless control unit lost communication with door multiplex control unit	B
U1281 Lost communication with MICU (MICU frame)	B
U128D Lost communication with METER	B

DTC (Immobilizer-Keyless Control Unit)

1. Problem verification

   -1. Clear the DTC with the HDS.

   -2. Turn the vehicle to the OFF (LOCK) mode and then the ON mode.

   -3. Wait for at least 6 seconds.

   -4. Check for DTCs with the HDS.

DTC Description	DTC
U0155 Immobilizer-keyless control unit lost communication with gauge control module	B

DTC Description	DTC
U0199 Immobilizer-keyless control unit lost communication with door multiplex control unit	B
U1281 Lost communication with MICU (MICU frame)	B
U128D Lost communication with METER	B

Are any DTCs indicated?

YES

Go to step 2.

NO

Intermittent failure, the system is OK at this time. Check for poor connections or loose terminals.

2. Open wire check (B-CAN_H line, B-CAN_L line)

-1. Turn the vehicle to the OFF (LOCK) mode.

-2. Disconnect the receiving control unit connector.

Immobilizer-keyless control unit 7P connector

-3. Disconnect the transmitting control unit connector(s).

Refer to the DTC shown on the display, then disconnect the connector(s) based on the instructions (see table).

DTC	Connector
U0155	Gauge control module connector A (32P)
U0199	Power window master switch 37P connector
U1281	Body control module connector B (36P)
U128D	Gauge control module connector A (32P)

-4. Check for continuity between the receiving control unit and the transmitting control unit on the B-CAN_H circuit and the B-CAN_L circuit.

Test condition	Vehicle OFF (LOCK) mode Immobilizer-keyless control unit 7P connector: disconnected Transmitting control unit connector(s) for indicated DTCs: disconnected

DTC	Circuit name	Receiving control unit		Transmitting control unit	
		Connector	Terminal	Connector	Terminal
U0155	B-CAN_H	Immobilizer-keyless control unit 7P connector	No. 4	Gauge control module connector A (32P)	No. 30
	B-CAN_L		No. 5		No. 31
U0199	B-CAN_H	Immobilizer-keyless control unit 7P connector	No. 4	Power window master switch 37P connector	No. 32
	B-CAN_L		No. 5		No. 31
U1281	B-CAN_H	Immobilizer-keyless control unit 7P connector	No. 4	Body control module connector B (36P)	No. 20
	B-CAN_L		No. 5		No. 21
U128D	B-CAN_H	Immobilizer-keyless control unit 7P connector	No. 4	Gauge control module connector A (32P)	No. 30
	B-CAN_L		No. 5		No. 31

Is there continuity?

YES

The B-CAN_H wire and the B-CAN_L wire are OK. Refer to the DTC shown on the display, then replace the control unit based on the instructions (see table).

DTC	Operation for transmitting control unit
U0155	Gauge control module
U0199	Power window master switch
U1281	Body control module
U128D	Gauge control module

NO

Repair an open in the B-CAN_H wire and/or the B-CAN_L wire.

DTC U1280 (IMMOBILIZER-KEYLESS CONTROL UNIT)

DTC U1280 : Communication bus line error (BUS-OFF)

NOTE: If you are troubleshooting multiple DTCs, be sure to follow the instructions in B-CAN System Diagnosis Test Mode A .

DTC Description	DTC
U1280 Communication bus line error (BUS-OFF)	B

DTC (Immobilizer-Keyless Control Unit)

1. Problem verification

   -1. Clear the DTCs with the HDS.

   -2. Turn the vehicle to the OFF (LOCK) mode and then the ON mode.

   -3. Wait for at least 6 seconds.

   -4. Check for DTCs with the HDS.

DTC Description	DTC
U1280 Communication bus line error (BUS-OFF)	B

Is DTC U1280 indicated?

YES

Go to body control module DTC U1280 troubleshooting .

NO

Intermittent failure, the system is OK at this time. Check for loose or poor connections.

REMOVAL & INSTALLATION TEST

DRIVING POSITION MEMORY SWITCH REMOVAL, INSTALLATION, AND TEST

Removal and Installation

1

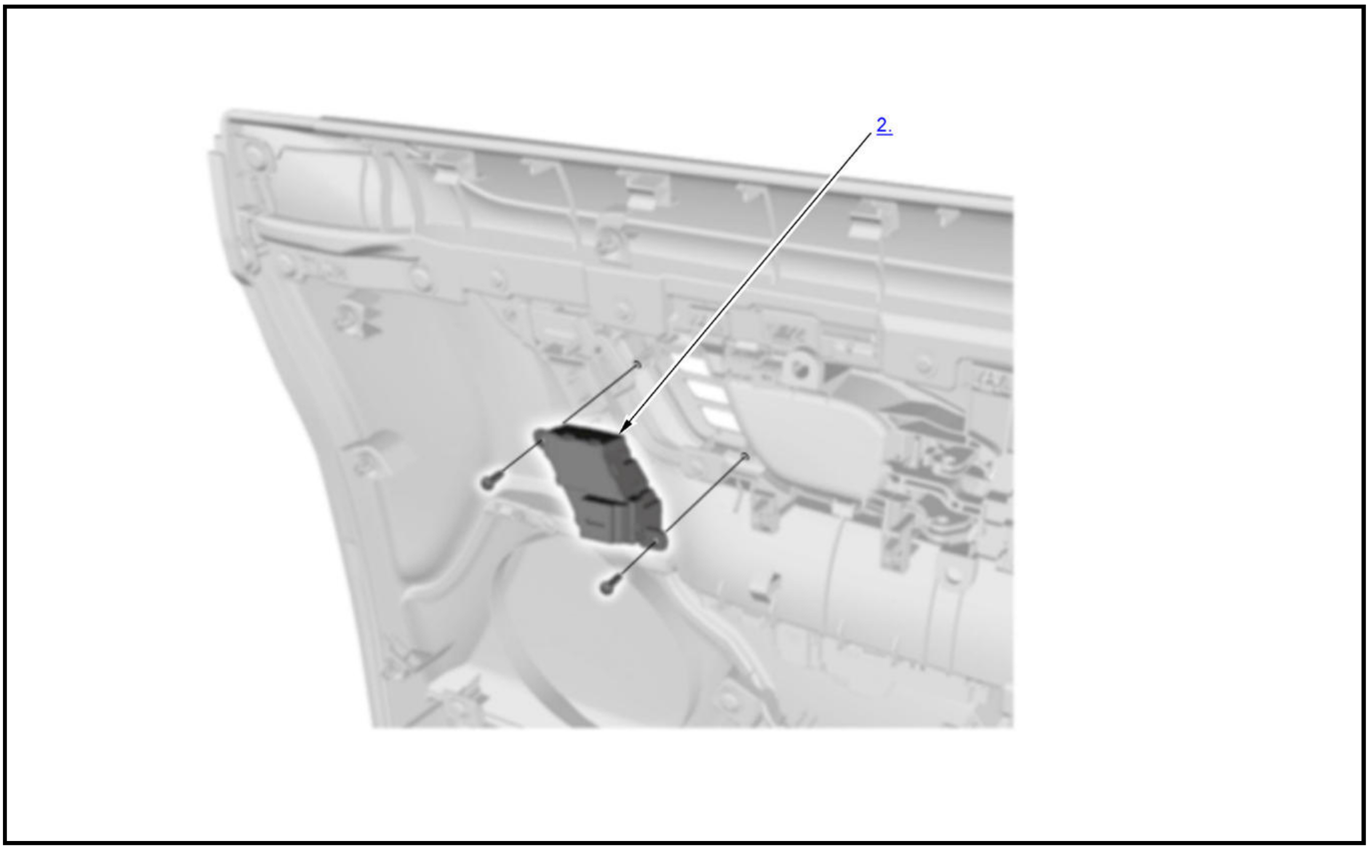

1. Driver's Door Panel - Remove
2. Driving Position Memory Switch - Remove
3. All Removed Parts - Install

    1. Install the parts in the reverse order of removal.

Test

1. Driving Position Memory Switch - Test

    1. Check the driving position memory switch according to the table.

NOTE:

- **Before testing, make sure not to short the driving position memory switch circuit.**
- **When an LED is located between terminals, check if the LED lights by connecting power and ground to the LED.**
- **Note this important operating characteristic; diode bias causes a diode to fully conduct electricity in one direction (forward), while not at all in the opposite direction (reverse).**

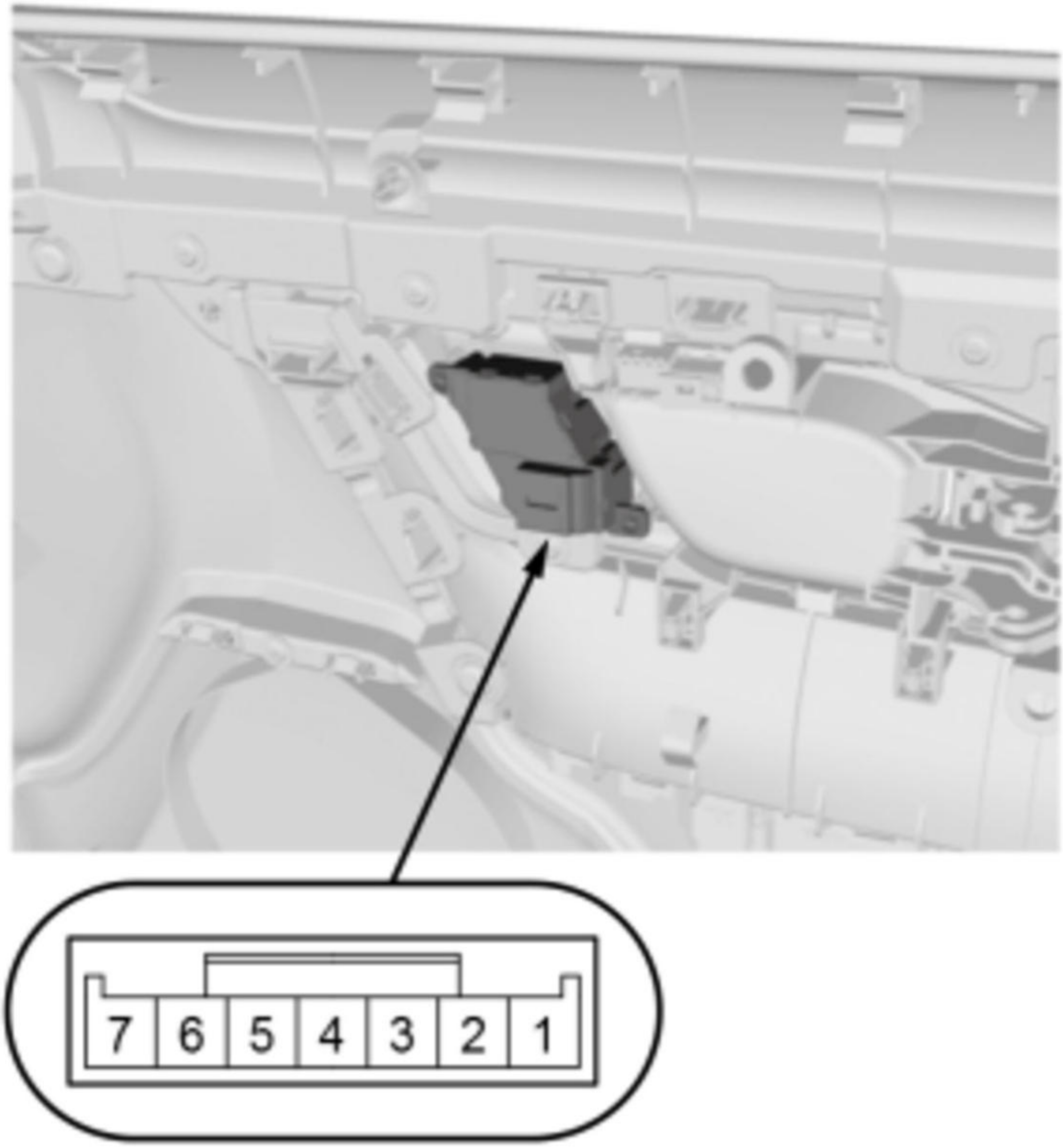

Terminal / Position		1	3	4	5	6	7		2
SET button	OFF								
	ON				○				○
Position 1 button	OFF								
	ON						○		○
Position 2 button	OFF								
	ON					○			○
Indicator 1				⊕				-ʍʍ-▷-	⊖
Indicator 2			⊕					-ʍʍ-▷-	⊖
Illumination		⊕						-ʍʍ-▷-	⊖

○—○ = Continuity check

⊕—⊖ = Voltage for LED

2. If the result is not as specified, replace the driving position memory switch.

REMOVAL AND INSTALLATION

BODY CONTROL MODULE REMOVAL AND INSTALLATION

Removal and Installation

NOTE:

- Without keyless access system: If the body control module is replaced, **do the immobilizer system registration** . If the original body control module is installed, confirm that all systems work properly.
- With keyless access system: If the body control module is replaced, **do the keyless access system registration** . If the original body control module is installed, confirm that all systems work properly.
- The body control module has a component of the immobilizer system. The body control module must be registered when the body control module is replaced, or the vehicle will not start.

1

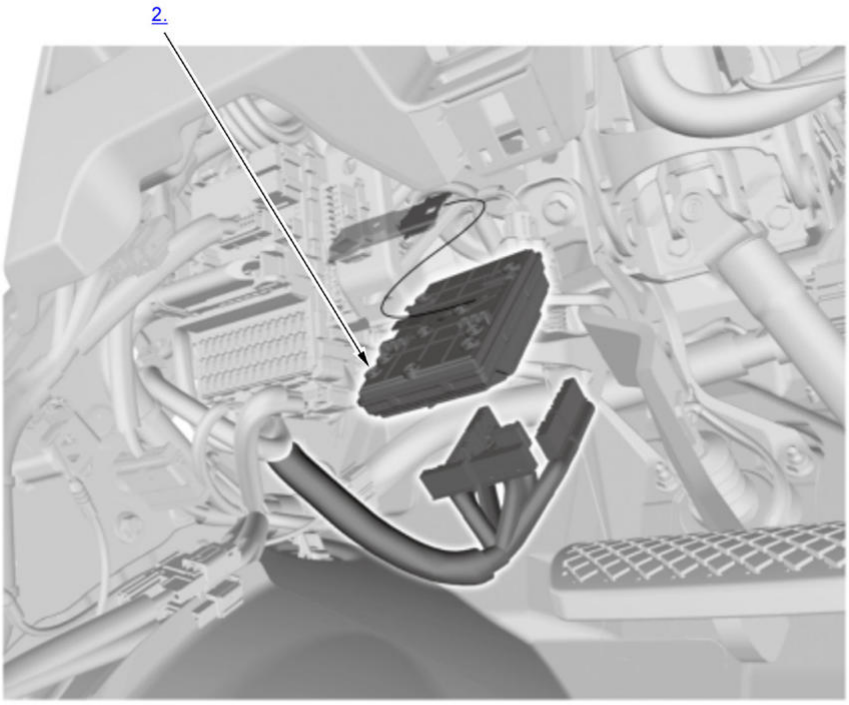

1. **Driver's Dashboard Undercover - Remove**
2. Body Control Module - Remove
3. All Removed Parts - Install

    1. Install the parts in the reverse order of removal.

4. **Immobilizer System - Register (Without Keyless Access System)**
5. **Keyless Access System - Register (With Keyless Access System)**

POWER SEAT CONTROL UNIT REMOVAL AND INSTALLATION

Removal and Installation

NOTE: If the replaced control unit is not a new one, **clear the driving position memory** . If the original control unit is installed, confirm that all systems work properly.

1

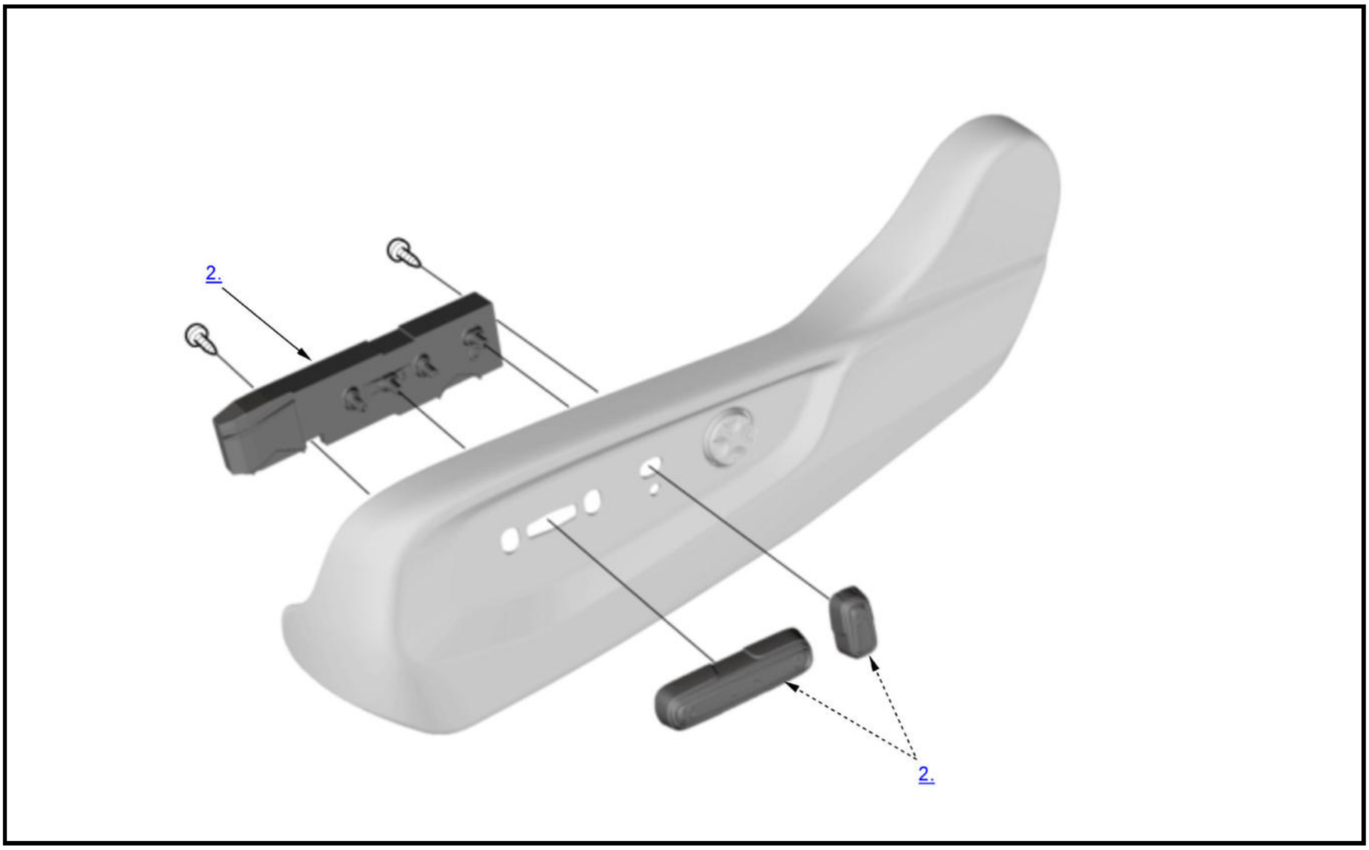

1. **Driver's Seat Recline Cover - Remove**

   NOTE: If you are removing the driver's seat recline cover, you do not need to remove the driver's seat.

2. Power Seat Control Unit/Power Seat Adjustment Switch - Remove
3. All Removed Parts - Install

   1. Install the parts in the reverse order of removal.

4. Driving Position Memory - Clear

   1. If the replaced power seat control unit is not a new one, **clear the driving position memory** .

REMOVAL AND INSTALLATION

BODY CONTROL MODULE REMOVAL AND INSTALLATION

Removal and Installation

SRS components are located in this area. Review the SRS component locations and the precautions and procedures before doing repairs or service.

NOTE:

- If the body control module is replaced, do the keyless access system registration . If the original body control module is installed, confirm that all systems work properly.
- The body control module has a component of the immobilizer system. The body control module must be registered when the body control module is replaced, or the vehicle will not start.

Procedure

NOTE: **Numbered call-outs in figure pertain to list numbers in following procedure.**

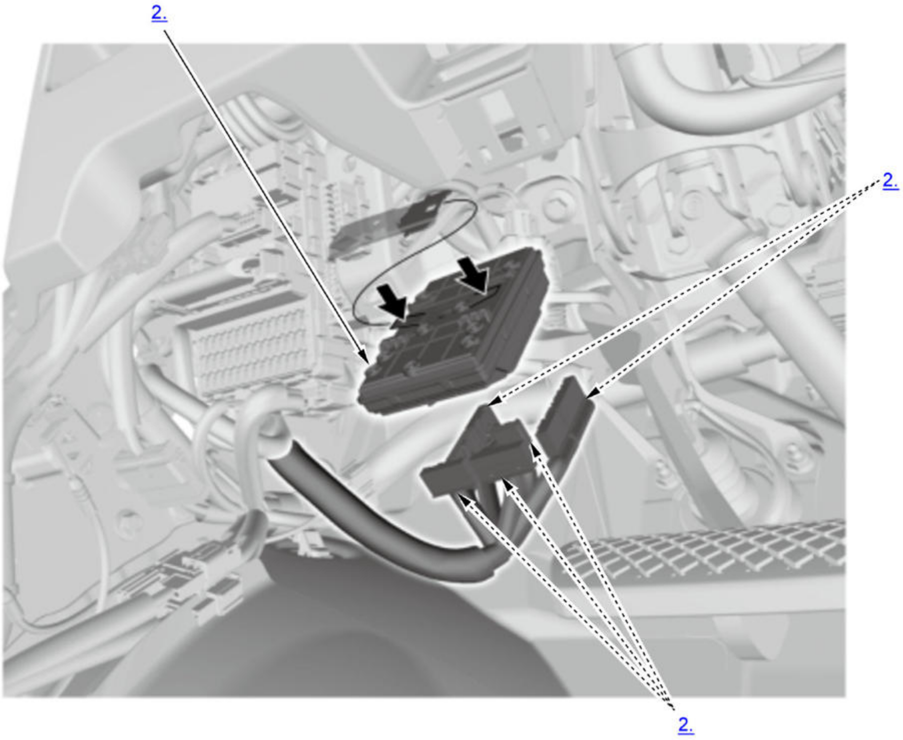

Fig. 1: Exploded View Of Body Control Module Components
Courtesy of HONDA, U.S.A., INC.

1. Driver's Dashboard Undercover - Remove
2. Body Control Module - Remove
3. All Removed Parts - Install

1. Install the parts in the reverse order of removal.

4. Keyless Access System - Register
5. Body Control Module - Update

POWER SEAT CONTROL UNIT REMOVAL AND INSTALLATION

Removal and Installation

SRS components are located in this area. Review the SRS component locations and the precautions and procedures before doing repairs or service.

NOTE: If you are substituting a known-good power seat control unit, clear the driving position memory . If the original control unit is installed, confirm that all systems work properly.

Procedure

NOTE: **Numbered call-outs in figure pertain to list numbers in following procedure.**

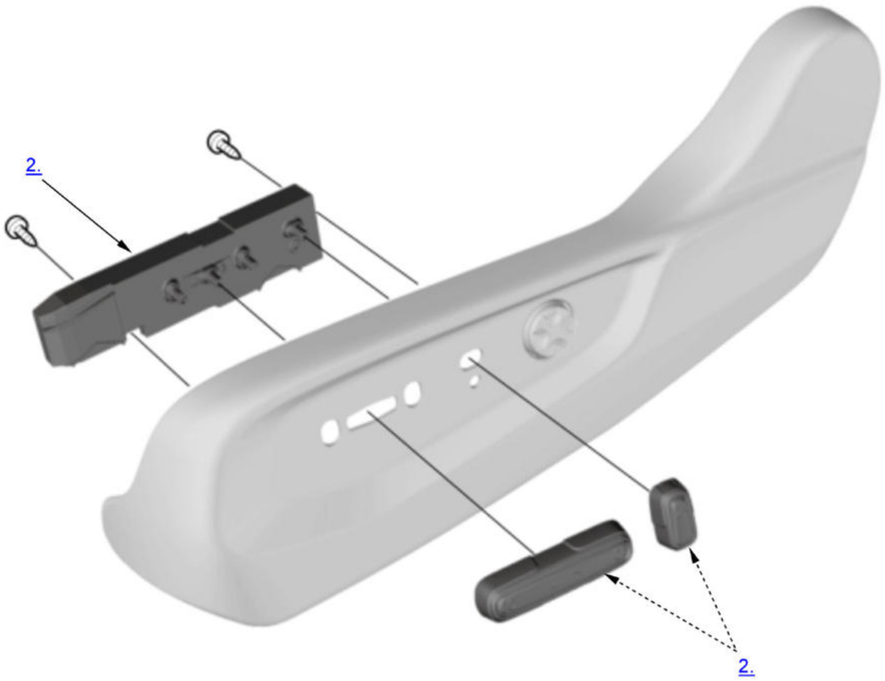

Fig. 2: Exploded View Of Power Seat Control Unit Components
Courtesy of HONDA, U.S.A., INC.

1. Driver's Seat Recline Cover - Remove

   NOTE: If you are removing the driver's seat recline cover, you do not need to remove the driver's seat.

2. Power Seat Control Unit/Power Seat Adjustment Switch - Remove
3. All Removed Parts - Install

   1. Install the parts in the reverse order of removal.

4. Driving Position Memory - Clear

   When substituting a known-good power seat control unit, clear the driving position memory .

REMOVAL, INSTALLATION & TEST

DRIVING POSITION MEMORY SWITCH REMOVAL, INSTALLATION, AND TEST

Removal and Installation

Procedure

NOTE: **Numbered call-outs in figure pertain to list numbers in following procedure.**

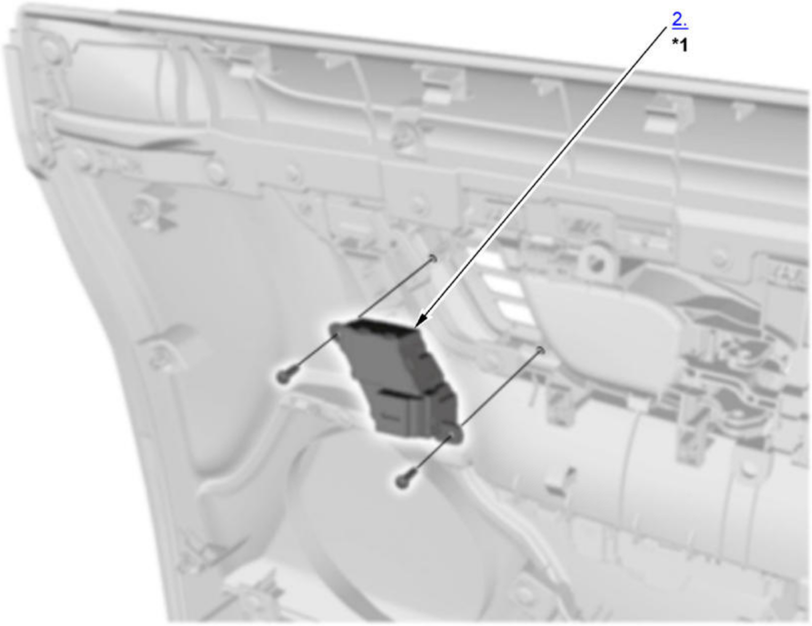

Fig. 3: Driving Position Memory Switch Components
Courtesy of HONDA, U.S.A., INC.

*1	Driving Position Memory Switch Light: LED

1. Driver's Door Panel - Remove
2. Driving Position Memory Switch - Remove
3. All Removed Parts - Install

    1. Install the parts in the reverse order of removal.

Test

1. Driving Position Memory Switch - Test

    1. Check the driving position memory switch according to the table.

    NOTE:

    - When an LED is located between terminals, check if the LED lights by connecting power and ground to the LED.
    - Note this important operating characteristic; diode bias causes a diode to fully conduct electricity in one direction (forward), while not at all in the opposite direction (reverse).

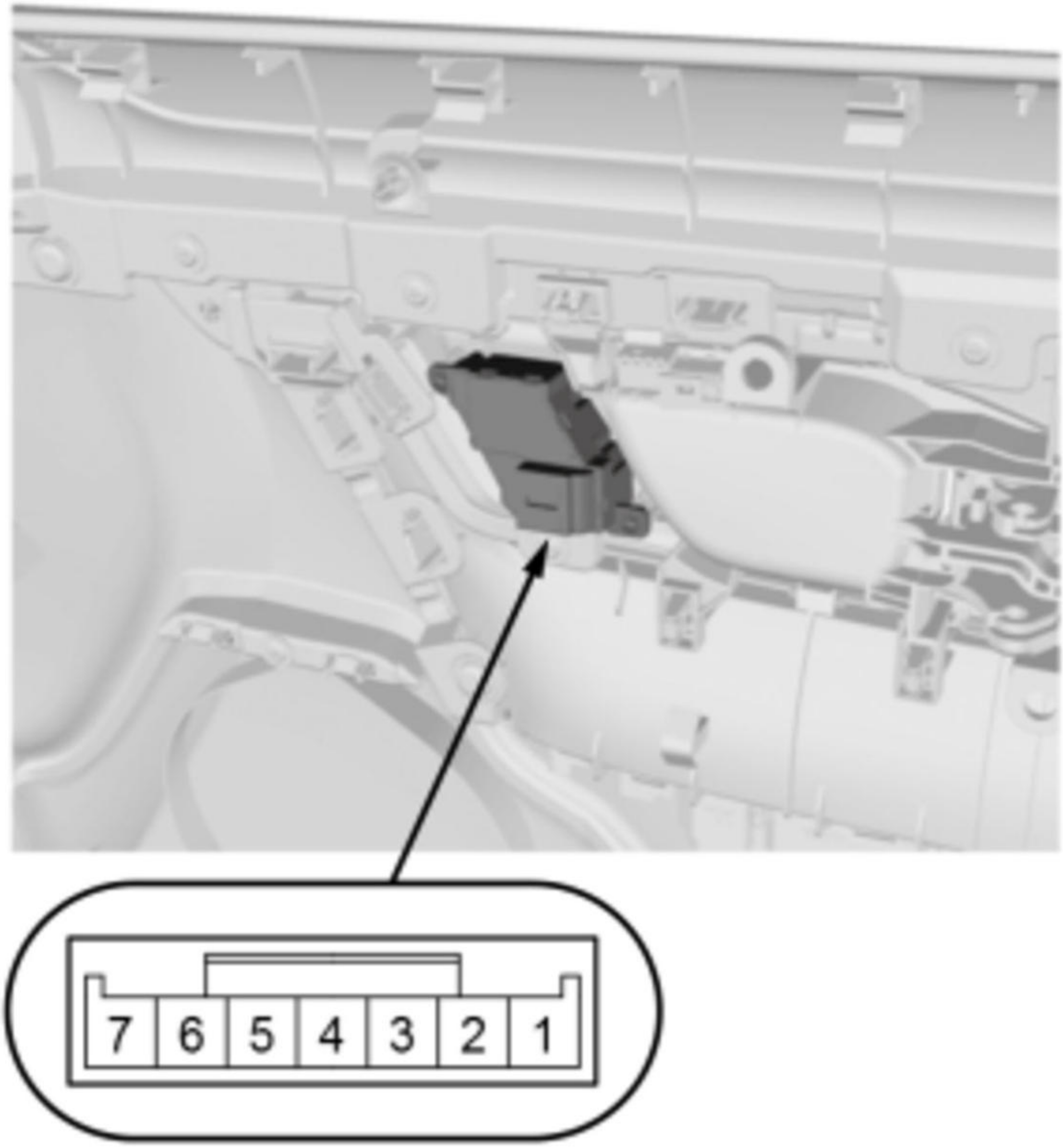

Position		1	3	4	5	6	7		2
SET button	OFF								
	ON				○				○
Position 1 button	OFF								
	ON						○		○
Position 2 button	OFF								
	ON					○			○
Indicator 1				⊕					⊖
Indicator 2			⊕						⊖
Illumination		⊕							⊖

○—○ = Continuity check

⊕—⊖ = Voltage for LED

2. If the result is not as specified, replace the driving position memory switch.

DESCRIPTION & OPERATION

DRIVING POSITION MEMORY SYSTEM DESCRIPTION

Overview

The driving position memory system (DPMS) can automatically store the driver's seat and power mirrors positions to one of two memorized presets. Drivers can activate the system using the driving position memory switch or the remote.

Along with the seat, the power door lock settings will also be memorized based on which remote (Driver 1 or Driver 2) is used.

Memorizing a Seat Position

Turn the vehicle to the ON mode, and then move the seat to the desired position. Press the SET button on the driving position memory switch, then both of the green LED will begin to flash. Press No. 1 or No. 2 to match the remote that is to be used. There will be two more beeps confirming that the seat position have been memorized. The LED will remain lit, unless the seat is moved from the memorized position.

Memorized Position Recall with the Remotes

After the seat position is memorized, the seat moves to the memorized position when the appropriate remote UNLOCK button is pressed and the driver's door is opened. When the seat moves to the memorized position, the green LED corresponding with that remote stays lit until the position is changed or the vehicle is turned to the OFF (LOCK) mode.

Memorized Customized Setting Recall with the Remotes

Customize settings are controlled independently between the Driver 1 and 2 remotes.

Fail-safe Function

If a failure occurs related to the power supply and B-CAN inputs, the control unit detects an abnormal condition and enters a fail-safe mode stopping control of the functions.

DRIVING POSITION MEMORY SYSTEM DESCRIPTION - COMPONENTS

Power Seat Adjustment Switch

The power seat adjustment switch is located in the recline cover and combines the slide, recline, and the height switch.

Power Seat Motors/Seat Position Sensors

Each motor has a sensor that detects motor rotation and sends a pulse to the power seat control unit when the motor rotates. The control unit stores the number of pulses in its memory and uses it to memorize the seat position.

DRIVING POSITION MEMORY SYSTEM DESCRIPTION - SYSTEM DIAGRAM

For locations of each component on vehicle, refer to Component Location Index

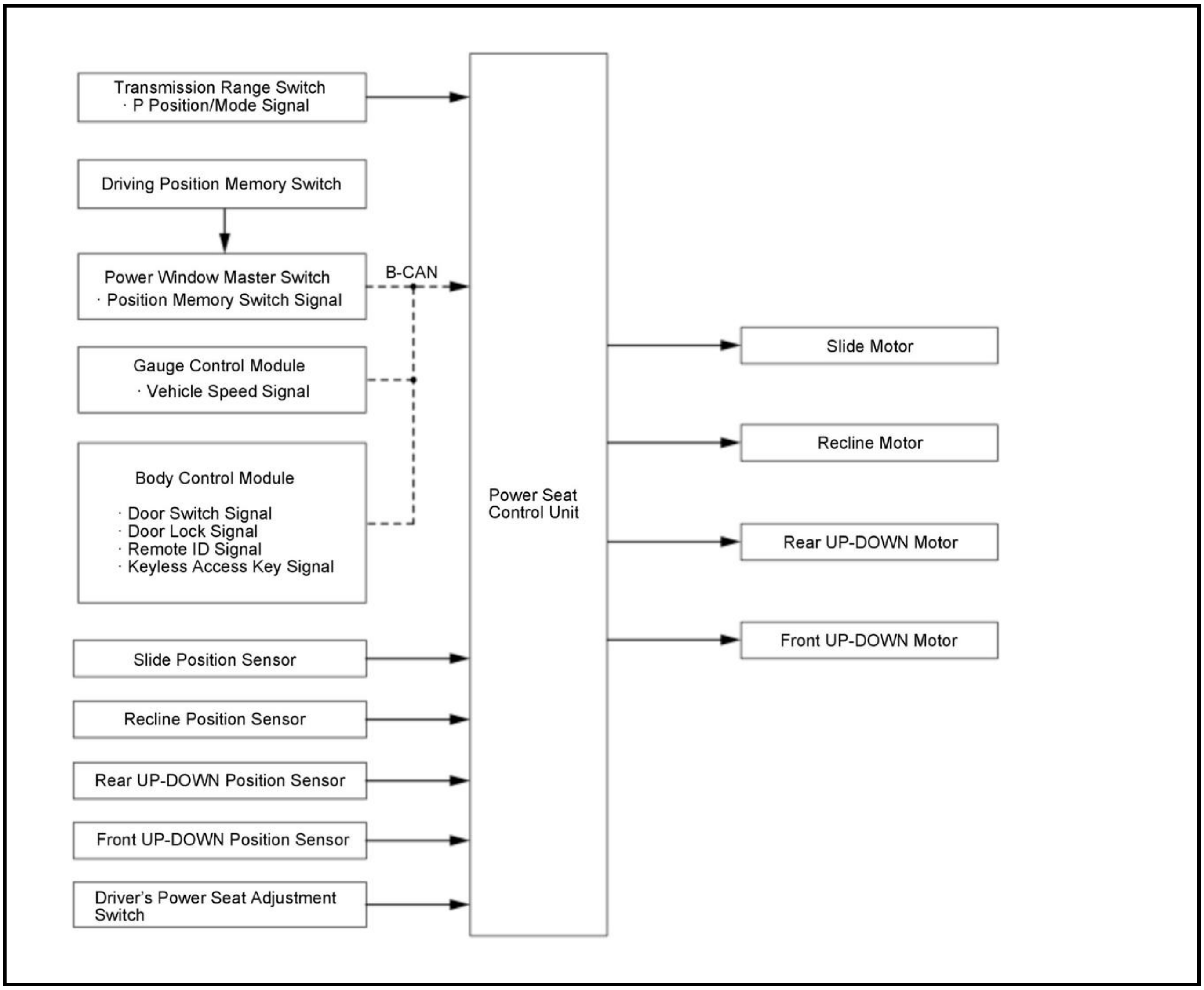
Transmission Range Switch
· P Position/Mode Signal
Driving Position Memory Switch
Power Window Master Switch
· Position Memory Switch Signal
B-CAN
Gauge Control Module
· Vehicle Speed Signal
Body Control Module
· Door Switch Signal
· Door Lock Signal
· Remote ID Signal
· Keyless Access Key Signal
Slide Position Sensor
Recline Position Sensor
Rear UP-DOWN Position Sensor
Front UP-DOWN Position Sensor
Driver's Power Seat Adjustment Switch
Power Seat Control Unit
Slide Motor
Recline Motor
Rear UP-DOWN Motor
Front UP-DOWN Motor

MULTIPLEX INTEGRATED CONTROL SYSTEM DESCRIPTION

Overview

The body control module is one of the F-CAN and the B-CAN components. The body control module controls many systems related to the body controller area and security system, and also works as a gateway to diagnose the other B-CAN connected ECUs with the HDS.

Self-Diagnostic Function

The body control module provides the self-diagnostic function for checking the communication and input systems.

Communication Check (Test Mode 1):

When the B-CAN BUS or the connection to the gauge control module is disconnected, an error code is shown with the number of blinks of the individual map light.

Switch Input Check (Test Mode 2):

When the input of a switch or a sensor to the body control module has changed, diagnosis of the input system can be performed on the basis of the individual map light flashing count.

HDS Diagnostics

The HDS connects to the data link connector (DLC) to communicate with the vehicle's control units. This allows the HDS to retrieve DTCs, diagnostic data, or transmit forced commands during output function tests.

Customize Memory Function

The body control module has a feature that allows the settings of certain outputs to be customized to user preferences with the HDS.

Fail-safe Function

Hardware Fail-safe Control

When a CPU problem or an abnormal power supply voltage is detected, the body control module moves to the hardware fail-safe mode, and each system output load is set to the pre-programmed fail-safe value.

Software Fail-safe Control

When any of the data from the B-CAN circuit cannot be received within a specified time, or an unusual combination of the data is recognized, the body control module moves to the software fail-safe mode. The data that cannot be received is forced to a pre-programmed value.

CONNECTOR VIEW

BODY CONTROL MODULE CONNECTOR FOR INPUTS AND OUTPUTS

Connector Index
Body Control Module Connector A (14P)
Body Control Module Connector B (36P)
Body Control Module Connector C (28P)
Body Control Module Connector D (40P)
Body Control Module Connector E (24P)
Body Control Module Connector F (36P) (with keyless access system)
Body Control Module Connector G (32P) (with keyless access system)

Body Control Module Connector A (14P) (female terminals)

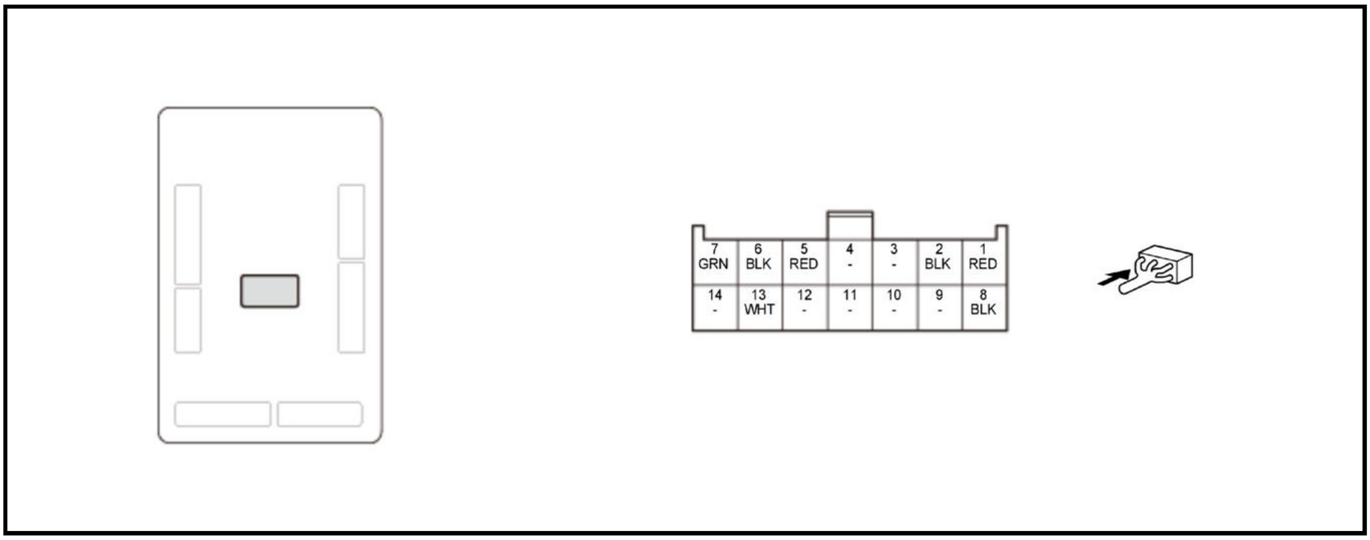

Terminal number	Terminal name	Description	Signal
1	+B HAZARD	+B power supply	About battery voltage at all times
2	GND	Body control module ground	Less than 0.2 V at all times
3	---	Not used	---
4	---	Not used	---

Terminal number	Terminal name	Description	Signal
5*	KEY LT	Outputs ignition key light signal	---
6	GND	Body control module ground	Less than 0.2 V at all times
7	RR WIPER MTR	Outputs rear window wiper motor signal	---
8	GND	Body control module ground	Less than 0.2 V at all times
9	---	Not used	---
10	---	Not used	---
11	---	Not used	---
12	---	Not used	---
13	INTR LIGHT-	Detects interior lights signal	---
14	---	Not used	---

*: Without keyless access system

Body Control Module Connector B (36P) (female terminals)

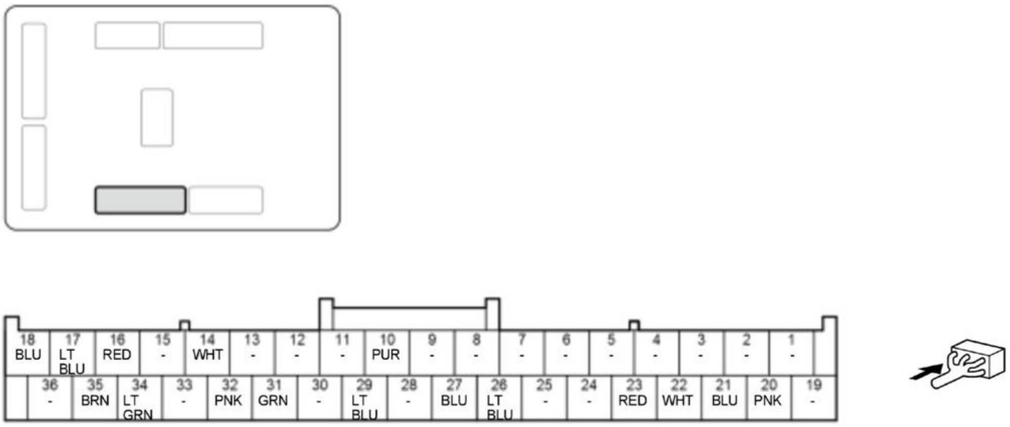
18 BLU
17 LT BLU
16 RED
15 -
14 WHT
13 -
12 -
11 -
10 PUR
9 -
8 -
7 -
6 -
5 -
4 -
3 -
2 -
1 -
36 -
35 BRN
34 LT GRN
33 -
32 PNK
31 GRN
30 -
29 LT BLU
28 -
27 BLU
26 LT BLU
25 -
24 -
23 RED
22 WHT
21 BLU
20 PNK
19 -

Terminal number	Terminal name	Description	Signal
1	---	Not used	---
2	---	Not used	---
3	---	Not used	---
4	---	Not used	---
5	---	Not used	---
6	---	Not used	---
7	---	Not used	---
8	---	Not used	---
9	---	Not used	---
10	BACK UP(WIPER)	Outputs windshield wiper control unit/motor (wiper HI/LO) signal	With wiper HI or LO operation: about battery voltageIf none of above conditions are met: less than 0.2 V
11	---	Not used	---
12	---	Not used	---
13	---	Not used	---

Terminal number	Terminal name	Description	Signal
14	P/W TIMER	Drives power window relay	Without vehicle off operation: about battery voltageWith vehicle off operation: less than 0.2 V
15	---	Not used	---
16* 1	+B SMART	+B power source	About battery voltage at all times
17	RR L TURN	Outputs left turn signal light signal	With left turn signal lights are ON: about battery voltage
18	FR L TURN	Outputs left turn signal light signal	With left turn signal lights are ON: about battery voltage
19	---	Not used	---
20	B-CAN_H	Communication line	---
21	B-CAN_L	Communication line	---
22	F-CAN A_H* 2F-CAN_H* 3	Communication line	---
23	F-CAN A_L* 2F-CAN_L* 3	Communication line	---

*1: With keyless access system

*2: With CAN gateway

*3: Without CAN gateway

*4: Without keyless access system

*5: Without power tailgate

Terminal number	Terminal name	Description	Signal
24	---	Not used	---
25	---	Not used	---
26* 4	KEY SOL	Outputs key interlock solenoid signal	With vehicle in ACCESSORY or ON mode and P position/mode: about battery voltageWith vehicle in ACCESSORY or ON mode and out of P position/mode: less than 0.2 V
27	DOOR LOCK RELAY CL-	Drives power door lock relay circuit (LOCK) signal	With door lock actuators in locking operation: less than 0.2 V
28	---	Not used	---
29* 5	TRUNK ACT RLY CL-	Drives tailgate release actuator relay circuit	With trunk release actuator operation: less than 0.2 V
30	---	Not used	---
31	DR DOOR UNLOCK RELAY CL-	Drives power door lock relay circuit (DR UNLOCK)	With driver's door lock actuator in unlocking operation: less than 0.2 V
32	DOOR UNLOCK RELAY CL-	Drives power door lock relay circuit (UNLOCK)	With door lock actuators in unlocking operation: less than 0.2 V
33	---	Not used	---
34	RR R TURN	Outputs right turn signal light signal	With right turn signal lights are ON: about battery voltage
35	FR R TURN	Outputs right turn signal light signal	With right turn signal lights are ON: about battery voltage

Terminal number	Terminal name	Description	Signal
36	---	Not used	---

*1: With keyless access system

*2: With CAN gateway

*3: Without CAN gateway

*4: Without keyless access system

*5: Without power tailgate

Body Control Module Connector C (28P) (female terminals)

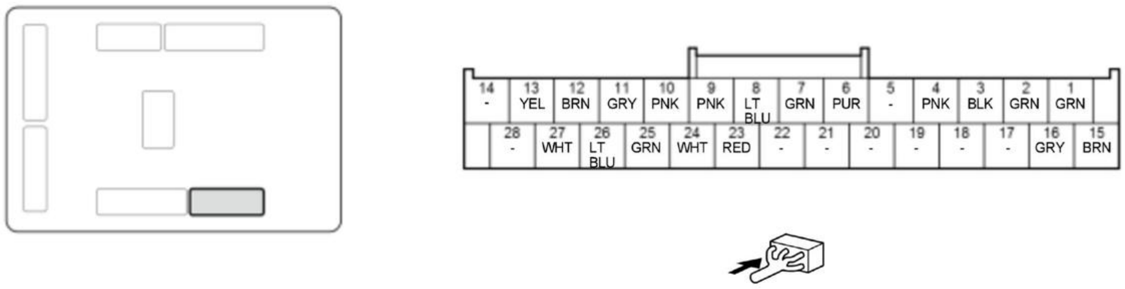
14
-
13
YEL
12
BRN
11
GRY
10
PNK
9
PNK
8
LT BLU
7
GRN
6
PUR
5
-
4
PNK
3
BLK
2
GRN
1
GRN
28
-
27
WHT
26
LT BLU
25
GRN
24
WHT
23
RED
22
-
21
-
20
-
19
-
18
-
17
-
16
GRY
15
BRN

Terminal number	Terminal name	Description	Signal
1	ATP-P	Detects transmission in P position/mode signal	With P position/mode: less than 0.2 VWith out of P position/mode and body control module is wakeup mode: about battery voltageWith out of P position/mode and body control module is sleep mode: pulse

*: With front fog light

Terminal number	Terminal name	Description	Signal
2	HAZARD SW	Detects hazard warning switch signal	With hazard warning switch OFF: about battery voltageWith hazard warning switch ON: less than 0.2 V
3	COMBI SW GND(LT)	Ground for combination light switch	Less than 0.2 V at all times
4	T/G OPEN SW	Detects tailgate outer handle switch signal	With tailgate outer handle switch ON: less than 0.2 VWith tailgate outer handle switch OFF and body control module is wakeup mode: about battery voltageWith tailgate outer handle switch OFF and body control module is sleep mode: pulse

Terminal number	Terminal name	Description	Signal
5	---	Not used	---
6*	FR FOG SW	Detects front fog light switch signal	With front fog light switch ON: less than 0.2 VWith front fog light switch OFF and body control module is wakeup mode: about battery voltageWith front fog light switch OFF and body control module is sleep mode: pulse
7	PASSING SW	Detects combination light switch PASSING signal	With combination light switch PASSING: less than 0.2 VWith combination light switch OFF and body control module is wakeup mode: about battery voltageWith combination light switch OFF and body control module is sleep mode: pulse
8	H/L HI SW	Detects combination light switch HI signal	With combination light switch HI: less than 0.2 VWith combination light switch OFF and body control module is wakeup mode: about battery voltageWith combination light switch OFF and body control module is sleep mode: pulse
9	H/L ON SW	Detects combination light switch ON signal	With combination light switch ON: less than 0.2 VWith combination light switch OFF and body control module is wakeup mode: about battery voltageWith combination light switch OFF and body control module is sleep mode: pulse
10	H/L OFF SW	Detects combination light switch OFF signal	With combination light switch OFF: less than 0.2 VWith combination light switch ON and body control module is wakeup mode: about battery voltageWith combination light switch ON and body control module is sleep mode: pulse
11	PARKING LT SW	Detects combination light switch PARKING signal	With combination light switch PARKING: less than 0.2 VWith combination light switch OFF and body control module is wakeup mode: about battery voltageWith combination light switch OFF and body control module is sleep mode: pulse
12	IG2 DRL	IG2 power source	With vehicle in ON mode: about battery voltage
13	LIN(FR WIPER)	Communication line	---
14	---	Not used	---

*: With front fog light

Terminal number	Terminal name	Description	Signal
15	RR L SILCON UNLOCK	Detects left rear door lock knob switch signal	With left rear door lock knob switch UNLOCK: less than 0.2 VWith left rear door lock knob switch LOCK and body control module is wakeup mode: about battery voltageWith left rear door lock knob switch LOCK and body control module is sleep mode: pulse
16	RR R SILCON UNLOCK	Detects right rear door lock knob switch signal	With right rear door lock knob switch UNLOCK: less than 0.2 VWith right rear door lock knob switch LOCK and body control module is wakeup mode: about battery voltageWith right rear door lock knob switch LOCK and body control module is sleep mode: pulse
17	---	Not used	---
18	---	Not used	---
19	---	Not used	---
20	---	Not used	---
21	---	Not used	---
22	---	Not used	---
23	ACC KEYLOCK	ACC power source	With vehicle in ACCESSORY or ON mode: about battery voltage
24	BACK LT	Detects back-up light signal	With vehicle in ON mode and R position/mode: about battery voltageIf none of above conditions are met: less than 0.2 V
25	STOP SW	Detects brake pedal position switch signal	With brake pedal pressed: about battery voltageWith brake pedal released: less than 0.2 V
26	P-PIN SW	Detects park pin switch signal	With park pin switch ON: less than 0.2 VWith park pin switch OFF: about battery voltage
27	+B BACK UP	+B power source	About battery voltage at all times
28	---	Not used	---

*: With front fog light

Body Control Module Connector D (40P) (female terminals)

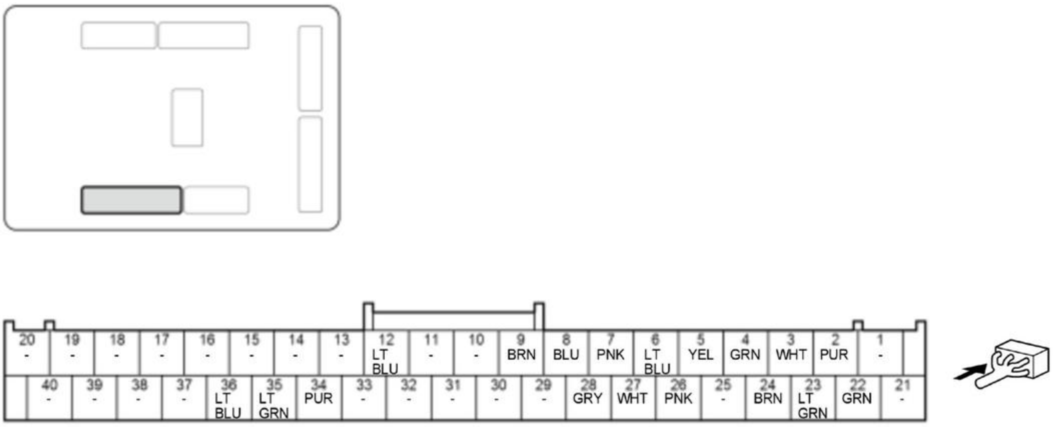

Terminal number	Terminal name	Description	Signal
1	---	Not used	---
2	FR WIPER INT SW	Detects windshield wiper switch INT or LO signal	With windshield wiper switch INT or LO: less than 0.2 VWith out of windshield wiper switch INT or LO and body control module is wakeup mode: about battery voltageWith out of windshield wiper switch INT or LO and body control module is sleep mode: less than 0.2 V
3	FR WIPER HI SW	Detects windshield wiper switch HI or LO signal	With windshield wiper switch HI or LO: less than 0.2 VWith out of windshield wiper switch HI or LO and body control module is wakeup mode: about battery voltageWith out of windshield wiper switch HI or LO and body control module is sleep mode: less than 0.2 V
4	FR WIPER MIST SW	Detects windshield washer switch MIST signal	With windshield washer switch MIST: less than 0.2 VWith out of windshield wiper switch MIST and body control module is wakeup mode: about battery voltageWith out of windshield wiper switch MIST and body control module is sleep mode: less than 0.2 V
5	FR WASHER SW	Detects windshield washer switch ON signal	With windshield washer switch ON: less than 0.2 VWith windshield washer switch OFF and body control module is wakeup mode: about battery voltageWith windshield washer switch OFF and body control module is sleep mode: less than 0.2 V
6	RR WIPER INT SW	Detects rear window wiper switch INT signal	With rear window wiper switch INT: less than 0.2 VWith out of rear window wiper switch INT and body control module is wakeup mode: about battery voltageWith out of rear

Terminal number	Terminal name	Description	Signal
			window wiper switch INT and body control module is sleep mode: less than 0.2 V
7	RR WIPER SW	Detects rear window wiper switch ON signal	With rear window wiper switch ON: less than 0.2 VWith out of rear window wiper switch ON and body control module is wakeup mode: about battery voltageWith out of rear window wiper switch ON and body control module is sleep mode: less than 0.2 V
8	RR WASHER SW	Detects rear window washer switch signal	With rear window washer switch ON: less than 0.2 VWith rear window washer switch OFF and body control module is wakeup mode: about battery voltageWith rear window washer switch OFF and body control module is sleep mode: less than 0.2 V
9	COMBI SW GND(WIP)	Ground for wiper/washer switch	Less than 0.2 V at all times
10	---	Not used	---

*1: Without keyless access system

*2: Without power tailgate

Terminal number	Terminal name	Description	Signal
11	---	Not used	---
12	FR DEICER SW	Detects heated windshield wiper area switch signal	With heated windshield wiper area switch ON: less than 0.2 VWith heated windshield wiper area switch OFF and body control module is wakeup mode: about battery voltageWith heated windshield wiper area switch OFF and body control module is sleep mode: less than 0.2 V
13	---	Not used	---
14	---	Not used	---
15	---	Not used	---
16	---	Not used	---
17	---	Not used	---
18	---	Not used	---
19	---	Not used	---
20	---	Not used	---
21	---	Not used	---
22	FL DOOR SW	Detects driver's door switch signal	With driver's door switch ON: less than 0.2 VWith driver's door switch OFF and body control module is wakeup mode: about battery voltageWith driver's door switch OFF

Terminal number	Terminal name	Description	Signal
			and body control module is sleep mode: pulse
23	FR DOOR SW	Detects front passenger's door switch signal	With front passenger's door switch ON: less than 0.2 VWith front passenger's door switch OFF and body control module is wakeup mode: about battery voltageWith front passenger's door switch OFF and body control module is sleep mode: pulse
24	RL DOOR SW	Detects left rear door switch signal	With left rear door switch ON: less than 0.2 VWith left rear door switch OFF and body control module is wakeup mode: about battery voltageWith left rear door switch OFF and body control module is sleep mode: pulse
25	---	Not used	---
26* 1	KEY SW	Detects ignition key switch signal	With ignition key switch ON: less than 0.2 VWith ignition key switch OFF and body control module is wakeup mode: about battery voltageWith ignition key switch OFF and body control module is sleep mode: pulse
27	T/G SW	Detects tailgate latch switch signal	With tailgate latch switch ON: less than 0.2 VWith tailgate latch switch OFF and body control module is wakeup mode: about battery voltageWith tailgate latch switch OFF and body control module is sleep mode: pulse
28	RR DOOR SW	Detects right rear door switch signal	With right rear door switch ON: less than 0.2 VWith right rear door switch OFF and body control module is wakeup mode: about battery voltageWith right rear door switch OFF and body control module is sleep mode: pulse
29	---	Not used	---

*1: Without keyless access system

*2: Without power tailgate

Terminal number	Terminal name	Description	Signal
30	---	Not used	---
31	---	Not used	---
32	---	Not used	---
33	---	Not used	---
34* 2	CDS	Detects SRS unit collision detection signal	With SRS unit collision detection: less than 0.2 VWith SRS unit non-

Terminal number	Terminal name	Description	Signal
			collision detection and body control module is wakeup mode: about battery voltageWith body control module is sleep mode: less than 0.2 V at all time
35	S-NET	Communication line	---
36	K LINE	Communication line	---
37	---	Not used	---
38	---	Not used	---
39	---	Not used	---
40	---	Not used	---

*1: Without keyless access system

*2: Without power tailgate

Body Control Module Connector E (24P) (female terminals)

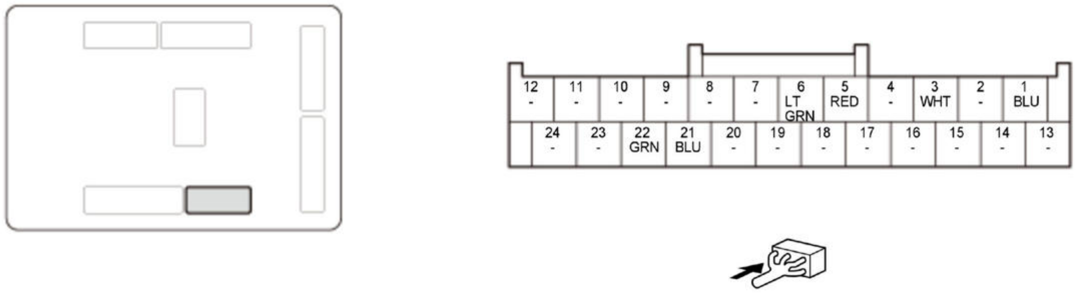

Terminal number	Terminal name	Description	Signal
1	IG1 FUEL PUMP	IG1 power source	With vehicle in ON or START mode: about battery voltage
2	---	Not used	---
3	TRUNK LT	Outputs cargo area light signal	With cargo area light ON: less than 0.2 V
4	---	Not used	---
5	R TURN SW	Detects right turn signal switch signal	With right turn signal switch ON: less than 0.2 VWith right turn signal switch OFF and body control module is wakeup mode: about battery voltageWith right turn signal switch OFF and body control module is sleep mode: less than 0.2 V

*1: With intermittent dwell time controller

*2: With keyless access system

Terminal number	Terminal name	Description	Signal
6	L TURN SW	Detects left turn signal switch signal	With left turn signal switch ON: less than 0.2 VWith left turn signal switch OFF and body control module is wakeup mode: about battery voltageWith left turn signal switch OFF and body control module is sleep mode: less than 0.2 V
7	---	Not used	---
8	---	Not used	---
9	---	Not used	---
10	---	Not used	---
11	---	Not used	---
12	---	Not used	---
13	---	Not used	---
14	---	Not used	---
15	---	Not used	---
16	---	Not used	---
17	---	Not used	---
18	---	Not used	---
19	---	Not used	---
20	---	Not used	---
21* 1	FR WIPER INT VOL	Detects windshield wiper/washer switch intermittent dwell time controller signal	With vehicle in ON mode: about 0-5 V (depending on intermittent dwell time controller)
22* 2	SMART BUZZER	Outputs keyless buzzer signal	---
23	---	Not used	---
24	---	Not used	---

*1: With intermittent dwell time controller

*2: With keyless access system

Body Control Module Connector F (36P) (female terminals) (with keyless access system)

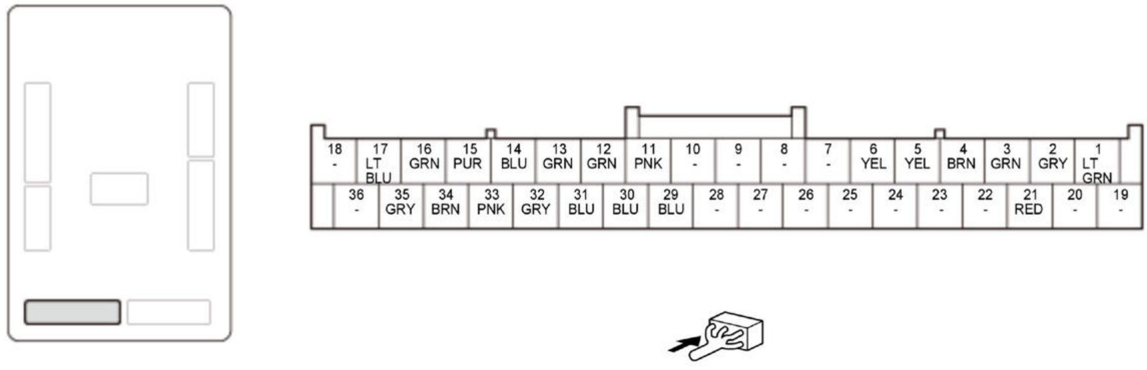
18 -
17 LT BLU
16 GRN
15 PUR
14 BLU
13 GRN
12 GRN
11 PNK
10 -
9 -
8 -
7 -
6 YEL
5 YEL
4 BRN
3 GRN
2 GRY
1 LT GRN
36 -
35 GRY
34 BRN
33 PNK
32 GRY
31 BLU
30 BLU
29 BLU
28 -
27 -
26 -
25 -
24 -
23 -
22 -
21 RED
20 -
19 -

Terminal number	Terminal name	Description	Signal
1*	MTR CONT	Outputs electric steering lock (MTR CONT) signal	---

*: With electric steering lock

Terminal number	Terminal name	Description	Signal
2	IG1 COIL+	Drives IG1A and IG1B relay circuit	With vehicle in ON or START mode: about battery voltageWith vehicle in OFF (LOCK) mode: less than 0.2 V
3	START SW IND1	Drives engine start/stop switch light (RED)	With engine start/stop switch light (RED) OFF: about battery voltageWith engine start/stop switch light (RED) ON: less than 0.2 V
4	START SW ILL	Drives engine start/stop switch light (WHITE)	With engine start/stop switch light (WHITE) OFF: about battery voltageWith engine start/stop switch light (WHITE) ON: less than 0.2 V
5*	ESL PWR	Outputs electric steering lock (ESL PWR) signal	---
6	STS	Outputs engine starting request signal	With engine starting request: about battery voltage
7	---	Not used	---
8	---	Not used	---
9	---	Not used	---
10	---	Not used	---
11	SSSW LF ANT+	Outputs engine start/stop switch LF antenna signal	---
12	EXT FR AS+	Outputs front passenger's door outer handle LF antenna signal	---
13	EXT FR DR+	Outputs driver's door outer handle LF antenna signal	---
14	EXT TR+	Outputs rear bumper LF antenna signal	---
15	EXT M+	Outputs middle interior LF antenna signal	---
16	EXT F+	Outputs front interior LF antenna signal	---
17	EXT R+	Outputs rear interior LF antenna signal	---
18	---	Not used	---
19	---	Not used	---
20	---	Not used	---
21	L-LINE	Communication line	---
22	---	Not used	---
23	---	Not used	---
24	---	Not used	---
25	---	Not used	---
26	---	Not used	---
27	---	Not used	---

Terminal number	Terminal name	Description	Signal
28	---	Not used	---
29	SSSW LF ANT-	Outputs engine start/stop switch LF antenna signal	---
30	EXT FR AS-	Outputs front passenger's door outer handle LF antenna signal	---
31	EXT FR DR-	Outputs driver's door outer handle LF antenna signal	---
32	EXT TR-	Outputs rear bumper LF antenna signal	---

*: With electric steering lock

Terminal number	Terminal name	Description	Signal
33	EXT M-	Outputs middle interior LF antenna signal	---
34	EXT F-	Outputs front interior LF antenna signal	---
35	EXT R-	Outputs rear interior LF antenna signal	---
36	---	Not used	---

*: With electric steering lock

Body Control Module Connector G (32P) (female terminals) (with keyless access system)

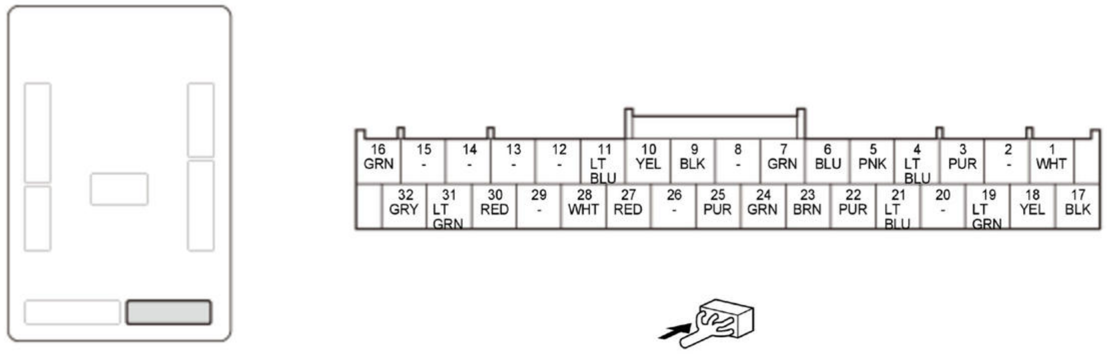
16 GRN
15 -
14 -
13 -
12 -
11 LT BLU
10 YEL
9 BLK
8 -
7 GRN
6 BLU
5 PNK
4 LT BLU
3 PUR
2 -
1 WHT
32 GRY
31 LT GRN
30 RED
29 -
28 WHT
27 RED
26 -
25 PUR
24 GRN
23 BRN
22 PUR
21 LT BLU
20 -
19 LT GRN
18 YEL
17 BLK

Terminal number	Terminal name	Description	Signal
1	DL FR AS	Detects front passenger's door outer handle touch sensor (LOCK) signal	---
2	---	Not used	---
3* 1	ESL SW B	Detects electric steering lock (ESL SW B) signal	---
4* 1	ESL SW C	Detects electric steering lock (ESL SW C) signal	---
5* 1	ESL SW D	Detects electric steering lock	---

Terminal number	Terminal name	Description	Signal
		(ESL SW D) signal	
6* 1	MTR CUT1(CONT)	Detects electric steering lock (MTR CUT1(CONT)) signal	---
7* 1	MTR CUT2(IG1)	Detects electric steering lock (MTR CUT2(IG1)) signal	---
8	---	Not used	---
9	SS2(-)	Detects engine start/stop switch (SS2(-)) signal	---
10	IG1-B SIG	IG1 power source	With vehicle in ON or START mode: about battery voltage
11	IG2 SIG	IG2 power source	With vehicle in ON mode: about battery voltage
12	---	Not used	---
13	---	Not used	---
14	---	Not used	---
15	---	Not used	---

*1: With electric steering lock

*2: With hands free access power tailgate

Terminal number	Terminal name	Description	Signal
16	ACC RLY CL+	Drives ACC relay circuit	With vehicle in ACCESSORY or ON mode: about battery voltageWith vehicle in OFF (LOCK) mode: less than 0.2 V
17	CONT RLY GND	Ground for IG1A/IG1B/IG2/ACC relay circuits	Less than 0.2 V at all times
18	SS1(+)	Detects engine start/stop switch (SS1(+)) signal	Engine start/stop switch pressed: about battery voltageEngine start/stop switch released: less than 0.2 V
19	DL FR DR	Detects driver's door outer handle touch sensor (LOCK) signal	---
20	---	Not used	---
21	T/G CLOSE SW	Detects tailgate lock switch signal	With tailgate lock switch ON: less than 0.2 VWith tailgate lock switch OFF and body control module is wakeup mode: about battery voltageWith tailgate lock switch OFF and body control module is sleep mode: pulse
22	TS FR DR	Detects driver's door outer handle touch sensor (UNLOCK) signal	---
23	PARK BUSY	Detects parking brake switch signal	---
24* 2	KICK SNSR	Detects hands free access power tailgate control unit/sensor signal	---
25	TS FR AS	Detects front passenger's door outer handle touch sensor (UNLOCK) signal	---

Terminal number	Terminal name	Description	Signal
26	---	Not used	---
27	IG1-A SIG	IG1 power source	With vehicle in ON or START mode: about battery voltage
28* 1	IGN TRX	Communication line	---
29	---	Not used	---
30	VOUT FR AS	Drives front passenger's door outer handle touch sensor	---
31	VOUT FR DR	Drives driver's door outer handle touch sensor	---
32	IG2 COIL+	Drives IG2 relay circuit	With vehicle in ON mode: about battery voltageWith vehicle in OFF (LOCK) mode: less than 0.2 V

*1: With electric steering lock

*2: With hands free access power tailgate

POWER SEAT CONTROL UNIT CONNECTOR FOR INPUTS AND OUTPUTS

Connector Index
Power Seat Control Unit Connector A (20P)
Power Seat Control Unit Connector B (12P)

Power Seat Control Unit Connector A (20P) (female terminals)

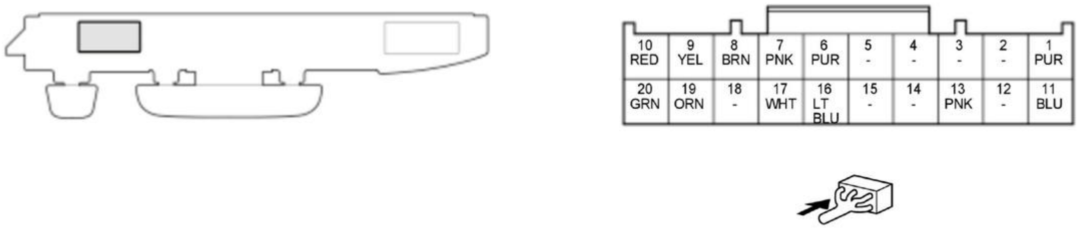

Terminal number	Terminal name	Description	Signal
1	ATP-PBK	Detects transmission in P position/mode signal	With P position/mode: less than 0.2 VWithout P position/mode: about battery voltage
2	---	Not used	---
3	---	Not used	---
4	---	Not used	---
5	---	Not used	---
6	VCC	Drives position sensors	With power seat control unit in wake-up mode: about 5 V
7	TISE	Detects front up-down position sensor signal	About 0.5 - 4.5 V (depending on front up-down position)
8	SLSE	Detects slide position sensor signal	About 0.5 - 4.5 V (depending on slide position)

Terminal number	Terminal name	Description	Signal
9	HESE	Detects rear up-down position sensor signal	About 0.5 - 4.5 V (depending on rear up-down position)
10	RESE	Detects recline position sensor signal	About 0.5 - 4.5 V (depending on recline position)
11	+B BACK UP	+B power source	About battery voltage at all times
12	---	Not used	---
13	IG METER	IG1 power source	With vehicle in ON or START mode: about battery voltage
14	---	Not used	---
15	---	Not used	---
16	B-CAN_H	Communication line	---
17	B-CAN_L	Communication line	---
18	---	Not used	---
19	SEG	Ground for position sensors	Less than 0.2 V at all times
20	S GND	Power seat control unit ground	Less than 0.2 V at all times

Power Seat Control Unit Connector B (12P) (female terminals)

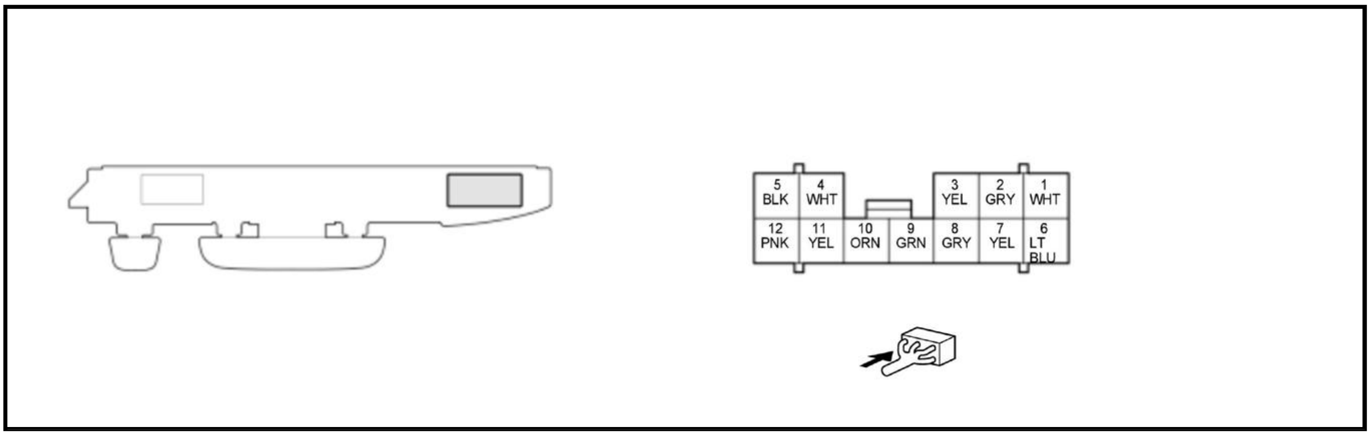

Terminal number	Terminal name	Description	Signal
1	SLIDE RR	Drives slide motor	With slide motor operation (rear side): about battery voltage
2	GND/P-SEAT1	Power seat control unit ground	Less than 0.2 V at all times
3	SLIDE FR	Drives slide motor	With slide motor operation (front side): about battery voltage
4	HEIGHT DOWN	Drives rear up-down motor	With rear up-down motor operation (down): about battery voltage
5	GND/P-SEAT2	Power seat control unit ground	Less than 0.2 V at all times
6	+B/P-SEAT1	+B power source	About battery voltage at all times
7	TILT DOWN	Drives front up-down motor	With front up-down motor operation (down): about battery voltage
8	REC FR	Drives recline motor	With recline motor operation (front side): about battery voltage
9	HEIGHT UP	Drives rear up-down motor	With rear up-down motor operation (up): about battery voltage
10	TILT UP	Drives front up-down motor	With front up-down motor operation (up): about battery voltage

Terminal number	Terminal name	Description	Signal
11	REC RR	Drives recline motor	With recline motor operation (rear side): about battery voltage
12	+B/P-SEAT1	+B power source	About battery voltage at all times

INPUT TEST

DRIVING POSITION MEMORY SYSTEM (DOOR MULTIPLEX CONTROL UNIT AND POWER SEAT CONTROL UNIT) INPUT TEST

NOTE:

- SRS components are located in this area. **Review the SRS component locations** and **the precautions and procedures** before doing repairs or service.
- Make sure the fuses associated with the system is OK.
- Before testing, check for DTCs. If any DTCs are indicated, troubleshoot those DTCs first.
- If you are troubleshooting multiple DTCs, be sure to follow the instructions in **B-CAN System Diagnosis Test Mode A** .

Power Seat Control Unit

1. Turn the vehicle to the OFF (LOCK) mode.

2. Disconnect the power seat control unit connectors.

Power Seat Control Unit Connector A (20P) (female terminals): ① Power Seat Control Unit Connector B (12P) (female terminals): ②

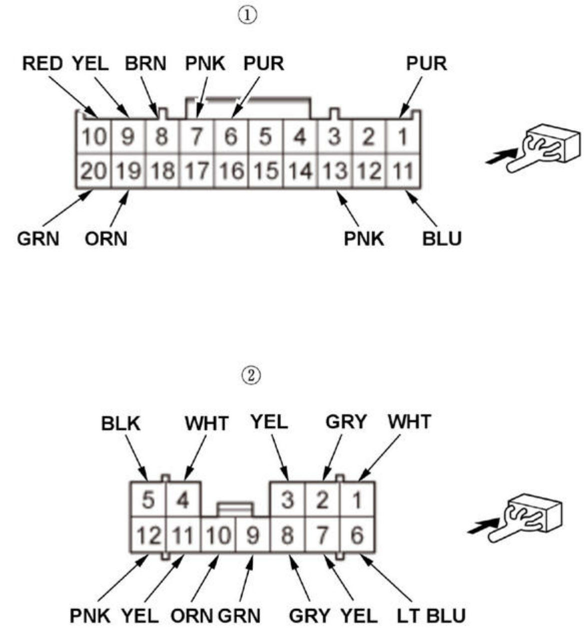
①
RED
YEL
BRN
PNK
PUR
PUR
10 9 8 7 6 5 4 3 2 1
20 19 18 17 16 15 14 13 12 11
GRN
ORN
PNK
BLU
②
BLK
WHT
YEL
GRY
WHT
5 4 3 2 1
12 11 10 9 8 7 6
PNK
YEL
ORN
GRN
GRY
YEL
LT BLU

Inspect the connectors and socket terminals to be sure they are all making good contact:

- If the terminals are bent, loose, or corroded, repair them as necessary, and recheck the system.
- If the terminals look OK, go to step 4.

Reconnect the connectors to the power seat control unit, and do the following input tests:

- If any test indicates a problem, find and correct the cause, then recheck the system.
- If all the input tests prove OK, go to step 5.

Cavity	Wire	Test condition	Test: Desired result	Possible cause if desired result is not obtained
A13	PNK	Vehicle ON mode	Measure the voltage to ground:There should be battery voltage.	An open or high resistance in the wire

Cavity	Wire	Test condition	Test: Desired result	Possible cause if desired result is not obtained
A11	BLU	Under all conditions	Measure the voltage to ground:There should be battery voltage.	An open or high resistance in the wire
B6	LT BLU	Under all conditions	Measure the voltage to ground:There should be battery voltage.	An open or high resistance in the wire
B12	PNK	Under all conditions	Measure the voltage to ground:There should be battery voltage.	An open or high resistance in the wire
B2	GRY	In all power modes	Measure the voltage to ground:There should be less than 0.2 V.	• Poor ground (G501) • An open or high resistance in the ground wire
B5	BLK	In all power modes	Measure the voltage to ground:There should be less than 0.2 V.	• Poor ground (G501) • An open or high resistance in the ground wire
A20	GRN	In all power modes	Measure the voltage to ground:There should be less than 0.2 V.	• Poor ground (G501) • An open or high resistance in the ground wire
A1	PUR	Shift position/mode in P	Check for continuity to ground:There should be continuity.	• Faulty transmission range switch • An open or high resistance in the wire
		Shift position/mode in any other than P	Check for continuity to ground:There should be no continuity.	• Faulty transmission range switch • A short to ground in the wire
A6	PUR	Vehicle ON mode	Measure the voltage to ground:There should be at least about 10 V.	• Faulty position sensor • A short to ground in the wire
A10A19	REDORN	Run the recline motor	Measure the voltage between terminals A10	• Faulty position sensor

Cavity	Wire	Test condition	Test: Desired result	Possible cause if desired result is not obtained
			(+) and A19 (-):There should be about 2.5 V average.	• An open or high resistance in the wire • A short to ground in the wire
A8A19	BRNORN	Run the slide motor	Measure the voltage between terminals A8 (+) and A19 (-):There should be about 2.5 V average.	• Faulty position sensor • An open or high resistance in the wire • A short to ground in the wire
A7A19	PNKORN	Run the front up-down motor	Measure the voltage between terminals A7 (+) and A19 (-):There should be about 2.5 V average.	• Faulty position sensor • An open or high resistance in the wire • A short to ground in the wire
A9A19	YELORN	Run the rear up-down motor	Measure the voltage between terminals A9 (+) and A19 (-):There should be about 2.5 V average.	• Faulty position sensor • An open or high resistance in the wire • A short to ground in the wire

5. Turn the vehicle to the OFF (LOCK) mode.Disconnect the connectors from the power seat control unit, and do these input tests at the following connectors:

- If any test indicates a problem, find and correct the cause, then recheck the system.
- If all the input tests prove OK, go to step 7.

Cavity	Wire	Test condition	Test: Desired result	Possible cause if desired result is not obtained
B3B1	YELWHT	Under all conditions	Connect terminals B6 and B3, and terminals B1 and B2:The seat should slide forward.	• Faulty slide motor • An open or high resistance in the wire
			Connect terminals B6 and B1, and terminals B3 and B2:The seat should slide backward.	
B8B11	GRYYEL	Under all conditions	Connect terminals B12 and B8, and terminals B11 and B5:The seat should recline forward.	• Faulty recline motor • An open or high resistance in the wire
			Connect terminals B12 and B11, and terminals B8 and B5:The seat should recline backward.	
B10B7	ORNYEL	Under all conditions	Connect terminals B6 and B10, and terminals	• Faulty front up-down motor

Cavity	Wire	Test condition	Test: Desired result	Possible cause if desired result is not obtained
			B7 and B2:The front of seat should move up.	- An open or high resistance in the wire
			Connect terminals B6 and B7, and terminals B10 and B2:The front of seat should move down.	
B9B4	GRNWHT	Under all conditions	Connect terminals B12 and B9, and terminals B4 and B5:The rear of seat should move up.	- Faulty rear up-down motor - An open or high resistance in the wire
			Connect terminals B12 and B4, and terminals B9 and B5:The rear of seat should move down.	

Door Multiplex Control Unit (Power Window Master Switch)

7. Turn the vehicle to the OFF (LOCK) mode.

8. Disconnect the power window master switch 37P connector.

Power Window Master Switch 37P Connector (female terminals)

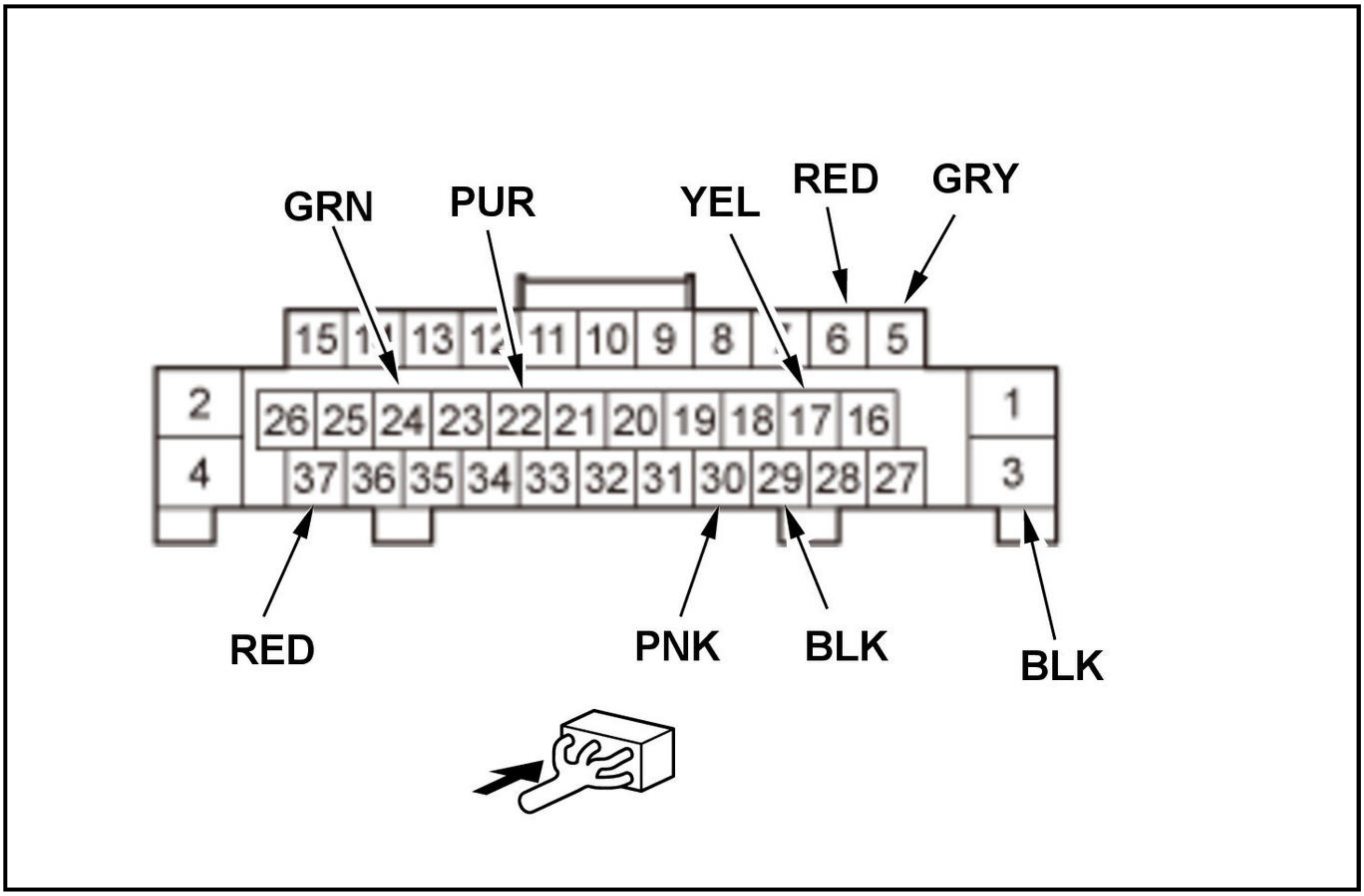

Inspect the connector and socket terminals to be sure they are all making good contact:

- If the terminals are bent, loose, or corroded, repair them as necessary, and recheck the system.
- If the terminals look OK, go to step 10.

Reconnect the connector to the power window master switch, do the following input tests:

- If any test indicates a problem, find and correct the cause, then recheck the system.
- If all the input tests prove OK, go to step 11.

Cavity	Wire	Test condition	Test: Desired result	Possible cause if desired result is not obtained
37	RED	Under all conditions	Measure the voltage to ground:There should be battery voltage.	An open or high resistance in the wire
3	BLK	In all power modes	Measure the voltage to ground:There should be less than 0.2 V.	• Poor ground (G401) • An open or high resistance in the ground wire
29	BLK	In all power modes	Measure the voltage to ground:There should be less than 0.2 V.	• Poor ground (G401) • An open or high resistance in the ground wire
5	GRY	Vehicle ON mode, POSITION 1 button pressed	Measure the voltage to ground:There should be less than 0.2 V.	• Faulty driving position memory switch • Poor ground (G401) or an open in the ground wire • An open or high resistance in the wire
		Vehicle ON mode, POSITION 1 button released	Measure the voltage to ground:There should be about 5 V.	• Faulty driving position memory switch • A short to ground in the wire
6	RED	Vehicle ON mode, POSITION 2 button pressed	Measure the voltage to ground:There should be less than 0.2 V.	• Faulty driving position memory switch • Poor ground (G401) or an open in the ground wire • An open or high resistance in the wire
		Vehicle ON mode, POSITION 2 button released	Measure the voltage to ground:There should be about 5 V.	• Faulty driving position memory switch • A short to ground in the wire

Cavity	Wire	Test condition	Test: Desired result	Possible cause if desired result is not obtained
17	YEL	Vehicle ON mode, SET button pressed	Measure the voltage to ground:There should be less than 0.2 V.	• Faulty driving position memory switch • Poor ground (G501) or an open in the ground wire

Cavity	Wire	Test condition	Test: Desired result	Possible cause if desired result is not obtained
				- An open or high resistance in the wire
		Vehicle ON mode, SET button released	Measure the voltage to ground:There should be about 5 V.	- Faulty driving position memory switch - A short to ground in the wire

11. Turn the vehicle to the OFF (LOCK) mode.Disconnect the connector from the power window master switch, do the following input tests:

- If any test indicates a problem, find and correct the cause, then recheck the system.
- If all the input tests prove OK, go to step 13.

Cavity	Wire	Test condition	Test: Desired result	Possible cause if desired result is not obtained
22	PUR	Under all conditions	Connect terminals No. 22 and No. 37 with a jumper wire:The driving position memory switch INDICATOR 1 should come on.	- Faulty LED - Faulty driving position memory switch - Poor ground (G401) or an open in the ground wire - An open or high resistance in the wire
24	GRN	Under all conditions	Connect terminals No. 24 and No. 37 with a jumper wire:The driving position memory switch INDICATOR 2 should come on.	- Faulty LED - Faulty driving position memory switch - Poor ground (G401) or an open in the ground wire - An open or high resistance in the wire
30	PNK	Under all conditions	Connect terminals No. 30 and No. 37 with a jumper wire:The driving position memory switch lights should come on.	- Faulty LED - Faulty driving position memory switch - Poor ground (G401) or an open in the ground wire - An open or high resistance in the wire

13. If multiple failures are found on more than one control unit, **replace the power seat control unit** . If input failures are related to a particular control unit, replace the control unit.

TEST

MULTIPLEX INTEGRATED CONTROL SYSTEM SLEEP AND WAKE-UP MODE TEST

Shift to the sleep mode:Close all doors. Turn the vehicle to the OFF (LOCK) mode, then open and close the driver's door. If the body control module receives no signals from the inputs listed below, it will go into sleep mode in less than 40 seconds.

- IG1 power supply
- IG2 power supply
- B-CAN data
- Hazard warning switch (ON)

2. Confirm sleep mode:

NOTE: **Check the official Honda service website for more service information about parasitic draw at the 12 volt battery.Check the parasitic draw at the 12 volt battery while entering sleep mode; amperage should change from about 200 mA to less than 35 mA in less than 40 seconds.Shift to wake-up mode:When turning the vehicle to the ON mode, the body control module, the gauge control module, the power window master switch, and the PCM will wake-up at the same time without "talking" to each other through the communication lines. When any switch in the multiplex integrated control system is turned on, it wakes up its related control unit which, in turn, wakes up the other units. After confirming the sleep mode, look in the following table for the switch most related to the problem. Operate that switch and see if its control unit wakes up.**

NOTE: **If any control unit is faulty and does not wake up, several circuits in the system malfunction at the same time. Below is a list of the switches and input signals that wake them up.**

- IG1 power supply
- IG2 power supply
- ACC power supply
- B-CAN data
- F-CAN data
- Driver's door lock switch (LOCK/UNLOCK)
- Front passenger's door lock switch (LOCK/UNLOCK)
- Driver's door switch (door open)
- Front passenger's door switch (door open)
- Left rear door switch (door open)
- Right rear door switch (door open)
- Tailgate latch switch (tailgate open)
- Tailgate opener switch (ON)
- Tailgate outer handle switch (ON)
- Hood latch switch (hood closed)
- Driver's door key cylinder switch (LOCK/UNLOCK)
- Driver's door lock knob switch (LOCK/UNLOCK)
- Front passenger's door lock knob switch (LOCK/UNLOCK)
- Left rear door lock knob switch (UNLOCK)
- Right rear door lock knob switch (UNLOCK)

- Hazard warning switch (ON)
- Combination light switch (Parking, Headlight, Dimmer, Passing, Fog ON)
- Transmission range switch (P)
- Audio security switch (ON)

REWRITE

BODY CONTROL MODULE UPDATE

Procedure

1. Body Control Module - Update

   NOTE: When updating control units, use the most current version of the HDS software and interface device. Refer to available service information for the latest information on update devices.

CIRCUIT DIAGRAM

DRIVING POSITION MEMORY SYSTEM (DPMS) CIRCUIT DIAGRAM

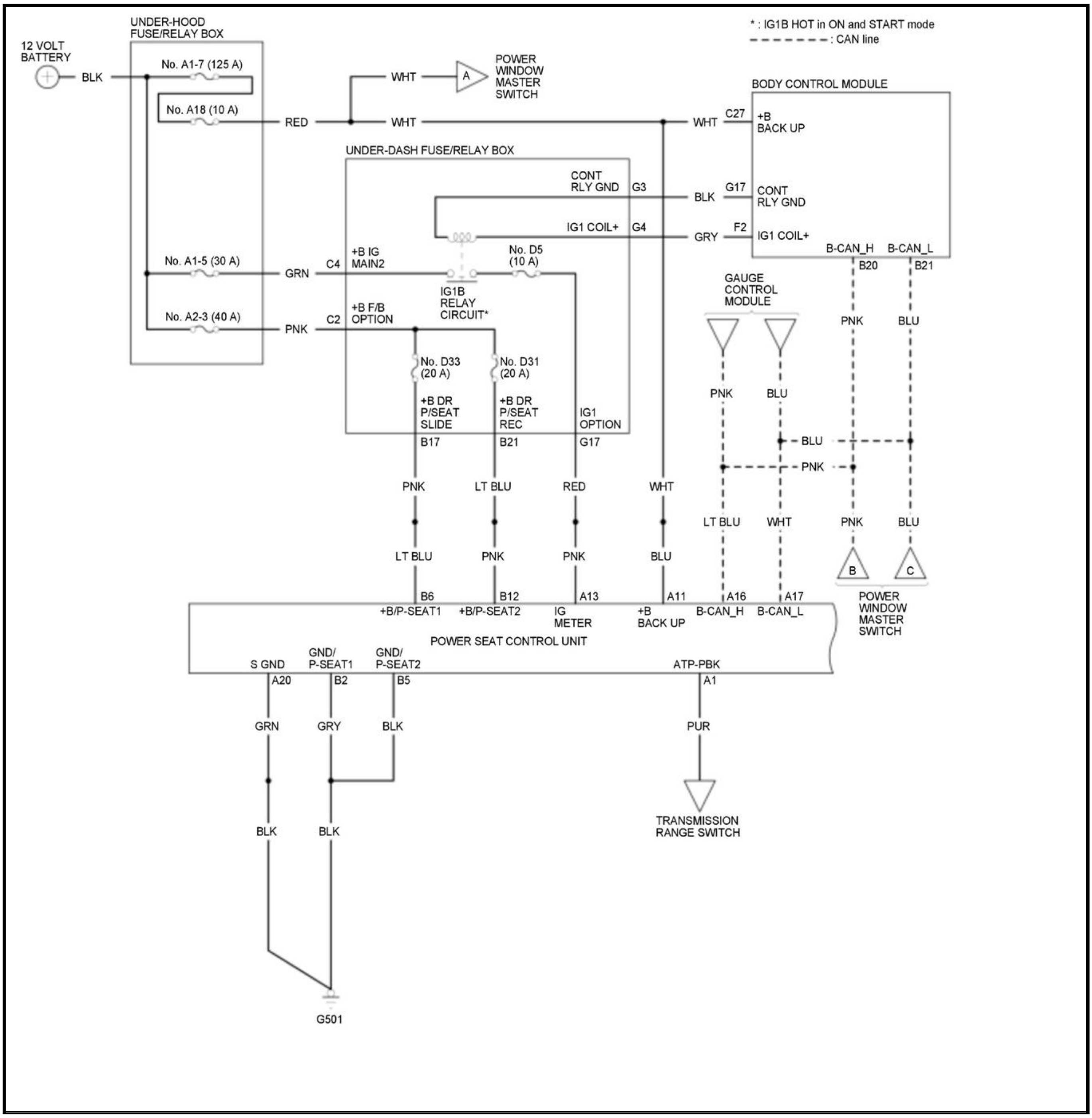
* : IG1B HOT in ON and START mode
: CAN line
UNDER-HOOD FUSE/RELAY BOX
12 VOLT BATTERY
BLK
No. A1-7 (125 A)
No. A18 (10 A)
RED
WHT
A
POWER WINDOW MASTER SWITCH
WHT
WHT
C27
BODY CONTROL MODULE
+B BACK UP
UNDER-DASH FUSE/RELAY BOX
CONT RLY GND
G3
BLK
G17
CONT RLY GND
IG1 COIL+
G4
GRY
F2
IG1 COIL+
B-CAN_H
B-CAN_L
B20
B21
No. A1-5 (30 A)
GRN
C4
+B IG MAIN2
No. D5 (10 A)
IG1B RELAY CIRCUIT*
No. A2-3 (40 A)
PNK
C2
+B F/B OPTION
GAUGE CONTROL MODULE
PNK
BLU
No. D33 (20 A)
No. D31 (20 A)
PNK
BLU
+B DR P/SEAT SLIDE
+B DR P/SEAT REC
IG1 OPTION
B17
B21
G17
BLU
PNK
PNK
LT BLU
RED
WHT
LT BLU
WHT
PNK
BLU
LT BLU
PNK
PNK
BLU
B
C
POWER WINDOW MASTER SWITCH
B6
B12
A13
A11
A16
A17
+B/P-SEAT1
+B/P-SEAT2
IG METER
+B BACK UP
B-CAN_H
B-CAN_L
POWER SEAT CONTROL UNIT
S GND
GND/ P-SEAT1
GND/ P-SEAT2
ATP-PBK
A20
B2
B5
A1
GRN
GRY
BLK
PUR
BLK
BLK
TRANSMISSION RANGE SWITCH
G501

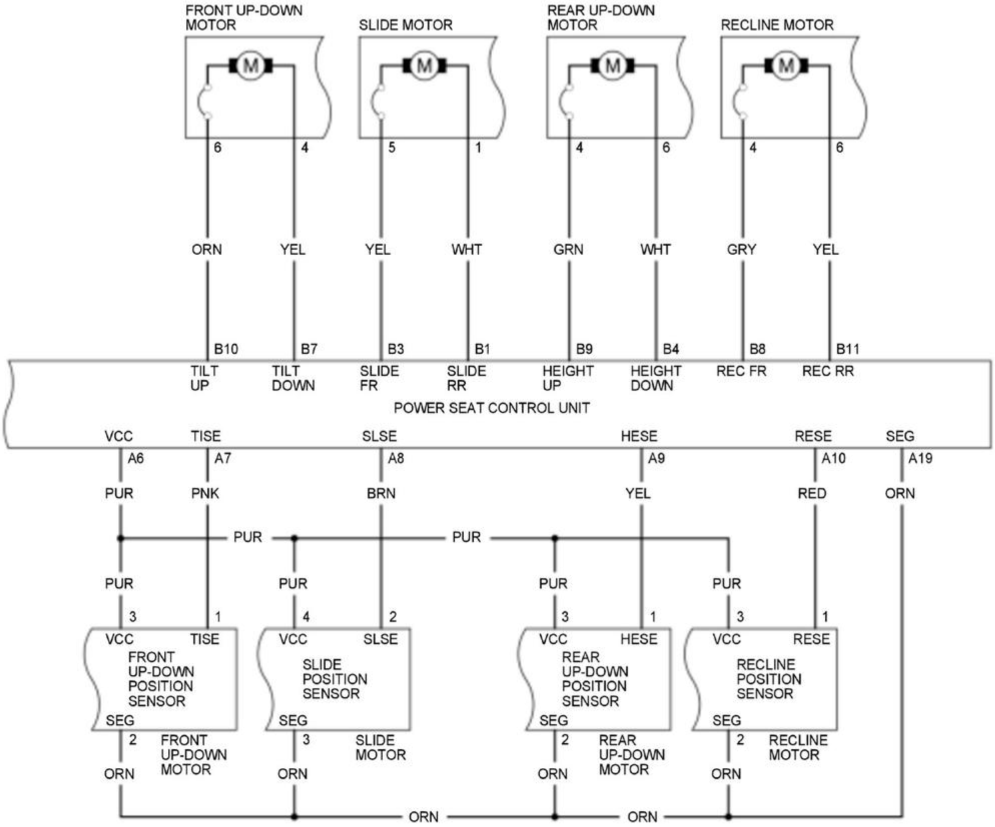

FRONT UP-DOWN MOTOR
SLIDE MOTOR
REAR UP-DOWN MOTOR
RECLINE MOTOR
M
6
4
5
1
4
6
4
6
ORN
YEL
YEL
WHT
GRN
WHT
GRY
YEL
B10
B7
B3
B1
B9
B4
B8
B11
TILT UP
TILT DOWN
SLIDE FR
SLIDE RR
HEIGHT UP
HEIGHT DOWN
REC FR
REC RR
POWER SEAT CONTROL UNIT
VCC
TISE
SLSE
HESE
RESE
SEG
A6
A7
A8
A9
A10
A19
PUR
PNK
BRN
YEL
RED
ORN
PUR
PUR
PUR
PUR
PUR
PUR
3
1
4
2
3
1
3
1
VCC
TISE
FRONT UP-DOWN POSITION SENSOR
SEG
VCC
SLSE
SLIDE POSITION SENSOR
SEG
VCC
HESE
REAR UP-DOWN POSITION SENSOR
SEG
VCC
RESE
RECLINE POSITION SENSOR
SEG
2
FRONT UP-DOWN MOTOR
3
SLIDE MOTOR
2
REAR UP-DOWN MOTOR
2
RECLINE MOTOR
ORN
ORN
ORN
ORN
ORN
ORN

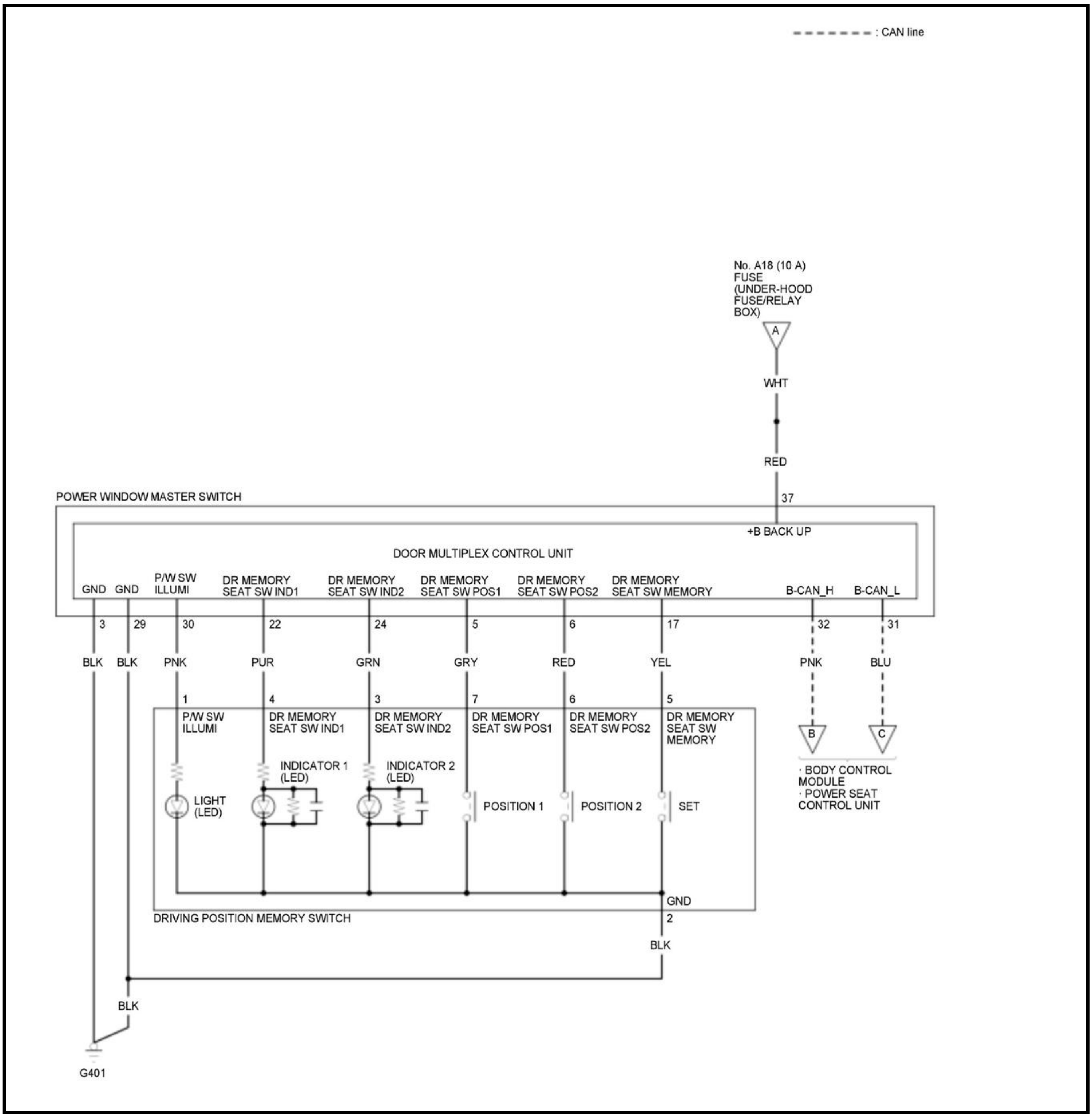

: CAN line
No. A18 (10 A) FUSE (UNDER-HOOD FUSE/RELAY BOX)
A
WHT
RED
37
POWER WINDOW MASTER SWITCH
+B BACK UP
DOOR MULTIPLEX CONTROL UNIT
GND
GND
P/W SW ILLUMI
DR MEMORY SEAT SW IND1
DR MEMORY SEAT SW IND2
DR MEMORY SEAT SW POS1
DR MEMORY SEAT SW POS2
DR MEMORY SEAT SW MEMORY
B-CAN_H
B-CAN_L
3
29
30
22
24
5
6
17
32
31
BLK
BLK
PNK
PUR
GRN
GRY
RED
YEL
PNK
BLU
1
4
3
7
6
5
P/W SW ILLUMI
DR MEMORY SEAT SW IND1
DR MEMORY SEAT SW IND2
DR MEMORY SEAT SW POS1
DR MEMORY SEAT SW POS2
DR MEMORY SEAT SW MEMORY
B
C
· BODY CONTROL MODULE
· POWER SEAT CONTROL UNIT
INDICATOR 1 (LED)
INDICATOR 2 (LED)
LIGHT (LED)
POSITION 1
POSITION 2
SET
GND
2
DRIVING POSITION MEMORY SWITCH
BLK
BLK
G401

LEARNING RESET CLEAR

DRIVING POSITION MEMORY CLEAR

Procedure

Clear the driving position memory after doing any of the following actions:

- Power seat motor test or replacement.
- Substituting a known-good power seat control unit.

NOTE: When the driving position is cleared from the power seat control unit, the driving positions for both Position 1 and 2 are also cleared.

1. Driving Position Memory - Clear
    1. Turn the vehicle to the OFF (LOCK) mode.

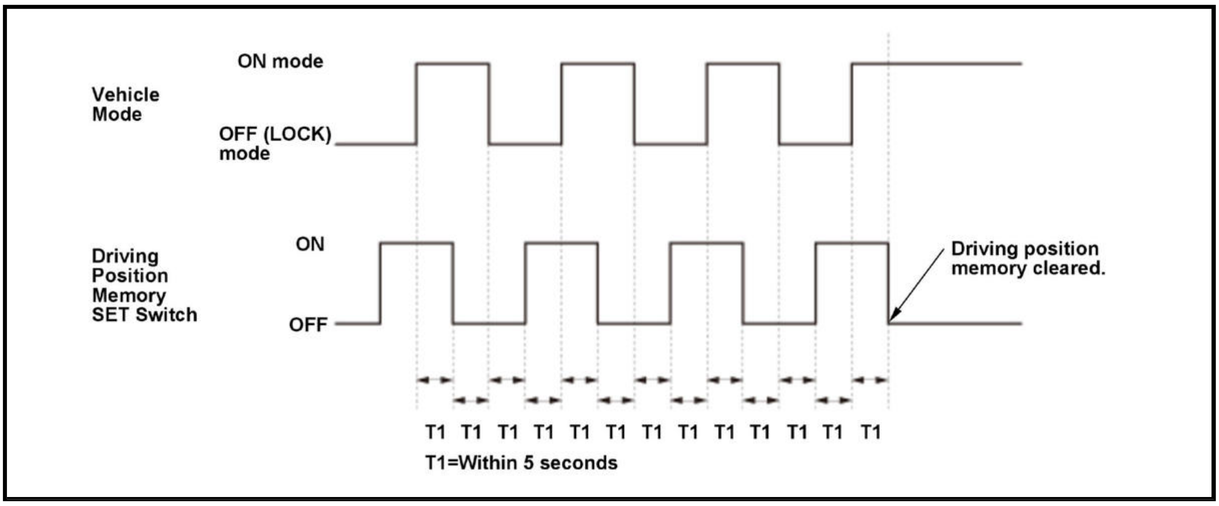

2. Press and hold the SET button of the driving position memory switch.

3. Turn the vehicle to the ON mode.

4. Release the SET button of the driving position memory switch.

5. Repeat steps 1-4 three more times.

NOTE:

- **Once the memory is successfully cleared, the driving position memory switch indicator 1 and 2 turn on for 3 seconds.**
- **If the indicators do not turn on, go back to step 1 and repeat the procedure.**

COMPONENT LOCATION INDEX

DRIVING POSITION MEMORY SYSTEM (DPMS) COMPONENT LOCATION INDEX

For relationships between signals in a system, refer to System Diagram.

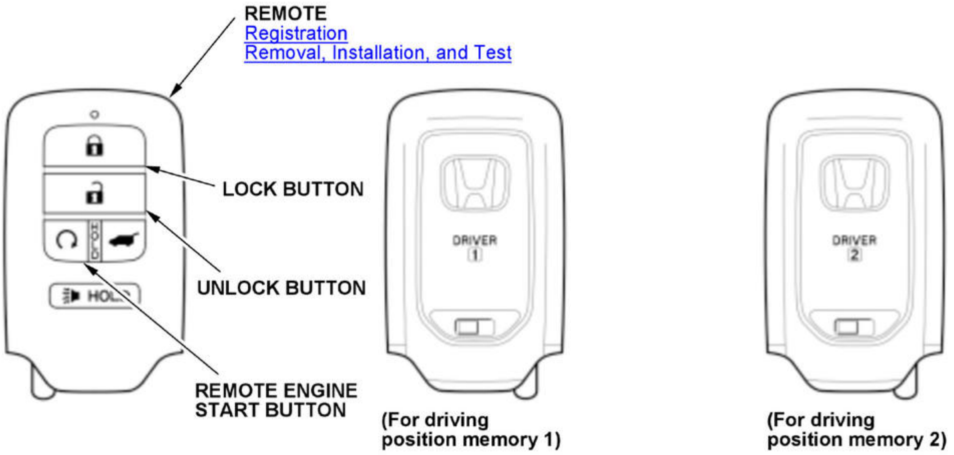
REMOTE
Registration
Removal, Installation, and Test
LOCK BUTTON
UNLOCK BUTTON
REMOTE ENGINE START BUTTON
HOLD
DRIVER 1
DRIVER 2
(For driving position memory 1)
(For driving position memory 2)

View of the remote when the door key is removed.

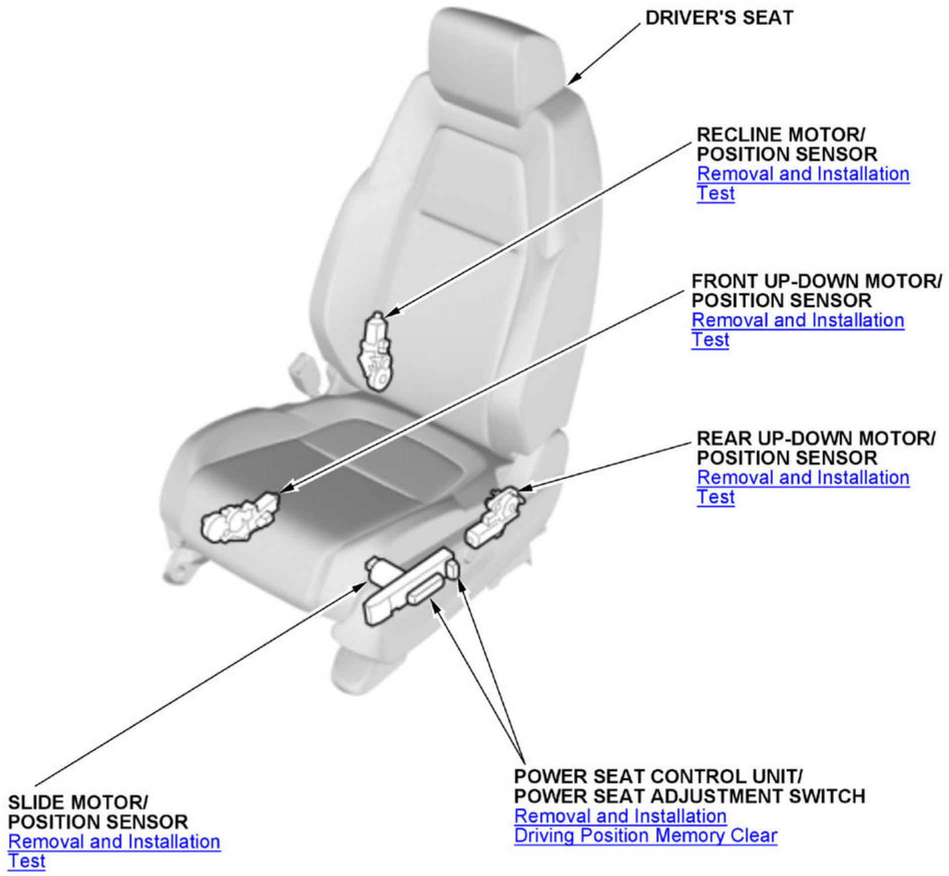
DRIVER'S SEAT
RECLINE MOTOR/
POSITION SENSOR
Removal and Installation
Test
FRONT UP-DOWN MOTOR/
POSITION SENSOR
Removal and Installation
Test
REAR UP-DOWN MOTOR/
POSITION SENSOR
Removal and Installation
Test
SLIDE MOTOR/
POSITION SENSOR
Removal and Installation
Test
POWER SEAT CONTROL UNIT/
POWER SEAT ADJUSTMENT SWITCH
Removal and Installation
Driving Position Memory Clear

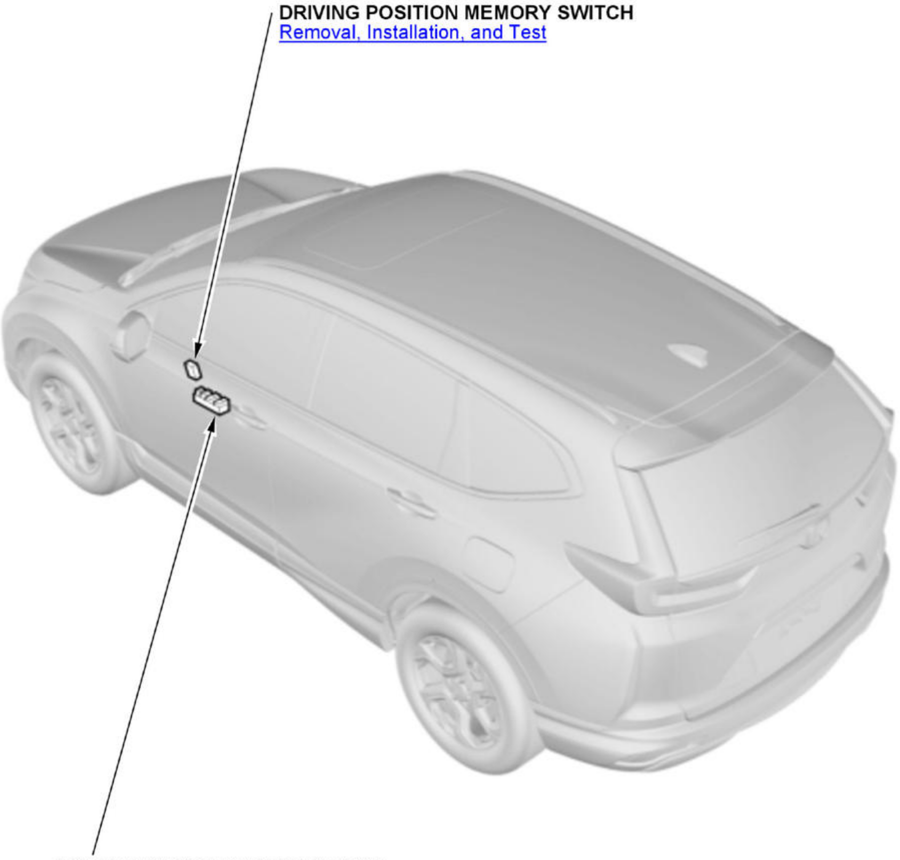

DRIVING POSITION MEMORY SWITCH
Removal, Installation, and Test

POWER WINDOW MASTER SWITCH
(Has a built-in the door multiplex control unit)
Removal, Installation, and Test
Resetting

DESCRIPTION & OPERATION

INTERIOR LIGHTS SYSTEM DESCRIPTION

System Function

Driver's door lock knob switch link

When the driver's door lock knob switch moves from the lock/unlock position, the body control module detects a driver's door open/close position, and the relay control module controls the interior lights.

Input			Output Control	
Driver's Door Lock Knob Switch (ON: LOCK)	**Each Door Switch**	**Vehicle Mode**	**Before Input Change**	**After Input Change**
ON -> OFF	All OFF (Door close)	Remote Engine Start	Lighting ON	Lights ON by timer condition 1
			Lighting OFF	Lights ON by timer condition 5
		OFF (LOCK)	Lighting ON	Lights ON by timer condition 1
			Lighting OFF	Lights ON by timer condition 5
		ACC	--	Continue the status before input change
	Any ON (Door open)	--		
OFF -> ON	All OFF (Door close)	Remote Engine Start	--	Lights OFF
		OFF (LOCK) or ACC	--	
	Any ON (Door open)	OFF (LOCK) or ACC	--	Continue the status before input change

NOTE: The "--" means that it is not used on this system.

Each door switch link

Anytime a door switch closes (ON signal), the body control module provides a ground to the interior lights.

Input			Output Control	
Each Door Switch	**Driver's Door Lock Knob Switch (ON: LOCK)**	**Vehicle Mode**	**Before Input Change**	**After Input Change**
Any ON (Door open) -> All OFF (Door close)	OFF	Remote Engine Start	Lighting ON	Lights ON by timer condition 2
			Lighting OFF	Continue the status before input change
		OFF (LOCK)	Lighting ON	Lights ON by timer condition 2
			Lighting OFF	Continue the status before input change

Input			Output Control	
Each Door Switch	Driver's Door Lock Knob Switch (ON: LOCK)	Vehicle Mode	Before Input Change	After Input Change
		ACC or ON	--	Lights OFF
	ON	--	--	
Any OFF (Door close) -> ON (Door open)	--	Remote Engine Start	Lighting ON	Lights ON by timer condition 3 (Timer restart)
			Lighting OFF	Lights ON by timer condition 3
		OFF (LOCK)	Lighting ON	Lights ON by timer condition 3 (Timer restart)
			Lighting OFF	Lights ON by timer condition 3
		ACC or ON	--	Lights ON

NOTE: The "--" means that it is not used on this system.

Remote link

When the system detects that the key is inserted into the remote is inside the vehicle, the body control module provides a ground to the interior lights.

Input		Output Control	
Vehicle Mode	Each Door Switch	Before Input Change	After Input Change
ACC -> OFF (LOCK)	All Door Switch OFF (Close)	Lighting ON	Lights ON by timer condition 1
		Lighting OFF	Lights ON by timer condition 5
	Any Door Switch ON (Open)	--	Lights ON by timer condition 3
OFF (LOCK) -> ACC	All Door Switch OFF (Close)	--	Continue the status before input change
	Any Door Switch ON (Open)	--	Lights ON

NOTE: The "--" means that it is not used on this system.

Engine start/stop switch link

When the vehicle is turned to the ACCESSORY mode or the ON mode with the doors closed and the entry light control system illuminating the start/stop switch lights, the relay control module gradually turns the lights off.

Input		Output Control	
Vehicle Mode	Each Door Switch	Before Input Change	After Input Change
Remote Engine Start	All OFF	--	Lights OFF
	Any ON	--	Lights ON by timer condition 3
ON -> ACC	--	--	Continue the status before input change
ACC -> ON	All OFF	--	Lights OFF

Input		Output Control	
Vehicle Mode	**Each Door Switch**	**Before Input Change**	**After Input Change**
ON	Any ON	--	Lights ON
	All OFF	--	Lights OFF
	Any ON	--	Lights ON

NOTE: The "--" means that it is not used on this system.

Keyless link

When the body control module receives an unlock signal from the remote, it provides a ground to the interior lights.

Input			Output Control	
Keyless Door LOCK/UNLOCK Signal	**Each Door Switch**	**Driver's Door Lock Knob Switch (ON: LOCK)**	**Before Input Change**	**After Input Change**
UNLOCK signal	All OFF (Door close)	ON -> OFF or OFF	--	Lights ON by timer condition 4
		ON	--	Continue the status before input change
	Any ON (Door open)	--	--	Lights ON by timer condition 3
LOCK signal	All OFF (Door close)	OFF -> ON or ON	--	Lights OFF
		OFF	--	Continue the status before input change
	Any ON (Door open)	--	--	Continue the status before input change

NOTE: The "--" means that it is not used on this system.

Timer Control

The chart shows lighting duration, along with the dimming function that occurs at the end of the timer period.

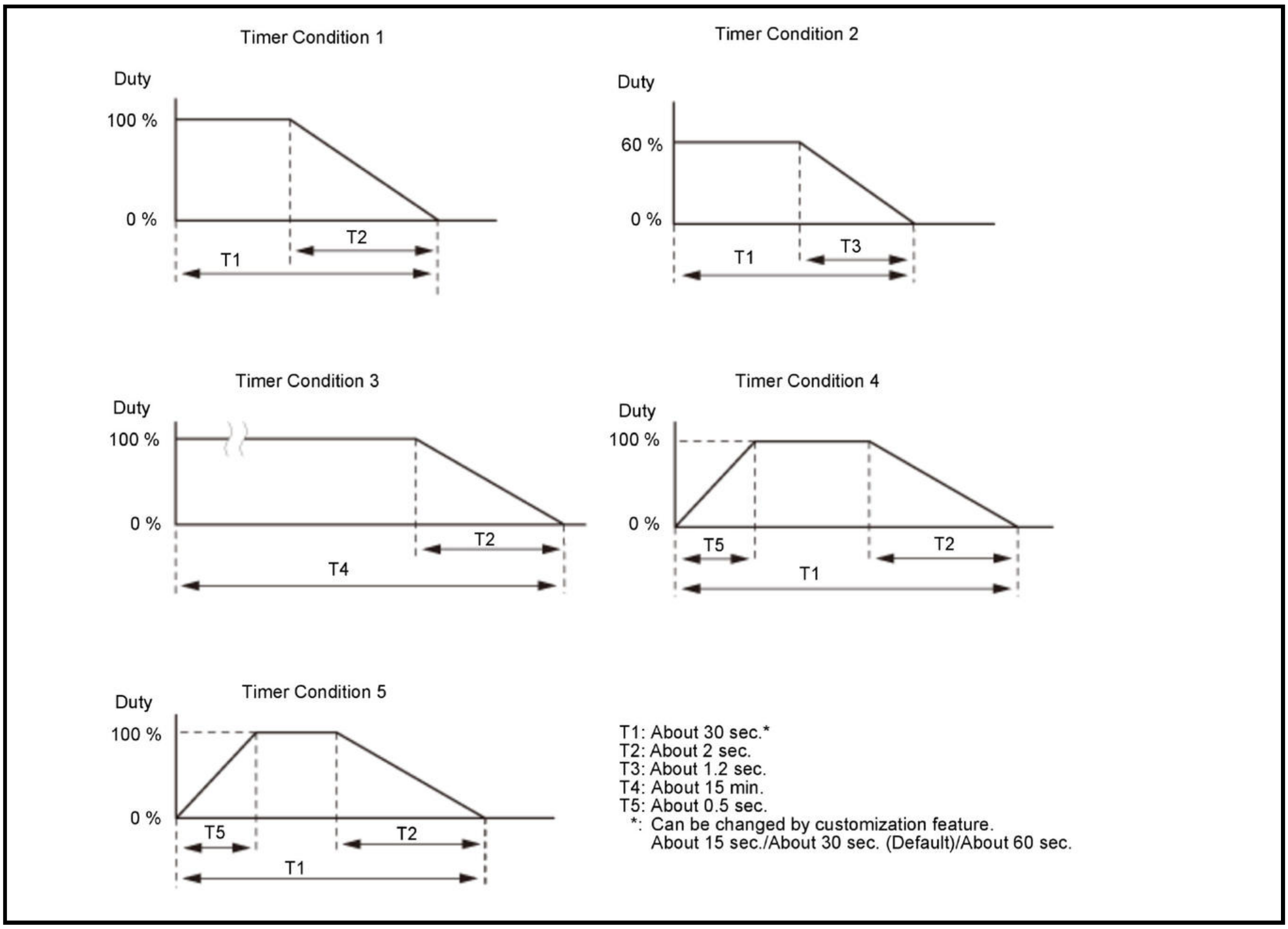

T1: About 30 sec.*
T2: About 2 sec.
T3: About 1.2 sec.
T4: About 15 min.
T5: About 0.5 sec.
*: Can be changed by customization feature.
About 15 sec./About 30 sec. (Default)/About 60 sec.

Tailgate Link Control

The body control module controls the cargo area lights ON, OFF based on the tailgate latch switch or full latch switch signals.

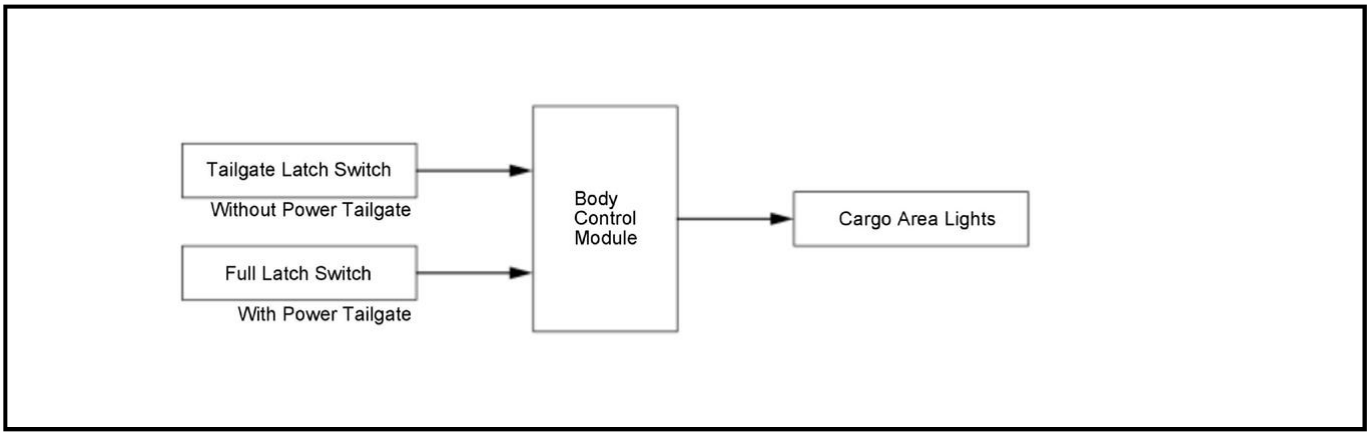
Tailgate Latch Switch
Without Power Tailgate
Full Latch Switch
With Power Tailgate
Body Control Module
Cargo Area Lights

INTERIOR LIGHTS SYSTEM DESCRIPTION - COMPONENTS

Individual Map Light

The individual map light can be turned on and off by pressing on the map light lens. A mechanical switch illuminates the individual map light regardless of conditions.

Ambient Light

The ambient light is built into the interior light switch, linked with the combination light switch.

Ceiling Light

The ceiling light is placed in the center of the headliner, linked with the entry light control system.

Cargo Area Lights

The cargo area lights are placed in the cargo area and illuminates when the tailgate opens.

Vanity Mirror Lights (With Vanity Mirror Light)

The vanity mirror lights built into both sunvisors and illuminates when the vanity mirror cover opens.

Door Inner Handle Lights (With Door Inner Handle Light)

The door inner handle lights are placed in each door panel, linked with the combination light switch. Brightness of the door inner handle lights can be adjusted.

Footwell Lights (With Footwell Light)

The footwell lights are placed under the dashboard around the driver's and passenger's feet and is linked with the combination light switch.

INTERIOR LIGHTS SYSTEM DESCRIPTION - SYSTEM DIAGRAM

For locations of each component on vehicle, refer to Component Location Index

- Interior Lights
- Entry Lights Control System

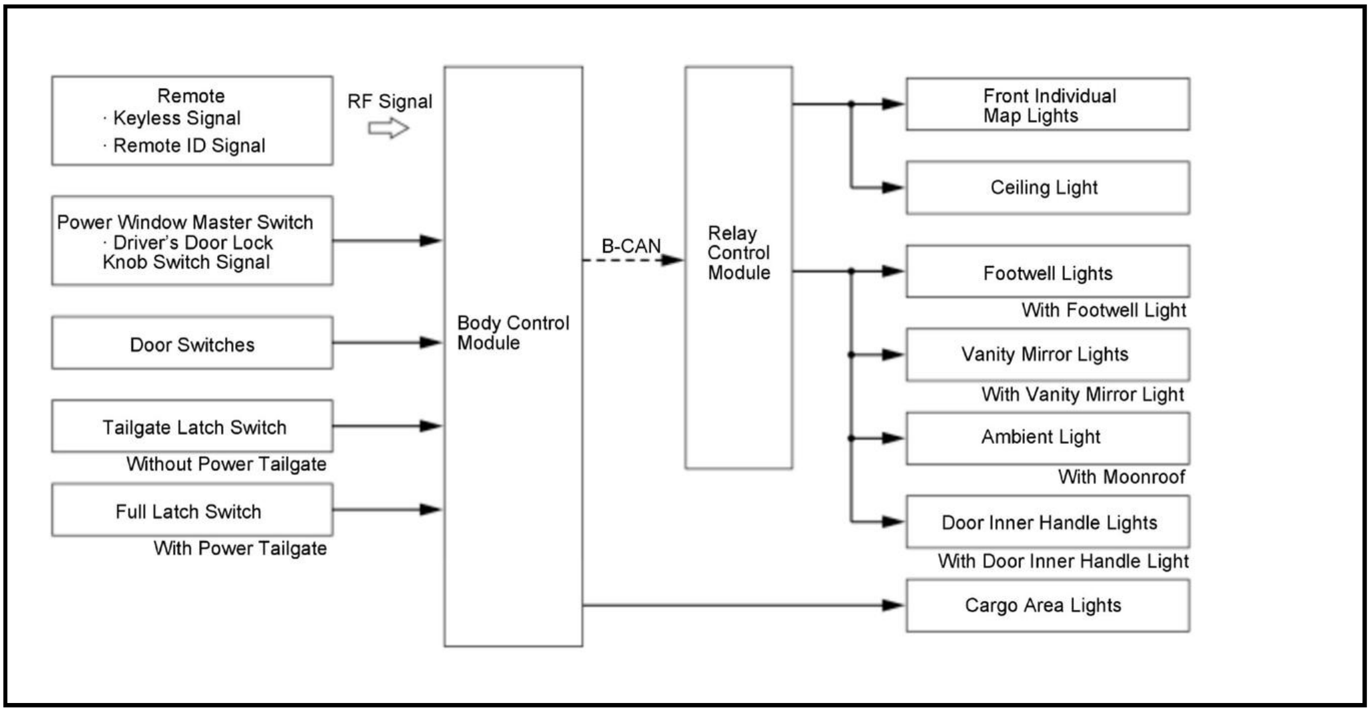
Remote
· Keyless Signal
· Remote ID Signal
RF Signal
Power Window Master Switch
· Driver's Door Lock Knob Switch Signal
Door Switches
Tailgate Latch Switch
Without Power Tailgate
Full Latch Switch
With Power Tailgate
Body Control Module
B-CAN
Relay Control Module
Front Individual Map Lights
Ceiling Light
Footwell Lights
With Footwell Light
Vanity Mirror Lights
With Vanity Mirror Light
Ambient Light
With Moonroof
Door Inner Handle Lights
With Door Inner Handle Light
Cargo Area Lights

CIRCUIT DIAGRAM

ENTRY LIGHTS CONTROL SYSTEM CIRCUIT DIAGRAM

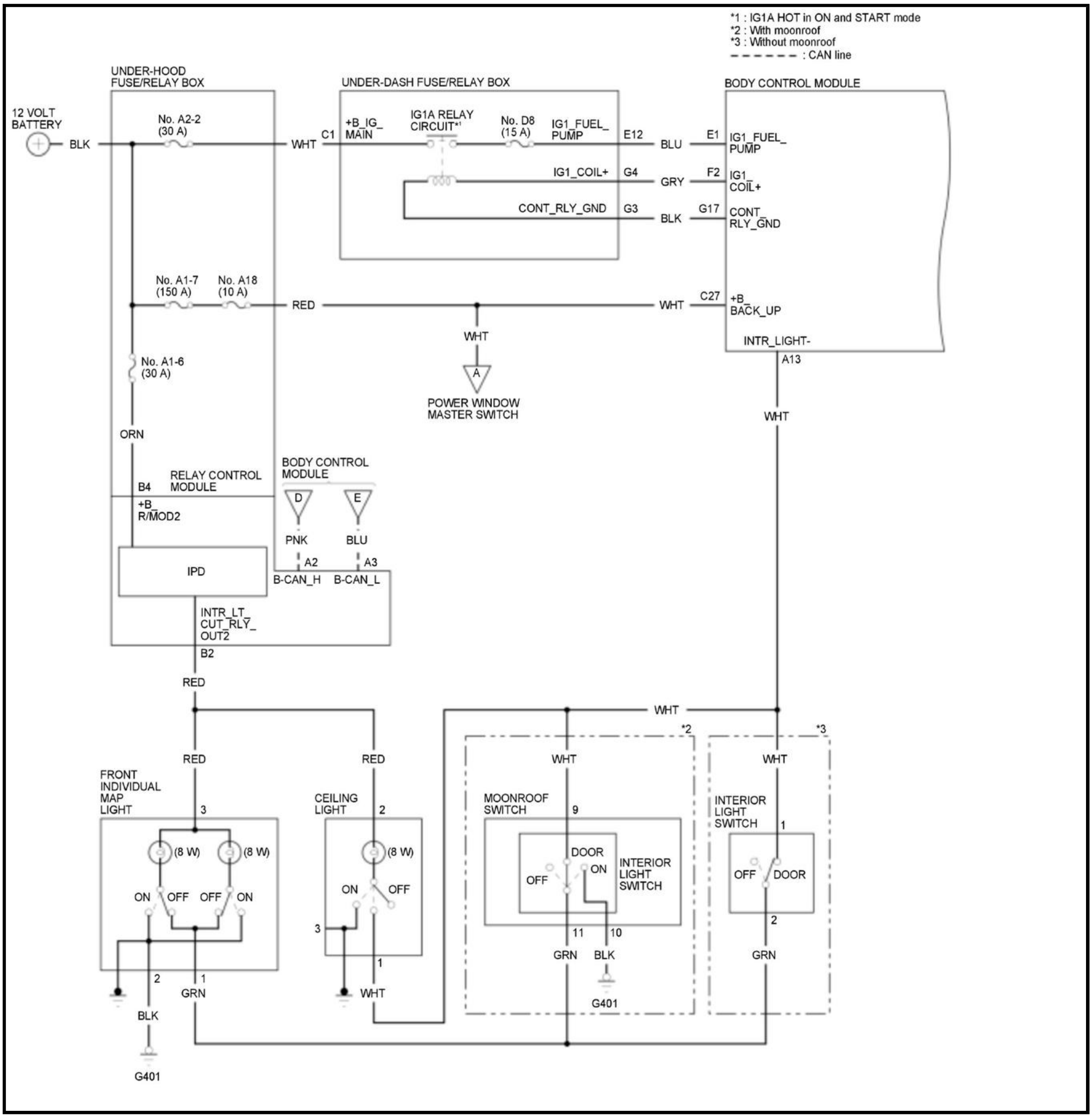
*1 : IG1A HOT in ON and START mode
*2 : With moonroof
*3 : Without moonroof
: CAN line
UNDER-HOOD FUSE/RELAY BOX
UNDER-DASH FUSE/RELAY BOX
BODY CONTROL MODULE
12 VOLT BATTERY
BLK
No. A2-2 (30 A)
WHT
C1
+B_IG_ MAIN
IG1A RELAY CIRCUIT*1
No. D8 (15 A)
IG1_FUEL_ PUMP
E12
BLU
E1
IG1_FUEL_ PUMP
IG1_COIL+
G4
GRY
F2
IG1_ COIL+
CONT_RLY_GND
G3
BLK
G17
CONT_ RLY_GND
No. A1-7 (150 A)
No. A18 (10 A)
RED
WHT
C27
+B_ BACK_UP
INTR_LIGHT-
A13
WHT
A
POWER WINDOW MASTER SWITCH
No. A1-6 (30 A)
ORN
BODY CONTROL MODULE
D
E
RELAY CONTROL MODULE
B4
+B_ R/MOD2
PNK
BLU
A2
A3
IPD
B-CAN_H
B-CAN_L
INTR_LT_ CUT_RLY_ OUT2
B2
RED
WHT
*2
*3
RED
RED
WHT
WHT
FRONT INDIVIDUAL MAP LIGHT
3
(8 W)
(8 W)
ON
OFF
OFF
ON
2
1
BLK
GRN
G401
CEILING LIGHT
2
(8 W)
ON
OFF
3
1
WHT
MOONROOF SWITCH
9
DOOR
OFF
ON
INTERIOR LIGHT SWITCH
11
10
GRN
BLK
G401
INTERIOR LIGHT SWITCH
1
OFF
DOOR
2
GRN

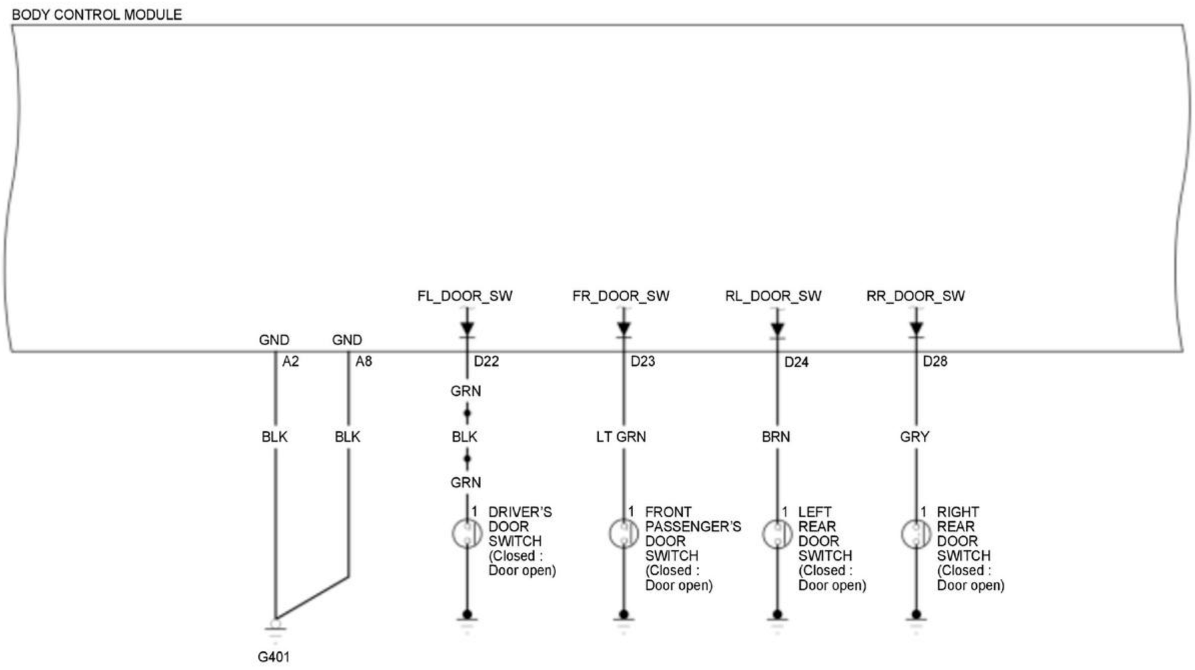
BODY CONTROL MODULE
FL_DOOR_SW
FR_DOOR_SW
RL_DOOR_SW
RR_DOOR_SW
GND
GND
A2
A8
D22
D23
D24
D28
GRN
BLK
GRN
BLK
BLK
LT GRN
BRN
GRY
1
DRIVER'S DOOR SWITCH (Closed : Door open)
1
FRONT PASSENGER'S DOOR SWITCH (Closed : Door open)
1
LEFT REAR DOOR SWITCH (Closed : Door open)
1
RIGHT REAR DOOR SWITCH (Closed : Door open)
G401

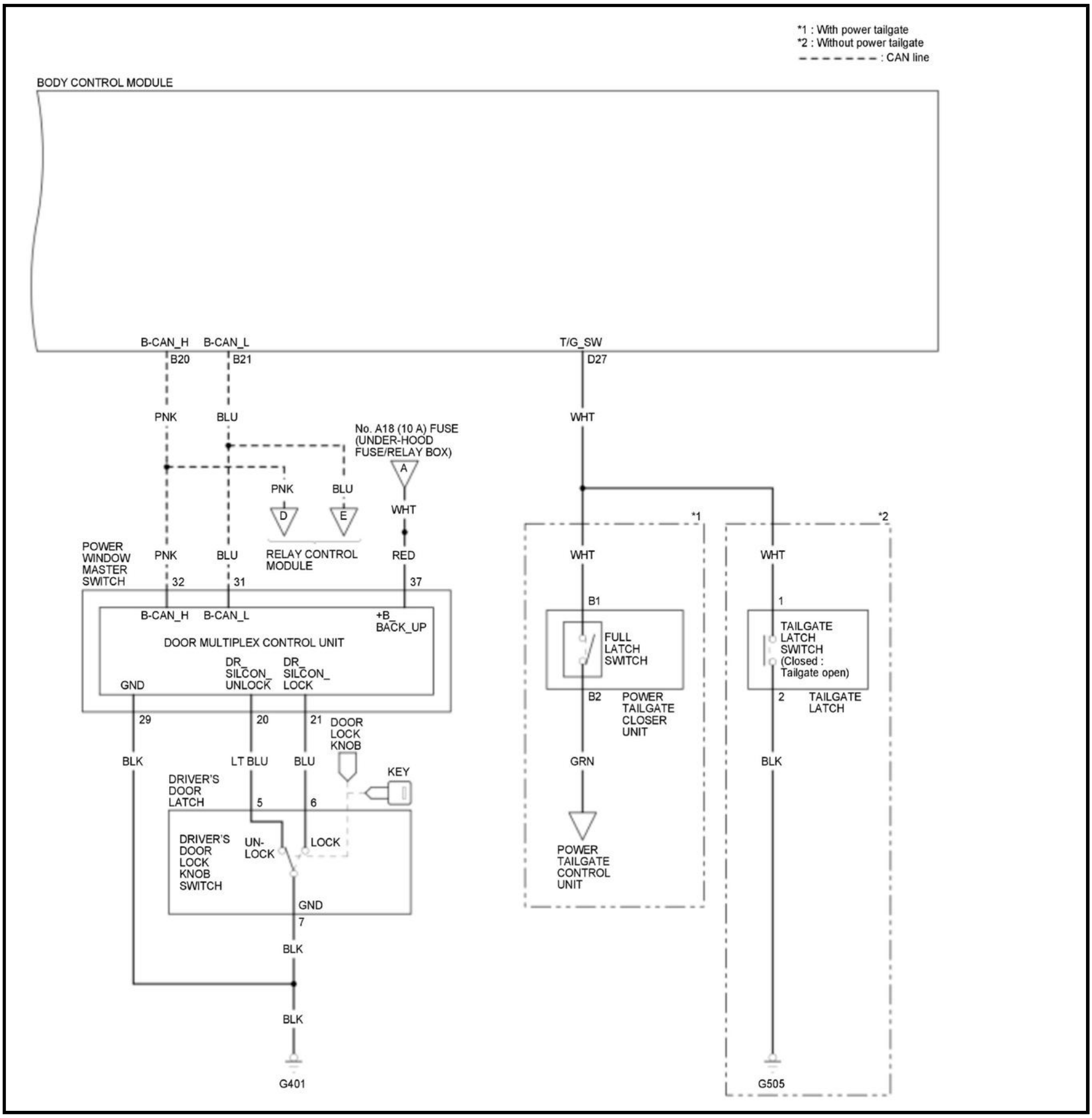

*1 : With power tailgate
*2 : Without power tailgate
: CAN line
BODY CONTROL MODULE
B-CAN_H
B-CAN_L
T/G_SW
B20
B21
D27
PNK
BLU
WHT
No. A18 (10 A) FUSE
(UNDER-HOOD
FUSE/RELAY BOX)
A
PNK
BLU
D
E
WHT
RELAY CONTROL
MODULE
RED
POWER
WINDOW
MASTER
SWITCH
PNK
BLU
32
31
37
B-CAN_H
B-CAN_L
+B_
BACK_UP
DOOR MULTIPLEX CONTROL UNIT
DR_
SILCON_
UNLOCK
DR_
SILCON_
LOCK
GND
29
20
21
DOOR
LOCK
KNOB
BLK
LT BLU
BLU
KEY
DRIVER'S
DOOR
LATCH
5
6
DRIVER'S
DOOR
LOCK
KNOB
SWITCH
UN-
LOCK
LOCK
GND
7
BLK
BLK
G401
*1
*2
WHT
WHT
B1
1
FULL
LATCH
SWITCH
TAILGATE
LATCH
SWITCH
(Closed :
Tailgate open)
B2
POWER
TAILGATE
CLOSER
UNIT
2
TAILGATE
LATCH
GRN
BLK
POWER
TAILGATE
CONTROL
UNIT
G505

INTERIOR LIGHTS CIRCUIT DIAGRAM

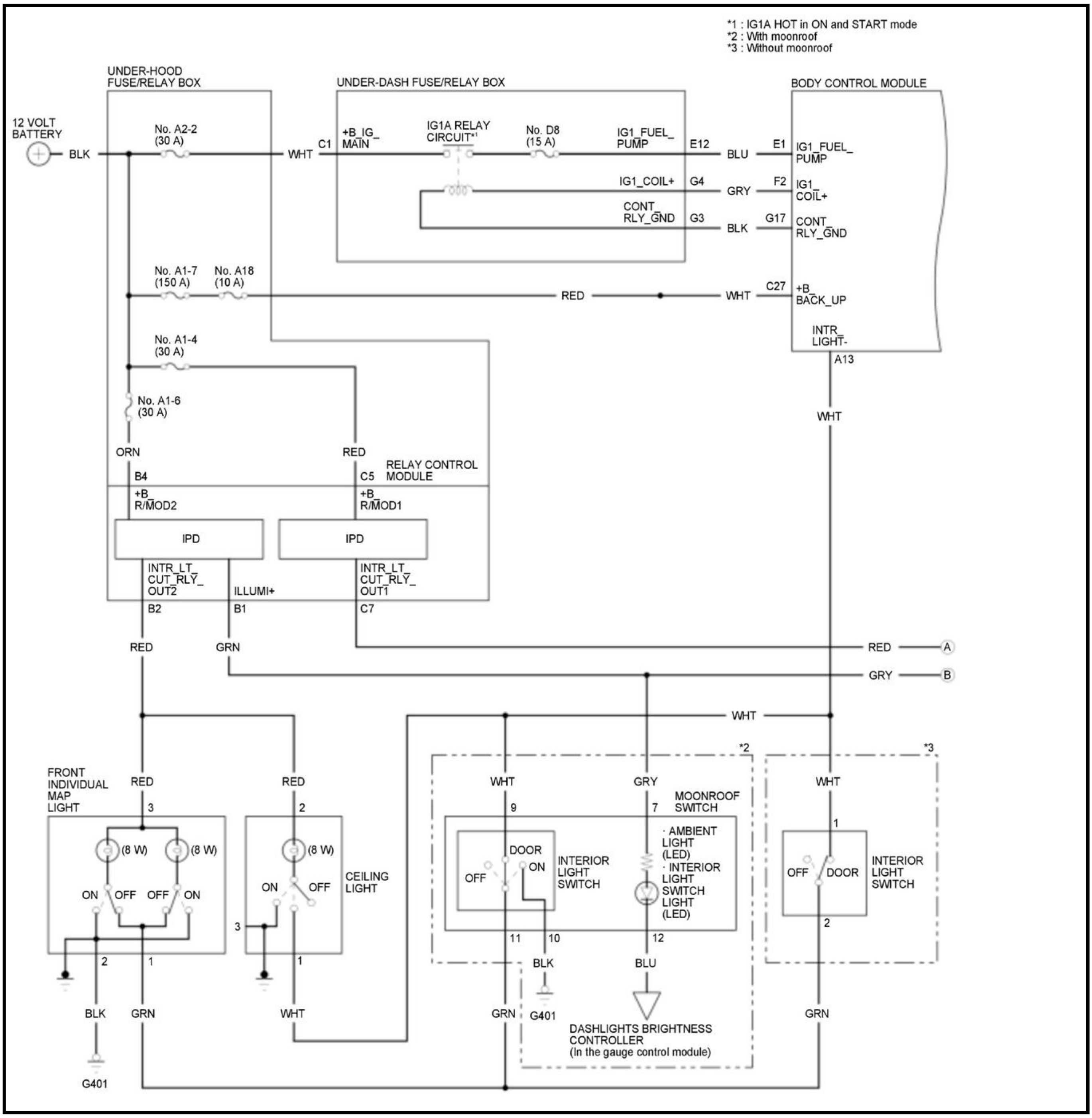
*1 : IG1A HOT in ON and START mode
*2 : With moonroof
*3 : Without moonroof
UNDER-HOOD FUSE/RELAY BOX
UNDER-DASH FUSE/RELAY BOX
BODY CONTROL MODULE
12 VOLT BATTERY
BLK
No. A2-2 (30 A)
WHT
C1
+B_IG_ MAIN
IG1A RELAY CIRCUIT*1
No. D8 (15 A)
IG1_FUEL_ PUMP
E12
BLU
E1
IG1_FUEL_ PUMP
IG1_COIL+
G4
GRY
F2
IG1_ COIL+
CONT_ RLY_GND
G3
BLK
G17
CONT_ RLY_GND
No. A1-7 (150 A)
No. A18 (10 A)
RED
WHT
C27
+B_ BACK_UP
INTR_ LIGHT-
A13
No. A1-4 (30 A)
No. A1-6 (30 A)
WHT
ORN
RED
RELAY CONTROL MODULE
B4
C5
+B_ R/MOD2
+B_ R/MOD1
IPD
IPD
INTR_LT_ CUT_RLY_ OUT2
ILLUMI+
INTR_LT_ CUT_RLY_ OUT1
B2
B1
C7
RED
GRN
RED
A
GRY
B
WHT
*2
*3
FRONT INDIVIDUAL MAP LIGHT
RED
3
(8 W)
(8 W)
ON
OFF
OFF
ON
2
1
BLK
GRN
G401
RED
2
(8 W)
ON
OFF
CEILING LIGHT
3
1
WHT
WHT
9
GRY
7
MOONROOF SWITCH
DOOR
OFF
ON
INTERIOR LIGHT SWITCH
· AMBIENT LIGHT (LED)
· INTERIOR LIGHT SWITCH LIGHT (LED)
11
10
12
BLK
BLU
G401
GRN
DASHLIGHTS BRIGHTNESS CONTROLLER (In the gauge control module)
WHT
1
OFF
DOOR
INTERIOR LIGHT SWITCH
2
GRN

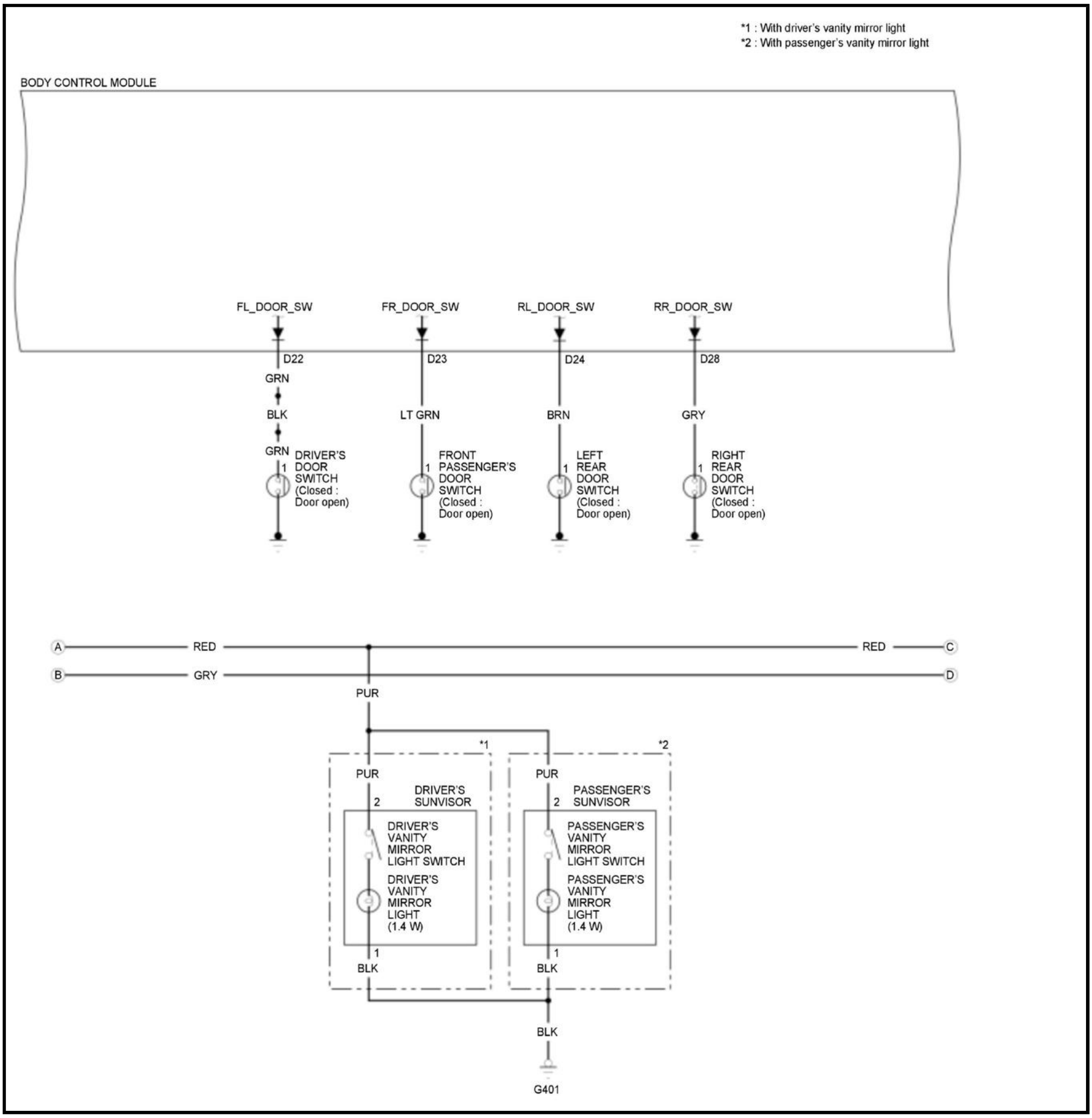
*1 : With driver's vanity mirror light
*2 : With passenger's vanity mirror light
BODY CONTROL MODULE
FL_DOOR_SW
FR_DOOR_SW
RL_DOOR_SW
RR_DOOR_SW
D22
D23
D24
D28
GRN
BLK
GRN
LT GRN
BRN
GRY
1
DRIVER'S DOOR SWITCH (Closed : Door open)
1
FRONT PASSENGER'S DOOR SWITCH (Closed : Door open)
1
LEFT REAR DOOR SWITCH (Closed : Door open)
1
RIGHT REAR DOOR SWITCH (Closed : Door open)
A
RED
RED
C
B
GRY
D
PUR
*1
*2
PUR
2
DRIVER'S SUNVISOR
DRIVER'S VANITY MIRROR LIGHT SWITCH
DRIVER'S VANITY MIRROR LIGHT (1.4 W)
1
BLK
PUR
2
PASSENGER'S SUNVISOR
PASSENGER'S VANITY MIRROR LIGHT SWITCH
PASSENGER'S VANITY MIRROR LIGHT (1.4 W)
1
BLK
BLK
G401

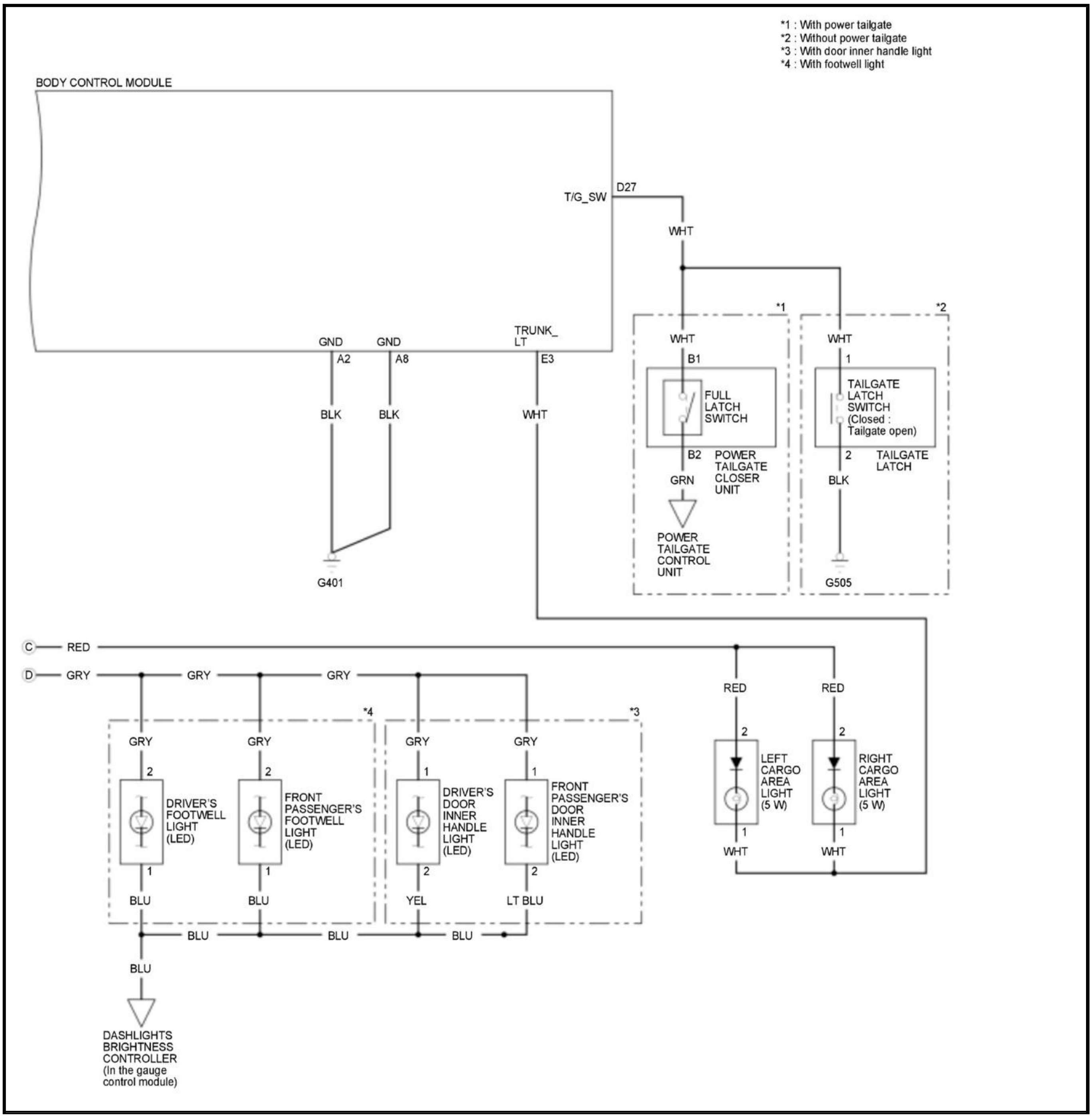
*1 : With power tailgate
*2 : Without power tailgate
*3 : With door inner handle light
*4 : With footwell light
BODY CONTROL MODULE
T/G_SW
D27
WHT
GND
GND
TRUNK_LT
A2
A8
E3
BLK
BLK
WHT
G401
WHT
B1
FULL LATCH SWITCH
B2
POWER TAILGATE CLOSER UNIT
GRN
POWER TAILGATE CONTROL UNIT
WHT
1
TAILGATE LATCH SWITCH (Closed : Tailgate open)
2
TAILGATE LATCH
BLK
G505
C
RED
D
GRY
GRY
GRY
RED
RED
2
2
LEFT CARGO AREA LIGHT (5 W)
RIGHT CARGO AREA LIGHT (5 W)
1
1
WHT
WHT
GRY
GRY
GRY
GRY
2
2
1
1
DRIVER'S FOOTWELL LIGHT (LED)
FRONT PASSENGER'S FOOTWELL LIGHT (LED)
DRIVER'S DOOR INNER HANDLE LIGHT (LED)
FRONT PASSENGER'S DOOR INNER HANDLE LIGHT (LED)
1
1
2
2
BLU
BLU
YEL
LT BLU
BLU
BLU
BLU
BLU
DASHLIGHTS BRIGHTNESS CONTROLLER (In the gauge control module)

COMPONENT LOCATION INDEX

ENTRY LIGHTS CONTROL SYSTEM COMPONENT LOCATION INDEX

For the Keyless Access System, refer to Keyless Access System, Component Location Index.
For relationships between signals in a system, refer to System Diagram.

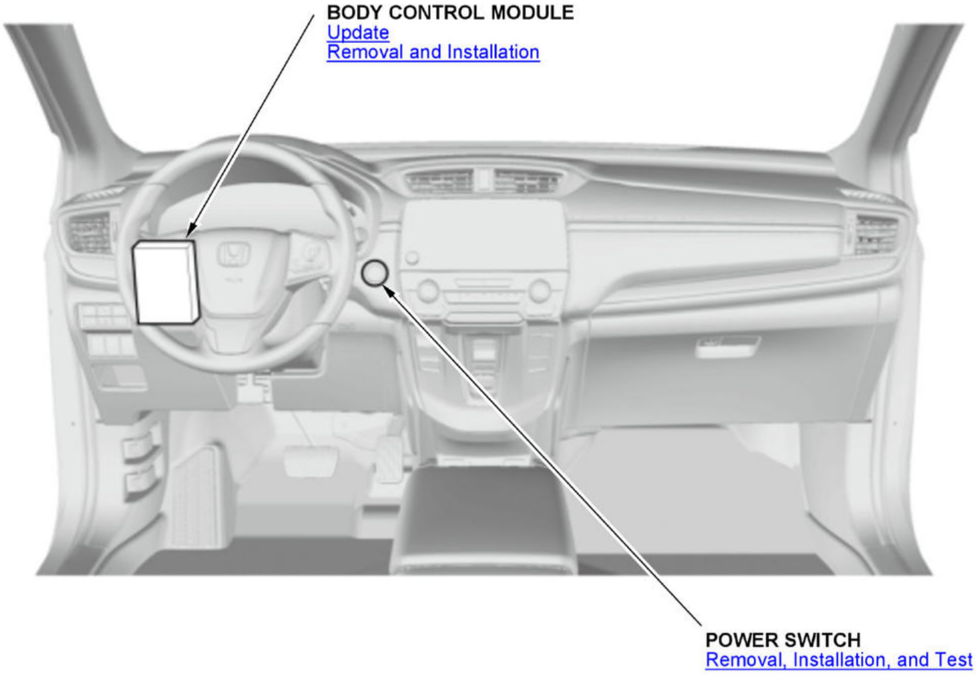
BODY CONTROL MODULE
Update
Removal and Installation
POWER SWITCH
Removal, Installation, and Test

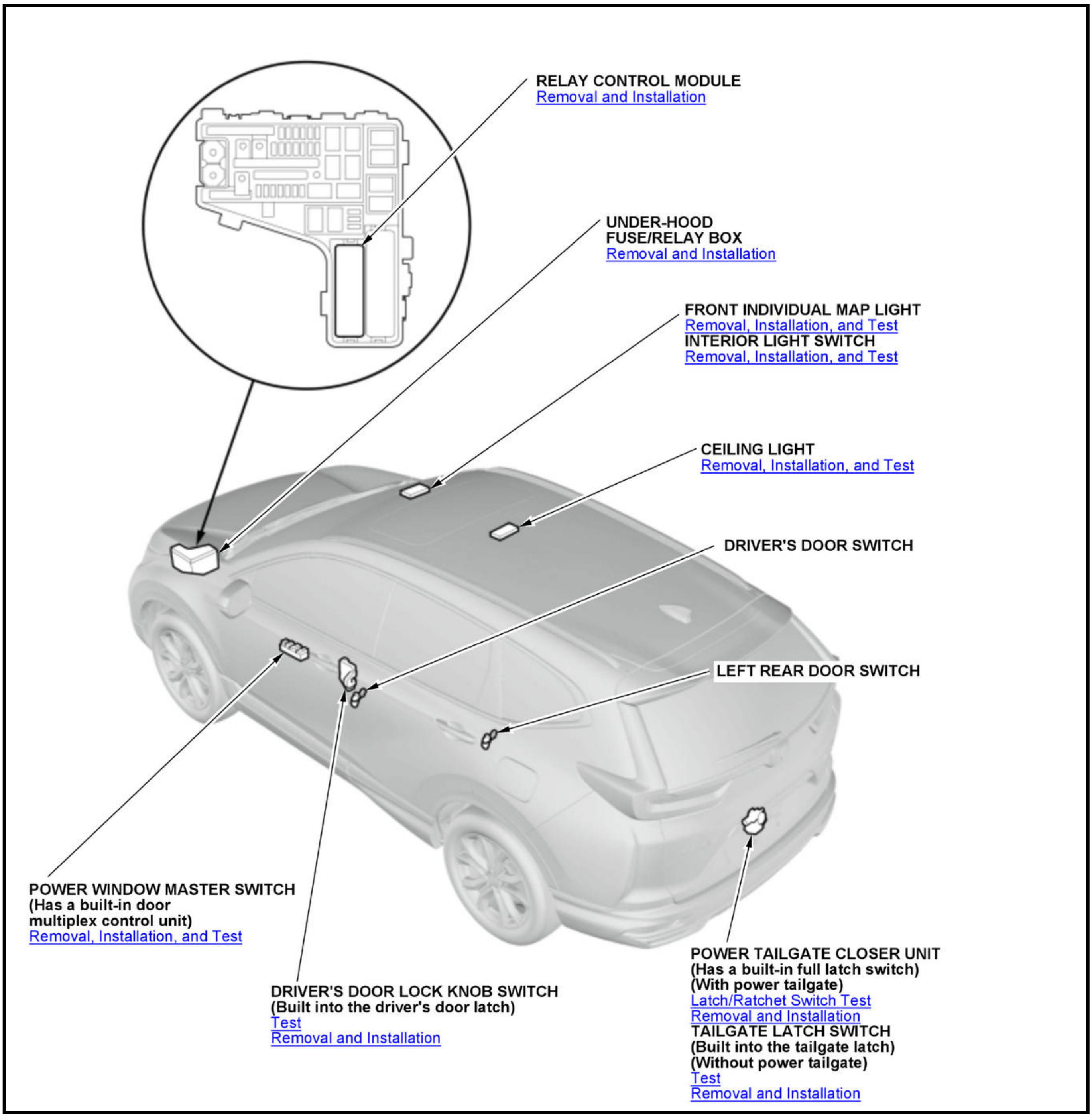
RELAY CONTROL MODULE
Removal and Installation
UNDER-HOOD FUSE/RELAY BOX
Removal and Installation
FRONT INDIVIDUAL MAP LIGHT
Removal, Installation, and Test
INTERIOR LIGHT SWITCH
Removal, Installation, and Test
CEILING LIGHT
Removal, Installation, and Test
DRIVER'S DOOR SWITCH
LEFT REAR DOOR SWITCH
POWER WINDOW MASTER SWITCH (Has a built-in door multiplex control unit)
Removal, Installation, and Test
DRIVER'S DOOR LOCK KNOB SWITCH (Built into the driver's door latch)
Test
Removal and Installation
POWER TAILGATE CLOSER UNIT (Has a built-in full latch switch) (With power tailgate)
Latch/Ratchet Switch Test
Removal and Installation
TAILGATE LATCH SWITCH (Built into the tailgate latch) (Without power tailgate)
Test
Removal and Installation

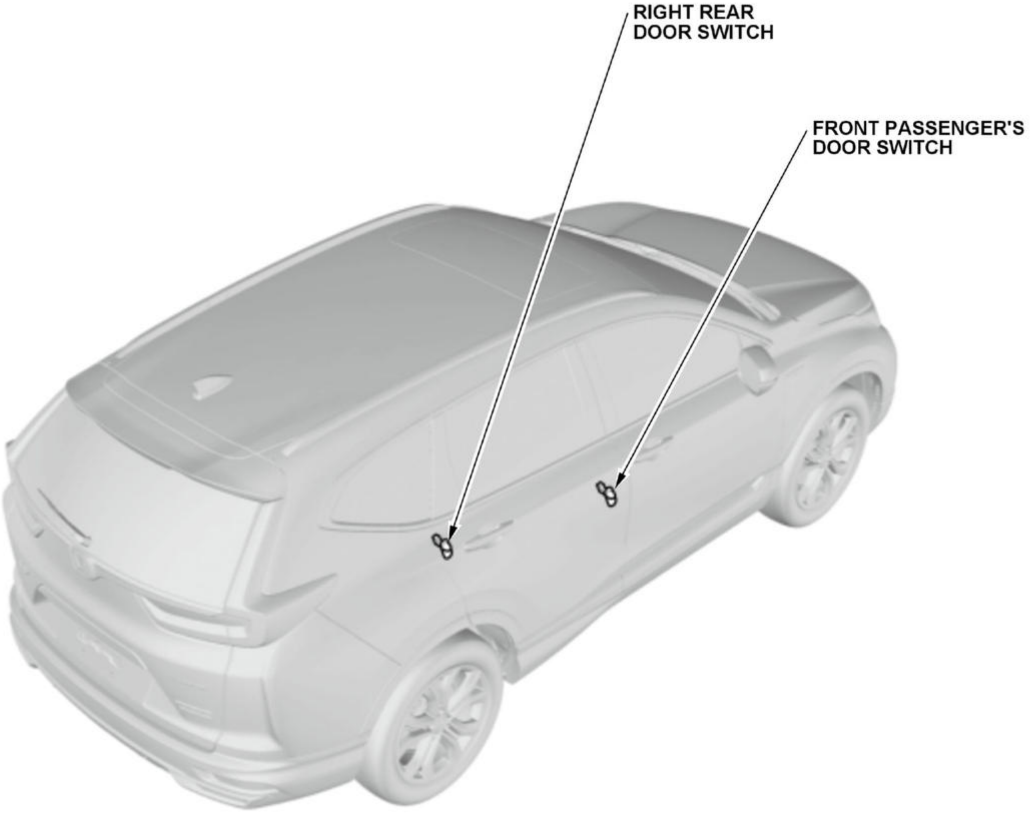
RIGHT REAR DOOR SWITCH
FRONT PASSENGER'S DOOR SWITCH

INTERIOR LIGHTS COMPONENT LOCATION INDEX

For relationships between signals in a system, refer to System Diagram.

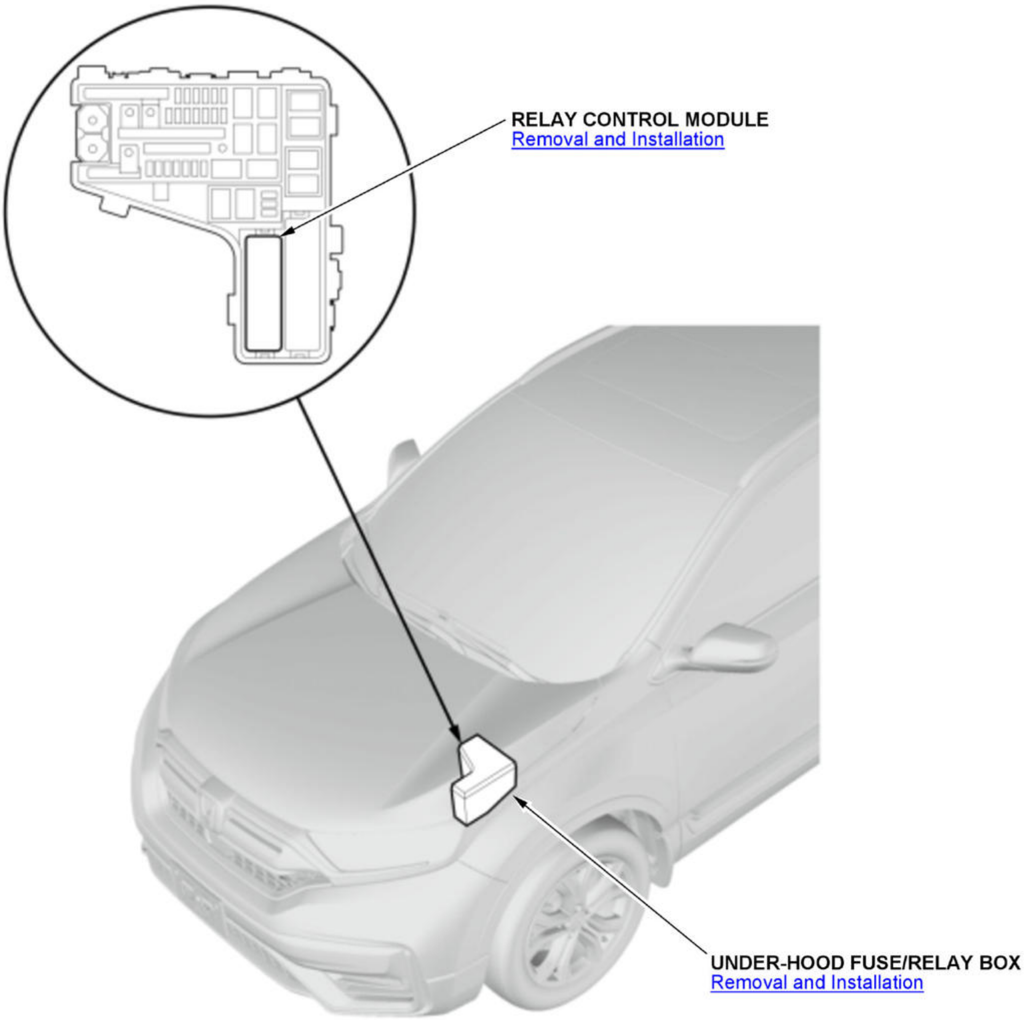
RELAY CONTROL MODULE
Removal and Installation
UNDER-HOOD FUSE/RELAY BOX
Removal and Installation

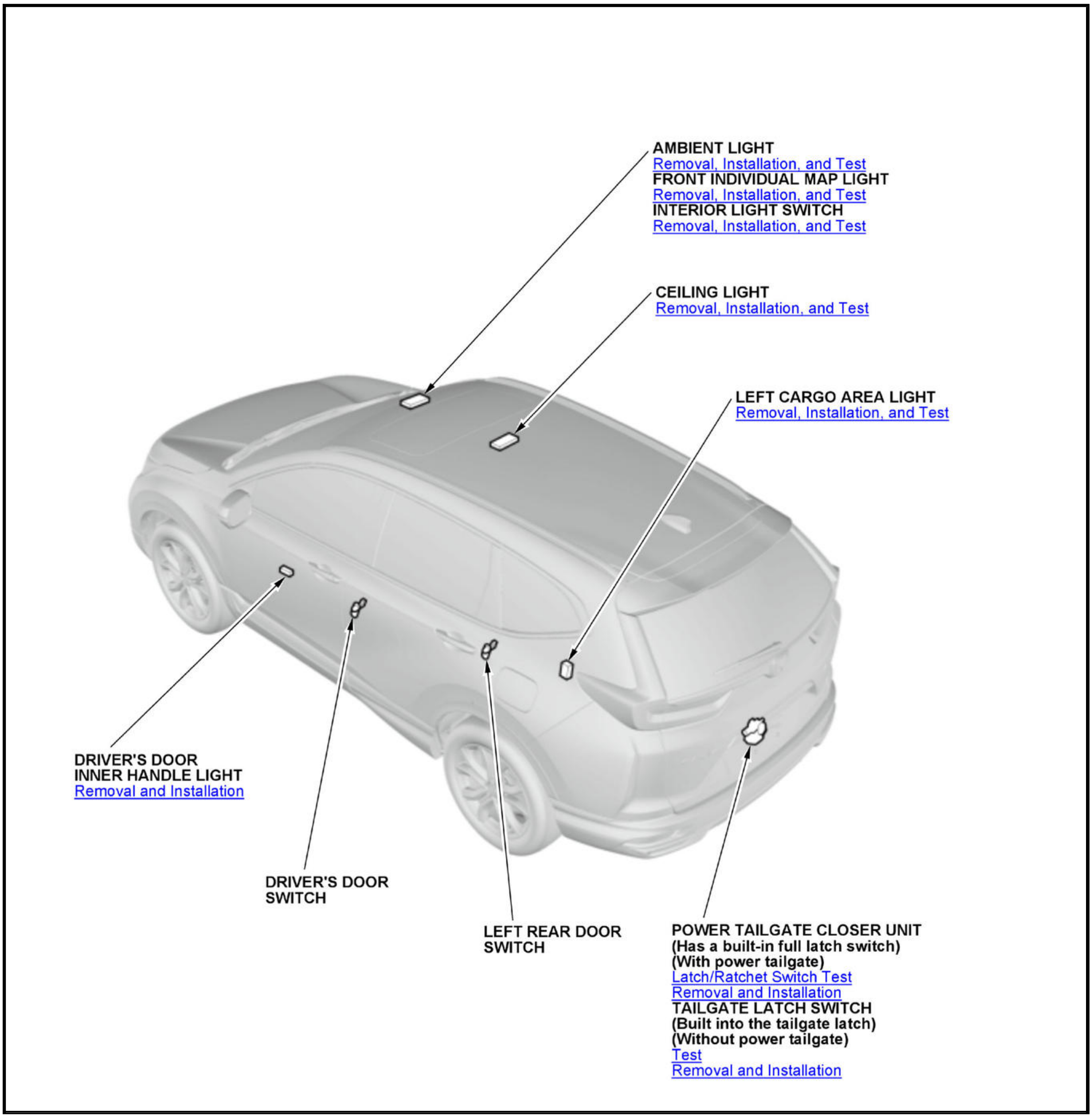
AMBIENT LIGHT
Removal, Installation, and Test
FRONT INDIVIDUAL MAP LIGHT
Removal, Installation, and Test
INTERIOR LIGHT SWITCH
Removal, Installation, and Test
CEILING LIGHT
Removal, Installation, and Test
LEFT CARGO AREA LIGHT
Removal, Installation, and Test
DRIVER'S DOOR INNER HANDLE LIGHT
Removal and Installation
DRIVER'S DOOR SWITCH
LEFT REAR DOOR SWITCH
POWER TAILGATE CLOSER UNIT
(Has a built-in full latch switch)
(With power tailgate)
Latch/Ratchet Switch Test
Removal and Installation
TAILGATE LATCH SWITCH
(Built into the tailgate latch)
(Without power tailgate)
Test
Removal and Installation

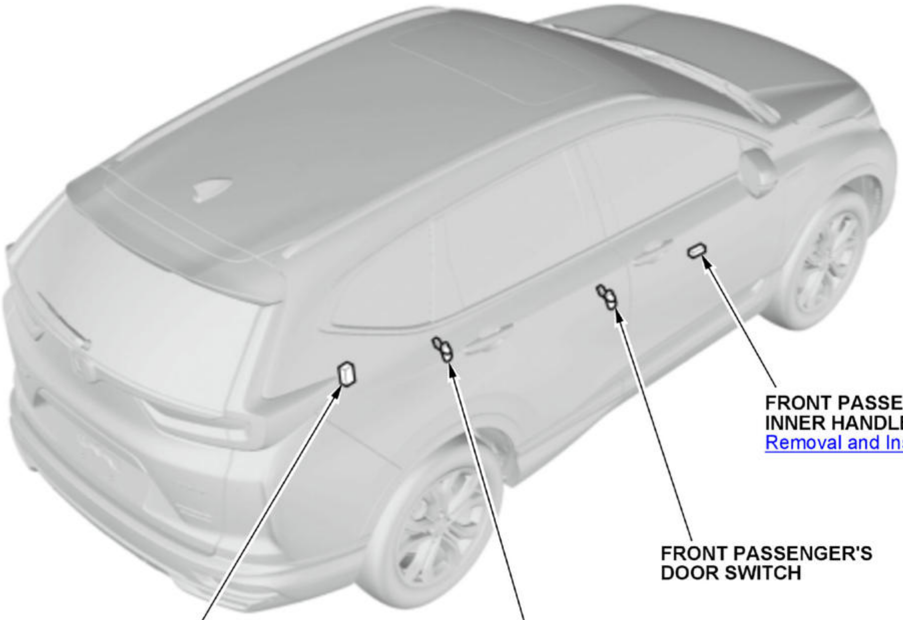
FRONT PASSENGER'S DOOR INNER HANDLE LIGHT
Removal and Installation
FRONT PASSENGER'S DOOR SWITCH
RIGHT REAR DOOR SWITCH
RIGHT CARGO AREA LIGHT
Removal, Installation, and Test

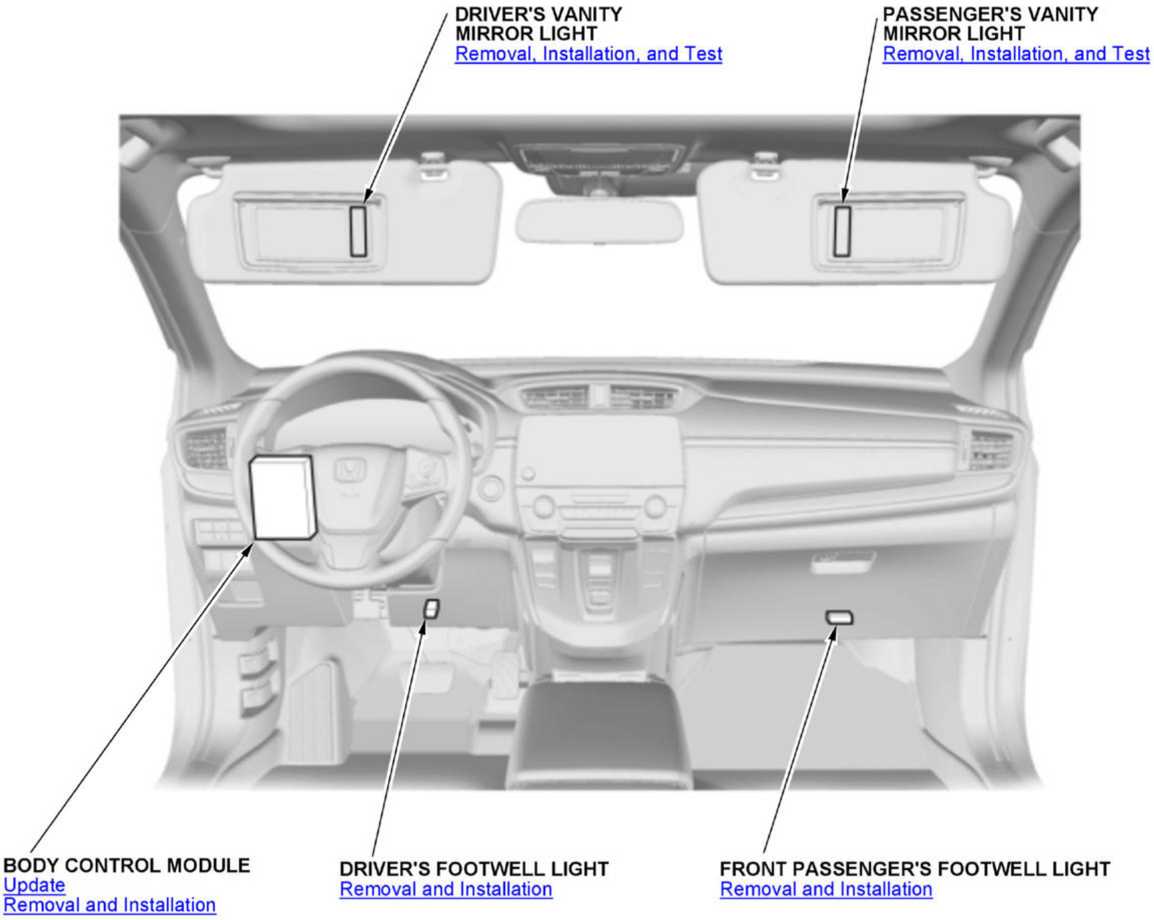
DRIVER'S VANITY MIRROR LIGHT
Removal, Installation, and Test
PASSENGER'S VANITY MIRROR LIGHT
Removal, Installation, and Test
BODY CONTROL MODULE
Update
Removal and Installation
DRIVER'S FOOTWELL LIGHT
Removal and Installation
FRONT PASSENGER'S FOOTWELL LIGHT
Removal and Installation

REMOVAL & INSTALLATION TEST

AMBIENT LIGHT REMOVAL, INSTALLATION, AND TEST

Removal and Installation

NOTE: The ambient lights are built into the moonroof switch (with moonroof), roof console module (with panoramic glass roof), and rear individual map light (with panoramic glass roof).

Front

1. Front Individual Map Light (With Moonroof) - Remove
2. Roof Console Module (With Panoramic Glass Roof)- Remove
3. All Removed Parts - Install

    1. Install the parts in the reverse order of removal.

    Rear

4. Rear Individual Map Light - Remove
5. All Removed Parts - Install

    1. Install the parts in the reverse order of removal.

Test

1. Ambient Light - Test

    Front (With Moonroof)

    NOTE: The ambient light (A) is built into the interior light switch (B).

    1. Check the lights according to the chart below.

NOTE:

- **When an LED is located between terminals, check if the LED illuminates by connecting power and ground to the LED.**
- **Note this important operating characteristic; diode bias causes a diode to fully conduct electricity in one direction (forward), while not at all in the opposite direction (reverse).**

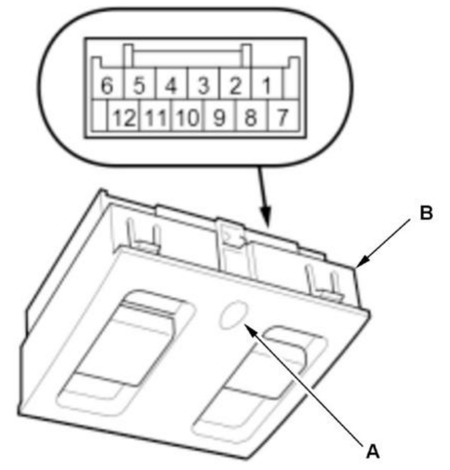

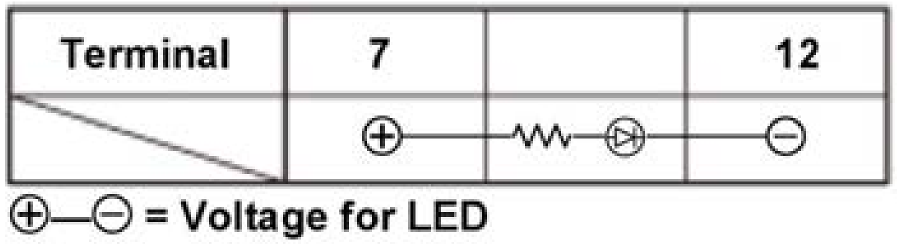

Terminal	7		12
	⊕		⊖

⊕—⊖ = Voltage for LED

2. If the ambient light does not come on, the LED is faulty; **replace the interior light switch assembly**.

Front (With Panoramic Glass Roof)

NOTE: The ambient light is built into the roof console module (A).

1. Check the lights according to the chart below.

NOTE:

- **When an LED is located between terminals, check if the LED illuminates by connecting power and ground to the LED.**
- **Note this important operating characteristic; diode bias causes a diode to fully conduct electricity in one direction (forward), while not at all in the opposite direction (reverse).**

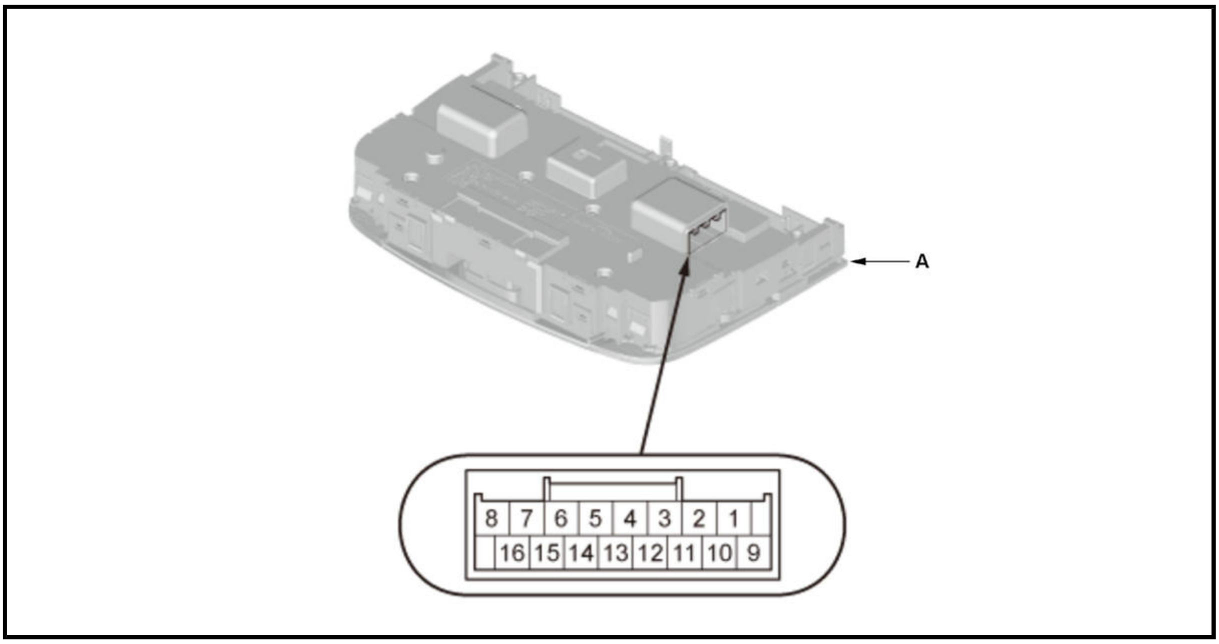

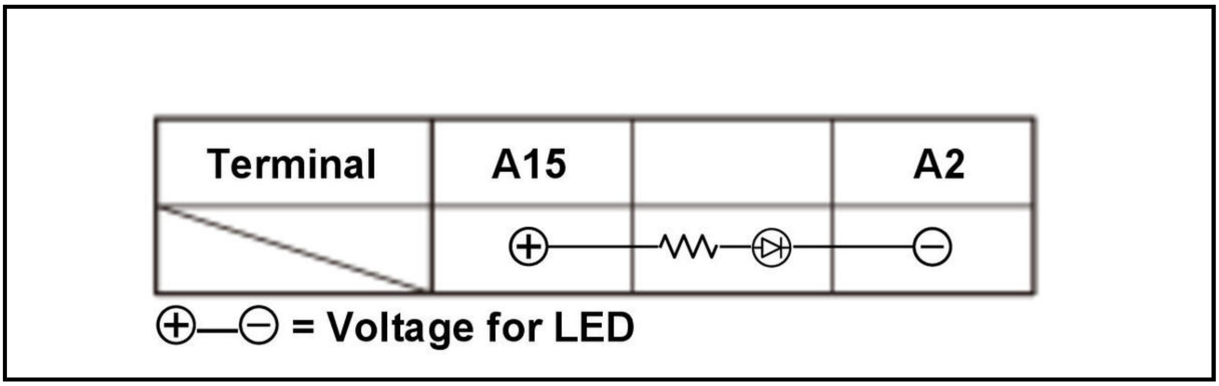

Terminal	A15		A2
	⊕	—⋀⋁⋀—⊳|—	⊖

⊕—⊖ = Voltage for LED

2. If the ambient light does not come on, the LED is faulty; replace the roof console module.

Rear

NOTE: The ambient light is built into the rear individual map light (A).

1. Check the lights according to the chart below.

NOTE:

- **When an LED is located between terminals, check if the LED illuminates by connecting power and ground to the LED.**
- **Note this important operating characteristic; diode bias causes a diode to fully conduct electricity in one direction (forward), while not at all in the opposite direction (reverse).**

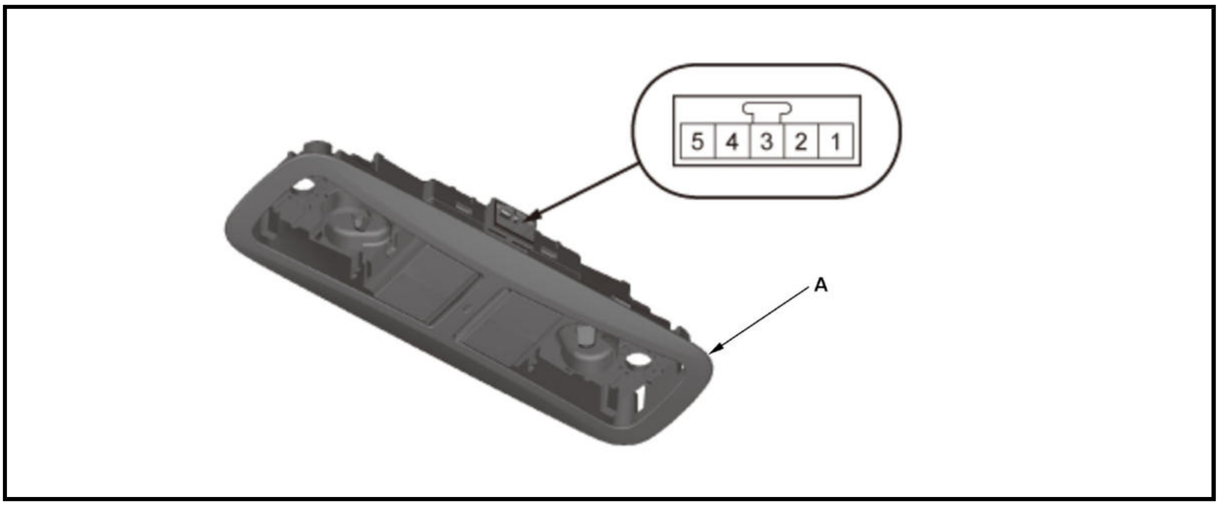

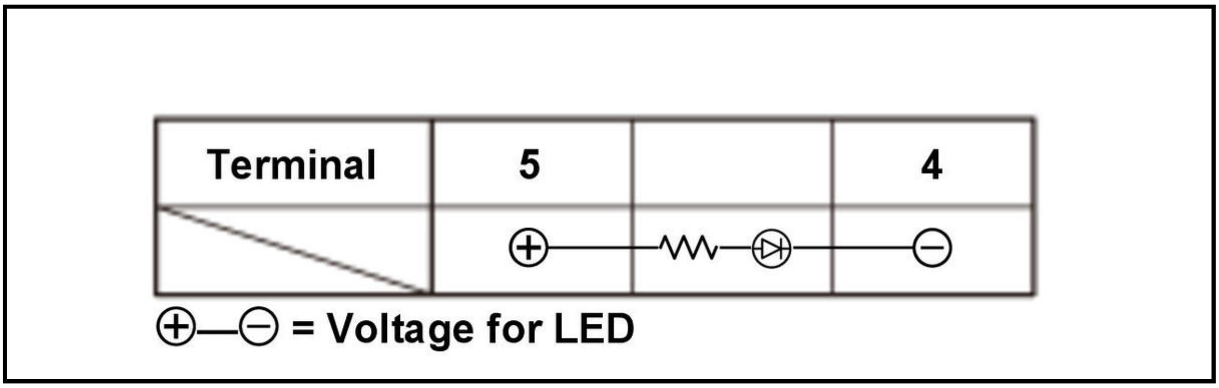

Terminal	5		4
	⊕	—ʌʌʌ—⊕▷—	⊖

⊕—⊖ = Voltage for LED

2. If the ambient light does not come on, the LED is faulty; replace the rear individual map light.

CARGO AREA LIGHT REMOVAL, INSTALLATION, AND TEST

Removal and Installation

1

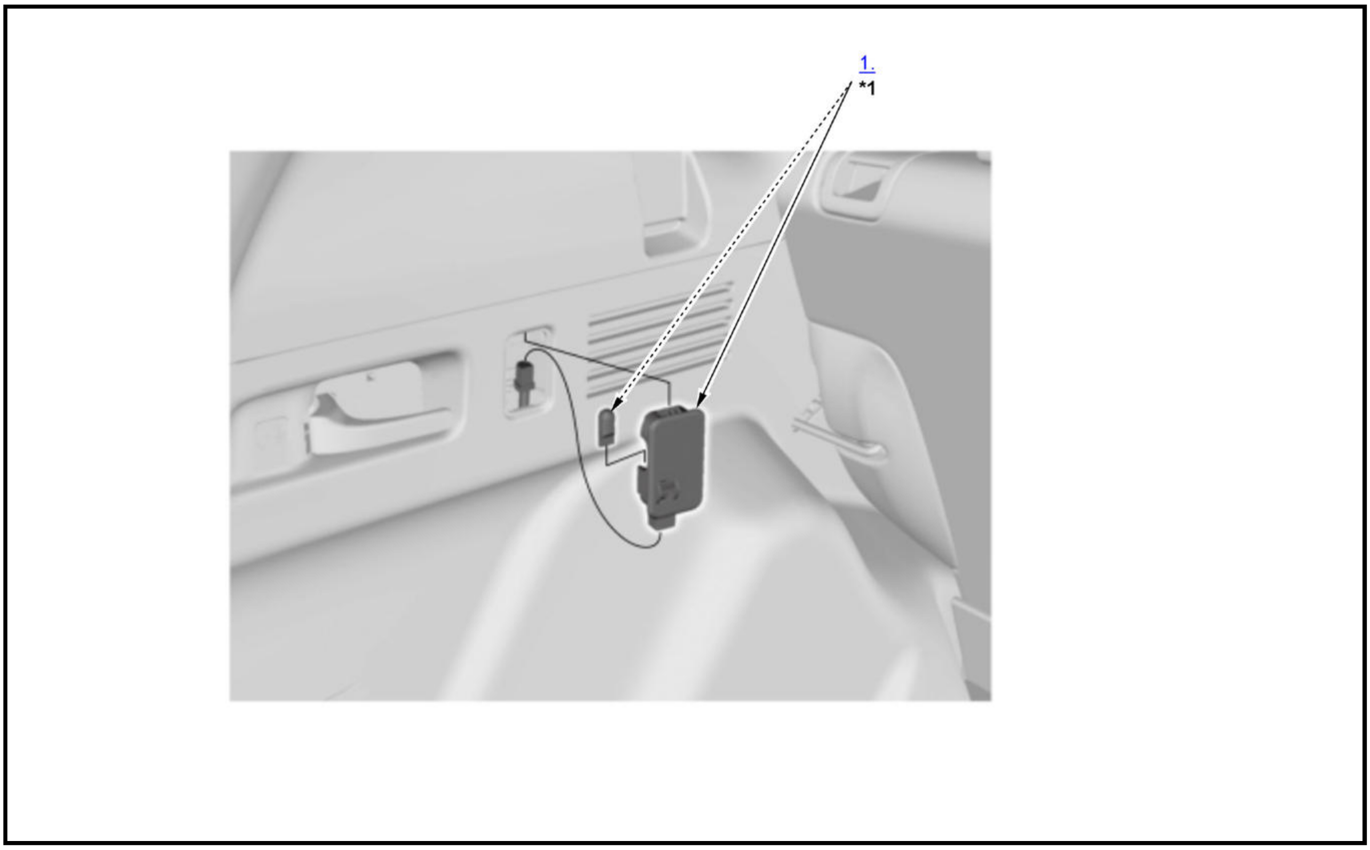

*1	Cargo Area Light: 5 W

1. Cargo Area Light - Remove
2. All Removed Parts - Install

1. Install the parts in the reverse order of removal.

Test

1. Cargo Area Light (With ON/OFF Switch) - Test

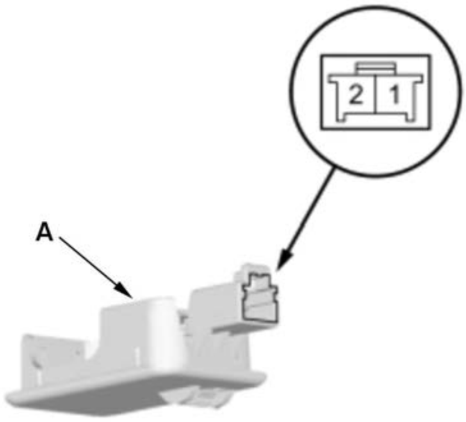

Terminal / Position	1		2
ON	○	⊗	○
OFF			

NOTE: When doing the cargo area light (A) test, make sure the bulbs are installed correctly and not damaged or burnt out.

1. Check for continuity between the terminals in each switch position according to the table in illustration.

2. If the continuity is not as specified, replace the bulb or the cargo area light.

CEILING LIGHT REMOVAL, INSTALLATION, AND TEST

Removal and Installation

NOTE: 🕮 Where icon is shown, further information shown below.

1

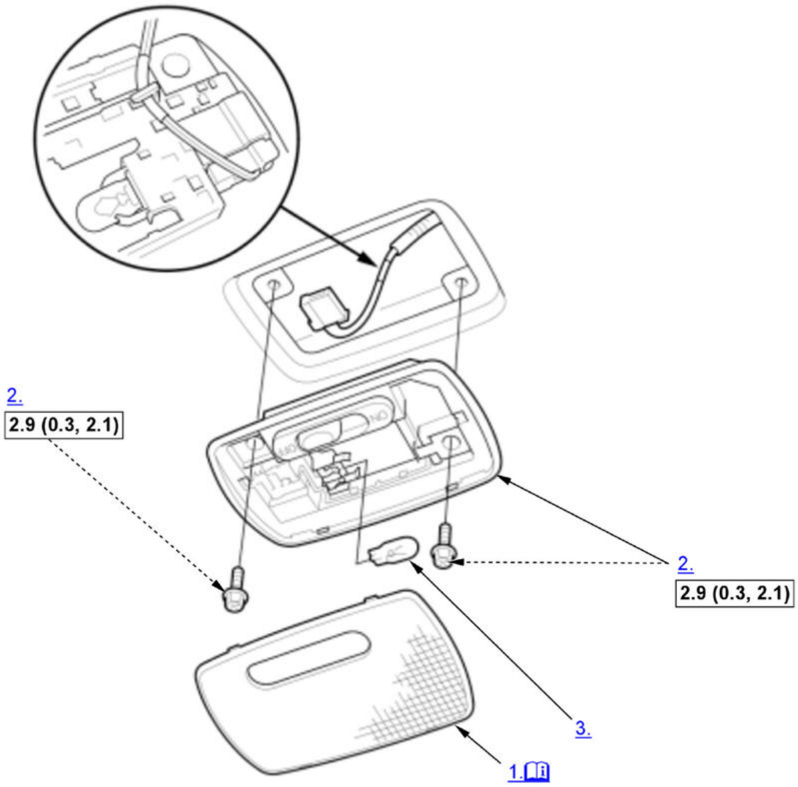

ℹ	Detailed information, notes, and precautions
▭	Torque: N.m (kgf.m, lbf.ft)
*1	Ceiling Light: 8W

1. Lens - Remove

   Carefully pry off the lenses.

2. Ceiling Light - Remove
3. Bulb - Remove
4. All Removed Parts - Install

   1. Install the parts in the reverse order of removal.

Test

1. Ceiling Light - Test

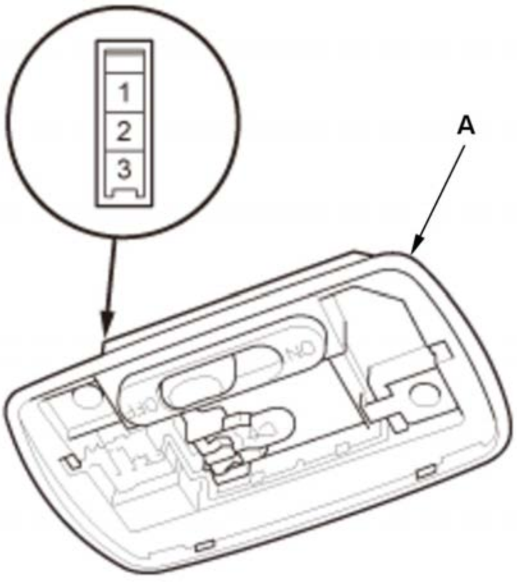

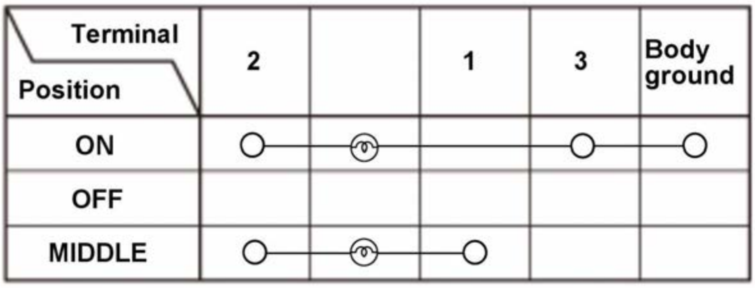

Terminal / Position	2		1	3	Body ground
ON	○—	—⊗—	—	—○—	—○
OFF					
MIDDLE	○—	—⊗—	—○		

NOTE: When doing the ceiling light test, make sure the bulbs are installed correctly.

1. Check for continuity between the terminals in each switch position according to the table in illustration.

2. If the continuity is not as specified, replace the bulb or the ceiling light (A).

FRONT INDIVIDUAL MAP LIGHT REMOVAL, INSTALLATION, AND TEST

Removal and Installation

NOTE: 🕮 Where icon is shown, further information shown below.

1

With moonroof

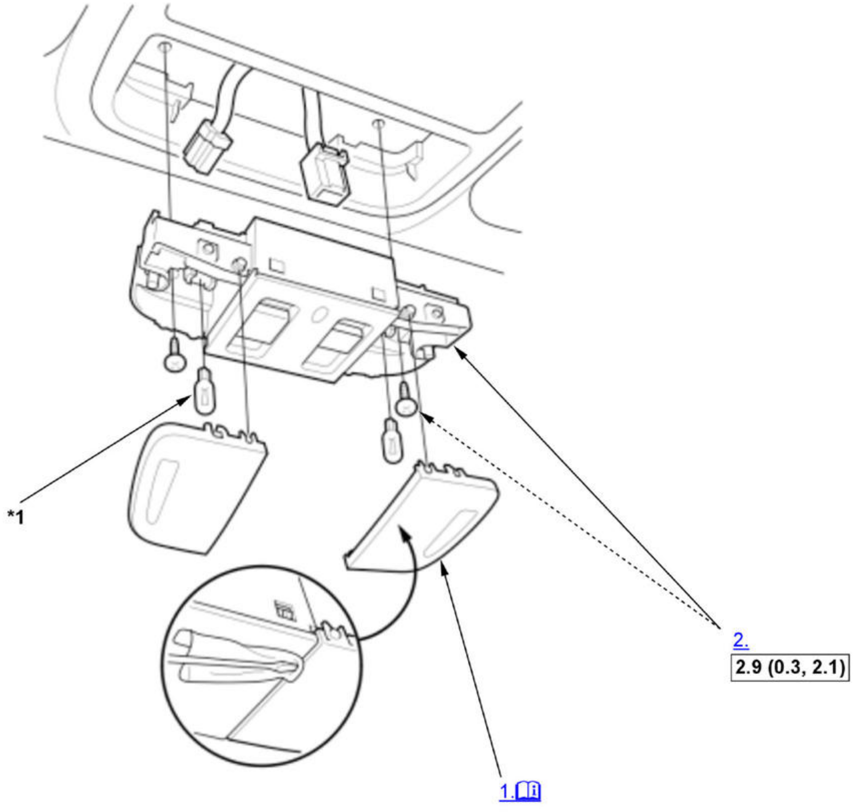

ℹ	Detailed information, notes, and precautions
▭	Torque: N.m (kgf.m, lbf.ft)
*1	Front Individual Map Light: 8 W

2

Without moonroof

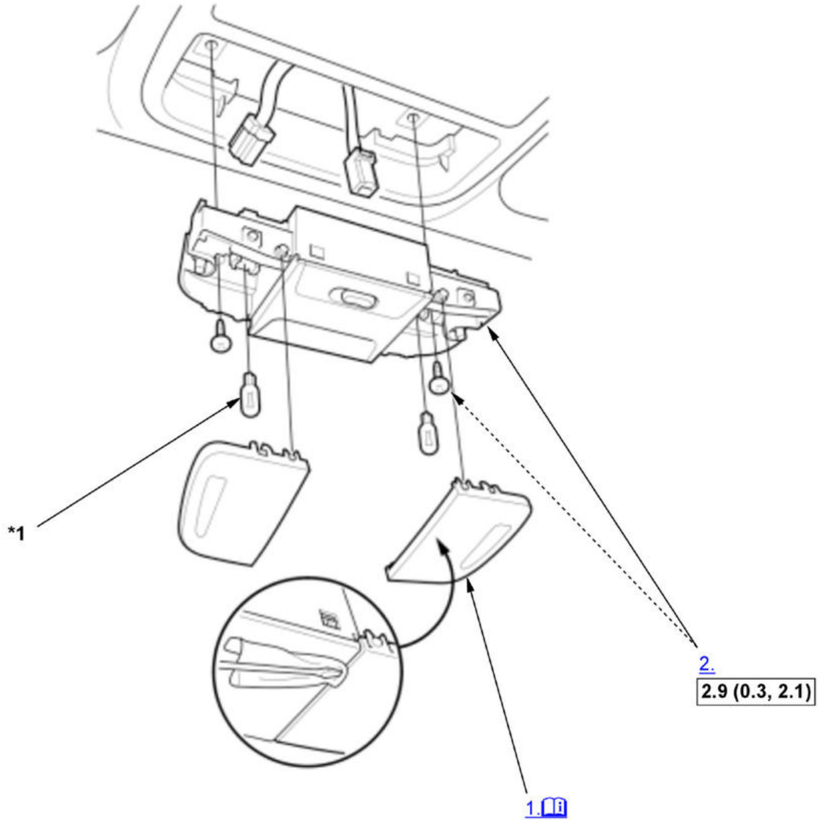

ℹ	Detailed information, notes, and precautions
☐	Torque: N.m (kgf.m, lbf.ft)
*1	Front Individual Map Light: 8 W

1. Lens - Remove

   Carefully pry off the lenses.

2. Front Individual Map Light - Remove
3. **Interior Light Switch - Remove**
4. All Removed Parts - Install

   1. Install the parts in the reverse order of removal.

Test

1. Front Individual Map Light - Test

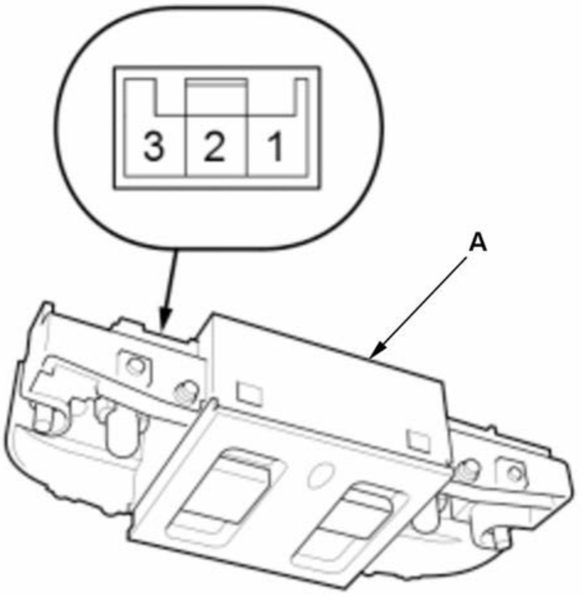

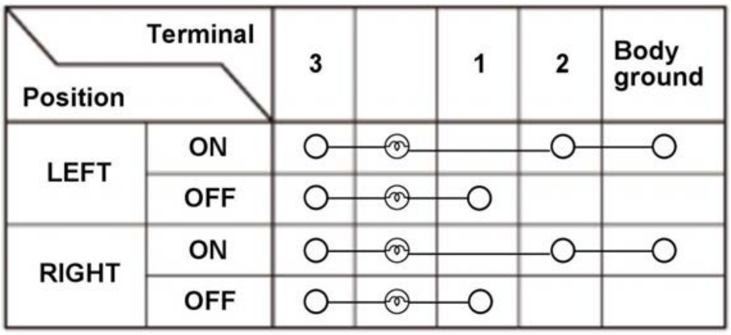

Position \ Terminal		3		1	2	Body ground
LEFT	ON	○	⊗		○	○
	OFF	○	⊗	○		
RIGHT	ON	○	⊗		○	○
	OFF	○	⊗	○		

NOTE: When doing the front individual map light test, make sure the bulbs are installed correctly.

1. Check for continuity between the terminals in each switch position according to the table in illustration.

2. If the continuity is not as specified, replace the bulb(s) or the front individual map light (A).

INTERIOR LIGHT SWITCH REMOVAL, INSTALLATION, AND TEST

Removal and Installation

NOTE: 🕮 Where icon is shown, further information shown below.

1

With moonroof

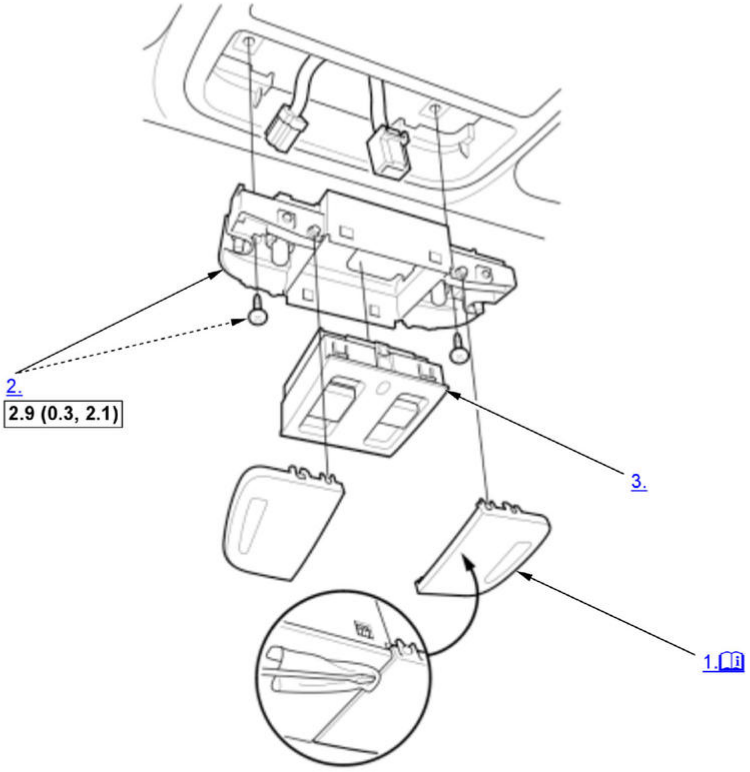

ℹ	Detailed information, notes, and precautions
☐	Torque: N.m (kgf.m, lbf.ft)

2

Without moonroof and panoramic glass roof

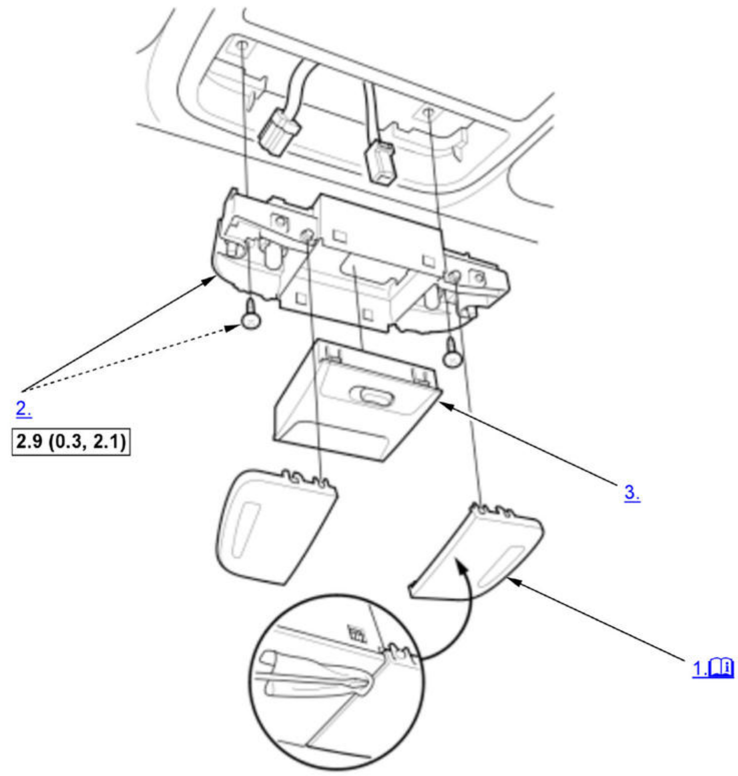

ℹ	Detailed information, notes, and precautions
▭	Torque: N.m (kgf.m, lbf.ft)

1. Lens - Remove

   Carefully pry off the lenses.

2. Front Individual Map Light - Remove
3. Interior Light Switch - Remove
4. All Removed Parts - Install

   1. Install the parts in the reverse order of removal.

Test

1. Interior Light Switch - Test

With moonroof

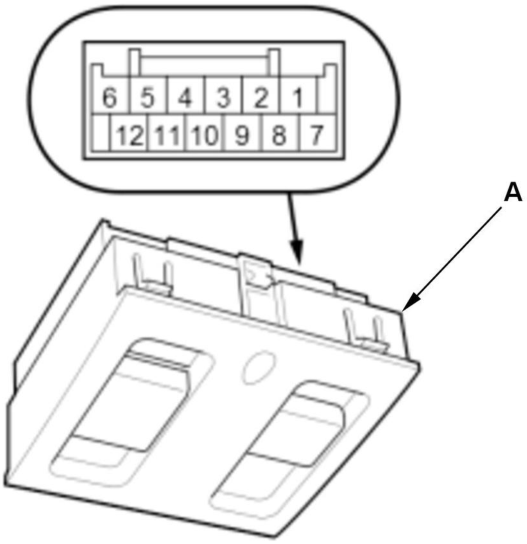

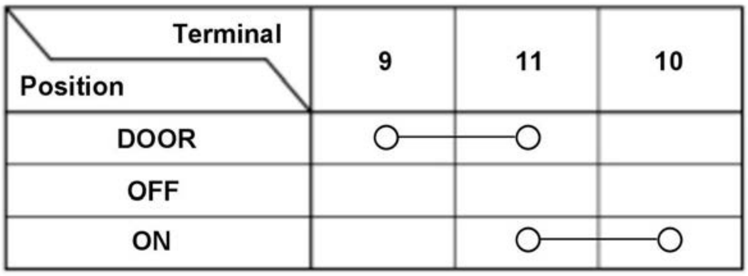

Position \ Terminal	9	11	10
DOOR	○	○	
OFF			
ON		○	○

Without moonroof and panoramic glass roof

1. Check for continuity between the terminals in each switch position according to the table in illustration.

2. If the continuity is not as specified the interior light switch is faulty; replace the interior light switch assembly (A).

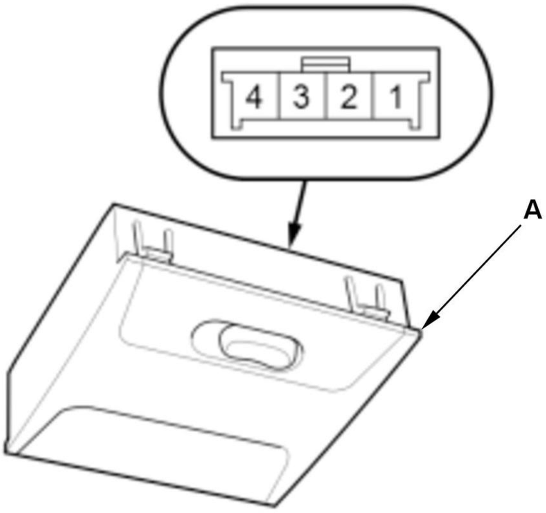

Position \ Terminal	1	2
DOOR	○	○
OFF		

REAR INDIVIDUAL MAP LIGHT REMOVAL, INSTALLATION, AND TEST

Removal and Installation

NOTE: ℹ Where icon is shown, further information shown below.

1

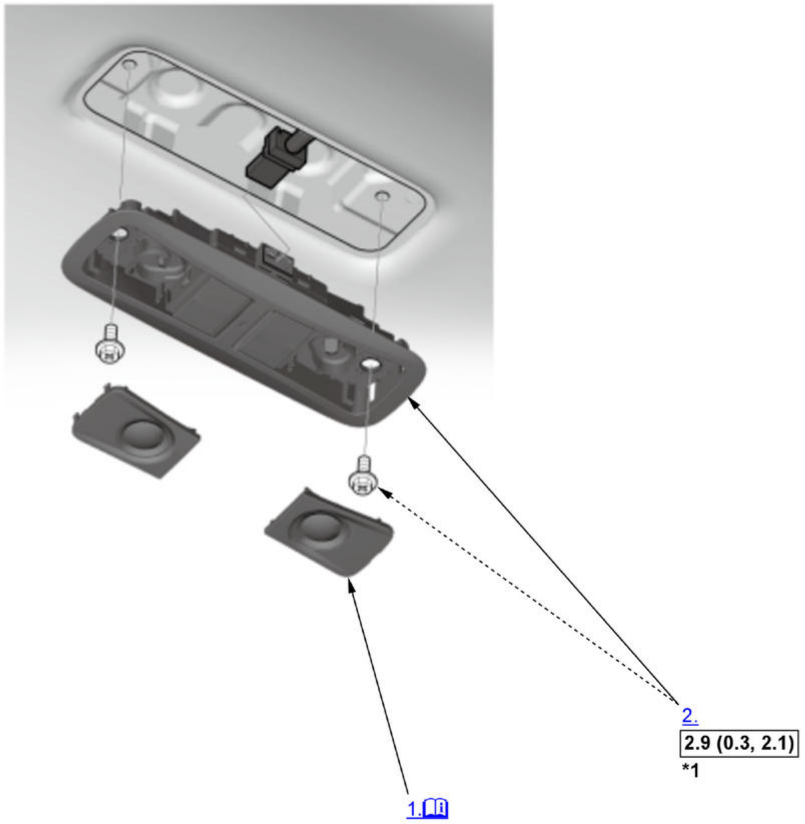

ℹ	Detailed information, notes, and precautions
▭	Torque: N.m (kgf.m, lbf.ft)
*1	Rear Individual Map Light: LEDAmbient Light: LED

1. Lens - Remove

   Carefully pry off the lenses.

2. Rear Individual Map Light - Remove
3. All Removed Parts - Install

   1. Install the parts in the reverse order of removal.

Test

1. Rear Individual Map Light - Test

   1. Check the rear individual map light (A) according to the table in illustration below.

NOTE:

- **When an LED is located between terminals, check if the LED illuminates by connecting power and ground to the LED.**
- **Note this important operating characteristic; diode bias causes a diode to fully conduct electricity in one direction (forward), while not at all in the opposite direction (reverse).**

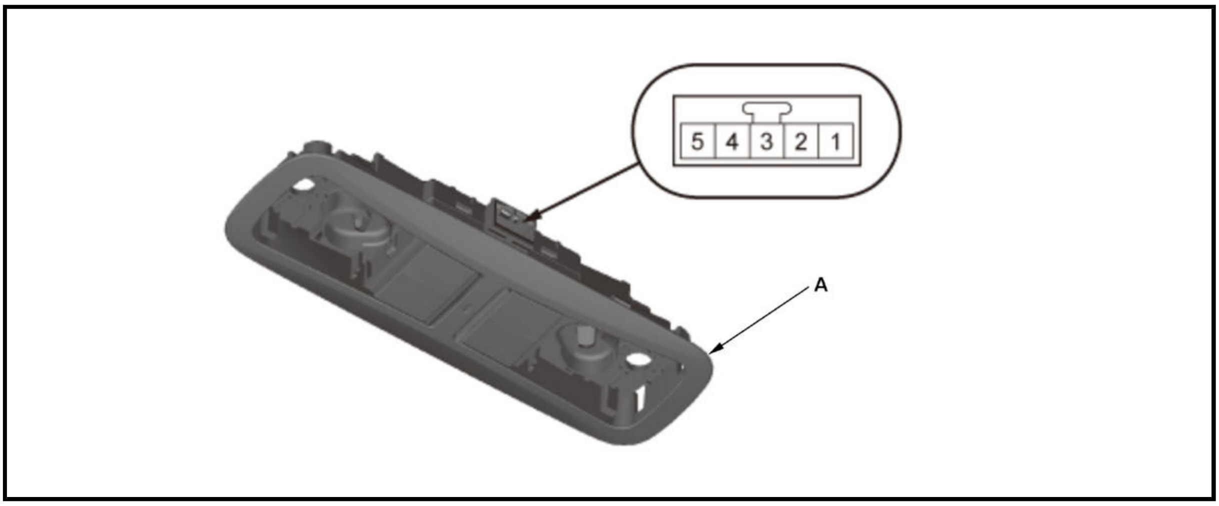

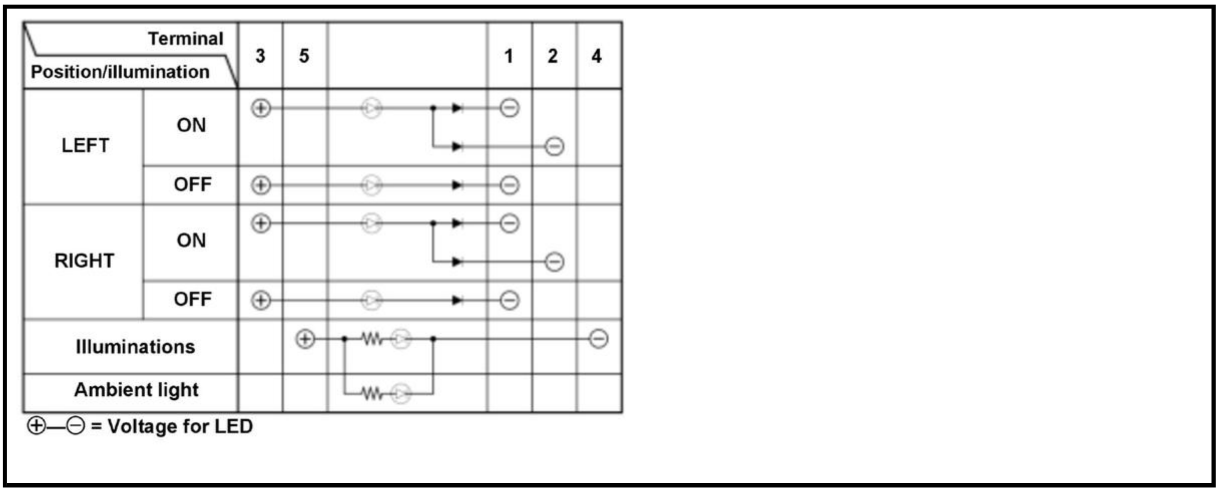
Terminal
Position/illumination
3
5
1
2
4
LEFT
ON
OFF
RIGHT
ON
OFF
Illuminations
Ambient light
⊕—⊖ = Voltage for LED

2. If the result is not as specified, replace the rear individual map light.

ROOF CONSOLE MODULE REMOVAL, INSTALLATION, AND TEST

Removal and Installation

NOTE: Where icon is shown, further information shown below.

1

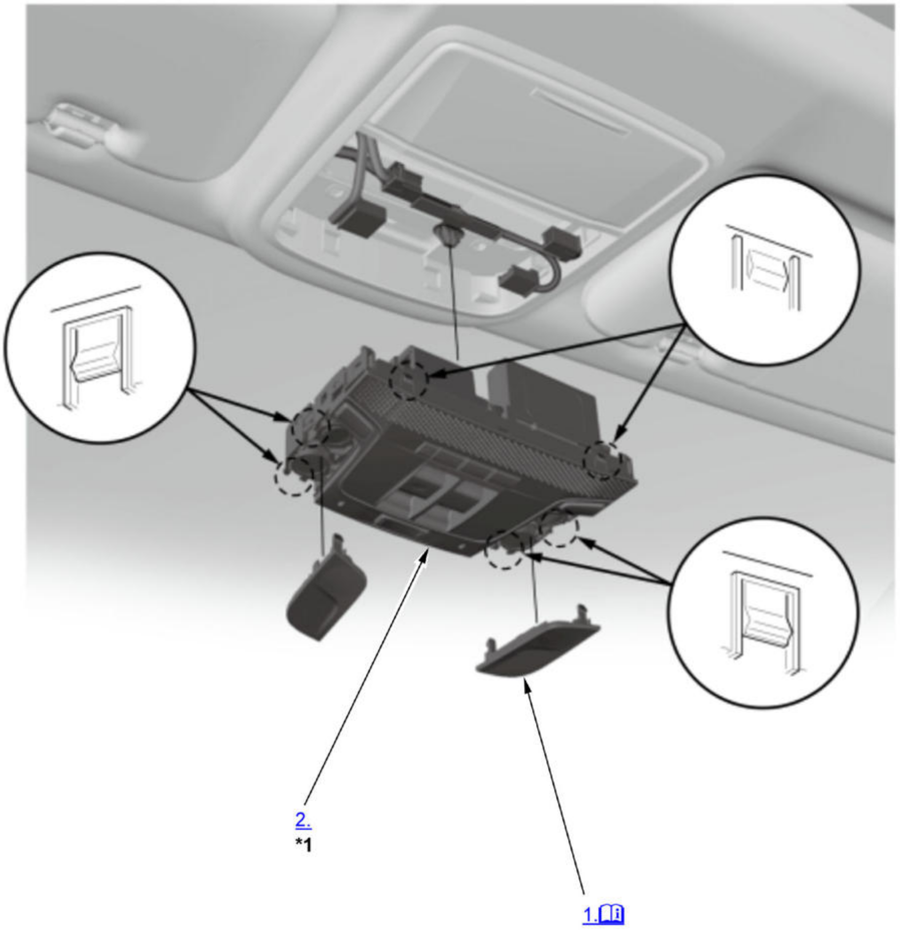

ℹ	Detailed information, notes, and precautions
▭	Torque: N.m (kgf.m, lbf.ft)
*1	Interior Light: LEDFront Individual Map Light: LEDAmbient Light: LED

1. Lens - Remove

   Carefully pry off the lenses.

2. Roof Console Module - Remove
3. All Removed Parts - Install

   1. Install the parts in the reverse order of removal.

Test

1. Roof Console Module - Test

   NOTE: The interior light switch and the individual map light switch are built into the roof console module (A).

   1. Check the interior light switch and the individual map light switch according to the chart below.

NOTE:

- **When an LED is located between terminals, check if the LED lights by connecting power and ground to the LED.**
- **Note this important operating characteristic; diode bias causes a diode to fully conduct electricity in one direction (forward), while not at all in the opposite direction (reverse).**

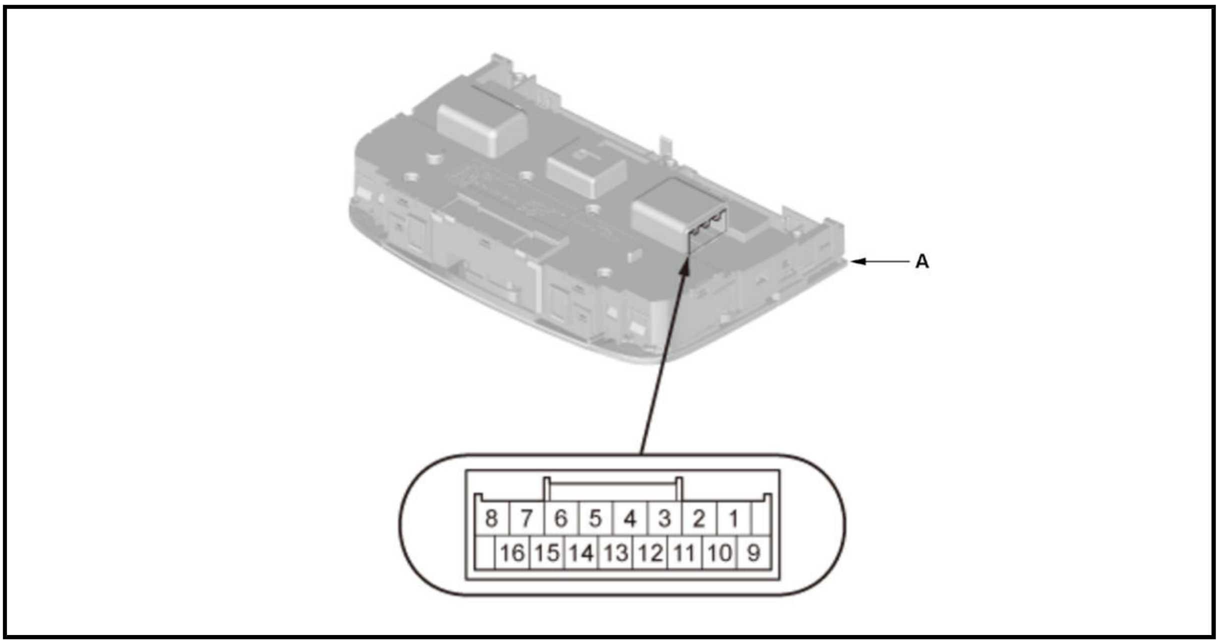
A
8
7
6
5
4
3
2
1
16
15
14
13
12
11
10
9

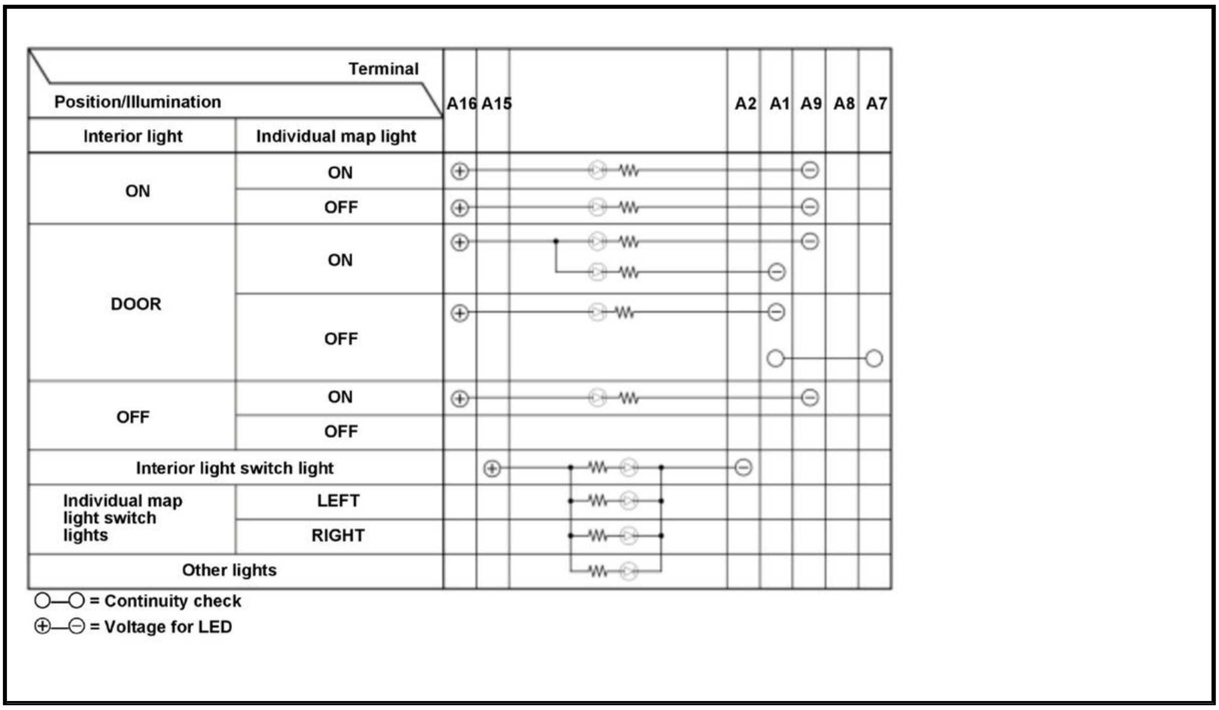
Terminal
Position/Illumination
A16
A15
A2
A1
A9
A8
A7
Interior light
Individual map light
ON
ON
OFF
DOOR
ON
OFF
OFF
ON
OFF
Interior light switch light
Individual map light switch lights
LEFT
RIGHT
Other lights
○—○ = Continuity check
⊕—⊖ = Voltage for LED

2. If the result is not as specified, the interior light switch and/or the individual map light switch are faulty; replace the roof console module.

VANITY MIRROR LIGHT REMOVAL, INSTALLATION, AND TEST

Removal and Installation

NOTE: Where icon is shown, further information shown below.

1

Type A

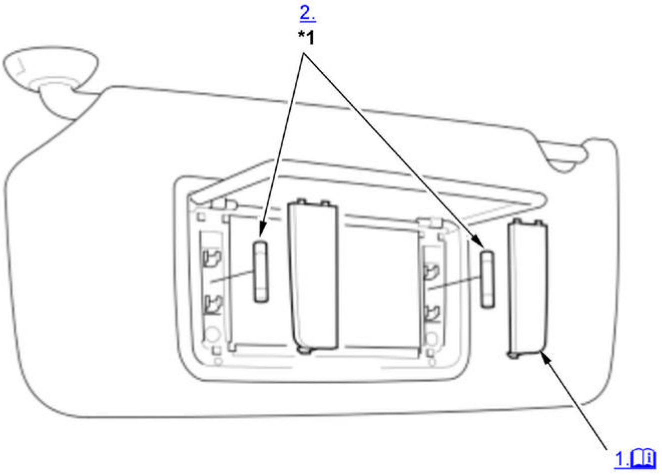

🛈	Detailed information, notes, and precautions
*1	Vanity Mirror Light: 1CP

2

Type B

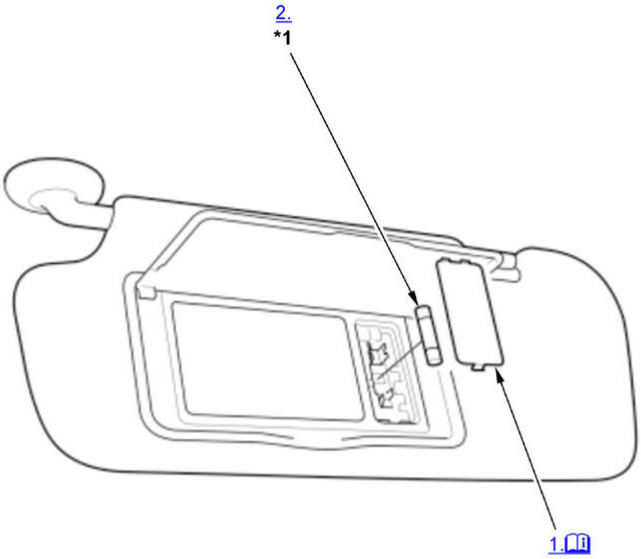

🛈	Detailed information, notes, and precautions
*1	Vanity Mirror Light: 1.4 W

1. Lens - Remove

   Carefully pry off the lenses.

2. Vanity Mirror Light - Remove

3. All Removed Parts - Install

1. Install the parts in the reverse order of removal.

Test

1. **Sunvisor - Remove**
2. Vanity Mirror Light - Test

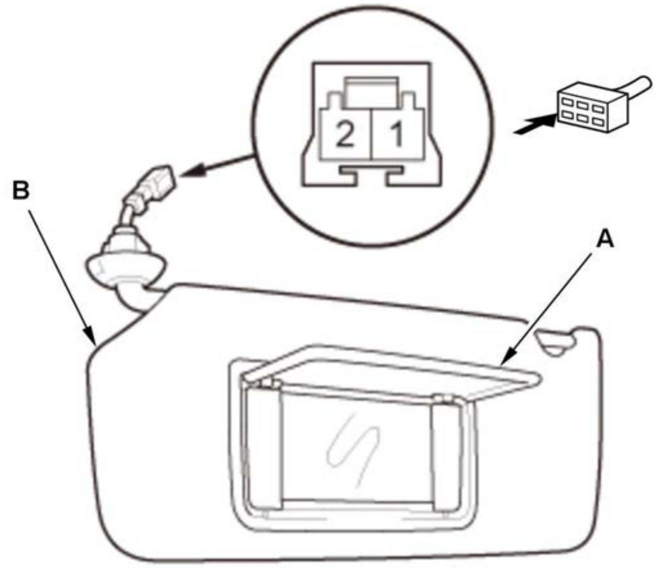

Type A

Type B

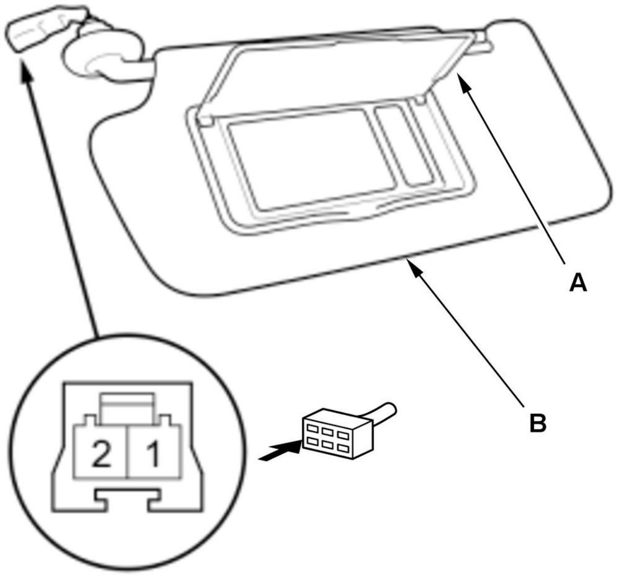

Terminal / Position	1		2
OPENED	○—	—⊗—	—○
CLOSED			

NOTE: When doing the vanity mirror light test, make sure the bulbs are installed correctly and not damaged or burnt out.

1. Check for continuity between the terminals in each vanity mirror cover (A) position according to the table in illustration.

2. If the continuity is not as specified, replace the bulb(s).

3. If the continuity is still not as specified, **replace the sunvisor**

(B).

3. All Removed Parts - Install

1. Install the parts in the reverse order of removal.

REMOVAL AND INSTALLATION

CONSOLE BOX LIGHT REMOVAL AND INSTALLATION

Removal and Installation

1

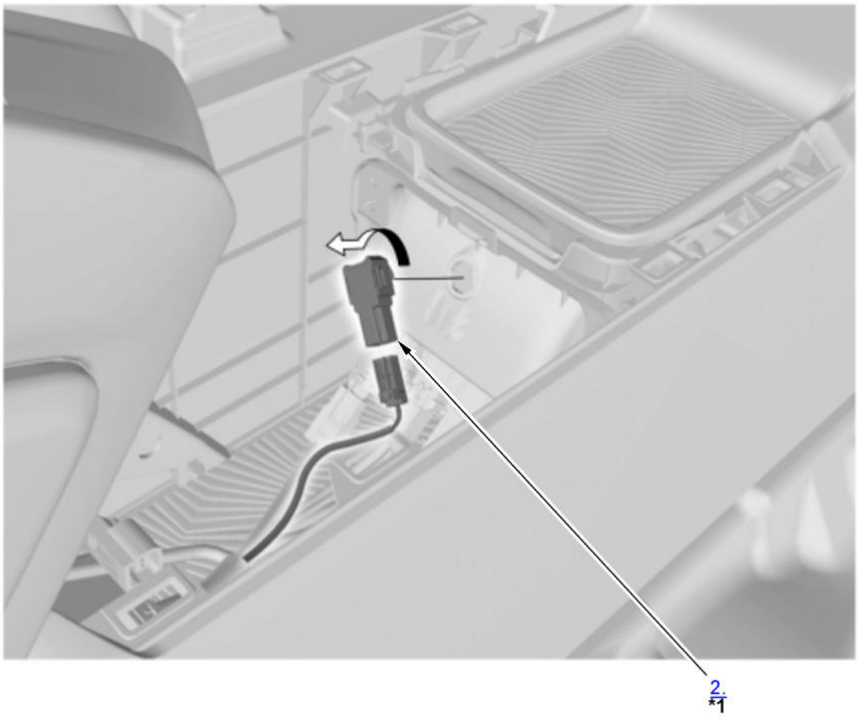

*1	Console Box Light: LED

1. **Center Console Box Panel - Remove**
2. Console Box Light - Remove
3. All Parts Removed - Install

1. Install the parts in the reverse order of removal.

FOOTWELL LIGHT REMOVAL AND INSTALLATION

Removal and Installation

1

Driver's

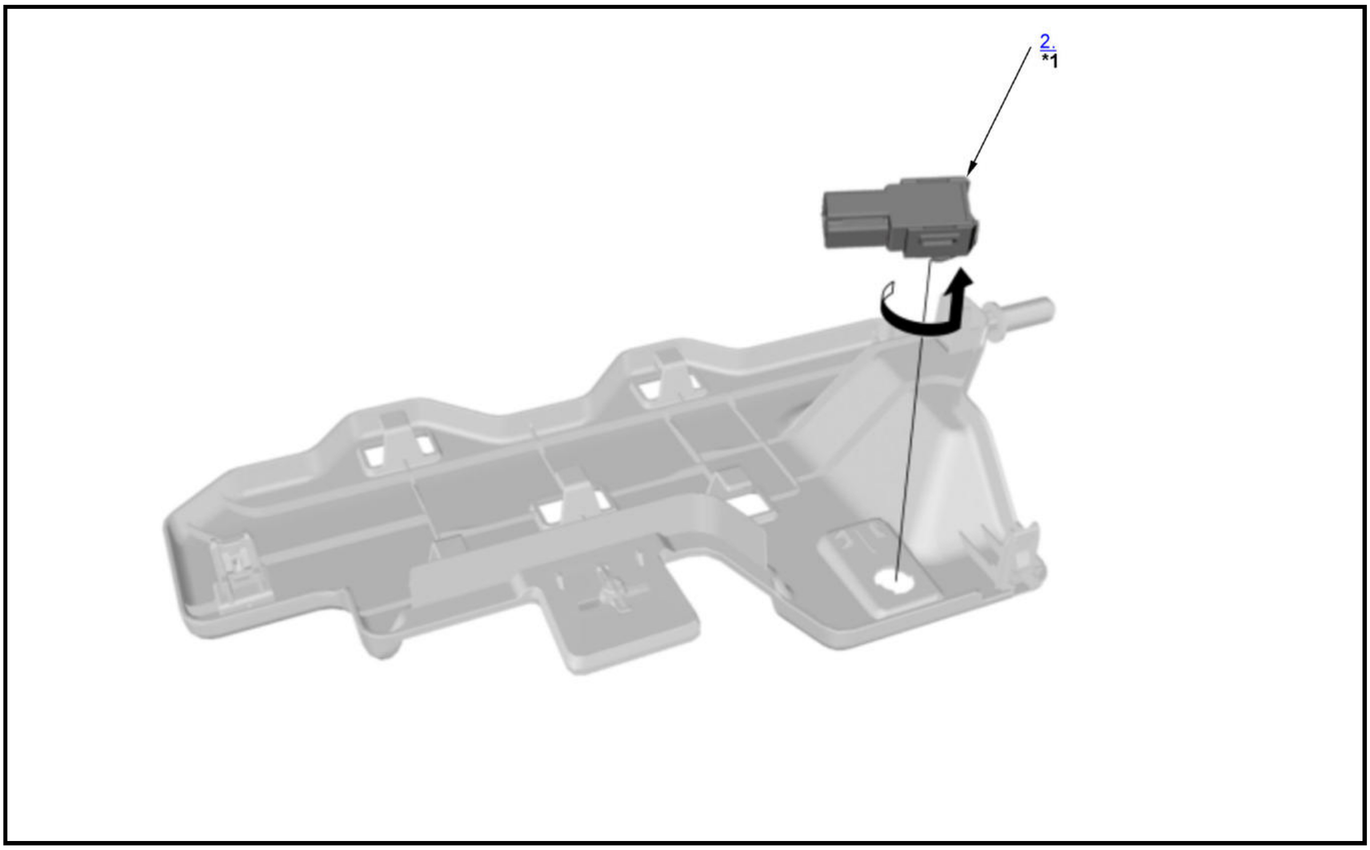

*1	Driver's Footwell Light: LED

2

Front Passenger's

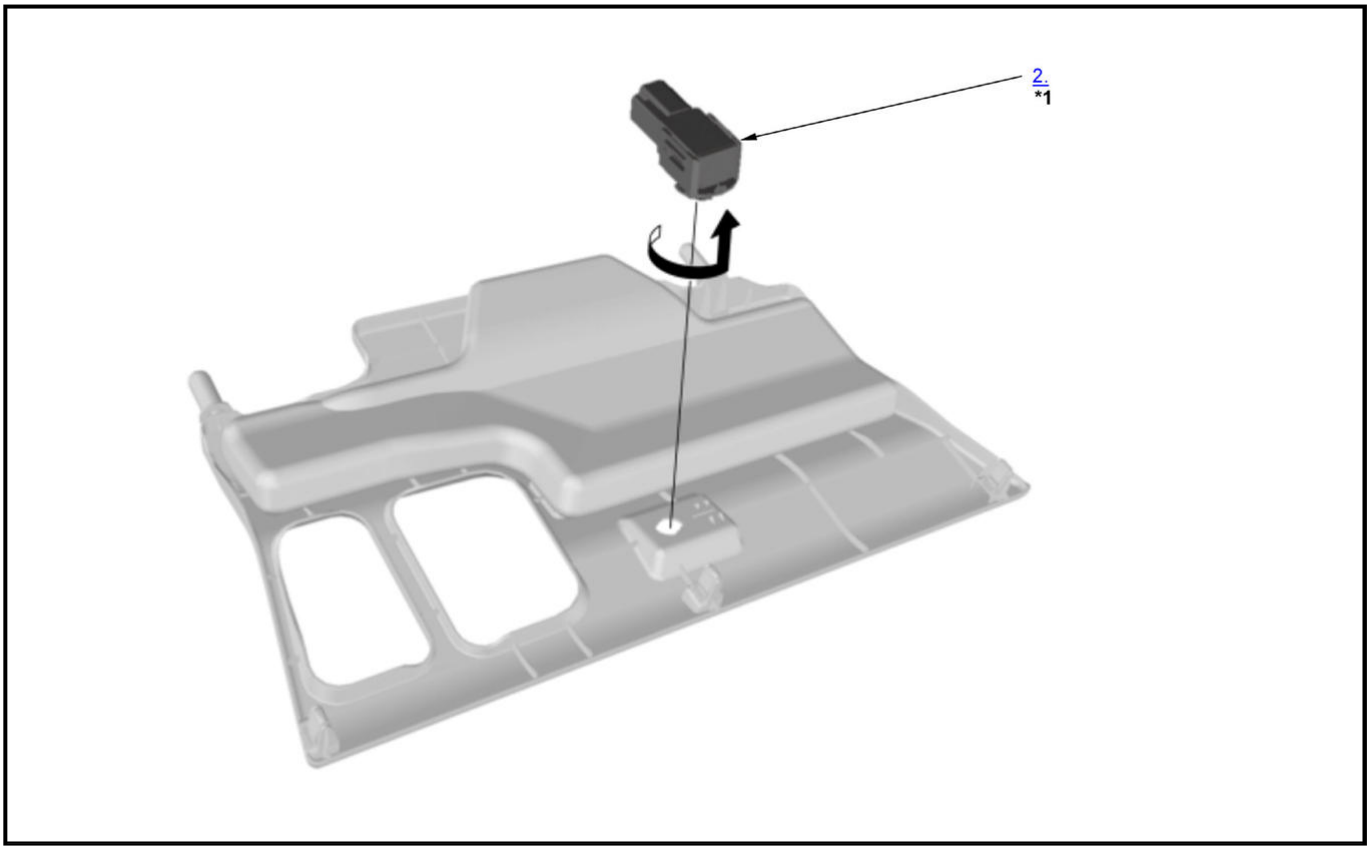

*1	Front Passenger's Footwell Light: LED

Driver's Side

1. **Driver's Dashboard Undercover - Remove**
2. Driver's Footwell Light - Remove
3. All Parts Removed - Install

1. Install the parts in the reverse order of removal.

Passenger's Side

4. **Passenger's Dashboard Undercover - Remove**
5. Front Passenger's Footwell Light - Remove
6. All Parts Removed - Install

1. Install the parts in the reverse order of removal.

REMOVAL AND INSTALLATION

FOOTWELL LIGHT REMOVAL AND INSTALLATION

Removal and Installation

Driver's

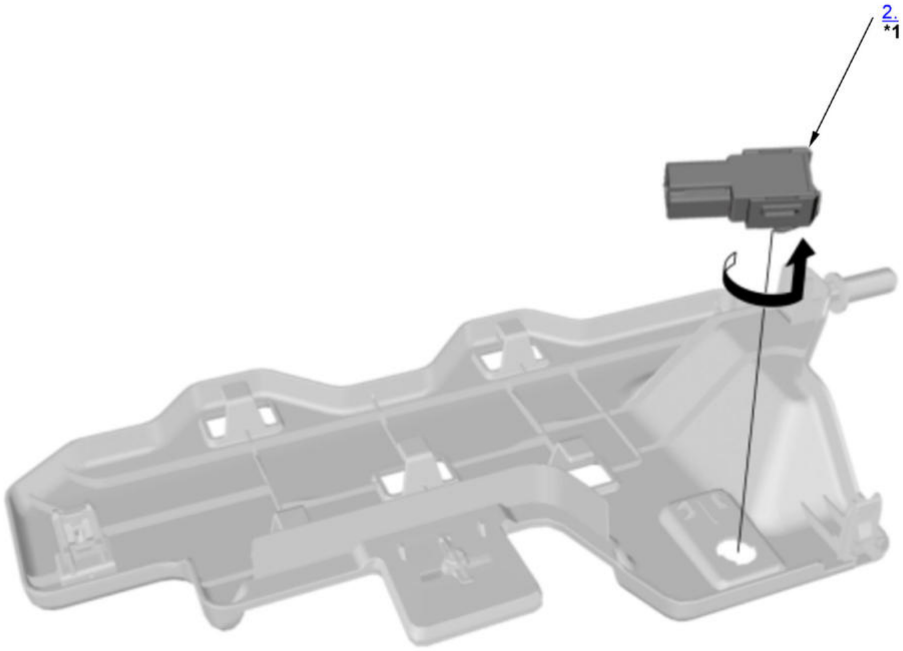

Fig. 1: Driver's Footwell Light Components
Courtesy of HONDA, U.S.A., INC.

*1	Driver's Footwell Light: LED

1. Driver's Dashboard Undercover - Remove
2. Driver's Footwell Light - Remove
3. All Parts Removed - Install

1. Install the parts in the reverse order of removal.

Front Passenger's

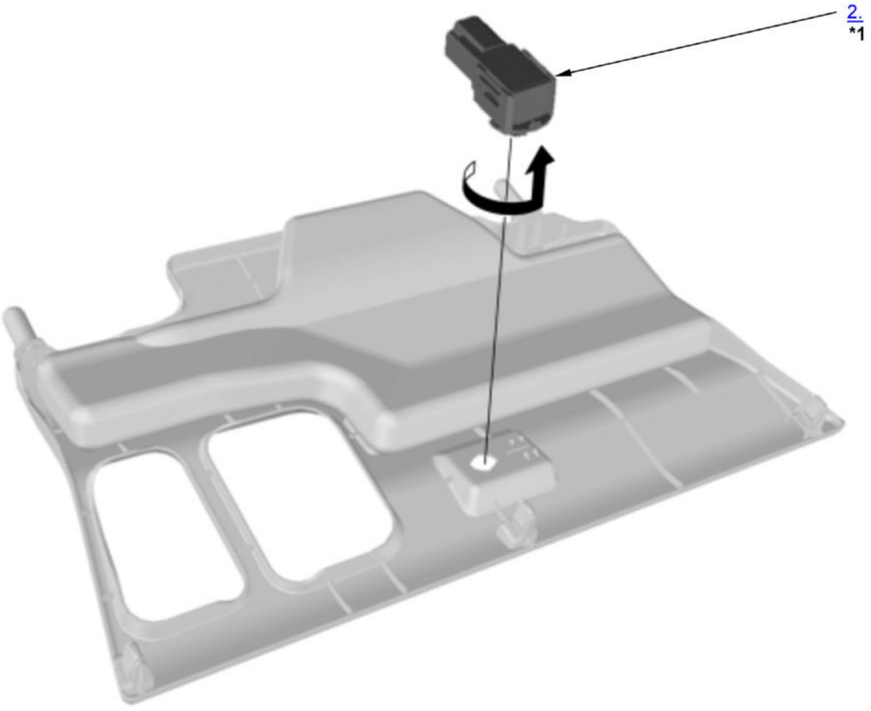

Fig. 2: Front Passenger's Footwell Light Components
Courtesy of HONDA, U.S.A., INC.

*1	Front Passenger's Footwell Light: LED

1. Passenger's Dashboard Undercover - Remove
2. Front Passenger's Footwell Light - Remove
3. All Parts Removed - Install

    1. Install the parts in the reverse order of removal.

REMOVAL, INSTALLATION & TEST

AMBIENT LIGHT REMOVAL, INSTALLATION, AND TEST

Removal and Installation

NOTE: The ambient lights is built into the interior light switch.

1. Interior Light Switch - Remove
2. All Removed Parts - Install

    1. Install the parts in the reverse order of removal.

Test

1. Ambient Light - Test

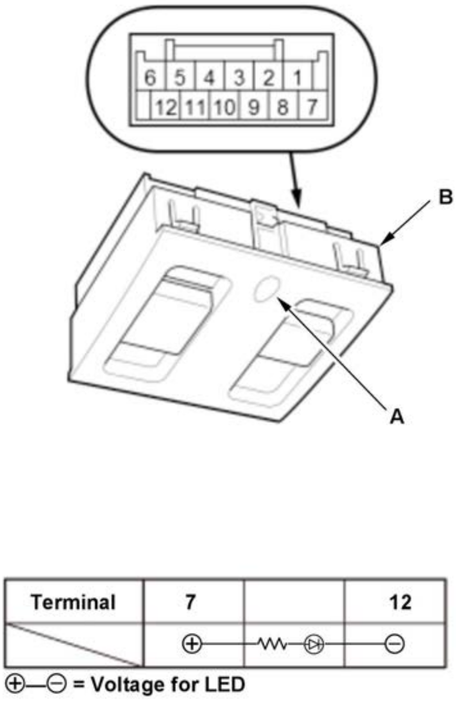

NOTE: The ambient light (A) is built into the interior light switch (B).

1. Check the lights according to the table.

NOTE:

- When an LED is located between terminals, check if the LED illuminates by connecting power and ground to the LED.
- Note this important operating characteristic; diode bias causes a diode to fully conduct electricity in one direction (forward), while not at all in the opposite direction (reverse).

2. If the ambient light does not come on, the LED is faulty; **replace the interior light switch**.

CARGO AREA LIGHT REMOVAL, INSTALLATION, AND TEST

Removal and Installation

Procedure

NOTE: **Numbered call-outs in figure pertain to list numbers in following procedure.**

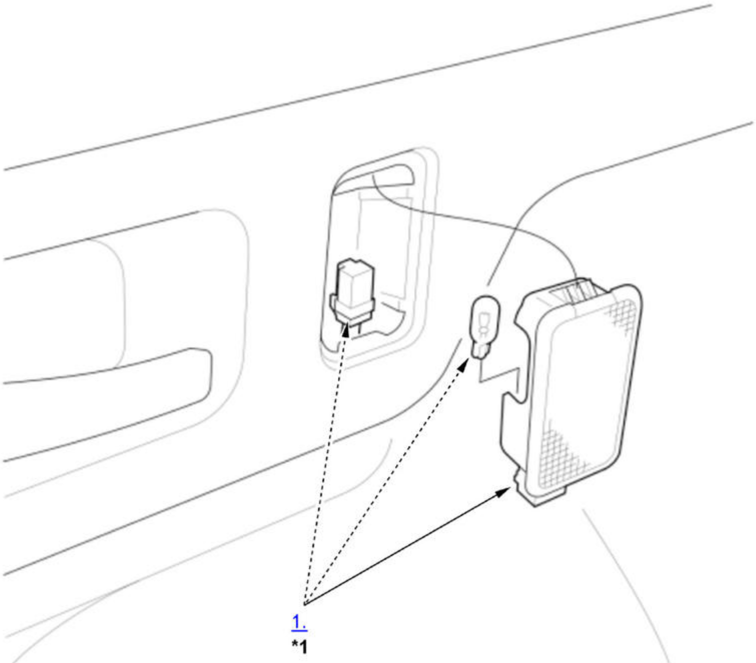

Fig. 3: Cargo Area Light Components
Courtesy of HONDA, U.S.A., INC.

*1	Cargo Area Light: 5 W

1. Cargo Area Light - Remove
2. All Removed Parts - Install

1. Install the parts in the reverse order of removal.

Test

1. Cargo Area Light - Test

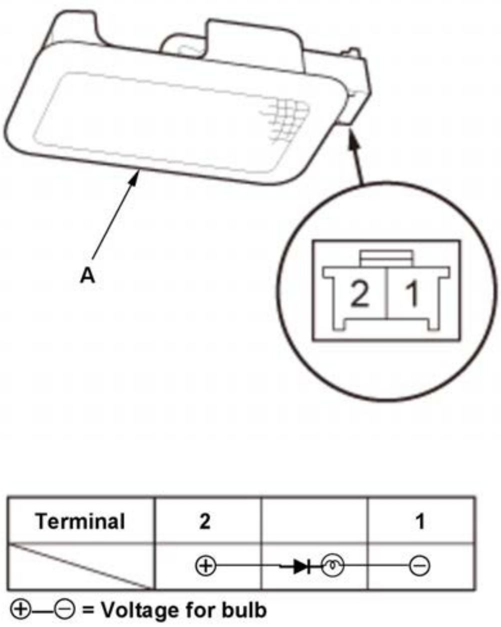

NOTE: When doing the cargo area light (A) test, make sure the bulb is installed correctly and not damaged or burnt out.

1. Check the light according to the table.

NOTE: Note this important operating characteristic; diode bias causes a diode to fully conduct electricity in one direction (forward), while not at all in the opposite direction (reverse).

2. If the result is not as specified, replace the bulb or cargo area light.

CEILING LIGHT REMOVAL, INSTALLATION, AND TEST

Removal and Installation

Procedure

NOTE: **Numbered call-outs in figure pertain to list numbers in following procedure.**

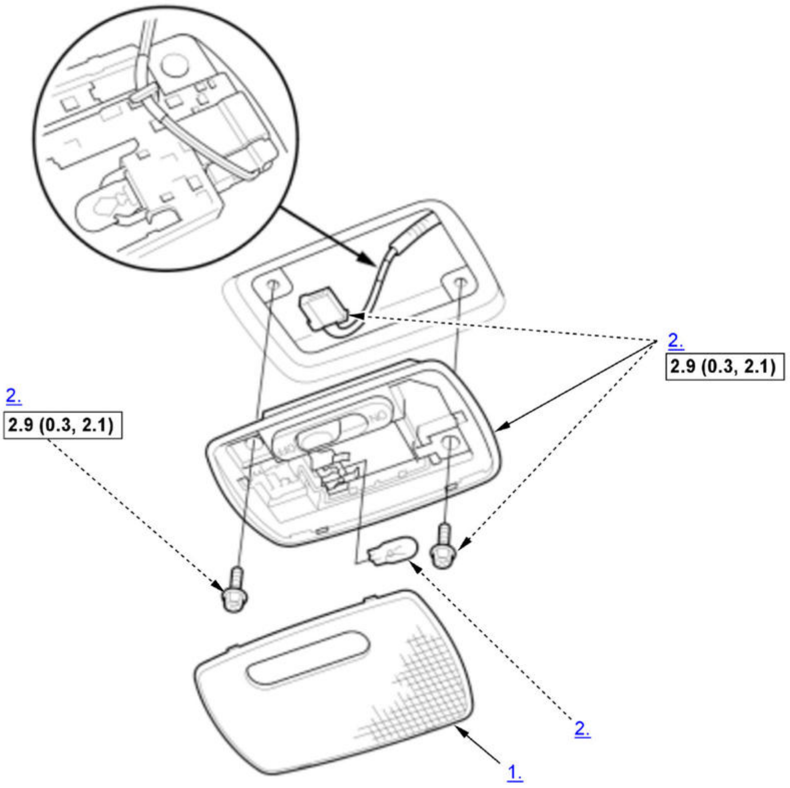

[Fig. 4: Exploded View Of Ceiling Light Components](#)

Courtesy of HONDA, U.S.A., INC.

	Torque: N.m (kgf.m, lbf.ft)
*1	Ceiling Light: 8W

1. Lens - Remove
2. Ceiling Light - Remove
3. All Removed Parts - Install

1. Install the parts in the reverse order of removal.

Test

1. Ceiling Light - Test

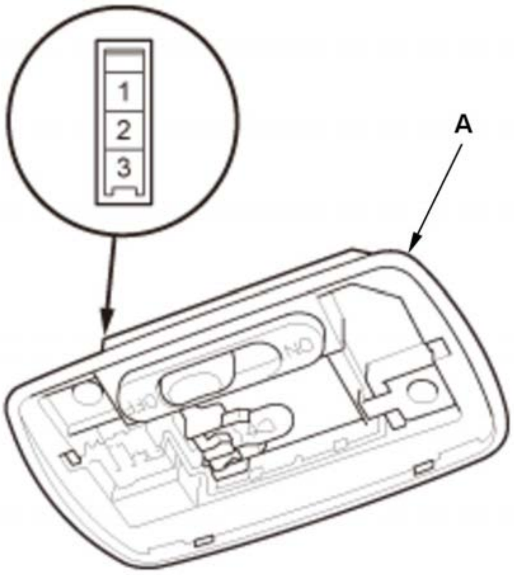

Terminal / Position	2		1	3	Body ground
ON	○	⊚	─	○	○
OFF					
MIDDLE	○	⊚	○		

NOTE: When doing the ceiling light test, make sure the bulbs are installed correctly and not damaged or burnt out.

1. Check for continuity between the terminals in each switch position according to the table.

2. If the continuity is not as specified, replace the bulb or the ceiling light (A).

FRONT INDIVIDUAL MAP LIGHT REMOVAL, INSTALLATION, AND TEST

Removal and Installation

Procedure

NOTE: **Numbered call-outs in figure pertain to list numbers in following procedure.**

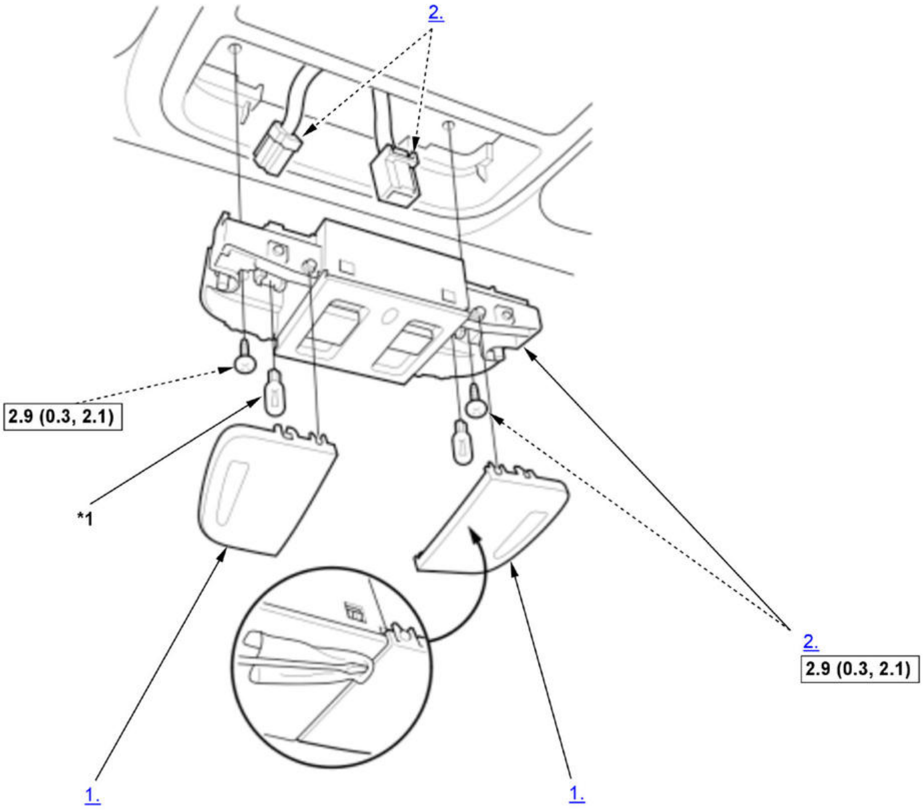

Fig. 5: Exploded View Of Front Individual Map Light Components (With Moonroof)
Courtesy of HONDA, U.S.A., INC.

▭	Torque: N.m (kgf.m, lbf.ft)
*1	Front Individual Map Light: 8 W

NOTE: **Numbered call-outs in figure pertain to list numbers in following procedure.**

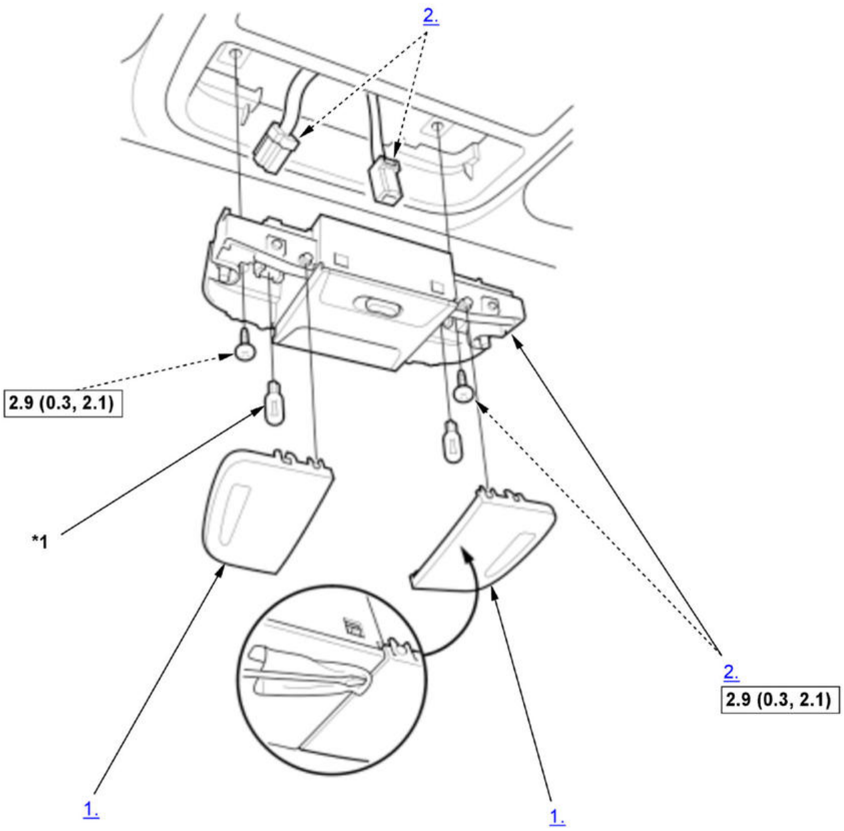

Fig. 6: Exploded View Of Front Individual Map Light Components (Without Moonroof)
Courtesy of HONDA, U.S.A., INC.

▭	Torque: N.m (kgf.m, lbf.ft)
*1	Front Individual Map Light: 8 W

1. Lens - Remove
2. Front Individual Map Light - Remove
3. **Interior Light Switch - Remove**
4. All Removed Parts - Install

> 1. Install the parts in the reverse order of removal.

Test

1. Front Individual Map Light - Test

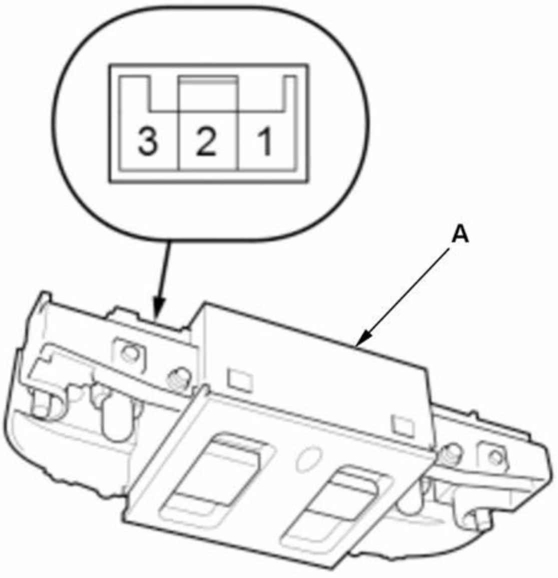

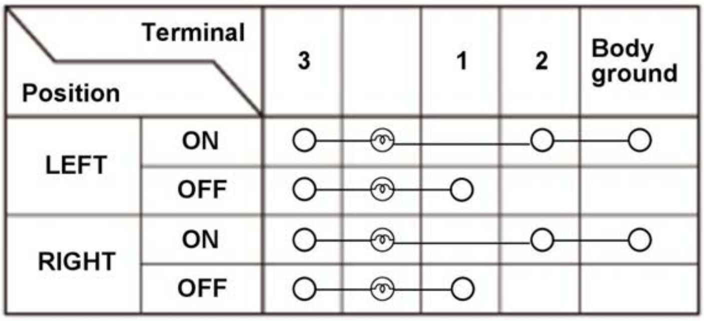

Position		Terminal 3		1	2	Body ground
LEFT	ON	○	⊗		○	○
	OFF	○	⊗	○		
RIGHT	ON	○	⊗		○	○
	OFF	○	⊗	○		

NOTE: When doing the front individual map light test, make sure the bulbs are installed correctly and not damaged or burnt out.

1. Check for continuity between the terminals in each switch position according to the table.

2. If the continuity is not as specified, replace the bulb(s) or the front individual map light (A).

INTERIOR LIGHT SWITCH REMOVAL, INSTALLATION, AND TEST

Removal and Installation

Procedure

NOTE: **Numbered call-outs in figure pertain to list numbers in following procedure.**

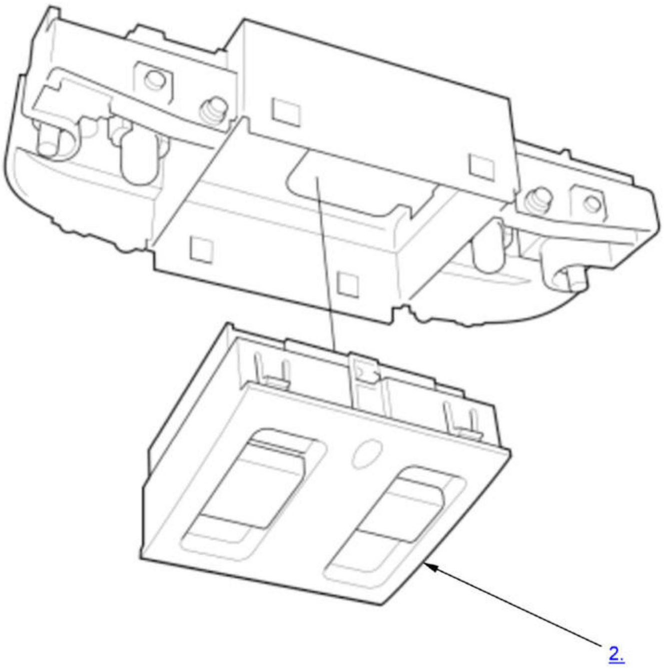

Fig. 7: Interior Light Switch Components (With Moonroof)
Courtesy of HONDA, U.S.A., INC.

NOTE: **Numbered call-outs in figure pertain to list numbers in following procedure.**

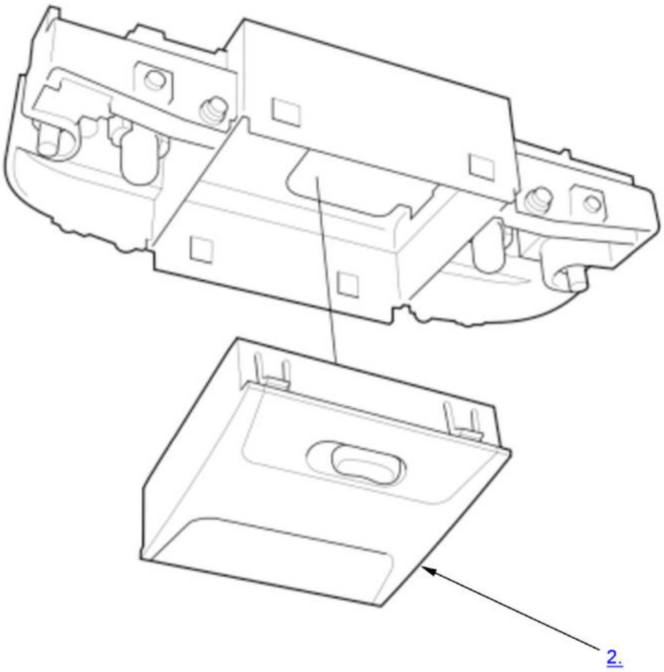

Fig. 8: Interior Light Switch (Without Moonroof)
Courtesy of HONDA, U.S.A., INC.

1. Front Individual Map Light - Remove
2. Interior Light Switch - Remove

3. All Removed Parts - Install

1. Install the parts in the reverse order of removal.

Test

1. Interior Light Switch - Test

1. Check for continuity between the terminals in each switch position according to the table.

With moonroof

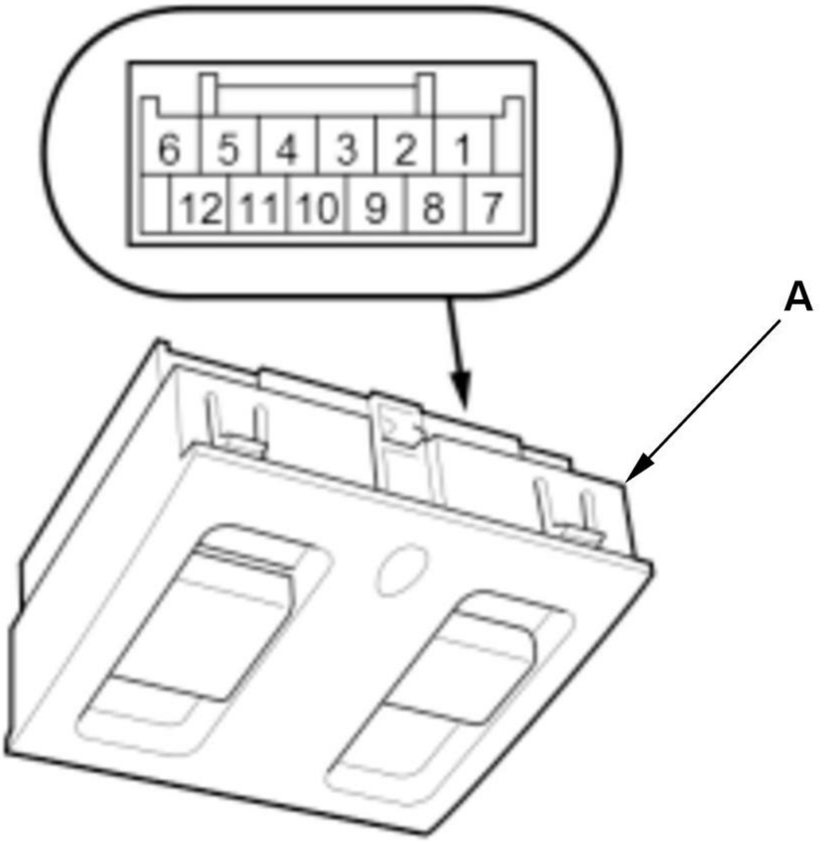

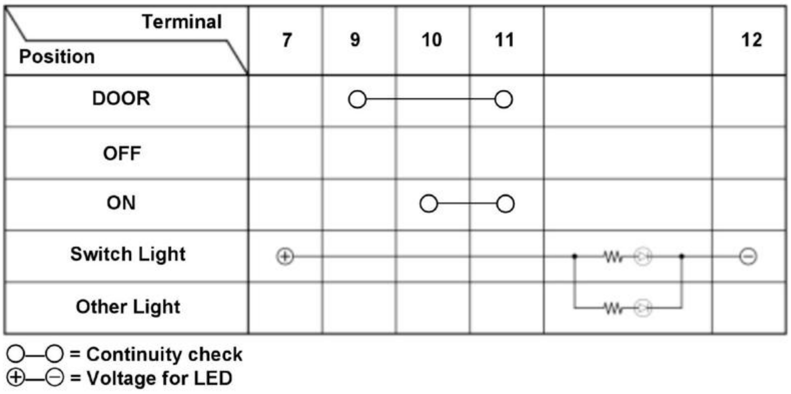

Terminal / Position	7	9	10	11		12
DOOR		○	—	○		
OFF						
ON			○	○		
Switch Light	⊕	—	—	—	—W—⊗—	⊖
Other Light					—W—⊗—	

○—○ = Continuity check
⊕—⊖ = Voltage for LED

Without moonroof

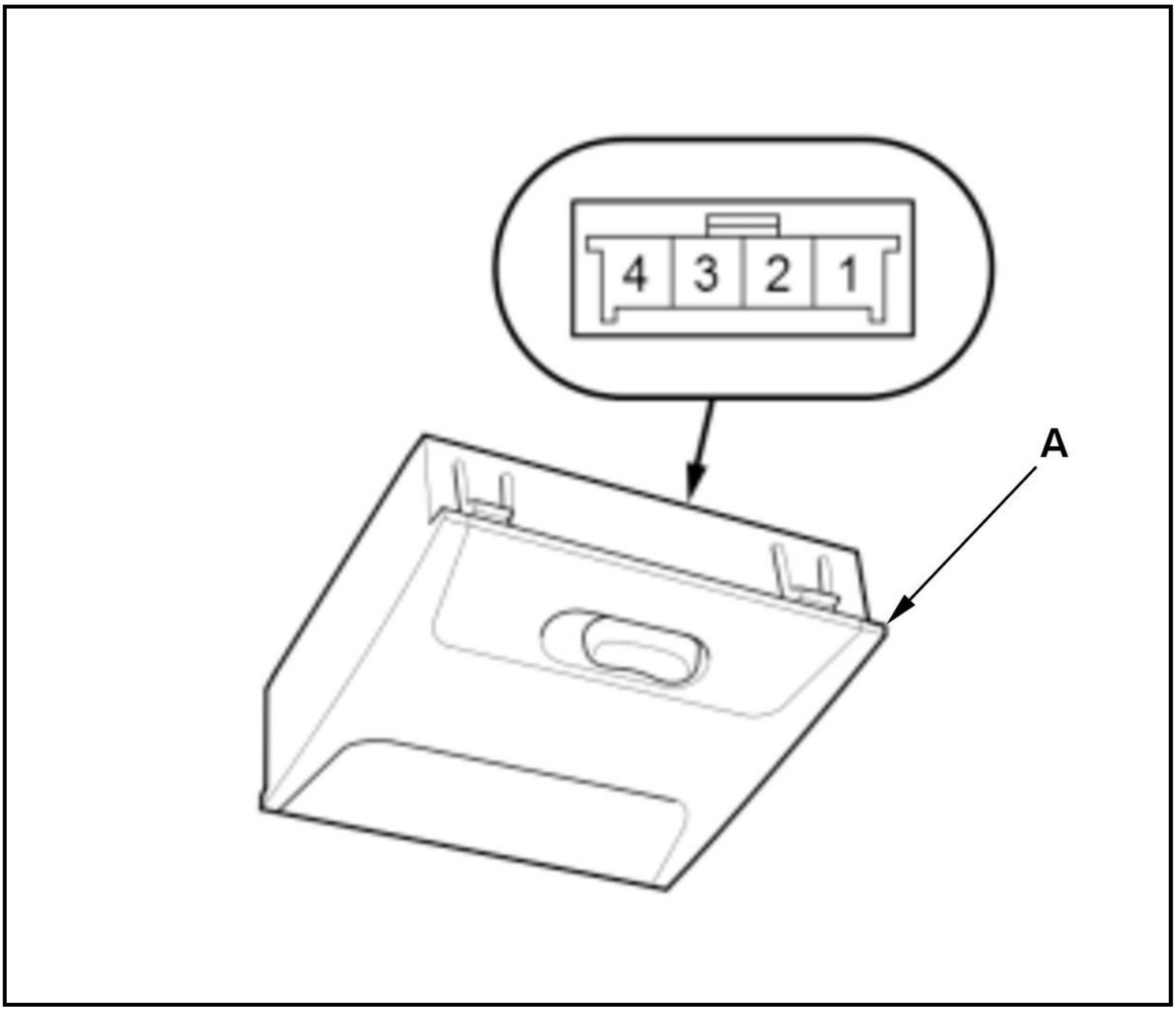

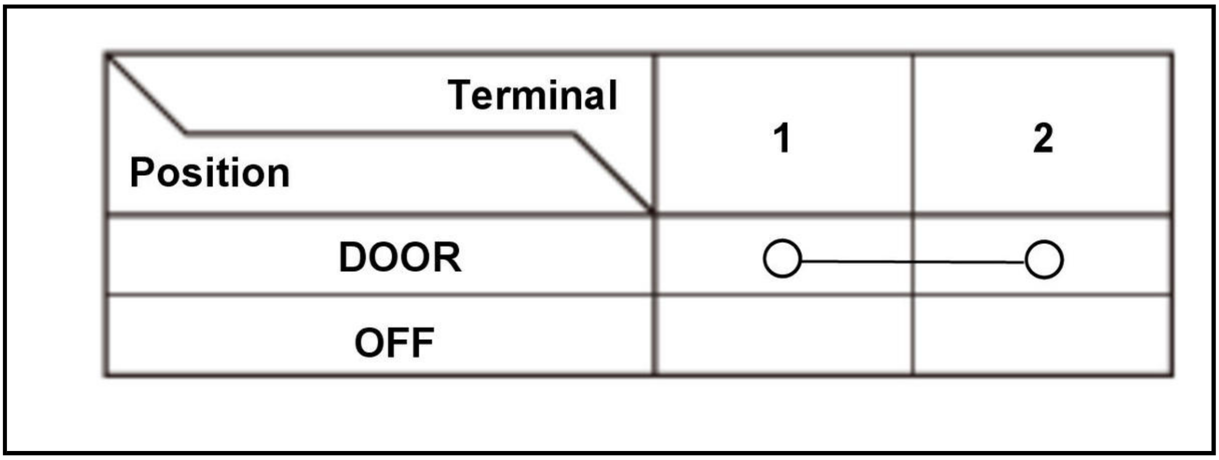

Terminal / Position	1	2
DOOR	○—	—○
OFF		

2. If the continuity is not as specified the interior light switch is faulty; replace the interior light switch assembly (A).

VANITY MIRROR LIGHT REMOVAL, INSTALLATION, AND TEST

Removal and Installation

Procedure

NOTE: **Numbered call-outs in figure pertain to list numbers in following procedure.**

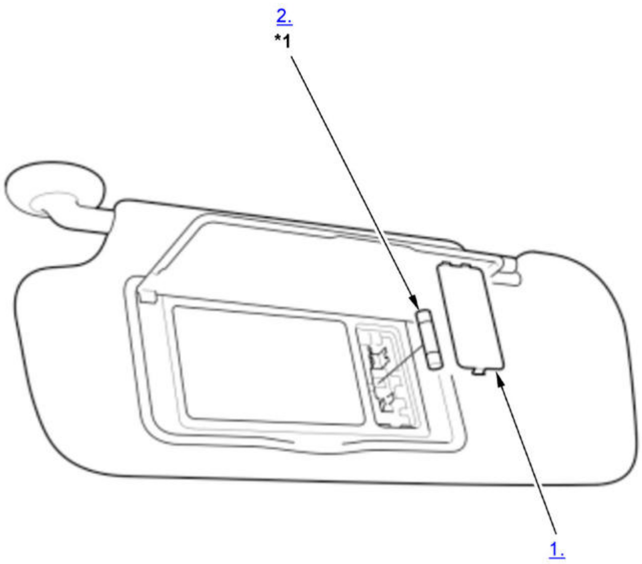

Fig. 9: Vanity Mirror Light Components
Courtesy of HONDA, U.S.A., INC.

*1	Vanity Mirror Light: 14V - 1.4W

1. Lens - Remove
2. Vanity Mirror Light - Remove
3. All Removed Parts - Install

1. Install the parts in the reverse order of removal.

Test

1. **Sunvisor - Remove**
2. Vanity Mirror Light - Test

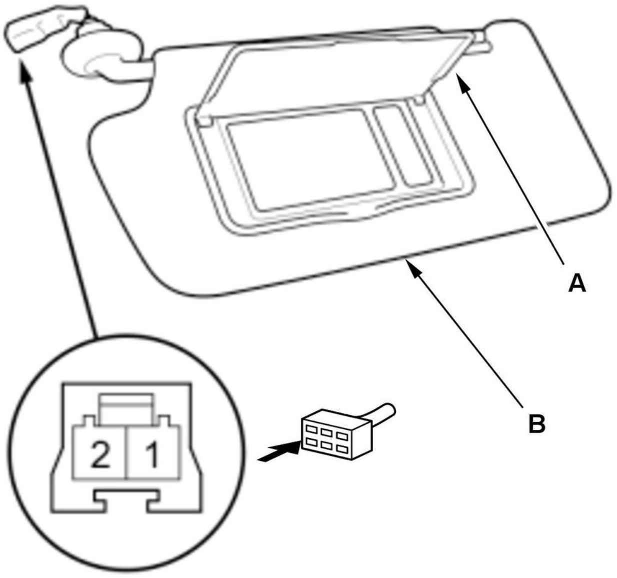

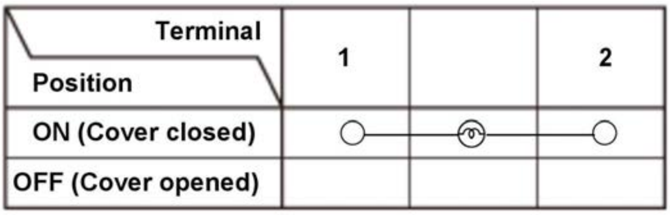

Terminal / Position	1		2
ON (Cover closed)	○—	—⊗—	—○
OFF (Cover opened)			

NOTE: When doing the vanity mirror light test, make sure the bulbs are installed correctly and not damaged or burnt out.

1. Check for continuity between the terminals in each vanity mirror cover (A) position according to the table.

2. If the continuity is not as specified, replace the bulb(s).

3. If the continuity is still not as specified, **replace the sunvisor** (B).

3. All Removed Parts - Install

1. Install the parts in the reverse order of removal.

DESCRIPTION & OPERATION

INTERIOR LIGHTS SYSTEM DESCRIPTION

System Function

Driver's door lock knob switch link

When the driver's door lock knob switch moves from the lock/unlock position, the body control module detects a driver's door open/close position, and the relay control module controls the interior lights.

Input			Output Control	
Driver's Door Lock Knob Switch (ON: LOCK)	**Each Door Switch**	**Vehicle Mode**	**Before Input Change**	**After Input Change**
ON -> OFF	All OFF (Door close)	Remote Engine Start	Lighting ON	Lights ON by timer condition 1
			Lighting OFF	Lights ON by timer condition 5
		OFF (LOCK)	Lighting ON	Lights ON by timer condition 1
			Lighting OFF	Lights ON by timer condition 5
		ACC	--	Continue the status before input change
	Any ON (Door open)	--		
OFF-> ON	All OFF (Door close)	Remote Engine Start	--	Lights OFF
		OFF (LOCK) or ACC	--	
	Any ON (Door open)	OFF (LOCK) or ACC	--	Continue the status before input change

NOTE: The "--" means that it is not used on this system.

Each door switch link

Anytime a door switch closes (ON signal), the body control module provides a ground to the interior lights.

Input			Output Control	
Each Door Switch	**Driver's Door Lock Knob Switch (ON: LOCK)**	**Vehicle Mode**	**Before Input Change**	**After Input Change**
Any ON (Door open)->All OFF (Door close)	OFF	Remote Engine Start	Lighting ON	Lights ON by timer condition 2
			Lighting OFF	Continue the status before input change
		OFF (LOCK)	Lighting ON	Lights ON by timer condition 2
			Lighting OFF	Continue the status before input change

Input			Output Control	
Each Door Switch	**Driver's Door Lock Knob Switch (ON: LOCK)**	**Vehicle Mode**	**Before Input Change**	**After Input Change**
		ACC or ON	--	Lights OFF
	ON	--	--	
Any OFF (Door close)->ON (Door open)	--	Remote Engine Start	Lighting ON	Lights ON by timer condition 3 (Timer restart)
			Lighting OFF	Lights ON by timer condition 3
		OFF (LOCK)	Lighting ON	Lights ON by timer condition 3 (Timer restart)
			Lighting OFF	Lights ON by timer condition 3
		ACC or ON	--	Lights ON

NOTE: The "--" means that it is not used on this system.

Ignition key switch/remote link

When the system detects that the key is inserted into the ignition key switch or the remote is inside the vehicle, the body control module provides a ground to the interior lights.

Input		Output Control	
Vehicle Mode	**Each Door Switch**	**Before Input Change**	**After Input Change**
ACC -> OFF (LOCK)	All Door Switch OFF (Close)	Lighting ON	Lights ON by timer condition 1
		Lighting OFF	Lights ON by timer condition 5
	Any Door Switch ON (Open)	--	Lights ON by timer condition 3
OFF (LOCK) -> ACC	All Door Switch OFF (Close)	--	Continue the status before input change
	Any Door Switch ON (Open)	--	Lights ON

NOTE: The "--" means that it is not used on this system.

Engine start/stop switch link

When the vehicle is turned to the ACCESSORY mode or the ON mode with the doors closed and the entry light control system illuminating the start/stop switch lights, the relay control module gradually turns the lights off.

Input		Output Control	
Vehicle Mode	**Each Door Switch**	**Before Input Change**	**After Input Change**
Remote Engine Start	All OFF	--	Lights OFF
	Any ON	--	Lights ON by timer condition 3
ON -> ACC	--	--	Continue the status before input change
ACC -> ON	All OFF	--	Lights OFF

Input		Output Control	
Vehicle Mode	**Each Door Switch**	**Before Input Change**	**After Input Change**
ON	Any ON	--	Lights ON
	All OFF	--	Lights OFF
	Any ON	--	Lights ON

NOTE: The "--" means that it is not used on this system.

Keyless link

When the body control module receives an unlock signal from the keyless transmitter or remote, the body control module provides a ground to the interior lights.

Input			Output Control	
Keyless Door LOCK/UNLOCK Signal	**Each Door Switch**	**Driver's Door Lock Knob Switch (ON: LOCK)**	**Before Input Change**	**After Input Change**
UNLOCK signal	All OFF (Door close)	ON -> OFF or OFF	--	Lights ON by timer condition 4
		ON	--	Continue the status before input change
	Any ON (Door open)	--	--	Lights ON by timer condition 3
LOCK signal	All OFF (Door close)	OFF -> ON or ON	--	Lights OFF
		OFF	--	Continue the status before input change
	Any ON (Door open)	--	--	Continue the status before input change

NOTE: The "--" means that it is not used on this system.

Timer Control

The chart shows lighting duration, along with the dimming function that occurs at the end of the timer period.

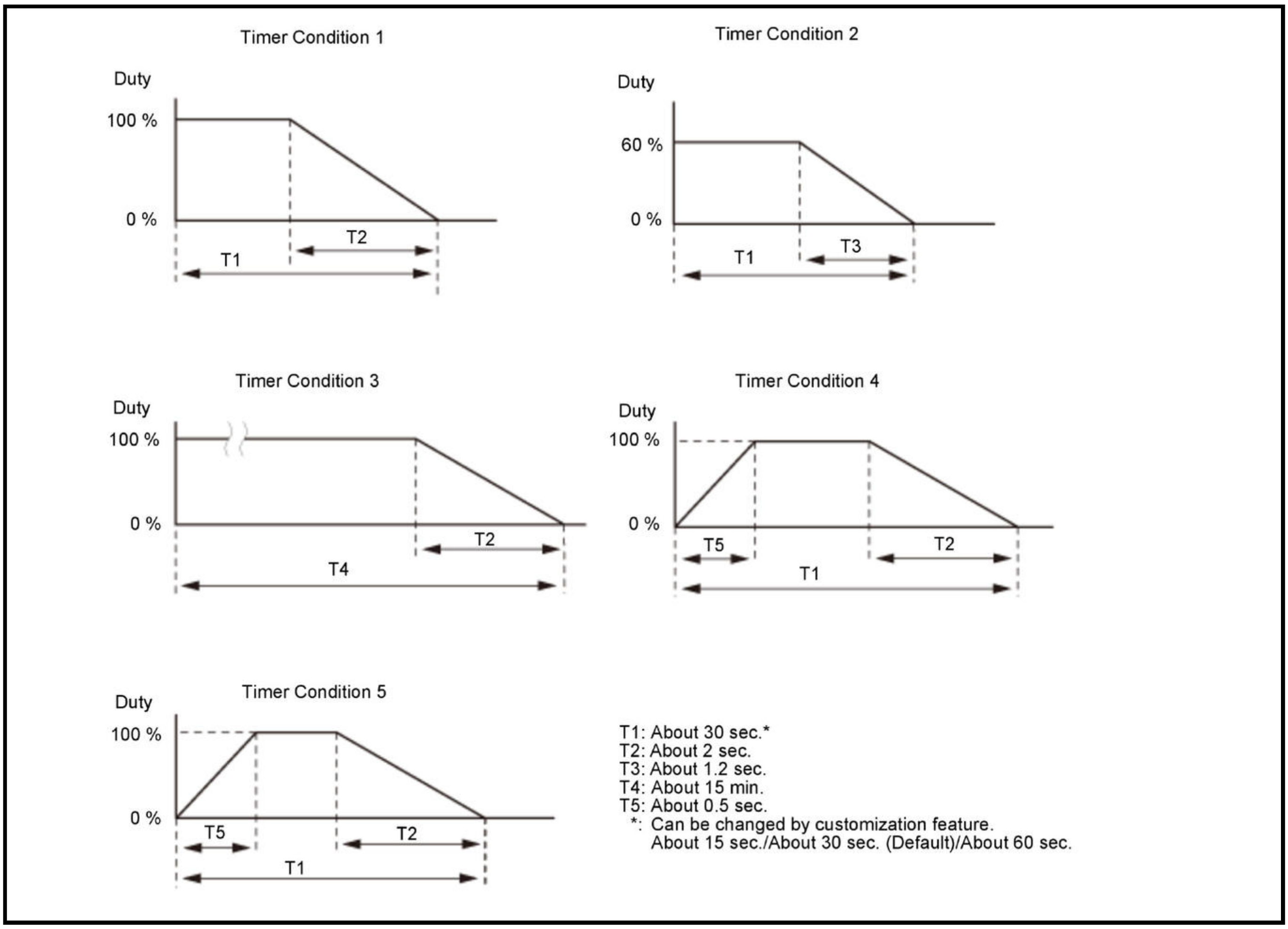

T1: About 30 sec.*
T2: About 2 sec.
T3: About 1.2 sec.
T4: About 15 min.
T5: About 0.5 sec.
*: Can be changed by customization feature.
About 15 sec./About 30 sec. (Default)/About 60 sec.

Tailgate Link Control

The body control module controls the cargo area lights ON, OFF based on the tailgate latch switch or full latch switch signals.

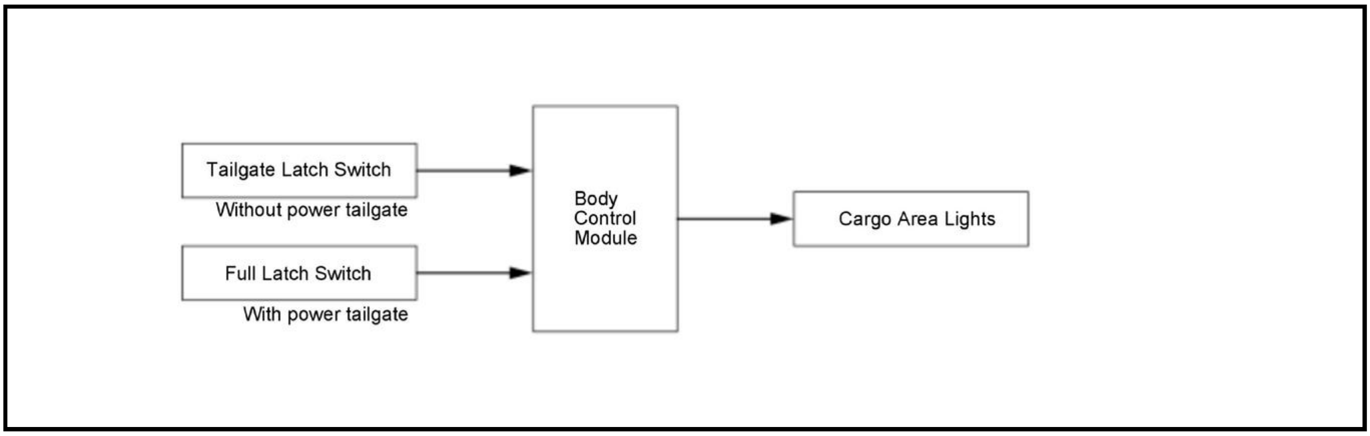
Tailgate Latch Switch
Without power tailgate
Full Latch Switch
With power tailgate
Body Control Module
Cargo Area Lights

INTERIOR LIGHTS SYSTEM DESCRIPTION - COMPONENTS

Individual Map Light

The individual map light can be turned on and off by pressing on the map light lens. A mechanical switch illuminates the individual map light regardless of conditions.

Ambient Light

The ambient light is built into the interior light switch and rear individual map light, linked with the combination light switch.

Ceiling Light (Without Panoramic Glass Roof)

The ceiling light is placed in the center of the headliner, linked with the entry light control system.

Cargo Area Lights

The cargo area lights are placed in the cargo area and illuminates when the tailgate opens.

Vanity Mirror Lights

Some models are equipped with the vanity mirror lights built into both sunvisors and illuminates when the vanity mirror cover opens.

Door Inner Handle Lights

The door inner handle lights are placed in each door panel, linked with the combination light switch. Brightness of the door inner handle lights can be adjusted.

Footwell Lights

The footwell lights are placed under the dashboard around the driver's and passenger's feet and is linked with the combination light switch.

Console Box Light (With Console Box Light)

The console box light is placed in center console, linked with the combination light switch.

INTERIOR LIGHTS SYSTEM DESCRIPTION - SYSTEM DIAGRAM

For locations of each component on vehicle, refer to Component Location Index

- Interior Lights
- Entry Lights Control System

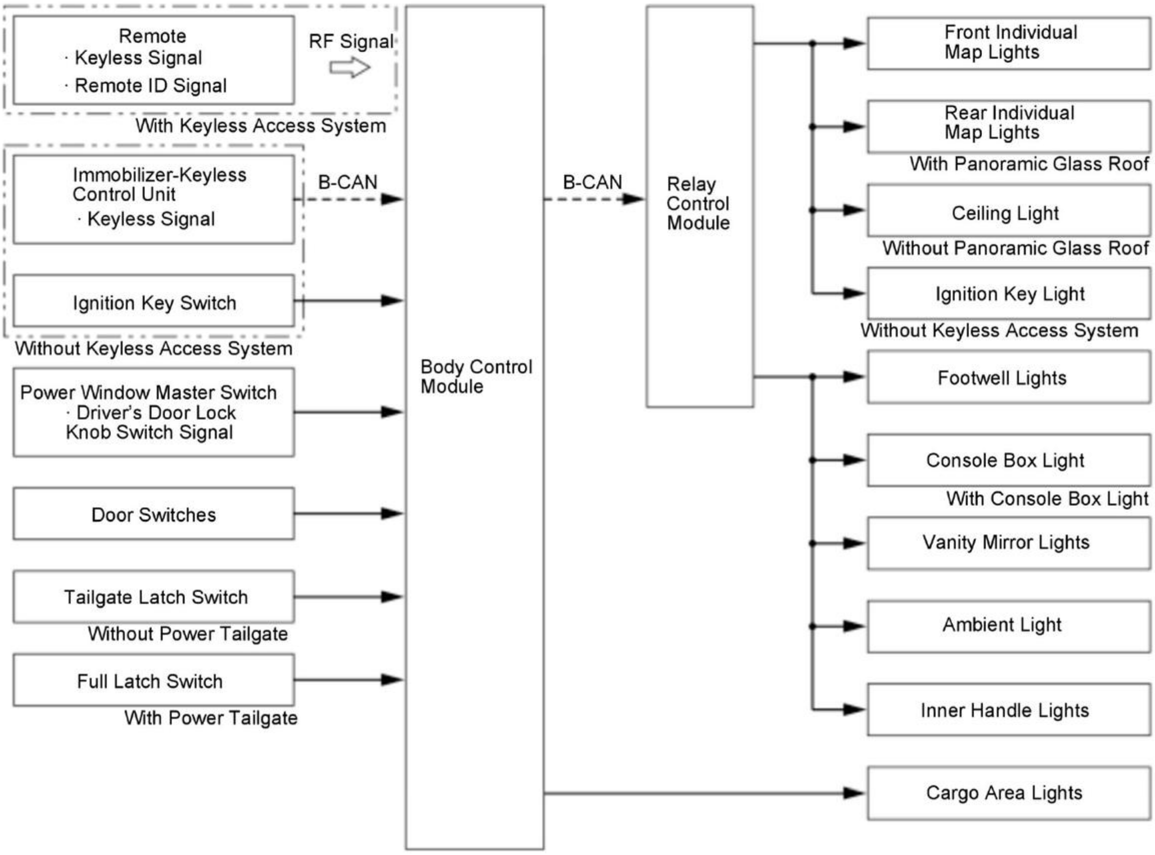
Remote
· Keyless Signal
· Remote ID Signal
RF Signal
With Keyless Access System
Immobilizer-Keyless Control Unit
· Keyless Signal
B-CAN
Ignition Key Switch
Without Keyless Access System
Power Window Master Switch
· Driver's Door Lock Knob Switch Signal
Door Switches
Tailgate Latch Switch
Without Power Tailgate
Full Latch Switch
With Power Tailgate
Body Control Module
B-CAN
Relay Control Module
Front Individual Map Lights
Rear Individual Map Lights
With Panoramic Glass Roof
Ceiling Light
Without Panoramic Glass Roof
Ignition Key Light
Without Keyless Access System
Footwell Lights
Console Box Light
With Console Box Light
Vanity Mirror Lights
Ambient Light
Inner Handle Lights
Cargo Area Lights

INPUT TEST

ENTRY LIGHTS CONTROL SYSTEM (BODY CONTROL MODULE AND DOOR MULTIPLEX CONTROL UNIT) INPUT TEST

NOTE:

- Make sure the fuses associated with the system is OK.
- If you are troubleshooting multiple DTCs, be sure to follow the instructions in B-CAN System Diagnosis Test Mode A .

Body Control Module

1. Turn the vehicle to the OFF (LOCK) mode.

2. Disconnect body control module connectors.

Body Control Module Connector A (14P) (female terminals): ① Body Control Module Connector C (28P) (female terminals): ② Body Control Module Connector D (40P) (female terminals): ③ Body Control

Module Connector E (24P) (female terminals): ④

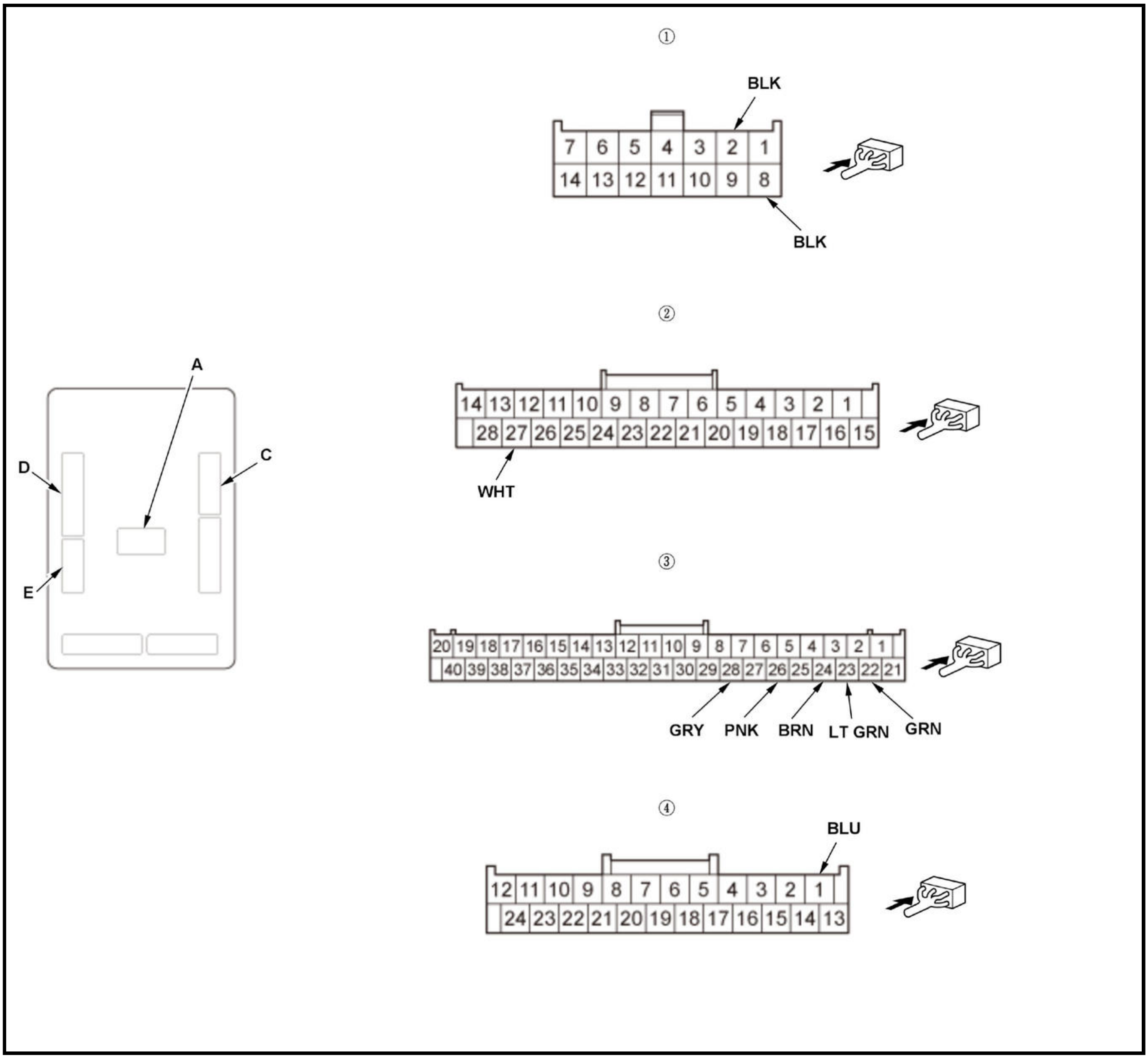
①
BLK
7 6 5 4 3 2 1
14 13 12 11 10 9 8
BLK
②
14 13 12 11 10 9 8 7 6 5 4 3 2 1
28 27 26 25 24 23 22 21 20 19 18 17 16 15
WHT
A
D
C
E
③
20 19 18 17 16 15 14 13 12 11 10 9 8 7 6 5 4 3 2 1
40 39 38 37 36 35 34 33 32 31 30 29 28 27 26 25 24 23 22 21
GRY
PNK
BRN
LT GRN
GRN
④
BLU
12 11 10 9 8 7 6 5 4 3 2 1
24 23 22 21 20 19 18 17 16 15 14 13

Inspect the connectors and socket terminals to be sure they are all making good contact:

- If the terminals are bent, loose, or corroded, repair them as necessary, and recheck the system.
- If the terminals look OK, go to step 4.

Reconnect the connectors to the body control module, and do the following input tests:

- If any test indicates a problem, find and correct the cause, then recheck the system.
- If all the input tests prove OK, then go to step 5.

Cavity	Wire	Test condition	Test: Desired result	Possible cause if desired result is not obtained
C27	WHT	Under all conditions	Measure the voltage to ground: There should be battery voltage.	An open or high resistance in the wire
E1	BLU	Vehicle ON mode	Measure the voltage to ground: There should be battery voltage.	An open or high resistance in the wire

Cavity	Wire	Test condition	Test: Desired result	Possible cause if desired result is not obtained
A2	BLK	In all power modes	Measure the voltage to ground: There should be less than 0.2 V.	• Poor ground (G401) • An open or high resistance in the ground wire
A8	BLK	In all power modes	Measure the voltage to ground: There should be less than 0.2 V.	• Poor ground (G401) • An open or high resistance in the ground wire
D22	GRN	Driver's door open	Measure the voltage to ground: There should be less than 0.2 V.	• Faulty driver's door switch • Faulty driver's door switch ground • An open or high resistance in the wire
		Driver's door closed	Measure the voltage to ground: There should be battery voltage.	• Faulty driver's door switch • A short to ground in the wire
D23	LT GRN	Front passenger's door open	Measure the voltage to ground: There should be less than 0.2 V.	• Faulty front passenger's door switch • Faulty front passenger's door switch ground • An open or high resistance in the wire
		Front passenger's door closed	Measure the voltage to ground: There should be battery voltage.	• Faulty front passenger's door switch • A short to ground in the wire
D24	BRN	Left rear door open	Measure the voltage to ground: There should be less than 0.2 V.	• Faulty left rear door switch • Faulty left rear door switch ground • An open or high resistance in the wire
		Left rear door closed	Measure the voltage to ground: There should be battery voltage.	• Faulty left rear door switch • A short to ground in the wire

*: Without keyless access system

Cavity	Wire	Test condition	Test: Desired result	Possible cause if desired result is not obtained
D28	GRY	Right rear door open	Measure the voltage to ground: There should be less than 0.2 V.	• Faulty right rear door switch • Faulty right rear door switch ground • An open or high resistance in the wire
		Right rear door closed	Measure the voltage to ground: There should be battery voltage.	• Faulty right rear door switch • A short to ground in the wire
D26*	PNK	Ignition key inserted into the ignition key switch	Measure the voltage to ground: There should be less than 0.2 V.	• Faulty ignition key switch • Poor ground (G401) or an open in the ground wire • An open or high resistance in the wire
		Ignition key removed from the ignition key switch	Measure the voltage to ground: There should be battery voltage.	• Faulty ignition key switch • A short to ground in the wire

*: Without keyless access system

Door Multiplex Control Unit (Power Window Master Switch)

5. Turn the vehicle to the OFF (LOCK) mode.

6. Disconnect the power window master switch 37P connector.

Power Window Master Switch 37P Connector (female terminals)

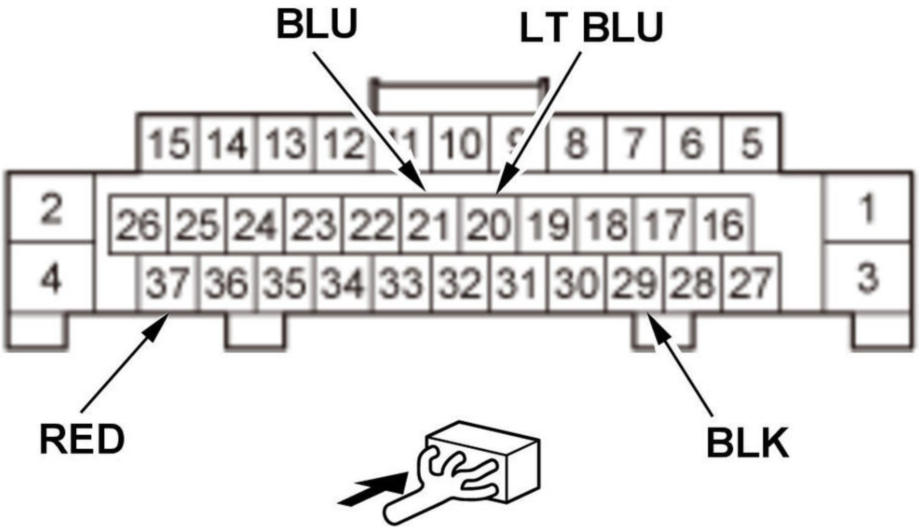

Inspect the connector and socket terminals to be sure they are all making good contact:

- If the terminals are bent, loose, or corroded, repair them as necessary, and recheck the system.
- If the terminals look OK, go to step 8.

Reconnect the connectors to the power window master switch; do the following input tests:

- If any test indicates a problem, find and correct the cause, then recheck the system.
- If all the input tests prove OK, go to step 9.

Cavity	Wire	Test condition	Test: Desired result	Possible cause if desired result is not obtained
37	RED	Under all conditions	Measure the voltage to ground: There should be battery voltage.	An open or high resistance in the wire

Cavity	Wire	Test condition	Test: Desired result	Possible cause if desired result is not obtained
29	BLK	In all power modes	Measure the voltage to ground: There should be less than 0.2 V.	• Poor ground (G401) • An open or high resistance in the ground wire
21	BLU	Driver's door lock knob switch in LOCK	Measure the voltage to ground: There should be less than 0.2 V.	• Faulty driver's door lock knob switch • Poor ground (G401) or an open in the ground wire • An open or high resistance in the wire
		Driver's door lock knob switch in UNLOCK	Measure the voltage to ground: There should be battery voltage.	• Faulty driver's door lock knob switch

Cavity	Wire	Test condition	Test: Desired result	Possible cause if desired result is not obtained
				- A short to ground in the wire
20	LT BLU	Driver's door lock knob switch in UNLOCK	Measure the voltage to ground: There should be less than 0.2 V.	- Faulty driver's door lock knob switch - Poor ground (G401) or an open in the ground wire - An open or high resistance in the wire
		Driver's door lock knob switch in LOCK	Measure the voltage to ground: There should be battery voltage.	- Faulty driver's door lock knob switch - A short to ground in the wire

9. If multiple failures are found on more than one control unit, **replace the body control module** . If input failures are related to a particular control unit, replace the control unit.

TEST

IGNITION KEY LIGHT TEST

Test

NOTE: SRS components are located in this area. Review the **SRS component locations** and the **precautions and procedures** before doing repairs or service.

1. **Column Covers - Remove**
2. Ignition Key Light - Test

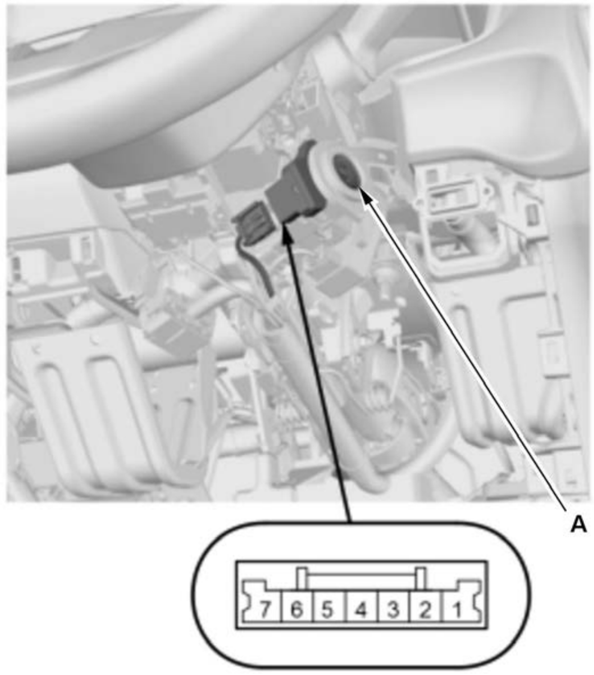

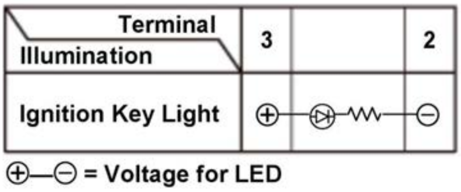

Terminal Illumination	3		2
Ignition Key Light	⊕	—⊳|—ʍ—	⊖

⊕—⊖ = Voltage for LED

1. Disconnect the connector.

2. Check the light according to the table.

NOTE:

- **When an LED is located between terminals, check if the LED illuminates by connecting power and ground to the LED.**
- **Note this important operating characteristic; diode bias causes a diode to fully conduct electricity in one direction (forward), while not at all in the opposite direction (reverse).**

3. If the result is not as specified, the ignition key light is faulty; replace the steering lock (A).

3. All Removed Parts - Install

1. Install the parts in the reverse order of removal.

IGNITION KEY SWITCH TEST

Test

NOTE: SRS components are located in this area. Review the SRS component locations and the precautions and procedures before doing repairs or service.

1. Column Covers - Remove
2. Ignition Key Switch - Test

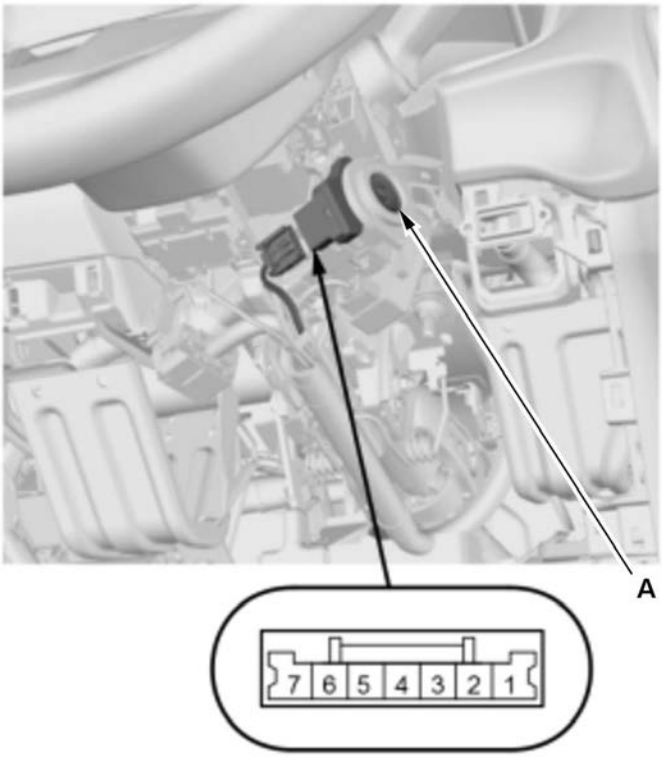

Terminal / Condition	6	7
Key inserted	○	○
Key removed		

1. Disconnect the connector.

2. Check for continuity between the terminals in each switch condition according to the table.

3. If the continuity is not as specified, the ignition key switch is faulty; **replace the steering lock**

(A).

3. All Removed Parts - Install

1. Install the parts in the reverse order of removal.

TAILGATE LATCH SWITCH TEST

Test

1. **Tailgate Lower Trim Panel - Remove**
2. Tailgate Latch Switch - Test

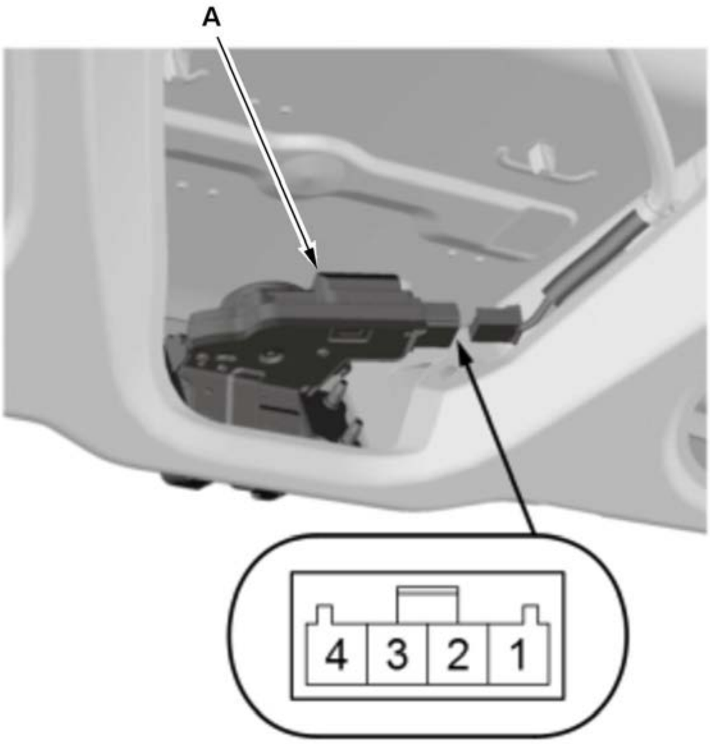

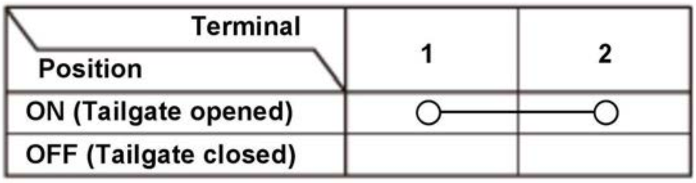

Terminal / Position	1	2
ON (Tailgate opened)	○	○
OFF (Tailgate closed)		

1. Disconnect the connector.

2. Check for continuity between the terminals in each switch position according to the table.

3. If the continuity is not as specified, the tailgate latch switch is faulty; **replace the tailgate latch**

(A).

3. All Parts Removed - Install

1. Install the parts in the reverse order of removal.

CIRCUIT DIAGRAM

ENTRY LIGHTS CONTROL SYSTEM CIRCUIT DIAGRAM

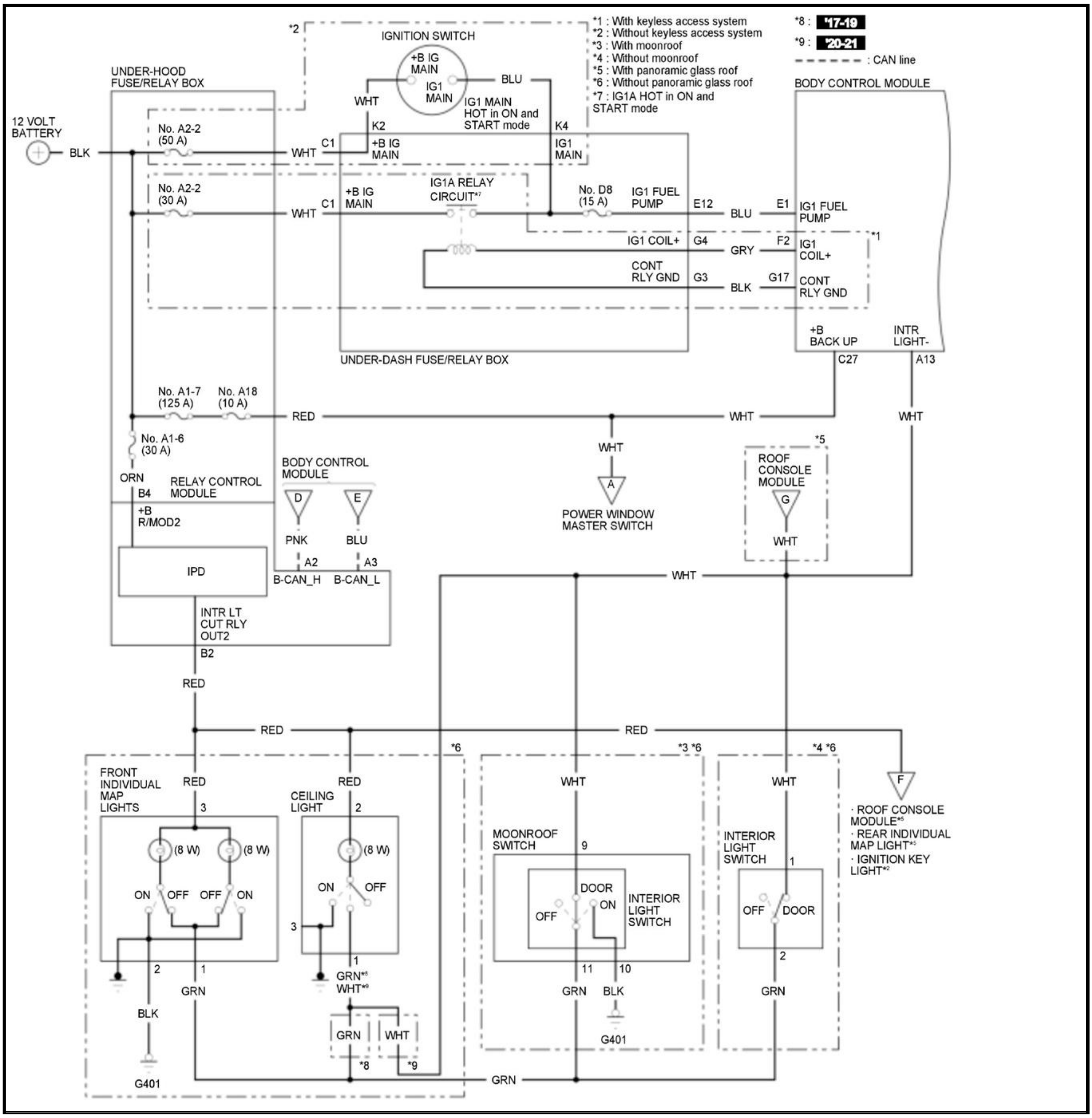
*1 : With keyless access system
*2 : Without keyless access system
*3 : With moonroof
*4 : Without moonroof
*5 : With panoramic glass roof
*6 : Without panoramic glass roof
*7 : IG1A HOT in ON and START mode
*8 : '17-19
*9 : '20-21
: CAN line
*2
IGNITION SWITCH
+B IG MAIN
IG1 MAIN
BLU
WHT
IG1 MAIN HOT in ON and START mode
UNDER-HOOD FUSE/RELAY BOX
12 VOLT BATTERY
BLK
No. A2-2 (50 A)
WHT
C1
K2
+B IG MAIN
K4
IG1 MAIN
No. A2-2 (30 A)
WHT
C1
+B IG MAIN
IG1A RELAY CIRCUIT*7
No. D8 (15 A)
IG1 FUEL PUMP
E12
BLU
E1
IG1 FUEL PUMP
IG1 COIL+
G4
GRY
F2
IG1 COIL+
*1
CONT RLY GND
G3
BLK
G17
CONT RLY GND
BODY CONTROL MODULE
UNDER-DASH FUSE/RELAY BOX
+B BACK UP
INTR LIGHT-
C27
A13
No. A1-7 (125 A)
No. A18 (10 A)
RED
WHT
WHT
No. A1-6 (30 A)
ORN
B4
RELAY CONTROL MODULE
+B R/MOD2
BODY CONTROL MODULE
D
E
PNK
BLU
A2
A3
WHT
A
POWER WINDOW MASTER SWITCH
*5
ROOF CONSOLE MODULE
G
WHT
IPD
B-CAN_H
B-CAN_L
WHT
INTR LT CUT RLY OUT2
B2
RED
RED
RED
*6
*3 *6
*4 *6
FRONT INDIVIDUAL MAP LIGHTS
RED
3
(8 W)
(8 W)
ON
OFF
OFF
ON
2
1
GRN
BLK
G401
CEILING LIGHT
RED
2
(8 W)
ON
OFF
3
1
GRN*8
WHT*9
GRN
WHT
*8
*9
WHT
MOONROOF SWITCH
9
DOOR
OFF
ON
INTERIOR LIGHT SWITCH
11
10
GRN
BLK
G401
WHT
INTERIOR LIGHT SWITCH
1
OFF
DOOR
2
GRN
GRN
F
· ROOF CONSOLE MODULE*5
· REAR INDIVIDUAL MAP LIGHT*5
· IGNITION KEY LIGHT*2

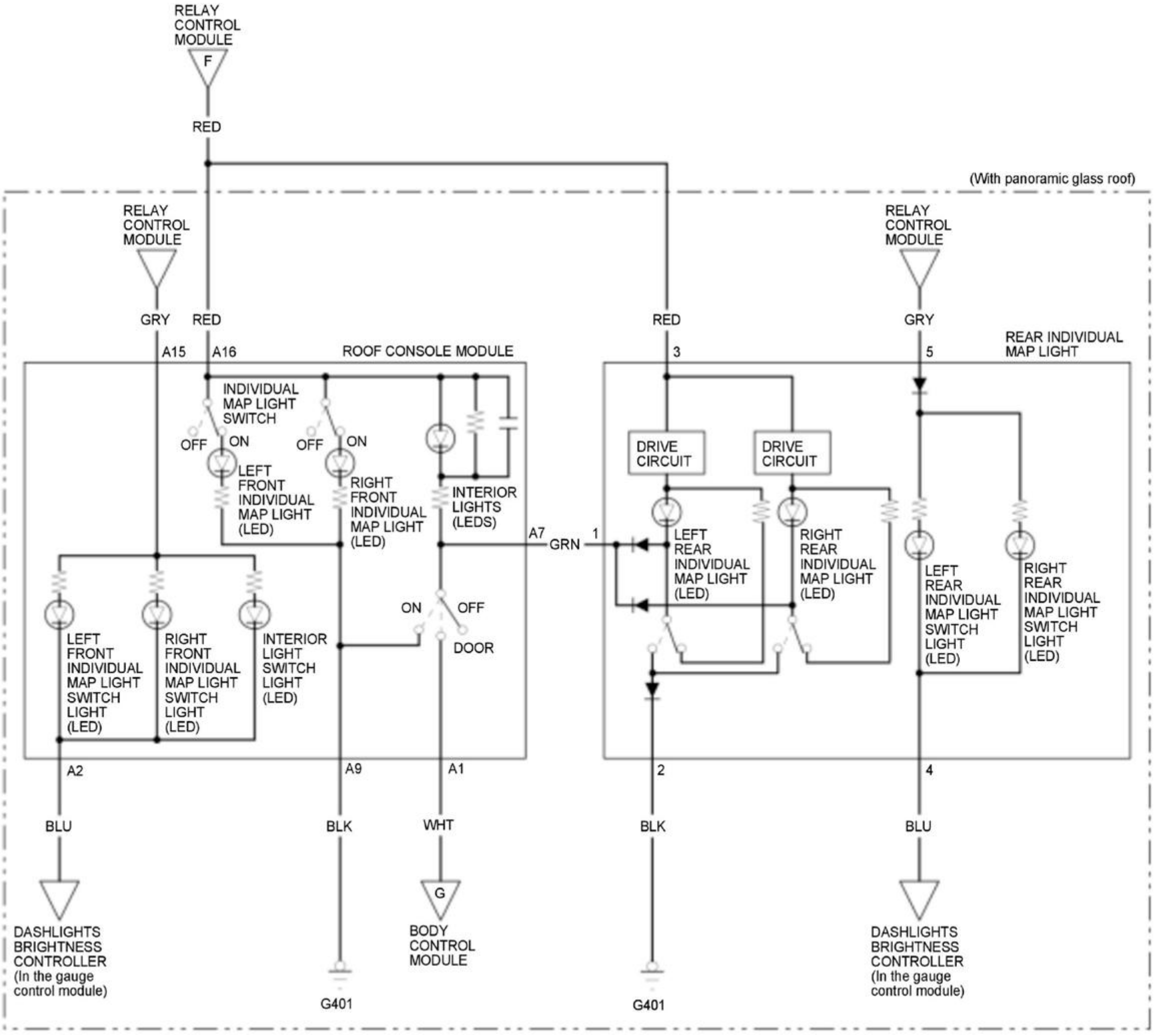
RELAY CONTROL MODULE
F
RED
(With panoramic glass roof)
RELAY CONTROL MODULE
GRY
RED
A15
A16
ROOF CONSOLE MODULE
INDIVIDUAL MAP LIGHT SWITCH
OFF
ON
OFF
ON
LEFT FRONT INDIVIDUAL MAP LIGHT (LED)
RIGHT FRONT INDIVIDUAL MAP LIGHT (LED)
INTERIOR LIGHTS (LEDS)
A7
GRN
1
LEFT FRONT INDIVIDUAL MAP LIGHT SWITCH LIGHT (LED)
RIGHT FRONT INDIVIDUAL MAP LIGHT SWITCH LIGHT (LED)
INTERIOR LIGHT SWITCH LIGHT (LED)
ON
OFF
DOOR
A2
A9
A1
BLU
BLK
WHT
DASHLIGHTS BRIGHTNESS CONTROLLER (In the gauge control module)
G401
G
BODY CONTROL MODULE
RED
3
DRIVE CIRCUIT
DRIVE CIRCUIT
LEFT REAR INDIVIDUAL MAP LIGHT (LED)
RIGHT REAR INDIVIDUAL MAP LIGHT (LED)
2
BLK
G401
RELAY CONTROL MODULE
GRY
5
REAR INDIVIDUAL MAP LIGHT
LEFT REAR INDIVIDUAL MAP LIGHT SWITCH LIGHT (LED)
RIGHT REAR INDIVIDUAL MAP LIGHT SWITCH LIGHT (LED)
4
BLU
DASHLIGHTS BRIGHTNESS CONTROLLER (In the gauge control module)

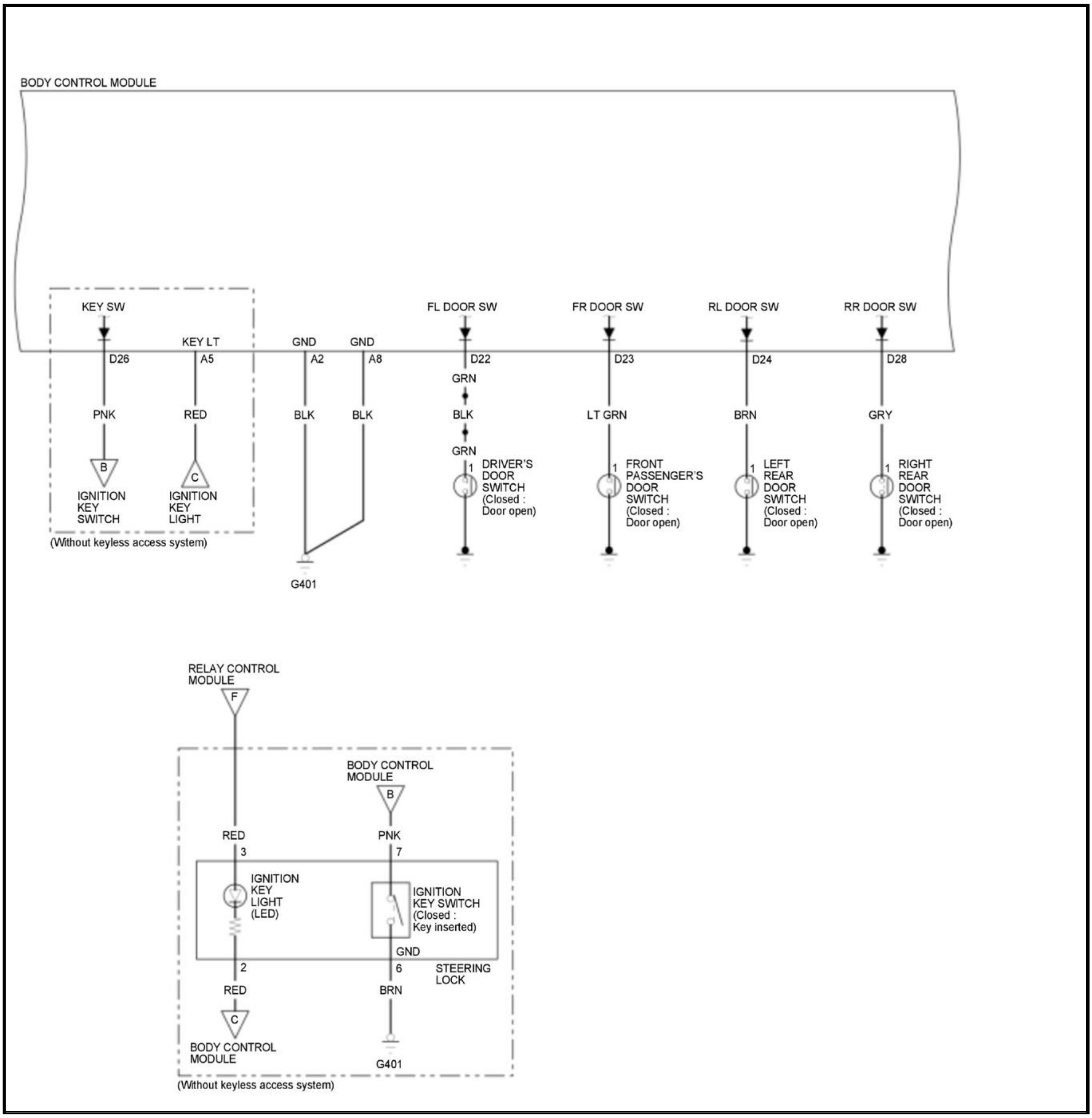
BODY CONTROL MODULE
KEY SW
KEY LT
GND
GND
FL DOOR SW
FR DOOR SW
RL DOOR SW
RR DOOR SW
D26
A5
A2
A8
D22
D23
D24
D28
PNK
RED
BLK
BLK
GRN
BLK
GRN
LT GRN
BRN
GRY
B
C
IGNITION KEY SWITCH
IGNITION KEY LIGHT
(Without keyless access system)
G401
1
DRIVER'S DOOR SWITCH (Closed : Door open)
1
FRONT PASSENGER'S DOOR SWITCH (Closed : Door open)
1
LEFT REAR DOOR SWITCH (Closed : Door open)
1
RIGHT REAR DOOR SWITCH (Closed : Door open)
RELAY CONTROL MODULE
F
BODY CONTROL MODULE
B
RED
PNK
3
7
IGNITION KEY LIGHT (LED)
IGNITION KEY SWITCH (Closed : Key inserted)
GND
2
6
STEERING LOCK
RED
BRN
C
BODY CONTROL MODULE
G401
(Without keyless access system)

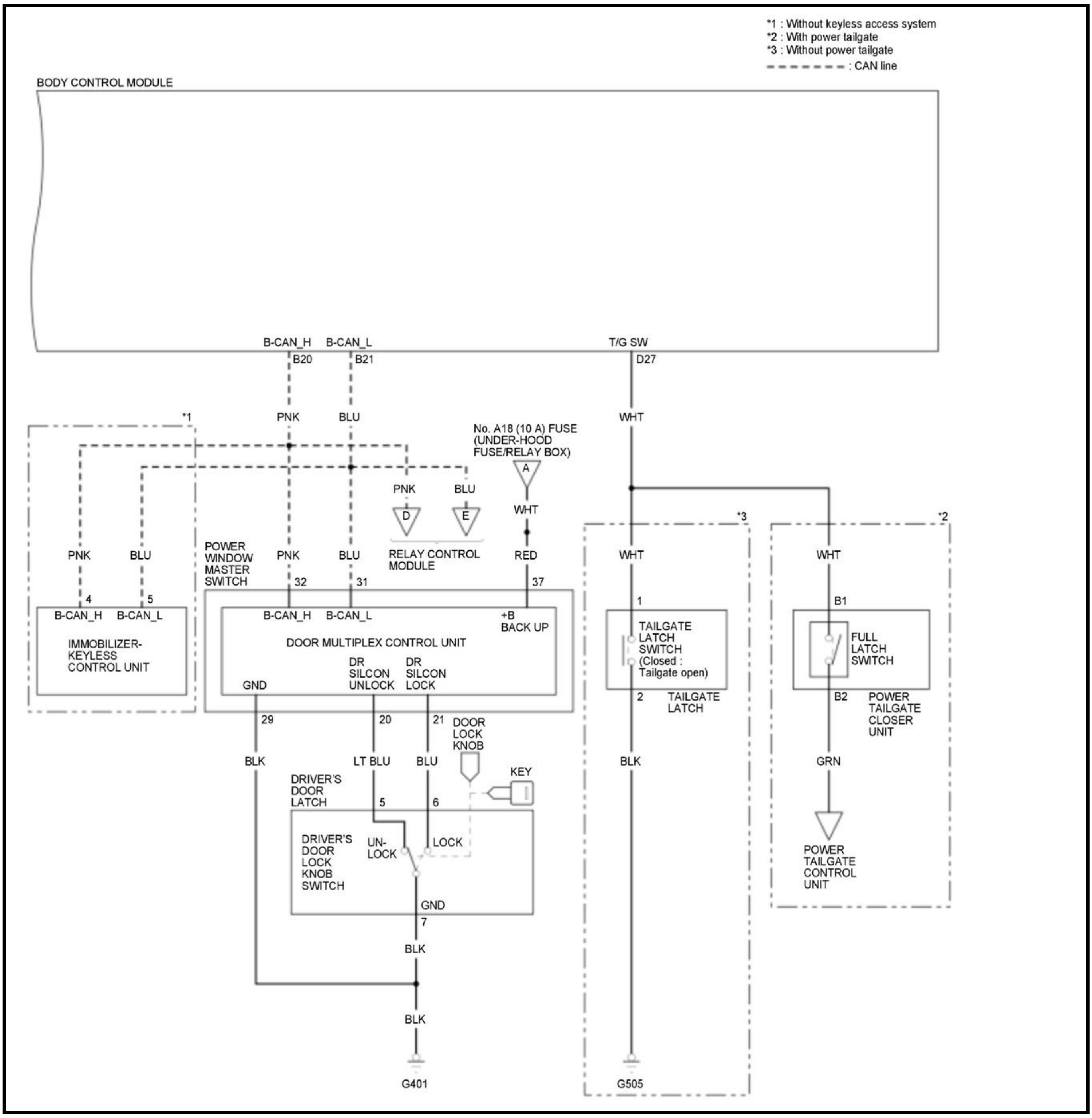

*1 : Without keyless access system
*2 : With power tailgate
*3 : Without power tailgate
: CAN line
BODY CONTROL MODULE
B-CAN_H
B-CAN_L
T/G SW
B20
B21
D27
PNK
BLU
WHT
No. A18 (10 A) FUSE (UNDER-HOOD FUSE/RELAY BOX)
A
D
E
RELAY CONTROL MODULE
RED
POWER WINDOW MASTER SWITCH
32
31
37
DOOR MULTIPLEX CONTROL UNIT
+B BACK UP
DR SILCON UNLOCK
DR SILCON LOCK
GND
29
20
21
IMMOBILIZER-KEYLESS CONTROL UNIT
4
5
DOOR LOCK KNOB
KEY
BLK
LT BLU
DRIVER'S DOOR LATCH
5
6
DRIVER'S DOOR LOCK KNOB SWITCH
UN-LOCK
LOCK
7
G401
TAILGATE LATCH SWITCH (Closed : Tailgate open)
1
2
TAILGATE LATCH
G505
FULL LATCH SWITCH
B1
B2
POWER TAILGATE CLOSER UNIT
GRN
POWER TAILGATE CONTROL UNIT

INTERIOR LIGHTS CIRCUIT DIAGRAM

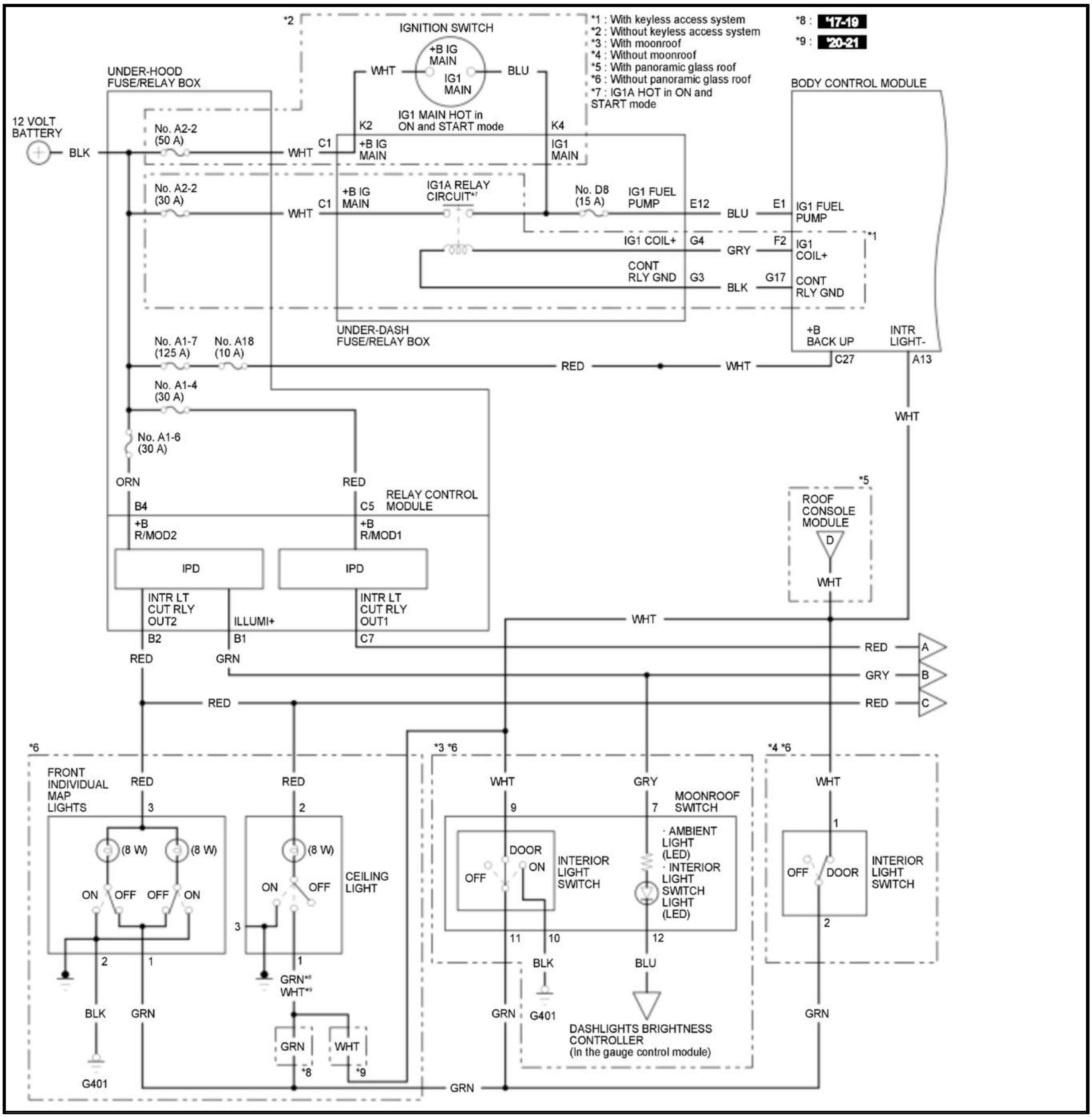
*1 : With keyless access system
*2 : Without keyless access system
*3 : With moonroof
*4 : Without moonroof
*5 : With panoramic glass roof
*6 : Without panoramic glass roof
*7 : IG1A HOT in ON and START mode
*8 : '17-19
*9 : '20-21
IGNITION SWITCH
+B IG MAIN
IG1 MAIN
IG1 MAIN HOT in ON and START mode
UNDER-HOOD FUSE/RELAY BOX
12 VOLT BATTERY
BLK
No. A2-2 (50 A)
No. A2-2 (30 A)
WHT
BLU
C1
K2
K4
+B IG MAIN
IG1 MAIN
IG1A RELAY CIRCUIT*7
No. D8 (15 A)
IG1 FUEL PUMP
E12
E1
IG1 COIL+
G4
GRY
F2
CONT RLY GND
G3
G17
BODY CONTROL MODULE
IG1 FUEL PUMP
IG1 COIL+
CONT RLY GND
UNDER-DASH FUSE/RELAY BOX
No. A1-7 (125 A)
No. A18 (10 A)
RED
+B BACK UP
INTR LIGHT-
C27
A13
No. A1-4 (30 A)
No. A1-6 (30 A)
ORN
B4
C5
RELAY CONTROL MODULE
+B R/MOD2
+B R/MOD1
IPD
IPD
INTR LT CUT RLY OUT2
ILLUMI+
INTR LT CUT RLY OUT1
B2
B1
C7
GRN
ROOF CONSOLE MODULE
D
A
B
C
FRONT INDIVIDUAL MAP LIGHTS
(8 W)
ON
OFF
CEILING LIGHT
GRN*8
WHT*9
G401
MOONROOF SWITCH
DOOR
INTERIOR LIGHT SWITCH
AMBIENT LIGHT (LED)
INTERIOR LIGHT SWITCH LIGHT (LED)
DASHLIGHTS BRIGHTNESS CONTROLLER (In the gauge control module)
9
7
11
10
12
1
2
3

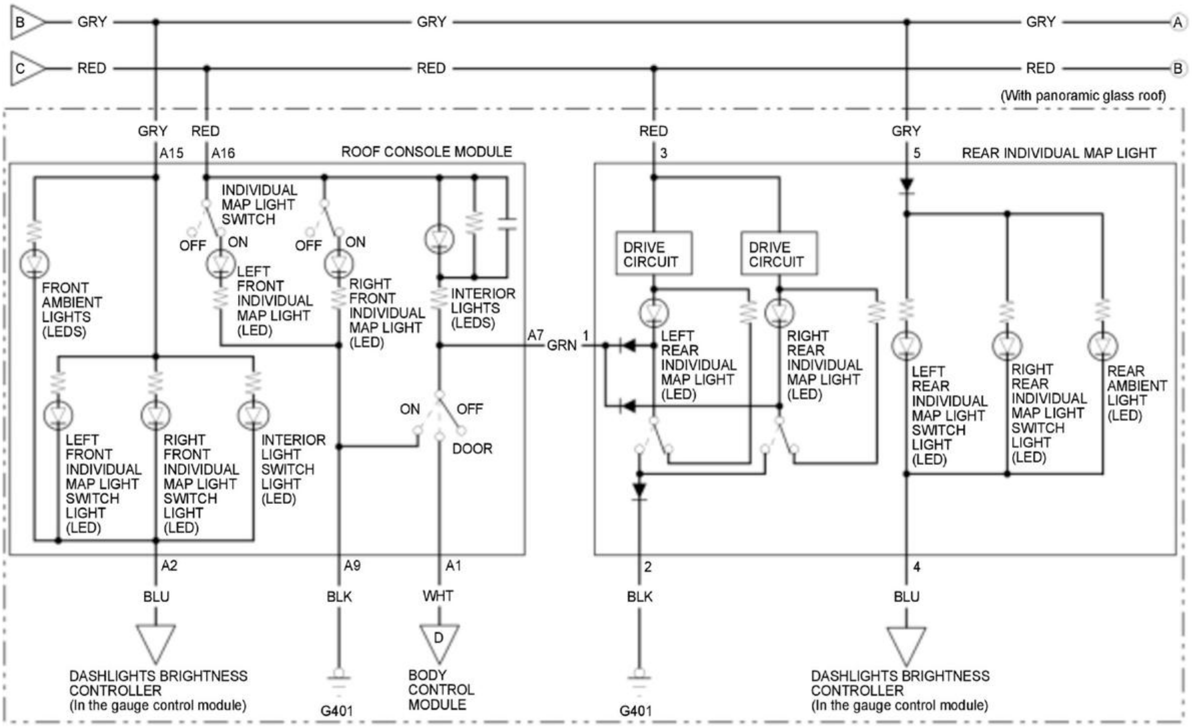
B
GRY
GRY
GRY
A
C
RED
RED
RED
B
(With panoramic glass roof)
GRY
RED
A15
A16
ROOF CONSOLE MODULE
INDIVIDUAL MAP LIGHT SWITCH
OFF
ON
OFF
ON
FRONT AMBIENT LIGHTS (LEDS)
LEFT FRONT INDIVIDUAL MAP LIGHT (LED)
RIGHT FRONT INDIVIDUAL MAP LIGHT (LED)
INTERIOR LIGHTS (LEDS)
A7
GRN
1
ON
OFF
DOOR
LEFT FRONT INDIVIDUAL MAP LIGHT SWITCH LIGHT (LED)
RIGHT FRONT INDIVIDUAL MAP LIGHT SWITCH LIGHT (LED)
INTERIOR LIGHT SWITCH LIGHT (LED)
A2
A9
A1
BLU
BLK
WHT
D
DASHLIGHTS BRIGHTNESS CONTROLLER (In the gauge control module)
G401
BODY CONTROL MODULE
RED
3
GRY
5
REAR INDIVIDUAL MAP LIGHT
DRIVE CIRCUIT
DRIVE CIRCUIT
LEFT REAR INDIVIDUAL MAP LIGHT (LED)
RIGHT REAR INDIVIDUAL MAP LIGHT (LED)
LEFT REAR INDIVIDUAL MAP LIGHT SWITCH LIGHT (LED)
RIGHT REAR INDIVIDUAL MAP LIGHT SWITCH LIGHT (LED)
REAR AMBIENT LIGHT (LED)
2
4
BLK
BLU
G401
DASHLIGHTS BRIGHTNESS CONTROLLER (In the gauge control module)

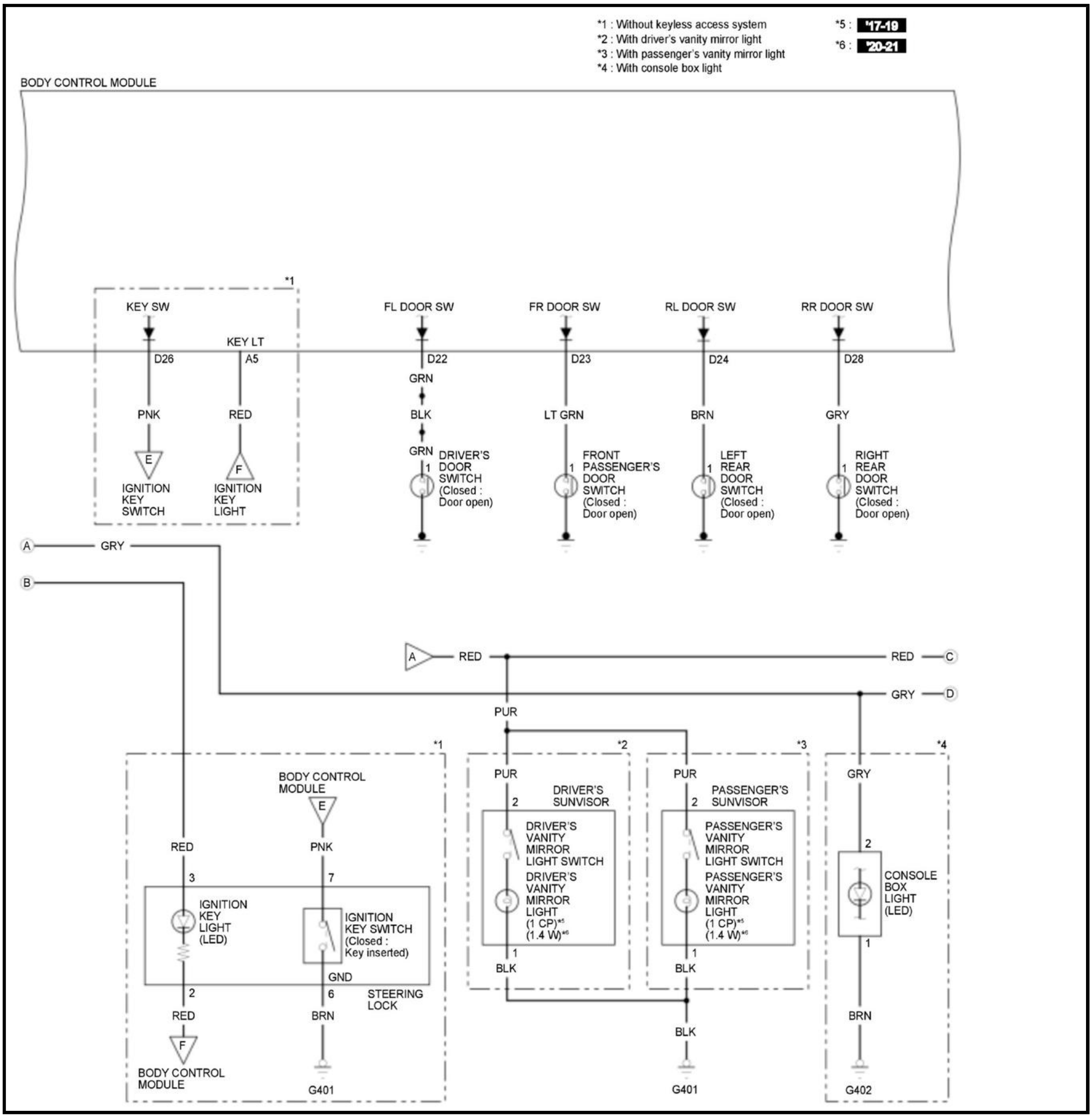
*1 : Without keyless access system
*2 : With driver's vanity mirror light
*3 : With passenger's vanity mirror light
*4 : With console box light
*5 : '17-19
*6 : '20-21
BODY CONTROL MODULE
*1
KEY SW
KEY LT
FL DOOR SW
FR DOOR SW
RL DOOR SW
RR DOOR SW
D26
A5
D22
D23
D24
D28
GRN
PNK
RED
BLK
LT GRN
BRN
GRY
GRN
E
IGNITION KEY SWITCH
F
IGNITION KEY LIGHT
1
DRIVER'S DOOR SWITCH (Closed : Door open)
1
FRONT PASSENGER'S DOOR SWITCH (Closed : Door open)
1
LEFT REAR DOOR SWITCH (Closed : Door open)
1
RIGHT REAR DOOR SWITCH (Closed : Door open)
A
GRY
B
A
RED
RED
C
GRY
D
PUR
*1
*2
*3
*4
BODY CONTROL MODULE
E
PNK
RED
3
7
IGNITION KEY LIGHT (LED)
IGNITION KEY SWITCH (Closed : Key inserted)
GND
2
6
STEERING LOCK
RED
BRN
F
BODY CONTROL MODULE
G401
PUR
2
DRIVER'S SUNVISOR
DRIVER'S VANITY MIRROR LIGHT SWITCH
DRIVER'S VANITY MIRROR LIGHT (1 CP)*5 (1.4 W)*6
1
BLK
PUR
2
PASSENGER'S SUNVISOR
PASSENGER'S VANITY MIRROR LIGHT SWITCH
PASSENGER'S VANITY MIRROR LIGHT (1 CP)*5 (1.4 W)*6
1
BLK
BLK
G401
GRY
2
CONSOLE BOX LIGHT (LED)
1
BRN
G402

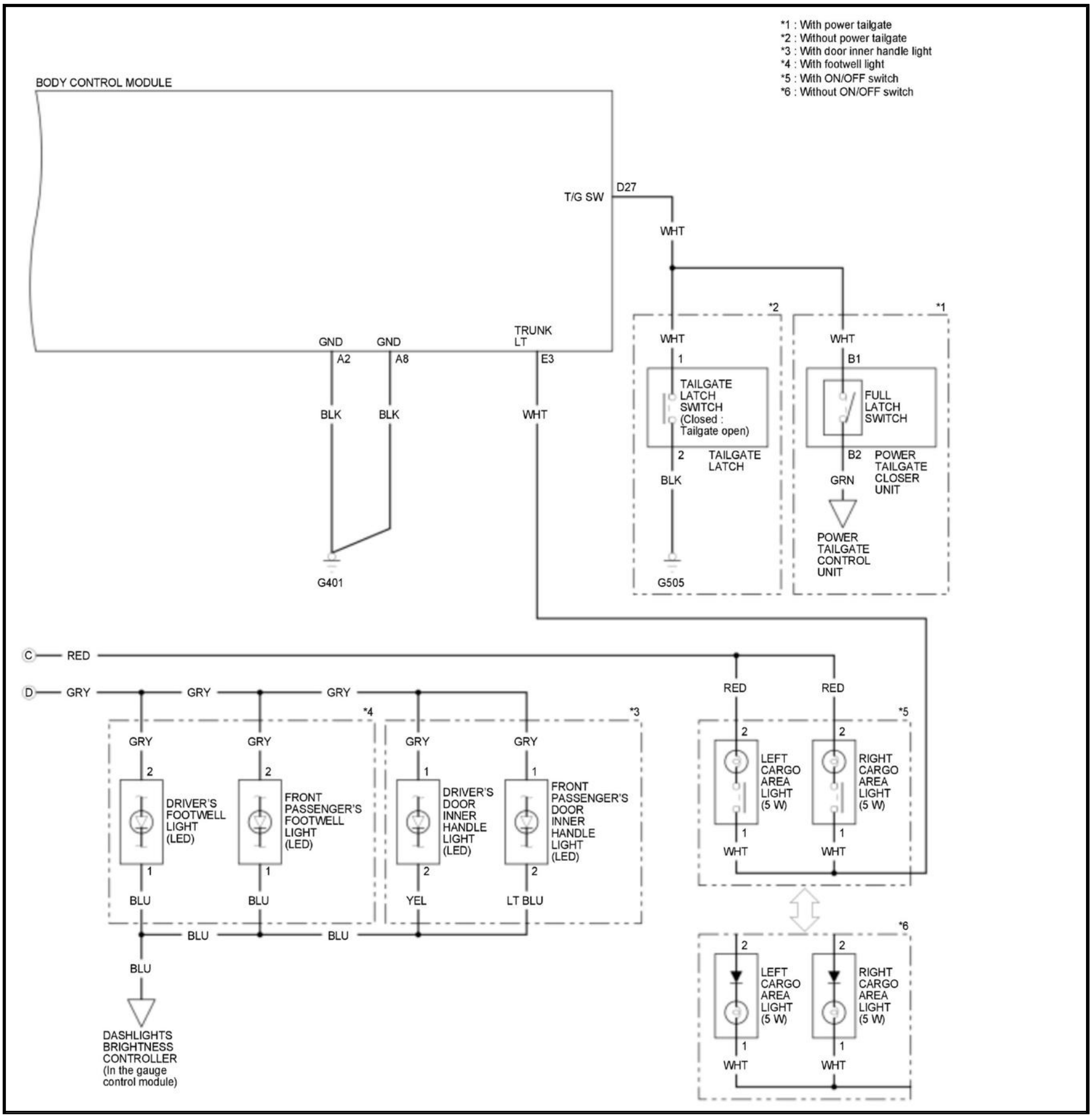

*1 : With power tailgate
*2 : Without power tailgate
*3 : With door inner handle light
*4 : With footwell light
*5 : With ON/OFF switch
*6 : Without ON/OFF switch
BODY CONTROL MODULE
T/G SW
D27
WHT
GND
GND
TRUNK LT
A2
A8
E3
BLK
BLK
WHT
G401
WHT
1
TAILGATE LATCH SWITCH (Closed : Tailgate open)
2
TAILGATE LATCH
BLK
G505
WHT
B1
FULL LATCH SWITCH
B2
POWER TAILGATE CLOSER UNIT
GRN
POWER TAILGATE CONTROL UNIT
C
RED
D
GRY
GRY
GRY
DRIVER'S FOOTWELL LIGHT (LED)
FRONT PASSENGER'S FOOTWELL LIGHT (LED)
DRIVER'S DOOR INNER HANDLE LIGHT (LED)
FRONT PASSENGER'S DOOR INNER HANDLE LIGHT (LED)
BLU
YEL
LT BLU
DASHLIGHTS BRIGHTNESS CONTROLLER (In the gauge control module)
RED
LEFT CARGO AREA LIGHT (5 W)
RIGHT CARGO AREA LIGHT (5 W)
WHT

COMPONENT LOCATION INDEX

ENTRY LIGHTS CONTROL SYSTEM COMPONENT LOCATION INDEX

For the Keyless Access System, refer to Keyless Access System, Component Location Index.

For relationships between signals in a system, refer to System Diagram.

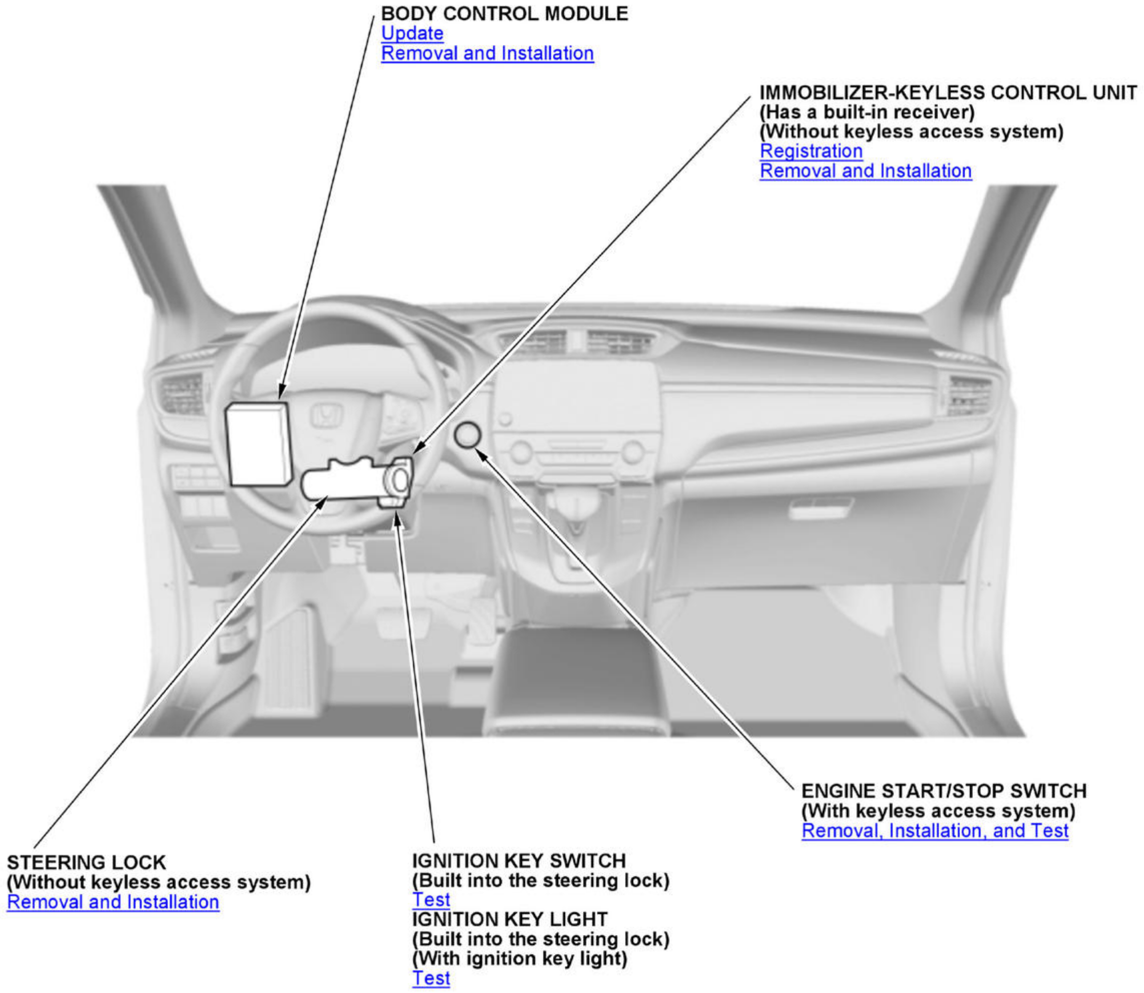
BODY CONTROL MODULE
Update
Removal and Installation
IMMOBILIZER-KEYLESS CONTROL UNIT
(Has a built-in receiver)
(Without keyless access system)
Registration
Removal and Installation
ENGINE START/STOP SWITCH
(With keyless access system)
Removal, Installation, and Test
STEERING LOCK
(Without keyless access system)
Removal and Installation
IGNITION KEY SWITCH
(Built into the steering lock)
Test
IGNITION KEY LIGHT
(Built into the steering lock)
(With ignition key light)
Test

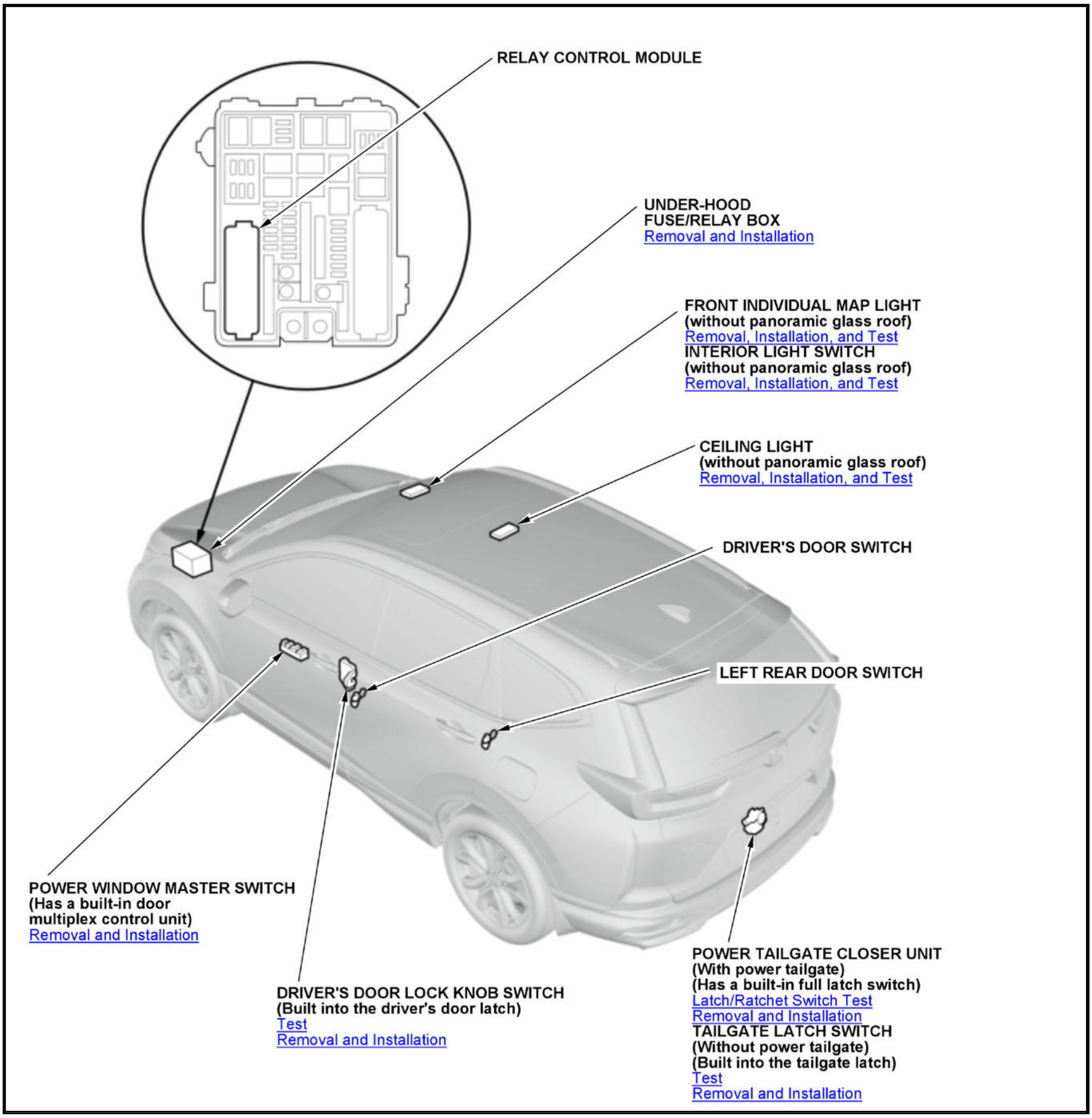
RELAY CONTROL MODULE
UNDER-HOOD FUSE/RELAY BOX
Removal and Installation
FRONT INDIVIDUAL MAP LIGHT (without panoramic glass roof)
Removal, Installation, and Test
INTERIOR LIGHT SWITCH (without panoramic glass roof)
Removal, Installation, and Test
CEILING LIGHT (without panoramic glass roof)
Removal, Installation, and Test
DRIVER'S DOOR SWITCH
LEFT REAR DOOR SWITCH
POWER WINDOW MASTER SWITCH (Has a built-in door multiplex control unit)
Removal and Installation
DRIVER'S DOOR LOCK KNOB SWITCH (Built into the driver's door latch)
Test
Removal and Installation
POWER TAILGATE CLOSER UNIT (With power tailgate) (Has a built-in full latch switch)
Latch/Ratchet Switch Test
Removal and Installation
TAILGATE LATCH SWITCH (Without power tailgate) (Built into the tailgate latch)
Test
Removal and Installation

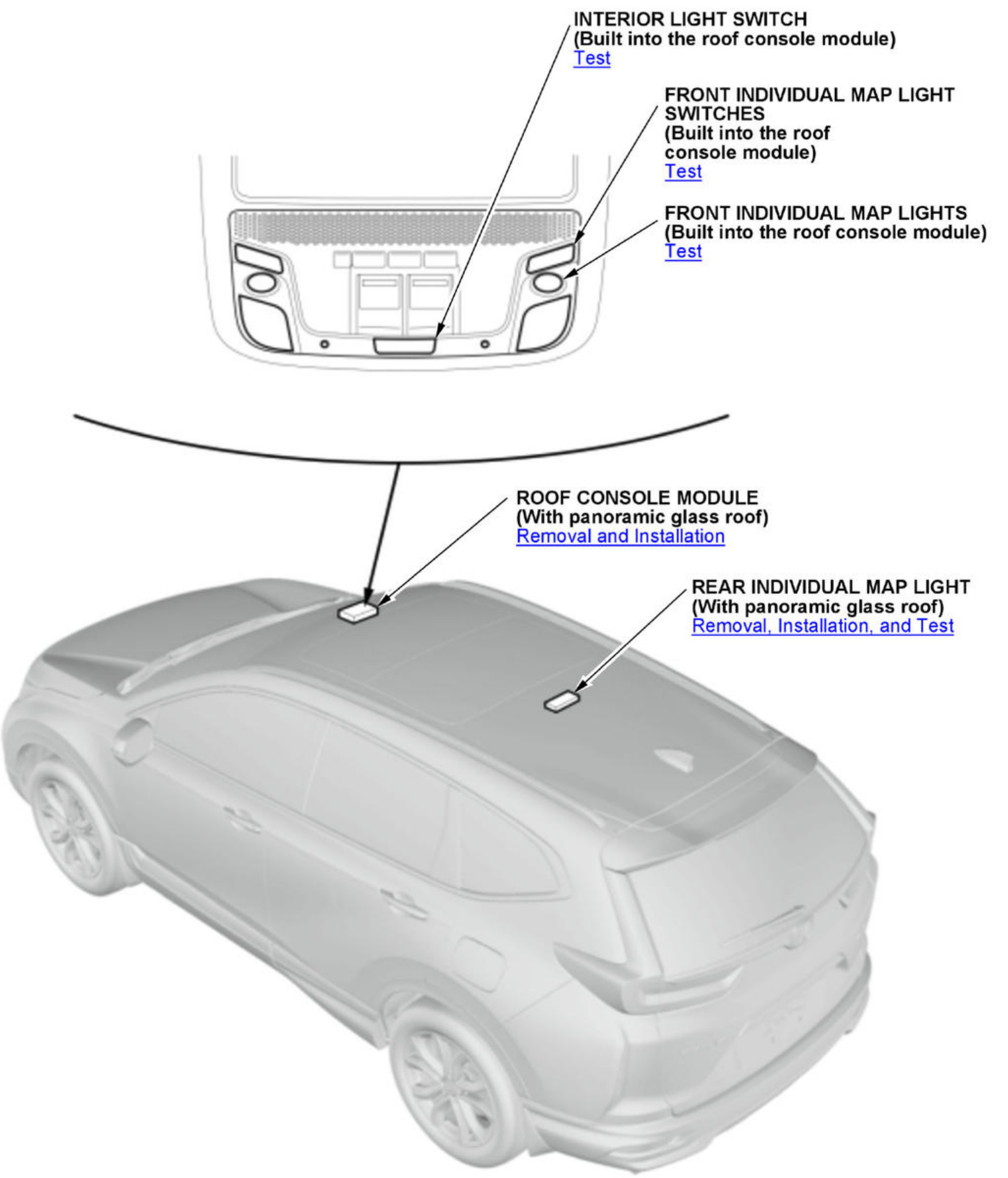
INTERIOR LIGHT SWITCH
(Built into the roof console module)
Test
FRONT INDIVIDUAL MAP LIGHT SWITCHES
(Built into the roof console module)
Test
FRONT INDIVIDUAL MAP LIGHTS
(Built into the roof console module)
Test
ROOF CONSOLE MODULE
(With panoramic glass roof)
Removal and Installation
REAR INDIVIDUAL MAP LIGHT
(With panoramic glass roof)
Removal, Installation, and Test

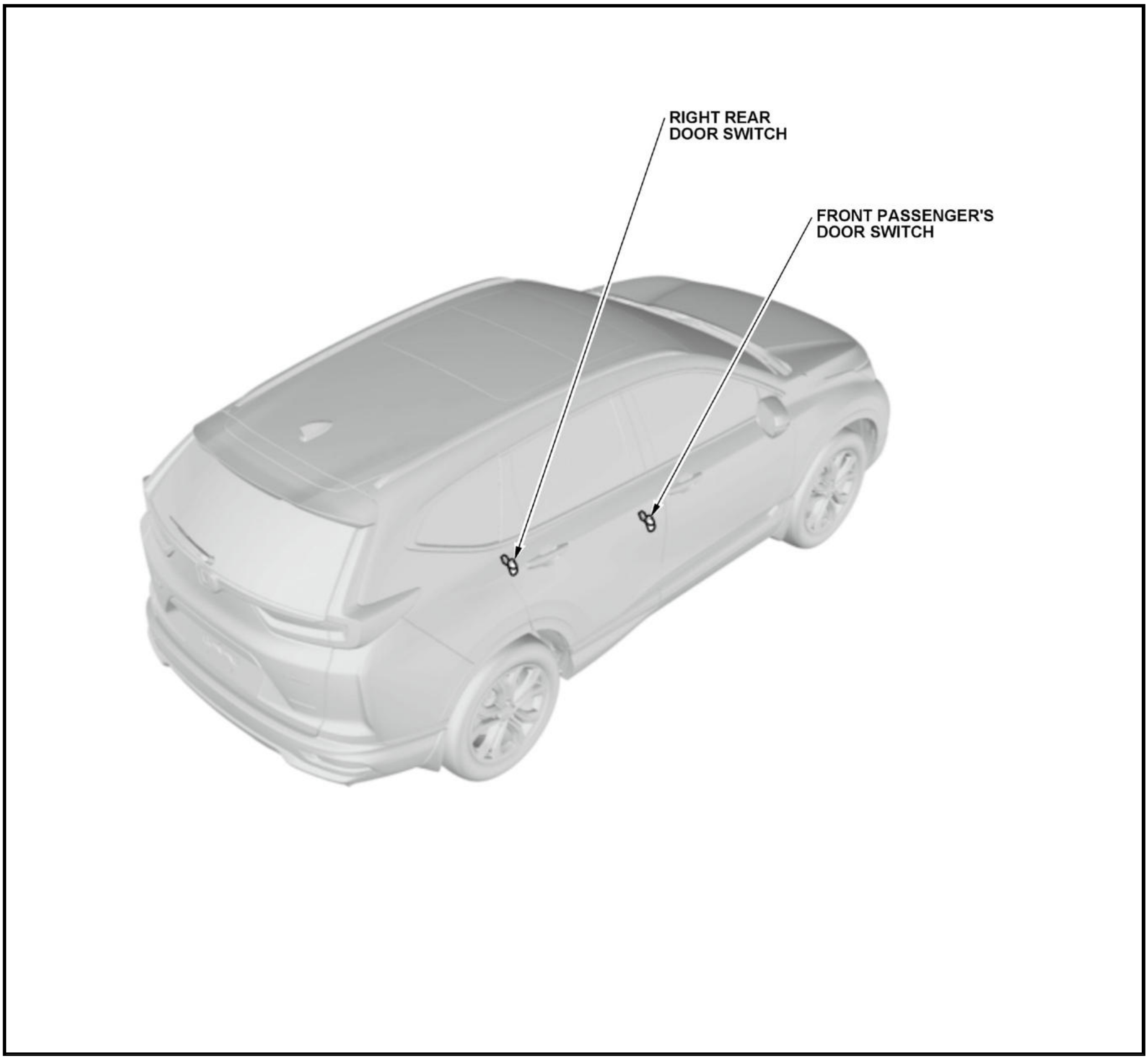
RIGHT REAR
DOOR SWITCH
FRONT PASSENGER'S
DOOR SWITCH

INTERIOR LIGHTS COMPONENT LOCATION INDEX

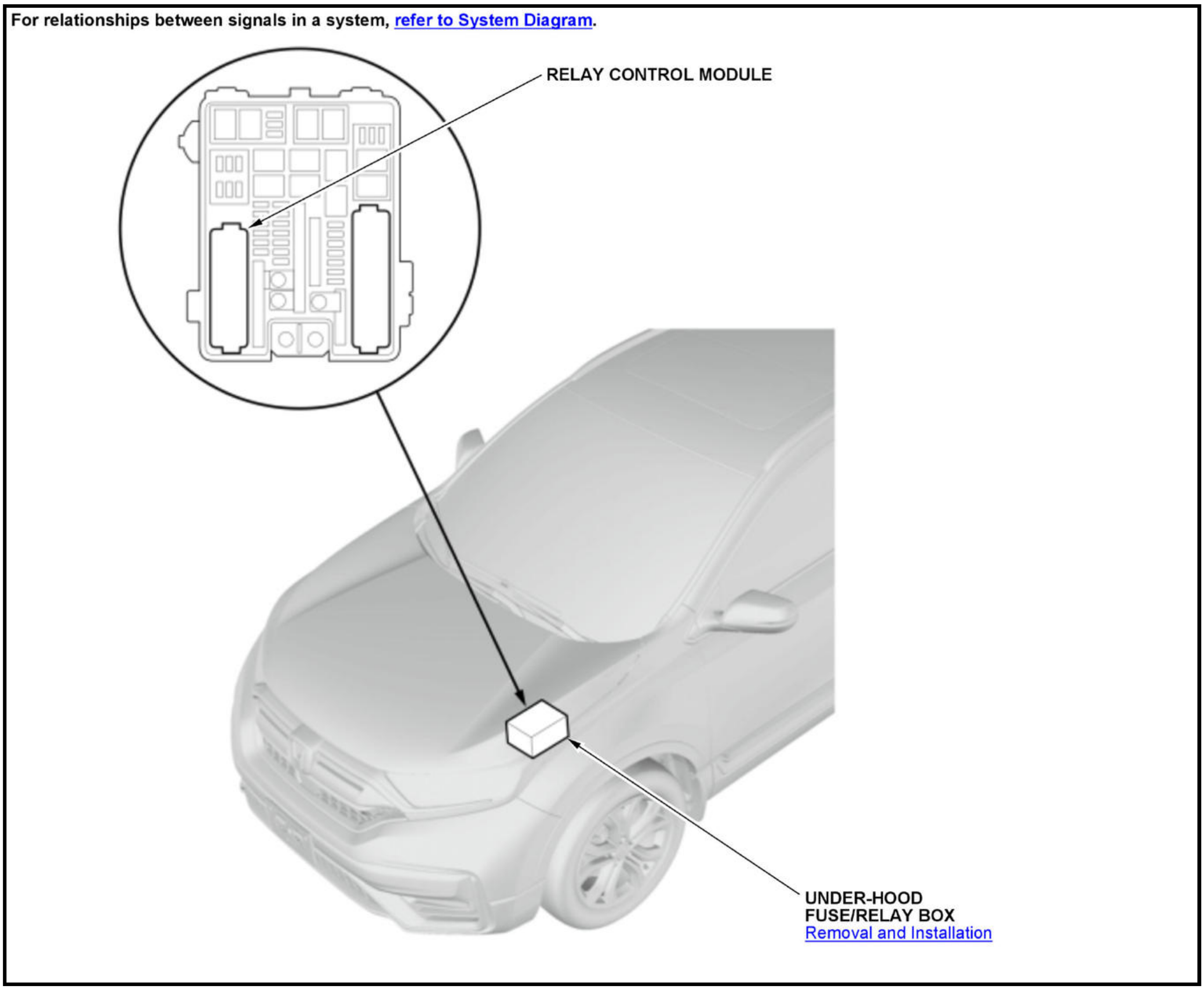

For relationships between signals in a system, refer to System Diagram.

RELAY CONTROL MODULE
UNDER-HOOD
FUSE/RELAY BOX
Removal and Installation

With panoramic glass roof

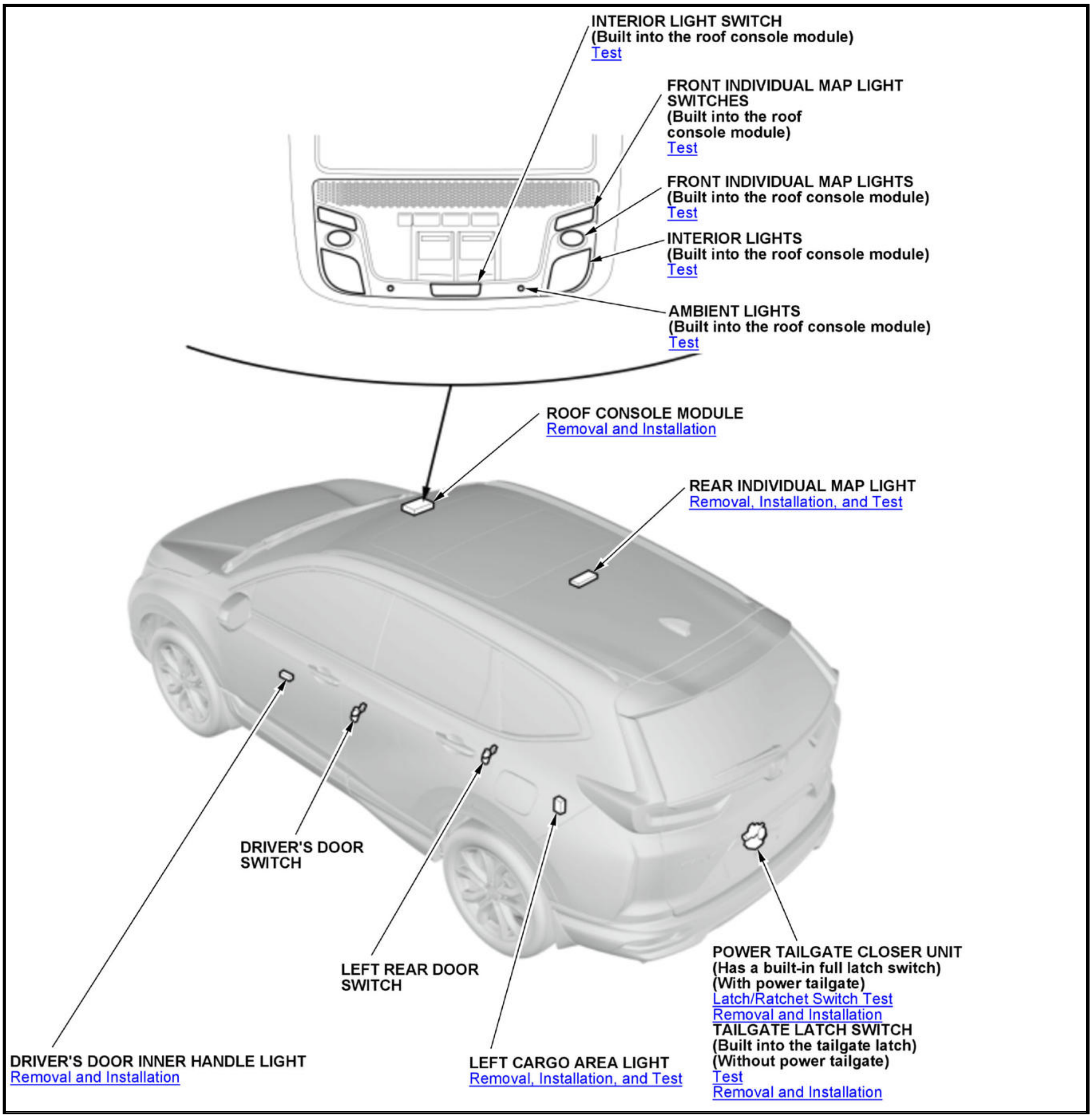
INTERIOR LIGHT SWITCH
(Built into the roof console module)
Test
FRONT INDIVIDUAL MAP LIGHT SWITCHES
(Built into the roof console module)
Test
FRONT INDIVIDUAL MAP LIGHTS
(Built into the roof console module)
Test
INTERIOR LIGHTS
(Built into the roof console module)
Test
AMBIENT LIGHTS
(Built into the roof console module)
Test
ROOF CONSOLE MODULE
Removal and Installation
REAR INDIVIDUAL MAP LIGHT
Removal, Installation, and Test
DRIVER'S DOOR SWITCH
LEFT REAR DOOR SWITCH
POWER TAILGATE CLOSER UNIT
(Has a built-in full latch switch)
(With power tailgate)
Latch/Ratchet Switch Test
Removal and Installation
TAILGATE LATCH SWITCH
(Built into the tailgate latch)
(Without power tailgate)
Test
Removal and Installation
DRIVER'S DOOR INNER HANDLE LIGHT
Removal and Installation
LEFT CARGO AREA LIGHT
Removal, Installation, and Test

Without panoramic glass roof

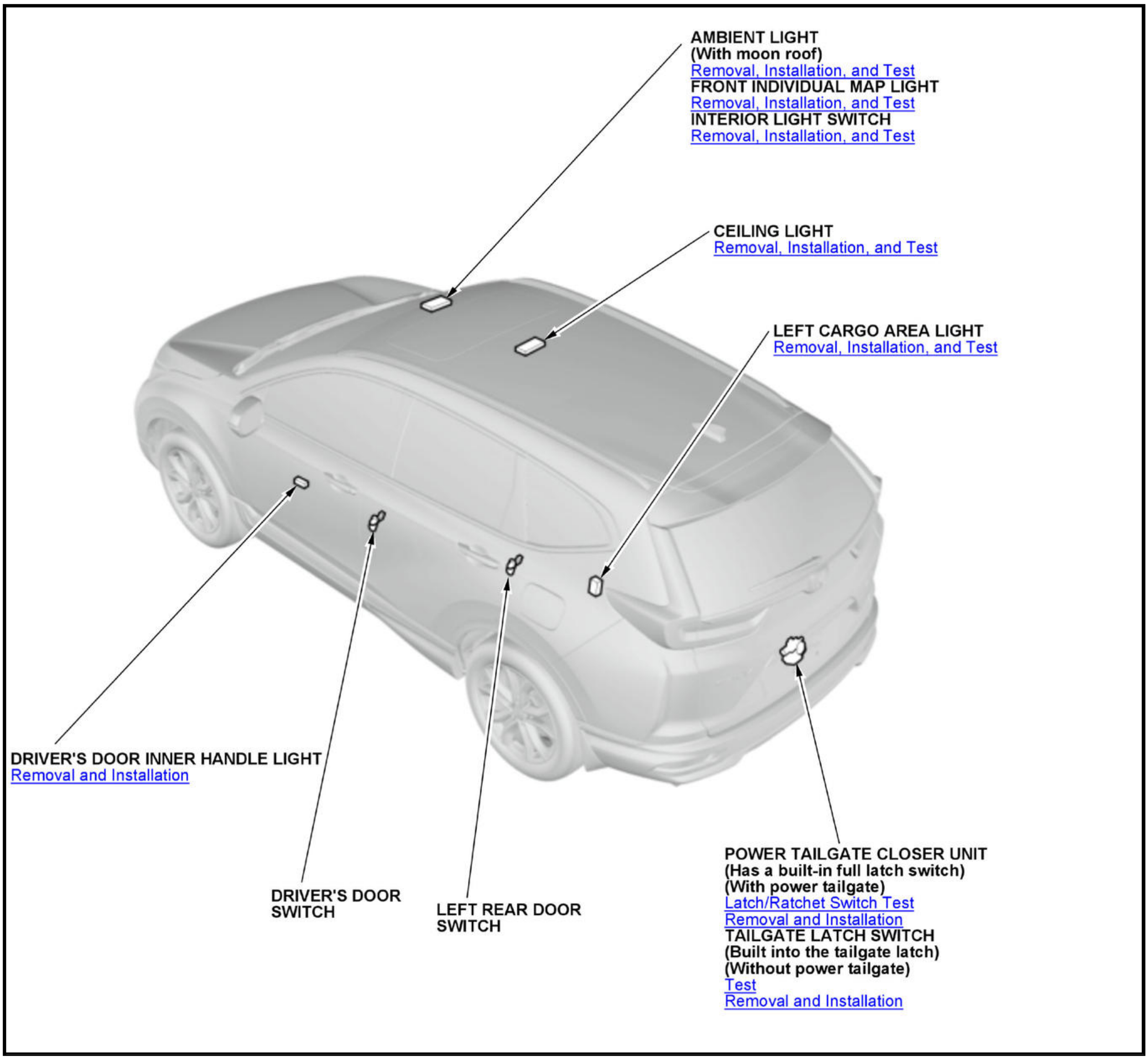
AMBIENT LIGHT
(With moon roof)
Removal, Installation, and Test
FRONT INDIVIDUAL MAP LIGHT
Removal, Installation, and Test
INTERIOR LIGHT SWITCH
Removal, Installation, and Test
CEILING LIGHT
Removal, Installation, and Test
LEFT CARGO AREA LIGHT
Removal, Installation, and Test
DRIVER'S DOOR INNER HANDLE LIGHT
Removal and Installation
DRIVER'S DOOR SWITCH
LEFT REAR DOOR SWITCH
POWER TAILGATE CLOSER UNIT
(Has a built-in full latch switch)
(With power tailgate)
Latch/Ratchet Switch Test
Removal and Installation
TAILGATE LATCH SWITCH
(Built into the tailgate latch)
(Without power tailgate)
Test
Removal and Installation

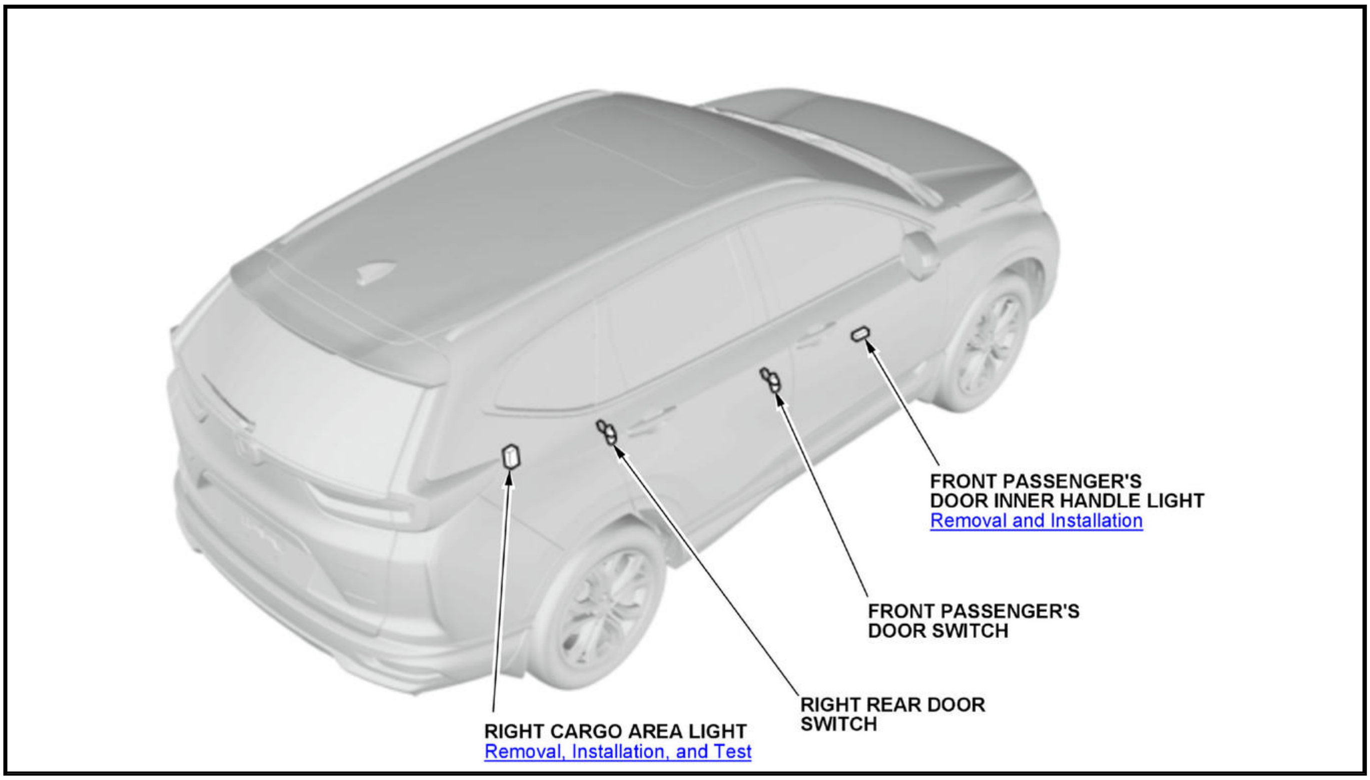
FRONT PASSENGER'S DOOR INNER HANDLE LIGHT
Removal and Installation
FRONT PASSENGER'S DOOR SWITCH
RIGHT REAR DOOR SWITCH
RIGHT CARGO AREA LIGHT
Removal, Installation, and Test

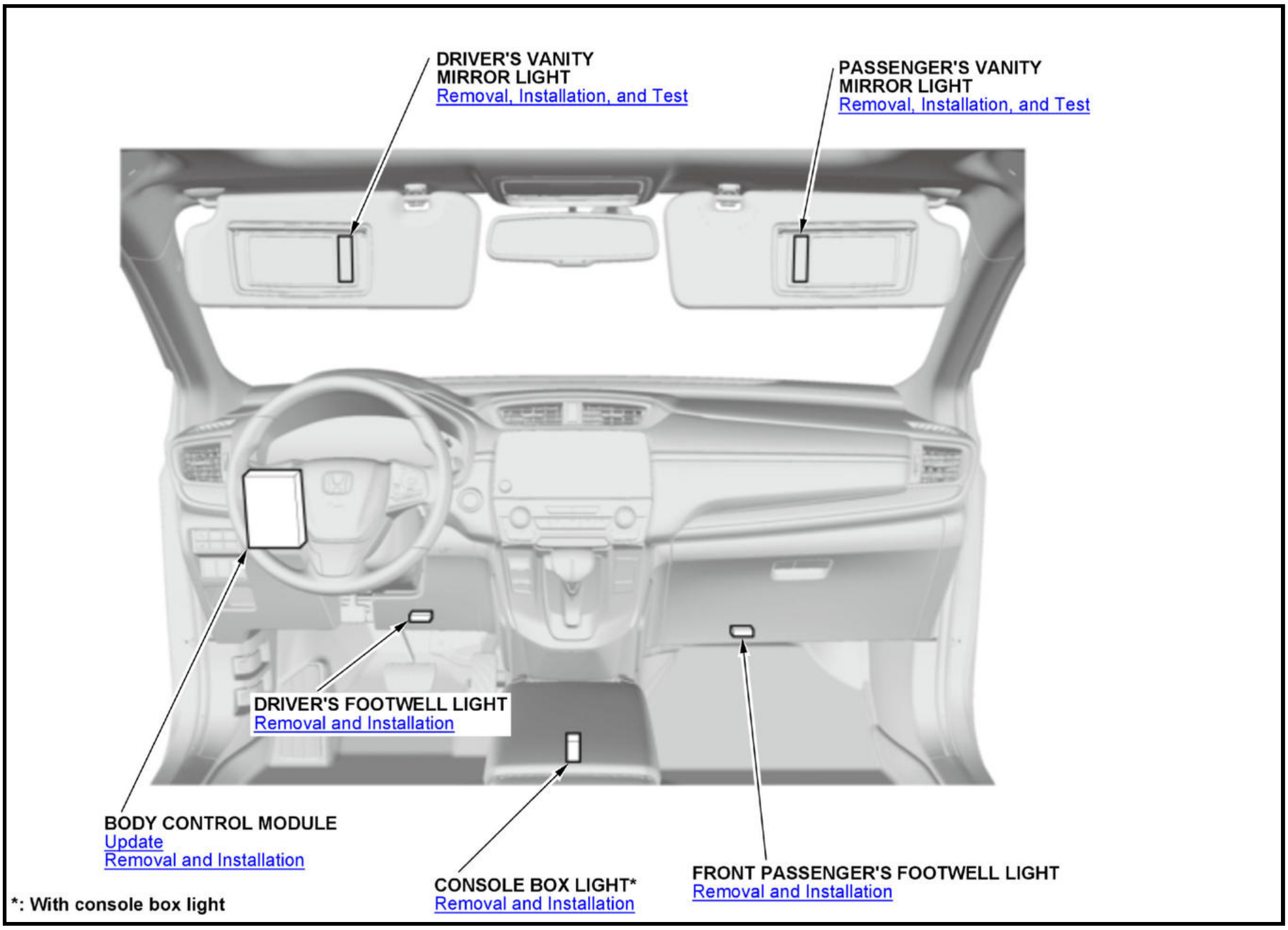
DRIVER'S VANITY MIRROR LIGHT
Removal, Installation, and Test
PASSENGER'S VANITY MIRROR LIGHT
Removal, Installation, and Test
DRIVER'S FOOTWELL LIGHT
Removal and Installation
BODY CONTROL MODULE
Update
Removal and Installation
CONSOLE BOX LIGHT*
Removal and Installation
FRONT PASSENGER'S FOOTWELL LIGHT
Removal and Installation
*: With console box light

Interior Trim - Components Location - CR-V (Except Hybrid)

COMPONENT LOCATION INDEX

CONSOLES COMPONENT LOCATION INDEX

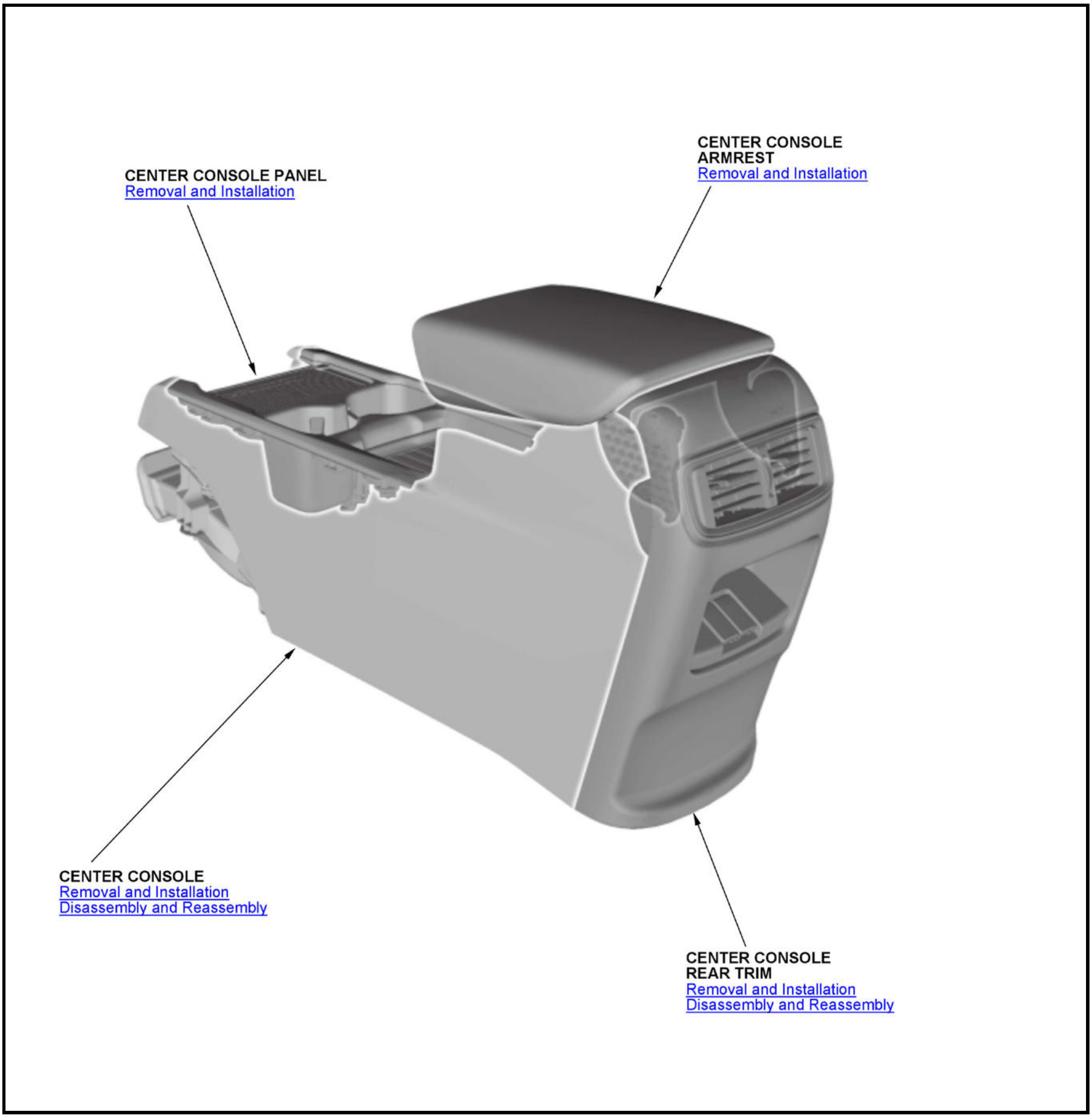
CENTER CONSOLE PANEL
Removal and Installation
CENTER CONSOLE ARMREST
Removal and Installation
CENTER CONSOLE
Removal and Installation
Disassembly and Reassembly
CENTER CONSOLE REAR TRIM
Removal and Installation
Disassembly and Reassembly

DASHBOARD COMPONENT LOCATION INDEX

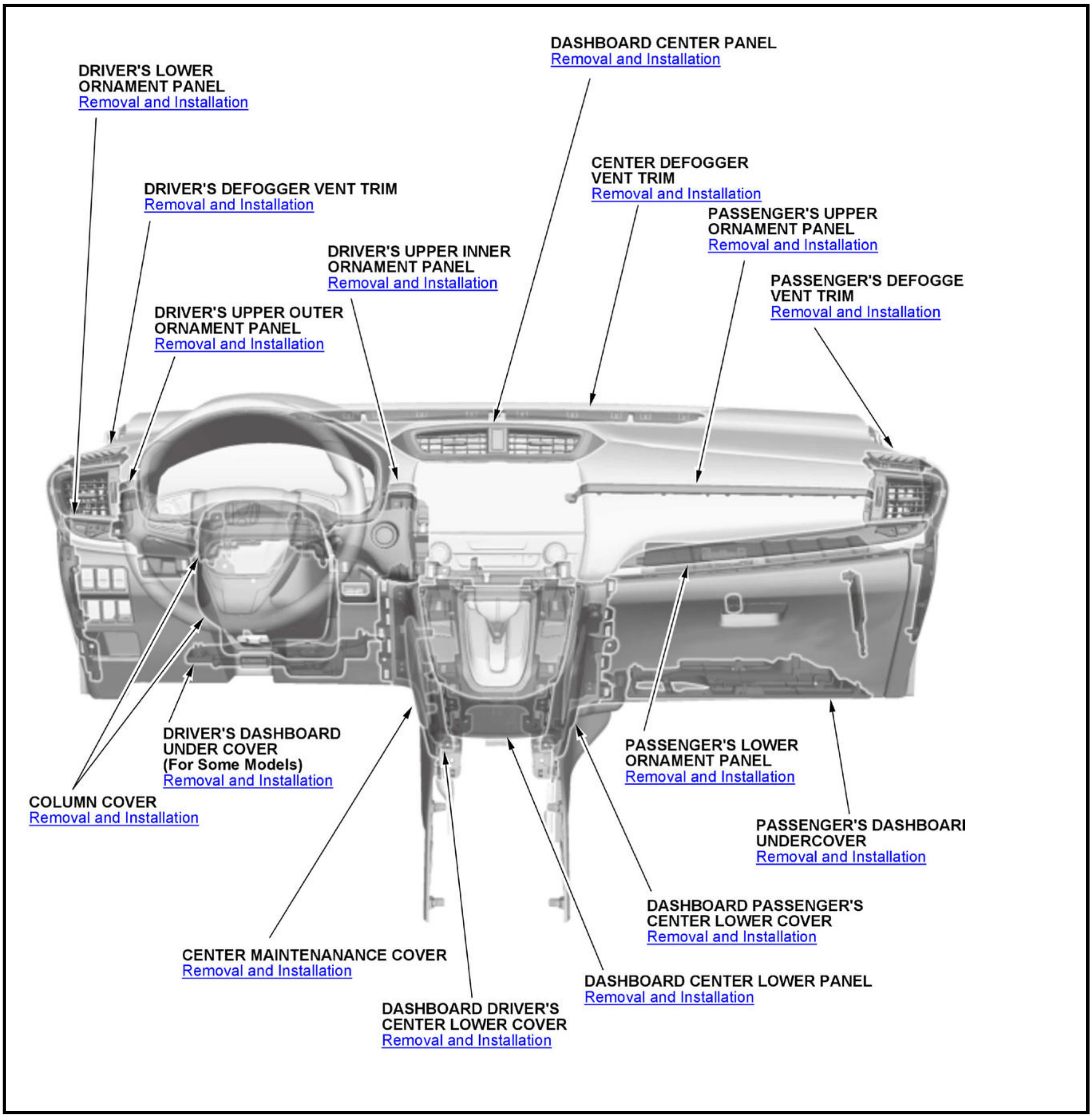

DRIVER'S LOWER ORNAMENT PANEL
Removal and Installation

DASHBOARD CENTER PANEL
Removal and Installation

DRIVER'S DEFOGGER VENT TRIM
Removal and Installation

CENTER DEFOGGER VENT TRIM
Removal and Installation

PASSENGER'S UPPER ORNAMENT PANEL
Removal and Installation

DRIVER'S UPPER INNER ORNAMENT PANEL
Removal and Installation

PASSENGER'S DEFOGGE VENT TRIM
Removal and Installation

DRIVER'S UPPER OUTER ORNAMENT PANEL
Removal and Installation

DRIVER'S DASHBOARD UNDER COVER (For Some Models)
Removal and Installation

PASSENGER'S LOWER ORNAMENT PANEL
Removal and Installation

COLUMN COVER
Removal and Installation

PASSENGER'S DASHBOARI UNDERCOVER
Removal and Installation

DASHBOARD PASSENGER'S CENTER LOWER COVER
Removal and Installation

CENTER MAINTENANANCE COVER
Removal and Installation

DASHBOARD CENTER LOWER PANEL
Removal and Installation

DASHBOARD DRIVER'S CENTER LOWER COVER
Removal and Installation

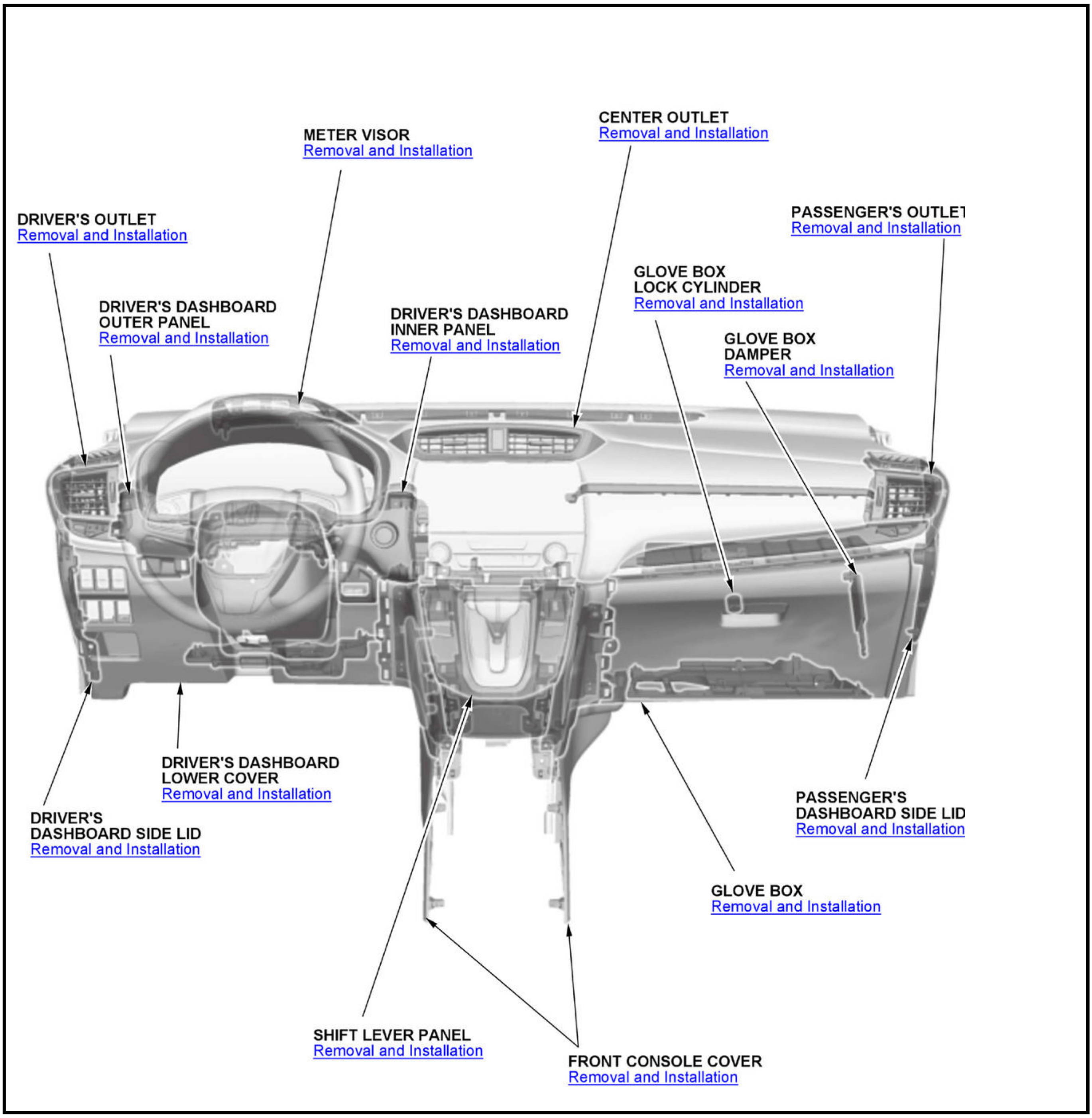
METER VISOR
Removal and Installation
CENTER OUTLET
Removal and Installation
DRIVER'S OUTLET
Removal and Installation
PASSENGER'S OUTLET
Removal and Installation
GLOVE BOX
LOCK CYLINDER
Removal and Installation
DRIVER'S DASHBOARD
OUTER PANEL
Removal and Installation
DRIVER'S DASHBOARD
INNER PANEL
Removal and Installation
GLOVE BOX
DAMPER
Removal and Installation
DRIVER'S DASHBOARD
LOWER COVER
Removal and Installation
DRIVER'S
DASHBOARD SIDE LID
Removal and Installation
PASSENGER'S
DASHBOARD SIDE LID
Removal and Installation
GLOVE BOX
Removal and Installation
SHIFT LEVER PANEL
Removal and Installation
FRONT CONSOLE COVER
Removal and Installation

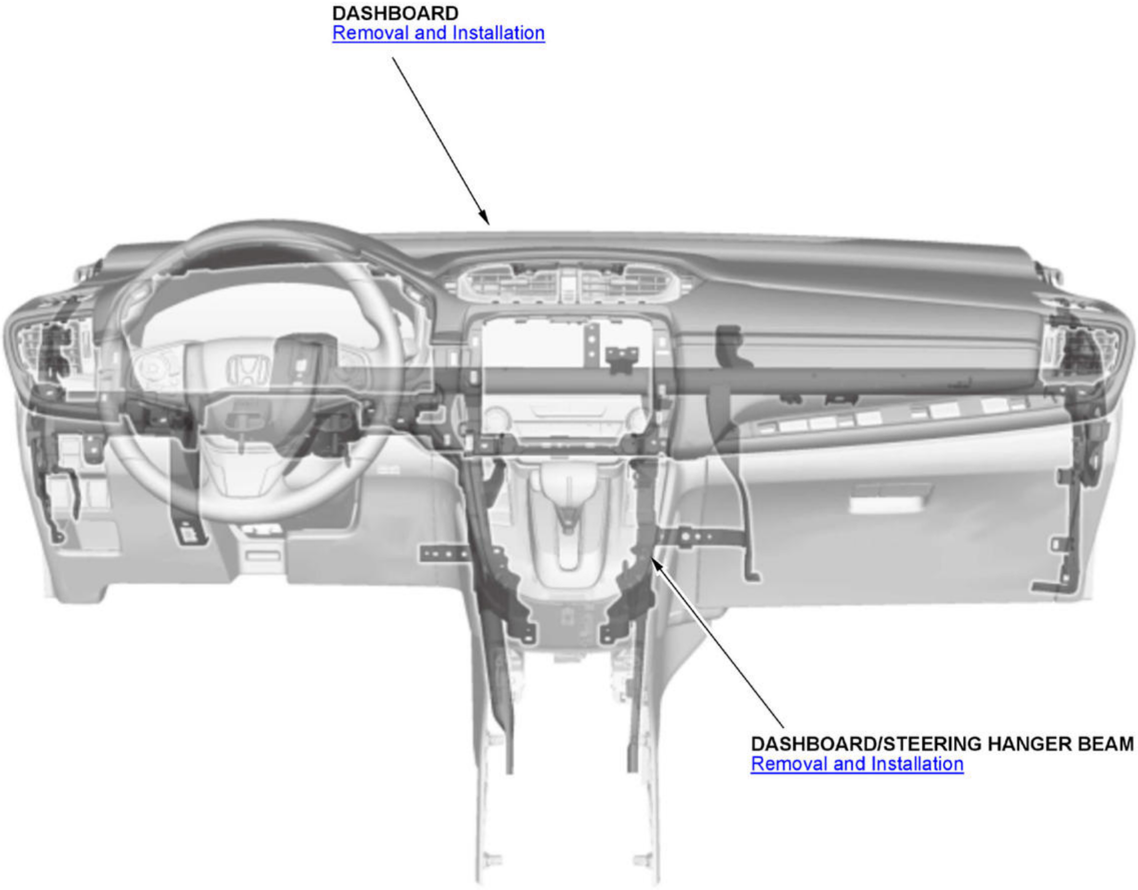
DASHBOARD
Removal and Installation
DASHBOARD/STEERING HANGER BEAM
Removal and Installation

INTERIOR TRIM COMPONENT LOCATION INDEX

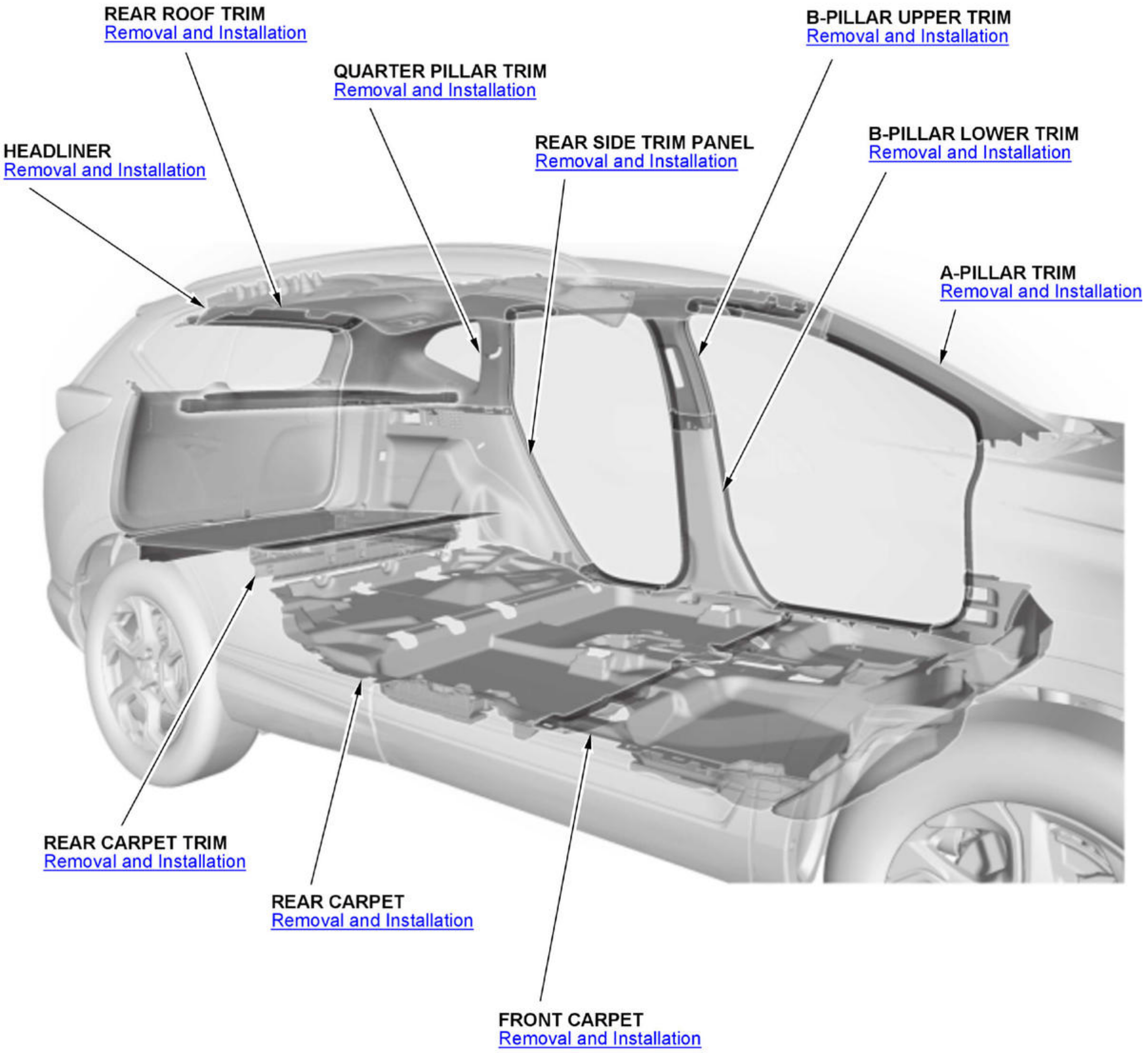
REAR ROOF TRIM
Removal and Installation
QUARTER PILLAR TRIM
Removal and Installation
B-PILLAR UPPER TRIM
Removal and Installation
HEADLINER
Removal and Installation
REAR SIDE TRIM PANEL
Removal and Installation
B-PILLAR LOWER TRIM
Removal and Installation
A-PILLAR TRIM
Removal and Installation
REAR CARPET TRIM
Removal and Installation
REAR CARPET
Removal and Installation
FRONT CARPET
Removal and Installation

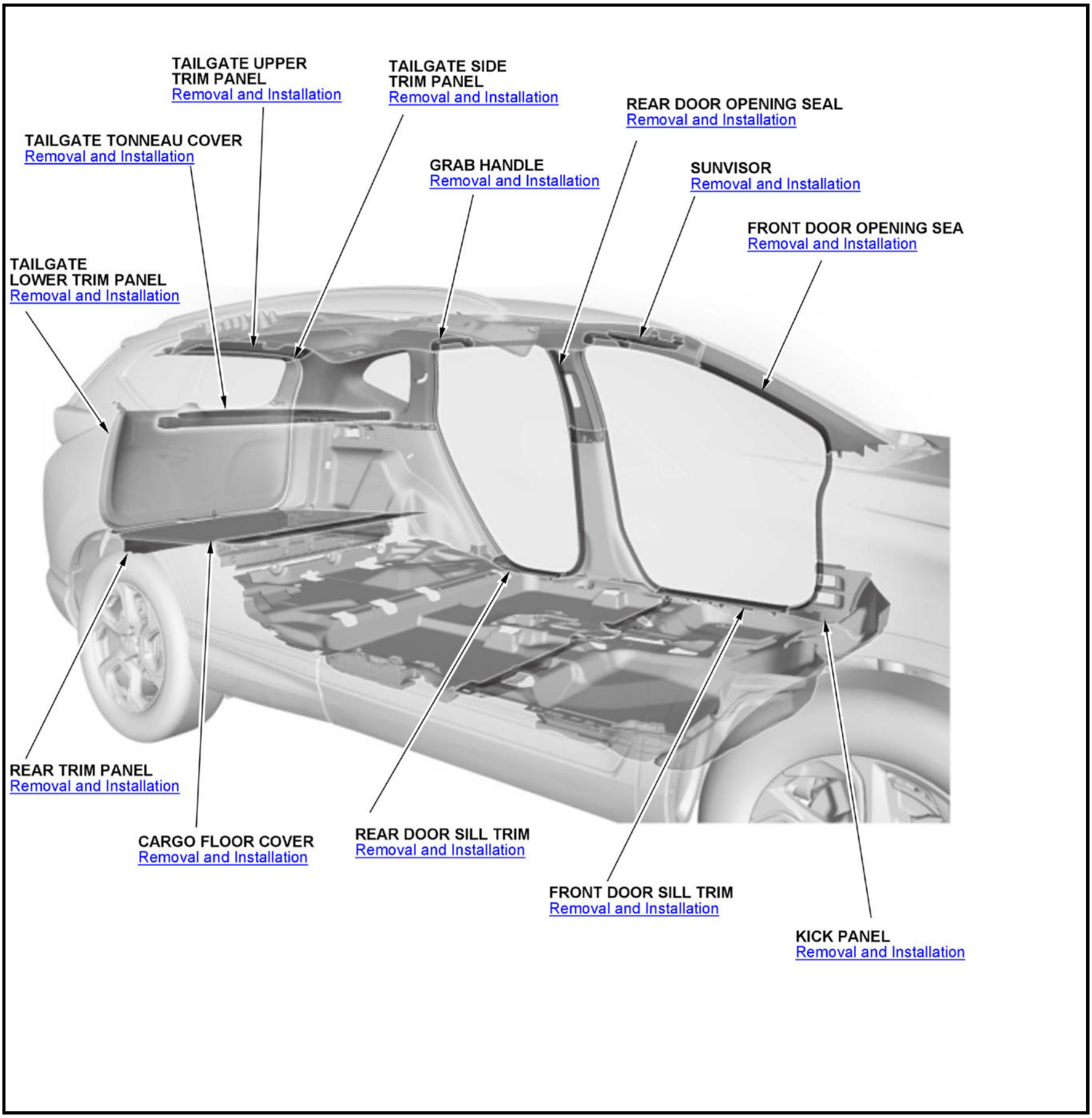
TAILGATE UPPER TRIM PANEL
Removal and Installation
TAILGATE SIDE TRIM PANEL
Removal and Installation
REAR DOOR OPENING SEAL
Removal and Installation
TAILGATE TONNEAU COVER
Removal and Installation
GRAB HANDLE
Removal and Installation
SUNVISOR
Removal and Installation
FRONT DOOR OPENING SEA
Removal and Installation
TAILGATE LOWER TRIM PANEL
Removal and Installation
REAR TRIM PANEL
Removal and Installation
CARGO FLOOR COVER
Removal and Installation
REAR DOOR SILL TRIM
Removal and Installation
FRONT DOOR SILL TRIM
Removal and Installation
KICK PANEL
Removal and Installation

COMPONENT LOCATION INDEX

CONSOLES COMPONENT LOCATION INDEX

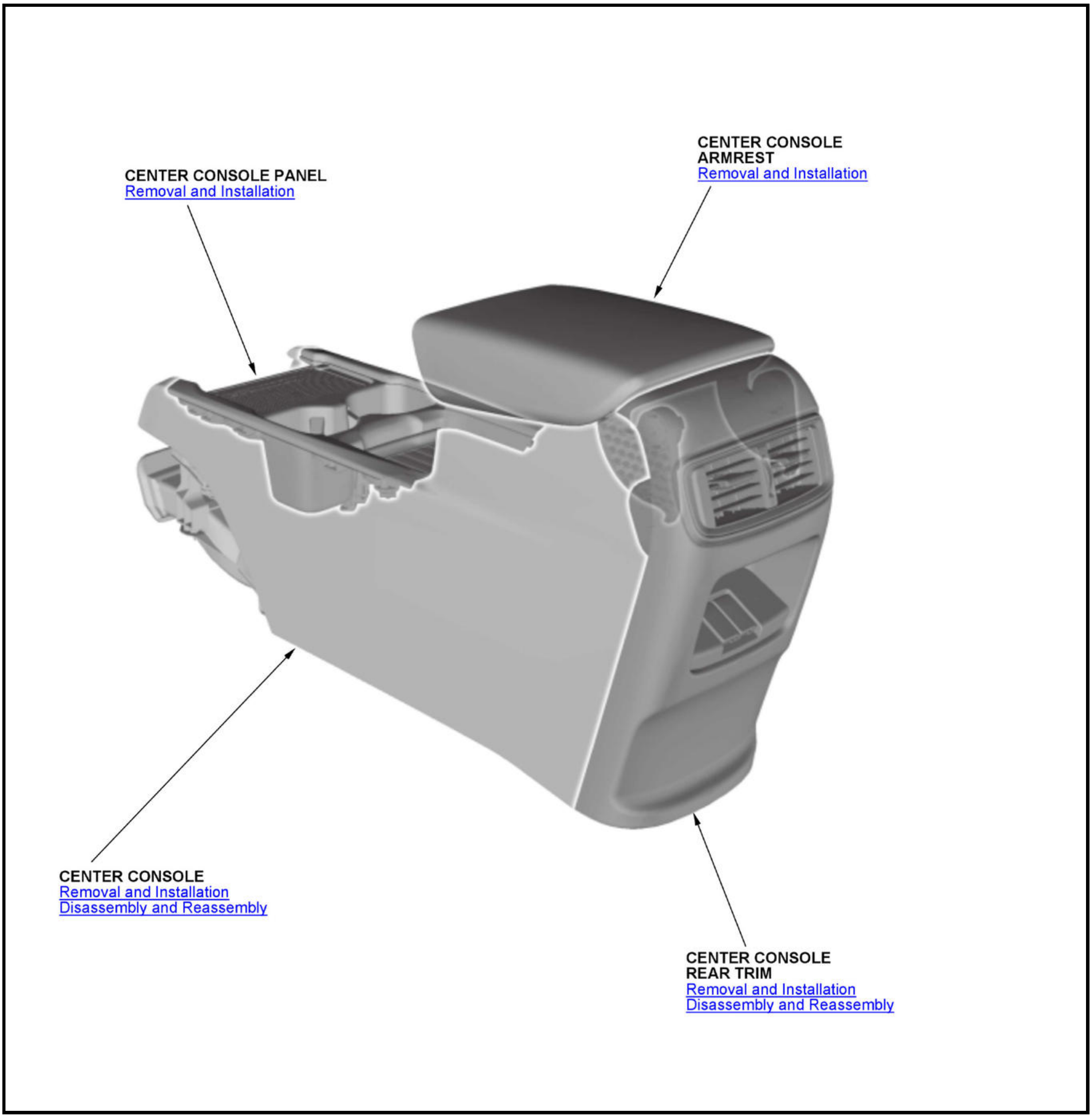
CENTER CONSOLE PANEL
Removal and Installation
CENTER CONSOLE ARMREST
Removal and Installation
CENTER CONSOLE
Removal and Installation
Disassembly and Reassembly
CENTER CONSOLE REAR TRIM
Removal and Installation
Disassembly and Reassembly

DASHBOARD COMPONENT LOCATION INDEX

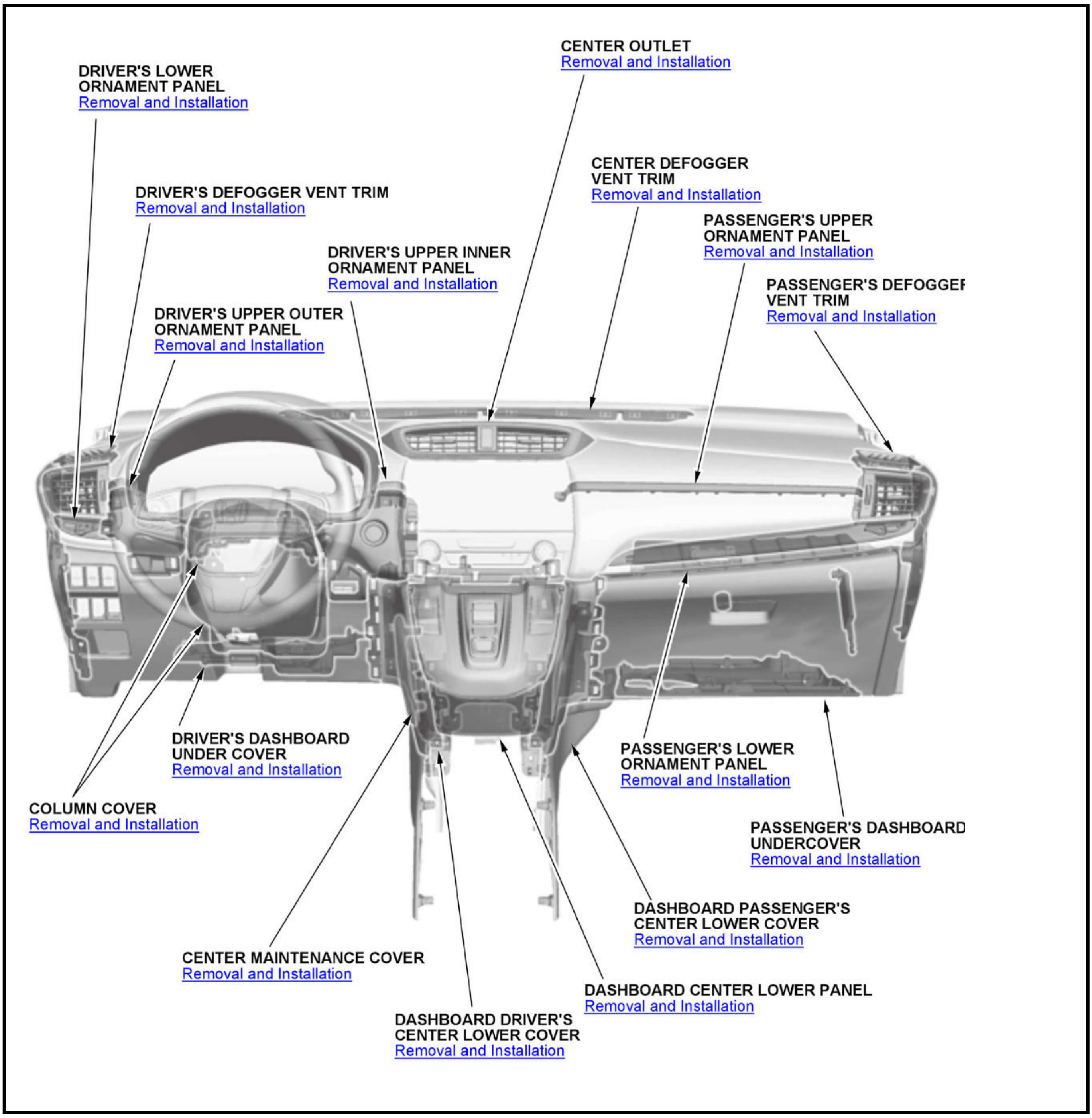
CENTER OUTLET
Removal and Installation
DRIVER'S LOWER ORNAMENT PANEL
Removal and Installation
CENTER DEFOGGER VENT TRIM
Removal and Installation
DRIVER'S DEFOGGER VENT TRIM
Removal and Installation
PASSENGER'S UPPER ORNAMENT PANEL
Removal and Installation
DRIVER'S UPPER INNER ORNAMENT PANEL
Removal and Installation
PASSENGER'S DEFOGGE
VENT TRIM
Removal and Installation
DRIVER'S UPPER OUTER ORNAMENT PANEL
Removal and Installation
DRIVER'S DASHBOARD UNDER COVER
Removal and Installation
PASSENGER'S LOWER ORNAMENT PANEL
Removal and Installation
COLUMN COVER
Removal and Installation
PASSENGER'S DASHBOARD UNDERCOVER
Removal and Installation
DASHBOARD PASSENGER'S CENTER LOWER COVER
Removal and Installation
CENTER MAINTENANCE COVER
Removal and Installation
DASHBOARD CENTER LOWER PANEL
Removal and Installation
DASHBOARD DRIVER'S CENTER LOWER COVER
Removal and Installation

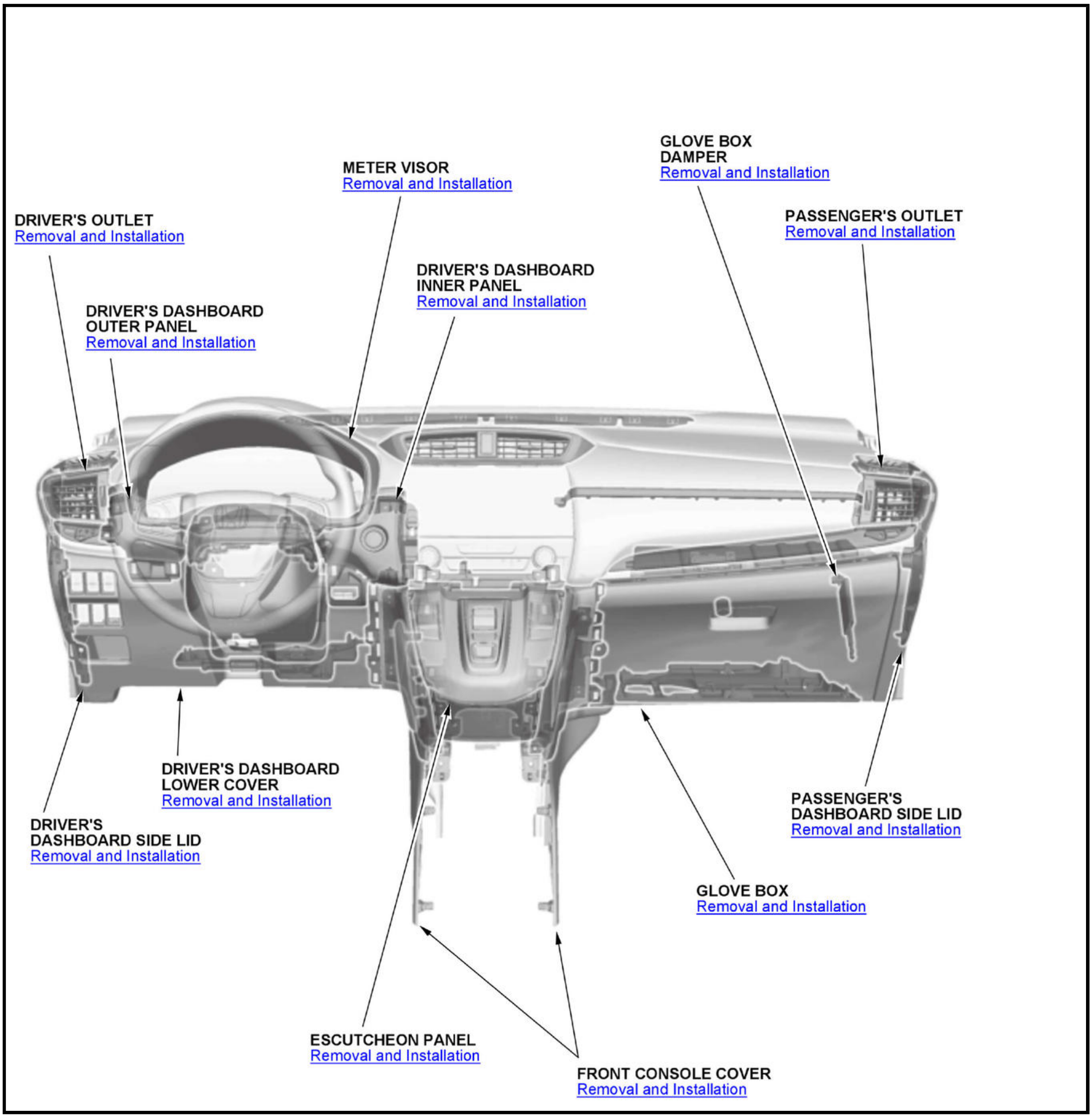
GLOVE BOX DAMPER
Removal and Installation
METER VISOR
Removal and Installation
DRIVER'S OUTLET
Removal and Installation
PASSENGER'S OUTLET
Removal and Installation
DRIVER'S DASHBOARD INNER PANEL
Removal and Installation
DRIVER'S DASHBOARD OUTER PANEL
Removal and Installation
DRIVER'S DASHBOARD LOWER COVER
Removal and Installation
DRIVER'S DASHBOARD SIDE LID
Removal and Installation
PASSENGER'S DASHBOARD SIDE LID
Removal and Installation
GLOVE BOX
Removal and Installation
ESCUTCHEON PANEL
Removal and Installation
FRONT CONSOLE COVER
Removal and Installation

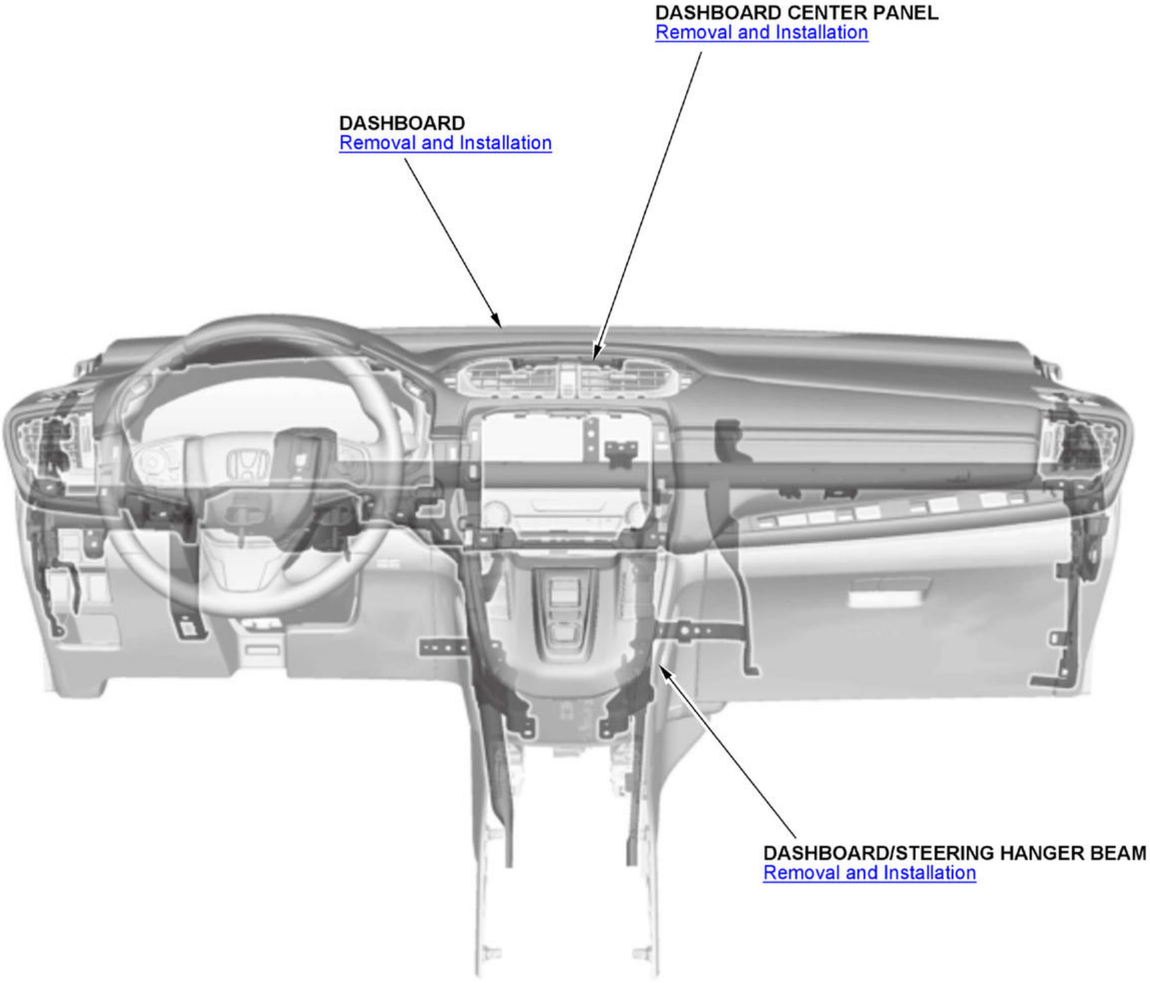
DASHBOARD CENTER PANEL
Removal and Installation
DASHBOARD
Removal and Installation
DASHBOARD/STEERING HANGER BEAM
Removal and Installation

INTERIOR TRIM COMPONENT LOCATION INDEX

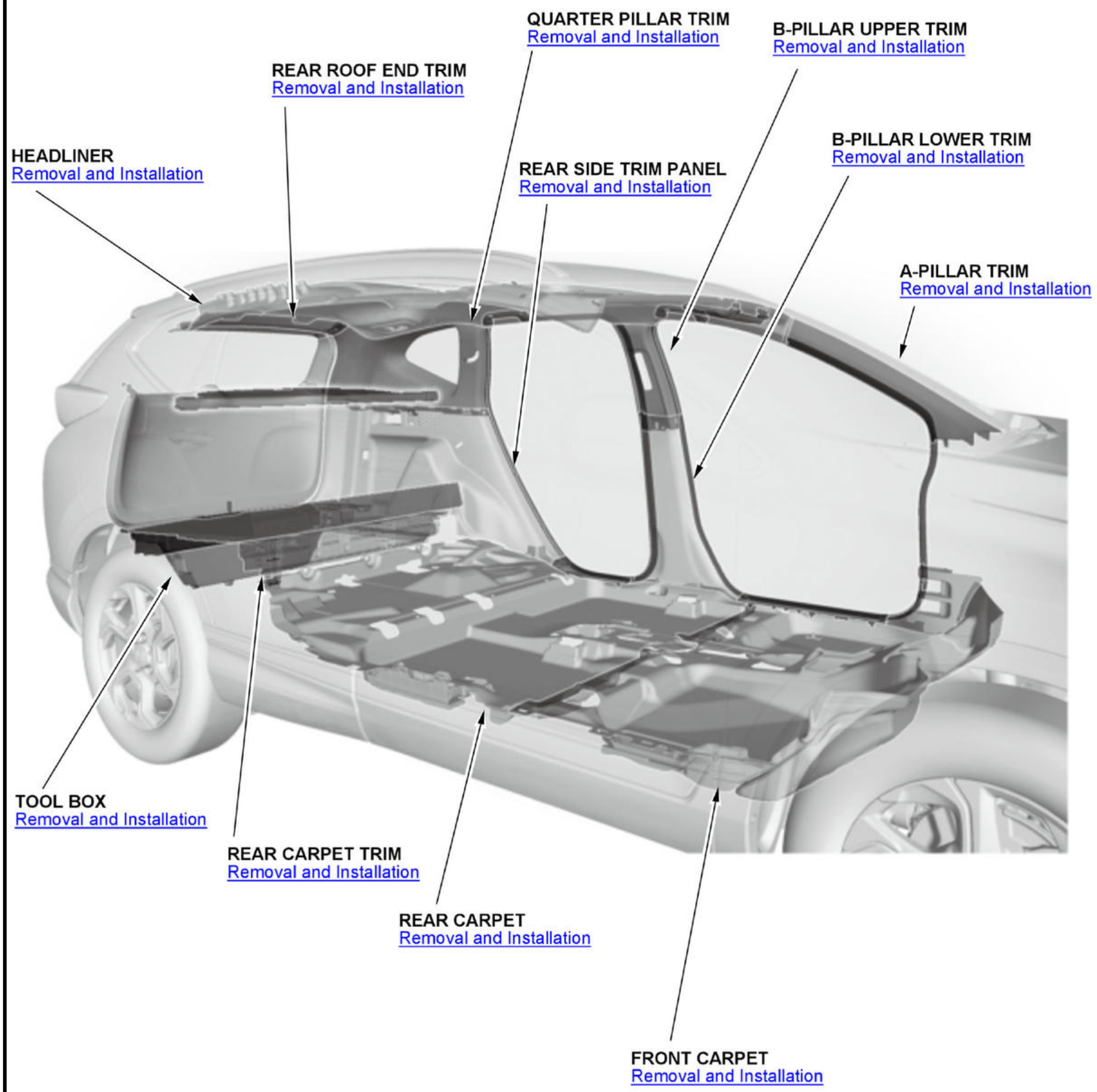
QUARTER PILLAR TRIM
Removal and Installation
B-PILLAR UPPER TRIM
Removal and Installation
REAR ROOF END TRIM
Removal and Installation
HEADLINER
Removal and Installation
REAR SIDE TRIM PANEL
Removal and Installation
B-PILLAR LOWER TRIM
Removal and Installation
A-PILLAR TRIM
Removal and Installation
TOOL BOX
Removal and Installation
REAR CARPET TRIM
Removal and Installation
REAR CARPET
Removal and Installation
FRONT CARPET
Removal and Installation

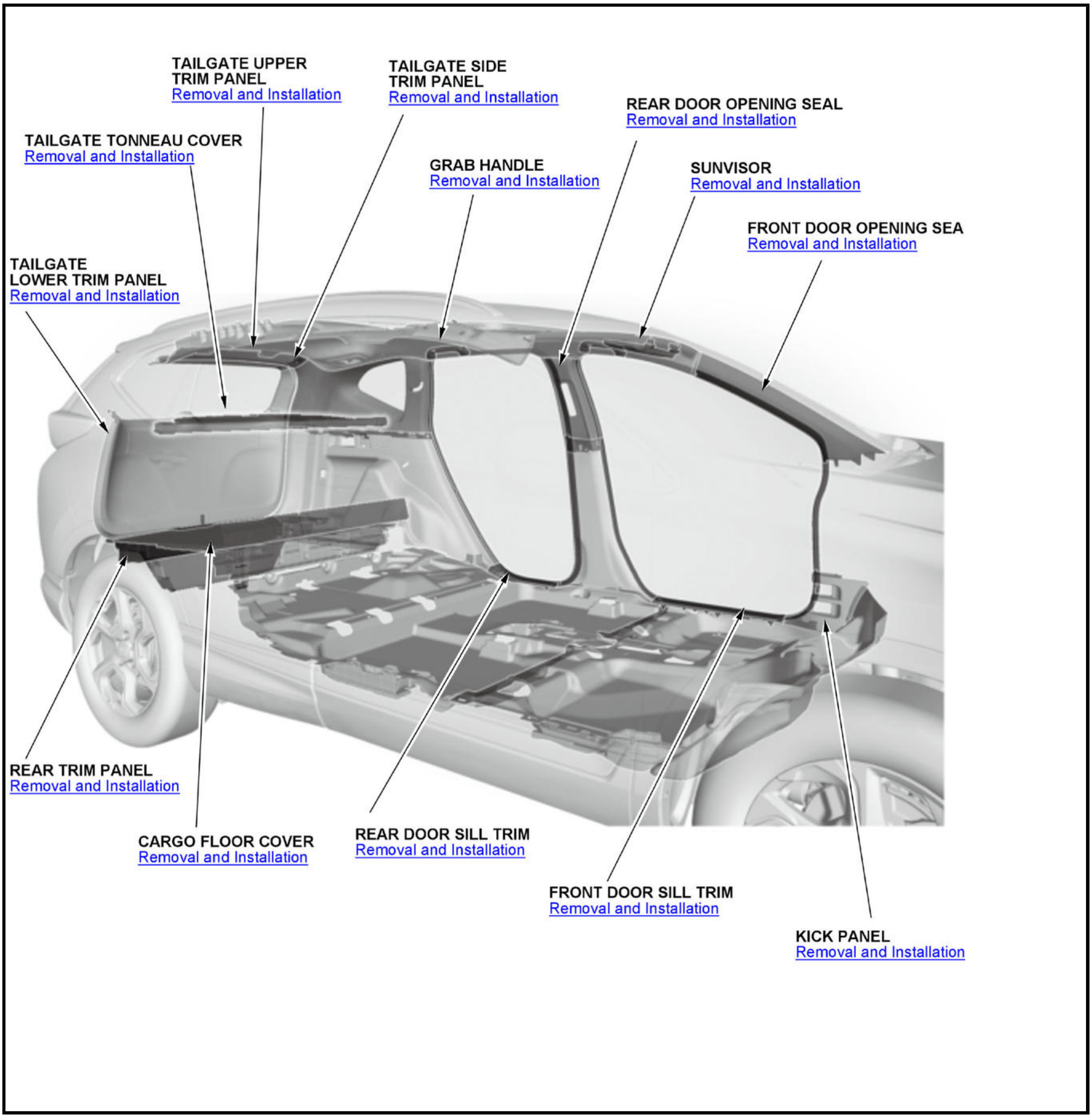
TAILGATE UPPER TRIM PANEL
Removal and Installation
TAILGATE SIDE TRIM PANEL
Removal and Installation
REAR DOOR OPENING SEAL
Removal and Installation
TAILGATE TONNEAU COVER
Removal and Installation
GRAB HANDLE
Removal and Installation
SUNVISOR
Removal and Installation
FRONT DOOR OPENING SEA
Removal and Installation
TAILGATE LOWER TRIM PANEL
Removal and Installation
REAR TRIM PANEL
Removal and Installation
CARGO FLOOR COVER
Removal and Installation
REAR DOOR SILL TRIM
Removal and Installation
FRONT DOOR SILL TRIM
Removal and Installation
KICK PANEL
Removal and Installation

DISASSEMBLY AND REASSEMBLY

CENTER CONSOLE DISASSEMBLY AND REASSEMBLY

Exploded View

Procedure

NOTE: **Numbered call-outs in figure pertain to list numbers in following procedure.**

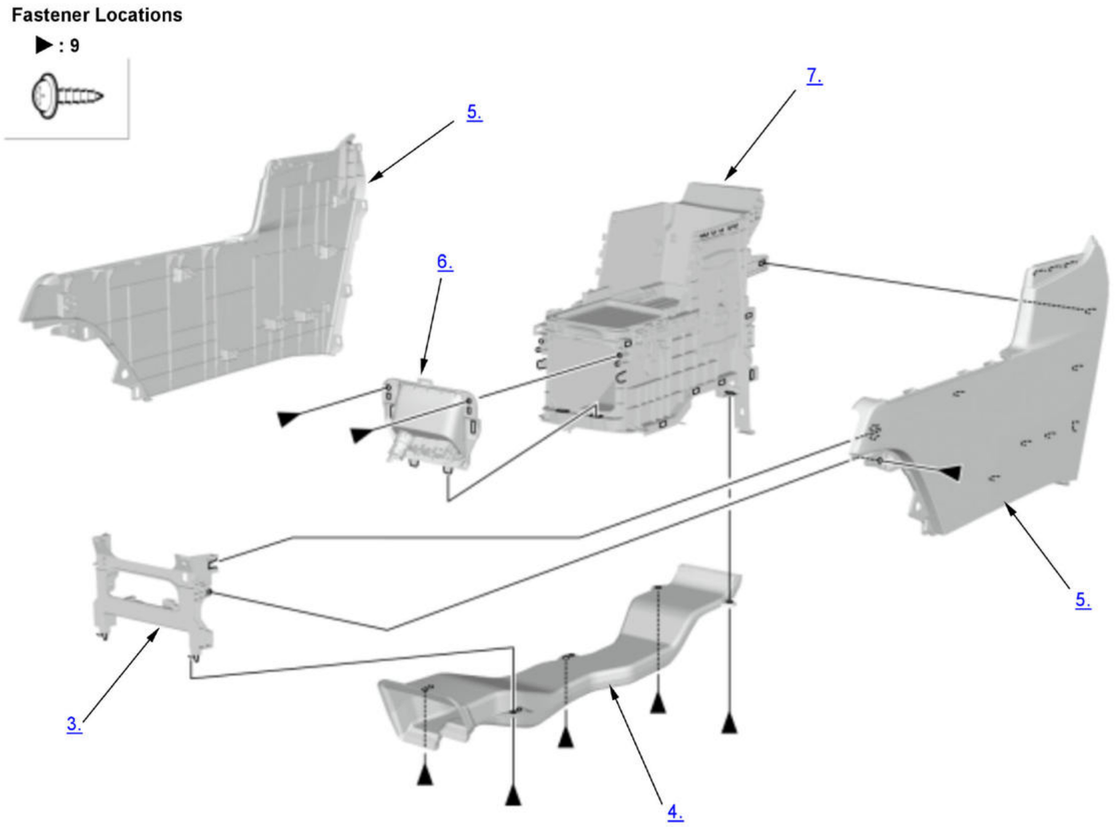

Fig. 1: Exploded View Of Center Console Components
Courtesy of HONDA, U.S.A., INC.

1. Center Console - Remove
2. Center Console Panel - Remove
3. Center Console Front Bracket - Remove
4. Center Console Front Duct - Remove
5. Center Console Side Panel - Remove
6. Center Console Box Jack Panel - Remove
7. Center Console Box - Remove
8. All Disassembled Parts - Reassemble

1. Reassemble the parts in the reverse order of disassembly.

CENTER CONSOLE REAR TRIM DISASSEMBLY AND REASSEMBLY

Exploded View

Procedure

NOTE: **Numbered call-outs in figure pertain to list numbers in following procedure.**

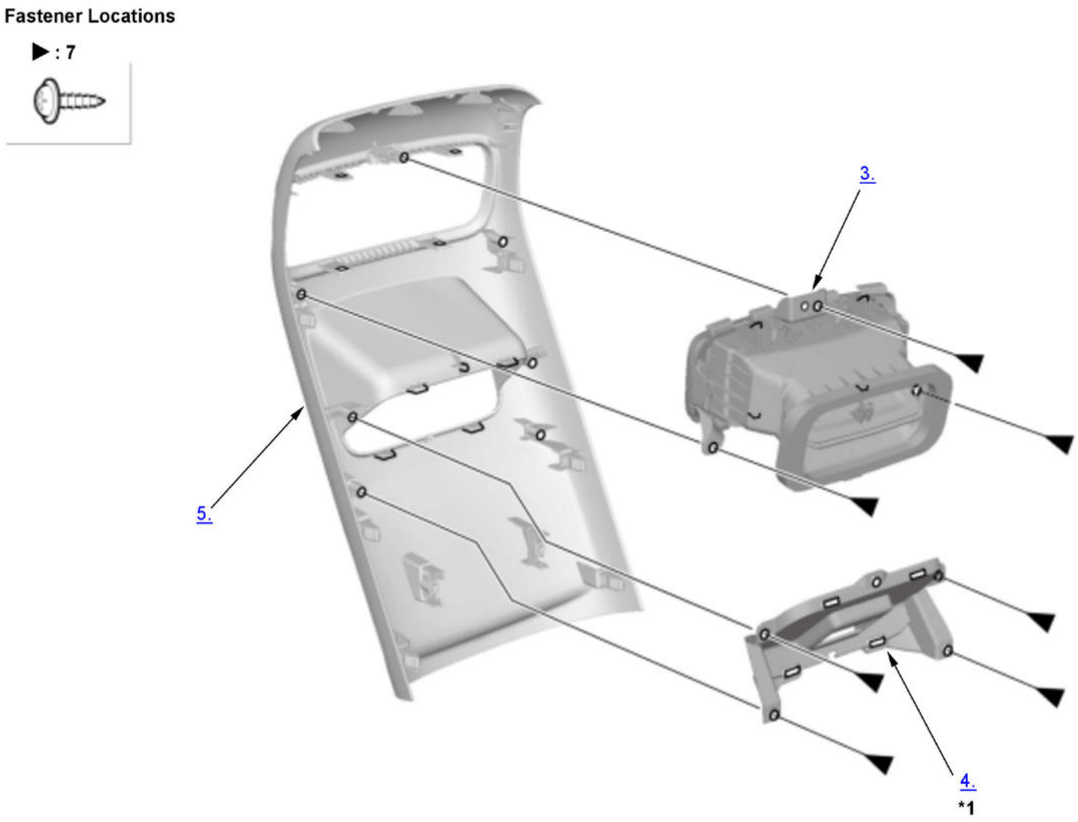

Fig. 2: Exploded View Of Center Console Rear Trim Components
Courtesy of HONDA, U.S.A., INC.

*1	For Some Models

1. Center Console Rear Trim Assembly - Remove
2. USB Charger Unit - Remove
3. Center Console Outlet - Remove
4. Center Console Rear Jack Panel - Remove
5. Center Console Rear Trim - Remove
6. All Disassembled Parts - Reassemble

1. Reassemble the parts in the reverse order of disassembly.

REMOVAL AND INSTALLATION

CARPET REMOVAL AND INSTALLATION

Removal and Installation

Front

NOTE: Numbered call-outs in figure pertain to list numbers in following procedure.

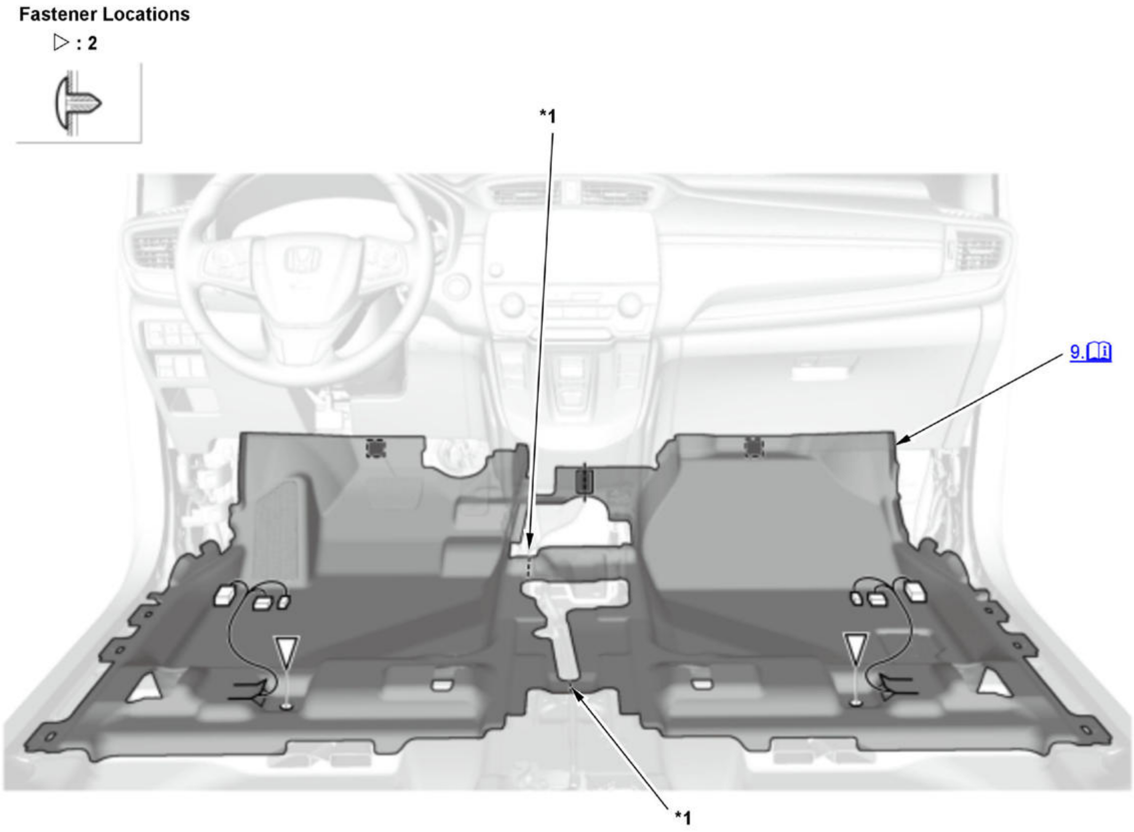

Fig. 3: Front Carpet Components
Courtesy of HONDA, U.S.A., INC.

*1	Cut line

1. 12 Volt Battery Terminal - Disconnect

   NOTE: Wait at least 3 minutes before starting work.

2. Both Front Seats - Remove
3. Front Door Sill Trim - Remove
4. Both Kick Panels - Remove
5. Center Console - Remove
6. Center Console Bracket - Remove
7. Steering Joint Cover - Remove
8. Rear Vent Duct - Remove
9. Front Floor Carpet - Remove

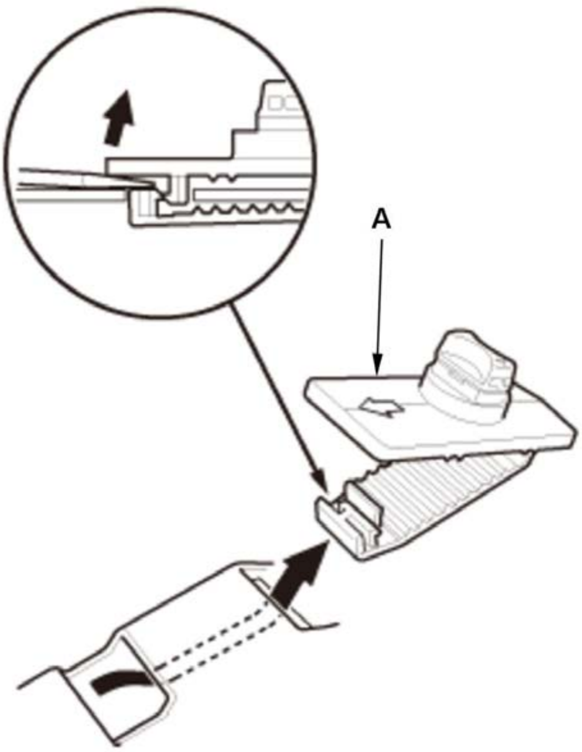	1. If necessary, remove the floor mat holder (A).

10. All Removed Parts - Install

1. Install the parts in the reverse order of removal.

Rear

NOTE: **Numbered call-outs in figure pertain to list numbers in following procedure.**

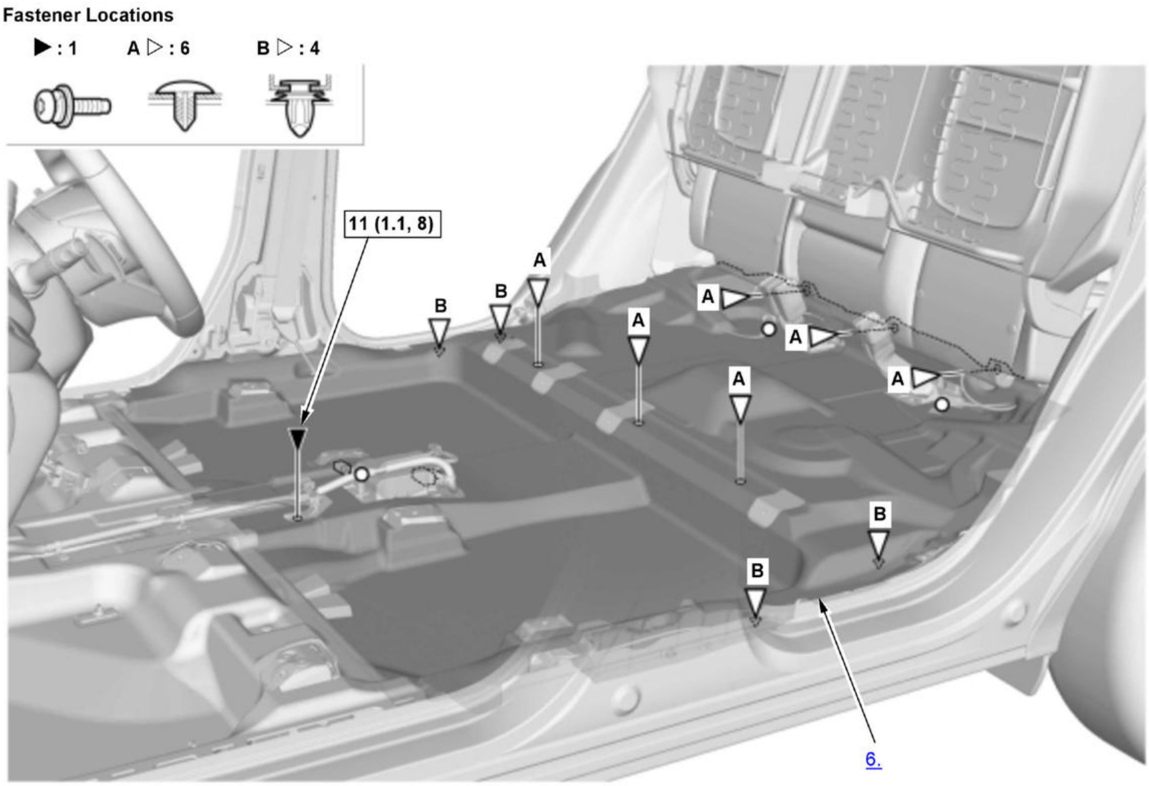
Fastener Locations
▶ : 1
A ▷ : 6
B ▷ : 4
11 (1.1, 8)
B
B
A
A
A
A
A
A
B
B
6.

Fig. 4: Rear Carpet Components With Torque Specifications
Courtesy of HONDA, U.S.A., INC.

▭	Torque: N.m (kgf.m, lbf.ft)

1. 12 Volt Battery Terminal - Disconnect

   NOTE: Wait at least 3 minutes before starting work.

2. Center Console - Remove
3. Both Front Seats - Remove
4. Both B-pillar Lower Trims - Remove
5. Rear Seat Cushion - Lift
6. Rear Floor Carpet - Remove
7. All Removed Parts - Install

   1. Install the parts in the reverse order of removal.

CENTER CONSOLE ARMREST REMOVAL AND INSTALLATION

Removal and Installation

Where icon is shown, for further information see below.

Procedure

NOTE: **Numbered call-outs in figure pertain to list numbers in following procedure.**

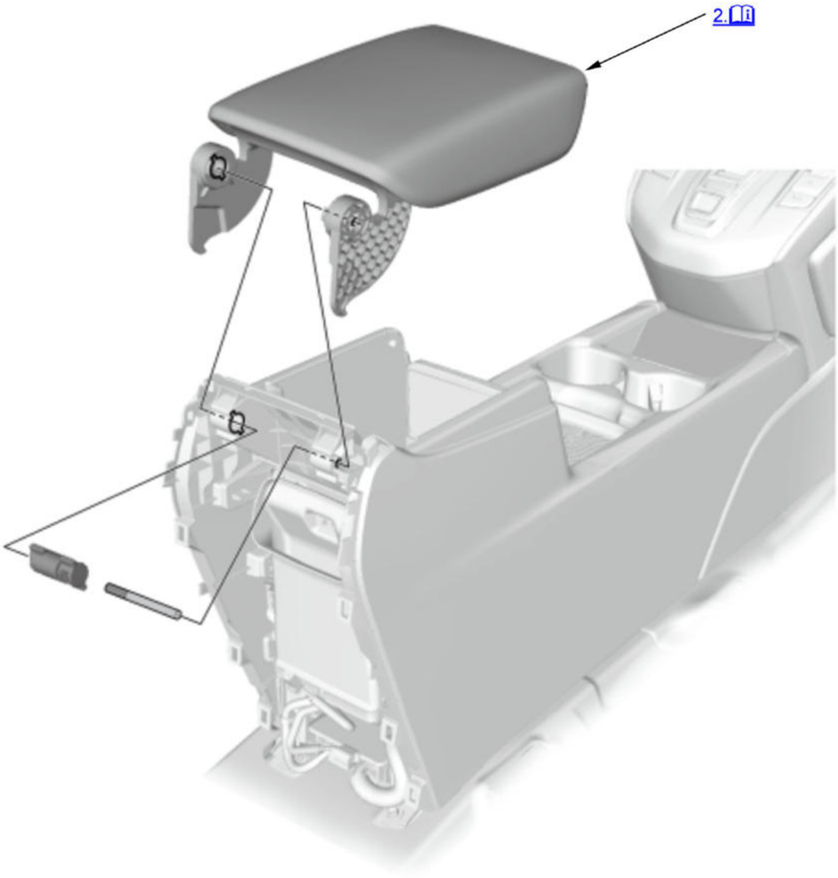

Fig. 5: Exploded View Of Center Console Armrest Components
Courtesy of HONDA, U.S.A., INC.

ℹ	Detailed information, notes, and precautions

1. Center Console Rear Trim - Remove
2. Center Console Armrest - Remove

   NOTE: When removing the center console armrest to close the center console box.

3. All Removed Parts - Install

1. Install the parts in the reverse order of removal.

CENTER CONSOLE PANEL REMOVAL AND INSTALLATION

Removal and Installation

Procedure

NOTE: **Numbered call-outs in figure pertain to list numbers in following procedure.**

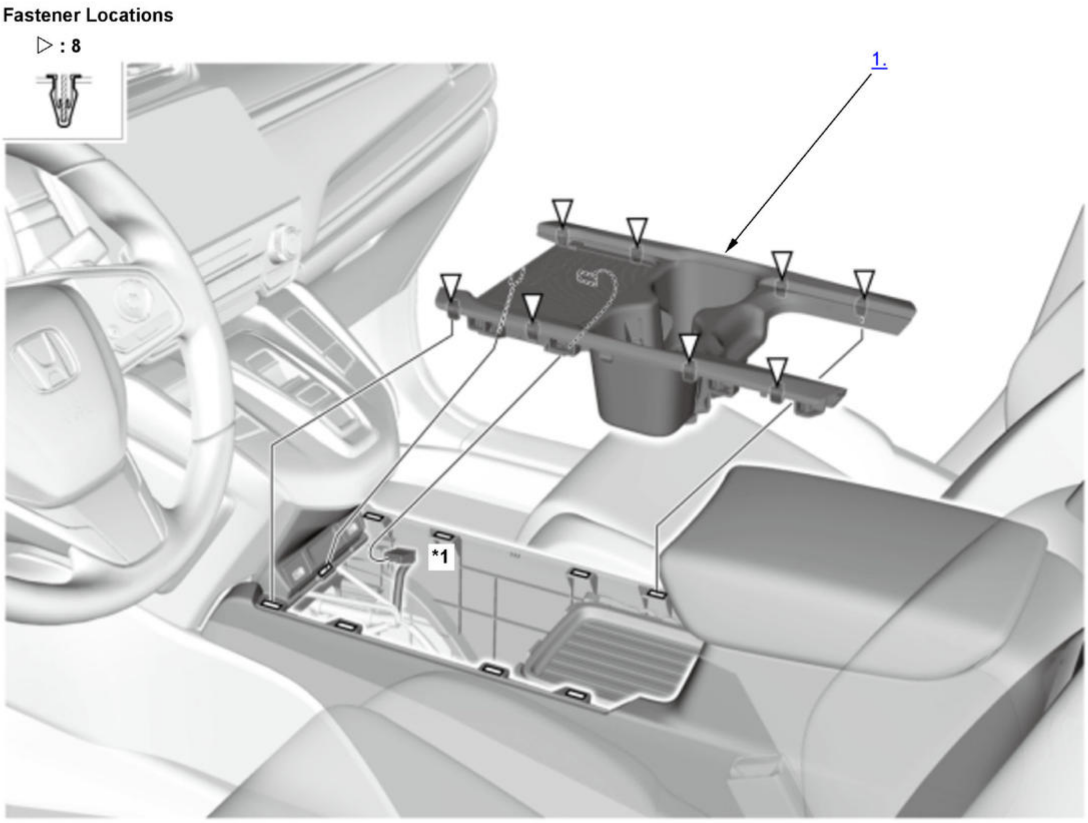

Fig. 6: Exploded View Of Center Console Panel Components
Courtesy of HONDA, U.S.A., INC.

*1	With wireless charger

1. Center Console Panel - Remove
2. All Removed Parts - Install

1. Install the parts in the reverse order of removal.

CENTER CONSOLE REAR TRIM REMOVAL AND INSTALLATION

Removal and Installation

SRS components are located in this area. Review the **SRS component locations** and the **precautions and procedures** before doing repairs or service.

Procedure

NOTE: **Numbered call-outs in figure pertain to list numbers in following procedure.**

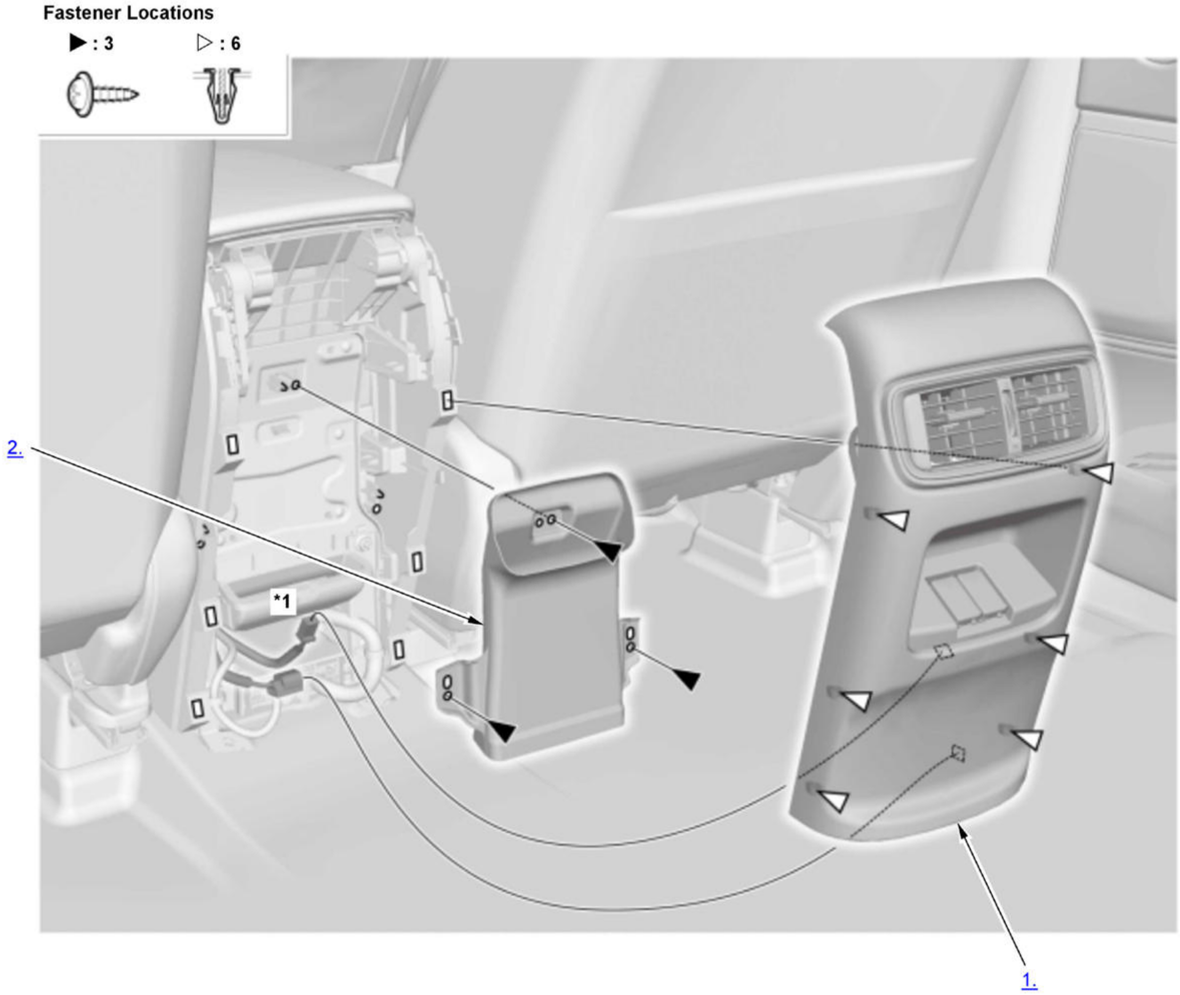

Fig. 7: Exploded View Of Center Console Rear Trim Components
Courtesy of HONDA, U.S.A., INC.

*1	For Some Models

1. Center Console Rear Trim Assembly - Remove
2. Center Console Rear Duct - Remove
3. All Removed Parts - Install

1. Install the parts in the reverse order of removal.

CENTER CONSOLE REMOVAL AND INSTALLATION

Removal and Installation

SRS components are located in this area. Review the **SRS component locations** and the **precautions and procedures** before doing repairs or service.

NOTE: How to read the torque specifications .

1. Center Console Tray - Remove

    1. Remove the center console mat (A).

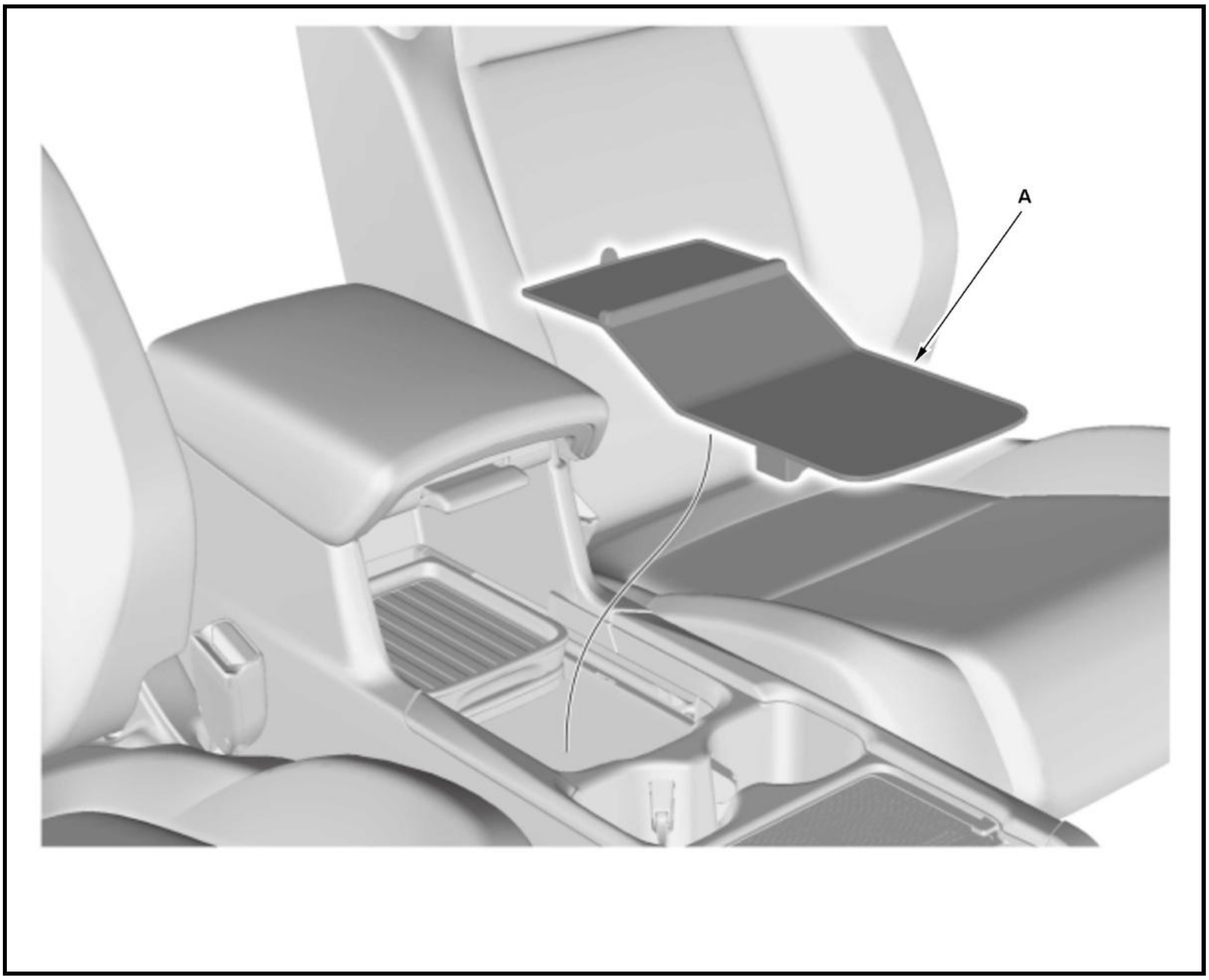

2. Dashboard Center Lower Panel - Remove
3. Both Front Console Covers - Remove
4. Center Console Rear Trim Assembly - Remove
5. Center Console - Remove

    1. Disconnect the connectors (A) and the harness clips (B).

    NOTE: The positions and number of connectors vary depending on model type.

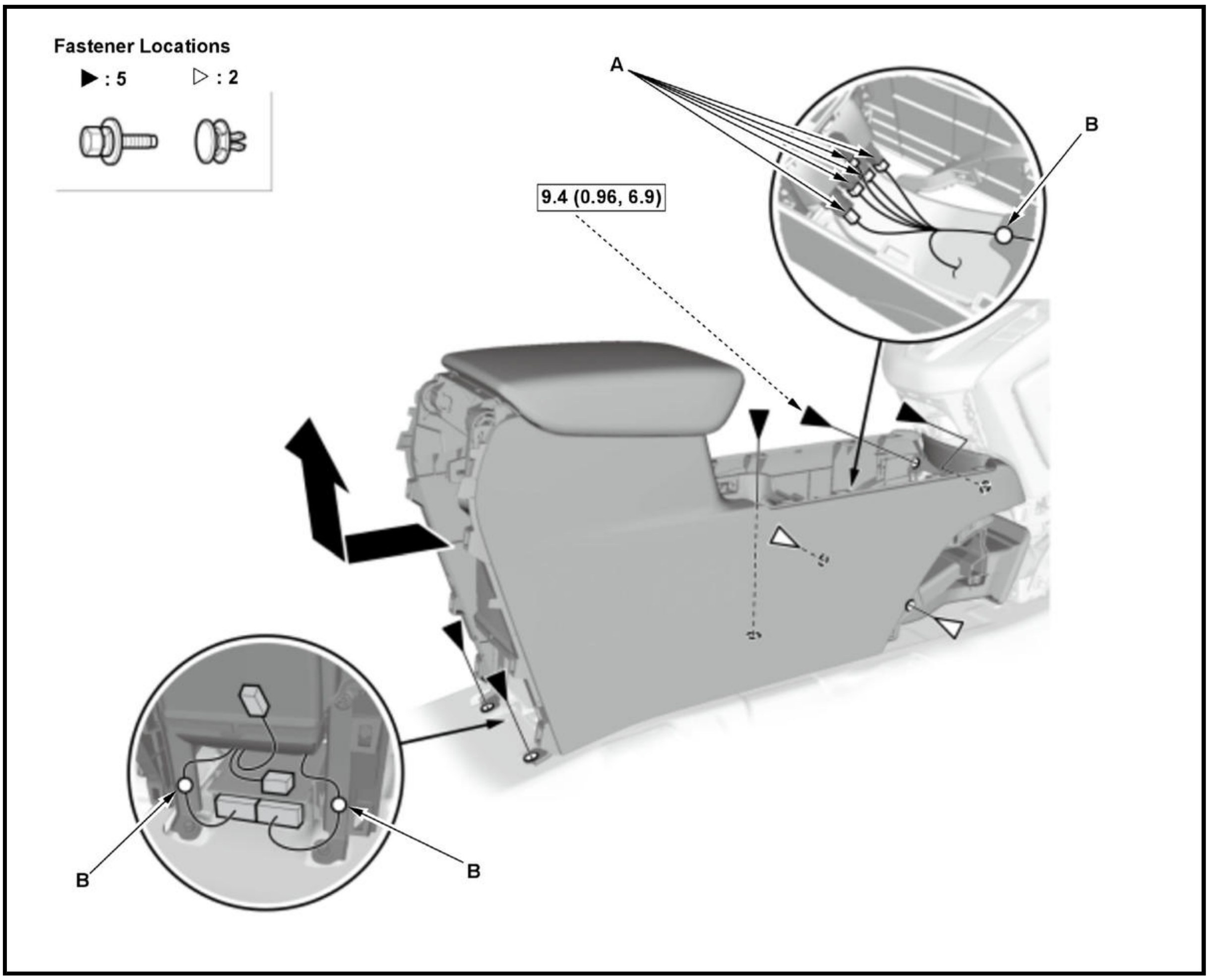
Fastener Locations
▶ : 5
▷ : 2
A
B
9.4 (0.96, 6.9)
B
B

2. Remove the clips and bolts.

6. Center Console Bracket - Remove

1. If necessary, remove the center console bracket (A).

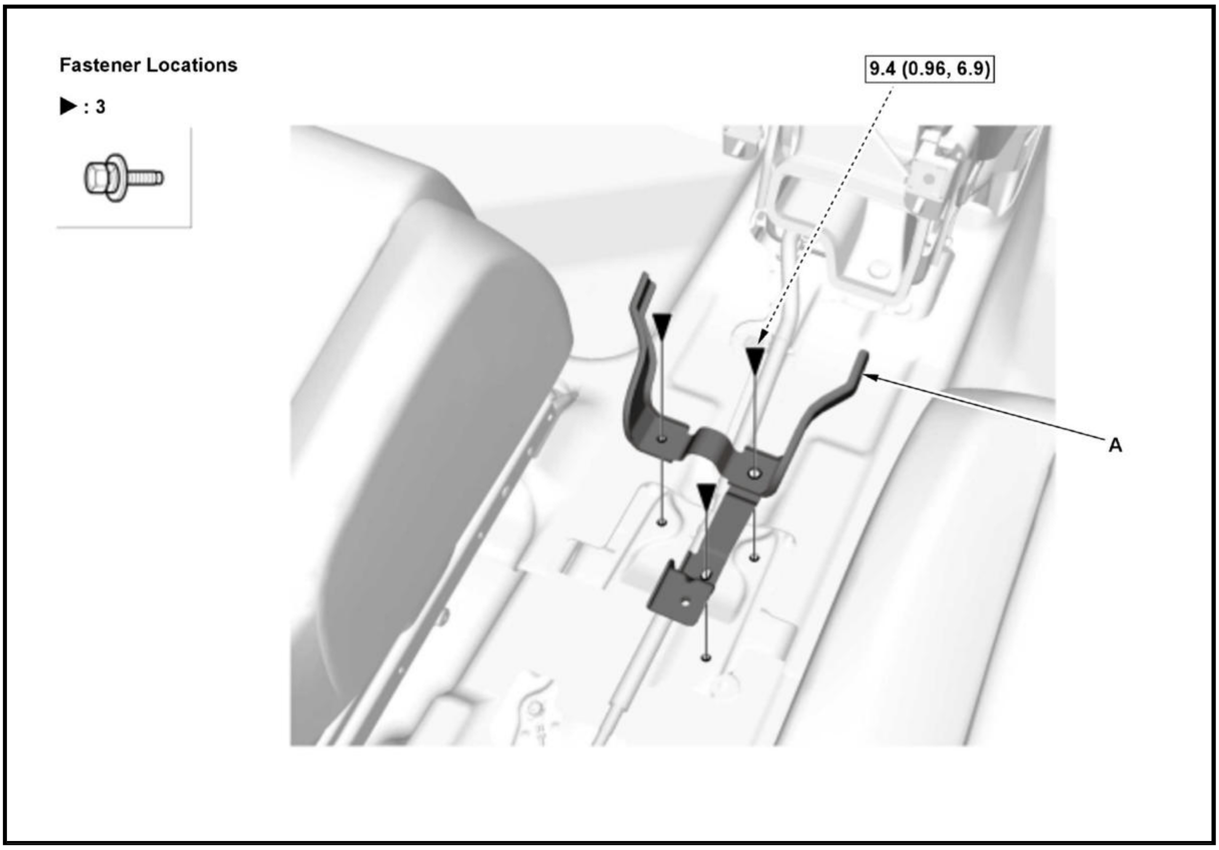
Fastener Locations
▶ : 3
9.4 (0.96, 6.9)
A

7. All Removed Parts - Install

    1. Install the parts in the reverse order of removal.

DASHBOARD CENTER LOWER COVER REMOVAL AND INSTALLATION

Removal and Installation

NOTE:How to read the torque specifications .

1. Center Maintenance Cover - Remove

    1. If necessary, remove the center maintenance cover (A).

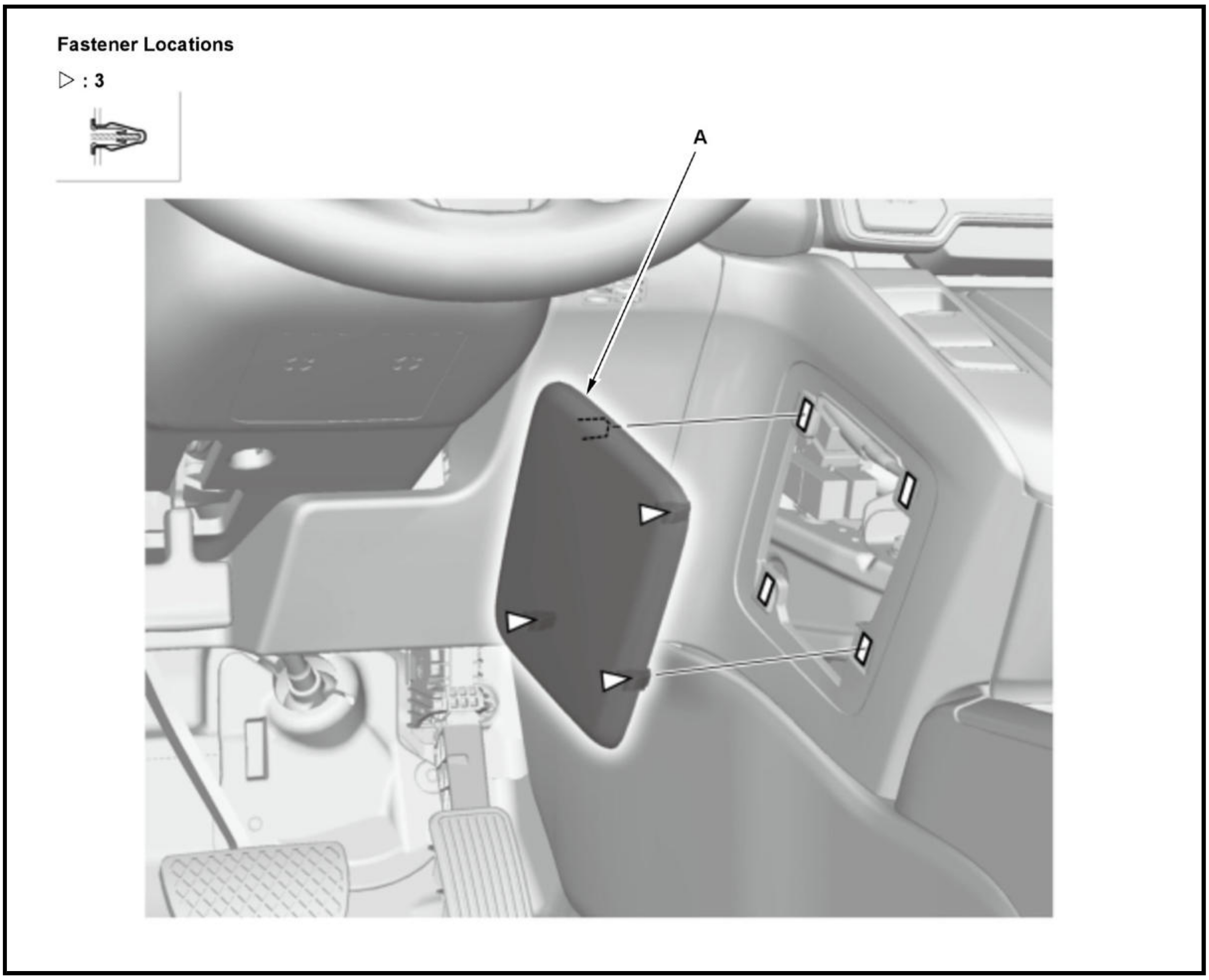

2. Glove Box - Remove
3. Driver's Dashboard Inner Panel - Remove
4. Escutcheon Panel - Remove
5. Center Console - Remove
6. Dashboard Center Lower Cover Assembly - Remove

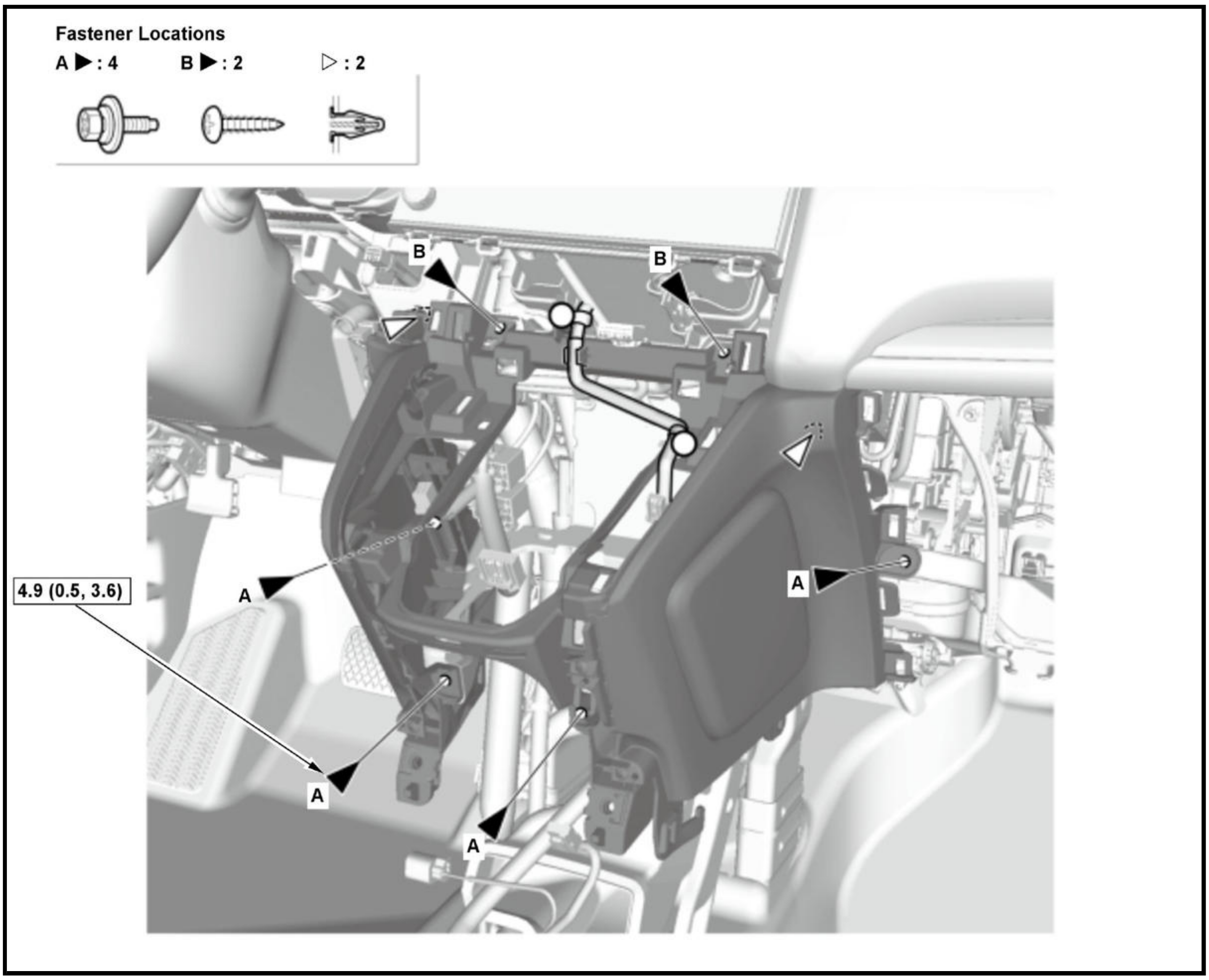
Fastener Locations
A ▶: 4
B ▶: 2
▷: 2
B
B
4.9 (0.5, 3.6)
A
A
A
A

7. Dashboard Center Lower Cover - Disassemble

1. Remove the dashboard driver's center lower cover (A) and the dashboard passenger's center lower cover (B) from the dashboard center lower bracket (C).

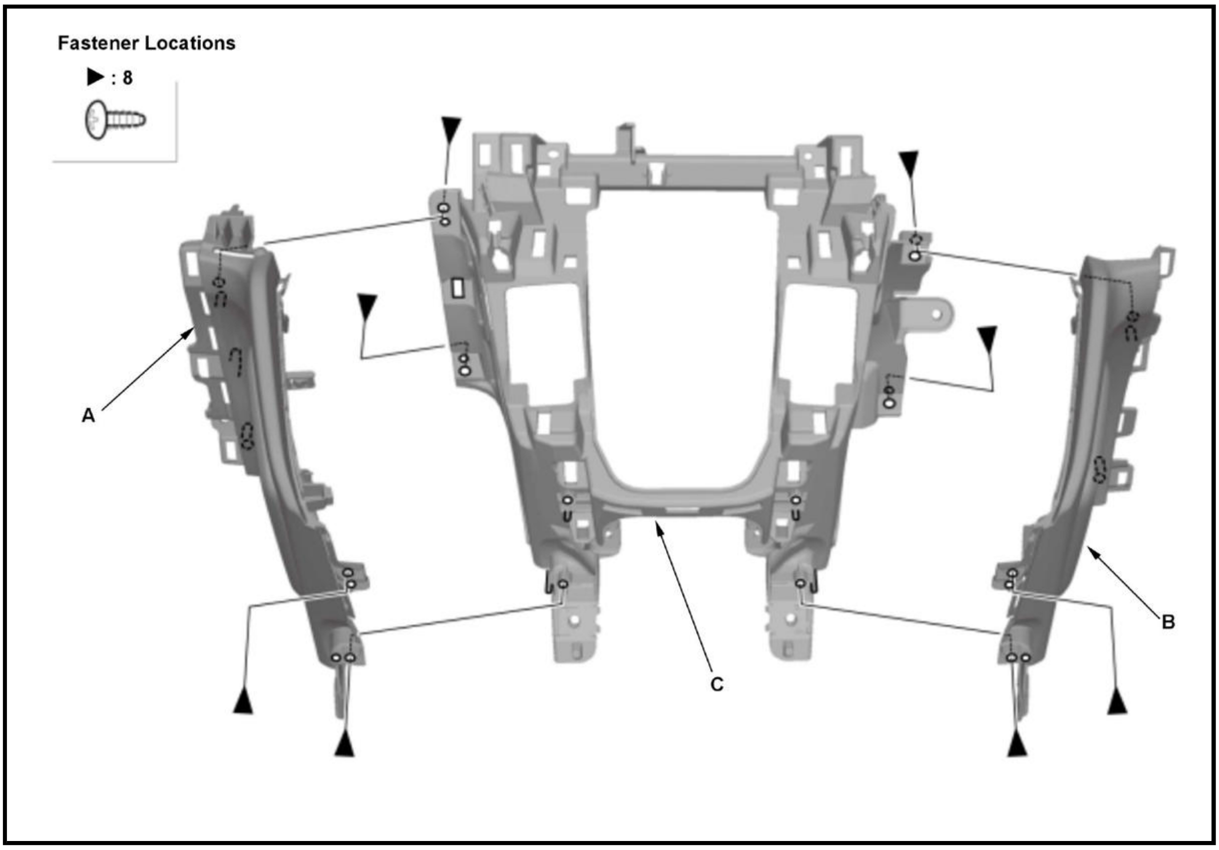
Fastener Locations
▶: 8
A
B
C

8. All Removed Parts - Install

1. Install the parts in the reverse order of removal.

DASHBOARD CENTER LOWER PANEL REMOVAL AND INSTALLATION

Removal and Installation

NOTE: The positions and number of connectors vary depending on model type.

Procedure

NOTE: **Numbered call-outs in figure pertain to list numbers in following procedure.**

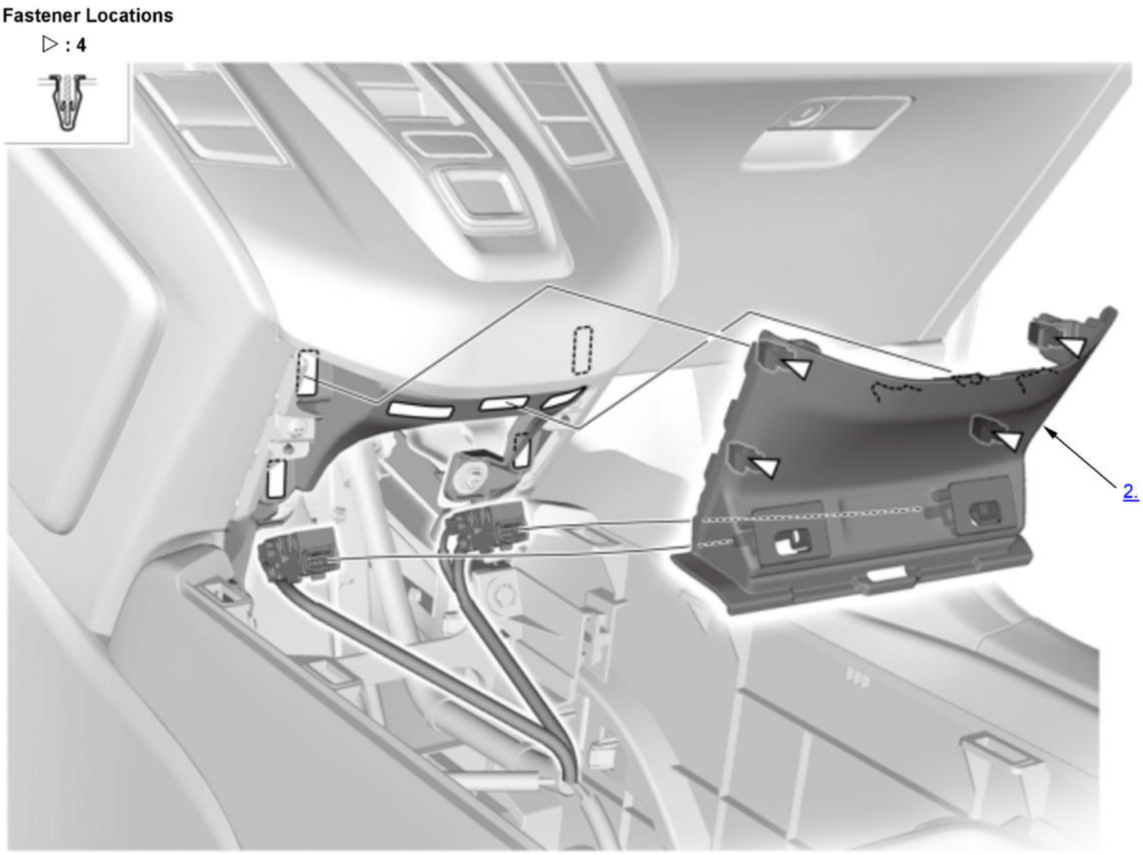

Fig. 8: Exploded View Of Dashboard Center Lower Panel Components
Courtesy of HONDA, U.S.A., INC.

1. Center Console Panel - Remove
2. Dashboard Center Lower Panel - Remove
3. All Removed Parts - Install

1. Install the parts in the reverse order of removal.

DASHBOARD CENTER PANEL REMOVAL AND INSTALLATION

Removal and Installation

Procedure

NOTE: **Numbered call-outs in figure pertain to list numbers in following procedure.**

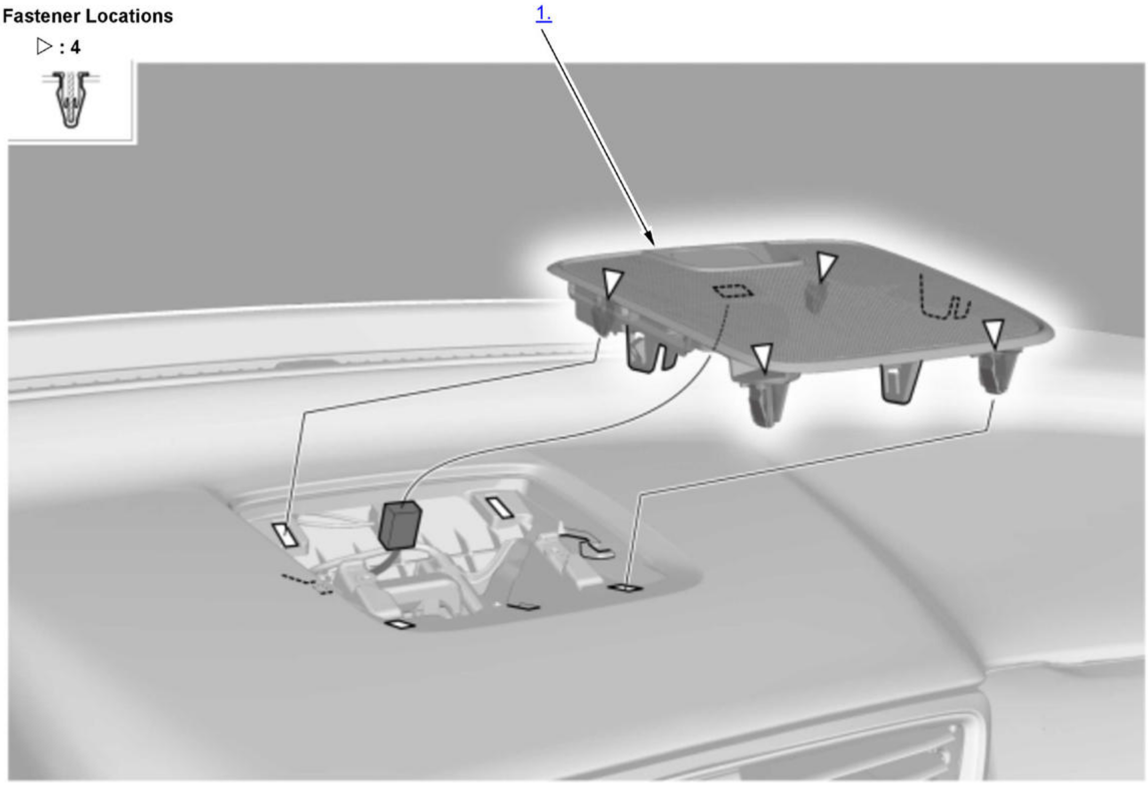

Fig. 9: Dashboard Center Panel Components
Courtesy of HONDA, U.S.A., INC.

1. Dashboard Center Panel - Remove
2. All Removed Parts - Install

1. Install the parts in the reverse order of removal.

DASHBOARD METER VISOR REMOVAL AND INSTALLATION

Removal and Installation

Procedure

NOTE: **Numbered call-outs in figure pertain to list numbers in following procedure.**

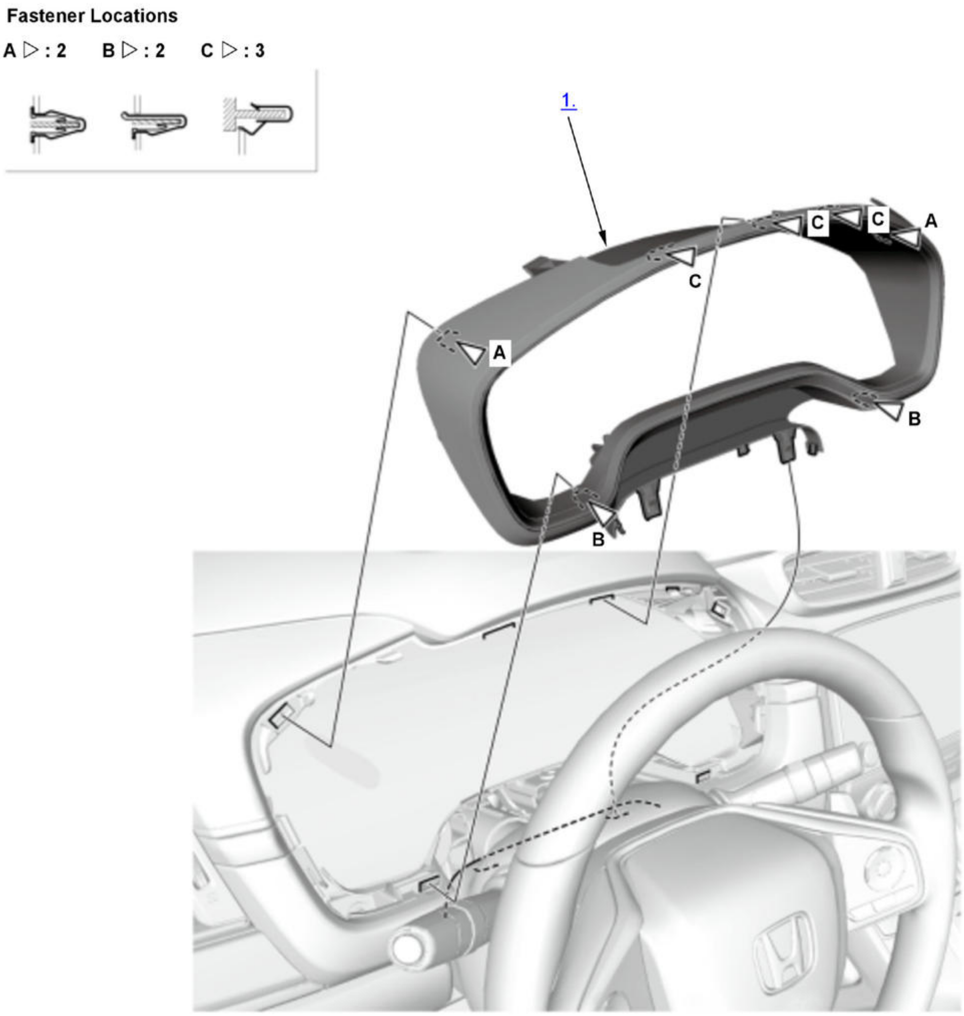

[Fig. 10: Exploded View Of Dashboard Meter Visor Components](#)
Courtesy of HONDA, U.S.A., INC.

1. Dashboard Meter Visor - Remove
2. All Removed Parts - Install

1. Install the parts in the reverse order of removal.

DASHBOARD ORNAMENT PANEL REMOVAL AND INSTALLATION

Removal and Installation

Driver's Side

NOTE: **Numbered call-outs in figure pertain to list numbers in following procedure.**

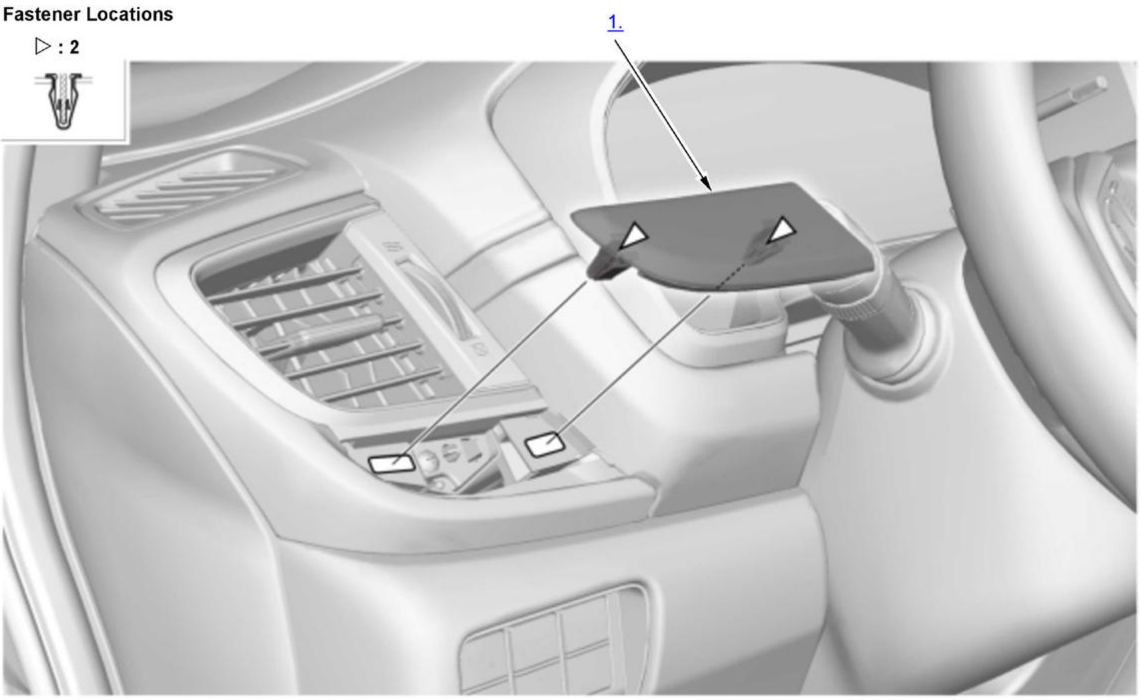

[Fig. 11: Driver's Side Dashboard Ornament Panel Components](#)
Courtesy of HONDA, U.S.A., INC.

1. Driver's Lower Ornament Panel - Remove
2. All Removed Parts - Install

> 1. Install the parts in the reverse order of removal.

Passenger's Side

NOTE: **Numbered call-outs in figure pertain to list numbers in following procedure.**

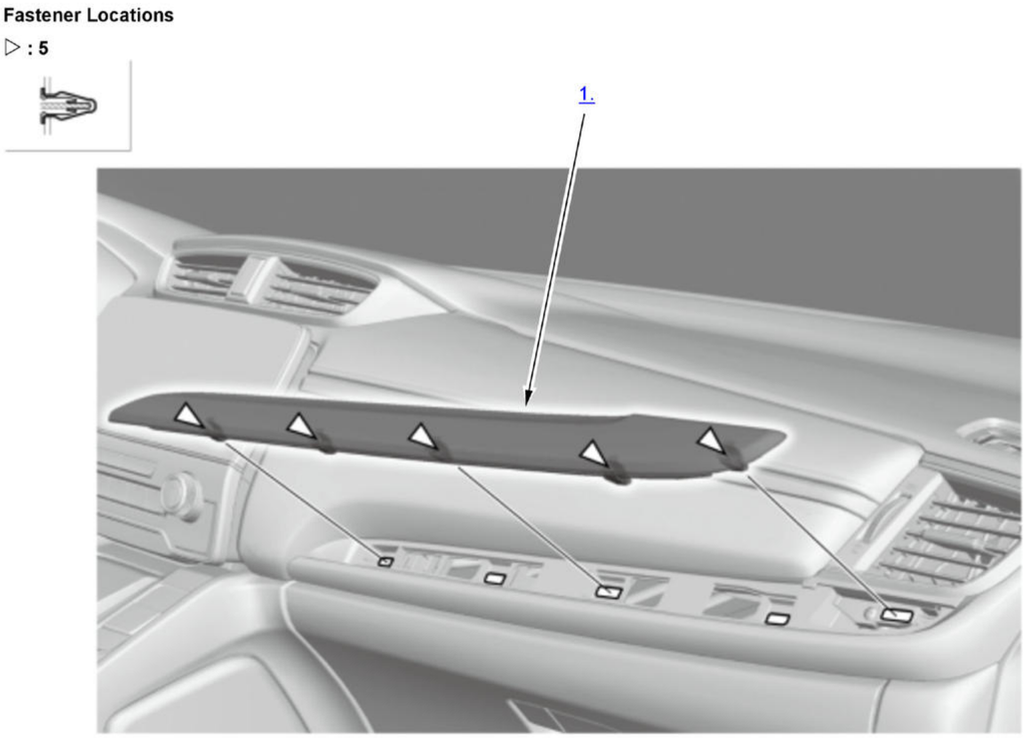
Fastener Locations
▷ : 5
1.

[Fig. 12: Passenger's Side Dashboard Ornament Panel Components (1 Of 2)](#)
Courtesy of HONDA, U.S.A., INC.

NOTE: **Numbered call-outs in figure pertain to list numbers in following procedure.**

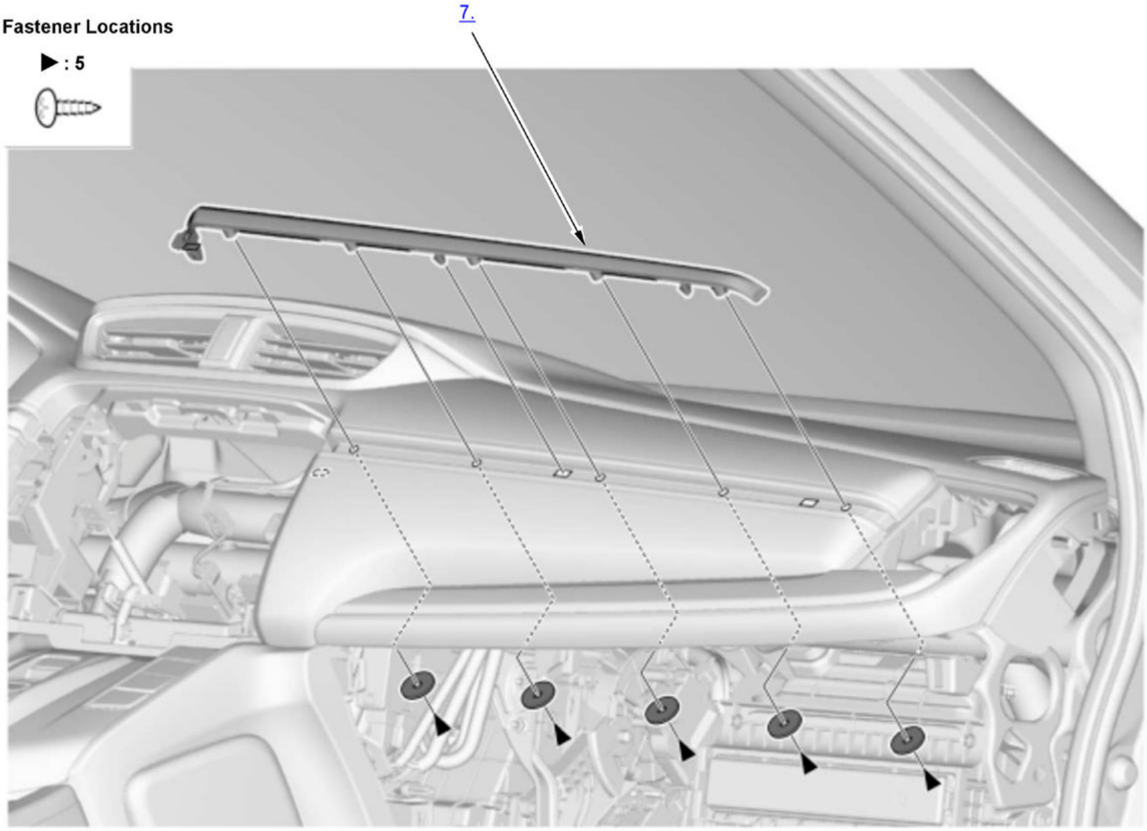
7.
Fastener Locations
▶ : 5

[Fig. 13: Passenger's Side Dashboard Ornament Panel Components (2 Of 2)](#)
Courtesy of HONDA, U.S.A., INC.

1. Passenger's Lower Ornament Panel - Remove
2. **Climate Control Panel - Remove**
3. **Audio Unit - Remove (For some models)**
4. **Audio-Navigation Unit - Remove (For some models)**
5. **Passenger's Outlet - Remove**
6. **Glove Box - Remove**
7. Passenger's Upper Ornament Panel - Remove
8. All Removed Parts - Install

    1. Install the parts in the reverse order of removal.

DASHBOARD OUTLET REMOVAL AND INSTALLATION

Removal and Installation

Driver's Side

NOTE: **Numbered call-outs in figure pertain to list numbers in following procedure.**

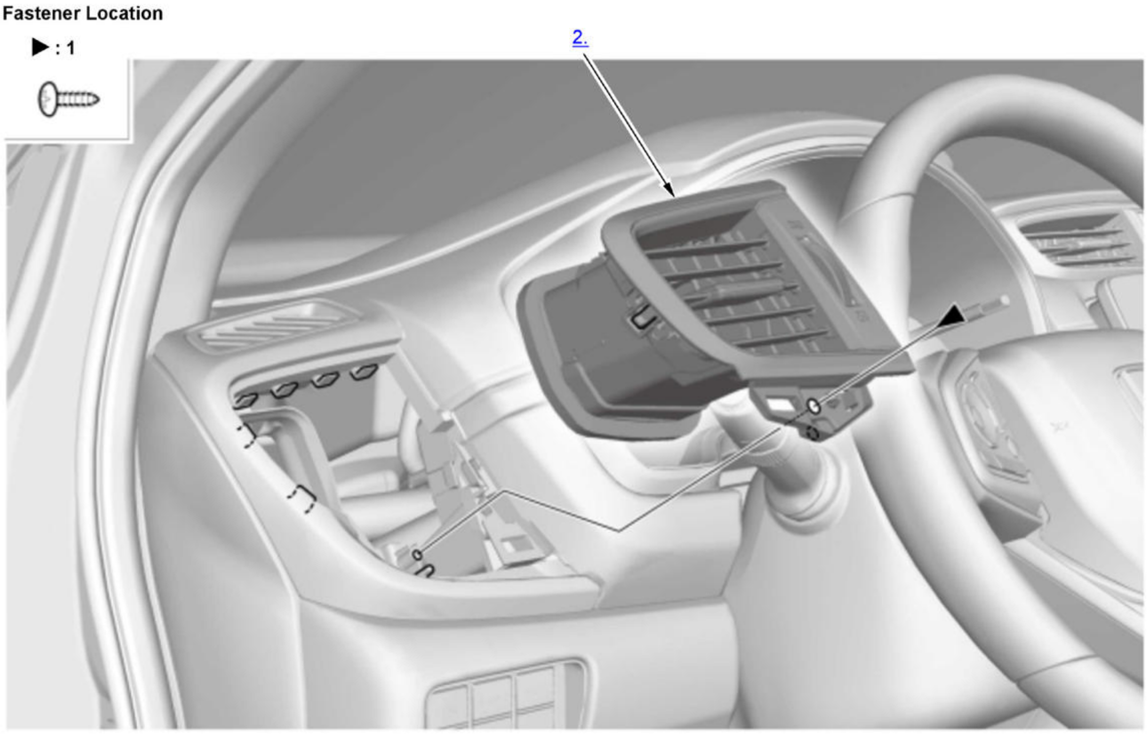

Fig. 14: Driver's Side Dashboard Outlet Components
Courtesy of HONDA, U.S.A., INC.

1. **Driver's Lower Ornament Panel - Remove**
2. Driver's Outlet - Remove
3. All Removed Parts - Install

    1. Install the parts in the reverse order of removal.

Center Area

NOTE: **Numbered call-outs in figure pertain to list numbers in following procedure.**

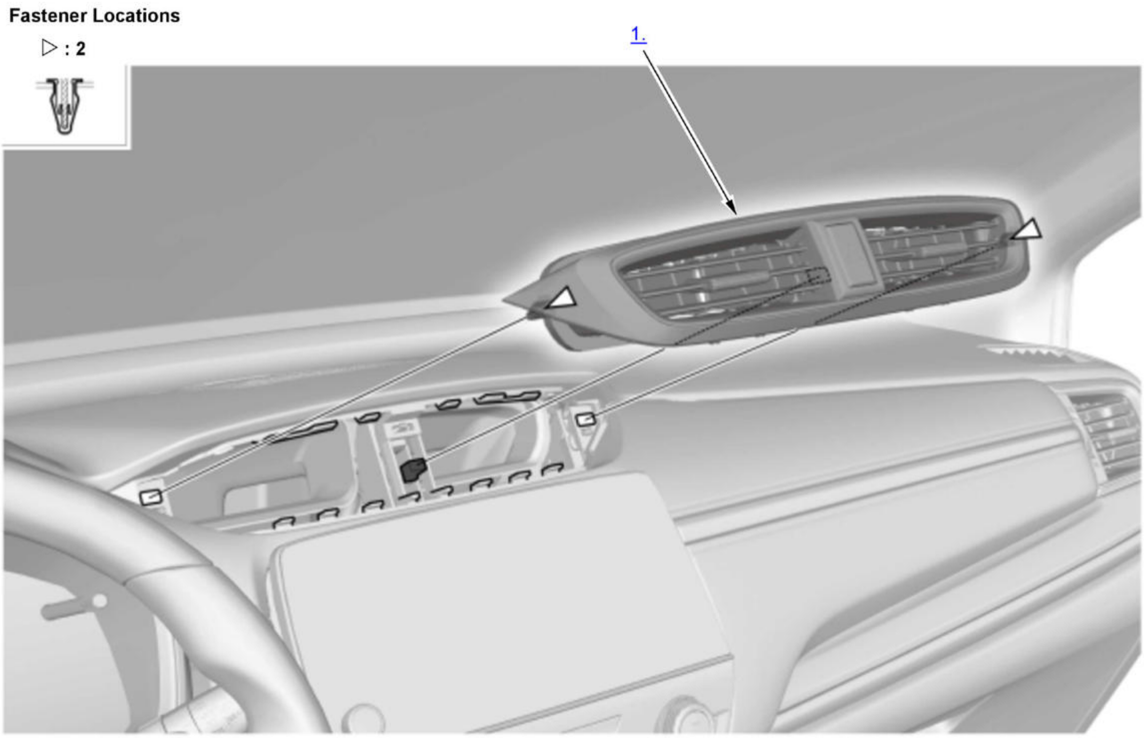

Fig. 15: Center Area Dashboard Outlet Components (1 Of 2)
Courtesy of HONDA, U.S.A., INC.

NOTE: **Numbered call-outs in figure pertain to list numbers in following procedure.**

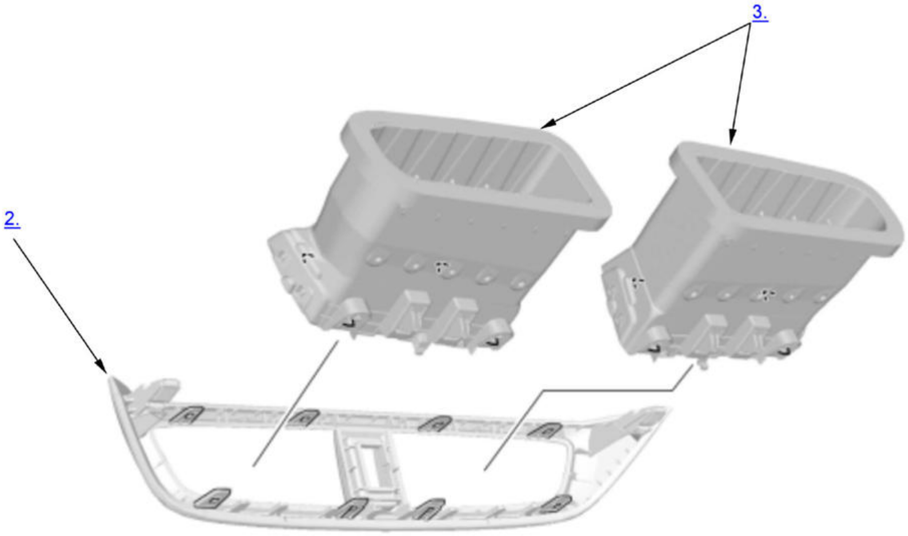

Fig. 16: Center Area Dashboard Outlet Components (2 Of 2)
Courtesy of HONDA, U.S.A., INC.

1. Center Outlet - Remove
2. Center Outlet Panel - Remove
3. Center Outlet Duct - Remove
4. All Removed Parts - Install

1. Install the parts in the reverse order of removal.

Passenger's side

NOTE: **Numbered call-outs in figure pertain to list numbers in following procedure.**

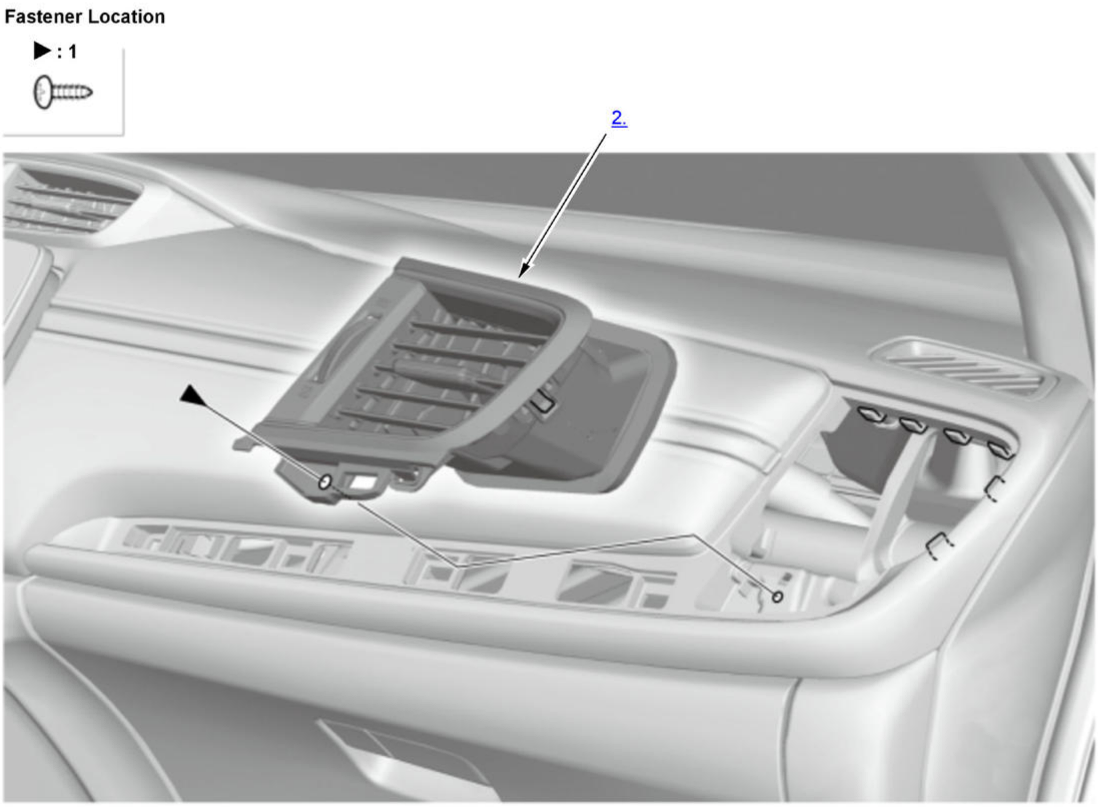

Fig. 17: Passenger's Side Dashboard Outlet Components
Courtesy of HONDA, U.S.A., INC.

1. Passenger's Lower Ornament Panel - Remove
2. Passenger's Outlet - Remove
3. All Removed Parts - Install

1. Install the parts in the reverse order of removal.

DASHBOARD REMOVAL AND INSTALLATION

Removal and Installation

SRS components are located in this area. Review the SRS component locations and the precautions and procedures before doing repairs or service.

NOTE: Where icon is shown, for further information see below.

Procedure

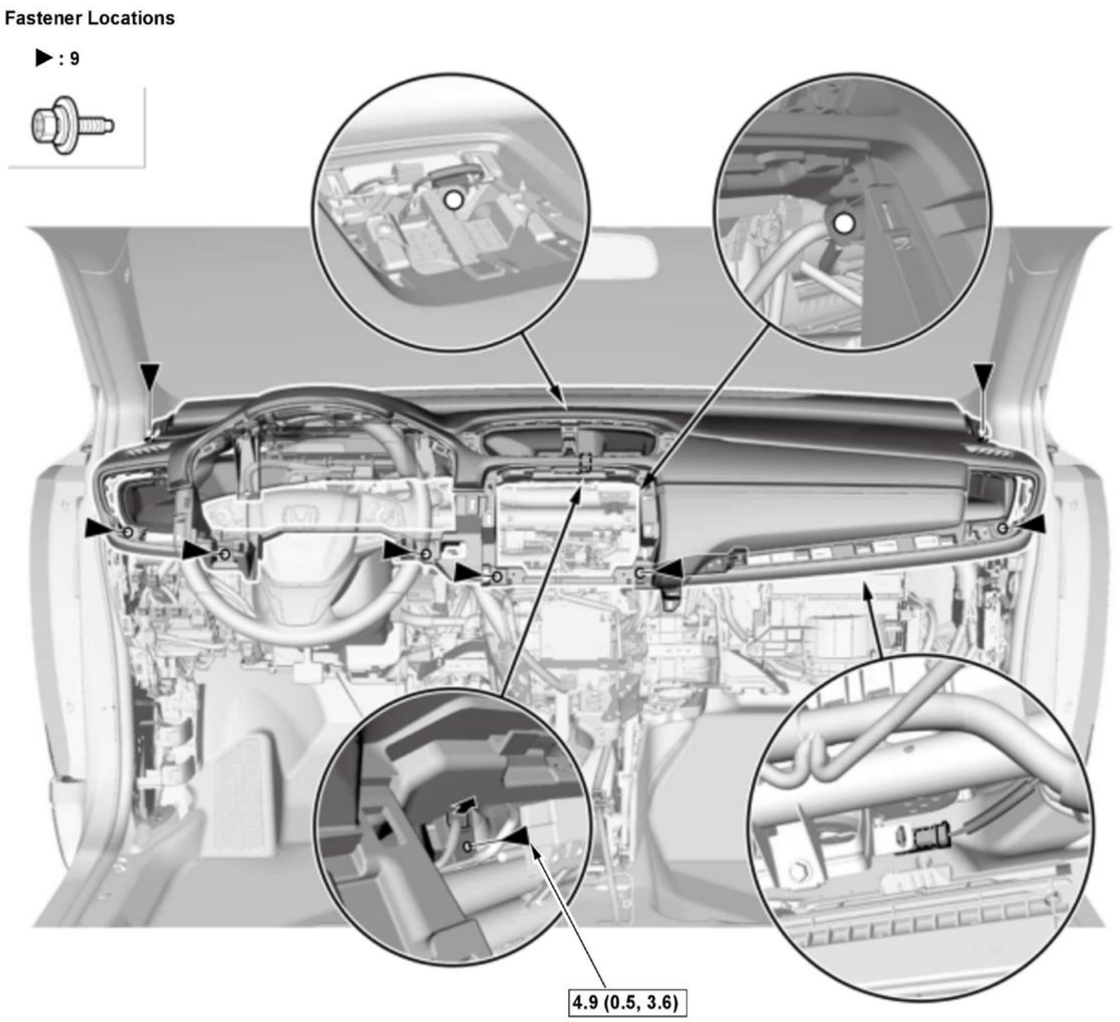

Fig. 18: Dashboard Components
Courtesy of HONDA, U.S.A., INC.

ℹ	Detailed information, notes, and precautions
☐	Torque: N.m (kgf.m, lbf.ft)

1. **12 Volt Battery Terminal - Disconnect**

   NOTE: Wait at least 3 minutes before starting work.

2. **Both Front Pillar Trims - Removal**
3. **Dashboard Meter Visor - Remove**
4. **Gauge Control Module - Remove**
5. **Driver's Dashboard Undercover - Remove**
6. **Driver's Dashboard Side Lid - Remove**
7. **Passenger's Dashboard Undercover - Remove**
8. **Driver's Dashboard Lower Cover - Remove**
9. **Driver's Lower Ornament Panel - Remove**
10. **Driver's Outlet - Remove**
11. **Driver's Dashboard Outer Panel - Remove**
12. **Climate Control Panel - Remove**

13. Audio Unit - Remove (For some models)
14. Audio-Navigation Unit - Remove (For some models)
15. Driver's Dashboard Inner Panel - Remove
16. Center Outlet - Remove
17. Passenger's Lower Ornament Panel - Remove
18. Passenger's Outlet - Remove
19. Glove Box - Remove
20. Passenger's Dashboard Side Lid - Remove
21. Dashboard Center Lower Cover Assembly - Remove
22. Dashboard Center Panel - Remove
23. Dashboard - Remove
24. Passenger's Dashboard Stay - Remove

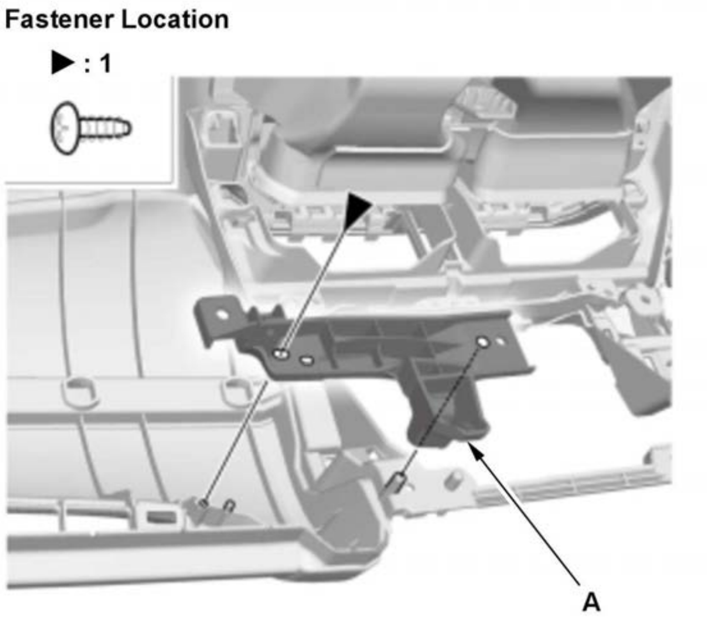	1. If necessary, remove the passenger's dashboard stay (A).

25. All Removed Parts - Install

1. Install the parts in the reverse order of removal.

DASHBOARD SIDE LID REMOVAL AND INSTALLATION

Removal and Installation

Driver's Side

NOTE: **Numbered call-outs in figure pertain to list numbers in following procedure.**

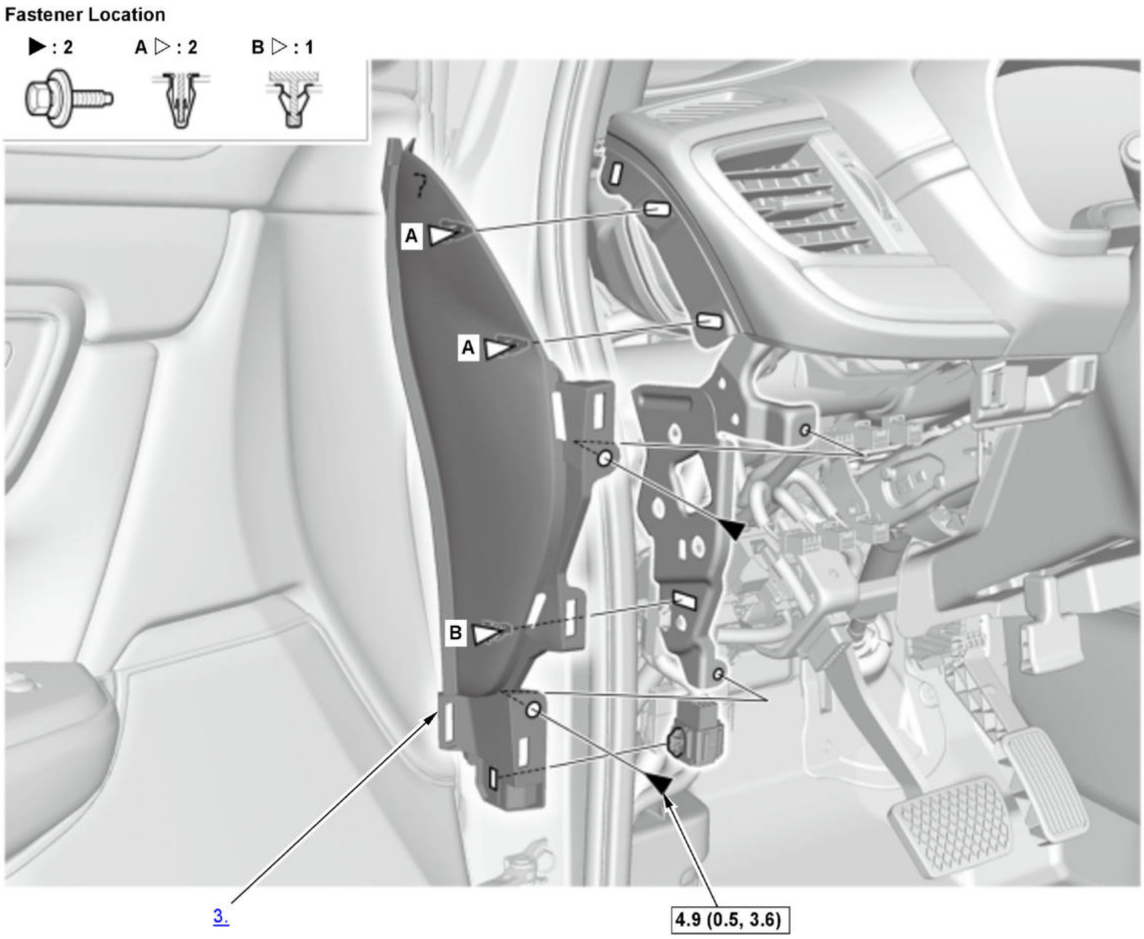

Fig. 19: Driver's Side Dashboard Side Lid Components
Courtesy of HONDA, U.S.A., INC.

☐	Torque: N.m (kgf.m, lbf.ft)

1. **Driver's Dashboard Lower Cover - Remove**
2. Front Door Opening Seal - Remove

   1. **Remove the front door opening seal as needed**.

3. Driver's Dashboard Side Lid - Remove
4. All Removed Parts - Install

   1. Install the parts in the reverse order of removal.

Passenger's Side

NOTE: **Numbered call-outs in figure pertain to list numbers in following procedure.**

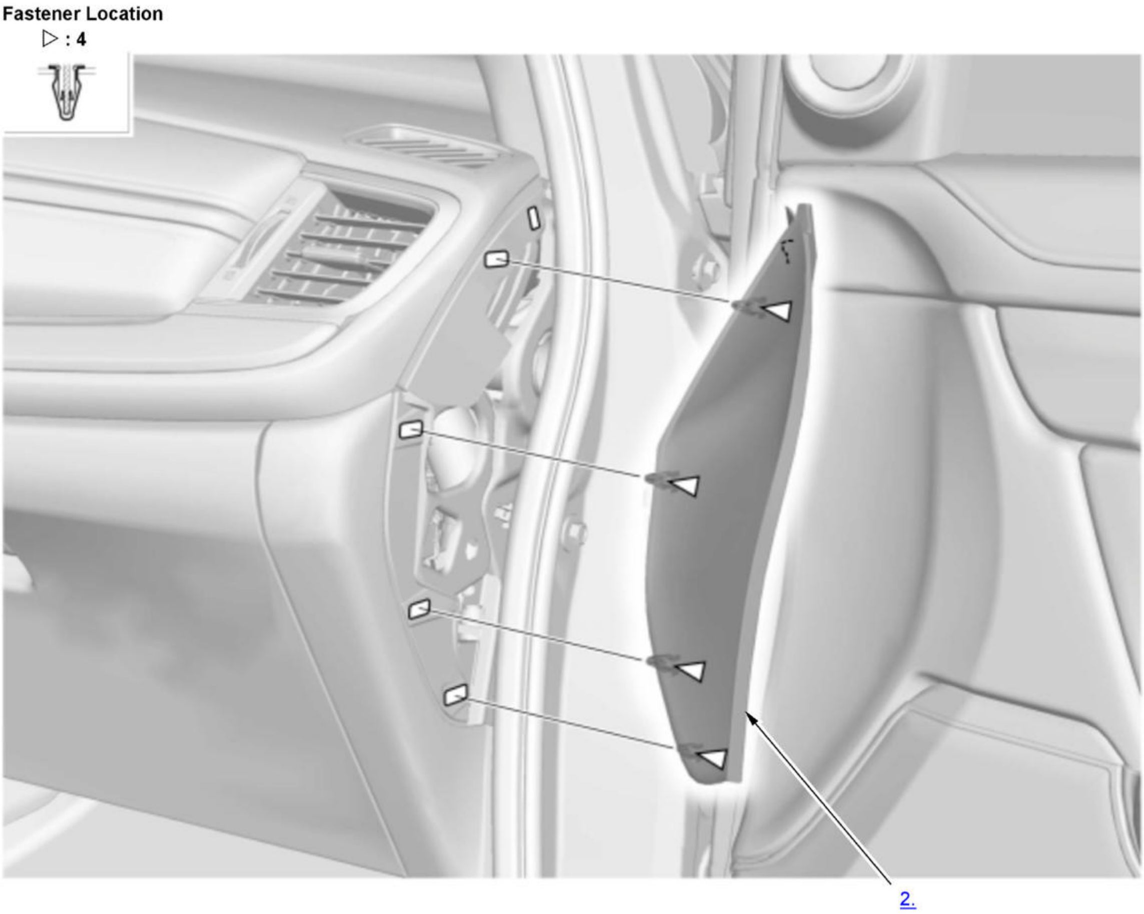

[Fig. 20: Passenger's Side Dashboard Side Lid Components](#)
Courtesy of HONDA, U.S.A., INC.

1. Front Door Opening Seal - Remove

1. Remove the front door opening seal as needed.

2. Passenger's Dashboard Side Lid - Remove
3. All Removed Parts - Install

1. Install the parts in the reverse order of removal.

DASHBOARD UNDERCOVER REMOVAL AND INSTALLATION

Removal and Installation

Driver's Side

NOTE: **Numbered call-outs in figure pertain to list numbers in following procedure.**

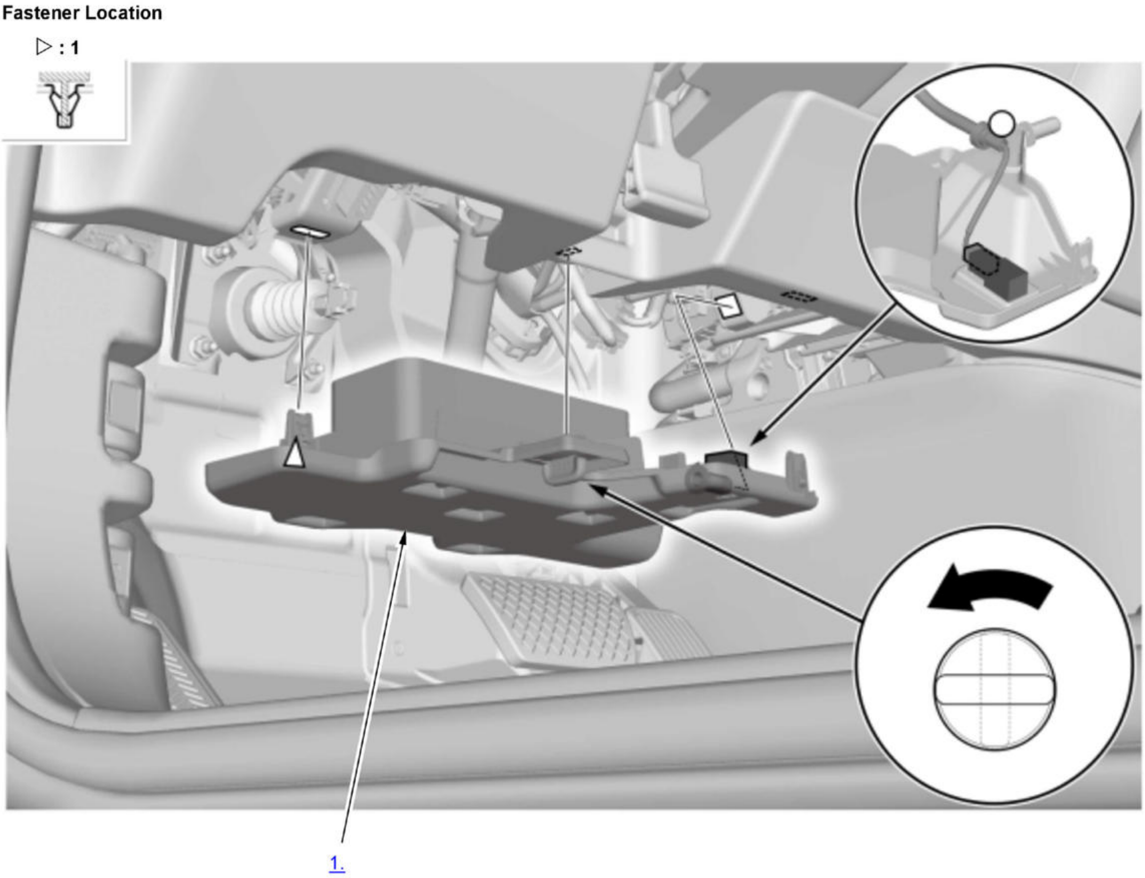

Fig. 21: Driver's Side Dashboard Undercover Components
Courtesy of HONDA, U.S.A., INC.

1. Driver's Dashboard Undercover - Remove
2. All Removed Parts - Install

1. Install the parts in the reverse order of removal.

Passenger's Side

NOTE: **Numbered call-outs in figure pertain to list numbers in following procedure.**

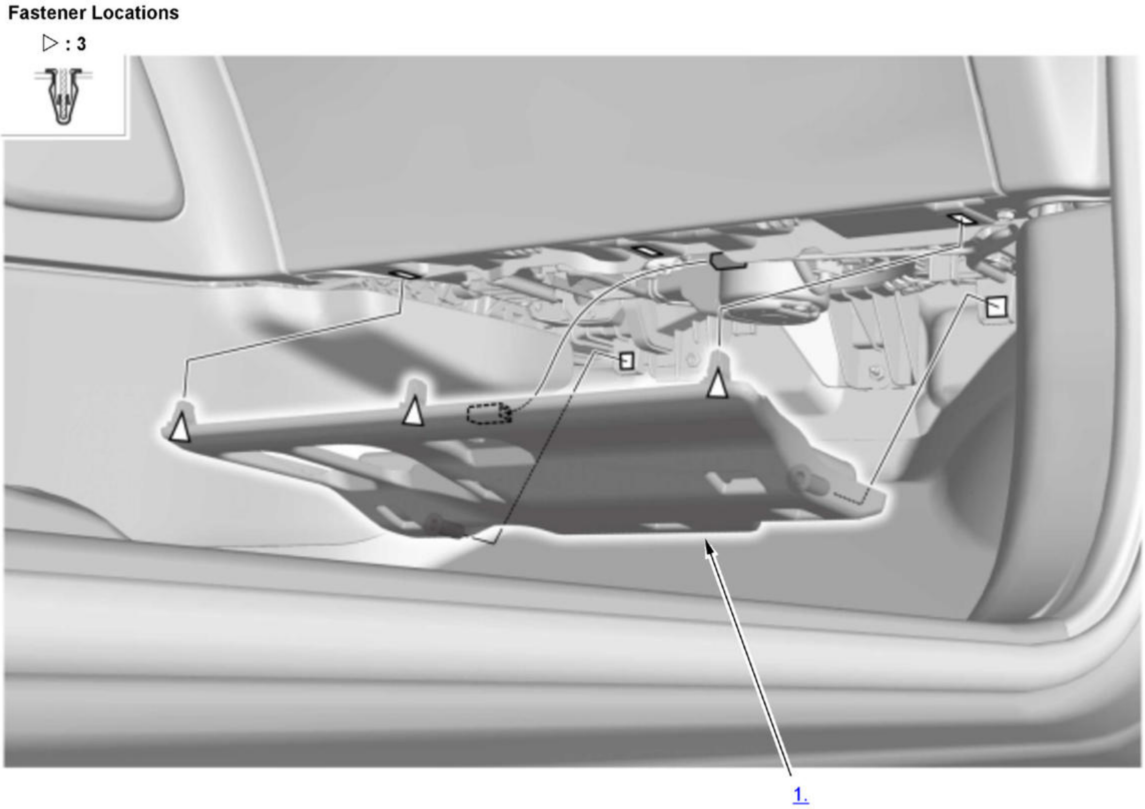

Fig. 22: Passenger's Side Dashboard Undercover Components
Courtesy of HONDA, U.S.A., INC.

1. Passenger's Dashboard Undercover - Remove
2. All Removed Parts - Install

> 1. Install the parts in the reverse order of removal.

DASHBOARD/STEERING HANGER BEAM REMOVAL AND INSTALLATION

Removal and Installation

SRS components are located in this area. Review the SRS component locations and the precautions and procedures before doing repairs or service.

NOTE:

- How to read the torque specifications .
- Do not release the lock lever until the steering column is installed. If the lock lever is released before installation, adjust the steering column after installation.

1. 12 Volt Battery Terminal - Disconnect

   NOTE: Wait at least 3 minutes before starting work.

2. Both Front Pillar Trims - Removal
3. Column Cover - Remove
4. Driver's Dashboard Lower Cover - Remove
5. Both Dashboard Undercover - Remove
6. Both Dashboard Side Lid - Remove
7. Center Console - Remove
8. Center Console Bracket - Remove

9. **Brake Pedal Position Switch - Remove**
10. **Linkage Assembly - Remove**
11. Dashboard/Steering Hanger Beam - Remove

<table>
<tr>
<td>

Driver's Side

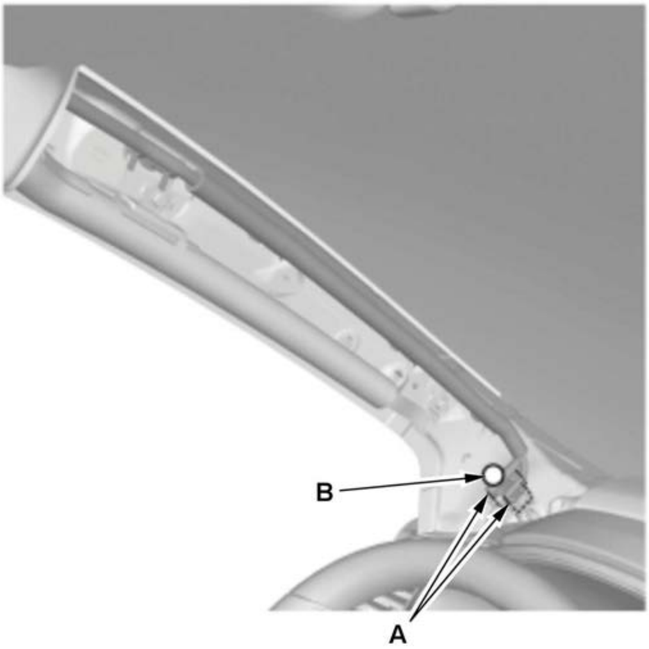

Passenger's Side

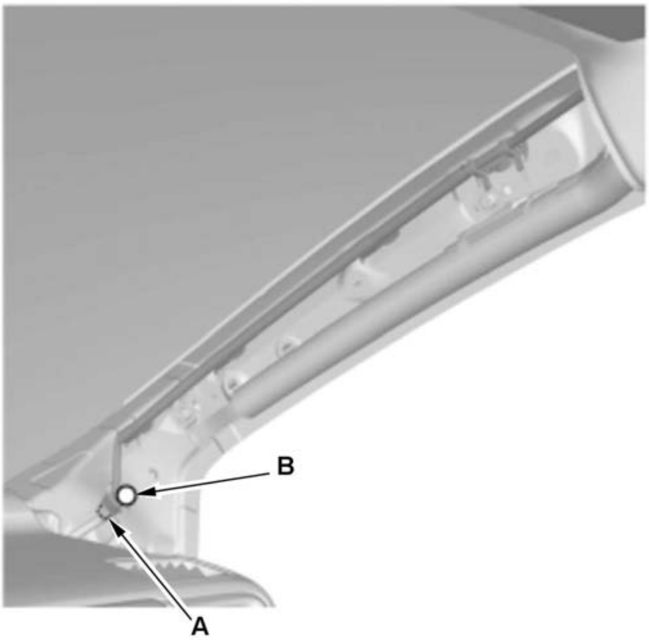

</td>
<td>

Front Pillar Area

1. Disconnect the connectors (A) and remove the clips (B).

NOTE: The positions and number of connectors vary depending on model type.

</td>
</tr>
</table>

Steering Column Area

2. Disconnect the connectors (A) and remove the clips (B).

NOTE: The positions and number of connectors vary depending on model type.

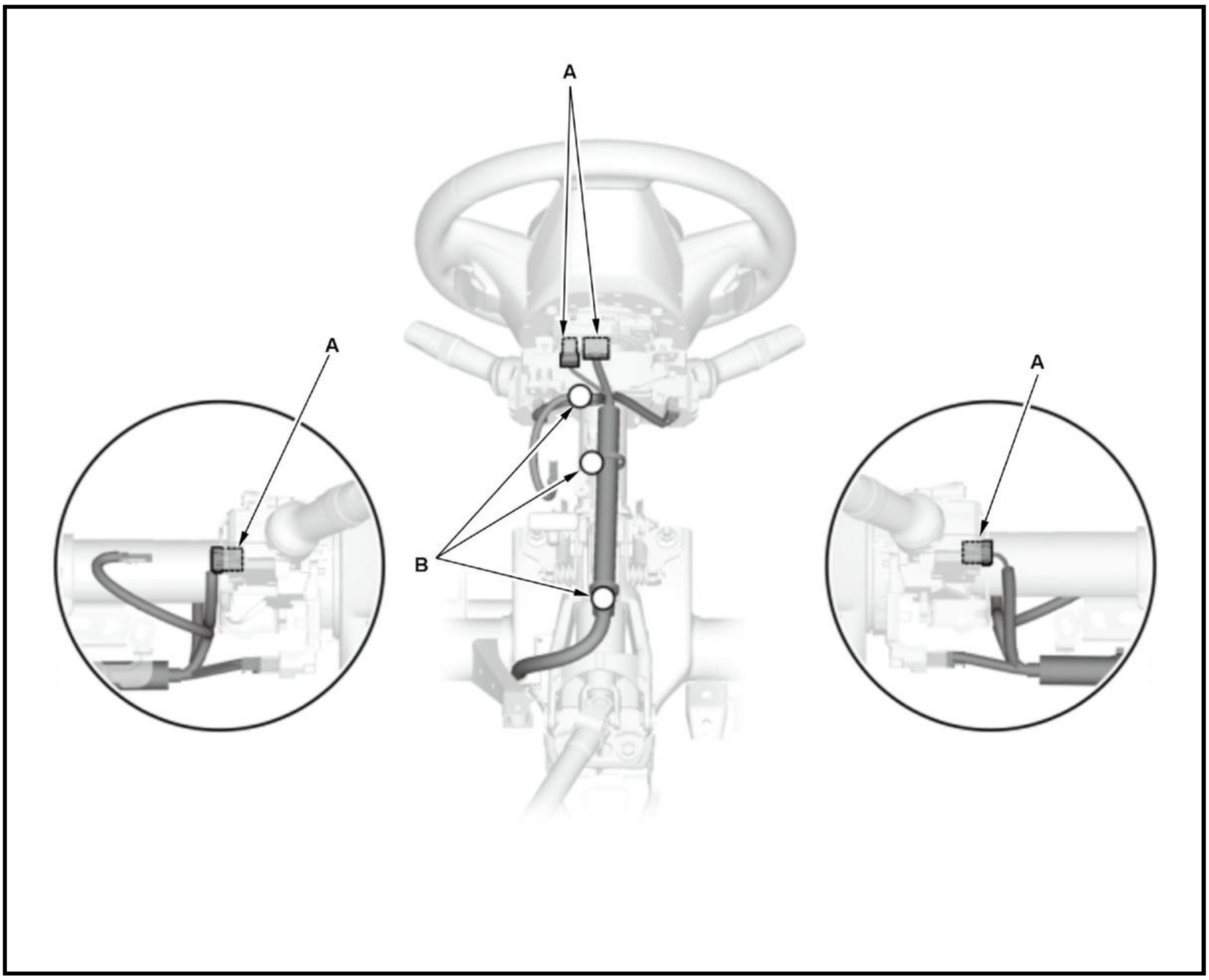

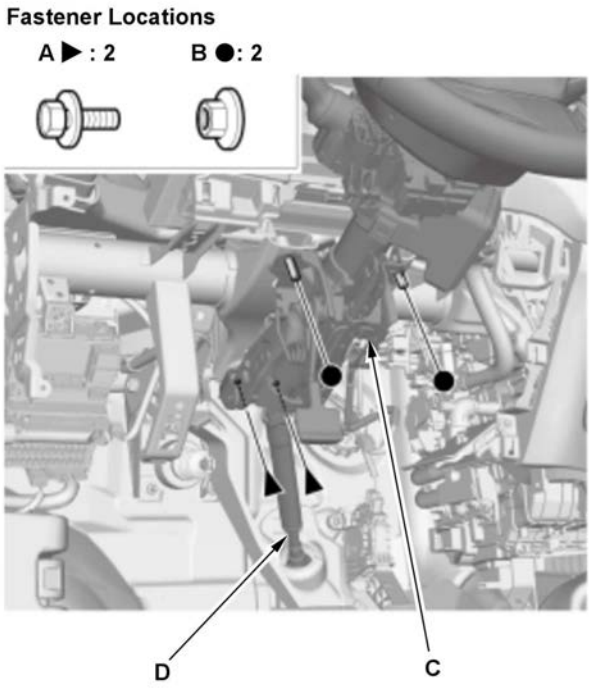	3. **Remove the bolts (A) and nuts (B)** . 4. Lay the steering column (C) on the driver's floor. **NOTE:** - Wrap the steering column in a shop towel to avoid any damage. - Be careful not to pull out the lower side from the steering shaft during working.

Driver's Side

5. Disconnect the connectors (A) and remove the clip (B).

NOTE: The positions and number of connectors vary depending on models.

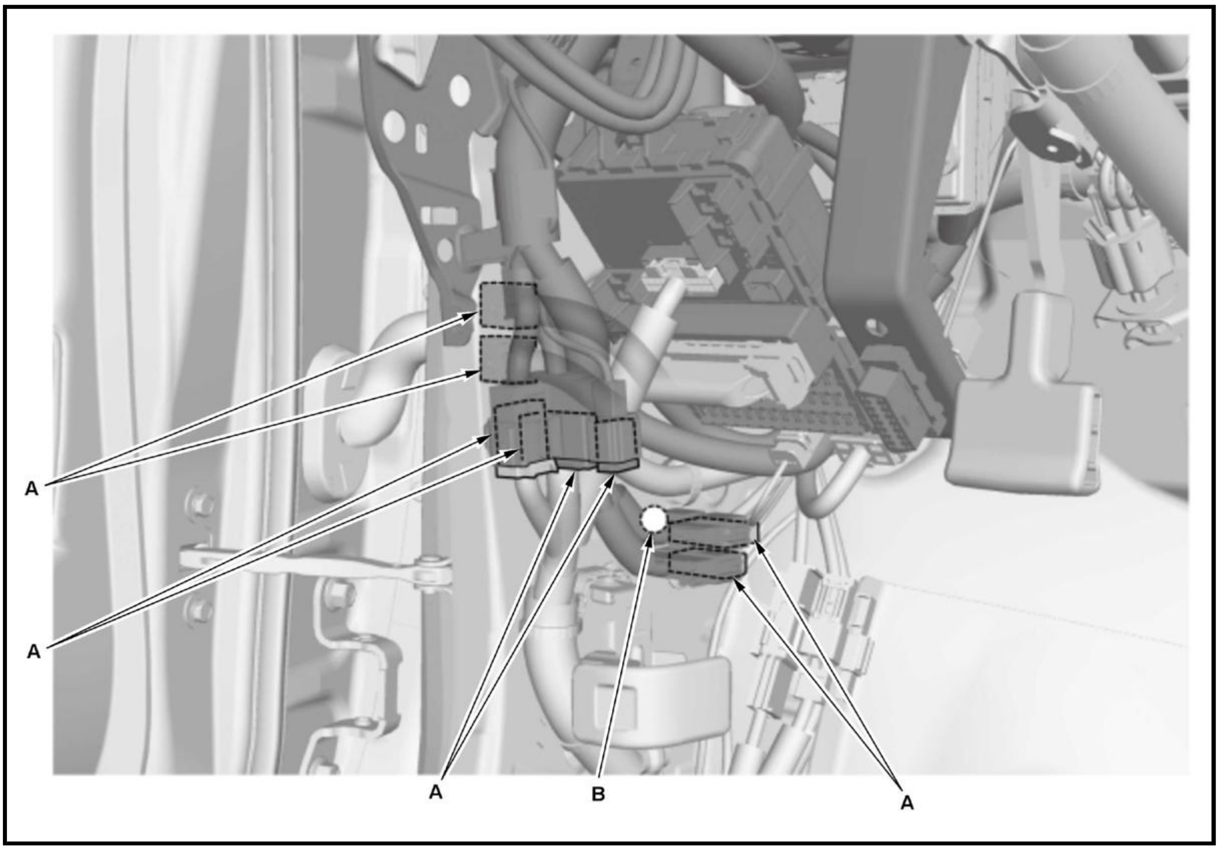
A
A
A
B
A

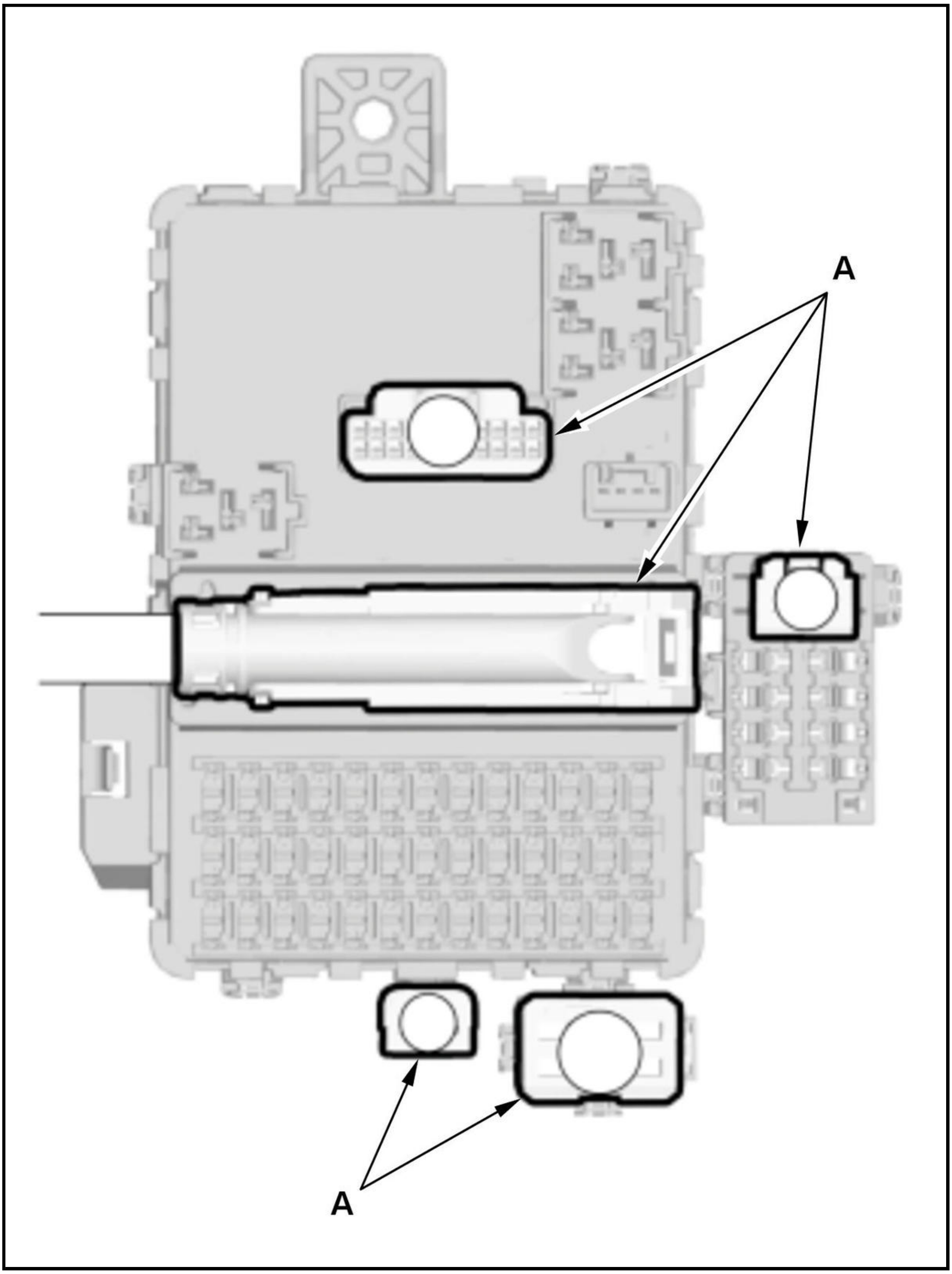

Passenger's Side

6. Disconnect the connectors (A).

NOTE: The positions and number of connectors vary depending on models.

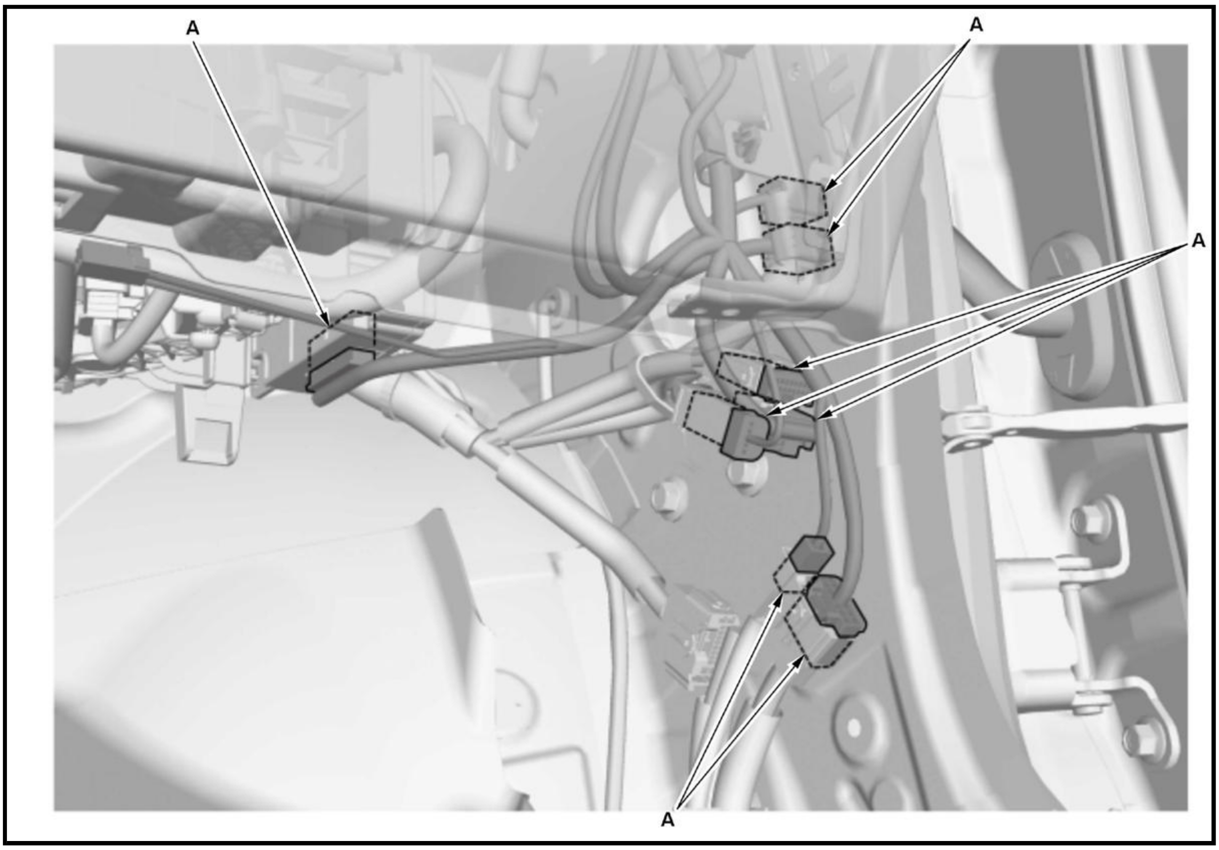

Center Area

7. Disconnect the connectors (A) and remove the clips (B).

NOTE: The positions and number of connectors vary depending on models.

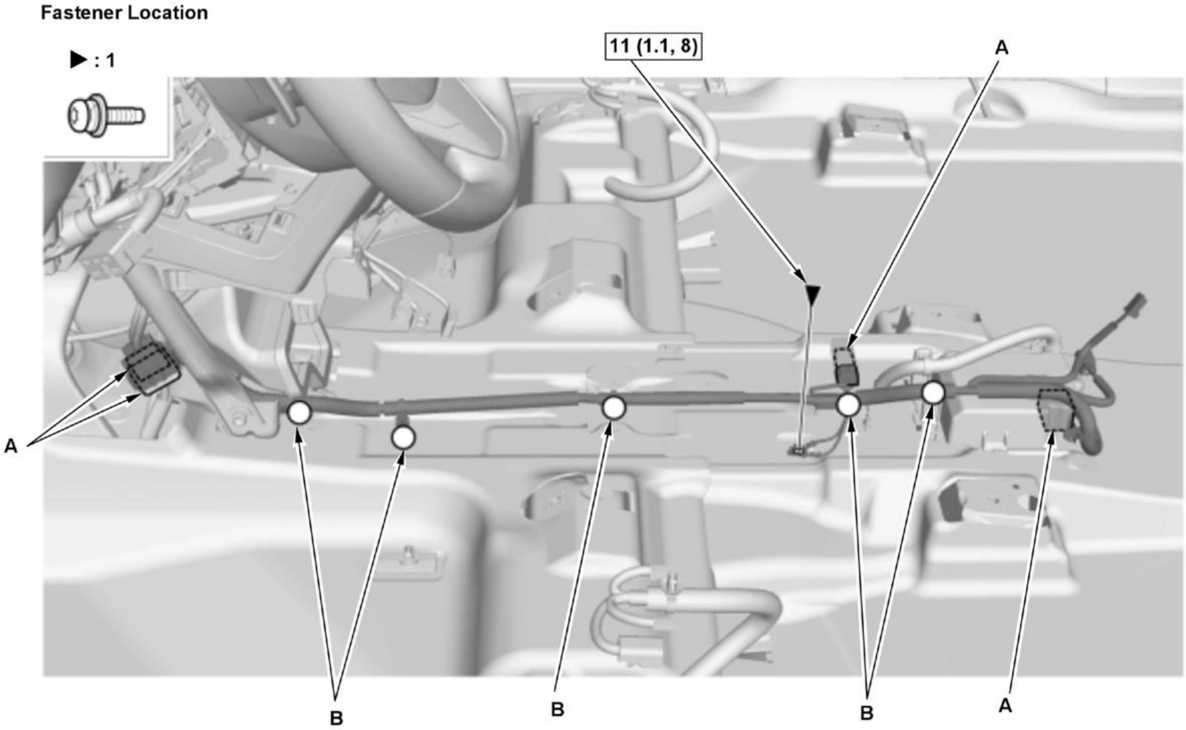
Fastener Location
▶ : 1
11 (1.1, 8)
A
A
B
B
B
A

Fig. 23: Harness Retaining Bolt With Torque Specifications
Courtesy of HONDA, U.S.A., INC.

8. Remove the bolt.

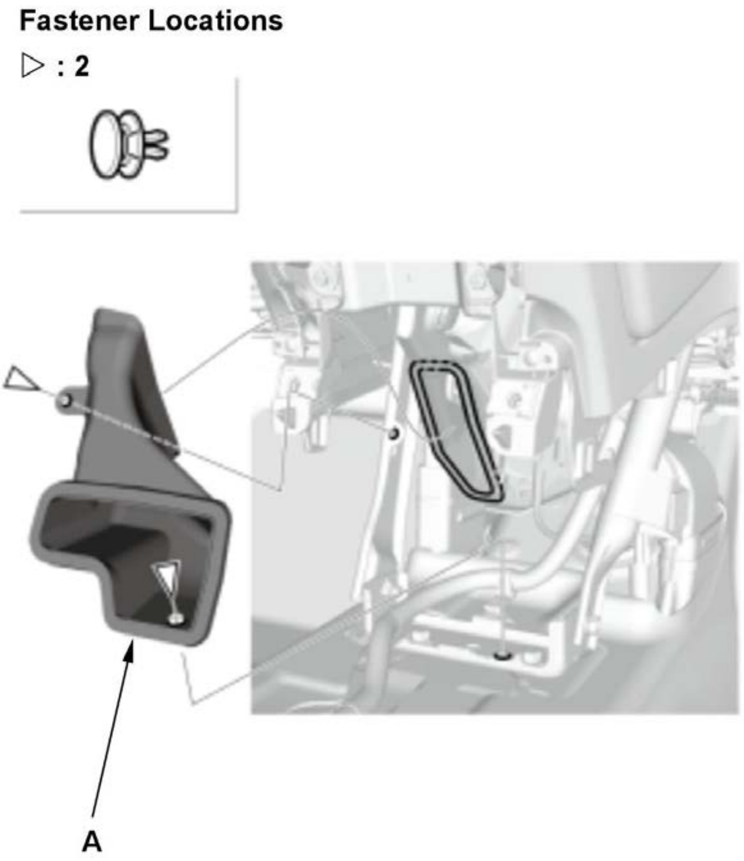
Fastener Locations
▷ : 2
A

9. Remove the rear heater joint duct (A).

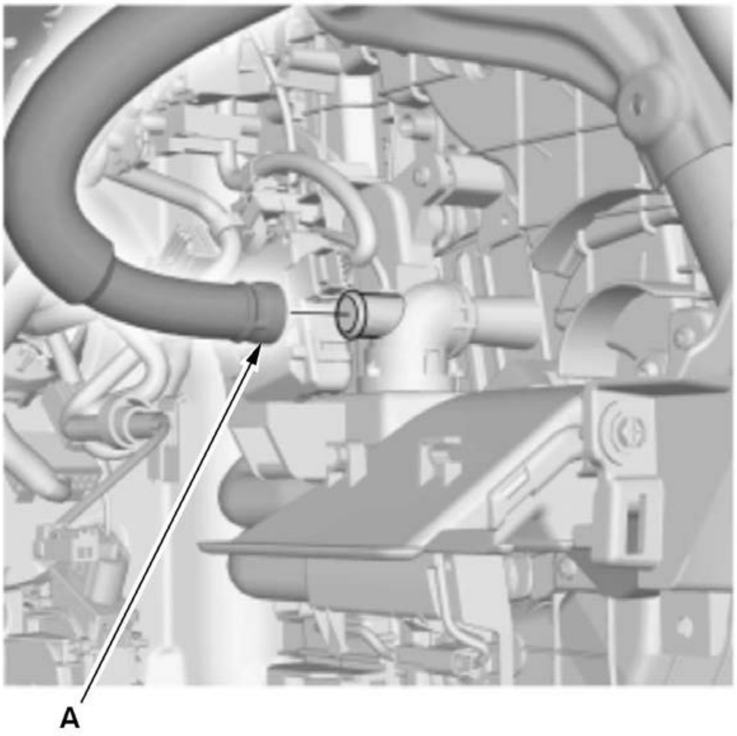

10. Disconnect the aspirator hose (A).

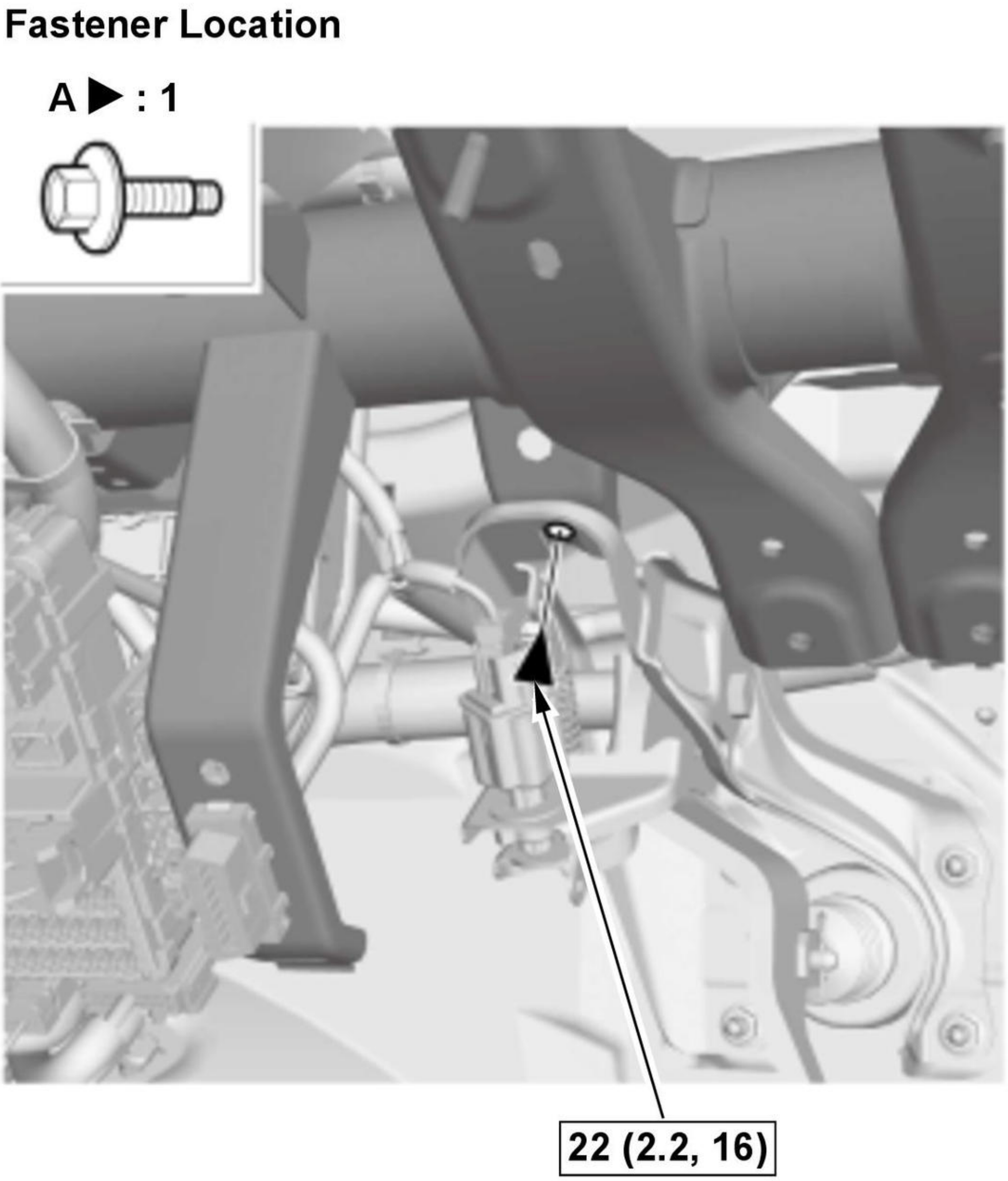
Fastener Location
A ▶ : 1
22 (2.2, 16)

Fig. 24: Driver's Side Dashboard/Steering Hanger Beam Bolt With Torque Specifications
Courtesy of HONDA, U.S.A., INC.

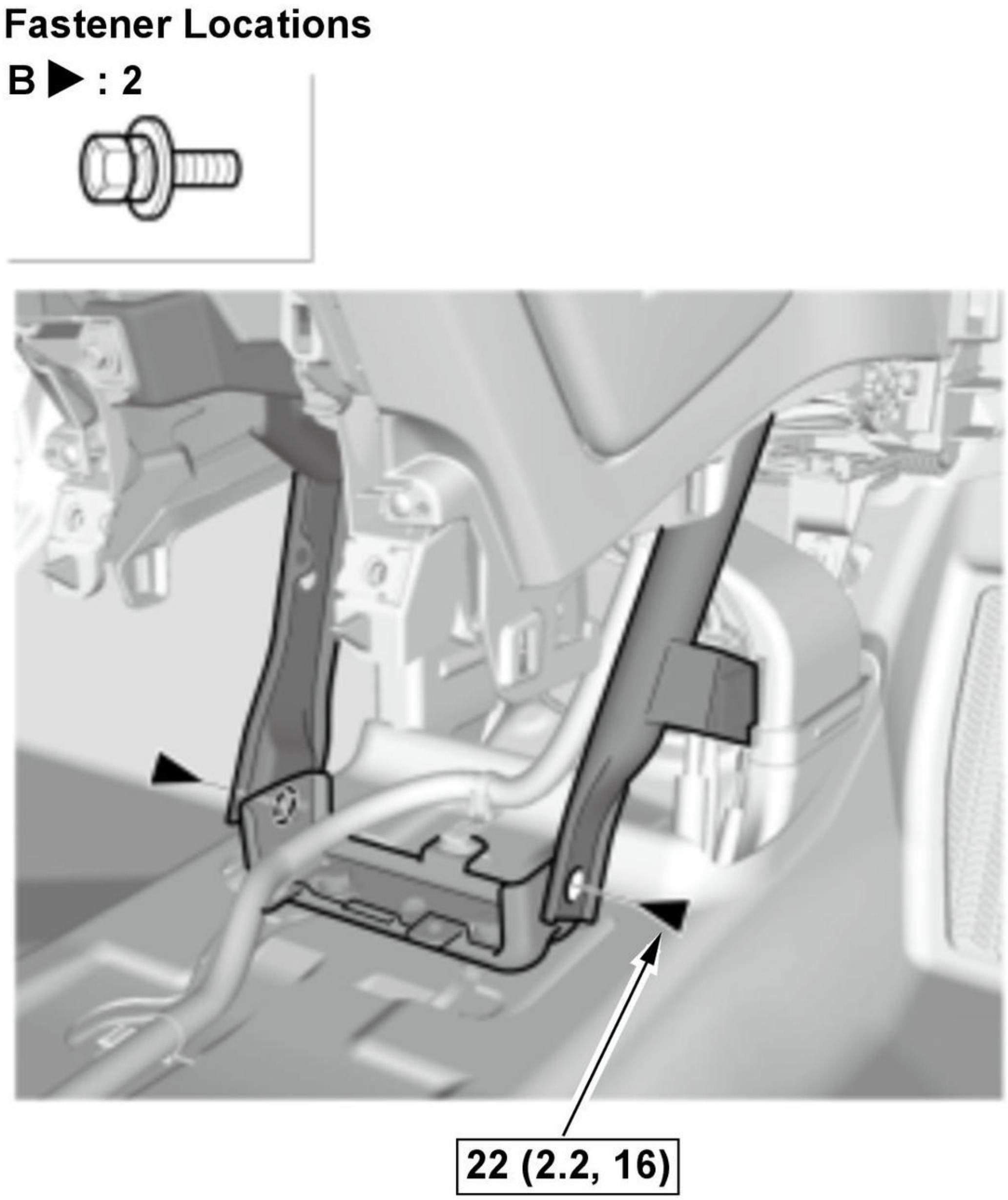
Fastener Locations
B ▶ : 2
22 (2.2, 16)

Fig. 25: Center Area Dashboard/Steering Hanger Beam Bolts With Torque Specifications
Courtesy of HONDA, U.S.A., INC.

11. Remove the bolts (A, B).

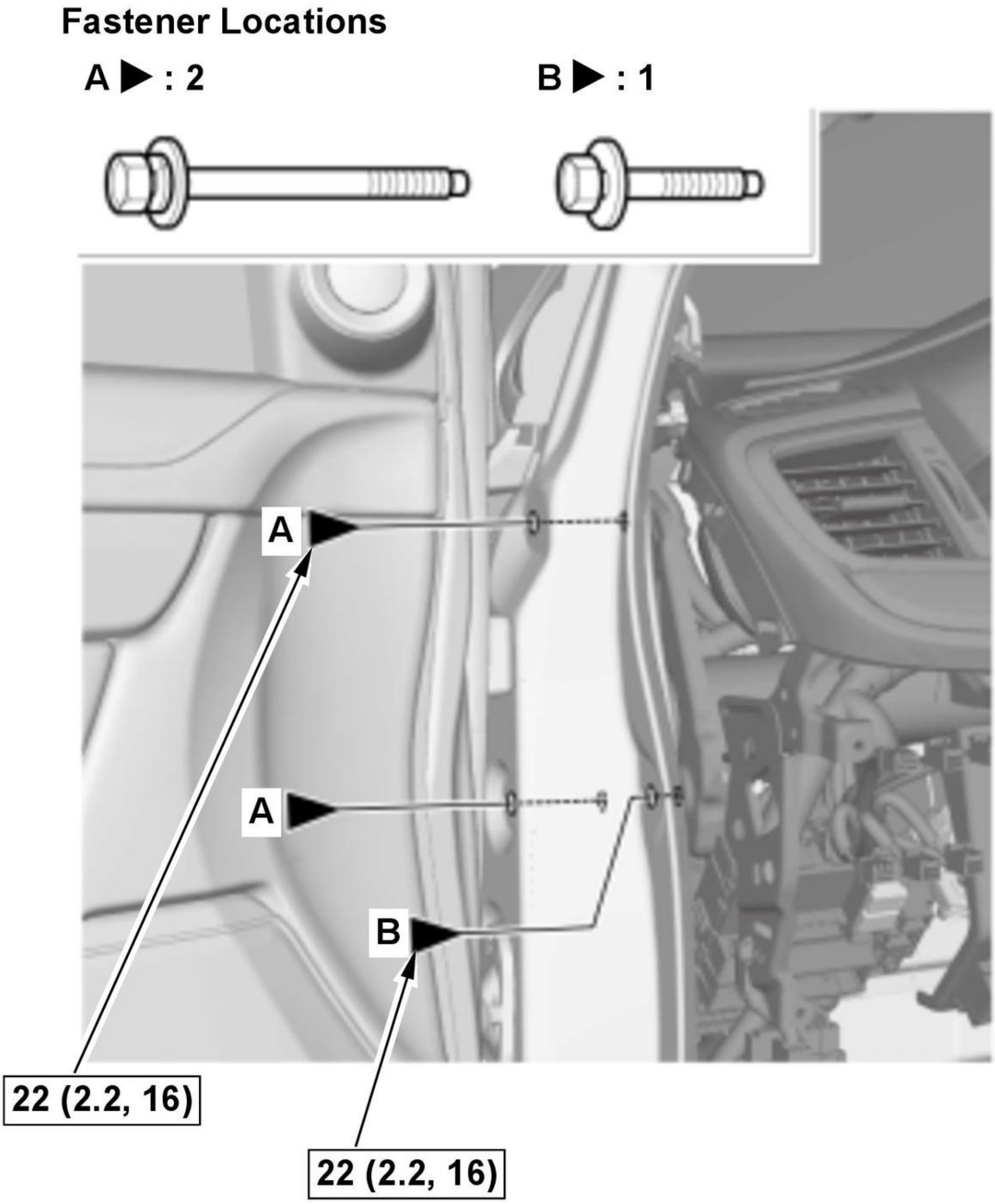
Fastener Locations
A ▶ : 2
B ▶ : 1
A
A
B
22 (2.2, 16)
22 (2.2, 16)

Fig. 26: Driver's Side Dashboard/Steering Hanger Beam Bolts With Torque Specifications
Courtesy of HONDA, U.S.A., INC.

12. Remove the bolts (A, B).

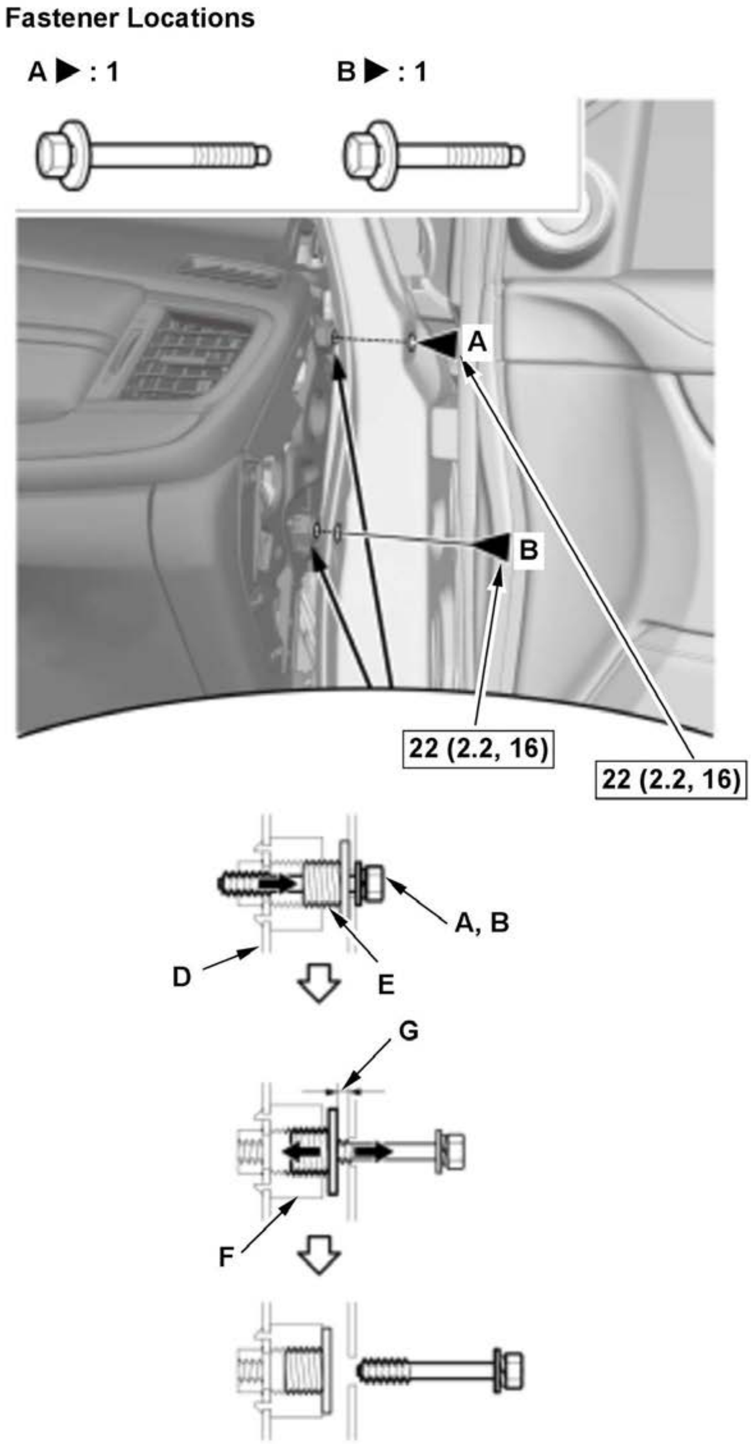
Fastener Locations
A ▶ : 1
B ▶ : 1
A
B
22 (2.2, 16)
22 (2.2, 16)
A, B
D
E
G
F

Fig. 27: Passenger's Side Dashboard/Steering Hanger Beam Bolts With Torque Specifications
Courtesy of HONDA, U.S.A., INC.

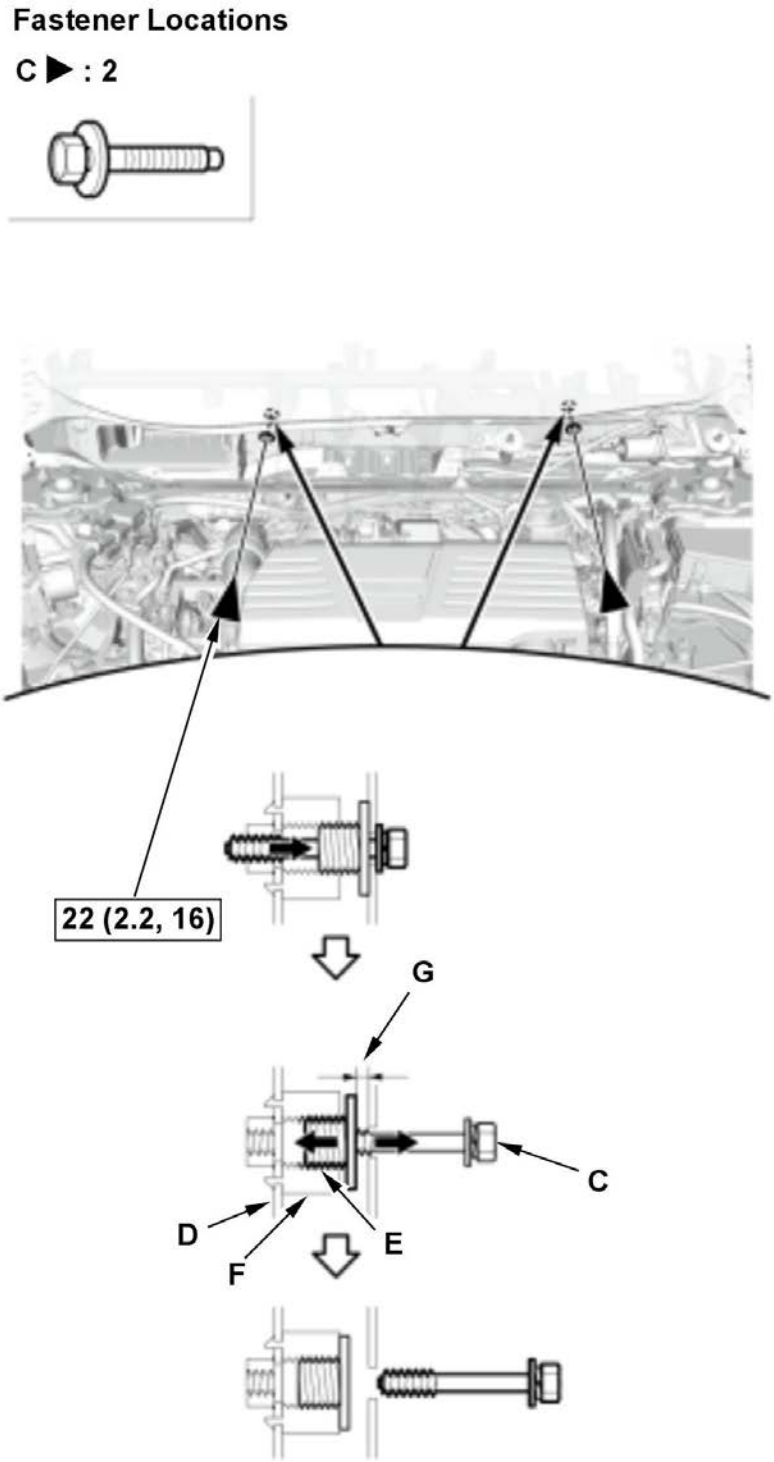

[Fig. 28: Engine Compartment Area Dashboard/Steering Hanger Beam Bolts With Torque Specifications]

Courtesy of HONDA, U.S.A., INC.

13. Loosen the special bolts (A, B, C) until they disengage from the threads on the hanger beam (D), and engage the inside threads of the collar bolts (E). The thread lock on the special bolts makes the special bolts and the collar bolts turn together.

14. Continue to loosen the special bolts to turn the collar bolts into the fixed space adjusters (F) until the collar bolts

engage the adjuster brackets. This creates a gap (G) between the collar bolts and the body.

15. Remove the special bolts.

NOTE: The special bolt (A) remains in the body side.

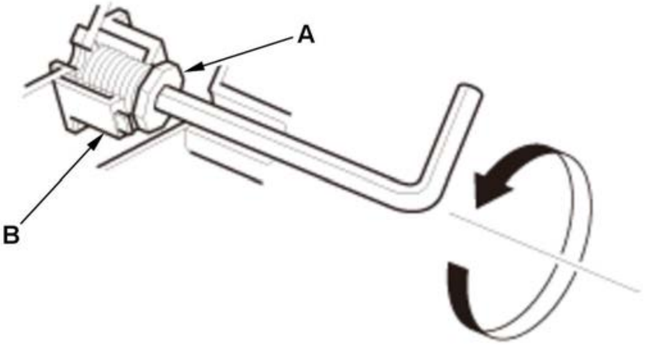	16. Check that the collar bolt (A) are seated in the fixed space adjusters (B). **NOTE:** If either collar bolt was not seated, replace the special bolts.

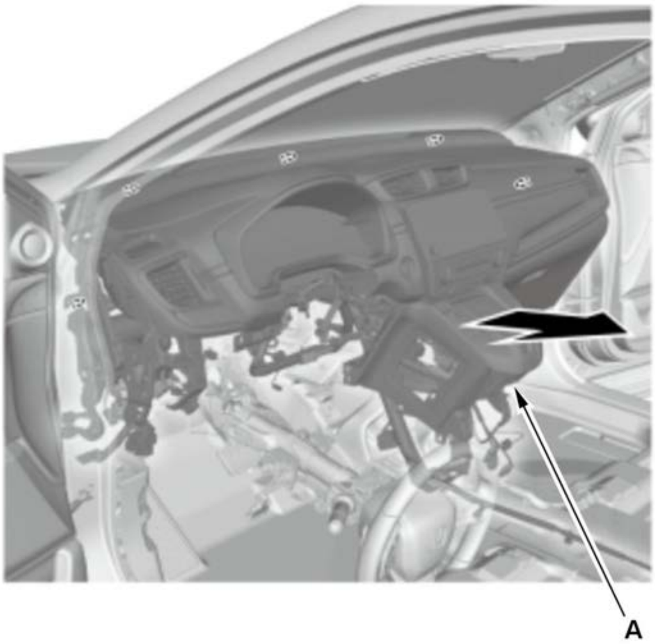	17. Remove the dashboard/steering hanger beam (A).

12. Center Lower Bracket - Remove

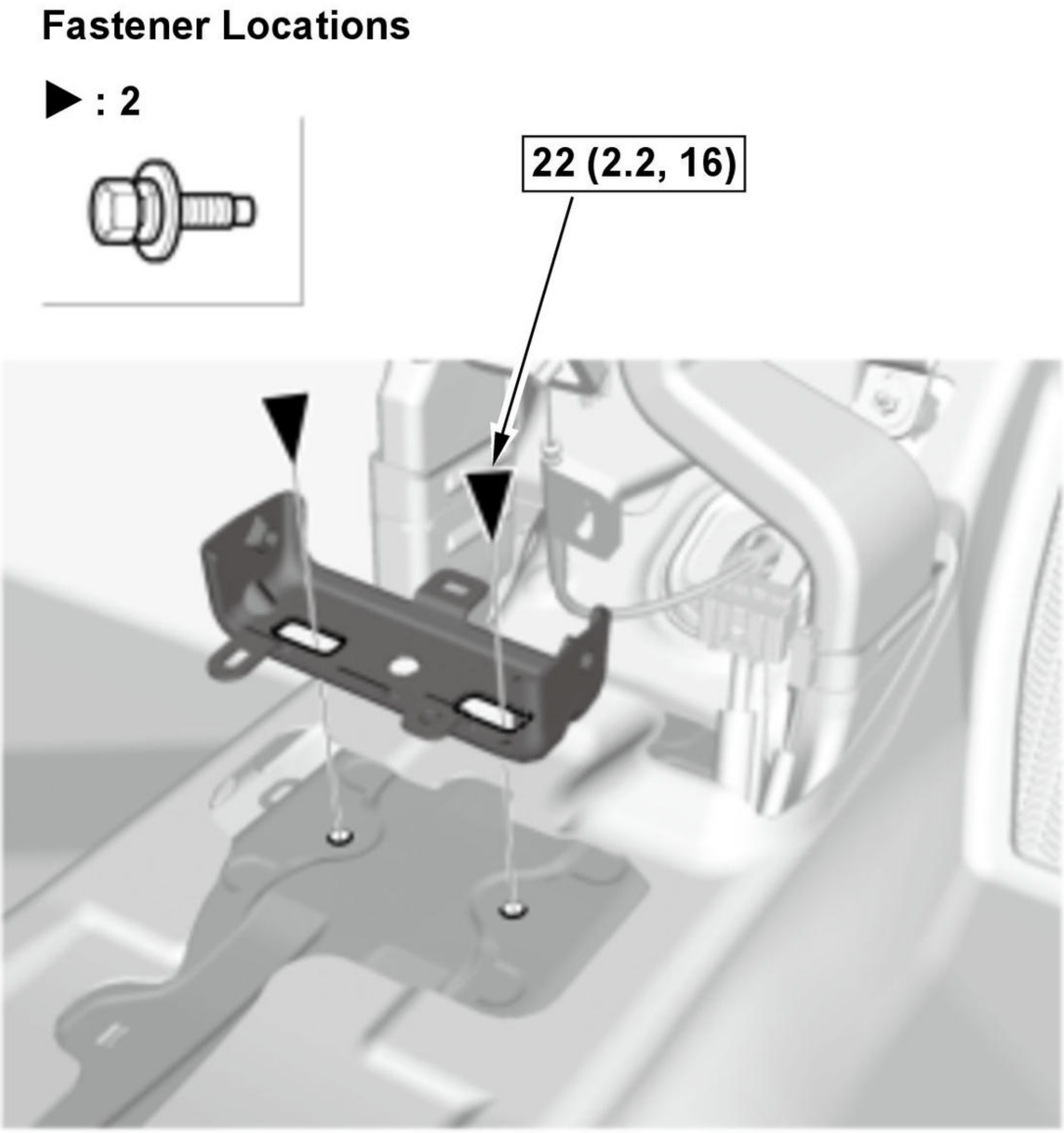

Fig. 29: Center Lower Bracket With Torque Specifications
Courtesy of HONDA, U.S.A., INC.

13. All Removed Parts - Install

Special Bolt Tightening 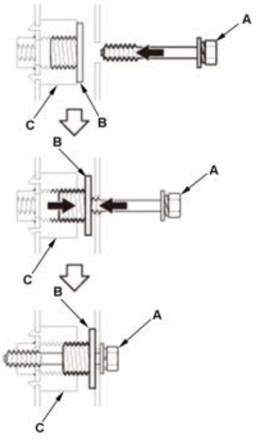	1. Install the parts in the reverse order of removal, and note these items: **NOTE:** • Before reinstalling the dashboard, screw the special bolt (A) into the collar bolt (B), and check that they turn together. If they do not turn together, replace the special bolts. • Before reinstalling the dashboard, be sure the collar bolts can be screwed/unscrewed lightly by hand, and then screw them into the fixed space adjusters (C) fully by hand. Do not tighten them with any tools. • Make sure the dashboard fits onto the guide pins correctly. • Before tightening the bolts, make sure the wire harnesses are not pinched. • Make sure the connectors are plugged in properly.

	• After setting the dashboard in the body, reinstall all of the mounting bolts but do not tighten them. First tighten the driver's side mounting bolts to the specified torque, then tighten the remaining special bolts. As you tighten the bolts, the collar bolts screw out of the space adjuster until they contact the body. Continue tightening the special bolts to the specified torque. • As you tighten the bolts, the collar bolts screw out of the space adjuster until they contact the body. Continue tightening the special bolts to the specified torque. • Do the 12 volt battery terminal connection procedure . • Check for any DTCs that may have been set during repairs, and clear them.

14. Steering Column - Inspect
15. Brake Pedal Position Switch - Adjust

DEFOGGER VENT TRIM REMOVAL AND INSTALLATION

Removal and Installation

Procedure

NOTE: **Numbered call-outs in figure pertain to list numbers in following procedure.**

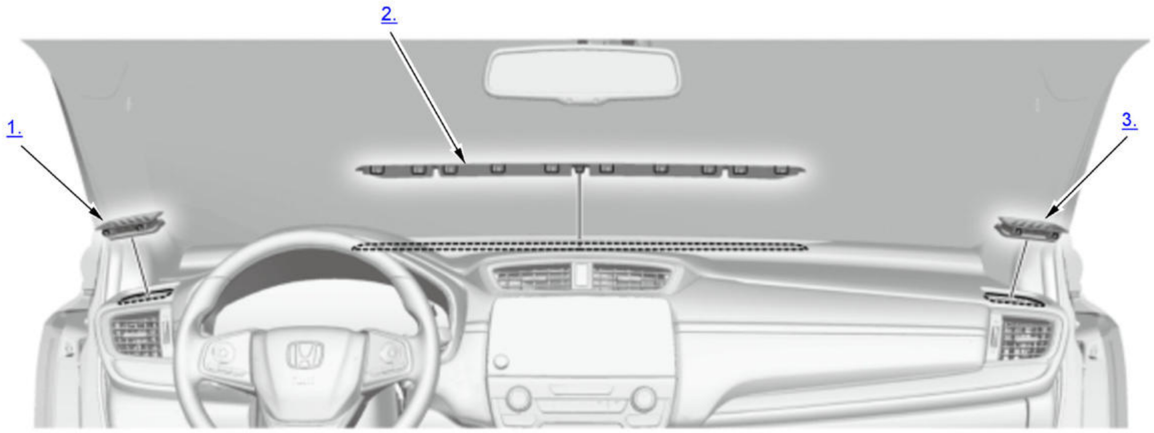

Fig. 30: Defogger Vent Trim Components
Courtesy of HONDA, U.S.A., INC.

1. Driver's Defogger Vent Trim - Remove
2. Center Defogger Vent Trim - Remove
3. Passenger's Defogger Vent Trim - Remove
4. All Removed Parts - Install

1. Install the parts in the reverse order of removal.

DRIVER'S DASHBOARD LOWER COVER REMOVAL AND INSTALLATION

Removal and Installation

NOTE: 📖 Where icon is shown, for further information see below.

Procedure

NOTE: **Numbered call-outs in figure pertain to list numbers in following procedure.**

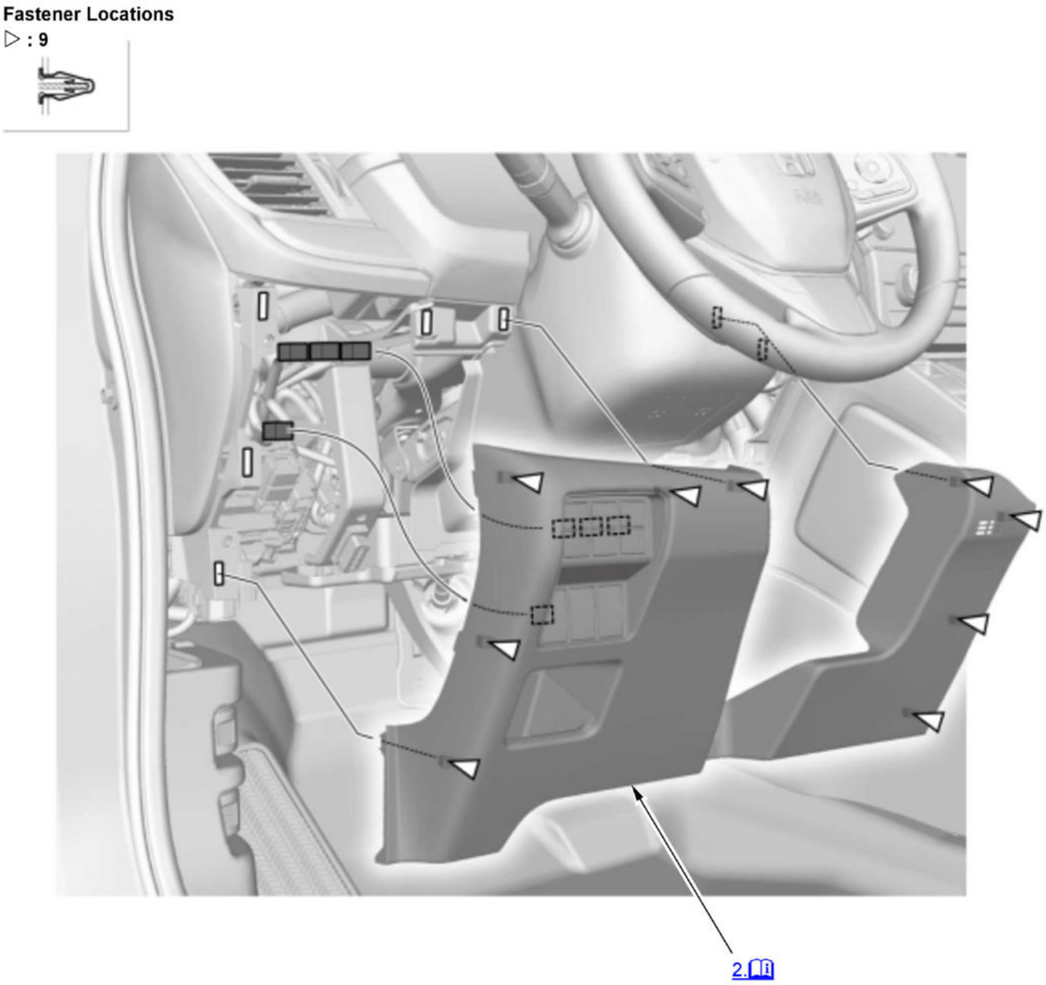

Fig. 31: Driver's Dashboard Lower Cover Components
Courtesy of HONDA, U.S.A., INC.

ℹ	Detailed information, notes, and precautions

1. Driver's Dashboard Undercover - Remove
2. Driver's Dashboard Lower Cover - Remove

   NOTE: The number of connectors may vary depending on the model.

3. All Removed Parts - Install

   1. Install the parts in the reverse order of removal.

DRIVER'S DASHBOARD PANEL REMOVAL AND INSTALLATION

Removal and Installation

Outer Panel

NOTE: **Numbered call-outs in figure pertain to list numbers in following procedure.**

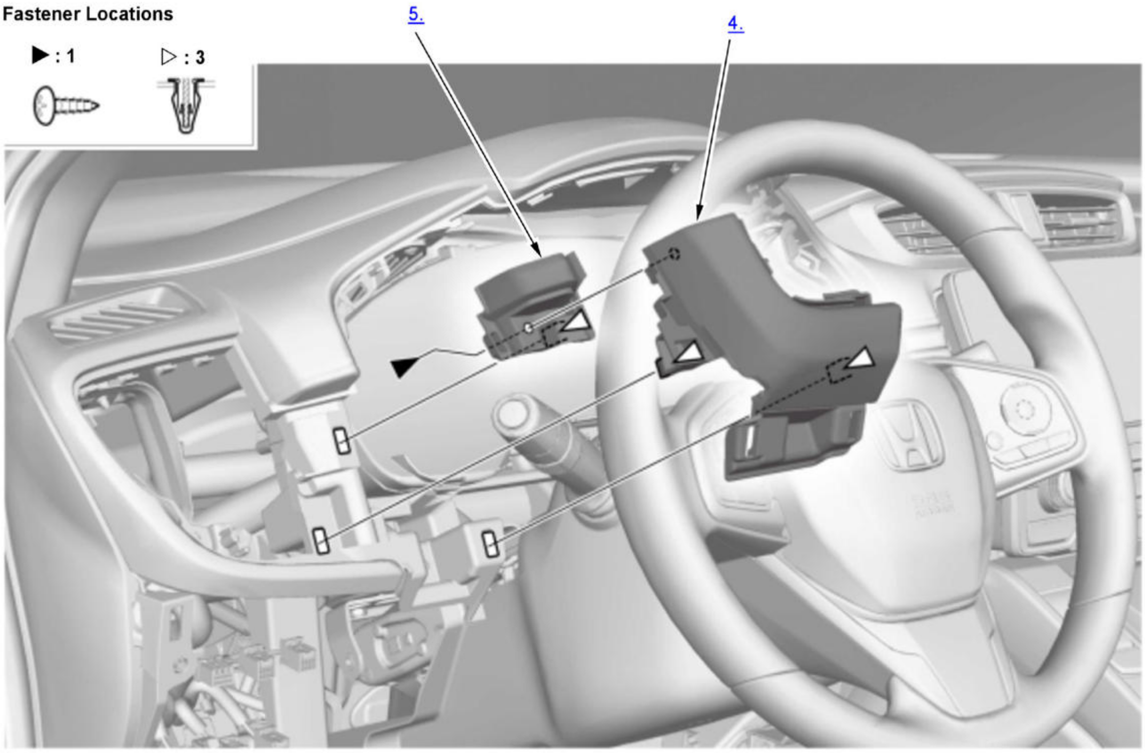

Fig. 32: Exploded View Of Driver's Dashboard Outer Panel Components
Courtesy of HONDA, U.S.A., INC.

1. Driver's Outlet - Remove
2. Dashboard Meter Visor - Remove
3. Driver's Dashboard Lower Cover - Remove
4. Driver's Dashboard Outer Panel - Remove
5. Driver's Upper Outer Ornament Panel - Remove
6. All Removed Parts - Install

1. Install the parts in the reverse order of removal.

Inner Panel

NOTE: **Numbered call-outs in figure pertain to list numbers in following procedure.**

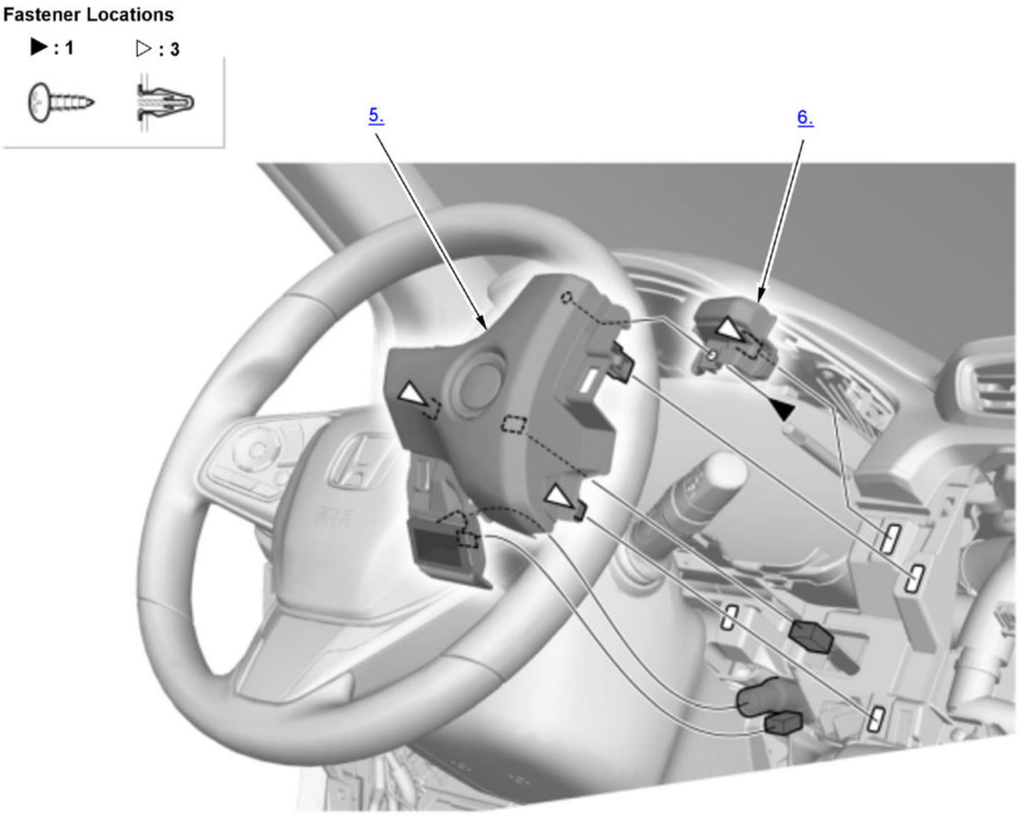

Fig. 33: Exploded View Of Driver's Dashboard Inner Panel Components
Courtesy of HONDA, U.S.A., INC.

1. Dashboard Meter Visor - Remove
2. Audio Unit - Remove (For some models)
3. Audio-Navigation Unit - Remove (For some models)
4. Driver's Dashboard Lower Cover - Remove
5. Driver's Dashboard Inner Panel - Remove
6. Driver's Upper Inner Ornament Panel - Remove
7. All Removed Parts - Install
    1. Install the parts in the reverse order of removal.

ESCUTCHEON PANEL REMOVAL AND INSTALLATION

Removal and Installation

Procedure

NOTE: **Numbered call-outs in figure pertain to list numbers in following procedure.**

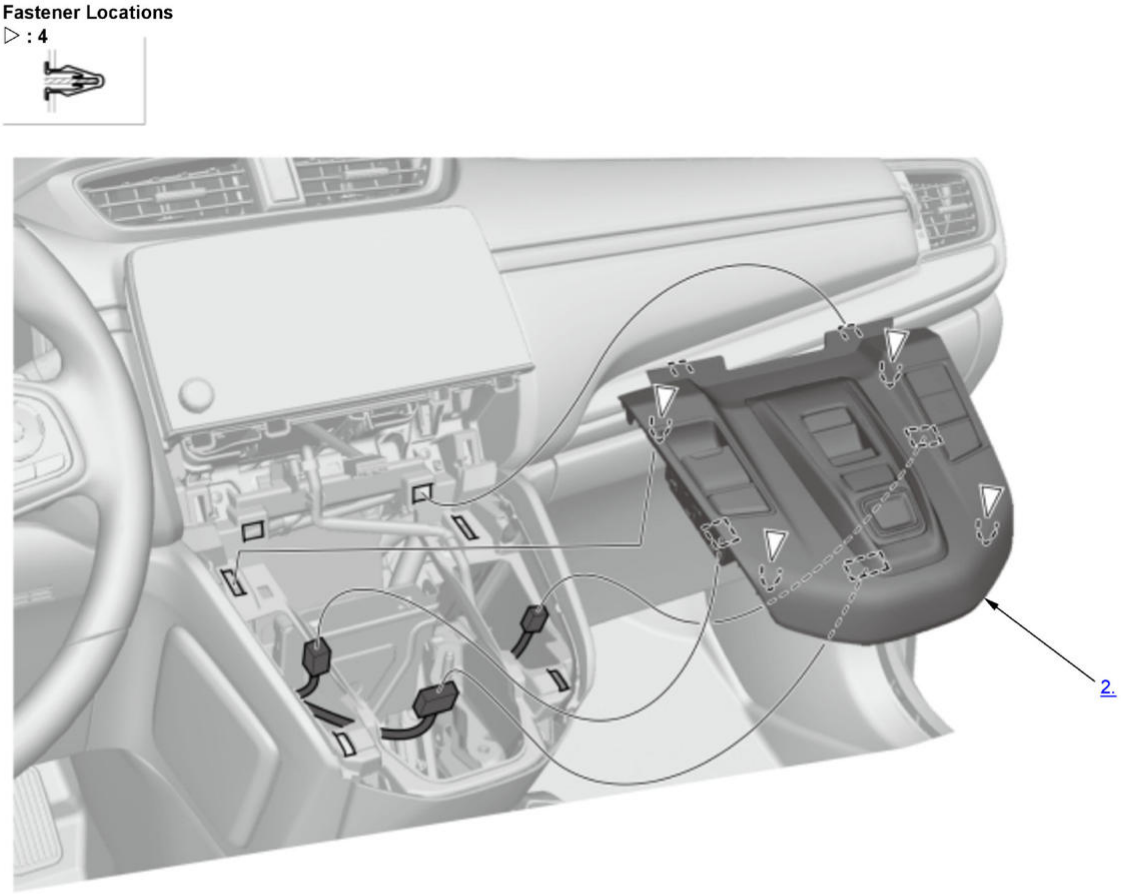

[Fig. 34: Exploded View Of Escutcheon Panel Components](#)
Courtesy of HONDA, U.S.A., INC.

1. Climate Control Panel - Remove
2. Escutcheon Panel - Remove
3. All Removed Parts - Install

1. Install the parts in the reverse order of removal.

FRONT CONSOLE COVER REMOVAL AND INSTALLATION

Removal and Installation

Procedure

NOTE: **Numbered call-outs in figure pertain to list numbers in following procedure.**

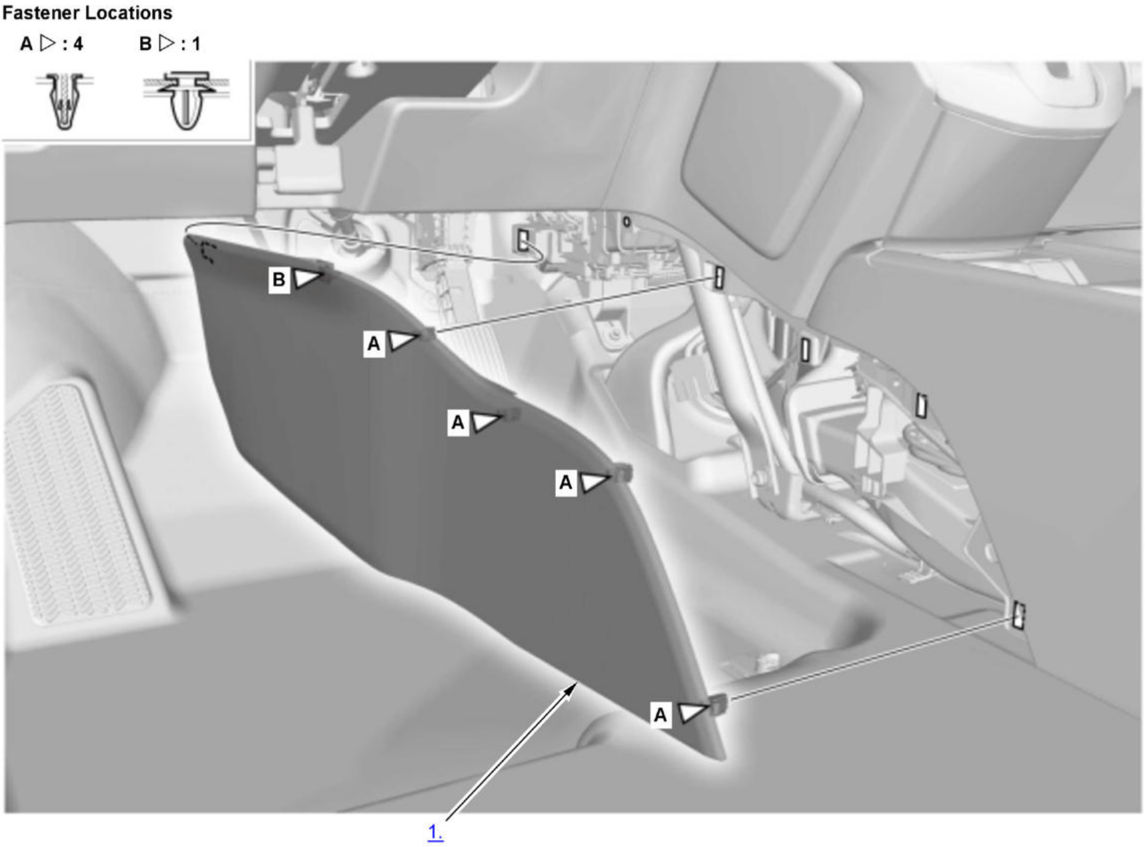
Fastener Locations
A ▷ : 4
B ▷ : 1
B
A
A
A
A
1.

Fig. 35: Driver's Side Front Console Components
Courtesy of HONDA, U.S.A., INC.

NOTE: **Numbered call-outs in figure pertain to list numbers in following procedure.**

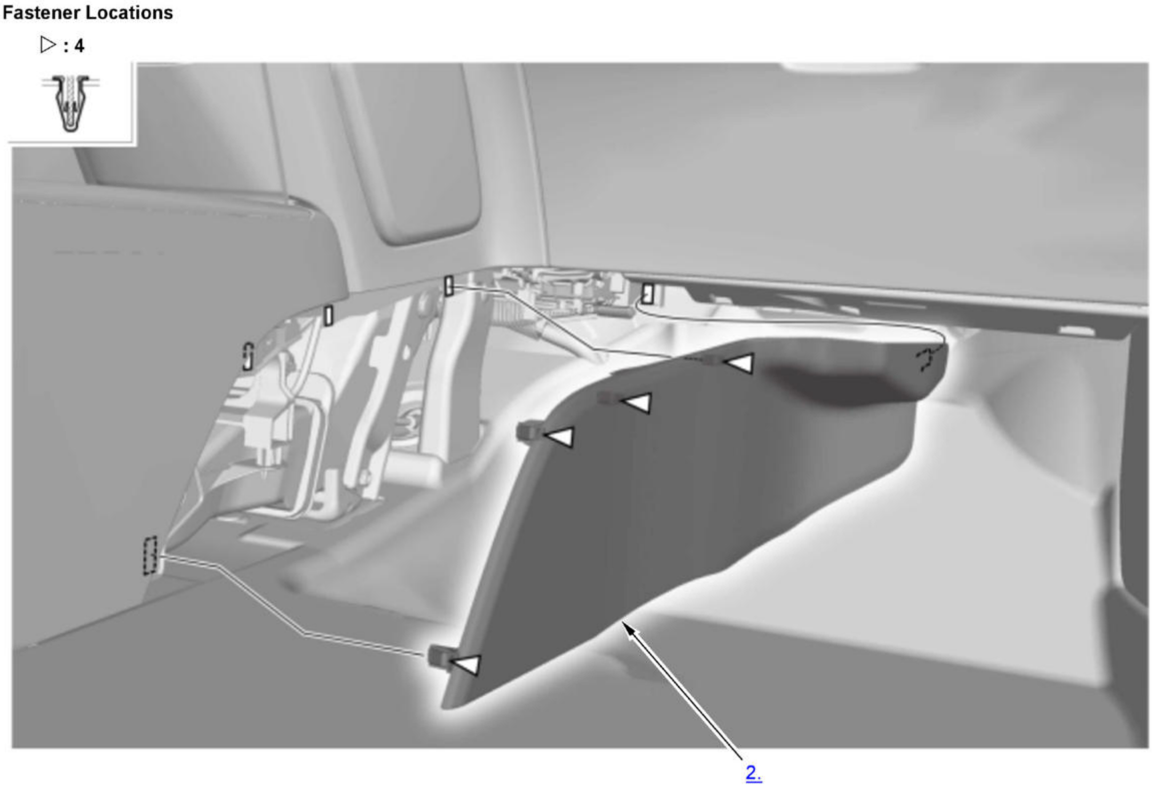
Fastener Locations
▷ : 4
2.

Fig. 36: Passenger's Side Front Console Components
Courtesy of HONDA, U.S.A., INC.

1. Driver's Front Console Cover - Remove
2. Passenger's Front Console Cover - Remove
3. All Removed Parts - Install

1. Install the parts in the reverse order of removal.

GLOVE BOX LOCK CYLINDER REMOVAL AND INSTALLATION

Removal and Installation

1. Glove Box Lock Cylinder - Remove

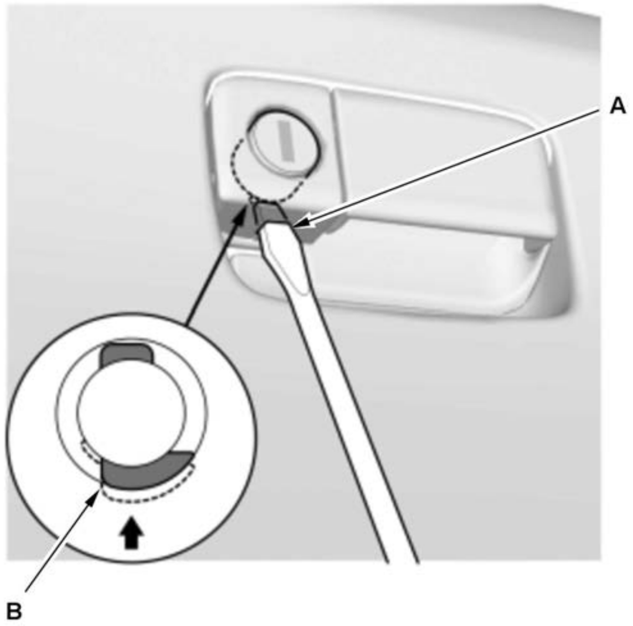	1. Insert a flat-tip screwdriver to the maintenance hole (A), and push the stopper (B).
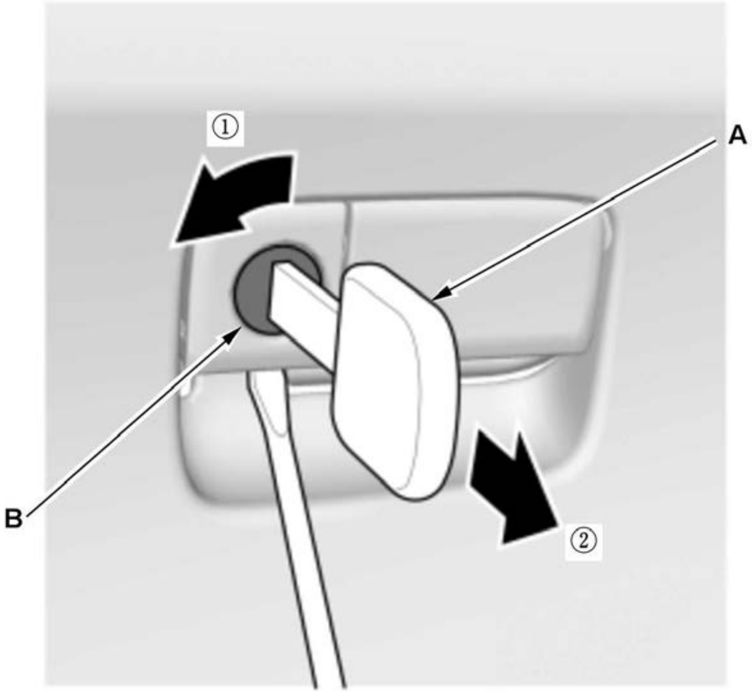	2. Insert the key (A) and turn it slightly to lock the stopper. 3. Pull out the glove box lock cylinder (B), and remove it.

2. All Removed Parts - Install

1. Install the parts in the reverse order of removal.

GLOVE BOX REMOVAL AND INSTALLATION

Removal and Installation

Procedure

NOTE: **Numbered call-outs in figure pertain to list numbers in following procedure.**

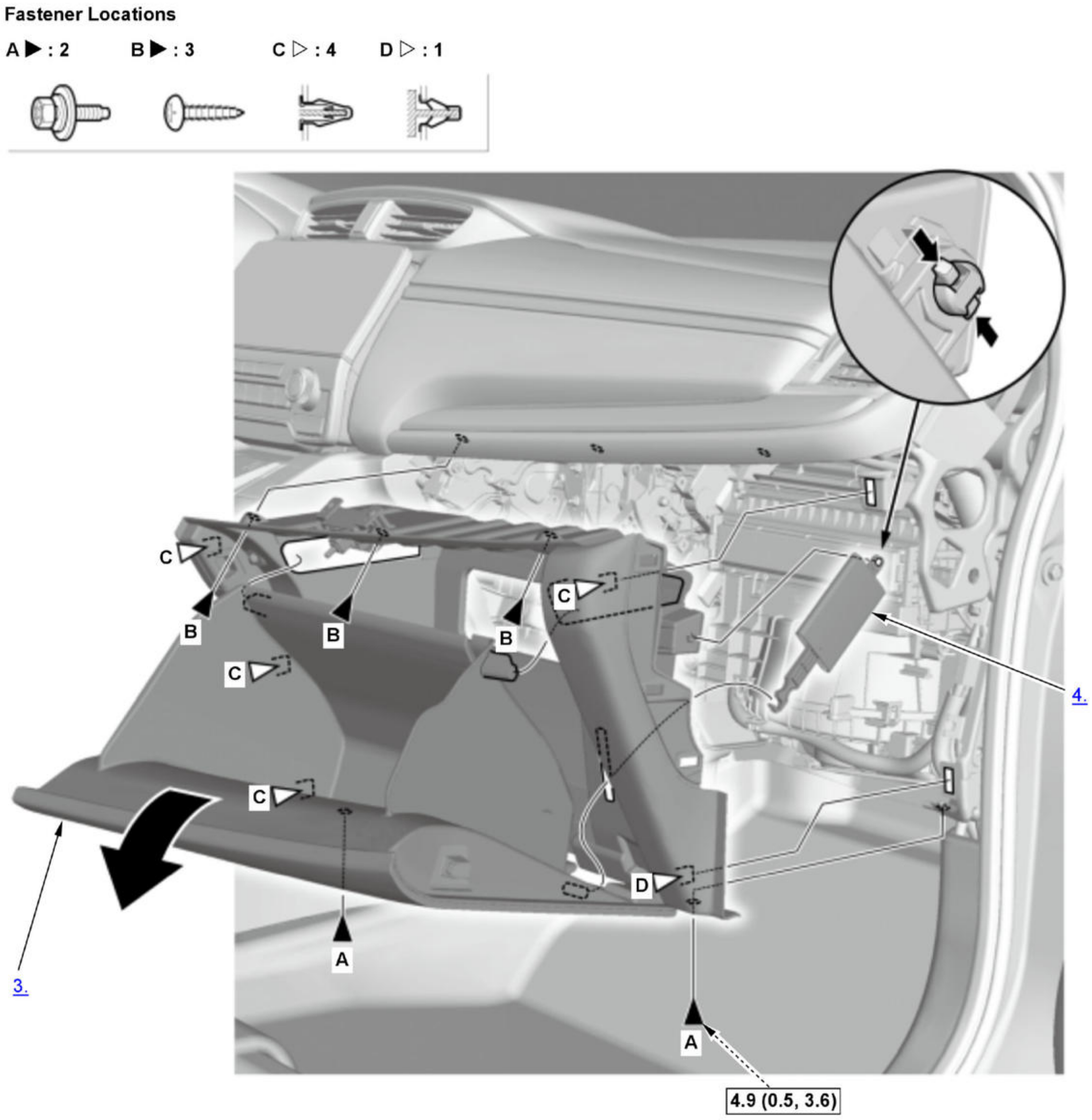

[Fig. 37: Exploded View Of Glove Box Components](#)
Courtesy of HONDA, U.S.A., INC.

☐	Torque: N.m (kgf.m, lbf.ft)

1. [Passenger's Dashboard Side Lid - Remove](#)
2. [Passenger's Dashboard Undercover - Remove](#)
3. Glove Box - Remove
4. Glove Box Damper - Remove
5. All Removed Parts - Install
    1. Install the parts in the reverse order of removal.

GRAB HANDLE REMOVAL AND INSTALLATION

Removal

1. Grab Handle - Remove

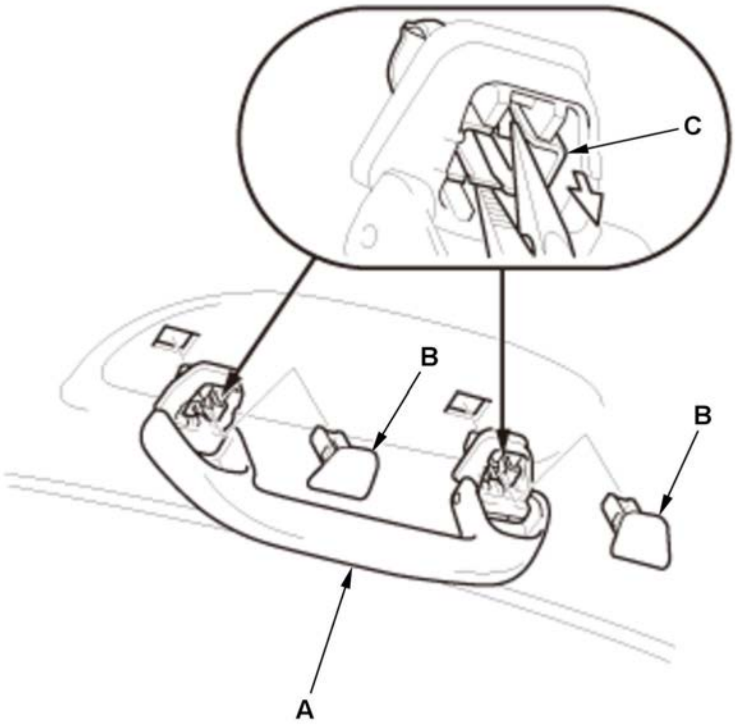	1. Lower the grab handle (A). 2. Remove the caps (B). 3. Squeeze the clips (C) with pliers, then remove the grab handle.

Inspection

1. Grab Handle - Check

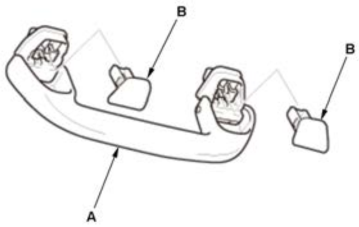	1. If the side curtain airbag has not deployed, inspect the grab handle (A) for damage. A damaged grab handle may cause the side curtain airbag to deploy improperly, possibly causing injury. Replace the grab handle if it has any of the following damage: • Any cracks or breakage in the grab handle • Any cracks or stress-whitening in the caps (B)

Installation

1. Grab Handle - Install

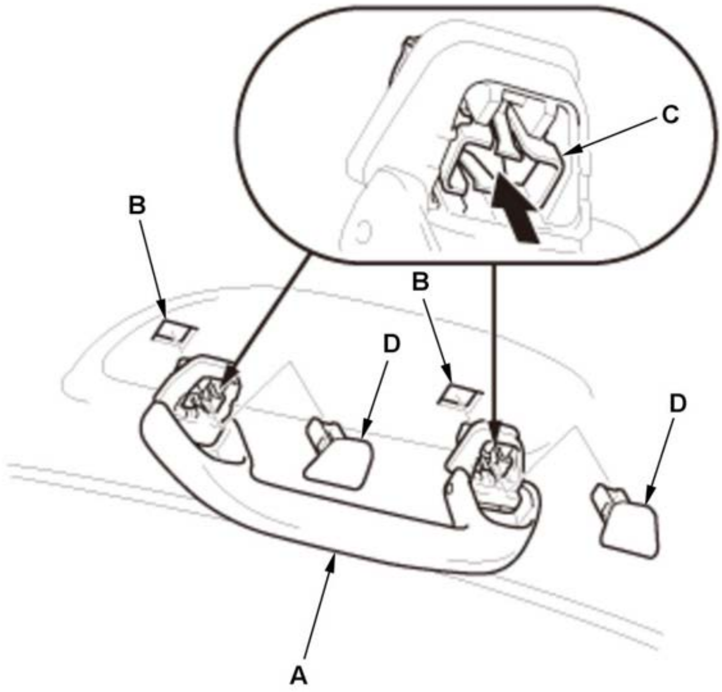	1. Position the grab handle (A) on the grab handle bracket (B). 2. Push on the grab handle until the clips (C) snap into place securely. 3. Install the caps (D) fully into the clips.

HEADLINER REMOVAL AND INSTALLATION

Removal and Installation

SRS components are located in this area. Review the SRS component locations and the precautions and procedures before doing repairs or service.

1. 12 Volt Battery Terminal - Disconnect

   NOTE: Wait at least 3 minutes before starting work.

2. Both A-Pillar Trims - Remove
3. Both B-pillar Upper/Lower Trims - Remove
4. Both Quarter Pillar Trims - Remove
5. Ceiling Light - Remove
6. Grab Handles - Remove
7. Both Sunvisors and Sunvisor Holders - Remove
8. Rearview Mirror Connector - Disconnect (For Some Models)
9. Automatic Lighting/Rain Sensor Connector - Disconnect (For Some Models)
10. Multipurpose Camera Unit Connector - Disconnect (For Some Models)
11. Roof Console Assembly - Remove

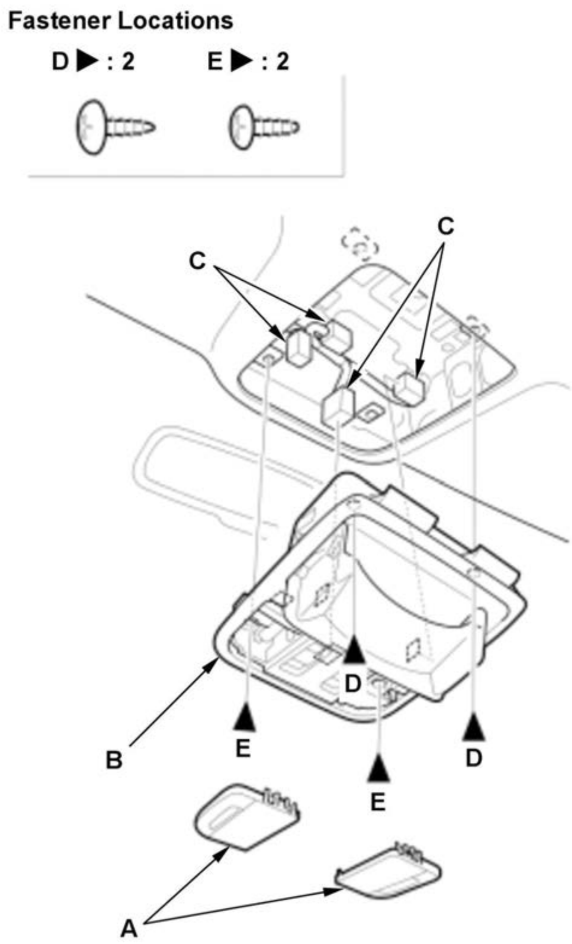 Fastener Locations D ▶ : 2 E ▶ : 2 C C D B E D E A	1. Remove the lenses (A), then remove the roof console assembly (B). 2. For some models: Disconnect the connector(s) (C).

12. Headliner - Remove

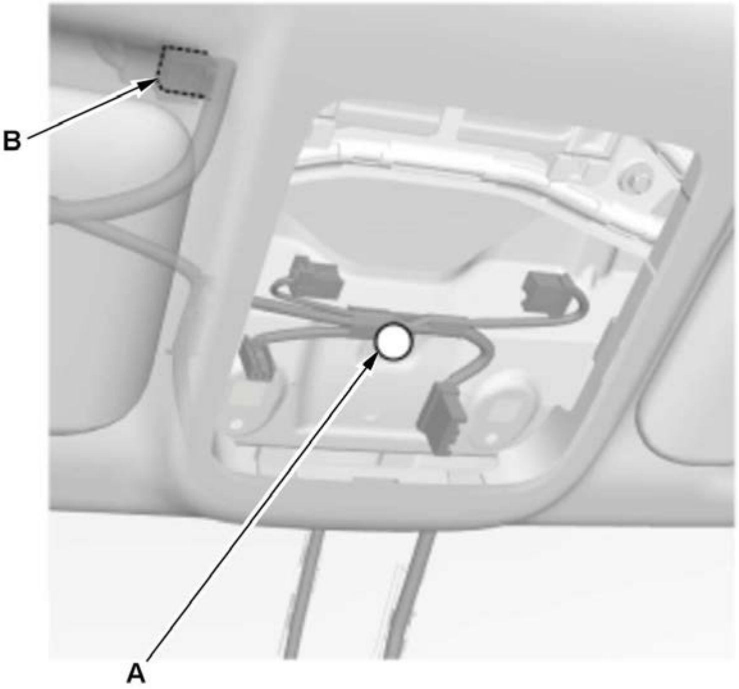	1. Release the harness clip (A). 2. For some models: Disconnect the connector (B).

Driver's Side 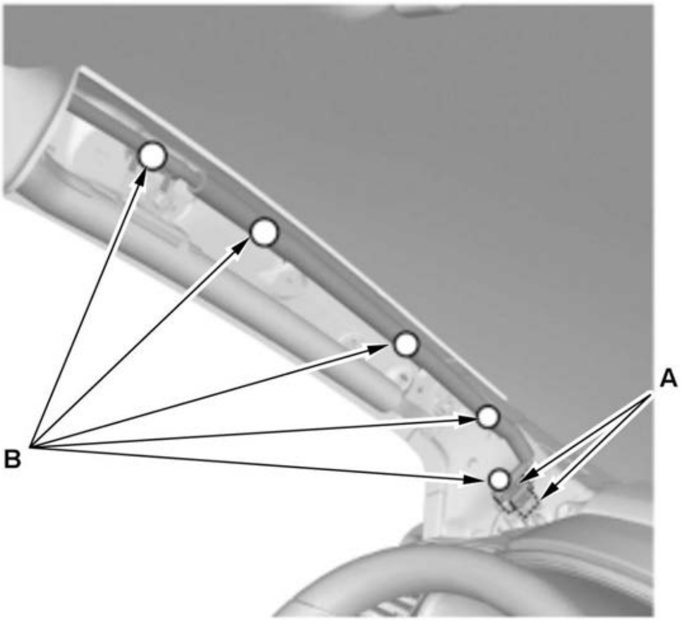 **Passenger's Side** 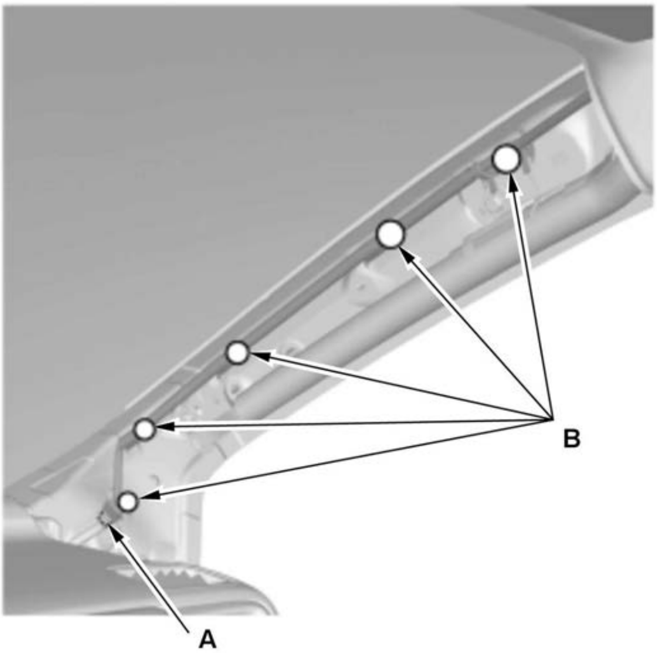 **Right Quarter Pillar Area**	3. Disconnect the connectors (A), and release the harness clips (B). **NOTE:** The positions and number of connectors vary depending on models.

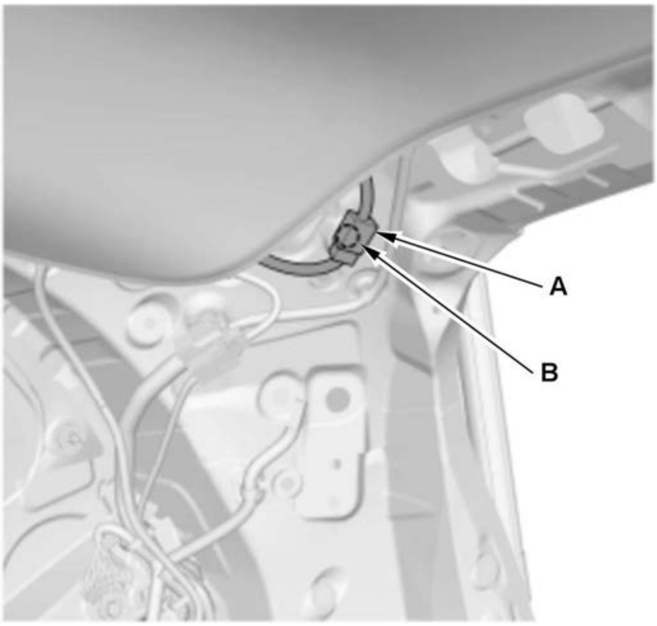

Standard Roof

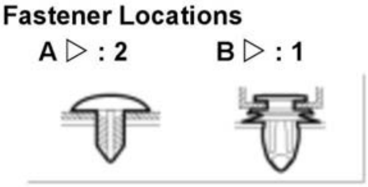
Fastener Locations
A ▷ : 2
B ▷ : 1

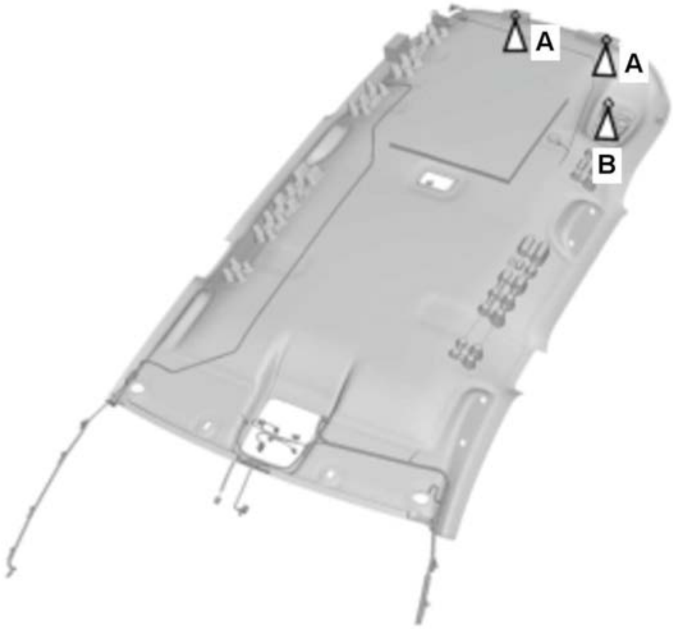

With Moonroof

4. Slide the front seats all the way back, and recline the seat-back fully.

5. Fold down the rear seats.

6. With the help of an assistant, lower the headliner.

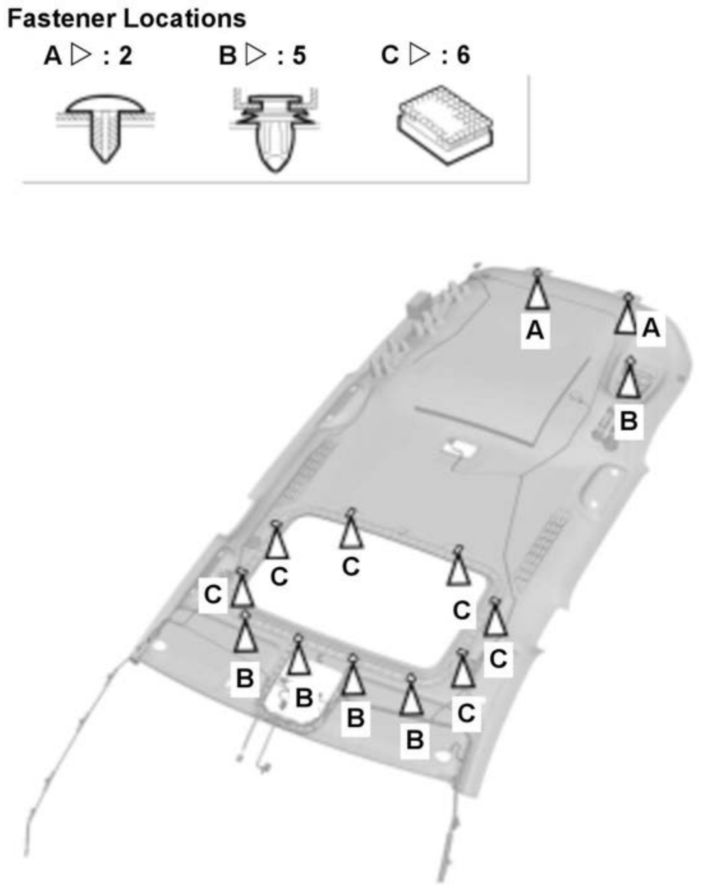
Fastener Locations
A ▷ : 2
B ▷ : 5
C ▷ : 6
A
A
B
C
C
C
C
C
B
B
B
B
C

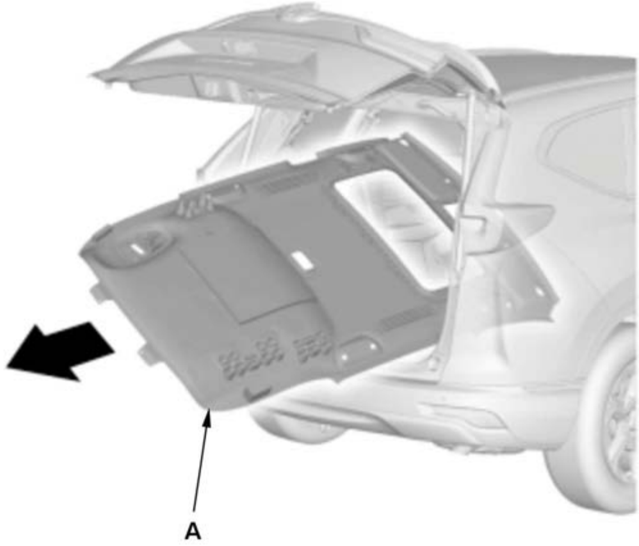

7. With the help of an assistant, remove the headliner (A) through the tailgate opening.
NOTE: Do not bend the headliner. Bending the headliner will crease and damage it.

13. Headliner Cushion Tape - Remove

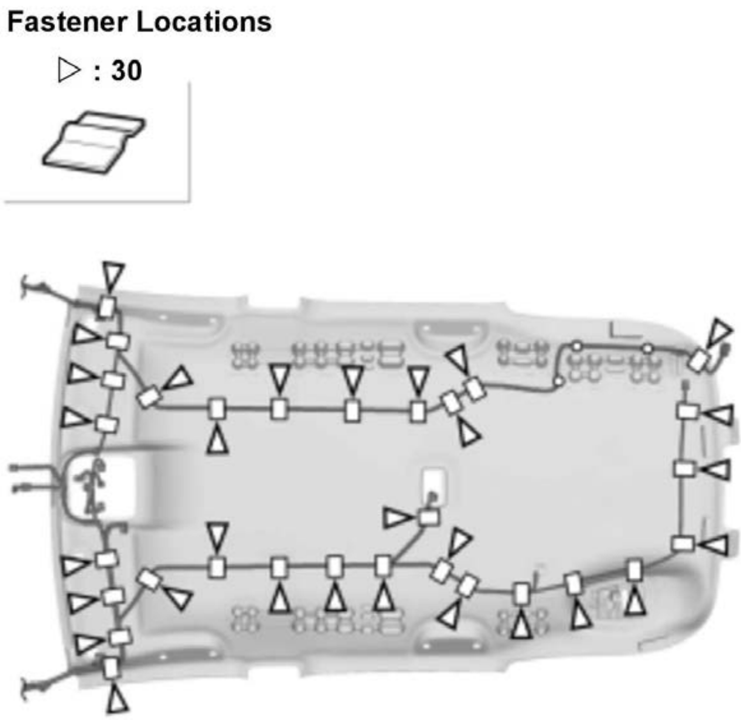
Fastener Locations
▷ : 30

Standard Roof

With Moonroof

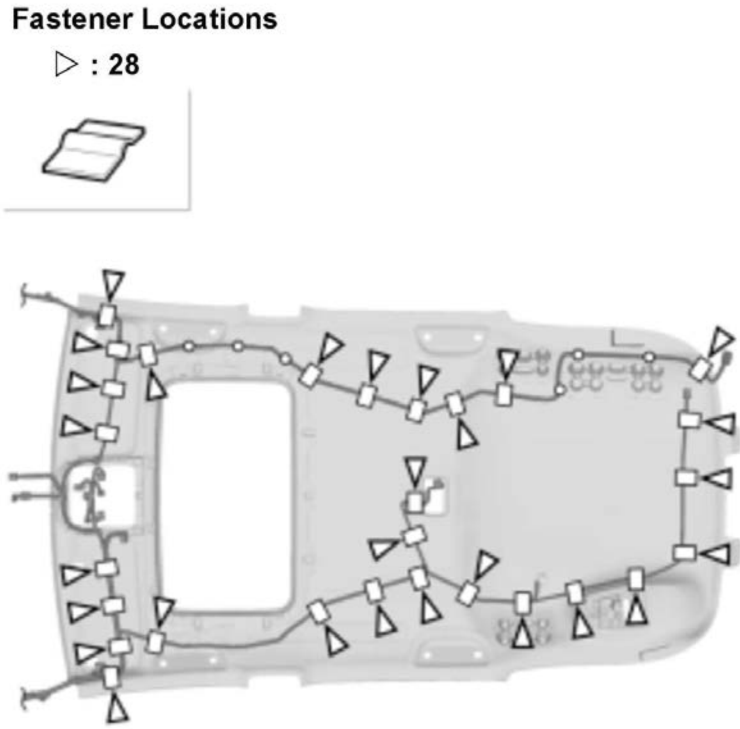
Fastener Locations
▷ : 28

1. If necessary, remove the cushion tapes.

14. Headliner - Check

Standard Roof

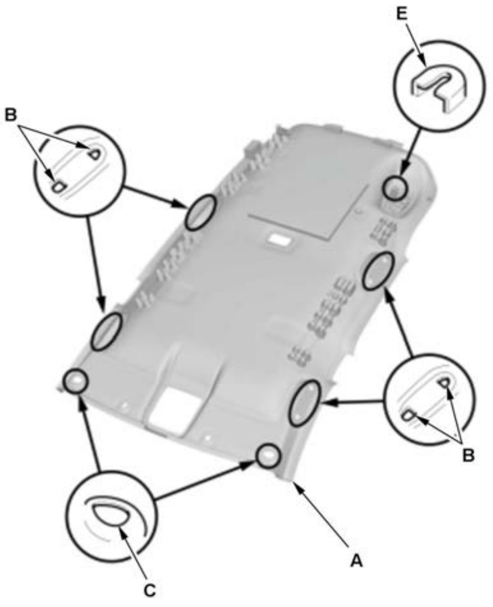

With Moonroof

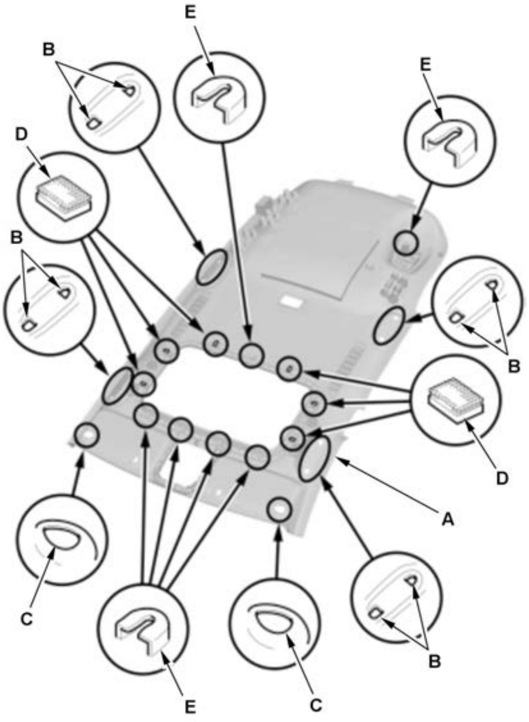

1. If the side curtain airbag has deployed, replace the headliner (A), along with the other parts listed for side curtain airbag deployment.

2. To prevent the side curtain airbags from deploying improperly and possibly causing injury, inspect the headliner and all removed trim. Replace any pieces that has any of the following damage:

- Any creases or tears in the headliner
- Any damages around the grab handle holes (B) or the sunvisor holes (C) in the headliner
- Any fastener bases (D) and the clip bases (E) which have come off the headliner

15. ELR Cover/ELR Bracket Cover - Remove

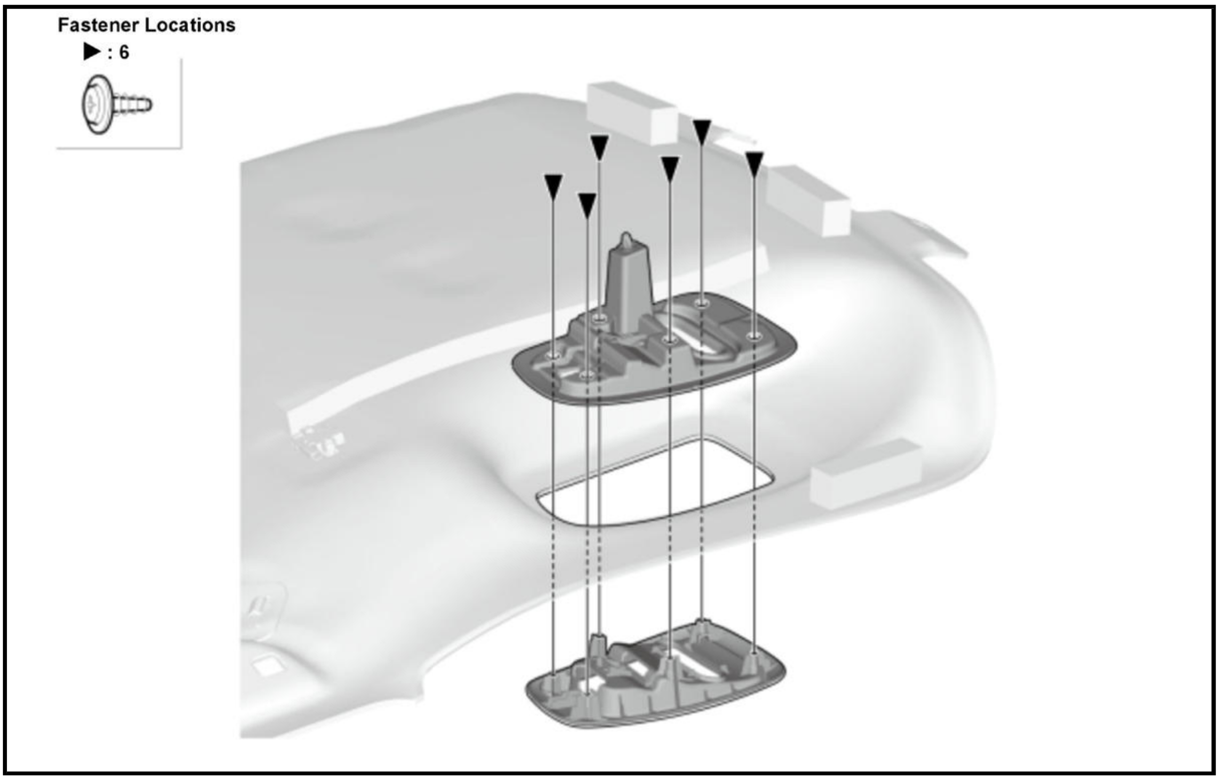

16. Headliner/Pillar Trim Overlap - Check
17. All Removed Parts - Install

1. Install the parts in the reverse order of removal.

INTERIOR TRIM REMOVAL AND INSTALLATION - CARGO AREAS

Removal and Installation

Tailgate Tonneau Cover

1. Tailgate Tonneau Cover - Remove

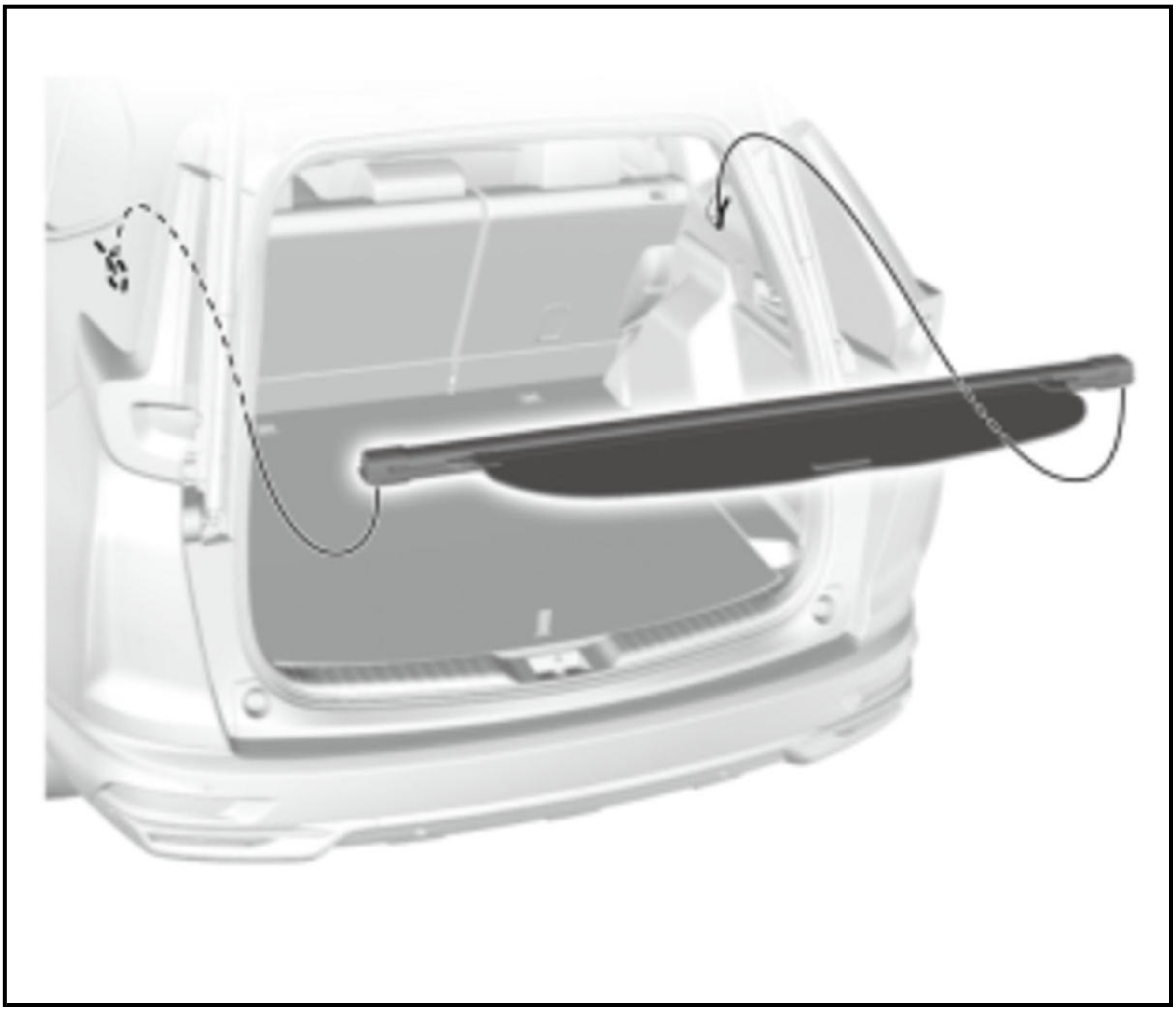

2. All Removed Parts - Install

   1. Install the parts in the reverse order of removal.

Cargo Floor Cover

1. Cargo Floor Cover - Remove

   1. Remove the tie down hooks (A).

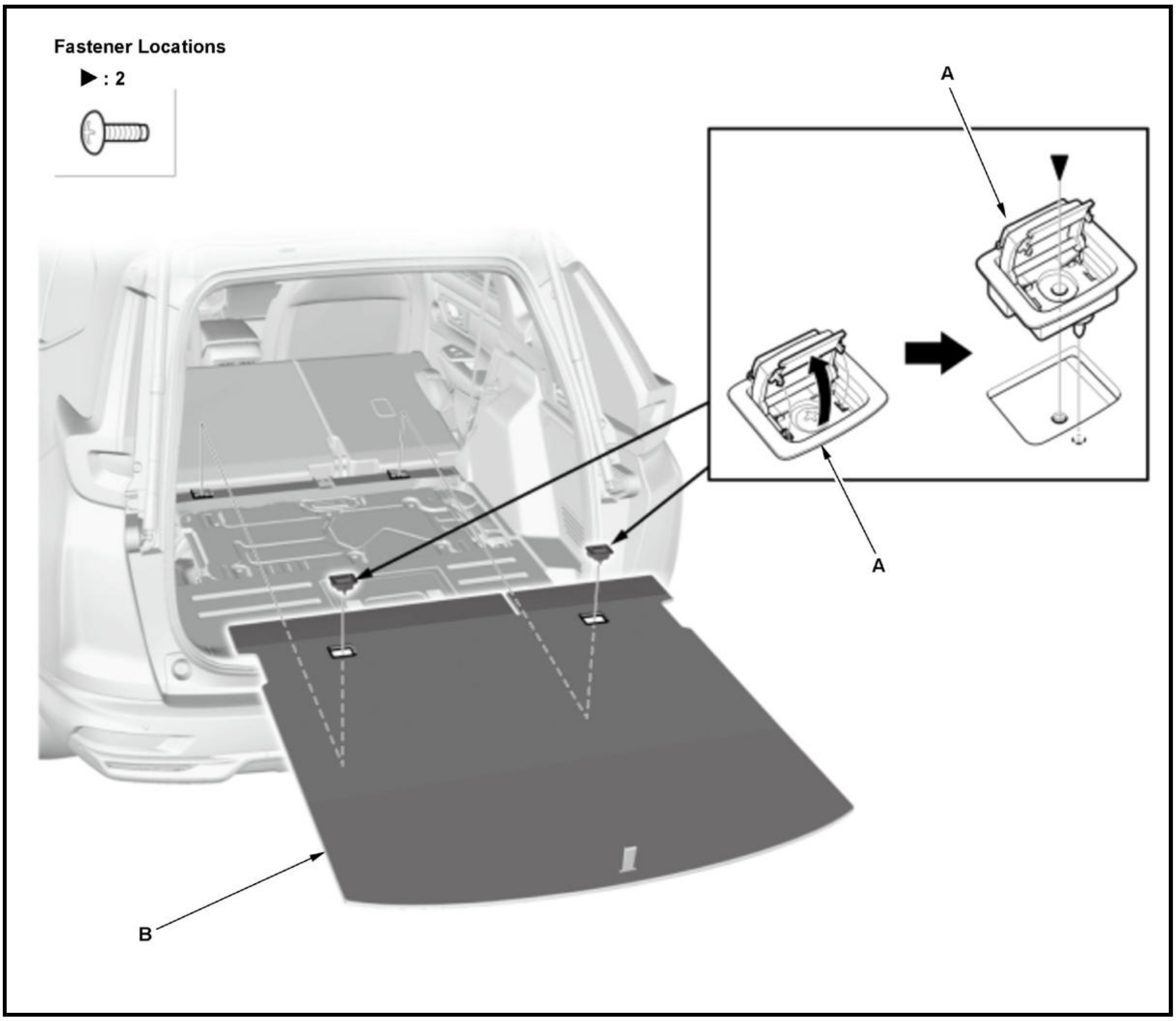
Fastener Locations
▶ : 2
A
A
B

2. Remove the cargo floor cover (B).

2. All Removed Parts - Install

1. Install the parts in the reverse order of removal.

Tool Box

1. Tool Box - Remove

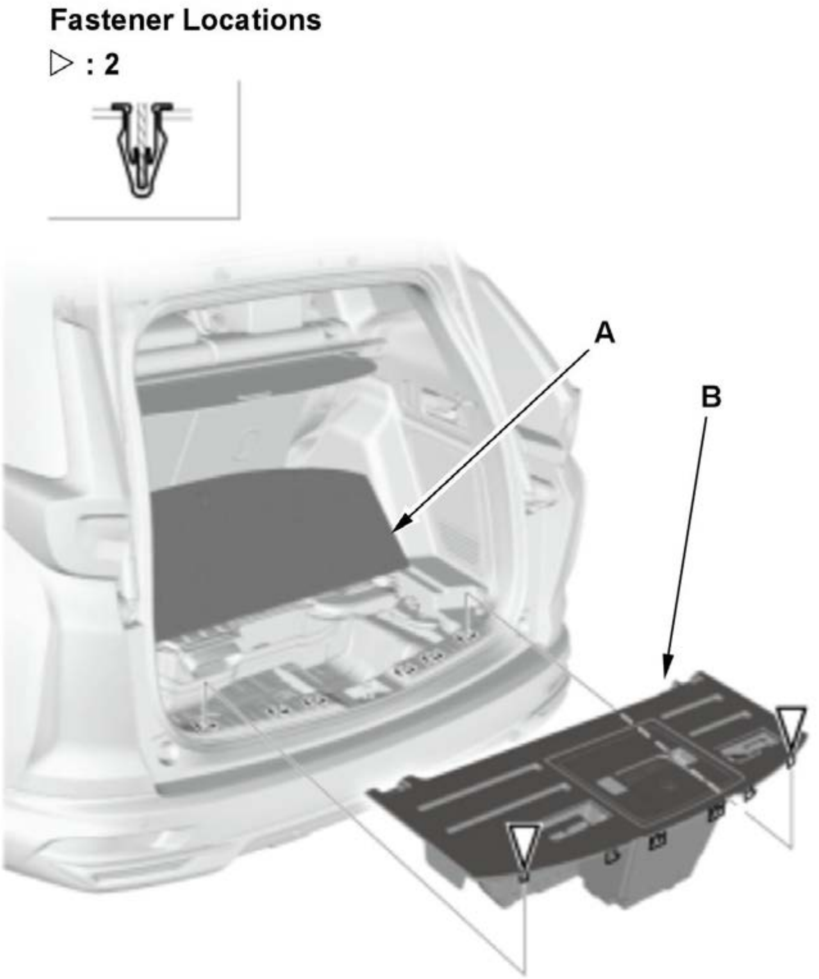 Fastener Locations ▷ : 2 A B	1. Open the cargo floor cover (A). 2. Remove the tool box (B).

2. All Removed Parts - Install

1. Install the parts in the reverse order of removal.

Rear Trim Panel

1. Tool Box - Remove
2. Rear Trim Panel - Remove

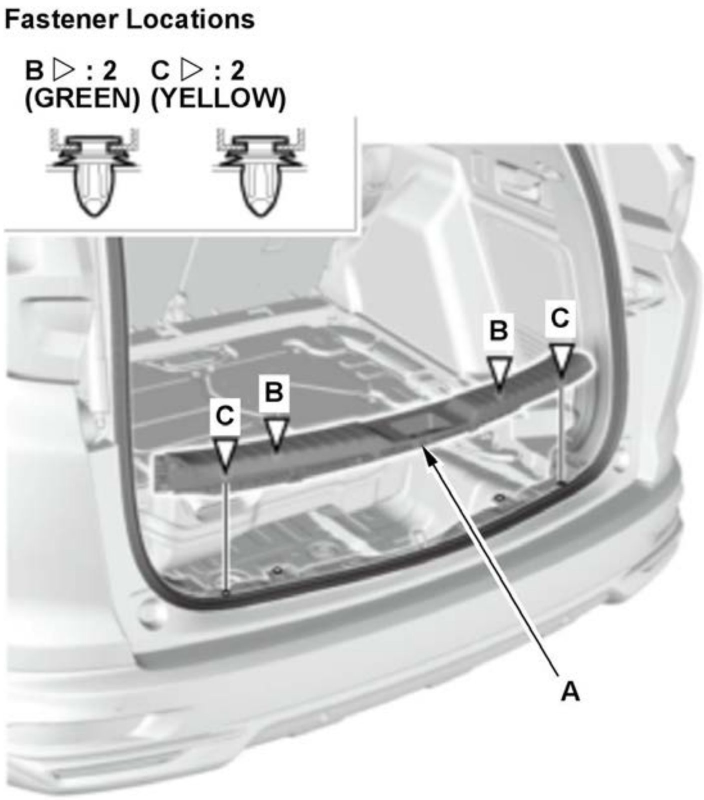 Fastener Locations B ▷ : 2 (GREEN) C ▷ : 2 (YELLOW) B C C B A	1. Remove the tailgate weatherstrip as needed. 2. Remove the rear trim panel (A).

3. All Removed Parts - Install

1. Install the parts in the reverse order of removal.

Rear Carpet Trim

1. Cargo Floor Cover - Remove
2. Rear Carpet Trim - Remove

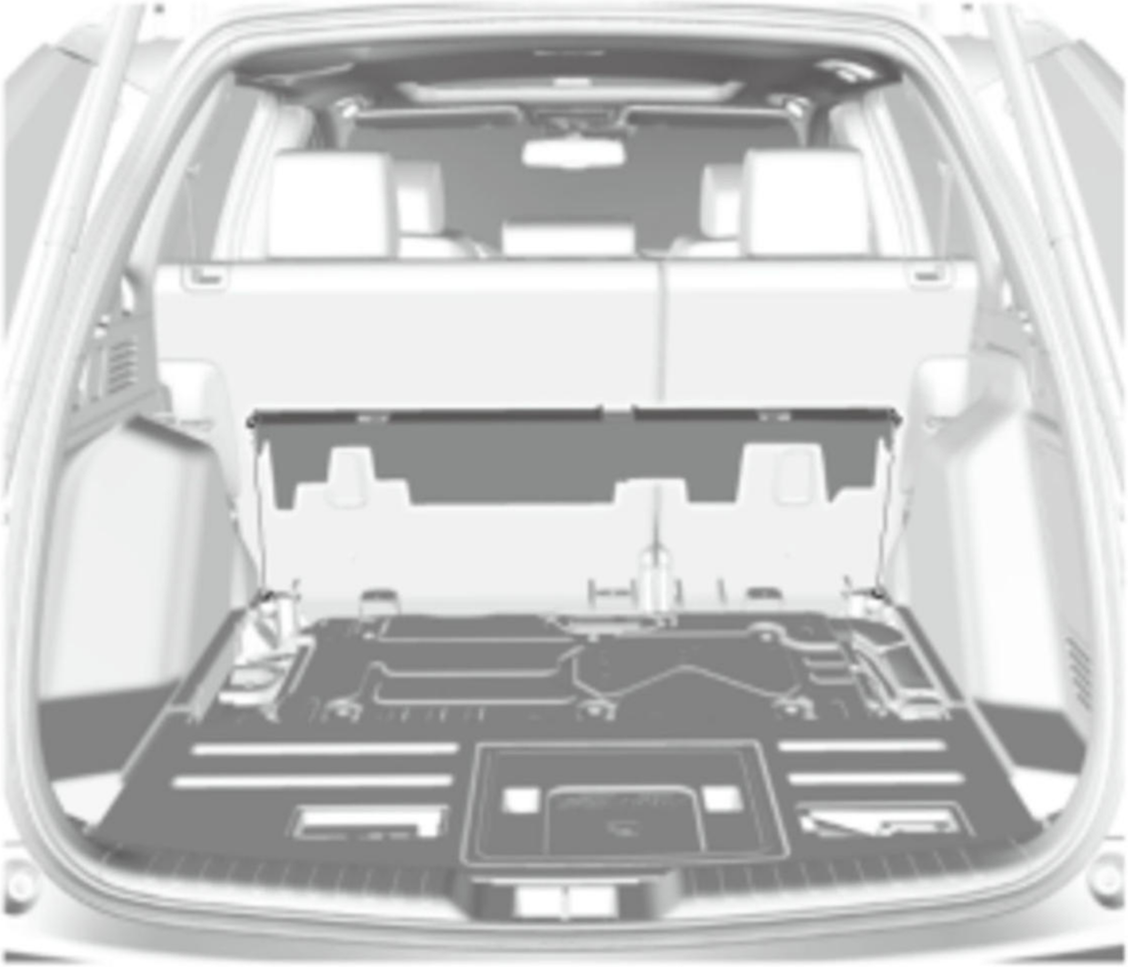

3. All Removed Parts - Install

1. Install the parts in the reverse order of removal.

INTERIOR TRIM REMOVAL AND INSTALLATION - DOOR AREAS

Removal and Installation

Front Door Opening Seal

1. B-pillar Lower Trim - Remove
2. Front Door Opening Seal - Remove

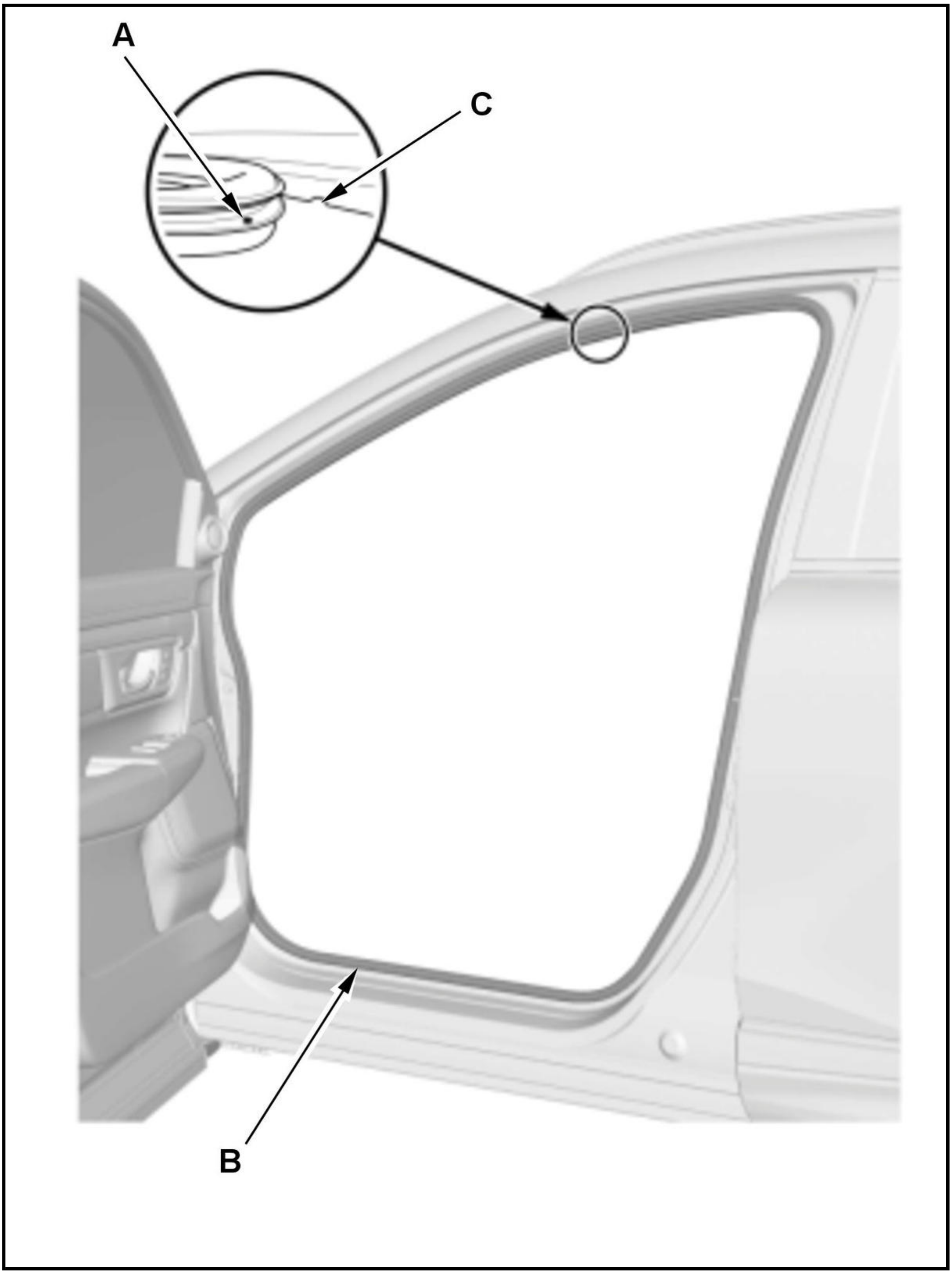

NOTE: Align the painted mark (A) of the front door opening seal (B) with the notch (C) on the body, then push the front door opening seal against the body.

3. All Removed Parts - Install

1. Install the parts reverse order of removal.

4. **Water Leaks - Check**

Front Door Sill Trim / Kick Panel

1. Front Door Sill Trim - Remove

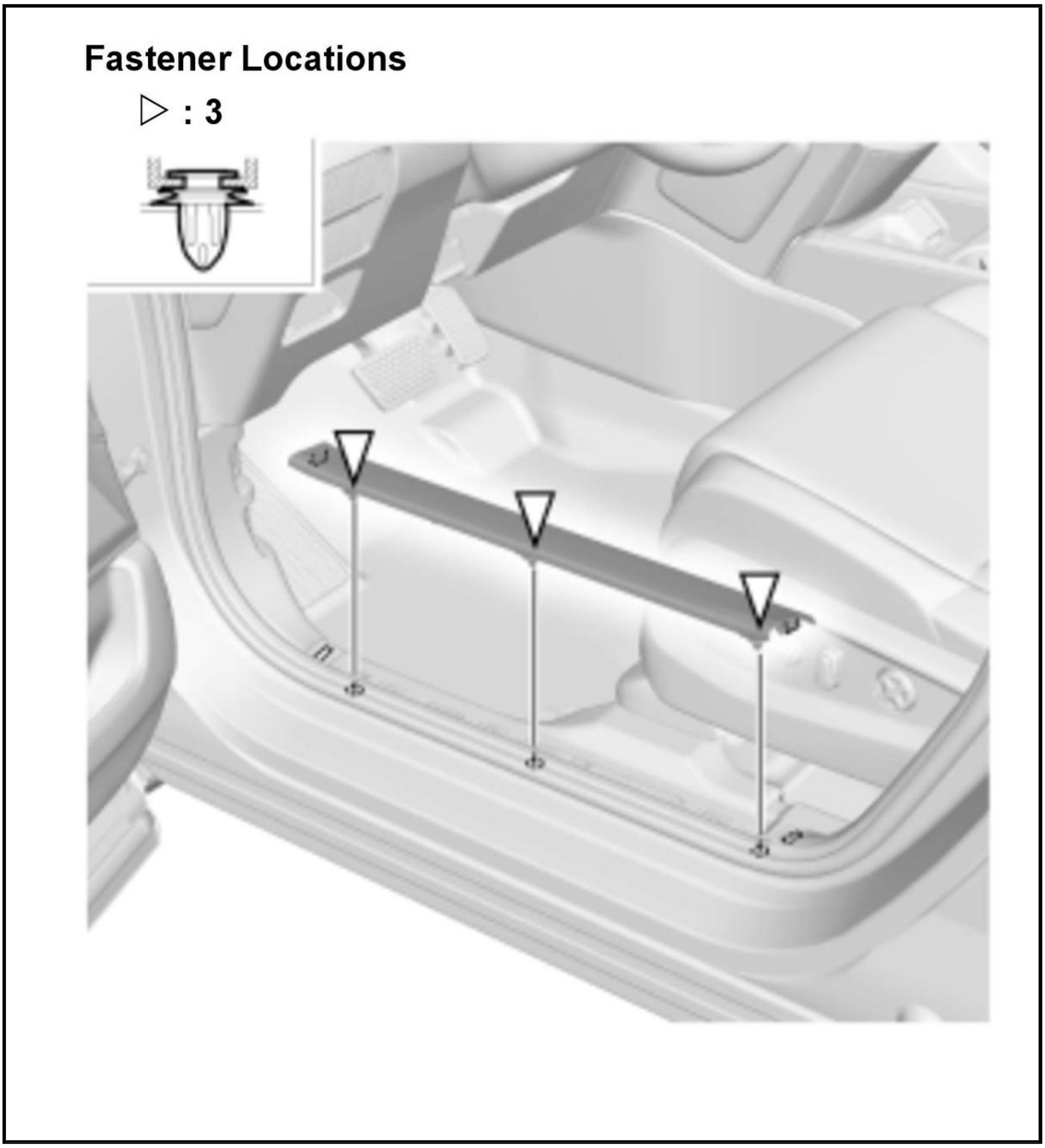
Fastener Locations
▷ : 3

2. Kick Panel - Remove

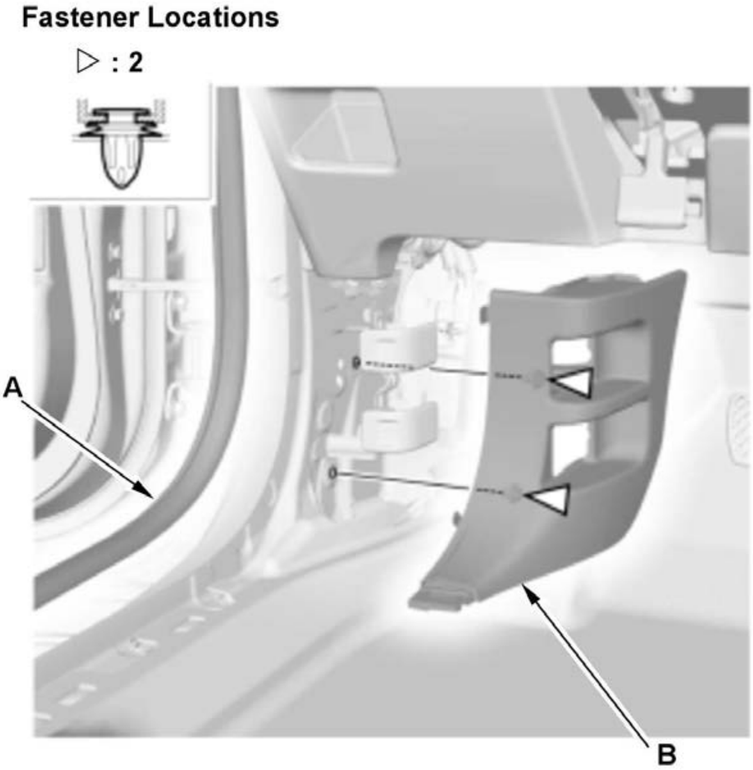
Fastener Locations
▷ : 2
A
B

Driver's Side

Passenger's Side

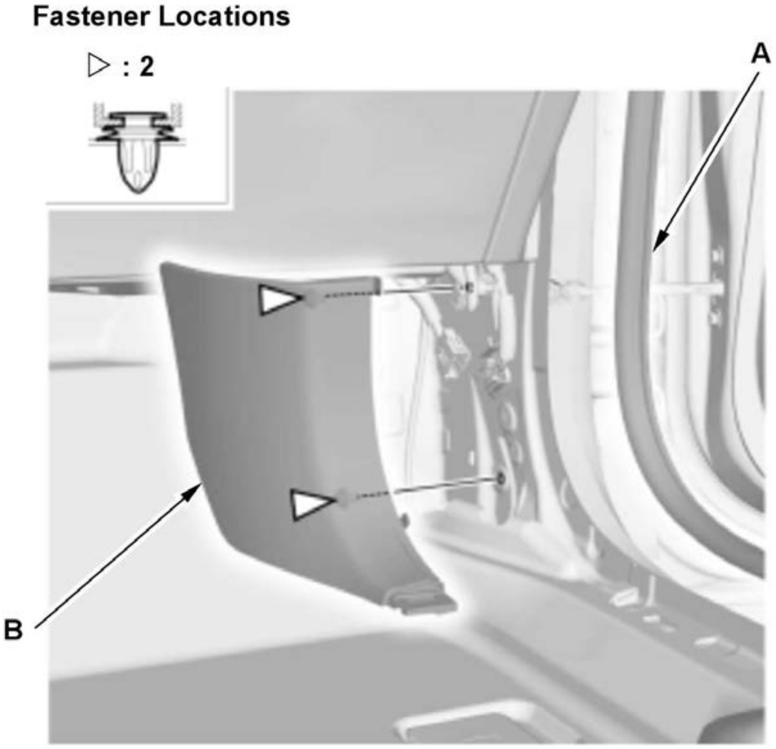
Fastener Locations
▷ : 2
A
B

1. Pull out the front door opening seal (A) as needed.

2. Remove the kick panel (B).

3. All Removed Parts - Install

1. Install the parts in the reverse order of removal.

Rear Door Opening Seal

1. B-pillar Lower Trim - Remove

2. Rear Door Opening Seal - Remove

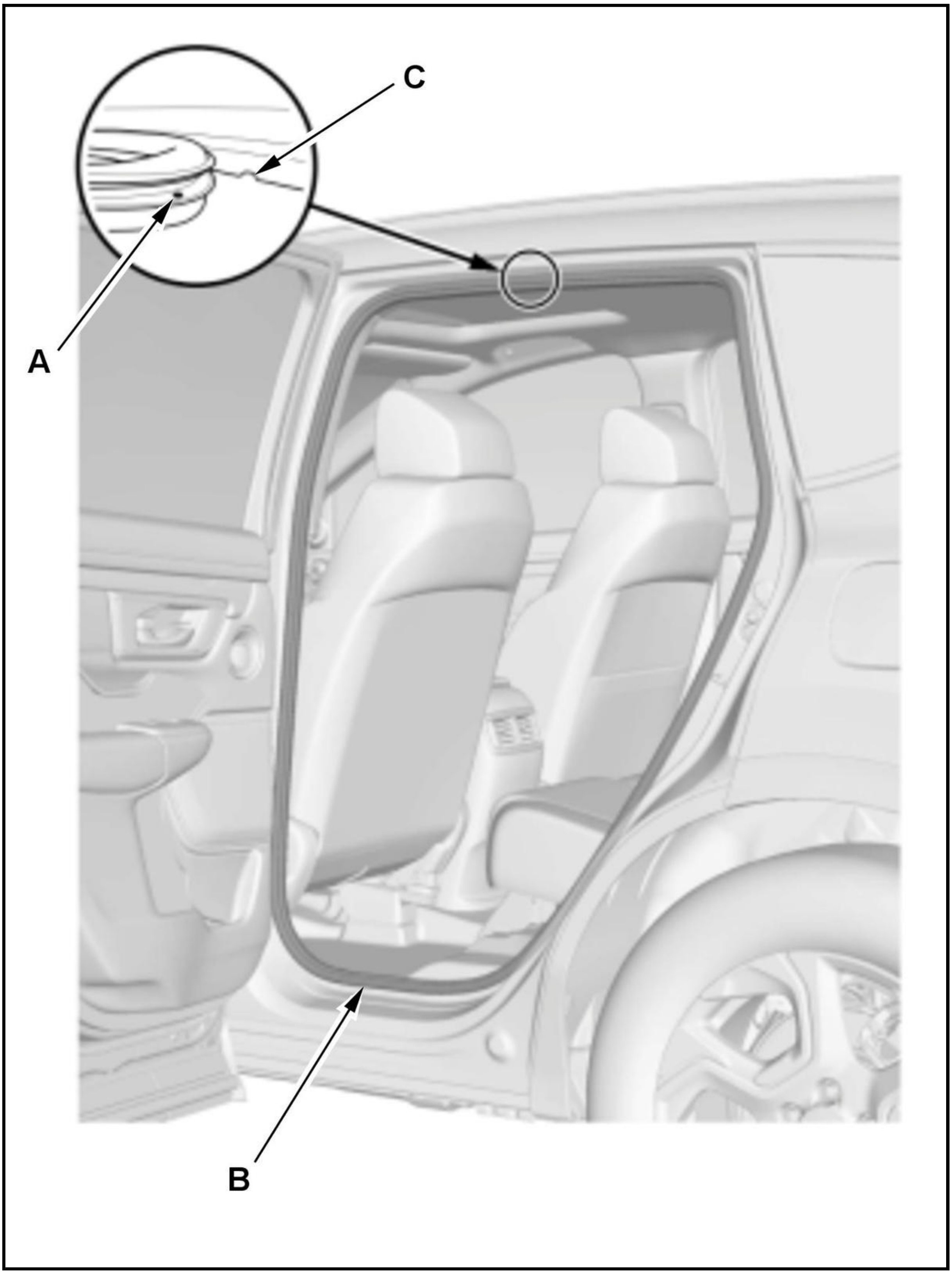

NOTE: Align the painted mark (A) of the rear door opening seal (B) with the notch (C) on the body, then push the rear door opening seal against the body.

3. All Removed Parts - Install

1. Install the parts reverse order of removal.

4. Water Leaks - Check

Rear Door Sill Trim

1. Rear Door Sill Trim - Remove

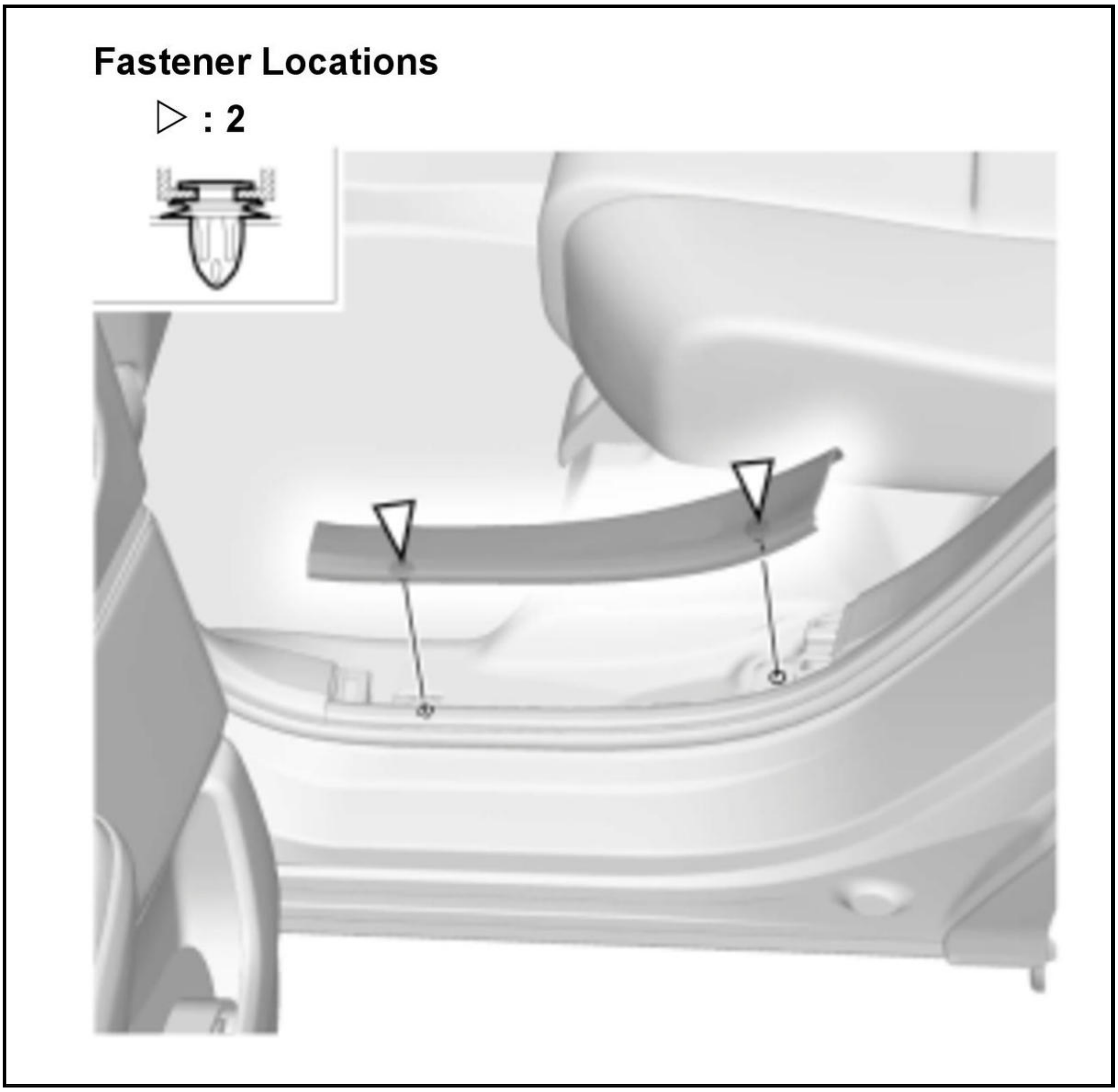

2. All Removed Parts - Install

1. Install the parts in the reverse order of removal.

INTERIOR TRIM REMOVAL AND INSTALLATION - PILLAR AREAS

Removal and Installation

SRS components are located in this area. Review the **SRS component locations** and the **precautions and procedures** before doing repairs or service.

NOTE: If the side airbags and/or side curtain airbags have deployed, the affected pillar area trim and attachment clips must be replaced. **Refer to Component Replacement/Inspection After Deployment** .

A-Pillar Trim

1. A-Pillar Trim - Remove

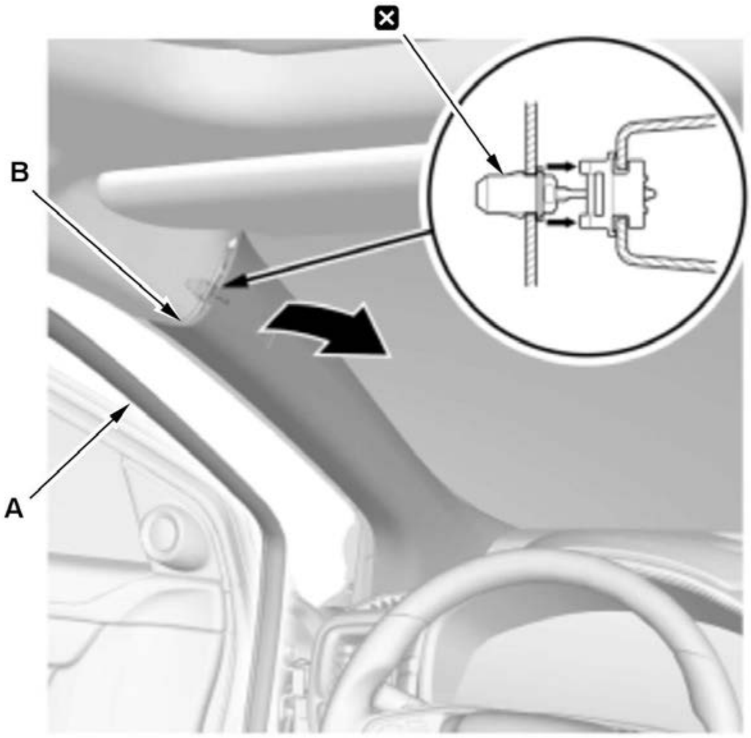

1. Remove the front door opening seal (A) as needed.

2. Pull out the A-pillar trim (B).

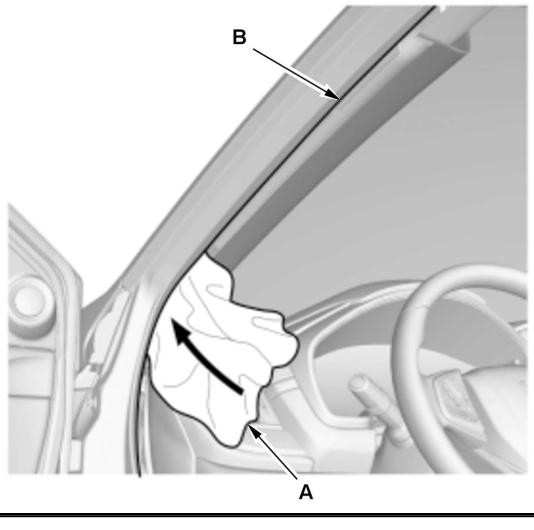

3. Put a shop towel (A) in the opening between the A-pillar trim (B) and the dashboard to prevent the A-pillar clips from falling.

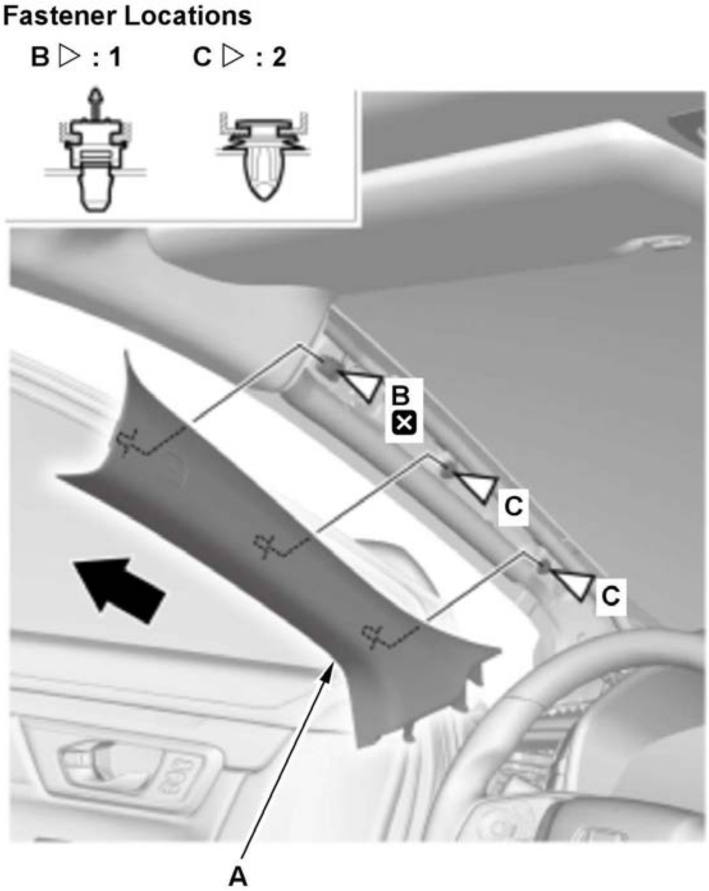 Fastener Locations B ▷ : 1 C ▷ : 2 B C C A	4. Remove the A-pillar trim (A). **NOTE:** The upper clips (B, C) will stay in the body.

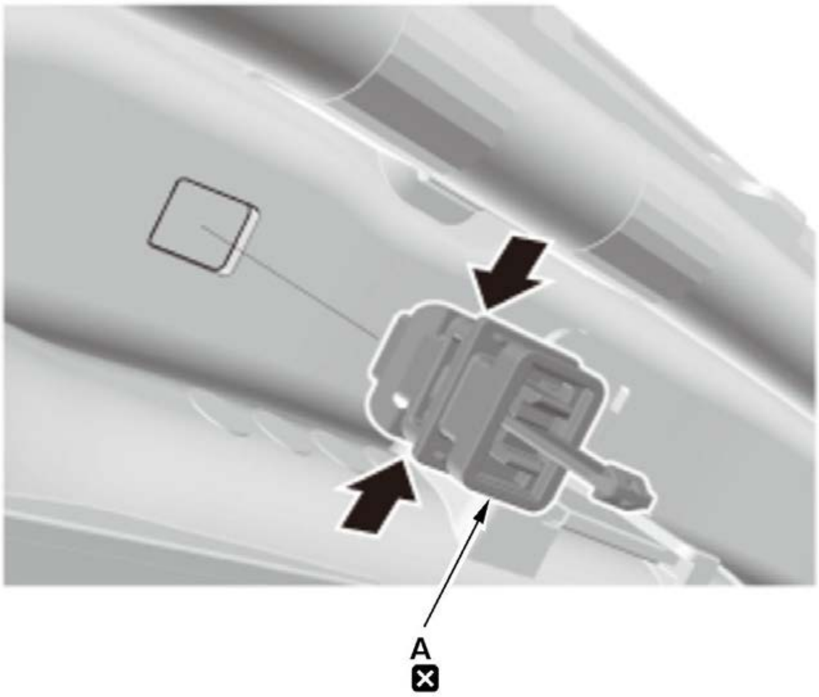	5. Remove the upper clip (A).

2. A-Pillar Trim - Check

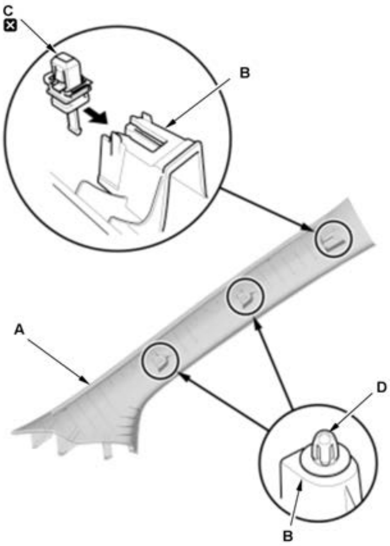

1. If the side curtain airbag has deployed, replace the A-pillar trim (A) and all the clips on the trim with new parts.

2. If the side curtain airbag has not deployed, check the A-pillar trim and note the following items:

- To prevent the side curtain airbags from deploying improperly and possibly causing injury, inspect the A-pillar trim and replace it with a new one if it has any of the following damage:
-
    - Any cracks, deformations, or stress-whitened areas in the A-pillar trim.
    - Any cracks or stress-whitening in the clip seating surfaces (B).
- After checking and adjusting the overlap between the headliner and the A-pillar trim, replace the upper clip (C) with a new one.
- If the clips (D) are damaged or stress-whitened, replace them with new ones.
- Make sure the side curtain airbag is not tucked under the clips or the trim ribs.
- Do not push too hard on the A-pillar trim. If you push too hard, the clip will be damaged, and it will not hold the trim properly.
- Gently tug on the A-pillar trim to verify that all clips are securely fastened

3. All Removed Parts - Install

1. Install the parts in the reverse order of removal.

4. **Headliner/Pillar Trim Overlap - Check**

B-pillar Upper/Lower Trim

1. **Front Door Sill Trim - Remove**
2. **Rear Door Sill Trim - Remove**
3. B-pillar Lower Trim - Remove

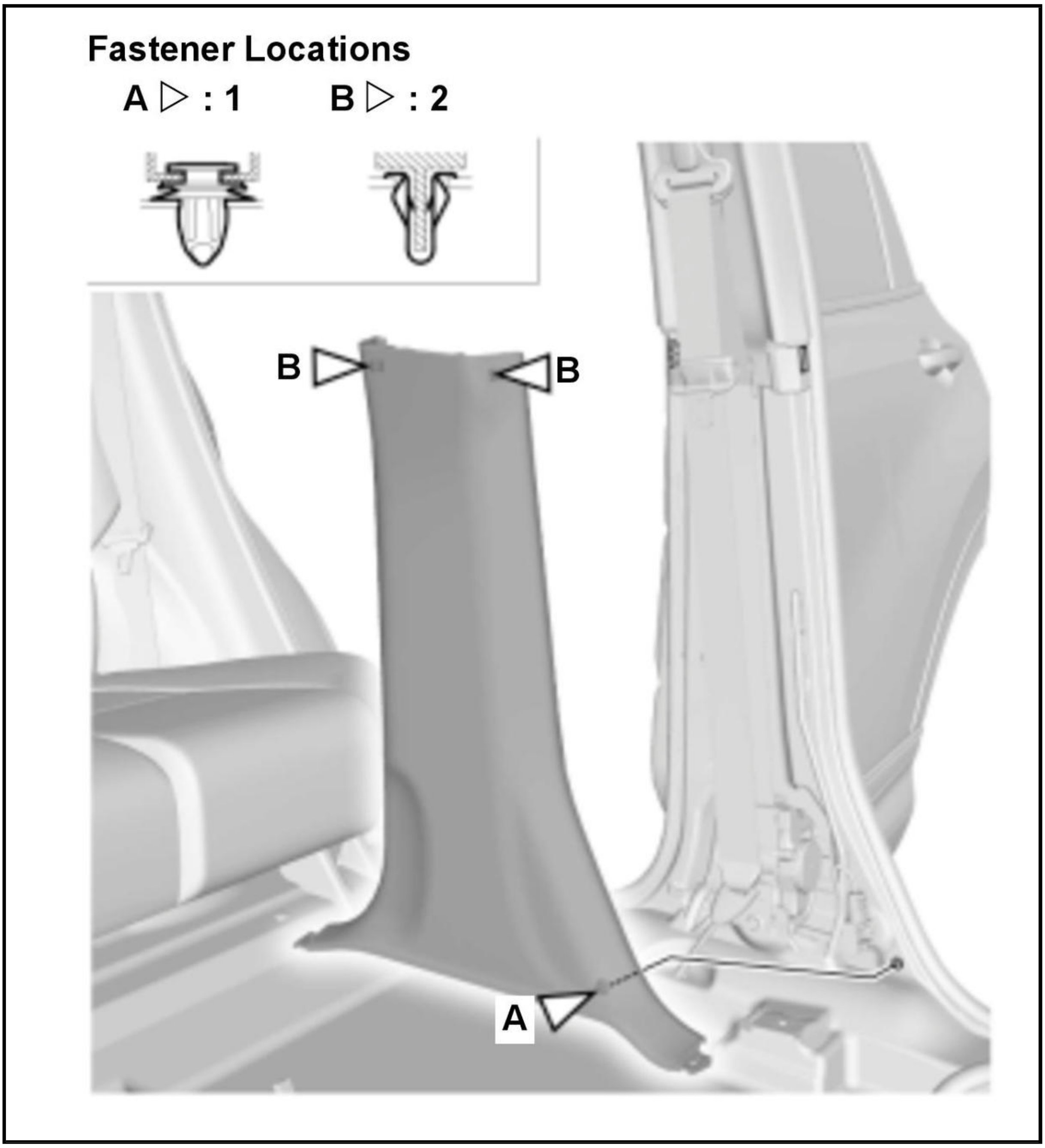
Fastener Locations
A ▷ : 1
B ▷ : 2
B
B
A

4. [Front Seat Belt Upper Anchor Bolt - Remove]

5. B-pillar Upper Trim - Remove

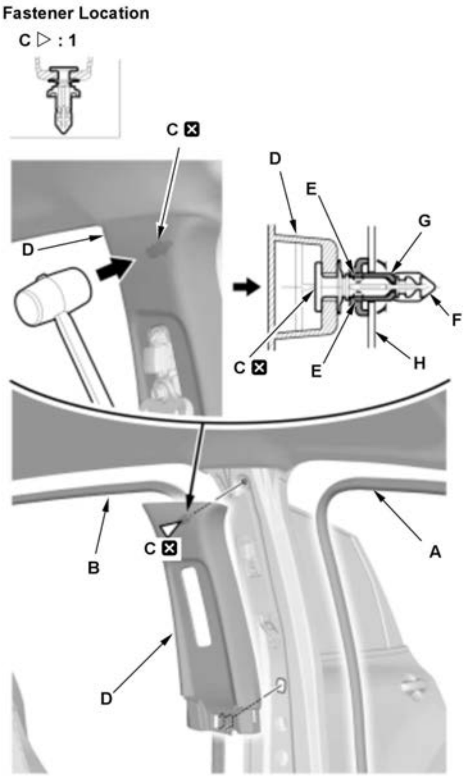

1. Remove the front and the rear door opening seals (A, B) as needed.

2. Hit the upper clip (C) in the B-pillar upper trim (D) with a rubber mallet. Hitting the clip breaks the projections (E) on the pin (F), and pushes it into the grommet (G) on the body (H).

NOTE: The upper clip must be replaced with a new one when the B-pillar trim is reinstalled.

6. B-pillar Upper/Lower Trim - Check

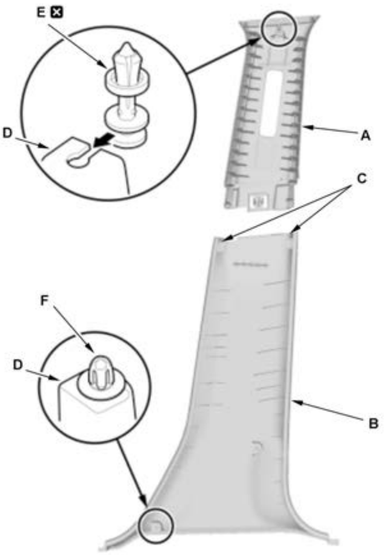

1. If the side curtain airbag has deployed, replace the B-pillar upper trim (A), the B-pillar lower trim (B), and all clips on the trim with new parts.

2. If the side curtain airbag has not deployed, check the B-pillar upper/lower trim and note the following items:

- To prevent the side curtain airbags from deploying improperly and possibly causing injury, inspect the B-pillar upper/lower trims and replace them with new ones if they have any of the following damage:
-
    - Any cracks or deformations in the B-pillar lower trim, or any breakages in the hooks (C) fitted with the B-pillar upper trim.
    - Any cracks or stress-whitening areas in the clip seating surface (D).
- After checking and adjusting the overlap between the headliner and the B-pillar trim, replace the upper clip (E) with a new one.
- If the clip (F) is damaged or stress-whitened, replace it with a new one.

7. All Removed Parts - Install

1. Install the parts in the reverse order of removal.

8. **Headliner/Pillar Trim Overlap - Check**

Quarter Pillar Trim

1. Rear Roof End Trim - Remove

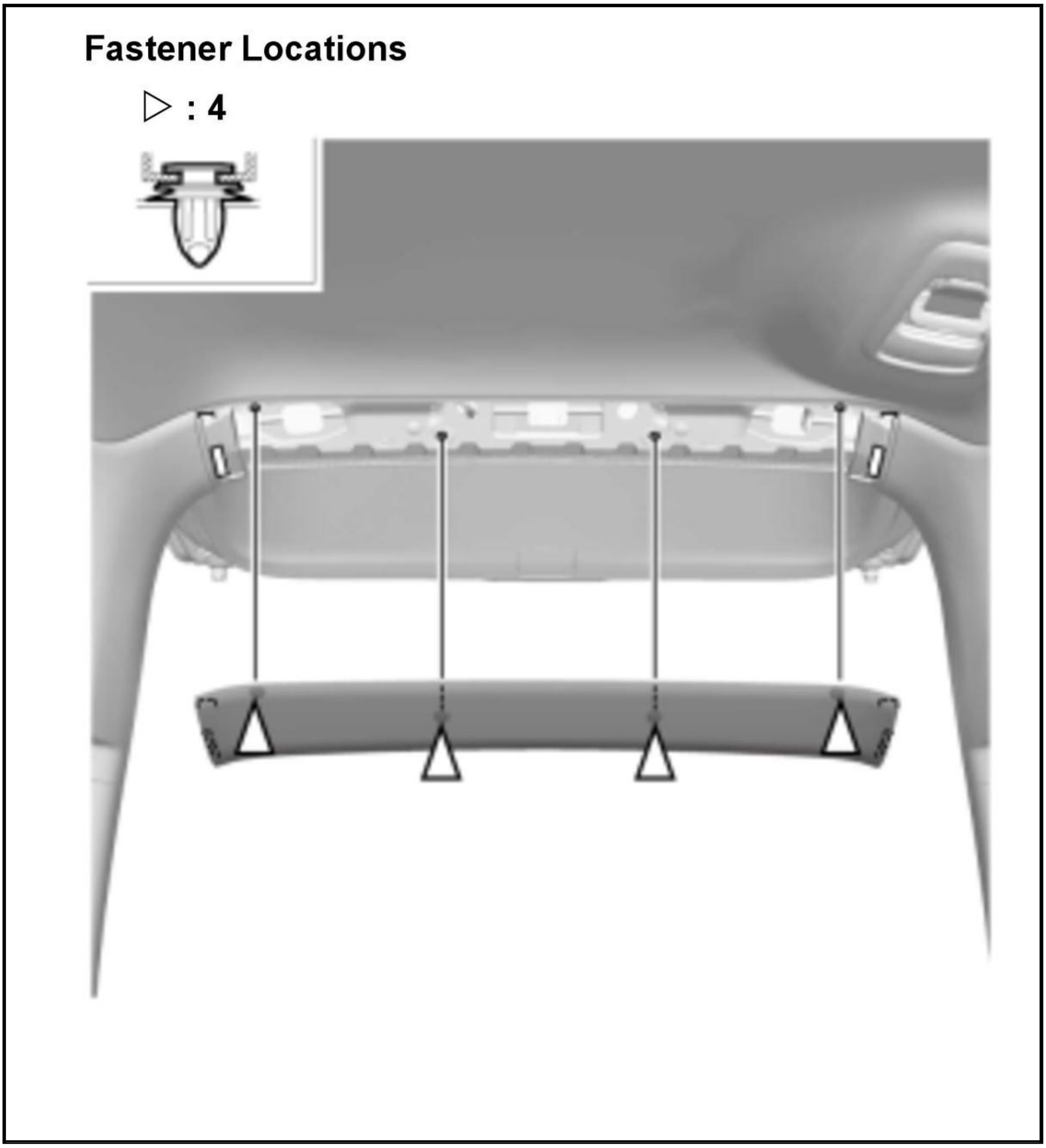
Fastener Locations
▷ : 4

2. **Rear Seat Belt Lower Anchor Bolt - Remove**
3. **Rear Side Trim Panel - Remove**
4. Quarter Pillar Trim - Remove

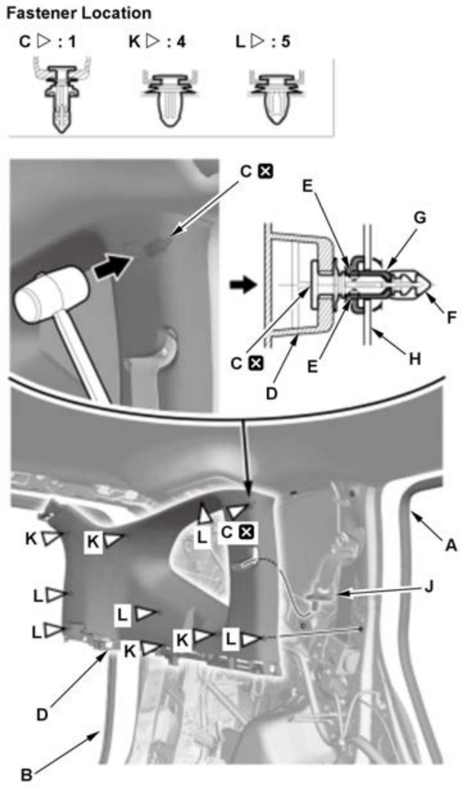

1. Remove the rear door opening seal (A) and the tailgate weatherstrip (B) as needed.

2. Hit the upper clip (C) in the quarter pillar trim (D) with a rubber mallet. Hitting the clip breaks the projections (E) on the pin (F), and pushes it into the grommet (G) on the body (H).

NOTE: The upper clip must be replaced with a new one when the quarter pillar trim is reinstalled.

3. Pull back the quarter pillar trim.

4. Pass the rear seat belt lower anchor (J) through the hole in the quarter pillar trim.

5. Quarter Pillar Trim - Check

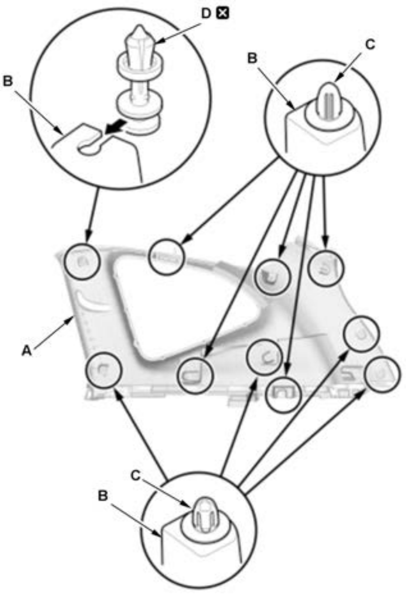

1. If the side curtain airbag has deployed, replace the quarter pillar trim (A) and all clips on the trim with new parts.

2. If the side curtain airbag has not deployed, check the quarter pillar trim and note the following items:

- To prevent the side curtain airbags from deploying improperly and possibly causing injury, inspect the quarter pillar trim and replace it with a new one if it has any of the following damage:
-
    - Any cracks, deformations, or stress-whitened areas in the quarter pillar trim.
    - Any cracks or stress-whitening in the clip seating surfaces (B).
- If the clips (C) are damaged or stress-whitened, replace them with new ones.
- After checking and adjusting the overlap between the headliner and the quarter pillar trim, replace the upper clip (D) with a new ones.
- Make sure the side curtain airbag is not tucked under the clips or the trim ribs.
- Gently tug on the quarter pillar trim to verify that all clips are securely fastened.

6. All Removed Parts - Install

1. Install the parts in the reverse order of removal.

7. **Headliner/Pillar Trim Overlap - Check**

INTERIOR TRIM REMOVAL AND INSTALLATION - REAR SIDE AREA

Removal and Installation

1. **Rear Door Sill Trim - Remove**
2. **Rear Trim Panel - Remove**
3. **Rear Carpet Trim - Remove**
4. Rear Door Opening Seal - Remove

1. **Remove the rear door opening seal as needed.**

5. Tailgate Weatherstrip - Remove

1. **Remove the tailgate weatherstrip as needed.**

6. Rear Side Trim Panel - Remove

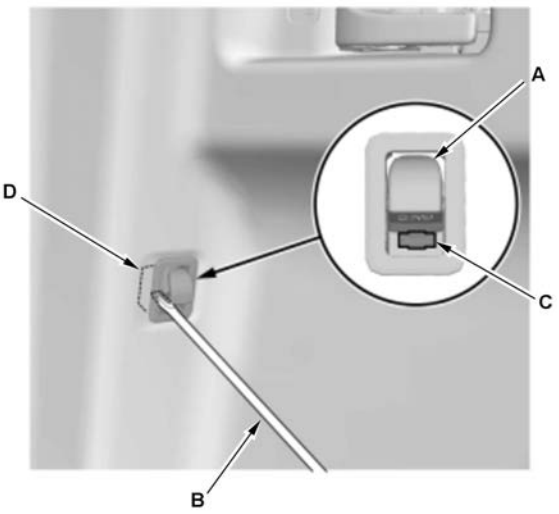	1. Turn the hook (A) up and using a small flat tip screwdriver (B), push in the white release tab (C) while pulling out the trunk hook (D).

2. Remove the rear side trim panel (A).

Left Side

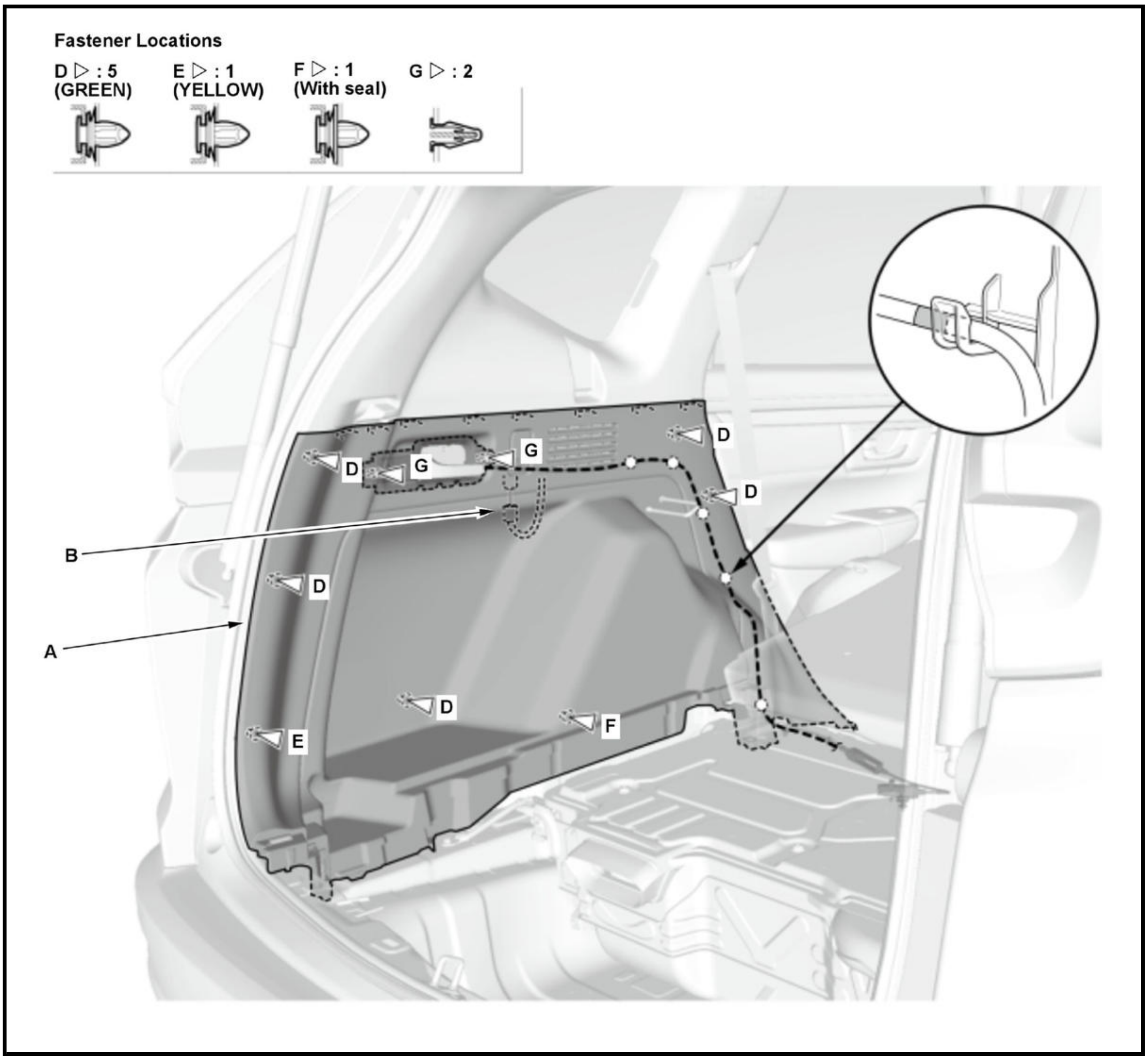
Fastener Locations
D ▷ : 5
(GREEN)
E ▷ : 1
(YELLOW)
F ▷ : 1
(With seal)
G ▷ : 2
D
D
G
G
D
B
D
A
D
F
E

Right Side

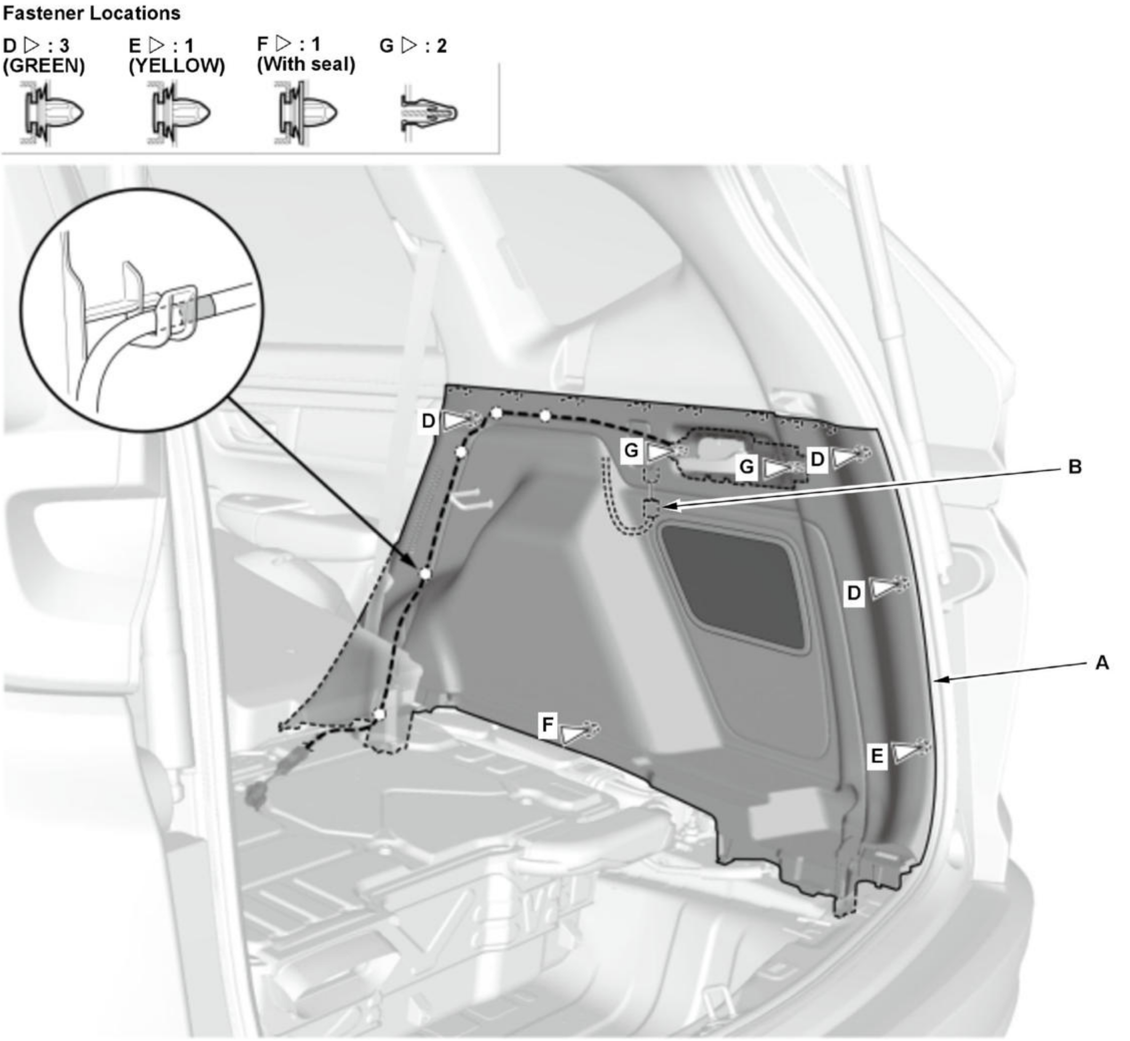
Fastener Locations
D ▷ : 3 (GREEN)
E ▷ : 1 (YELLOW)
F ▷ : 1 (With seal)
G ▷ : 2
D
G
G
D
B
D
A
F
E

3. Disconnect the connector (B).

7. All Removed Parts - Install

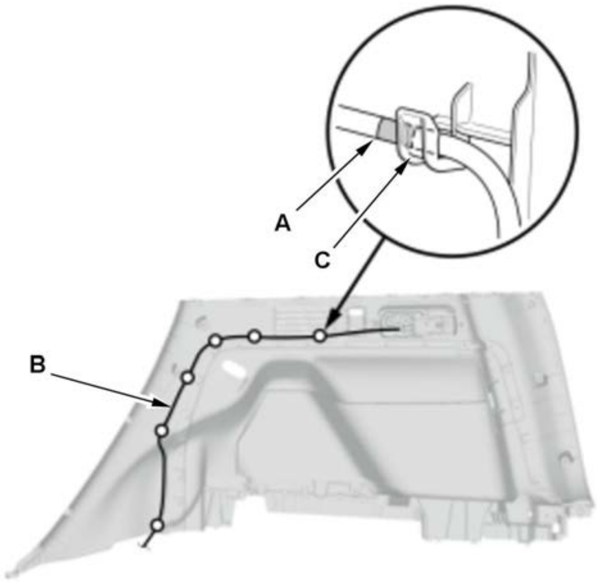	1. Install the parts in the reverse order of removal. **NOTE:** Align the marks (A) on the rear seat release cable (B) with the hooks (C) as shown.

Removal and Installation

1. Tailgate Upper Trim Panel - Remove

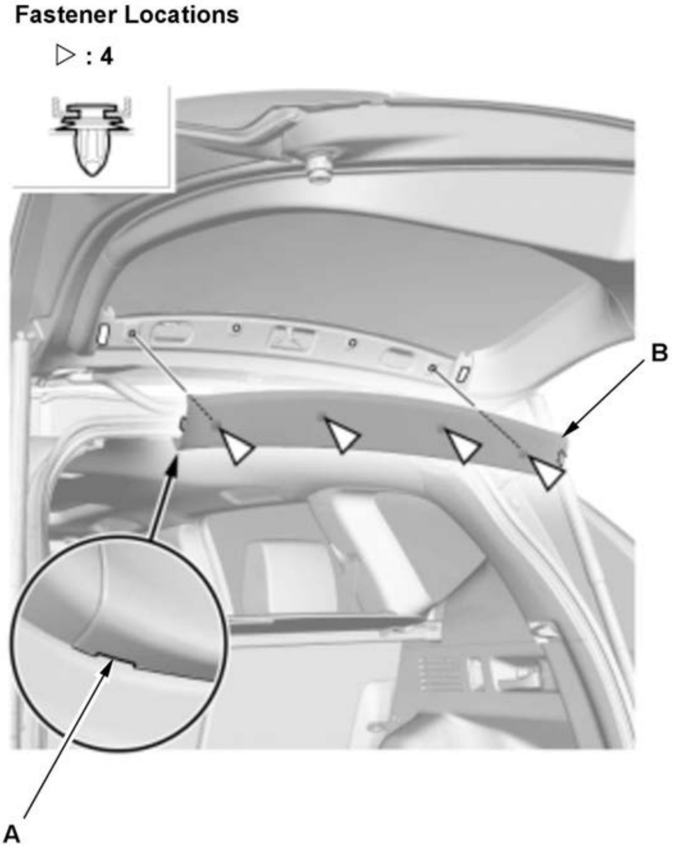 Fastener Locations ▷ : 4 B A	1. Pry out on the notch (A) in the tailgate upper trim panel (B) with the trim tool.

2. Both Tailgate Side Trim Panels - Remove

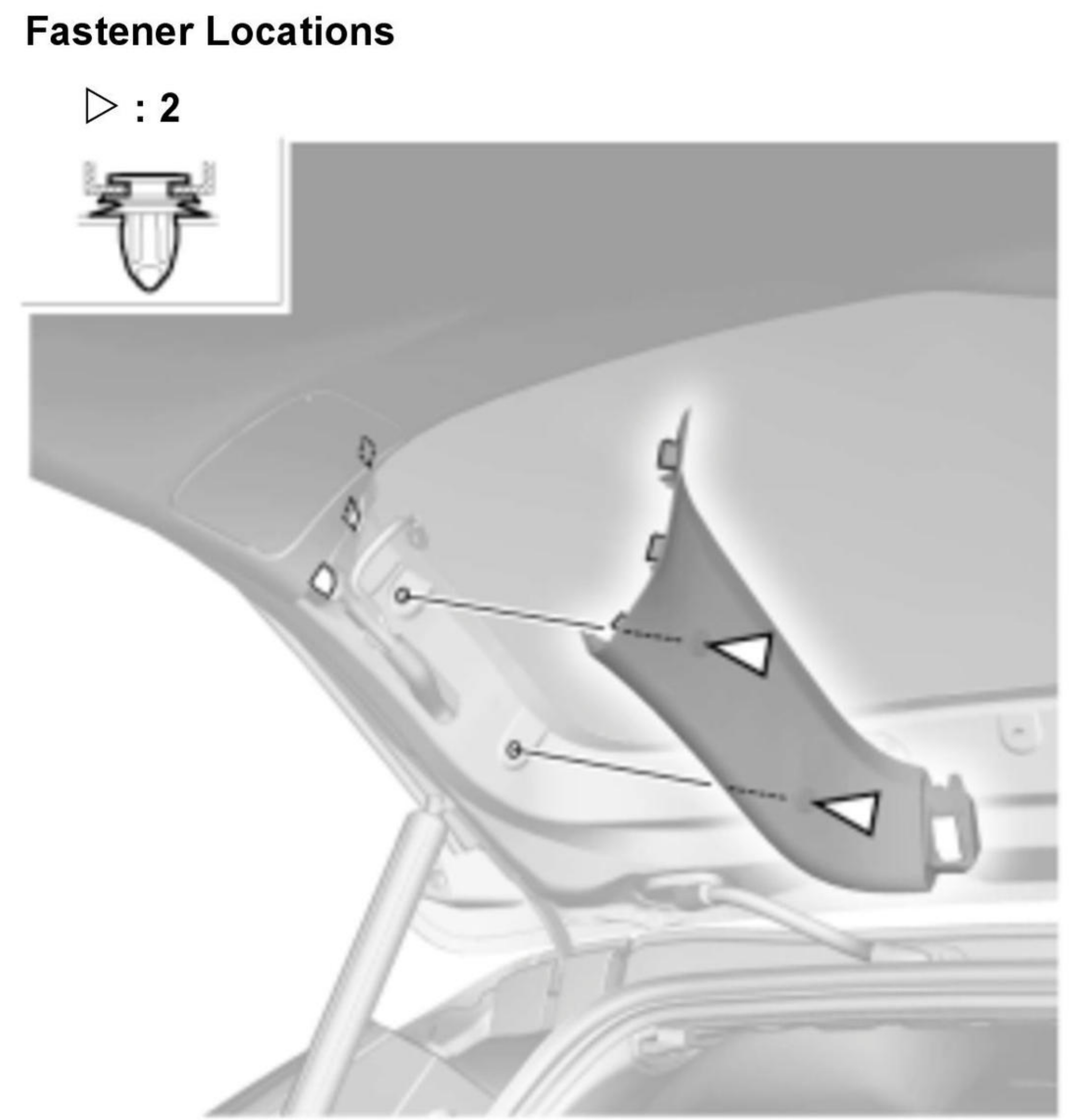
Fastener Locations
▷ : 2

3. Tailgate Lower Trim Panel - Remove

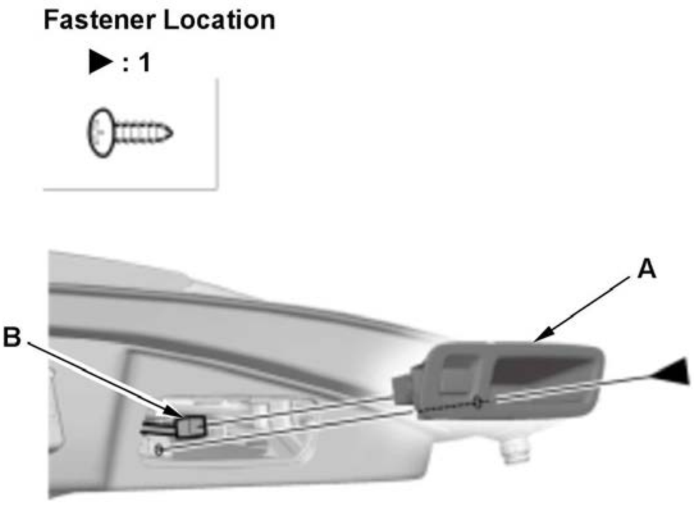 Fastener Location ▶ : 1 A B	1. Remove the tailgate pull pocket (A). 2. For some models: Disconnect the connector (B).

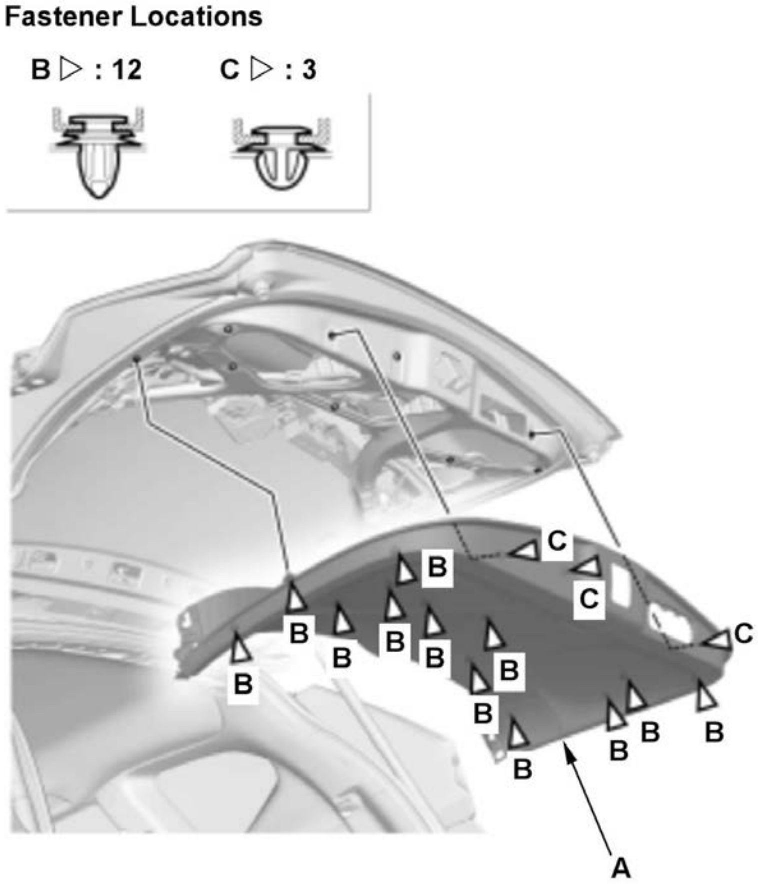	3. Remove the tailgate lower trim panel (A).

4. All Removed Parts - Install

1. Install the parts in the reverse order of removal.

STEERING COLUMN COVER REMOVAL AND INSTALLATION

Removal and Installation

Procedure

NOTE: **Numbered call-outs in figure pertain to list numbers in following procedure.**

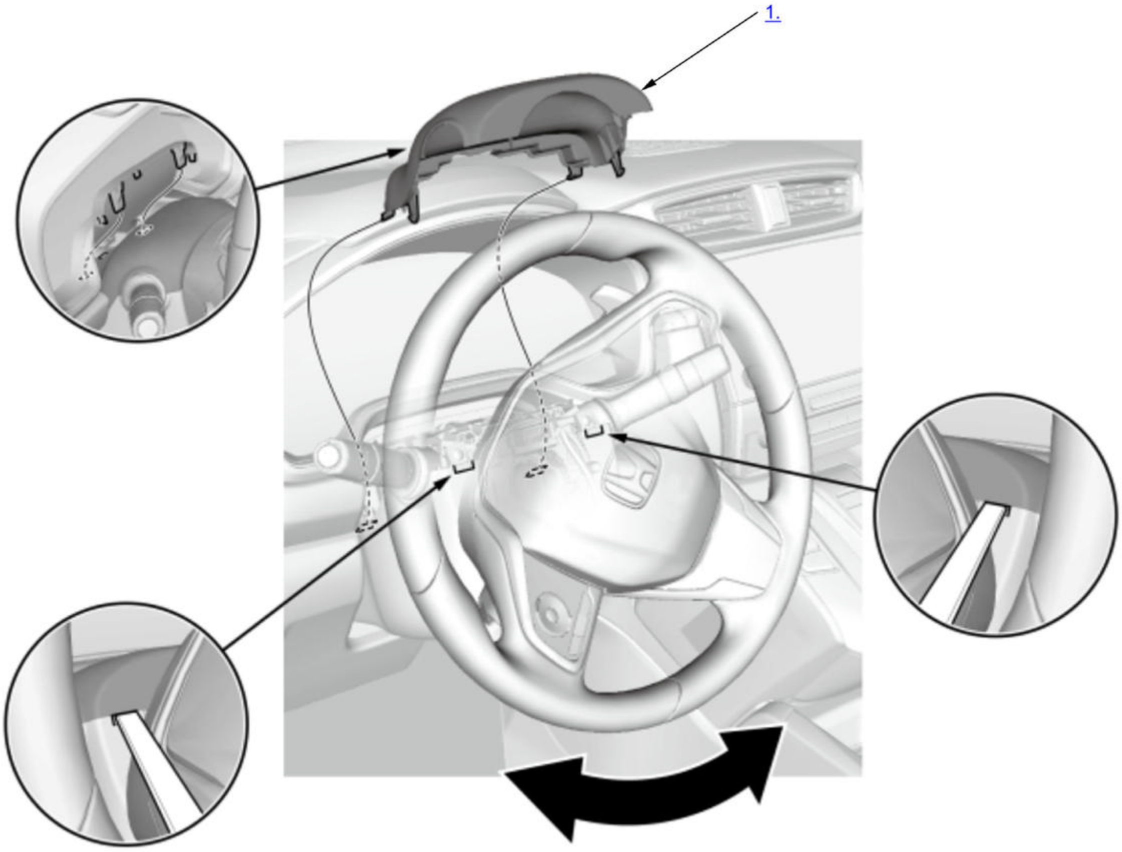

Fig. 38: Upper Steering Column Cover Components
Courtesy of HONDA, U.S.A., INC.

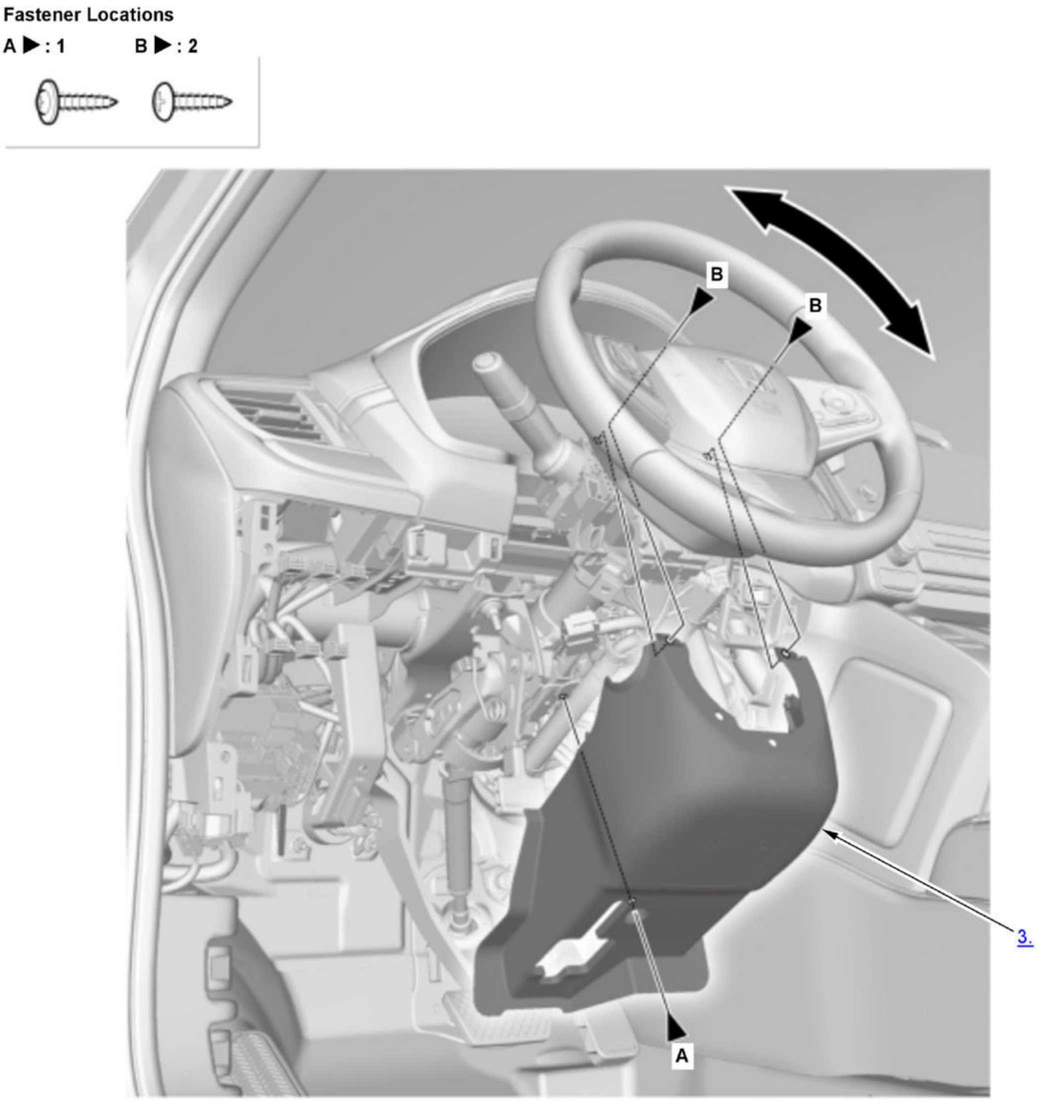

Fig. 39: Lower Steering Column Cover Components
Courtesy of HONDA, U.S.A., INC.

1. Upper Column Cover - Remove
2. **Driver's Dashboard Lower Cover - Remove**
3. Lower Column Cover - Remove
4. All Removed Parts - Install

1. Install the parts in the reverse order of removal.

SUNVISOR REMOVAL AND INSTALLATION

Removal and Installation

1. Sunvisor - Remove

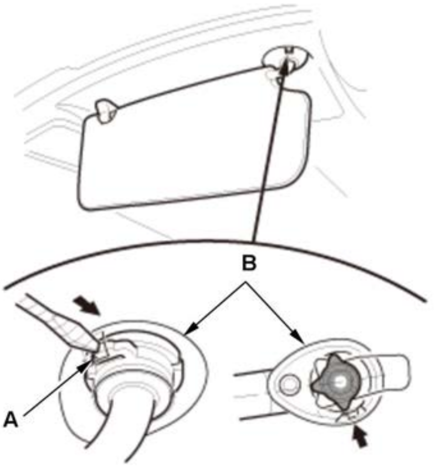

1. Push the hook (A) with a flat-tip screwdriver through the hole in the front side of the bracket cover (B).

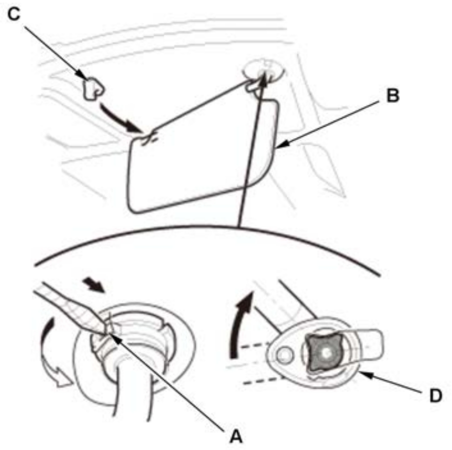

2. While pushing in the hook (A) with a flat-tip screwdriver, release the sunvisor (B) from the holder (C), and rotate the sunvisor backward 45Â°.
NOTE: Make sure the hook slides into the bracket cover (D) as you rotate the sunvisor.

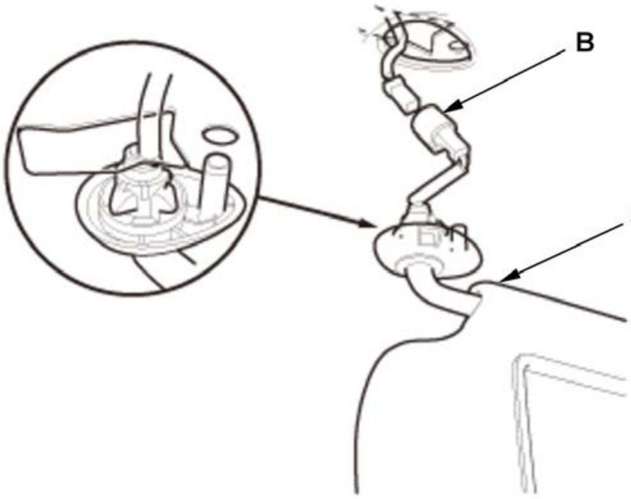

3. Remove the sunvisor (A).

4. For some models: Disconnect the connector (B).

2. Sunvisor Holder - Remove

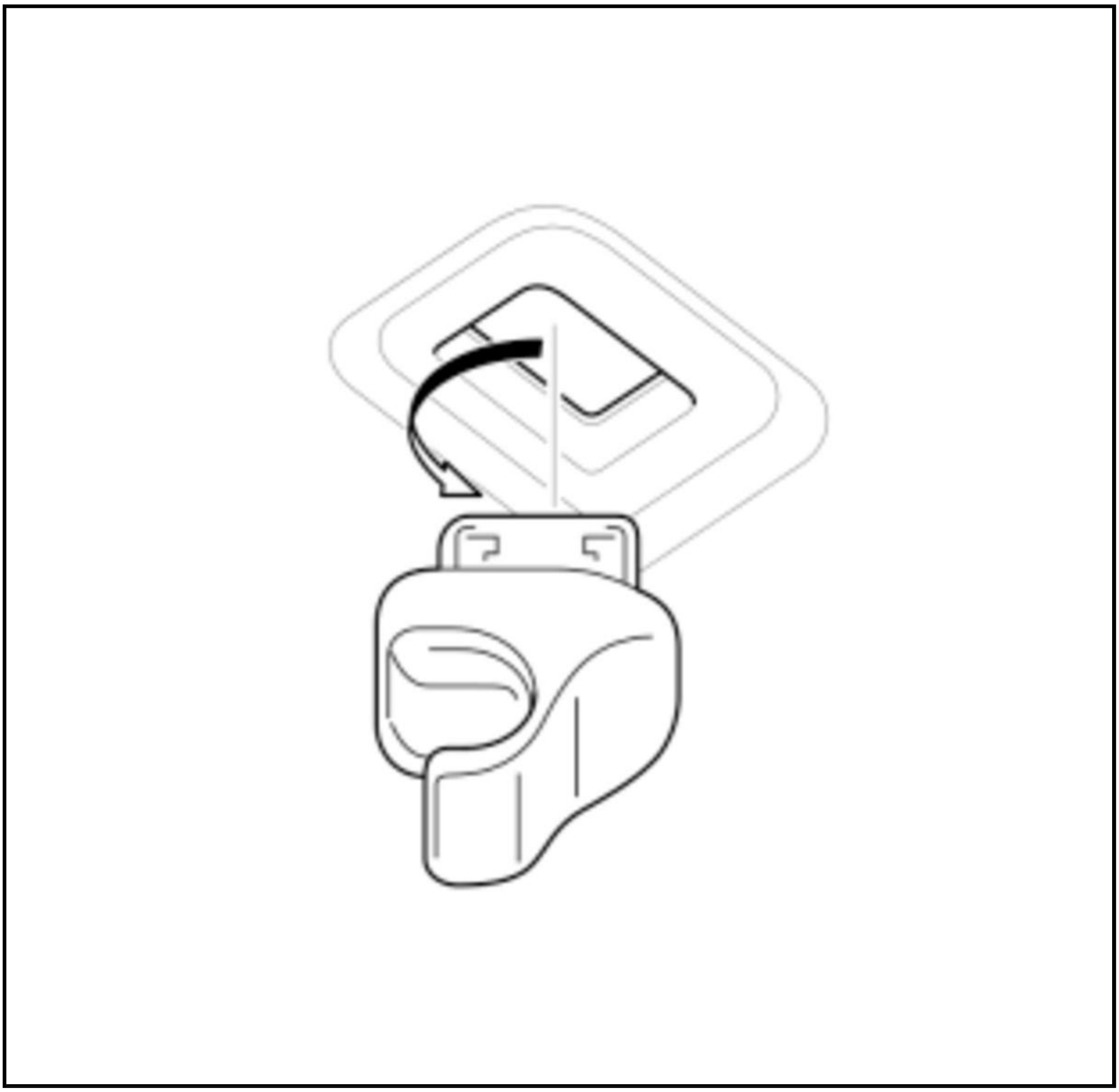

3. Sunvisor - Check

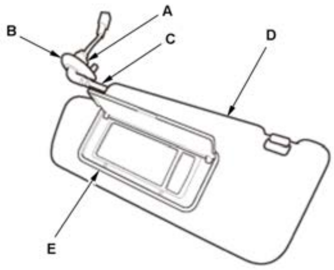	1. If the side curtain airbag has deployed, replace the sunvisor, along with the other parts listed for side curtain airbag deployment. 2. If the side curtain airbag has not deployed, inspect the sunvisor for damage. A damaged sunvisor may cause the side curtain airbags to deploy improperly, possibly causing injury. Replace the sunvisor if it has any of the following damage: • Any cracks in the sunvisor bracket (A) • Any cracks in the sunvisor bracket cover (B) • Any bends or cracks in the sunvisor shaft (C) • Any cracks in the sunvisor base (D) • Any cracks in the vanity mirror base (E) 3. If the sunvisor holder is damaged or stress-whitened, replace it with new one.

4. All Removed Parts - Install

1. Install the parts in the reverse order of removal.

DISASSEMBLY AND REASSEMBLY

CENTER CONSOLE DISASSEMBLY AND REASSEMBLY

Exploded View

1

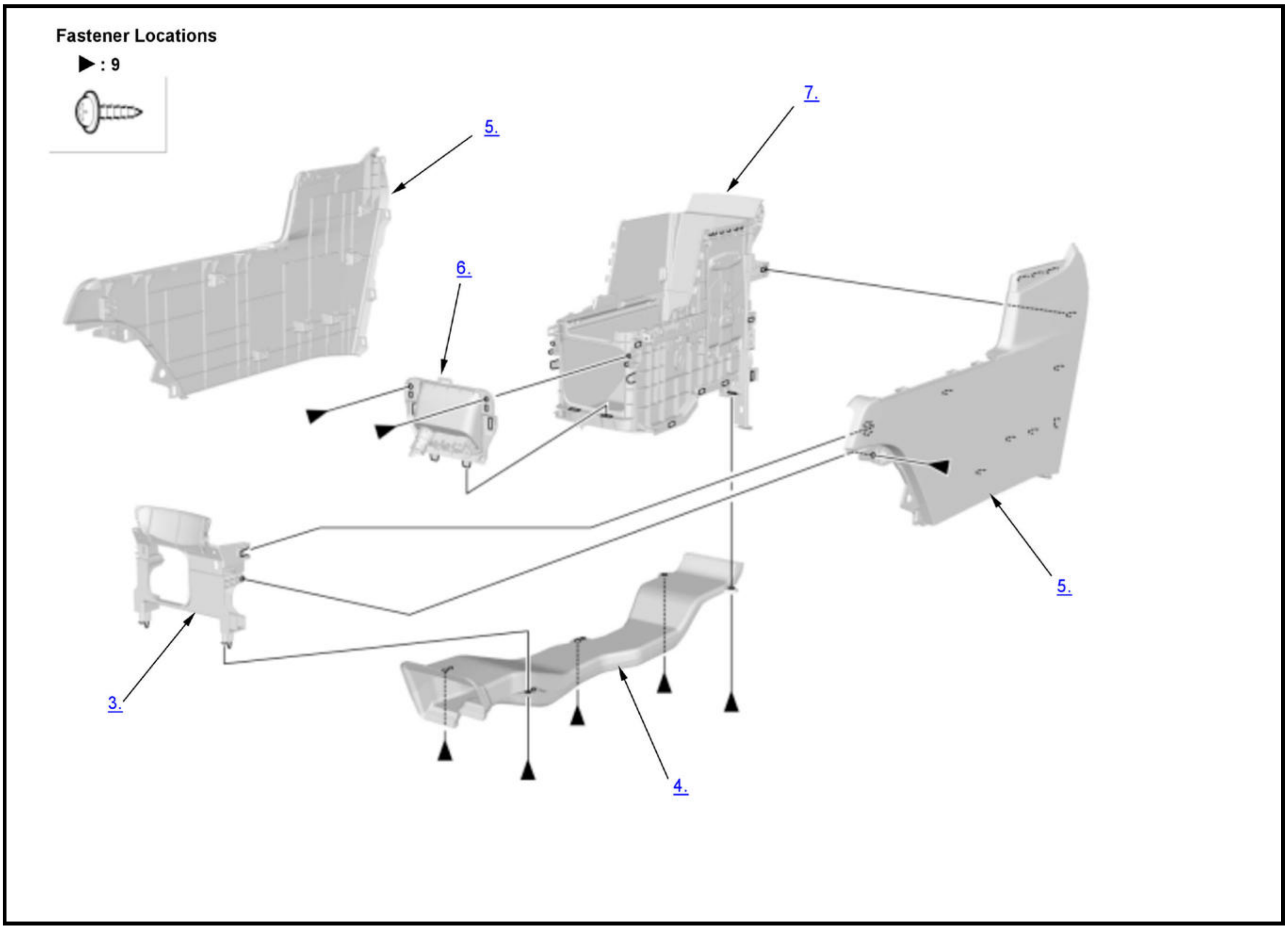

1. **Center Console - Remove**
2. **Center Console Armrest - Remove**
3. Center Console Front Bracket - Remove
4. Center Console Front Duct - Remove
5. Center Console Side Panel - Remove
6. Center Console Box Jack Panel - Remove
7. Center Console Box - Remove
8. All Disassembled Parts - Reassemble

> 1. Reassemble the parts in the reverse order of disassembly.

CENTER CONSOLE REAR TRIM DISASSEMBLY AND REASSEMBLY

Exploded View

1

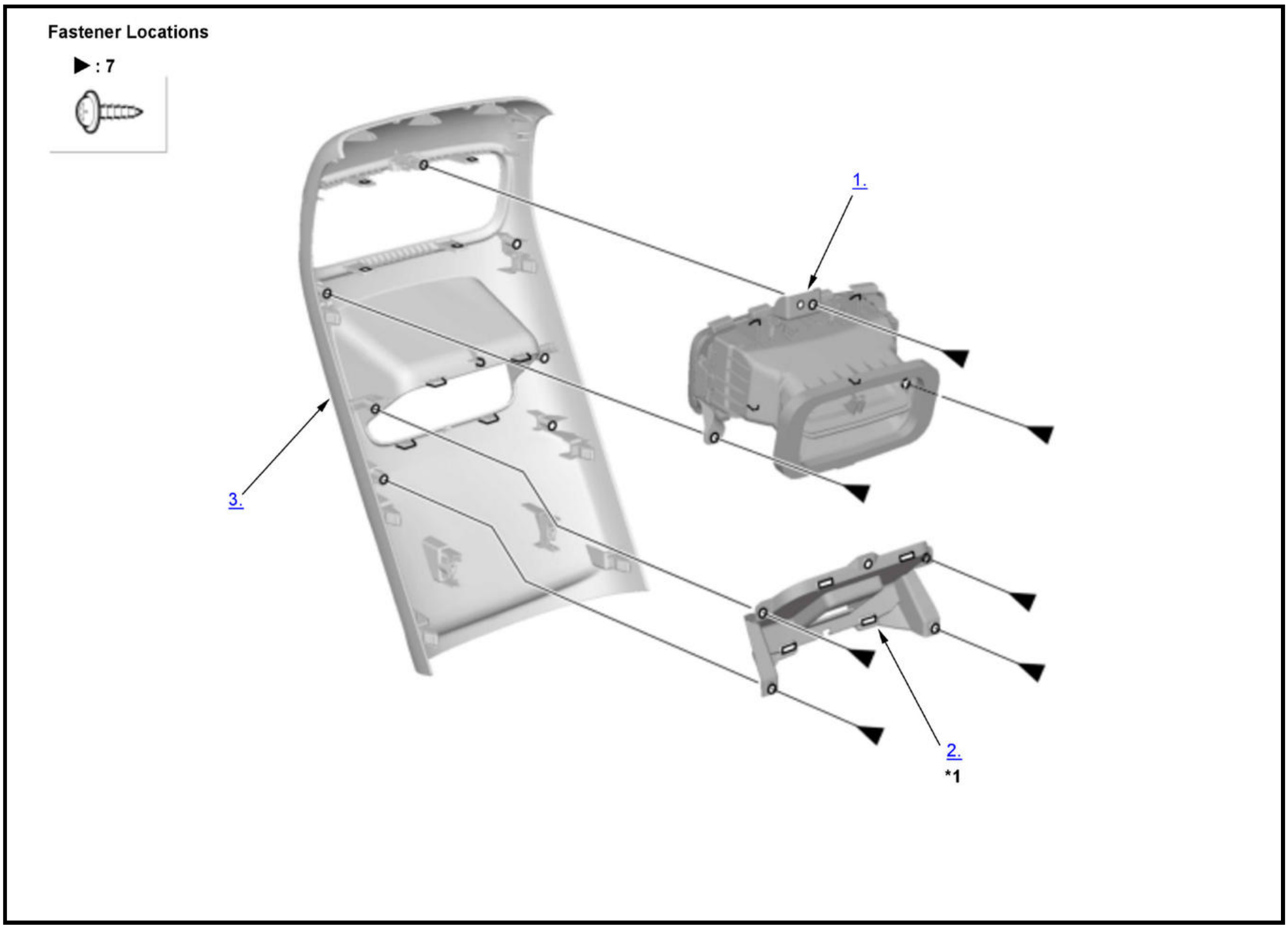

*1	For Some Models

1. Center Console Outlet - Remove
2. Center Console Rear Jack Panel - Remove
3. Center Console Rear Trim - Remove
4. All Disassembled Parts - Reassemble

> 1. Reassemble the parts in the reverse order of disassembly.

REMOVAL AND INSTALLATION

CARPET REMOVAL AND INSTALLATION

Removal and Installation

1

Front

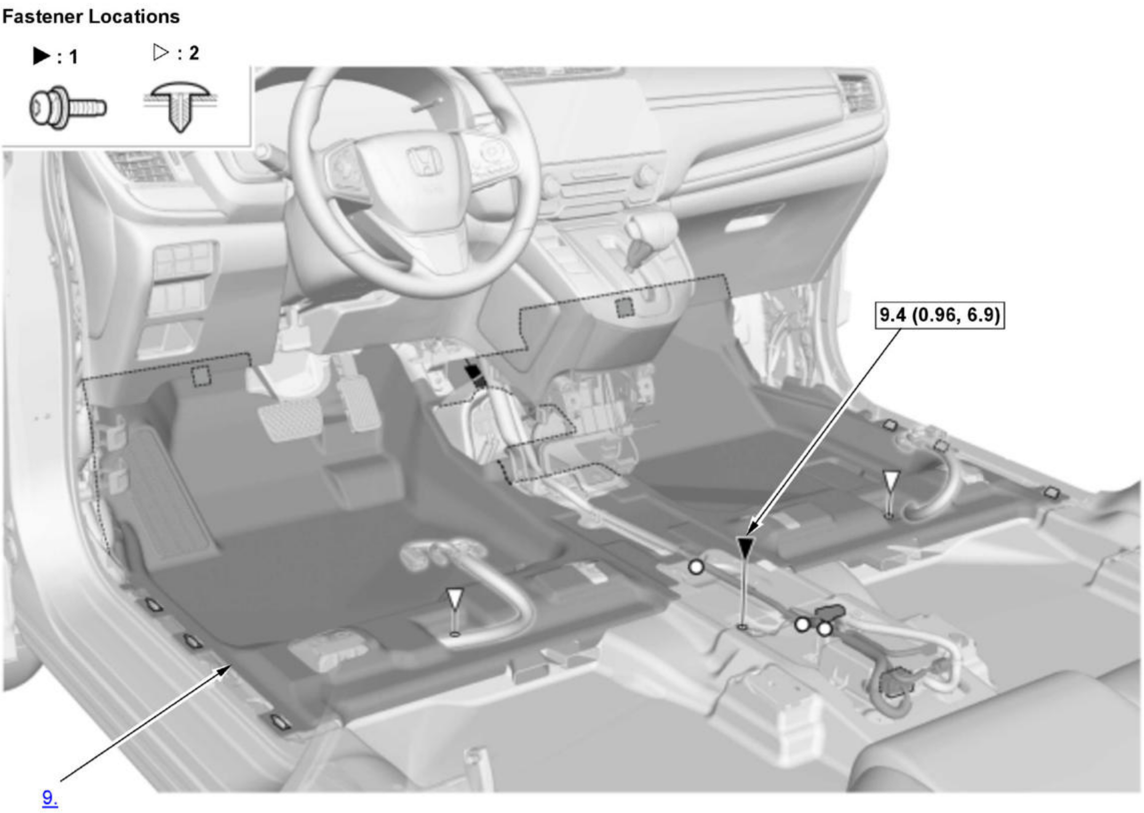
Fastener Locations
▶ : 1
▷ : 2
9.4 (0.96, 6.9)
9.

☐	Torque: N.m (kgf.m, lbf.ft)

2

Rear

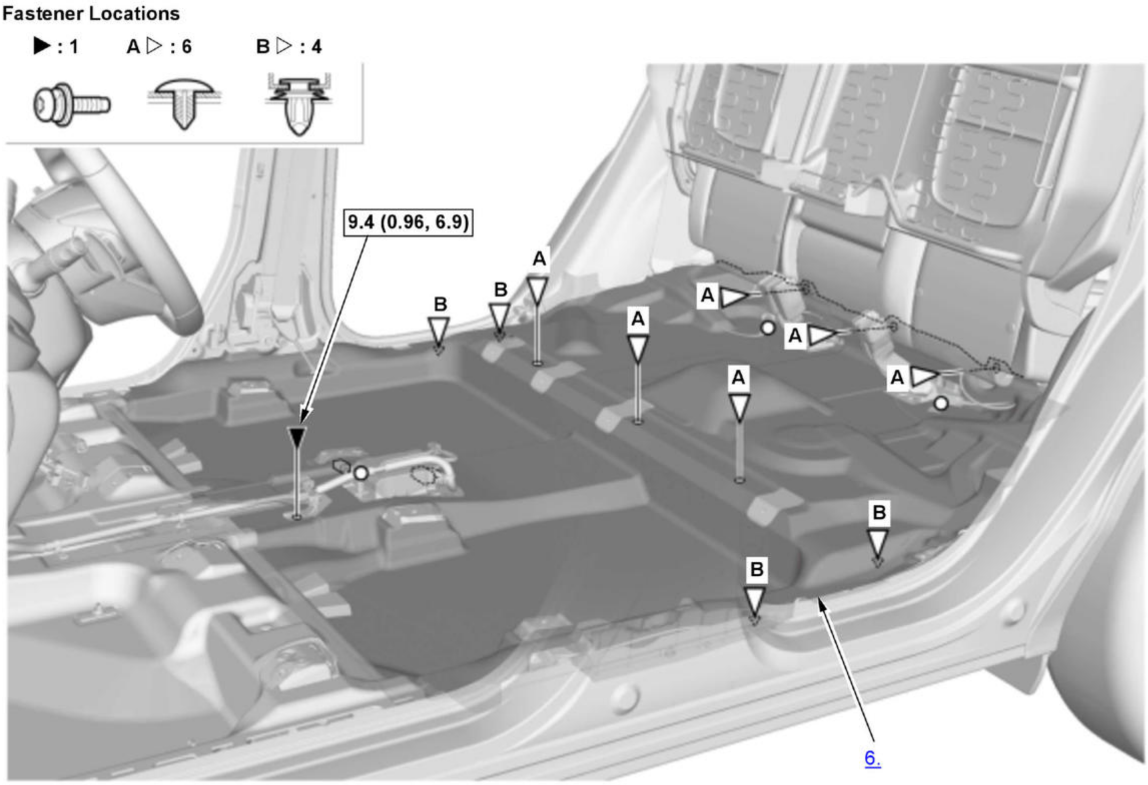
Fastener Locations
▶ : 1
A ▷ : 6
B ▷ : 4
9.4 (0.96, 6.9)
A
A
A
A
A
A
B
B
B
B
6.

☐	Torque: N.m (kgf.m, lbf.ft)

Front

1. 12 Volt Battery Terminal - Disconnect

   NOTE: Wait at least 3 minutes before starting work.

2. Both Front Seats - Remove
3. Front Door Sill Trim - Remove
4. Both Kick Panels - Remove
5. Center Console - Remove
6. Center Console Bracket - Remove
7. Steering Joint Cover - Remove
8. Rear Vent Duct - Remove
9. Front Floor Carpet - Remove
10. All Removed Parts - Install

    1. Install the parts in the reverse order of removal.

Rear

11. 12 Volt Battery Terminal - Disconnect

    NOTE: Wait at least 3 minutes before starting work.

12. Center Console - Remove
13. Both Front Seats - Remove
14. Both B-pillar Lower Trims - Remove
15. Rear Seat Cushion - Lift
16. Rear Floor Carpet - Remove
17. All Removed Parts - Install

    1. Install the parts in the reverse order of removal.

CENTER CONSOLE ARMREST REMOVAL AND INSTALLATION

Removal and Installation

NOTE: 📖 Where icon is shown, further information shown below.

1

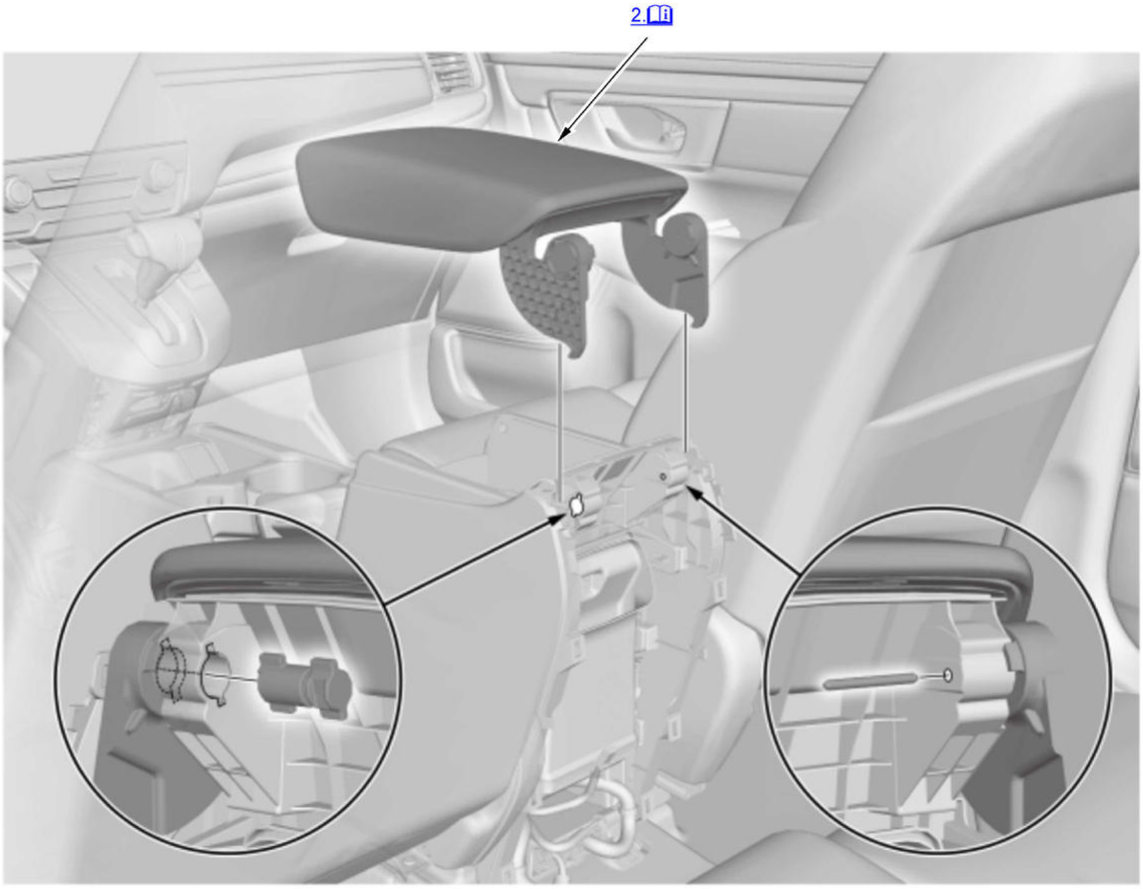

🛈	Detailed information, notes, and precautions

1. Center Console Rear Trim - Remove
2. Center Console Armrest - Remove

   NOTE: When removing the center console armrest, close the center console box.

3. All Removed Parts - Install

   1. Install the parts in the reverse order of removal.

CENTER CONSOLE PANEL REMOVAL AND INSTALLATION

Removal and Installation

1

2017-19

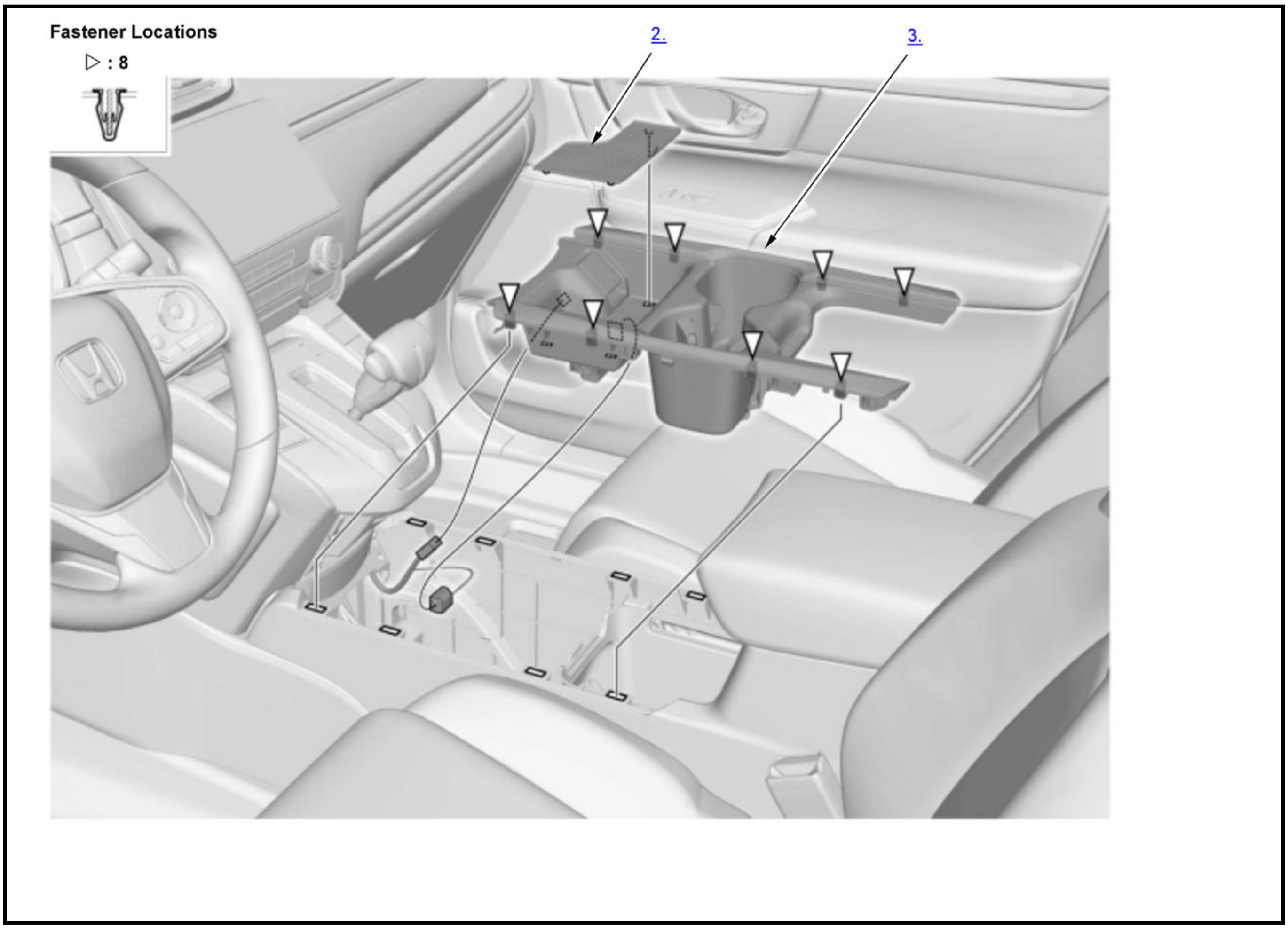
Fastener Locations
▷ : 8
2.
3.

2

2020-21

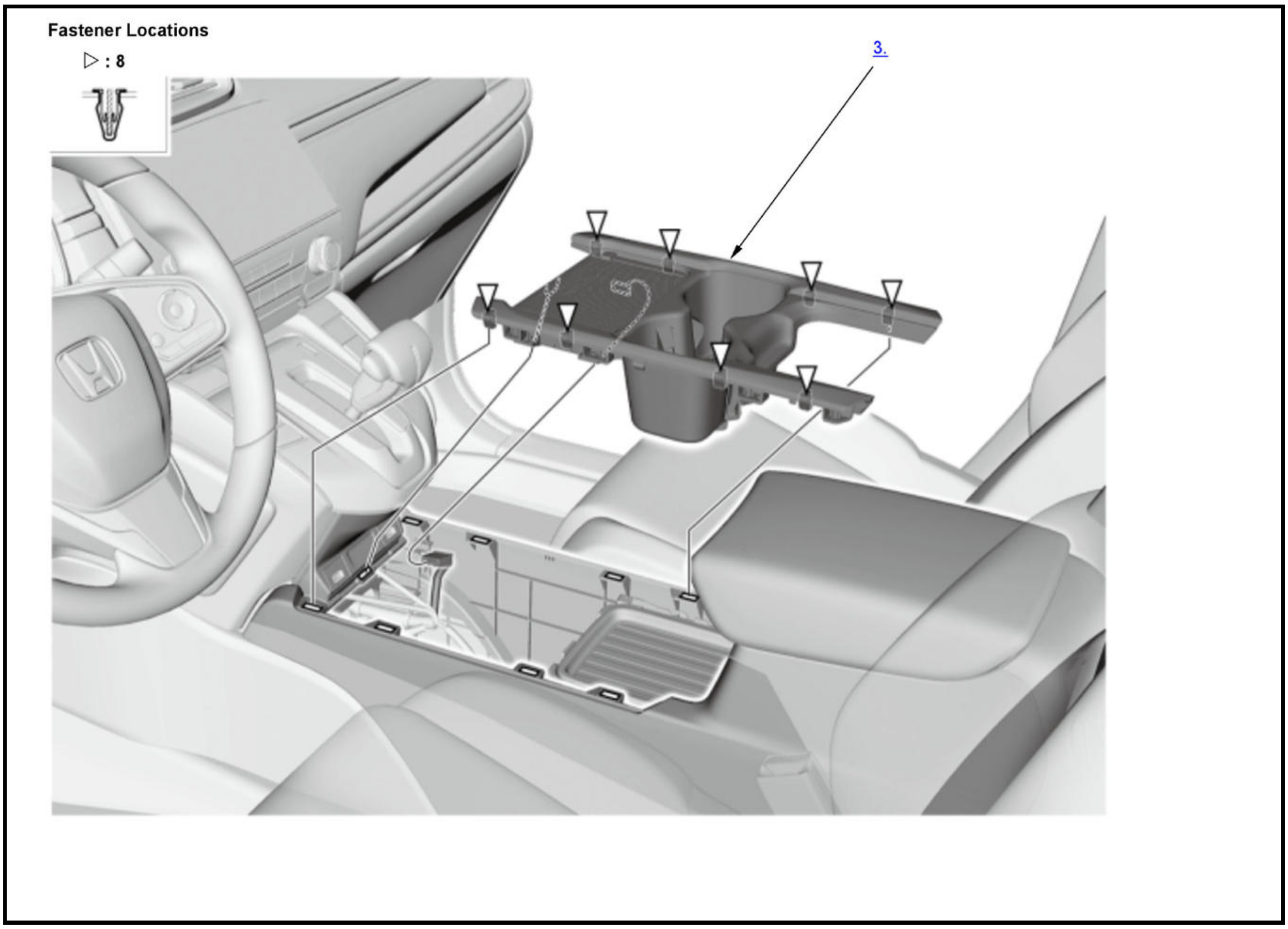

1. 2017-19 Dashboard Center Lower Panel - Remove
2. Center Console Front Mat - Remove
3. Center Console Panel - Remove
4. All Removed Parts - Install

> 1. Install the parts in the reverse order of removal.

CENTER CONSOLE REAR TRIM REMOVAL AND INSTALLATION

Removal and Installation

1

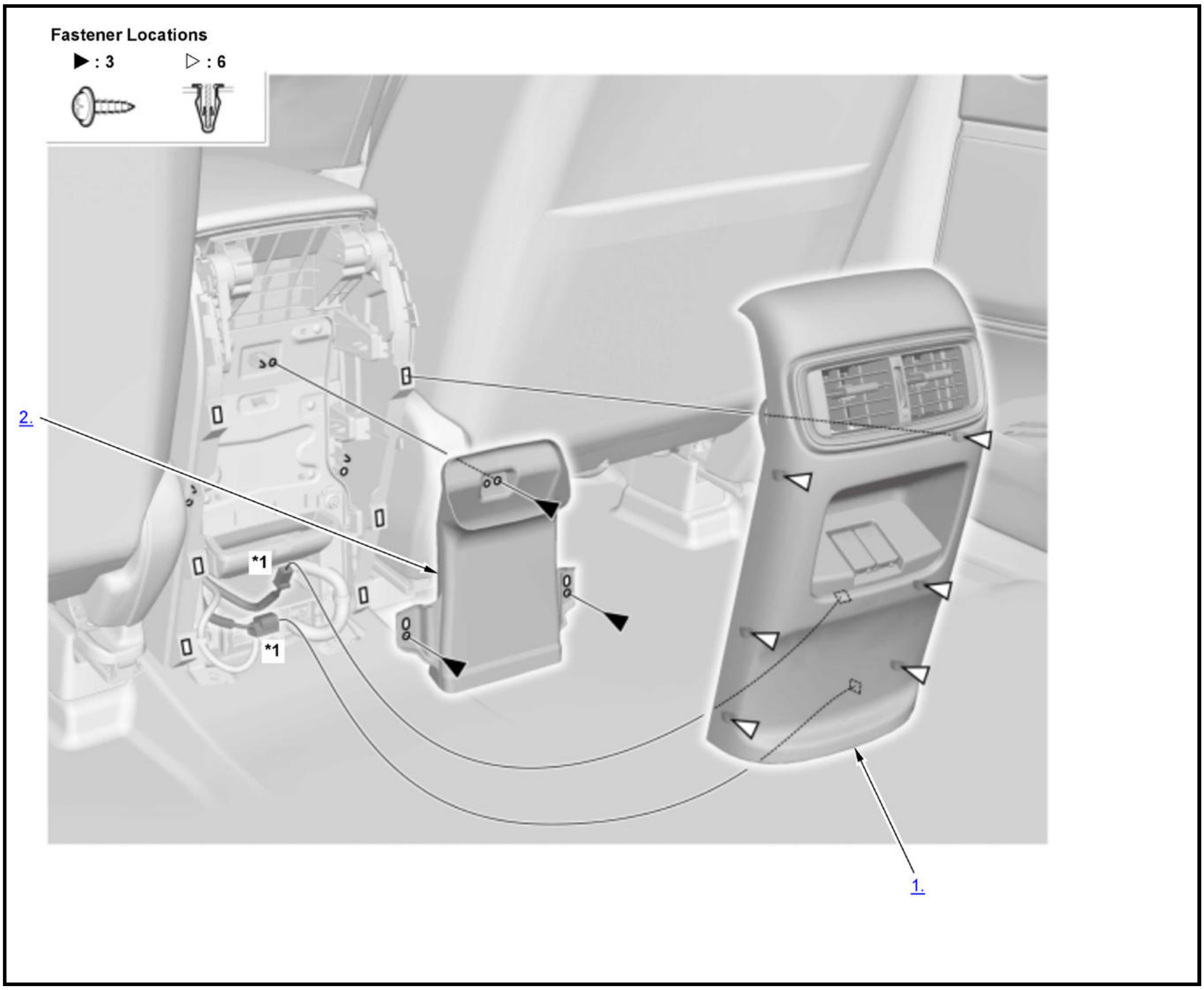

*1	For Some Models

1. Center Console Rear Trim Assembly - Remove
2. Center Console Rear Duct - Remove
3. All Removed Parts - Install

1. Install the parts in the reverse order of removal.

CENTER CONSOLE REMOVAL AND INSTALLATION

Removal and Installation

NOTE:

- How to read the torque specifications
- SRS components are located in this area. Review the SRS component locations and the precautions and procedures before doing repairs or service.

1. Center Console Tray - Remove

   1. For some models: Remove the center console tray (A).

Center Console Tray Type 1

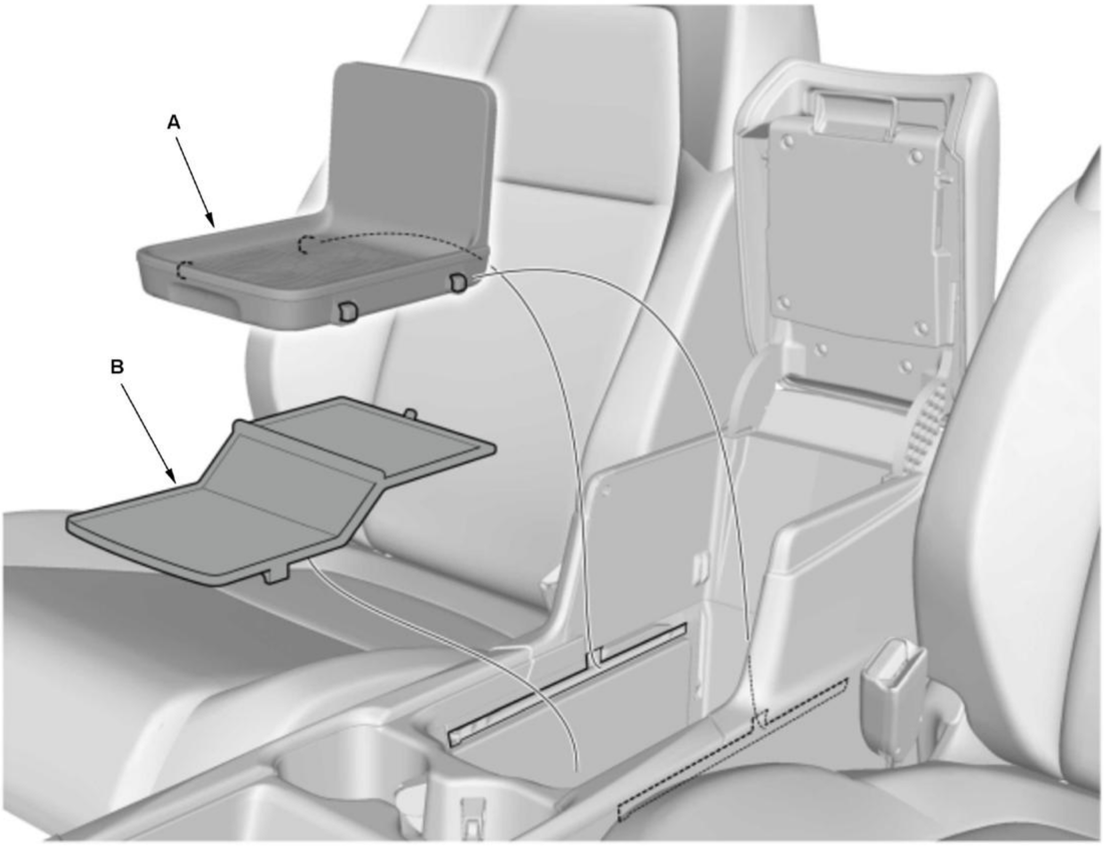

Center Console Tray Type 2

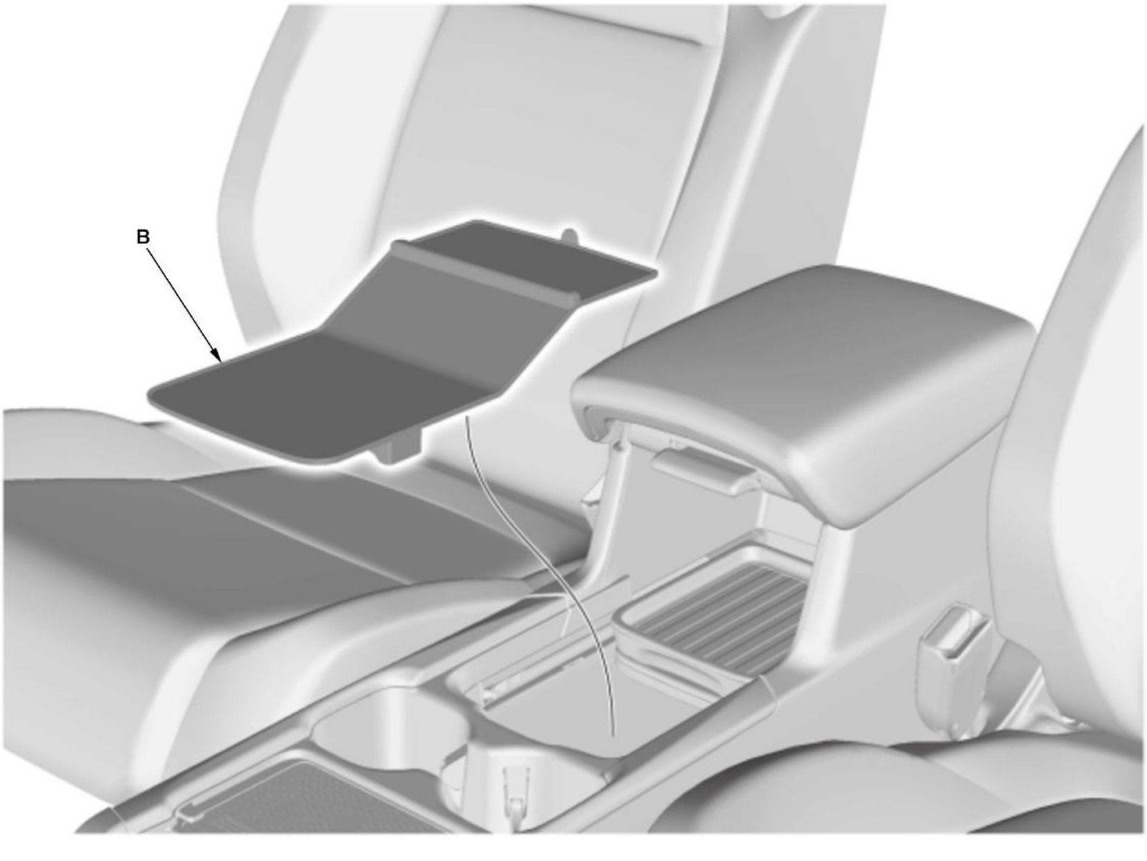

    2. Remove the center console rear mat (B).

2. Dashboard Center Lower Panel - Remove
3. Both Front Console Covers - Remove
4. Center Console Panel - Remove
5. Center Console Rear Trim Assembly - Remove
6. Center Console - Remove

    1. Disconnect the connectors (A) and the harness clips (B).

    NOTE: **The positions and number of connectors vary depending on model type.**

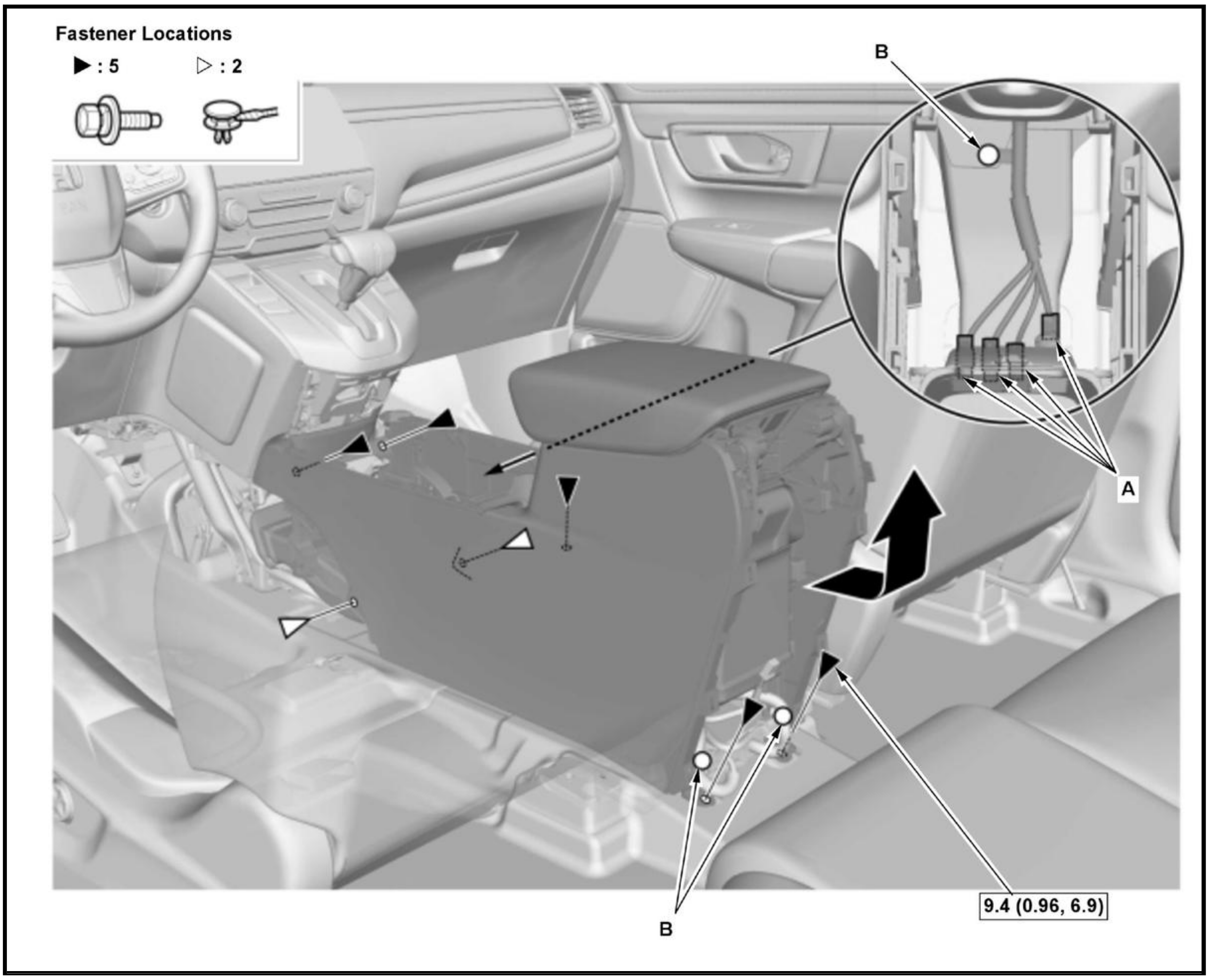

    2. Remove the clips and bolts.

7. Center Console Bracket - Remove

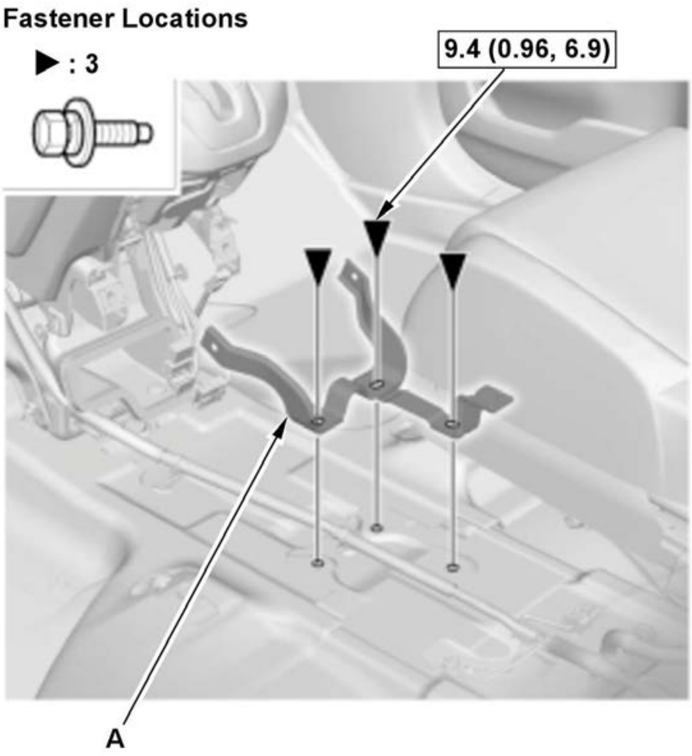	1. If necessary, remove the center console bracket (A).

8. All Removed Parts - Install

1. Install the parts in the reverse order of removal.

DASHBOARD CENTER LOWER COVER REMOVAL AND INSTALLATION

Removal and Installation

NOTE: How to read the torque specifications

1. Center Maintenance Cover - Remove

    1. If necessary, remove the center maintenance cover (A),

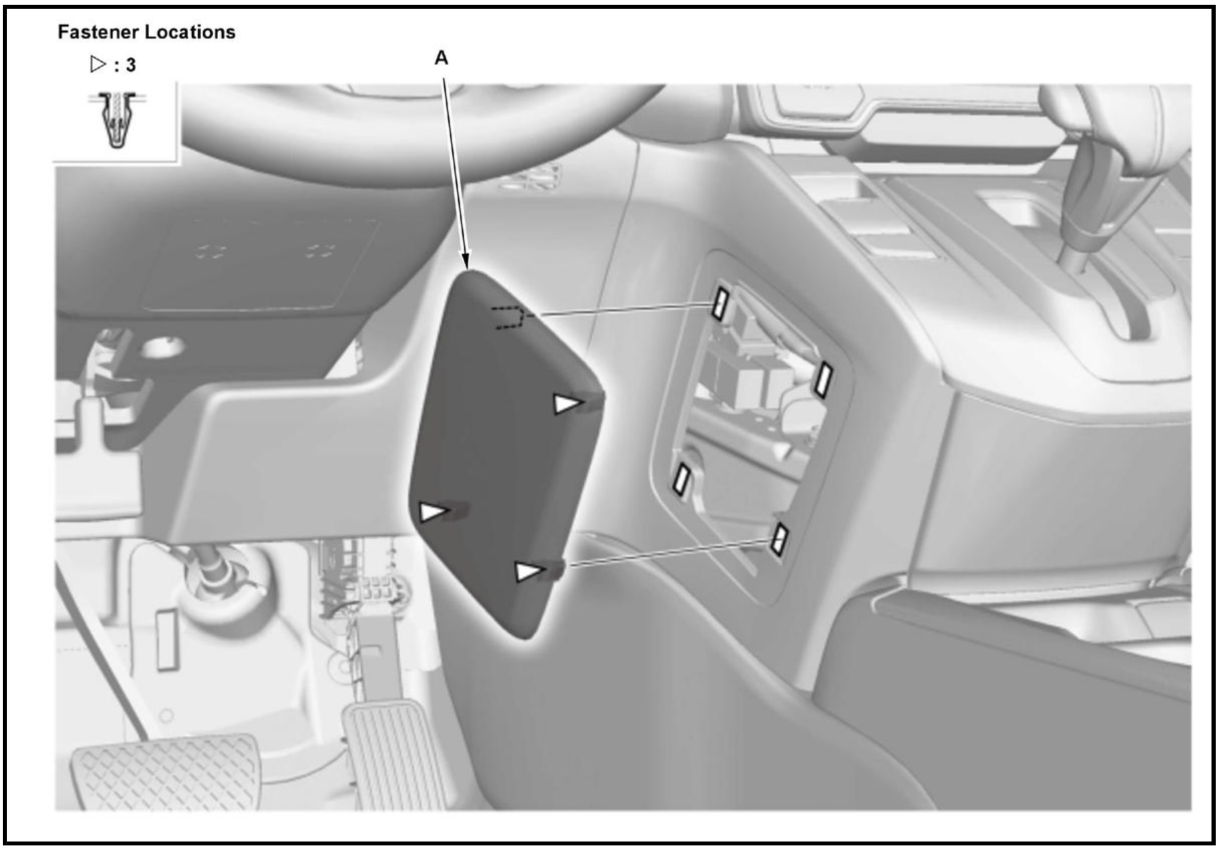

2. **Dashboard Center Lower Panel - Remove**
3. **Climate Control Panel - Remove**
4. **Glove Box - Remove**
5. **Driver's Dashboard Lower Cover - Remove**
6. **Driver's Dashboard Inner Panel - Remove**
7. **Shift Lever Panel - Remove**
8. Center Console - Remove

    1. **Remove the center console as needed**.

9. Dashboard Center Lower Cover Assembly - Remove

    1. Release the clips.

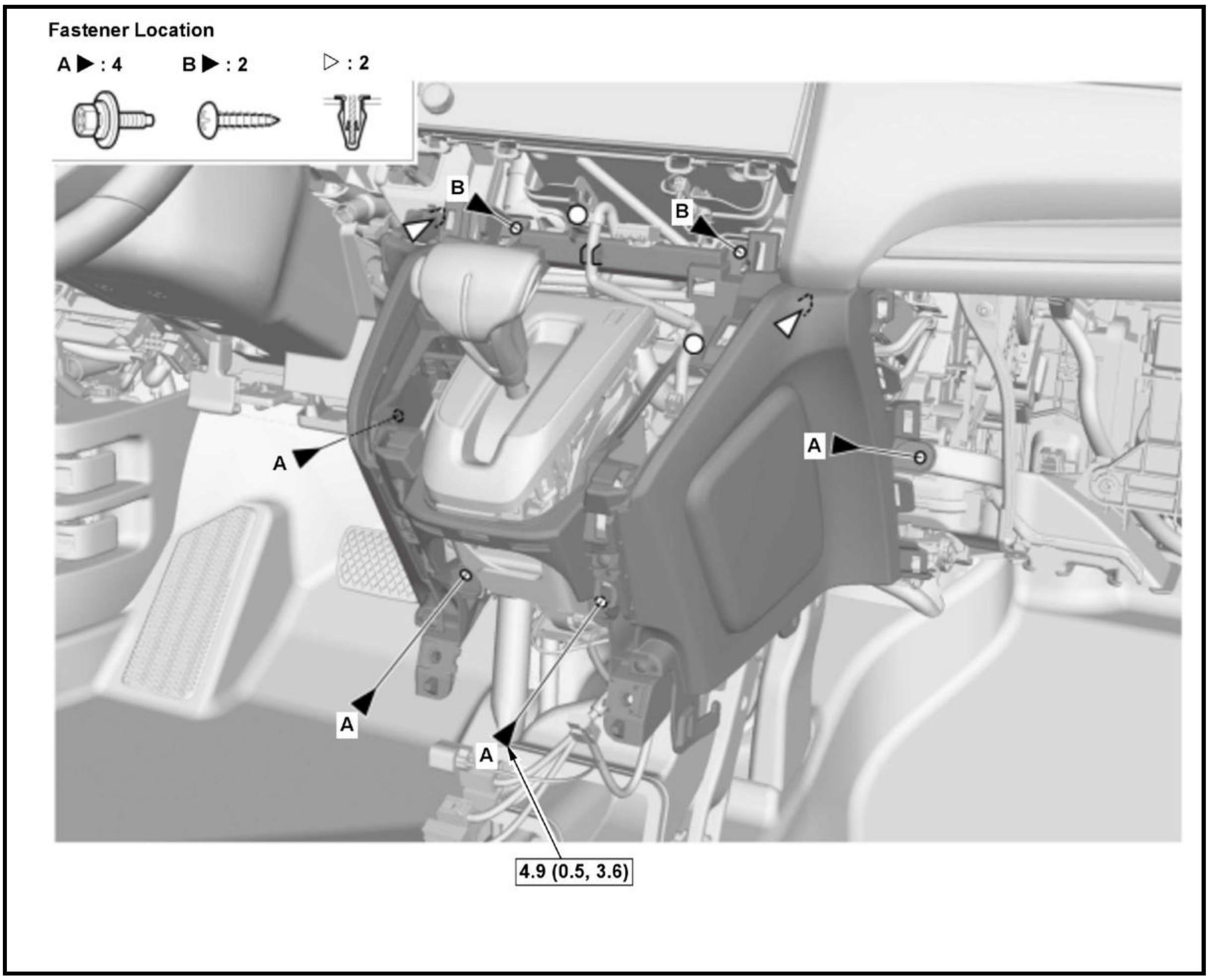
Fastener Location
A ▶ : 4
B ▶ : 2
▷ : 2
B
B
A
A
A
A
4.9 (0.5, 3.6)

2. Remove the bolts (A) and screws (B).

10. Dashboard Side Center Lower Cover - Remove

1. Remove the dashboard driver's center lower cover (A) and the dashboard passenger's center lower cover (B) from the dashboard center lower bracket (C).

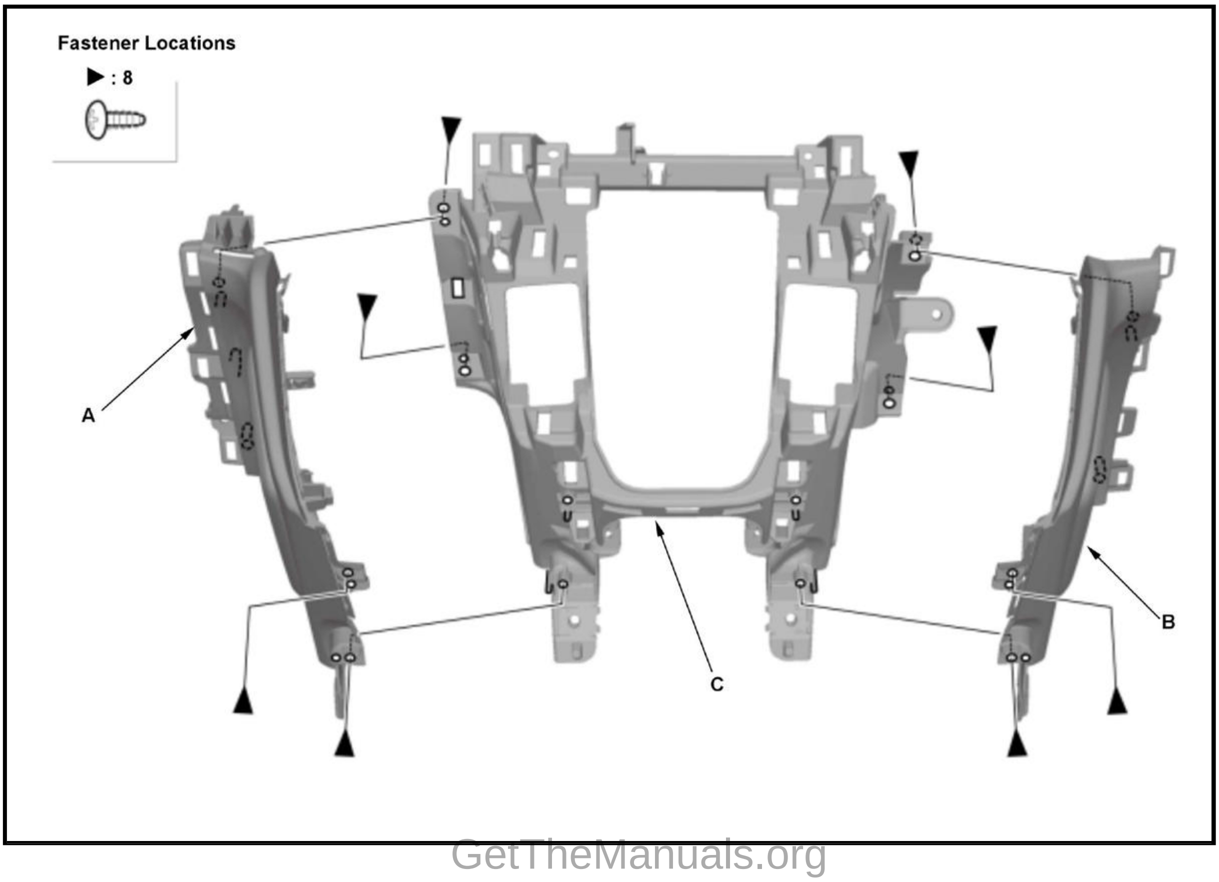
Fastener Locations
▶ : 8
A
B
C

11. All Removed Parts - Install

1. Install the parts in the reverse order of removal.

DASHBOARD CENTER LOWER PANEL REMOVAL AND INSTALLATION

Removal and Installation

1

2017-19

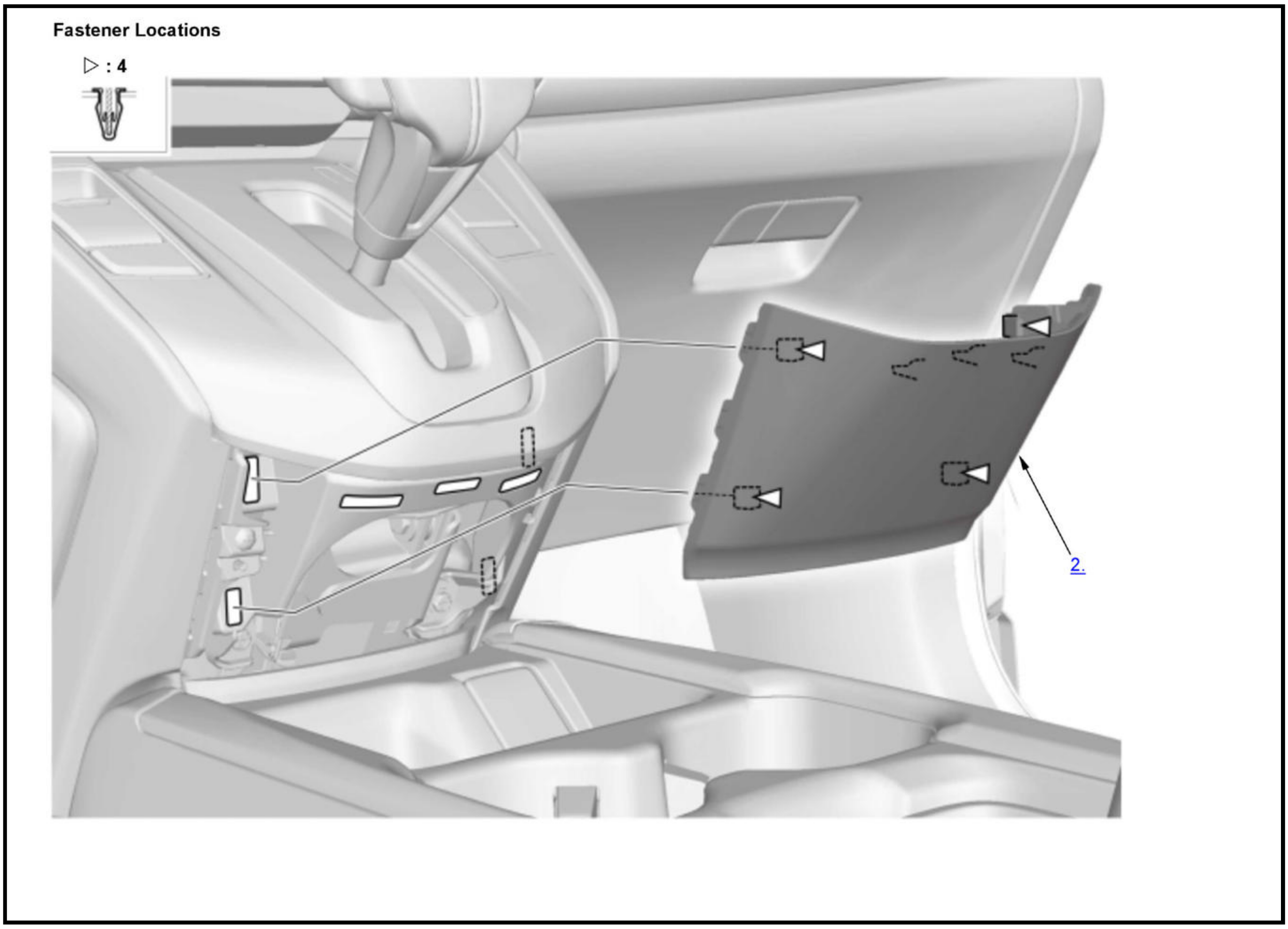
Fastener Locations
▷ : 4
2.

2

2020-21

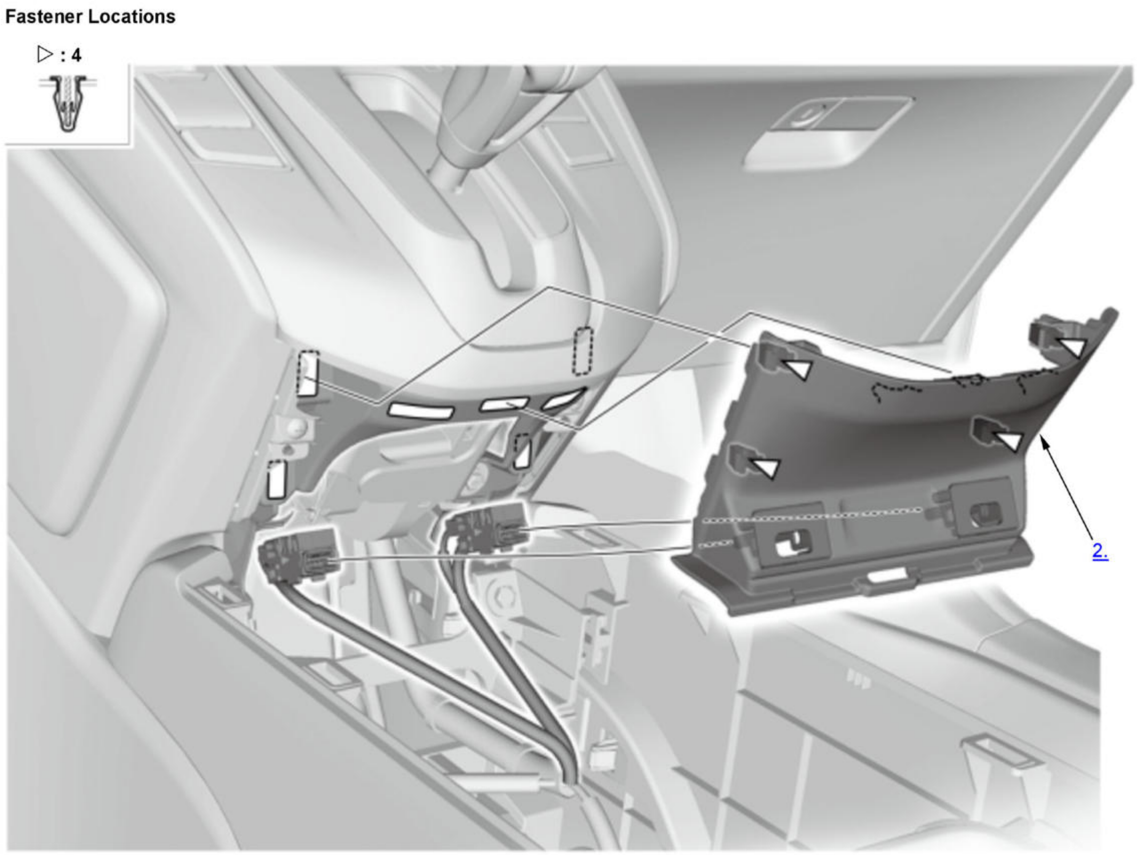

1. 2020-21 Center Console Panel - Remove
2. Dashboard Center Lower Panel - Remove
3. All Removed Parts - Install

> 1. Install the parts in the reverse order of removal.

DASHBOARD CENTER PANEL REMOVAL AND INSTALLATION

Removal and Installation

1

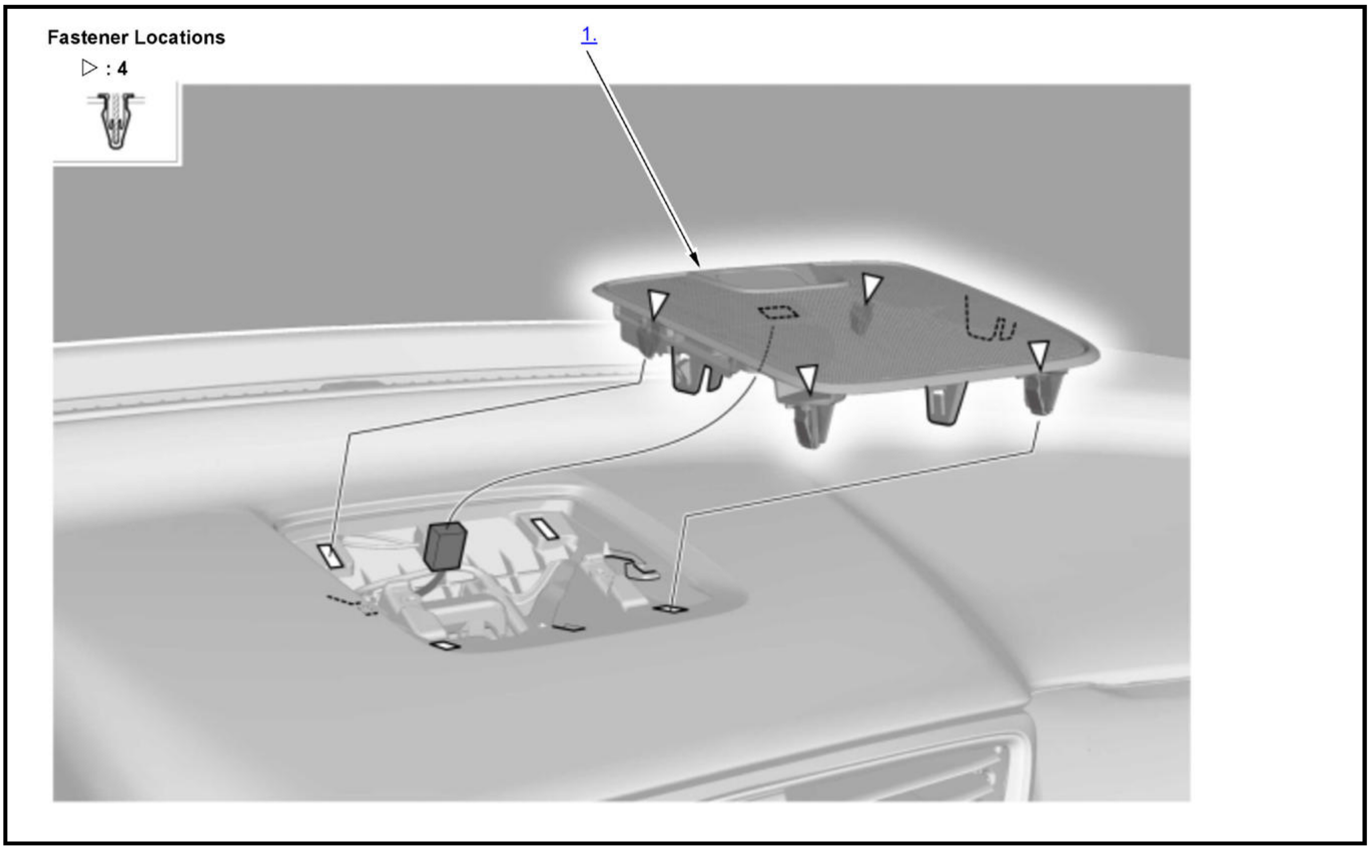
Fastener Locations
▷ : 4
1.

1. Dashboard Center Panel - Remove
2. All Removed Parts - Install

> 1. Install the parts in the reverse order of removal.

DASHBOARD METER VISOR REMOVAL AND INSTALLATION

Removal and Installation

1

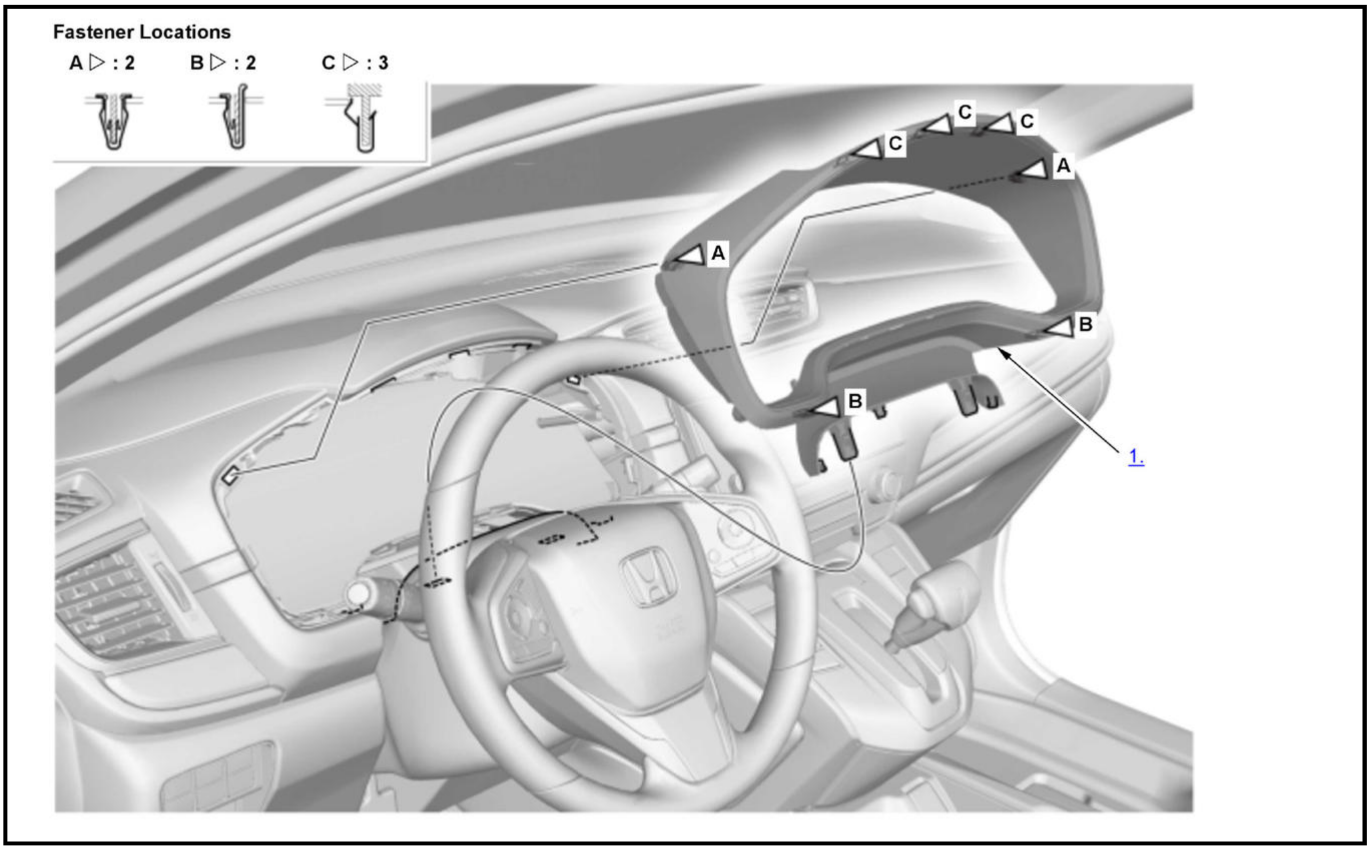
Fastener Locations
A ▷ : 2
B ▷ : 2
C ▷ : 3
A
A
B
B
C
C
C
1.

1. Meter Visor - Remove
2. All Removed Parts - Install

1. Install the parts in the reverse order of removal.

DASHBOARD ORNAMENT PANEL REMOVAL AND INSTALLATION

Removal and Installation

1

Driver 's Side

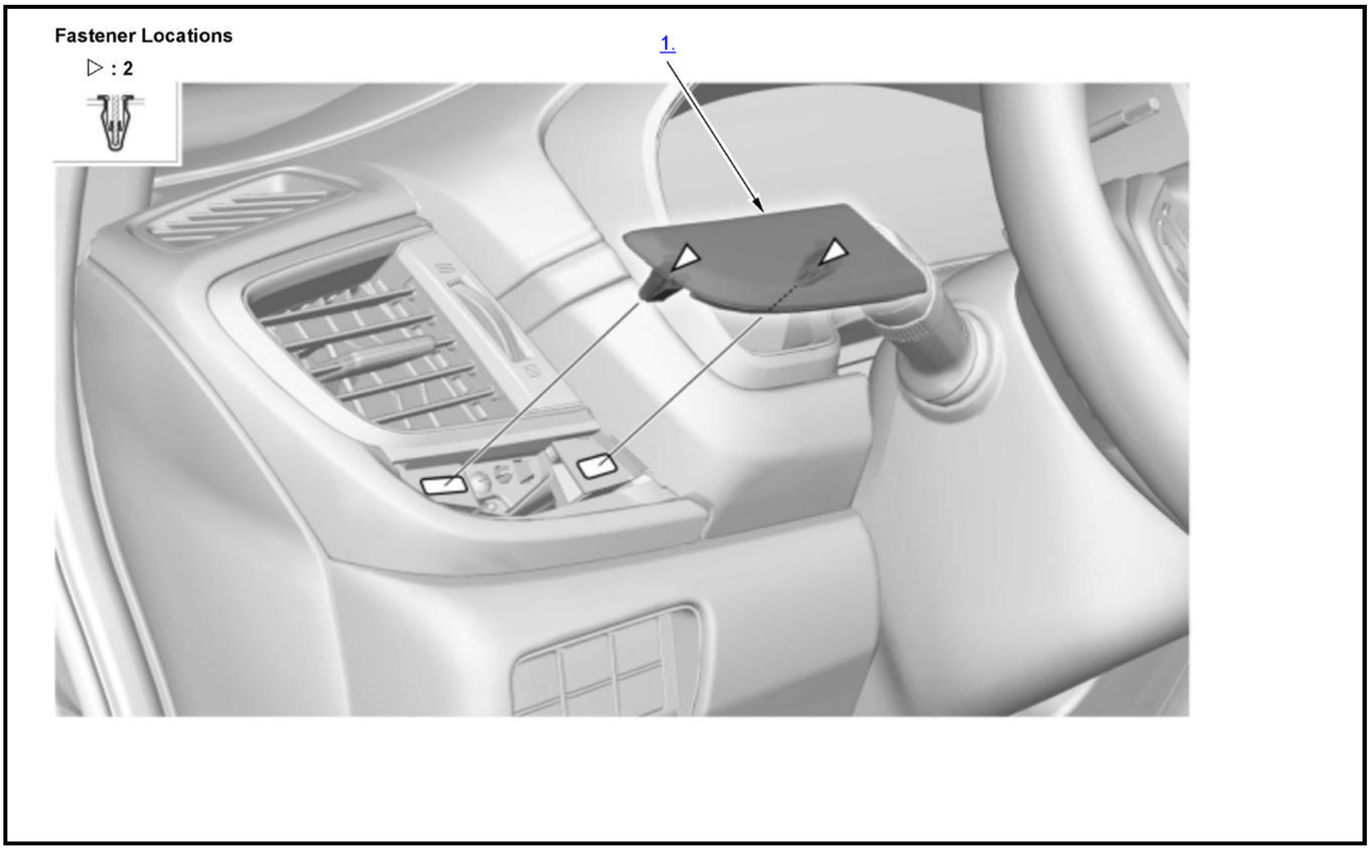
Fastener Locations
▷ : 2
1.

2

Passenger's Side

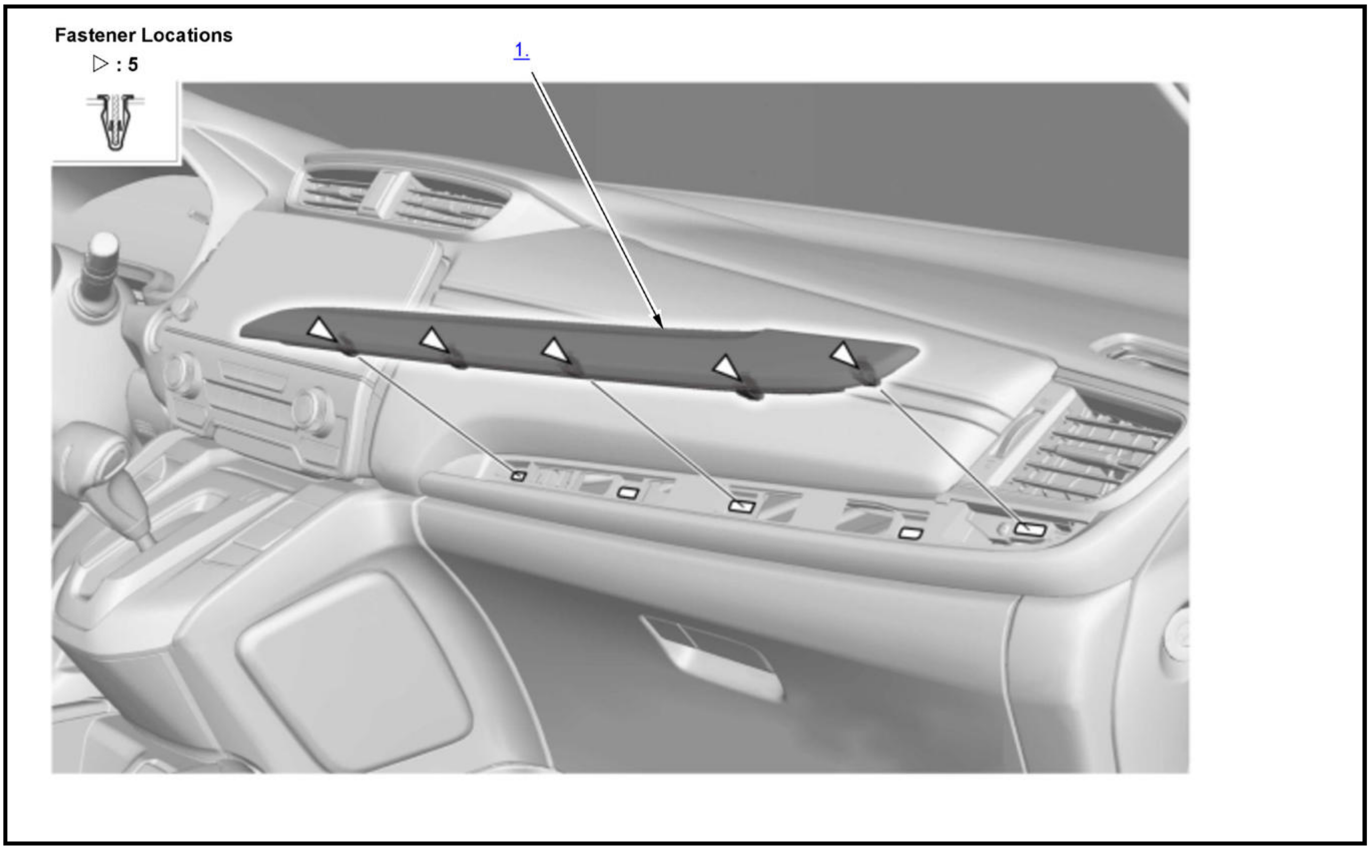
Fastener Locations
▷ : 5
1.

Passenger's Side

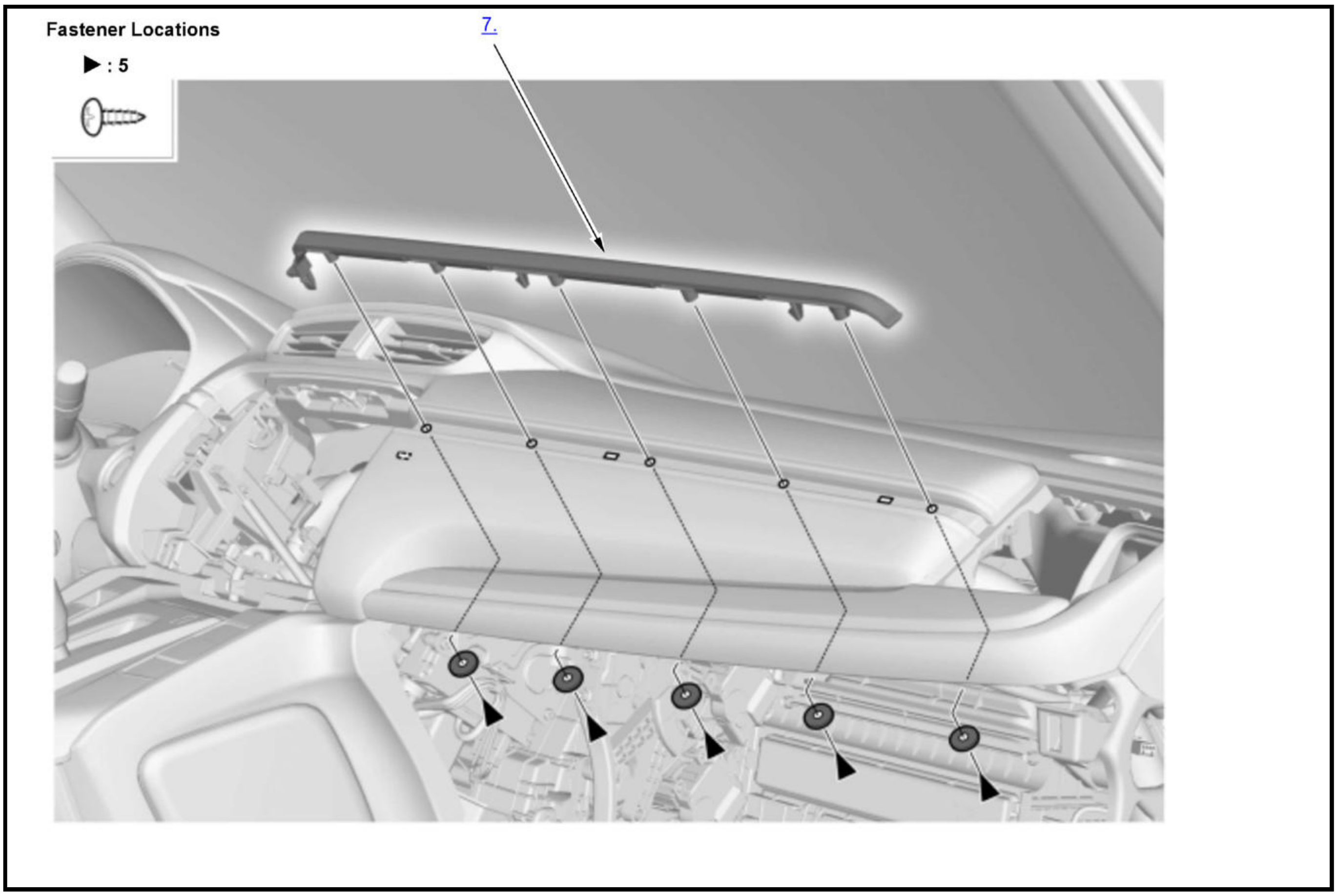

Driver 's Side

1. Driver's Lower Ornament Panel - Remove
2. All Removed Parts - Install

1. Install the parts in the reverse order of removal.

Passenger's Side

3. Passenger's Lower Ornament Panel - Remove
4. **Climate Control Panel - Remove**
5. **Audio Unit - Remove (With Audio Unit)**
6. **Audio-Navigation Unit -Remove (With Audio-Navigation Unit)**
7. **Passenger's Outlet - Remove**
8. **Glove Box - Remove**
9. Passenger's Upper Ornament Panel - Remove
10. All Removed Parts - Install

1. Install the parts in the reverse order of removal.

DASHBOARD OUTLET REMOVAL AND INSTALLATION

Removal and Installation

1

Driver's Side

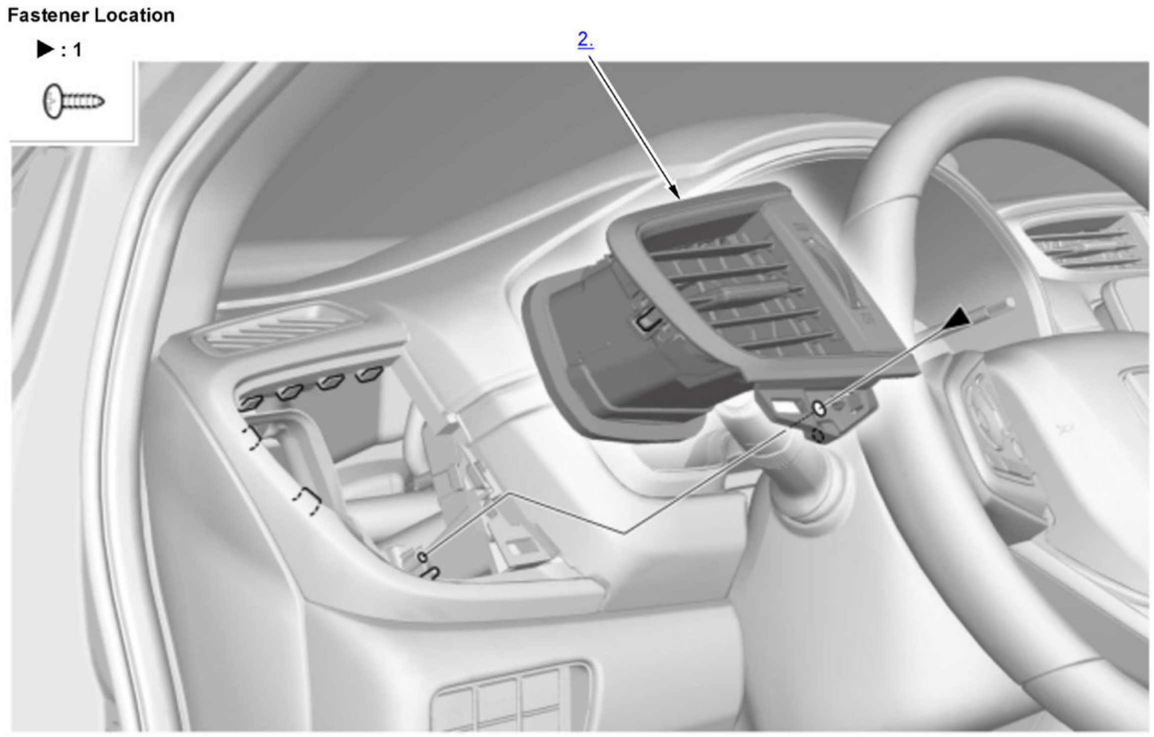
Fastener Location
▶ : 1
2.

2

Center Area

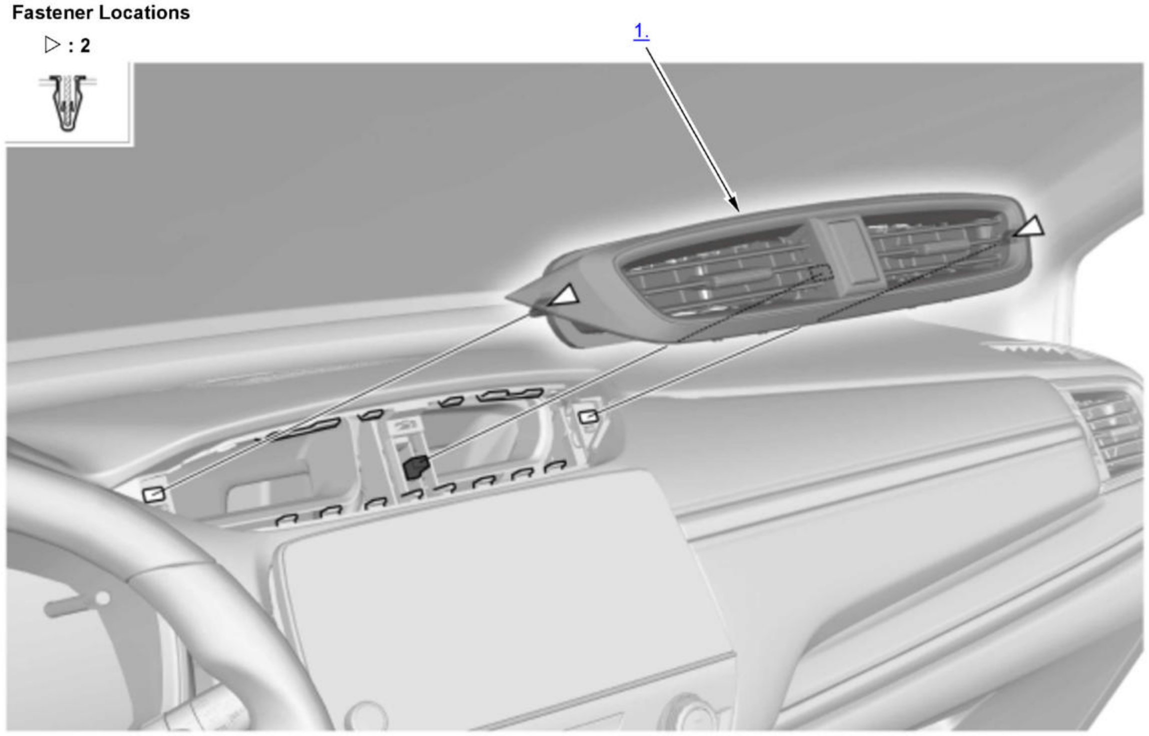
Fastener Locations
▷ : 2
1.

3

Passenger's side

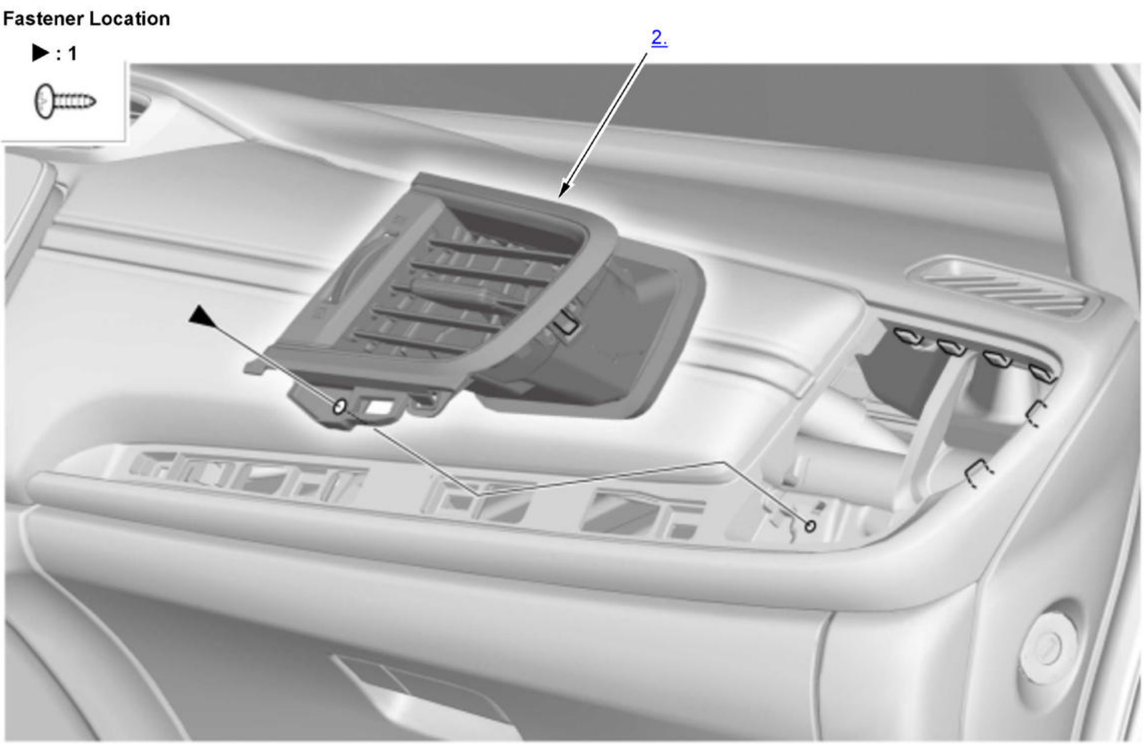

Driver's Side

1. Driver's Lower Ornament Panel - Remove
2. Driver's Outlet - Remove
3. All Removed Parts - Install

1. Install the parts in the reverse order of removal.

Center Area

4. Center Outlet - Remove
5. All Removed Parts - Install

1. Install the parts in the reverse order of removal.

Passenger's Side

6. Passenger's Lower Ornament Panel - Remove
7. Passenger's Outlet - Remove
8. All Removed Parts - Install

1. Install the parts in the reverse order of removal.

DASHBOARD REMOVAL AND INSTALLATION

Removal and Installation

NOTE:

- 📖 Where icon is shown, further information shown below.

- SRS components are located in this area. Review the SRS component locations and the precautions and procedures before doing repairs or service.

1

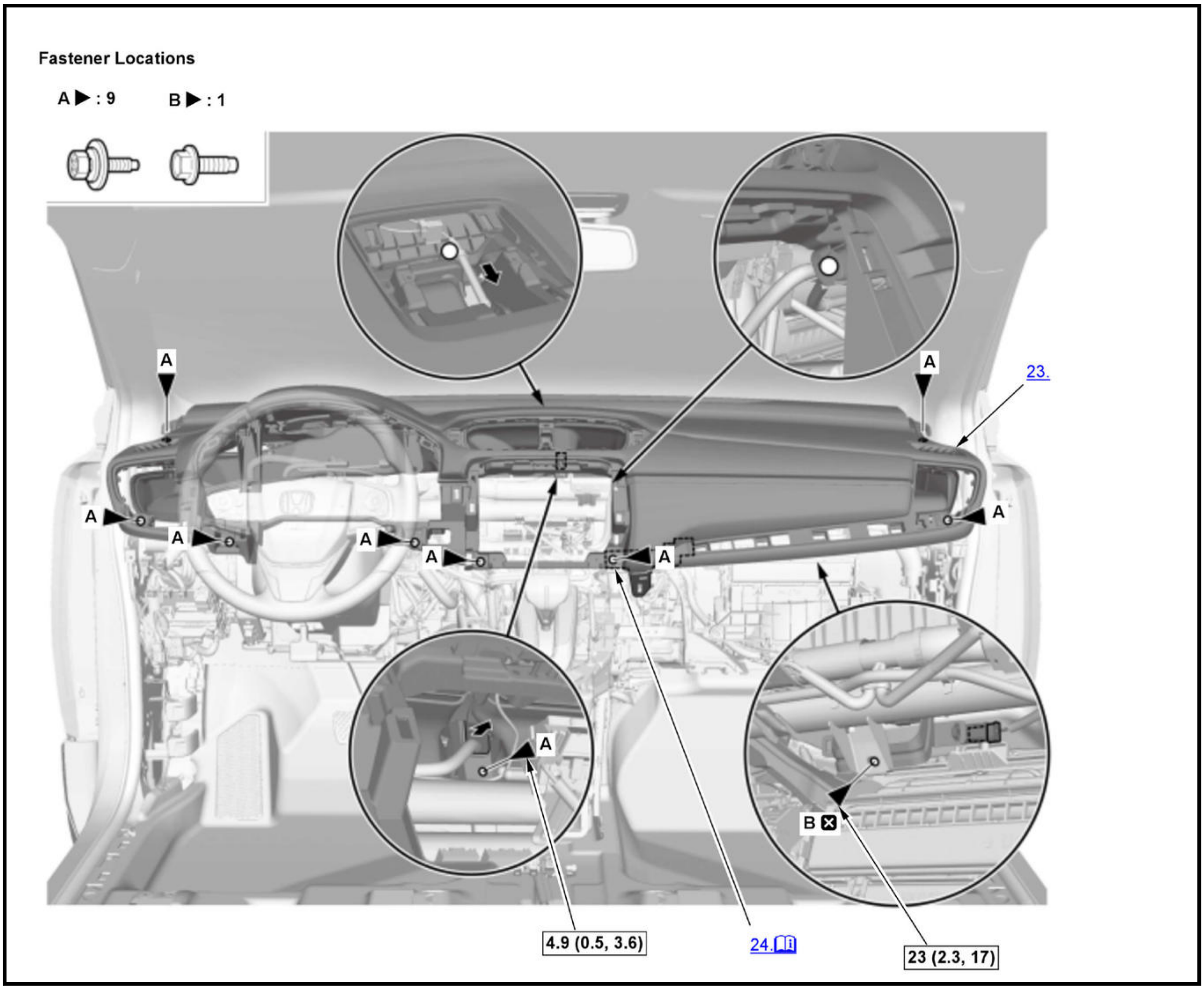

ℹ	Detailed information, notes, and precautions
☐	Torque: N.m (kgf.m, lbf.ft)
☒	Replace

1. 12 Volt Battery Terminal - Disconnect

   NOTE: Wait at least 3 minutes before starting work.

2. Both A Pillar Trims - Removal
3. Meter Visor - Remove
4. Gauge Control Module - Remove
5. Driver's Dashboard Side Lid - Remove
6. Driver's Dashboard Undercover - Remove
7. Passenger's Dashboard Undercover - Remove
8. Driver's Dashboard Lower Cover - Remove
9. Driver's Lower Ornament Panel - Remove

10. Driver's Outlet - Remove
11. Driver's Dashboard Outer Panel - Remove
12. Climate Control Panel - Remove
13. Audio Unit - Remove (With Audio Unit)
14. Audio-Navigation Unit -Remove (With Audio-Navigation Unit)
15. Driver's Dashboard Inner Panel - Remove
16. Center Outlet - Remove
17. Passenger's Lower Ornament Panel - Remove
18. Passenger's Outlet - Remove
19. Glove Box - Remove
20. Passenger's Dashboard Side Lid - Remove
21. Dashboard Center Lower Cover Assembly - Remove
22. Sunlight Sensor - Remove
23. Dashboard - Remove
24. Dashboard Passenger's stay - Remove

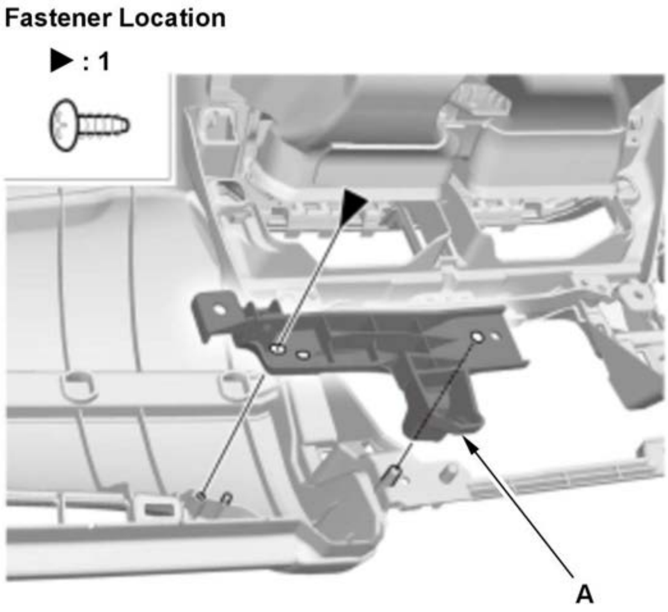	1. If necessary, remove the dashboard passenger's bracket (A).

25. All Removed Parts - Install

1. Install the parts in the reverse order of removal.

DASHBOARD SIDE LID REMOVAL AND INSTALLATION

Removal and Installation

1

Driver's Side

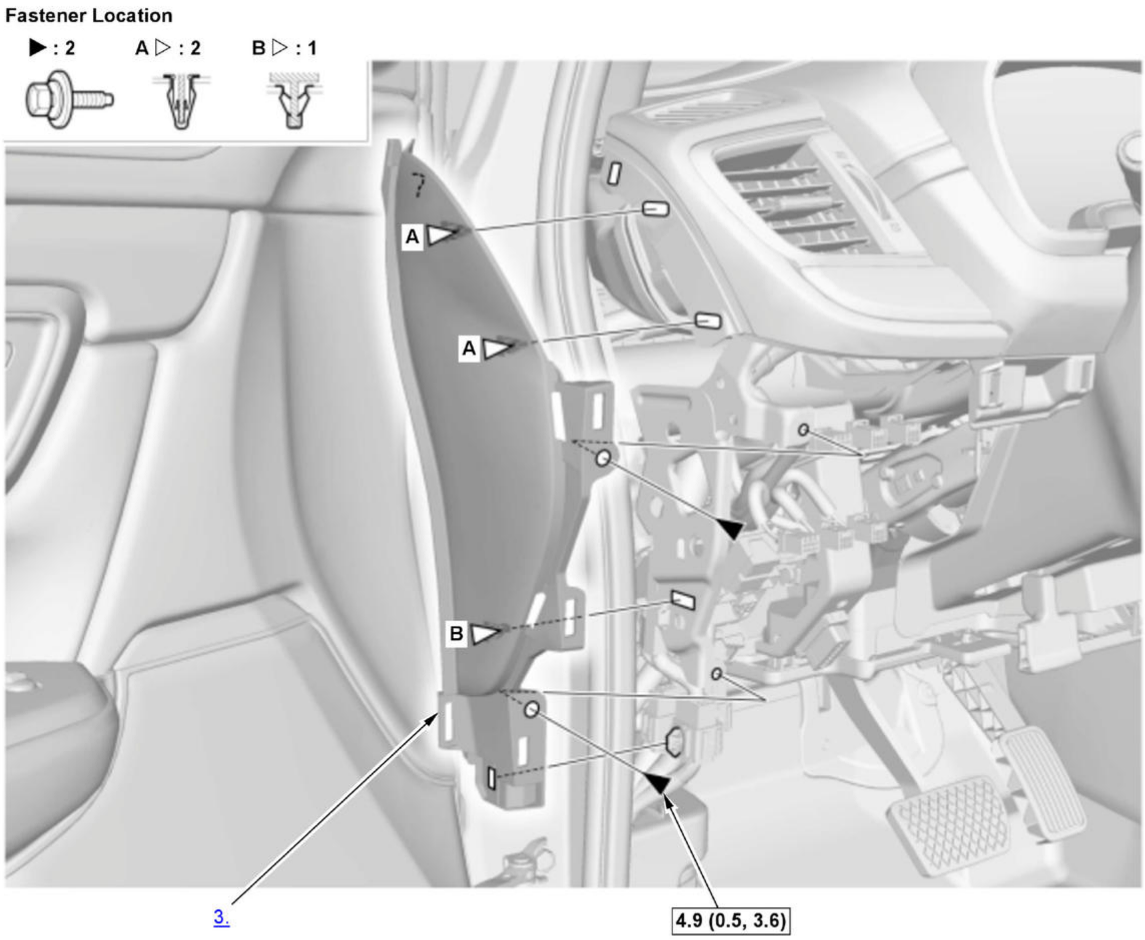
Fastener Location
▶ : 2
A ▷ : 2
B ▷ : 1
A
A
B
3.
4.9 (0.5, 3.6)

☐	Torque: N.m (kgf.m, lbf.ft)

2

Passenger's Side (Without Front Passenger's Airbag ON/OFF Switch)

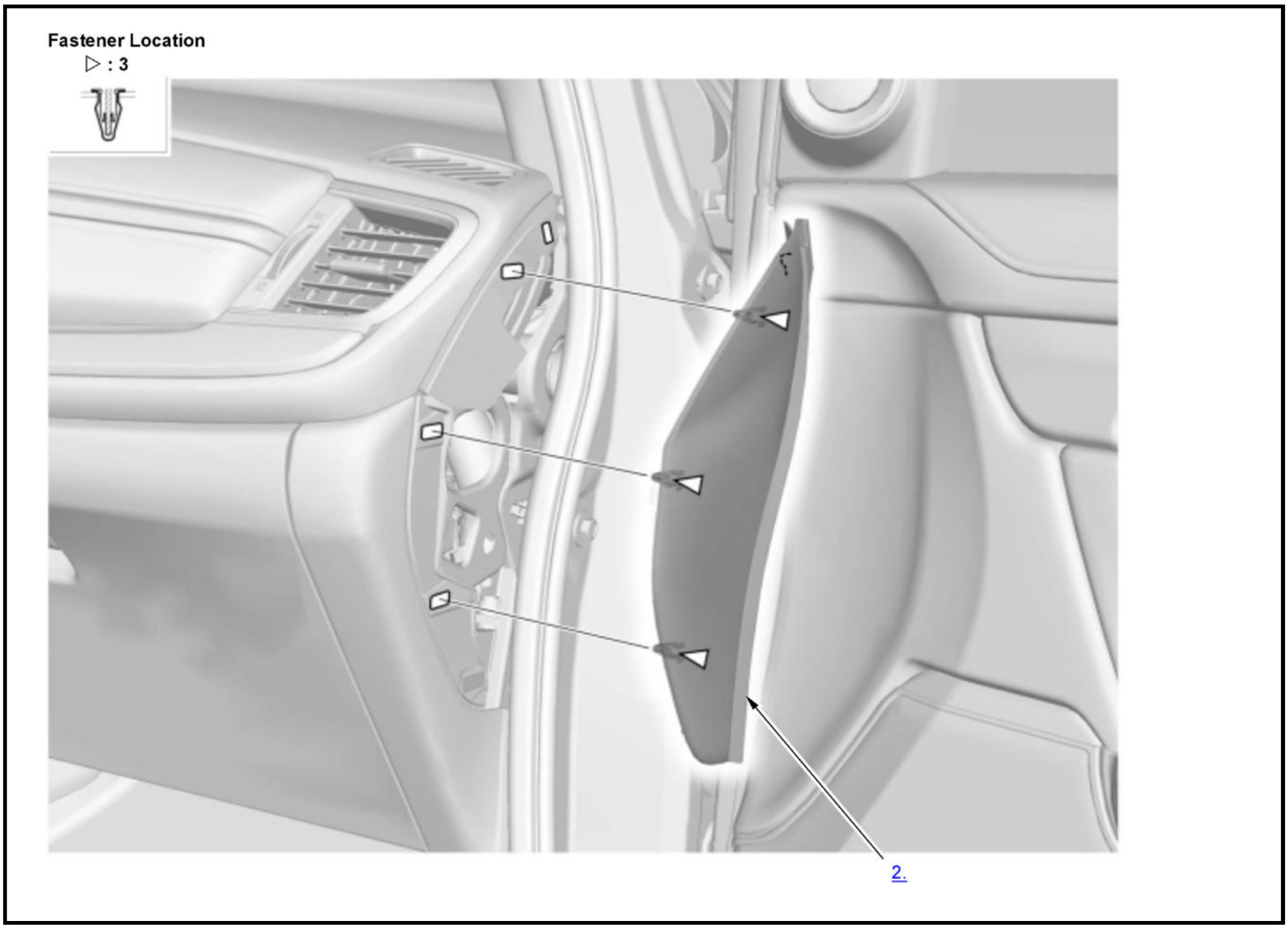
Fastener Location
▷ : 3
2.

Passenger's Side (With Front Passenger's Airbag ON/OFF Switch)

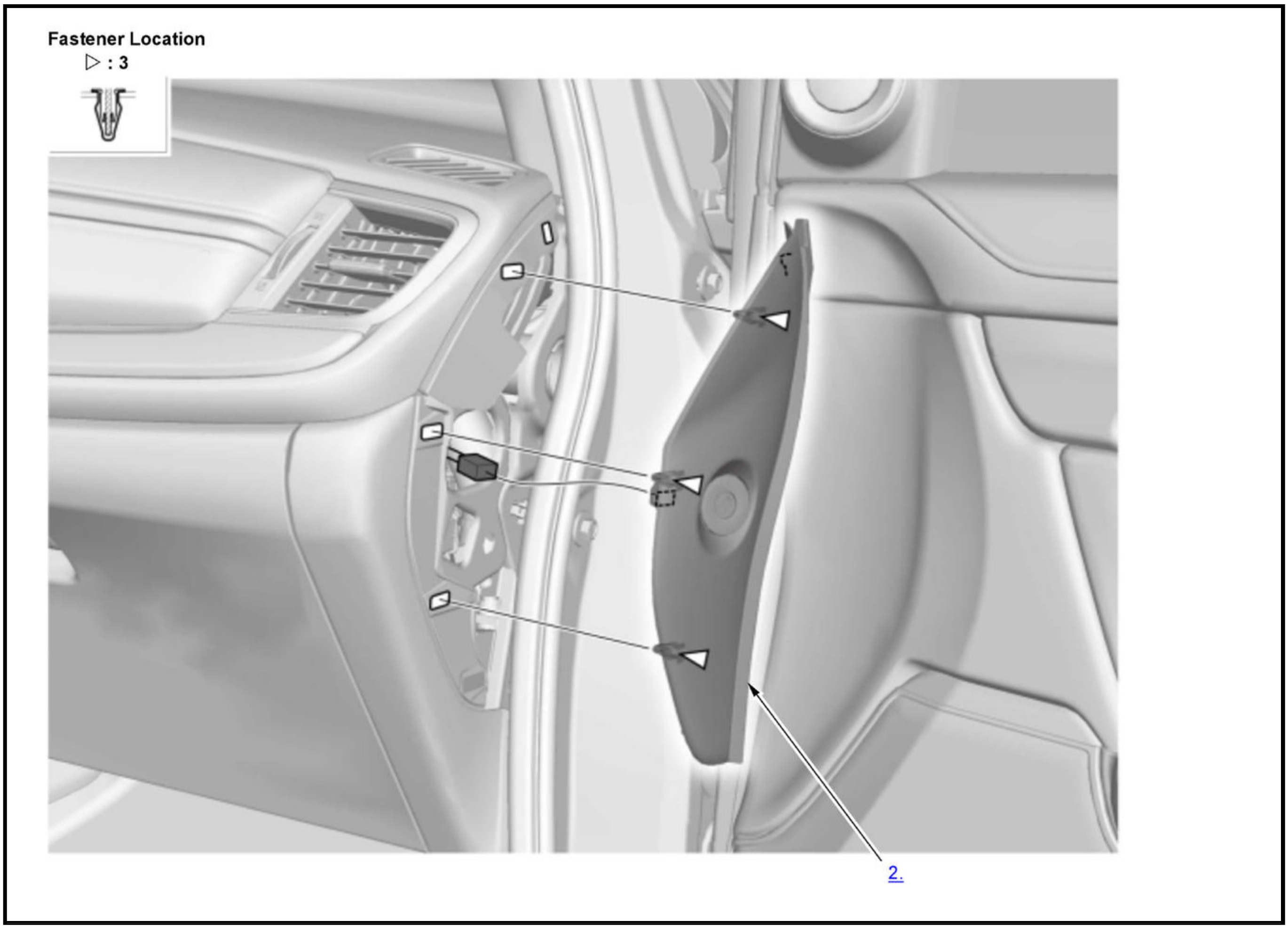
Fastener Location
▷ : 3
2.

Driver's Side

1. Driver's Dashboard Lower Cover - Remove
2. Front Door Opening Seal - Remove
    1. Remove the front door opening seal as needed.
3. Driver's Dashboard Side Lid - Remove
4. All Removed Parts - Install
    1. Install the parts in the reverse order of removal.

Passenger's Side

5. Front Door Opening Seal - Remove
    1. Remove the front door opening seal as needed.
6. Passenger's Dashboard Side Lid - Remove
7. All Removed Parts - Install
    1. Install the parts in the reverse order of removal.

DASHBOARD UNDERCOVER REMOVAL AND INSTALLATION

Removal and Installation

1

Driver's Side

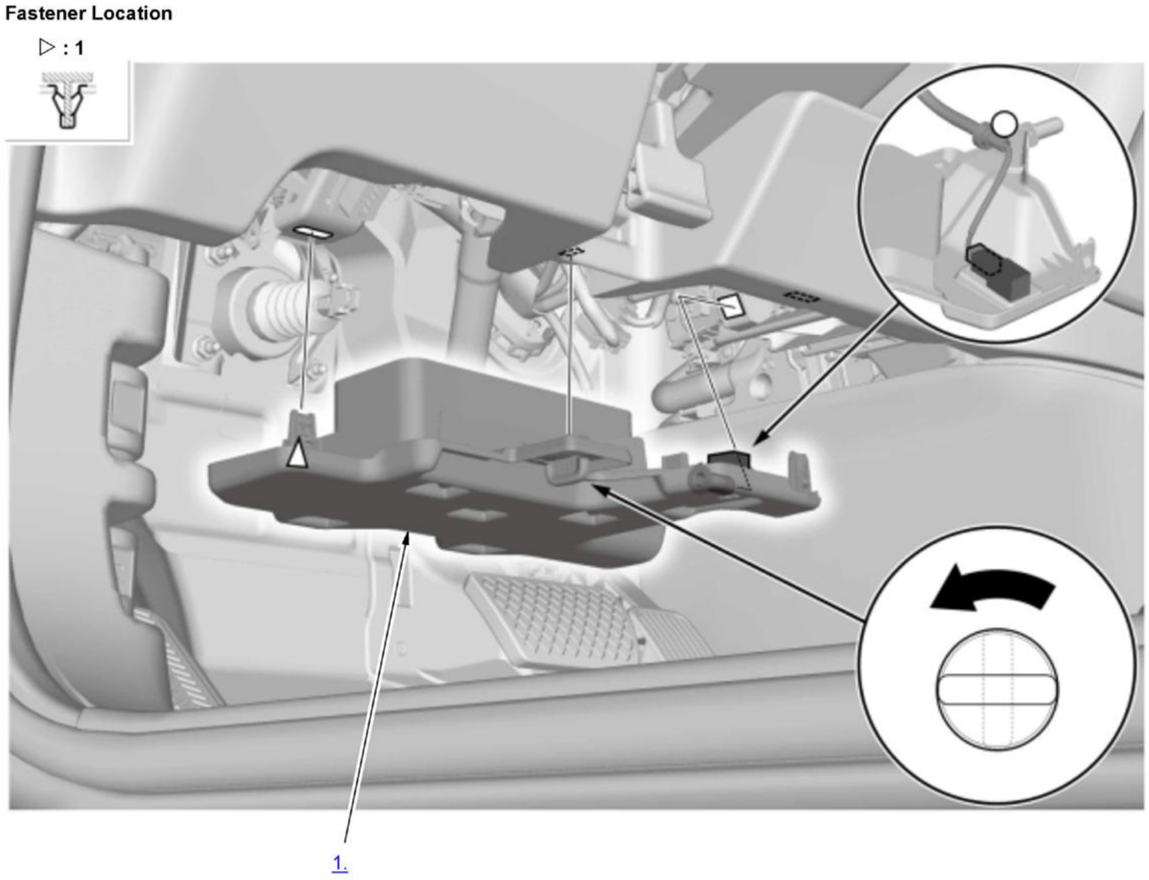

2

Passenger's Side

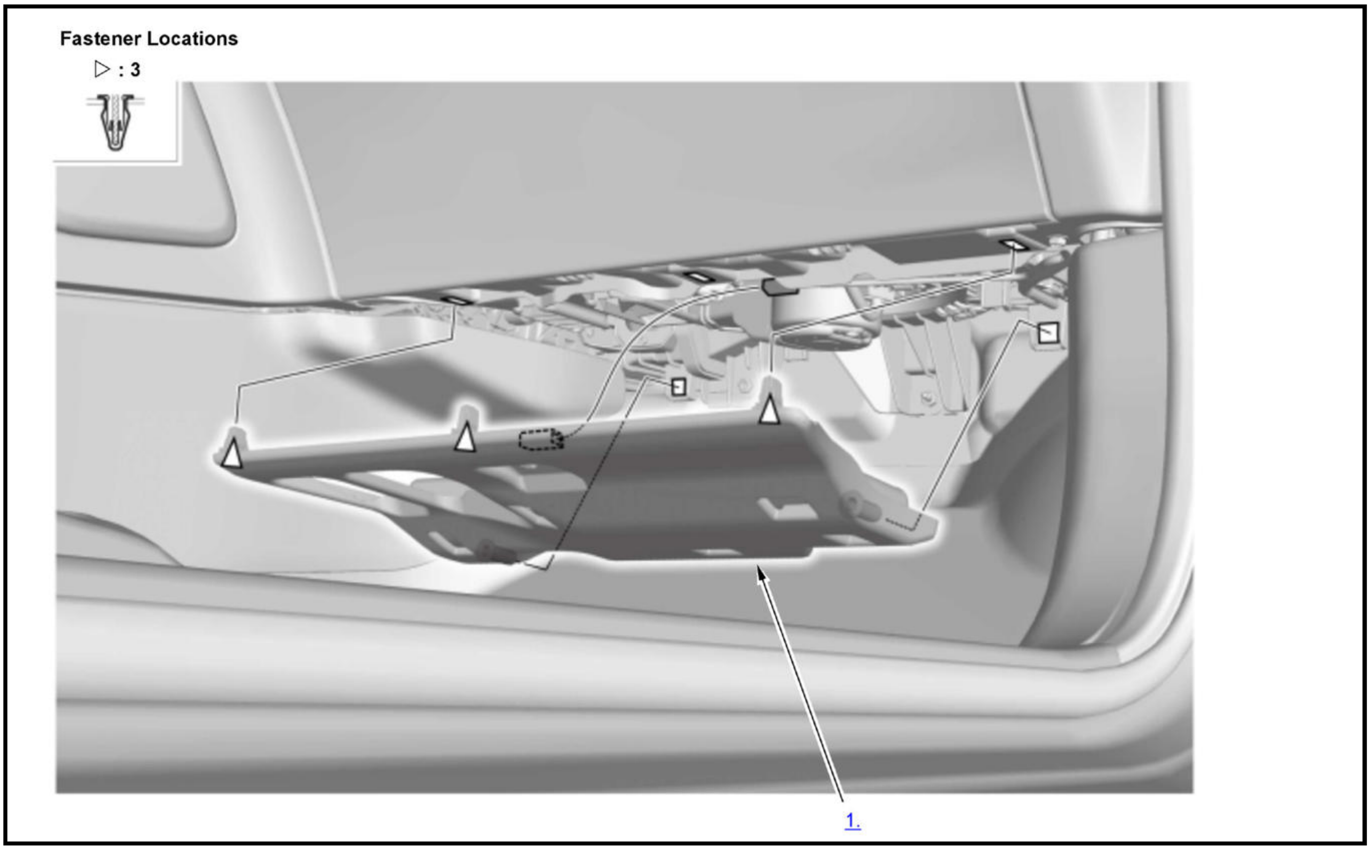

Driver's Side

1. Driver's Dashboard Undercover - Remove
2. All Removed Parts - Install

1. Install the parts in the reverse order of removal.

Passenger's Side

3. Passenger's Dashboard Undercover - Remove
4. All Removed Parts - Install

1. Install the parts in the reverse order of removal.

DEFOGGER VENT TRIM REMOVAL AND INSTALLATION

Removal and Installation

1

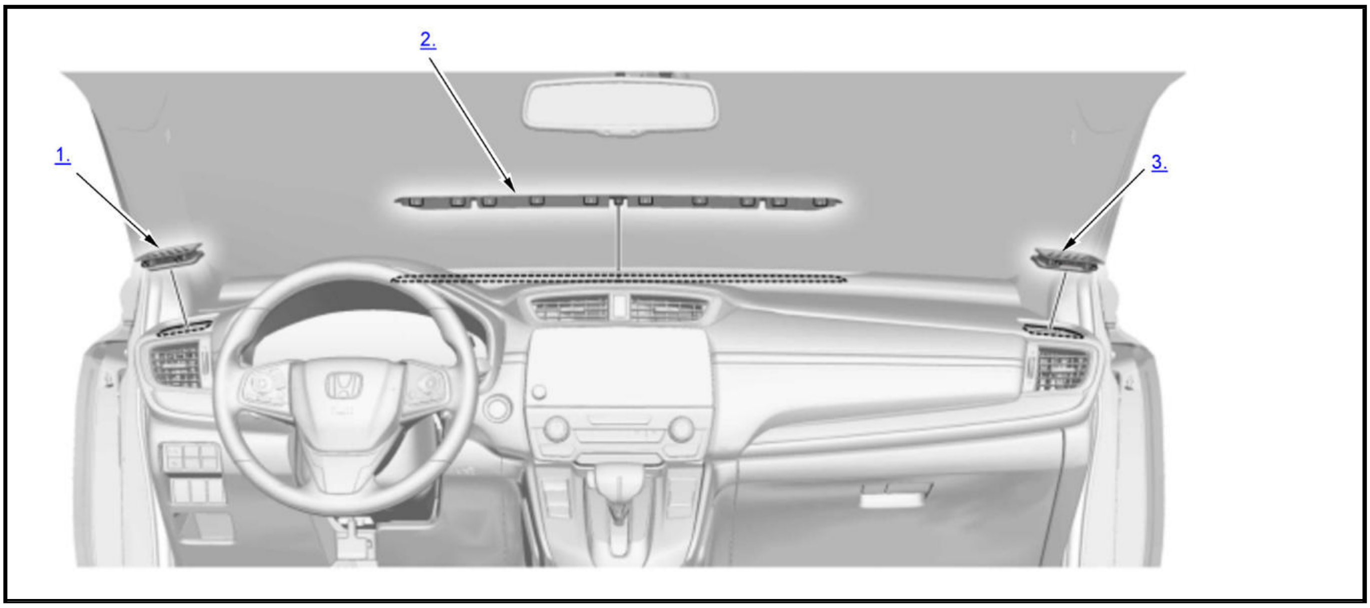

1. Driver's Defogger Vent Trim - Remove
2. Center Defogger Vent Trim - Remove
3. Passenger's Defogger Vent Trim - Remove
4. All Removed Parts - Install

1. Install the parts in the reverse order of removal.

DRIVER'S DASHBOARD LOWER COVER REMOVAL AND INSTALLATION

Removal and Installation

NOTE: 🛈 Where icon is shown, further information shown below.

1

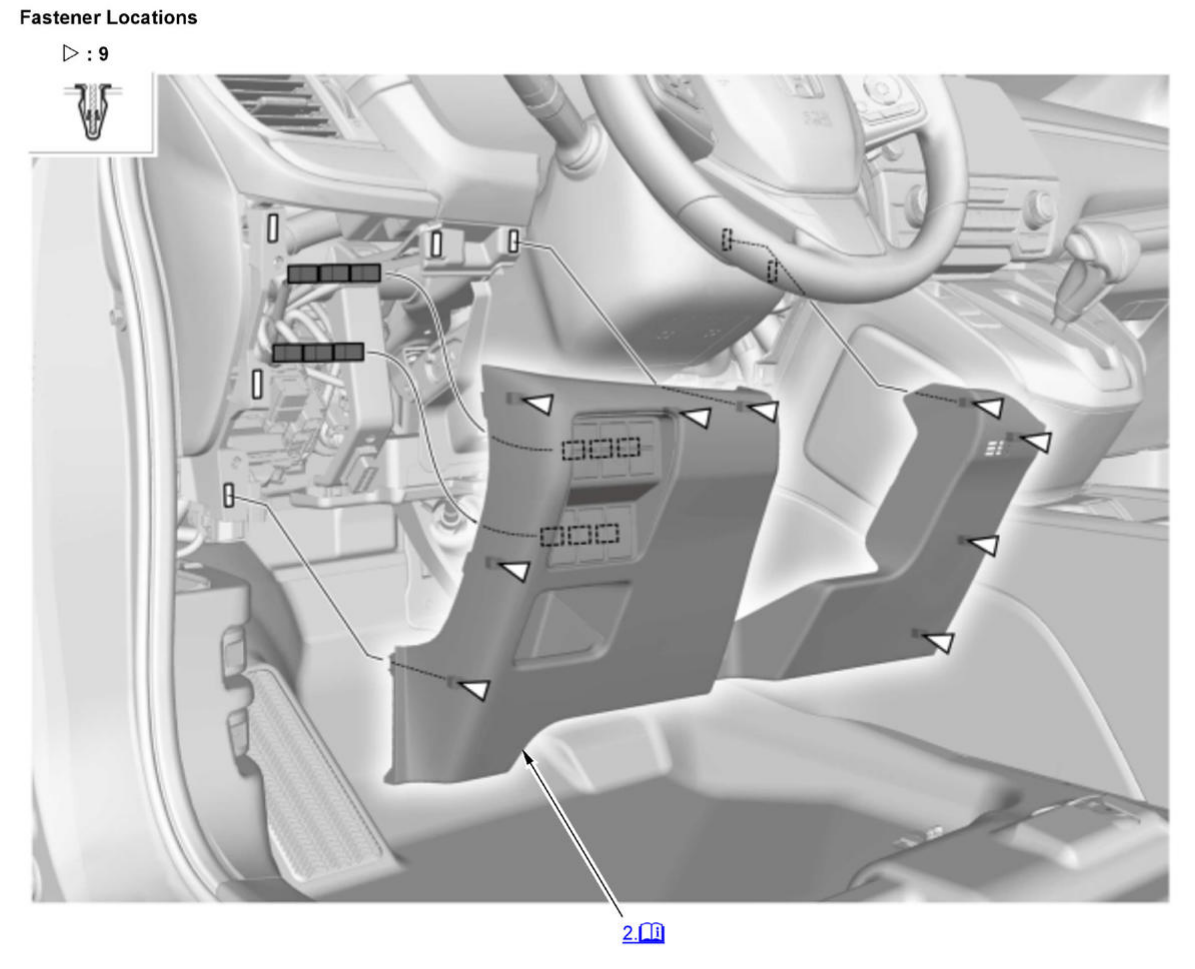

	Detailed information, notes, and precautions

1. Driver's Dashboard Undercover - Remove
2. Driver's Dashboard Lower Cover - Remove

   NOTE: The number of connectors may vary depending on the model.

3. All Removed Parts - Install

   1. Install the parts in the reverse order of removal.

DRIVER'S DASHBOARD PANEL REMOVAL AND INSTALLATION

Removal and Installation

1

Outer Side

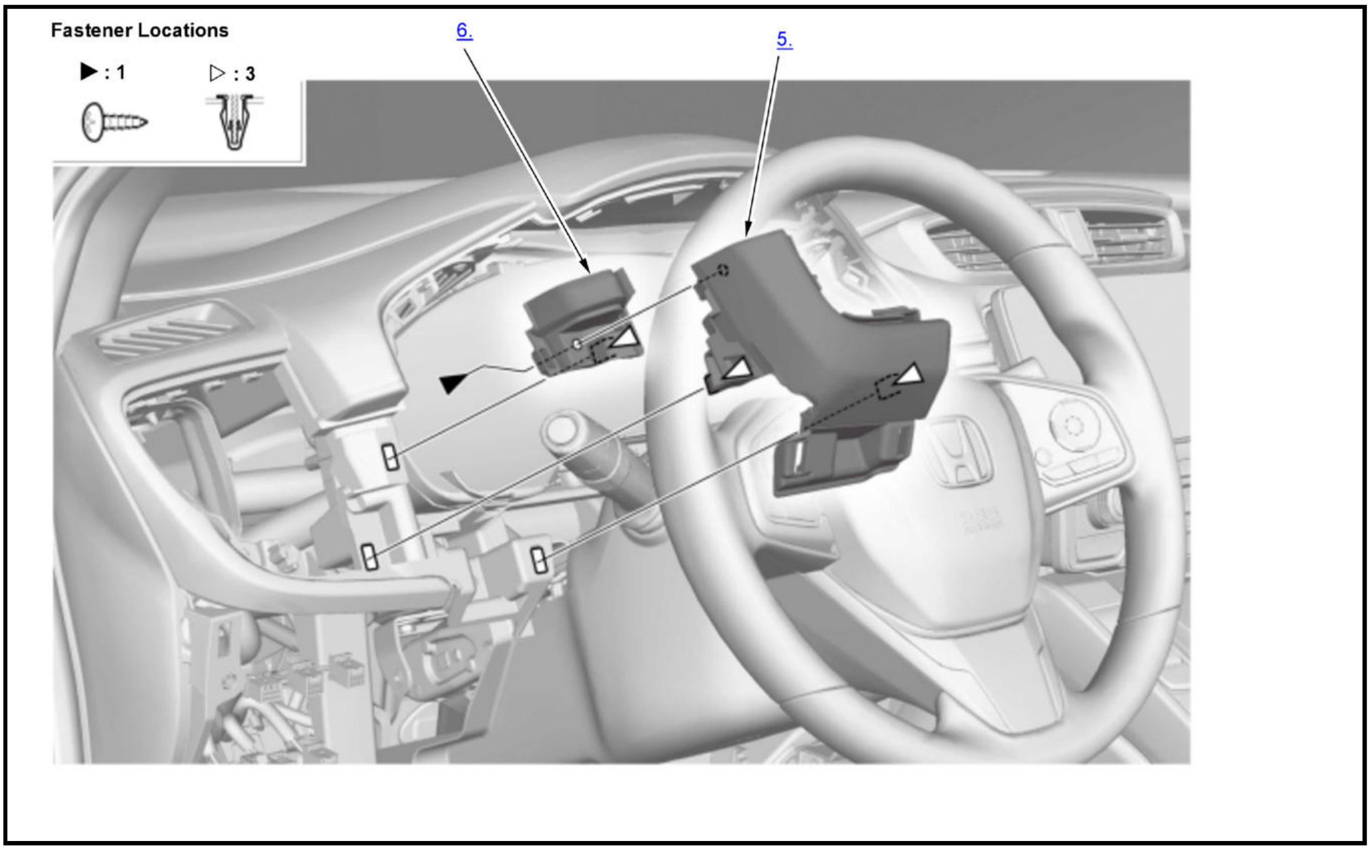
Fastener Locations
▶ : 1
▷ : 3
6.
5.

2

Inner Side

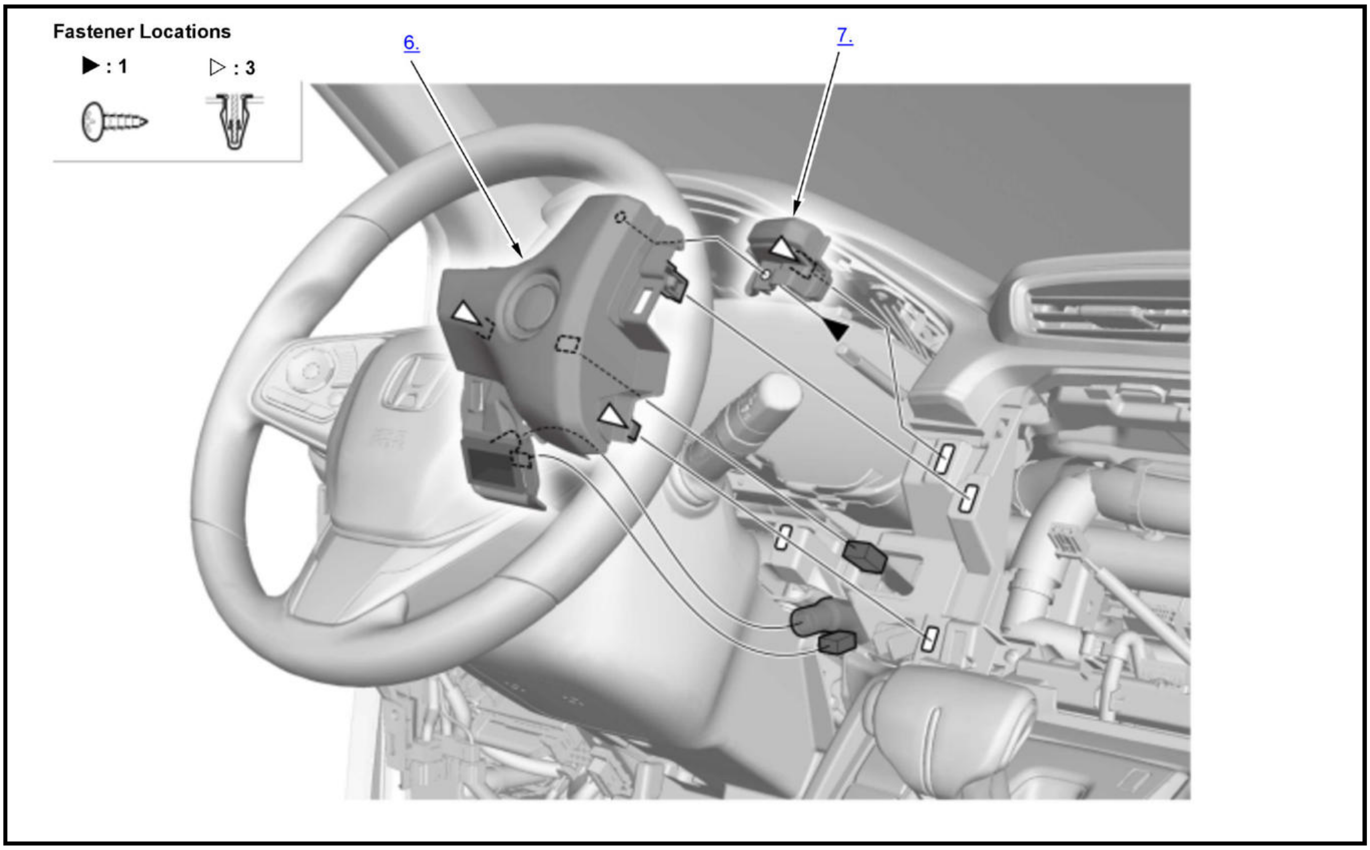
Fastener Locations
▶ : 1
▷ : 3
6.
7.

Outer Side

1. **Driver's Lower Ornament Panel - Remove**
2. **Driver's Outlet - Remove**
3. **Meter Visor - Remove**

4. **Driver's Dashboard Lower Cover - Remove**
5. Driver's Dashboard Outer Panel - Remove
6. Driver 's Upper Outer Ornament Panel - Remove
7. All Removed Parts - Install

1. Install the parts in the reverse order of removal.

Inner Side

8. **Meter Visor - Remove**
9. **Climate Control Panel - Remove**
10. **Audio Unit - Remove (With Audio Unit)**
11. **Audio-Navigation Unit -Remove (With Audio-Navigation Unit)**
12. **Driver's Dashboard Lower Cover - Remove**
13. Driver's Dashboard Inner Panel - Remove
14. Driver 's Upper Inner Ornament Panel - Remove
15. All Removed Parts - Install

1. Install the parts in the reverse order of removal.

FRONT CONSOLE COVER REMOVAL AND INSTALLATION

Removal and Installation

1

Driver's Side

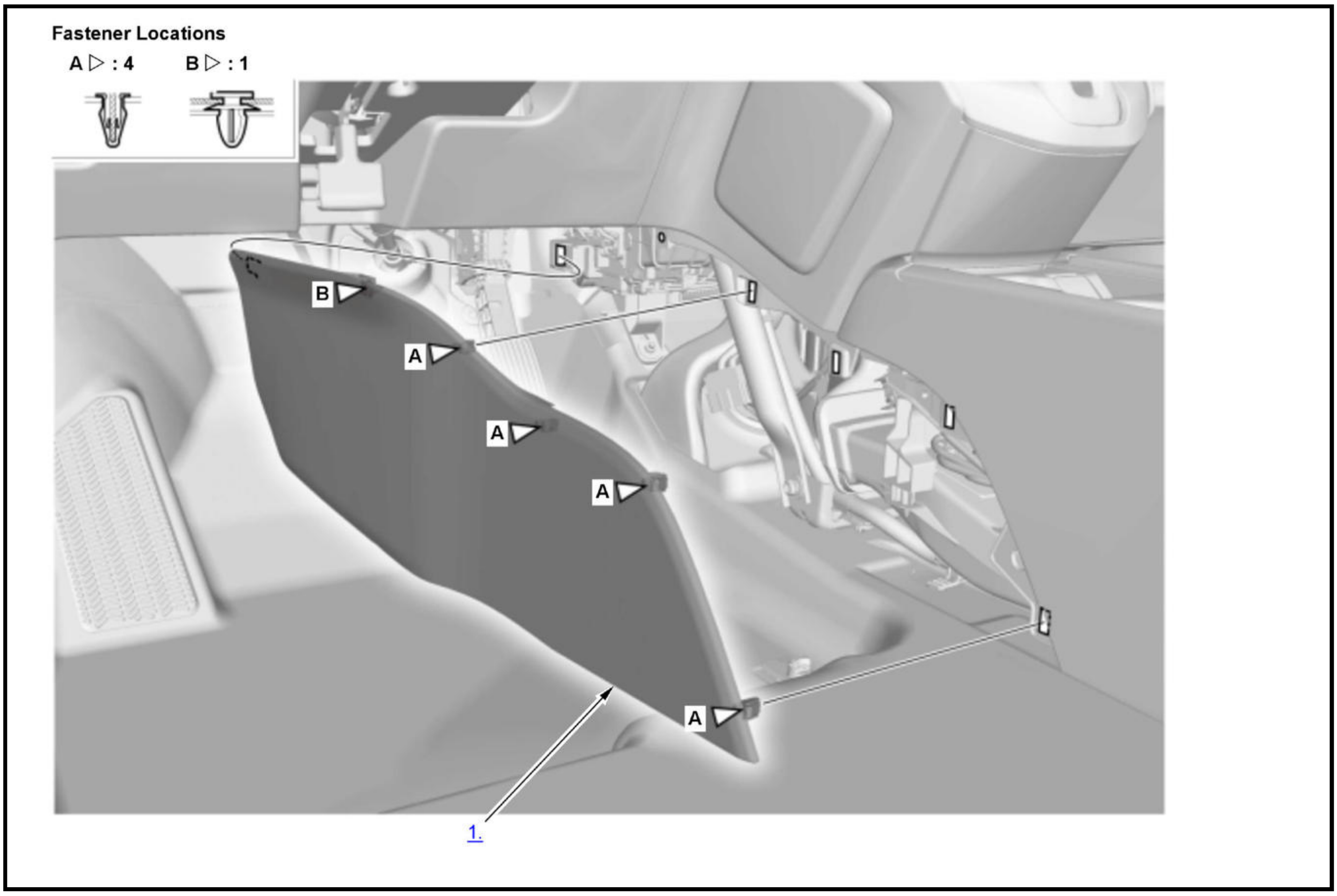

Passenger's Side

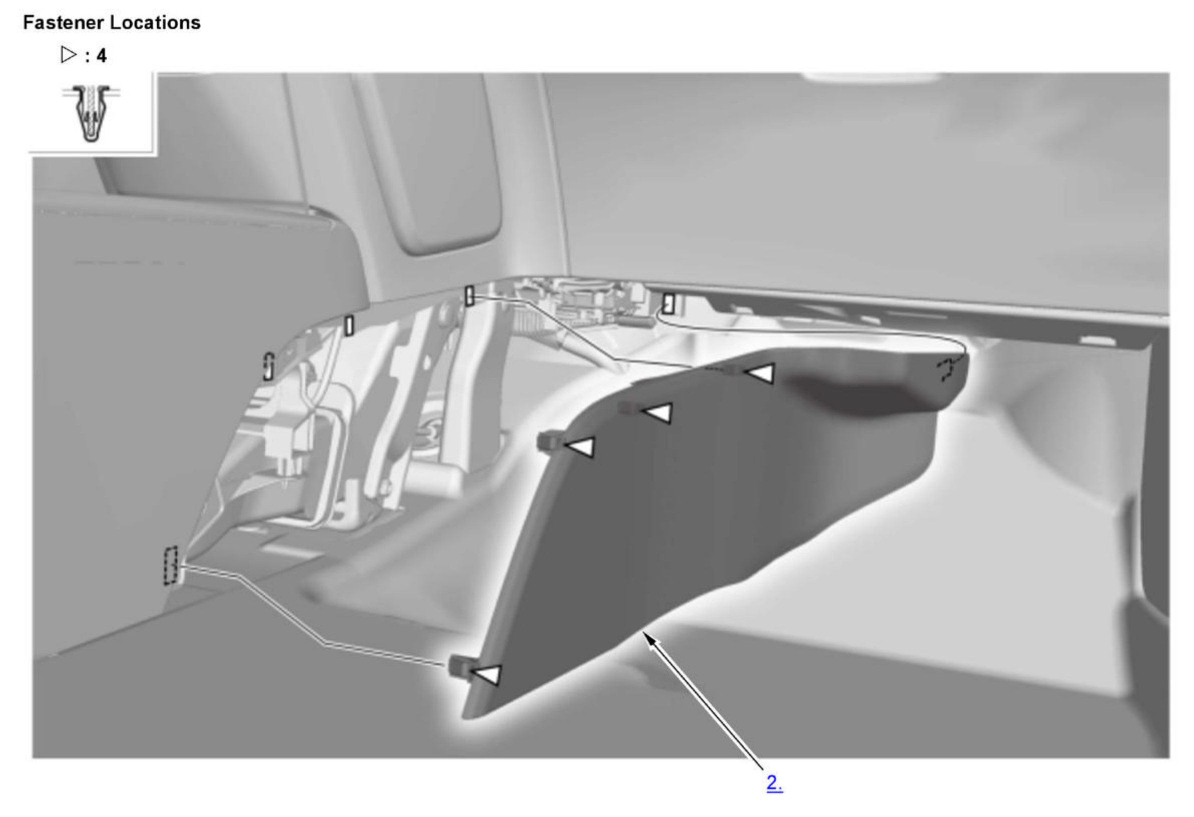

1. Driver's Front Console Cover - Remove
2. Passenger's Front Console Cover - Remove
3. All Removed Parts - Install

1. Install the parts in the reverse order of removal.

GLOVE BOX LOCK CYLINDER REMOVAL AND INSTALLATION

Removal and Installation

1. Glove Box Lock Cylinder - Remove

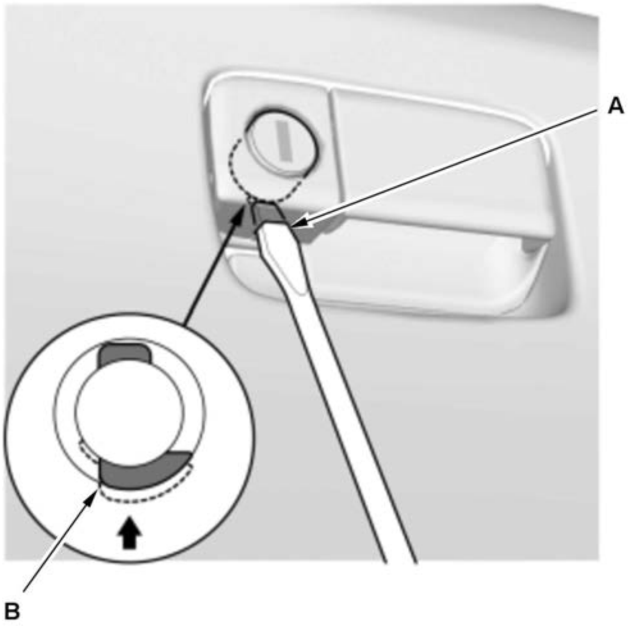 A B	1. Insert a flat-tip screwdriver to the maintenance hole (A), and push the stopper (B).

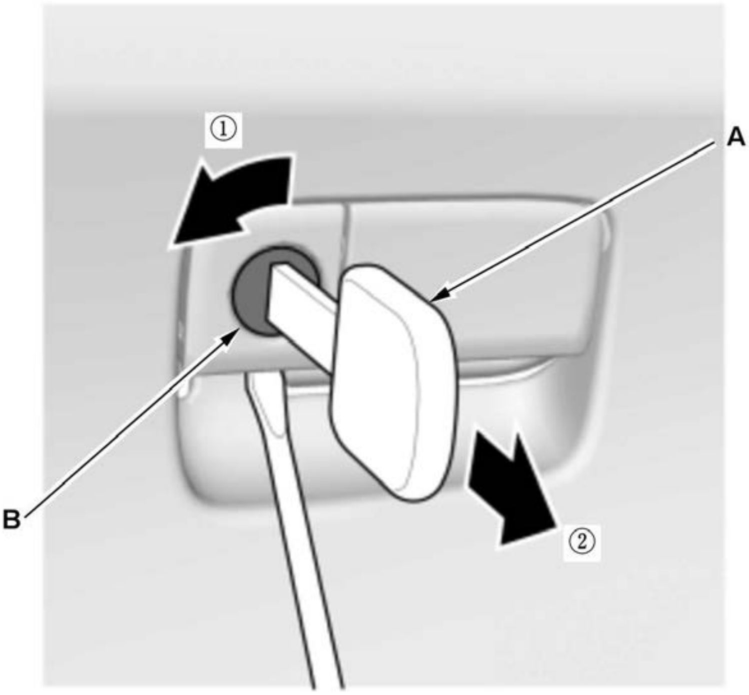	2. Insert the key (A) and turn it slightly to lock the stopper. 3. Pull out the glove box lock cylinder (B), and remove it.

2. All Removed Parts - Install

1. Install the parts in the reverse order of removal.

GLOVE BOX REMOVAL AND INSTALLATION

Removal and Installation

1

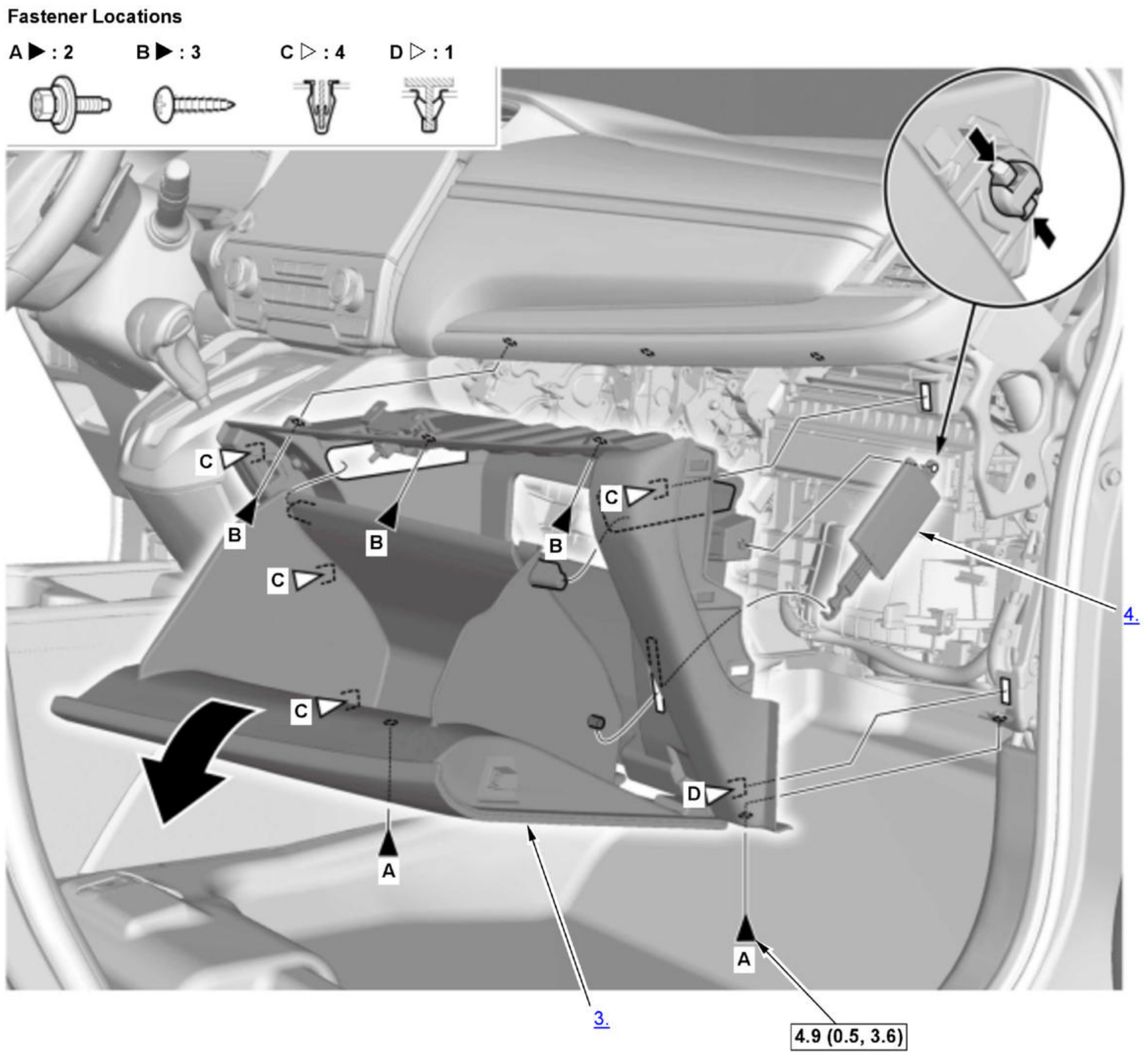
Fastener Locations
A ▶ : 2
B ▶ : 3
C ▷ : 4
D ▷ : 1
C
C
C
C
B
B
B
D
A
A
4.
3.
4.9 (0.5, 3.6)

☐	Torque: N.m (kgf.m, lbf.ft)

1. **Passenger's Dashboard Side Lid - Remove**
2. **Passenger's Dashboard Undercover - Remove**
3. Glove Box - Remove
4. Glove Box Damper - Remove
5. All Removed Parts - Install

1. Install the parts in the reverse order of removal.

GRAB HANDLE REMOVAL AND INSTALLATION

Removal

1. Grab Handle - Remove

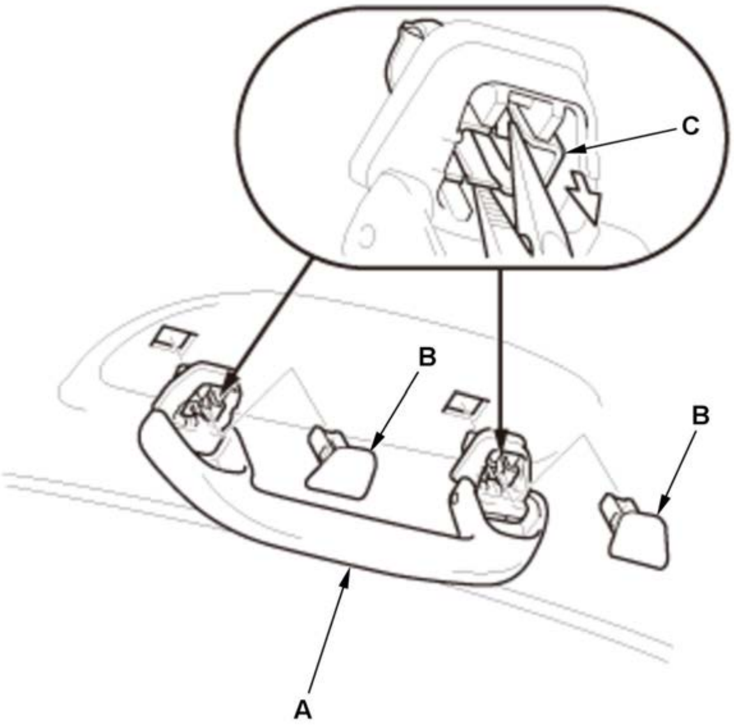	1. Lower the grab handle (A). 2. Remove the caps (B). 3. Squeeze the clips (C) with pliers, then remove the grab handle.

Inspection

1. Grab Handle - Check

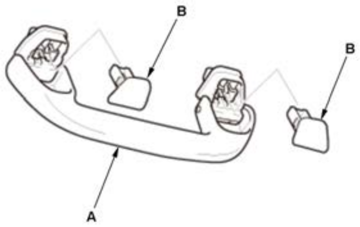	1. If the side curtain airbag has not deployed, inspect the grab handle (A) for damage. A damaged grab handle may cause the side curtain airbag to deploy improperly, possibly causing injury. Replace the grab handle if it has any of the following damage: • Any cracks or breakage in the grab handle • Any cracks or stress-whitening in the caps (B)

Installation

1. Grab Handle - Install

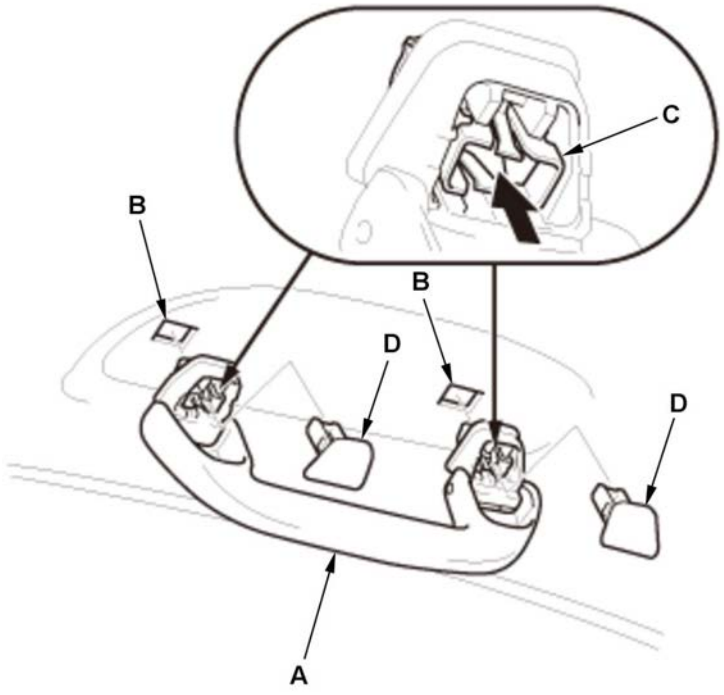

1. Position the grab handle (A) on the grab handle bracket (B).

2. Push on the grab handle until the clips (C) snap into place securely.

3. Install the caps (D) fully into the clips.

HEADLINER REMOVAL AND INSTALLATION

Removal and Installation

NOTE: SRS components are located in this area. Review the SRS component locations and the precautions and procedures before doing repairs or service.

1. 12 Volt Battery Terminal - Disconnect
2. Both A-Pillar Trims - Remove
3. Both B-Pillar Upper/Lower Trims - Remove
4. Both Quarter Pillar Trims - Remove
5. Ceiling Light - Remove (For Some Models)
6. Rear Individual Map Light - Remove (For Some Models)
7. Grab Handles - Remove
8. Both Sunvisors and Sunvisor Holders - Remove
9. Rearview Mirror Connector - Disconnect (For Some Models)
10. Automatic Lighting/Rain Sensor Connector - Disconnect (For Some Models)
11. Multipurpose Camera Unit Connector - Disconnect (For Some Models)
12. Rear Roof End Trim - Remove
13. Roof Console Assembly - Remove

With Panoramic Glass Roof

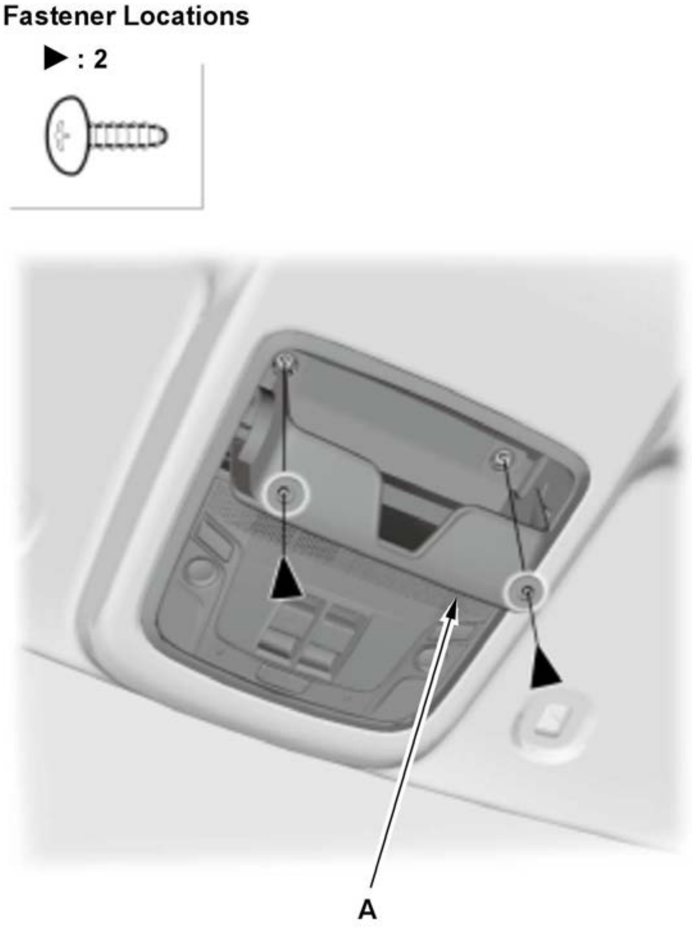
Fastener Locations
▶ : 2
A

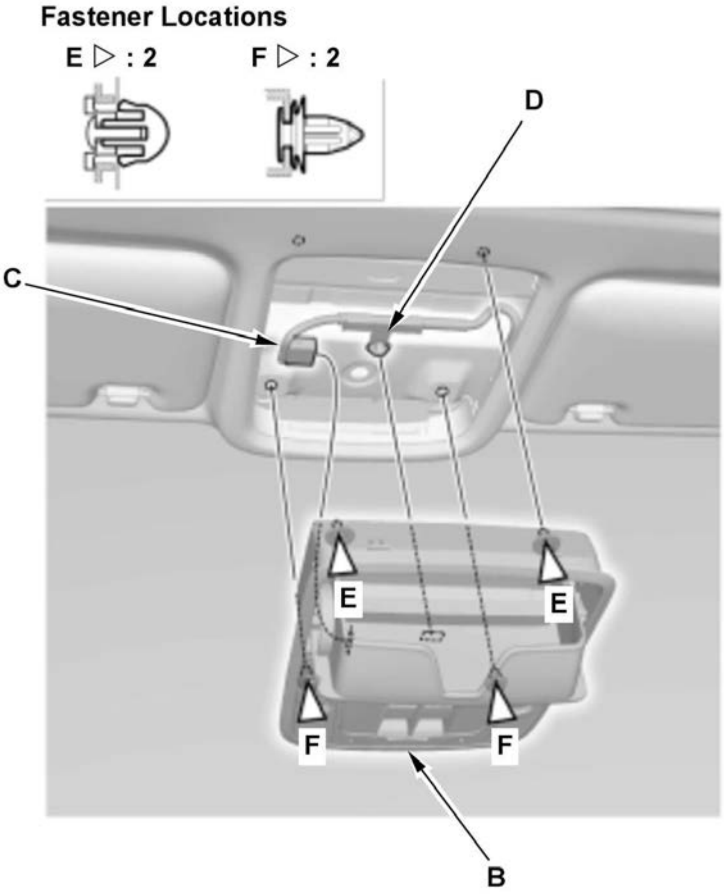
Fastener Locations
E ▷ : 2
F ▷ : 2
D
C
E
E
F
F
B

1. Open the roof console assembly (A), then remove the screws.

2. Remove the roof console assembly (B) and then, disconnect the connector (C) and remove the harness clip (D).

Without Panoramic Glass Roof

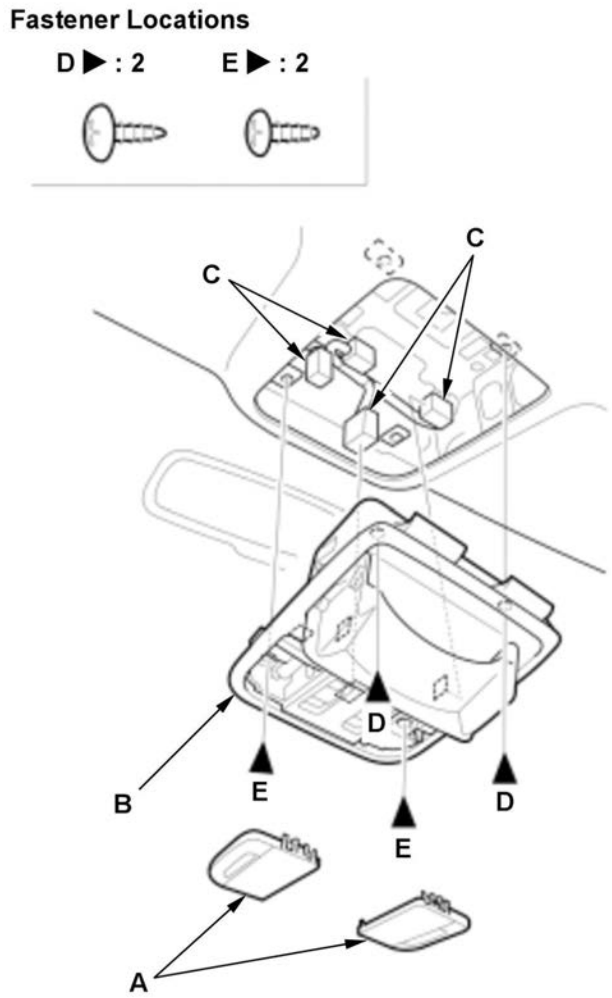
Fastener Locations
D ▶ : 2
E ▶ : 2
C
C
D
B
E
D
E
A

3. Remove the lenses (A), then remove the roof console assembly (B).

4. For some models: Disconnect the connector(s) (C).

14. Headliner - Remove

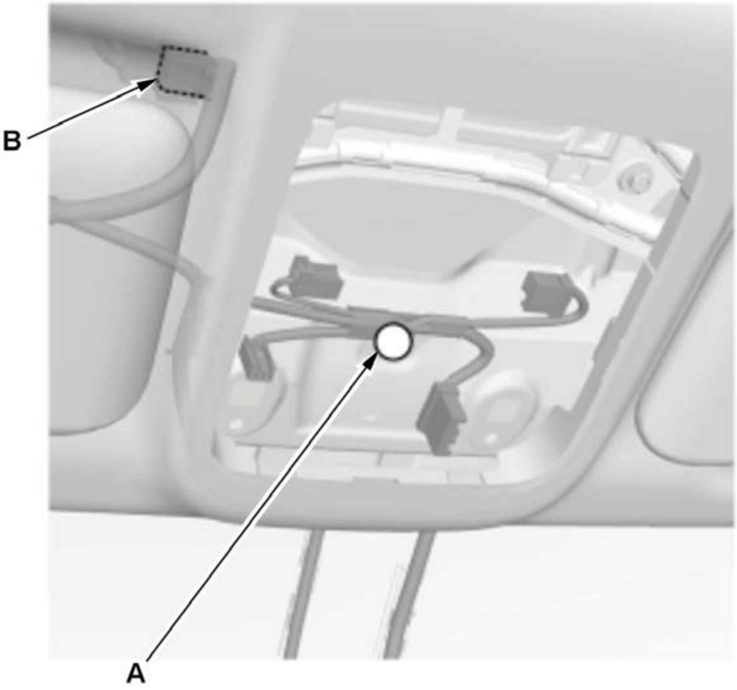

1. Release the harness clip (A).

2. For some models: Disconnect the connector (B).

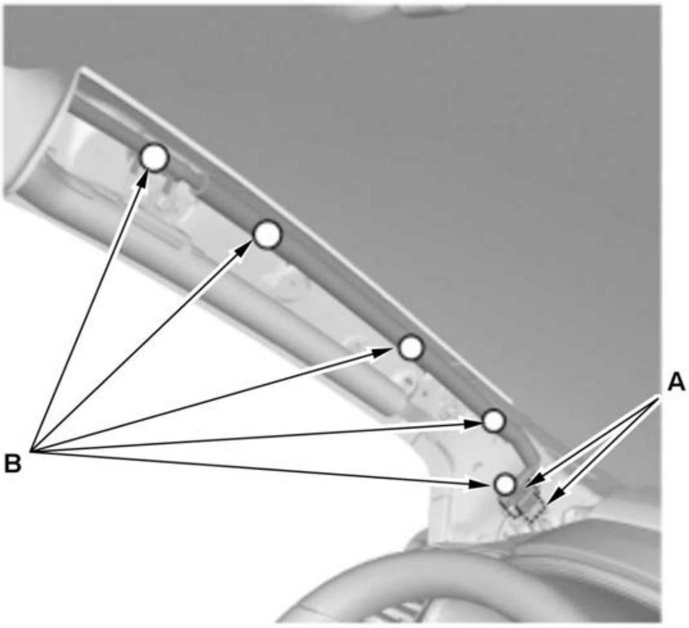

Driver's Side

Passenger's Side

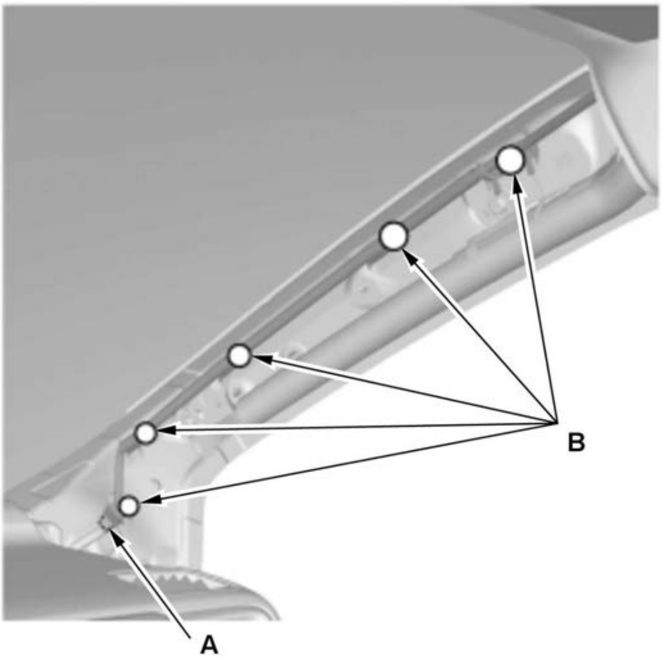

Right Quarter Pillar Area

3. Disconnect the connectors (A), and release the harness clips (B).

NOTE:

The positions and number of connectors vary depending on models.

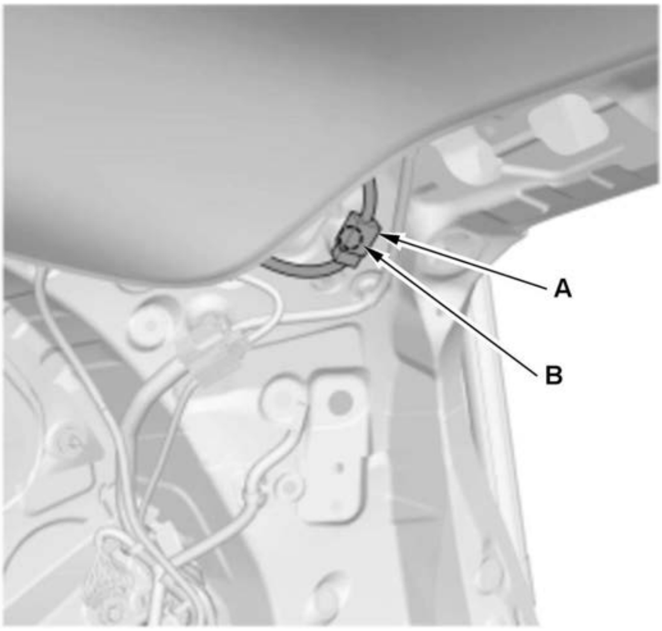

Standard Roof

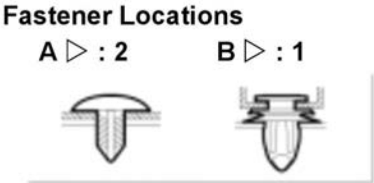
Fastener Locations
A ▷ : 2
B ▷ : 1

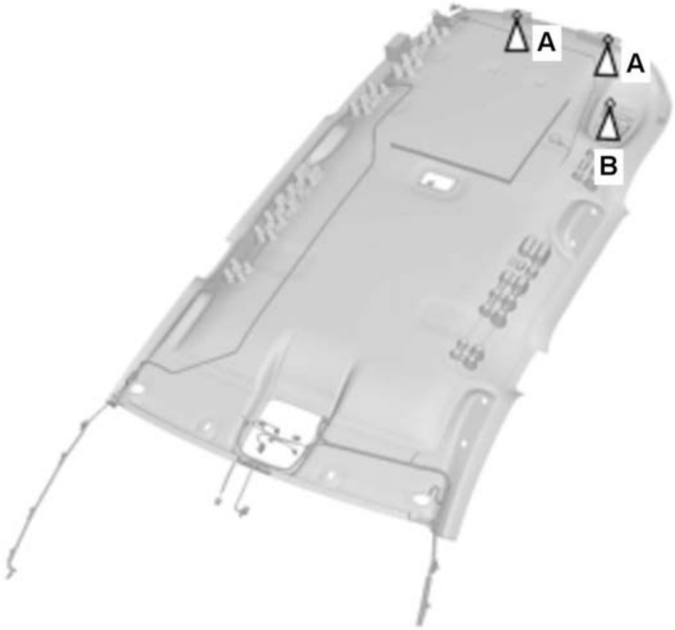

With Moonroof

4. Slide the front seats all the way back, and recline the seat-back fully.

5. Fold down the rear seats.

6. With the help of an assistant, lower the headliner.

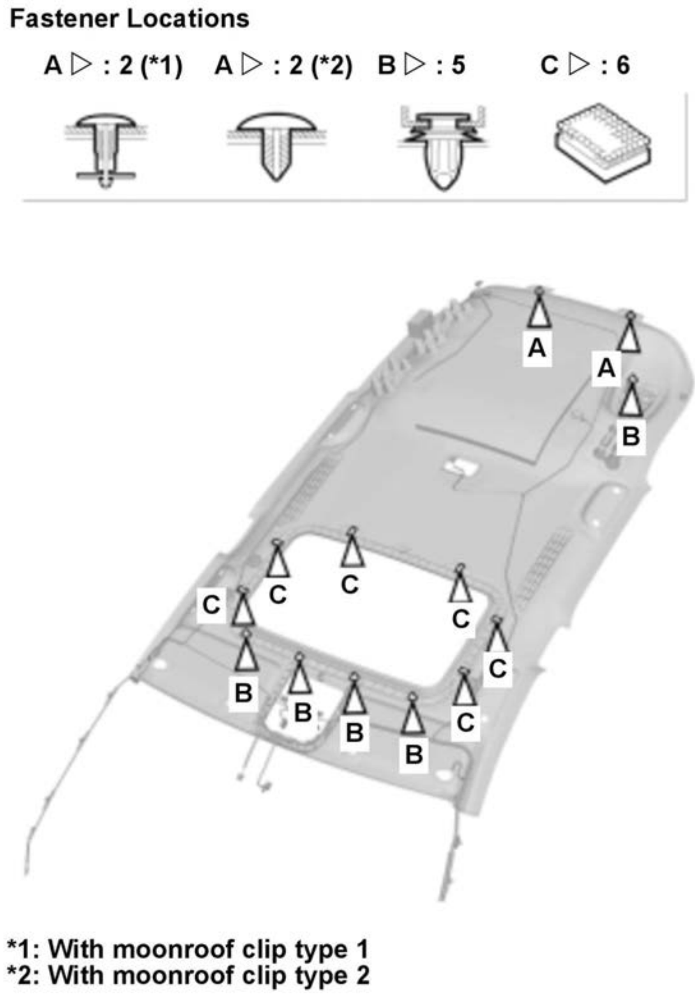
Fastener Locations
A ▷ : 2 (*1)
A ▷ : 2 (*2)
B ▷ : 5
C ▷ : 6
A
A
B
C
C
C
C
C
C
B
B
B
B
*1: With moonroof clip type 1
*2: With moonroof clip type 2

With Panoramic Glass Roof

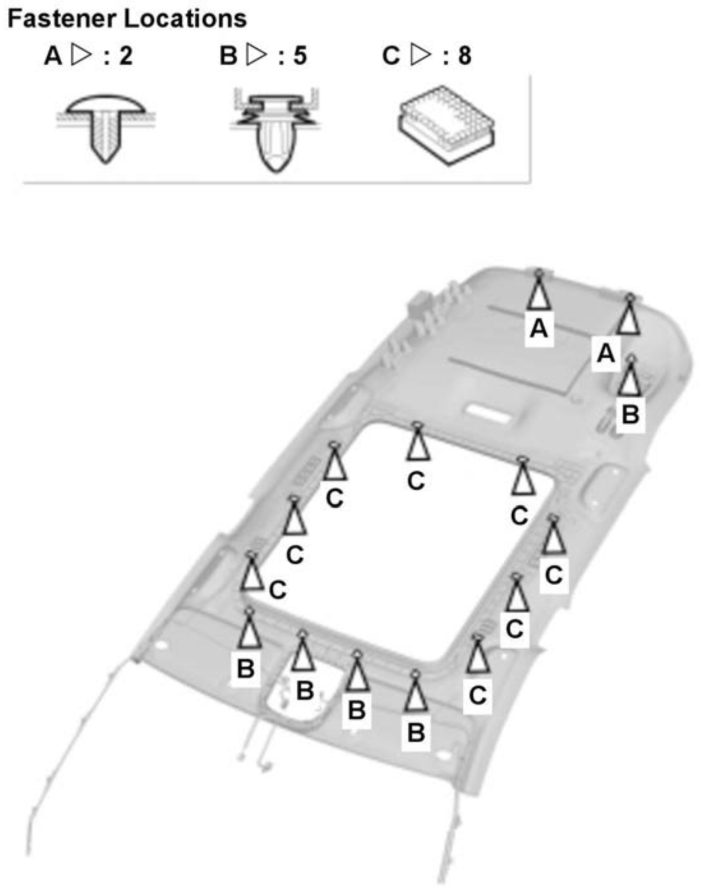
Fastener Locations
A ▷ : 2
B ▷ : 5
C ▷ : 8
A
A
B
C
C
C
C
C
C
C
C
B
B
B
B

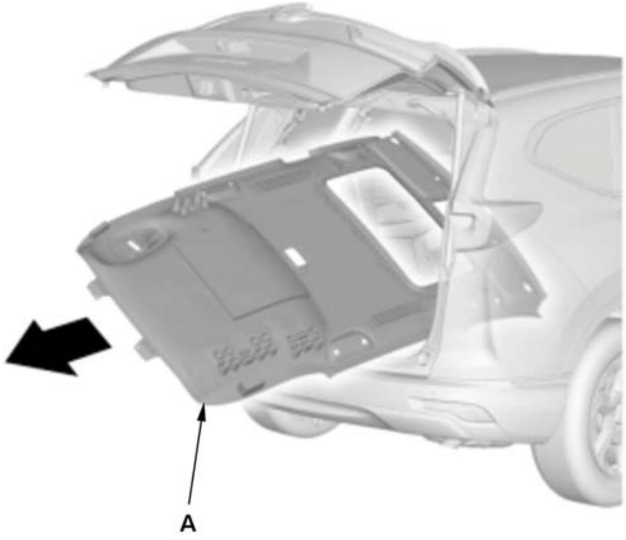

7. With the help of an assistant, remove the headliner (A) through the tailgate opening.

NOTE:

Do not bend the headliner. Bending the headliner will crease and damage it.

15. Headliner Cushion Tape - Remove

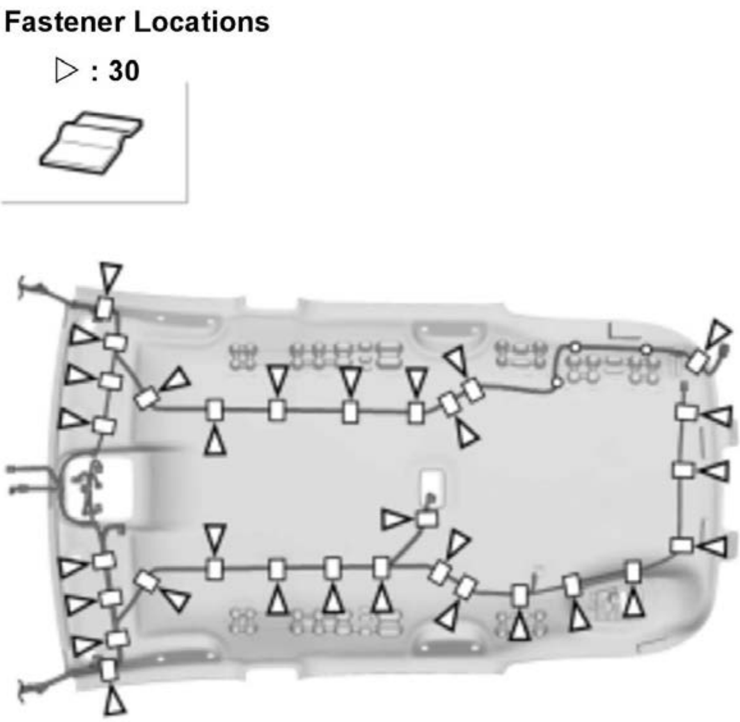
Fastener Locations
▷ : 30

Standard Roof

With Moonroof

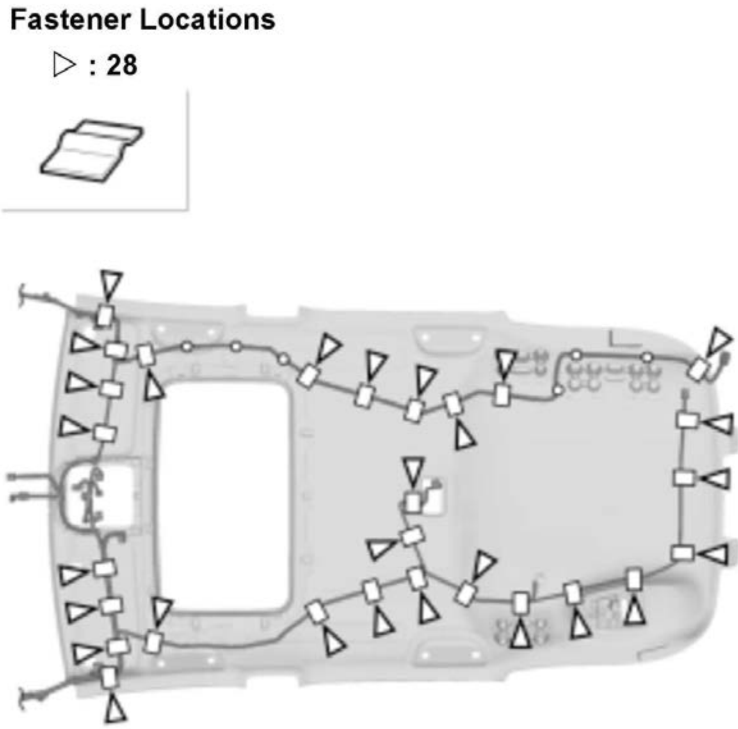
Fastener Locations
▷ : 28

With Panoramic Glass Roof

1. If necessary, remove the cushion tapes.

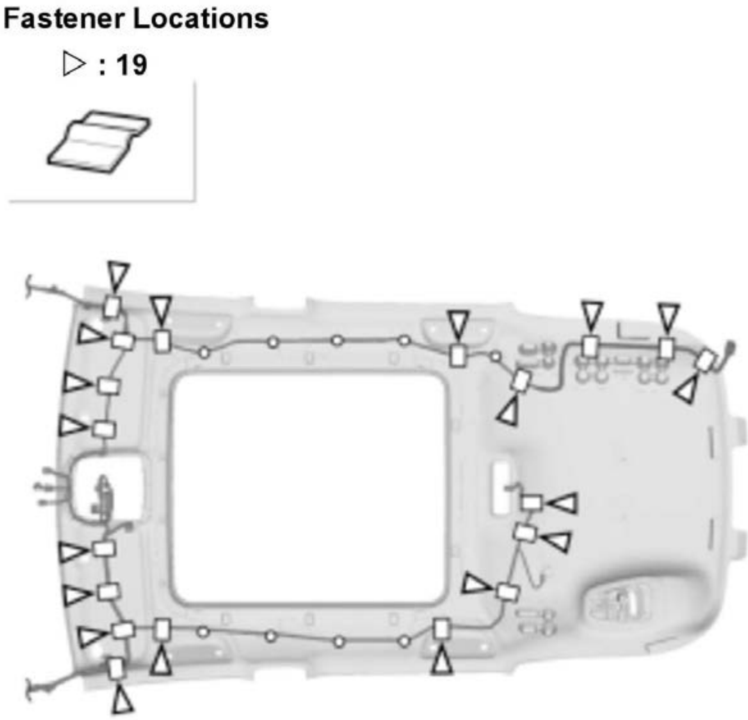	

16. Headliner - Check

Standard Roof 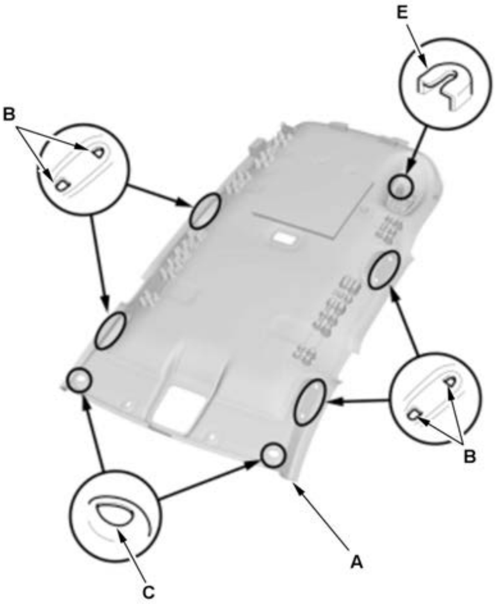 **With Moonroof**	1. If the side curtain airbag has deployed, replace the headliner (A), along with the other parts listed for side curtain airbag deployment. 2. To prevent the side curtain airbags from deploying improperly and possibly causing injury, inspect the headliner and all removed trim. Replace any pieces that has any of the following damage: - Any creases or tears in the headliner - Any damages around the grab handle holes (B) or the sunvisor holes (C) in the headliner - Any fastener bases (D) and the clip bases (E) which have come off the headliner

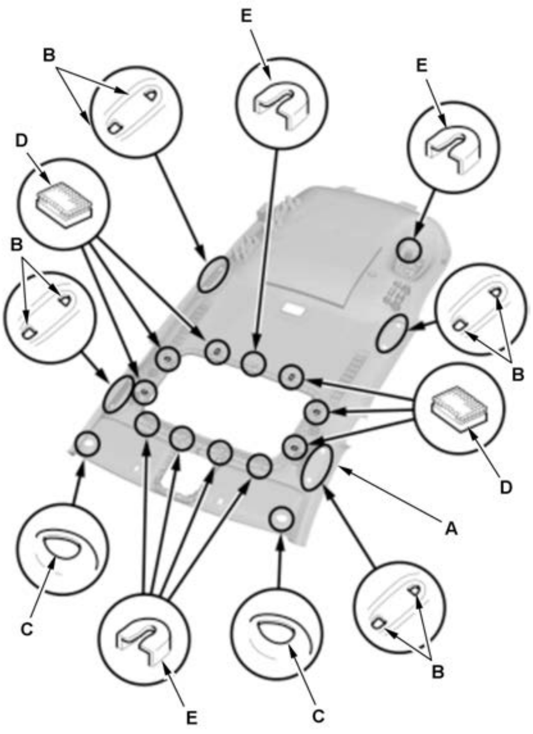

E
B
E
D
B
B
D
A
C
E
C
B

With Panoramic Glass Roof

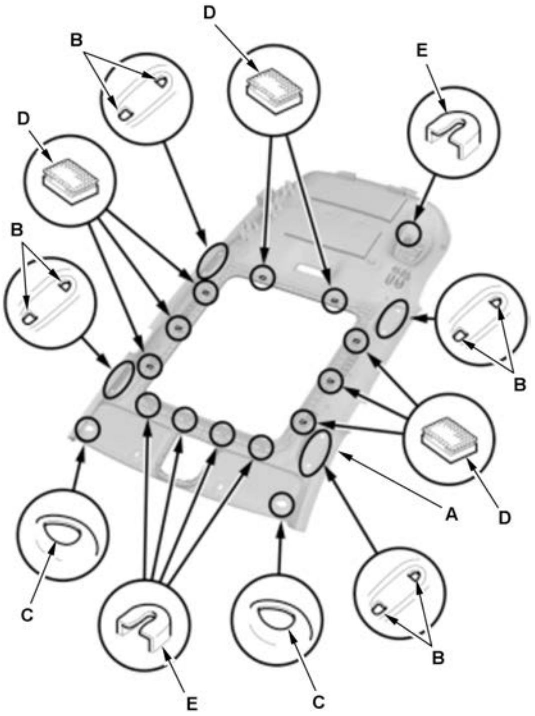

D
B
E
D
B
B
A
D
C
E
C
B

17. All Removed Parts - Install

1. Install the parts in the reverse order of removal.

INTERIOR TRIM REMOVAL AND INSTALLATION - CARGO AREAS

Removal and Installation

1. Tailgate Tonneau Cover / Cargo Floor Cover - Remove

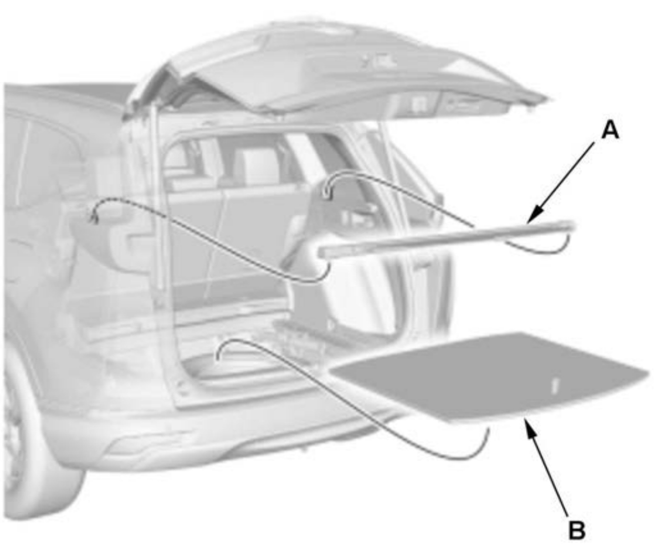	1. Remove the tailgate tonneau cover (A) and cargo floor cover (B).

2. Rear Carpet Trim - Remove

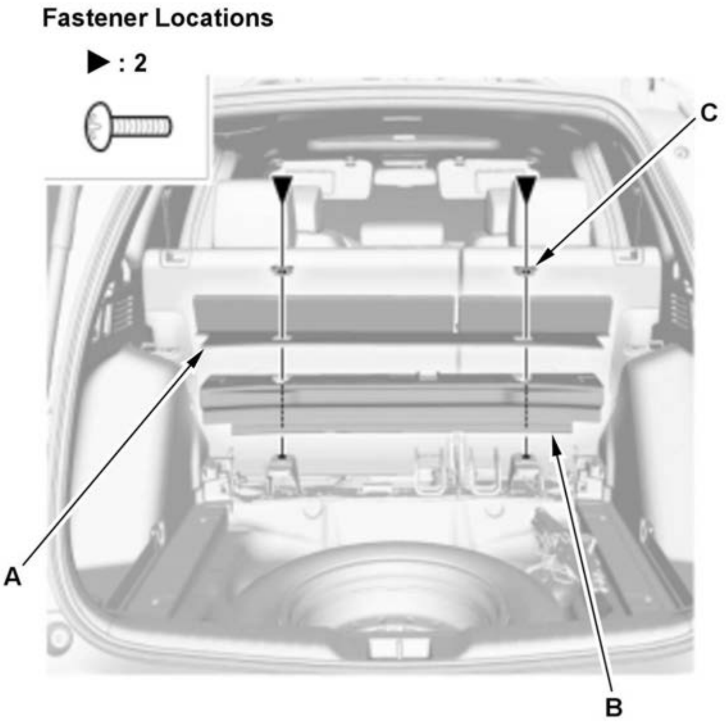 Fastener Locations ▶ : 2 C A B	1. Remove the tie down hooks (C)2. Remove the rear carpet trim A, B.

3. Rear Trim Panel - Remove

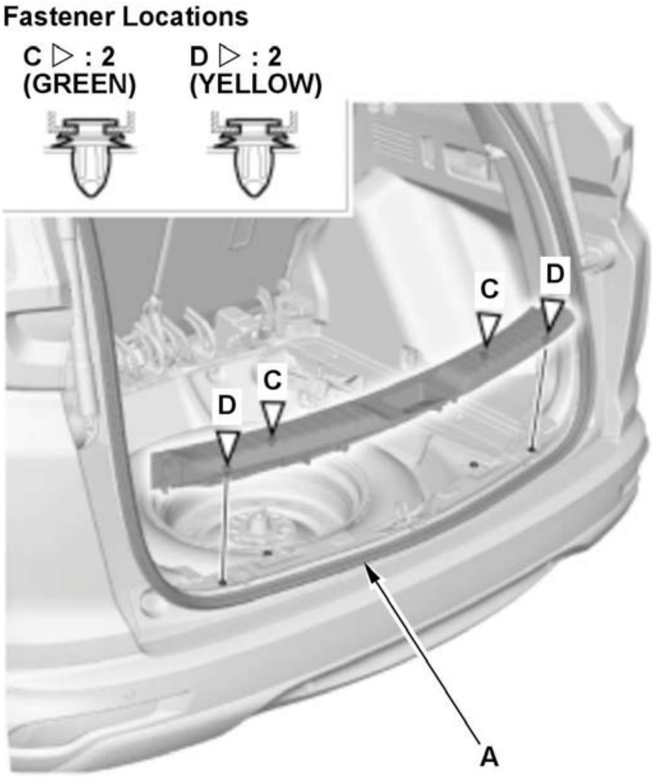 Fastener Locations C ▷ : 2 (GREEN) D ▷ : 2 (YELLOW) C D D C A	1. Remove the tailgate weatherstrip (A) as needed. 2. Remove the rear trim panel (B).

4. All Removed Parts - Install

1. Install the parts in the reverse order of removal.

INTERIOR TRIM REMOVAL AND INSTALLATION - DOOR AREAS

Removal and Installation

Front Door Opening Seal

1. B-pillar Lower Trim - Remove
2. Front Door Opening Seal - Remove

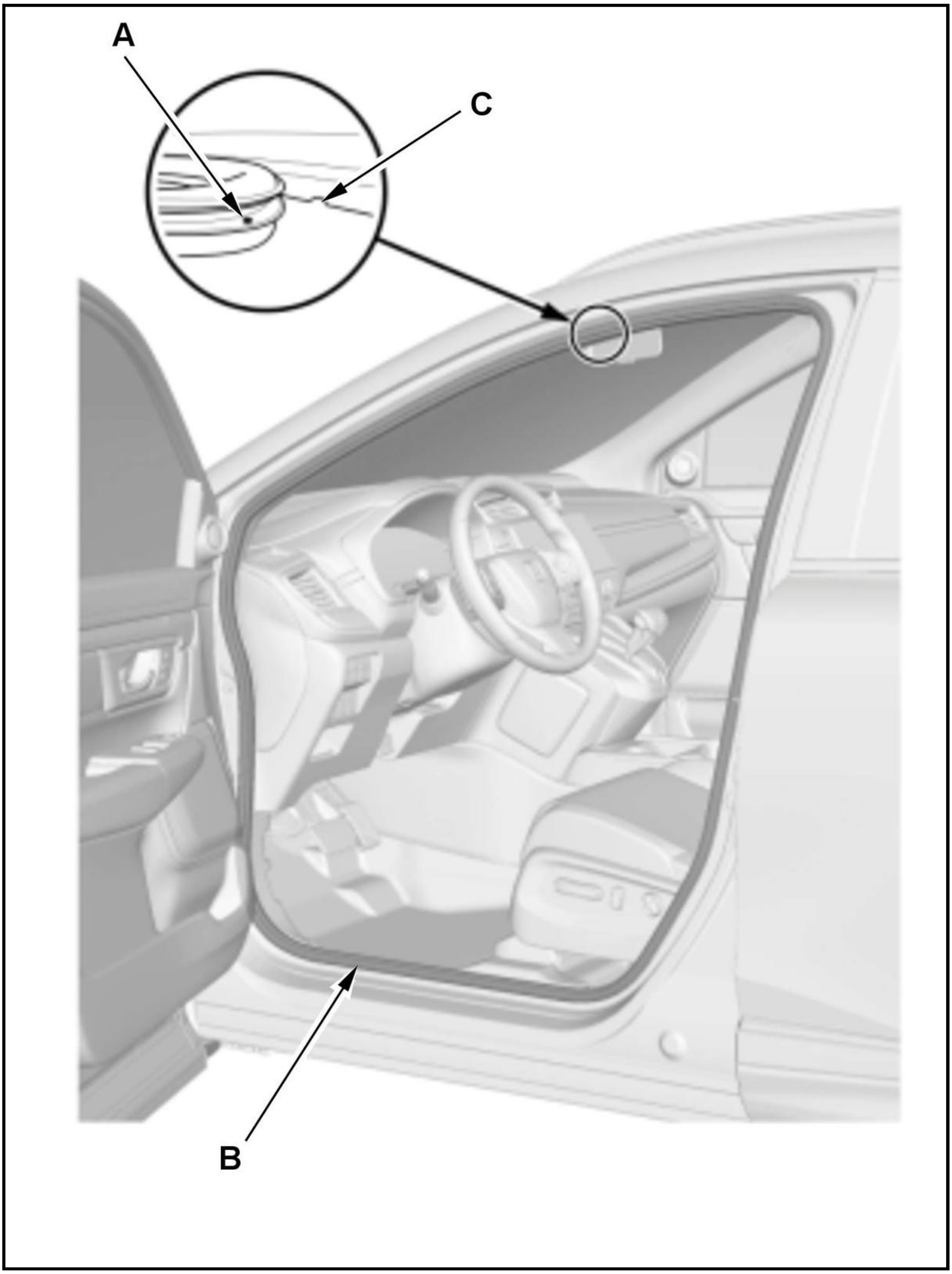

NOTE: Align the painted mark (A) of the front door opening seal (B) with the notch (C) on the body, then push the front door opening seal against the body.

3. All Removed Parts - Install

   1. Install the parts reverse order of removal.

4. Water Leaks - Check

Front Door Sill Trim / Kick Panel

5. Front Door Sill Trim - Remove

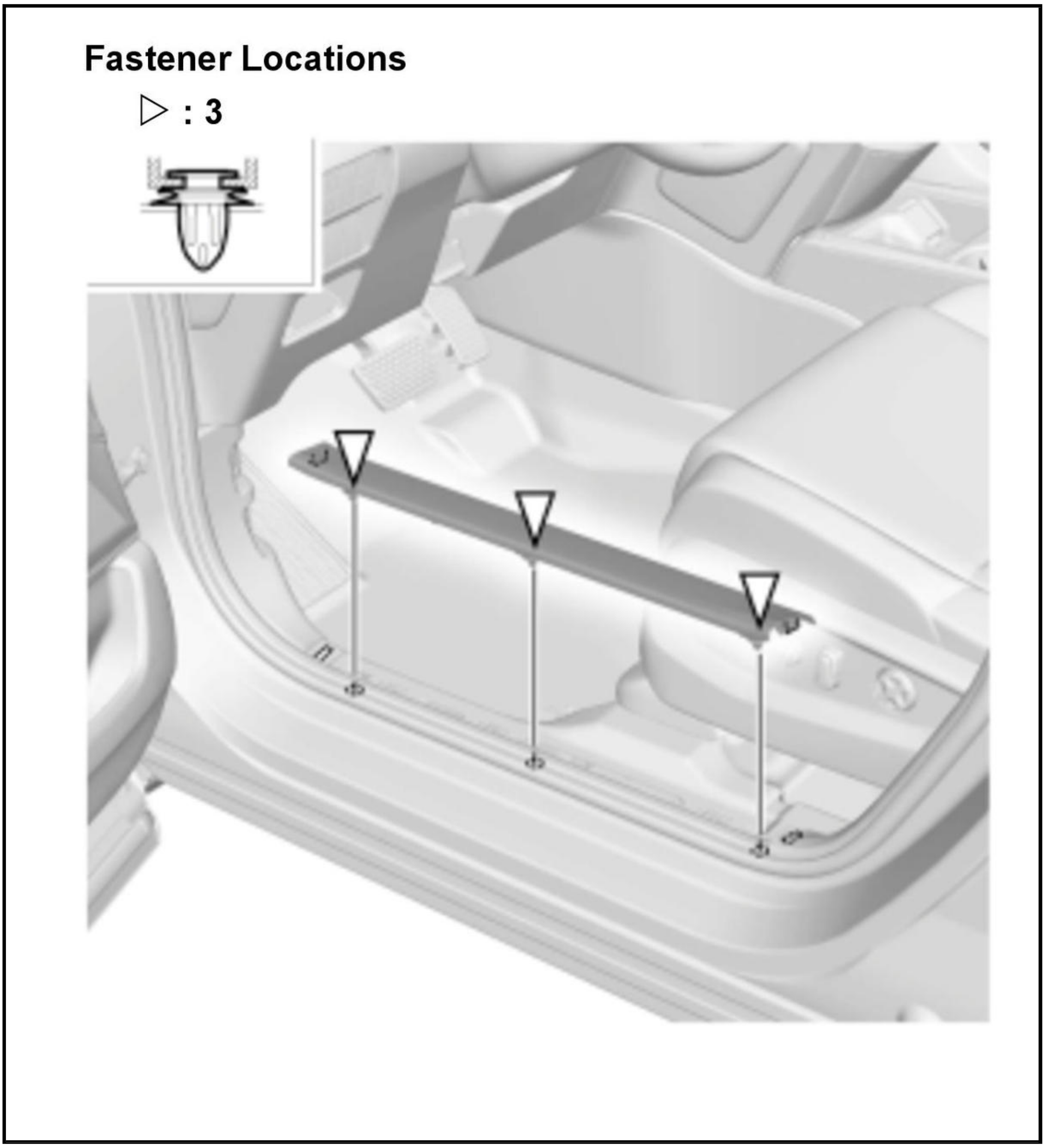
Fastener Locations
▷ : 3

6. Kick Panel - Remove

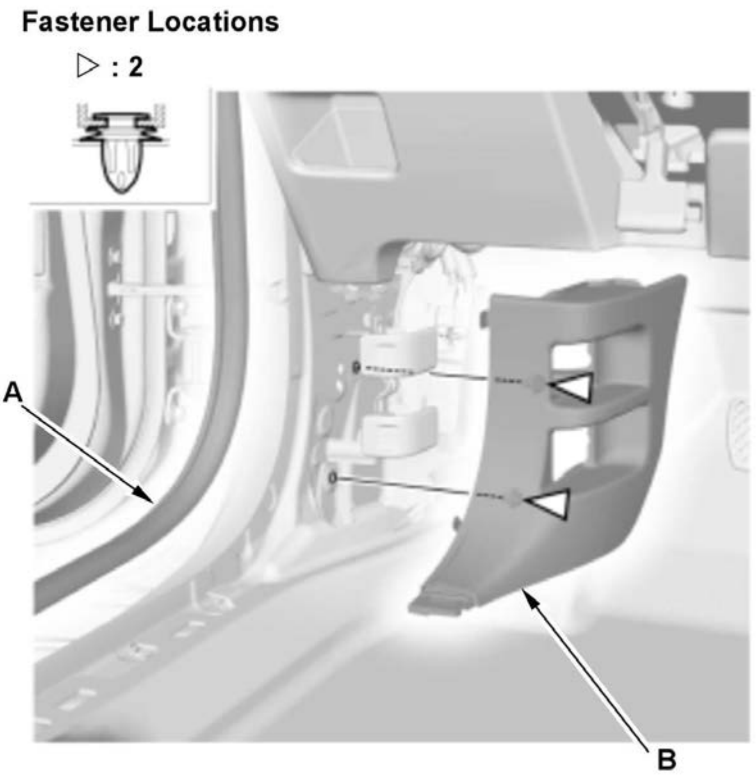 Fastener Locations ▷ : 2 A B **Driver's Side** **Passenger's Side** 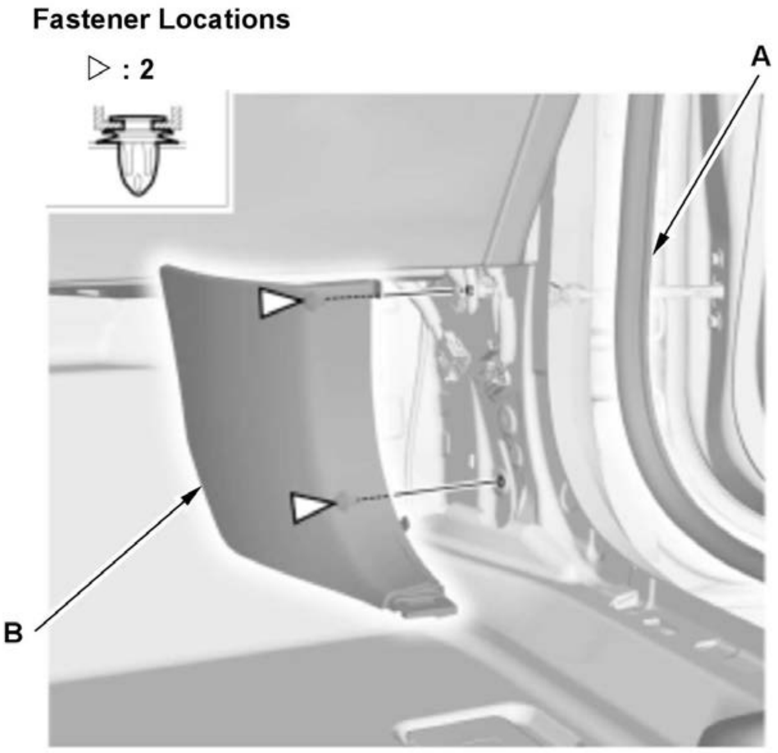 Fastener Locations ▷ : 2 A B	1. Pull out the front door opening seal (A) as needed. 2. Remove the kick panels (B).

7. All Removed Parts - Install

1. Install the parts in the reverse order of removal.

Rear Door Opening Seal

8. **B-pillar Lower Trim - Remove**

9. Rear Door Opening Seal - Remove

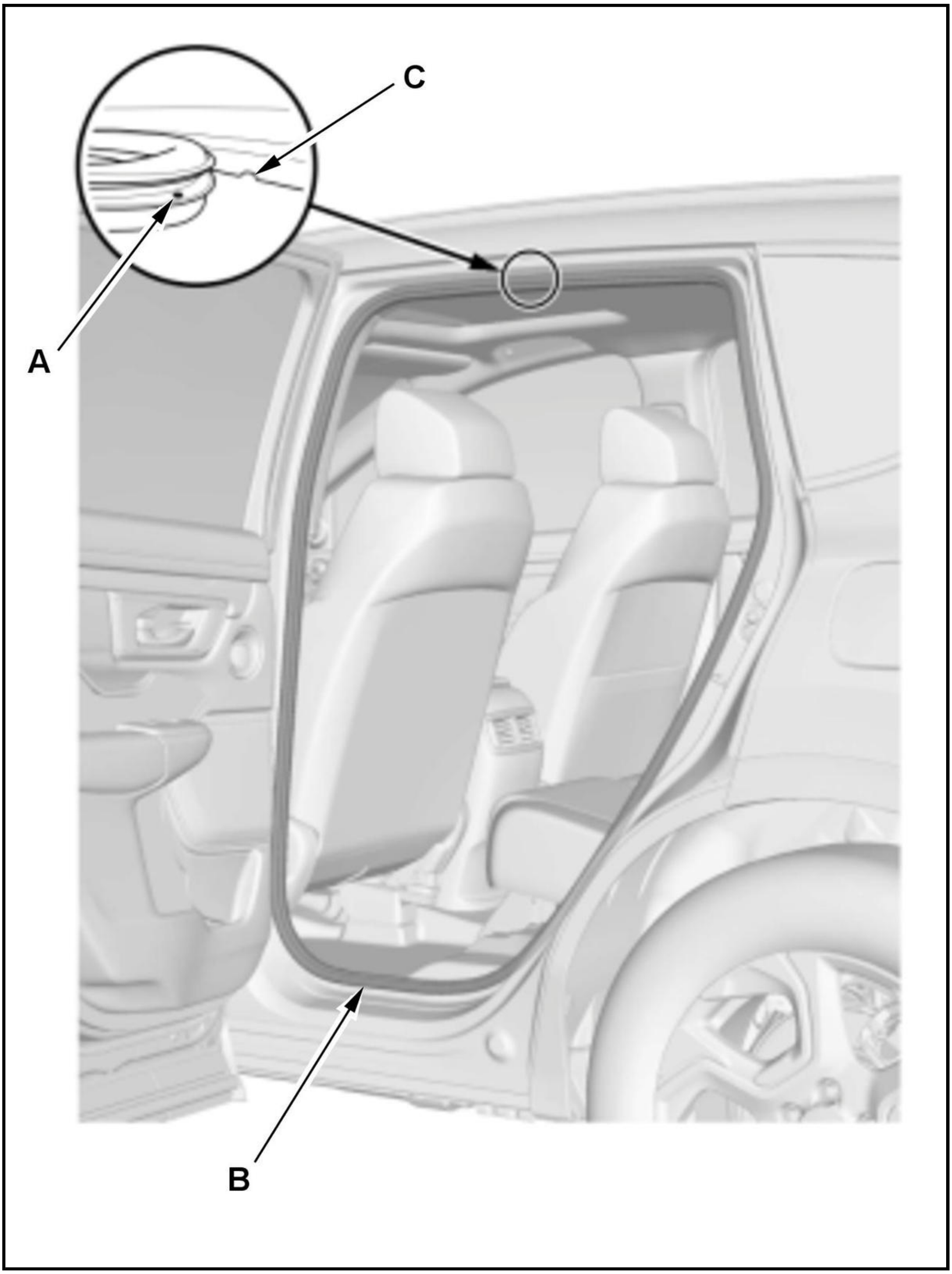

NOTE: Align the painted mark (A) of the rear door opening seal (B) with the notch (C) on the body, then push the rear door opening seal against the body.

10. All Removed Parts - Install

1. Install the parts reverse order of removal.

11. **Water Leaks - Check**

Rear Door Sill Trim

12. Rear Door Sill Trim - Remove

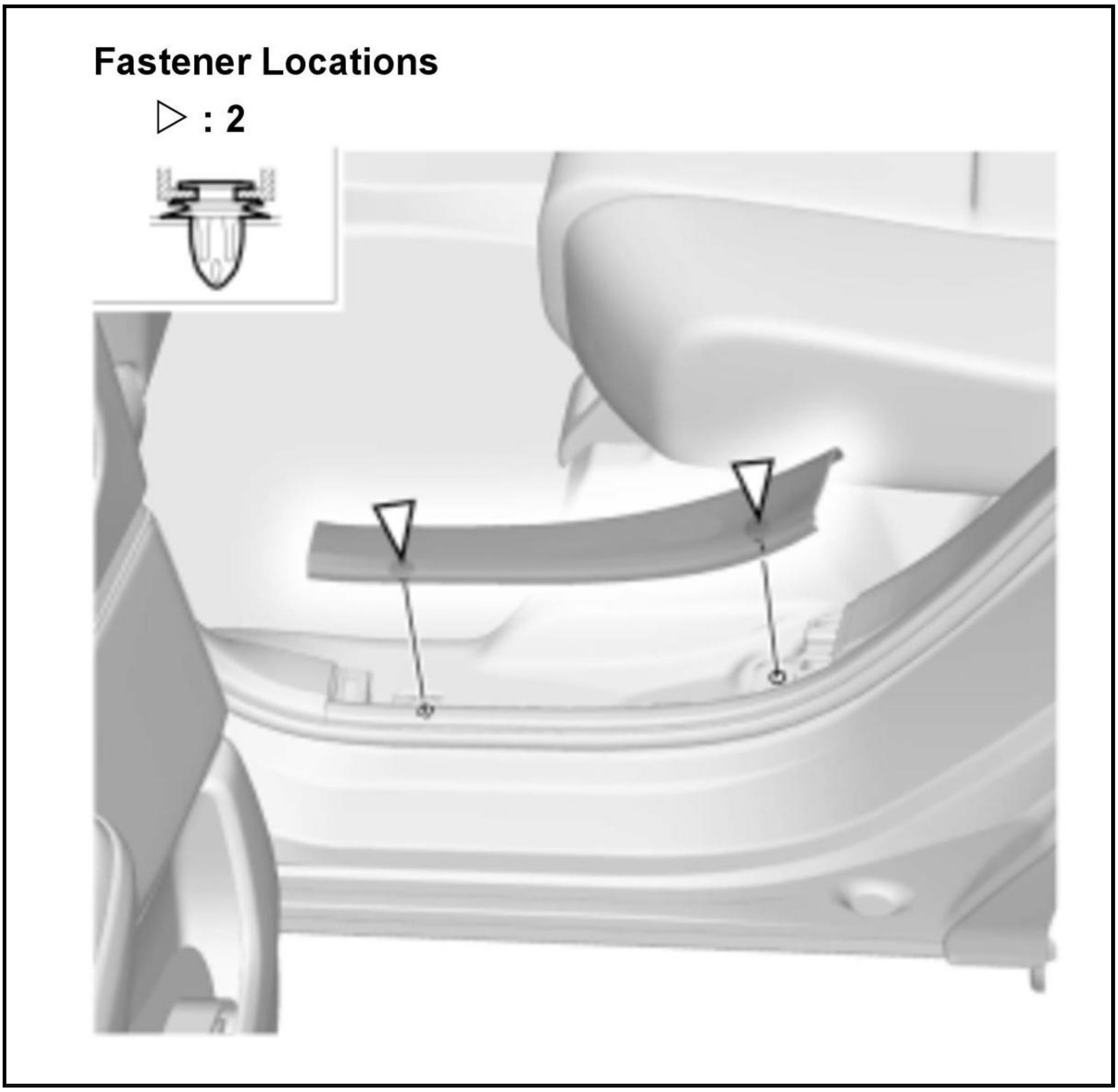

13. All Removed Parts - Install

1. Install the parts in the reverse order of removal.

INTERIOR TRIM REMOVAL AND INSTALLATION - PILLAR AREAS

Removal and Installation

NOTE:

- SRS components are located in this area. Review the **SRS component locations** and the **precautions and procedures** before doing repairs or service.
- If the side airbags and/or side curtain airbags have deployed, the affected pillar area trim and attachment clips must be replaced. **Refer to Component Replacement/Inspection After Deployment** .

A-Pillar Trim

1. A-Pillar Trim - Remove

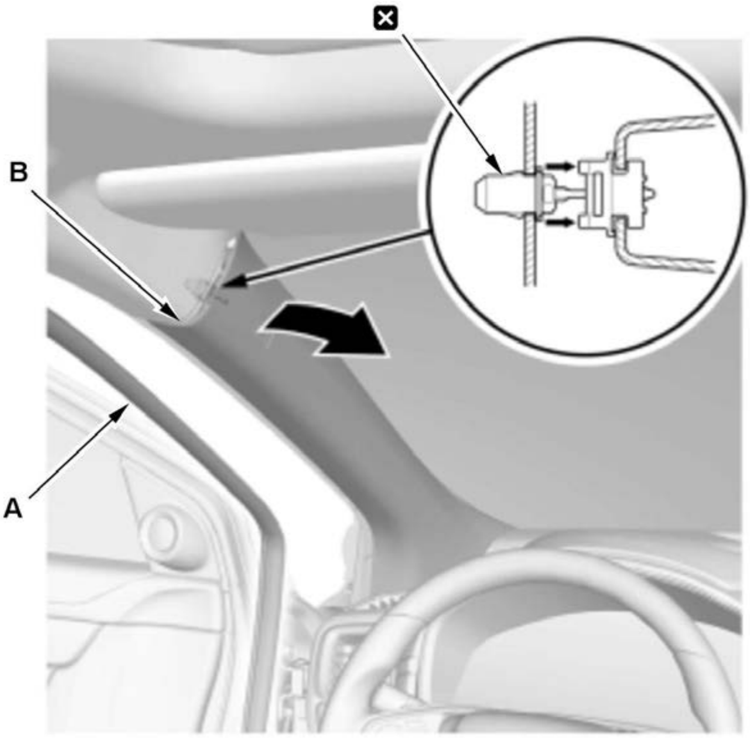	1. Remove the front door opening seal (A) as needed. 2. Pull out the A-pillar trim (B).

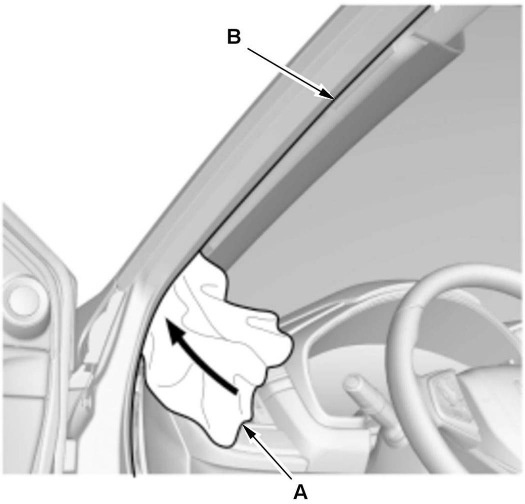	3. Put a shop towel (A) in the opening between the A-pillar trim (B) and the dashboard to prevent the A-pillar clips from falling.

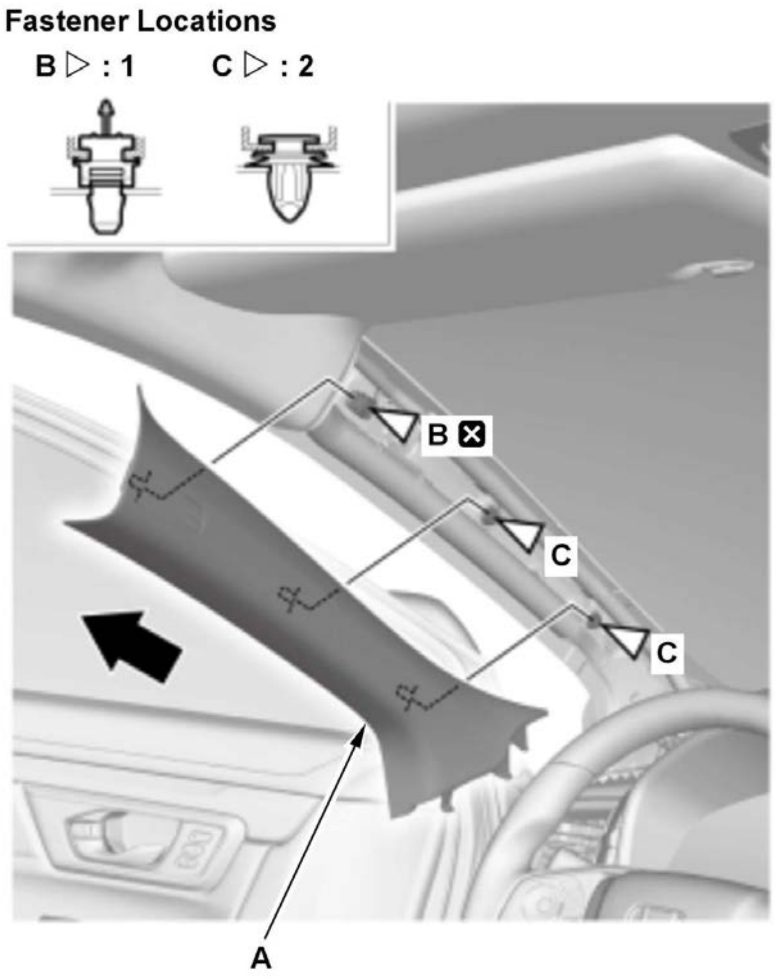 Fastener Locations B ▷ : 1 C ▷ : 2 B ☒ C C A	4. Remove the A-pillar trim (A). **NOTE:** **The upper clip (B, C) will stay in the body.**

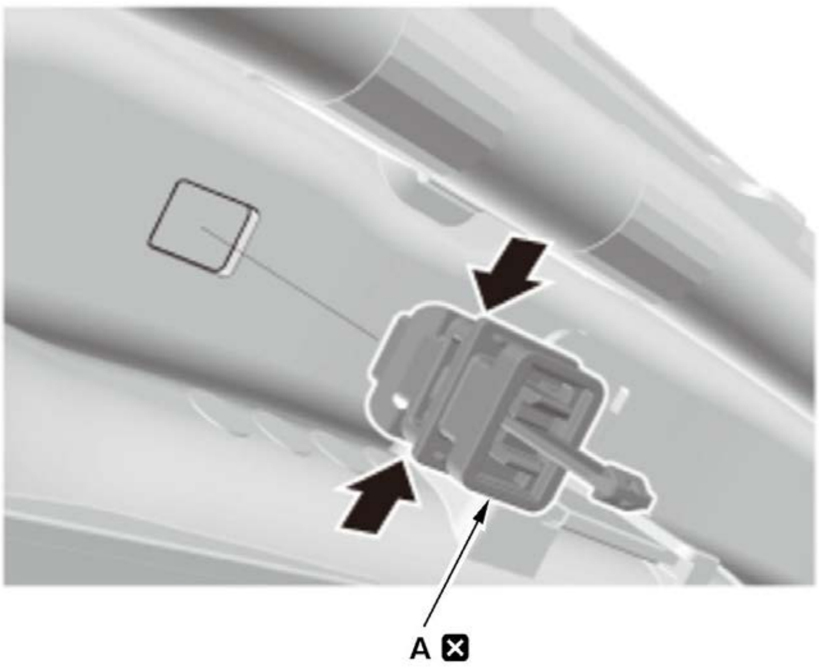	5. Remove the upper clip (A).

2. A-Pillar Trim - Check

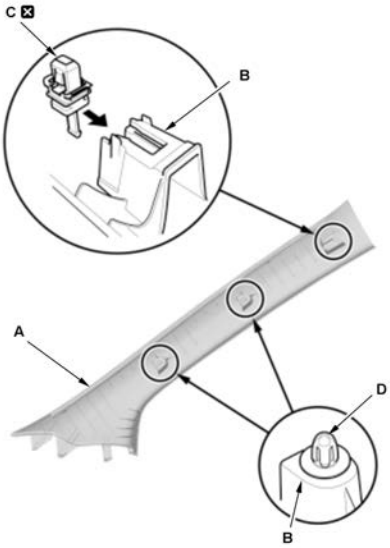 	1. If the side curtain airbag has deployed, replace the A-pillar trim (A) and all the clips on the trim with new parts. 2. If the side curtain airbag has not deployed, check the A-pillar trim and note the following items: • To prevent the side curtain airbags from deploying improperly and possibly causing injury, inspect the A-pillar trim and replace it with a new one if it has any of the following damage: • • - Any cracks, deformations, or stress-whitened areas in the A-pillar trim. • - Any cracks or stress-whitening in the clip seating surfaces (B). • After checking and adjusting the overlap between the headliner and the A-pillar trim, replace the upper clip (C) with a new one. • If the clips (D) are damaged or stress-whitened, replace them with new ones. • Make sure the side curtain airbag is not tucked under the clips or the trim ribs. • Do not push too hard on the A-pillar trim. If you push too hard, the clip will be damaged, and it will not hold the trim properly. • Gently tug on the A-pillar trim to verify that all clips are securely fastened

3. All Removed Parts - Install

1. Install the parts in the reverse order of removal.

4. **Headliner/Pillar Trim Overlap - Check**

B-pillar Upper/Lower Trim

5. **Front Door Sill Trim - Remove**
6. **Rear Door Sill Trim - Remove**
7. B-pillar Lower Trim - Remove

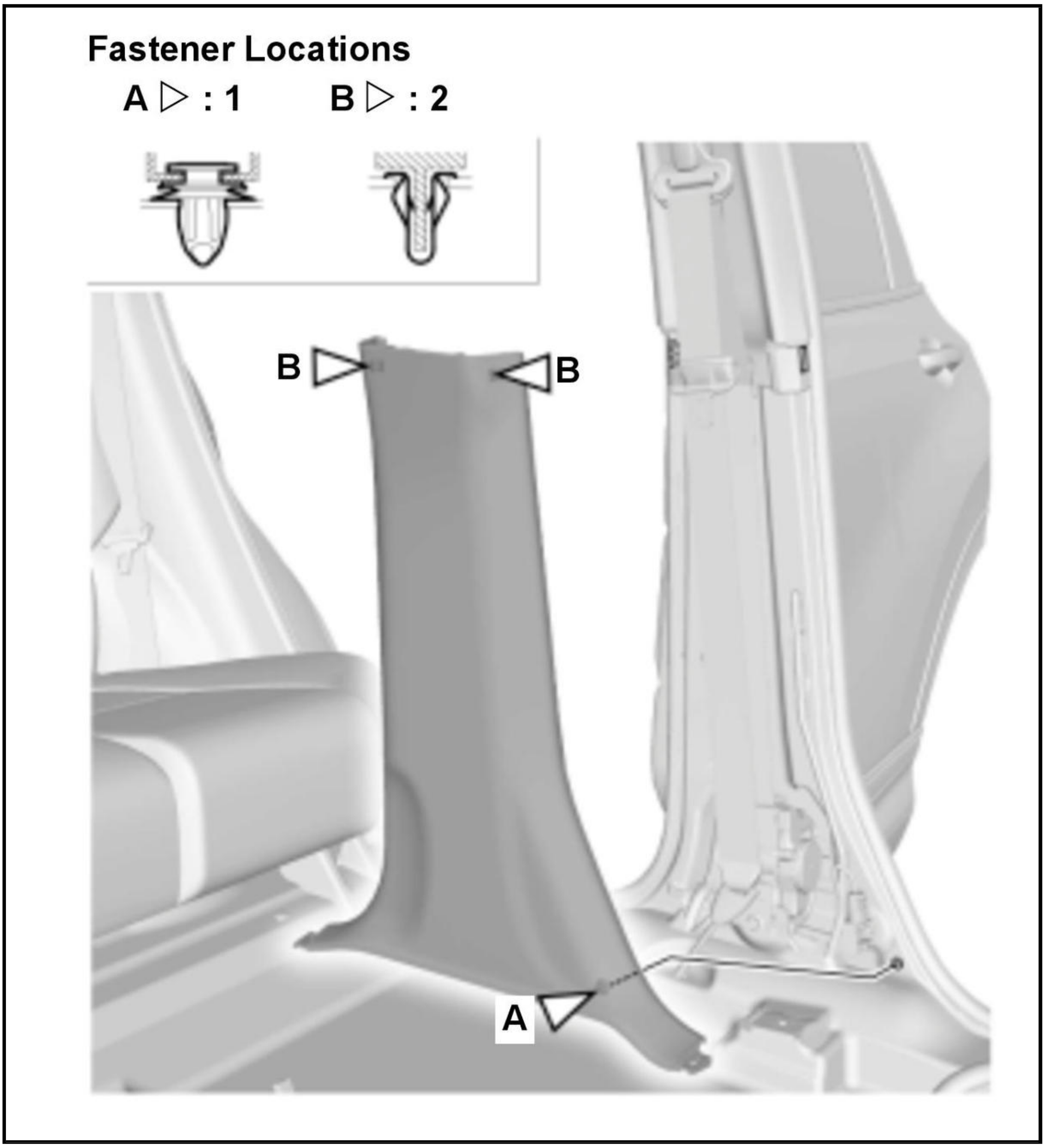
Fastener Locations
A ▷ : 1
B ▷ : 2
B
B
A

8. **Front Seat Belt Upper Anchor Bolt - Remove**

9. B-pillar Upper Trim - Remove

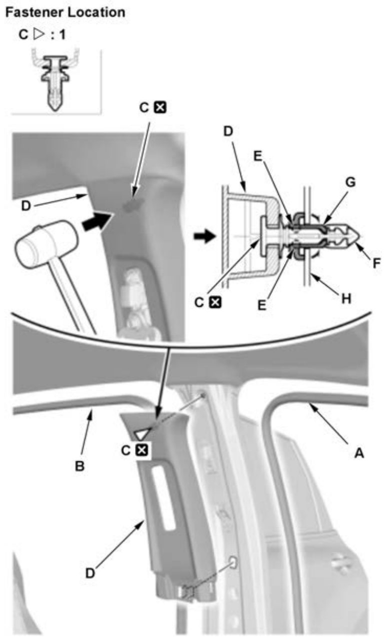

1. Remove the front and the rear door opening seals (A, B) as needed2. Hit the upper clip (C) in the B-pillar upper trim (D) with a rubber mallet. Hitting the clip breaks the projections (E) on the pin (F), and pushes it into the grommet (G) on the body (H).

NOTE:

The upper clip must be replaced with a new one when the B-pillar trim is reinstalled.

10. B-pillar Upper/Lower Trim - Check

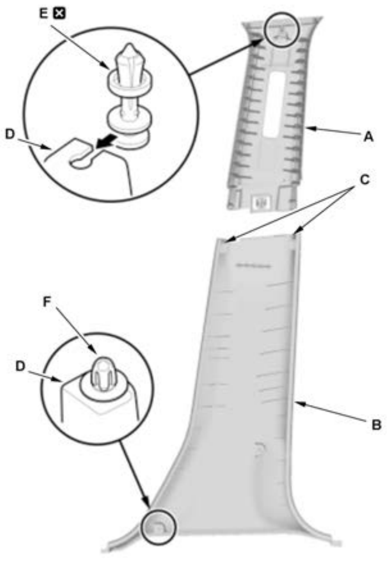

1. If the side curtain airbag has deployed, replace the B-pillar upper trim (A), the B-pillar lower trim (B), and all clips on the trim with new parts.

2. If the side curtain airbag has not deployed, check the B-pillar upper/lower trim and note the following items:

- To prevent the side curtain airbags from deploying improperly and possibly causing injury, inspect the B-pillar upper/lower trims and replace them with new ones if they have any of the following damage:
-
  - -

    Any cracks or deformations in the B-pillar lower trim, or any breakages in the hooks (C) fitted with the B-pillar upper trim.

  - -

    Any cracks or stress-whitening areas in the clip seating surface (D).

- After checking and adjusting the overlap between the headliner and the B-pillar trim, replace the upper clip (E) with a new one.
- If the clip (F) is damaged or stress-whitened, replace it with a new one.

11. All Removed Parts - Install

1. Install the parts in the reverse order of removal.

12. Headliner/Pillar Trim Overlap - Check

Quarter Pillar Trim

13. Rear Roof End Trim - Remove

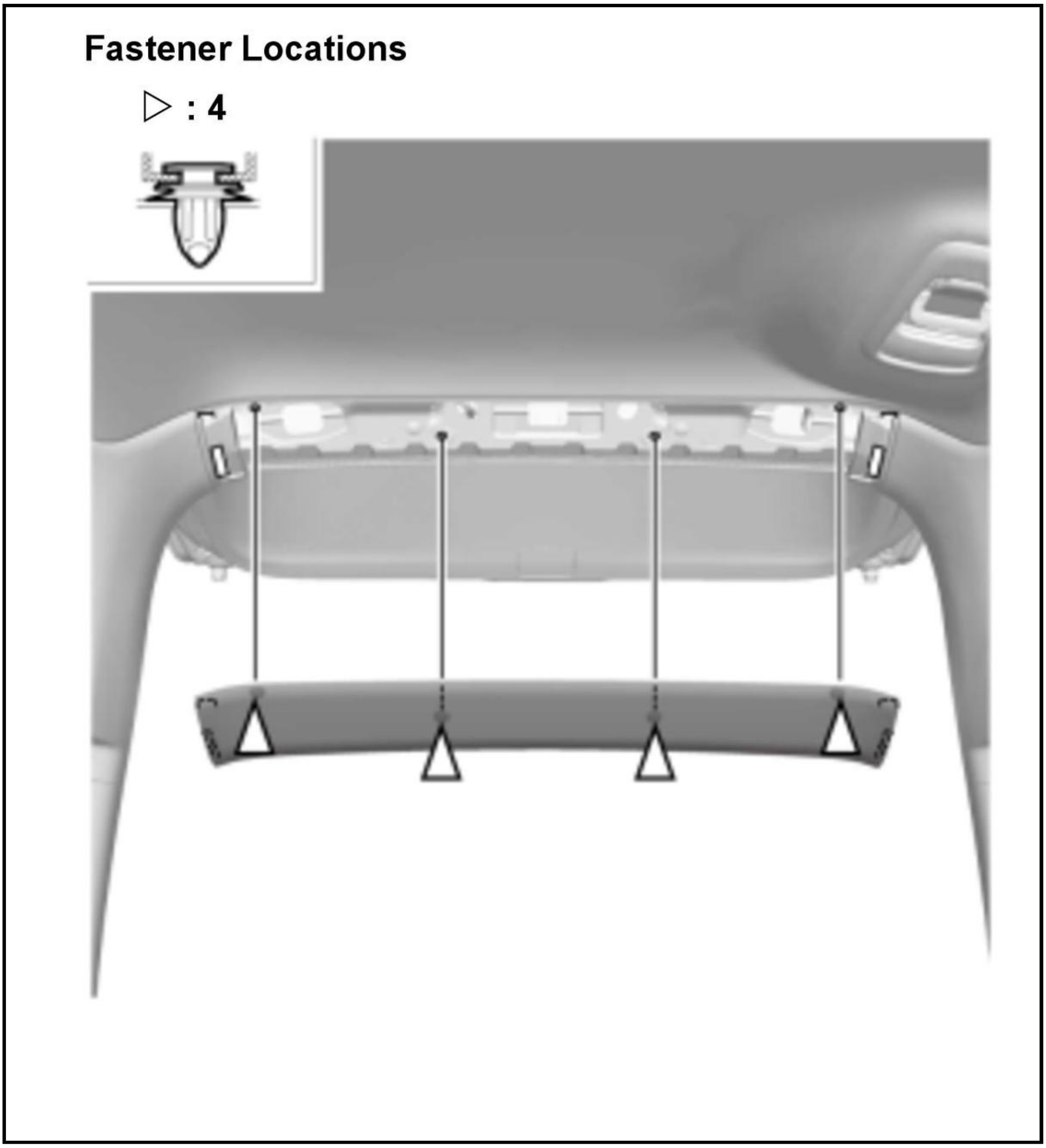
Fastener Locations
▷ : 4

14. Rear Seat Belt Lower Anchor Bolt - Remove
15. Rear Side Trim Panel - Remove
16. Quarter Pillar Trim - Remove

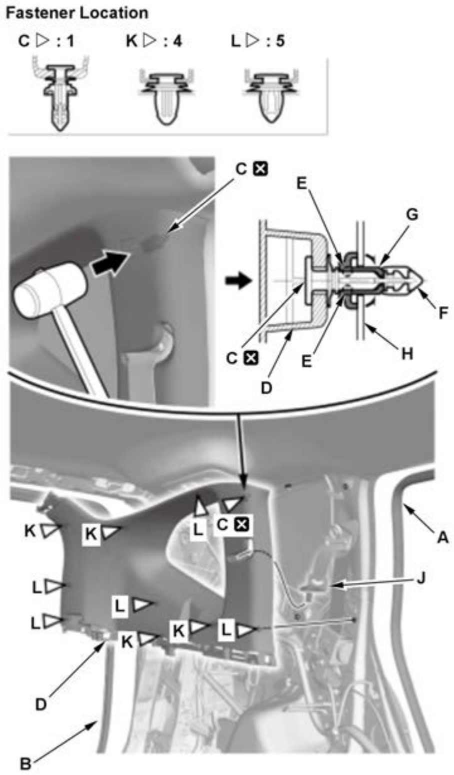

1. Remove the rear door opening seal (A) and the tailgate weatherstrip (B) as needed.

2. Hit the upper clip (C) in the quarter pillar trim (D) with a rubber mallet. Hitting the clip breaks the projections (E) on the pin (F), and pushes it into the grommet (G) on the body (H).

NOTE:

The upper clip must be replaced with a new one when the quarter pillar trim is reinstalled.

3. Pull back the quarter pillar trim.

4. Pass the second row seat belt lower anchor (J) through the hole in the quarter pillar trim.

17. Quarter Pillar Trim - Check

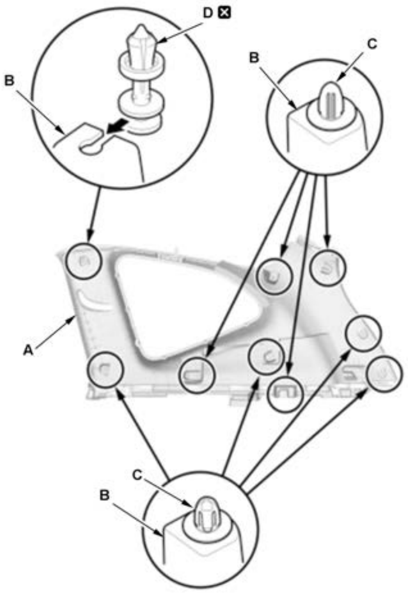

1. If the side curtain airbag has deployed, replace the quarter pillar trim (A) and all clips on the trim with new parts.

2. If the side curtain airbag has not deployed, check the quarter pillar trim and note the following items:

- To prevent the side curtain airbags from deploying improperly and possibly causing injury, inspect the quarter pillar trim and replace it with a new one if it has any of the following damage:
-
    - -

      Any cracks, deformations, or stress-whitened areas in the quarter pillar trim.
    - -

      Any cracks or stress-whitening in the clip seating surfaces (B).
- If the clips (C) are damaged or stress-whitened, replace them with new ones.
- After checking and adjusting the overlap between the headliner and the quarter pillar trim, replace the upper clip (D) with a new ones.
- Make sure the side curtain airbag is not tucked under the clips or the trim ribs.
- Gently tug on the quarter pillar trim to verify that all clips are securely fastened.

18. All Removed Parts - Install

    1. Install the parts in the reverse order of removal.

19. **Headliner/Pillar Trim Overlap - Check**

INTERIOR TRIM REMOVAL AND INSTALLATION - REAR SIDE AREA

Removal and Installation

1. **Rear Trim Panel - Remove**
2. Rear Door Opening Seal - Remove

    1. **Remove the rear door opening seal as needed**.

3. Tailgate Weatherstrip - Remove

    1. **Remove the tailgate weatherstrip as needed** .

4. **Rear Seat - Remove**
5. Rear Side Trim Panel - Remove

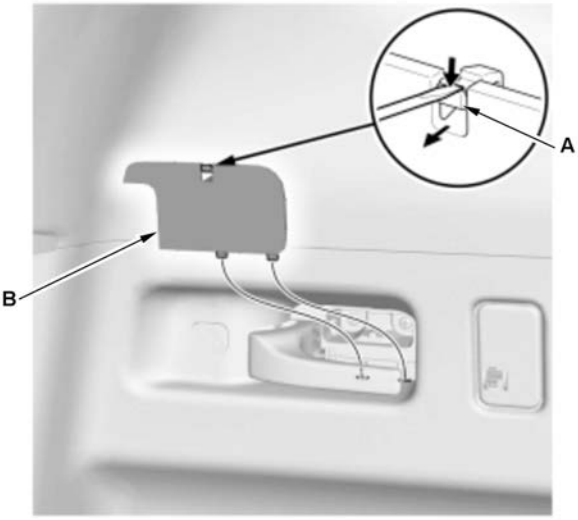	1. Push down on the upper hook (A) on the rear seat release lever cap (B) with a trim tool, then remove the rear seat release lever cap.
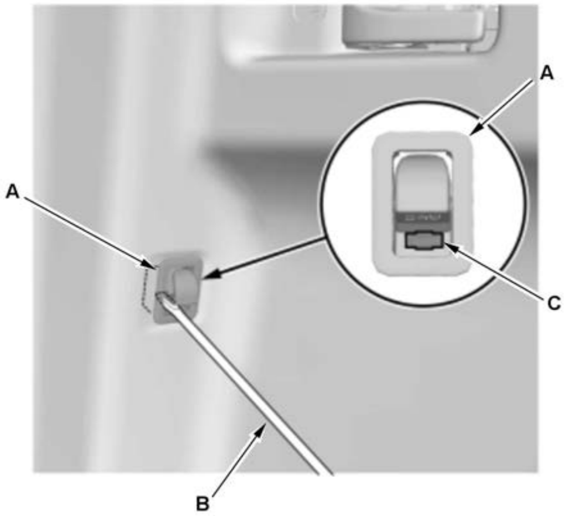	2. Turn the hook (A) up and using a small flat tip screwdriver (B), push in the white release tab (C) while pulling out the trunk hook.

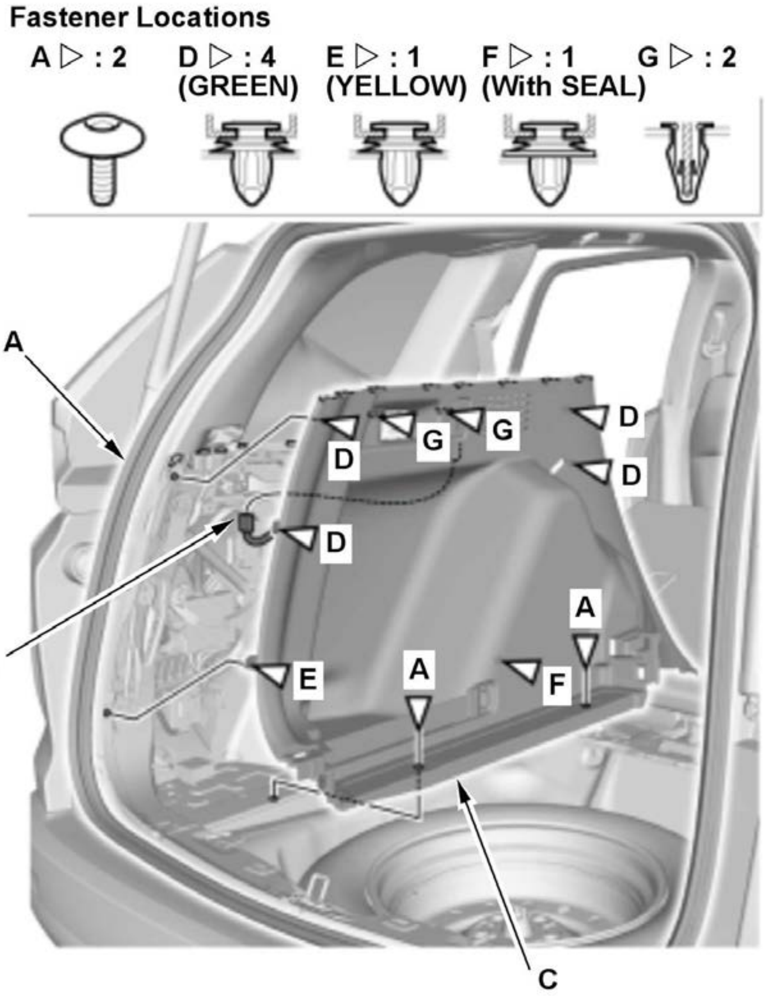
Fastener Locations
A ▷ : 2
D ▷ : 4 (GREEN)
E ▷ : 1 (YELLOW)
F ▷ : 1 (With SEAL)
G ▷ : 2
A
D
G
G
D
D
D
B
A
A
E
F
C

3. Remove the clips (A).

4. Disconnect the connector (B).

5. Remove the rear side trim panel (C).

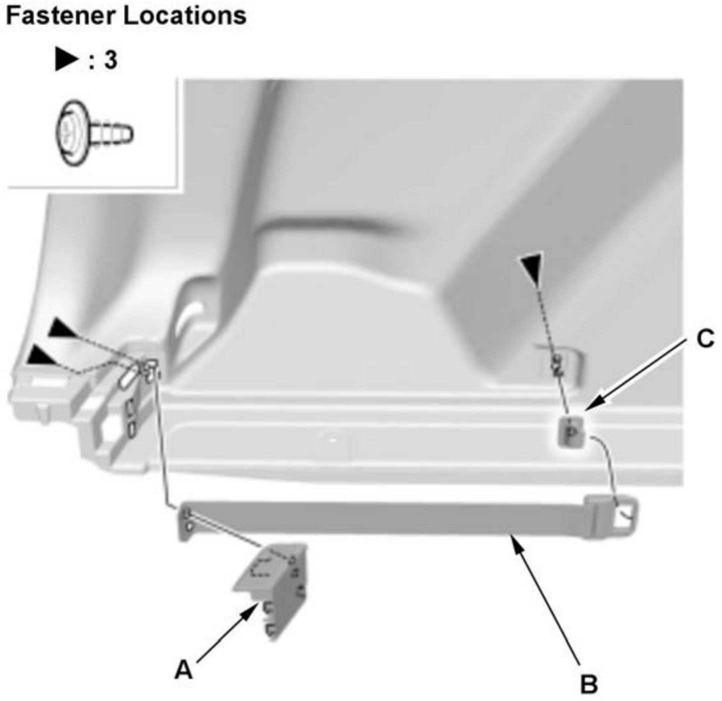
Fastener Locations
▶ : 3
C
A
B

6. If necessary remove the lid (A), band (B) and hook (C).

6. All Removed Parts - Install

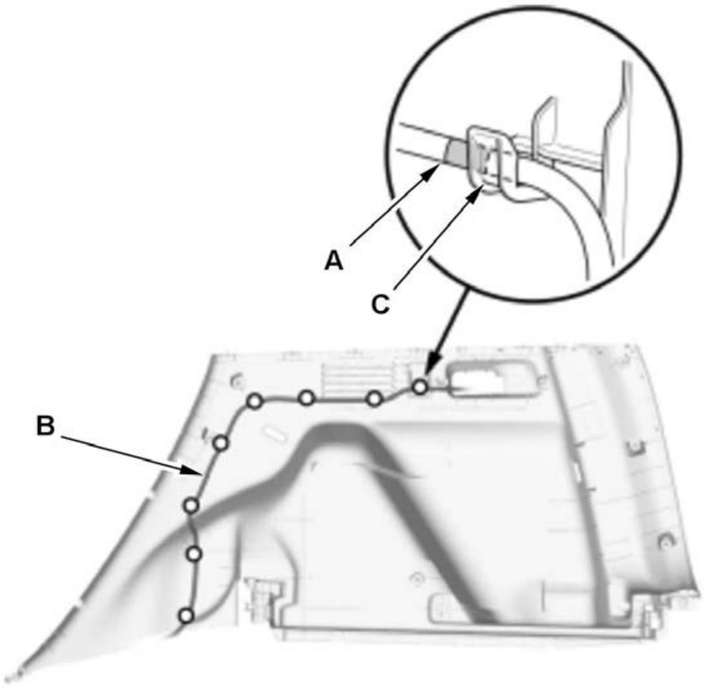	1. Install the parts in the reverse order of removal. **NOTE:** **Align the marks (A) on the rear seat release cable (B) with the clips (C) as shown.**

INTERIOR TRIM REMOVAL AND INSTALLATION - TAILGATE AREAS

Removal and Installation

1. Tailgate Upper Trim Panel - Remove

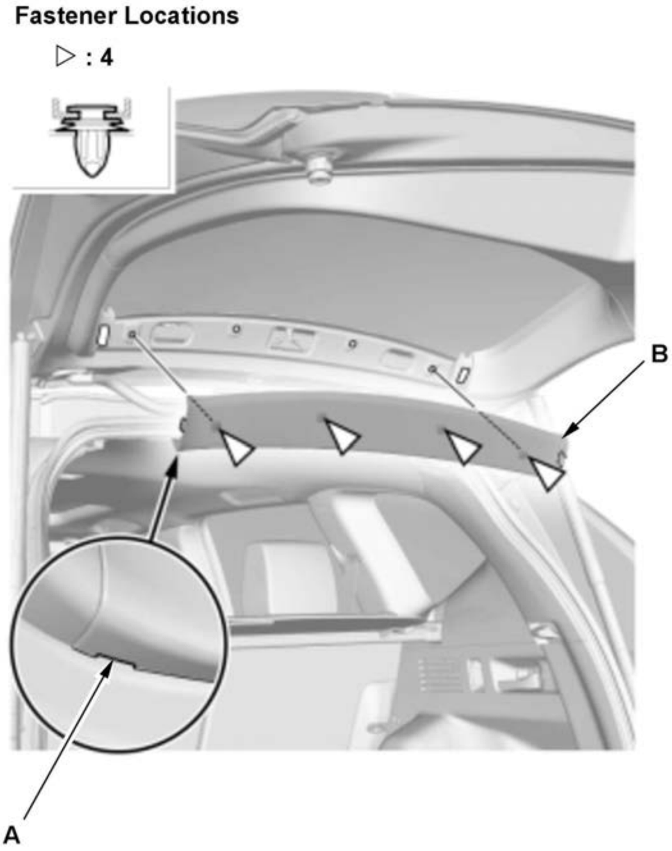	1. Pry out on the notch (A) in the tailgate upper trim panel (B) with the trim tool.

2. Both Tailgate Side Trim Panels - Remove

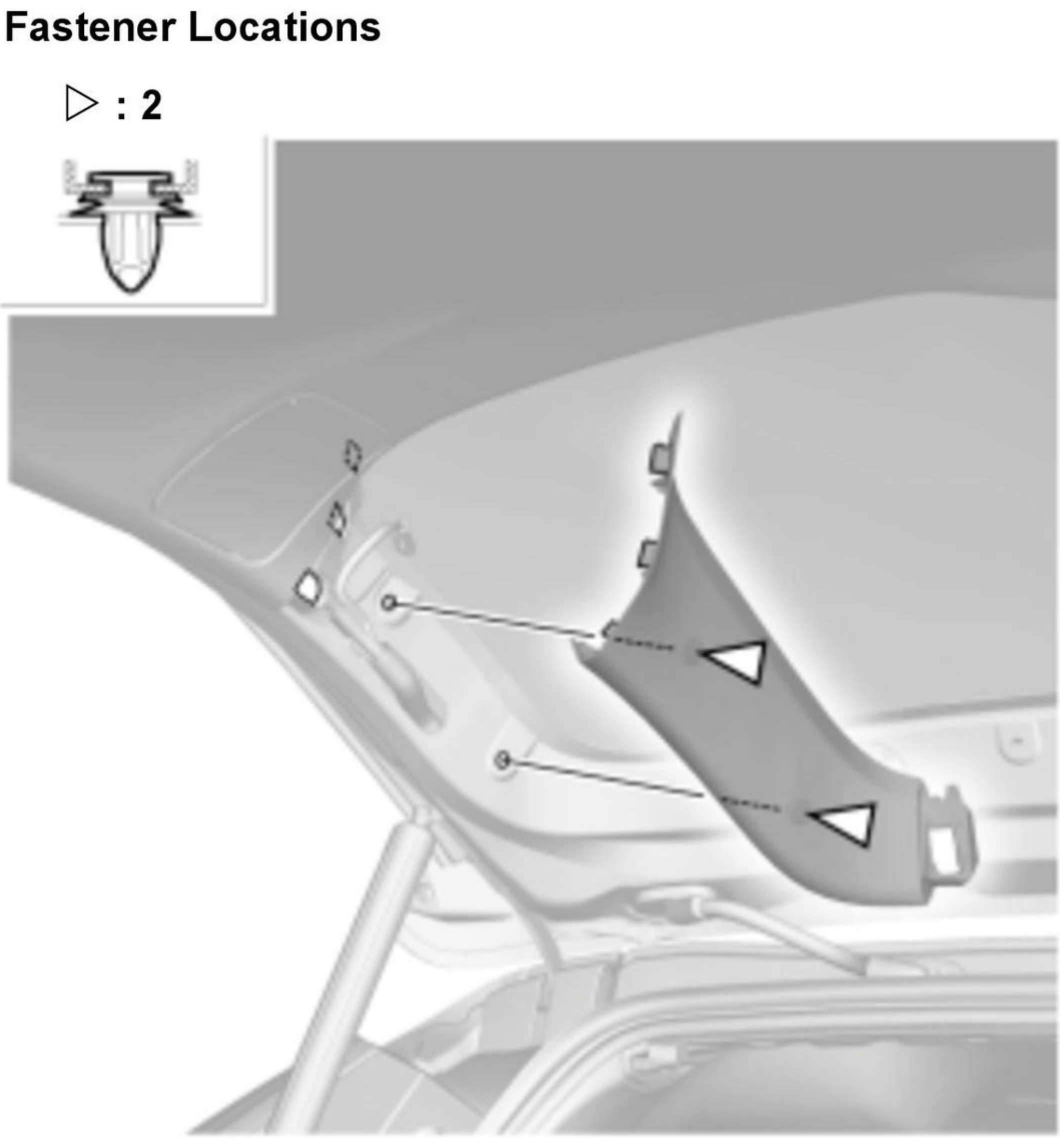
Fastener Locations
▷ : 2

3. Tailgate Lower Trim Panel - Remove

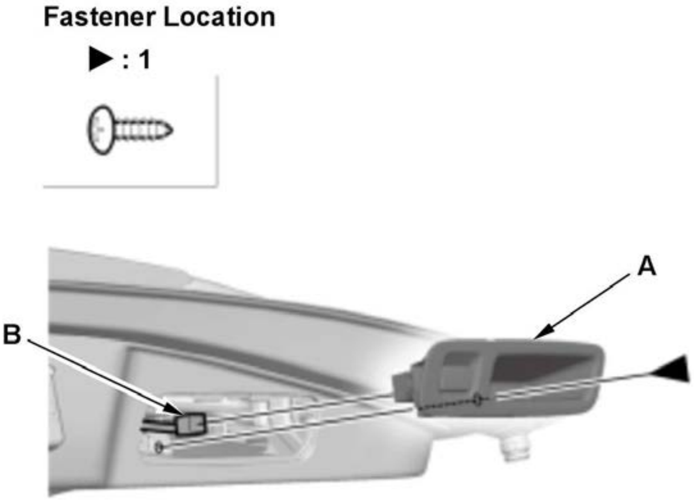
Fastener Location
▶ : 1
A
B

1. Remove the tailgate pull pocket (A).

2. For some models: Disconnect the connector (B).

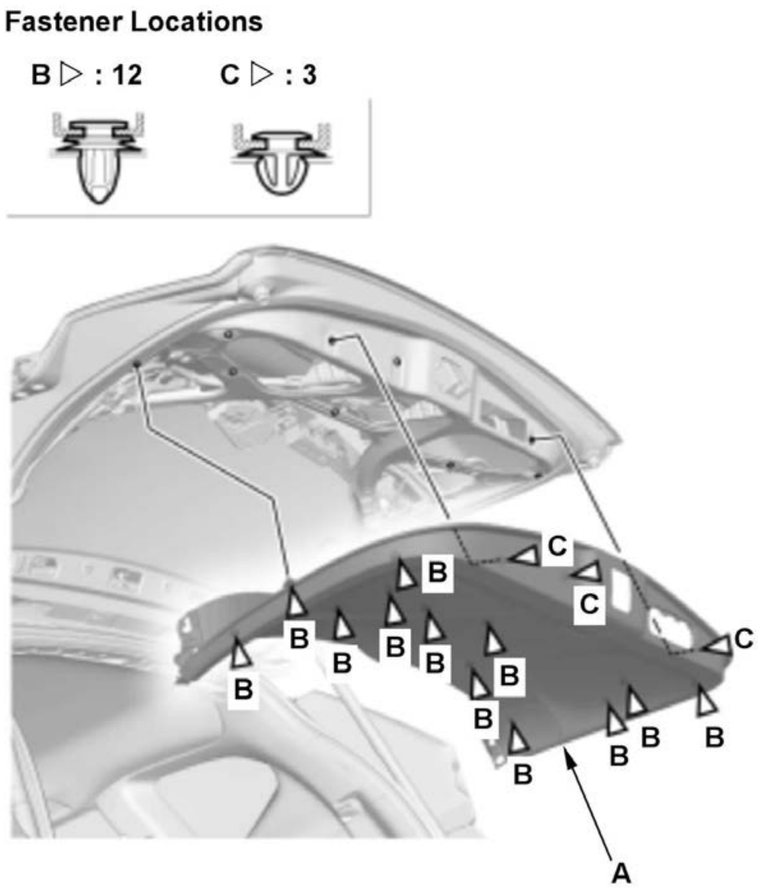 Fastener Locations B ▷ : 12 C ▷ : 3 B C C C A	3. Remove the tailgate lower trim panel (A).

4. All Removed Parts - Install

1. Install the parts in the reverse order of removal.

SHIFT LEVER PANEL REMOVAL AND INSTALLATION

Removal and Installation

1

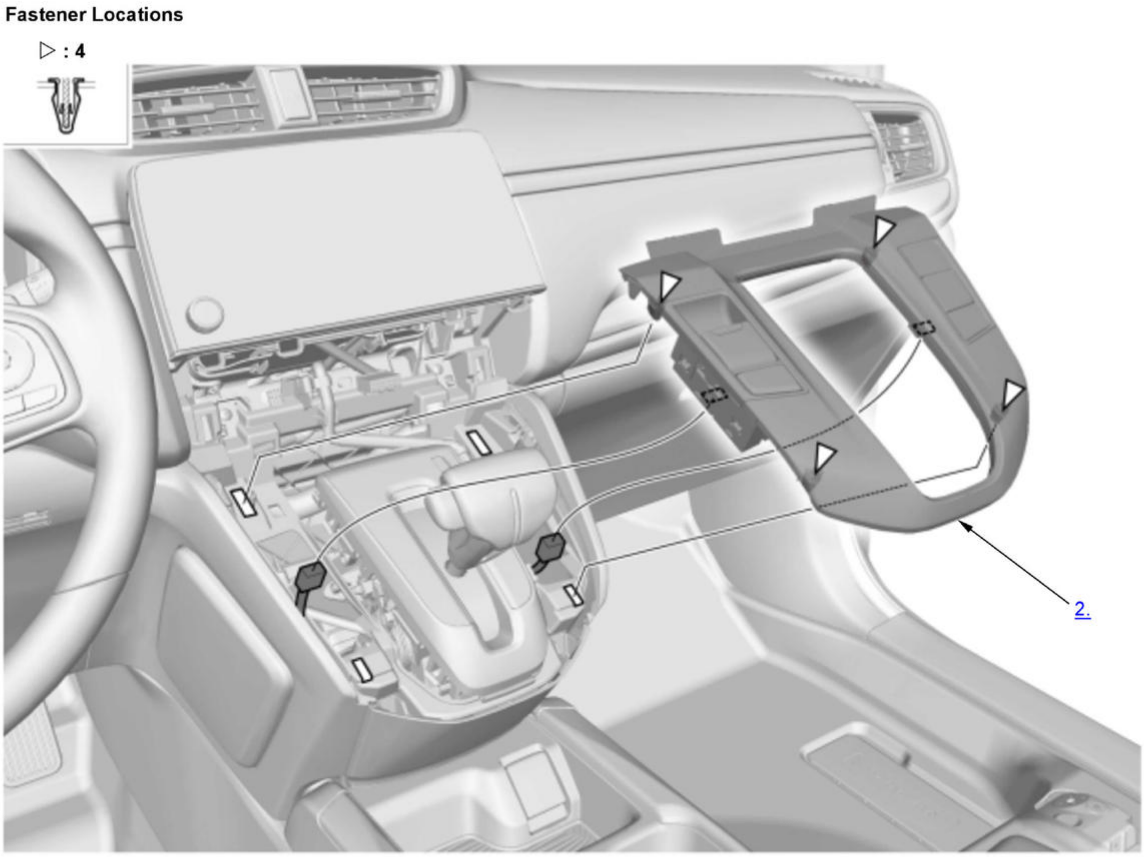

1. Climate Control Panel - Remove
2. Shift Lever Panel - Remove
3. All Removed Parts - Install

1. Install the parts in the reverse order of removal.

STEERING COLUMN COVER REMOVAL AND INSTALLATION

Removal and Installation

1

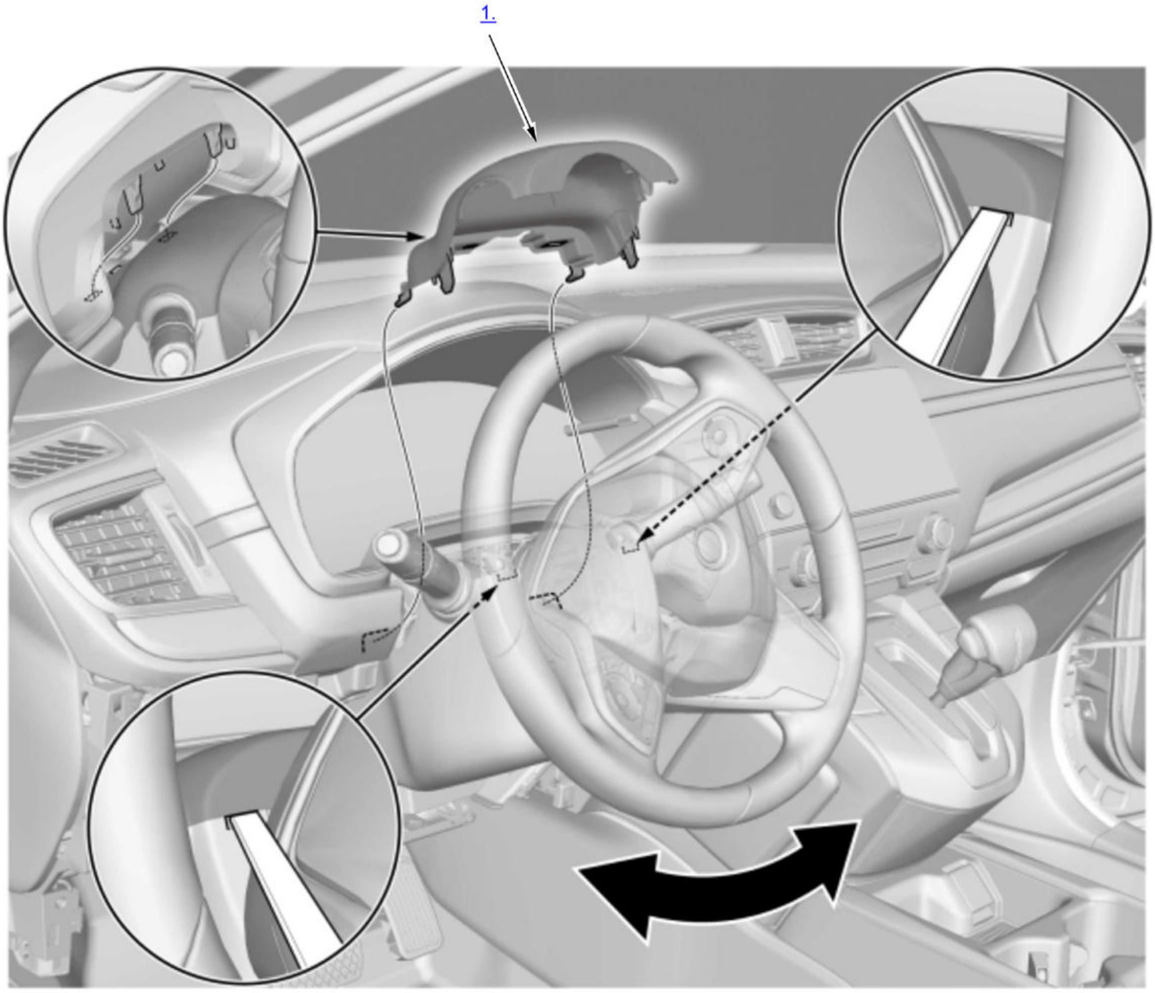
1.

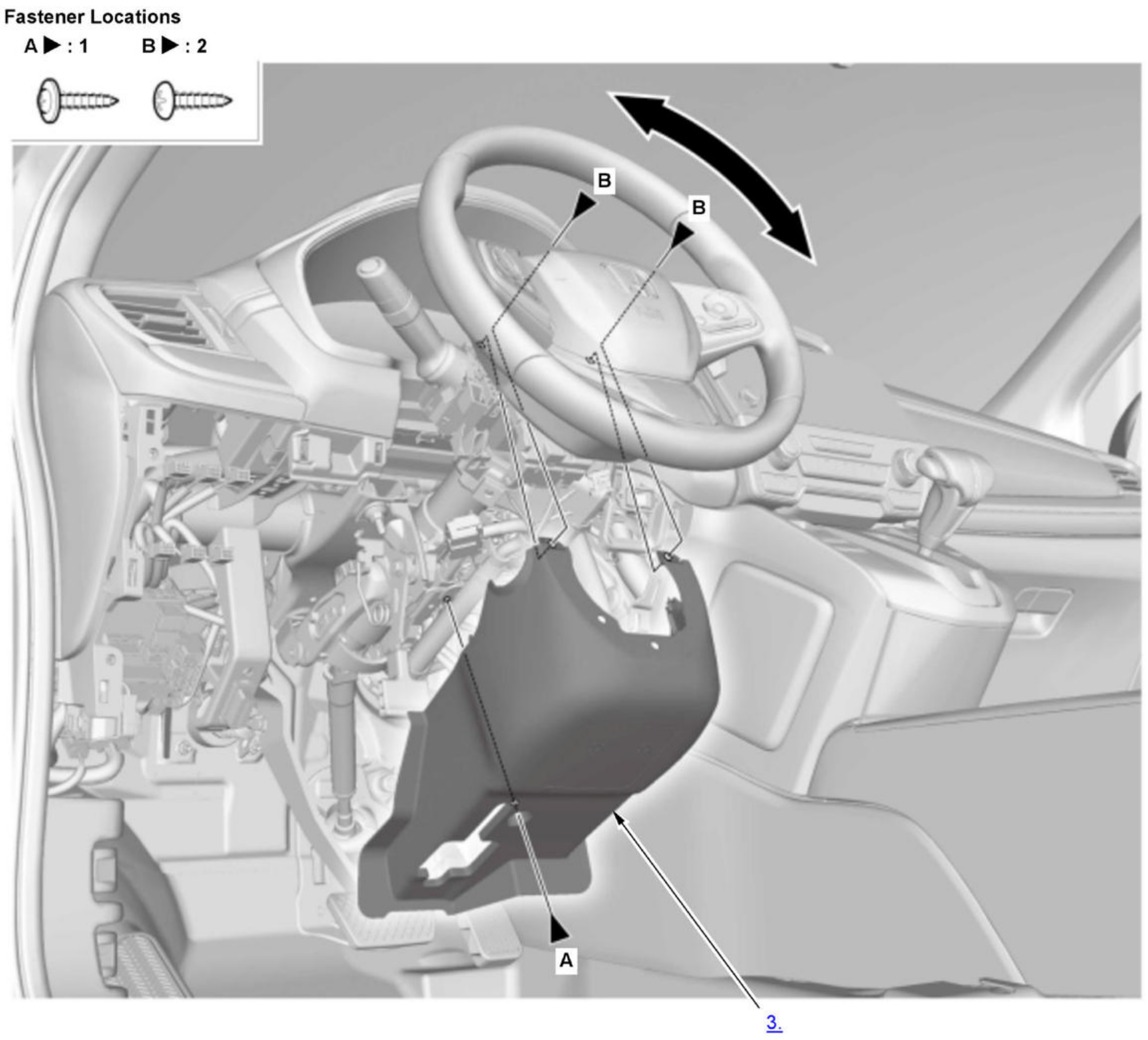

1. Upper Column Cover - Remove
2. **Driver's Dashboard Lower Cover - Remove**
3. Lower Column Cover - Remove
4. All Removed Parts - Install

   1. Install the parts in the reverse order of removal.

SUNVISOR REMOVAL AND INSTALLATION

Removal and Installation

1. Sunvisor - Remove

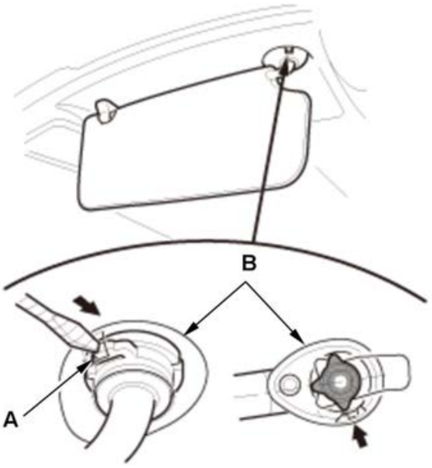

1. Push the hook (A) with a flat-tip screwdriver through the hole in the front side of the bracket cover (B).

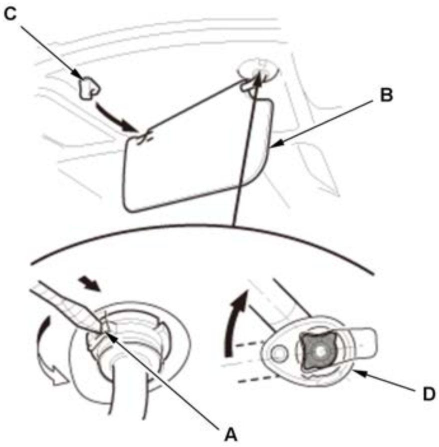

2. While pushing in the hook (A) with a flat-tip screwdriver, release the sunvisor (B) from the holder (C), and rotate the sunvisor backward 45 deg..

NOTE:

Make sure the hook slides into the bracket cover (D) as you rotate the sunvisor.

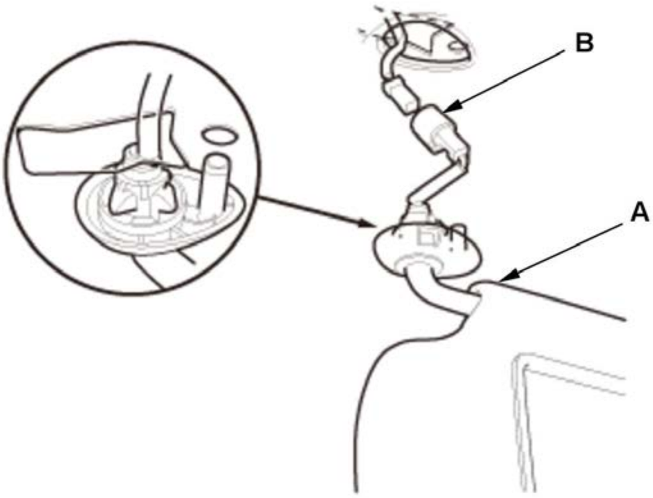

3. Remove the sunvisor (A).

4. For some models: Disconnect the connector (B).

2. Sunvisor Holder - Remove

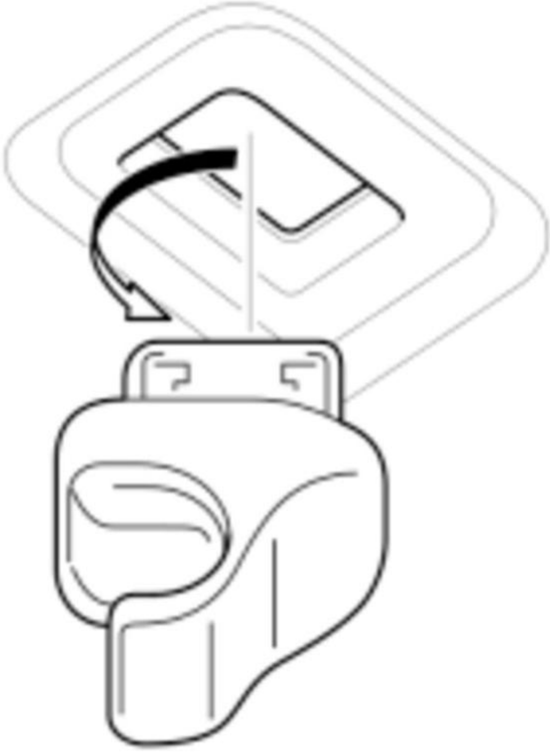

3. Sunvisor - Check

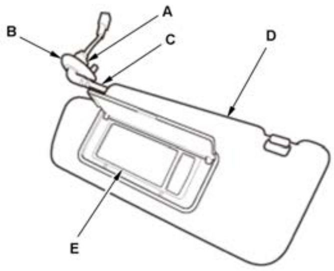	1. If the side curtain airbag has deployed, replace the sunvisor, along with the other parts listed for side curtain airbag deployment. 2. If the side curtain airbag has not deployed, inspect the sunvisor for damage. A damaged sunvisor may cause the side curtain airbags to deploy improperly, possibly causing injury. Replace the sunvisor if it has any of the following damage: - Any cracks in the sunvisor bracket (A) - Any cracks in the sunvisor bracket cover (B) - Any bends or cracks in the sunvisor shaft (C) - Any cracks in the sunvisor base (D) - Any cracks in the vanity mirror base (E) 3. If the sunvisor holder is damaged or stress-whitened, replace it with new one.

4. All Removed Parts - Install

1. Install the parts in the reverse order of removal.

DTC TROUBLESHOOTING

DTC B1926

DTC B1926 : Backup Control Antenna Open or Short

NOTE: If you are troubleshooting multiple DTCs, be sure to follow the instructions in B-CAN System Diagnosis Test Mode A .

DTC Description	DTC
B1926 Backup Control Antenna Open or Short	B

DTC (Keyless Access Backup Control Unit)

1. Problem verification

   -1. Clear the DTCs with the HDS.

   -2. Touch the power switch with the keyless remote. The buttons on the keyless remote should be facing you.

   -3. While holding the keyless remote against the power switch, do this procedure ten times without pressing the brake pedal: Press the power switch to select the OFF (LOCK), ACCESSORY, ON, and OFF (LOCK) mode.

   -4. Check for DTCs with the HDS.

DTC Description	DTC
B1926 Backup Control Antenna Open or Short	B

   Is DTC B1926 indicated?

   YES

   Replace the power switch .

   NO

   Intermittent failure, the system is OK at this time. Check for loose or poor connections.

DTC U1280 (KEYLESS ACCESS BACKUP CONTROL UNIT)

DTC U1280 : B-CAN communication bus line error (BUS-OFF)

NOTE: If you are troubleshooting multiple DTCs, be sure to follow the instructions in B-CAN System Diagnosis Test Mode A .

DTC Description	DTC
U1280 B-CAN communication bus line error (BUS-OFF)	B

DTC (Keyless Access Backup Control Unit)

1. Problem verification

-1. Clear the DTCs with the HDS.

-2. Turn the vehicle to the OFF (LOCK) mode and then the ON mode.

-3. Wait for at least 6 seconds.

-4. Check for DTCs with the HDS.

DTC Description	DTC
U1280 B-CAN communication bus line error (BUS-OFF)	B

Is DTC U1280 indicated?

YES

Go to body control module DTC U1280 troubleshooting .

NO

Intermittent failure, the system is OK at this time. Check for loose or poor connections.

DTC U128D (KEYLESS ACCESS BACKUP CONTROL UNIT)

DTC U128D : Backup Control Unit Lost Communication with Gauge Control Module

NOTE:

- If you are troubleshooting multiple DTCs, be sure to follow the instructions in **B-CAN System Diagnosis Test Mode A** .
- Refer to the DTC code shown on the display, and then inspect the connectors and terminals based on the instructions in the table below.
- The DTC may be stored due to the grounding failure or the power source failure at the transmitting control unit (the grounding inspection and the power source inspection on each control unit are required prior to this checking process).

DTC Description	DTC
U128D Backup Control Unit Lost Communication with Gauge Control Module	B

DTC (Keyless Access Backup Control Unit)

1. Problem verification

-1. Clear the DTC with the HDS.

-2. Turn the vehicle to the OFF (LOCK) mode and then the ON mode.

-3. Wait for at least 6 seconds.

-4. Check for DTCs with the HDS.

DTC Description	DTC
U128D Backup Control Unit Lost Communication with Gauge Control Module	B

Are any DTCs indicated?

YES

Go to step 2.

NO

Intermittent failure, the system is OK at this time. Check for poor connections or loose terminals.

2. Open wire check (B-CAN_H line, B-CAN_L line)

-1. Turn the vehicle to the OFF (LOCK) mode.

-2. Disconnect the receiving control unit connector.

Body control module connector B (36P)

-3. Disconnect the transmitting control unit connector(s).

Refer to the DTC shown on the display, then disconnect the connector(s) based on the instructions (see table).

DTC	Connector
U128D	Gauge control module connector A (32P)

-4. Measure the resistance between the receiving control unit and the transmitting control unit on the B-CAN_H circuit and the B-CAN_L circuit.

Test condition	Vehicle OFF (LOCK) mode Body control module connector B (36P): disconnected Transmitting control unit connector(s) for indicated DTCs: disconnected

DTC	Circuit name	Receiving control unit		Transmitting control unit	
		Connector	Terminal	Connector	Terminal
U128D	B-CAN_H	Body control module connector B (36P)	No. 20	Gauge control module connector A (32P)	No. 30
	B-CAN_L		No. 21		No. 31

Is there 1.0 Ω or less?

YES

The B-CAN_H wire and the B-CAN_L wire are OK.

Refer to the DTC shown on the display, then replace the control unit based on the instructions (see table).

DTC	Operation for transmitting control unit
U128D	Gauge control module

NO

Repair an open in the B-CAN_H wire and/or the B-CAN_L wire.

DTC TROUBLESHOOTING

DTC B12C5

DTC B12C5 : Engine Start/Stop Switch (Power Switch) Failure

NOTE: If you are troubleshooting multiple DTCs, be sure to follow the instructions in B-CAN System Diagnosis Test Mode A .

DTC Description	DTC
B12C5 Engine Start/Stop Switch (Power Switch) Failure	B

DTC (Keyless Access Power Control Unit)

1. Problem verification

   -1. Clear the DTCs with the HDS.

   -2. Press the power switch at least twenty times, then wait for at least 20 seconds.

   -3. Check for DTCs with the HDS.

DTC Description	DTC
B12C5 Engine Start/Stop Switch (Power Switch) Failure	B

   Is DTC B12C5 indicated?

   YES

   Go to step 2.

   NO

   Intermittent failure, the system is OK at this time. Check for loose or poor connections.

2. Determine possible failure area (+B_SMART line, GND line, other)

   -1. Turn the vehicle to the OFF (LOCK) mode.

   -2. Disconnect the following connector.

Power switch 10P connector

   -3. Measure the voltage between test points 1 and 2.

Test condition	Vehicle OFF (LOCK) mode Power switch 10P connector: disconnected
Test point 1	Power switch 10P connector (female terminals) No. 5: ①
Test point 2	Power switch 10P connector (female terminals) No. 1: ①

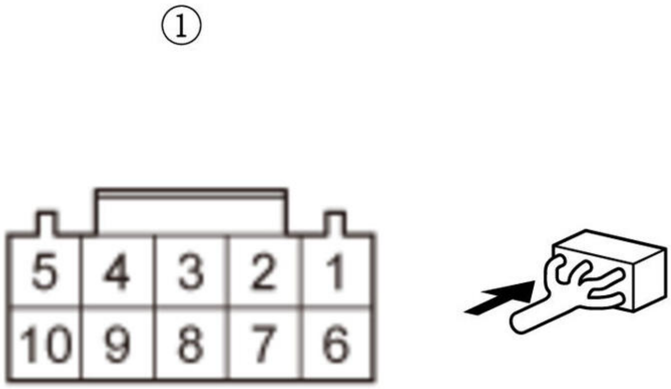

Is there battery voltage?

YES

The +B_SMART and GND wires are OK. Go to step 3.

NO

Go to step 6.

3. Shorted wire check (SS1 (+), SS2 (-) lines)

-1. Disconnect the following connector.

Body control module connector G (32P)

-2. Measure the resistance between test points 1 and 2.

Test condition	Vehicle OFF (LOCK) mode Power switch 10P connector: disconnected Body control module connector G (32P): disconnected
Test point 1	Power switch 10P connector (female terminals) No. 6: ①
Test point 2	Body ground

Test point 1	Power switch 10P connector (female terminals) No. 10: ①
Test point 2	Body ground

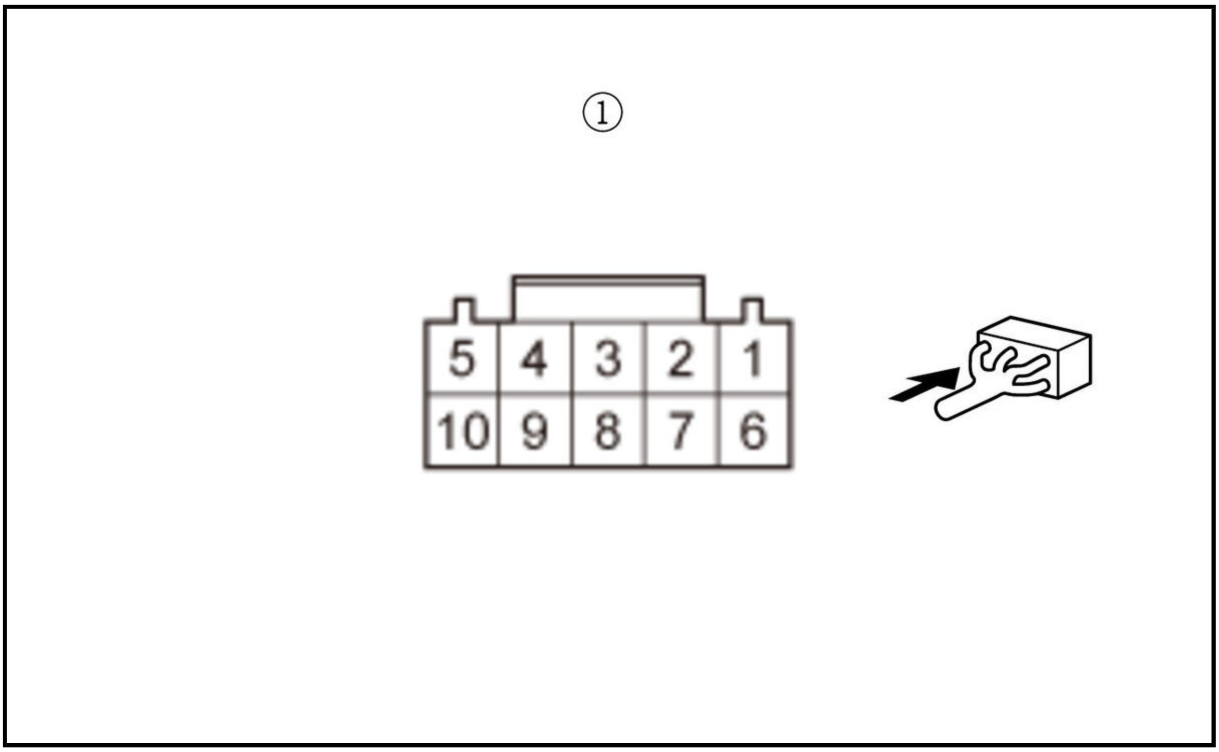

Is there 1.0 MΩ or more?

YES

The SS1 (+) and SS2 (-) wires are not shorted. Go to step 4.

NO

Repair short to ground in the wire.

4. Open wire check (SS1 (+), SS2 (-) lines)

-1. Measure the resistance between test points 1 and 2.

Test condition	Vehicle OFF (LOCK) mode Power switch 10P connector: disconnected Body control module connector G (32P): disconnected
Test point 1	Power switch 10P connector (female terminals) No. 6: ①
Test point 2	**Body control module connector G (32P) No. 18**

Test point 1	Power switch 10P connector (female terminals) No. 10: ①
Test point 2	**Body control module connector G (32P) No. 9**

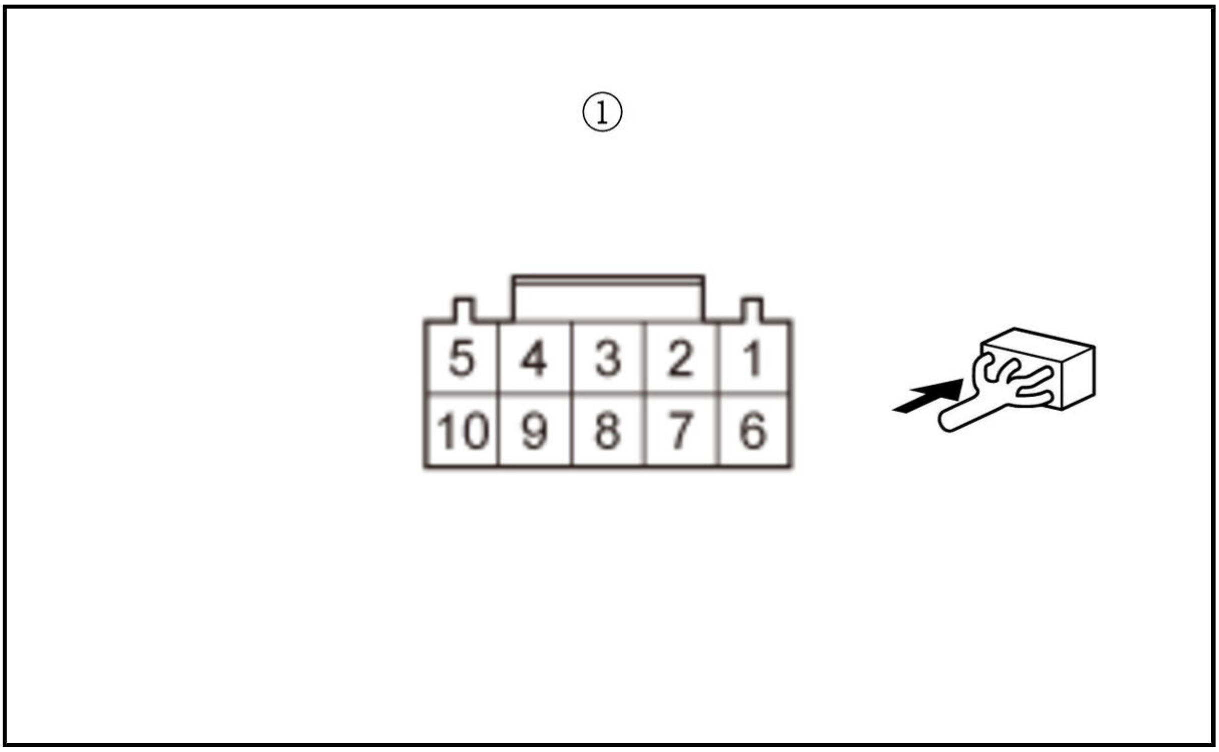

Is there 1.0 Ω or less?

YES

The SS1 (+) and SS2 (-) wires are OK. Go to step 5.

NO

Repair an open or high resistance in the wire.

5. Power switch check

-1. Do the power switch test .

Is the power switch OK?

YES

Replace the body control module .

NO

Replace the power switch .

6. Open wire check (+B_SMART line)

-1. Measure the voltage between test points 1 and 2.

Test condition	Vehicle OFF (LOCK) mode Power switch 10P connector: disconnected Body control module connector G (32P): disconnected
Test point 1	Power switch 10P connector (female terminals) No. 5: ①
Test point 2	Body ground

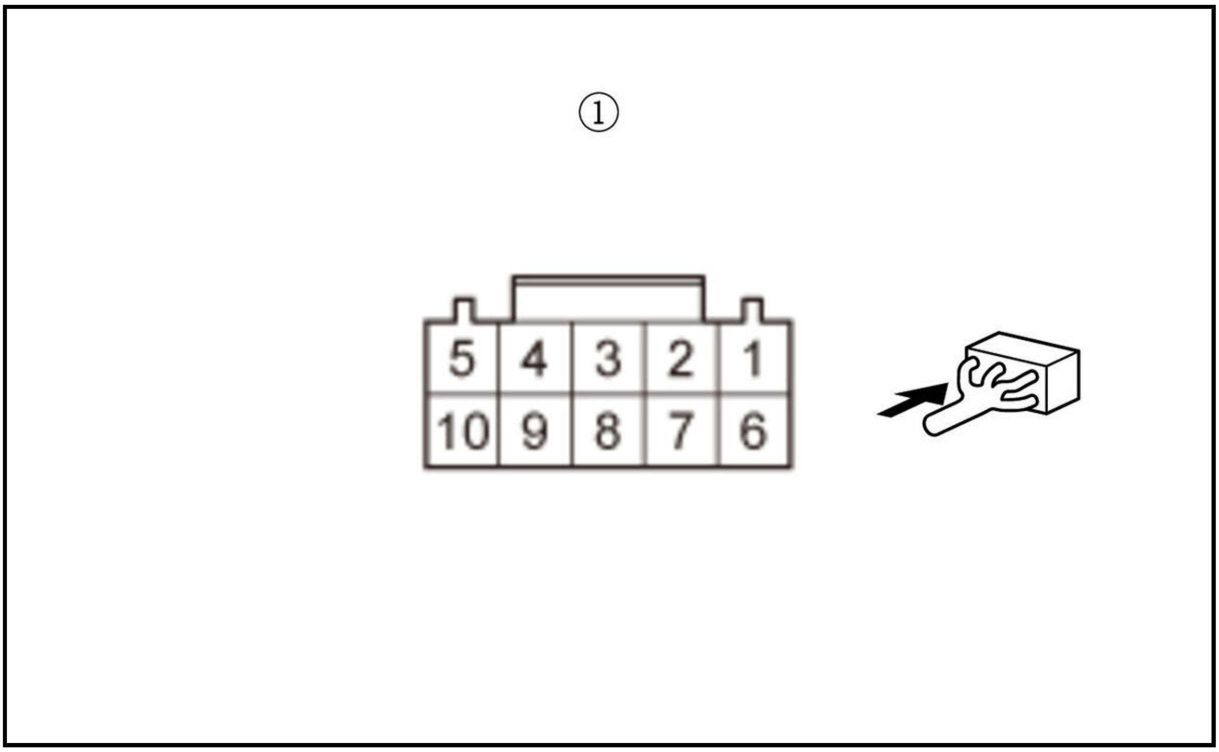

Is there battery voltage?

YES

Repair an open or high resistance in the GND wire.

NO

Repair an open or high resistance in the +B_SMART wire.

DTC B12D0

DTC B12D0 : Power Control Unit IG1A Circuit Error

NOTE:

- If you are troubleshooting multiple DTCs, be sure to follow the instructions in **B-CAN System Diagnosis Test Mode A** .
- Make sure aftermarket accessories are not installed.

DTC Description	DTC
B12D0 Power Control Unit IG1A Circuit Error	B

DTC (Keyless Access Power Control Unit)

1. Problem verification

   -1. Clear the DTCs with the HDS.

   Do this procedure five times.

   - Turn the vehicle to the OFF (LOCK) mode and wait for at least 10 seconds.
   - Turn the vehicle to the ACCESSORY mode and wait for at least 10 seconds.
   - Turn the vehicle to the ON mode and wait for at least 10 seconds.

   -3. Check for DTCs with the HDS.

DTC Description	DTC
B12D0 Power Control Unit IG1A Circuit Error	B

Is DTC B12D0 indicated?

YES

Replace the body control module .

NO

Intermittent failure, the system is OK at this time. Check for loose or poor connections.

DTC B12D1

DTC B12D1 : Power Control Unit IG1B Circuit Error

NOTE:

- If you are troubleshooting multiple DTCs, be sure to follow the instructions in **B-CAN System Diagnosis Test Mode A** .
- Make sure aftermarket accessories are not installed.

DTC Description	DTC
B12D1 Power Control Unit IG1B Circuit Error	B

DTC (Keyless Access Power Control Unit)

1. Problem verification

-1. Clear the DTCs with the HDS.

Do this procedure five times.

- Turn the vehicle to the OFF (LOCK) mode and wait for at least 10 seconds.
- Turn the vehicle to the ACCESSORY mode and wait for at least 10 seconds.
- Turn the vehicle to the ON mode and wait for at least 10 seconds.

-3. Check for DTCs with the HDS.

DTC Description	DTC
B12D1 Power Control Unit IG1B Circuit Error	B

Is DTC B12D1 indicated?

YES

Replace the body control module .

NO

Intermittent failure, the system is OK at this time. Check for loose or poor connections.

DTC B12D2

DTC B12D2 : Power Control Unit IG2 Circuit Error

NOTE:

- If you are troubleshooting multiple DTCs, be sure to follow the instructions in B-CAN System Diagnosis Test Mode A .
- Make sure aftermarket accessories are not installed.

DTC Description	DTC
B12D2 Power Control Unit IG2 Circuit Error	B

DTC (Keyless Access Power Control Unit)

1. Problem verification

-1. Clear the DTCs with the HDS.

Do this procedure five times.

- Turn the vehicle to the OFF (LOCK) mode and wait for at least 10 seconds.
- Turn the vehicle to the ACCESSORY mode and wait for at least 10 seconds.
- Turn the vehicle to the ON mode and wait for at least 10 seconds.

-3. Check for DTCs with the HDS.

DTC Description	DTC
B12D2 Power Control Unit IG2 Circuit Error	B

Is DTC B12D2 indicated?

YES

Replace the body control module .

NO

Intermittent failure, the system is OK at this time. Check for loose or poor connections.

DTC B12D3

DTC B12D3 : Power Control Unit IG Latch Circuit Error

NOTE:

- If you are troubleshooting multiple DTCs, be sure to follow the instructions in B-CAN System Diagnosis Test Mode A .
- Make sure aftermarket accessories are not installed.

DTC Description	DTC
B12D3 Power Control Unit IG Latch Circuit Error	B

DTC (Keyless Access Power Control Unit)

1. Problem verification

-1. Clear the DTCs with the HDS.

-2. Do this procedure five times: Press the power switch to select the OFF (LOCK), ACCESSORY, ON, and OFF (LOCK) mode.

-3. Check for DTCs with the HDS.

DTC Description	DTC
B12D3 Power Control Unit IG Latch Circuit Error	B

Is DTC B12D3 indicated?

YES

Replace the body control module .

NO

Intermittent failure, the system is OK at this time.

DTC B12E5

DTC B12E5 : Incorrect assembly of control unit for electric steering lock equipped vehicle

NOTE: If you are troubleshooting multiple DTCs, be sure to follow the instructions in **B-CAN System Diagnosis Test Mode A** .

DTC Description	DTC
B12E5 Incorrect assembly of control unit for electric steering lock equipped vehicle	B

DTC (Keyless Access Power Control Unit)

1. Problem verification

-1. Select model on the HDS screen.

-2. When prompted by the HDS, select YES when asked if the vehicle has keyless access system, then press and hold the power switch for at least 2 minutes. This selects the forced ON mode.

-3. Clear the DTCs with the HDS.

-4. Turn the vehicle to the OFF (LOCK) mode.

-5. Press the power switch.

-6. Select model on the HDS screen.

-7. When prompted by the HDS, select YES when asked if the vehicle has keyless access system, then press and hold the power switch for at least 2 minutes. This selects the forced ON mode.

-8. Check for DTCs with the HDS.

DTC Description	DTC
B12E5 Incorrect assembly of control unit for electric steering lock equipped vehicle	B

Is DTC B12E5 indicated?

YES

Incorrect assembly of control unit for electric steering lock equipped vehicle. **Replace it with the correct body control module** .

NO

Intermittent failure, the system is OK at this time. Check for loose or poor connections.

DTC B12F3

DTC B12F3 : Power Control Unit Lost Communication with Transmission Control Unit

NOTE:

- If you are troubleshooting multiple DTCs, be sure to follow the instructions in **B-CAN System Diagnosis Test Mode A** .
- Before troubleshooting, make sure the fuses and **relays** associated with the system is OK.

DTC Description	DTC
B12F3 Power Control Unit Lost Communication with Transmission Control Unit	B

DTC (Keyless Access Power Control Unit)

1. Problem verification 1

   -1. Clear the DTCs with the HDS.

   -2. Do this procedure ten times: Turn the vehicle to the OFF(LOCK), ACCESSORY, ON, and OFF(LOCK) mode.

   -3. Check for DTCs with the HDS.

DTC Description	DTC
B12F3 Power Control Unit Lost Communication with Transmission Control Unit	B

   Is DTC B12F3 indicated?

   YES

   Go to step 2.

   NO

   Intermittent failure, the system is OK at this time. Check for loose or poor connections.

2. Open wire check (+B_BACKUP_FI-ECU line)

   -1. Turn the vehicle to the OFF (LOCK) mode.

   -2. Disconnect the following connector.

Park pawl actuator drive unit 26P connector

   -3. Measure the voltage between test points 1 and 2.

Test condition	Vehicle OFF (LOCK) mode Park pawl actuator drive unit 26P connector: disconnected
Test point 1	**Park pawl actuator drive unit 26P connector No. 13**
Test point 2	Body ground

   Is there battery voltage?

YES

The +B_BACKUP_FI-ECU wire is OK. Go to step 3.

NO

Repair an open or high resistance in the wire.

3. Open wire check (IG1_SRS2 line)

-1. Turn the vehicle to the ON mode.

-2. Measure the voltage between test points 1 and 2.

Test condition	Vehicle OFF (LOCK) mode Park pawl actuator drive unit 26P connector: disconnected
Test point 1	**Park pawl actuator drive unit 26P connector No. 15**
Test point 2	Body ground

Is there battery voltage?

YES

The IG1_SRS2 wire is OK. Go to step 4.

NO

Repair an open or high resistance in the wire.

4. Open wire check (GND lines)

-1. Turn the vehicle to the OFF (LOCK) mode.

-2. Measure the resistance between test points 1 and 2 individually.

Test condition	Vehicle OFF (LOCK) mode Park pawl actuator drive unit 26P connector: disconnected
Test point 1	**Park pawl actuator drive unit 26P connector No. 2**
Test point 2	Body ground

Test point 1	**Park pawl actuator drive unit 26P connector No. 3**
Test point 2	Body ground

Test point 1	**Park pawl actuator drive unit 26P connector No. 17**
Test point 2	Body ground

Test point 1	**Park pawl actuator drive unit 26P connector No. 18**
Test point 2	Body ground

Is there 1.0 Ω or less?

YES

The GND wires are OK. Go to step 5.

NO

Repair an open or high resistance in the ground wire or poor ground (G251).

5. Shorted wire check (IGN_TRX line)

-1. Disconnect the following connector.

Body control module connector G (32P)

-2. Measure the resistance between test points 1 and 2.

Test condition	Vehicle OFF (LOCK) mode Park pawl actuator drive unit 26P connector: disconnected Body control module connector G (32P): disconnected
Test point 1	**Park pawl actuator drive unit 26P connector No. 9**
Test point 2	Body ground

Is there 1.0 MΩ or more?

YES

The IGN_TRX wire is not shorted. Go to step 6.

NO

Repair a short to ground in the wire.

6. Open wire check (IGN_TRX line)

-1. Measure the resistance between test points 1 and 2.

Test condition	Vehicle OFF (LOCK) mode Park pawl actuator drive unit 26P connector: disconnected Body control module connector G (32P): disconnected
Test point 1	**Body control module connector G (32P) No. 28**
Test point 2	**Park pawl actuator drive unit 26P connector No. 9**

Is there 1.0 Ω or less?

YES

The IGN_TRX wire is OK. Go to step 7.

NO

Repair an open or high resistance in the wire.

7. Keyless access system check:

Reconnect these items:

- Park pawl actuator drive unit 26P connector
- Body control module connector G (32P)

-2. With driver's power window open, turn the vehicle to the OFF (LOCK) mode.

-3. **Do the 12 volt battery terminal disconnection procedure** .

-4. Wait for at least 10 seconds to clear the DTCs.

-5. **Do the 12 volt battery terminal reconnection procedure** .

-6. Turn the vehicle to the ON mode then the OFF (LOCK) mode.

-7. Remove all the keyless remotes from inside the vehicle. Hold them outside the open driver's window, at least 20 cm (7.9 in) away from the vehicle.

-8. Close all doors, then press the power switch.

-9. The keyless remotes bring to the vehicle inside, during close all doors.

-10.

Touch the power switch with the keyless remote. The buttons on the keyless remote should be facing you.

-11.

Press the power switch, and turn the vehicle to the ON mode.

Does the mode change to ON?

YES

Go to step 8.

NO

Replace the body control module .

8. Problem verification 2

-1. Clear the DTCs with the HDS.

-2. Do this procedure ten times: Turn the vehicle to the OFF(LOCK), ACCESSORY, ON, and OFF(LOCK) mode.

-3. Check for DTCs with the HDS.

DTC Description	DTC
B12F3 Power Control Unit Lost Communication with Transmission Control Unit	B

Is DTC B12F3 indicated?

YES

Replace the park pawl actuator drive unit .

NO

Intermittent failure, the system is OK at this time. Check for loose or poor connections.

DTC U0073 (KEYLESS ACCESS POWER CONTROL UNIT)

DTC U0073 : F-CAN Communication Bus Line Error

NOTE: If you are troubleshooting multiple DTCs, be sure to follow the instructions in **B-CAN System Diagnosis Test Mode A** .

DTC Description	DTC
U0073 F-CAN Communication Bus Line Error	B

DTC (Keyless Access Power Control Unit)

1. Problem verification

   -1. Clear the DTCs with the HDS.

   -2. Turn the vehicle to the OFF (LOCK) mode and then the ON mode.

   -3. Wait for at least 6 seconds.

   -4. Check for DTCs with the HDS.

DTC Description	DTC
U0073 F-CAN Communication Bus Line Error	B

Is DTC U0073 indicated?

YES

Go to the troubleshooting for CAN gateway system DTC(s) .

NO

Intermittent failure, the system is OK at this time.

DTC U0100, U0122 (KEYLESS ACCESS POWER CONTROL UNIT)

DTC U0100 : Power Control Unit Lost Communication with PCM

DTC U0122: Power Control Unit Lost Communication with ABS/VSA Modulator-Control Unit

NOTE:

- If you are troubleshooting multiple DTCs, be sure to follow the instructions in **B-CAN System Diagnosis Test Mode A** .
- Refer to the DTC code shown on the display, and then inspect the connectors and terminals based on the instructions in the table below.
- The DTC may be stored due to the grounding failure or the power source failure at the transmitting control unit (the grounding inspection and the power source inspection on each control unit are required prior to this checking process).

DTC Description	DTC
U0100 Power Control Unit Lost Communication with PCM	B
U0122 Power Control Unit Lost Communication with ABS/VSA Modulator-Control Unit	B

DTC (Keyless Access Power Control Unit)

1. Problem verification

   -1. Clear the DTCs with the HDS.

   -2. Turn the vehicle to the OFF (LOCK) mode and then the ON mode.

   -3. Wait for at least 6 seconds.

   -4. Check for DTCs with the HDS.

DTC Description	DTC
U0100 Power Control Unit Lost Communication with PCM	B
U0122 Power Control Unit Lost Communication with ABS/VSA Modulator-Control Unit	B

Are any DTCs indicated?

YES

Go to step 2.

NO

Intermittent failure, the system is OK at this time. Check for poor connections or loose terminals.

2. CAN gateway system DTC check

-1. Check for CAN gateway system DTCs with the HDS.

DTC Description	DTC
U0029-00 CAN Gateway F-CAN ch A Bus Off	B
U0047-00 CAN Gateway F-CAN ch B Bus Off	B
U0056-00 CAN Gateway F-CAN ch C Bus Off	B
U0065-00 CAN Gateway F-CAN ch D Bus Off	B
U0038-00 CAN Gateway F-CAN ch E Bus Off	B
U3000-49 CAN Gateway Internal Failure	B

Is DTC U0029-00, U0047-00, U0056-00, U0038-00, and/or U3000-49 indicated?

YES

Go to the troubleshooting for CAN gateway system DTC(s) .

NO

Go to step 3.

3. F-CAN circuit communication check (Receiving control unit)

-1. Select the FUNCTION TEST in the CAN gateway with the HDS, then select the F-CAN Bus Connected Unit Check.

F-CAN Bus Connected Unit Check

Does the body control module detect the CAN gateway Bus channels B?

Bus B is Not Available

Go to step 4.

Bus B is Available

Go to step 5.

4. Open wire check (F-CAN B lines)

-1. Turn the vehicle to the OFF (LOCK) mode.

-2. Disconnect the following connectors.

CAN gateway 16P connectorBody control module connector B (36P)

-3. Measure the resistance between test points 1 and 2.

Test condition	Vehicle OFF (LOCK) mode CAN gateway 16P connector: disconnected Body control module connector B (36P): disconnected
Test point 1	CAN gateway 16P connector (female terminals) No. 6: ①
Test point 2	**Body control module connector B (36P) No. 22**

Test point 1	CAN gateway 16P connector (female terminals) No. 14: ①
Test point 2	**Body control module connector B (36P) No. 23**

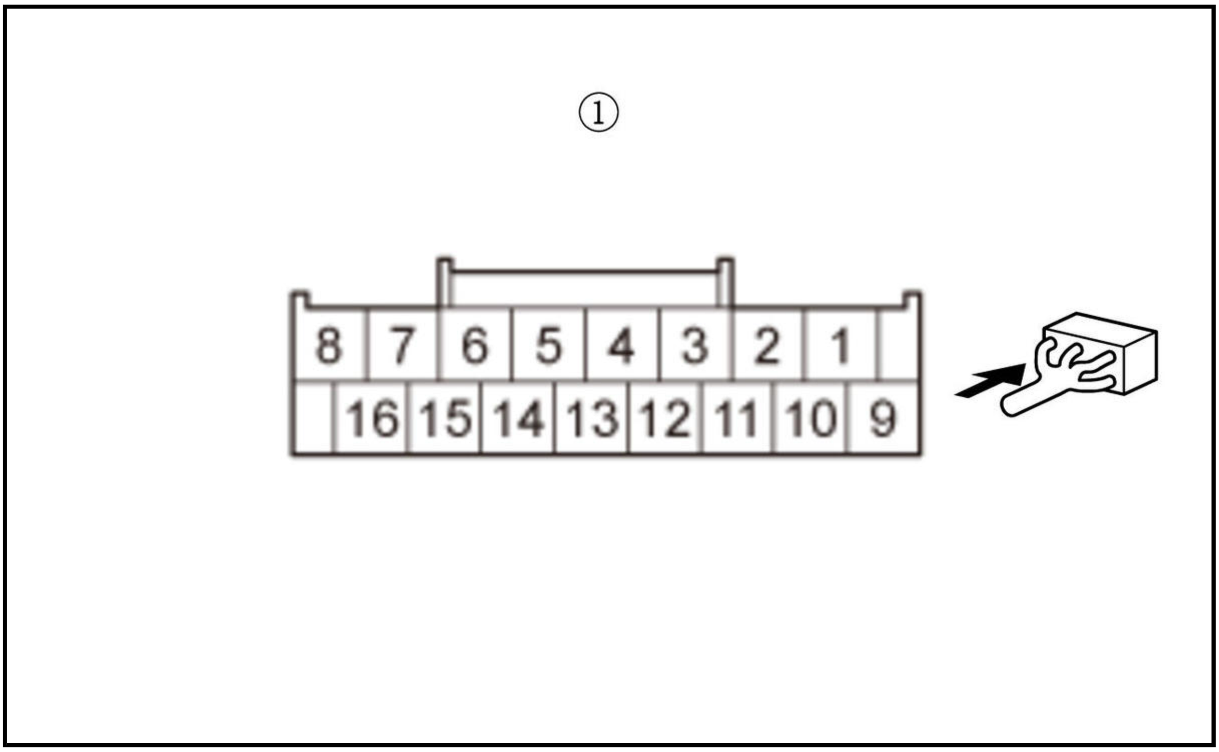

Is there 1.0 Ω or less?

YES

The F-CAN B_H and F-CAN B_L wires are OK. **Replace the body control module** .

NO

Repair an open in F-CAN B_H or F-CAN B_L wire.

5. F-CAN circuit communication check (Transmitting control unit)

-1. Select the FUNCTION TEST in the CAN gateway with the HDS, then select the F-CAN Bus Connected Unit Check.

F-CAN Bus Connected Unit Check

According to the detected DTC on the following table, make sure that the transmitting control unit detects the CAN gateway Bus channel(s) normally.

DTC	Transmitting control unit	Detected CAN gateway Bus channel(s) at normal
U0100	PCM	A, B, E
U0122	VSA modulator-control unit	B, C

Is it detected normally?

Detected normal

Intermittent failure, the system is OK at this time. Check for poor connections or loose terminals at the transmitting control unit and the CAN gateway.

U0100: PCM is Not Available for Bus A

Go to step 6.

U0100: PCM is Not Available for Bus B

Go to step 7.

U0100: PCM is Not Available for Bus E

Go to step 9.

U0122: VSA modulator-control unit is Not Available for Bus B

Go to step 7.

U0122: VSA modulator-control unit is Not Available for Bus C

Go to step 8.

6. Open wire check (F-CAN A lines)

-1. Turn the vehicle to the OFF (LOCK) mode.

-2. U0100: Jump the SCS line with the HDS, and wait more than 1 minute.

SCS short

-3. According to the detected DTC on the following table, disconnect the transmitting control unit connector(s).

DTC	Connector
-	CAN gateway 16P connector
U0100	PCM connector A (50P)

-4. Measure the resistance between test points 1 and 2.

Test condition	Vehicle OFF (LOCK) mode CAN gateway 16P connector: disconnected Transmitting control unit connector(s) for indicated DTCs: disconnected

DTC	Circuit name	Test point 1 (Receiving control unit)		Test point 2 (Transmitting control unit)	
		Connector	Terminal	Connector	Terminal
U0100	F-CAN A_H	CAN gateway 16P connector (female	No. 3	PCM connector A (50P)	No. 37

DTC	Circuit name	Test point 1 (Receiving control unit)		Test point 2 (Transmitting control unit)	
		Connector	Terminal	Connector	Terminal
	F-CAN A_L	terminals): ①	No. 11		No. 36

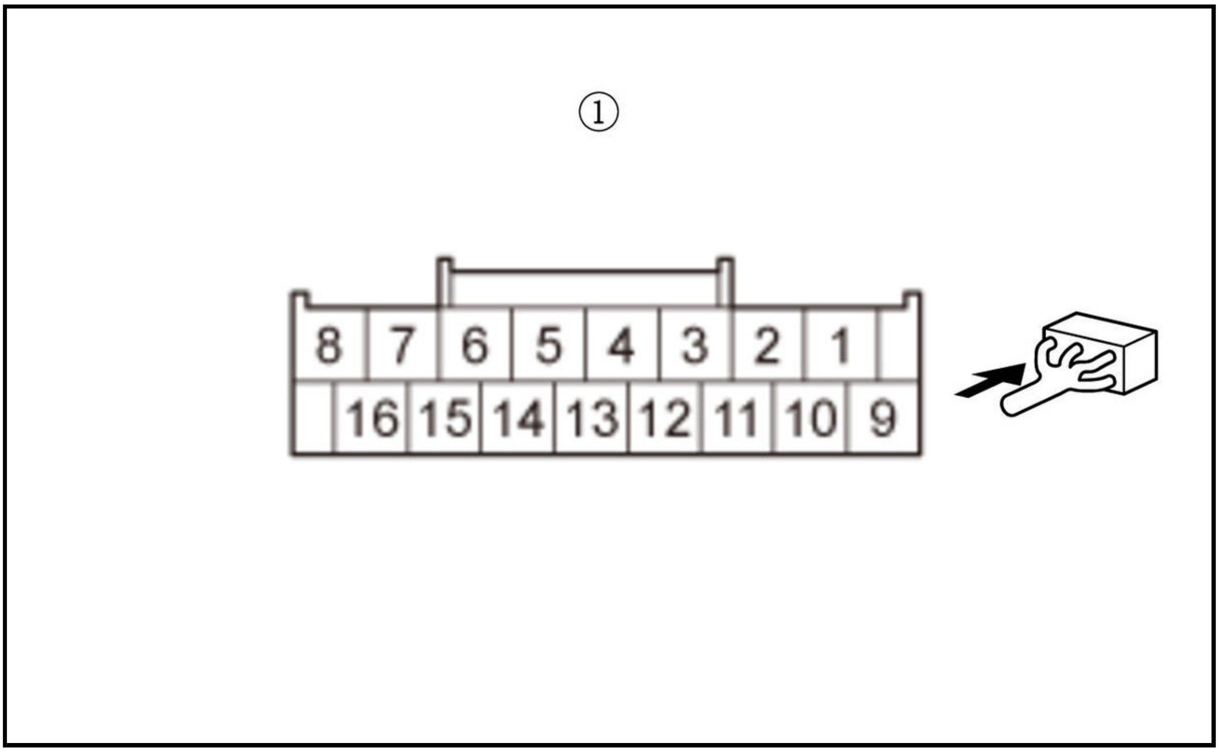

Is there 1.0 Ω or less?

YES

The F-CAN A_H wire and the F-CAN A_L wire are OK. According to the detected DTC on the following table replace the correspond control unit.

DTC	Operation for transmitting control unit
U0100	PCM

NO

Repair an open in F-CAN A_H or F-CAN A_L wire.

7. Open wire check (F-CAN B lines)

-1. Turn the vehicle to the OFF (LOCK) mode.

-2. U0100: Jump the SCS line with the HDS, and wait more than 1 minute.

SCS short

-3. According to the detected DTC on the following table, disconnect the transmitting control unit connector(s).

DTC	Connector
-	CAN gateway 16P connector
U0100	PCM connector A (50P)
U0122	VSA modulator-control unit 46P connector

-4. Measure the resistance between test points 1 and 2.

Test condition	Vehicle OFF (LOCK) mode CAN gateway 16P connector: disconnected Transmitting control unit connector(s) for indicated DTCs: disconnected

DTC	Circuit name	Test point 1 (Receiving control unit)		Test point 2 (Transmitting control unit)	
		Connector	**Terminal**	**Connector**	**Terminal**
U0100	F-CAN B_H	CAN gateway 16P connector (female terminals): ①	No. 6	PCM connector A (50P)	No. 39
	F-CAN B_L		No. 14		No. 38
U0122	F-CAN B_H	CAN gateway 16P connector (female terminals): ①	No. 6	VSA modulator-control unit 46P connector	No. 40
	F-CAN B_L		No. 14		No. 28

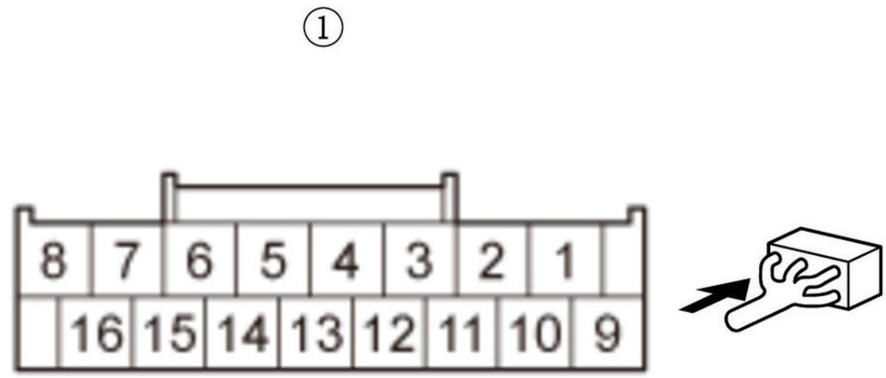

Is there 1.0 Ω or less?

YES

The F-CAN B_H wire and the F-CAN B_L wire are OK. According to the detected DTC on the following table replace the correspond control unit.

DTC	Operation for transmitting control unit
U0100	PCM
U0122	VSA modulator-control unit

NO

Repair an open in F-CAN B_H or F-CAN B_L wire.

8. Open wire check (F-CAN C lines)

-1. Turn the vehicle to the OFF (LOCK) mode.

-2. According to the detected DTC on the following table, disconnect the transmitting control unit connector(s).

DTC	Connector
-	CAN gateway 16P connector
U0122	VSA modulator-control unit 46P connector

-3. Measure the resistance between test points 1 and 2.

Test condition	Vehicle OFF (LOCK) mode CAN gateway 16P connector: disconnected Transmitting control unit connector(s) for indicated DTCs: disconnected

DTC	Circuit name	Test point 1 (Receiving control unit)		Test point 2 (Transmitting control unit)	
		Connector	Terminal	Connector	Terminal
U0122	F-CAN C_H	CAN gateway 16P connector (female terminals): ①	No. 5	**VSA modulator-control unit 46P connector**	No. 46
	F-CAN C_L		No. 13		No. 34

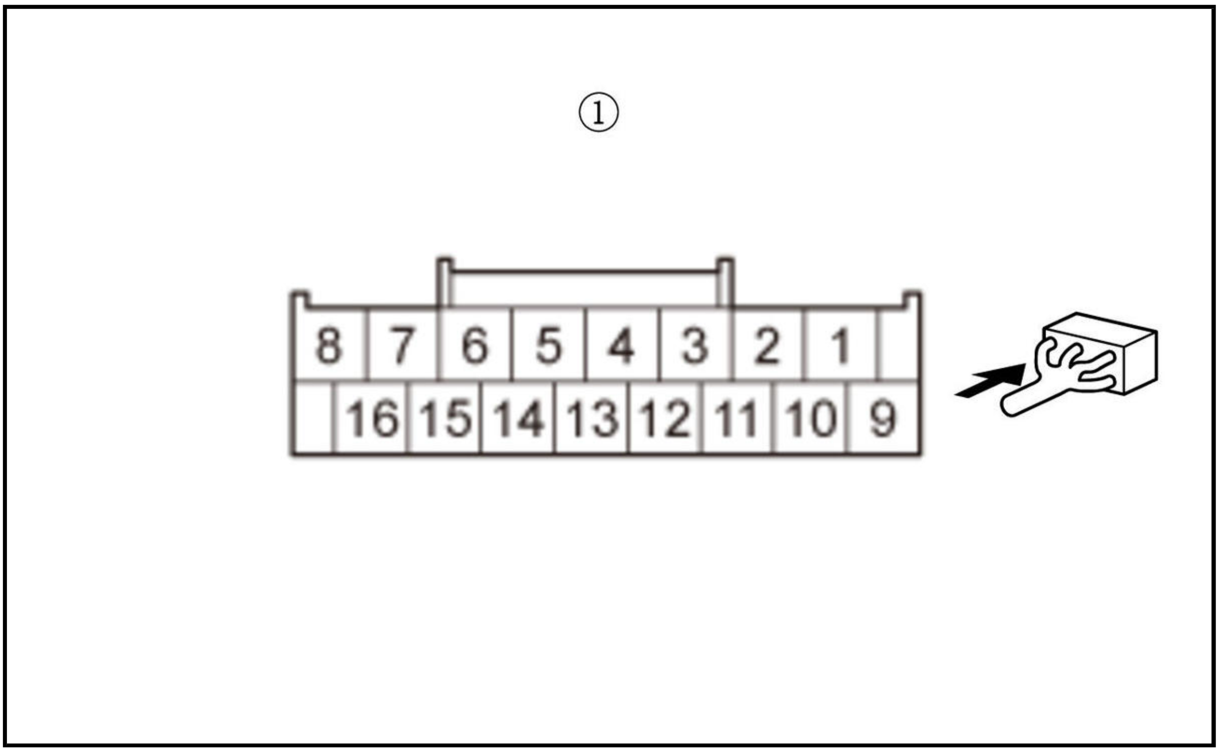

Is there 1.0 Ω or less?

YES

The F-CAN C_H wire and the F-CAN C_L wire are OK. According to the detected DTC on the following table replace the correspond control unit.

DTC	Operation for transmitting control unit
U0122	**VSA modulator-control unit**

NO

Repair an open in F-CAN C_H or F-CAN C_L wire.

9. Open wire check (EP-CAN A lines)

-1. Turn the vehicle to the OFF (LOCK) mode.

-2. U0100: Jump the SCS line with the HDS, and wait more than 1 minute.

SCS short

-3. According to the detected DTC on the following table, disconnect the transmitting control unit connector(s).

DTC	Connector
-	CAN gateway 16P connector
U0100	PCM connector A (50P)

-4. Measure the resistance between test points 1 and 2.

Test condition	Vehicle OFF (LOCK) mode CAN gateway 16P connector: disconnected Transmitting control unit connector(s) for indicated DTCs: disconnected

DTC	Circuit name	Test point 1 (Receiving control unit)		Test point 2 (Transmitting control unit)	
		Connector	Terminal	Connector	Terminal
U0100	EP-CAN A_H	CAN gateway 16P connector (female terminals): ①	No. 16	PCM connector A (50P)	No. 21
	EP-CAN A_L		No. 8		No. 20

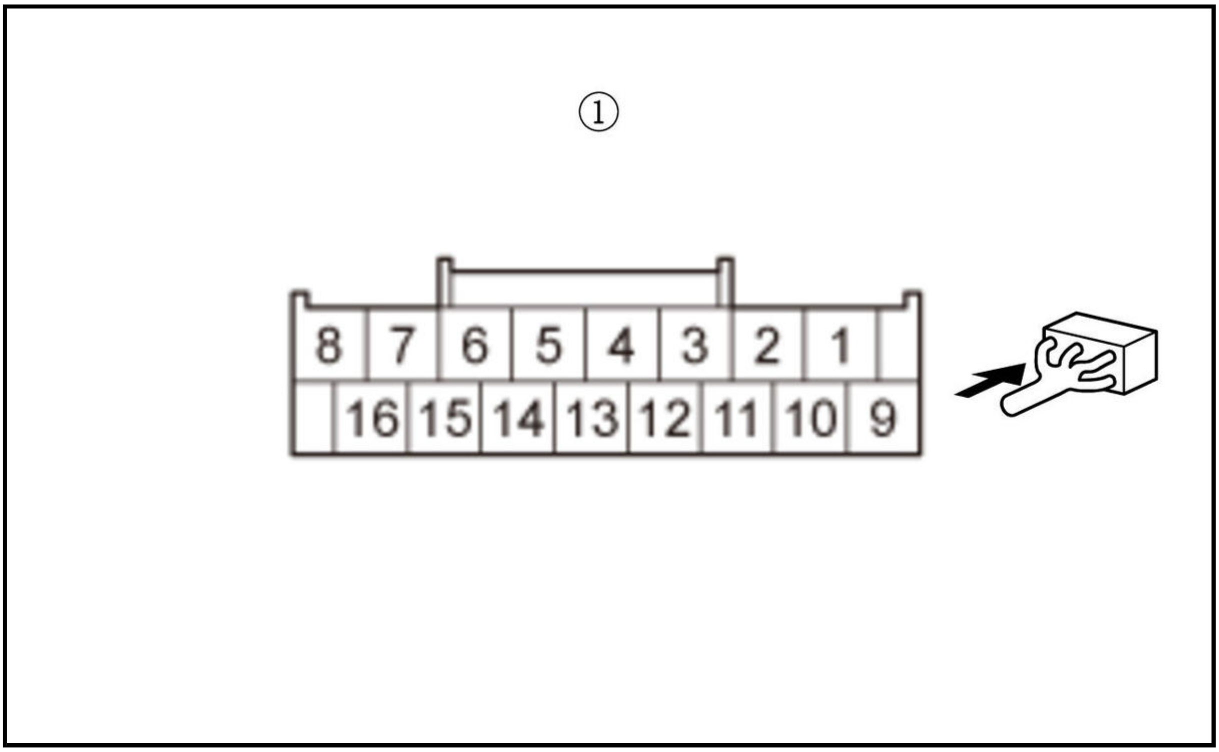

Is there 1.0 Ω or less?

YES

The EP-CAN A_H wire and the EP-CAN A_L wire are OK. According to the detected DTC on the following table replace the correspond control unit.

DTC	Operation for transmitting control unit
U0100	PCM

NO

Repair an open in EP-CAN A_H or EP-CAN A_L wire.

DTC U1280 (KEYLESS ACCESS POWER CONTROL UNIT)

DTC U1280 : B-CAN communication bus line error (BUS-OFF)

NOTE: If you are troubleshooting multiple DTCs, be sure to follow the instructions in **B-CAN System Diagnosis Test Mode A** .

DTC Description	DTC
U1280 B-CAN communication bus line error (BUS-OFF)	B

DTC (Keyless Access Power Control Unit)

1. Problem verification

   -1. Clear the DTCs with the HDS.

   -2. Turn the vehicle to the OFF (LOCK) mode and then the ON mode.

   -3. Wait for at least 6 seconds.

   -4. Check for DTCs with the HDS.

DTC Description	DTC
U1280 B-CAN communication bus line error (BUS-OFF)	B

Is DTC U1280 indicated?

YES

Go to body control module DTC U1280 troubleshooting .

NO

Intermittent failure, the system is OK at this time. Check for loose or poor connections.

DTC U1281 (KEYLESS ACCESS POWER CONTROL UNIT)

DTC U1281 : Power Control Unit Lost Communication with MICU

NOTE: If you are troubleshooting multiple DTCs, be sure to follow the instructions in **B-CAN System Diagnosis Test Mode A** .

DTC Description	DTC
U1281 Power Control Unit Lost Communication with MICU	B

DTC (Keyless Access Power Control Unit)

1. Problem verification

   -1. Clear the DTCs with the HDS.

   -2. Turn the vehicle to the OFF (LOCK) mode and then the ON mode.

-3. Wait for at least 6 seconds.

-4. Check for DTCs with the HDS.

DTC Description	DTC
U1281 Power Control Unit Lost Communication with MICU	B

Is DTC U1281 indicated?

YES

Replace the body control module .

NO

Intermittent failure, the system is OK at this time. Check for loose or poor connections.

DTC U128D (KEYLESS ACCESS POWER CONTROL UNIT)

DTC U128D : Power Control Unit Lost Communication with Gauge Control Module

NOTE:

- If you are troubleshooting multiple DTCs, be sure to follow the instructions in **B-CAN System Diagnosis Test Mode A** .
- Refer to the DTC code shown on the display, and then inspect the connectors and terminals based on the instructions in the table below.
- The DTC may be stored due to the grounding failure or the power source failure at the transmitting control unit (the grounding inspection and the power source inspection on each control unit are required prior to this checking process).

DTC Description	DTC
U128D Power Control Unit Lost Communication with Gauge Control Module	B

DTC (Keyless Access Power Control Unit)

1. Problem verification

-1. Clear the DTC with the HDS.

-2. Turn the vehicle to the OFF (LOCK) mode and then the ON mode.

-3. Wait for at least 6 seconds.

-4. Check for DTCs with the HDS.

DTC Description	DTC
U128D Power Control Unit Lost Communication with Gauge Control Module	B

Are any DTCs indicated?

YES

Go to step 2.

NO

Intermittent failure, the system is OK at this time. Check for poor connections or loose terminals.

2. Open wire check (B-CAN_H line, B-CAN_L line)

-1. Turn the vehicle to the OFF (LOCK) mode.

-2. Disconnect the receiving control unit connector.

Body control module connector B (36P)

-3. Disconnect the transmitting control unit connector(s).

Refer to the DTC shown on the display, then disconnect the connector(s) based on the instructions (see table).

DTC	Connector
U128D	Gauge control module connector A (32P)

-4. Measure the resistance between the receiving control unit and the transmitting control unit on the B-CAN_H circuit and the B-CAN_L circuit.

Test condition	Vehicle OFF (LOCK) mode Body control module connector B (36P): disconnected Transmitting control unit connector(s) for indicated DTCs: disconnected

DTC	Circuit name	Receiving control unit		Transmitting control unit	
		Connector	Terminal	Connector	Terminal
U128D	B-CAN_H	Body control module connector B (36P)	No. 20	Gauge control module connector A (32P)	No. 30
	B-CAN_L		No. 21		No. 31

Is there 1.0 Ω or less?

YES

The B-CAN_H wire and the B-CAN_L wire are OK. Refer to the DTC shown on the display, then replace the control unit based on the instructions (see table).

DTC	Operation for transmitting control unit
U128D	Gauge control module

NO

Repair an open in the B-CAN_H wire and/or the B-CAN_L wire.

TROUBLESHOOTING

DTC B1926

DTC B1926 : Backup Control Antenna Open or Short

NOTE: If you are troubleshooting multiple DTCs, be sure to follow the instructions in **B-CAN System Diagnosis Test Mode A** .

DTC Description	DTC
B1926 Backup Control Antenna Open or Short	B

DTC (Keyless Access Backup Control Unit)

1. Problem verification

   -1. Clear the DTCs with the HDS.

   -2. Touch the engine start/stop switch with the keyless remote. The buttons on the keyless remote should be facing you.

   -3. While holding the keyless remote against the engine start/stop switch, do this procedure ten times without pressing the brake pedal: Press the engine start/stop switch to select the OFF (LOCK), ACCESSORY, ON, and OFF (LOCK) mode.

   -4. Check for DTCs with the HDS.

DTC Description	DTC
B1926 Backup Control Antenna Open or Short	B

   Is DTC B1926 indicated?

   YES

   Replace the engine start/stop switch .

   NO

   Intermittent failure, the system is OK at this time. Check for loose or poor connections.

DTC U1280 (KEYLESS ACCESS BACKUP CONTROL UNIT)

DTC U1280 : B-CAN communication bus line error (BUS-OFF)

NOTE: If you are troubleshooting multiple DTCs, be sure to follow the instructions in **B-CAN System Diagnosis Test Mode A** .

DTC Description	DTC
U1280 B-CAN communication bus line error (BUS-OFF)	B

DTC (Keyless Access Backup Control Unit)

1. Problem verification

-1. Clear the DTCs with the HDS.

-2. Turn the vehicle to the OFF (LOCK) mode and then the ON mode.

-3. Wait for at least 6 seconds.

-4. Check for DTCs with the HDS.

DTC Description	DTC
U1280 B-CAN communication bus line error (BUS-OFF)	B

Is DTC U1280 indicated?

YES

Go to body control module DTC U1280 troubleshooting .

NO

Intermittent failure, the system is OK at this time. Check for loose or poor connections.

DTC U128D (KEYLESS ACCESS BACKUP CONTROL UNIT)

DTC U128D : Backup Control Unit Lost Communication with Gauge Control Module

NOTE:

- If you are troubleshooting multiple DTCs, be sure to follow the instructions in **B-CAN System Diagnosis Test Mode A** .
- Refer to the DTC code shown on the display, and then inspect the connectors and terminals based on the instructions in the table below.
- The DTC may be stored due to the grounding failure or the power source failure at the transmitting control unit (the grounding inspection and the power source inspection on each control unit are required prior to this checking process).

DTC Description	DTC
U128D Backup Control Unit Lost Communication with Gauge Control Module	B

DTC (Keyless Access Backup Control Unit)

1. Problem verification

-1. Clear the DTC with the HDS.

-2. Turn the vehicle to the OFF (LOCK) mode and then the ON mode.

-3. Wait for at least 6 seconds.

-4. Check for DTCs with the HDS.

DTC Description	DTC
U128D Backup Control Unit Lost Communication with Gauge Control Module	B

Are any DTCs indicated?

YES

Go to step 2.

NO

Intermittent failure, the system is OK at this time. Check for poor connections or loose terminals.

2. Open wire check (B-CAN_H line, B-CAN_L line)

-1. Turn the vehicle to the OFF (LOCK) mode.

-2. Disconnect the receiving control unit connector.

Body control module connector B (36P)

-3. Disconnect the transmitting control unit connector(s).

Refer to the DTC shown on the display, then disconnect the connector(s) based on the instructions (see table).

DTC	Connector
U128D	Gauge control module connector A (32P)

-4. Check for continuity between the receiving control unit and the transmitting control unit on the B-CAN_H circuit and the B-CAN_L circuit.

Test condition	Vehicle OFF (LOCK) mode Body control module connector B (36P): disconnected Transmitting control unit connector(s) for indicated DTCs: disconnected

DTC	Circuit name	Receiving control unit		Transmitting control unit	
		Connector	Terminal	Connector	Terminal
U128D	B-CAN_H	Body control module connector B (36P)	No. 20	Gauge control module connector A (32P)	No. 30
	B-CAN_L		No. 21		No. 31

Is there continuity?

YES

The B-CAN_H wire and the B-CAN_L wire are OK. Refer to the DTC shown on the display, then replace the control unit based on the instructions (see chart below).

DTC	Operation for transmitting control unit
U128D	Gauge control module

NO

Repair an open in the B-CAN_H wire and/or the B-CAN_L wire.

DTC TROUBLESHOOTING

DTC B1601

DTC B1601 : Keyless access control unit internal (CPU) error

NOTE: If you are troubleshooting multiple DTCs, be sure to follow the instructions in B-CAN System Diagnosis Test Mode A .

DTC Description	DTC
B1601 Keyless access control unit internal (CPU) error	B

DTC (Keyless Access Control Unit)

1. Problem verification

   -1. Clear the DTCs with the HDS.

   -2. Turn the vehicle to the OFF (LOCK) mode and then the ON mode.

   -3. Check for DTCs with the HDS.

DTC Description	DTC
B1601 Keyless access control unit internal (CPU) error	B

Is DTC B1601 indicated?

YES

Replace the body control module .

NO

Intermittent failure, the system is OK at this time.

DTC B1602

DTC B1602 : Keyless access control unit internal (EEPROM) error

NOTE: If you are troubleshooting multiple DTCs, be sure to follow the instructions in B-CAN System Diagnosis Test Mode A .

DTC Description	DTC
B1602 Keyless access control unit internal (EEPROM) error	B

DTC (Keyless Access Control Unit)

1. Problem verification

   -1. Clear the DTCs with the HDS.

   -2. Turn the vehicle to the OFF (LOCK) mode and then the ON mode.

   -3. Check for DTCs with the HDS.

DTC Description	DTC
B1602 Keyless access control unit internal (EEPROM) error	B

Is DTC B1602 indicated?

YES

Replace the body control module .

NO

Intermittent failure, the system is OK at this time.

DTC B1640

DTC B1640 : RF1 antenna not connected or malfunction

NOTE: If you are troubleshooting multiple DTCs, be sure to follow the instructions in **B-CAN System Diagnosis Test Mode A** .

DTC Description	DTC
B1640 RF1 antenna not connected or malfunction	B

DTC (Keyless Access Control Unit)

1. Problem verification

-1. Clear the DTCs with the HDS.

-2. Touch the door outer handle touch sensor (LOCK) to lock the door.

-3. Touch the door outer handle touch sensor (UNLOCK) to unlock the door.

-4. Check for DTCs with the HDS.

DTC Description	DTC
B1640 RF1 antenna not connected or malfunction	B

Is DTC B1640 indicated?

YES

Replace the body control module .

NO

Intermittent failure, the system is OK at this time. Check for loose or poor connections.

DTC B1645

DTC B1645 : Driver's Door LF Antenna Circuit Short

NOTE: If you are troubleshooting multiple DTCs, be sure to follow the instructions in **B-CAN System Diagnosis Test Mode A** .

DTC Description	DTC
B1645 Driver's Door LF Antenna Circuit Short	B

DTC (Keyless Access Control Unit)

1. Problem verification

   -1. Clear the DTCs with the HDS.

   -2. Select the KEYLESS ACCESS CONTROL UNIT from the ONE-PUSH START system select menu with the HDS, and enter the SELF CHECK.

   One-Push - KEYLESS ACCESS CONTROL UNIT - SELF CHECK

   -3. Do the SELF CHECK.

   -4. Check for DTCs with the HDS.

DTC Description	DTC
B1645 Driver's Door LF Antenna Circuit Short	B

   Is DTC B1645 indicated?

   YES

   Go to step 2.

   NO

   Intermittent failure, the system is OK at this time. Check for loose or poor connections.

2. Shorted wire check (EXT_FR_DR+, EXT_FR_DR- lines)

   -1. Turn the vehicle to the OFF (LOCK) mode.

   -2. Disconnect the following connectors.

Body control module connector F (36P)
Driver's door outer handle 8P connector

   -3. Measure the resistance between test points 1 and 2.

Test condition	Vehicle OFF (LOCK) mode Body control module connector F (36P): disconnected Driver's door outer handle 8P connector: disconnected
Test point 1	**Body control module connector F (36P) No. 13**
Test point 2	Body ground

Test point 1	**Body control module connector F (36P) No. 31**
Test point 2	Body ground

   Is there 1.0 MΩ or more?

   YES

   The EXT_FR_DR+ and EXT_FR_DR- wires are not shorted. Go to step 3.

   NO

   Repair a short to ground in the wire.

3. Shorted wire check (EXT_FR_DR+ line to EXT_FR_DR- line)

-1. Measure the resistance between test points 1 and 2.

Test condition	Vehicle OFF (LOCK) mode Body control module connector F (36P): disconnected Driver's door outer handle 8P connector: disconnected
Test point 1	**Body control module connector F (36P) No. 13**
Test point 2	**Body control module connector F (36P) No. 31**

Is there 1.0 MΩ or more?

YES

The EXT_FR_DR+ and EXT_FR_DR- wires are OK. Go to step 4.

NO

Repair a short in EXT_FR_DR+ wire to EXT_FR_DR- wire.

4. Body control module EXT_FR_DR+, EXT_FR_DR- line output check

-1. Reconnect the following connector.

Body control module connector F (36P)

-2. Turn the vehicle to the ON mode.

-3. Select KEYLESS ACCESS CONTROL UNIT from the ONE-PUSH START system select menu with the HDS, and enter FUNCTIONAL TESTS.

One-Push - KEYLESS ACCESS CONTROL UNIT - FUNCTIONAL TESTS

-4. Measure the voltage between test points 1 and 2.

Test condition	Vehicle ON mode Driver's door outer handle 8P connector: disconnected

Test point 1	Driver's door outer handle 8P connector (female terminals) No. 2: ①
Test point 2	Driver's door outer handle 8P connector (female terminals) No. 6: ①

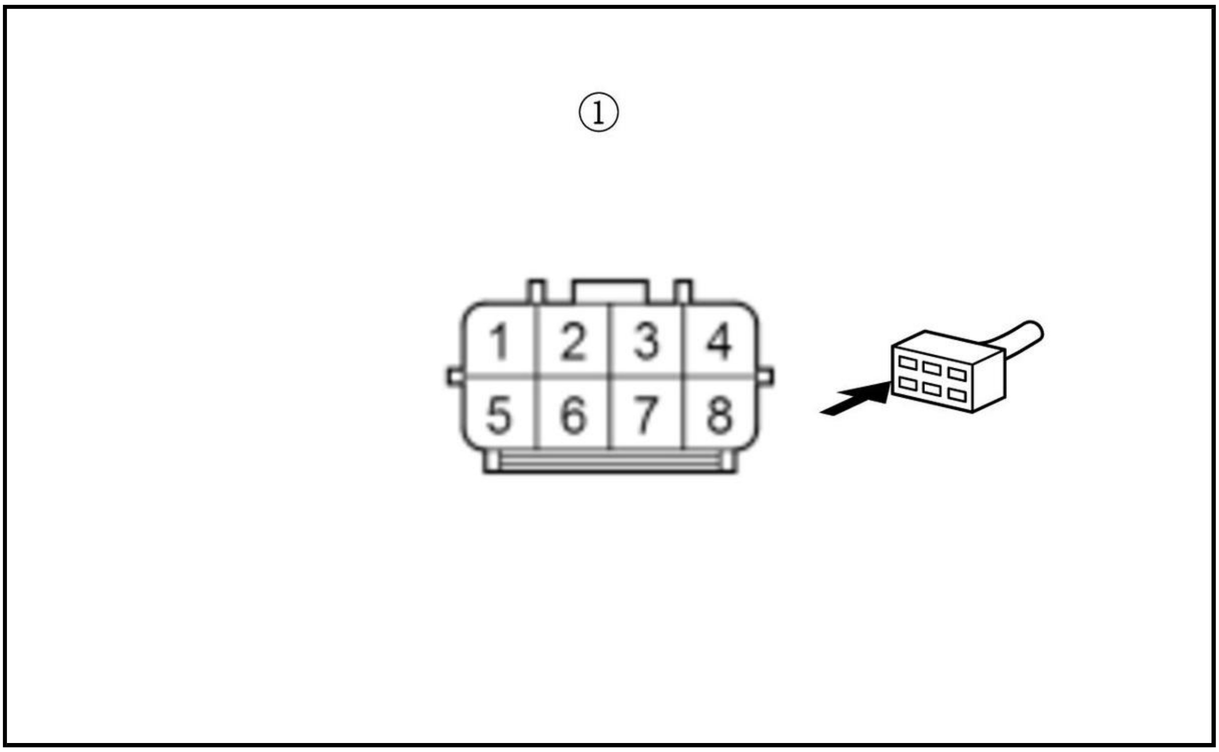

-5. Select DRIVER (DOOR) ANTENNA L DC OUTPUT with the HDS.

Is there voltage?

YES

Faulty LF antenna; replace the driver's door outer handle .

NO

Replace the body control module .

DTC B1646

DTC B1646 : Driver's Door LF Antenna Circuit Open

NOTE: If you are troubleshooting multiple DTCs, be sure to follow the instructions in B-CAN System Diagnosis Test Mode A .

DTC Description	DTC
B1646 Driver's Door LF Antenna Circuit Open	B

DTC (Keyless Access Control Unit)

1. Problem verification

-1. Clear the DTCs with the HDS.

-2. Select the KEYLESS ACCESS CONTROL UNIT from the ONE-PUSH START system select menu with the HDS, and enter the SELF CHECK.

One-Push - KEYLESS ACCESS CONTROL UNIT - SELF CHECK

-3. Do the SELF CHECK.

-4. Check for DTCs with the HDS.

DTC Description	DTC
B1646 Driver's Door LF Antenna Circuit Open	B

Is DTC B1646 indicated?

YES

Go to step 2.

NO

Intermittent failure, the system is OK at this time. Check for loose or poor connections.

2. Body control module EXT_FR_DR+, EXT_FR_DR- line output check

-1. Turn the vehicle to the OFF (LOCK) mode.

-2. Disconnect the following connector.

Driver's door outer handle 8P connector

-3. Turn the vehicle to the ON mode.

-4. Select KEYLESS ACCESS CONTROL UNIT from the ONE-PUSH START system select menu with the HDS, and enter FUNCTIONAL TESTS.

One-Push - KEYLESS ACCESS CONTROL UNIT - FUNCTIONAL TESTS

-5. Measure the voltage between test points 1 and 2.

Test condition	Vehicle ON mode Driver's door outer handle 8P connector: disconnected
Test point 1	Driver's door outer handle 8P connector (female terminals) No. 2: ①
Test point 2	Driver's door outer handle 8P connector (female terminals) No. 6: ①

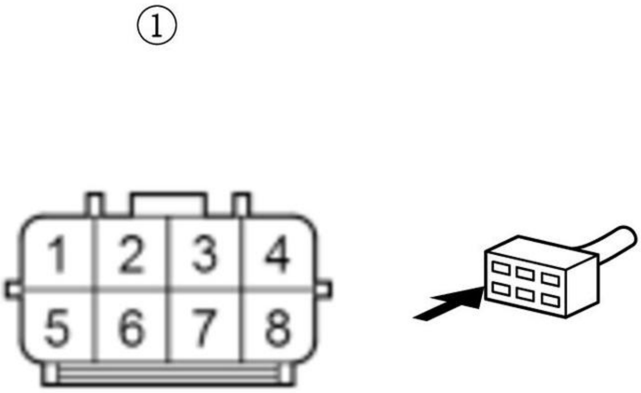

-6. Select DRIVER (DOOR) ANTENNA L DC OUTPUT with the HDS.

Is there voltage?

YES

Faulty LF antenna; **replace the driver's door outer handle** .

NO

Go to step 3.

3. Open wire check (EXT_FR_DR+, EXT_FR_DR- lines)

-1. Turn the vehicle to the OFF (LOCK) mode.

-2. Connect terminals A and B with a jumper wire.

Terminal A	Driver's door outer handle 8P connector (female terminals) No. 2: ①
Terminal B	Driver's door outer handle 8P connector (female terminals) No. 6: ①

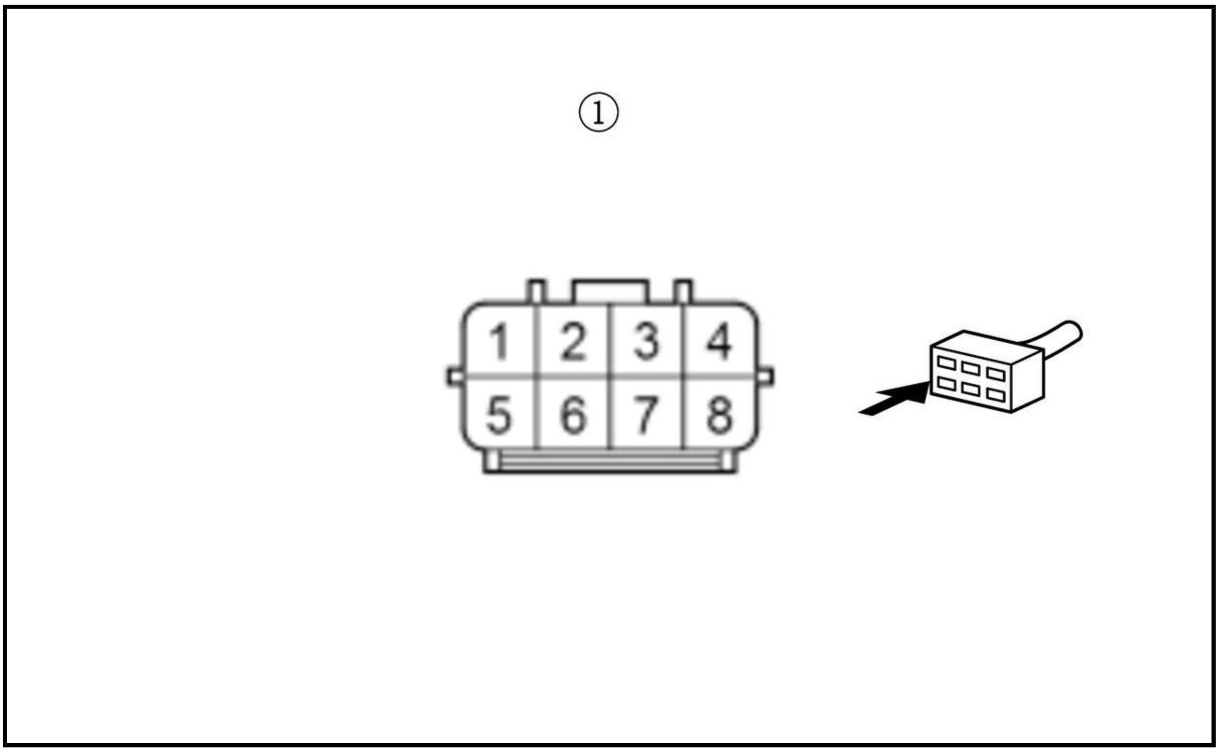

-3. Disconnect the following connector.

Body control module connector F (36P)

-4. Measure the resistance between test points 1 and 2.

Test condition	Vehicle OFF (LOCK) mode Body control module connector F (36P): disconnected Driver's door outer handle 8P connector: disconnected Driver's door outer handle 8P connector No. 2 and No. 6: jumped
Test point 1	**Body control module connector F (36P) No. 13**
Test point 2	**Body control module connector F (36P) No. 31**

Is there 1.0 Ω or less?

YES

The EXT_FR_DR+ and EXT_FR_DR- wires are OK. **Replace the body control module** .

NO

Repair an open or high resistance in the wire.

DTC B1647

DTC B1647 : Passenger's Door LF Antenna Circuit Short

NOTE: If you are troubleshooting multiple DTCs, be sure to follow the instructions in **B-CAN System Diagnosis Test Mode A** .

DTC Description	DTC
B1647 Passenger's Door LF Antenna Circuit Short	B

DTC (Keyless Access Control Unit)

1. Problem verification

   -1. Clear the DTCs with the HDS.

   -2. Select the KEYLESS ACCESS CONTROL UNIT from the ONE-PUSH START system select menu with the HDS, and enter the SELF CHECK.

   One-Push - KEYLESS ACCESS CONTROL UNIT - SELF CHECK

   -3. Do the SELF CHECK.

   -4. Check for DTCs with the HDS.

DTC Description	DTC
B1647 Passenger's Door LF Antenna Circuit Short	B

   Is DTC B1647 indicated?

   YES

   Go to step 2.

   NO

   Intermittent failure, the system is OK at this time. Check for loose or poor connections.

2. Shorted wire check (EXT_FR_AS+, EXT_FR_AS- lines)

   -1. Turn the vehicle to the OFF (LOCK) mode.

   -2. Disconnect the following connectors.

Body control module connector F (36P)
Front passenger's door outer handle 8P connector

   -3. Measure the resistance between test points 1 and 2.

Test condition	Vehicle OFF (LOCK) mode Body control module connector F (36P): disconnected

	Front passenger's door outer handle 8P connector: disconnected
Test point 1	**Body control module connector F (36P) No. 12**
Test point 2	Body ground

Test point 1	**Body control module connector F (36P) No. 30**
Test point 2	Body ground

Is there 1.0 MΩ or more?

YES

The EXT_FR_AS+ and EXT_FR_AS- wires are not shorted. Go to step 3.

NO

Repair a short to ground in the wire.

3. Shorted wire check (EXT_FR_AS+ line to EXT_FR_AS- line)

-1. Measure the resistance between test points 1 and 2.

Test condition	Vehicle OFF (LOCK) mode Body control module connector F (36P): disconnected Front passenger's door outer handle 8P connector: disconnected
Test point 1	**Body control module connector F (36P) No. 12**
Test point 2	**Body control module connector F (36P) No. 30**

Is there 1.0 MΩ or more?

YES

The EXT_FR_AS+ and EXT_FR_AS- wires are OK. Go to step 4.

NO

Repair a short in EXT_FR_AS+ wire to EXT_FR_AS- wire.

4. Body control module EXT_FR_AS+, EXT_FR_AS- line output check

-1. Reconnect the following connector.

Body control module connector F (36P)

-2. Turn the vehicle to the ON mode.

-3. Select KEYLESS ACCESS CONTROL UNIT from the ONE-PUSH START system select menu with the HDS, and enter FUNCTIONAL TESTS.

One-Push - KEYLESS ACCESS CONTROL UNIT - FUNCTIONAL TESTS

-4. Measure the voltage between test points 1 and 2.

Test condition	Vehicle ON mode Front passenger's door outer handle 8P connector: disconnected

Test point 1	Front passenger's door outer handle 8P connector (female terminals) No. 2: ①

Test point 2	Front passenger's door outer handle 8P connector (female terminals) No. 6: ①

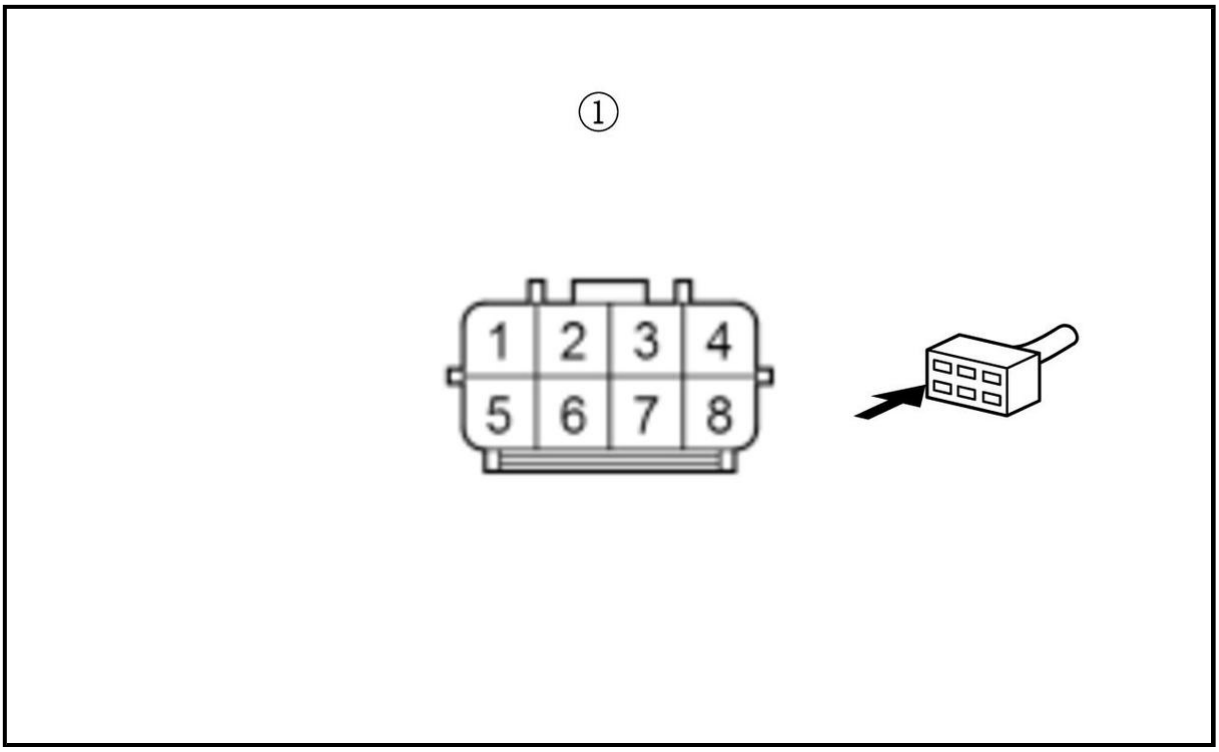

-5. Select FRONT PASSENGER (DOOR) ANTENNA L DC OUTPUT with the HDS.

Is there voltage?

YES

Faulty LF antenna; **replace the front passenger's door outer handle** .

NO

Replace the body control module .

DTC B1648

DTC B1648 : Passenger's Door LF Antenna Circuit Open

NOTE: If you are troubleshooting multiple DTCs, be sure to follow the instructions in **B-CAN System Diagnosis Test Mode A** .

DTC Description	DTC
B1648 Passenger's Door LF Antenna Circuit Open	B

DTC (Keyless Access Control Unit)

1. Problem verification

-1. Clear the DTCs with the HDS.

-2. Select the KEYLESS ACCESS CONTROL UNIT from the ONE-PUSH START system select menu with the HDS, and enter the SELF CHECK.

One-Push - KEYLESS ACCESS CONTROL UNIT - SELF CHECK

-3. Do the SELF CHECK.

-4. Check for DTCs with the HDS.

DTC Description	DTC
B1648 Passenger's Door LF Antenna Circuit Open	B

Is DTC B1648 indicated?

YES

Go to step 2.

NO

Intermittent failure, the system is OK at this time. Check for loose or poor connections.

2. Body control module EXT_FR_AS+, EXT_FR_AS- line output check

-1. Turn the vehicle to the OFF (LOCK) mode.

-2. Disconnect the following connector.

Front passenger's door outer handle 8P connector

-3. Turn the vehicle to the ON mode.

-4. Select KEYLESS ACCESS CONTROL UNIT from the ONE-PUSH START system select menu with the HDS, and enter FUNCTIONAL TESTS.

One-Push - KEYLESS ACCESS CONTROL UNIT - FUNCTIONAL TESTS

-5. Measure the voltage between test points 1 and 2.

Test condition	Vehicle ON mode Front passenger's door outer handle 8P connector: disconnected
Test point 1	Front passenger's door outer handle 8P connector (female terminals) No. 2: ①
Test point 2	Front passenger's door outer handle 8P connector (female terminals) No. 6: ①

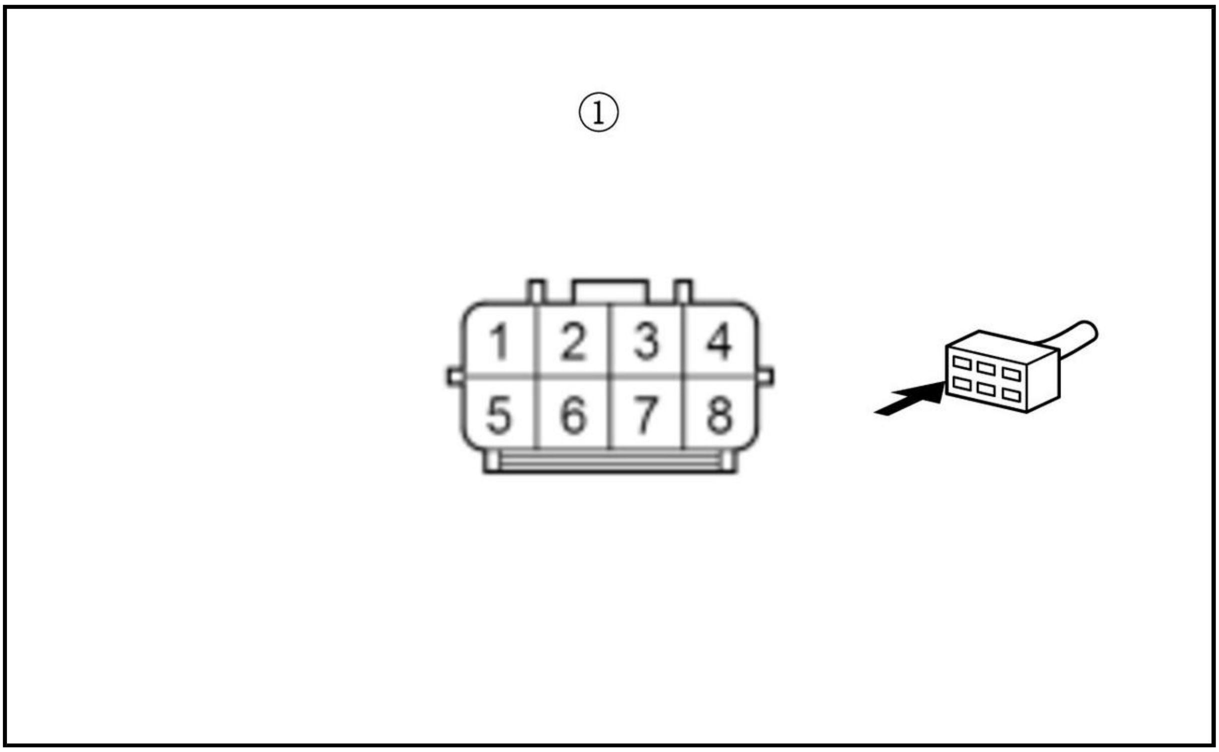

-6. Select FRONT PASSENGER (DOOR) ANTENNA L DC OUTPUT with the HDS.

Is there voltage?

YES

Faulty LF antenna; **replace the front passenger's door outer handle** .

NO

Go to step 3.

3. Open wire check (EXT_FR_AS+, EXT_FR_AS- lines)

-1. Turn the vehicle to the OFF (LOCK) mode.

-2. Connect terminals A and B with a jumper wire.

Terminal A	Front passenger's door outer handle 8P connector (female terminals) No. 2: ①
Terminal B	Front passenger's door outer handle 8P connector (female terminals) No. 6: ①

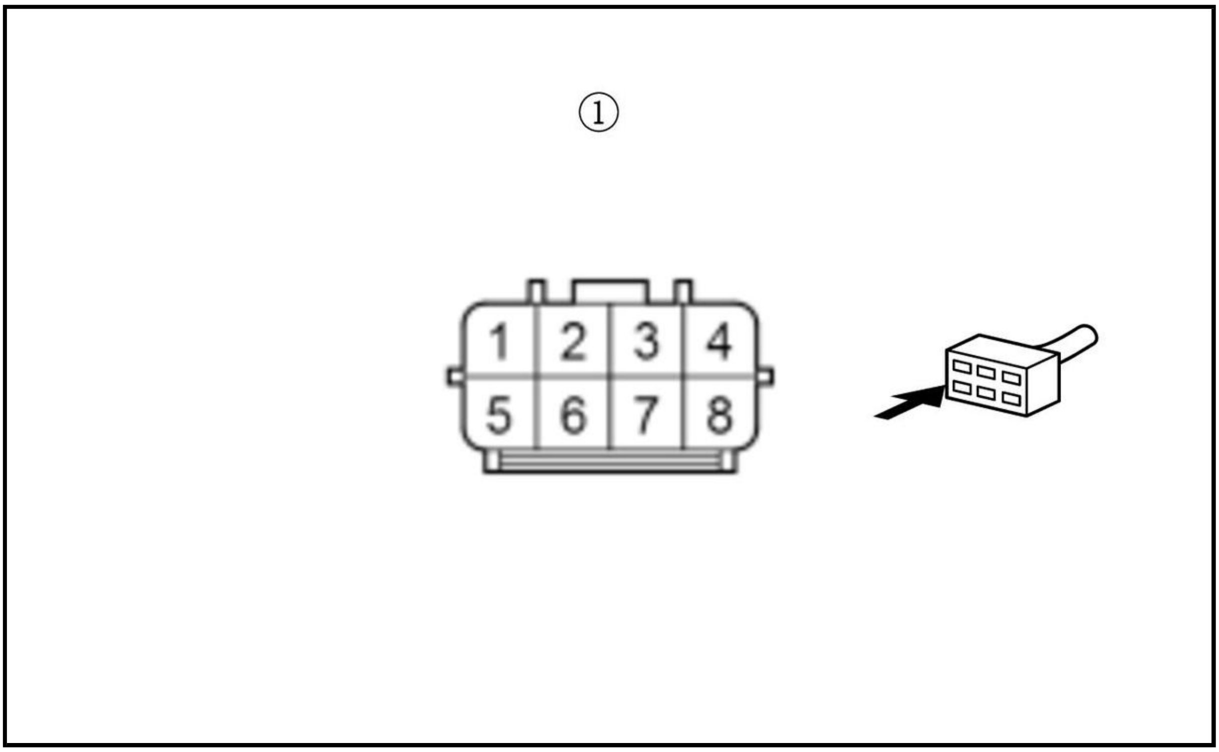

-3. Disconnect the following connector.

Body control module connector F (36P)

-4. Measure the resistance between test points 1 and 2.

Test condition	Vehicle OFF (LOCK) mode Body control module connector F (36P): disconnected Front passenger's door outer handle 8P connector: disconnected Front passenger's door outer handle 8P connector No. 2 and No. 6: jumped
Test point 1	**Body control module connector F (36P) No. 12**
Test point 2	**Body control module connector F (36P) No. 30**

Is there 1.0 Ω or less?

YES

The EXT_FR_AS+ and EXT_FR_AS- wires are OK. **Replace the body control module** .

NO

Repair an open or high resistance in the wire.

DTC B1657

DTC B1657 : Rear Bumper LF Antenna Circuit Short

NOTE: If you are troubleshooting multiple DTCs, be sure to follow the instructions in **B-CAN System Diagnosis Test Mode A** .

DTC Description	DTC
B1657 Rear Bumper LF Antenna Circuit Short	B

DTC (Keyless Access Control Unit)

1. Problem verification

-1. Clear the DTCs with the HDS.

-2. Select the KEYLESS ACCESS CONTROL UNIT from the ONE-PUSH START system select menu with the HDS, and enter the SELF CHECK.

One-Push - KEYLESS ACCESS CONTROL UNIT - SELF CHECK

-3. Do the SELF CHECK.

-4. Check for DTCs with the HDS.

DTC Description	DTC
B1657 Rear Bumper LF Antenna Circuit Short	B

Is DTC B1657 indicated?

YES

Go to step 2.

NO

Intermittent failure, the system is OK at this time. Check for loose or poor connections.

2. Shorted wire check (EXT_TR+, EXT_TR- lines)

-1. Turn the vehicle to the OFF (LOCK) mode.

-2. Disconnect the following connectors.

Body control module connector F (36P)
Rear bumper LF antenna 2P connector

-3. Measure the resistance between test points 1 and 2.

Test condition	Vehicle OFF (LOCK) mode Body control module connector F (36P): disconnected Rear bumper LF antenna 2P connector: disconnected
Test point 1	**Body control module connector F (36P) No. 14**
Test point 2	Body ground

Test point 1	**Body control module connector F (36P) No. 32**
Test point 2	Body ground

Is there 1.0 MΩ or more?

YES

The EXT_TR+ and EXT_TR- wires are not shorted. Go to step 3.

NO

Repair a short to ground in the wire.

3. Shorted wire check (EXT_TR+ line to EXT_TR- line)

-1. Measure the resistance between test points 1 and 2.

Test condition	Vehicle OFF (LOCK) mode Body control module connector F (36P): disconnected Rear bumper LF antenna 2P connector: disconnected
Test point 1	**Body control module connector F (36P) No. 14**
Test point 2	**Body control module connector F (36P) No. 32**

Is there 1.0 MΩ or more?

YES

The EXT_TR+ and EXT_TR- wires are OK. Go to step 4.

NO

Repair a short in EXT_TR+ wire to EXT_TR- wire.

4. Body control module EXT_TR+, EXT_TR- line output check

-1. Reconnect the following connector.

Body control module connector F (36P)

-2. Turn the vehicle to the ON mode.

-3. Select KEYLESS ACCESS CONTROL UNIT from the ONE-PUSH START system select menu with the HDS, and enter FUNCTIONAL TESTS.

One-Push - KEYLESS ACCESS CONTROL UNIT - FUNCTIONAL TESTS

-4. Measure the voltage between test points 1 and 2.

Test condition	Vehicle ON mode Rear bumper LF antenna 2P connector: disconnected

Test point 1	Rear bumper LF antenna 2P connector (female terminals) No. 2: ①
Test point 2	Rear bumper LF antenna 2P connector (female terminals) No. 1: ①

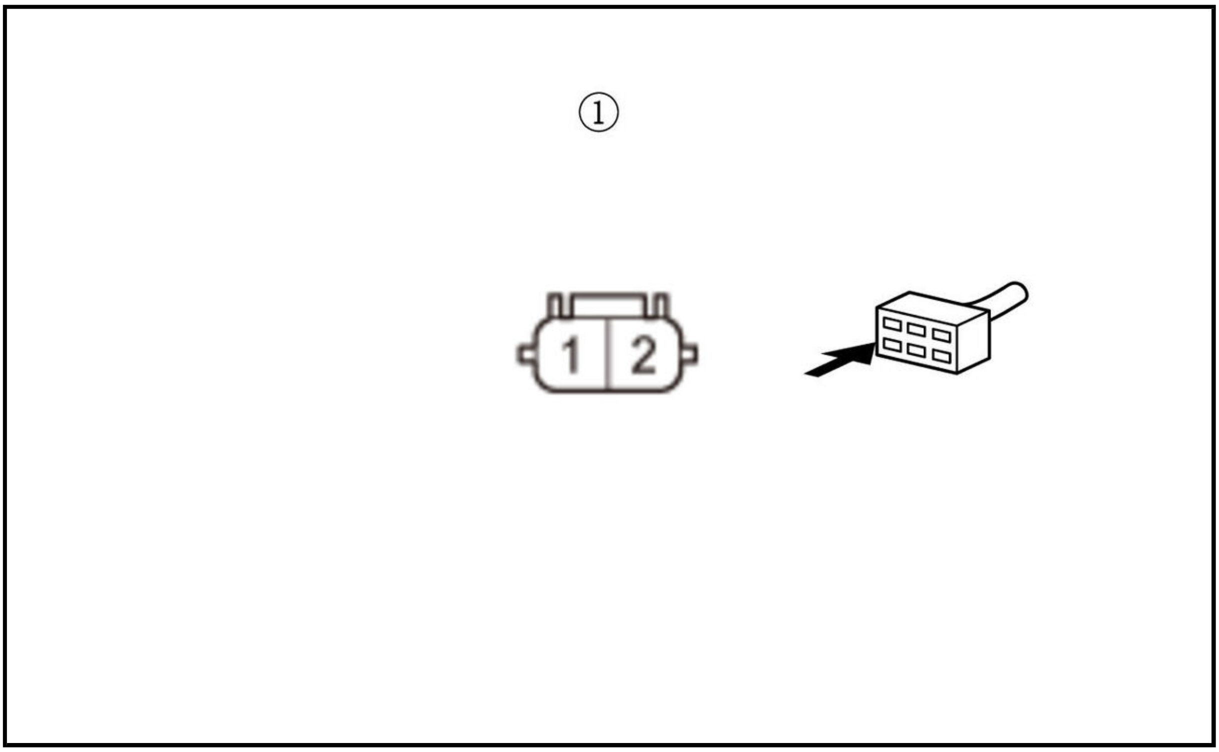

-5. Select CABIN REAR ANTENNA L DC OUTPUT with the HDS.

Is there voltage?

YES

Faulty rear bumper LF antenna; **replace the rear bumper LF antenna** .

NO

Replace the body control module .

DTC B1658

DTC B1658 : Rear Bumper LF Antenna Circuit Open

NOTE: If you are troubleshooting multiple DTCs, be sure to follow the instructions in **B-CAN System Diagnosis Test Mode A** .

DTC Description	DTC
B1658 Rear Bumper LF Antenna Circuit Open	B

DTC (Keyless Access Control Unit)

1. Problem verification

   -1. Clear the DTCs with the HDS.

   -2. Select the KEYLESS ACCESS CONTROL UNIT from the ONE-PUSH START system select menu with the HDS, and enter the SELF CHECK.

   One-Push - KEYLESS ACCESS CONTROL UNIT - SELF CHECK

   -3. Do the SELF CHECK.

   -4. Check for DTCs with the HDS.

DTC Description	DTC
B1658 Rear Bumper LF Antenna Circuit Open	B

Is DTC B1658 indicated?

YES

Go to step 2.

NO

Intermittent failure, the system is OK at this time. Check for loose or poor connections.

2. Body control module EXT_TR+, EXT_TR- line output check

-1. Turn the vehicle to the OFF (LOCK) mode.

-2. Disconnect the following connector.

Rear bumper LF antenna 2P connector

-3. Turn the vehicle to the ON mode.

-4. Select KEYLESS ACCESS CONTROL UNIT from the ONE-PUSH START system select menu with the HDS, and enter FUNCTIONAL TESTS.

One-Push - KEYLESS ACCESS CONTROL UNIT - FUNCTIONAL TESTS

-5. Measure the voltage between test points 1 and 2.

Test condition	Vehicle ON mode Rear bumper LF antenna 2P connector: disconnected
Test point 1	Rear bumper LF antenna 2P connector (female terminals) No. 2: ①
Test point 2	Rear bumper LF antenna 2P connector (female terminals) No. 1: ①

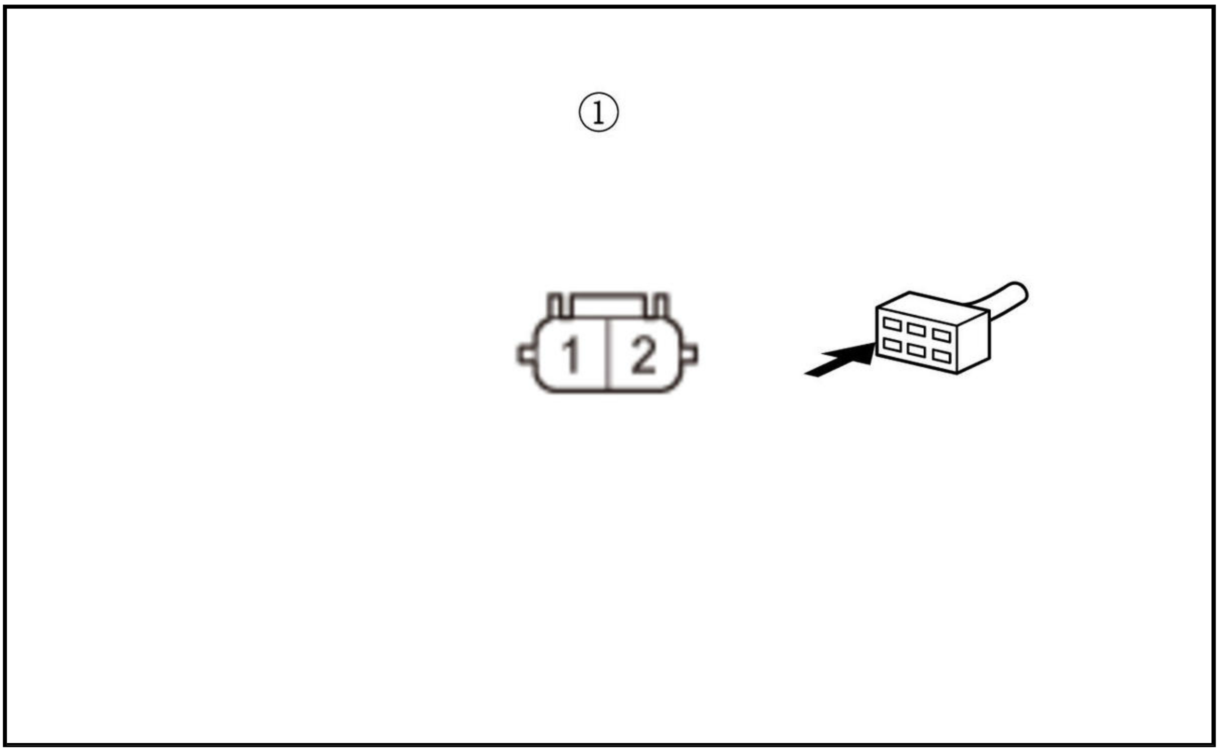

-6. Select CABIN REAR ANTENNA L DC OUTPUT with the HDS.

Is there voltage?

YES

Faulty rear bumper LF antenna; **replace the rear bumper LF antenna** .

NO

Go to step 3.

3. Open wire check (EXT_TR+, EXT_TR- lines)

-1. Turn the vehicle to the OFF (LOCK) mode.

-2. Connect terminals A and B with a jumper wire.

Terminal A	Rear bumper LF antenna 2P connector (female terminals) No. 2: ①
Terminal B	Rear bumper LF antenna 2P connector (female terminals) No. 1: ①

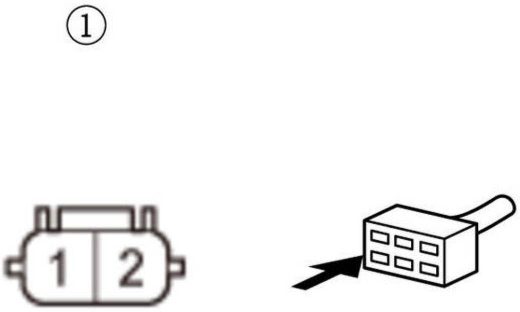

-3. Disconnect the following connector.

Body control module connector F (36P)

-4. Measure the resistance between test points 1 and 2.

Test condition	Vehicle OFF (LOCK) mode Body control module connector F (36P): disconnected Rear bumper LF antenna 2P connector: disconnected Rear bumper LF antenna 2P connector No. 1 and No. 2: jumped
Test point 1	**Body control module connector F (36P) No. 14**
Test point 2	**Body control module connector F (36P) No. 32**

Is there 1.0 Ω or less?

YES

The EXT_TR+ and EXT_TR- wires are OK. **Replace the body control module** .

NO

Repair an open or high resistance in the wire.

DTC B1659

DTC B1659 : Front Interior LF Antenna Circuit Short

NOTE: If you are troubleshooting multiple DTCs, be sure to follow the instructions in **B-CAN System Diagnosis Test Mode A** .

DTC Description	DTC
B1659 Front Interior LF Antenna Circuit Short	B

DTC (Keyless Access Control Unit)

1. Problem verification

   -1. Clear the DTCs with the HDS.

   -2. Select the KEYLESS ACCESS CONTROL UNIT from the ONE-PUSH START system select menu with the HDS, and enter the SELF CHECK.

   One-Push - KEYLESS ACCESS CONTROL UNIT - SELF CHECK

   -3. Do the SELF CHECK.

   -4. Check for DTCs with the HDS.

DTC Description	DTC
B1659 Front Interior LF Antenna Circuit Short	B

   Is DTC B1659 indicated?

   YES

   Go to step 2.

   NO

   Intermittent failure, the system is OK at this time. Check for loose or poor connections.

2. Shorted wire check (EXT_F+, EXT_F- lines)

   -1. Turn the vehicle to the OFF (LOCK) mode.

   -2. Disconnect the following connectors.

Body control module connector F (36P)
Front interior LF antenna 2P connector

   -3. Measure the resistance between test points 1 and 2.

Test condition	Vehicle OFF (LOCK) mode Body control module connector F (36P): disconnected

	Front interior LF antenna 2P connector: disconnected
Test point 1	**Body control module connector F (36P) No. 16**
Test point 2	Body ground

Test point 1	**Body control module connector F (36P) No. 34**
Test point 2	Body ground

Is there 1.0 MΩ or more?

YES

The EXT_F+ and EXT_F- wires are not shorted. Go to step 3.

NO

Repair a short to ground in the wire.

3. Shorted wire check (EXT_F+ line to EXT_F- line)

-1. Measure the resistance between test points 1 and 2.

Test condition	Vehicle OFF (LOCK) mode Body control module connector F (36P): disconnected Front interior LF antenna 2P connector: disconnected
Test point 1	**Body control module connector F (36P) No. 16**
Test point 2	**Body control module connector F (36P) No. 34**

Is there 1.0 MΩ or more?

YES

The EXT_F+ and EXT_F- wires are OK. Go to step 4.

NO

Repair a short in EXT_F+ wire to EXT_F- wire.

4. Body control module EXT_F+, EXT_F- line output check

-1. Reconnect the following connector.

Body control module connector F (36P)

-2. Turn the vehicle to the ON mode.

-3. Select KEYLESS ACCESS CONTROL UNIT from the ONE-PUSH START system select menu with the HDS, and enter FUNCTIONAL TESTS.

One-Push - KEYLESS ACCESS CONTROL UNIT - FUNCTIONAL TESTS

-4. Measure the voltage between test points 1 and 2.

Test condition	Vehicle ON mode Front interior LF antenna 2P connector: disconnected

Test point 1	Front interior LF antenna 2P connector (female terminals) No. 2: ①

Test point 2	Front interior LF antenna 2P connector (female terminals) No. 1: ①

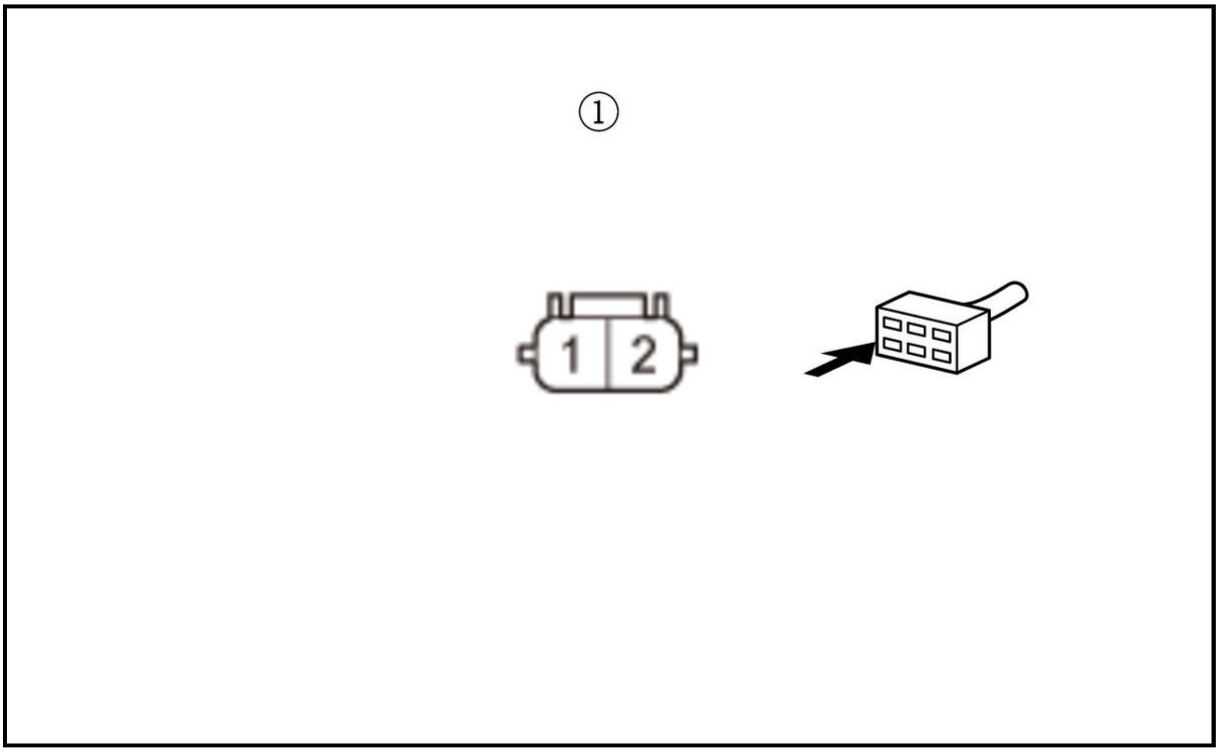

-5. Select CABIN FRONT ANTENNA L DC OUTPUT with the HDS.

Is there voltage?

YES

Faulty front interior LF antenna; **replace the front interior LF antenna** .

NO

Replace the body control module .

DTC B1660

DTC B1660 : Front Interior LF Antenna Circuit Open

NOTE: If you are troubleshooting multiple DTCs, be sure to follow the instructions in **B-CAN System Diagnosis Test Mode A** .

DTC Description	DTC
B1660 Front Interior LF Antenna Circuit Open	B

DTC (Keyless Access Control Unit)

1. Problem verification

-1. Clear the DTCs with the HDS.

-2. Select the KEYLESS ACCESS CONTROL UNIT from the ONE-PUSH START system select menu with the HDS, and enter the SELF CHECK.

One-Push - KEYLESS ACCESS CONTROL UNIT - SELF CHECK

-3. Do the SELF CHECK.

-4. Check for DTCs with the HDS.

DTC Description	**DTC**
B1660 Front Interior LF Antenna Circuit Open	B

Is DTC B1660 indicated?

YES

Go to step 2.

NO

Intermittent failure, the system is OK at this time. Check for loose or poor connections.

2. Body control module EXT_F+, EXT_F- line output check

-1. Turn the vehicle to the OFF (LOCK) mode.

-2. Disconnect the following connector.

Front interior LF antenna 2P connector

-3. Turn the vehicle to the ON mode.

-4. Select KEYLESS ACCESS CONTROL UNIT from the ONE-PUSH START system select menu with the HDS, and enter FUNCTIONAL TESTS.

One-Push - KEYLESS ACCESS CONTROL UNIT - FUNCTIONAL TESTS

-5. Measure the voltage between test points 1 and 2.

Test condition	Vehicle ON mode Front interior LF antenna 2P connector: disconnected
Test point 1	Front interior LF antenna 2P connector (female terminals) No. 2: ①
Test point 2	Front interior LF antenna 2P connector (female terminals) No. 1: ①

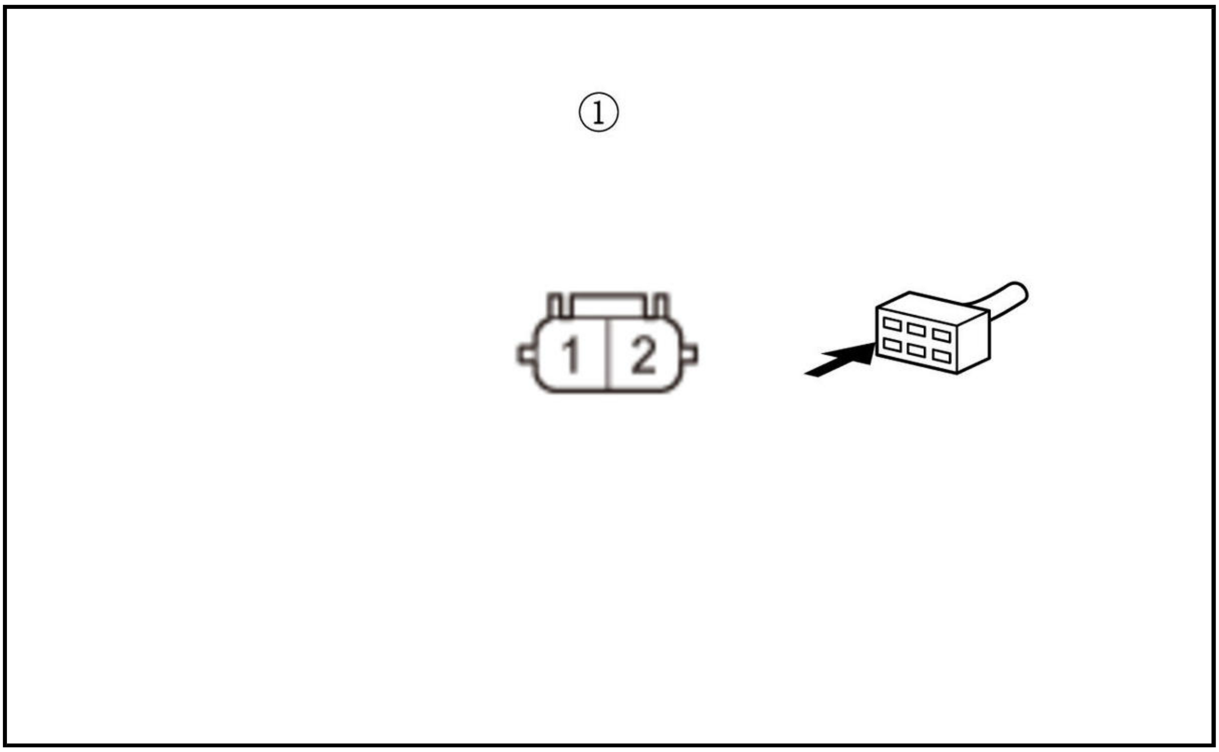

-6. Select CABIN FRONT ANTENNA L DC OUTPUT with the HDS.

Is there voltage?

YES

Faulty front interior LF antenna; **replace the front interior LF antenna** .

NO

Go to step 3.

3. Open wire check (EXT_F+, EXT_F- lines)

-1. Turn the vehicle to the OFF (LOCK) mode.

-2. Connect terminals A and B with a jumper wire.

Terminal A	Front interior LF antenna 2P connector (female terminals) No. 2: ①
Terminal B	Front interior LF antenna 2P connector (female terminals) No. 1: ①

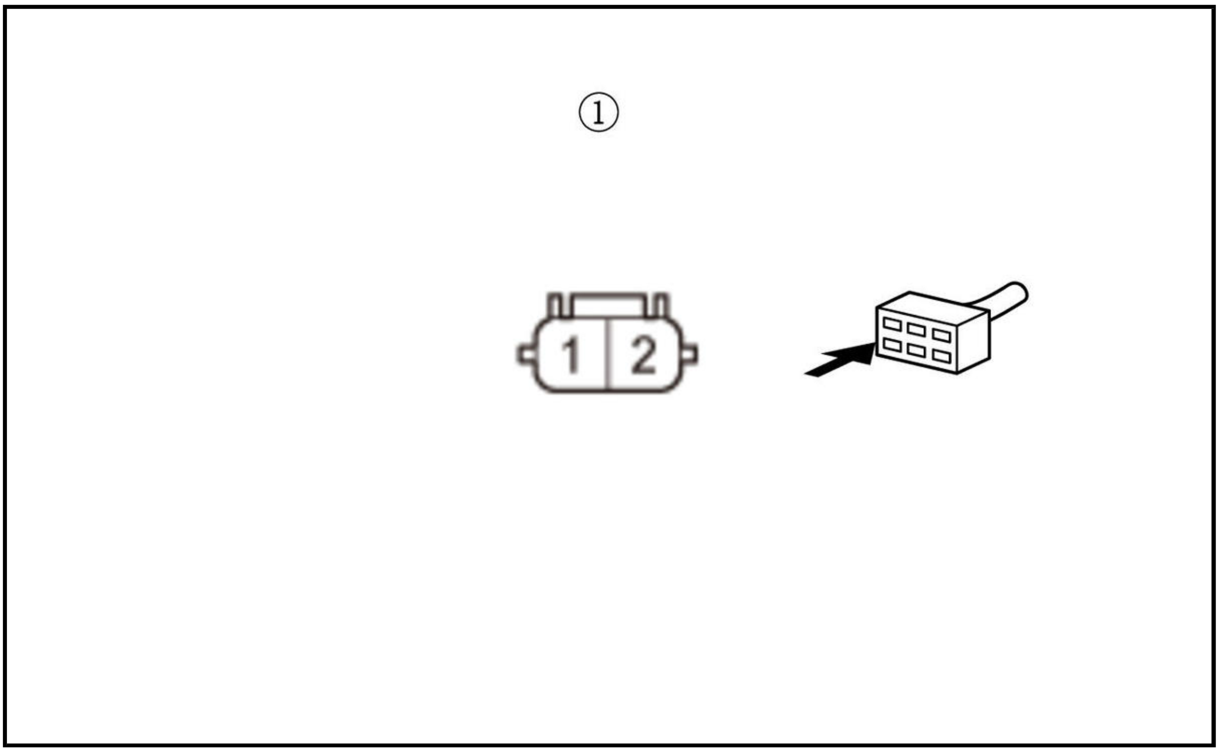

-3. Disconnect the following connector.

Body control module connector F (36P)

-4. Measure the resistance between test points 1 and 2.

Test condition	Vehicle OFF (LOCK) mode Body control module connector F (36P): disconnected Front interior LF antenna 2P connector: disconnected Front interior LF antenna 2P connector No. 1 and No. 2: jumped
Test point 1	**Body control module connector F (36P) No. 16**
Test point 2	**Body control module connector F (36P) No. 34**

Is there 1.0 Ω or less?

YES

The EXT_F+ and EXT_F- wires are OK. **Replace the body control module** .

NO

Repair an open or high resistance in the wire.

DTC B1661, B1667

DTC B1661 : Middle Interior Antenna Circuit Shorted

DTC B1667 : Rear Shelf (Middle Interior) LF Antenna Circuit Short

NOTE: If you are troubleshooting multiple DTCs, be sure to follow the instructions in **B-CAN System Diagnosis Test Mode A** .

DTC Description	DTC
B1661 Middle Interior Antenna Circuit Shorted	B
B1667 Rear Shelf (Middle Interior) LF Antenna Circuit Short	B

DTC (Keyless Access Control Unit)

1. Problem verification

   -1. Clear the DTCs with the HDS.

   -2. Select the KEYLESS ACCESS CONTROL UNIT from the ONE-PUSH START system select menu with the HDS, and enter the SELF CHECK.

   -3. Do the SELF CHECK.

   One-Push - KEYLESS ACCESS CONTROL UNIT - SELF CHECK

   -4. Check for DTCs with the HDS.

DTC Description	DTC
B1661 Middle Interior Antenna Circuit Shorted	B

DTC Description	DTC
B1667 Rear Shelf (Middle Interior) LF Antenna Circuit Short	B

   Is DTC B1661 or B1667 indicated?

   YES

   Go to step 2.

   NO

   Intermittent failure, the system is OK at this time. Check for loose or poor connections.

2. Shorted wire check (EXT_M+, EXT_M- lines)

   -1. Turn the vehicle to the OFF (LOCK) mode.

   -2. Disconnect the following connectors.

Body control module connector F (36P) Middle interior LF antenna 2P connector

   -3. Measure the resistance between test points 1 and 2.

Test condition	Vehicle OFF (LOCK) mode Body control module connector F (36P): disconnected Middle interior LF antenna 2P connector: disconnected
Test point 1	**Body control module connector F (36P) No. 15**
Test point 2	Body ground

Test point 1	**Body control module connector F (36P) No. 33**
Test point 2	Body ground

   Is there 1.0 MΩ or more?

   YES

   The EXT_M+ and EXT_M- wires are not shorted. Go to step 3.

   NO

Repair a short to ground in the wire.

3. Shorted wire check (EXT_M+ to EXT_M- line)

-1. Measure the resistance between test points 1 and 2.

Test condition	Vehicle OFF (LOCK) mode Body control module connector F (36P): disconnected Middle interior LF antenna 2P connector: disconnected
Test point 1	**Body control module connector F (36P) No. 15**
Test point 2	**Body control module connector F (36P) No. 33**

Is there 1.0 MΩ or more?

YES

The EXT_M+ and EXT_M- wires are OK. Go to step 4.

NO

Repair a short in EXT_M+ to EXT_M- wire.

4. Body control module EXT_M+, EXT_M- line output check

-1. Reconnect the following connector.

Body control module connector F (36P)

-2. Turn the vehicle to the ON mode.

-3. Select KEYLESS ACCESS CONTROL UNIT from the ONE-PUSH START system select menu with the HDS, and enter FUNCTIONAL TESTS.

One-Push - KEYLESS ACCESS CONTROL UNIT - FUNCTIONAL TESTS

-4. Measure the voltage between test points 1 and 2.

Test condition	Vehicle ON mode Middle interior LF antenna 2P connector: disconnected
Test point 1	Middle interior LF antenna 2P connector (female terminals) No. 2: ①
Test point 2	Middle interior LF antenna 2P connector (female terminals) No. 1: ①

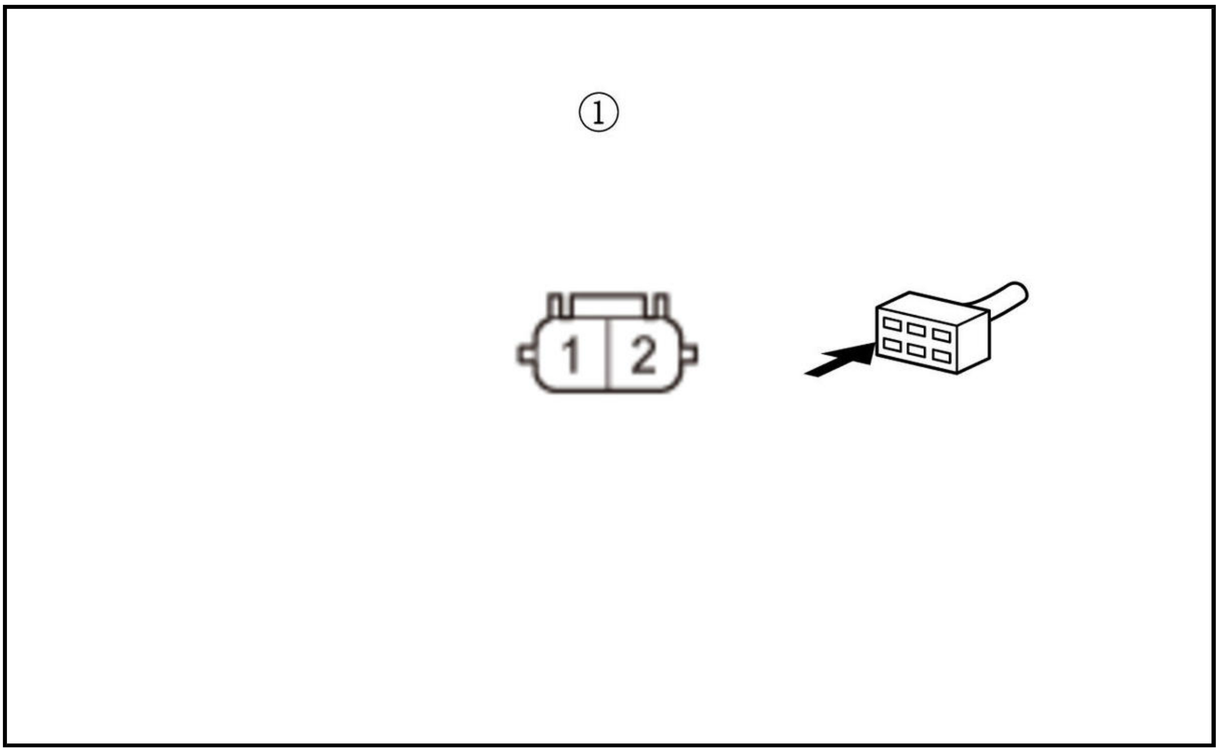

-5. Select CABIN MIDDLE ANTENNA L DC OUTPUT with the HDS.

Is there voltage?

YES

Faulty middle interior LF antenna; **Replace the middle interior LF antenna** .

NO

Replace the body control module .

DTC B1662, B1668

DTC B1662 : Middle Interior Antenna Circuit Opened

DTC B1668 : Rear Shelf (Middle Interior) LF Antenna Circuit Open

NOTE: If you are troubleshooting multiple DTCs, be sure to follow the instructions in **B-CAN System Diagnosis Test Mode A** .

DTC Description	DTC
B1662 Middle Interior Antenna Circuit Opened	B
B1668 Rear Shelf (Middle Interior) LF Antenna Circuit Open	B

DTC (Keyless Access Control Unit)

1. Problem verification

   -1. Clear the DTCs with the HDS.

   -2. Select the KEYLESS ACCESS CONTROL UNIT from the ONE-PUSH START system select menu with the HDS, and enter the SELF CHECK.

   One-Push - KEYLESS ACCESS CONTROL UNIT - SELF CHECK

   -3. Do the SELF CHECK.

-4. Check for DTCs with the HDS.

DTC Description	DTC
B1662 Middle Interior Antenna Circuit Opened	B
B1668 Rear Shelf (Middle Interior) LF Antenna Circuit Open	B

Is DTC B1662 or B1668 indicated?

YES

Go to step 2.

NO

Intermittent failure, the system is OK at this time. Check for loose or poor connections.

2. Body control module EXT_M+, EXT_M- line output check

-1. Turn the vehicle to the OFF (LOCK) mode.

-2. Disconnect the following connector.

Middle interior LF antenna 2P connector

-3. Turn the vehicle to the ON mode.

-4. Select KEYLESS ACCESS CONTROL UNIT from the ONE-PUSH START system select menu with the HDS, and enter FUNCTIONAL TESTS.

One-Push - KEYLESS ACCESS CONTROL UNIT - FUNCTIONAL TESTS

-5. Measure the voltage between test points 1 and 2.

Test condition	Vehicle ON mode Middle interior LF antenna 2P connector: disconnected
Test point 1	Middle interior LF antenna 2P connector (female terminals) No. 2: ①
Test point 2	Middle interior LF antenna 2P connector (female terminals) No. 1: ①

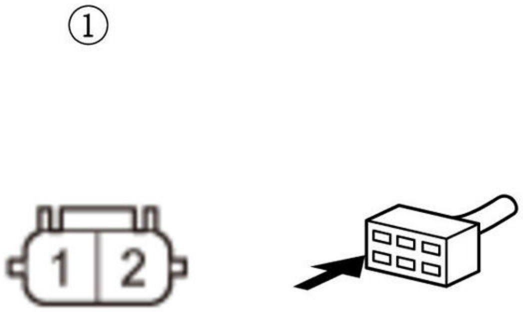

-6. Select CABIN MIDDLE ANTENNA L DC OUTPUT with the HDS.

Is there voltage?

YES

Faulty middle interior LF antenna; **Replace the middle interior LF antenna** .

NO

Go to step 3.

3. Open wire check (EXT_M+, EXT_M- lines)

-1. Turn the vehicle to the OFF (LOCK) mode.

-2. Connect terminals A and B with a jumper wire.

Terminal A	Middle interior LF antenna 2P connector (female terminals) No. 2: ①
Terminal B	Middle interior LF antenna 2P connector (female terminals) No. 1: ①

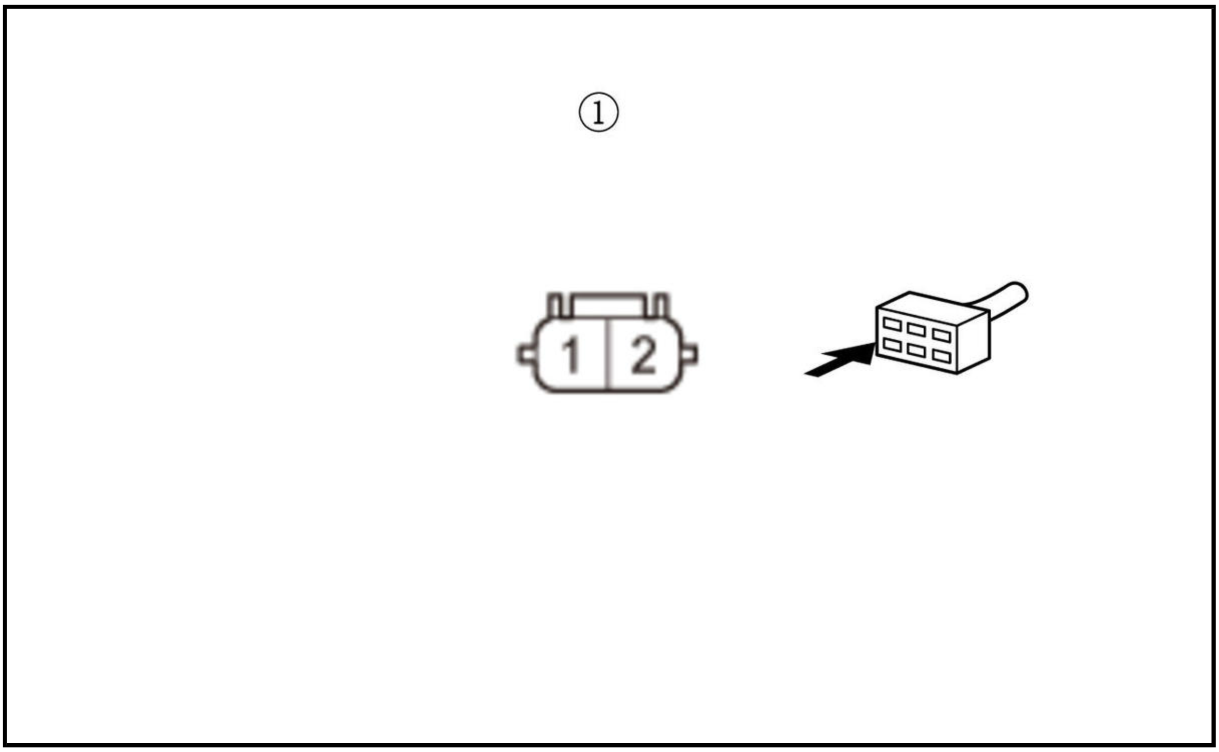

-3. Disconnect the following connector.

Body control module connector F (36P)

-4. Measure the resistance between test points 1 and 2.

Test condition	Vehicle OFF (LOCK) mode Body control module connector F (36P): disconnected Middle interior LF antenna 2P connector: disconnected
Test point 1	**Body control module connector F (36P) No. 15**
Test point 2	**Body control module connector F (36P) No. 33**

Is there 1.0 Ω or less?

YES

The EXT_M+ and EXT_M- wires are OK. **Replace the body control module** .

NO

Repair an open or high resistance in the wire.

DTC B1663

DTC B1663 : Rear Interior LF Antenna Circuit Short

NOTE: If you are troubleshooting multiple DTCs, be sure to follow the instructions in **B-CAN System Diagnosis Test Mode A** .

DTC Description	DTC
B1663 Rear Interior LF Antenna Circuit Short	B

DTC (Keyless Access Control Unit)

1. Problem verification

-1. Clear the DTCs with the HDS.

-2. Select the KEYLESS ACCESS CONTROL UNIT from the ONE-PUSH START system select menu with the HDS, and enter the SELF CHECK.

One-Push - KEYLESS ACCESS CONTROL UNIT - SELF CHECK

-3. Do the SELF CHECK.

-4. Check for DTCs with the HDS.

DTC Description	DTC
B1663 Rear Interior LF Antenna Circuit Short	B

Is DTC B1663 indicated?

YES

Go to step 2.

NO

Intermittent failure, the system is OK at this time. Check for loose or poor connections.

2. Shorted wire check (EXT_R+, EXT_R- lines)

-1. Turn the vehicle to the OFF (LOCK) mode.

-2. Disconnect the following connectors.

Body control module connector F (36P)
Rear interior LF antenna 2P connector

-3. Measure the resistance between test points 1 and 2.

Test condition	Vehicle OFF (LOCK) mode Body control module connector F (36P): disconnected Rear interior LF antenna 2P connector: disconnected
Test point 1	**Body control module connector F (36P) No. 17**
Test point 2	Body ground

Test point 1	**Body control module connector F (36P) No. 35**
Test point 2	Body ground

Is there 1.0 MΩ or more?

YES

The EXT_R+ and EXT_R- wires are not shorted. Go to step 3.

NO

Repair a short to ground in the wire.

3. Shorted wire check (EXT_R+ line to EXT_R- line)

-1. Measure the resistance between test points 1 and 2.

Test condition	Vehicle OFF (LOCK) mode Body control module connector F (36P): disconnected Rear interior LF antenna 2P connector: disconnected
Test point 1	**Body control module connector F (36P) No. 17**
Test point 2	**Body control module connector F (36P) No. 35**

Is there 1.0 MΩ or more?

YES

The EXT_R+ and EXT_R- wires are OK. Go to step 4.

NO

Repair a short in EXT_R+ wire to EXT_R- wire.

4. Body control module EXT_R+, EXT_R- line output check

-1. Reconnect the following connector.

Body control module connector F (36P)

-2. Turn the vehicle to the ON mode.

-3. Select KEYLESS ACCESS CONTROL UNIT from the ONE-PUSH START system select menu with the HDS, and enter FUNCTIONAL TESTS.

One-Push - KEYLESS ACCESS CONTROL UNIT - FUNCTIONAL TESTS

-4. Measure the voltage between test points 1 and 2.

Test condition	Vehicle ON mode Rear interior LF antenna 2P connector: disconnected

Test point 1	Rear interior LF antenna 2P connector (female terminals) No. 2: ①
Test point 2	Rear interior LF antenna 2P connector (female terminals) No. 1: ①

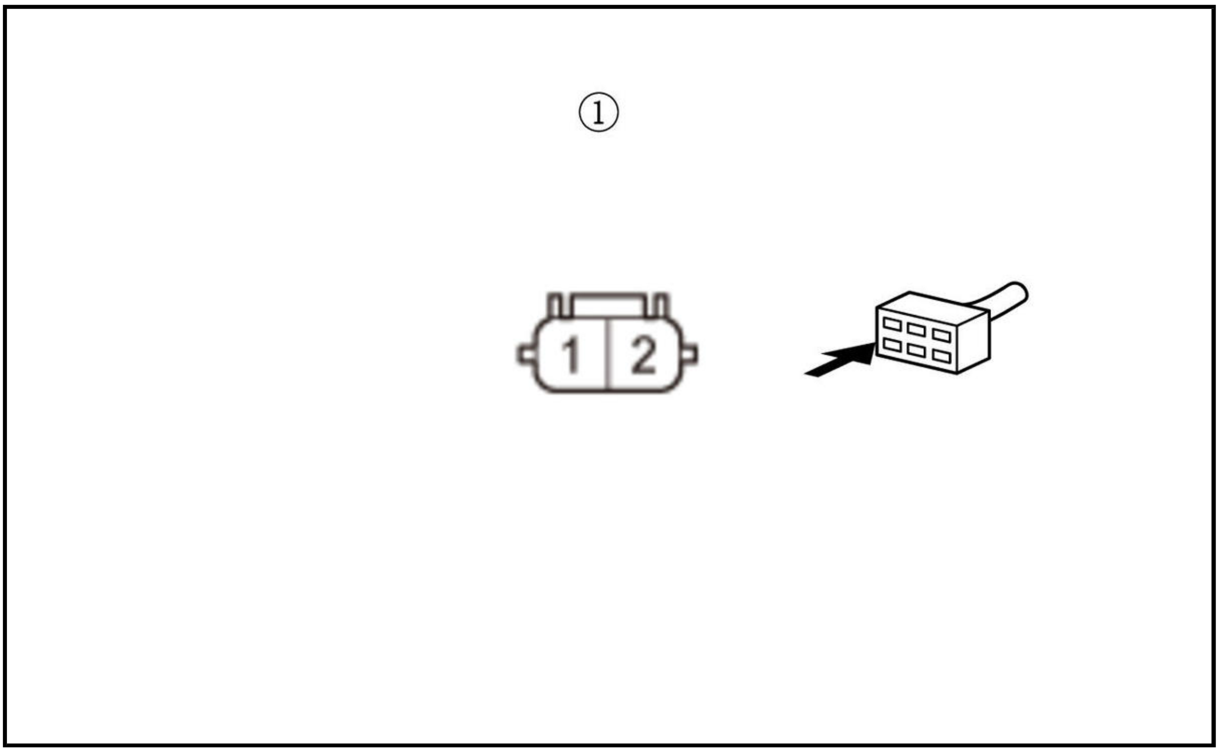

-5. Select CABIN REAR ANTENNA L DC OUTPUT with the HDS.

Is there voltage?

YES

Faulty rear interior LF antenna; **replace the rear interior LF antenna** .

NO

Replace the body control module .

DTC B1664

DTC B1664 : Rear Interior LF Antenna Circuit Open

NOTE: If you are troubleshooting multiple DTCs, be sure to follow the instructions in **B-CAN System Diagnosis Test Mode A** .

DTC Description	DTC
B1664 Rear Interior LF Antenna Circuit Open	B

DTC (Keyless Access Control Unit)

1. Problem verification

   -1. Clear the DTCs with the HDS.

   -2. Select the KEYLESS ACCESS CONTROL UNIT from the ONE-PUSH START system select menu with the HDS, and enter the SELF CHECK.

   One-Push - KEYLESS ACCESS CONTROL UNIT - SELF CHECK

   -3. Do the SELF CHECK.

   -4. Check for DTCs with the HDS.

DTC Description	DTC
B1664 Rear Interior LF Antenna Circuit Open	B

Is DTC B1664 indicated?

YES

Go to step 2.

NO

Intermittent failure, the system is OK at this time. Check for loose or poor connections.

2. Body control module EXT_R+, EXT_R- line output check

-1. Turn the vehicle to the OFF (LOCK) mode.

-2. Disconnect the following connector.

Rear interior LF antenna 2P connector

-3. Turn the vehicle to the ON mode.

-4. Select KEYLESS ACCESS CONTROL UNIT from the ONE-PUSH START system select menu with the HDS, and enter FUNCTIONAL TESTS.

One-Push - KEYLESS ACCESS CONTROL UNIT - FUNCTIONAL TESTS

-5. Measure the voltage between test points 1 and 2.

Test condition	Vehicle ON mode Rear interior LF antenna 2P connector: disconnected
Test point 1	Rear interior LF antenna 2P connector (female terminals) No. 2: ①
Test point 2	Rear interior LF antenna 2P connector (female terminals) No. 1: ①

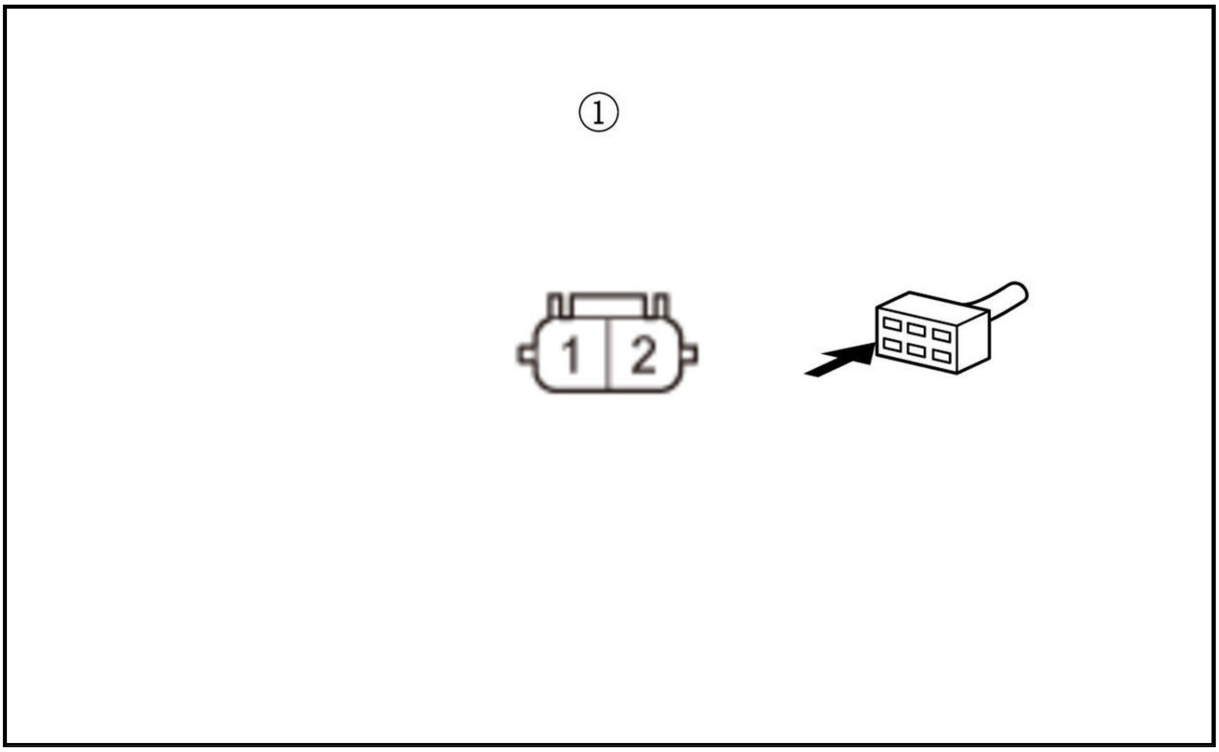

-6. Select CABIN REAR ANTENNA L DC OUTPUT with the HDS.

Is there voltage?

YES

Faulty rear interior LF antenna; **replace the rear interior LF antenna** .

NO

Go to step 3.

3. Open wire check (EXT_R+, EXT_R- lines)

-1. Turn the vehicle to the OFF (LOCK) mode.

-2. Connect terminals A and B with a jumper wire.

Terminal A	Rear interior LF antenna 2P connector (female terminals) No. 2: ①
Terminal B	Rear interior LF antenna 2P connector (female terminals) No. 1: ①

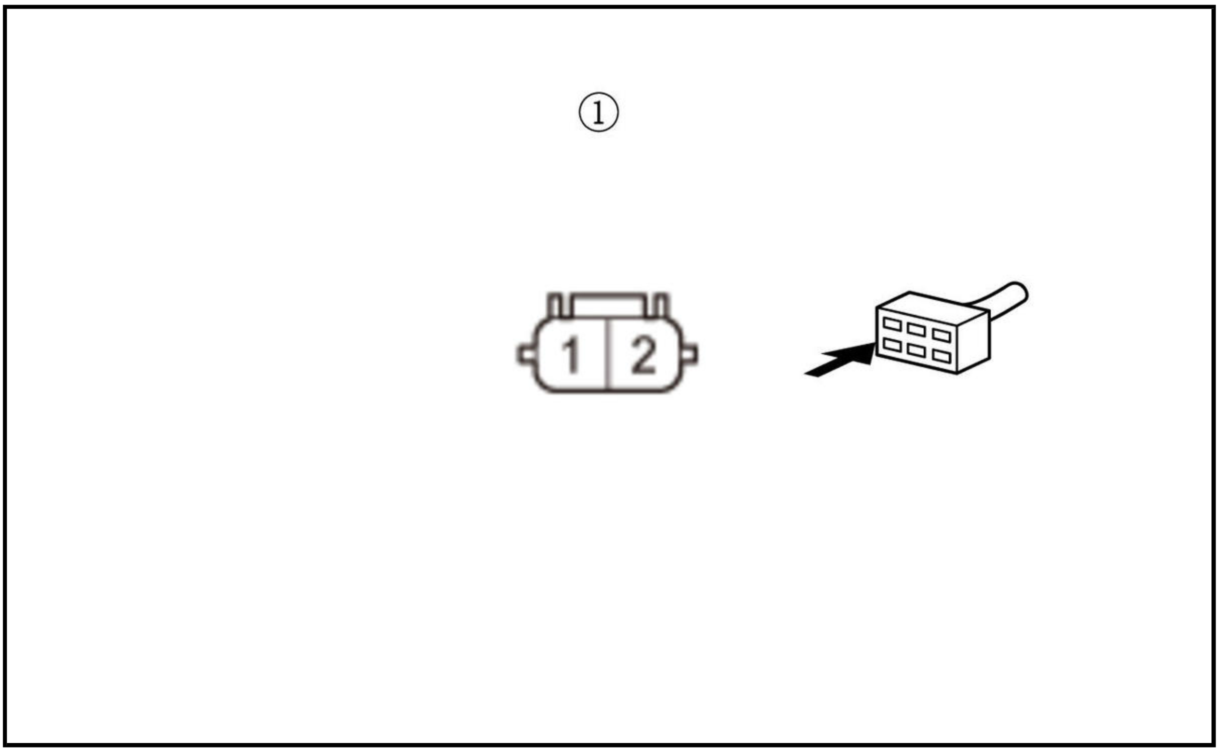

-3. Disconnect the following connector.

Body control module connector F (36P)

-4. Measure the resistance between test points 1 and 2.

Test condition	Vehicle OFF (LOCK) mode Body control module connector F (36P): disconnected Rear interior LF antenna 2P connector: disconnected Rear interior LF antenna 2P connector No. 1 and No. 2: jumped
Test point 1	**Body control module connector F (36P) No. 17**
Test point 2	**Body control module connector F (36P) No. 35**

Is there 1.0 Ω or less?

YES

The EXT_R+ and EXT_R- wires are OK. **Replace the body control module** .

NO

Repair an open or high resistance in the wire.

DTC U1280 (KEYLESS ACCESS CONTROL UNIT)

DTC U1280 : Keyless access control unit communication bus line error (BUS-OFF)

NOTE: If you are troubleshooting multiple DTCs, be sure to follow the instructions in **B-CAN System Diagnosis Test Mode A** .

DTC Description	DTC
U1280 Keyless access control unit communication bus line error (BUS-OFF)	B

DTC (Keyless Access Control Unit)

1. Problem verification

   -1. Clear the DTCs with the HDS.

   -2. Turn the vehicle to the OFF (LOCK) mode and then the ON mode.

   -3. Wait for at least 6 seconds.

   -4. Check for DTCs with the HDS.

DTC Description	DTC
U1280 Keyless access control unit communication bus line error (BUS-OFF)	B

   Is DTC U1280 indicated?

   YES

   Go to body control module DTC U1280 troubleshooting .

   NO

   Intermittent failure, the system is OK at this time. Check for loose or poor connections.

DTC U1281 (KEYLESS ACCESS CONTROL UNIT)

DTC U1281 : Keyless Access Control Unit Lost Communication with MICU

NOTE: If you are troubleshooting multiple DTCs, be sure to follow the instructions in **B-CAN System Diagnosis Test Mode A** .

DTC Description	DTC
U1281 Keyless Access Control Unit Lost Communication with MICU	B

DTC (Keyless Access Control Unit)

1. Problem verification

   -1. Clear the DTCs with the HDS.

-2. Turn the vehicle to the OFF (LOCK) mode and then the ON mode.

-3. Wait for at least 6 seconds.

-4. Check for DTCs with the HDS.

DTC Description	DTC
U1281 Keyless Access Control Unit Lost Communication with MICU	B

Is DTC U1281 indicated?

YES

Replace the body control module .

NO

Intermittent failure, the system is OK at this time. Check for loose or poor connections.

DTC U128D (KEYLESS ACCESS CONTROL UNIT)

DTC U128D : Keyless Access Control Unit Lost Communication with Gauge Control Module

NOTE:

- If you are troubleshooting multiple DTCs, be sure to follow the instructions in B-CAN System Diagnosis Test Mode A .
- Refer to the DTC code shown on the display, and then inspect the connectors and terminals based on the instructions in the table below.
- The DTC may be stored due to the grounding failure or the power source failure at the transmitting control unit (the grounding inspection and the power source inspection on each control unit are required prior to this checking process).

DTC Description	DTC
U128D Keyless Access Control Unit Lost Communication with Gauge Control Module	B

DTC (Keyless Access Control Unit)

1. Problem verification

-1. Clear the DTC with the HDS.

-2. Turn the vehicle to the OFF (LOCK) mode and then the ON mode.

-3. Wait for at least 6 seconds.

-4. Check for DTCs with the HDS.

DTC Description	DTC
U128D Keyless Access Control Unit Lost Communication with Gauge Control Module	B

Are any DTCs indicated?

YES

Go to step 2.

NO

Intermittent failure, the system is OK at this time. Check for poor connections or loose terminals.

2. Open wire check (B-CAN_H line, B-CAN_L line)

-1. Turn the vehicle to the OFF (LOCK) mode.

-2. Disconnect the receiving control unit connector.

Body control module connector B (36P)

-3. Disconnect the transmitting control unit connector(s).

Refer to the DTC shown on the display, then disconnect the connector(s) based on the instructions (see table).

DTC	Connector
U128D	Gauge control module connector A (32P)

-4. Measure the resistance between the receiving control unit and the transmitting control unit on the B-CAN_H circuit and the B-CAN_L circuit.

Test condition	Vehicle OFF (LOCK) mode Body control module connector B (36P): disconnected Transmitting control unit connector(s) for indicated DTCs: disconnected

DTC	Circuit name	Receiving control unit		Transmitting control unit	
		Connector	Terminal	Connector	Terminal
U128D	B-CAN_H	Body control module connector B (36P)	No. 20	Gauge control module connector A (32P)	No. 30
	B-CAN_L		No. 21		No. 31

Is there 1.0 Ω or less?

YES

The B-CAN_H wire and the B-CAN_L wire are OK.

Refer to the DTC shown on the display, then replace the control unit based on the instructions (see table).

DTC	Operation for transmitting control unit
U128D	Gauge control module

NO

Repair an open in the B-CAN_H wire and/or the B-CAN_L wire.

DTC TROUBLESHOOTING

DTC B1601

DTC B1601 : Keyless access control unit internal (CPU) error

NOTE: If you are troubleshooting multiple DTCs, be sure to follow the instructions in B-CAN System Diagnosis Test Mode A .

DTC Description	DTC
B1601 Keyless access control unit internal (CPU) error	B

DTC (Keyless Access Control Unit)

1. Problem verification

   -1. Clear the DTCs with the HDS.

   -2. Turn the vehicle to the OFF (LOCK) mode and then the ON mode.

   -3. Check for DTCs with the HDS.

DTC Description	DTC
B1601 Keyless access control unit internal (CPU) error	B

   Is DTC B1601 indicated?

   YES

   Replace the body control module .

   NO

   Intermittent failure, the system is OK at this time.

DTC B1602

DTC B1602 : Keyless access control unit internal (EEPROM) error

NOTE: If you are troubleshooting multiple DTCs, be sure to follow the instructions in B-CAN System Diagnosis Test Mode A .

DTC Description	DTC
B1602 Keyless access control unit internal (EEPROM) error	B

DTC (Keyless Access Control Unit)

1. Problem verification

   -1. Clear the DTCs with the HDS.

   -2. Turn the vehicle to the OFF (LOCK) mode and then the ON mode.

   -3. Check for DTCs with the HDS.

DTC Description	DTC
B1602 Keyless access control unit internal (EEPROM) error	B

Is DTC B1602 indicated?

YES

Replace the body control module .

NO

Intermittent failure, the system is OK at this time.

DTC B1632

DTC B1632 : MTR CONT Signal Error

NOTE: If you are troubleshooting multiple DTCs, be sure to follow the instructions in **B-CAN System Diagnosis Test Mode A** .

DTC Description	DTC
B1632 MTR CONT Signal Error	B

DTC (Keyless Access Control Unit)

1. Problem verification

-1. Clear the DTCs with the HDS.

-2. Start the engine.

-3. Stop the engine.

-4. Check for DTCs with the HDS.

DTC Description	DTC
B1632 MTR CONT Signal Error	B

Is DTC B1632 indicated?

YES

Go to step 2.

NO

Intermittent failure, the system is OK at this time.

2. Shorted wire check (MTR CONT line)

-1. Turn the vehicle to the OFF (LOCK) mode.

-2. Disconnect the following connectors.

Body control module connector F (36P)
Electric steering lock 12P connector

-3. Turn the vehicle to the ON mode.

-4. Measure the voltage between test points 1 and 2.

Test condition	Vehicle ON mode Body control module connector F (36P): disconnected Electric steering lock 12P connector: disconnected
Test point 1	Electric steering lock 12P connector (female terminals) No. 1: ①
Test point 2	Body ground

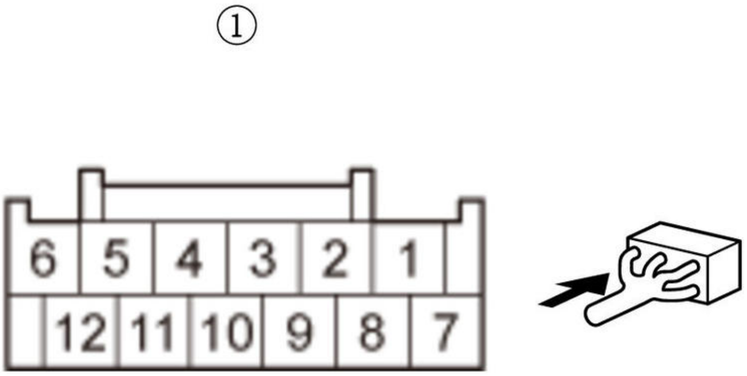

Is there battery voltage?

YES

Repair a short to power in the wire.

NO

Go to step 3.

3. Electric steering lock MTR CONT line internal short to power check

-1. Turn the vehicle to the OFF (LOCK) mode.

-2. Reconnect the following connector.

Electric steering lock 12P connector

-3. Turn the vehicle to the ON mode.

-4. Measure the voltage between test points 1 and 2.

Test condition	Vehicle ON mode Body control module connector F (36P): disconnected
Test point 1	**Body control module connector F (36P) No. 1**
Test point 2	Body ground

Is there battery voltage?

YES

Replace the electric steering lock .

NO

Replace the body control module .

DTC B1640

DTC B1640 : RF1 antenna not connected or malfunction

NOTE: If you are troubleshooting multiple DTCs, be sure to follow the instructions in B-CAN System Diagnosis Test Mode A .

DTC Description	DTC
B1640 RF1 antenna not connected or malfunction	B

DTC (Keyless Access Control Unit)

1. Problem verification

-1. Clear the DTCs with the HDS.

-2. Touch the door outer handle touch sensor (LOCK) to lock the door.

-3. Touch the door outer handle touch sensor (UNLOCK) to unlock the door.

-4. Check for DTCs with the HDS.

DTC Description	DTC
B1640 RF1 antenna not connected or malfunction	B

Is DTC B1640 indicated?

YES

Replace the body control module .

NO

Intermittent failure, the system is OK at this time. Check for loose or poor connections.

DTC B1645

DTC B1645 : Driver's Door LF Antenna Circuit Short

NOTE: If you are troubleshooting multiple DTCs, be sure to follow the instructions in B-CAN System Diagnosis Test Mode A .

DTC Description	DTC
B1645 Driver's Door LF Antenna Circuit Short	B

DTC (Keyless Access Control Unit)

1. Problem verification

-1. Clear the DTCs with the HDS.

-2. Select the KEYLESS ACCESS CONTROL UNIT from the ONE-PUSH START system select menu with the HDS, and enter the SELF CHECK.

One-Push - KEYLESS ACCESS CONTROL UNIT - SELF CHECK

-3. Do the SELF CHECK.

-4. Check for DTCs with the HDS.

DTC Description	DTC
B1645 Driver's Door LF Antenna Circuit Short	B

Is DTC B1645 indicated?

YES

Go to step 2.

NO

Intermittent failure, the system is OK at this time. Check for loose or poor connections.

2. Shorted wire check (EXT FR DR+, EXT FR DR- lines)

-1. Turn the vehicle to the OFF (LOCK) mode.

-2. Disconnect the following connectors.

Body control module connector F (36P)
Driver's door outer handle 8P connector

-3. Check for continuity between test points 1 and 2.

Test condition	Vehicle OFF (LOCK) mode Body control module connector F (36P): disconnected Driver's door outer handle 8P connector: disconnected
Test point 1	**Body control module connector F (36P) No. 13**
Test point 2	Body ground

Test point 1	**Body control module connector F (36P) No. 31**
Test point 2	Body ground

Is there continuity?

YES

Repair a short to ground in the wire.

NO

The EXT FR DR+ and EXT FR DR- wires are not shorted. Go to step 3.

3. Shorted wire check (EXT FR DR+ line to EXT FR DR- line)

-1. Check for continuity between test points 1 and 2.

Test condition	Vehicle OFF (LOCK) mode Body control module connector F (36P): disconnected Driver's door outer handle 8P connector: disconnected
Test point 1	**Body control module connector F (36P) No. 13**
Test point 2	**Body control module connector F (36P) No. 31**

Is there continuity?

YES

Repair a short in EXT FR DR+ wire to EXT FR DR- wire.

NO

The EXT FR DR+ and EXT FR DR- wires are OK. Go to step 4.

4. Body control module EXT FR DR+, EXT FR DR- line output check

-1. Reconnect the following connector.

Body control module connector F (36P)

-2. Turn the vehicle to the ON mode.

-3. Select KEYLESS ACCESS CONTROL UNIT from the ONE-PUSH START system select menu with the HDS, and enter FUNCTIONAL TESTS.

One-Push - KEYLESS ACCESS CONTROL UNIT - FUNCTIONAL TESTS

-4. Measure the voltage between test points 1 and 2.

Test condition	Vehicle ON mode Driver's door outer handle 8P connector: disconnected

Test point 1	Driver's door outer handle 8P connector (female terminals) No. 2: ①
Test point 2	Driver's door outer handle 8P connector (female terminals) No. 6: ①

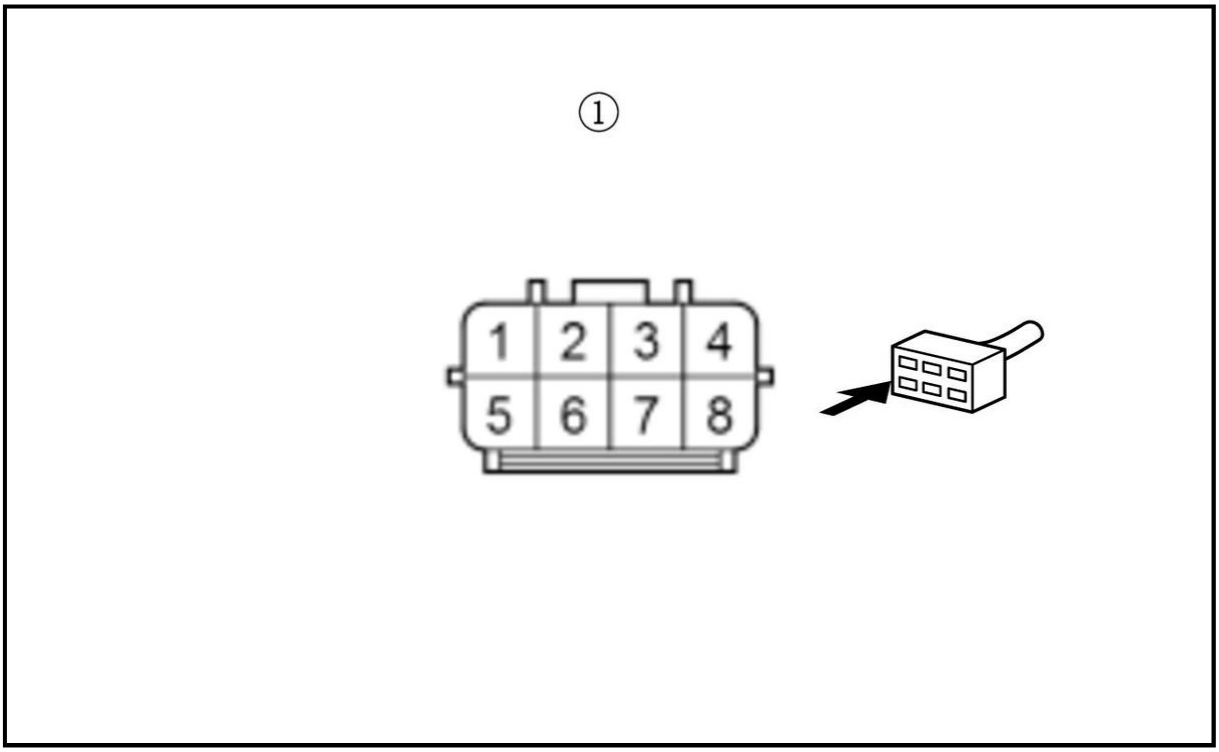

-5. Select DRIVER (DOOR) ANTENNA L DC OUTPUT with the HDS.

Is there voltage?

YES

Faulty LF antenna; replace the driver's door outer handle .

NO

Replace the body control module .

DTC B1646

DTC B1646 : Driver's Door LF Antenna Circuit Open

NOTE: If you are troubleshooting multiple DTCs, be sure to follow the instructions in B-CAN System Diagnosis Test Mode A .

DTC Description	DTC
B1646 Driver's Door LF Antenna Circuit Open	B

DTC (Keyless Access Control Unit)

1. Problem verification

   -1. Clear the DTCs with the HDS.

   -2. Select the KEYLESS ACCESS CONTROL UNIT from the ONE-PUSH START system select menu with the HDS, and enter the SELF CHECK.

   One-Push - KEYLESS ACCESS CONTROL UNIT - SELF CHECK

   -3. Do the SELF CHECK.

   -4. Check for DTCs with the HDS.

DTC Description	DTC
B1646 Driver's Door LF Antenna Circuit Open	B

   Is DTC B1646 indicated?

   YES

   Go to step 2.

   NO

   Intermittent failure, the system is OK at this time. Check for loose or poor connections.

2. Body control module EXT FR DR+, EXT FR DR- line output check

   -1. Turn the vehicle to the OFF (LOCK) mode.

   -2. Disconnect the following connector.

Driver's door outer handle 8P connector

   -3. Turn the vehicle to the ON mode.

   -4. Select KEYLESS ACCESS CONTROL UNIT from the ONE-PUSH START system select menu with the HDS, and enter FUNCTIONAL TESTS.

   One-Push - KEYLESS ACCESS CONTROL UNIT - FUNCTIONAL TESTS

   -5. Measure the voltage between test points 1 and 2.

Test condition	Vehicle ON mode Driver's door outer handle 8P connector: disconnected
Test point 1	Driver's door outer handle 8P connector (female terminals) No. 2: ①
Test point 2	Driver's door outer handle 8P connector (female terminals) No. 6: ①

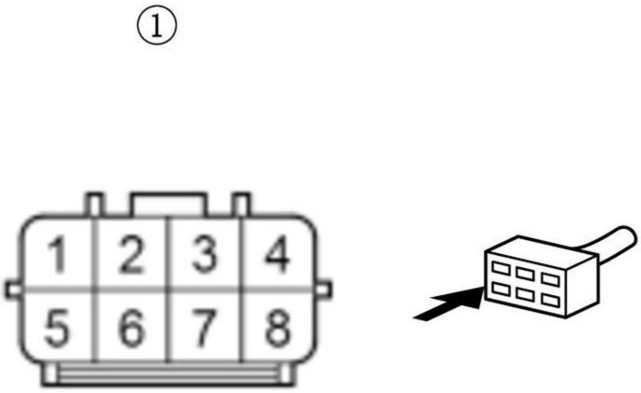

-6. Select DRIVER (DOOR) ANTENNA L DC OUTPUT with the HDS.

Is there voltage?

YES

Faulty LF antenna; **replace the driver's door outer handle** .

NO

Go to step 3.

3. Open wire check (EXT FR DR+, EXT FR DR- lines)

-1. Turn the vehicle to the OFF (LOCK) mode.

-2. Connect terminals A and B with a jumper wire.

Terminal A	Driver's door outer handle 8P connector (female terminals) No. 2: ①
Terminal B	Driver's door outer handle 8P connector (female terminals) No. 6: ①

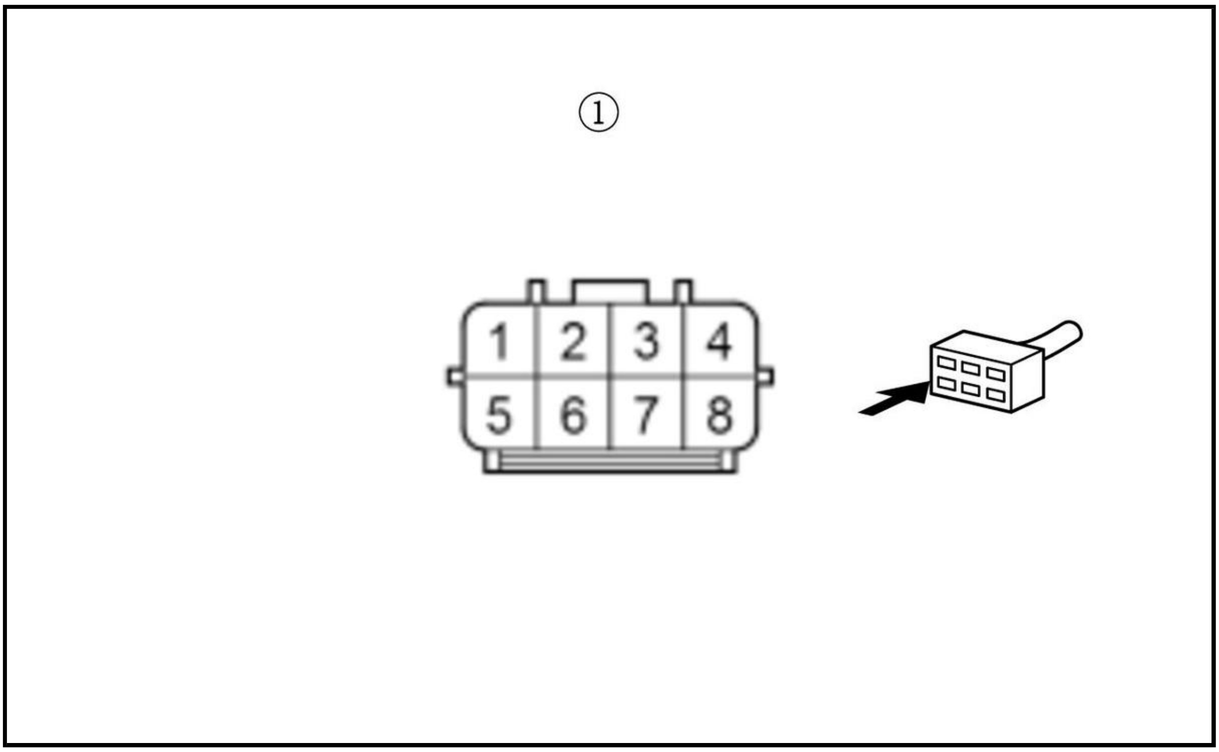

-3. Disconnect the following connector.

Body control module connector F (36P)

-4. Check for continuity between test points 1 and 2.

Test condition	Vehicle OFF (LOCK) mode Body control module connector F (36P): disconnected Driver's door outer handle 8P connector: disconnected Driver's door outer handle 8P connector No. 2 and No. 6: jumped
Test point 1	**Body control module connector F (36P) No. 13**
Test point 2	**Body control module connector F (36P) No. 31**

Is there continuity?

YES

The EXT FR DR+ and EXT FR DR- wires are OK. **Replace the body control module** .

NO

Repair an open or high resistance in the wire.

DTC B1647

DTC B1647 : Passenger's Door LF Antenna Circuit Short

NOTE: If you are troubleshooting multiple DTCs, be sure to follow the instructions in **B-CAN System Diagnosis Test Mode A** .

DTC Description	DTC
B1647 Passenger's Door LF Antenna Circuit Short	B

DTC (Keyless Access Control Unit)

1. Problem verification

-1. Clear the DTCs with the HDS.

-2. Select the KEYLESS ACCESS CONTROL UNIT from the ONE-PUSH START system select menu with the HDS, and enter the SELF CHECK.

One-Push - KEYLESS ACCESS CONTROL UNIT - SELF CHECK

-3. Do the SELF CHECK.

-4. Check for DTCs with the HDS.

DTC Description	DTC
B1647 Passenger's Door LF Antenna Circuit Short	B

Is DTC B1647 indicated?

YES

Go to step 2.

NO

Intermittent failure, the system is OK at this time. Check for loose or poor connections.

2. Shorted wire check (EXT FR AS+, EXT FR AS- lines)

-1. Turn the vehicle to the OFF (LOCK) mode.

-2. Disconnect the following connectors.

Body control module connector F (36P)
Front passenger's door outer handle 8P connector

-3. Check for continuity between test points 1 and 2.

Test condition	Vehicle OFF (LOCK) mode Body control module connector F (36P): disconnected Front passenger's door outer handle 8P connector: disconnected
Test point 1	**Body control module connector F (36P) No. 12**
Test point 2	Body ground

Test point 1	**Body control module connector F (36P) No. 30**
Test point 2	Body ground

Is there continuity?

YES

Repair a short to ground in the wire.

NO

The EXT FR AS+ and EXT FR AS- wires are not shorted. Go to step 3.

3. Shorted wire check (EXT FR AS+ line to EXT FR AS- line)

-1. Check for continuity between test points 1 and 2.

Test condition	Vehicle OFF (LOCK) mode Body control module connector F (36P): disconnected Front passenger's door outer handle 8P connector: disconnected

Test point 1	**Body control module connector F (36P) No. 12**
Test point 2	**Body control module connector F (36P) No. 30**

Is there continuity?

YES

Repair a short in EXT FR AS+ wire to EXT FR AS- wire.

NO

The EXT FR AS+ and EXT FR AS- wires are OK. Go to step 4.

4. Body control module EXT FR AS+, EXT FR AS- line output check

-1. Reconnect the following connector.

Body control module connector F (36P)

-2. Turn the vehicle to the ON mode.

-3. Select KEYLESS ACCESS CONTROL UNIT from the ONE-PUSH START system select menu with the HDS, and enter FUNCTIONAL TESTS.

One-Push - KEYLESS ACCESS CONTROL UNIT - FUNCTIONAL TESTS

-4. Measure the voltage between test points 1 and 2.

Test condition	Vehicle ON mode Front passenger's door outer handle 8P connector: disconnected

Test point 1	Front passenger's door outer handle 8P connector (female terminals) No. 2: ①
Test point 2	Front passenger's door outer handle 8P connector (female terminals) No. 6: ①

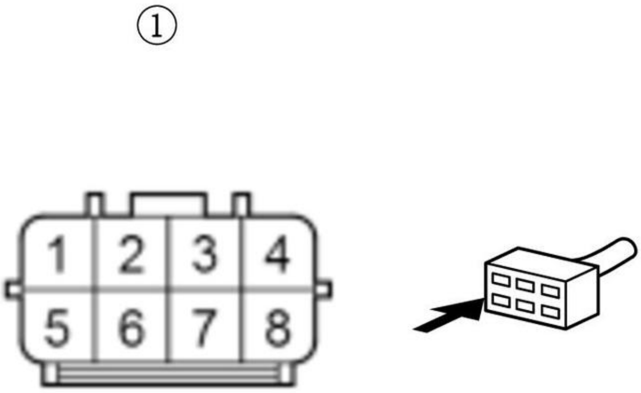

-5. Select FRONT PASSENGER (DOOR) ANTENNA L DC OUTPUT with the HDS.

Is there voltage?

YES

Faulty LF antenna; replace the front passenger's door outer handle .

NO

Replace the body control module .

DTC B1648

DTC B1648 : Passenger's Door LF Antenna Circuit Open

NOTE: If you are troubleshooting multiple DTCs, be sure to follow the instructions in B-CAN System Diagnosis Test Mode A .

DTC Description	DTC
B1648 Passenger's Door LF Antenna Circuit Open	B

DTC (Keyless Access Control Unit)

1. Problem verification

   -1. Clear the DTCs with the HDS.

   -2. Select the KEYLESS ACCESS CONTROL UNIT from the ONE-PUSH START system select menu with the HDS, and enter the SELF CHECK.

   One-Push - KEYLESS ACCESS CONTROL UNIT - SELF CHECK

   -3. Do the SELF CHECK.

   -4. Check for DTCs with the HDS.

DTC Description	DTC
B1648 Passenger's Door LF Antenna Circuit Open	B

   Is DTC B1648 indicated?

   YES

   Go to step 2.

   NO

   Intermittent failure, the system is OK at this time. Check for loose or poor connections.

2. Body control module EXT FR AS+, EXT FR AS- line output check

   -1. Turn the vehicle to the OFF (LOCK) mode.

   -2. Disconnect the following connector.

Front passenger's door outer handle 8P connector

   -3. Turn the vehicle to the ON mode.

-4. Select KEYLESS ACCESS CONTROL UNIT from the ONE-PUSH START system select menu with the HDS, and enter FUNCTIONAL TESTS.

One-Push - KEYLESS ACCESS CONTROL UNIT - FUNCTIONAL TESTS

-5. Measure the voltage between test points 1 and 2.

Test condition	Vehicle ON mode Front passenger's door outer handle 8P connector: disconnected
Test point 1	Front passenger's door outer handle 8P connector (female terminals) No. 2: ①
Test point 2	Front passenger's door outer handle 8P connector (female terminals) No. 6: ①

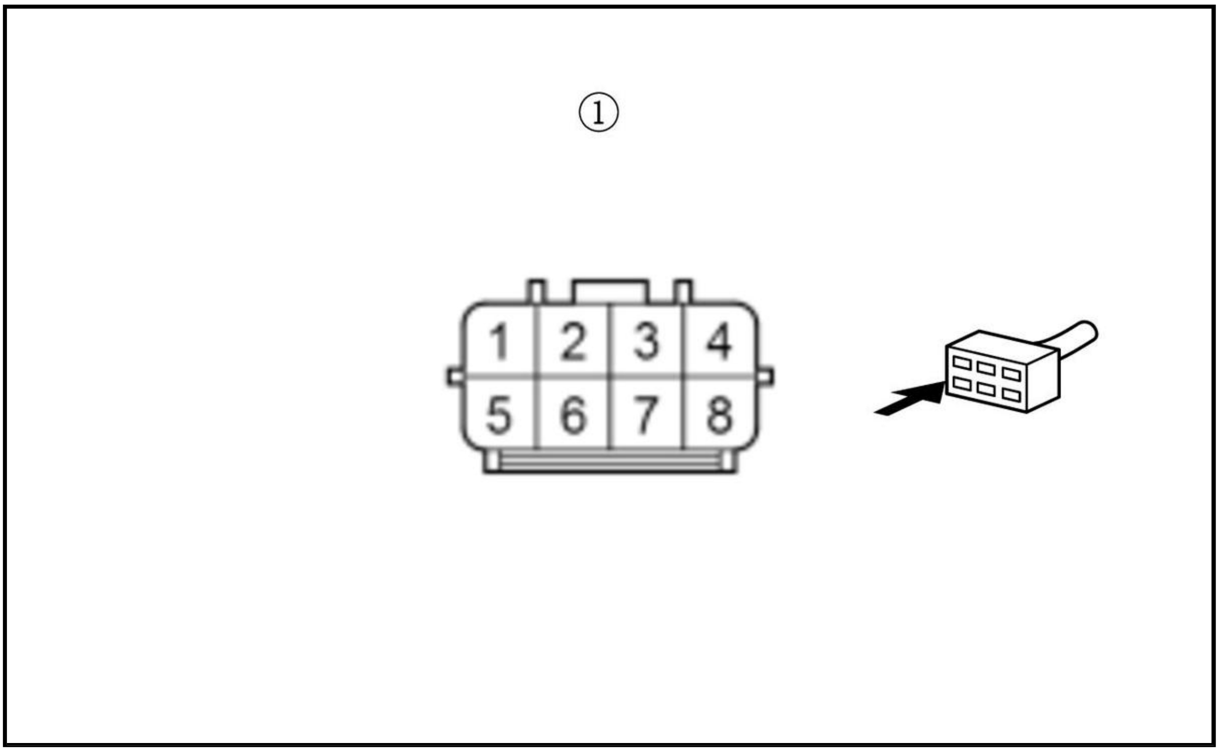

-6. Select FRONT PASSENGER (DOOR) ANTENNA L DC OUTPUT with the HDS.

Is there voltage?

YES

Faulty LF antenna; **replace the front passenger's door outer handle** .

NO

Go to step 3.

3. Open wire check (EXT FR AS+, EXT FR AS- lines)

-1. Turn the vehicle to the OFF (LOCK) mode.

-2. Connect terminals A and B with a jumper wire.

Terminal A	Front passenger's door outer handle 8P connector (female terminals) No. 2: ①
Terminal B	Front passenger's door outer handle 8P connector (female terminals) No. 6: ①

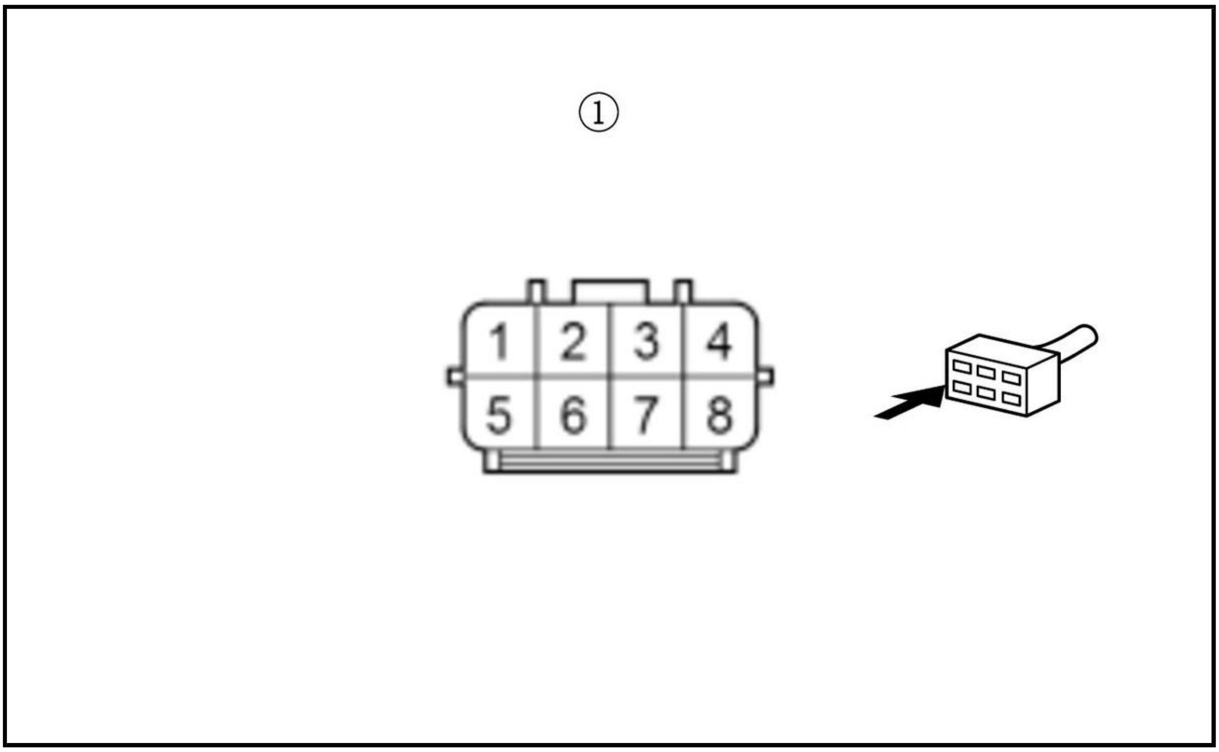

-3. Disconnect the following connector.

Body control module connector F (36P)

-4. Check for continuity between test points 1 and 2.

Test condition	Vehicle OFF (LOCK) mode Body control module connector F (36P): disconnected Front passenger's door outer handle 8P connector: disconnected Front passenger's door outer handle 8P connector No. 2 and No. 6: jumped
Test point 1	**Body control module connector F (36P) No. 12**
Test point 2	**Body control module connector F (36P) No. 30**

Is there continuity?

YES

The EXT FR AS+ and EXT FR AS- wires are OK. **Replace the body control module** .

NO

Repair an open or high resistance in the wire.

DTC B1657

DTC B1657 : Rear Bumper LF Antenna Circuit Short

NOTE: If you are troubleshooting multiple DTCs, be sure to follow the instructions in **B-CAN System Diagnosis Test Mode A** .

DTC Description	DTC
B1657 Rear Bumper LF Antenna Circuit Short	B

DTC (Keyless Access Control Unit)

1. Problem verification

-1. Clear the DTCs with the HDS.

-2. Select the KEYLESS ACCESS CONTROL UNIT from the ONE-PUSH START system select menu with the HDS, and enter the SELF CHECK.

One-Push - KEYLESS ACCESS CONTROL UNIT - SELF CHECK

-3. Do the SELF CHECK.

-4. Check for DTCs with the HDS.

DTC Description	DTC
B1657 Rear Bumper LF Antenna Circuit Short	B

Is DTC B1657 indicated?

YES

Go to step 2.

NO

Intermittent failure, the system is OK at this time. Check for loose or poor connections.

2. Shorted wire check (EXT TR+, EXT TR- lines)

-1. Turn the vehicle to the OFF (LOCK) mode.

-2. Disconnect the following connectors.

Body control module connector F (36P)
Rear bumper LF antenna 2P connector

-3. Check for continuity between test points 1 and 2.

Test condition	Vehicle OFF (LOCK) mode Body control module connector F (36P): disconnected Rear bumper LF antenna 2P connector: disconnected
Test point 1	**Body control module connector F (36P) No. 14**
Test point 2	Body ground

Test point 1	**Body control module connector F (36P) No. 32**
Test point 2	Body ground

Is there continuity?

YES

Repair a short to ground in the wire.

NO

The EXT TR+ and EXT TR- wires are not shorted. Go to step 3.

3. Shorted wire check (EXT TR+ line to EXT TR- line)

-1. Check for continuity between test points 1 and 2.

Test condition	Vehicle OFF (LOCK) mode Body control module connector F (36P): disconnected Rear bumper LF antenna 2P connector: disconnected

Test point 1	**Body control module connector F (36P) No. 14**
Test point 2	**Body control module connector F (36P) No. 32**

Is there continuity?

YES

Repair a short in EXT TR+ wire to EXT TR- wire.

NO

The EXT TR+ and EXT TR- wires are OK. Go to step 4.

4. Body control module EXT TR+, EXT TR- line output check

-1. Reconnect the following connector.

Body control module connector F (36P)

-2. Turn the vehicle to the ON mode.

-3. Select KEYLESS ACCESS CONTROL UNIT from the ONE-PUSH START system select menu with the HDS, and enter FUNCTIONAL TESTS.

One-Push - KEYLESS ACCESS CONTROL UNIT - FUNCTIONAL TESTS

-4. Measure the voltage between test points 1 and 2.

Test condition	Vehicle ON mode Rear bumper LF antenna 2P connector: disconnected

Test point 1	Rear bumper LF antenna 2P connector (female terminals) No. 2: ①
Test point 2	Rear bumper LF antenna 2P connector (female terminals) No. 1: ①

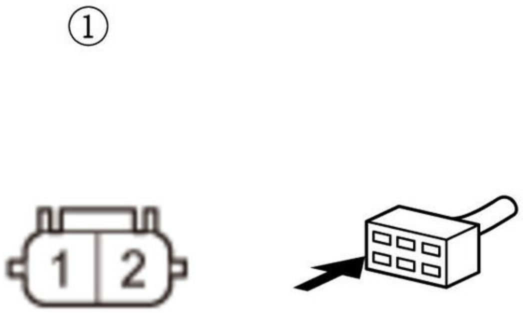

-5. Select CABIN REAR ANTENNA L DC OUTPUT with the HDS.

Is there voltage?

YES

Faulty rear bumper LF antenna; **replace the rear bumper LF antenna** .

NO

Replace the body control module .

DTC B1658

DTC B1658 : Rear Bumper LF Antenna Circuit Open

NOTE: If you are troubleshooting multiple DTCs, be sure to follow the instructions in **B-CAN System Diagnosis Test Mode A** .

DTC Description	DTC
B1658 Rear Bumper LF Antenna Circuit Open	B

DTC (Keyless Access Control Unit)

1. Problem verification

   -1. Clear the DTCs with the HDS.

   -2. Select the KEYLESS ACCESS CONTROL UNIT from the ONE-PUSH START system select menu with the HDS, and enter the SELF CHECK.

   One-Push - KEYLESS ACCESS CONTROL UNIT - SELF CHECK

   -3. Do the SELF CHECK.

   -4. Check for DTCs with the HDS.

DTC Description	DTC
B1658 Rear Bumper LF Antenna Circuit Open	B

   Is DTC B1658 indicated?

   YES

   Go to step 2.

   NO

   Intermittent failure, the system is OK at this time. Check for loose or poor connections.

2. Body control module EXT TR+, EXT TR- line output check

   -1. Turn the vehicle to the OFF (LOCK) mode.

   -2. Disconnect the following connector.

Rear bumper LF antenna 2P connector

   -3. Turn the vehicle to the ON mode.

-4. Select KEYLESS ACCESS CONTROL UNIT from the ONE-PUSH START system select menu with the HDS, and enter FUNCTIONAL TESTS.

One-Push - KEYLESS ACCESS CONTROL UNIT - FUNCTIONAL TESTS

-5. Measure the voltage between test points 1 and 2.

Test condition	Vehicle ON mode Rear bumper LF antenna 2P connector: disconnected
Test point 1	Rear bumper LF antenna 2P connector (female terminals) No. 2: ①
Test point 2	Rear bumper LF antenna 2P connector (female terminals) No. 1: ①

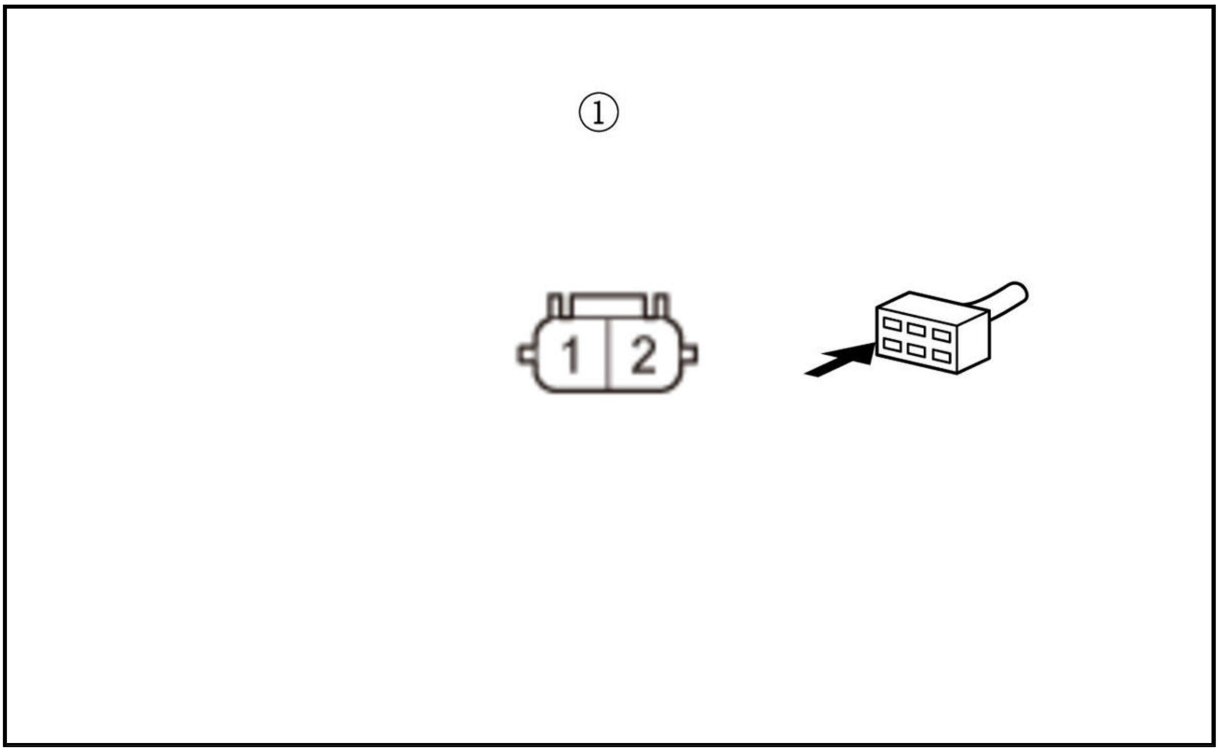

-6. Select CABIN REAR ANTENNA L DC OUTPUT with the HDS.

Is there voltage?

YES

Faulty rear bumper LF antenna; **replace the rear bumper LF antenna** .

NO

Go to step 3.

3. Open wire check (EXT TR+, EXT TR- lines)

-1. Turn the vehicle to the OFF (LOCK) mode.

-2. Connect terminals A and B with a jumper wire.

Terminal A	Rear bumper LF antenna 2P connector (female terminals) No. 2: ①
Terminal B	Rear bumper LF antenna 2P connector (female terminals) No. 1: ①

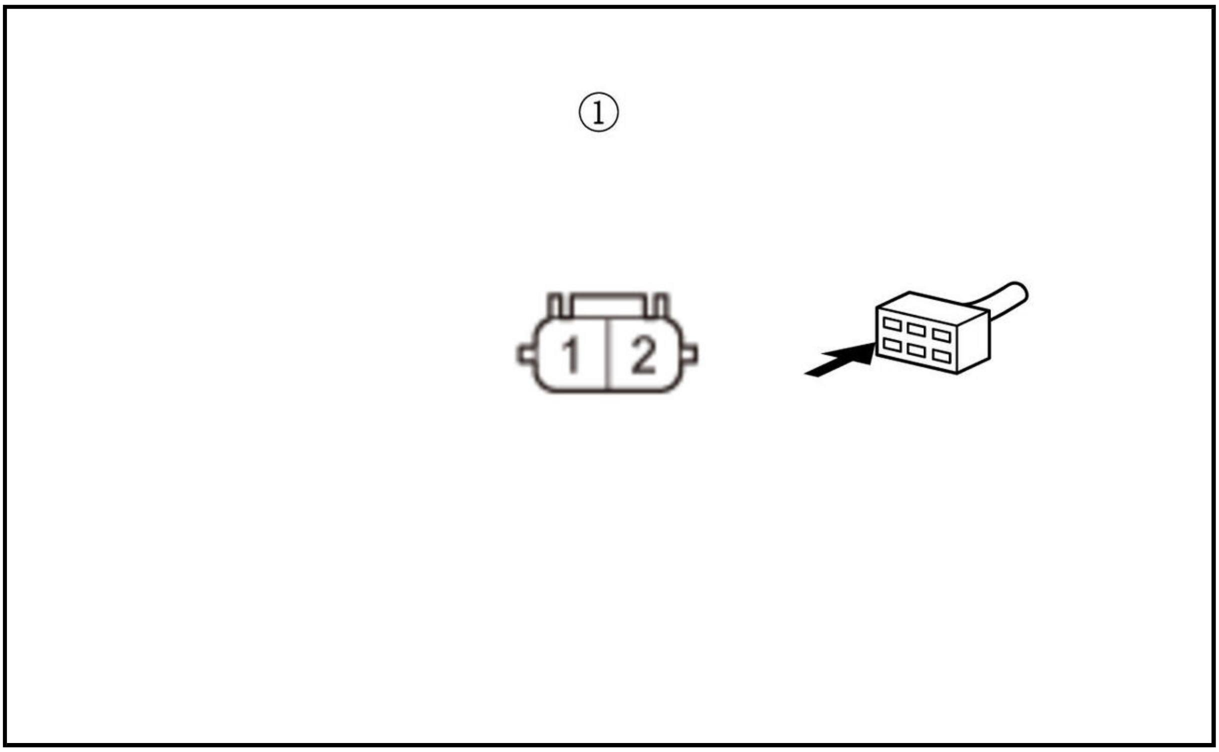

-3. Disconnect the following connector.

Body control module connector F (36P)

-4. Check for continuity between test points 1 and 2.

Test condition	Vehicle OFF (LOCK) mode Body control module connector F (36P): disconnected Rear bumper LF antenna 2P connector: disconnected Rear bumper LF antenna 2P connector No. 1 and No. 2: jumped
Test point 1	**Body control module connector F (36P) No. 14**
Test point 2	**Body control module connector F (36P) No. 32**

Is there continuity?

YES

The EXT TR+ and EXT TR- wires are OK. **Replace the body control module** .

NO

Repair an open or high resistance in the wire.

DTC B1659

DTC B1659 : Front Interior LF Antenna Circuit Short

NOTE: If you are troubleshooting multiple DTCs, be sure to follow the instructions in **B-CAN System Diagnosis Test Mode A** .

DTC Description	DTC
B1659 Front Interior LF Antenna Circuit Short	B

DTC (Keyless Access Control Unit)

1. Problem verification

-1. Clear the DTCs with the HDS.

-2. Select the KEYLESS ACCESS CONTROL UNIT from the ONE-PUSH START system select menu with the HDS, and enter the SELF CHECK.

One-Push - KEYLESS ACCESS CONTROL UNIT - SELF CHECK

-3. Do the SELF CHECK.

-4. Check for DTCs with the HDS.

DTC Description	DTC
B1659 Front Interior LF Antenna Circuit Short	B

Is DTC B1659 indicated?

YES

Go to step 2.

NO

Intermittent failure, the system is OK at this time. Check for loose or poor connections.

2. Shorted wire check (EXT F+, EXT F- lines)

-1. Turn the vehicle to the OFF (LOCK) mode.

-2. Disconnect the following connectors.

Body control module connector F (36P)
Front interior LF antenna 2P connector

-3. Check for continuity between test points 1 and 2.

Test condition	Vehicle OFF (LOCK) mode Body control module connector F (36P): disconnected Front interior LF antenna 2P connector: disconnected
Test point 1	**Body control module connector F (36P) No. 16**
Test point 2	Body ground

Test point 1	**Body control module connector F (36P) No. 34**
Test point 2	Body ground

Is there continuity?

YES

Repair a short to ground in the wire.

NO

The EXT F+ and EXT F- wires are not shorted. Go to step 3.

3. Shorted wire check (EXT F+ line to EXT F- line)

-1. Check for continuity between test points 1 and 2.

Test condition	Vehicle OFF (LOCK) mode Body control module connector F (36P): disconnected Front interior LF antenna 2P connector: disconnected

Test point 1	**Body control module connector F (36P) No. 16**
Test point 2	**Body control module connector F (36P) No. 34**

Is there continuity?

YES

Repair a short in EXT F+ wire to EXT F- wire.

NO

The EXT F+ and EXT F- wires are OK. Go to step 4.

4. Body control module EXT F+, EXT F- line output check

-1. Reconnect the following connector.

Body control module connector F (36P)

-2. Turn the vehicle to the ON mode.

-3. Select KEYLESS ACCESS CONTROL UNIT from the ONE-PUSH START system select menu with the HDS, and enter FUNCTIONAL TESTS.

One-Push - KEYLESS ACCESS CONTROL UNIT - FUNCTIONAL TESTS

-4. Measure the voltage between test points 1 and 2.

Test condition	Vehicle ON mode Front interior LF antenna 2P connector: disconnected
Test point 1	Front interior LF antenna 2P connector (female terminals) No. 2: ①
Test point 2	Front interior LF antenna 2P connector (female terminals) No. 1: ①

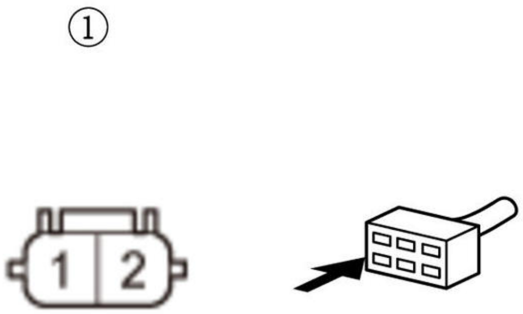

-5. Select CABIN FRONT ANTENNA L DC OUTPUT with the HDS.

Is there voltage?

YES

Faulty front interior LF antenna; **replace the front interior LF antenna** .

NO

Replace the body control module .

DTC B1660

DTC B1660 : Front Interior LF Antenna Circuit Open

NOTE: If you are troubleshooting multiple DTCs, be sure to follow the instructions in **B-CAN System Diagnosis Test Mode A** .

DTC Description	DTC
B1660 Front Interior LF Antenna Circuit Open	B

DTC (Keyless Access Control Unit)

1. Problem verification

-1. Clear the DTCs with the HDS.

-2. Select the KEYLESS ACCESS CONTROL UNIT from the ONE-PUSH START system select menu with the HDS, and enter the SELF CHECK.

One-Push - KEYLESS ACCESS CONTROL UNIT - SELF CHECK

-3. Do the SELF CHECK.

-4. Check for DTCs with the HDS.

DTC Description	DTC
B1660 Front Interior LF Antenna Circuit Open	B

Is DTC B1660 indicated?

YES

Go to step 2.

NO

Intermittent failure, the system is OK at this time. Check for loose or poor connections.

2. Body control module EXT F+, EXT F- line output check

-1. Turn the vehicle to the OFF (LOCK) mode.

-2. Disconnect the following connector.

Front interior LF antenna 2P connector

-3. Turn the vehicle to the ON mode.

-4. Select KEYLESS ACCESS CONTROL UNIT from the ONE-PUSH START system select menu with the HDS, and enter FUNCTIONAL TESTS.

-5. Measure the voltage between test points 1 and 2.

Test condition	Vehicle ON mode Front interior LF antenna 2P connector: disconnected
Test point 1	Front interior LF antenna 2P connector (female terminals) No. 2: ①
Test point 2	Front interior LF antenna 2P connector (female terminals) No. 1: ①

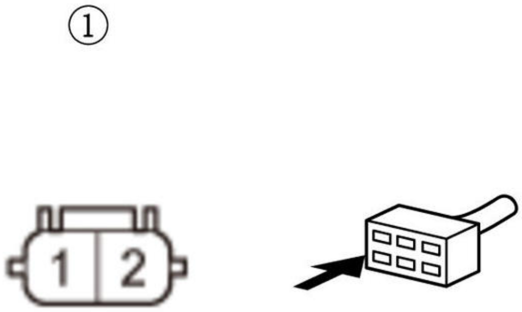

-6. Select CABIN FRONT ANTENNA L DC OUTPUT with the HDS.

Is there voltage?

YES

Faulty front interior LF antenna; **replace the front interior LF antenna** .

NO

Go to step 3.

3. Open wire check (EXT F+, EXT F- lines)

-1. Turn the vehicle to the OFF (LOCK) mode.

-2. Connect terminals A and B with a jumper wire.

Terminal A	Front interior LF antenna 2P connector (female terminals) No. 2: ①
Terminal B	Front interior LF antenna 2P connector (female terminals) No. 1: ①

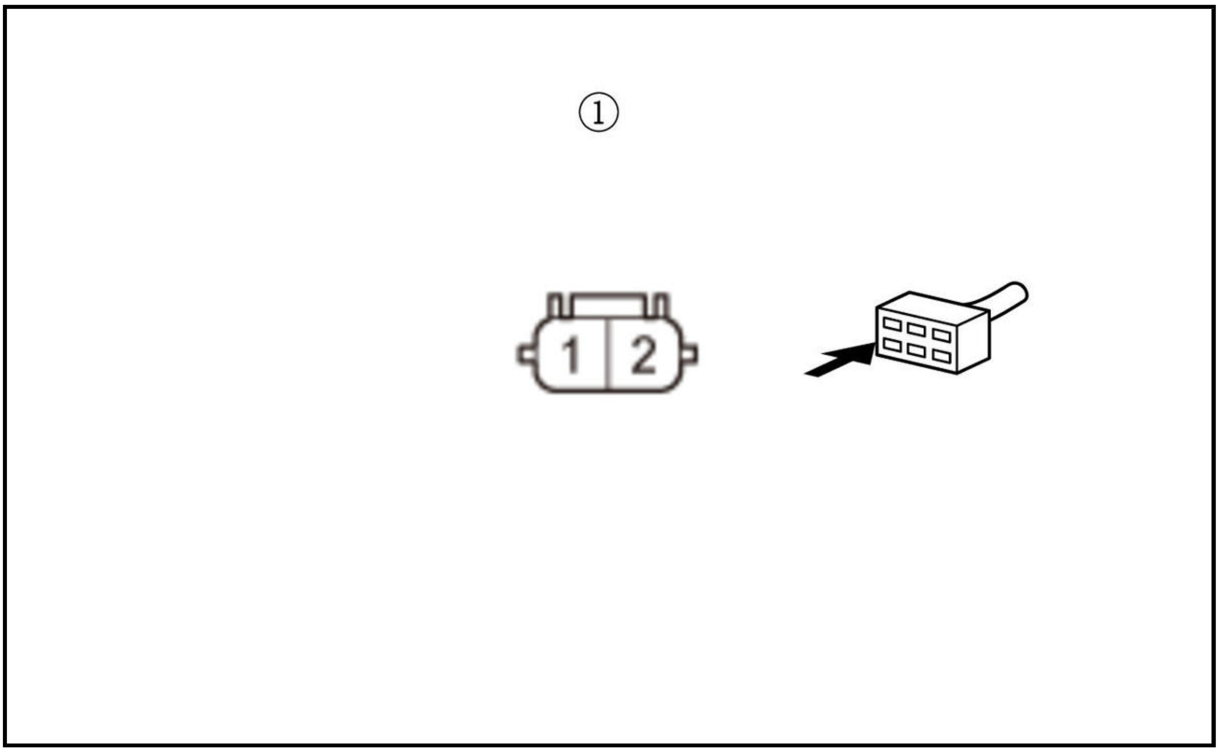

-3. Disconnect the following connector.

Body control module connector F (36P)

-4. Check for continuity between test points 1 and 2.

Test condition	Vehicle OFF (LOCK) mode Body control module connector F (36P): disconnected Front interior LF antenna 2P connector: disconnected Front interior LF antenna 2P connector No. 1 and No. 2: jumped
Test point 1	**Body control module connector F (36P) No. 16**
Test point 2	**Body control module connector F (36P) No. 34**

Is there continuity?

YES

The EXT F+ and EXT F- wires are OK. **Replace the body control module** .

NO

Repair an open or high resistance in the wire.

DTC B1661, B1667

DTC B1661 : Middle Interior Antenna Circuit Shorted

DTC B1667 : Rear Shelf (Middle Interior) LF Antenna Circuit Short

NOTE: If you are troubleshooting multiple DTCs, be sure to follow the instructions in **B-CAN System Diagnosis Test Mode A** .

DTC Description	DTC
B1661 Middle Interior Antenna Circuit Shorted	B
B1667 Rear Shelf (Middle Interior) LF Antenna Circuit Short	B

DTC (Keyless Access Control Unit)

1. Problem verification

   -1. Clear the DTCs with the HDS.

   -2. Select the KEYLESS ACCESS CONTROL UNIT from the ONE-PUSH START system select menu with the HDS, and enter the SELF CHECK.

   -3. Do the SELF CHECK.

   One-Push - KEYLESS ACCESS CONTROL UNIT - SELF CHECK

   -4. Check for DTCs with the HDS.

DTC Description	DTC
B1661 Middle Interior Antenna Circuit Shorted	B
B1667 Rear Shelf (Middle Interior) LF Antenna Circuit Short	B

   Is DTC B1661 or B1667 indicated?

   YES

   Go to step 2.

   NO

   Intermittent failure, the system is OK at this time. Check for loose or poor connections.

2. Shorted wire check (EXT M+, EXT M- lines)

   -1. Turn the vehicle to the OFF (LOCK) mode.

   -2. Disconnect the following connectors.

Body control module connector F (36P)Middle interior LF antenna 2P connector

   -3. Check for continuity between test points 1 and 2.

Test condition	Vehicle OFF (LOCK) mode Body control module connector F (36P): disconnected Middle interior LF antenna 2P connector: disconnected
Test point 1	**Body control module connector F (36P) No. 15**
Test point 2	Body ground

Test point 1	**Body control module connector F (36P) No. 33**
Test point 2	Body ground

   Is there continuity?

   YES

   Repair a short to ground in the wire.

   NO

   The EXT M+ and EXT M- wires are not shorted. Go to step 3.

3. Shorted wire check (EXT M+ to EXT M- line)

   -1. Check for continuity between test points 1 and 2.

Test condition	Vehicle OFF (LOCK) mode Body control module connector F (36P): disconnected Middle interior LF antenna 2P connector: disconnected
Test point 1	**Body control module connector F (36P) No. 15**
Test point 2	**Body control module connector F (36P) No. 33**

Is there continuity?

YES

Repair a short in EXT M+ to EXT M- wire.

NO

The EXT M+ and EXT M- wires are OK. Go to step 4.

4. Body control module EXT M+, EXT M- line output check

-1. Reconnect the following connector.

Body control module connector F (36P)

-2. Turn the vehicle to the ON mode.

-3. Select KEYLESS ACCESS CONTROL UNIT from the ONE-PUSH START system select menu with the HDS, and enter FUNCTIONAL TESTS.

One-Push - KEYLESS ACCESS CONTROL UNIT - FUNCTIONAL TESTS

-4. Measure the voltage between test points 1 and 2.

Test condition	Vehicle ON mode Middle interior LF antenna 2P connector: disconnected
Test point 1	Middle interior LF antenna 2P connector (female terminals) No. 2: ①
Test point 2	Middle interior LF antenna 2P connector (female terminals) No. 1: ①

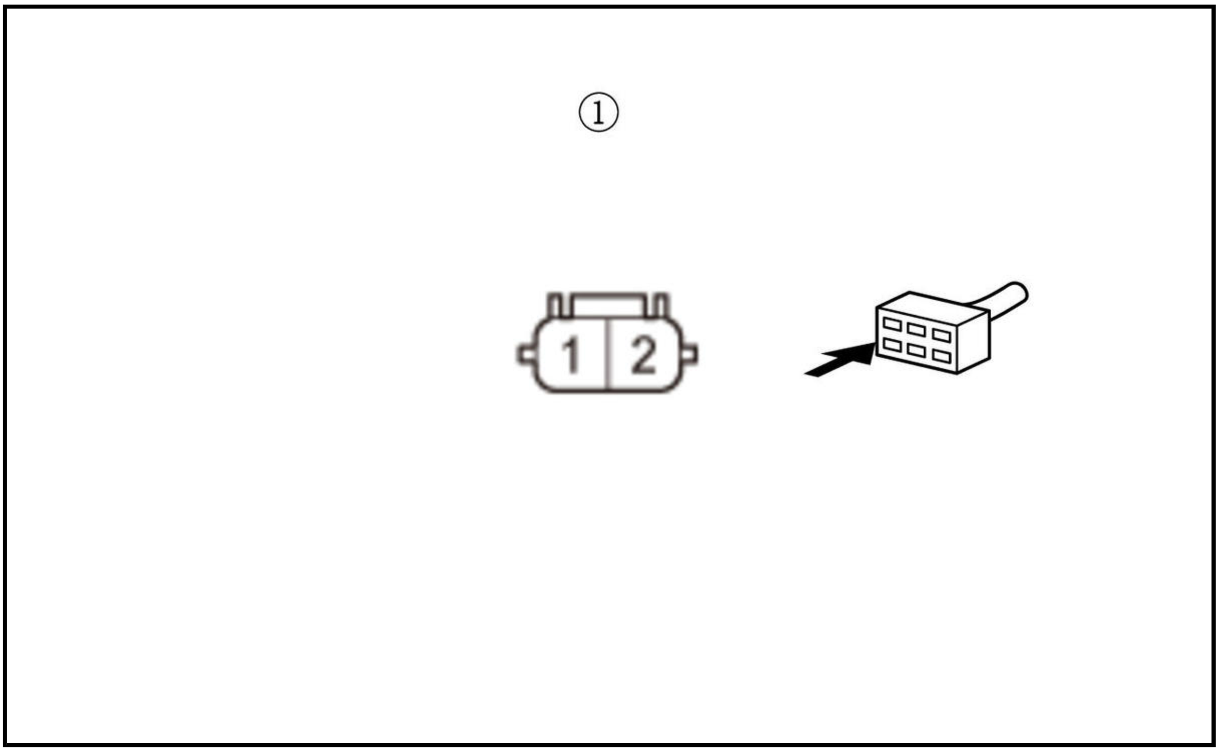

-5. Select CABIN MIDDLE ANTENNA L DC OUTPUT with the HDS.

Is there voltage?

YES

Faulty middle interior LF antenna; **Replace the middle interior LF antenna** .

NO

Replace the body control module .

DTC B1662, B1668

DTC B1662 : Middle Interior Antenna Circuit Opened

DTC B1668 : Rear Shelf (Middle Interior) LF Antenna Circuit Open

NOTE: If you are troubleshooting multiple DTCs, be sure to follow the instructions in **B-CAN System Diagnosis Test Mode A** .

DTC Description	DTC
B1662 Middle Interior Antenna Circuit Opened	B
B1668 Rear Shelf (Middle Interior) LF Antenna Circuit Open	B

DTC (Keyless Access Control Unit)

1. Problem verification

   -1. Clear the DTCs with the HDS.

   -2. Select the KEYLESS ACCESS CONTROL UNIT from the ONE-PUSH START system select menu with the HDS, and enter the SELF CHECK.

   One-Push - KEYLESS ACCESS CONTROL UNIT - SELF CHECK

   -3. Do the SELF CHECK.

   -4. Check for DTCs with the HDS.

DTC Description	DTC
B1662 Middle Interior Antenna Circuit Opened	B
B1668 Rear Shelf (Middle Interior) LF Antenna Circuit Open	B

   Is DTC B1662 or B1668 indicated?

   YES

   Go to step 2.

   NO

   Intermittent failure, the system is OK at this time. Check for loose or poor connections.

2. Body control module EXT M+, EXT M- line output check

   -1. Turn the vehicle to the OFF (LOCK) mode.

   -2. Disconnect the following connector.

Middle interior LF antenna 2P connector

-3. Turn the vehicle to the ON mode.

-4. Select KEYLESS ACCESS CONTROL UNIT from the ONE-PUSH START system select menu with the HDS, and enter FUNCTIONAL TESTS.

One-Push - KEYLESS ACCESS CONTROL UNIT - FUNCTIONAL TESTS

-5. Measure the voltage between test points 1 and 2.

Test condition	Vehicle ON mode Middle interior LF antenna 2P connector: disconnected
Test point 1	Middle interior LF antenna 2P connector (female terminals) No. 2: ①
Test point 2	Middle interior LF antenna 2P connector (female terminals) No. 1: ①

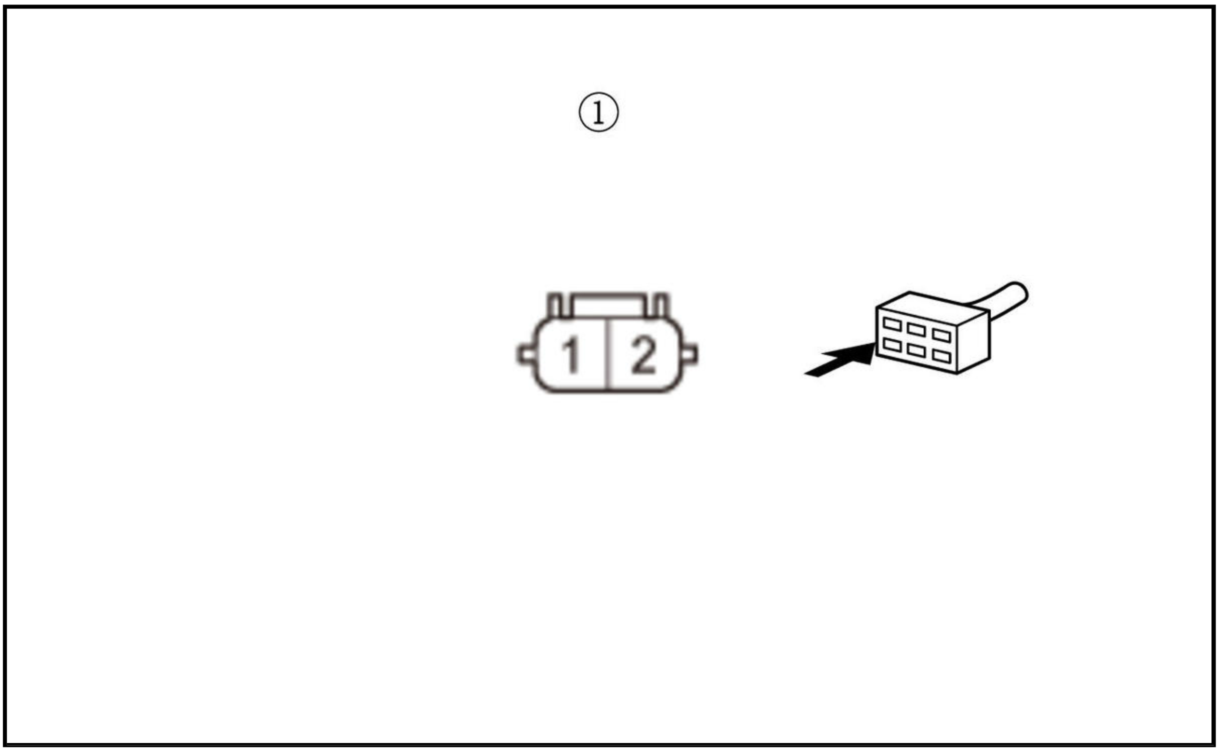

-6. Select CABIN MIDDLE ANTENNA L DC OUTPUT with the HDS.

Is there voltage?

YES

Faulty middle interior LF antenna; **Replace the middle interior LF antenna** .

NO

Go to step 3.

3. Open wire check (EXT M+, EXT M- lines)

-1. Turn the vehicle to the OFF (LOCK) mode.

-2. Connect terminals A and B with a jumper wire.

Terminal A	Middle interior LF antenna 2P connector (female terminals) No. 2: ①
Terminal B	Middle interior LF antenna 2P connector (female terminals) No. 1: ①

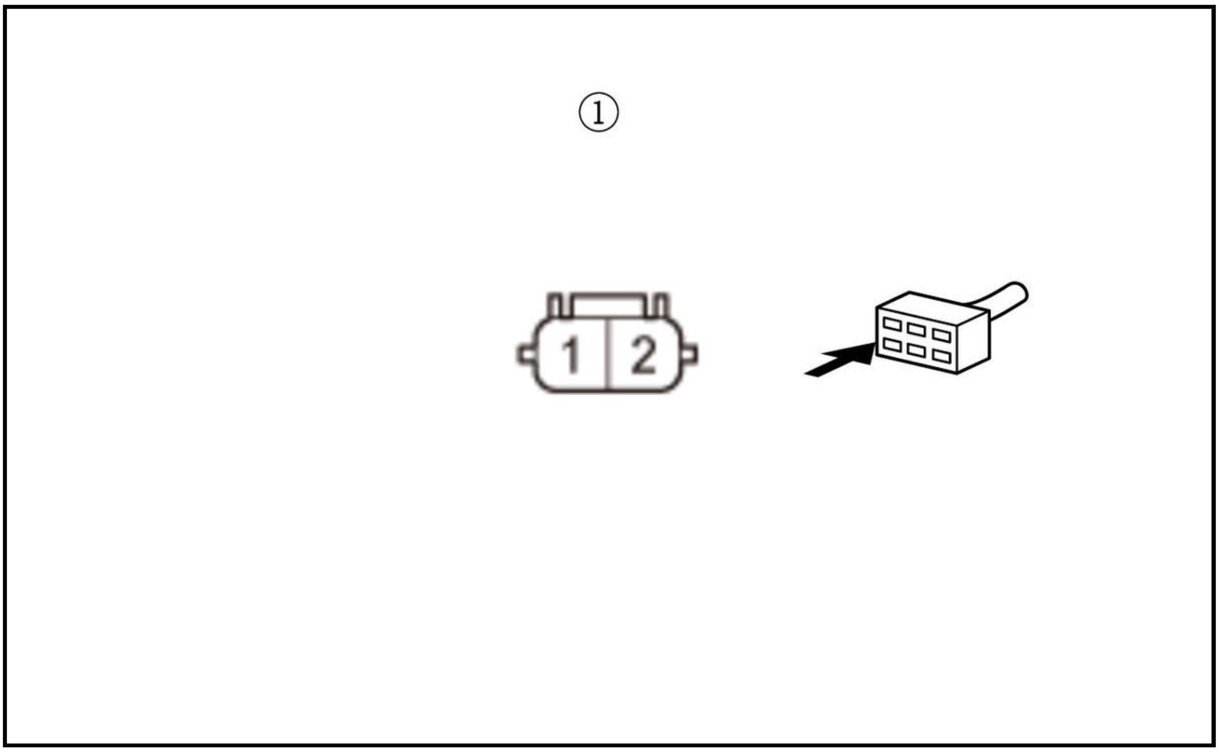

-3. Disconnect the following connector.

Body control module connector F (36P)

-4. Check for continuity between test points 1 and 2.

Test condition	Vehicle OFF (LOCK) mode Body control module connector F (36P): disconnected Middle interior LF antenna 2P connector: disconnected
Test point 1	Body control module connector F (36P) No. 15
Test point 2	Body control module connector F (36P) No. 33

Is there continuity?

YES

The EXT M+ and EXT M- wires are OK. Replace the body control module .

NO

Repair an open or high resistance in the wire.

DTC B1663

DTC B1663 : Rear Interior LF Antenna Circuit Short

NOTE: If you are troubleshooting multiple DTCs, be sure to follow the instructions in B-CAN System Diagnosis Test Mode A .

DTC Description	DTC
B1663 Rear Interior LF Antenna Circuit Short	B

DTC (Keyless Access Control Unit)

1. Problem verification

-1. Clear the DTCs with the HDS.

-2. Select the KEYLESS ACCESS CONTROL UNIT from the ONE-PUSH START system select menu with the HDS, and enter the SELF CHECK.

One-Push - KEYLESS ACCESS CONTROL UNIT - SELF CHECK

-3. Do the SELF CHECK.

-4. Check for DTCs with the HDS.

DTC Description	DTC
B1663 Rear Interior LF Antenna Circuit Short	B

Is DTC B1663 indicated?

YES

Go to step 2.

NO

Intermittent failure, the system is OK at this time. Check for loose or poor connections.

2. Shorted wire check (EXT R+, EXT R- lines)

-1. Turn the vehicle to the OFF (LOCK) mode.

-2. Disconnect the following connectors.

Body control module connector F (36P)
Rear interior LF antenna 2P connector

-3. Check for continuity between test points 1 and 2.

Test condition	Vehicle OFF (LOCK) mode Body control module connector F (36P): disconnected Rear interior LF antenna 2P connector: disconnected
Test point 1	**Body control module connector F (36P) No. 17**
Test point 2	Body ground

Test point 1	**Body control module connector F (36P) No. 35**
Test point 2	Body ground

Is there continuity?

YES

Repair a short to ground in the wire.

NO

The EXT R+ and EXT R- wires are not shorted. Go to step 3.

3. Shorted wire check (EXT R+ line to EXT R- line)

-1. Check for continuity between test points 1 and 2.

Test condition	Vehicle OFF (LOCK) mode Body control module connector F (36P): disconnected Rear interior LF antenna 2P connector: disconnected
Test point 1	**Body control module connector F (36P) No. 17**

Test point 2	**Body control module connector F (36P) No. 35**

Is there continuity?

YES

Repair a short in EXT R+ wire to EXT R- wire.

NO

The EXT R+ and EXT R- wires are OK. Go to step 4.

4. Body control module EXT R+, EXT R- line output check

-1. Reconnect the following connector.

Body control module connector F (36P)

-2. Turn the vehicle to the ON mode.

-3. Select KEYLESS ACCESS CONTROL UNIT from the ONE-PUSH START system select menu with the HDS, and enter FUNCTIONAL TESTS.

One-Push - KEYLESS ACCESS CONTROL UNIT - FUNCTIONAL TESTS

-4. Measure the voltage between test points 1 and 2.

Test condition	Vehicle ON mode Rear interior LF antenna 2P connector: disconnected
Test point 1	Rear interior LF antenna 2P connector (female terminals) No. 2: ①
Test point 2	Rear interior LF antenna 2P connector (female terminals) No. 1: ①

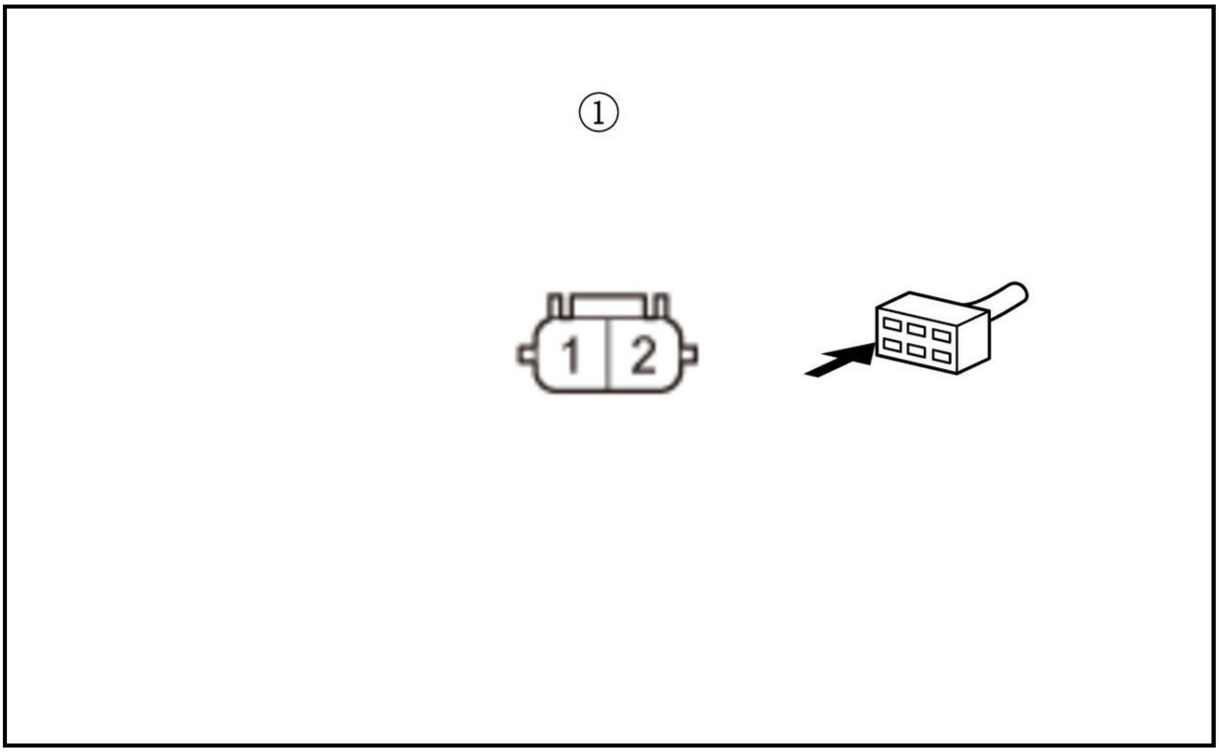

-5. Select CABIN REAR ANTENNA L DC OUTPUT with the HDS.

Is there voltage?

YES

Faulty rear interior LF antenna; replace the rear interior LF antenna .

NO

Replace the body control module .

DTC B1664

DTC B1664 : Rear Interior LF Antenna Circuit Open

NOTE: If you are troubleshooting multiple DTCs, be sure to follow the instructions in B-CAN System Diagnosis Test Mode A .

DTC Description	DTC
B1664 Rear Interior LF Antenna Circuit Open	B

DTC (Keyless Access Control Unit)

1. Problem verification

-1. Clear the DTCs with the HDS.

-2. Select the KEYLESS ACCESS CONTROL UNIT from the ONE-PUSH START system select menu with the HDS, and enter the SELF CHECK.

One-Push - KEYLESS ACCESS CONTROL UNIT - SELF CHECK

-3. Do the SELF CHECK.

-4. Check for DTCs with the HDS.

DTC Description	DTC
B1664 Rear Interior LF Antenna Circuit Open	B

Is DTC B1664 indicated?

YES

Go to step 2.

NO

Intermittent failure, the system is OK at this time. Check for loose or poor connections.

2. Body control module EXT R+, EXT R- line output check

-1. Turn the vehicle to the OFF (LOCK) mode.

-2. Disconnect the following connector.

Rear interior LF antenna 2P connector

-3. Turn the vehicle to the ON mode.

-4. Select KEYLESS ACCESS CONTROL UNIT from the ONE-PUSH START system select menu with the HDS, and enter FUNCTIONAL TESTS.

-5. Measure the voltage between test points 1 and 2.

Test condition	Vehicle ON mode Rear interior LF antenna 2P connector: disconnected
Test point 1	Rear interior LF antenna 2P connector (female terminals) No. 2: ①
Test point 2	Rear interior LF antenna 2P connector (female terminals) No. 1: ①

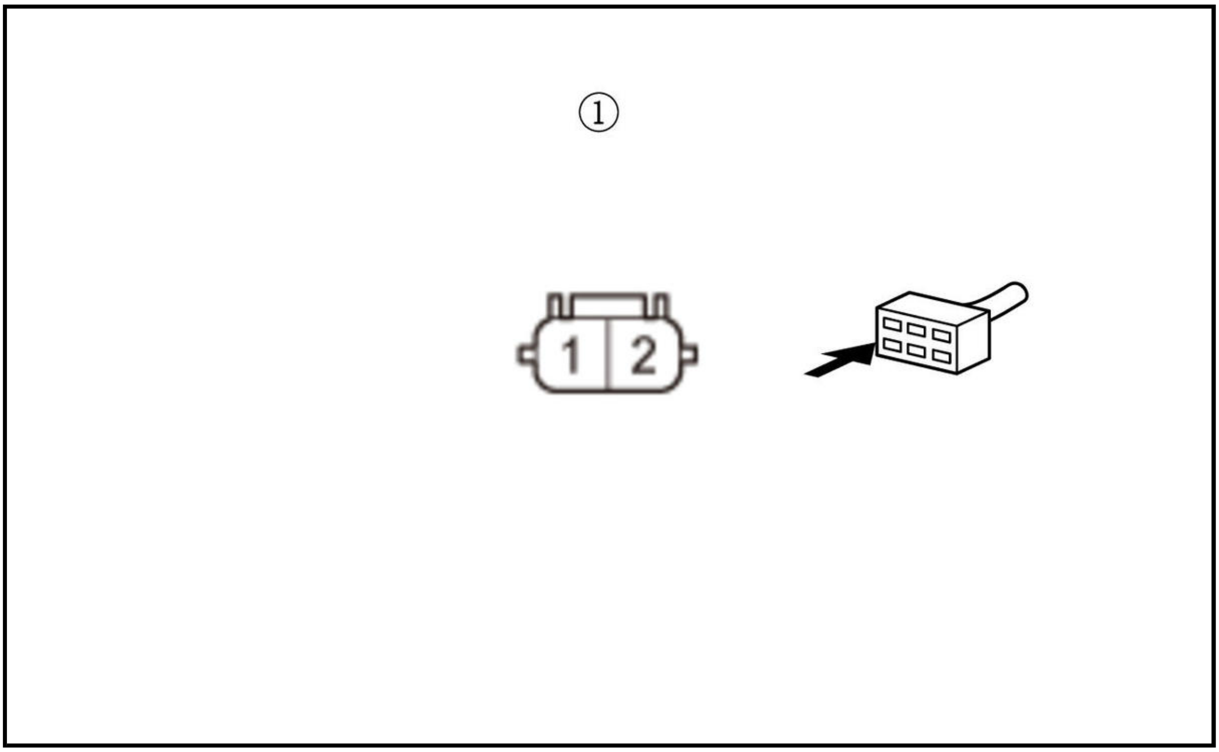

-6. Select CABIN REAR ANTENNA L DC OUTPUT with the HDS.

Is there voltage?

YES

Faulty rear interior LF antenna; **replace the rear interior LF antenna** .

NO

Go to step 3.

3. Open wire check (EXT R+, EXT R- lines)

-1. Turn the vehicle to the OFF (LOCK) mode.

-2. Connect terminals A and B with a jumper wire.

Terminal A	Rear interior LF antenna 2P connector (female terminals) No. 2: ①
Terminal B	Rear interior LF antenna 2P connector (female terminals) No. 1: ①

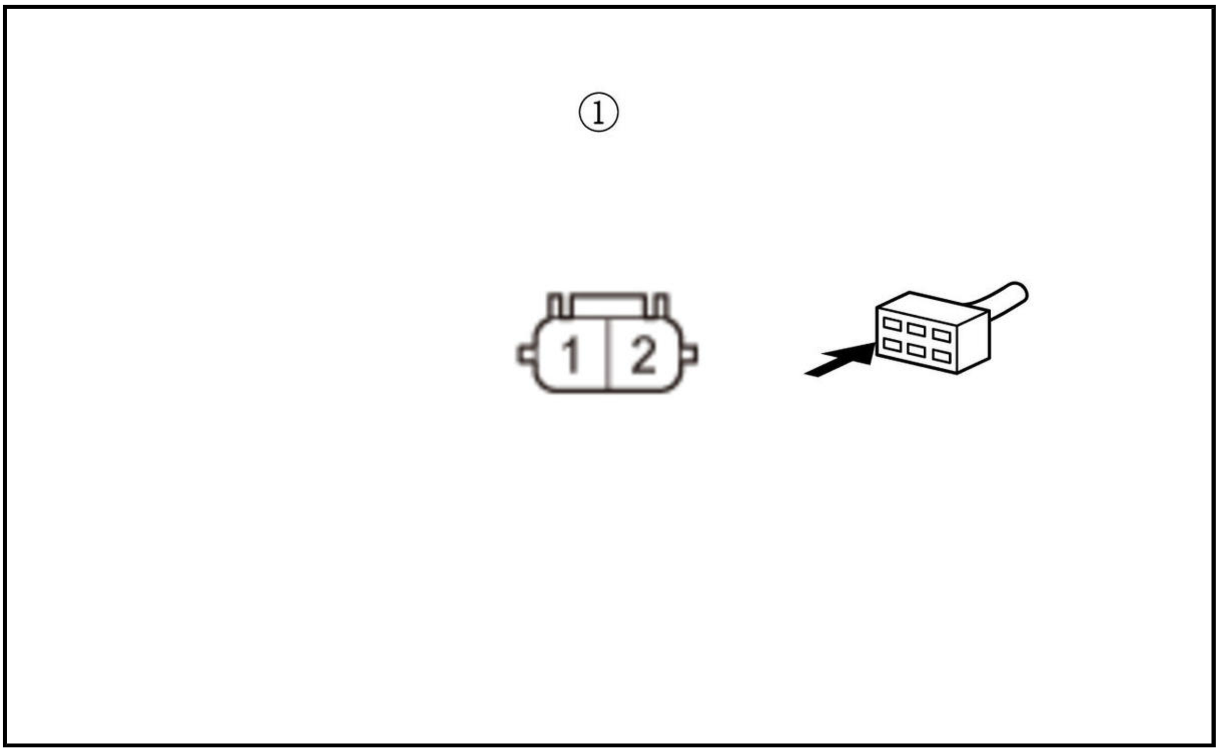

-3. Disconnect the following connector.

Body control module connector F (36P)

-4. Check for continuity between test points 1 and 2.

Test condition	Vehicle OFF (LOCK) mode Body control module connector F (36P): disconnected Rear interior LF antenna 2P connector: disconnected Rear interior LF antenna 2P connector No. 1 and No. 2: jumped
Test point 1	**Body control module connector F (36P) No. 17**
Test point 2	**Body control module connector F (36P) No. 35**

Is there continuity?

YES

The EXT R+ and EXT R- wires are OK. **Replace the body control module** .

NO

Repair an open or high resistance in the wire.

DTC U1280 (KEYLESS ACCESS CONTROL UNIT)

DTC U1280 : Keyless access control unit communication bus line error (BUS-OFF)

NOTE: If you are troubleshooting multiple DTCs, be sure to follow the instructions in **B-CAN System Diagnosis Test Mode A** .

DTC Description	DTC
U1280 Keyless access control unit communication bus line error (BUS-OFF)	B

DTC (Keyless Access Control Unit)

1. Problem verification

-1. Clear the DTCs with the HDS.

-2. Turn the vehicle to the OFF (LOCK) mode and then the ON mode.

-3. Wait for at least 6 seconds.

-4. Check for DTCs with the HDS.

DTC Description	DTC
U1280 Keyless access control unit communication bus line error (BUS-OFF)	B

Is DTC U1280 indicated?

YES

Go to body control module DTC U1280 troubleshooting .

NO

Intermittent failure, the system is OK at this time. Check for loose or poor connections.

DTC U1281 (KEYLESS ACCESS CONTROL UNIT)

DTC U1281 : Keyless Access Control Unit Lost Communication with MICU

NOTE: If you are troubleshooting multiple DTCs, be sure to follow the instructions in **B-CAN System Diagnosis Test Mode A** .

DTC Description	DTC
U1281 Keyless Access Control Unit Lost Communication with MICU	B

DTC (Keyless Access Control Unit)

1. Problem verification

-1. Clear the DTCs with the HDS.

-2. Turn the vehicle to the OFF (LOCK) mode and then the ON mode.

-3. Wait for at least 6 seconds.

-4. Check for DTCs with the HDS.

DTC Description	DTC
U1281 Keyless Access Control Unit Lost Communication with MICU	B

Is DTC U1281 indicated?

YES

Replace the body control module .

NO

Intermittent failure, the system is OK at this time. Check for loose or poor connections.

DTC U128D (KEYLESS ACCESS CONTROL UNIT)

DTC U128D : Keyless Access Control Unit Lost Communication with Gauge Control Module

NOTE:

- If you are troubleshooting multiple DTCs, be sure to follow the instructions in **B-CAN System Diagnosis Test Mode A** .
- Refer to the DTC code shown on the display, and then inspect the connectors and terminals based on the instructions in the table below.
- The DTC may be stored due to the grounding failure or the power source failure at the transmitting control unit (the grounding inspection and the power source inspection on each control unit are required prior to this checking process).

DTC Description	DTC
U128D Keyless Access Control Unit Lost Communication with Gauge Control Module	B

DTC (Keyless Access Control Unit)

1. Problem verification

   -1. Clear the DTC with the HDS.

   -2. Turn the vehicle to the OFF (LOCK) mode and then the ON mode.

   -3. Wait for at least 6 seconds.

   -4. Check for DTCs with the HDS.

DTC Description	DTC
U128D Keyless Access Control Unit Lost Communication with Gauge Control Module	B

   Are any DTCs indicated?

   YES

   Go to step 2.

   NO

   Intermittent failure, the system is OK at this time. Check for poor connections or loose terminals.

2. Open wire check (B-CAN_H line, B-CAN_L line)

   -1. Turn the vehicle to the OFF (LOCK) mode.

   -2. Disconnect the receiving control unit connector.

Body control module connector B (36P)

   -3. Disconnect the transmitting control unit connector(s).

   Refer to the DTC shown on the display, then disconnect the connector(s) based on the instructions (see table).

DTC	Connector
U128D	Gauge control module connector A (32P)

   -4. Check for continuity between the receiving control unit and the transmitting control unit on the B-CAN_H circuit and the B-CAN_L circuit.

Test condition	Vehicle OFF (LOCK) mode Body control module connector B (36P): disconnected Transmitting control unit connector(s) for indicated DTCs: disconnected

DTC	Circuit name	Receiving control unit		Transmitting control unit	
		Connector	Terminal	Connector	Terminal
U128D	B-CAN_H	**Body control module connector B (36P)**	No. 20	**Gauge control module connector A (32P)**	No. 30
	B-CAN_L		No. 21		No. 31

Is there continuity?

YES

The B-CAN_H wire and the B-CAN_L wire are OK. Refer to the DTC shown on the display, then replace the control unit based on the instructions (see table).

DTC	Operation for transmitting control unit
U128D	**Gauge control module**

NO

Repair an open in the B-CAN_H wire and/or the B-CAN_L wire.

DTC TROUBLESHOOTING

DTC B12C5

DTC B12C5 : Engine Start/Stop Switch Failure

NOTE: If you are troubleshooting multiple DTCs, be sure to follow the instructions in **B-CAN System Diagnosis Test Mode A** .

DTC Description	DTC
B12C5 Engine Start/Stop Switch Failure	B

DTC (Keyless Access Power Control Unit)

1. Problem verification

   -1. Clear the DTCs with the HDS.

   -2. Press the engine start/stop switch at least twenty times, then wait for at least 20 seconds.

   -3. Check for DTCs with the HDS.

DTC Description	DTC
B12C5 Engine Start/Stop Switch Failure	B

   Is DTC B12C5 indicated?

   YES

   Go to step 2.

   NO

   Intermittent failure, the system is OK at this time. Check for loose or poor connections.

2. Determine possible failure area (+B SMART line, GND line, other)

   -1. Turn the vehicle to the OFF (LOCK) mode.

   -2. Disconnect the following connector.

Engine start/stop switch 10P connector

   -3. Measure the voltage between test points 1 and 2.

Test condition	Vehicle OFF (LOCK) mode Engine start/stop switch 10P connector: disconnected
Test point 1	Engine start/stop switch 10P connector (female terminals) No. 5: ①
Test point 2	Engine start/stop switch 10P connector (female terminals) No. 1: ①

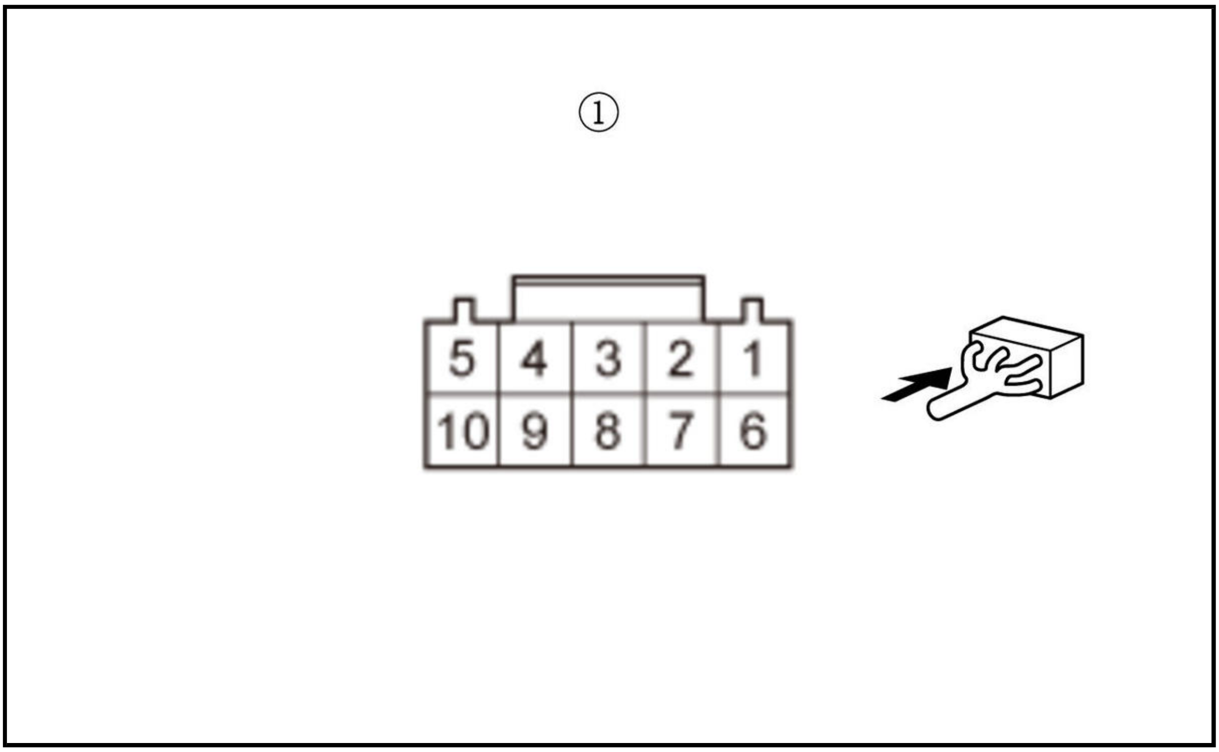

Is there battery voltage?

YES

The +B SMART and GND wires are OK. Go to step 3.

NO

Go to step 6.

3. Shorted wire check (SS1 (+), SS2 (-) lines)

-1. Disconnect the following connector.

Body control module connector G (32P)

-2. Check for continuity between test points 1 and 2.

Test condition	Vehicle OFF (LOCK) mode Engine start/stop switch 10P connector: disconnected Body control module connector G (32P): disconnected
Test point 1	Engine start/stop switch 10P connector (female terminals) No. 6: ①
Test point 2	Body ground

Test point 1	Engine start/stop switch 10P connector (female terminals) No. 10: ①
Test point 2	Body ground

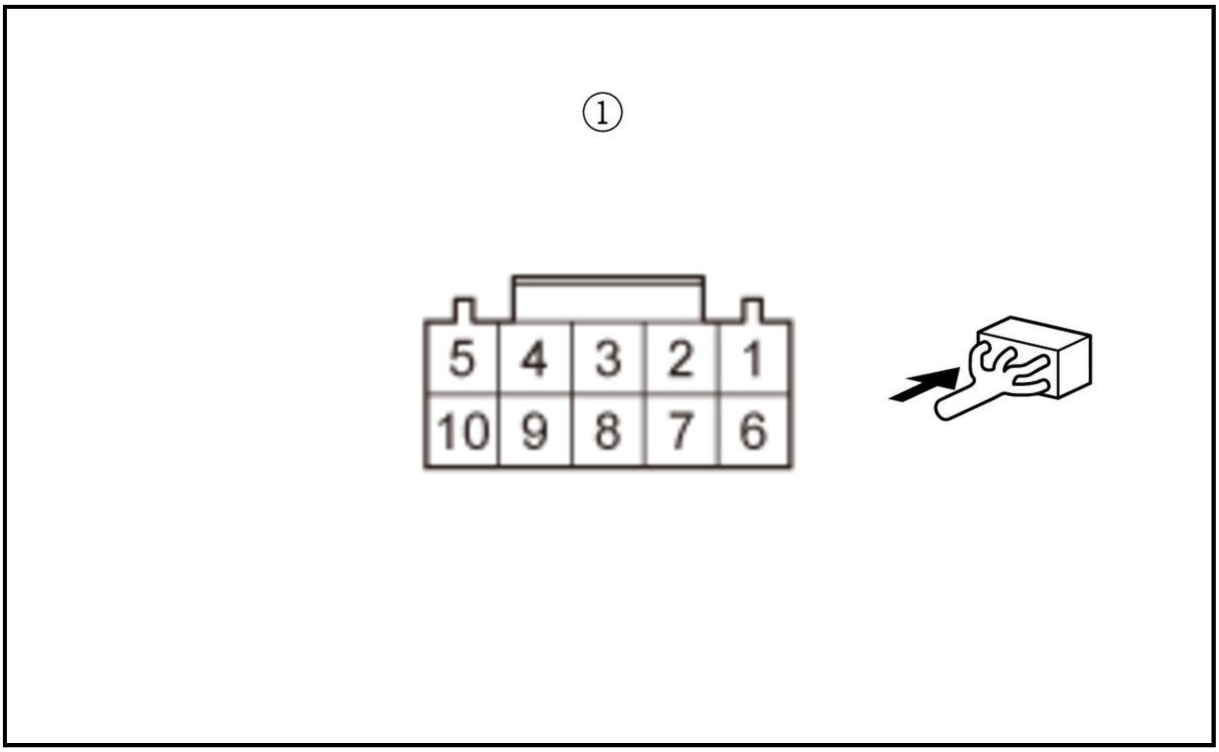

Is there continuity?

YES

Repair short to ground in the wire.

NO

The SS1 (+) and SS2 (-) wires are not shorted. Go to step 4.

4. Open wire check (SS1 (+), SS2 (-) lines)

-1. Check for continuity between test points 1 and 2.

Test condition	Vehicle OFF (LOCK) mode Engine start/stop switch 10P connector: disconnected Body control module connector G (32P): disconnected
Test point 1	Engine start/stop switch 10P connector (female terminals) No. 6: ①
Test point 2	**Body control module connector G (32P) No. 18**

Test point 1	Engine start/stop switch 10P connector (female terminals) No. 10: ①
Test point 2	**Body control module connector G (32P) No. 9**

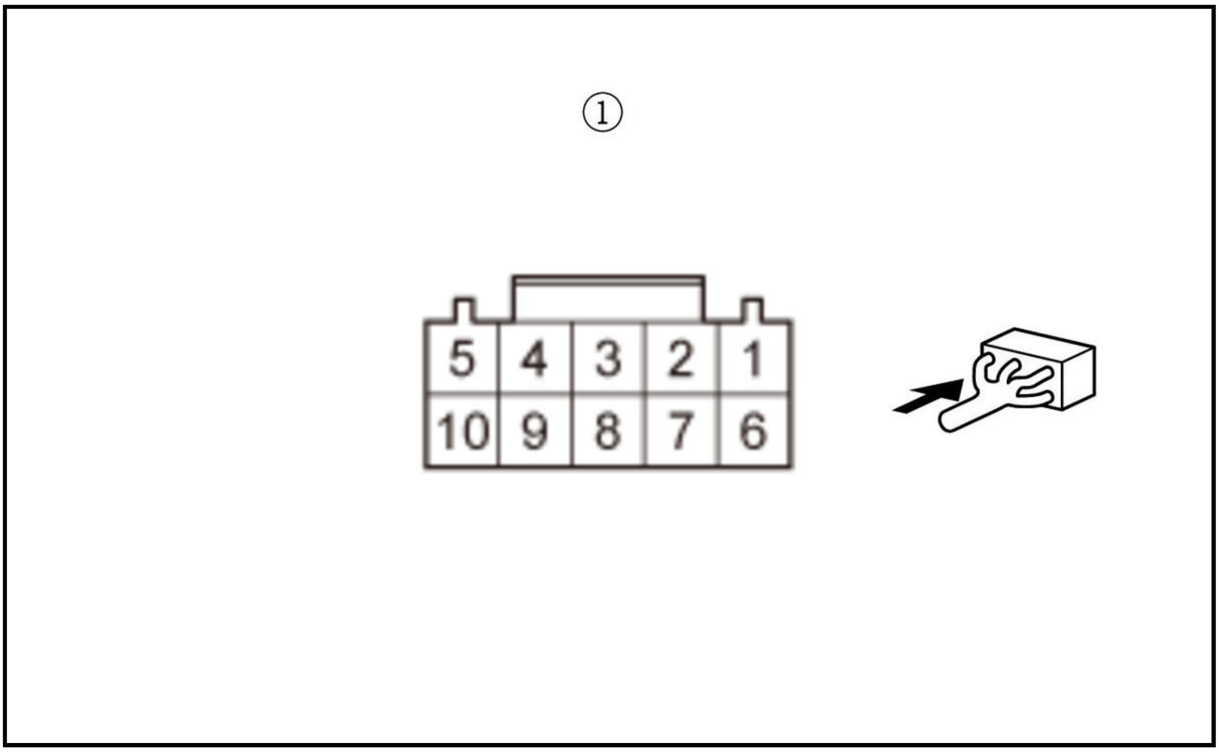

Is there continuity?

YES

The SS1 (+) and SS2 (-) wires are OK. Go to step 5.

NO

Repair an open or high resistance in the wire.

5. Engine start/stop switch check

   -1. **Do the engine start/stop switch test** .

   Is the engine start/stop switch OK?

   YES

   Replace the body control module .

   NO

   Replace the engine start/stop switch .

6. Open wire check (+B SMART line)

   -1. Measure the voltage between test points 1 and 2.

Test condition	Vehicle OFF (LOCK) mode Engine start/stop switch 10P connector: disconnected Body control module connector G (32P): disconnected
Test point 1	Engine start/stop switch 10P connector (female terminals) No. 5: ①
Test point 2	Body ground

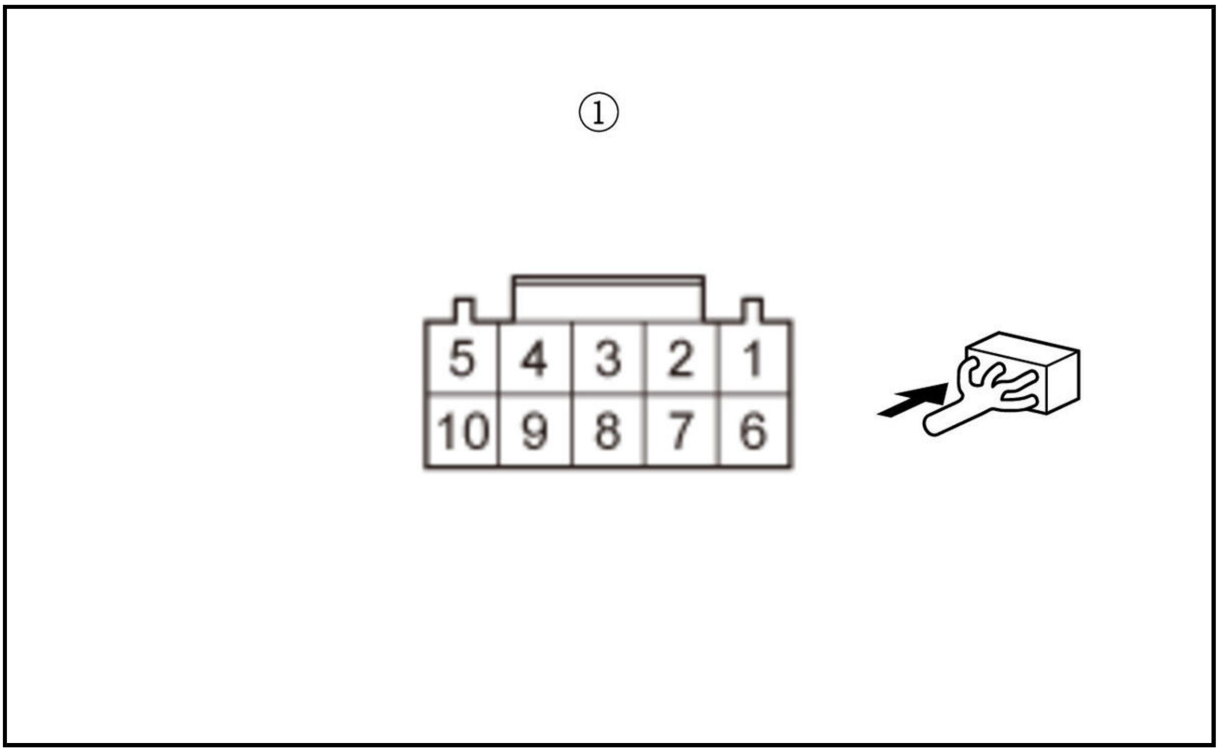

Is there battery voltage?

YES

Repair an open or high resistance in the GND wire.

NO

Repair an open or high resistance in the +B SMART wire.

DTC B12C6

DTC B12C6 : Electric Steering Lock Switch C/D Monitor Circuit Failure

NOTE: If you are troubleshooting multiple DTCs, be sure to follow the instructions in **B-CAN System Diagnosis Test Mode A** .

DTC Description	DTC
B12C6 Electric Steering Lock Switch C/D Monitor Circuit Failure	B

DTC (Keyless Access Power Control Unit)

1. Problem verification

   -1. Clear the DTCs with the HDS.

   -2. Press the engine start/stop switch at least ten times.

   -3. Check for DTCs with the HDS.

DTC Description	DTC
B12C6 Electric Steering Lock Switch C/D Monitor Circuit Failure	B

Is DTC B12C6 indicated?

YES

Go to step 2.

NO

Intermittent failure, the system is OK at this time. Check for loose or poor connections.

2. ESL SW line check 1

-1. Check the parameter(s) below with the HDS.

Signal	Threshold		Current conditions	
	Values	Unit	Values	Unit
Electrical Steering Lock SWITCH C	OFF	B	B	B
Electrical Steering Lock SWITCH D	OFF	B	B	B

Are ELECTRICAL STEERING LOCK SWITCH C and ELECTRICAL STEERING LOCK SWITCH D data list values OFF?

YES

Go to step 9.

NO

Go to step 3.

3. ESL SW line check 2

-1. Check the parameter(s) below with the HDS.

Signal	Threshold		Current conditions	
	Values	Unit	Values	Unit
Electrical Steering Lock SWITCH C	OFF	B	B	B
Electrical Steering Lock SWITCH D	OFF	B	B	B

Are ELECTRICAL STEERING LOCK SWITCH C data list value OFF?

YES

Go to step 10.

NO

Go to step 4.

4. ESL SW line check 3

-1. Check the parameter(s) below with the HDS.

Signal	Threshold		Current conditions	
	Values	Unit	Values	Unit
Electrical Steering Lock SWITCH C	OFF	B	B	B
Electrical Steering Lock SWITCH D	OFF	B	B	B

Are ELECTRICAL STEERING LOCK SWITCH D data list value OFF?

YES

Go to step 12.

NO

Go to step 5.

5. Shorted wire check (ESL SW C line) 1

-1. Turn the vehicle to the OFF (LOCK) mode.

-2. Disconnect the following connector.

Electric steering lock 12P connector

-3. Check for continuity between test points 1 and 2.

Test condition	Vehicle OFF (LOCK) mode Electric steering lock 12P connector: disconnected
Test point 1	Electric steering lock 12P connector (female terminals) No. 9: ①
Test point 2	Body ground

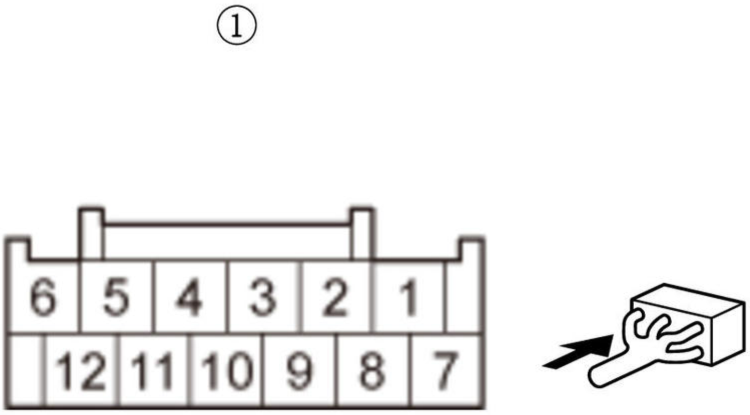

Is there continuity?

YES

Go to step 6.

NO

Go to step 7.

6. Shorted wire check (ESL SW C line) 2

-1. Disconnect the following connector.

Body control module connector G (32P)

-2. Check for continuity between test points 1 and 2.

Test condition	Vehicle OFF (LOCK) mode Electric steering lock 12P connector: disconnected Body control module connector G (32P): disconnected
Test point 1	Electric steering lock 12P connector (female terminals) No. 9: ①
Test point 2	Body ground

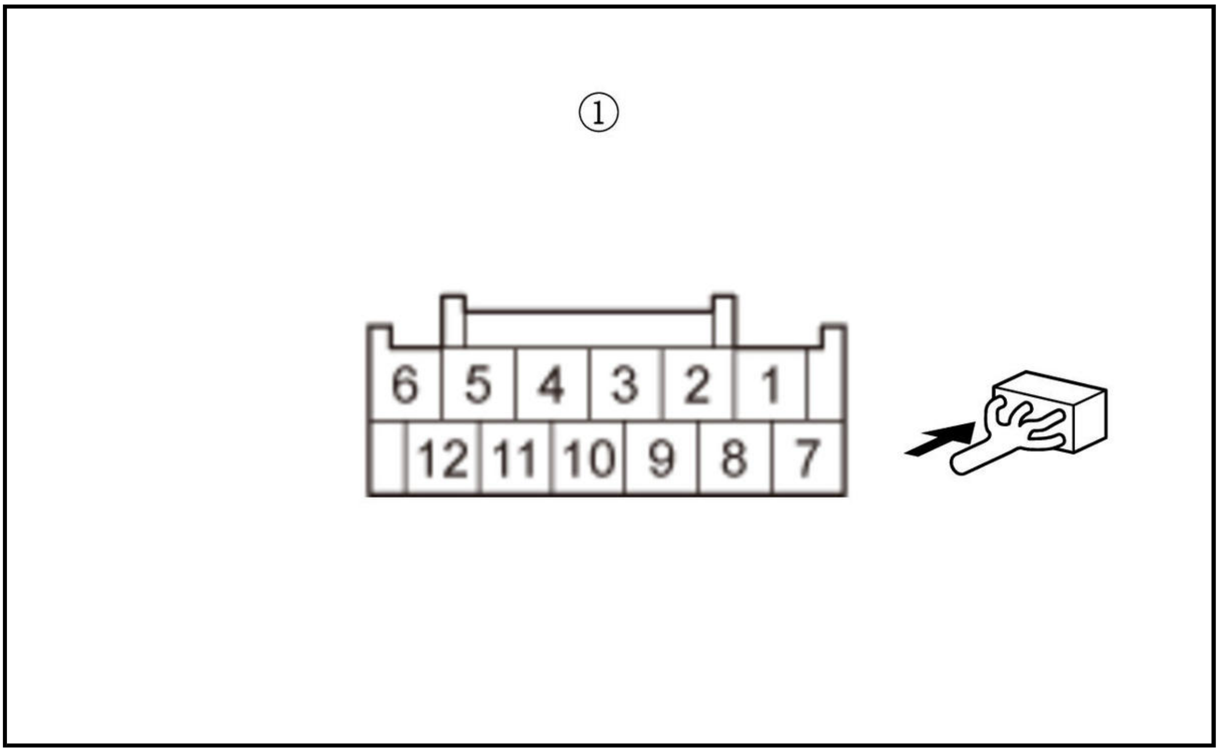

Is there continuity?

YES

Repair a short to ground in the wire.

NO

The ESL SW C wire is OK. **Replace the body control module** .

7. Shorted wire check (ESL SW D line) 1

-1. Check for continuity between test points 1 and 2.

Test condition	Vehicle OFF (LOCK) mode Electric steering lock 12P connector: disconnected
Test point 1	Electric steering lock 12P connector (female terminals) No. 10: ①
Test point 2	Body ground

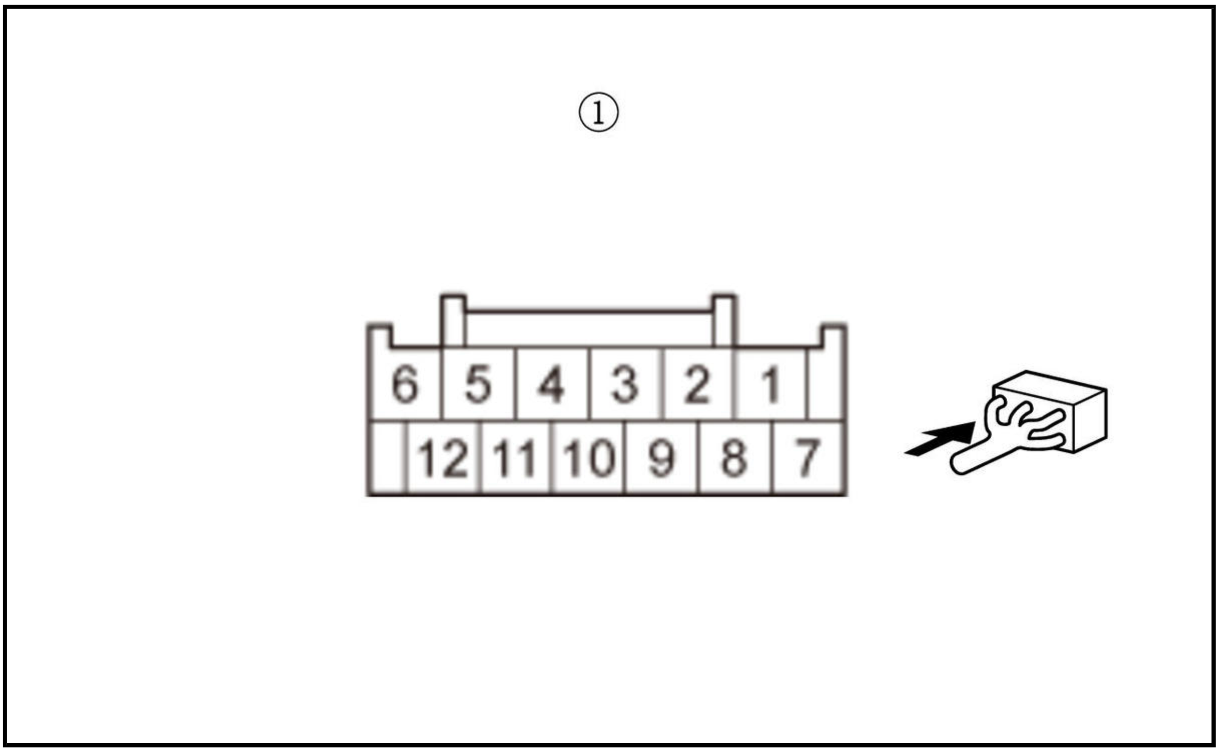

Is there continuity?

YES

Go to step 8.

NO

The ESL SW D wire is OK. **Replace the electric steering lock** .

8. Shorted wire check (ESL SW D line) 2

-1. Disconnect the following connector.

Body control module connector G (32P)

-2. Check for continuity between test points 1 and 2.

Test condition	Vehicle OFF (LOCK) mode Electric steering lock 12P connector: disconnected Body control module connector G (32P): disconnected
Test point 1	Electric steering lock 12P connector (female terminals) No. 10: ①
Test point 2	Body ground

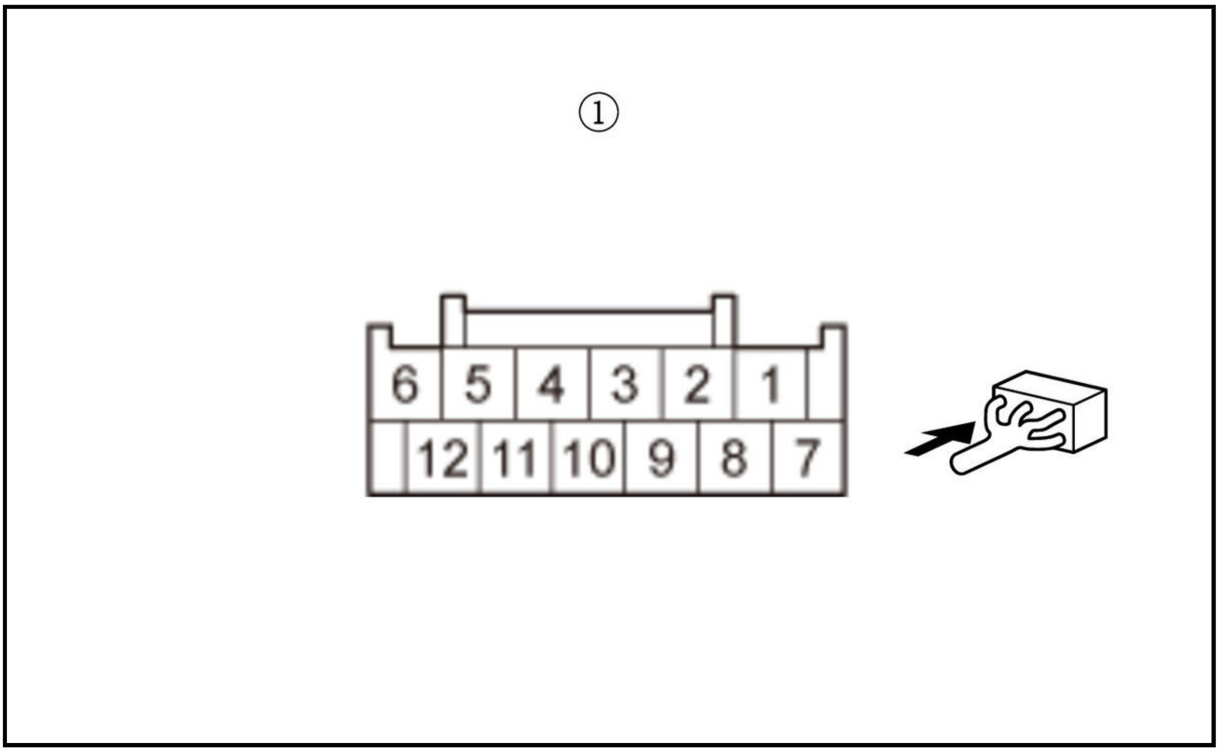

Is there continuity?

YES

Repair a short to ground in the wire.

NO

The ESL SW D wire is OK. **Replace the body control module** .

9. Open wire check (GND line)

-1. Turn the vehicle to the OFF (LOCK) mode.

-2. Disconnect the following connector.

Electric steering lock 12P connector

-3. Check for continuity between test points 1 and 2.

Test condition	Vehicle OFF (LOCK) mode Electric steering lock 12P connector: disconnected
Test point 1	Electric steering lock 12P connector (female terminals) No. 7: ①
Test point 2	Body ground

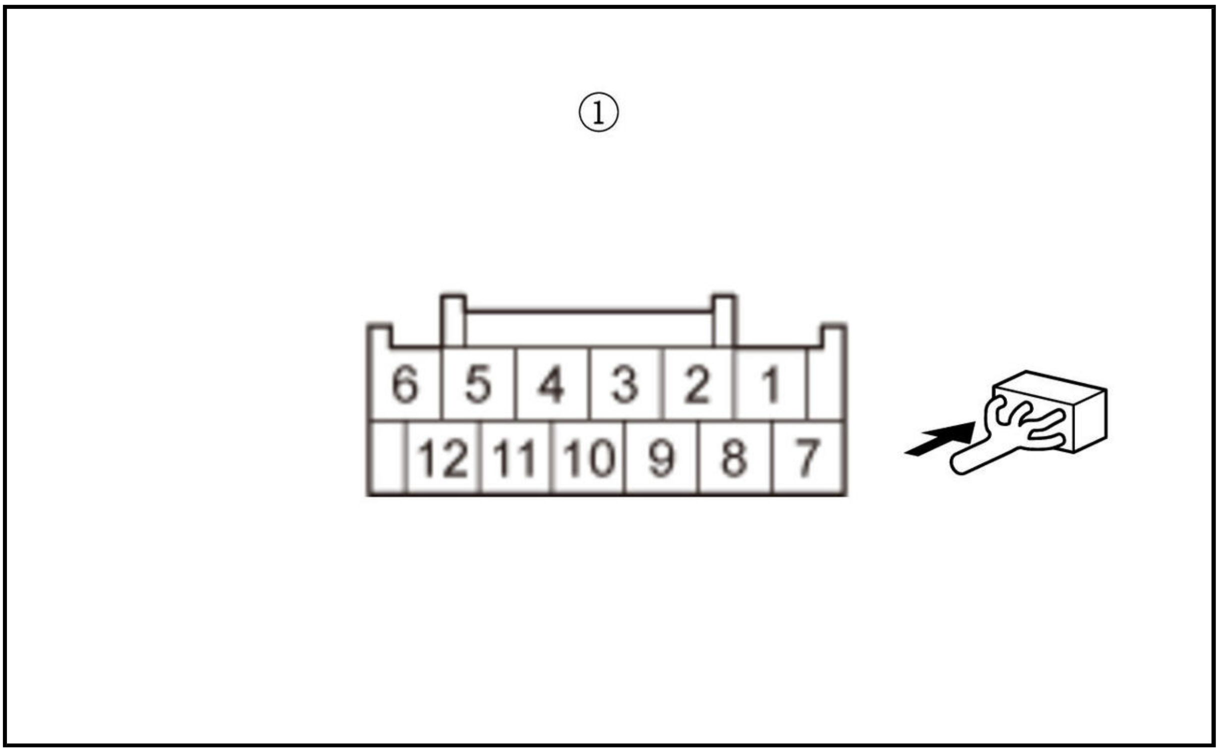

Is there continuity?

YES

The GND wire is OK. **Replace the electric steering lock** .

NO

Repair an open or high resistance in the ground wire or poor ground (G401).

10. Open wire check (ESL SW C line) 1

-1. Turn the vehicle to the OFF (LOCK) mode.

-2. Disconnect the following connector.

Electric steering lock 12P connector

-3. Turn the vehicle to the ON mode.

-4. Measure the voltage between test points 1 and 2.

Test condition	Vehicle ON mode Electric steering lock 12P connector: disconnected
Test point 1	Electric steering lock 12P connector (female terminals) No. 9: ①
Test point 2	Body ground

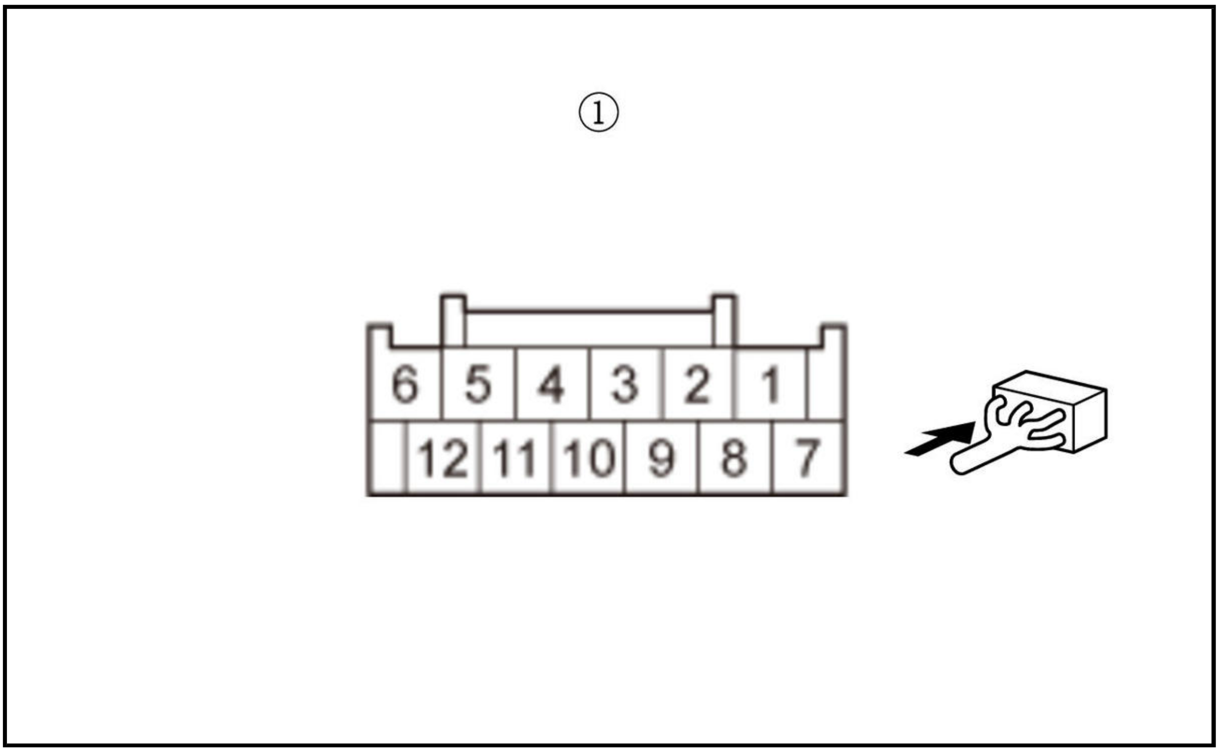

Is there battery voltage?

YES

The ESL SW C wire is OK. **Replace the electric steering lock** .

NO

Go to step 11.

11. Open wire check (ESL SW C line) 2

-1. Turn the vehicle to the OFF (LOCK) mode.

-2. Disconnect the following connector.

Body control module connector G (32P)

-3. Check for continuity between test points 1 and 2.

Test condition	Vehicle OFF (LOCK) mode Electric steering lock 12P connector: disconnected Body control module connector G (32P): disconnected
Test point 1	Electric steering lock 12P connector (female terminals) No. 9: ①
Test point 2	**Body control module connector G (32P) No. 4**

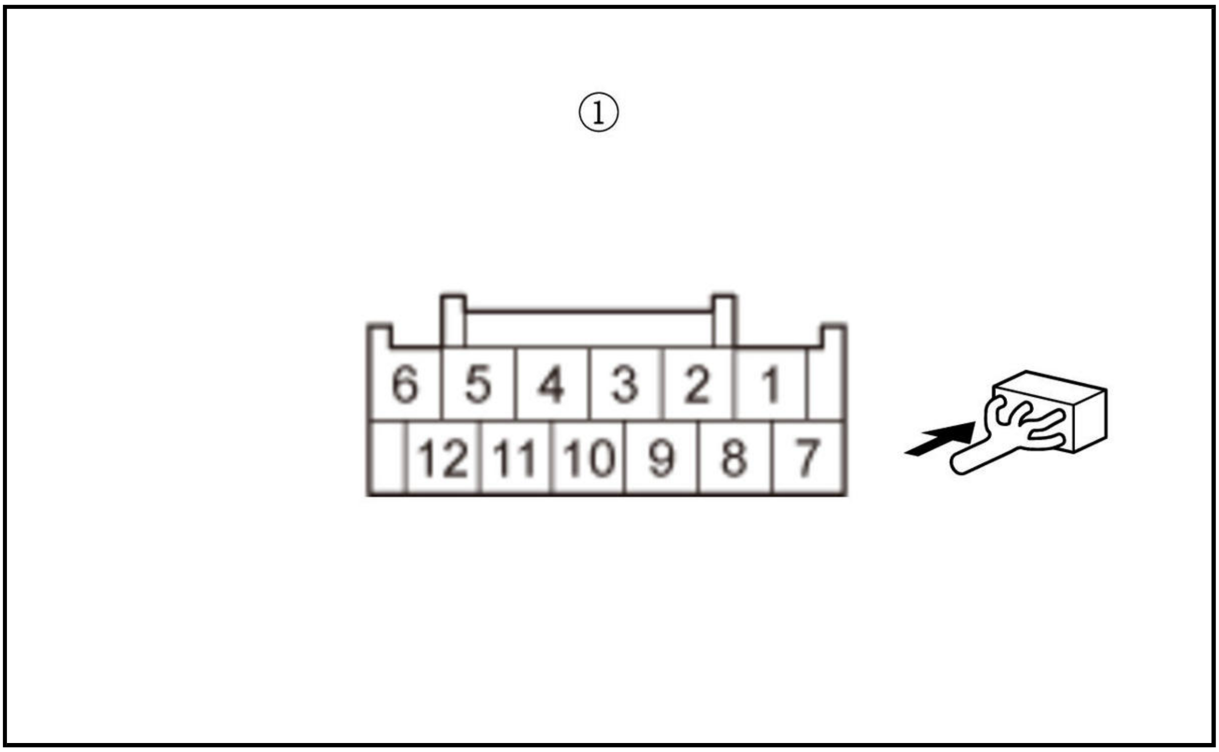

Is there continuity?

YES

The ESL SW C wire is OK. **Replace the body control module** .

NO

Repair an open or high resistance in the wire.

12. Open wire check (ESL SW D line) 1

-1. Turn the vehicle to the OFF (LOCK) mode.

-2. Disconnect the following connector.

Electric steering lock 12P connector

-3. Turn the vehicle to the ON mode.

-4. Measure the voltage between test points 1 and 2.

Test condition	Vehicle ON mode Electric steering lock 12P connector: disconnected
Test point 1	Electric steering lock 12P connector (female terminals) No. 10: ①
Test point 2	Body ground

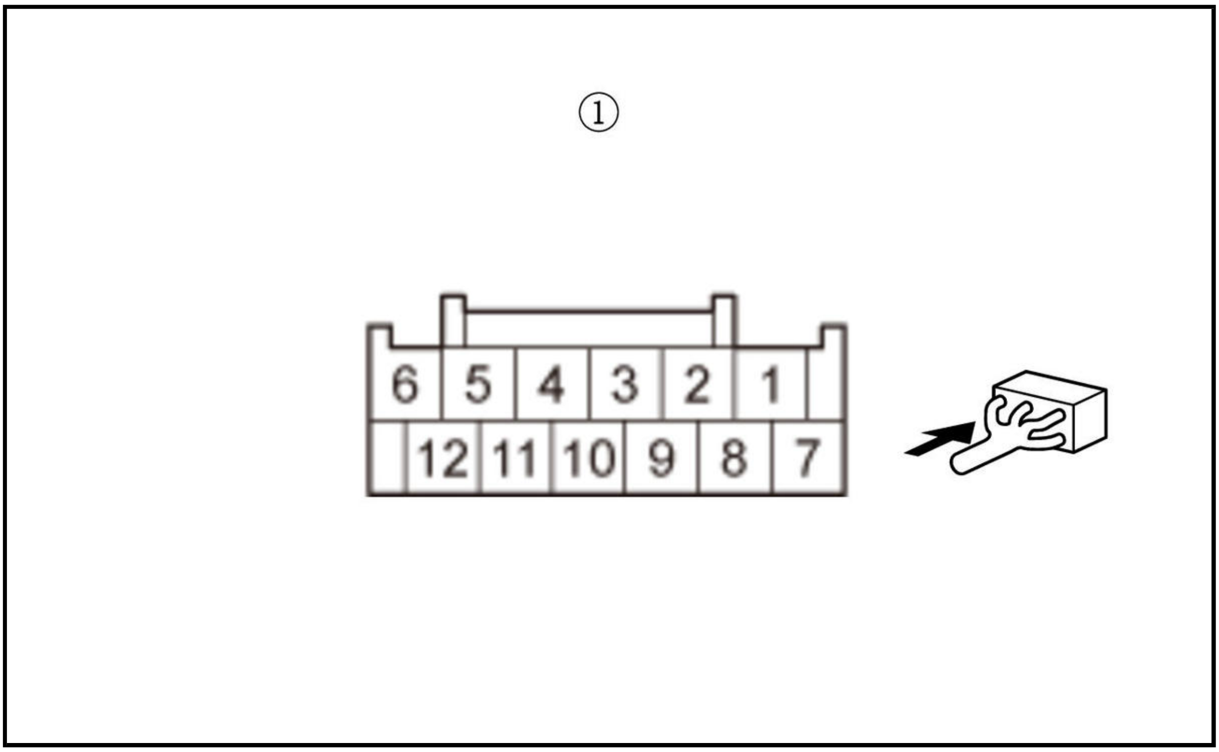

Is there battery voltage?

YES

The ESL SW D wire is OK. **Replace the electric steering lock** .

NO

Go to step 13.

13. Open wire check (ESL SW D line) 2

-1. Turn the vehicle to the OFF (LOCK) mode.

-2. Disconnect the following connector.

Body control module connector G (32P)

-3. Check for continuity between test points 1 and 2.

Test condition	Vehicle OFF (LOCK) mode Electric steering lock 12P connector: disconnected Body control module connector G (32P): disconnected
Test point 1	Electric steering lock 12P connector (female terminals) No. 10: ①
Test point 2	**Body control module connector G (32P) No. 5**

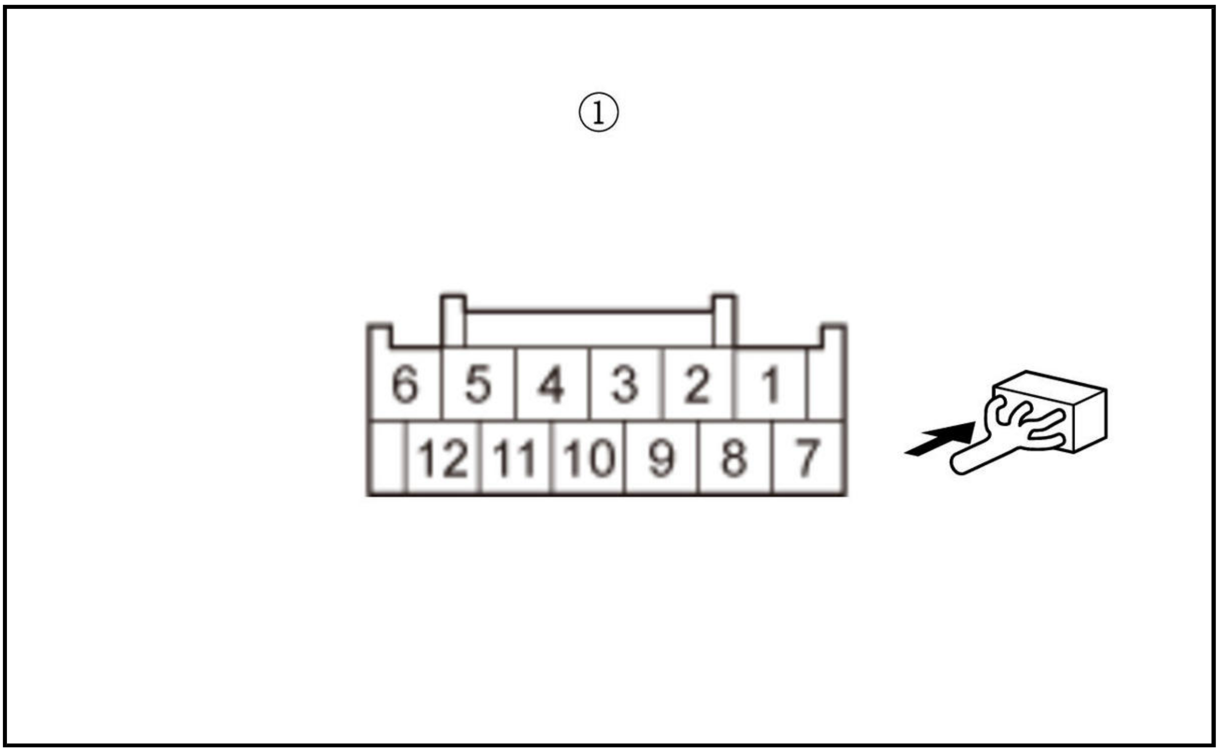

Is there continuity?

YES

The ESL SW D wire is OK. **Replace the body control module** .

NO

Repair an open or high resistance in the wire.

DTC B12C7

DTC B12C7 : Electric Steering Lock Motor Circuit Failure

NOTE: If you are troubleshooting multiple DTCs, be sure to follow the instructions in **B-CAN System Diagnosis Test Mode A** .

DTC Description	DTC
B12C7 Electric Steering Lock Motor Circuit Failure	B

DTC (Keyless Access Power Control Unit)

1. Problem verification

   -1. Clear the DTCs with the HDS.

   -2. Do this procedure ten times: Press the engine start/stop switch to select the OFF (LOCK), ACCESSORY, ON, and OFF (LOCK) mode.

   -3. Check for DTCs with the HDS.

DTC Description	DTC
B12C7 Electric Steering Lock Motor Circuit Failure	B

   Is DTC B12C7 indicated?

   YES

Go to step 2.

NO

Intermittent failure, the system is OK at this time. Check for loose or poor connections.

2. Open wire check (GND line)

-1. Turn the vehicle to the OFF (LOCK) mode.

-2. Disconnect the following connector.

Electric steering lock 12P connector

-3. Check for continuity between test points 1 and 2.

Test condition	Vehicle OFF (LOCK) mode Electric steering lock 12P connector: disconnected
Test point 1	Electric steering lock 12P connector (female terminals) No. 7: ①
Test point 2	Body ground

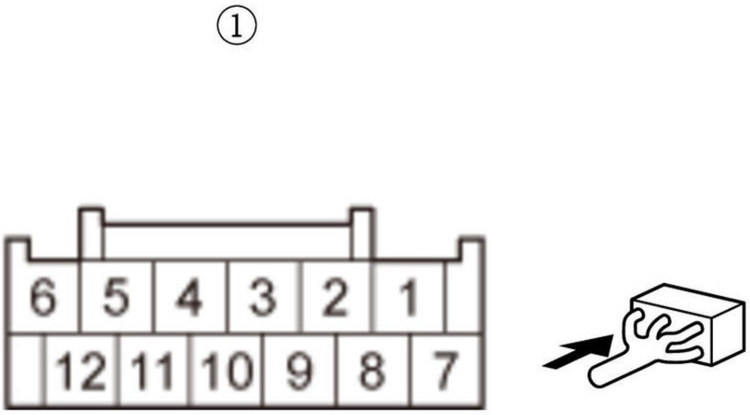

Is there continuity?

YES

The GND wire is OK. Go to step 3.

NO

Repair an open or high resistance in the ground wire or poor ground (G401).

3. Shorted wire check (MTR CUT1(CONT), MTR CUT2(IG1) lines)

-1. Disconnect the following connector.

Body control module connector G (32P)

-2. Check for continuity between test points 1 and 2.

Test condition	Vehicle OFF (LOCK) mode Electric steering lock 12P connector: disconnected Body control module connector G (32P): disconnected
Test point 1	Electric steering lock 12P connector (female terminals) No. 2: ①
Test point 2	Body ground

Test point 1	Electric steering lock 12P connector (female terminals) No. 4: ①
Test point 2	Body ground

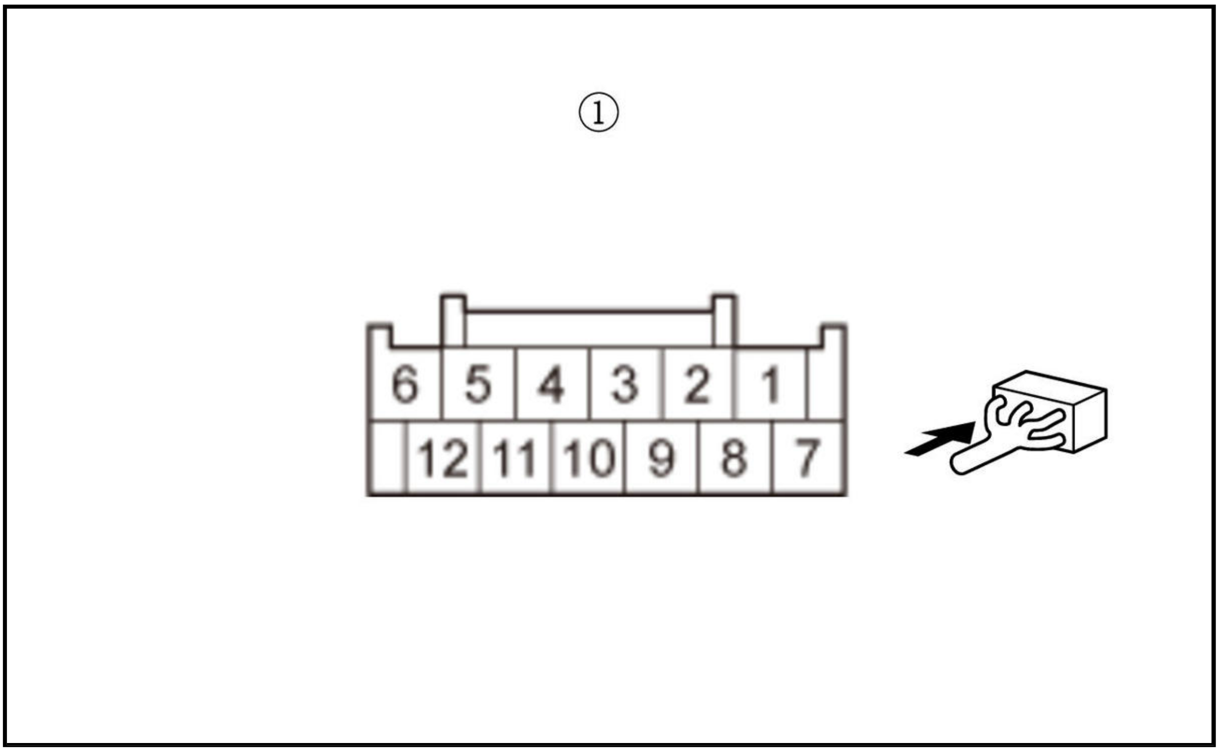

Is there continuity?

YES

Repair a short to ground in the wire.

NO

The MTR CUT1(CONT) and MTR CUT2(IG1) wires are not shorted. Go to step 4.

4. Open wire check (MTR CUT1(CONT), MTR CUT2(IG1) lines)

-1. Check for continuity between test points 1 and 2.

Test condition	Vehicle OFF (LOCK) mode Electric steering lock 12P connector: disconnected Body control module connector G (32P): disconnected
Test point 1	**Body control module connector G (32P) No. 6**
Test point 2	Electric steering lock 12P connector (female terminals) No. 2: ①

Test point 1	**Body control module connector G (32P) No. 7**
Test point 2	Electric steering lock 12P connector (female terminals) No. 4: ①

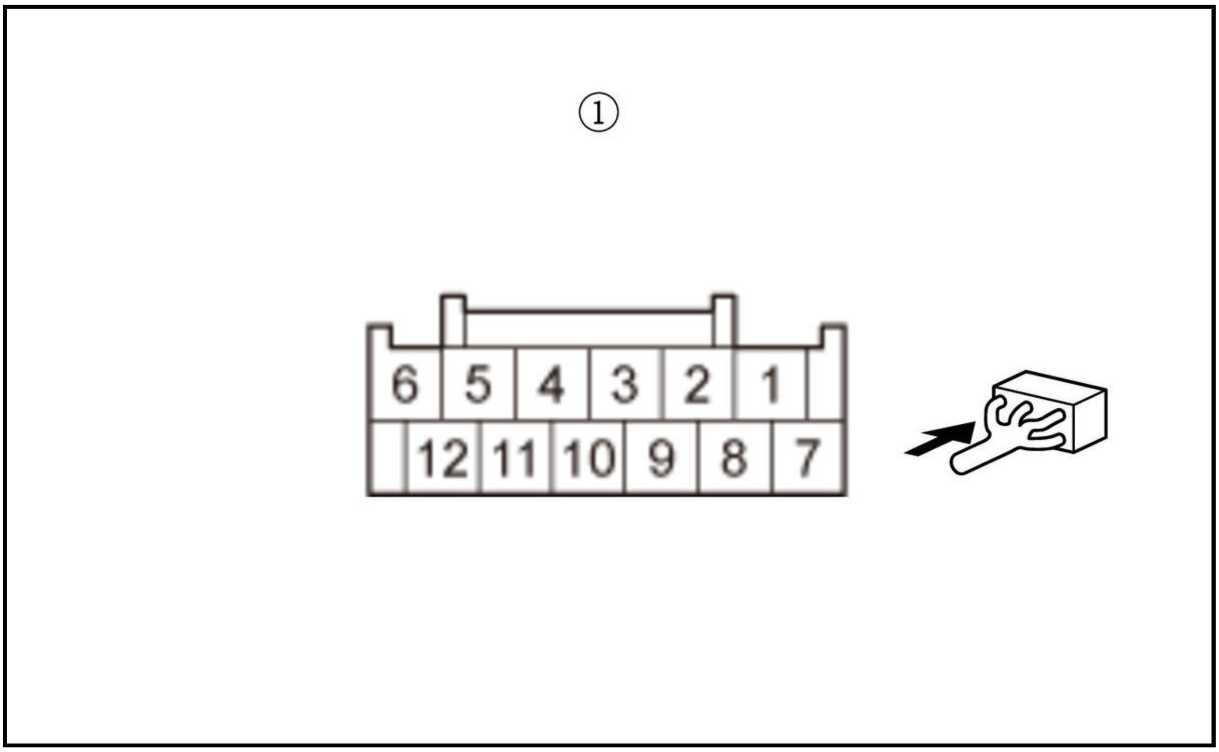

Is there continuity?

YES

The MTR CUT1(CONT) and MTR CUT2(IG1) wires are OK. **Replace the electric steering lock** . If the DTC is still present, **replace the body control module** .

NO

Repair an open or high resistance in the wire.

DTC B12D0

DTC B12D0 : Power Control Unit IG1A Circuit Error

NOTE:

- If you are troubleshooting multiple DTCs, be sure to follow the instructions in **B-CAN System Diagnosis Test Mode A** .
- Make sure aftermarket accessories are not installed.

DTC Description	DTC
B12D0 Power Control Unit IG1A Circuit Error	B

DTC (Keyless Access Power Control Unit)

1. Problem verification

-1. Clear the DTCs with the HDS.

Do this procedure five times.

- Turn the vehicle to the OFF (LOCK) mode and wait for at least 10 seconds.
- Turn the vehicle to the ACCESSORY mode and wait for at least 10 seconds.
- Turn the vehicle to the ON mode and wait for at least 10 seconds.

-3. Check for DTCs with the HDS.

DTC Description	DTC
B12D0 Power Control Unit IG1A Circuit Error	B

Is DTC B12D0 indicated?

YES

Replace the body control module .

NO

Intermittent failure, the system is OK at this time. Check for loose or poor connections.

DTC B12D1

DTC B12D1 : Power Control Unit IG1B Circuit Error

NOTE:

- If you are troubleshooting multiple DTCs, be sure to follow the instructions in **B-CAN System Diagnosis Test Mode A** .
- Make sure aftermarket accessories are not installed.

DTC Description	DTC
B12D1 Power Control Unit IG1B Circuit Error	B

DTC (Keyless Access Power Control Unit)

1. Problem verification

-1. Clear the DTCs with the HDS.

Do this procedure five times.

- Turn the vehicle to the OFF (LOCK) mode and wait for at least 10 seconds.
- Turn the vehicle to the ACCESSORY mode and wait for at least 10 seconds.
- Turn the vehicle to the ON mode and wait for at least 10 seconds.

-3. Check for DTCs with the HDS.

DTC Description	DTC
B12D1 Power Control Unit IG1B Circuit Error	B

Is DTC B12D1 indicated?

YES

Replace the body control module .

NO

Intermittent failure, the system is OK at this time. Check for loose or poor connections.

DTC B12D2

DTC B12D2 : Power Control Unit IG2 Circuit Error

NOTE:

- If you are troubleshooting multiple DTCs, be sure to follow the instructions in **B-CAN System Diagnosis Test Mode A** .
- Make sure aftermarket accessories are not installed.

DTC Description	DTC
B12D2 Power Control Unit IG2 Circuit Error	B

DTC (Keyless Access Power Control Unit)

1. Problem verification

   -1. Clear the DTCs with the HDS.

   Do this procedure five times.

   - Turn the vehicle to the OFF (LOCK) mode and wait for at least 10 seconds.
   - Turn the vehicle to the ACCESSORY mode and wait for at least 10 seconds.
   - Turn the vehicle to the ON mode and wait for at least 10 seconds.

   -3. Check for DTCs with the HDS.

DTC Description	DTC
B12D2 Power Control Unit IG2 Circuit Error	B

   Is DTC B12D2 indicated?

   YES

   Replace the body control module .

   NO

   Intermittent failure, the system is OK at this time. Check for loose or poor connections.

DTC B12D3

DTC B12D3 : Power Control Unit IG Latch Circuit Error

NOTE:

- If you are troubleshooting multiple DTCs, be sure to follow the instructions in **B-CAN System Diagnosis Test Mode A** .
- Make sure aftermarket accessories are not installed.

DTC Description	DTC
B12D3 Power Control Unit IG Latch Circuit Error	B

DTC (Keyless Access Power Control Unit)

1. Problem verification

   -1. Clear the DTCs with the HDS.

   -2. Do this procedure five times: Press the engine start/stop switch to select the OFF (LOCK), ACCESSORY, ON, and OFF (LOCK) mode.

-3. Check for DTCs with the HDS.

DTC Description	DTC
B12D3 Power Control Unit IG Latch Circuit Error	B

Is DTC B12D3 indicated?

YES

Replace the body control module .

NO

Intermittent failure, the system is OK at this time.

DTC B12E0

DTC B12E0 : Electric Steering Lock Switch Internal Error

NOTE: If you are troubleshooting multiple DTCs, be sure to follow the instructions in **B-CAN System Diagnosis Test Mode A** .

DTC Description	DTC
B12E0 Electric Steering Lock Switch Internal Error	B

DTC (Keyless Access Power Control Unit)

1. Problem verification

   -1. Clear the DTCs with the HDS.

   -2. Do this procedure ten times: Press the engine start/stop switch to select the OFF (LOCK), ACCESSORY, ON, and OFF (LOCK) mode.

   -3. Check for DTCs with the HDS.

DTC Description	DTC
B12E0 Electric Steering Lock Switch Internal Error	B

Is DTC B12E0 indicated?

YES

Replace the electric steering lock .

NO

Intermittent failure, the system is OK at this time.

DTC B12E1

DTC B12E1 : Electric Steering Lock Motor Internal Error

NOTE:

- If you are troubleshooting multiple DTCs, be sure to follow the instructions in **B-CAN System Diagnosis Test Mode A** .
- Make sure aftermarket accessories are not installed.

DTC Description	DTC
B12E1 Electric Steering Lock Motor Internal Error	B

DTC (Keyless Access Power Control Unit)

1. Problem verification

-1. Clear the DTCs with the HDS.

-2. Do this procedure ten times: Press the engine start/stop switch to select the OFF (LOCK), ACCESSORY, ON, and OFF (LOCK) mode.

-3. Check for DTCs with the HDS.

DTC Description	DTC
B12E1 Electric Steering Lock Motor Internal Error	B

Is DTC B12E1 indicated?

YES

Go to step 2.

NO

Intermittent failure, the system is OK at this time. Check for loose or poor connections.

2. Open wire check (+B SMART line)

-1. Turn the vehicle to the OFF (LOCK) mode.

-2. Disconnect the following connector.

Electric steering lock 12P connector

-3. Measure the voltage between test points 1 and 2.

Test condition	Vehicle OFF (LOCK) mode Electric steering lock 12P connector: disconnected
Test point 1	Electric steering lock 12P connector (female terminals) No. 3: ①
Test point 2	Body ground

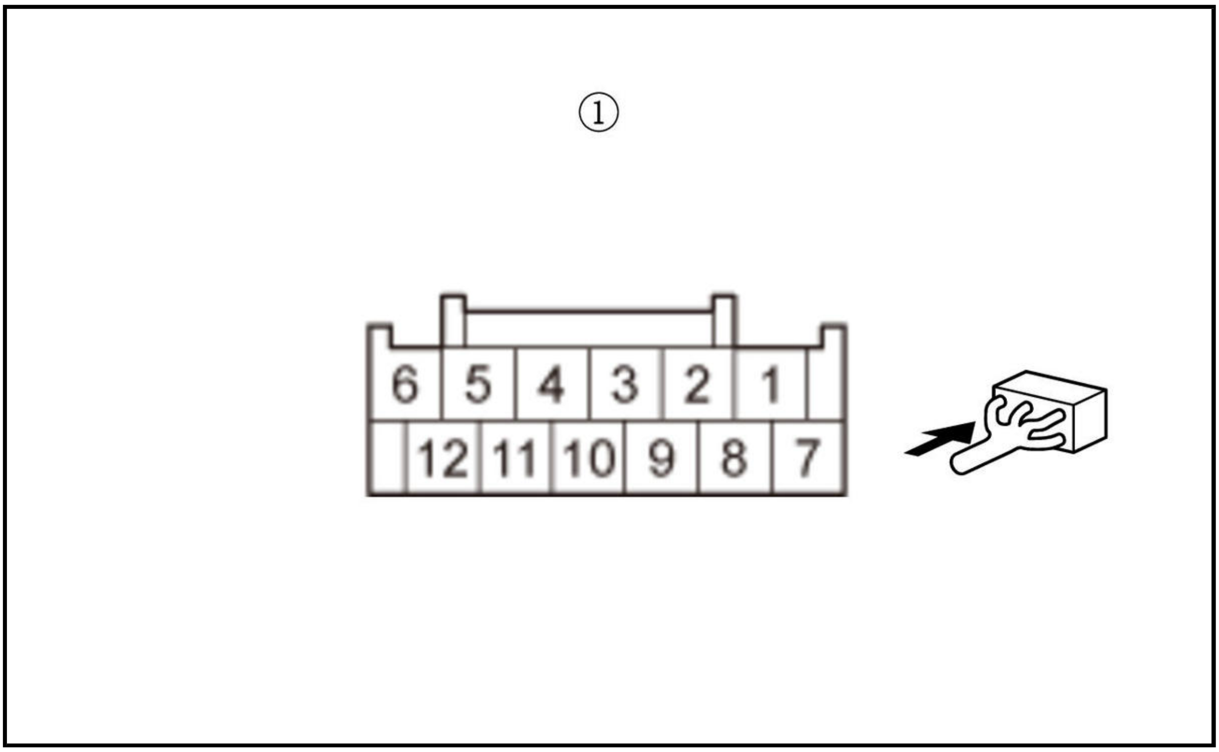

Is there battery voltage?

YES

The +B SMART wire is OK. Go to step 3.

NO

Repair an open or high resistance in the wire.

3. Open wire check (GND line)

-1. Check for continuity between test points 1 and 2.

Test condition	Vehicle OFF (LOCK) mode Electric steering lock 12P connector: disconnected
Test point 1	Electric steering lock 12P connector (female terminals) No. 7: ①
Test point 2	Body ground

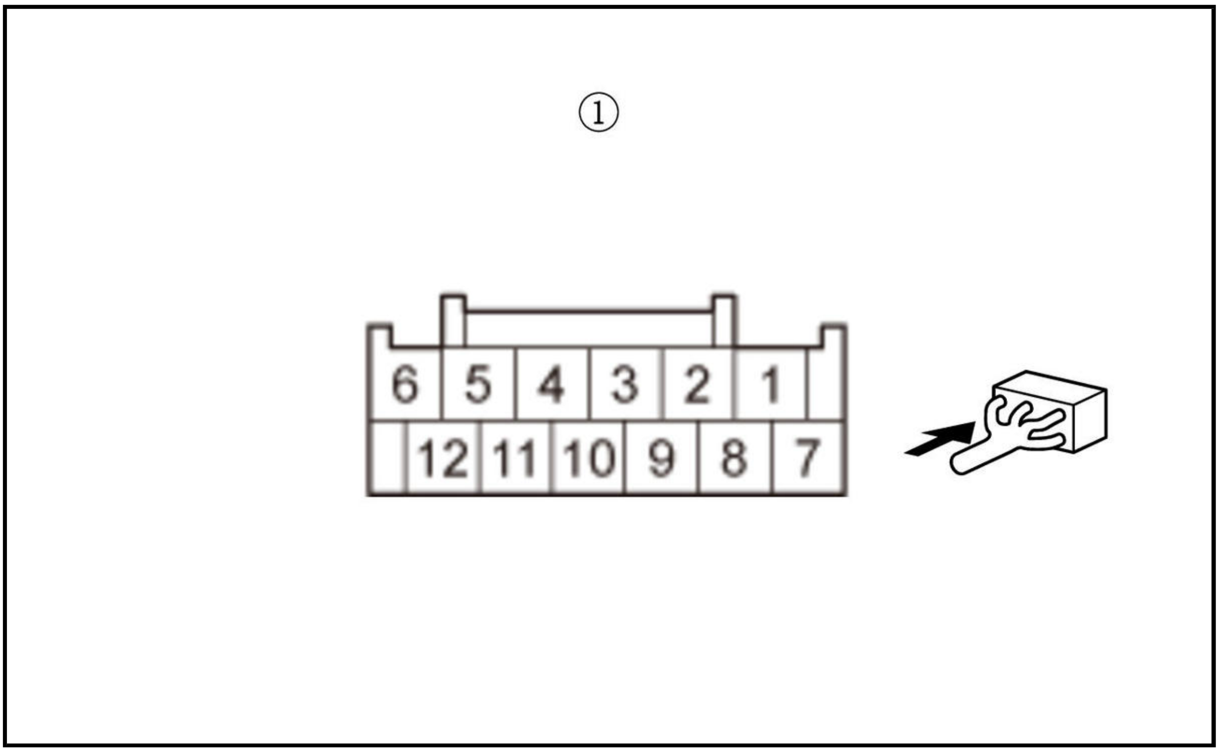

Is there continuity?

YES

The GND wire is OK. Go to step 4.

NO

Repair an open or high resistance in the ground wire or poor ground (G401).

4. Open wire check (IG1 FUEL PUMP line)

-1. Turn the vehicle to the ON mode.

-2. Measure the voltage between test points 1 and 2.

Test condition	Vehicle ON mode Electric steering lock 12P connector: disconnected
Test point 1	Electric steering lock 12P connector (female terminals) No. 12: ①
Test point 2	Body ground

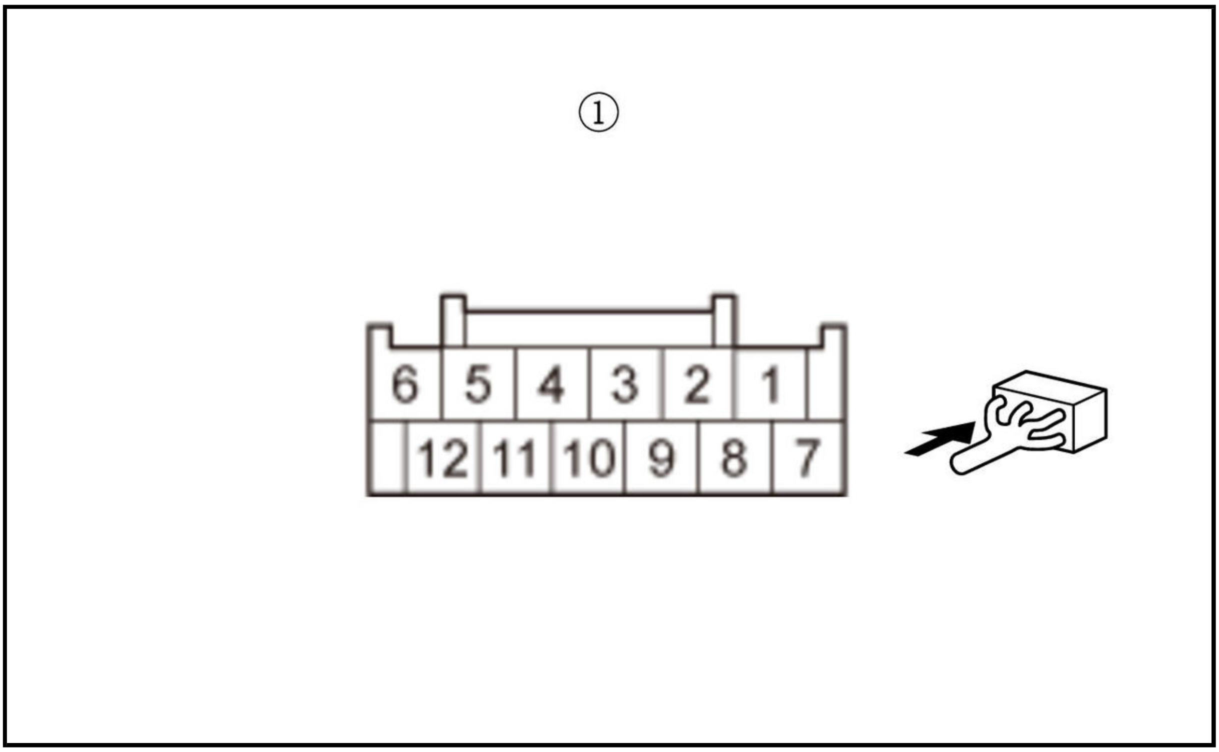

Is there battery voltage?

YES

The IG1 FUEL PUMP wire is OK. Go to step 5.

NO

Repair an open or high resistance in the wire.

5. Open wire check (MTR CONT line)

-1. Turn the vehicle to the OFF (LOCK) mode.

-2. Disconnect the following connector.

Body control module connector F (36P)

-3. Check for continuity between test points 1 and 2.

Test condition	Vehicle OFF (LOCK) mode Electric steering lock 12P connector: disconnected Body control module connector F (36P): disconnected
Test point 1	Electric steering lock 12P connector (female terminals) No. 1: ①
Test point 2	**Body control module connector F (36P) No. 1**

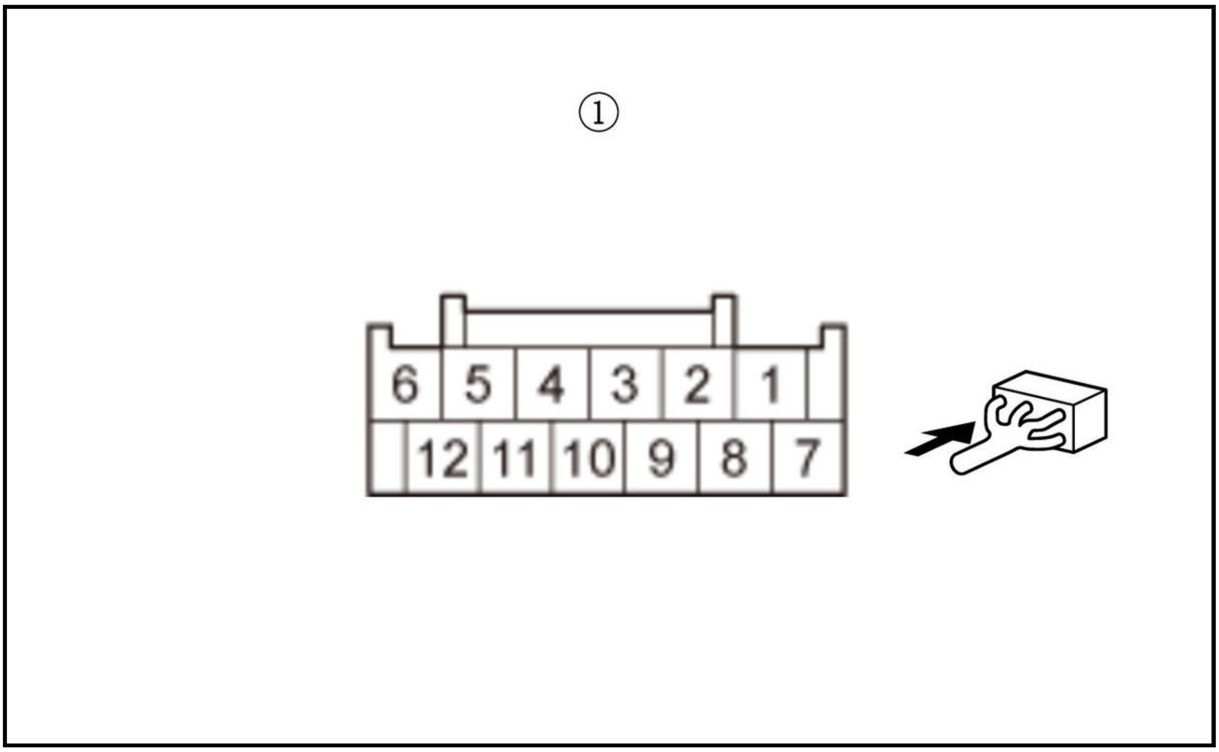

Is there continuity?

YES

The MTR CONT wire is OK. Go to step 6.

NO

Repair an open or high resistance in the wire.

6. Shorted wire check (MTR CUT1(CONT), MTR CUT2(IG1) lines)

-1. Disconnect the following connector.

Body control module connector G (32P)

-2. Check for continuity between test points 1 and 2.

Test condition	Vehicle OFF (LOCK) mode Electric steering lock 12P connector: disconnected Body control module connector F (36P): disconnected Body control module connector G (32P): disconnected
Test point 1	Electric steering lock 12P connector (female terminals) No. 2: ①
Test point 2	Body ground

Test point 1	Electric steering lock 12P connector (female terminals) No. 4: ①
Test point 2	Body ground

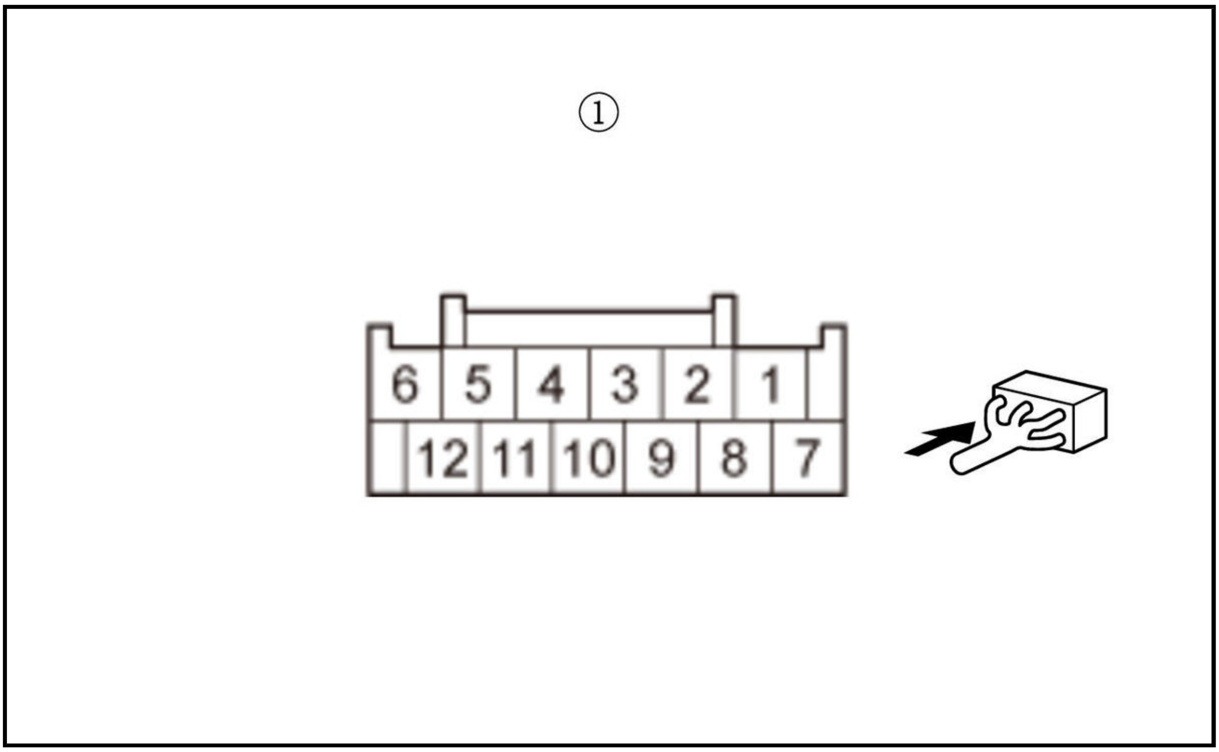

Is there continuity?

YES

Repair a short to ground in the wire.

NO

The MTR CUT1(CONT) and MTR CUT2(IG1) wires are not shorted. Go to step 7.

7. Open wire check (MTR CUT1(CONT), MTR CUT2(IG1) lines)

-1. Check for continuity between test points 1 and 2.

Test condition	Vehicle OFF (LOCK) mode Electric steering lock 12P connector: disconnected Body control module connector F (36P): disconnected Body control module connector G (32P): disconnected
Test point 1	**Body control module connector G (32P) No. 6**
Test point 2	Electric steering lock 12P connector (female terminals) No. 2: ①

Test point 1	**Body control module connector G (32P) No. 7**
Test point 2	Electric steering lock 12P connector (female terminals) No. 4: ①

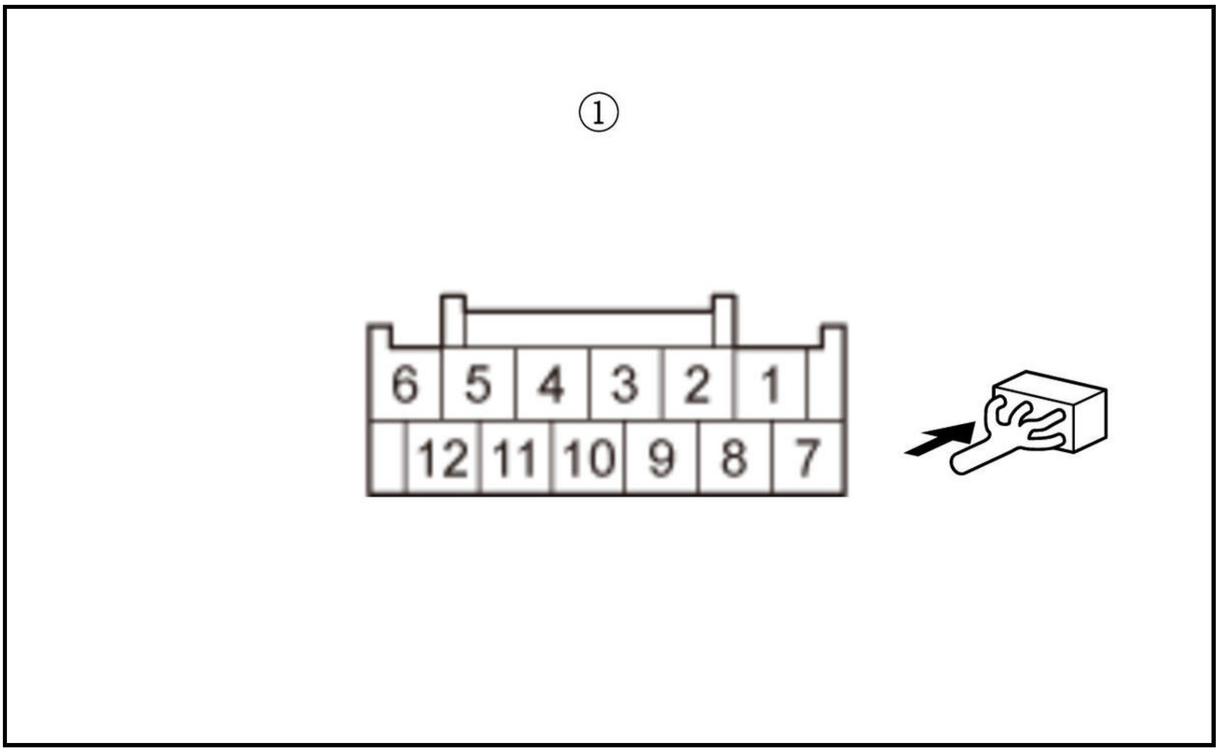

Is there continuity?

YES

The MTR CUT1(CONT) and MTR CUT2(IG1) wires are OK. **Replace the electric steering lock** . If the DTC is still present, **replace the body control module** .

NO

Repair an open or high resistance in the wire.

DTC B12E2

DTC B12E2 : Electric Steering Lock Low Level Failure of MTRCUT1

NOTE:

- If you are troubleshooting multiple DTCs, be sure to follow the instructions in **B-CAN System Diagnosis Test Mode A** .
- Before troubleshooting, make sure the fuses associated with the system is OK.

DTC Description	DTC
B12E2 Electric Steering Lock Low Level Failure of MTRCUT1	B

DTC (Keyless Access Power Control Unit)

1. Problem verification

-1. Clear the DTCs with the HDS.

-2. Do this procedure ten times: Press the engine start/stop switch to select the OFF (LOCK), ACCESSORY, ON, and OFF (LOCK) mode.

-3. Check for DTCs with the HDS.

DTC Description	DTC
B12E2 Electric Steering Lock Low Level Failure of MTRCUT1	B

Is DTC B12E2 indicated?

YES

Go to step 2.

NO

Intermittent failure, the system is OK at this time. Check for loose or poor connections.

2. Open wire check (+B SMART line)

-1. Turn the vehicle to the OFF (LOCK) mode.

-2. Disconnect the following connector.

Electric steering lock 12P connector

-3. Measure the voltage between test points 1 and 2.

Test condition	Vehicle OFF (LOCK) mode Electric steering lock 12P connector: disconnected
Test point 1	Electric steering lock 12P connector (female terminals) No. 3: ①
Test point 2	Body ground

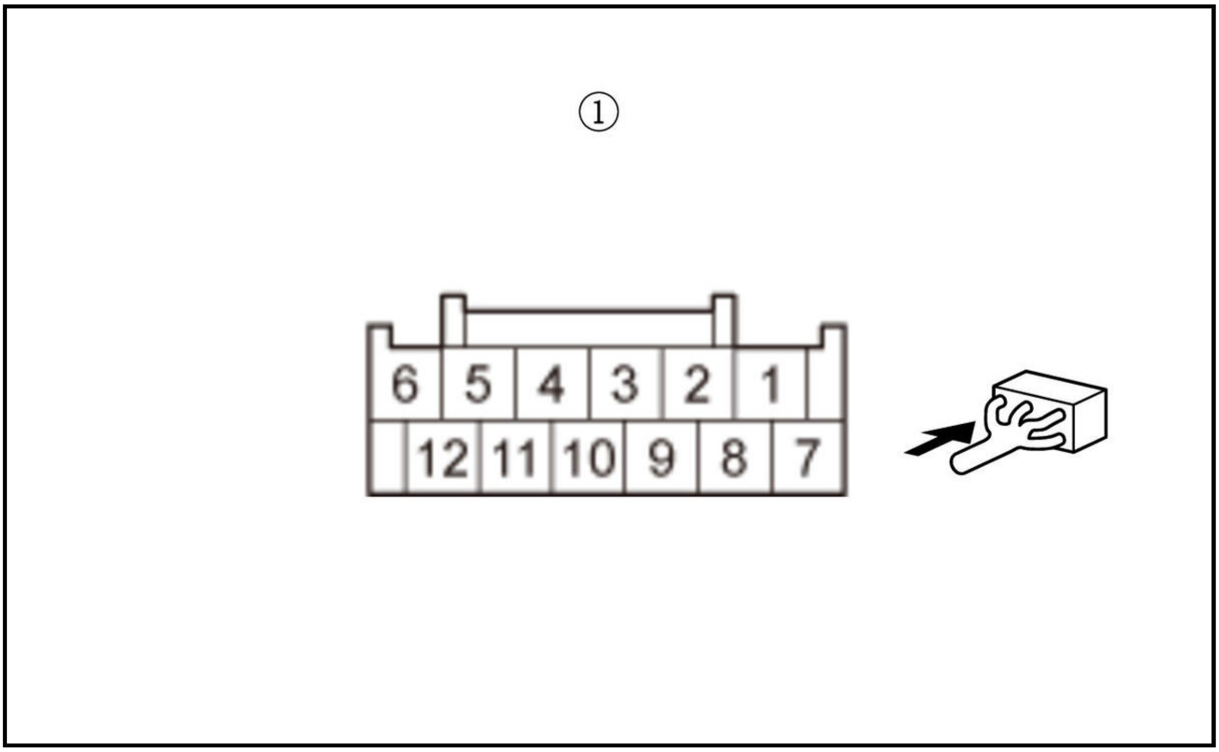

Is there battery voltage?

YES

The +B SMART wire is OK. Go to step 3.

NO

Repair an open or high resistance in the wire.

3. Open wire check (GND line)

-1. Check for continuity between test points 1 and 2.

Test condition	Vehicle OFF (LOCK) mode Electric steering lock 12P connector: disconnected
Test point 1	Electric steering lock 12P connector (female terminals) No. 7: ①
Test point 2	Body ground

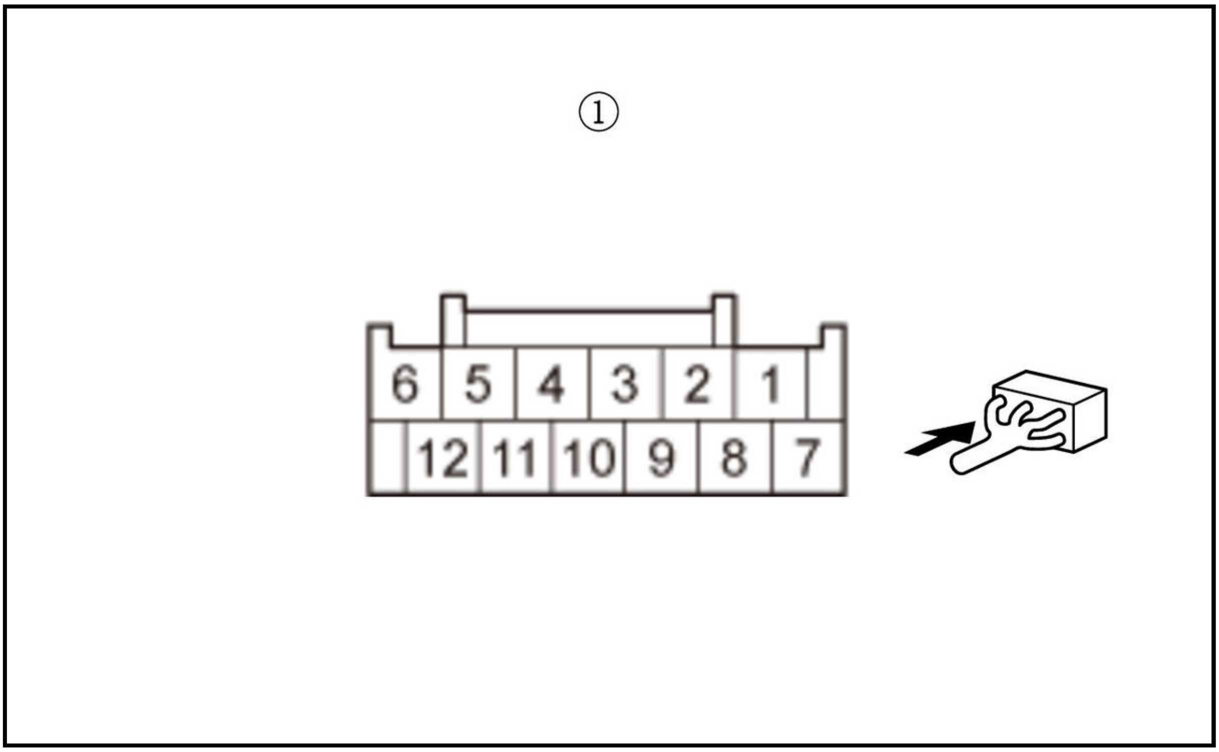

Is there continuity?

YES

The GND wire is OK. Go to step 4.

NO

Repair an open or high resistance in the ground wire or poor ground (G401).

4. Open wire check (IG1 FUEL PUMP line)

-1. Turn the vehicle to the ON mode.

-2. Measure the voltage between test points 1 and 2.

Test condition	Vehicle ON mode Electric steering lock 12P connector: disconnected
Test point 1	Electric steering lock 12P connector (female terminals) No. 12: ①
Test point 2	Body ground

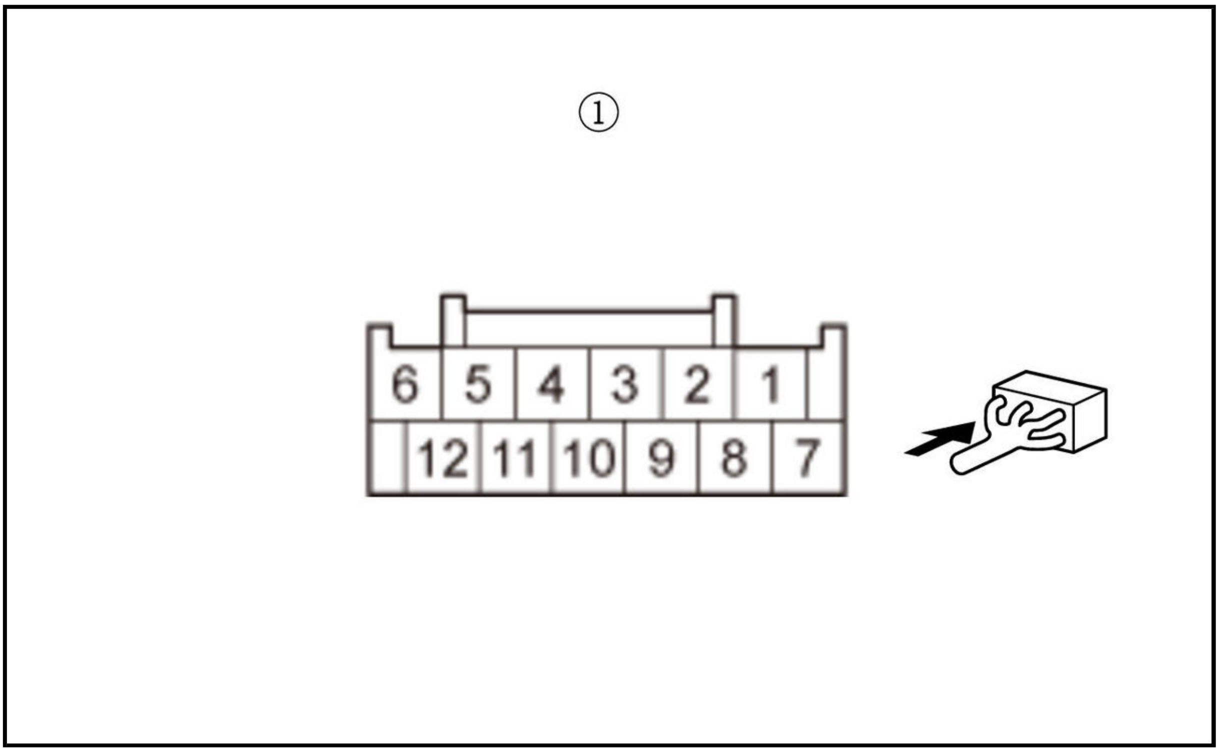

Is there battery voltage?

YES

The IG1 FUEL PUMP wire is OK. Go to step 5.

NO

Repair an open or high resistance in the wire.

5. Open wire check (MTR CONT line)

-1. Turn the vehicle to the OFF (LOCK) mode.

-2. Disconnect the following connector.

Body control module connector F (36P)

-3. Check for continuity between test points 1 and 2.

Test condition	Vehicle OFF (LOCK) mode Electric steering lock 12P connector: disconnected Body control module connector F (36P): disconnected
Test point 1	Electric steering lock 12P connector (female terminals) No. 1: ①

Test point 2	**Body control module connector F (36P) No. 1**

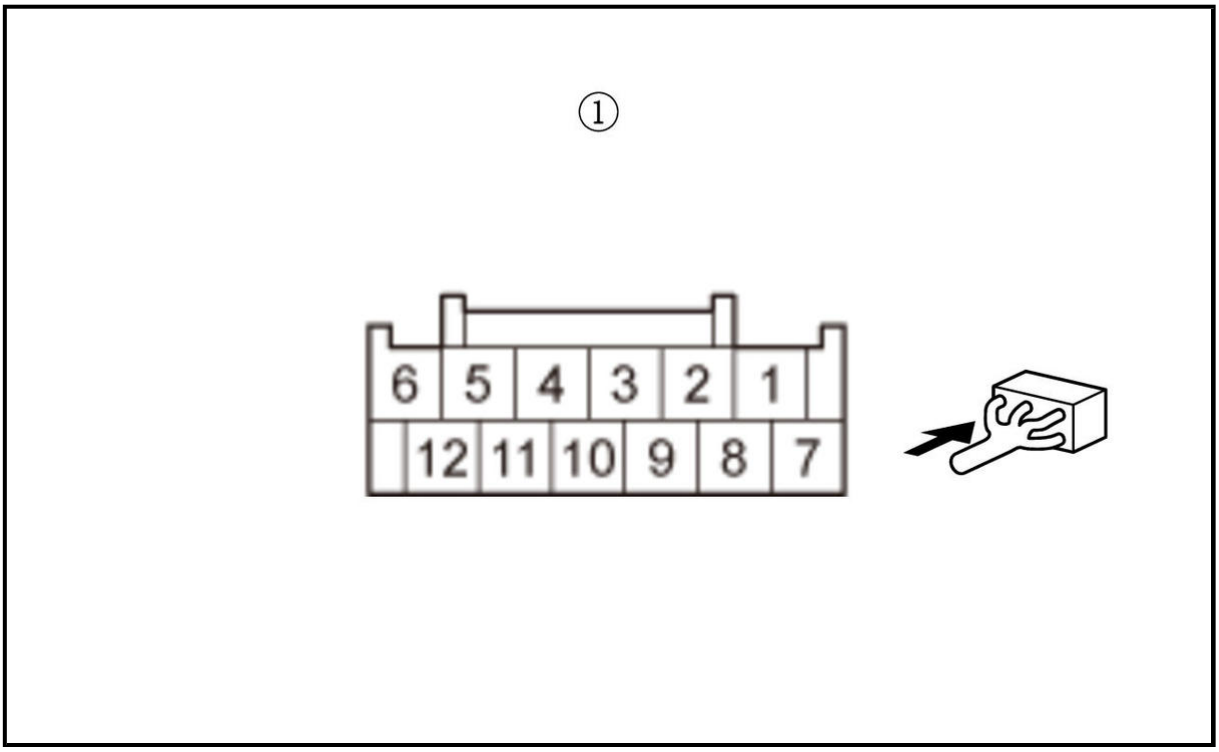

Is there continuity?

YES

The MTR CONT wire is OK. Go to step 6.

NO

Repair an open or high resistance in the wire.

6. Shorted wire check (MTR CUT1(CONT), MTR CUT2(IG1) lines)

-1. Disconnect the following connector.

Body control module connector G (32P)

-2. Check for continuity between test points 1 and 2.

Test condition	Vehicle OFF (LOCK) mode Electric steering lock 12P connector: disconnected Body control module connector F (36P): disconnected Body control module connector G (32P): disconnected
Test point 1	Electric steering lock 12P connector (female terminals) No. 2: ①
Test point 2	Body ground

Test point 1	Electric steering lock 12P connector (female terminals) No. 4: ①
Test point 2	Body ground

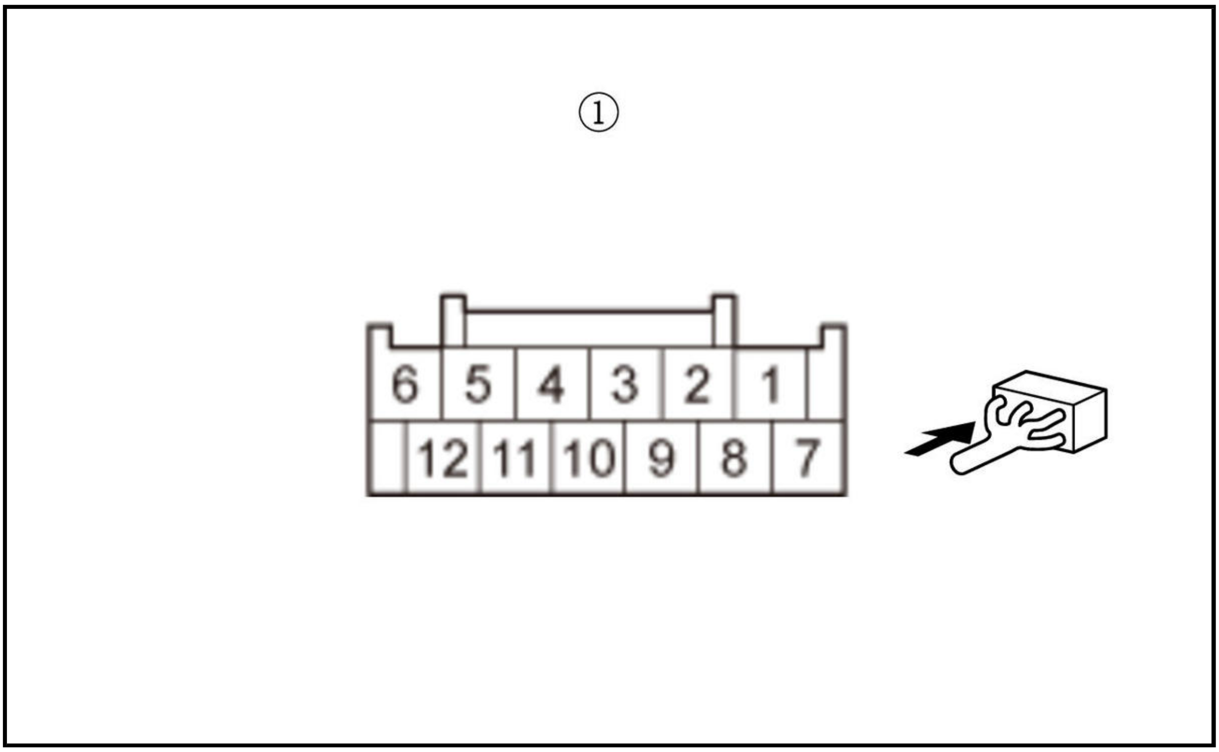

Is there continuity?

YES

Repair a short to ground in the wire.

NO

The MTR CUT1(CONT) and MTR CUT2(IG1) wires are not shorted. Go to step 7.

7. Open wire check (MTR CUT1(CONT), MTR CUT2(IG1) lines)

-1. Check for continuity between test points 1 and 2.

Test condition	Vehicle OFF (LOCK) mode Electric steering lock 12P connector: disconnected Body control module connector F (36P): disconnected Body control module connector G (32P): disconnected
Test point 1	**Body control module connector G (32P) No. 6**
Test point 2	Electric steering lock 12P connector (female terminals) No. 2: ①

Test point 1	**Body control module connector G (32P) No. 7**
Test point 2	Electric steering lock 12P connector (female terminals) No. 4: ①

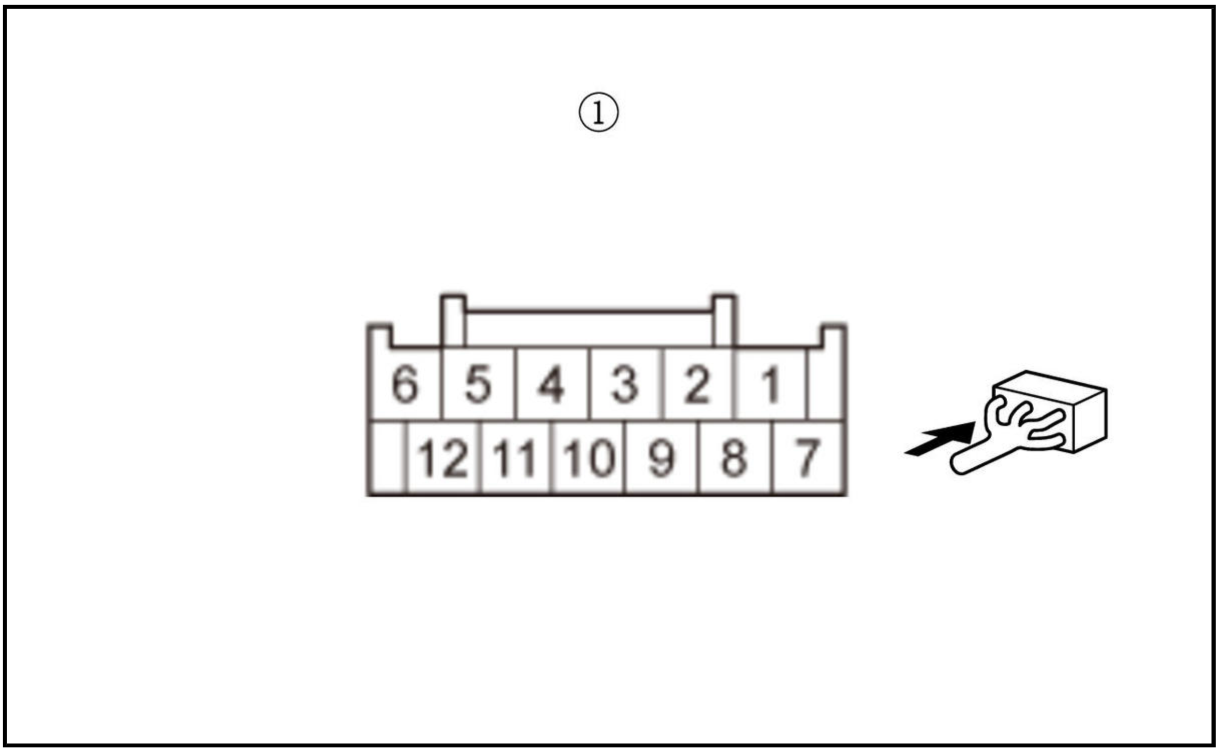

Is there continuity?

YES

The MTR CUT1(CONT) and MTR CUT2(IG1) wires are OK. **Replace the electric steering lock** . If the DTC is still present, **replace the body control module** .

NO

Repair an open or high resistance in the wire.

DTC B12E3

DTC B12E3 : Electric Steering Lock High Level Failure of MTRCUT1

NOTE:

- If you are troubleshooting multiple DTCs, be sure to follow the instructions in **B-CAN System Diagnosis Test Mode A** .
- Before troubleshooting, make sure the fuses associated with the system is OK.

DTC Description	DTC
B12E3 Electric Steering Lock High Level Failure of MTRCUT1	B

DTC (Keyless Access Power Control Unit)

1. Problem verification

-1. Clear the DTCs with the HDS.

-2. Do this procedure ten times: Press the engine start/stop switch to select the OFF (LOCK), ACCESSORY, ON, and OFF (LOCK) mode.

-3. Check for DTCs with the HDS.

DTC Description	DTC
B12E3 Electric Steering Lock High Level Failure of MTRCUT1	B

Is DTC B12E3 indicated?

YES

Go to step 2.

NO

Intermittent failure, the system is OK at this time. Check for loose or poor connections.

2. Open wire check (GND line)

-1. Turn the vehicle to the OFF (LOCK) mode.

-2. Disconnect the following connector.

Electric steering lock 12P connector

-3. Check for continuity between test points 1 and 2.

Test condition	Vehicle OFF (LOCK) mode Electric steering lock 12P connector: disconnected
Test point 1	Electric steering lock 12P connector (female terminals) No. 7: ①
Test point 2	Body ground

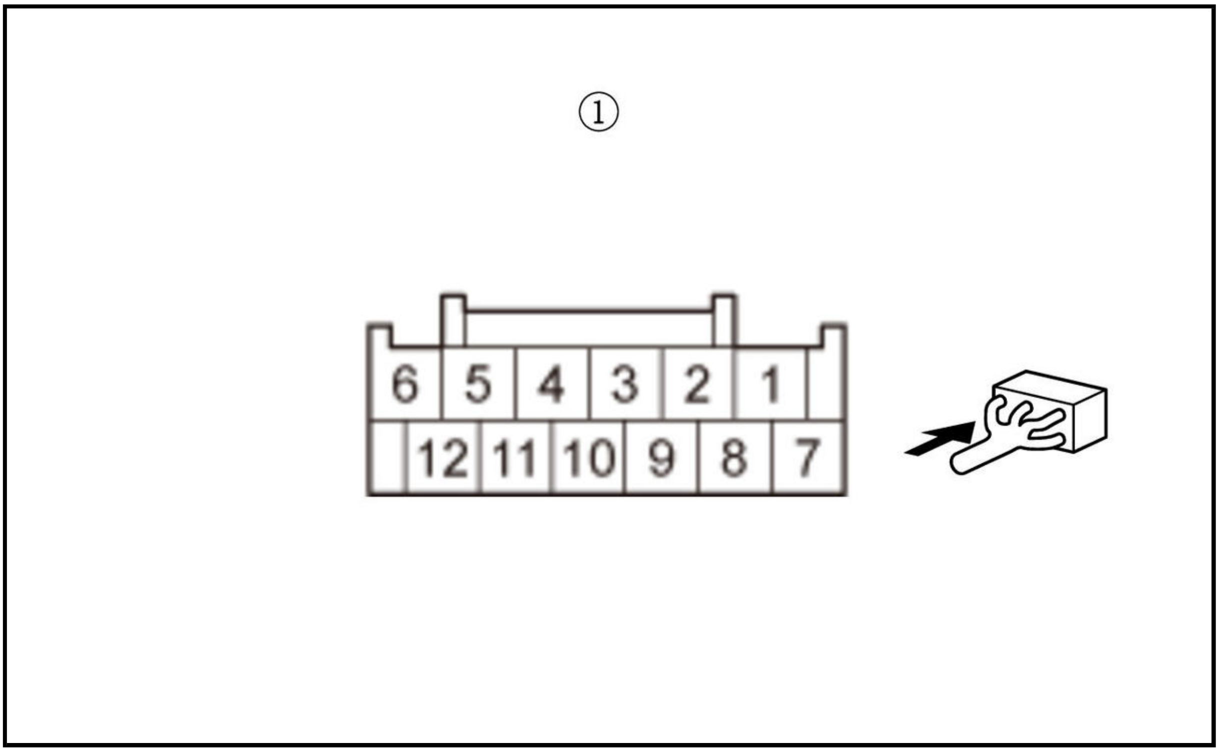

Is there continuity?

YES

The GND wire is OK. Go to step 3.

NO

Repair an open or high resistance in the ground wire or poor ground (G401).

3. Open wire check (MTR CUT1(CONT) line)

-1. Disconnect the following connector.

Body control module connector G (32P)

-2. Check for continuity between test points 1 and 2.

Test condition	Vehicle OFF (LOCK) mode Electric steering lock 12P connector: disconnected Body control module connector G (32P): disconnected
Test point 1	Electric steering lock 12P connector (female terminals) No. 2: ①
Test point 2	**Body control module connector G (32P) No. 6**

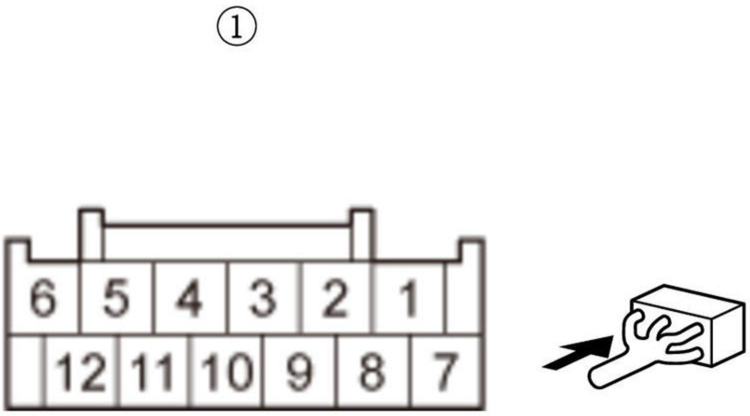

Is there continuity?

YES

The MTR CUT1(CONT) wire is OK. **Replace the electric steering lock** . If the DTC is still present, **replace the body control module** .

NO

Repair an open or high resistance in the wire.

DTC B12E4

DTC B12E4 : Electric Steering Lock High Level Failure of MTRCUT2

NOTE:

- If you are troubleshooting multiple DTCs, be sure to follow the instructions in **B-CAN System Diagnosis Test Mode A** .
- Before troubleshooting, make sure the fuses associated with the system is OK.

DTC Description	DTC
B12E4 Electric Steering Lock High Level Failure of MTRCUT2	B

DTC (Keyless Access Power Control Unit)

1. Problem verification

-1. Clear the DTCs with the HDS.

-2. Do this procedure ten times: Press the engine start/stop switch to select the OFF (LOCK), ACCESSORY, ON, and OFF (LOCK) mode.

-3. Check for DTCs with the HDS.

DTC Description	DTC
B12E4 Electric Steering Lock High Level Failure of MTRCUT2	B

Is DTC B12E4 indicated?

YES

Go to step 2.

NO

Intermittent failure, the system is OK at this time. Check for loose or poor connections.

2. Open wire check (GND line)

-1. Turn the vehicle to the OFF (LOCK) mode.

-2. Disconnect the following connector.

Electric steering lock 12P connector

-3. Check for continuity between test points 1 and 2.

Test condition	Vehicle OFF (LOCK) mode Electric steering lock 12P connector: disconnected
Test point 1	Electric steering lock 12P connector (female terminals) No. 7: ①
Test point 2	Body ground

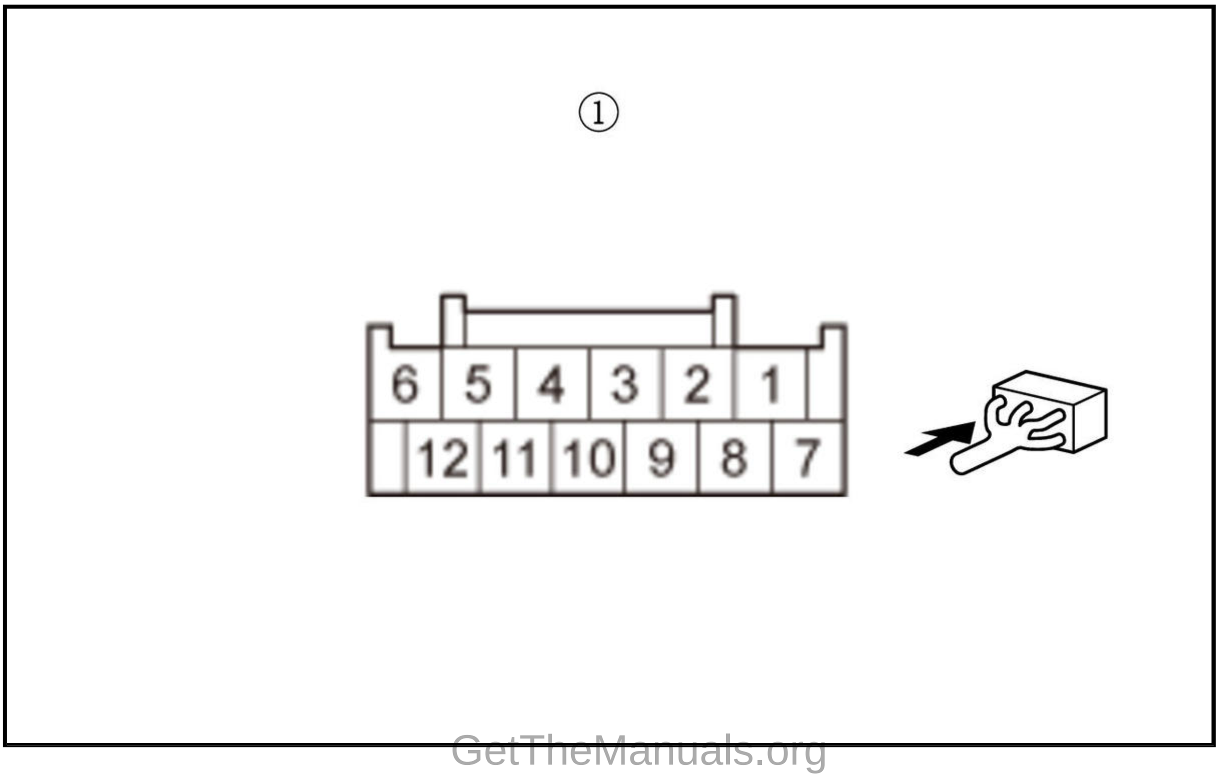

Is there continuity?

YES

The GND wire is OK. Go to step 3.

NO

Repair an open or high resistance in the ground wire or poor ground (G401).

3. Open wire check (MTR CUT2(IG1) line)

-1. Disconnect the following connector.

Body control module connector G (32P)

-2. Check for continuity between test points 1 and 2.

Test condition	Vehicle OFF (LOCK) mode Electric steering lock 12P connector: disconnected Body control module connector G (32P): disconnected
Test point 1	Electric steering lock 12P connector (female terminals) No. 4: ①
Test point 2	**Body control module connector G (32P) No. 7**

Is there continuity?

YES

The MTR CUT2(IG1) wire is OK. **Replace the electric steering lock** . If the DTC is still present, **replace the body control module** .

NO

Repair an open or high resistance in the wire.

DTC B12E5

DTC B12E5 : Incorrect assembly of control unit for electric steering lock equipped vehicle

NOTE: If you are troubleshooting multiple DTCs, be sure to follow the instructions in **B-CAN System Diagnosis Test Mode A** .

DTC Description	DTC
B12E5 Incorrect assembly of control unit for electric steering lock equipped vehicle	B

DTC (Keyless Access Power Control Unit)

1. Problem verification

-1. Select model on the HDS screen.

-2. When prompted by the HDS, select YES when asked if the vehicle has keyless access system, then press and hold the engine start/stop switch for at least 2 minutes. This selects the forced ON mode.

-3. Clear the DTCs with the HDS.

-4. Turn the vehicle to the OFF (LOCK) mode.

-5. Press the engine start/stop switch.

-6. Select model on the HDS screen.

-7. When prompted by the HDS, select YES when asked if the vehicle has keyless access system, then press and hold the engine start/stop switch for at least 2 minutes. This selects the forced ON mode.

-8. Check for DTCs with the HDS.

DTC Description	DTC
B12E5 Incorrect assembly of control unit for electric steering lock equipped vehicle	B

Is DTC B12E5 indicated?

YES

Incorrect assembly of control unit for electric steering lock equipped vehicle. **Replace it with the correct body control module** .

NO

Intermittent failure, the system is OK at this time. Check for loose or poor connections.

DTC B12F0

DTC B12F0 : Power Control Unit Lost Communication with Electric Steering Lock

NOTE:

- If you are troubleshooting multiple DTCs, be sure to follow the instructions in **B-CAN System Diagnosis Test Mode A** .
- Before troubleshooting, make sure the fuses associated with the system is OK.

DTC Description	DTC
B12F0 Power Control Unit Lost Communication with Electric Steering Lock	B

DTC (Keyless Access Power Control Unit)

1. Problem verification 1

-1. Clear the DTCs with the HDS.

-2. Do this procedure ten times: Press the engine start/stop switch to select the OFF (LOCK), ACCESSORY, ON, and OFF (LOCK) mode.

-3. Check for DTCs with the HDS.

DTC Description	DTC
B12F0 Power Control Unit Lost Communication with Electric Steering Lock	B

Is DTC B12F0 indicated?

YES

Go to step 2.

NO

Intermittent failure, the system is OK at this time. Check for loose or poor connections.

2. Open wire check (+B SMART line)

-1. Turn the vehicle to the OFF (LOCK) mode.

-2. Disconnect the following connector.

Electric steering lock 12P connector

-3. Measure the voltage between test points 1 and 2.

Test condition	Vehicle OFF (LOCK) mode Electric steering lock 12P connector: disconnected
Test point 1	Electric steering lock 12P connector (female terminals) No. 3: ①
Test point 2	Body ground

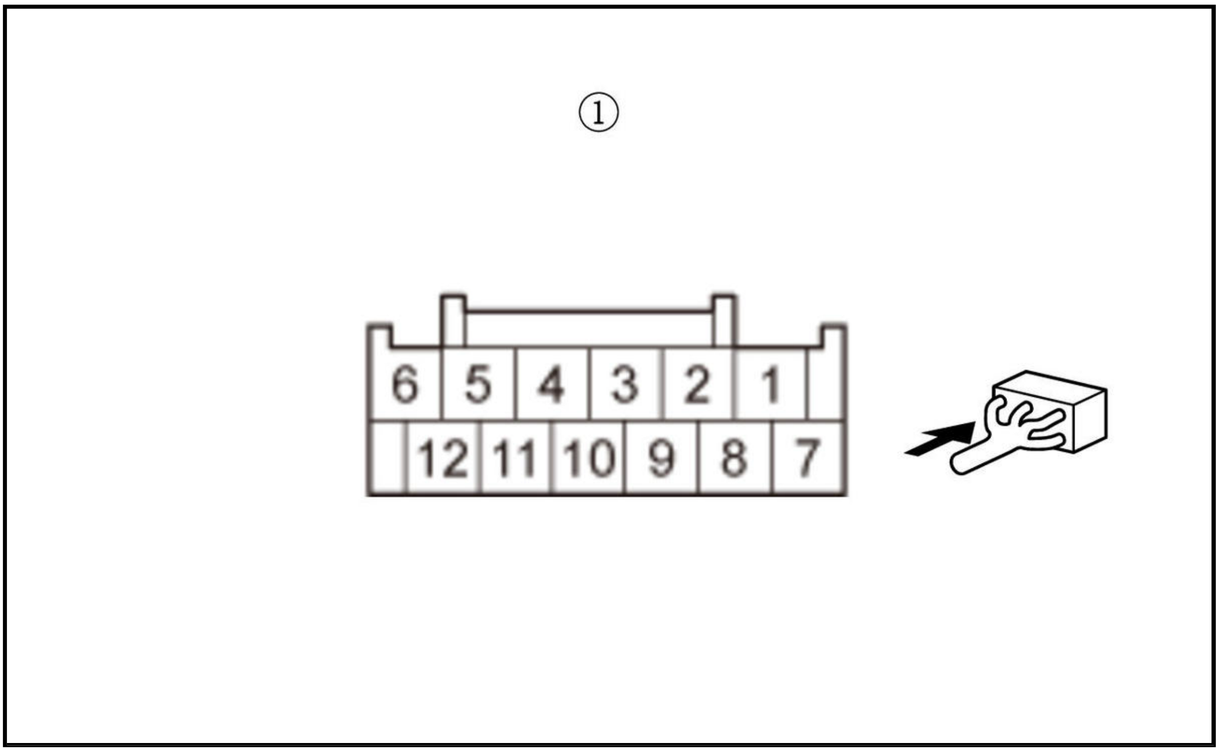

Is there battery voltage?

YES

The +B SMART wire is OK. Go to step 3.

NO

Repair an open or high resistance in the wire.

3. Open wire check (GND line)

-1. Check for continuity between test points 1 and 2.

Test condition	Vehicle OFF (LOCK) mode Electric steering lock 12P connector: disconnected
Test point 1	Electric steering lock 12P connector (female terminals) No. 7: ①

Test point 2	Body ground

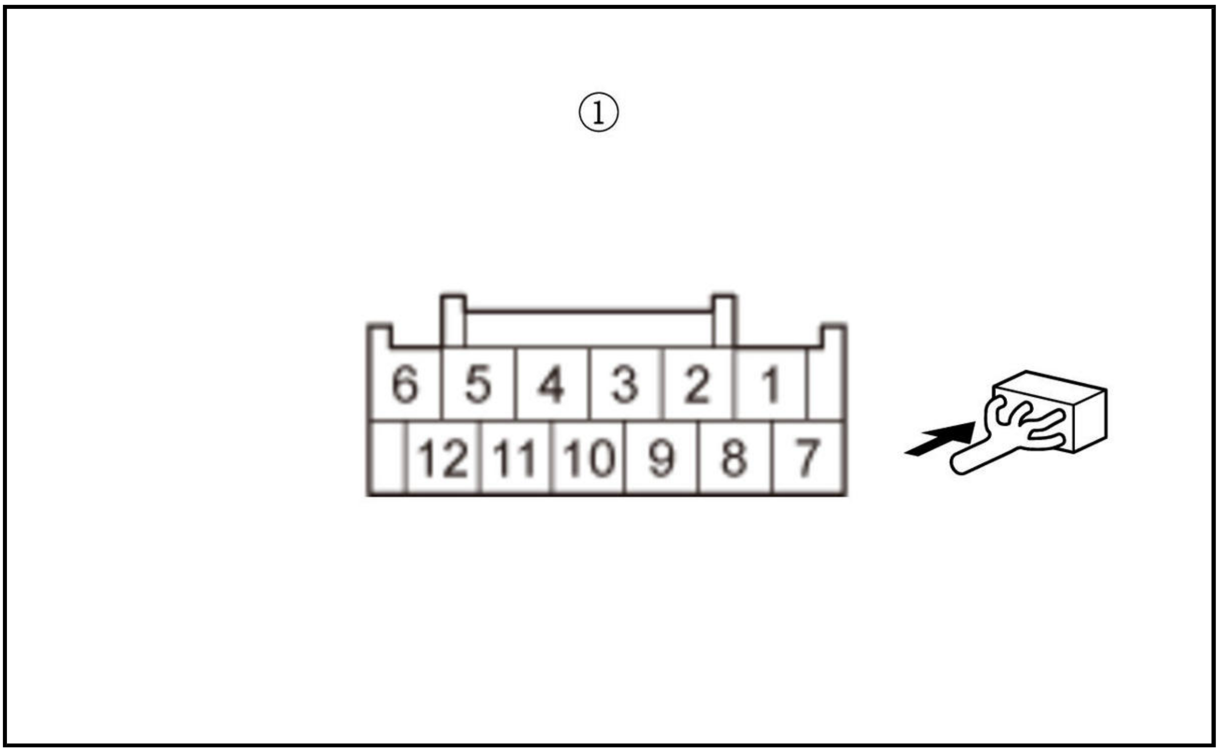

Is there continuity?

YES

The GND wire is OK. Go to step 4.

NO

Repair an open or high resistance in the ground wire or poor ground (G401).

4. Shorted wire check (IGN TRX line)

-1. Disconnect the following connector.

Body control module connector G (32P)

-2. Check for continuity between test points 1 and 2.

Test condition	Vehicle OFF (LOCK) mode Electric steering lock 12P connector: disconnected Body control module connector G (32P): disconnected
Test point 1	Electric steering lock 12P connector (female terminals) No. 6: ①
Test point 2	Body ground

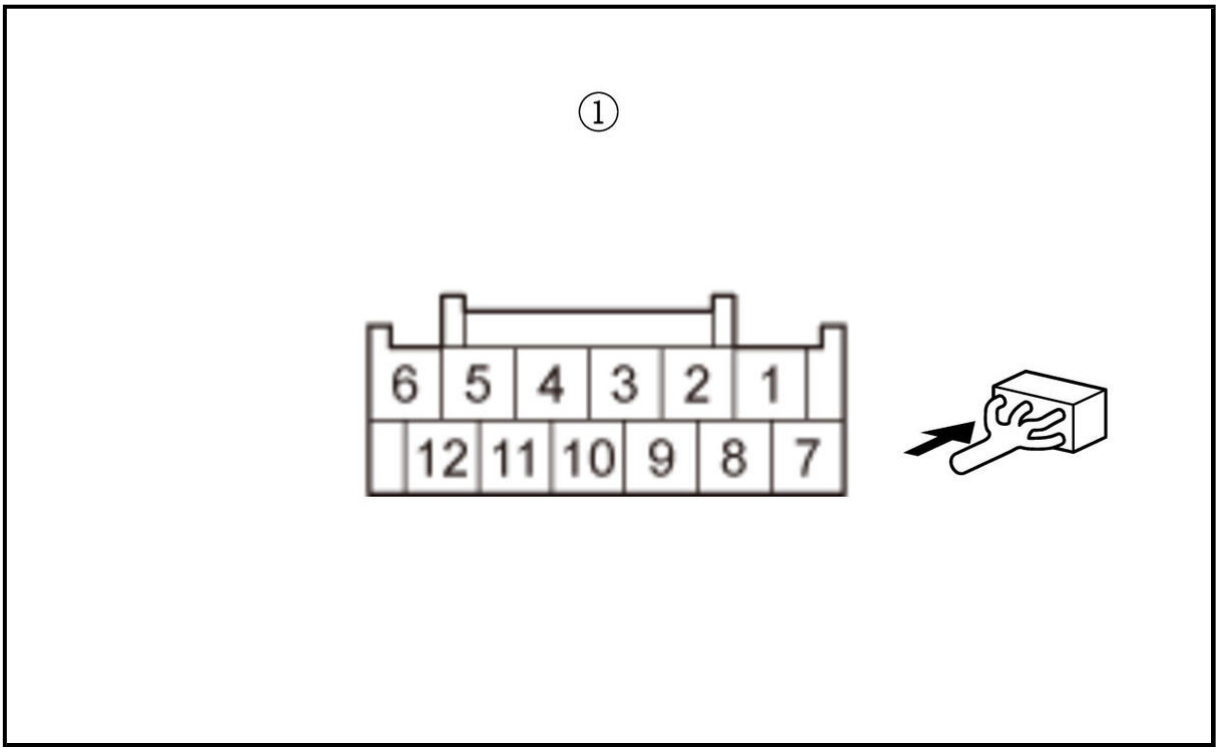

Is there continuity?

YES

Repair a short to ground in the wire.

NO

The IGN TRX wire is not shorted. Go to step 5.

5. Open wire check (IGN TRX line)

-1. Check for continuity between test points 1 and 2.

Test condition	Vehicle OFF (LOCK) mode Electric steering lock 12P connector: disconnected Body control module connector G (32P): disconnected
Test point 1	Electric steering lock 12P connector (female terminals) No. 6: ①
Test point 2	**Body control module connector G (32P) No. 28**

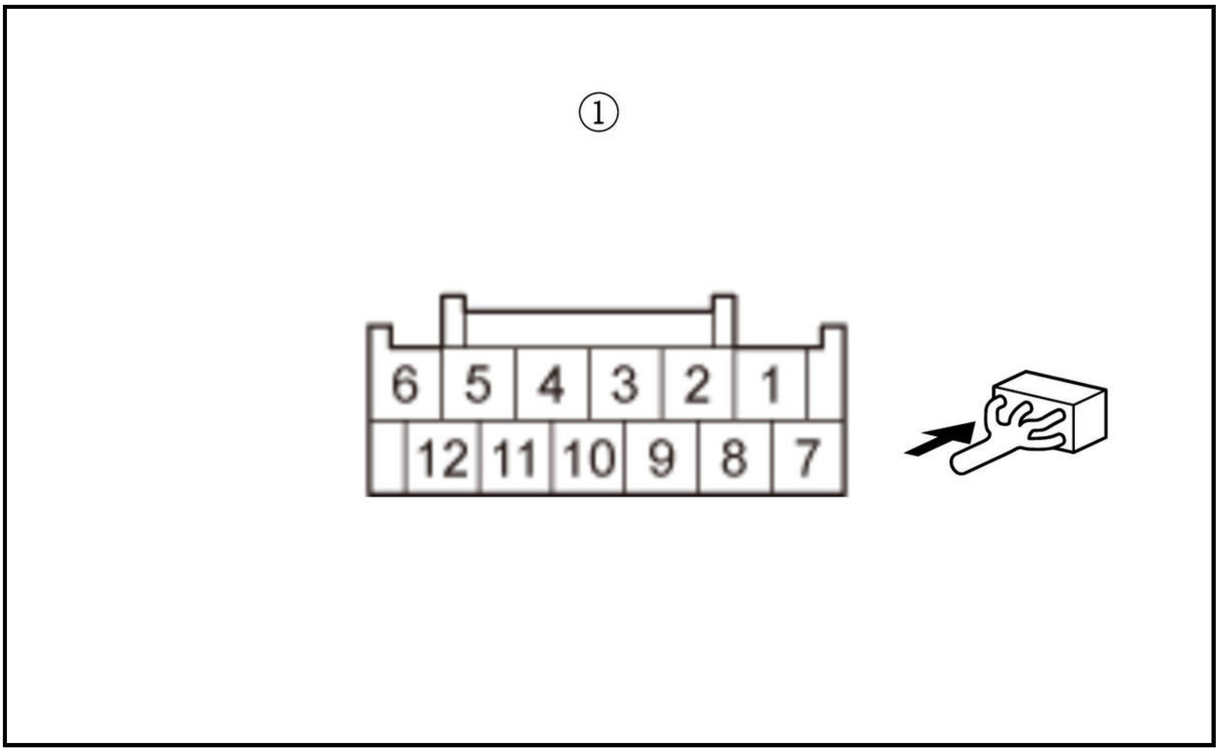

Is there continuity?

YES

The IGN TRX wire is OK. Go to step 6.

NO

Repair an open or high resistance in the wire.

6. Keyless access system check:

Reconnect these items:

- Electric steering lock 12P connector
- Body control module connector G (32P)

-2. With driver's power window open, turn the vehicle to the OFF (LOCK) mode.

-3. **Do the 12 volt battery terminal disconnection procedure** .

-4. Wait for at least 10 seconds to clear the DTCs.

-5. **Do the 12 volt battery terminal reconnection procedure** .

-6. Turn the vehicle to the ON mode then the OFF (LOCK) mode.

-7. Remove all the keyless remotes from inside the vehicle. Hold them outside the open driver's window, at least 20 cm (8.0 in) away from the vehicle.

-8. Close all doors, then press the engine start/stop switch.

-9. The keyless remotes bring to the vehicle inside, during close all doors.

-10.

Touch the engine start/stop switch with the keyless remote. The buttons on the keyless remote should be facing you.

-11.

Press the engine start/stop switch, and turn the vehicle to the ON mode.

Does the mode change to ON?

YES

Go to step 7.

NO

Go to step 8.

7. Problem verification 2

   -1. Clear the DTCs with the HDS.

   -2. Do this procedure ten times: Press the engine start/stop switch to select the OFF (LOCK), ACCESSORY, ON, and OFF (LOCK) mode.

   -3. Check for DTCs with the HDS.

DTC Description	DTC
B12F0 Power Control Unit Lost Communication with Electric Steering Lock	B

   Is DTC B12F0 indicated?

   YES

   Replace the electric steering lock .

   NO

   Intermittent failure, the system is OK at this time. Check for loose or poor connections.

8. Electric steering lock communication status check

   -1. Select COMMUNICATION STATUS in the INSPECTION MENU with the HDS.

   One-Push - KEYLESS ACCESS CONTROL UNIT - STATUS LOG

   Check the value of STATUS with ELECTRICAL STEERING LOCK, STATUS with KEYLESS ACCESS CONTROL UNIT, and STATUS with BACKUP CONTROL UNIT with the HDS.

   One-Push - BACKUP CONTROL UNIT - STATUS LOG

B	HDS Description	Value
Status with ESL	MTR CUT1 (Cont) Status	1
	MTR CUT2 (IG) Status	1
	IG1 Input State of ESL	1
	MTRCONT Status of ESL	1
	ESL Motor Status	1
	Switch D detection for Unlock Status	1
	Switch C detection for Unlock Status	1
	Switch B detection for Unlock Status	1
Status with KEYLESS ACCESS CONTROL UNIT	FOB KEY Authentication Result	1

B	HDS Description	Value
Status with BACKUP CONTROL UNIT	FOB KEY Authentication Result	1

NOTE: The parameters are displayed only when the vehicle cannot be turned to the ON mode.

Are only Status with ELECTRICAL STEERING LOCK 1 values indicated?

YES

Replace the electric steering lock .

NO

Replace the body control module .

DTC U0073 (KEYLESS ACCESS POWER CONTROL UNIT)

DTC U0073 : F-CAN Communication Bus Line Error

NOTE: If you are troubleshooting multiple DTCs, be sure to follow the instructions in **B-CAN System Diagnosis Test Mode A** .

DTC Description	DTC
U0073 F-CAN Communication Bus Line Error	B

DTC (Keyless Access Power Control Unit)

1. Problem verification

   -1. Clear the DTCs with the HDS.

   -2. Turn the vehicle to the OFF (LOCK) mode and then the ON mode.

   -3. Wait for at least 6 seconds.

   -4. Check for DTCs with the HDS.

DTC Description	DTC
U0073 F-CAN Communication Bus Line Error	B

   Is DTC U0073 indicated?

   YES: with CAN gateway

   Go to the troubleshooting for CAN gateway system DTC(s) .

   YES: without CAN gateway

   Go to F-CAN Circuit Troubleshooting .

   NO

   Intermittent failure, the system is OK at this time.

DTC U0100, U0122 (KEYLESS ACCESS POWER CONTROL UNIT)

DTC U0100 : Power Control Unit Lost Communication with PCM

DTC U0122: Power Control Unit Lost Communication with ABS/VSA Modulator-Control Unit

NOTE:

- If you are troubleshooting multiple DTCs, be sure to follow the instructions in **B-CAN System Diagnosis Test Mode A** .
- Refer to the DTC code shown on the display, and then inspect the connectors and terminals based on the instructions in the table below.
- The DTC may be stored due to the grounding failure or the power source failure at the transmitting control unit (the grounding inspection and the power source inspection on each control unit are required prior to this checking process).

DTC Description	DTC
U0100 Power Control Unit Lost Communication with PCM	B
U0122 Power Control Unit Lost Communication with ABS/VSA Modulator-Control Unit	B

DTC (Keyless Access Power Control Unit)

1. Problem verification

   -1. Clear the DTCs with the HDS.

   -2. Turn the vehicle to the OFF (LOCK) mode and then the ON mode.

   -3. Wait for at least 6 seconds.

   -4. Check for DTCs with the HDS.

DTC Description	DTC
U0100 Power Control Unit Lost Communication with PCM	B
U0122 Power Control Unit Lost Communication with ABS/VSA Modulator-Control Unit	B

   Are any DTCs indicated?

   YES: with CAN gateway

   Go to step 2.

   YES: without CAN gateway

   Go to step 8.

   NO

   Intermittent failure, the system is OK at this time. Check for poor connections or loose terminals.

2. CAN gateway system DTC check

   -1. Turn the vehicle to the ON mode.

   -2. Check for CAN gateway system DTCs with the HDS.

DTC Description	DTC
U0029-00 CAN Gateway F-CAN ch A Bus Off	B
U0047-00 CAN Gateway F-CAN ch B Bus Off	B

DTC Description	DTC
U3000-49 CAN Gateway Internal Failure	B

Is DTC U0029-00, U0047-00, and/or U3000-49 indicated?

YES

Go to the troubleshooting for CAN gateway system DTC(s) .

NO

Go to step 3.

3. F-CAN circuit communication check (Receiving control unit)

-1. Select the FUNCTION TEST in the CAN gateway with the HDS, then select the F-CAN Bus Connected Unit Check.

F-CAN Bus Connected Unit Check

Does the body control module detect the CAN gateway Bus channels A?

Bus A is Not Available

Go to step 4.

Bus A is Available

Go to step 5.

4. Open wire check (F-CAN A lines)

-1. Turn the vehicle to the OFF (LOCK) mode.

-2. Disconnect the following connectors.

CAN gateway 12P connector (12P connector type) CAN gateway 16P connector (16P connector type) Body control module connector B (36P)

-3. Measure the resistance between test points 1 and 2.

Test condition	Vehicle OFF (LOCK) mode CAN gateway 12P connector (12P connector type): disconnected CAN gateway 16P connector (16P connector type): disconnected Body control module connector B (36P): disconnected
Test point 1	CAN gateway 12P connector (female terminals) (12P connector type) No. 3: ① CAN gateway 16P connector (female terminals) (16P connector type) No. 3: ②
Test point 2	**Body control module connector B (36P) No. 22**

Test point 1	CAN gateway 12P connector (female terminals) (12P connector type) No. 9: ① CAN gateway 16P connector (female terminals) (16P connector type) No. 11: ②
Test point 2	**Body control module connector B (36P) No. 23**

①

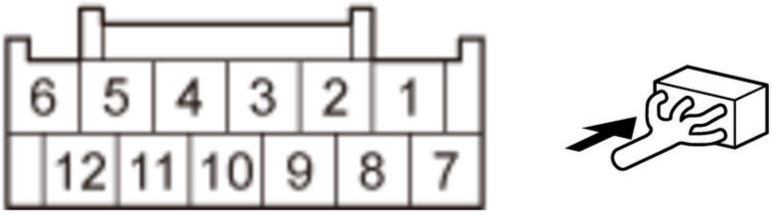
6
5
4
3
2
1
12
11
10
9
8
7

②

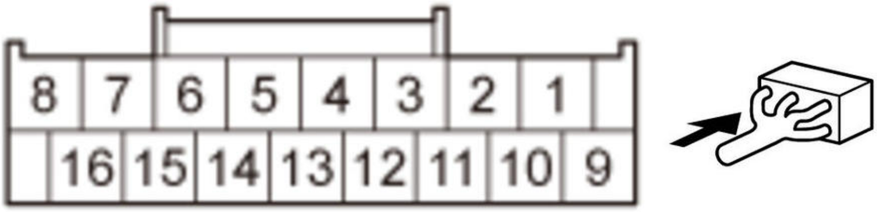
8
7
6
5
4
3
2
1
16
15
14
13
12
11
10
9

Is there 1.0 Ω or less?

YES

The F-CAN A_H and F-CAN A_L wires are OK. **Replace the body control module** .

NO

Repair an open in F-CAN A_H or F-CAN A_L wire.

5. F-CAN circuit communication check (Transmitting control unit)

-1. Select the FUNCTION TEST in the CAN gateway with the HDS, then select the F-CAN Bus Connected Unit Check.

F-CAN Bus Connected Unit Check

According to the detected DTC on the following table, make sure that the transmitting control unit detects the CAN gateway Bus channel(s) normally.

DTC	Transmitting control unit	Detected CAN gateway Bus channel(s) at normal
U0100	PCM	A, B
U0122	VSA modulator-control unit	A, B

Is it detected normally?

Detected normal

Intermittent failure, the system is OK at this time. Check for poor connections or loose terminals at the transmitting control unit and the CAN gateway.

U0100: PCM is Not Available for Bus A

Go to step 6.

U0100: PCM is Not Available for Bus B

Go to step 7.

U0122: VSA modulator-control unit is Not Available for Bus A

Go to step 6.

U0122: VSA modulator-control unit is Not Available for Bus B

Go to step 7.

6. Open wire check (F-CAN A lines)

-1. Turn the vehicle to the OFF (LOCK) mode.

-2. U0100: Jump the SCS line with the HDS, and wait more than 1 minute.

SCS short

-3. According to the detected DTC on the following table, disconnect the transmitting control unit connector(s).

DTC	Connector
-	CAN gateway 12P connector (12P connector type)CAN gateway 16P connector (16P connector type)
U0100	PCM connector A (50P)
U0122	VSA modulator-control unit 46P connector

-4. Measure the resistance between test points 1 and 2.

Test condition	Vehicle OFF (LOCK) mode CAN gateway 12P connector (12P connector type): disconnected CAN gateway 16P connector (16P connector type): disconnected Transmitting control unit connector(s) for indicated DTCs: disconnected

CAN gateway 12P connector type

DTC	Circuit name	Test point 1 (Receiving control unit)		Test point 2 (Transmitting control unit)	
		Connector	Terminal	Connector	Terminal
U0100	F-CAN A_H	CAN gateway 12P connector (female terminals): ①	No. 3	PCM connector A (50P)	No. 37
	F-CAN A_L		No. 9		No. 36
U0122	F-CAN A_H	CAN gateway 12P connector (female terminals): ①	No. 3	VSA modulator-control unit 46P connector	No. 40
	F-CAN A_L		No. 9		No. 28

CAN gateway 16P connector type

DTC	Circuit name	Test point 1 (Receiving control unit)		Test point 2 (Transmitting control unit)	
		Connector	Terminal	Connector	Terminal
U0100	F-CAN A_H	CAN gateway 16P connector (female terminals): ②	No. 3	PCM connector A (50P)	No. 37
	F-CAN A_L		No. 11		No. 36
U0122	F-CAN A_H	CAN gateway 16P connector (female terminals): ②	No. 3	VSA modulator-control unit 46P connector	No. 40
	F-CAN A_L		No. 11		No. 28

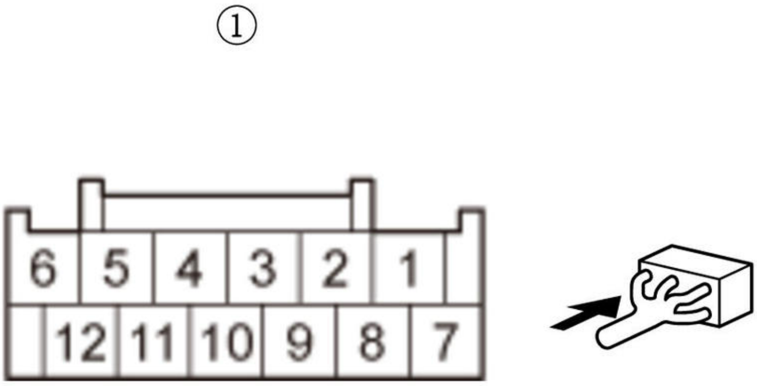

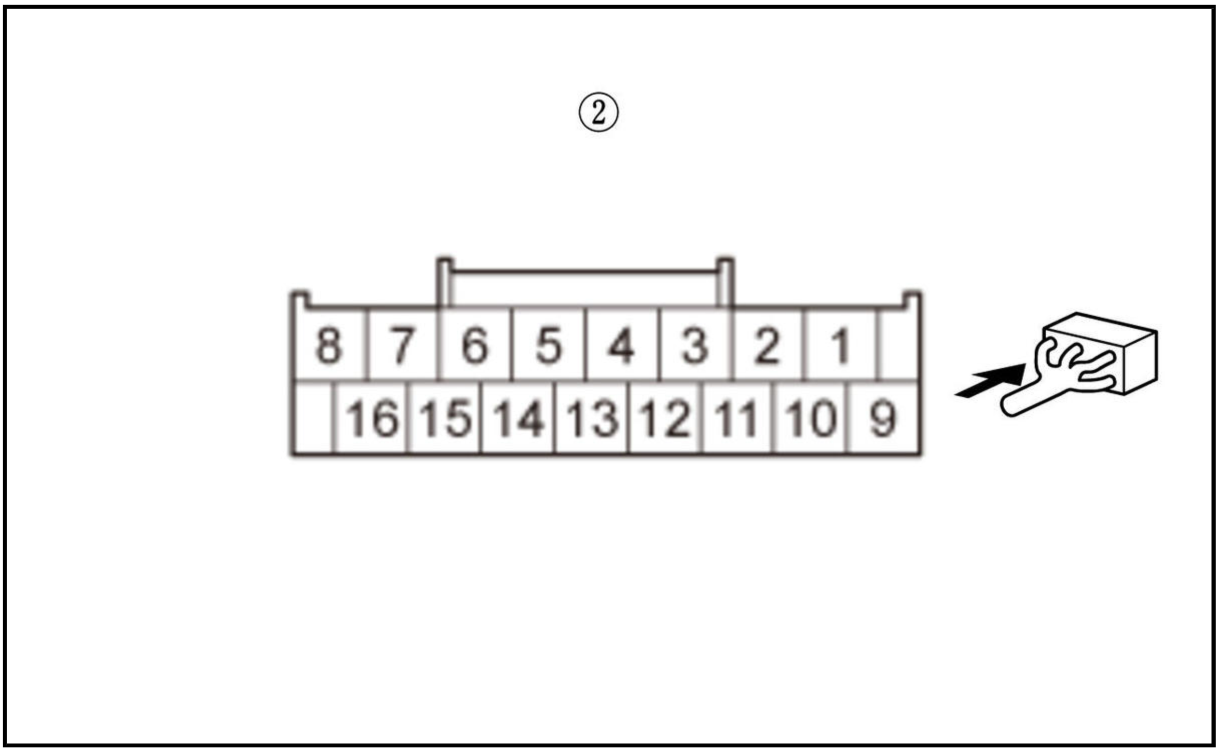

Is there 1.0 Ω or less?

YES

The F-CAN A_H wire and the F-CAN A_L wire are OK. According to the detected DTC on the following table replace the correspond control unit.

DTC	Operation for transmitting control unit
U0100	**PCM**
U0122	**VSA modulator-control unit**

NO

Repair an open in F-CAN A_H or F-CAN A_L wire.

7. Open wire check (F-CAN B lines)

-1. Turn the vehicle to the OFF (LOCK) mode.

-2. U0100: Jump the SCS line with the HDS, and wait more than 1 minute.

SCS short

-3. According to the detected DTC on the following table, disconnect the transmitting control unit connector(s).

DTC	Connector
-	CAN gateway 12P connector (12P connector type)CAN gateway 16P connector (16P connector type)
U0100	PCM connector A (50P)
U0122	VSA modulator-control unit 46P connector

-4. Measure the resistance between test points 1 and 2.

Test condition	Vehicle OFF (LOCK) mode CAN gateway 12P connector (12P connector type): disconnected CAN gateway 16P connector (16P connector type): disconnected

	Transmitting control unit connector(s) for indicated DTCs: disconnected

CAN gateway 12P connector type

DTC	Circuit name	Test point 1 (Receiving control unit)		Test point 2 (Transmitting control unit)	
		Connector	Terminal	Connector	Terminal
U0100	F-CAN B_H	CAN gateway 12P connector (female terminals): ①	No. 12	PCM connector A (50P)	No. 39
	F-CAN B_L		No. 5		No. 38
U0122	F-CAN B_H	CAN gateway 12P connector (female terminals): ①	No. 12	VSA modulator-control unit 46P connector	No. 46
	F-CAN B_L		No. 5		No. 34

CAN gateway 16P connector type

DTC	Circuit name	Test point 1 (Receiving control unit)		Test point 2 (Transmitting control unit)	
		Connector	Terminal	Connector	Terminal
U0100	F-CAN B_H	CAN gateway 16P connector (female terminals): ②	No. 6	PCM connector A (50P)	No. 39
	F-CAN B_L		No. 14		No. 38
U0122	F-CAN B_H	CAN gateway 16P connector (female terminals): ②	No. 6	VSA modulator-control unit 46P connector	No. 46
	F-CAN B_L		No. 14		No. 34

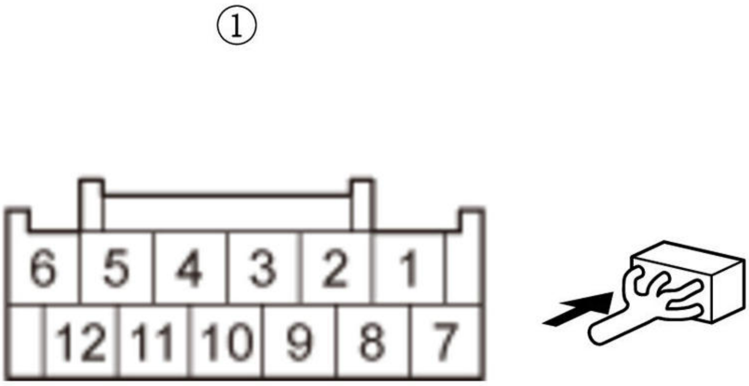

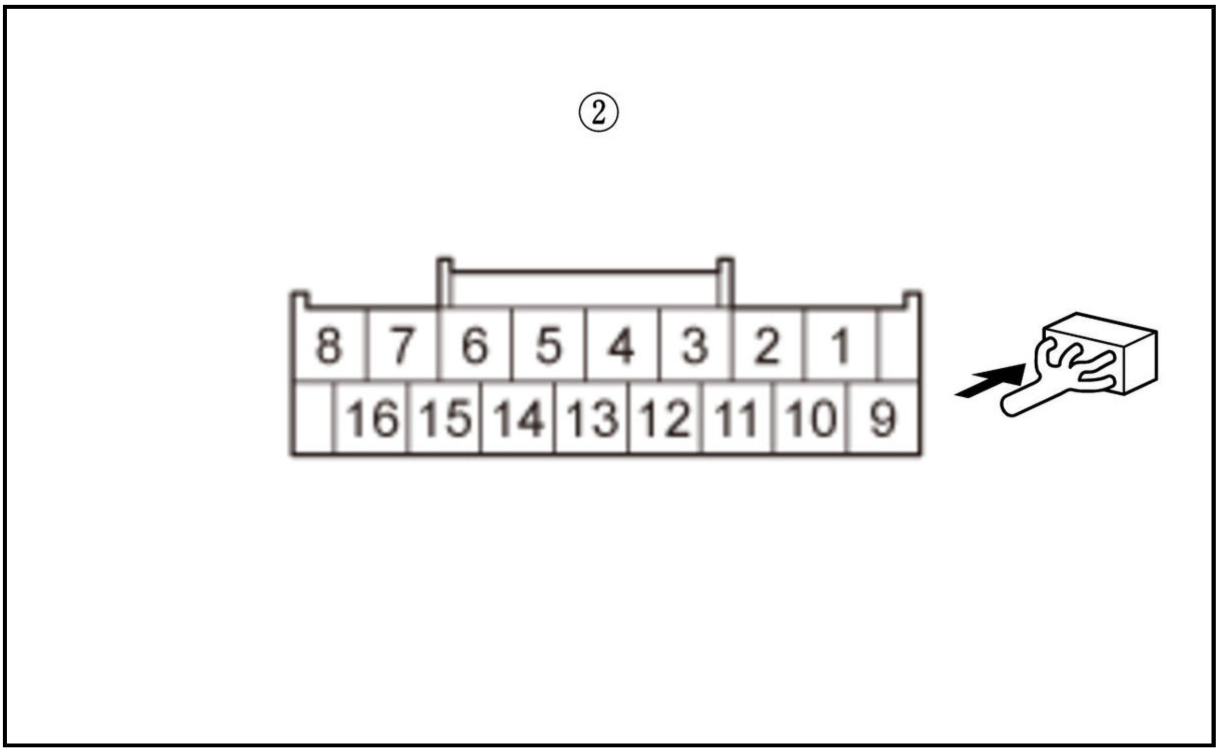

Is there 1.0 Ω or less?

YES

The F-CAN B_H wire and the F-CAN B_L wire are OK.According to the detected DTC on the following table replace the correspond control unit.

DTC	Operation for transmitting control unit
U0100	**PCM**
U0122	**VSA modulator-control unit**

NO

Repair an open in F-CAN B_H or F-CAN B_L wire.

8. Open wire check (F-CAN_H line, F-CAN_L line)

-1. Turn the vehicle to the OFF (LOCK) mode.

-2. Disconnect the following connector.

Body control module connector B (36P)

-3. U0100: Jump the SCS line with the HDS, and wait more than 1 minute.

SCS short

-4. Disconnect the transmitting control unit connector(s).

Refer to the DTC shown on the display, then disconnect the connector(s) based on the instructions (see table).

DTC	Connector
U0100	PCM connector A (51P)
U0122	VSA modulator-control unit 46P connector

-5. Measure the resistance between the receiving control unit and the transmitting control unit on the F-CAN_H circuit and the F-CAN_L circuit.

Test condition	Receiving control unit connector(s): disconnected Transmitting control unit connector(s) for indicated DTCs: disconnected

DTC	Circuit name	Receiving control unit		Transmitting control unit	
		Connector	Terminal	Connector	Terminal
U0100	F-CAN_H	Body control module connector B (36P)	No. 22	PCM connector A (51P)	No. 2
	F-CAN_L		No. 23		No. 1
U0122	F-CAN_H	Body control module connector B (36P)	No. 22	VSA modulator-control unit 46P connector	No. 40
	F-CAN_L		No. 23		No. 28

Is there 1.0 Ω or less?

YES

The F-CAN_H wire and the F-CAN_L wire are OK. Refer to the DTC shown on the display, replace the control unit based on the instructions (see table).

DTC	Operation for transmitting control unit
U0100	PCM
U0122	VSA modulator-control unit

NO

Repair an open in the F-CAN_H wire and/or the F-CAN_L wire.

DTC U1280 (KEYLESS ACCESS POWER CONTROL UNIT)

DTC U1280 : B-CAN communication bus line error (BUS-OFF)

NOTE: If you are troubleshooting multiple DTCs, be sure to follow the instructions in B-CAN System Diagnosis Test Mode A .

DTC Description	DTC
U1280 B-CAN communication bus line error (BUS-OFF)	B

DTC (Keyless Access Power Control Unit)

1. Problem verification

-1. Clear the DTCs with the HDS.

-2. Turn the vehicle to the OFF (LOCK) mode and then the ON mode.

-3. Wait for at least 6 seconds.

-4. Check for DTCs with the HDS.

DTC Description	DTC
U1280 B-CAN communication bus line error (BUS-OFF)	B

Is DTC U1280 indicated?

YES

Go to body control module DTC U1280 troubleshooting .

NO

Intermittent failure, the system is OK at this time. Check for loose or poor connections.

DTC U1281 (KEYLESS ACCESS POWER CONTROL UNIT)

DTC U1281 : Power Control Unit Lost Communication with MICU

NOTE: If you are troubleshooting multiple DTCs, be sure to follow the instructions in B-CAN System Diagnosis Test Mode A .

DTC Description	DTC
U1281 Power Control Unit Lost Communication with MICU	B

DTC (Keyless Access Power Control Unit)

1. Problem verification

   -1. Clear the DTCs with the HDS.

   -2. Turn the vehicle to the OFF (LOCK) mode and then the ON mode.

   -3. Wait for at least 6 seconds.

   -4. Check for DTCs with the HDS.

DTC Description	DTC
U1281 Power Control Unit Lost Communication with MICU	B

Is DTC U1281 indicated?

YES

Replace the body control module .

NO

Intermittent failure, the system is OK at this time. Check for loose or poor connections.

DTC U128D (KEYLESS ACCESS POWER CONTROL UNIT)

DTC U128D : Power Control Unit Lost Communication with Gauge Control Module

NOTE:

- If you are troubleshooting multiple DTCs, be sure to follow the instructions in B-CAN System Diagnosis Test Mode A .
- Refer to the DTC code shown on the display, and then inspect the connectors and terminals based on the instructions in the table below.
- The DTC may be stored due to the grounding failure or the power source failure at the transmitting control unit (the grounding inspection and the power source inspection on each control unit are required prior to this checking process).

DTC Description	DTC
U128D Power Control Unit Lost Communication with Gauge Control Module	B

DTC (Keyless Access Power Control Unit)

1. Problem verification

-1. Clear the DTC with the HDS.

-2. Turn the vehicle to the OFF (LOCK) mode and then the ON mode.

-3. Wait for at least 6 seconds.

-4. Check for DTCs with the HDS.

DTC Description	DTC
U128D Power Control Unit Lost Communication with Gauge Control Module	B

Are any DTCs indicated?

YES

Go to step 2.

NO

Intermittent failure, the system is OK at this time. Check for poor connections or loose terminals.

2. Open wire check (B-CAN_H line, B-CAN_L line)

-1. Turn the vehicle to the OFF (LOCK) mode.

-2. Disconnect the receiving control unit connector.

Body control module connector B (36P)

-3. Disconnect the transmitting control unit connector(s).

Refer to the DTC shown on the display, then disconnect the connector(s) based on the instructions (see table).

DTC	Connector
U128D	Gauge control module connector A (32P)

-4. Check for continuity between the receiving control unit and the transmitting control unit on the B-CAN_H circuit and the B-CAN_L circuit.

Test condition	Vehicle OFF (LOCK) mode Body control module connector B (36P): disconnected Transmitting control unit connector(s) for indicated DTCs: disconnected

DTC	Circuit name	Receiving control unit		Transmitting control unit	
		Connector	Terminal	Connector	Terminal
U128D	B-CAN_H	**Body control module connector B (36P)**	No. 20	**Gauge control module connector A (32P)**	No. 30
	B-CAN_L		No. 21		No. 31

Is there continuity?

YES

The B-CAN_H wire and the B-CAN_L wire are OK. Refer to the DTC shown on the display, then replace the control unit based on the instructions (see table).

DTC	Operation for transmitting control unit
U128D	**Gauge control module**

NO

Repair an open in the B-CAN_H wire and/or the B-CAN_L wire.

REMOVAL & INSTALLATION TEST

LANEWATCH SWITCH REMOVAL, INSTALLATION, AND TEST

Removal and Installation

SRS components are located in this area. Review the SRS component locations , and the precautions and procedures before doing repairs or service.

1. Combination Light Switch - Remove
2. All Removed Parts - Install

1. Install the parts in the reverse order of removal.

Test

1. LaneWatch Switch - Test

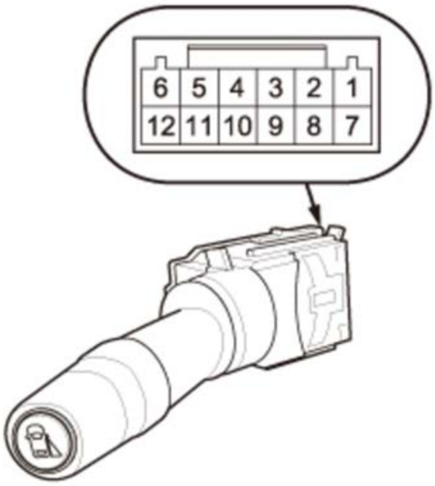

Terminal / Position	3	4
PRESSED	○	○
RELEASED		

1. Check for continuity between the combination light switch 12P connector (male terminals) terminals in each switch position according to the table in illustration.
   - If the continuity is not as specified, replace the combination light switch .

REMOVAL AND INSTALLATION

BSI RADAR UNIT REMOVAL AND INSTALLATION

Removal and Installation

NOTE: How to read the torque specifications .

1. Rear Bumper - Remove
2. BSI Radar Unit - Remove

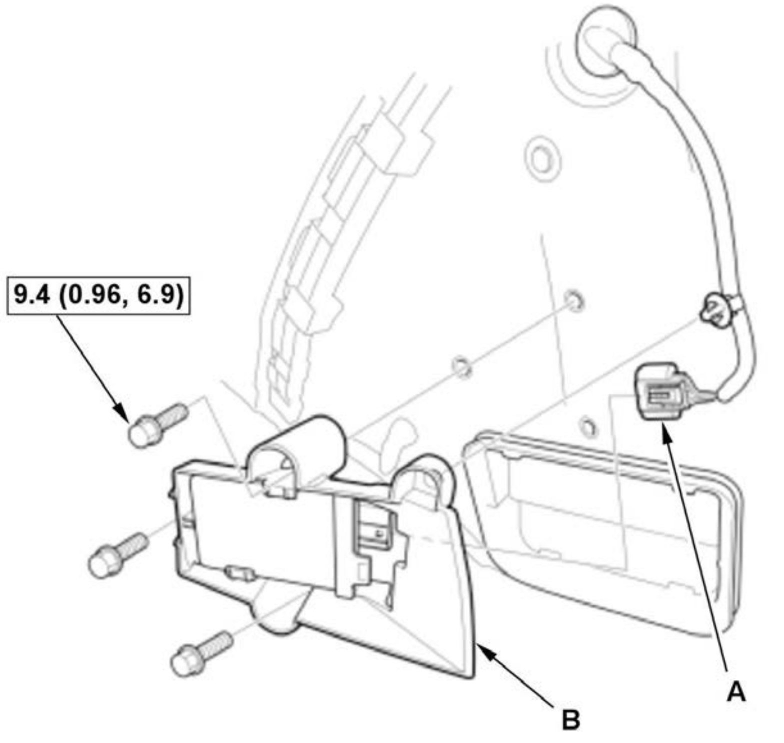 This illustration shows the left side of the vehicle. The right side is symmetrical.	1. Disconnect the BSI radar unit connector (A). 2. Remove the BSI radar unit assembly (B).
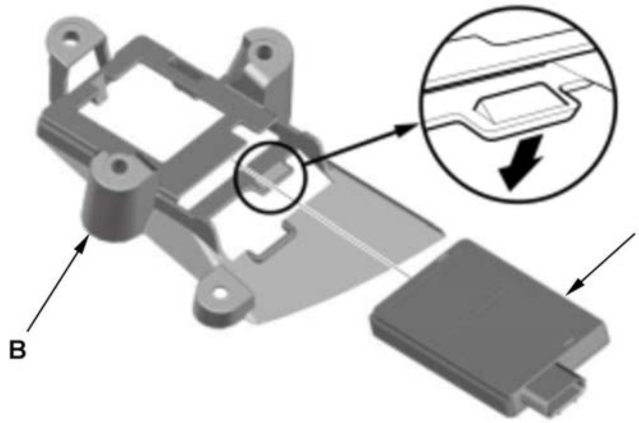 	3. If necessary, remove the BSI radar unit (A) from the bracket (B).

3. All Removed Parts - Install

    1. Install the parts in the reverse order of removal.

4. BSI Radar Unit Aiming - Inspect
5. Rear Bumper - Install

LANEWATCH CAMERA REMOVAL AND INSTALLATION

Removal and Installation

1. Passenger's Side Mirror Housing Lower Cover - Remove
2. LaneWatch Camera - Remove

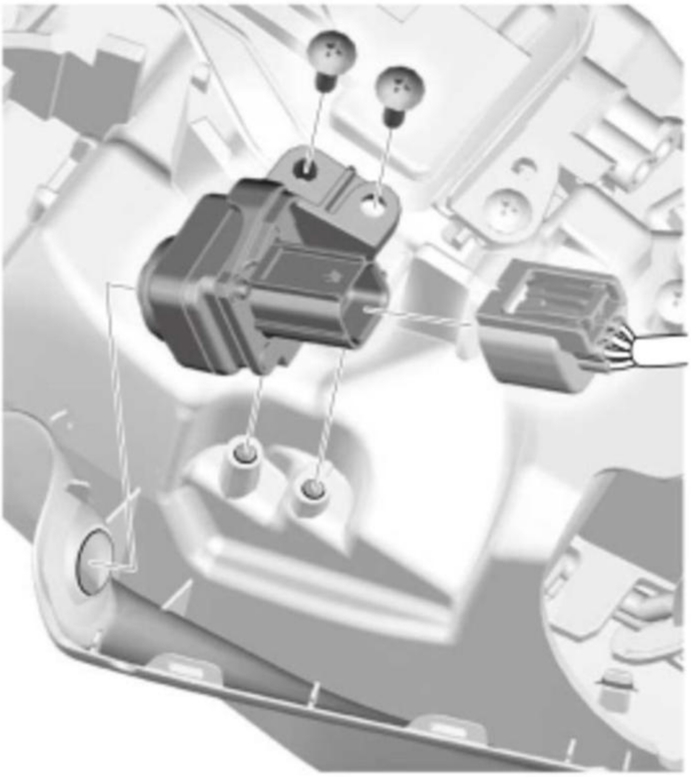

3. All Removed Parts - Install

1. Install the parts in the reverse order of removal.

4. **LaneWatch Camera - Aim**

DESCRIPTION AND OPERATION

BLIND SPOT INFORMATION (BSI) SYSTEM DESCRIPTION

The Blind Spot Information (BSI) radar unit emits radar waves from the left and right BSI radar and detects other vehicles in the blind spot. BSI system function uses the BSI radar unit. The BSI alert indicators warn the driver when a vehicle enters the driver's side or the passenger's side blind spot alert zone. If the driver turns on the turn signal while the BSI alert is on, the BSI alert flashes and an audible alarm sounds to warn the driver.

If the BSI radar unit malfunctions, the BSI system stops operating. The vehicle alerts the driver that there is a problem by turning on a warning indicator on the gauge control module.

Radar Zone Definition

The BSI radars are installed on the left and right sides of the rear body panel and covered by the bumper. The mounting positions are symmetrical on the left and the right.

BSI System

The radar wave emission range and the vehicle detection range of the BSI radar unit are shown. They are symmetrical. The alert zone makes up only a part of the radar detection range.

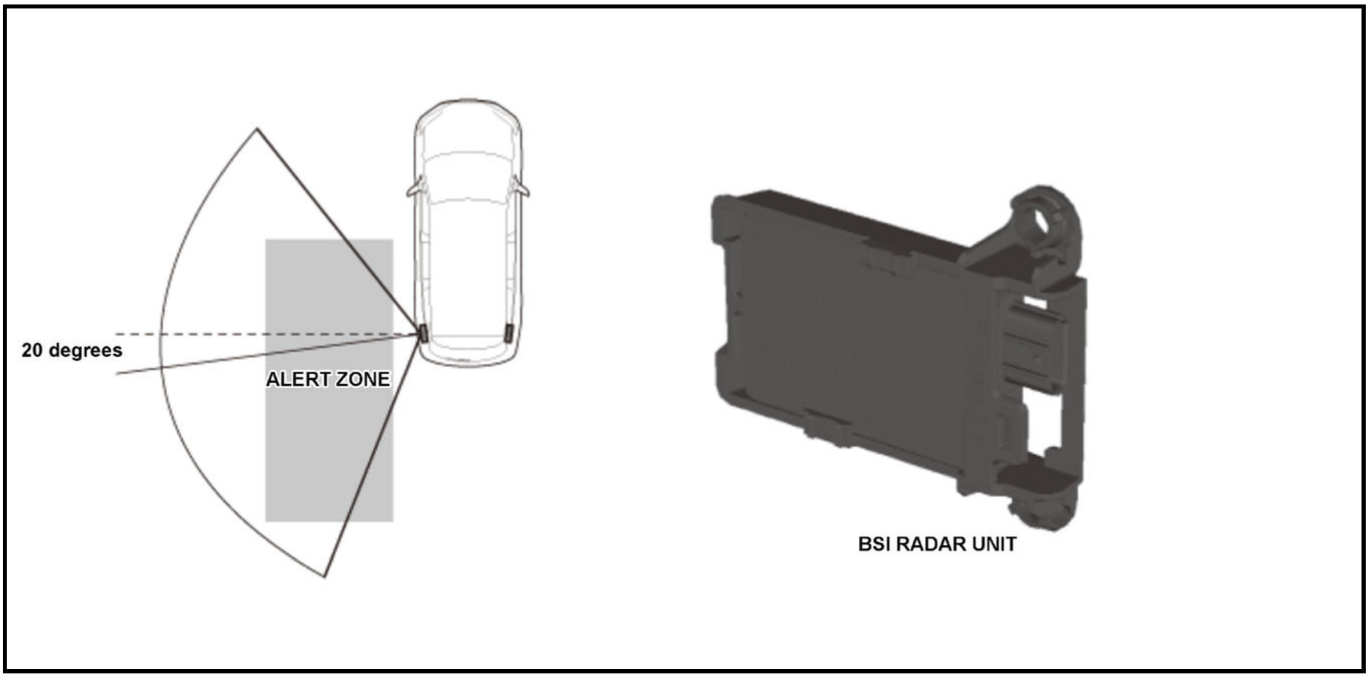

Blind Spot Information (BSI) system

The BSI system alerts the driver by the BSI alert indicator when a vehicle enters the blind spot alert zone. See Warn Conditions for more information.

Warning Conditions

Under normal conditions, the BSI system generally does not alert stationary objects like highway infrastructure, guardrails, posts, walls, foliage, parked cars, etc. The system also doesn't notify when vehicles are traveling in the opposite direction.

B	Vehicle operation speed:	Relative speed: Less than
Pass from rear	20-99 mph (32-160 km/h)	31 mph (50 km/h)

B	Vehicle operation speed:	Relative speed: Less than
Lane changes		12 mph (20 km/h)
Passing		12 mph (20 km/h)
Starting		---

Pass from rear

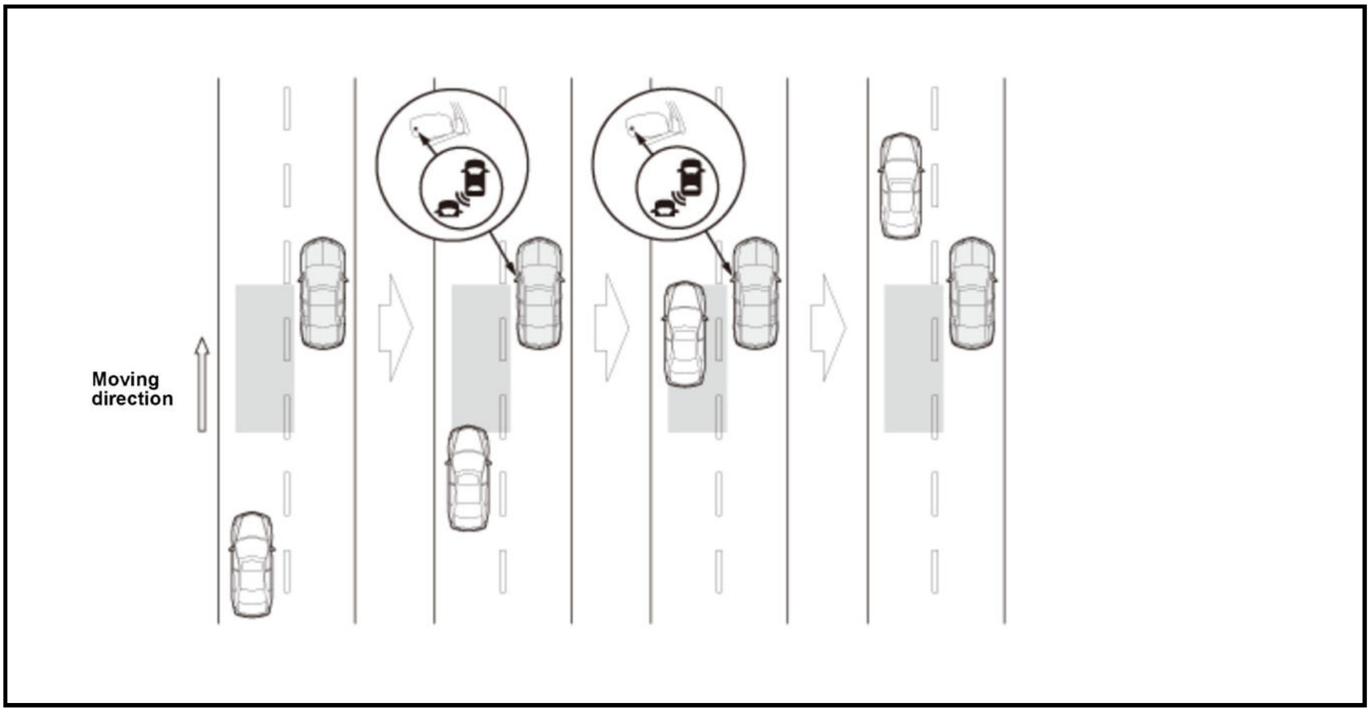
Moving direction

Lane changes

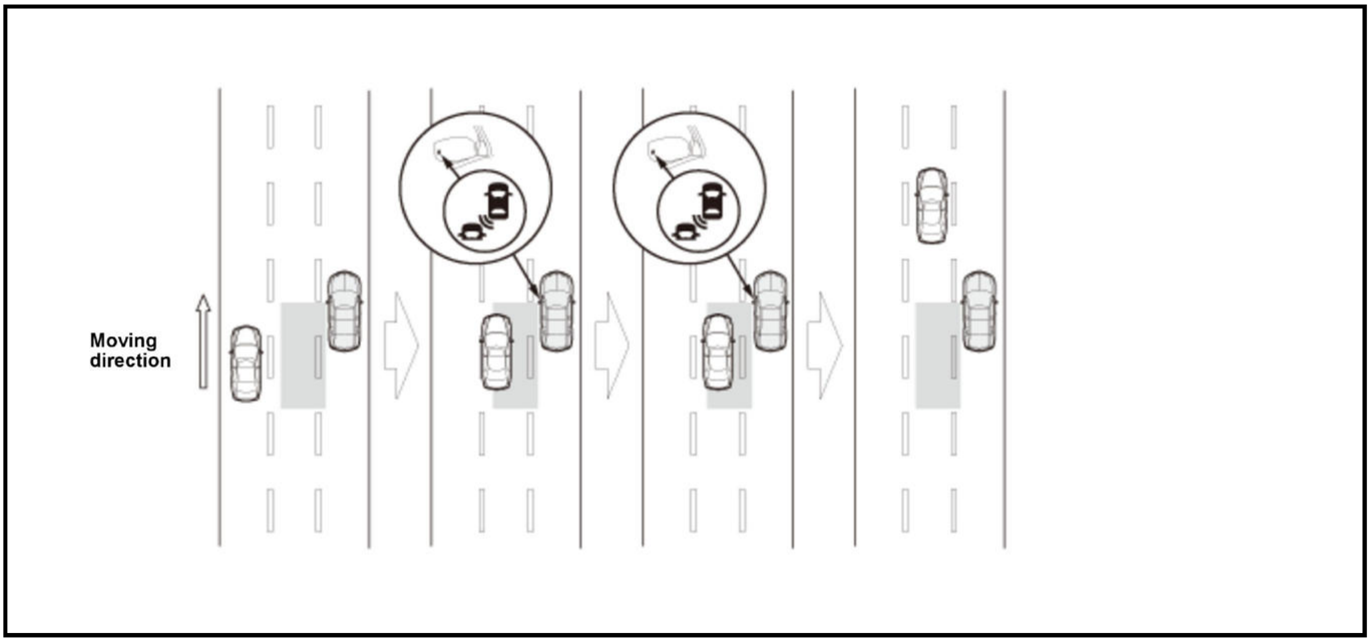
Moving direction

Passing

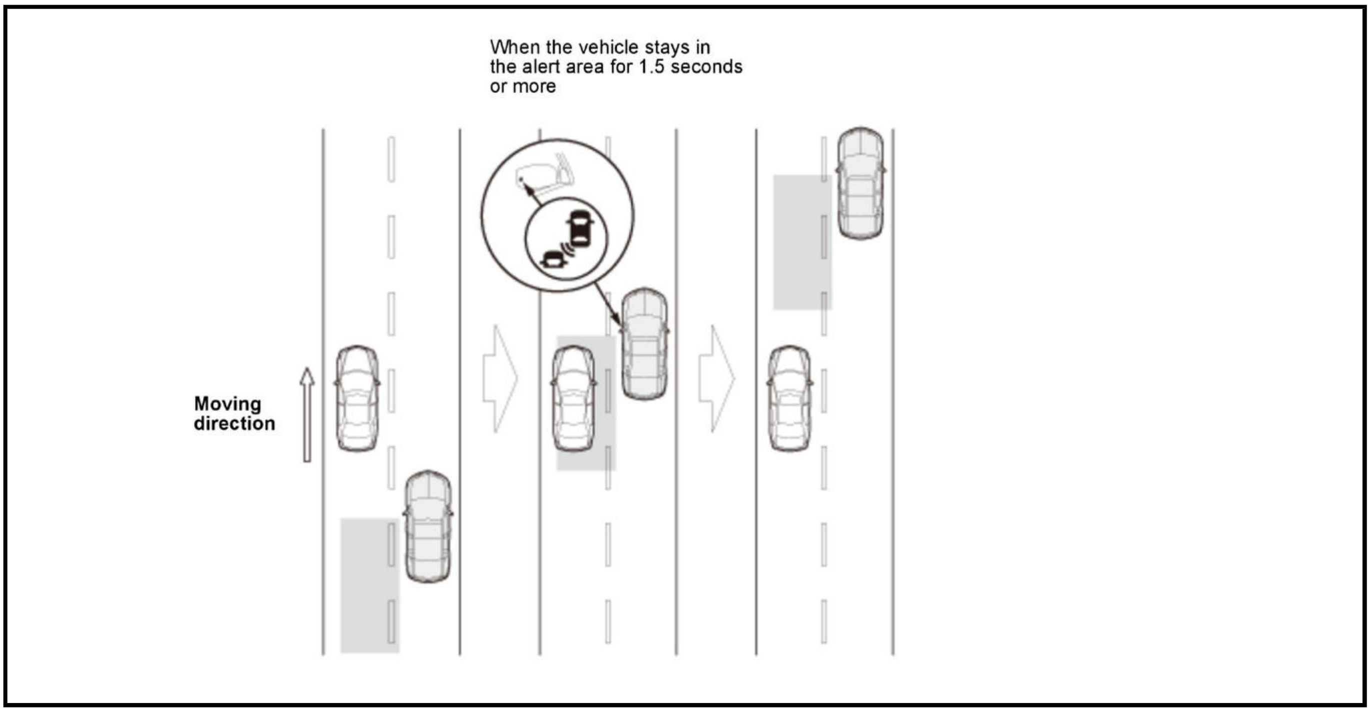
When the vehicle stays in the alert area for 1.5 seconds or more
Moving direction

Starting

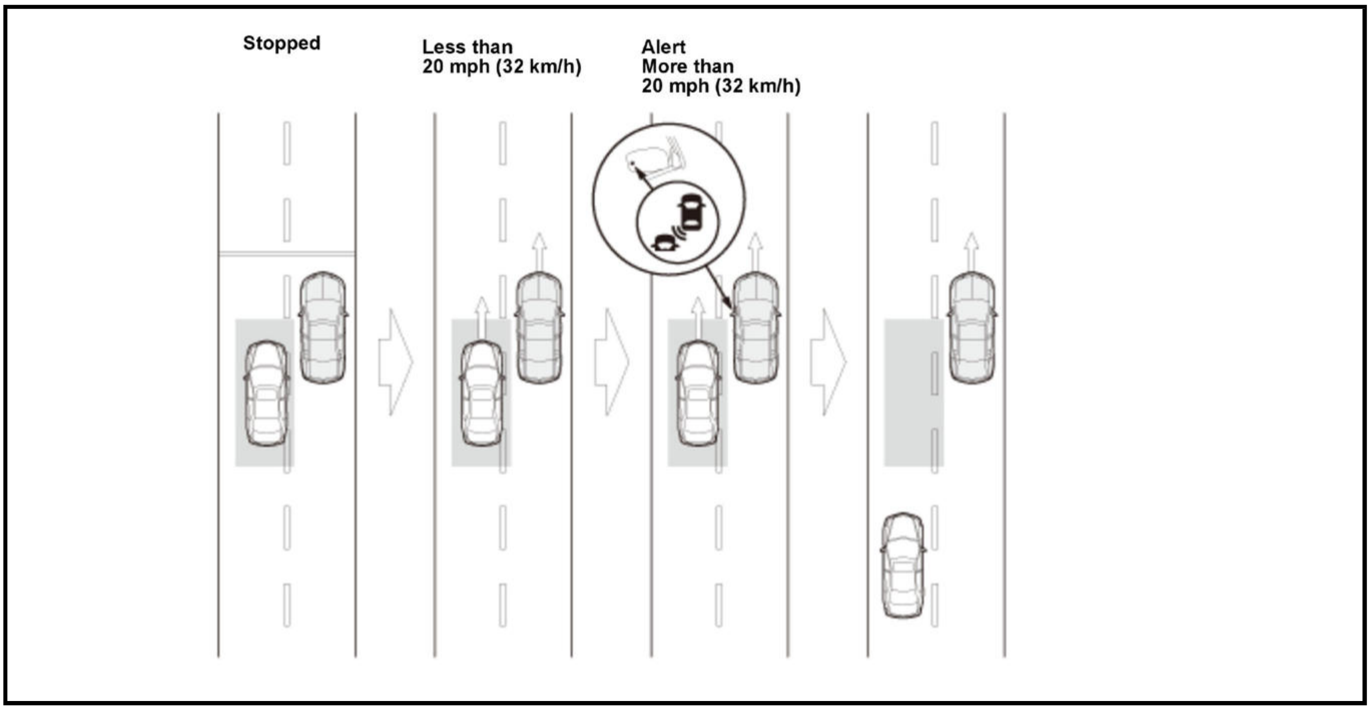
Stopped
Less than 20 mph (32 km/h)
Alert More than 20 mph (32 km/h)

No Warn Conditions

One or more lanes apart

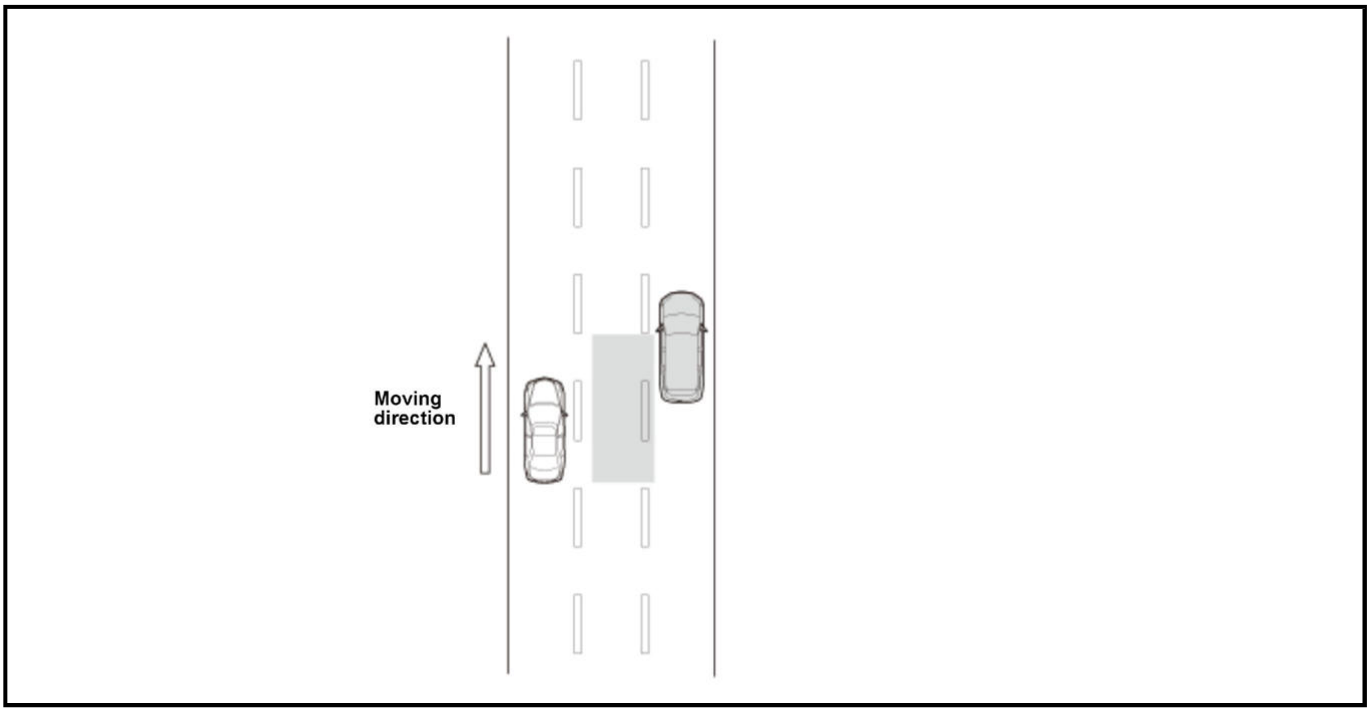
Moving
direction

Opposite cars

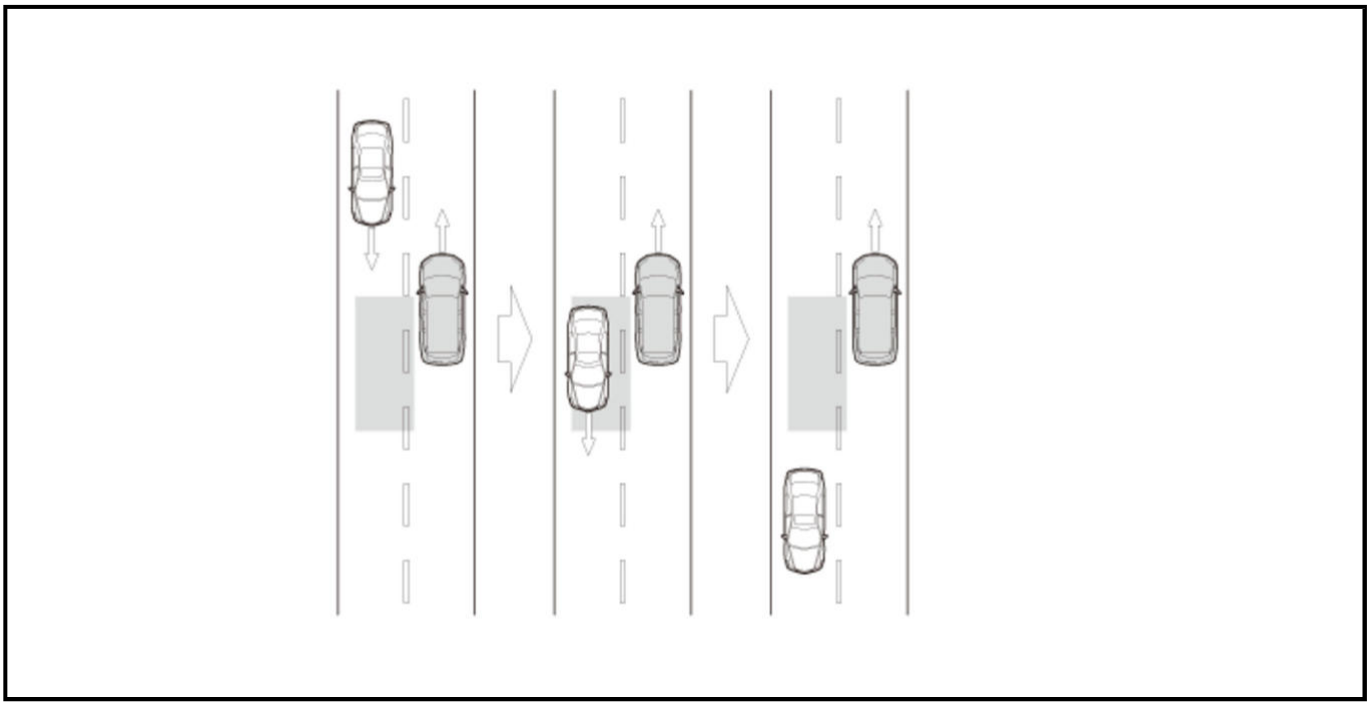

Static objects

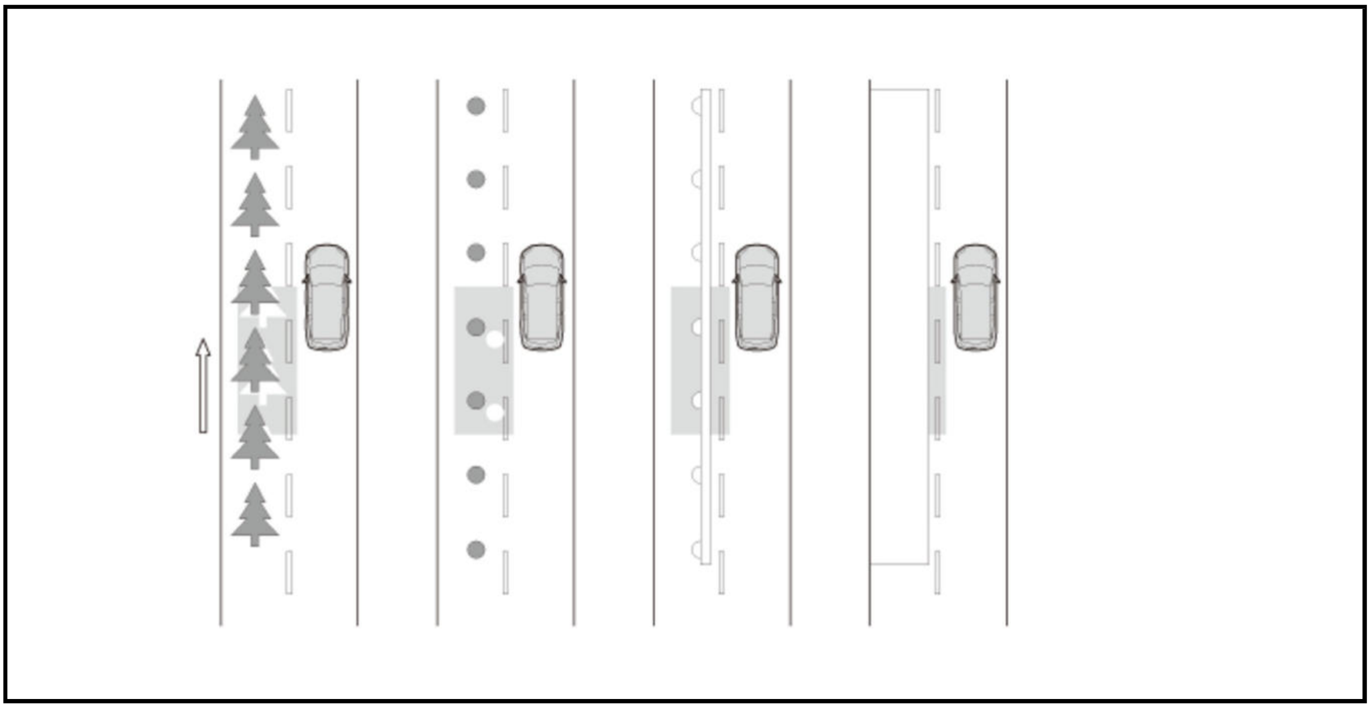

BLIND SPOT INFORMATION (BSI) SYSTEM DESCRIPTION - SYSTEM DIAGRAM

The system diagram of the BSI system is shown below.

For locations of each component on the vehicle, refer to Component Location Index:

- PCM
- Gauge control module
- Blind spot information units, Blind spot information indicators
- Body control module
- Combination Light Switch

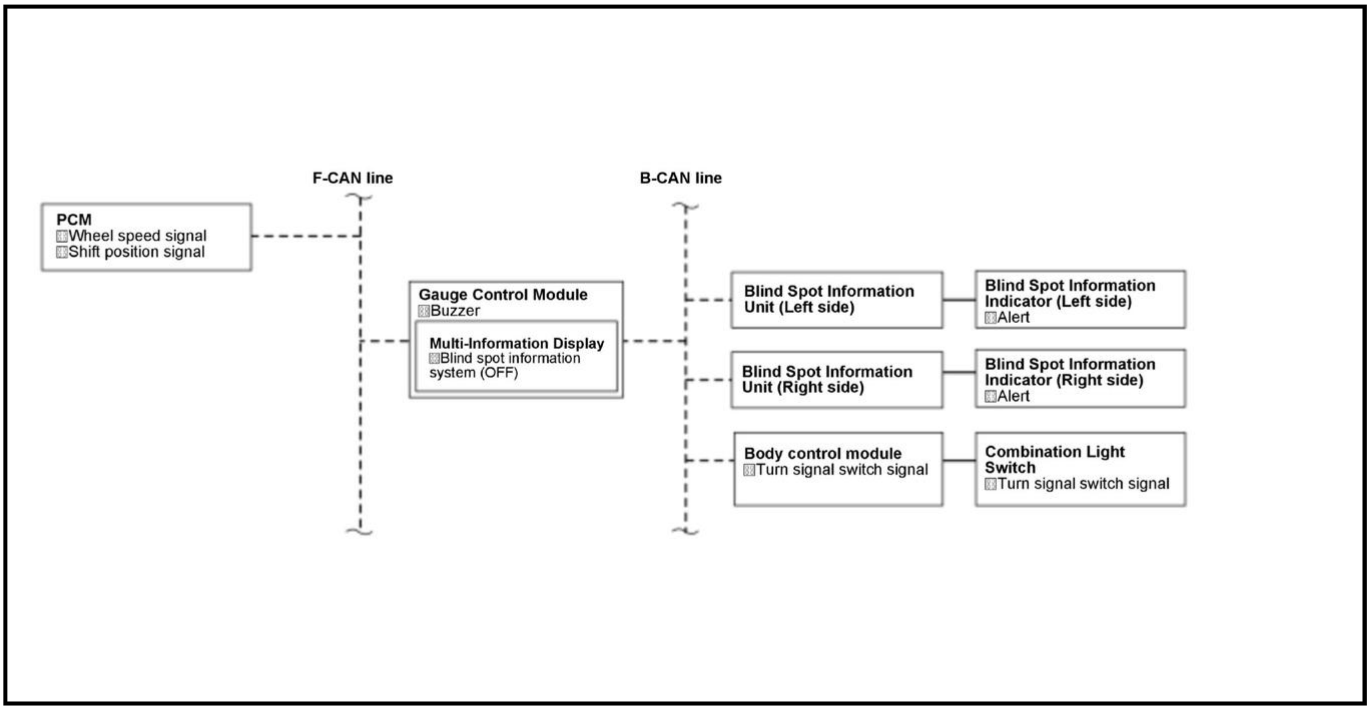
F-CAN line
B-CAN line
PCM
Wheel speed signal
Shift position signal
Gauge Control Module
Buzzer
Multi-Information Display
Blind spot information system (OFF)
Blind Spot Information Unit (Left side)
Blind Spot Information Indicator (Left side)
Alert
Blind Spot Information Unit (Right side)
Blind Spot Information Indicator (Right side)
Alert
Body control module
Turn signal switch signal
Combination Light Switch
Turn signal switch signal

CROSS TRAFFIC MONITOR SYSTEM DESCRIPTION

The Blind Spot Information (BSI) radar unit emits radar waves from the left and right BSI radar and detects other vehicles in the blind spot. Cross Traffic Monitor system function uses the BSI radar unit.

The cross traffic monitor system's alerting arrows are displayed on the rearview camera image of the center display unit when the vehicle is in reverse. When an approaching vehicle enters the cross traffic monitor alert zone, the cross traffic monitor warns the driver with a warning indicator and an audible alarm.

If the BSI radar unit malfunctions, the cross traffic monitor system stops operating. The vehicle alerts the driver that there is a problem by turning on the BSI indicator on the gauge control module, and the cross traffic monitor indicator is shown on the rearview camera image when the vehicle is in reverse gear.

Radar Zone Definition

The BSI radars are installed on the left and right sides of the rear body panel and covered by the bumper. The mounting positions are symmetrical on the left and the right.

Cross Traffic Monitor System

When the BSI radar has a clear view of the environment around it, the cross traffic monitor system will warn to approaching vehicles.

The cross traffic monitor system evaluates the approaching target's speed, time to potential collision and location in the cross traffic monitor system's alert zone to decide if the system should warn or not warn the driver.

Detection Conditions

Parameter	Warn
Your vehicle speed	less than 3 mph (5 km/h)
Time to collision	1.2 to 3.2 seconds
Target closing speed	More than 6 mph (10 km/h), 16 mph (25 km/h) or less
Detection range	Less than 8.3 m (27.2 ft) or based on time to collision (up to 25m (82.0 ft))

The system defines the time to collision, measured in seconds, that it takes for the target vehicle traveling at its current speed to reach the line L when the target vehicle is approaching perpendicular (between line A and B) to the customer's vehicle. If the target vehicle is approaching from a wider angle (between line B and C), the time to collision is measured by how long it takes the target vehicle traveling at its current speed to reach point B.

Detection Range

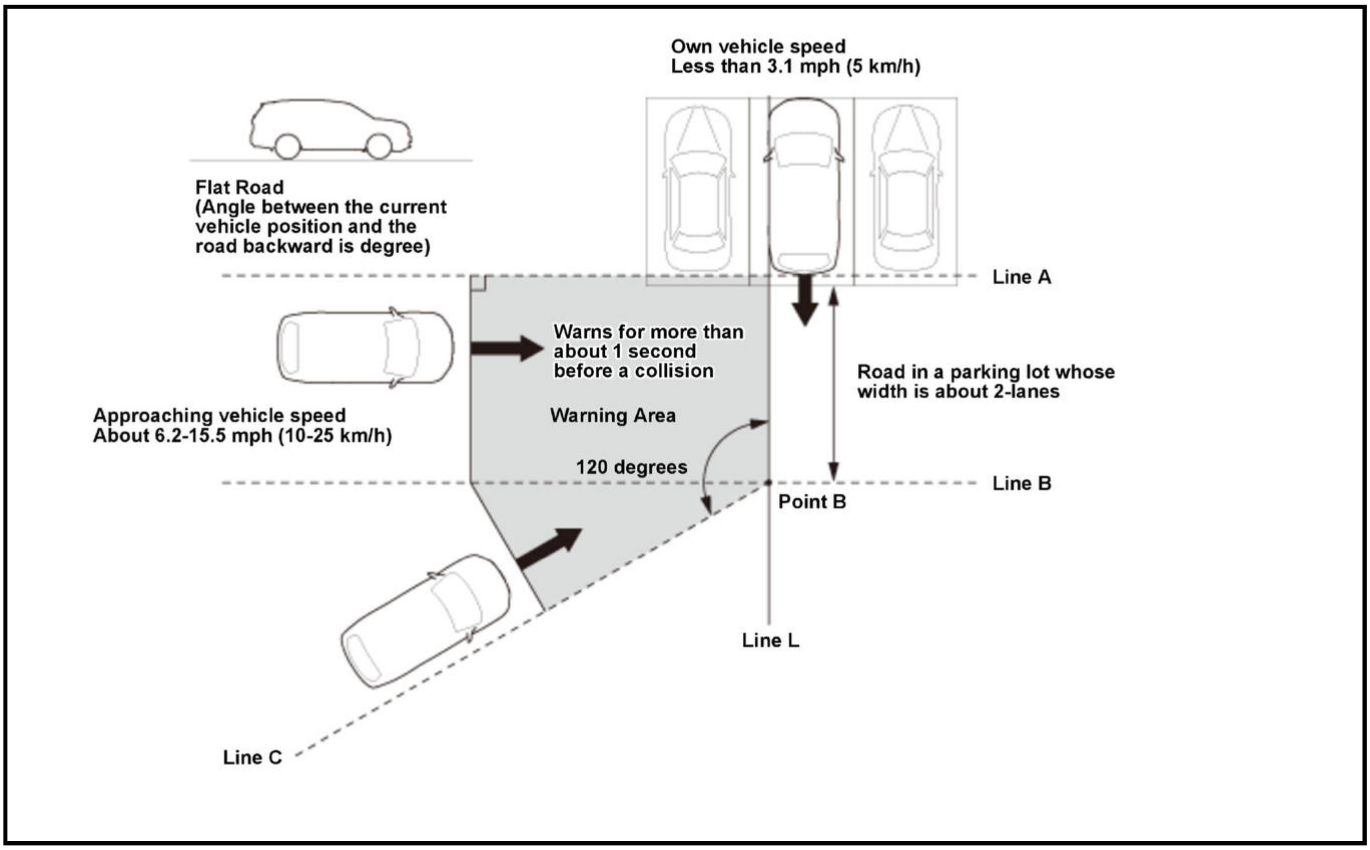
Own vehicle speed
Less than 3.1 mph (5 km/h)
Flat Road
(Angle between the current vehicle position and the road backward is degree)
Line A
Warns for more than about 1 second before a collision
Road in a parking lot whose width is about 2-lanes
Approaching vehicle speed
About 6.2-15.5 mph (10-25 km/h)
Warning Area
120 degrees
Line B
Point B
Line L
Line C

Cross Traffic Monitor (CTM) system

When driving in reverse, the blind spot information radar unit monitors vehicles approaching from behind your vehicle. When detecting a vehicle approaching from behind, the unit sends the information to the audio-navigation unit via B-CAN line. When receiving the information, the audio-navigation unit gives the warning to the driver by displaying "<<" (a warning arrow) on the rearview camera image. An audible alarm is generated by the meter. The warning indicates left, right or both. The cross traffic monitor system gives a warning depending on the position, speed of the target vehicle in the detection range and the time remaining to the collision.

Restriction Factors	Warning Conditions
Own Vehicle Speed	Less than 3 mph (5 km/h)*
Remaining Time to Collision	Greater than 1.2 to less than 3.2 seconds*
Target Vehicle Speed	Greater than 6 mph (10 km/h) and less than 16 mph (25 km/h)*
Distance to Target Vehicle	Less than 8.3m (27.2 ft) or based on time to collision (up to 25m (82.0 ft))

*: Warnings may be issued out side of these conditions listed above.

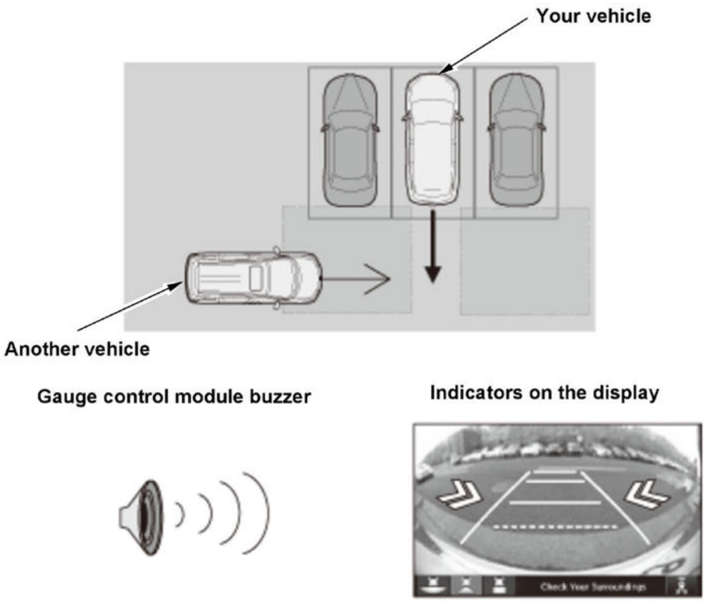
Your vehicle
Another vehicle
Gauge control module buzzer
Indicators on the display
Check Your Surroundings

CROSS TRAFFIC MONITOR SYSTEM DESCRIPTION - SYSTEM DIAGRAM

The system diagram of the Cross Traffic Monitor system is shown below.

For locations of each component on the vehicle, refer to Component Location Index:

- PCM
- Gauge control module
- Blind spot information units
- Audio-navigation unit , Center display unit
- Rearview camera

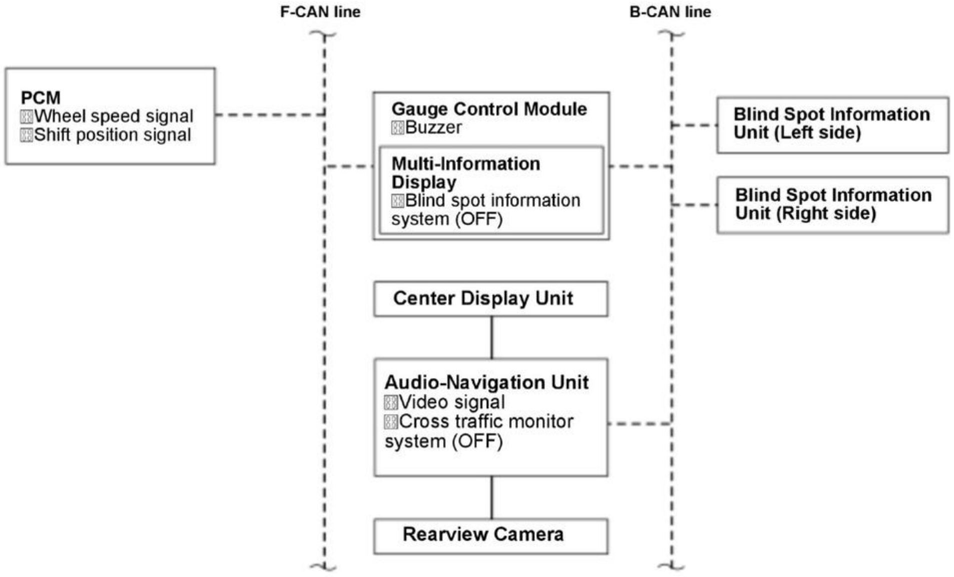
F-CAN line
B-CAN line
PCM
□Wheel speed signal
□Shift position signal
Gauge Control Module
□Buzzer
Multi-Information Display
□Blind spot information system (OFF)
Blind Spot Information Unit (Left side)
Blind Spot Information Unit (Right side)
Center Display Unit
Audio-Navigation Unit
□Video signal
□Cross traffic monitor system (OFF)
Rearview Camera

LANEWATCH SYSTEM DESCRIPTION

LaneWatch System

LaneWatch uses a camera and the display to help drivers recognize objects in the passenger's side blind spot. The added visibility improves safety when changing lanes or making right turns.

The driver can see other vehicles, bicycles, or pedestrians that are not normally visible in the passenger's side mirror.

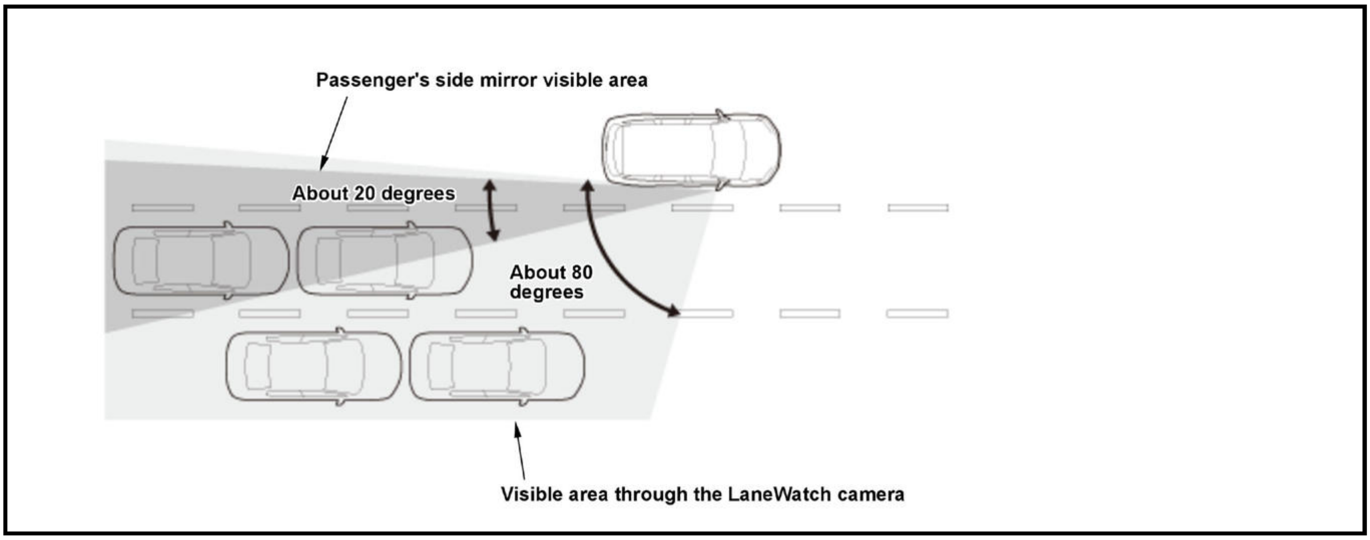
Passenger's side mirror visible area
About 20 degrees
About 80 degrees
Visible area through the LaneWatch camera

Reference line

The LaneWatch image is provided with three reference lines, each showing the distance from the rear bumper. Three lines that appear on the display can give an idea of how far the vehicles or objects on the display are from your vehicle, respectively. If an object is near line 1 (in red), it indicates that it is close to your vehicle, whereas an object near line 3 is farther away.

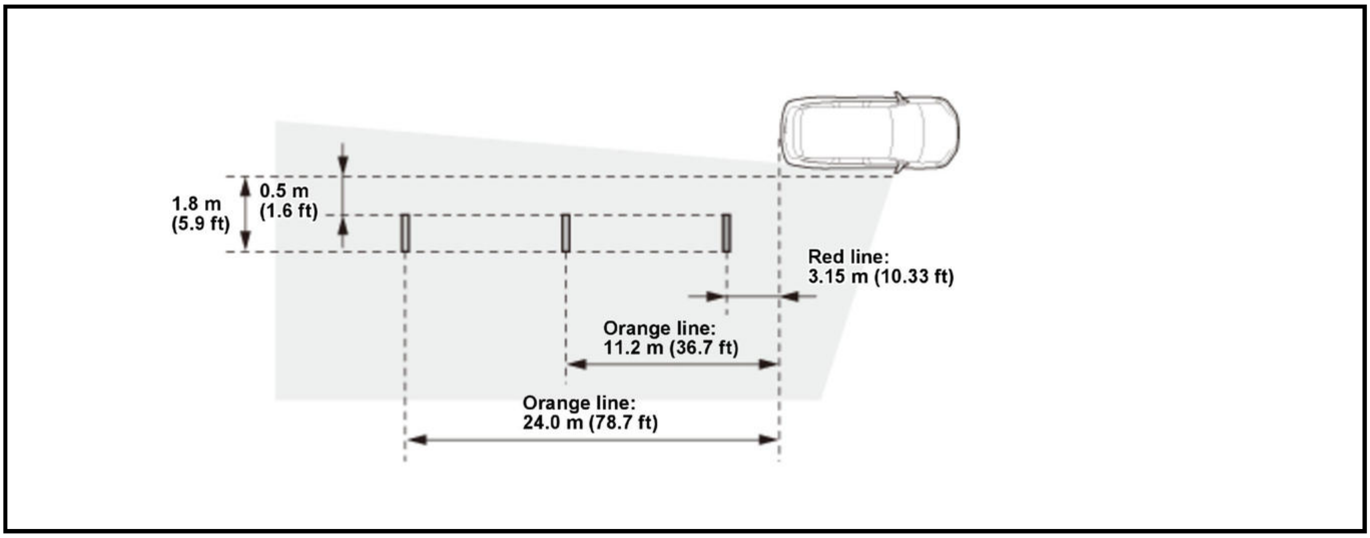
1.8 m (5.9 ft)
0.5 m (1.6 ft)
Red line: 3.15 m (10.33 ft)
Orange line: 11.2 m (36.7 ft)
Orange line: 24.0 m (78.7 ft)

Display image (Normal mode)

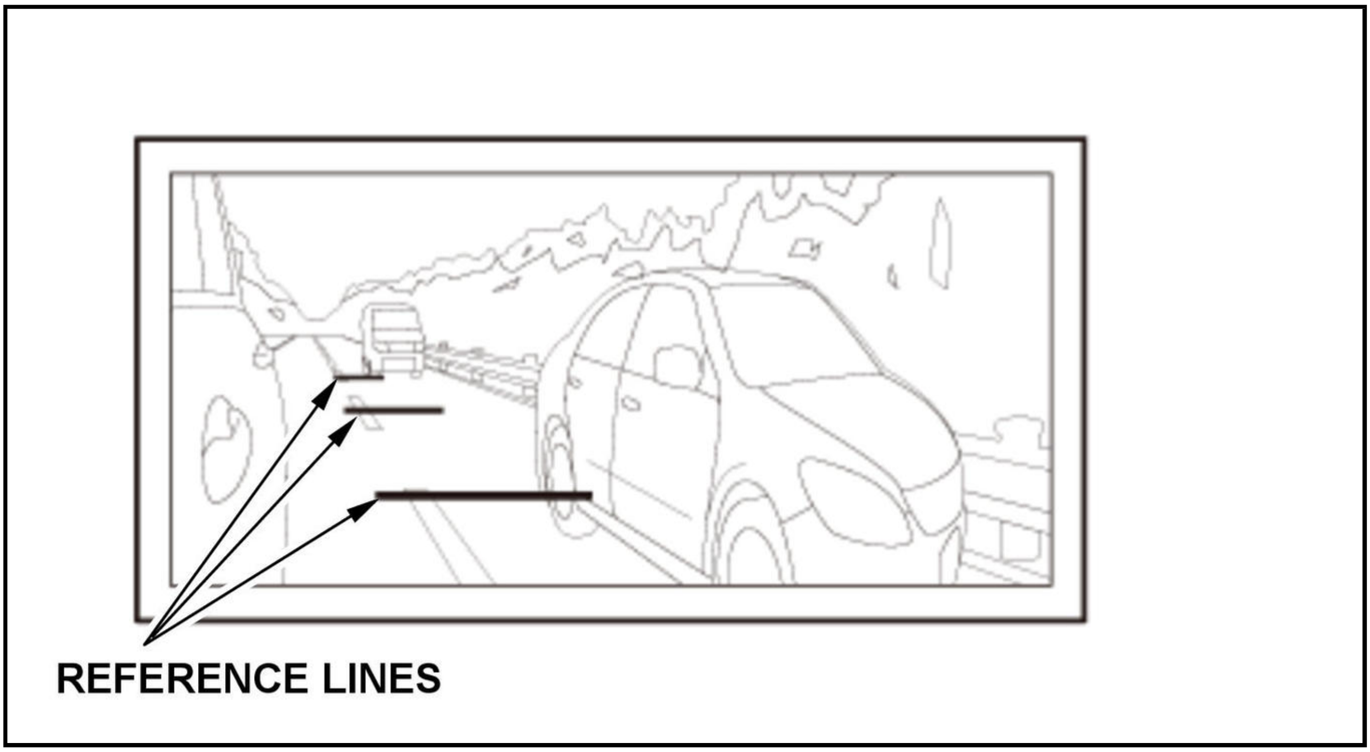

LaneWatch camera

The LaneWatch camera is built into the passenger's side power mirror which sends the image to the display.

LaneWatch Switch

The LaneWatch switch is built into the combination light switch.

Center Display Unit

The image appears on the center display unit.

Operation

- Whether the display is on or off, pressing the LaneWatch switch will change the display to the LaneWatch screen.
- When the turn signal switch is moved to the right turn position (lane change or continuous flash), the display will change to the LaneWatch camera view.

LANEWATCH SYSTEM DESCRIPTION - SYSTEM DIAGRAM

The system diagram of the LaneWatch system is shown below.

For locations of each component on the vehicle, refer to Component Location Index:

- **Audio unit** or **Audio-navigation unit** , **Center display unit**
- **LaneWatch camera, LaneWatch switch**
- **Gauge control module**
- **Body control module**

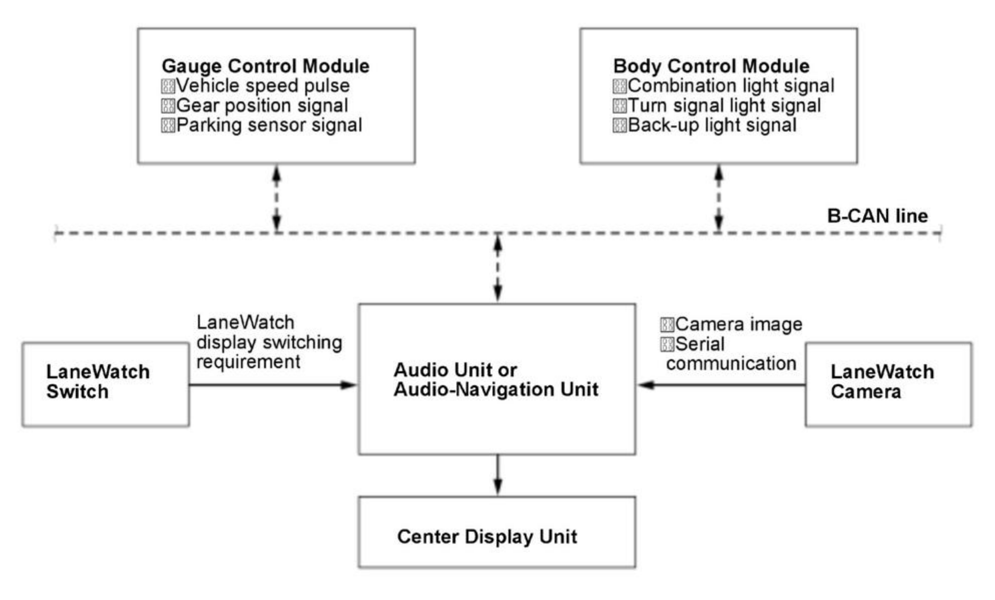
Gauge Control Module
Vehicle speed pulse
Gear position signal
Parking sensor signal
Body Control Module
Combination light signal
Turn signal light signal
Back-up light signal
B-CAN line
LaneWatch Switch
LaneWatch display switching requirement
Audio Unit or Audio-Navigation Unit
Camera image
Serial communication
LaneWatch Camera
Center Display Unit

CONNECTOR VIEW

BSI RADAR UNIT CONNECTOR FOR INPUTS AND OUTPUTS

Left Side BSI Radar Unit 6P Connector (female terminals)

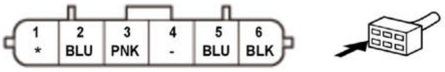
1
*
2
BLU
3
PNK
4
-
5
BLU
6
BLK

*: RED (Without auto idle stop system)
LT GRN (With auto idle stop system)

Terminal number	Terminal name	Description
1	IG1 OPTION *1IG1 EBB *2	Detects ignition signal
2	BSI L IND	Drives the left BSI alert indicator
3	B-CAN_H	B-CAN communication (high) circuit
4	Not used	-
5	B-CAN_L	B-CAN communication (low) circuit
6	GND	Ground circuit for the BSI radar unit

*1: Without auto idle stop system

*2: With auto idle stop system

Right Side BSI Radar Unit 6P Connector (female terminals)

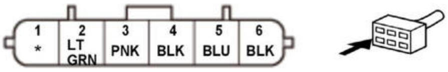

*: RED (Without auto idle stop system)
LT GRN (With auto idle stop system)

Terminal number	Terminal name	Description
1	IG1 OPTION *1IG1 EBB *2	Detects ignition signal
2	BSI R IND	Drives the right BSI alert indicator
3	B-CAN_H	B-CAN communication (high) circuit
4	GND	Ground circuit for the BSI radar unit
5	B-CAN_L	B-CAN communication (low) circuit
6	GND	Ground circuit for the BSI radar unit

*1: Without auto idle stop system

*2: With auto idle stop system

CHECK

BSI RADAR UNIT MOUNTING AREA CHECK

Special Tools Required

Image	Description/Tool Number
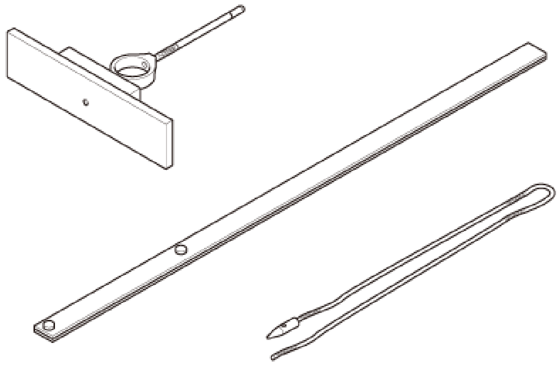	Target Set 07AAJ-STKA160

Adjustment

1. Center Line - Set
2. BSI Radar Unit - Remove
3. Upper Body Measuring Dimensions - BSI Radar Unit Mounting Positions
    1. Install bolts on each hole of the body panel.

2. Measure the length from the tip of the bolt installed to each hole A, B, and C to the body center line.

NOTE: If the measured lengths between the body center line and hole A to C are different from the standard, take the vehicle to a body repair shop to have the panel adjusted to standard.

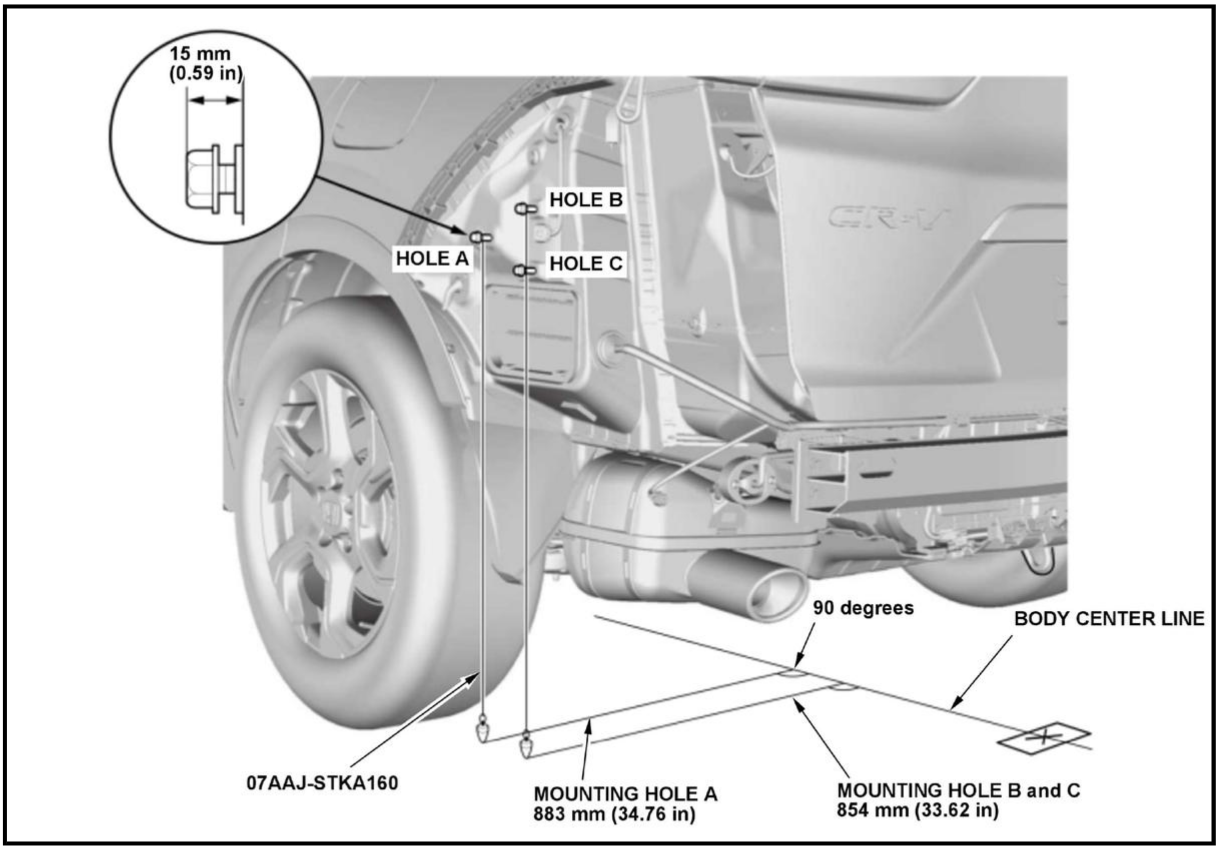
15 mm
(0.59 in)
HOLE B
HOLE A
HOLE C
90 degrees
BODY CENTER LINE
07AAJ-STKA160
MOUNTING HOLE A
883 mm (34.76 in)
MOUNTING HOLE B and C
854 mm (33.62 in)

4. BSI Radar Unit - Install
5. Rear Bumper - Install

ADJUSTMENT

LANEWATCH CAMERA AIMING

Special Tools Required

Image	Description/Tool Number
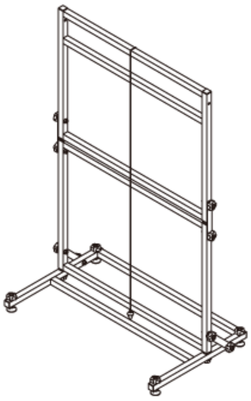	LaneWatch Aiming Stand Set 070AK-T2AA100

Image	Description/Tool Number
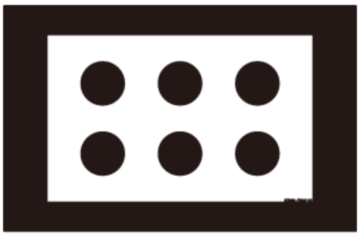	Aiming Marker 070AK-T2AA110

Adjustment

NOTE:

- The LaneWatch camera must be aimed after one or more of the following procedures are done:
-
    - LaneWatch camera removal or replacement
    - Passenger's side power mirror removal or replacement
    - Passenger's side door panel removal or replacement
    - Passenger's side door panel body repair
    - Passenger's side door position adjustment
- Set up the vehicle:
-
    - Install the aiming target on the passenger's side of the vehicle.
    - Do the aiming in a proper place where you can obtain about 4.5 m (14.8 ft) distance between the target pattern and the vehicle (from the center of the front wheel hub).
- Prepare these items:
-
    - Tape measure and ruler
    - Felt-tip pen
    - Tape
    - String
- Park the vehicle on level ground in a wide open area to avoid any reflection from objects that could affect the alignment procedure. Make sure you have at least the following amount of space around the vehicle: 6.5 m (21.3 ft) in length, 3.5 m (11.5 ft) in width.

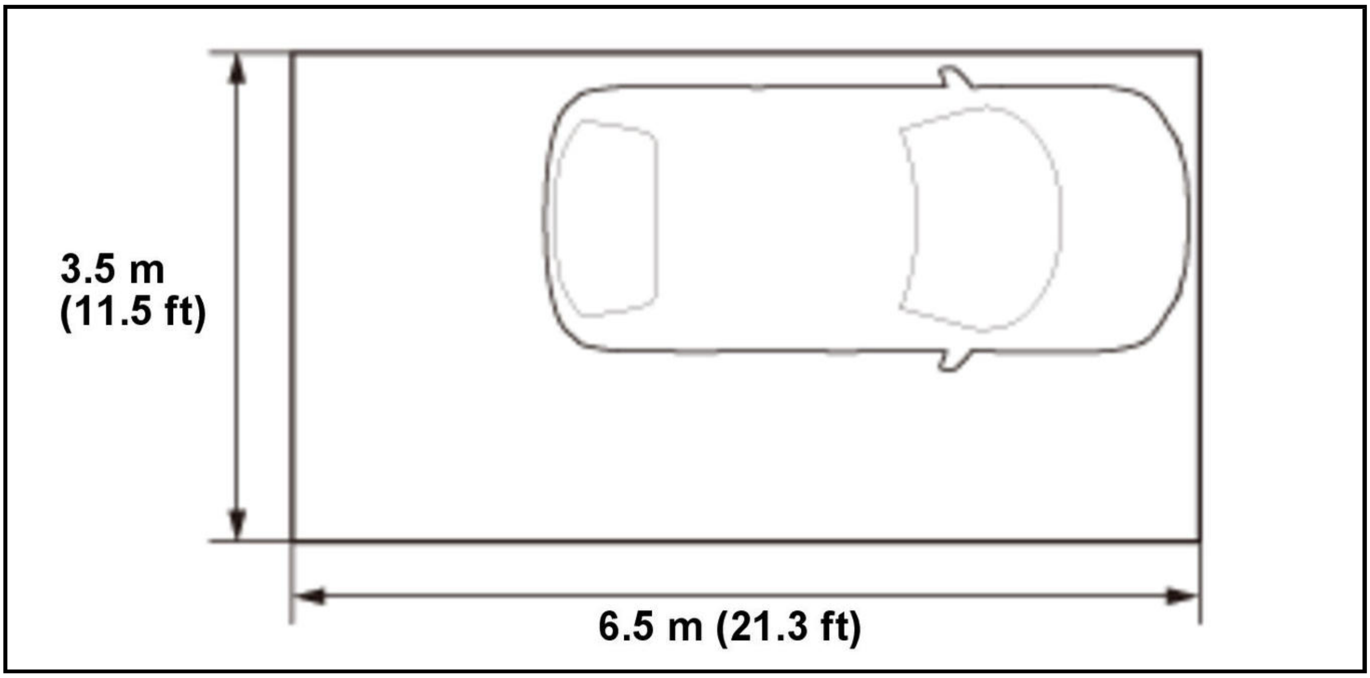
3.5 m
(11.5 ft)
6.5 m (21.3 ft)

- When marking on the floor surface, use suitable tape to mark the exact locations.

1. **Before Aiming - Set**
2. Aiming Marker - Set

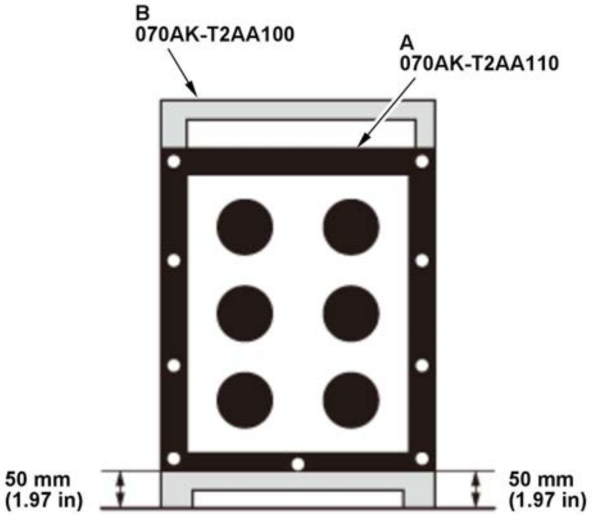
B
070AK-T2AA100
A
070AK-T2AA110
50 mm
(1.97 in)
50 mm
(1.97 in)

NOTE:

- Make sure there are no other objects except the aiming target in this area.
- Check the tire pressures, and adjust them to the specified value if needed.
- Put a person or an object equivalent to the driver's weight in the driver's seat.

1. Set the aiming marker (A) to the LaneWatch aiming stand (B), and adjust the height of the aiming marker.

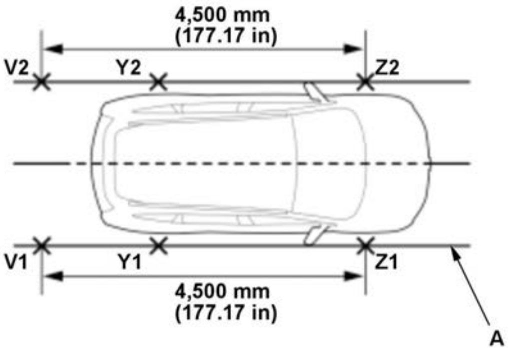
4,500 mm
(177.17 in)
V2
Y2
Z2
V1
Y1
Z1
4,500 mm
(177.17 in)
A

2. Pull a string (A) between the point Z1 and point Y1, and tape both ends of the string on the floor surface.

NOTE: Repeat this step for the opposite side, and pull a string on the floor surface.

3. Measure and make a new spot V1 on the floor surface at the rear of the vehicle 4, 500 mm (177.17 in) from the point Z1.

NOTE: Repeat this step for the opposite side, and mark a new spot V2 on the floor surface.

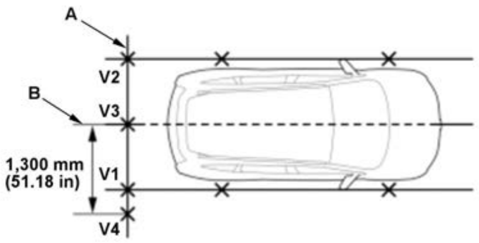	4. Stretch a string (A) between the point V1 and point V2, and tape both ends of the string on the floor surface. Mark a new spot V3 where the string crosses with the center-line (B). 5. On the string, mark a new spot V4 which is 1, 300 mm (51.19 in) from the point V3 to the passenger's side.
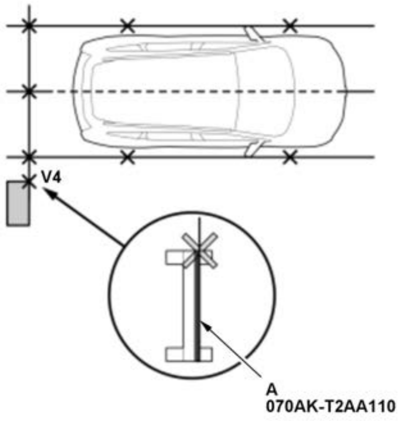	6. Place the left side edge of the aiming marker (A) on the point V4 that you made in the previous step. Align the legs of the marker with the string to make sure the marker is square to the vehicle.

3. LaneWatch Camera - Aim

NOTE:

- When you stop the aiming procedure, turn the vehicle to the OFF (LOCK) mode.
- If the aiming procedure fails, brighten or darken the ambient lighting in case the lighting is affecting the aiming.

1. **Start the LaneWatch camera aiming**

2. Press the LaneWatch switch on the end of the turn signal switch to aim the camera.

3. Wait until the aiming process is complete, and the display returns to the LaneWatch camera image.

INSPECTION

BSI RADAR UNIT AIMING INSPECTION

Special Tools Required

Image	Description/Tool Number
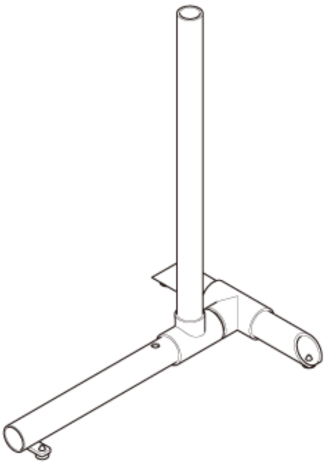	Stand 07AAJ-TK8A100*
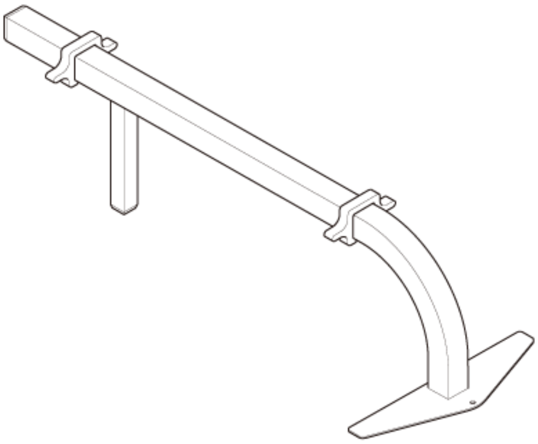	Rim Frame 07AAJ-TK8A150
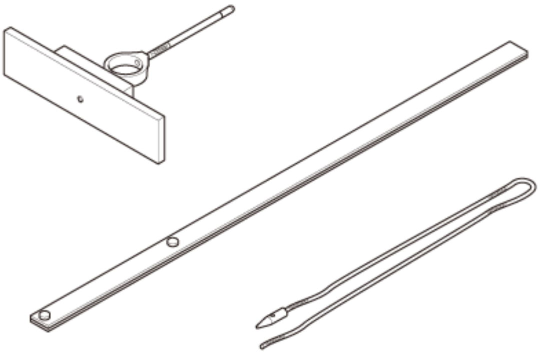	Target Set 07AAJ-STKA160

Image	Description/Tool Number
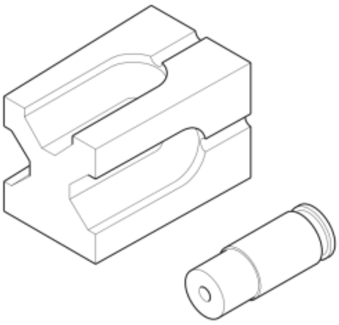	Angle Gauge 07AAJ-STKA170
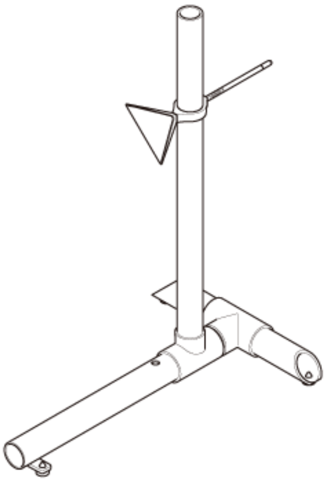	Stand Set 07AAJ-STKA220*

*: Use Stand 07AAJ-TK8A100 or Stand Set 07AAJ-STKA220 for aiming.

Adjustment

NOTE: Inspect the BSI radar unit aiming in these instances:

- After replacing or removing and reinstalling one or both of the BSI radar units.
- After repairing the body panel(s) where the BSI radar unit(s) mount.
- For any of the following DTCs:
-
  - B18B8: **Left Side BSI Radar Unit Azimuth Off Alignment**
  - B1E68: **Right Side BSI Radar Unit Azimuth Off Alignment**
- Park the vehicle on level ground (within 1 degree of slope) with at least 4 m (13 ft) of space on both sides and behind the vehicle. Do not do this procedure with the vehicle on a lift or with the tires on steel plates or rollers.
- Keep the front wheels in the straight ahead position.
- When marking on the floor, use suitable tape to mark the exact locations.

1. **Rear Bumper - Remove**
2. BSI Radar Unit Aiming - Inspect

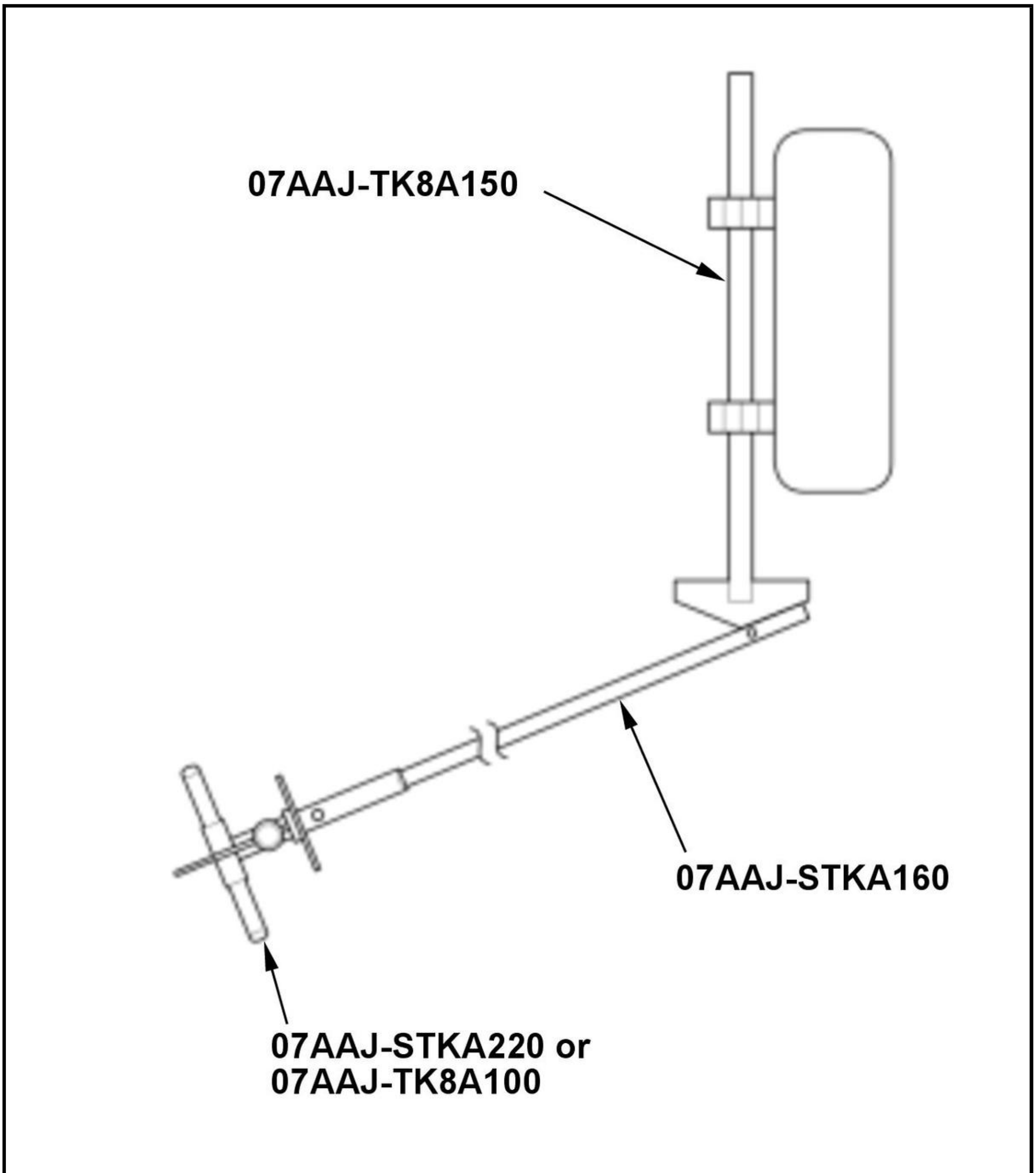

This illustration shows the left side of the vehicle.
The right side is symmetrical.

Prepare the items shown:

- Felt-tip pen
- Tape

Before Inspection:

- Do not make any bumper repairs in the areas over or near the two radar units on vehicles equipped with the Blind Spot Information (BSI) System. The composition of the repair materials, and/or increased material thickness in the repaired area, may interfere with BSI radar unit operation.
- Clean the surface of the BSI radar unit.
- Make sure the vehicle does not have aftermarket suspension.
- Make sure that all of the tires are the correct size and inflated to the proper pressure.
- Make sure the fuel tank is full.
- Remove all cargo from the vehicle except the tool kit and the spare tire.

- Make sure the steering wheel is pointed straight ahead, and do not turn it after setting the vehicle.
- Shift the transmission to P position, and the parking brake applied.
- If the vehicle you are aiming was involved in a collision or if you suspect the alignment is out of specifications, you must perform a wheel alignment prior to aiming the BSI radar.

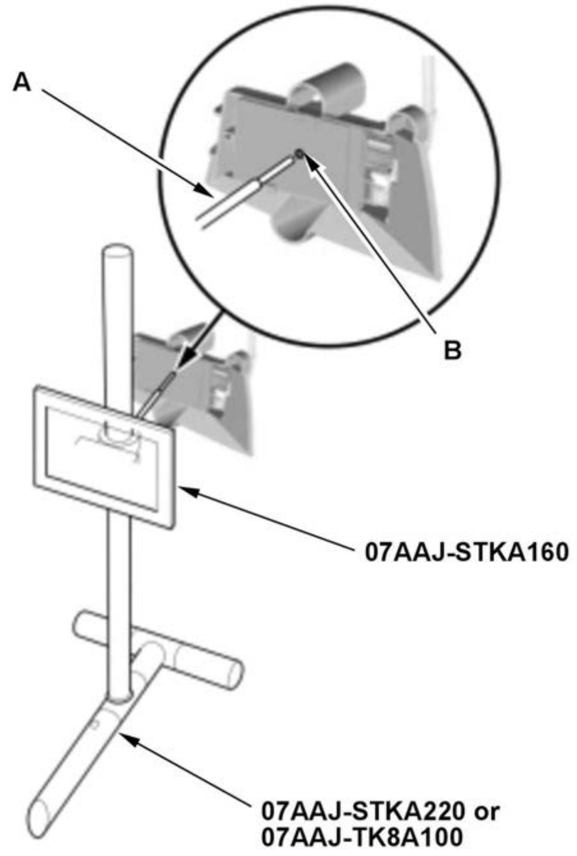 A B 07AAJ-STKA160 07AAJ-STKA220 or 07AAJ-TK8A100 This illustration shows the left side of the vehicle. The right side is symmetrical.	1. Set the target on the stand. 2. Set the tip (A) of the target at the same height as the center (B).

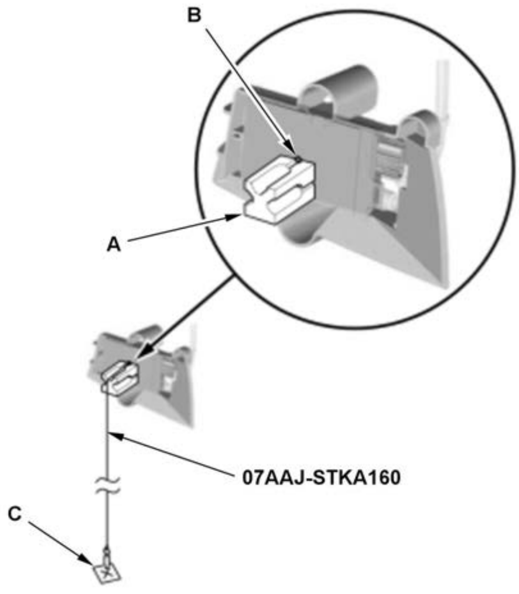 This illustration shows the left side of the vehicle. The right side is symmetrical.	3. Set the angle gauge (A) against the radar unit, and align the cutout of the angle gauge with the center (B) on the radar unit. **NOTE:** The angle gauge can be set at any of the 3 angle settings for this procedure. 4. Hang the plumb bob from the angle gauge, and mark a point (C) on the floor where the tip of the plumb bob touches the floor.

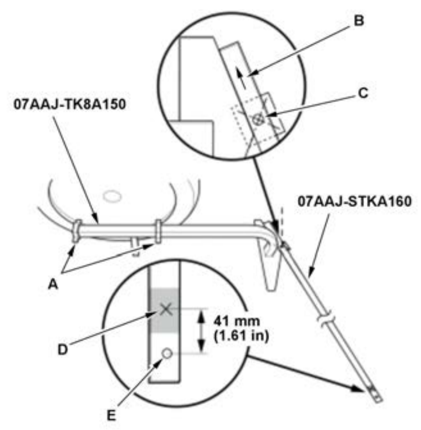
B
C
07AAJ-TK8A150
07AAJ-STKA160
A
41 mm
(1.61 in)
D
E

This illustration shows the left side of the vehicle.
The right side is symmetrical.

5. Place the rim frame by the rear wheel on the side of the vehicle you are aiming. Adjust the spacers (A) to fit against the wheel rim to make the rim frame parallel with the wheel.

NOTE: Make sure the spacers are touching the wheel rim.

6. Assemble the two sections of the straightedge, then place the hole on the end of the straightedge over the point (C) that you made on the floor in the previous step. Slide the rim frame rearward until the rim frame and the straightedge meet.

NOTE: Set the straightedge according to the arrow (B).

7. Mark a point (D) that is 41 mm (1.61 in) from the hole (E) on the end of the straightedge.

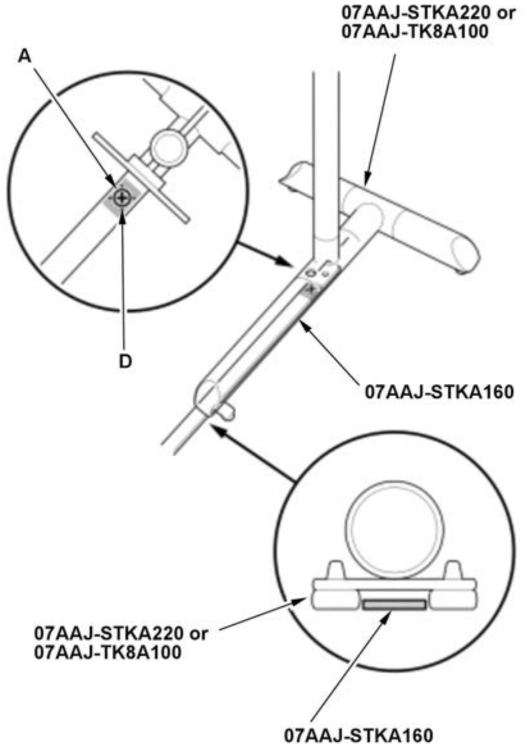
07AAJ-STKA220 or
07AAJ-TK8A100
A
D
07AAJ-STKA160
07AAJ-STKA220 or
07AAJ-TK8A100
07AAJ-STKA160

8. Place the target over the other end of the straightedge, and align the hole (A) at the base of the target with the point (D) on the straightedge.

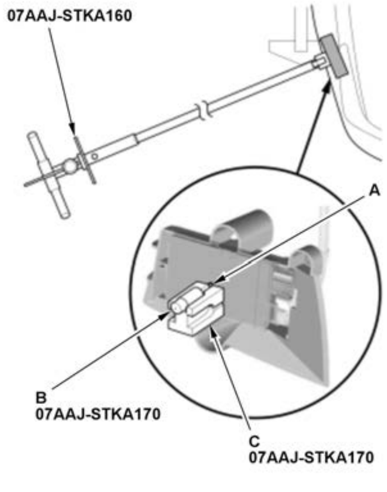
07AAJ-STKA160
A
B
07AAJ-STKA170
C
07AAJ-STKA170

This illustration shows the left side of the vehicle.
The right side is symmetrical.

9. With the angle gauge facing up at the 0 degree setting (indicated on the angle gauge), set the angle gauge against the radar unit. Align the cutout in the angle gauge with the center (A) on the radar unit.

WARNING: Do not aim the laser beam at anyone's eyes.

10. Turn on the laser pointer (B), and set it on the angle gauge (C) so that the beam hits on the target.

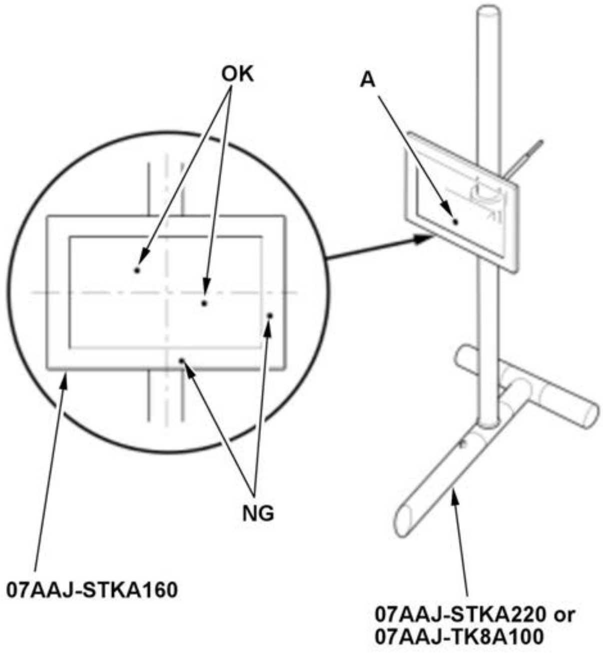 OK A NG 07AAJ-STKA160 07AAJ-STKA220 or 07AAJ-TK8A100	11. Check the point (A) where the laser beam hits the target: - If the laser beam is within the target, the BSI radar unit is aimed properly. - If the laser beam is out of the target range, **check the BSI radar unit mounting area**.

3. **Rear Bumper - Install**

DTC TROUBLESHOOTING INDEX

BLIND SPOT INFORMATION (BSI) SYSTEM DTC TROUBLESHOOTING INDEX

Left Side BSI Radar Unit DTC

DTC	Detection Item
B18A1	Left Side BSI Radar Unit Internal Circuit Error
B18A5	Left Side BSI Radar Unit Temperature High
B18B4	Left Side BSI Radar Unit Dirty
B18B8	Left Side BSI Radar Unit Azimuth Off Alignment
B18BA	Different Version in the Left and Right Side BSI Radar Unit
B18C5	Short to GND in the Left Side BSI Radar Unit Indicator Circuit
B18C6	Short to Power in the Left Side BSI Radar Unit Indicator Circuit
B18C7	Open in the Left Side BSI Radar Unit Indicator Circuit
B18DB	Left Side BSI Radar Unit Received The Audio/Navigation Unit Failure Information
B18EA	Left Side BSI Radar Unit received PCM (A/T System) Failure Information
U1280	Communication Bus Line Error (Bus-Off)
U1281	Left Side BSI Radar Unit Lost Communication With MICU or BCM
U128D	Left Side BSI Radar Unit Lost Communication With Gauge Control Module
U1297	Left Side BSI Radar Unit Lost Communication With Right Side BSI Radar Unit

Right Side BSI Radar Unit DTC

DTC	Detection Item
B1E51	Right Side BSI Radar Unit Internal Circuit Error
B1E55	Right Side BSI Radar Unit Temperature High
B1E64	Right Side BSI Radar Unit Dirty
B1E68	Right Side BSI Radar Unit Azimuth Off Alignment
B1E6A	Different Version in the Left and Right Side BSI Radar Unit
B1E75	Short to GND in the Right Side BSI Radar Unit Indicator Circuit
B1E76	Short to Power in the Right Side BSI Radar Unit Indicator Circuit

DTC	Detection Item
B1E77	Open in the Right Side BSI Radar Unit Indicator Circuit
B1E9A	Right Side BSI Radar Unit received PCM (A/T System) Failure Information
U1280	Communication Bus Line Error (Bus-Off)
U1281	Right Side BSI Radar Unit Lost Communication With MICU or BCM
U128D	Right Side BSI Radar Unit Lost Communication With Gauge Control Module
U128F	Right Side BSI Radar Unit Lost Communication With Left Side BSI Radar Unit

CIRCUIT DIAGRAM

BLIND SPOT INFORMATION (BSI) SYSTEM CIRCUIT DIAGRAM (WITH AUTO IDLE STOP SYSTEM) (2020 2021)

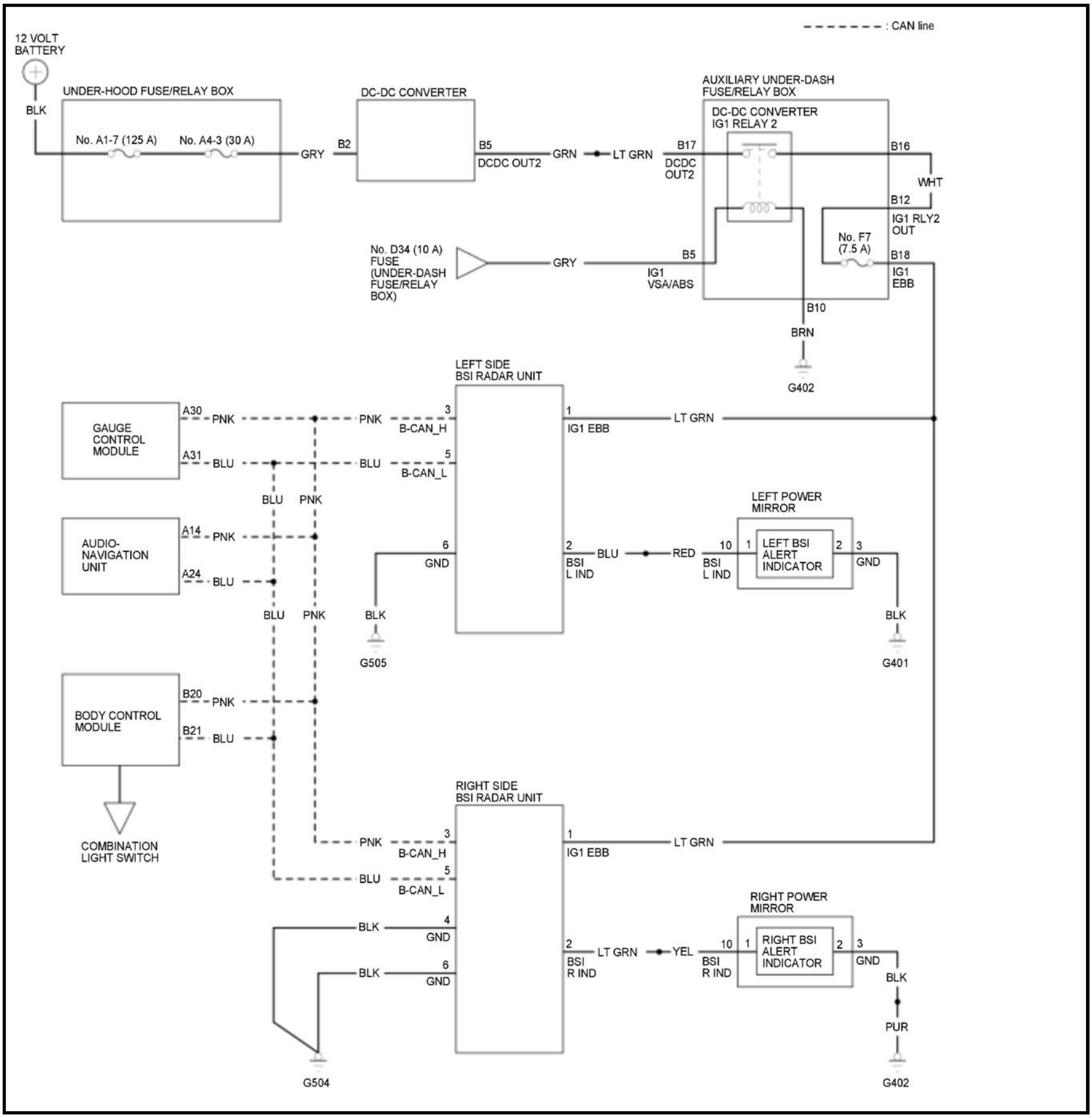

: CAN line
12 VOLT BATTERY
BLK
UNDER-HOOD FUSE/RELAY BOX
No. A1-7 (125 A)
No. A4-3 (30 A)
GRY
B2
DC-DC CONVERTER
B5
DCDC OUT2
GRN
LT GRN
B17
DCDC OUT2
AUXILIARY UNDER-DASH FUSE/RELAY BOX
DC-DC CONVERTER IG1 RELAY 2
B16
WHT
B12
IG1 RLY2 OUT
No. F7 (7.5 A)
B18
IG1 EBB
No. D34 (10 A) FUSE (UNDER-DASH FUSE/RELAY BOX)
GRY
B5
IG1 VSA/ABS
B10
BRN
G402
LEFT SIDE BSI RADAR UNIT
GAUGE CONTROL MODULE
A30
PNK
A31
BLU
PNK
3
B-CAN_H
BLU
5
B-CAN_L
1
IG1 EBB
LT GRN
BLU
PNK
AUDIO-NAVIGATION UNIT
A14
PNK
A24
BLU
6
GND
BLK
G505
2
BSI L IND
BLU
RED
LEFT POWER MIRROR
10
BSI L IND
1
LEFT BSI ALERT INDICATOR
2
3
GND
BLK
G401
BLU
PNK
BODY CONTROL MODULE
B20
PNK
B21
BLU
COMBINATION LIGHT SWITCH
RIGHT SIDE BSI RADAR UNIT
PNK
3
B-CAN_H
BLU
5
B-CAN_L
1
IG1 EBB
LT GRN
BLK
4
GND
BLK
6
GND
G504
2
BSI R IND
LT GRN
YEL
RIGHT POWER MIRROR
10
BSI R IND
1
RIGHT BSI ALERT INDICATOR
2
3
GND
BLK
PUR
G402

BLIND SPOT INFORMATION (BSI) SYSTEM CIRCUIT DIAGRAM (WITHOUT AUTO IDLE STOP SYSTEM)

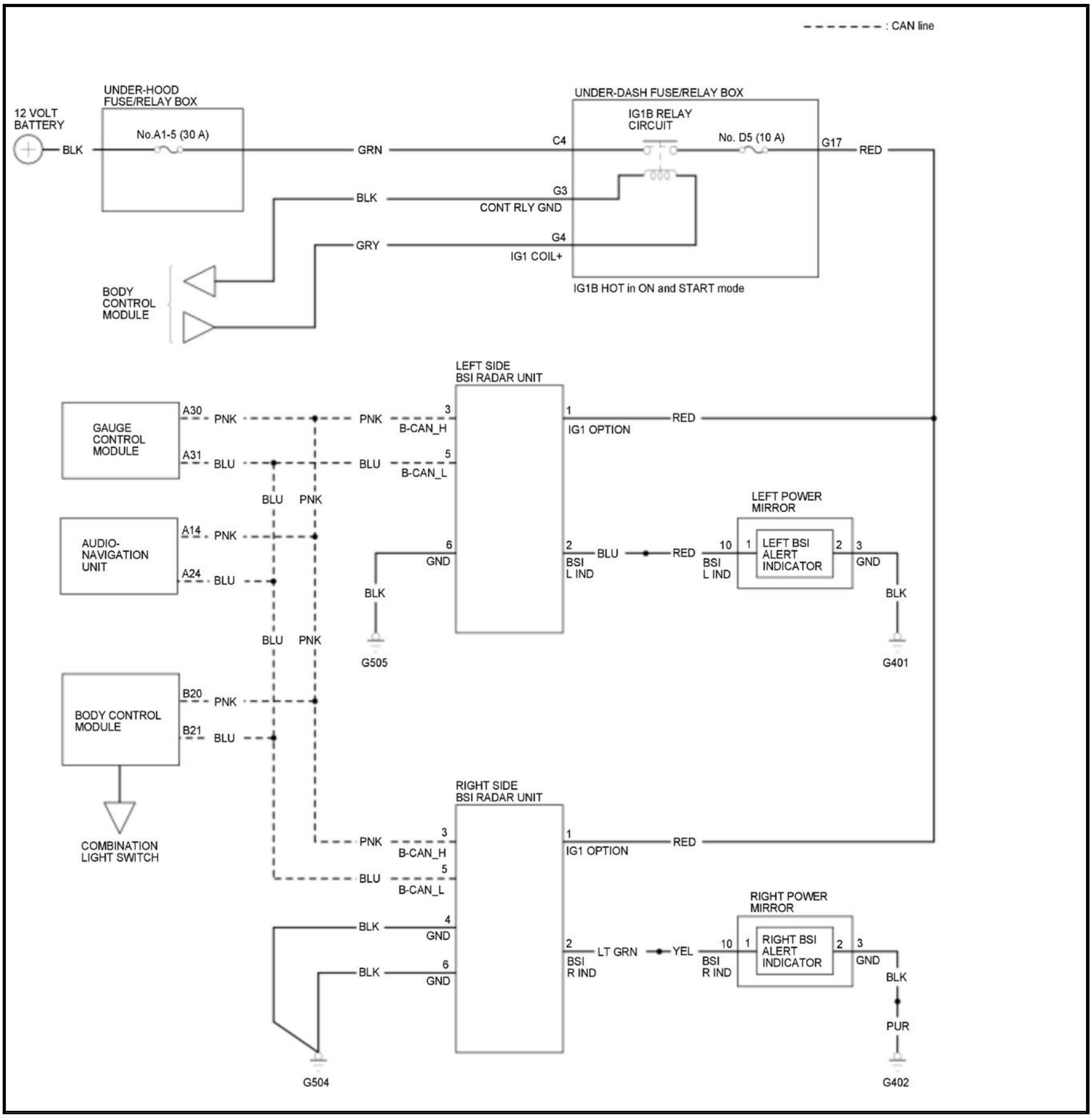
: CAN line
12 VOLT BATTERY
BLK
UNDER-HOOD FUSE/RELAY BOX
No.A1-5 (30 A)
GRN
UNDER-DASH FUSE/RELAY BOX
IG1B RELAY CIRCUIT
C4
No. D5 (10 A)
G17
RED
BLK
G3
CONT RLY GND
GRY
G4
IG1 COIL+
IG1B HOT in ON and START mode
BODY CONTROL MODULE
LEFT SIDE BSI RADAR UNIT
GAUGE CONTROL MODULE
A30
PNK
PNK
3
B-CAN_H
1
IG1 OPTION
RED
A31
BLU
BLU
5
B-CAN_L
BLU
PNK
LEFT POWER MIRROR
AUDIO-NAVIGATION UNIT
A14
PNK
6
GND
2
BSI L IND
BLU
RED
10
BSI L IND
1
LEFT BSI ALERT INDICATOR
2
3
GND
A24
BLU
BLK
BLK
BLU
PNK
G505
G401
BODY CONTROL MODULE
B20
PNK
B21
BLU
COMBINATION LIGHT SWITCH
RIGHT SIDE BSI RADAR UNIT
PNK
3
B-CAN_H
1
IG1 OPTION
RED
BLU
5
B-CAN_L
RIGHT POWER MIRROR
BLK
4
GND
2
BSI R IND
LT GRN
YEL
10
BSI R IND
1
RIGHT BSI ALERT INDICATOR
2
3
GND
BLK
6
GND
BLK
PUR
G504
G402

LANEWATCH CIRCUIT DIAGRAM (WITH AUTO IDLE STOP SYSTEM) (2020 2021)

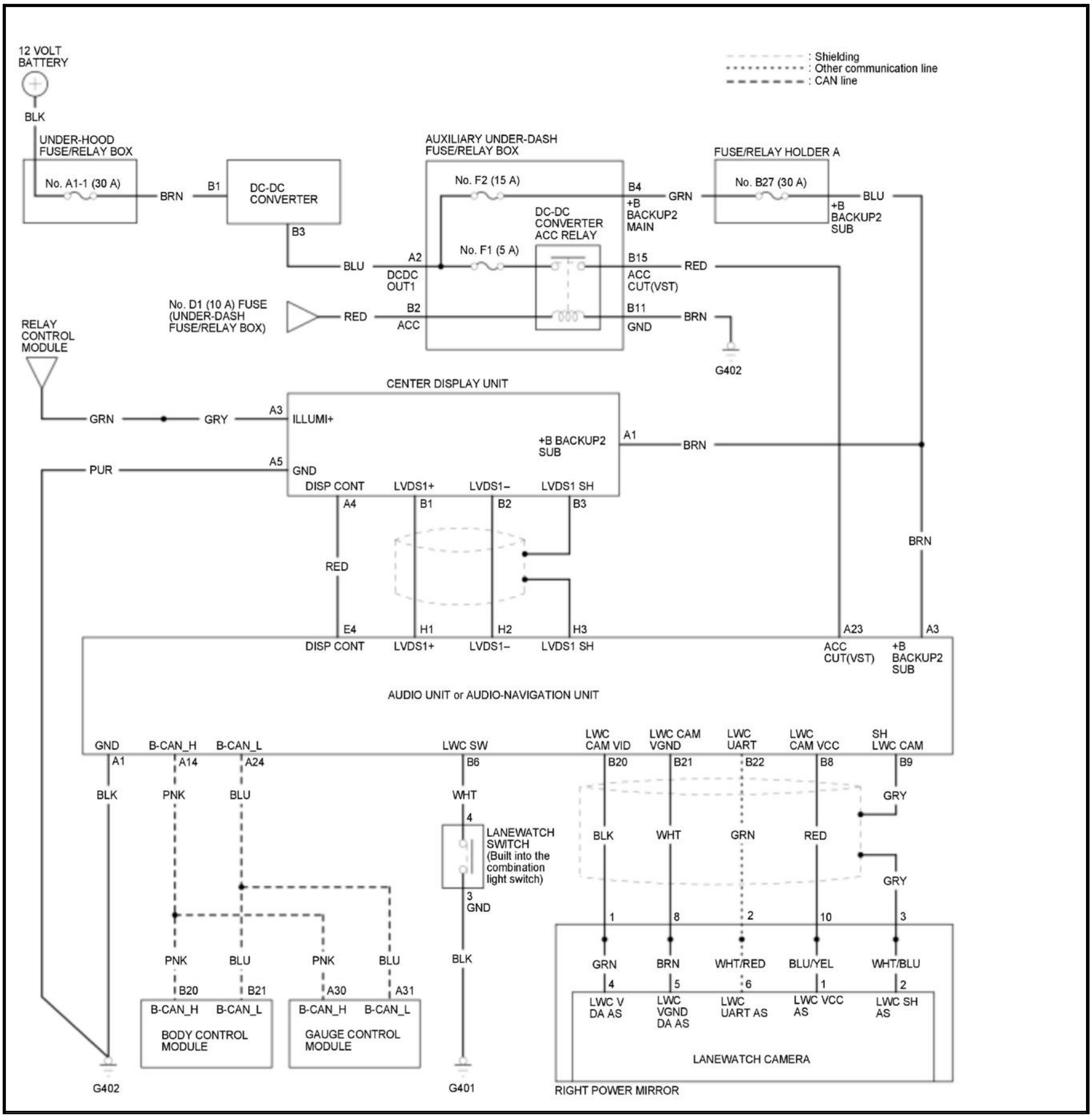
12 VOLT BATTERY
BLK
UNDER-HOOD FUSE/RELAY BOX
No. A1-1 (30 A)
BRN
B1
DC-DC CONVERTER
B3
BLU
: Shielding
: Other communication line
: CAN line
AUXILIARY UNDER-DASH FUSE/RELAY BOX
No. F2 (15 A)
B4
+B BACKUP2 MAIN
GRN
DC-DC CONVERTER ACC RELAY
No. F1 (5 A)
A2
DCDC OUT1
B15
ACC CUT(VST)
RED
B2
ACC
B11
GND
BRN
G402
FUSE/RELAY HOLDER A
No. B27 (30 A)
+B BACKUP2 SUB
BLU
No. D1 (10 A) FUSE (UNDER-DASH FUSE/RELAY BOX)
RED
RELAY CONTROL MODULE
GRN
GRY
PUR
CENTER DISPLAY UNIT
A3
ILLUMI+
A5
GND
+B BACKUP2 SUB
A1
BRN
DISP CONT
LVDS1+
LVDS1–
LVDS1 SH
A4
B1
B2
B3
RED
BRN
E4
H1
H2
H3
A23
A3
DISP CONT
LVDS1+
LVDS1–
LVDS1 SH
ACC CUT(VST)
+B BACKUP2 SUB
AUDIO UNIT or AUDIO-NAVIGATION UNIT
GND
B-CAN_H
B-CAN_L
LWC SW
LWC CAM VID
LWC CAM VGND
LWC UART
LWC CAM VCC
SH LWC CAM
A1
A14
A24
B6
B20
B21
B22
B8
B9
BLK
PNK
BLU
WHT
GRY
4
LANEWATCH SWITCH (Built into the combination light switch)
3
GND
BLK
WHT
GRN
RED
GRY
1
8
2
10
3
PNK
BLU
PNK
BLU
BLK
GRN
BRN
WHT/RED
BLU/YEL
WHT/BLU
B20
B21
A30
A31
4
5
6
1
2
B-CAN_H
B-CAN_L
BODY CONTROL MODULE
B-CAN_H
B-CAN_L
GAUGE CONTROL MODULE
LWC V DA AS
LWC VGND DA AS
LWC UART AS
LWC VCC AS
LWC SH AS
LANEWATCH CAMERA
G402
G401
RIGHT POWER MIRROR

LANEWATCH CIRCUIT DIAGRAM (WITHOUT AUTO IDLE STOP SYSTEM)

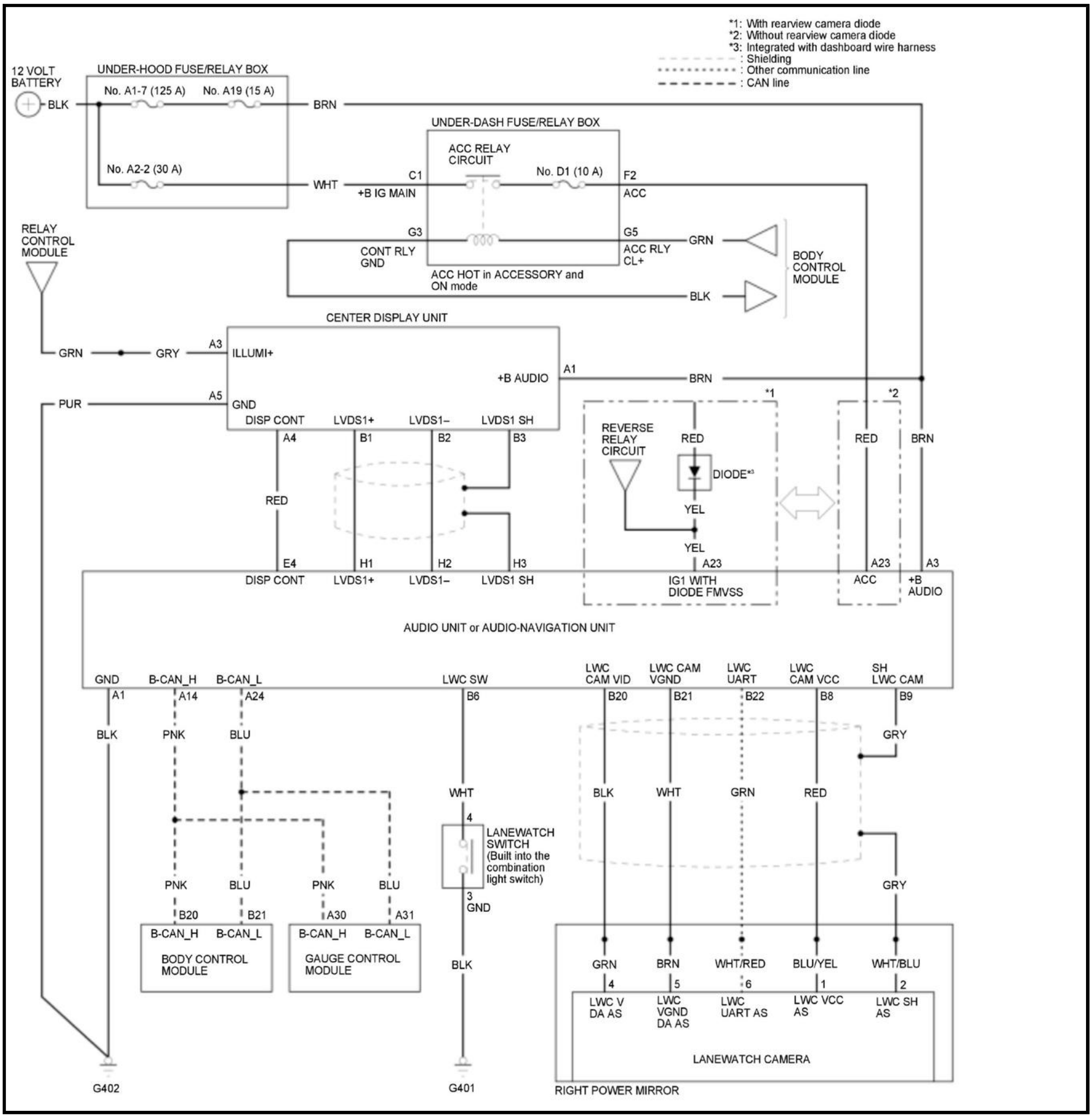

*1: With rearview camera diode
*2: Without rearview camera diode
*3: Integrated with dashboard wire harness
: Shielding
: Other communication line
: CAN line
12 VOLT BATTERY
UNDER-HOOD FUSE/RELAY BOX
No. A1-7 (125 A)
No. A19 (15 A)
No. A2-2 (30 A)
BLK
BRN
WHT
UNDER-DASH FUSE/RELAY BOX
ACC RELAY CIRCUIT
No. D1 (10 A)
C1
+B IG MAIN
F2
ACC
G3
CONT RLY GND
G5
ACC RLY CL+
GRN
ACC HOT in ACCESSORY and ON mode
BLK
BODY CONTROL MODULE
RELAY CONTROL MODULE
CENTER DISPLAY UNIT
GRN
GRY
A3
ILLUMI+
A1
+B AUDIO
BRN
PUR
A5
GND
DISP CONT
LVDS1+
LVDS1–
LVDS1 SH
A4
B1
B2
B3
RED
*1
*2
REVERSE RELAY CIRCUIT
RED
DIODE*3
YEL
YEL
RED
BRN
E4
H1
H2
H3
A23
A23
A3
DISP CONT
LVDS1+
LVDS1–
LVDS1 SH
IG1 WITH DIODE FMVSS
ACC
+B AUDIO
AUDIO UNIT or AUDIO-NAVIGATION UNIT
GND
B-CAN_H
B-CAN_L
LWC SW
LWC CAM VID
LWC CAM VGND
LWC UART
LWC CAM VCC
SH LWC CAM
A1
A14
A24
B6
B20
B21
B22
B8
B9
BLK
PNK
BLU
GRY
WHT
BLK
WHT
GRN
RED
4
LANEWATCH SWITCH (Built into the combination light switch)
3
GND
PNK
BLU
PNK
BLU
GRY
B20
B21
A30
A31
B-CAN_H
B-CAN_L
BODY CONTROL MODULE
B-CAN_H
B-CAN_L
GAUGE CONTROL MODULE
BLK
GRN
BRN
WHT/RED
BLU/YEL
WHT/BLU
4
5
6
1
2
LWC V DA AS
LWC VGND DA AS
LWC UART AS
LWC VCC AS
LWC SH AS
LANEWATCH CAMERA
G402
G401
RIGHT POWER MIRROR

GENERAL INFORMATION

HOW TO START LANEWATCH CAMERA AIMING

Procedure

1. LaneWatch Camera Aiming - Start
    1. Do the LaneWatch camera aiming marker preparation
    2. Turn the vehicle to the ON mode.
    3. Press and hold the PHONE button, the DISPLAY MODE button, and the AUDIO POWER button until the Select Diagnosis Items menu screen is displayed.

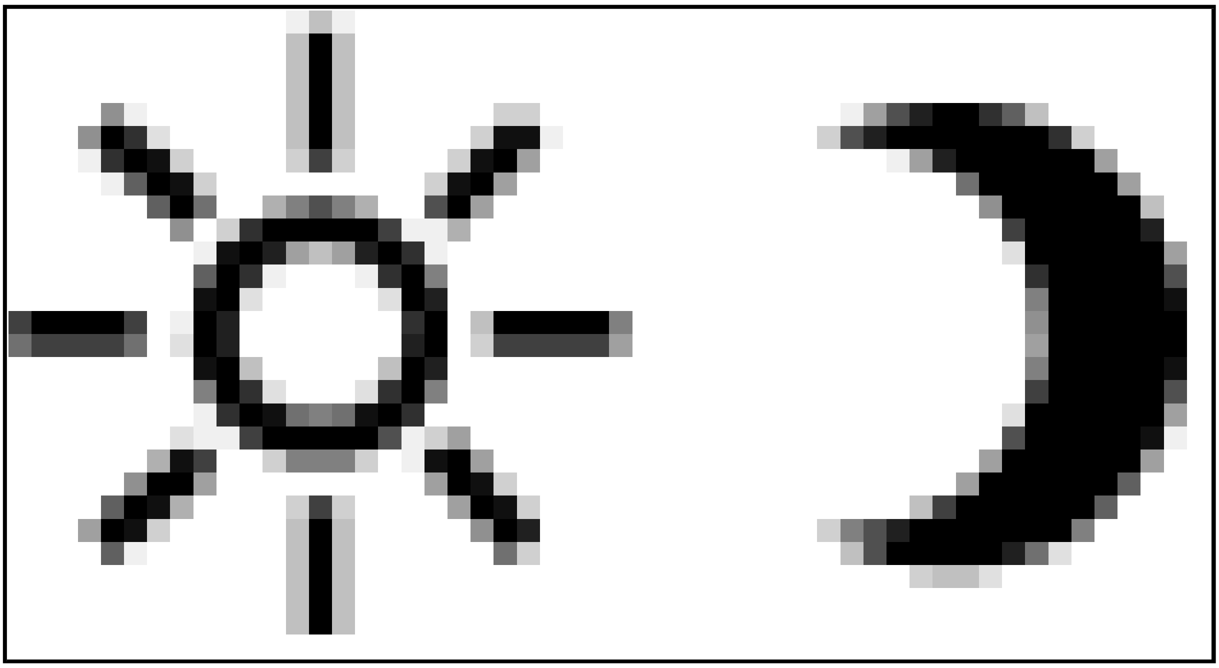

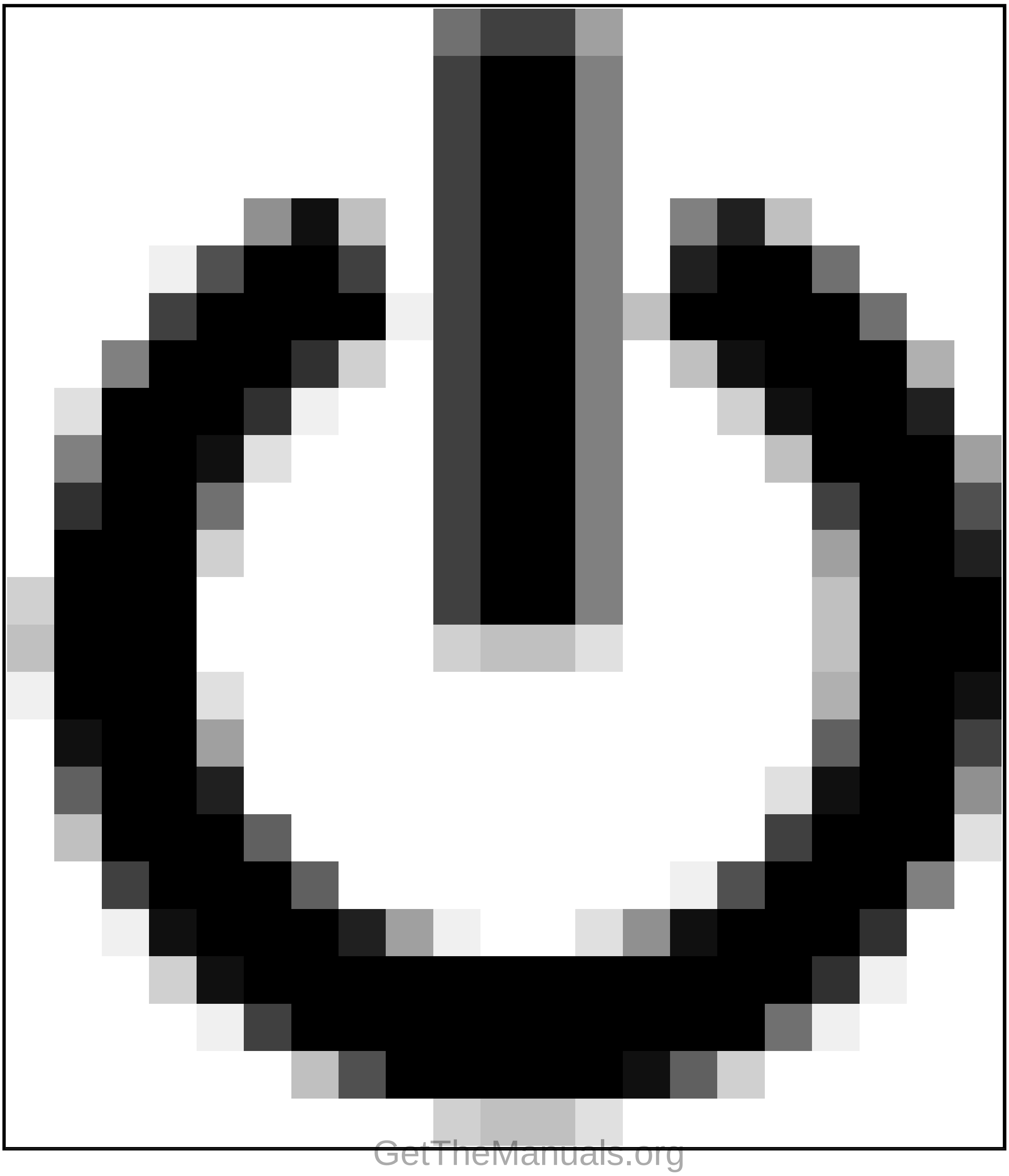

NOTE: The buttons needs to be pressed together simultaneously.

Displaying Select Diagnosis Items Menu Screen

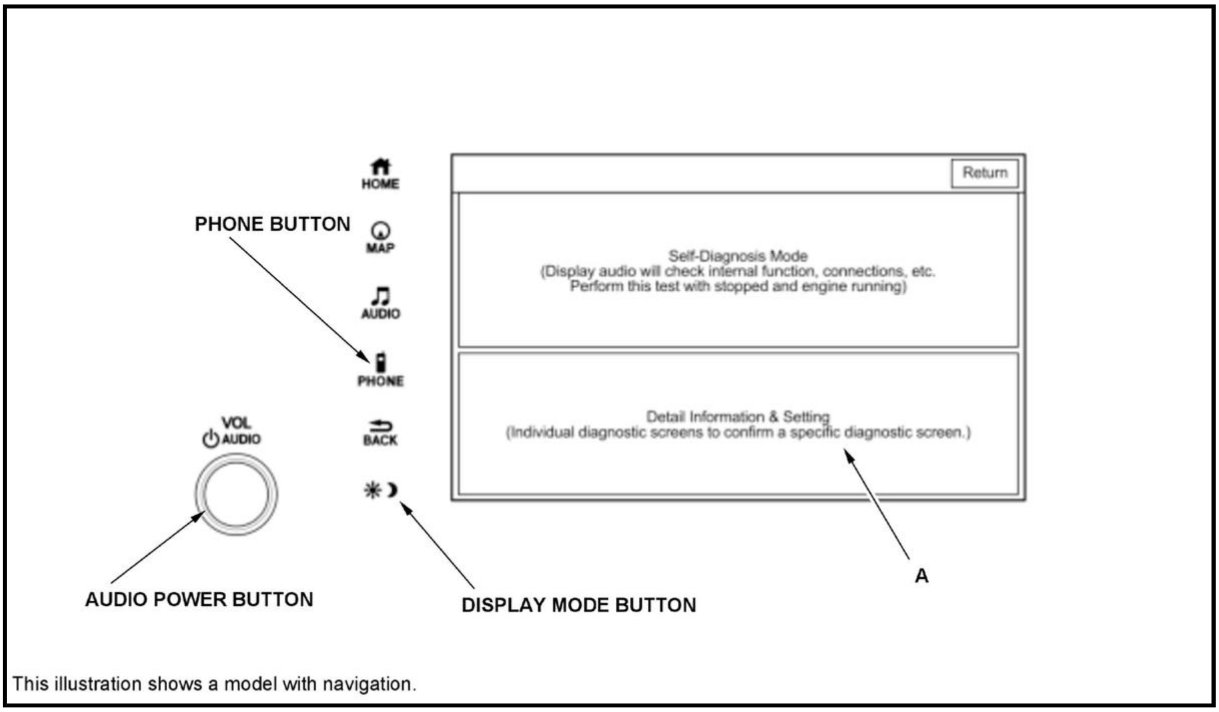
HOME
MAP
AUDIO
PHONE
BACK
PHONE BUTTON
VOL AUDIO
AUDIO POWER BUTTON
DISPLAY MODE BUTTON
Return
A

Self-Diagnosis Mode
(Display audio will check internal function, connections, etc.
Perform this test with stopped and engine running)

Detail Information & Setting
(Individual diagnostic screens to confirm a specific diagnostic screen.)

This illustration shows a model with navigation.

4. When the Select Diagnosis Items menu appears, select the Detail Information and Setting (A).

5. Select the Functional Setup icon (A).

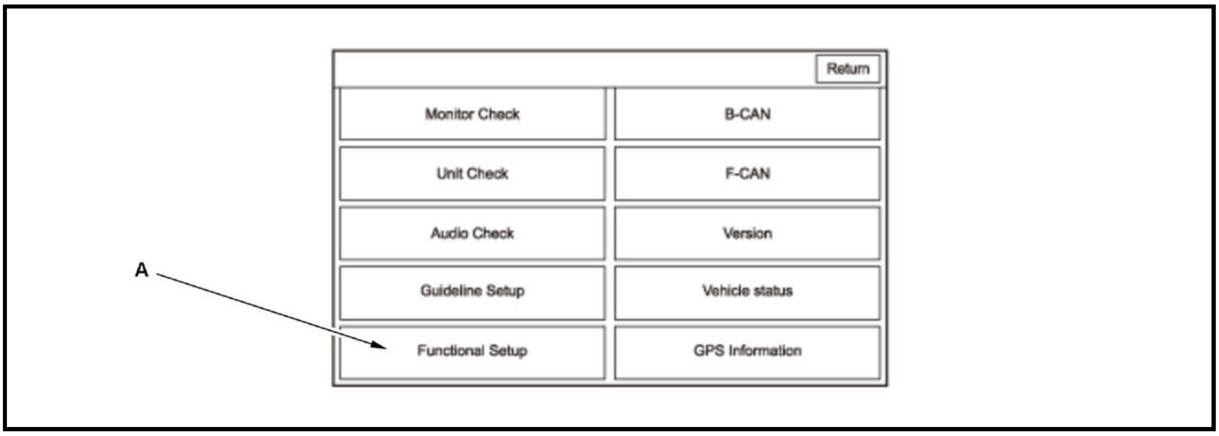
Return
Monitor Check
B-CAN
Unit Check
F-CAN
Audio Check
Version
Guideline Setup
Vehicle status
Functional Setup
GPS Information
A

6. Select the LaneWatch icon (A).

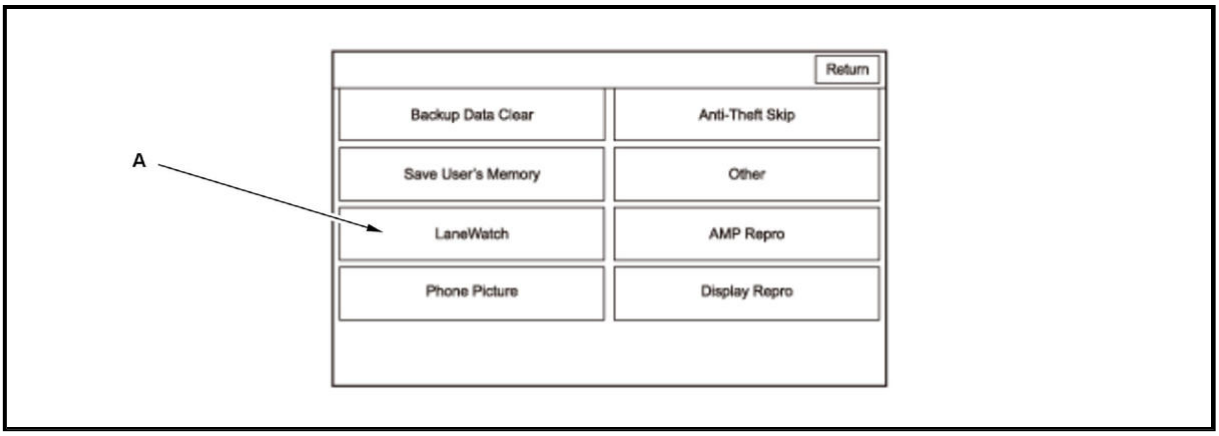
Return
Backup Data Clear
Anti-Theft Skip
Save User's Memory
Other
LaneWatch
AMP Repro
Phone Picture
Display Repro
A

7. Select the Aiming Start icon (A).

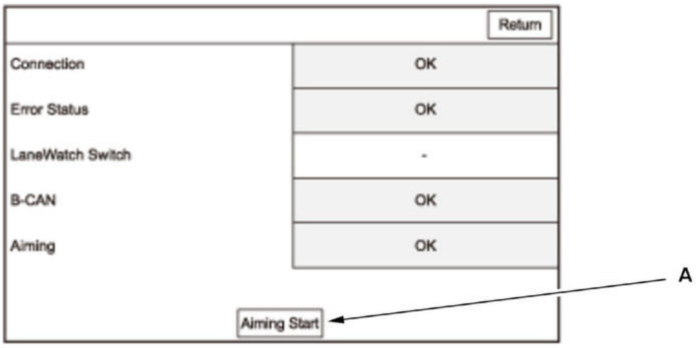

Connection	OK
Error Status	OK
LaneWatch Switch	-
B-CAN	OK
Aiming	OK

8. Do the LaneWatch camera aim procedure.

COMPONENT LOCATION INDEX

BLIND SPOT INFORMATION (BSI) SYSTEM COMPONENT LOCATION INDEX

For relationships between signals in a system, refer to System Diagram.

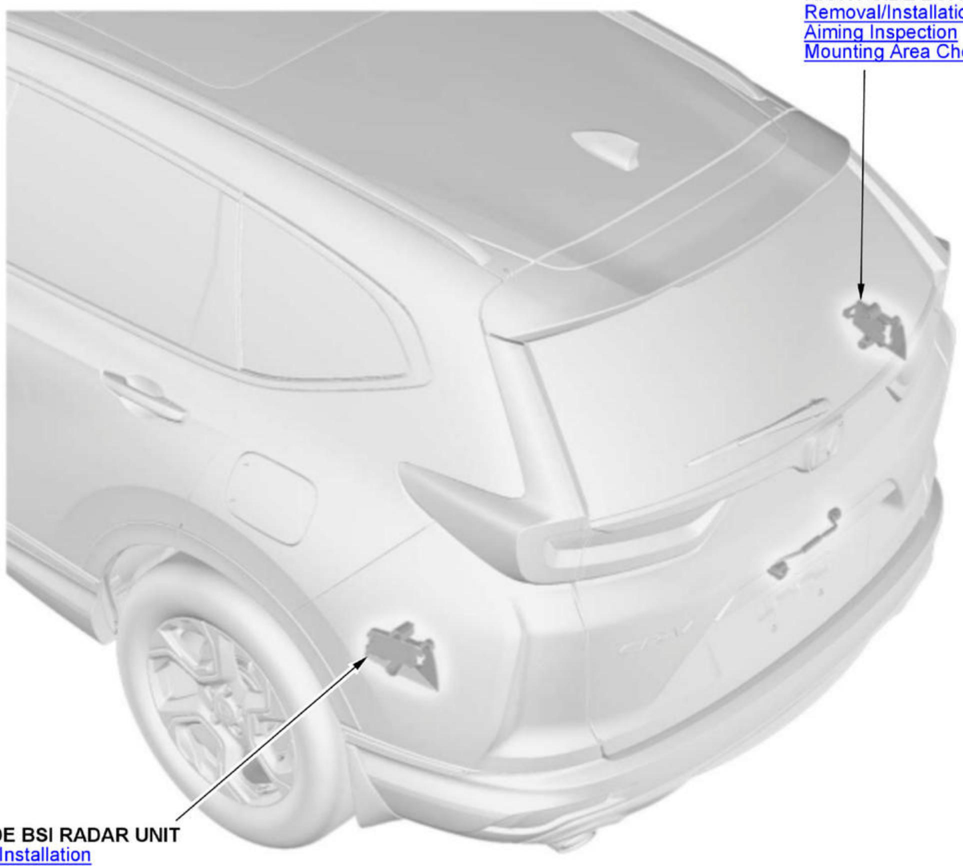

RIGHT SIDE BSI RADAR UNIT
Removal/Installation
Aiming Inspection
Mounting Area Check

LEFT SIDE BSI RADAR UNIT
Removal/Installation
Aiming Inspection
Mounting Area Check

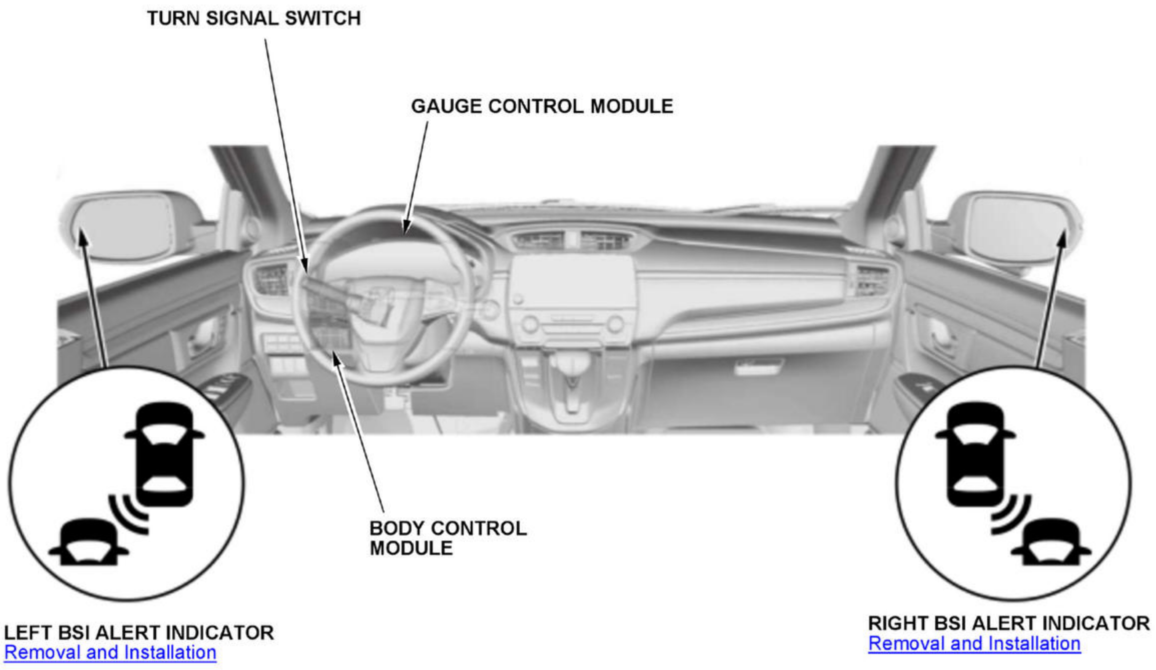
TURN SIGNAL SWITCH
GAUGE CONTROL MODULE
BODY CONTROL MODULE
LEFT BSI ALERT INDICATOR
Removal and Installation
RIGHT BSI ALERT INDICATOR
Removal and Installation

CROSS TRAFFIC MONITOR COMPONENT LOCATION INDEX

For relationships between signals in a system, refer to System Diagram.

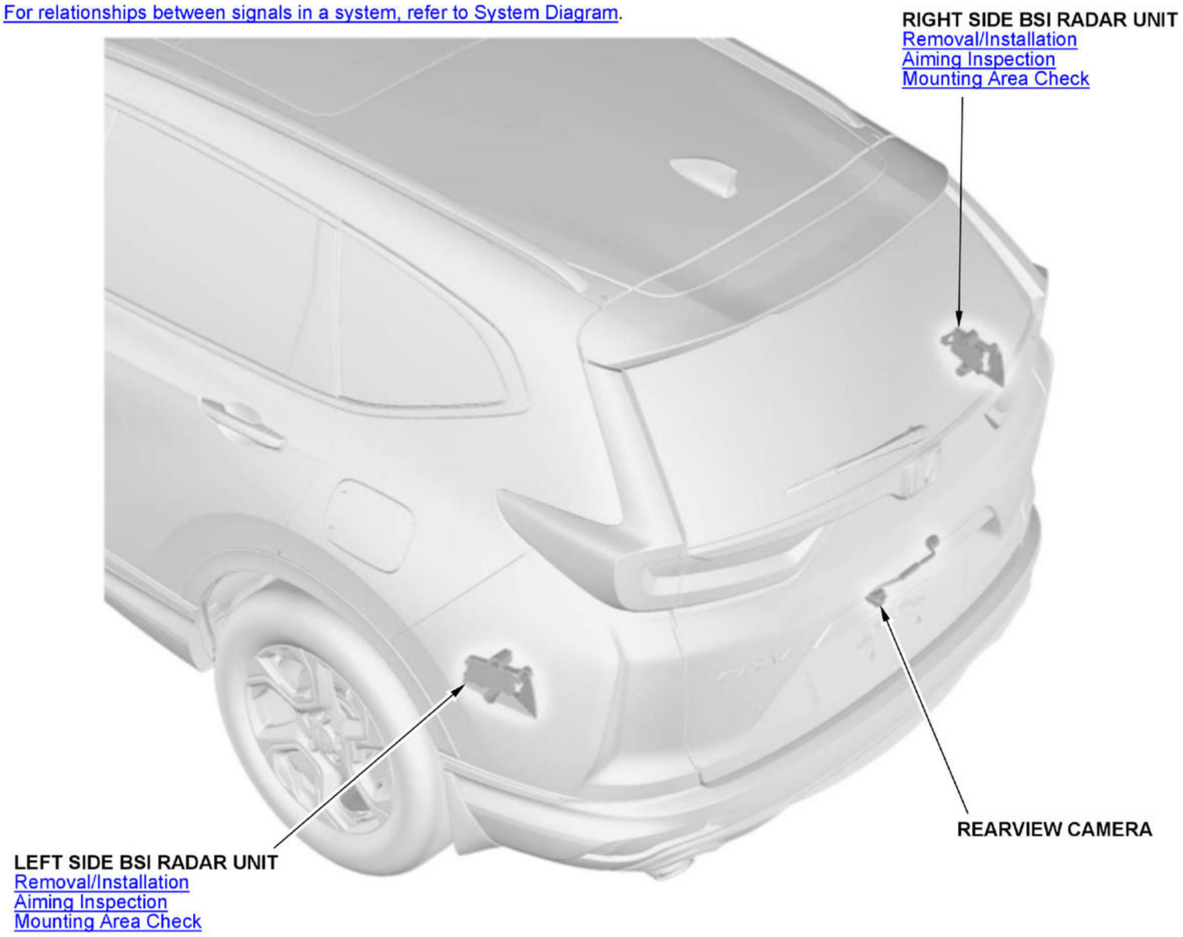
RIGHT SIDE BSI RADAR UNIT
Removal/Installation
Aiming Inspection
Mounting Area Check
REARVIEW CAMERA
LEFT SIDE BSI RADAR UNIT
Removal/Installation
Aiming Inspection
Mounting Area Check

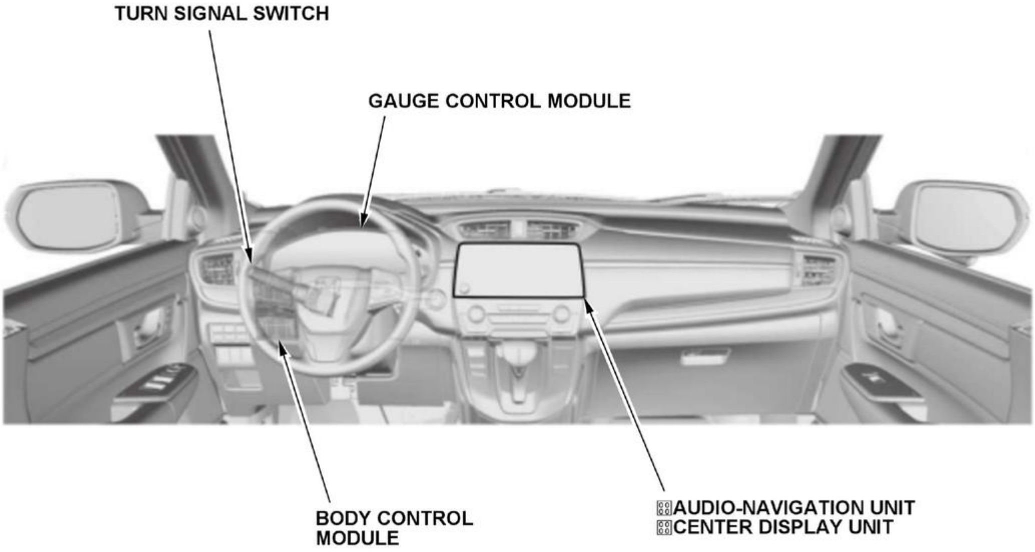
TURN SIGNAL SWITCH
GAUGE CONTROL MODULE
BODY CONTROL MODULE
▦AUDIO-NAVIGATION UNIT
▦CENTER DISPLAY UNIT

LANEWATCH COMPONENT LOCATION INDEX

For relationships between signals in a system, refer to System Diagram.

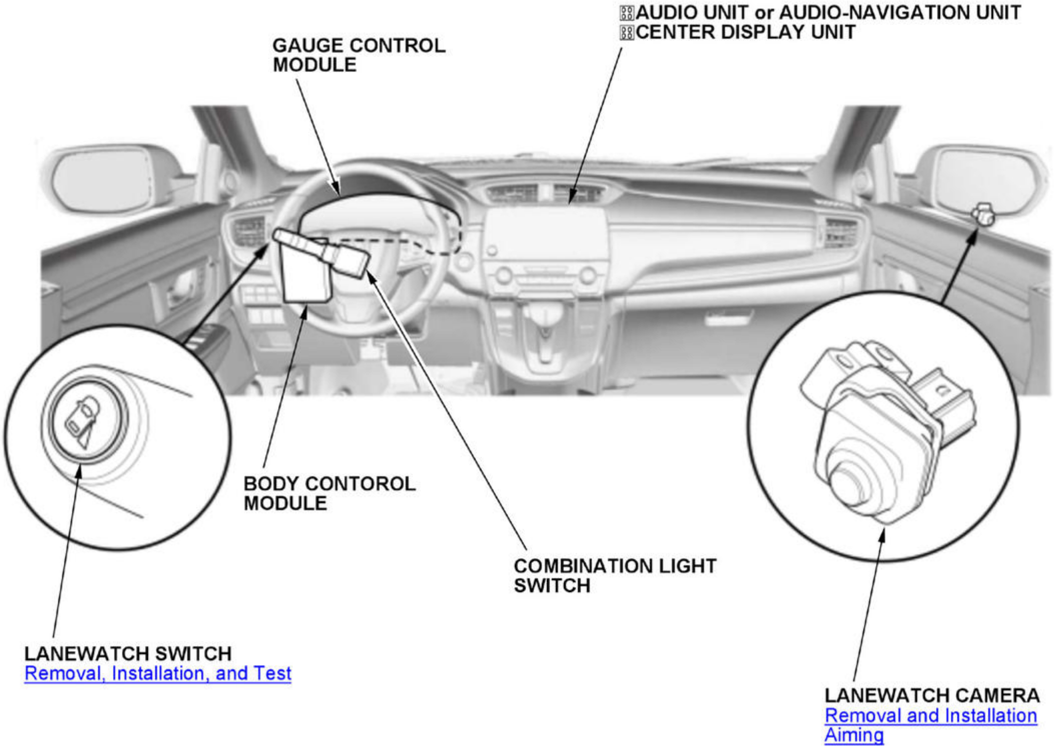
GAUGE CONTROL MODULE
▦AUDIO UNIT or AUDIO-NAVIGATION UNIT
▦CENTER DISPLAY UNIT
BODY CONTOROL MODULE
COMBINATION LIGHT SWITCH
LANEWATCH SWITCH
Removal, Installation, and Test
LANEWATCH CAMERA
Removal and Installation
Aiming

SYMPTOM TROUBLESHOOTING

BLIND SPOT INFORMATION (BSI) SYSTEM SYMPTOM TROUBLESHOOTING

The BSI alert indicator comes on when no other vehicle is in the detectable area (Wrong indication)

1. DTC check

-1. Turn the vehicle to the ON mode.

-2. Check for DTCs with the HDS.

DTC Description	DTC
B	B

DTC Description	DTC
B	B

DTC (BSI)

Are any DTCs indicated?

YES

Go to the indicated DTC troubleshooting .

NO

Go to step 2.

2. Vehicle settings check

   -1. Check the BSI system is ON status, and make sure the BSI system customizing operation.

   Is the BSI system ON?

   YES

   Go to step 3.

   NO

   Cancel the OFF status by operating the BSI customization.

3. Driving condition check:

   Interview the customer about when the symptom occurred to determine if an inspection is needed.

   NOTE: The BSI system cannot work properly in the following driving situations:

   - In rainy, snowy, or foggy weather.
   - When receiving a jamming signal from outside.
   - When followed by other vehicles at a curve in a road.
   - When another vehicle is getting close to yours when turning right or left.
   - When the rear bumper is deformed.
   - When the sensor is out of place.
   - In places where there is a guardrail, pole, or tree.
   - When an area of bumper around the installed sensor is soiled.

   Is an inspection required?

   YES

   Go to step 4.

   NO

   Explain to the customer that the system sometimes cannot detect under certain driving conditions.

4. Rear bumper installation check

   -1. Make sure that the rear bumper is correctly installed, and check the rear bumper for alteration or deformation.

   NOTE: Do not make any bumper repairs in the areas over or near the two radar units on vehicles equipped with the Blind Spot Information (BSI) System. The composition of the repair materials, and/or increased material thickness in the repaired area, may interfere with BSI radar unit operation.

   Is the rear bumper OK?

   YES

   Go to step 5.

   NO

   If the rear bumper is incorrectly installed, reinstall it correctly. If it is damaged or deformed, replace it. If it is modified, explain to the customer that modifying rear bumper may lead to improper BSI system operation.

5. BSI radar check

   -1. **Remove the rear bumper** .

   -2. Check the inside and outside of the rear bumper for dirt, contaminants, or stickers. Also, check the BSI radar unit surface for dirt or contaminants.

   Is the BSI radar unit OK?

   YES

   Go to step 6.

   NO

   Completely wipe off any dirt or contaminants from the BSI radar unit surface or rear bumper.

6. BSI radar installation check

   -1. Check the body surface where the BSI radar unit is mounted for deformation.

   Is the body surface OK?

   YES

   Replace the appropriate BSI radar unit .

   NO

   Go to the BSI radar unit mounting area check.

The BSI does not come on when other vehicles are in the detectable area (No indication)

1. DTC check

   -1. Turn the vehicle to the ON mode.

   -2. Check for DTCs with the HDS.

DTC Description	DTC
B	B

DTC Description	DTC
B	B

DTC (BSI)

Are any DTCs indicated?

YES

Go to the indicated DTC troubleshooting .

NO

Go to step 2.

2. Vehicle settings check

   -1. Check the BSI system is ON status, and make sure the BSI system customizing operation.

   Is the BSI system ON?

   YES

   Go to step 3.

   NO

   Cancel the OFF status by operating the BSI customization.

3. Driving condition check:

   Interview the customer about when the symptom occurred to determine if an inspection is needed.

   NOTE: The BSI system cannot work properly in the following driving situations:

   - In rainy, snowy, or foggy weather.
   - When small targets in the detectable area cannot reflect radar; for example, a motor bike.
   - When there is ice, snow, or dirt is stuck to the rear bumper.
   - When driving in a traffic lane divided with road marking ramps.
   - When a vehicle comes over in the lane next to yours from a far lane.
   - When the temperature around the sensor is high.
   - When the rear bumper is deformed.
   - When the sensor is out of place.
   - When an area of bumper around the installed sensor is soiled.

   Is an inspection required?

   YES

   Go to step 4.

   NO

   The system is OK at this time. Check the rear bumper for dirt contamination. If everything looks OK, explain BSI system precautions to the customer.

4. Rear bumper installation check

    -1. Make sure that the rear bumper is correctly installed, and check the rear bumper for alteration or deformation.

    NOTE: Do not make any bumper repairs in the areas over or near the two radar units on vehicles equipped with the Blind Spot Information (BSI) System. The composition of the repair materials, and/or increased material thickness in the repaired area, may interfere with BSI radar unit operation.

    Is the rear bumper OK?

    YES

    Go to step 5.

    NO

    If the rear bumper is incorrectly installed, reinstall it correctly. If it is damaged or deformed, replace it. If it is modified, explain to the customer that modifying rear bumper may lead to improper BSI system operation.

5. BSI radar check

    -1. **Remove the rear bumper** .

    -2. Check the inside and outside of the rear bumper for dirt, contaminants, or stickers. Also, check the BSI radar unit surface for dirt or contaminants.

    Is the BSI radar unit OK?

    YES

    Go to step 6.

    NO

    Completely wipe off any dirt or contaminants from the BSI radar unit surface or the rear bumper.

6. BSI radar installation check

    -1. Check the body surface where the BSI radar unit is mounted for deformation.

    Is the body surface OK?

    YES

    Replace the appropriate BSI radar unit .

    NO

    Go to the BSI radar unit mounting area check.

The BSI indicator does not go off, or does not come on

1. DTC check

    -1. Turn the vehicle to the ON mode.

    -2. Check for DTCs with the HDS.

DTC Description	DTC
B	B

DTC Description	DTC
B	B

DTC (BSI)

Are any DTCs indicated?

YES

Go to the indicated DTC troubleshooting .

NO

Go to step 2.

2. Problem verification

-1. Turn the vehicle to the OFF (LOCK) mode, then the ON mode.

-2. Check the BSI indicator comes on, and then goes off.

Does the BSI indicator come on, then go off?

YES

Intermittent failure, the system is OK at this time. Refer to intermittent failures troubleshooting .

NO

Go to step 3.

3. Vehicle settings check

-1. Check the BSI system is ON status, and make sure the BSI system customizing operation.

Is the BSI system ON?

YES

Go to step 4.

NO

Cancel the OFF status by operating the BSI customization.

4. Gauge control module check

-1. Do the gauge control module self-diagnostic function .

Is the gauge control module OK?

YES

Replace the appropriate BSI radar unit .

NO

Replace the gauge control module .

The HDS does not communicate with the BSI system

1. DTC check

   -1. Turn the vehicle to the ON mode.

   -2. Check for DTCs with the HDS.

DTC Description	DTC
B	B

DTC Description	DTC
B	B

   DTC (BSI)

   Are any DTCs indicated?

   YES

   Go to the indicated DTC troubleshooting .

   NO

   Go to step 2.

2. 12 volt battery check

   -1. Test the 12 volt battery .

   Is the 12 volt battery OK?

   YES

   Go to step 3.

   NO

   Charge or replace the 12 volt battery .

3. Gauge control module check

   -1. Do the gauge control module self-diagnostic function .

   Does the buzzer sound?

   YES

   Replace the appropriate BSI radar unit .

   NO

   Replace the gauge control module .

The buzzer does not sound

1. DTC check

-1. Turn the vehicle to the ON mode.

-2. Check for DTCs with the HDS.

DTC Description	DTC
B	B

DTC Description	DTC
B	B

DTC (BSI)

Are any DTCs indicated?

YES

Go to the indicated DTC troubleshooting .

NO

Go to step 2.

2. Vehicle settings check

   -1. Check the BSI system is ON status, and make sure the BSI system customizing operation.

   Is the BSI system ON?

   YES

   Go to step 3.

   NO

   Cancel the OFF status by operating the BSI customization.

3. Gauge control module check

   -1. **Do the gauge control module self-diagnostic function** .

   Does the buzzer sound?

   YES

   Replace the appropriate BSI radar unit .

   NO

   Replace the gauge control module .

LANEWATCH SYMPTOM TROUBLESHOOTING

Does not switch to the LaneWatch screen

1. LaneWatch system check (audio/navigation system diagnostic mode)

   -1. Turn the vehicle to the ON mode.

   Go into the system diagnostic mode, and select the Detail Information and Setting.

   - **Without navigation**

- **With navigation**

-3. Select the Functional Setup icon.

-4. Select the LaneWatch icon.

Is "Connection OK" indicated?

YES

Go to step 2.

NO

Check for hard error codes (audio/navigation DTCs).

- **Without navigation**
- **With navigation**

2. LaneWatch switch check (audio/navigation system diagnostic mode)

-1. Operate the LaneWatch switch.

Is "LaneWatch Switch ON" indicated?

YES

Intermittent failure, the system is OK at this time.

NO

Go to step 3.

3. Open wire check (LWC SW line)

-1. Turn the vehicle to the OFF (LOCK) mode.

-2. Disconnect the following connector.

Combination light switch 12P connector

-3. Connect terminals A and B with a jumper wire.

Terminal A	Combination light switch 12P connector (female terminals) No. 4: ①
Terminal B	Body ground

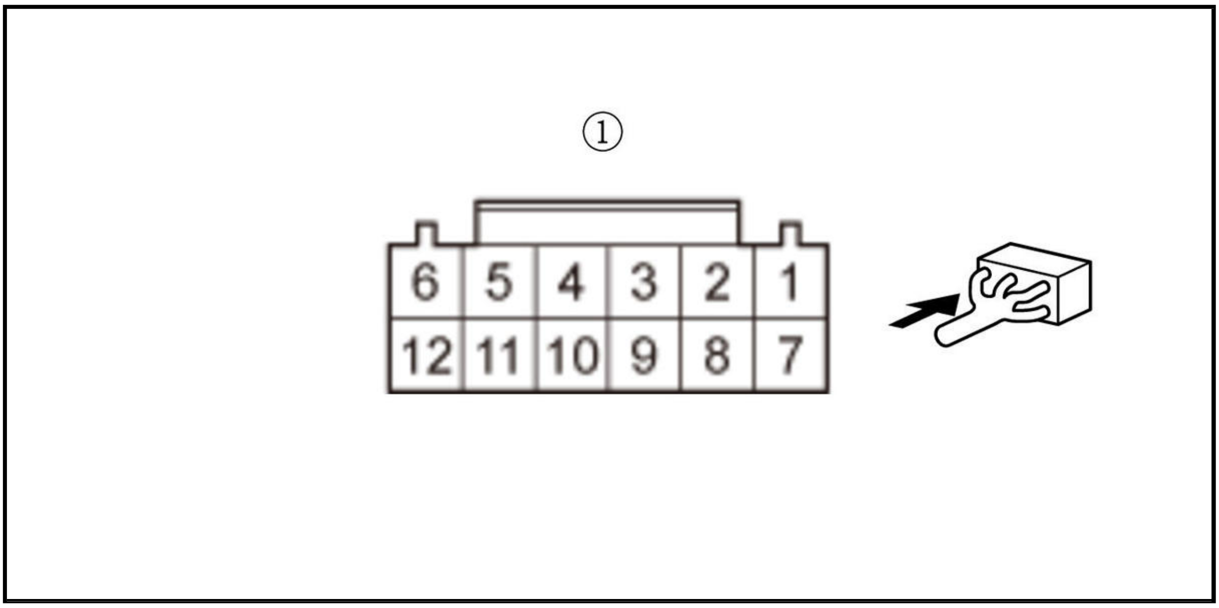

-4. Turn the vehicle to the ON mode.

Go into the system diagnostic mode, and select the Detail Information and Setting.

- **Without navigation**
- **With navigation**

-6. Select the Functional Setup icon.

-7. Select the LaneWatch icon.

Is "LaneWatch Switch ON" indicated?

YES

Go to step 4.

NO

Repair an open in the LWC SW wire between the combination light switch and the audio unit or the audio-navigation unit.

4. Open wire check (GND line)

-1. Turn the vehicle to the OFF (LOCK) mode.

-2. Remove the jumper wire.

-3. Connect terminals A and B with a jumper wire.

Terminal A	Combination light switch 12P connector (female terminals) No. 3: ①
Terminal B	Combination light switch 12P connector (female terminals) No. 4: ①

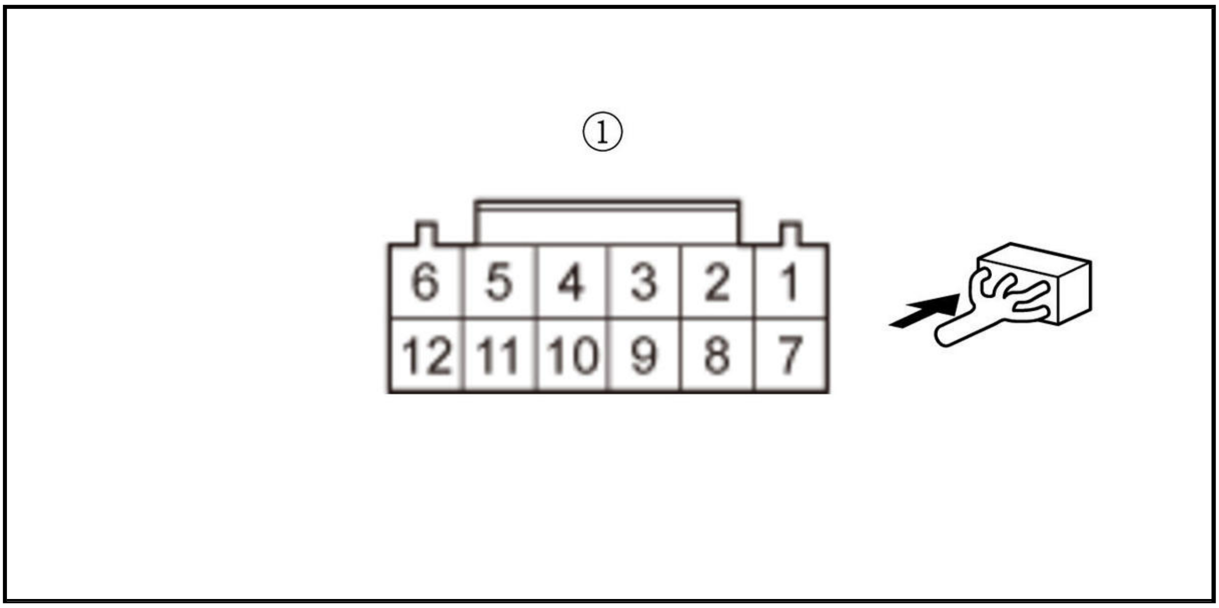

-4. Turn the vehicle to the ON mode.

Go into the system diagnostic mode, and select the Detail Information and Setting.

- **Without navigation**
- **With navigation**

-6. Select the Functional Setup icon.

-7. Select the LaneWatch icon.

Is "LaneWatch Switch ON" indicated?

YES

Replace the combination light switch .

NO

Repair an open in the GND wire between the combination light switch and body ground (G401), or repair poor ground (G401).

LaneWatch camera image does not come on (Switches to the black screen)

1. LaneWatch system check (audio/navigation system diagnostic mode)

-1. Turn the vehicle to the ON mode.

Go into the system diagnostic mode, and select the Detail Information and Setting.

- **Without navigation**
- **With navigation**

-3. Select the Functional Setup icon.

-4. Select the LaneWatch icon.

Is "Connection OK" indicated?

YES

Go to step 2.

NO

Check for hard error codes (audio/navigation DTCs).

- **Without navigation**
- **With navigation**

2. Determine possible failure area (LWC CAM VID/LWC V DA AS line, LWC CAM VGND/LWC VGND DA AS line, LaneWatch camera, others)

-1. Start the engine.

-2. Check the B-CAN status.

Is "B-CAN OK" indicated?

YES

Go to step 3.

NO

Go to step 5.

3. Open wire check (LWC CAM VID/LWC V DA AS line)

-1. Stop the engine.

-2. Disconnect the following connectors.

LaneWatch camera 6P connector
Audio unit or audio-navigation unit connector B (24P)

-3. Check for continuity between test points 1 and 2.

Test condition	Vehicle OFF (LOCK) mode
B	LaneWatch camera 6P connector: disconnected
B	Audio unit or audio-navigation unit connector B (24P): disconnected
Test point 1	LaneWatch camera 6P connector (female terminals) No. 4: ①
Test point 2	**Audio unit** or **audio-navigation unit** connector B (24P) No. 20

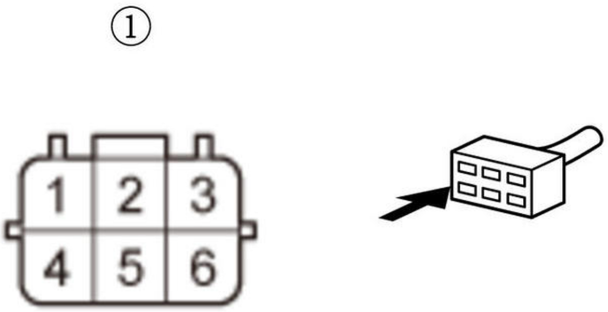

Is there continuity?

YES

Go to step 4.

NO

Repair an open in the LWC CAM VID/LWC V DA AS wire between the LaneWatch camera and the audio unit or the audio-navigation unit.

4. Open wire check (LWC CAM VGND/LWC VGND DA AS line)

-1. Check for continuity between test points 1 and 2.

Test condition	Vehicle OFF (LOCK) mode
B	LaneWatch camera 6P connector: disconnected
B	Audio unit or audio-navigation unit connector B (24P): disconnected
Test point 1	LaneWatch camera 6P connector (female terminals) No. 5: ①
Test point 2	**Audio unit** or **audio-navigation unit** connector B (24P) No. 21

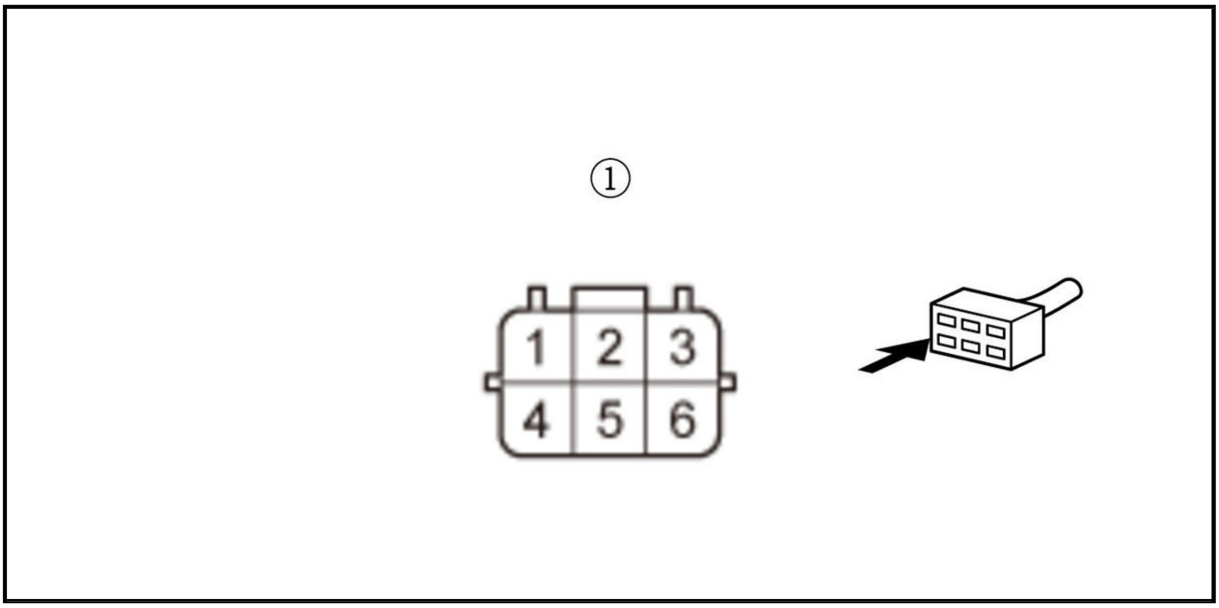

Is there continuity?

YES

Replace the LaneWatch camera .

NO

Repair an open in the LWC CAM VGND/LWC VGND DA AS wire between the LaneWatch camera and the audio unit or the audio-navigation unit.

5. Body electrical DTC check

-1. Stop the engine.

-2. Turn the vehicle to the ON mode.

-3. Check for DTCs with the HDS.

DTC Description	DTC
B	B

Are any DTCs indicated?

YES

Go to the indicated DTC's troubleshooting .

NO

Go to step 6.

6. Open wire check (B-CAN_H, B-CAN_L line)

-1. Turn the vehicle to the OFF (LOCK) mode.

-2. Disconnect the following connectors.

Body control module connector B (36P)
Audio unit or audio-navigation unit connector A (24P)

-3. Check for continuity between test points 1 and 2.

Test condition	Vehicle OFF (LOCK) mode
B	Body control module connector B (36P): disconnected
B	Audio unit or audio-navigation unit connector A (24P): disconnected
Test point 1	**Body control module connector B (36P) No. 20**
Test point 2	**Audio unit** or **audio-navigation unit** connector A (24P) No. 14

Test point 1	**Body control module connector B (36P) No. 21**
Test point 2	**Audio unit** or **audio-navigation unit** connector A (24P) No. 24

Is there continuity?

YES

Check for poor connection or loose terminal at the audio unit or the audio-navigation unit. If the symptom does not go away, replace the **audio unit** or the **audio-navigation unit** .

NO

Repair an open in the B-CAN_H wire or the B-CAN_L wire between the body control module and the audio unit or the audio-navigation unit.

SYMPTOM TROUBLESHOOTING INDEX

BLIND SPOT INFORMATION (BSI) SYSTEM SYMPTOM TROUBLESHOOTING INDEX (BLIND SPOT INFORMATION (BSI) SYSTEM)

Symptom	Diagnostic procedure	Also check for
The BSI alert indicator comes on when no other vehicle is in the detectable area (Wrong indication)	**Symptom troubleshooting**.	B
The BSI does not come on when other vehicles are in the	**Symptom troubleshooting**.	B

Symptom	Diagnostic procedure	Also check for
detectable area (No indication)		
The BSI indicator does not go off, or does not come on	- Symptom troubleshooting. - Gauge control module self-diagnostic function	B
The buzzer does not sound	- Symptom troubleshooting. - Gauge control module self-diagnostic function	B
The HDS does not communicate with the BSI system	Symptom troubleshooting.	Incorrect HDS software.
HDS does not communicate with the BSI radar units or the vehicle	Troubleshoot the DLC circuit .	- Incorrect HDS software. - Shorted reference voltage.

LANEWATCH SYMPTOM TROUBLESHOOTING INDEX

Symptom	Diagnostic procedure	Also check for
LaneWatch camera image does not come on (Switches to the black screen)	Symptom troubleshooting.	B
Does not switch to the LaneWatch screen	Symptom troubleshooting.	B

HOW TO INFORMATION

HOW TO TROUBLESHOOT THE LANEWATCH

LaneWatch

The LaneWatch displays the blind spot of the passenger's side through the LaneWatch camera. The image appears on the center display unit.

LaneWatch Camera

The LaneWatch camera is built into the passenger's side power mirror which sends the image to the audio unit or the audio-navigation unit.

LaneWatch Switch

The LaneWatch switch is built into the combination light switch.

Self-Diagnostic Function

The LaneWatch has a self-diagnostic function that you can access through the audio unit or the audio-navigation unit.

SYMPTOM TROUBLESHOOTING INDEX FOR VIEWER

DOES NOT SWITCH TO THE LANEWATCH SCREEN

Diagnostic procedure

- Symptom troubleshooting.

HDS DOES NOT COMMUNICATE WITH THE BSI RADAR UNITS OR THE VEHICLE (BLIND SPOT INFORMATION (BSI) SYSTEM)

Diagnostic procedure

- Troubleshoot the DLC circuit .

Also check for

- Incorrect HDS software.
- Shorted reference voltage.

LANEWATCH CAMERA IMAGE DOES NOT COME ON (SWITCHES TO THE BLACK SCREEN)

Diagnostic procedure

- Symptom troubleshooting.

THE BSI ALERT INDICATOR COMES ON WHEN NO OTHER VEHICLE IS IN THE DETECTABLE AREA (WRONG INDICATION) (BLIND SPOT INFORMATION (BSI) SYSTEM)

Diagnostic procedure

- Symptom troubleshooting.

THE BSI DOES NOT COME ON WHEN OTHER VEHICLES ARE IN THE DETECTABLE AREA (NO INDICATION) (BLIND SPOT INFORMATION (BSI) SYSTEM)

Diagnostic procedure

- Symptom troubleshooting.

THE BSI INDICATOR DOES NOT GO OFF, OR DOES NOT COME ON(BLIND SPOT INFORMATION (BSI) SYSTEM)

Diagnostic procedure

- Symptom troubleshooting.
- Gauge control module self-diagnostic function

THE HDS DOES NOT COMMUNICATE WITH THE BSI SYSTEM(BLIND SPOT INFORMATION (BSI) SYSTEM)

Diagnostic procedure

- Symptom troubleshooting.

Also check for

Incorrect HDS software.

THE BUZZER DOES NOT SOUND(BLIND SPOT INFORMATION (BSI) SYSTEM)

Diagnostic procedure

- Symptom troubleshooting.
- Gauge control module self-diagnostic function

REMOVAL & INSTALLATION TEST

POWER MIRROR SWITCH REMOVAL, INSTALLATION, AND TEST

Removal and Installation

1

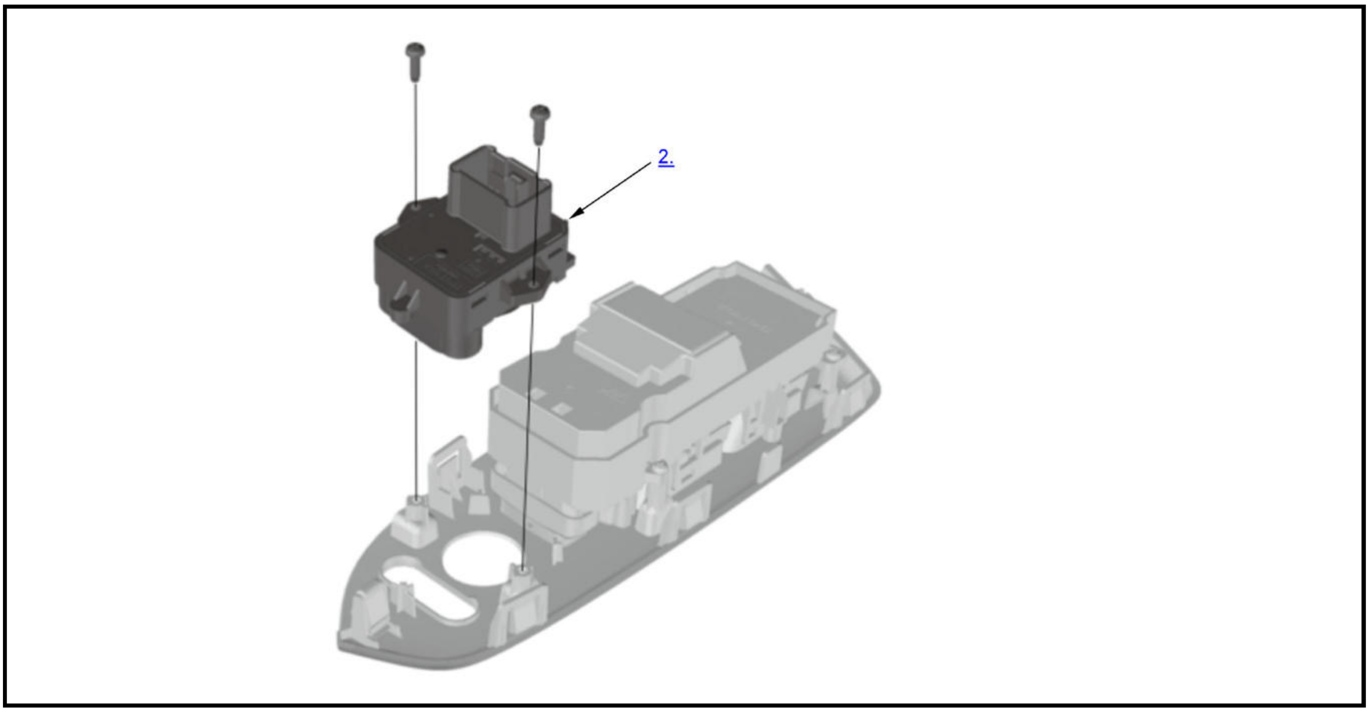

1. Front Door Power Window Switch Panel - Remove
2. Power Mirror Switch - Remove
3. All Removed Parts - Install

   1. Install the parts in the reverse order of removal.

Test

1. Power Mirror Switch - Test

   1. Check the power mirror switch (A) according to the table in illustration.

NOTE:

- **Before testing, make sure not to short the power mirror switch.**
- **When an LED is located between terminals, check if the LED lights by connecting power and ground to the LED.**
- **Note this important operating characteristic; diode bias causes a diode to fully conduct electricity in one direction (forward), while not at all in the opposite direction (reverse).**

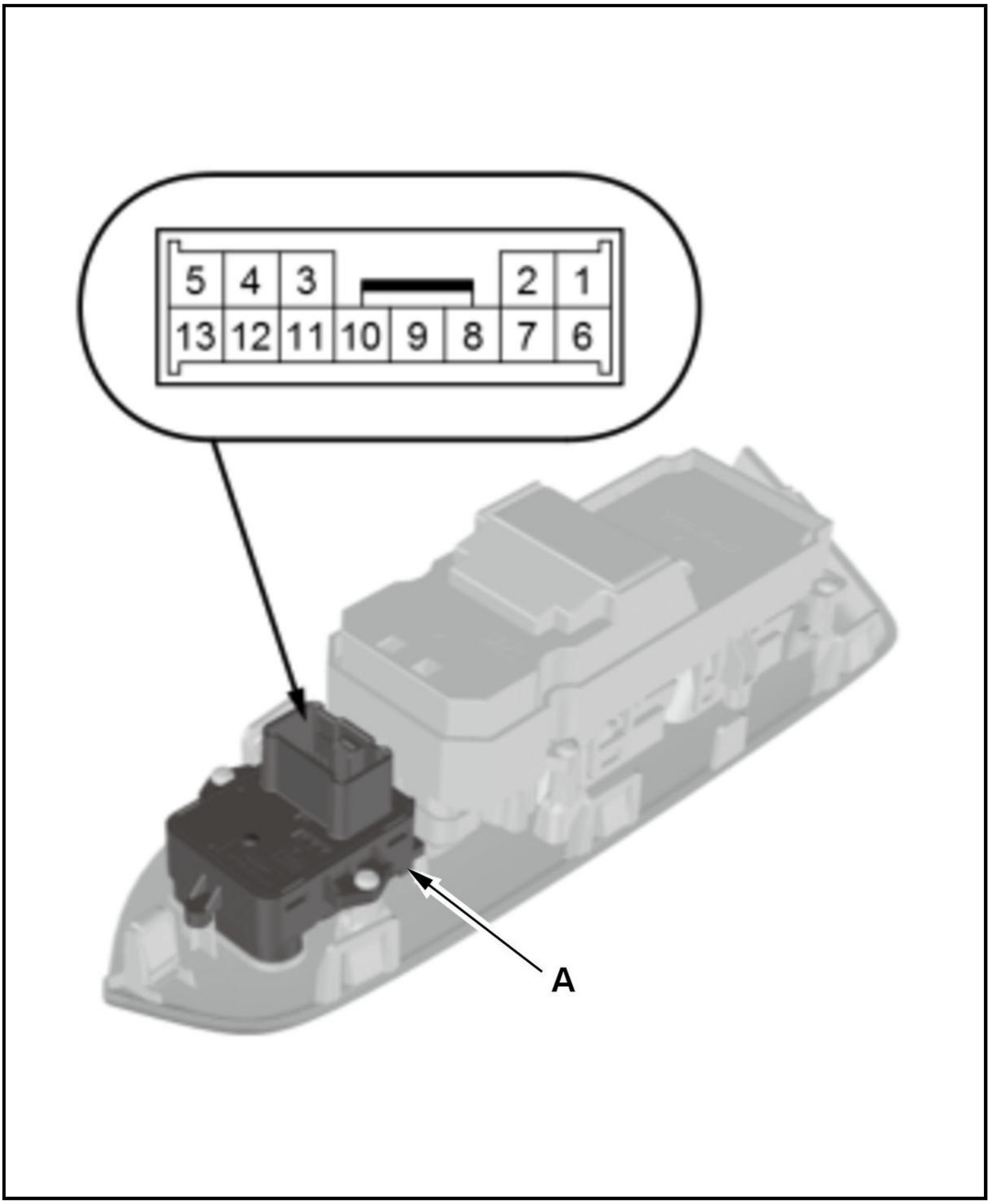
A

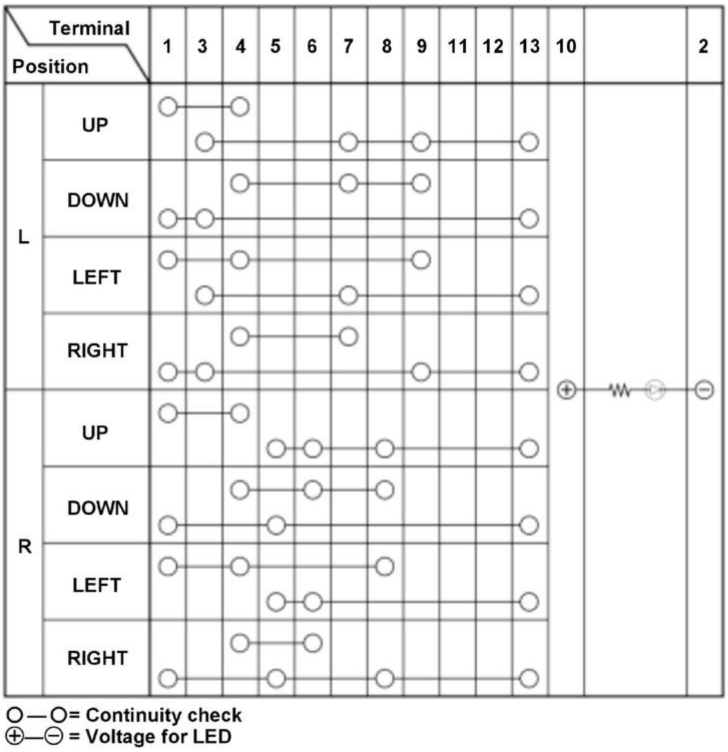

Position		1	3	4	5	6	7	8	9	11	12	13	10		2
L	UP	○		○									⊕		⊖
			○				○		○			○			
	DOWN			○			○		○						
		○	○									○			
	LEFT	○		○					○						
			○				○					○			
	RIGHT			○			○								
		○	○						○			○			
R	UP	○		○											
					○	○		○				○			
	DOWN			○		○		○							
		○			○							○			
	LEFT	○		○				○							
					○	○						○			
	RIGHT			○		○									
		○			○			○				○			

○—○= Continuity check
⊕—⊖ = Voltage for LED

2. If the result is not as specified, replace the power mirror switch.

REMOVAL AND INSTALLATION

MIRROR HOLDER REMOVAL AND INSTALLATION

Removal and Installation

Mirror Holder Type 1

1. Mirror Holder - Remove

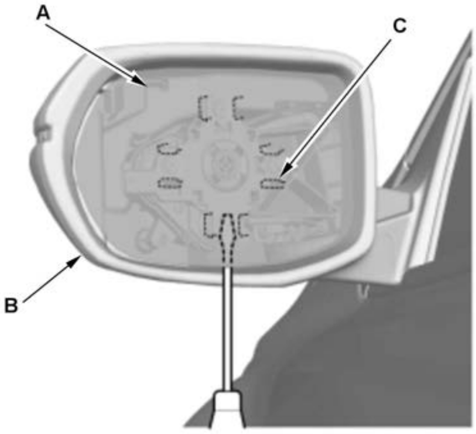	1. Carefully push on the top edge of the mirror holder (A) by hand. 2. Put a shop towel in the opening between the bottom edge of the mirror holder and the mirror housing (B) to prevent scratches. 3. Insert a flat-tip screwdriver under the mirror holder, and twist the screwdriver to release the hooks (C).

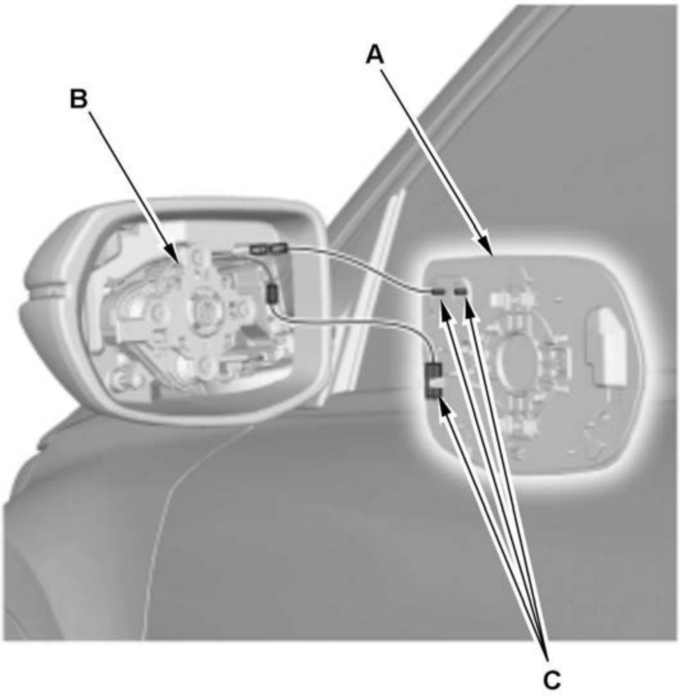	4. Separate the mirror holder (A) from the actuator (B). 5. For some models: Disconnect the connectors (C).

2. All Removed Parts - Install

1. Install the parts in the reverse order of removal, check the actuator operation

Mirror Holder Type 2

3. Mirror Holder - Remove

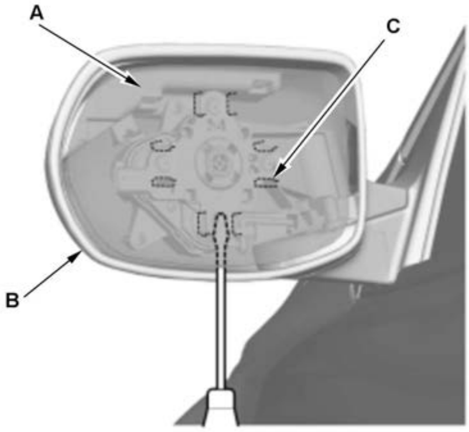	1. Carefully push on the top edge of the mirror holder (A) by hand. 2. Put a shop towel in the opening between the bottom edge of the mirror holder and the mirror housing (B) to prevent scratches. 3. Insert a flat-tip screwdriver under the mirror holder, and twist the screwdriver to release the hooks (C).

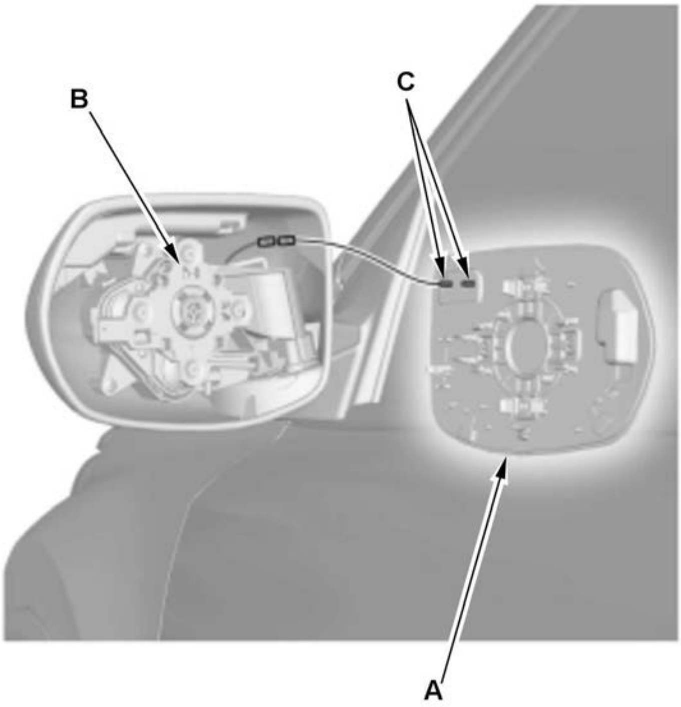	4. Separate the mirror holder (A) from the actuator (B). 5. For some models: Disconnect the connectors (C).

4. All Removed Parts - Install

1. Install the parts in the reverse order of removal, check the actuator operation

MIRROR HOUSING COVER REMOVAL AND INSTALLATION

Removal and Installation

Mirror Housing Cover Type 1

1. Mirror Holder - Remove
2. Mirror Housing Upper Cover - Remove

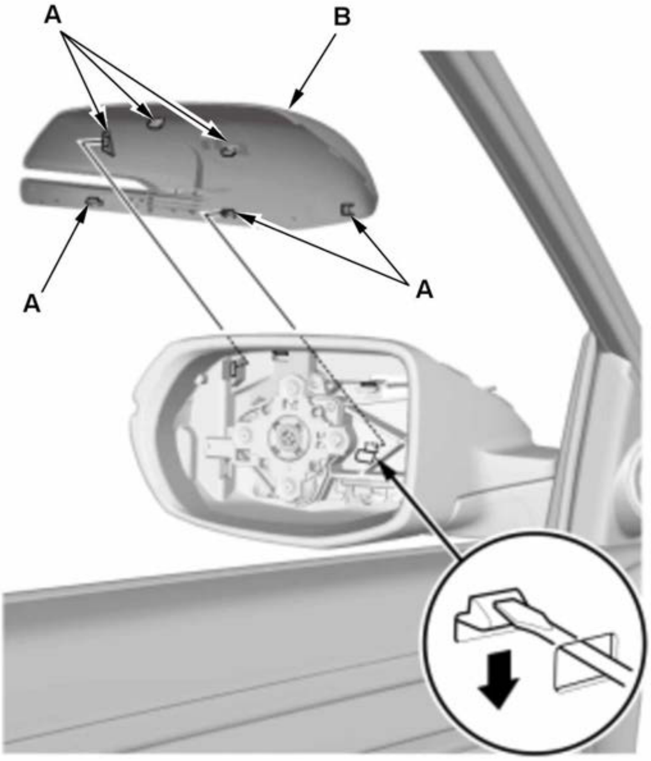	1. Release the hooks (A), then remove the mirror housing upper cover (B).

3. Mirror Housing Lower Cover - Remove

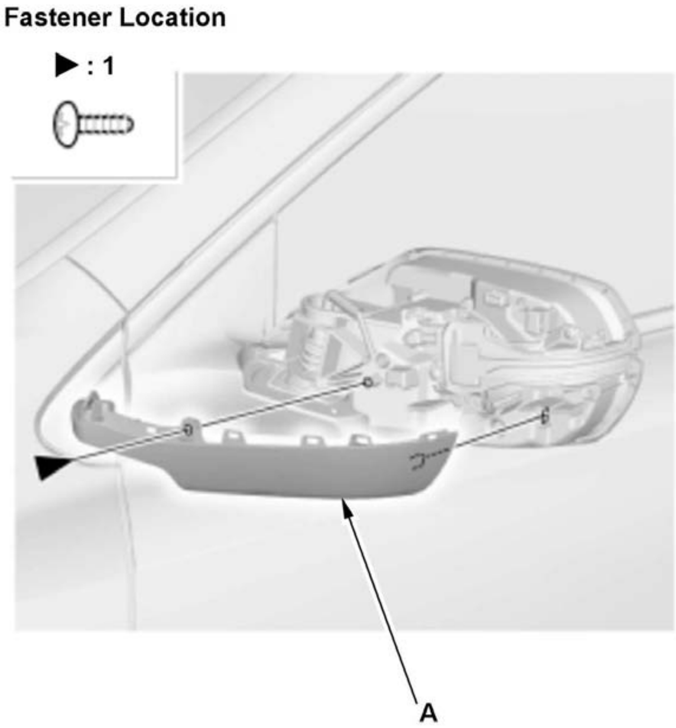	1. Remove the mirror housing lower cover (A). 2. Remove these items (For some models): - **Side turn signal light (with mirror turn)** - **LaneWatch camera (with LaneWatch)**

4. **Power Mirror - Remove**

5. Mirror Visor - Remove

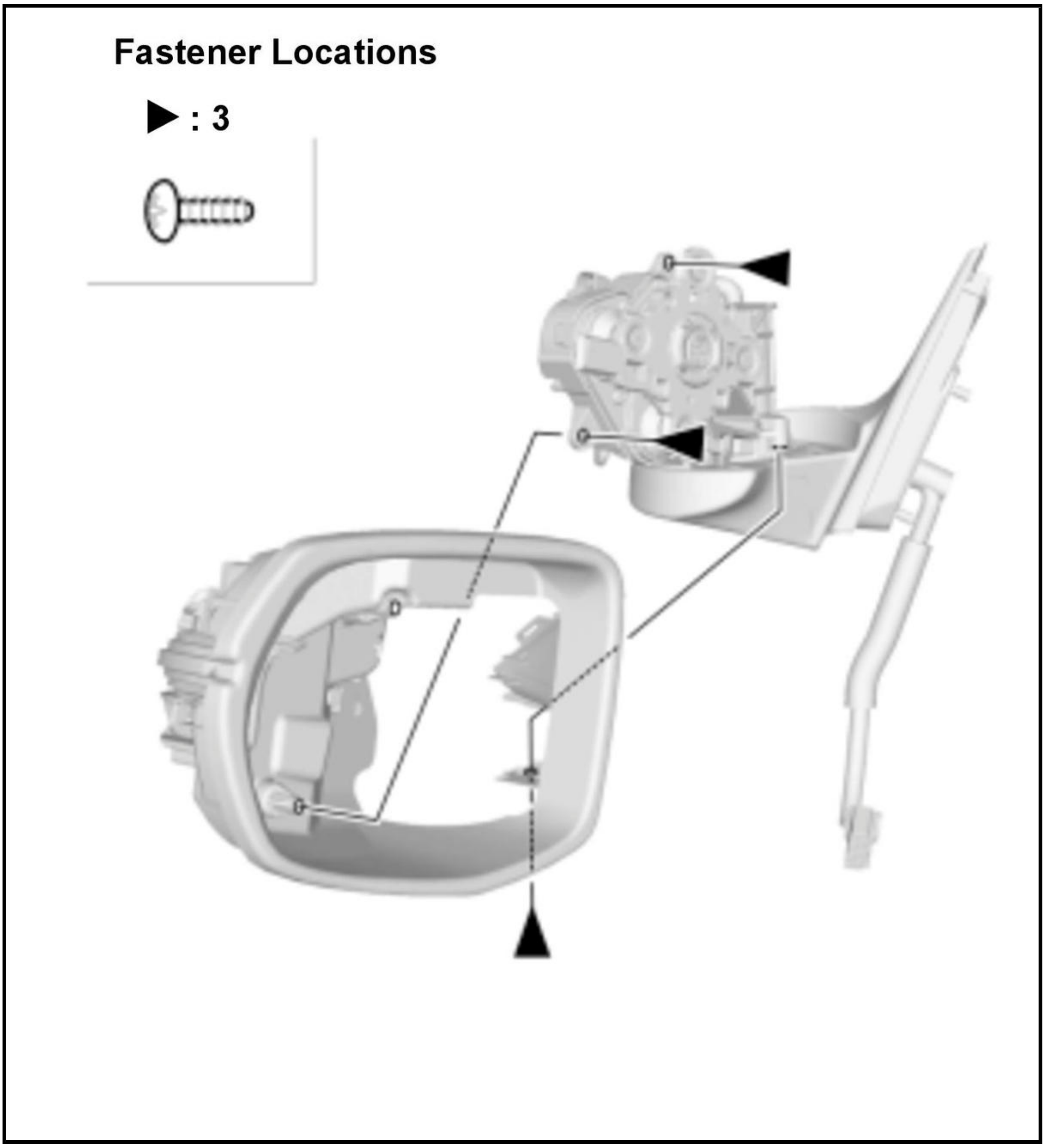

6. All Removed Parts - Install

   1. Install the parts in the reverse order of removal.

7. LaneWatch Camera - Aim (With LaneWatch)

Mirror Housing Cover Type 2

8. Mirror Holder - Remove
9. Mirror Housing Cover - Remove

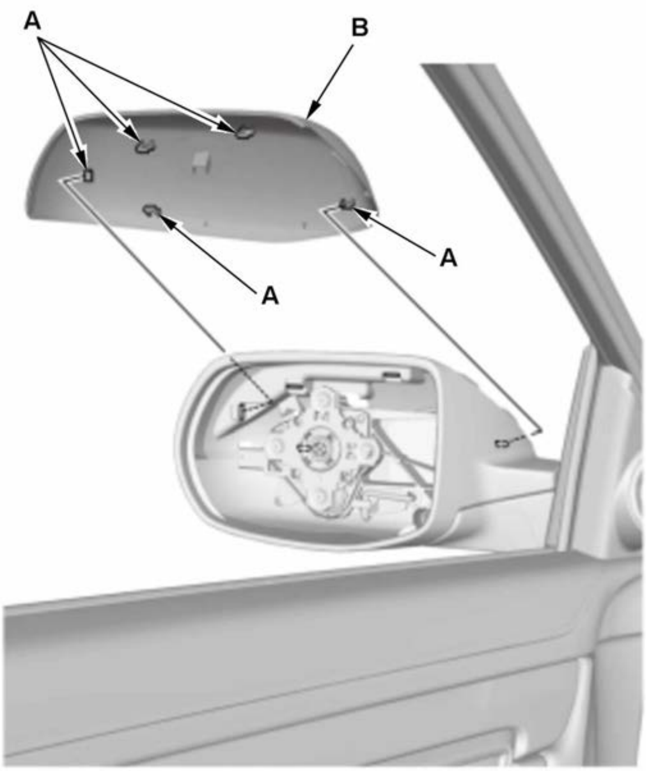	1. Release the hooks (A), then remove the mirror housing upper cover (B).

10. All Removed Parts - Install

1. Install the parts in the reverse order of removal.

POWER MIRROR ACTUATOR/RETRACT ACTUATOR REMOVAL AND INSTALLATION

Removal and Installation

NOTE:

- Where icon is shown, further information shown below.
- The power mirror actuator is a part of the power mirror assembly, and it cannot be replaced by itself.

1

With Side Turn Signal Light

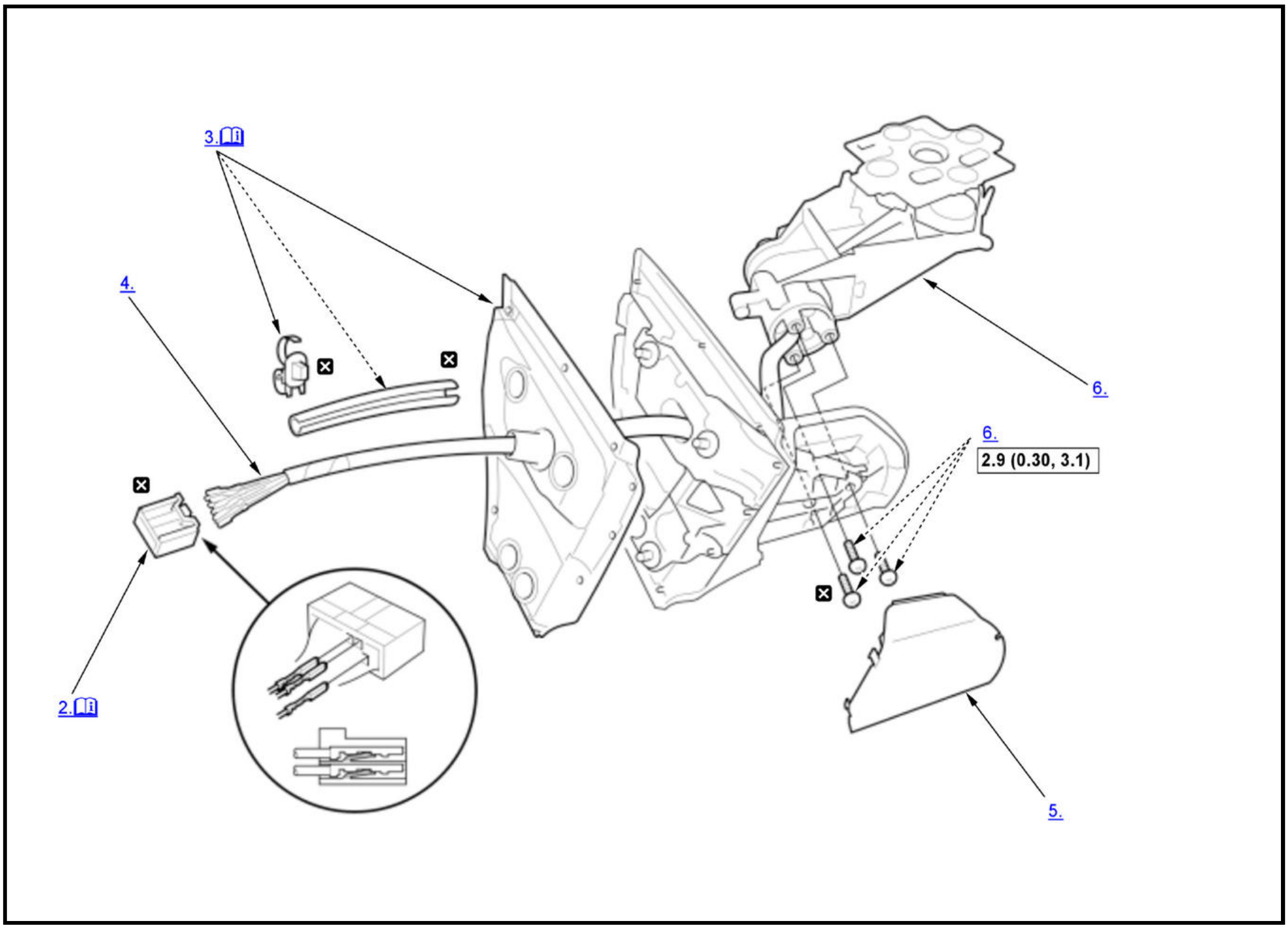
3.
4.
6.
6.
2.9 (0.30, 3.1)
2.
5.

ℹ	Detailed information, notes, and precautions
☐	Torque: N.m (kgf.m, lbf.ft)
☒	Replace

2

Without Side Turn Signal Light

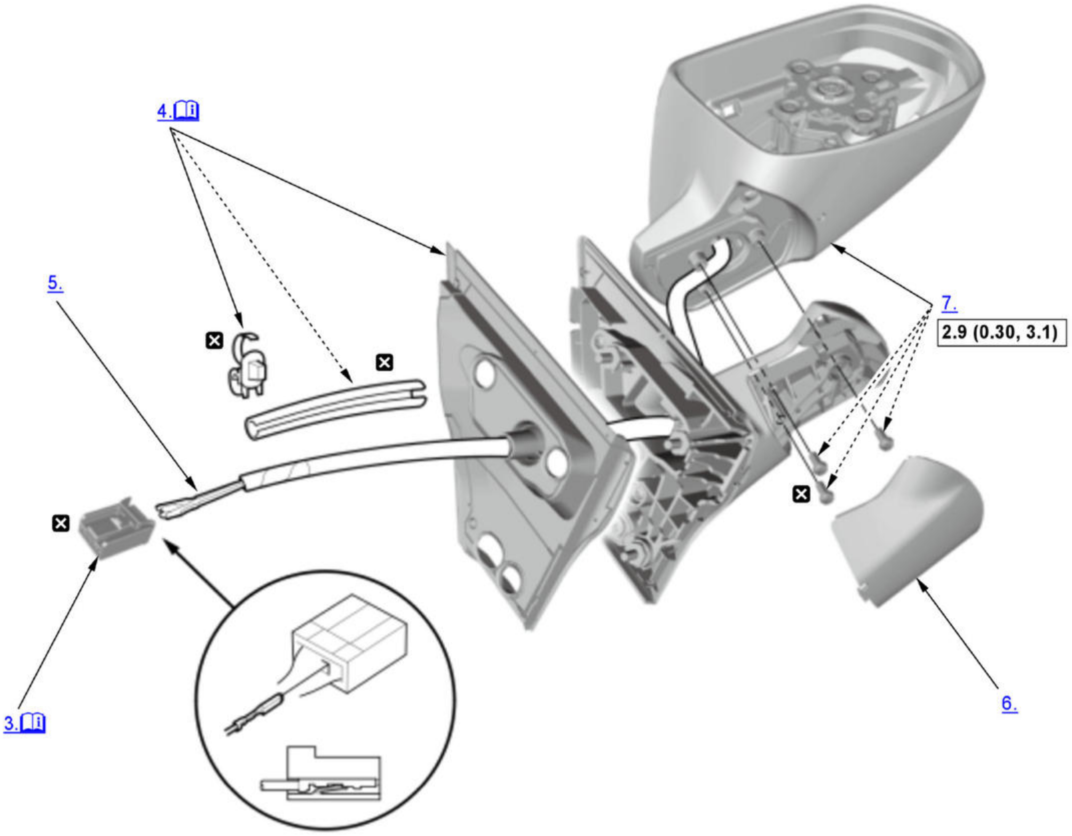
4.
5.
3.
7.
2.9 (0.30, 3.1)
6.

ℹ	Detailed information, notes, and precautions
▭	Torque: N.m (kgf.m, lbf.ft)
☒	Replace

3

Without Side Turn Signal Light

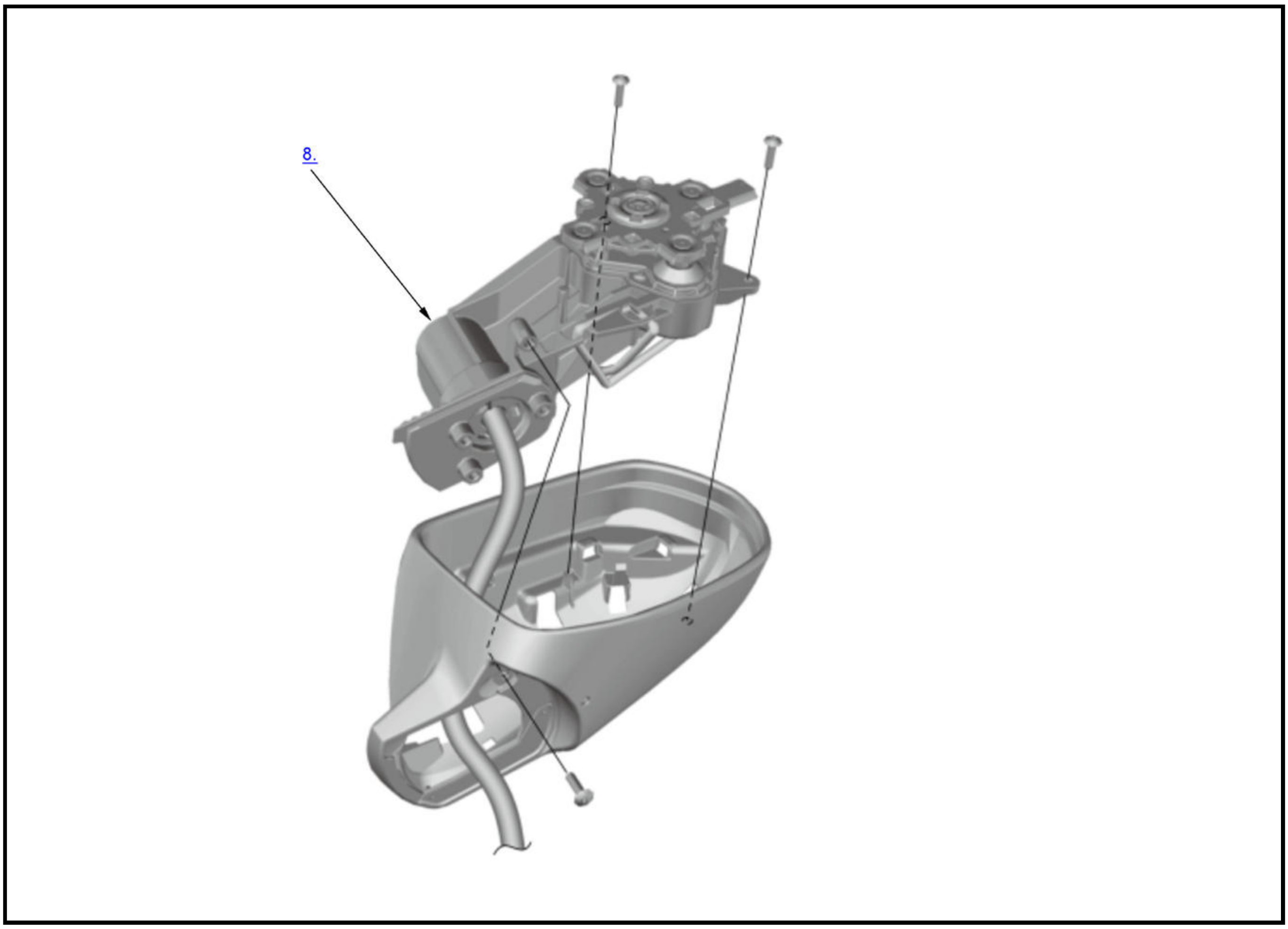

With Side Turn Signal Light

1. MIror Visor - Remove
2. Connector - Disassembly

   1. Release the lock (A) and remove the terminal (B) from the connector (C).

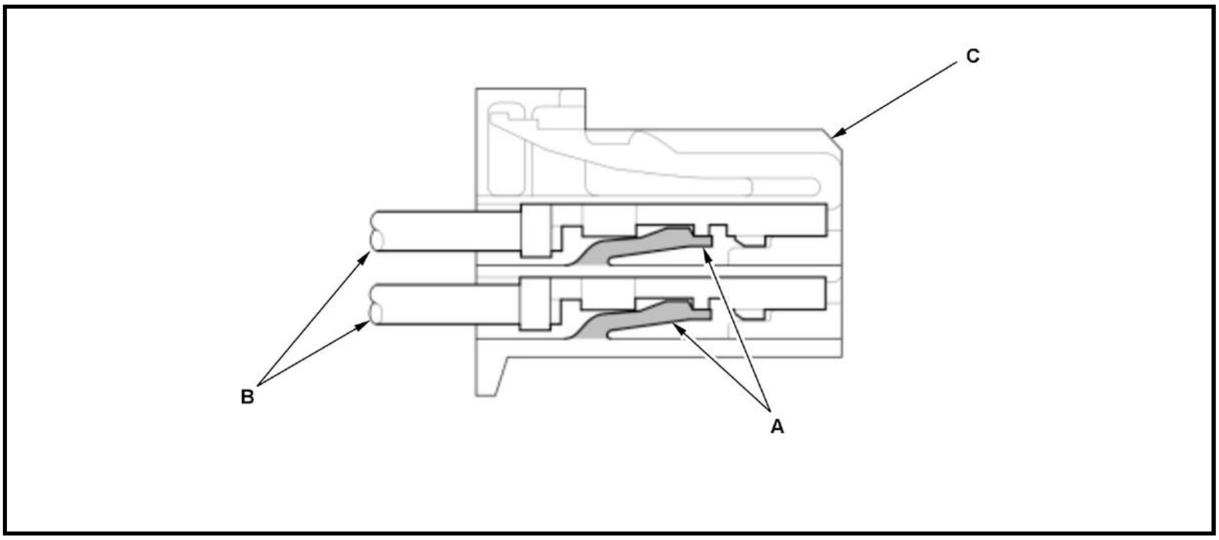

Note for installation

2. Insert the power mirror wires into the terminal locations as shown.

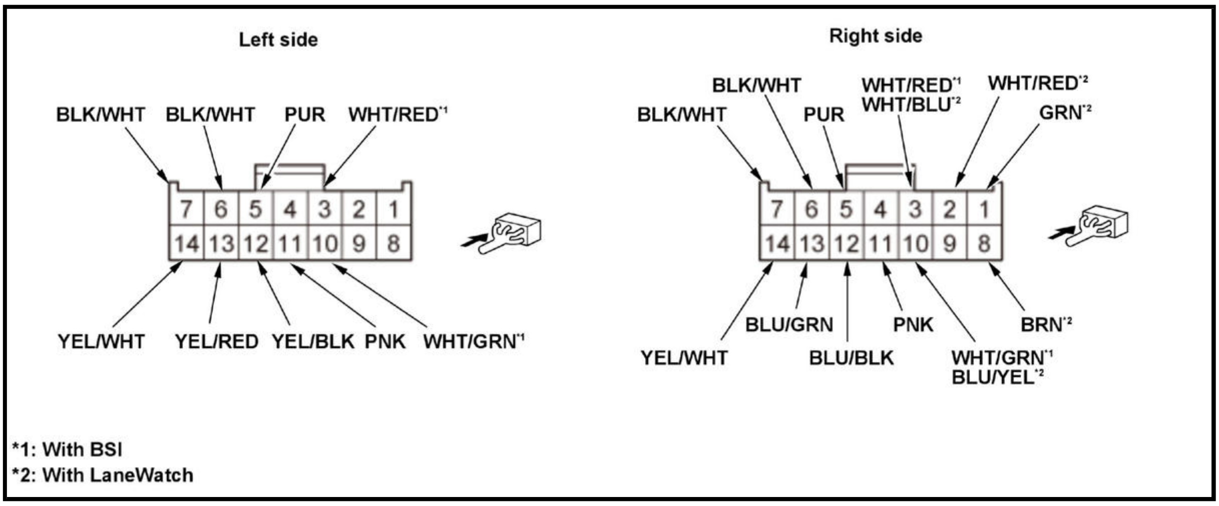
Left side
BLK/WHT
BLK/WHT
PUR
WHT/RED*1
7 6 5 4 3 2 1
14 13 12 11 10 9 8
YEL/WHT
YEL/RED
YEL/BLK
PNK
WHT/GRN*1
Right side
BLK/WHT
BLK/WHT
PUR
WHT/RED*1
WHT/BLU*2
WHT/RED*2
GRN*2
7 6 5 4 3 2 1
14 13 12 11 10 9 8
YEL/WHT
BLU/GRN
BLU/BLK
PNK
WHT/GRN*1
BLU/YEL*2
BRN*2

*1: With BSI

*2: With LaneWatch

3. Gasket/Harness Clip - Remove

Note for installation

1. Install the gasket (A) and the harness clip (B) on the wire harness at the proper positions, and apply the electrical tapes (C) and the EPDM (D) to fix them.

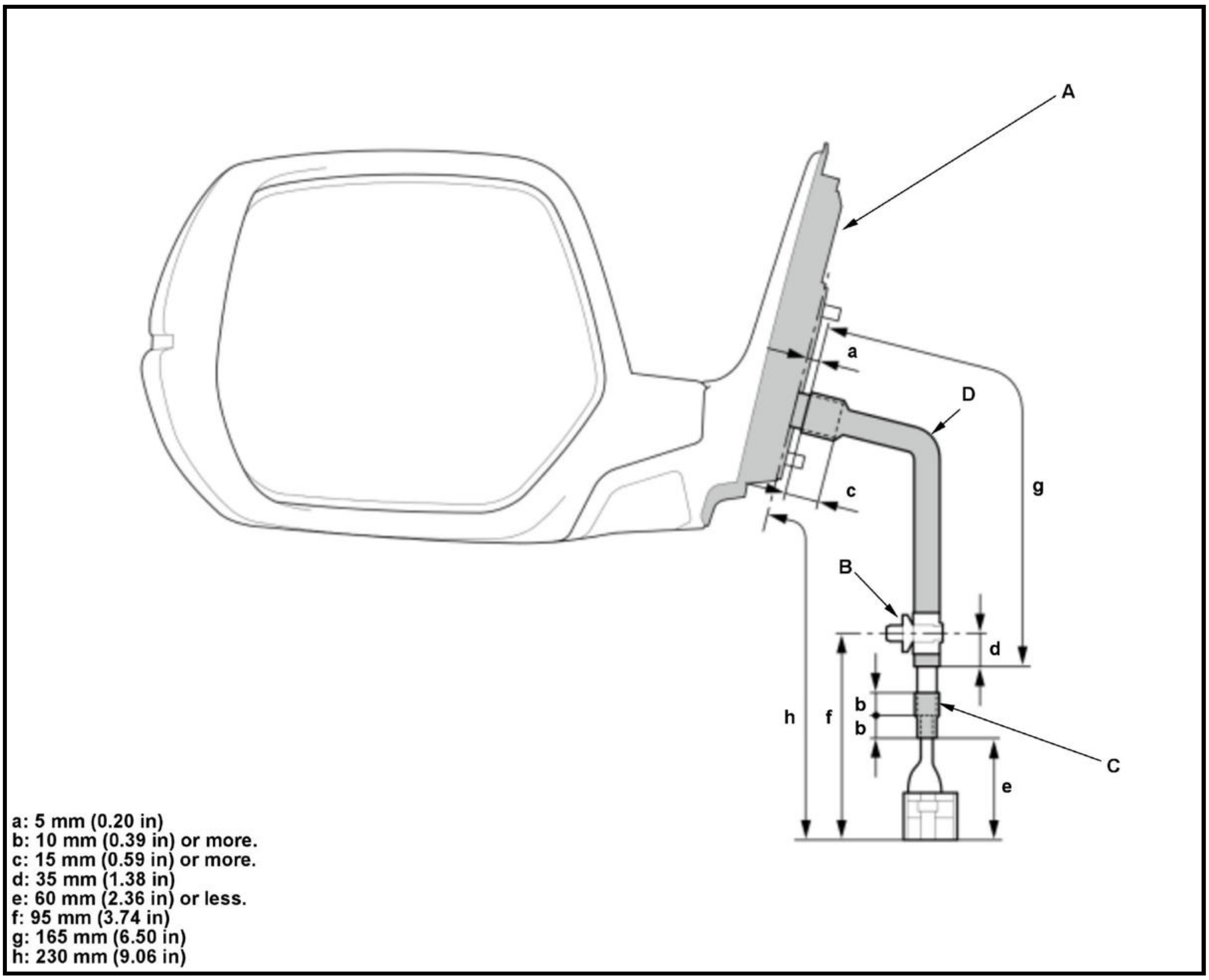
A
a
D
c
g
B
d
b
b
h
f
C
e

a: 5 mm (0.20 in)
b: 10 mm (0.39 in) or more.
c: 15 mm (0.59 in) or more.
d: 35 mm (1.38 in)
e: 60 mm (2.36 in) or less.
f: 95 mm (3.74 in)
g: 165 mm (6.50 in)
h: 230 mm (9.06 in)

4. Wire Harness - Remove
5. Base Cover - Remove
6. Power Mirror Actuator - Remove
7. All Removed Parts - Install

1. Install the parts in the reverse order of removal.

8. **LaneWatch Camera - Aim (With LaneWatch)**

Without Side Turn Signal Light

9. **Mirror Housing Cover - Remove**
10. **Power Mirror - Remove**
11. Connector - Disassembly

1. Release the lock (A) and remove the terminal (B) from the connector (C).

4P Connector Type

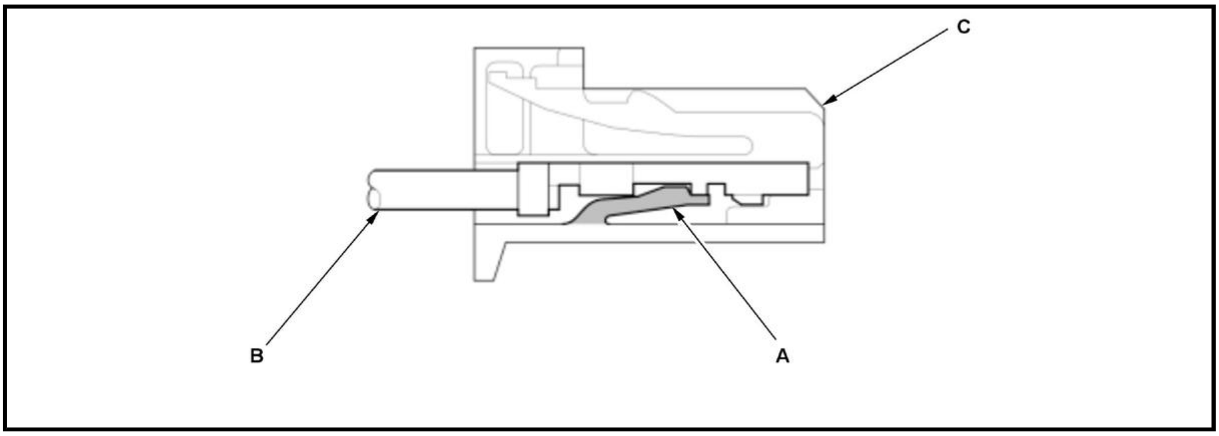

14P Connector Type

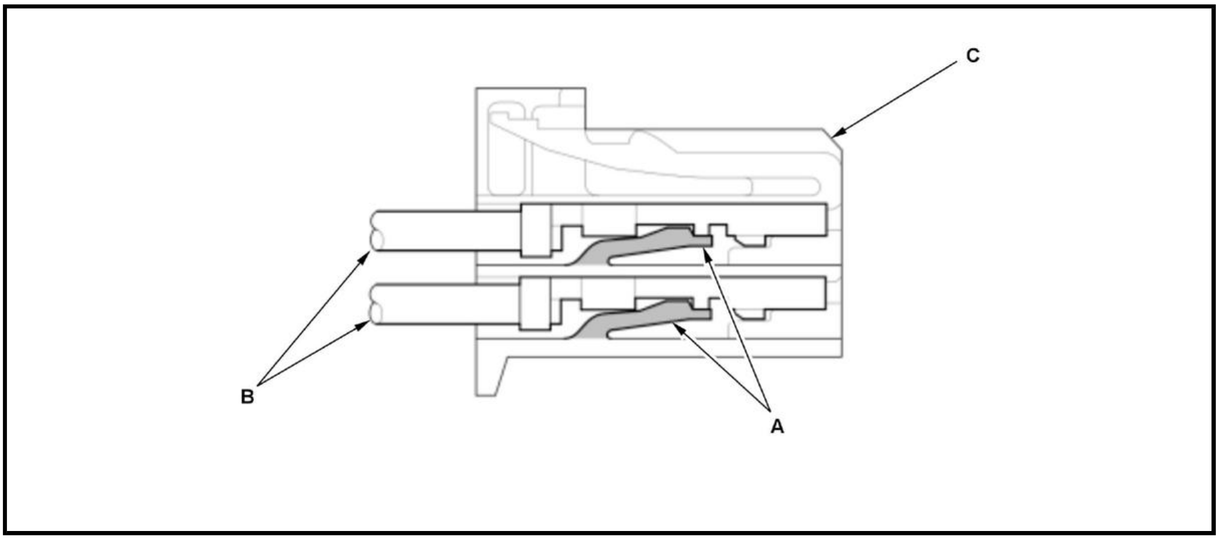

Note for installation

2. Insert the power mirror wires into the terminal locations as shown.

4P Connector Type

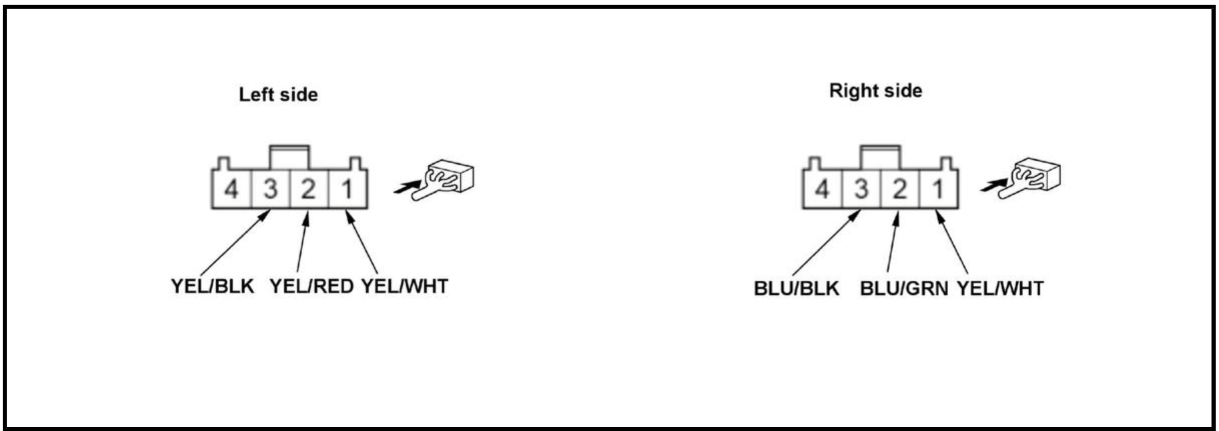
Left side
4
3
2
1
YEL/BLK
YEL/RED
YEL/WHT
Right side
4
3
2
1
BLU/BLK
BLU/GRN
YEL/WHT

14P Connector Type

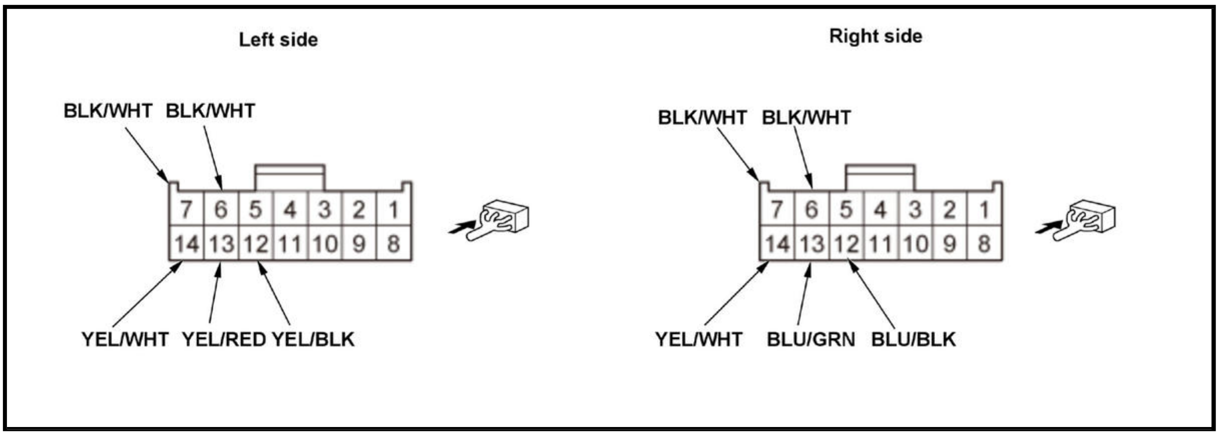
Left side
BLK/WHT
BLK/WHT
7 6 5 4 3 2 1
14 13 12 11 10 9 8
YEL/WHT
YEL/RED
YEL/BLK
Right side
BLK/WHT
BLK/WHT
7 6 5 4 3 2 1
14 13 12 11 10 9 8
YEL/WHT
BLU/GRN
BLU/BLK

12. Gasket/Harness Clip - Remove

Note for installation

1. Install the gasket (A) and the harness clip (B) on the wire harness at the proper positions, and apply the electrical tapes (C) and the EPDM (D) to fix them.

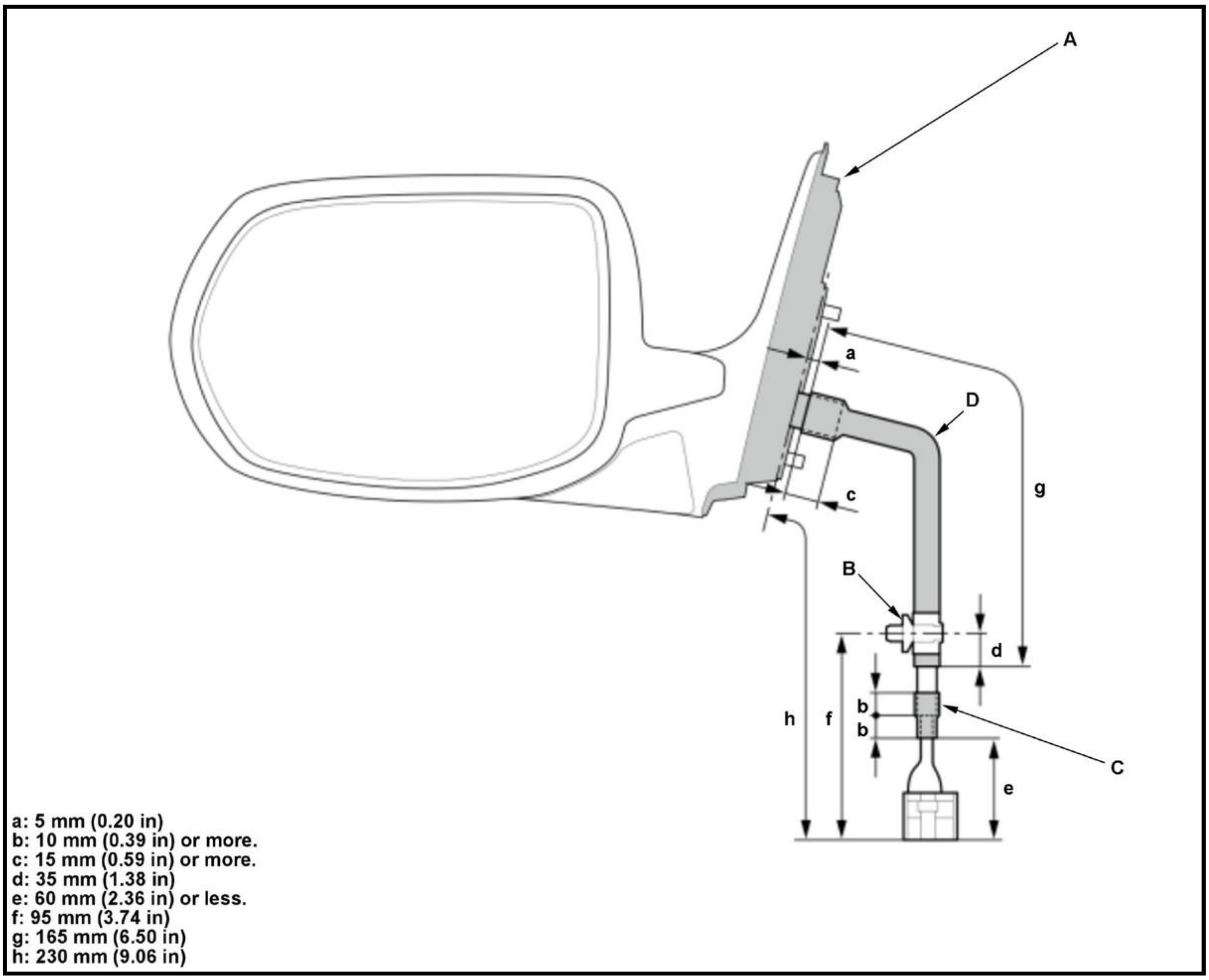
A
D
B
C
a
b
b
c
d
e
f
g
h

a: 5 mm (0.20 in)
b: 10 mm (0.39 in) or more.
c: 15 mm (0.59 in) or more.
d: 35 mm (1.38 in)
e: 60 mm (2.36 in) or less.
f: 95 mm (3.74 in)
g: 165 mm (6.50 in)
h: 230 mm (9.06 in)

13. Wire Harness - Remove
14. Base Cover - Remove
15. Power Mirror Assembly - Remove
16. Power Mirror Actuator - Remove
17. All Removed Parts - Install

1. Install the parts in the reverse order of removal.

POWER MIRROR REMOVAL AND INSTALLATION

Removal and Installation

NOTE: How to read the torque specifications

1. Front Door Panel - Remove
2. Mirror Trim - Remove

Fastener Locations 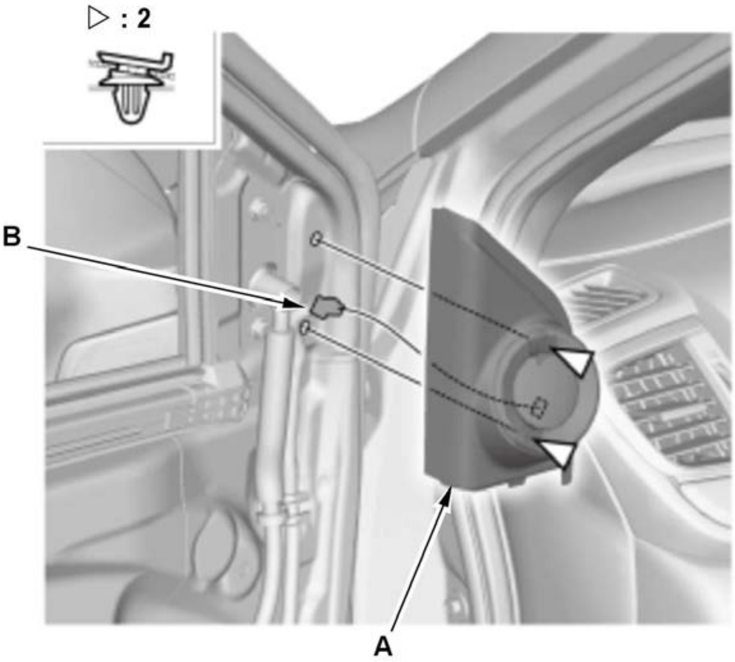 	1. Remove the mirror cover (A). 2. With front tweeter: Disconnect the connector (B).

3. Power Mirror - Remove

<table>
<tr>
<td>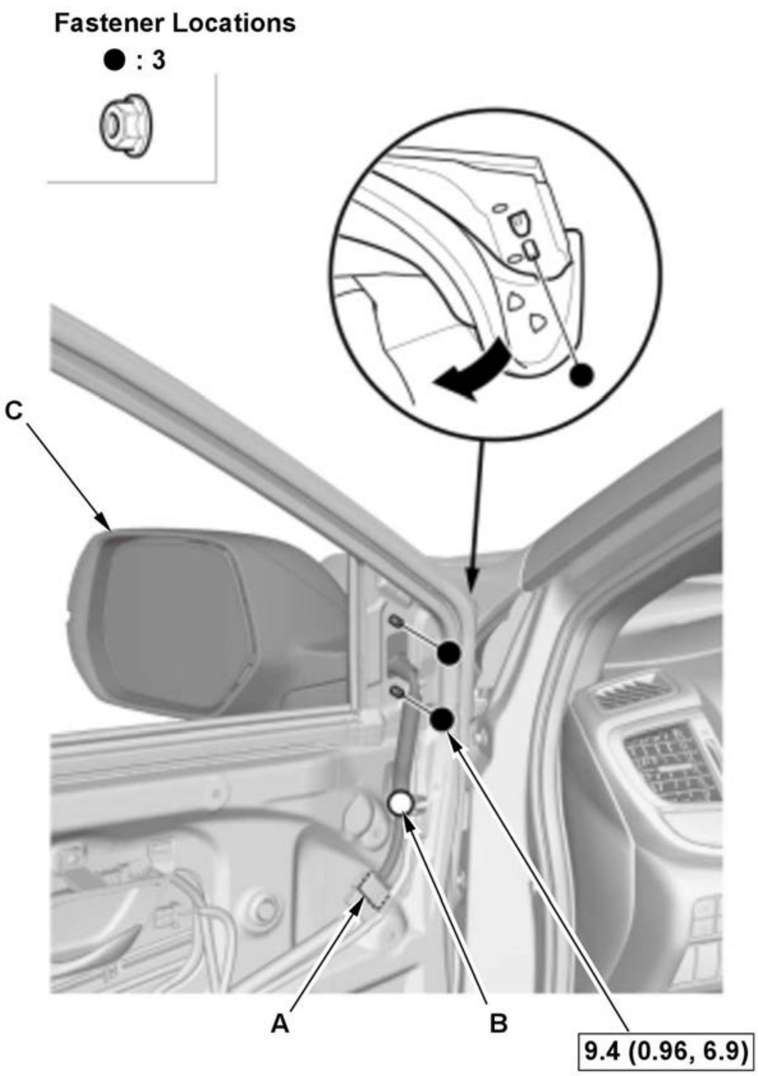
</td>
<td>1. Disconnect the connector (A).
2. Remove the harness clip (B).
3. While holding the power mirror (C), remove the nuts.</td>
</tr>
</table>

4. All Removed Parts - Install

1. Install the parts in the reverse order of removal.

5. LaneWatch Camera - Aim (With LaneWatch)

REARVIEW MIRROR HARNESS COVER BASE REMOVAL AND INSTALLATION

Removal

1. Rearview Mirror (Auto Dimming Type) - Remove
2. Rearview Mirror Harness Cover Base - Remove

<table>
<tr>
<td>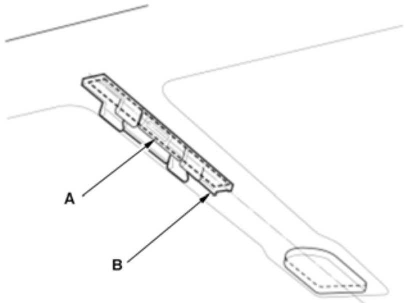
</td>
<td>1. Cut through the adhesive tape (A) under the rearview mirror harness cover base (B) using a piano wire, then remove the base.
2. Scrape off all of the original adhesive tape with a putty knife from the windshield. Clean the bonding surface on the inside face of the windshield with isopropyl alcohol. Make sure the bonding surface is kept free of water, oil and grease.</td>
</tr>
</table>

Installation

1. Rearview Mirror Harness Cover Base - Install

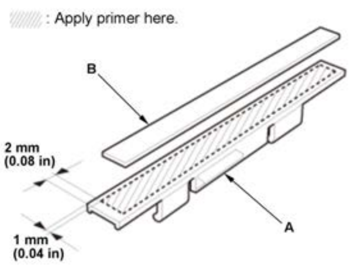

1. If you are reinstalling the original rearview mirror harness cover base (A), scrape off all of the original adhesive tape from the base with a putty knife. Clean the base surface with isopropyl alcohol. Apply primer to the base as shown, and attach the adhesive tape (B) to the base.

Adhesive tape:

Thickness	0.8 mm (0.031 in)
Width	7 mm (0.28 in)

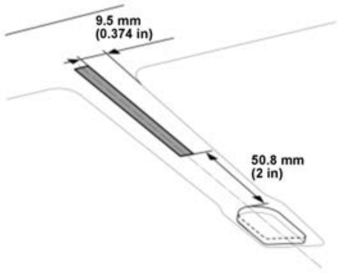

2. Before installing the rearview mirror harness cover base, apply primer to the area where the harness cover base will be installed to the inside face of the windshield. Let the primer dry at least 10 minutes, then attach the rearview mirror harness cover base to the windshield within 12 hours.

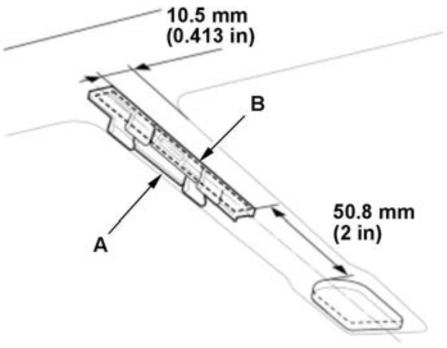

3. Install the rearview mirror harness cover base (A) with the adhesive tape (B) to the inside face of the windshield as shown.

2. **Rearview Mirror - Install**

REARVIEW MIRROR REMOVAL AND INSTALLATION

Removal and Installation

1

Rearview Mirror Type 1

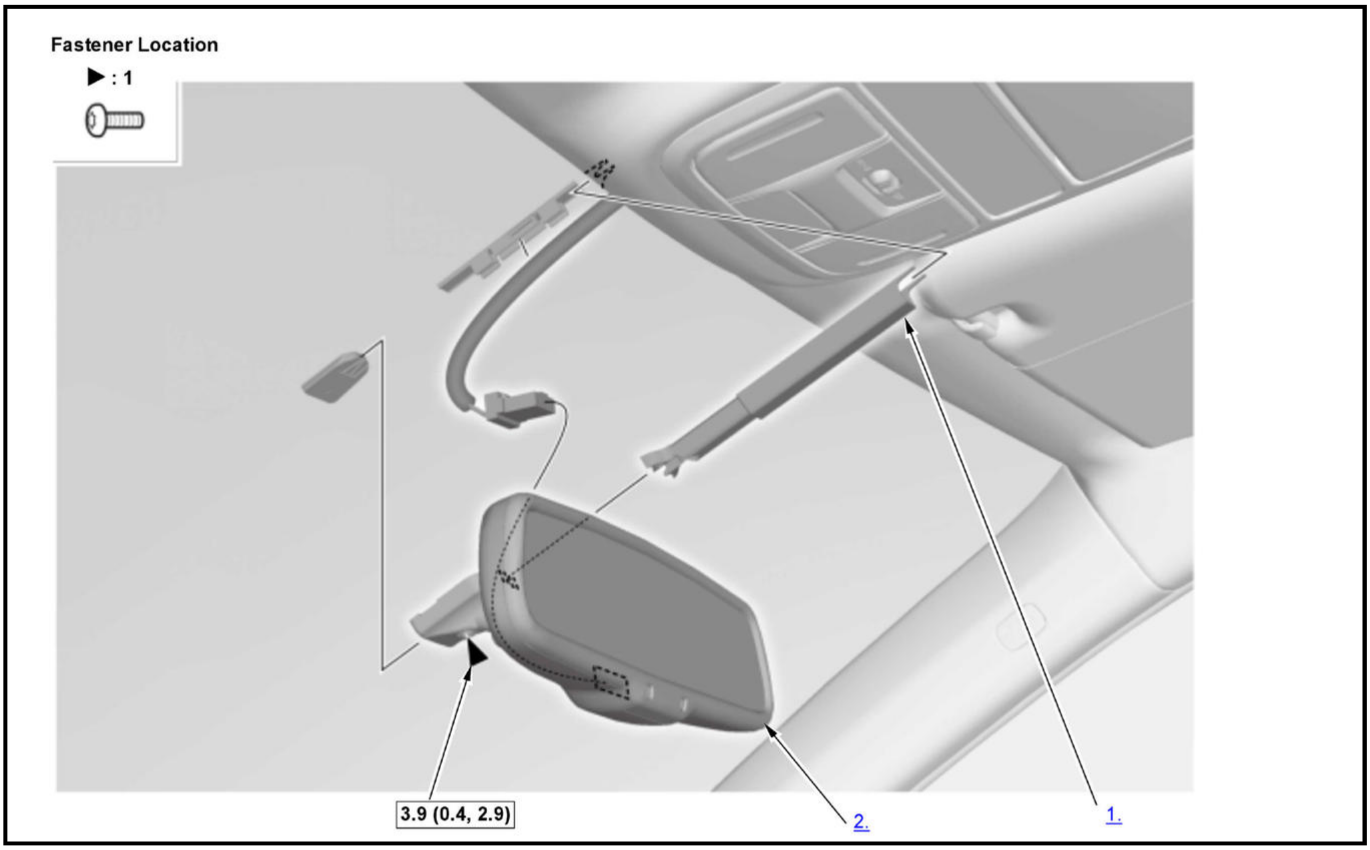
Fastener Location
▶ : 1
3.9 (0.4, 2.9)
2.
1.

☐	Torque: N.m (kgf.m, lbf.ft)

2

Rearview Mirror Type 2

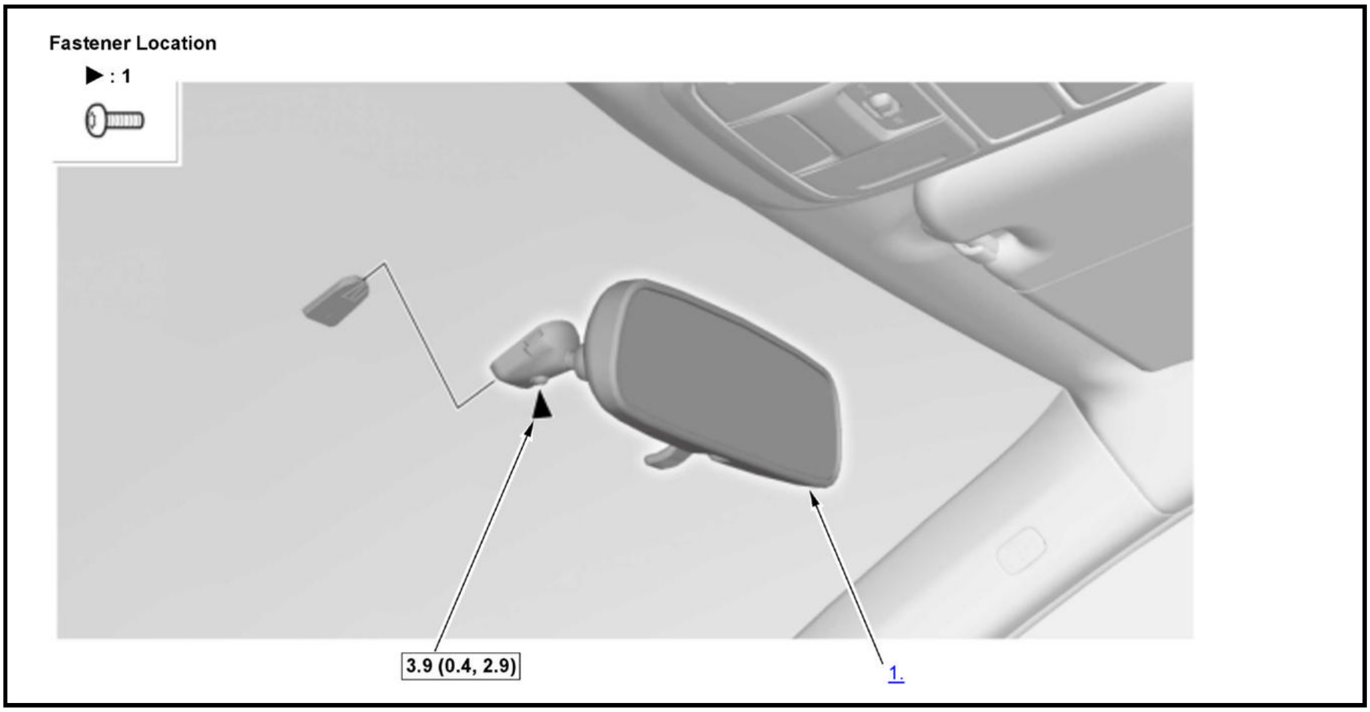
Fastener Location
▶ : 1
3.9 (0.4, 2.9)
1.

☐	Torque: N.m (kgf.m, lbf.ft)

3

Rearview Mirror Type 3

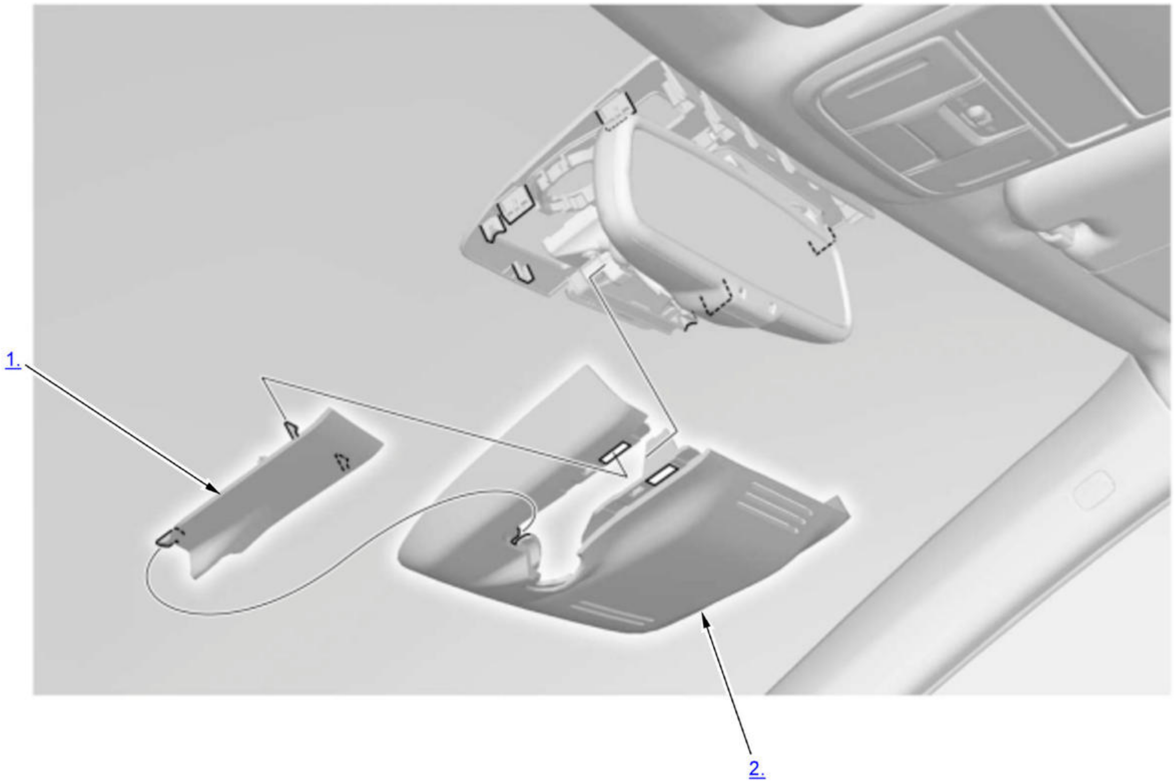

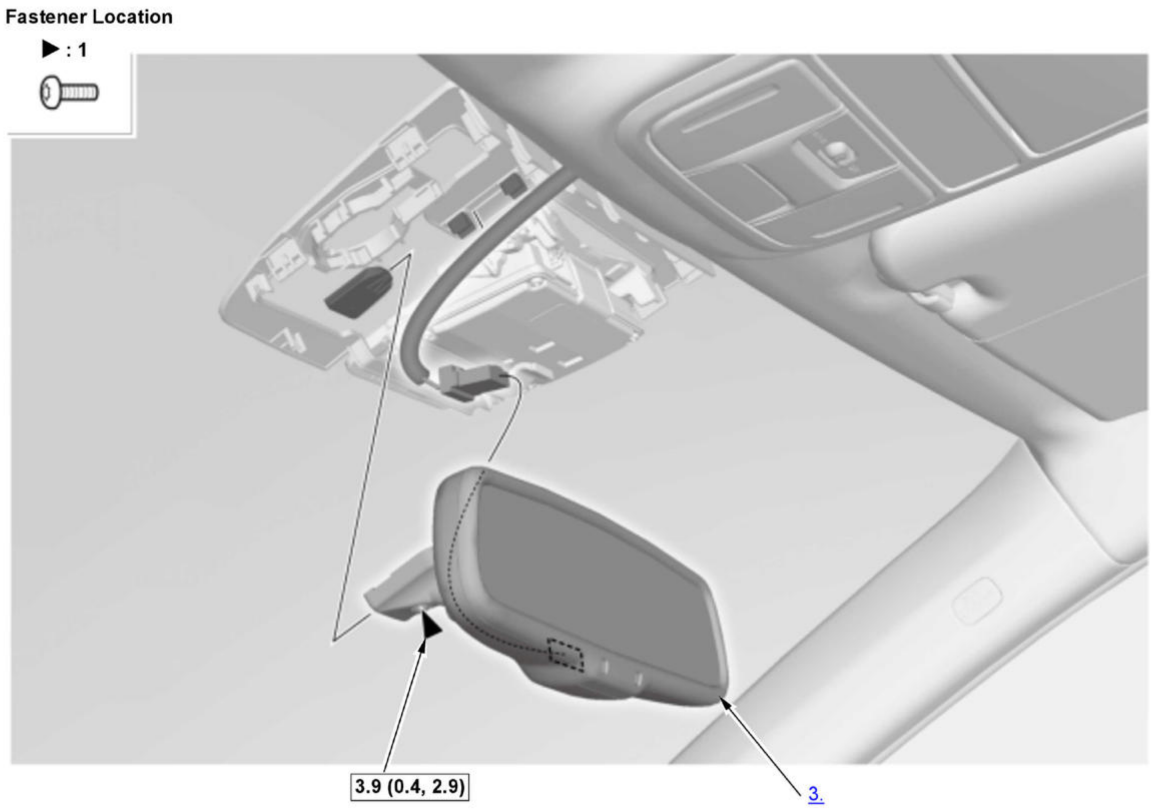
Fastener Location
▶ : 1
3.9 (0.4, 2.9)
3.

▭	Torque: N.m (kgf.m, lbf.ft)

Rearview Mirror Type 1

1. Rearview Mirror Harness Cover - Remove
2. Rearview Mirror - Remove
3. All Removed Parts - Install

1. Install the parts in the reverse order of removal.

Rearview Mirror Type 2

4. Rearview Mirror - Remove
5. All Removed Parts - Install

1. Install the parts in the reverse order of removal.

Rearview Mirror Type 3

6. Sensor Cover Lid - Remove
7. Sensor Cover - Remove
8. Rearview Mirror - Remove
9. All Removed Parts - Install

1. Install the parts in the reverse order of removal.

REMOVAL AND INSTALLATION

MIRROR HOLDER REMOVAL AND INSTALLATION

Removal and Installation

1. Mirror Holder - Remove

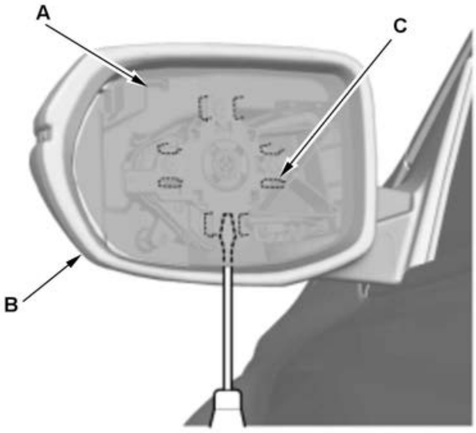	1. Carefully push on the top edge of the mirror holder (A) by hand. 2. Put a shop towel in the opening between the bottom edge of the mirror holder and the mirror housing (B) to prevent scratches. 3. Insert a flat-tip screwdriver under the mirror holder, and twist the screwdriver to release the hooks (C).

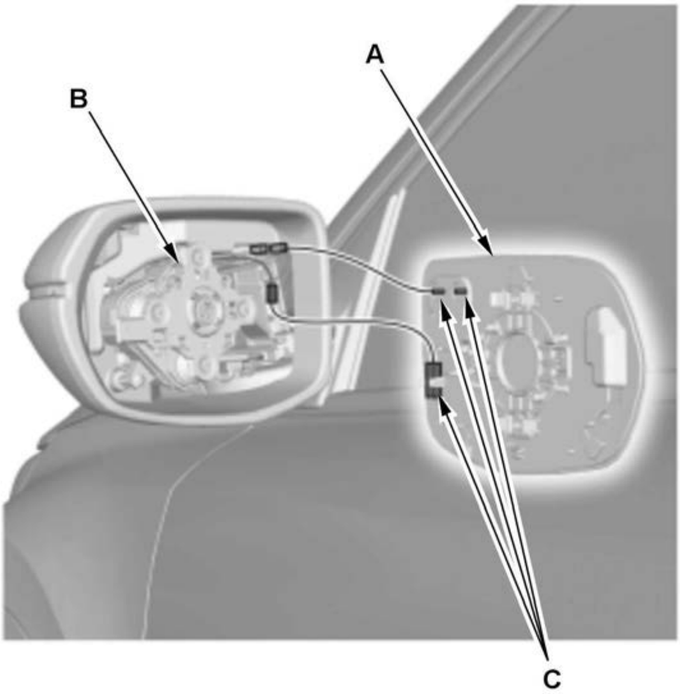	4. Separate the mirror holder (A) from the actuator (B). 5. For some models: Disconnect the connectors (C).

2. All Removed Parts - Install

1. Install the parts in the reverse order of removal, check the actuator operation

MIRROR HOUSING COVER REMOVAL AND INSTALLATION

Removal and Installation

Mirror Housing Cover Type 1

1. **Mirror Holder - Remove**
2. Mirror Housing Upper Cover - Remove

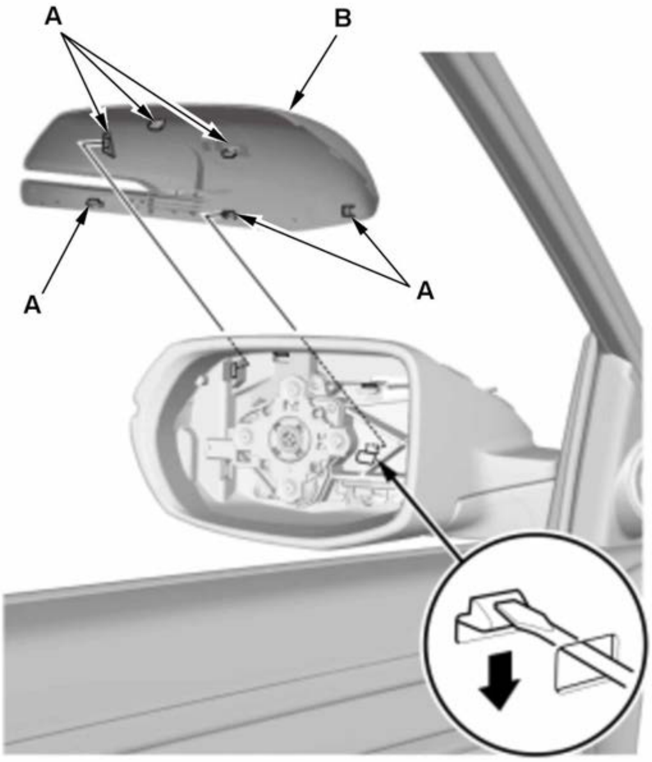	1. Release the hooks (A), then remove the mirror housing upper cover (B).

3. Mirror Housing Lower Cover - Remove

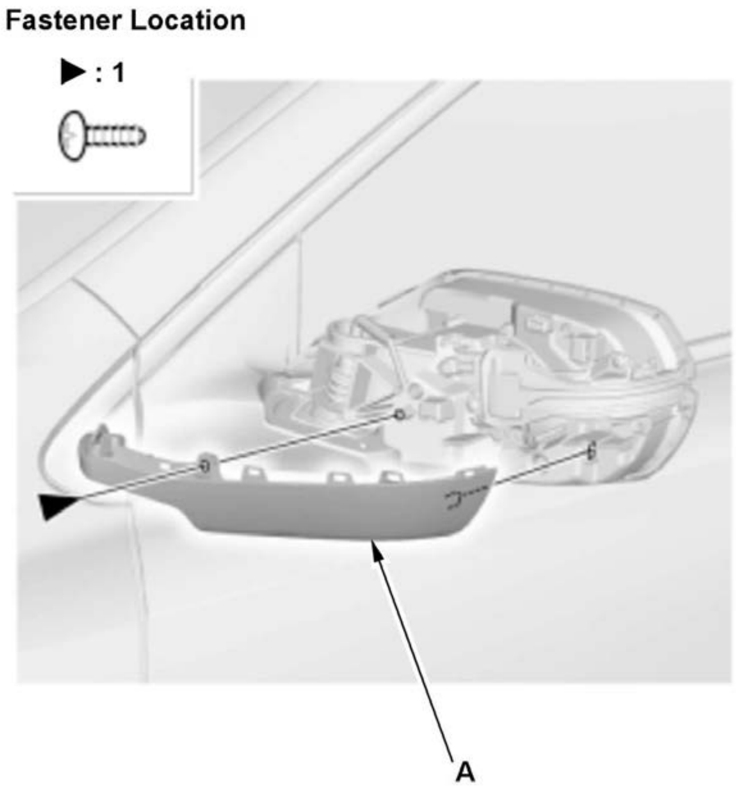 Fastener Location ▶ : 1 A	1. Remove the mirror housing lower cover (A).

4. Side Turn Signal Light - Remove
5. Power Mirror - Remove
6. Mirror Visor - Remove

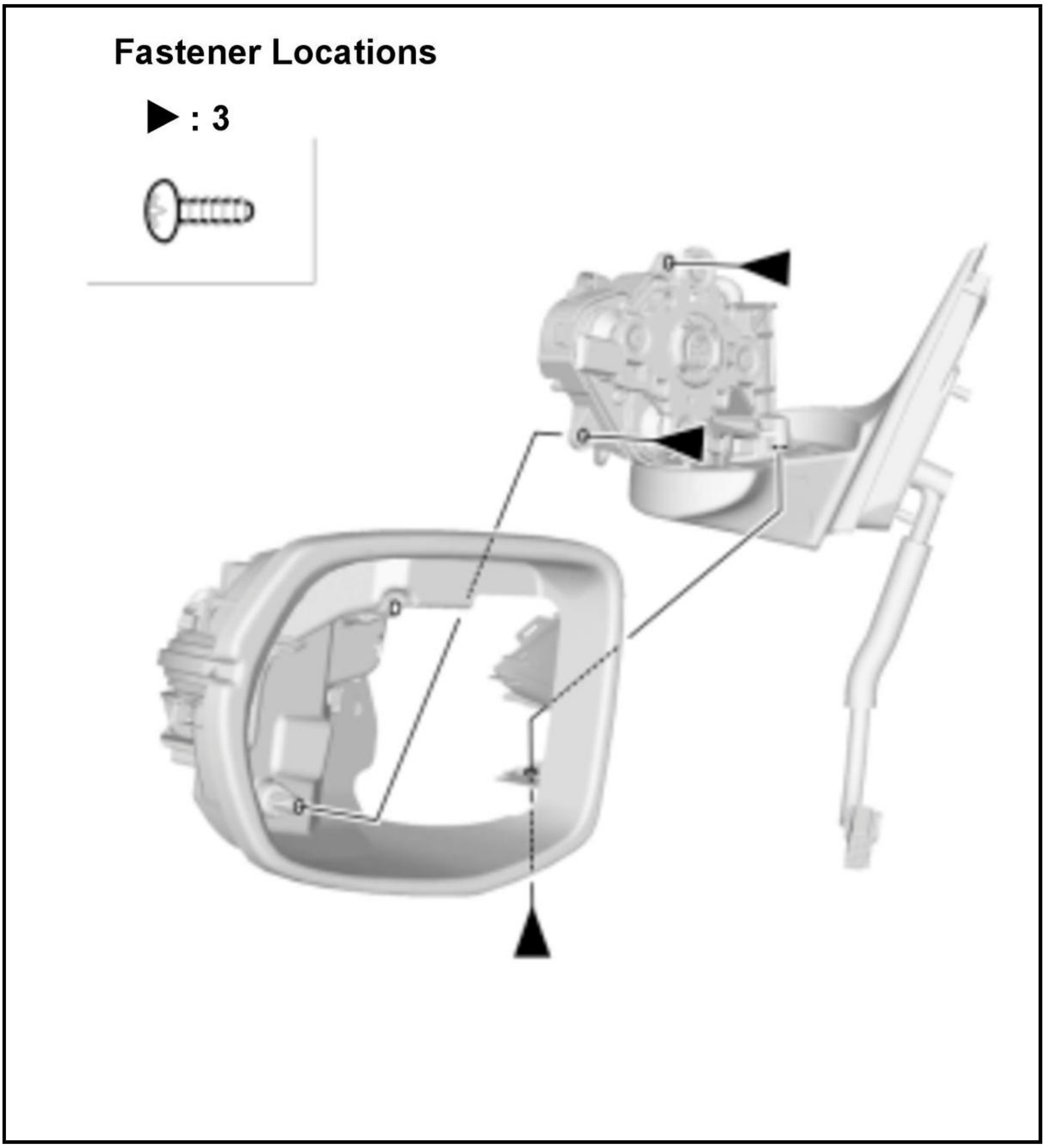
Fastener Locations
▶ : 3

7. All Removed Parts - Install

1. Install the parts in the reverse order of removal.

Mirror Housing Cover Type 2

1. Mirror Holder - Remove
2. Mirror Housing Cover - Remove

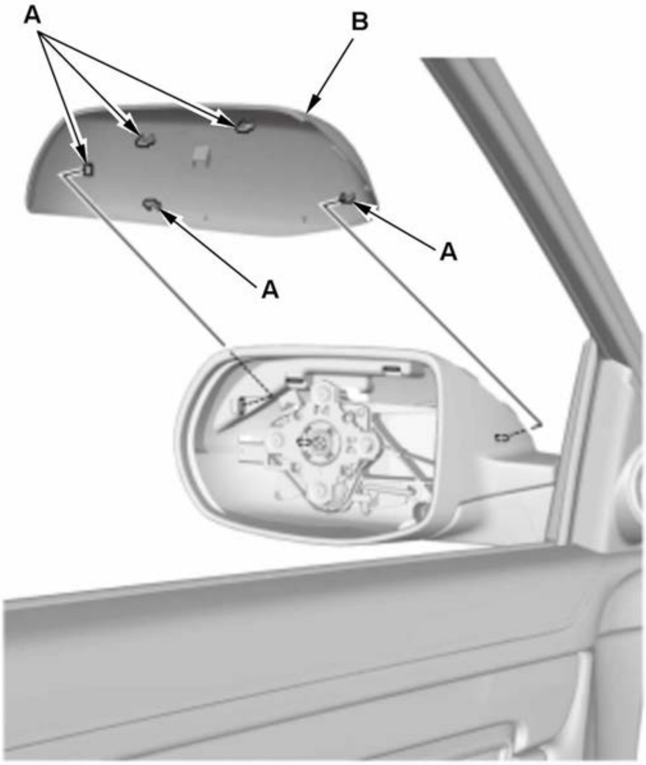	1. Release the hooks (A), then remove the mirror housing upper cover (B).

3. All Removed Parts - Install

1. Install the parts in the reverse order of removal.

POWER MIRROR ACTUATOR REMOVAL AND INSTALLATION

Removal and Installation

NOTE:

- 🛈 Where icon is shown, for further information see below.
- The power mirror actuator is a part of the power mirror assembly, and it cannot be replaced by itself.

14P Connector Type

NOTE: **Numbered call-outs in figure pertain to list numbers in following procedure.**

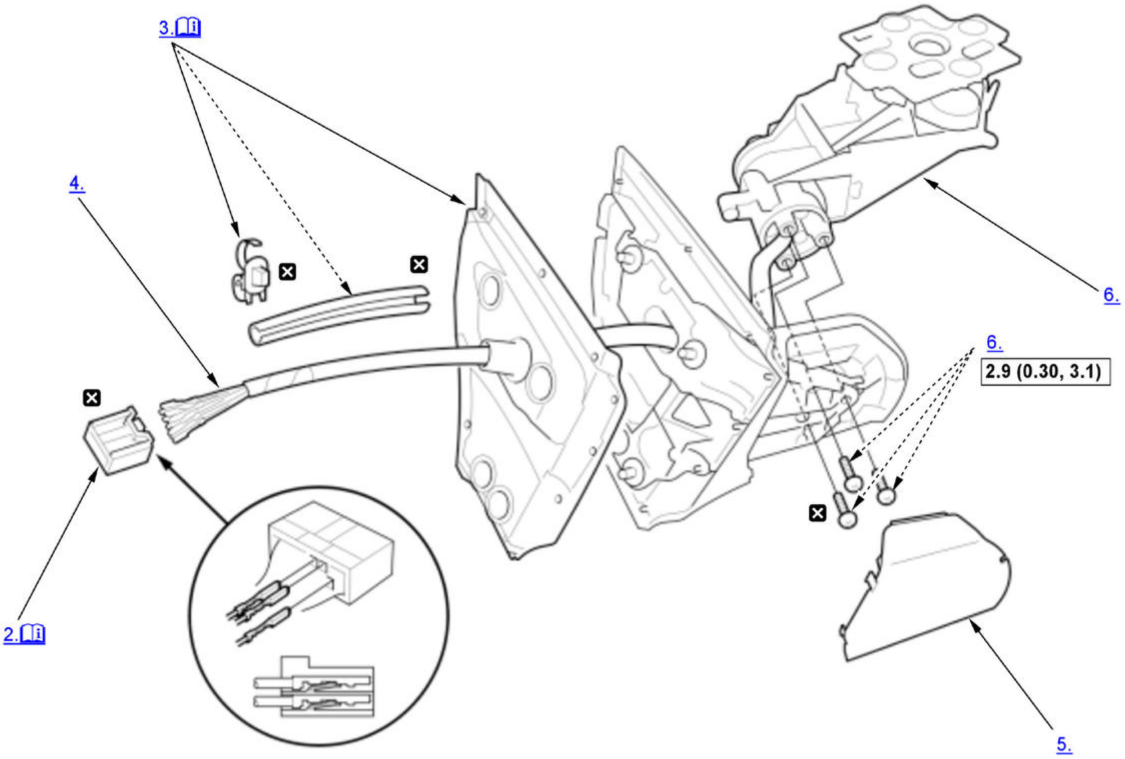

Fig. 1: Exploded View Of Power Mirror Actuator Components (14P Connector Type)
Courtesy of HONDA, U.S.A., INC.

ℹ	Detailed information, notes, and precautions
☐	Torque: N.m (kgf.m, lbf.ft)
☒	Replace

1. Mirror Visor - Remove
2. Connector - Disassembly

    1. Release the lock (A) and remove the terminal (B) from the connector (C).

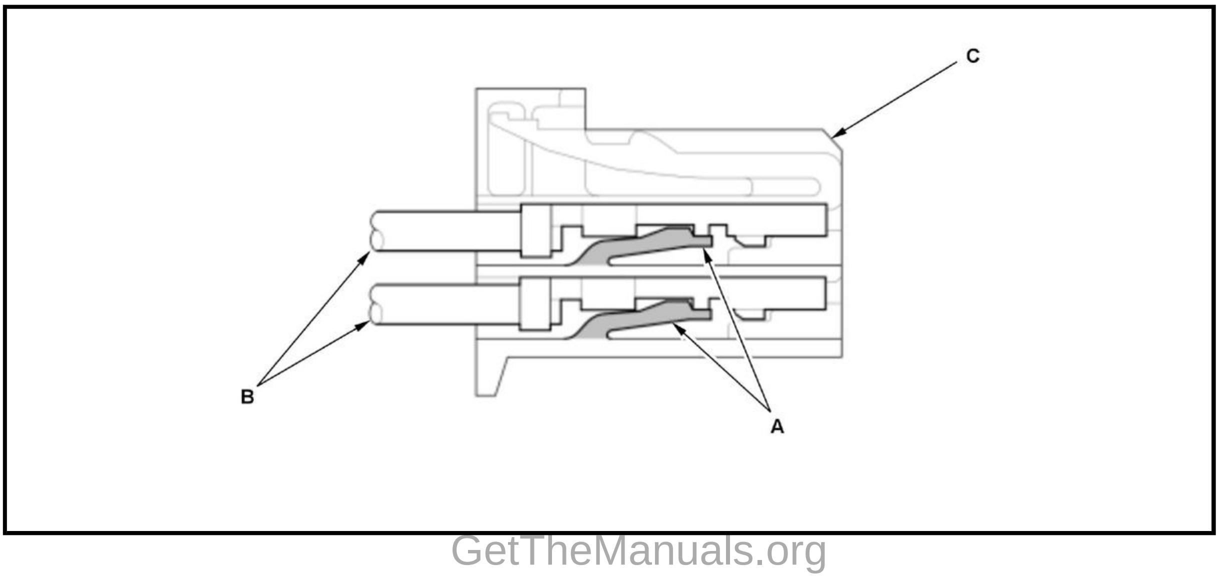

Note for installation

2. Insert the power mirror wires into the terminal locations as shown.

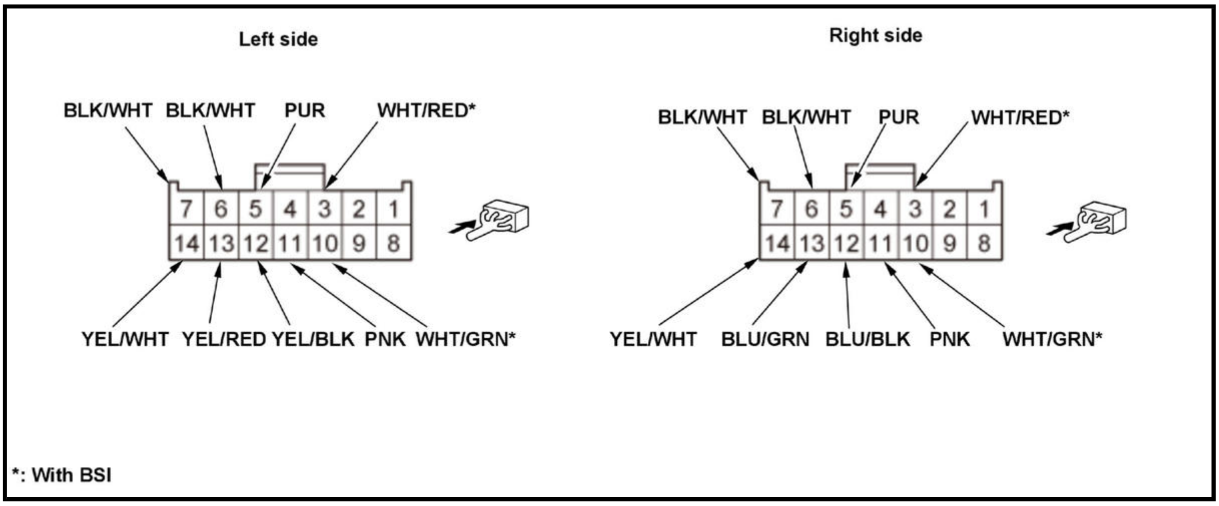
Left side
BLK/WHT
BLK/WHT
PUR
WHT/RED*
7 6 5 4 3 2 1
14 13 12 11 10 9 8
YEL/WHT
YEL/RED
YEL/BLK
PNK
WHT/GRN*
Right side
BLK/WHT
BLK/WHT
PUR
WHT/RED*
7 6 5 4 3 2 1
14 13 12 11 10 9 8
YEL/WHT
BLU/GRN
BLU/BLK
PNK
WHT/GRN*
*: With BSI

3. Gasket/Harness Clip - Remove

Note for installation

1. Install the gasket (A) and the harness clip (B) on the wire harness at the proper positions, and apply the electrical tapes (C) and the EPDM (D) to fix them.

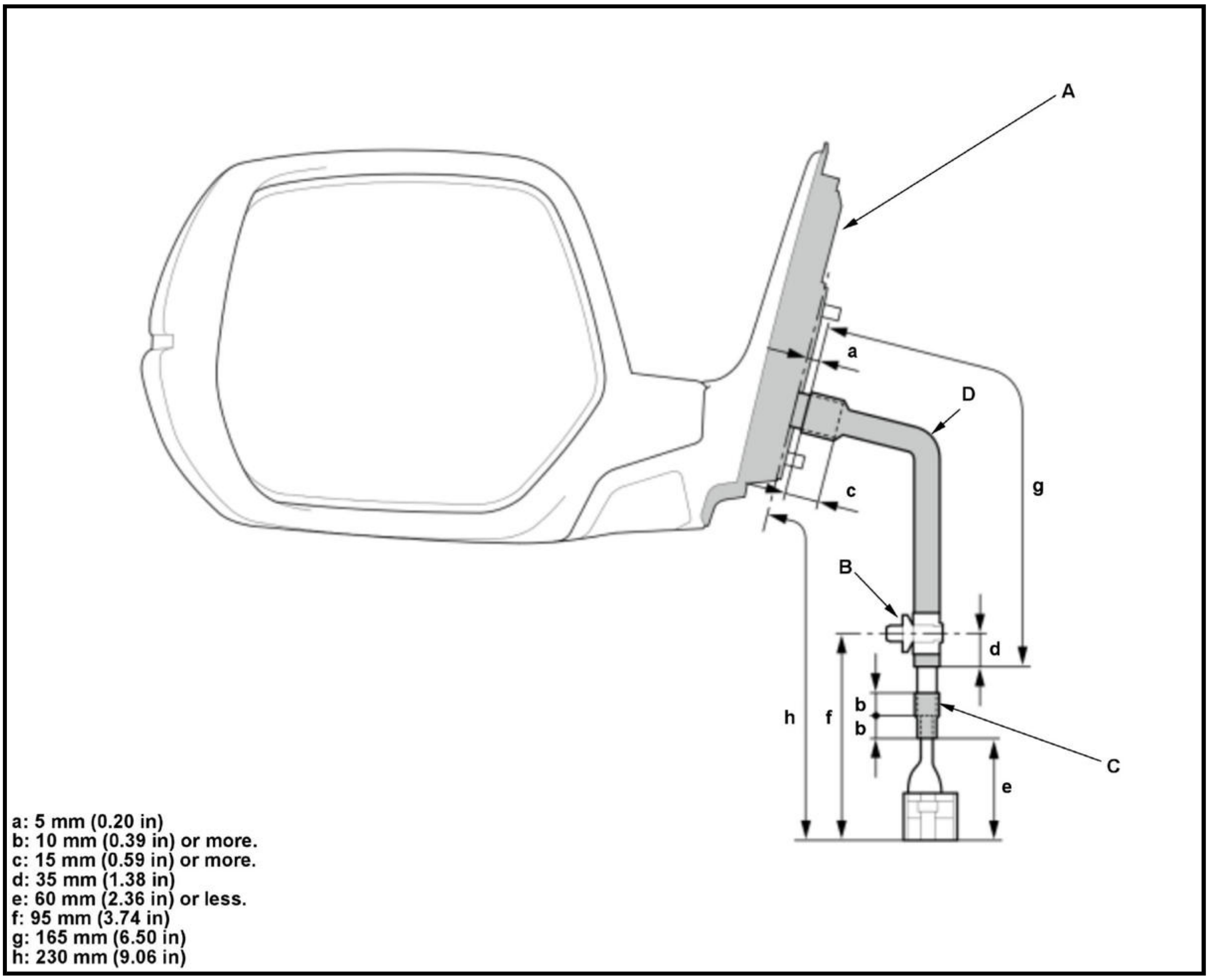
A
a
D
g
c
B
d
h
f
b
b
C
e
a: 5 mm (0.20 in)
b: 10 mm (0.39 in) or more.
c: 15 mm (0.59 in) or more.
d: 35 mm (1.38 in)
e: 60 mm (2.36 in) or less.
f: 95 mm (3.74 in)
g: 165 mm (6.50 in)
h: 230 mm (9.06 in)

4. Wire Harness - Remove
5. Base Cover - Remove
6. Power Mirror Actuator - Remove
7. All Removed Parts - Install

1. Install the parts in the reverse order of removal.

4P Connector Type

NOTE: **Numbered call-outs in figure pertain to list numbers in following procedure.**

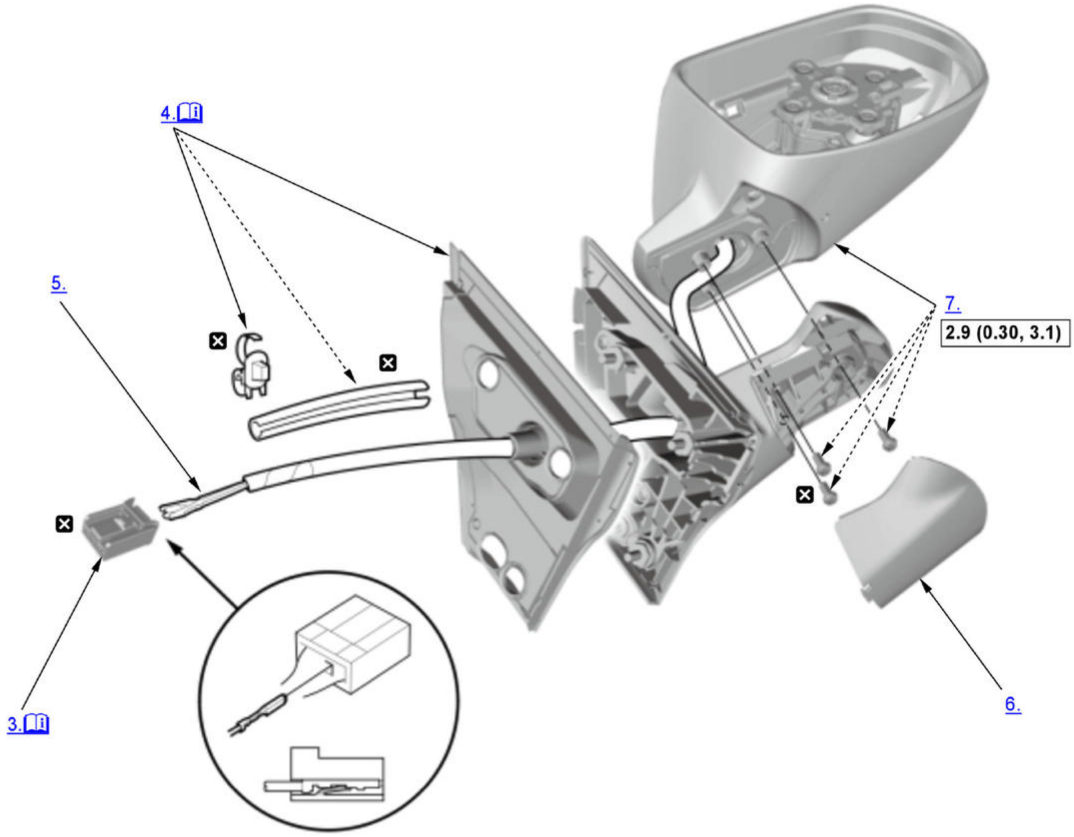

Fig. 2: Exploded View Of Power Mirror Actuator Components (4P Connector Type - 1 Of 2)
Courtesy of HONDA, U.S.A., INC.

ⓘ	Detailed information, notes, and precautions
☐	Torque: N.m (kgf.m, lbf.ft)
☒	Replace

NOTE: **Numbered call-outs in figure pertain to list numbers in following procedure.**

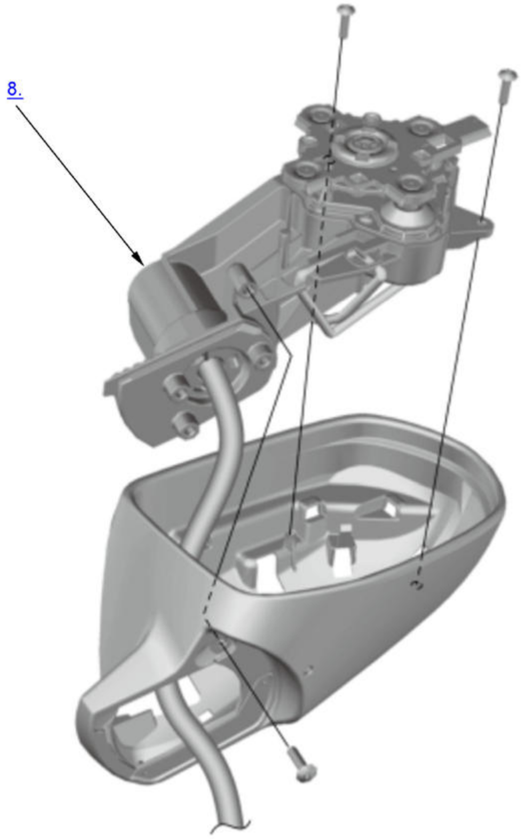

Fig. 3: Exploded View Of Power Mirror Actuator Components (4P Connector Type - 2 Of 2)
Courtesy of HONDA, U.S.A., INC.

1. Mirror Housing Cover - Remove
2. Power Mirror - Remove
3. Connector - Disassembly

    1. Release the lock (A) and remove the terminal (B) from the connector (C).

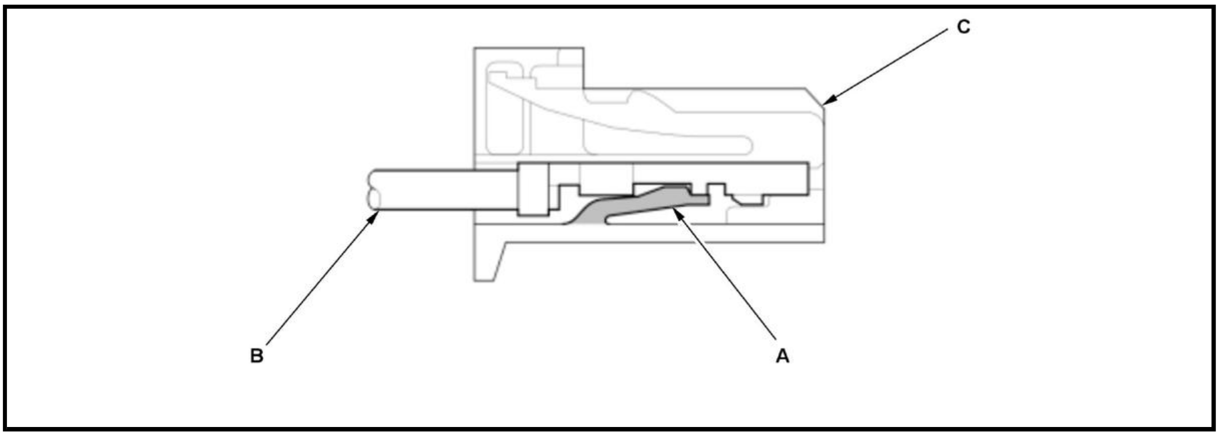

Note for installation

2. Insert the power mirror wires into the terminal locations as shown.

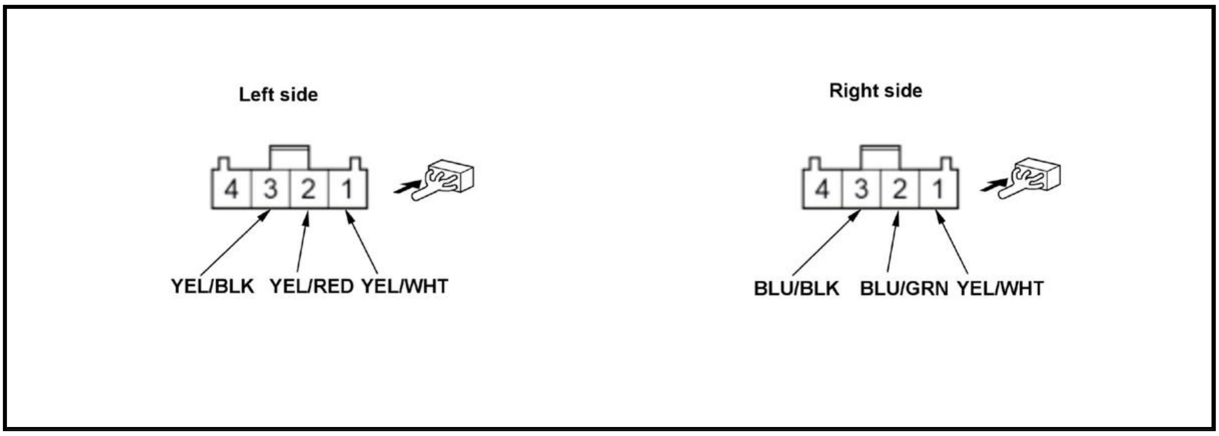
Left side
4 3 2 1
YEL/BLK
YEL/RED
YEL/WHT
Right side
4 3 2 1
BLU/BLK
BLU/GRN
YEL/WHT

4. Gasket/Harness Clip - Remove

Note for installation

1. Install the gasket (A) and the harness clip (B) on the wire harness at the proper positions, and apply the electrical tapes (C) and the EPDM (D) to fix them.

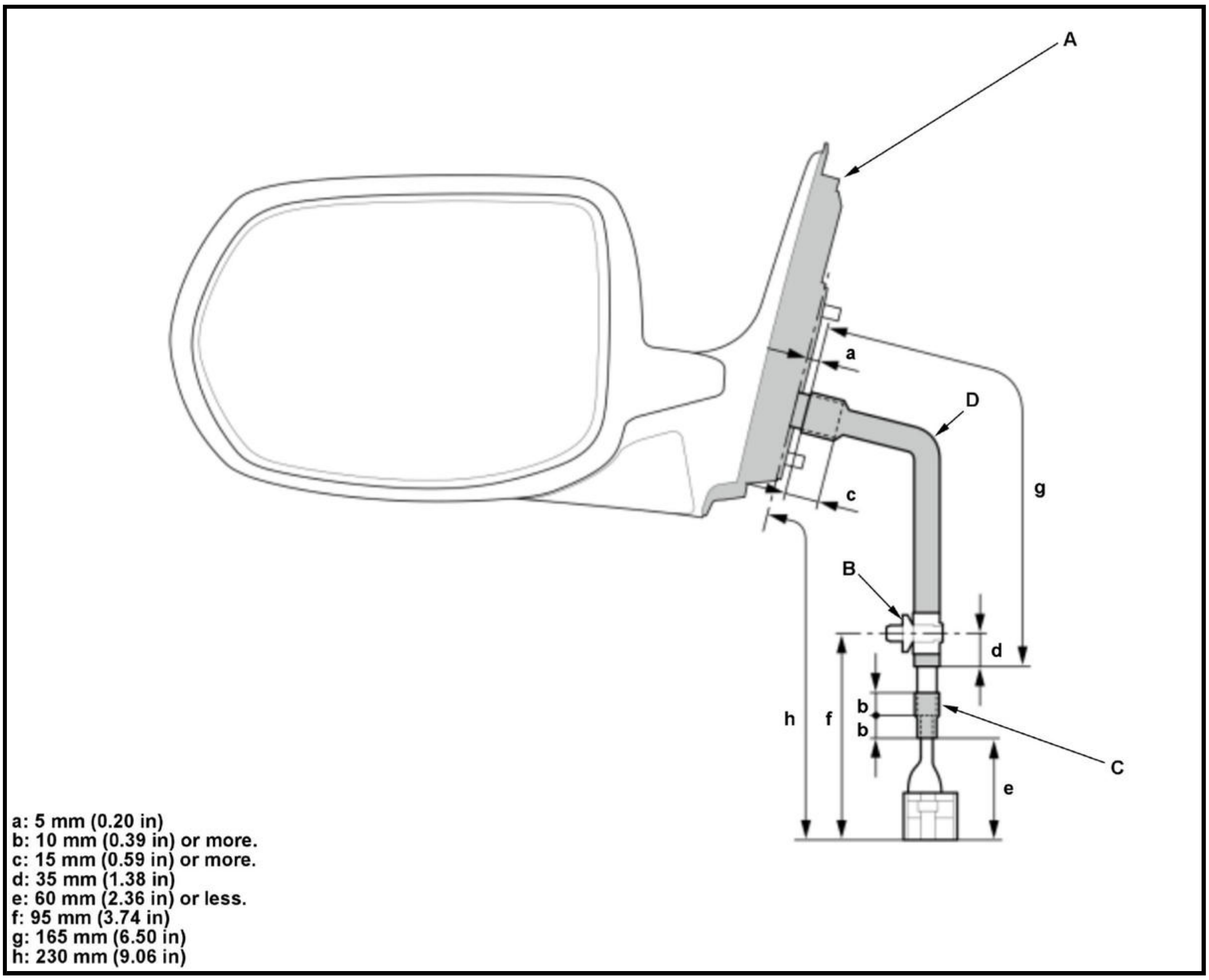
A
D
B
C
a
c
g
d
b
b
e
h
f

a: 5 mm (0.20 in)
b: 10 mm (0.39 in) or more.
c: 15 mm (0.59 in) or more.
d: 35 mm (1.38 in)
e: 60 mm (2.36 in) or less.
f: 95 mm (3.74 in)
g: 165 mm (6.50 in)
h: 230 mm (9.06 in)

5. Wire Harness - Remove
6. Base Cover - Remove
7. Power Mirror Assembly - Remove
8. Power Mirror Actuator - Remove
9. All Removed Parts - Install

1. Install the parts in the reverse order of removal.

POWER MIRROR REMOVAL AND INSTALLATION

Removal and Installation

NOTE: **How to read the torque specifications**

1. **Front Door Panel - Remove**
2. Mirror Trim - Remove

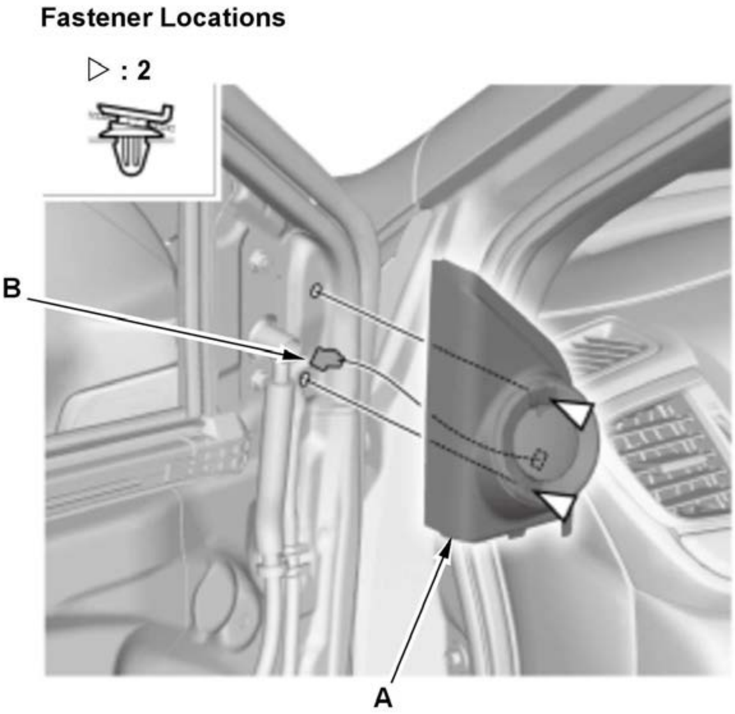 Fastener Locations ▷ : 2 B A	1. Remove the mirror cover (A). 2. With front tweeter: Disconnect the connector (B).

3. Power Mirror - Remove

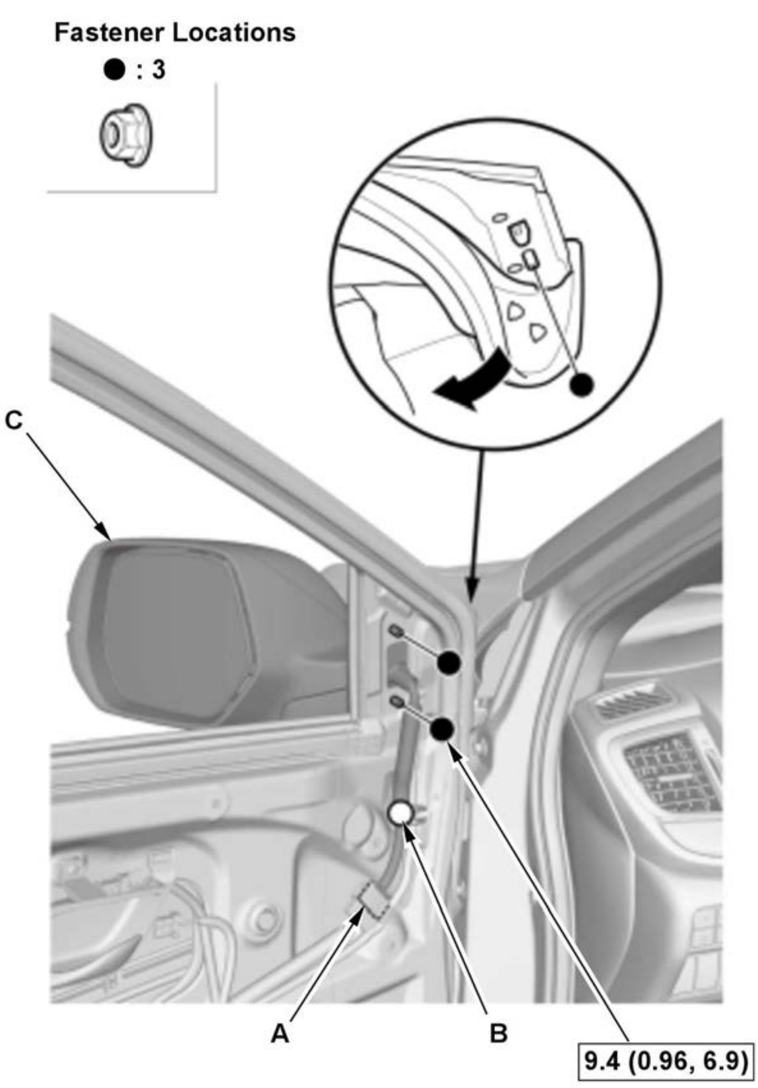 Fastener Locations ● : 3 C A B 9.4 (0.96, 6.9)	1. Disconnect the connector (A). 2. Remove the harness clip (B). 3. While holding the power mirror (C), remove the nuts.

4. All Removed Parts - Install

1. Install the parts in the reverse order of removal.

REARVIEW MIRROR REMOVAL AND INSTALLATION

Removal and Installation

Rearview Mirror Type 1

NOTE: **Numbered call-outs in figure pertain to list numbers in following procedure.**

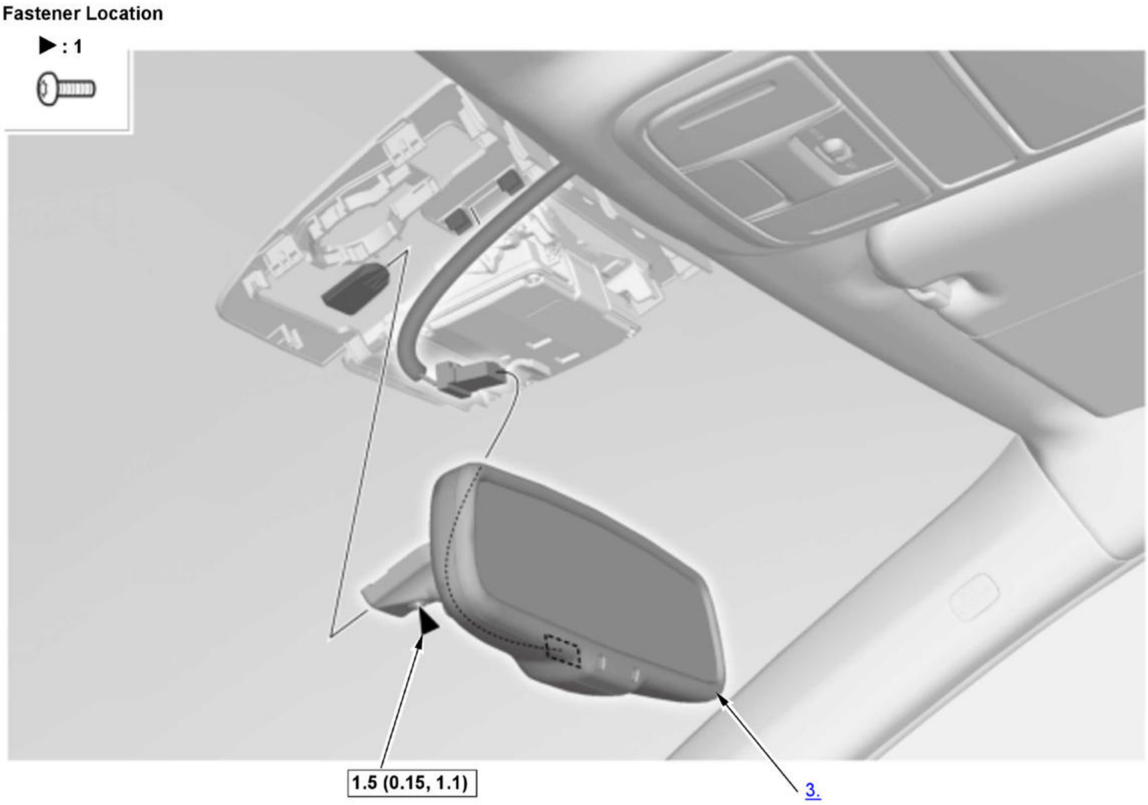

Fig. 4: Rearview Mirror Components (Type 1)
Courtesy of HONDA, U.S.A., INC.

☐	Torque: N.m (kgf.m, lbf.ft)

1. Sensor Cover Lid - Remove
2. Sensor Cover - Remove
3. Rearview Mirror - Remove
4. All Removed Parts - Install

   1. Install the parts in the reverse order of removal.

Rearview Mirror Type 2

NOTE: **Numbered call-outs in figure pertain to list numbers in following procedure.**

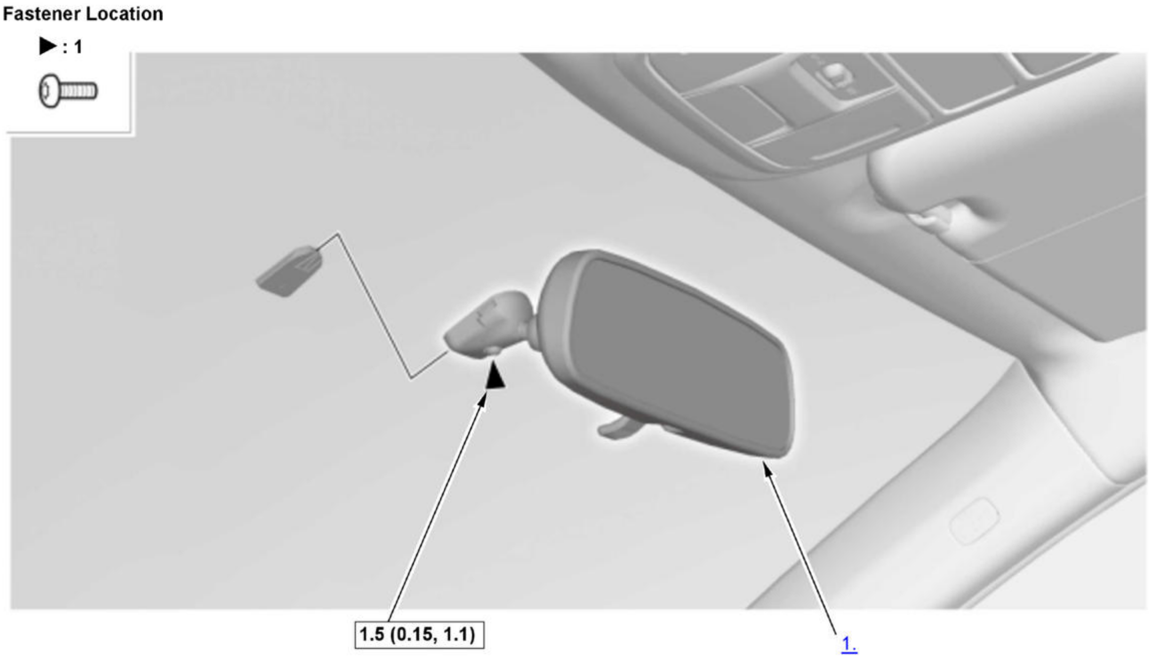

Fig. 5: Rearview Mirror Components (Type 2)
Courtesy of HONDA, U.S.A., INC.

▭	Torque: N.m (kgf.m, lbf.ft)

1. Rearview Mirror - Remove
2. All Removed Parts - Install

1. Install the parts in the reverse order of removal.

REMOVAL, INSTALLATION & TEST

POWER MIRROR SWITCH REMOVAL, INSTALLATION, AND TEST

Removal and Installation

Procedure

NOTE: **Numbered call-outs in figure pertain to list numbers in following procedure.**

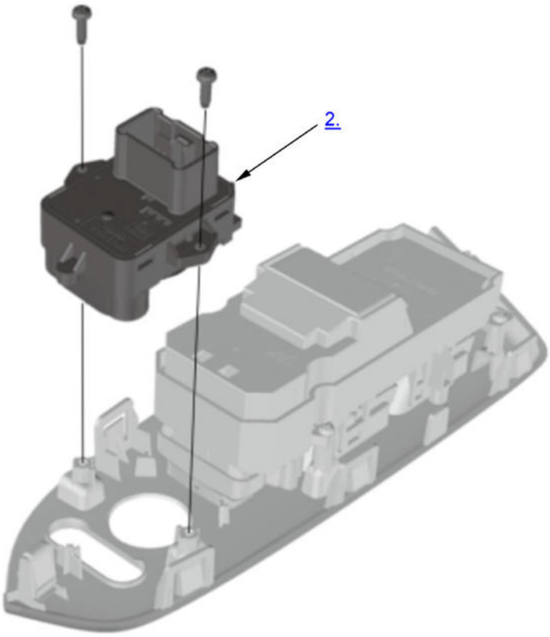

Fig. 6: Power Mirror Switch Components
Courtesy of HONDA, U.S.A., INC.

1. **Front Door Power Window Switch Panel - Remove**
2. Power Mirror Switch - Remove
3. All Removed Parts - Install

1. Install the parts in the reverse order of removal.

Test

1. Power Mirror Switch - Test

   1. Check the power mirror switch (A) according to the table.

   NOTE:

   - When an LED is located between terminals, check if the LED lights by connecting power and ground to the LED.
   - Note this important operating characteristic; diode bias causes a diode to fully conduct electricity in one direction (forward), while not at all in the opposite direction (reverse).

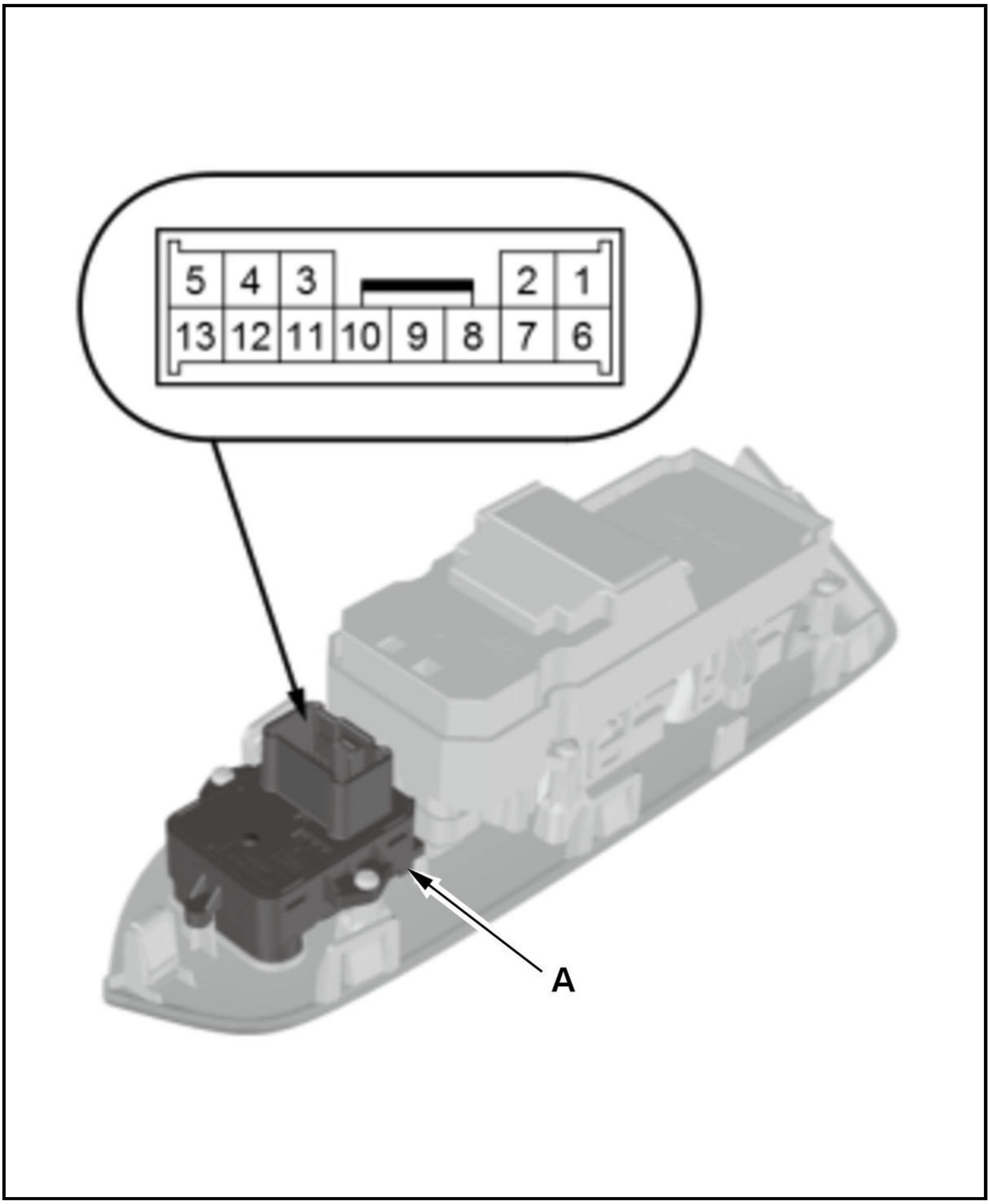
A

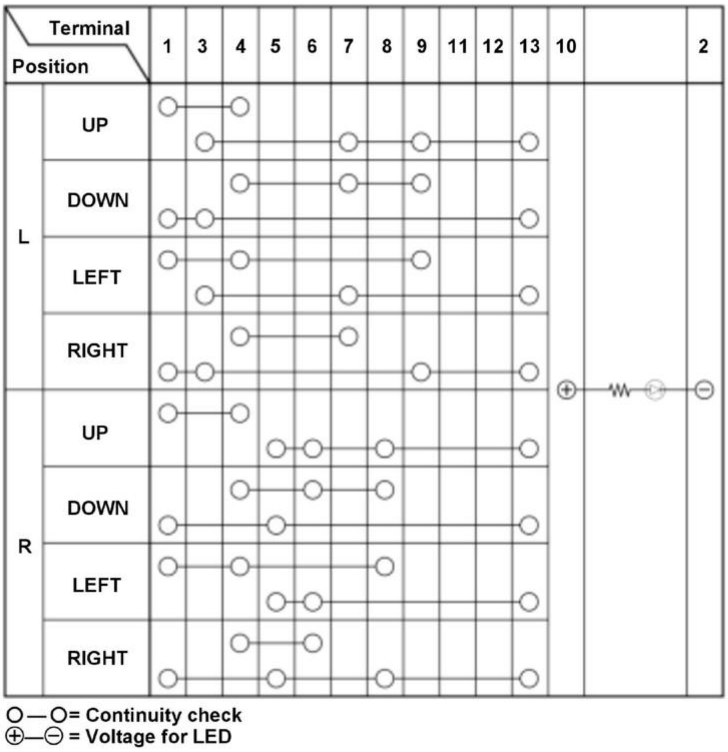

Position		1	3	4	5	6	7	8	9	11	12	13	10		2
L	UP	○		○									⊕		⊖
			○				○		○			○			
	DOWN			○			○		○						
		○	○									○			
	LEFT	○		○					○						
			○				○					○			
	RIGHT			○			○								
		○	○						○			○			
R	UP	○		○											
					○	○		○				○			
	DOWN			○		○		○							
		○			○							○			
	LEFT	○		○				○							
					○	○						○			
	RIGHT			○		○									
		○			○			○				○			

○—○= Continuity check
⊕—⊖ = Voltage for LED

2. If the result is not as specified, replace the power mirror switch.

DESCRIPTION & OPERATION

AUTOMATIC DIMMING MIRRORS SYSTEM DESCRIPTION

Basic Control/Function

Based on each signal, the control unit judges whether the light at the rear of the vehicle is stronger than the light sensed at the front. If the control unit judges that the light sensed by the rear-facing lux level sensor is brighter than the light sensed by the front-facing lux level sensor, it transmits a signal relaying that information to the drive circuit.

When shifting the transmission to the R position/mode while automatic dimming control is in operation, the automatic dimming turns off and the mirror returns to its highest state of reflectivity. When shifting the transmission out of the R position/mode, the automatic dimming control function is reactivated.

Fail-safe Function

In case of a lux level sensor malfunction, the mirror will become clear as a fail-safe action.

AUTOMATIC DIMMING MIRRORS SYSTEM DESCRIPTION - COMPONENTS

Inside Mirror

The front-facing lux level sensor is attached to the front of the mirror housing. Day or night, it senses the amount of ambient light at the front of the vehicle, and that signal is transmitted to the control unit located inside the mirror housing. The rear-facing lux level sensor is attached to the rear of the mirror housing. It senses the amount of light or glare at the rear of the vehicle, and transmits that signal to the control unit.

AUTOMATIC DIMMING MIRRORS SYSTEM DESCRIPTION - SYSTEM DIAGRAM

For locations of each component on the vehicle, refer to Component Location Index

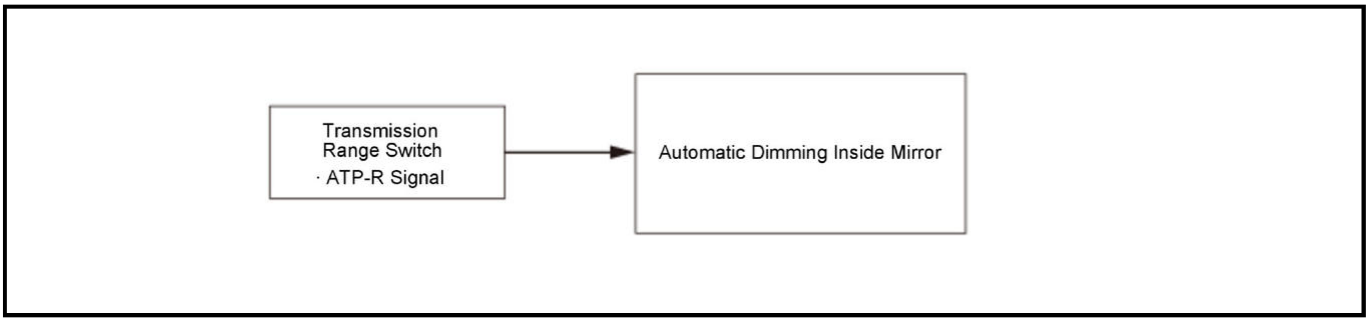

POWER MIRRORS SYSTEM DESCRIPTION

Mirror Defogger Function (With Mirror Defogger)

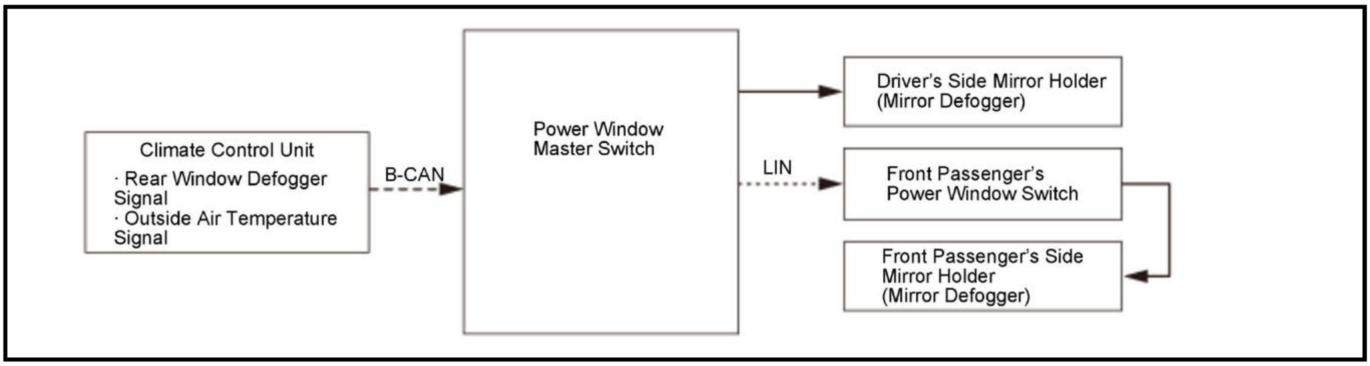
Climate Control Unit
· Rear Window Defogger Signal
· Outside Air Temperature Signal
B-CAN
Power Window Master Switch
LIN
Driver's Side Mirror Holder (Mirror Defogger)
Front Passenger's Power Window Switch
Front Passenger's Side Mirror Holder (Mirror Defogger)

Manual Function

The mirror defogger is controlled by the climate control unit. When the vehicle is turned to the ON mode and the rear window defogger/mirror defogger switch is pressed, the climate control unit sends the defogger ON signal as a B-CAN signal to the power window master switch. The power window master switch operates the driver's side mirror defogger, and sends the defogger ON signal via LIN to the front passenger's power window switch to operate the passenger's side mirror defogger.

Auto Mirror Defogger Function

When the power window master switch receives a signal that the outside air temperature is 41 deg.F (5 deg.C) or below from the outside air temperature sensor, the power window master switch automatically turns on the left and right mirror defoggers within 10 seconds after the vehicle is turned to the ON mode. The mirror defogger output automatically stops in 10 minutes as a result of its timer. If the power window master switch receives a rear window defogger/mirror defogger switch input signal from the climate control unit during mirror defogger output, the power window master switch shuts off the auto operation function immediately.

Defogger Timer Function

The mirror defogger provides the timer control function that is controlled by the climate control unit. The timer control is operated by turning the vehicle to ON mode, then turning on the rear window defogger/mirror defogger switch. The timer operating time varies according to ambient temperature. If the rear window defogger/mirror defogger switch is turned on when the timer is active, it toggles between ON and OFF every time the switch is pressed.

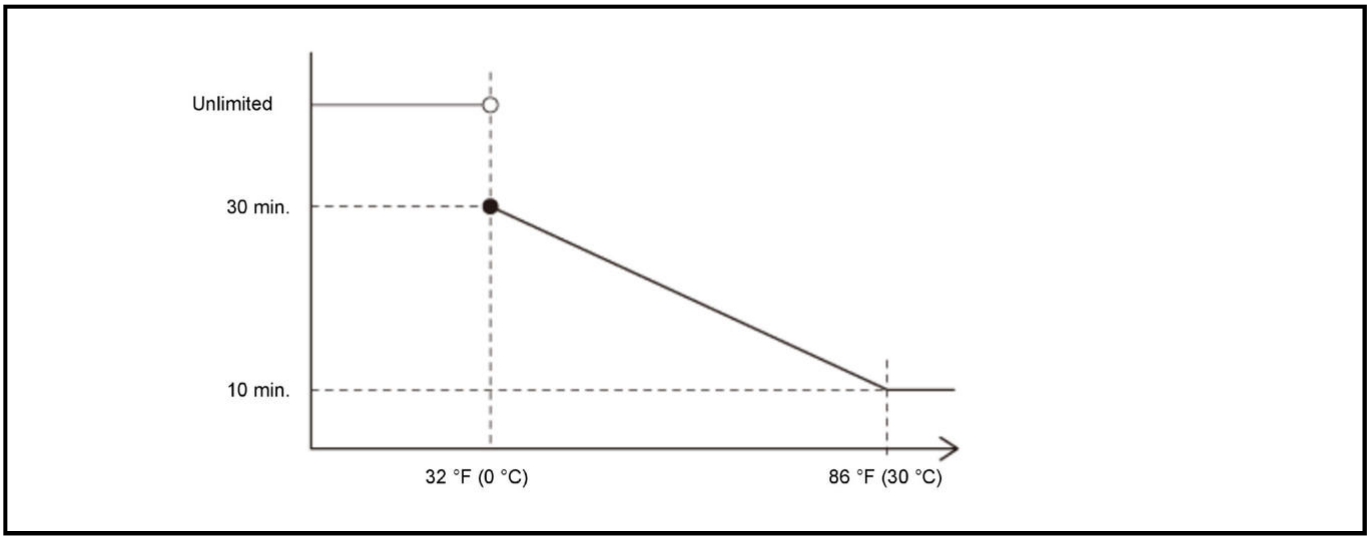

POWER MIRRORS SYSTEM DESCRIPTION - COMPONENTS

Power Mirror

The power mirror has a built-in power mirror actuator, and the power mirror defogger.

Power Window Master Switch

During power mirror control, the power window master switch operates the mirror defogger on the driver's side via B-CAN signal input.

Front Passenger's Power Window Switch

During power mirror control, the front passenger's power window switch receives a signal from the power window master switch via LIN and operates the mirror defogger on the passenger's side.

POWER MIRRORS SYSTEM DESCRIPTION - SYSTEM DIAGRAM

For locations of each component on the vehicle, refer to Component Location Index

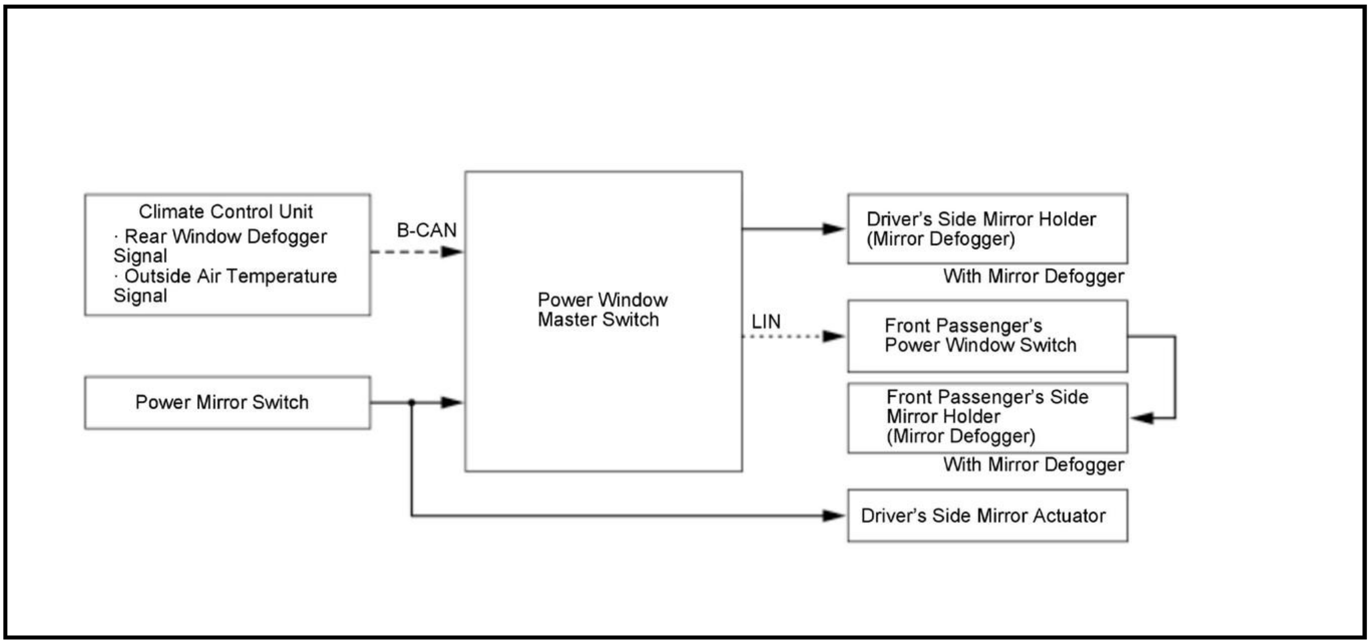
Climate Control Unit
· Rear Window Defogger Signal
· Outside Air Temperature Signal
B-CAN
Power Window Master Switch
Power Mirror Switch
LIN
Driver's Side Mirror Holder (Mirror Defogger)
With Mirror Defogger
Front Passenger's Power Window Switch
Front Passenger's Side Mirror Holder (Mirror Defogger)
With Mirror Defogger
Driver's Side Mirror Actuator

CONNECTOR VIEW

AUTOMATIC DIMMING INSIDE MIRROR CONNECTOR FOR INPUTS AND OUTPUTS

Automatic Dimming Inside Mirror 7P Connector (female terminals)

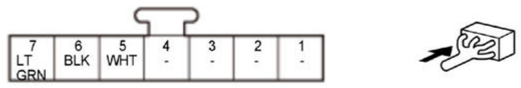
7
LT GRN
6
BLK
5
WHT
4
-
3
-
2
-
1
-

Terminal number	Terminal name	Description	Signal
1	---	Not used	---
2	---	Not used	---
3	---	Not used	---
4	---	Not used	---
5	BACK LT	Detects back-up light signal	With vehicle in ON mode and R position/mode: about battery voltageIf

Terminal number	Terminal name	Description	Signal
			none of above conditions are met: less than 0.2 V
6	GND	Automatic dimming inside mirror ground	Less than 0.2 V at all times
7	IG1 OPTION	IG1 power source	With vehicle in ON or START mode: about battery voltage

INPUT TEST

POWER MIRRORS (FRONT PASSENGER'S POWER WINDOW SWITCH) INPUT TEST

NOTE:

- Make sure the fuses associated with the system is OK.
- If you are troubleshooting multiple DTCs, be sure to follow the instructions in **B-CAN System Diagnosis Test Mode A** .

1. Turn the vehicle to the OFF (LOCK) mode.

2. Disconnect the front passenger's power window switch 37P connector.

Front Passenger's Power Window Switch 37P Connector (female terminals)

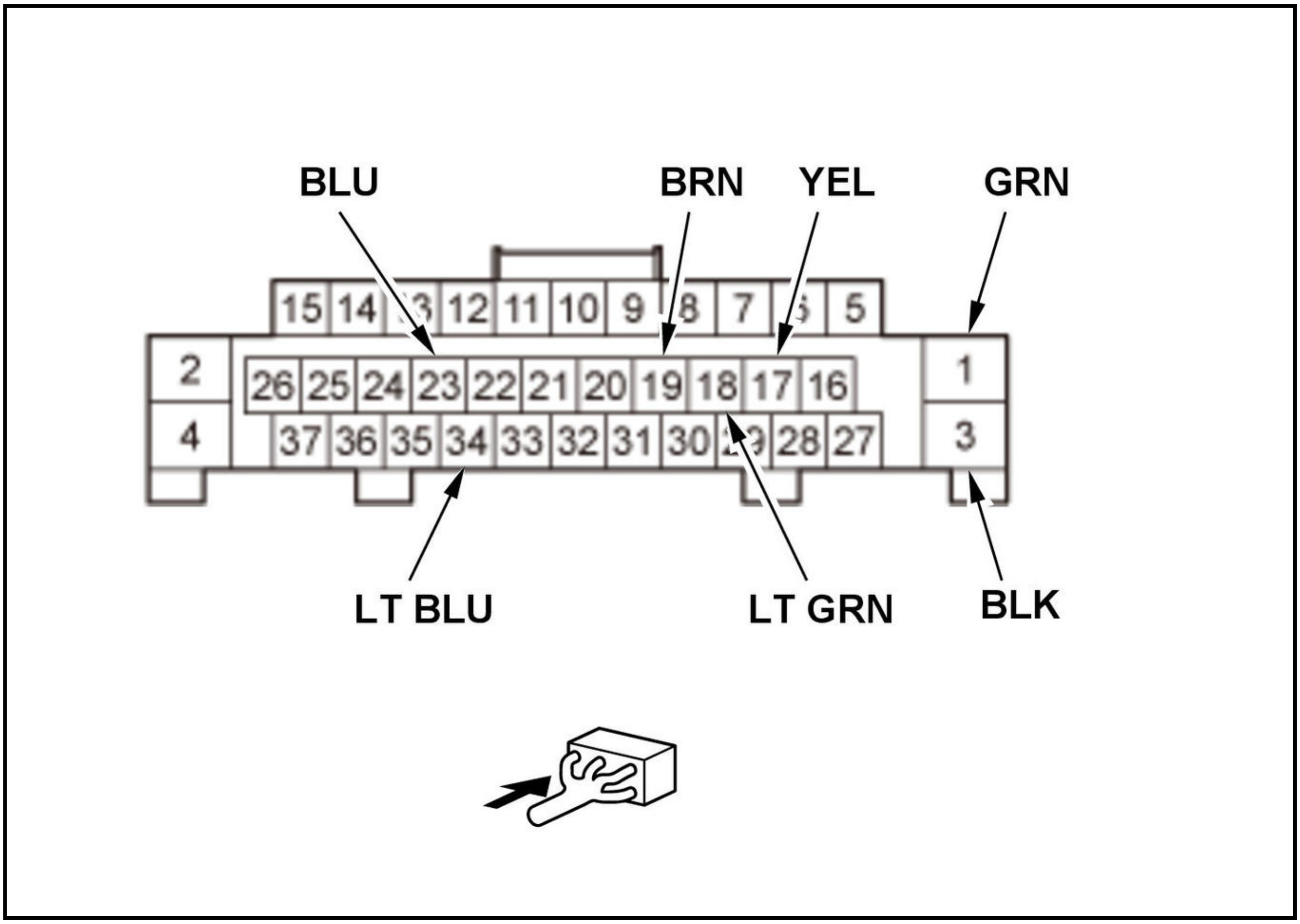
BLU
BRN
YEL
GRN
15 14 13 12 11 10 9 8 7 6 5
2
26 25 24 23 22 21 20 19 18 17 16
1
4
37 36 35 34 33 32 31 30 29 28 27
3
LT BLU
LT GRN
BLK

Inspect the connector and socket terminals to be sure they are all making good contact:

- If the terminals are bent, loose, or corroded, repair them as necessary, and recheck the system.
- If the terminals look OK, go to step 4.

With the connector still disconnected, do the following input tests:

- If any test indicates a problem, find and correct the cause, then recheck the system.
- If all the input tests prove OK, go to step 5.

Cavity	Wire	Test condition	Test: Desired result	Possible cause if desired result is not obtained
19*17	BRN*YEL	Vehicle ON mode, connect terminals No. 1 and No. 17, and terminals No. 19 and No. 3 with jumper wires.	Check the right power mirror operation: The right power mirror should move LEFT.	• Faulty right power mirror • Poor ground (G401) or an open in the ground wire • An open or high resistance in the wire
		Vehicle ON mode, connect terminals No. 1 and No. 19, and terminals No. 17 and No. 3 with jumper wires.	Check the right power mirror operation: The right power mirror should move RIGHT.	

*1: With mirror defogger

*2: With panoramic glass roof

*3: With moonroof

Cavity	Wire	Test condition	Test: Desired result	Possible cause if desired result is not obtained
17*18	YEL*LT GRN	Connect terminals No. 1 and No. 18, and terminals No. 17 and No. 3 with jumper wires.	Check the right power mirror operation: The right power mirror should move UP.	• Faulty right power mirror • Poor ground (G401) or an open in the ground wire • An open or high resistance in the wire
		Connect terminals No. 1 and No. 17, and terminals No. 18 and No. 3 with jumper wires.	Check the right power mirror operation: The right power mirror should move DOWN.	
23* 1	BLU	Vehicle ON mode, connect terminals No. 1 and No. 23 with a jumper wire	Check the right power mirror defogger operation: The right power mirror defogger should work (the inside lower edge becomes warm).	• Faulty right power mirror defogger • Poor ground (G401) or an open in the ground wire • An open or high resistance in the wire
34	LT BLU	Disconnect these connectors: • Power window master switch 37P connector • Panoramic glass roof motor	Check for continuity between terminal No. 34 and power window master switch 37P connector terminal No. 36: There should be continuity.	An open in the LIN (P/W) wire

Cavity	Wire	Test condition	Test: Desired result	Possible cause if desired result is not obtained
		control unit 14P connector* 2 • Moonroof motor-control unit 14P connector* 3	Check for continuity between terminal No. 34 and panoramic glass roof motor-control unit 14P connector terminal No. 12: There should be continuity.	An open in the LIN(P/W) wire
			Check for continuity between terminal No. 34 and moonroof motor-control unit 14P connector terminal No. 12: There should be continuity.	An open in the LIN (P/W) wire
			Check for continuity to ground: There should be no continuity.	A short to ground in the LIN (P/W) wire

*1: With mirror defogger

*2: With panoramic glass roof

*3: With moonroof

5. Turn the vehicle to the OFF (LOCK) mode. Reconnect the connector, and do the following input tests:

- If any test indicates a problem, find and correct the cause, then recheck the system.
- If all the input tests prove OK, replace the front passenger's power window switch .

NOTE: After replacing the front passenger's power window switch, do the resetting the power window control unit .

Cavity	Wire	Test condition	Test: Desired result	Possible cause if desired result is not obtained
1	GRN	Under all conditions	Measure the voltage to ground: There should be battery voltage.	An open or high resistance in the wire
3	BLK	In all power modes	Measure the voltage to ground: There should be less than 0.2 V.	• Poor ground (G401) • An open or high resistance in the ground wire

POWER MIRRORS (POWER WINDOW MASTER SWITCH) INPUT TEST

NOTE:

- Make sure the fuses associated with the system is OK.
- If you are troubleshooting multiple DTCs, be sure to follow the instructions in B-CAN System Diagnosis Test Mode A .

1. Turn the vehicle to the OFF (LOCK) mode.

2. Disconnect the power window master switch 37P connector.

Power Window Master Switch 37P Connector (female terminals)

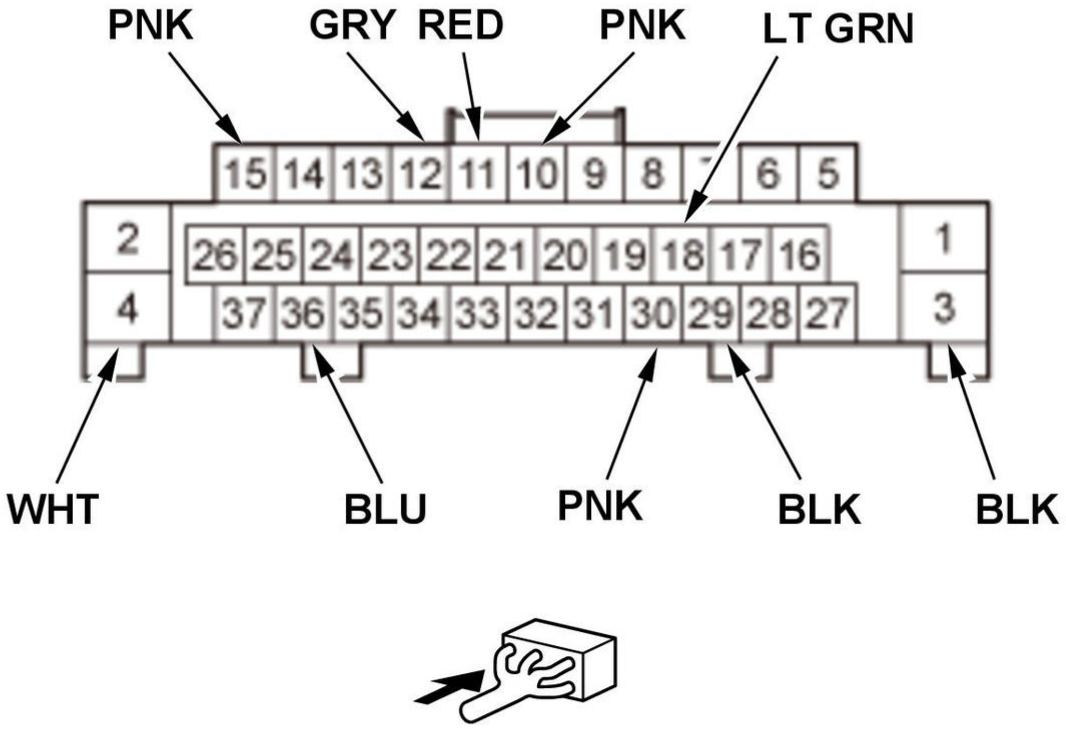

Inspect the connector and socket terminals to be sure they are all making good contact:

- If the terminals are bent, loose, or corroded, repair them as necessary, and recheck the system.
- If the terminals look OK, go to step 4.

With the connector still disconnected, do the following input tests:

- If any test indicates a problem, find and correct the cause, then recheck the system.
- If all the input tests prove OK, go to step 5.

Cavity	Wire	Test condition	Test: Desired result	Possible cause if desired result is not obtained
10	PNK	Vehicle ON mode, power mirror switch in RIGHT mirror position	Measure the voltage to ground: There should be battery voltage when the power mirror switch LEFT or DOWN is pressed.	Faulty power mirror switch An open or high resistance in the wire
11	RED	Vehicle ON mode, power mirror switch in RIGHT mirror position	Measure the voltage to ground: There should be battery voltage when the power mirror switch RIGHT or DOWN is pressed.	Faulty power mirror switch An open or high resistance in the wire
12	GRY	Vehicle ON mode	Measure the voltage to ground: There should be battery voltage when the	Faulty power mirror switch

Cavity	Wire	Test condition	Test: Desired result	Possible cause if desired result is not obtained
			power mirror switch UP or LEFT is pressed.	- An open or high resistance in the wire
15* 1	PNK	Vehicle ON mode, connect terminals No. 18 and No. 15 with a jumper wire	Check the left power mirror defogger operation: The left power mirror defogger should work (the inside lower edge becomes warm).	- Faulty left power mirror defogger - Poor ground (G401) or an open in the ground wire - An open or high resistance in the wire

*1: With mirror defogger

*2: With panoramic glass roof

*3: With moonroof

Cavity	Wire	Test condition	Test: Desired result	Possible cause if desired result is not obtained
30	PNK	Vehicle ON mode, connect terminals No. 18 and No. 30 with a jumper wire	Check the power mirror switch light operation: The power mirror switch light should come on.	- Faulty LED - Faulty power mirror switch - Poor ground (G401) or an open in the ground wire - An open or high resistance in the wire
36	BLU	Disconnect these connectors: - Front passenger's power window switch 37P connector - Panoramic glass roof motor-control unit 14P connector* 2 - Moonroof motor-control unit 14P connector* 3	Check for continuity between terminal No. 36 and front passenger's power window switch 37P connector terminal No. 34: There should be continuity.	An open in the LIN(P/W) wire
			Check for continuity between terminal No. 36 and panoramic glass roof motor-control unit 14P connector terminal No. 12: There should be continuity.	An open in the LINP/W) wire
			Check for continuity between terminal No. 36 and moonroof motor-control unit 14P connector terminal No. 12: There should be continuity.	An open in the LIN(P/W) wire
			Check for continuity to ground: There should be no continuity.	A short to ground in the LIN(P/W) wire

*1: With mirror defogger

*2: With panoramic glass roof

*3: With moonroof

Reconnect the connector, and do the following input tests:

- If any test indicates a problem, find and correct the cause, then recheck the system.
- If all the input tests prove OK, **replace the power window master switch** .

NOTE: After replacing the power window master switch, **do the resetting the power window control unit** .

Cavity	Wire	Test condition	Test: Desired result	Possible cause if desired result is not obtained
4	WHT	Under all conditions	Measure the voltage to ground: There should be battery voltage.	An open or high resistance in the wire
18	LT GRN	Vehicle ON mode	Measure the voltage to ground: There should be battery voltage.	An open or high resistance in the wire
3	BLK	In all power modes	Measure the voltage to ground: There should be less than 0.2 V.	• Poor ground (G401) • An open or high resistance in the ground wire
29	BLK	In all power modes	Measure the voltage to ground: There should be less than 0.2 V.	• Poor ground (G401) • An open or high resistance in the ground wire

TEST

AUTOMATIC DIMMING MIRRORS TEST

1. Turn the vehicle to the ON mode. Measure the voltage between terminal No. 7 and body ground.

- If there is battery voltage, go to step 3.
- If there is no voltage, check for:
-
    - -

      Blown No. D5 (10 A) fuse in the under-dash fuse/relay box
    - -

      An open or high resistance in the wire

Automatic Dimming Inside Mirror 7P Connector (female terminals)

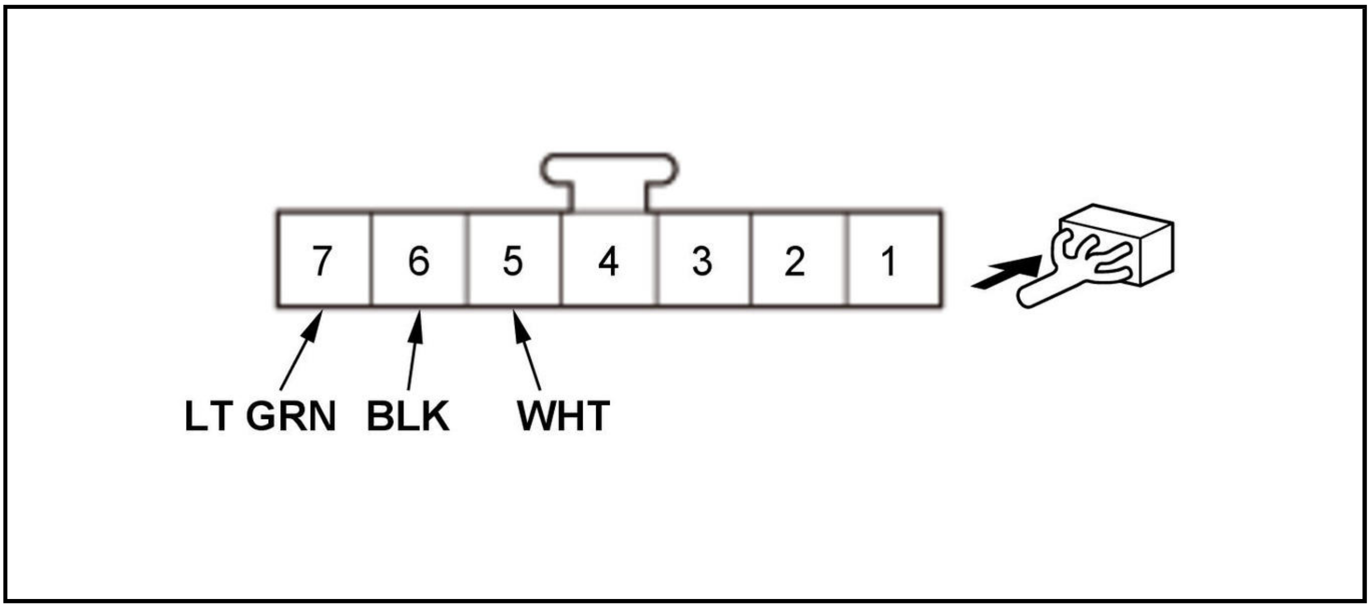

Measure the voltage between terminal No. 6 and body ground.

- If there is less than 0.2 V, go to step 4.
- If there is voltage more than 0.2 V, check for:
-
    - -

      An open or high resistance in the ground wire
    - -

      Poor ground (G401)

Measure the voltage between terminal No. 5 and body ground with the shift lever in R position/mode.

- If there is battery voltage, **replace the rearview mirror** .
- If there is no voltage, check for:
-
    - -

      An open or high resistance in the wire
    - -

      Faulty under-dash fuse/relay box
    - -

      Faulty reverse relay circuit
    - -

      Faulty transmission range switch

POWER MIRROR ACTUATOR TEST

Test

1. **Front Door Panel - Remove**
2. Power Mirror Actuator - Test

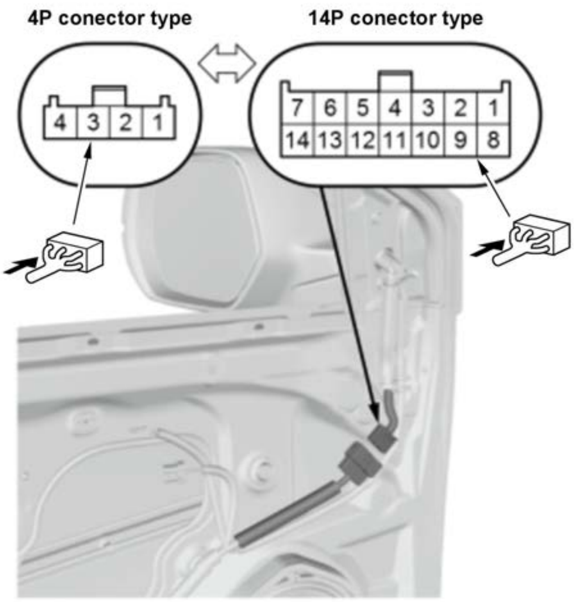

Left and Right Power Mirror Actuator

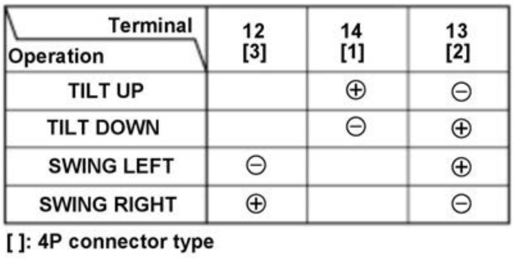

Terminal / Operation	12 [3]	14 [1]	13 [2]
TILT UP		⊕	⊖
TILT DOWN		⊖	⊕
SWING LEFT	⊖		⊕
SWING RIGHT	⊕		⊖

[ ]: 4P connector type

NOTE: Before testing, make sure not to short the power mirror actuator circuit.

1. Check the actuator operation by connecting power and ground according to the table.

2. If the mirror fails to work properly, check for an open or high resistance in the wire between the connector and the mirror holder. If the wire is OK, replace the actuator

.

Defogger

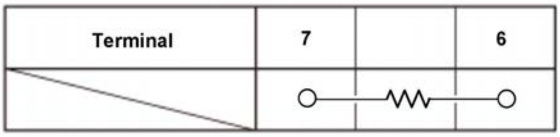

Terminal	7		6
	○	─⋀⋀⋀─	○

3. Check for continuity between the terminals according to the table. There should be continuity.

4. If there is no continuity, check for an open or high resistance in the wire between the connector and the mirror holder. If the wire is OK, replace the mirror holder

.

3. All Removed Parts - Install

1. Install the parts in the reverse order of removal.

CIRCUIT DIAGRAM

AUTOMATIC DIMMING MIRRORS CIRCUIT DIAGRAM

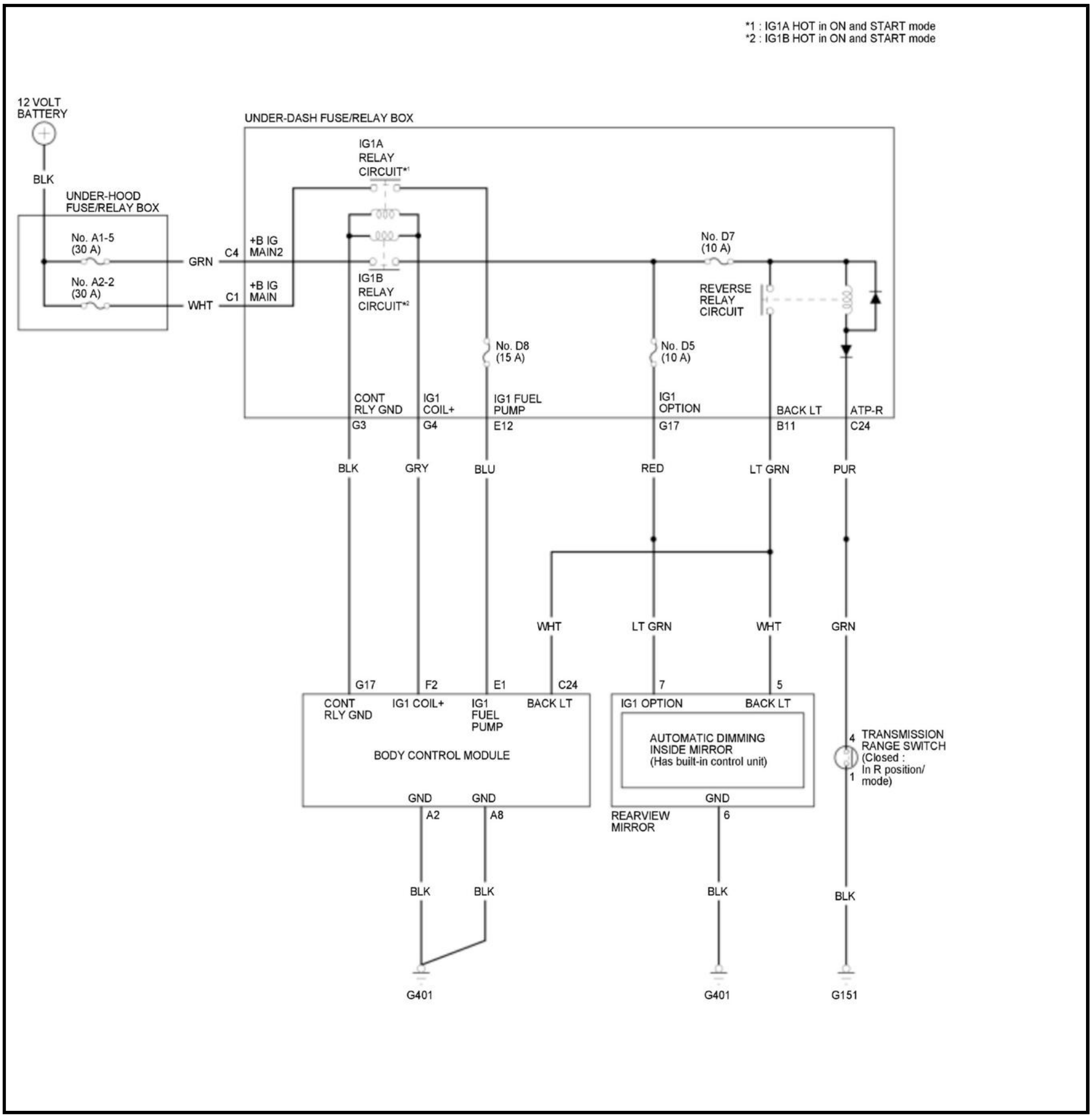
*1 : IG1A HOT in ON and START mode
*2 : IG1B HOT in ON and START mode
12 VOLT BATTERY
BLK
UNDER-HOOD FUSE/RELAY BOX
No. A1-5 (30 A)
No. A2-2 (30 A)
GRN
WHT
C4
C1
UNDER-DASH FUSE/RELAY BOX
+B IG MAIN2
+B IG MAIN
IG1A RELAY CIRCUIT*1
IG1B RELAY CIRCUIT*2
No. D7 (10 A)
REVERSE RELAY CIRCUIT
No. D8 (15 A)
No. D5 (10 A)
CONT RLY GND
G3
IG1 COIL+
G4
IG1 FUEL PUMP
E12
IG1 OPTION
G17
BACK LT
B11
ATP-R
C24
BLK
GRY
BLU
RED
LT GRN
PUR
WHT
LT GRN
WHT
GRN
G17
F2
E1
C24
CONT RLY GND
IG1 COIL+
IG1 FUEL PUMP
BACK LT
BODY CONTROL MODULE
GND
GND
A2
A8
7
5
IG1 OPTION
BACK LT
AUTOMATIC DIMMING INSIDE MIRROR (Has built-in control unit)
GND
6
REARVIEW MIRROR
4
1
TRANSMISSION RANGE SWITCH (Closed : In R position/ mode)
BLK
BLK
BLK
BLK
G401
G401
G151

POWER MIRRORS CIRCUIT DIAGRAM

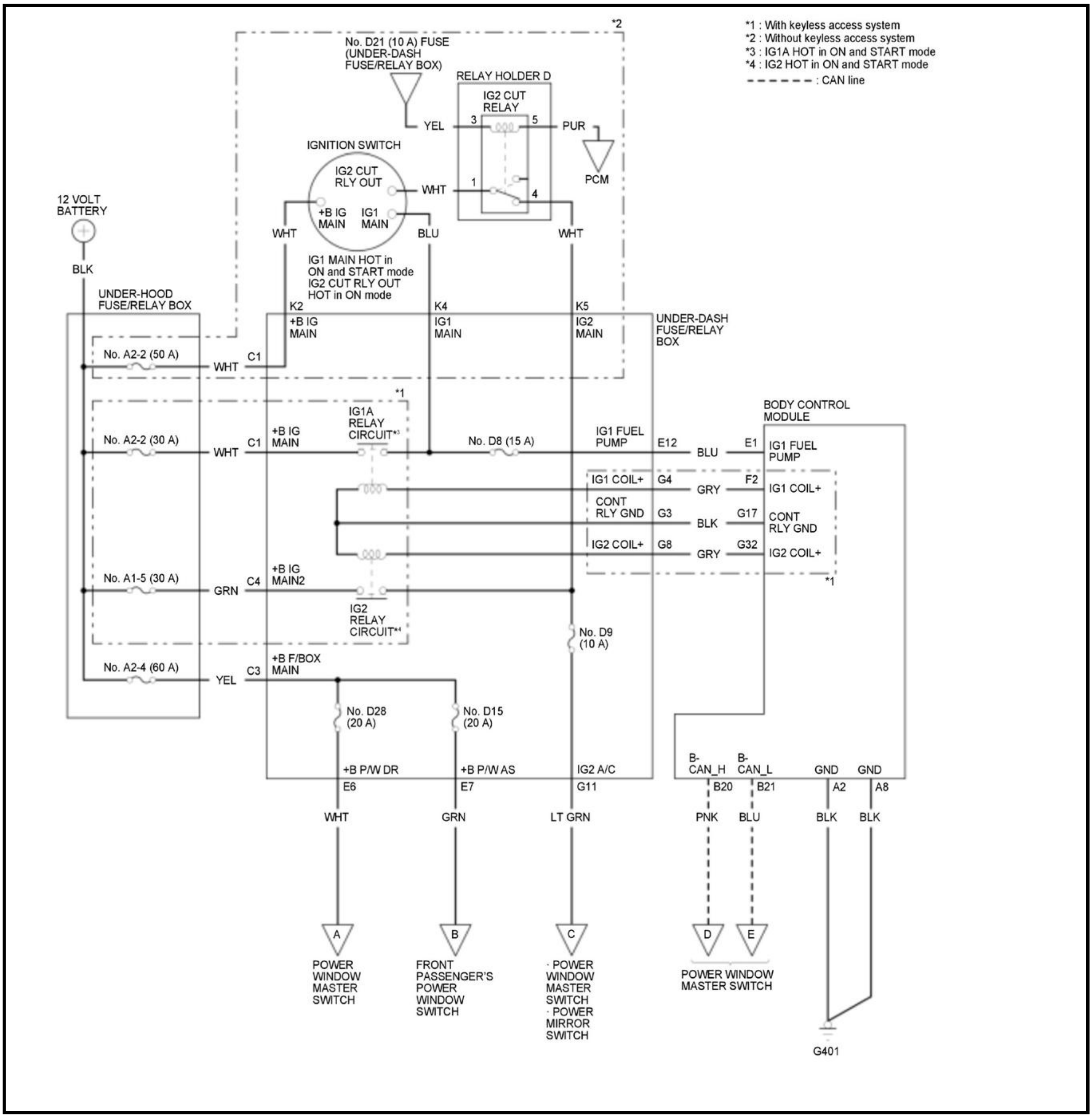
*1 : With keyless access system
*2 : Without keyless access system
*3 : IG1A HOT in ON and START mode
*4 : IG2 HOT in ON and START mode
- - - - - - : CAN line

*2
No. D21 (10 A) FUSE (UNDER-DASH FUSE/RELAY BOX)
RELAY HOLDER D
IG2 CUT RELAY
YEL
3
5
PUR
PCM
1
4
WHT
IGNITION SWITCH
IG2 CUT RLY OUT
+B IG MAIN
IG1 MAIN
12 VOLT BATTERY
WHT
BLU
WHT
BLK
IG1 MAIN HOT in ON and START mode
IG2 CUT RLY OUT HOT in ON mode
UNDER-HOOD FUSE/RELAY BOX
K2
+B IG MAIN
K4
IG1 MAIN
K5
IG2 MAIN
UNDER-DASH FUSE/RELAY BOX
No. A2-2 (50 A)
WHT
C1
*1
IG1A RELAY CIRCUIT*3
No. A2-2 (30 A)
WHT
C1
+B IG MAIN
No. D8 (15 A)
IG1 FUEL PUMP
E12
BLU
E1
BODY CONTROL MODULE
IG1 FUEL PUMP
IG1 COIL+
G4
GRY
F2
IG1 COIL+
CONT RLY GND
G3
BLK
G17
CONT RLY GND
IG2 COIL+
G8
GRY
G32
IG2 COIL+
*1
No. A1-5 (30 A)
GRN
C4
+B IG MAIN2
IG2 RELAY CIRCUIT*4
No. D9 (10 A)
No. A2-4 (60 A)
YEL
C3
+B F/BOX MAIN
No. D28 (20 A)
No. D15 (20 A)
+B P/W DR
E6
+B P/W AS
E7
IG2 A/C
G11
B-CAN_H
B20
B-CAN_L
B21
GND
A2
GND
A8
WHT
GRN
LT GRN
PNK
BLU
BLK
BLK
A
B
C
D
E
POWER WINDOW MASTER SWITCH
FRONT PASSENGER'S POWER WINDOW SWITCH
· POWER WINDOW MASTER SWITCH
· POWER MIRROR SWITCH
POWER WINDOW MASTER SWITCH
G401

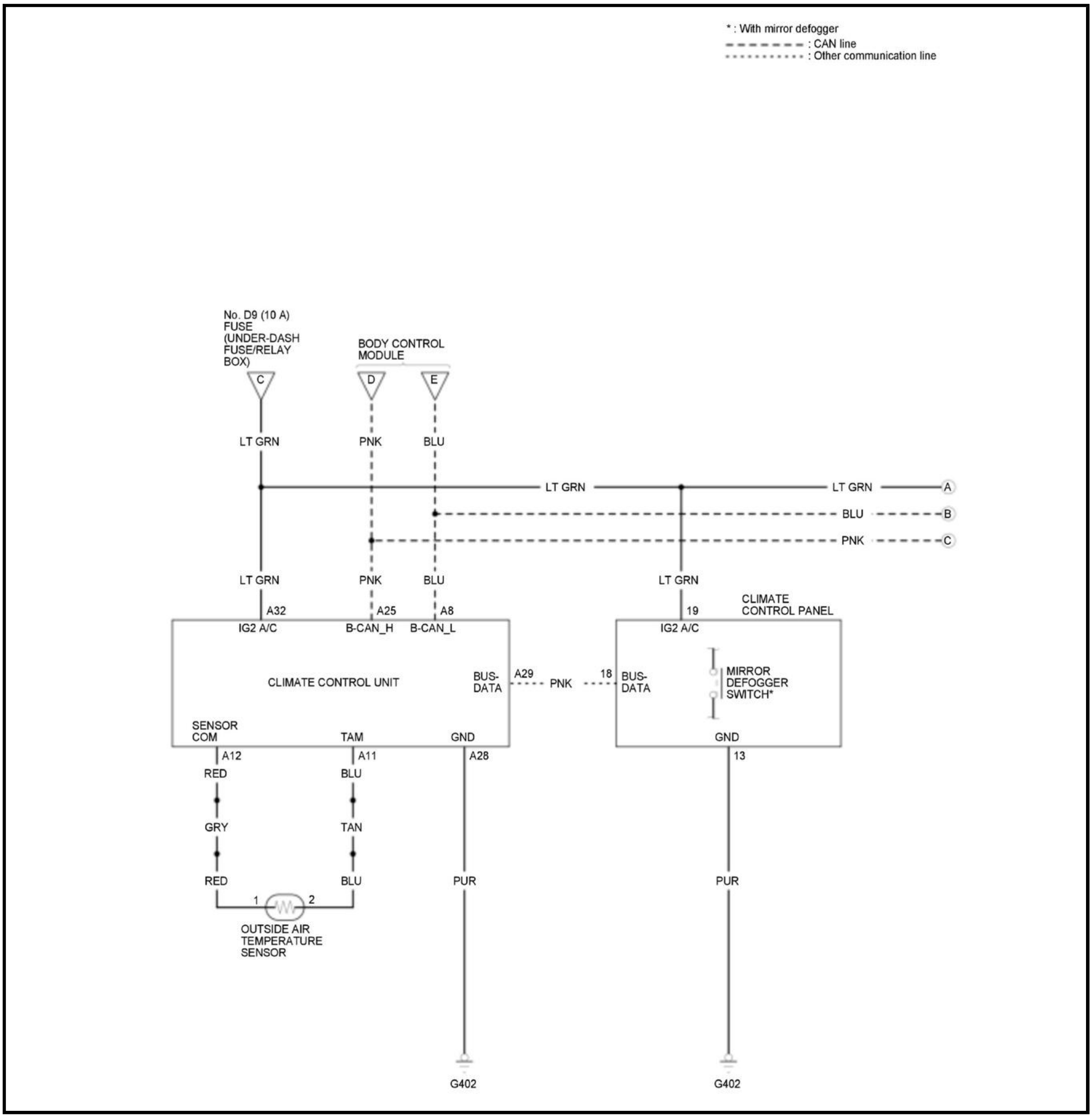

* : With mirror defogger
: CAN line
: Other communication line
No. D9 (10 A) FUSE (UNDER-DASH FUSE/RELAY BOX)
BODY CONTROL MODULE
C
D
E
LT GRN
PNK
BLU
LT GRN
LT GRN
A
BLU
B
PNK
C
LT GRN
PNK
BLU
LT GRN
A32
A25
A8
19
CLIMATE CONTROL PANEL
IG2 A/C
B-CAN_H
B-CAN_L
IG2 A/C
CLIMATE CONTROL UNIT
BUS-DATA
A29
PNK
18
BUS-DATA
MIRROR DEFOGGER SWITCH*
SENSOR COM
TAM
GND
GND
A12
A11
A28
13
RED
BLU
GRY
TAN
RED
BLU
PUR
PUR
1
2
OUTSIDE AIR TEMPERATURE SENSOR
G402
G402

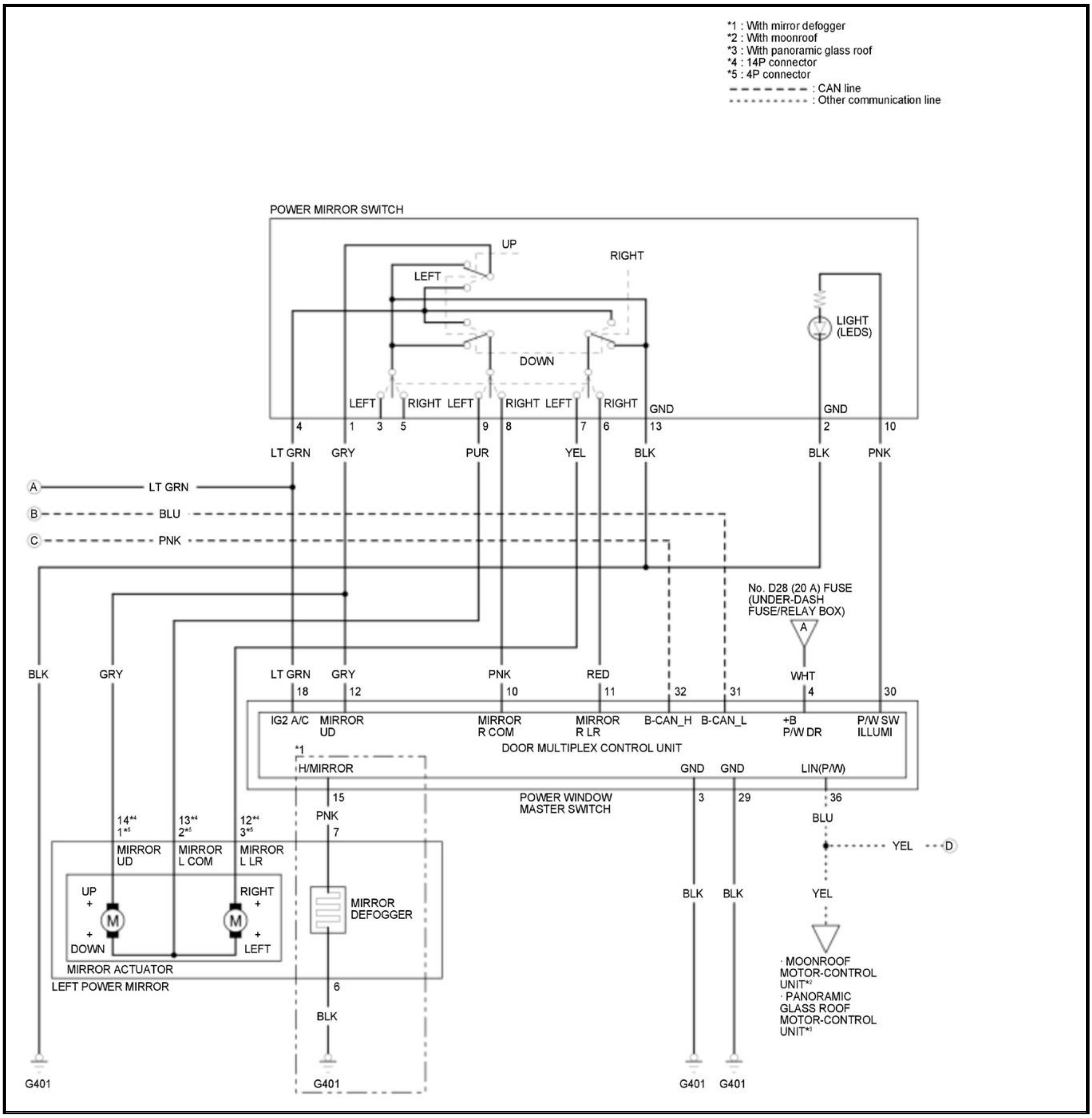
*1 : With mirror defogger
*2 : With moonroof
*3 : With panoramic glass roof
*4 : 14P connector
*5 : 4P connector
: CAN line
: Other communication line
POWER MIRROR SWITCH
UP
LEFT
RIGHT
DOWN
LIGHT (LEDS)
LEFT
RIGHT
LEFT
RIGHT
LEFT
RIGHT
GND
GND
4
1
3
5
9
8
7
6
13
2
10
LT GRN
GRY
PUR
YEL
BLK
BLK
PNK
A
LT GRN
B
BLU
C
PNK
No. D28 (20 A) FUSE (UNDER-DASH FUSE/RELAY BOX)
A
BLK
GRY
LT GRN
GRY
PNK
RED
WHT
18
12
10
11
32
31
4
30
IG2 A/C
MIRROR UD
MIRROR R COM
MIRROR R LR
B-CAN_H
B-CAN_L
+B P/W DR
P/W SW ILLUMI
DOOR MULTIPLEX CONTROL UNIT
*1
H/MIRROR
GND
GND
LIN(P/W)
POWER WINDOW MASTER SWITCH
15
3
29
36
PNK
BLU
7
YEL
D
14*4 1*5
13*4 2*5
12*4 3*5
MIRROR UD
MIRROR L COM
MIRROR L LR
UP +
+ DOWN
RIGHT +
+ LEFT
M
M
MIRROR DEFOGGER
MIRROR ACTUATOR
LEFT POWER MIRROR
6
BLK
BLK
BLK
YEL
· MOONROOF MOTOR-CONTROL UNIT*2
· PANORAMIC GLASS ROOF MOTOR-CONTROL UNIT*3
G401
G401
G401
G401

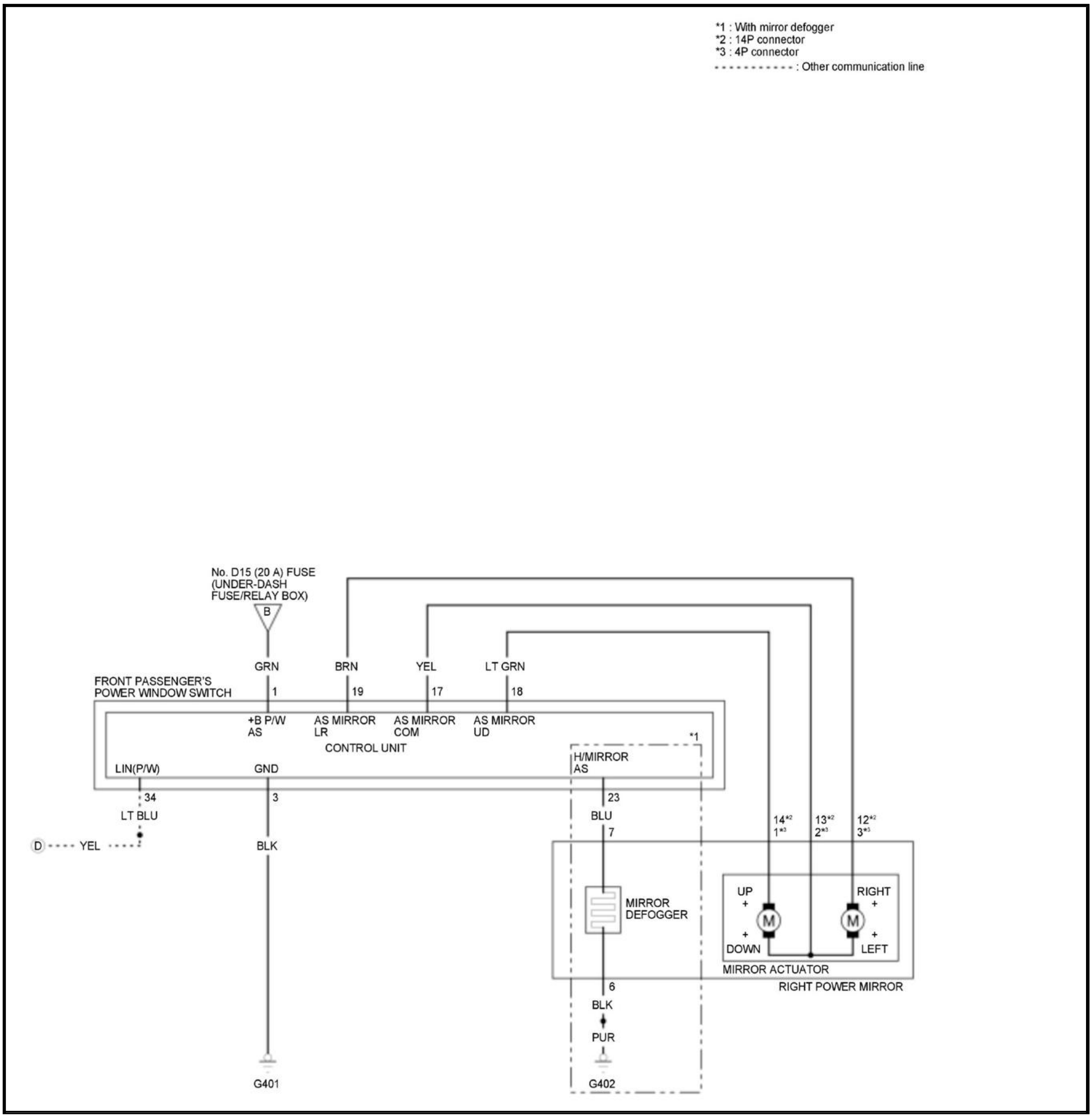
*1 : With mirror defogger
*2 : 14P connector
*3 : 4P connector
: Other communication line
No. D15 (20 A) FUSE
(UNDER-DASH
FUSE/RELAY BOX)
B
GRN
BRN
YEL
LT GRN
FRONT PASSENGER'S
POWER WINDOW SWITCH
1
19
17
18
+B P/W
AS
AS MIRROR
LR
AS MIRROR
COM
AS MIRROR
UD
CONTROL UNIT
*1
H/MIRROR
AS
LIN(P/W)
GND
34
3
23
LT BLU
BLU
7
D
YEL
BLK
14*2
1*3
13*2
2*3
12*2
3*3
UP
+
RIGHT
+
M
M
MIRROR
DEFOGGER
+
DOWN
+
LEFT
MIRROR ACTUATOR
RIGHT POWER MIRROR
6
BLK
PUR
G401
G402

COMPONENT LOCATION INDEX

AUTOMATIC DIMMING MIRRORS ELECTRICAL COMPONENT LOCATION INDEX

For relationships between signals in a system, refer to System Diagram.

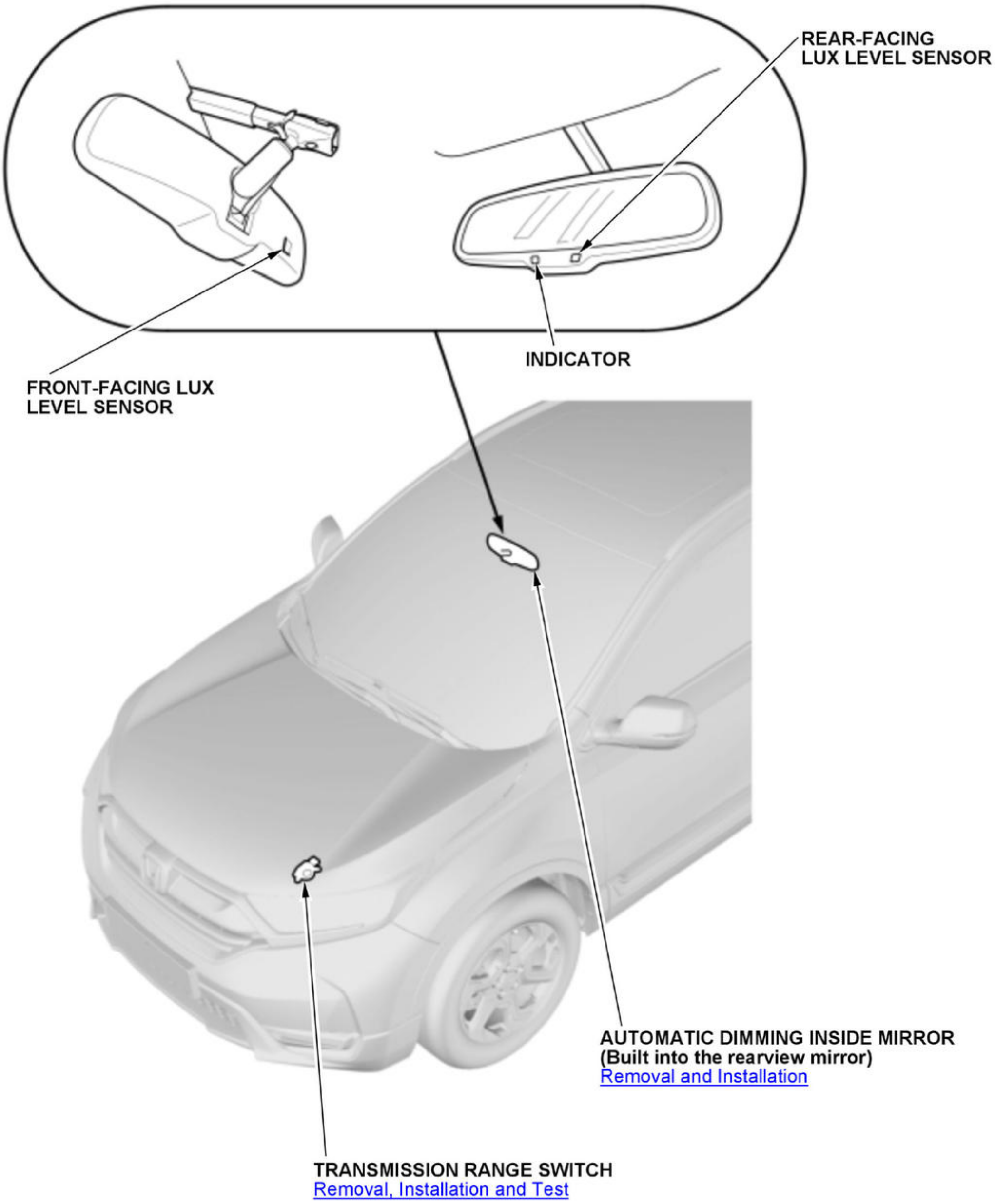
REAR-FACING
LUX LEVEL SENSOR
INDICATOR
FRONT-FACING LUX
LEVEL SENSOR
AUTOMATIC DIMMING INSIDE MIRROR
(Built into the rearview mirror)
Removal and Installation
TRANSMISSION RANGE SWITCH
Removal, Installation and Test

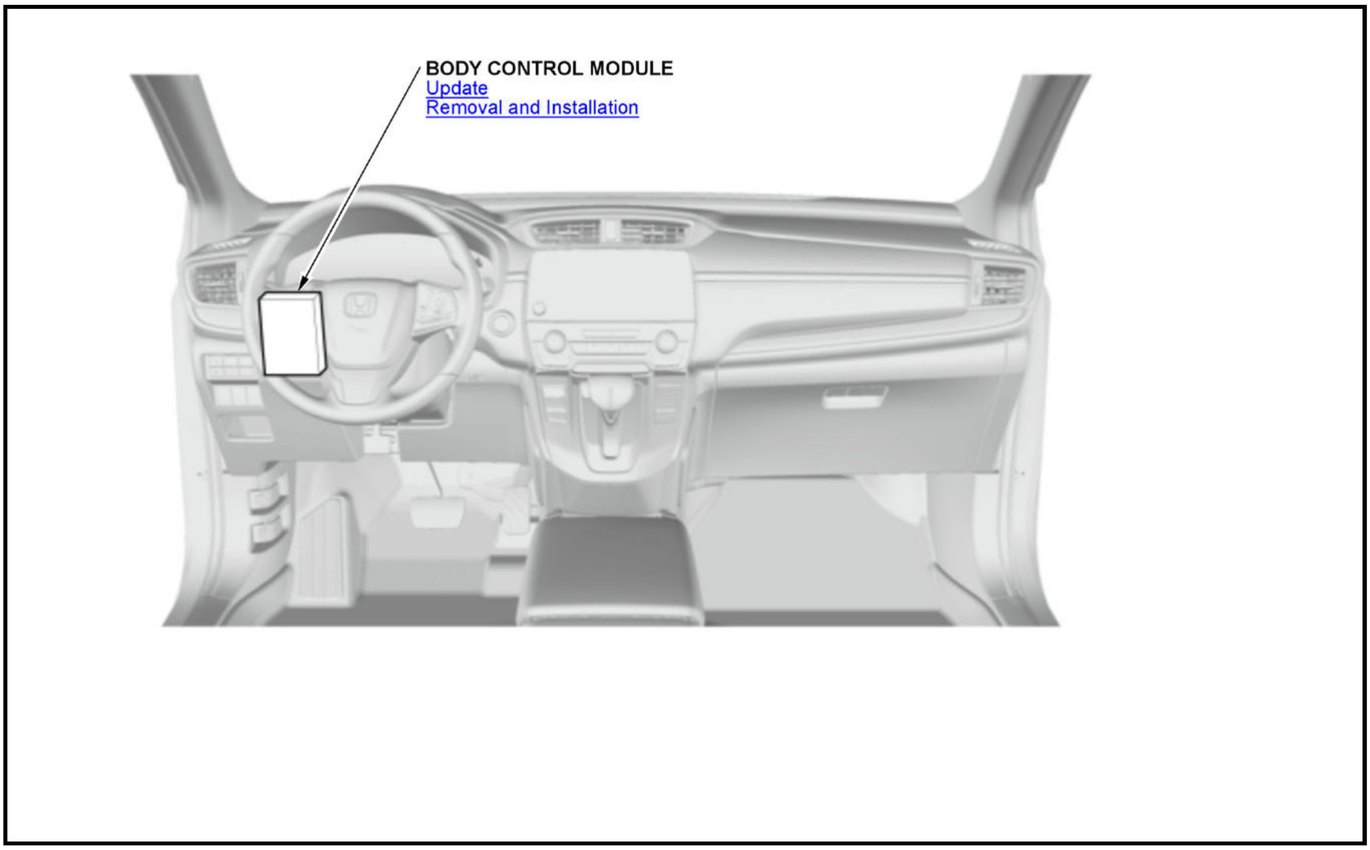
BODY CONTROL MODULE
Update
Removal and Installation

MIRRORS COMPONENT LOCATION INDEX

Mirror Housing Cover Type 1

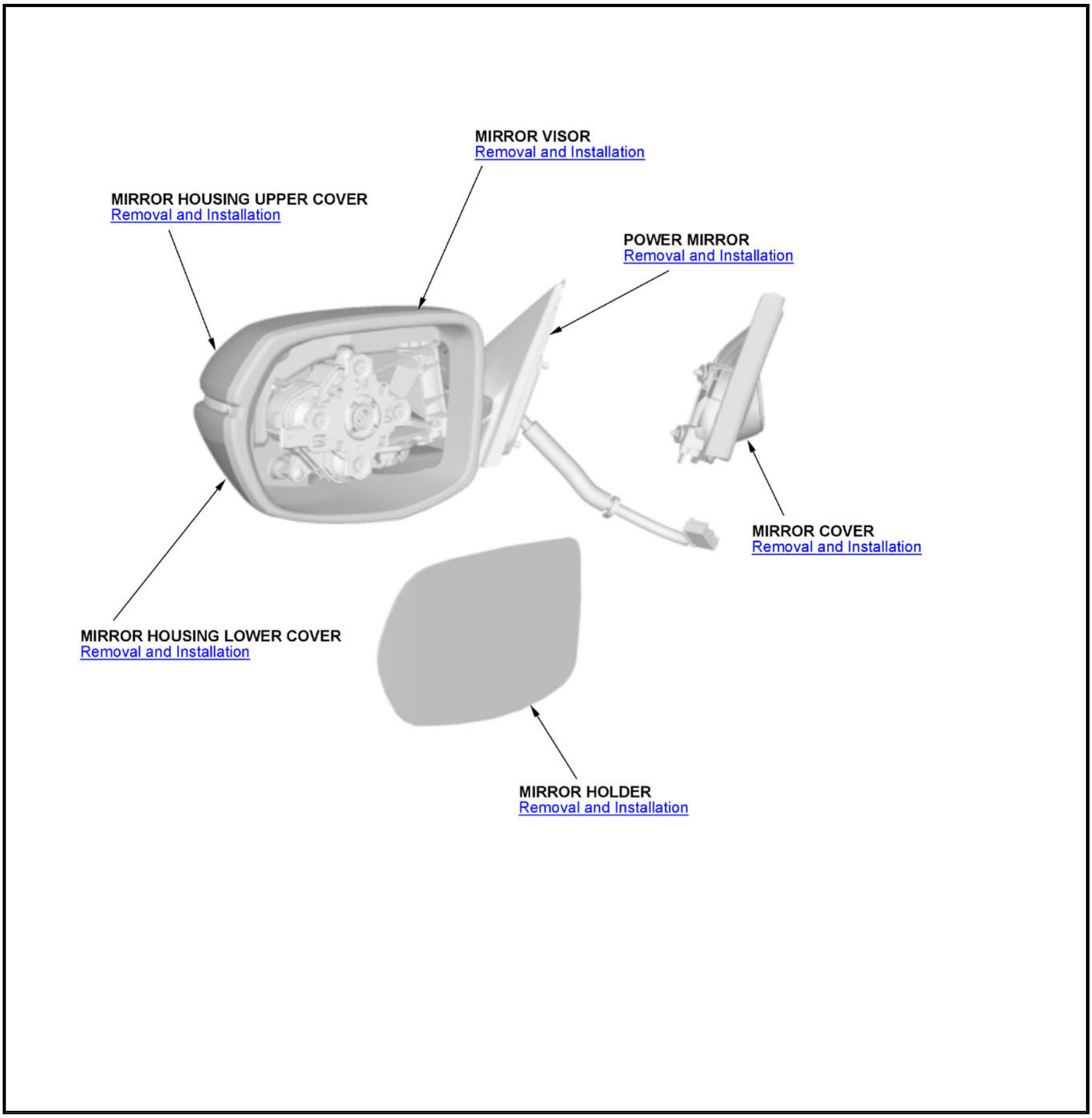
MIRROR VISOR
Removal and Installation
MIRROR HOUSING UPPER COVER
Removal and Installation
POWER MIRROR
Removal and Installation
MIRROR COVER
Removal and Installation
MIRROR HOUSING LOWER COVER
Removal and Installation
MIRROR HOLDER
Removal and Installation

Mirror Housing Cover Type 2

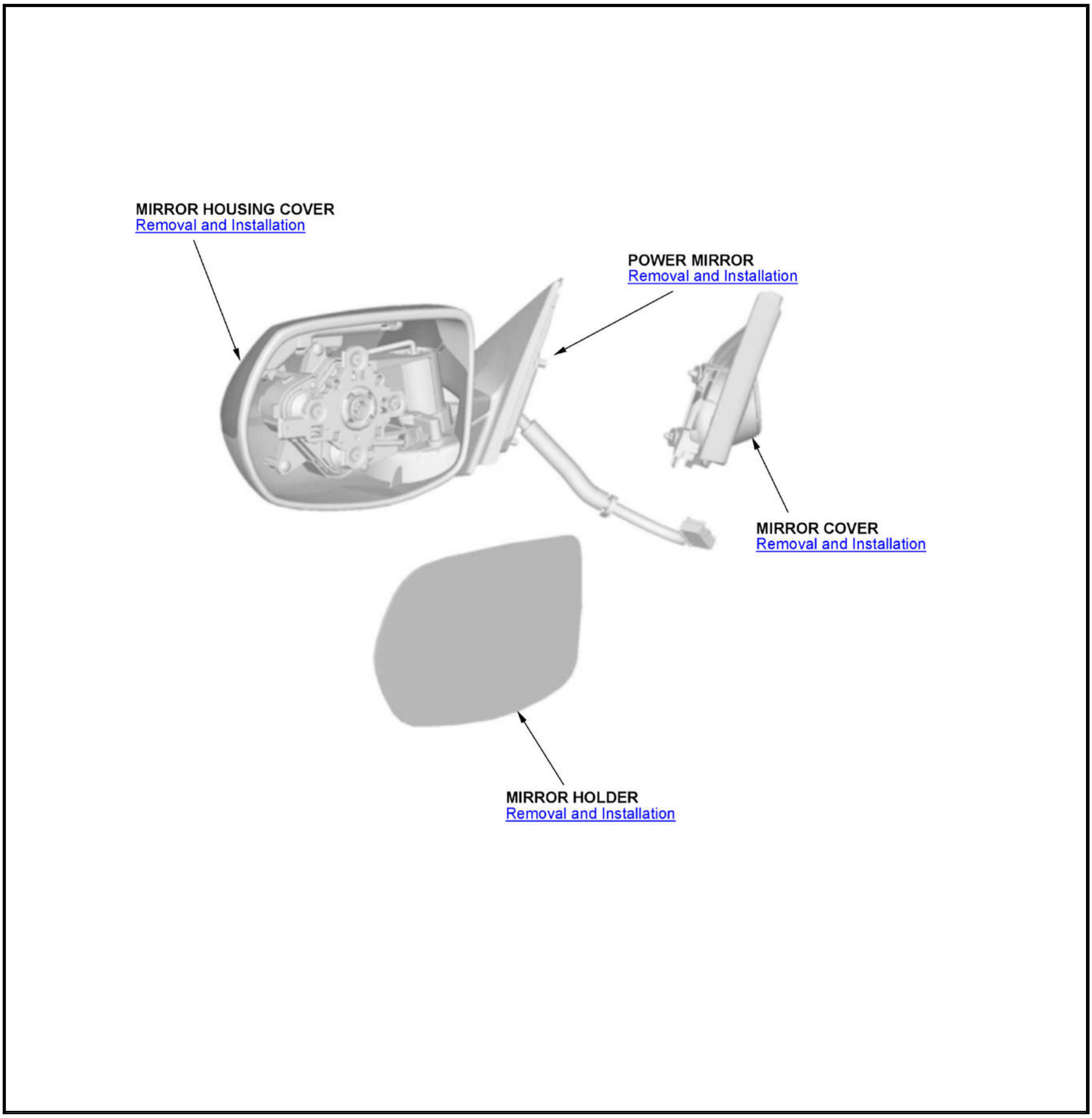
MIRROR HOUSING COVER
Removal and Installation
POWER MIRROR
Removal and Installation
MIRROR COVER
Removal and Installation
MIRROR HOLDER
Removal and Installation

Rearview Mirror type 1

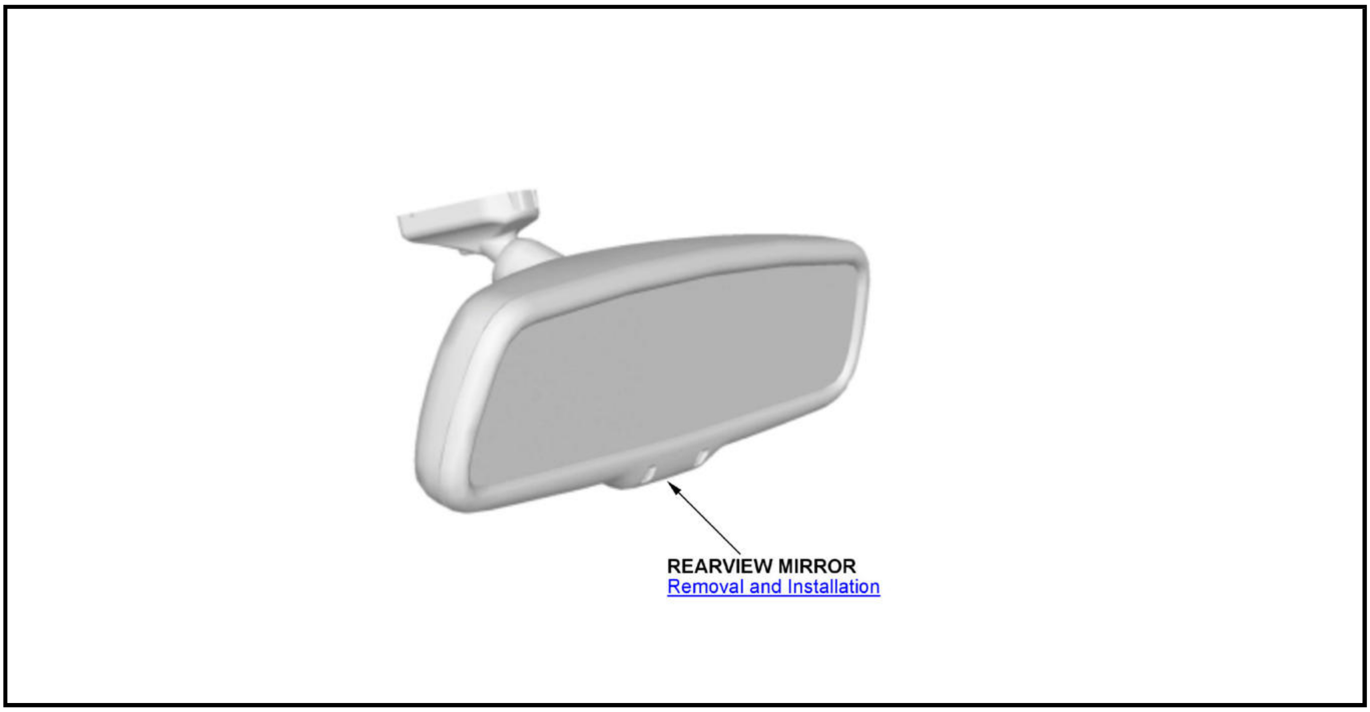
REARVIEW MIRROR
Removal and Installation

Rearview Mirror type 2

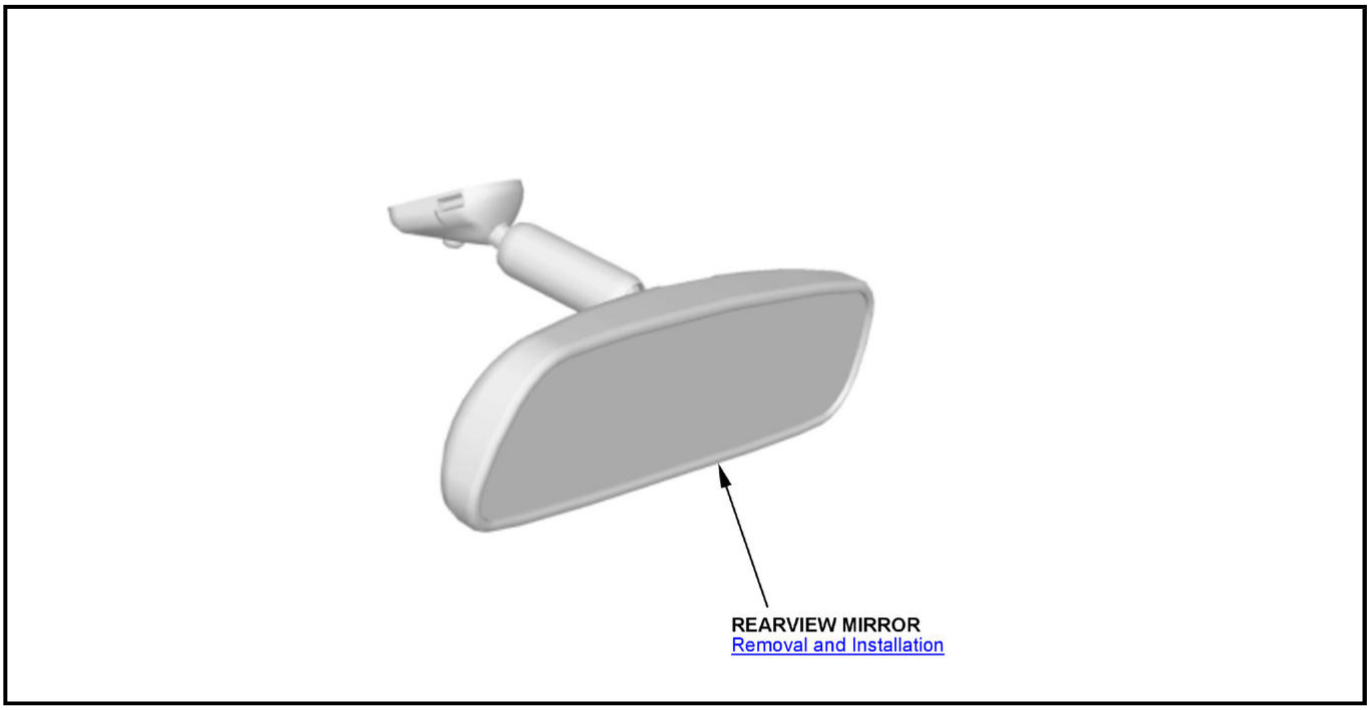
REARVIEW MIRROR
Removal and Installation

POWER MIRRORS COMPONENT LOCATION INDEX

For relationships between signals in a system, refer to System Diagram.

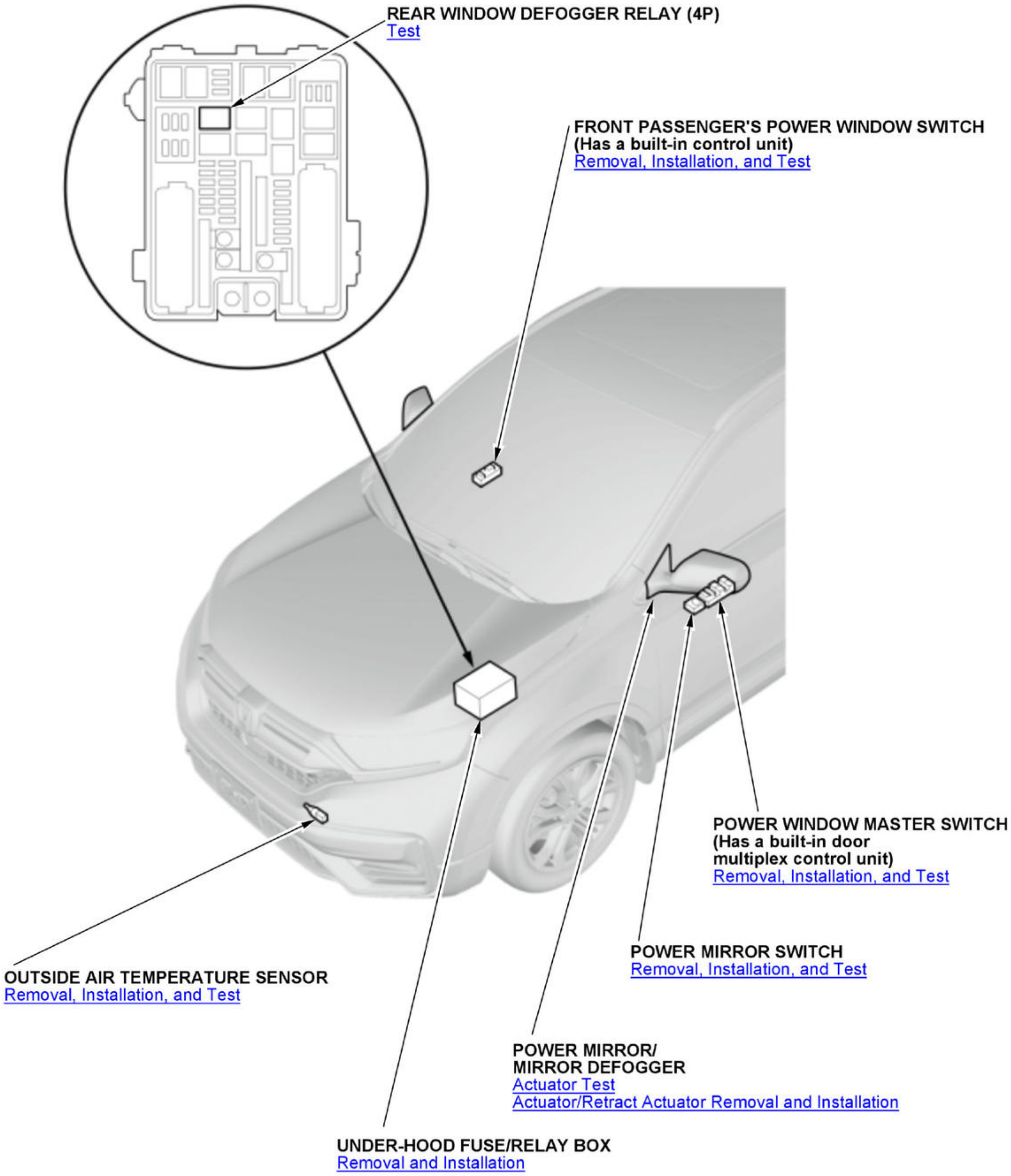
REAR WINDOW DEFOGGER RELAY (4P)
Test

FRONT PASSENGER'S POWER WINDOW SWITCH
(Has a built-in control unit)
Removal, Installation, and Test

POWER WINDOW MASTER SWITCH
(Has a built-in door
multiplex control unit)
Removal, Installation, and Test

POWER MIRROR SWITCH
Removal, Installation, and Test

OUTSIDE AIR TEMPERATURE SENSOR
Removal, Installation, and Test

POWER MIRROR/
MIRROR DEFOGGER
Actuator Test
Actuator/Retract Actuator Removal and Installation

UNDER-HOOD FUSE/RELAY BOX
Removal and Installation

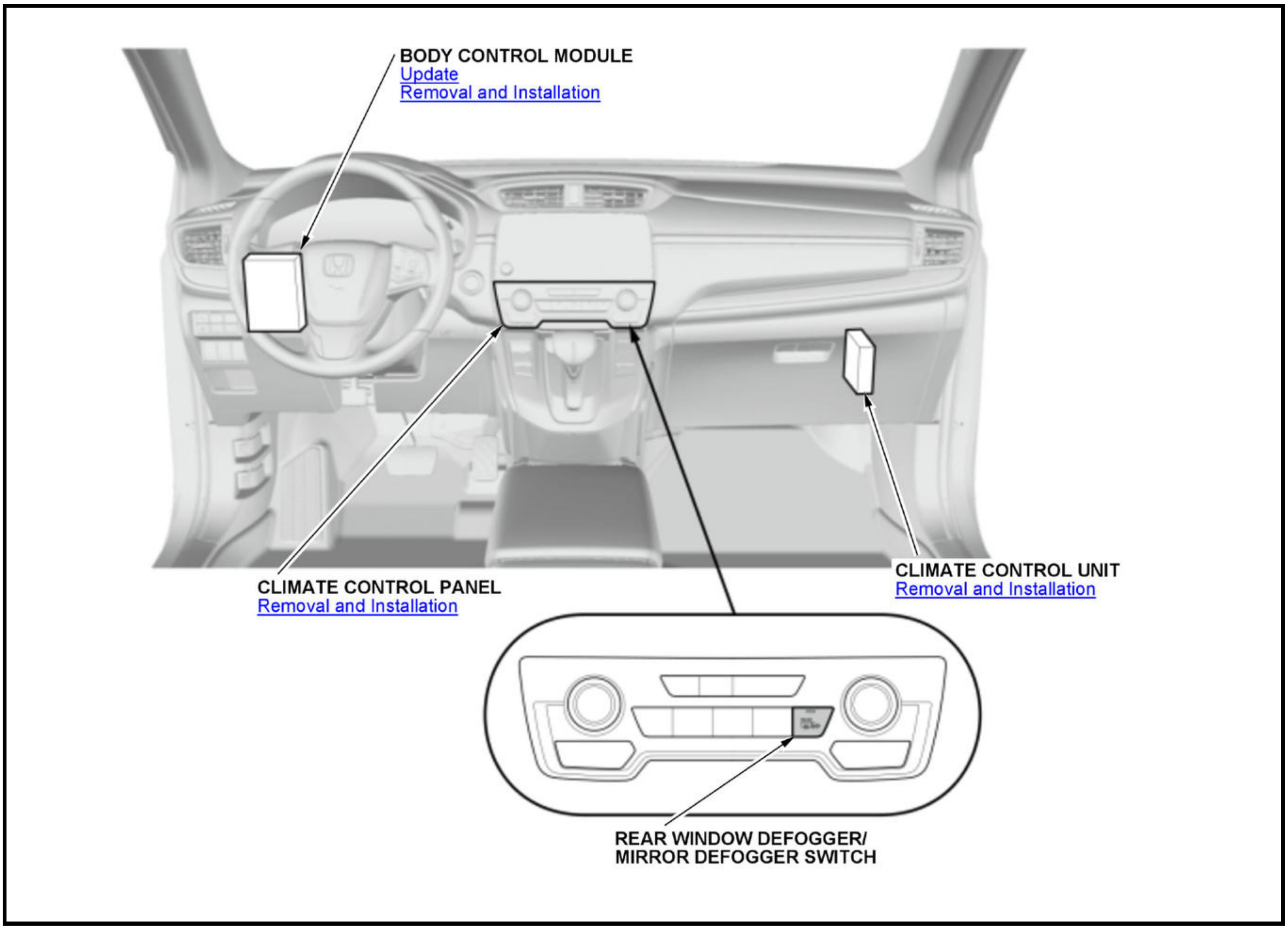
BODY CONTROL MODULE
Update
Removal and Installation
CLIMATE CONTROL PANEL
Removal and Installation
CLIMATE CONTROL UNIT
Removal and Installation
REAR WINDOW DEFOGGER/
MIRROR DEFOGGER SWITCH

DESCRIPTION & OPERATION

AUTOMATIC DIMMING MIRRORS SYSTEM DESCRIPTION

Basic Control/Function

Based on each signal, the control unit judges whether the light at the rear of the vehicle is stronger than the light sensed at the front. If the control unit judges that the light sensed by the rear-facing lux level sensor is brighter than the light sensed by the front-facing lux level sensor, it transmits a signal relaying that information to the drive circuit.

When shifting the transmission to the R position/mode while automatic dimming control is in operation, the automatic dimming turns off and the mirror returns to its highest state of reflectivity. When shifting the transmission out of the R position/mode, the automatic dimming control function is reactivated.

Failsafe Function

In case of a lux level sensor malfunction, the mirror will become clear as a failsafe action.

AUTOMATIC DIMMING MIRRORS SYSTEM DESCRIPTION - COMPONENTS

Inside Mirror

The front-facing lux level sensor is attached to the front of the mirror housing. Day or night, it senses the amount of ambient light at the front of the vehicle, and that signal is transmitted to the control unit located inside the mirror housing. The rear-facing lux level sensor is attached to the rear of the mirror housing. It senses the amount of light or glare at the rear of the vehicle, and transmits that signal to the control unit.

AUTOMATIC DIMMING MIRRORS SYSTEM DESCRIPTION - SYSTEM DIAGRAM

For locations of each component on the vehicle, refer to Component Location Index

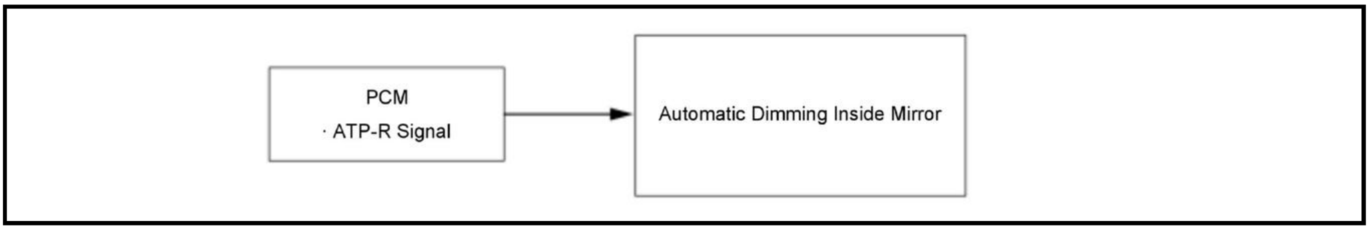
PCM
· ATP-R Signal
Automatic Dimming Inside Mirror

POWER MIRRORS SYSTEM DESCRIPTION

Mirror Defogger Function (With Mirror Defogger)

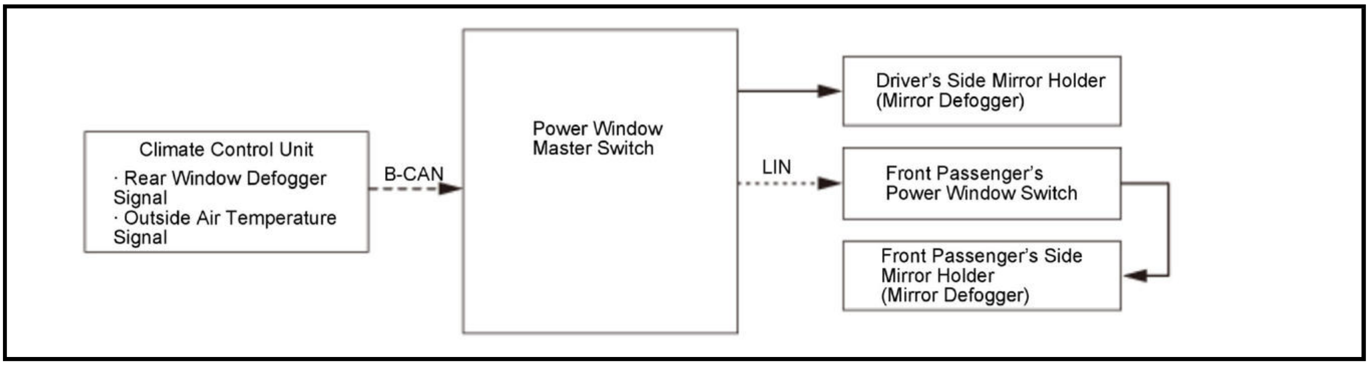
Climate Control Unit
· Rear Window Defogger Signal
· Outside Air Temperature Signal
B-CAN
Power Window Master Switch
LIN
Driver's Side Mirror Holder (Mirror Defogger)
Front Passenger's Power Window Switch
Front Passenger's Side Mirror Holder (Mirror Defogger)

Manual Function

The mirror defogger is controlled by the climate control unit. When the vehicle is turned to the ON mode and the rear window defogger/mirror defogger switch is pressed, the climate control unit sends the defogger ON signal as a B-CAN signal to the power window master switch. The power window master switch operates the driver's side mirror defogger, and sends the defogger ON signal via LIN to the front passenger's power window switch to operate the passenger's side mirror defogger.

Auto Mirror Defogger Function

When the power window master switch receives a signal that the outside air temperature is 41 deg.F (5 deg.C) or below from the outside air temperature sensor, the power window master switch automatically turns on the left and right mirror defoggers within 10 seconds after the vehicle is turned to the ON mode. The mirror defogger output automatically stops in 10 minutes as a result of its timer. If the power window master switch receives a rear window defogger/mirror defogger switch input signal from the climate control unit during mirror defogger output, the power window master switch shuts off the auto operation function immediately.

Defogger Timer Function

The mirror defogger provides the timer control function that is controlled by the climate control unit. The timer control is operated by turning the vehicle to ON mode, then turning on the rear window defogger/mirror defogger switch. The timer operating time varies according to ambient temperature. If the rear window defogger/mirror defogger switch is turned on when the timer is active, it toggles between ON and OFF every time the switch is pressed.

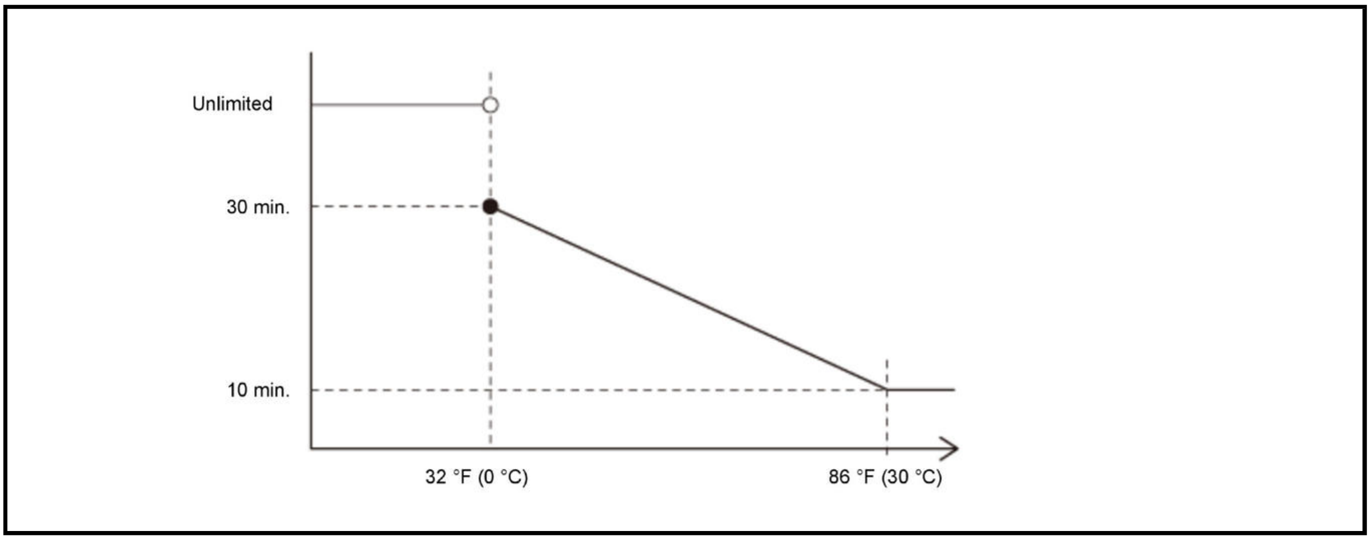

POWER MIRRORS SYSTEM DESCRIPTION - COMPONENTS

Power Mirror

The power mirror has a built-in power mirror actuator, and the power mirror defogger.

Power Window Master Switch

During power mirror control, the power window master switch operates the mirror defogger on the driver's side via B-CAN signal input.

Front Passenger's Power Window Switch

During power mirror control, the front passenger's power window switch receives a signal from the power window master switch via LIN and operates the mirror defogger on the passenger's side.

POWER MIRRORS SYSTEM DESCRIPTION - SYSTEM DIAGRAM

For locations of each component on the vehicle, refer to Component Location Index

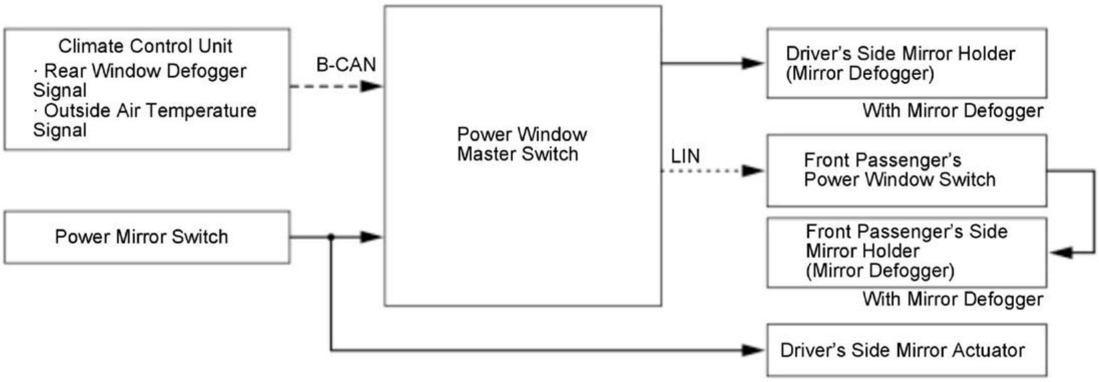
Climate Control Unit
· Rear Window Defogger Signal
· Outside Air Temperature Signal
B-CAN
Power Window Master Switch
Power Mirror Switch
LIN
Driver's Side Mirror Holder (Mirror Defogger)
With Mirror Defogger
Front Passenger's Power Window Switch
Front Passenger's Side Mirror Holder (Mirror Defogger)
With Mirror Defogger
Driver's Side Mirror Actuator

TEST

POWER MIRROR ACTUATOR TEST

Test

1. **Front Door Panel - Remove**
2. Power Mirror Actuator - Test

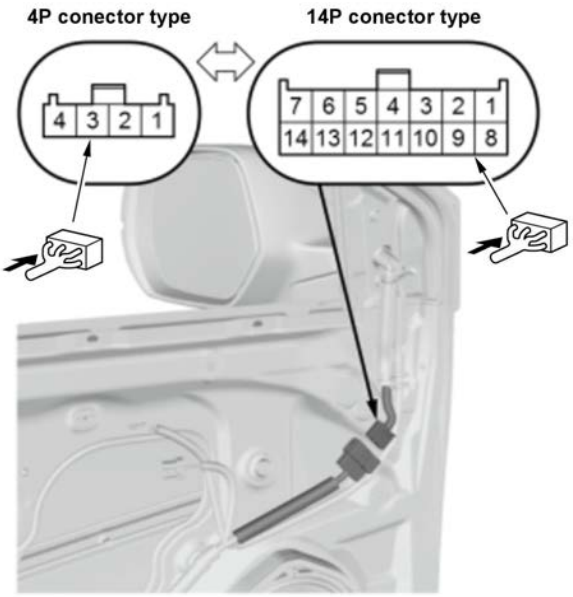 4P conector type 4 3 2 1 14P conector type 7 6 5 4 3 2 1 14 13 12 11 10 9 8 **Left and Right Power Mirror Actuator**	**NOTE:** Before testing, make sure not to short the power mirror actuator circuit. 1. Disconnect the connector. 2. Check the actuator operation by connecting power and ground according to the table. 3. If the mirror fails to work properly, check for an open or high resistance in the wire between the connector and the mirror holder. If the wire is OK, **replace the actuator** .

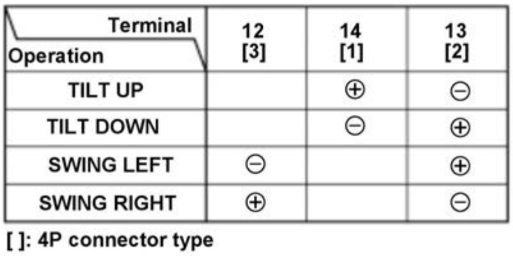

Terminal / Operation	12 [3]	14 [1]	13 [2]
TILT UP		⊕	⊖
TILT DOWN		⊖	⊕
SWING LEFT	⊖		⊕
SWING RIGHT	⊕		⊖

[ ]: 4P connector type

Defogger (With mirror defogger)

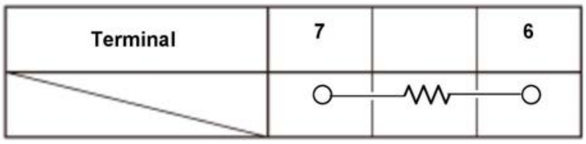

4. Check for continuity between the terminals according to the table. There should be continuity.

5. If there is no continuity, check for an open or high resistance in the wire between the connector and the mirror holder. If the wire is OK, replace the mirror holder .

3. All Removed Parts - Install

1. Install the parts in the reverse order of removal.

CONNECTOR VIEW

AUTOMATIC DIMMING INSIDE MIRROR CONNECTOR FOR INPUTS AND OUTPUTS

Automatic Dimming Inside Mirror 7P Connector (female terminals)

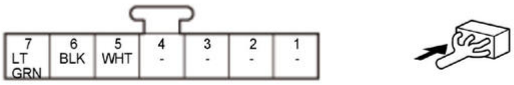

Terminal number	Terminal name	Description	Signal
1	---	Not used	---
2	---	Not used	---
3	---	Not used	---
4	---	Not used	---
5	BACK_LT	Detects back-up light signal	With vehicle in ON mode and R position/mode: about battery voltage. If none of above conditions are met: less than 0.2 V
6	GND	Automatic dimming inside mirror ground	Less than 0.2 V at all times
7	IG1_OPTION	IG1 power source	With vehicle in ON or START mode: about battery voltage

CIRCUIT DIAGRAM

AUTOMATIC DIMMING MIRRORS CIRCUIT DIAGRAM

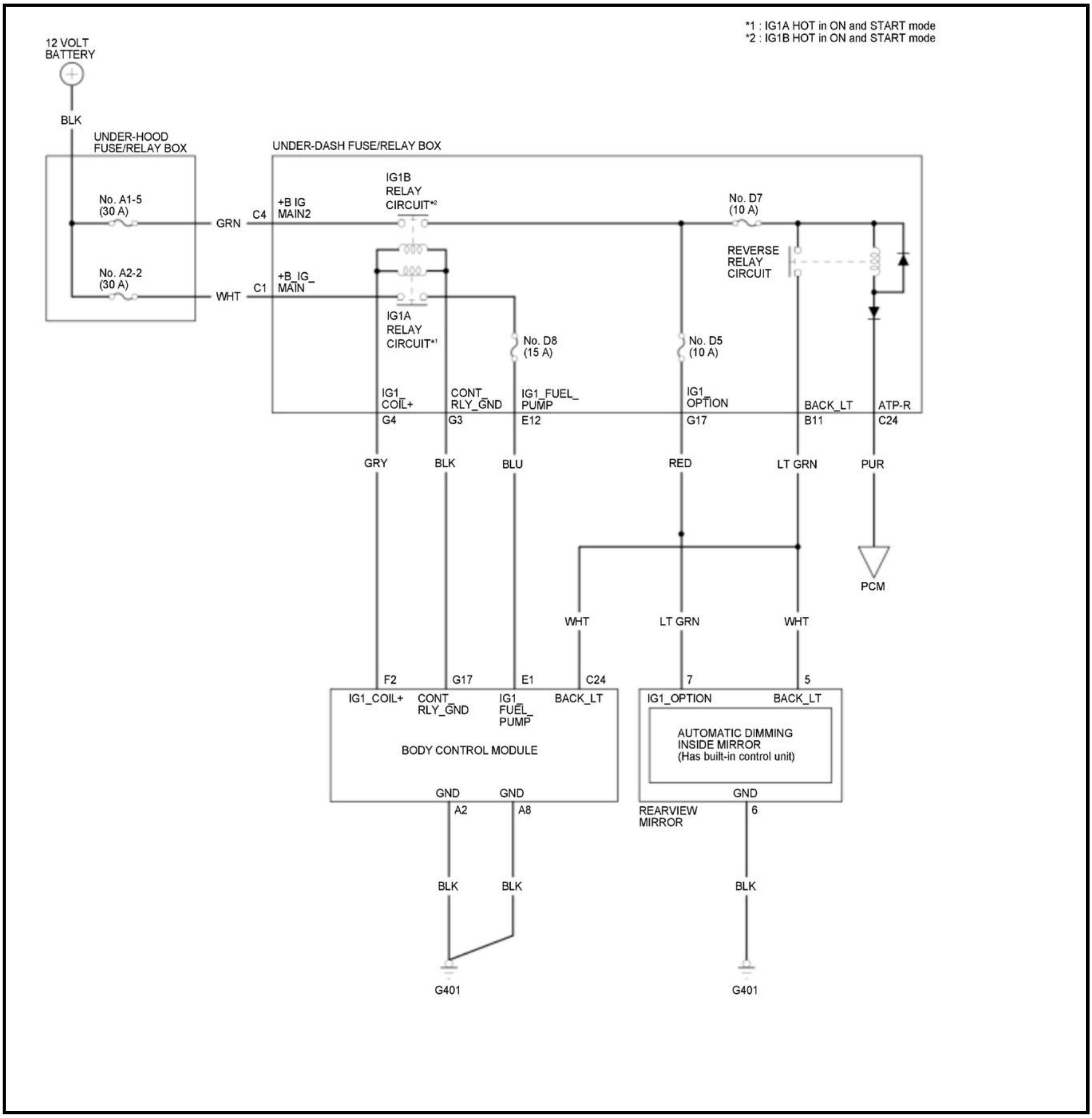
*1 : IG1A HOT in ON and START mode
*2 : IG1B HOT in ON and START mode
12 VOLT BATTERY
BLK
UNDER-HOOD FUSE/RELAY BOX
No. A1-5 (30 A)
No. A2-2 (30 A)
GRN
WHT
C4
C1
UNDER-DASH FUSE/RELAY BOX
+B IG MAIN2
+B_IG_MAIN
IG1B RELAY CIRCUIT*2
IG1A RELAY CIRCUIT*1
No. D7 (10 A)
REVERSE RELAY CIRCUIT
No. D8 (15 A)
No. D5 (10 A)
IG1_COIL+
G4
CONT_RLY_GND
G3
IG1_FUEL_PUMP
E12
IG1_OPTION
G17
BACK_LT
B11
ATP-R
C24
GRY
BLK
BLU
RED
LT GRN
PUR
PCM
WHT
LT GRN
WHT
F2
G17
E1
C24
IG1_COIL+
CONT_RLY_GND
IG1_FUEL_PUMP
BACK_LT
BODY CONTROL MODULE
GND
GND
A2
A8
7
5
IG1_OPTION
BACK_LT
AUTOMATIC DIMMING INSIDE MIRROR (Has built-in control unit)
GND
6
REARVIEW MIRROR
BLK
BLK
BLK
G401
G401

POWER MIRRORS CIRCUIT DIAGRAM

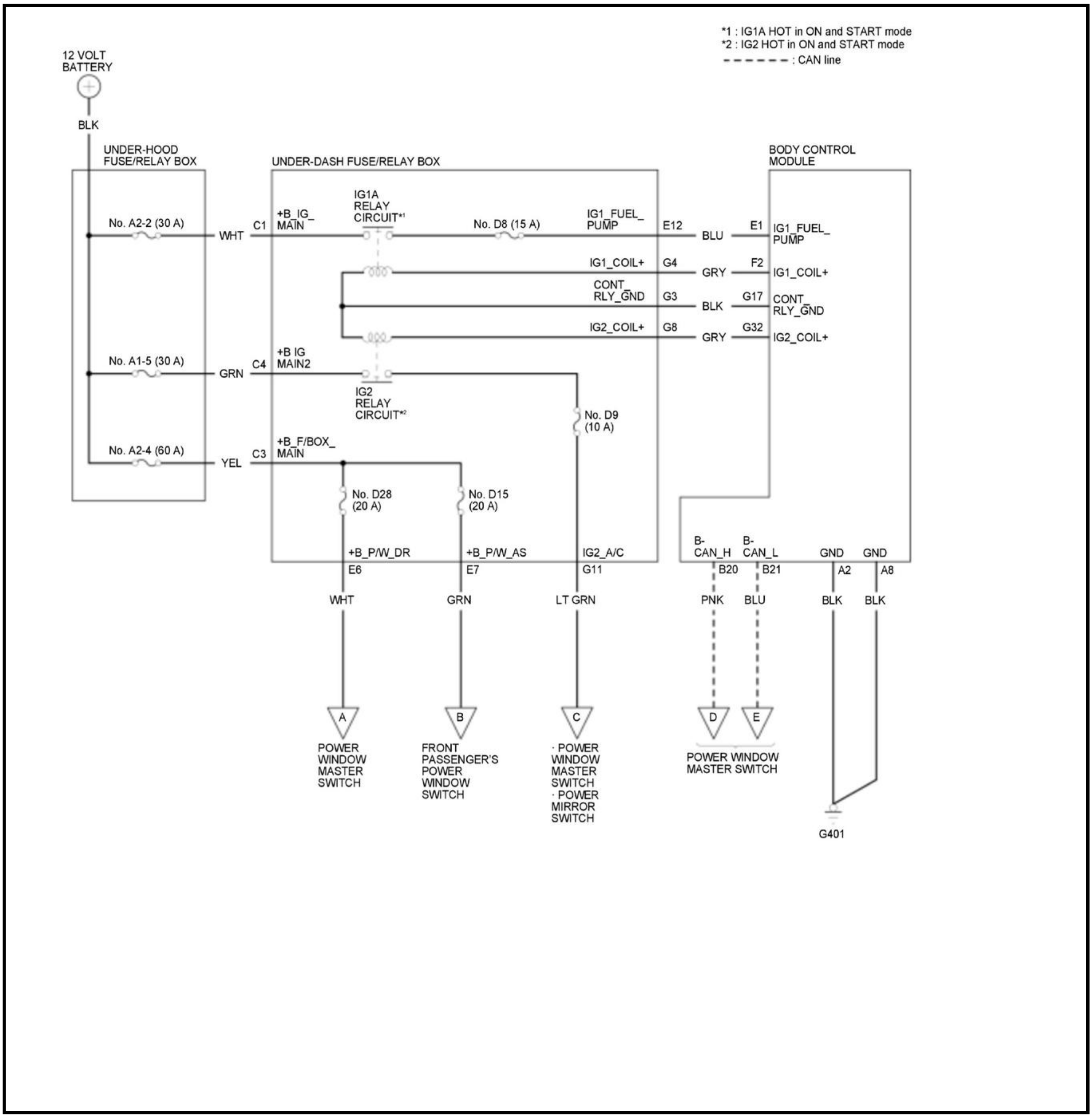
*1 : IG1A HOT in ON and START mode
*2 : IG2 HOT in ON and START mode
- - - - - - : CAN line
12 VOLT BATTERY
BLK
UNDER-HOOD FUSE/RELAY BOX
UNDER-DASH FUSE/RELAY BOX
BODY CONTROL MODULE
No. A2-2 (30 A)
WHT
C1
+B_IG_ MAIN
IG1A RELAY CIRCUIT*1
No. D8 (15 A)
IG1_FUEL_ PUMP
E12
BLU
E1
IG1_FUEL_ PUMP
IG1_COIL+
G4
GRY
F2
IG1_COIL+
CONT_ RLY_GND
G3
BLK
G17
CONT_ RLY_GND
IG2_COIL+
G8
GRY
G32
IG2_COIL+
No. A1-5 (30 A)
GRN
C4
+B IG MAIN2
IG2 RELAY CIRCUIT*2
No. D9 (10 A)
No. A2-4 (60 A)
YEL
C3
+B_F/BOX_ MAIN
No. D28 (20 A)
No. D15 (20 A)
+B_P/W_DR
E6
+B_P/W_AS
E7
IG2_A/C
G11
B- CAN_H
B20
B- CAN_L
B21
GND
A2
GND
A8
WHT
GRN
LT GRN
PNK
BLU
BLK
BLK
A
B
C
D
E
POWER WINDOW MASTER SWITCH
FRONT PASSENGER'S POWER WINDOW SWITCH
· POWER WINDOW MASTER SWITCH
· POWER MIRROR SWITCH
POWER WINDOW MASTER SWITCH
G401

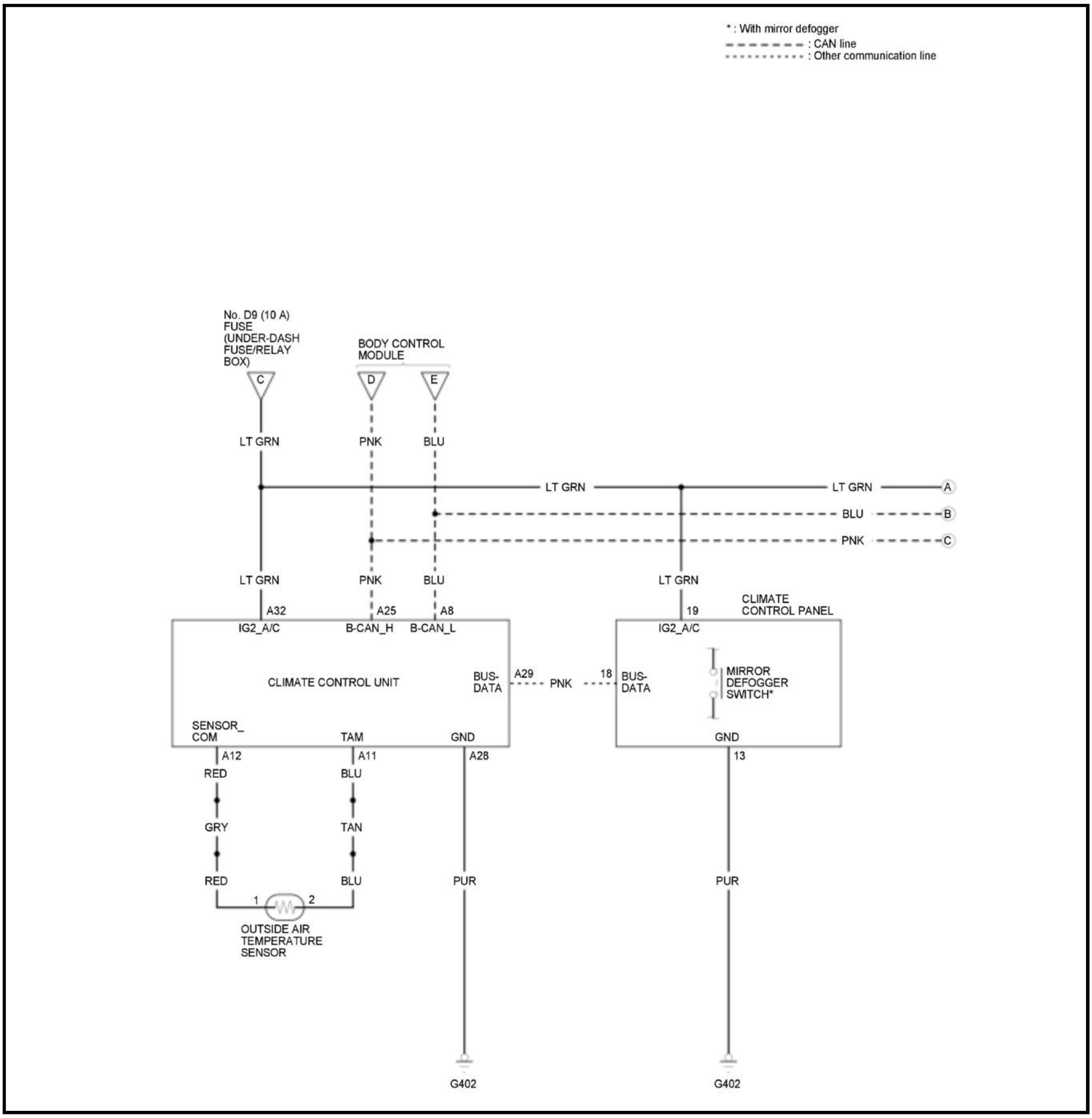
* : With mirror defogger
: CAN line
: Other communication line
No. D9 (10 A) FUSE (UNDER-DASH FUSE/RELAY BOX)
BODY CONTROL MODULE
C
D
E
LT GRN
PNK
BLU
LT GRN
LT GRN
BLU
PNK
A
B
C
LT GRN
PNK
BLU
LT GRN
A32
A25
A8
19
CLIMATE CONTROL PANEL
IG2_A/C
B-CAN_H
B-CAN_L
IG2_A/C
CLIMATE CONTROL UNIT
BUS-DATA
A29
PNK
18
BUS-DATA
MIRROR DEFOGGER SWITCH*
SENSOR_COM
TAM
GND
GND
A12
A11
A28
13
RED
BLU
GRY
TAN
RED
BLU
PUR
PUR
1
2
OUTSIDE AIR TEMPERATURE SENSOR
G402
G402

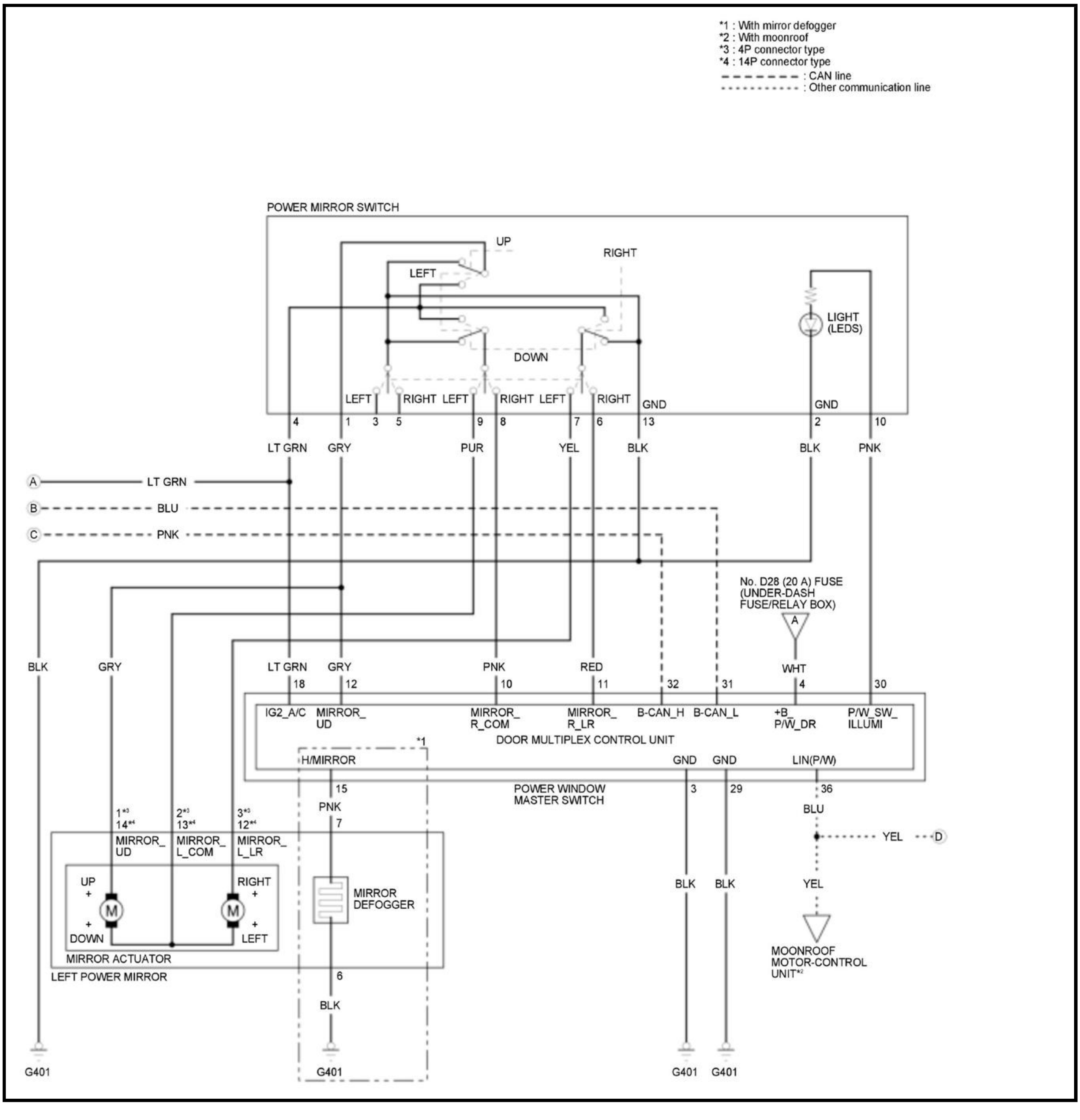
*1 : With mirror defogger
*2 : With moonroof
*3 : 4P connector type
*4 : 14P connector type
: CAN line
: Other communication line
POWER MIRROR SWITCH
UP
RIGHT
LEFT
DOWN
LIGHT (LEDS)
LEFT
RIGHT
LEFT
RIGHT
LEFT
RIGHT
GND
GND
4
1
3
5
9
8
7
6
13
2
10
LT GRN
GRY
PUR
YEL
BLK
BLK
PNK
A
LT GRN
B
BLU
C
PNK
No. D28 (20 A) FUSE (UNDER-DASH FUSE/RELAY BOX)
A
BLK
GRY
LT GRN
GRY
PNK
RED
WHT
18
12
10
11
32
31
4
30
IG2_A/C
MIRROR_ UD
MIRROR_ R_COM
MIRROR_ R_LR
B-CAN_H
B-CAN_L
+B_ P/W_DR
P/W_SW_ ILLUMI
DOOR MULTIPLEX CONTROL UNIT
*1
H/MIRROR
GND
GND
LIN(P/W)
15
POWER WINDOW MASTER SWITCH
3
29
36
PNK
BLU
7
1*3 14*4
2*3 13*4
3*3 12*4
MIRROR_ UD
MIRROR_ L_COM
MIRROR_ L_LR
YEL
D
UP +
RIGHT +
+ DOWN
+ LEFT
M
M
MIRROR DEFOGGER
BLK
BLK
YEL
MIRROR ACTUATOR
LEFT POWER MIRROR
6
BLK
MOONROOF MOTOR-CONTROL UNIT*2
G401
G401
G401
G401

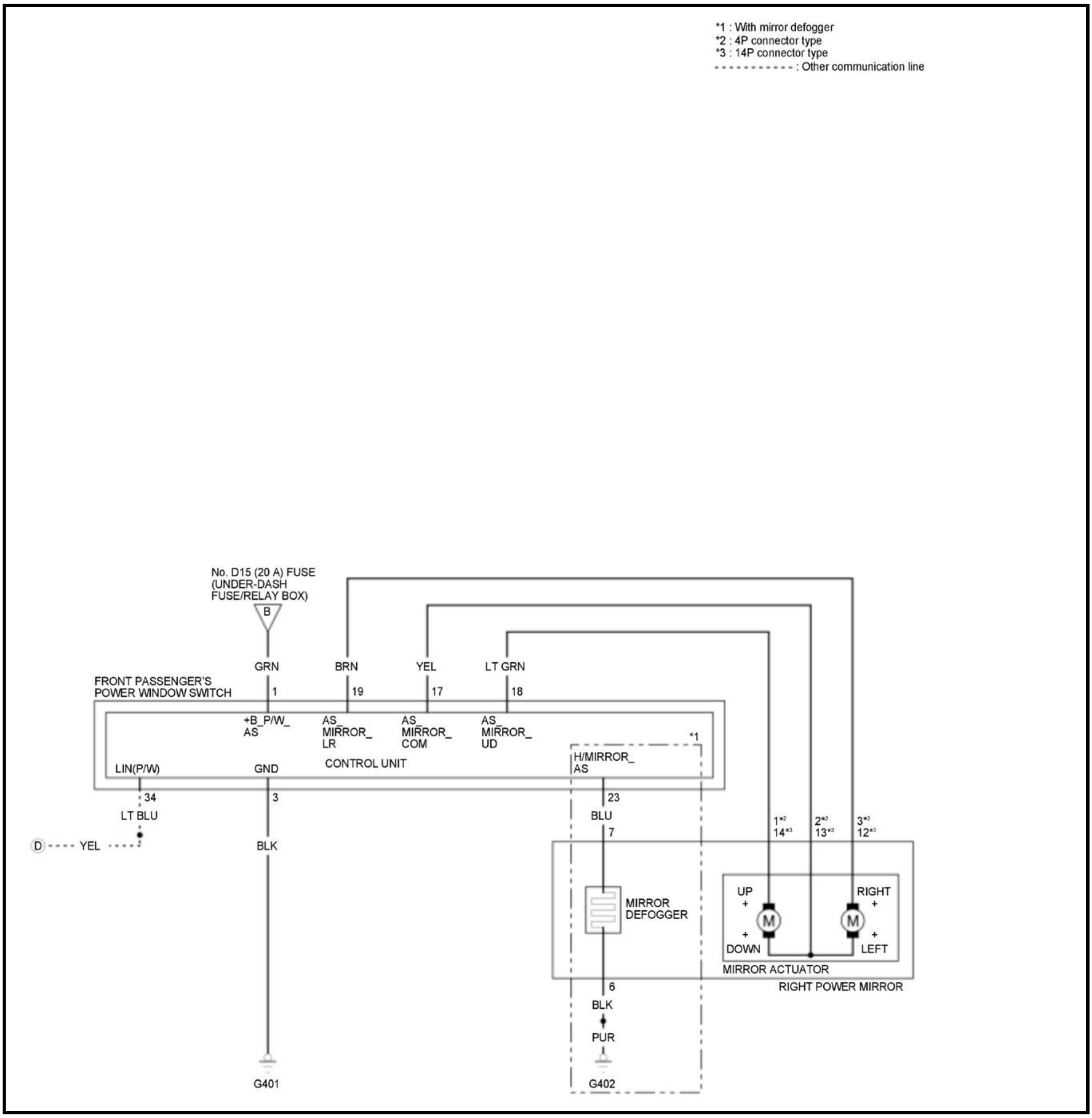
*1 : With mirror defogger
*2 : 4P connector type
*3 : 14P connector type
: Other communication line
No. D15 (20 A) FUSE
(UNDER-DASH
FUSE/RELAY BOX)
B
GRN
BRN
YEL
LT GRN
FRONT PASSENGER'S
POWER WINDOW SWITCH
1
19
17
18
+B_P/W_
AS
AS_
MIRROR_
LR
AS_
MIRROR_
COM
AS_
MIRROR_
UD
*1
H/MIRROR_
AS
CONTROL UNIT
LIN(P/W)
GND
34
3
23
LT BLU
BLU
7
1*2
14*3
2*2
13*3
3*2
12*3
D
YEL
BLK
MIRROR
DEFOGGER
UP
+
+
DOWN
RIGHT
+
+
LEFT
M
M
MIRROR ACTUATOR
RIGHT POWER MIRROR
6
BLK
PUR
G401
G402

COMPONENT LOCATION INDEX

AUTOMATIC DIMMING MIRRORS ELECTRICAL COMPONENT LOCATION INDEX

For relationships between signals in a system, refer to System Diagram.

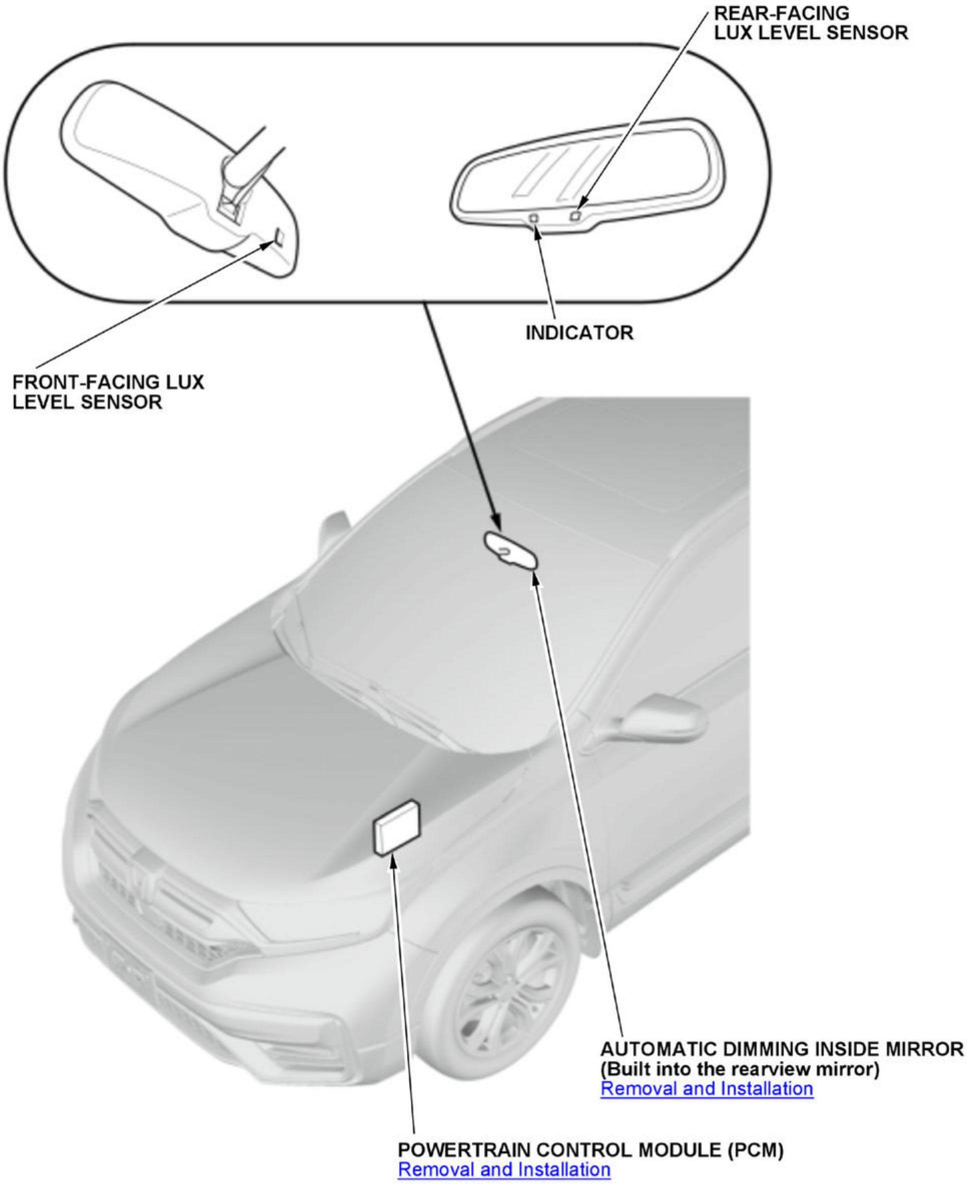
REAR-FACING
LUX LEVEL SENSOR
INDICATOR
FRONT-FACING LUX
LEVEL SENSOR
AUTOMATIC DIMMING INSIDE MIRROR
(Built into the rearview mirror)
Removal and Installation
POWERTRAIN CONTROL MODULE (PCM)
Removal and Installation

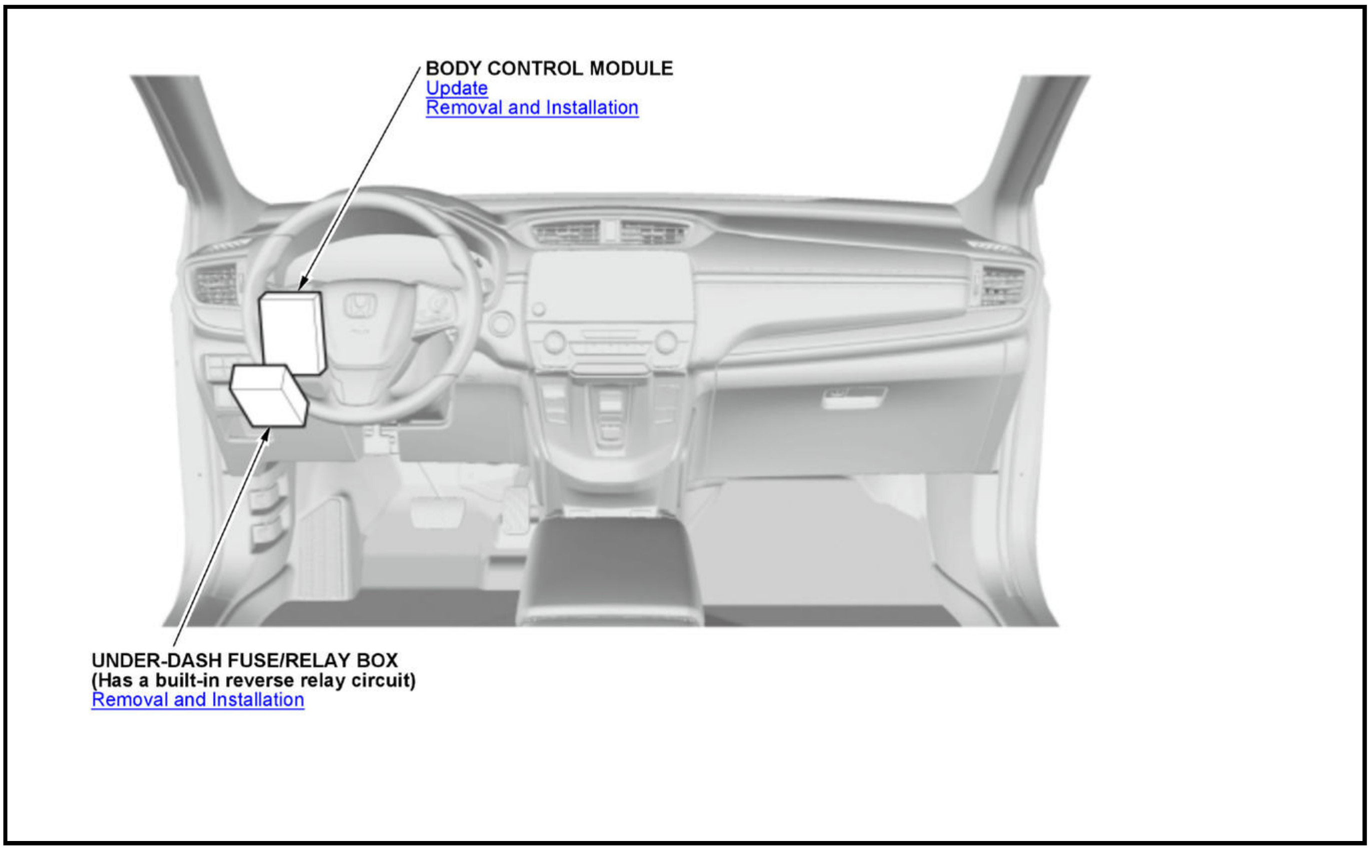
BODY CONTROL MODULE
Update
Removal and Installation
UNDER-DASH FUSE/RELAY BOX
(Has a built-in reverse relay circuit)
Removal and Installation

MIRRORS COMPONENT LOCATION INDEX

Mirror Housing Cover Type 1

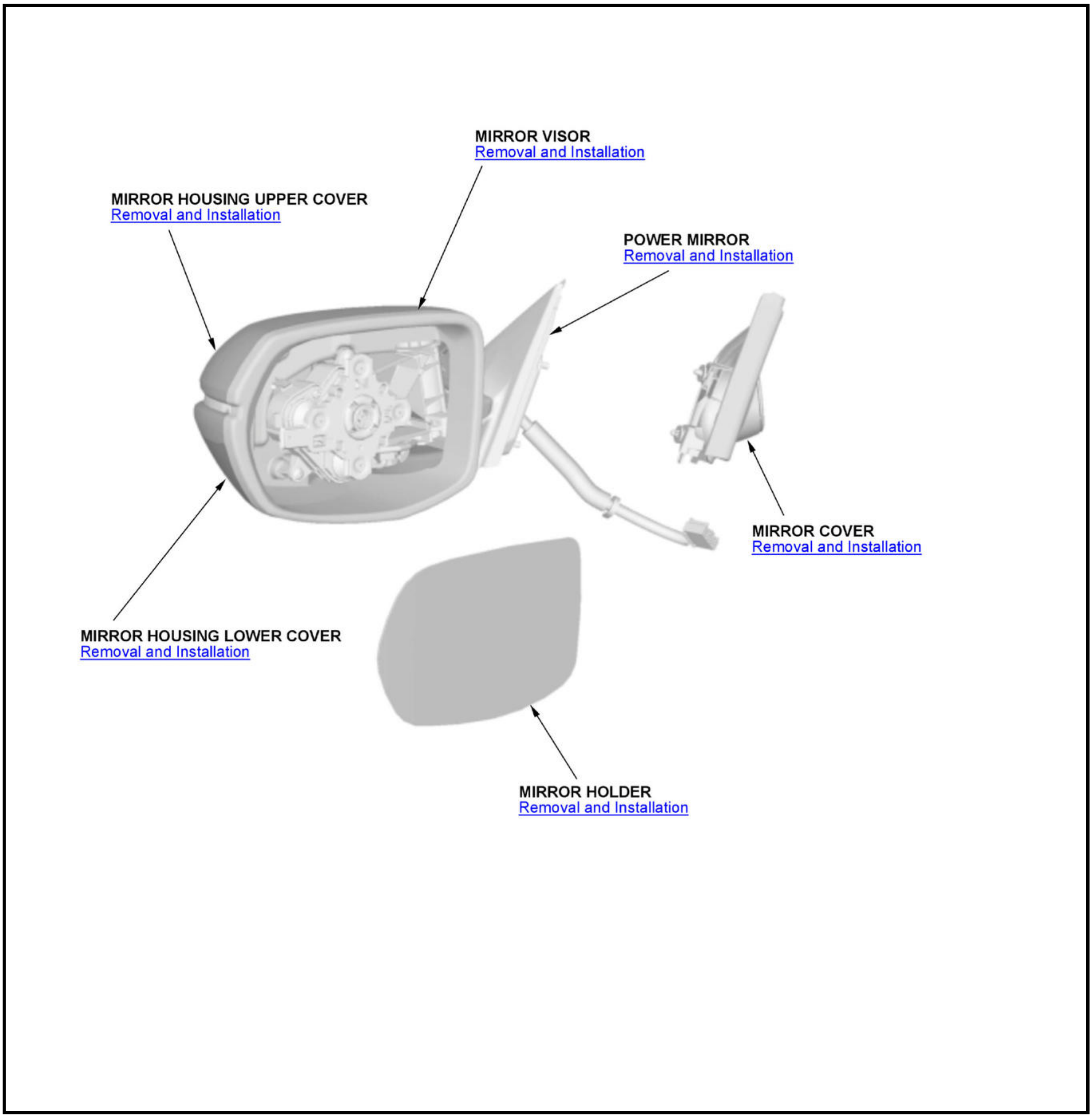
MIRROR VISOR
Removal and Installation
MIRROR HOUSING UPPER COVER
Removal and Installation
POWER MIRROR
Removal and Installation
MIRROR COVER
Removal and Installation
MIRROR HOUSING LOWER COVER
Removal and Installation
MIRROR HOLDER
Removal and Installation

Mirror Housing Cover Type 2

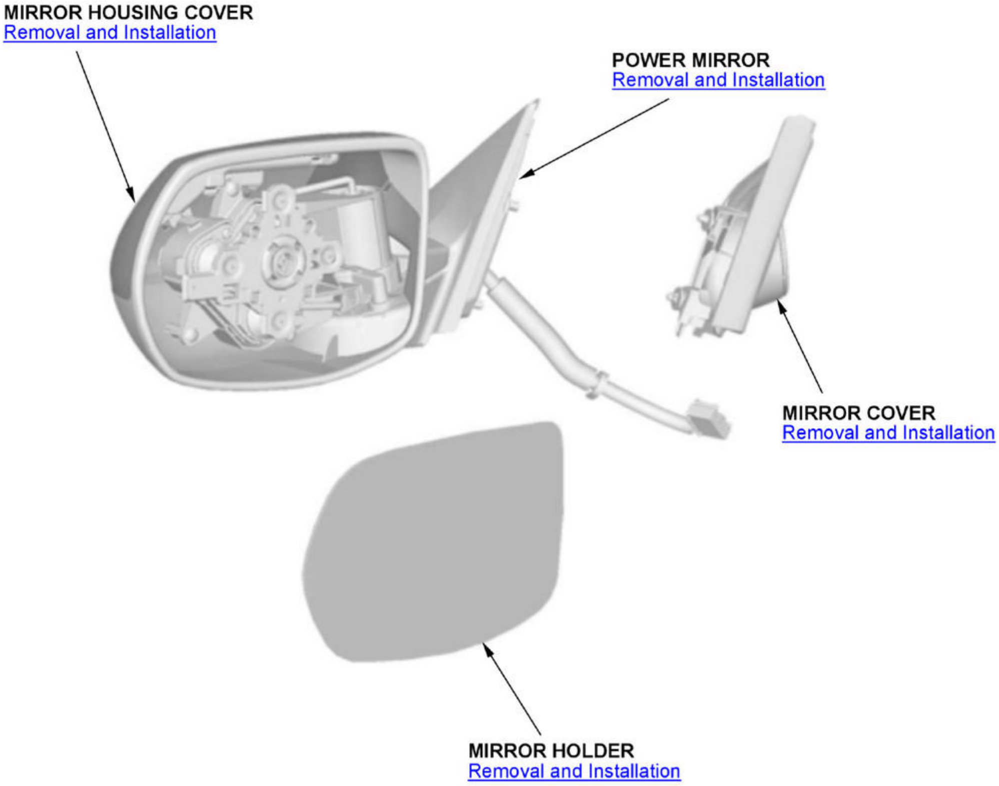
MIRROR HOUSING COVER
Removal and Installation
POWER MIRROR
Removal and Installation
MIRROR COVER
Removal and Installation
MIRROR HOLDER
Removal and Installation

Rearview Mirror type 1

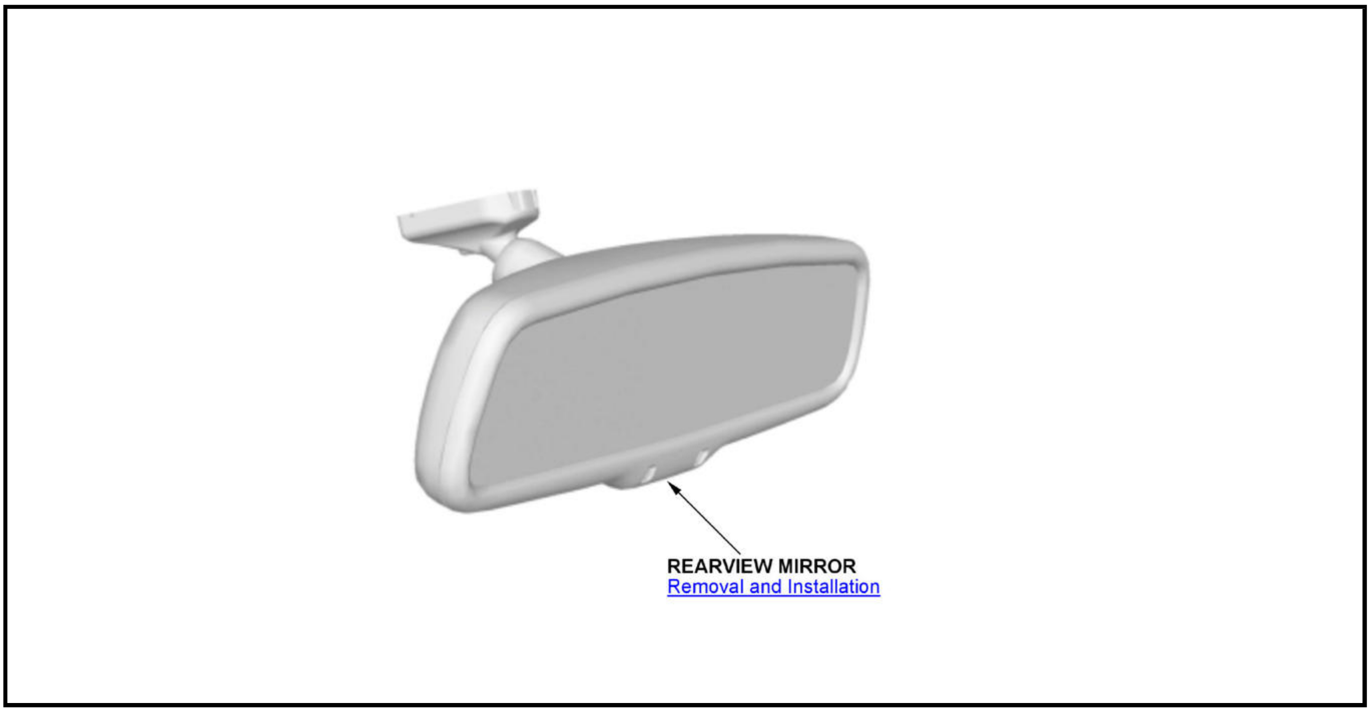
REARVIEW MIRROR
Removal and Installation

Rearview Mirror type 2

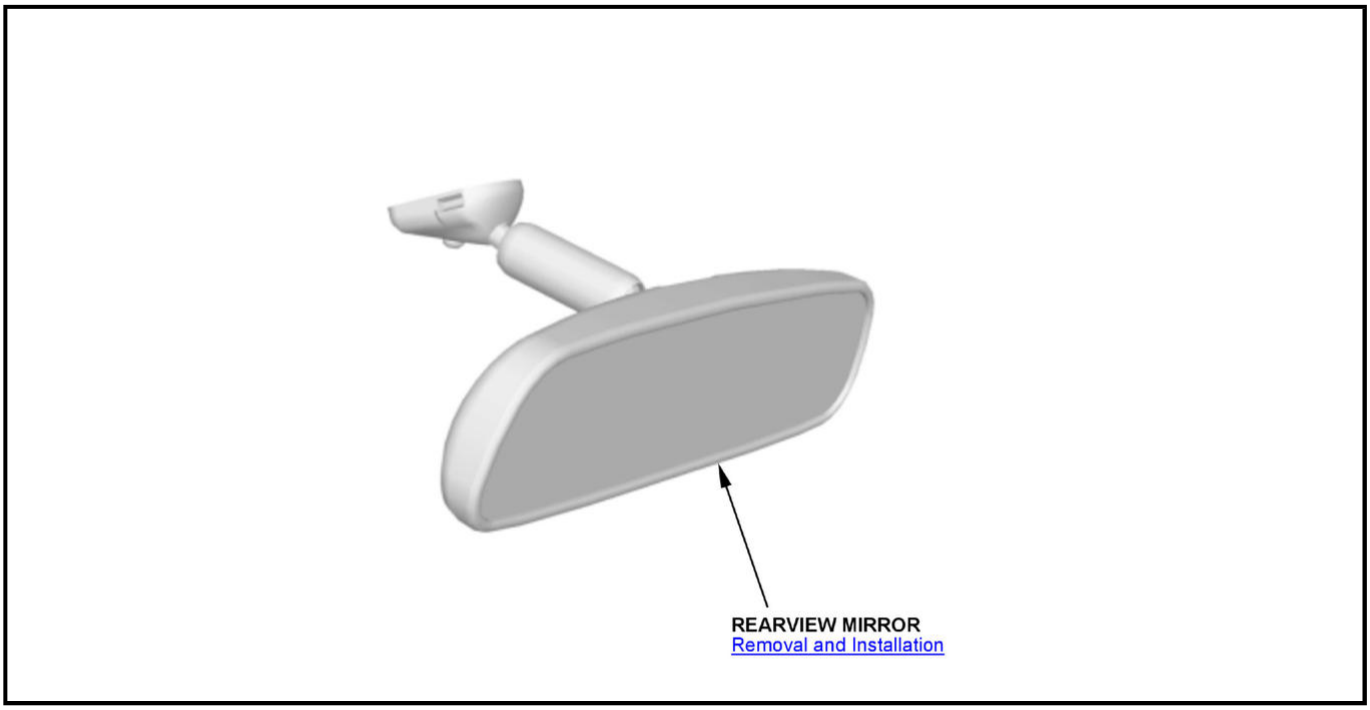
REARVIEW MIRROR
Removal and Installation

POWER MIRRORS COMPONENT LOCATION INDEX

For relationships between signals in a system, refer to System Diagram.

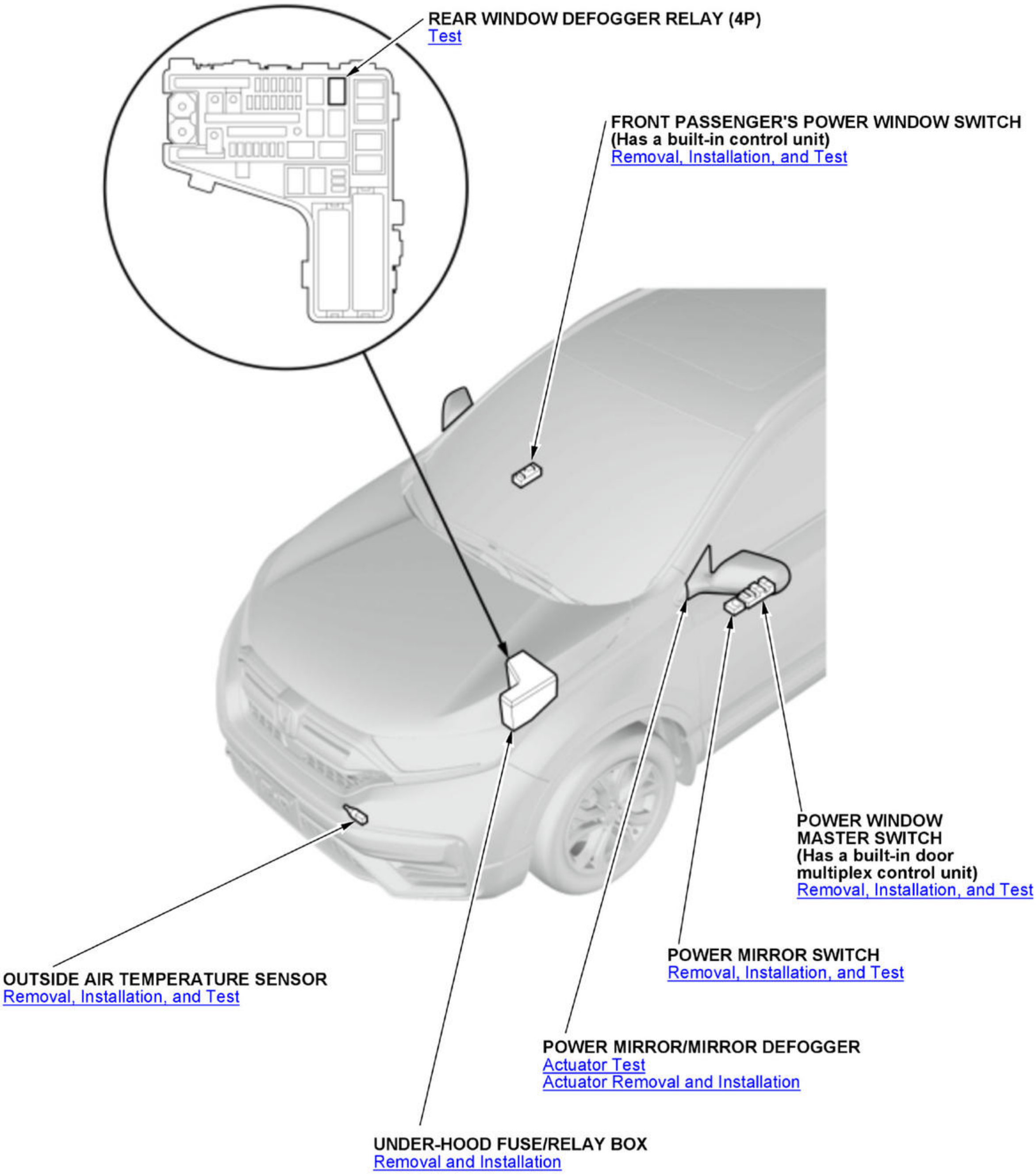
REAR WINDOW DEFOGGER RELAY (4P)
Test
FRONT PASSENGER'S POWER WINDOW SWITCH
(Has a built-in control unit)
Removal, Installation, and Test
POWER WINDOW
MASTER SWITCH
(Has a built-in door
multiplex control unit)
Removal, Installation, and Test
POWER MIRROR SWITCH
Removal, Installation, and Test
OUTSIDE AIR TEMPERATURE SENSOR
Removal, Installation, and Test
POWER MIRROR/MIRROR DEFOGGER
Actuator Test
Actuator Removal and Installation
UNDER-HOOD FUSE/RELAY BOX
Removal and Installation

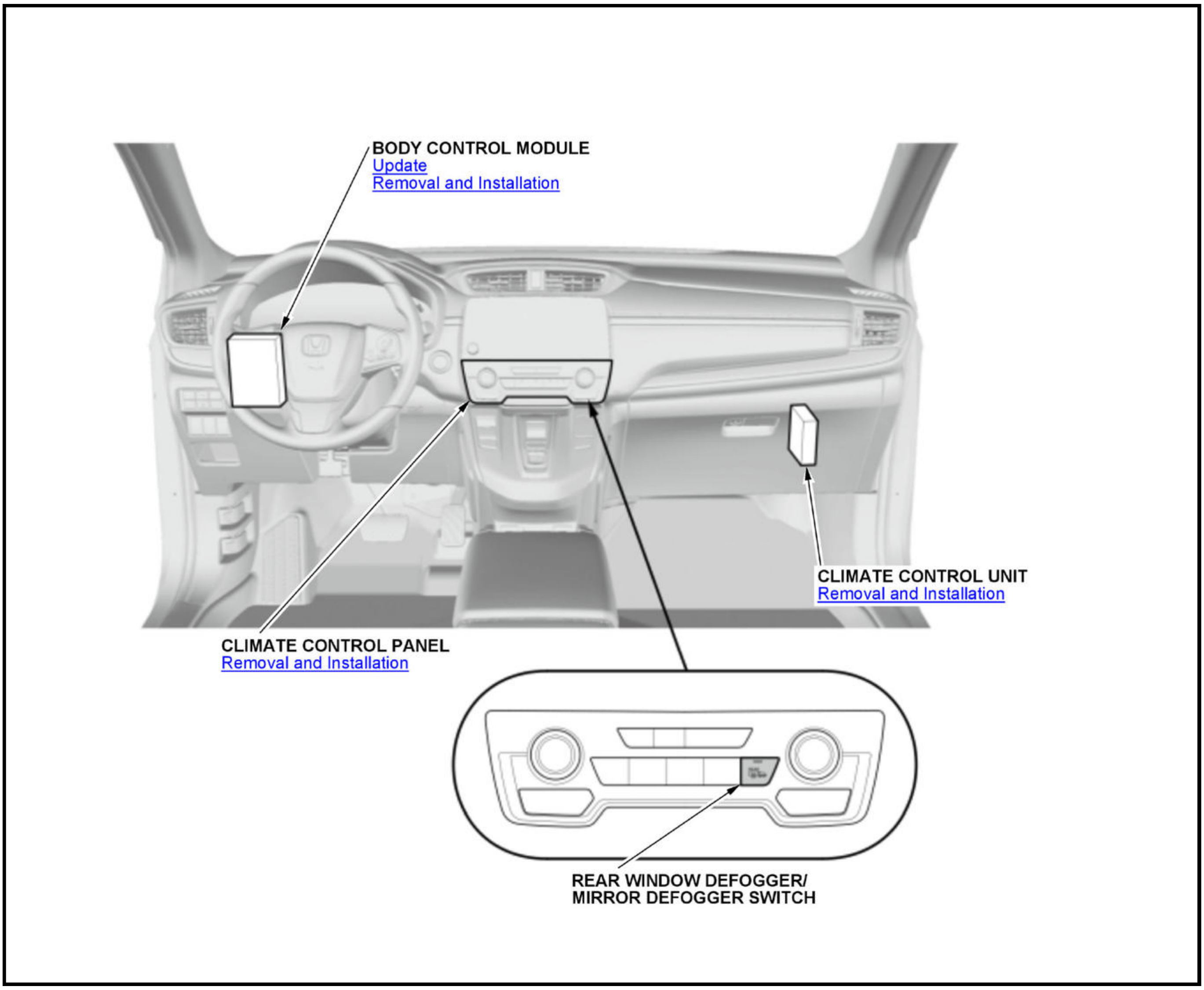
BODY CONTROL MODULE
Update
Removal and Installation
CLIMATE CONTROL UNIT
Removal and Installation
CLIMATE CONTROL PANEL
Removal and Installation
REAR WINDOW DEFOGGER/
MIRROR DEFOGGER SWITCH

REMOVAL & INSTALLATION TEST

MOONROOF SWITCH REMOVAL, INSTALLATION, AND TEST

Removal and Installation

NOTE: The moonroof switch is built into the interior light switch.

1. Front Individual Map Light - Remove
2. Moonroof Switch - Remove
3. All Removed Parts - Install

1. Install the parts in the reverse order of removal.

Test

1. Moonroof Switch - Test

1. Check for continuity between the terminals in each switch position according to the table.

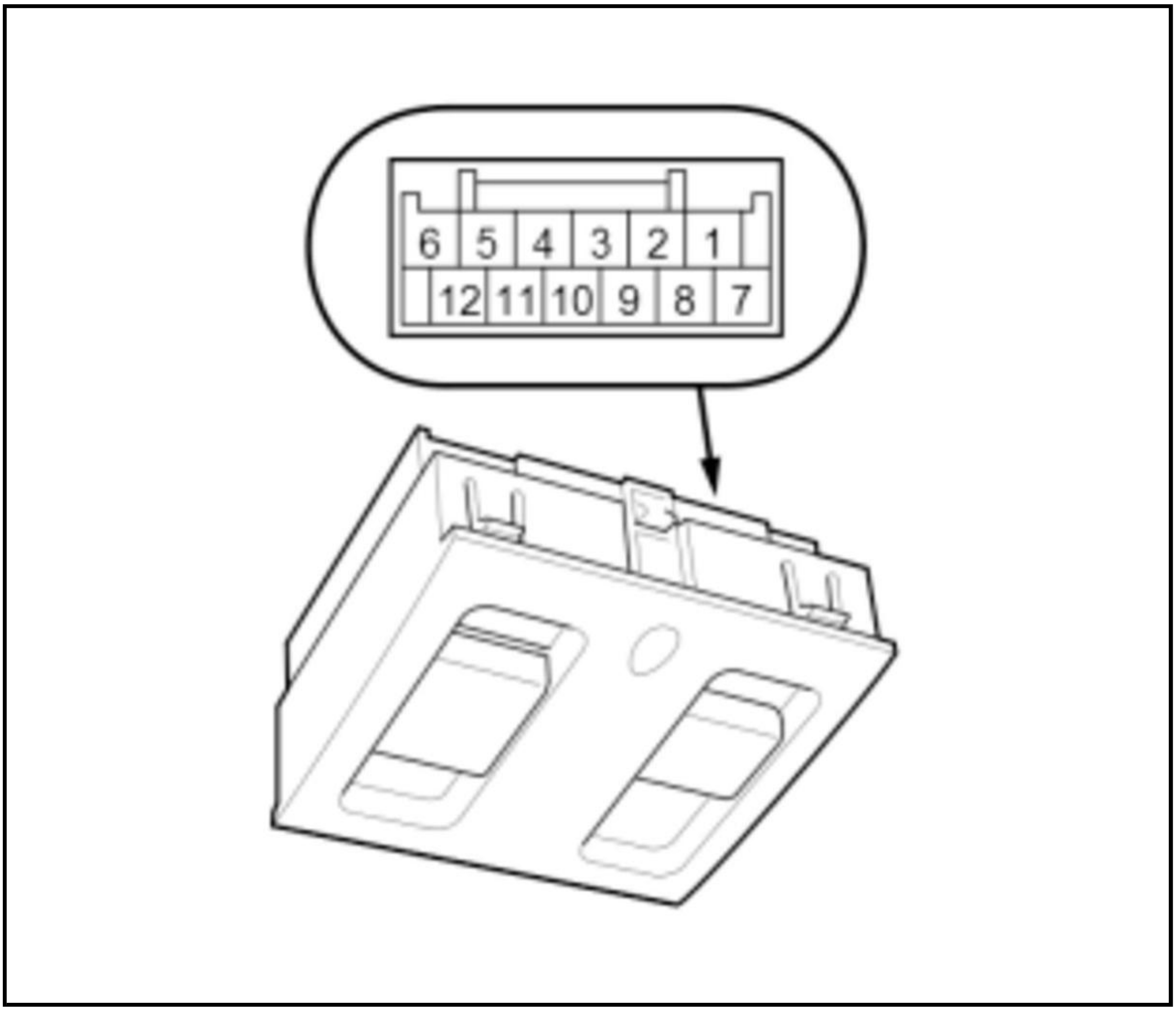

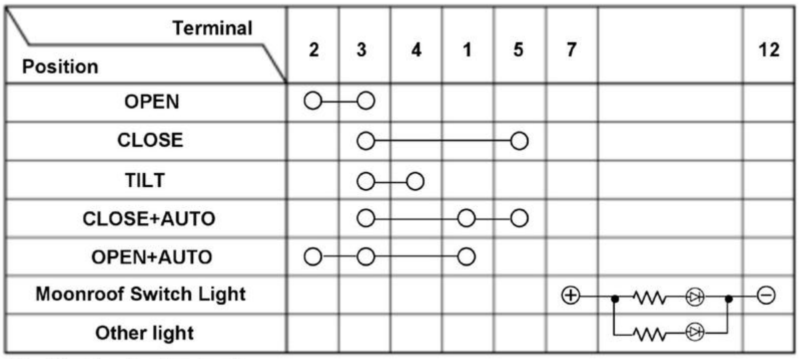

Position \ Terminal	2	3	4	1	5	7		12
OPEN	○	○						
CLOSE		○			○			
TILT		○	○					
CLOSE+AUTO		○		○	○			
OPEN+AUTO	○	○		○				
Moonroof Switch Light						⊕		⊖
Other light								

○—○ = Continuity check
⊕—⊖ = Voltage for LED

2. If the continuity is not as specified, replace the moonroof switch.

REMOVAL AND INSTALLATION

MOONROOF DRAIN CHANNEL REMOVAL AND INSTALLATION

Removal and Installation

1. Moonroof Glass - Remove
2. Moonroof Drain Channel - Remove

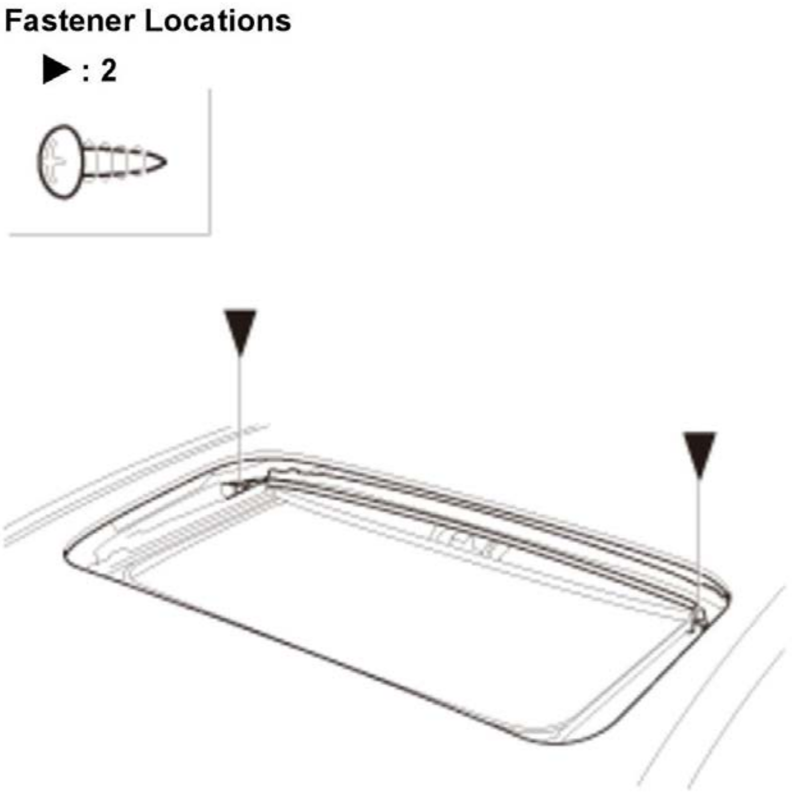

1. Remove the screws.

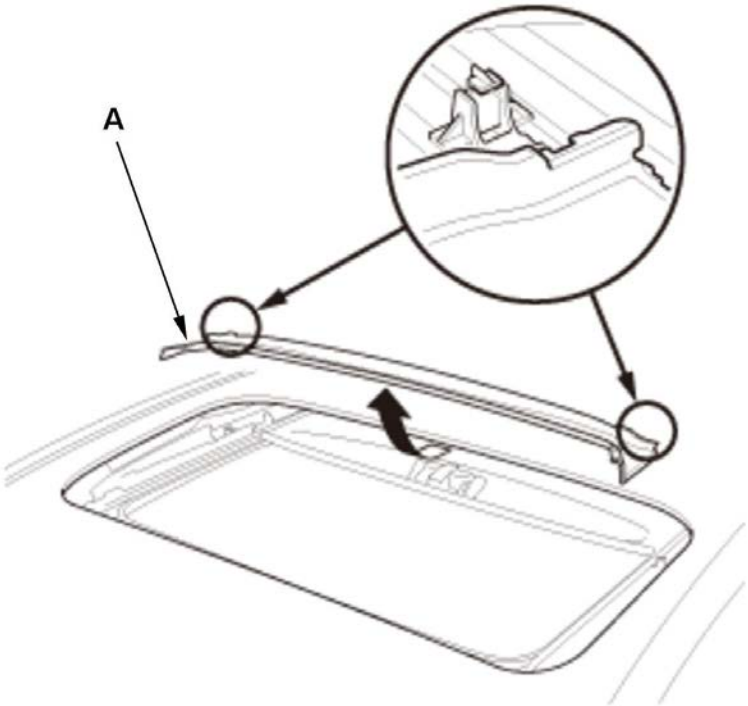	2. Remove the drain channel (A).

3. All Removed Parts - Install

1. Install the parts in the reverse order of removal.

MOONROOF DRAIN CHANNEL SLIDER AND CABLE ASSEMBLY REMOVAL AND INSTALLATION

Removal and Installation

NOTE: SRS components are located in this area. Review the **SRS component locations** and the **precautions and procedures** before doing repairs or service.

1. **Moonroof Motor-Control Unit - Remove**
2. **Moonroof Drain Channel - Remove**
3. **Moonroof Frame - Remove**
4. Moonroof Drain Channel Slider and Moonroof Cable Assembly - Remove

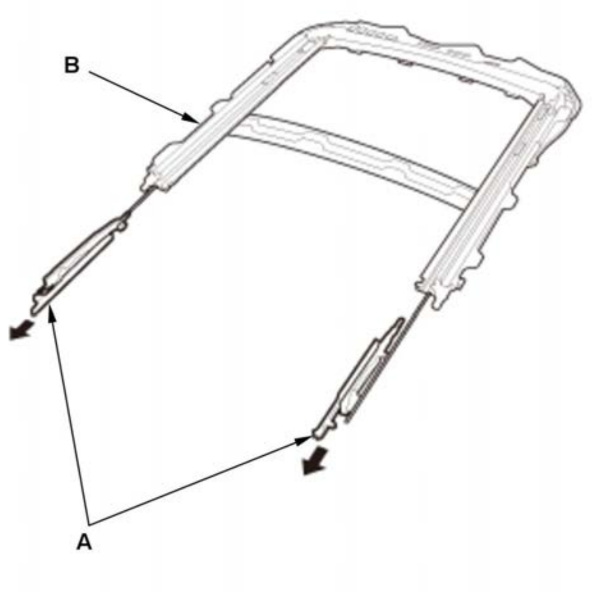	1. Slide the drain channel slider and the cable assemblys (A) back from the frame (B), then remove it.

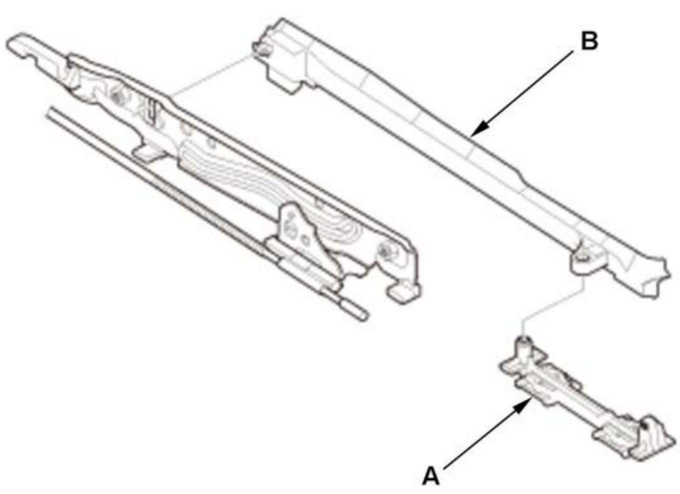	2. Remove the drain channel slider (A) and the moonroof link (B).

5. All Removed Parts - Install

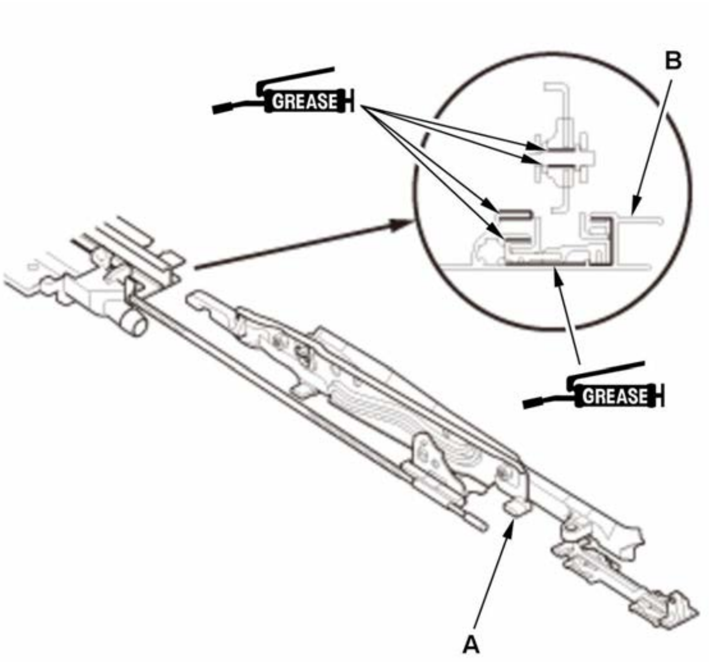	1. Install the parts in the reverse order of removal. **NOTE:** • **Apply multipurpose grease to the glass brackets (A) and the guide rail area of the frame (B) indicated by the arrows.** • **Before reinstalling the motor, make sure both link lifters are parallel, and in the tilt up position.**

6. Moonroof Glass Position - Adjust
7. Moonroof Motor-Control Unit - Reset
8. Water Leaks - Check

MOONROOF FRAME AND DRAIN TUBE REMOVAL AND INSTALLATION

Removal and Installation

NOTE:

- How to read the torque specifications .
- SRS components are located in this area. Review the SRS component locations and the precautions and procedures before doing repairs or service.
- Before installing the frame, clear the drain tubes and the drain valves using compressed air.
- To install a new drain tube, tie the string left in the body during drain tube removal to the top end of the new drain tube, and pull it up into the roof.
- When connecting the drain tubes, slide them over the frame nozzles at least 10 mm (0.39 in).
- Check the frame seal.
- When installing the frame, first attach the rear hook into the body hole.
- Install the tube clips (A) on the drain tubes (B) as shown.

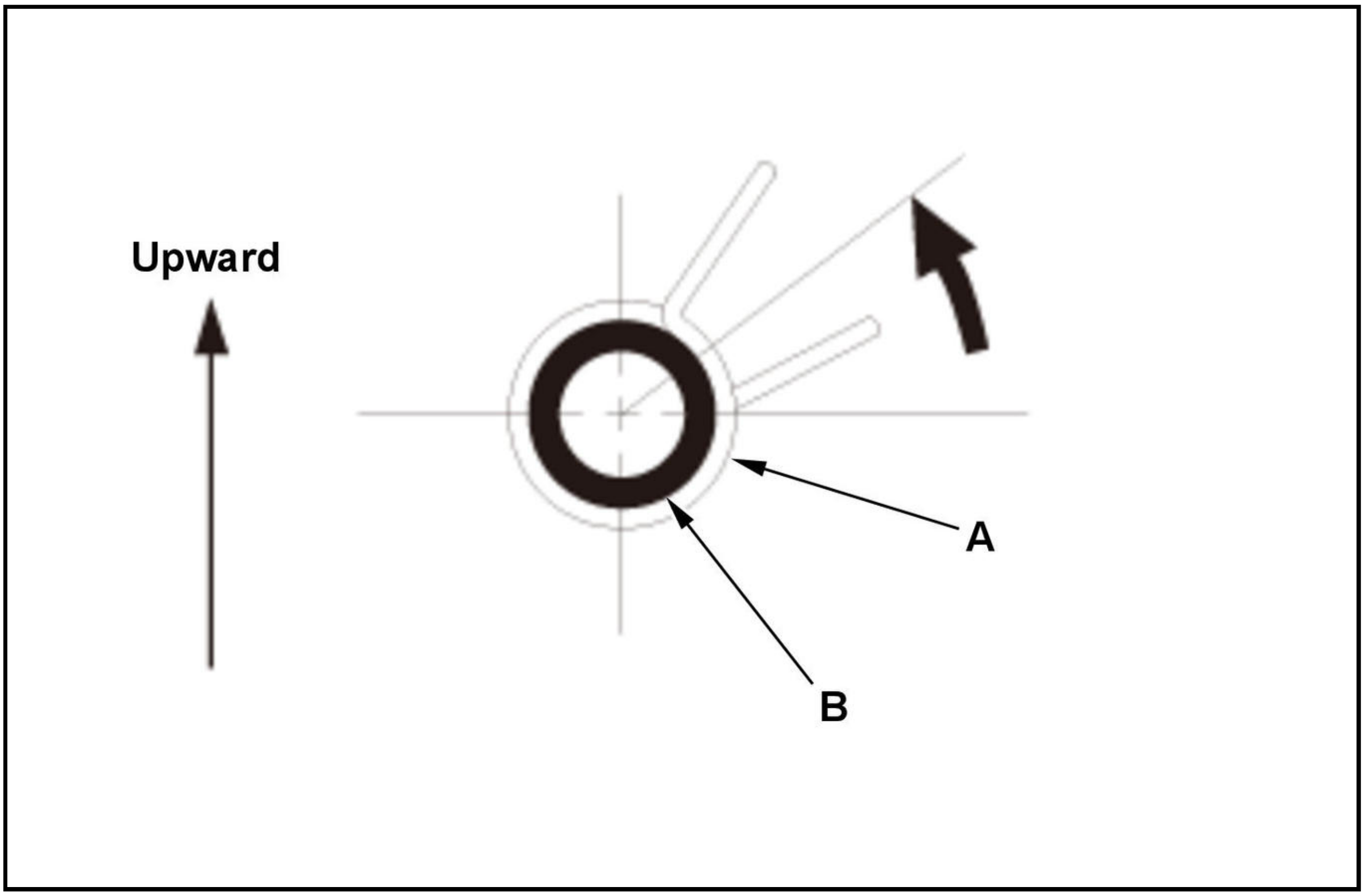

Moonroof Frame

1. Headliner - Remove
2. Moonroof Frame - Remove

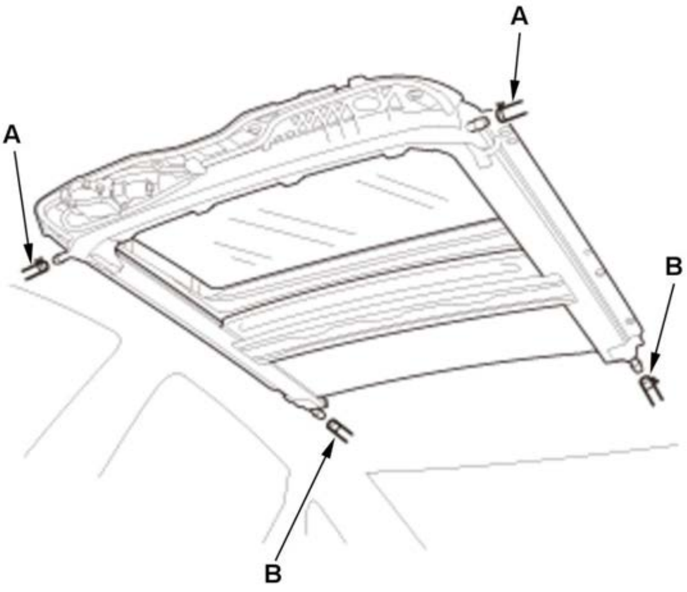	1. Disconnect the front drain tubes (A) and the rear drain tubes (B).

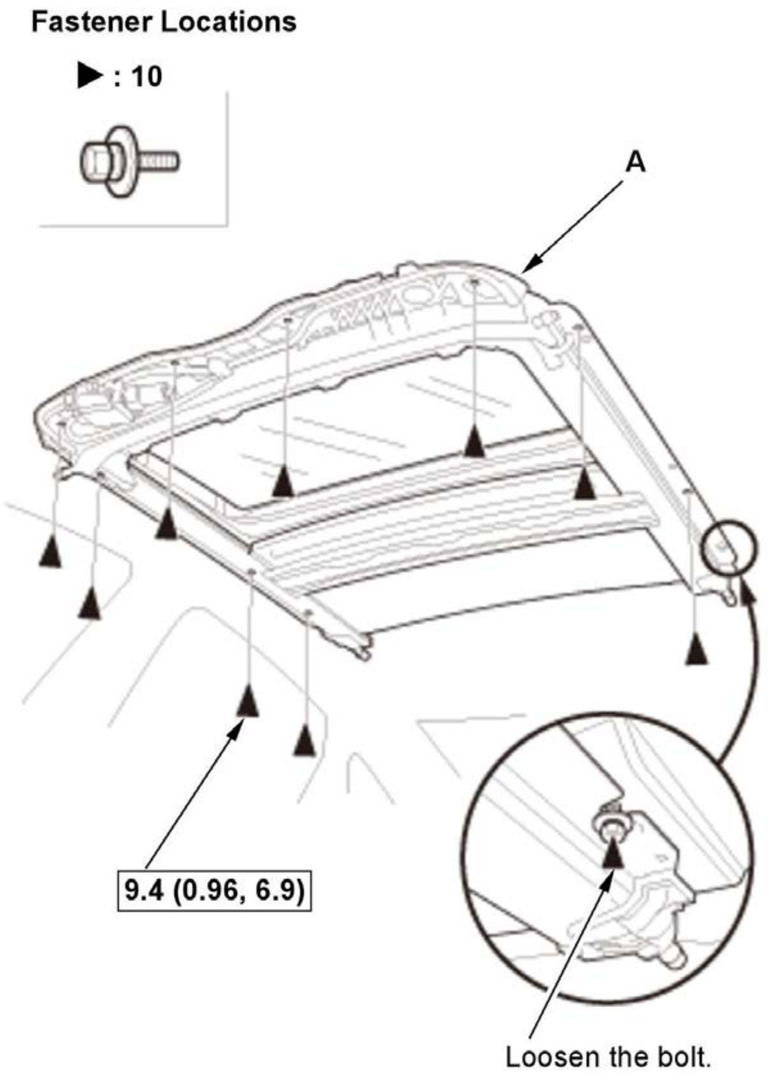 Fastener Locations ▶ : 10 A 9.4 (0.96, 6.9) Loosen the bolt.	2. Remove the moonroof frame (A).

3. Moonroof Frame Seal - Remove

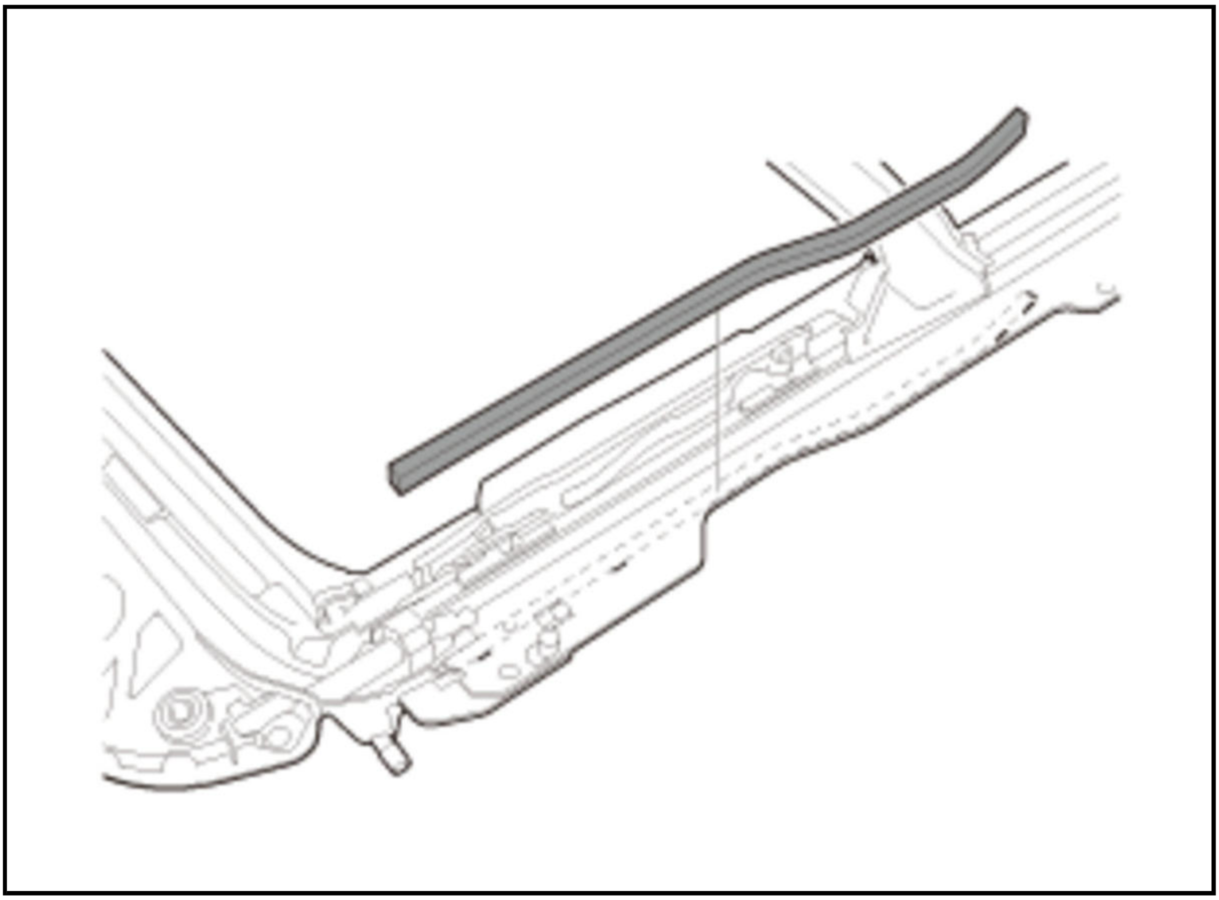

4. All Removed Parts - Install

1. Install the parts in the reverse order of removal.

5. **Moonroof Glass Position - Adjust**

Front Drain Tube

6. **Headliner - Remove**
7. **Driver's Dashboard Undercover - Remove**
8. **Front Inner Fender - Remove**
9. Moonroof Front Drain Tube - Remove

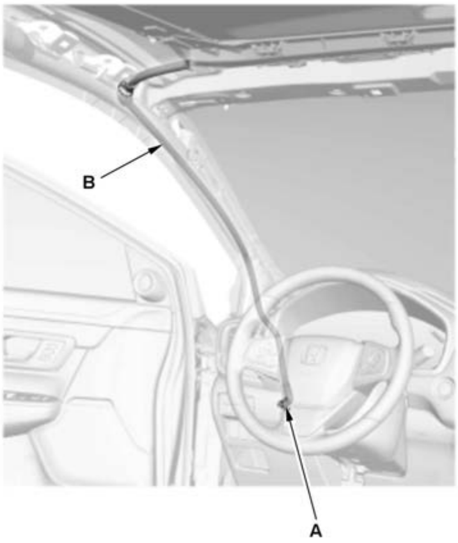	1. Pull the front drain valve (A) out of the body hole. 2. Tie a string to the top end of the front drain tube (B), then pull the drain tube down out of the pillar. Leave the string in the pillar to use when reinstalling the drain tube.

10. All Removed Parts - Install

1. Install the parts in the reverse order of removal.

11. **Water Leaks - Check**

Rear Drain Tube

12. **Headliner - Remove**
13. **Rear Side Trim Panel - Remove**
14. Moonroof Rear Drain Tube - Remove

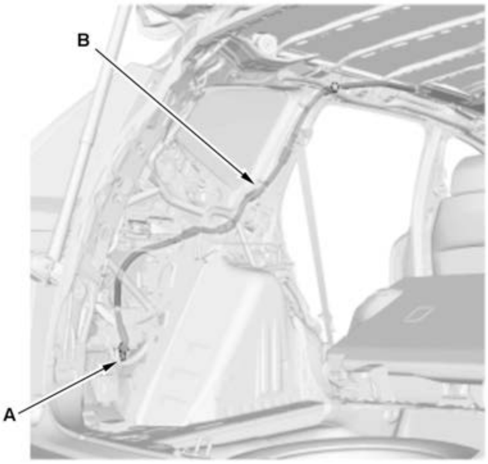	1. Pull the rear drain valve (A) out of the body hole. 2. Tie a string to the top end of the rear drain tube (B), then pull the drain tube down out of the pillar. Leave the string in the pillar to use when reinstalling the drain tube.

15. All Removed Parts - Install

1. Install the parts in the reverse order of removal.

16. **Water Leaks - Check**

MOONROOF GLASS REMOVAL AND INSTALLATION

Removal and Installation

NOTE: **How to read the torque specifications**

1. Moonroof Glass - Remove

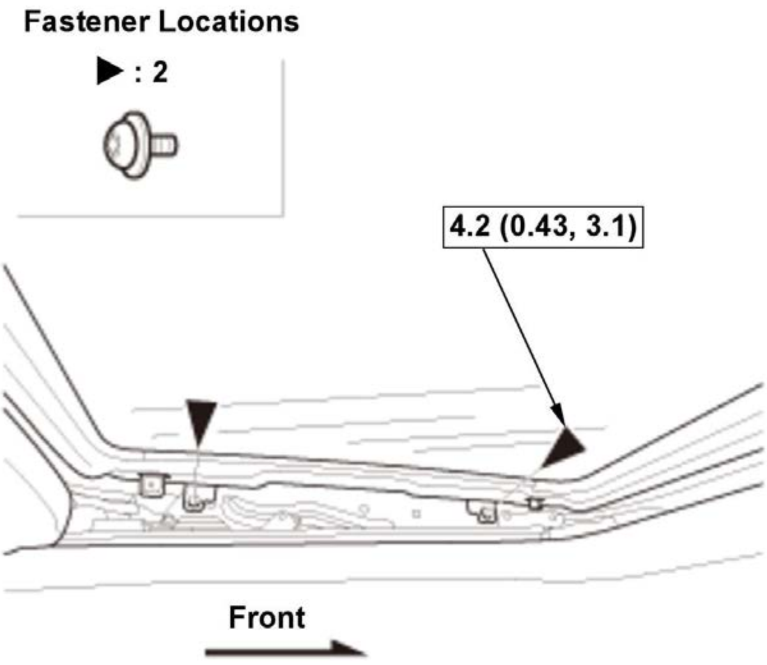 Fastener Locations ▶ : 2 4.2 (0.43, 3.1) Front	1. Remove the bolts. 2. Repeat on the opposite side.

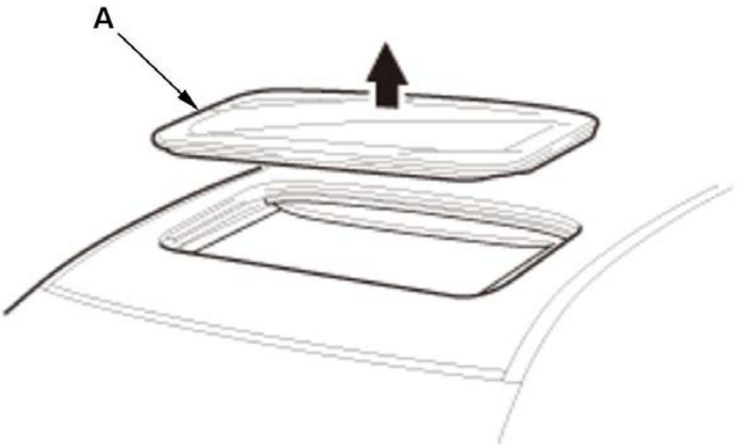	3. Remove the glass (A) by lifting it up.

2. All Removed Parts - Install

1. Install the parts in the reverse order of removal.

3. **Moonroof Glass Position - Adjust**

MOONROOF GLASS ROOF SEAL REMOVAL AND INSTALLATION

Removal

1. **Moonroof Glass - Remove**
2. Moonroof Glass Roof Seal - Remove

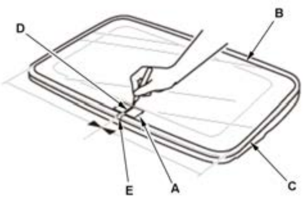	1. Place a piece of masking tape (A) on the middle of the front edge of the moonroof glass (B). Make sure that the tape is on the glass only, and is not touching the glass roof seal (C). 2. Place a mark (D) on the masking tape that aligns with the seam (E) of the glass roof seal. 3. Push down on the top of the original glass roof seal with your thumb until a small section separates from the moonroof glass. Once a section has started to separate, grip it and pull outward, working around the moonroof glass until the glass roof seal is completely removed (note the locations of the holes in the glass roof seal).

Installation

1. Moonroof Glass Roof Seal - Install

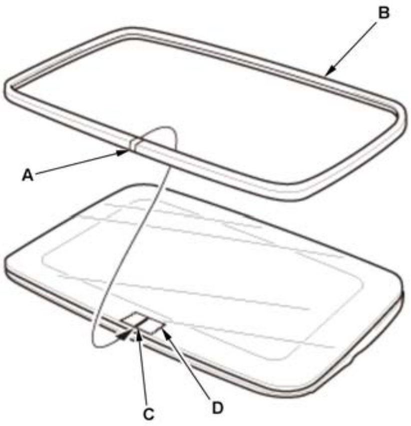	1. Align the seam (A) of the new glass roof seal (B) to the mark (C) on the masking tape (D). Make sure the holes are pointed in the same direction as noted in removal procedure. 2. Press the ridge of the new glass roof seal into the groove on the moonroof glass starting at the seam. Work toward one corner; then go back to the middle and work toward the opposite corner. **NOTE:** **Be careful not to stretch the glass roof seal.** 3. Continue pressing along one side, from corner to corner; then press along the opposite side, from corner to corner. 4. At the rear of the moonroof glass, continue pressing from one corner to the middle; then press from the opposite corner to the middle until the glass roof seal is completely installed. 5. Check for proper fit of the new glass roof seal by opening and closing the moonroof.

2. Moonroof Glass - Install

MOONROOF MOTOR-CONTROL UNIT REMOVAL AND INSTALLATION

Removal and Installation

NOTE: How to read the torque specifications

1. Headliner - Remove
2. Moonroof Motor-Control Unit - Remove

<table>
<tr>
<td>
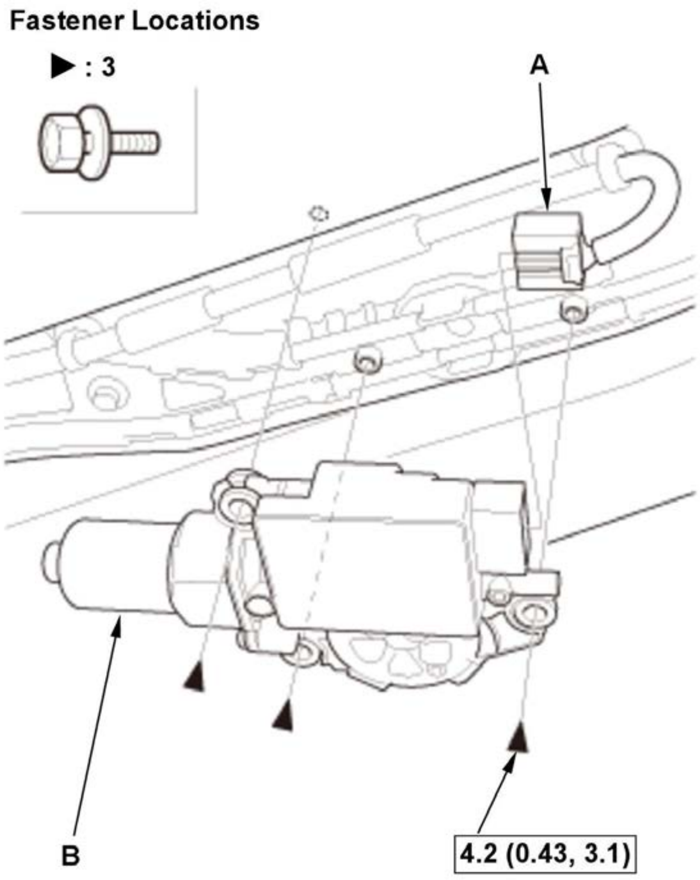

</td>
<td>
1. Disconnect the connector (A).

2. Remove the moonroof motor-control unit (B).
</td>
</tr>
</table>

3. All Removed Parts - Install

   1. Install the parts in the reverse order of removal.

4. Moonroof Motor-Control Unit - Reset

MOONROOF SUNSHADE REMOVAL AND INSTALLATION

Removal and Installation

1. Moonroof Frame - Remove
2. Moonroof Sunshade - Remove

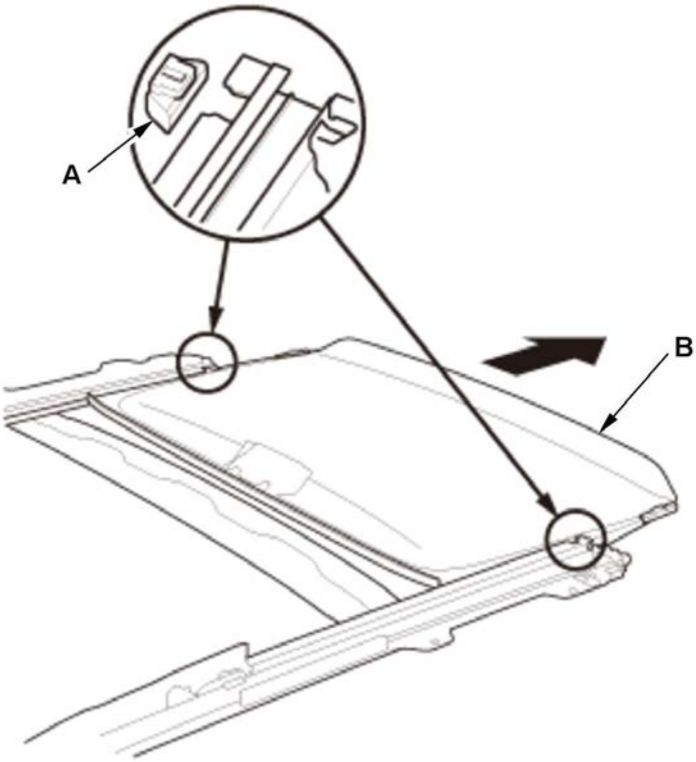	1. Remove the moonroof sunshade rear stoppers (A). 2. Remove the moonroof sunshade (B).

3. Moonroof Sunshade Handle Bracket - Remove

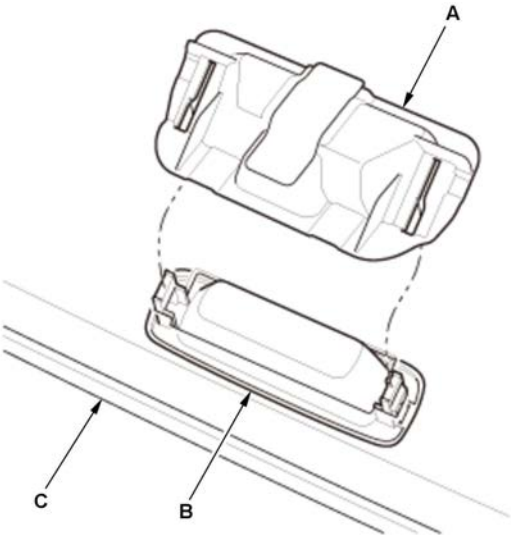	1. Remove the moonroof sunshade handle bracket (A), then remove the moonroof sunshade handle (B) from the moonroof sunshade (C).

4. All Removed Parts - Install

1. Install the parts in the reverse order of removal.

MOONROOF WIND DEFLECTOR REMOVAL AND INSTALLATION

Removal and Installation

1. Moonroof Wind Deflector - Remove

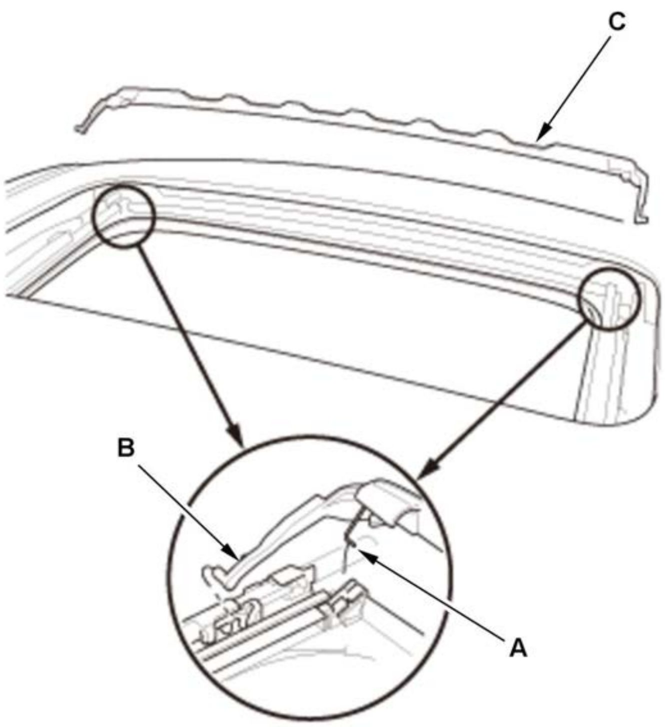	1. Open the glass fully. 2. Release both deflector springs (A) and both deflector blades (B). 3. Remove the wind deflector (C).

2. All Removed Parts - Install

1. Install the parts in the reverse order of removal.

3. **Moonroof Motor-Control Unit - Reset**

PANORAMIC GLASS ROOF CABLE ASSEMBLY REMOVAL AND INSTALLATION

Removal and Installation

NOTE: SRS components are located in this area. Review the **SRS component locations** and the **precautions and procedures** before doing repairs or service.

1. **Panoramic Glass Glass Roof Motor - Remove**
2. **Panoramic Glass Drain Channel - Remove**
3. Glass Roof Cable Assembly and Glass Bracket - Remove

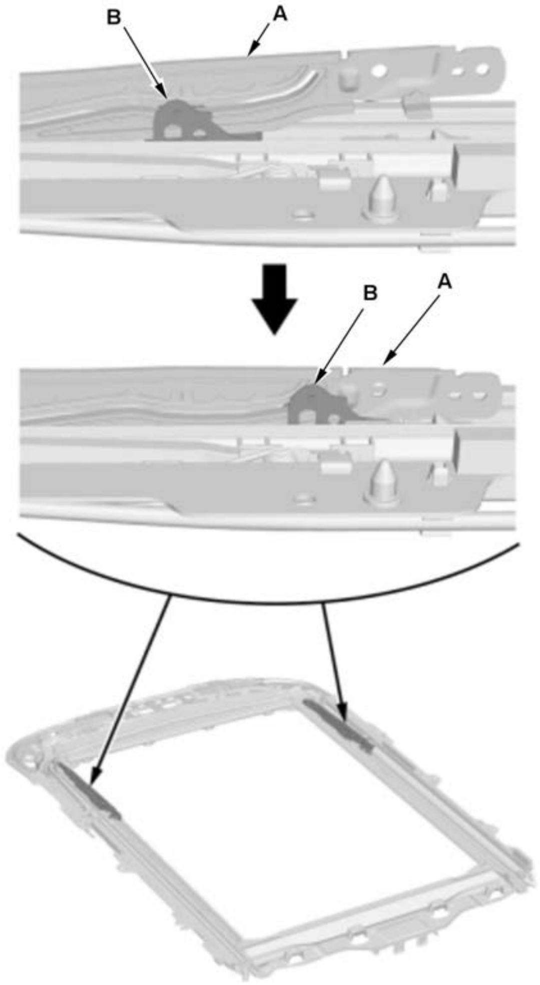	1. Tilt the glass brackets (A) down by sliding the link lifters (B) back, then slide both glass brackets back with the link lifters.

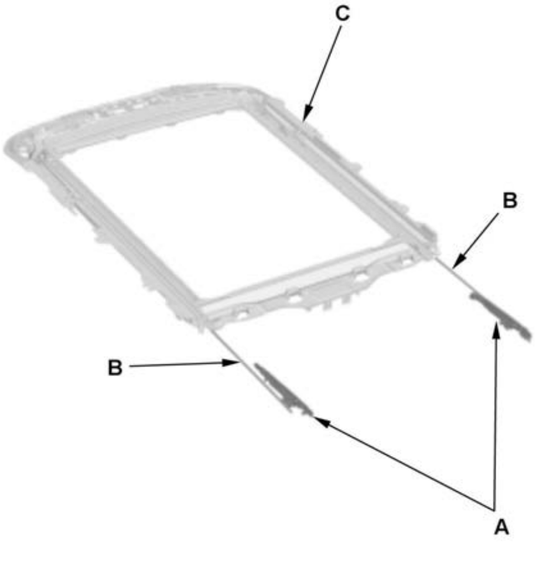	2. Slide the glass brackets (A) on the glass roof cables (B) towards the rear, and pull it out from the frame (C). 3. Pull out the cable assemblies.

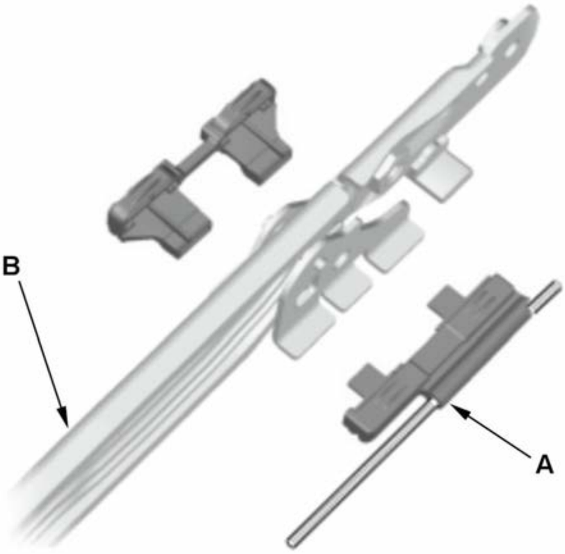	4. Remove the glass bracket link (A) from the glass bracket (B).

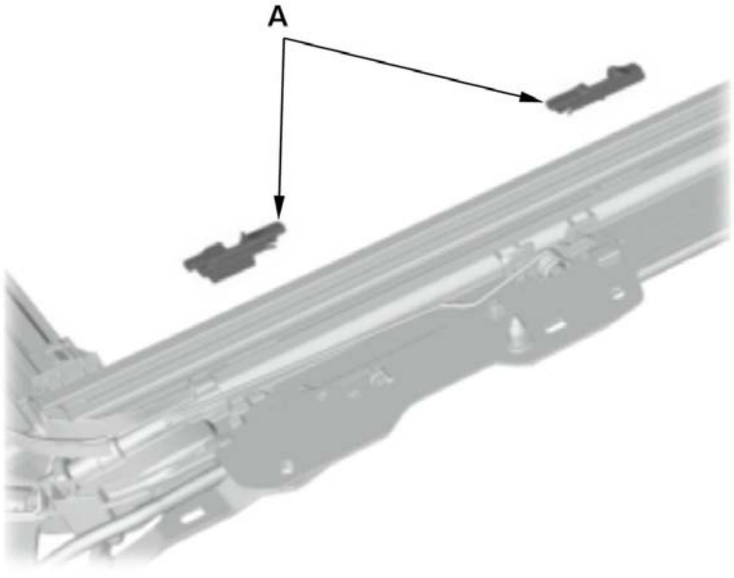	5. If necessary, remove the set plates (A).

4. All Removed Parts - Install

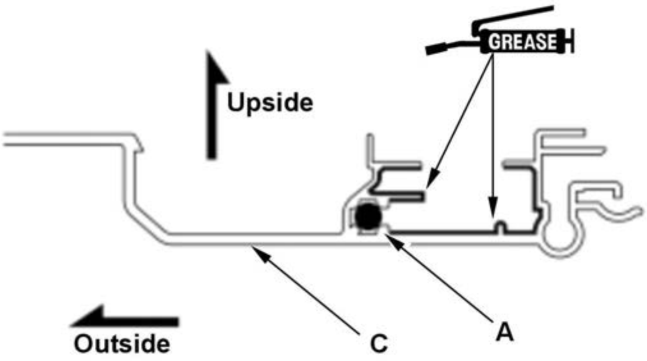

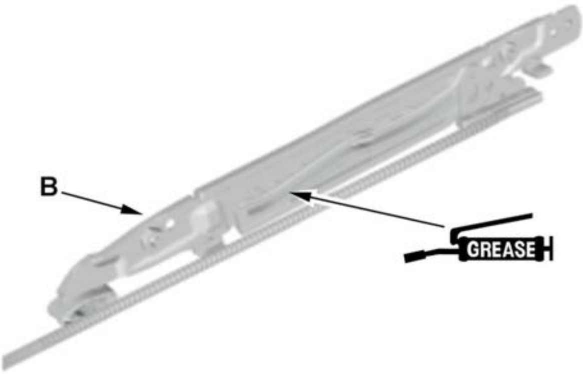

1. Install the parts in the reverse order of removal.

NOTE:

- **Before install the glass roof cables (A), apply multipurpose grease to the glass brackets (B) and the guide rail areas of the frame (C) indicated by the arrows.**
- **Alignment the bracket links.**
-
  - -

    Insert the glass brackets until it comes to a stop against the frame.
-
  - -

    Make sure the glass roof cables are correctly installed.
-
  - -

    Slide the link lifters (D) forward until it is against the tip of the guide rails (E).
-
  - -

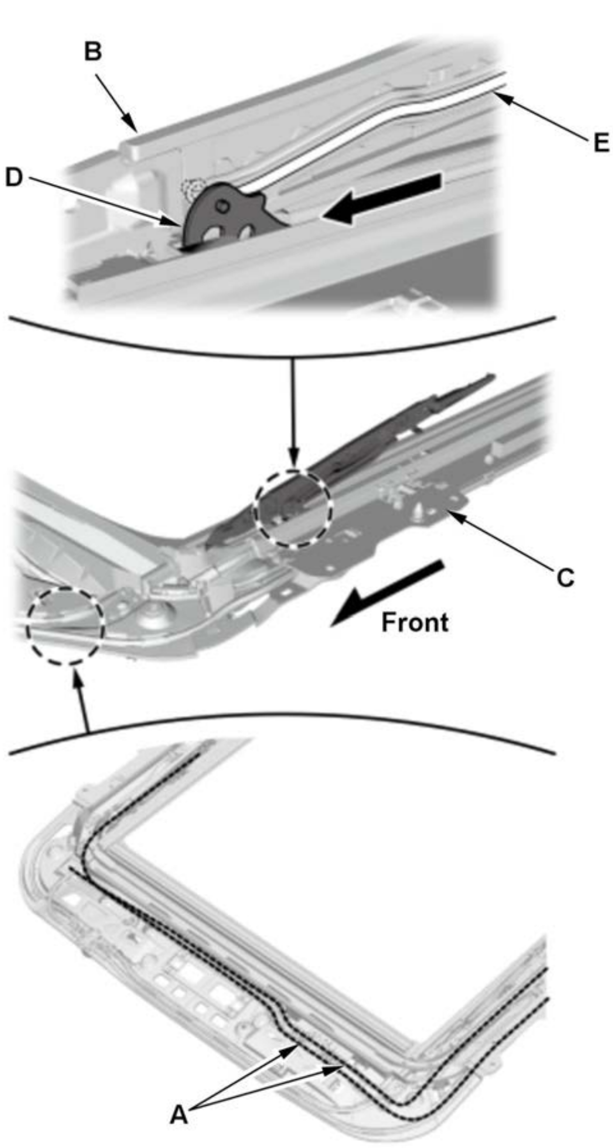	**Before reinstalling the motor, make sure both link lifters are parallel, and in the tilt up position.**

5. Panoramic Glass Glass Position - Adjust
6. Panoramic Glass Roof Motor-Control Unit - Reset

PANORAMIC GLASS ROOF DRAIN CHANNEL REMOVAL AND INSTALLATION

Removal and Installation

NOTE:

- How to read the torque specifications .
- SRS components are located in this area. Review the SRS component locations and the precautions and procedures before doing repairs or service.

1. Panoramic Glass Front Glass - Remove
2. Panoramic Glass Sunshade - Remove
3. Panoramic Glass Drain Channel - Remove

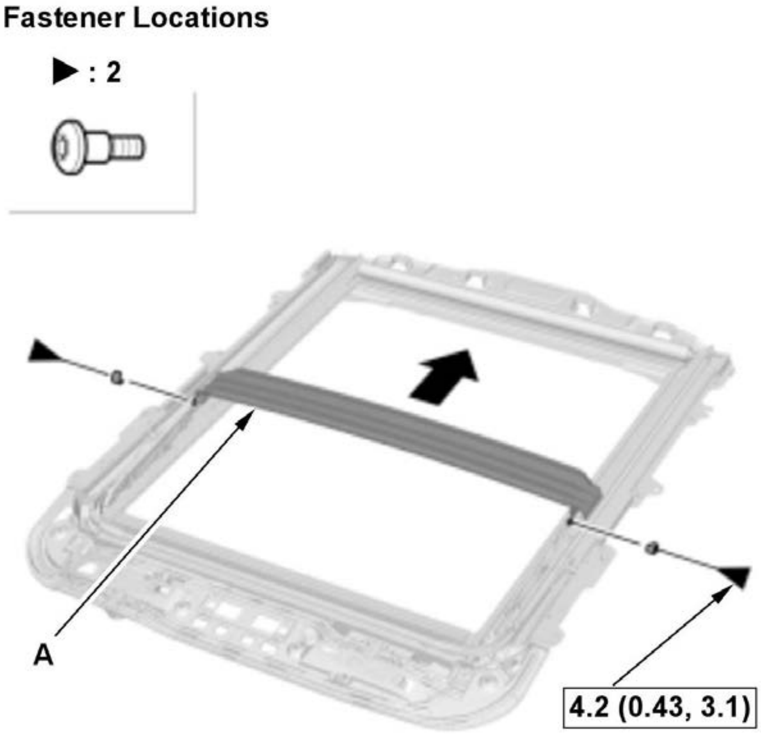	1. Remove the front drain channel (A).

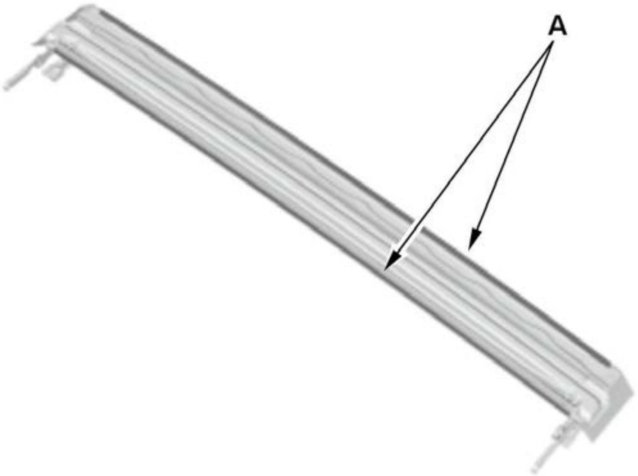	2. If necessary, remove the drain channel seals (A).

4. All Removed Parts - Install

1. Install the parts in the reverse order of removal.

5. **Panoramic Glass Glass Position - Adjust**

PANORAMIC GLASS ROOF FRAME AND DRAIN TUBE REMOVAL AND INSTALLATION

Removal and Installation

NOTE:

- **How to read the torque specifications** .
- SRS components are located in this area. Review the **SRS component locations** and the **precautions and procedures** before doing repairs or service.
- **Reset the panoramic glass roof motor-control unit** , when the panoramic glass roof was moved manually.

- **Reset the power sunshade motor-control unit** , when the power sunshade was moved manually.

Frame

1. **Headliner - Remove**
2. These Items - Remove

   If necessary, remove these items.

   - **Remove the panoramic front glass**
   - **Remove the panoramic glass wind deflector**
   - **Remove the motor**
3. Panoramic Glass Frame - Remove

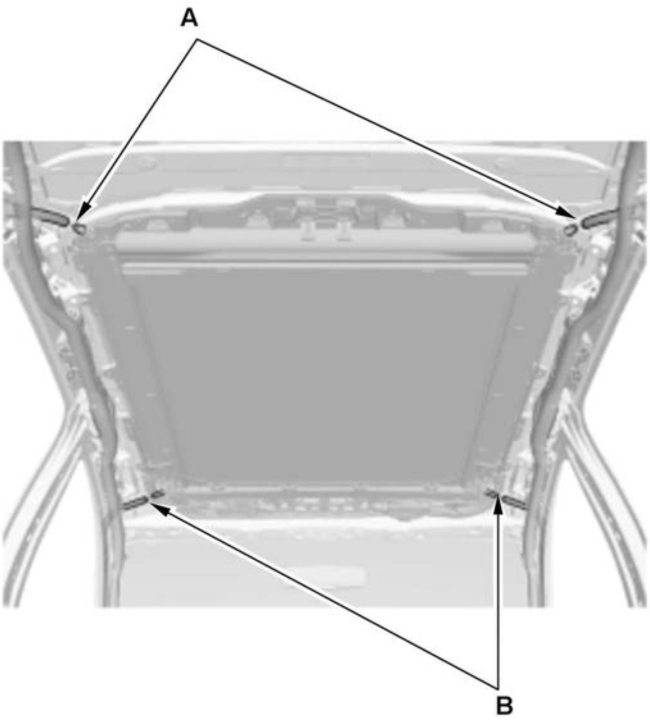	1. Disconnect the front drain tubes (A) and the rear drain tubes (B).

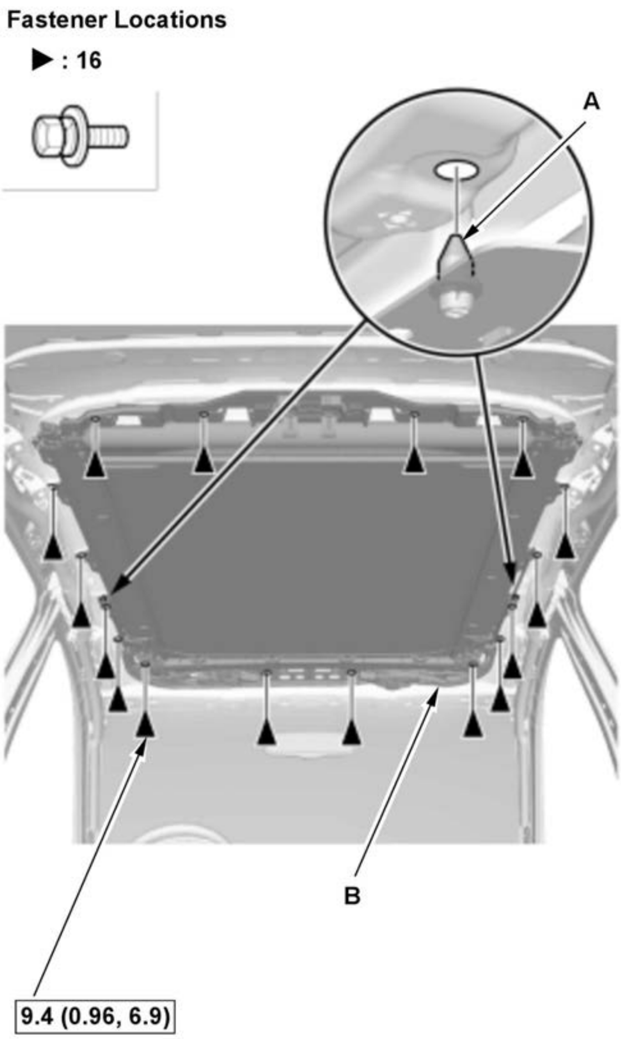	2. Remove the bolts and lower the frame to release the pins (A). 3. With the help of an assistant, then remove the panoramic glass roof frame (B).

4. All Removed Parts - Install

1. Install the parts in the reverse order of removal.

5. **Panoramic Glass Glass Position - Adjust**

Front Drain Tube

6. **Headliner - Remove**
7. **Driver's Dashboard Undercover - Remove**
8. **Glove Box - Remove**
9. Front Drain Tube - Remove

Driver's Side

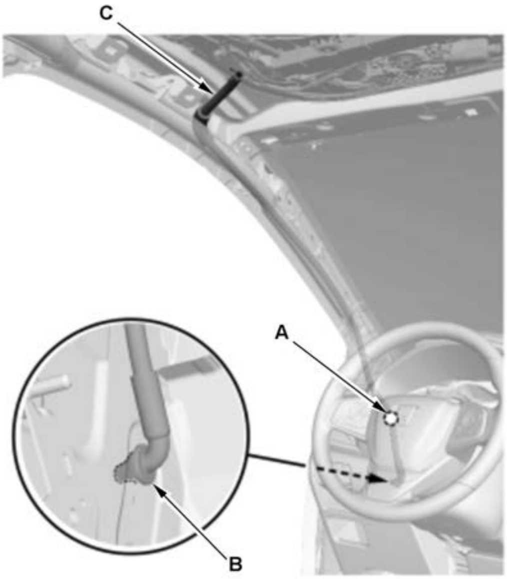

Passenger's Side

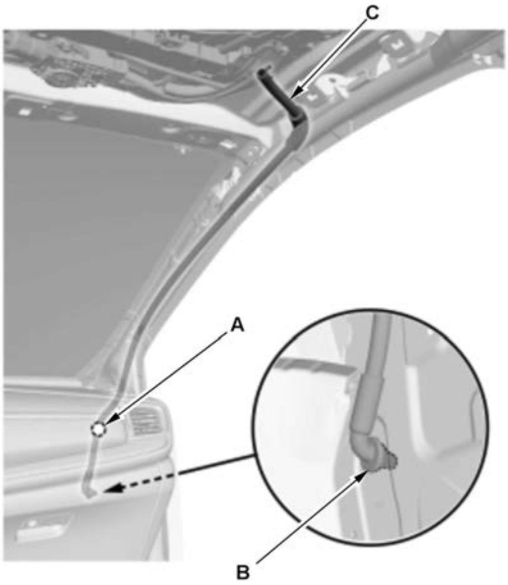

1. Remove the clip (A).

2. Pull the front drain valves (B) out of the body hole.

3. Tie a string to the top end of the front drain tubes (C), then pull the drain tubes down out of the pillars. Leave the string in the pillar to use when reinstalling the drain tubes.

10. All Removed Parts - Install

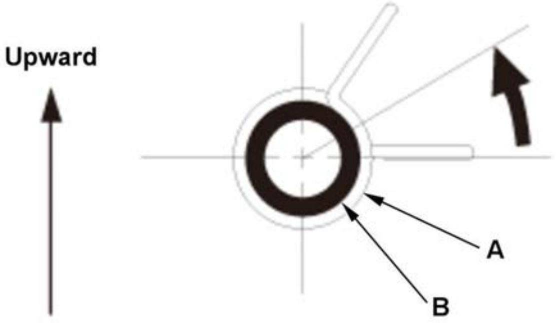

1. Install the parts in the reverse order of removal.

NOTE:

- **Before installing the drain tubes, clear the drain tubes and the drain valves using compressed air.**

	- **When connecting the drain tubes, slide them over the frame nozzles at least 10 mm (0.39 in).** - **Install the tube clips (A) on the drain tubes (B) as shown.**

Rear Drain Tube

11. **Headliner - Remove**
12. **Subwoofer - Remove**
13. Rear Drain Tube - Remove

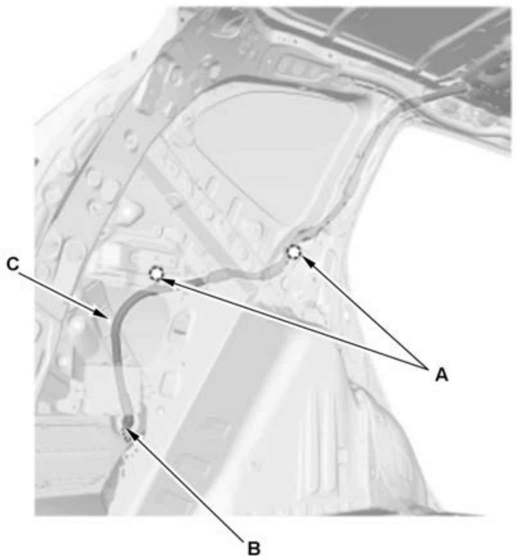 **Left Side** **Right Side**	1. Remove the clip(s) (A). 2. Pull the rear drain valves (B) out of the body hole. 3. Tie a string to the top end of the rear drain tubes (C), then pull the drain tubes down out of the pillars. Leave the string in the pillar to use when reinstalling the drain tubes.

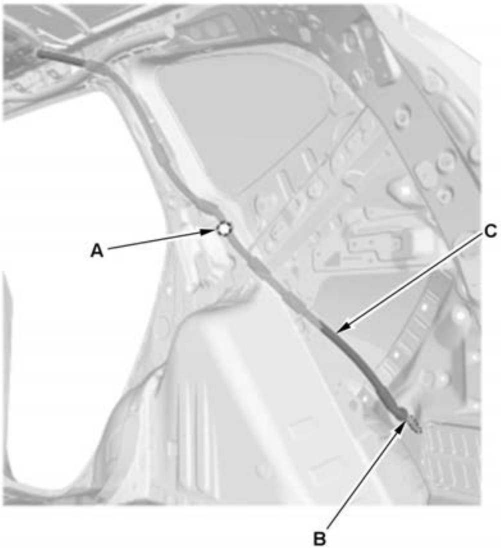	

14. All Removed Parts - Install

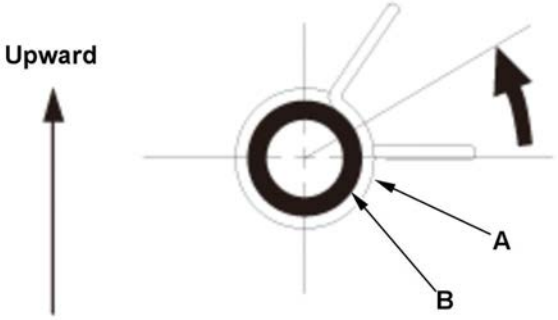	1. Install the parts in the reverse order of removal. **NOTE:** - **Before installing the drain tubes, clear the drain tubes and the drain valves using compressed air.** - **When connecting the drain tubes, slide them over the frame nozzles at least 10 mm (0.39 in).** - **Install the tube clips (A) on the drain tubes (B) as shown.**

PANORAMIC GLASS ROOF FRONT GLASS REMOVAL AND INSTALLATION

Removal and Installation

NOTE: How to read the torque specifications

1. Panoramic Glass Inner Blind Cover - Remove

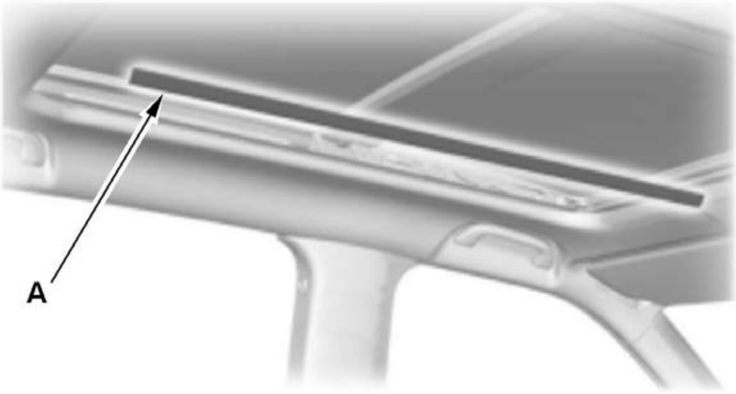	1. Close the front glass roof fully. 2. Slide the sunshade all the way back. 3. Remove the inner blind cover (A). 4. Repeat on the opposite side.

2. Panoramic Glass Front Glass - Remove

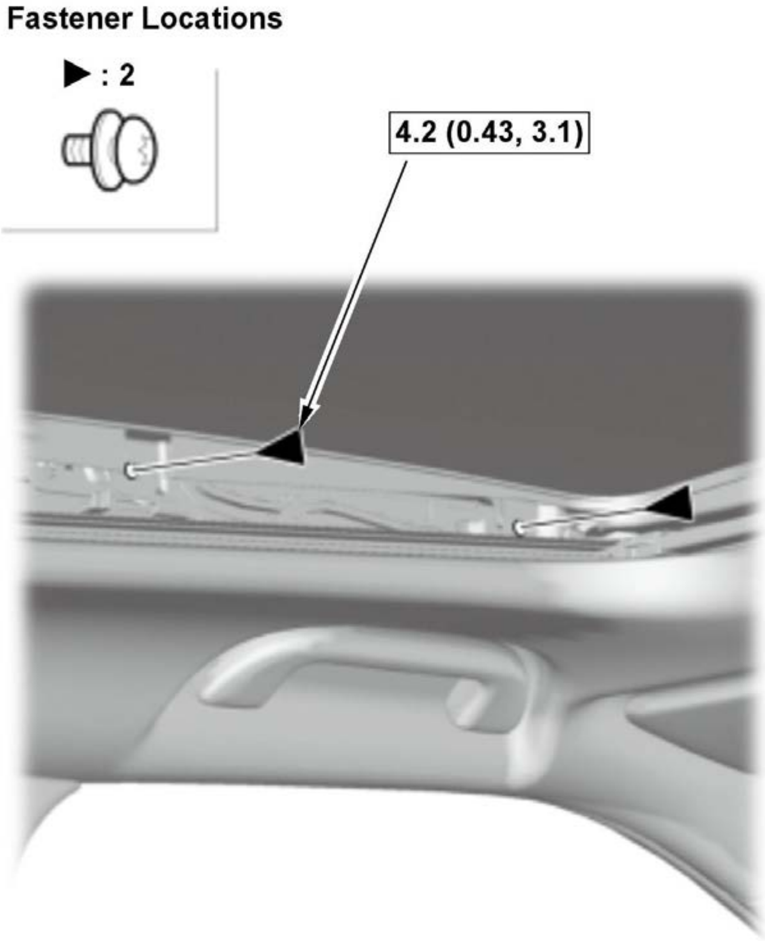 Fastener Locations ▶ : 2 4.2 (0.43, 3.1)	1. Remove the bolts. 2. Repeat on the opposite side.

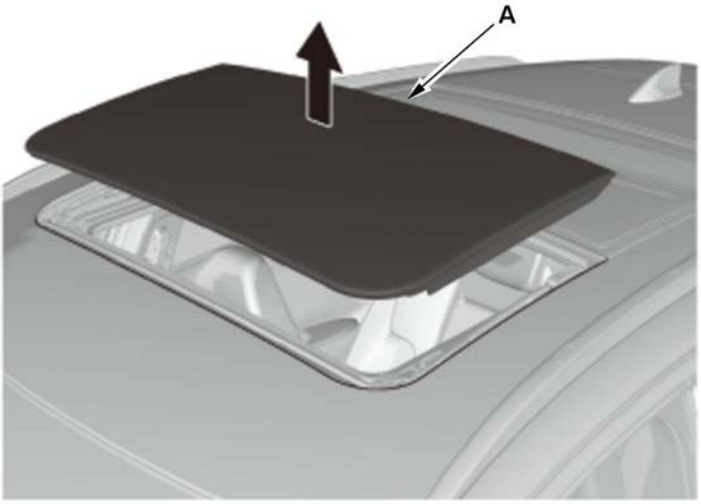	3. With the help of an assistant, then remove the front glass (A) by lifting it up.

3. All Removed Parts - Install

1. Install the parts in the reverse order of removal.

4. **Panoramic Glass Glass Position - Adjust**

PANORAMIC GLASS ROOF MOTOR REMOVAL AND INSTALLATION

Removal and Installation

NOTE:

- **How to read the torque specifications.**
- SRS components are located in this area. Review the **SRS component locations** and the **precautions and procedures** before doing repairs or service.

Sunshade Motor

1. **Headliner - Remove**
2. Sunshade Motor - Remove

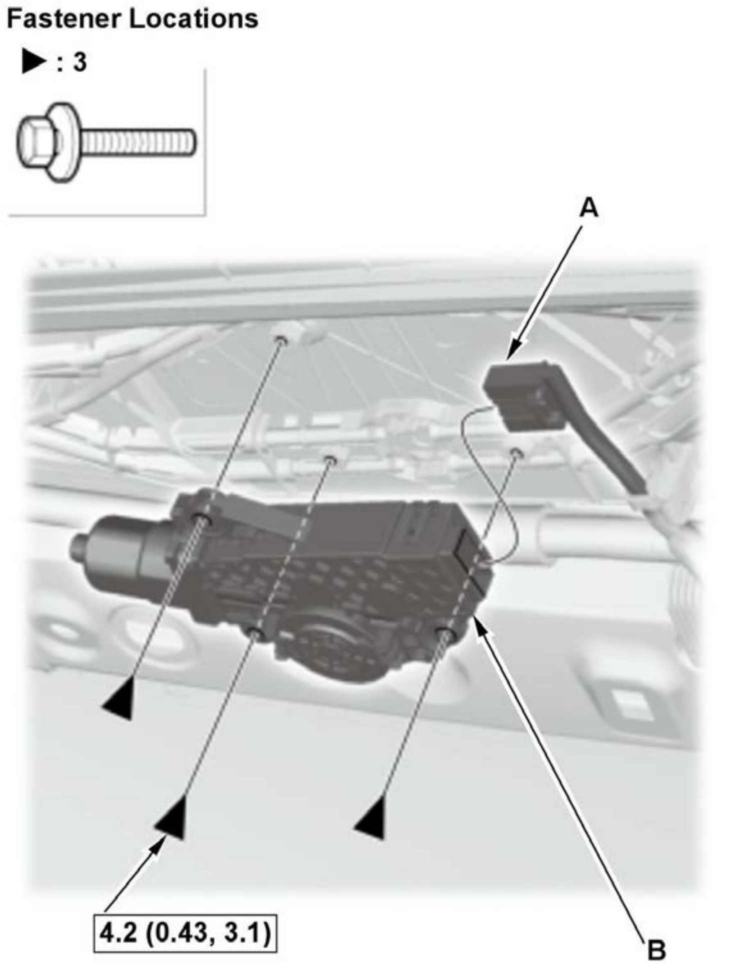 Fastener Locations ▶ : 3 A 4.2 (0.43, 3.1) B	1. Disconnect the connector (A). 2. Remove the panoramic sunshade motor (B).

3. All Removed Parts - Install

1. Install the parts in the reverse order of removal.

4. **Power Sunshade Motor-Control Unit - Reset**

Glass Roof Motor

5. **Headliner - Remove**
6. Panoramic Glass Glass Roof Motor - Remove

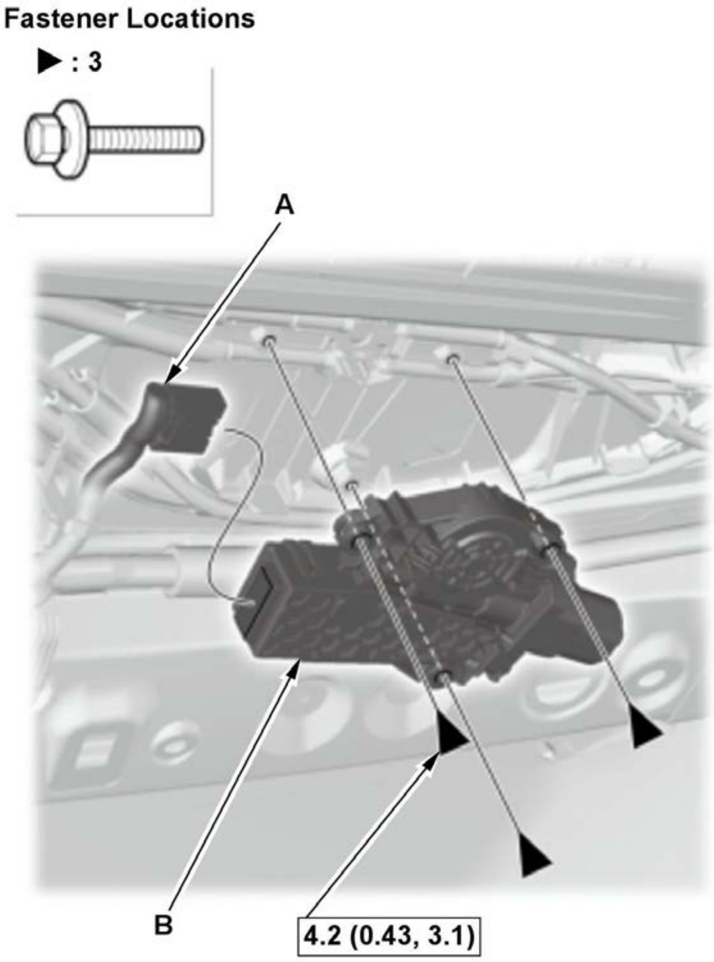 Fastener Locations ▶ : 3 A B 4.2 (0.43, 3.1)	1. Disconnect the connector (A). 2. Remove the panoramic glass roof motor (B).

7. All Removed Parts - Install

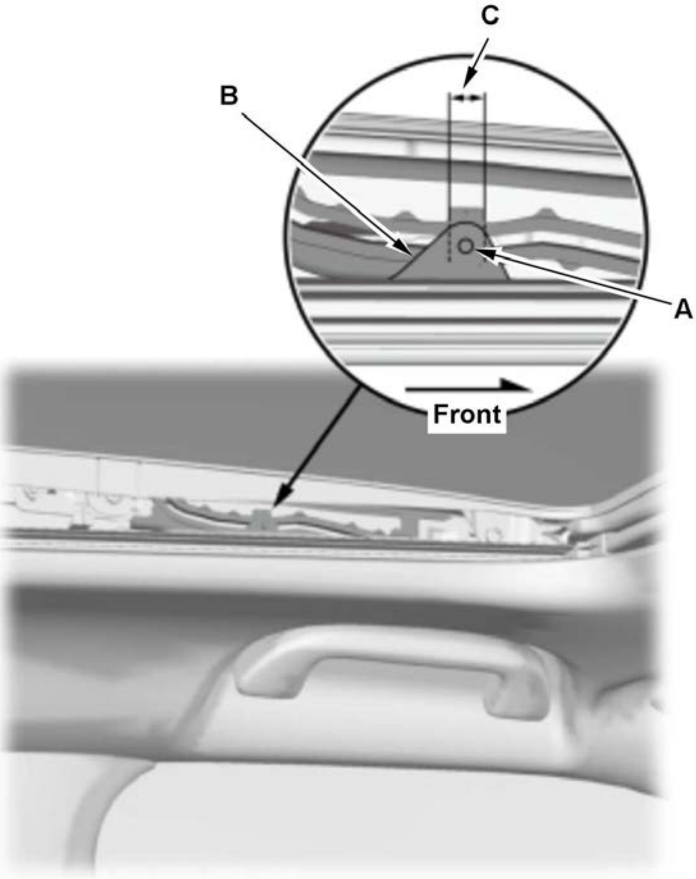	1. Install the parts in the reverse order of removal. **NOTE:** **Remove the inner blind covers, and check the position of the link lifters (A) of the glass brackets (B) and that the link lifters is positioned within the area (C).**

8. Panoramic Glass Roof Motor-Control Unit - Reset

PANORAMIC GLASS ROOF REAR GLASS REMOVAL AND INSTALLATION

Removal and Installation

NOTE:

- **How to read the torque specifications** .
- SRS components are located in this area. Review the **SRS component locations** and the **precautions and procedures** before doing repairs or service.

1. **Panoramic Glass Frame - Remove**
2. Panoramic Glass Rear Glass - Remove

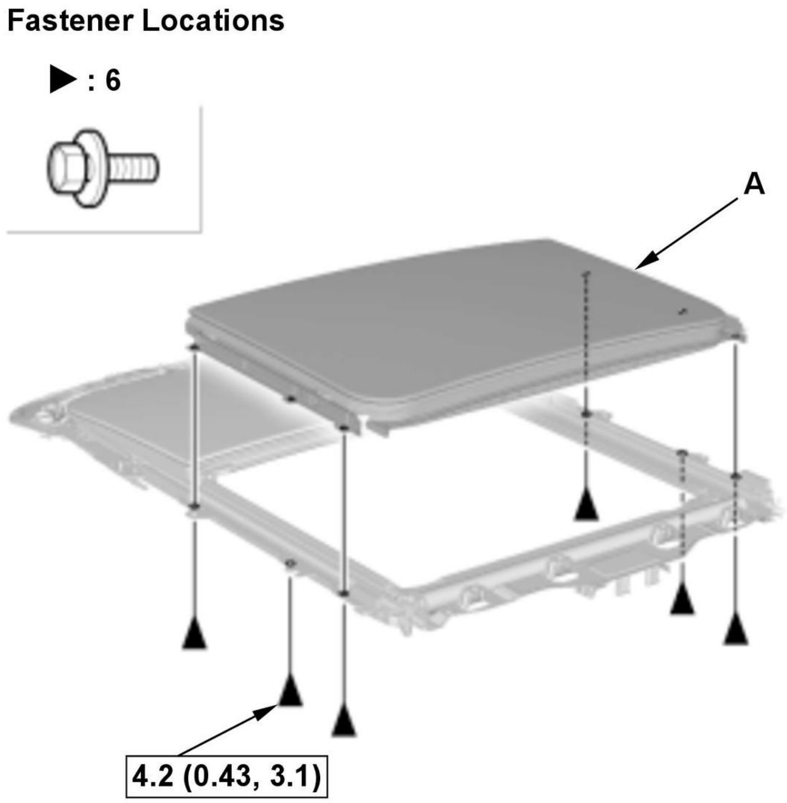	1. Remove the rear glass (A).

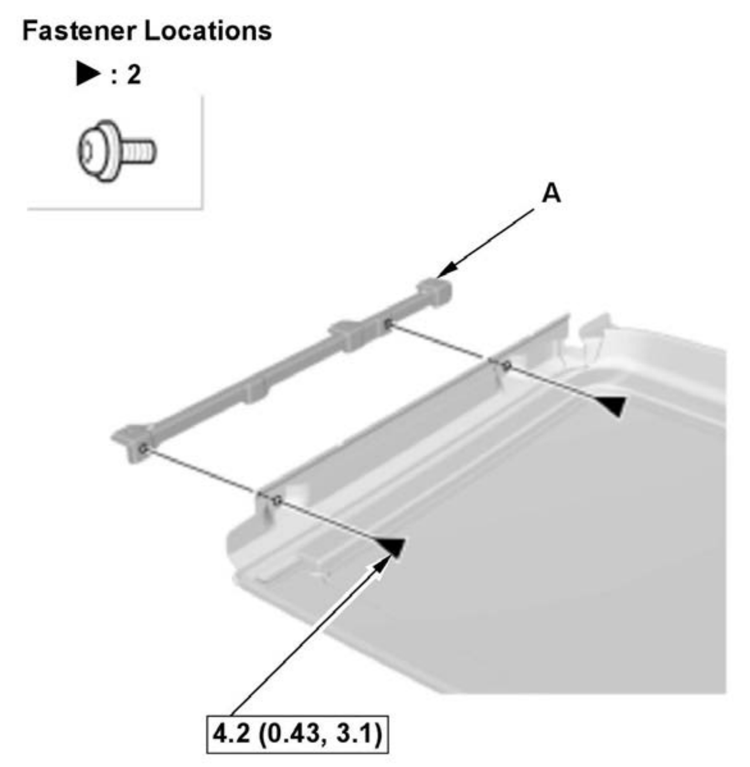	2. If necessary, remove the rear glass bracket (A).

3. All Removed Parts - Install

1. Install the parts in the reverse order of removal.

4. **Panoramic Glass Glass Position - Adjust**

PANORAMIC GLASS ROOF SEAL REMOVAL AND INSTALLATION

Removal

NOTE: SRS components are located in this area. Review the **SRS component locations** and the **precautions and procedures** before doing repairs or service.

Front

1. **Panoramic Glass Front Glass - Remove**
2. Panoramic Glass Front Glass Roof Seal - Remove

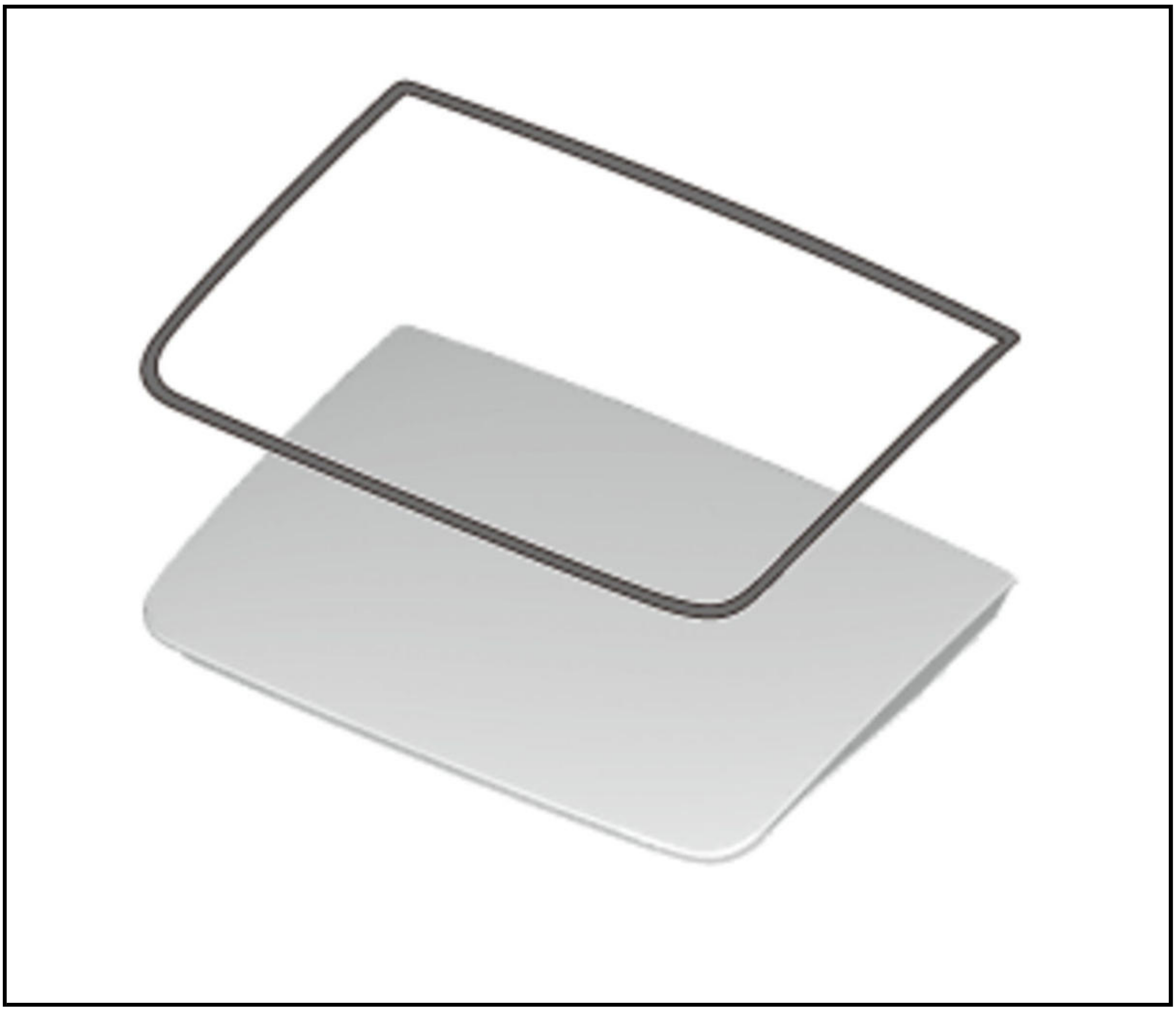

Rear

3. **Panoramic Glass Rear Glass - Remove**
4. Panoramic Glass Rear Glass Roof Seal - Remove

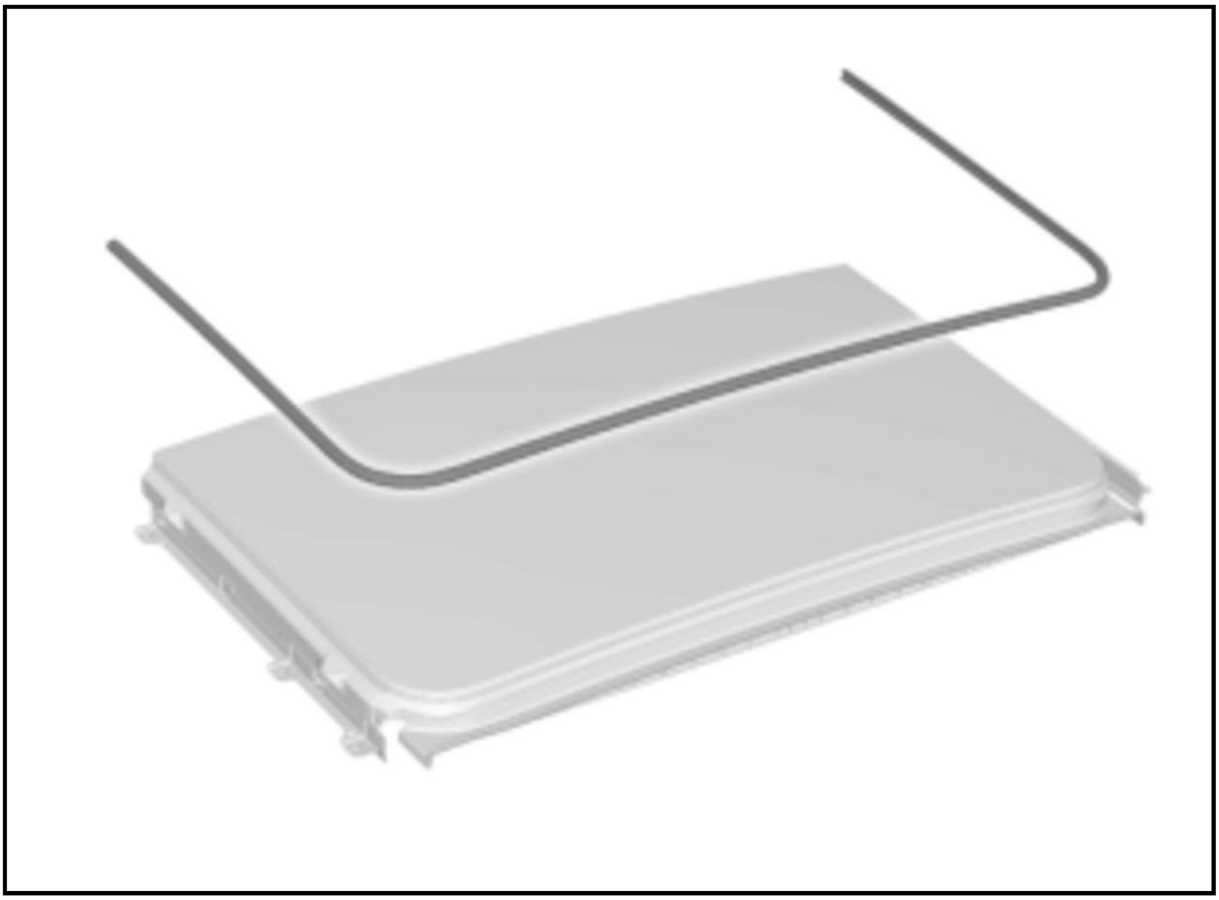

Installation

Front

1. Panoramic Glass Front Glass Roof Seal - Install

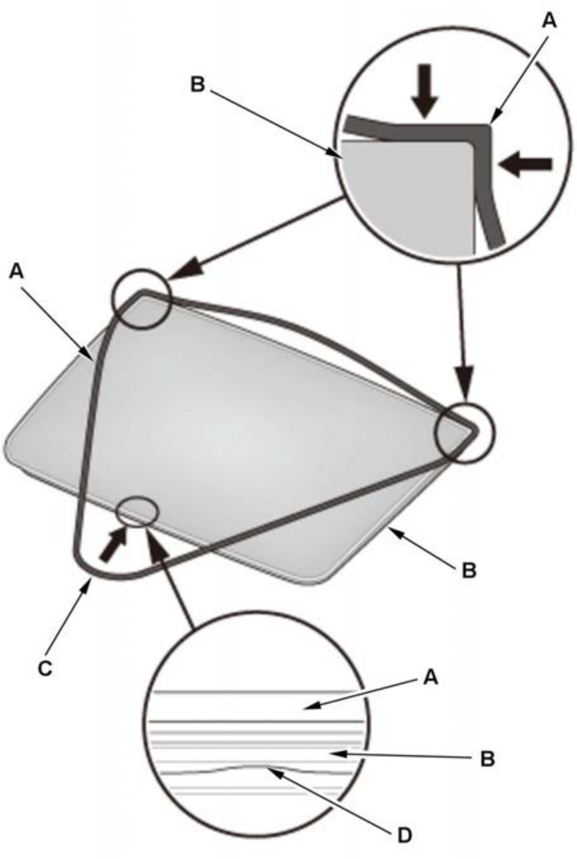	1. Press the two ends of the font glass roof seal (A) rear corners of the front glass (B). 2. Align the midpoint (C) of the font glass roof seal to the center (D) of the front side front glass, and then install it. **NOTE:** **Be careful not to stretch the front glass roof seal.**

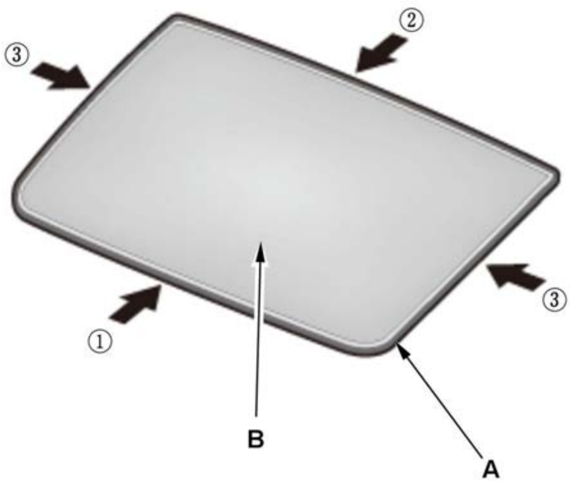	3. Install the font glass roof seal (A) to the front glass (B) as shown. **NOTE:** **After installation, make sure that the glass roof seal is not twisted or have any gaps.**

2. Panoramic Glass Front Glass - Install
3. Panoramic Glass Glass Roof Position - Check

Rear

4. Panoramic Glass Rear Glass Roof Seal - Install

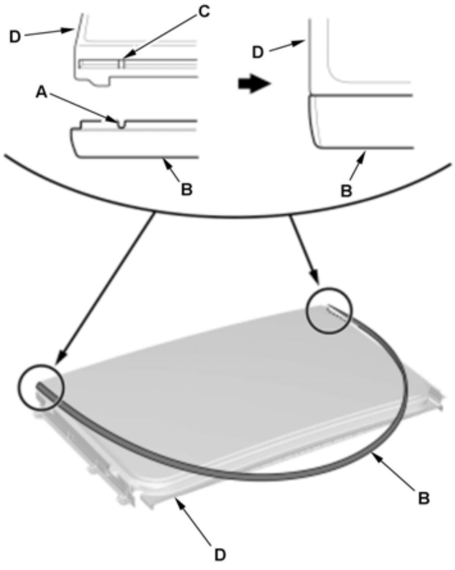	1. Align the notch (A) of the rear glass roof seal (B) to the projection (C) of the rear glass (D), and then press the rear glass roof seal onto both sides of the front of the rear glass. **NOTE:** - **Be careful not to stretch the rear glass roof seal.** - **Check the rear glass roof seal lines up with the edges of the rear glass as shown.**

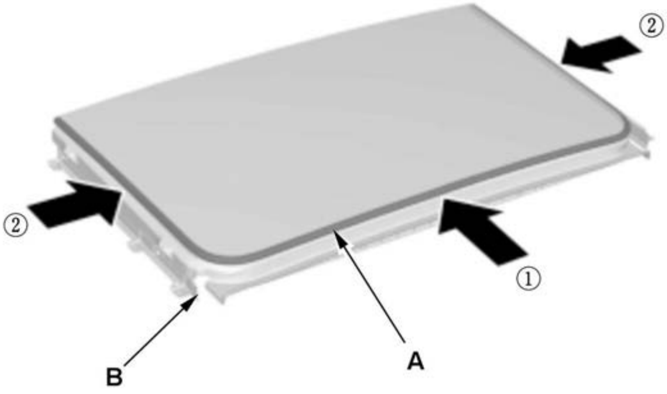	2. Install the rear glass roof seal (A) to the rear glass (B) as shown. **NOTE:** **After installation, make sure that the rear glass roof seal is not twisted or have any gaps.**
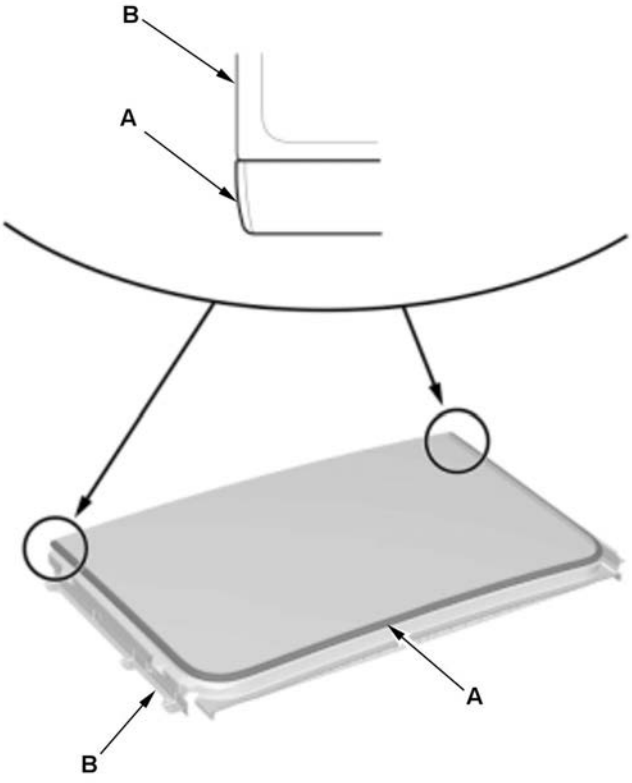	3. Make sure the rear glass roof seal (A) line up with the edges of the rear glass (B) as shown.

5. Panoramic Glass Rear Glass - Install
6. Panoramic Glass Glass Roof Position - Check

PANORAMIC GLASS ROOF SUNSHADE CABLE ASSEMBLY REMOVAL AND INSTALLATION

Removal and Installation

NOTE: SRS components are located in this area. Review the SRS component locations and the precautions and procedures before doing repairs or service.

1. Panoramic Glass Front Glass - Remove
2. Sunshade Motor - Remove
3. Panoramic Glass Sunshade - Remove
4. Panoramic Glass Cable Assembly - Remove

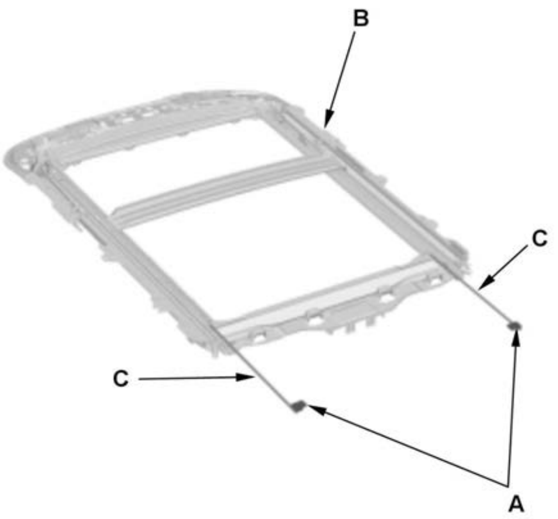 	1. Slide the shoe (A) on the sunshade cable towards the rear, and pull it out from the frame (B). 2. Pull out the cable assembly (C).

5. All Removed Parts - Install

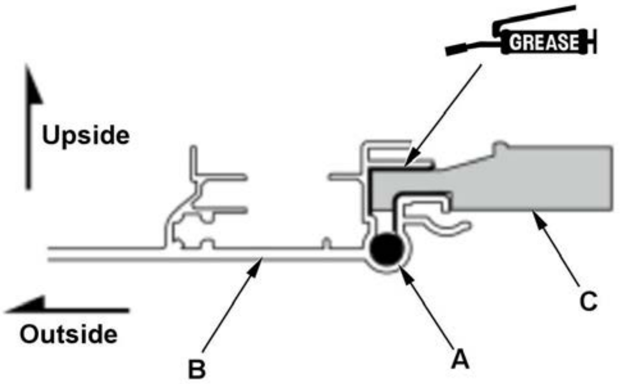 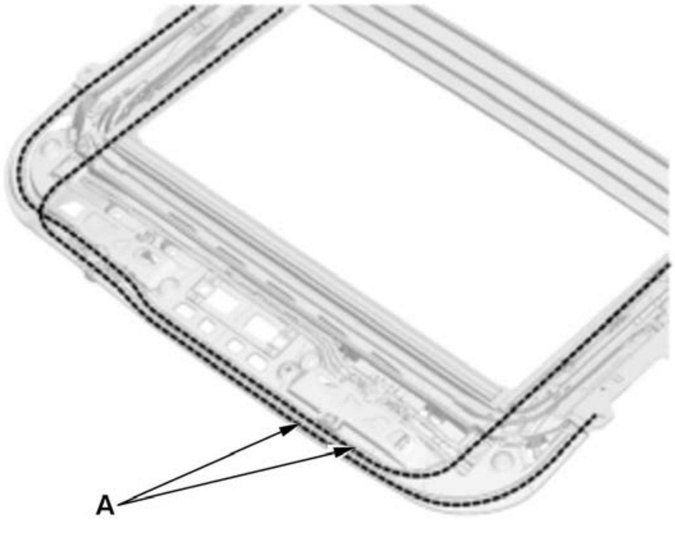 	1. Install the parts in the reverse order of removal. **NOTE:** - **Before install the sunshade cables (A), apply multipurpose grease to the guide rail areas of the frame (B) indicated by the arrow.** - **Make sure the sunshade cables are correctly installed.** - **Slide both shoes (C) to the front of the frame.** - **Before reinstalling the motor, make sure both shoes are parallel.**

6. Panoramic Glass Glass Position - Adjust

7. Power Sunshade Motor-Control Unit - Reset

PANORAMIC GLASS ROOF SUNSHADE REMOVAL AND INSTALLATION

Removal and Installation

NOTE: SRS components are located in this area. Review the SRS component locations and the precautions and procedures before doing repairs or service.

1. Panoramic Glass Rear - Remove
2. Panoramic Glass Sunshade - Remove

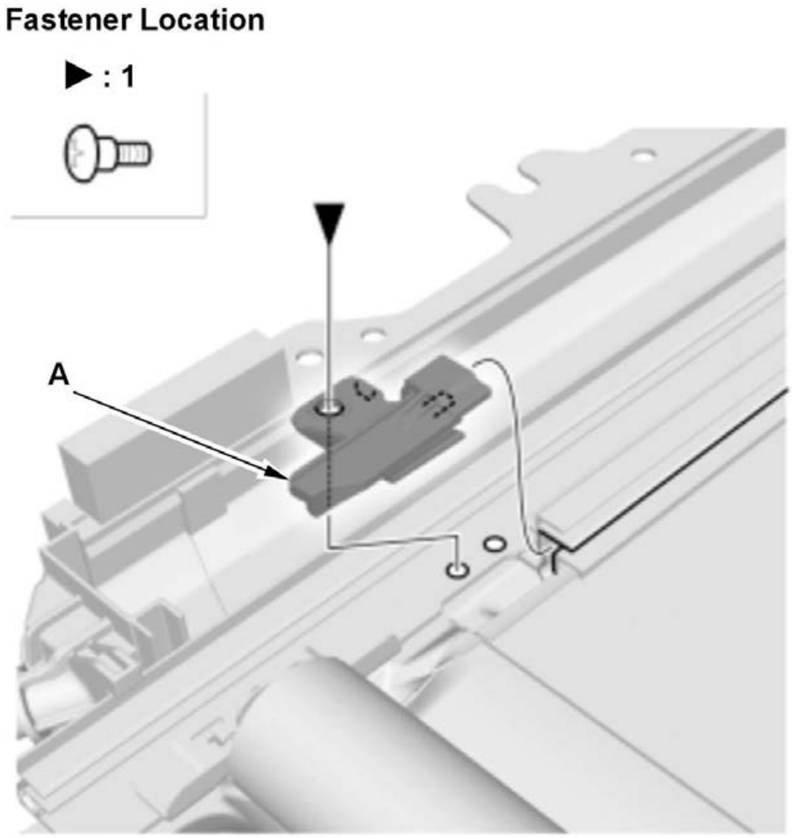	1. Remove the bracket (A). 2. Repeat on the opposite side.

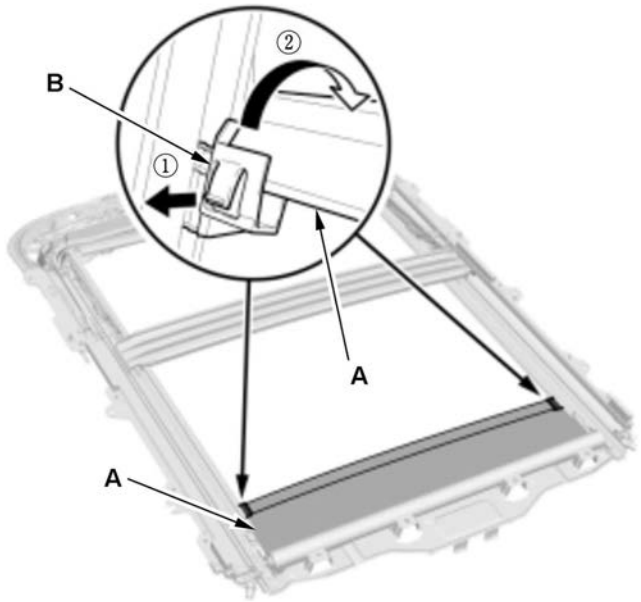

3. Release the sunshade (A) from the sunshade shoes (B) as shown.

NOTE:

Firmly hold the sunshade with both hands; otherwise the wind-up force will be transferred to the sunshade.

4. Close the sunshade slightly.

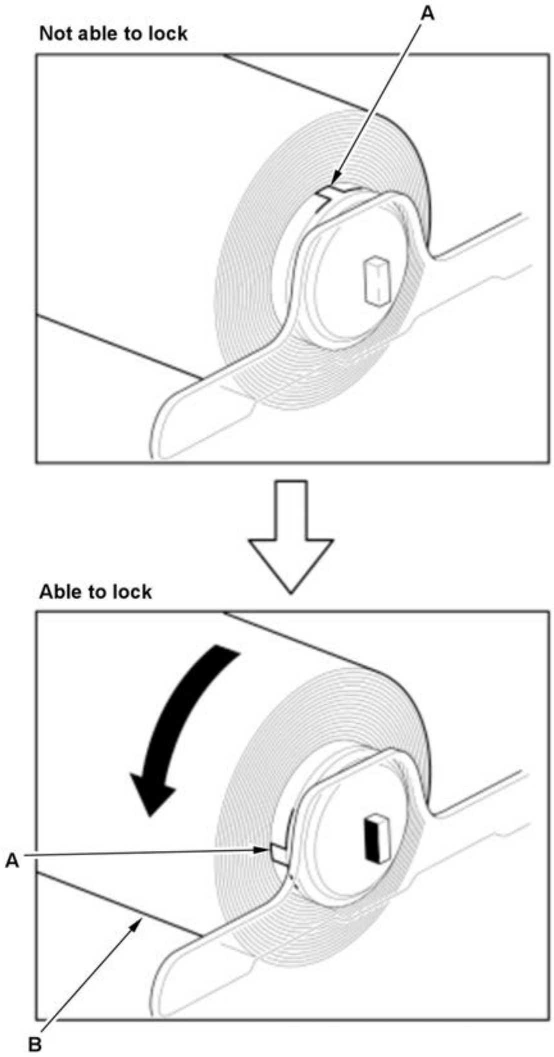

5. Turn marking (A) of the sunshade (B) until it is in the position that can be locked as shown in the lower figure.

NOTE:

- **Do not remove the sunshade from the bracket in this step.**
- **If the sunshade is removed from the sunshade base, the spring is uncoiled, and the sunshade cannot be winded.**

6. Release the end of the sunshade roll shaft (A) from the sunshade base (B), then pull up the sunshade (C) as shown.

NOTE: **Do not remove the other end of the sunshade from the bracket in this step.**

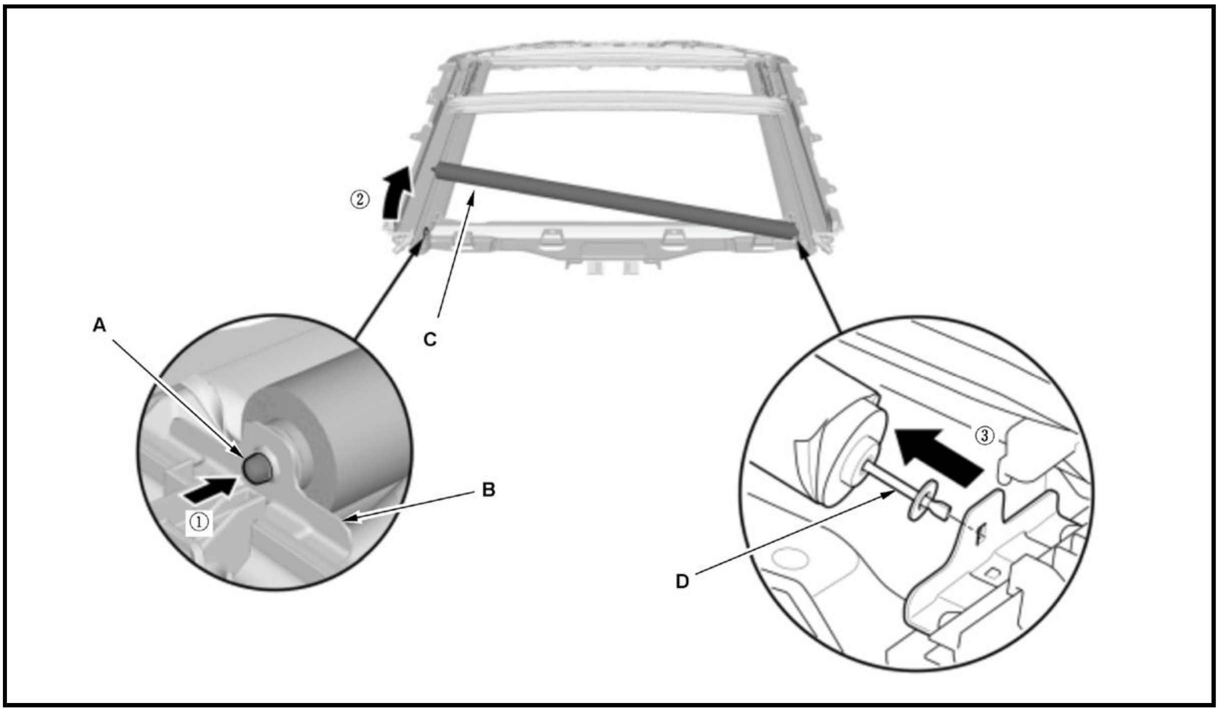

7. With the released end tilted up, slowly pull out the sunshade roll shaft (D), then lock the sunshade.

8. Remove the sunshade.

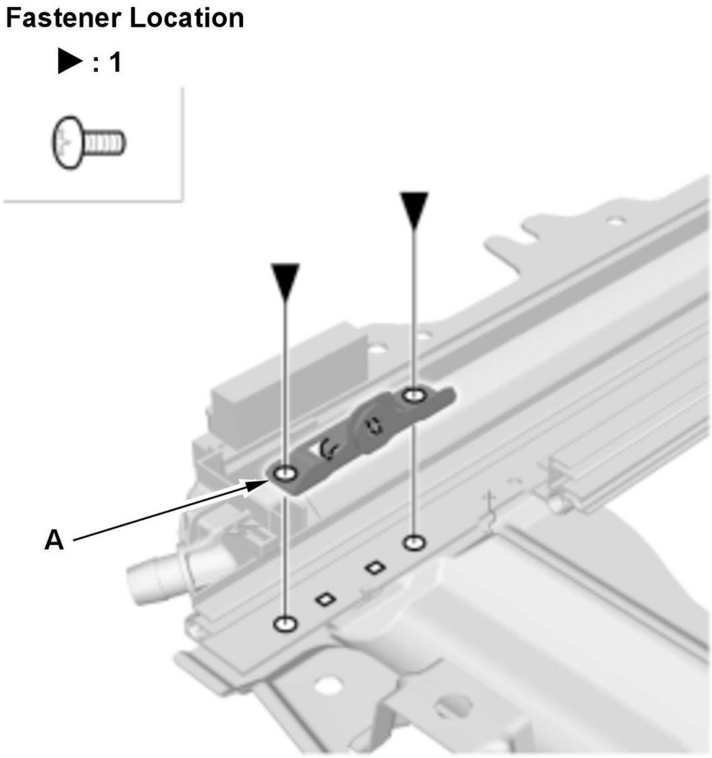	9. If necessary, remove the sunshade base (A).

3. All Removed Parts - Install

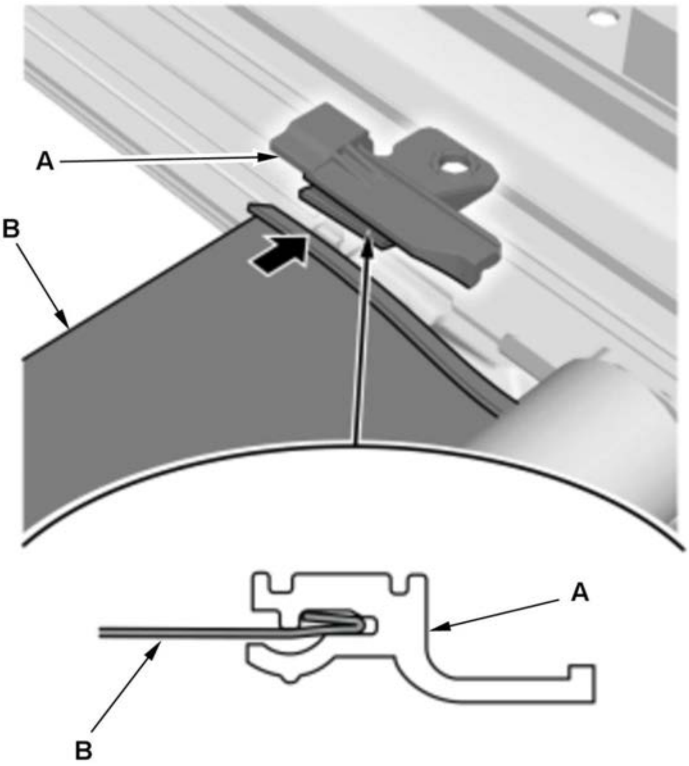

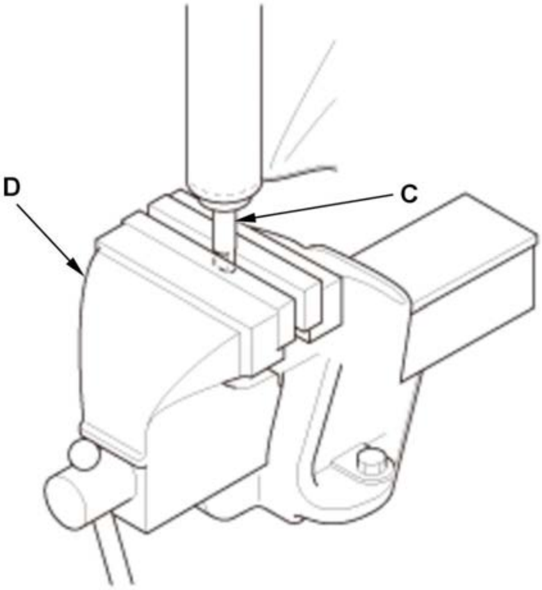

1. Install the parts in the reverse order of removal.

NOTE:

- **When installing the bracket (A) to the sunshade (B), fold the end of sunshade as shown.**
- **If the spring is uncoiled when removing the sunshade, restore the wind-up mechanism by carrying out the following procedures.**

-1. Secure the flat part on the sunshade roll shaft (C) in a vise (D).

-2. While pressing down the sunshade, rotate the sunshade 19 revolutions as shown.

-3. Remove the sunshade from the vise.

NOTE: The wind-up mechanism should be locked up when removing the sunshade from the vise.

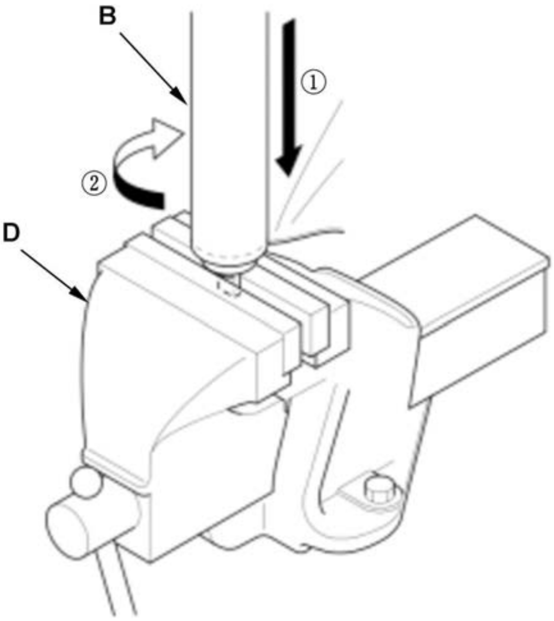	

PANORAMIC GLASS ROOF WIND DEFLECTOR REMOVAL AND INSTALLATION

Removal and Installation

1. Panoramic Glass Frame - Remove
2. Panoramic Glass Wind Deflector - Remove

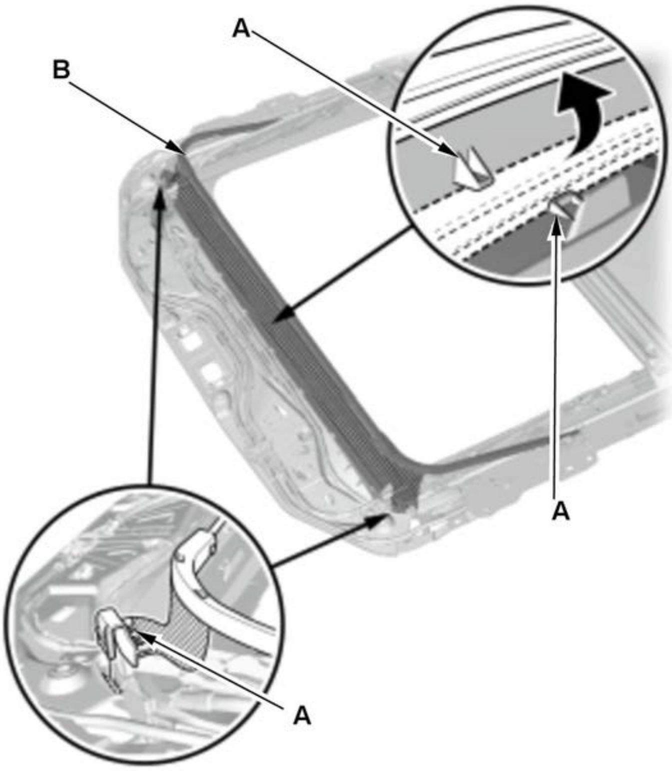	1. Release the hooks (A), and then lift up the wind deflector (B).

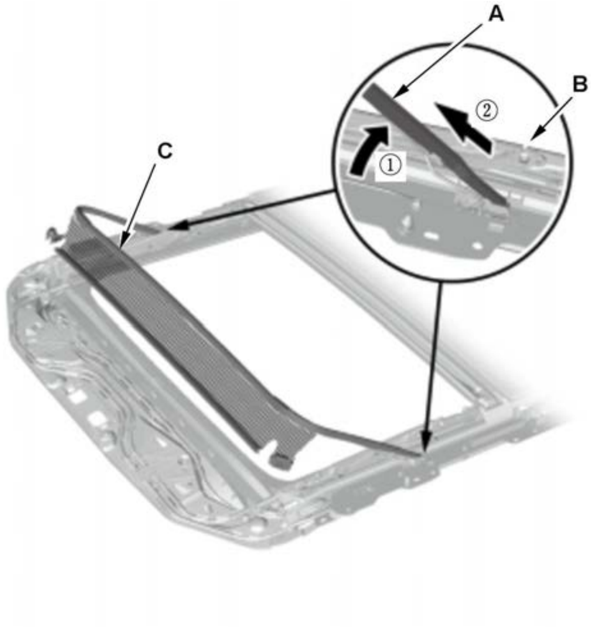	2. Disconnect the deflector springs (A) from the frame (B), and then remove the wind deflector (C).

3. All Removed Parts - Install

1. Install the parts in the reverse order of removal.

REMOVAL AND INSTALLATION

MOONROOF DRAIN CHANNEL REMOVAL AND INSTALLATION

Removal and Installation

1. Moonroof Glass - Remove
2. Moonroof Drain Channel - Remove

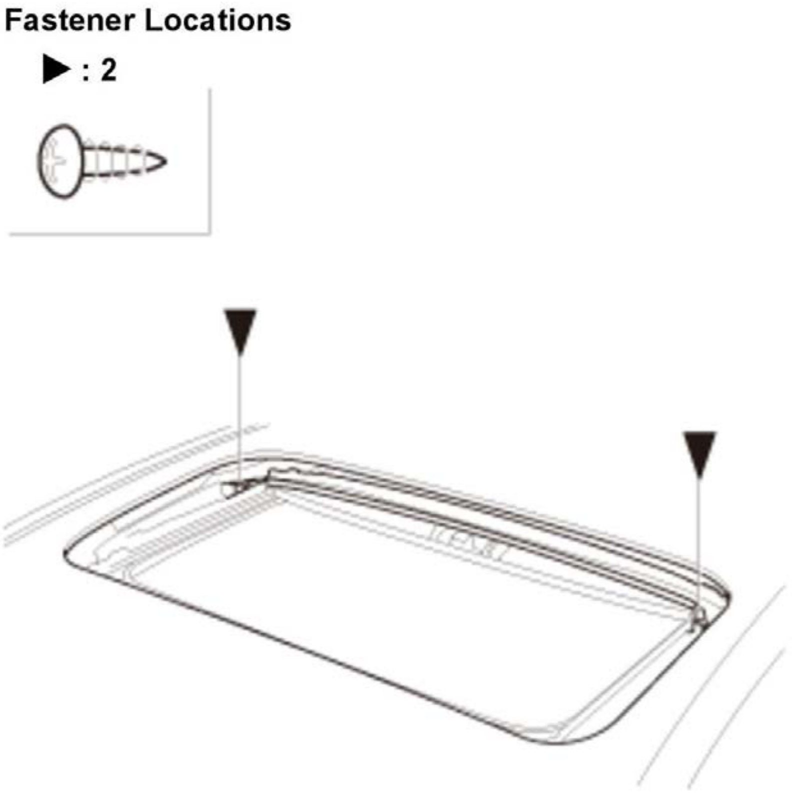	1. Remove the screws.

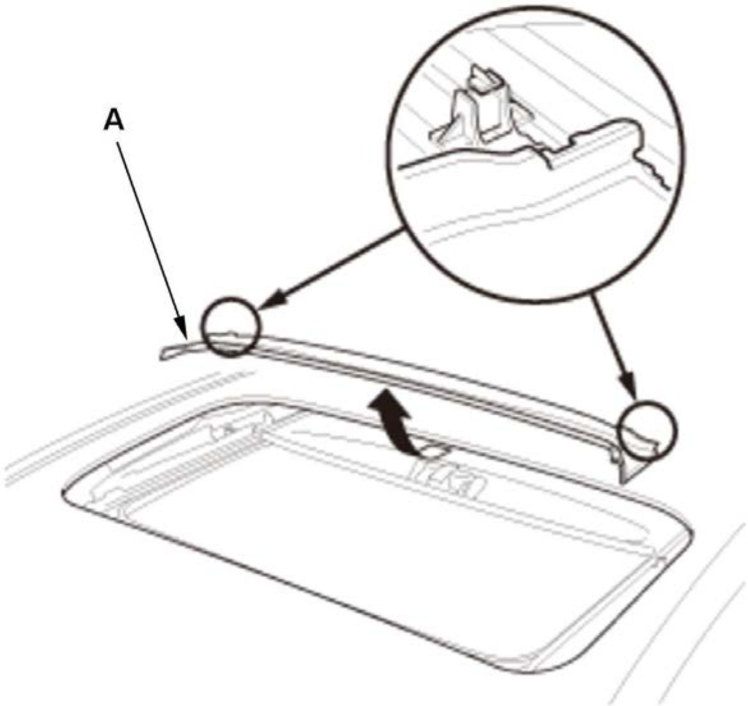	2. Remove the drain channel (A).

3. All Removed Parts - Install

1. Install the parts in the reverse order of removal.

MOONROOF DRAIN CHANNEL SLIDER AND CABLE ASSEMBLY REMOVAL AND INSTALLATION

Removal and Installation

SRS components are located in this area. Review the **SRS component locations** and the **precautions and procedures** before doing repairs or service.

1. **Moonroof Motor-Control Unit - Remove**
2. **Moonroof Drain Channel - Remove**
3. **Moonroof Frame - Remove**
4. Moonroof Drain Channel Slider and Moonroof Cable Assembly - Remove

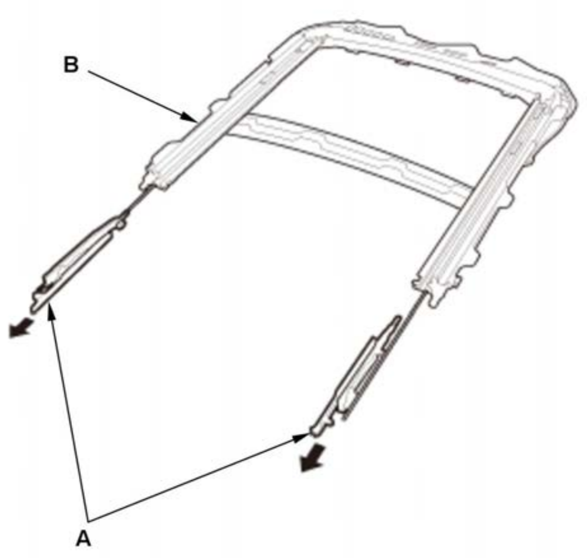

1. Slide the drain channel slider and the cable assemblies (A) back from the frame (B), then remove it.

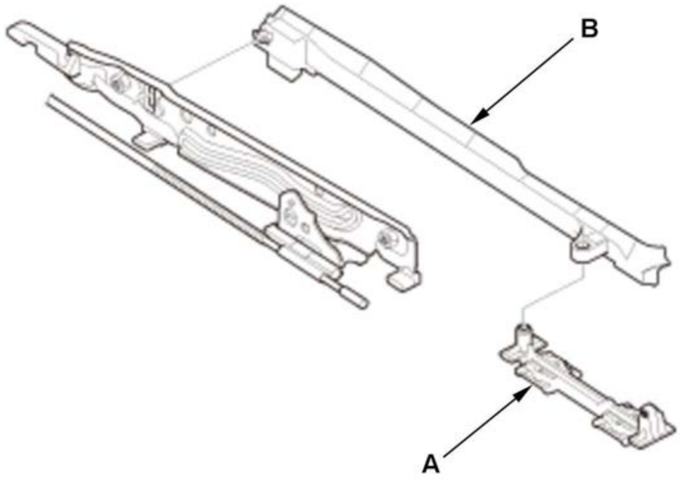

2. Remove the drain channel slider (A) and the moonroof link (B).

5. All Removed Parts - Install

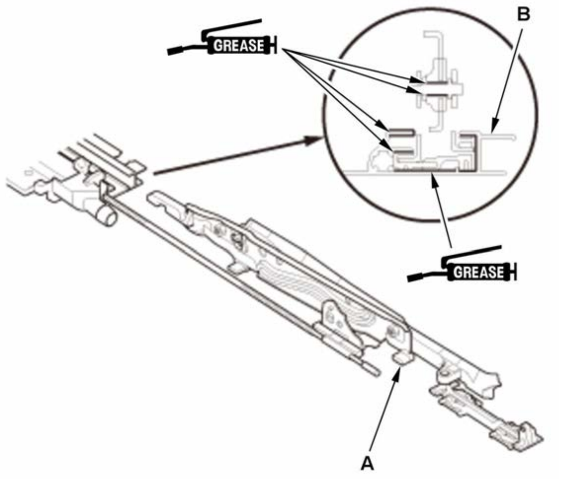

1. Install the parts in the reverse order of removal.

NOTE:

- Apply multipurpose grease to the glass brackets (A) and the guide rail area of the frame (B) indicated by the arrows.
- Before reinstalling the motor, make sure both link lifters are parallel, and in the tilt up position.

6. **Moonroof Glass Position - Adjust**
7. **Moonroof Motor-Control Unit - Reset**

8. Water Leaks - Check

MOONROOF FRAME AND DRAIN TUBE REMOVAL AND INSTALLATION

Removal and Installation

SRS components are located in this area. Review the SRS component locations and the precautions and procedures before doing repairs or service.

NOTE:

- How to read the torque specifications .
- Before installing the frame, clear the drain tubes and the drain valves using compressed air.
- To install a new drain tube, tie the string left in the body during drain tube removal to the top end of the new drain tube, and pull it up into the roof.
- When connecting the drain tubes, slide them over the frame nozzles at least 10 mm (0.39 in).
- Check the frame seal.
- When installing the frame, first attach the rear hook into the body hole.
- Install the tube clips (A) on the drain tubes (B) as shown.

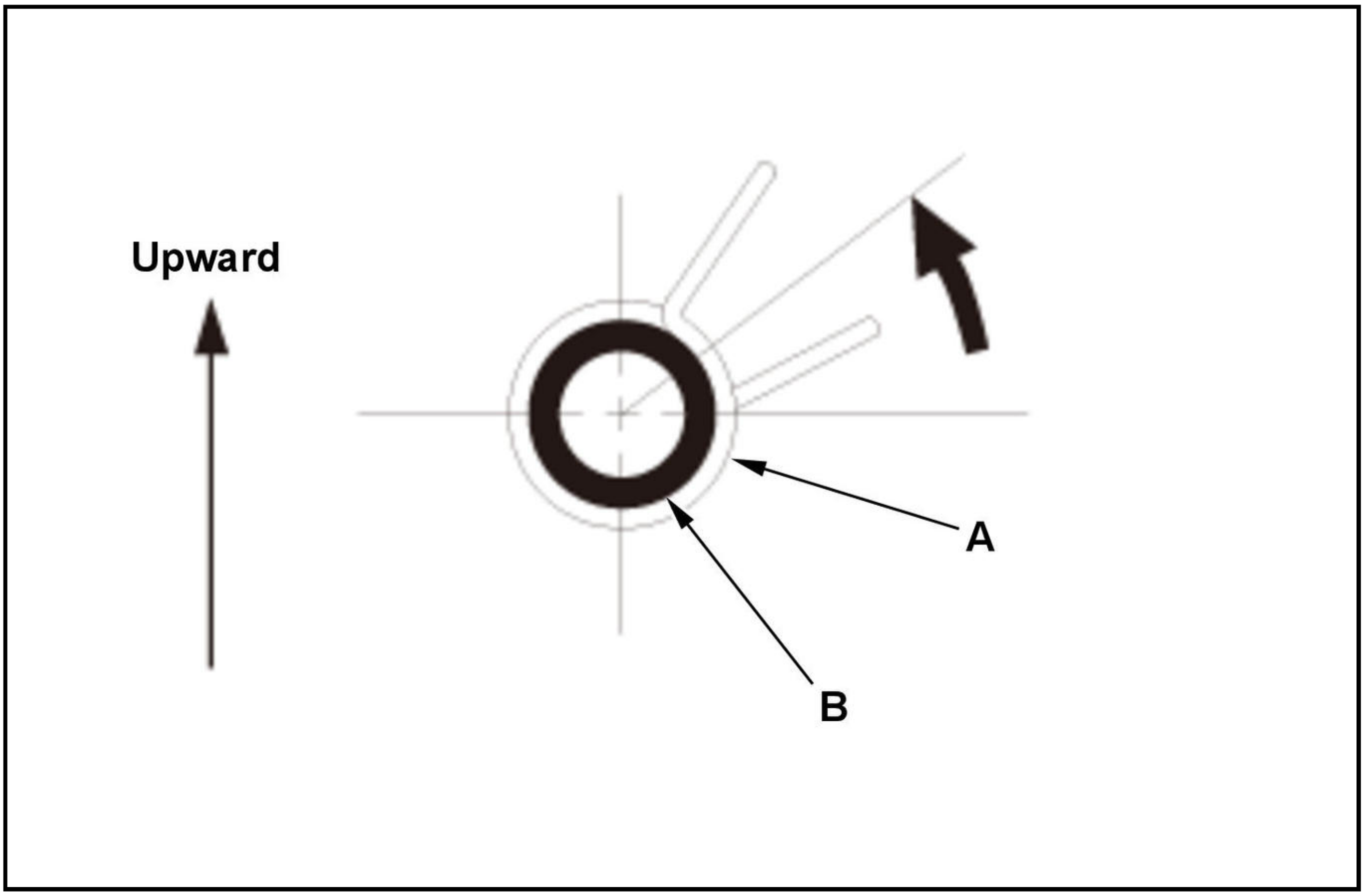

Moonroof Frame

1. Headliner - Remove
2. Moonroof Frame - Remove

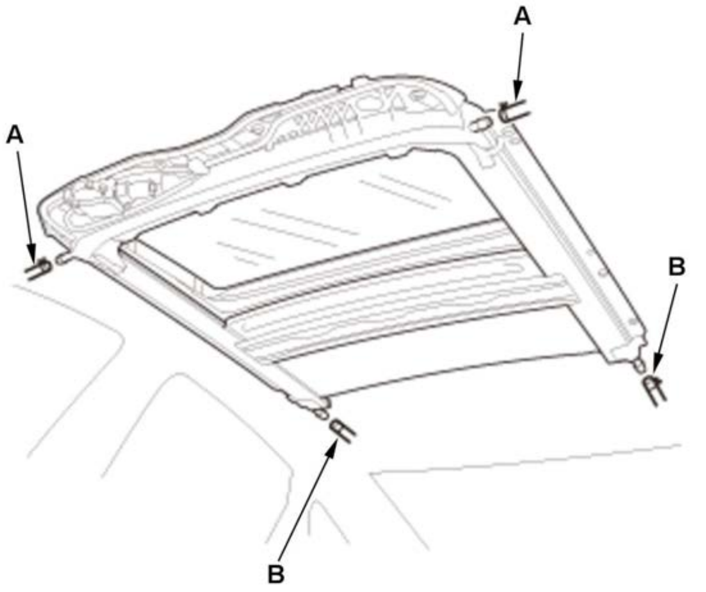	1. Disconnect the front drain tubes (A) and the rear drain tubes (B).

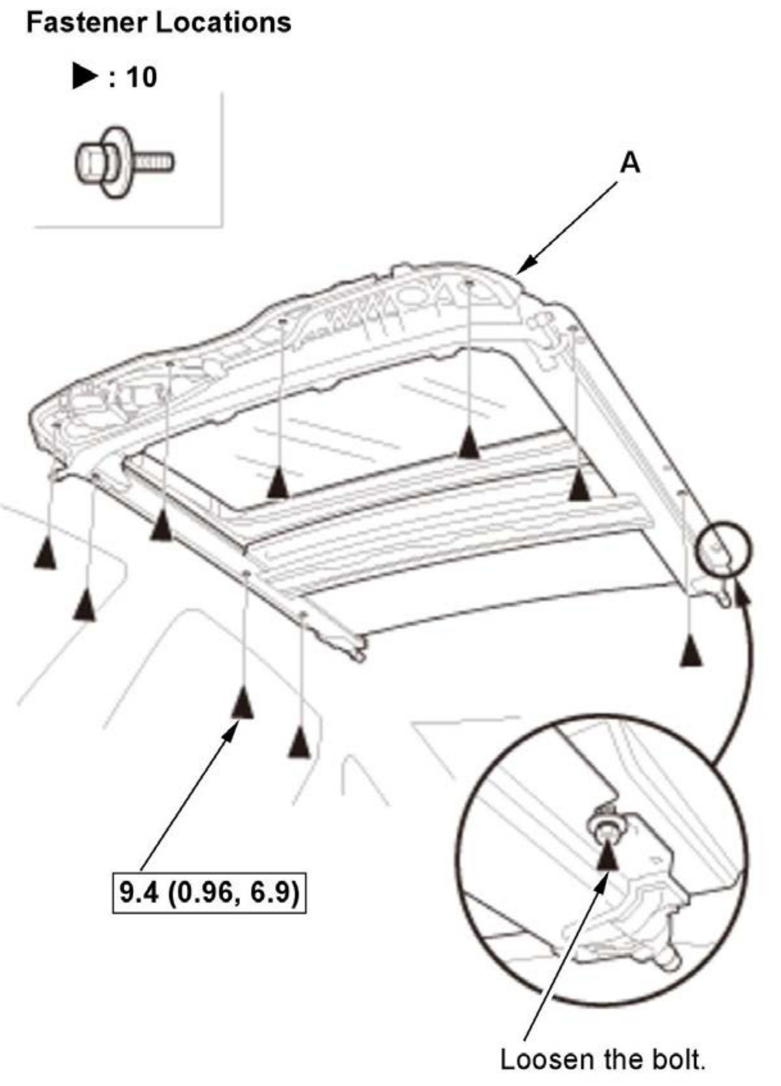 Fastener Locations ▶ : 10 A 9.4 (0.96, 6.9) Loosen the bolt.	2. Remove the moonroof frame (A).

3. Moonroof Frame Seal - Remove

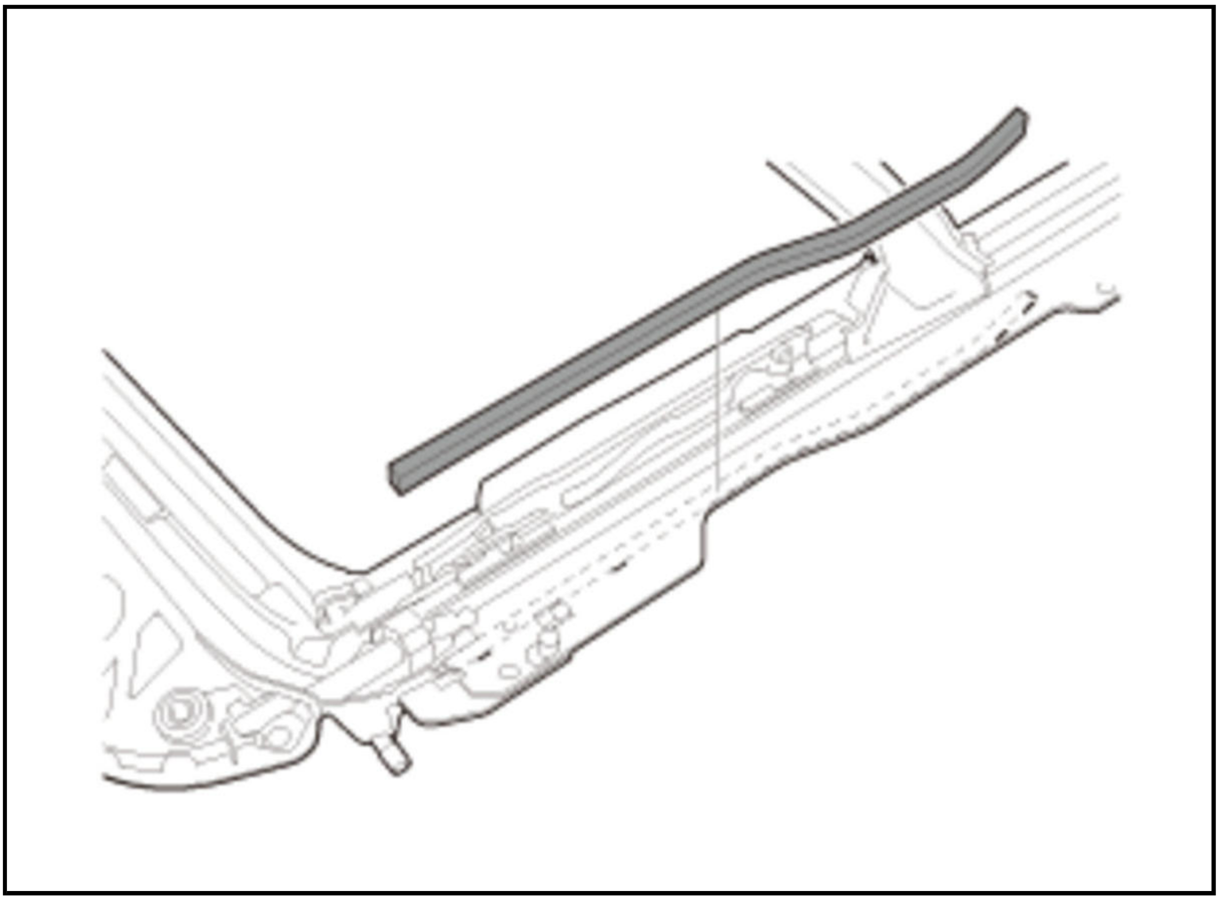

4. All Removed Parts - Install

1. Install the parts in the reverse order of removal.

5. **Moonroof Glass Position - Adjust**

Front Drain Tube

1. **Headliner - Remove**
2. **Driver's Dashboard Undercover - Remove**
3. **Front Inner Fender - Remove**
4. Moonroof Front Drain Tube - Remove

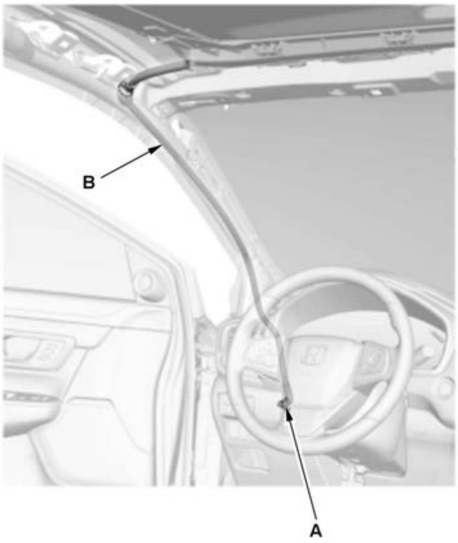	1. Pull the front drain valve (A) out of the body hole. 2. Tie a string to the top end of the front drain tube (B), then pull the drain tube down out of the pillar. Leave the string in the pillar to use when reinstalling the drain tube.

5. All Removed Parts - Install

1. Install the parts in the reverse order of removal.

6. **Water Leaks - Check**

Rear Drain Tube

1. **Headliner - Remove**
2. **Rear Side Trim Panel - Remove**
3. Moonroof Rear Drain Tube - Remove

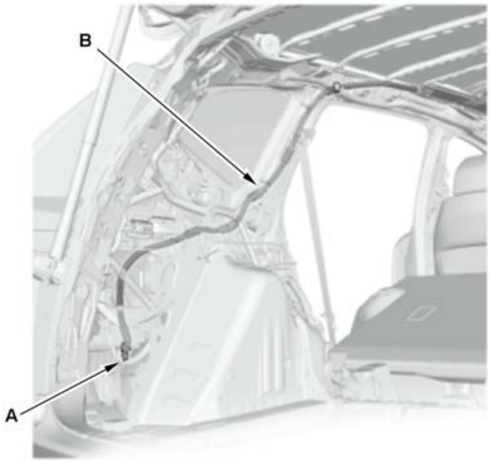	1. Pull the rear drain valve (A) out of the body hole. 2. Tie a string to the top end of the rear drain tube (B), then pull the drain tube down out of the pillar. Leave the string in the pillar to use when reinstalling the drain tube.

4. All Removed Parts - Install

1. Install the parts in the reverse order of removal.

5. **Water Leaks - Check**

MOONROOF GLASS REMOVAL AND INSTALLATION

Removal and Installation

NOTE: **How to read the torque specifications**

1. Moonroof Glass - Remove

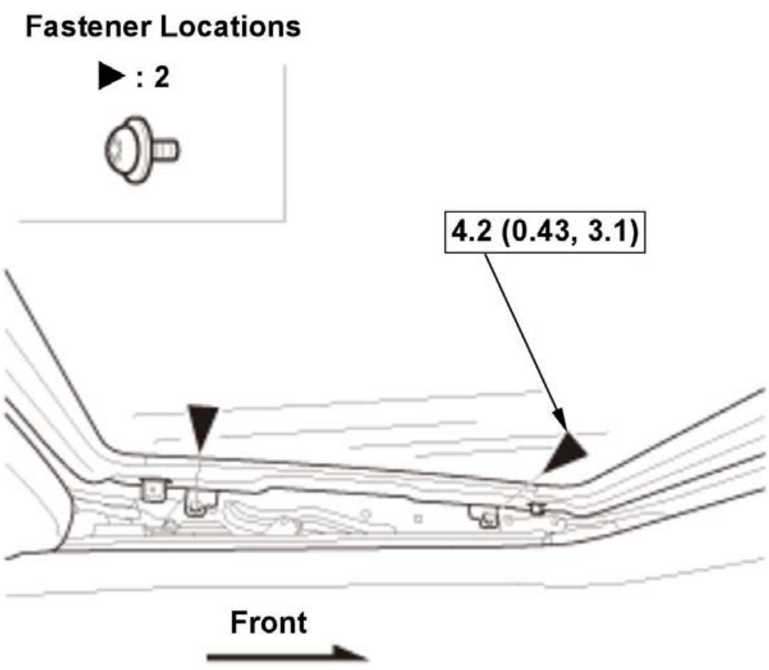 Fastener Locations ▶ : 2 4.2 (0.43, 3.1) Front	1. Remove the bolts. 2. Repeat on the opposite side.
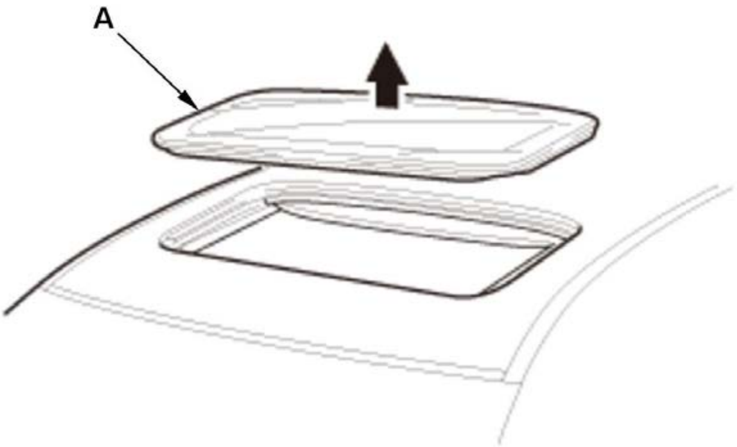	3. Remove the glass (A) by lifting it up.

2. All Removed Parts - Install

1. Install the parts in the reverse order of removal.

3. Moonroof Glass Position - Adjust

MOONROOF GLASS ROOF SEAL REMOVAL AND INSTALLATION

Removal

1. Moonroof Glass - Remove
2. Moonroof Glass Roof Seal - Remove

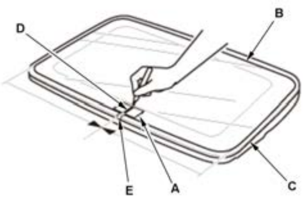	1. Place a piece of masking tape (A) on the middle of the front edge of the moonroof glass (B). Make sure that the tape is on the glass only, and is not touching the glass roof seal (C). 2. Place a mark (D) on the masking tape that aligns with the seam (E) of the glass roof seal. 3. Push down on the top of the original glass roof seal with your thumb until a small section separates from the moonroof glass. Once a section has started to separate, grip it and pull outward, working around the moonroof glass until the glass roof seal is completely removed (note the locations of the holes in the glass roof seal).

Installation

1. Moonroof Glass Roof Seal - Install

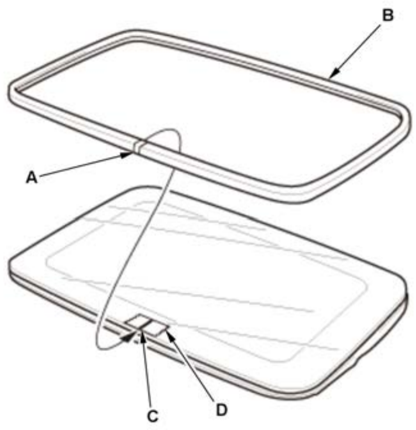	1. Align the seam (A) of the new glass roof seal (B) to the mark (C) on the masking tape (D). Make sure the holes are pointed in the same direction as noted in removal procedure. 2. Press the ridge of the new glass roof seal into the groove on the moonroof glass starting at the seam. Work toward one corner; then go back to the middle and work toward the opposite corner. **NOTE:** Be careful not to stretch the glass roof seal. 3. Continue pressing along one side, from corner to corner; then press along the opposite side, from corner to corner. 4. At the rear of the moonroof glass, continue pressing from one corner to the middle; then press from the opposite corner to the middle until the glass roof seal is completely installed. 5. Check for proper fit of the new glass roof seal by opening and closing the moonroof.

2. **Moonroof Glass - Install**

MOONROOF MOTOR-CONTROL UNIT REMOVAL AND INSTALLATION

Removal and Installation

NOTE: **How to read the torque specifications**

1. **Headliner - Remove**
2. Moonroof Motor-Control Unit - Remove

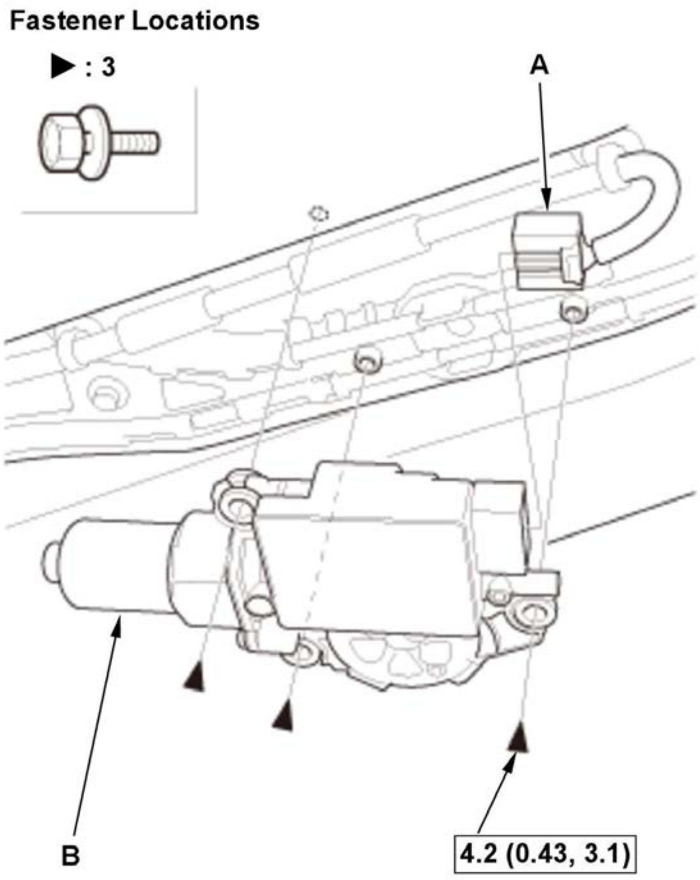	1. Disconnect the connector (A). 2. Remove the moonroof motor-control unit (B).

3. All Removed Parts - Install

1. Install the parts in the reverse order of removal.

4. **Moonroof Motor-Control Unit - Reset**

MOONROOF SUNSHADE REMOVAL AND INSTALLATION

Removal and Installation

1. **Moonroof Frame - Remove**
2. Moonroof Sunshade - Remove

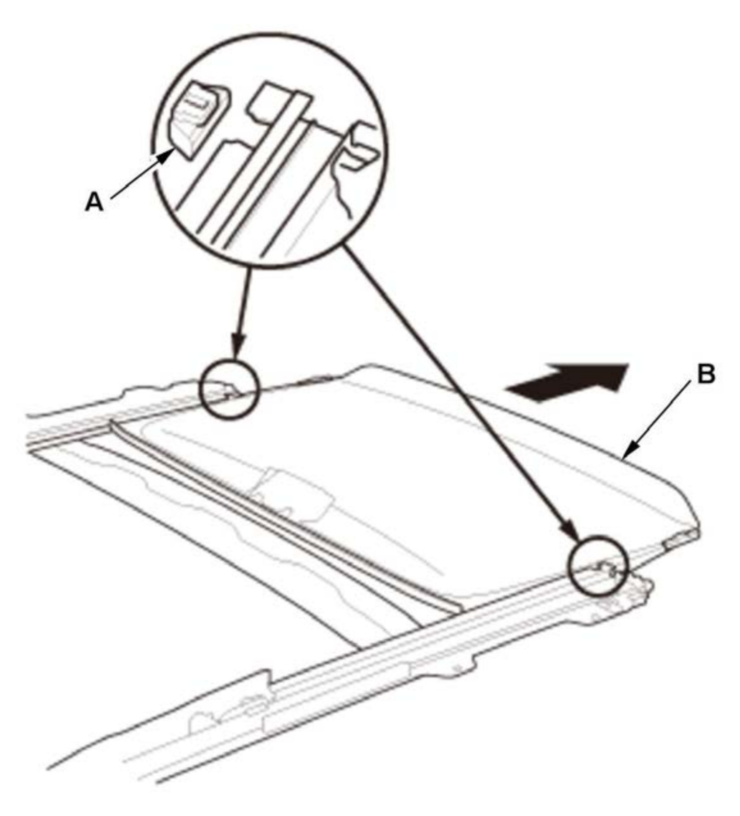	1. Remove the moonroof sunshade rear stoppers (A). 2. Remove the moonroof sunshade (B).

3. Moonroof Sunshade Handle Bracket - Remove

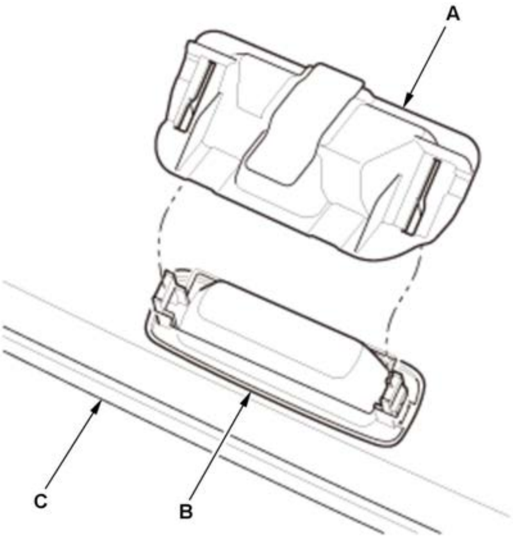	1. Remove the moonroof sunshade handle bracket (A), then remove the moonroof sunshade handle (B) from the moonroof sunshade (C).

4. All Removed Parts - Install

1. Install the parts in the reverse order of removal.

MOONROOF WIND DEFLECTOR REMOVAL AND INSTALLATION

Removal and Installation

1. Moonroof Wind Deflector - Remove

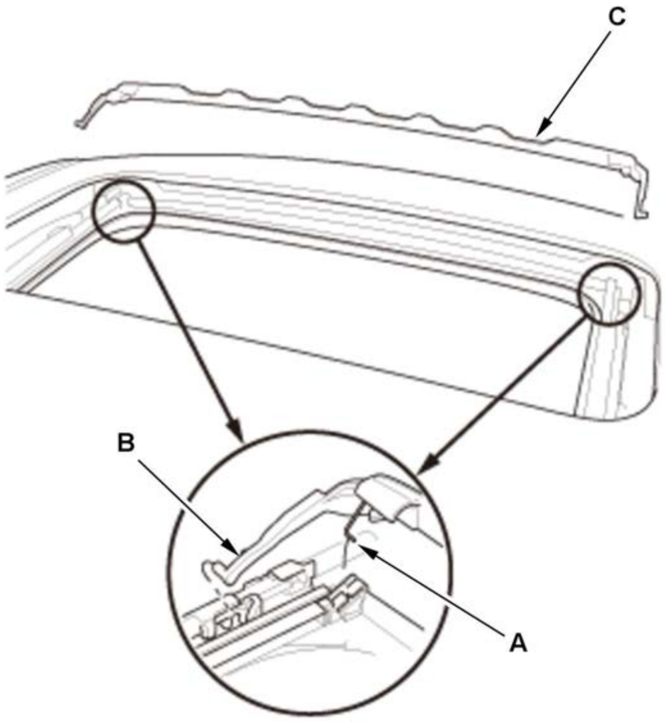	1. Open the glass fully. 2. Release both deflector springs (A) and both deflector blades (B). 3. Remove the wind deflector (C).

2. All Removed Parts - Install

1. Install the parts in the reverse order of removal.

3. **Moonroof Motor-Control Unit - Reset**

REMOVAL, INSTALLATION & TEST

MOONROOF SWITCH REMOVAL, INSTALLATION, AND TEST

Removal and Installation

NOTE: The moonroof switch is built into the interior light switch.

1. **Front Individual Map Light - Remove**
2. **Interior Light Switch - Remove**
3. All Removed Parts - Install

1. Install the parts in the reverse order of removal.

Test

NOTE: The moonroof switch is built into the interior light switch.

1. Moonroof Switch - Test

    1. Check for continuity between the terminals in each switch position according to the table.

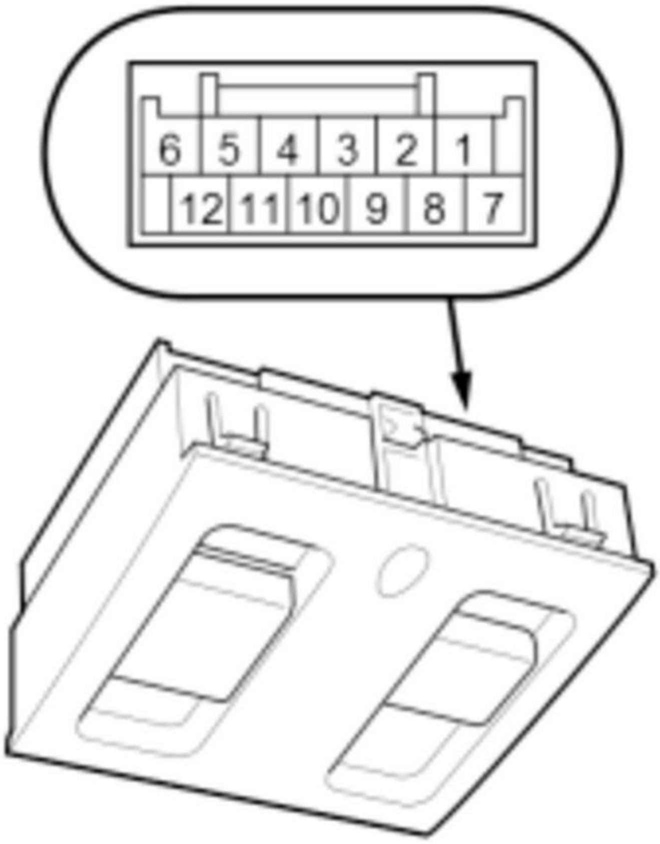

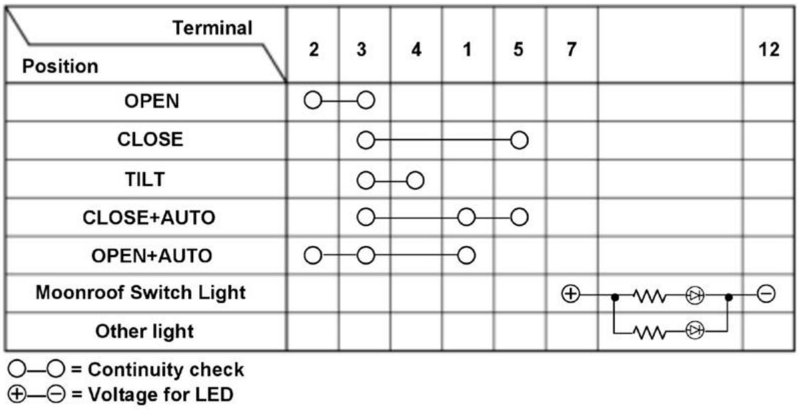

Terminal / Position	2	3	4	1	5	7		12
OPEN	○	○						
CLOSE		○			○			
TILT		○	○					
CLOSE+AUTO		○		○	○			
OPEN+AUTO	○	○		○				
Moonroof Switch Light						⊕		⊖
Other light								

○—○ = Continuity check

⊕—⊖ = Voltage for LED

2. If the continuity is not as specified, replace the interior light switch.

SYMPTOM TROUBLESHOOTING INDEX FOR VIEWER

DURING AUTO CLOSE OPERATION, MOONROOF GLASS REVERSES WHEN NO OBJECT IS TRAPPED.

Diagnostic procedure

- Check for dirt and debris in the track.
- Reset the moonroof motor-control unit.

MOONROOF GLASS DOES NOT MOVE AND MOTOR DOES NOT TURN.

Diagnostic procedure

- Check for a run down 12 volt battery .
- Check for a blown fuse.
- Check for a faulty moonroof switch .
- Check for a defective moonroof motor-control unit.

MOONROOF GLASS DOES NOT MOVE SMOOTHLY.

Diagnostic procedure

- Check for a defective moonroof motor-control unit.
- Check the moonroof motor.
- Check the glass position adjustment.
- Check the sliding parts.

MOONROOF GLASS DOES NOT MOVE, BUT MOTOR TURNS.

Diagnostic procedure

- Check for foreign matter stuck between the guide rail and the slider.
- Make sure the cable assembly is attached properly.
- Check for a loose inner cable.
- Check for a defective gear or inner cable.

MOONROOF GLASS DOES NOT STOP AT PROPER FLUSH CLOSED POSITION.

Diagnostic procedure

- Reset the moonroof motor-control unit.
- Check the glass position adjustment.

MOONROOF GLASS MOVES, BUT THERE IS NO AUTO FUNCTION.

Diagnostic procedure

- Reset the moonroof motor-control unit.

MOTOR NOISE FROM MOONROOF

Diagnostic procedure

- Check for a loose motor.
- Check for a worn gear or bearing.
- Check for a deformed cable assembly.
- Check for dirt or debris.

WATER LEAKS FROM MOONROOF

Diagnostic procedure

- Check for a defective or an improperly installed glass weatherstrip or drain channel.
- Check for a gap between the drain channel seal and the roof panel.
- **Check the glass position adjustment**.
- Check for a clogged or detached drain tube.

WIND NOISE FROM MOONROOF

Diagnostic procedure

- Check for excessive clearance between the glass weatherstrip and the roof panel.
- **Check the glass position adjustment**.

DESCRIPTION & OPERATION

MOONROOF SYSTEM DESCRIPTION

Operation (Manual)

The moonroof is activated by pushing the switch to the first detent of the open or close position.

Operation (Auto)

The automatic operation of moonroof is activated by pressing the switch to the second detent of the open or close position. The moonroof will automatically open or close completely even if the switch is released.

Tilt function

Auto tilt up operation

During moonroof auto tilt operation, the moonroof will go to full tilt up position when the moonroof tilt switch is pressed and released.

Auto tilt down operation

The moonroof is moved to the full closing position when the close switch is pressed to second detent position, and then released.

Manual operation (only for tilt down)

In a tilted position, the moonroof is controlled to operate the tilt down when the close switch is pressed to first detent position.

Auto Reverse Function

When the moonroof is closing and the stopping load is greater than the prescribed value, the moonroof will move in reverse direction momentarily then stop. The control unit detects "Pinching" by checking the pulses output from the pulse sensor in the moonroof motor.

Learning Function

The learning function allows the moonroof to open and close with auto operation. If learning is not completed, the auto operation will not function.

Keyless/Key Cylinder Operation

By pressing and holding the UNLOCK button of the remote a second time, the windows and moonroof open. The windows stop moving when the UNLOCK button is released.

With the key inserted in the driver's door key cylinder, turn the key a second time holding it (counterclockwise to close). The windows and moonroof stop moving when the key is released.

Keyless Operation	OPEN	Possible
	CLOSE	Impossible
Key Cylinder Operation	OPEN	Possible
	CLOSE	Possible

Failsafe Function

When a failure occurs in the inputs of the motor pulses and moonroof switch, the failsafe function stops the control of each function.

MOONROOF SYSTEM DESCRIPTION - SYSTEM DIAGRAM

For locations of each component on the vehicle, refer to Component Location Index

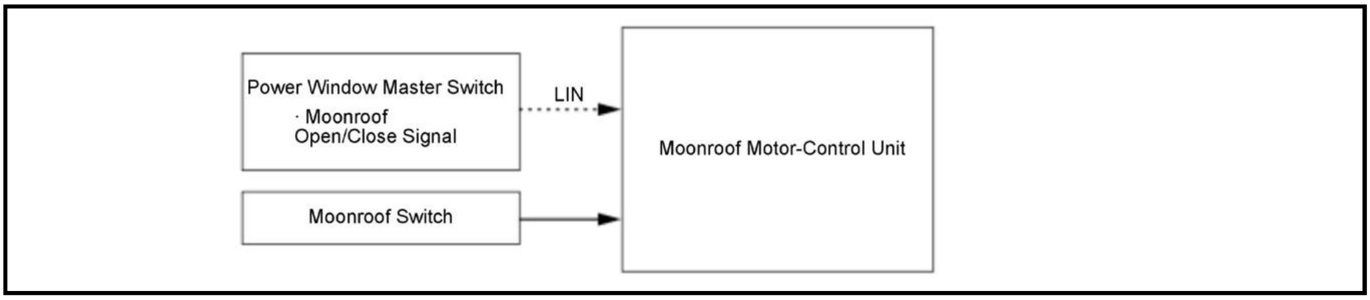

SYMPTOM TROUBLESHOOTING INDEX

MOONROOF ELECTRICAL SYMPTOM TROUBLESHOOTING INDEX

Symptom	Diagnostic procedure	Also check for
Water leaks from moonroof	• Check for a defective or an improperly installed glass weatherstrip or drain channel. • Check for a gap between the drain channel seal and the roof panel. • Check the glass position adjustment. • Check for a clogged or detached drain tube.	B
Wind noise from moonroof	• Check for excessive clearance between the glass weatherstrip and the roof panel. • Check the glass position adjustment.	B
Motor noise from moonroof	• Check for a loose motor. • Check for a worn gear or bearing. • Check for a deformed cable assembly.	B

Symptom	Diagnostic procedure	Also check for
	• Check for dirt or debris.	
Moonroof glass does not move smoothly.	• Check for a defective moonroof motor-control unit. • Check the moonroof motor. • Check the glass position adjustment. • Check the sliding parts.	B
Moonroof glass does not move, but motor turns.	• Check for foreign matter stuck between the guide rail and the slider. • Make sure the cable assembly is attached properly. • Check for a loose inner cable. • Check for a defective gear or inner cable.	B
Moonroof glass does not move and motor does not turn.	• Check for a run down 12 volt battery . • Check for a blown fuse. • Check for a faulty moonroof switch . • Check for a defective moonroof motor-control unit.	B
Moonroof glass does not stop at proper flush closed position.	• Reset the moonroof motor-control unit. • Check the glass position adjustment.	B
During auto close operation, moonroof glass reverses when no object is trapped.	• Check for dirt and debris in the track. • Reset the moonroof motor-control unit.	B
Moonroof glass moves, but there is no AUTO function.	Reset the moonroof motor-control unit.	B

CONNECTOR VIEW

MOONROOF MOTOR-CONTROL UNIT CONNECTOR FOR INPUTS AND OUTPUTS

Moonroof Motor-Control Unit 14P Connector (female terminals)

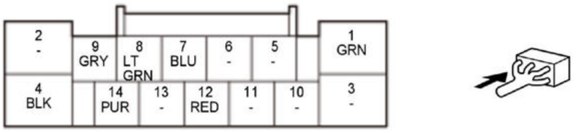

Terminal number	Terminal name	Description	Signal
1	+B_SUNROOF	+B power source	About battery voltage at all times
2	---	Not used	---
3	---	Not used	---
4	GND	Moonroof motor-control unit ground	Less than 0.2 V at all times
5	---	Not used	---
6	---	Not used	---
7	S/R_SW_OPEN	Detects moonroof switch OPEN signal	With moonroof switch OPEN: less than 0.2 V With moonroof switch any other than OPEN and moonroof motor-control unit is wakeup mode: about battery voltage
8	S/R_SW_TILT	Detects moonroof switch TILT signal	With moonroof switch TILT: less than 0.2 V With moonroof switch any other than TILT and moonroof motor-control unit is wakeup mode: about battery voltage
9	S/R_SW_CLOSE	Detects moonroof switch CLOSE signal	With moonroof switch CLOSE: less than 0.2 V With moonroof switch any other than CLOSE and moonroof motor-control unit is wakeup mode: about battery voltage
10	---	Not used	---
11	---	Not used	---
12	LIN(P/W)	Communication line	---
13	---	Not used	---
14	S/R_SW_AUTO	Detects moonroof switch AUTO signal	With moonroof switch AUTO: less than 0.2 V With moonroof switch any other than AUTO and moonroof motor-control unit is wakeup mode: about battery voltage

CIRCUIT DIAGRAM

MOONROOF CIRCUIT DIAGRAM

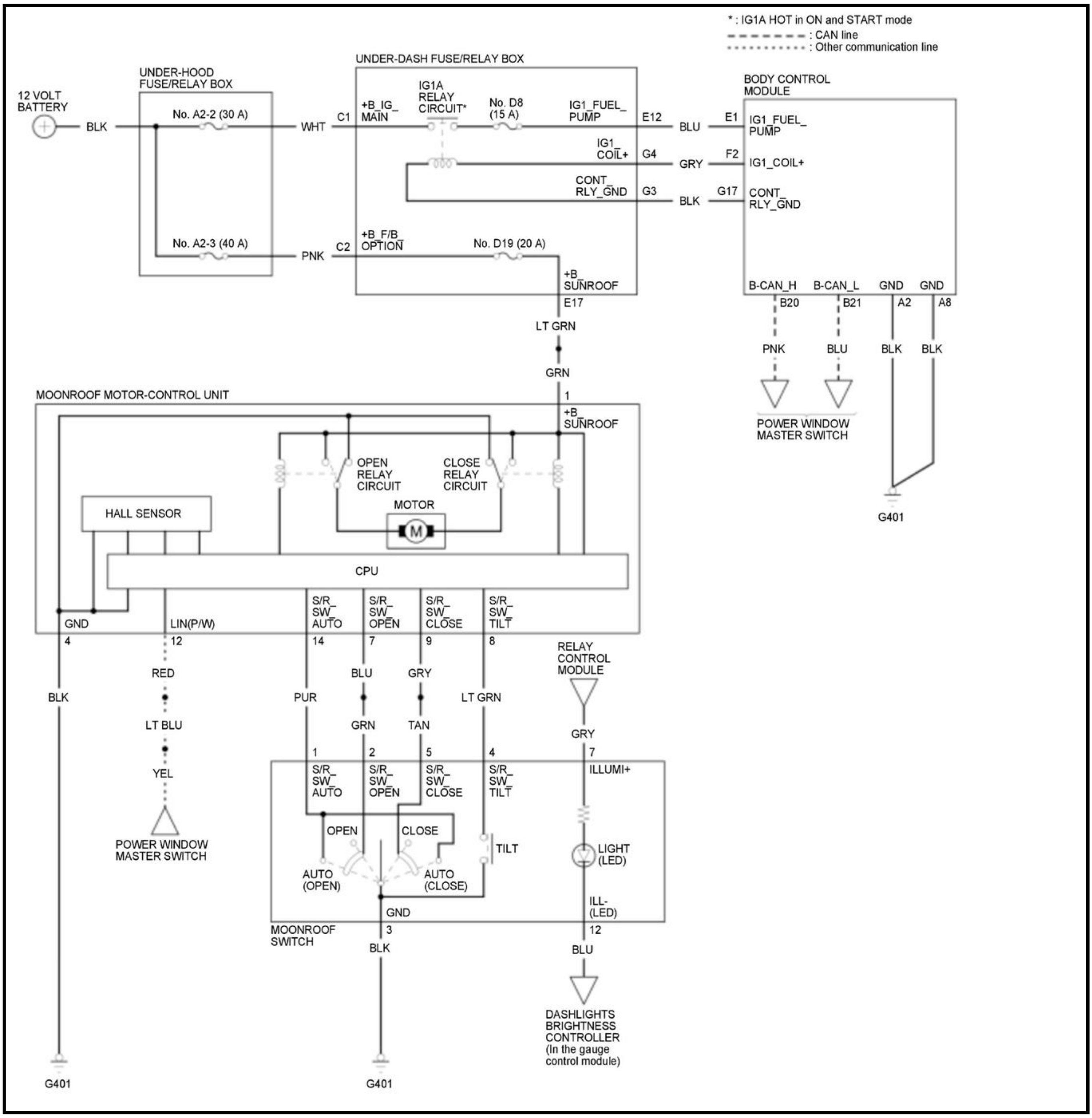
*: IG1A HOT in ON and START mode
: CAN line
: Other communication line
12 VOLT BATTERY
BLK
UNDER-HOOD FUSE/RELAY BOX
No. A2-2 (30 A)
No. A2-3 (40 A)
WHT
PNK
C1
C2
UNDER-DASH FUSE/RELAY BOX
+B_IG_MAIN
IG1A RELAY CIRCUIT*
No. D8 (15 A)
IG1_FUEL_PUMP
E12
IG1_COIL+
G4
CONT_RLY_GND
G3
+B_F/B_OPTION
No. D19 (20 A)
+B_SUNROOF
E17
BLU
GRY
BLK
BODY CONTROL MODULE
E1
F2
G17
IG1_FUEL_PUMP
IG1_COIL+
CONT_RLY_GND
B-CAN_H
B-CAN_L
GND
GND
B20
B21
A2
A8
PNK
BLU
BLK
BLK
POWER WINDOW MASTER SWITCH
G401
LT GRN
GRN
1
MOONROOF MOTOR-CONTROL UNIT
+B_SUNROOF
OPEN RELAY CIRCUIT
CLOSE RELAY CIRCUIT
MOTOR
M
HALL SENSOR
CPU
GND
4
LIN(P/W)
12
S/R_SW_AUTO
14
S/R_SW_OPEN
7
S/R_SW_CLOSE
9
S/R_SW_TILT
8
RELAY CONTROL MODULE
RED
LT BLU
YEL
POWER WINDOW MASTER SWITCH
BLK
PUR
BLU
GRN
GRY
TAN
LT GRN
GRY
1
2
5
4
7
S/R_SW_AUTO
S/R_SW_OPEN
S/R_SW_CLOSE
S/R_SW_TILT
ILLUMI+
OPEN
CLOSE
TILT
AUTO (OPEN)
AUTO (CLOSE)
LIGHT (LED)
GND
ILL- (LED)
MOONROOF SWITCH
3
12
BLK
BLU
DASHLIGHTS BRIGHTNESS CONTROLLER (In the gauge control module)
G401
G401

ADJUSTMENT

MOONROOF GLASS POSITION ADJUSTMENT

Adjustment

NOTE: How to read the torque specifications

1. Moonroof Glass Position - Check

Front and Rear 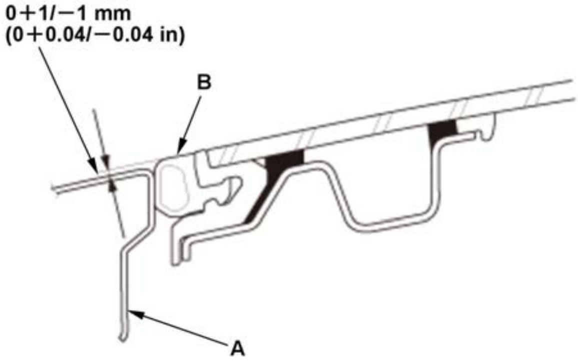 0+1/−1 mm (0+0.04/−0.04 in) B A **Right and Left** 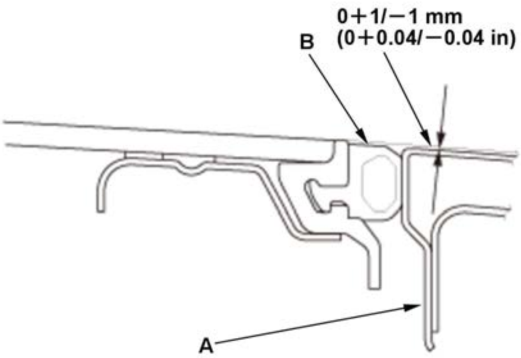 0+1/−1 mm (0+0.04/−0.04 in) B A	1. The roof panel (A) should be even with the glass roof seal (B) within the range shown below. If not, make the following adjustment.

Front and rear:	**0+1/-1 mm (0+0.04/-0.04 in)**
Right and left:	**0+1/-1 mm (0+0.04/-0.04 in)**

2. Moonroof Glass Position - Adjust

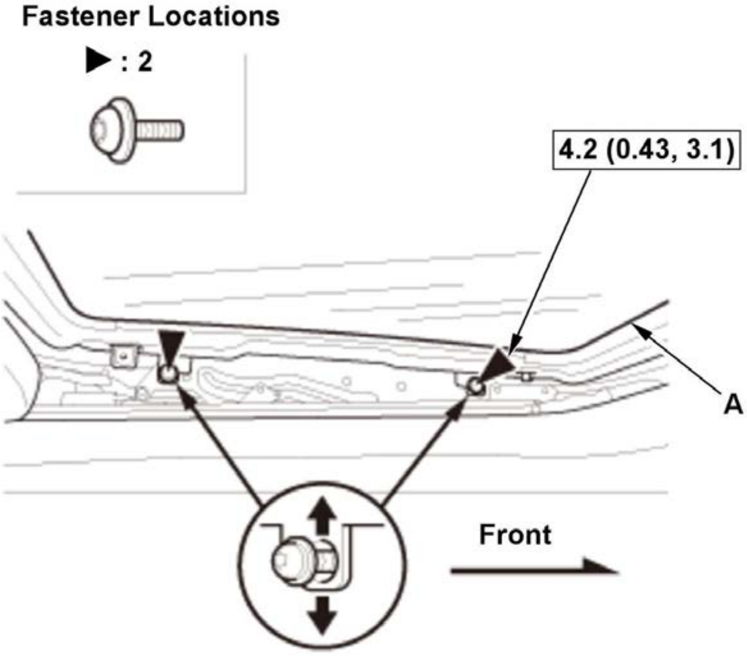 Fastener Locations ▶ : 2 4.2 (0.43, 3.1) A Front	1. Slightly loosen the bolts. 2. Move the glass (A) up or down. 3. Tighten all bolts securely. 4. If necessary, repeat on the opposite side.

3. **Moonroof Motor-Control Unit - Reset**
4. **Water Leaks - Check**

COMPONENT LOCATION INDEX

MOONROOF ELECTRICAL COMPONENT LOCATION INDEX

For relationships between signals in a system, refer to System Diagram.

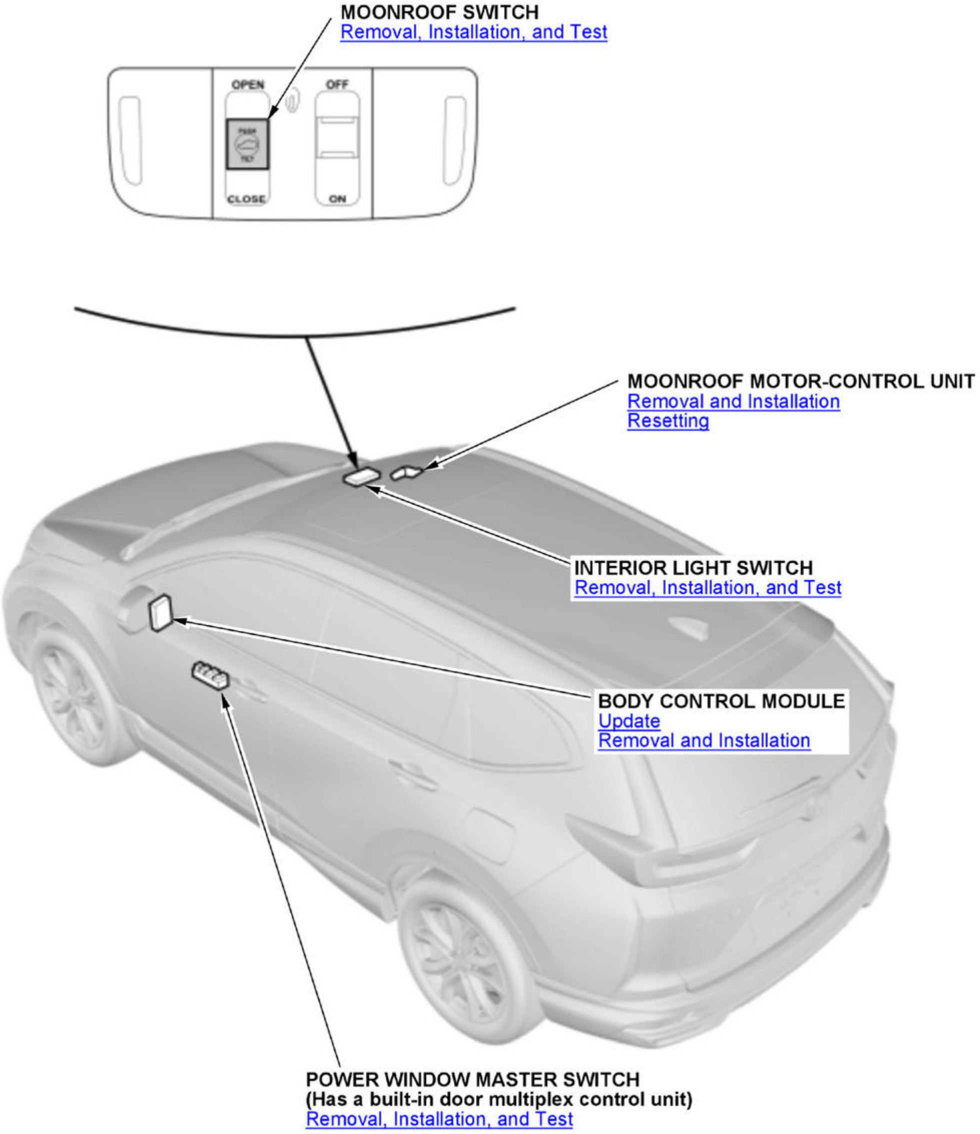
MOONROOF SWITCH
Removal, Installation, and Test
OPEN
OFF
CLOSE
ON
MOONROOF MOTOR-CONTROL UNIT
Removal and Installation
Resetting
INTERIOR LIGHT SWITCH
Removal, Installation, and Test
BODY CONTROL MODULE
Update
Removal and Installation
POWER WINDOW MASTER SWITCH
(Has a built-in door multiplex control unit)
Removal, Installation, and Test

MOONROOF MECHANICAL COMPONENT LOCATION INDEX

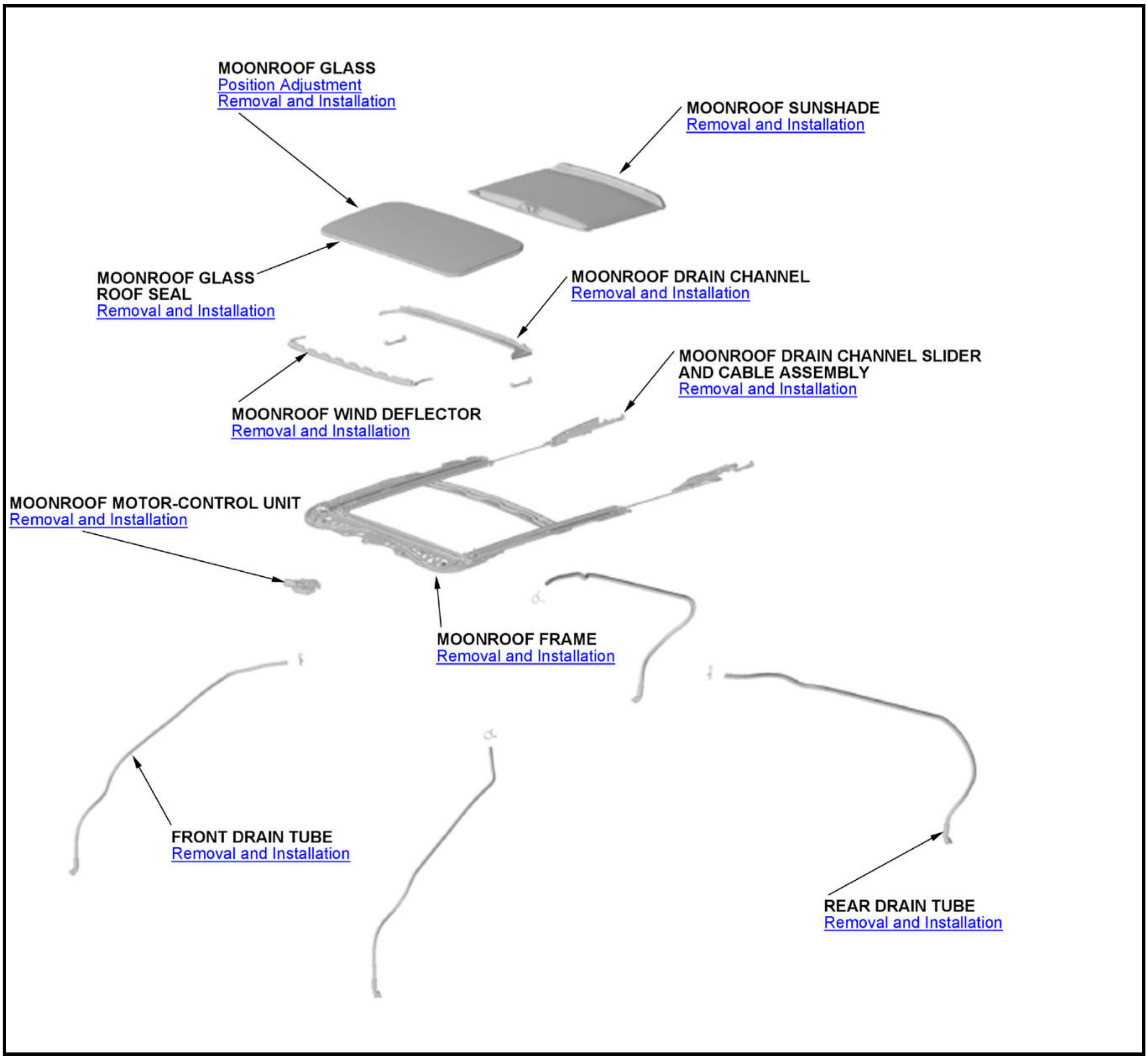
MOONROOF GLASS
Position Adjustment
Removal and Installation
MOONROOF SUNSHADE
Removal and Installation
MOONROOF GLASS ROOF SEAL
Removal and Installation
MOONROOF DRAIN CHANNEL
Removal and Installation
MOONROOF DRAIN CHANNEL SLIDER AND CABLE ASSEMBLY
Removal and Installation
MOONROOF WIND DEFLECTOR
Removal and Installation
MOONROOF MOTOR-CONTROL UNIT
Removal and Installation
MOONROOF FRAME
Removal and Installation
FRONT DRAIN TUBE
Removal and Installation
REAR DRAIN TUBE
Removal and Installation

LEARNING RESET CLEAR

RESETTING THE MOONROOF MOTOR-CONTROL UNIT

Procedure

1. Moonroof Control Unit - Reset

   Resetting the moonroof is required when any of the following have occurred:

   - The moonroof stops during AUTO/MANUAL operation.
   - The moonroof does not work during auto operation.
   - The moonroof was moved manually while the 12 volt battery was dead or disconnected.
   - The moonroof motor was removed or replaced with a new one.
   - Any of components related to the moonroof were replaced or removed and installed.
   -
     - -

       Wind deflector
   -

  - -

    Moonroof glass

-
  - -

    Moonroof seal

-
  - -

    Moonroof glass bracket

-
  - -

    Moonroof frame/drain channel slider and cable assembly

-
  - -

    Moonroof cables, etc.

To reset the moonroof control unit, do these steps:

1. Close the driver's door, and leave it closed until the procedure is complete.

2. Turn the vehicle to the OFF (LOCK) mode.

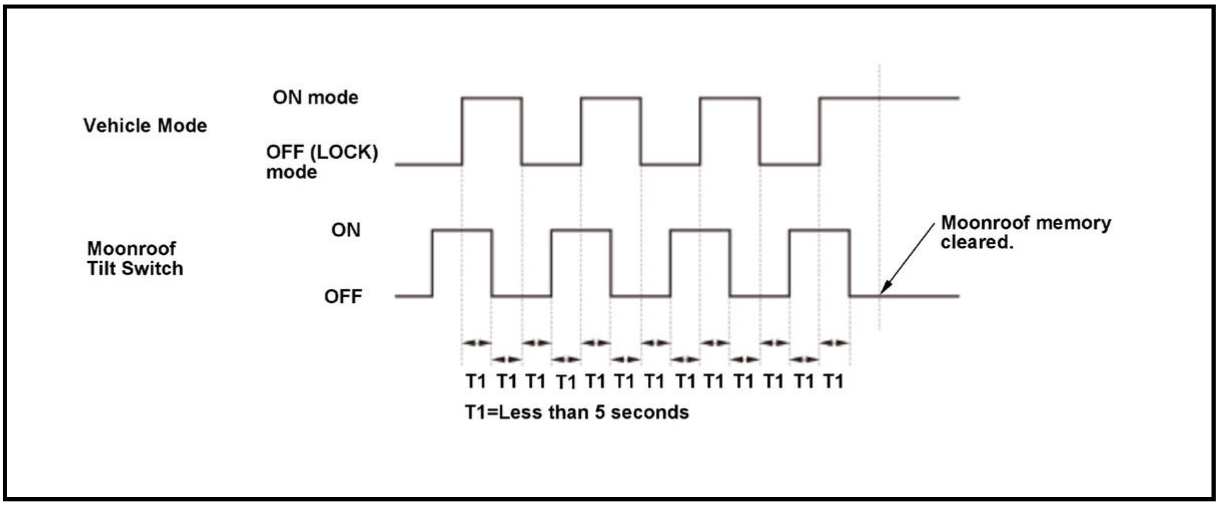
Vehicle Mode
ON mode
OFF (LOCK) mode
Moonroof Tilt Switch
ON
OFF
Moonroof memory cleared.
T1 T1 T1 T1 T1 T1 T1 T1 T1 T1 T1 T1 T1
T1=Less than 5 seconds

3. Press and hold the tilt switch, and turn the vehicle to the ON mode.

4. Release the tilt switch, and turn the vehicle to the OFF (LOCK) mode.

5. Repeat steps 3 and 4 three more times.

6. Check if the AUTO OPEN and AUTO CLOSE function still work. If they still work, the AUTO functions have not been cleared, go back to step 1. If the AUTO functions have been cleared, go to step 7.

7. Press and hold the moonroof close switch until the moonroof is fully open in the tilt position.

8. Confirm that the moonroof control unit is reset by using the moonroof AUTO OPEN and AUTO CLOSE function.

DESCRIPTION AND OPERATION

MOONROOF SYSTEM DESCRIPTION

Operation (Manual)

The moonroof is activated by pushing the switch to the first detent of the open or close position.

Operation (Auto)

The automatic operation of moonroof is activated by pressing the switch to the second detent of the open or close position. The moonroof will automatically open or close completely even if the switch is released.

Tilt function

Auto tilt up operation

During moonroof auto tilt operation, the moonroof will go to full tilt up position when the moonroof tilt switch is pressed and released.

Auto tilt down operation

The moonroof is moved to the full closing position when the close switch is pressed to second detent position, and then released.

Manual operation (only for tilt down)

In a tilted position, the moonroof is controlled to operate the tilt down when the close switch is pressed to first detent position.

Auto Reverse Function

When the moonroof is closing and the stopping load is greater than the prescribed value, the moonroof will move in reverse direction momentarily then stop. The control unit detects "Pinching" by checking the pulses output from the pulse sensor in the moonroof motor.

Learning Function

The learning function allows the moonroof to open and close with auto operation. If learning is not completed, the auto operation will not function.

Keyless/Key Cylinder Operation

By pressing and holding the UNLOCK button of the keyless transmitter or the remote a second time, the windows and moonroof open. The windows stop moving when the UNLOCK button is released.

With the key inserted in the driver's door key cylinder, turn the key a second time holding it (counterclockwise to close). The windows and moonroof stop moving when the key is released.

Keyless Operation	OPEN	Possible
	CLOSE	Possible
Key Cylinder Operation	OPEN	Impossible
	CLOSE	Possible

MOONROOF SYSTEM DESCRIPTION - SYSTEM DIAGRAM

For locations of each component on the vehicle, refer to Component Location Index

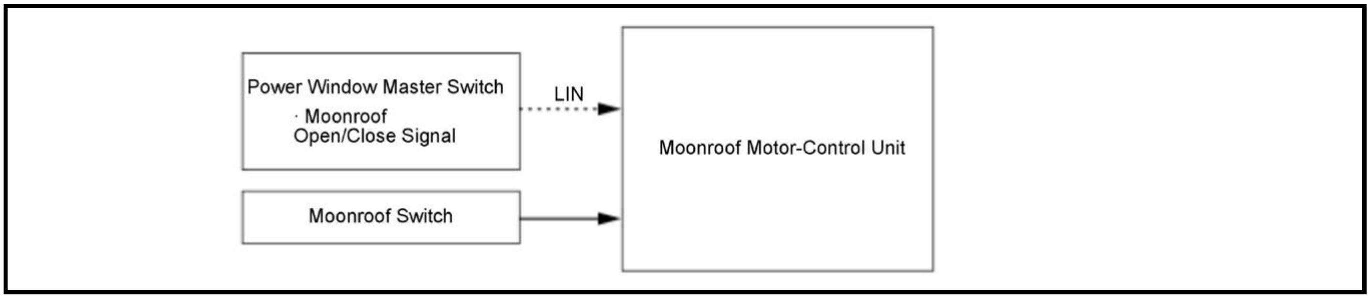
Power Window Master Switch
· Moonroof Open/Close Signal
LIN
Moonroof Switch
Moonroof Motor-Control Unit

PANORAMIC GLASS ROOF SYSTEM DESCRIPTION

Basic Control/Function

The panoramic glass roof opens when the panoramic glass roof open switch is turned to on. During this process, the sunshade also opens keeping a given distance to the panoramic glass roof if the sunshade is closed.The panoramic glass roof closes when the panoramic glass roof close switch is turned to on.

The power sunshade opens when the power sunshade open switch is turned to on.The power sunshade closes when the power sunshade close switch is turned to on. If the panoramic glass roof is opened, the power sunshade stops closing just short of the panoramic glass roof position. If the power sunshade close switch is turned to on again, the power sunshade closes again along with the panoramic glass roof keeping a given distance to each other.

Each switch has the first detent position (to do the manual roof or sunshade operation) and the second detent position (to do the automatic roof or sunshade operation). In the manual operation, the roof or the sunshade opens/closes only while the switch in first detent. In the automatic operation, the roof or the sunshade opens/closes fully once it is set to the second detent.

NOTE: However, the only available option for the tilt up is the automatic operation.

AUTO OPEN Function

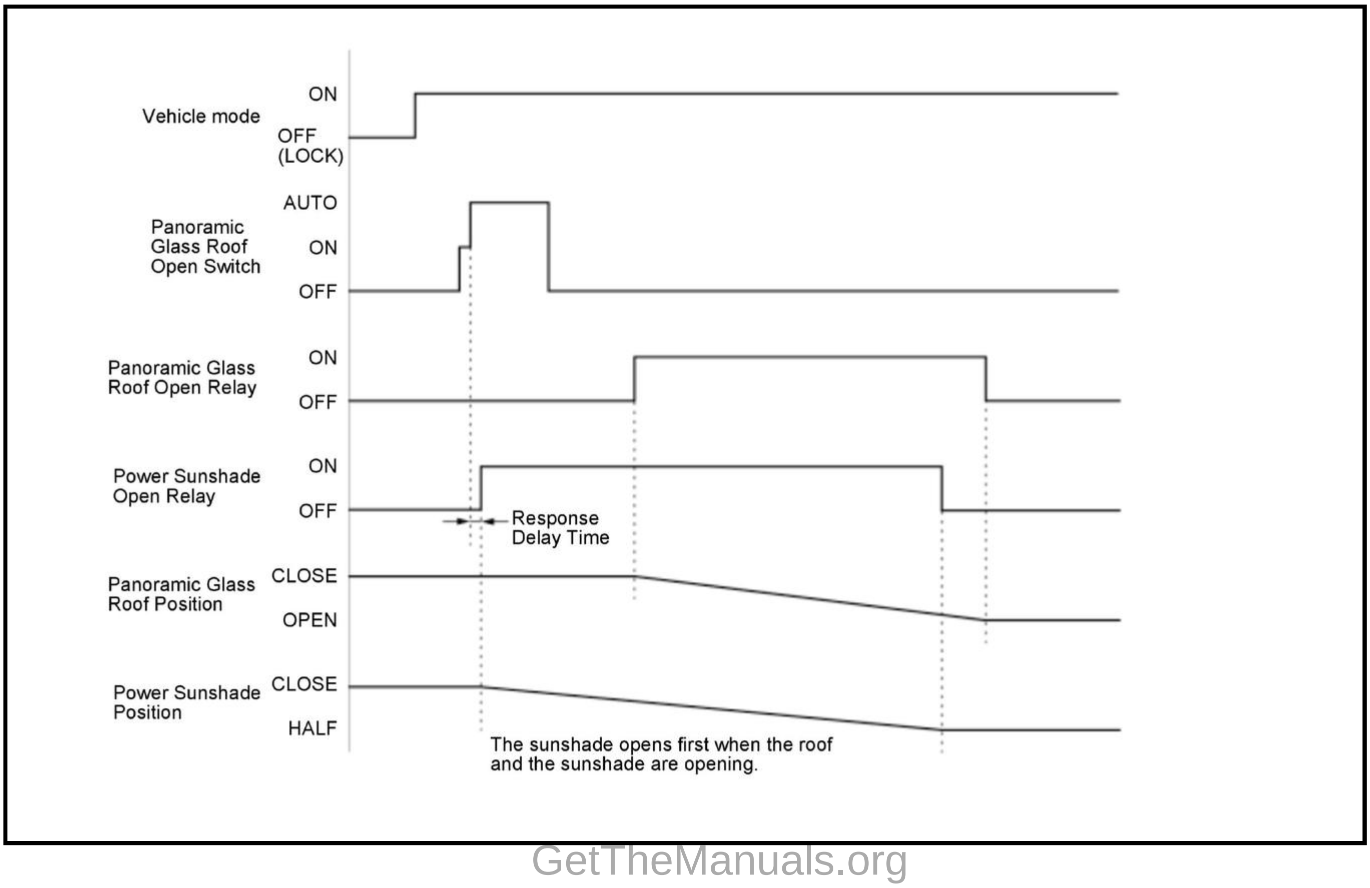

AUTO CLOSE Function

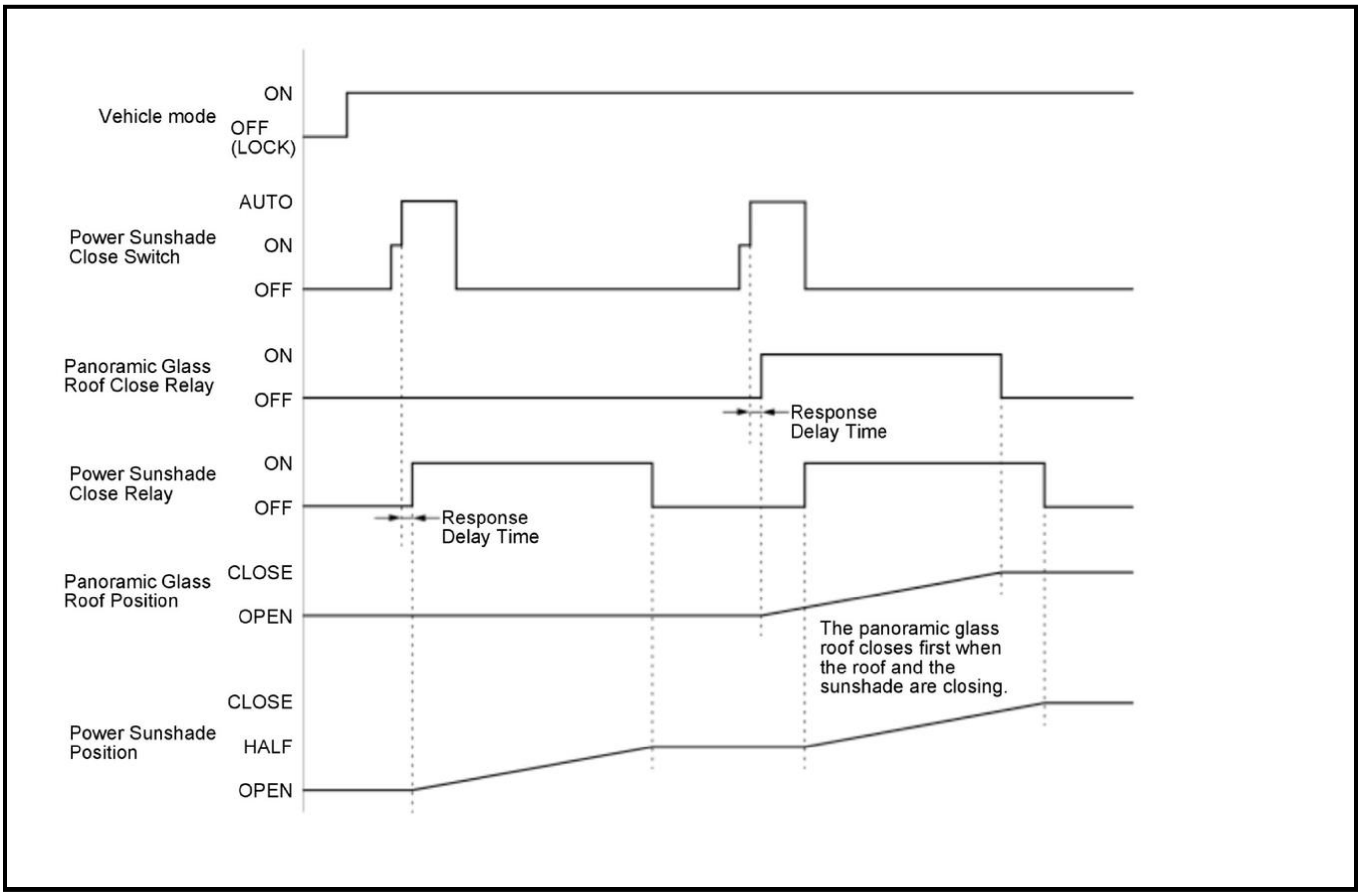

ACTIVATION TERM	CANCELLATION TERM
• Vehicle is turned to the ON mode or the vehicle OFF timer signal is on. • AUTO switch is turned on after pressing open or close switch. • The voltage over the switch exceeds the minimum working voltage.	• Vehicle is turned to the OFF (LOCK) mode and the vehicle OFF timer signal is off. • When the panoramic glass roof switch is pressed again. • When the power sunshade switch is pressed again. • Pinching is detected. • Fully opening or fully closing is detected. • Fail safe function is operated.

Tilt Function

- Auto tilt up operation

The panoramic glass roof tilts up when the panoramic glass roof tilt switch is turned to on. In this process, first, the sunshade opens to a certain extent, and then the panoramic glass roof tilts up if the sunshade is closed. Once the panoramic glass roof tilt switch is turned to on, the panoramic glass roof tilts up automatically without having to keep pressing the switch.

- Auto tilt down operation

The panoramic glass roof tilts down when the panoramic glass roof close switch is turned to on while the panoramic glass roof is tilted-upward. In this process, first, the panoramic glass roof tilts down, and then the sunshade closes. The switch has the first detent position (to do the manual roof or sunshade operation) and the second detent position (to do the automatic roof or sunshade operation). In the manual operation, the roof or the sunshade opens/closes only while the switch in first detent. In the automatic operation, the roof or the sunshade opens/closes fully once it is set to the second detent.

TILT UP Function

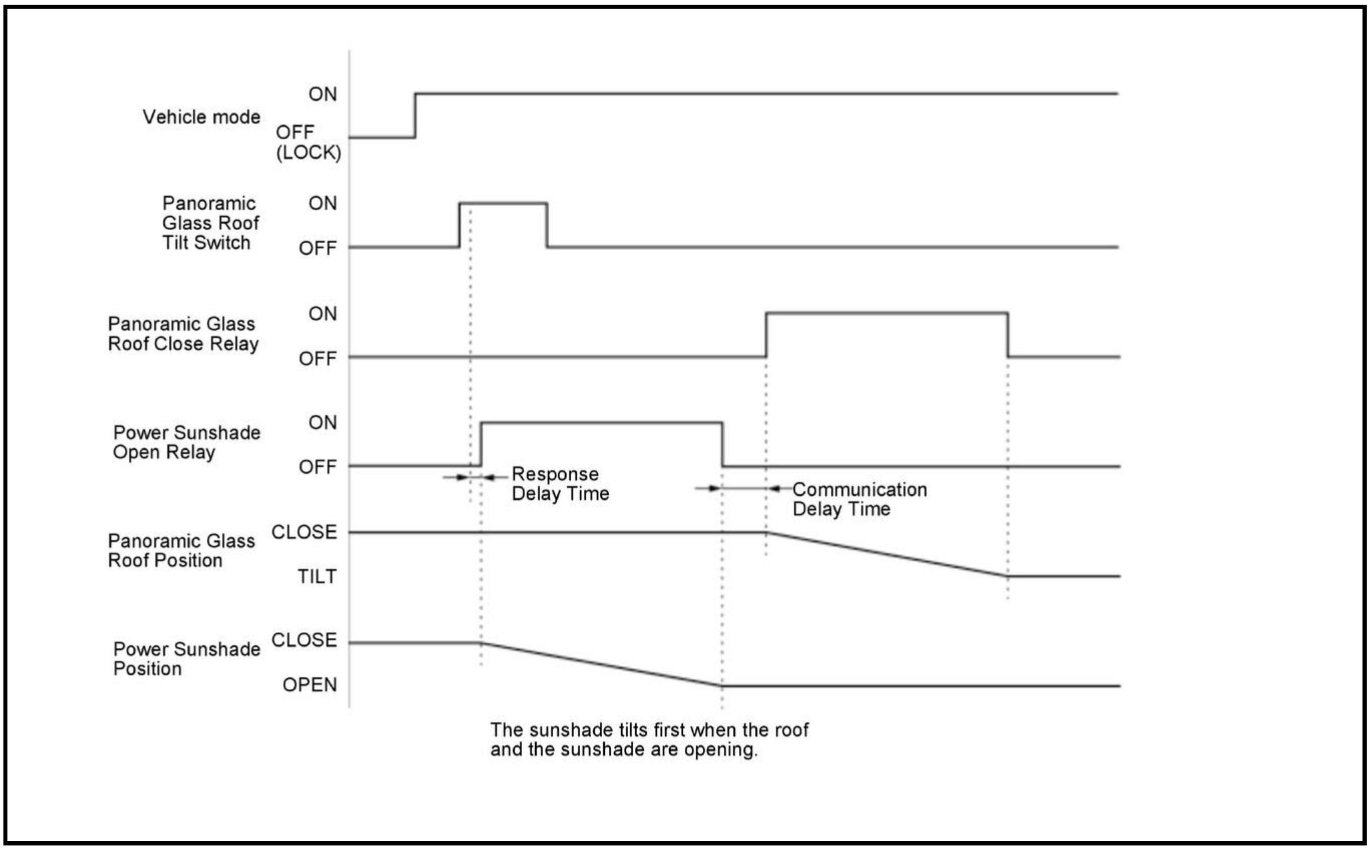

TILT DOWN Function

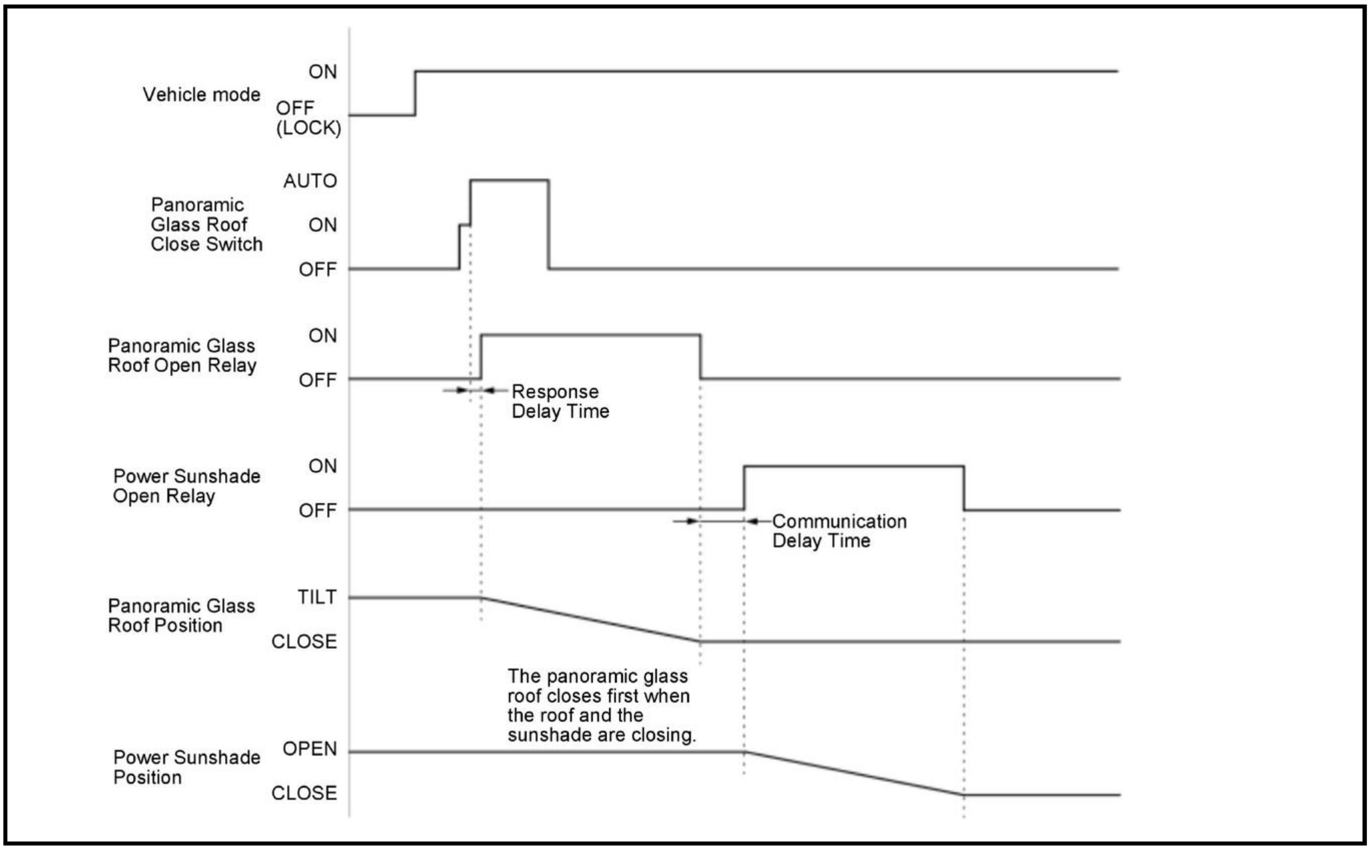

ACTIVATION TERM	CANCELLATION TERM
• Vehicle is turned to the ON mode or the vehicle OFF timer signal is on. • Tilt switch is turned on.	• Vehicle is turned to the OFF (Lock) mode and the vehicle OFF timer signal is off. • Open, close or tilt switch is turned on again.

ACTIVATION TERM	CANCELLATION TERM
• The voltage over the switch exceeds the minimum working voltage.	• Pinching is detected. • Fully tilt opening or fully closing is detected. • Fail safe function is operated.

Pinching Detect Function

When the panoramic glass roof is closing and the stopping load is greater than a prescribed threshold, the sunroof will reverse direction momentarily then stop. The control unit detects "Pinching" by checking the pulses output from the pulse sensor in the panoramic glass roof motor.

Learning Function

The panoramic glass roof and the power sunshade have learning functions. If the learning is not completed, the automatic operation from the open, close or tilt operation can not be done.

Failsafe Function

Only manual operations are available, when the controls of each function are disabled by the fail safe function while in the power supply failure or the control unit failure.

PANORAMIC GLASS ROOF SYSTEM DESCRIPTION - SYSTEM DIAGRAM

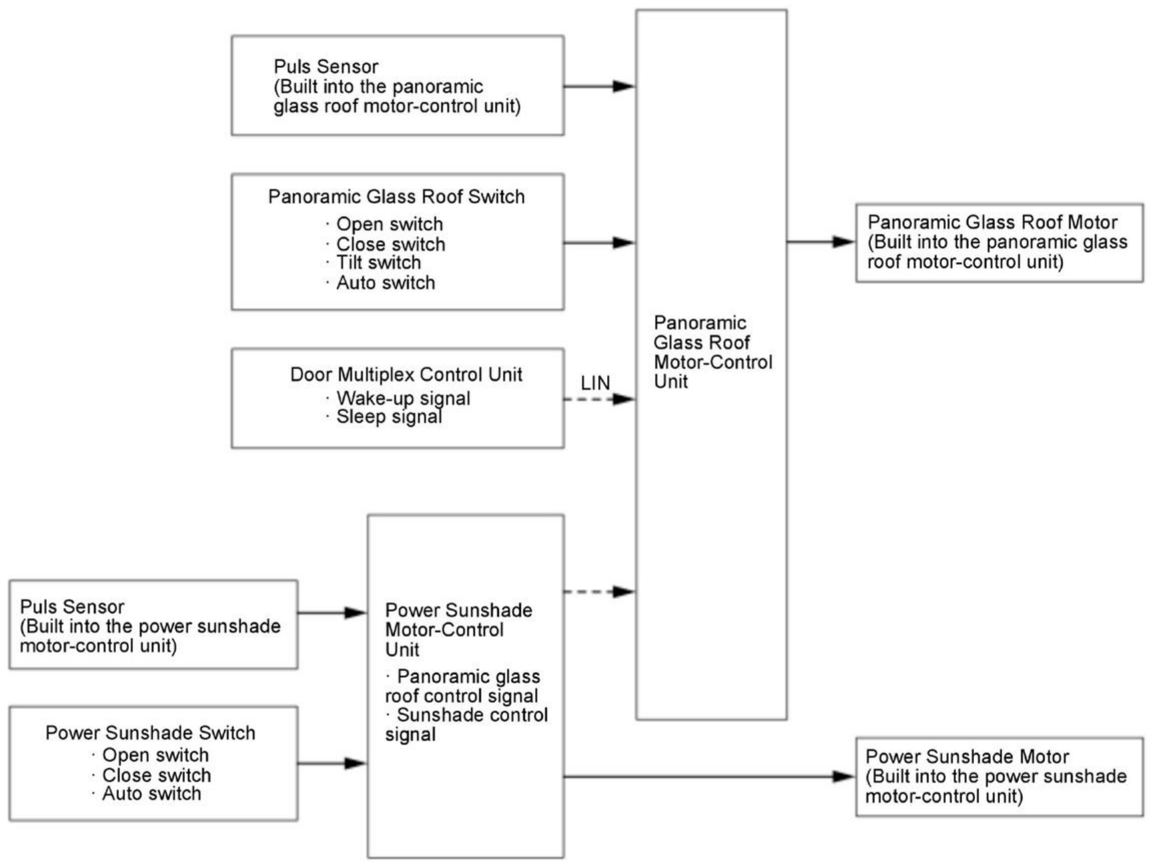
Puls Sensor
(Built into the panoramic glass roof motor-control unit)
Panoramic Glass Roof Switch
· Open switch
· Close switch
· Tilt switch
· Auto switch
Door Multiplex Control Unit
· Wake-up signal
· Sleep signal
LIN
Panoramic Glass Roof Motor-Control Unit
Panoramic Glass Roof Motor
(Built into the panoramic glass roof motor-control unit)
Puls Sensor
(Built into the power sunshade motor-control unit)
Power Sunshade Switch
· Open switch
· Close switch
· Auto switch
Power Sunshade Motor-Control Unit
· Panoramic glass roof control signal
· Sunshade control signal
Power Sunshade Motor
(Built into the power sunshade motor-control unit)

CONNECTOR VIEW

MOONROOF MOTOR-CONTROL UNIT CONNECTOR FOR INPUTS AND OUTPUTS

Moonroof Motor-Control Unit 14P Connector (female terminals)

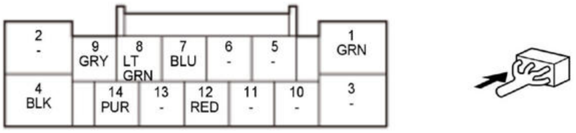

Terminal number	Terminal name	Description	Signal
1	+B SUNROOF	+B power source	About battery voltage at all times
2	---	Not used	---
3	---	Not used	---
4	GND	Moonroof motor-control unit ground	Less than 0.2 V at all times
5	---	Not used	---
6	---	Not used	---
7	S/R SW OPEN	Detects moonroof switch OPEN signal	With moonroof switch OPEN: less than 0.2 V With moonroof switch any other than OPEN and moonroof motor-control unit is wakeup mode: about battery voltage
8	S/R SW TILT	Detects moonroof switch TILT signal	With moonroof switch TILT: less than 0.2 V With moonroof switch any other than TILT and moonroof motor-control unit is wakeup mode: about battery voltage
9	S/R SW CLOSE	Detects moonroof switch CLOSE signal	With moonroof switch CLOSE: less than 0.2 V With moonroof switch any other than CLOSE and moonroof motor-control unit is wakeup mode: about battery voltage
10	---	Not used	---
11	---	Not used	---
12	LIN(P/W)	Communication line	---
13	---	Not used	---
14	S/R SW AUTO	Detects moonroof switch AUTO signal	With moonroof switch AUTO: less than 0.2 V With moonroof switch any other than AUTO and moonroof motor-control unit is wakeup mode: about battery voltage

PANORAMIC GLASS ROOF MOTOR-CONTROL UNIT CONNECTOR FOR INPUTS AND OUTPUTS

Panoramic Glass Roof Motor-Control Unit 14P Connector (female terminals)

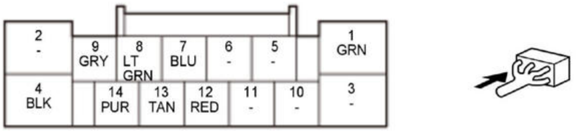

Terminal number	Terminal name	Description	Signal
1	+B SUNROOF	+B power source	About battery voltage at all times
2	---	Not used	---
3	---	Not used	---
4	GND	Panoramic glass roof motor-control unit ground	Less than 0.2 V at all times
5	---	Not used	---
6	---	Not used	---
7	S/R SW OPEN	Detects panoramic glass roof switch OPEN signal	With panoramic glass roof switch OPEN: less than 0.2 V With panoramic glass roof switch any other than OPEN and panoramic glass roof motor-control unit is wakeup mode: about battery voltage
8	S/R SW TILT	Detects panoramic glass roof switch TILT signal	With panoramic glass roof switch TILT: less than 0.2 V With panoramic glass roof switch any other than TILT and panoramic glass roof motor-control unit is wakeup mode: about battery voltage
9	S/R SW CLOSE	Detects panoramic glass roof switch CLOSE signal	With panoramic glass roof switch CLOSE: less than 0.2 V With panoramic glass roof switch any other than CLOSE and panoramic glass roof motor-control unit is wakeup mode: about battery voltage
10	---	Not used	---
11	---	Not used	---
12	LIN(P/W)	Communication line	---
13	SUNSHADE CONTL	Communication line	---
14	S/R SW AUTO	Detects panoramic glass roof switch AUTO signal	With panoramic glass roof switch AUTO: less than 0.2 V With panoramic glass roof switch any other than AUTO and panoramic glass roof motor-control unit is wakeup mode: about battery voltage

POWER SUNSHADE MOTOR-CONTROL UNIT CONNECTOR FOR INPUTS AND OUTPUTS

Power Sunshade Motor-Control Unit 14P Connector (female terminals)

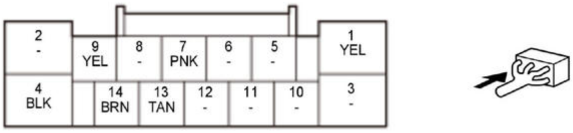

Terminal number	Terminal name	Description	Signal
1	+B SUNSHADE	+B power source	About battery voltage at all times
2	---	Not used	---
3	---	Not used	---
4	GND	Power sunshade motor-control unit ground	Less than 0.2 V at all times
5	---	Not used	---
6	---	Not used	---
7	SUNSHADE SW OPEN	Detects power sunshade switch OPEN signal	With power sunshade switch OPEN: less than 0.2 V With power sunshade switch any other than OPEN and power sunshade motor-control unit is wakeup mode: about battery voltage
8	---	Not used	---
9	SUNSHADE SW CLOSE	Detects power sunshade switch CLOSE signal	With power sunshade switch CLOSE: less than 0.2 V With power sunshade switch any other than CLOSE and power sunshade motor-control unit is wakeup mode: about battery voltage
10	---	Not used	---
11	---	Not used	---
12	---	Not used	---
13	SUNSHADE CONTL	Communication line	---
14	SUNSHADE SW AUTO	Detects power sunshade switch AUTO signal	With power sunshade switch AUTO: less than 0.2 V With power sunshade switch any other than AUTO and power sunshade motor-control unit is wakeup mode: about battery voltage

INPUT TEST

MOONROOF MOTOR-CONTROL UNIT INPUT TEST

NOTE:

- Make sure the fuses associated with the system is OK.
- If the moonroof works OK manually, but will not work in AUTO, or reverses frequently (obstacle detection), **reset the moonroof motor-control unit** before proceeding with the input test.

1. Turn the vehicle to the OFF (LOCK) mode.

2. Disconnect the moonroof motor-control unit 14P connector.

Moonroof Motor-Control Unit 14P Connector (female terminals)

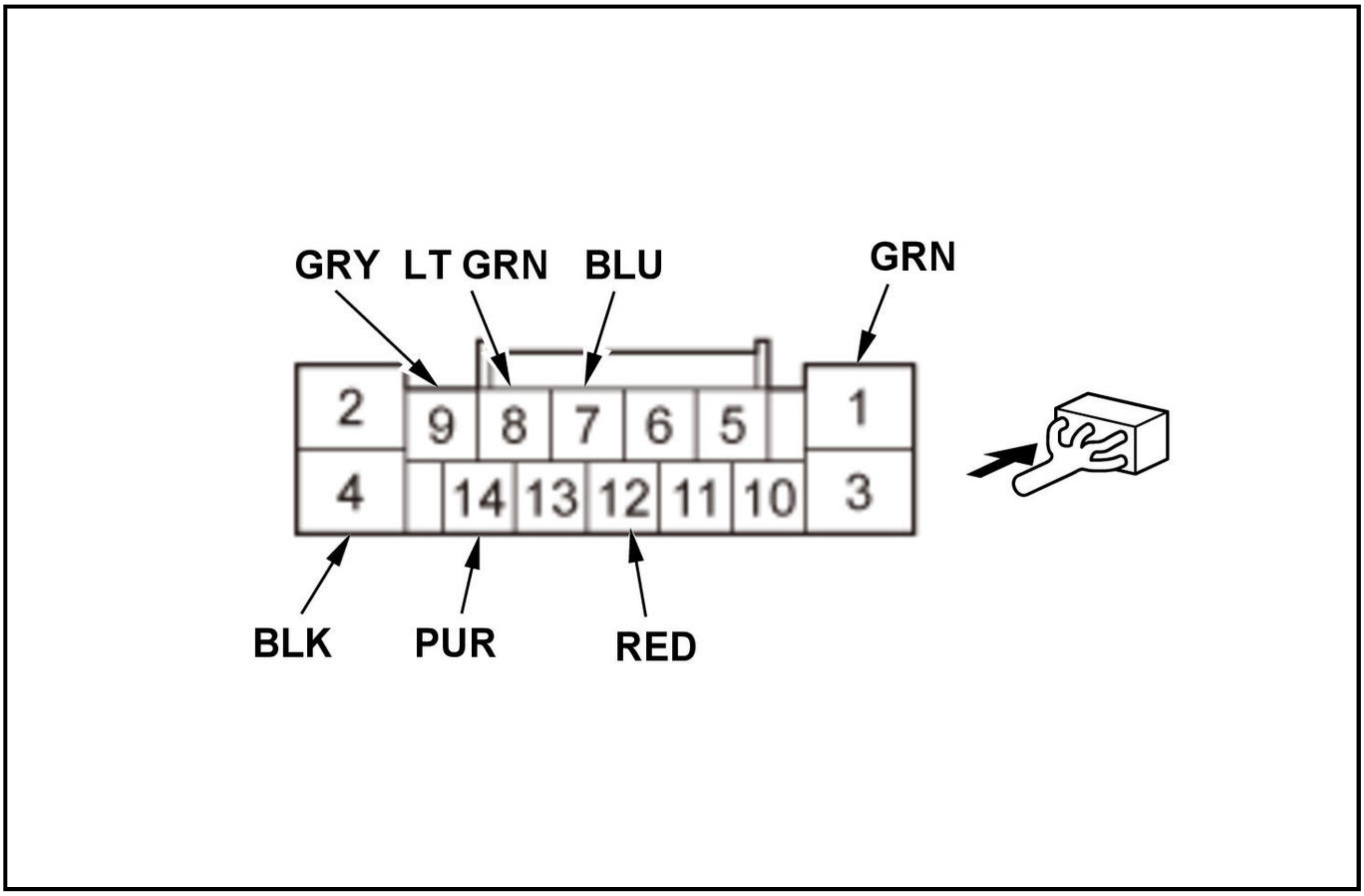

Inspect the connector and socket terminals to be sure they are all making good contact:

- If the terminals are bent, loose, or corroded, repair them as necessary, and recheck the system.
- If the terminals are OK, go to step 4.

With the connectors still disconnected, do the following input tests:

- If any test indicates a problem, find and correct the cause, then recheck the system.
- If all the input tests prove OK, go to step 5.

Cavity	Wire	Test condition	Test: Desired result	Possible cause if desired result is not obtained
12	RED	Disconnect these connectors: • Power window master switch 37P connector • Front passenger's power window	Check for continuity between terminal No. 12 and power window master switch 37P connector terminal No. 36:There should be continuity	An open in the LIN(P/W) wire
			Check for continuity between terminal No. 12	An open in the LIN(P/W) wire

Cavity	Wire	Test condition	Test: Desired result	Possible cause if desired result is not obtained
		switch 37P connector	and front passenger's power window switch 37P connector terminal No. 34:There should be continuity.	
			Check for continuity to ground: There should be no continuity.	A short to ground in the LIN (P/W) wire

Reconnect the connector, and do the following input tests:

- If any test indicates a problem, find and correct the cause, then recheck the system.
- If all the input tests prove OK, **replace the moonroof motor-control unit** .

Cavity	Wire	Test condition	Test: Desired result	Possible cause if desired result is not obtained
1	GRN	Under all conditions	Measure the voltage to ground: There should be battery voltage.	An open or high resistance in the wire
4	BLK	In all power modes	Measure the voltage to ground: There should be less than 0.2 V.	• Poor ground (G401) • An open or high resistance in the ground wire
9	GRY	Vehicle ON mode, moonroof switch in CLOSE position	Measure the voltage to ground: There should be less than 0.2 V.	• Faulty moonroof switch • Poor ground (G401) or an open in the ground wire • An open or high resistance in the wire
		Vehicle ON mode, moonroof switch released	Measure the voltage to ground: There should be battery voltage.	• Faulty moonroof switch • A short to ground in the wire
8	LT GRN	Vehicle ON mode, moonroof switch in TILT position	Measure the voltage to ground: There should be less than 0.2 V.	• Faulty moonroof switch • Poor ground (G401) or an open in the ground wire • An open or high resistance in the wire
		Vehicle ON mode, moonroof switch released	Measure the voltage to ground: There should be battery voltage.	• Faulty moonroof switch • A short to ground in the wire
7	BLU	Vehicle ON mode, moonroof switch in OPEN position	Measure the voltage to ground: There should be less than 0.2 V.	• Faulty moonroof switch • Poor ground (G401) or an open in the ground wire

Cavity	Wire	Test condition	Test: Desired result	Possible cause if desired result is not obtained
				- An open or high resistance in the wire
		Vehicle ON mode, moonroof switch released	Measure the voltage to ground: There should be battery voltage.	- Faulty moonroof switch - A short to ground in the wire
14	PUR	Vehicle ON mode, moonroof switch in AUTO (OPEN) or AUTO (CLOSE) position	Measure the voltage to ground: There should be less than 0.2 V.	- Faulty moonroof switch - Poor ground (G401) or an open in the ground wire - An open or high resistance in the wire
		Vehicle ON mode, moonroof switch released	Measure the voltage to ground: There should be battery voltage.	- Faulty moonroof switch - A short to ground in the wire

PANORAMIC GLASS ROOF MOTOR-CONTROL UNIT INPUT TEST

NOTE:

- Make sure the fuses associated with the system is OK.
- If the panoramic glass roof works OK manually, but will not work in AUTO, or reverses frequently (obstacle detection), **reset the panoramic glass roof motor-control unit** before proceeding with the input test.

1. Turn the vehicle to the OFF (LOCK) mode.

2. Disconnect the panoramic glass roof motor-control unit 14P connector.

Panoramic Glass Roof Motor-Control Unit 14P Connector (female terminals)

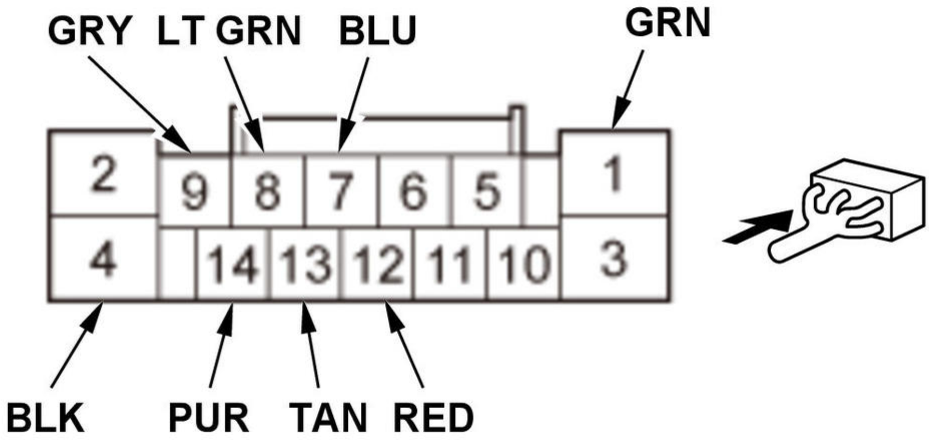

Inspect the connector and socket terminals to be sure they are all making good contact:

- If the terminals are bent, loose, or corroded, repair them as necessary, and recheck the system.
- If the terminals are OK, go to step 4.

With the connectors still disconnected, do the following input tests:

- If any test indicates a problem, find and correct the cause, then recheck the system.
- If all the input tests prove OK, go to step 5.

Cavity	Wire	Test condition	Test: Desired result	Possible cause if desired result is not obtained
12	RED	Disconnect these connectors: • Power window master switch 37P connector • Front passenger's power window switch 37P connector	Check for continuity between terminal No. 12 and power window master switch 37P connector terminal No. 36:There should be continuity	An open in the LIN(P/W) wire
			Check for continuity between terminal No. 12 and front passenger's power window switch 37P connector terminal No. 34:There should be continuity.	An open in the LIN(P/W) wire
			Check for continuity to ground: There should be no continuity.	A short to ground in the LIN (P/W) wire

Cavity	Wire	Test condition	Test: Desired result	Possible cause if desired result is not obtained
13	TAN	Disconnect power sunshade motor-control unit 14P connector	Check for continuity between terminal No. 13 and power sunshade motor-control unit 14P connector terminal No. 13: There should be continuity	An open in the SUNSHADE CONTL wire
			Check for continuity to ground: There should be no continuity.	A short to ground in the SUNSHADE CONTL wire

Reconnect the connector, and do the following input tests:

- If any test indicates a problem, find and correct the cause, then recheck the system.
- If all the input tests prove OK, replace the panoramic glass roof motor-control unit .

Cavity	Wire	Test condition	Test: Desired result	Possible cause if desired result is not obtained
1	GRN	Under all conditions	Measure the voltage to ground: There should be battery voltage.	An open or high resistance in the wire
4	BLK	In all power modes	Measure the voltage to ground: There should be less than 0.2 V.	• Poor ground (G401) • An open or high resistance in the ground wire
9	GRY	Vehicle ON mode, panoramic glass roof switch in CLOSE position	Measure the voltage to ground: There should be less than 0.2 V.	• Faulty panoramic glass roof switch • Poor ground (G401) or an open in the ground wire • An open or high resistance in the wire
		Vehicle ON mode, panoramic glass roof switch released	Measure the voltage to ground: There should be battery voltage.	• Faulty panoramic glass roof switch • A short to ground in the wire
8	LT GRN	Vehicle ON mode, panoramic glass roof switch in TILT position	Measure the voltage to ground: There should be less than 0.2 V.	• Faulty panoramic glass roof switch • Poor ground (G401) or an open in the ground wire • An open or high resistance in the wire
		Vehicle ON mode, panoramic glass roof switch released	Measure the voltage to ground: There should be battery voltage.	• Faulty panoramic glass roof switch • A short to ground in the wire

Cavity	Wire	Test condition	Test: Desired result	Possible cause if desired result is not obtained
7	BLU	Vehicle ON mode, panoramic glass roof switch in OPEN position	Measure the voltage to ground: There should be less than 0.2 V.	• Faulty panoramic glass roof switch • Poor ground (G401) or an open in the ground wire • An open or high resistance in the wire
		Vehicle ON mode, panoramic glass roof switch released	Measure the voltage to ground: There should be battery voltage.	• Faulty panoramic glass roof switch • A short to ground in the wire

Cavity	Wire	Test condition	Test: Desired result	Possible cause if desired result is not obtained
14	PUR	Vehicle ON mode, panoramic glass roof switch in AUTO (OPEN) or AUTO (CLOSE) position	Measure the voltage to ground: There should be less than 0.2 V.	• Faulty panoramic glass roof switch • Poor ground (G401) or an open in the ground wire • An open or high resistance in the wire
		Vehicle ON mode, panoramic glass roof switch released	Measure the voltage to ground: There should be battery voltage.	• Faulty panoramic glass roof switch • A short to ground in the wire

POWER SUNSHADE MOTOR-CONTROL UNIT INPUT TEST

- Make sure the fuses associated with the system is OK.
- If the power sunshade works OK manually, but will not work in AUTO, or reverses frequently (obstacle detection), reset the power sunshade motor-control unit before proceeding with the input test.

1. Turn the vehicle to the OFF (LOCK) mode.

2. Disconnect the power sunshade motor-control unit 14P connector.

Power Sunshade Motor-Control Unit 14P Connector (female terminals)

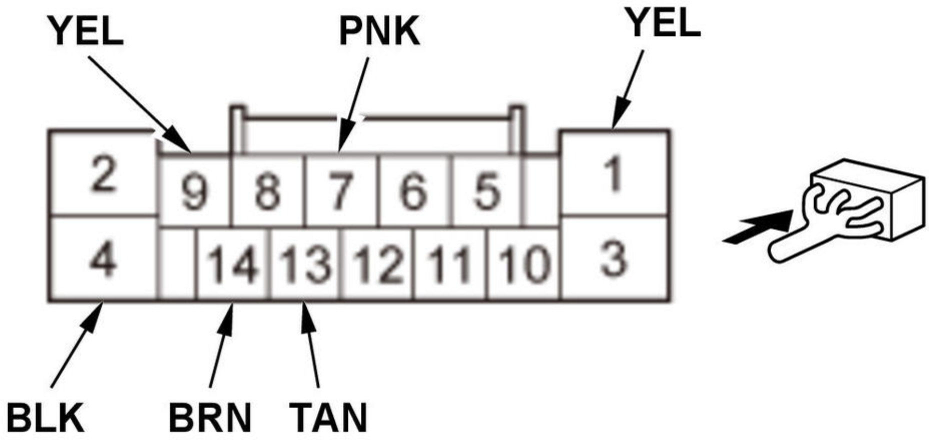

Inspect the connector and socket terminals to be sure they are all making good contact:

- If the terminals are bent, loose, or corroded, repair them as necessary, and recheck the system.
- If the terminals are OK, go to step 4.

With the connectors still disconnected, do the following input tests:

- If any test indicates a problem, find and correct the cause, then recheck the system.
- If all the input tests prove OK, go to step 5.

Cavity	Wire	Test condition	Test: Desired result	Possible cause if desired result is not obtained
13	TAN	Disconnect panoramic glass roof motor-control unit 14P connector	Check for continuity between terminal No. 13 and panoramic glass roof motor-control unit 14P connector terminal No. 13: There should be continuity	An open in the SUNSHADE CONTL wire
			Check for continuity to ground: There should be no continuity.	A short to ground in the SUNSHADE CONTL wire

Reconnect the connector, and do the following input tests:

- If any test indicates a problem, find and correct the cause, then recheck the system.
- If all the input tests prove OK, **replace the power sunshade motor-control unit** .

Cavity	Wire	Test condition	Test: Desired result	Possible cause if desired result is not obtained
1	YEL	Under all conditions	Measure the voltage to ground: There should be	An open or high resistance in the wire

Cavity	Wire	Test condition	Test: Desired result	Possible cause if desired result is not obtained
			battery voltage.	

Cavity	Wire	Test condition	Test: Desired result	Possible cause if desired result is not obtained
4	BLK	In all power modes	Measure the voltage to ground: There should be less than 0.2 V.	• Poor ground (G401) • An open or high resistance in the ground wire
9	YEL	Vehicle ON mode, power sunshade switch in CLOSE position	Measure the voltage to ground: There should be less than 0.2 V.	• Faulty power sunshade switch • Poor ground (G401) or an open in the ground wire • An open or high resistance in the wire
		Vehicle ON mode, power sunshade switch released	Measure the voltage to ground: There should be battery voltage.	• Faulty power sunshade switch • A short to ground in the wire
7	PNK	Vehicle ON mode, power sunshade switch in OPEN position	Measure the voltage to ground: There should be less than 0.2 V.	• Faulty power sunshade switch • Poor ground (G401) or an open in the ground wire • An open or high resistance in the wire
		Vehicle ON mode, power sunshade switch released	Measure the voltage to ground: There should be battery voltage.	• Faulty power sunshade switch • A short to ground in the wire
14	BRN	Vehicle ON mode, power sunshade switch in AUTO (OPEN) or AUTO (CLOSE) position	Measure the voltage to ground: There should be less than 0.2 V.	• Faulty power sunshade switch • Poor ground (G401) or an open in the ground wire • An open or high resistance in the wire
		Vehicle ON mode, power sunshade switch released	Measure the voltage to ground: There should be battery voltage.	• Faulty power sunshade switch • A short to ground in the wire

ADJUSTMENT

MOONROOF GLASS POSITION ADJUSTMENT

Adjustment

NOTE: How to read the torque specifications

1. Moonroof Glass Position - Check

Front and Rear

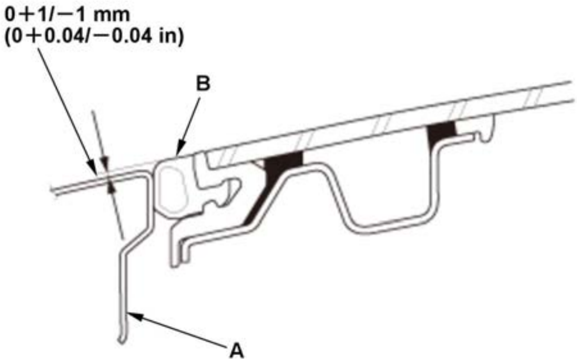

Right and Left

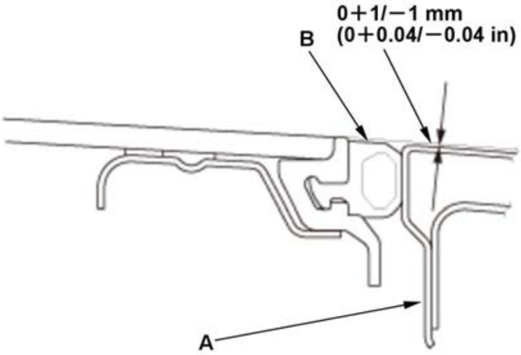

1. The roof panel (A) should be even with the glass roof seal (B) within the range shown below. If not, make the following adjustment.

Front and rear:	**0+1/-1 mm (0+0.04/-0.04 in)**
Right and left:	**0+1/-1 mm (0+0.04/-0.04 in)**

2. Moonroof Glass Position - Adjust

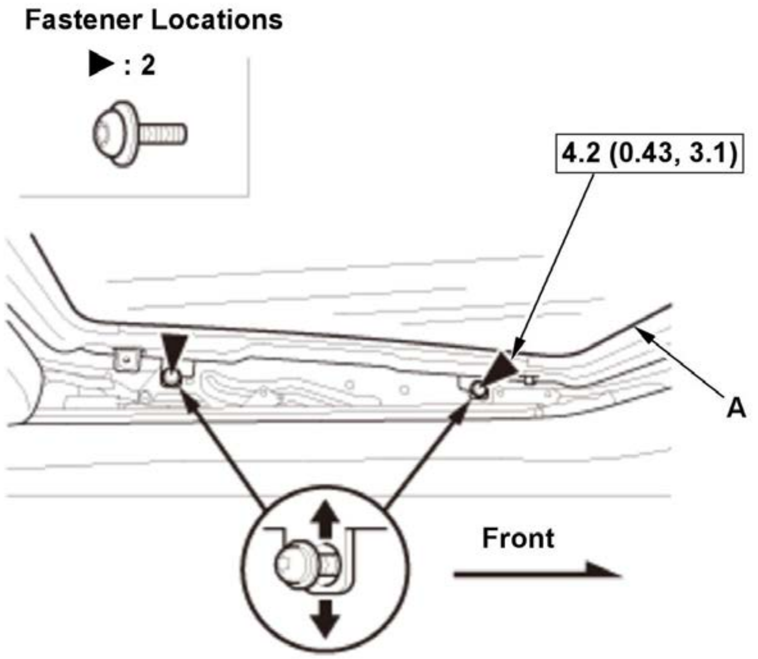 Fastener Locations ▶ : 2 4.2 (0.43, 3.1) A Front	1. Slightly loosen the bolts. 2. Move the glass (A) up or down. 3. Tighten all bolts securely. 4. If necessary, repeat on the opposite side.

3. Moonroof Motor-Control Unit - Reset
4. Water Leaks - Check

PANORAMIC GLASS ROOF GLASS POSITION ADJUSTMENT

Adjustment

NOTE: How to read the torque specifications.

Front Glass

1. Panoramic Glass Front Glass Position - Check

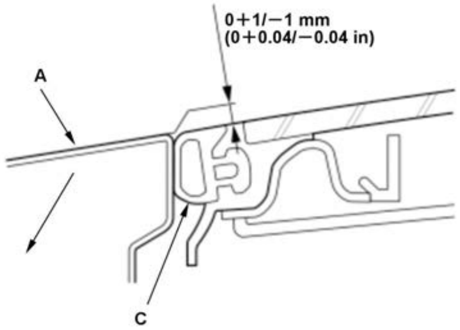 **Front** **Rear**	1. The roof panel (A) and the rear glass (B) should be even with the front glass roof seal (C) to within 0+1/-1 mm (0+0.04/-0.04 in) all the way around. If not, make the following adjustment.

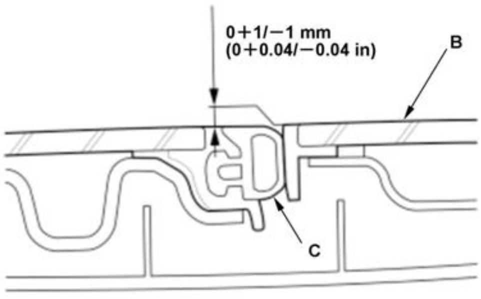 0+1/−1 mm (0+0.04/−0.04 in) B C **Side** 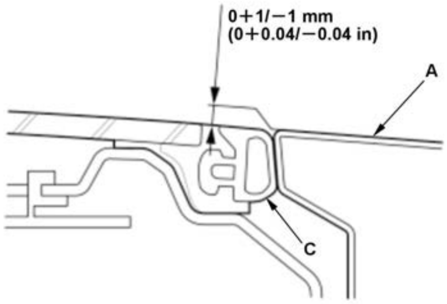 0+1/−1 mm (0+0.04/−0.04 in) A C	

Side:	**0+1/-1 mm (0+0.04/-0.04 in)**

Front:	**0+1/-1 mm (0+0.04/-0.04 in)**
Rear:	**0+1/-1 mm (0+0.04/-0.04 in)**

2. **Inner Blind Cover - Remove**
3. Panoramic Glass Front Glass Position - Adjust

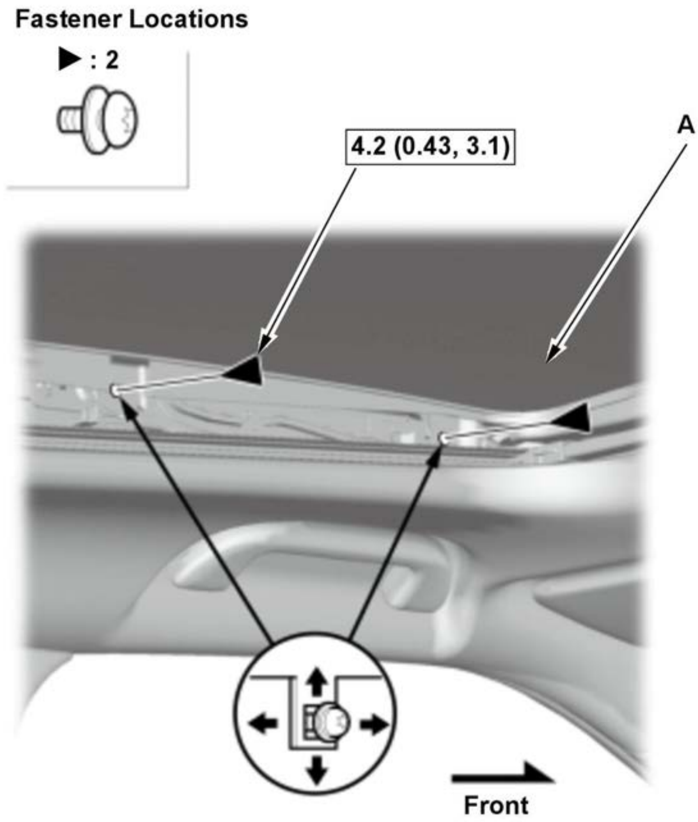 Fastener Locations ▶ : 2 4.2 (0.43, 3.1) A Front	1. Slightly loosen the bolts. 2. Adjust the front glass (A) up or down, and forward or rearward. 3. Tighten all bolts securely. 4. If necessary, repeat on the opposite side.

4. Inner Blind Cover - Install
5. Panoramic Glass Roof Motor-Control Unit - Reset
6. Water Leaks - Check

Rear Glass

7. Panoramic Glass Rear Glass Position - Check

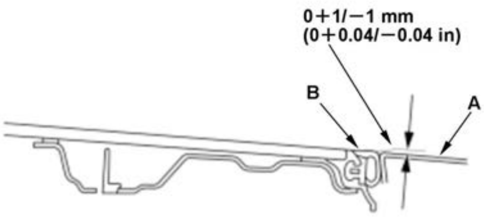 0+1/−1 mm (0+0.04/−0.04 in) B A **Rear** **Side**	1. The roof panel (A) should be even with the rear glass roof seal (B) to within 0+1/-1 mm (0+0.04/-0.04 in) all the way around. If not, make the following adjustment.

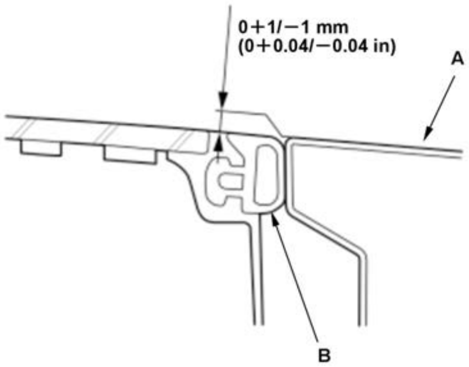 0+1/−1 mm (0+0.04/−0.04 in) A B	

Side:	**0+1/-1 mm (0+0.04/-0.04 in)**

Rear:	**0+1/-1 mm (0+0.04/-0.04 in)**

8. **Inner Blind Cover - Remove**
9. Panoramic Glass Rear Glass Position - Adjust

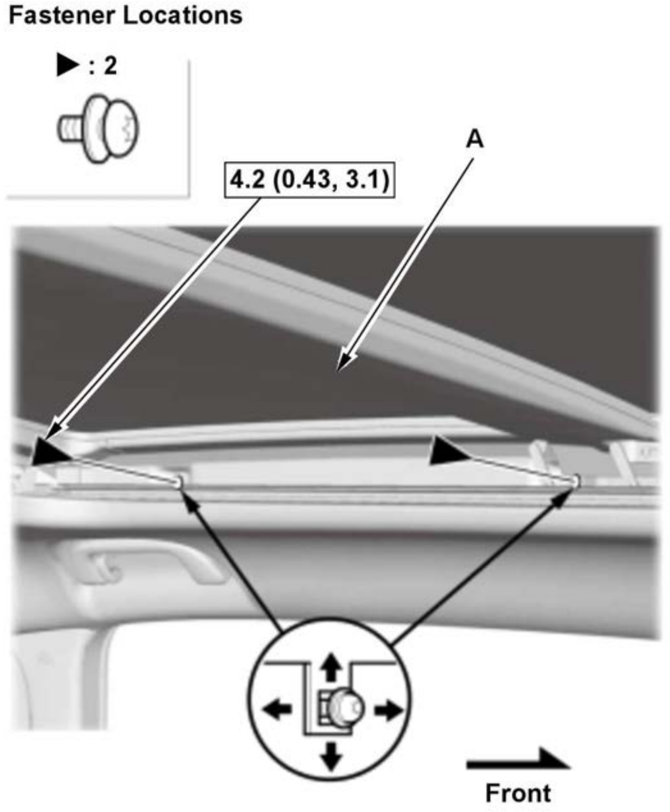 Fastener Locations ▶ : 2 4.2 (0.43, 3.1) A Front	1. Slightly loosen the bolts. 2. Adjust the rear glass (A) up or down, and forward or rearward. 3. Tighten all bolts securely. 4. If necessary, repeat on the opposite side.

10. **Inner Blind Cover - Install**
11. **Water Leaks - Check**

TEST

PANORAMIC GLASS ROOF/POWER SUNSHADE SWITCH TEST

Test

1. **Roof Console Module - Remove**
2. Panoramic Glass Roof/Power Sunshade Switch - Test

NOTE: The panoramic glass roof/power sunshade switch is built into the roof console module (A).

1. Check the switch for continuity according to the table.

NOTE:

- When an LED is located between terminals, check if the LED lights up by connecting power and ground to the LED.
- Note this important operating characteristic; diode bias causes a diode to fully conduct electricity in one direction (forward), while not at all in the opposite direction (reverse).

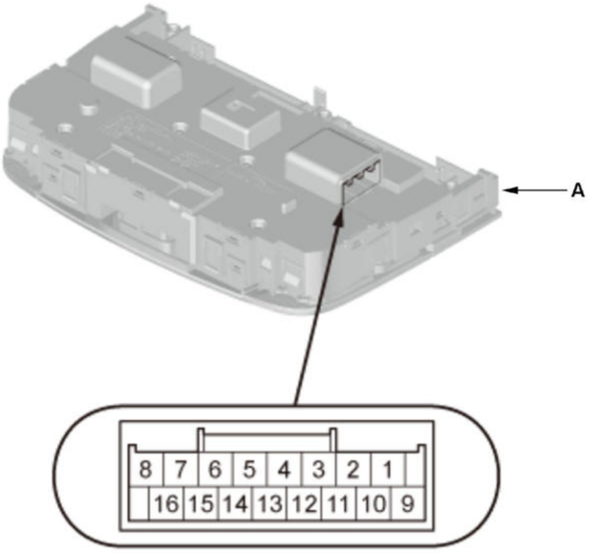

Panoramic Glass Roof Switch

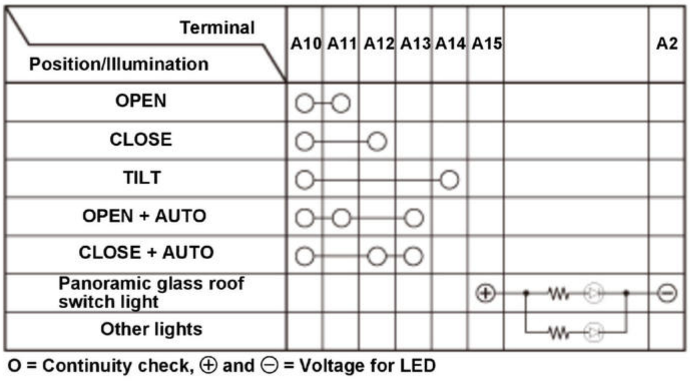

Terminal / Position/Illumination	A10	A11	A12	A13	A14	A15		A2
OPEN	O	O						
CLOSE	O		O					
TILT	O				O			
OPEN + AUTO	O	O		O				
CLOSE + AUTO	O		O	O				
Panoramic glass roof switch light						⊕		⊖
Other lights								

O = Continuity check, ⊕ and ⊖ = Voltage for LED

Power Sunshade Switch

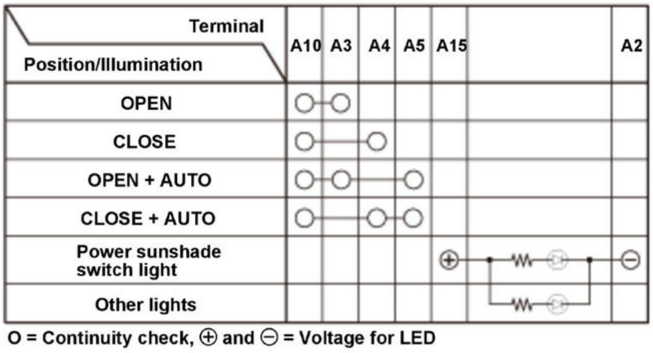

Terminal / Position/Illumination	A10	A3	A4	A5	A15		A2
OPEN	O	O					
CLOSE	O		O				
OPEN + AUTO	O	O		O			
CLOSE + AUTO	O		O	O			
Power sunshade switch light					⊕		⊖
Other lights							

O = Continuity check, ⊕ and ⊖ = Voltage for LED

2. If the result is not as specified, the moonroof switch is faulty; replace the roof console module .

CIRCUIT DIAGRAM

MOONROOF CIRCUIT DIAGRAM

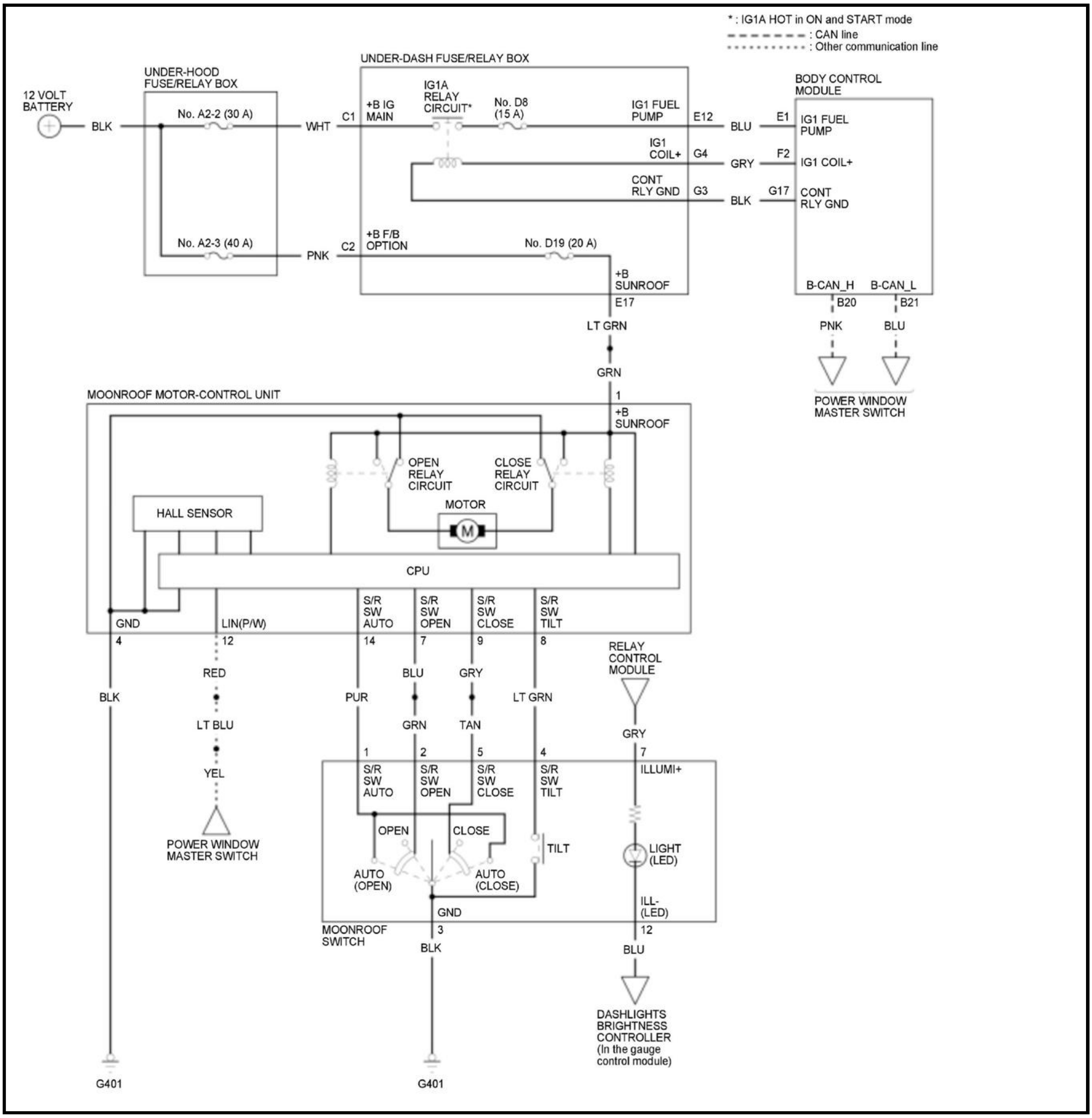
* : IG1A HOT in ON and START mode
: CAN line
: Other communication line
12 VOLT BATTERY
BLK
UNDER-HOOD FUSE/RELAY BOX
No. A2-2 (30 A)
No. A2-3 (40 A)
WHT
PNK
C1
C2
UNDER-DASH FUSE/RELAY BOX
+B IG MAIN
IG1A RELAY CIRCUIT*
No. D8 (15 A)
IG1 FUEL PUMP
IG1 COIL+
CONT RLY GND
+B F/B OPTION
No. D19 (20 A)
+B SUNROOF
E17
E12
G4
G3
BLU
GRY
BLK
E1
F2
G17
BODY CONTROL MODULE
IG1 FUEL PUMP
IG1 COIL+
CONT RLY GND
B-CAN_H
B-CAN_L
B20
B21
PNK
BLU
POWER WINDOW MASTER SWITCH
LT GRN
GRN
1
MOONROOF MOTOR-CONTROL UNIT
+B SUNROOF
OPEN RELAY CIRCUIT
CLOSE RELAY CIRCUIT
MOTOR
M
HALL SENSOR
CPU
GND
LIN(P/W)
S/R SW AUTO
S/R SW OPEN
S/R SW CLOSE
S/R SW TILT
4
12
14
7
9
8
RELAY CONTROL MODULE
BLK
RED
LT BLU
YEL
POWER WINDOW MASTER SWITCH
PUR
BLU
GRN
GRY
TAN
LT GRN
GRY
1
2
5
4
7
S/R SW AUTO
S/R SW OPEN
S/R SW CLOSE
S/R SW TILT
ILLUMI+
OPEN
CLOSE
TILT
AUTO (OPEN)
AUTO (CLOSE)
LIGHT (LED)
ILL- (LED)
GND
MOONROOF SWITCH
3
12
BLK
BLU
DASHLIGHTS BRIGHTNESS CONTROLLER (In the gauge control module)
G401
G401

PANORAMIC GLASS ROOF CIRCUIT DIAGRAM

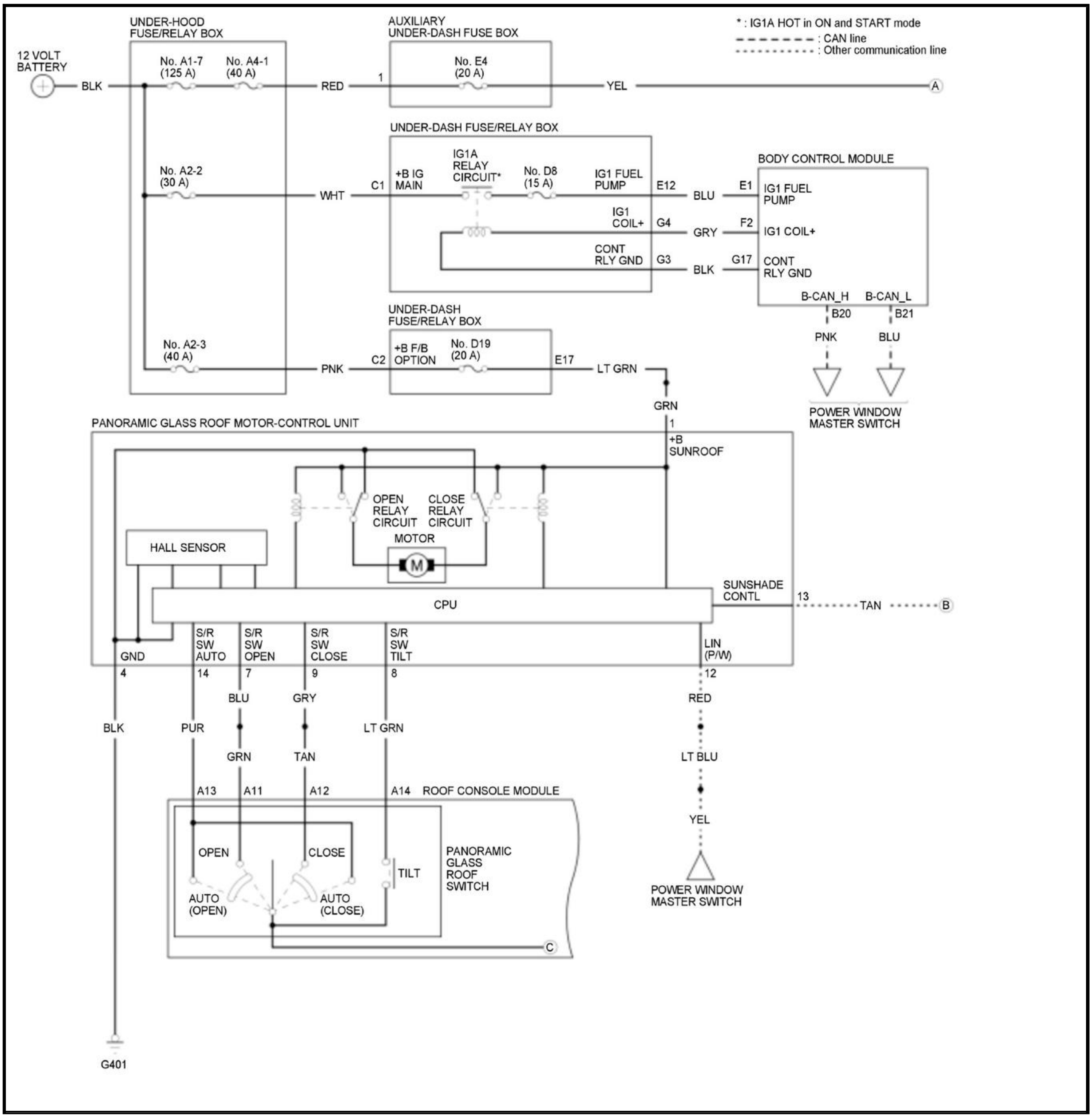
* : IG1A HOT in ON and START mode
: CAN line
: Other communication line
12 VOLT BATTERY
BLK
UNDER-HOOD FUSE/RELAY BOX
No. A1-7 (125 A)
No. A4-1 (40 A)
RED
1
AUXILIARY UNDER-DASH FUSE BOX
No. E4 (20 A)
YEL
A
No. A2-2 (30 A)
WHT
C1
UNDER-DASH FUSE/RELAY BOX
+B IG MAIN
IG1A RELAY CIRCUIT*
No. D8 (15 A)
IG1 FUEL PUMP
E12
BLU
E1
IG1 COIL+
G4
GRY
F2
CONT RLY GND
G3
BLK
G17
BODY CONTROL MODULE
IG1 FUEL PUMP
IG1 COIL+
CONT RLY GND
B-CAN_H
B-CAN_L
B20
B21
PNK
BLU
POWER WINDOW MASTER SWITCH
No. A2-3 (40 A)
PNK
C2
UNDER-DASH FUSE/RELAY BOX
+B F/B OPTION
No. D19 (20 A)
E17
LT GRN
GRN
PANORAMIC GLASS ROOF MOTOR-CONTROL UNIT
1
+B SUNROOF
OPEN RELAY CIRCUIT
CLOSE RELAY CIRCUIT
MOTOR
M
HALL SENSOR
CPU
SUNSHADE CONTL
13
TAN
B
GND
S/R SW AUTO
S/R SW OPEN
S/R SW CLOSE
S/R SW TILT
LIN (P/W)
4
14
7
9
8
12
BLU
GRY
RED
BLK
PUR
LT GRN
GRN
TAN
LT BLU
YEL
A13
A11
A12
A14
ROOF CONSOLE MODULE
OPEN
CLOSE
TILT
AUTO (OPEN)
AUTO (CLOSE)
PANORAMIC GLASS ROOF SWITCH
C
POWER WINDOW MASTER SWITCH
G401

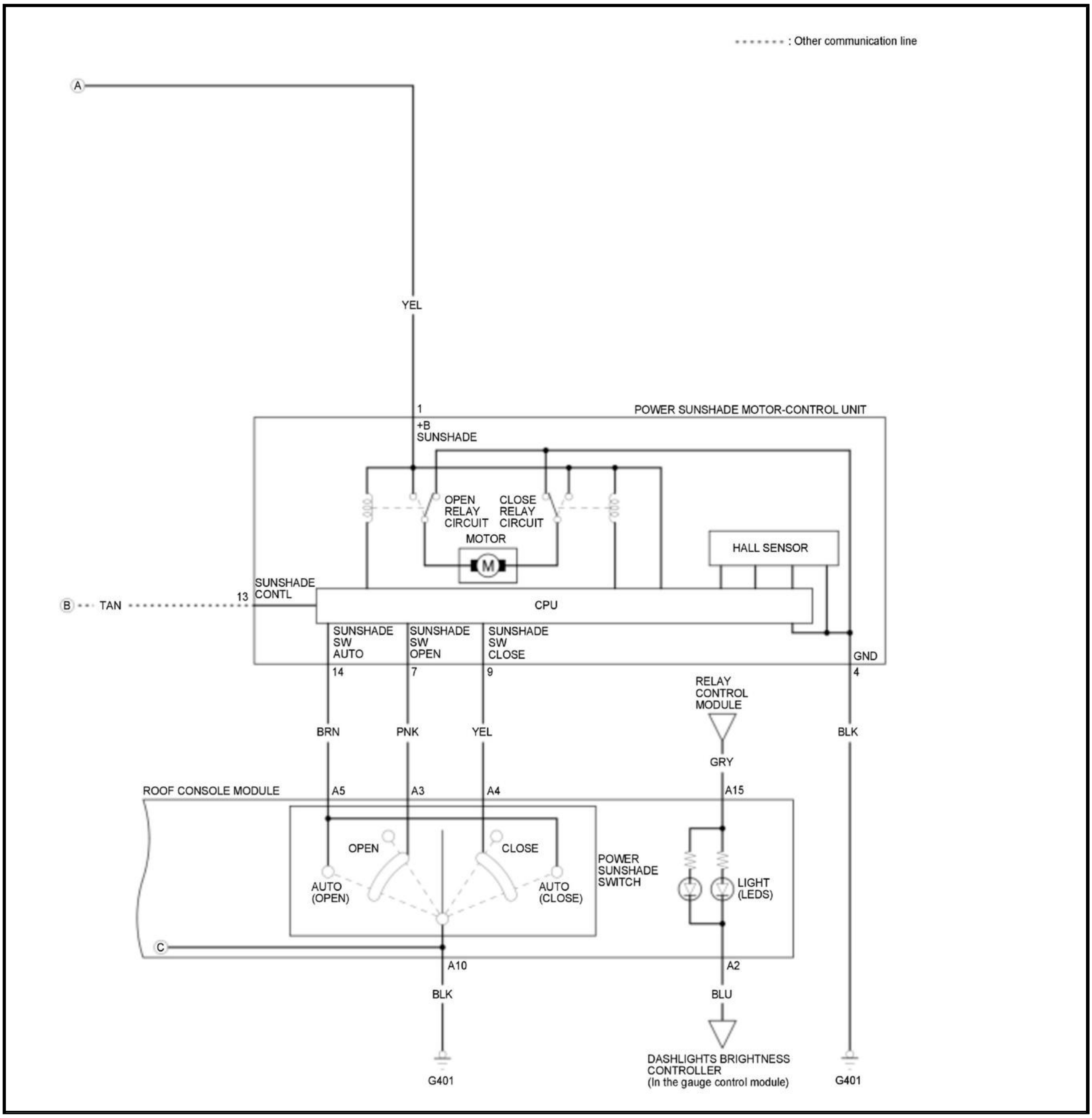
: Other communication line
A
YEL
1
POWER SUNSHADE MOTOR-CONTROL UNIT
+B SUNSHADE
OPEN RELAY CIRCUIT
CLOSE RELAY CIRCUIT
MOTOR
M
HALL SENSOR
B
TAN
13
SUNSHADE CONTL
CPU
SUNSHADE SW AUTO
SUNSHADE SW OPEN
SUNSHADE SW CLOSE
GND
14
7
9
4
RELAY CONTROL MODULE
BRN
PNK
YEL
BLK
GRY
ROOF CONSOLE MODULE
A5
A3
A4
A15
OPEN
CLOSE
AUTO (OPEN)
AUTO (CLOSE)
POWER SUNSHADE SWITCH
LIGHT (LEDS)
C
A10
A2
BLK
BLU
G401
DASHLIGHTS BRIGHTNESS CONTROLLER (In the gauge control module)
G401

LEARNING RESET CLEAR

RESETTING THE MOONROOF MOTOR-CONTROL UNIT

Procedure

1. Moonroof Control Unit - Reset

   Resetting the moonroof is required when any of the following have occurred:

   - The moonroof stops during AUTO/MANUAL operation.
   - The moonroof does not work during auto operation.
   - The moonroof was moved manually while the 12 volt battery was dead or disconnected.
   - The moonroof motor was removed or replaced with a new one.
   - Any of components related to the moonroof were replaced or removed and installed.
   -
     - Wind deflector

-
    - Moonroof glass
-
    - Moonroof seal
-
    - Moonroof glass bracket
-
    - Moonroof frame/drain channel slider and cable assembly
-
    - Moonroof cables, etc.

To reset the moonroof control unit, do these steps:

1. Close the driver's door, and leave it closed until the procedure is complete.

2. Turn the vehicle to the OFF (LOCK) mode.

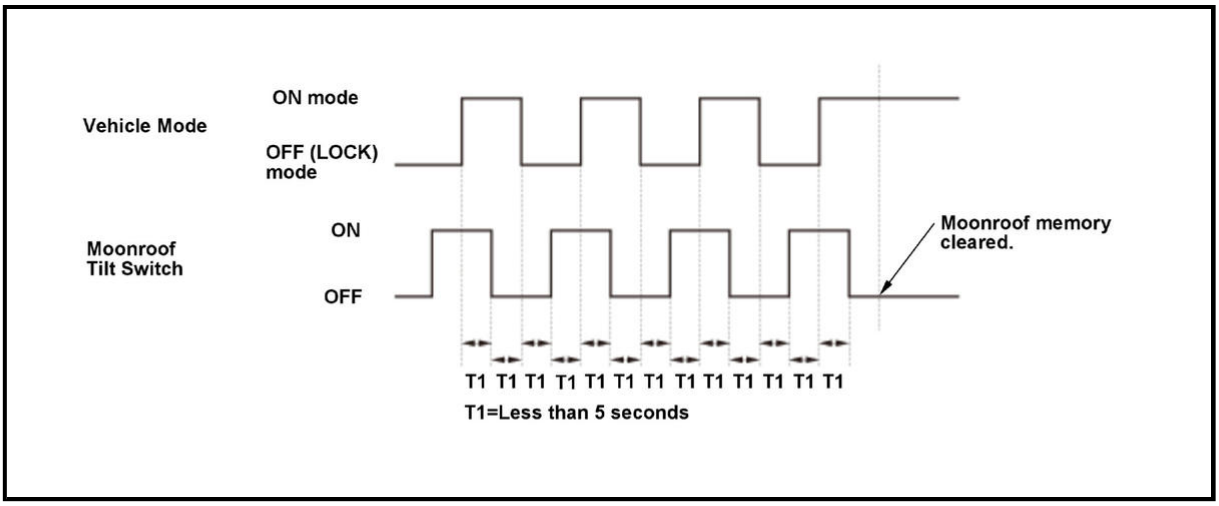

3. Press and hold the tilt switch, and turn the vehicle to the ON mode.

4. Release the tilt switch, and turn the vehicle to the OFF (LOCK) mode.

5. Repeat steps 3 and 4 three more times.

6. Check if the AUTO OPEN and AUTO CLOSE function still work. If they still work, the AUTO functions have not been cleared, go back to step 1. If the AUTO functions have been cleared, go to step 7.

7. Press and hold the moonroof close switch until the moonroof is fully open in the tilt position.

8. Confirm that the moonroof control unit is reset by using the moonroof AUTO OPEN and AUTO CLOSE function.

RESETTING THE PANORAMIC GLASS ROOF MOTOR-CONTROL UNIT

Procedure

NOTE: Do the panoramic glass roof clear, and then the position learning and the sliding surface learning when any of the following have occurred:

- The panoramic glass roof stops during AUTO/MANUAL operation.
- The panoramic glass roof does not work during AUTO operation.
- The panoramic glass roof was moved manually while the battery was dead or disconnected.

- The panoramic glass roof motor was removed or replaced with a new one.
- Any of components related to the panoramic glass roof were replaced or removed and installed.

1. Panoramic Glass Roof Control Unit - Clear

   To clear the panoramic glass roof control unit and the power sunshade control unit, do these steps:

   1. Close the driver's door, and leave it closed until the procedure is complete.

   2. Turn the vehicle to the OFF (LOCK) mode.

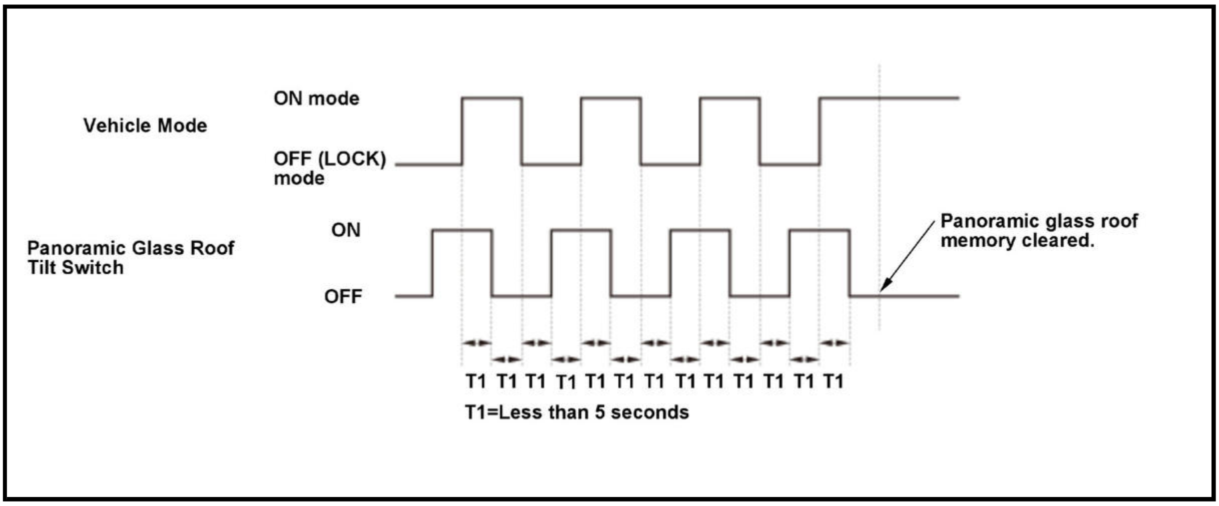
Vehicle Mode
ON mode
OFF (LOCK) mode
Panoramic Glass Roof Tilt Switch
ON
OFF
Panoramic glass roof memory cleared.
T1 T1 T1 T1 T1 T1 T1 T1 T1 T1 T1 T1 T1
T1=Less than 5 seconds

   3. Press and hold the tilt switch, and turn the vehicle to the ON mode.

   4. Release the tilt switch, and turn the vehicle to the OFF (LOCK) mode.

   5. Repeat steps 3 and 4 four times in total.

   6. Check if the AUTO OPEN and AUTO CLOSE function of the panoramic glass roof and the power sunshade still work. If they still work, the AUTO functions have not been cleared, go back to step 1. If the AUTO functions have been cleared, go to the position learning and the sliding surface learning.

2. Panoramic Glass Roof Control Unit - Position Learning

   To perform the position learning on the panoramic glass roof control unit, do these steps:

   1. Press and hold the panoramic glass roof close switch until the panoramic glass roof is tilted fully open.

   2. Press and hold the power sunshade close switch until the power sunshade is fully closed.

   3. Confirm that the AUTO OPEN and the AUTO CLOSE for the panoramic glass roof and the power sunshade work properly.

3. Panoramic Glass Roof Control Unit - Sliding Surface Learning

   To perform the sliding surface learning on the panoramic glass roof control unit, do these steps:

   1. Do the sliding surface learning by operating the AUTO function for open, close and tilt of the panoramic glass roof.

RESETTING THE POWER SUNSHADE MOTOR-CONTROL UNIT

Procedure

NOTE: Do the power sunshade clear, and then the position learning or the sliding surface learning when any of the following have occurred:

- The power sunshade stops during AUTO/MANUAL operation.
- The power sunshade does not work during AUTO operation.
- The power sunshade was moved manually while the battery was dead or disconnected.
- The panoramic glass roof motor was removed or replaced with a new one.
- Any of components related to the power sunshade were replaced or removed and installed.

1. **Power Sunshade Control Unit - Clear**

   NOTE: Refer to procedure of the panoramic glass roof control unit.

2. **Power Sunshade Control Unit- Position Learning**

   NOTE: Refer to procedure of the panoramic glass roof control unit.

3. Power Sunshade Control Unit- Sliding Surface Learning

To perform the sliding surface learning the power sunshade control unit, do these steps: 1. Do the sliding surface learning by operating the AUTO function for both open and close of the power sunshade.

COMPONENT LOCATION INDEX

MOONROOF ELECTRICAL COMPONENT LOCATION INDEX

For relationships between signals in a system, refer to System Diagram.

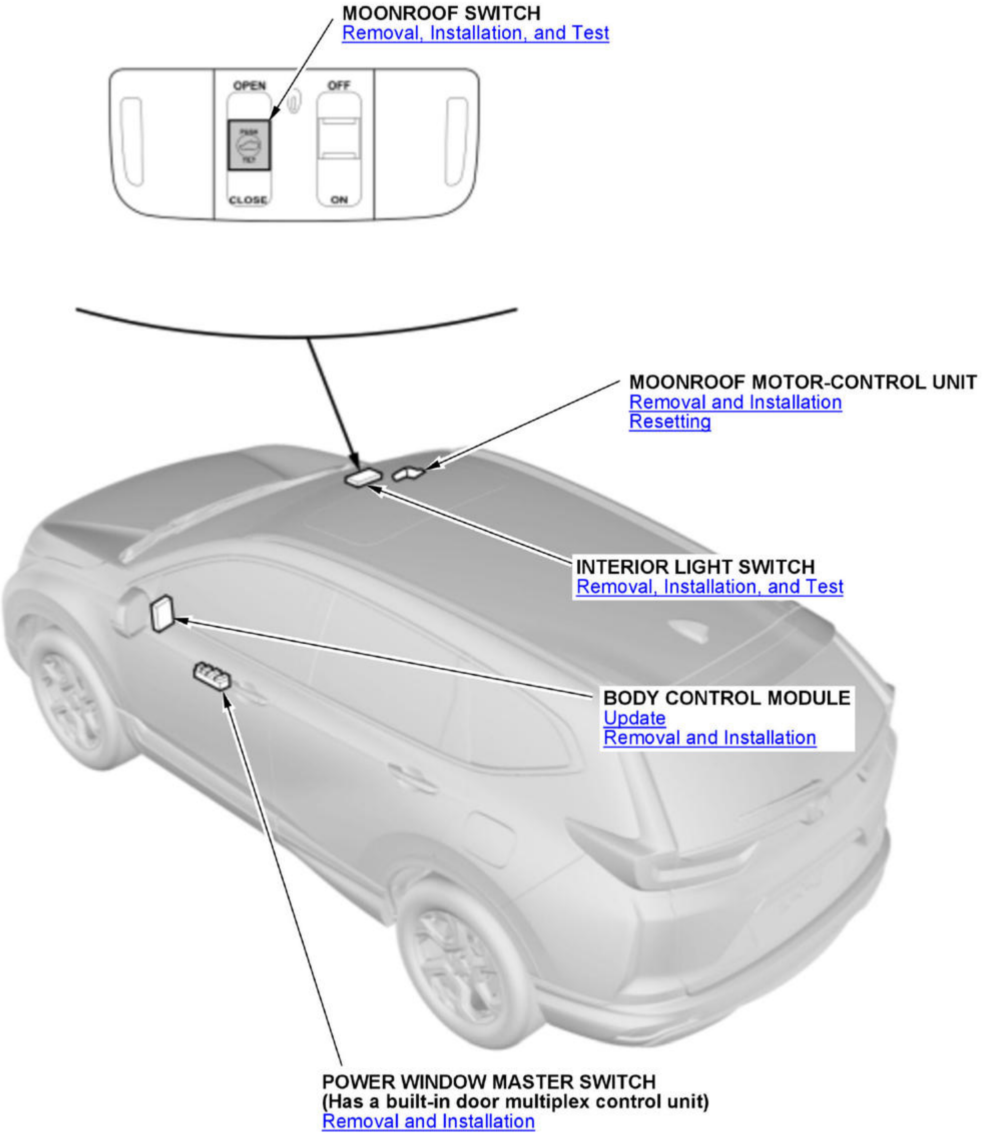
MOONROOF SWITCH
Removal, Installation, and Test
OPEN
OFF
CLOSE
ON
MOONROOF MOTOR-CONTROL UNIT
Removal and Installation
Resetting
INTERIOR LIGHT SWITCH
Removal, Installation, and Test
BODY CONTROL MODULE
Update
Removal and Installation
POWER WINDOW MASTER SWITCH
(Has a built-in door multiplex control unit)
Removal and Installation

MOONROOF MECHANICAL COMPONENT LOCATION INDEX

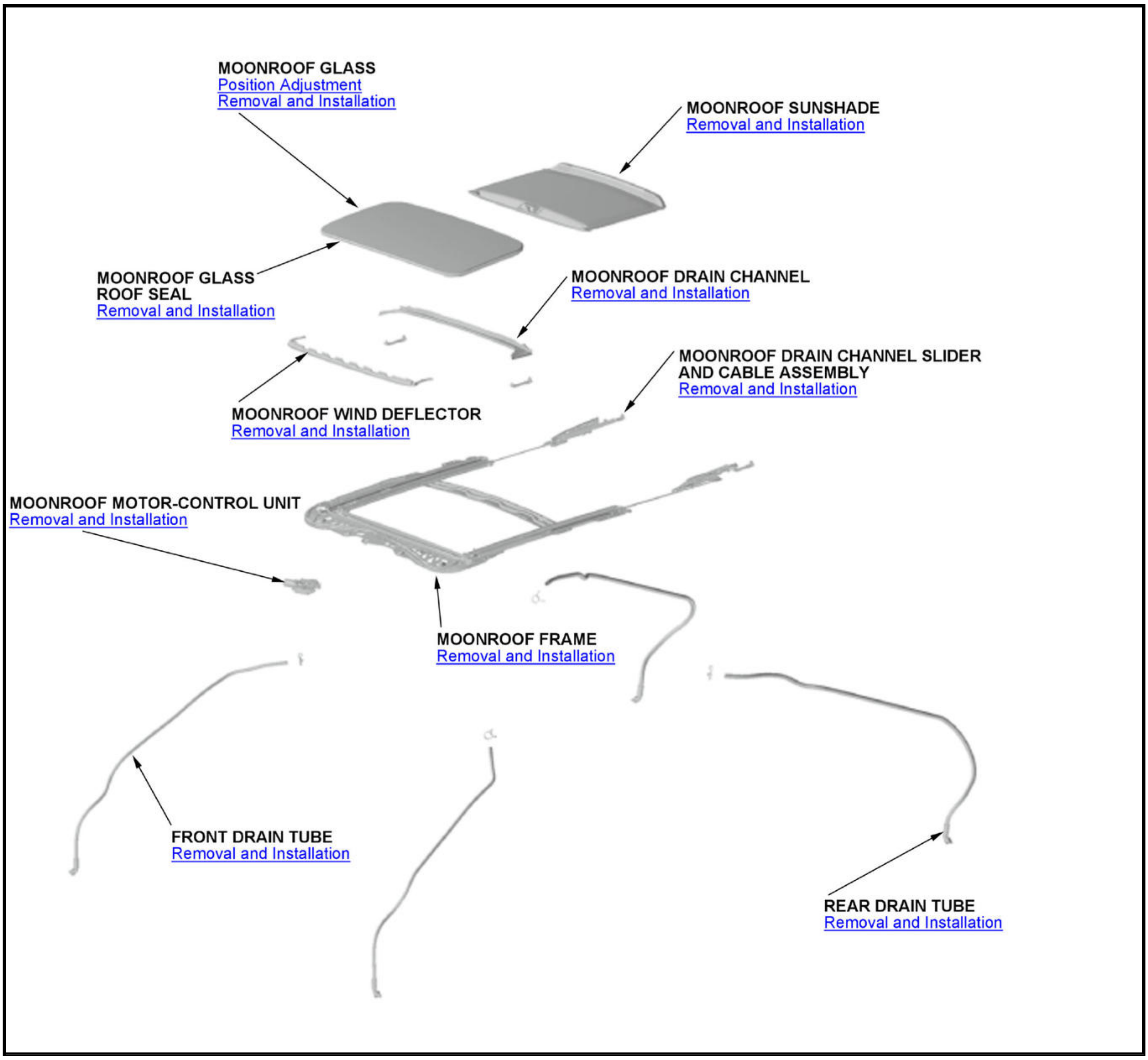
MOONROOF GLASS
Position Adjustment
Removal and Installation
MOONROOF SUNSHADE
Removal and Installation
MOONROOF GLASS ROOF SEAL
Removal and Installation
MOONROOF DRAIN CHANNEL
Removal and Installation
MOONROOF DRAIN CHANNEL SLIDER AND CABLE ASSEMBLY
Removal and Installation
MOONROOF WIND DEFLECTOR
Removal and Installation
MOONROOF MOTOR-CONTROL UNIT
Removal and Installation
MOONROOF FRAME
Removal and Installation
FRONT DRAIN TUBE
Removal and Installation
REAR DRAIN TUBE
Removal and Installation

PANORAMIC GLASS ROOF ELECTRICAL COMPONENT LOCATION INDEX

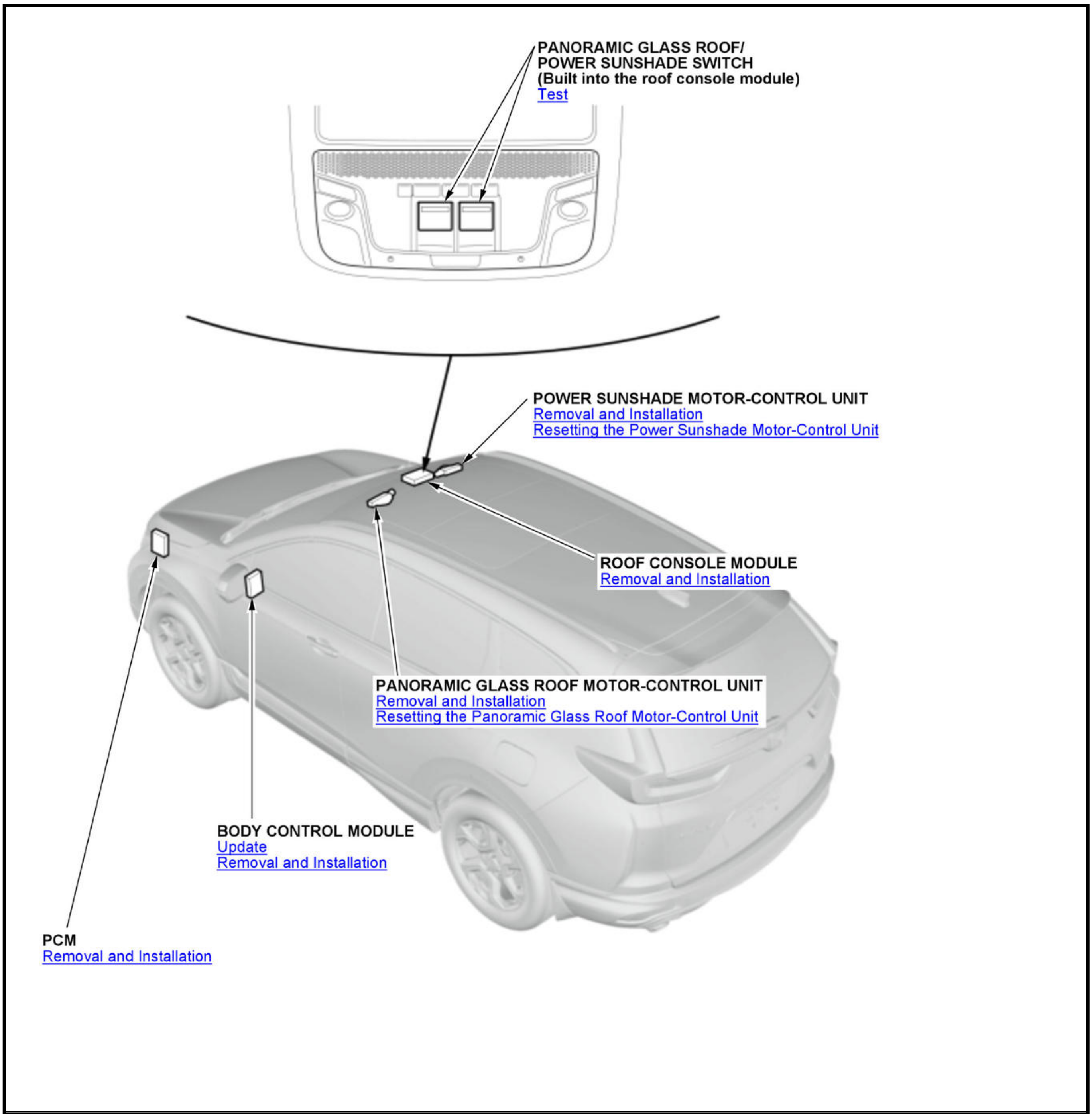
PANORAMIC GLASS ROOF/
POWER SUNSHADE SWITCH
(Built into the roof console module)
Test
POWER SUNSHADE MOTOR-CONTROL UNIT
Removal and Installation
Resetting the Power Sunshade Motor-Control Unit
ROOF CONSOLE MODULE
Removal and Installation
PANORAMIC GLASS ROOF MOTOR-CONTROL UNIT
Removal and Installation
Resetting the Panoramic Glass Roof Motor-Control Unit
BODY CONTROL MODULE
Update
Removal and Installation
PCM
Removal and Installation

PANORAMIC GLASS ROOF MECHANICAL COMPONENT LOCATION INDEX

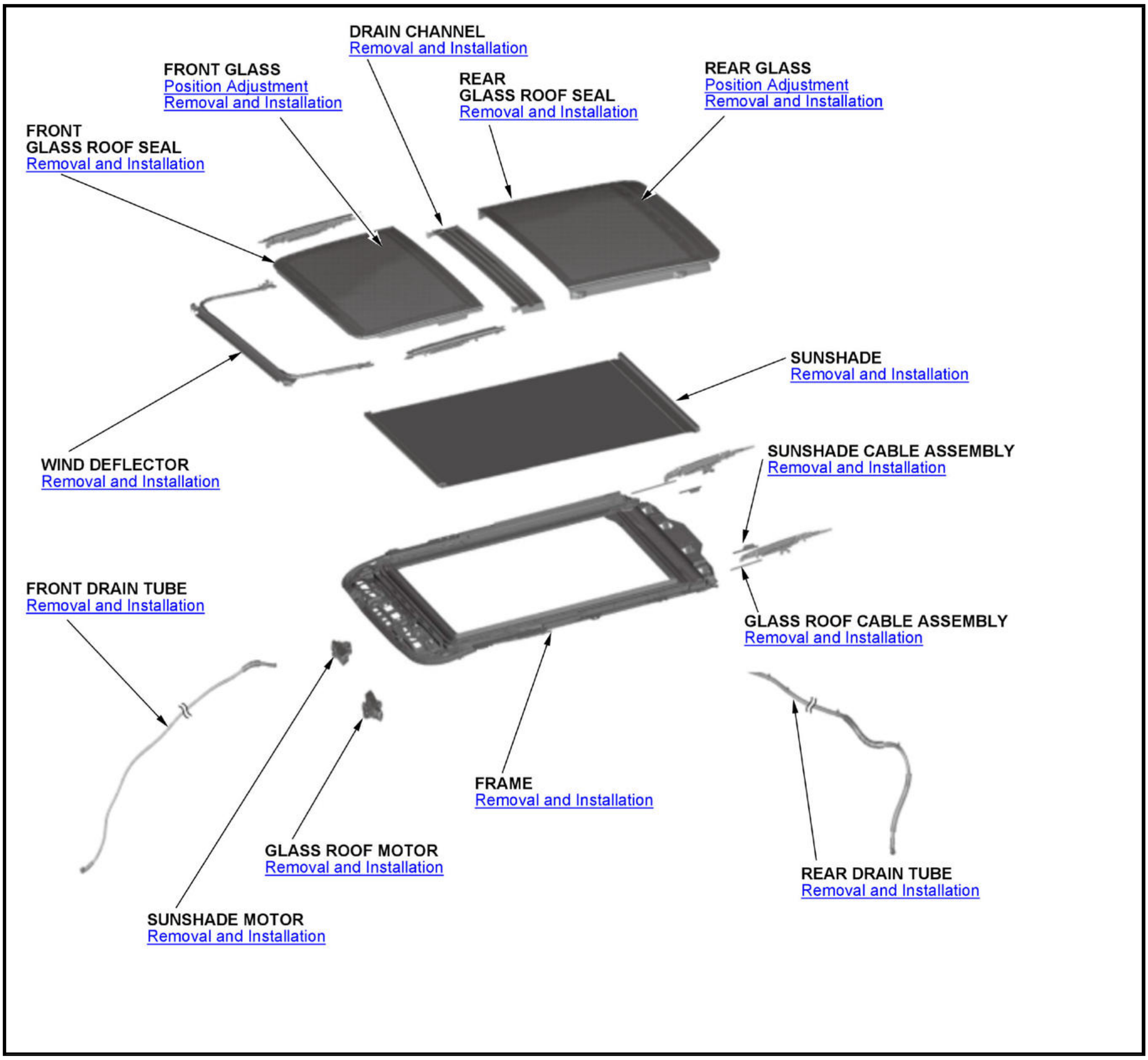
DRAIN CHANNEL
Removal and Installation
FRONT GLASS
Position Adjustment
Removal and Installation
REAR GLASS ROOF SEAL
Removal and Installation
REAR GLASS
Position Adjustment
Removal and Installation
FRONT GLASS ROOF SEAL
Removal and Installation
SUNSHADE
Removal and Installation
SUNSHADE CABLE ASSEMBLY
Removal and Installation
WIND DEFLECTOR
Removal and Installation
FRONT DRAIN TUBE
Removal and Installation
GLASS ROOF CABLE ASSEMBLY
Removal and Installation
FRAME
Removal and Installation
GLASS ROOF MOTOR
Removal and Installation
REAR DRAIN TUBE
Removal and Installation
SUNSHADE MOTOR
Removal and Installation

SYMPTOM TROUBLESHOOTING INDEX

MOONROOF ELECTRICAL SYMPTOM TROUBLESHOOTING INDEX

Symptom	Diagnostic procedure	Also check for
Water leaks from moonroof	• Check for a defective or an improperly installed glass weatherstrip or drain channel. • Check for a gap between the drain channel seal and the roof panel. • Check the glass position adjustment. • Check for a clogged or detached drain tube.	B
Wind noise from moonroof	• Check for excessive clearance between the glass weatherstrip and the roof panel. • Check the glass position adjustment.	B
Motor noise from moonroof	• Check for a loose motor. • Check for a worn gear or bearing. • Check for a deformed cable assembly.	B

Symptom	Diagnostic procedure	Also check for
	- Check for dirt or debris.	
Moonroof glass does not move smoothly.	- **Check for a defective moonroof motor-control unit**. - **Check the moonroof motor**. - **Check the glass position adjustment**. - Check the sliding parts.	B
Moonroof glass does not move, but motor turns.	- Check for foreign matter stuck between the guide rail and the slider. - Make sure the cable assembly is attached properly. - Check for a loose inner cable. - Check for a defective gear or inner cable.	B
Moonroof glass does not move and motor does not turn.	- **Check for a run down 12 volt battery** . - Check for a blown fuse. - **Check for a faulty moonroof switch** . - **Check for a defective moonroof motor-control unit**.	B
Moonroof glass does not stop at proper flush closed position.	- **Reset the moonroof motor-control unit**. - **Check the glass position adjustment**.	B
During auto close operation, moonroof glass reverses when no object is trapped.	- Check for dirt and debris in the track. - **Reset the moonroof motor-control unit**.	B
Moonroof glass moves, but there is no AUTO function.	**Reset the moonroof motor-control unit**.	B

SYMPTOM TROUBLESHOOTING INDEX FOR VIEWER

DURING AUTO CLOSE OPERATION, MOONROOF GLASS REVERSES WHEN NO OBJECT IS TRAPPED.

Diagnostic procedure

- Check for dirt and debris in the track.
- **Reset the moonroof motor-control unit**.

MOONROOF GLASS DOES NOT MOVE AND MOTOR DOES NOT TURN.

Diagnostic procedure

- **Check for a run down 12 volt battery** .
- Check for a blown fuse.
- **Check for a faulty moonroof switch** .
- **Check for a defective moonroof motor-control unit**.

MOONROOF GLASS DOES NOT MOVE SMOOTHLY.

Diagnostic procedure

- **Check for a defective moonroof motor-control unit**.
- **Check the moonroof motor**.
- **Check the glass position adjustment**.
- Check the sliding parts.

MOONROOF GLASS DOES NOT MOVE, BUT MOTOR TURNS.

Diagnostic procedure

- Check for foreign matter stuck between the guide rail and the slider.
- Make sure the cable assembly is attached properly.
- Check for a loose inner cable.
- Check for a defective gear or inner cable.

MOONROOF GLASS DOES NOT STOP AT PROPER FLUSH CLOSED POSITION.

Diagnostic procedure

- **Reset the moonroof motor-control unit**.
- **Check the glass position adjustment**.

MOONROOF GLASS MOVES, BUT THERE IS NO AUTO FUNCTION.

Diagnostic procedure

- **Reset the moonroof motor-control unit**.

MOTOR NOISE FROM MOONROOF

Diagnostic procedure

- Check for a loose motor.
- Check for a worn gear or bearing.
- Check for a deformed cable assembly.
- Check for dirt or debris.

WATER LEAKS FROM MOONROOF

Diagnostic procedure

- Check for a defective or an improperly installed glass weatherstrip or drain channel.
- Check for a gap between the drain channel seal and the roof panel.
- **Check the glass position adjustment**.
- Check for a clogged or detached drain tube.

WIND NOISE FROM MOONROOF

Diagnostic procedure

- Check for excessive clearance between the glass weatherstrip and the roof panel.
- **Check the glass position adjustment**.

TROUBLESHOOTING

DTC B1125

DTC B1125 : Driver's power window motor A pulse malfunction

NOTE: If you are troubleshooting multiple DTCs, be sure to follow the instructions in B-CAN System Diagnosis Test Mode A .

DTC Description	DTC
B1125 Driver's power window motor A pulse malfunction	B

DTC (Multiplex Control Unit, Door)

1. Problem verification

   -1. Check the parameter(s) below with the HDS.

Signal	Current conditions	
	Values	Unit
Driver's P/W Motor PulseA	B	B

   Does the information indicator display DETECT while the window is moving, and display NONE when the window is stopped?

   YES

   Intermittent failure, the system is OK at this time.

   NO

   Go to step 2.

2. Power window motor pulse check

   -1. Turn the vehicle to the OFF (LOCK) mode.

   -2. Disconnect the following connector.

Driver's power window motor 6P connector

   -3. Connect terminals A and B with a jumper wire.

Terminal A	Driver's power window motor 6P connector (female terminals) No. 5: ①
Terminal B	Body ground

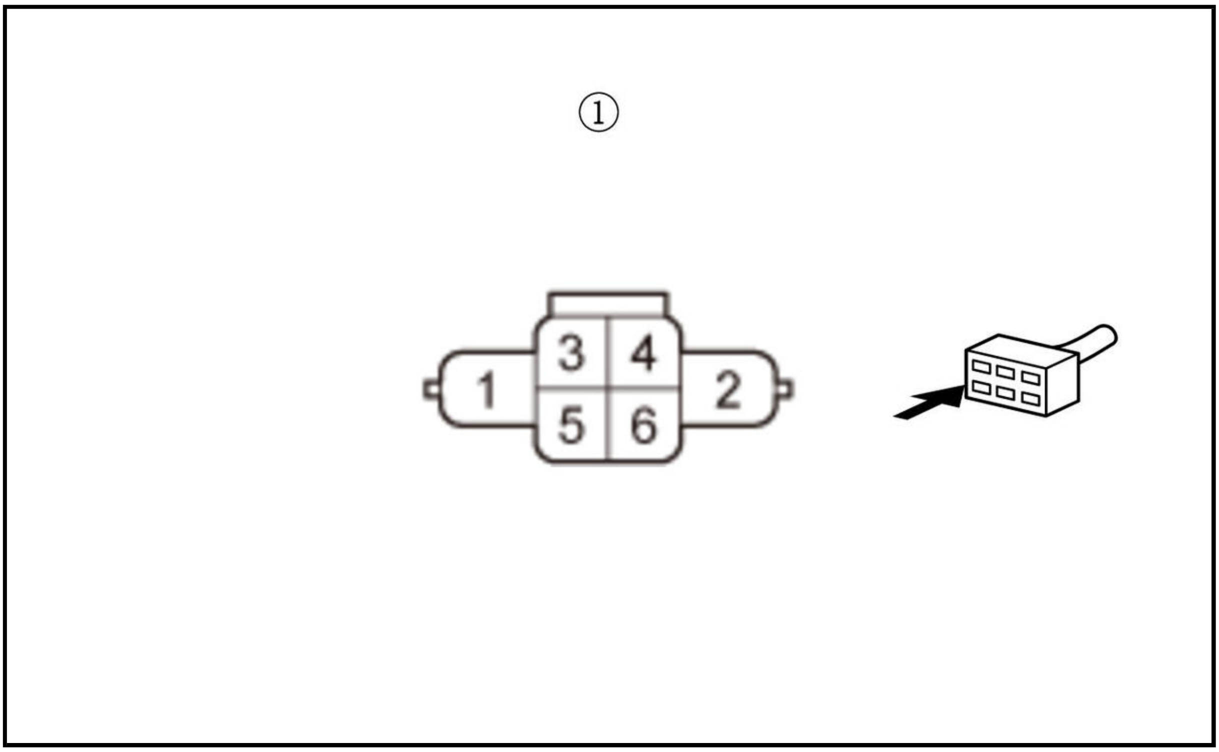

-4. Connect and disconnect the jumper wire to body ground repeatedly.

-5. Check the parameter(s) below with the HDS.

Signal	Current conditions	
	Values	Unit
Driver's P/W Motor PulseA	B	B

Does the information indicator display DETECT?

YES

Faulty driver's power window motor; **replace the driver's door regulator** .

NO

Go to step 3.

3. Shorted wire check (P/W DR MTR PLSA line)

-1. Turn the vehicle to the OFF (LOCK) mode.

-2. Disconnect the following connector.

Power window master switch 37P connector

-3. Check for continuity between test points 1 and 2.

Test condition	Vehicle OFF (LOCK) mode Driver's power window motor 6P connector: disconnected Power window master switch 37P connector: disconnected
Test point 1	**Power window master switch 37P connector No. 33**
Test point 2	Body ground

Is there continuity?

YES

Repair a short to ground in the wire.

NO

Repair an open or high resistance in the wire.

DTC B1126

DTC B1126 : Driver's power window motor B pulse malfunction

NOTE: If you are troubleshooting multiple DTCs, be sure to follow the instructions in **B-CAN System Diagnosis Test Mode A** .

DTC Description	DTC
B1126 Driver's power window motor B pulse malfunction	B

DTC (Multiplex Control Unit, Door)

1. Problem verification

   -1. Check the parameter(s) below with the HDS.

Signal	Current conditions	
	Values	Unit
Driver's P/W Motor PulseB	B	B

   Does the information indicator display DETECT while the window is moving, and display NONE when the window is stopped?

   YES

   Intermittent failure, the system is OK at this time.

   NO

   Go to step 2.

2. Power window motor pulse check

   -1. Turn the vehicle to the OFF (LOCK) mode.

   -2. Disconnect the following connector.

Driver's power window motor 6P connector

   -3. Connect terminals A and B with a jumper wire.

Terminal A	Driver's power window motor 6P connector (female terminals) No. 3: ①
Terminal B	Body ground

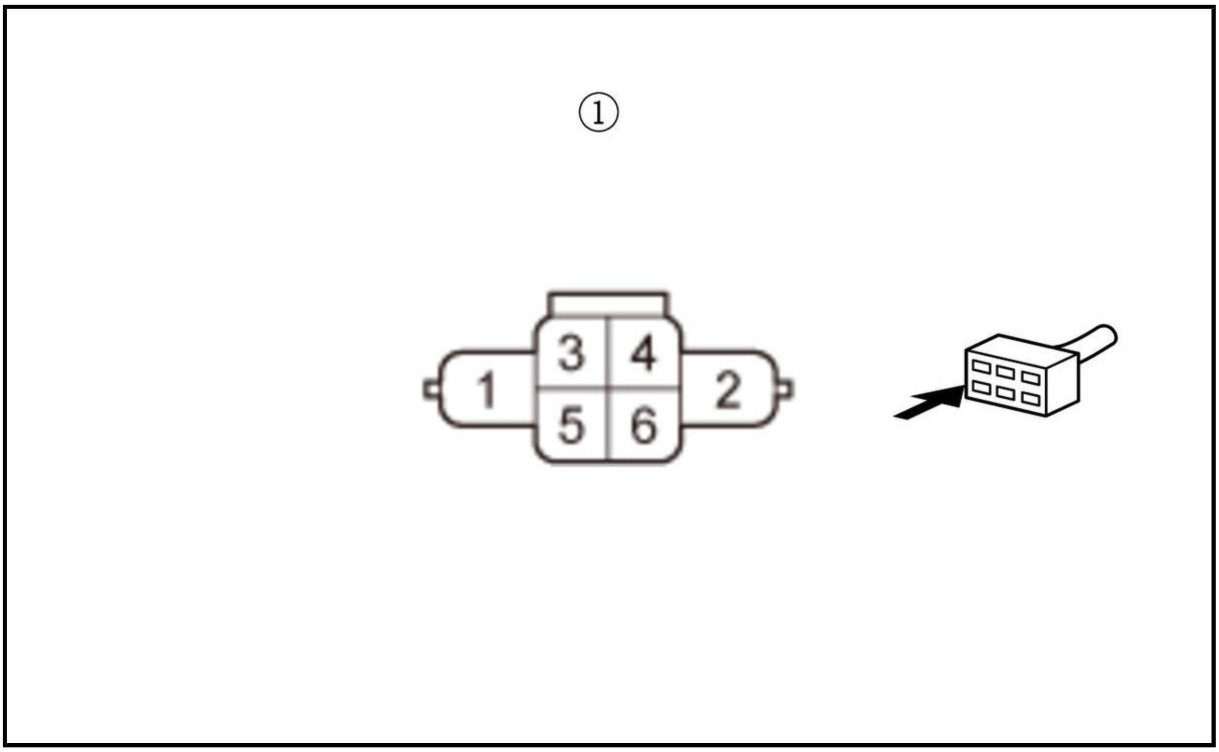

-4. Connect and disconnect the jumper wire to ground repeatedly.

-5. Check the parameter(s) below with the HDS.

Signal	Current conditions	
	Values	Unit
Driver's P/W Motor PulseB	B	B

Does the information indicator display DETECT?

YES

Faulty driver's power window motor; **replace the driver's door regulator** .

NO

Go to step 3.

3. Shorted wire check (P/W DR MTR PLSB line)

-1. Turn the vehicle to the OFF (LOCK) mode.

-2. Disconnect the following connector.

Power window master switch 37P connector

-3. Check for continuity between test points 1 and 2.

Test condition	Vehicle OFF (LOCK) mode Driver's power window motor 6P connector: disconnected Power window master switch 37P connector: disconnected
Test point 1	**Power window master switch 37P connector No. 35**
Test point 2	Body ground

Is there continuity?

YES

Repair a short to ground in the wire.

NO

Repair an open or high resistance in the wire.

DTC B1127

DTC B1127 : Driver's door lock key cylinder switch malfunction

NOTE: If you are troubleshooting multiple DTCs, be sure to follow the instructions in **B-CAN System Diagnosis Test Mode A** .

DTC Description	DTC
B1127 Driver's door lock key cylinder switch malfunction	B

DTC (Multiplex Control Unit, Door)

1. Problem verification (driver's door key cylinder switch in the neutral position)

-1. Check the parameter(s) below with the HDS.

Signal	Current conditions	
	Values	Unit
Driver's Door Key Cylinder Switch(LOCK)	B	B

Signal	Current conditions	
	Values	Unit
Driver's Door Key Cylinder Switch(UNLOCK)	B	B

Is either information indicator ON?

YES

Go to step 4.

NO

Go to step 2.

2. Problem verification (driver's door key cylinder switch in the lock position)

-1. With the driver's door key cylinder in the lock position, check the parameter(s) below with the HDS.

Signal	Current conditions	
	Values	Unit
Driver's Door Key Cylinder Switch(LOCK)	B	B
Driver's Door Key Cylinder Switch(UNLOCK)	B	B

Are both information indicators ON?

YES

Go to step 3.

NO

Intermittent failure, the system is OK at this time.

3. Shorted wire check (DR KEY CYL UNLOCK to DR KEY CYL LOCK line)

-1. Turn the vehicle to the OFF (LOCK) mode.

-2. Disconnect the following connector.

Driver's door latch 10P connector

-3. Connect terminals A and B with a jumper wire.

Terminal A	**Power window master switch 37P connector No. 7**
Terminal B	Body ground

-4. Check the parameter(s) below with the HDS.

Signal	Current conditions	
	Values	Unit
Driver's Door Key Cylinder Switch(LOCK)	B	B
Driver's Door Key Cylinder Switch(UNLOCK)	B	B

Are both information indicators ON?

YES

Repair a short between the wires.

NO

The DR KEY CYL UNLOCK to DR KEY CYL LOCK wire is OK. Faulty driver's door key cylinder switch; **replace the driver's door latch** .

4. Determine possible failure area (driver's door latch, others)

-1. Turn the vehicle to the OFF (LOCK) mode.

-2. Disconnect the following connector.

Driver's door latch 10P connector

-3. Check the parameter(s) below with the HDS.

Signal	Current conditions	
	Values	Unit
Driver's Door Key Cylinder Switch (LOCK)	B	B
Driver's Door Key Cylinder Switch (UNLOCK)	B	B

Is either information indicator ON?

YES

Go to step 5.

NO

Faulty driver's door key cylinder switch; **replace the driver's door latch** .

5. Shorted wire check (DR KEY CYL UNLOCK, DR KEY CYL LOCK lines)

-1. Turn the vehicle to the OFF (LOCK) mode.

-2. Disconnect the following connector.

Power window master switch 37P connector

-3. Check for continuity between test points 1 and 2.

Test condition	Vehicle OFF (LOCK) modeDriver's door latch 10P connector: disconnectedPower window master switch 37P connector: disconnected
Test point 1	**Power window master switch 37P connector No. 7**
Test point 2	Body ground

Test point 1	**Power window master switch 37P connector No. 8**
Test point 2	Body ground

Is there continuity?

YES

Repair a short to ground in the wire.

NO

The DR KEY CYL UNLOCK and DR KEY CYL LOCK wires are OK. **Replace the power window master switch** ..

DTC B1128

DTC B1128 : Driver's door lock switch malfunction

NOTE: If you are troubleshooting multiple DTCs, be sure to follow the instructions in **B-CAN System Diagnosis Test Mode A** .

DTC Description	DTC
B1128 Driver's door lock switch malfunction	B

DTC (Multiplex Control Unit, Door)

1. Problem verification

-1. Clear the DTCs with the HDS.

-2. Check for DTCs with the HDS.

DTC Description	DTC
B1128 Driver's door lock switch malfunction	B

Is DTC B1128 indicated?

YES

Replace the power window master switch .

NO

Intermittent failure, the system is OK at this time.

DTC B1129

DTC B1129 : Driver's door lock knob switch malfunction

NOTE: If you are troubleshooting multiple DTCs, be sure to follow the instructions in **B-CAN System Diagnosis Test Mode A** .

DTC Description	DTC
B1129 Driver's door lock knob switch malfunction	B

DTC (Multiplex Control Unit, Door)

1. Problem verification

   -1. Clear the DTCs with the HDS.

   -2. Operate the driver's door lock knob switch several times.

   -3. Check for DTCs with the HDS.

DTC Description	DTC
B1129 Driver's door lock knob switch malfunction	B

   Is DTC B1129 indicated?

   YES

   Go to step 2.

   NO

   Intermittent failure, the system is OK at this time.

2. Determine possible failure area (DR SILCON UNLOCK, DR SILCON LOCK lines)

   -1. With the driver's door lock knob switch in the lock position, check the parameter(s) below with the HDS.

Signal	Current conditions	
	Values	Unit
Driver's Door Lock Knob Switch(UNLOCK)	B	B

   Is the DRIVER'S DOOR LOCK KNOB SWITCH (UNLOCK) information indicator ON?

   YES

   Go to step 5.

   NO

   Go to step 3.

3. Shorted wire check (DR SILCON LOCK line)

   -1. Turn the vehicle to the OFF (LOCK) mode.

   -2. Disconnect the following connectors.

Driver's door latch 10P connectorPower window master switch 37P connector

-3. Check for continuity between test points 1 and 2.

Test condition	Vehicle OFF (LOCK) modeDriver's door latch 10P connector: disconnectedPower window master switch 37P connector: disconnected
Test point 1	**Power window master switch 37P connector No. 21**
Test point 2	Body ground

Is there continuity?

YES

Repair a short to ground in the wire.

NO

The DR SILCON LOCK wire is not shorted to ground. Go to step 4.

4. Shorted wire check (DR SILCON UNLOCK line to DR SILCON LOCK line)

-1. Check for continuity between test points 1 and 2.

Test condition	Vehicle OFF (LOCK) modeDriver's door latch 10P connector: disconnectedPower window master switch 37P connector: disconnected
Test point 1	**Power window master switch 37P connector No. 20**
Test point 2	**Power window master switch 37P connector No. 21**

Is there continuity?

YES

Repair a short in DR SILCON UNLOCK wire to DR SILCON LOCK wire.

NO

Faulty driver's door lock knob switch; **replace the driver's door latch** .

5. Shorted wire check (DR SILCON UNLOCK line)

-1. Turn the vehicle to the OFF (LOCK) mode.

-2. Disconnect the following connectors.

Driver's door latch 10P connectorPower window master switch 37P connector

-3. Check for continuity between test points 1 and 2.

Test condition	Vehicle OFF (LOCK) modeDriver's door latch 10P connector: disconnectedPower window master switch 37P connector: disconnected
Test point 1	**Power window master switch 37P connector No. 20**
Test point 2	Body ground

Is there continuity?

YES

Repair a short to ground in the wire.

NO

The DR SILCON UNLOCK wire is not shorted to ground. Go to step 6.

6. Shorted wire check (DR SILCON UNLOCK line to DR SILCON LOCK line)

   -1. Check for continuity between test points 1 and 2.

Test condition	Vehicle OFF (LOCK) modeDriver's door latch 10P connector: disconnectedPower window master switch 37P connector: disconnected
Test point 1	**Power window master switch 37P connector No. 20**
Test point 2	**Power window master switch 37P connector No. 21**

   Is there continuity?

   YES

   Repair a short in DR SILCON UNLOCK wire to DR SILCON LOCK wire.

   NO

   Faulty driver's door lock knob switch; **replace the driver's door latch** .

DTC B1130

DTC B1130 : Front passenger's power window motor A pulse malfunction

NOTE: If you are troubleshooting multiple DTCs, be sure to follow the instructions in **B-CAN System Diagnosis Test Mode A** .

DTC Description	DTC
B1130 Front passenger's power window motor A pulse malfunction	B

DTC (Multiplex Control Unit, Door)

1. Problem verification

   -1. Clear the DTCs with the HDS.

   -2. Turn the vehicle to the OFF (LOCK) mode and then the ON mode.

   -3. Open and close the front passenger's power window by using the front passenger's power window switch manually.

   -4. Check for DTCs with the HDS.

DTC Description	DTC
B1130 Front passenger's power window motor A pulse malfunction	B

   Is DTC B1130 indicated?

   YES

   Go to step 2.

   NO

   Intermittent failure, the system is OK at this time.

2. Open wire check (P/W AS MTR PLSA line)

-1. Turn the vehicle to the OFF (LOCK) mode.

-2. Disconnect the following connectors.

Front passenger's power window switch 37P connectorFront passenger's power window motor 6P connector

-3. Check for continuity between test points 1 and 2.

Test condition	Vehicle OFF (LOCK) modeFront passenger's power window switch 37P connector: disconnectedFront passenger's power window motor 6P connector: disconnected
Test point 1	**Front passenger's power window switch 37P connector No. 35**
Test point 2	Front passenger's power window motor 6P connector (female terminals) No. 5: ①

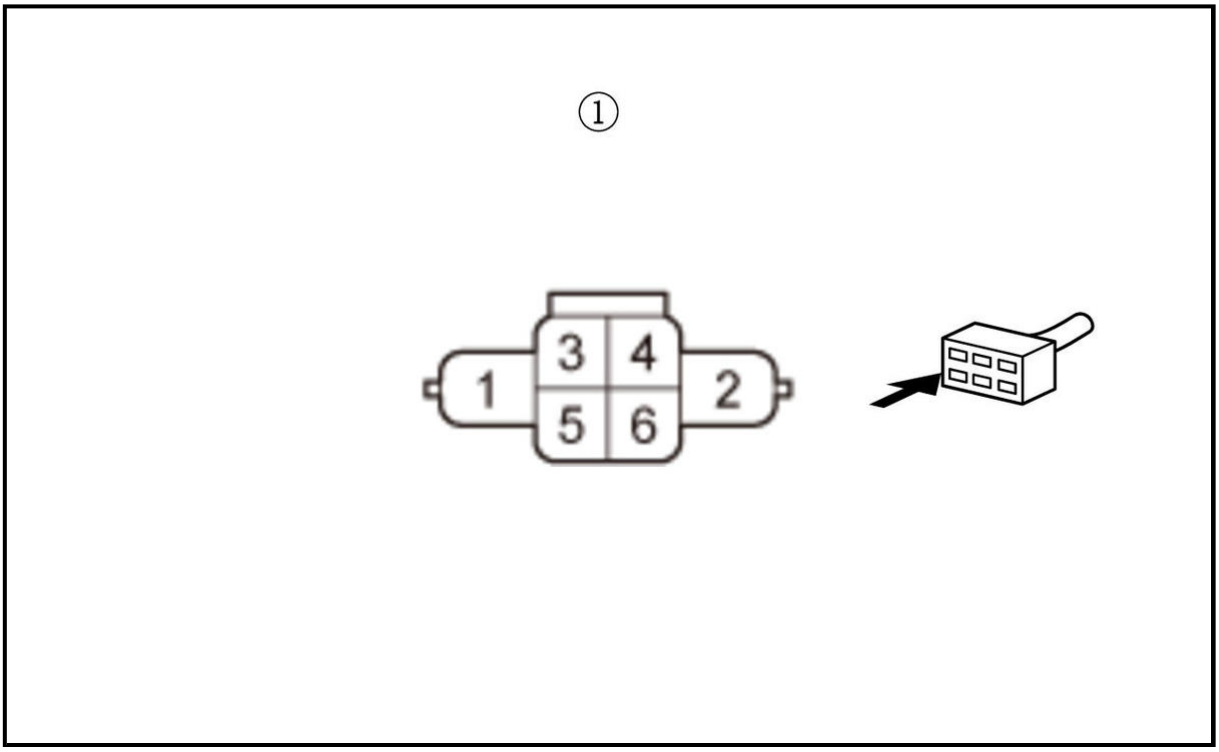

Is there continuity?

YES

The P/W AS MTR PLSA wire is not open. Go to step 3.

NO

Repair an open or high resistance in the wire.

3. Shorted wire check (P/W AS MTR PLSA line)

-1. Check for continuity between test points 1 and 2.

Test condition	Vehicle OFF (LOCK) modeFront passenger's power window switch 37P connector: disconnectedFront passenger's power window motor 6P connector: disconnected
Test point 1	**Front passenger's power window switch 37P connector No. 35**
Test point 2	Body ground

Is there continuity?

YES

Repair a short to ground in the wire.

NO

The P/W AS MTR PLSA wire is OK. **Substitute a known good front passenger's power window switch** . If the DTC is still present, **replace the front passenger's door regulator** .

DTC B1131

DTC B1131 : Front passenger's power window motor B pulse malfunction

NOTE: If you are troubleshooting multiple DTCs, be sure to follow the instructions in **B-CAN System Diagnosis Test Mode A** .

DTC Description	DTC
B1131 Front passenger's power window motor B pulse malfunction	B

DTC (Multiplex Control Unit, Door)

1. Problem verification

   -1. Clear the DTCs with the HDS.

   -2. Turn the vehicle to the OFF (LOCK) mode and then the ON mode.

   -3. Open and close the front passenger's power window by using the front passenger's power window switch manually.

   -4. Check for DTCs with the HDS.

DTC Description	DTC
B1131 Front passenger's power window motor B pulse malfunction	B

   Is DTC B1131 indicated?

   YES

   Go to step 2.

   NO

   Intermittent failure, the system is OK at this time.

2. Open wire check (P/W AS MTR PLSB line)

   -1. Turn the vehicle to the OFF (LOCK) mode.

   -2. Disconnect the following connectors.

Front passenger's power window switch 37P connectorFront passenger's power window motor 6P connector

   -3. Check for continuity between test points 1 and 2.

Test condition	Vehicle OFF (LOCK) modeFront passenger's power window switch 37P connector: disconnectedFront passenger's power window motor 6P connector: disconnected
Test point 1	**Front passenger's power window switch 37P connector No. 37**

Test point 2	Front passenger's power window motor 6P connector (female terminals) No. 3: ①

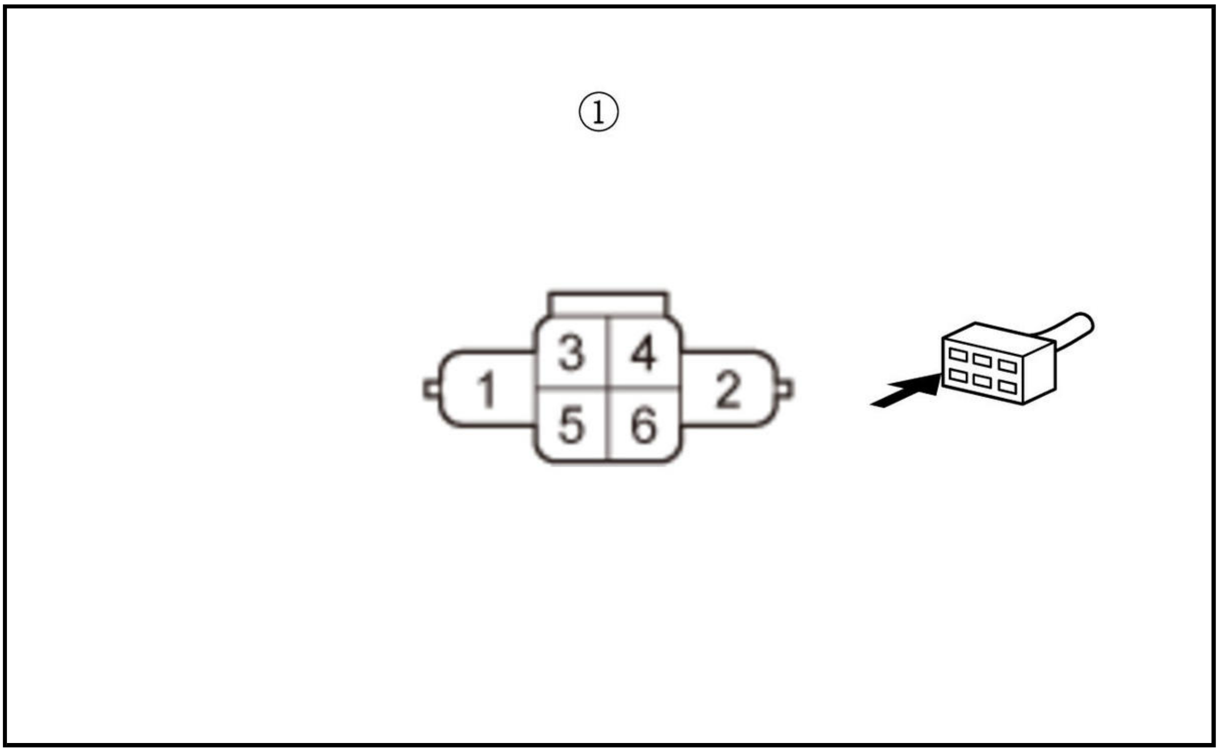

Is there continuity?

YES

The P/W AS MTR PLSB wire is not open. Go to step 3.

NO

Repair an open or high resistance in the wire.

3. Shorted wire check (P/W AS MTR PLSB line)

-1. Check for continuity between test points 1 and 2.

Test condition	Vehicle OFF (LOCK) modeFront passenger's power window switch 37P connector: disconnectedFront passenger's power window motor 6P connector: disconnected
Test point 1	**Front passenger's power window switch 37P connector No. 37**
Test point 2	Body ground

Is there continuity?

YES

Repair a short to ground in the wire.

NO

The P/W AS MTR PLSB wire is OK. **Substitute a known good front passenger's power window switch** . If the DTC is still present, **replace the front passenger's door regulator** .

DTC B1140

DTC B1140 : Driver's power window position detect circuit malfunction

NOTE: If you are troubleshooting multiple DTCs, be sure to follow the instructions in **B-CAN System Diagnosis Test Mode A** .

DTC Description	DTC
B1140 Driver's power window position detect circuit malfunction	B

DTC (Multiplex Control Unit, Door)

1. Problem verification

   -1. Clear the DTCs with the HDS.

   -2. Turn the vehicle to the OFF (LOCK) mode and then the ON mode.

   -3. Open and close the driver's power window by using the power window master switch manually.

   -4. Check for DTCs with the HDS.

DTC Description	DTC
B1125 Driver's power window motor A pulse malfunction	B
B1126 Driver's power window motor B pulse malfunction	B

   Is DTC B1125 or B1126 indicated?

   YES

   Troubleshoot DTC **B1125** or **B1126**.

   NO

   Resetting the power window master switch .

DTC B1142

DTC B1142 : Door Multiplex Control Unit lost communication with front passenger's power window switch (UART line open)

NOTE: If you are troubleshooting multiple DTCs, be sure to follow the instructions in **B-CAN System Diagnosis Test Mode A** .

DTC Description	DTC
B1142 Door Multiplex Control Unit lost communication with front passenger's power window switch (UART line open)	B

DTC (Multiplex Control Unit, Door)

1. Problem verification

   -1. Clear the DTCs with the HDS.

   -2. Turn the vehicle to the OFF (LOCK) mode and then the ON mode.

   -3. Check for DTCs with the HDS.

DTC Description	DTC
B1142 Door Multiplex Control Unit lost communication with front passenger's power window switch (UART line open)	B

Is DTC B1142 indicated?

YES

Go to step 2.

NO

Intermittent failure, the system is OK at this time.

2. Open wire check (LIN(P/W) line)

-1. Turn the vehicle to the OFF (LOCK) mode.

-2. Disconnect the following connectors.

Power window master switch 37P connectorFront passenger's power window switch 37P connectorPanoramic glass roof motor-control unit 14P connector (with panoramic glass roof)Moonroof motor-control unit 14P connector (with moonroof)

-3. Check for continuity between test points 1 and 2.

Test condition	Vehicle OFF (LOCK) modePower window master switch 37P connector: disconnectedFront passenger's power window switch 37P connector: disconnectedPanoramic glass roof motor-control unit 14P connector (with panoramic glass roof): disconnectedMoonroof motor-control unit 14P connector (with moonroof): disconnected
Test point 1	**Power window master switch 37P connector No. 36**
Test point 2	**Front passenger's power window switch 37P connector No. 34**

Test point 1	**Power window master switch 37P connector No. 36**
Test point 2	**Panoramic glass roof motor-control unit 14P connector No. 12 (with panoramic glass roof)**

Test point 1	**Power window master switch 37P connector No. 36**
Test point 2	**Moonroof motor-control unit 14P connector No. 12 (with moonroof)**

Is there continuity?

YES

The LIN(P/W) wire is not open. Go to step 3.

NO

Repair an open or high resistance in the wire.

3. Shorted wire check (LIN(P/W) line)

-1. Check for continuity between test points 1 and 2.

Test condition	Vehicle OFF (LOCK) modePower window master switch 37P connector: disconnectedFront passenger's power window switch 37P connector: disconnectedPanoramic glass roof motor-control unit 14P connector (with panoramic glass roof): disconnectedMoonroof motor-control unit 14P connector (with moonroof): disconnected
Test point 1	**Power window master switch 37P connector No. 36**
Test point 2	Body ground

Is there continuity?

YES

Repair a short to ground in the wire.

NO

The LIN(P/W) wire is not shorted to ground. Go to step 4.

4. Shorted wire check (LIN(P/W) line to power)

   -1. Turn the vehicle to the ON mode.

   -2. Measure the voltage between test points 1 and 2.

Test condition	Vehicle ON modePower window master switch 37P connector: disconnectedFront passenger's power window switch 37P connector: disconnectedPanoramic glass roof motor-control unit 14P connector (with panoramic glass roof): disconnectedMoonroof motor-control unit 14P connector (with moonroof): disconnected

Test point 1	**Power window master switch 37P connector No. 36**
Test point 2	Body ground

Is there less than 0.2 V?

YES

The LIN(P/W) wire is OK. **Do the input test for terminals of the front passenger's power window switch** . If the tests prove OK, **substitute a known good front passenger's power window switch** . If the DTC goes away, **replace the original front passenger's power window switch** . If the DTC is still present, **replace the power window master switch** .

NO

Repair a short to power in the wire.

DTC B1145

DTC B1145 : Front passenger's power window position detect circuit malfunction

NOTE: If you are troubleshooting multiple DTCs, be sure to follow the instructions in **B-CAN System Diagnosis Test Mode A** .

DTC Description	DTC
B1145 Front passenger's power window position detect circuit malfunction	B

DTC (Multiplex Control Unit, Door)

1. Problem verification

   -1. Clear the DTCs with the HDS.

   -2. Open and close the front passenger's power window by using the front passenger's power window switch manually.

   -3. Check for DTCs with the HDS.

DTC Description	DTC
B1145 Front passenger's power window position detect circuit malfunction	B

Is DTC B1145 indicated?

YES

Go to step 2.

NO

Intermittent failure, the system is OK at this time.

2. DTC check

-1. Check for DTCs with the HDS.

DTC Description	DTC
B1130 Front passenger's power window motor A pulse malfunction	B
B1131 Front passenger's power window motor B pulse malfunction	B

Is DTC B1130 or B1131 indicated?

YES

Troubleshoot DTC **B1130** or **B1131**.

NO

Resetting the front passenger's power window switch .

DTC U1280 (MULTIPLEX CONTROL UNIT, DOOR)

DTC U1280 : Communication bus line error (BUS-OFF)

NOTE: If you are troubleshooting multiple DTCs, be sure to follow the instructions in **B-CAN System Diagnosis Test Mode A** .

DTC Description	DTC
U1280 Communication bus line error (BUS-OFF)	B

DTC (Multiplex Control Unit, Door)

1. Problem verification

-1. Clear the DTCs with the HDS.

-2. Turn the vehicle to the OFF (LOCK) mode and then the ON mode.

-3. Wait for at least 6 seconds.

-4. Check for DTCs with the HDS.

DTC Description	DTC
U1280 Communication bus line error (BUS-OFF)	B

Is DTC U1280 indicated?

YES

Go to body control module DTC U1280 troubleshooting .

NO

Intermittent failure, the system is OK at this time. Check for loose or poor connections.

DTC U1281, U128D, U1299 (MULTIPLEX CONTROL UNIT, DOOR)

DTC U1281 : Door multiplex control unit lost communication with MICU **DTC U128D** : Door multiplex control unit lost communication with gauge control module **DTC U1299** : Door multiplex control unit lost communication with climate control unit

NOTE:

- If you are troubleshooting multiple DTCs, be sure to follow the instructions in B-CAN System Diagnosis Test Mode A .
- Refer to the DTC code shown on the display, and then inspect the connectors and terminals based on the instructions in the table below.
- The DTC may be stored due to the grounding failure or the power source failure at the transmitting control unit (the grounding inspection and the power source inspection on each control unit are required prior to this checking process).

DTC Description	DTC
U1281 Door multiplex control unit lost communication with MICU	B
U128D Door multiplex control unit lost communication with gauge control module	B
U1299 Door multiplex control unit lost communication with climate control unit	B

DTC (Multiplex Control Unit, Door)

1. Problem verification

-1. Clear the DTC with the HDS.

-2. Turn the vehicle to the OFF (LOCK) mode and then the ON mode.

-3. Wait for at least 6 seconds.

-4. Check for DTCs with the HDS.

DTC Description	DTC
U1281 Door multiplex control unit lost communication with MICU	B
U128D Door multiplex control unit lost communication with gauge control module	B
U1299 Door multiplex control unit lost communication with climate control unit	B

Are any DTCs indicated?

YES

Go to step 2.

NO

Intermittent failure, the system is OK at this time. Check for poor connections or loose terminals.

2. Open wire check (B-CAN_H line, B-CAN_L line)

-1. Turn the vehicle to the OFF (LOCK) mode.

-2. Disconnect the receiving control unit connector.

Power window master switch 37P connector

-3. Disconnect the transmitting control unit connector(s).

Refer to the DTC shown on the display, then disconnect the connector(s) based on the instructions (see table).

DTC	Connector
U1281	Body control module connector B (36P)
U128D	Gauge control module connector A (32P)
U1299	Climate control unit connector A (32P)

-4. Check for continuity between the receiving control unit and the transmitting control unit on the B-CAN_H circuit and the B-CAN_L circuit.

Test condition	Vehicle OFF (LOCK) modePower window master switch 37P connector: disconnectedTransmitting control unit connector(s) for indicated DTCs: disconnected

DTC	Circuit name	Receiving control unit		Transmitting control unit	
		Connector	Terminal	Connector	Terminal
U1281	B-CAN_H	**Power window master switch 37P connector**	No. 32	**Body control module connector B (36P)**	No. 20
	B-CAN_L		No. 31		No. 21
U128D	B-CAN_H	**Power window master switch 37P connector**	No. 32	**Gauge control module connector A (32P)**	No. 30
	B-CAN_L		No. 31		No. 31
U1299	B-CAN_H	**Power window master switch 37P connector**	No. 32	**Climate control unit connector A (32P)**	No. 25
	B-CAN_L		No. 31		No. 8

Is there continuity?

YES

The B-CAN_H wire and the B-CAN_L wire are OK.Refer to the DTC shown on the display, then replace the control unit based on the instructions (see chart below).

DTC	Operation for transmitting control unit
U1281	**Body control module**
U128D	**Gauge control module**

DTC	Operation for transmitting control unit
U1064	**Climate control unit**

NO

Repair an open in the B-CAN_H wire and/or the B-CAN_L wire.

DTC TROUBLESHOOTING

DTC B1125

DTC B1125 : Driver's power window motor A pulse malfunction

NOTE: If you are troubleshooting multiple DTCs, be sure to follow the instructions in B-CAN System Diagnosis Test Mode A .

DTC Description	DTC
B1125 Driver's power window motor A pulse malfunction	B

DTC (Multiplex Control Unit, Door)

1. Problem verification

   -1. Check the parameter(s) below with the HDS.

Signal	Current conditions	
	Values	Unit
Driver's P/W Motor PulseA	B	B

   Does the information indicator display DETECT while the window is moving, and display NONE when the window is stopped?

   YES

   Intermittent failure, the system is OK at this time.

   NO

   Go to step 2.

2. Power window motor pulse check

   -1. Turn the vehicle to the OFF (LOCK) mode.

   -2. Disconnect the following connector.

Driver's power window motor 6P connector

   -3. Connect terminals A and B with a jumper wire.

Terminal A	Driver's power window motor 6P connector (female terminals) No. 5: ①
Terminal B	Body ground

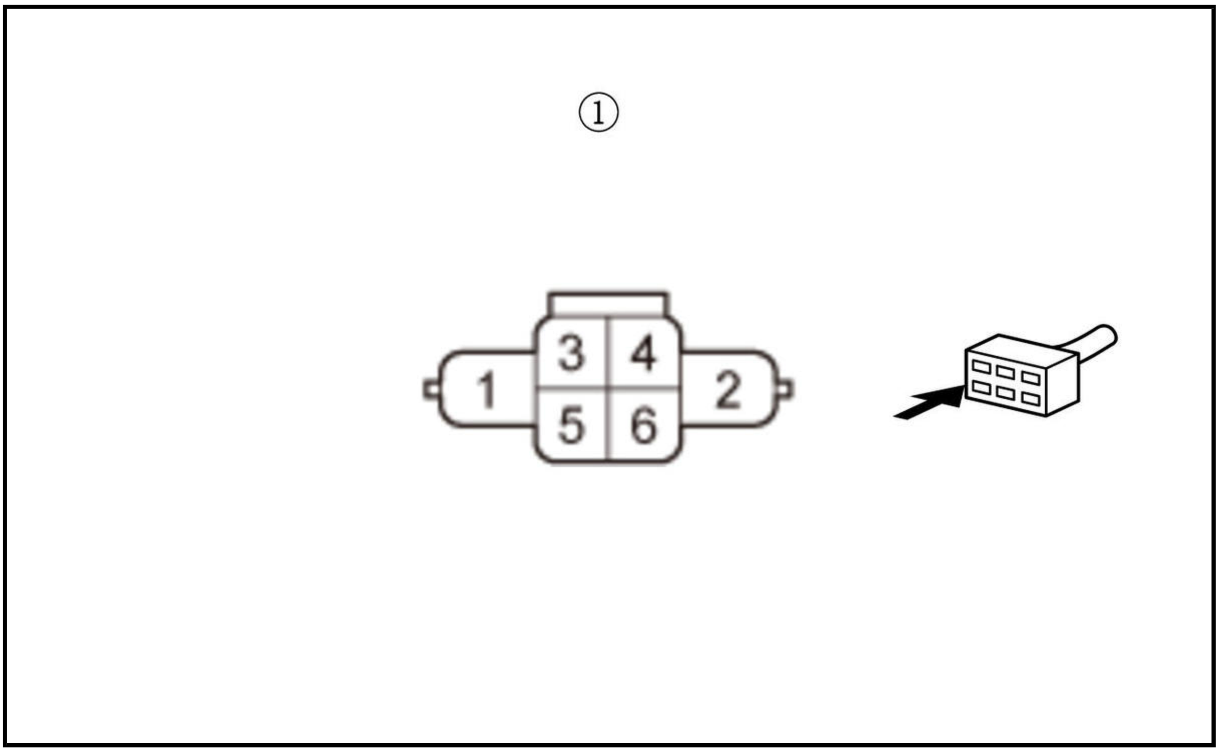

-4. Connect and disconnect the jumper wire to body ground repeatedly.

-5. Check the parameter(s) below with the HDS.

Signal	**Current conditions**	
	Values	**Unit**
Driver's P/W Motor PulseA	B	B

Does the information indicator display DETECT?

YES

Faulty driver's power window motor; **replace the driver's door regulator** .

NO

Go to step 3.

3. Shorted wire check (P/W_DR_MTR_PLSA line)

-1. Turn the vehicle to the OFF (LOCK) mode.

-2. Disconnect the following connector.

Power window master switch 37P connector

-3. Measure the resistance between test points 1 and 2.

Test condition	Vehicle OFF (LOCK) mode Driver's power window motor 6P connector: disconnected Power window master switch 37P connector: disconnected
Test point 1	**Power window master switch 37P connector No. 33**
Test point 2	Body ground

Is there 1.0 MΩ or more?

YES

Repair an open or high resistance in the wire.

NO

Repair a short to ground in the wire.

DTC B1126

DTC B1126 : Driver's power window motor B pulse malfunction

NOTE: If you are troubleshooting multiple DTCs, be sure to follow the instructions in **B-CAN System Diagnosis Test Mode A** .

DTC Description	DTC
B1126 Driver's power window motor B pulse malfunction	B

DTC (Multiplex Control Unit, Door)

1. Problem verification

   -1. Check the parameter(s) below with the HDS.

Signal	Current conditions	
	Values	Unit
Driver's P/W Motor PulseB	B	B

   Does the information indicator display DETECT while the window is moving, and display NONE when the window is stopped?

   YES

   Intermittent failure, the system is OK at this time.

   NO

   Go to step 2.

2. Power window motor pulse check

   -1. Turn the vehicle to the OFF (LOCK) mode.

   -2. Disconnect the following connector.

Driver's power window motor 6P connector

   -3. Connect terminals A and B with a jumper wire.

Terminal A	Driver's power window motor 6P connector (female terminals) No. 3: ①
Terminal B	Body ground

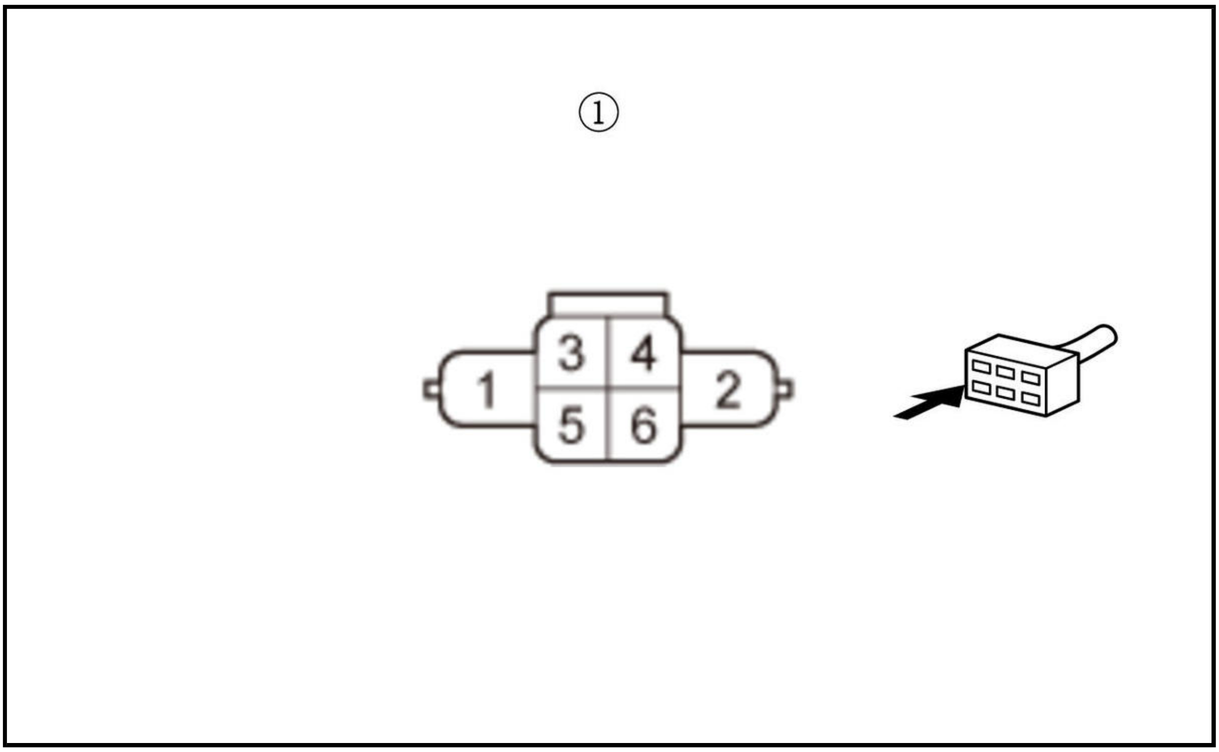

-4. Connect and disconnect the jumper wire to ground repeatedly.

-5. Check the parameter(s) below with the HDS.

Signal	Current conditions	
	Values	Unit
Driver's P/W Motor PulseB	B	B

Does the information indicator display DETECT?

YES

Faulty driver's power window motor; replace the driver's door regulator .

NO

Go to step 3.

3. Shorted wire check (P/W_DR_MTR_PLSB line)

-1. Turn the vehicle to the OFF (LOCK) mode.

-2. Disconnect the following connector.

Power window master switch 37P connector

-3. Measure the resistance between test points 1 and 2.

Test condition	Vehicle OFF (LOCK) mode Driver's power window motor 6P connector: disconnected Power window master switch 37P connector: disconnected
Test point 1	Power window master switch 37P connector No. 35
Test point 2	Body ground

Is there 1.0 MΩ or more?

YES

Repair an open or high resistance in the wire.

NO

Repair a short to ground in the wire.

DTC B1127

DTC B1127 : Driver's door lock key cylinder switch malfunction

NOTE: If you are troubleshooting multiple DTCs, be sure to follow the instructions in **B-CAN System Diagnosis Test Mode A** .

DTC Description	DTC
B1127 Driver's door lock key cylinder switch malfunction	B

DTC (Multiplex Control Unit, Door)

1. Problem verification (driver's door key cylinder switch in the neutral position)

   -1. Check the parameter(s) below with the HDS.

Signal	Current conditions	
	Values	Unit
Driver's Door Key Cylinder Switch(LOCK)	B	B
Driver's Door Key Cylinder Switch(UNLOCK)	B	B

   Is either information indicator ON?

   YES

   Go to step 4.

   NO

   Go to step 2.

2. Problem verification (driver's door key cylinder switch in the lock position)

   -1. With the driver's door key cylinder in the lock position, check the parameter(s) below with the HDS.

Signal	Current conditions	
	Values	Unit
Driver's Door Key Cylinder Switch (LOCK)	B	B
Driver's Door Key Cylinder Switch (UNLOCK)	B	B

   Are both information indicators ON?

   YES

   Go to step 3.

   NO

   Intermittent failure, the system is OK at this time.

3. Shorted wire check (DR_KEY_CYL_UNLOCK to DR_KEY_CYL_LOCK line)

-1. Turn the vehicle to the OFF (LOCK) mode.

-2. Disconnect the following connector.

Driver's door latch 10P connector

-3. Connect terminals A and B with a jumper wire.

Terminal A	**Power window master switch 37P connector No. 7**
Terminal B	Body ground

-4. Check the parameter(s) below with the HDS.

Signal	Current conditions	
	Values	Unit
Driver's Door Key Cylinder Switch (LOCK)	B	B
Driver's Door Key Cylinder Switch (UNLOCK)	B	B

Are both information indicators ON?

YES

Repair a short between the wires.

NO

The DR_KEY_CYL_UNLOCK to DR_KEY_CYL_LOCK wire is OK. Faulty driver's door key cylinder switch; **replace the driver's door latch** .

4. Determine possible failure area (driver's door latch, others)

-1. Turn the vehicle to the OFF (LOCK) mode.

-2. Disconnect the following connector.

Driver's door latch 10P connector

-3. Check the parameter(s) below with the HDS.

Signal	Current conditions	
	Values	Unit
Driver's Door Key Cylinder Switch (LOCK)	B	B
Driver's Door Key Cylinder Switch (UNLOCK)	B	B

Is either information indicator ON?

YES

Go to step 5.

NO

Faulty driver's door key cylinder switch; **replace the driver's door latch** .

5. Shorted wire check (DR_KEY_CYL_UNLOCK, DR_KEY_CYL_LOCK lines)

-1. Turn the vehicle to the OFF (LOCK) mode.

-2. Disconnect the following connector.

Power window master switch 37P connector

-3. Measure the resistance between test points 1 and 2.

Test condition	Vehicle OFF (LOCK) mode Driver's door latch 10P connector: disconnected Power window master switch 37P connector: disconnected
Test point 1	**Power window master switch 37P connector No. 7**
Test point 2	Body ground

Test point 1	**Power window master switch 37P connector No. 8**
Test point 2	Body ground

Is there 1.0 MΩ or more?

YES

The DR_KEY_CYL_UNLOCK and DR_KEY_CYL_LOCK wires are OK. **Replace the power window master switch** ..

NO

Repair a short to ground in the wire.

DTC B1128

DTC B1128 : Driver's door lock switch malfunction

NOTE: If you are troubleshooting multiple DTCs, be sure to follow the instructions in **B-CAN System Diagnosis Test Mode A** .

DTC Description	DTC
B1128 Driver's door lock switch malfunction	B

DTC (Multiplex Control Unit, Door)

1. Problem verification

-1. Clear the DTCs with the HDS.

-2. Check for DTCs with the HDS.

DTC Description	DTC
B1128 Driver's door lock switch malfunction	B

Is DTC B1128 indicated?

YES

Replace the power window master switch .

NO

Intermittent failure, the system is OK at this time.

DTC B1129

DTC B1129 : Driver's door lock knob switch malfunction

NOTE: If you are troubleshooting multiple DTCs, be sure to follow the instructions in **B-CAN System Diagnosis Test Mode A** .

DTC Description	DTC
B1129 Driver's door lock knob switch malfunction	B

DTC (Multiplex Control Unit, Door)

1. Problem verification

   -1. Clear the DTCs with the HDS.

   -2. Operate the driver's door lock knob switch several times.

   -3. Check for DTCs with the HDS.

DTC Description	DTC
B1129 Driver's door lock knob switch malfunction	B

   Is DTC B1129 indicated?

   YES

   Go to step 2.

   NO

   Intermittent failure, the system is OK at this time.

2. Determine possible failure area (DR_SILCON_UNLOCK, DR_SILCON_LOCK lines)

   -1. With the driver's door lock knob switch in the lock position, check the parameter(s) below with the HDS.

Signal	Current conditions	
	Values	Unit
Driver's Door Lock Knob Switch (UNLOCK)	B	B

   Is the DRIVER'S DOOR LOCK KNOB SWITCH (UNLOCK) information indicator ON?

   YES

   Go to step 5.

   NO

   Go to step 3.

3. Shorted wire check (DR_SILCON_LOCK line)

   -1. Turn the vehicle to the OFF (LOCK) mode.

   -2. Disconnect the following connectors.

Driver's door latch 10P connector Power window master switch 37P connector

-3. Measure the resistance between test points 1 and 2.

Test condition	Vehicle OFF (LOCK) mode Driver's door latch 10P connector: disconnected Power window master switch 37P connector: disconnected
Test point 1	**Power window master switch 37P connector No. 21**
Test point 2	Body ground

Is there 1.0 MΩ or more?

YES

The DR_SILCON_LOCK wire is not shorted to ground. Go to step 4.

NO

Repair a short to ground in the wire.

4. Shorted wire check (DR_SILCON_UNLOCK line to DR_SILCON_LOCK line)

-1. Measure the resistance between test points 1 and 2.

Test condition	Vehicle OFF (LOCK) mode Driver's door latch 10P connector: disconnected Power window master switch 37P connector: disconnected
Test point 1	**Power window master switch 37P connector No. 20**
Test point 2	**Power window master switch 37P connector No. 21**

Is there 1.0 MΩ or more?

YES

Faulty driver's door lock knob switch; **replace the driver's door latch** .

NO

Repair a short in DR_SILCON_UNLOCK wire to DR_SILCON_LOCK wire.

5. Shorted wire check (DR_SILCON_UNLOCK line)

-1. Turn the vehicle to the OFF (LOCK) mode.

-2. Disconnect the following connectors.

Driver's door latch 10P connector Power window master switch 37P connector

-3. Measure the resistance between test points 1 and 2.

Test condition	Vehicle OFF (LOCK) mode Driver's door latch 10P connector: disconnected Power window master switch 37P connector: disconnected
Test point 1	**Power window master switch 37P connector No. 20**
Test point 2	Body ground

Is there 1.0 MΩ or more?

YES

The DR_SILCON_UNLOCK wire is not shorted to ground. Go to step 6.

NO

Repair a short to ground in the wire.

6. Shorted wire check (DR_SILCON_UNLOCK line to DR_SILCON_LOCK line)

-1. Measure the resistance between test points 1 and 2.

Test condition	Vehicle OFF (LOCK) mode Driver's door latch 10P connector: disconnected Power window master switch 37P connector: disconnected
Test point 1	**Power window master switch 37P connector No. 20**
Test point 2	**Power window master switch 37P connector No. 21**

Is there 1.0 MΩ or more?

YES

Faulty driver's door lock knob switch; **replace the driver's door latch** .

NO

Repair a short in DR_SILCON_UNLOCK wire to DR_SILCON_LOCK wire.

DTC B1130

DTC B1130 : Front Passenger's power window motor A-phase pulse signal input error

NOTE: If you are troubleshooting multiple DTCs, be sure to follow the instructions in **B-CAN System Diagnosis Test Mode A** .

DTC Description	DTC
B1130 Front Passenger's power window motor A-phase pulse signal input error	B

DTC (Multiplex Control Unit, Door)

1. Problem verification

-1. Clear the DTCs with the HDS.

-2. Turn the vehicle to the OFF (LOCK) mode and then the ON mode.

-3. Open and close the front passenger's power window by using the front passenger's power window switch manually.

-4. Check for DTCs with the HDS.

DTC Description	DTC
B1130 Front Passenger's power window motor A-phase pulse signal input error	B

Is DTC B1130 indicated?

YES

Go to step 2.

NO

Intermittent failure, the system is OK at this time.

2. Open wire check (P/W_AS_MTR_PLSA line)

-1. Turn the vehicle to the OFF (LOCK) mode.

-2. Disconnect the following connectors.

Front passenger's power window switch 37P connector Front passenger's power window motor 6P connector

-3. Measure the resistance between test points 1 and 2.

Test condition	Vehicle OFF (LOCK) mode Front passenger's power window switch 37P connector: disconnected Front passenger's power window motor 6P connector: disconnected
Test point 1	**Front passenger's power window switch 37P connector No. 35**
Test point 2	Front passenger's power window motor 6P connector (female terminals) No. 5: ①

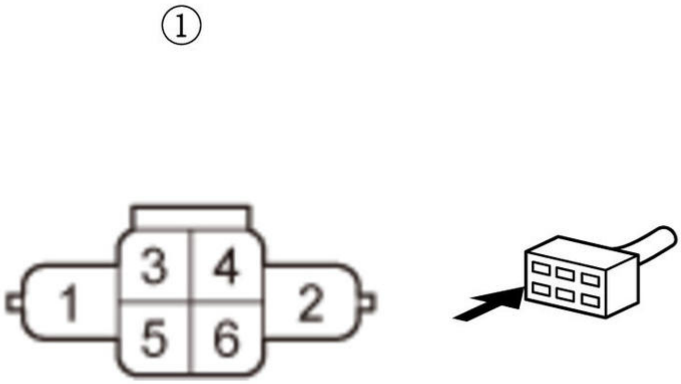

Is there 1.0 Ω or less?

YES

The P/W_AS_MTR_PLSA wire is not open. Go to step 3.

NO

Repair an open or high resistance in the wire.

3. Shorted wire check (P/W_AS_MTR_PLSA line)

-1. Measure the resistance between test points 1 and 2.

Test condition	Vehicle OFF (LOCK) mode Front passenger's power window switch 37P connector: disconnected Front passenger's power window motor 6P connector: disconnected
Test point 1	**Front passenger's power window switch 37P connector No. 35**
Test point 2	Body ground

Is there 1.0 MΩ or more?

YES

The P/W_AS_MTR_PLSA wire is OK. **Substitute a known good front passenger's power window switch** . If the DTC is still present, **replace the front passenger's door regulator** .

NO

Repair a short to ground in the wire.

DTC B1131

DTC B1131 : Front Passenger's power window motor B-phase pulse signal input error

NOTE: If you are troubleshooting multiple DTCs, be sure to follow the instructions in **B-CAN System Diagnosis Test Mode A** .

DTC Description	DTC
B1131 Front Passenger's power window motor B-phase pulse signal input error	B

DTC (Multiplex Control Unit, Door)

1. Problem verification

-1. Clear the DTCs with the HDS.

-2. Turn the vehicle to the OFF (LOCK) mode and then the ON mode.

-3. Open and close the front passenger's power window by using the front passenger's power window switch manually.

-4. Check for DTCs with the HDS.

DTC Description	DTC
B1131 Front Passenger's power window motor B-phase pulse signal input error	B

Is DTC B1131 indicated?

YES

Go to step 2.

NO

Intermittent failure, the system is OK at this time.

2. Open wire check (P/W_AS_MTR_PLSB line)

-1. Turn the vehicle to the OFF (LOCK) mode.

-2. Disconnect the following connectors.

Front passenger's power window switch 37P connector Front passenger's power window motor 6P connector

-3. Measure the resistance between test points 1 and 2.

Test condition	Vehicle OFF (LOCK) mode Front passenger's power window switch 37P connector: disconnected Front passenger's power window motor 6P connector: disconnected
Test point 1	**Front passenger's power window switch 37P connector No. 37**
Test point 2	Front passenger's power window motor 6P connector (female terminals) No. 3: ①

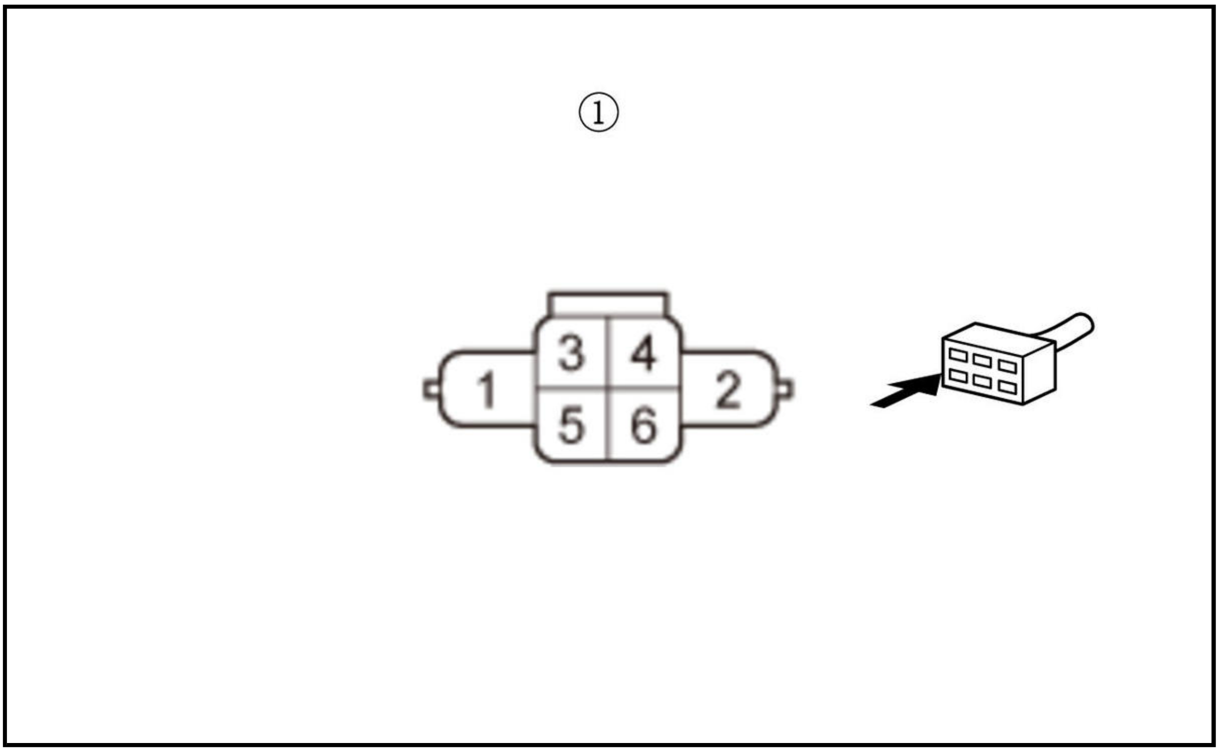

Is there 1.0 Ω or less?

YES

The P/W_AS_MTR_PLSB wire is not open. Go to step 3.

NO

Repair an open or high resistance in the wire.

3. Shorted wire check (P/W_AS_MTR_PLSB line)

-1. Measure the resistance between test points 1 and 2.

Test condition	Vehicle OFF (LOCK) mode Front passenger's power window switch 37P connector: disconnected Front passenger's power window motor 6P connector: disconnected
Test point 1	**Front passenger's power window switch 37P connector No. 37**
Test point 2	Body ground

Is there 1.0 MΩ or more?

YES

The P/W_AS_MTR_PLSB wire is OK. **Substitute a known good front passenger's power window switch** . If the DTC is still present, **replace the front passenger's door regulator** .

NO

Repair a short to ground in the wire.

DTC B1140

DTC B1140 : Driver's power window position detect circuit malfunction

NOTE: If you are troubleshooting multiple DTCs, be sure to follow the instructions in **B-CAN System Diagnosis Test Mode A** .

DTC Description	DTC
B1140 Driver's power window position detect circuit malfunction	B

DTC (Multiplex Control Unit, Door)

1. Problem verification

-1. Clear the DTCs with the HDS.

-2. Turn the vehicle to the OFF (LOCK) mode and then the ON mode.

-3. Open and close the driver's power window by using the power window master switch manually.

-4. Check for DTCs with the HDS.

DTC Description	DTC
B1125 Driver's power window motor A pulse malfunction	B
B1126 Driver's power window motor B pulse malfunction	B

Is DTC B1125 or B1126 indicated?

YES

Troubleshoot DTC **B1125** or **B1126**.

NO

Resetting the power window master switch .

DTC B1142

DTC B1142 : Power window master switch lost communication with the other units (UART communication Error)

NOTE: If you are troubleshooting multiple DTCs, be sure to follow the instructions in **B-CAN System Diagnosis Test Mode A** .

DTC Description	DTC
B1142 Power window master switch lost communication with the other units (UART communication Error)	B

DTC (Multiplex Control Unit, Door)

1. Problem verification

-1. Clear the DTCs with the HDS.

-2. Turn the vehicle to the OFF (LOCK) mode and then the ON mode.

-3. Check for DTCs with the HDS.

DTC Description	DTC
B1142 Power window master switch lost communication with the other units (UART communication Error)	B

Is DTC B1142 indicated?

YES

Go to step 2.

NO

Intermittent failure, the system is OK at this time.

2. Open wire check (LIN(P/W) line)

-1. Turn the vehicle to the OFF (LOCK) mode.

-2. Disconnect the following connectors.

Power window master switch 37P connector Front passenger's power window switch 37P connector Moonroof motor-control unit 14P connector (with moonroof)

-3. Measure the resistance between test points 1 and 2.

Test condition	Vehicle OFF (LOCK) mode Power window master switch 37P connector: disconnected Front passenger's power window switch 37P connector: disconnected Moonroof motor-control unit 14P connector (with moonroof): disconnected
Test point 1	**Power window master switch 37P connector No. 36**
Test point 2	**Front passenger's power window switch 37P connector No. 34**

Test point 1	**Power window master switch 37P connector No. 36**
Test point 2	**Moonroof motor-control unit 14P connector No. 12 (with moonroof)**

Is there 1.0 Ω or less?

YES

The LIN (P/W) wire is not open. Go to step 3.

NO

Repair an open or high resistance in the wire.

3. Shorted wire check (LIN (P/W) line)

-1. Measure the resistance between test points 1 and 2.

Test condition	Vehicle OFF (LOCK) mode Power window master switch 37P connector: disconnected

	Front passenger's power window switch 37P connector: disconnected Moonroof motor-control unit 14P connector (with moonroof): disconnected
Test point 1	**Power window master switch 37P connector No. 36**
Test point 2	Body ground

Is there 1.0 MΩ or more?

YES

The LIN (P/W) wire is not shorted to ground. Go to step 4.

NO

Repair a short to ground in the wire.

4. Shorted wire check (LIN (P/W) line to power)

-1. Turn the vehicle to the ON mode.

-2. Measure the voltage between test points 1 and 2.

Test condition	Vehicle ON mode Power window master switch 37P connector: disconnected Front passenger's power window switch 37P connector: disconnected Moonroof motor-control unit 14P connector (with moonroof): disconnected
Test point 1	**Power window master switch 37P connector No. 36**
Test point 2	Body ground

Is there less than 0.2 V?

YES

The LIN(P/W) wire is OK. **Do the input test for terminals of the front passenger's power window switch** . If the tests prove OK, **substitute a known good front passenger's power window switch** . If the DTC goes away, **replace the original front passenger's power window switch** . If the DTC is still present, **replace the power window master switch** .

NO

Repair a short to power in the wire.

DTC B1145

DTC B1145 : Front passenger's window position detect circuit malfunction

NOTE: If you are troubleshooting multiple DTCs, be sure to follow the instructions in **B-CAN System Diagnosis Test Mode A** .

DTC Description	DTC
B1145 Front passenger's window position detect circuit malfunction	B

DTC (Multiplex Control Unit, Door)

1. Problem verification

-1. Clear the DTCs with the HDS.

-2. Open and close the front passenger's power window by using the front passenger's power window switch manually.

-3. Check for DTCs with the HDS.

DTC Description	DTC
B1145 Front passenger's window position detect circuit malfunction	B

Is DTC B1145 indicated?

YES

Go to step 2.

NO

Intermittent failure, the system is OK at this time.

2. DTC check

-1. Check for DTCs with the HDS.

DTC Description	DTC
B1130 Front Passenger's power window motor A-phase pulse signal input error	B
B1131 Front Passenger's power window motor B-phase pulse signal input error	B

Is DTC B1130 or B1131 indicated?

YES

Troubleshoot DTC **B1130** or **B1131**.

NO

Resetting the front passenger's power window switch .

DTC U1280 (MULTIPLEX CONTROL UNIT, DOOR)

DTC U1280 : Communication bus line error (BUS-OFF)

NOTE: If you are troubleshooting multiple DTCs, be sure to follow the instructions in **B-CAN System Diagnosis Test Mode A** .

DTC Description	DTC
U1280 Communication bus line error (BUS-OFF)	B

DTC (Multiplex Control Unit, Door)

1. Problem verification

-1. Clear the DTCs with the HDS.

-2. Turn the vehicle to the OFF (LOCK) mode and then the ON mode.

-3. Wait for at least 6 seconds.

-4. Check for DTCs with the HDS.

DTC Description	DTC
U1280 Communication bus line error (BUS-OFF)	B

Is DTC U1280 indicated?

YES

Go to body control module DTC U1280 troubleshooting .

NO

Intermittent failure, the system is OK at this time. Check for loose or poor connections.

DTC U1281, U128D, U1299 (MULTIPLEX CONTROL UNIT, DOOR)

DTC U1281 : Power Window Master Switch lost communication with MICU (body control module)

DTC U128D : Power Window Master Switch lost communication with gauge control module

DTC U1299 : Power Window Master Switch lost communication with climate control unit

NOTE:

- If you are troubleshooting multiple DTCs, be sure to follow the instructions in **B-CAN System Diagnosis Test Mode A** .
- Refer to the DTC code shown on the display, and then inspect the connectors and terminals based on the instructions in the table below.
- The DTC may be stored due to the grounding failure or the power source failure at the transmitting control unit (the grounding inspection and the power source inspection on each control unit are required prior to this checking process).

DTC Description	DTC
U1281 Power Window Master Switch lost communication with MICU (body control module)	B
U128D Power Window Master Switch lost communication with gauge control module	B
U1299 Power Window Master Switch lost communication with climate control unit	B

DTC (Multiplex Control Unit, Door)

1. Problem verification

   -1. Clear the DTC with the HDS.

   -2. Turn the vehicle to the OFF (LOCK) mode and then the ON mode.

   -3. Wait for at least 6 seconds.

   -4. Check for DTCs with the HDS.

DTC Description	DTC
U1281 Power Window Master Switch lost communication with MICU (body control module)	B
U128D Power Window Master Switch lost communication with gauge control module	B
U1299 Power Window Master Switch lost communication with climate control unit	B

   Are any DTCs indicated?

YES

Go to step 2.

NO

Intermittent failure, the system is OK at this time. Check for poor connections or loose terminals.

2. Open wire check (B-CAN_H line, B-CAN_L line)

-1. Turn the vehicle to the OFF (LOCK) mode.

-2. Disconnect the receiving control unit connector.

Power window master switch 37P connector

-3. Disconnect the transmitting control unit connector(s).

Refer to the DTC shown on the display, then disconnect the connector(s) based on the instructions (see table).

DTC	Connector
U1281	Body control module connector B (36P)
U128D	Gauge control module connector A (32P)
U1299	Climate control unit connector A (32P)

-4. Measure the resistance between the receiving control unit and the transmitting control unit on the B-CAN_H circuit and the B-CAN_L circuit.

Test condition	Vehicle OFF (LOCK) mode Power window master switch 37P connector: disconnected Transmitting control unit connector(s) for indicated DTCs: disconnected

DTC	Circuit name	Receiving control unit		Transmitting control unit	
		Connector	Terminal	Connector	Terminal
U1281	B-CAN_H	**Power window master switch 37P connector**	No. 32	**Body control module connector B (36P)**	No. 20
	B-CAN_L		No. 31		No. 21
U128D	B-CAN_H	**Power window master switch 37P connector**	No. 32	**Gauge control module connector A (32P)**	No. 30
	B-CAN_L		No. 31		No. 31
U1299	B-CAN_H	**Power window master switch 37P connector**	No. 32	**Climate control unit connector A (32P)**	No. 25
	B-CAN_L		No. 31		No. 8

Is there 1.0 Ω or less?

YES

The B-CAN_H wire and the B-CAN_L wire are OK. Refer to the DTC shown on the display, then replace the control unit based on the instructions (see table).

DTC	Operation for transmitting control unit
U1281	**Body control module**
U128D	**Gauge control module**

DTC	Operation for transmitting control unit
U1064	**Climate control unit**

NO

Repair an open in the B-CAN_H wire and/or the B-CAN_L wire.

HOW TO INFORMATION

HOW TO TROUBLESHOOT THE ROAD DEPARTURE MITIGATION

RDM Indicator (Amber)

When the RDM system detects a problem during operation, the RDM system stops operating, and the RDM indicator turns on.

NOTE:

- For RDM system function, **review the Road Departure Mitigation System Description** .
- The RDM system communicates with other control units via F-CAN. For RDM system diagram, **refer to the System Diagram for RDM** . If a connected unit malfunctions, the RDM system will not operate. In this case, both RDM indicator and connected unit indicator come on and stay on (except for the gauge control module).

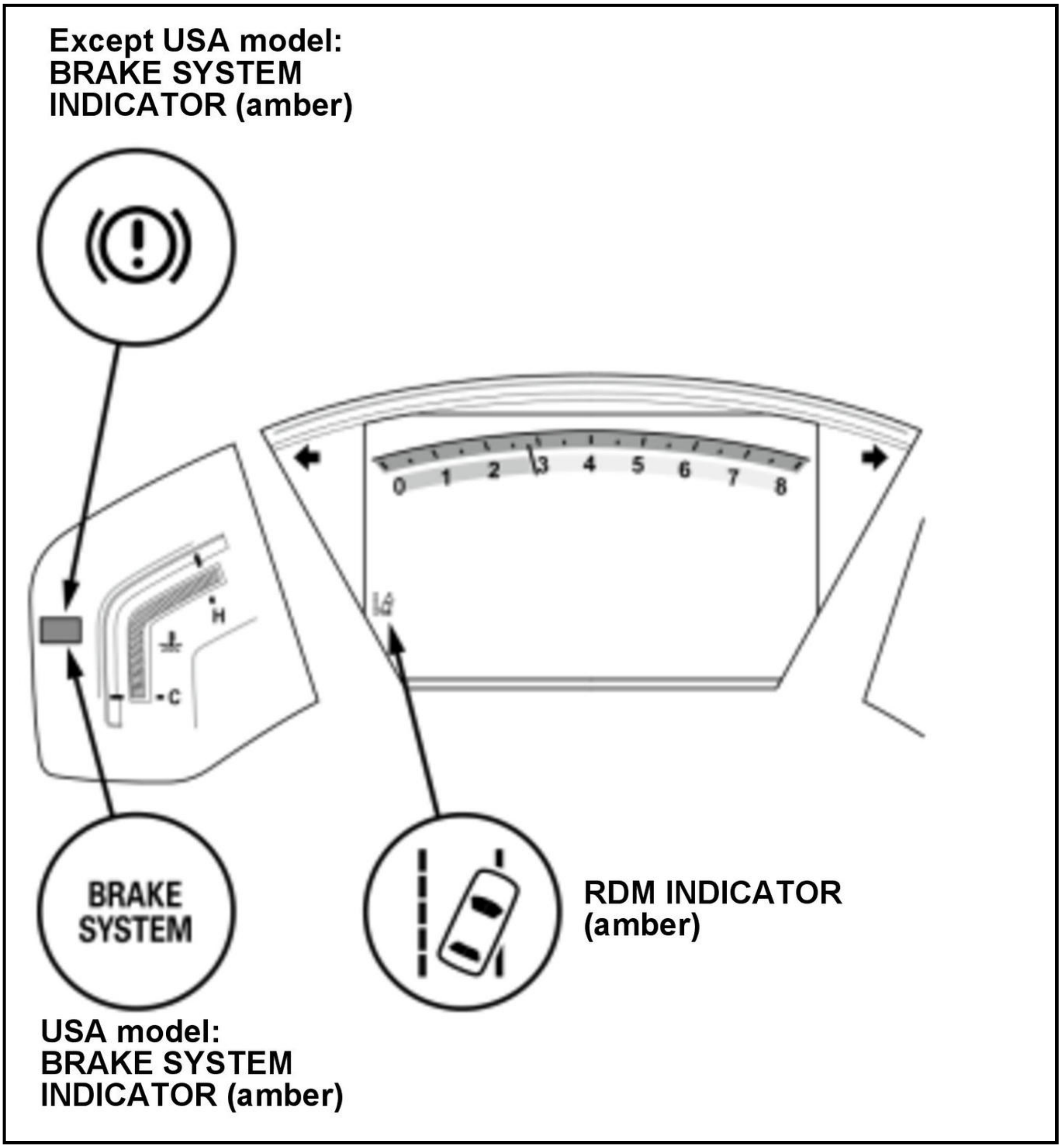
Except USA model:
BRAKE SYSTEM
INDICATOR (amber)
0
1
2
3
4
5
6
7
8
H
C
BRAKE
SYSTEM
RDM INDICATOR
(amber)
USA model:
BRAKE SYSTEM
INDICATOR (amber)

Multi-Information Display (MID) Indication

When the RDM system is OK, the RDM indicates its operation on the MID when the MAIN switch is ON.

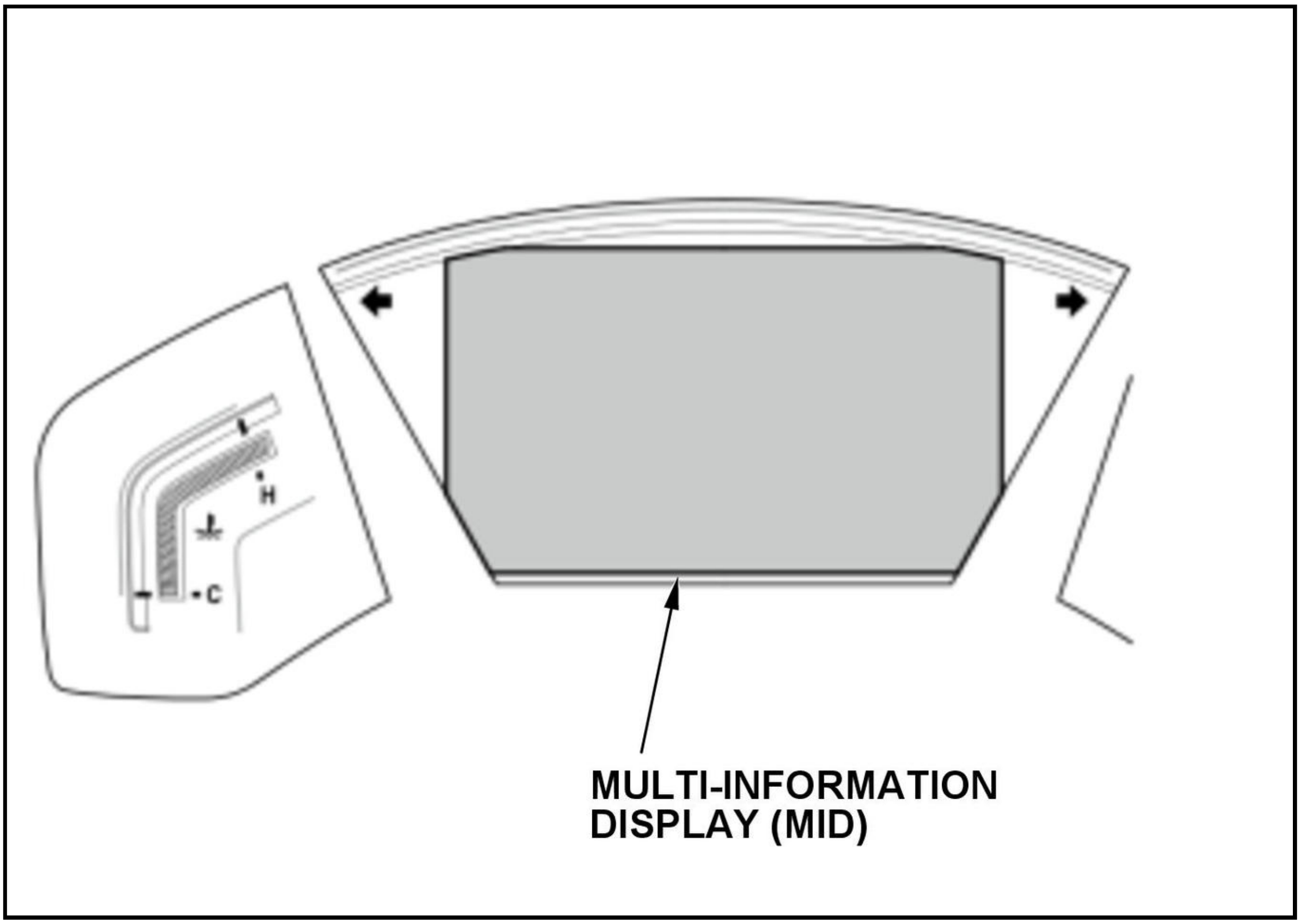

Self-Diagnostic Function

The RDM system has a self-diagnostic function. If the self-diagnostic function detects a malfunction, the RDM system stops operating, turns on the RDM indicator, and stores DTCs.

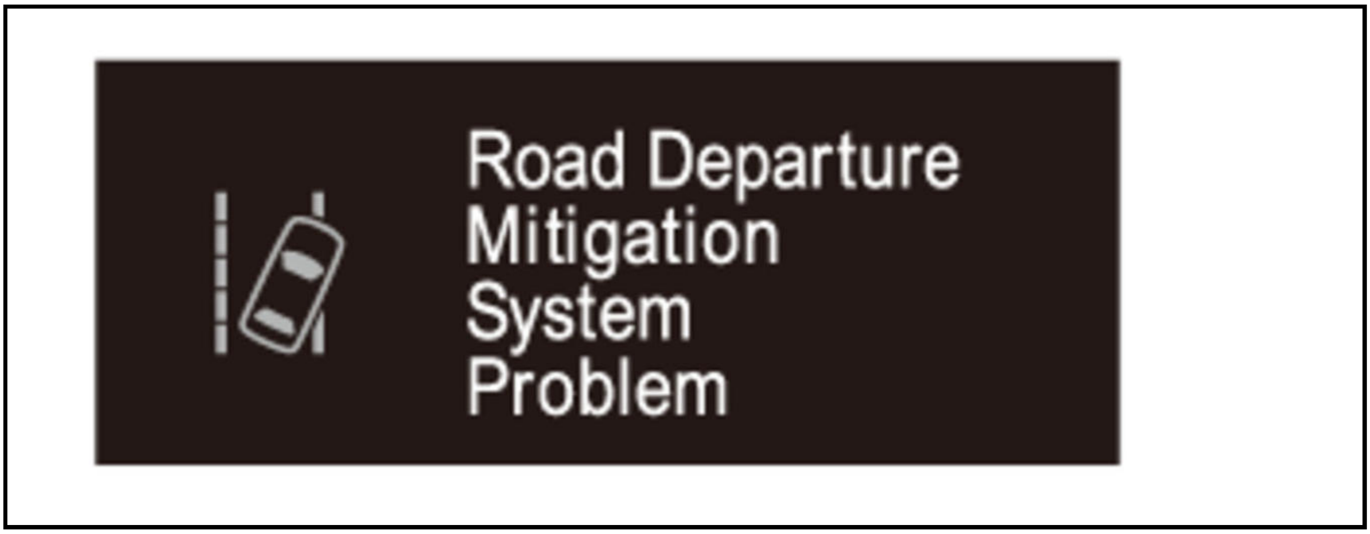

Road Departure Mitigation System Problem

RDM Switch

Press and hold the RDM switch for at least 1 second to turn the RDM system off and on.

Millimeter Wave Radar

The millimeter wave radar measures the distance between your vehicle and the vehicle directly ahead to calculate the difference in speed between the vehicles.

The millimeter wave radar has a self-diagnostic function. If the system detects a problem, it disables the RDM, and turns on the RDM indicator.

Dirt or dust detective function (Clean Millimeter Wave Radar Indication)

If the millimeter wave radar or front grille gets dirty, the RDM system stops operating and the following message on the MID will appear. Clean the millimeter wave radar and the front grille surface. Once the millimeter wave radar and front grille surface are clean, the message on the MID disappears and the RDM system automatically turns on.

NOTE:

- The following MID message may come on temporarily when passing through an enclosed space, such as tunnel.
- Under the above conditions DTC P2583-97 is stored.
- When it is snowing, the radio waves transmitted and received by the millimeter wave radar may be refracted by the snow or ice attached around the millimeter wave radar such as the front grille. At this time, DTC P2583-76 is stored depending on the situation.
- After DTC P2583-76 is stored, the message (Radar Obstructed) is displayed on the MID at the initial stage in some models, and then the indicators come on.

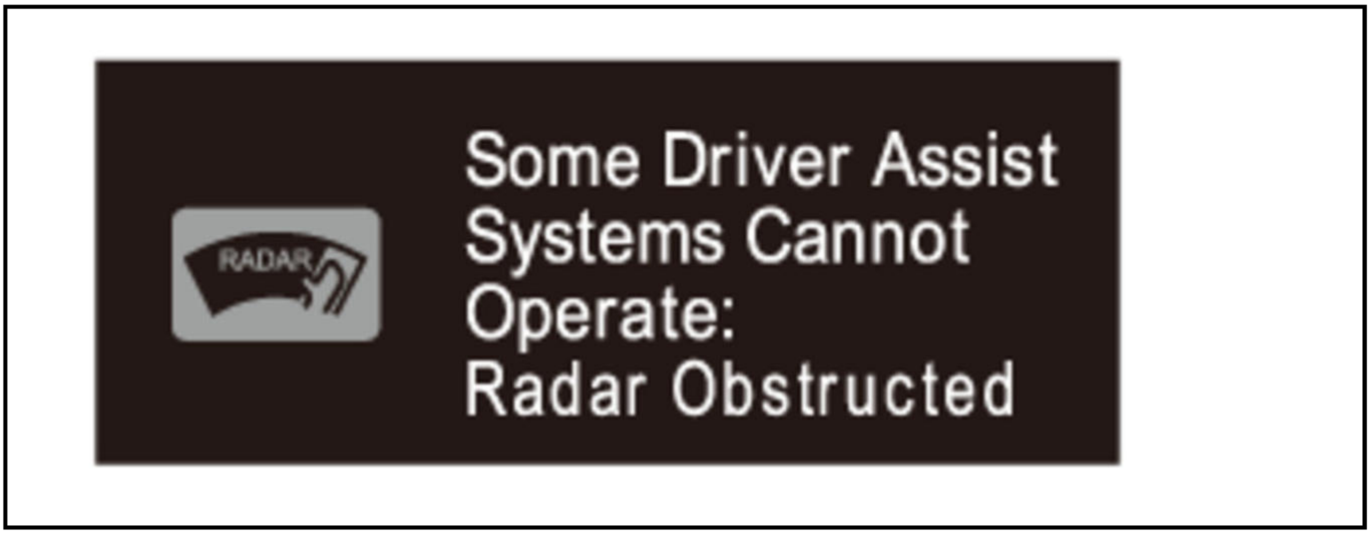

Some Driver Assist Systems Cannot Operate:
Radar Obstructed

Millimeter Wave Radar Aiming

If the millimeter wave radar is removed or replaced, you must do the millimeter wave radar aiming procedure, otherwise the RDM indicator blinks.

Multipurpose Camera Unit

The multipurpose camera unit uses input from the EPS control unit, the SRS unit, the PCM, and the VSA modulator-control unit to warn the driver when approaching the vehicle ahead. The multipurpose camera unit communicates with the gauge control module to send the warning signal.

The multipurpose camera unit also has an error detection function which sends a signal to the millimeter wave radar if an error is detected. The millimeter wave radar receives this information from the multipurpose camera unit.

Dirt or dust detective function (CLEAN FRONT WINDSHIELD Indication)

If the following message appears on the MID, the camera lens or the windshield has enough dirt so that the camera view is obstructed, the RDM system stops operating.

Clean any dirt or contamination on the camera lens or the windshield. Once the camera's view is unobstructed, the indicator on the MID turns off and the RDM system automatically turns back to ON.

NOTE: When millimeter wave radar detected dirt or dust on the multipurpose camera lens or the windshield surface, DTC B2A60-97 is stored as a past failure.

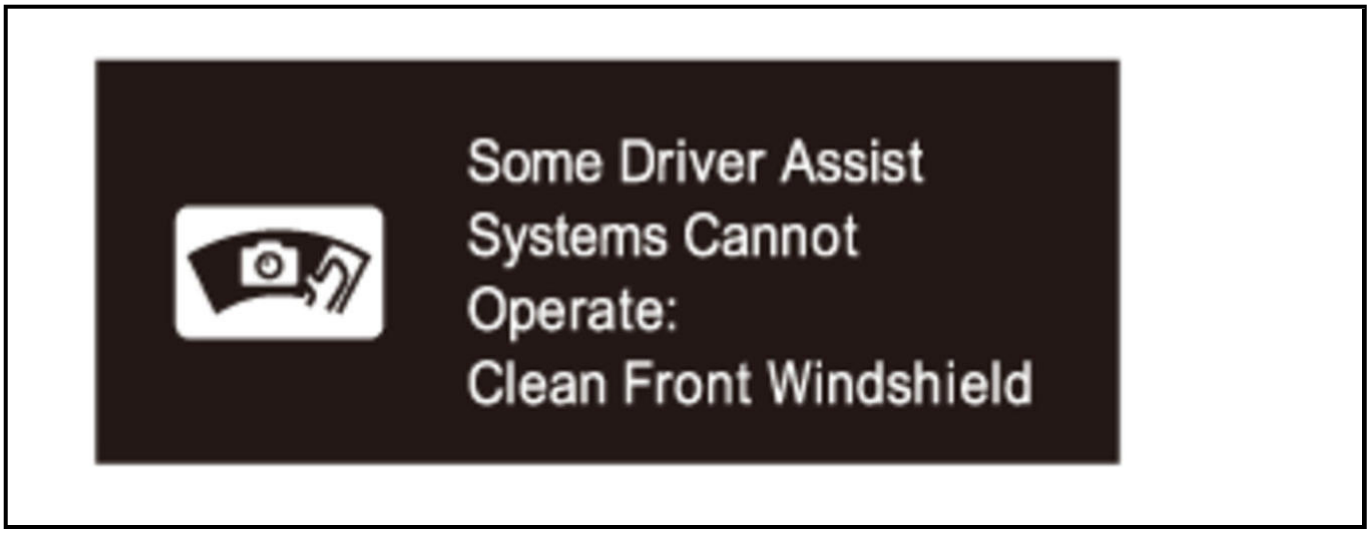

Some Driver Assist
Systems Cannot
Operate:
Clean Front Windshield

System Protect Function (High temperature) (MULTIPURPOSE CAMERA HOT Indication)

If the following message appears on the MID, the RDM system stops operating, and stores a DTC.

When the multipurpose camera temperature cools down to its proper operating temperature, the indicator on the MID turns off, and the RDM system automatically resumes operation.

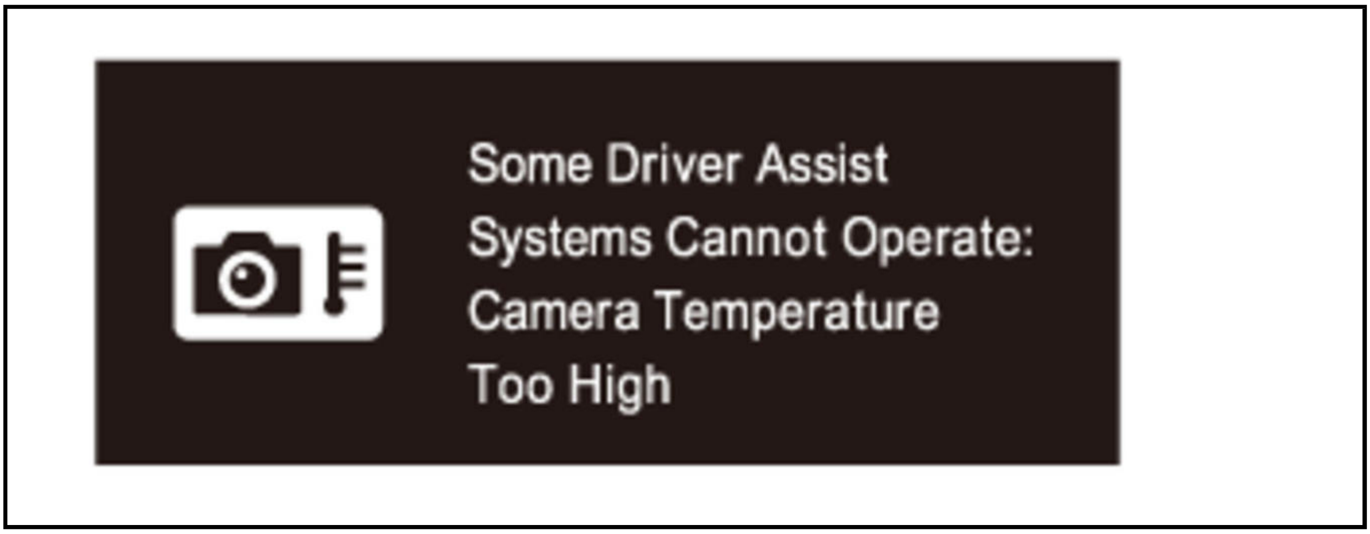

Some Driver Assist
Systems Cannot Operate:
Camera Temperature
Too High

Multipurpose Camera Aiming Function

If the multipurpose camera unit is removed or replaced, you must do the multipurpose camera aiming procedure. If the aiming is incomplete, the RDM indicator blinks.

CAN Communication

The RDM system communicates with other control units via F-CAN. For RDM system diagram, **refer to the System Diagram for RDM** .

If the millimeter wave radar and the multipurpose camera unit detects a communication error or a malfunction in another connected unit, the RDM system will not operate even though it is OK. In this case, both the RDM indicator and the related unit indicator will come on and stay on.

Intermittent Failures

The term "intermittent failure" means a system may have had a failure, but it checks OK now. If you cannot reproduce the condition, check for intermittent failure DTCs. If intermittent failure DTCs are not stored, check for loose connections and terminals. Also check ground and power connections related to the circuit that you are troubleshooting.

How to Troubleshoot DTCs

Check the DTCs with the HDS.

NOTE: For RDM system DTCs, **refer to the DTC troubleshooting index** .

Before troubleshooting, check and note these items:

- Ask the customer about the conditions when the problem occurred, and try to reproduce the same conditions for troubleshooting.
- If the symptom does not appear and the RDM indicator does not come on while test-driving, but your troubleshooting was based on the DTC, check for poor connections or loose terminals at all connectors related to the circuit that you are troubleshooting.
- After the troubleshooting or repairs are done, clear the DTCs, and test-drive the vehicle under the same conditions as when the DTC was originally set. Make sure the RDM indicator does not come on.
- The RDM system sometimes stops operating because of the environment (weather, road conditions, driving conditions, etc.). Intermittent failure DTCs may be stored in these cases.

How to Retrieve DTCs

NOTE: Make sure the 12 volt battery is fully charged before you begin.

1. **Connect the HDS**

2. Use the HDS to check for Integrated Driver Support System DTCs.

3. Read and record the DTC.

4. Turn the vehicle to the OFF (LOCK) mode.

5. Disconnect the HDS.

6. Do the troubleshooting procedure for the DTC.

How to Clear DTCs

NOTE: Make sure the 12 volt battery is fully charged before you begin.

1. **Connect the HDS**

2. In the Driving Support of the HDS, select Integrated Driver Support System, then DTCs, choose the clear DTCs icon, and follow the prompts.

3. Turn the vehicle to the OFF (LOCK) mode.

4. Disconnect the HDS.

DESCRIPTION & OPERATION

NAVIGATION SYSTEM DESCRIPTION

Basic Configuration

The navigation system is a highly-sophisticated, hybrid locating system that uses satellites and a map database to show you where you are and to help guide you to a desired destination.

The navigation system receives signals from the global positioning system (GPS), a network of 24 or more satellites in orbit around the earth. By receiving signals from several of these satellites, the navigation system can determine the latitude, longitude, and elevation of the vehicle. In addition, signals from the navigation unit's own gyro sensor and vehicle information (vehicle speed pulse) enable the system to keep track of the vehicle's direction and speed of travel.

This hybrid system has advantages over a system that is either entirely self-contained or one that relies totally on the GPS. For example, the self-contained portion of the system can keep track of vehicle position even when satellite signals cannot be received. When the navigation system is on, the GPS can keep track of the vehicle position even when the vehicle is transported by ferry.

The navigation system applies all location, direction, and speed information to maps and calculates a route to the destination entered. As you drive to that destination, the system provides both visual and audio guidance.

Audio-Navigation Unit

Refer to the Audio System Description for the audio-navigation unit (display audio) and audio functions .

Navigation Function

The navigation function is installed in the audio-navigation unit as an application. The basic navigation system is composed of the audio-navigation unit, center display unit, vehicle information signals (vehicle speed pulse, reverse signal), and the GPS antenna.

Function Diagram

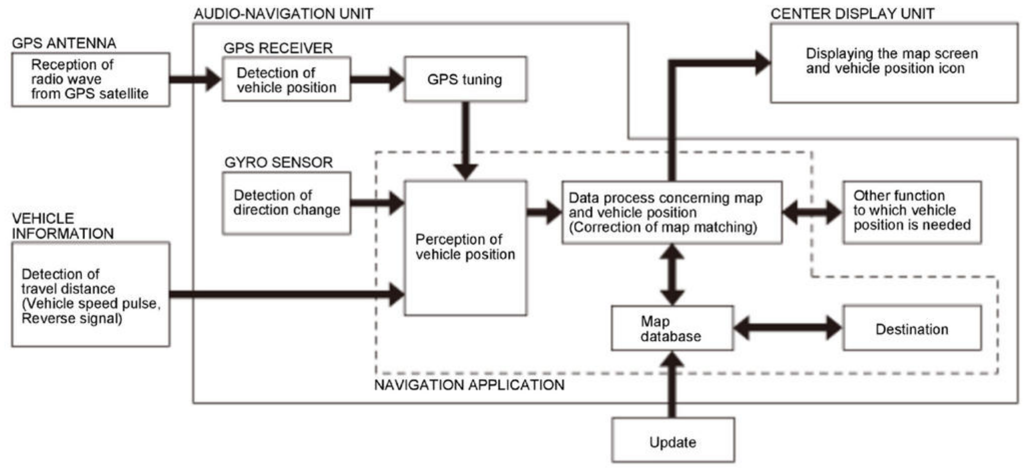
AUDIO-NAVIGATION UNIT
CENTER DISPLAY UNIT
GPS ANTENNA
Reception of radio wave from GPS satellite
GPS RECEIVER
Detection of vehicle position
GPS tuning
Displaying the map screen and vehicle position icon
GYRO SENSOR
Detection of direction change
VEHICLE INFORMATION
Perception of vehicle position
Data process concerning map and vehicle position (Correction of map matching)
Other function to which vehicle position is needed
Detection of travel distance (Vehicle speed pulse, Reverse signal)
Map database
Destination
NAVIGATION APPLICATION
Update

Calculation of Vehicle Position

The audio-navigation unit calculates the vehicle position (the driving direction and the current position) by receiving the directional change signals from the gyro sensor, and the travel distance signals from vehicle information (vehicle speed pulse, BACK LT (reverse) signal).

Map Matching Tuning

Map match tuning means that the vehicle's position is properly indicated on mapped roads. The map data transmitted from the SD card is checked against the current vehicle position data and the vehicle's position is indicated on the nearest road. Map matching tuning cannot be done when the vehicle is on an unmapped road, or if the vehicle is far away from a mapped road.

GPS Tuning

GPS tuning improves the accuracy of the vehicle's actual position in relation to the GPS vehicle position. The audio-navigation unit compares its calculated vehicle position with the GPS position. If there is a large difference between the two positions, the GPS tuning adjusts the calculated vehicle position to the GPS position.

Distance Tuning

The audio-navigation unit compares the vehicles calculated distance using the VSP and the vehicle's actual position based on GPS data. If the values are different, the audio-navigation unit decreases or increases the tuning value depending if the vehicle's calculated position is always ahead or behind the GPS position.

Vehicle Speed Pulse

The vehicle speed pulse is sent by the PCM. The PCM receives a signal from the output shaft speed sensor, then processes the signal and transmits it to the speedometer and other systems.

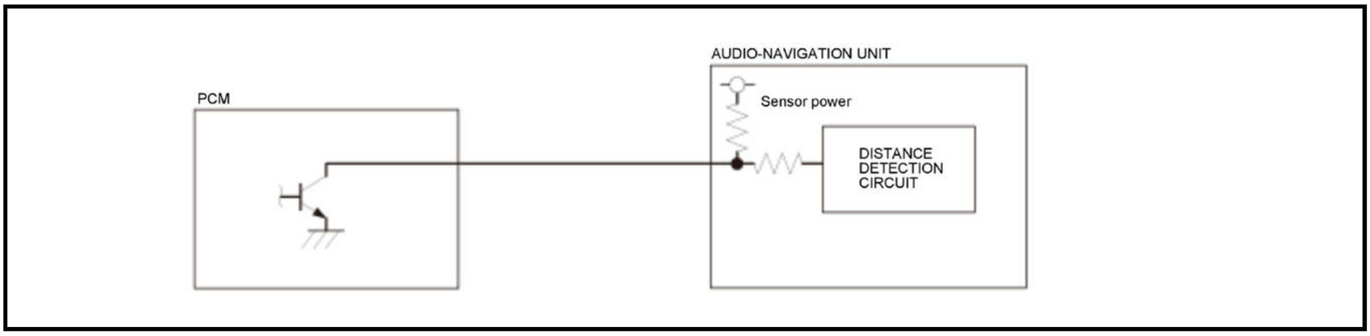

Gyro Sensor

The gyro sensor (located in the audio-navigation unit) detects the direction change (angular speed) and the attitude of the vehicle.

When the vehicle turns left or right, the gyro sensor outputs the voltage. But the sensor outputs the offset voltage when the vehicle is stopped. The audio-navigation unit calculates the relative bearing of the vehicle from the offset voltage. Since the vehicle may generate the yaw rate even when the vehicle is stopped. (when the vehicle is spun on a turn table), the audio-navigation unit prevents incorrect calculations using the gyro sensor temperature information.

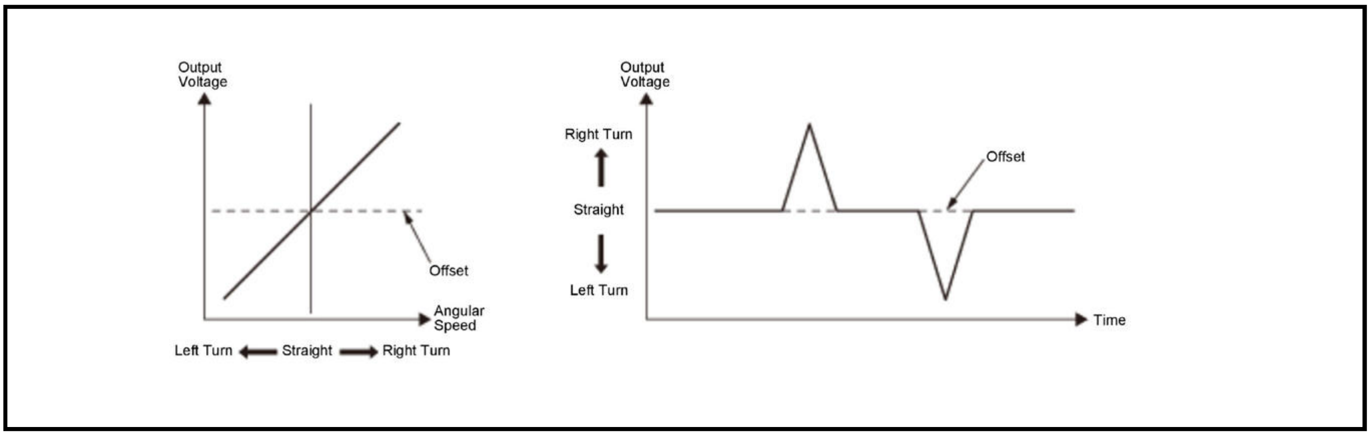

When the vehicle repeats acceleration/slowdown, the gyro sensor outputs the voltage. In addition, the gyro sensor is affected by the vehicle's slant angle. The audio-navigation unit calculates the slant angle of the vehicle from the offset voltage.

To correctly calculate when the vehicle is at an angle, the audio-navigation unit sets up the offset in these cases:

- GPS altitude is constant.
- Vehicle speed is constant.

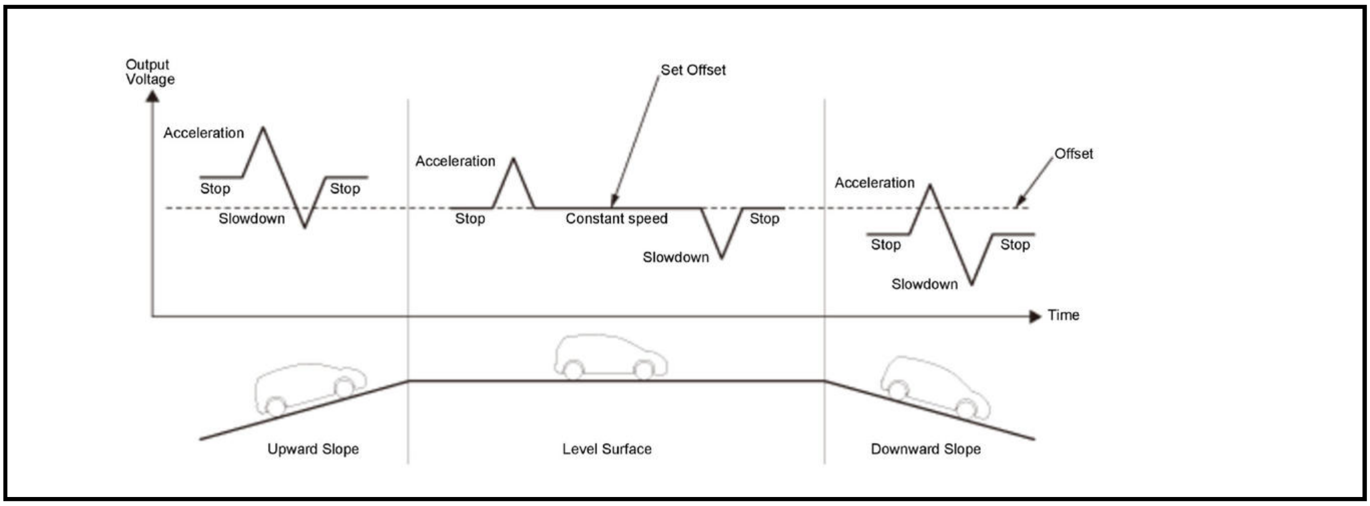

Oscillation Gyro Principles

The piezoelectric parts have electric/mechanical transfer characteristics. They bend vertically when voltage is applied to both sides of the parts, and voltage is generated between both sides of the piezoelectric parts when they are bent by an external force. The oscillation gyro functions by utilizing this characteristic of the piezoelectric parts and Coriolis force. (Coriolis force deflects moving objects as a result of the earth's rotation.) In the oscillation gyro, this force moves the sensor element when angular velocity is applied.

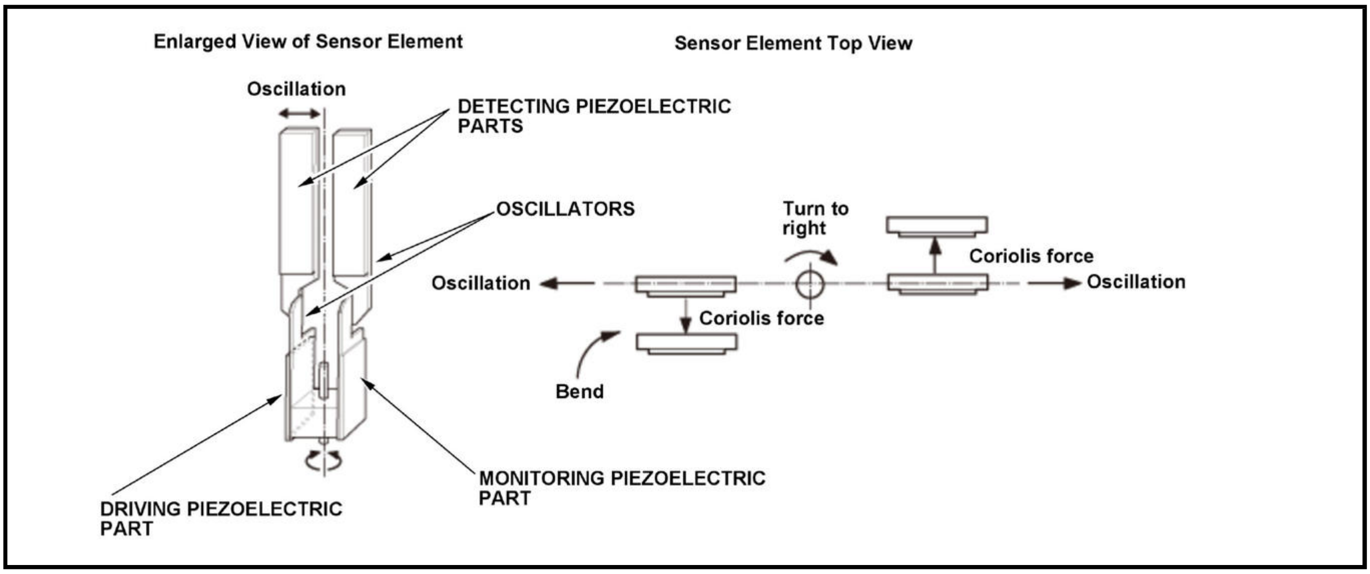
Enlarged View of Sensor Element
Sensor Element Top View
Oscillation
DETECTING PIEZOELECTRIC PARTS
OSCILLATORS
Turn to right
Coriolis force
Oscillation
Oscillation
Coriolis force
Bend
MONITORING PIEZOELECTRIC PART
DRIVING PIEZOELECTRIC PART

Global Positioning System (GPS)

The global positioning system (GPS) enables the navigation system to determine the current position of the vehicle by using the signals transmitted from the satellites in orbit around the earth. The satellites transmit the satellite identification signal, orbit information, transmission time signal, and other information. When the GPS receiver receives a signal from four or more satellites simultaneously, it calculates the current position of the vehicle based on the distance to each satellite and the satellite's position in its respective orbit.

Position Detection Image with GPS Satellite

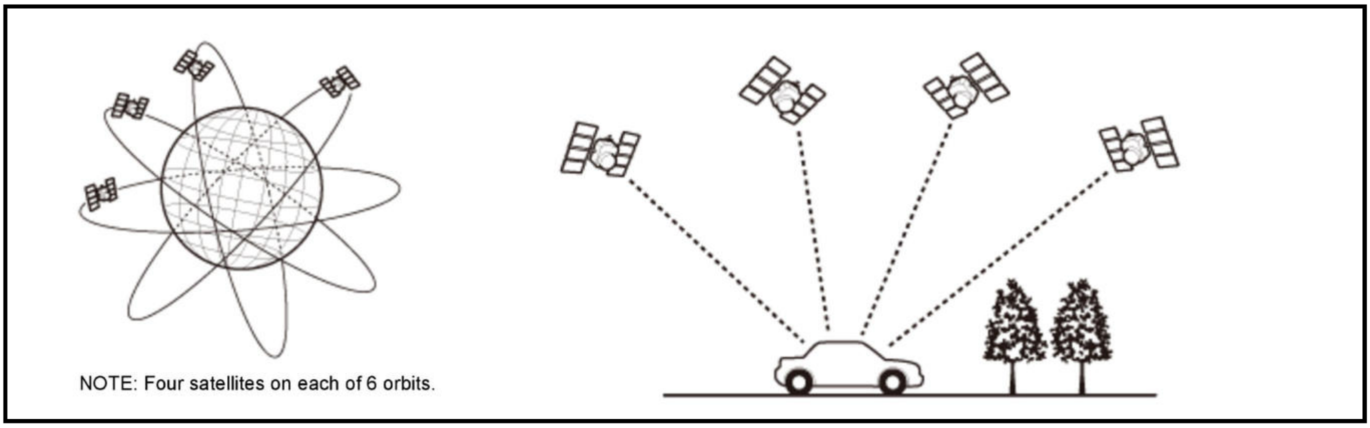
NOTE: Four satellites on each of 6 orbits.

Precision of GPS

The precision of the GPS varies according to the number of satellites from which signals are received and the view of the sky.

Number of Satellites	Condition	Description
None	Faulty reception	The GPS cannot be utilized due to a faulty GPS receiver or antenna, or other fault or interference.
2 or less	Impossible to detect vehicle position	GPS function is normal. The satellite signals received by the GPS are too few to detect the vehicle position.
3	Vehicle position detectable in 2 dimensions	The longitude and latitude of the vehicle position can be detected (less precise than detection in three dimensions).
4 or more	Vehicle position detectable in 3 dimensions (elevation displayed)	The longitude, latitude and the altitude of the vehicle position can be detected (more precise than detection in two dimensions).

GPS Antenna

The GPS antenna amplifies and transmits the signals received from the satellites to the GPS receiver.

GPS Receiver and Clock

The GPS receiver is built into the audio-navigation unit. It calculates the vehicle position by receiving the signal from the GPS antenna. The current time, vehicle position, and signal reception condition are transmitted from the GPS receiver to the navigation system to adjust vehicle position and the clock display in the audio-navigation unit. Also, the audio-navigation unit can set world time zones automatically by calculating the vehicle position.

Audio Guidance

The audio-navigation unit outputs navigation voice guidance before entering an intersection or passing a junction.

- With stereo amplifier: The voice guidance are sent to the stereo amplifier using the analog audio line (AUX NAVI), then outputs them to the front speaker(s) (driver's side).
- Without stereo amplifier: The voice guidance outputs to the front speaker(s) (driver's side).

Muting Signal Logic

When the speaker outputs the voice guidance, audio muting logic is orchestrated by the audio-navigation unit. The audio-navigation unit determines what audio source has priority to use speakers. **Refer to the audio system Description** for muting signal logic with the audio-navigation unit.

Voice Control Function

This navigation system also has voice recognition that allows voice control of most of the audio, navigation, and the HFL functions. The TALK button on the steering wheel activate the voice control. The voice control also allows control of the audio and climate functions.

Muting Signal Logic

When the voice recognition is in use, audio muting logic is orchestrated by the audio-navigation unit. The audio-navigation unit determines what audio source has priority to use speakers Refer to the audio system Overview for muting signal logic with the audio-navigation unit.

Fan Mute Operation

When the voice recognition is in use, the audio-navigation unit sends the fan mute signal to the climate control unit via the B-CAN. The blower fan operating voltage may be reduced depending on the current fan speed.

Turn by Turn Directions

The audio-navigation unit outputs the route guidance (direction) information to the multi-information display (MID) in the gauge control module via the digital signal line (LVDS2). In the case of route guidance mode, the MID shows the simple routing guidance using an arrow. When other than route guidance mode, the MID shows the azimuth (direction) information in 16-directions.

HD Traffic (TM)

The HD Traffic (TM) is a broadcast for delivering traffic information to the driver. The traffic data is coded using the FM broadcast.

The HD Traffic (TM) uses a decoder in the audio-navigation unit to decode the traffic information data. It is integrated directly into a navigation system. The traffic information is displayed with the navigation route guidance. It is used to avoid traffic jams and accidents (see the Navigation System repair service information for more information).

HondaLink Assist

HondaLink delivers remote services to the vehicle using the customer's compatible Bluetooth phone. **Refer to the audio system Description** .

Microphone

The Microphone receives navigation voice command, and transmits them to the audio-navigation unit. **Refer to the HandsFreeLink system Description** .

HFL (Navigation Voice Control) Switch

The HFL (navigation voice control) switch and the audio remote switch are integrated to the audio remote-HFL switch. **Refer to the audio system Description** .

Multi-View Rearview Camera

The multi-view rearview camera allows the driver to see what is behind the vehicle by displaying the image on the audio-navigation unit. There are three different selectable views. **Refer to the audio system Description** .

NAVIGATION SYSTEM DESCRIPTION - SYSTEM DIAGRAM

For locations of each component on vehicle, refer to Navigation System Component Location Index.

With Stereo Amplifier

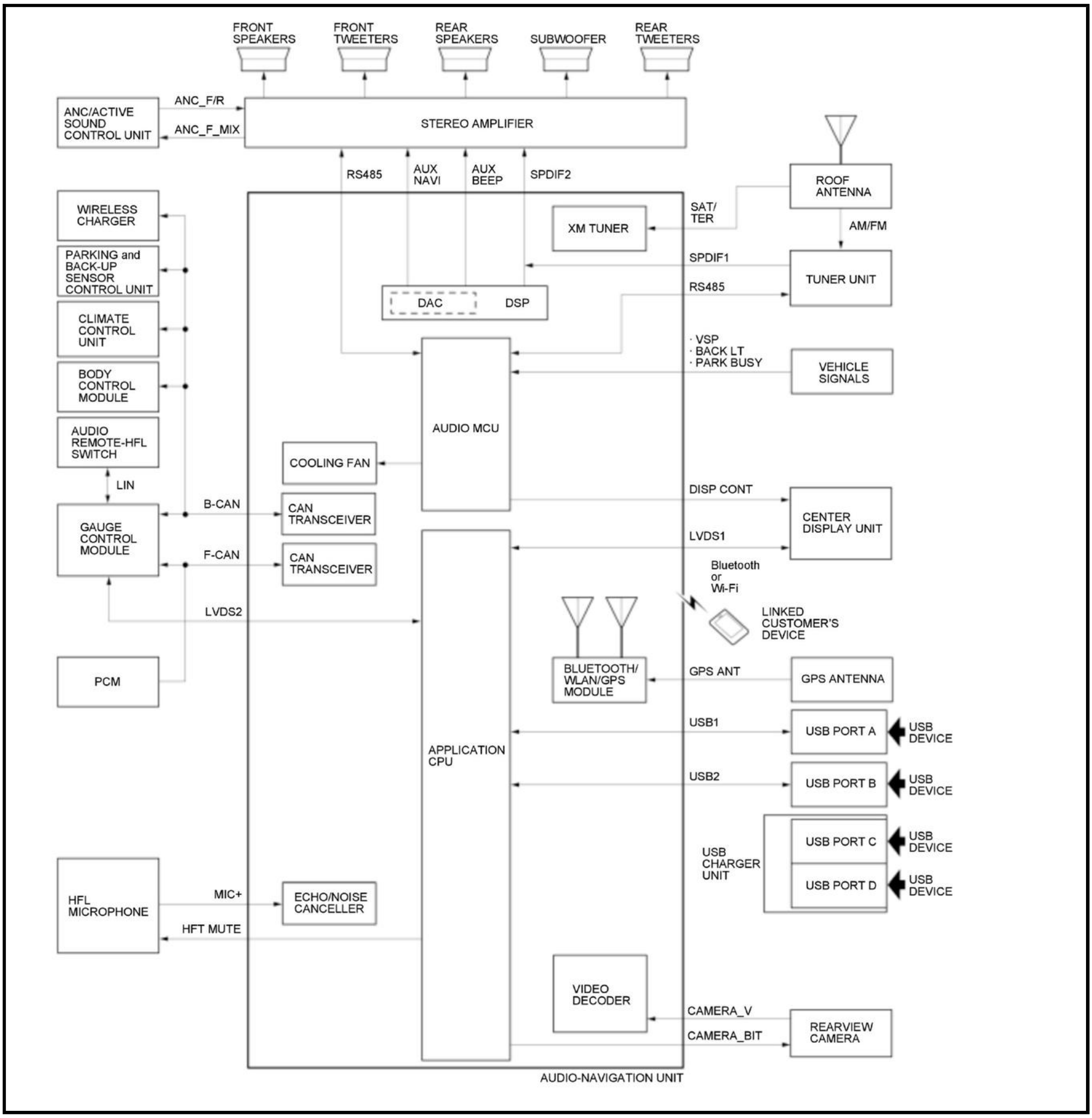
FRONT SPEAKERS
FRONT TWEETERS
REAR SPEAKERS
SUBWOOFER
REAR TWEETERS
ANC/ACTIVE SOUND CONTROL UNIT
ANC_F/R
ANC_F_MIX
STEREO AMPLIFIER
RS485
AUX NAVI
AUX BEEP
SPDIF2
ROOF ANTENNA
SAT/ TER
AM/FM
WIRELESS CHARGER
XM TUNER
PARKING and BACK-UP SENSOR CONTROL UNIT
SPDIF1
TUNER UNIT
RS485
DAC
DSP
CLIMATE CONTROL UNIT
· VSP
· BACK LT
· PARK BUSY
VEHICLE SIGNALS
BODY CONTROL MODULE
AUDIO REMOTE-HFL SWITCH
AUDIO MCU
COOLING FAN
LIN
DISP CONT
B-CAN
CAN TRANSCEIVER
CENTER DISPLAY UNIT
GAUGE CONTROL MODULE
LVDS1
F-CAN
CAN TRANSCEIVER
Bluetooth or Wi-Fi
LVDS2
LINKED CUSTOMER'S DEVICE
PCM
BLUETOOTH/ WLAN/GPS MODULE
GPS ANT
GPS ANTENNA
USB1
USB PORT A
USB DEVICE
APPLICATION CPU
USB2
USB PORT B
USB DEVICE
USB CHARGER UNIT
USB PORT C
USB DEVICE
USB PORT D
USB DEVICE
HFL MICROPHONE
MIC+
ECHO/NOISE CANCELLER
HFT MUTE
VIDEO DECODER
CAMERA_V
CAMERA_BIT
REARVIEW CAMERA
AUDIO-NAVIGATION UNIT

Without Stereo Amplifier

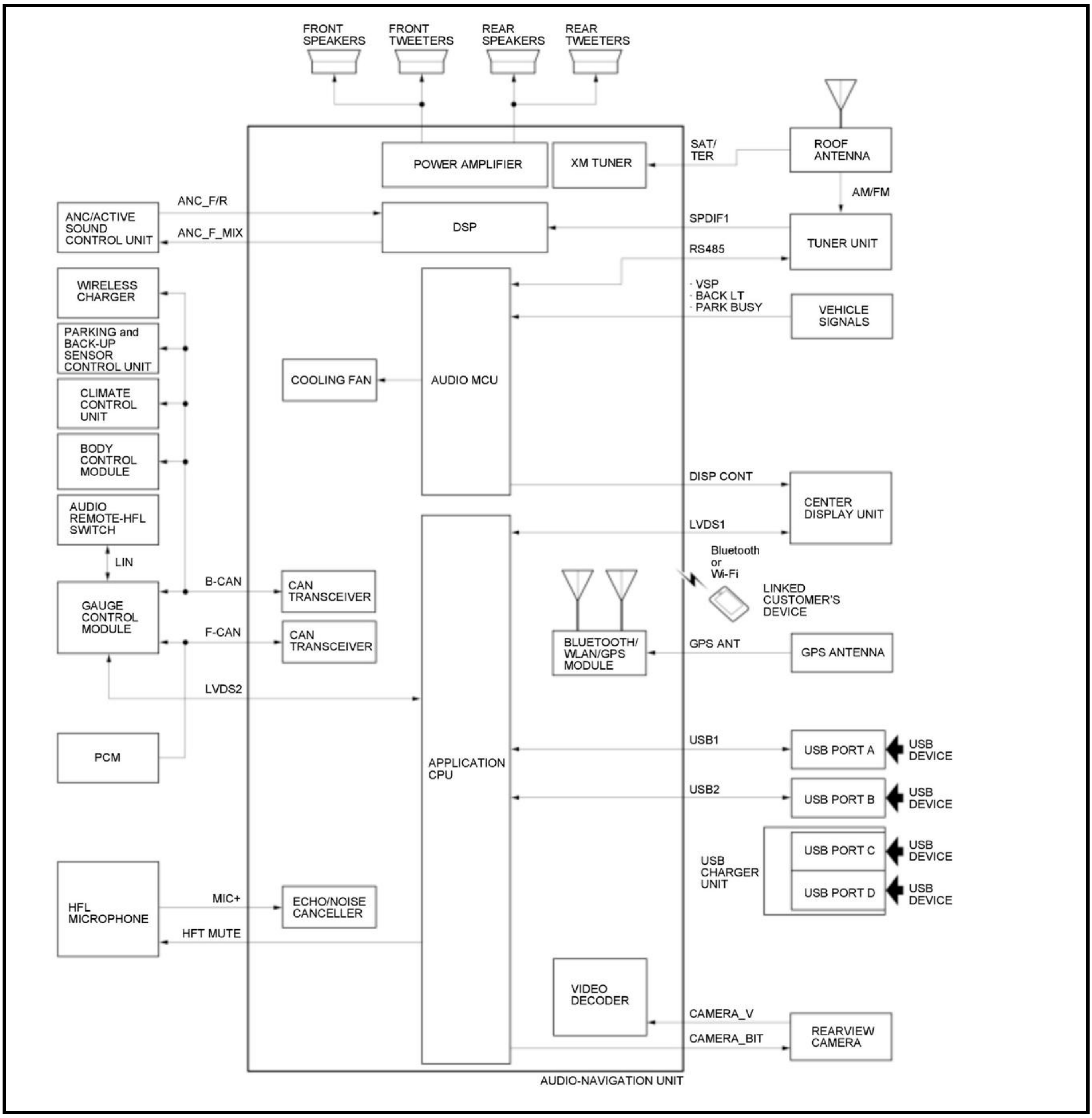
FRONT SPEAKERS
FRONT TWEETERS
REAR SPEAKERS
REAR TWEETERS
ROOF ANTENNA
SAT/ TER
POWER AMPLIFIER
XM TUNER
AM/FM
ANC/ACTIVE SOUND CONTROL UNIT
ANC_F/R
ANC_F_MIX
DSP
SPDIF1
TUNER UNIT
RS485
WIRELESS CHARGER
· VSP
· BACK LT
· PARK BUSY
VEHICLE SIGNALS
PARKING and BACK-UP SENSOR CONTROL UNIT
COOLING FAN
AUDIO MCU
CLIMATE CONTROL UNIT
BODY CONTROL MODULE
DISP CONT
CENTER DISPLAY UNIT
AUDIO REMOTE-HFL SWITCH
LVDS1
LIN
Bluetooth or Wi-Fi
LINKED CUSTOMER'S DEVICE
B-CAN
CAN TRANSCEIVER
GAUGE CONTROL MODULE
F-CAN
CAN TRANSCEIVER
BLUETOOTH/ WLAN/GPS MODULE
GPS ANT
GPS ANTENNA
LVDS2
USB1
USB PORT A
USB DEVICE
PCM
APPLICATION CPU
USB2
USB PORT B
USB DEVICE
USB CHARGER UNIT
USB PORT C
USB DEVICE
USB PORT D
USB DEVICE
HFL MICROPHONE
MIC+
ECHO/NOISE CANCELLER
HFT MUTE
VIDEO DECODER
CAMERA_V
CAMERA_BIT
REARVIEW CAMERA
AUDIO-NAVIGATION UNIT

Power Supply Diagram

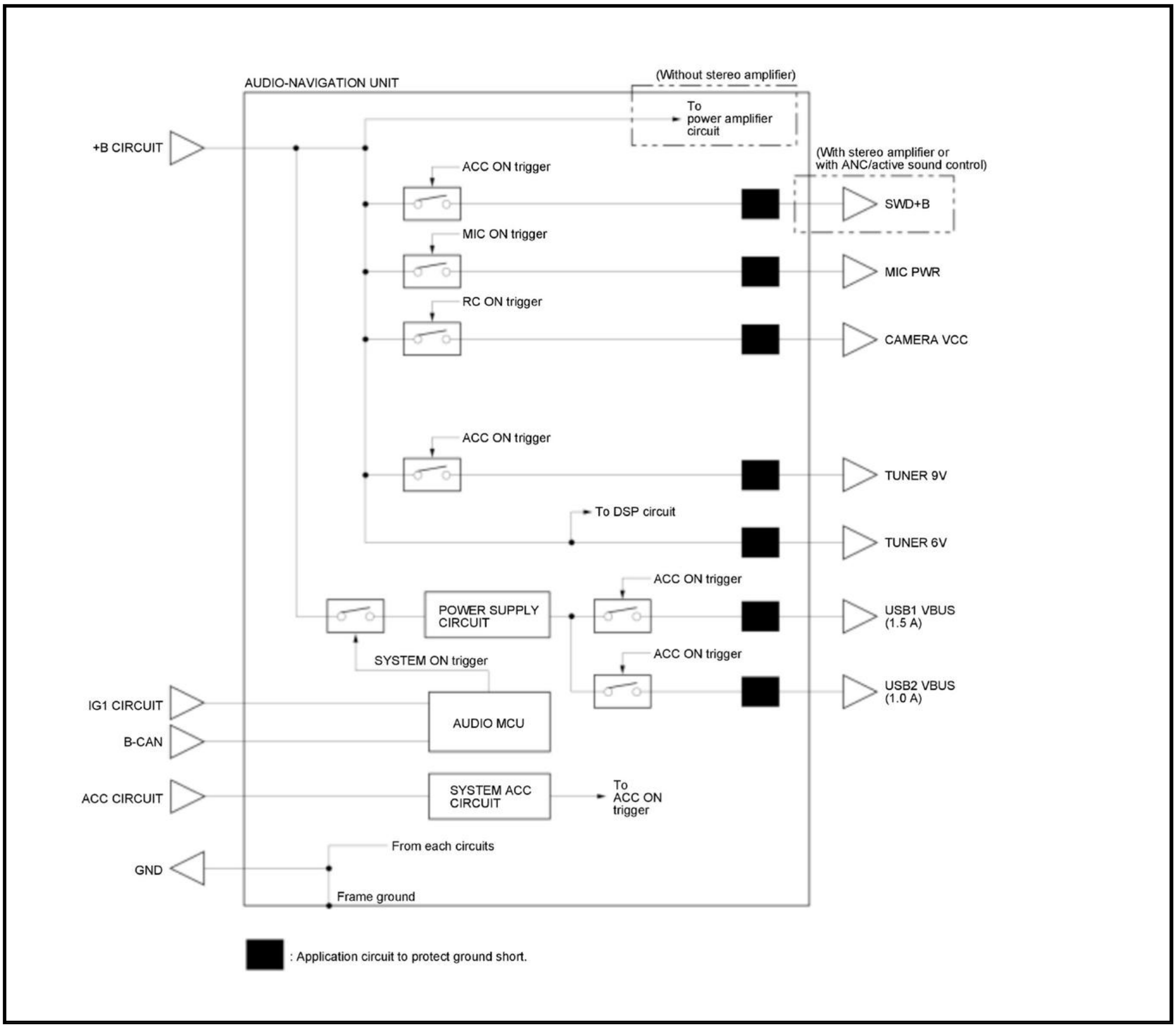
AUDIO-NAVIGATION UNIT
(Without stereo amplifier)
To power amplifier circuit
+B CIRCUIT
(With stereo amplifier or with ANC/active sound control)
ACC ON trigger
SWD+B
MIC ON trigger
MIC PWR
RC ON trigger
CAMERA VCC
ACC ON trigger
TUNER 9V
To DSP circuit
TUNER 6V
ACC ON trigger
POWER SUPPLY CIRCUIT
USB1 VBUS (1.5 A)
SYSTEM ON trigger
ACC ON trigger
USB2 VBUS (1.0 A)
IG1 CIRCUIT
AUDIO MCU
B-CAN
ACC CIRCUIT
SYSTEM ACC CIRCUIT
To ACC ON trigger
From each circuits
GND
Frame ground
: Application circuit to protect ground short.

DIAGNOSIS

NAVIGATION SYSTEM DIAGNOSTIC MODE

NOTE:

- Check the vehicle 12 volt battery condition first .
- The screens detail indicated may change depending on equipment or specification.

Start-Up Procedure and Diagnostic Menu

1. Turn the vehicle to the ON mode. If needed, start the engine. Press and hold the PHONE button, the DISPLAY MODE (

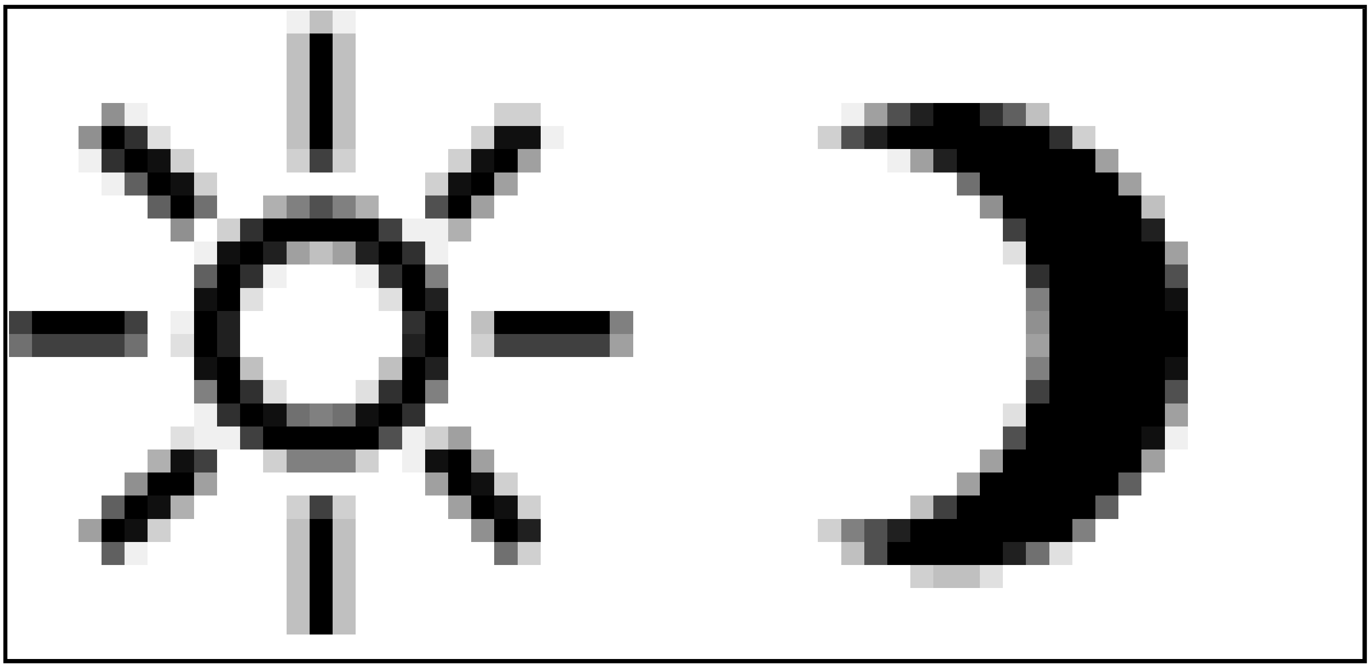

) button, and the AUDIO POWER (

⏻

) button until the Select Diagnosis Items menu screen is displayed:

NOTE: The buttons needs to be pressed together simultaneously.

- Self-Diagnosis Mode (runs the automatic diagnosis of the navigation system)
- Detail Information and Setting (allows you to manually diagnose the navigation system)

Displaying Select Diagnosis Items Menu Screen

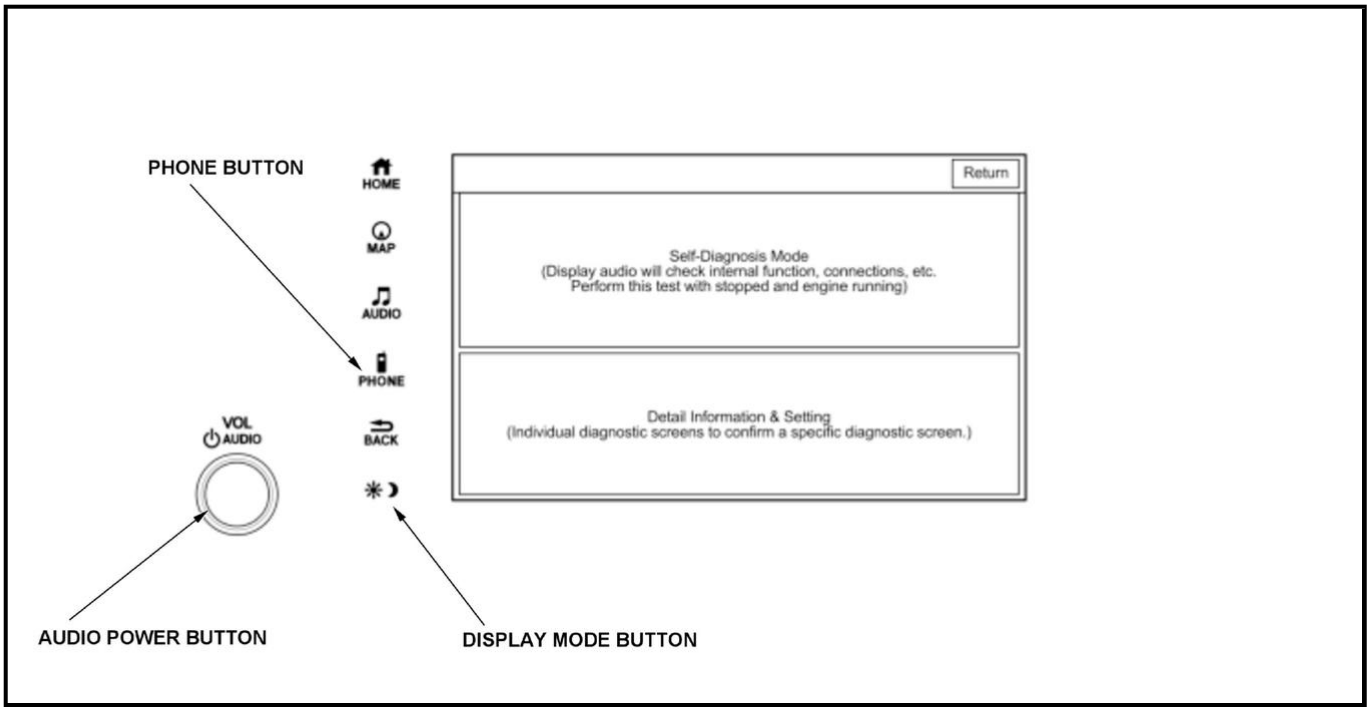
PHONE BUTTON
HOME
MAP
AUDIO
PHONE
BACK
VOL
AUDIO
AUDIO POWER BUTTON
DISPLAY MODE BUTTON
Return

Self-Diagnosis Mode
(Display audio will check internal function, connections, etc.
Perform this test with stopped and engine running)

Detail Information & Setting
(Individual diagnostic screens to confirm a specific diagnostic screen.)

Self-Diagnosis Mode (System Links)

1. Select the Self-Diagnosis Mode from the Select Diagnosis Items menu. The message at the bottom of the screen flashes indicating "Diagnosis in progress...", do not turn the vehicle to the OFF (LOCK) mode.

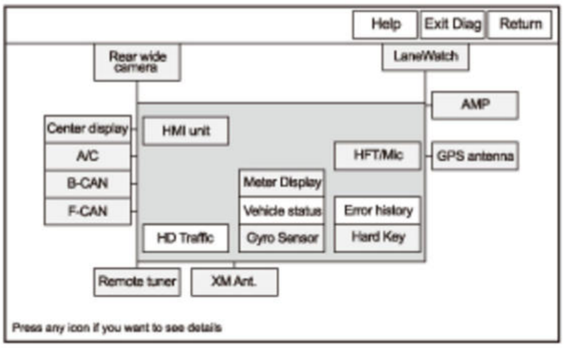
Help
Exit Diag
Return
Rear wide camera
LaneWatch
AMP
Center display
A/C
B-CAN
F-CAN
HMI unit
HFT/Mic
GPS antenna
Meter Display
Vehicle status
Gyro Sensor
Error history
Hard Key
HD Traffic
Remote tuner
XM Ant.

Press any icon if you want to see details

The diagnosis tests the following:

- Most of the wires connecting the external navigation components shown in the block diagram.
- The results from the various components shown in the block diagram.
- The audio-navigation unit checks the microphone by listening to the "'Pi Pi Pon" sound produced by the audio-navigation unit from the speakers when the diagnosis is started. This requires that the audio system be operating normally.

When the diagnosis finishes, the icons turn different colors based on their test status.

NOTE: By selecting the Help icon, you can see a description for each color.

Icon Colors	Description
Green	The system ran a diagnosis and the results are OK.
Red*	Errors that require replacement of hardware or harness. Examples are connection error or memory diagnosis errors. Select the red icon and check each diagnostic screen (refer to the description for diagnostic screens in the Unit Check).

Icon Colors	Description
Yellow	- Errors that do not require hardware replacement, or the connection check is in the state which is not done. Such as leaving the vehicle in the ACCESSORY mode or because of a missing accessory. - When the audio-navigation unit detects a failure, and stores DTC, the Error History icon turns yellow.
White	The diagnosis is running. The screen functions are locked out while the diagnosis runs.
Gray	- The system cannot automatically check this function. You have to select the diagnosis item and manually do additional testing, like checking the audio-navigation unit buttons in the Hard Key test. When you complete the Hard Key test and return to the System Links screen, the gray icon turns green. - The Vehicle Status icon anytime shows gray. - When the audio-navigation unit does not store DTCs, the Error History icon shows gray.

*:	The F-CAN icon and the B-CAN icon turns red when the vehicle is in the ACCESSORY mode. Check the System Links with the engine running, and if the F-CAN icon and the B-CAN icon turns green, the system is OK at this time.

4. Select the icon to see the details of that diagnostic function. The icon colors on the screen may not change until you exit and reenter the Self-Diagnosis mode. In some cases, you may have to restart the engine for the indication to change. After you repair the affected component or harness, repeat this diagnosis.

Factory Diagnostic Screen In Line Diag and Linking

If the vehicle left the factory in the factory diagnostic mode, you will see this screen every time you turn the vehicle to the ON mode. Sometimes this screen also appears after you replace the audio-navigation unit with a new or remanufactured unit. Normally the factory does the steps necessary to verify proper operation and terminate the factory diagnosis. Until the proper confirmation sequence is done, the screen appears every time you turn the vehicle to the ON mode.

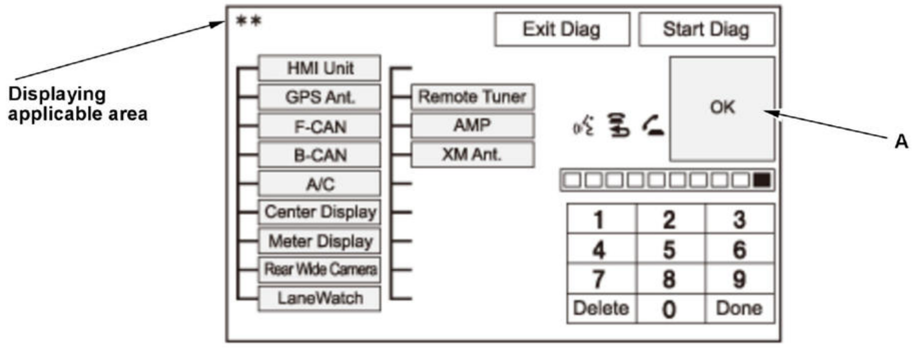

NOTE: The system cannot complete a full diagnosis unless vehicle is in the ON mode.

1. Select the Start Diag icon to check the connection between the audio-navigation unit and related components. When the connection diagnosis is in progress, the icon (A) indicates Detecting..., and each icon turns white. If the connection is OK, the icon turns green. If the connection is NG, the icon turns red. Check for connection between the audio-navigation unit and related unit on the failure connection line.

NOTE: When the item is a variation equipment, the icon shows yellow, and it is not reflected in diagnosis.

2. If the connection diagnosis is finished, press the steering commander switch buttons (the TALK button, PICK-UP button, and the HANG-UP/BACK button) to check the HFL switch. As each button is pressed, the corresponding icon on the display should turn green.

3. Press the TALK button, and within 5 seconds in a normal voice say "testing". The Mic Level indicator on the screen should momentarily turn green.

4. If all the diagnosis are OK, the icon (A) indicates OK. Select the Exit Diag icon to exit the diagnostic mode. The In Line Diag should not appear again.

Forced Completing of In Line Diag and Linking

Follow these steps to prevent the screen from appearing in the future:

1. While displaying the In Line Diag screen, press and hold the PHONE button, the DISPLAY MODE (

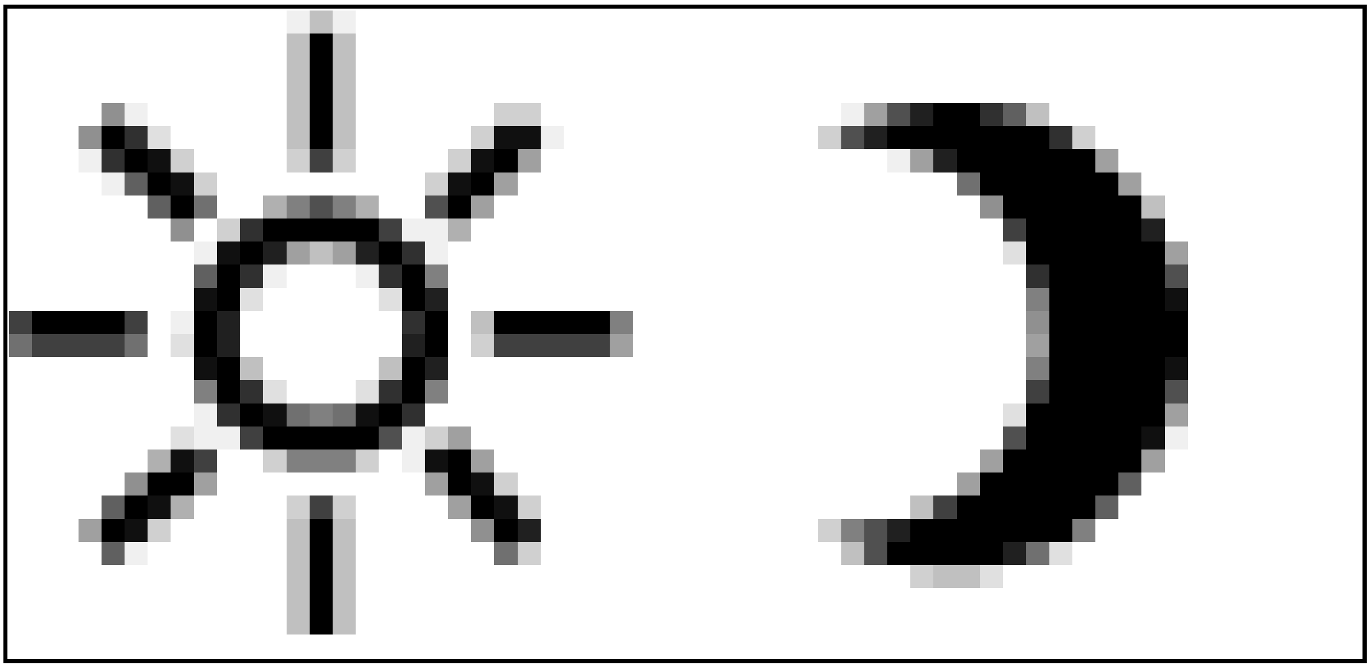

) button, and the AUDIO POWER (

⏻) button until the Select Diagnosis Items menu screen is displayed.

2. While displaying the Select Diagnosis Items menu screen, press and hold the HOME button until the In Line Diag setting screen is displayed.

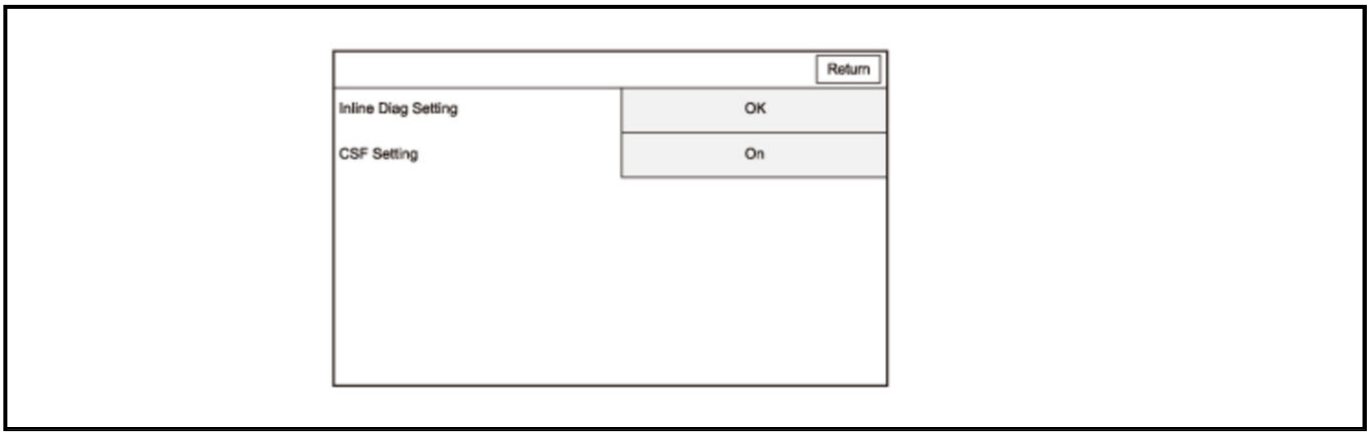

Inline Diag Setting	OK
CSF Setting	On

3. Set the Inline Diag Setting to OK (complete). The system restarts and a normal start-up process occurs. The In Line Diag should not appear again.

Detail Information and Setting

This section allows you to run a specific diagnosis and allows additional setting choices for some screens that are not shown when touching an icon from the System Links screen.

Select the item you want to check, and the test begins. To return to the previous screen, select the Return icon.

- Monitor Check
- Unit Check
- Audio Check
- Guideline Setup
- Functional Setup
- B-CAN*
- F-CAN*
- Version
- Vehicle Status*
- GPS Information

*: Refer to the Unit Check for details.

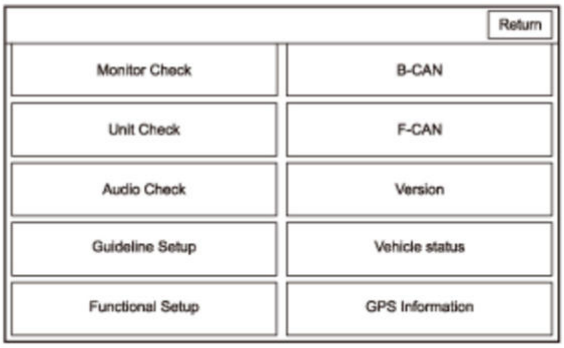
Return
Monitor Check
B-CAN
Unit Check
F-CAN
Audio Check
Version
Guideline Setup
Vehicle status
Functional Setup
GPS Information

Monitor Check

These screens allow you to troubleshoot the LCD display on the center display unit. Select the item you want to check, and follow the diagnostic instructions.

- RGB Color
- Gray Tone
- White Raster
- Black Raster
- Color Pattern
- Touch Panel Check
- Touch Panel Adjustment
- Monitor Adjustment

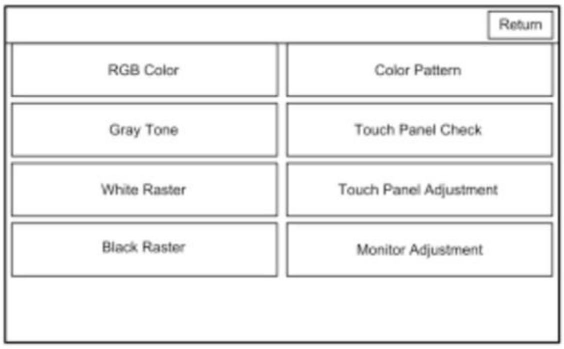
Return
RGB Color
Color Pattern
Gray Tone
Touch Panel Check
White Raster
Touch Panel Adjustment
Black Raster
Monitor Adjustment

RGB Color

NOTE: Displaying an anomaly in this diagnosis screen is not necessarily a failure.

This screen verifies that the display is receiving the video (R, G, B, and Composite sync) signals properly. The three primary colors should all appear without distortion. The combination of all three should produce a central white section. If any of the color circles are missing, **replace the center display unit** .

The diagnostic screen is displayed in full screen mode while pressing the HOME button.

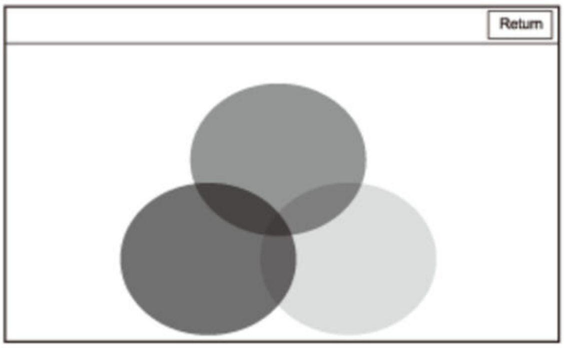

Gray Tone

NOTE: Displaying an anomaly in this diagnosis screen is not necessarily a failure.

This screen checks problems with contrast in 16 gradations. You should be able to see the changes from bar to bar across the scale. It is normal for the two bars on either side to appear the same.

The diagnostic screen is displayed in full screen mode while pressing the HOME button.

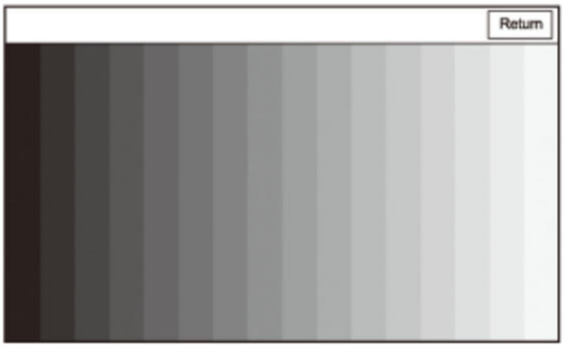

White Raster

NOTE: Displaying an anomaly in this diagnosis screen is not necessarily a failure.

This screen checks for pixels that may be dead (off). The entire display must be white.

The diagnostic screen is displayed in full screen mode while pressing the HOME button.

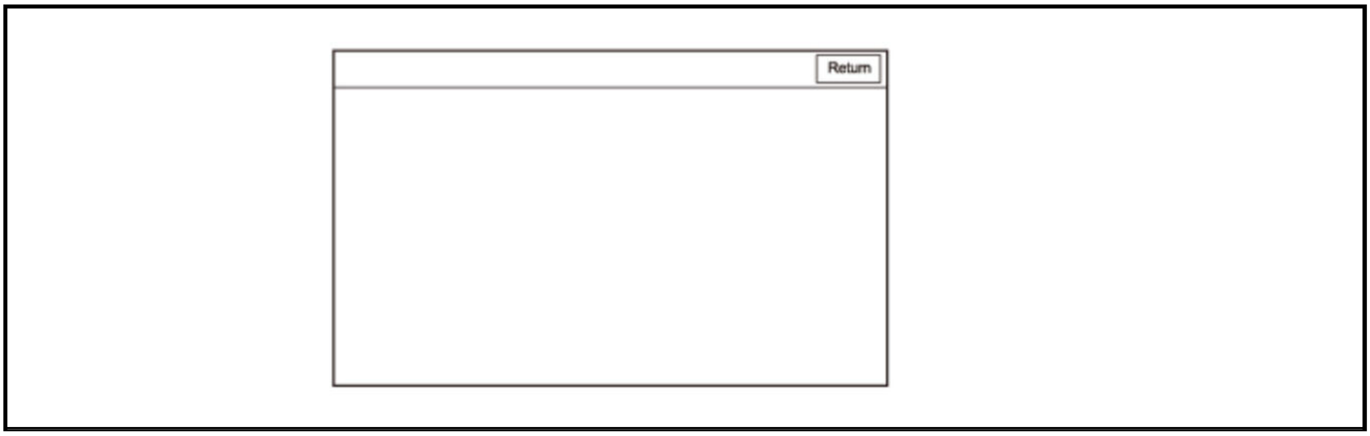

Black Raster

NOTE: Displaying an anomaly in this diagnosis screen is not necessarily a failure.

This screen checks for pixels that may be stuck on. The entire display must be black.

The diagnostic screen is displayed in full screen mode while pressing the HOME button.

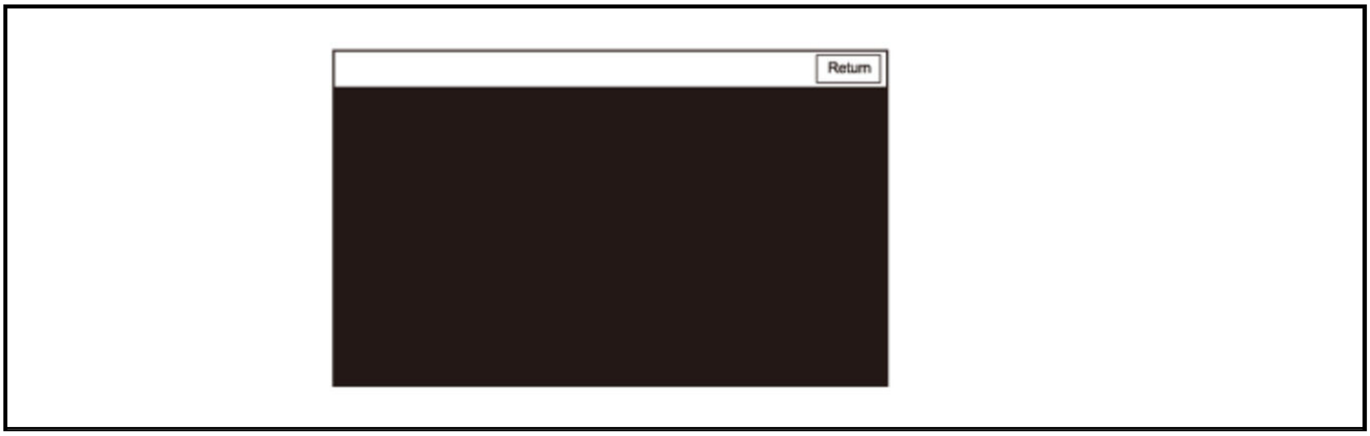

Color Pattern

NOTE: Displaying an anomaly in this diagnosis screen is not necessarily a failure.

The screen shows the colors being used for the map and menu screens. This is for factory use only. To check the color signal, use the RGB Color diagnosis.

The diagnostic screen is displayed in full screen mode while pressing the HOME button.

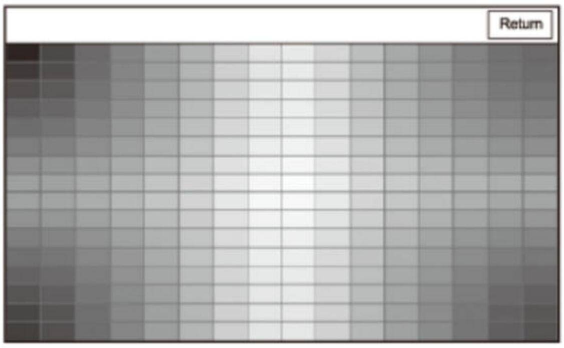

Touch Panel Check

This check allows you to check the sensitivity of touch panel. If the screen is operated in the state while the telop (A) is displayed, the track changes to black, and the action name (Tap, Double tap, Pinch, Slide, and Flick) appears on the caption (B) for 5 seconds. The screen displays the coordinates of where the screen was touched. If the BACK button is pressed, the screen returns to the Monitor Check menu. If another location other than the location pressed responds, do the Touch Panel Adjustment.

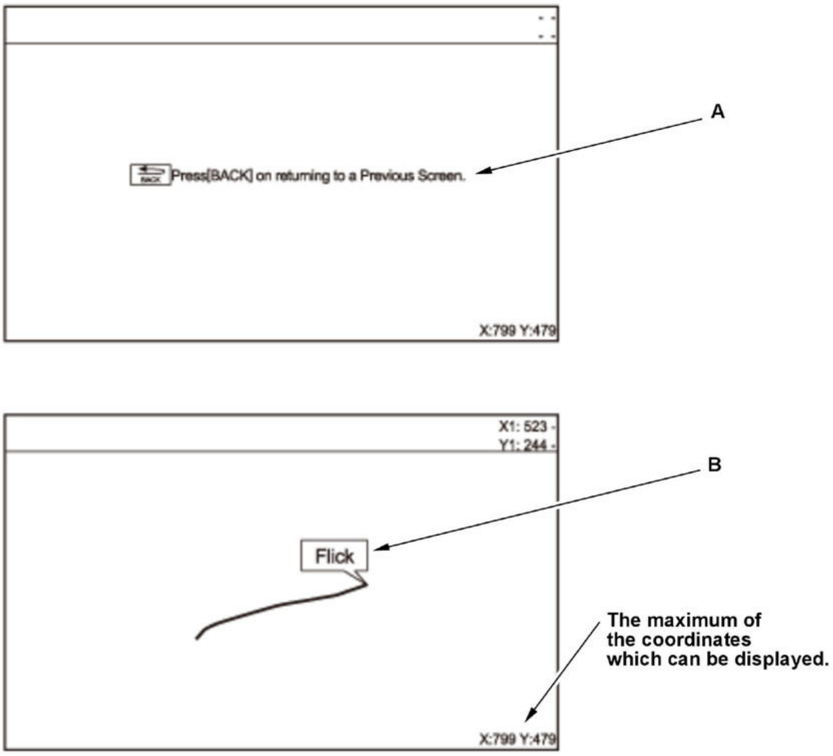
Press[BACK] on returning to a Previous Screen.

X:799 Y:479

X1: 523 -
Y1: 244 -

X:799 Y:479

Touch Panel Adjustment

This screen adjusts the alignment of these touch locations with the location of the buttons images on the screen.

The screen consists of the + icons. Touch the center of the five + icons on order 1-5. To store the settings, select the Set.

NOTE: Touch the center of the +icon correctly.

When selecting the Set icon, the audio-navigation unit reflects the result of the touch panel adjustment. Select Return to exit the Touch Panel Adjustment screen.

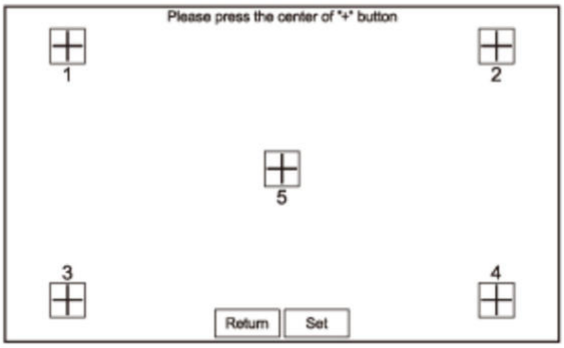
Please press the center of "+" button
1
2
5
3
4
Return
Set

Monitor Adjustment

This screen adjusts the brightness, etc. of the camera (rearview or LaneWatch) image.

Select Return to exit the Monitor Adjustment screen.

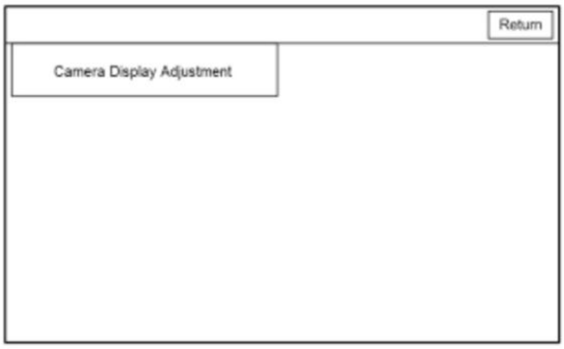
Return
Camera Display Adjustment

Unit Check (Quick Check)

These screens allow you to diagnose the audio-navigation unit and related units. Some of the tests and screens that are displayed under the Unit Check are same as the checks listed under the Detail Information and Setting.

To start the test, select the item you want to check.

NOTE: These items describe in indication order. Swipe the screen to check the next items.

- HMI unit
- F-CAN
- B-CAN
- USB
- Vehicle status
- HFL/Mic
- Hard Key
- Error history
- Rear wide camera
- Front Camera (not supported)
- LaneWatch (if equiped)
- Remote tuner
- AMP
- XM Ant.

- CD (not supported)
- Center display
- iPhone
- Meter Display
- GPS antenna
- HD Traffic
- Gyro Sensor
- A/C
- Telematics Diag (not supported)
- MirrorLink

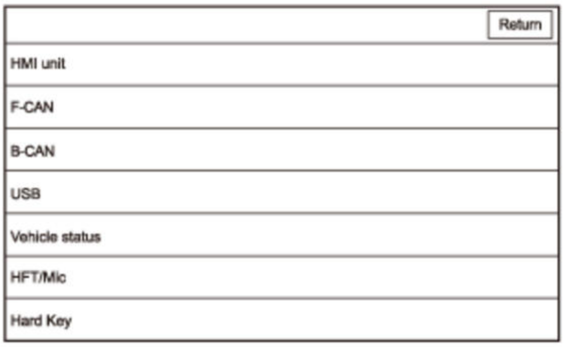

HMI Unit

This diagnosis checks for problems in the audio-navigation unit processor. When you start this diagnosis, the audio-navigation unit may freeze or delay up to a minute while the diagnosis runs.

- D-RAM: Displays the result of the access to the D-RAM (OK/NG). If NG, check for hard error codes.
- Model: Displays the audio-navigation unit manufacture's model number.
- Serial No. : Displays the audio-navigation unit serial number. That should be the same as the serial number found on the upper side of the audio-navigation unit.
- Flash: Displays the result of the access to the flash memory (OK/NG). If NG, replace the audio-navigation unit .

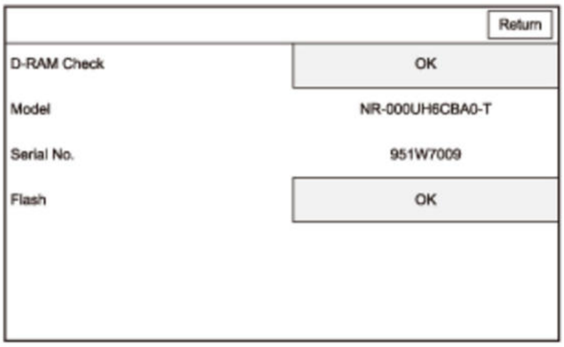

D-RAM Check	OK
Model	NR-000UH6CBA0-T
Serial No.	951W7009
Flash	OK

F-CAN

NOTE:

- This diagnosis must have the engine running.
- Swipe the screen to check the next items.

This diagnosis checks whether the audio-navigation unit has received specific F-CAN data. If F-CAN shows NO ERROR, an error is not detected between the F-CAN bus and the audio-navigation unit.

- If F-CAN shows RX ERROR, **replace the audio-navigation unit** .
- If F-CAN shows TIME OUT, There is a possibility that some items are NG (red icon). When all the items from each transmitting unit is NG, check for F-CAN DTCs with the HDS. If DTCs not detected, check for continuity in the F-CAN lines between the audio-navigation unit and the transmitting unit.

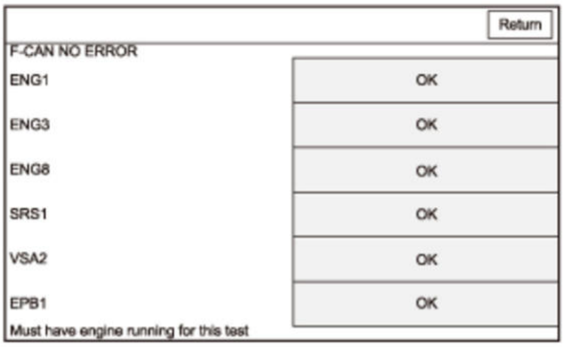

F-CAN NO ERROR

ENG1	OK
ENG3	OK
ENG8	OK
SRS1	OK
VSA2	OK
EPB1	OK

Must have engine running for this test

B-CAN

NOTE:

- This diagnosis must have the engine running.
- Swipe the screen to check the next items.

This diagnosis checks whether the audio-navigation unit has received specific B-CAN data. If B-CAN shows NO ERROR, an error is not detected between the B-CAN bus and the audio-navigation unit.

- If B-CAN shows RX ERROR, **replace the audio-navigation unit** .
- If B-CAN shows TIME OUT, There is a possibility that some items are NG (red icon). When all the items from each transmitting unit is NG, check for B-CAN DTCs with the HDS. If DTCs not detected, check for continuity in the B-CAN lines between the audio-navigation unit and the transmitting unit.

Item	Transmitting Unit
VSPNE, AT, ILLUMI, ST_SW_PAD, VINNO, STRG_ANG, ODO_TRIP, TRICOM1 - 4, METER_RMD	Gauge control module

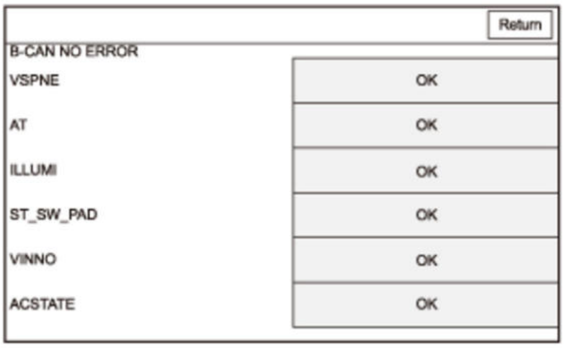

B-CAN NO ERROR

VSPNE	OK
AT	OK
ILLUMI	OK
ST_SW_PAD	OK
VINNO	OK
ACSTATE	OK

USB

This diagnosis displays the USB device status that is connected to the audio-navigation unit.

If the USB memory device is connected to the USB port A or B, the screen displays the USB controller status, the Bus power status, and the device status.

When you connect a USB mass storage device, you can see the capacity used and the amount of free space available.

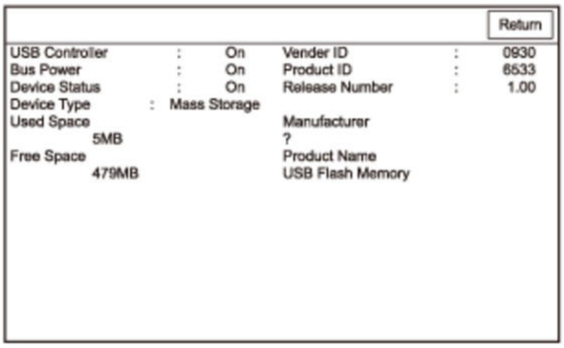

```
USB Controller      :     On     Vender ID          :    0930
Bus Power           :     On     Product ID         :    6533
Device Status       :     On     Release Number     :    1.00
Device Type     :  Mass Storage
Used Space                       Manufacturer
          5MB                    ?
Free Space                       Product Name
          479MB                  USB Flash Memory
```

Vehicle Status

Use this screen to confirm that the audio-navigation unit is properly receiving input signals. The displayed value changes each time according to the state of input signal.

NOTE: These items describe in indication order. Swipe the screen to check the next items.

Item	Input	Description
VSP	VSP line	- 1: When the vehicle speed pulse is received from the PCM or the TCM - 0: When the vehicle speed pulse is not received from the PCM or the TCM

Item	Input	Description
BACK	BACK LT line	- 1: When the transmission is shifted to R position/mode - 0: When the transmission is shifted to any position/mode other than R position/mode
IG	B-CAN lines	- 1: When the vehicle is in the ON mode - 0: When vehicle is in the ACCESSORY mode
C_METER_ILL_STATUS	B-CAN lines	- 1: When position lights, or headlights are on - 0: When position lights, or headlights are off
C_METER_ILL_CANCEL	B-CAN lines	- 1: When the dashlights brightness control knob is more than 90 % brightness with the position lights turned on - 0: When the dashlights brightness control knob is less than 90 % brightness with the position lights turned on
C_METER_ILL_STEP	B-CAN lines	With the position lights on, use the dashlights brightness control knob to dim and brighten the

Item	Input	Description
		gauge. The value changes from 1 (max low) to 22 (max high).
Speed	B-CAN lines	This item indicates the vehicle speed (km/h).
TV-PARK	B-CAN lines	• 1: When the parking brake is applied • 0: When the parking brake is not applied
NAVI-PARK	B-CAN lines	• 1: When the parking brake is applied • 0: When the parking brake is not applied
Current received VIN	B-CAN lines	This item indicates the VIN that received from the PCM.
Initial registered VIN	B-CAN lines	This item indicates the initial registration VIN (10 is added to the beginning of indicated VIN) that is saved in the audio-navigation unit.
Last registered VIN	B-CAN lines	This item indicates the additional registration VIN (11 is added to the beginning of indicated VIN) when the audio-navigation unit is substituted into another vehicle, or when a PCM is substituted or replaced into this vehicle.

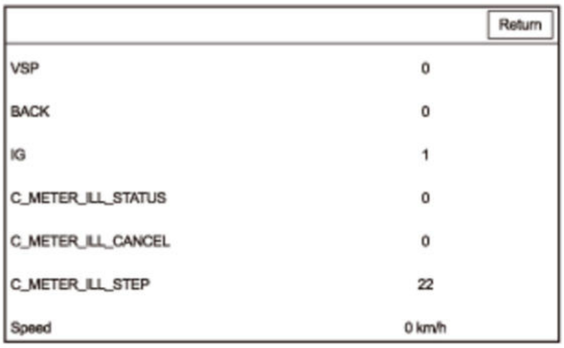

VSP	0
BACK	0
IG	1
C_METER_ILL_STATUS	0
C_METER_ILL_CANCEL	0
C_METER_ILL_STEP	22
Speed	0 km/h

HFL/Mic

This diagnosis allows you to independently test the Bluetooth module and the microphone. The Bluetooth module is built into the audio-navigation unit. To properly check the microphones, make sure you are sitting in the driver's seat.

NOTE: Before this diagnosis, check the response of the TALK button on the audio remote-HFL switch by the Hard Key diagnosis.

- If the Bluetooth Connection Diagnosis shows NG, **replace the audio-navigation unit** .
- Press the TALK button, and within 5 seconds in a normal voice say "testing" toward the microphone in the roof console. The Mic Level indicator on the screen should momentarily turn green. The test is set to OK by indicating green more than 6 steps. If there is no Mic Level movement when you speak, **go to HFL does not work properly troubleshooting** .

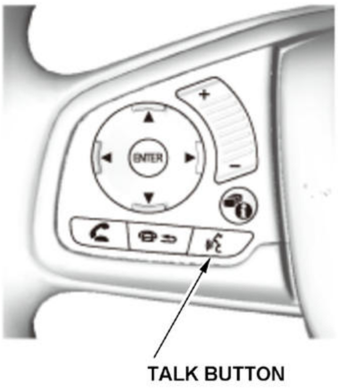
ENTER
TALK BUTTON

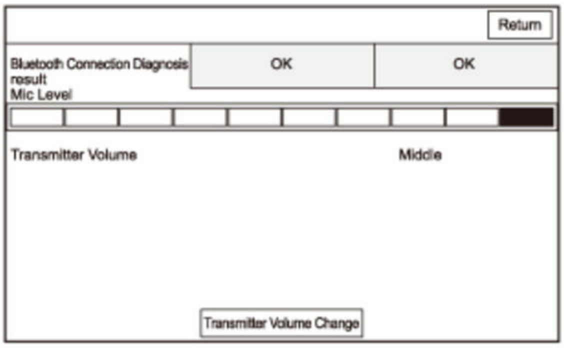
Return
Transmitter Volume Change

Bluetooth Connection Diagnosis result: OK OK

Mic Level

Transmitter Volume: Middle

If you select the Transmitter Volume Change icon, the transmitter volume can be selected from three selection (Large, Middle, Small).

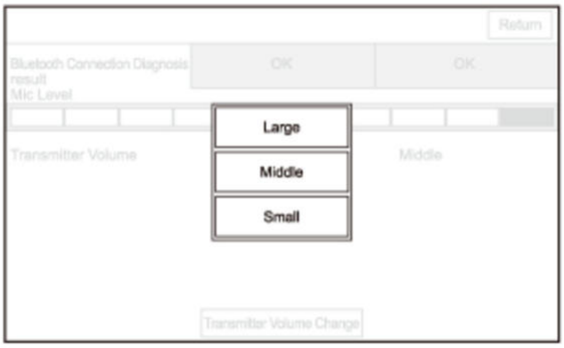
Return
Bluetooth Connection Diagnosis result
OK
OK
Mic Level
Transmitter Volume
Middle
Large
Middle
Small
Transmitter Volume Change

Hard Key

This diagnosis checks the center display unit face buttons, the audio remote-HFL switch. For this model, the audio remote-HFL switch buttons use the data bus via the gauge control module for communications.

To complete the test, press each buttons. As each function is tested, the corresponding button on the display should highlight. If the test cannot be completed, the corresponding icon on the Hard Key menu screen shows red.

- If any button of the center display unit does not respond, **replace the center display unit** .
- If any button of the audio remote-HFL switch does not respond, **replace the audio remote-HFL switch** .
- If all buttons of the audio remote-HFL switch do not respond, go to **Audio remote-HFL switch does not work properly (audio-navigation unit buttons work) troubleshooting** .

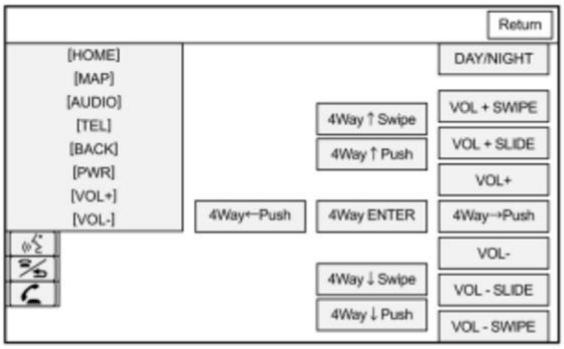
Return
[HOME]
[MAP]
[AUDIO]
[TEL]
[BACK]
[PWR]
[VOL+]
[VOL-]
DAY/NIGHT
4Way ↑ Swipe
VOL + SWIPE
4Way ↑ Push
VOL + SLIDE
VOL+
4Way←Push
4Way ENTER
4Way→Push
VOL-
4Way ↓ Swipe
VOL - SLIDE
4Way ↓ Push
VOL - SWIPE

Error History

If you select Hard Error or Soft Error, you can see the error information. **Refer to How to Check for Error History to use this diagnosis**.

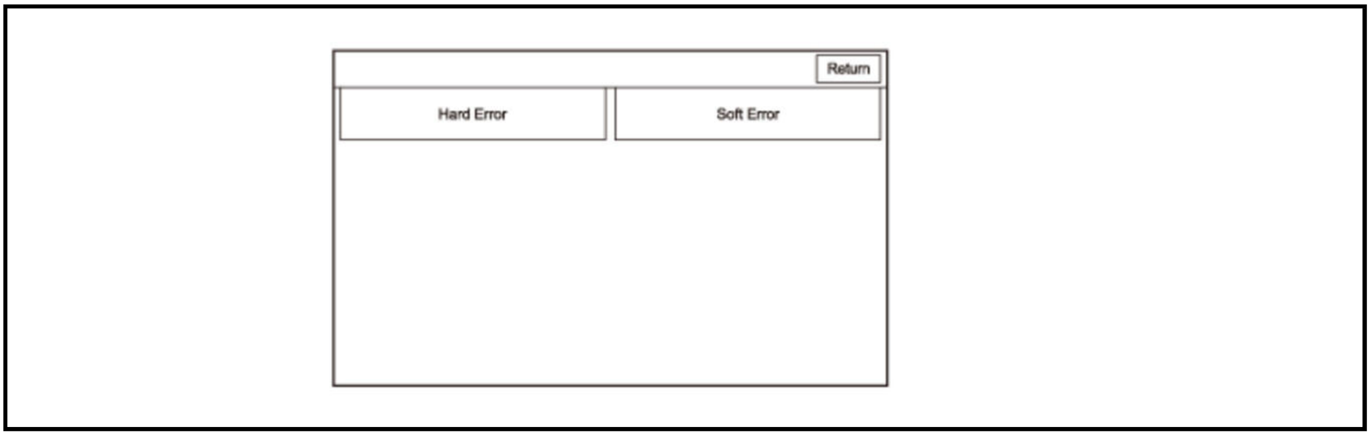

Rear Wide Camera

This diagnosis checks the rearview camera connection.

- If Connection shows NG, **check for hard error codes**.
- If Connection shows OK, press the HOME button to display the rearview camera image. To return to the previous screen, press the HOME button again.

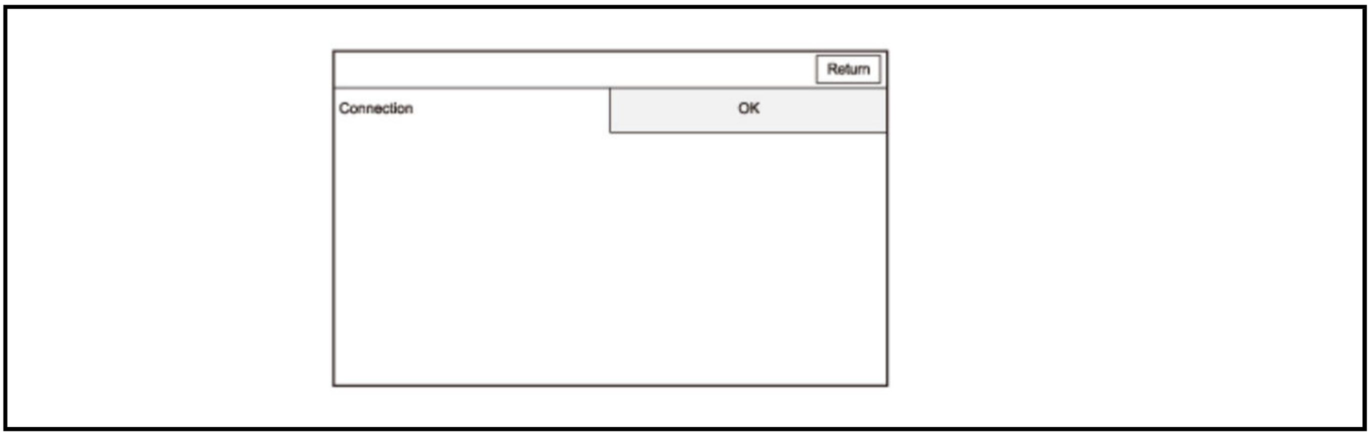

Connection OK

LaneWatch

This diagnosis checks the LaneWatch camera connection.

- If Connection shows NG, **check for hard error codes**.
- If Connection shows OK, press the HOME button to display the LaneWatch camera image. To return to the previous screen, press the HOME button again.

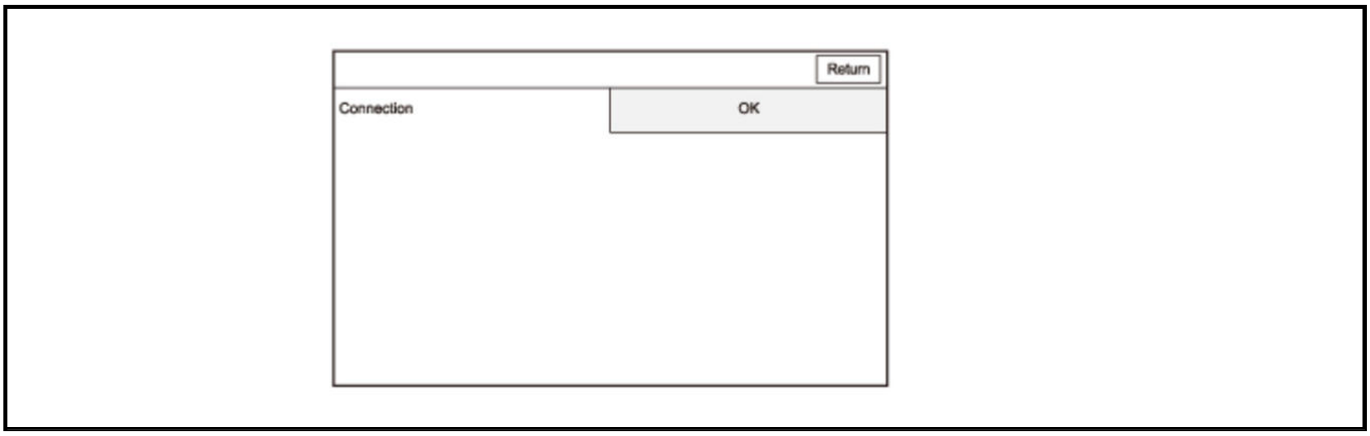

Connection OK

Remote Tuner

NOTE:

- For factory use only. Do not alter any settings unless directed.
- These items describe in indication order. Swipe the screen to check the next items.

This diagnosis displays the external AM/FM radio tuner (tuner unit) status.

- System 'com version display: Displays the tuner unit processor version.
- Serial number display: Displays the tuner unit serial number. That should be the same as the serial number found on the upper side of the tuner unit.
- Frequency: Displays frequency of the radio station which is being received. Frequency can be changed by selecting each icon (A).
- Source can be changed in this order: Radio sources by selecting the Band Change icon.
- Radio reception level display: Displays radio reception level (dB). The AM/FM antenna power status can be changed to on or off by selecting the Ant +B OFF icon.
- Target Area: Displays the destination of the tuner unit at 2 digits.
- Operating status display: If the vehicle has diversity antenna, you can select the radio antenna function from M (Main), S (Sub), or P (Diversity).
- RBDS BER display: Displays the RBDS bit error ratio.
- SNR display: Displays the Sound/Noise ratio about the AM or FM.
- Total preset number: Displays number of radio station preset about the AM or FM.
- HD functions ON/OFF: Displays the HD function is available (YES) or not available (NO).
- VOL: Displays the current volume level.
- Split Mode: Displays the split mode on or off. That can be changed by selecting the Split Mode icon.
- Blend Mode: Displays the blend mode which is being received. The blend mode can be changed to AUTO/ANALOG/DIGITAL by selecting the Blend Mode icon.
- HD Mode: Displays the HD mode status (ON: HD, OFF: analog) at frequency of the radio station which is being received. That can be changed by selecting the HD Mode icon.

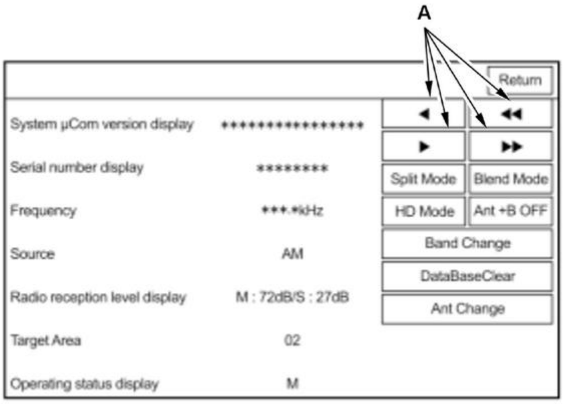

System µCom version display	****************
Serial number display	********
Frequency	***.*kHz
Source	AM
Radio reception level display	M : 72dB/S : 27dB
Target Area	02
Operating status display	M

AMP

This diagnosis checks the digital bus (RS485) connection between the audio-navigation unit and the stereo amplifier.

If Connection shows NG, **go to No sound is heard from all the speakers (display is normal) troubleshooting** .

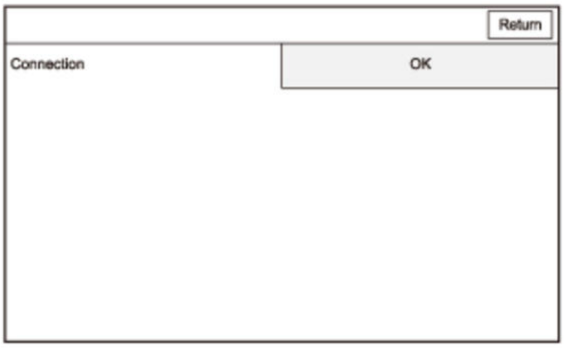
Return

Connection OK

XM Ant.

This diagnosis checks the XM antenna connection between the audio-navigation unit and the roof antenna. The XM radio tuner is built into the audio-navigation unit.

If Connection shows NG, **check for hard error codes**.

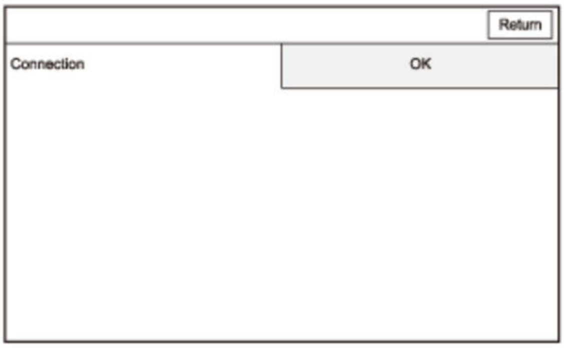
Return

Connection OK

Center display

These items describe in indication order. Swipe the screen to check the next items.

This diagnosis checks the digital bus (LVDS1) connection between the audio-navigation unit and the center display unit, and displays the center display unit status.

- Connection: Checks the digital bus (LVDS1) between the audio-navigation unit and the center display unit. This item should indicate OK.
- Unit Status Information: Indicates the center display unit processor status. If any of the status indicates NG, turn the vehicle to the OFF (LOCK) mode then the ON mode, and recheck the status. If the status still indicates NG, **replace the center display unit** .
- Unit Version Information: Displays the center display unit various version number.

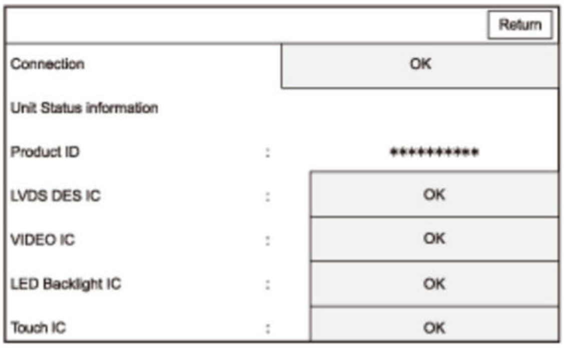
Return

Connection OK

Unit Status information

Product ID : **********

LVDS DES IC : OK

VIDEO IC : OK

LED Backlight IC : OK

Touch IC : OK

iPhone

This screen shows the information about the connected iPhone Â® by App Mode.

Meter Display

This diagnosis checks the digital bus (LVDS2) between the audio-navigation unit and the gauge control module.

If Connection shows NG, go to The MID does not display the audio-navigation unit information troubleshooting.

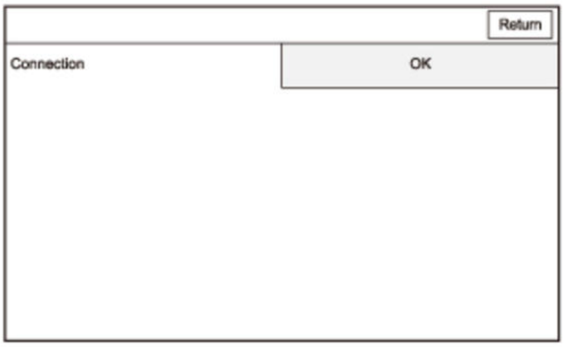

Connection OK

GPS Antenna

This diagnosis checks the GPS antenna connection.

If Antenna shows NG, the GPS antenna may be failure. Check for hard error codes.

Select Information to see the GPS satellite details.

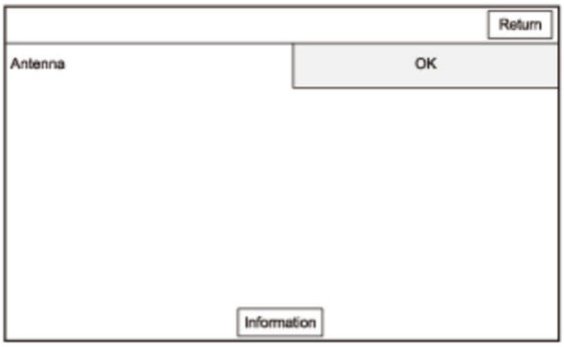

Antenna OK

HD Traffic

This diagnosis displays the HD traffic status.

- Service Status: Displays the HD traffic service status on (1) or off (except 1).
- Frequency can be changed by selecting each icon (A).
- Station Name: Displays the call sign of the receiving HD traffic station.
- Receive Status: Displays the reception status of HD traffic.
- Data Buffer Counter: If the unit receives the data from the HD traffic station, displays the number of buffering data.

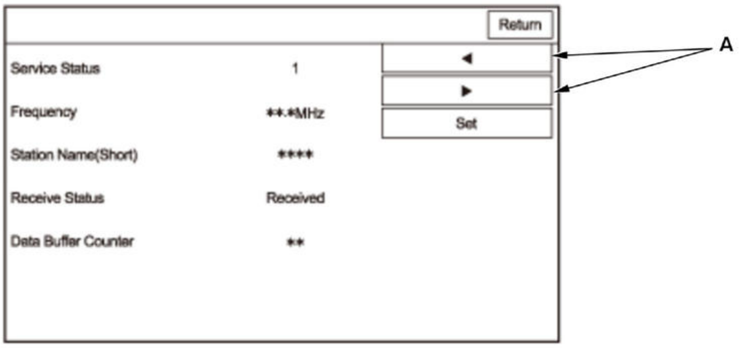

Service Status	1
Frequency	**.*MHz
Station Name(Short)	****
Receive Status	Received
Data Buffer Counter	**

Gyro Sensor

This diagnosis checks the gyro sensor in the audio-navigation unit. This devices detect how the vehicle moves, and repositions the vehicle position icon on the map screen. Select the GYRO Sensor.

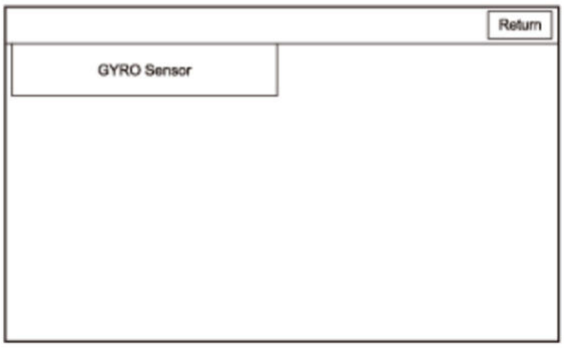

- X/Y/Z AXIS ANGLE: Indicates the angular speed of the gyro sensor.
- ANGLE Check: The audio-navigation unit checks if the angular speed is in range of threshold value.
- Temperature: Indicates the temperature of the gyro sensor.
- Sensor Temperature Check: The audio-navigation unit checks if the gyro sensor temperature is in range of threshold value.
- Reset: All values can be reset to the factory specification.

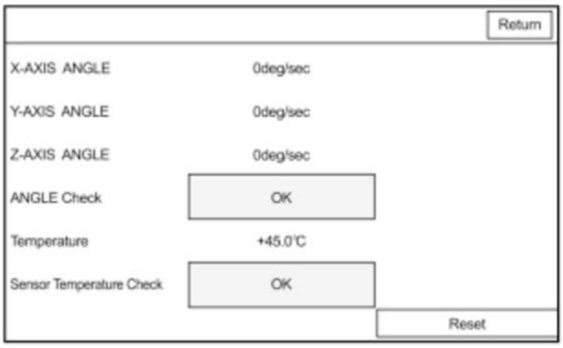

X-AXIS ANGLE	0deg/sec
Y-AXIS ANGLE	0deg/sec
Z-AXIS ANGLE	0deg/sec
ANGLE Check	OK
Temperature	+45.0℃
Sensor Temperature Check	OK

A/C

This diagnosis detects if the vehicle is in the ON mode using information provided over the F-CAN bus, then it tests the climate control signal via the B-CAN bus between the audio-navigation unit and the climate control unit. Make sure the engine is running for this test.

If Connection shows NG, **check for hard error codes**.

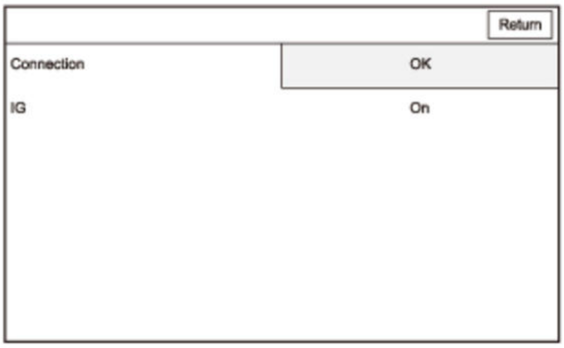

Connection OK

IG On

MirrorLink

This screen shows the information about the connected smartphone by MirrorLink.

Audio Check

These screens allow you to troubleshoot the audio function. Select the Speaker Check icon.

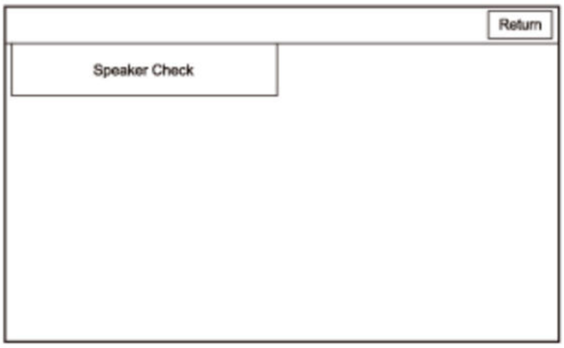

Speaker Check

NOTE:

- Make sure the audio system is off before this diagnosis.
- While doing the diagnosis, the fader and the balance positions are set to the center.

This diagnosis checks the audio speakers individually.

Select the UP icon or the Down icon to check speakers. A tone should sound from the speaker.

When you select the Up icon, the system checks the speakers in this order: ① -> ② -> ③ -> ④ -> ⑤ -> ⑥ -> ⑦ -> ⑧ -> ⑨ -> ⑩ -> ①
When you select the Down icon, the system checks the speakers in this order: ① -> ⑩ -> ⑨ -> ⑧ -> ⑦ -> ⑥ -> ⑤ -> ④ -> ③ -> ② -> ①

Â	Display Message	Vehicle Test Condition
①	FR-L	You should hear a tone from the left front door speaker and the left front tweeter* 2.

Â	Display Message	Vehicle Test Condition
② * 1	FRTW-L	You should hear a tone from the left front tweeter.
③	FR-R	You should hear a tone from the right front door speaker and the right front tweeter* 2.
④ * 1	FRTW-R	You should hear a tone from the right front tweeter.
⑤	RR1-R	You should hear a tone from the right rear door speaker and the right rear tweeter* 2.
⑥ * 1	RR1TW-R	You should hear a tone from the right rear tweeter.
⑦ * 1	SW1	You should hear a tone from the subwoofer.
⑧	RR1-L	You should hear a tone from the left rear door speaker and the left rear tweeter* 2.
⑨ * 1	RR1TW-L	You should hear a tone from the left rear tweeter.
⑩	ALL	You should hear a tone from all speakers.

*1: With stereo amplifier
*2: Without stereo amplifier

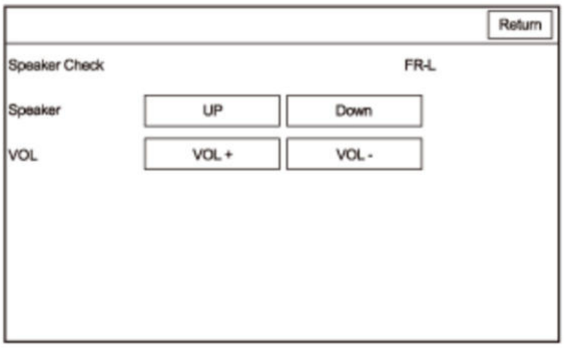

Guideline Setup

These screens adjusts the rearview camera image guide lines. Select the Rear wide camera icon to adjust the guide lines.

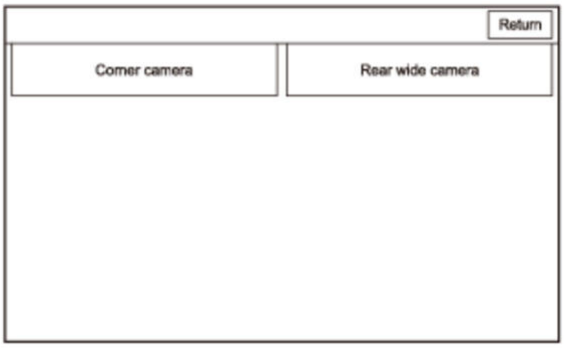

Rear Wide Camera

Select the item you want to adjust.

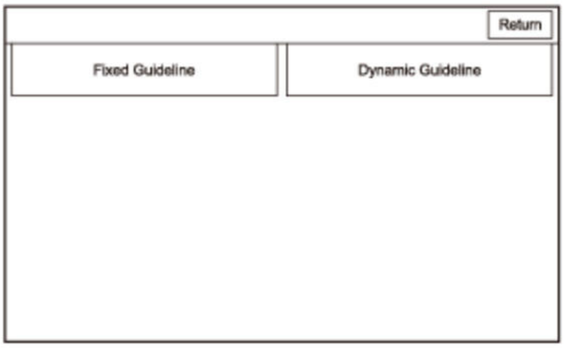
Return
Fixed Guideline
Dynamic Guideline

Select the view mode icons (Wide View, Normal View, Top Down View) you want to adjust.

NOTE: The Top Down View cannot be selected when the dynamic guideline is selected.

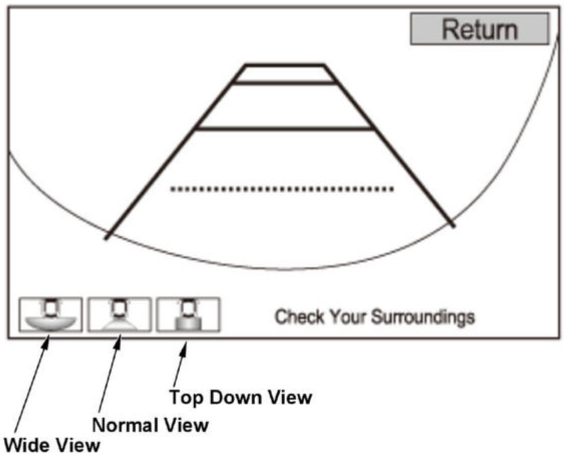
Return
Check Your Surroundings
Top Down View
Normal View
Wide View

Press the PHONE button to display the sub menu.

- Default: All guidelines can be reset to the factory specification.
- Save: Reflects the result of the guideline adjustment.
- Guideline Setup: Adjust the guideline.
- Message Setup: Adjust the caution message position.
- Rudder Angle (Dynamic Guideline): The steering angle which adjusts the position of the chosen guideline.

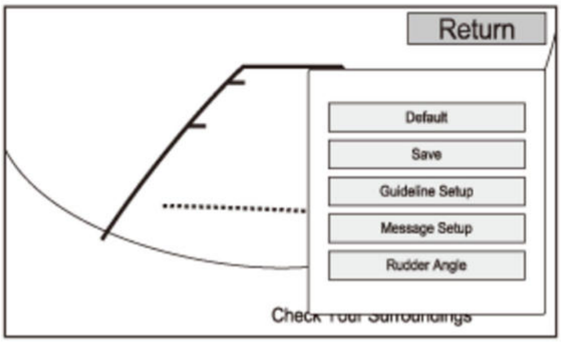
Return
Default
Save
Guideline Setup
Message Setup
Rudder Angle
Check Your Surroundings

Guideline Setup

Touch each arrow icon to move the guidelines up/down or left/right. The screen displays the information about the adjusted distance and its direction.

If you want to keep the setting, press the PHONE button to display the settings sub menu. The audio-navigation unit saves the setting by selecting the Save icon on the settings sub menu.

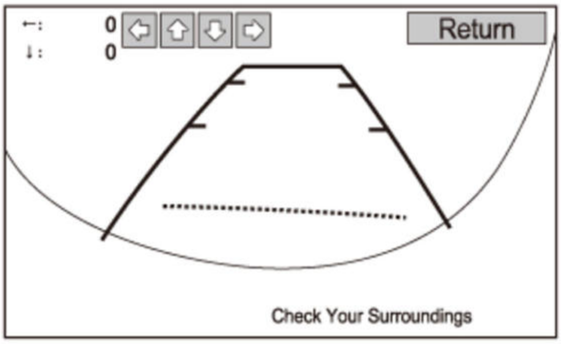
←: 0
↓: 0
Return
Check Your Surroundings

Message Setup

Touch each arrow to move the message (A) up/down or left/right.

If you want to keep the setting, press the PHONE button to display the settings sub menu. The audio-navigation unit saves the setting by selecting the Save icon on the settings sub menu.

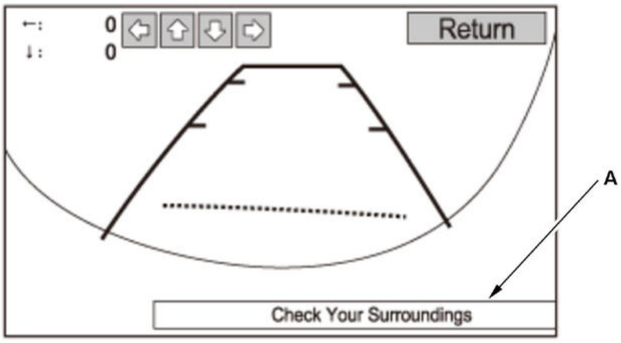
←: 0
↓: 0
Return
A
Check Your Surroundings

Rudder Angle

Select different steering angles (90 deg. - Lock end) from the sub menu. After selecting, do the Guideline Adjustment. The adjustment method for the guideline locations is the same as the Fixed Guideline.

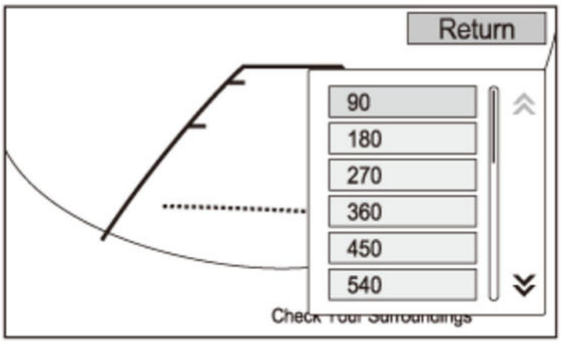
Return
90
180
270
360
450
540
Check Your Surroundings

Functional Setup

These screens allows for diagnosis and settings about functions of the audio-navigation unit. Select the item you want to check.

- Backup Data Clear
- Save User's Memory
- LaneWatch (if equiped)
- Phone Picture
- Anti-Theft Skip (with audio system theft protection)
- Other
- AMP Repro (factory use only)
- Display Repro (factory use only)

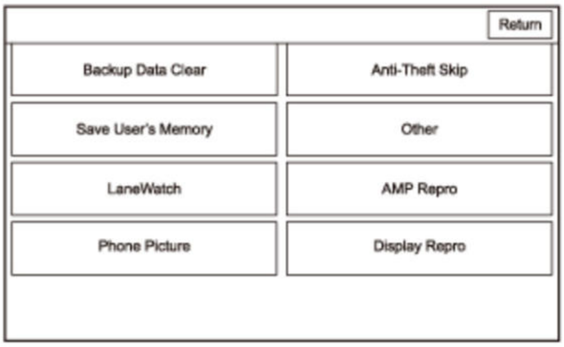
Return
Backup Data Clear
Anti-Theft Skip
Save User's Memory
Other
LaneWatch
AMP Repro
Phone Picture
Display Repro

Backup Data Clear

This screen initializes the back-up data in the audio-navigation unit. Select the All Clear icon.

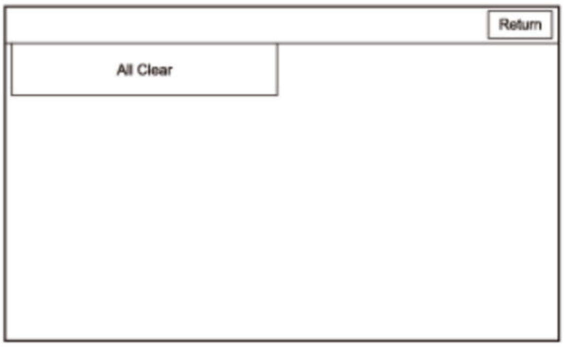
Return
All Clear

All Clear

The all clear function deletes the data in the audio-navigation unit, and restores it to the factory defaults. This function is equivalent to Memory Refresh in the System Settings Menu.

When selecting the All Clear icon, the confirmation screen appears.

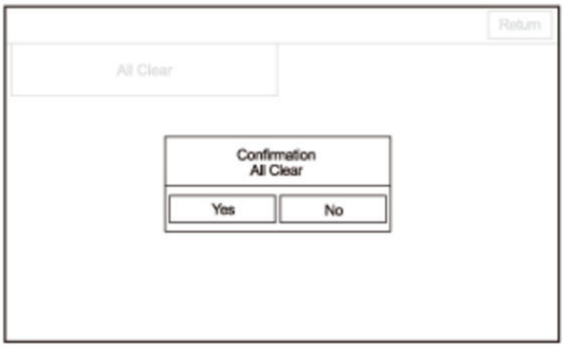

Confirmation
All Clear

When selecting the Yes icon, the second confirmation screen appears.

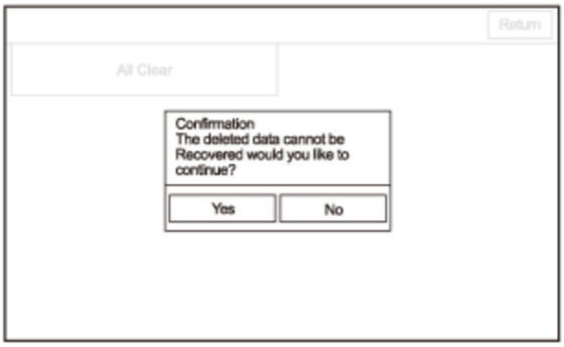

Confirmation
The deleted data cannot be Recovered would you like to continue?

When selecting the Yes icon, the system restarts after performing the All Clear process. After the restart, a normal start-up process occurs.

Save User's Memory

When replacing the audio-navigation unit, this function allows the technician to transfer the customer's personal data to the new audio-navigation unit. The transferred information includes their setup settings and personal addresses. The dealer inserts a USB device into the USB port A or B, and then selects the Save Users Memory function. The two functions in this diagnostic screen are Export and Import. Export saves the customer's data to the USB device, and Import moves the USB device files to the new audio-navigation unit.

This function does not start until you connect a USB device to the USB port.

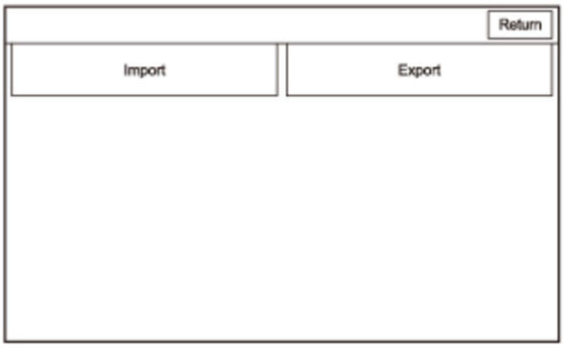

1. Select the Export icon to move the customer's data from the original audio-navigation unit to the USB device. Select the Yes icon on the Export User Data Confirmation screen. The process takes only a couple of seconds. The system stores. DAT files on the USB device.

NOTE: If the Export icon is grayed out, check the USB port.

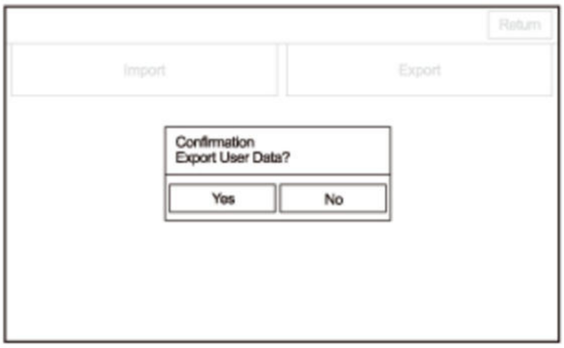

Confirmation
Export User Data?

2. After replacing the new audio-navigation unit, allow the system to boot up. Insert the USB device into the USB port A or B and enter the Save Users Memory in the System Diagnostic Mode.

3. Select the Import icon to move the two files stored by the Export process from the USB device to the new audio-navigation unit. Select the Yes icon on the Import User Data Confirmation screen. When the transfer is finished (a few seconds) the system automatically reboots. After the system reboots, remove the USB device from the USB port.

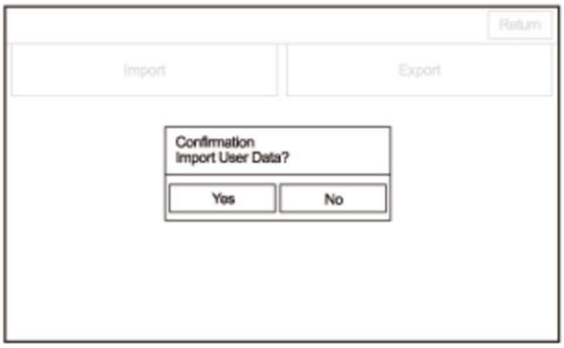

Confirmation
Import User Data?

LaneWatch

This diagnosis checks the LaneWatch status.

- If Connection shows hyphen (-), **check for hard error codes**.
- Error Status: Indicates LaneWatch camera status OK or NG. If Error Status shows NG, replace the LaneWatch camera. When the LaneWatch camera is disconnected, the status shows hyphen (-).
- If Error Status shows OK, press the HOME button to display the LaneWatch camera image. To return to the previous screen, press the HOME button again.
- LaneWatch Switch: LaneWatch switch status on or off. When the LaneWatch switch is pressing, the status shows ON. When the LaneWatch switch is released, the status shows hyphen (-).
- B-CAN: Checks whether the audio-navigation unit has received specific B-CAN data from the body control module. If B-CAN shows NG, check for B-CAN DTCs with the HDS. If DTCs are not detected, check for B-CAN lines continuity between the audio-navigation unit and the body control module.
- If Connection, Error Status, LaneWatch Switch, and B-CAN shows OK, the LaneWatch camera aiming procedure is available. If the LaneWatch camera need to aiming, refer to the How to Start LaneWatch Camera Aiming. When the aiming fails, Aiming shows NG.

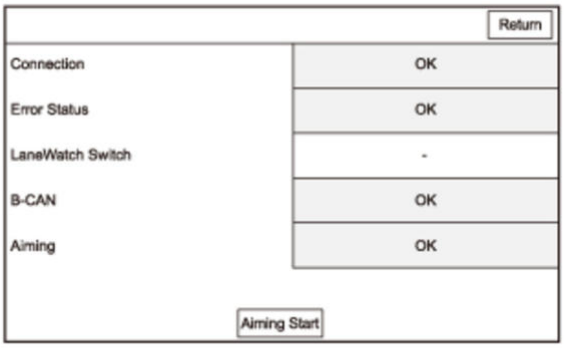
Return
Aiming Start

Connection	OK
Error Status	OK
LaneWatch Switch	-
B-CAN	OK
Aiming	OK

Phone Picture

This screen allows you to enable or disable the Show Contact Picture with On/Off.

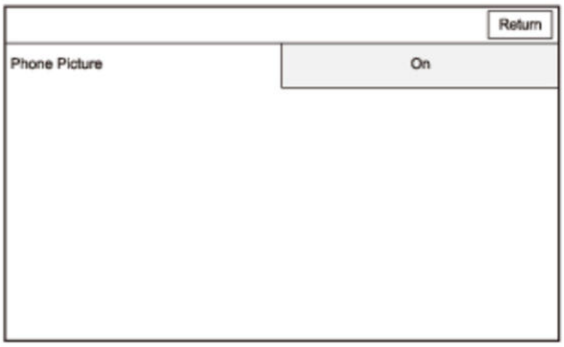

Phone Picture	On

Anti-Theft Skip (With Audio System Theft Protection)

This selection can cancel the anti-theft mode temporarily (for 150 seconds).

The Anti-Theft Skip icon is grayed out when the anti-theft mode is already canceled.

Other

Select the item you want to check.

- Pandora Setting
- HD Radio Setting
- SXM Setting
- Smartphone Information

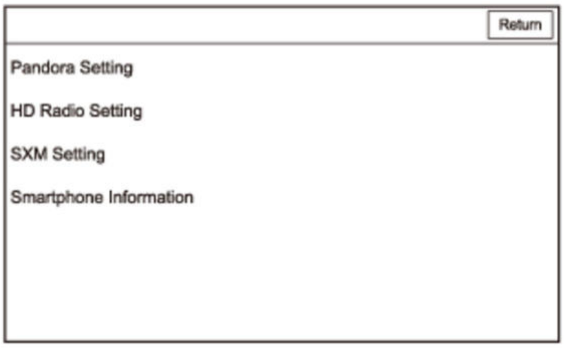
Return
Pandora Setting
HD Radio Setting
SXM Setting
Smartphone Information

Pandora Setting

This screen allows you to restrict the Pandora function to the running vehicle. Refer to the Owner's Manual for more information about the Pandora setting function.

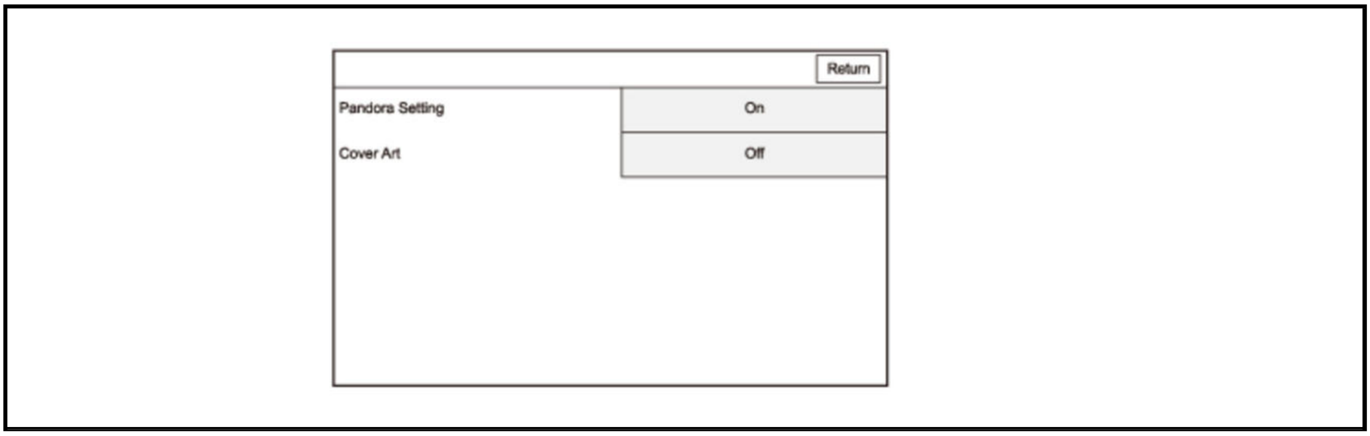

Pandora Setting On

Cover Art Off

HD Radio Setting

This screen allows you to restrict the HD radio album art function to the running vehicle. Refer to the Owner's Manual for more information about the album art function.

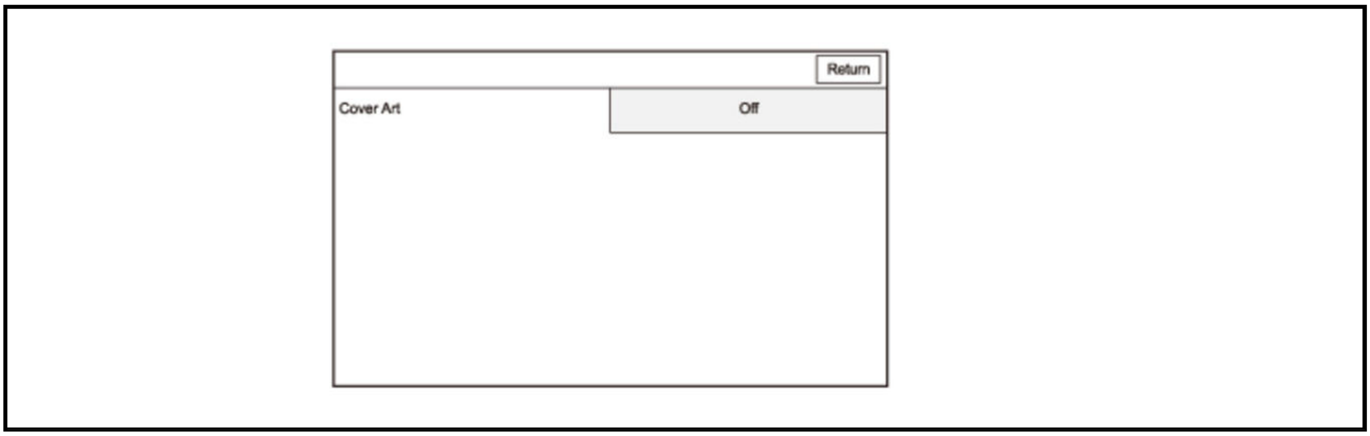

Cover Art Off

SXM Setting

This screen allows you to restrict the XM radio album art function to the running vehicle. Refer to the Owner's Manual for more information about the album art function.

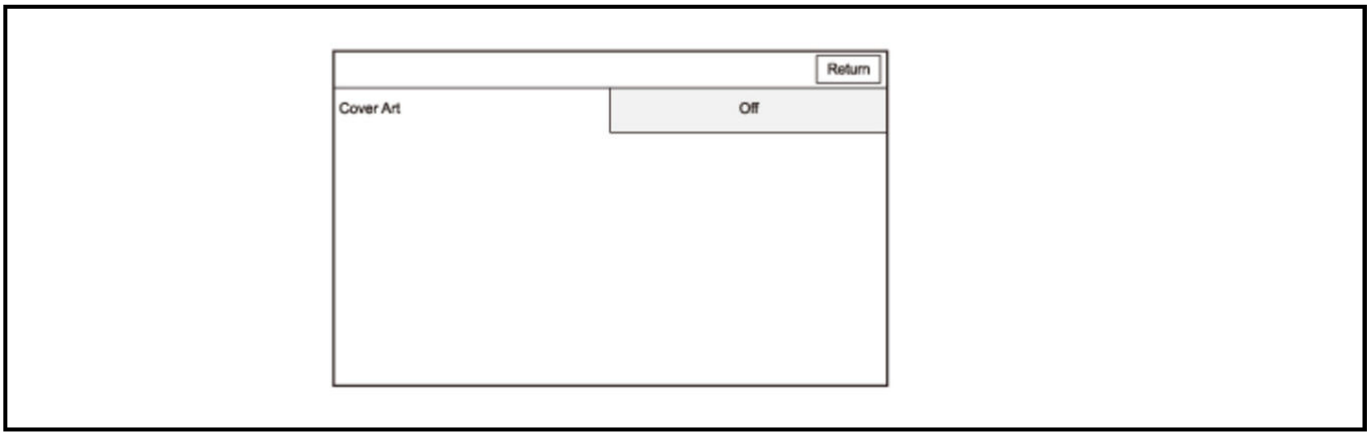

Cover Art Off

Smartphone Information

This screen allows you to enable or disable the function about smartphone connection.

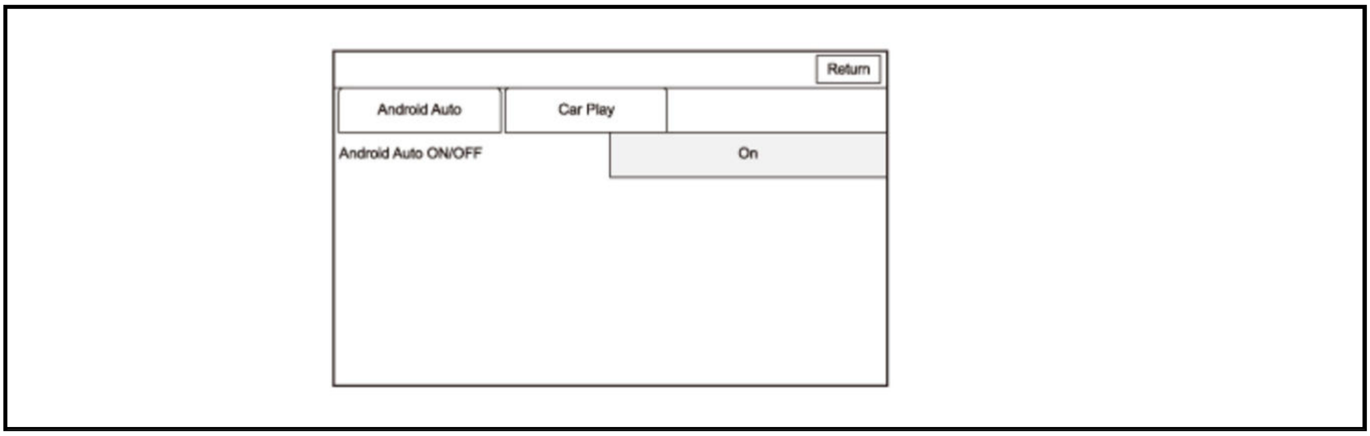

Android Auto ON/OFF: On

Version

This screen displays the current version information about each module in the audio-navigation unit.

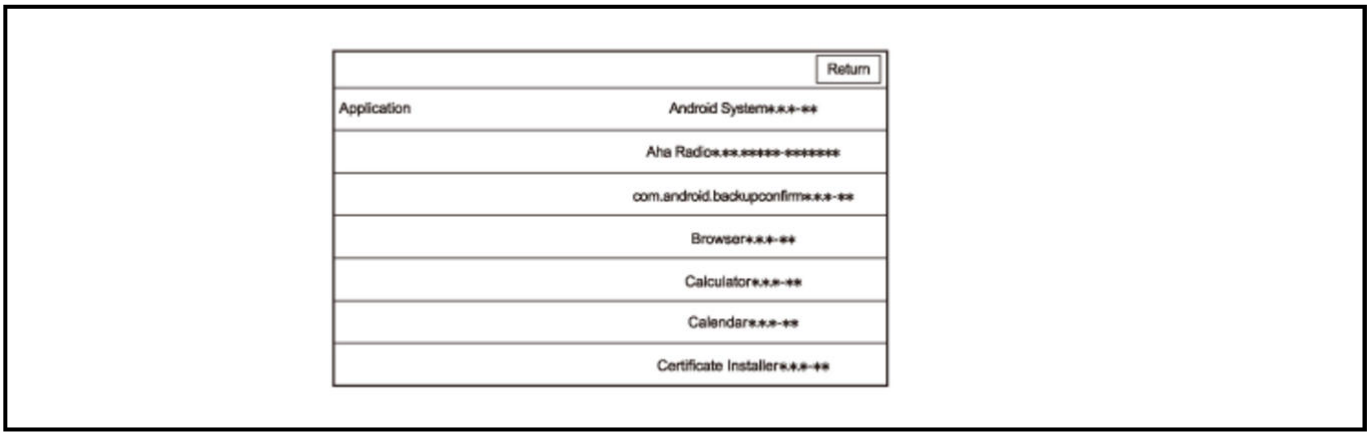

Application	Android System*.*.*-**
	Aha Radio*.**.*****-*******
	com.android.backupconfirm*.*.*-**
	Browser*.*.*-**
	Calculator*.*.*-**
	Calendar*.*.*-**
	Certificate Installer*.*.*-**

GPS Information

This screen shows the current status of GPS reception. The circular diagram shows the current location of the GPS satellites (yellow numbers) as they would appear in the sky. The outer circle represents the horizon (0 degrees elevation). The middle and inner circles represents 30 and 60 degrees respectively. The very center of the diagram (90 degrees elevation) is directly overhead. Nearby obstructions, like tall buildings will block satellites in that direction. That is why it is necessary to be in an open area to effectively troubleshoot GPS reception issues. The satellite numbers shown on the diagram while pressing the HOME button that correspond to the PRN (satellite ID number). There are always at least 24 active GPS satellites in orbit. Because satellites fail, and have to be removed from service, spares are always parked in orbit, ready to be activated. This is why the PRN can be greater than 24.

NOTE: When you use this screen for troubleshooting, park the vehicle outside, away from buildings, tall trees, and hightension wires for at least 10 minutes with the engine running.

- The Number of Satellites box shows the number of acquired satellites (maximum of 12). It should contain three or more icons.
- The Current Position shows latitude, longitude, and elevation (in feet). If there are less than four satellites, the elevation can be grossly inaccurate.
- The date/time field shows the current date and time that is received from the GPS satellite.

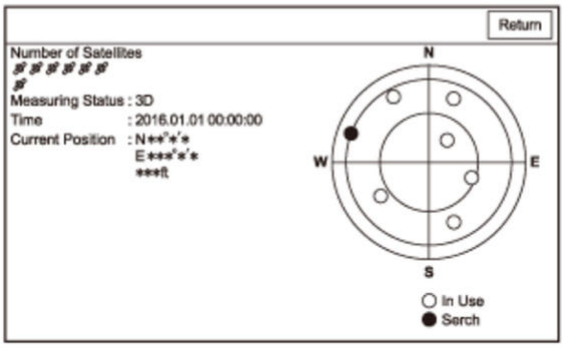

Number of Satellites
Measuring Status : 3D
Time : 2016.01.01 00:00:00
Current Position : N**°*'*
E***°*'*
***ft

CALIBRATION CORRECTION

NAVIGATION SYSTEM SENSOR CALIBRATION

Procedure

NOTE:

- Check the vehicle 12 volt battery condition first .
- You should do this procedure in an open area away from buildings, power lines, other vehicles, and any other sources of strong magnetic fields.

1. Sensor - Calibration

1. Test-drive the vehicle on the road in a straight line for at least 200 m (656 ft) at a constant speed (turn less than 5 deg/s, accelerate less than 1 mph/s (1.6 km/h/s)).

2. Park the vehicle in an open area, and wait at least 2 minutes with the engine running.

3. Test-drive the vehicle in an open area, and make a 90-degree turn (repeat 2-4 times).

SYMPTOM TROUBLESHOOTING INDEX

NAVIGATION SYSTEM SYMPTOM TROUBLESHOOTING INDEX

NOTE:

- Before troubleshooting, check any official Honda service website for more information about the navigation system.
- Refer to Audio System Symptom Troubleshooting for information about the symptom of audio-navigation unit which is not in the following table .

Symptom	Diagnostic Procedure	Also Check for
Audio-navigation unit power will not turn on (No information display)	Symptom Troubleshooting	• Blown fuses • Screen settings • Error Messages • Software not up to date
Navigation system stays on the CSF screen	Navigation DTCs	• GPS Initialization • Aftermarket metallic window tint on the front window or electronic aftermarket accessories

Symptom	Diagnostic Procedure	Also Check for
		(possibly hidden) mounted near the GPS antenna or the audio-navigation unit - Disconnected or defective GPS antenna
Poor GPS reception or interference	**Do the GPS Information in the System Diagnostic Mode**	- **Global Positioning System (GPS) Limitations** - Aftermarket metallic window tint on the front window or electronic aftermarket accessories (possibly hidden) mounted near the GPS antenna or the audio-navigation unit
Vehicle position icon wanders across the map when driving (does not follow a displayed road) or map vehicle ICON spins	**Symptom Troubleshooting**	- **Global Positioning System (GPS) Limitations** - **Map Matching** - **Sensor Calibration** - VSP missing - Poor or no GPS reception - Check for any related service bulletin software updates
Navigation touch panel does not work	**Do the Touch Panel Check in the System Diagnostic Mode**	**Forced Rebooting of Audio-Navigation Unit**
Clock will not set to correct time	Â	Check the GPS signal
System always comes up in-line diagnostic mode	**Factory diagnostic screen In Line Diagnostic mode**	Â
The MID does not display the audio-navigation unit information	**Symptom Troubleshooting**	Â
Voice control does not work/respond	Â	Check for any related service bulletin software updates
Voice guidance cannot be heard, is broken up, or there is static	Â	Volume or voice feedback setting (see the Navigation System repair service information)
No HD traffic information	**Go to AM/FM radio display is blank or no station information is displayed troubleshooting**	Local outage or no local broadcast. Compare to a known-good vehicle of the same year and trim.

DTC TROUBLESHOOTING INDEX

NAVIGATION SYSTEM DTC TROUBLESHOOTING INDEX

NOTE: **These DTCs cannot be read with the HDS. To view them, refer to How to Check for Error History (Navigation DTCs)**.

DTC	Description	Circuit
1102	USB Diag	USB

DTC	Description	Circuit
1301	GPS Antenna Error	GPS antenna
1302	GPS Receiver Error 1	GPS receiver
1304	Gyro Error 1	Internal gyro
1306	Vehicle Speed Pulse	PCM or TCM
1702	XM Antenna Error	XM antenna
2608	R-Camera Diag	Rearview camera
2610	DRAM Diag	Audio-navigation unit DRAM
2701	GPS Diag: Antenna	GPS antenna
2703	Aircon Diag	Climate control unit
2706	Gyro Diag: ECU Temp XX deg.C	Internal gyro

SYMPTOM TROUBLESHOOTING

NAVIGATION SYSTEM SYMPTOM TROUBLESHOOTING - AUDIO-NAVIGATION UNIT POWER WILL NOT TURN ON (NO INFORMATION DISPLAY)

NOTE:

- **Check the vehicle 12 volt battery condition first** .
- Check if the Display Mode (☀ ☽) button has been pressed, and turned off the display (see the Owner's Manual for more information).
- Check the connectors for poor connections or loose terminals.
- Check the fuses and **relays** associated with the system, and check for a short in the related lines.

1. Problem verification

   -1. Turn the vehicle to the ON mode.

   -2. Check if the center display unit indicates any information.

   Is any information displayed?

   YES

   Intermittent failure, the system is OK at this time.

   NO

   The failure is duplicated, go to step 2.

2. Determine possible failure area (LVDS1 circuit, others)

   -1. Shield the center display unit from the sun with your hand, and check that the display is back lit (only the back light is on).

   Can you see the back light?

   YES

   Go to step 11.

   NO

   Go to step 3.

3. Open wire check (+B_AUDIO line)

-1. Disconnect the following connector.

Center display unit connector A (5P)

-2. Measure the voltage between test points 1 and 2.

Test condition	Vehicle OFF (LOCK) mode
Â	Center display unit connector A (5P): disconnected
Test point 1	**Center display unit connector A (5P) No. 1**
Test point 2	Body ground

Is there battery voltage?

YES

The +B_AUDIO wire is OK. Go to step 4.

NO

Repair an open in the wire.

4. Open wire check (GND line)

-1. Measure the resistance between test points 1 and 2.

Test condition	Vehicle OFF (LOCK) mode
Â	Center display unit connector A (5P): disconnected
Test point 1	**Center display unit connector A (5P) No. 5**
Test point 2	Body ground

Is there 1.0 Ω or less?

YES

The GND wire is OK. Go to step 5.

NO

Repair an open or high resistance in the ground wire or poor ground (G402).

5. Determine possible failure area (DISP_CONT line, others)

-1. Reconnect center display unit connector A (5P).

-2. Disconnect the following connector.

Audio-navigation unit connector E (16P)

-3. Turn the vehicle to the ON mode.

-4. Measure the voltage between test points 1 and 2.

Test condition	Vehicle ON mode
Â	Audio-navigation unit connector E (16P): disconnected
Test point 1	**Audio-navigation unit connector E (16P) No. 4**

Test point 2	Body ground

Is there about 3.3 V?

YES

The DISP_CONT wire is OK. Go to step 7.

NO

Go to step 6.

6. Open wire check (DISP_CONT line)

-1. Measure the voltage between test points 1 and 2.

Test condition	Vehicle ON mode
Â	Audio-navigation unit connector E (16P): disconnected
Test point 1	**Center display unit connector A (5P) No. 4**
Test point 2	Body ground

Is there about 3.3 V?

YES

Repair an open in the wire.

NO

Replace the center display unit .

7. Determine possible failure area (center display unit, others)

-1. Turn the vehicle to the OFF (LOCK) mode.

-2. Reconnect audio-navigation unit connector E (16P).

-3. Turn the vehicle to the ON mode.

-4. Measure the voltage between test points 1 and 2.

Test condition	Vehicle ON mode
Test point 1	**Audio-navigation unit connector E (16P) No. 4**
Test point 2	Body ground

Is there less than 0.2 V?

Yes

Replace the center display unit .

No

Go to step 8.

8. Open wire check (+B_AUDIO line)

-1. Turn the vehicle to the OFF (LOCK) mode.

-2. Disconnect the following connector.

Audio-navigation unit connector A (24P)

-3. Measure the voltage between test points 1 and 2.

Test condition	Vehicle OFF (LOCK) mode
Â	Audio-navigation unit connector A (24P): disconnected
Test point 1	**Audio-navigation unit connector A (24P) No. 3**
Test point 2	Body ground

Is there battery voltage?

YES

The +B_AUDIO wire is OK. Go to step 9.

NO

Repair an open in the wire.

9. Open wire check (ACC line)

-1. Turn the vehicle to the ON mode.

-2. Measure the voltage between test points 1 and 2.

Test condition	Vehicle ON mode
Â	Audio-navigation unit connector A (24P): disconnected
Test point 1	**Audio-navigation unit connector A (24P) No. 23**
Test point 2	Body ground

Is there battery voltage?

YES

The ACC wire is OK. Go to step 10.

NO

Repair an open in the wire.

10. Open wire check (GND line)

-1. Turn the vehicle to the OFF (LOCK) mode.

-2. Reconnect audio-navigation unit connector A (24P).

-3. Turn the vehicle to the ON mode.

-4. Measure the voltage between test points 1 and 2.

Test condition	Vehicle ON mode
Test point 1	**Audio-navigation unit connector A (24P) No. 1**
Test point 2	Body ground

Is there less than 0.2 V?

YES

Replace the audio-navigation unit .

NO

Repair an open or high resistance in the ground wire or poor ground (G402).

11. Shorted wire check (LVDS1+ line to LVDS1- line)

-1. Turn the vehicle to the OFF (LOCK) mode.

-2. Disconnect the following connectors.

Audio-navigation unit connector H (3P)
Center display unit connector B (3P)

-3. Measure the resistance between test points 1 and 2.

Test condition	Vehicle OFF (LOCK) mode
Â	Audio-navigation unit connector H (3P): disconnected
Â	Center display unit connector B (3P): disconnected
Test point 1	Center display unit connector B (3P) No. 1
Test point 2	Center display unit connector B (3P) No. 2

Is there 1.0 MΩ or more?

YES

The LVDS1+ wire and the LVDS1**-** wire are not shorted. Go to step 12.

NO

There is a short in the wires. Replace the affected shielded harness.

12. Shorted wire check (LVDS1 SH line to another lines)

-1. Measure the resistance between test points 1 and 2.

Test condition	Vehicle OFF (LOCK) mode
Â	Audio-navigation unit connector H (3P): disconnected
Â	Center display unit connector B (3P): disconnected
Test point 1	Center display unit connector B (3P) No. 1
Test point 2	Center display unit connector B (3P) No. 3

Test point 1	Center display unit connector B (3P) No. 2
Test point 2	Center display unit connector B (3P) No. 3

Is there 1.0 MΩ or more?

YES

The LVDS1 SH wire is not shorted. Go to step 13.

NO

There is a short in the wires. Replace the affected shielded harness.

13. Open wire check (LVDS1+ line, LVDS1- line)

-1. Measure the resistance between test points 1 and 2.

Test condition	Vehicle OFF (LOCK) mode
Â	Audio-navigation unit connector H (3P): disconnected
Â	Center display unit connector B (3P): disconnected
Test point 1	**Audio-navigation unit connector H (3P) No. 1**
Test point 2	**Center display unit connector B (3P) No. 1**

Test point 1	**Audio-navigation unit connector H (3P) No. 2**
Test point 2	**Center display unit connector B (3P) No. 2**

Is there 1.0 Ω or less?

YES

The LVDS1+ and the LVDS1**-** wires are OK. Go to step 14.

NO

There is an open in the wire(s). Replace the affected shielded harness.

14. Center display unit check (substitution)

-1. Substitute a known-good center display unit.

-2. Reconnect all the connectors, and recheck.

Does the symptom go away?

YES

Replace the original center display unit .

NO

Replace the audio-navigation unit .

NAVIGATION SYSTEM SYMPTOM TROUBLESHOOTING - THE MID DOES NOT DISPLAY THE AUDIO-NAVIGATION UNIT INFORMATION

NOTE:

- **Check the vehicle 12 volt battery condition first** .
- If the audio remote-HFL switch does not respond, **go to Audio remote-HFL switch does not work properly (audio unit buttons work) troubleshooting** .
- Check the connectors for poor connections or loose terminals.

1. Problem verification

-1. Turn the vehicle to the ON mode.

-2. Select Audio, Navigation, and HFL from the multi-information display (MID) menu screen.

Are audio, navigation, and HFL information displayed?

YES

Intermittent failure, the system is OK at this time.

NO

The failure is duplicated, go to step 2.

2. Shorted wire check (LVDS2+ line, LVDS2- line)

-1. Turn the vehicle to the OFF (LOCK) mode.

-2. Disconnect the following connectors.

Audio-navigation unit connector J (3P)
Gauge control module connector C (3P)

-3. Measure the resistance between test points 1 and 2.

Test condition	Vehicle OFF (LOCK) mode
Â	Audio-navigation unit connector J (3P): disconnected
Â	Gauge control module connector C (3P): disconnected
Test point 1	**Audio-navigation unit connector J (3P) No. 1**
Test point 2	Body ground

Test point 1	**Audio-navigation unit connector J (3P) No. 2**
Test point 2	Body ground

Is there 1.0 MΩ or more?

YES

The LVDS2+ and the LVDS2**-** wires are not shorted to ground. Go to step 3.

NO

There is a short to body ground in the wire. Replace the affected shielded harness.

3. Shorted wire check (LVDS2+ line to LVDS2- line)

-1. Measure the resistance between test points 1 and 2.

Test condition	Vehicle OFF (LOCK) mode
Â	Audio-navigation unit connector J (3P): disconnected
Â	Gauge control module connector C (3P): disconnected
Test point 1	**Audio-navigation unit connector J (3P) No. 1**
Test point 2	**Audio-navigation unit connector J (3P) No. 2**

Is there 1.0 MΩ or more?

YES

The LVDS2+ wire and the LVDS2**-** wire are not shorted. Go to step 4.

NO

There is a short in the wires. Replace the affected shielded harness.

4. Shorted wire check (LVDS2 SH line to another lines)

-1. Measure the resistance between test points 1 and 2.

Test condition	Vehicle OFF (LOCK) mode
Â	Audio-navigation unit connector J (3P): disconnected
Â	Gauge control module connector C (3P): disconnected
Test point 1	**Audio-navigation unit connector J (3P) No. 1**
Test point 2	**Audio-navigation unit connector J (3P) No. 3**

Test point 1	**Audio-navigation unit connector J (3P) No. 2**
Test point 2	**Audio-navigation unit connector J (3P) No. 3**

Is there 1.0 MΩ or more?

YES

The LVDS2 SH wire is not shorted. Go to step 5.

NO

There is a short in the wires. Replace the affected shielded harness.

5. Open wire check (LVDS2+ line, LVDS2- line)

-1. Measure the resistance between test points 1 and 2.

Test condition	Vehicle OFF (LOCK) mode
Â	Audio-navigation unit connector J (3P): disconnected
Â	Gauge control module connector C (3P): disconnected
Test point 1	**Audio-navigation unit connector J (3P) No. 1**
Test point 2	**Gauge control module connector C (3P) No. 1**

Test point 1	**Audio-navigation unit connector J (3P) No. 2**
Test point 2	**Gauge control module connector C (3P) No. 2**

Is there 1.0 Ω or less?

YES

The LVDS2+ and the LVDS2**-** wires are OK. Go to step 6.

NO

There is an open in the wire(s). Replace the affected shielded harness.

6. Audio-navigation unit check (substitution)

-1. Substitute a known-good audio-navigation unit.

-2. Reconnect all the connectors, and recheck.

Does the symptom go away?

YES

Replace the original audio-navigation unit .

NO

Replace the gauge control module .

NAVIGATION SYSTEM SYMPTOM TROUBLESHOOTING - VEHICLE POSITION ICON WANDERS ACROSS THE MAP WHEN DRIVING (DOES NOT FOLLOW A DISPLAYED ROAD) OR MAP VEHICLE ICON SPINS

NOTE:

- **Check the vehicle 12 volt battery condition first** .
- This is not the same condition as when driving off-road (or on a fire or logging road).
- This condition is caused by a loss of map matching from a bad sensor input. Check for aftermarket or other objects that can block the GPS signal. **Always do the Map Matching** before proceeding with the troubleshooting.
- Check the connectors for poor connections or loose terminals.

1. Problem verification

   -1. Test-drive the vehicle in an open area, and check if the vehicle position icon displays the actual vehicle position.

   NOTE: Make sure that a known-good vehicle's navigation can follow the displayed map in the test area.

   Does the vehicle position icon wanders across the map?

   YES

   The failure is duplicated, go to step 2.

   NO

   Intermittent failure, the system is OK at this time.

2. DTC check

   -1. **Check for hard error codes**.

   Are there any navigation DTCs indicated?

   YES

   Go to indicated DTC's troubleshooting.

   NO

   Go to step 3.

3. Determine possible failure area (audio-navigation unit, BACK LT line)

   -1. **Go into the System Diagnostic Mode, and use the Vehicle Status diagnosis to check the BACK signal**.

   -2. Shift the transmission to R position/mode.

   Does the BACK signal change from [0] to [1] when the transmission is shifted from P position/mode to R position/mode?

   YES

   Go to step 5.

   NO

Go to step 4.

4. Open wire check (BACK_LT line)

   -1. Shift the transmission to P position/mode.

   -2. Turn the vehicle to the OFF (LOCK) mode.

   -3. Disconnect the following connector.

Audio-navigation unit connector C (32P)

   -4. Turn the vehicle to the ON mode.

   -5. Shift the transmission to R position/mode.

   -6. Measure the voltage between test points 1 and 2.

Test condition	Vehicle ON mode
Â	Audio-navigation unit connector C (32P): disconnected
Test point 1	**Audio-navigation unit connector C (32P) No. 15**
Test point 2	Body ground

   Is there battery voltage?

   YES

   Replace the audio-navigation unit .

   NO

   Repair an open in the wire.

5. Audio-navigation unit check (substitution)

   -1. Shift the transmission to P position/mode.

   -2. Turn the vehicle to the OFF (LOCK) mode.

   -3. **Substitute a known-good audio-navigation unit** , and check to see if the problem occurs in the same location.

   Does the problem occur in the same location each time?

   YES

   Try to replicate the problem in a known-good vehicle (same model, year, and trim). If the problem can be duplicated, the problem is in the map database. Report the problem according to the Navigation System Manual under Reporting Errors.

   NO

   Replace the original audio-navigation unit .

NAVIGATION SYSTEM SYMPTOM TROUBLESHOOTING - VOICE GUIDANCE CANNOT BE HEARD, IS BROKEN UP, OR THERE IS STATIC

NOTE:

- **Check the vehicle 12 volt battery condition first** .

- Check the volume and voice feedback setting for the navigation system in set-up.
- Check the connectors for poor connections or loose terminals.

1. Problem verification

-1. Check the navigation voice guidance output.

Does the system output the voice guidance?

YES

Intermittent failure, the system is OK at this time.

NO

The failure is duplicated, go to step 2.

2. Determine possible failure area (voice guidance output circuit, others)

-1. **Go into the System Diagnostic Mode, and use the speaker check mode**.

Did all speakers produce a tone?

YES: With stereo amplifier

Go to step 3.

YES: Without stereo amplifier

Replace the audio-navigation unit .

NO: The sound is cannot be heard in all speakers

Go to No sound is heard from all the speakers (display is normal) troubleshooting .

NO: The sound is cannot be heard in front center speaker

Go to Audio system sound is weak or distorted (display is normal) troubleshooting .

3. Shorted wire check (AUX NAVI line, AUX NAVI GND line)

-1. Turn the vehicle to the OFF (LOCK) mode.

-2. Disconnect the following connectors.

Audio-navigation unit connector B (24P)
Stereo amplifier connector C (16P)

-3. Measure the resistance between test points 1 and 2.

Test condition	Vehicle OFF (LOCK) mode
Â	Audio-navigation unit connector B (24P): disconnected
Â	Stereo amplifier connector C (16P): disconnected
Test point 1	**Audio-navigation unit connector B (24P) No. 13**
Test point 2	Body ground

Test point 1	**Audio-navigation unit connector B (24P) No. 14**
Test point 2	Body ground

Is there 1.0 MΩ or more?

YES

The AUX NAVI and the AUX NAVI GND wires are not shorted to ground. Go to step 4.

NO

There is a short to body ground in the wire. Replace the affected shielded harness.

4. Shorted wire check (AUX lines)

-1. Measure the resistance between test points 1 and 2.

Test condition	Vehicle OFF (LOCK) mode
Â	Audio-navigation unit connector B (24P): disconnected
Â	Stereo amplifier connector C (16P): disconnected

Test point 1:Audio-navigation unit connector B (24P)	**Test points 2:Audio-navigation unit connector B (24P)**
No. 1	No. 2, No. 13, No. 14

Test point 1:Audio-navigation unit connector B (24P)	**Test points 2:Audio-navigation unit connector B (24P)**
No. 2	No. 13, No. 14
No. 13	No. 14

Is there 1.0 M? or more between any of the terminals?

YES

The AUX wires are not shorted in the wires. Go to step 5.

NO

There is a short in the wires. Replace the affected shielded harness.

5. Open wire check (AUX NAVI line, AUX NAVI GND line)

-1. Measure the resistance between test points 1 and 2.

Test condition	Vehicle OFF (LOCK) mode
Â	Audio-navigation unit connector B (24P): disconnected
Â	Stereo amplifier connector C (16P): disconnected
Test point 1	**Audio-navigation unit connector B (24P) No. 13**
Test point 2	**Stereo amplifier connector C (16P) No. 12**

Test point 1	**Audio-navigation unit connector B (24P) No. 14**
Test point 2	**Stereo amplifier connector C (16P) No. 5**

Is there 1.0 Ω or less?

YES

The AUX NAVI and the AUX NAVI GND wires are OK. Go to step 6.

NO

There is an open in the wire(s). Replace the affected shielded harness.

6. Stereo amplifier check (substitution)

   -1. **Substitute a known-good stereo amplifier** .

   -2. Reconnect all the connectors, and recheck.

   Does the symptom go away?

   YES

   Replace the original stereo amplifier .

   NO

   Replace the audio-navigation unit .

HOW TO INFORMATION

HOW TO TROUBLESHOOT THE NAVIGATION SYSTEM

General Operation

Refer to the Navigation repair service information for the navigation system operating procedures.

Forced Rebooting of Audio-Navigation Unit

If the system freezes, and the screen does not respond, you can attempt rebooting the audio-navigation unit by pressing and holding the AUDIO POWER (⏻) button for 5 seconds. When the function is effective, the confirmation screen appears.

Anti-Theft Feature (With audio system theft protection)

The audio-navigation unit has an anti-theft protection circuit. When one of the following occurs, the unit enters the anti-theft mode:

- Disconnecting the 12 volt battery terminal.
- Disconnecting audio-navigation unit connector A (24P).
- Removing the +B line's fuses.

After the service, reconnect power to the audio-navigation unit, and turn the vehicle to the ON mode. There are two ways to exit the anti-theft mode:

- Press and hold the AUDIO POWER (⏻) button for at least 2 seconds. The audio-navigation unit automatically exits the anti-theft mode. If the audio-navigation unit does not exit anti-theft mode, turn the vehicle to the OFF (LOCK) mode then the ON mode (if possible, start the engine), and try to release the anti-theft several times.
- Enter the 5-digit anti-theft code. If the input of code fails 10 times in a row, the screen is locked for 60 minutes.

When the audio-navigation unit is installed in another vehicle (same Year/Model/Trim), like in cases where a known-good unit was substituted for testing, **do the Anti-Theft Skip mode in the System Diagnostic Mode**. This mode will release the anti-theft code for 150 seconds.

Symptom Diagnosis

Certain circumstances and system limitations may result in occasional vehicle positioning errors. Some customers may think this indicates a problem with the navigation system when, in fact, the system is normal. Keep the following items in mind when interviewing customers about symptoms of the navigation system.

Self-Inertial Navigation Limitations

The limitations of the self-inertial portion of the navigation system (the gyro and the vehicle speed signal) can cause discrepancies between the vehicle's actual position and the indicated vehicle's position (GPS vehicle position).

The following circumstances may cause vehicle positioning errors:

- Moving the vehicle with the engine stopped and the vehicle stopped, such as by ferry or tow truck, or if the vehicle is spun on a turn table.
- Tire slippage, changes in tire rolling diameters, and some driving situations may cause discrepancies in travel distances. Examples of this include;
-
  - -

    Continuous tire slippage on a slippery surface

  - -

    Driving with snow chains mounted

  - -

    Abnormal tire pressure

  - -

    Incorrect tire size

  - -

    Frequent lane changes across a wide highway

  - -

    Very bumpy roads

- Tolerances in the system and map inaccuracies sometimes limit how precisely the vehicle's position is indicated. Examples of this include;
-
  - -

    Driving on roads not shown on the map (map matching is not possible)

  - -

    Driving on a road that winds in one direction, such as a loop bridge, an interchange, or a spiral parking garage

  - -

    Driving on a road with a series of sharp hair-pin turns

  - -

Driving near a gradual highway exit or transition

- -

  Driving on one of two close parallel roads

- -

  Making many 90 degree turns

Global Positioning System (GPS) Limitations

The GPS cannot detect the vehicle's position or elevation during the following instances:

- For the first 5 to 10 minutes after reconnecting the 12 volt battery (this process can take as long as 45 minutes).
- When the satellite signals are blocked by tall buildings, mountains, tunnels, large trees, inside parking structures or large trucks.
- When the GPS antenna is blocked by metallic window tinting or by an object placed above it in the vehicle. The GPS antenna requires a clear unobstructed view of the sky.
- When there is no satellite signal output (signal output is sometimes stopped for satellite servicing).
- When the satellite signals are blocked by the operation of some electronic aftermarket accessories including, but not limited to non-OEM in-dash entertainment units (amp, CD players/changers, radar detectors, theft recovery systems, etc.) and cell phones placed near the navigation system.

The accuracy of the GPS is reduced during these instances:

- Metallic window tinting above the GPS antenna.
- When only three or fewer satellite signals are received (Four satellite signals are required for accurate positioning).
- When driving near high tension power lines.
- When the satellite signals are blocked by the operation of some electronic aftermarket accessories including, but not limited to non-OEM in-dash entertainment units (amp, CD players/changers, radar detectors, theft recovery systems, etc.) and cell phones placed near the navigation system.
- When the satellite control centers are experiencing problems.

LCD Unit Limitations

The center display unit is touch sensitive. Touch the display directly to select items on the screen.

- Heavy gloves, fingernails or pens cannot be used on the touch panel.
- In cold temperatures, the display may stay dark for the first minute until it warms up.
- When the display is too hot because of direct summer sunlight, it remains dark until the temperature drops (you may see an error message displayed stating this fact).
- Fingerprints on the screen may be noticeable. Clean the screen with a soft, damp cloth. You may use a mild cleaner intended for eye glasses or computer screens. To avoid scratching the panel, do not rub too hard or use abrasive cleaners or shop towels.

Symptom Duplication

When the symptom can be duplicated, verify that it is not a characteristic of the system. Review the Navigation repair service information and compare it to a known-good vehicle (with the same software and database), under the same conditions. If the symptom is not the same as the known-good vehicle, follow the self-diagnostic procedures and the appropriate troubleshooting procedures.

When the symptom does not reappear or only reappears intermittently, ask the customer about the conditions when the symptom occurred.

- Always ask the customer to demonstrate the problem.
- Try to establish possible user error or misunderstanding of the system.
- Try to establish if outside interference may have been the cause.
- Vibration, temperature extremes, and moisture (dew, humidity) are factors that are difficult to duplicate.
- Inspect the vehicle for after-market electronic devices (vehicle locators, amps, radar detectors, etc.) that may be hidden.

When troubleshooting navigation system problems, ensure that the known-good vehicle is the same software version year and model as the vehicle being serviced. Mixing incompatible navigation systems or other system components can delay the troubleshooting process by creating symptoms or issues unrelated to the original problem.

System Initialization

If the navigation system loses power (like the 12 volt battery terminal was disconnected), the navigation system requires initialization. Once completed, your system is ready to use.

This initialization requires the following:

- With audio system theft protection: Press and hold the AUDIO POWER (⏻) button for at least 2 seconds. The audio-navigation unit exits the anti-theft mode. Or you can enter the 5-digit anti-theft code.
- GPS initialization (may not be needed depending of the length of time the system was without power).
- Map matching aligns the GPS to a location on the map.

GPS Initialization

NOTE: You must park the vehicle outside with a clear view of the sky.

Depending on the length of time the battery was disconnected, your system may require GPS initialization. If it does, the CSF screen appears:

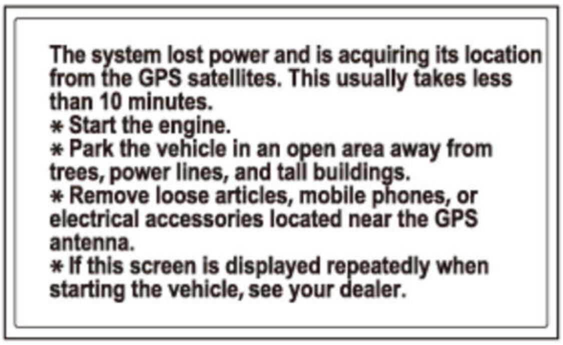

The system lost power and is acquiring its location from the GPS satellites. This usually takes less than 10 minutes.
* Start the engine.
* Park the vehicle in an open area away from trees, power lines, and tall buildings.
* Remove loose articles, mobile phones, or electrical accessories located near the GPS antenna.
* If this screen is displayed repeatedly when starting the vehicle, see your dealer.

If this procedure is not necessary, the system proceeds directly to the Disclaimer screen. During initialization, the system searches for all available GPS satellites, and obtains their orbital information. Park the vehicle out in the open with a clear view of the sky for this procedure.

If the navigation system finds the satellites properly, the CSF screen changes to the Disclaimer screen. If within 10 minutes the system fails to locate a sufficient number of satellites to locate your position, the confirmation screen appears.

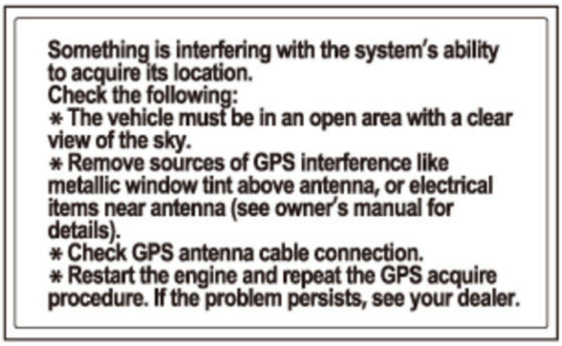

Something is interfering with the system's ability to acquire its location.
Check the following:
∗ The vehicle must be in an open area with a clear view of the sky.
∗ Remove sources of GPS interference like metallic window tint above antenna, or electrical items near antenna (see owner's manual for details).
∗ Check GPS antenna cable connection.
∗ Restart the engine and repeat the GPS acquire procedure. If the problem persists, see your dealer.

If this screen appears, turn off the engine, then restart the vehicle and move it to a different location. If the Disclaimer screen appears, the GPS initialization is complete.

NOTE:

- The average acquiring time is less than 10 minutes, but it can take as long as 45 minutes.
- If the system is still unable to acquire a signal, follow the instructions on the screen. If this screen appears again, check for hard error codes.
- Skip a CSF screen by pressing the DISPLAY MODE (☼ ☾) button and the HOME button at the same time for 5 seconds and you can move to the Disclaimer screen.

Map Matching

This part of the initialization matches the GPS coordinates with a road on the map screen. To do this part of the procedure, make sure that the navigation system displays a map, and drive the vehicle on a mapped road shown on the map screen. Do not enter a destination at this time. When the name of the current road you are driving on appears at the bottom of the screen, the entire procedure is complete. Your system is now ready to use.

How to Check Error History (Navigation DTCs)

NOTE: The navigation DTCs cannot be retrieved with the HDS.

The Error History feature is to record intermittent audio/navigation issues that occur while the customer is using the system. Sometimes the customer complaint cannot be duplicated. The error history may record the information needed to diagnose the problem. To check the error history:

1. Turn the vehicle to the ON mode.

2. Press and hold the PHONE button, the DISPLAY MODE (

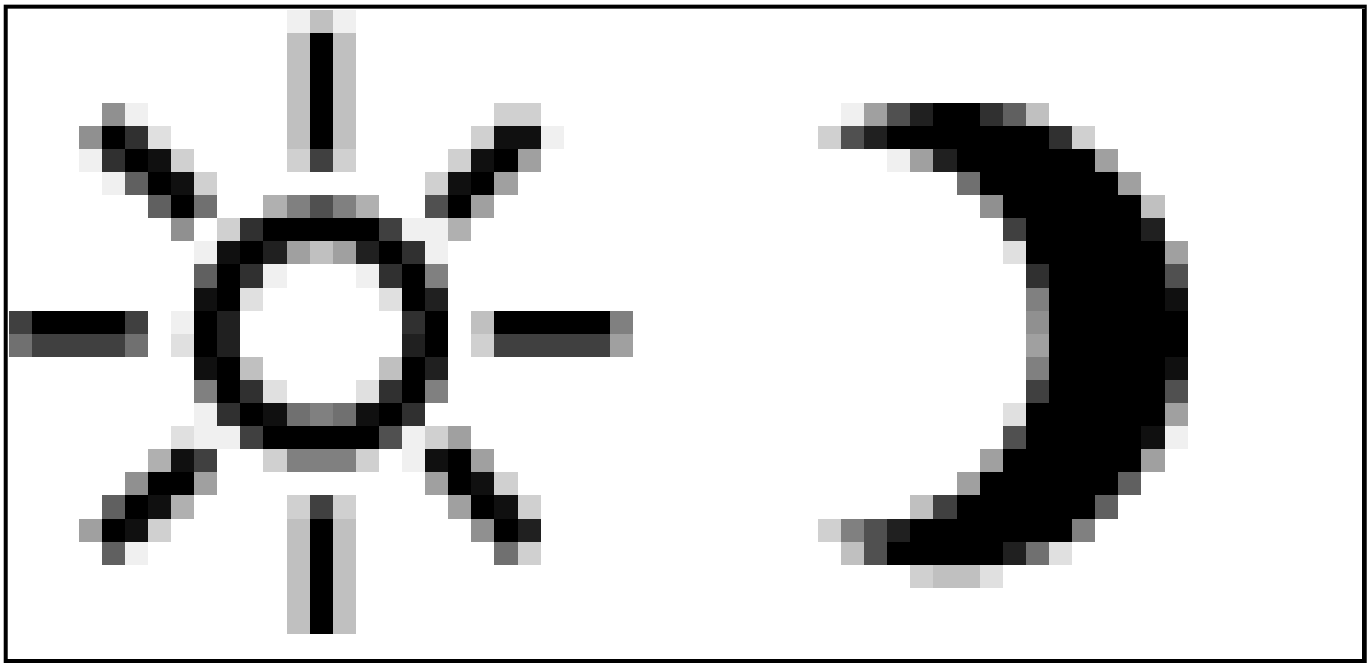

) button, and the AUDIO POWER (

⏻

) button until the Select Diagnosis Items menu screen is displayed.

NOTE: The buttons needs to be pressed together simultaneously.

Displaying Select Diagnosis Items Menu Screen

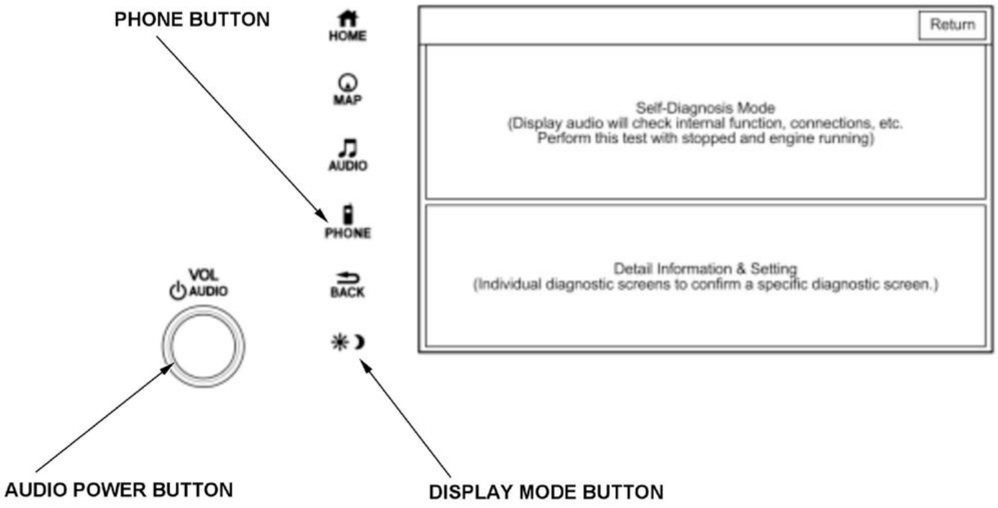
PHONE BUTTON
HOME
MAP
AUDIO
PHONE
BACK
VOL
AUDIO
Return
AUDIO POWER BUTTON
DISPLAY MODE BUTTON

Self-Diagnosis Mode
(Display audio will check internal function, connections, etc.
Perform this test with stopped and engine running)

Detail Information & Setting
(Individual diagnostic screens to confirm a specific diagnostic screen.)

3. When the Select Diagnosis Items menu appears, select the Self-Diagnosis Mode.

4. When the audio-navigation unit has hard error codes, the Error History icon (A) appears yellow. When no hard error codes are stored, the icon appears gray. To view the errors with their navigation DTC, select the Error History icon.

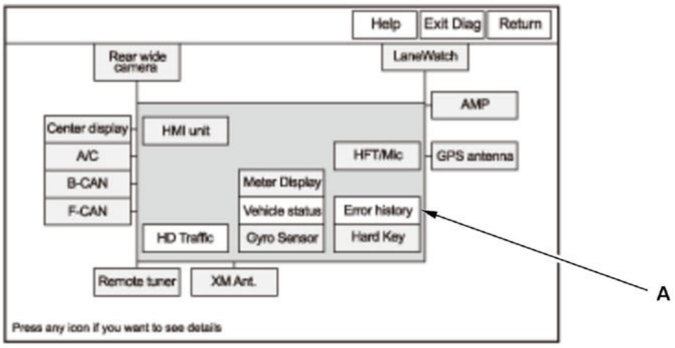
Help
Exit Diag
Return
Rear wide camera
LaneWatch
AMP
Center display
A/C
B-CAN
F-CAN
HMI unit
HFT/Mic
GPS antenna
Meter Display
Vehicle status
Gyro Sensor
Error history
Hard Key
HD Traffic
Remote tuner
XM Ant.
A

Press any icon if you want to see details

5. Select the Hard Error icon in the Error History menu.

NOTE: The Soft Error feature is for factory use only.

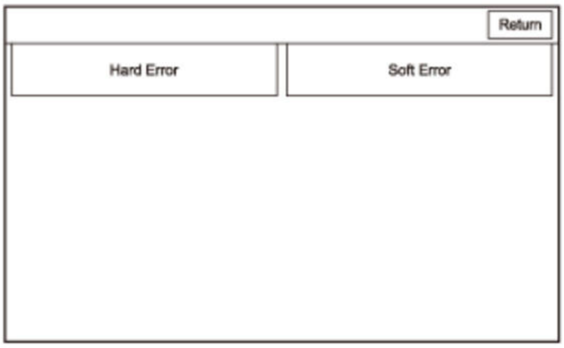
Return
Hard Error
Soft Error

The Hard Error screen displays the following information by selecting the Date/Time icon (A):

- The date and time when the error occurred. Swipe the screen to check the next items.
- The navigation DTC for the error.
- A brief description of the navigation DTC.

NOTE: The Save feature is for factory use only.

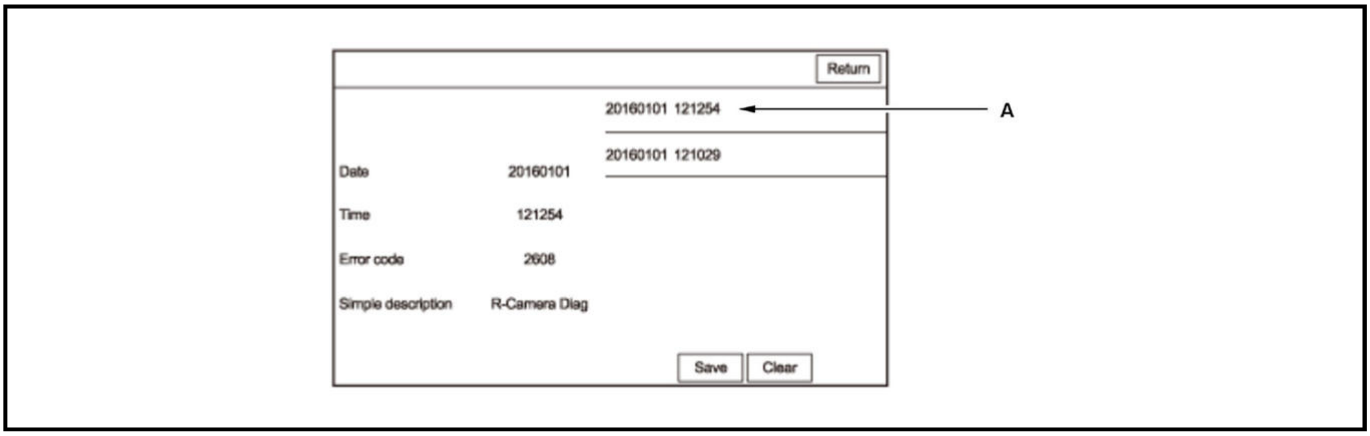

20160101 121254

20160101 121029

Date 20160101

Time 121254

Error code 2608

Simple description R-Camera Diag

7. Use the navigation DTC Troubleshooting table to troubleshoot the error. Select the Return icon to exit the Error History main menu.

How to Clear Error History

NOTE: The navigation DTCs cannot be deleted with the HDS.

8. Select the Clear icon in the Hard Error. The confirmation screen appears.

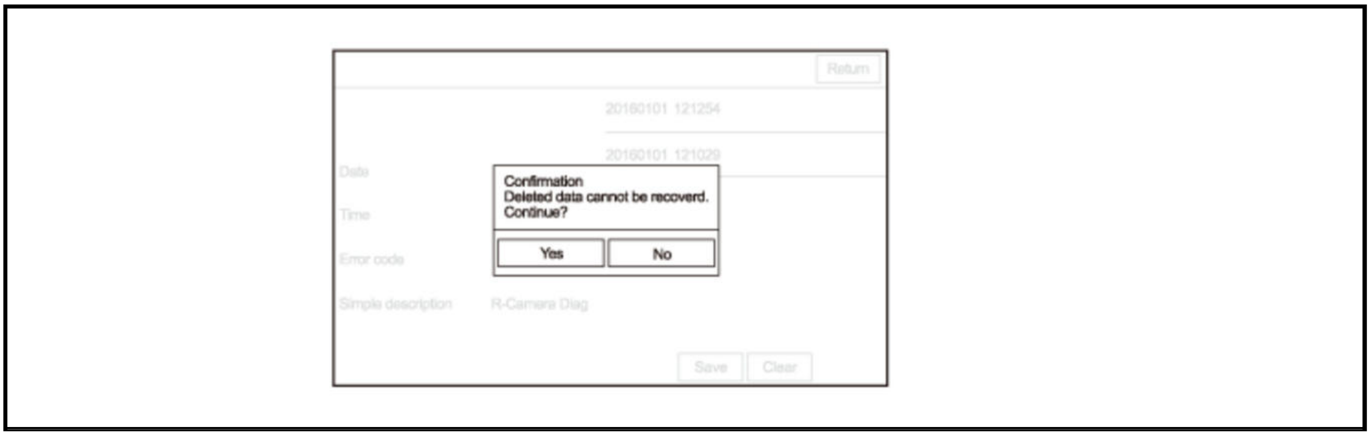

Confirmation
Deleted data cannot be recoverd.
Continue?

9. Select the Yes icon. All Hard Error histories are cleared. Select the Return icon to exit the Error History.

COMPONENT LOCATION INDEX

NAVIGATION SYSTEM COMPONENT LOCATION INDEX

For relationships between signals in a system,

refer to system diagram.

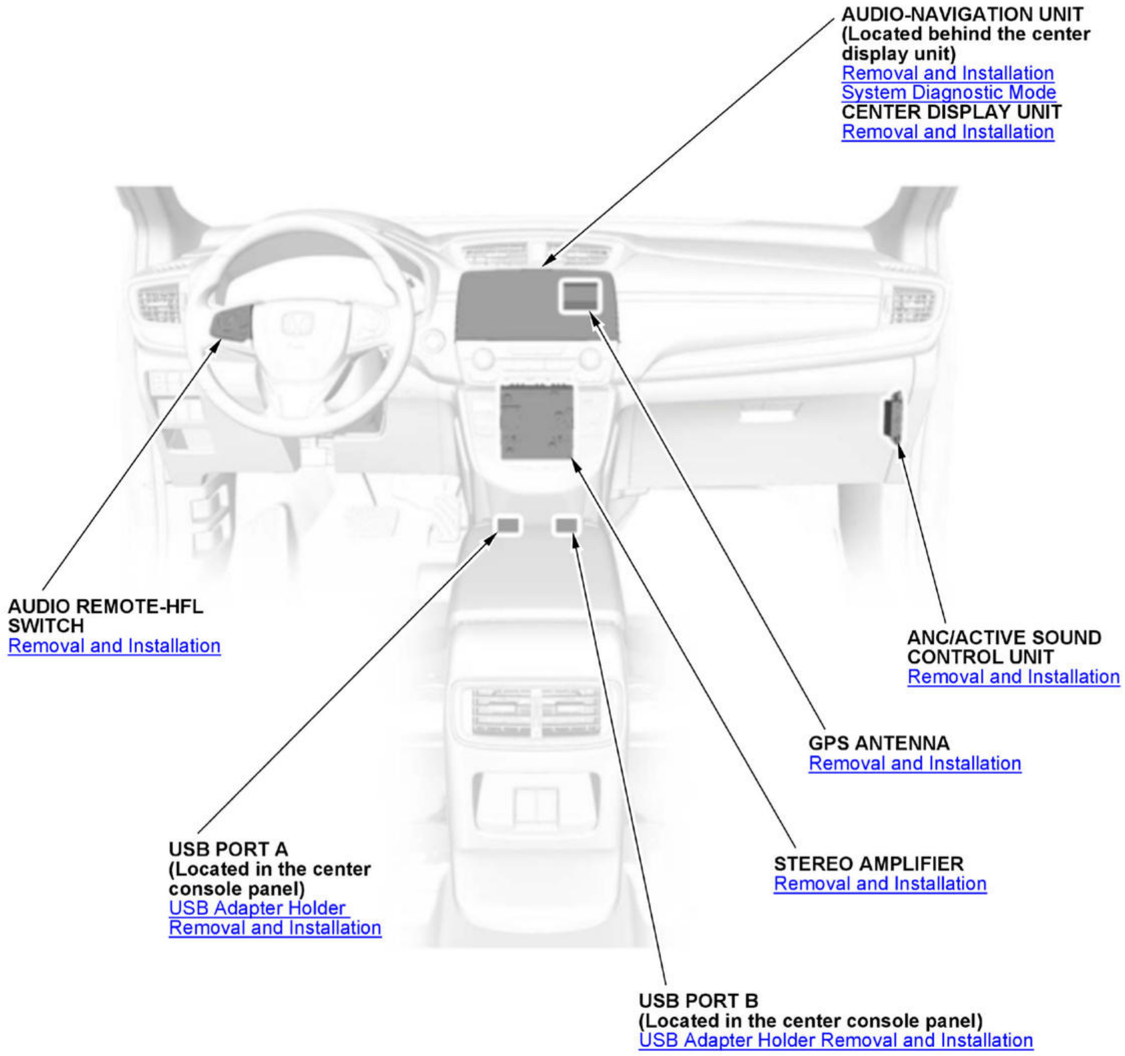
AUDIO-NAVIGATION UNIT
(Located behind the center display unit)
Removal and Installation
System Diagnostic Mode
CENTER DISPLAY UNIT
Removal and Installation
AUDIO REMOTE-HFL SWITCH
Removal and Installation
ANC/ACTIVE SOUND CONTROL UNIT
Removal and Installation
GPS ANTENNA
Removal and Installation
USB PORT A
(Located in the center console panel)
USB Adapter Holder
Removal and Installation
STEREO AMPLIFIER
Removal and Installation
USB PORT B
(Located in the center console panel)
USB Adapter Holder Removal and Installation

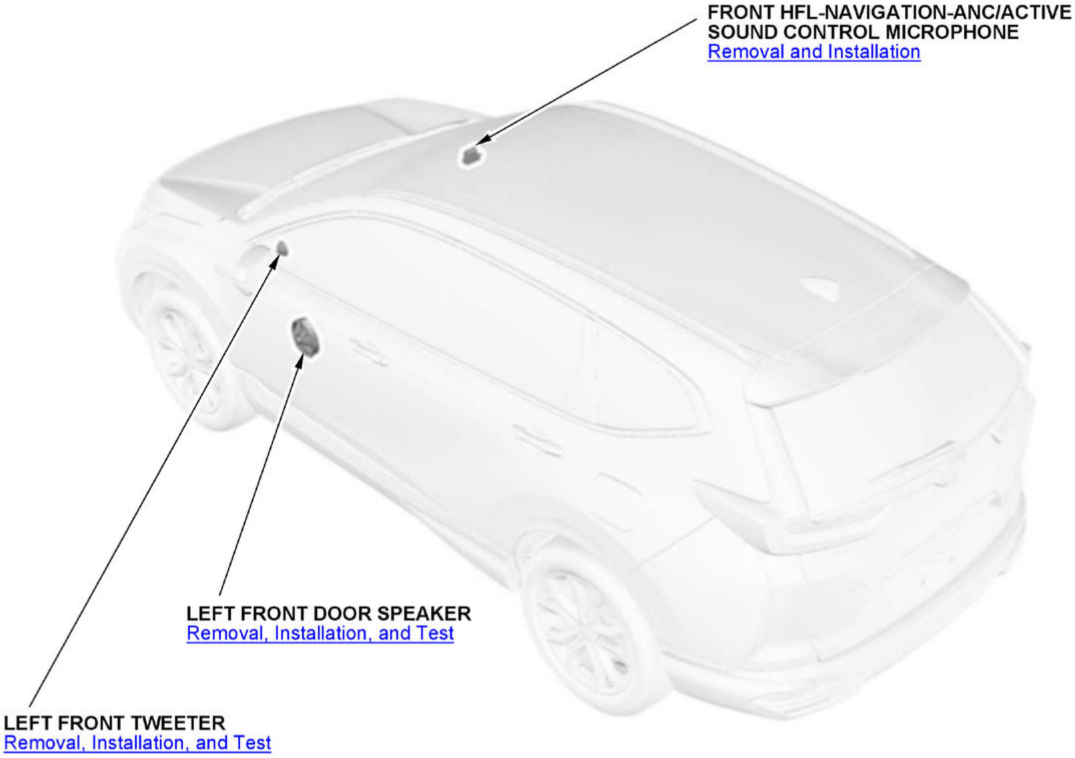
FRONT HFL-NAVIGATION-ANC/ACTIVE SOUND CONTROL MICROPHONE
Removal and Installation
LEFT FRONT DOOR SPEAKER
Removal, Installation, and Test
LEFT FRONT TWEETER
Removal, Installation, and Test

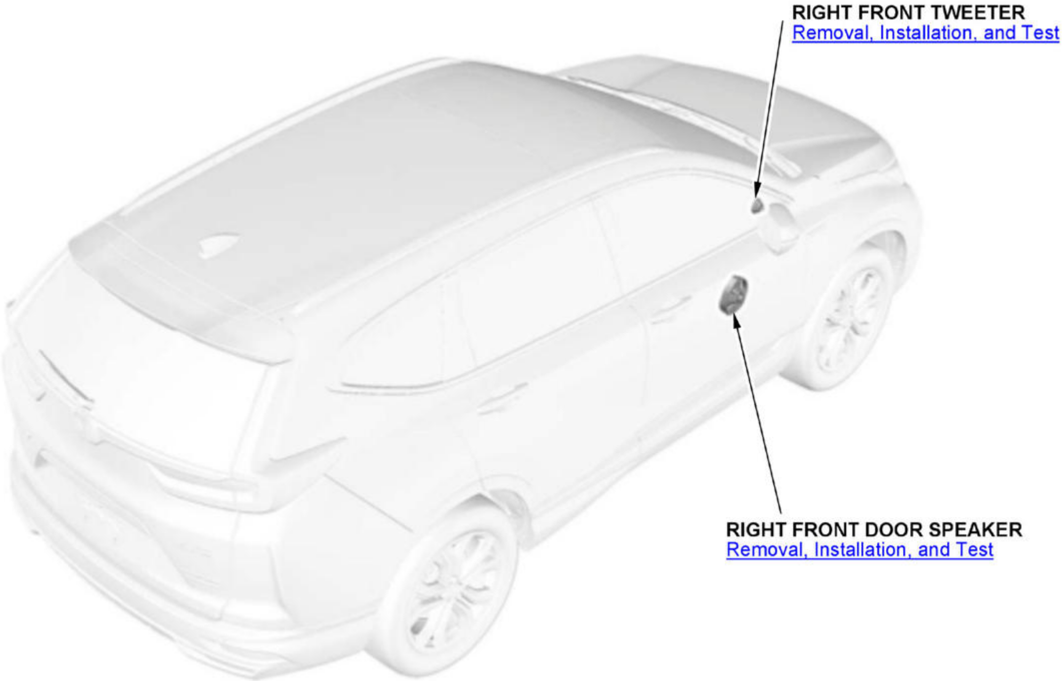
RIGHT FRONT TWEETER
Removal, Installation, and Test
RIGHT FRONT DOOR SPEAKER
Removal, Installation, and Test

DESCRIPTION AND OPERATION

NAVIGATION SYSTEM DESCRIPTION

Basic Configuration

The navigation system is a highly-sophisticated, hybrid locating system that uses satellites and a map database to show you where you are and to help guide you to a desired destination.

The navigation system receives signals from the global positioning system (GPS), a network of 24 or more satellites in orbit around the earth. By receiving signals from several of these satellites, the navigation system can determine the latitude, longitude, and elevation of the vehicle. In addition, signals from the navigation unit's own gyro sensor and vehicle information (vehicle speed pulse) enable the system to keep track of the vehicle's direction and speed of travel.

This hybrid system has advantages over a system that is either entirely self-contained or one that relies totally on the GPS. For example, the self-contained portion of the system can keep track of vehicle position even when satellite signals cannot be received. When the navigation system is on, the GPS can keep track of the vehicle position even when the vehicle is transported by ferry.

The navigation system applies all location, direction, and speed information to maps and calculates a route to the destination entered. As you drive to that destination, the system provides both visual and audio guidance.

Audio-Navigation Unit

Refer to the Audio System Description for the audio-navigation unit (display audio) and audio functions .

Navigation Function

The navigation function is installed in the audio-navigation unit as an application. The basic navigation system is composed of the audio-navigation unit, center display unit, vehicle information signals (vehicle speed pulse, reverse signal), and the GPS antenna.

Function Diagram

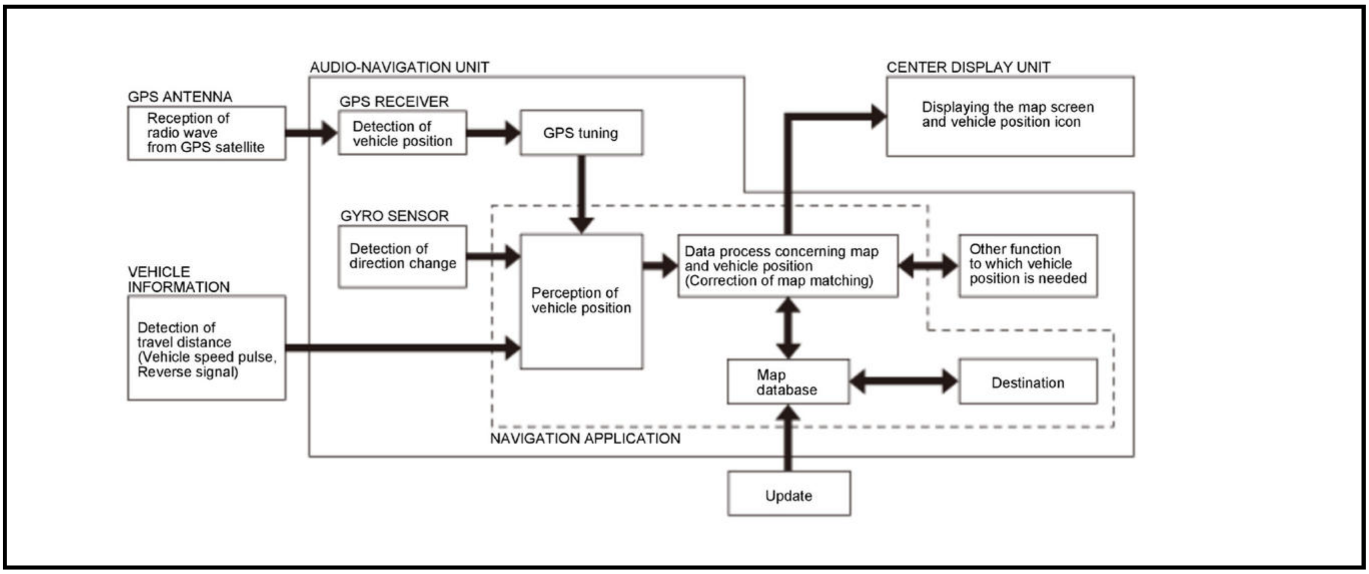
AUDIO-NAVIGATION UNIT
CENTER DISPLAY UNIT
GPS ANTENNA
Reception of radio wave from GPS satellite
GPS RECEIVER
Detection of vehicle position
GPS tuning
Displaying the map screen and vehicle position icon
GYRO SENSOR
Detection of direction change
Perception of vehicle position
Data process concerning map and vehicle position (Correction of map matching)
Other function to which vehicle position is needed
VEHICLE INFORMATION
Detection of travel distance (Vehicle speed pulse, Reverse signal)
Map database
Destination
NAVIGATION APPLICATION
Update

Calculation of Vehicle Position

The audio-navigation unit calculates the vehicle position (the driving direction and the current position) by receiving the directional change signals from the gyro sensor, and the travel distance signals from vehicle information (vehicle speed pulse, BACK LT (reverse) signal).

Map Matching Tuning

Map match tuning means that the vehicle's position is properly indicated on mapped roads. The map data transmitted from the SD card is checked against the current vehicle position data and the vehicle's position is indicated on the nearest road. Map matching tuning cannot be done when the vehicle is on an unmapped road, or if the vehicle is far away from a mapped road.

GPS Tuning

GPS tuning improves the accuracy of the vehicle's actual position in relation to the GPS vehicle position. The audio-navigation unit compares its calculated vehicle position with the GPS position. If there is a large difference between the two positions, the GPS tuning adjusts the calculated vehicle position to the GPS position.

Distance Tuning

The audio-navigation unit compares the vehicles calculated distance using the VSP and the vehicle's actual position based on GPS data. If the values are different, the audio-navigation unit decreases or increases the tuning value depending if the vehicle's calculated position is always ahead or behind the GPS position.

Vehicle Speed Pulse

The vehicle speed pulse is sent by the PCM. The PCM receives a signal from the output shaft speed sensor, then processes the signal and transmits it to the speedometer and other systems.

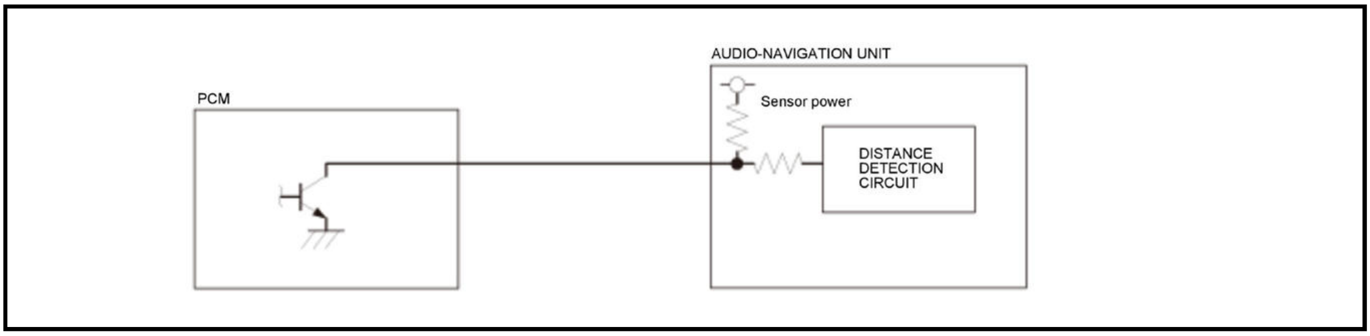

Gyro Sensor

The gyro sensor (located in the audio-navigation unit) detects the direction change (angular speed) and the attitude of the vehicle.

When the vehicle turns left or right, the gyro sensor outputs the voltage. But the sensor outputs the offset voltage when the vehicle is stopped. The audio-navigation unit calculates the relative bearing of the vehicle from the offset voltage. Since the vehicle may generate the yaw rate even when the vehicle is stopped. (when the vehicle is spun on a turn table), the audio-navigation unit prevents incorrect calculations using the gyro sensor temperature information.

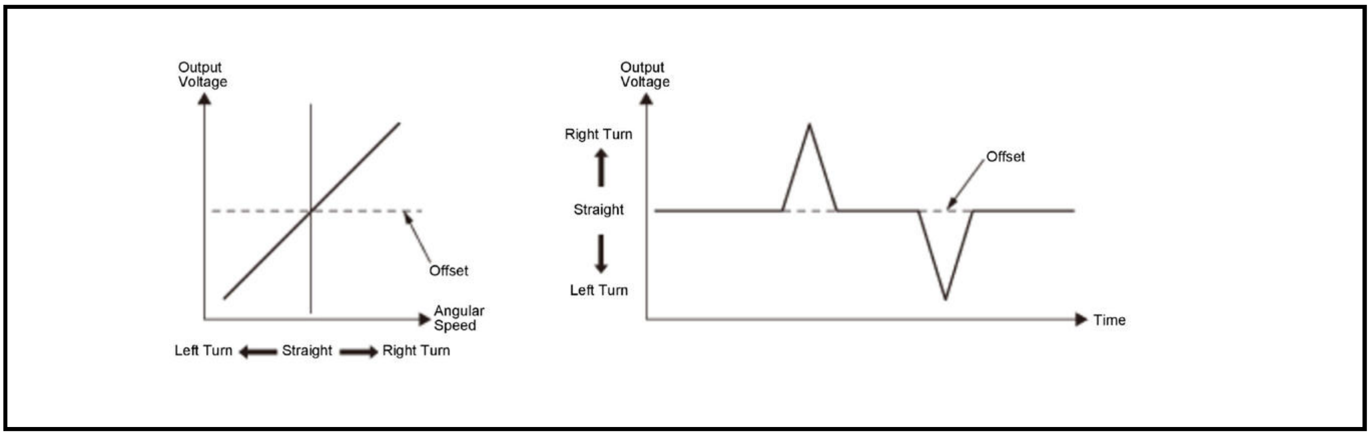

When the vehicle repeats acceleration/slowdown, the gyro sensor outputs the voltage. In addition, the gyro sensor is affected by the vehicle's slant angle. The audio-navigation unit calculates the slant angle of the vehicle from the offset voltage.

To correctly calculate when the vehicle is at an angle, the audio-navigation unit sets up the offset in these cases:

- GPS altitude is constant.
- Vehicle speed is constant.

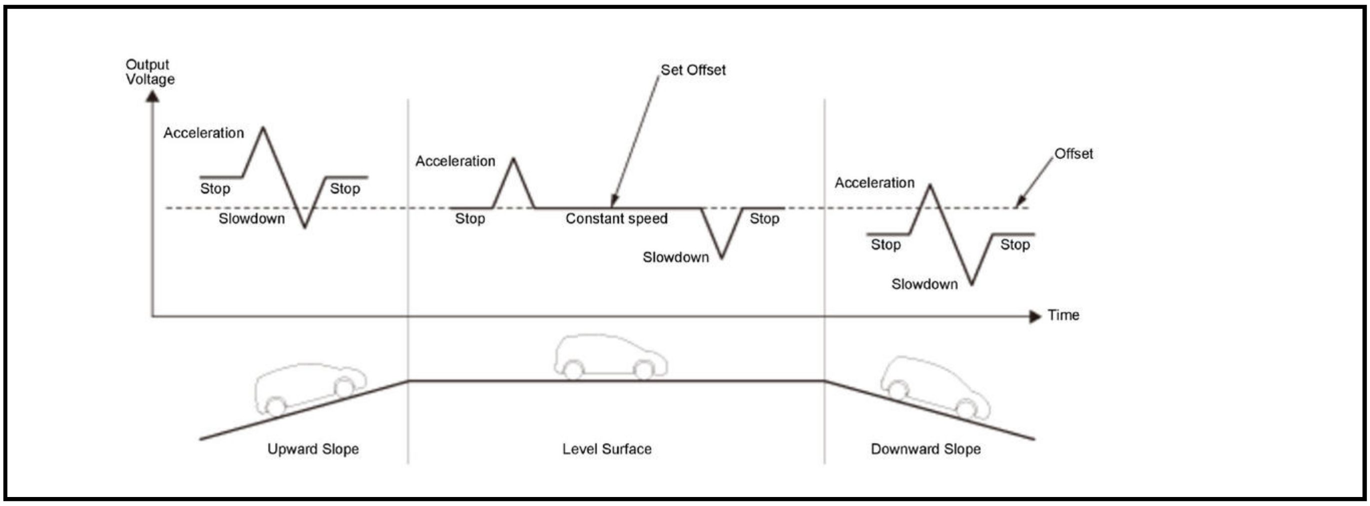
Output Voltage
Acceleration
Stop
Stop
Slowdown
Set Offset
Acceleration
Stop
Constant speed
Stop
Slowdown
Offset
Acceleration
Stop
Stop
Slowdown
Time
Upward Slope
Level Surface
Downward Slope

Oscillation Gyro Principles

The piezoelectric parts have electric/mechanical transfer characteristics. They bend vertically when voltage is applied to both sides of the parts, and voltage is generated between both sides of the piezoelectric parts when they are bent by an external force. The oscillation gyro functions by utilizing this characteristic of the piezoelectric parts and Coriolis force. (Coriolis force deflects moving objects as a result of the earth's rotation.) In the oscillation gyro, this force moves the sensor element when angular velocity is applied.

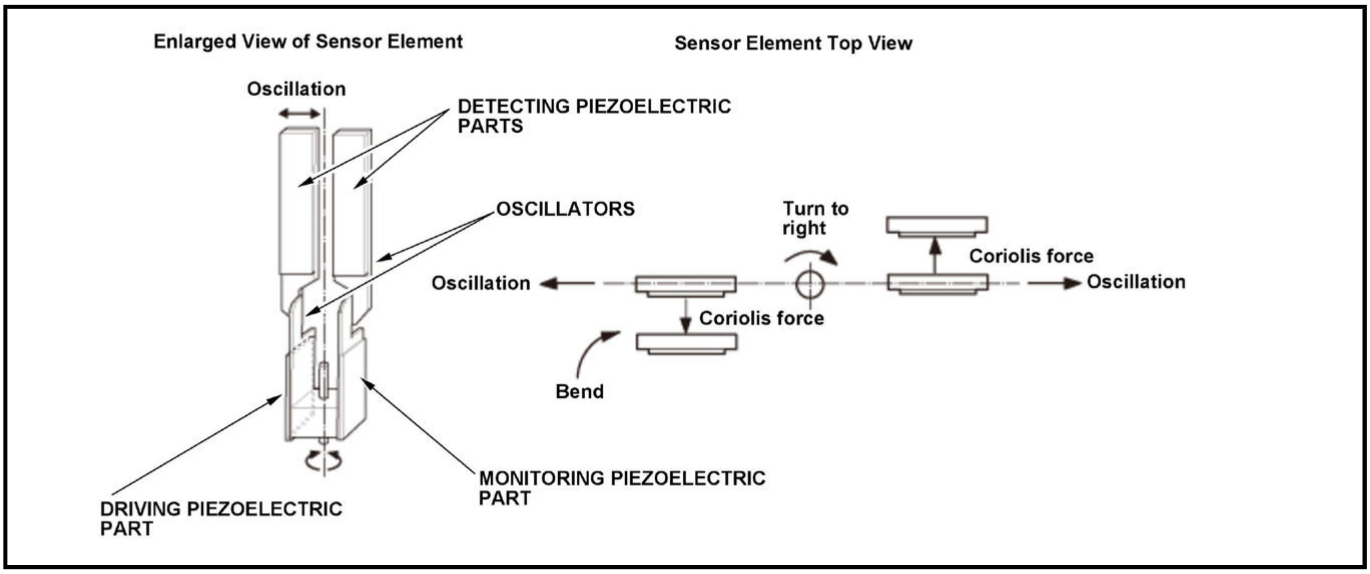
Enlarged View of Sensor Element
Sensor Element Top View
Oscillation
DETECTING PIEZOELECTRIC PARTS
OSCILLATORS
Turn to right
Coriolis force
Oscillation
Oscillation
Coriolis force
Bend
MONITORING PIEZOELECTRIC PART
DRIVING PIEZOELECTRIC PART

Global Positioning System (GPS)

The global positioning system (GPS) enables the navigation system to determine the current position of the vehicle by using the signals transmitted from the satellites in orbit around the earth. The satellites transmit the satellite identification signal, orbit information, transmission time signal, and other information. When the GPS receiver receives a signal from four or more satellites simultaneously, it calculates the current position of the vehicle based on the distance to each satellite and the satellite's position in its respective orbit.

Position Detection Image with GPS Satellite

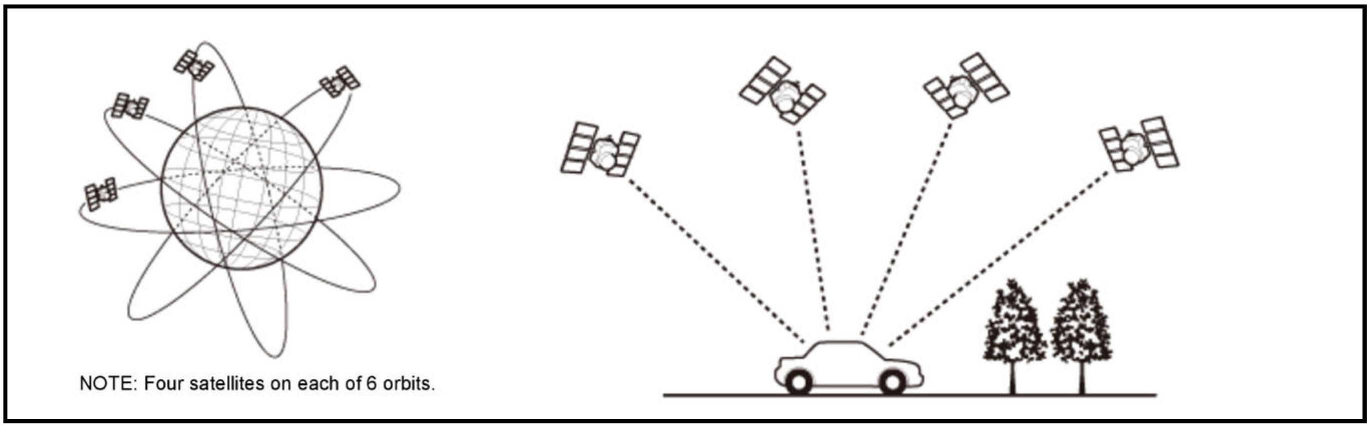
NOTE: Four satellites on each of 6 orbits.

Precision of GPS

The precision of the GPS varies according to the number of satellites from which signals are received and the view of the sky.

Number of Satellites	Condition	Description
None	Faulty reception	The GPS cannot be utilized due to a faulty GPS receiver or antenna, or other fault or interference.
2 or less	Impossible to detect vehicle position	GPS function is normal. The satellite signals received by the GPS are too few to detect the vehicle position.
3	Vehicle position detectable in 2 dimensions	The longitude and latitude of the vehicle position can be detected (less precise than detection in three dimensions).
4 or more	Vehicle position detectable in 3 dimensions (elevation displayed)	The longitude, latitude and the altitude of the vehicle position can be detected (more precise than detection in two dimensions).

GPS Antenna

The GPS antenna amplifies and transmits the signals received from the satellites to the GPS receiver.

GPS Receiver and Clock

The GPS receiver is built into the audio-navigation unit. It calculates the vehicle position by receiving the signal from the GPS antenna. The current time, vehicle position, and signal reception condition are transmitted from the GPS receiver to the navigation system to adjust vehicle position and the clock display in the audio-navigation unit. Also, the audio-navigation unit can set world time zones automatically by calculating the vehicle position.

Audio Guidance

The audio-navigation unit outputs navigation voice guidance before entering an intersection or passing a junction.

- With stereo amplifier: The voice guidance are sent to the stereo amplifier using the analog audio line (AUX NAVI), then outputs them to the front speaker(s) (driver's side).
- Without stereo amplifier: The voice guidance outputs to the front speaker(s) (driver's side).

Muting Signal Logic

When the speaker outputs the voice guidance, audio muting logic is orchestrated by the audio-navigation unit. The audio-navigation unit determines what audio source has priority to use speakers. **Refer to the audio system Description** for muting signal logic with the audio-navigation unit.

Voice Control Function

This navigation system also has voice recognition that allows voice control of most of the audio, navigation, and the HFL functions. The TALK button on the steering wheel activate the voice control. The voice control also allows control of the audio and climate functions.

Muting Signal Logic

When the voice recognition is in use, audio muting logic is orchestrated by the audio-navigation unit. The audio-navigation unit determines what audio source has priority to use speakers Refer to the audio system Overview for muting signal logic with the audio-navigation unit.

Fan Mute Operation

When the voice recognition is in use, the audio-navigation unit sends the fan mute signal to the climate control unit via the B-CAN. The blower fan operating voltage may be reduced depending on the current fan speed.

Turn by Turn Directions

The audio-navigation unit outputs the route guidance (direction) information to the multi-information display (MID) in the gauge control module via the digital signal line (LVDS2). In the case of route guidance mode, the MID shows the simple routing guidance using an arrow. When other than route guidance mode, the MID shows the azimuth (direction) information in 16-directions.

HD Traffic (TM)

The HD Traffic (TM) is a broadcast for delivering traffic information to the driver. The traffic data is coded using the FM broadcast.

The HD Traffic (TM) uses a decoder in the audio-navigation unit to decode the traffic information data. It is integrated directly into a navigation system. The traffic information is displayed with the navigation route guidance. It is used to avoid traffic jams and accidents (see the Navigation System information for more information).

HondaLink Assist

HondaLink delivers remote services to the vehicle using the customer's compatible Bluetooth phone. **Refer to the audio system Description** .

Microphone

The Microphone receives navigation voice command, and transmits them to the audio-navigation unit. **Refer to the HandsFreeLink system Description** .

HFL (Navigation Voice Control) Switch

The HFL (navigation voice control) switch and the audio remote switch are integrated to the audio remote-HFL switch. **Refer to the audio system Description** .

Multi-View Rearview Camera

The multi-view rearview camera allows the driver to see what is behind the vehicle by displaying the image on the audio-navigation unit. There are three different selectable views. **Refer to the audio system Description** .

NAVIGATION SYSTEM DESCRIPTION - SYSTEM DIAGRAM

For locations of each component on vehicle, refer to Navigation System Component Location Index.

With Stereo Amplifier

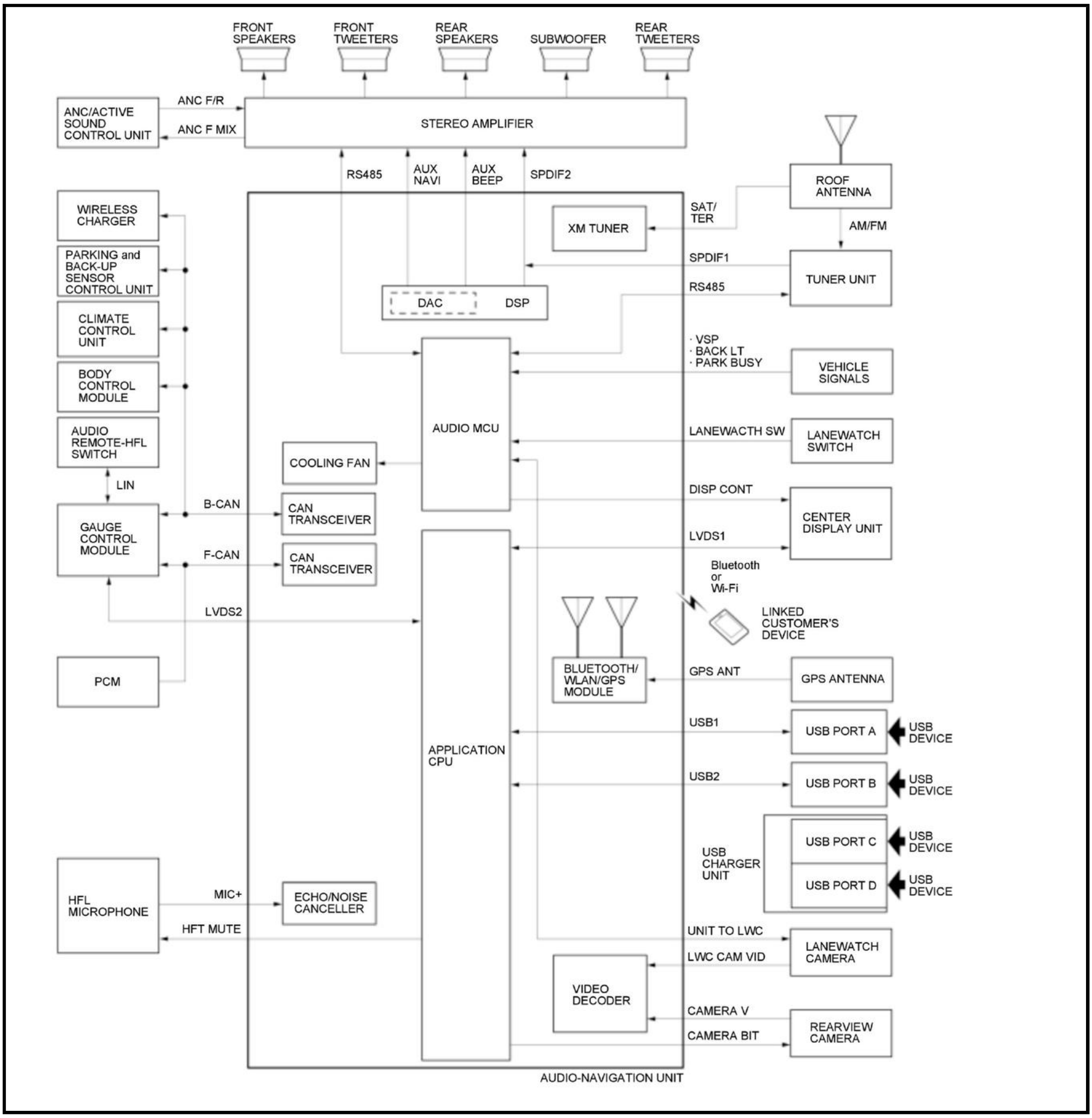
FRONT SPEAKERS
FRONT TWEETERS
REAR SPEAKERS
SUBWOOFER
REAR TWEETERS
ANC/ACTIVE SOUND CONTROL UNIT
ANC F/R
ANC F MIX
STEREO AMPLIFIER
RS485
AUX NAVI
AUX BEEP
SPDIF2
ROOF ANTENNA
SAT/ TER
XM TUNER
AM/FM
SPDIF1
TUNER UNIT
RS485
DAC
DSP
WIRELESS CHARGER
PARKING and BACK-UP SENSOR CONTROL UNIT
CLIMATE CONTROL UNIT
BODY CONTROL MODULE
AUDIO REMOTE-HFL SWITCH
LIN
· VSP
· BACK LT
· PARK BUSY
VEHICLE SIGNALS
AUDIO MCU
LANEWACTH SW
LANEWATCH SWITCH
COOLING FAN
DISP CONT
CENTER DISPLAY UNIT
GAUGE CONTROL MODULE
B-CAN
CAN TRANSCEIVER
F-CAN
CAN TRANSCEIVER
LVDS1
Bluetooth or Wi-Fi
LVDS2
LINKED CUSTOMER'S DEVICE
PCM
BLUETOOTH/ WLAN/GPS MODULE
GPS ANT
GPS ANTENNA
APPLICATION CPU
USB1
USB PORT A
USB DEVICE
USB2
USB PORT B
USB DEVICE
USB CHARGER UNIT
USB PORT C
USB DEVICE
USB PORT D
USB DEVICE
HFL MICROPHONE
MIC+
ECHO/NOISE CANCELLER
HFT MUTE
UNIT TO LWC
LANEWATCH CAMERA
LWC CAM VID
VIDEO DECODER
CAMERA V
CAMERA BIT
REARVIEW CAMERA
AUDIO-NAVIGATION UNIT

Without Stereo Amplifier

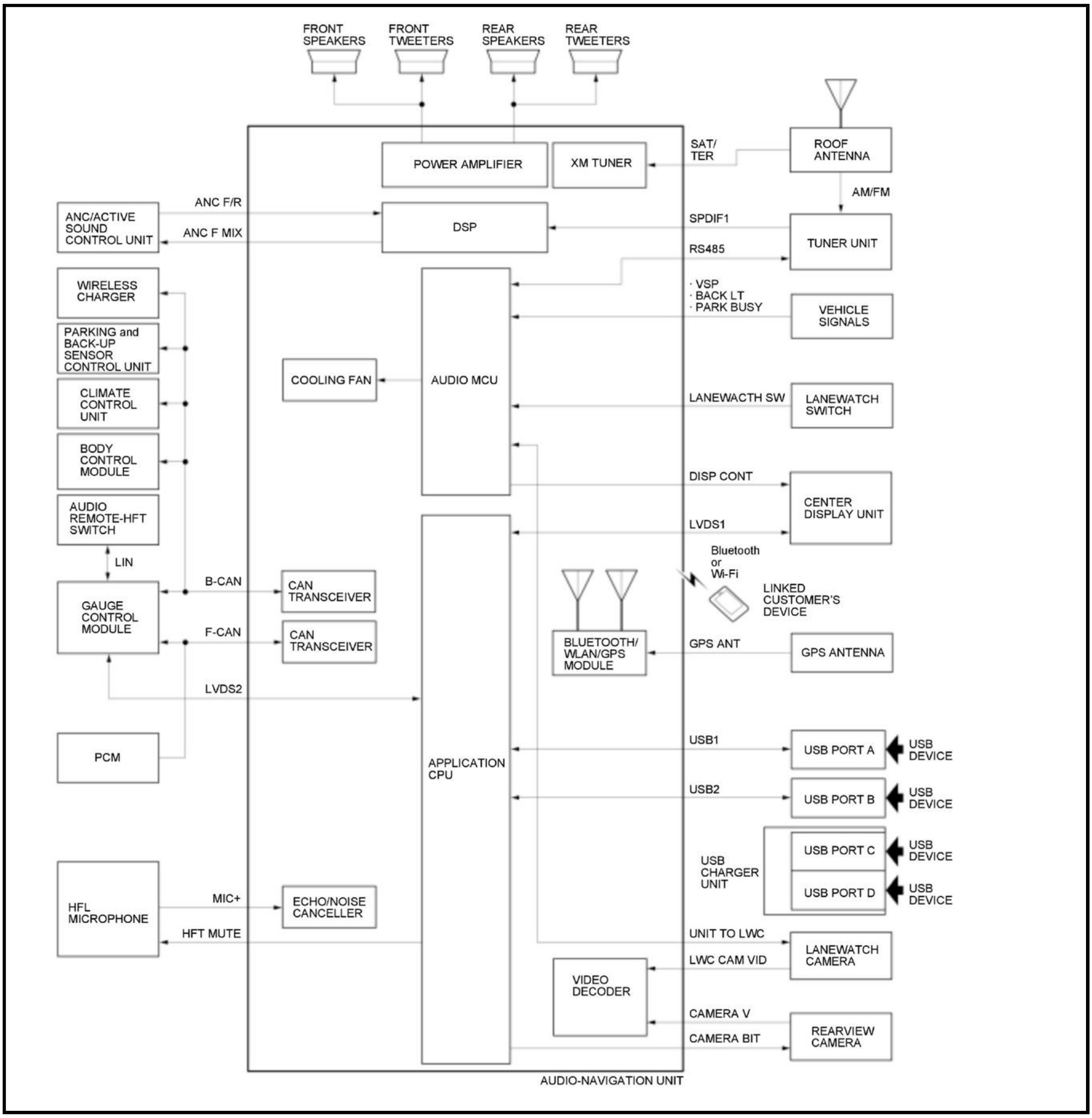
FRONT SPEAKERS
FRONT TWEETERS
REAR SPEAKERS
REAR TWEETERS
ROOF ANTENNA
SAT/ TER
POWER AMPLIFIER
XM TUNER
AM/FM
ANC/ACTIVE SOUND CONTROL UNIT
ANC F/R
ANC F MIX
DSP
SPDIF1
TUNER UNIT
RS485
WIRELESS CHARGER
· VSP
· BACK LT
· PARK BUSY
VEHICLE SIGNALS
PARKING and BACK-UP SENSOR CONTROL UNIT
COOLING FAN
AUDIO MCU
CLIMATE CONTROL UNIT
LANEWACTH SW
LANEWATCH SWITCH
BODY CONTROL MODULE
DISP CONT
CENTER DISPLAY UNIT
AUDIO REMOTE-HFT SWITCH
LVDS1
LIN
Bluetooth or Wi-Fi
LINKED CUSTOMER'S DEVICE
GAUGE CONTROL MODULE
B-CAN
CAN TRANSCEIVER
F-CAN
CAN TRANSCEIVER
BLUETOOTH/ WLAN/GPS MODULE
GPS ANT
GPS ANTENNA
LVDS2
PCM
APPLICATION CPU
USB1
USB PORT A
USB DEVICE
USB2
USB PORT B
USB DEVICE
USB CHARGER UNIT
USB PORT C
USB DEVICE
USB PORT D
USB DEVICE
HFL MICROPHONE
MIC+
ECHO/NOISE CANCELLER
HFT MUTE
UNIT TO LWC
LANEWATCH CAMERA
LWC CAM VID
VIDEO DECODER
CAMERA V
REARVIEW CAMERA
CAMERA BIT
AUDIO-NAVIGATION UNIT

Power Supply Diagram

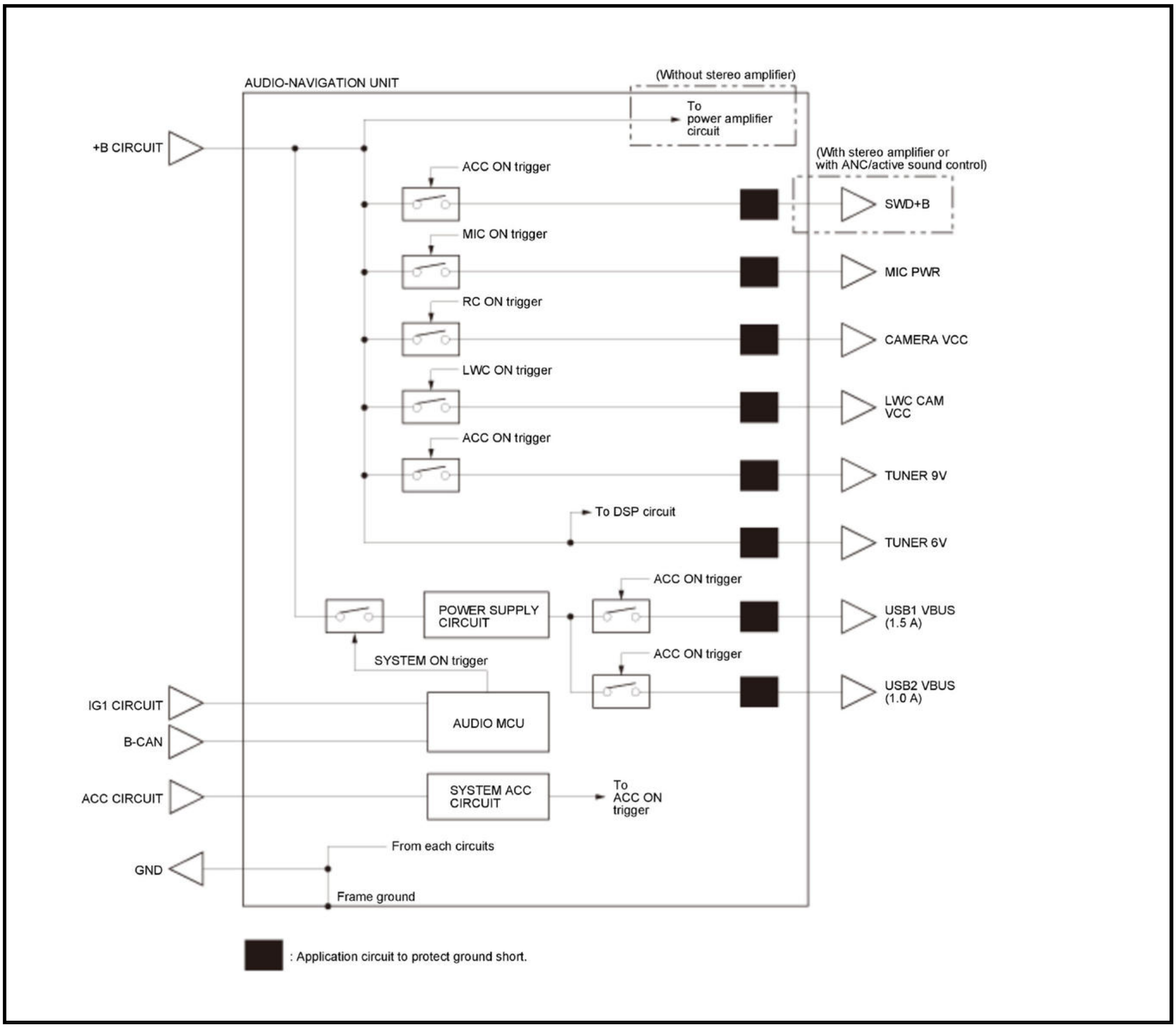
AUDIO-NAVIGATION UNIT
(Without stereo amplifier)
To power amplifier circuit
+B CIRCUIT
(With stereo amplifier or with ANC/active sound control)
ACC ON trigger
SWD+B
MIC ON trigger
MIC PWR
RC ON trigger
CAMERA VCC
LWC ON trigger
LWC CAM VCC
ACC ON trigger
TUNER 9V
To DSP circuit
TUNER 6V
ACC ON trigger
POWER SUPPLY CIRCUIT
USB1 VBUS (1.5 A)
SYSTEM ON trigger
ACC ON trigger
USB2 VBUS (1.0 A)
IG1 CIRCUIT
AUDIO MCU
B-CAN
ACC CIRCUIT
SYSTEM ACC CIRCUIT
To ACC ON trigger
From each circuits
GND
Frame ground
■ : Application circuit to protect ground short.

CALIBRATION CORRECTION

NAVIGATION SYSTEM SENSOR CALIBRATION

Procedure

NOTE:

- Check the vehicle 12 volt battery condition first .
- You should do this procedure in an open area away from buildings, power lines, other vehicles, and any other sources of strong magnetic fields.

1. Sensor - Calibration

1. Test-drive the vehicle on the road in a straight line for at least 200 m (656 ft) at a constant speed (turn less than 5 deg/s, accelerate less than 1 mph/s (1.6 km/h/s)).

2. Park the vehicle in an open area, and wait at least 2 minutes with the engine running.

3. Test-drive the vehicle in an open area, and make a 90-degree turn (repeat 2-4 times).

DIAGNOSIS

NAVIGATION SYSTEM DIAGNOSTIC MODE

NOTE:

- **Check the vehicle 12 volt battery condition first** .
- The screens detail indicated may change depending on equipment or specification.

Start-Up Procedure and Diagnostic Menu

1. Turn the vehicle to the ON mode. If needed, start the engine.

2. Press and hold the PHONE button, the DISPLAY MODE button, and the AUDIO POWER button until the Select Diagnosis Items menu screen is displayed:

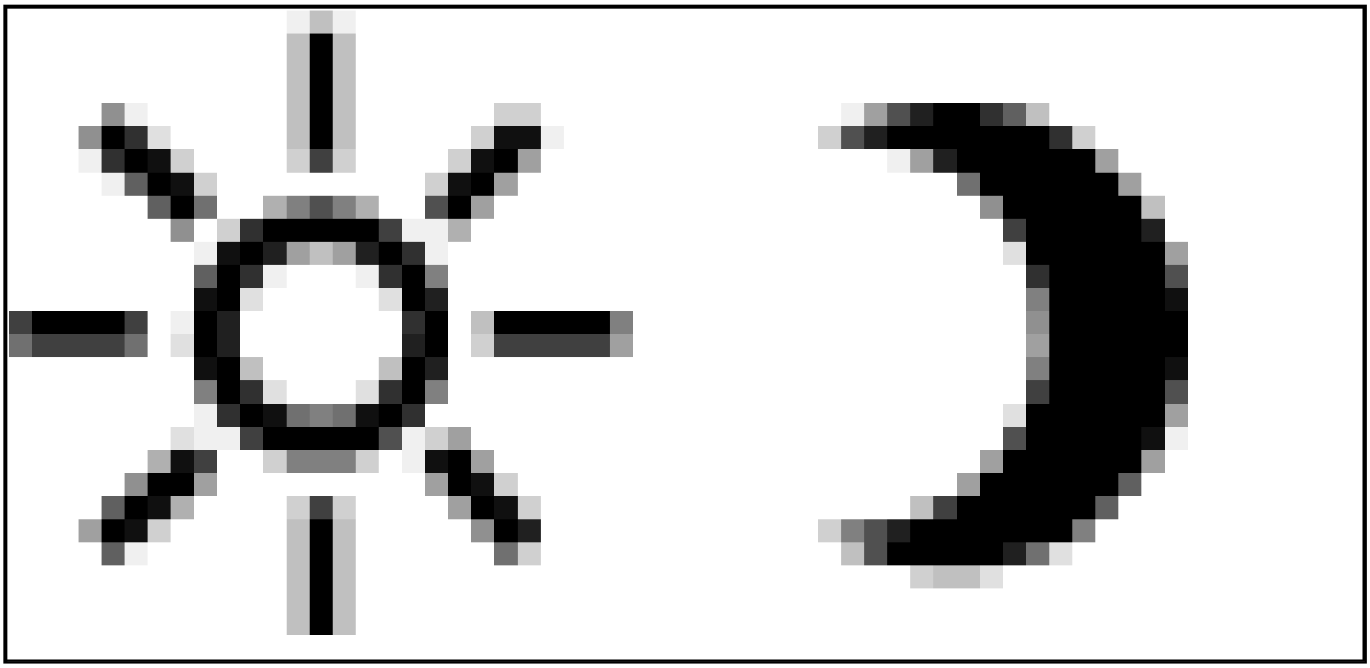

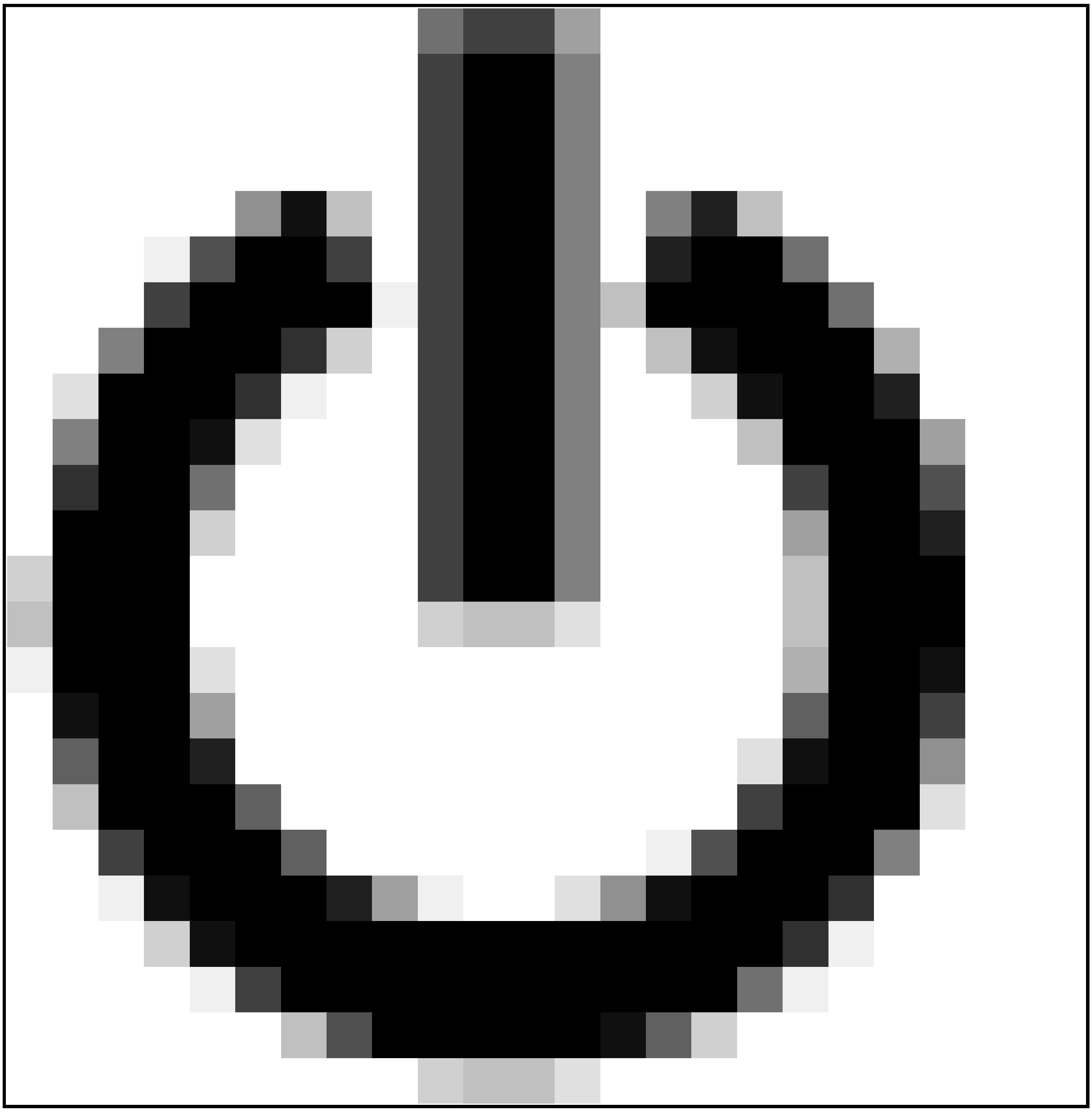

NOTE: The buttons needs to be pressed together simultaneously.

- Self-Diagnosis Mode (runs the automatic diagnosis of the navigation system)
- Detail Information and Setting (allows you to manually diagnose the navigation system)

Displaying Select Diagnosis Items Menu Screen

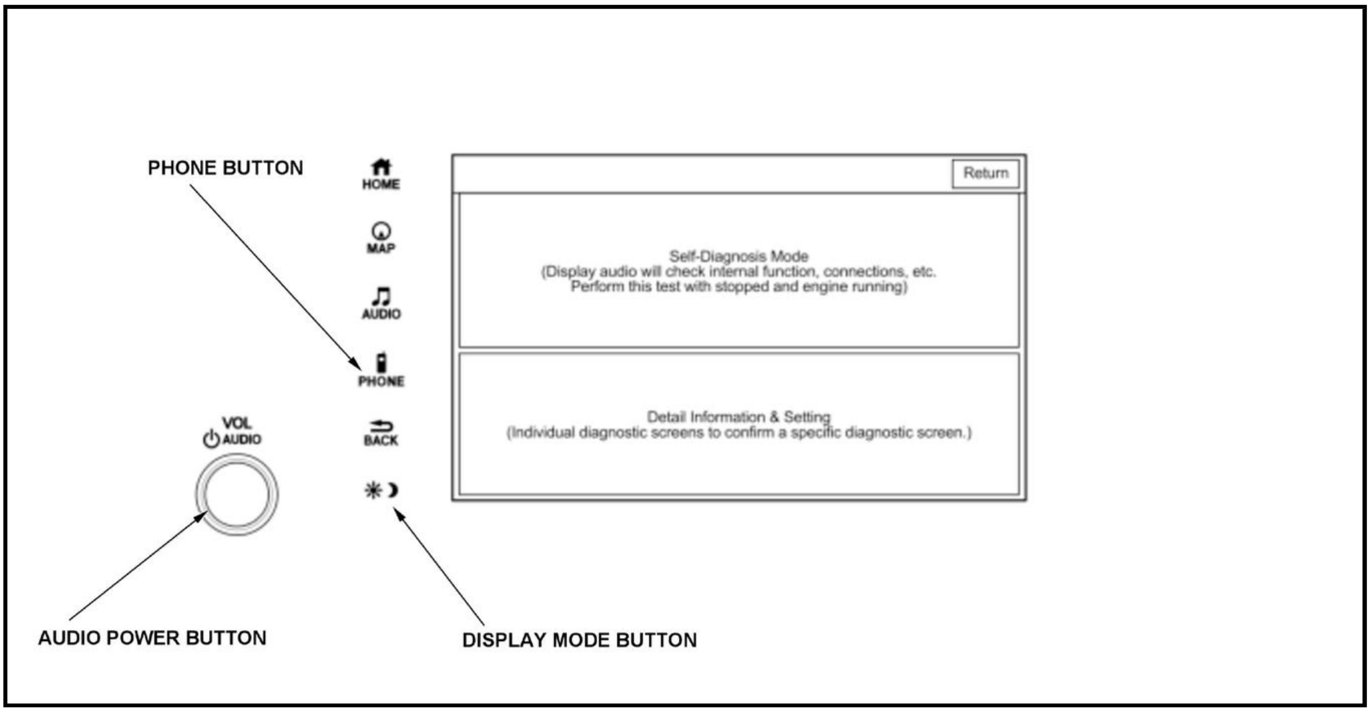
PHONE BUTTON
HOME
MAP
AUDIO
PHONE
BACK
VOL
AUDIO
Return
AUDIO POWER BUTTON
DISPLAY MODE BUTTON

Self-Diagnosis Mode
(Display audio will check internal function, connections, etc.
Perform this test with stopped and engine running)

Detail Information & Setting
(Individual diagnostic screens to confirm a specific diagnostic screen.)

Self-Diagnosis Mode (System Links)

1. Select the Self-Diagnosis Mode from the Select Diagnosis Items menu. The message at the bottom of the screen flashes indicating "Diagnosis in progress...", do not turn the vehicle to the OFF (LOCK) mode.

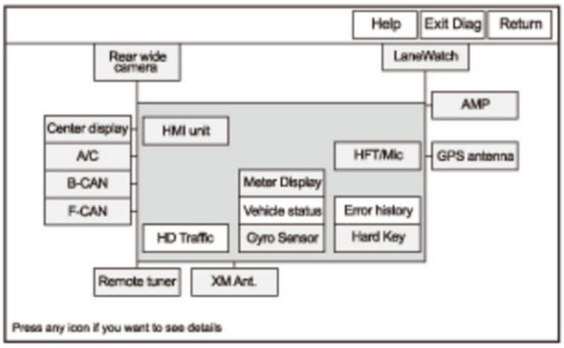
Help
Exit Diag
Return
Rear wide camera
LaneWatch
AMP
Center display
A/C
B-CAN
F-CAN
HMI unit
HFT/Mic
GPS antenna
Meter Display
Vehicle status
Error history
HD Traffic
Gyro Sensor
Hard Key
Remote tuner
XM Ant.

Press any icon if you want to see details

2. The diagnosis tests the following:

- Most of the wires connecting the external navigation components shown in the block diagram.
- The results from the various components shown in the block diagram.
- The audio-navigation unit checks the microphone by listening to the "Pi Pi Pon" sound produced by the audio-navigation unit from the speakers when the diagnosis is started. This requires that the audio system be operating normally.

3. When the diagnosis finishes, the icons turn different colors based on their test status.

NOTE: By selecting the Help icon, you can see a description for each color.

Icon Colors	Description
Green	The system ran a diagnosis and the results are OK.
Red*	Errors that require replacement of hardware or harness. Examples are connection error or memory diagnosis errors. Select the red icon and check each diagnostic screen (refer to the description for diagnostic screens in the Unit Check).

Icon Colors	Description
Yellow	• Errors that do not require hardware replacement, or the connection check is in the state which is not done. Such as leaving the vehicle in the ACCESSORY mode or because of a missing accessory. • When the audio-navigation unit detects a failure, and stores DTC, the Error History icon turns yellow.
White	The diagnosis is running. The screen functions are locked out while the diagnosis runs.
Gray	• The system cannot automatically check this function. You have to select the diagnosis item and manually do additional testing, like checking the audio-navigation unit buttons in the Hard Key test. When you complete the Hard Key test and return to the System Links screen, the gray icon turns green. • The Vehicle Status icon anytime shows gray. • When the audio-navigation unit does not store DTCs, the Error History icon shows gray.

*:	The F-CAN icon and the B-CAN icon turns red when the vehicle is in the ACCESSORY mode. Check the System Links with the engine running, and if the F-CAN icon and the B-CAN icon turns green, the system is OK at this time.

4. Select the icon to see the details of that diagnostic function. The icon colors on the screen may not change until you exit and reenter the Self-Diagnosis mode. In some cases, you may have to restart the engine for the indication to change. After you repair the affected component or harness, repeat this diagnosis.

Factory Diagnostic Screen In Line Diag and Linking

If the vehicle left the factory in the factory diagnostic mode, you will see this screen every time you turn the vehicle to the ON mode. Sometimes this screen also appears after you replace the audio-navigation unit with a new or remanufactured unit. Normally the factory does the steps necessary to verify proper operation and terminate the factory diagnosis. Until the proper confirmation sequence is done, the screen appears every time you turn the vehicle to the ON mode.

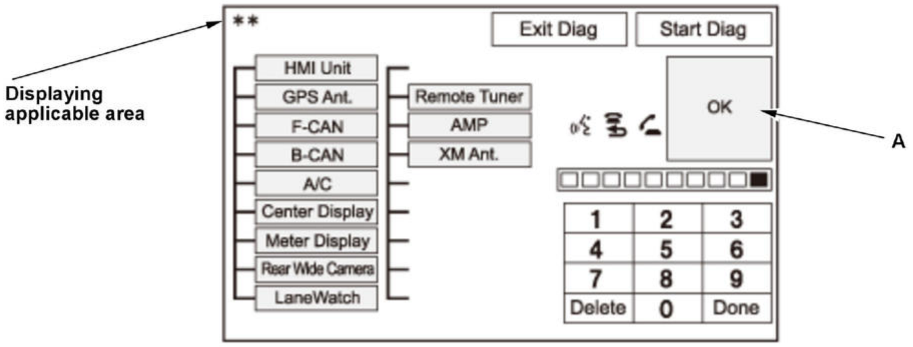

NOTE: The system cannot complete a full diagnosis unless vehicle is in the ON mode.

1. Select the Start Diag icon to check the connection between the audio-navigation unit and related components. When the connection diagnosis is in progress, the icon (A) indicates Detecting..., and each icon turns white. If the connection is OK, the icon turns green. If the connection is NG, the icon turns red. Check for connection between the audio-navigation unit and related unit on the failure connection line.

NOTE: When the item is a variation equipment, the icon shows yellow, and it is not reflected in diagnosis.

2. If the connection diagnosis is finished, press the steering commander switch buttons (the TALK button, PICK-UP button, and the HANG-UP/BACK button) to check the HFL switch. As each button is pressed, the corresponding icon on the display should turn green.

3. Press the TALK button, and within 5 seconds in a normal voice say ' 'testing' '. The Mic Level indicator on the screen should momentarily turn green.

4. If all the diagnosis are OK, the icon (A) indicates OK. Select the Exit Diag icon to exit the diagnostic mode. The In Line Diag should not appear again.

Forced Completing of In Line Diag and Linking

Follow these steps to prevent the screen from appearing in the future:

1. While displaying the In Line Diag screen, press and hold the PHONE button, the DISPLAY MODE button, and the AUDIO POWER button until the Select Diagnosis Items menu screen is displayed.

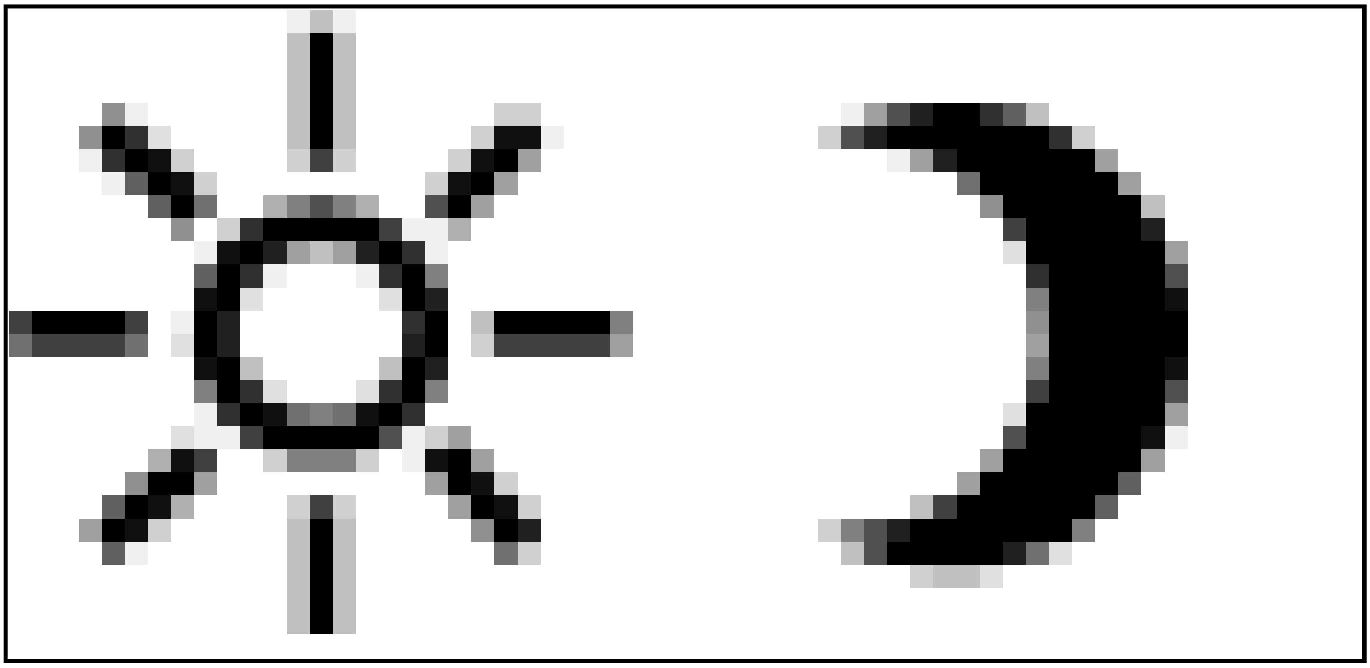

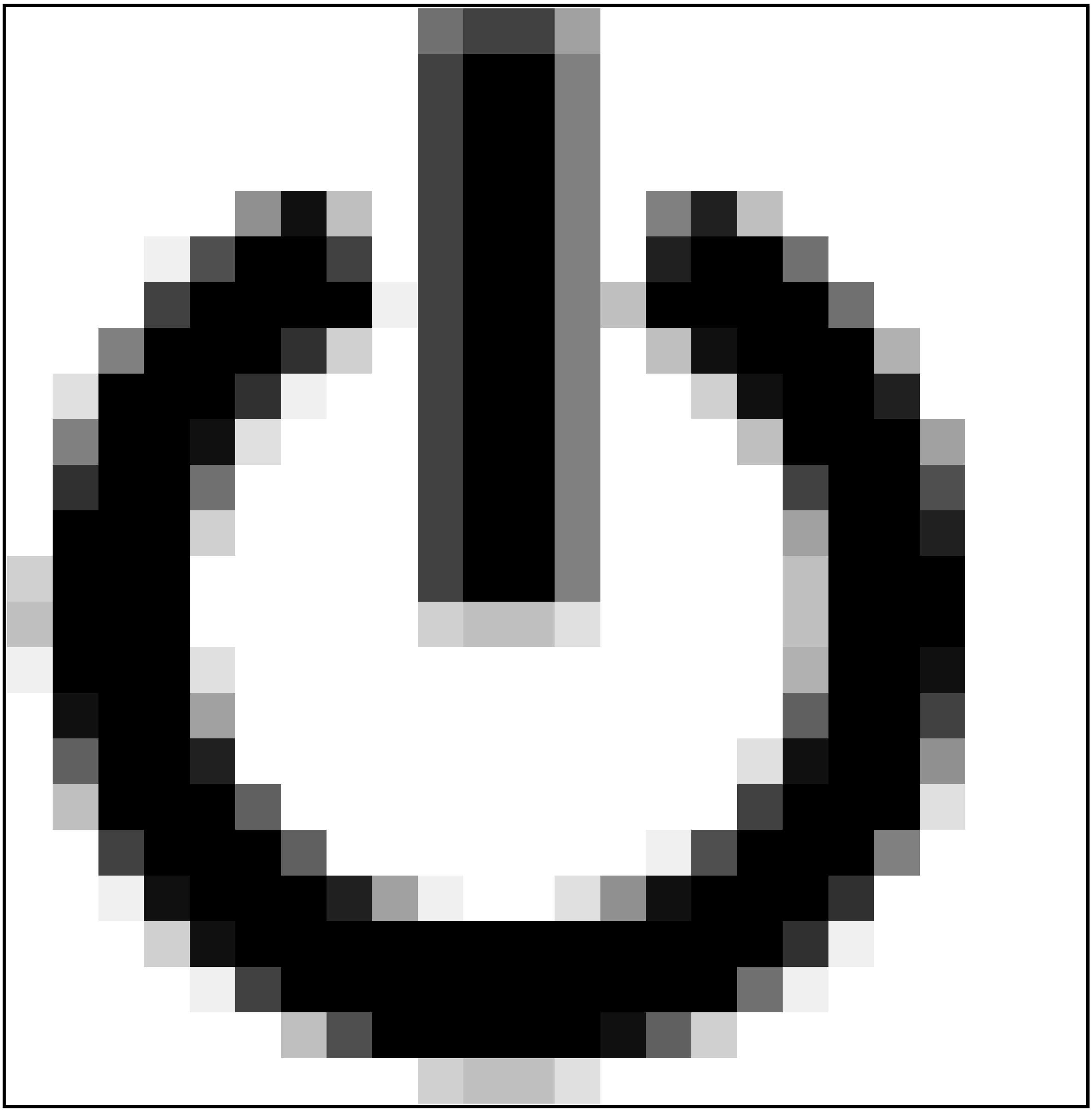

2. While displaying the Select Diagnosis Items menu screen, press and hold the HOME button until the In Line Diag setting screen is displayed.

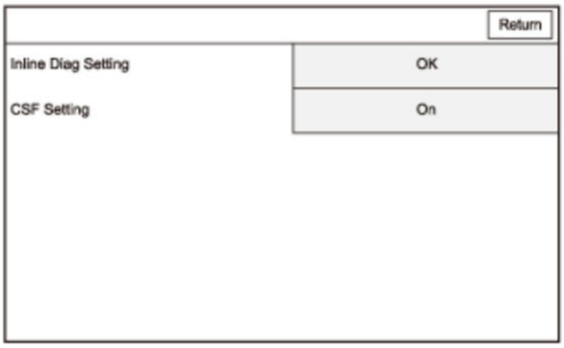

Inline Diag Setting	OK
CSF Setting	On

3. Set the Inline Diag Setting to OK (complete). The system restarts and a normal start-up process occurs. The In Line Diag should not appear again.

Detail Information and Setting

This section allows you to run a specific diagnosis and allows additional setting choices for some screens that are not shown when touching an icon from the System Links screen.

Select the item you want to check, and the test begins. To return to the previous screen, select the Return icon.

- Monitor Check
- Unit Check
- Audio Check
- Guideline Setup
- Functional Setup
- B-CAN*
- F-CAN*
- Version
- Vehicle Status*
- GPS Information

*: Refer to the Unit Check for details.

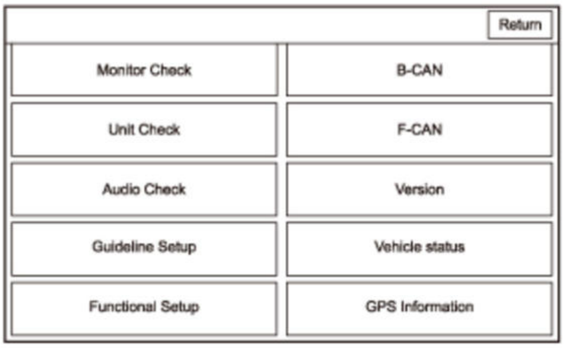
Return
Monitor Check
B-CAN
Unit Check
F-CAN
Audio Check
Version
Guideline Setup
Vehicle status
Functional Setup
GPS Information

Monitor Check

These screens allow you to troubleshoot the LCD display on the center display unit. Select the item you want to check, and follow the diagnostic instructions.

- RGB Color
- Gray Tone
- White Raster
- Black Raster
- Color Pattern
- Touch Panel Check
- Touch Panel Adjustment
- Monitor Adjustment

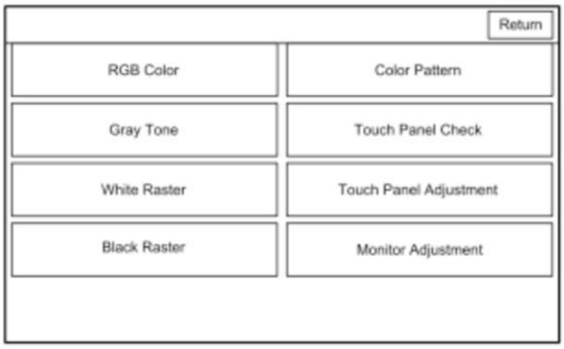
Return
RGB Color
Color Pattern
Gray Tone
Touch Panel Check
White Raster
Touch Panel Adjustment
Black Raster
Monitor Adjustment

RGB Color

NOTE: Displaying an anomaly in this diagnosis screen is not necessarily a failure.

This screen verifies that the display is receiving the video (R, G, B, and Composite sync) signals properly. The three primary colors should all appear without distortion. The combination of all three should produce a central white section. If any of the color circles are missing, **replace the center display unit** .

The diagnostic screen is displayed in full screen mode while pressing the HOME button.

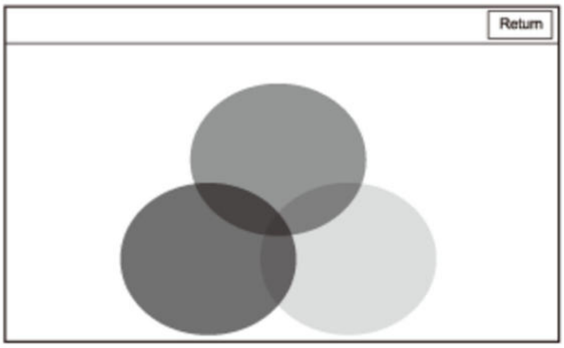

Gray Tone

NOTE: Displaying an anomaly in this diagnosis screen is not necessarily a failure.

This screen checks problems with contrast in 16 gradations. You should be able to see the changes from bar to bar across the scale. It is normal for the two bars on either side to appear the same.

The diagnostic screen is displayed in full screen mode while pressing the HOME button.

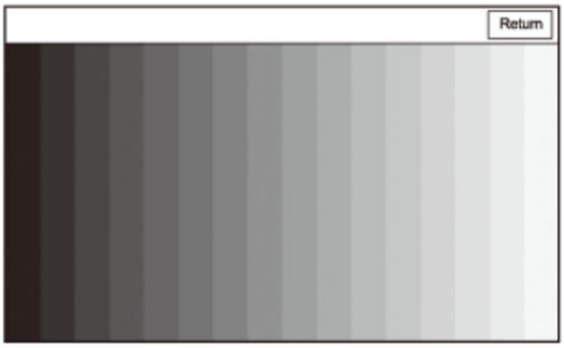

White Raster

NOTE: Displaying an anomaly in this diagnosis screen is not necessarily a failure.

This screen checks for pixels that may be dead (off). The entire display must be white.

The diagnostic screen is displayed in full screen mode while pressing the HOME button.

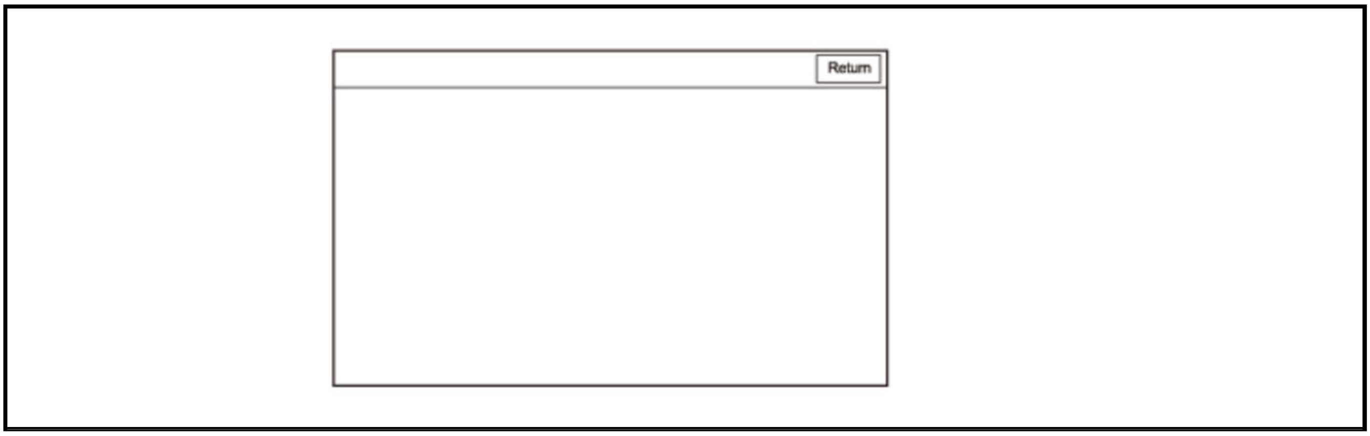

Black Raster

NOTE: Displaying an anomaly in this diagnosis screen is not necessarily a failure.

This screen checks for pixels that may be stuck on. The entire display must be black.

The diagnostic screen is displayed in full screen mode while pressing the HOME button.

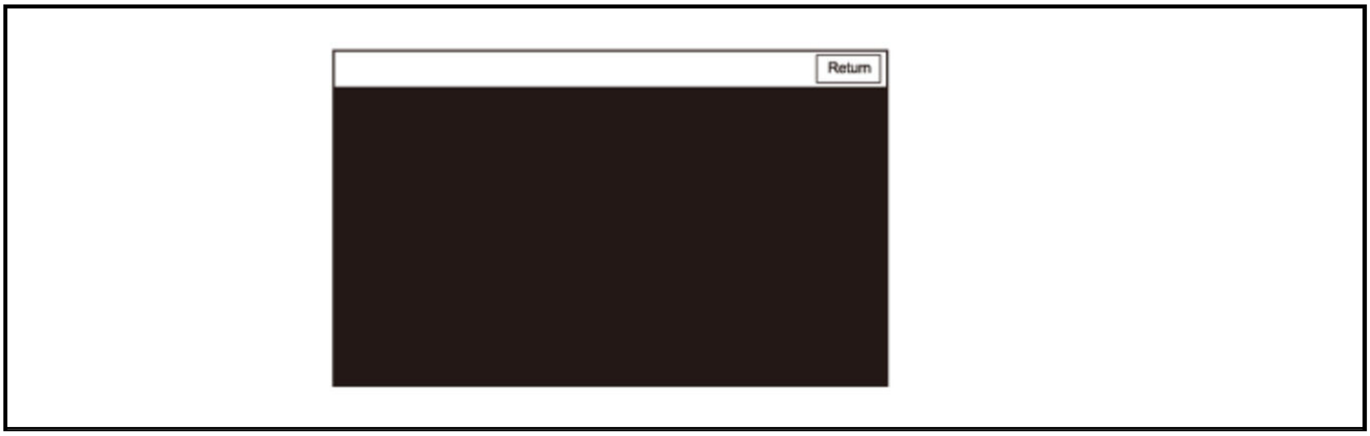

Color Pattern

NOTE: Displaying an anomaly in this diagnosis screen is not necessarily a failure.

The screen shows the colors being used for the map and menu screens. This is for factory use only. To check the color signal, use the RGB Color diagnosis.

The diagnostic screen is displayed in full screen mode while pressing the HOME button.

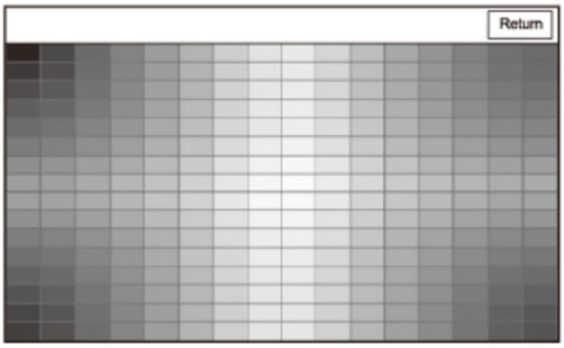

Touch Panel Check

This check allows you to check the sensitivity of touch panel. If the screen is operated in the state while the telop (A) is displayed, the track changes to black, and the action name (Tap, Double tap, Pinch, Slide, and Flick) appears on the caption (B) for 5 seconds. The screen displays the coordinates of where the screen was touched. If the BACK button is pressed, the screen returns to the Monitor Check menu. If another location other than the location pressed responds, do the Touch Panel Adjustment.

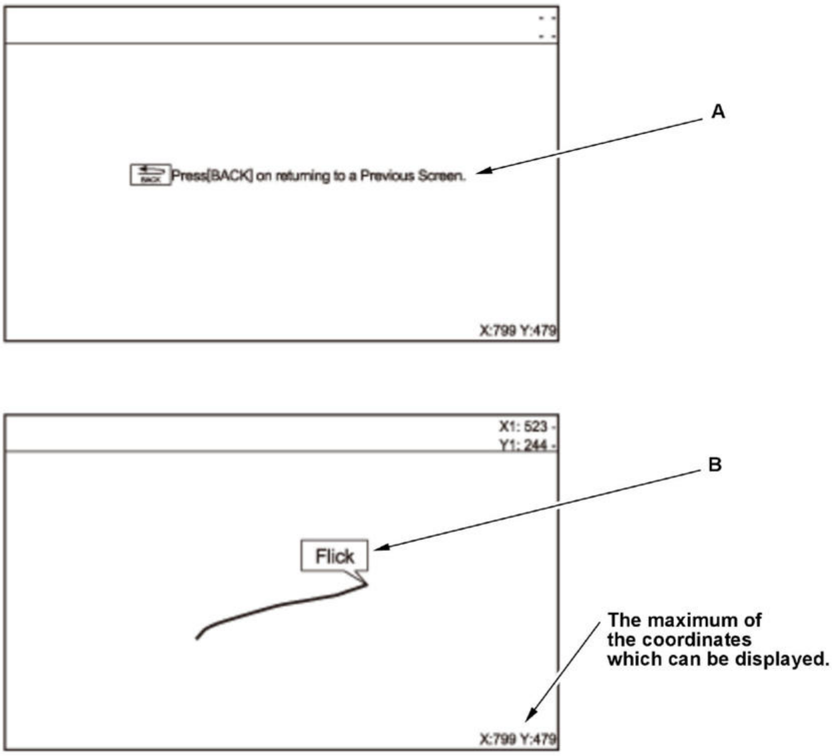
Press[BACK] on returning to a Previous Screen.

Touch Panel Adjustment

This screen adjusts the alignment of these touch locations with the location of the buttons images on the screen.

The screen consists of the + icons. Touch the center of the five + icons on order 1-5. To store the settings, select the Set.

NOTE: Touch the center of the +icon correctly.

When selecting the Set icon, the audio-navigation unit reflects the result of the touch panel adjustment. Select Return to exit the Touch Panel Adjustment screen.

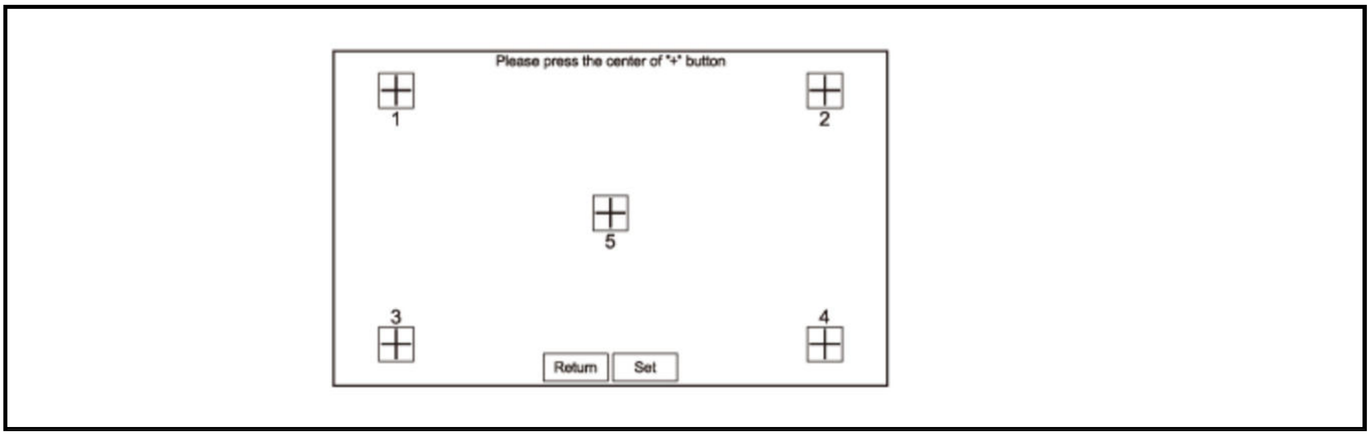

Please press the center of "+" button

Monitor Adjustment

This screen adjusts the brightness, etc. of the camera (rearview or LaneWatch) image.

Select Return to exit the Monitor Adjustment screen.

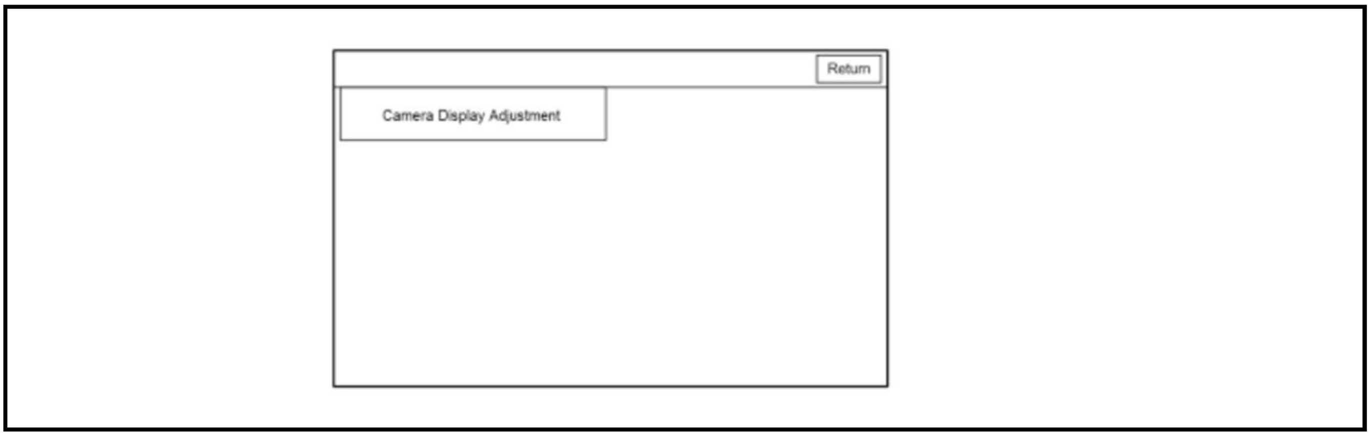

Unit Check (Quick Check)

These screens allow you to diagnose the audio-navigation unit and related units. Some of the tests and screens that are displayed under the Unit Check are same as the checks listed under the Detail Information and Setting.

To start the test, select the item you want to check.

NOTE: These items describe in indication order. Swipe the screen to check the next items.

- HMI unit
- F-CAN
- B-CAN
- USB
- Vehicle status
- HFL/Mic
- Hard Key
- Error history
- Rear wide camera
- Front Camera (not supported)
- LaneWatch
- Remote tuner
- AMP
- XM Ant.

- CD (not supported)
- Center display
- iPhone
- Meter Display
- GPS antenna
- HD Traffic
- Gyro Sensor
- A/C
- Telematics Diag (not supported)
- MirrorLink

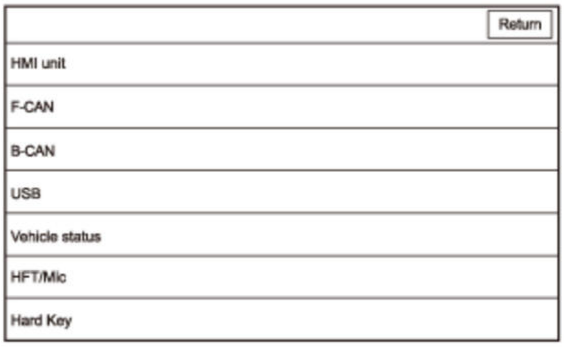

HMI Unit

This diagnosis checks for problems in the audio-navigation unit processor. When you start this diagnosis, the audio-navigation unit may freeze or delay up to a minute while the diagnosis runs.

- D-RAM: Displays the result of the access to the D-RAM (OK/NG). If NG, **check for hard error codes**.
- Model: Displays the audio-navigation unit manufacture's model number.
- Serial No. : Displays the audio-navigation unit serial number. That should be the same as the serial number found on the upper side of the audio-navigation unit.
- Flash: Displays the result of the access to the flash memory (OK/NG). If NG, **replace the audio-navigation unit** .

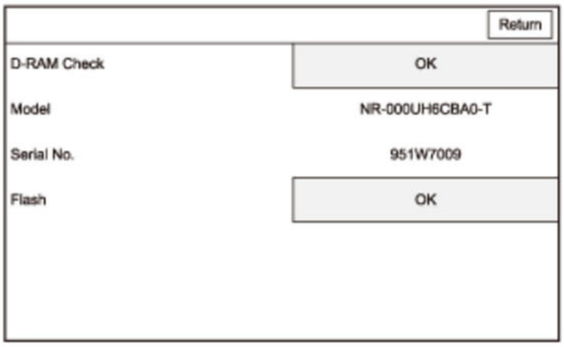

D-RAM Check	OK
Model	NR-000UH6CBA0-T
Serial No.	951W7009
Flash	OK

F-CAN

NOTE:

- This diagnosis must have the engine running.
- Swipe the screen to check the next items.

This diagnosis checks whether the audio-navigation unit has received specific F-CAN data. If F-CAN shows NO ERROR, an error is not detected between the F-CAN bus and the audio-navigation unit.

- If F-CAN shows RX ERROR, **replace the audio-navigation unit** .
- If F-CAN shows TIME OUT, There is a possibility that some items are NG (red icon). When all the items from each transmitting unit is NG, check for F-CAN DTCs with the HDS. If DTCs not detected, check for continuity in the F-CAN lines between the audio-navigation unit and the transmitting unit.

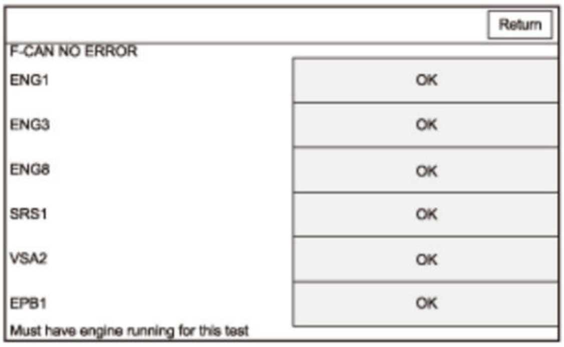

F-CAN NO ERROR

ENG1	OK
ENG3	OK
ENG8	OK
SRS1	OK
VSA2	OK
EPB1	OK

Must have engine running for this test

B-CAN

NOTE:

- This diagnosis must have the engine running.
- Swipe the screen to check the next items.

This diagnosis checks whether the audio-navigation unit has received specific B-CAN data. If B-CAN shows NO ERROR, an error is not detected between the B-CAN bus and the audio-navigation unit.

- If B-CAN shows RX ERROR, **replace the audio-navigation unit** .
- If B-CAN shows TIME OUT, There is a possibility that some items are NG (red icon). When all the items from each transmitting unit is NG, check for B-CAN DTCs with the HDS. If DTCs not detected, check for continuity in the B-CAN lines between the audio-navigation unit and the transmitting unit.

Item	Transmitting Unit
VSPNE, AT, ILLUMI, ST_SW_PAD, VINNO, STRG_ANG, ODO_TRIP, TRICOM1 - 4, METER_RMD	Gauge control module

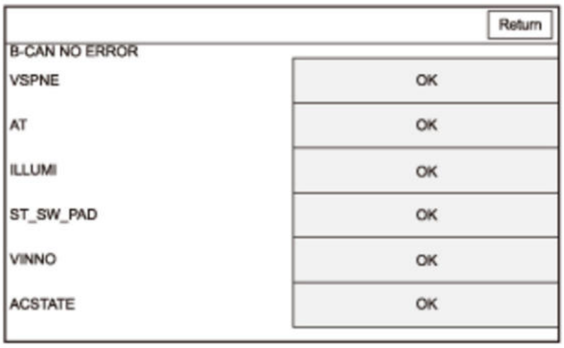

B-CAN NO ERROR

VSPNE	OK
AT	OK
ILLUMI	OK
ST_SW_PAD	OK
VINNO	OK
ACSTATE	OK

USB

This diagnosis displays the USB device status that is connected to the audio-navigation unit.

If the USB memory device is connected to the USB port A or B, the screen displays the USB controller status, the Bus power status, and the device status.

When you connect a USB mass storage device, you can see the capacity used and the amount of free space available.

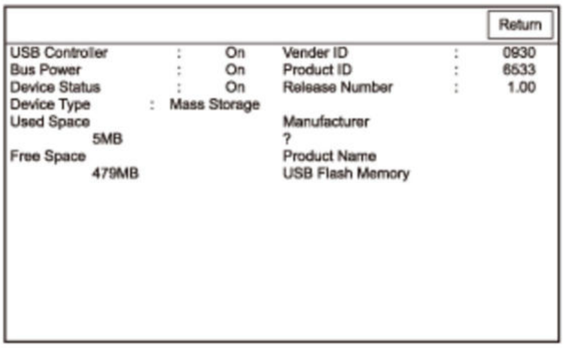

```
USB Controller    :    On        Vender ID         :   0930
Bus Power         :    On        Product ID        :   6533
Device Status     :    On        Release Number    :   1.00
Device Type    :  Mass Storage
Used Space                       Manufacturer
          5MB                    ?
Free Space                       Product Name
          479MB                  USB Flash Memory
```

Vehicle Status

Use this screen to confirm that the audio-navigation unit is properly receiving input signals. The displayed value changes each time according to the state of input signal.

NOTE: These items describe in indication order. Swipe the screen to check the next items.

Item	Input	Description
VSP	VSP line	• 1: When the vehicle speed pulse is received from the PCM or the TCM • 0: When the vehicle speed pulse is not received from the PCM or the TCM

Item	Input	Description
BACK	BACK LT line	• 1: When the transmission is shifted to R position/mode • 0: When the transmission is shifted to any position/mode other than R position/mode
IG	B-CAN lines	• 1: When the vehicle is in the ON mode • 0: When vehicle is in the ACCESSORY mode
C_METER_ILL_STATUS	B-CAN lines	• 1: When position lights, or headlights are on • 0: When position lights, or headlights are off
C_METER_ILL_CANCEL	B-CAN lines	• 1: When the dashlights brightness control knob is more than 90 % brightness with the position lights turned on • 0: When the dashlights brightness control knob is less than 90 % brightness with the position lights turned on
C_METER_ILL_STEP	B-CAN lines	With the position lights on, use the dashlights brightness control knob to dim and brighten the

Item	Input	Description
		gauge. The value changes from 1 (max low) to 22 (max high).
Speed	B-CAN lines	This item indicates the vehicle speed (km/h).
TV-PARK	B-CAN lines	• 1: When the parking brake is applied • 0: When the parking brake is not applied
NAVI-PARK	B-CAN lines	• 1: When the parking brake is applied • 0: When the parking brake is not applied
Current received VIN	B-CAN lines	This item indicates the VIN that received from the PCM.
Initial registered VIN	B-CAN lines	This item indicates the initial registration VIN (10 is added to the beginning of indicated VIN) that is saved in the audio-navigation unit.
Last registered VIN	B-CAN lines	This item indicates the additional registration VIN (11 is added to the beginning of indicated VIN) when the audio-navigation unit is substituted into another vehicle, or when a PCM is substituted or replaced into this vehicle.

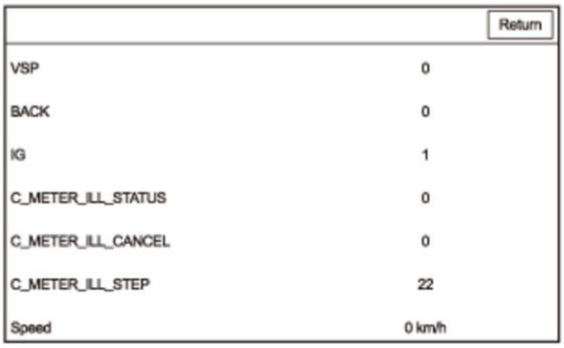

VSP	0
BACK	0
IG	1
C_METER_ILL_STATUS	0
C_METER_ILL_CANCEL	0
C_METER_ILL_STEP	22
Speed	0 km/h

HFL/Mic

This diagnosis allows you to independently test the Bluetooth module and the microphone. The Bluetooth module is built into the audio-navigation unit. To properly check the microphones, make sure you are sitting in the driver's seat.

NOTE: Before this diagnosis, check the response of the TALK button on the audio remote-HFL switch by the Hard Key diagnosis.

- If the Bluetooth Connection Diagnosis shows NG, **replace the audio-navigation unit** .
- Press the TALK button, and within 5 seconds in a normal voice say ' 'testing' ' toward the microphone in the roof console. The Mic Level indicator on the screen should momentarily turn green. The test is set to OK by indicating green more than 6 steps. If there is no Mic Level movement when you speak, **go to HFL does not work properly troubleshooting** .

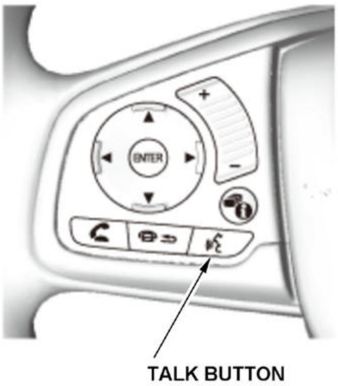
ENTER
+
-
TALK BUTTON

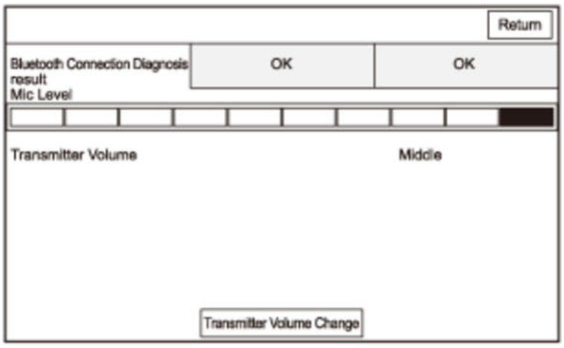
Return
Transmitter Volume Change

Bluetooth Connection Diagnosis result: OK OK

Mic Level

Transmitter Volume: Middle

If you select the Transmitter Volume Change icon, the transmitter volume can be selected from three selection (Large, Middle, Small).

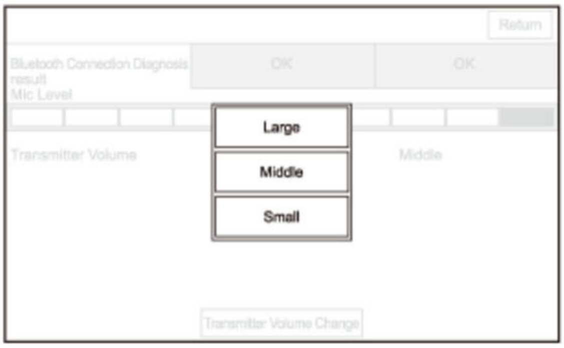
Large
Middle
Small

Hard Key

This diagnosis checks the center display unit face buttons, the audio remote-HFL switch. For this model, the audio remote-HFL switch buttons use the data bus via the gauge control module for communications.

To complete the test, press each buttons. As each function is tested, the corresponding button on the display should highlight. If the test cannot be completed, the corresponding icon on the Hard Key menu screen shows red.

- If any button of the center display unit does not respond, **replace the center display unit** .
- If any button of the audio remote-HFL switch does not respond, **replace the audio remote-HFL switch** .
- If all buttons of the audio remote-HFL switch do not respond, go to **Audio remote-HFL switch does not work properly (audio-navigation unit buttons work) troubleshooting** .

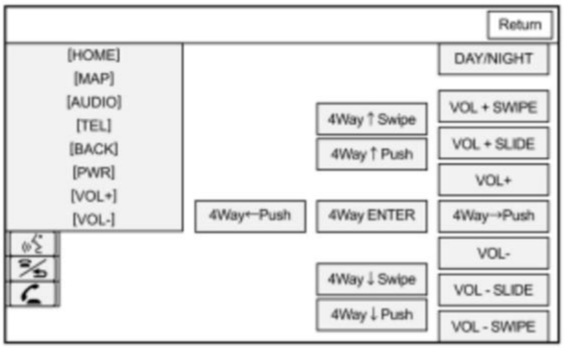
Return
[HOME]
[MAP]
[AUDIO]
[TEL]
[BACK]
[PWR]
[VOL+]
[VOL-]
DAY/NIGHT
VOL + SWIPE
VOL + SLIDE
VOL+
4Way↑Swipe
4Way↑Push
4Way←Push
4Way ENTER
4Way→Push
VOL-
4Way↓Swipe
4Way↓Push
VOL - SLIDE
VOL - SWIPE

Error History

If you select Hard Error or Soft Error, you can see the error information. **Refer to How to Check for Error History to use this diagnosis**.

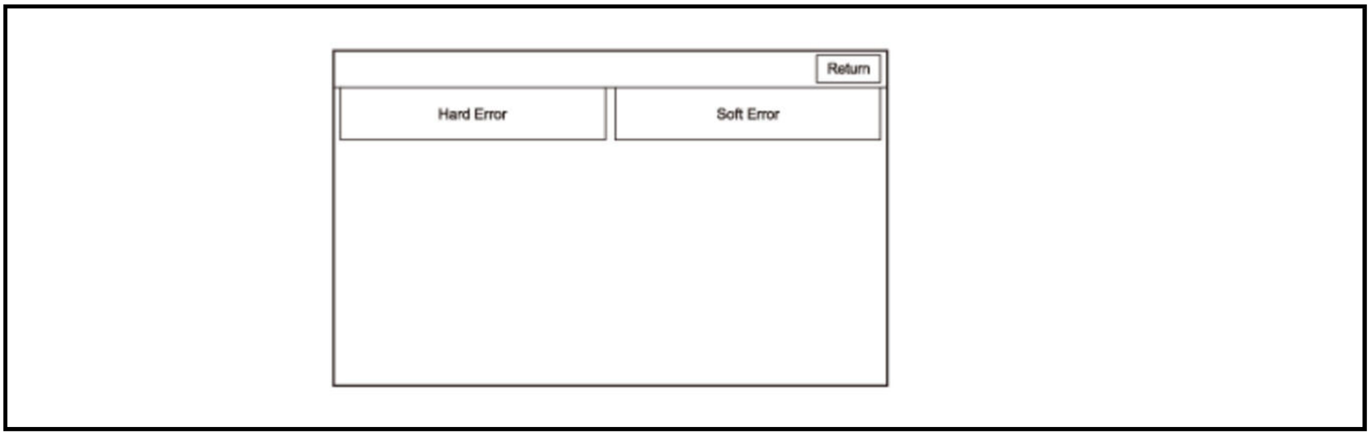

Rear Wide Camera

This diagnosis checks the rearview camera connection.

- If Connection shows NG, **check for hard error codes**.
- If Connection shows OK, press the HOME button to display the rearview camera image. To return to the previous screen, press the HOME button again.

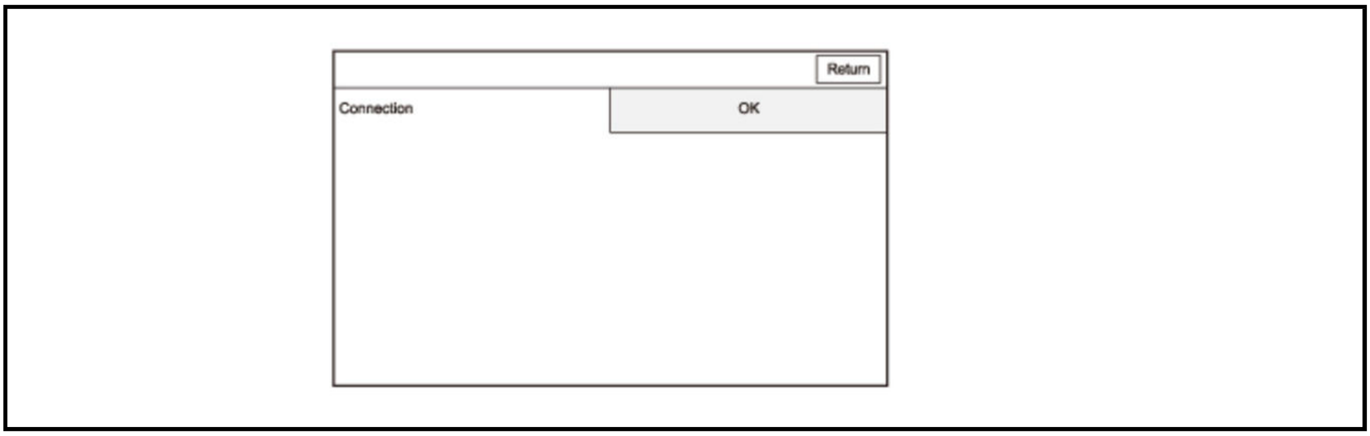

Connection OK

LaneWatch

This diagnosis checks the LaneWatch camera connection.

- If Connection shows NG, **check for hard error codes**.
- If Connection shows OK, press the HOME button to display the LaneWatch camera image. To return to the previous screen, press the HOME button again.

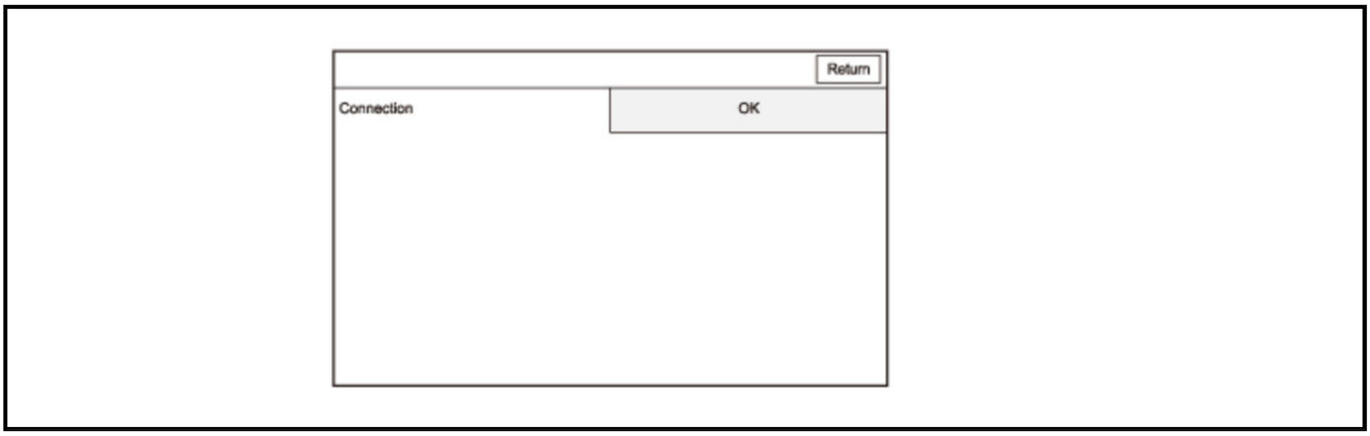

Connection OK

Remote Tuner

NOTE:

- For factory use only. Do not alter any settings unless directed.
- These items describe in indication order. Swipe the screen to check the next items.

This diagnosis displays the external AM/FM radio tuner (tuner unit) status.

- System 'com version display: Displays the tuner unit processor version.
- Serial number display: Displays the tuner unit serial number. That should be the same as the serial number found on the upper side of the tuner unit.
- Frequency: Displays frequency of the radio station which is being received. Frequency can be changed by selecting each icon (A).
- Source can be changed in this order: Radio sources by selecting the Band Change icon.
- Radio reception level display: Displays radio reception level (dB). The AM/FM antenna power status can be changed to on or off by selecting the Ant +B OFF icon.
- Target Area: Displays the destination of the tuner unit at 2 digits.
- Operating status display: If the vehicle has diversity antenna, you can select the radio antenna function from M (Main), S (Sub), or P (Diversity).
- RBDS BER display: Displays the RBDS bit error ratio.
- SNR display: Displays the Sound/Noise ratio about the AM or FM.
- Total preset number: Displays number of radio station preset about the AM or FM.
- HD functions ON/OFF: Displays the HD function is available (YES) or not available (NO).
- VOL: Displays the current volume level.
- Split Mode: Displays the split mode on or off. That can be changed by selecting the Split Mode icon.
- Blend Mode: Displays the blend mode which is being received. The blend mode can be changed to AUTO/ANALOG/DIGITAL by selecting the Blend Mode icon.
- HD Mode: Displays the HD mode status (ON: HD, OFF: analog) at frequency of the radio station which is being received. That can be changed by selecting the HD Mode icon.

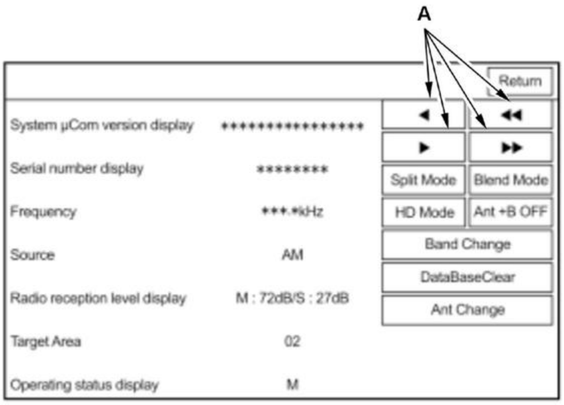

System µCom version display	****************
Serial number display	********
Frequency	***.*kHz
Source	AM
Radio reception level display	M : 72dB/S : 27dB
Target Area	02
Operating status display	M

AMP

This diagnosis checks the digital bus (RS485) connection between the audio-navigation unit and the stereo amplifier.

If Connection shows NG, **go to No sound is heard from all the speakers (display is normal) troubleshooting** .

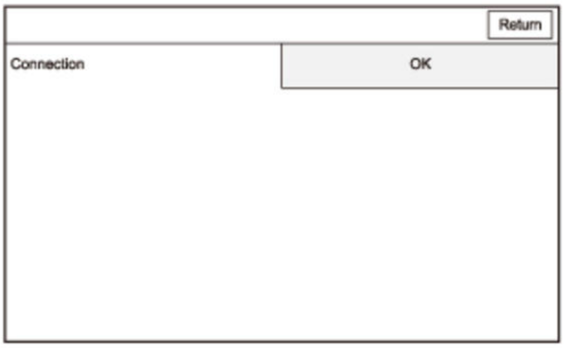

Connection OK

XM Ant.

This diagnosis checks the XM antenna connection between the audio-navigation unit and the roof antenna. The XM radio tuner is built into the audio-navigation unit.

If Connection shows NG, **check for hard error codes**.

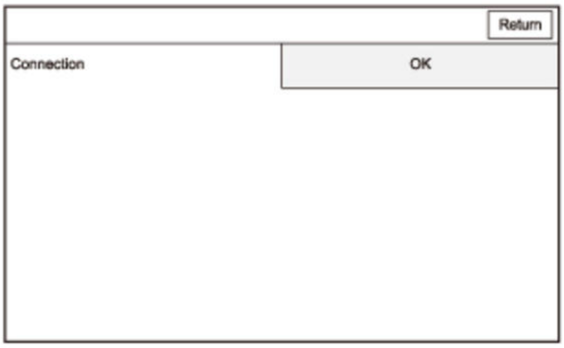

Connection OK

Center display

These items describe in indication order. Swipe the screen to check the next items.

This diagnosis checks the digital bus (LVDS1) connection between the audio-navigation unit and the center display unit, and displays the center display unit status.

- Connection: Checks the digital bus (LVDS1) between the audio-navigation unit and the center display unit. This item should indicate OK.
- Unit Status Information: Indicates the center display unit processor status. If any of the status indicates NG, turn the vehicle to the OFF (LOCK) mode then the ON mode, and recheck the status. If the status still indicates NG, **replace the center display unit** .
- Unit Version Information: Displays the center display unit various version number.

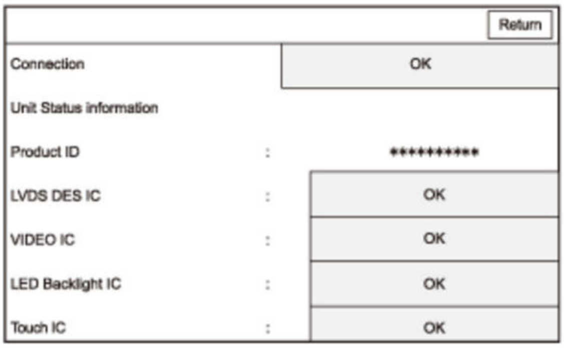

Connection OK

Unit Status information

Product ID : **********

LVDS DES IC : OK

VIDEO IC : OK

LED Backlight IC : OK

Touch IC : OK

iPhone

This screen shows the information about the connected iPhone Â® by App Mode.

Meter Display

This diagnosis checks the digital bus (LVDS2) between the audio-navigation unit and the gauge control module.

If Connection shows NG, **go to The MID does not display the audio-navigation unit information troubleshooting**.

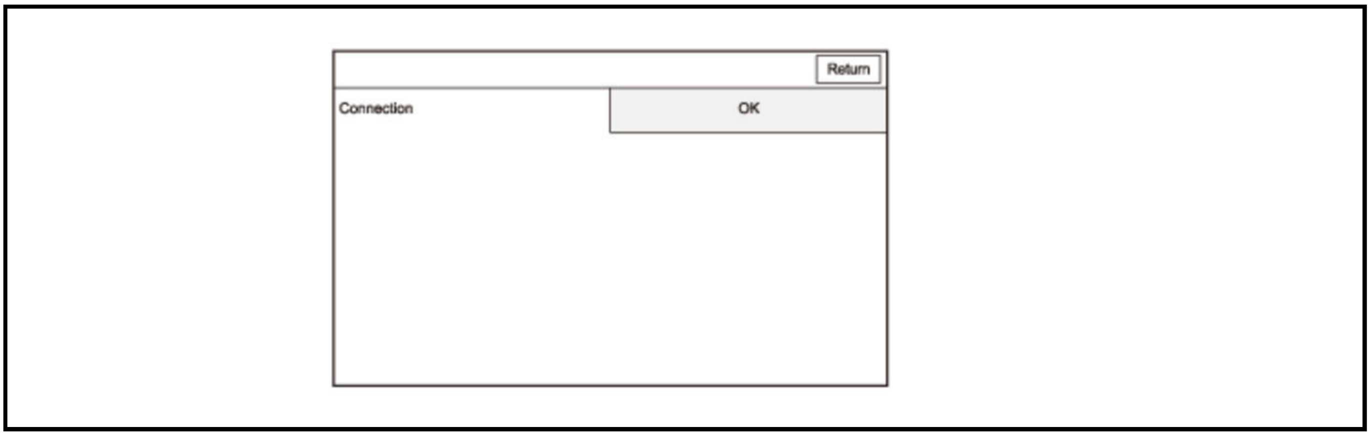

Connection OK

GPS Antenna

This diagnosis checks the GPS antenna connection.

If Antenna shows NG, the GPS antenna may be failure. **Check for hard error codes**.

Select Information to see the GPS satellite details.

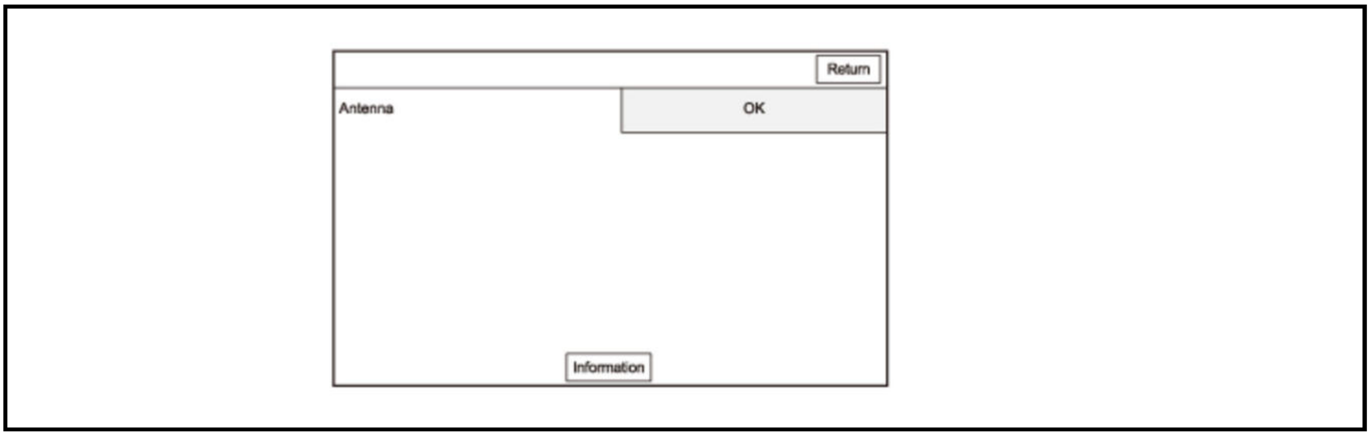

Antenna OK

HD Traffic

This diagnosis displays the HD traffic status.

- Service Status: Displays the HD traffic service status on (1) or off (except 1).
- Frequency can be changed by selecting each icon (A).
- Station Name: Displays the call sign of the receiving HD traffic station.
- Receive Status: Displays the reception status of HD traffic.
- Data Buffer Counter: If the unit receives the data from the HD traffic station, displays the number of buffering data.

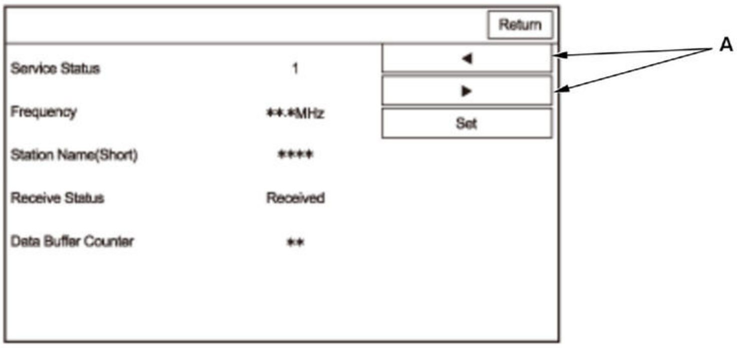

Service Status 1
Frequency **.*MHz
Station Name(Short) ****
Receive Status Received
Data Buffer Counter **

Gyro Sensor

This diagnosis checks the gyro sensor in the audio-navigation unit. This devices detect how the vehicle moves, and repositions the vehicle position icon on the map screen. Select the GYRO Sensor.

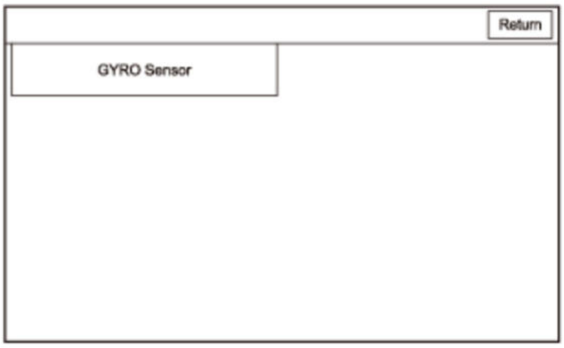

- X/Y/Z AXIS ANGLE: Indicates the angular speed of the gyro sensor.
- ANGLE Check: The audio-navigation unit checks if the angular speed is in range of threshold value.
- Temperature: Indicates the temperature of the gyro sensor.
- Sensor Temperature Check: The audio-navigation unit checks if the gyro sensor temperature is in range of threshold value.
- Reset: All values can be reset to the factory specification.

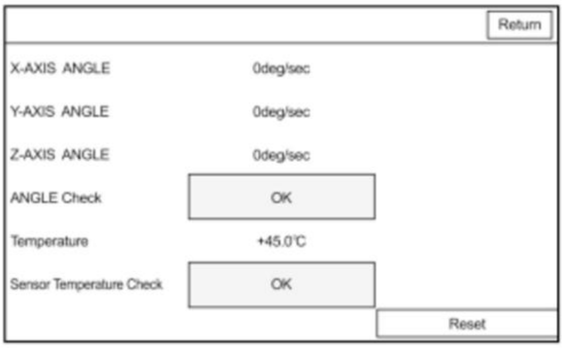

X-AXIS ANGLE 0deg/sec
Y-AXIS ANGLE 0deg/sec
Z-AXIS ANGLE 0deg/sec
ANGLE Check OK
Temperature +45.0℃
Sensor Temperature Check OK

A/C

This diagnosis detects if the vehicle is in the ON mode using information provided over the F-CAN bus, then it tests the climate control signal via the B-CAN bus between the audio-navigation unit and the climate control unit. Make sure the engine is running for this test.

If Connection shows NG, **check for hard error codes**.

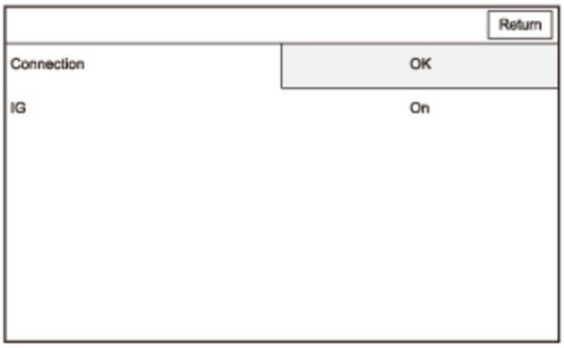

Connection OK

IG On

MirrorLink

This screen shows the information about the connected smartphone by MirrorLink.

Audio Check

These screens allow you to troubleshoot the audio function. Select the Speaker Check icon.

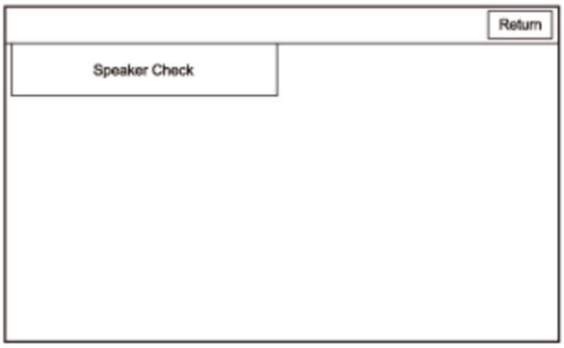

Speaker Check

NOTE:

- Make sure the audio system is off before this diagnosis.
- While doing the diagnosis, the fader and the balance positions are set to the center.

This diagnosis checks the audio speakers individually.

Select the UP icon or the Down icon to check speakers. A tone should sound from the speaker.

When you select the Up icon, the system checks the speakers in this order: ① -> ② -> ③ -> ④ -> ⑤ -> ⑥ -> ⑦ -> ⑧ -> ⑨ -> ⑩ -> ①
When you select the Down icon, the system checks the speakers in this order: ① -> ⑩ -> ⑨ -> ⑧ -> ⑦ -> ⑥ -> ⑤ -> ④ -> ③ -> ② -> ①

Â	Display Message	Vehicle Test Condition
①	FR-L	You should hear a tone from the left front door speaker and the left front tweeter* 2.

Â	Display Message	Vehicle Test Condition
② * 1	FRTW-L	You should hear a tone from the left front tweeter.
③	FR-R	You should hear a tone from the right front door speaker and the right front tweeter* 2.
④ * 1	FRTW-R	You should hear a tone from the right front tweeter.
⑤	RR1-R	You should hear a tone from the right rear door speaker and the right rear tweeter* 2.
⑥ * 1	RR1TW-R	You should hear a tone from the right rear tweeter.
⑦ * 1	SW1	You should hear a tone from the subwoofer.
⑧	RR1-L	You should hear a tone from the left rear door speaker and the left rear tweeter* 2.
⑨ * 1	RR1TW-L	You should hear a tone from the left rear tweeter.
⑩	ALL	You should hear a tone from all speakers.

*1: With stereo amplifier
*2: Without stereo amplifier

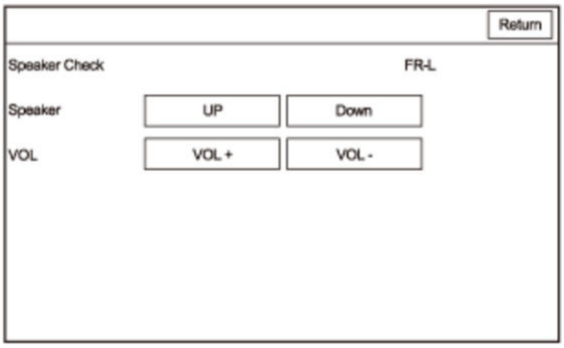

Speaker Check FR-L

Guideline Setup

These screens adjusts the rearview camera image guide lines. Select the Rear wide camera icon to adjust the guide lines.

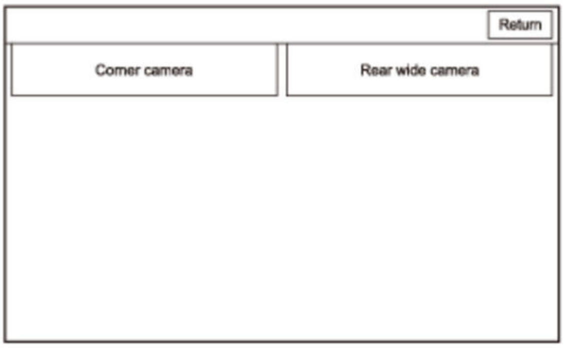

Rear Wide Camera

Select the item you want to adjust.

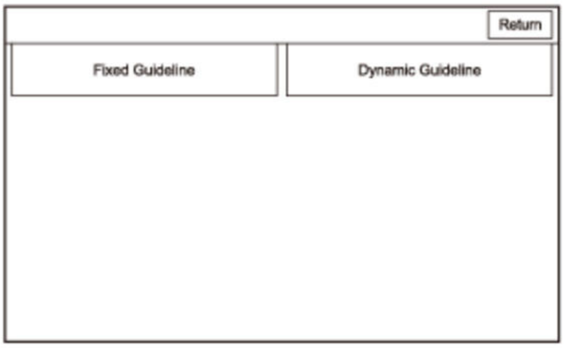
Return
Fixed Guideline
Dynamic Guideline

Select the view mode icons (Wide View, Normal View, Top Down View) you want to adjust.

NOTE: The Top Down View cannot be selected when the dynamic guideline is selected.

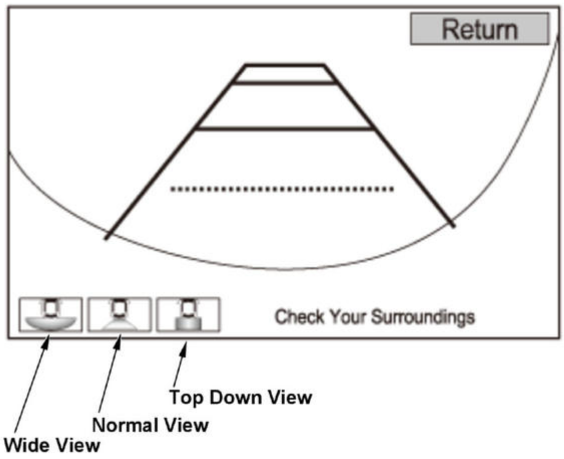
Return
Check Your Surroundings
Top Down View
Normal View
Wide View

Press the PHONE button to display the sub menu.

- Default: All guidelines can be reset to the factory specification.
- Save: Reflects the result of the guideline adjustment.
- Guideline Setup: Adjust the guideline.
- Message Setup: Adjust the caution message position.
- Rudder Angle (Dynamic Guideline): The steering angle which adjusts the position of the chosen guideline.

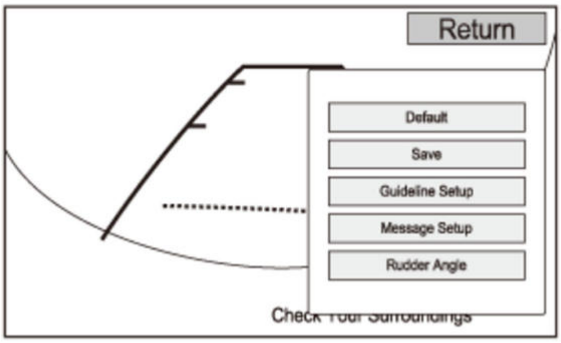
Return
Default
Save
Guideline Setup
Message Setup
Rudder Angle
Check Your Surroundings

Guideline Setup

Touch each arrow icon to move the guidelines up/down or left/right. The screen displays the information about the adjusted distance and its direction.

If you want to keep the setting, press the PHONE button to display the settings sub menu. The audio-navigation unit saves the setting by selecting the Save icon on the settings sub menu.

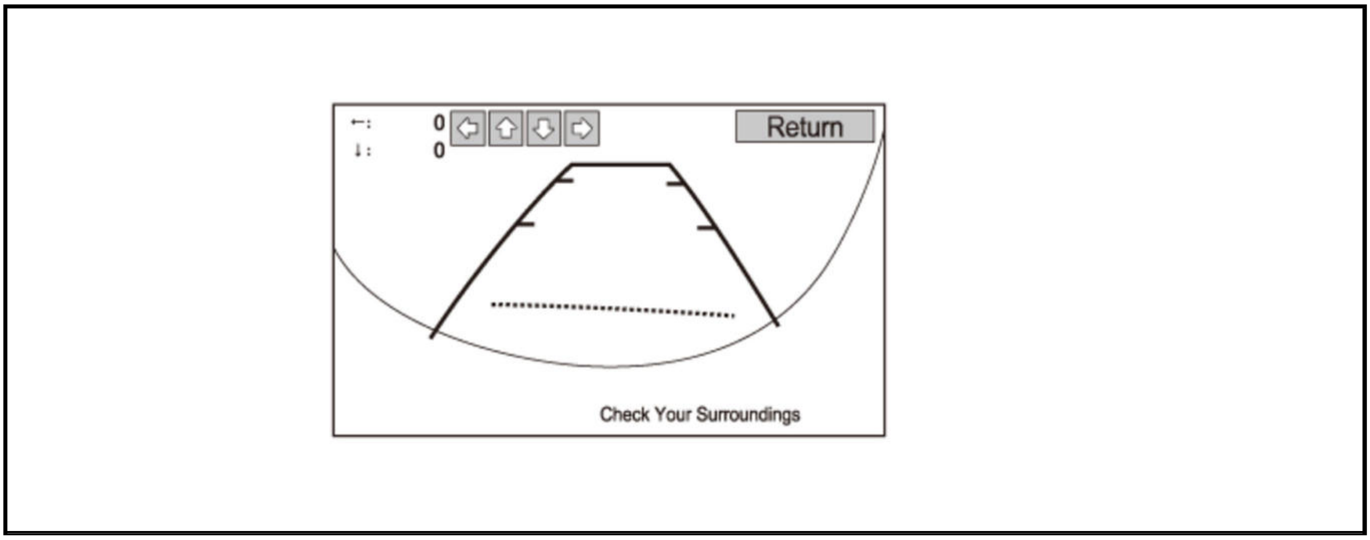
←: 0
↓: 0
Return
Check Your Surroundings

Message Setup

Touch each arrow to move the message (A) up/down or left/right.

If you want to keep the setting, press the PHONE button to display the settings sub menu. The audio-navigation unit saves the setting by selecting the Save icon on the settings sub menu.

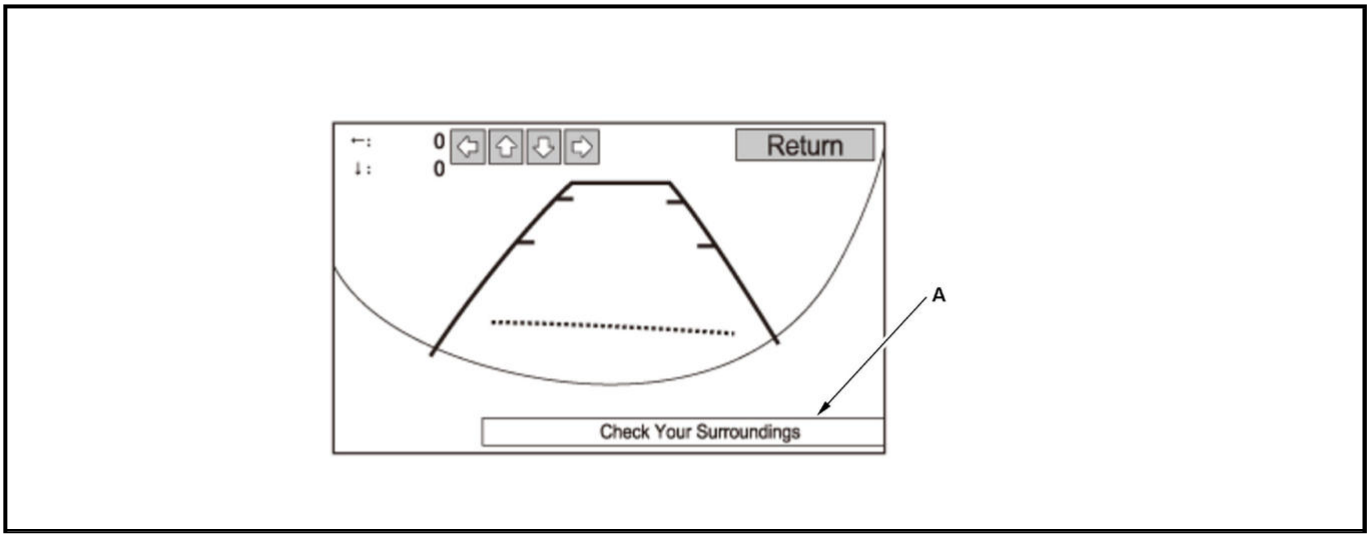
←: 0
↓: 0
Return
A
Check Your Surroundings

Rudder Angle

Select different steering angles (90 deg. - Lock end) from the sub menu. After selecting, do the Guideline Adjustment. The adjustment method for the guideline locations is the same as the Fixed Guideline.

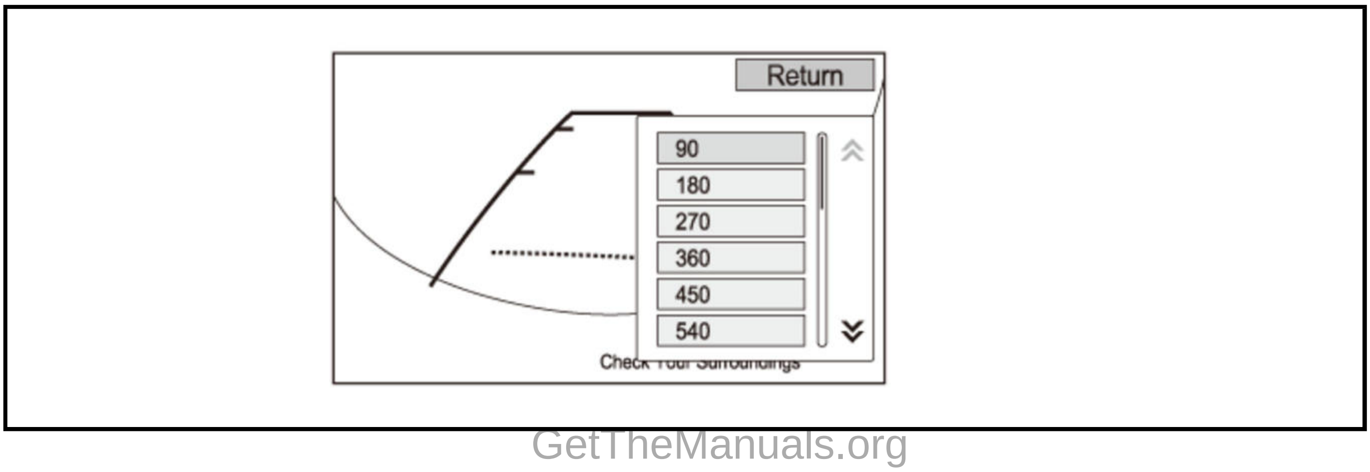
Return
90
180
270
360
450
540
Check Your Surroundings

Functional Setup

These screens allows for diagnosis and settings about functions of the audio-navigation unit. Select the item you want to check.

- Backup Data Clear
- Save User's Memory
- LaneWatch
- Phone Picture
- Anti-Theft Skip (with audio system theft protection)
- Other
- AMP Repro (factory use only)
- Display Repro (factory use only)

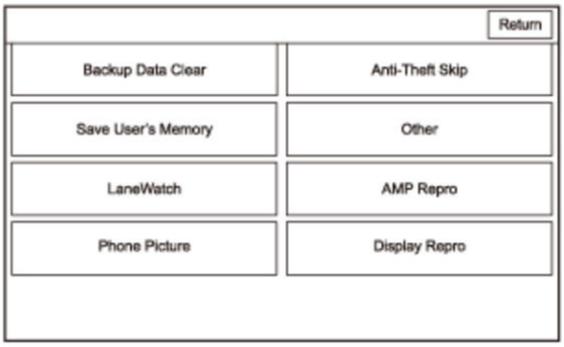
Return
Backup Data Clear
Anti-Theft Skip
Save User's Memory
Other
LaneWatch
AMP Repro
Phone Picture
Display Repro

Backup Data Clear

This screen initializes the back-up data in the audio-navigation unit. Select the All Clear icon.

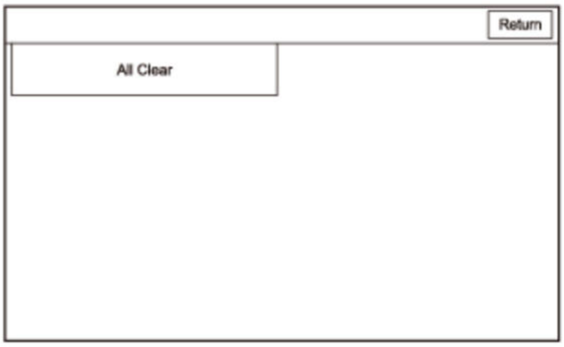
Return
All Clear

All Clear

The all clear function deletes the data in the audio-navigation unit, and restores it to the factory defaults. This function is equivalent to Memory Refresh in the System Settings Menu.

When selecting the All Clear icon, the confirmation screen appears.

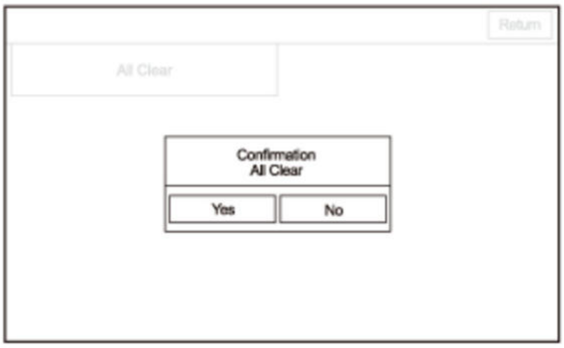

Confirmation
All Clear

When selecting the Yes icon, the second confirmation screen appears.

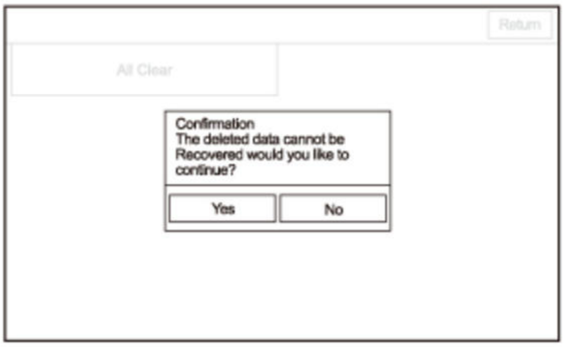

Confirmation
The deleted data cannot be Recovered would you like to continue?

When selecting the Yes icon, the system restarts after performing the All Clear process. After the restart, a normal start-up process occurs.

Save User's Memory

When replacing the audio-navigation unit, this function allows the technician to transfer the customer's personal data to the new audio-navigation unit. The transferred information includes their setup settings and personal addresses. The dealer inserts a USB device into the USB port A or B, and then selects the Save Users Memory function. The two functions in this diagnostic screen are Export and Import. Export saves the customer's data to the USB device, and Import moves the USB device files to the new audio-navigation unit.

This function does not start until you connect a USB device to the USB port.

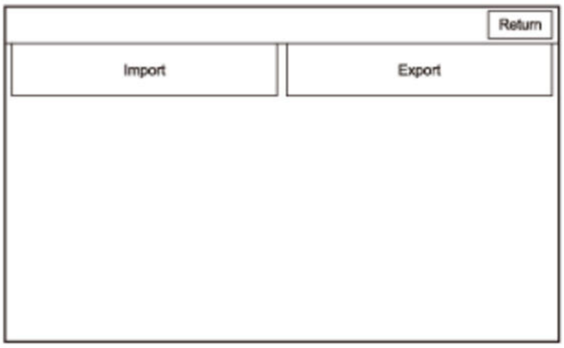

1. Select the Export icon to move the customer's data from the original audio-navigation unit to the USB device. Select the Yes icon on the Export User Data Confirmation screen. The process takes only a couple of seconds. The system stores.DAT files on the USB device.

NOTE: If the Export icon is grayed out, check the USB port.

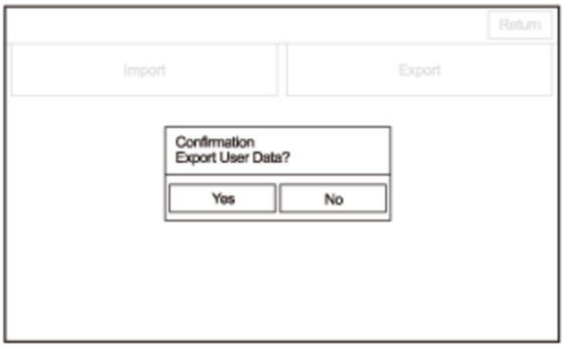

Confirmation
Export User Data?

2. After replacing the new audio-navigation unit, allow the system to boot up. Insert the USB device into the USB port A or B and enter the Save Users Memory in the System Diagnostic Mode.

3. Select the Import icon to move the two files stored by the Export process from the USB device to the new audio-navigation unit. Select the Yes icon on the Import User Data Confirmation screen. When the transfer is finished (a few seconds) the system automatically reboots. After the system reboots, remove the USB device from the USB port.

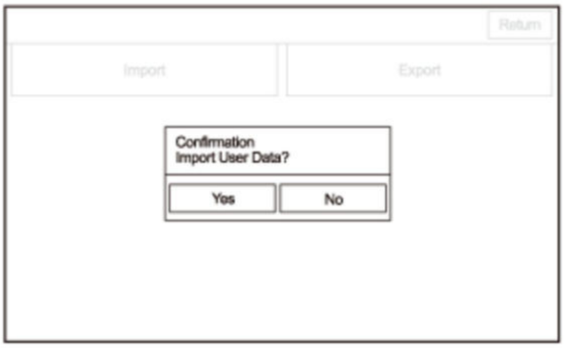

Confirmation
Import User Data?

LaneWatch

This diagnosis checks the LaneWatch status.

- If Connection shows hyphen (-), **check for hard error codes**.
- Error Status: Indicates LaneWatch camera status OK or NG. If Error Status shows NG, **replace the LaneWatch camera** . When the LaneWatch camera is disconnected, the status shows hyphen (-).
- If Error Status shows OK, press the HOME button to display the LaneWatch camera image. To return to the previous screen, press the HOME button again.
- LaneWatch Switch: LaneWatch switch status on or off. When the LaneWatch switch is pressing, the status shows ON. When the LaneWatch switch is released, the status shows hyphen (-).
- B-CAN: Checks whether the audio-navigation unit has received specific B-CAN data from the body control module. If B-CAN shows NG, check for B-CAN DTCs with the HDS. If DTCs are not detected, check for B-CAN lines continuity between the audio-navigation unit and the body control module.
- If Connection, Error Status, LaneWatch Switch, and B-CAN shows OK, the LaneWatch camera aiming procedure is available. If the LaneWatch camera need to aiming, **refer to the How to Start LaneWatch Camera Aiming** . When the aiming fails, Aiming shows NG.

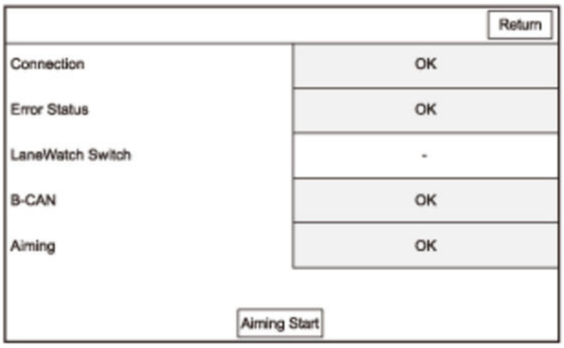
Return
Aiming Start

Connection	OK
Error Status	OK
LaneWatch Switch	-
B-CAN	OK
Aiming	OK

Phone Picture

This screen allows you to enable or disable the Show Contact Picture with On/Off.

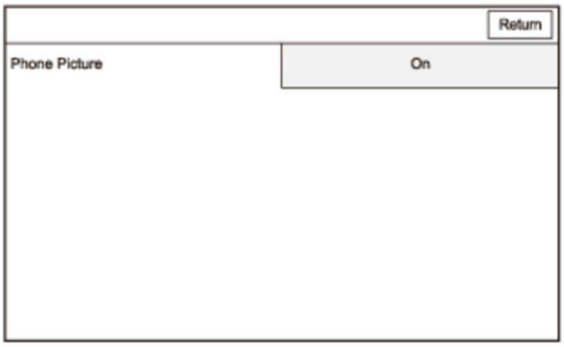

Phone Picture	On

Anti-Theft Skip (With Audio System Theft Protection)

This selection can cancel the anti-theft mode temporarily (for 150 seconds).

The Anti-Theft Skip icon is grayed out when the anti-theft mode is already canceled.

Other

Select the item you want to check.

- Pandora Setting
- HD Radio Setting
- SXM Setting
- Smartphone Information

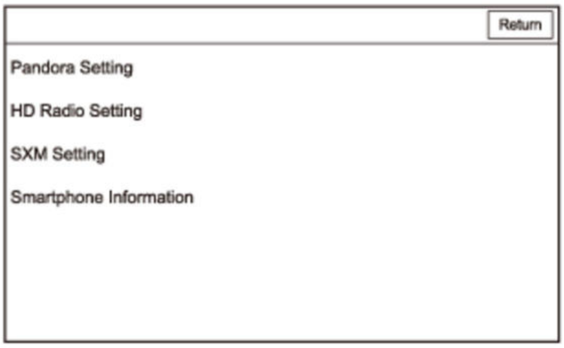
Return
Pandora Setting
HD Radio Setting
SXM Setting
Smartphone Information

Pandora Setting

This screen allows you to restrict the Pandora function to the running vehicle. Refer to the Owner's Manual for more information about the Pandora setting function.

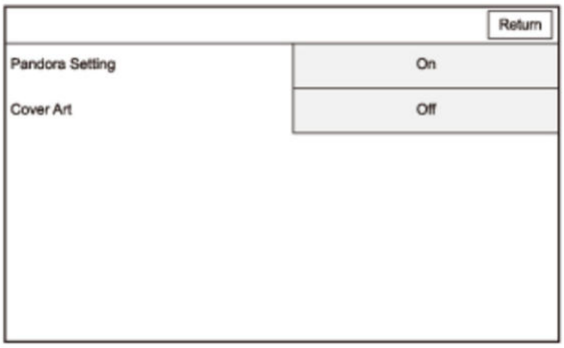

Pandora Setting	On
Cover Art	Off

HD Radio Setting

This screen allows you to restrict the HD radio album art function to the running vehicle. Refer to the Owner's Manual for more information about the album art function.

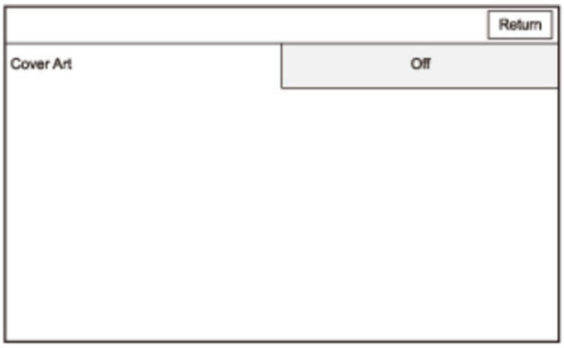

Cover Art	Off

SXM Setting

This screen allows you to restrict the XM radio album art function to the running vehicle. Refer to the Owner's Manual for more information about the album art function.

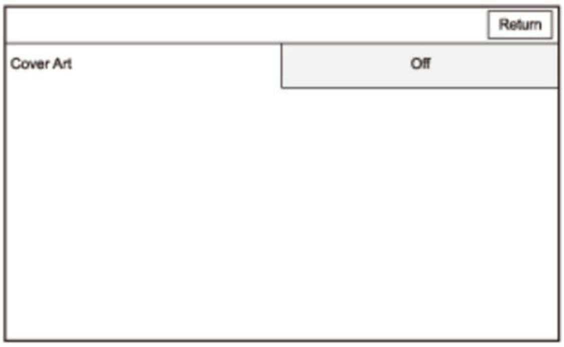

Cover Art	Off

Smartphone Information

This screen allows you to enable or disable the function about smartphone connection.

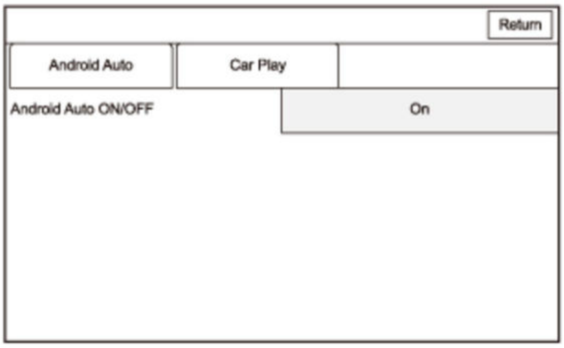

Android Auto ON/OFF On

Version

This screen displays the current version information about each module in the audio-navigation unit.

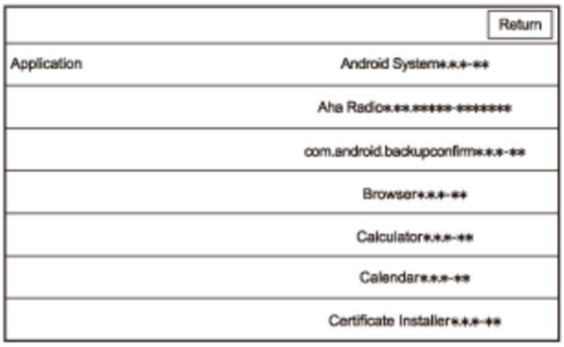

Application	Android System*.*.*-**
	Aha Radio*.**.*****-*******
	com.android.backupconfirm*.*.*-**
	Browser*.*.*-**
	Calculator*.*.*-**
	Calendar*.*.*-**
	Certificate Installer*.*.*-**

GPS Information

This screen shows the current status of GPS reception. The circular diagram shows the current location of the GPS satellites (yellow numbers) as they would appear in the sky. The outer circle represents the horizon (0 degrees elevation). The middle and inner circles represents 30 and 60 degrees respectively. The very center of the diagram (90 degrees elevation) is directly overhead. Nearby obstructions, like tall buildings will block satellites in that direction. That is why it is necessary to be in an open area to effectively troubleshoot GPS reception issues. The satellite numbers shown on the diagram while pressing the HOME button that correspond to the PRN (satellite ID number). There are always at least 24 active GPS satellites in orbit. Because satellites fail, and have to be removed from service, spares are always parked in orbit, ready to be activated. This is why the PRN can be greater than 24.

NOTE: When you use this screen for troubleshooting, park the vehicle outside, away from buildings, tall trees, and hightension wires for at least 10 minutes with the engine running.

- The Number of Satellites box shows the number of acquired satellites (maximum of 12). It should contain three or more icons.
- The Current Position shows latitude, longitude, and elevation (in feet). If there are less than four satellites, the elevation can be grossly inaccurate.
- The date/time field shows the current date and time that is received from the GPS satellite.

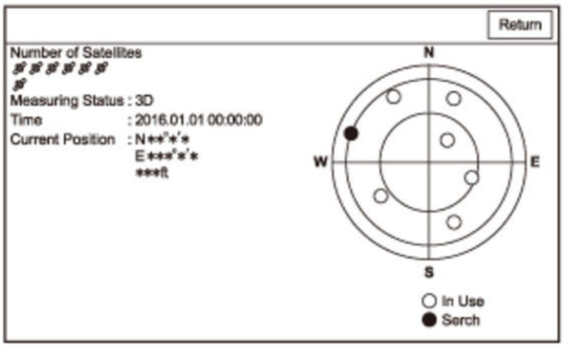

Number of Satellites

Measuring Status : 3D

Time : 2016.01.01 00:00:00

Current Position : N**°*'*
E***°*'*
***ft

DTC TROUBLESHOOTING INDEX

NAVIGATION SYSTEM DTC TROUBLESHOOTING INDEX

NOTE: These DTCs cannot be read with the HDS. To view them, refer to How to Check for Error History (Navigation DTCs).

DTC	Description	Circuit
1102	USB Diag	USB
1301	GPS Antenna Error	GPS antenna
1302	GPS Receiver Error 1	GPS receiver
1304	Gyro Error 1	Internal gyro
1306	Vehicle Speed Pulse	PCM or TCM
1702	XM Antenna Error	XM antenna
2608	R-Camera Diag	Rearview camera
2610	DRAM Diag	Audio-navigation unit DRAM
2618	LaneWatch Diag	LaneWatch camera
2701	GPS Diag: Antenna	GPS antenna
2703	Aircon Diag	Climate control unit
2706	Gyro Diag: ECU Temp XX deg.C	Internal gyro

COMPONENT LOCATION INDEX

NAVIGATION SYSTEM COMPONENT LOCATION INDEX

For relationships between signals in a system,

refer to system diagram.

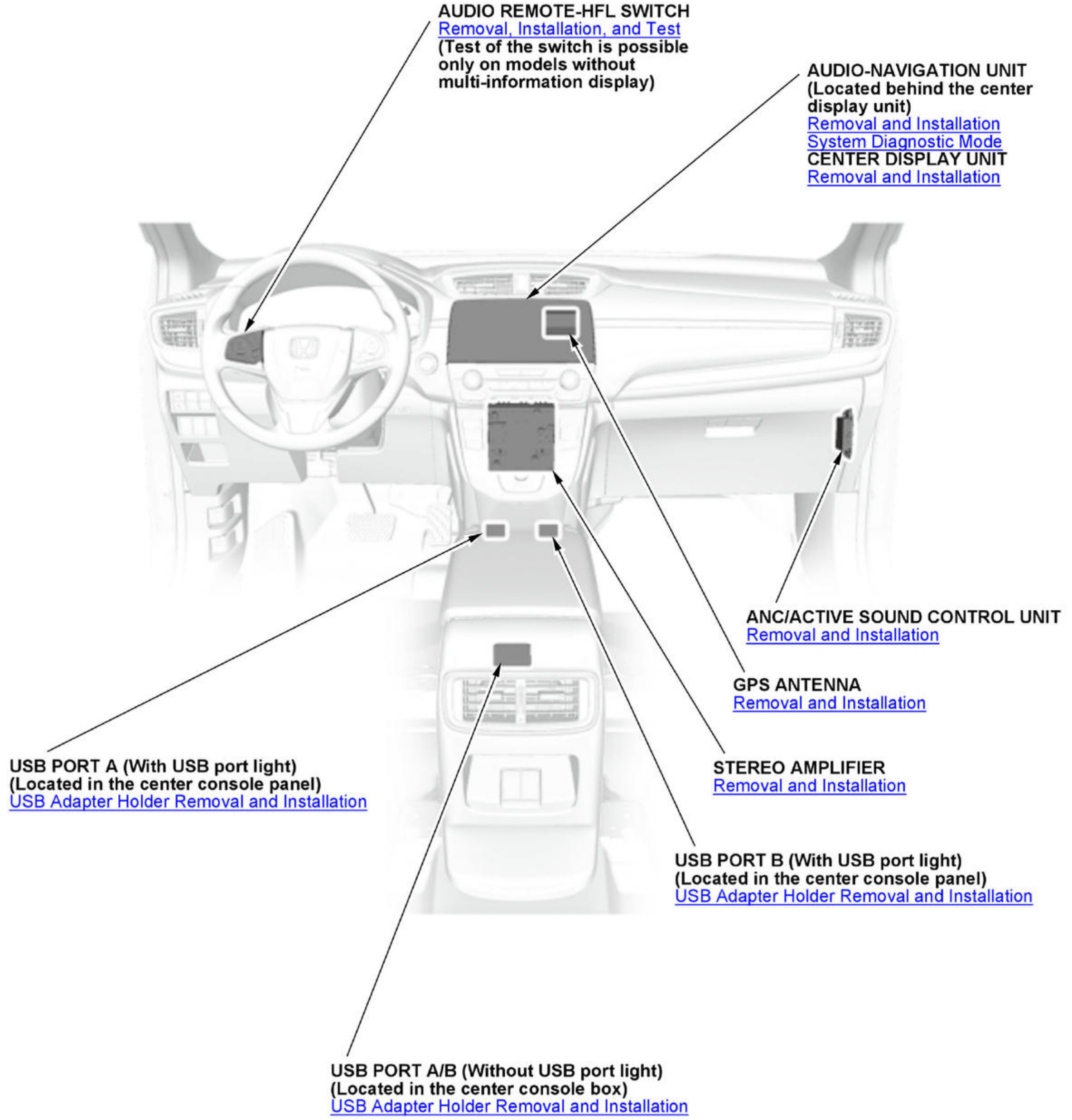
AUDIO REMOTE-HFL SWITCH
Removal, Installation, and Test
(Test of the switch is possible only on models without multi-information display)
AUDIO-NAVIGATION UNIT
(Located behind the center display unit)
Removal and Installation
System Diagnostic Mode
CENTER DISPLAY UNIT
Removal and Installation
ANC/ACTIVE SOUND CONTROL UNIT
Removal and Installation
GPS ANTENNA
Removal and Installation
STEREO AMPLIFIER
Removal and Installation
USB PORT A (With USB port light)
(Located in the center console panel)
USB Adapter Holder Removal and Installation
USB PORT B (With USB port light)
(Located in the center console panel)
USB Adapter Holder Removal and Installation
USB PORT A/B (Without USB port light)
(Located in the center console box)
USB Adapter Holder Removal and Installation

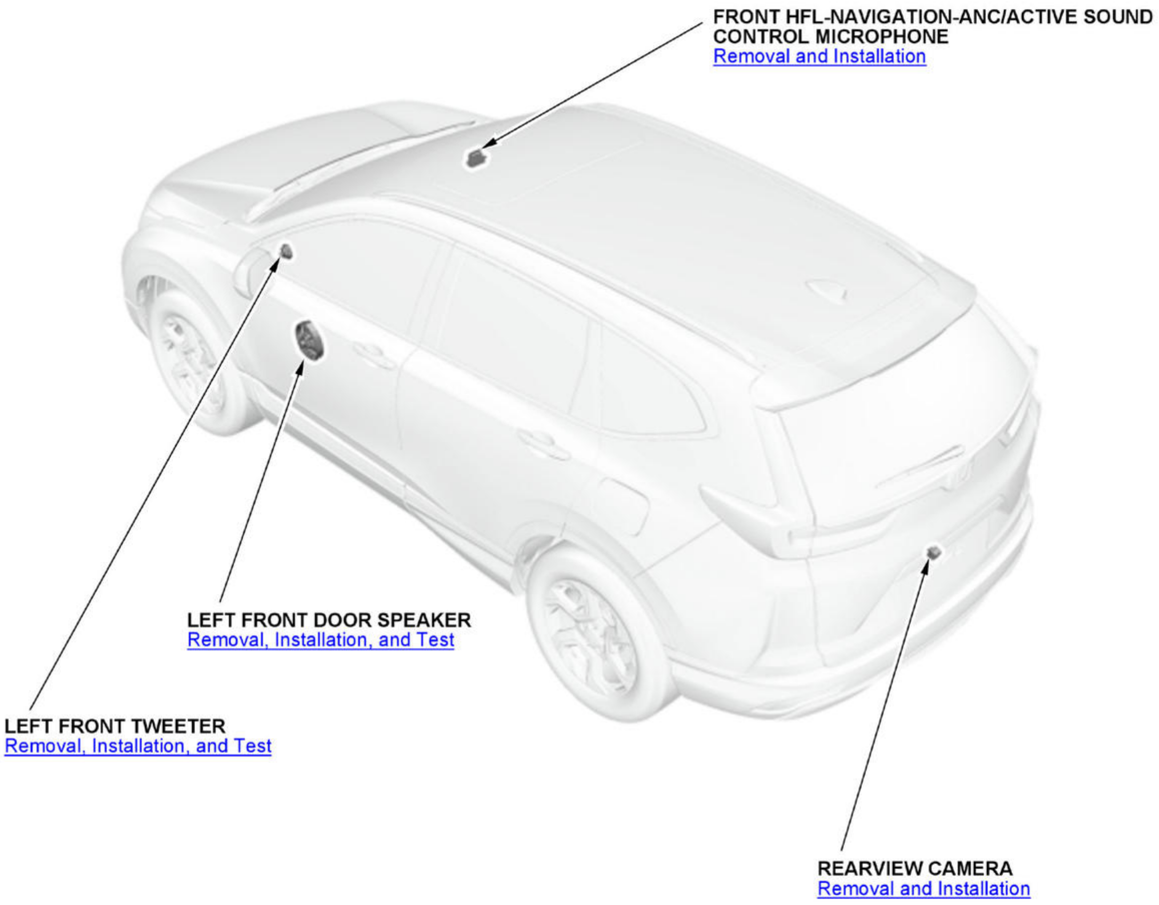
FRONT HFL-NAVIGATION-ANC/ACTIVE SOUND CONTROL MICROPHONE
Removal and Installation
LEFT FRONT DOOR SPEAKER
Removal, Installation, and Test
LEFT FRONT TWEETER
Removal, Installation, and Test
REARVIEW CAMERA
Removal and Installation

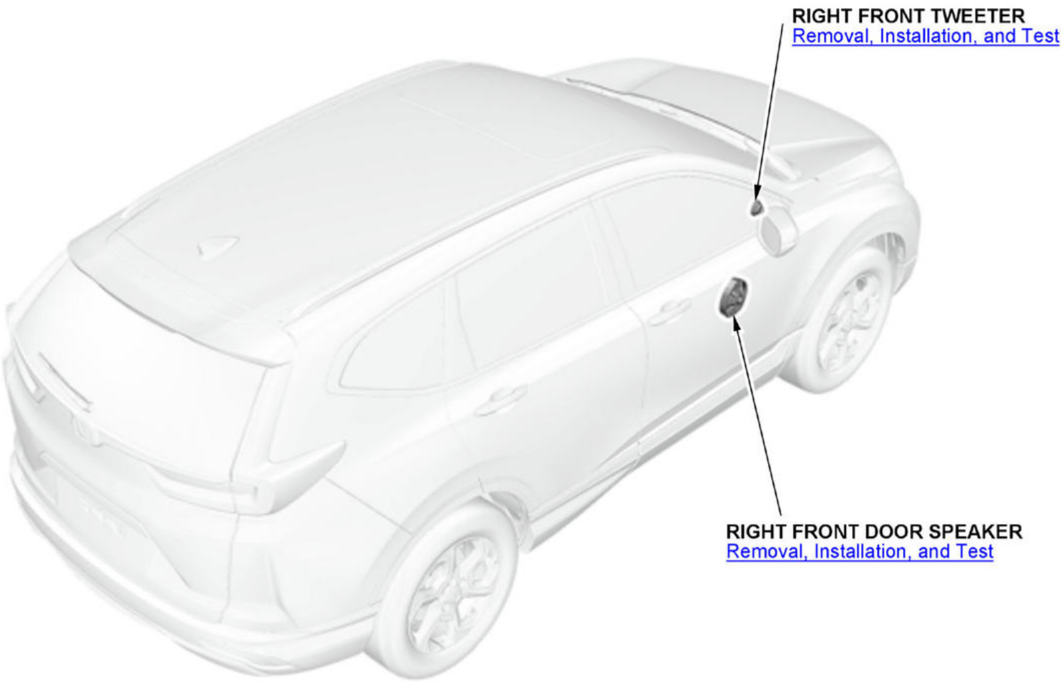
RIGHT FRONT TWEETER
Removal, Installation, and Test
RIGHT FRONT DOOR SPEAKER
Removal, Installation, and Test

SYMPTOM TROUBLESHOOTING

NAVIGATION SYSTEM SYMPTOM TROUBLESHOOTING

Audio-navigation unit power will not turn on (No information display)

NOTE:

- **Check the vehicle 12 volt battery condition first** .
- Check if the Display Mode (☼ ☽) button has been pressed, and turned off the display (see the Owner's Manual for more information).
- Check the connectors for poor connections or loose terminals.
- Check the fuses and **relays** associated with the system, and check for a short in the related lines.

1. Problem verification

   -1. Turn the vehicle to the ON mode.

-2. Check if the center display unit indicates any information (indicates the Honda Globe screen first).

Is any information displayed?

YES

Intermittent failure, the system is OK at this time.

NO

The failure is duplicated, go to step 2.

2. Determine possible failure area (LVDS1 circuit, others)

-1. Shield the center display unit from the sun with your hand, and check that the display is back lit (only the back light is on).

Can you see the back light?

YES

Go to step 11.

NO

Go to step 3.

3. Open wire check (+B BACKUP2 SUB/+B AUDIO line) 1

-1. Disconnect the following connector.

Center display unit connector A (5P)

-2. Measure the voltage between test points 1 and 2.

Test condition	Vehicle OFF (LOCK) mode
Â	Center display unit connector A (5P): disconnected
Test point 1	**Center display unit connector A (5P) No. 1**
Test point 2	Body ground

Is there battery voltage?

YES

The +B BACKUP2 SUB/+B AUDIO wire is OK. Go to step 4.

NO

Repair an open in the wire.

4. Open wire check (GND line) 1

-1. Measure the resistance between test points 1 and 2.

Test condition	Vehicle OFF (LOCK) mode
Â	Center display unit connector A (5P): disconnected
Test point 1	**Center display unit connector A (5P) No. 5**
Test point 2	Body ground

Is there 1.0 Ω or less?

YES

The GND wire is OK. Go to step 5.

NO

Repair an open or high resistance in the ground wire or poor ground (G402).

5. Determine possible failure area (DISP CONT line, others)

-1. Reconnect center display unit connector A (5P).

-2. Disconnect the following connector.

Audio-navigation unit connector E (16P)

-3. Turn the vehicle to the ON mode.

-4. Measure the voltage between test points 1 and 2.

Test condition	Vehicle ON mode
Â	Audio-navigation unit connector E (16P): disconnected
Test point 1	**Audio-navigation unit connector E (16P) No. 4**
Test point 2	Body ground

Is there about 3.3 V?

YES

The DISP CONT wire is OK. Go to step 7.

NO

Go to step 6.

6. Open wire check (DISP CONT line)

-1. Measure the voltage between test points 1 and 2.

Test condition	Vehicle ON mode
Â	Audio-navigation unit connector E (16P): disconnected
Test point 1	**Center display unit connector A (5P) No. 4**
Test point 2	Body ground

Is there about 3.3 V?

YES

Repair an open in the wire.

NO

Replace the center display unit .

7. Determine possible failure area (center display unit, others)

-1. Turn the vehicle to the OFF (LOCK) mode.

-2. Reconnect audio-navigation unit connector E (16P).

-3. Turn the vehicle to the ON mode.

-4. Measure the voltage between test points 1 and 2.

Test condition	Vehicle ON mode
Test point 1	**Audio-navigation unit connector E (16P) No. 4**
Test point 2	Body ground

Is there less than 0.2 V?

Yes

Replace the center display unit .

No

Go to step 8.

8. Open wire check (+B BACKUP2 SUB/+B AUDIO line) 2

-1. Turn the vehicle to the OFF (LOCK) mode.

-2. Disconnect the following connector.

Audio-navigation unit connector A (24P)

-3. Measure the voltage between test points 1 and 2.

Test condition	Vehicle OFF (LOCK) mode
Â	Audio-navigation unit connector A (24P): disconnected
Test point 1	**Audio-navigation unit connector A (24P) No. 3**
Test point 2	Body ground

Is there battery voltage?

YES

The +B BACKUP2 SUB/+B AUDIO wire is OK. Go to step 9.

NO

Repair an open in the wire.

9. Open wire check (ACC CUT(VST)/ACC/IG1 WITH DIODE FMVSS line)

-1. Turn the vehicle to the ON mode.

-2. Measure the voltage between test points 1 and 2.

Test condition	Vehicle ON mode
Â	Audio-navigation unit connector A (24P): disconnected
Test point 1	**Audio-navigation unit connector A (24P) No. 23**
Test point 2	Body ground

Is there battery voltage?

YES

The ACC CUT(VST)/ACC/IG1 WITH DIODE FMVSS wire is OK. Go to step 10.

NO

Repair an open in the wire.

10. Open wire check (GND line) 2

-1. Turn the vehicle to the OFF (LOCK) mode.

-2. Reconnect audio-navigation unit connector A (24P).

-3. Turn the vehicle to the ON mode.

-4. Measure the voltage between test points 1 and 2.

Test condition	Vehicle ON mode
Test point 1	**Audio-navigation unit connector A (24P) No. 1**
Test point 2	Body ground

Is there less than 0.2 V?

YES

Replace the audio-navigation unit .

NO

Repair an open or high resistance in the ground wire or poor ground (G402).

11. Shorted wire check (LVDS1+ line to LVDS1- line)

-1. Turn the vehicle to the OFF (LOCK) mode.

-2. Disconnect the following connectors.

Audio-navigation unit connector H (3P)
Center display unit connector B (3P)

-3. Measure the resistance between test points 1 and 2.

Test condition	Vehicle OFF (LOCK) mode
Â	Audio-navigation unit connector H (3P): disconnected
Â	Center display unit connector B (3P): disconnected
Test point 1	**Center display unit connector B (3P) No. 1**
Test point 2	**Center display unit connector B (3P) No. 2**

Is there 1.0 MΩ or more?

YES

The LVDS1+ wire and the LVDS1- wire are not shorted. Go to step 12.

NO

There is a short in the wires. Replace the affected shielded harness.

12. Shorted wire check (LVDS1 SH line to another lines)

-1. Measure the resistance between test points 1 and 2.

Test condition	Vehicle OFF (LOCK) mode
Â	Audio-navigation unit connector H (3P): disconnected
Â	Center display unit connector B (3P): disconnected
Test point 1	**Center display unit connector B (3P) No. 1**
Test point 2	**Center display unit connector B (3P) No. 3**

Test point 1	**Center display unit connector B (3P) No. 2**
Test point 2	**Center display unit connector B (3P) No. 3**

Is there 1.0 MΩ or more?

YES

The LVDS1 SH wire is not shorted. Go to step 13.

NO

There is a short in the wires. Replace the affected shielded harness.

13. Open wire check (LVDS1+ line, LVDS1- line)

-1. Measure the resistance between test points 1 and 2.

Test condition	Vehicle OFF (LOCK) mode
Â	Audio-navigation unit connector H (3P): disconnected
Â	Center display unit connector B (3P): disconnected
Test point 1	**Audio-navigation unit connector H (3P) No. 1**
Test point 2	**Center display unit connector B (3P) No. 1**

Test point 1	**Audio-navigation unit connector H (3P) No. 2**
Test point 2	**Center display unit connector B (3P) No. 2**

Is there 1.0 Ω or less?

YES

The LVDS1+ and the LVDS1**-** wires are OK. Go to step 14.

NO

There is an open in the wire(s). Replace the affected shielded harness.

14. Center display unit check (substitution)

-1. Substitute a known-good center display unit.

-2. Reconnect all the connectors, and recheck.

Does the symptom go away?

YES

Replace the original center display unit .

NO

Replace the audio-navigation unit .

The MID does not display the audio-navigation unit information

NOTE:

- **Check the vehicle 12 volt battery condition first** .
- If the audio remote-HFL switch does not respond, **go to Audio remote-HFL switch does not work properly (audio unit buttons work) troubleshooting** .
- Check the connectors for poor connections or loose terminals.

1. Problem verification

-1. Turn the vehicle to the ON mode.

-2. Select Audio, Navigation, and HFL from the multi-information display (MID) menu screen.

Are audio, navigation, and HFL information displayed?

YES

Intermittent failure, the system is OK at this time.

NO

The failure is duplicated, go to step 2.

2. Shorted wire check (LVDS2+ line, LVDS2- line)

-1. Turn the vehicle to the OFF (LOCK) mode.

-2. Disconnect the following connectors.

Audio-navigation unit connector J (3P)
Gauge control module connector C (3P)

-3. Check for continuity between test points 1 and 2.

Test condition	Vehicle OFF (LOCK) mode
Â	Audio-navigation unit connector J (3P): disconnected
Â	Gauge control module connector C (3P): disconnected
Test point 1	**Audio-navigation unit connector J (3P) No. 1**
Test point 2	Body ground

Test point 1	**Audio-navigation unit connector J (3P) No. 2**
Test point 2	Body ground

Is there continuity?

YES

There is a short to body ground in the wire. Replace the affected shielded harness.

NO

The LVDS2+ and the LVDS2**-** wires are not shorted to ground. Go to step 3.

3. Shorted wire check (LVDS2+ line to LVDS2- line)

-1. Check for continuity between test points 1 and 2.

Test condition	Vehicle OFF (LOCK) mode
Â	Audio-navigation unit connector J (3P): disconnected
Â	Gauge control module connector C (3P): disconnected
Test point 1	**Audio-navigation unit connector J (3P) No. 1**
Test point 2	**Audio-navigation unit connector J (3P) No. 2**

Is there continuity?

YES

There is a short in the wires. Replace the affected shielded harness.

NO

The LVDS2+ wire and the LVDS2**-** wire are not shorted. Go to step 4.

4. Shorted wire check (LVDS2 SH line to another lines)

-1. Check for continuity between test points 1 and 2.

Test condition	Vehicle OFF (LOCK) mode
Â	Audio-navigation unit connector J (3P): disconnected
Â	Gauge control module connector C (3P): disconnected
Test point 1	**Audio-navigation unit connector J (3P) No. 1**
Test point 2	**Audio-navigation unit connector J (3P) No. 3**

Test point 1	**Audio-navigation unit connector J (3P) No. 2**
Test point 2	**Audio-navigation unit connector J (3P) No. 3**

Is there continuity?

YES

There is a short in the wires. Replace the affected shielded harness.

NO

The LVDS2 SH wire is not shorted. Go to step 5.

5. Open wire check (LVDS2+ line, LVDS2- line)

-1. Check for continuity between test points 1 and 2.

Test condition	Vehicle OFF (LOCK) mode
Â	Audio-navigation unit connector J (3P): disconnected
Â	Gauge control module connector C (3P): disconnected
Test point 1	**Audio-navigation unit connector J (3P) No. 1**
Test point 2	**Gauge control module connector C (3P) No. 1**

Test point 1	**Audio-navigation unit connector J (3P) No. 2**
Test point 2	**Gauge control module connector C (3P) No. 2**

Is there continuity?

YES

The LVDS2+ and the LVDS2**-** wires are OK. Go to step 6.

NO

There is an open in the wire(s). Replace the affected shielded harness.

6. Audio-navigation unit check (substitution)

   -1. Substitute a known-good audio-navigation unit.

   -2. Reconnect all the connectors, and recheck.

   Does the symptom go away?

   YES

   Replace the original audio-navigation unit .

   NO

   Replace the gauge control module .

Vehicle position icon wanders across the map when driving (does not follow a displayed road) or map vehicle ICON spins

NOTE:

- **Check the vehicle 12 volt battery condition first** .
- This is not the same condition as when driving off-road (or on a fire or logging road).
- This condition is caused by a loss of map matching from a bad sensor input. Check for aftermarket or other objects that can block the GPS signal. **Always do the Map Matching** before proceeding with the troubleshooting.
- Check the connectors for poor connections or loose terminals.

1. Problem verification

   -1. Test-drive the vehicle in an open area, and check if the vehicle position icon displays the actual vehicle position.

   NOTE: Make sure that a known-good vehicle's navigation can follow the displayed map in the test area.

   Does the vehicle position icon wanders across the map?

   YES

   The failure is duplicated, go to step 2.

   NO

   Intermittent failure, the system is OK at this time.

2. DTC check

   -1. **Check for hard error codes**.

   Are there any navigation DTCs indicated?

YES

Go to indicated DTC's troubleshooting.

NO

Go to step 3.

3. Determine possible failure area (audio-navigation unit, BACK LT line)

-1. **Go into the System Diagnostic Mode, and use the Vehicle Status diagnosis to check the BACK signal**.

-2. Shift the transmission to R position/mode.

Does the BACK signal change from [0] to [1] when the transmission is shifted from P position/mode to R position/mode?

YES

Go to step 5.

NO

Go to step 4.

4. Open wire check (BACK LT line)

-1. Shift the transmission to P position/mode.

-2. Turn the vehicle to the OFF (LOCK) mode.

-3. Disconnect the following connector.

Audio-navigation unit connector C (32P)

-4. Turn the vehicle to the ON mode.

-5. Shift the transmission to R position/mode.

-6. Measure the voltage between test points 1 and 2.

Test condition	Vehicle ON mode
Â	Audio-navigation unit connector C (32P): disconnected
Test point 1	**Audio-navigation unit connector C (32P) No. 15**
Test point 2	Body ground

Is there battery voltage?

YES

Replace the audio-navigation unit .

NO

Repair an open in the wire.

5. Audio-navigation unit check (substitution)

-1. Shift the transmission to P position/mode.

-2. Turn the vehicle to the OFF (LOCK) mode.

-3. **Substitute a known-good audio-navigation unit** , and check to see if the problem occurs in the same location.

Does the problem occur in the same location each time?

YES

Try to replicate the problem in a known-good vehicle (same model, year, and trim). If the problem can be duplicated, the problem is in the map database. Report the problem according to the Navigation System Manual under Reporting Errors.

NO

Replace the original audio-navigation unit .

Voice guidance cannot be heard, is broken up, or there is static

NOTE:

- **Check the vehicle 12 volt battery condition first** .
- Check the volume and voice feedback setting for the navigation system in set-up.
- Check the connectors for poor connections or loose terminals.

1. Problem verification

   -1. Check the navigation voice guidance output.

   Does the system output the voice guidance?

   YES

   Intermittent failure, the system is OK at this time.

   NO

   The failure is duplicated, go to step 2.

2. Determine possible failure area (voice guidance output circuit, others)

   -1. **Go into the System Diagnostic Mode, and use the speaker check mode**.

   Did all speakers produce a tone?

   YES: With stereo amplifier

   Go to step 3.

   YES: Without stereo amplifier

   Replace the audio-navigation unit .

   NO: The sound is cannot be heard in all speakers

   Go to No sound is heard from all the speakers (display is normal) troubleshooting .

   NO: The sound is cannot be heard in front center speaker

   Go to Audio system sound is weak or distorted (display is normal) troubleshooting .

3. Shorted wire check (AUX NAVI line, AUX NAVI GND line)

-1. Turn the vehicle to the OFF (LOCK) mode.

-2. Disconnect the following connectors.

Audio-navigation unit connector B (24P)
Stereo amplifier connector C (16P)

-3. Check for continuity between test points 1 and 2.

Test condition	Vehicle OFF (LOCK) mode
Â	Audio-navigation unit connector B (24P): disconnected
Â	Stereo amplifier connector C (16P): disconnected
Test point 1	**Audio-navigation unit connector B (24P) No. 13**
Test point 2	Body ground

Test point 1	**Audio-navigation unit connector B (24P) No. 14**
Test point 2	Body ground

Is there continuity?

YES

There is a short to body ground in the wire. Replace the affected shielded harness.

NO

The AUX NAVI and the AUX NAVI GND wires are not shorted to ground. Go to step 4.

4. Shorted wire check (AUX lines)

-1. Check for continuity between test points 1 and 2.

Test condition	Vehicle OFF (LOCK) mode
Â	Audio-navigation unit connector B (24P): disconnected
Â	Stereo amplifier connector C (16P): disconnected

Test point 1:Audio-navigation unit connector B (24P)	**Test points 2:Audio-navigation unit connector B (24P)**
No. 1	No. 2, No. 13, No. 14

Test point 1:Audio-navigation unit connector B (24P)	**Test points 2:Audio-navigation unit connector B (24P)**
No. 2	No. 13, No. 14
No. 13	No. 14

Is there continuity between any of the terminals?

YES

There is a short in the wires. Replace the affected shielded harness.

NO

The AUX wires are not shorted in the wires. Go to step 5.

5. Open wire check (AUX NAVI line, AUX NAVI GND line)

-1. Check for continuity between test points 1 and 2.

Test condition	Vehicle OFF (LOCK) mode
Â	Audio-navigation unit connector B (24P): disconnected
Â	Stereo amplifier connector C (16P): disconnected
Test point 1	**Audio-navigation unit connector B (24P) No. 13**
Test point 2	**Stereo amplifier connector C (16P) No. 12**

Test point 1	**Audio-navigation unit connector B (24P) No. 14**
Test point 2	**Stereo amplifier connector C (16P) No. 5**

Is there continuity?

YES

The AUX NAVI and the AUX NAVI GND wires are OK. Go to step 6.

NO

There is an open in the wire(s). Replace the affected shielded harness.

6. Stereo amplifier check (substitution)

-1. **Substitute a known-good stereo amplifier** .

-2. Reconnect all the connectors, and recheck.

Does the symptom go away?

YES

Replace the original stereo amplifier .

NO

Replace the audio-navigation unit .

SYMPTOM TROUBLESHOOTING INDEX

NAVIGATION SYSTEM SYMPTOM TROUBLESHOOTING INDEX

NOTE:

- Before troubleshooting, check any official Honda service website for more information about the navigation system.
- **Refer to Audio System Symptom Troubleshooting for information about the symptom of audio-navigation unit which is not in the following table** .

Symptom	Diagnostic Procedure	Also Check for
Audio-navigation unit power will not turn on (No information display)	**Symptom Troubleshooting**	Blown fuses Screen settings **Error Messages** Software not up to date

Symptom	Diagnostic Procedure	Also Check for
Navigation system stays on the CSF screen	**Navigation DTCs**	- **GPS Initialization** - Aftermarket metallic window tint on the front window or electronic aftermarket accessories (possibly hidden) mounted near the GPS antenna or the audio-navigation unit - Disconnected or defective GPS antenna
Poor GPS reception or interference	**Do the GPS Information in the System Diagnostic Mode**	- **Global Positioning System (GPS) Limitations** - Aftermarket metallic window tint on the front window or electronic aftermarket accessories (possibly hidden) mounted near the GPS antenna or the audio-navigation unit
Vehicle position icon wanders across the map when driving (does not follow a displayed road) or map vehicle ICON spins	**Symptom Troubleshooting**	- **Global Positioning System (GPS) Limitations** - **Map Matching** - **Sensor Calibration** - VSP missing - Poor or no GPS reception - Check for any related service bulletin software updates
Navigation touch panel does not work	**Do the Touch Panel Check in the System Diagnostic Mode**	**Forced Rebooting of Audio-Navigation Unit**
Clock will not set to correct time	Â	Check the GPS signal
System always comes up in-line diagnostic mode	**Factory diagnostic screen In Line Diagnostic mode**	Â
The MID does not display the audio-navigation unit information	**Symptom Troubleshooting**	Â
Voice control does not work/respond	Â	Check for any related service bulletin software updates
Voice guidance cannot be heard, is broken up, or there is static	Â	Volume or voice feedback setting (see the Navigation System information)

Symptom	Diagnostic Procedure	Also Check for
No HD traffic information	**Go to AM/FM radio display is blank or no station information is displayed troubleshooting**	Local outage or no local broadcast. Compare to a known-good vehicle of the same year and trim.
LaneWatch camera image does not come on	**Symptom Troubleshooting**	**Navigation DTCs**

HOW TO INFORMATION

HOW TO TROUBLESHOOT THE NAVIGATION SYSTEM

General Operation

Refer to the Navigation information for the navigation system operating procedures.

How to Recognize Audio Unit and Audio-Navigation Unit (Display audio type)

There are two kinds of audio units with 7-inch display unit according to a vehicle model. These units exist as an audio unit (without navigation) and an audio-navigation unit (with navigation), and are look like a same, but the audio-navigation unit displays a Honda Globe screen after displaying a Honda logo screen* every time when you turn the vehicle to the ACCESSORY mode.

*: When the system is turned on first time at cold start.

Forced Rebooting of Audio-Navigation Unit

If the system is frozen, and the screen does not respond, you can attempt rebooting the audio-navigation unit by pressing and holding the AUDIO POWER (⏻) button for 5 seconds. When the function is effective, the confirmation screen appears.

Anti-Theft Feature (With audio system theft protection)

The audio-navigation unit has an anti-theft protection circuit. When one of the following occurs, the unit enters the anti-theft mode:

- Disconnecting the 12 volt battery terminal.
- Disconnecting audio-navigation unit connector A (24P).
- Removing the +B line's fuses.

After the service, reconnect power to the audio-navigation unit, and turn the vehicle to the ON mode. There are two ways to exit the anti-theft mode:

- Press and hold the AUDIO POWER (⏻) button for at least 2 seconds. The audio-navigation unit automatically exits the anti-theft mode. If the audio-navigation unit does not exit anti-theft mode, turn the vehicle to the OFF (LOCK) mode then the ON mode (if possible, start the engine), and try to release the anti-theft several times.
- Enter the 5-digit anti-theft code. If the input of code fails 10 times in a row, the screen is locked for 60 minutes.

When the audio-navigation unit is installed in another vehicle (same Year/Model/Trim), like in cases where a known-good unit was substituted for testing, do the Anti-Theft Skip mode in the System Diagnostic Mode. This mode will release the anti-theft code for 150 seconds.

Symptom Diagnosis

Certain circumstances and system limitations may result in occasional vehicle positioning errors. Some customers may think this indicates a problem with the navigation system when, in fact, the system is normal. Keep the following items in mind when interviewing customers about symptoms of the navigation system.

Self-Inertial Navigation Limitations

The limitations of the self-inertial portion of the navigation system (the gyro and the vehicle speed signal) can cause discrepancies between the vehicle's actual position and the indicated vehicle's position (GPS vehicle position).

The following circumstances may cause vehicle positioning errors:

- Moving the vehicle with the engine stopped and the vehicle stopped, such as by ferry or tow truck, or if the vehicle is spun on a turn table.
- Tire slippage, changes in tire rolling diameters, and some driving situations may cause discrepancies in travel distances. Examples of this include;
-
    - Continuous tire slippage on a slippery surface
    - Driving with snow chains mounted
    - Abnormal tire pressure
    - Incorrect tire size
    - Frequent lane changes across a wide highway
    - Very bumpy roads
- Tolerances in the system and map inaccuracies sometimes limit how precisely the vehicle's position is indicated. Examples of this include;
-
    - Driving on roads not shown on the map (map matching is not possible)
    - Driving on a road that winds in one direction, such as a loop bridge, an interchange, or a spiral parking garage
    - Driving on a road with a series of sharp hair-pin turns
    - Driving near a gradual highway exit or transition
    - Driving on one of two close parallel roads
    - Making many 90 degree turns

Global Positioning System (GPS) Limitations

The GPS cannot detect the vehicle's position or elevation during the following instances:

- For the first 5 to 10 minutes after reconnecting the 12 volt battery (this process can take as long as 45 minutes).
- When the satellite signals are blocked by tall buildings, mountains, tunnels, large trees, inside parking structures or large trucks.
- When the GPS antenna is blocked by metallic window tinting or by an object placed above it in the vehicle. The GPS antenna requires a clear unobstructed view of the sky.
- When there is no satellite signal output (signal output is sometimes stopped for satellite servicing).
- When the satellite signals are blocked by the operation of some electronic aftermarket accessories including, but not limited to non-OEM in-dash entertainment units (amp, CD players/changers, radar detectors, theft recovery systems, etc.) and cell phones placed near the navigation system.

The accuracy of the GPS is reduced during these instances:

- Metallic window tinting above the GPS antenna.
- When only three or fewer satellite signals are received (Four satellite signals are required for accurate positioning).
- When driving near high tension power lines.
- When the satellite signals are blocked by the operation of some electronic aftermarket accessories including, but not limited to non-OEM in-dash entertainment units (amp, CD players/changers, radar detectors, theft recovery systems, etc.) and cell phones placed near the navigation system.
- When the satellite control centers are experiencing problems.

LCD Unit Limitations

The center display unit is touch sensitive. Touch the display directly to select items on the screen.

- Heavy gloves, fingernails or pens cannot be used on the touch panel.
- In cold temperatures, the display may stay dark for the first minute until it warms up.
- When the display is too hot because of direct summer sunlight, it remains dark until the temperature drops (you may see an error message displayed stating this fact).
- Fingerprints on the screen may be noticeable. Clean the screen with a soft, damp cloth. You may use a mild cleaner intended for eye glasses or computer screens. To avoid scratching the panel, do not rub too hard or use abrasive cleaners or shop towels.

Symptom Duplication

When the symptom can be duplicated, verify that it is not a characteristic of the system. Review the Navigation information and compare it to a known-good vehicle (with the same software and database), under the same conditions. If the symptom is not the same as the known-good vehicle, follow the self-diagnostic procedures and the appropriate troubleshooting procedures.

When the symptom does not reappear or only reappears intermittently, ask the customer about the conditions when the symptom occurred.

- Always ask the customer to demonstrate the problem.
- Try to establish possible user error or misunderstanding of the system.
- Try to establish if outside interference may have been the cause.
- Vibration, temperature extremes, and moisture (dew, humidity) are factors that are difficult to duplicate.
- Inspect the vehicle for after-market electronic devices (vehicle locators, amps, radar detectors, etc.) that may be hidden.

When troubleshooting navigation system problems, ensure that the known-good vehicle is the same software version year and model as the vehicle being serviced. Mixing incompatible navigation systems or other system components can delay the troubleshooting process by creating symptoms or issues unrelated to the original problem.

System Initialization

If the navigation system loses power (like the 12 volt battery terminal was disconnected), the navigation system requires initialization. Once completed, your system is ready to use.

This initialization requires the following:

- With audio system theft protection: Press and hold the AUDIO POWER (⏻) button for at least 2 seconds. The audio-navigation unit exits the anti-theft mode. Or you can enter the 5-digit anti-theft code.
- GPS initialization (may not be needed depending of the length of time the system was without power).
- Map matching aligns the GPS to a location on the map.

GPS Initialization

NOTE: You must park the vehicle outside with a clear view of the sky.

Depending on the length of time the battery was disconnected, your system may require GPS initialization. If it does, the CSF screen appears:

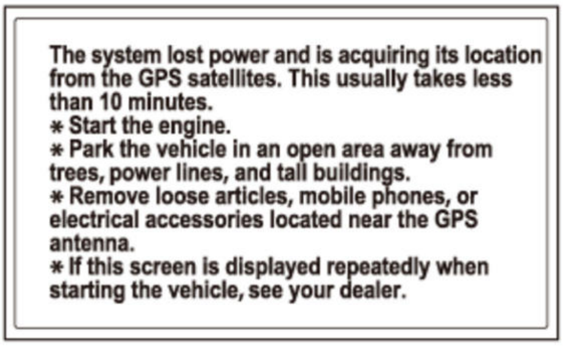

The system lost power and is acquiring its location from the GPS satellites. This usually takes less than 10 minutes.
* Start the engine.
* Park the vehicle in an open area away from trees, power lines, and tall buildings.
* Remove loose articles, mobile phones, or electrical accessories located near the GPS antenna.
* If this screen is displayed repeatedly when starting the vehicle, see your dealer.

If this procedure is not necessary, the system proceeds directly to the Disclaimer screen. During initialization, the system searches for all available GPS satellites, and obtains their orbital information. Park the vehicle out in the open with a clear view of the sky for this procedure.

If the navigation system finds the satellites properly, the CSF screen changes to the Disclaimer screen. If within 10 minutes the system fails to locate a sufficient number of satellites to locate your position, the confirmation screen appears.

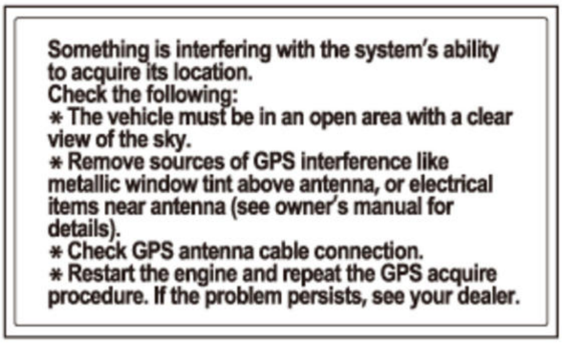

Something is interfering with the system's ability to acquire its location.
Check the following:
* The vehicle must be in an open area with a clear view of the sky.
* Remove sources of GPS interference like metallic window tint above antenna, or electrical items near antenna (see owner's manual for details).
* Check GPS antenna cable connection.
* Restart the engine and repeat the GPS acquire procedure. If the problem persists, see your dealer.

If this screen appears, turn off the engine, then restart the vehicle and move it to a different location. If the Disclaimer screen appears, the GPS initialization is complete.

NOTE:

- The average acquiring time is less than 10 minutes, but it can take as long as 45 minutes.
- If the system is still unable to acquire a signal, follow the instructions on the screen. If this screen appears again, check for hard error codes.
- Skip a CSF screen by pressing the DISPLAY MODE (☼ ☽) button and the HOME button at the same time for 5 seconds and you can move to the Disclaimer screen.

Map Matching

This part of the initialization matches the GPS coordinates with a road on the map screen. To do this part of the procedure, make sure that the navigation system displays a map, and drive the vehicle on a mapped road shown on the map screen. Do not enter a destination at this time. When the name of the current road you are driving on appears at the bottom of the screen, the entire procedure is complete. Your system is now ready to use.

How to Check Error History (Navigation DTCs)

NOTE: The navigation DTCs cannot be retrieved with the HDS.

The Error History feature is to record intermittent audio/navigation issues that occur while the customer is using the system. Sometimes the customer complaint cannot be duplicated. The error history may record the information needed to diagnose the problem. To check the error history:

1. Turn the vehicle to the ON mode.

2. Press and hold the PHONE button, the DISPLAY MODE button, and the AUDIO POWER button until the Select Diagnosis Items menu screen is displayed.

NOTE: The buttons needs to be pressed together simultaneously.

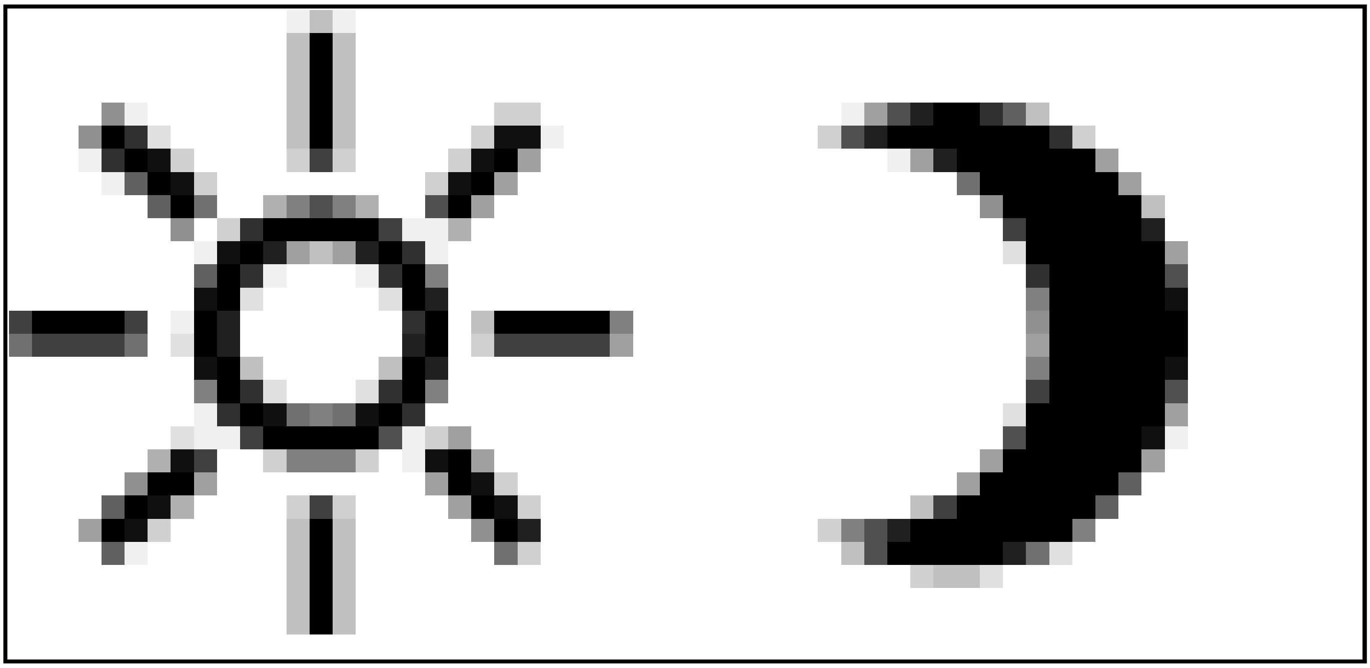

Displaying Select Diagnosis Items Menu Screen

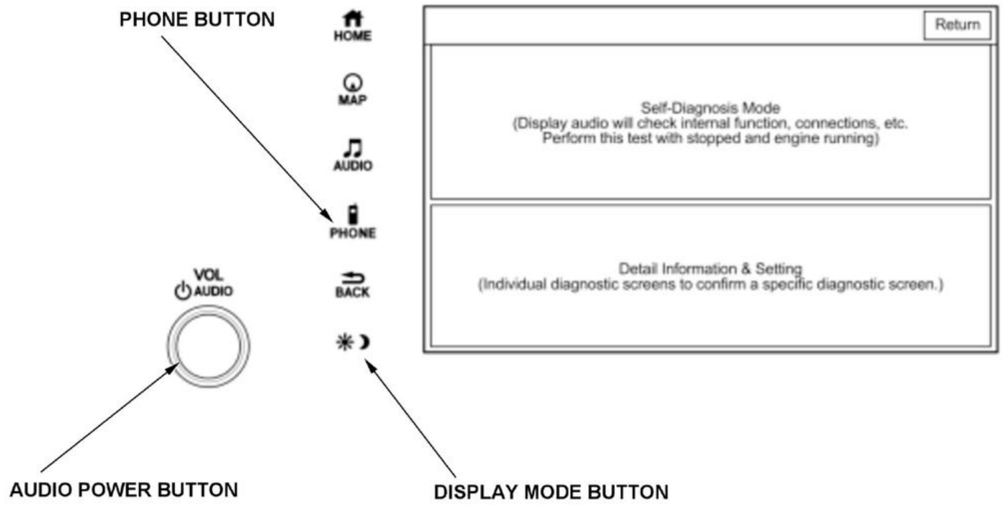
PHONE BUTTON
HOME
MAP
AUDIO
PHONE
BACK
VOL
AUDIO
AUDIO POWER BUTTON
DISPLAY MODE BUTTON
Return

Self-Diagnosis Mode
(Display audio will check internal function, connections, etc.
Perform this test with stopped and engine running)

Detail Information & Setting
(Individual diagnostic screens to confirm a specific diagnostic screen.)

3. When the Select Diagnosis Items menu appears, select the Self-Diagnosis Mode.

4. When the audio-navigation unit has hard error codes, the Error History icon (A) appears yellow. When no hard error codes are stored, the icon appears gray. To view the errors with their navigation DTC, select the Error History icon.

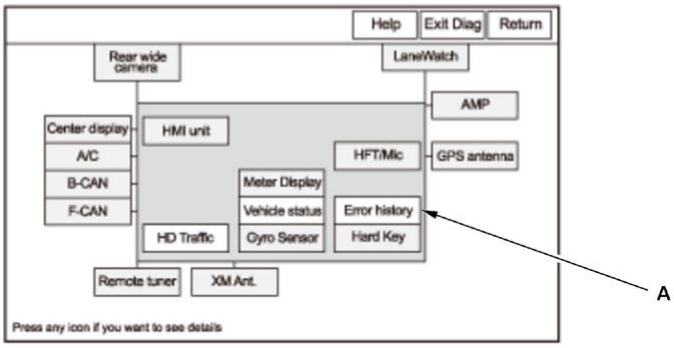
Help
Exit Diag
Return
Rear wide camera
LaneWatch
AMP
Center display
A/C
B-CAN
F-CAN
HMI unit
HFT/Mic
GPS antenna
Meter Display
Vehicle status
Gyro Sensor
Error history
Hard Key
HD Traffic
Remote tuner
XM Ant.
A

Press any icon if you want to see details

5. Select the Hard Error icon in the Error History menu.

NOTE: The Soft Error feature is for factory use only.

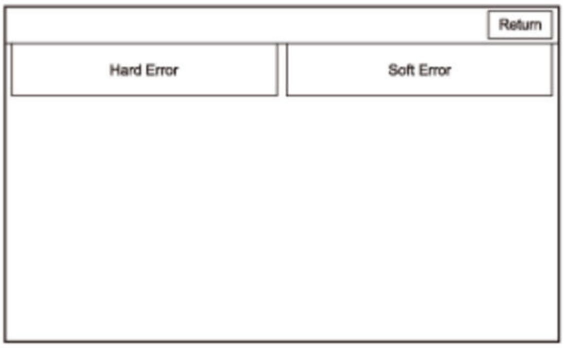
Return
Hard Error
Soft Error

6. The Hard Error screen displays the following information by selecting the Date/Time icon (A):

- The date and time when the error occurred. Swipe the screen to check the next items.
- The navigation DTC for the error.
- A brief description of the navigation DTC.

NOTE: The Save feature is for factory use only.

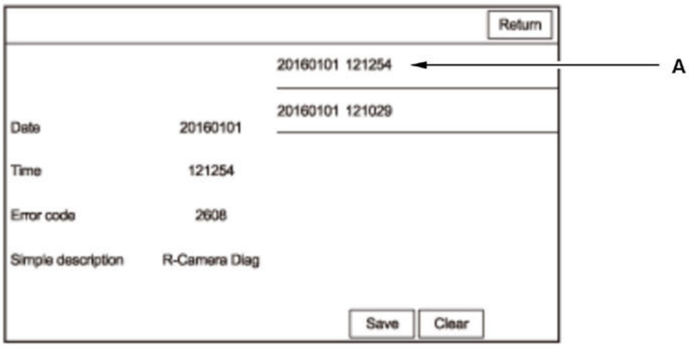

20160101 121254

20160101 121029

Date 20160101

Time 121254

Error code 2608

Simple description R-Camera Diag

7. Use the navigation DTC Troubleshooting table to troubleshoot the error. Select the Return icon to exit the Error History main menu.

How to Clear Error History

NOTE: The navigation DTCs cannot be deleted with the HDS.

8. Select the Clear icon in the Hard Error. The confirmation screen appears.

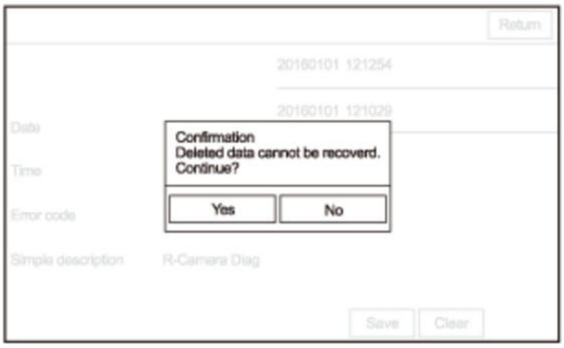

20160101 121254

20160101 121029

Date

Time

Error code

Simple description R-Camera Diag

Confirmation
Deleted data cannot be recoverd.
Continue?

9. Select the Yes icon. All Hard Error histories are cleared. Select the Return icon to exit the Error History.

REMOVAL AND INSTALLATION

CAN GATEWAY REMOVAL AND INSTALLATION(CAN GATEWAY)

Removal and Installation

1

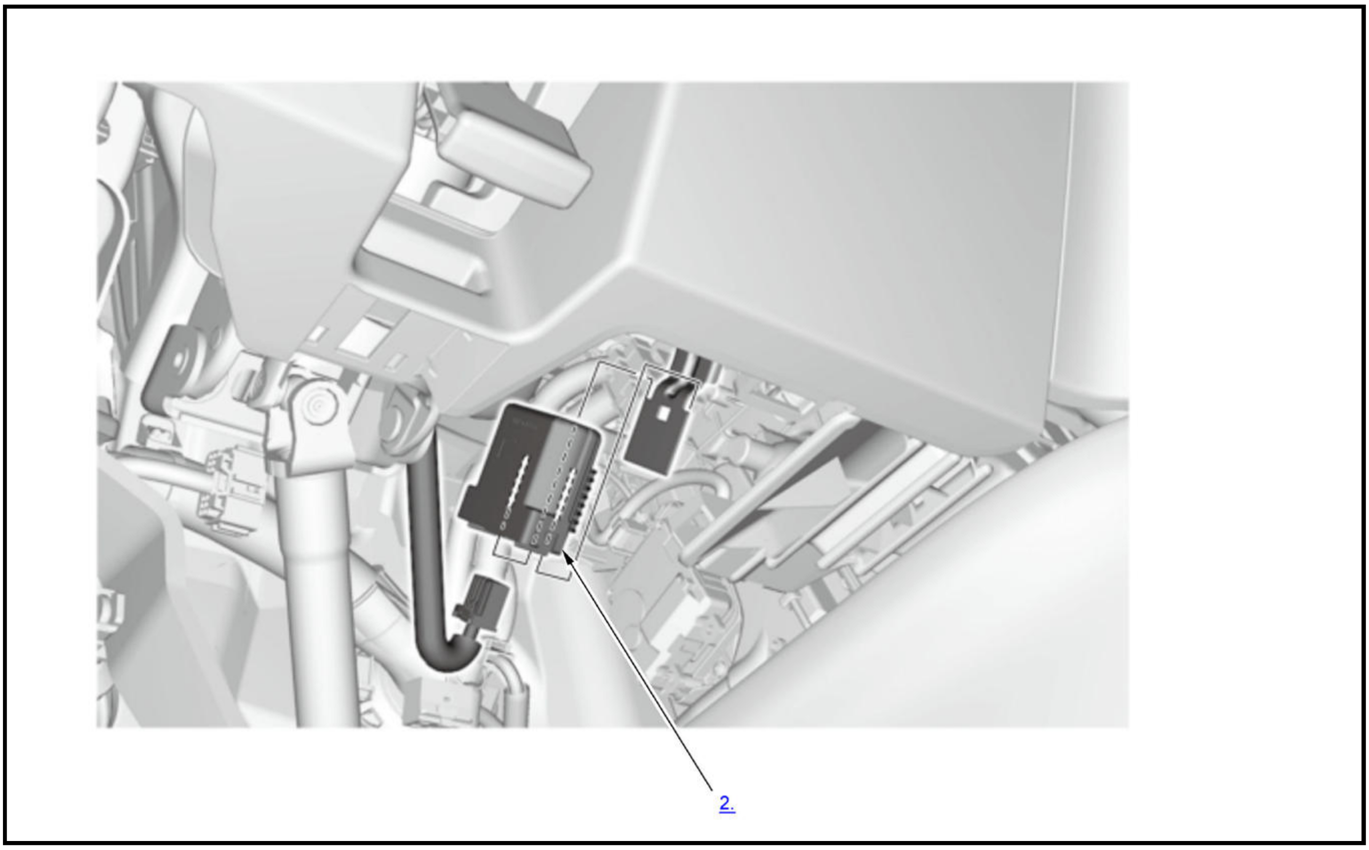

1. Driver's Dashboard Lower Cover - Remove
2. CAN Gateway - Remove
3. All Removed Parts - Install

    1. Install the parts in the reverse order of removal.

4. CAN Gateway - Update

    NOTE: When replacing the CAN gateway, do this procedure.

REMOVAL AND INSTALLATION

CAN GATEWAY REMOVAL AND INSTALLATION

Removal and Installation

Procedure

NOTE: **Numbered call-outs in figure pertain to list numbers in following procedure.**

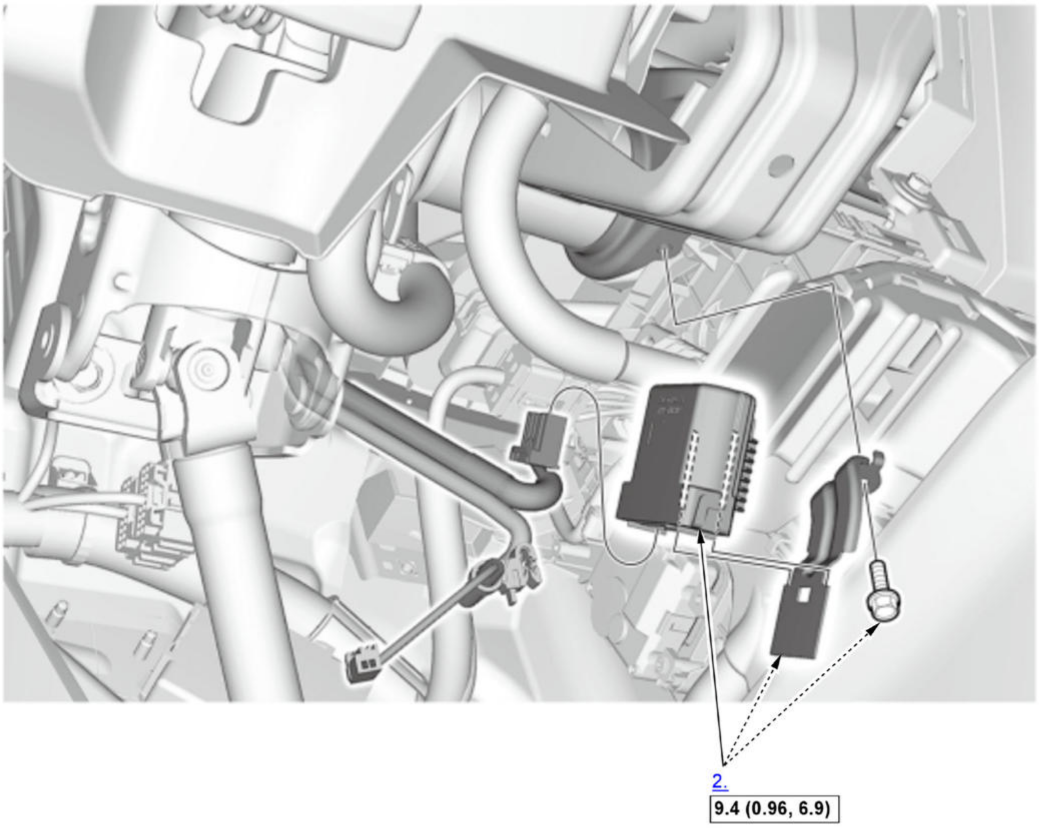

Fig. 1: Exploded View Of CAN Gateway Components
Courtesy of HONDA, U.S.A., INC.

☐	Torque: N.m (kgf.m, lbf.ft)

1. Driver's Dashboard Lower Cover - Remove
2. CAN Gateway - Remove
3. All Removed Parts - Install

    1. Install the parts in the reverse order of removal.

4. CAN Gateway - Update (When Replacing)

    NOTE: When replacing the CAN gateway, do this procedure.

DESCRIPTION & OPERATION

COMMUNICATION SYSTEMS (F-CAN) DESCRIPTION

F-CAN (High-speed CAN) (without CAN gateway)

The network between the powertrain and control units for chassis system is called F-CAN and it employs high speed CAN with communication rate at 500 kbps.

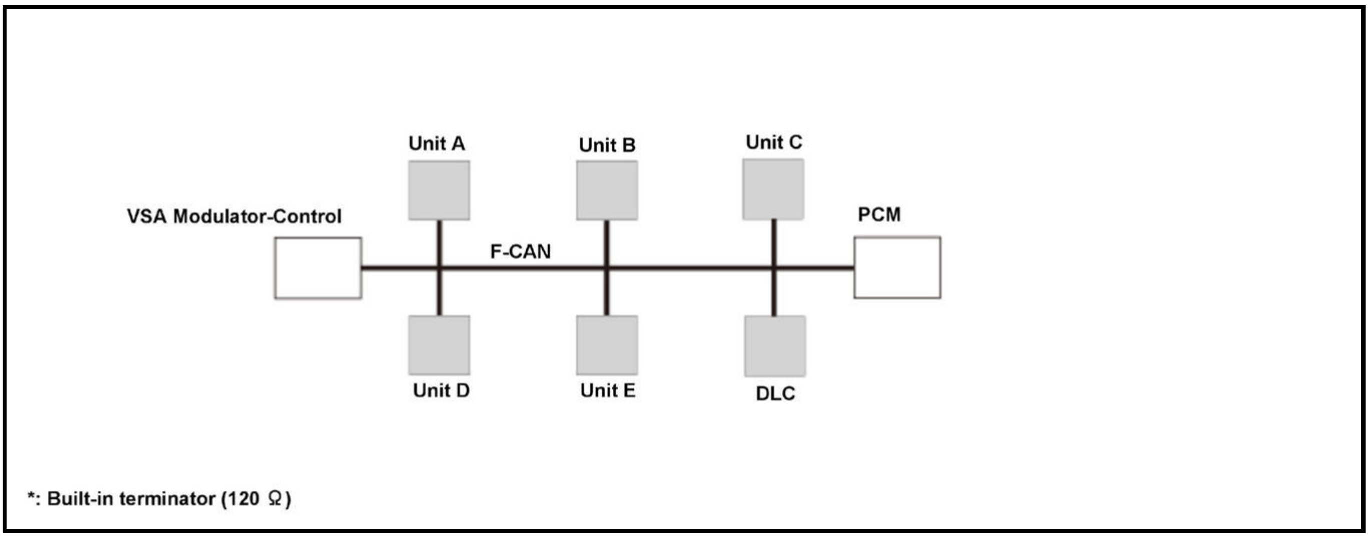
Unit A
Unit B
Unit C
VSA Modulator-Control
F-CAN
PCM
Unit D
Unit E
DLC
*: Built-in terminator (120 Ω)

F-CAN (High-speed CAN), CAN Gateway (with CAN gateway)

For locations of each component on vehicle, refer to Component Location Index

The network between the powertrain and control unit for chassis system is called F-CAN and it employs high speed CAN with communication rate at 500 kbps. In order to increase the number of the control units connected to F-CAN bus, it is divided into two F-CAN buses, and the CAN gateway is adapted to connect between each F-CAN bus (F-CAN A: conventional F-CAN structure, F-CAN B: F-CAN structure using the CAN gateway).

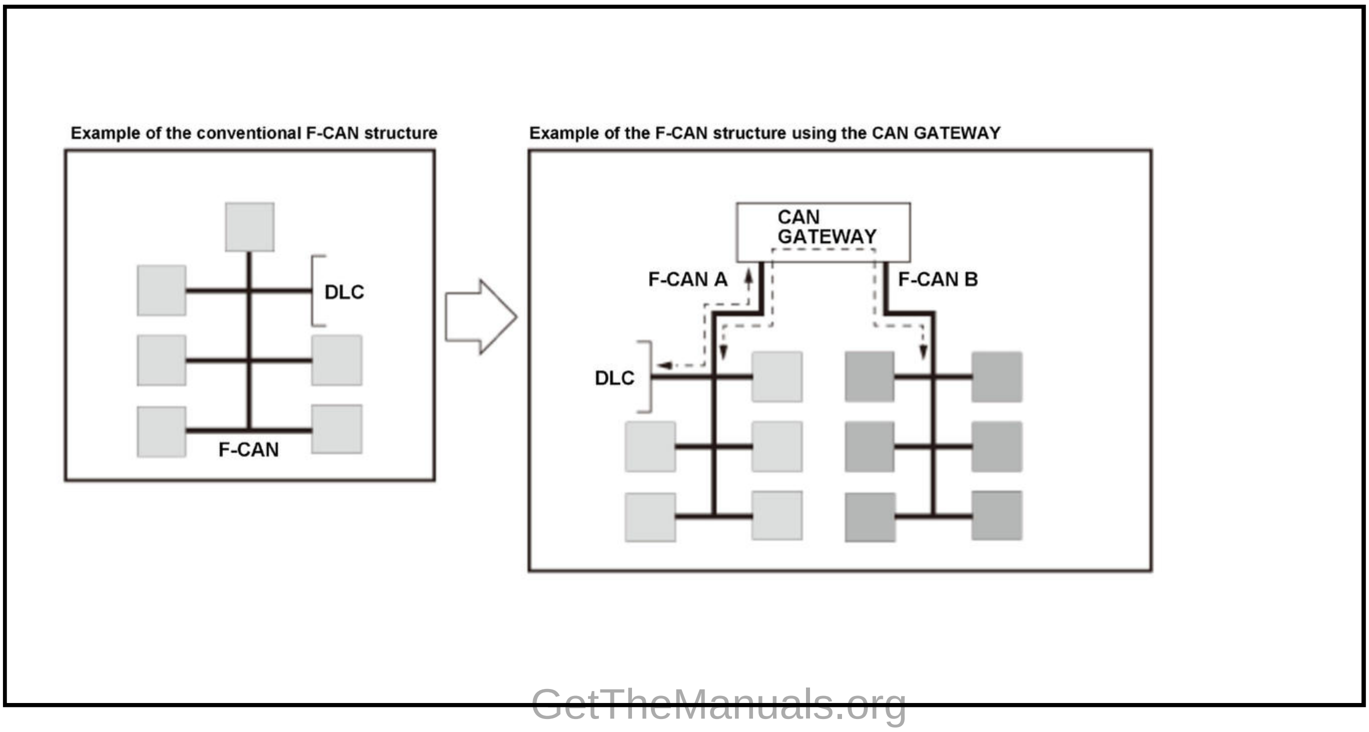
Example of the conventional F-CAN structure
DLC
F-CAN
Example of the F-CAN structure using the CAN GATEWAY
CAN GATEWAY
F-CAN A
F-CAN B
DLC

Typical CAN Bus Communication Operation

The F-CAN detects the differential voltage generated between two communication wires (CAN_H and CAN_L) and uses it as a signal level. This is a digital signal that indicates "1" when equal voltage is found and "0" when unequal voltage is found.

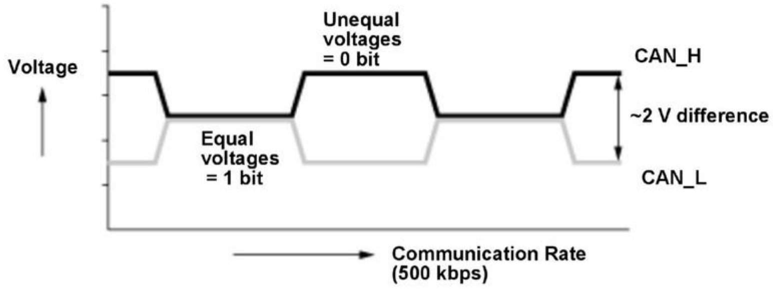

NETWORK COMMUNICATIONS SYSTEM DESCRIPTION

CAN (Controller Area Network) and the LIN (Local Interconnect Network)

The vehicle uses the CAN (Controller Area Network) and the LIN (Local Interconnect Network) as the in-vehicle LAN (Local Area Network). These networks enable the control units to exchange information over the CAN bus. The CAN consists of the F-CAN network that enables the control units to exchange the signals regarding the power train/chassis and the B-CAN network for the signals regarding the body. These networks are interconnected at the gauge control module (gateway).

The LIN is used for connecting the PCM to the shutter grille and the 12 volt battery sensor; as well as for connecting the power window master switch, front passenger's power window switch, panoramic glass roof motor-control unit *1, and the moonroof motor-control unit *2, ensuring a reliable communication suitable for the control system.

As multi-communication system between several control units, the system also provides the K-LINE and L-LINE for transmitting the diagnostic results from the HDS (Honda Diagnostic System) and the S-NET for transmitting the immobilizer signals.

*1: With panoramic glass roof*2: With moonroof

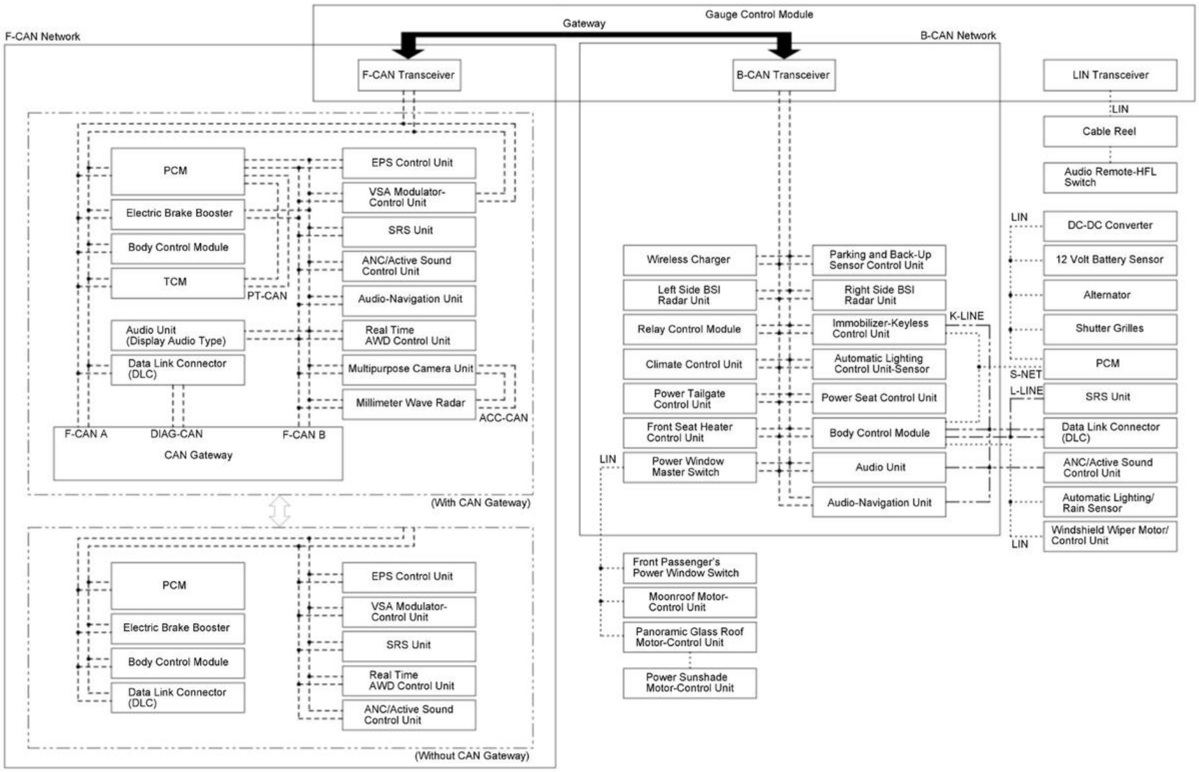
Gauge Control Module
Gateway
F-CAN Network
B-CAN Network
F-CAN Transceiver
B-CAN Transceiver
LIN Transceiver
LIN
Cable Reel
Audio Remote-HFL Switch
PCM
Electric Brake Booster
Body Control Module
TCM
PT-CAN
EPS Control Unit
VSA Modulator-Control Unit
SRS Unit
ANC/Active Sound Control Unit
Audio-Navigation Unit
Audio Unit (Display Audio Type)
Real Time AWD Control Unit
Data Link Connector (DLC)
Multipurpose Camera Unit
Millimeter Wave Radar
ACC-CAN
F-CAN A
DIAG-CAN
F-CAN B
CAN Gateway
(With CAN Gateway)
PCM
Electric Brake Booster
Body Control Module
Data Link Connector (DLC)
EPS Control Unit
VSA Modulator-Control Unit
SRS Unit
Real Time AWD Control Unit
ANC/Active Sound Control Unit
(Without CAN Gateway)
Wireless Charger
Parking and Back-Up Sensor Control Unit
Left Side BSI Radar Unit
Right Side BSI Radar Unit
Relay Control Module
Immobilizer-Keyless Control Unit
K-LINE
Climate Control Unit
Automatic Lighting Control Unit-Sensor
Power Tailgate Control Unit
Power Seat Control Unit
Front Seat Heater Control Unit
Body Control Module
LIN
Power Window Master Switch
Audio Unit
Audio-Navigation Unit
Front Passenger's Power Window Switch
Moonroof Motor-Control Unit
Panoramic Glass Roof Motor-Control Unit
Power Sunshade Motor-Control Unit
LIN
DC-DC Converter
12 Volt Battery Sensor
Alternator
Shutter Grilles
S-NET
PCM
L-LINE
SRS Unit
Data Link Connector (DLC)
ANC/Active Sound Control Unit
Automatic Lighting/ Rain Sensor
LIN
Windshield Wiper Motor/ Control Unit

CAN

The CAN (control area network) is a multi communication system that ISO has developed and standardized for the automobile. The CAN employs a multi-master system in which multiple control units connected to a bus communicate with each other.

Communicating Method

CAN communication uses a data frame format on the CAN line. The CAN uses the CSMA/CA (Carrier Sense Multiple Access with Collision Avoidance) method to data frame collisions. This method transmits information only when the bus is sensed to be idle. The data frame uses "0" (dominant) and "1" (recessive) to create a message, which consists of the data field (message), arbitration field (data ID), control field (data length), CRC field (sending error detection), and the ACK field (end of message). After sending the data, each control unit classifies the data by the controller ID and controls outputs as commanded.

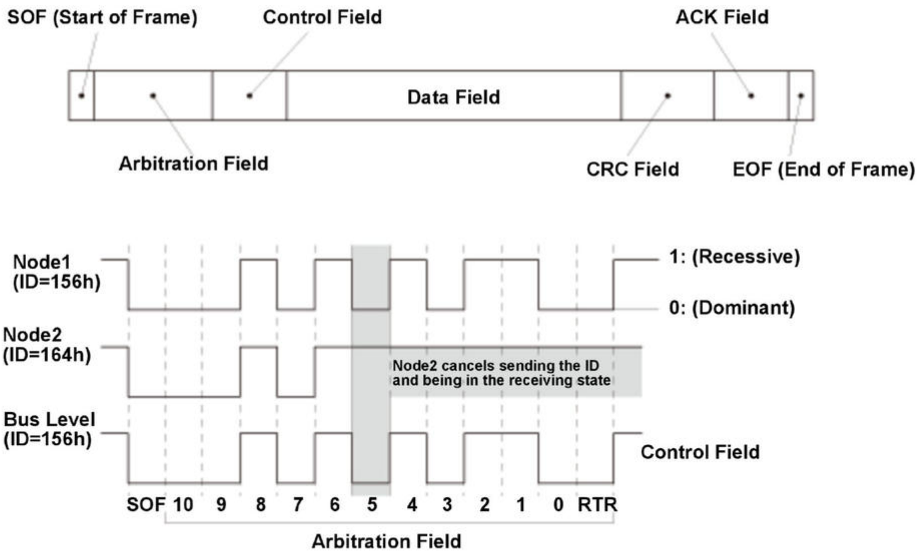
SOF (Start of Frame)
Control Field
ACK Field
Data Field
Arbitration Field
CRC Field
EOF (End of Frame)
Node1 (ID=156h)
1: (Recessive)
0: (Dominant)
Node2 (ID=164h)
Node2 cancels sending the ID and being in the receiving state
Bus Level (ID=156h)
Control Field
SOF 10 9 8 7 6 5 4 3 2 1 0 RTR
Arbitration Field

F-CAN

The network connecting the powertrain and chassis is called F-CAN and it employs high speed CAN with communication rate at 500 kbps. The F-CAN was composed of a single F-CAN Bus. To respond to the increase in the number of ECUs connected to the F-CAN and the increase in the amount of communication, the composition of the F-CAN network is divided into multiple bus lines, and an F-CAN gateway with a data-forwarding function is established, enabling the communication among the CAN Bus lines. Connection of each control unit has control units with terminating resistor installed for preventing signal from being reflected back at each end of a pair of twisted signal cable which is comprised of F-CAN_H and F-CAN_L, with other control units in parallel connection between them. By rapidly switching between equal and unequal voltages, digital data can be transmitted in bits.

B-CAN

The network between control units for body electrical system is called B-CAN and it employs low speed CAN with communication rate at 125 kbps. Connection of each control unit has control units with terminating resistor installed for preventing signal from being reflected back at each end of a pair of twisted wire which is comprised of B-CAN_H and B-CAN_L, with other control units in parallel connection between them.

Power Saving Mode Control

Since some control units for the body system are functional even if turning the vehicle in the OFF (LOCK) mode, the power-saving mode is set for these units for the purpose of reducing the dark current. Transition to the power-saving mode (sleep mode) and returning from it (wakeup mode) are controlled by the active, sleep and wakeup signals. The control units that are not in "wait for sleep" state send the active signals to the bus line periodically and stop sending them when it is in "wait for sleep" state. When all control units do not send the active signal anymore, one or more control units send the sleep signals. The control units that received the sleep signals go into the power-saving mode. In the event of inputs from switch or sensor during the power-saving mode, they send the wakeup signals to the bus line. In this case, they return from the power-saving mode.

LIN

Overview

The LIN is a bus based on UART. Communication rate of LIN is slower than that of CAN, and it is used for systems for which a high speed communication is not required. It is able to reduce the wire harness bulk as well as to reduce cost thanks to its connection with each control unit with just single bus. The LIN employs a single-master system, in which only single master control unit serves as a master control unit to control all the signals on the LIN bus. Other units become slave units to serve in accordance with request from the master control unit. This vehicle employs a LIN with a communication speed of 19, 200 bps for connecting the PCM to the shutter grille and the 12 volt battery sensor; and a LIN with a communication speed of 9, 600 bps for connecting the power window master switch, front passenger's window switch, panoramic glass roof *1, and the moonroof control unit/motor* 2.

*1: With panoramic glass roof

*2: With moonroof

Communication System

LIN uses a single-master system, where one ECU controls all bus communication. The other controllers act as slave units, communicating only when requested by the PCM. The message frame is comprised of the header frame that sends the master's request and the response frame that sends the slave's response. The header frame consists of the SYNCH BREAK field for showing the frame start, SYNCH field for correcting the baud rate, and the IDENT field for showing the control unit that requests the response. The response frame consists of the data fields and the CHECK SUM field for detecting transmitting errors.

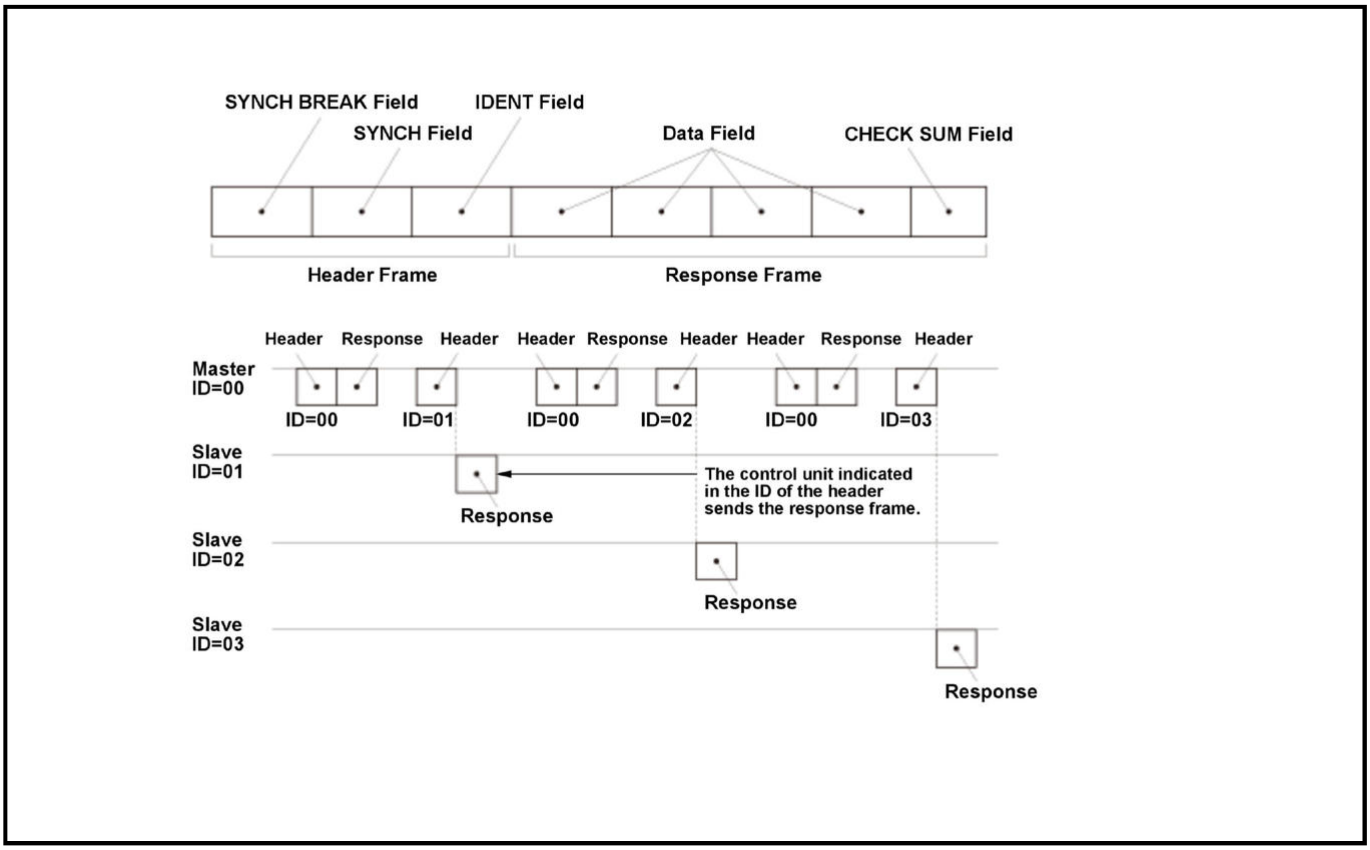
SYNCH BREAK Field
SYNCH Field
IDENT Field
Data Field
CHECK SUM Field
Header Frame
Response Frame
Header
Response
Header
Header
Response
Header
Header
Response
Header
Master ID=00
ID=00
ID=01
ID=00
ID=02
ID=00
ID=03
Slave ID=01
Response
The control unit indicated in the ID of the header sends the response frame.
Slave ID=02
Response
Slave ID=03
Response

Power Saving Mode

The body electrical system has a control unit which does not stop operating when the vehicle is turned to the OFF (LOCK) mode in order to perform door lock control and light control. These control units have a power saving mode to reduce the standby power requirement.

Network Communication Troubleshooting

The HDS (Honda Diagnostic System) uses the K-LINE for displaying the control unit and self-diagnostic results both in the F-CAN bus and B-CAN bus. The K-LINE bus is the communication circuit that uses the UART whose baud rate is 10.4 kbps. The vehicles equipped with keyless access system, also have an L-LINE data bus that connects the DLC to the body control module. This line allows the HDS to communicate with the body control module or immobilizer-keyless control unit if the remote or keyless transmitter are lost or malfunctioning, preventing the ignition from being switched on. The S-NET serves as a path to transmit a signal from a transponder integrated into the remote or keyless transmitter, to control units related to the immobilizer system, such as the PCM and body control module. The gauge control module provides the display function for body-system DTC (Diagnostic Trouble Code). The DTCs are displayed when the gauge control module receives the SCS terminal short signal via F-CAN bus or the body control module service check ON signal via B-CAN bus. The gauge control module then reads the self-diagnostic results sent by each control unit via B-CAN bus, and displays the DTCs

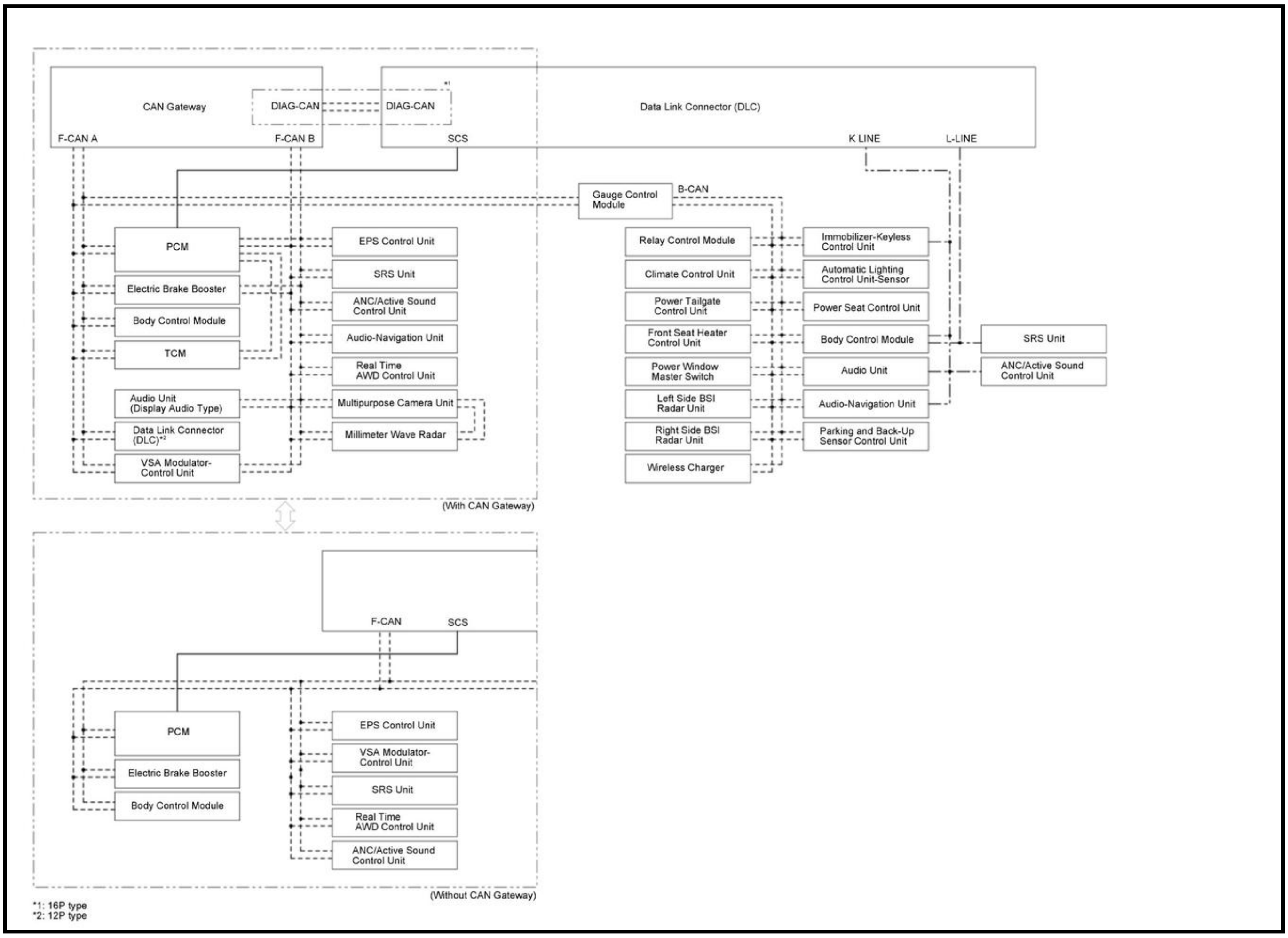
CAN Gateway
DIAG-CAN
DIAG-CAN
*1
Data Link Connector (DLC)
F-CAN A
F-CAN B
SCS
K LINE
L-LINE
Gauge Control Module
B-CAN
PCM
Electric Brake Booster
Body Control Module
TCM
Audio Unit (Display Audio Type)
Data Link Connector (DLC)*2
VSA Modulator-Control Unit
EPS Control Unit
SRS Unit
ANC/Active Sound Control Unit
Audio-Navigation Unit
Real Time AWD Control Unit
Multipurpose Camera Unit
Millimeter Wave Radar
Relay Control Module
Climate Control Unit
Power Tailgate Control Unit
Front Seat Heater Control Unit
Power Window Master Switch
Left Side BSI Radar Unit
Right Side BSI Radar Unit
Wireless Charger
Immobilizer-Keyless Control Unit
Automatic Lighting Control Unit-Sensor
Power Seat Control Unit
Body Control Module
Audio Unit
Audio-Navigation Unit
Parking and Back-Up Sensor Control Unit
SRS Unit
ANC/Active Sound Control Unit
(With CAN Gateway)
F-CAN
SCS
PCM
Electric Brake Booster
Body Control Module
EPS Control Unit
VSA Modulator-Control Unit
SRS Unit
Real Time AWD Control Unit
ANC/Active Sound Control Unit
(Without CAN Gateway)
*1: 16P type
*2: 12P type

TROUBLESHOOTING

DLC CIRCUIT TROUBLESHOOTING (2.4 L ENGINE) (2017 2018 2019)

DLC Circuit Troubleshooting

NOTE: If you suspect the HDS or the HDS DLC cable may be the source of the communication problem, verify that they are working properly by connecting them to a known-good, similar vehicle and system, and checking for communication problems.

1. HDS communication check

   -1. Turn the vehicle to the OFF (LOCK) mode.

   -2. Connect the HDS to the data link connector .

   NOTE: Make sure the HDS is properly connected to the data link connector.

   -3. Turn the vehicle to the ON mode, and turn on the HDS.

Does the HDS identify the vehicle?

YES

Go to step 2.

NO

Go to step 9.

2. Determine possible failure area (PGM-FI system, other systems)

-1. Check for Pending or Confirmed DTCs in the PGM-FI system with the HDS.

DTC Description	Confirmed DTC	Pending DTC
B	B	B

DTC (PGM-FI)

Are any Pending or Confirmed DTCs indicated?

YES

Go to the indicated DTCs troubleshooting.

NO

If the HDS does not communicate with the SRS, go to step 3.

NO

If the HDS does not communicate with the IMMOBI (immobilizer) system, go to step 4.

NO

If the HDS does not communicate with the BODY ELECTRICAL system, go to step 5.

3. SRS check

-1. Turn the vehicle to the OFF (LOCK) mode.

-2. Turn the vehicle to the ON mode, and watch the SRS indicator.

Does the SRS indicator come on and go off?

YES

Go to step 6.

NO

Go to the symptom troubleshooting for SRS indicator stays on, but no DTCs are stored, or cannot be read .

4. Immobilizer system check

-1. Turn the vehicle to the OFF (LOCK) mode.

-2. Turn the vehicle to the ON mode, and watch the security indicator.

Does the security indicator stay on or flash?

YES

Go to the immobilizer system troubleshooting .

NO

The immobilizer system is OK. Go to step 6.

5. Body electrical system check

-1. **Do the gauge self-diagnostic function** .

-2. Check the gauge display.

Is Error 2 indicated?

YES

Go to the indicated DTCs troubleshooting.

NO

Go to step 6.

6. Open wire check (K LINE line or L-LINE line)

-1. Turn the vehicle to the OFF (LOCK) mode.

-2. Disconnect the HDS from the data link connector.

Disconnect the control unit(s) on the K LINE or L-LINE that does not communicate.

NOTE: Before disconnecting the SRS unit connector, **do the 12 volt battery terminal disconnection procedure** and wait for at least 3 minutes.

K LINE

- Audio unit connector A (24P)
- Body control module connector D (40P)
- Immobilizer-keyless control unit 7P connector

L-LINE

- SRS unit connector A (36P)

-4. Check for continuity between data link connector (16P: ①) No. 7 (K LINE line) and these connector terminals, or data link connector (16P: ①) No. 15 (L-LINE line) and these connector terminals:

K LINE

Connector	Terminal
Audio unit connector A (24P)	No. 12
Body control module connector D (40P)	No. 36
Immobilizer-keyless control unit 7P connector	No. 3

L-LINE

Connector	Terminal
SRS unit connector A (39P)	No. 33

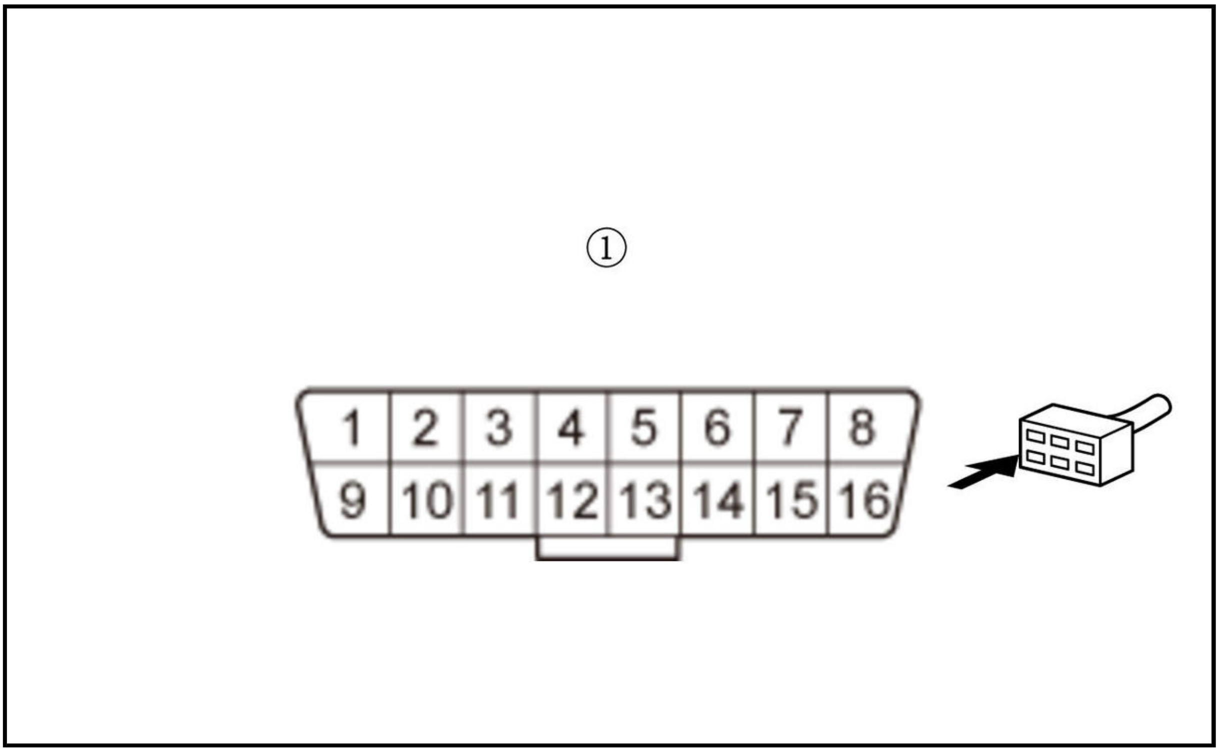

Is there continuity between the data link connector and the terminals in the chart?

YES

Go to step 7.

NO

Repair an open in the wire between the data link connector (K LINE wire or L-LINE wire) and the appropriate connector.

7. Determine possible failure area (short in K LINE line or L-LINE line, others)

   -1. Reconnect all connectors.

   -2. If the 12 volt battery negative terminal is disconnected in step 6-3, **do the 12 volt battery terminal reconnection procedure** .

   -3. Turn the vehicle to the ON mode.

   -4. Measure the voltage between test points 1 and 2.

Test condition	Vehicle ON mode
Test point 1	Data link connector (16P) (female terminal) No. 7 and No. 15: ①
Test point 2	Body ground

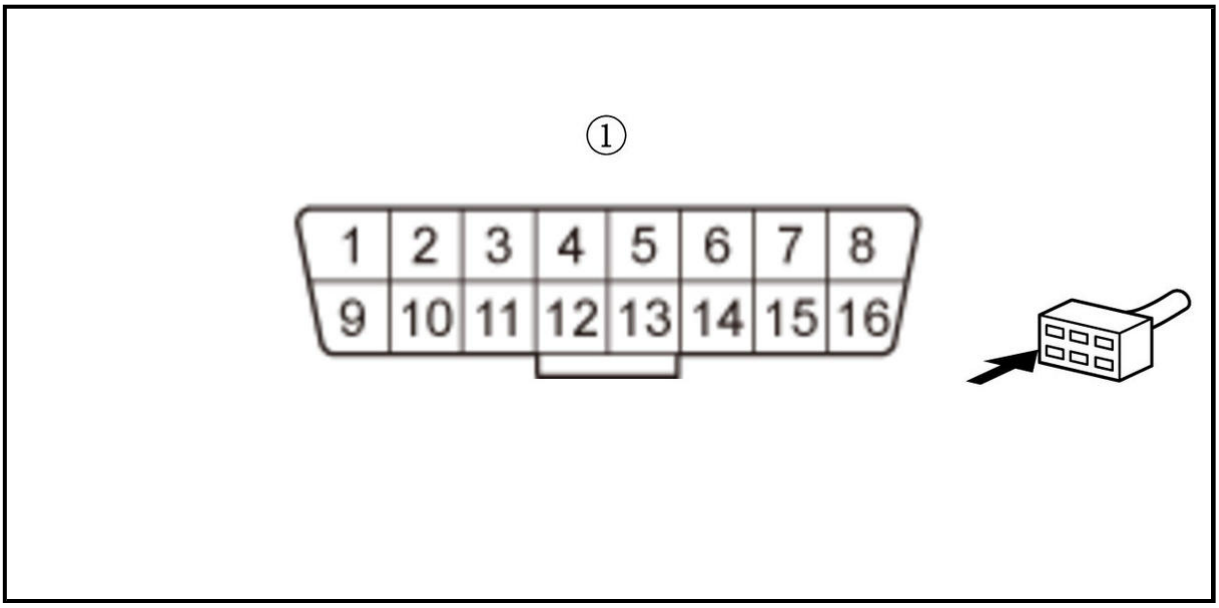

Is there any voltage?

YES

Go to step 9.

NO

Go to step 8.

8. Shorted wire check (K LINE line, L-LINE line):

   Continue to measure the voltage between data link connector (16P) No. 7 (K LINE line) and body ground, or data link connector (16P) No. 15 (L-LINE line) and body ground while disconnecting these parts, one at a time:

   NOTE: Turn the vehicle to the OFF (LOCK) mode before disconnecting the connector, and turn the vehicle to the ON mode before measuring the voltage.

   K LINE

   - Audio unit connector A (24P)
   - Body control module connector D (40P)
   - Immobilizer-keyless control unit 7P connector

   L-LINE

   - SRS unit connector A (36P)

   Does voltage come back when one of the above components is disconnected?

   YES

   Replace the part that any voltage was detected when it was disconnected.

   NO

   Repair a short in the wire between data link connector (16P) No. 7 (K LINE) and the audio unit, the immobilizer-keyless control unit, or the body control module, or data link connector (16P) No. 15 (L-LINE) and the SRS unit.

9. Body electrical system (B-CAN) check

-1. **Do the gauge self-diagnostic function** .

-2. Check for gauge control module DTCs without the HDS.

Is DTC U0029 and/or U0100 indicated?

YES

Go to the PCM power and ground circuit troubleshooting .

NO

Go to step 10.

10. Open wire check (+B BACK UP line)

-1. Turn the vehicle to the OFF (LOCK) mode.

-2. Disconnect the HDS from the data link connector.

-3. Measure the voltage between test points 1 and 2.

Test condition	Vehicle OFF (LOCK) mode
Test point 1	Data link connector (16P) (female terminal) No. 16: ①
Test point 2	Body ground

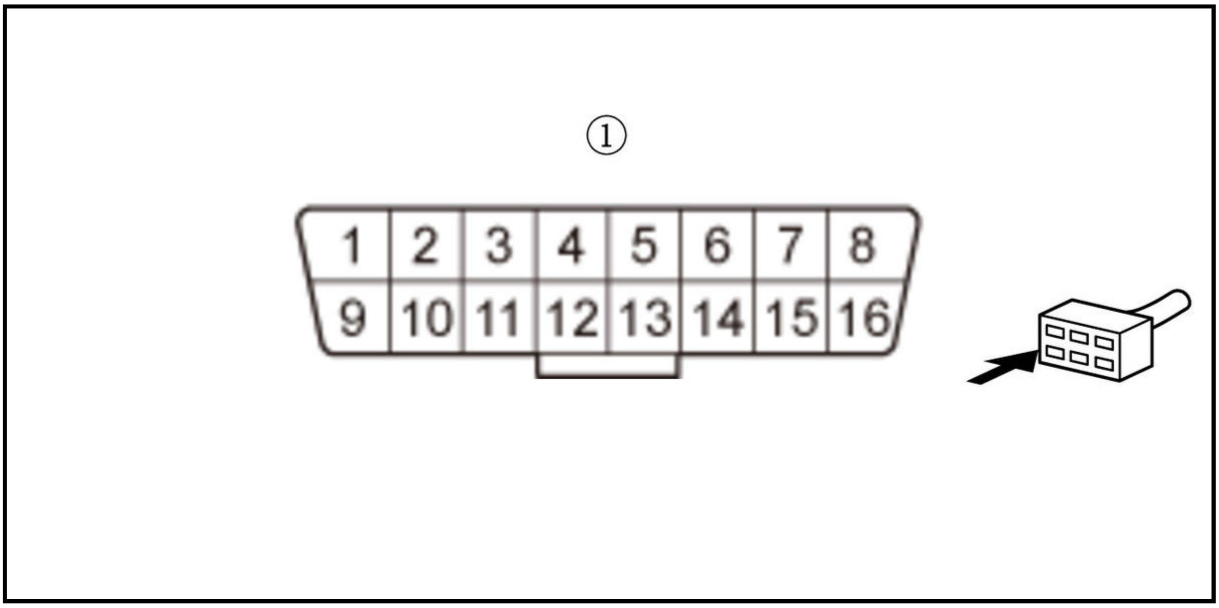

Is there battery voltage?

YES

Go to step 11.

NO

Repair an open in the +B BACK UP wire between data link connector (16P) No. 16 and the No. A18 (10 A) fuse in the under-hood fuse/relay box.

11. Open wire check (GND line)

-1. Measure the voltage between test points 1 and 2.

Test condition	Vehicle OFF (LOCK) mode
Test point 1	Data link connector (16P) (female terminal) No. 4: ①
Test point 2	Data link connector (16P) (female terminal) No. 16: ①

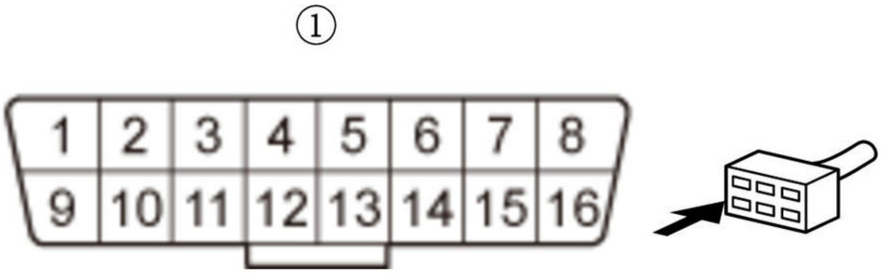

Is there battery voltage?

YES

Go to step 12.

NO

Repair an open in the GND wire between data link connector (16P) No. 4 and G401.

12. Open wire check (F-CAN_H line)

-1. Jump the SCS line with the HDS, and wait more than 1 minute.

-2. Disconnect the following connector.

PCM connector A (51P)

-3. Check for continuity between test points 1 and 2.

Test condition	Vehicle OFF (LOCK) mode
B	PCM connector A (51P): disconnected
Test point 1	**PCM connector A (51P) No. 2**
Test point 2	Data link connector (16P) (female terminal) No. 6: ①

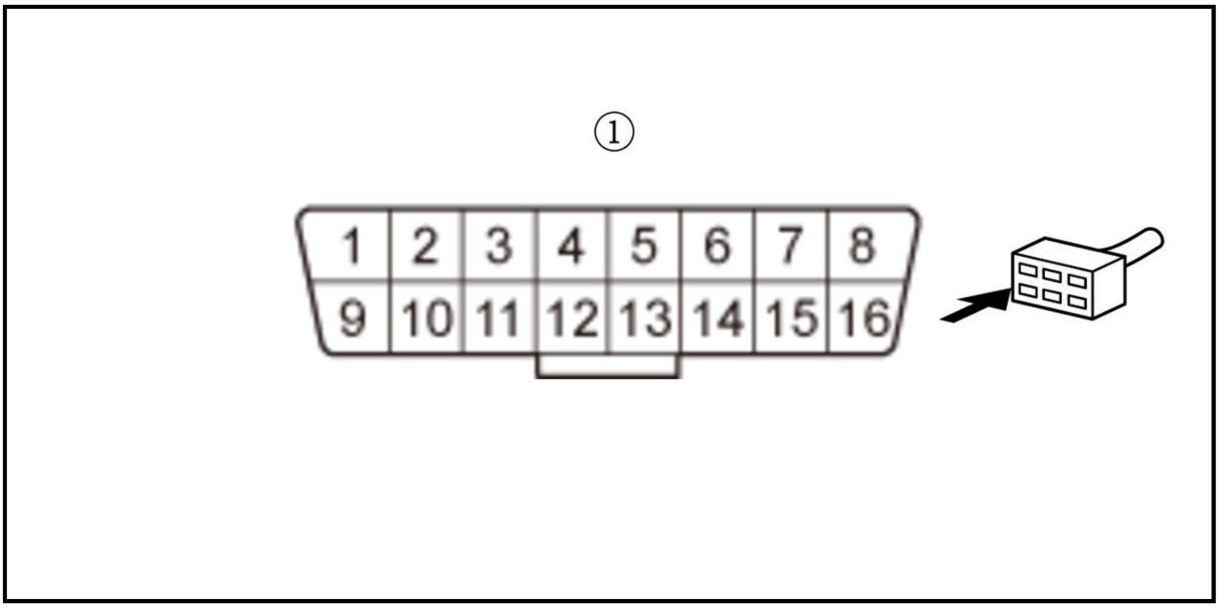
①
1
2
3
4
5
6
7
8
9
10
11
12
13
14
15
16

Is there continuity?

YES

The F-CAN_H wire is not open. Go to step 13.

NO

Repair an open in the F-CAN_H wire between the PCM (A2) and the data link connector (16P) No. 6.

13. Open wire check (F-CAN_L line)

-1. Check for continuity between test points 1 and 2.

Test condition	Vehicle OFF (LOCK) mode
B	PCM connector A (51P): disconnected

Test point 1	**PCM connector A (51P) No. 1**
Test point 2	Data link connector (16P) (female terminal) No. 14: ①

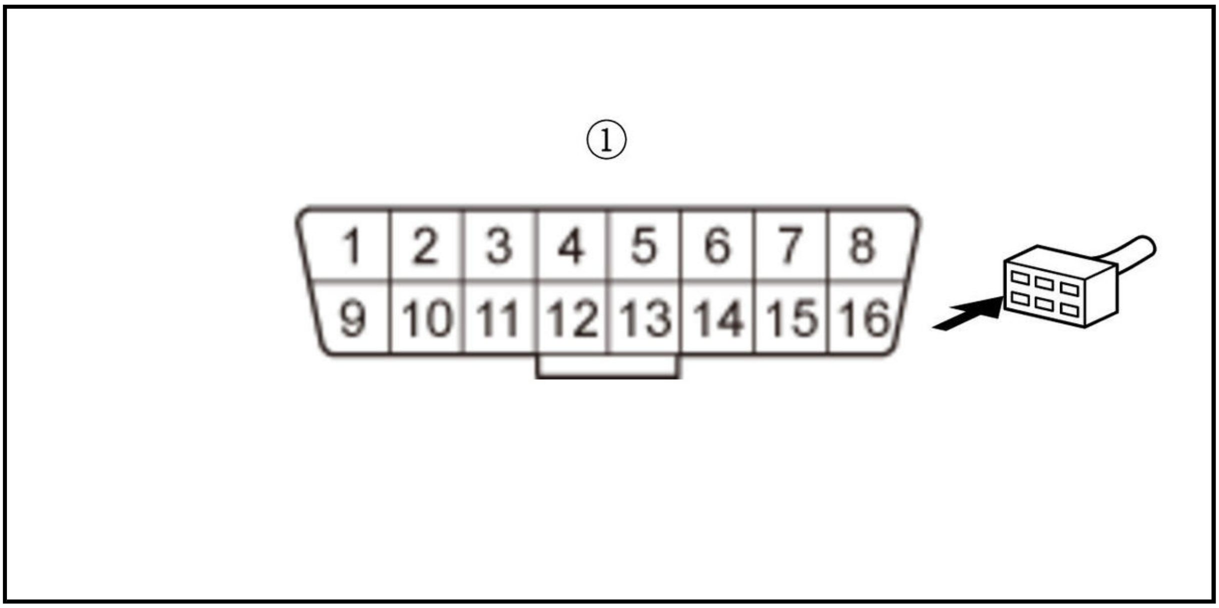
①
1
2
3
4
5
6
7
8
9
10
11
12
13
14
15
16

Is there continuity?

YES

The F-CAN_L wire is not open. Check for any authorized service information related to the DTCs or symptoms you are troubleshooting, or **substitute a known-good PCM** .

NO

Repair an open in the F-CAN_L wire between the PCM (A1) and data link connector (16P) No. 14.

DLC CIRCUIT TROUBLESHOOTING (CAN GATEWAY (KA/KC)) (2020 2021)

DLC Circuit Troubleshooting

NOTE: If you suspect the HDS or the HDS DLC cable may be the source of the communication problem, verify that they are working properly by connecting them to a known-good, similar vehicle and system, then check for communication problems.

*1: With navigation
*2: Without navigation

1. HDS communication check

   -1. Turn the vehicle to the OFF (LOCK) mode.

   -2. **Connect the HDS to the data link connector** .

   NOTE: Make sure the HDS is properly connected to the data link connector.

   -3. Turn the vehicle to the ON mode, and turn on the HDS.

   Does the HDS identify the vehicle?

   YES

   Go to step 2.

   NO

   Go to step 17.

2. Determine possible failure area (PGM-FI system, other systems)

   -1. Check for Pending or Confirmed DTCs in the PGM-FI system with the HDS.

DTC Description	Confirmed DTC	Pending DTC
B	B	B

   DTC (PGM-FI)

   Are any Pending or Confirmed DTCs indicated?

   YES

   Go to the indicated DTC's troubleshooting.

   NO

   If the HDS does not communicate with the PCM, go to step 3.

   NO

If the HDS does not communicate with the SRS, go to step 5.

NO

If the HDS does not communicate with the VSA system, go to step 6.

NO

If the HDS does not communicate with the EPS system, go to step 7.

NO

If the HDS does not communicate with the ELECTRIC BRAKE BOOSTER system, go to step 8.

NO

If the HDS does not communicate with the IMMOBI (immobilizer) system, go to step 9.

NO

If the HDS does not communicate with the ONE PUSH START system, go to step 10.

NO

If the HDS does not communicate with the BODY ELECTRICAL system, go to step 11.

NO

If the HDS does not communicate with the Real Time AWD System, go to step 12.

NO

If the HDS does not communicate with the DRIVING SUPPORT system, go to step 13.

3. Open wire check (F-CAN A_H line)

-1. Turn the vehicle to the OFF (LOCK) mode.

-2. Jump the SCS line with the HDS, and wait more than 1 minute.

-3. Disconnect the following connectors.

CAN gateway 16P connector
PCM connector A (50P)

-4. Measure the resistance between test points 1 and 2.

Test condition	Vehicle OFF (LOCK) mode
B	CAN gateway 16P connector: disconnected
B	PCM connector A (50P): disconnected
Test point 1	CAN gateway 16P connector (female terminal) No. 3: ①
Test point 2	**PCM connector A (50P) No. 37**

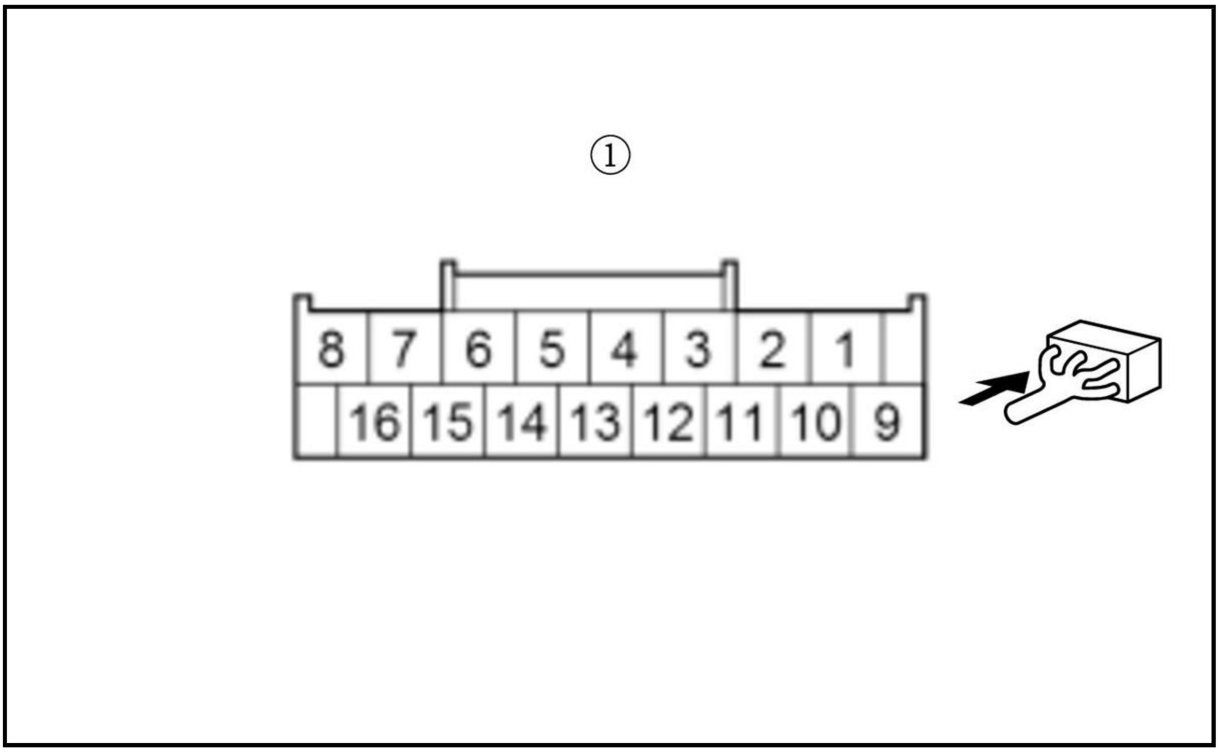

Is there 1.0 Ω or less?

YES

Go to step 4.

NO

Repair an open in the F-CAN A_H wire between the PCM (A37) and the CAN gateway.

4. Open wire check (F-CAN A_L line)

-1. Measure the resistance between test points 1 and 2.

Test condition	Vehicle OFF (LOCK) mode
B	CAN gateway 16P connector: disconnected
B	PCM connector A (50P): disconnected
Test point 1	CAN gateway 16P connector (female terminals) No. 11: ①
Test point 2	**PCM connector A (50P) No. 36**

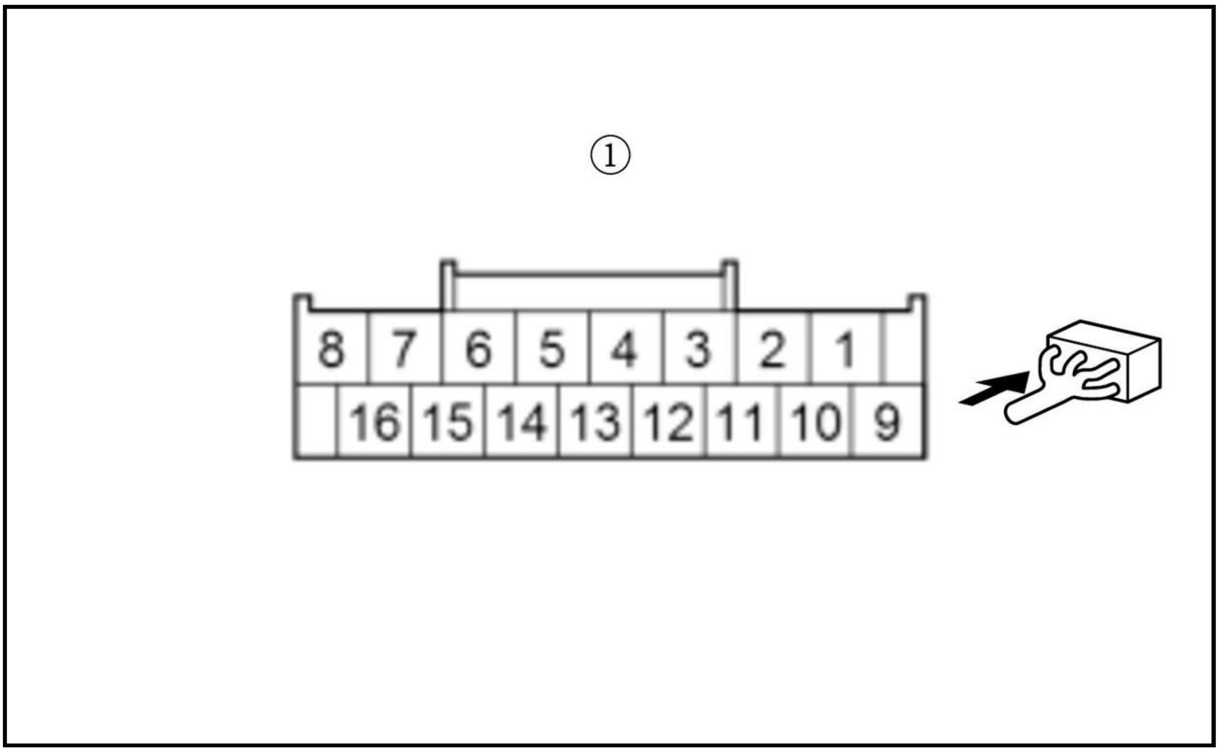

Is there 1.0 Ω or less?

YES

The F-CAN A_L wire is OK. Check for poor connections or loose terminals at the CAN gateway and the PCM. **Go to the PCM power and ground circuit troubleshooting** .

NO

Repair an open in the F-CAN A_L wire between the PCM (A36) and the CAN gateway.

5. SRS check

-1. Turn the vehicle to the OFF (LOCK) mode.

-2. Turn the vehicle to the ON mode, and watch the SRS indicator.

Does the SRS indicator come on and go off?

YES

Go to step 14.

NO

Go to the symptom troubleshooting for SRS indicator stays on, but no DTCs are stored, or cannot be read .

6. VSA system check

-1. Turn the vehicle to the OFF (LOCK) mode.

-2. Turn the vehicle to the ON mode, and watch the VSA indicator.

Does the VSA indicator come on and go off?

YES

The VSA system is OK. Go to step 14.

NO

Go to the symptom troubleshooting for ABS indicator, brake system indicator (red), VSA indicator, and brake system indicator (amber) do not go off .

7. EPS system check

   -1. Turn the vehicle to the OFF (LOCK) mode.

   -2. Start the engine, and watch the EPS indicator.

   Does the EPS indicator come on and go off?

   YES

   The EPS system is OK. Go to step 14.

   NO

   Go to the symptom troubleshooting for EPS indicator does not go off, and no DTCs are stored .

8. Electric brake booster system check

   -1. Turn the vehicle to the OFF (LOCK) mode.

   -2. Turn the vehicle to the ON mode, and watch the brake system indicator (amber).

   Does the brake system indicator (amber) come on and go off?

   YES

   The electric brake booster system is OK. Go to step 14.

   NO

   Go to the electric brake booster symptom troubleshooting for brake system indicator (red) and brake system indicator (amber) do not go off .

9. Immobilizer system check

   -1. Turn the vehicle to the OFF (LOCK) mode.

   -2. Turn the vehicle to the ON mode, and watch the security indicator.

   Does the security indicator stay on or flash?

   YES

   Go to the immobilizer system troubleshooting .

   NO

   The immobilizer system is OK. Go to step 14.

10. Keyless access system check

    -1. Turn the vehicle to the OFF (LOCK) mode.

    -2. Turn the vehicle to the ON mode, and watch the keyless access indicator and the security indicator.

    Does the keyless access indicator stay on or the security indicator stay on or flash?

YES

Go to the keyless access system symptom troubleshooting information .

NO

Go to step 14.

11. Body electrical system check

    -1. Do the gauge self-diagnostic function .

    -2. Check the gauge display.

    Is Error 2 indicated?

    YES

    Go to the indicated DTC's troubleshooting.

    NO

    Go to step 14.

12. Real time AWD System check

    -1. Turn the vehicle to the OFF (LOCK) mode.

    -2. Turn the vehicle to the ON mode, and watch the AWD system indicator on the multi-information display (MID).

    Is the AWD system indicator indicated?

    YES

    Go to the real time AWD system symptom troubleshooting .

    NO

    The real time AWD system is OK. Go to step 14.

13. Driving support system check

    -1. Turn the vehicle to the OFF (LOCK) mode.

    -2. Turn the vehicle to the ON mode, and watch the ACC indicator and the LKAS indicator on the multi-information display (MID).

    Are the ACC indicator and/or the LKAS indicator indicated?

    YES

    Go to the driving support system symptom troubleshooting; ACC , LKAS .

    NO

    The driving support system is OK. Go to step 14.

14. Open wire check (K LINE line or L-LINE line)

    -1. Turn the vehicle to the OFF (LOCK) mode.

-2. Disconnect the HDS from the data link connector.

Disconnect the control unit(s) on the K LINE or L-LINE that does not communicate.

NOTE: Before disconnecting the SRS unit connector, **do the 12 volt battery terminal disconnection procedure** and wait for at least 3 minutes.

K LINE

- Audio-navigation unit connector A (24P) *1
- Audio unit connector A (24P) *2
- Body control module connector D (40P)
- ANC/active sound control unit 20P connector
- Immobilizer-keyless control unit 7P connector

L-LINE

- Body control module connector F (36P)
- SRS unit connector A (36P)

-4. Measure the resistance between data link connector (16P: ①) No. 7 (K LINE line) and these connector terminals, or data link connector (16P: ①) No. 15 (L-LINE line) and these connector terminals:

K LINE

Connector	Terminal
Audio-navigation unit connector A (24P)*1	No. 12
Audio unit connector A (24P)*2	No. 12
Body control module connector D (40P)	No. 36
ANC/active sound control unit 20P connector	No. 14
Immobilizer-keyless control unit 7P connector	No. 3

L-LINE

Connector	Terminal
Body control module connector F (36P)	No. 21
SRS unit connector A (39P)	No. 33

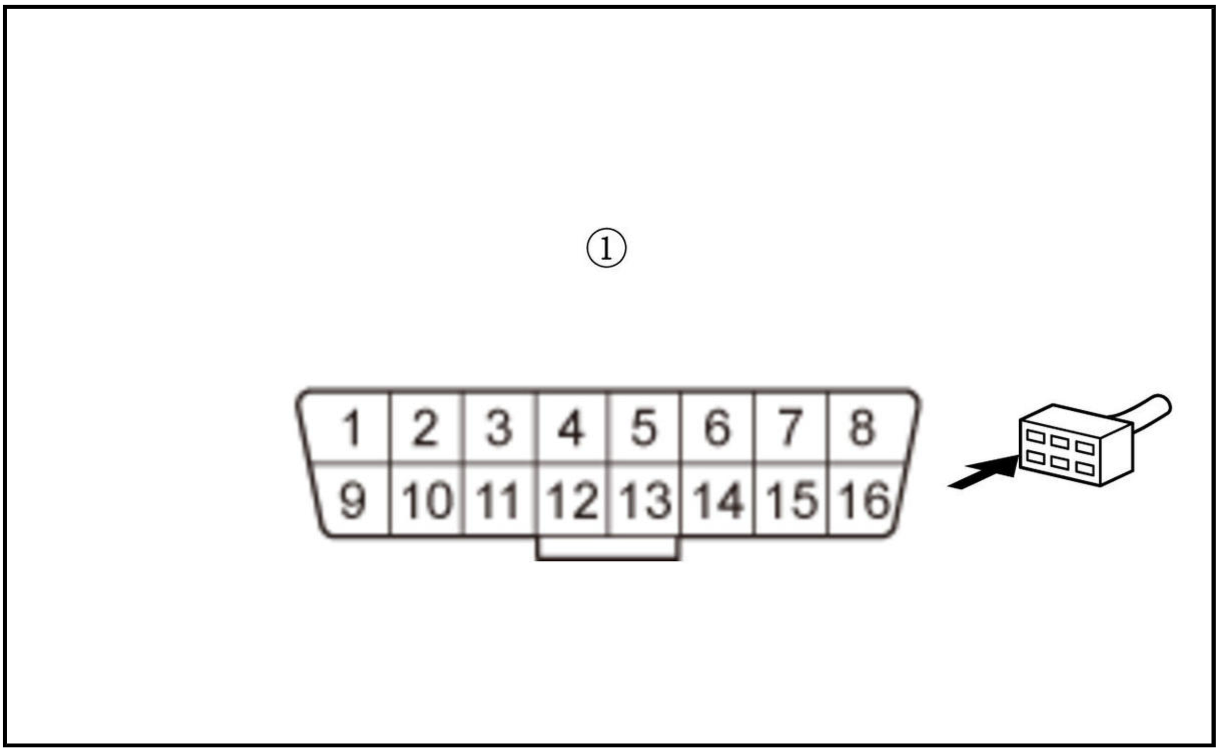

Is there 1.0 Ω or less between the data link connector and the terminals in the chart?

YES

Go to step 15.

NO

Repair an open in the wire between the data link connector (K LINE wire or L-LINE wire) and the appropriate connector.

15. Determine possible failure area (short in K LINE line or L-LINE line, others)

-1. Reconnect all connectors.

-2. If the 12 volt battery negative terminal is disconnected in step 14-3, **do the 12 volt battery terminal reconnection procedure** .

-3. Turn the vehicle to the ON mode.

-4. Measure the voltage between test points 1 and 2.

Test condition	Vehicle ON mode
Test point 1	Data link connector (16P) (female terminal) No. 7 and No. 15: ①
Test point 2	Body ground

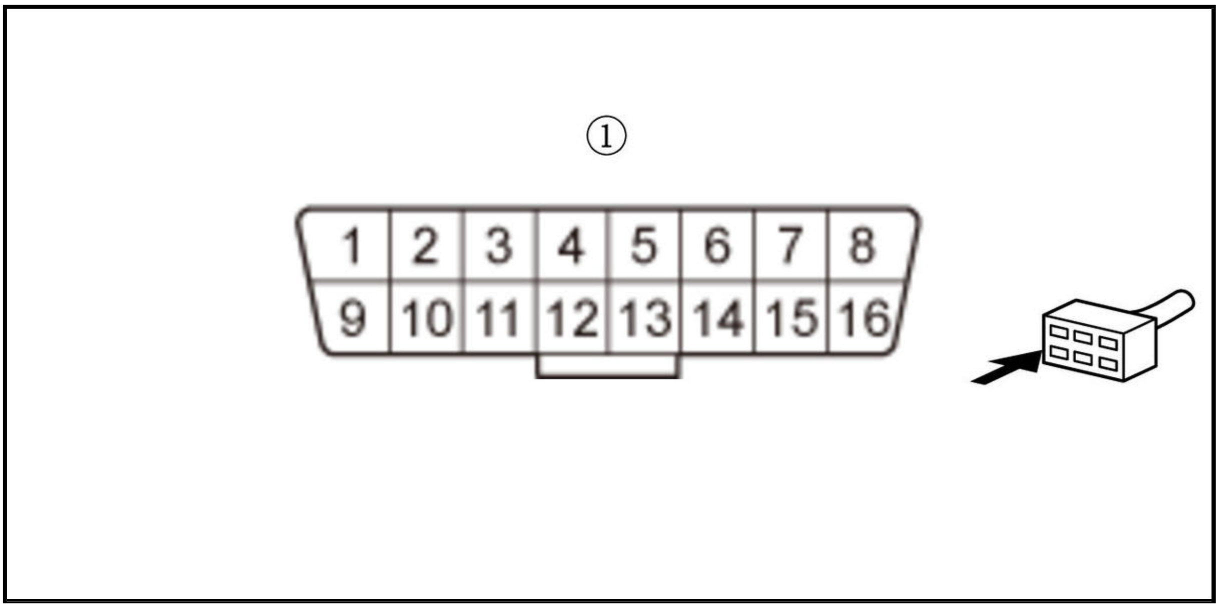

Is there any voltage?

YES

Go to step 17.

NO

Go to step 16.

16. Shorted wire check (K LINE line, L-LINE line):

    Continue to measure the voltage between data link connector (16P) No. 7 (K LINE line) and body ground, or data link connector (16P) No. 15 (L-LINE line) and body ground while disconnecting these parts, one at a time:

    NOTE: Turn the vehicle to the OFF (LOCK) mode before disconnecting the connector, and turn the vehicle to the ON mode before measuring the voltage.

    K LINE

    - Audio-navigation unit connector A (24P) *1
    - Audio unit connector A (24P) *2
    - Body control module connector D (40P)
    - ANC/active sound control unit 20P connector
    - Immobilizer-keyless control unit 7P connector

    L-LINE

    - Body control module connector F (36P)
    - SRS unit connector A (36P)

      NOTE: Before disconnecting the SRS unit connector, do the 12 volt battery terminal disconnection procedure and wait for at least 3 minutes.

    Is there battery voltage when the one of the above components is disconnected?

    YES

    Replace the component that caused the battery voltage to return when it was disconnected.

NO

Repair a short in the wire between data link connector (16P) No. 7 (K LINE) and the audio-navigation unit *1 audio unit *2, the ANC/active sound control unit, immobilizer-keyless control unit, or the body control module, or data link connector (16P) No. 15 (L-LINE) and the body control module or the SRS unit.

17. Body electrical system (B-CAN) check

-1. Do the gauge self-diagnostic function .

-2. Check for gauge control module DTCs without the HDS.

Is DTC U0029 and/or U0100 indicated?

YES

Go to the PCM power and ground circuit troubleshooting .

NO

Go to step 18.

18. Open wire check (+B BACK UP line)

-1. Turn the vehicle to the OFF (LOCK) mode.

-2. Disconnect the HDS from the data link connector.

-3. Measure the voltage between test points 1 and 2.

Test condition	Vehicle OFF (LOCK) mode
Test point 1	Data link connector (16P) (female terminal) No. 16: ①
Test point 2	Body ground

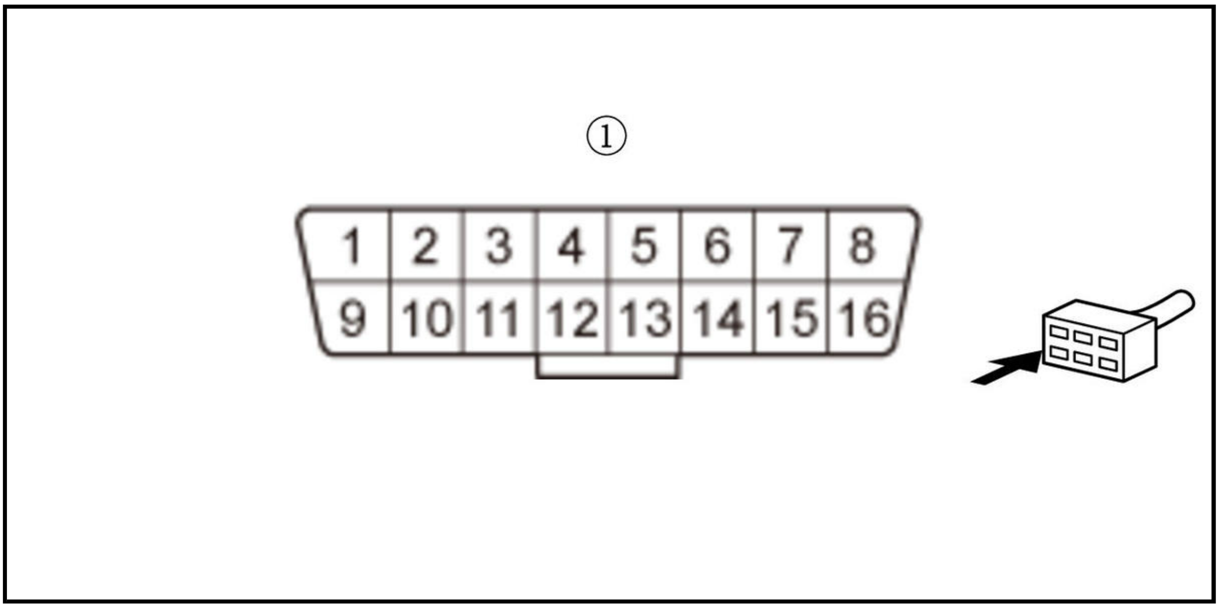

Is there battery voltage?

YES

Go to step 19.

NO

Repair an open in the +B BACK UP wire between data link connector (16P) No. 16 and the **No. A18** .

19. Open wire check (GND line)

-1. Measure the voltage between test points 1 and 2.

Test condition	Vehicle OFF (LOCK) mode
Test point 1	Data link connector (16P) (female terminal) No. 4: ①
Test point 2	Data link connector (16P) (female terminal) No. 16: ①

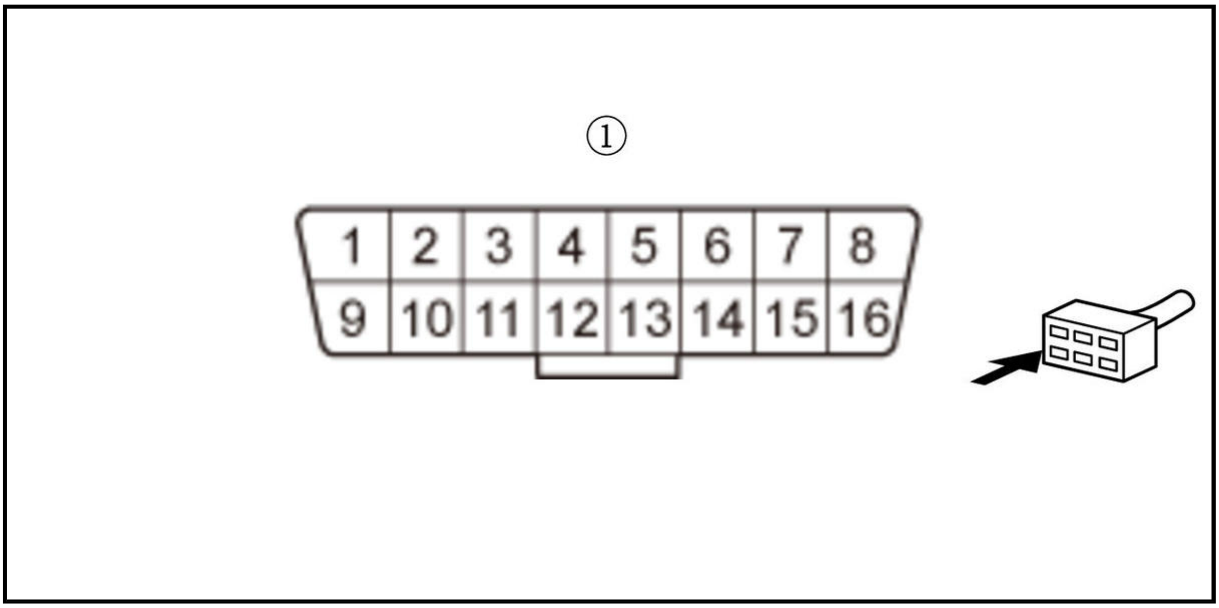

Is there battery voltage?

YES

Go to step 20.

NO

Repair an open in the GND wire between data link connector (16P) No. 4 and G401.

20. Open wire check (+B BACK UP line)

-1. Disconnect the following connector.

CAN gateway 16P connector

-2. Measure the voltage between test points 1 and 2.

Test condition	Vehicle OFF (LOCK) mode
B	CAN gateway 16P connector: disconnected
Test point 1	CAN gateway 16P connector (female terminals) No. 1: ①
Test point 2	Body ground

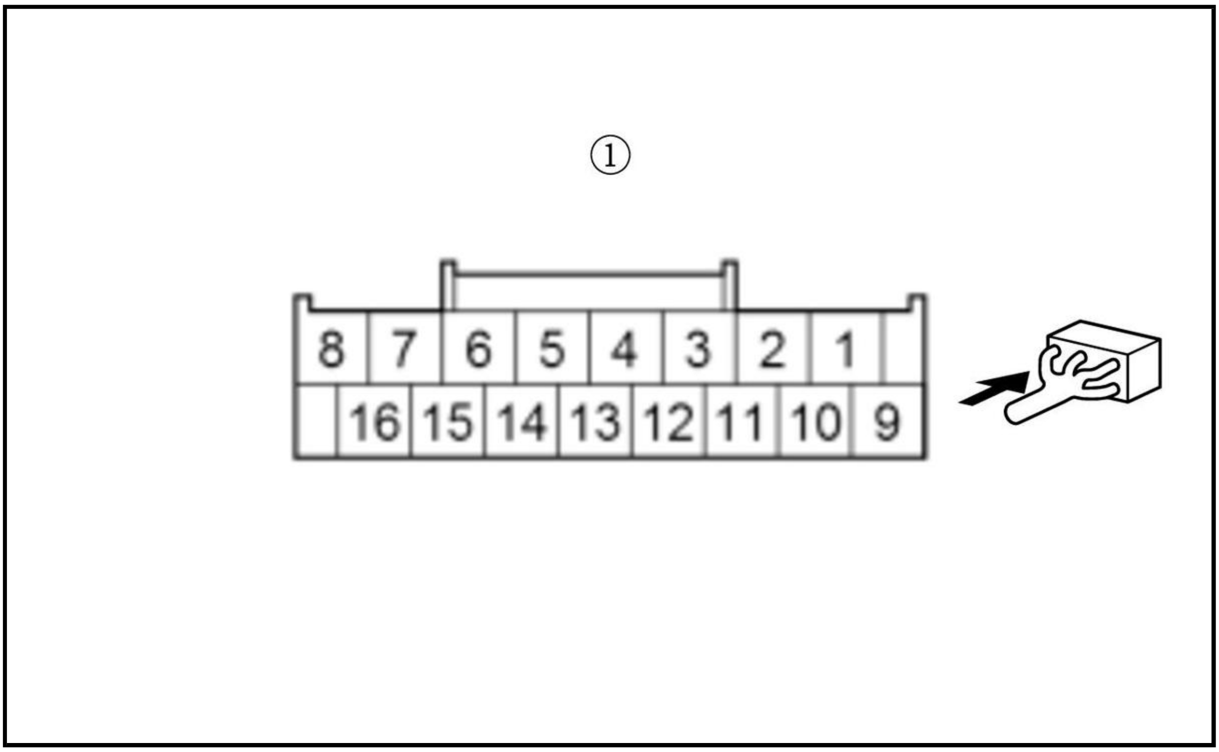

Is there battery voltage?

YES

Go to step 21.

NO

Repair an open in the +B BACK UP wire between the CAN gateway and the **No. A18** .

21. Open wire check (IG1 METER line)

-1. Turn the vehicle to the ON mode.

-2. Measure the voltage between test points 1 and 2.

Test condition	Vehicle ON mode
B	CAN gateway 16P connector: disconnected
Test point 1	CAN gateway 16P connector (female terminals) No. 9: ①
Test point 2	Body ground

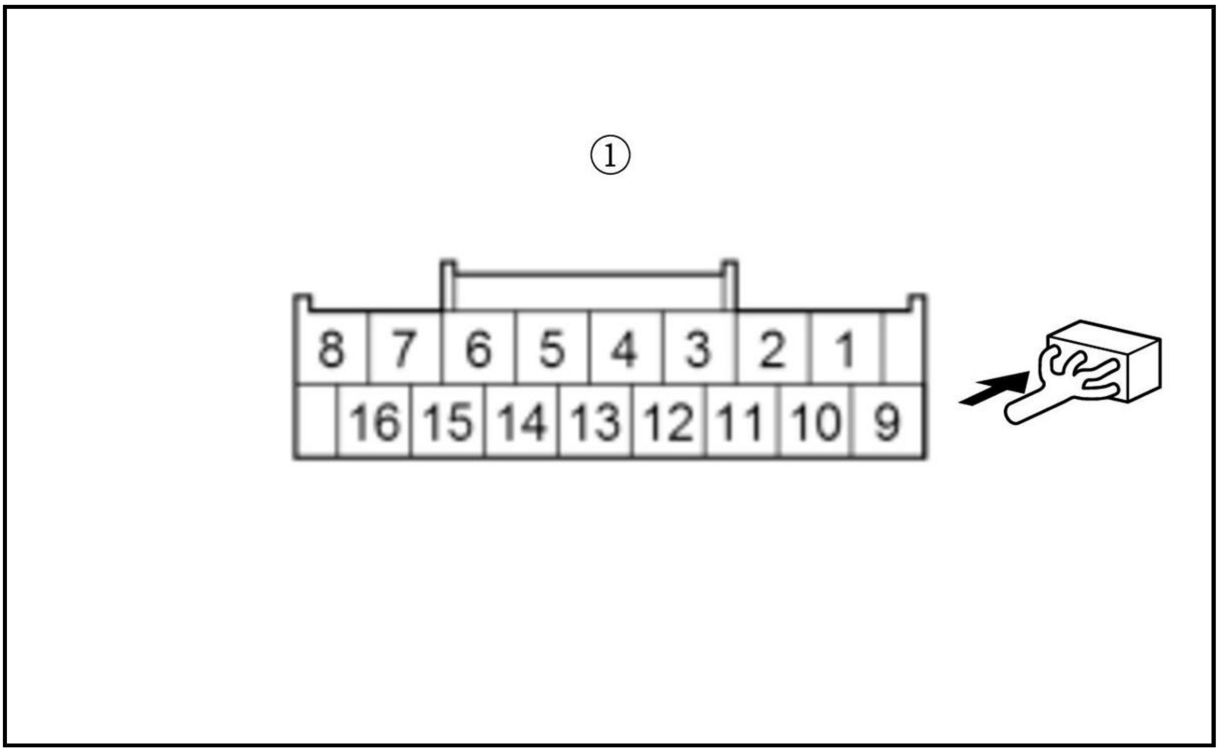

Is there battery voltage?

YES

Go to step 22.

NO

Repair an open in the IG1 METER wire between the CAN gateway and the **No. D7** .

22. Open wire check (GND lines)

-1. Turn the vehicle to the OFF (LOCK) mode.

-2. Measure the resistance between test points 1 and 2.

Test condition	Vehicle OFF (LOCK) mode
B	CAN gateway 16P connector: disconnected
Test point 1	CAN gateway 16P connector (female terminals) No. 12: ①
Test point 2	Body ground

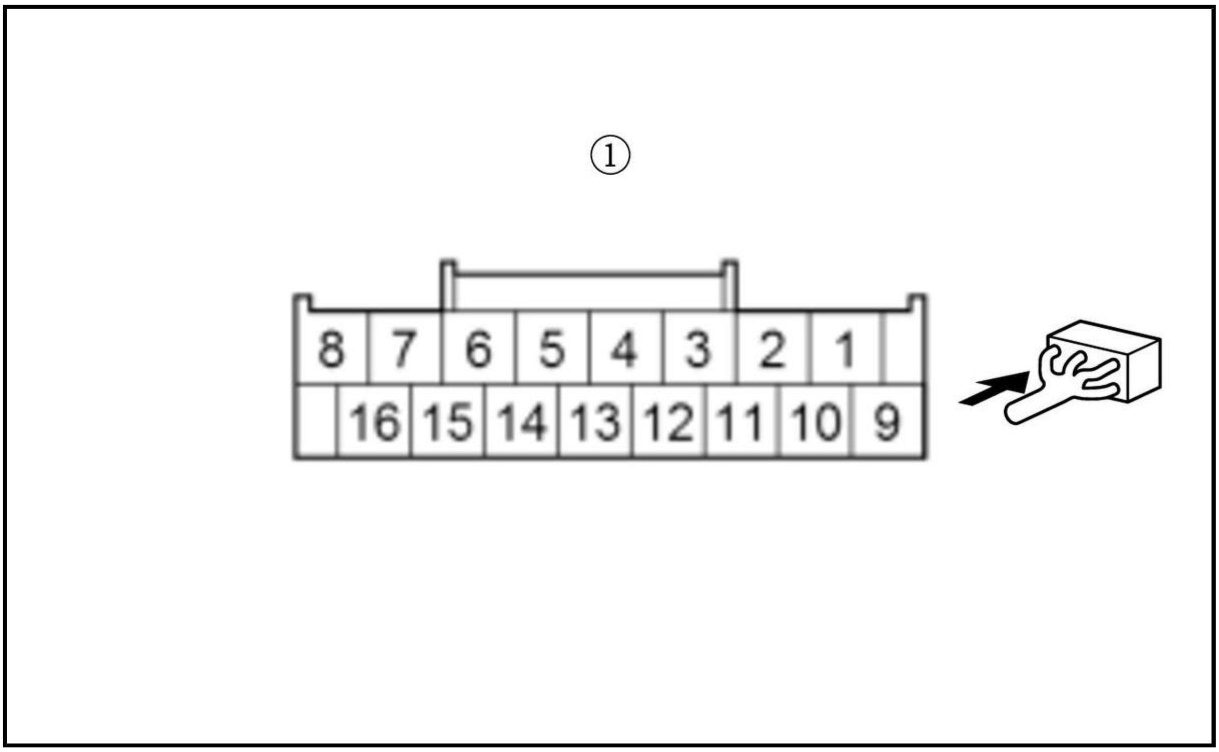

Is there 1.0 Ω or less?

YES

Go to step 23.

NO

Repair an open in the GND wire between the CAN gateway and G401.

23. Open wire check (DIAG-CAN_H line)

-1. Measure the resistance between test points 1 and 2.

Test condition	Vehicle OFF (LOCK) mode
B	CAN gateway 16P connector: disconnected
Test point 1	CAN gateway 16P connector (female terminals) No. 2: ①
Test point 2	Data link connector (16P) (female terminal) No. 6: ②

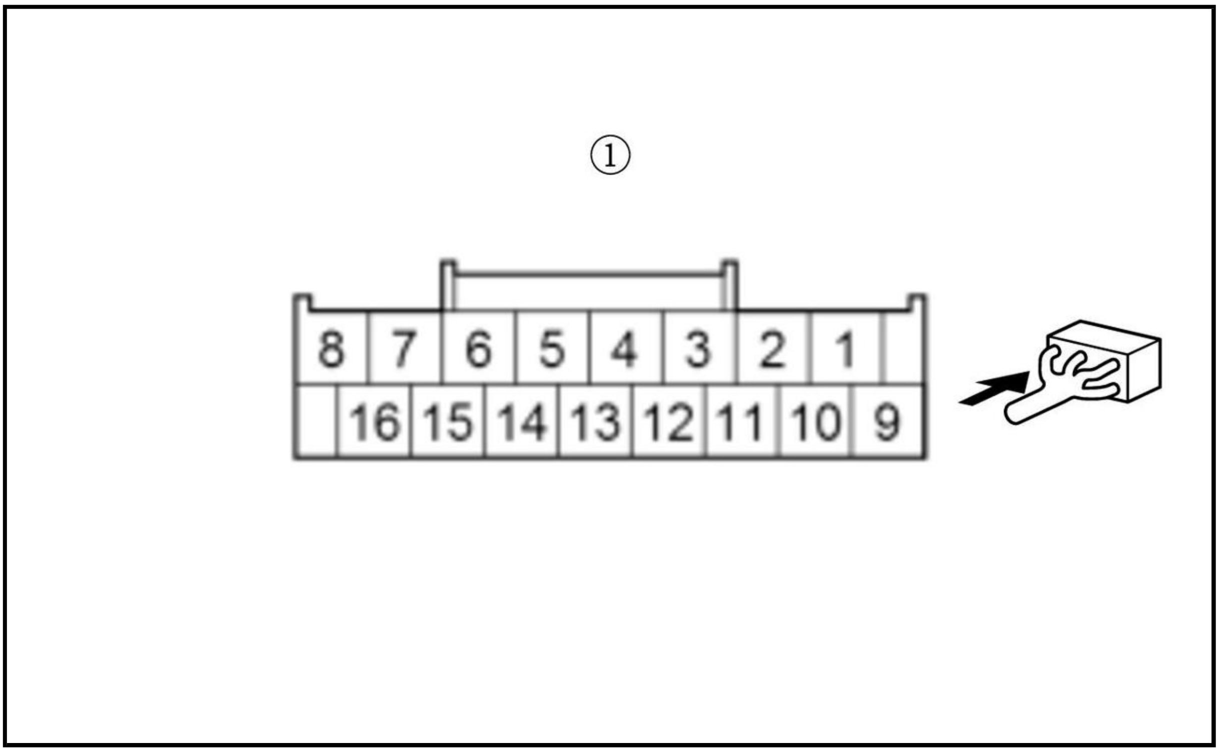
①
8
7
6
5
4
3
2
1
16
15
14
13
12
11
10
9

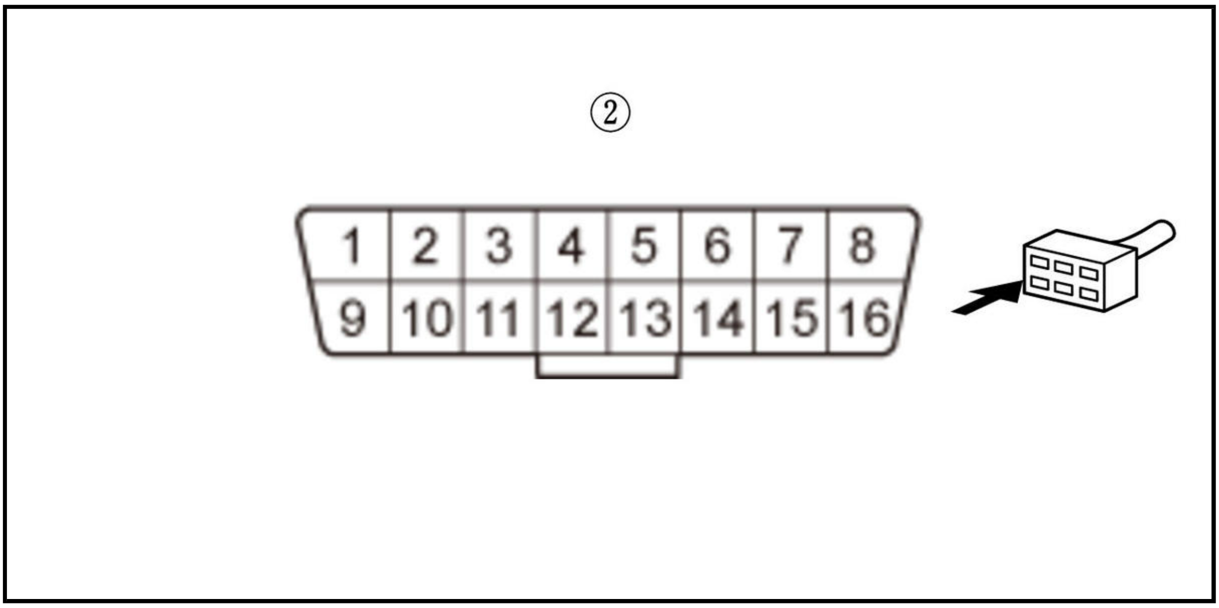
②
1
2
3
4
5
6
7
8
9
10
11
12
13
14
15
16

Is there 1.0 Ω or less?

YES

Go to step 24.

NO

Repair an open in the DIAG-CAN_H wire between the CAN gateway and data link connector (16P) No. 6.

24. Open wire check (DIAG-CAN_L line)

-1. Measure the resistance between test points 1 and 2.

Test condition	Vehicle OFF (LOCK) mode
B	CAN gateway 16P connector: disconnected
Test point 1	CAN gateway 16P connector (female terminals) No. 10: ①

Test point 2	Data link connector (16P) (female terminal) No. 14: ②

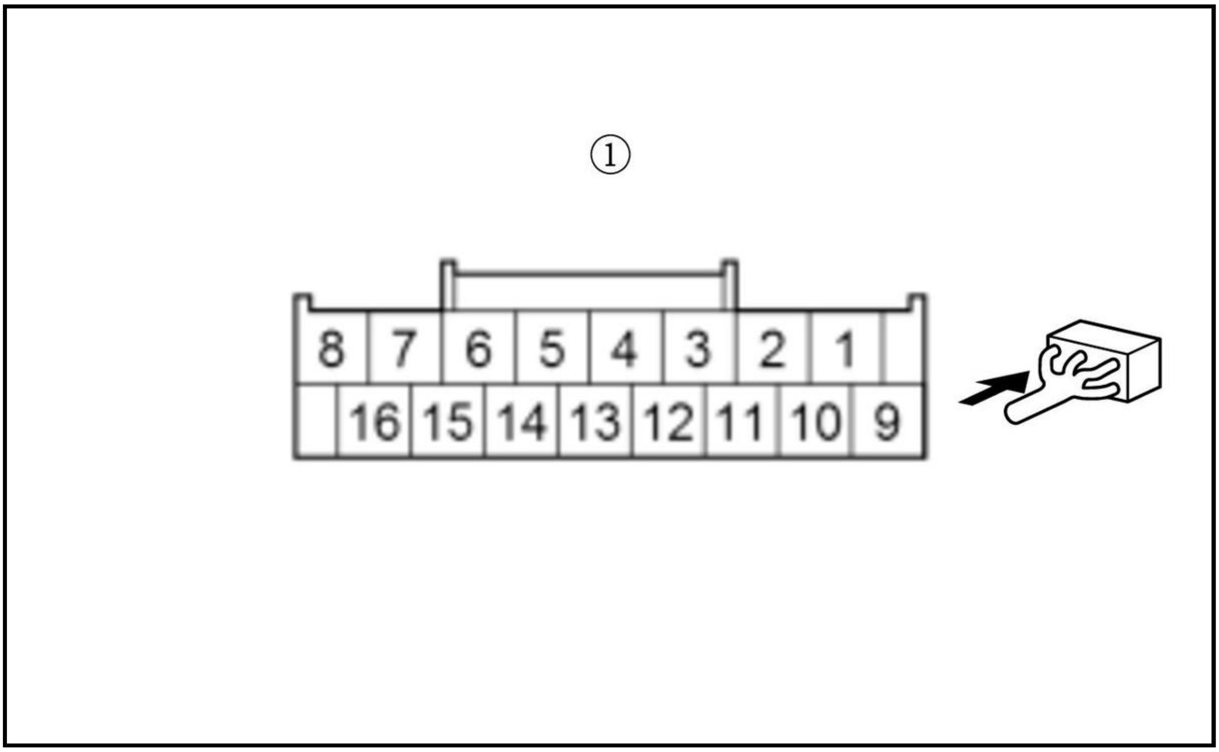
①
8
7
6
5
4
3
2
1
16
15
14
13
12
11
10
9

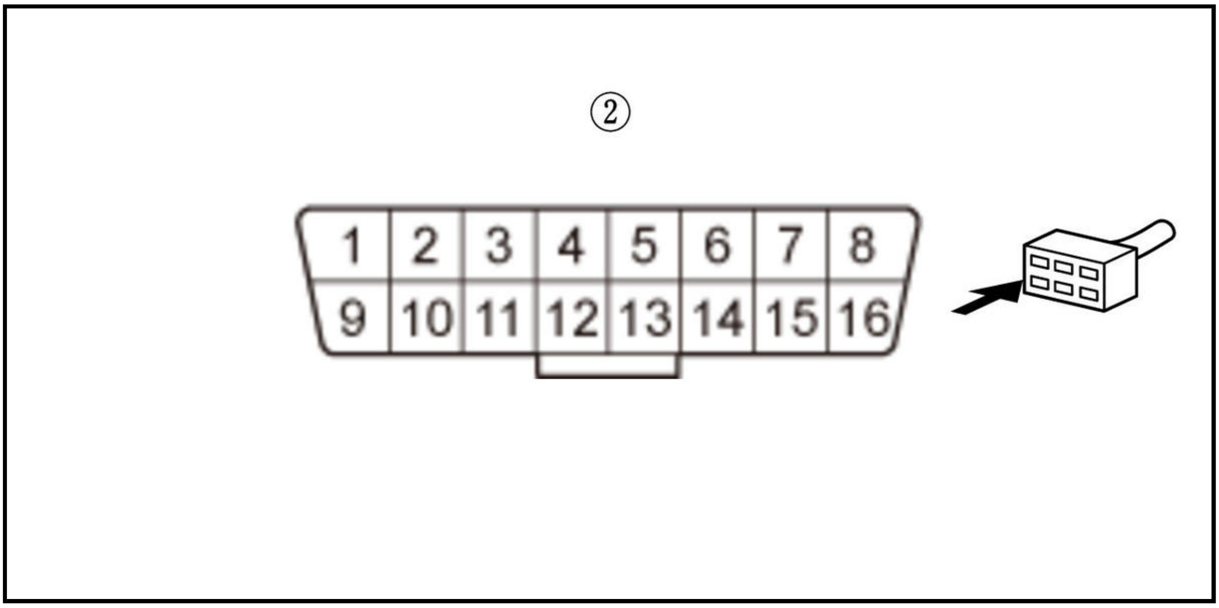
②
1
2
3
4
5
6
7
8
9
10
11
12
13
14
15
16

Is there 1.0 Ω or less?

YES

Go to step 25.

NO

Repair an open in the DIAG-CAN_L wire between the CAN gateway and data link connector (16P) No. 14.

25. Shorted wire check (DIAG-CAN_H line)

-1. Measure the resistance between test points 1 and 2.

Test condition	Vehicle OFF (LOCK) mode

B	CAN gateway 16P connector: disconnected
Test point 1	Data link connector (16P) (female terminal) No. 6: ①
Test point 2	Body ground

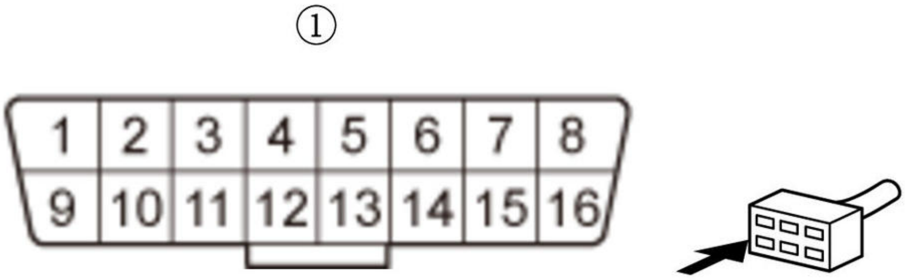

Is there 1 MΩ or more?

YES

Go to step 26.

NO

Repair a short in the DIAG-CAN_H wire between the CAN gateway and data link connector (16P) No. 6.

26. Shorted wire check (DIAG-CAN_L line)

-1. Measure the resistance between test points 1 and 2.

Test condition	Vehicle OFF (LOCK) mode
B	CAN gateway 16P connector: disconnected
Test point 1	Data link connector (16P) (female terminal) No. 14: ①
Test point 2	Body ground

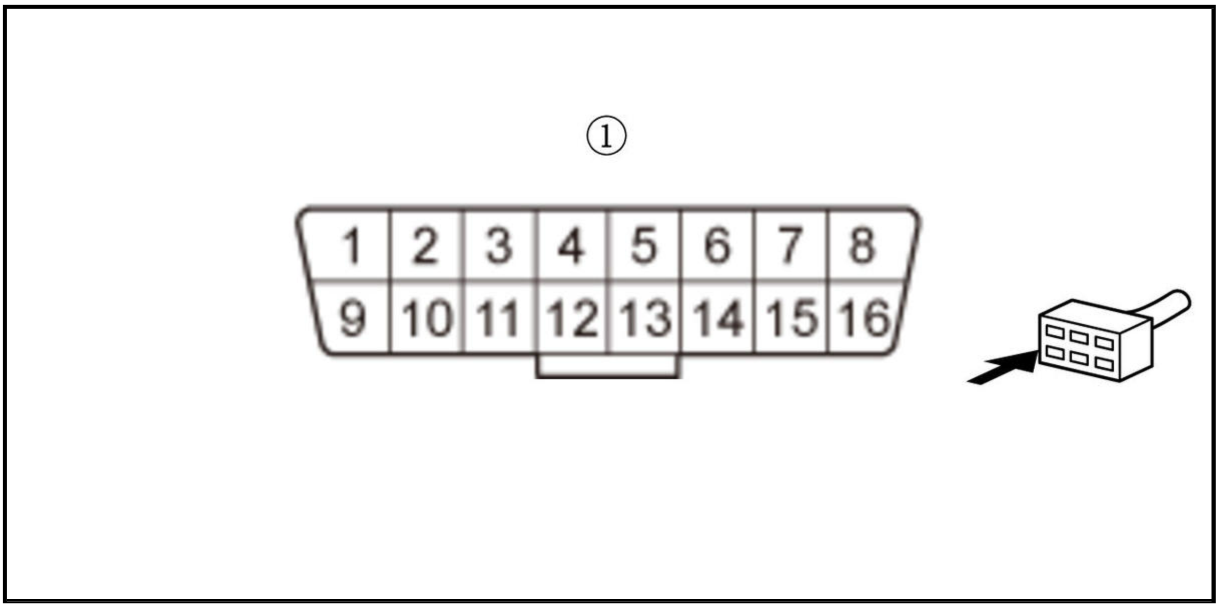
①
1 2 3 4 5 6 7 8
9 10 11 12 13 14 15 16

Is there 1 MΩ or more?

YES

Go to step 27.

NO

Repair a short in the DIAG-CAN_L wire between the CAN gateway and data link connector (16P) No. 14.

27. Shorted wire check (DIAG-CAN_H line to DIAG-CAN_L line)

-1. Measure the resistance between test points 1 and 2.

Test condition	Vehicle OFF (LOCK) mode
B	CAN gateway 16P connector: disconnected
Test point 1	Data link connector (16P) (female terminal) No. 6: ①
Test point 2	Data link connector (16P) (female terminal) No. 14: ①

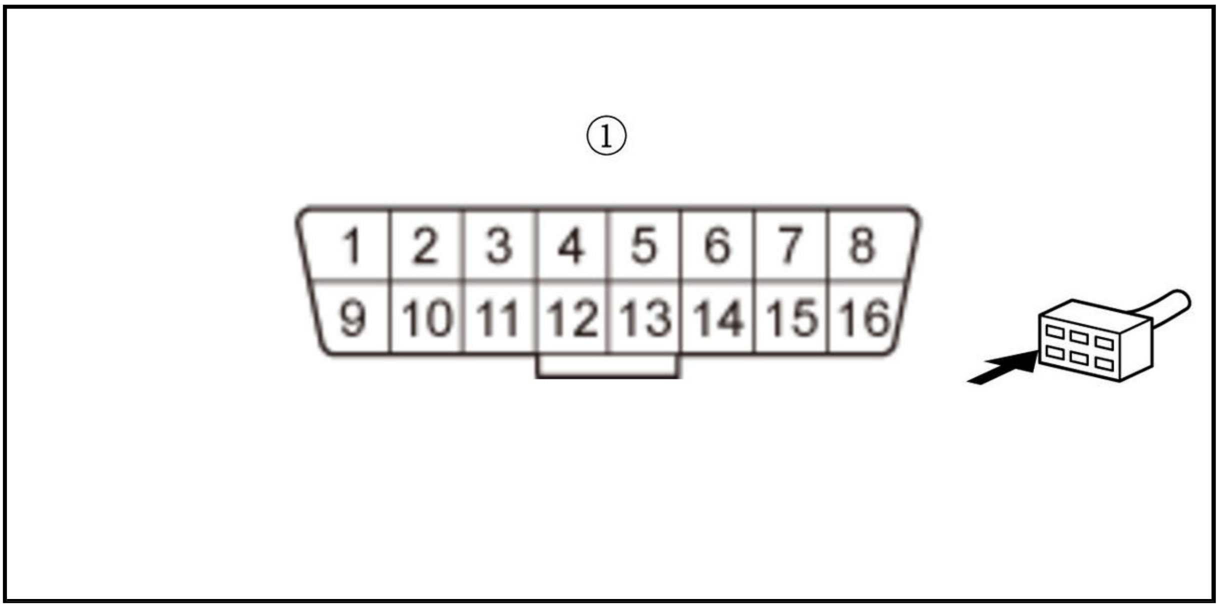
①
1 2 3 4 5 6 7 8
9 10 11 12 13 14 15 16

Is there 1 MΩ or more?

YES

The DIAG-CAN_H wire and DIAG-CAN_L wire are OK. Check for any authorized service information related to the DTCs or symptoms you are troubleshooting, or **substitute a known-good CAN gateway** .

NO

Repair a short in the DIAG-CAN_H wire to the DIAG-CAN_L wire between data link connector (16P) No. 6 and No. 14.

DLC CIRCUIT TROUBLESHOOTING (CAN GATEWAY) (2017 2018 2019)

DLC Circuit Troubleshooting

NOTE: If you suspect the HDS or the HDS DLC cable may be the source of the communication problem, verify that they are working properly by connecting them to a known-good, similar vehicle and system, and checking for communication problems.

*1: With navigation
*2: Without navigation

1. HDS communication check

   -1. Turn the vehicle to the OFF (LOCK) mode.

   -2. **Connect the HDS to the data link connector** .

   NOTE: Make sure the HDS is properly connected to the data link connector.

   -3. Turn the vehicle to the ON mode, and turn on the HDS.

   Does the HDS identify the vehicle?

   YES

   Go to step 2.

   NO

   Go to step 11.

2. Determine possible failure area (PGM-FI system, other systems)

   -1. Check for Pending or Confirmed DTCs in the PGM-FI system with the HDS.

DTC Description	Confirmed DTC	Pending DTC
B	B	B

   DTC (PGM-FI)

   Are any Pending or Confirmed DTCs indicated?

   YES

   Go to the indicated DTCs troubleshooting.

   NO

   If the HDS does not communicate with the PCM, go to step 3.

NO

If the HDS does not communicate with the SRS, go to step 5.

NO

If the HDS does not communicate with the ONE PUSH START system, go to step 6.

NO

If the HDS does not communicate with the BODY ELECTRICAL system, go to step 7.

3. Open wire check (F-CAN A_H line) 1

-1. Turn the vehicle to the OFF (LOCK) mode.

-2. Jump the SCS line with the HDS, and wait more than 1 minute.

-3. Disconnect the following connectors.

CAN gateway 12P connector
PCM connector A (50P)

-4. Check for continuity between test points 1 and 2.

Test condition	Vehicle OFF (LOCK) mode

B	CAN gateway 12P connector: disconnected
B	PCM connector A (50P): disconnected
Test point 1	CAN gateway 12P connector (female terminal) No. 3: ①
Test point 2	PCM connector A (50P) No. 37

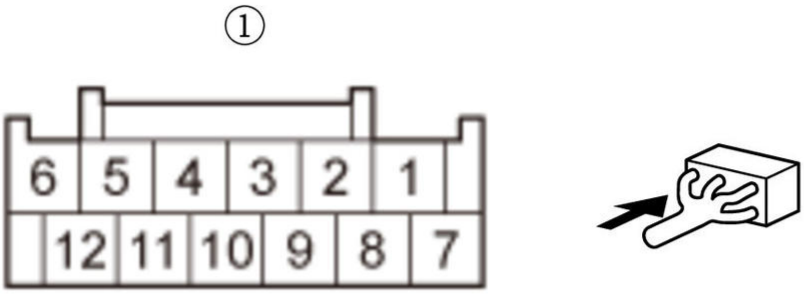

Is there continuity?

YES

Go to step 4.

NO

Repair an open in the F-CAN A_H wire between the PCM (A37) and the CAN gateway.

4. Open wire check (F-CAN A_L line) 1

-1. Check for continuity between test points 1 and 2.

Test condition	Vehicle OFF (LOCK) mode
B	CAN gateway 12P connector: disconnected
B	PCM connector A (50P): disconnected
Test point 1	CAN gateway 12P connector (female terminal) No. 9: ①
Test point 2	PCM connector A (50P) No. 36

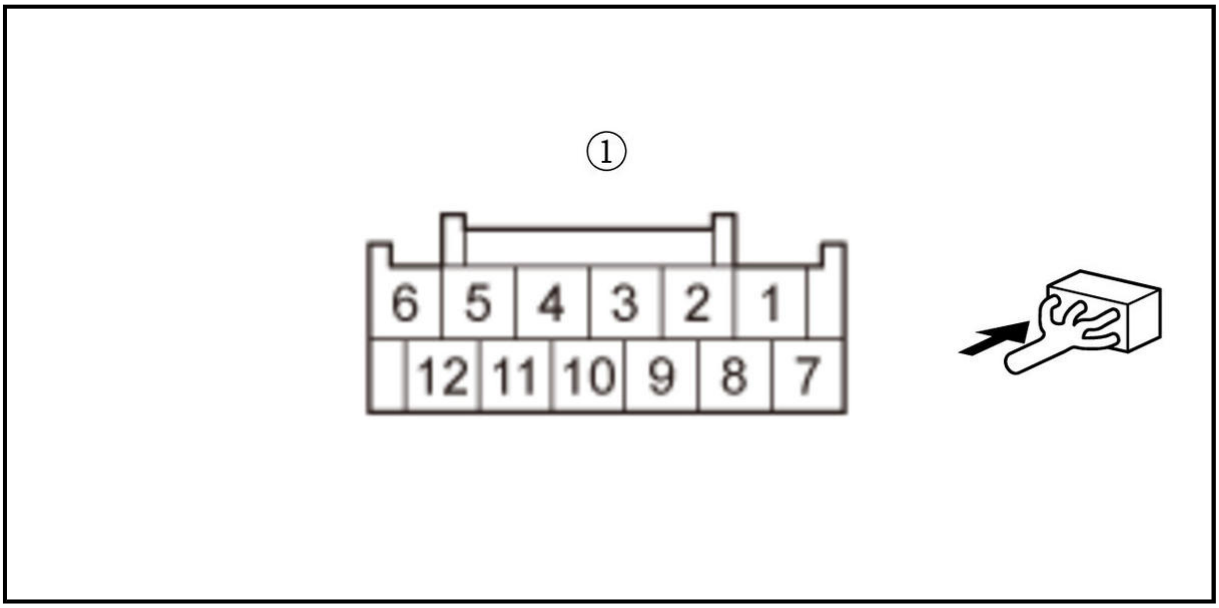

Is there continuity?

YES

The F-CAN A_L wire is OK. Check for poor connections or loose terminals at the CAN gateway and the PCM. Go to the PCM power and ground circuit troubleshooting .

NO

Repair an open in the F-CAN A_L wire between the PCM (A36) and the CAN gateway.

5. SRS check

-1. Turn the vehicle to the OFF (LOCK) mode.

-2. Turn the vehicle to the ON mode, and watch the SRS indicator.

Does the SRS indicator come on and go off?

YES

Go to step 8.

NO

Go to the symptom troubleshooting for SRS indicator stays on, but no DTCs are stored, or cannot be read .

6. Keyless access system check

-1. Turn the vehicle to the OFF (LOCK) mode.

-2. Turn the vehicle to the ON mode, and watch the keyless access indicator and the security indicator.

Does the keyless access indicator stay on or the security indicator stay on or flash?

YES

Go to the keyless access system symptom troubleshooting information .

NO

Go to step 8.

7. Body electrical system check

-1. **Do the gauge self-diagnostic function** .

-2. Check the gauge display.

Is Error 2 indicated?

YES

Go to the indicated DTCs troubleshooting.

NO

Go to step 8.

8. Open wire check (K LINE line or L-LINE line)

-1. Turn the vehicle to the OFF (LOCK) mode.

-2. Disconnect the HDS from the data link connector.

Disconnect the control unit(s) on the K LINE or L-LINE that does not communicate.

NOTE: Before disconnecting the SRS unit connector, **do the 12 volt battery terminal disconnection procedure** and wait for at least 3 minutes.

K LINE

- Audio-navigation unit connector A (24P) *1
- Audio unit connector A (24P) *2
- Body control module connector D (40P)
- ANC/active sound control unit 20P connector

L-LINE

- Body control module connector F (36P)
- SRS unit connector A (36P)

-4. Check for continuity between data link connector (16P: ①) No. 7 (K LINE line) and these connector terminals, or data link connector (16P: ①) No. 15 (L-LINE line) and these connector terminals:

K LINE

Connector	Terminal
Audio-navigation unit connector A (24P)*1	No. 12
Audio unit connector A (24P)*2	No. 12
Body control module connector D (40P)	No. 36

Connector	Terminal
ANC/active sound control unit 20P connector	No. 14

L-LINE

Connector	Terminal
Body control module connector F (36P)	No. 21
SRS unit connector A (39P)	No. 33

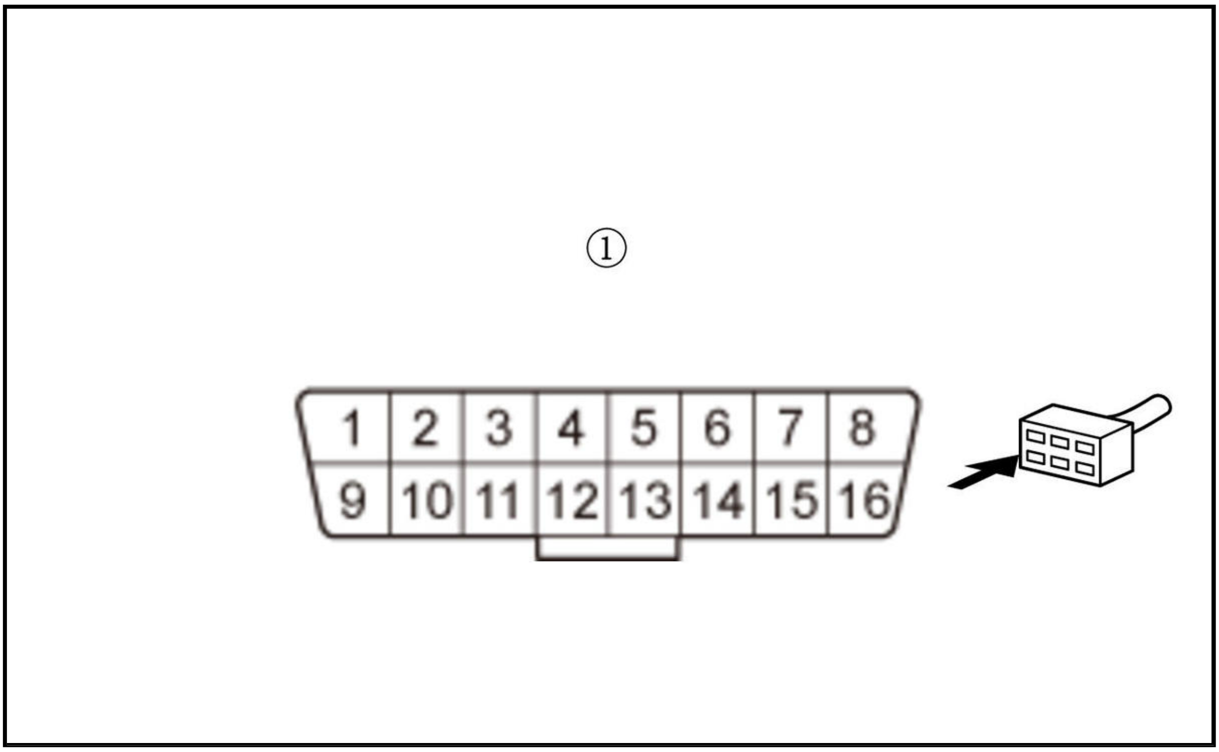

Is there continuity between the data link connector and the terminals in the chart?

YES

Go to step 9.

NO

Repair an open in the wire between the data link connector (K LINE wire or L-LINE wire) and the appropriate connector.

9. Determine possible failure area (short in K LINE line or L-LINE line, others)

-1. Reconnect all connectors.

-2. If the 12 volt battery negative terminal is disconnected in step 8-3, **do the 12 volt battery terminal reconnection procedure** .

-3. Turn the vehicle to the ON mode.

-4. Measure the voltage between test points 1 and 2.

Test condition	Vehicle ON mode
Test point 1	Data link connector (16P) (female terminal) No. 7 and No. 15: ①
Test point 2	Body ground

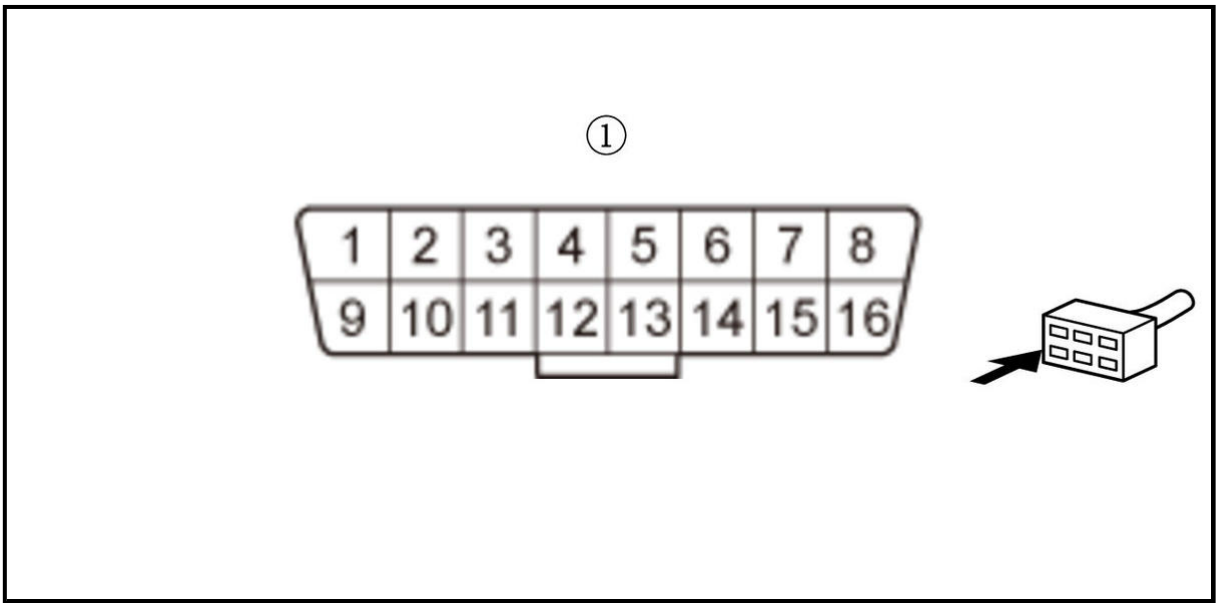

Is there any voltage?

YES

Go to step 11.

NO

Go to step 10.

10. Shorted wire check (K LINE line, L-LINE line):

    Continue to measure the voltage between data link connector (16P) No. 7 (K LINE line) and body ground, or data link connector (16P) No. 15 (L-LINE line) and body ground while disconnecting these parts, one at a time:

    NOTE: Turn the vehicle to the OFF (LOCK) mode before disconnecting the connector, and turn the vehicle to the ON mode before measuring the voltage.

    K LINE

    - Audio-navigation unit connector A (24P) *1
    - Audio unit connector A (24P) *2
    - Body control module connector D (40P)
    - ANC/active sound control unit 20P connector

    L-LINE

    - Body control module connector F (36P)
    - SRS unit connector A (36P)

    Does voltage come back when one of the above components is disconnected?

    YES

    Replace the part that any voltage was detected when it was disconnected.

NO

Repair a short in the wire between data link connector (16P) No. 7 (K LINE) and the audio-navigation unit *1 audio unit *2, the ANC/active sound control unit, or the body control module, or data link connector (16P) No. 15 (L-LINE) and the body control module or the SRS unit.

11. Body electrical system (B-CAN) check

-1. **Do the gauge self-diagnostic function** .

-2. Check for gauge control module DTCs without the HDS.

Is DTC U0029 and/or U0100 indicated?

YES

Go to the PCM power and ground circuit troubleshooting .

NO

Go to step 12.

12. Open wire check (+B BACK UP line)

-1. Turn the vehicle to the OFF (LOCK) mode.

-2. Disconnect the HDS from the data link connector.

-3. Measure the voltage between test points 1 and 2.

Test condition	Vehicle OFF (LOCK) mode
Test point 1	Data link connector (16P) (female terminal) No. 16: ①
Test point 2	Body ground

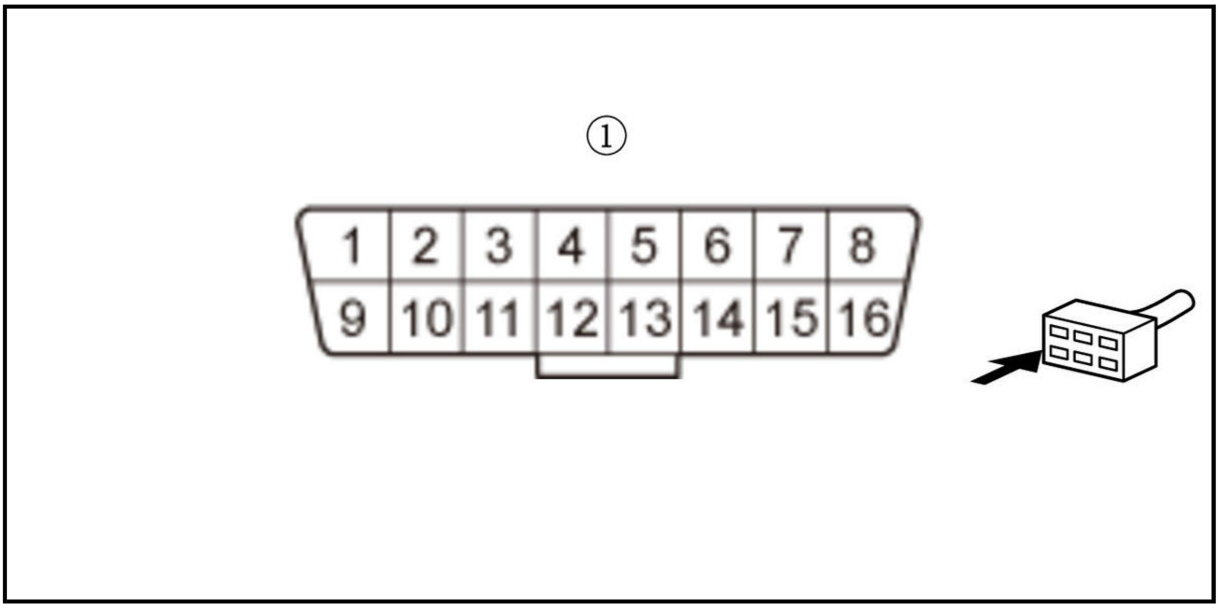

Is there battery voltage?

YES

Go to step 13.

NO

Repair an open in the +B BACK UP wire between data link connector (16P) No. 16 and the No. A18 (10 A) fuse in the under-hood fuse/relay box.

13. Open wire check (GND line)

-1. Measure the voltage between test points 1 and 2.

Test condition	Vehicle OFF (LOCK) mode
Test point 1	Data link connector (16P) (female terminal) No. 4: ①
Test point 2	Data link connector (16P) (female terminal) No. 16: ①

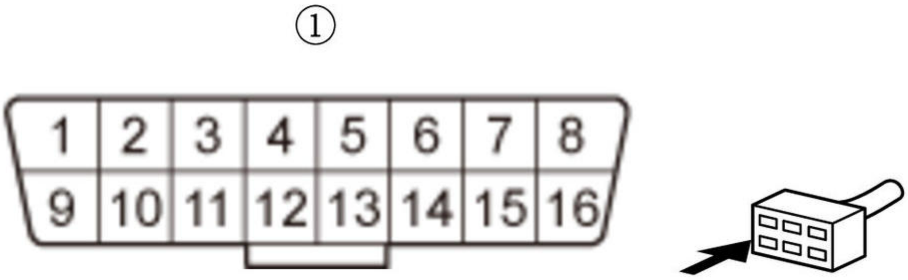

Is there battery voltage?

YES

Go to step 14.

NO

Repair an open in the GND wire between data link connector (16P) No. 4 and G401.

14. Open wire check (+B BACK UP line)

-1. Disconnect the following connector.

CAN gateway 12P connector

-2. Measure the voltage between test points 1 and 2.

Test condition	Vehicle OFF (LOCK) mode
B	CAN gateway 12P connector: disconnected
Test point 1	CAN gateway 12P connector (female terminal) No. 1: ①
Test point 2	Body ground

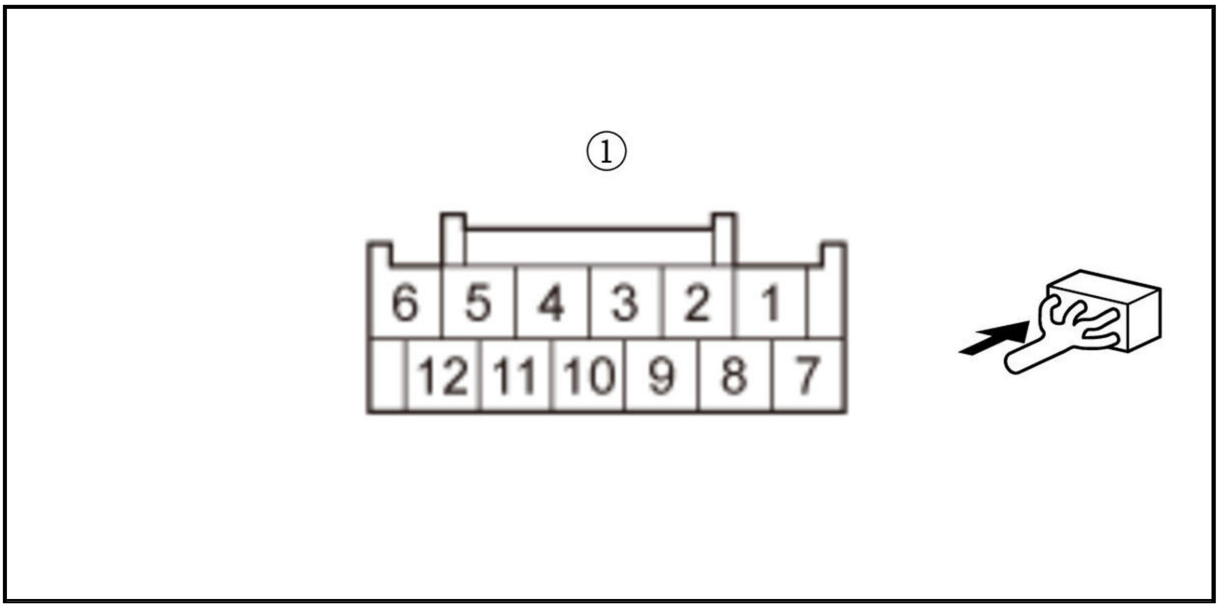

Is there battery voltage?

YES

Go to step 15.

NO

Repair an open in the +B BACK UP wire between the CAN gateway and the No. A18 (10 A) fuse in the under-hood fuse/relay box.

15. Open wire check (IG1 METER line)

-1. Turn the vehicle to the ON mode.

-2. Measure the voltage between test points 1 and 2.

Test condition	Vehicle ON mode
B	CAN gateway 12P connector: disconnected
Test point 1	CAN gateway 12P connector (female terminal) No. 7: ①
Test point 2	Body ground

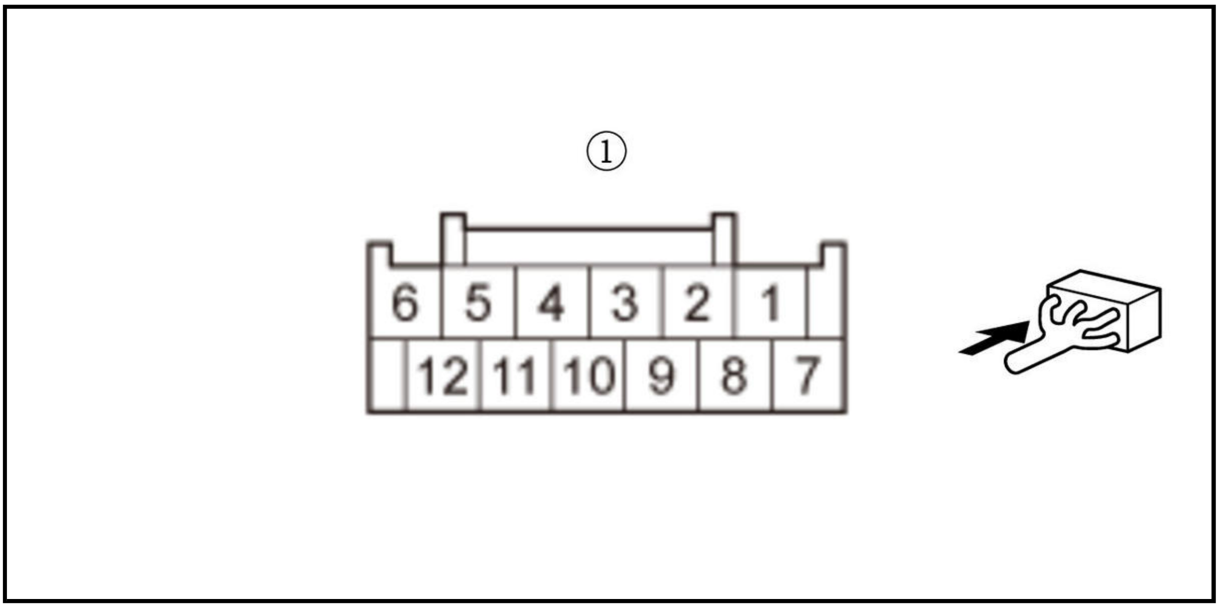

Is there battery voltage?

YES

Go to step 16.

NO

Repair an open in the IG1 METER wire between the CAN gateway and the No. D7 (10 A) fuse in the under-dash fuse/relay box.

16. Open wire check (GND lines)

-1. Turn the vehicle to the OFF (LOCK) mode.

-2. Check for continuity between test points 1 and 2.

Test condition	Vehicle OFF (LOCK) mode
B	CAN gateway 12P connector: disconnected
Test point 1	CAN gateway 12P connector (female terminal) No. 10: ①
Test point 2	Body ground

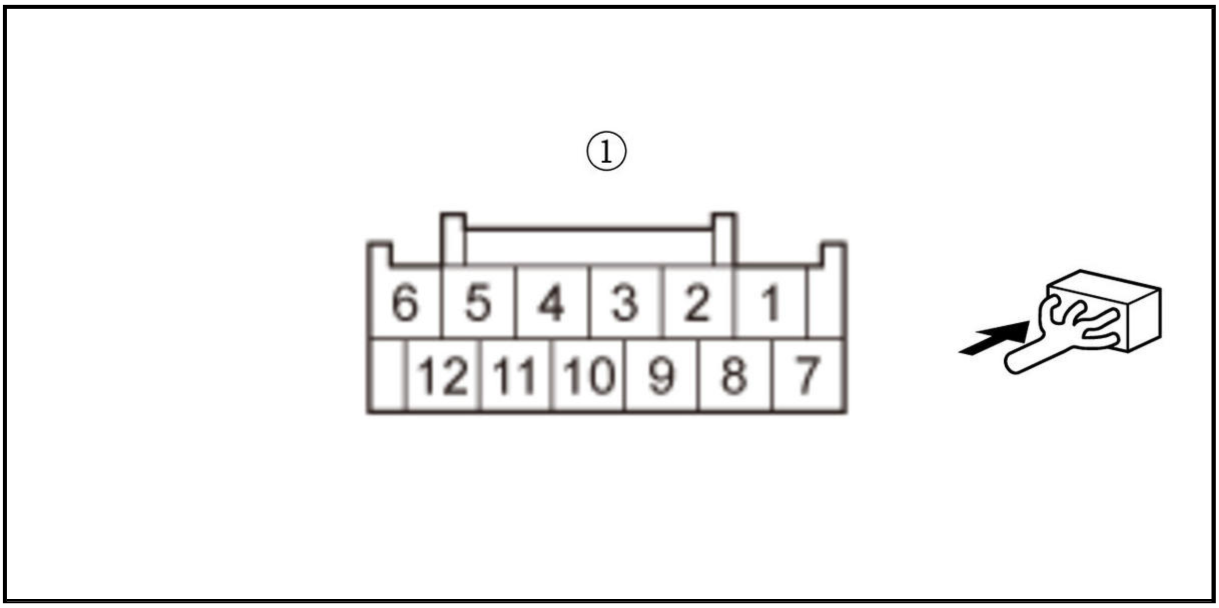

Is there continuity?

YES

Go to step 17.

NO

Repair an open in the GND wire between the CAN gateway and G401.

17. Open wire check (F-CAN A_H line) 2

-1. Check for continuity between test points 1 and 2.

Test condition	Vehicle OFF (LOCK) mode
B	CAN gateway 12P connector: disconnected

Test point 1	CAN gateway 12P connector (female terminal) No. 3: ①
Test point 2	Data link connector (16P) (female terminal) No. 6: ②

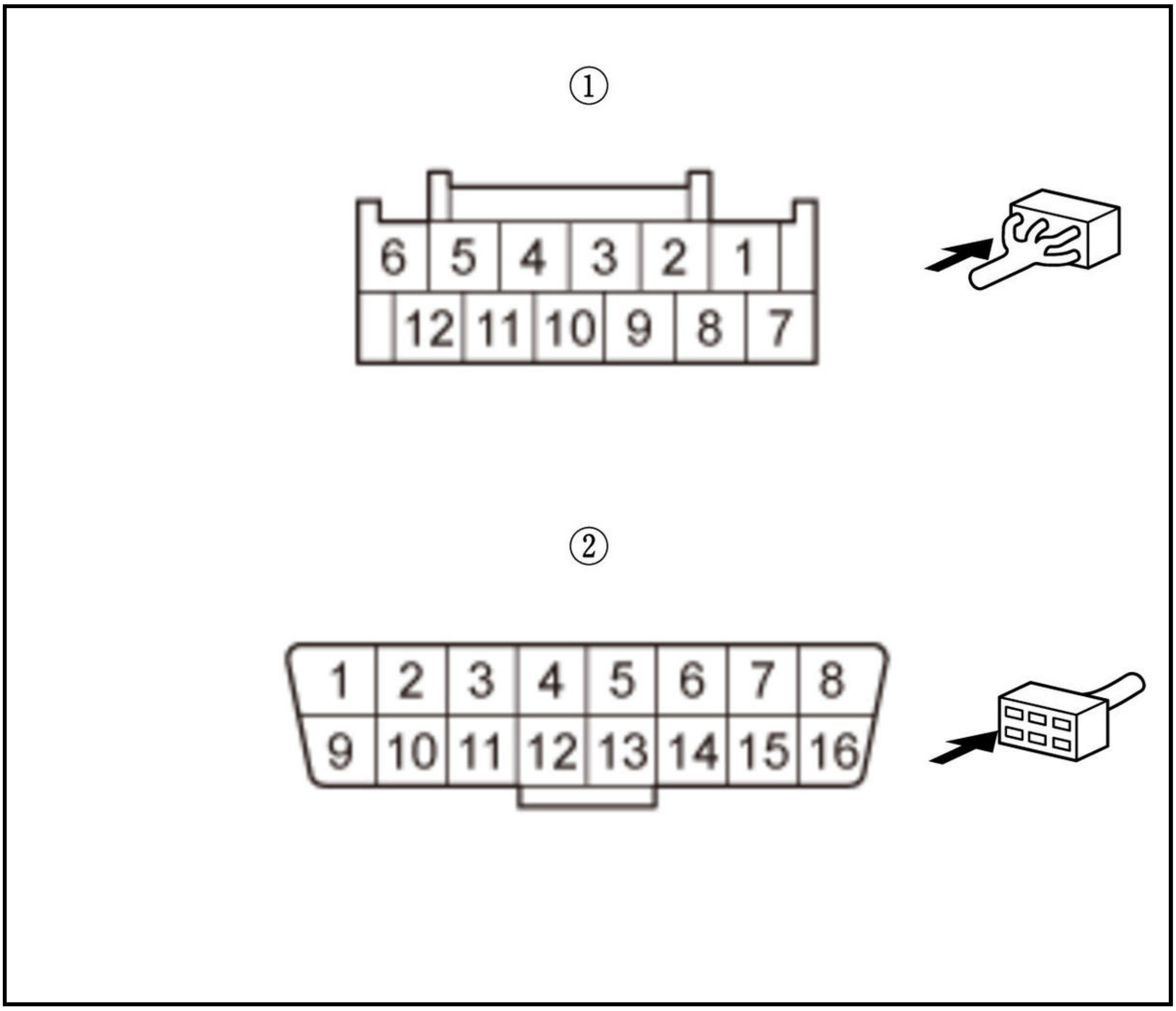

Is there continuity?

YES

Go to step 18.

NO

Repair an open in the F-CAN A_H wire between the CAN gateway and data link connector (16P) No. 6.

18. Open wire check (F-CAN A_L line) 2

-1. Check for continuity between test points 1 and 2.

Test condition	Vehicle OFF (LOCK) mode
B	CAN gateway 12P connector: disconnected
Test point 1	CAN gateway 12P connector (female terminal) No. 9: ①
Test point 2	Data link connector (16P) (female terminal) No. 14: ②

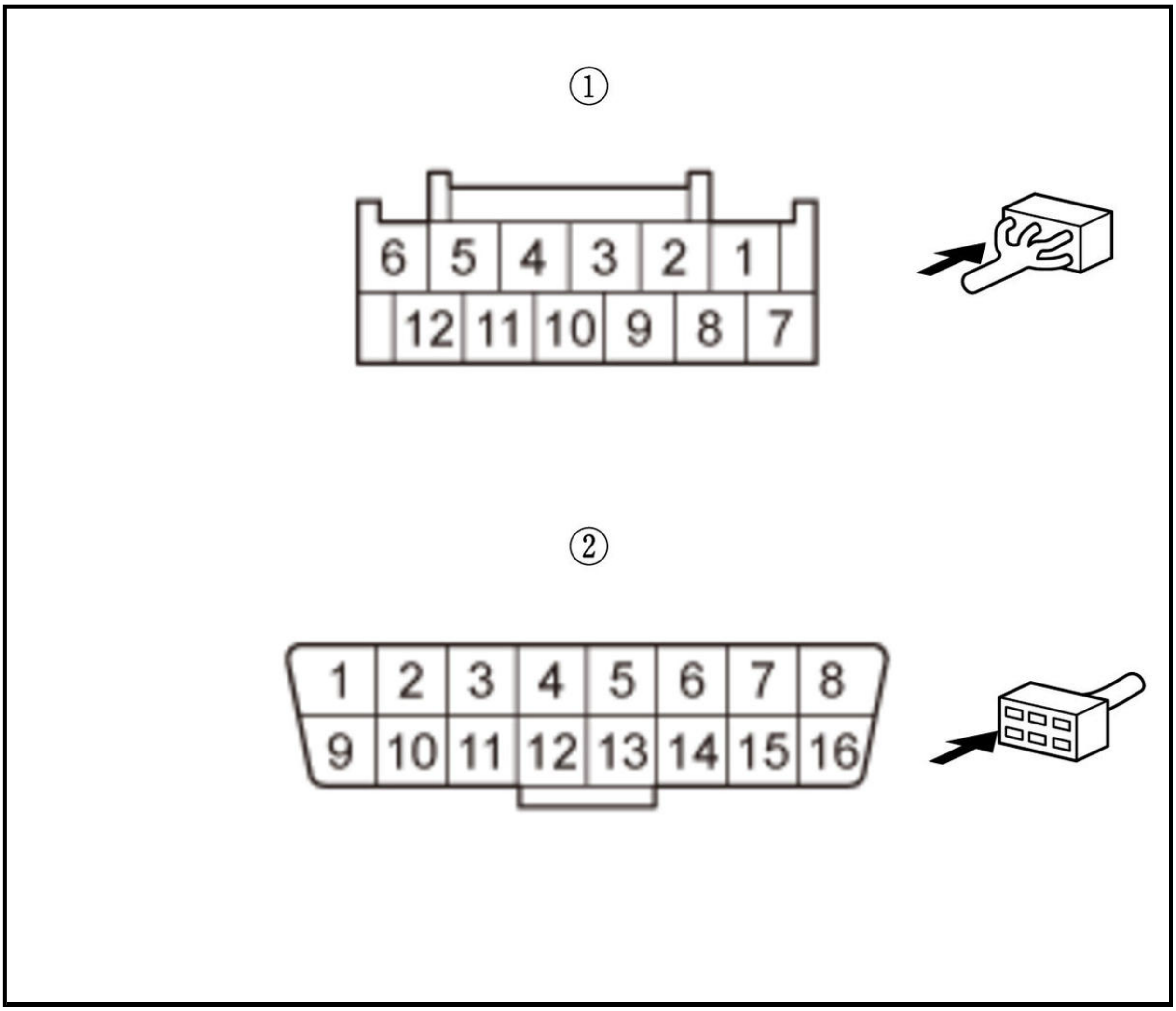

Is there continuity?

YES

Go to step 19.

NO

Repair an open in the F-CAN A_L wire between the CAN gateway and data link connector (16P) No. 14.

19. Open wire check (F-CAN A_H line) 3

-1. Jump the SCS line with the HDS, and wait more than 1 minute.

-2. Disconnect the following connectors.

PCM connector A (50P)

-3. Check for continuity between test points 1 and 2.

Test condition	Vehicle OFF (LOCK) mode
B	PCM connector A (50P): disconnected
Test point 1	**PCM connector A (50P) No. 37**
Test point 2	Data link connector (16P) (female terminal) No. 6: ①

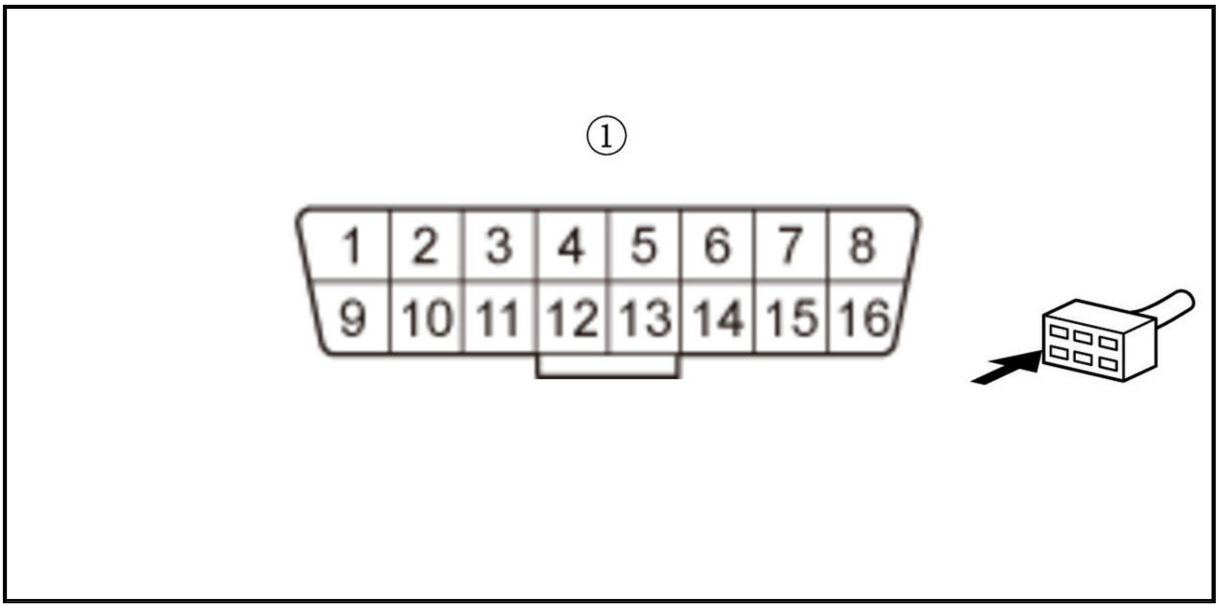
①
1
2
3
4
5
6
7
8
9
10
11
12
13
14
15
16

Is there continuity?

YES

Go to step 20.

NO

Repair an open in the F-CAN A_H wire between the PCM (A37) and data link connector (16P) No. 6.

20. Open wire check (F-CAN A_L line) 3

-1. Check for continuity between test points 1 and 2.

Test condition	Vehicle OFF (LOCK) mode
B	PCM connector A (50P): disconnected
Test point 1	PCM connector A (50P) No. 36
Test point 2	Data link connector (16P) (female terminal) No. 14: ①

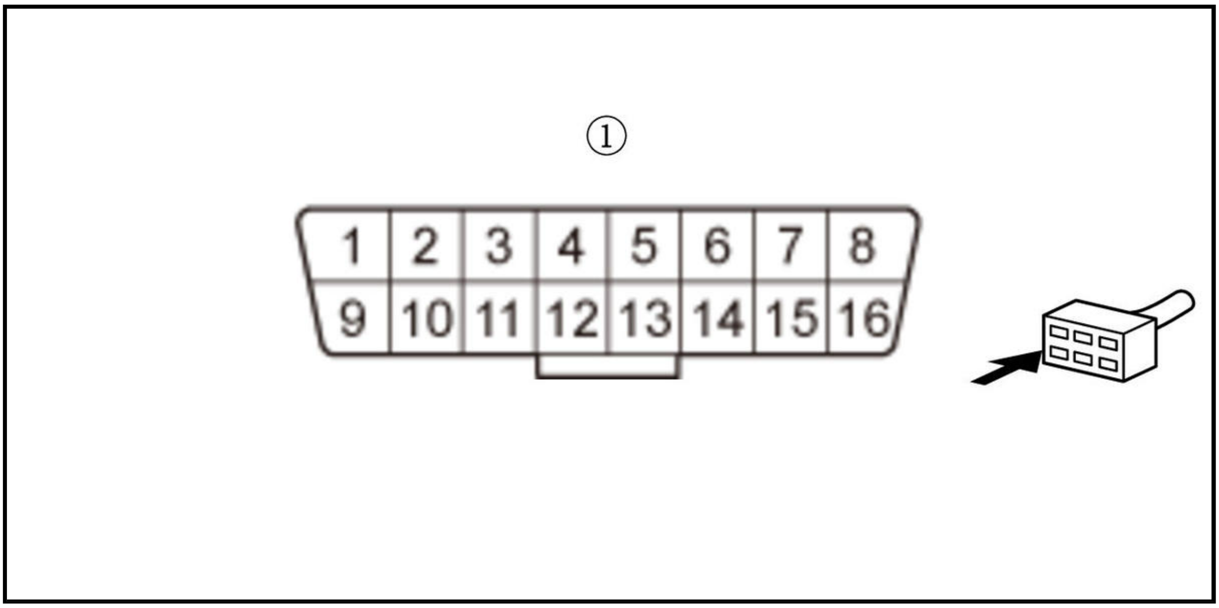
①
1
2
3
4
5
6
7
8
9
10
11
12
13
14
15
16

Is there continuity?

YES

Go to step 21.

NO

Repair an open in the F-CAN A_L wire between the PCM (A36) and data link connector (16P) No. 14.

21. Shorted wire check (F-CAN A_H line)

-1. Check for continuity between test points 1 and 2.

Test condition	Vehicle OFF (LOCK) mode
B	CAN gateway 12P connector: disconnected
Test point 1	Data link connector (16P) (female terminal) No. 6: ①
Test point 2	Body ground

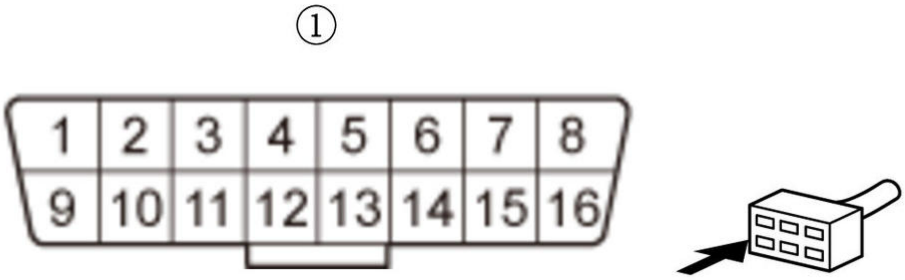

Is there continuity?

YES

Repair a short in the F-CAN A_H wire between the CAN gateway and data link connector (16P) No. 6.

NO

Go to step 22.

22. Shorted wire check (F-CAN A_L line)

-1. Check for continuity between test points 1 and 2.

Test condition	Vehicle OFF (LOCK) mode
B	CAN gateway 12P connector: disconnected
Test point 1	Data link connector (16P) (female terminal) No. 14: ①
Test point 2	Body ground

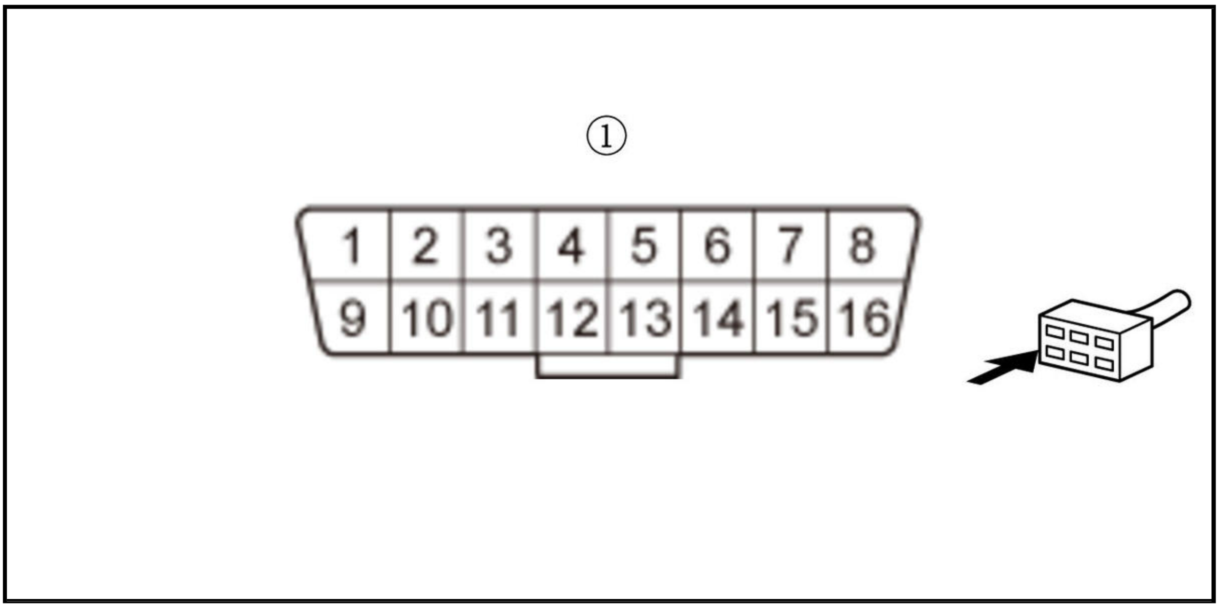
①
1
2
3
4
5
6
7
8
9
10
11
12
13
14
15
16

Is there continuity?

YES

Repair a short in the F-CAN A_L wire between the CAN gateway and data link connector (16P) No. 14.

NO

Go to step 23.

23. Shorted wire check (F-CAN A_H line to F-CAN A_L line)

-1. Check for continuity between test points 1 and 2.

Test condition	Vehicle OFF (LOCK) mode
B	CAN gateway 12P connector: disconnected
Test point 1	Data link connector (16P) (female terminal) No. 6: ①
Test point 2	Data link connector (16P) (female terminal) No. 14: ①

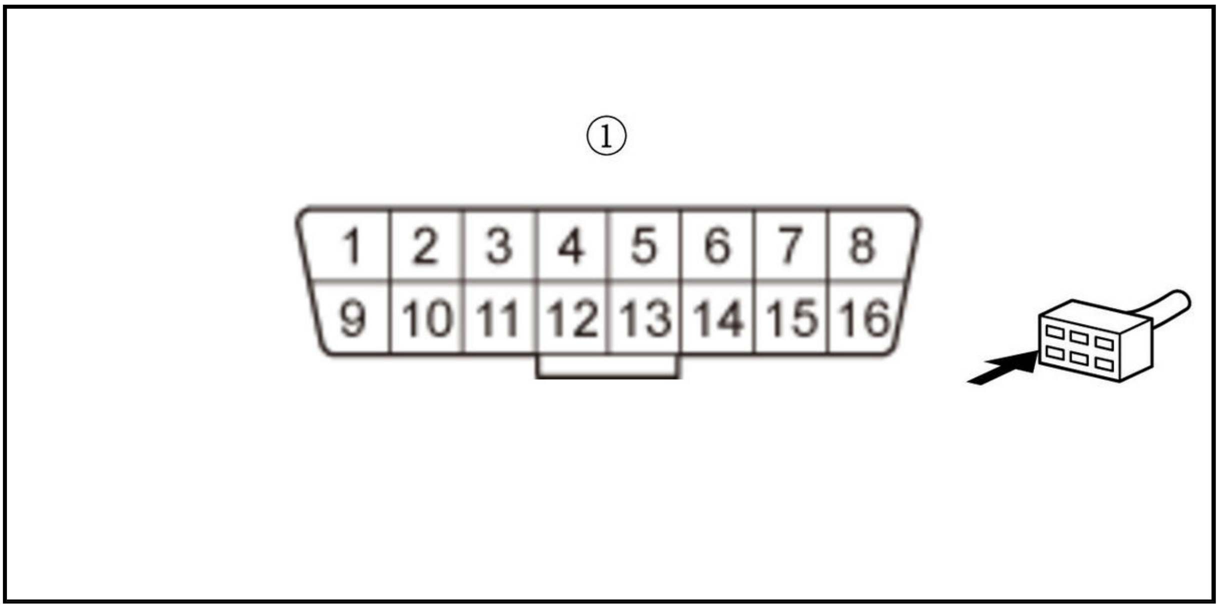
①
1
2
3
4
5
6
7
8
9
10
11
12
13
14
15
16

Is there continuity?

YES

Repair a short in the F-CAN A_H wire to the F-CAN A_L wire between data link connector (16P) No. 6 and No. 14.

NO

The F-CAN A_H wire and F-CAN A_L wire are OK. Check for any authorized service information related to the DTCs or symptoms you are troubleshooting, or **substitute a known-good CAN gateway** .

F-CAN CIRCUIT TROUBLESHOOTING (2.4 L ENGINE) (2017 2018 2019)

NOTE:

- Before disconnecting the SRS unit connector, **do the 12 volt battery terminal disconnection procedure** , and wait for at least 3 minutes.
- Before disconnecting the electric brake booster connector, turn the vehicle to the OFF (LOCK) mode with driver's door open, then wait 3 minutes. Do not open and close the driver's door.

1. F-CAN circuit resistance check

   -1. Turn the vehicle to the OFF (LOCK) mode.

   -2. Jump the SCS line with the HDS, and wait more than 1 minute.

   -3. Disconnect the following connector.

PCM connector A (51P)

   -4. Measure the resistance between test points 1 and 2.

Test condition	Vehicle OFF (LOCK) mode
B	PCM connector A (51P): disconnected
Test point 1	**PCM connector A (51P) No. 1**
Test point 2	**PCM connector A (51P) No. 2**

   Is there about 85-107 Ω?

   YES

   Go to step 16.

   NO

   Go to step 2.

2. Shorted wire check (F-CAN_H line to F-CAN_L line):

   Disconnect the following connectors.

   - Gauge control module connector A (32P)
   - VSA modulator-control unit 46P connector
   - EPS control unit connector B (6P)
   - Body control module connector B (36P)
   - SRS unit connector A (39P)
   - Electric brake booster 26P connector
   - Real time AWD control unit 24P connector (with AWD)

-2. Check for continuity between test points 1 and 2.

Test condition	Vehicle OFF (LOCK) mode
	PCM connector A (51P): disconnected
	Gauge control module connector A (32P): disconnected
	VSA modulator-control unit 46P connector: disconnected
	EPS control unit connector B (6P): disconnected
	Body control module connector B (36P): disconnected
	SRS unit connector A (39P): disconnected
	Electric brake booster 26P connector: disconnected
	Real time AWD control unit 24P connector (with AWD): disconnected
Test point 1	**PCM connector A (51P) No. 1**
Test point 2	**PCM connector A (51P) No. 2**

Is there continuity?

YES

Repair a short in the F-CAN_H wire to F-CAN_L wire between the PCM terminals A1 and A2.

NO

The F-CAN_H and F-CAN_L wires are not shorted. Go to step 3.

3. Open wire check (F-CAN_H line) 1

-1. Check for continuity between test points 1 and 2.

Test condition	Vehicle OFF (LOCK) mode
	PCM connector A (51P): disconnected
	Gauge control module connector A (32P): disconnected
	VSA modulator-control unit 46P connector: disconnected
	EPS control unit connector B (6P): disconnected
	Body control module connector B (36P): disconnected
	SRS unit connector A (39P): disconnected
	Electric brake booster 26P connector: disconnected
	Real time AWD control unit 24P connector (with AWD): disconnected
Test point 1	**Gauge control module connector A (32P) No. 19**
Test point 2	**PCM connector A (51P) No. 2**

Is there continuity?

YES

The F-CAN_H wire is not open. Go to step 4.

NO

Repair an open in the F-CAN_H wire between the PCM (A2) and the gauge control module.

4. Open wire check (F-CAN_H line) 2

-1. Check for continuity between test points 1 and 2.

Test condition	Vehicle OFF (LOCK) mode
	PCM connector A (51P): disconnected

	Gauge control module connector A (32P): disconnected
	VSA modulator-control unit 46P connector: disconnected
	EPS control unit connector B (6P): disconnected
	Body control module connector B (36P): disconnected
	SRS unit connector A (39P): disconnected
	Electric brake booster 26P connector: disconnected
	Real time AWD control unit 24P connector (with AWD): disconnected
Test point 1	**VSA modulator-control unit 46P connector No. 40**
Test point 2	**PCM connector A (51P) No. 2**

Is there continuity?

YES

The F-CAN_H wire is not open. Go to step 5.

NO

Repair an open in the F-CAN_H wire between the PCM (A2) and the VSA modulator-control unit.

5. Open wire check (F-CAN_H line) 3

-1. Check for continuity between test points 1 and 2.

Test condition	Vehicle OFF (LOCK) mode
	PCM connector A (51P): disconnected
	Gauge control module connector A (32P): disconnected
	VSA modulator-control unit 46P connector: disconnected
	EPS control unit connector B (6P): disconnected
	Body control module connector B (36P): disconnected
	SRS unit connector A (39P): disconnected
	Electric brake booster 26P connector: disconnected
	Real time AWD control unit 24P connector (with AWD): disconnected
Test point 1	**EPS control unit connector B (6P) No. 3**
Test point 2	**PCM connector A (51P) No. 2**

Is there continuity?

YES

The F-CAN_H wire is not open. Go to step 6.

NO

Repair an open in the F-CAN_H wire between the PCM (A2) and the EPS control unit.

6. Open wire check (F-CAN_H line) 4

-1. Check for continuity between test points 1 and 2.

Test condition	Vehicle OFF (LOCK) mode
	PCM connector A (51P): disconnected
	Gauge control module connector A (32P): disconnected
	VSA modulator-control unit 46P connector: disconnected
	EPS control unit connector B (6P): disconnected

	Body control module connector B (36P): disconnected
	SRS unit connector A (39P): disconnected
	Electric brake booster 26P connector: disconnected
	Real time AWD control unit 24P connector (with AWD): disconnected
Test point 1	**Electric brake booster 26P connector No. 26**
Test point 2	**PCM connector A (51P) No. 2**

Is there continuity?

YES

The F-CAN_H wire is not open. Go to step 7.

NO

Repair an open in the F-CAN_H wire between the PCM (A2) and the electric brake booster.

7. Open wire check (F-CAN_H line) 5

-1. Check for continuity between test points 1 and 2.

Test condition	Vehicle OFF (LOCK) mode
	PCM connector A (51P): disconnected
	Gauge control module connector A (32P): disconnected
	VSA modulator-control unit 46P connector: disconnected
	EPS control unit connector B (6P): disconnected
	Body control module connector B (36P): disconnected
	SRS unit connector A (39P): disconnected
	Electric brake booster 26P connector: disconnected
	Real time AWD control unit 24P connector (with AWD): disconnected
Test point 1	**Body control module connector B (36P) No. 22**

Test point 2	**PCM connector A (51P) No. 2**

Is there continuity?

YES (with AWD)

The F-CAN_H wire is not open. Go to step 8.

YES (without real time AWD)

The F-CAN_H wire is not open. Go to step 9.

NO

Repair an open in the F-CAN_H wire between the PCM (A2) and the body control module.

8. Open wire check (F-CAN_H line) 6

-1. Check for continuity between test points 1 and 2.

Test condition	Vehicle OFF (LOCK) mode
	PCM connector A (51P): disconnected
	Gauge control module connector A (32P): disconnected
	VSA modulator-control unit 46P connector: disconnected

	EPS control unit connector B (6P): disconnected
	Body control module connector B (36P): disconnected
	SRS unit connector A (39P): disconnected
	Electric brake booster 26P connector: disconnected
	Real time AWD control unit 24P connector (with AWD): disconnected
Test point 1	**Real time AWD control unit 24P connector No. 14**
Test point 2	**PCM connector A (51P) No. 2**

Is there continuity?

YES

The F-CAN_H wire is not open. Go to step 9.

NO

Repair an open in the F-CAN_H wire between the PCM (A2) and the real time AWD control unit.

9. Open wire check (F-CAN_L line) 1

-1. Check for continuity between test points 1 and 2.

Test condition	Vehicle OFF (LOCK) mode
	PCM connector A (51P): disconnected
	Gauge control module connector A (32P): disconnected
	VSA modulator-control unit 46P connector: disconnected
	EPS control unit connector B (6P): disconnected
	Body control module connector B (36P): disconnected
	SRS unit connector A (39P): disconnected
	Electric brake booster 26P connector: disconnected
	Real time AWD control unit 24P connector (with AWD): disconnected
Test point 1	**Gauge control module connector A (32P) No. 20**
Test point 2	**PCM connector A (51P) No. 1**

Is there continuity?

YES

The F-CAN_L wire is not open. Go to step 10.

NO

Repair an open in the F-CAN_L wire between the PCM (A1) and the gauge control module.

10. Open wire check (F-CAN_L line) 2

-1. Check for continuity between test points 1 and 2.

Test condition	Vehicle OFF (LOCK) mode
	PCM connector A (51P): disconnected
	Gauge control module connector A (32P): disconnected
	VSA modulator-control unit 46P connector: disconnected
	EPS control unit connector B (6P): disconnected
	Body control module connector B (36P): disconnected
	SRS unit connector A (39P): disconnected

	Electric brake booster 26P connector: disconnected
	Real time AWD control unit 24P connector (with AWD): disconnected
Test point 1	**VSA modulator-control unit 46P connector No. 28**
Test point 2	**PCM connector A (51P) No. 1**

Is there continuity?

YES

The F-CAN_L wire is not open. Go to step 11.

NO

Repair an open in the F-CAN_L wire between the PCM (A1) and the VSA modulator-control unit.

11. Open wire check (F-CAN_L line) 3

-1. Check for continuity between test points 1 and 2.

Test condition	Vehicle OFF (LOCK) mode
	PCM connector A (51P): disconnected
	Gauge control module connector A (32P): disconnected
	VSA modulator-control unit 46P connector: disconnected
	EPS control unit connector B (6P): disconnected
	Body control module connector B (36P): disconnected
	SRS unit connector A (39P): disconnected
	Electric brake booster 26P connector: disconnected
	Real time AWD control unit 24P connector (with AWD): disconnected
Test point 1	**EPS control unit connector B (6P) No. 1**
Test point 2	**PCM connector A (51P) No. 1**

Is there continuity?

YES

The F-CAN_L wire is not open. Go to step 12.

NO

Repair an open in the F-CAN_L wire between the PCM (A1) and the EPS control unit.

12. Open wire check (F-CAN_L line) 4

-1. Check for continuity between test points 1 and 2.

Test condition	Vehicle OFF (LOCK) mode
	PCM connector A (51P): disconnected
	Gauge control module connector A (32P): disconnected
	VSA modulator-control unit 46P connector: disconnected
	EPS control unit connector B (6P): disconnected
	Body control module connector B (36P): disconnected
	SRS unit connector A (39P): disconnected
	Electric brake booster 26P connector: disconnected
	Real time AWD control unit 24P connector (with AWD): disconnected
Test point 1	**Electric brake booster 26P connector No. 18**

Test point 2	**PCM connector A (51P) No. 1**

Is there continuity?

YES

The F-CAN_L wire is not open. Go to step 13.

NO

Repair an open in the F-CAN_L wire between the PCM (A1) and the electric brake booster.

13. Open wire check (F-CAN_L line) 5

-1. Check for continuity between test points 1 and 2.

Test condition	Vehicle OFF (LOCK) mode
	PCM connector A (51P): disconnected
	Gauge control module connector A (32P): disconnected
	VSA modulator-control unit 46P connector: disconnected
	EPS control unit connector B (6P): disconnected
	Body control module connector B (36P): disconnected
	SRS unit connector A (39P): disconnected
	Electric brake booster 26P connector: disconnected
	Real time AWD control unit 24P connector (with AWD): disconnected
Test point 1	**Body control module connector B (36P) No. 23**
Test point 2	**PCM connector A (51P) No. 1**

Is there continuity?

YES (with AWD)

The F-CAN_L wire is not open. Go to step 14.

YES (without real time AWD)

The F-CAN_L wire is not open. Go to step 15.

NO

Repair an open in the F-CAN_L wire between the PCM (A1) and the body control module.

14. Open wire check (F-CAN_L line) 6

-1. Check for continuity between test points 1 and 2.

Test condition	Vehicle OFF (LOCK) mode
	PCM connector A (51P): disconnected
	Gauge control module connector A (32P): disconnected
	VSA modulator-control unit 46P connector: disconnected
	EPS control unit connector B (6P): disconnected
	Body control module connector B (36P): disconnected
	SRS unit connector A (39P): disconnected
	Electric brake booster 26P connector: disconnected
	Real time AWD control unit 24P connector (with AWD): disconnected
Test point 1	**Real time AWD control unit 24P connector No. 24**

Test point 2	**PCM connector A (51P) No. 1**

Is there continuity?

YES

The F-CAN_L wire is not open. Go to step 15.

NO

Repair an open in the F-CAN_L wire between the PCM (A1) and the real time AWD control unit.

15. VSA modulator-control unit internal resistance check

-1. Reconnect VSA modulator-control unit 46P connector.

-2. Measure the resistance between test points 1 and 2.

Test condition	Vehicle OFF (LOCK) mode
	PCM connector A (51P): disconnected
	Gauge control module connector A (32P): disconnected
	EPS control unit connector B (6P): disconnected
	Body control module connector B (36P): disconnected
	SRS unit connector A (39P): disconnected
	Electric brake booster 26P connector: disconnected
	Real time AWD control unit 24P connector (with AWD): disconnected
Test point 1	**PCM connector A (51P) No. 1**
Test point 2	**PCM connector A (51P) No. 2**

Is there about 112-136 Ω?

YES

Go to step 16.

NO

Replace the VSA modulator-control unit .

16. Shorted wire check (F-CAN_H line):

Disconnect the following connectors.

- Gauge control module connector A (32P)
- VSA modulator-control unit 46P connector
- EPS control unit connector B (6P)
- Body control module connector B (36P)
- SRS unit connector A (39P)
- Electric brake booster 26P connector
- Real time AWD control unit 24P connector

-2. Check for continuity between test points 1 and 2.

Test condition	Vehicle OFF (LOCK) mode
	PCM connector A (51P): disconnected
	Gauge control module connector A (32P): disconnected

	VSA modulator-control unit 46P connector: disconnected
	EPS control unit connector B (6P): disconnected
	Body control module connector B (36P): disconnected
	SRS unit connector A (39P): disconnected
	Electric brake booster 26P connector: disconnected
	Real time AWD control unit 24P connector (with AWD): disconnected
Test point 1	**PCM connector A (51P) No. 2**
Test point 2	Body ground

Is there continuity?

YES

Repair a short in the F-CAN_H wire between the PCM (A2) and the gauge control module, the VSA modulator-control unit, the EPS control unit, the body control module, the SRS unit, the electric brake booster, the real time AWD control unit, or the DLC.

NO

The F-CAN_H wire is OK. Go to step 17.

17. Shorted wire check (F-CAN_L line)

-1. Check for continuity between test points 1 and 2.

Test condition	Vehicle OFF (LOCK) mode
	PCM connector A (51P): disconnected
	Gauge control module connector A (32P): disconnected
	VSA modulator-control unit 46P connector: disconnected
	EPS control unit connector B (6P): disconnected
	Body control module connector B (36P): disconnected
	SRS unit connector A (39P): disconnected
	Electric brake booster 26P connector: disconnected
	Real time AWD control unit 24P connector (with AWD): disconnected
Test point 1	**PCM connector A (51P) No. 1**
Test point 2	Body ground

Is there continuity?

YES

Repair a short in the F-CAN_L wire between the PCM (A1) and the gauge control module, the VSA modulator-control unit, the EPS control unit, the body control module, the SRS unit, the electric brake booster, the real time AWD control unit, or the DLC.

NO

The F-CAN_L wire is OK. Go to step 18.

18. Gauge control module check

-1. Reconnect all connectors.

-2. Connect the HDS to the DLC.

-3. Disconnect the following connector.

Gauge control module connector A (32P)

-4. Turn the vehicle to the ON mode, and read the HDS.

Does the HDS identify the vehicle?

YES

Replace the gauge control module .

NO (without real time AWD)

Reconnect gauge control module connector A (32P) with vehicle in OFF (LOCK) mode, then go to step 20.

NO (with AWD)

Reconnect gauge control module connector A (32P) with vehicle in OFF (LOCK) mode, then go to step 19.

19. Real time AWD control unit check

-1. Turn the vehicle to the OFF (LOCK) mode.

-2. Disconnect the following connector.

Real time AWD control unit 24P connector

-3. Turn the vehicle to the ON mode, and read the HDS.

Does the HDS identify the vehicle?

YES

Replace the real time AWD control unit .

NO

Reconnect real time AWD control unit 24P connector with vehicle in OFF (LOCK) mode, then go to step 20.

20. VSA modulator-control unit check

-1. Turn the vehicle to the OFF (LOCK) mode.

-2. Disconnect the following connector.

VSA modulator-control unit 46P connector

-3. Turn the vehicle to the ON mode, and read the HDS.

Does the HDS identify the vehicle?

YES

Replace the VSA modulator-control unit .

NO

Reconnect the VSA modulator-control unit 46P connector with vehicle in OFF (LOCK) mode, then go to step 21.

21. EPS control unit check

-1. Turn the vehicle to the OFF (LOCK) mode.

-2. Disconnect the following connector.

EPS control unit connector B (6P)

-3. Turn the vehicle to the ON mode, and read the HDS.

Does the HDS identify the vehicle?

YES

Replace the EPS control unit .

NO

Reconnect EPS control unit connector B (6P) with vehicle in OFF (LOCK) mode, then go to step 22.

22. Electric brake booster check

-1. Turn the vehicle to the OFF (LOCK) mode.

-2. Disconnect the following connector.

Electric brake booster 26P connector

-3. Turn the vehicle to the ON mode, and read the HDS.

Does the HDS identify the vehicle?

YES

Replace the electric brake booster .

NO

- **Substitute a known-good body control module** , then recheck. If the HDS identifies the vehicle and the body control module was substituted, **replace the original body control module** .
- Check for any authorized service information related to the DTCs or symptoms you are troubleshooting, or **substitute a known-good PCM** .

DIAGNOSIS

BODY ELECTRICAL TROUBLESHOOTING - B-CAN SYSTEM DIAGNOSIS TEST MODE 1 AND TEST MODE 2 (WITHOUT THE HDS)

Shift to Test Mode 1

Check the PCM for DTCs and troubleshoot PCM or F-CAN loss of communication errors first, then do this diagnosis if the HDS is not available.

1. Check the BACK UP fuse and the FI MAIN fuse. If a fuse is blown, find and correct the cause, then replace the fuse.

2. Move the front individual map light switch OFF, the interior light switch to the DOOR position, the ceiling light switch to the MIDDLE position, and close all doors.

NOTE: **Do steps 3-7 within 10 seconds.**

3. Turn the vehicle to the ON mode.

4. Pull and hold the passing switch in its PASSING position.

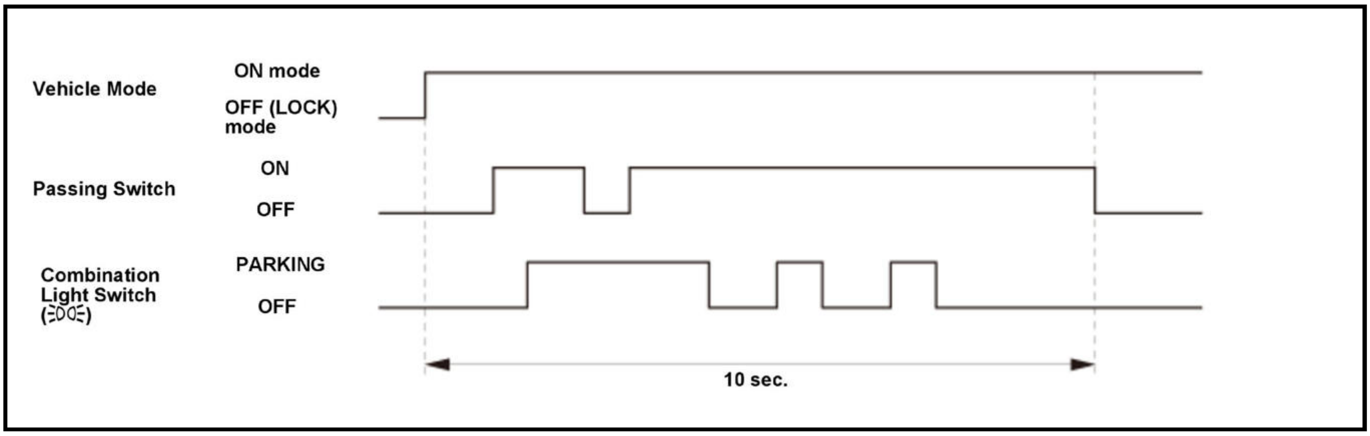

5. While holding the combination light switch is in PASSING position, turn to the PARKING position, then release, pull, and hold the combination light switch in its PASSING position.

6. Turn the combination light switch to OFF, then turn to the PARKING position, and turn to OFF two more times.

7. Release the combination light switch.

8. Wait 5 seconds, and watch the front individual map lights and the ceiling light. When the lights flash quickly once, the system enters in Test Mode 1.

9. If the front individual map lights and the ceiling light keeps blinking after entering Test Mode 1. Check for B-CAN unit communication error.

Error	Display code(blinking pattern)
Communication bus line error (BUS OFF).	1
The body control module cannot receive signals from the gauge control module.	5

10. Check for B-CAN DTCs indicated by the LCD display while still in Test Mode 1. Press the TRIP button to display the next code. After you get to the last code, the display shows END. If no DTCs are stored, the display reads NO.

NOTE: **If the test times out, turn the vehicle to the OFF (LOCK) mode, and repeat steps 3**

With Multi-Information Display (MID)

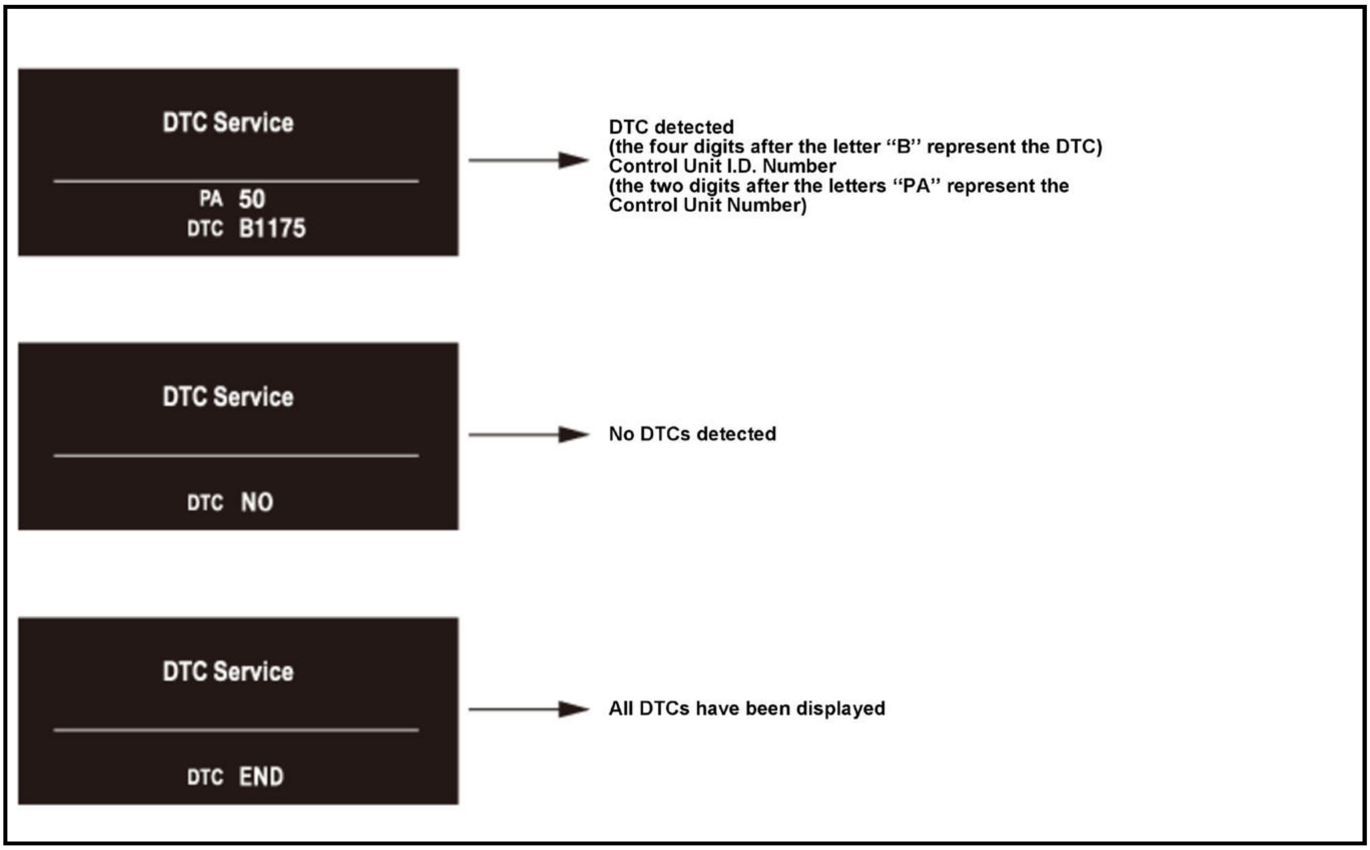
DTC Service
PA 50
DTC B1175
DTC detected
(the four digits after the letter "B" represent the DTC)
Control Unit I.D. Number
(the two digits after the letters "PA" represent the Control Unit Number)
DTC Service
DTC NO
No DTCs detected
DTC Service
DTC END
All DTCs have been displayed

Without Multi-Information Display (MID)

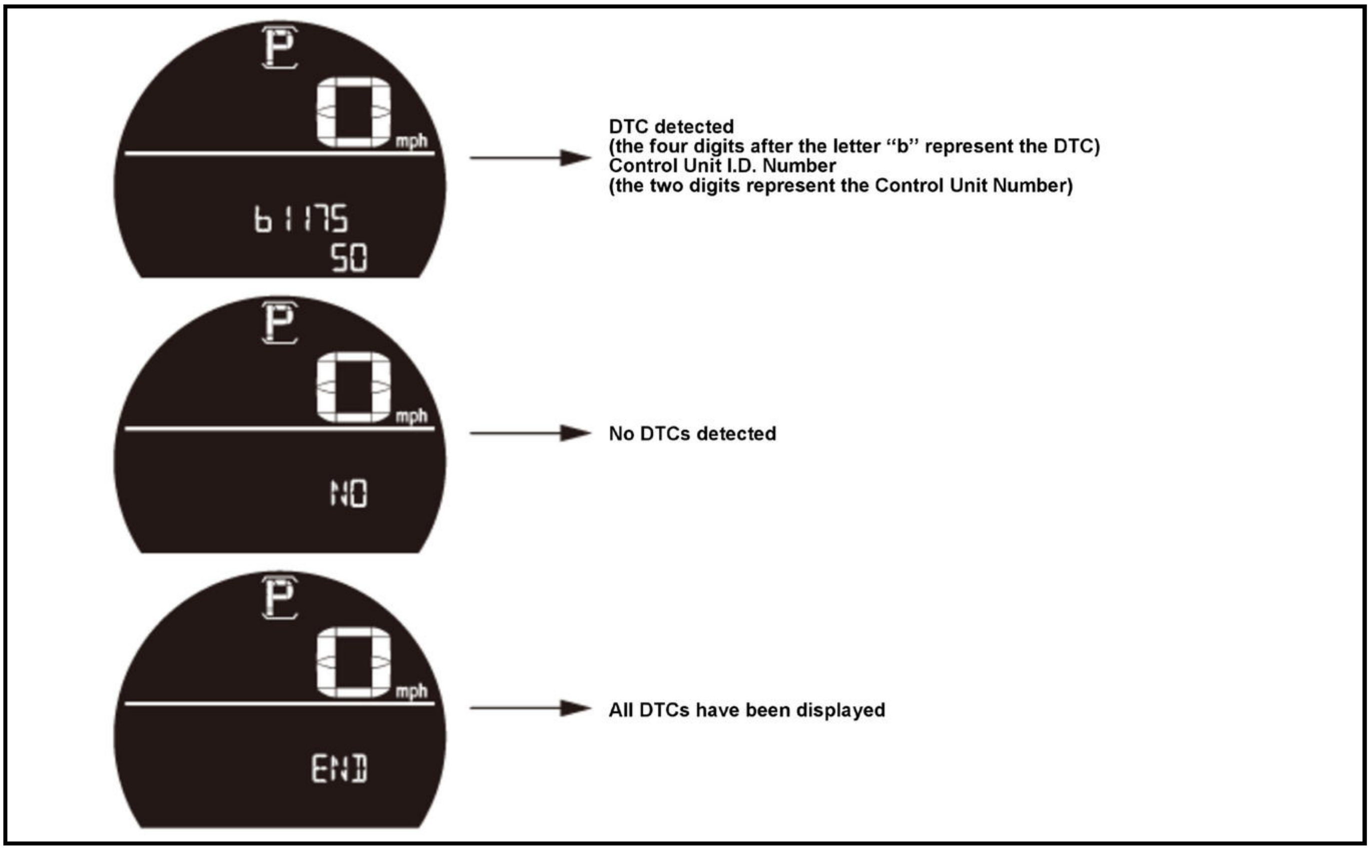
P
0
mph
b1175
50
DTC detected
(the four digits after the letter "b" represent the DTC)
Control Unit I.D. Number
(the two digits represent the Control Unit Number)
P
0
mph
NO
No DTCs detected
P
0
mph
END
All DTCs have been displayed

The control unit that has stored the code can be identified by the number shown after the letter "PA" on the multi-information display (MID).

Control Unit	Control Unit I.D. Number
Relay control module	11
Body control module	18
Power window master switch	30

Control Unit	Control Unit I.D. Number
Power tailgate control unit	31
Gauge control module	50
Climate control unit / HVAC control unit	51
Automatic lighting control unit-sensor	72
Power seat control unit	95
Immobilizer-keyless control unit	96
Parking and back-up sensor control unit	9A
Left side BSI radar unit	9F
Front seat heater control unit	A2
Right side BSI radar unit	A7
Wireless charger	AF

NOTE: You can also check B-CAN communication status by the following methods:

- The body control module self-diagnostic function Test Mode 1 and Test Mode 2 can check some communication statuses and some switch circuits.
- The gauge control module self-diagnostic function can check communication status .

Record all DTCs and sort them by DTC type, then troubleshoot them in this order:

- Internal error DTCs
- Loss of communication DTCs
- Signal error DTCs

12. Clear the DTCs by pressing and holding the SEL/RESET knob for about 10 seconds.

13. You will hear a beep to confirm the codes have been cleared. Operate the devices that failed, and recheck for codes.

Shift to Test Mode 2

NOTE: Do steps 14-17 within 10 seconds.

14. Pull and hold the combination light switch in its PASSING position.

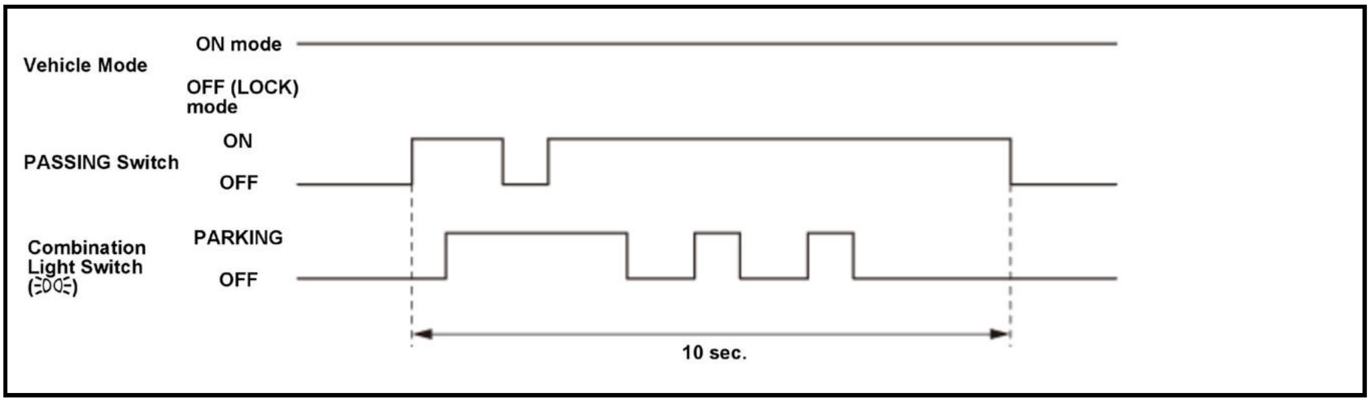

15. While holding the combination light switch is in PASSING position, turn to the PARKING position, then release, pull, and hold the combination light switch in its PASSING position.

16. Turn the combination light switch to OFF, then turn to the PARKING position, and turn to OFF two more times.

17. Release the combination light switch.

18. Wait 5 seconds, and watch the front individual map lights and the ceiling light. When the lights flash two times quickly and then go off, the system is in Test Mode 2.

NOTE: **If you repeat this procedure, the system automatically returns to Test Mode 1.**

19. The following tables list the circuits that can be checked in Test Mode 2. Operate the switch that is most closely related to the problem. If the circuit is OK, the individual map lights, and ceiling light blink once. If the circuit is faulty, there is no such indication.

- -

  If the front individual map lights and ceiling light do not blink even when a switch is operated, check two or three other circuits listed in the table. If the front individual map lights and ceiling light blink for each circuit, the additional circuits are OK; repair the short or open circuit that failed the test in step 19.

- -

  If the front individual map lights and ceiling light do not blink again, this means that the control unit has failed without triggering a DTC. Test a few more circuits. If they also fail, check the related control units using their input tests.

Body Control Module

Item	
Driver's door switch	Ignition key switch
Front passenger's door switch	Turn signal switch (LEFT)
Left rear door switch	Turn signal switch (RIGHT)
Right rear door switch	Hazard warning switch
Tailgate latch switch	Headlight switch (ON)
Tailgate outer handle switch	Headlight switch (OFF)
Left rear door lock knob switch (UNLOCK)	Lighting switch
Right rear door lock knob switch (UNLOCK)	Passing switch
Windshield wiper HI/LO switch	Front fog light switch
Windshield wiper INT/LO switch	Park pin switch
Windshield wiper MIST switch	Brake pedal position switch
Windshield wiper intermittent dwell time controller	Back-up light switch
Windshield washer switch	Transmission range switch
Rear window wiper switch	Driver's door outer handle touch sensor
Rear window wiper INT switch	Front passenger's door outer handle touch sensor
Rear window washer switch	Driver's door outer handle lock switch
Electric parking brake switch	Front passenger's door outer handle lock switch
Hands free access power tailgate control unit/sensor	B

Relay Control Module

Item	
Hood latch switch	B

Door Multiplex Control Unit

Item	
Driver's door lock switch (UNLOCK)	Power window master switch(Driver's window UP, DOWN, AUTO)
Driver's door lock switch (LOCK)	

Item	
Driver's door lock knob switch (UNLOCK)	Power window master switch(Front passenger's window UP, DOWN, AUTO)
Driver's door lock knob switch (LOCK)	
Driver's door key cylinder switch (UNLOCK)*	Power window master switch(Left rear window UP, DOWN, AUTO)
Driver's door key cylinder switch (LOCK)*	
Driving position memory switch (SET)	Power window master switch(Right rear window UP, DOWN, AUTO)
Driving position memory switch (POSITION 1)	

*: A second key is necessary to check the key cylinder inputs. Be sure to rotate the key cylinder switch two times to each position (lock and lock, unlock and unlock) to ensure the door lock knob switch is in the appropriate position.

Item	
Driving position memory switch (POSITION 2)	B

*: A second key is necessary to check the key cylinder inputs. Be sure to rotate the key cylinder switch two times to each position (lock and lock, unlock and unlock) to ensure the door lock knob switch is in the appropriate position.

Gauge Control Module

Item	
Electric parking brake/automatic brake hold switch	Audio remote-HFL switch
VSA OFF switch	Cruise control/ACC combination switch
TPMS switch	ECON switch
Brake fluid level switch	CMBS OFF switch
Washer fluid level switch	Idle stop OFF switch

BODY ELECTRICAL TROUBLESHOOTING - B-CAN SYSTEM DIAGNOSIS TEST MODE A - INITIAL COMMUNICATION AND DTC CHECKS

Check the PCM for DTCs and troubleshoot PCM or F-CAN loss of communication errors first, then do this diagnosis if the symptom is related to the B-CAN system.

Compare the symptom with this list of B-CAN related systems:

- Gauge control module
- Exterior lights
- Turn signals
- Entry light control
- Interior lights
- Safety indicators
- Horns (security and panic)
- Reminder chimes (seat belt, lights-on, and parking brake)
- Power window/panoramic glass roof/moonroof timer
- Wiper/washer
- Security
- Keyless entry
- Key interlock
- Power door locks
- Dashlights brightness
- Immobilizer

- Daytime running lights
- Driving position memory system
- Keyless access control
- Climate control
- BSI system
- Seat heater
- Parking and back-up sensor system
- Power tailgate
- Wireless charger

- -

  If the symptom is related to the B-CAN system, go to step 2.

- -

  If the symptom is not related to the B-CAN system, go to the system symptom troubleshooting.

2. **Connect the HDS to the data link connector (DLC)** .From the BODY ELECTRICAL system, select Mode Menu, then select the Connected Unit Menu to see if the following control units are communicating with the HDS.

- Body Control Module
- Relay control module
- Gauge control module
- Climate control unit
- Automatic lighting control unit-sensor
- Keyless access control unit
- Immobilizer-keyless control unit
- Door multiplex control unit
- Power tailgate control unit
- Power seat control unit
- Front seat heater control unit
- Parking and back-up sensor control unit
- Wireless charger

NOTE:

- If a unit is communicating with the HDS, "DETECT" is displayed.
- If a unit is not communicating or the vehicle is not equipped, "NOT AVAILABLE" is displayed.
- The HDS only checks the status one time when BODY ELECTRICAL is selected. To recheck the status after repair, reboot the HDS.

- -

  If all control units are communicating with the HDS, go to step 4.

- -

  If any of the control units are not communicating, go to **B-CAN System Diagnosis Test Mode B**.

- -

If all units are not communicating or only the body control module is communicating, go to **body control module DTC U1280 troubleshooting** .

4. Select the system that has the problem from the BODY ELECTRICAL SYSTEM SELECT menu, then select DTCs.

- -

  If any DTCs are indicated, go to step 5.

Record all DTCs, and sort them by DTC type, then troubleshoot them in this order:

- Internal error DTCs.
- Loss of communication DTCs.
- Signal error DTCs.

BODY ELECTRICAL TROUBLESHOOTING - B-CAN SYSTEM DIAGNOSIS TEST MODE B - CONTROL UNIT NOT COMMUNICATING

Do this diagnosis if any of the control units are not communicating (NOT AVAILABLE is displayed in the HDS) as found by the **B-CAN System Diagnosis Test Mode A**.

1. Using the HDS, select the system that has the symptom from the BODY ELECTRICAL SYSTEM SELECT menu.

2. Select DTCs, and then check for loss of communication DTCs.

- -

  If any loss of communication DTCs are indicated, go to step 3.

- -

  If any loss of communication DTCs are not indicated, **replace the body control module** .

Do the power, ground, and communication part of the input test for the unit(s) not communicating with the HDS.

- Body Control Module
- Relay control module
- Gauge control module
- Climate control unit
- Automatic lighting control unit-sensor
- Keyless access control unit
- Immobilizer-keyless control unit
- Door multiplex control unit
- Power tailgate control unit
- Power seat control unit
- Front seat heater control unit
- Parking and back-up sensor control unit
- Wireless charger
- Left side BSI radar unit
- Right side BSI radar unit

BODY ELECTRICAL TROUBLESHOOTING - B-CAN SYSTEM DIAGNOSIS TEST MODE C - NO DTCS AND OUTPUT WON'T SHUT OFF

Body Electrical Troubleshooting - B-CAN System Diagnosis Test Mode C - No DTCs and Output Won't Shut OFF

Do this diagnosis if a component that is controlled by the B-CAN system does not stop or turn off.

NOTE:

- If the component does not turn on, go to **B-CAN System Diagnosis Test Mode D**.
- See the B-CAN system unit input/output index for a list of input and output devices and the control units that monitor the input and control the output devices.

1. Check for DTCs by selecting the system MODE MENU from the HDS.

- -

  If any DTCs are indicated, go to **B-CAN System Diagnosis Test Mode A**.

- -

  If any DTCs are not indicated, go to step 2.

2. Turn off the switch that controls the malfunctioning component.

3. Select the applicable system from the system MODE MENU, then select DATA LIST, and check the input of the switch that controls the related component.

- -

  If HDS indicates the switch is OFF, go to step 4.

- -

  If HDS indicates the switch is not OFF, go to step 6.

4. In the DATA LIST, check the output signal of the malfunctioning component.

- -

  If the output signal is OFF, go to step 5.

- -

  If the output signal is not OFF, replace the control unit that controls the device that will not turn OFF.

5. Check the relay that does not stop or turn off, if applicable, then check for a short in the wire between the relay and the component, the relay and control unit, or the component and control unit.

- -

  If the relay and the wire harness are OK, replace the control unit that controls the component that will not stop or turn OFF.

- -

  If the relay and the wire harness are not OK, replace the relay or repair/replace the wire harness.

6. Check the switch, then check for a short in the wire between the switch and the control unit that monitors the switch.

- -

  If the switch and the wire harness are OK, replace the control unit that monitors the switch.

- -

  If the switch and the wire harness are not OK, replace the switch or repair/replace the appropriate wire harness.

BODY ELECTRICAL TROUBLESHOOTING - B-CAN SYSTEM DIAGNOSIS TEST MODE D - NO DTCS AND OUTPUT WON'T TURN ON

Do this diagnosis if a component that is controlled by the B-CAN system does not run or come on.

NOTE:

- If the component does not turn off or stop, go to **B-CAN System Diagnosis Test Mode C**.
- See the B-CAN system unit input/output index for a list of input and output devices and the control units that monitor the input and control the output devices.

1. Check the fuse of the malfunctioning output device.

- -

  If the fuse is OK, go to step 2.

- -

  If the fuse is not OK, replace the fuse. If the fuse blows again, repair the short to ground on the fuse circuit of the malfunctioning device.

2. Check for DTCs by selecting the system MODE MENU from the HDS.

- -

  If any DTCs are indicated, go to **B-CAN System Diagnosis Test Mode A**.

- -

  If any DTCs are not indicated, go to step 3.

3. Turn ON the switch that controls the malfunctioning component.

4. Select the applicable system from the system MODE MENU, then select DATA LIST, and check the input of the switch that controls the related component.

- -

  If there is an output signal, go to step 5.

- -

  If there is not an output signal, go to step 9.

5. Check the relay (if applicable) and ground, then check for an open or a short in the circuit for the malfunctioning component.

- -

  If the relay and the wire harness are OK, go to step 6.

- -

  If the relay and the wire harness are not OK, replace the relay or repair the wire circuit.

6. Do the function test for the malfunctioning component.

- -

  If the output device pass the function test, go to step 7.

- -

  If the output device does not pass the function test, replace the component.

7. With the malfunctioning output device connected, connect a voltmeter between the malfunctioning output device and body ground on the wire that the control unit uses to control the output device circuit.

8. Select FUNCTIONAL TESTS from the system MODE MENU, and do the forced operation test of the malfunctioning component.

- -

  If the voltage changes (12 V to 0 V, or 0 V to 12 V), inspect the ground for the component. If OK, replace the component.

- -

  If the voltage does not change, replace the control unit that controls the malfunctioning component.

9. Select DATA LIST from the system MODE MENU, and make sure the switch signal input for the malfunctioning system indicates a change when operated.

- -

  If the switch input indicates ON when the switch is ON, replace the control unit that controls the malfunctioning component.

- -

  If the switch input does not indicate ON when the switch is ON, go to step 10.

10. Check the switch and its ground (if applicable), then check for an open or a short in the wire between the switch and the control unit that monitors it.

- -

  If the switch and the wire harness are OK, replace the control unit that monitors the switch.

- -

  If the switch and the wire harness are not OK, replace the switch, or repair/replace the wire harness.

DTC TROUBLESHOOTING INDEX

NETWORK COMMUNICATION DTC TROUBLESHOOTING INDEX

NOTE: Record all DTCs, and sort them by DTC type using the DTC troubleshooting index, then troubleshoot the DTC(s) in this order:

- Internal error DTCs
- Loss of communication DTCs
- Signal error DTCs

Automatic Lighting Control Unit

DTC	Description	DTC type
B1575	Auto light sensor error	Internal error
U1280	BUS OFF state is detected by CAN controller	Loss of communication
U1281	Auto light control unit lost communication with MICU	Loss of communication
U128D	Auto light control unit lost communication with gauge control module	Loss of communication

Body Control Module

DTC	Description	DTC type
B1002	MICU internal error (EEPROM error)	Internal error
B1003	MICU Update Error	Internal error
B1028	Rear wiper motor(Park) signal error	Signal error
B1032	MICU lost communication with SRS unit (CDS message)	Signal error
B1036	IG1 Power Supply Circuit Malfunction	Signal error
B1038	IMMOBILIZER F-CAN Authentication ID Not Received	Signal error
B1039	IMMOBILIZER F-CAN Authentication ID Unmatch	Signal error
B1040	BCM lost communication with Front wiper	Loss of communication
B1041	Front Wiper motor malfunction	Signal error
B1042	Front Wiper security line error	Signal error
B1043	Front Wiper unit internal error (EEPROM error)	Internal error
B1077	Windshield wiper motor (Park) signal error	Signal error
B1275	Head light OFF position Circuit Malfunction	Signal error
B1276	Head light switch parking (small) position Circuit Malfunction	Signal error
B1277	Head light AUTO position Circuit Malfunction	Signal error
B1278	Head light ON position Circuit Malfunction	Signal error
B1279	Dimmer switch Circuit Malfunction	Signal error
B1280	Turn signal switch Circuit Malfunction	Signal error
B1281	Front wiper MIST position Circuit Malfunction	Signal error
B1282	Front wiper INT(AUTO) position Circuit Malfunction	Signal error
B1283	Front wiper LOW position Circuit Malfunction	Signal error
B1284	Front wiper HIGH position Circuit Malfunction	Signal error
B2352	Rain Light Sensor Unit Internal error (EEPROM error)	Signal error
B2375	Rain Sensing malfunction	Signal error
B2376	Light sensing malfunction	Signal error
U0073	F-CAN communication bus line error	Loss of communication
U0100	BCM lost communication with ECM/PCM	Loss of communication
U0122	BCM lost communication with VSA/ABS	Loss of communication
U1280	B-CAN communication bus line error (BUS-OFF)	Loss of communication
U128D	MICU lost communication with gauge control module	Loss of communication

DTC	Description	DTC type
U1291	MICU lost communication with relay control module	Loss of communication

Front Seat Heater Control Unit

DTC	Description	DTC type
B1C55	Driver's heater thermistor circuit open	Signal error
B1C56	Driver's heater thermistor circuit short	Signal error
B1C57	Passenger's heater thermistor circuit open	Signal error
B1C58	Passenger's heater thermistor circuit short	Signal error
B1C60	Driver's heater current abnormal high	Signal error
B1C61	Driver's heater current abnormal low	Signal error
B1C62	Passenger's heater current abnormal high	Signal error
B1C63	Passenger's heater current abnormal low	Signal error
B1C68	Driver's heater not heating	Signal error
B1C69	Passenger's heater not heating	Signal error
B1C70	Driver's main heater switch failure	Signal error
B1C71	Passenger's main heater switch failure	Signal error
U1064	Seat heater control unit lost communication with climate control unit	Loss of communication
U1280	Seat heater control unit communication bus line error (BUS-OFF)	Loss of communication

Gauge Control Module

DTC	Description	DTC type
B1175	Fuel level sensor (Fuel gauge sending unit) circuit malfunction	Signal error
B1176	Fuel level sensor (Fuel gauge sending unit) circuit short	Signal error
B1195	Gauge control module lost communication with Audio Remote Switch(LIN bus connected)	Loss of communication
U0029	F-CAN communication line error	Loss of communication
U0100	Gauge control module lost communication with ENG/AT	Loss of communication
U0101	Gauge control module lost communication with AT	Loss of communication
U0104	Gauge Control Module Lost Communication With Driving Support System Control Unit	Loss of communication
U0114	Gauge control module lost communication with All Wheel Drive Control Module	Loss of communication
U0122	Gauge control module lost communication with VSA modulator-control unit	Loss of communication
U0128	Gauge control module lost communication with EPB	Loss of communication
U0131	Gauge control module lost communication with EPS Unit	Loss of communication
U0151	Gauge control module lost communication with SRS unit	Loss of communication
U1280	Communication bus line error (BUS-OFF)	Loss of communication
U1281	Gauge control module lost communication with MICU (MICU frame)	Loss of communication
U1288	Gauge control module lost communication with PARKSR	Loss of communication
U128F	Gauge control module lost communication with BSI unit	Loss of communication

DTC	Description	DTC type
U129C	Gauge control module lost communication with multi purpose camera unit	Loss of communication
U3000-49	ECU internal circuit malfunction	Internal error
U3000-51	Reprogramming error	Internal error

Immobilizer-Keyless Control Unit

DTC	Description	DTC type
B1901	Immobilizer Unit Internal error (CPU error)	Internal error
B1902	Immobilizer Unit Internal error (EEPROM error)	Internal error
U1280	Communication bus line error (BUS-OFF)	Loss of communication

DTC	Description	DTC type
U0155	Immobilizer-keyless control unit lost communication with gauge control module	Loss of communication
U0199	Immobilizer-keyless control unit lost communication with door multiplex control unit	Loss of communication
U1281	Lost communication with MICU (MICU frame)	Loss of communication
U128D	Lost communication with METER	Loss of communication

Keyless Access Backup Control Unit

DTC	Description	DTC type
B1926	Backup Control Antenna Open or Short	Internal error
U1280	B-CAN communication bus line error (BUS-OFF)	Loss of communication
U128D	Backup Control Unit Lost Communication with Gauge Control Module	Loss of communication

Keyless Access Control Unit

DTC	Description	DTC type
B1601	Keyless access control unit internal (CPU) error	Internal error
B1602	Keyless access control unit internal (EEPROM) error	Internal error
B1632	MTR CONT Signal Error	Signal error
B1640	RF1 antenna not connected or malfunction	Signal error
B1645	Driver's Door LF Antenna Circuit Short	Signal error
B1646	Driver's Door LF Antenna Circuit Open	Signal error
B1647	Passenger's Door LF Antenna Circuit Short	Signal error
B1648	Passenger's Door LF Antenna Circuit Open	Signal error
B1657	Rear Bumper LF Antenna Circuit Short	Signal error
B1658	Rear Bumper LF Antenna Circuit Open	Signal error
B1659	Front Interior LF Antenna Circuit Short	Signal error
B1660	Front Interior LF Antenna Circuit Open	Signal error
B1661	Middle Interior Antenna Circuit Shorted	Signal error
B1662	Middle Interior Antenna Circuit Opened	Signal error
B1663	Rear Interior LF Antenna Circuit Short	Signal error
B1664	Rear Interior LF Antenna Circuit Open	Signal error
B1667	Rear Shelf (Middle Interior) LF Antenna Circuit Short	Signal error
B1668	Rear Shelf (Middle Interior) LF Antenna Circuit Open	Signal error
U1280	Keyless access control unit communication bus line error (BUS-OFF)	Loss of communication

DTC	Description	DTC type
U1281	Keyless Access Control Unit Lost Communication with MICU	Loss of communication
U128D	Keyless Access Control Unit Lost Communication with Gauge Control Module	Loss of communication

Keyless Access Power Control Unit

DTC	Description	DTC type
B12C5	Engine Start/Stop Switch Failure	Signal error
B12C6	Electric Steering Lock Switch C/D Monitor Circuit Failure	Signal error
B12C7	Electric Steering Lock Motor Circuit Failure	Signal error
B12D0	Power Control Unit IG1A Circuit Error	Internal error
B12D1	Power Control Unit IG1B Circuit Error	Internal error
B12D2	Power Control Unit IG2 Circuit Error	Internal error
B12D3	Power Control Unit IG Latch Circuit Error	Internal error
B12E0	Electric Steering Lock Switch Internal Error	Internal error
B12E1	Electric Steering Lock Motor Internal Error	Internal error
B12E2	Electric Steering Lock Low Level Failure of MTRCUT1	Signal error
B12E3	Electric Steering Lock High Level Failure of MTRCUT1	Signal error
B12E4	Electric Steering Lock High Level Failure of MTRCUT2	Signal error
B12E5	Incorrect assembly of control unit for electric steering lock equipped vehicle	Signal error
B12F0	Power Control Unit Lost Communication with Electric Steering Lock	Loss of communication
U0073	F-CAN Communication Bus Line Error	Loss of communication
U0100	Power Control Unit Lost Communication with PCM	Loss of communication
U0122	Power Control Unit Lost Communication with ABS/VSA Modulator-Control Unit	Loss of communication
U1280	B-CAN communication bus line error (BUS-OFF)	Loss of communication
U1281	Power Control Unit Lost Communication with MICU	Loss of communication
U128D	Power Control Unit Lost Communication with Gauge Control Module	Loss of communication

Multiplex Control Unit, Door (Power Window Master Switch)

DTC	Description	DTC type
B1125	Driver's power window motor A pulse malfunction	Signal error
B1126	Driver's power window motor B pulse malfunction	Signal error
B1127	Driver's door lock key cylinder switch malfunction	Signal error
B1128	Driver's door lock switch malfunction	Signal error
B1129	Driver's door lock knob switch malfunction	Signal error
B1130	Front passenger's power window motor A pulse malfunction	Signal error
B1131	Front passenger's power window motor B pulse malfunction	Signal error
B1140	Driver's power window position detect circuit malfunction	Signal error

DTC	Description	DTC type
B1142	Door Multiplex Control Unit lost communication with front passenger's power window switch (UART line open)	Loss of communication
B1145	Front passenger's power window position detect circuit malfunction	Signal error
U1280	Communication bus line error (BUS-OFF)	Loss of communication
U1281	Door multiplex control unit lost communication with MICU	Loss of communication
U128D	Door multiplex control unit lost communication with gauge control module	Loss of communication
U1299	Door multiplex control unit lost communication with climate control unit	Loss of communication

Parking and Back-Up Sensor Control Unit

DTC	Description	DTC type
B2601	Parking Sensor CPU Error	Internal error
B2602	Parking Sensor EEPROM Error	Internal error
B2610	Front 1st sensor failure	Signal error
B2611	Front 2nd sensor failure	Signal error
B2612	Front 3rd sensor failure	Signal error
B2613	Front 4th sensor failure	Signal error
B2614	Rear 1st sensor failure	Signal error
B2615	Rear 2nd sensor failure	Signal error
B2616	Rear 3rd sensor failure	Signal error
B2617	Rear 4th sensor failure	Signal error

DTC	Description	DTC type
B2618	Front 1st sensor data failure	Signal error
B2619	Front 2nd sensor data failure	Signal error
B261A	Front 3rd sensor data failure	Signal error
B261B	Front 4th sensor data failure	Signal error
B261C	Rear 1st sensor data failure	Signal error
B261D	Rear 2nd sensor data failure	Signal error
B261E	Rear 3rd sensor data failure	Signal error
B261F	Rear 4th sensor data failure	Signal error
B2646	Front sensor power failure	Signal error
B2647	Rear sensor power failure	Signal error
B2648	Front sensor signal short to ground	Signal error
B2649	Rear sensor signal short to ground	Signal error
B264A	Indicator circuit short to power	Signal error
B264B	Indicator circuit short to ground	Signal error
B264D	Front sensor combination error	Signal error
U0155	Lost communication with Gauge Control Module	Loss of communication
U1280	B-CAN communication bus line error (BUS-OFF)	Loss of communication
U1281	Lost communication with MICU	Loss of communication

Power Seat Control Unit

DTC	Description	DTC type
B1802	Power seat control unit internal (EEPROM) error	Internal error
B1825	Slide pulse error(no change in pulse for 1 second)	Signal error
B1826	Front height pulse error(no change in pulse for 1 second)	Signal error
B1827	Rear height pulse error(no change in pulse for 1 second)	Signal error
B1828	Recline pulse error(no change in pulse for 1 second)	Signal error
B1829	AT-P signal and VSP signal mismatch	Signal error
B1836	Power Seat Position Sensor circuit short	Signal error
B1837	Memory position calling timeout	Signal error
B1844	Power Seat Slide switch circuit malfunction	Signal error
B1845	Power Seat Recline switch circuit malfunction	Signal error
B1846	Power Seat Front Up-Down switch circuit malfunction	Signal error
B1847	Power Seat Rear Up-Down switch circuit malfunction	Signal error
U0199	Power seat control unit lost communication with door multiplex control unit (DRLockSW frame)	Loss of communication
U1280	B-CAN communication bus line error (BUS-OFF)	Loss of communication
U1281	Power seat control unit lost communication with MICU (MICU frame)	Loss of communication
U128D	Lost Communication With Gauge Control Module (VSP/NE frame)	Loss of communication

Power Tailgate Control Unit

DTC	Description	DTC type
B1352	Power Tailgate Control Unit Internal error (EEPROM error)	Internal error
B1375	Driver's side PTG switch circuit malfunction	Signal error
B1376	Tailgate Outer Handle switch circuit malfunction	Signal error
B1377	Power Tailgate Inner switch circuit malfunction	Signal error
B1378	Power Tailgate Right Touch/Pinch sensor circuit malfunction	Signal error
B1379	Power Tailgate Left Touch/Pinch sensor circuit malfunction	Signal error
B1380	Tailgate Closer Unit Neutral switch circuit malfunction	Signal error

DTC	Description	DTC type
B1382	Tailgate Closer Unit Full Latch switch circuit malfunction	Signal error
B1383	Tailgate Closer Unit Ratchet switch circuit malfunction	Signal error
B1384	Tailgate Closer Unit Half Latch switch circuit malfunction	Signal error
B1385	Power Tailgate temperature sensor malfunction	Signal error
B1386	Power Tailgate sensor Pulse A circuit malfunction	Signal error
B1387	Power Tailgate sensor Pulse B circuit malfunction	Signal error
B1388	Power Tailgate Drive Motor circuit malfunction	Signal error
B1390	Power Tailgate Closer Motor function error	Signal error
U0199	Lost communication with P/W (DRLOCKSW, KLDRLOCK frame)	Loss of communication
U1280	Communication Bus line Error(a bus OFF state is detected by Power Tail Gate ECU)	Loss of communication
U1281	Lost communication with MICU (MICU frame)	Loss of communication

DTC	Description	DTC type
U128D	Power Tailgate Control Unit lost communication with GAUGE Control Module	Loss of communication

Relay Control Module

DTC	Description	DTC type
B1051	Relay control module internal (CPU) error	Internal error
B1052	Relay control module internal (EEPROM) error	Internal error
B1075	Headlight switch malfunction	Signal error
B1080	Power supply circuit (IG1 line) input error for Relay Control Module and MICU	Signal error
B1085	Head Light Low Beam Power Source Abnormality	Signal error
B108A	Right Side Parking Light Circuit Shorted	Signal error
B108B	Left Side Parking Light Circuit Shorted	Signal error
B108C	Right Side Head Light Low Beam Circuit Shorted	Signal error
B108D	Left Side Head Light Low Beam Circuit Shorted	Signal error
B108E	Right Side Head Light High Beam Circuit Shorted	Signal error
B108F	Left Side Head Light High Beam Circuit Shorted	Signal error
B1090	Illumination Circuit Shorted	Signal error
B1091	DRL Circuit Shorted	Signal error
B1092	Interior Light Cut Circuit Shorted	Signal error
U1280	B-CAN communication bus line error (BUS-OFF)	Loss of communication
U1281	Relay control module lost communication with MICU(MICU frame)	Loss of communication
U128D	Relay control module lost communication with gauge control module(VSP/NE frame)	Loss of communication

Wireless Charger

DTC	Description	DTC Type
B22A0	Wireless charger unit failure	Internal error
B22A1	Wireless charger unit ACC input circuit failure	Signal error
U1280	Communication bus line Error (BUS-OFF)	Loss of communication
U1281	Wireless charger unit lost communication with MICU	Loss of communication
U1286	Wireless charger unit lost communication with Keyless Access Control Unit	Loss of communication
U128D	Wireless charger unit lost communication with Gauge control module	Loss of communication
U128E	Wireless charger unit lost communication with Audio-Navigation Unit	Loss of communication

REWRITE

CAN GATEWAY UPDATE (CAN GATEWAY)

Procedure

1. CAN Gateway - Update

   NOTE: When updating control units, use the most current version of the HDS software and interface device. Refer to User Manual of the Update Device for more information about updating control units.

CIRCUIT DIAGRAM

COMMUNICATION SYSTEMS CIRCUIT DIAGRAM (2.4 L ENGINE) (2017 2018 2019)

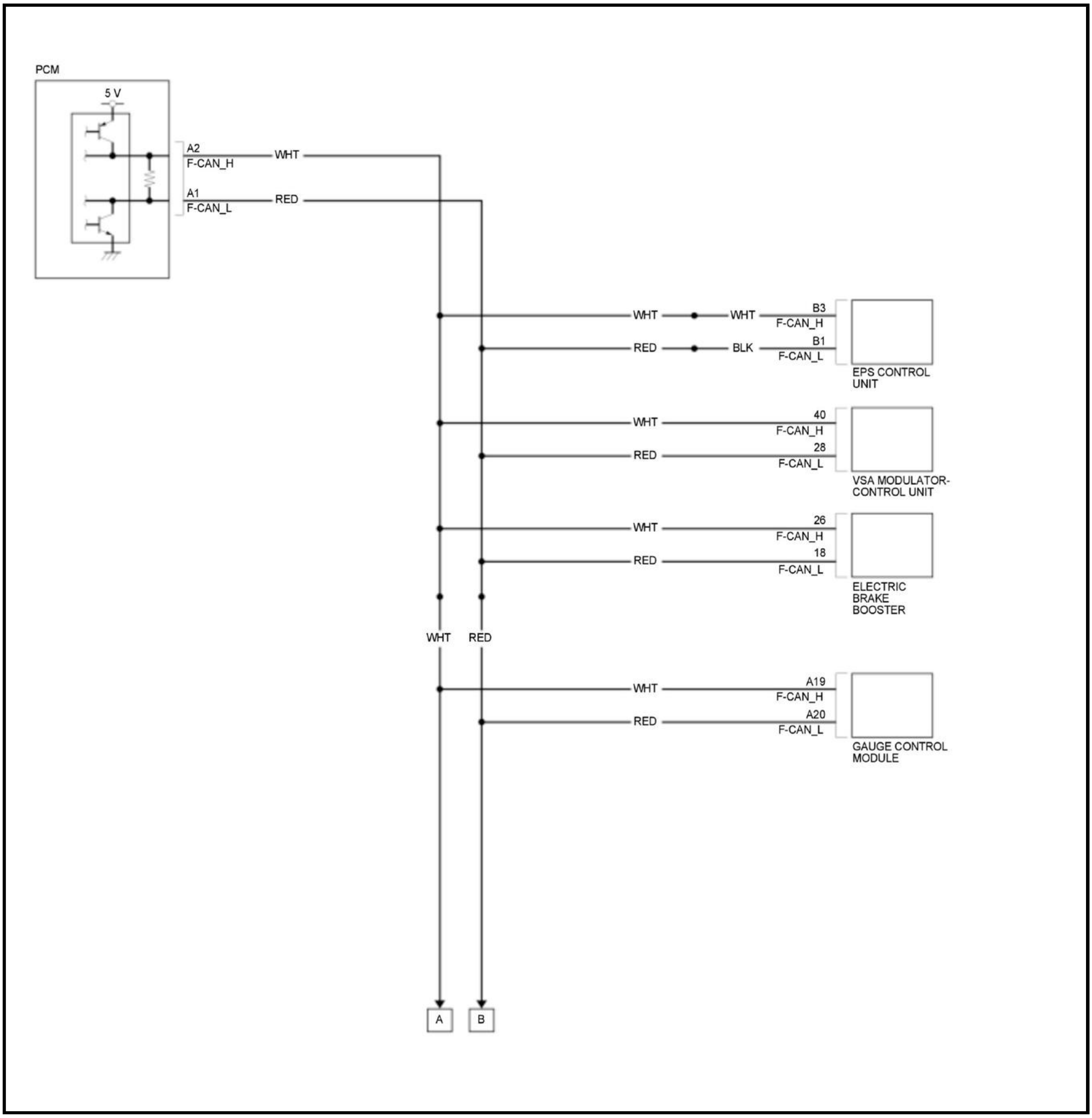
PCM
5 V
A2
F-CAN_H
WHT
A1
F-CAN_L
RED
WHT
WHT
B3
F-CAN_H
RED
BLK
B1
F-CAN_L
EPS CONTROL UNIT
WHT
40
F-CAN_H
RED
28
F-CAN_L
VSA MODULATOR-CONTROL UNIT
WHT
26
F-CAN_H
RED
18
F-CAN_L
ELECTRIC BRAKE BOOSTER
WHT
RED
WHT
A19
F-CAN_H
RED
A20
F-CAN_L
GAUGE CONTROL MODULE
A
B

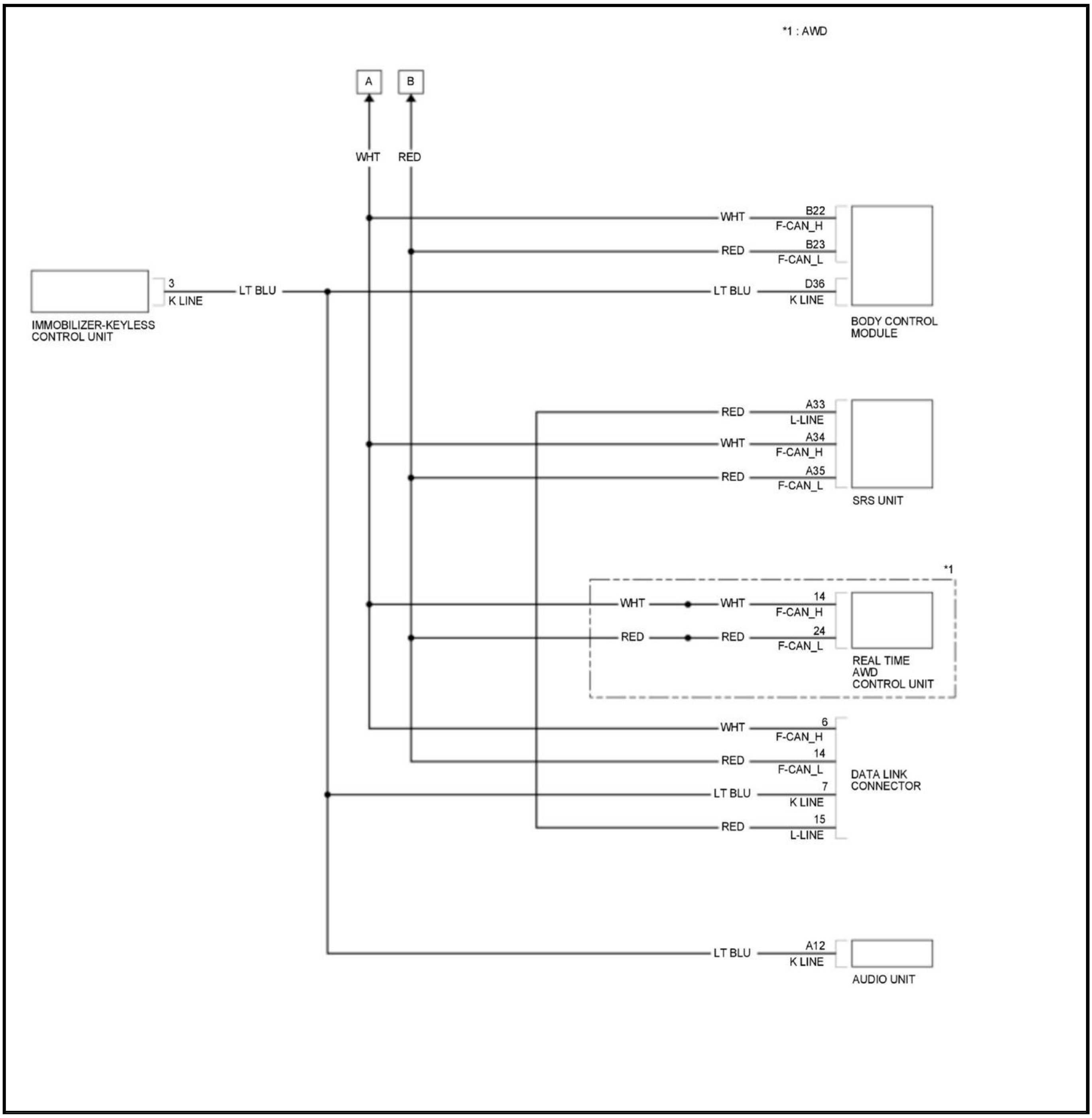
*1 : AWD
A
B
WHT
RED
WHT
B22
F-CAN_H
RED
B23
F-CAN_L
3
K LINE
LT BLU
LT BLU
D36
K LINE
IMMOBILIZER-KEYLESS CONTROL UNIT
BODY CONTROL MODULE
RED
A33
L-LINE
WHT
A34
F-CAN_H
RED
A35
F-CAN_L
SRS UNIT
*1
WHT
WHT
14
F-CAN_H
RED
RED
24
F-CAN_L
REAL TIME AWD CONTROL UNIT
WHT
6
F-CAN_H
RED
14
F-CAN_L
LT BLU
7
K LINE
RED
15
L-LINE
DATA LINK CONNECTOR
LT BLU
A12
K LINE
AUDIO UNIT

COMMUNICATION SYSTEMS CIRCUIT DIAGRAM (CAN GATEWAY)

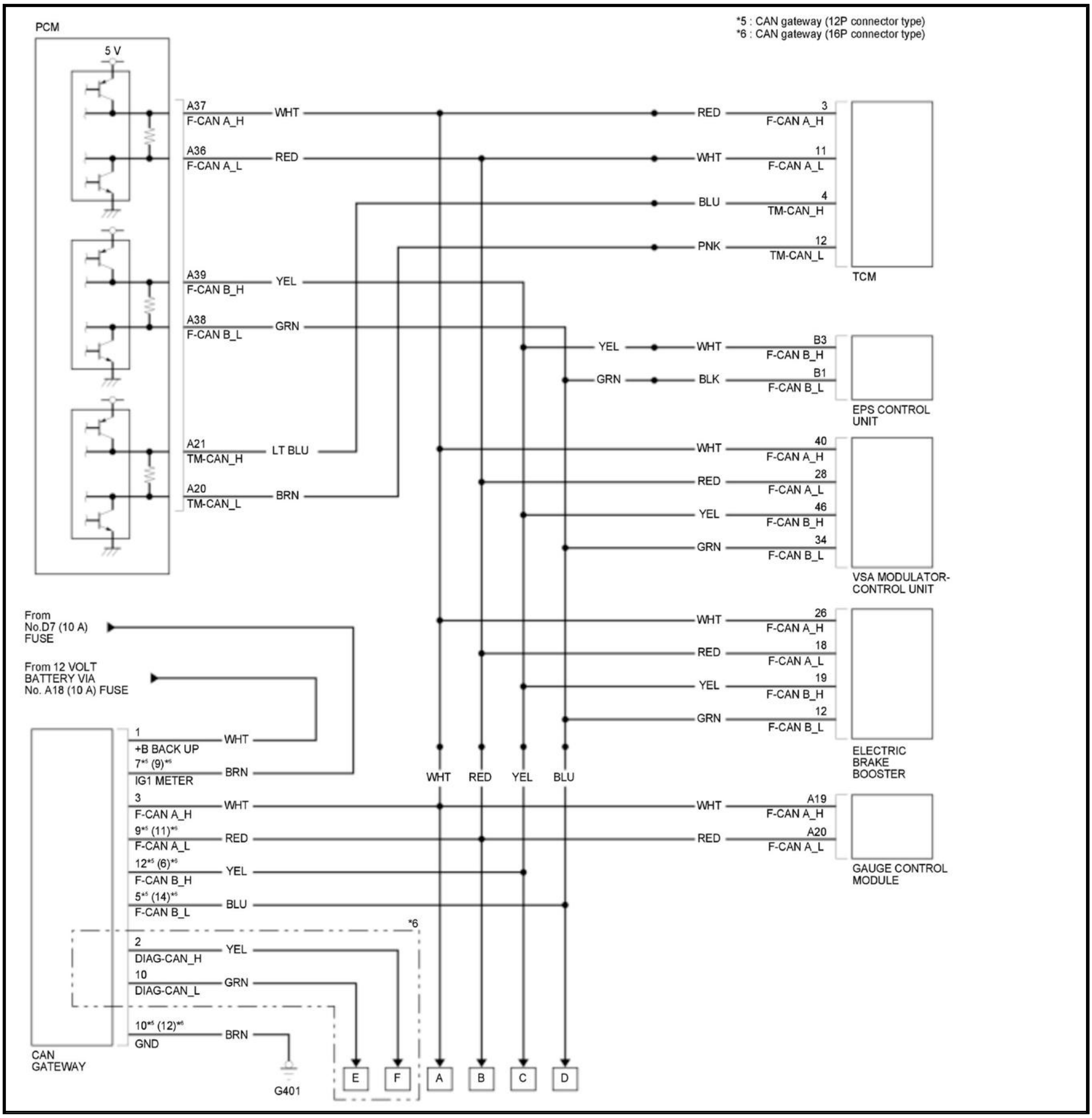
*5 : CAN gateway (12P connector type)
*6 : CAN gateway (16P connector type)
PCM
5 V
A37
F-CAN A_H
WHT
A36
F-CAN A_L
RED
A39
F-CAN B_H
YEL
A38
F-CAN B_L
GRN
A21
TM-CAN_H
LT BLU
A20
TM-CAN_L
BRN
RED
3
F-CAN A_H
WHT
11
F-CAN A_L
BLU
4
TM-CAN_H
PNK
12
TM-CAN_L
TCM
YEL
WHT
B3
F-CAN B_H
GRN
BLK
B1
F-CAN B_L
EPS CONTROL UNIT
WHT
40
F-CAN A_H
RED
28
F-CAN A_L
YEL
46
F-CAN B_H
GRN
34
F-CAN B_L
VSA MODULATOR-CONTROL UNIT
WHT
26
F-CAN A_H
RED
18
F-CAN A_L
YEL
19
F-CAN B_H
GRN
12
F-CAN B_L
ELECTRIC BRAKE BOOSTER
From No.D7 (10 A) FUSE
From 12 VOLT BATTERY VIA No. A18 (10 A) FUSE
1
+B BACK UP
WHT
7*5 (9)*6
IG1 METER
BRN
3
F-CAN A_H
WHT
9*5 (11)*6
F-CAN A_L
RED
12*5 (6)*6
F-CAN B_H
YEL
5*5 (14)*6
F-CAN B_L
BLU
*6
2
DIAG-CAN_H
YEL
10
DIAG-CAN_L
GRN
10*5 (12)*6
GND
BRN
G401
CAN GATEWAY
WHT
RED
YEL
BLU
WHT
A19
F-CAN A_H
RED
A20
F-CAN A_L
GAUGE CONTROL MODULE
E
F
A
B
C
D

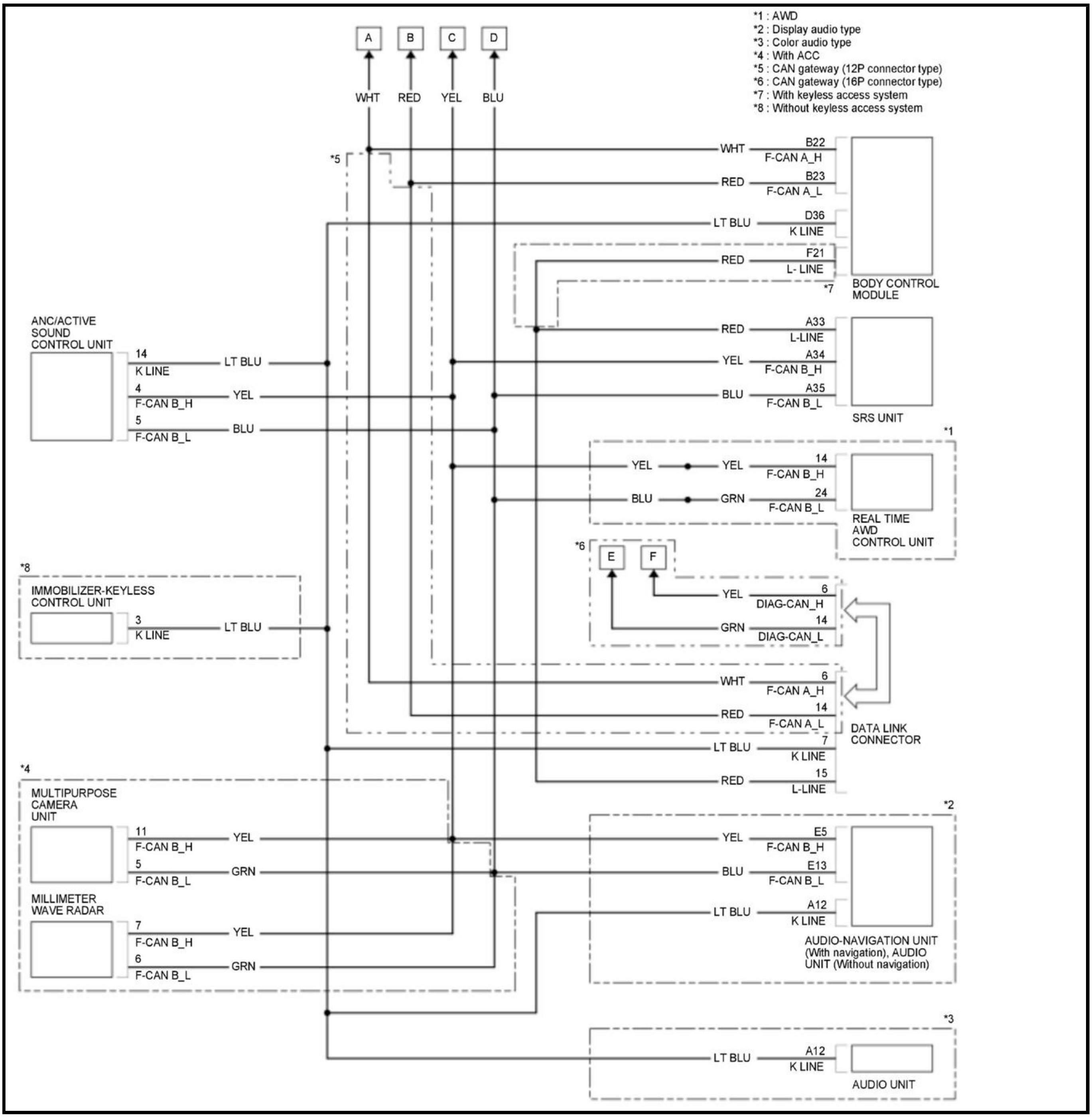
*1 : AWD
*2 : Display audio type
*3 : Color audio type
*4 : With ACC
*5 : CAN gateway (12P connector type)
*6 : CAN gateway (16P connector type)
*7 : With keyless access system
*8 : Without keyless access system
A
B
C
D
WHT
RED
YEL
BLU
*5
WHT
B22
F-CAN A_H
RED
B23
F-CAN A_L
LT BLU
D36
K LINE
RED
F21
L- LINE
*7
BODY CONTROL MODULE
ANC/ACTIVE SOUND CONTROL UNIT
14
K LINE
LT BLU
4
F-CAN B_H
YEL
5
F-CAN B_L
BLU
RED
A33
L-LINE
YEL
A34
F-CAN B_H
BLU
A35
F-CAN B_L
SRS UNIT
*1
YEL
YEL
14
F-CAN B_H
BLU
GRN
24
F-CAN B_L
REAL TIME AWD CONTROL UNIT
*6
E
F
*8
IMMOBILIZER-KEYLESS CONTROL UNIT
3
K LINE
LT BLU
YEL
6
DIAG-CAN_H
GRN
14
DIAG-CAN_L
WHT
6
F-CAN A_H
RED
14
F-CAN A_L
DATA LINK CONNECTOR
LT BLU
7
K LINE
RED
15
L-LINE
*4
MULTIPURPOSE CAMERA UNIT
11
F-CAN B_H
YEL
5
F-CAN B_L
GRN
MILLIMETER WAVE RADAR
7
F-CAN B_H
YEL
6
F-CAN B_L
GRN
*2
YEL
E5
F-CAN B_H
BLU
E13
F-CAN B_L
LT BLU
A12
K LINE
AUDIO-NAVIGATION UNIT (With navigation), AUDIO UNIT (Without navigation)
*3
LT BLU
A12
K LINE
AUDIO UNIT

2020-22 ACCESSORIES & EQUIPMENT

Network Communication - Testing & Troubleshooting - CR-V (Hybrid)

DESCRIPTION & OPERATION

NETWORK COMMUNICATIONS SYSTEM DESCRIPTION

CAN (Controller Area Network) and the LIN (Local Interconnect Network)

The vehicle uses the CAN (Controller Area Network) and the LIN (Local Interconnect Network) as the in-vehicle LAN (Local Area Network). These networks enable the control units to exchange information over the CAN bus. The CAN consists of the F-CAN network that enables the control units to exchange the signals regarding the power train/chassis and the B-CAN network for the signals regarding the body. These networks are interconnected at the gauge control module (gateway).

The LIN is used for connecting the gauge to the audio remote-HFL switch; as well as for connecting the PCM to the shutter grille and the 12 volt battery sensor; as well as for connecting the power window master switch, front passenger's power window switch, and the moonroof motor-control unit *, ensuring a reliable communication suitable for the control system.

As multi-communication system between several control units, the system also provides the K-LINE and L-LINE for transmitting the diagnostic results from the HDS (Honda Diagnostic System) and the S-NET for transmitting the immobilizer signals.

*: With moonroof

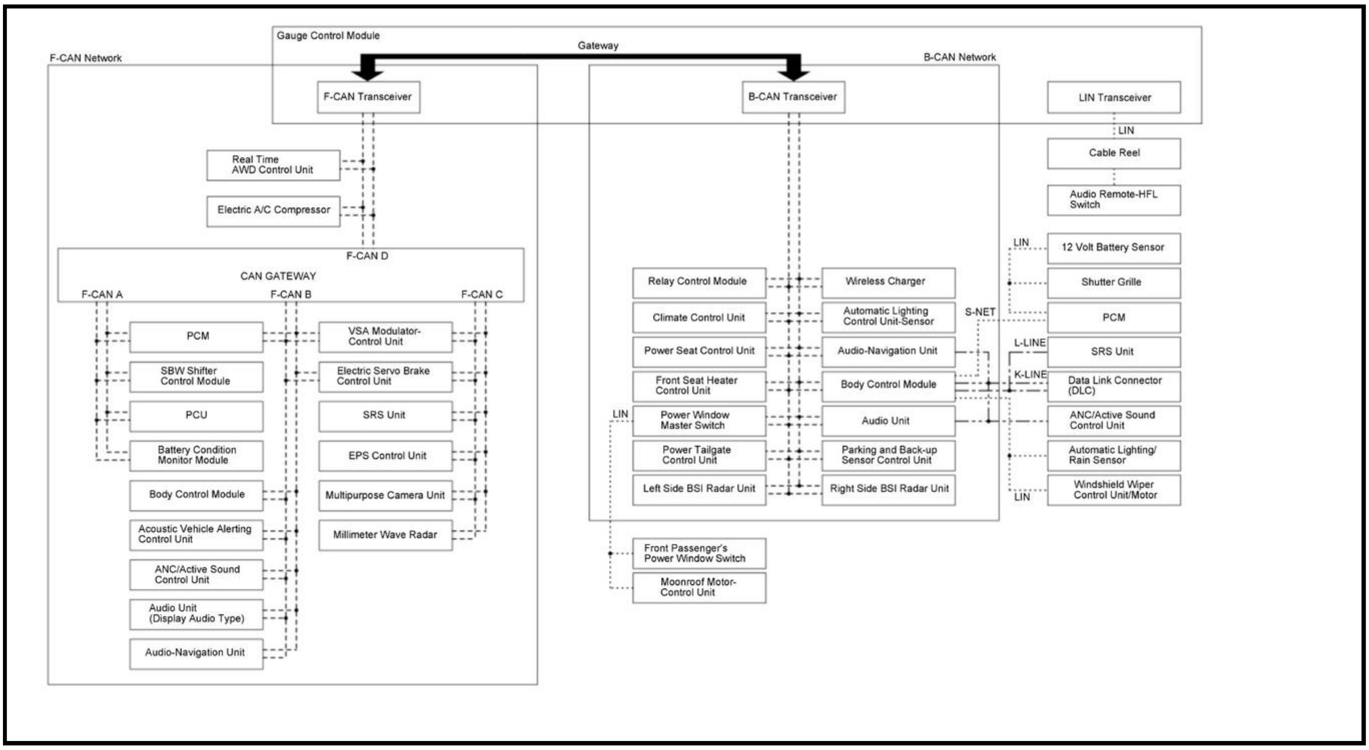
Gauge Control Module
Gateway
F-CAN Network
B-CAN Network
F-CAN Transceiver
B-CAN Transceiver
LIN Transceiver
LIN
Cable Reel
Audio Remote-HFL Switch
Real Time AWD Control Unit
Electric A/C Compressor
F-CAN D
CAN GATEWAY
F-CAN A
F-CAN B
F-CAN C
PCM
SBW Shifter Control Module
PCU
Battery Condition Monitor Module
Body Control Module
Acoustic Vehicle Alerting Control Unit
ANC/Active Sound Control Unit
Audio Unit (Display Audio Type)
Audio-Navigation Unit
VSA Modulator-Control Unit
Electric Servo Brake Control Unit
SRS Unit
EPS Control Unit
Multipurpose Camera Unit
Millimeter Wave Radar
Relay Control Module
Climate Control Unit
Power Seat Control Unit
Front Seat Heater Control Unit
LIN
Power Window Master Switch
Power Tailgate Control Unit
Left Side BSI Radar Unit
Wireless Charger
Automatic Lighting Control Unit-Sensor
Audio-Navigation Unit
Body Control Module
Audio Unit
Parking and Back-up Sensor Control Unit
Right Side BSI Radar Unit
Front Passenger's Power Window Switch
Moonroof Motor-Control Unit
S-NET
LIN
12 Volt Battery Sensor
Shutter Grille
PCM
L-LINE
SRS Unit
K-LINE
Data Link Connector (DLC)
ANC/Active Sound Control Unit
Automatic Lighting/ Rain Sensor
LIN
Windshield Wiper Control Unit/Motor

CAN

The CAN (control area network) is a multi communication system that ISO has developed and standardized for the automobile. The CAN employs a multi-master system in which multiple control units connected to a bus communicate with each other.

Communicating Method

CAN communication uses a data frame format on the CAN line. The CAN uses the CSMA/CA (Carrier Sense Multiple Access with Collision Avoidance) method to data frame collisions. This method transmits information only when the bus is sensed to be idle. The data frame uses "0" (dominant) and "1" (recessive) to create a message, which consists of the data field (message), arbitration field (data ID), control field (data length), CRC field (sending error detection), and the ACK field (end of message). After sending the data, each control unit classifies the data by the controller ID and controls outputs as commanded.

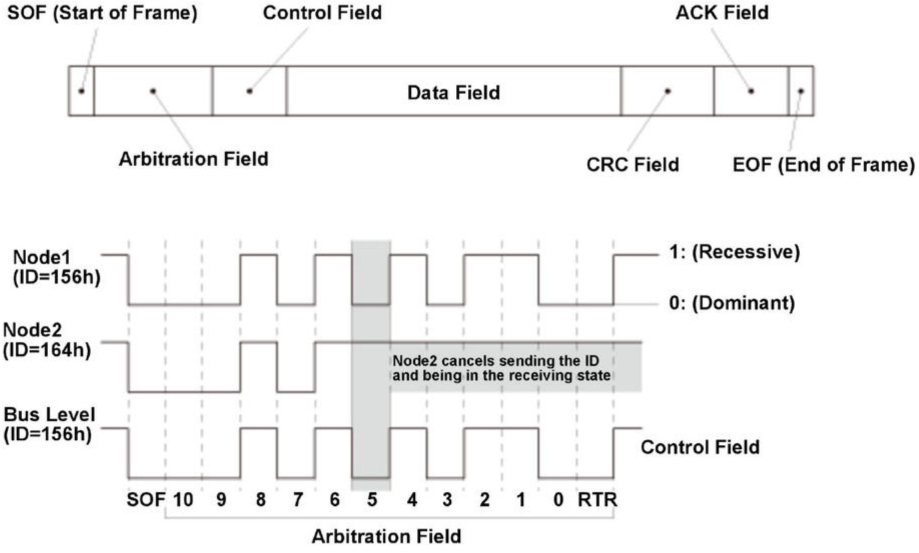

F-CAN

The network connecting the powertrain and chassis is called F-CAN and it employs high speed CAN with communication rate at 500 kbps. The F-CAN was composed of a single F-CAN Bus. To respond to the increase in the number of ECUs connected to the F-CAN and the increase in the amount of communication, the composition of the F-CAN network is divided into multiple bus lines, and an F-CAN gateway with a data-forwarding function is established, enabling the communication among the CAN Bus lines. Connection of each control unit has control units with terminating resistor installed for preventing signal from being reflected back at each end of a pair of twisted signal cable which is comprised of F-CAN_H and F-CAN_L, with other control units in parallel connection between them. By rapidly switching between equal and unequal voltages, digital data can be transmitted in bits.

B-CAN

The network between control units for body electrical system is called B-CAN and it employs low speed CAN with communication rate at 125 kbps. Connection of each control unit has control units with terminating resistor installed for preventing signal from being reflected back at each end of a pair of twisted wire which is comprised of B-CAN_H and B-CAN_L, with other control units in parallel connection between them.

Power Saving Mode Control

Since some control units for the body system are functional even if turning the vehicle in the OFF (LOCK) mode, the power-saving mode is set for these units for the purpose of reducing the dark current. Transition to the power-saving mode (sleep mode) and returning from it (wakeup mode) are controlled by the active, sleep and wakeup signals. The control units that are not in "wait for sleep" state send the active signals to the bus line periodically and stop sending them when it is in "wait for sleep" state. When all control units do not send the active signal anymore, one or more control units send the sleep signals. The control units that received the sleep signals go into the power-saving mode. In the event of inputs from switch or sensor during the power-saving mode, they send the wakeup signals to the bus line. In this case, they return from the power-saving mode.

LIN

Overview

The LIN is a bus based on UART. Communication rate of LIN is slower than that of CAN, and it is used for systems for which a high speed communication is not required. It is able to reduce the wire harness bulk as well as to reduce cost thanks to its connection with each control unit with just single bus. The LIN employs a single-master system, in which only single master control unit serves as a master control unit to control all the signals on the LIN bus. Other units become slave units to serve in accordance with request from the master control unit. This vehicle employs a LIN with a communication speed of 19, 200 bps for connecting the gauge to the audio remote-HFL switch; as well as for connecting the PCM to the shutter grille and the 12 volt battery sensor; and a LIN with a communication speed of 9, 600 bps for connecting the power window master switch, front passenger's window switch, and the moonroof motor-control unit *.

*1: With moonroof

Communication System

LIN uses a single-master system, where one ECU controls all bus communication. The other controllers act as slave units, communicating only when requested by the PCM. The message frame is comprised of the header frame that sends the master's request and the response frame that sends the slave's response. The header frame consists of the SYNCH BREAK field for showing the frame start, SYNCH field for correcting the baud rate, and the IDENT field for showing the control unit that requests the response. The response frame consists of the data fields and the CHECK SUM field for detecting transmitting errors.

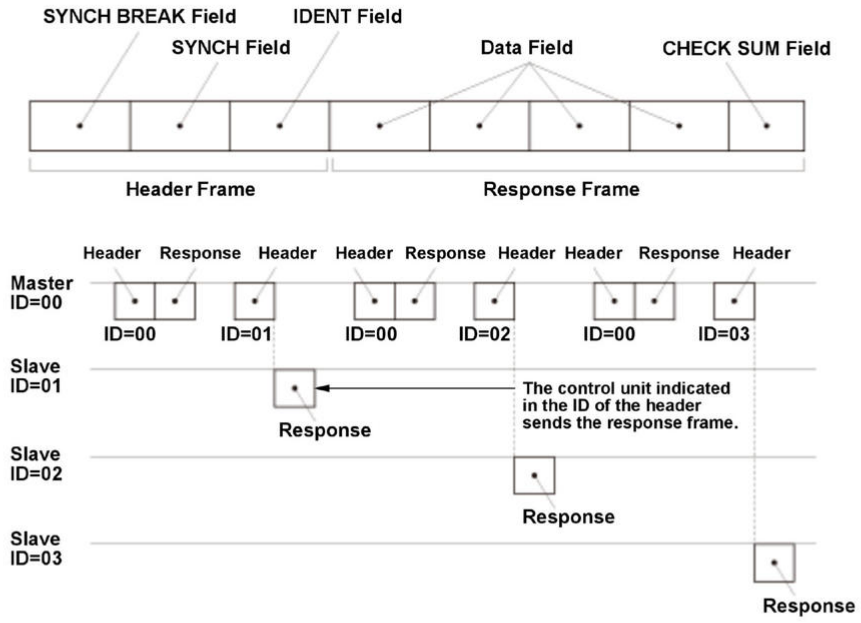
SYNCH BREAK Field
IDENT Field
SYNCH Field
Data Field
CHECK SUM Field
Header Frame
Response Frame
Header
Response
Header
Header
Response
Header
Header
Response
Header
Master
ID=00
ID=00
ID=01
ID=00
ID=02
ID=00
ID=03
Slave
ID=01
Response
The control unit indicated in the ID of the header sends the response frame.
Slave
ID=02
Response
Slave
ID=03
Response

Power Saving Mode

The body electrical system has a control unit which does not stop operating when the vehicle is turned to the OFF (LOCK) mode in order to perform door lock control and light control. These control units have a power saving mode to reduce the standby power requirement.

Network Communication Troubleshooting

The HDS (Honda Diagnostic System) uses the K-LINE for displaying the control unit and self-diagnostic results both in the F-CAN bus and B-CAN bus. The K-LINE bus is the communication circuit that uses the UART whose baud rate is 10.4 kbps. The vehicles equipped with keyless access system, also have an L-LINE data bus that connects the DLC to the body control module. This line allows the HDS to communicate with the body control module if the remote is lost or malfunctioning, preventing the ignition from being switched on. The S-NET serves as a path to transmit a signal from a transponder integrated into the remote, to control units related to the immobilizer system, such as the PCM and body control module. The gauge control module provides the display function for body-system DTC (Diagnostic Trouble Code). The DTCs are displayed when the gauge control module receives the SCS terminal short signal via F-CAN bus or the body control module service check ON signal via B-CAN bus. The gauge control module then reads the self-diagnostic results sent by each control unit via B-CAN bus, and displays the DTCs

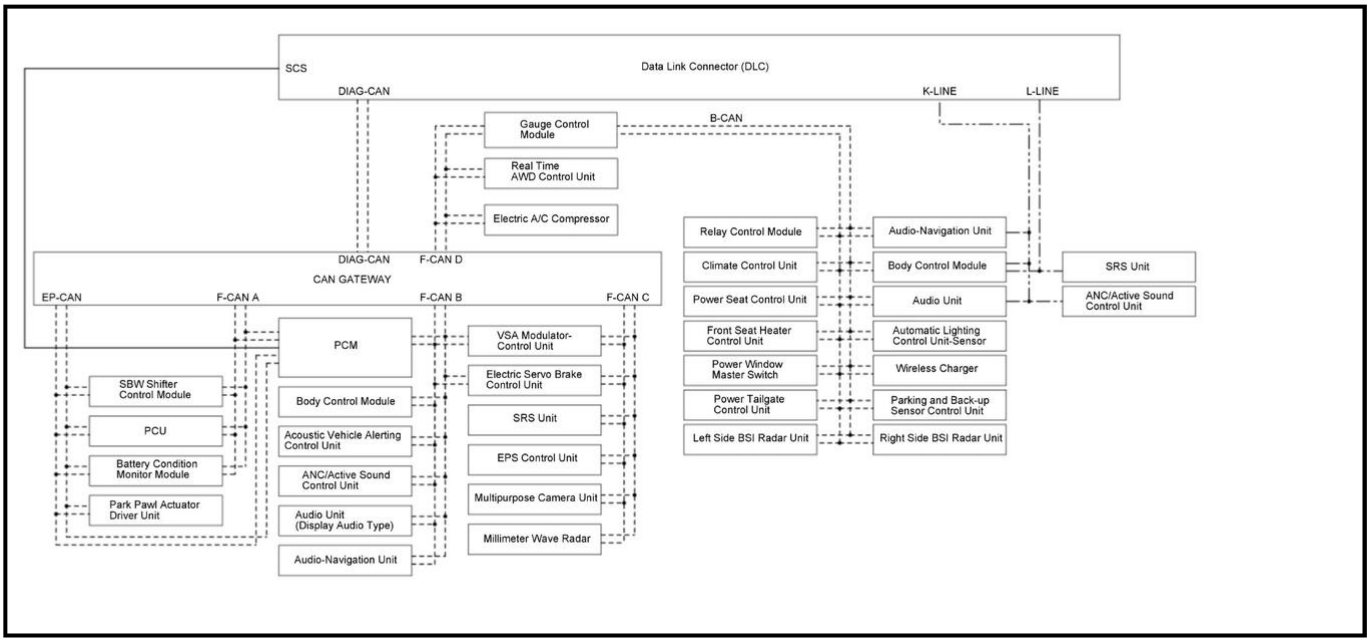
SCS
Data Link Connector (DLC)
DIAG-CAN
K-LINE
L-LINE
B-CAN
Gauge Control Module
Real Time AWD Control Unit
Electric A/C Compressor
Relay Control Module
Climate Control Unit
Power Seat Control Unit
Front Seat Heater Control Unit
Power Window Master Switch
Power Tailgate Control Unit
Left Side BSI Radar Unit
Audio-Navigation Unit
Body Control Module
Audio Unit
Automatic Lighting Control Unit-Sensor
Wireless Charger
Parking and Back-up Sensor Control Unit
Right Side BSI Radar Unit
SRS Unit
ANC/Active Sound Control Unit
DIAG-CAN
F-CAN D
CAN GATEWAY
EP-CAN
F-CAN A
F-CAN B
F-CAN C
PCM
Body Control Module
Acoustic Vehicle Alerting Control Unit
ANC/Active Sound Control Unit
Audio Unit (Display Audio Type)
Audio-Navigation Unit
SBW Shifter Control Module
PCU
Battery Condition Monitor Module
Park Pawl Actuator Driver Unit
VSA Modulator-Control Unit
Electric Servo Brake Control Unit
SRS Unit
EPS Control Unit
Multipurpose Camera Unit
Millimeter Wave Radar

DIAGNOSIS

BODY ELECTRICAL TROUBLESHOOTING - B-CAN SYSTEM DIAGNOSIS TEST MODE 1 AND TEST MODE 2 (WITHOUT THE HDS)

Shift to Test Mode 1

Check the PCM for DTCs and troubleshoot PCM or F-CAN loss of communication errors first, then do this diagnosis if the HDS is not available.

1. Check the BACK UP fuse and the FI MAIN fuse. If either fuse is blown, find and correct the cause, then replace the fuse.

2. Move the front individual map light switch OFF, the interior light switch to the DOOR position, the ceiling light switch to the MIDDLE position, and close all doors.

NOTE: Do steps 3-7 within 10 seconds.

3. Turn the vehicle to the ON mode.

4. Pull and hold the passing switch in its PASSING position.

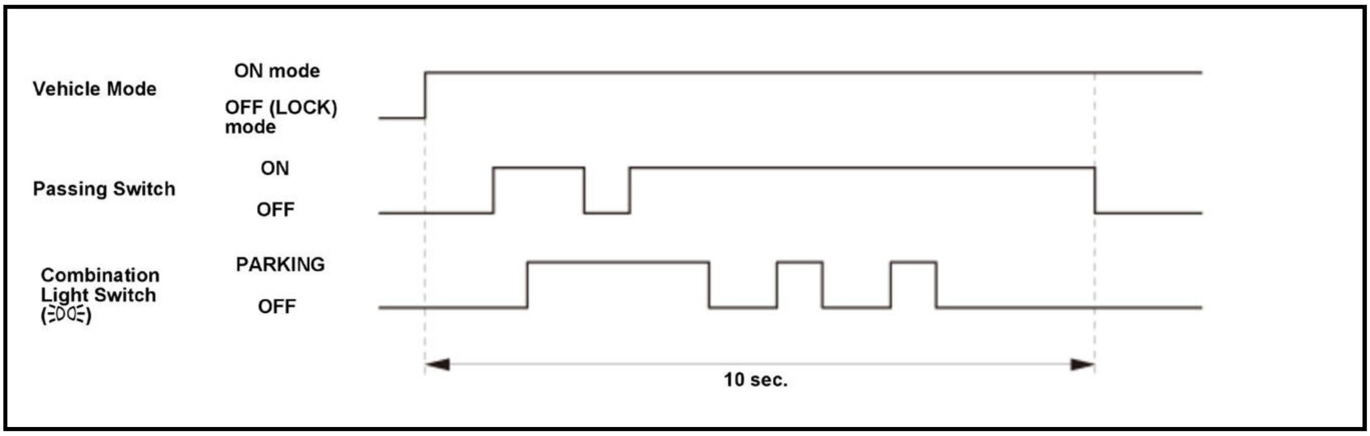

5. While holding the combination light switch is in PASSING position, turn to the PARKING position, then release, pull, and hold the combination light switch in its PASSING position.

6. Turn the combination light switch to OFF, then turn to the PARKING position, and turn to OFF two more times.

7. Release the combination light switch.

8. Wait 5 seconds, and watch the front individual map lights and the ceiling light. When the lights flash quickly once, the system enters in Test Mode 1.

9. If the front individual map lights and the ceiling light keeps blinking after entering Test Mode 1, check for B-CAN unit communication error.

Error	Display code (blinking pattern)
Communication bus line error (BUS OFF).	1
The body control module cannot receive signals from the gauge control module.	5

10. Check for B-CAN DTCs indicated by the LCD display while still in Test Mode 1. Press the TRIP button to display the next code. After you get to the last code, the display shows END. If no DTCs are stored, the display reads NO.

NOTE: If the test times out, turn the vehicle to the OFF (LOCK) mode, and repeat steps 3

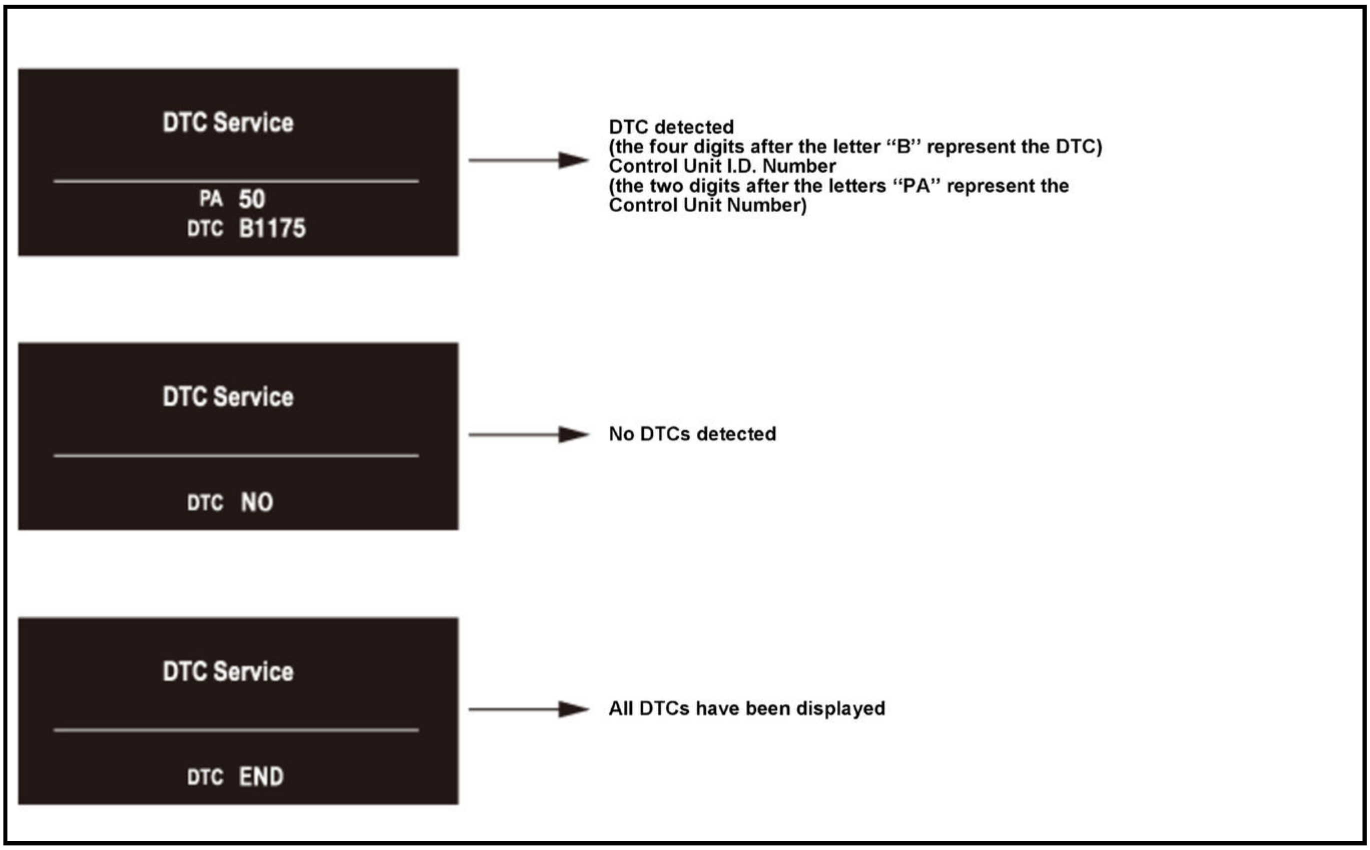
DTC Service
PA 50
DTC B1175
DTC detected
(the four digits after the letter "B" represent the DTC)
Control Unit I.D. Number
(the two digits after the letters "PA" represent the
Control Unit Number)
DTC Service
DTC NO
No DTCs detected
DTC Service
DTC END
All DTCs have been displayed

The control unit that has stored the code can be identified by the number shown after the letter "PA" on the multi-information display (MID).

Control Unit	Control Unit I.D. Number
Relay control module	11
Body control module	18
Power window master switch	30
Power tailgate control unit	31
Gauge control module	50
Climate control unit	51
Automatic lighting control unit-sensor	72
Power seat control unit	95
Left side BSI radar unit	9F
Front seat heater control unit	A2
Right side BSI radar unit	A7
Wireless charger	AF

NOTE: You can also check B-CAN communication status by the following methods:

- The body control module self-diagnostic function Test Mode 1 and Test Mode 2 can check some communication statuses and some switch circuits.
- The gauge control module self-diagnostic function can check communication status .

Record all DTCs and sort them by DTC type, then troubleshoot them in this order:

- Internal error DTCs
- Loss of communication DTCs
- Signal error DTCs

12. Clear the DTCs by pressing and holding the SEL/RESET knob for about 10 seconds.

13. You will hear a beep to confirm the codes have been cleared. Operate the devices that failed, and recheck for codes.

Shift to Test Mode 2

NOTE: Do steps 14-17 within 10 seconds.

14. Pull and hold the combination light switch in its PASSING position.

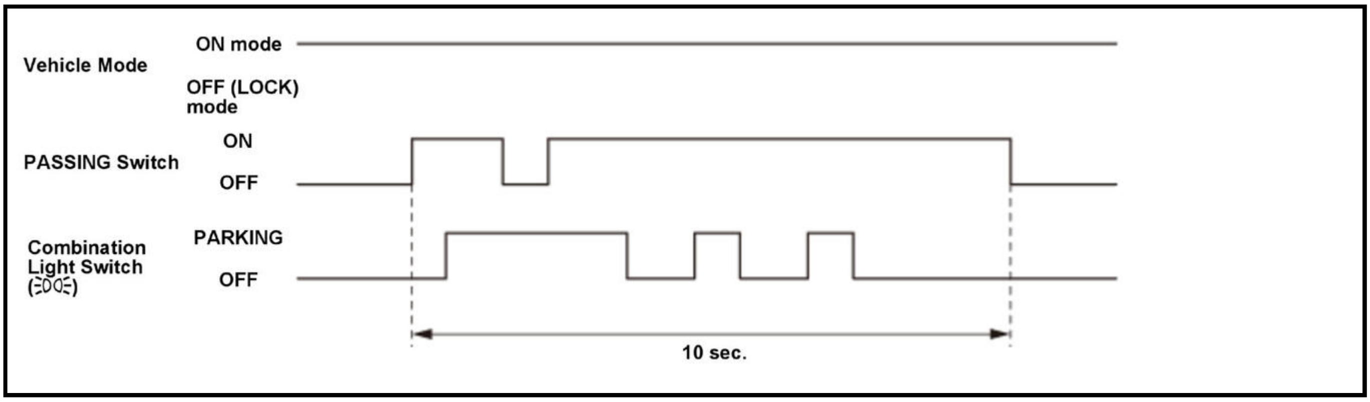

15. While holding the combination light switch is in PASSING position, turn to the PARKING position, then release, pull, and hold the combination light switch in its PASSING position.

16. Turn the combination light switch to OFF, then turn to the PARKING position, and turn to OFF two more times.

17. Release the combination light switch.

18. Wait 5 seconds, and watch the front individual map lights and the ceiling light. When the lights flash two times quickly and then go off, the system is in Test Mode 2.

NOTE: If you repeat this procedure, the system automatically returns to Test Mode 1.

19. The following tables list the circuits that can be checked in Test Mode 2. Operate the switch that is most closely related to the problem. If the circuit is OK, the individual map lights, and ceiling light blink once. If the circuit is faulty, there is no such indication.

- -

  If the front individual map lights and ceiling light do not blink even when a switch is operated, check two or three other circuits listed in the table. If the front individual map lights and ceiling light blink for each circuit, the additional circuits are OK; repair the short or open circuit that failed the test in step 19.

- -

  If the front individual map lights and ceiling light do not blink again, this means that the control unit has failed without triggering a DTC. Test a few more circuits. If they also fail, check the related control units using their input tests.

Body Control Module

Item	
Driver's door switch	Turn signal switch (LEFT)
Front passenger's door switch	Turn signal switch (RIGHT)
Left rear door switch	Hazard warning switch
Right rear door switch	Headlight switch (ON)
Tailgate latch switch	Headlight switch (OFF)

Item	
Tailgate outer handle switch	Lighting switch
Tailgate lock switch	Passing switch
Left rear door lock knob switch (UNLOCK)	Front fog light switch
Right rear door lock knob switch (UNLOCK)	Brake pedal position switch
Windshield wiper HI/LO switch	Driver's door outer handle touch sensor

Item	
Windshield wiper INT/LO switch	Front passenger's door outer handle touch sensor
Windshield wiper MIST switch	Electric parking brake switch
Windshield wiper intermittent dwell time controller	Hands free access power tailgate control unit/sensor
Windshield washer switch	B
Rear window wiper switch	
Rear window wiper INT switch	
Rear window washer switch	

Relay Control Module

Item	
Hood latch switch	B

Door Multiplex Control Unit

Item	
Driver's door lock switch (UNLOCK)	Power window master switch (Driver's window UP, DOWN, AUTO)
Driver's door lock switch (LOCK)	
Driver's door lock knob switch (UNLOCK)	Power window master switch (Front passenger's window UP, DOWN, AUTO)
Driver's door lock knob switch (LOCK)	
Driver's door key cylinder switch (UNLOCK)*	Power window master switch (Left rear window UP, DOWN, AUTO)
Driver's door key cylinder switch (LOCK)*	
Driving position memory switch (SET)	Power window master switch (Right rear window UP, DOWN, AUTO)
Driving position memory switch (POSITION 1)	
Driving position memory switch (POSITION 2)	B

*: A second key is necessary to check the key cylinder inputs. Be sure to rotate the key cylinder switch two times to each position (lock and lock, unlock and unlock) to ensure the door lock knob switch is in the appropriate position.

Gauge Control Module

Item	
Electric parking brake/automatic brake hold switch	Audio remote-HFL switch
VSA OFF switch	ACC combination switch
CMBS OFF switch	ECON switch
Brake fluid level switch	EV switch
B	SPORT mode switch

BODY ELECTRICAL TROUBLESHOOTING - B-CAN SYSTEM DIAGNOSIS TEST MODE A - INITIAL COMMUNICATION AND DTC CHECKS

Check the PCM for DTCs and troubleshoot PCM or F-CAN loss of communication errors first, then do this diagnosis if the symptom is related to the B-CAN system.

Compare the symptom with this list of B-CAN related systems:

- Gauge control module
- Exterior lights
- Turn signals
- Entry light control
- Interior lights
- Safety indicators
- Horns (security and panic) (if equipped)
- Reminder chimes (seat belt, lights-on, and parking brake)
- Power window timer (if equipped, panoramic glass roof or moonroof aiso apply)
- Wiper/washer
- Security (if equipped)
- Keyless entry
- Key interlock
- Power door locks
- Dashlights brightness
- Immobilizer
- Daytime running lights
- Keyless access control
- Climate control
- Seat heater

- -

  If the symptom is related to the B-CAN system, go to step 2.

- -

  If the symptom is not related to the B-CAN system, go to the system symptom troubleshooting.

2. **Connect the HDS to the data link connector (DLC)** . From the BODY ELECTRICAL system, select Mode Menu, then select the Connected Unit Menu to see if the following control units are communicating with the HDS.

- Acoustic vehicle alerting control unit
- Automatic lighting control unit-sensor
- Body Control Module
- BSI radar unit
- Climate control unit
- Front seat heater control unit
- Gauge control module
- Keyless access control unit
- Door multiplex control unit
- Parking and back-up sensor control unit
- Power seat control unit
- Power tailgate control unit
- Relay control module
- Wireless charger

NOTE:

- If a unit is communicating with the HDS, "DETECT" is displayed.
- If a unit is not communicating or the vehicle is not equipped, "NOT AVAILABLE" is displayed.
- The HDS only checks the status one time when BODY ELECTRICAL is selected. To recheck the status after repair, reboot the HDS.

- -

  If all control units are communicating with the HDS, go to step 4.

- -

  If any of the control units are not communicating, go to **B-CAN System Diagnosis Test Mode B**.

- -

  If all units are not communicating or only the body control module is communicating, go to **body control module DTC U1280 troubleshooting** .

Select the system that has the problem from the BODY ELECTRICAL SYSTEM SELECT menu, then select DTCs.

- -

  If any DTCs are indicated, go to step 5.

- -

  If the problem is related to one of the following items and the system that is malfunctioning does not stop or turn off, go to **B-CAN System Diagnosis Test Mode C**.

- -

  If the problem is related to one of the following items and the system that is malfunctioning does not run or turn on, go to **B-CAN System Diagnosis Test Mode D**.

-
  - Exterior lights
  - Turn signals
  - Entry light control
  - Interior lights
  - Horns (security and panic)
  - Wiper/washer
  - Power window
  - Power door locks
- -

  If the problem is related to one of the following items, go to the troubleshooting for that individual system.

-
  - Gauge control module
  - Safety indicators
  - Reminder chimes (seat belt, lights-on, and parking brake)

    - Security
    - Keyless entry
    - Dashlights brightness
    - Immobilizer
    - Rear window defogger (climate control)
    - Climate control
    - Keyless access control
    - Seat heater

Record all DTCs, and sort them by DTC type, then troubleshoot them in this order:

- Internal error DTCs.
- Loss of communication DTCs.
- Signal error DTCs.

BODY ELECTRICAL TROUBLESHOOTING - B-CAN SYSTEM DIAGNOSIS TEST MODE B - CONTROL UNIT NOT COMMUNICATING

Do this diagnosis if any of the control units are not communicating (NOT AVAILABLE is displayed in the HDS) as found by the **B-CAN System Diagnosis Test Mode A**.

1. Using the HDS, select the system that has the symptom from the BODY ELECTRICAL SYSTEM SELECT menu.

2. Select DTCs, and then check for loss of communication DTCs.

- -

  If any loss of communication DTCs are indicated, go to step 3.

- -

  If any loss of communication DTCs are not indicated, **replace the body control module** .

Do the power, ground, and communication part of the input test for the unit(s) not communicating with the HDS.

- Acoustic vehicle alerting control unit
- Automatic lighting control unit-sensor
- Body Control Module
- BSI radar unit
- Climate control unit
- Front seat heater control unit
- Gauge control module
- Keyless access control unit
- Door multiplex control unit
- Parking and back-up sensor control unit
- Power seat control unit
- Power tailgate control unit
- Relay control module
- Wireless charger

BODY ELECTRICAL TROUBLESHOOTING - B-CAN SYSTEM DIAGNOSIS TEST MODE C - NO DTCS AND OUTPUT WON'T SHUT OFF

Do this diagnosis if a component that is controlled by the B-CAN system does not stop or turn off.

NOTE:

- If the component does not turn on, go to **B-CAN System Diagnosis Test Mode D**.
- See the B-CAN system unit input/output index for a list of input and output devices and the control units that monitor the input and control the output devices.

1. Check for DTCs by selecting the system MODE MENU from the HDS.

- -

  If any DTCs are indicated, go to **B-CAN System Diagnosis Test Mode A**.

- -

  If any DTCs are not indicated, go to step 2.

2. Turn off the switch that controls the malfunctioning component.

3. Select the applicable system from the system MODE MENU, then select DATA LIST, and check the input of the switch that controls the related component.

- -

  If HDS indicates the switch is OFF, go to step 4.

- -

  If HDS indicates the switch is not OFF, go to step 6.

4. In the DATA LIST, check the output signal of the malfunctioning component.

- -

  If the output signal is OFF, go to step 5.

- -

  If the output signal is not OFF, replace the control unit that controls the device that will not turn OFF.

5. Check the relay that does not stop or turn off, if applicable, then check for a short in the wire between the relay and the component, the relay and control unit, or the component and control unit.

- -

  If the relay and the wire harness are OK, replace the control unit that controls the component that will not stop or turn OFF.

- -

  If the relay and the wire harness are not OK, replace the relay or repair/replace the wire harness.

6. Check the switch, then check for a short in the wire between the switch and the control unit that monitors the switch.

- -

If the switch and the wire harness are OK, replace the control unit that monitors the switch.

- -

  If the switch and the wire harness are not OK, replace the switch or repair/replace the appropriate wire harness.

BODY ELECTRICAL TROUBLESHOOTING - B-CAN SYSTEM DIAGNOSIS TEST MODE D - NO DTCS AND OUTPUT WON'T TURN ON

Do this diagnosis if a component that is controlled by the B-CAN system does not run or come on.

NOTE:

- If the component does not turn off or stop, go to B-CAN System Diagnosis Test Mode C.
- See the B-CAN system unit input/output index for a list of input and output devices and the control units that monitor the input and control the output devices.

1. Check the fuse of the malfunctioning output device.

- -

  If the fuse is OK, go to step 2.

- -

  If the fuse is not OK, replace the fuse. If the fuse blows again, repair the short to ground on the fuse circuit of the malfunctioning device.

2. Check for DTCs by selecting the system MODE MENU from the HDS.

- -

  If any DTCs are indicated, go to B-CAN System Diagnosis Test Mode A.

- -

  If any DTCs are not indicated, go to step 3.

3. Turn ON the switch that controls the malfunctioning component.

4. Select the applicable system from the system MODE MENU, then select DATA LIST, and check the input of the switch that controls the related component.

- -

  If there is an output signal, go to step 5.

- -

  If there is not an output signal, go to step 9.

5. Check the relay (if applicable) and ground, then check for an open or a short in the circuit for the malfunctioning component.

- -

  If the relay and the wire harness are OK, go to step 6.

- -

If the relay and the wire harness are not OK, replace the relay or repair the wire circuit.

6. Do the function test for the malfunctioning component.

- -

  If the output device pass the function test, go to step 7.

- -

  If the output device does not pass the function test, replace the component.

7. With the malfunctioning output device connected, connect a voltmeter between the malfunctioning output device and body ground on the wire that the control unit uses to control the output device circuit.

8. Select FUNCTIONAL TESTS from the system MODE MENU, and do the forced operation test of the malfunctioning component.

- -

  If the voltage changes (12 V to 0 V, or 0 V to 12 V), inspect the ground for the component. If OK, replace the component.

- -

  If the voltage does not change, replace the control unit that controls the malfunctioning component.

9. Select DATA LIST from the system MODE MENU, and make sure the switch signal input for the malfunctioning system indicates a change when operated.

- -

  If the switch input indicates ON when the switch is ON, replace the control unit that controls the malfunctioning component.

- -

  If the switch input does not indicate ON when the switch is ON, go to step 10.

10. Check the switch and its ground (if applicable), then check for an open or a short in the wire between the switch and the control unit that monitors it.

- -

  If the switch and the wire harness are OK, replace the control unit that monitors the switch.

- -

  If the switch and the wire harness are not OK, replace the switch, or repair/replace the wire harness.

REWRITE

CAN GATEWAY UPDATE

Procedure

1. CAN Gateway - Update

   NOTE: When updating control units, use the most current version of the HDS software and interface device. Refer to User service information of the Update Device for more information about updating control units.

DTC TROUBLESHOOTING INDEX

NETWORK COMMUNICATION DTC TROUBLESHOOTING INDEX

NOTE: Record all DTCs, and sort them by DTC type using the DTC troubleshooting index, then troubleshoot the DTC(s) in this order:

- Internal error DTCs
- Loss of communication DTCs
- Signal error DTCs

Acoustic Vehicle Alerting Control Unit

DTC	Description	DTC type
B2890-13	An open in the acoustic vehicle alerting speaker circuit	Signal error
U0029-00	F-CAN communication line error	Loss of communication
U0100-00	Acoustic vehicle alerting control unit lost communication with PCM	Loss of communication
U0101-00	Acoustic vehicle alerting control unit lost communication with PCM/TCM	Loss of communication
U0122-00	Acoustic vehicle alerting control unit lost communication with VSA modulator-control unit	Loss of communication
U0128-00	Acoustic vehicle alerting control unit lost communication with Electric parking brake control unit	Loss of communication
U0129-00	Acoustic vehicle alerting control unit lost communication with Electric servo brake control unit	Loss of communication
U0155-00	Acoustic vehicle alerting control unit lost communication with Gauge control module	Loss of communication

Automatic Lighting Control Unit

DTC	Description	DTC type
B1575	Auto light sensor error	Internal error
U1280	B-CAN communication bus line error (BUS-OFF)	Loss of communication
U1281	Auto Light Control Unit lost communication with MICU (body control module)	Loss of communication
U128D	Auto light control unit lost communication with gauge control module	Loss of communication

Body Control Module

DTC	Description	DTC type
B1002	BCM internal error (EEPROM error)	Internal error
B1003	BCM Update error	Internal error
B1028	Rear wiper motor (park) signal error	Signal error
B1032	CDS (Collision detection signal) signal error	Signal error
B1036	IG1 Power supply Circuit Malfunction	Signal error
B1038	IMMOBILIZER F-CAN Authentication ID Not Received	Signal error
B1039	IMMOBILIZER F-CAN Authentication ID Unmatch	Signal error
B1040	BCM lost communication with Front wiper	Loss of communication
B1041	Front Wiper motor malfunction	Signal error

DTC	Description	DTC type
B1042	Front Wiper security line error	Signal error
B1043	Front Wiper unit internal error (EEPROM error)	Internal error
B1077	Front wiper auto stop switch signal error	Signal error
B1275	Head light OFF position Circuit Malfunction	Signal error
B1276	Headlight Switch Parking (Small) Position Circuit Malfunction	Signal error
B1277	Head light AUTO position Circuit Malfunction	Signal error
B1278	Head light ON position Circuit Malfunction	Signal error
B1279	Dimmer switch Circuit Malfunction	Signal error
B1280	Turn signal switch Circuit Malfunction	Signal error

DTC	Description	DTC type
B1281	Front wiper MIST position Circuit Malfunction	Signal error
B1282	Front wiper INT(AUTO) position Circuit Malfunction	Signal error
B1283	Front wiper LOW position Circuit Malfunction	Signal error
B1284	Front wiper HIGH position Circuit Malfunction	Signal error
B2352	Rain Light Sensor Unit Internal error (EEPROM error)	Signal error
B2375	Rain Sensing malfunction in Rain/Light sensor	Signal error
B2376	Light sensing malfunction in Rain/Light sensor	Signal error
U0073	F-CAN communication bus line error (BUS-OFF)	Loss of communication
U0100	BCM lost communication with ECM/PCM	Loss of communication
U0122	BCM lost communication with VSA/ABS	Loss of communication
U1280	B-CAN communication bus line error (BUS-OFF)	Loss of communication
U128D	BCM lost communication with gauge control module	Loss of communication
U1291	BCM lost communication with relay control module	Loss of communication

Front Seat Heater Control Unit

DTC	Description	DTC type
B1C55	Driver's heater thermistor circuit open	Signal error
B1C56	Driver's heater thermistor circuit short	Signal error
B1C57	Passenger's heater thermistor circuit open	Signal error
B1C58	Passenger's heater thermistor circuit short	Signal error
B1C60	Driver's heater current abnormal high	Signal error
B1C61	Driver's heater current abnormal low	Signal error
B1C62	Passenger's heater current abnormal high	Signal error
B1C63	Passenger's heater current abnormal low	Signal error
B1C68	Driver's heater not heating	Signal error
B1C69	Passenger's heater not heating	Signal error
B1C70	Driver's main heater switch failure	Signal error
B1C71	Passenger's main heater switch failure	Signal error
U1064	Seat heater control unit lost communication with climate control unit	Loss of communication
U1280	Seat heater control unit communication bus line error (BUS-OFF)	Loss of communication

Gauge Control Module

DTC	Description	DTC type
B1175	Fuel level sensor (Fuel gauge sending unit) circuit malfunction	Signal error
B1176	Fuel level sensor (Fuel gauge sending unit) circuit short	Signal error
B1195	Gauge control module lost communication with Audio Remote Switch (LIN bus connected)	Loss of communication
U0029	F-CAN communication line error	Loss of communication
U0100	Gauge control module lost communication with ENG/AT	Loss of communication
U0101	Gauge control module lost communication with AT	Loss of communication
U0104	Gauge Control Module Lost Communication With Driving Support System Control Unit	Loss of communication
U0111	Gauge control module lost communication with Battery Condition Monitor Module	Loss of communication
U0114	Gauge control module lost communication with All Wheel Drive Control Module	Loss of communication
U0122	Gauge control module lost communication with VSA modulator-control unit	Loss of communication
U0128	Gauge control module lost communication with EPB	Loss of communication

DTC	Description	DTC type
U0131	Gauge control module lost communication with EPS Unit	Loss of communication
U0151	Gauge control module lost communication with SRS unit	Loss of communication
U1280	Communication bus line error (BUS-OFF)	Loss of communication
U1281	Gauge control module lost communication with MICU (body control module) (MICU frame)	Loss of communication
U1288	Gauge control module lost communication with PARKSR	Loss of communication
U128F	Gauge control module lost communication with BSI unit	Loss of communication
U129C	Gauge control module lost communication with multi purpose camera unit	Loss of communication
U12A0	Gauge control module lost communication with Acoustic Vehicle Alert System (AVAS)	Loss of communication
U3000-49	ECU internal circuit malfunction	Internal error
U3000-51	Reprogramming error	Internal error

Keyless Access Backup Control Unit

DTC	Description	DTC type
B1926	Backup Control Antenna Open or Short	Internal error
U1280	B-CAN communication bus line error (BUS-OFF)	Loss of communication
U128D	Backup Control Unit Lost Communication with Gauge Control Module	Loss of communication

Keyless Access Control Unit

DTC	Description	DTC type
B1601	Keyless access control unit internal (CPU) error	Internal error
B1602	Keyless access control unit internal (EEPROM) error	Internal error
B1640	RF1 antenna not connected or malfunction	Signal error
B1645	Driver's Door LF Antenna Circuit Short	Signal error

DTC	Description	DTC type
B1646	Driver's Door LF Antenna Circuit Open	Signal error
B1647	Passenger's Door LF Antenna Circuit Short	Signal error
B1648	Passenger's Door LF Antenna Circuit Open	Signal error
B1657	Rear Bumper LF Antenna Circuit Short	Signal error
B1658	Rear Bumper LF Antenna Circuit Open	Signal error
B1659	Front Interior LF Antenna Circuit Short	Signal error
B1660	Front Interior LF Antenna Circuit Open	Signal error
B1661	Middle Interior Antenna Circuit Shorted	Signal error
B1662	Middle Interior Antenna Circuit Opened	Signal error
B1663	Rear Interior LF Antenna Circuit Short	Signal error
B1664	Rear Interior LF Antenna Circuit Open	Signal error
B1667	Rear Shelf (Middle Interior) LF Antenna Circuit Short	Signal error
B1668	Rear Shelf (Middle Interior) LF Antenna Circuit Open	Signal error
U1280	Keyless access control unit communication bus line error (BUS-OFF)	Loss of communication
U1281	Keyless Access Control Unit Lost Communication with MICU	Loss of communication
U128D	Keyless Access Control Unit Lost Communication with Gauge Control Module	Loss of communication

Keyless Access Power Control Unit

DTC	Description	DTC type
B12C5	Engine Start/Stop Switch (Power Switch) Failure	Signal error
B12D0	Power Control Unit IG1A Circuit Error	Internal error
B12D1	Power Control Unit IG1B Circuit Error	Internal error
B12D2	Power Control Unit IG2 Circuit Error	Internal error
B12D3	Power Control Unit IG Latch Circuit Error	Internal error
B12E5	Incorrect assembly of control unit for electric steering lock equipped vehicle	Signal error
B12F3	Power Control Unit Lost Communication with Transmission Control Unit	Loss of communication
U0073	F-CAN Communication Bus Line Error	Loss of communication
U0100	Power Control Unit Lost Communication with PCM	Loss of communication
U0122	Power Control Unit Lost Communication with ABS/VSA Modulator-Control Unit	Loss of communication
U1280	B-CAN communication bus line error (BUS-OFF)	Loss of communication
U1281	Power Control Unit Lost Communication with MICU	Loss of communication
U128D	Power Control Unit Lost Communication with Gauge Control Module	Loss of communication

Multiplex Control Unit, Door (Power Window Master Switch)

DTC	Description	DTC type
B1125	Driver's power window motor A pulse malfunction	Signal error
B1126	Driver's power window motor B pulse malfunction	Signal error
B1127	Driver's door lock key cylinder switch malfunction	Signal error
B1128	Driver's door lock switch malfunction	Signal error
B1129	Driver's door lock knob switch malfunction	Signal error

DTC	Description	DTC type
B1130	Front Passenger's power window motor A-phase pulse signal input error	Signal error
B1131	Front Passenger's power window motor B-phase pulse signal input error	Signal error
B1140	Driver's power window position detect circuit malfunction	Signal error
B1142	Power window master switch lost communication with the other units (UART communication Error)	Loss of communication
B1145	Front passenger's window position detect circuit malfunction	Signal error
U1280	Communication bus line error (BUS-OFF)	Loss of communication
U1281	Power Window Master Switch lost communication with MICU (body control module)	Loss of communication
U128D	Power Window Master Switch lost communication with gauge control module	Loss of communication
U1299	Power Window Master Switch lost communication with climate control unit	Loss of communication

Parking and Back-Up Sensor Control Unit

DTC	Description	DTC type
B2601	Parking Sensor CPU Error	Internal error
B2602	Parking Sensor EEPROM Error	Internal error
B2610	Front 1st sensor failure	Signal error
B2611	Front 2nd sensor failure	Signal error
B2612	Front 3rd sensor failure	Signal error
B2613	Front 4th sensor failure	Signal error
B2614	Rear 1st sensor failure	Signal error
B2615	Rear 2nd sensor failure	Signal error
B2616	Rear 3rd sensor failure	Signal error
B2617	Rear 4th sensor failure	Signal error

DTC	Description	DTC type
B2618	Front 1st sensor data failure	Signal error
B2619	Front 2nd sensor data failure	Signal error
B261A	Front 3rd sensor data failure	Signal error
B261B	Front 4th sensor data failure	Signal error
B261C	Rear 1st sensor data failure	Signal error
B261D	Rear 2nd sensor data failure	Signal error
B261E	Rear 3rd sensor data failure	Signal error
B261F	Rear 4th sensor data failure	Signal error
B2646	Front sensor power failure	Signal error
B2647	Rear sensor power failure	Signal error
B2648	Front sensor signal short to ground	Signal error
B2649	Rear sensor signal short to ground	Signal error
B264A	Indicator circuit short to power	Signal error
B264B	Indicator circuit short to ground	Signal error
B264D	Front sensor combination error	Signal error
U0155	Lost communication with Gauge Control Module	Loss of communication
U1280	B-CAN communication bus line error (BUS-OFF)	Loss of communication

DTC	Description	DTC type
U1281	Lost communication with MICU	Loss of communication

Power Seat Control Unit

DTC	Description	DTC type
B1802	Power seat control unit internal (EEPROM) error	Internal error
B1825	Slide pulse error (no change in pulse for 1 second)	Signal error
B1826	Front height pulse error (no change in pulse for 1 second)	Signal error
B1827	Rear height pulse error (no change in pulse for 1 second)	Signal error
B1828	Driver seat recline motor pulse error	Signal error
B1829	AT-P signal and VSP or ESL_WHEEL signal mismatch	Signal error
B1836	Power Seat Position Sensor circuit short	Signal error
B1837	Memory position calling timeout	Signal error
B1844	Power Seat Slide switch circuit malfunction	Signal error
B1845	Power Seat Recline switch circuit malfunction	Signal error
B1846	Power Seat Front Up-Down switch circuit malfunction	Signal error
B1847	Power Seat Rear Up-Down switch circuit malfunction	Signal error
U0199	Power seat control unit lost communication with PW master SW	Loss of communication
U1280	B-CAN communication bus line error (BUS-OFF)	Loss of communication
U1281	Power seat control unit lost communication with MICU (body control module) (MICU frame)	Loss of communication
U128D	Lost Communication With Gauge Control Module (VSP/NE or ESL_WHEEL frame)	Loss of communication

Power Tailgate Control Unit

DTC	Description	DTC type
B1352	Power Tailgate Control Unit Internal error (EEPROM error)	Internal error
B1375	Driver's side PTG switch circuit malfunction	Signal error
B1376	Tailgate Outer Handle switch circuit malfunction	Signal error
B1377	Power Tailgate Inner switch circuit malfunction	Signal error
B1378	Power Tailgate Right Touch/Pinch sensor circuit malfunction	Signal error
B1379	Power Tailgate Left Touch/Pinch sensor circuit malfunction	Signal error
B1380	Tailgate Closer Unit Neutral switch circuit malfunction	Signal error
B1382	Tailgate Closer Unit Full Latch switch circuit malfunction	Signal error
B1383	Tailgate Closer Unit Ratchet switch circuit malfunction	Signal error
B1384	Tailgate Closer Unit Half Latch switch circuit malfunction	Signal error
B1385	Power Tailgate temperature sensor malfunction	Signal error
B1386	Power Tailgate sensor Pulse A circuit malfunction	Signal error
B1387	Power Tailgate sensor Pulse B circuit malfunction	Signal error
B1388	Power Tailgate Drive Motor circuit malfunction	Signal error
B1390	Power Tailgate Closer Motor circuit malfunction	Signal error

DTC	Description	DTC type
U0199	Lost communication with P/W (DRLOCKSW, KLDRLOCK frame)	Loss of communication
U1280	Communication Bus line Error (a bus OFF state is detected by Power Tail Gate ECU)	Loss of communication
U1281	Lost communication with MICU (MICU frame)	Loss of communication
U128D	Power Tailgate Control Unit lost communication with GAUGE Control Module	Loss of communication

Relay Control Module

DTC	Description	DTC type
B1051	Relay control module internal (CPU) error	Internal error
B1052	Relay control module internal (EEPROM) error	Internal error
B1075	Headlight switch malfunction	Signal error
B1080	Power supply circuit (IG1 line) input error for Relay Control Module and MICU	Signal error
B1085	Head Light Low Beam Power Source Abnormality	Signal error
B108A	Right Side Parking Light Circuit Shorted	Signal error
B108B	Left Side Parking Light Circuit Shorted	Signal error
B108C	Right Side Head Light Low Beam Circuit Shorted	Signal error
B108D	Left Side Head Light Low Beam Circuit Shorted	Signal error
B108E	Right Side Head Light High Beam Circuit Shorted	Signal error
B108F	Left Side Head Light High Beam Circuit Shorted	Signal error
B1090	Illumination Circuit Shorted	Signal error
B1091	DRL Circuit Shorted	Signal error
B1092	Interior Light Cut Circuit Shorted	Signal error
U1280	B-CAN communication bus line error (BUS-OFF)	Loss of communication
U1281	Relay control module lost communication with MICU (MICU frame)	Loss of communication
U128D	Relay control module lost communication with gauge control module (VSP/NE frame)	Loss of communication

Wireless Charger

DTC	Description	DTC Type
B22A0	Wireless charger unit failure	Internal error
B22A1	Wireless charger unit ACC input circuit failure	Signal error
U1280	Communication bus line Error (BUS-OFF)	Loss of communication
U1281	Wireless charger unit lost communication with MICU	Loss of communication
U1286	Wireless charger unit lost communication with Keyless Access Control Unit	Loss of communication
U128D	Wireless charger unit lost communication with Gauge control module	Loss of communication
U128E	Wireless charger unit lost communication with Audio-Navigation Unit	Loss of communication

TROUBLESHOOTING

DLC CIRCUIT TROUBLESHOOTING

NOTE: If you suspect the HDS or the HDS DLC cable may be the source of the communication problem, verify that they are working properly by connecting them to a known-good, similar vehicle and system, and check for communication problems.

*1: With navigation	
*2: Without navigation	

1. HDS communication check

   -1. Turn the vehicle to the OFF (LOCK) mode.

   -2. **Connect the HDS to the DLC** .

   NOTE: Make sure the HDS is properly connected to the DLC.

   -3. Turn the vehicle to the ON mode, and turn on the HDS.

   Does the HDS identify the vehicle?

   YES

   Go to step 2.

   NO

   Go to step 14.

2. Determine possible failure area (PGM-FI system, other systems)

   -1. Check for Pending or Confirmed DTCs in the PGM-FI system with the HDS.

DTC Description	Confirmed DTC	Pending DTC
B	B	B

   Are any Pending or Confirmed DTCs indicated?

   YES

   Go to the indicated DTC's troubleshooting.

   NO

   If the HDS does not communicate with the PCM, go to step 3.

   NO

   If the HDS does not communicate with the SRS, go to step 5.

   NO

   If the HDS does not communicate with the VSA system, go to step 6.

   NO

   If the HDS does not communicate with the EPS system, go to step 7.

   NO

   If the HDS does not communicate with the ONE-PUSH START system, go to step 8.

   NO

If the HDS does not communicate with the BODY ELECTRICAL system, go to step 9.

NO

If the HDS does not communicate with the DRIVING SUPPORT system, go to step 10.

3. Open wire check (F-CAN A_H line)

-1. Turn the vehicle to the OFF (LOCK) mode.

-2. Jump the SCS line with the HDS, and wait more than 1 minute.

-3. Disconnect the following connectors.

CAN gateway 16P connector
PCM connector A (50P)

-4. Measure the resistance between test points 1 and 2.

Test condition	Vehicle OFF (LOCK) mode
B	CAN gateway 16P connector: disconnected
B	PCM connector A (50P): disconnected
Test point 1	CAN gateway 16P connector (female terminals) No. 3: ①
Test point 2	PCM connector A (50P) No. 37

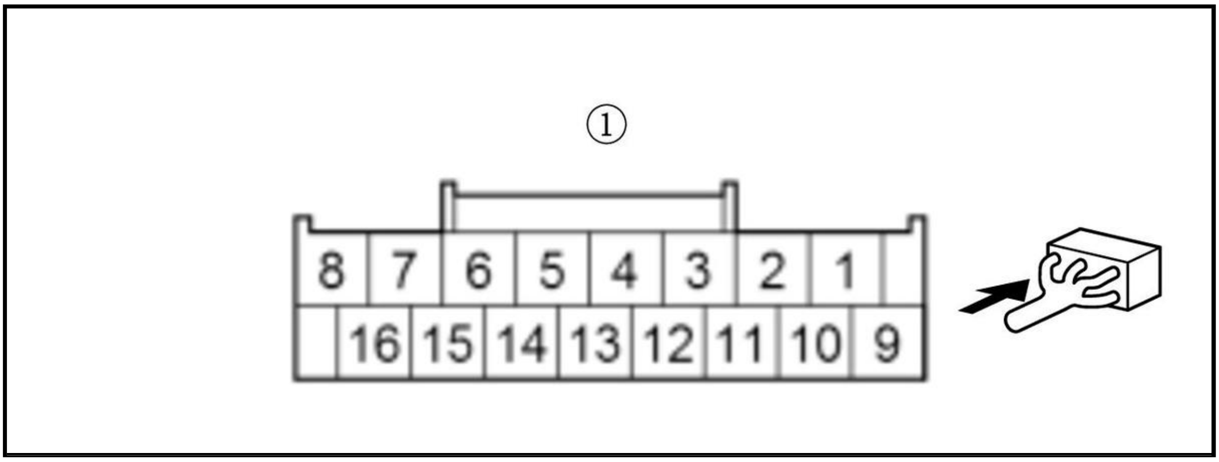

Is there 1.0 Ω or less?

YES

The F-CAN A_H wire is OK. Go to step 4.

NO

Repair an open in the F-CAN A_H wire between the PCM (A37) and the CAN gateway.

4. Open wire check (F-CAN A_L line)

-1. Measure the resistance between test points 1 and 2.

Test condition	Vehicle OFF (LOCK) mode
B	CAN gateway 16P connector: disconnected
B	PCM connector A (50P): disconnected
Test point 1	CAN gateway 16P connector (female terminals) No. 11: ①
Test point 2	**PCM connector A (50P) No. 36**

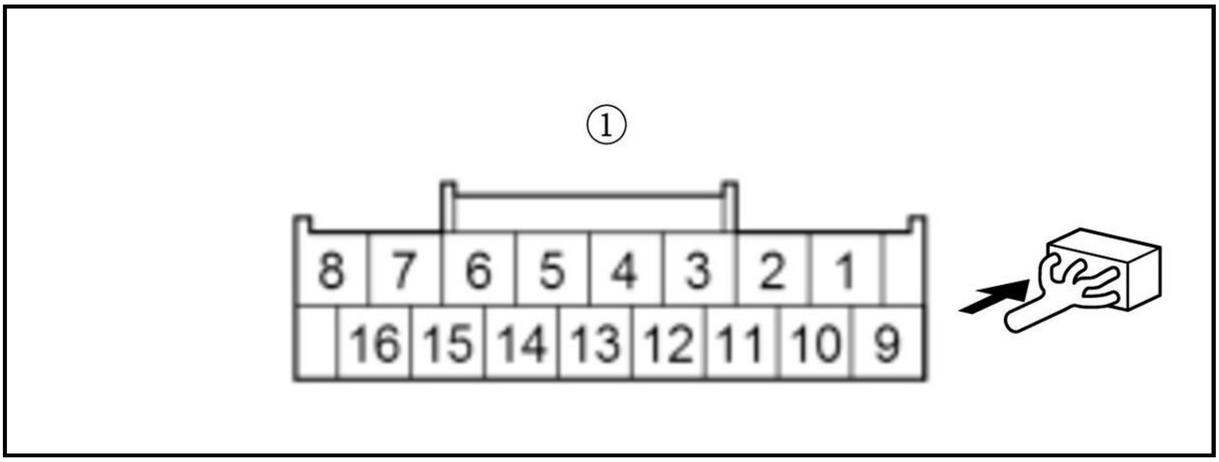

Is there 1.0 Ω or less?

YES

The F-CAN A_L wire is OK. Check for poor connections or loose terminals at the CAN gateway and the PCM. **Go to the PCM power and ground circuit troubleshooting** .

NO

Repair an open in the F-CAN A_L wire between the PCM (A36) and the CAN gateway.

5. SRS check

-1. Turn the vehicle to the OFF (LOCK) mode.

-2. Turn the vehicle to the ON mode, and watch the SRS indicator.

Does the SRS indicator come on and go off?

YES

The SRS is OK. Go to step 11.

NO

Go to the symptom troubleshooting for SRS indicator stays on, but no DTCs are stored, or cannot be read .

6. VSA system check

-1. Turn the vehicle to the OFF (LOCK) mode.

-2. Turn the vehicle to the ON mode, and watch the VSA indicator.

Does the VSA indicator come on and go off?

YES

The VSA system is OK. Go to step 11.

NO

Go to the symptom troubleshooting for ABS indicator, brake system indicator (red), VSA indicator, and brake system indicator (amber) do not go off .

7. EPS system check

-1. Turn the vehicle to the OFF (LOCK) mode.

-2. Enter the maintenance mode , then start the engine, and watch the EPS indicator.

Does the EPS indicator come on and go off?

YES

The EPS system is OK. Go to step 11.

NO

Go to the EPS symptom troubleshooting for EPS indicator does not go off, and no DTCs are stored .

8. Keyless access system check

-1. Turn the vehicle to the OFF (LOCK) mode.

-2. Turn the vehicle to the ON mode, and watch the security indicator.

Does the security indicator stay on or blinkΩ

YES

Go to the keyless access system symptom troubleshooting information .

NO

The keyless access system is OK. Go to step 11.

9. Body electrical system check

-1. Do the gauge control module self-diagnostic function .

-2. Check the gauge display.

Is Error 2 indicated?

YES

Go to the indicated DTC's troubleshooting.

NO

The body electrical system is OK. Go to step 11.

10. Driving support system check

-1. Turn the vehicle to the OFF (LOCK) mode.

-2. Turn the vehicle to the ON mode, and watch the ACC indicator, the CMBS indicator, the LKAS indicator, the RDM indicator, and the auto high-beam activation indicator.

Does the ACC indicator, the CMBS indicator, the LKAS indicator, the RDM indicator, and/or the auto high-beam activation indicator come on and go off?

YES

The driving support system is OK. Go to step 11.

NO

Go to the driving support system symptom troubleshooting; **ACC** , **CMBS** , **LKAS** , **RDM** , **Auto High-Beam** .

11. Open wire check (K-LINE line or L-LINE line)

-1. Turn the vehicle to the OFF (LOCK) mode.

-2. Disconnect the HDS from the DLC.

Disconnect the control unit(s) on the K-LINE or L-LINE that does not communicate.

NOTE: Before disconnecting the SRS unit connector, **do the 12 volt battery terminal disconnection procedure** and wait for at least 3 minutes.

K-LINE

- Audio-navigation unit connector A (24P) *1
- Audio unit connector A (24P) *2
- ANC/active sound control unit 20P connector
- Body control module connector D (40P)

L-LINE

- Body control module connector F (36P)
- SRS unit connector A (39P)

-4. Measure the resistance between DLC (16P) No. 7 (K-LINE line) and these connector terminals, or DLC (16P) No. 15 (L-LINE line) and these connector terminals:

K-LINE

Connector	Terminal
Audio-navigation unit connector A (24P)*1	No. 12
Audio unit connector A (24P)*2	No. 12
ANC/active sound control unit 20P connector	No. 14
Body control module connector D (40P)	No. 36

L-LINE

Connector	Terminal
Body control module connector F (36P)	No. 21
SRS unit connector A (39P)	No. 33

Is there 1.0 Ω or less between the DLC and the terminals in the chart?

YES

Go to step 12.

NO

Repair an open in the wire between the DLC (K-LINE wire or L-LINE wire) and the appropriate connector.

12. Determine possible failure area (short in K-LINE line or L-LINE line, others)

    -1. Reconnect all connectors.

    -2. If the 12 volt battery negative terminal is disconnected in step 11-3, **do the 12 volt battery terminal reconnection procedure** .

    -3. Turn the vehicle to the ON mode.

    -4. Measure the voltage between test points 1 and 2.

Test condition	Vehicle ON mode
Test point 1	DLC (16P) (female terminals) No. 7 and No. 15: ①
Test point 2	Body ground

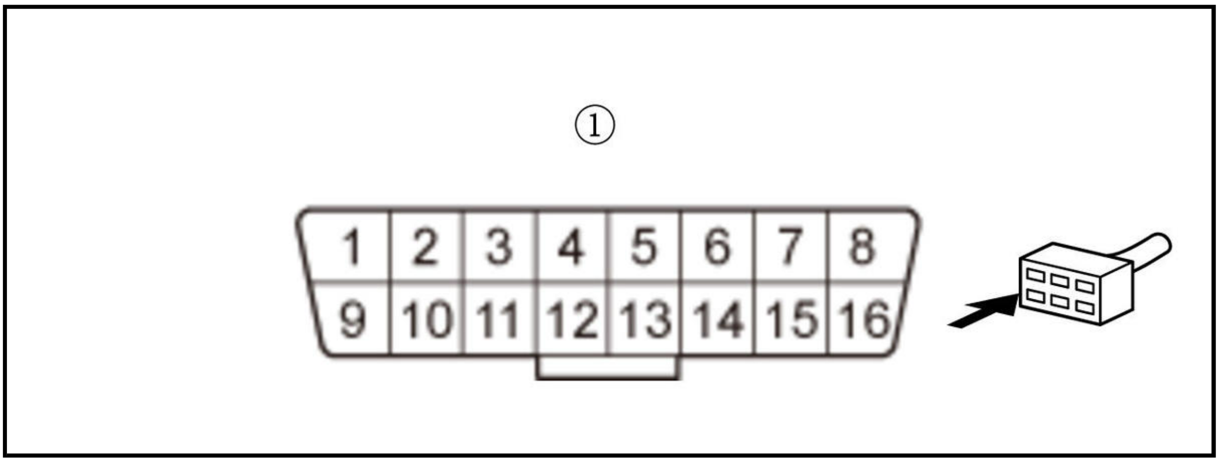

Is there any voltage?

YES

Go to step 14.

NO

Go to step 13.

13. Shorted wire check (K-LINE line, L-LINE line):

    Continue to measure the voltage between DLC (16P) No. 7 (K-LINE line) and body ground, or DLC (16P) No. 15 (L-LINE line) and body ground while disconnecting these parts, one at a time:

    NOTE: Turn the vehicle to the OFF (LOCK) mode before disconnecting the connector, and turn the vehicle to the ON mode before measuring the voltage.

    K-LINE

    - Audio-navigation unit connector A (24P) *1
    - Audio unit connector A (24P) *2
    - ANC/active sound control unit 20P connector
    - Body control module connector D (40P)

L-LINE

- Body control module connector F (36P)
- SRS unit connector A (39P)

  NOTE: Before disconnecting the SRS unit connector, **do the 12 volt battery terminal disconnection procedure** and wait for at least 3 minutes.

Is there battery voltage when the one of the above components is disconnected?

YES

Replace the component that caused the battery voltage to return when it was disconnected.

NO

Repair a short in the wire between the DLC (16P) No. 7 (K-LINE) and the audio-navigation unit *1, audio unit *2, the ANC/active sound control unit, the body control module, or the DLC (16P) No. 15 (L-LINE) and the body control module, the SRS unit.

14. Body electrical system (B-CAN) check

    -1. **Do the gauge control module self-diagnostic function** .

    -2. Check for gauge control module DTCs without the HDS.

    Is DTC U0029 and/or U0100 indicated?

    YES

    Do the PCM power and ground circuit troubleshooting .

    NO

    Go to step 15.

15. Open wire check (+B_BACK_UP line)

    -1. Turn the vehicle to the OFF (LOCK) mode.

    -2. Disconnect the HDS from the DLC.

    -3. Measure the voltage between test points 1 and 2.

Test condition	Vehicle OFF (LOCK) mode
Test point 1	DLC (16P) (female terminals) No. 16: ①
Test point 2	Body ground

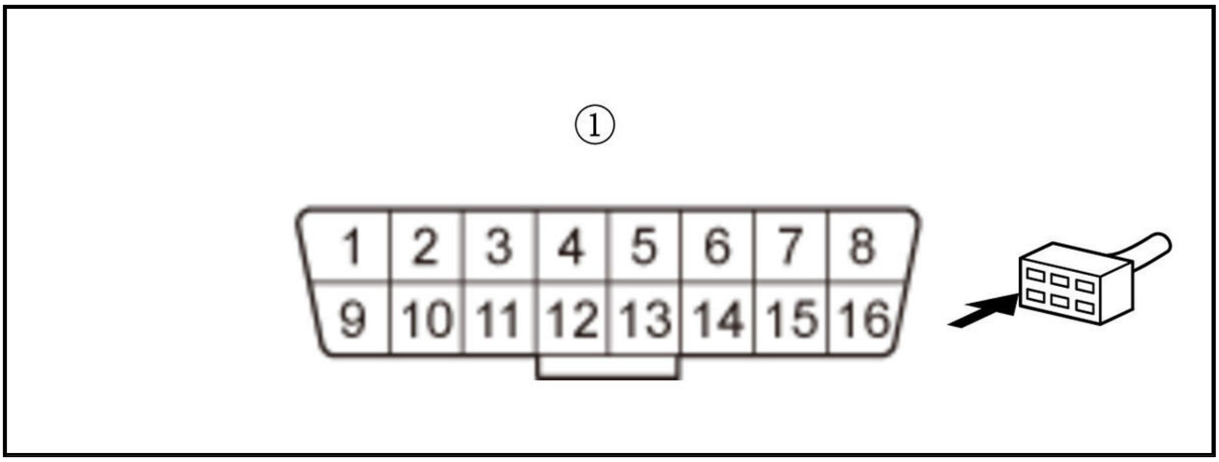
①
1
2
3
4
5
6
7
8
9
10
11
12
13
14
15
16

Is there battery voltage?

YES

The +B_BACK_UP wire is OK. Go to step 16.

NO

Repair an open in the +B_BACK_UP wire between data link connector (16P) No. 16 and the **No. A18 fuse** .

16. Open wire check (GND line)

-1. Measure the voltage between test points 1 and 2.

Test condition	Vehicle OFF (LOCK) mode
Test point 1	DLC (16P) (female terminals) No. 4: ①
Test point 2	DLC (16P) (female terminals) No. 16: ①

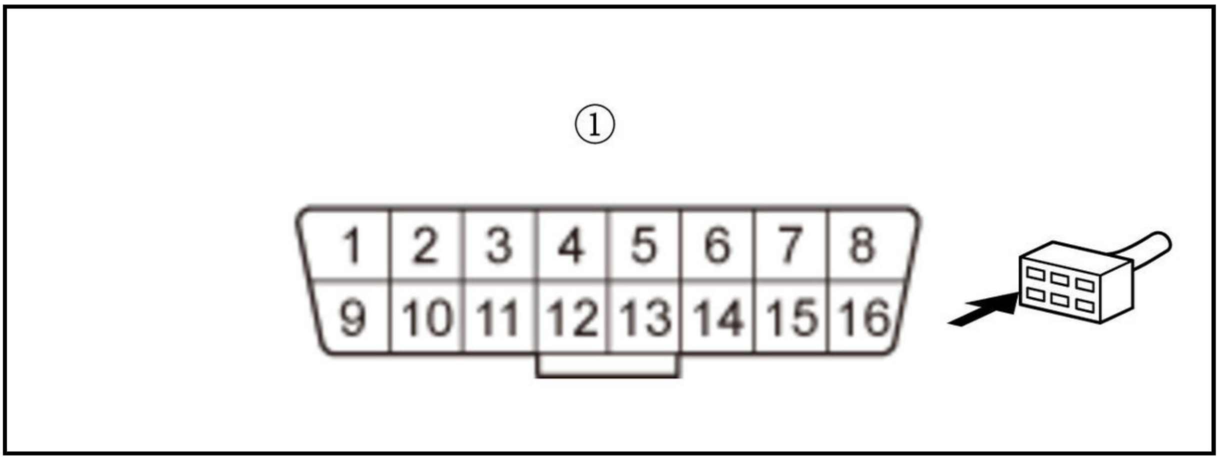
①
1
2
3
4
5
6
7
8
9
10
11
12
13
14
15
16

Is there battery voltage?

YES

The GND wire is OK. Go to step 17.

NO

Repair an open in the GND wire between DLC (16P) No. 4 and G401.

17. Open wire check (+B_BACK_UP line)

-1. Disconnect the following connector.

CAN gateway 16P connector

-2. Measure the voltage between test points 1 and 2.

Test condition	Vehicle OFF (LOCK) mode
Test point 1	CAN gateway 16P connector (female terminals) No. 1: ①

Test point 2	Body ground

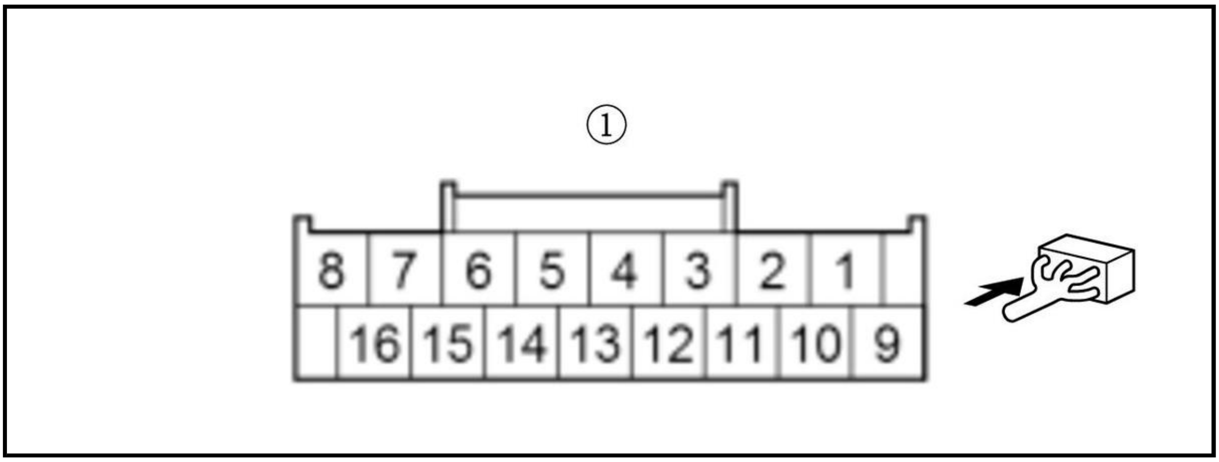

Is there battery voltage?

YES

The +B_BACK_UP wire is OK. Go to step 18.

NO

Repair an open in the +B_BACK_UP wire between CAN gateway (16P) No. 1 and the **No. A18 fuse** .

18. Open wire check (IG1_METER line)

-1. Turn the vehicle to the ON mode.

-2. Measure the voltage between test points 1 and 2.

Test condition	Vehicle ON mode
B	CAN gateway 16P connector: disconnected
Test point 1	CAN gateway 16P connector (female terminals) No. 9: ①
Test point 2	Body ground

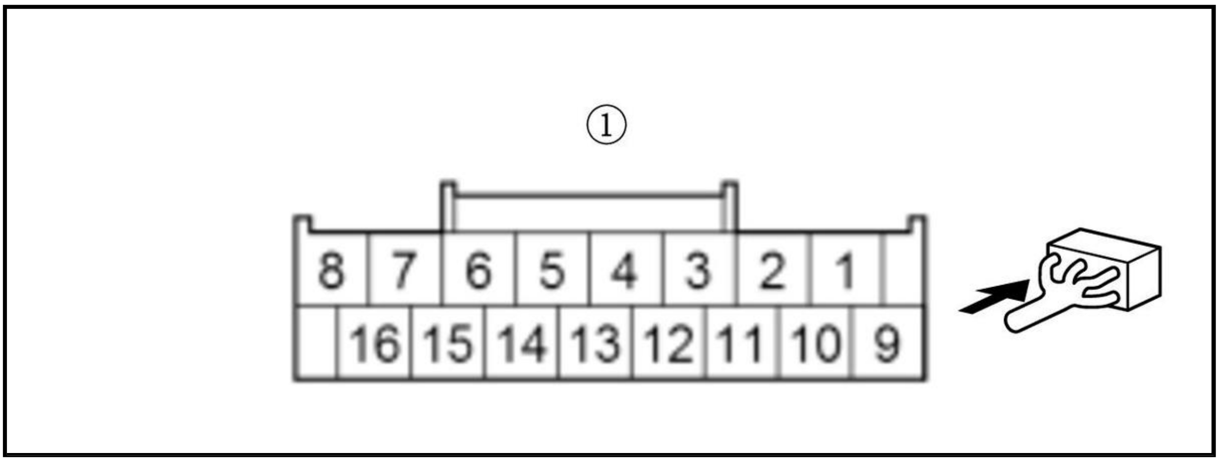

Is there battery voltage?

YES

The IG1_METER wire is OK. Go to step 19.

NO

Repair an open in the IG1_METER wire between the CAN gateway and the **No. D7 fuse** .

19. Open wire check (GND line)

-1. Turn the vehicle to the OFF (LOCK) mode.

-2. Measure the resistance between test points 1 and 2.

Test condition	Vehicle OFF (LOCK) mode
B	CAN gateway 16P connector: disconnected
Test point 1	CAN gateway 16P connector (female terminals) No. 12: ①
Test point 2	Body ground

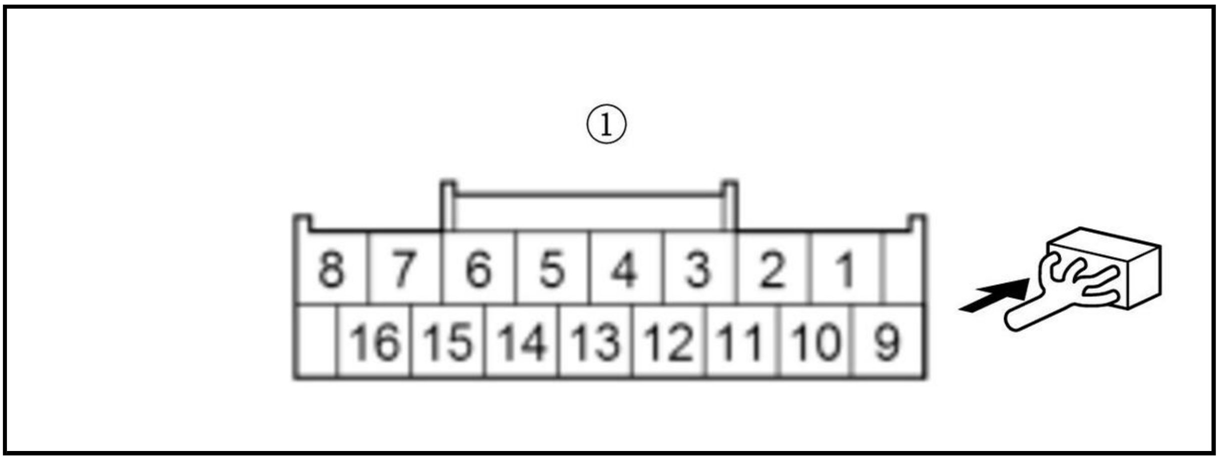

Is there 1.0 Ω or less?

YES

The GND wire is OK. Go to step 20.

NO

Repair an open in the GND wire between the CAN gateway and G401.

20. Open wire check (DIAG-CAN_H line)

-1. Measure the resistance between test points 1 and 2.

Test condition	Vehicle OFF (LOCK) mode
B	CAN gateway 16P connector: disconnected
Test point 1	CAN gateway 16P connector (female terminals) No. 2: ①
Test point 2	DLC (16P) (female terminals) No. 6: ②

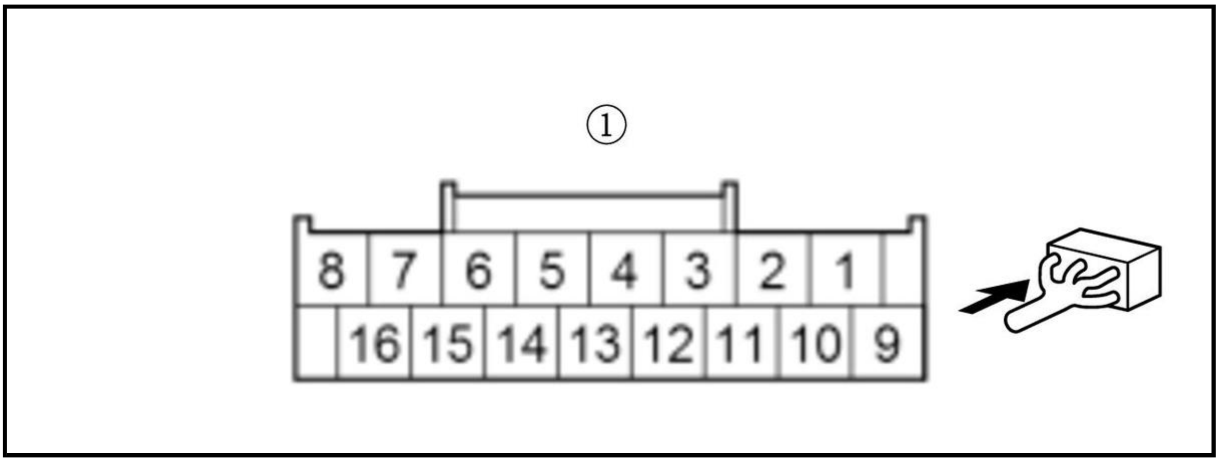

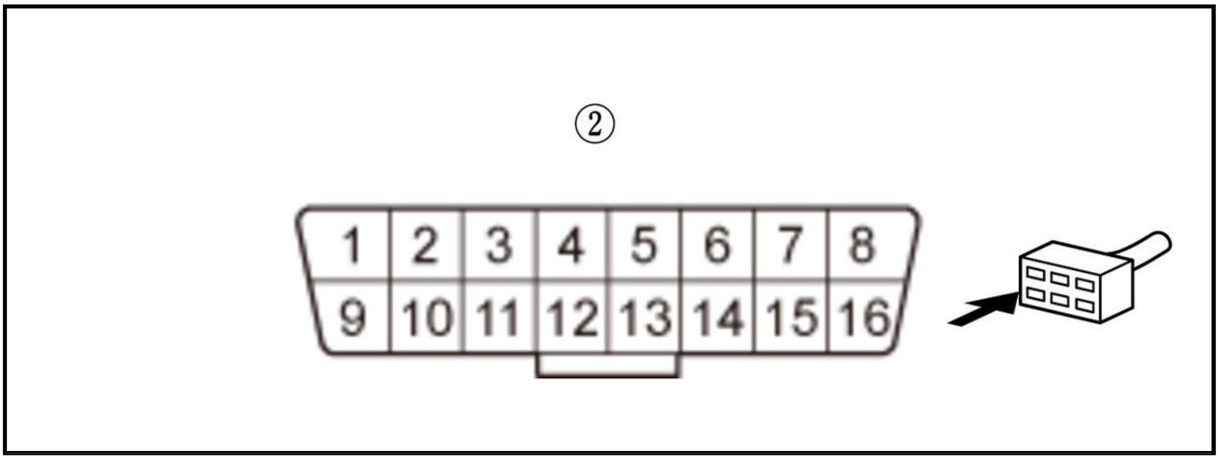

Is there 1.0 Ω or less?

YES

The DIAG-CAN_H wire is not open. Go to step 21.

NO

Repair an open in the DIAG-CAN_H wire between the CAN gateway and the DLC (16P) No. 6.

21. Open wire check (DIAG-CAN_L line)

-1. Measure the resistance between test points 1 and 2.

Test condition	Vehicle OFF (LOCK) mode
B	CAN gateway 16P connector: disconnected
Test point 1	CAN gateway 16P connector (female terminals) No. 10: ①

Test point 2	DLC (16P) (female terminals) No. 14: ②

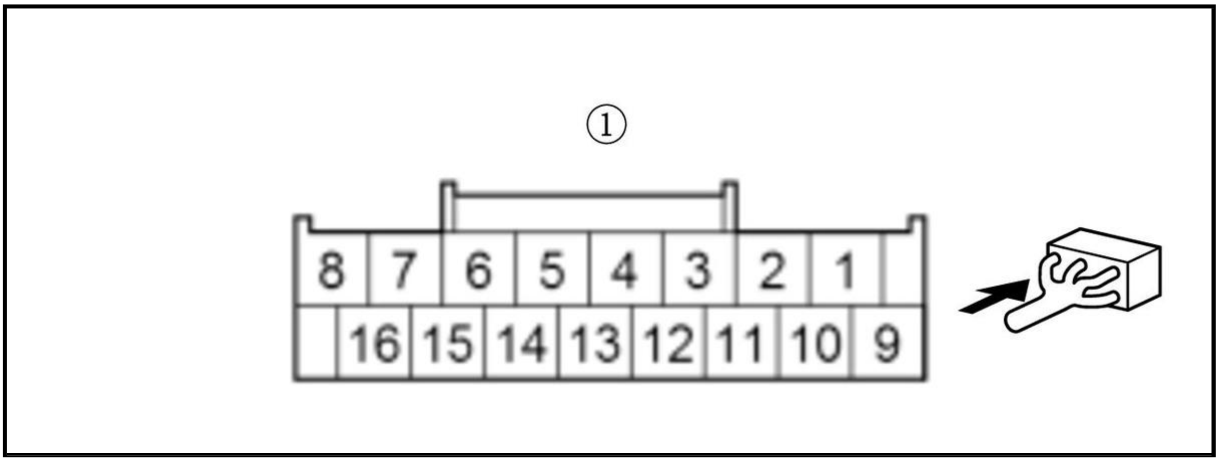
①
8
7
6
5
4
3
2
1
16
15
14
13
12
11
10
9

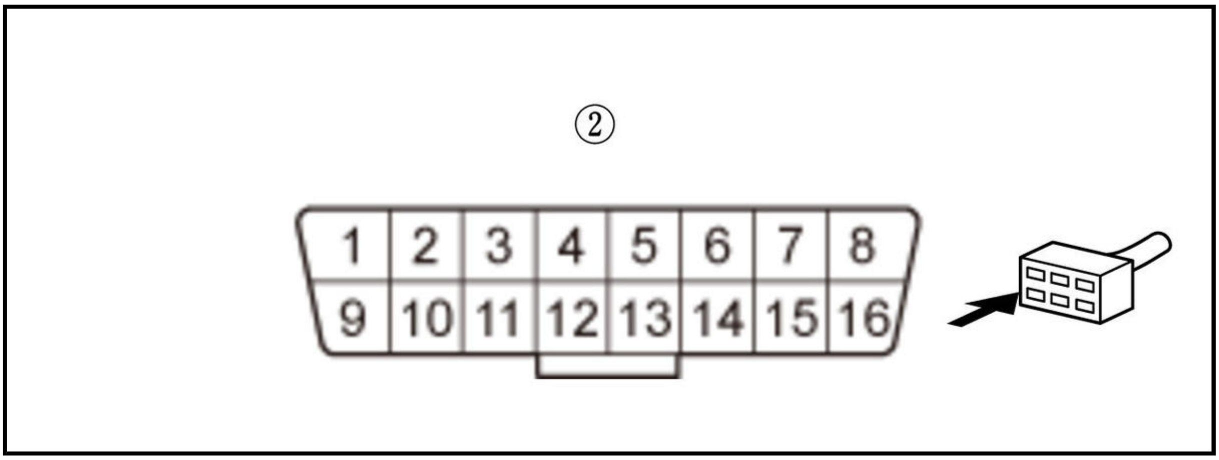
②
1
2
3
4
5
6
7
8
9
10
11
12
13
14
15
16

Is there 1.0 Ω or less?

YES

The DIAG-CAN_L wire is not open. Go to step 22.

NO

Repair an open in the DIAG-CAN_L wire between the CAN gateway and the DLC (16P) No. 14.

22. Shorted wire check (DIAG-CAN_H line)

-1. Measure the resistance between test points 1 and 2.

Test condition	Vehicle OFF (LOCK) mode
B	CAN gateway 16P connector: disconnected
Test point 1	DLC (16P) (female terminals) No. 6: ①
Test point 2	Body ground

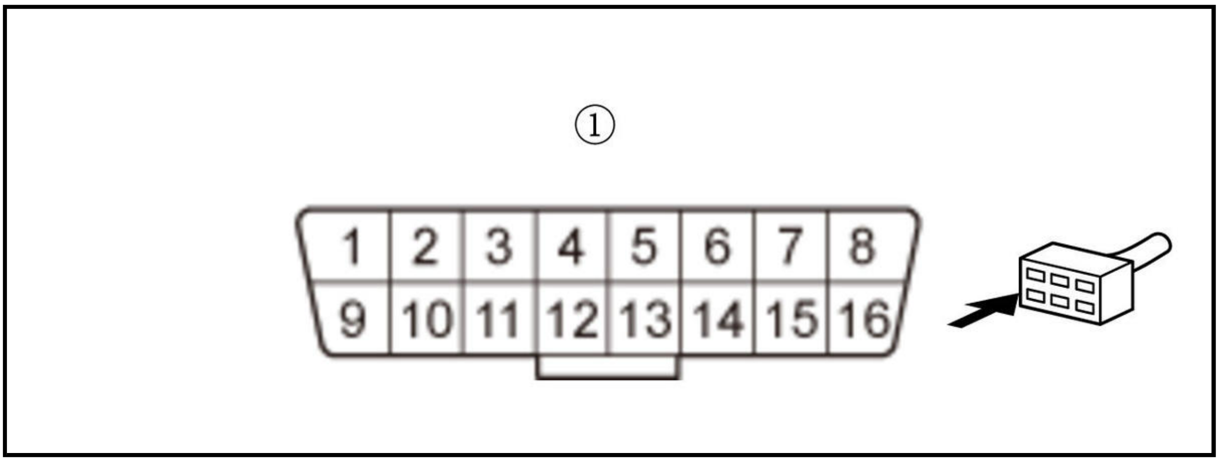

Is there 1 MΩ or more?

YES

The DIAG-CAN_H wire is not shorted to ground. Go to step 23.

NO

Repair a short in the DIAG-CAN_H wire between the CAN gateway and the DLC (16P) No. 6.

23. Shorted wire check (DIAG-CAN_L line)

-1. Measure the resistance between test points 1 and 2.

Test condition	Vehicle OFF (LOCK) mode
B	CAN gateway 16P connector: disconnected
Test point 1	DLC (16P) (female terminals) No. 14: ①
Test point 2	Body ground

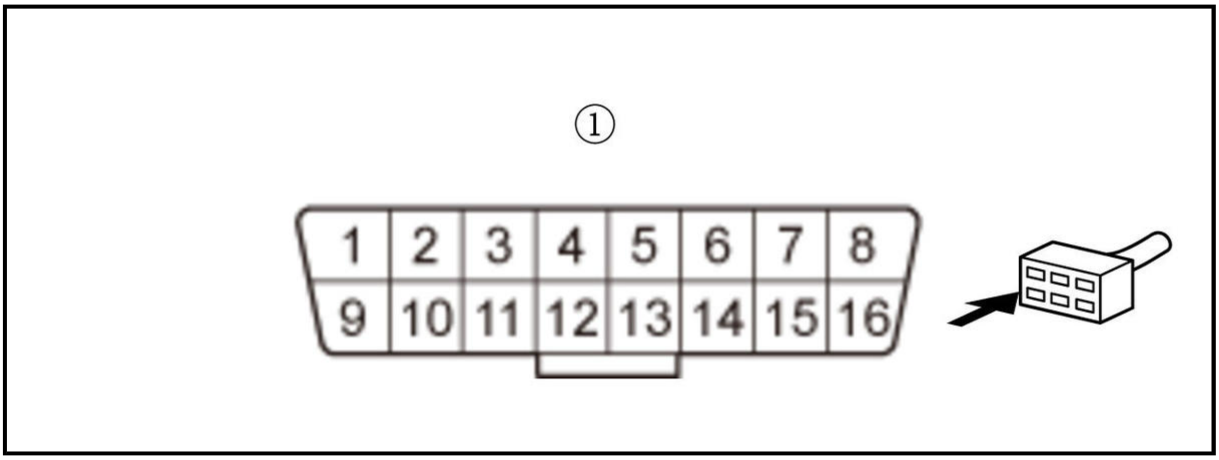

Is there 1 MΩ or more?

YES

The DIAG-CAN_L wire is not shorted to ground. Go to step 24.

NO

Repair a short in the DIAG-CAN_L wire between the CAN gateway and the DLC (16P) No. 14.

24. Shorted wire check (DIAG-CAN_H line to DIAG-CAN_L line)

-1. Measure the resistance between test points 1 and 2.

Test condition	Vehicle OFF (LOCK) mode
B	CAN gateway 16P connector: disconnected
Test point 1	DLC (16P) (female terminals) No. 6: ①
Test point 2	DLC (16P) (female terminals) No. 14: ①

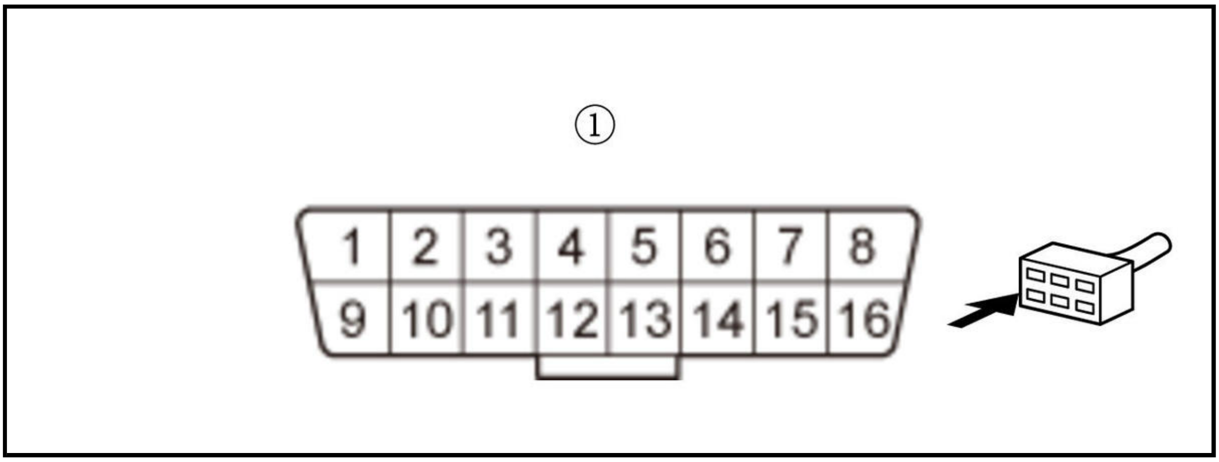

Is there 1 MΩ or more?

YES

The DIAG-CAN_H wire and the DIAG-CAN_L wire are OK. Check for any authorized service information related to the DTCs or symptoms you are troubleshooting, or **substitute a known-good CAN gateway** .

NO

Repair a short in the DIAG-CAN_H wire to the DIAG-CAN_L wire between DLC (16P) No. 6 and No. 14.

CIRCUIT DIAGRAM

COMMUNICATION SYSTEMS CIRCUIT DIAGRAM

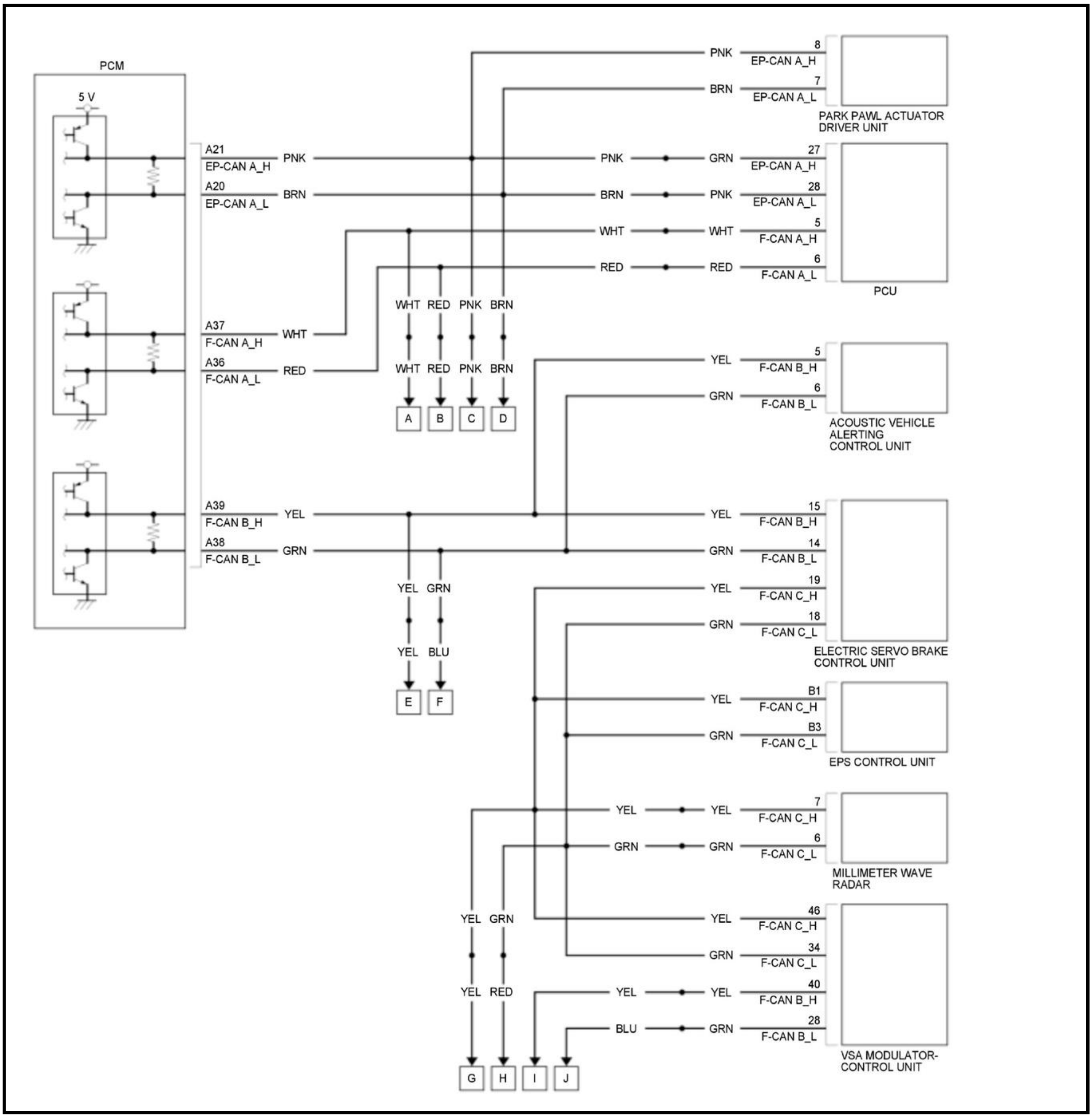
PCM
5 V
A21
EP-CAN A_H
PNK
A20
EP-CAN A_L
BRN
A37
F-CAN A_H
WHT
A36
F-CAN A_L
RED
A39
F-CAN B_H
YEL
A38
F-CAN B_L
GRN
PNK
8
EP-CAN A_H
BRN
7
EP-CAN A_L
PARK PAWL ACTUATOR DRIVER UNIT
PNK
GRN
27
EP-CAN A_H
BRN
PNK
28
EP-CAN A_L
WHT
WHT
5
F-CAN A_H
RED
RED
6
F-CAN A_L
PCU
WHT RED PNK BRN
WHT RED PNK BRN
A B C D
YEL
5
F-CAN B_H
GRN
6
F-CAN B_L
ACOUSTIC VEHICLE ALERTING CONTROL UNIT
YEL
15
F-CAN B_H
GRN
14
F-CAN B_L
YEL
19
F-CAN C_H
GRN
18
F-CAN C_L
ELECTRIC SERVO BRAKE CONTROL UNIT
YEL GRN
YEL BLU
E F
YEL
B1
F-CAN C_H
GRN
B3
F-CAN C_L
EPS CONTROL UNIT
YEL
YEL
7
F-CAN C_H
GRN
GRN
6
F-CAN C_L
MILLIMETER WAVE RADAR
YEL GRN
YEL RED
YEL
46
F-CAN C_H
GRN
34
F-CAN C_L
YEL
YEL
40
F-CAN B_H
BLU
GRN
28
F-CAN B_L
VSA MODULATOR-CONTROL UNIT
G H I J

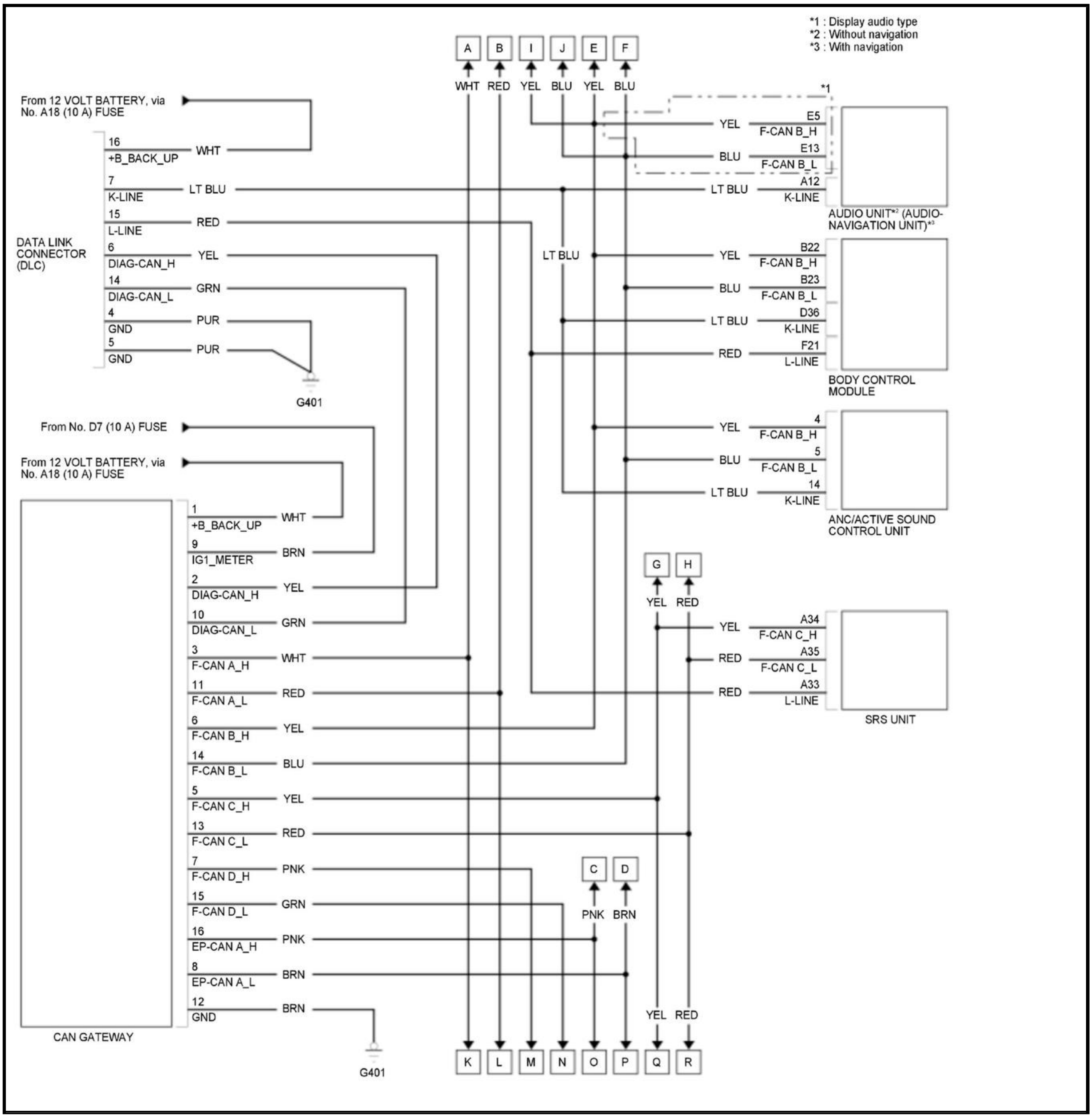
*1 : Display audio type
*2 : Without navigation
*3 : With navigation
A
B
I
J
E
F
WHT
RED
YEL
BLU
YEL
BLU
*1
From 12 VOLT BATTERY, via No. A18 (10 A) FUSE
16
+B_BACK_UP
WHT
7
K-LINE
LT BLU
15
L-LINE
RED
DATA LINK CONNECTOR (DLC)
6
DIAG-CAN_H
YEL
14
DIAG-CAN_L
GRN
4
GND
PUR
5
GND
PUR
G401
YEL
E5
F-CAN B_H
BLU
E13
F-CAN B_L
LT BLU
A12
K-LINE
AUDIO UNIT*2 (AUDIO-NAVIGATION UNIT)*3
LT BLU
YEL
B22
F-CAN B_H
BLU
B23
F-CAN B_L
LT BLU
D36
K-LINE
RED
F21
L-LINE
BODY CONTROL MODULE
From No. D7 (10 A) FUSE
From 12 VOLT BATTERY, via No. A18 (10 A) FUSE
YEL
4
F-CAN B_H
BLU
5
F-CAN B_L
LT BLU
14
K-LINE
ANC/ACTIVE SOUND CONTROL UNIT
1
+B_BACK_UP
WHT
9
IG1_METER
BRN
2
DIAG-CAN_H
YEL
10
DIAG-CAN_L
GRN
3
F-CAN A_H
WHT
11
F-CAN A_L
RED
6
F-CAN B_H
YEL
14
F-CAN B_L
BLU
5
F-CAN C_H
YEL
13
F-CAN C_L
RED
7
F-CAN D_H
PNK
15
F-CAN D_L
GRN
16
EP-CAN A_H
PNK
8
EP-CAN A_L
BRN
12
GND
BRN
CAN GATEWAY
G401
G
H
YEL
RED
YEL
A34
F-CAN C_H
RED
A35
F-CAN C_L
RED
A33
L-LINE
SRS UNIT
C
D
PNK
BRN
YEL
RED
K
L
M
N
O
P
Q
R

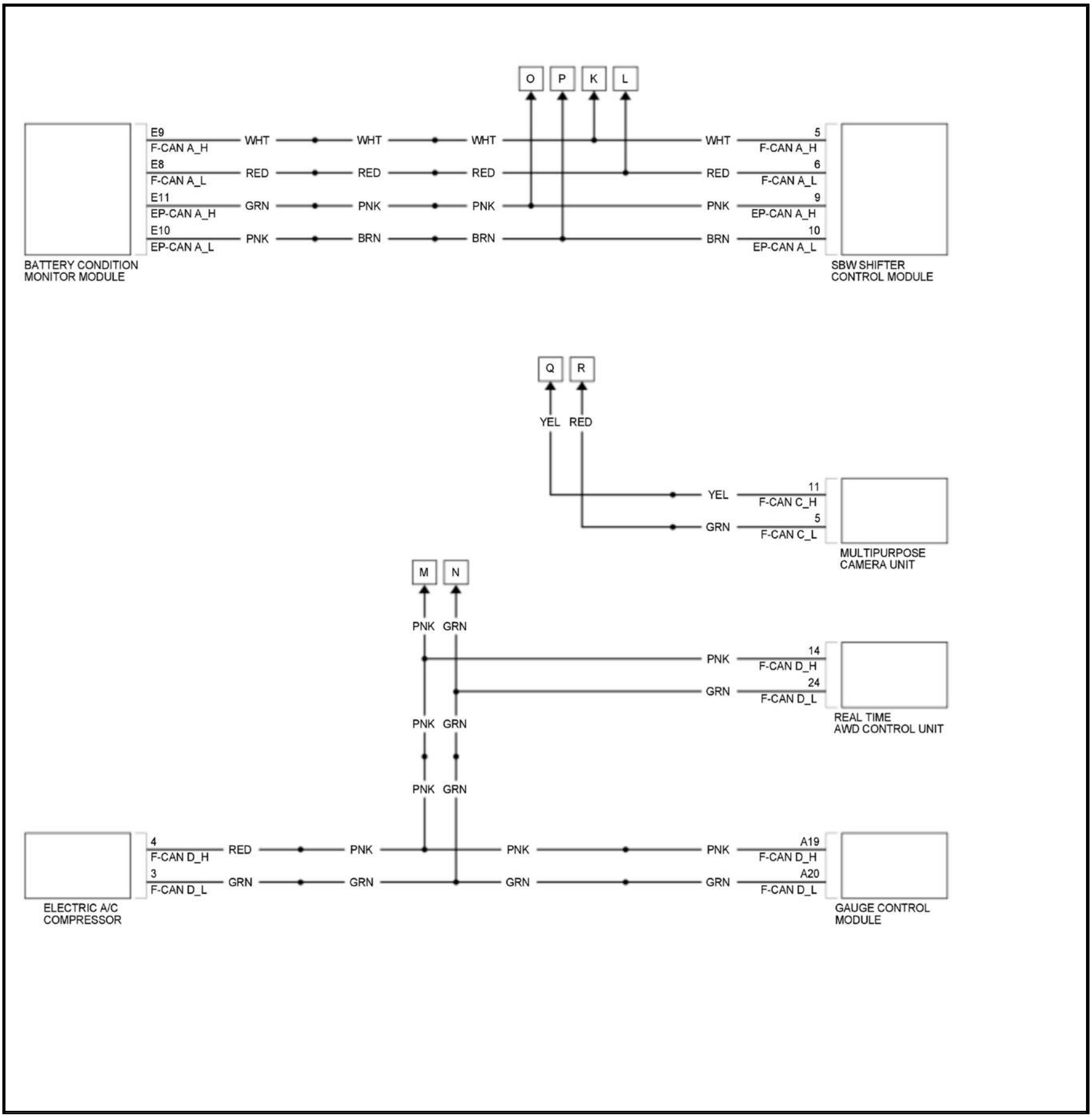
O
P
K
L
E9
F-CAN A_H
E8
F-CAN A_L
E11
EP-CAN A_H
E10
EP-CAN A_L
WHT
RED
GRN
PNK
BRN
5
F-CAN A_H
6
F-CAN A_L
9
EP-CAN A_H
10
EP-CAN A_L
BATTERY CONDITION MONITOR MODULE
SBW SHIFTER CONTROL MODULE
Q
R
YEL
RED
GRN
11
F-CAN C_H
5
F-CAN C_L
MULTIPURPOSE CAMERA UNIT
M
N
PNK
GRN
14
F-CAN D_H
24
F-CAN D_L
REAL TIME AWD CONTROL UNIT
4
F-CAN D_H
3
F-CAN D_L
ELECTRIC A/C COMPRESSOR
A19
F-CAN D_H
A20
F-CAN D_L
GAUGE CONTROL MODULE

DTC TROUBLESHOOTING

DTC B2601

DTC B2601 : Parking Sensor CPU Error

NOTE: If you are troubleshooting multiple DTCs, be sure to follow the instructions in B-CAN System Diagnosis Test Mode A .

DTC Description	DTC
B2601 Parking Sensor CPU Error	B

DTC (Parking and Back-Up Sensor Control Unit)

1. Problem verification

   -1. Clear the DTCs with the HDS.

   -2. Turn the vehicle to the OFF (LOCK) mode and then the ON mode.

   -3. Check for DTCs with the HDS.

DTC Description	DTC
B2601 Parking Sensor CPU Error	B

   Is DTC B2601 indicated?

   YES

   Replace the parking and back-up sensor control unit .

   NO

   Intermittent failure, the system is OK at this time. Check for loose or poor connections.

DTC B2602

DTC B2602 : Parking Sensor EEPROM Error

NOTE: If you are troubleshooting multiple DTCs, be sure to follow the instructions in B-CAN System Diagnosis Test Mode A .

DTC Description	DTC
B2602 Parking Sensor EEPROM Error	B

DTC (Parking and Back-Up Sensor Control Unit)

1. Problem verification

   -1. Clear the DTCs with the HDS.

   -2. Turn the vehicle to the OFF (LOCK) mode and then the ON mode.

   -3. Check for DTCs with the HDS.

DTC Description	DTC
B2602 Parking Sensor EEPROM Error	B

Is DTC B2602 indicated?

YES

Replace the parking and back-up sensor control unit .

NO

Intermittent failure, the system is OK at this time. Check for loose or poor connections.

DTC B2610, B2611, B2612, B2613

DTC B2610 : Front 1st sensor failure

DTC B2611 : Front 2nd sensor failure

DTC B2612 : Front 3rd sensor failure

DTC B2613 : Front 4th sensor failure

NOTE:

- If you are troubleshooting multiple DTCs, be sure to follow the instructions in **B-CAN System Diagnosis Test Mode A** .
- The connection order of the sensor is 1st -> 2nd -> 3rd -> 4th from the side near the control unit.

DTC Description	DTC
B2610 Front 1st sensor failure	B
B2611 Front 2nd sensor failure	B
B2612 Front 3rd sensor failure	B
B2613 Front 4th sensor failure	B

DTC (Parking and Back-Up Sensor Control Unit)

1. Problem verification

-1. Clear the DTCs with the HDS.

-2. Turn the vehicle to the OFF (LOCK) mode and then the ON mode.

-3. Wait for at least 6 seconds.

-4. Check for DTCs with the HDS.

DTC Description	DTC
B2610 Front 1st sensor failure	B
B2611 Front 2nd sensor failure	B
B2612 Front 3rd sensor failure	B
B2613 Front 4th sensor failure	B

Are any DTCs indicated?

YES

Refer to the DTC shown on the display, then replace the sensor based on the instructions (see table).

DTC	Operation for transmitting control unit
B2610	Left front corner sensor
B2611	Left front center sensor
B2612	Right front center sensor

DTC	Operation for transmitting control unit
B2613	Right front corner sensor

NO

Intermittent failure, the system is OK at this time. Check for loose or poor connections.

DTC B2614, B2615, B2616, B2617

DTC B2614 : Rear 1st sensor failure

DTC B2615 : Rear 2nd sensor failure

DTC B2616 : Rear 3rd sensor failure

DTC B2617 : Rear 4th sensor failure

NOTE:

- If you are troubleshooting multiple DTCs, be sure to follow the instructions in **B-CAN System Diagnosis Test Mode A** .
- The connection order of the sensor is 1st -> 2nd -> 3rd -> 4th from the side near the control unit.

DTC Description	DTC
B2614 Rear 1st sensor failure	B
B2615 Rear 2nd sensor failure	B
B2616 Rear 3rd sensor failure	B
B2617 Rear 4th sensor failure	B

DTC (Parking and Back-Up Sensor Control Unit)

1. Problem verification

-1. Clear the DTCs with the HDS.

-2. Turn the vehicle to the OFF (LOCK) mode and then the ON mode.

-3. Wait for at least 6 seconds.

-4. Check for DTCs with the HDS.

DTC Description	DTC
B2614 Rear 1st sensor failure	B
B2615 Rear 2nd sensor failure	B
B2616 Rear 3rd sensor failure	B
B2617 Rear 4th sensor failure	B

Are any DTCs indicated?

YES

Refer to the DTC shown on the display, then replace the sensor based on the instructions (see table).

DTC	Operation for transmitting control unit
B2614	Left rear corner sensor
B2615	Left rear center sensor
B2616	Right rear center sensor

DTC	Operation for transmitting control unit
B2617	Right rear corner sensor

NO

Intermittent failure, the system is OK at this time. Check for loose or poor connections.

DTC B2618, B2619, B261A, B261B

DTC B2618 : Front 1st sensor data failure

DTC B2619 : Front 2nd sensor data failure

DTC B261A : Front 3rd sensor data failure

DTC B261B : Front 4th sensor data failure

NOTE:

- If you are troubleshooting multiple DTCs, be sure to follow the instructions in B-CAN System Diagnosis Test Mode A .
- Before you troubleshoot, resetting the parking and back-up sensor control unit .
- The connection order of the sensor is 1st -> 2nd -> 3rd -> 4th from the side near the control unit.

DTC Description	DTC
B2618 Front 1st sensor data failure	B
B2619 Front 2nd sensor data failure	B
B261A Front 3rd sensor data failure	B
B261B Front 4th sensor data failure	B

DTC (Parking and Back-Up Sensor Control Unit)

1. Problem verification

-1. Clear the DTCs with the HDS.

-2. Turn the vehicle to the OFF (LOCK) mode and then the ON mode.

-3. Wait for at least 6 seconds.

-4. Check for DTCs with the HDS.

DTC Description	DTC
B2618 Front 1st sensor data failure	B
B2619 Front 2nd sensor data failure	B
B261A Front 3rd sensor data failure	B
B261B Front 4th sensor data failure	B

Are any DTCs indicated?

YES

Go to step 2.

NO

Intermittent failure, the system is OK at this time. Check for loose or poor connections.

2. DTC check

-1. Check for DTCs with the HDS.

DTC Description	DTC
B2618 Front 1st sensor data failure	B
B2619 Front 2nd sensor data failure	B
B261A Front 3rd sensor data failure	B
B261B Front 4th sensor data failure	B
B2646 Front sensor power failure	B
B2648 Front sensor signal short to ground	B

Are any DTCs indicated?

YES

Go to step 3.

YES

Go to step 4.

YES

Go to step 5.

YES

Go to step 6.

YES

Go to parking and back-up sensor system DTC B2646 troubleshooting.

YES

Go to parking and back-up sensor system DTC B2648 troubleshooting.

NO

Intermittent failure, the system is OK at this time. Check for loose or poor connections.

3. Open wire check (BOF_SIDE_L, SOF_SIDE_L, E1_SIDE_L lines)

-1. Turn the vehicle to the OFF (LOCK) mode.

-2. Disconnect the following connectors.

Parking and back-up sensor control unit 16P connector
Left front corner sensor 6P connector

-3. Measure the resistance between test points 1 and 2.

Test condition	Vehicle OFF (LOCK) mode Parking and back-up sensor control unit 16P connector: disconnected Left front corner sensor 6P connector: disconnected
B	B
Test point 1	**Parking and back-up sensor control unit 16P connector No. 7**
Test point 2	Left front corner sensor 6P connector (female terminals) No. 6: ①

Test point 1	**Parking and back-up sensor control unit 16P connector No. 6**
Test point 2	Left front corner sensor 6P connector (female terminals) No. 4: ①

Test point 1	**Parking and back-up sensor control unit 16P connector No. 13**
Test point 2	Left front corner sensor 6P connector (female terminals) No. 2: ①

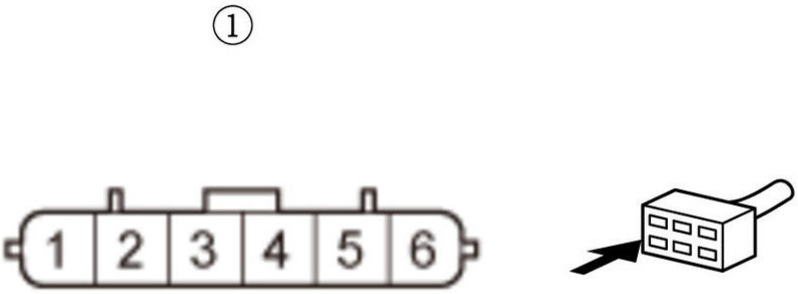

Is there 1.0 Ω or less?

YES

Replace the left front corner sensor .

NO

Repair an open or high resistance in BOF_SIDE_L, SOF_SIDE_L, or E1_SIDE_L wire.

4. Open wire check (BOF_CTR_L, SOF_CTR_L, E1_CTR_L lines)

-1. Turn the vehicle to the OFF (LOCK) mode.

-2. Disconnect the following connectors.

Left front corner sensor 6P connector

-3. Measure the resistance between test points 1 and 2.

Test condition	Vehicle OFF (LOCK) mode Left front corner sensor 6P connector: disconnected Left front center sensor 6P connector: disconnected
B	B
Test point 1	Left front corner sensor 6P connector (female terminals) No. 5: ①
Test point 2	Left front center sensor 6P connector (female terminals) No. 6: ②

Test point 1	Left front corner sensor 6P connector (female terminals) No. 3: ①
Test point 2	Left front center sensor 6P connector (female terminals) No. 4: ②

Test point 1	Left front corner sensor 6P connector (female terminals) No. 1: ①
Test point 2	Left front center sensor 6P connector (female terminals) No. 2: ②

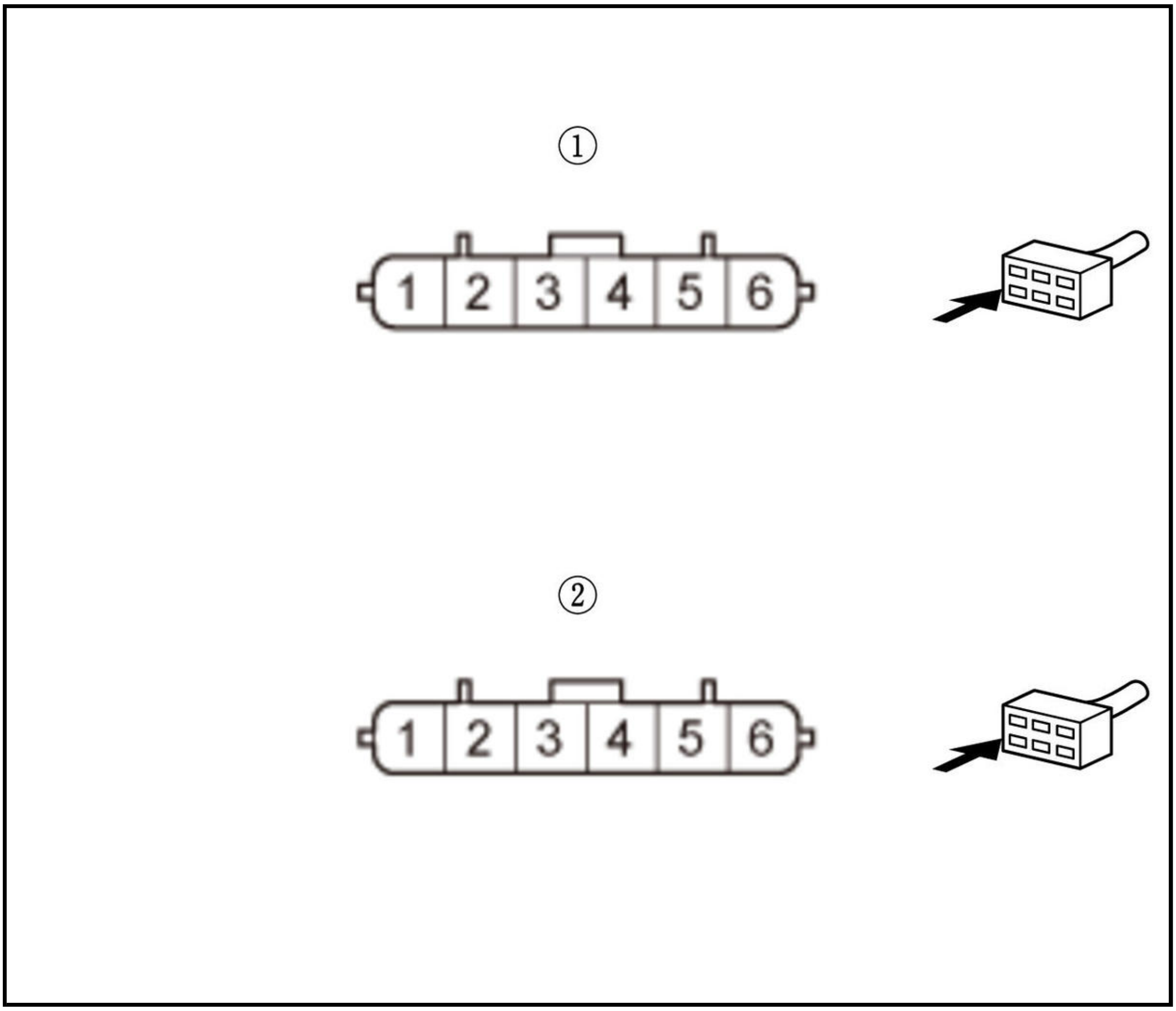

Is there 1.0 Ω or less?

YES

Replace the left front center sensor .

NO

Repair an open or high resistance in BOF_CTR_L, SOF_CTR_L, or E1_CTR_L wire.

5. Open wire check (BOF_CTR_R, SOF_CTR_R, E1_CTR_R lines)

-1. Turn the vehicle to the OFF (LOCK) mode.

-2. Disconnect the following connectors.

Left front center sensor 6P connector
Right front center sensor 6P connector

-3. Measure the resistance between test points 1 and 2.

Test condition	Vehicle OFF (LOCK) mode front center sensor 6P connector: disconnected Right front center sensor 6P connector: disconnected
B	B
Test point 1	Left front center sensor 6P connector (female terminals) No. 5: ①
Test point 2	Right front center sensor 6P connector (female terminals) No. 6: ②

Test point 1	Left front center sensor 6P connector (female terminals) No. 3: ①
Test point 2	Right front center sensor 6P connector (female terminals) No. 4: ②

Test point 1	Left front center sensor 6P connector (female terminals) No. 1: ①
Test point 2	Right front center sensor 6P connector (female terminals) No. 2: ②

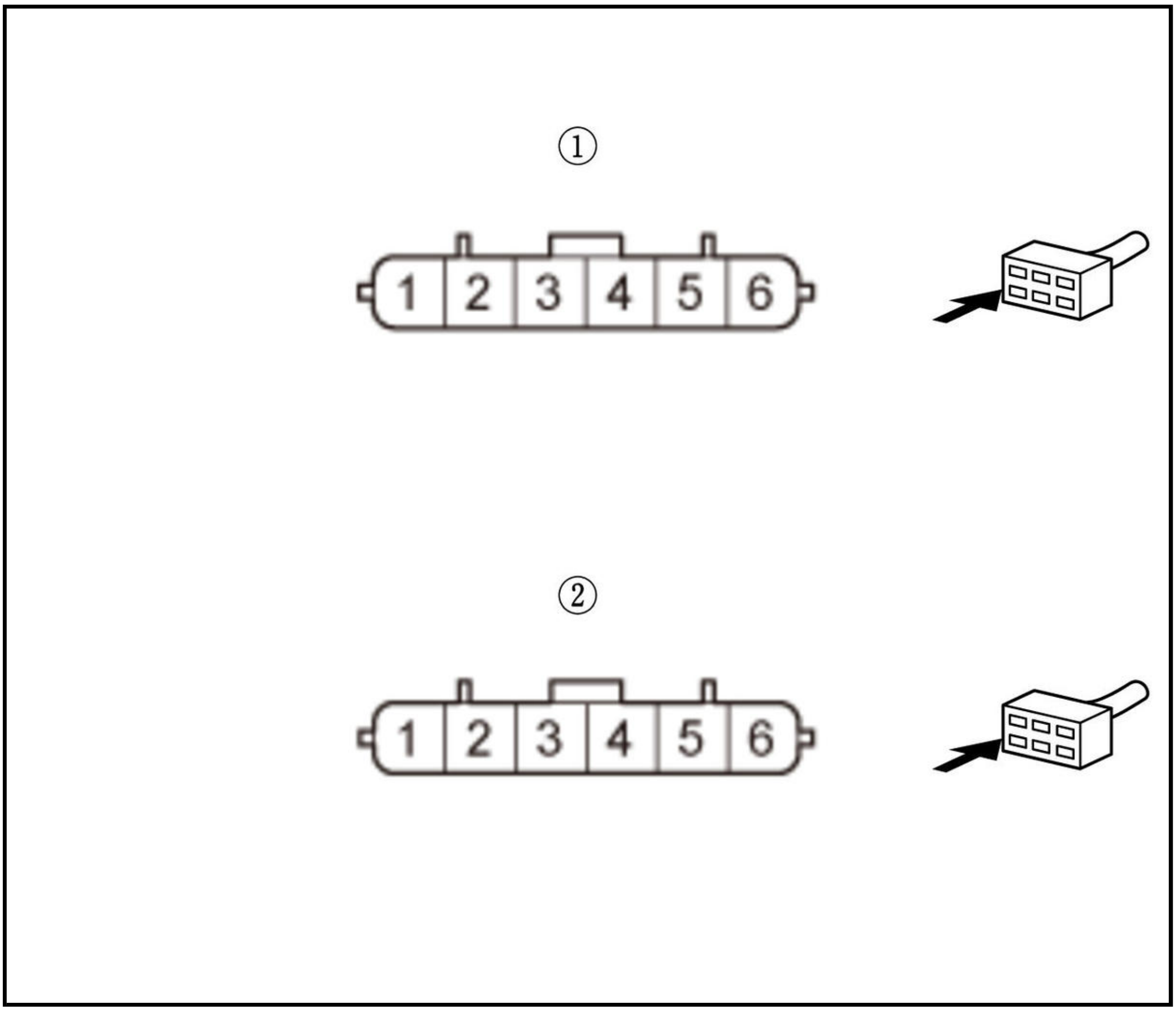

Is there 1.0 Ω or less?

YES

Replace the right front center sensor .

NO

Repair an open or high resistance in BOF_CTR_R, SOF_CTR_R, or E1_CTR_R wire.

6. Open wire check (BOF_SIDE_R, SOF_SIDE_R, E1_SIDE_R lines)

-1. Turn the vehicle to the OFF (LOCK) mode.

-2. Disconnect the following connectors.

Right front center sensor 6P connector
Right front corner sensor 6P connector

-3. Measure the resistance between test points 1 and 2.

Test condition	Vehicle OFF (LOCK) mode Right front center sensor 6P connector: disconnected Right front corner sensor 6P connector: disconnected
B	B
Test point 1	Right front center sensor 6P connector (female terminals) No. 5: ①

Test point 2	Right front corner sensor 6P connector (female terminals) No. 6: ②

Test point 1	Right front center sensor 6P connector (female terminals) No. 3: ①
Test point 2	Right front corner sensor 6P connector (female terminals) No. 4: ②

Test point 1	Right front center sensor 6P connector (female terminals) No. 1: ①
Test point 2	Right front corner sensor 6P connector (female terminals) No. 2: ②

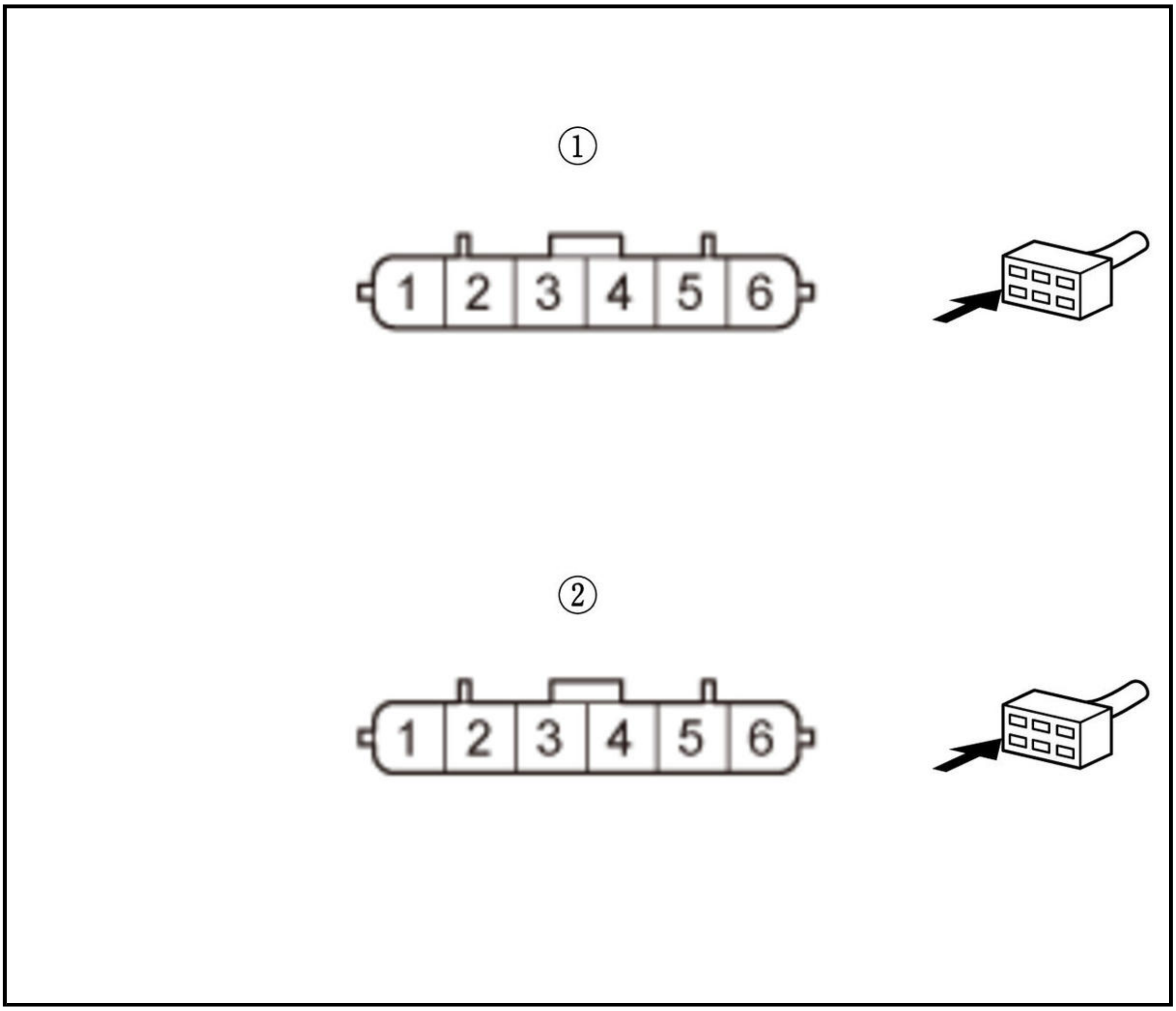

Is there 1.0 Ω or less?

YES

Replace the right front corner sensor .

NO

Repair an open or high resistance in BOF_SIDE_R, SOF_SIDE_R, or E1_SIDE_R wire.

DTC B261C, B261D, B261E, B261F

DTC B261C : Rear 1st sensor data failure

DTC B261D : Rear 2nd sensor data failure

DTC B261E : Rear 3rd sensor data failure

DTC B261F : Rear 4th sensor data failure

NOTE:

- If you are troubleshooting multiple DTCs, be sure to follow the instructions in **B-CAN System Diagnosis Test Mode A** .
- Before you troubleshoot, **resetting the parking and back-up sensor control unit** .
- The connection order of the sensor is 1st -> 2nd -> 3rd -> 4th from the side near the control unit.

DTC Description	DTC
B261C Rear 1st sensor data failure	B
B261D Rear 2nd sensor data failure	B
B261E Rear 3rd sensor data failure	B
B261F Rear 4th sensor data failure	B

DTC (Parking and Back-Up Sensor Control Unit)

1. Problem verification

   -1. Clear the DTCs with the HDS.

   -2. Turn the vehicle to the OFF (LOCK) mode and then the ON mode.

   -3. Wait for at least 6 seconds.

   -4. Check for DTCs with the HDS.

DTC Description	DTC
B261C Rear 1st sensor data failure	B
B261D Rear 2nd sensor data failure	B
B261E Rear 3rd sensor data failure	B
B261F Rear 4th sensor data failure	B

   Are any DTCs indicated?

   YES

   Go to step 2.

   NO

   Intermittent failure, the system is OK at this time. Check for loose or poor connections.

2. DTC check

   -1. Check for DTCs with the HDS.

DTC Description	DTC
B261C Rear 1st sensor data failure	B
B261D Rear 2nd sensor data failure	B
B261E Rear 3rd sensor data failure	B
B261F Rear 4th sensor data failure	B
B2647 Rear sensor power failure	B
B2649 Rear sensor signal short to ground	B

Are any DTCs indicated?

YES

Go to step 3.

YES

Go to step 4.

YES

Go to step 5.

YES

Go to step 6.

YES

Go to parking and back-up sensor system DTC B2647 troubleshooting.

YES

Go to parking and back-up sensor system DTC B2649 troubleshooting.

NO

Intermittent failure, the system is OK at this time. Check for loose or poor connections.

3. Open wire check (BOR_SIDE_L, SOR_SIDE_L, E2_SIDE_L lines)

-1. Turn the vehicle to the OFF (LOCK) mode.

-2. Disconnect the following connectors.

Parking and back-up sensor control unit 16P connector Left rear corner sensor 6P connector

-3. Measure the resistance between test points 1 and 2.

Test condition	Vehicle OFF (LOCK) mode Parking and back-up sensor control unit 16P connector: disconnected Left rear corner sensor 6P connector: disconnected
B	B
Test point 1	Parking and back-up sensor control unit 16P connector No. 16
Test point 2	Left rear corner sensor 6P connector (female terminals) No. 6: ①

Test point 1	Parking and back-up sensor control unit 16P connector No. 14
Test point 2	Left rear corner sensor 6P connector (female terminals) No. 4: ①

Test point 1	Parking and back-up sensor control unit 16P connector No. 12
Test point 2	Left rear corner sensor 6P connector (female terminals) No. 2: ①

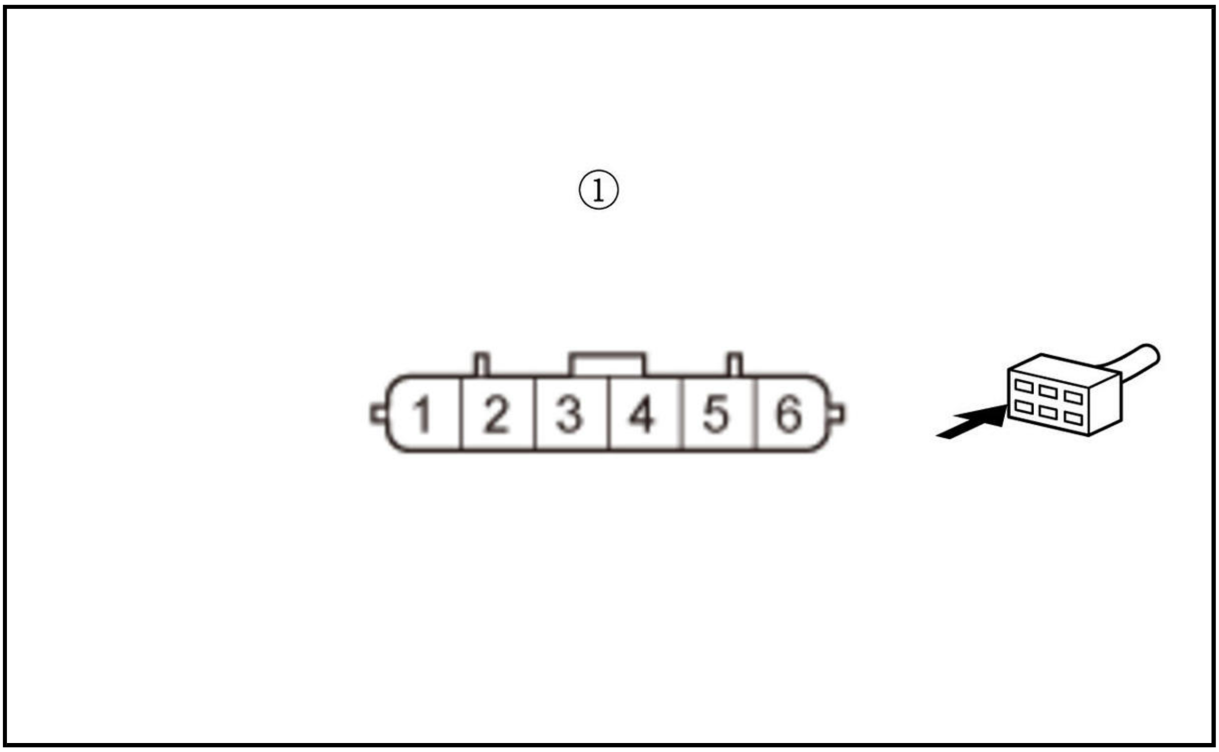

Is there 1.0 Ω or less?

YES

Replace the left rear corner sensor .

NO

Repair an open or high resistance in BOR_SIDE_L, SOR_SIDE_L, or E2_SIDE_L wire.

4. Open wire check (BOR_CTR_L, SOR_CTR_L, E2_CTR_L lines)

-1. Turn the vehicle to the OFF (LOCK) mode.

-2. Disconnect the following connectors.

Left rear corner sensor 6P connector Left rear center sensor 6P connector

-3. Measure the resistance between test points 1 and 2.

Test condition	Vehicle OFF (LOCK) mode Left rear corner sensor 6P connector: disconnected Left rear center sensor 6P connector: disconnected
B	B
Test point 1	Left rear corner sensor 6P connector (female terminals) No. 5: ①
Test point 2	Left rear center sensor 6P connector (female terminals) No. 6: ②

Test point 1	Left rear corner sensor 6P connector (female terminals) No. 3: ①
Test point 2	Left rear center sensor 6P connector (female terminals) No. 4: ②

Test point 1	Left rear corner sensor 6P connector (female terminals) No. 1: ①
Test point 2	Left rear center sensor 6P connector (female terminals) No. 2: ②

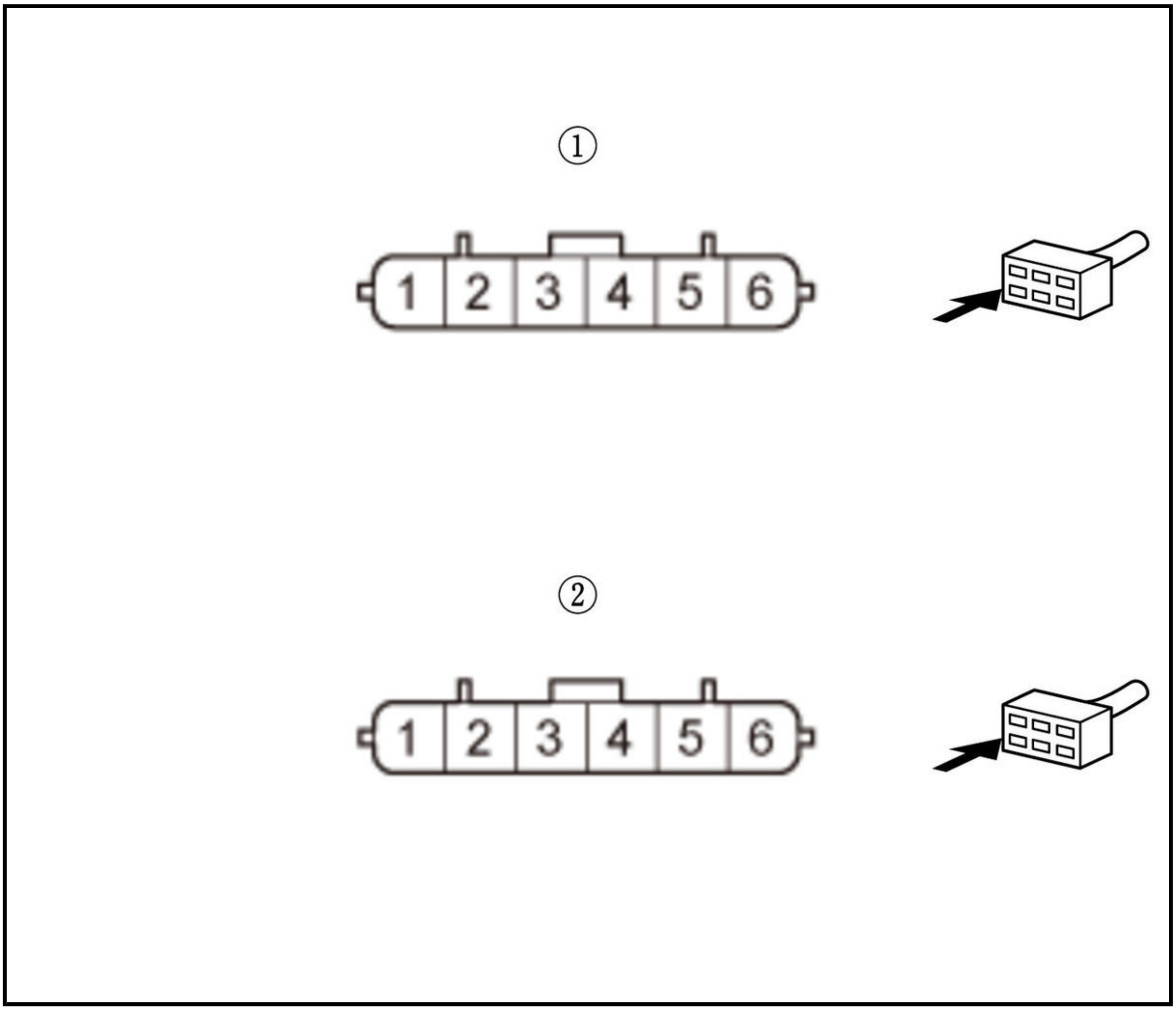

Is there 1.0 Ω or less?

YES

Replace the left rear center sensor .

NO

Repair an open or high resistance in BOR_CTR_L, SOR_CTR_L, or E2_CTR_L wire.

5. Open wire check (BOR_CTR_R, SOR_CTR_R, E2_CTR_R lines)

-1. Turn the vehicle to the OFF (LOCK) mode.

-2. Disconnect the following connectors.

Left rear center sensor 6P connector Right rear center sensor 6P connector

-3. Measure the resistance between test points 1 and 2.

Test condition	Vehicle OFF (LOCK) mode Left rear center sensor 6P connector: disconnected Right rear center sensor 6P connector: disconnected

B	B
Test point 1	Left rear center sensor 6P connector (female terminals) No. 5: ①
Test point 2	Right rear center sensor 6P connector (female terminals) No. 6: ②

Test point 1	Left rear center sensor 6P connector (female terminals) No. 3: ①
Test point 2	Right rear center sensor 6P connector (female terminals) No. 4: ②

Test point 1	Left rear center sensor 6P connector (female terminals) No. 1: ①
Test point 2	Right rear center sensor 6P connector (female terminals) No. 2: ②

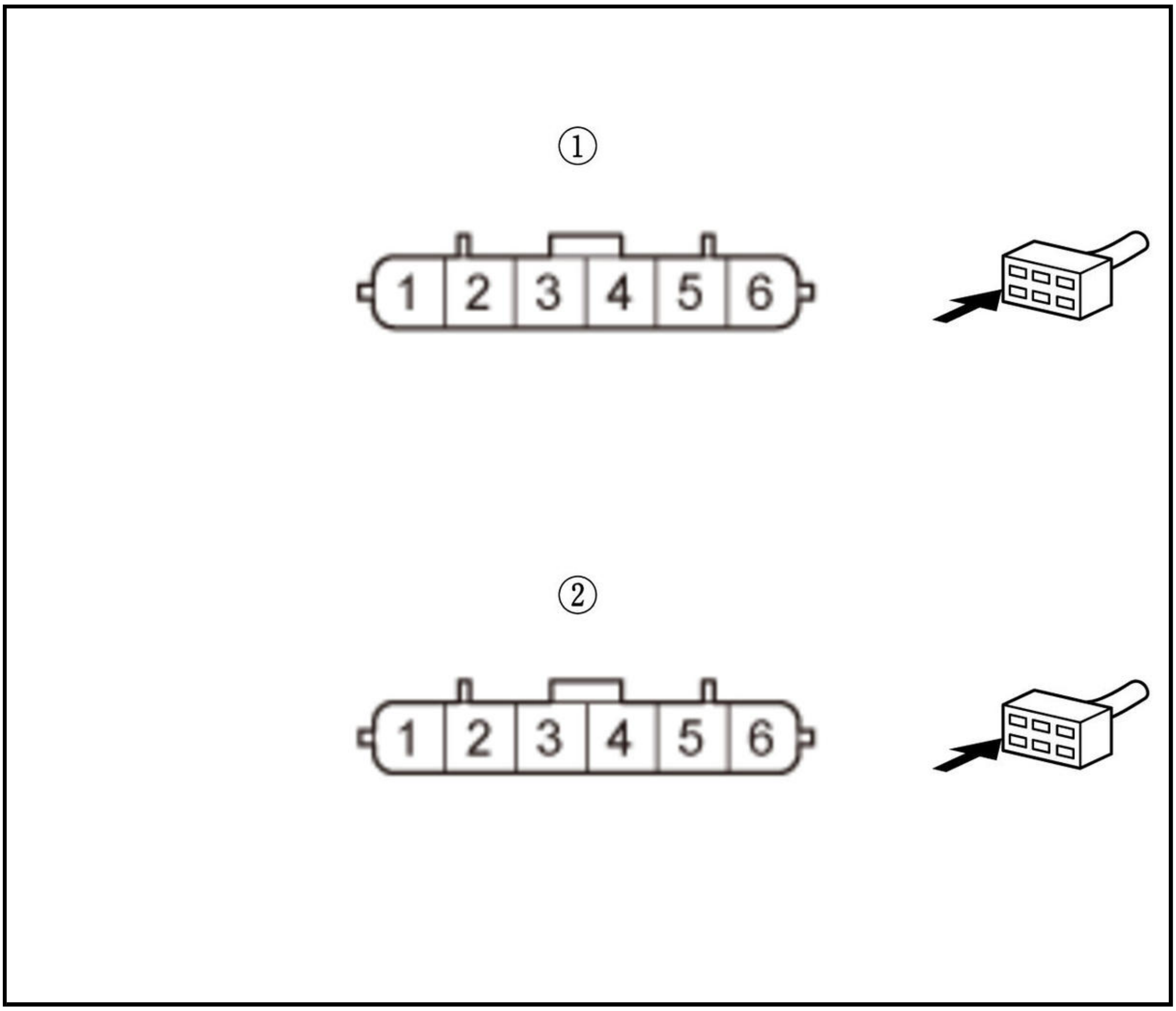

Is there 1.0 Ω or less?

YES

Replace the right rear center sensor .

NO

Repair an open or high resistance in BOR_CTR_R, SOR_CTR_R, or E2_CTR_R wire.

6. Open wire check (BOR_SIDE_R, SOR_SIDE_R, E2_SIDE_R lines)

-1. Turn the vehicle to the OFF (LOCK) mode.

-2. Disconnect the following connectors.

Right rear center sensor 6P connector Right rear corner sensor 6P connector

-3. Measure the resistance between test points 1 and 2.

Test condition	Vehicle OFF (LOCK) mode Right rear center sensor 6P connector: disconnected Right rear corner sensor 6P connector: disconnected
B	B
Test point 1	Right rear center sensor 6P connector (female terminals) No. 5: ①
Test point 2	Right rear corner sensor 6P connector (female terminals) No. 6: ②

Test point 1	Right rear center sensor 6P connector (female terminals) No. 3: ①
Test point 2	Right rear corner sensor 6P connector (female terminals) No. 4: ②

Test point 1	Right rear center sensor 6P connector (female terminals) No. 1: ①
Test point 2	Right rear corner sensor 6P connector (female terminals) No. 2: ②

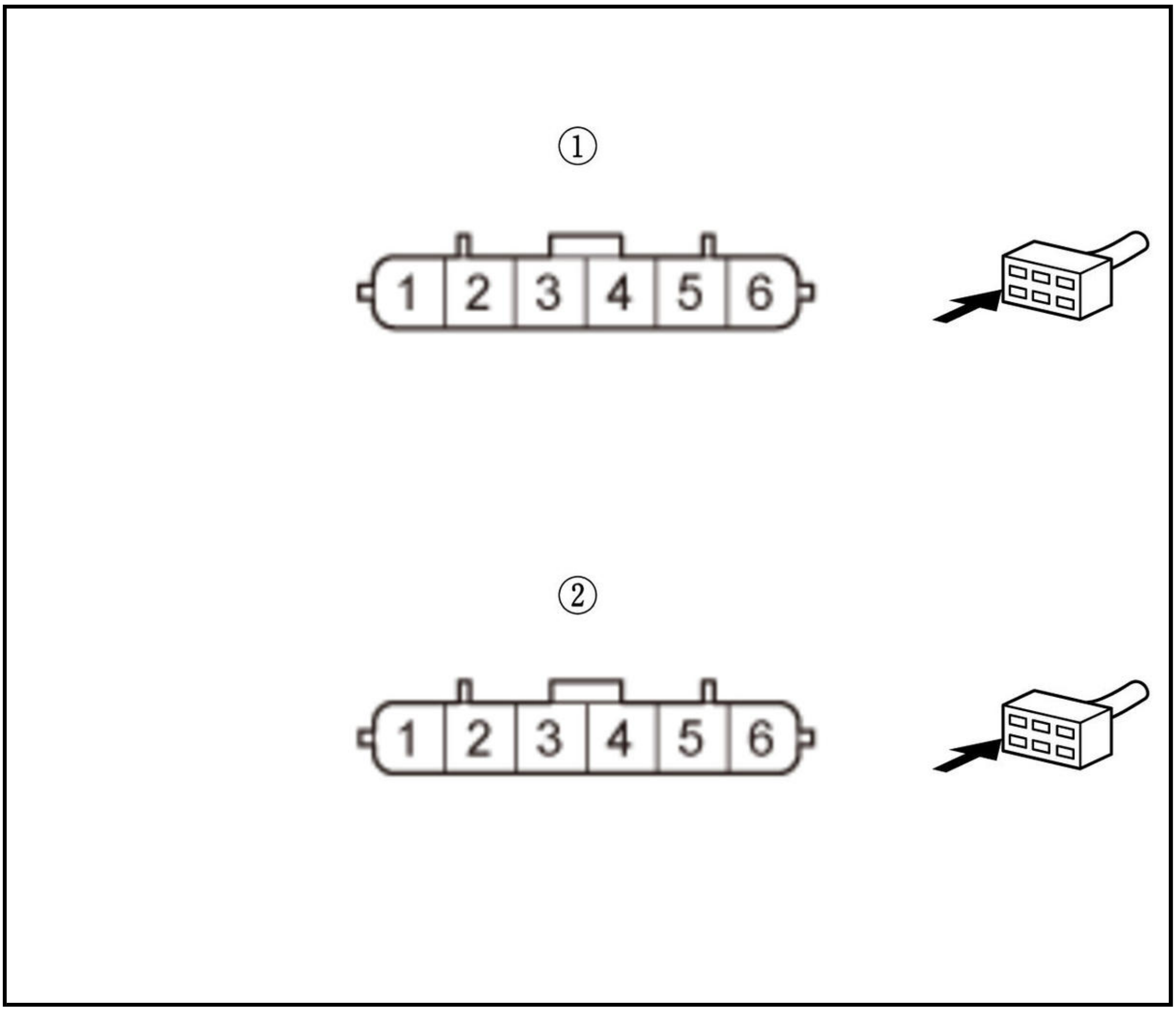

Is there 1.0 Ω or less?

YES

Replace the right rear corner sensor .

NO

Repair an open or high resistance in BOR_SIDE_R, SOR_SIDE_R, or E2_SIDE_R wire.

DTC B2646

DTC B2646 : Front sensor power failure

NOTE:

- If you are troubleshooting multiple DTCs, be sure to follow the instructions in B-CAN System Diagnosis Test Mode A .
- The connection order of the sensor is 1st -> 2nd -> 3rd -> 4th from the side near the control unit.

DTC Description	DTC
B2646 Front sensor power failure	B

DTC (Parking and Back-Up Sensor Control Unit)

1. Problem verification

    -1. Clear the DTCs with the HDS.

-2. Turn the vehicle to the OFF (LOCK) mode and then the ON mode.

-3. Wait for at least 6 seconds.

-4. Check for DTCs with the HDS.

DTC Description	DTC
B2646 Front sensor power failure	B

Is DTC B2646 indicated?

YES

Go to step 2.

NO

Intermittent failure, the system is OK at this time. Check for loose or poor connections.

2. Shorted wire check (BOF_SIDE_L, E1_SIDE_L lines) 1

-1. Disconnect the following connector.

Parking and back-up sensor control unit 16P connector

-2. Measure the resistance between test points 1 and 2.

Test condition	Vehicle OFF (LOCK) mode Parking and back-up sensor control unit 16P connector: disconnected
B	B
Test point 1	**Parking and back-up sensor control unit 16P connector No. 7**
Test point 2	**Parking and back-up sensor control unit 16P connector No. 13**

Is there 1.0 MΩ or more?

YES

Go to step 10.

NO

Go to step 3.

3. Shorted wire check (BOF_SIDE_R, E1_SIDE_R lines) 1

-1. Disconnect the following connector.

Right front center sensor 6P connector

-2. Measure the resistance between test points 1 and 2.

Test condition	Vehicle OFF (LOCK) mode Parking and back-up sensor control unit 16P connector: disconnected Right front center sensor 6P connector: disconnected
B	B
Test point 1	Right front center sensor 6P connector (female terminals) No. 5: ①

Test point 2	Right front center sensor 6P connector (female terminals) No. 1: ①

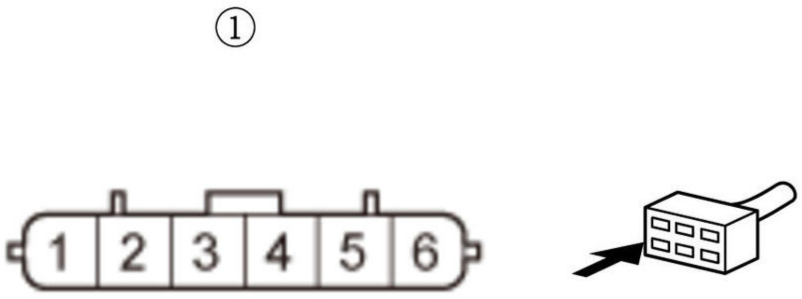

Is there 1.0 MΩ or more?

YES

Go to step 5.

NO

Go to step 4.

4. Shorted wire check (BOF_SIDE_R, E1_SIDE_R lines) 2

-1. Disconnect the following connector.

Right front corner sensor 6P connector

-2. Measure the resistance between test points 1 and 2.

Test condition	Vehicle OFF (LOCK) mode Parking and back-up sensor control unit 16P connector: disconnected Right front center sensor 6P connector: disconnected Right front corner sensor 6P connector: disconnected
B	B
Test point 1	Right front center sensor 6P connector (female terminals) No. 5: ①
Test point 2	Right front center sensor 6P connector (female terminals) No. 1: ①

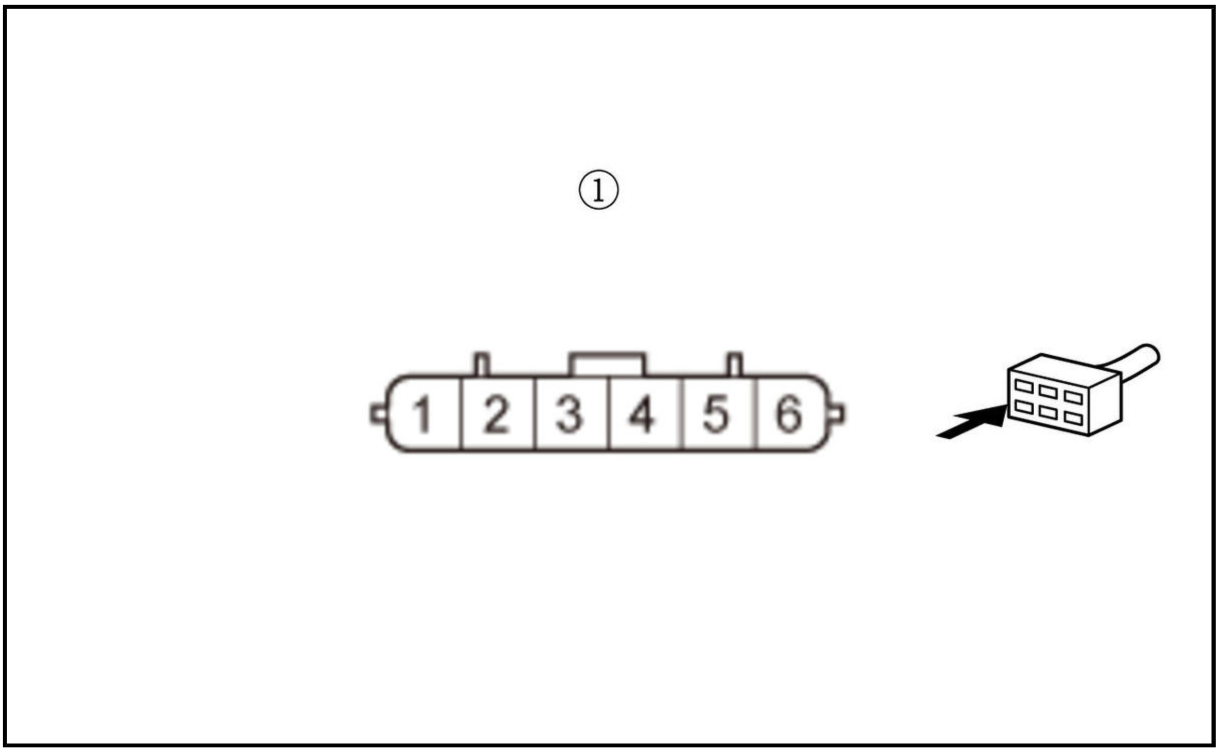

Is there 1.0 MΩ or more?

YES

Replace the right front corner sensor .

NO

Repair a short in the BOF_SIDE_R and E1_SIDE_R wires.

5. Shorted wire check (BOF_CTR_R, E1_CTR_R lines) 1

-1. Reconnect the following connector.

Right front center sensor 6P connector

-2. Disconnect the following connector.

Left front center sensor 6P connector

-3. Measure the resistance between test points 1 and 2.

Test condition	Vehicle OFF (LOCK) mode Parking and back-up sensor control unit 16P connector: disconnected Left front center sensor 6P connector: disconnected
B	B
Test point 1	Left front center sensor 6P connector (female terminals) No. 5: ①
Test point 2	Left front center sensor 6P connector (female terminals) No. 1: ①

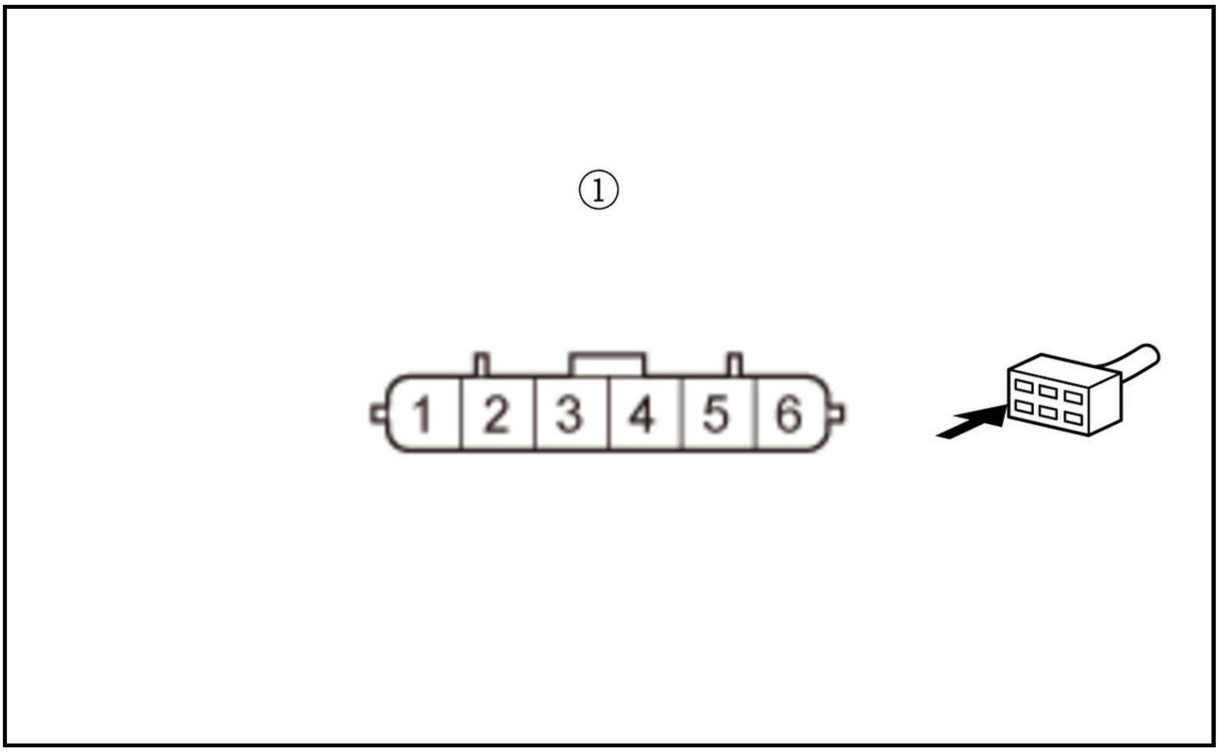

Is there 1.0 MΩ or more?

YES

Go to step 7.

NO

Go to step 6.

6. Shorted wire check (BOF_CTR_R, E1_CTR_R lines) 2

-1. Disconnect the following connector.

Right front center sensor 6P connector

-2. Measure the resistance between test points 1 and 2.

Test condition	Vehicle OFF (LOCK) mode Parking and back-up sensor control unit 16P connector: disconnected Left front center sensor 6P connector: disconnected Right front center sensor 6P connector: disconnected
B	B
Test point 1	Left front center sensor 6P connector (female terminals) No. 5: ①
Test point 2	Left front center sensor 6P connector (female terminals) No. 1: ①

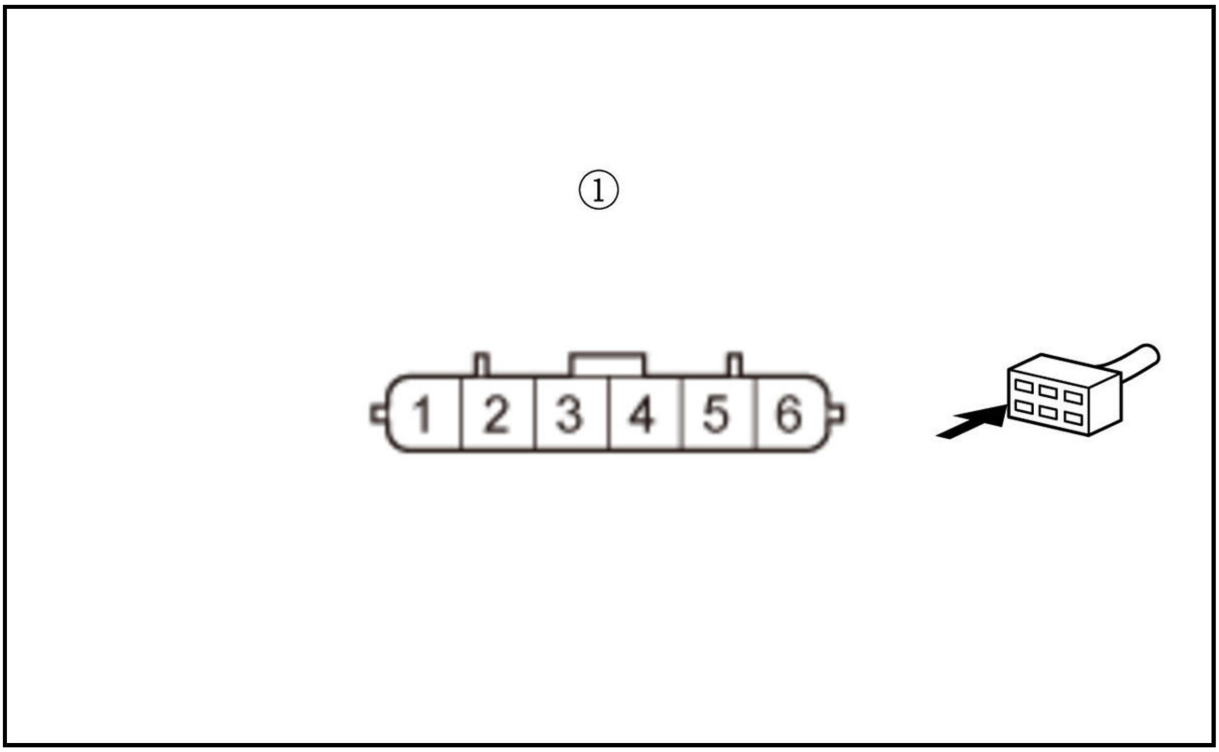

Is there 1.0 MΩ or more?

YES

Replace the right front center sensor .

NO

Repair a short in the BOF_CTR_R and E1_CTR_R wires.

7. Shorted wire check (BOF_CTR_L, E1_CTR_L lines) 1

-1. Reconnect the following connector.

Left front center sensor 6P connector

-2. Disconnect the following connector.

Left front corner sensor 6P connector

-3. Measure the resistance between test points 1 and 2.

Test condition	Vehicle OFF (LOCK) mode Parking and back-up sensor control unit 16P connector: disconnected Left front corner sensor 6P connector: disconnected
B	B
Test point 1	Left front corner sensor 6P connector (female terminals) No. 5: ①
Test point 2	Left front corner sensor 6P connector (female terminals) No. 1: ①

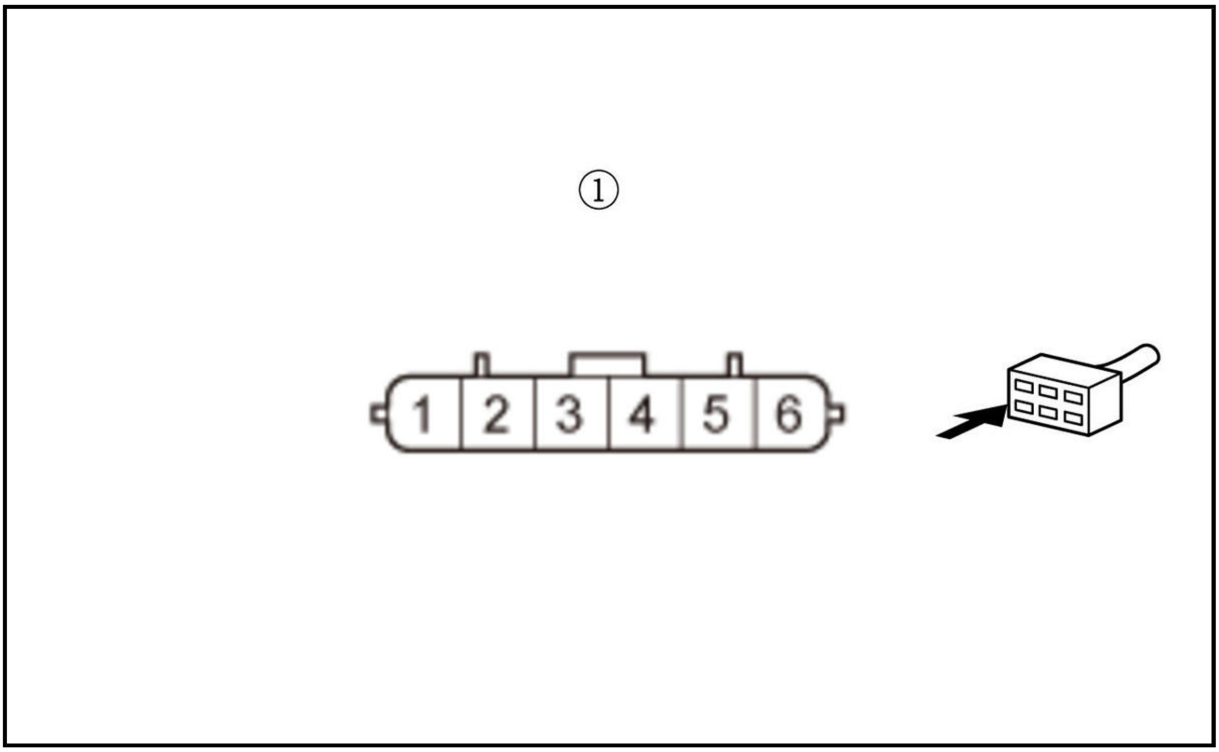

Is there 1.0 MΩ or more?

YES

Go to step 9.

NO

Go to step 8.

8. Shorted wire check (BOF_CTR_L, E1_CTR_L lines) 2

-1. Disconnect the following connector.

Left front center sensor 6P connector

-2. Measure the resistance between test points 1 and 2.

Test condition	Vehicle OFF (LOCK) mode Parking and back-up sensor control unit 16P connector: disconnected Left front corner sensor 6P connector: disconnected Left front center sensor 6P connector: disconnected
B	B
Test point 1	Left front corner sensor 6P connector (female terminals) No. 5: ①
Test point 2	Left front corner sensor 6P connector (female terminals) No. 1: ①

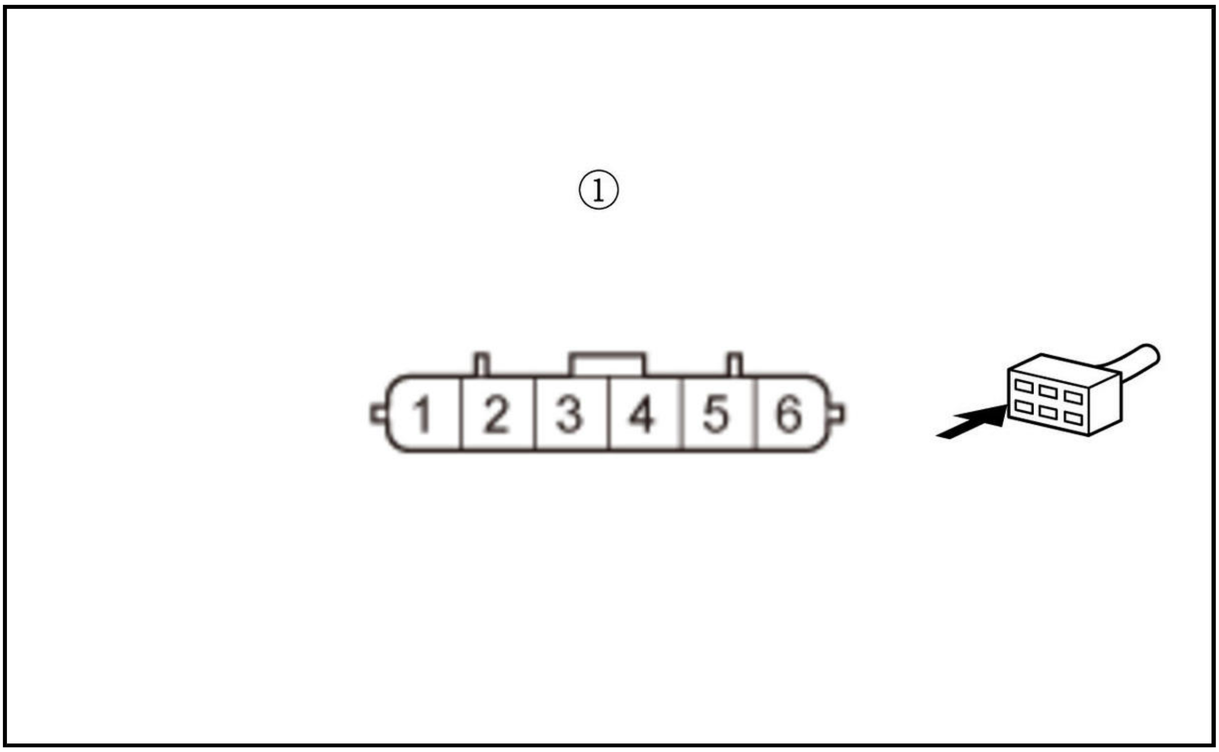

Is there 1.0 MΩ or more?

YES

Replace the left front center sensor .

NO

Repair a short in the BOF_CTR_L and E1_CTR_L wires.

9. Shorted wire check (BOF_SIDE_L, E1_SIDE_L lines) 2

-1. Measure the resistance between test points 1 and 2.

Test condition	Vehicle OFF (LOCK) mode Parking and back-up sensor control unit 16P connector: disconnected Left front corner sensor 6P connector: disconnected
B	B
Test point 1	**Parking and back-up sensor control unit 16P connector No. 7**
Test point 2	**Parking and back-up sensor control unit 16P connector No. 13**

Is there 1.0 MΩ or more?

YES

Replace the left front corner sensor .

NO

Repair a short in the BOF_SIDE_L and E1_SIDE_L wires.

10. Shorted wire check (BOF_SIDE_L line)

-1. Measure the resistance between test points 1 and 2.

Test condition	Vehicle OFF (LOCK) mode Parking and back-up sensor control unit 16P connector: disconnected

B	B
Test point 1	Parking and back-up sensor control unit 16P connector No. 7
Test point 2	Body ground

Is there 1.0 MΩ or more?

YES

Replace the parking and back-up sensor control unit .

NO

Repair a short to ground in the BOF_SIDE_L wire.

DTC B2647

DTC B2647 : Rear sensor power failure

NOTE:

- If you are troubleshooting multiple DTCs, be sure to follow the instructions in B-CAN System Diagnosis Test Mode A .
- The connection order of the sensor is 1st -> 2nd -> 3rd -> 4th from the side near the control unit.

DTC Description	DTC
B2647 Rear sensor power failure	B

DTC (Parking and Back-Up Sensor Control Unit)

1. Problem verification

   -1. Clear the DTCs with the HDS.

   -2. Turn the vehicle to the OFF (LOCK) mode and then the ON mode.

   -3. Wait for at least 6 seconds.

   -4. Check for DTCs with the HDS.

DTC Description	DTC
B2647 Rear sensor power failure	B

   Is DTC B2647 indicated?

   YES

   Go to step 2.

   NO

   Intermittent failure, the system is OK at this time. Check for loose or poor connections.

2. Shorted wire check (BOR_SIDE_L, E2_SIDE_L lines) 1

   -1. Disconnect the following connector.

Parking and back-up sensor control unit 16P connector

-2. Measure the resistance between test points 1 and 2.

Test condition	Vehicle OFF (LOCK) mode Parking and back-up sensor control unit 16P connector: disconnected
B	B
Test point 1	**Parking and back-up sensor control unit 16P connector No. 16**
Test point 2	**Parking and back-up sensor control unit 16P connector No. 12**

Is there 1.0 MΩ or more?

YES

Go to step 10.

NO

Go to step 3.

3. Shorted wire check (BOR_SIDE_R, E2_SIDE_R lines) 1

-1. Disconnect the following connector.

Right rear center sensor 6P connector

-2. Measure the resistance between test points 1 and 2.

Test condition	Vehicle OFF (LOCK) mode Parking and back-up sensor control unit 16P connector: disconnected Right rear center sensor 6P connector: disconnected
B	B
Test point 1	Right rear center sensor 6P connector (female terminals) No. 5: ①
Test point 2	Right rear center sensor 6P connector (female terminals) No. 1: ①

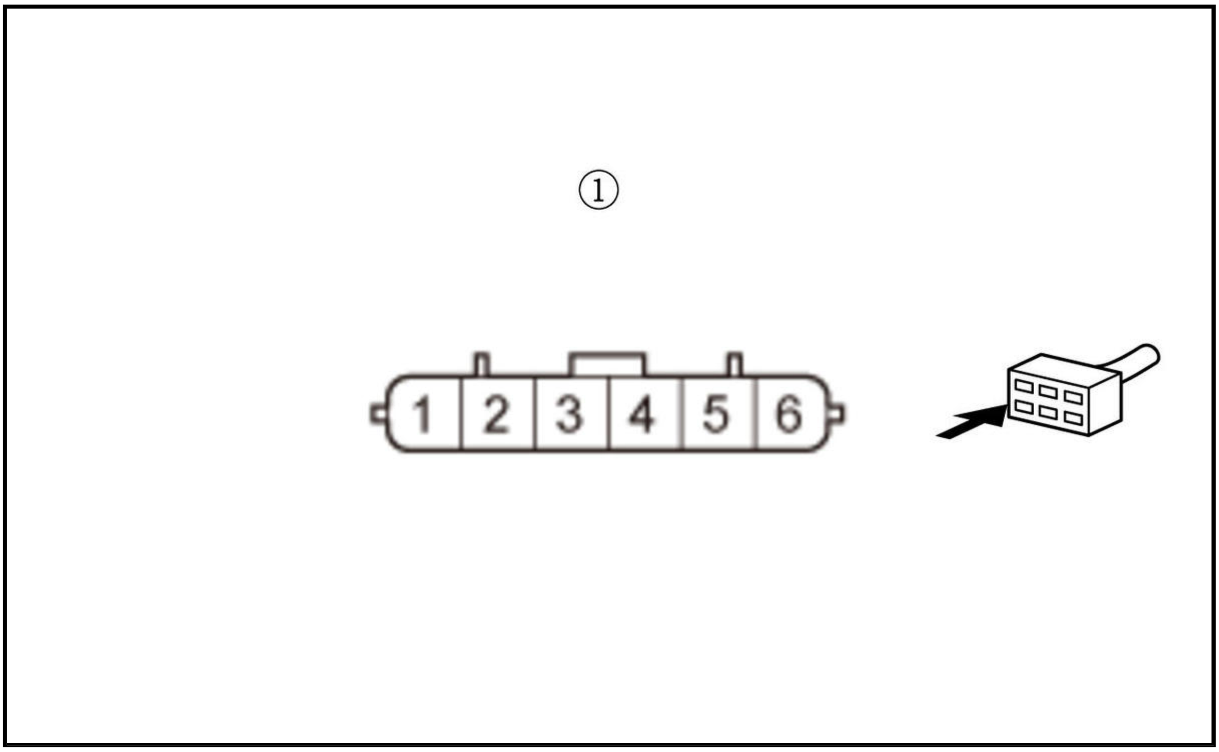

Is there 1.0 MΩ or more?

YES

Go to step 5.

NO

Go to step 4.

4. Shorted wire check (BOR_SIDE_R, E2_SIDE_R lines) 2

-1. Disconnect the following connector.

Right rear corner sensor 6P connector

-2. Measure the resistance between test points 1 and 2.

Test condition	Vehicle OFF (LOCK) mode Parking and back-up sensor control unit 16P connector: disconnected Right rear center sensor 6P connector: disconnected Right rear corner sensor 6P connector: disconnected
B	B
Test point 1	Right rear center sensor 6P connector (female terminals) No. 5: ①
Test point 2	Right rear center sensor 6P connector (female terminals) No. 1: ①

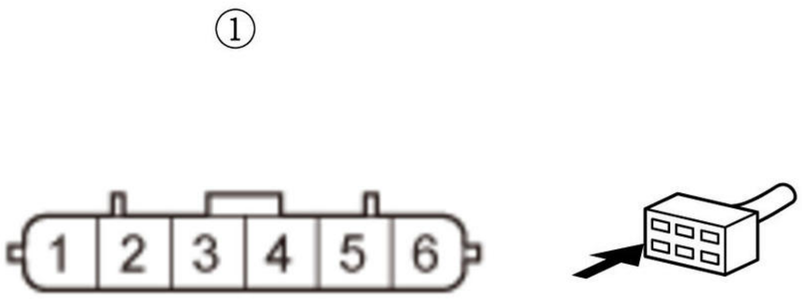

Is there 1.0 MΩ or more?

YES

Replace the right rear corner sensor .

NO

Repair a short in the BOR_SIDE_R and E2_SIDE_R wires.

5. Shorted wire check (BOR_CTR_R, E2_CTR_R lines) 1

-1. Reconnect the following connector.

Right rear center sensor 6P connector

-2. Disconnect the following connector.

Left rear center sensor 6P connector

-3. Measure the resistance between test points 1 and 2.

Test condition	Vehicle OFF (LOCK) mode Parking and back-up sensor control unit 16P connector: disconnected Left rear center sensor 6P connector: disconnected
B	B
Test point 1	Left rear center sensor 6P connector (female terminals) No. 5: ①
Test point 2	Left rear center sensor 6P connector (female terminals) No. 1: ①

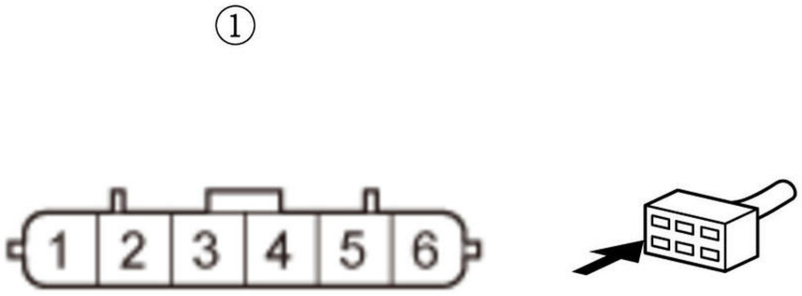

Is there 1.0 MΩ or more?

YES

Go to step 7.

NO

Go to step 6.

6. Shorted wire check (BOR_CTR_R, E2_CTR_R lines) 2

-1. Disconnect the following connector.

Right rear center sensor 6P connector

-2. Measure the resistance between test points 1 and 2.

Test condition	Vehicle OFF (LOCK) mode Parking and back-up sensor control unit 16P connector: disconnected Left rear center sensor 6P connector: disconnected Right rear center sensor 6P connector: disconnected
B	B
Test point 1	Left rear center sensor 6P connector (female terminals) No. 5: ①
Test point 2	Left rear center sensor 6P connector (female terminals) No. 1: ①

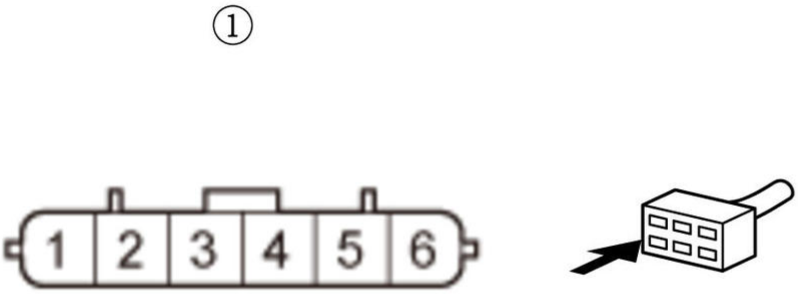

Is there 1.0 MΩ or more?

YES

Replace the right rear center sensor .

NO

Repair a short in the BOR_CTR_R and E2_CTR_R wires.

7. Shorted wire check (BOR_CTR_L, E2_CTR_L lines) 1

-1. Reconnect the following connector.

Left rear center sensor 6P connector

-2. Disconnect the following connector.

Left rear corner sensor 6P connector

-3. Measure the resistance between test points 1 and 2.

Test condition	Vehicle OFF (LOCK) mode Parking and back-up sensor control unit 16P connector: disconnected Left rear corner sensor 6P connector: disconnected
B	B

Test point 1	Left rear corner sensor 6P connector (female terminals) No. 5: ①
Test point 2	Left rear corner sensor 6P connector (female terminals) No. 1: ①

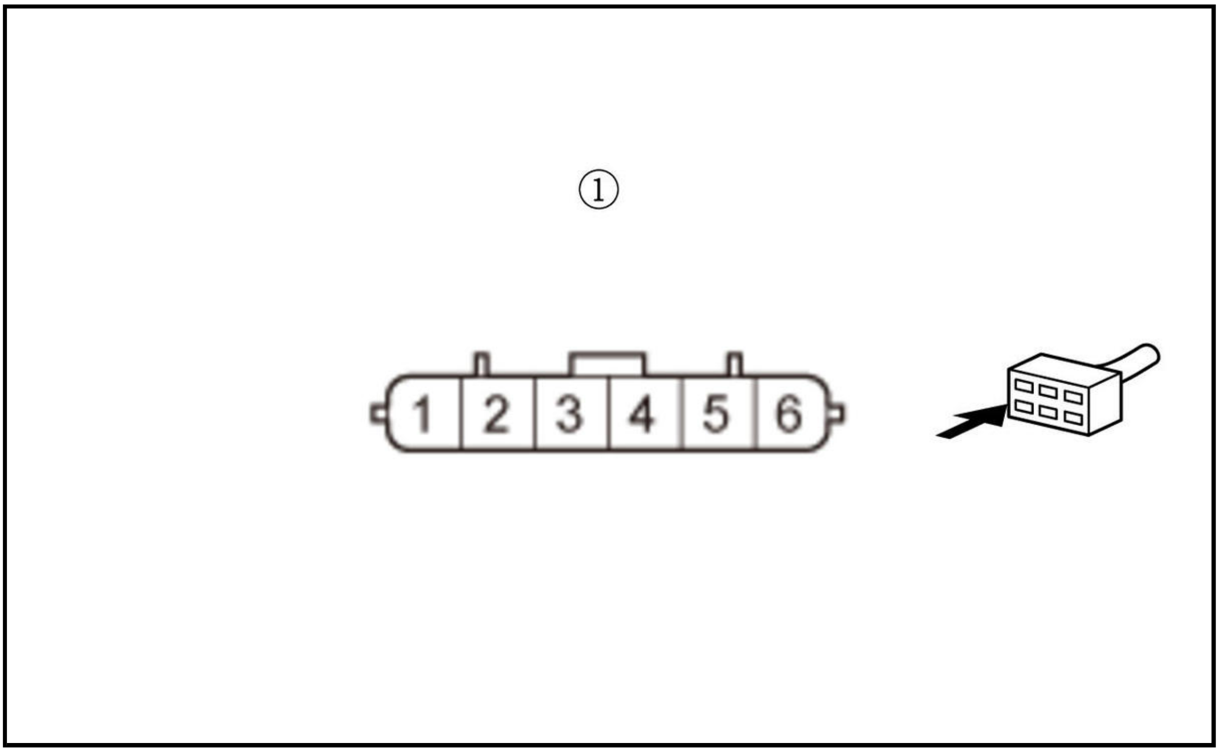

Is there 1.0 MΩ or more?

YES

Go to step 9.

NO

Go to step 8.

8. Shorted wire check (BOR_CTR_L, E2_CTR_L lines) 2

-1. Disconnect the following connector.

Left rear center sensor 6P connector

-2. Measure the resistance between test points 1 and 2.

Test condition	Vehicle OFF (LOCK) mode Parking and back-up sensor control unit 16P connector: disconnected Left rear corner sensor 6P connector: disconnected Left rear center sensor 6P connector: disconnected
B	B
Test point 1	Left rear corner sensor 6P connector (female terminals) No. 5: ①
Test point 2	Left rear corner sensor 6P connector (female terminals) No. 1: ①

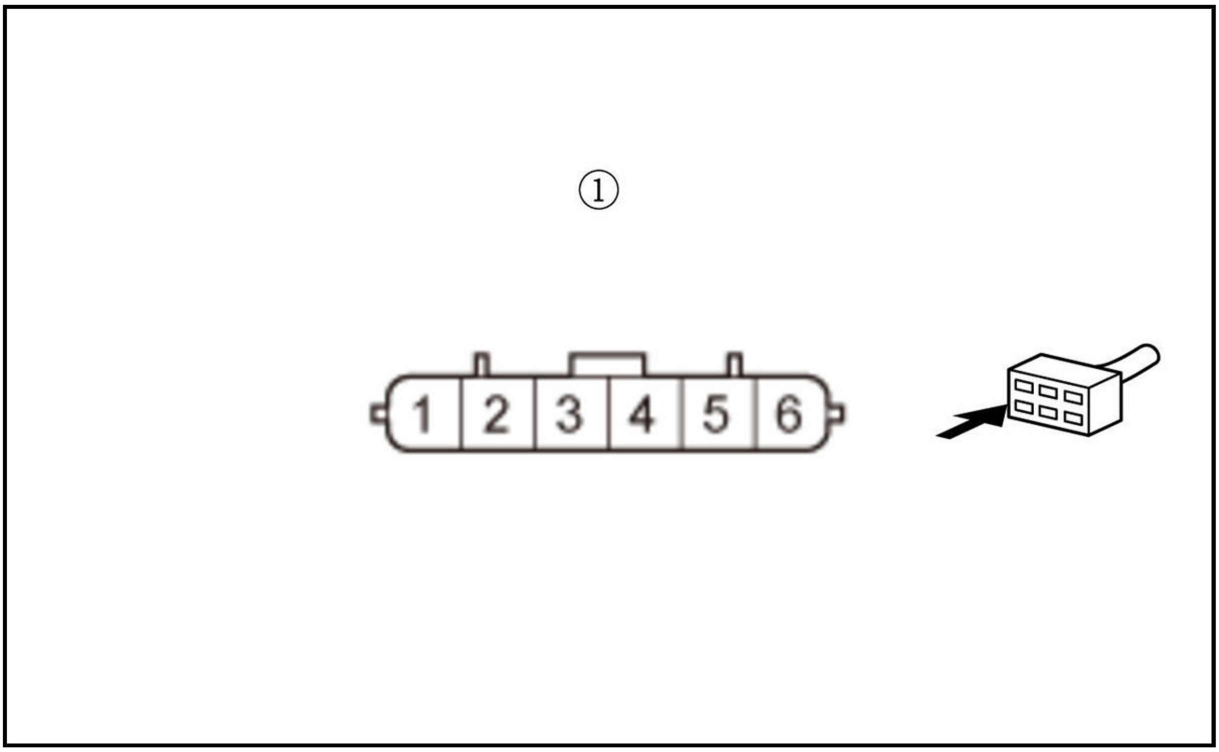

Is there 1.0 MΩ or more?

YES

Replace the left rear center sensor .

NO

Repair a short in the BOR_CTR_L and E2_CTR_L wires.

9. Shorted wire check (BOR_SIDE_L, E2_SIDE_L lines) 2

-1. Measure the resistance between test points 1 and 2.

Test condition	Vehicle OFF (LOCK) mode Parking and back-up sensor control unit 16P connector: disconnected Left rear corner sensor 6P connector: disconnected
B	B
Test point 1	**Parking and back-up sensor control unit 16P connector No. 16**
Test point 2	**Parking and back-up sensor control unit 16P connector No. 12**

Is there 1.0 MΩ or more?

YES

Replace the left rear corner sensor .

NO

Repair a short in the BOR_SIDE_L and E2_SIDE_L wires.

10. Shorted wire check (BOR_SIDE_L line)

-1. Measure the resistance between test points 1 and 2.

Test condition	Vehicle OFF (LOCK) mode Parking and back-up sensor control unit 16P connector: disconnected

B	B
Test point 1	Parking and back-up sensor control unit 16P connector No. 16
Test point 2	Body ground

Is there 1.0 MΩ or more?

YES

Replace the parking and back-up sensor control unit .

NO

Repair a short to ground in the BOR_SIDE_L wire.

DTC B2648

DTC B2648 : Front sensor signal short to ground

NOTE:

- If you are troubleshooting multiple DTCs, be sure to follow the instructions in B-CAN System Diagnosis Test Mode A .
- The connection order of the sensor is 1st -> 2nd -> 3rd -> 4th from the side near the control unit.

DTC Description	DTC
B2648 Front sensor signal short to ground	B

DTC (Parking and Back-Up Sensor Control Unit)

1. Problem verification

   -1. Clear the DTCs with the HDS.

   -2. Turn the vehicle to the OFF (LOCK) mode and then the ON mode.

   -3. Wait for at least 6 seconds.

   -4. Check for DTCs with the HDS.

DTC Description	DTC
B2648 Front sensor signal short to ground	B

   Is DTC B2648 indicated?

   YES

   Go to step 2.

   NO

   Intermittent failure, the system is OK at this time. Check for loose or poor connections.

2. Shorted wire check (SOF_SIDE_L, E1_SIDE_L lines) 1

   -1. Disconnect the following connector.

Parking and back-up sensor control unit 16P connector

-2. Measure the resistance between test points 1 and 2.

Test condition	Vehicle OFF (LOCK) mode Parking and back-up sensor control unit 16P connector: disconnected
B	B
Test point 1	**Parking and back-up sensor control unit 16P connector No. 6**
Test point 2	**Parking and back-up sensor control unit 16P connector No. 13**

Is there 1.0 MΩ or more?

YES

Go to step 10.

NO

Go to step 3.

3. Shorted wire check (SOF_SIDE_R, E1_SIDE_R lines) 1

-1. Disconnect the following connector.

Right front center sensor 6P connector

-2. Measure the resistance between test points 1 and 2.

Test condition	Vehicle OFF (LOCK) modeted Parking and back-up sensor control unit 16P connector: disconnected Right front center sensor 6P connector: disconnected
B	B
Test point 1	Right front center sensor 6P connector (female terminals) No. 3: ①
Test point 2	Right front center sensor 6P connector (female terminals) No. 1: ①

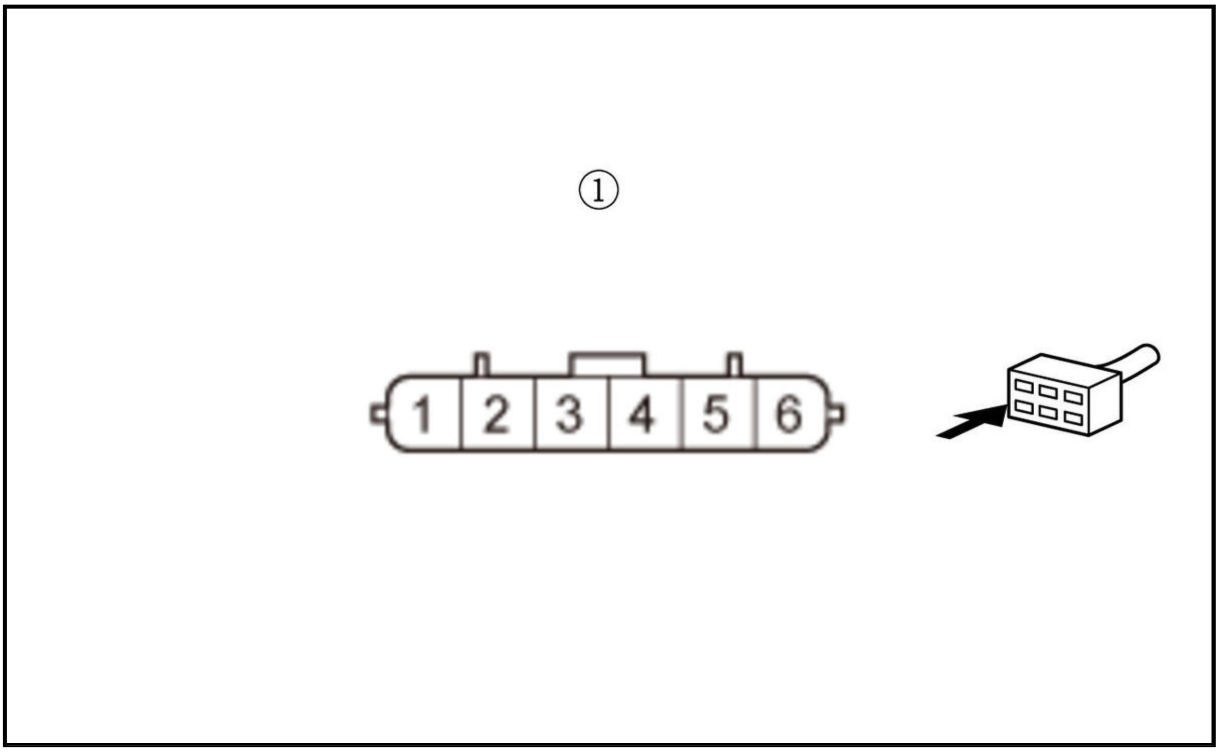

Is there 1.0 MΩ or more?

YES

Go to step 5.

NO

Go to step 4.

4. Shorted wire check (SOF_SIDE_R, E1_SIDE_R lines) 2

-1. Disconnect the following connector.

Right front corner sensor 6P connector

-2. Measure the resistance between test points 1 and 2.

Test condition	Vehicle OFF (LOCK) mode Parking and back-up sensor control unit 16P connector: disconnected Right front center sensor 6P connector: disconnected Right front corner sensor 6P connector: disconnected
B	B
Test point 1	Right front center sensor 6P connector (female terminals) No. 3: ①
Test point 2	Right front center sensor 6P connector (female terminals) No. 1: ①

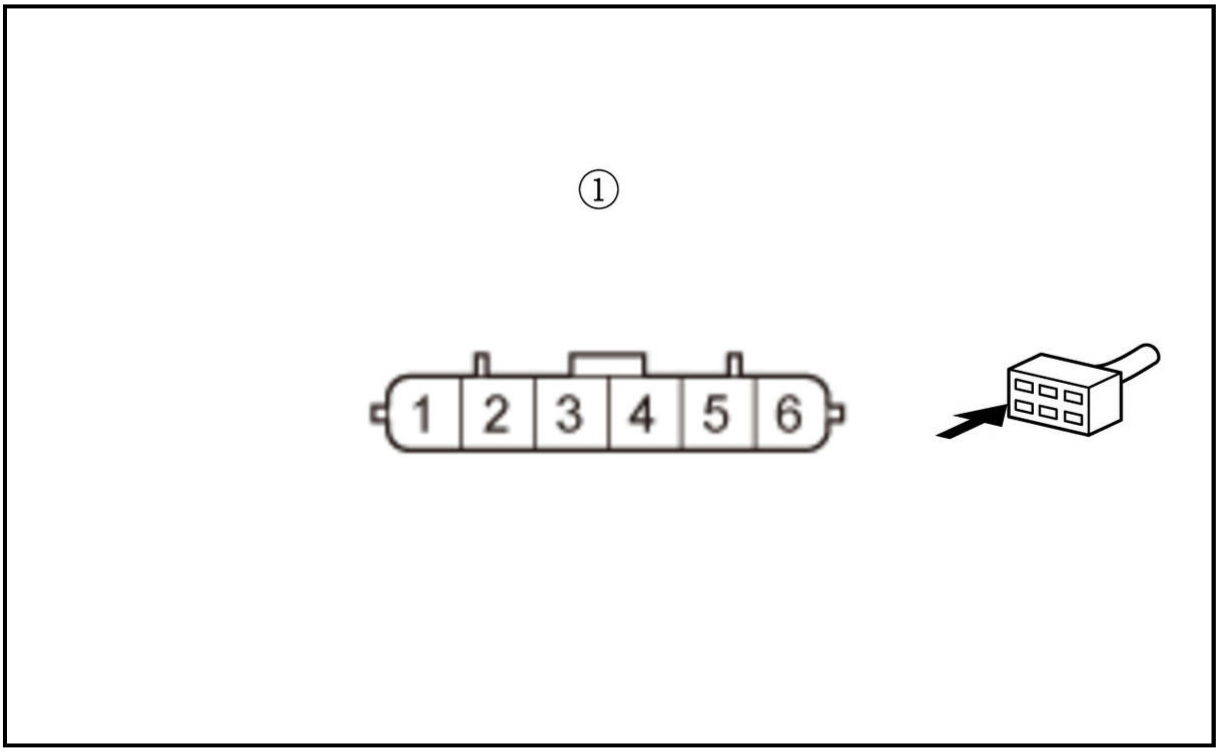

Is there 1.0 MΩ or more?

YES

Replace the right front corner sensor .

NO

Repair a short in the SOF_SIDE_R and E1_SIDE_R wires.

5. Shorted wire check (SOF_CTR_R, E1_CTR_R lines) 1

-1. Reconnect the following connector.

Right front center sensor 6P connector

-2. Disconnect the following connector.

Left front center sensor 6P connector

-3. Measure the resistance between test points 1 and 2.

Test condition	Vehicle OFF (LOCK) mode Parking and back-up sensor control unit 16P connector: disconnected Left front center sensor 6P connector: disconnected
B	B
Test point 1	Left front center sensor 6P connector (female terminals) No. 3: ①
Test point 2	Left front center sensor 6P connector (female terminals) No. 1: ①

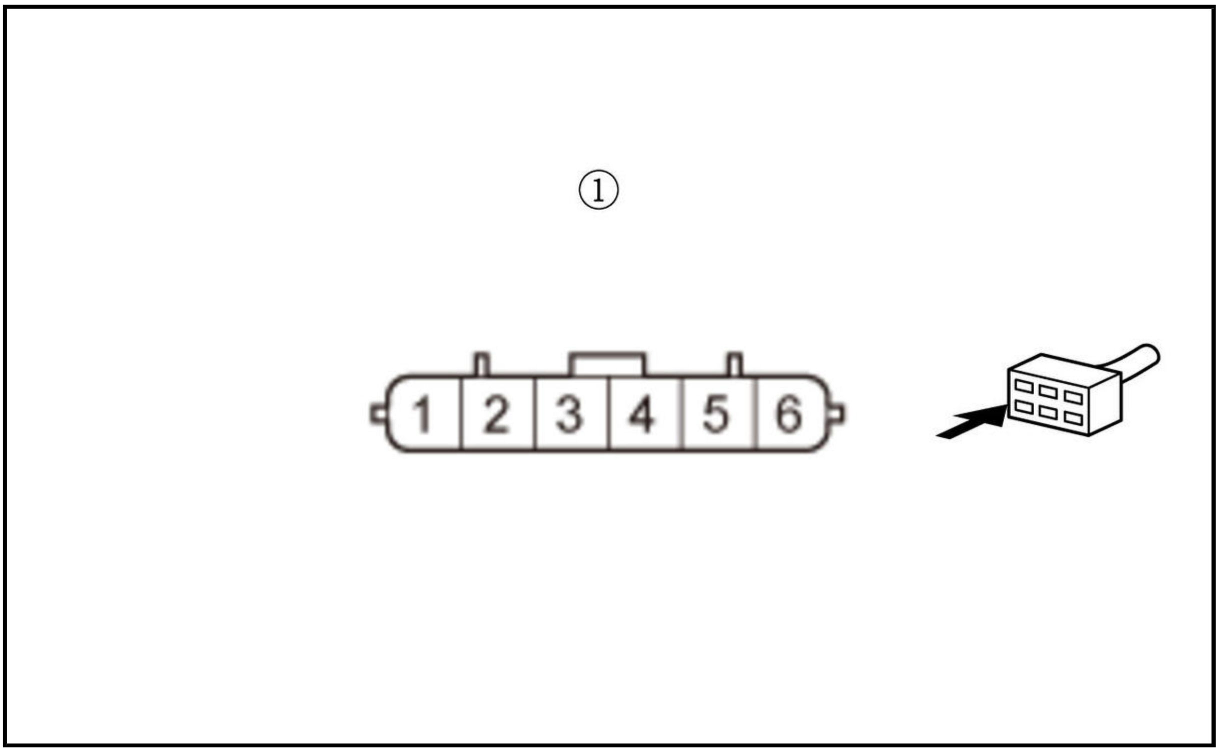

Is there 1.0 MΩ or more?

YES

Go to step 7.

NO

Go to step 6.

6. Shorted wire check (SOF_CTR_R, E1_CTR_R lines) 2

-1. Disconnect the following connector.

Right front center sensor 6P connector

-2. Measure the resistance between test points 1 and 2.

Test condition	Vehicle OFF (LOCK) mode Parking and back-up sensor control unit 16P connector: disconnected Left front center sensor 6P connector: disconnected Right front center sensor 6P connector: disconnected
B	B
Test point 1	Left front center sensor 6P connector (female terminals) No. 3: ①
Test point 2	Left front center sensor 6P connector (female terminals) No. 1: ①

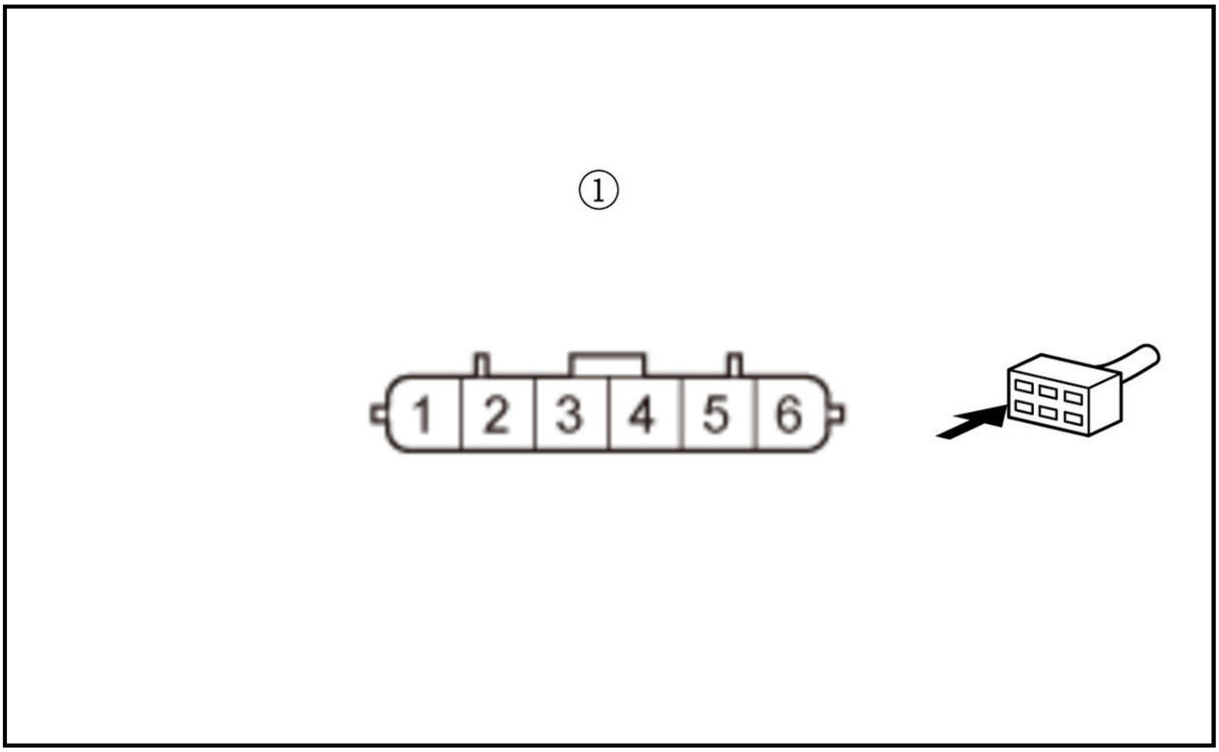

Is there 1.0 MΩ or more?

YES

Replace the right front center sensor .

NO

Repair a short in the SOF_CTR_R and E1_CTR_R wires.

7. Shorted wire check (SOF_CTR_L, E1_CTR_L lines) 1

-1. Reconnect the following connector.

Left front center sensor 6P connector

-2. Disconnect the following connector.

Left front corner sensor 6P connector

-3. Measure the resistance between test points 1 and 2.

Test condition	Vehicle OFF (LOCK) mode Parking and back-up sensor control unit 16P connector: disconnected Left front corner sensor 6P connector: disconnected
B	B

Test point 1	Left front corner sensor 6P connector (female terminals) No. 3: ①
Test point 2	Left front corner sensor 6P connector (female terminals) No. 1: ①

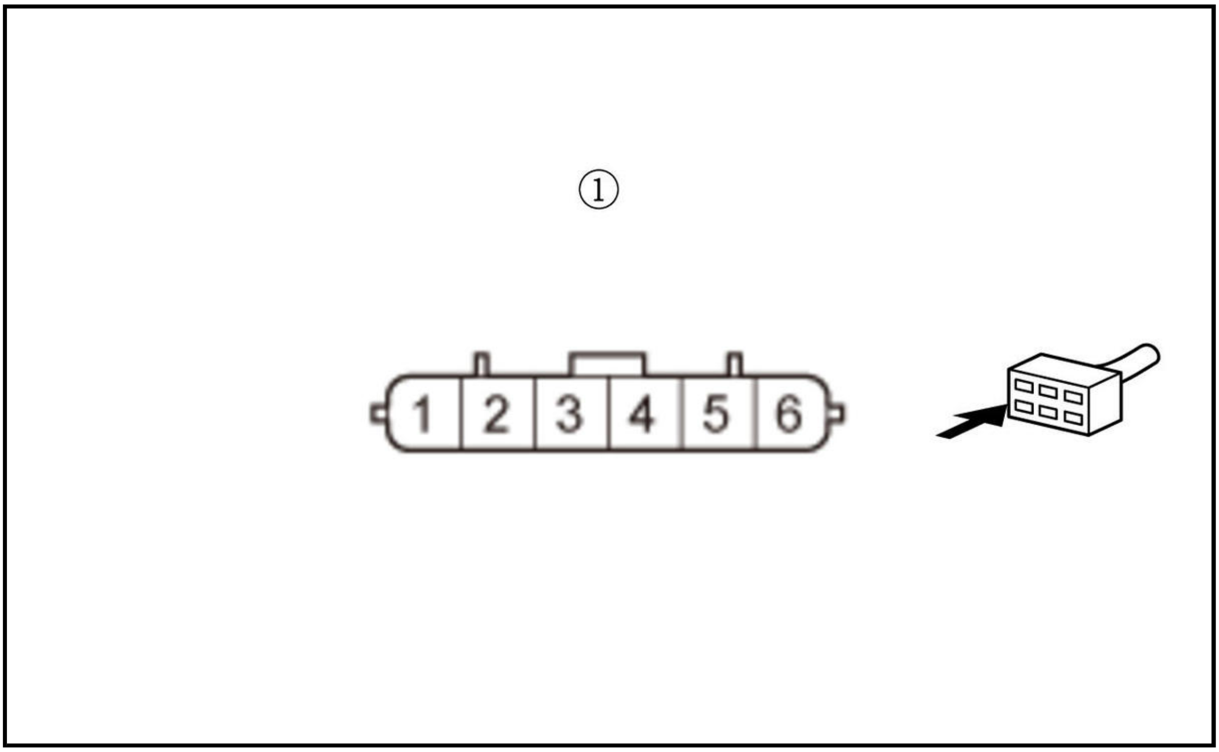

Is there 1.0 MΩ or more?

YES

Go to step 9.

NO

Go to step 8.

8. Shorted wire check (SOF_CTR_L, E1_CTR_L lines) 2

-1. Disconnect the following connector.

Left front center sensor 6P connector

-2. Measure the resistance between test points 1 and 2.

Test condition	Vehicle OFF (LOCK) mode Parking and back-up sensor control unit 16P connector: disconnected Left front corner sensor 6P connector: disconnected Left front center sensor 6P connector: disconnected
B	B
Test point 1	Left front corner sensor 6P connector (female terminals) No. 3: ①
Test point 2	Left front corner sensor 6P connector (female terminals) No. 1: ①

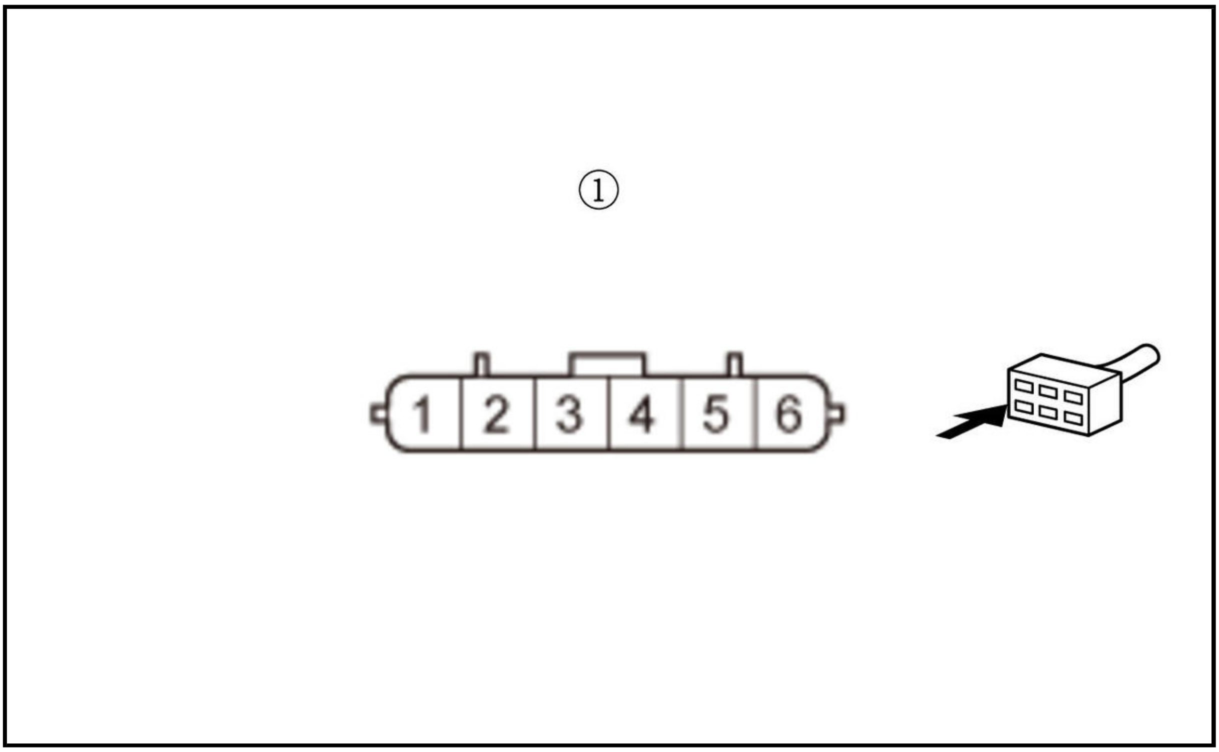

Is there 1.0 MΩ or more?

YES

Replace the left front center sensor .

NO

Repair a short in the SOF_CTR_L and E1_CTR_L wires.

9. Shorted wire check (SOF_SIDE_L, E1_SIDE_L lines) 2

-1. Measure the resistance between test points 1 and 2.

Test condition	Vehicle OFF (LOCK) mode Parking and back-up sensor control unit 16P connector: disconnected Left front corner sensor 6P connector: disconnected
B	B
Test point 1	**Parking and back-up sensor control unit 16P connector No. 6**
Test point 2	**Parking and back-up sensor control unit 16P connector No. 13**

Is there 1.0 MΩ or more?

YES

Replace the left front corner sensor .

NO

Repair a short in the SOF_SIDE_L and E1_SIDE_L wires.

10. Shorted wire check (SOF_SIDE_L line)

-1. Measure the resistance between test points 1 and 2.

Test condition	Vehicle OFF (LOCK) mode Parking and back-up sensor control unit 16P connector: disconnected

B	B
Test point 1	Parking and back-up sensor control unit 16P connector No. 6
Test point 2	Body ground

Is there 1.0 MΩ or more?

YES

Replace the parking and back-up sensor control unit .

NO

Repair a short to ground in the SOF_SIDE_L wire.

DTC B2649

DTC B2649 : Rear sensor signal short to ground

NOTE:

- If you are troubleshooting multiple DTCs, be sure to follow the instructions in B-CAN System Diagnosis Test Mode A .
- The connection order of the sensor is 1st -> 2nd -> 3rd -> 4th from the side near the control unit.

DTC Description	DTC
B2649 Rear sensor signal short to ground	B

DTC (Parking and Back-Up Sensor Control Unit)

1. Problem verification

   -1. Clear the DTCs with the HDS.

   -2. Turn the vehicle to the OFF (LOCK) mode and then the ON mode.

   -3. Wait for at least 6 seconds.

   -4. Check for DTCs with the HDS.

DTC Description	DTC
B2649 Rear sensor signal short to ground	B

   Is DTC B2649 indicated?

   YES

   Go to step 2.

   NO

   Intermittent failure, the system is OK at this time. Check for loose or poor connections.

2. Shorted wire check (SOR_SIDE_L, E2_SIDE_L lines) 1

   -1. Disconnect the following connector.

Parking and back-up sensor control unit 16P connector

-2. Measure the resistance between test points 1 and 2.

Test condition	Vehicle OFF (LOCK) mode Parking and back-up sensor control unit 16P connector: disconnected
B	B
Test point 1	Parking and back-up sensor control unit 16P connector No. 14
Test point 2	Parking and back-up sensor control unit 16P connector No. 12

Is there 1.0 MΩ or more?

YES

Go to step 10.

NO

Go to step 3.

3. Shorted wire check (SOR_SIDE_R, E2_SIDE_R lines) 1

-1. Disconnect the following connector.

Right rear center sensor 6P connector

-2. Measure the resistance between test points 1 and 2.

Test condition	Vehicle OFF (LOCK) mode Parking and back-up sensor control unit 16P connector: disconnected Right rear center sensor 6P connector: disconnected
B	B
Test point 1	Right rear center sensor 6P connector (female terminals) No. 3: ①
Test point 2	Right rear center sensor 6P connector (female terminals) No. 1: ①

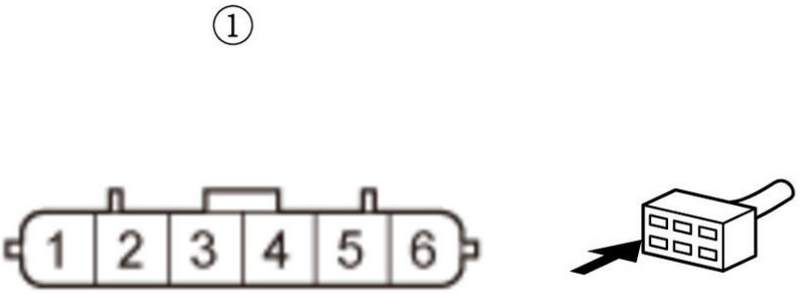

Is there 1.0 MΩ or more?

YES

Go to step 5.

NO

Go to step 4.

4. Shorted wire check (SOR_SIDE_R, E2_SIDE_R lines) 2

-1. Disconnect the following connector.

Right rear corner sensor 6P connector

-2. Measure the resistance between test points 1 and 2.

Test condition	Vehicle OFF (LOCK) mode Parking and back-up sensor control unit 16P connector: disconnected Right rear center sensor 6P connector: disconnected Right rear corner sensor 6P connector: disconnected
B	B
Test point 1	Right rear center sensor 6P connector (female terminals) No. 3: ①
Test point 2	Right rear center sensor 6P connector (female terminals) No. 1: ①

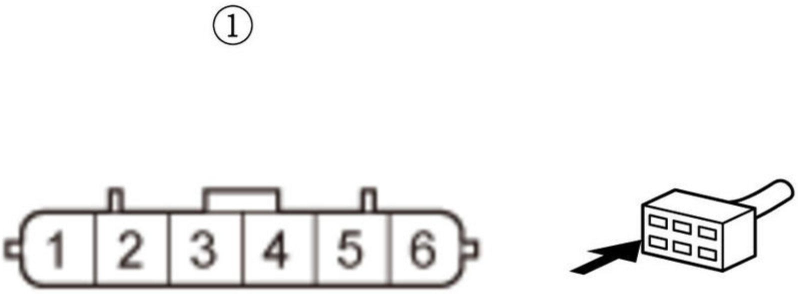

Is there 1.0 MΩ or more?

YES

Replace the right rear corner sensor .

NO

Repair a short in the SOR_SIDE_R and E2_SIDE_R wires.

5. Shorted wire check (SOR_CTR_R, E2_CTR_R lines) 1

-1. Reconnect the following connector.

Right rear center sensor 6P connector

-2. Disconnect the following connector.

Left rear center sensor 6P connector

-3. Measure the resistance between test points 1 and 2.

Test condition	Vehicle OFF (LOCK) mode Parking and back-up sensor control unit 16P connector: disconnected Left rear center sensor 6P connector: disconnected
B	B
Test point 1	Left rear center sensor 6P connector (female terminals) No. 3: ①
Test point 2	Left rear center sensor 6P connector (female terminals) No. 1: ①

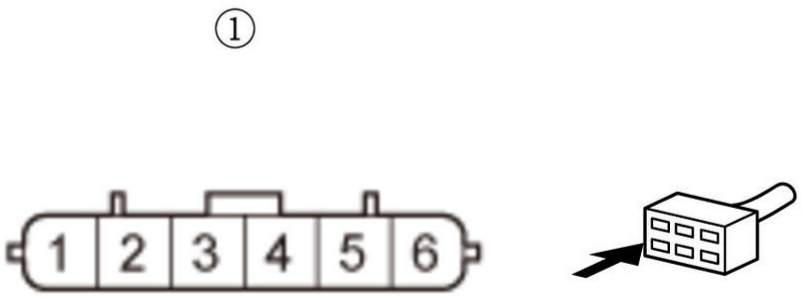

Is there 1.0 MΩ or more?

YES

Go to step 7.

NO

Go to step 6.

6. Shorted wire check (SOR_CTR_R, E2_CTR_R lines) 2

-1. Disconnect the following connector.

Right rear center sensor 6P connector

-2. Measure the resistance between test points 1 and 2.

Test condition	Vehicle OFF (LOCK) mode Parking and back-up sensor control unit 16P connector: disconnected Left rear center sensor 6P connector: disconnected Right rear center sensor 6P connector: disconnected
B	B
Test point 1	Left rear center sensor 6P connector (female terminals) No. 3: ①
Test point 2	Left rear center sensor 6P connector (female terminals) No. 1: ①

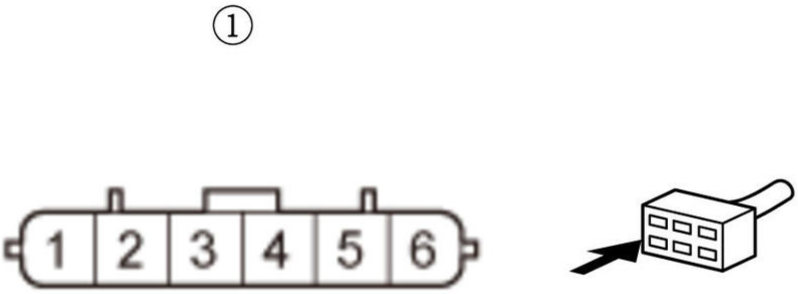

Is there 1.0 MΩ or more?

YES

Replace the right rear center sensor .

NO

Repair a short in the SOR_CTR_R and E2_CTR_R wires.

7. Shorted wire check (SOR_CTR_L, E2_CTR_L lines) 1

-1. Reconnect the following connector.

Left rear center sensor 6P connector

-2. Disconnect the following connector.

Left rear corner sensor 6P connector

-3. Measure the resistance between test points 1 and 2.

Test condition	Vehicle OFF (LOCK) mode Parking and back-up sensor control unit 16P connector: disconnected Left rear corner sensor 6P connector: disconnected
B	B

Test point 1	Left rear corner sensor 6P connector (female terminals) No. 3: ①
Test point 2	Left rear corner sensor 6P connector (female terminals) No. 1: ①

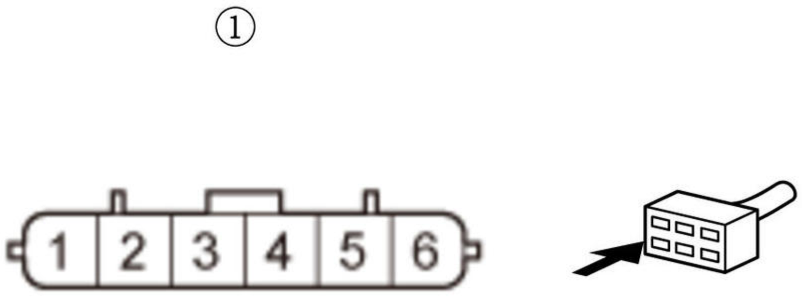

Is there 1.0 MΩ or more?

YES

Go to step 9.

NO

Go to step 8.

8. Shorted wire check (SOR_CTR_L, E2_CTR_L lines) 2

-1. Disconnect the following connector.

Left rear center sensor 6P connector

-2. Measure the resistance between test points 1 and 2.

Test condition	Vehicle OFF (LOCK) mode Parking and back-up sensor control unit 16P connector: disconnected Left rear corner sensor 6P connector: disconnected Left rear center sensor 6P connector: disconnected
B	B
Test point 1	Left rear corner sensor 6P connector (female terminals) No. 3: ①
Test point 2	Left rear corner sensor 6P connector (female terminals) No. 1: ①

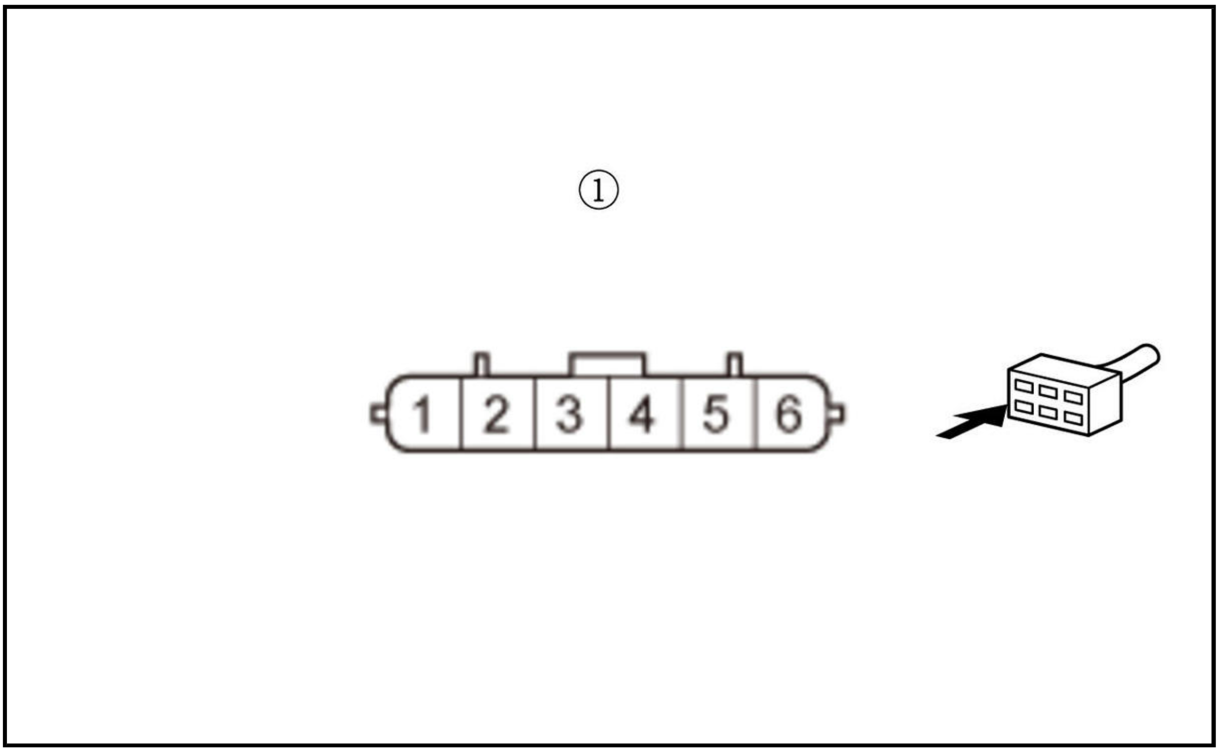

Is there 1.0 MΩ or more?

YES

Replace the left rear center sensor .

NO

Repair a short in the SOR_CTR_L and E2_CTR_L wires.

9. Shorted wire check (SOR_SIDE_L, E2_SIDE_L lines) 2

-1. Measure the resistance between test points 1 and 2.

Test condition	Vehicle OFF (LOCK) mode Left rear corner sensor 6P connector: disconnected Left rear corner sensor 6P connector: disconnected
B	B
Test point 1	**Parking and back-up sensor control unit 16P connector No. 14**
Test point 2	**Parking and back-up sensor control unit 16P connector No. 12**

Is there 1.0 MΩ or more?

YES

Replace the left rear corner sensor .

NO

Repair a short in the SOR_SIDE_L and E2_SIDE_L wires.

10. Shorted wire check (SOR_SIDE_L line)

-1. Measure the resistance between test points 1 and 2.

Test condition	Vehicle OFF (LOCK) mode Parking and back-up sensor control unit 16P connector: disconnected

B	B
Test point 1	Parking and back-up sensor control unit 16P connector No. 14
Test point 2	Body ground

Is there 1.0 MΩ or more?

YES

Replace the parking and back-up sensor control unit .

NO

Repair a short to ground in the SOR_SIDE_L wire.

DTC B264A

DTC B264A : Indicator circuit short to power

NOTE: If you are troubleshooting multiple DTCs, be sure to follow the instructions in B-CAN System Diagnosis Test Mode A .

DTC Description	DTC
B264A Indicator circuit short to power	B

DTC (Parking and Back-Up Sensor Control Unit)

1. Problem verification

   -1. Clear the DTCs with the HDS.

   -2. Turn the vehicle to the OFF (LOCK) mode and then the ON mode.

   -3. Wait for at least 6 seconds.

   -4. Check for DTCs with the HDS.

DTC Description	DTC
B264A Indicator circuit short to power	B

   Is DTC B264A indicated?

   YES

   Go to step 2.

   NO

   Intermittent failure, the system is OK at this time. Check for loose or poor connections.

2. Parking and back-up sensor switch check

   -1. Do the parking and back-up sensor switch test .

   Is the parking and back-up sensor switch OK?

   YES

   Go to step 3.

NO

Replace the parking and back-up sensor switch .

3. Shorted wire check (C/SNSR_IND line)

   -1. Turn the vehicle to the OFF (LOCK) mode.

   -2. Disconnect the following connector.

Parking and back-up sensor control unit 16P connector

   -3. Turn the vehicle to the ON mode.

   -4. Measure the voltage between test points 1 and 2.

Test condition	Vehicle ON mode Parking and back-up sensor control unit 16P connector: disconnected
B	B
Test point 1	Parking and back-up sensor control unit 16P connector No. 5
Test point 2	Body ground

Is there battery voltage?

YES

Repair a short to power in the C/SNSR_IND wire.

NO

Replace the parking and back-up sensor control unit .

DTC B264B

DTC B264B : Indicator circuit short to ground

NOTE: If you are troubleshooting multiple DTCs, be sure to follow the instructions in B-CAN System Diagnosis Test Mode A .

DTC Description	DTC
B264B Indicator circuit short to ground	B

DTC (Parking and Back-Up Sensor Control Unit)

1. Problem verification

   -1. Clear the DTCs with the HDS.

   -2. Turn the vehicle to the OFF (LOCK) mode and then the ON mode.

   -3. Wait for at least 6 seconds.

   -4. Check for DTCs with the HDS.

DTC Description	DTC
B264B Indicator circuit short to ground	B

Is DTC B264B indicated?

YES

Go to step 2.

NO

Intermittent failure, the system is OK at this time. Check for loose or poor connections.

2. Parking and back-up sensor switch check

-1. **Do the parking and back-up sensor switch test** .

Is the parking and back-up sensor switch OK?

YES

Go to step 3.

NO

Replace the parking and back-up sensor switch .

3. Shorted wire check (C/SNSR_IND line)

-1. Turn the vehicle to the OFF (LOCK) mode.

-2. Disconnect the following connector.

Parking and back-up sensor control unit 16P connector

-3. Measure the resistance between test points 1 and 2.

Test condition	Vehicle OFF (LOCK) mode Parking and back-up sensor control unit 16P connector: disconnected
B	B
Test point 1	**Parking and back-up sensor control unit 16P connector No. 5**
Test point 2	Body ground

Is there 1.0 MΩ or more?

YES

Replace the parking and back-up sensor control unit .

NO

Repair a short to ground in the C/SNSR_IND wire.

DTC B264D

DTC B264D : Front sensor combination error

NOTE: If you are troubleshooting multiple DTCs, be sure to follow the instructions in **B-CAN System Diagnosis Test Mode A** .

DTC Description	DTC
B264D Front sensor combination error	B

DTC (Parking and Back-Up Sensor Control Unit)

1. Problem verification

   -1. Clear the DTCs with the HDS.

   -2. Turn the vehicle to the OFF (LOCK) mode and then the ON mode.

   -3. Wait for at least 6 seconds.

   -4. Check for DTCs with the HDS.

DTC Description	DTC
B264D Front sensor combination error	B

Is DTC B264D indicated?

YES

Replace the parking and back-up sensor control unit .

NO

Intermittent failure, the system is OK at this time. Check for loose or poor connections.

DTC U0155, U1281 (PARKING/BACK-UP SENSOR CONTROL UNIT)

DTC U0155 : Lost communication with Gauge Control Module

DTC U1281 : Lost communication with MICU

NOTE:

- If you are troubleshooting multiple DTCs, be sure to follow the instructions in **B-CAN System Diagnosis Test Mode A** .
- Refer to the DTC code shown on the display, and then inspect the connectors and terminals based on the instructions in the table below.
- The DTC may be stored due to the grounding failure or the power source failure at the transmitting control unit (the grounding inspection and the power source inspection on each control unit are required prior to this checking process).

DTC Description	DTC
U0155 Lost communication with Gauge Control Module	B
U1281 Lost communication with MICU	B

DTC (Parking and Back-Up Sensor Control Unit)

1. Problem verification

   -1. Clear the DTC with the HDS.

   -2. Turn the vehicle to the OFF (LOCK) mode and then the ON mode.

   -3. Wait for at least 6 seconds.

   -4. Check for DTCs with the HDS.

DTC Description	DTC
U0155 Lost communication with Gauge Control Module	B
U1281 Lost communication with MICU	B

Are any DTCs indicated?

YES

Go to step 2.

NO

Intermittent failure, the system is OK at this time. Check for poor connections or loose terminals.

2. Open wire check (B-CAN_H line, B-CAN_L line)

-1. Turn the vehicle to the OFF (LOCK) mode.

-2. Disconnect the receiving control unit connector.

Parking and back-up sensor control unit 16P connector

-3. Disconnect the transmitting control unit connector(s).

Refer to the DTC shown on the display, then disconnect the connector(s) based on the instructions (see table).

DTC	Connector
U0155	Gauge control module connector A (32P)
U1281	Body control module connector B (36P)

-4. Measure the resistance between the receiving control unit and the transmitting control unit on the B-CAN_H circuit and the B-CAN_L circuit.

Test condition	Vehicle OFF (LOCK) mode Parking and back-up sensor control unit 16P connector: disconnected Transmitting control unit connector(s) for indicated DTCs: disconnected

DTC	Circuit name	Receiving control unit		Transmitting control unit	
		Connector	Terminal	Connector	Terminal
U0155	B-CAN_H	**Parking and back-up sensor control unit 16P connector**	No. 9	**Gauge control module connector A (32P)**	No. 30
	B-CAN_L		No. 2		No. 31
U1281	B-CAN_H	**Parking and back-up sensor control unit 16P connector**	No. 9	**Body control module connector B (36P)**	No. 20
	B-CAN_L		No. 2		No. 21

Is there 1.0 Ω or less?

YES

The B-CAN_H wire and the B-CAN_L wire are OK. Refer to the DTC shown on the display, then replace the control unit based on the instructions (see table).

DTC	Operation for transmitting control unit
U0155	**Gauge control module**
U1281	**Body control module**

NO

Repair an open in the B-CAN_H wire and/or the B-CAN_L wire.

DTC U1280 (PARKING/BACK-UP SENSOR CONTROL UNIT)

DTC U1280 : B-CAN communication bus line error (BUS-OFF)

NOTE: If you are troubleshooting multiple DTCs, be sure to follow the instructions in **B-CAN System Diagnosis Test Mode A** .

DTC Description	DTC
U1280 B-CAN communication bus line error (BUS-OFF)	B

DTC (Parking and Back-Up Sensor Control Unit)

1. Problem verification

   -1. Clear the DTCs with the HDS.

   -2. Turn the vehicle to the OFF (LOCK) mode and then the ON mode.

   -3. Wait for at least 6 seconds.

   -4. Check for DTCs with the HDS.

DTC Description	DTC
U1280 B-CAN communication bus line error (BUS-OFF)	B

   Is DTC U1280 indicated?

   YES

   Go to body control module DTC U1280 troubleshooting .

   NO

   Intermittent failure, the system is OK at this time. Check for loose or poor connections.

DTC TROUBLESHOOTING

DTC B2601 (2020 2021)

DTC B2601 : Parking Sensor CPU Error

NOTE: If you are troubleshooting multiple DTCs, be sure to follow the instructions in B-CAN System Diagnosis Test Mode A .

DTC Description	DTC
B2601 Parking Sensor CPU Error	B

DTC (Parking and Back-Up Sensor Control Unit)

1. Problem verification

-1. Clear the DTCs with the HDS.

-2. Turn the vehicle to the OFF (LOCK) mode and then the ON mode.

-3. Check for DTCs with the HDS.

DTC Description	DTC
B2601 Parking Sensor CPU Error	B

Is DTC B2601 indicated?

YES

Replace the parking and back-up sensor control unit .

NO

Intermittent failure, the system is OK at this time. Check for loose or poor connections.

DTC B2602 (2020 2021)

DTC B2602 : Parking Sensor EEPROM Error

NOTE: If you are troubleshooting multiple DTCs, be sure to follow the instructions in B-CAN System Diagnosis Test Mode A .

DTC Description	DTC
B2602 Parking Sensor EEPROM Error	B

DTC (Parking and Back-Up Sensor Control Unit)

1. Problem verification

-1. Clear the DTCs with the HDS.

-2. Turn the vehicle to the OFF (LOCK) mode and then the ON mode.

-3. Check for DTCs with the HDS.

DTC Description	DTC
B2602 Parking Sensor EEPROM Error	B

Is DTC B2602 indicated?

YES

Replace the parking and back-up sensor control unit .

NO

Intermittent failure, the system is OK at this time. Check for loose or poor connections.

DTC B2610, B2611, B2612, B2613 (2020 2021)

DTC B2610 : Front 1st sensor failure

DTC B2611 : Front 2nd sensor failure

DTC B2612 : Front 3rd sensor failure

DTC B2613 : Front 4th sensor failure

NOTE:

- If you are troubleshooting multiple DTCs, be sure to follow the instructions in **B-CAN System Diagnosis Test Mode A** .
- The connection order of the sensor is 1st -> 2nd -> 3rd -> 4th from the side near the control unit.

DTC Description	DTC
B2610 Front 1st sensor failure	B
B2611 Front 2nd sensor failure	B
B2612 Front 3rd sensor failure	B
B2613 Front 4th sensor failure	B

DTC (Parking and Back-Up Sensor Control Unit)

1. Problem verification

   -1. Clear the DTCs with the HDS.

   -2. Turn the vehicle to the OFF (LOCK) mode and then the ON mode.

   -3. Wait for at least 6 seconds.

   -4. Check for DTCs with the HDS.

DTC Description	DTC
B2610 Front 1st sensor failure	B
B2611 Front 2nd sensor failure	B
B2612 Front 3rd sensor failure	B
B2613 Front 4th sensor failure	B

Are any DTCs indicated?

YES

Refer to the DTC shown on the display, then replace the sensor based on the instructions (see table).

DTC	Operation for transmitting control unit
B2610	Left front corner sensor
B2611	Left front center sensor
B2612	Right front center sensor

DTC	Operation for transmitting control unit
B2613	Right front corner sensor

NO

Intermittent failure, the system is OK at this time. Check for loose or poor connections.

DTC B2614, B2615, B2616, B2617 (2020 2021)

DTC B2614 : Rear 1st sensor failure

DTC B2615 : Rear 2nd sensor failure

DTC B2616 : Rear 3rd sensor failure

DTC B2617 : Rear 4th sensor failure

NOTE:

- If you are troubleshooting multiple DTCs, be sure to follow the instructions in **B-CAN System Diagnosis Test Mode A** .
- The connection order of the sensor is 1st -> 2nd -> 3rd -> 4th from the side near the control unit.

DTC Description	DTC
B2614 Rear 1st sensor failure	B
B2615 Rear 2nd sensor failure	B
B2616 Rear 3rd sensor failure	B
B2617 Rear 4th sensor failure	B

DTC (Parking and Back-Up Sensor Control Unit)

1. Problem verification

-1. Clear the DTCs with the HDS.

-2. Turn the vehicle to the OFF (LOCK) mode and then the ON mode.

-3. Wait for at least 6 seconds.

-4. Check for DTCs with the HDS.

DTC Description	DTC
B2614 Rear 1st sensor failure	B
B2615 Rear 2nd sensor failure	B
B2616 Rear 3rd sensor failure	B
B2617 Rear 4th sensor failure	B

Are any DTCs indicated?

YES

Refer to the DTC shown on the display, then replace the sensor based on the instructions (see table).

DTC	Operation for transmitting control unit
B2614	Left rear corner sensor
B2615	Left rear center sensor
B2616	Right rear center sensor

DTC	Operation for transmitting control unit
B2617	Right rear corner sensor

NO

Intermittent failure, the system is OK at this time. Check for loose or poor connections.

DTC B2618, B2619, B261A, B261B (2020 2021)

DTC B2618 : Front 1st sensor data failure

DTC B2619 : Front 2nd sensor data failure

DTC B261A : Front 3rd sensor data failure

DTC B261B : Front 4th sensor data failure

NOTE:

- If you are troubleshooting multiple DTCs, be sure to follow the instructions in B-CAN System Diagnosis Test Mode A .
- Before you troubleshoot, resetting the parking and back-up sensor control unit .
- The connection order of the sensor is 1st -> 2nd -> 3rd -> 4th from the side near the control unit.

DTC Description	DTC
B2618 Front 1st sensor data failure	B
B2619 Front 2nd sensor data failure	B
B261A Front 3rd sensor data failure	B
B261B Front 4th sensor data failure	B

DTC (Parking and Back-Up Sensor Control Unit)

1. Problem verification

   -1. Clear the DTCs with the HDS.

   -2. Turn the vehicle to the OFF (LOCK) mode and then the ON mode.

   -3. Wait for at least 6 seconds.

   -4. Check for DTCs with the HDS.

DTC Description	DTC
B2618 Front 1st sensor data failure	B
B2619 Front 2nd sensor data failure	B
B261A Front 3rd sensor data failure	B
B261B Front 4th sensor data failure	B

Are any DTCs indicated?

YES

Go to step 2.

NO

Intermittent failure, the system is OK at this time. Check for loose or poor connections.

2. DTC check

-1. Check for DTCs with the HDS.

DTC Description	**DTC**
B2618 Front 1st sensor data failure	B
B2619 Front 2nd sensor data failure	B
B261A Front 3rd sensor data failure	B
B261B Front 4th sensor data failure	B
B2646 Front sensor power failure	B
B2648 Front sensor signal short to ground	B

Are any DTCs indicated?

YES: with front center sensor

Go to step 3.

YES: without front center sensor

Go to step 3.

YES: with front center sensor

Go to step 4.

YES: with front center sensor

Go to step 5.

YES: with front center sensor

Go to step 6.

YES: without front center sensor

Go to step 7.

YES

Go to parking and back-up sensor system DTC B2646 troubleshooting.

YES

Go to parking and back-up sensor system DTC B2648 troubleshooting.

NO

Intermittent failure, the system is OK at this time. Check for loose or poor connections.

3. Open wire check (BOF SIDE L, SOF SIDE L, E1 SIDE L lines)

-1. Turn the vehicle to the OFF (LOCK) mode.

-2. Disconnect the following connectors.

Parking and back-up sensor control unit 16P connector Left front corner sensor 6P connector

-3. Measure the resistance between test points 1 and 2.

Test condition	Vehicle OFF (LOCK) mode Parking and back-up sensor control unit 16P connector: disconnected Left front corner sensor 6P connector: disconnected
B	B
Test point 1	Parking and back-up sensor control unit 16P connector No. 7
Test point 2	Left front corner sensor 6P connector (female terminals) No. 6: ①

Test point 1	Parking and back-up sensor control unit 16P connector No. 6
Test point 2	Left front corner sensor 6P connector (female terminals) No. 4: ①

Test point 1	Parking and back-up sensor control unit 16P connector No. 13
Test point 2	Left front corner sensor 6P connector (female terminals) No. 2: ①

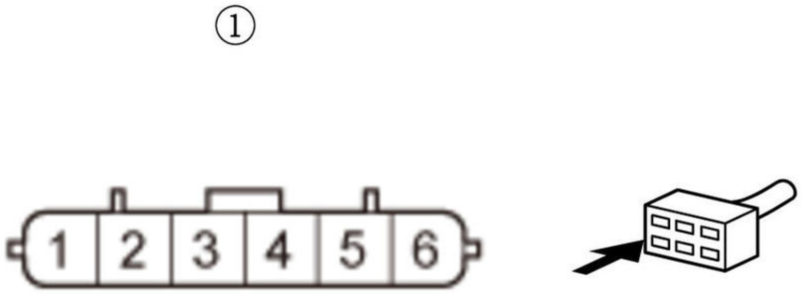

Is there 1.0 Ω or less?

YES

Replace the left front corner sensor .

NO

Repair an open or high resistance in BOF SIDE L, SOF SIDE L, or E1 SIDE L wire.

4. Open wire check (BOF CTR L, SOF CTR L, E1 CTR L lines)

-1. Turn the vehicle to the OFF (LOCK) mode.

-2. Disconnect the following connectors.

Left front corner sensor 6P connector Left front center sensor 6P connector

-3. Measure the resistance between test points 1 and 2.

Test condition	Vehicle OFF (LOCK) mode Left front corner sensor 6P connector: disconnected Left front center sensor 6P connector: disconnected
B	B
Test point 1	Left front corner sensor 6P connector (female terminals) No. 5: ①
Test point 2	Left front center sensor 6P connector (female terminals) No. 6: ②

Test point 1	Left front corner sensor 6P connector (female terminals) No. 3: ①
Test point 2	Left front center sensor 6P connector (female terminals) No. 4: ②

Test point 1	Left front corner sensor 6P connector (female terminals) No. 1: ①
Test point 2	Left front center sensor 6P connector (female terminals) No. 2: ②

①

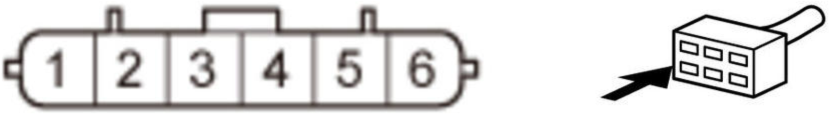

②

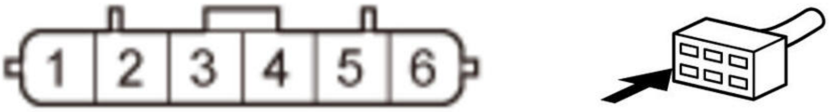

Is there 1.0 Ω or less?

YES

Replace the left front center sensor .

NO

Repair an open or high resistance in BOF CTR L, SOF CTR L, or E1 CTR L wire.

5. Open wire check (BOF CTR R, SOF CTR R, E1 CTR R lines)

-1. Turn the vehicle to the OFF (LOCK) mode.

-2. Disconnect the following connectors.

Left front center sensor 6P connector Right front center sensor 6P connector

-3. Measure the resistance between test points 1 and 2.

Test condition	Vehicle OFF (LOCK) mode Left front center sensor 6P connector: disconnected Right front center sensor 6P connector: disconnected
B	B
Test point 1	Left front center sensor 6P connector (female terminals) No. 5: ①
Test point 2	Right front center sensor 6P connector (female terminals) No. 6: ②

Test point 1	Left front center sensor 6P connector (female terminals) No. 3: ①
Test point 2	Right front center sensor 6P connector (female terminals) No. 4: ②

Test point 1	Left front center sensor 6P connector (female terminals) No. 1: ①
Test point 2	Right front center sensor 6P connector (female terminals) No. 2: ②

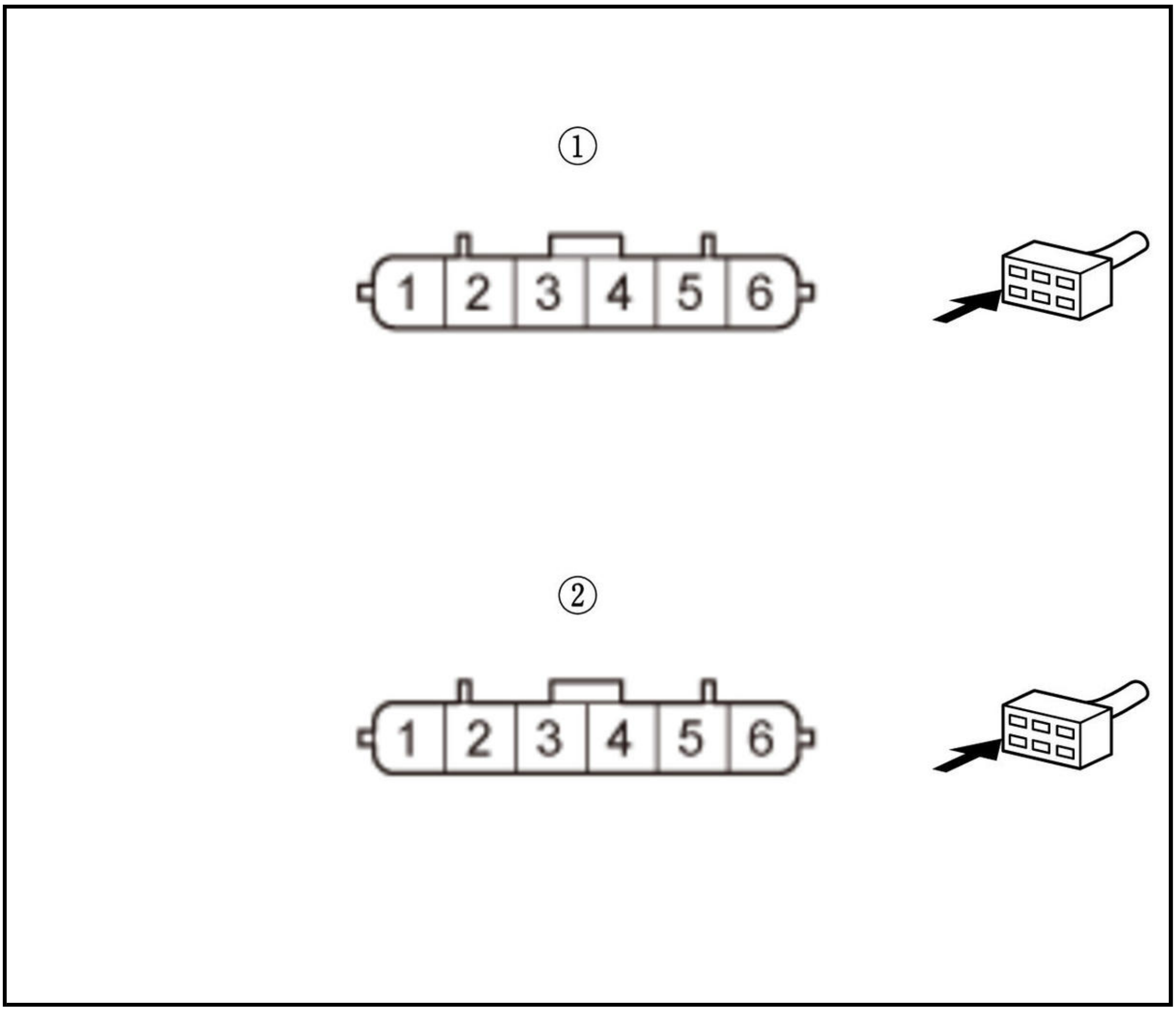

Is there 1.0 Ω or less?

YES

Replace the right front center sensor .

NO

Repair an open or high resistance in BOF CTR R, SOF CTR R, or E1 CTR R wire.

6. Open wire check (BOF SIDE R, SOF SIDE R, E1 SIDE R lines)

-1. Turn the vehicle to the OFF (LOCK) mode.

-2. Disconnect the following connectors.

Right front center sensor 6P connector Right front corner sensor 6P connector

-3. Measure the resistance between test points 1 and 2.

Test condition	Vehicle OFF (LOCK) mode Right front center sensor 6P connector: disconnected Right front corner sensor 6P connector: disconnected
B	B
Test point 1	Right front center sensor 6P connector (female terminals) No. 5: ①
Test point 2	Right front corner sensor 6P connector (female terminals) No. 6: ②

Test point 1	Right front center sensor 6P connector (female terminals) No. 3: ①
Test point 2	Right front corner sensor 6P connector (female terminals) No. 4: ②

Test point 1	Right front center sensor 6P connector (female terminals) No. 1: ①
Test point 2	Right front corner sensor 6P connector (female terminals) No. 2: ②

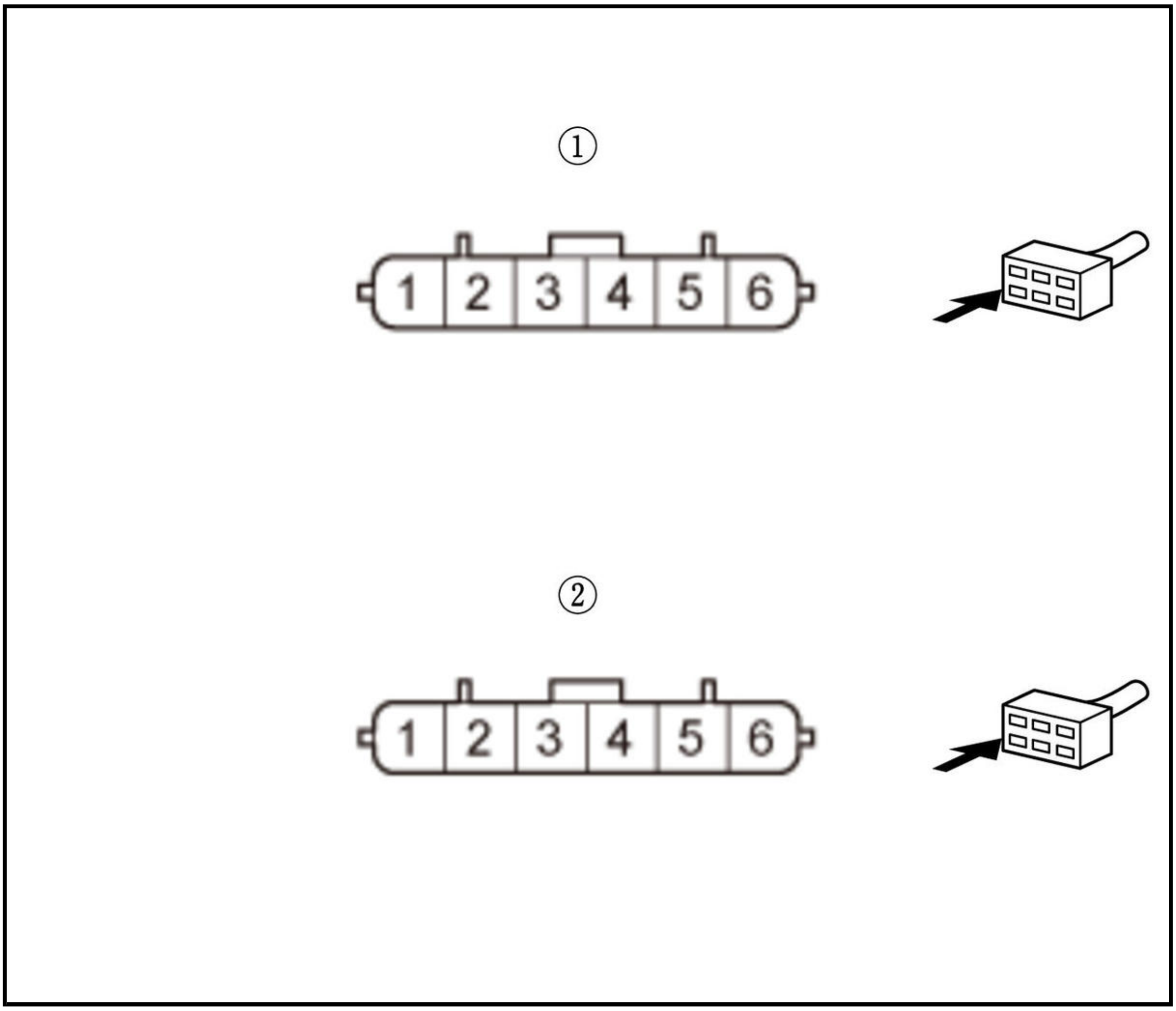

Is there 1.0 Ω or less?

YES

Replace the right front corner sensor .

NO

Repair an open or high resistance in BOF SIDE R, SOF SIDE R, or E1 SIDE R wire.

7. Open wire check (BOF CTR L, SOF CTR L, E1 CTR L lines)

-1. Turn the vehicle to the OFF (LOCK) mode.

-2. Disconnect the following connectors.

Left front corner sensor 6P connector Right front corner sensor 6P connector

-3. Measure the resistance between test points 1 and 2.

Test condition	Vehicle OFF (LOCK) mode Left front corner sensor 6P connector: disconnected Right front corner sensor 6P connector: disconnected
B	B
Test point 1	Left front corner sensor 6P connector (female terminals) No. 5: ①
Test point 2	Right front corner sensor 6P connector (female terminals) No. 6: ②

Test point 1	Left front corner sensor 6P connector (female terminals) No. 3: ①
Test point 2	Right front corner sensor 6P connector (female terminals) No. 4: ②

Test point 1	Left front corner sensor 6P connector (female terminals) No. 1: ①
Test point 2	Right front corner sensor 6P connector (female terminals) No. 2: ②

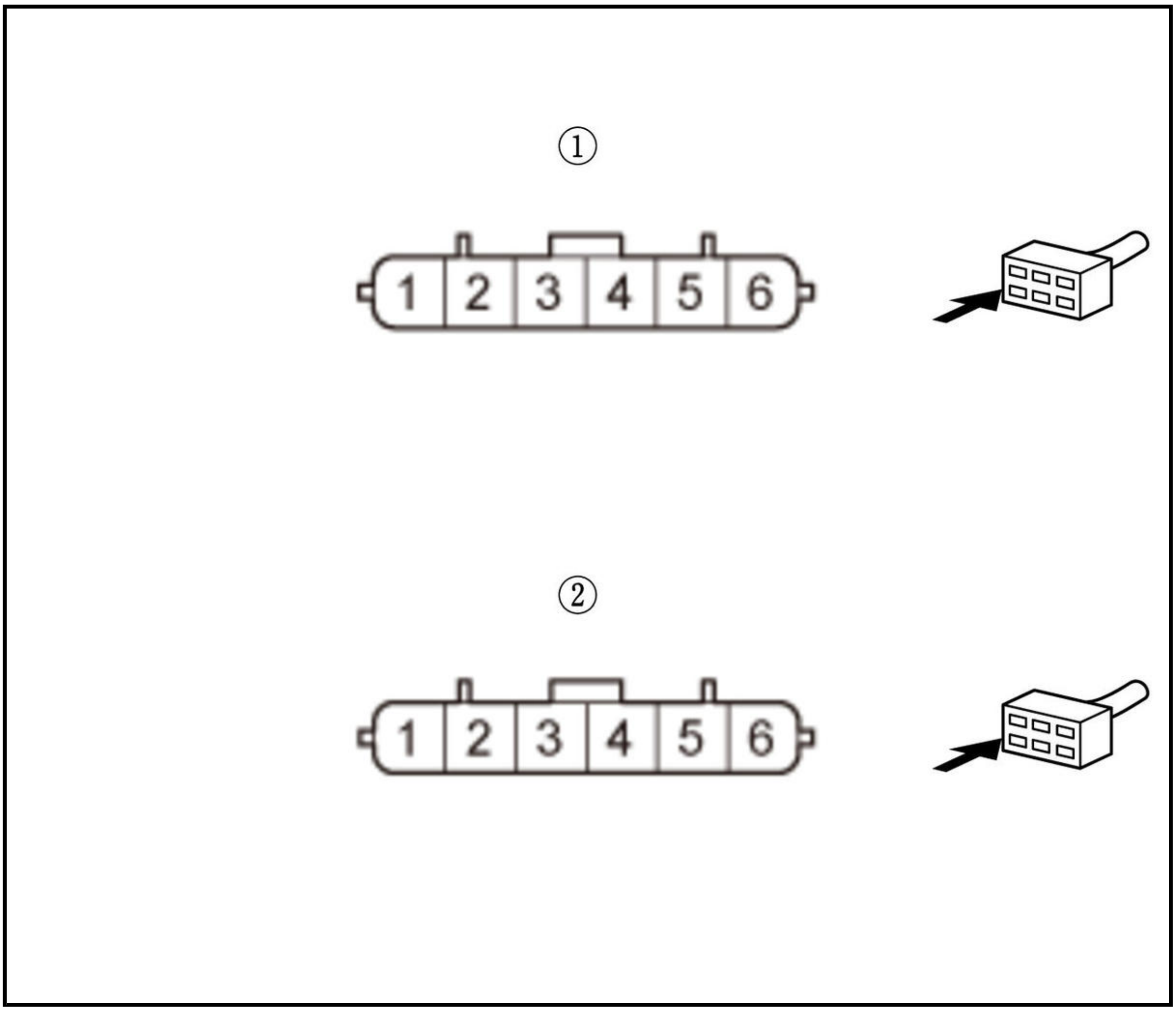

Is there 1.0 Ω or less?

YES

Replace the right front corner sensor .

NO

Repair an open or high resistance in BOF CTR L, SOF CTR L, or E1 CTR L wire.

DTC B261C, B261D, B261E, B261F (2020 2021)

DTC B261C : Rear 1st sensor data failure

DTC B261D : Rear 2nd sensor data failure

DTC B261E : Rear 3rd sensor data failure

DTC B261F : Rear 4th sensor data failure

NOTE:

- If you are troubleshooting multiple DTCs, be sure to follow the instructions in **B-CAN System Diagnosis Test Mode A** .
- Before you troubleshoot, **resetting the parking and back-up sensor control unit** .
- The connection order of the sensor is 1st -> 2nd -> 3rd -> 4th from the side near the control unit.

DTC Description	DTC
B261C Rear 1st sensor data failure	B
B261D Rear 2nd sensor data failure	B
B261E Rear 3rd sensor data failure	B
B261F Rear 4th sensor data failure	B

DTC (Parking and Back-Up Sensor Control Unit)

1. Problem verification

   -1. Clear the DTCs with the HDS.

   -2. Turn the vehicle to the OFF (LOCK) mode and then the ON mode.

   -3. Wait for at least 6 seconds.

   -4. Check for DTCs with the HDS.

DTC Description	DTC
B261C Rear 1st sensor data failure	B
B261D Rear 2nd sensor data failure	B
B261E Rear 3rd sensor data failure	B
B261F Rear 4th sensor data failure	B

   Are any DTCs indicated?

   YES

   Go to step 2.

   NO

   Intermittent failure, the system is OK at this time. Check for loose or poor connections.

2. DTC check

   -1. Check for DTCs with the HDS.

DTC Description	DTC
B261C Rear 1st sensor data failure	B
B261D Rear 2nd sensor data failure	B
B261E Rear 3rd sensor data failure	B
B261F Rear 4th sensor data failure	B
B2647 Rear sensor power failure	B
B2649 Rear sensor signal short to ground	B

Are any DTCs indicated?

YES

Go to step 3.

YES

Go to step 4.

YES

Go to step 5.

YES

Go to step 6.

YES

Go to parking and back-up sensor system DTC B2647 troubleshooting.

YES

Go to parking and back-up sensor system DTC B2649 troubleshooting.

NO

Intermittent failure, the system is OK at this time. Check for loose or poor connections.

3. Open wire check (BOR SIDE L, SOR SIDE L, E2 SIDE L lines)

   -1. Turn the vehicle to the OFF (LOCK) mode.

   -2. Disconnect the following connectors.

Parking and back-up sensor control unit 16P connector Left rear corner sensor 6P connector

   -3. Measure the resistance between test points 1 and 2.

Test condition	Vehicle OFF (LOCK) mode Parking and back-up sensor control unit 16P connector: disconnected Left rear corner sensor 6P connector: disconnected
B	B
Test point 1	Parking and back-up sensor control unit 16P connector No. 16
Test point 2	Left rear corner sensor 6P connector (female terminals) No. 6: ①

Test point 1	Parking and back-up sensor control unit 16P connector No. 14
Test point 2	Left rear corner sensor 6P connector (female terminals) No. 4: ①

Test point 1	**Parking and back-up sensor control unit 16P connector No. 12**
Test point 2	Left rear corner sensor 6P connector (female terminals) No. 2: ①

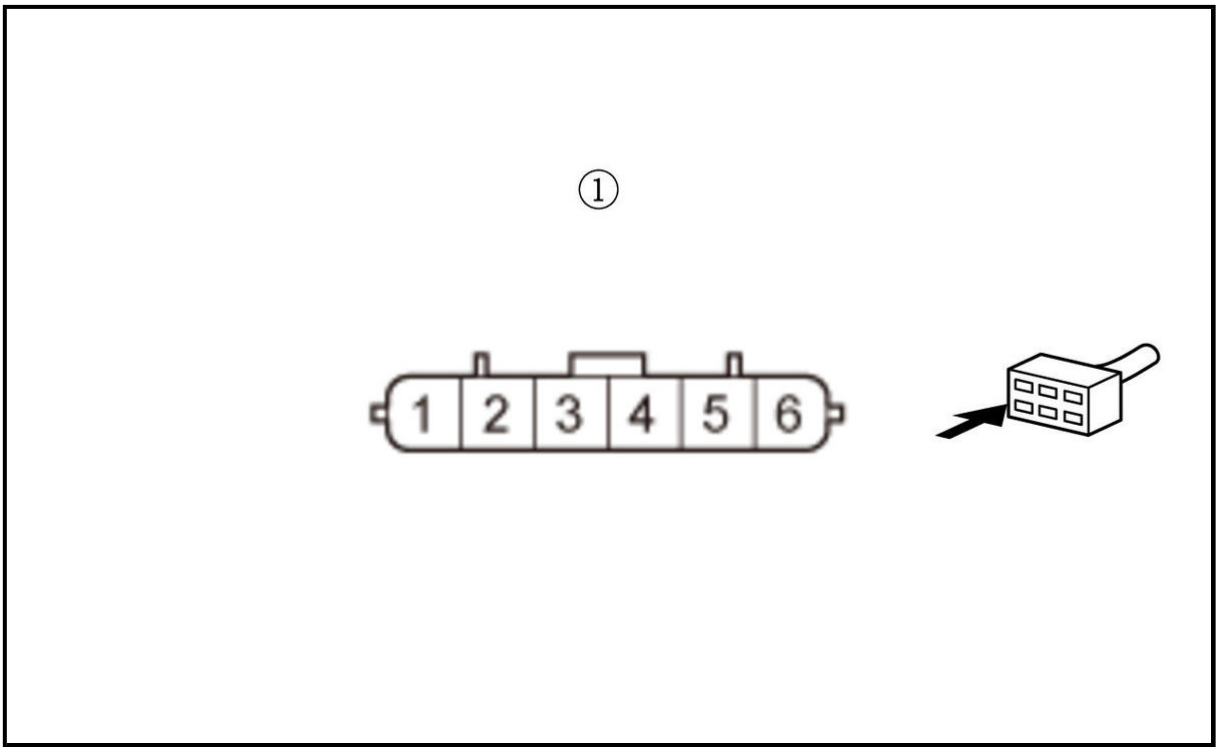

Is there 1.0 Ω or less?

YES

Replace the left rear corner sensor .

NO

Repair an open or high resistance in BOR SIDE L, SOR SIDE L, or E2 SIDE L wire.

4. Open wire check (BOR CTR L, SOR CTR L, E2 CTR L lines)

-1. Turn the vehicle to the OFF (LOCK) mode.

-2. Disconnect the following connectors.

Left rear corner sensor 6P connector Left rear center sensor 6P connector

-3. Measure the resistance between test points 1 and 2.

Test condition	Vehicle OFF (LOCK) mode Left rear corner sensor 6P connector: disconnected Left rear center sensor 6P connector: disconnected
B	B
Test point 1	Left rear corner sensor 6P connector (female terminals) No. 5: ①
Test point 2	Left rear center sensor 6P connector (female terminals) No. 6: ②

Test point 1	Left rear corner sensor 6P connector (female terminals) No. 3: ①
Test point 2	Left rear center sensor 6P connector (female terminals) No. 4: ②

Test point 1	Left rear corner sensor 6P connector (female terminals) No. 1: ①
Test point 2	Left rear center sensor 6P connector (female terminals) No. 2: ②

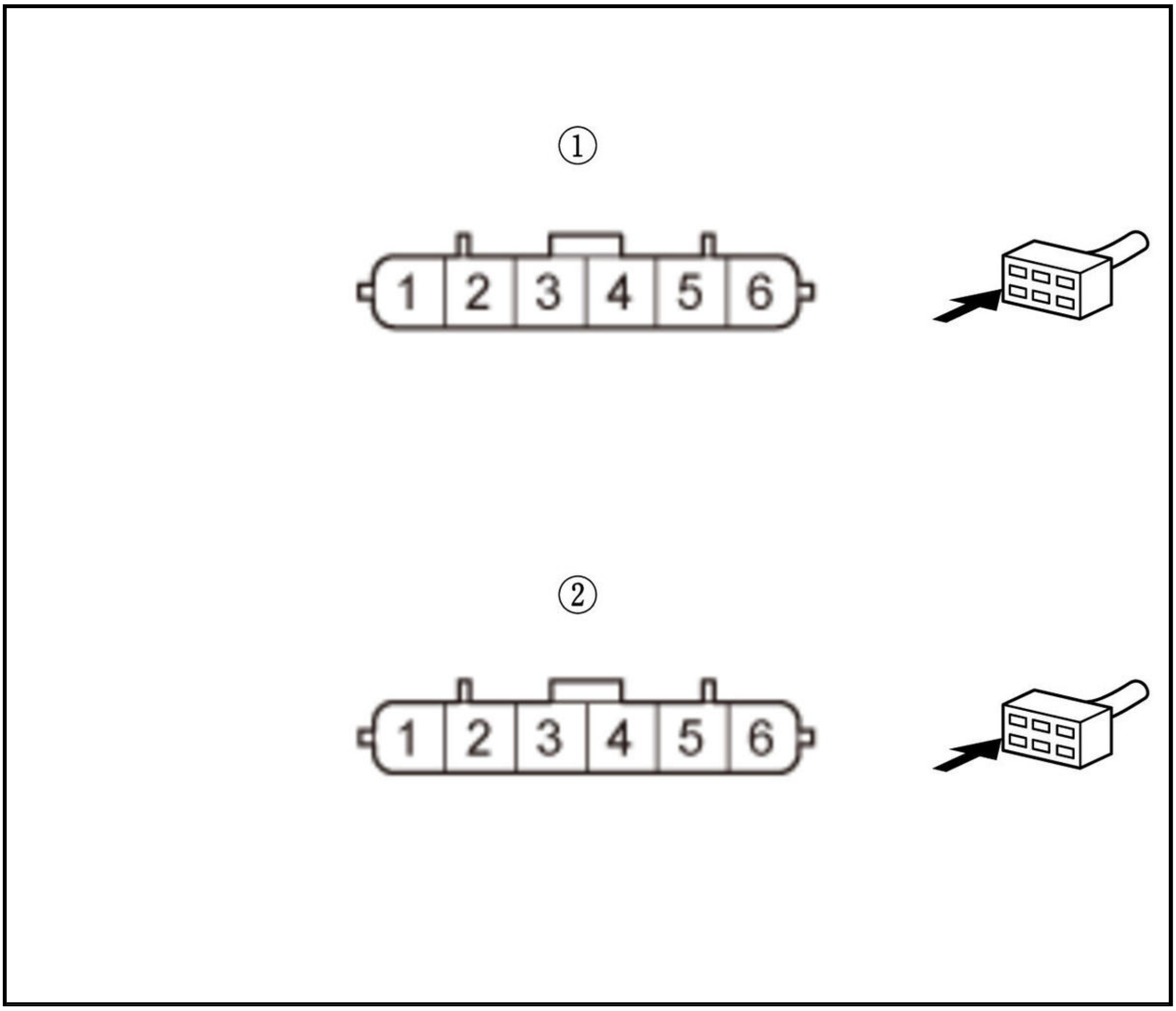

Is there 1.0 Ω or less?

YES

Replace the left rear center sensor .

NO

Repair an open or high resistance in BOR CTR L, SOR CTR L, or E2 CTR L wire.

5. Open wire check (BOR CTR R, SOR CTR R, E2 CTR R lines)

-1. Turn the vehicle to the OFF (LOCK) mode.

-2. Disconnect the following connectors.

Left rear center sensor 6P connector Right rear center sensor 6P connector

-3. Measure the resistance between test points 1 and 2.

Test condition	Vehicle OFF (LOCK) mode Left rear center sensor 6P connector: disconnected Right rear center sensor 6P connector: disconnected
B	B

Test point 1	Left rear center sensor 6P connector (female terminals) No. 5: ①
Test point 2	Right rear center sensor 6P connector (female terminals) No. 6: ②

Test point 1	Left rear center sensor 6P connector (female terminals) No. 3: ①
Test point 2	Right rear center sensor 6P connector (female terminals) No. 4: ②

Test point 1	Left rear center sensor 6P connector (female terminals) No. 1: ①
Test point 2	Right rear center sensor 6P connector (female terminals) No. 2: ②

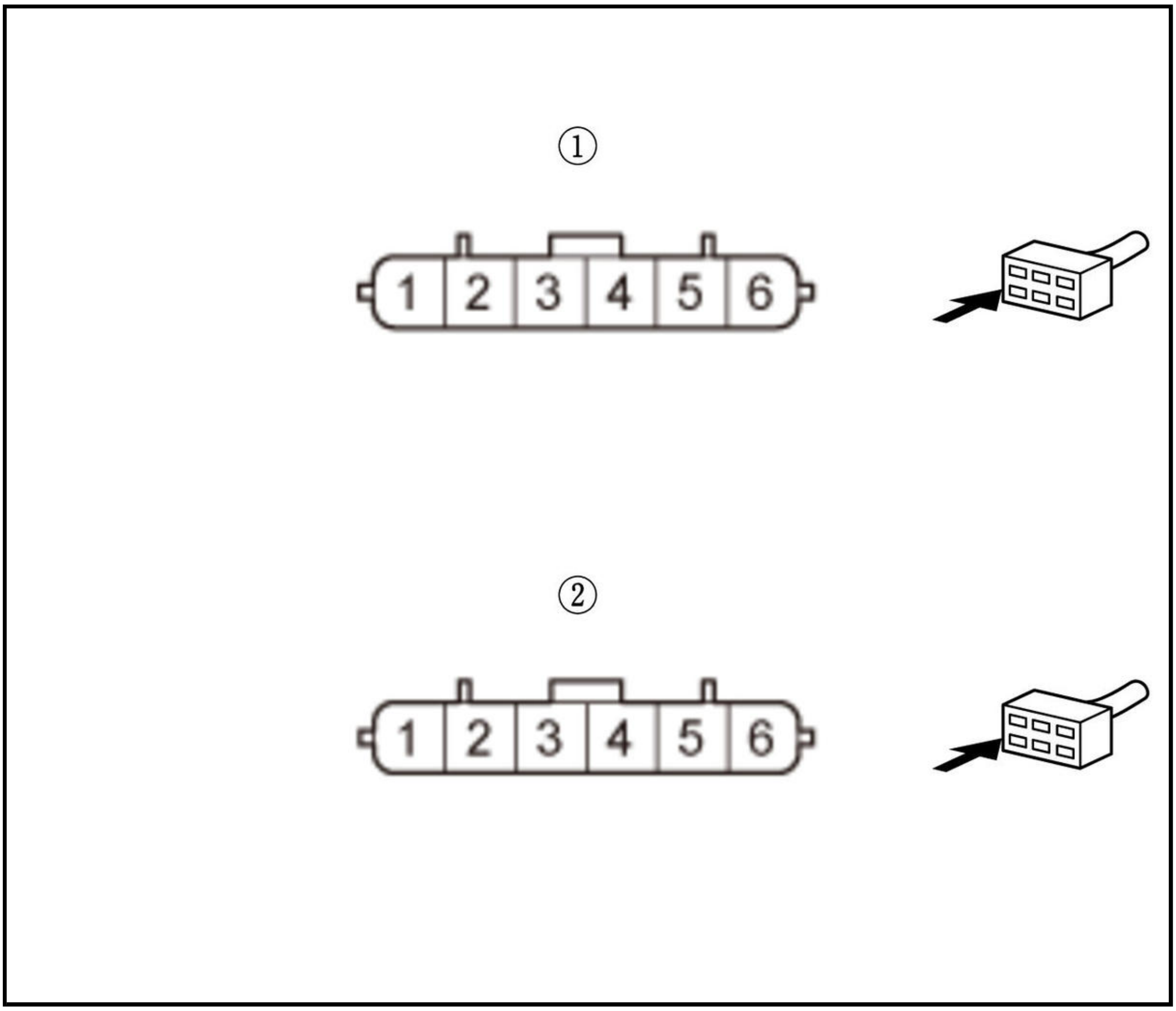

Is there 1.0 Ω or less?

YES

Replace the right rear center sensor .

NO

Repair an open or high resistance in BOR CTR R, SOR CTR R, or E2 CTR R wire.

6. Open wire check (BOR SIDE R, SOR SIDE R, E2 SIDE R lines)

-1. Turn the vehicle to the OFF (LOCK) mode.

-2. Disconnect the following connectors.

Right rear center sensor 6P connector Right rear corner sensor 6P connector

-3. Measure the resistance between test points 1 and 2.

Test condition	Vehicle OFF (LOCK) mode Right rear center sensor 6P connector: disconnected Right rear corner sensor 6P connector: disconnected
B	B
Test point 1	Right rear center sensor 6P connector (female terminals) No. 5: ①
Test point 2	Right rear corner sensor 6P connector (female terminals) No. 6: ②

Test point 1	Right rear center sensor 6P connector (female terminals) No. 3: ①
Test point 2	Right rear corner sensor 6P connector (female terminals) No. 4: ②

Test point 1	Right rear center sensor 6P connector (female terminals) No. 1: ①
Test point 2	Right rear corner sensor 6P connector (female terminals) No. 2: ②

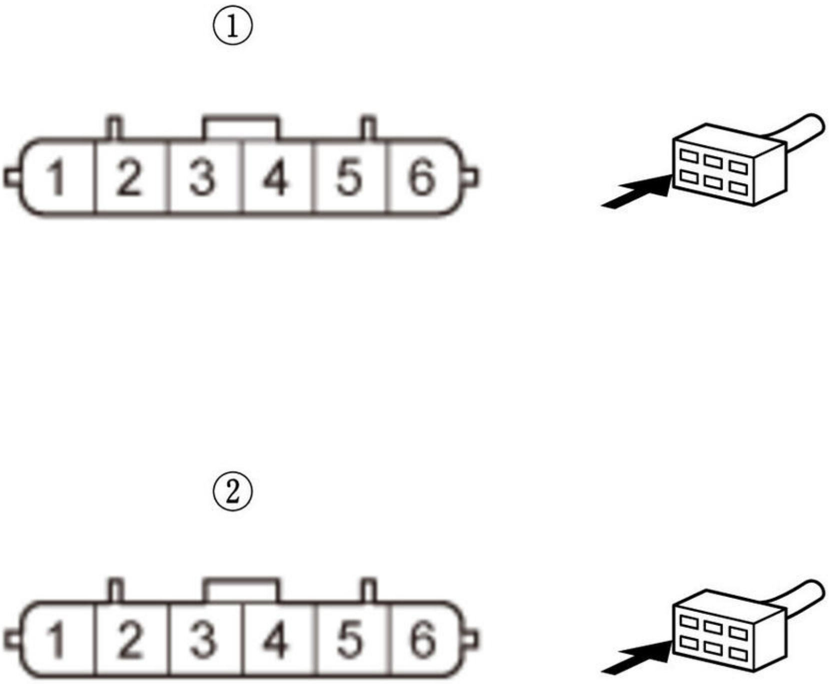

Is there 1.0 Ω or less?

YES

Replace the right rear corner sensor .

NO

Repair an open or high resistance in BOR SIDE R, SOR SIDE R, or E2 SIDE R wire.

DTC B2646 (2020 2021)

DTC B2646 : Front sensor power failure

NOTE:

- If you are troubleshooting multiple DTCs, be sure to follow the instructions in B-CAN System Diagnosis Test Mode A .
- The connection order of the sensor is 1st -> 2nd -> 3rd -> 4th from the side near the control unit.

DTC Description	DTC
B2646 Front sensor power failure	B

DTC (Parking and Back-Up Sensor Control Unit)

1. Problem verification

-1. Clear the DTCs with the HDS.

-2. Turn the vehicle to the OFF (LOCK) mode and then the ON mode.

-3. Wait for at least 6 seconds.

-4. Check for DTCs with the HDS.

DTC Description	DTC
B2646 Front sensor power failure	B

Is DTC B2646 indicated?

YES

Go to step 2.

NO

Intermittent failure, the system is OK at this time. Check for loose or poor connections.

2. Shorted wire check (BOF SIDE L, E1 SIDE L lines) 1

-1. Disconnect the following connector.

Parking and back-up sensor control unit 16P connector

-2. Measure the resistance between test points 1 and 2.

Test condition	Vehicle OFF (LOCK) mode Parking and back-up sensor control unit 16P connector: disconnected
B	B
Test point 1	Parking and back-up sensor control unit 16P connector No. 7
Test point 2	Parking and back-up sensor control unit 16P connector No. 13

Is there 1.0 MΩ or more?

YES

Go to step 12.

NO: with front center sensor

Go to step 3.

NO: without front center sensor

Go to step 5.

3. Shorted wire check (BOF SIDE R, E1 SIDE R lines) 1

-1. Disconnect the following connector.

Right front center sensor 6P connector

-2. Measure the resistance between test points 1 and 2.

Test condition	Vehicle OFF (LOCK) mode Parking and back-up sensor control unit 16P connector: disconnected Right front center sensor 6P connector: disconnected
B	B
Test point 1	Right front center sensor 6P connector (female terminals) No. 5: ①
Test point 2	Right front center sensor 6P connector (female terminals) No. 1: ①

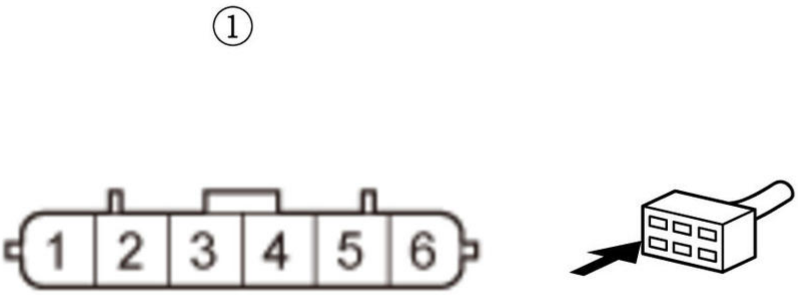

Is there 1.0 MΩ or more?

YES

Go to step 7.

NO

Go to step 4.

4. Shorted wire check (BOF SIDE R, E1 SIDE R lines) 2

-1. Disconnect the following connector.

Right front corner sensor 6P connector

-2. Measure the resistance between test points 1 and 2.

Test condition	Vehicle OFF (LOCK) mode Parking and back-up sensor control unit 16P connector: disconnected Right front center sensor 6P connector: disconnected Right front corner sensor 6P connector: disconnected
B	B
Test point 1	Right front center sensor 6P connector (female terminals) No. 5: ①
Test point 2	Right front center sensor 6P connector (female terminals) No. 1: ①

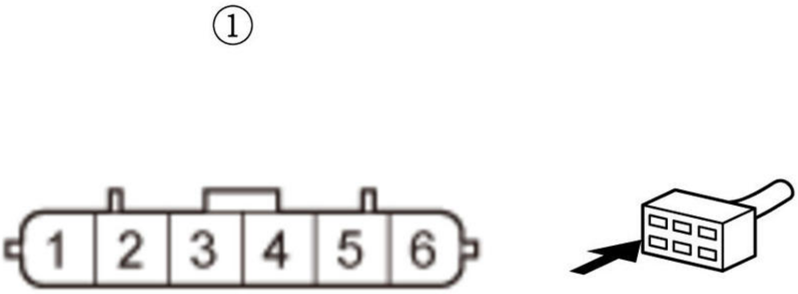

Is there 1.0 MΩ or more?

YES

Replace the right front corner sensor .

NO

Repair a short in the BOF SIDE R and E1 SIDE R wires.

5. Shorted wire check (BOF CTR L, E1 CTR L lines) 1

-1. Disconnect the following connector.

Left front corner sensor 6P connector

-2. Measure the resistance between test points 1 and 2.

Test condition	Vehicle OFF (LOCK) mode Parking and back-up sensor control unit 16P connector: disconnected Left front corner sensor 6P connector: disconnected
B	B
Test point 1	Left front corner sensor 6P connector (female terminals) No. 5: ①
Test point 2	Left front corner sensor 6P connector (female terminals) No. 1: ①

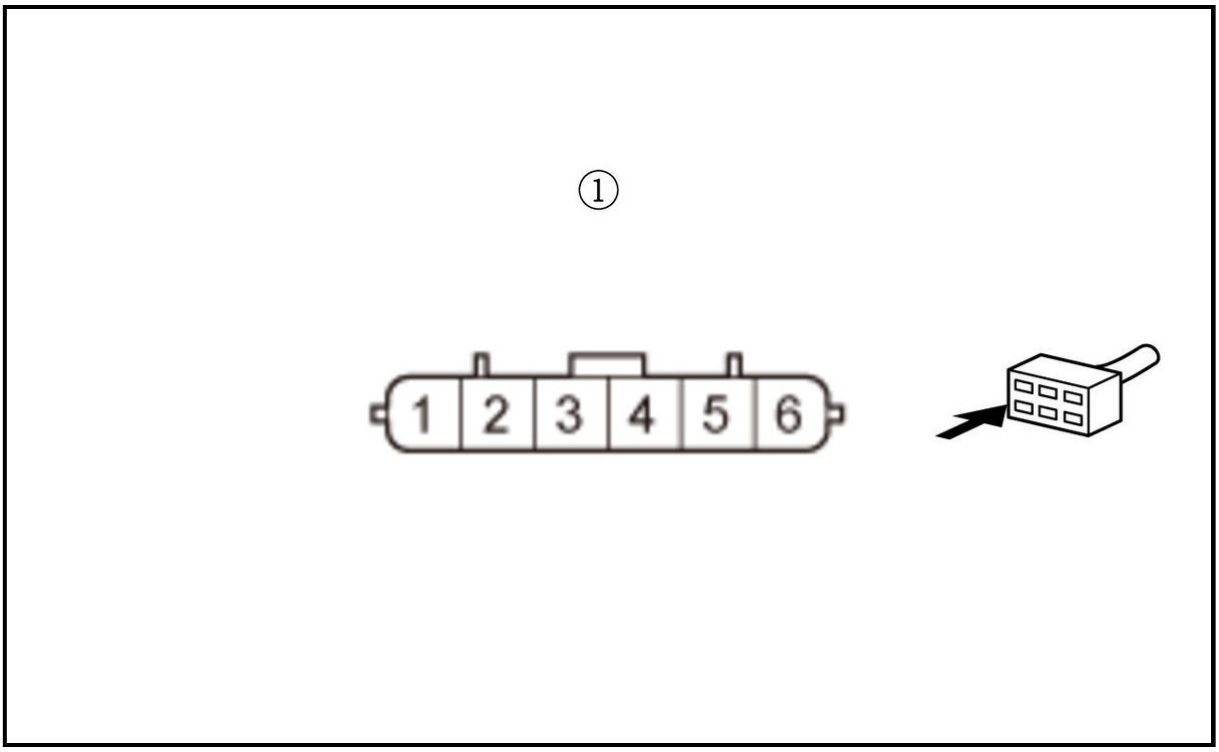

Is there 1.0 MΩ or more?

YES

Go to step 11.

NO

Go to step 6.

6. Shorted wire check (BOF SIDE R, E1 SIDE R lines) 2

-1. Disconnect the following connector.

Right front corner sensor 6P connector

-2. Measure the resistance between test points 1 and 2.

Test condition	Vehicle OFF (LOCK) mode Parking and back-up sensor control unit 16P connector: disconnected Left front corner sensor 6P connector: disconnected Right front corner sensor 6P connector: disconnected
B	B
Test point 1	Left front corner sensor 6P connector (female terminals) No. 5: ①
Test point 2	Left front corner sensor 6P connector (female terminals) No. 1: ①

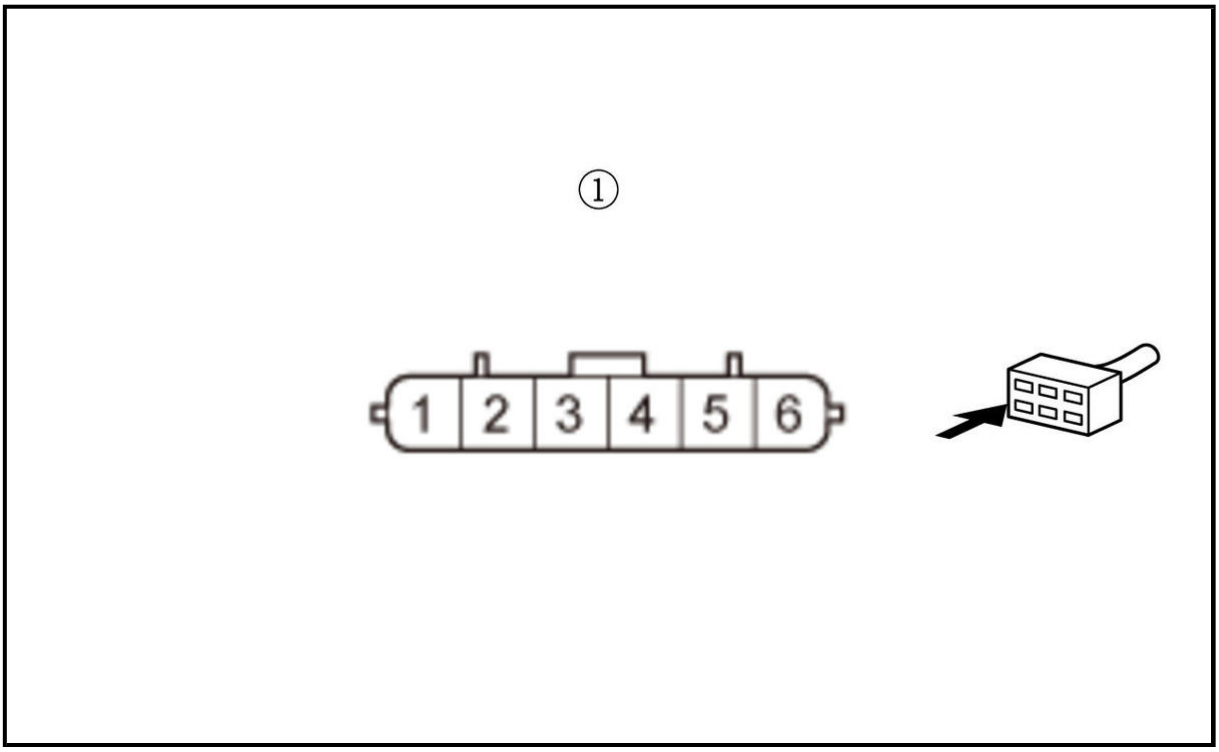

Is there 1.0 MΩ or more?

YES

Replace the right front corner sensor .

NO

Repair a short in the BOF SIDE R and E1 SIDE R wires.

7. Shorted wire check (BOF CTR R, E1 CTR R lines) 1

-1. Reconnect the following connector.

Right front center sensor 6P connector

-2. Disconnect the following connector.

Left front center sensor 6P connector

-3. Measure the resistance between test points 1 and 2.

Test condition	Vehicle OFF (LOCK) mode Parking and back-up sensor control unit 16P connector: disconnected Left front center sensor 6P connector: disconnected
B	B
Test point 1	Left front center sensor 6P connector (female terminals) No. 5: ①
Test point 2	Left front center sensor 6P connector (female terminals) No. 1: ①

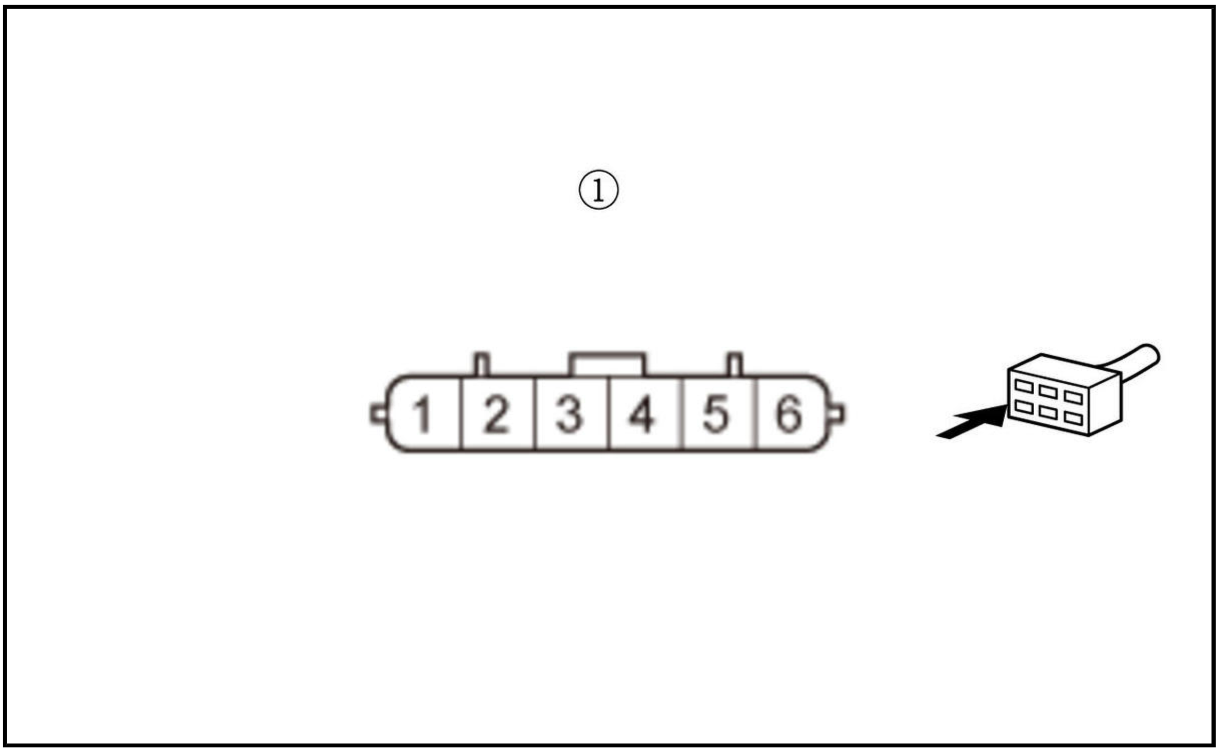

Is there 1.0 MΩ or more?

YES

Go to step 9.

NO

Go to step 8.

8. Shorted wire check (BOF CTR R, E1 CTR R lines) 2

   -1. Disconnect the following connector.

Right front center sensor 6P connector

   -2. Measure the resistance between test points 1 and 2.

Test condition	Vehicle OFF (LOCK) mode Parking and back-up sensor control unit 16P connector: disconnected Left front center sensor 6P connector: disconnected Right front center sensor 6P connector: disconnected
B	B
Test point 1	Left front center sensor 6P connector (female terminals) No. 5: ①
Test point 2	Left front center sensor 6P connector (female terminals) No. 1: ①

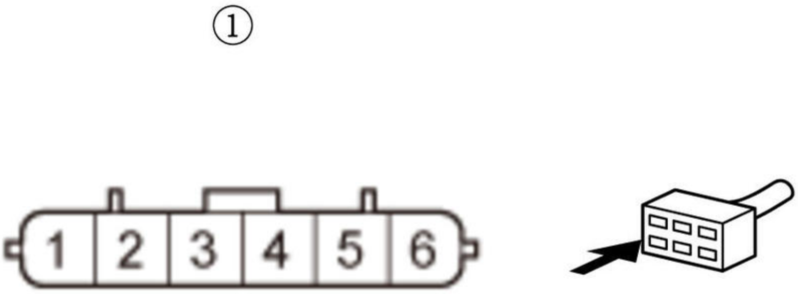

Is there 1.0 MΩ or more?

YES

Replace the right front center sensor .

NO

Repair a short in the BOF CTR R and E1 CTR R wires.

9. Shorted wire check (BOF CTR L, E1 CTR L lines) 1

-1. Reconnect the following connector.

Left front center sensor 6P connector

-2. Disconnect the following connector.

Left front corner sensor 6P connector

-3. Measure the resistance between test points 1 and 2.

Test condition	Vehicle OFF (LOCK) mode Parking and back-up sensor control unit 16P connector: disconnected Left front corner sensor 6P connector: disconnected
B	B
Test point 1	Left front corner sensor 6P connector (female terminals) No. 5: ①
Test point 2	Left front corner sensor 6P connector (female terminals) No. 1: ①

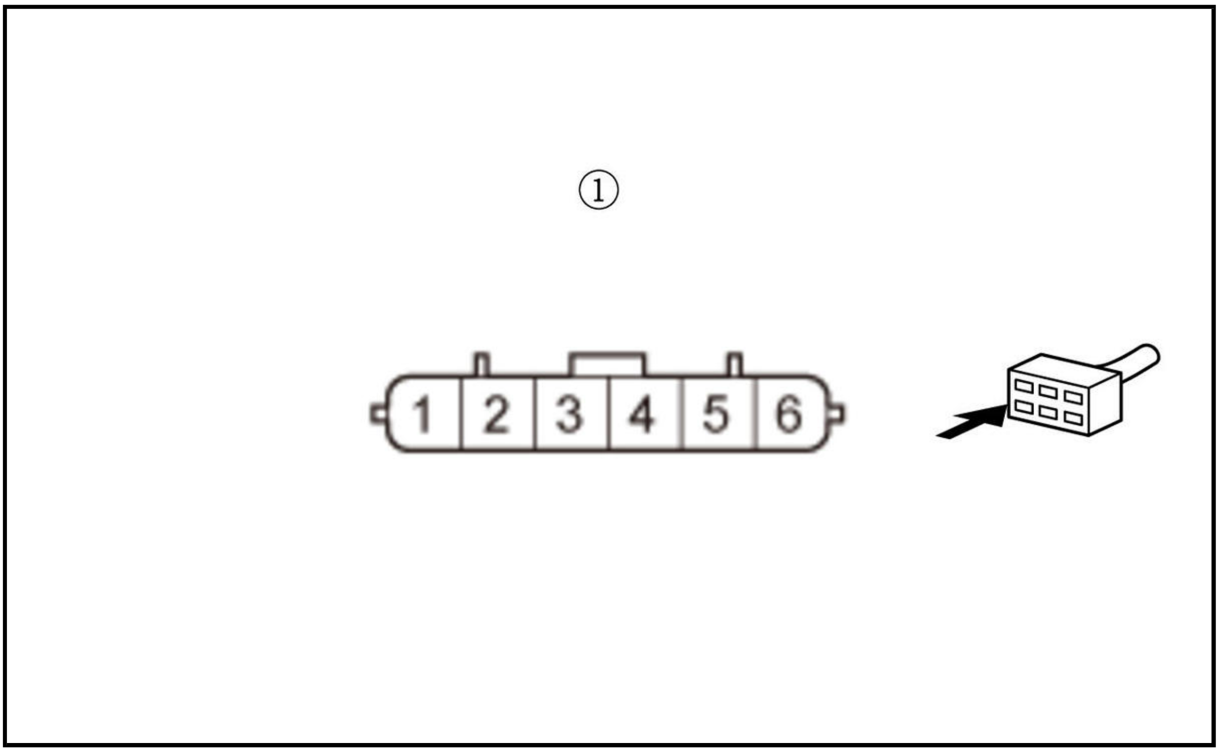

Is there 1.0 MΩ or more?

YES

Go to step 11.

NO

Go to step 10.

10. Shorted wire check (BOF CTR L, E1 CTR L lines) 2

-1. Disconnect the following connector.

Left front center sensor 6P connector

-2. Measure the resistance between test points 1 and 2.

Test condition	Vehicle OFF (LOCK) mode Parking and back-up sensor control unit 16P connector: disconnected Left front corner sensor 6P connector: disconnected Left front center sensor 6P connector: disconnected
B	B
Test point 1	Left front corner sensor 6P connector (female terminals) No. 5: ①
Test point 2	Left front corner sensor 6P connector (female terminals) No. 1: ①

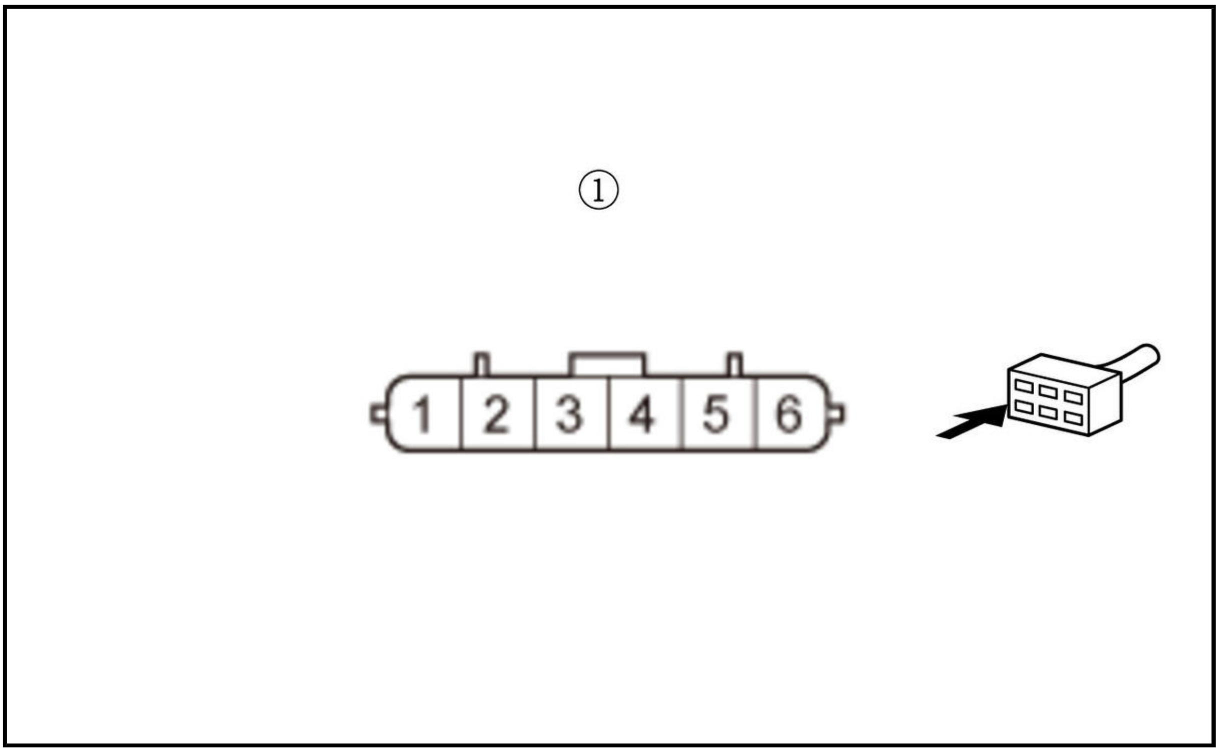

Is there 1.0 MΩ or more?

YES

Replace the left front center sensor .

NO

Repair a short in the BOF CTR L and E1 CTR L wires.

11. Shorted wire check (BOF SIDE L, E1 SIDE L lines) 2

-1. Measure the resistance between test points 1 and 2.

Test condition	Vehicle OFF (LOCK) mode Parking and back-up sensor control unit 16P connector: disconnected Left front corner sensor 6P connector: disconnected
B	B
Test point 1	**Parking and back-up sensor control unit 16P connector No. 7**
Test point 2	**Parking and back-up sensor control unit 16P connector No. 13**

Is there 1.0 MΩ or more?

YES

Replace the left front corner sensor .

NO

Repair a short in the BOF SIDE L and E1 SIDE L wires.

12. Shorted wire check (BOF SIDE L line)

-1. Measure the resistance between test points 1 and 2.

Test condition	Vehicle OFF (LOCK) mode Parking and back-up sensor control unit 16P connector: disconnected
B	B

Test point 1	Parking and back-up sensor control unit 16P connector No. 7
Test point 2	Body ground

Is there 1.0 MΩ or more?

YES

Replace the parking and back-up sensor control unit .

NO

Repair a short to ground in the BOF SIDE L wire.

DTC B2647 (2020 2021)

DTC B2647 : Rear sensor power failure

NOTE:

- If you are troubleshooting multiple DTCs, be sure to follow the instructions in B-CAN System Diagnosis Test Mode A .
- The connection order of the sensor is 1st -> 2nd -> 3rd -> 4th from the side near the control unit.

DTC Description	DTC
B2647 Rear sensor power failure	B

DTC (Parking and Back-Up Sensor Control Unit)

1. Problem verification

   -1. Clear the DTCs with the HDS.

   -2. Turn the vehicle to the OFF (LOCK) mode and then the ON mode.

   -3. Wait for at least 6 seconds.

   -4. Check for DTCs with the HDS.

DTC Description	DTC
B2647 Rear sensor power failure	B

   Is DTC B2647 indicated?

   YES

   Go to step 2.

   NO

   Intermittent failure, the system is OK at this time. Check for loose or poor connections.

2. Shorted wire check (BOR SIDE L, E2 SIDE L lines) 1

   -1. Disconnect the following connector.

Parking and back-up sensor control unit 16P connector

   -2. Measure the resistance between test points 1 and 2.

Test condition	Vehicle OFF (LOCK) mode Parking and back-up sensor control unit 16P connector: disconnected
B	B
Test point 1	**Parking and back-up sensor control unit 16P connector No. 16**
Test point 2	**Parking and back-up sensor control unit 16P connector No. 12**

Is there 1.0 MΩ or more?

YES

Go to step 10.

NO

Go to step 3.

3. Shorted wire check (BOR SIDE R, E2 SIDE R lines) 1

-1. Disconnect the following connector.

Right rear center sensor 6P connector

-2. Measure the resistance between test points 1 and 2.

Test condition	Vehicle OFF (LOCK) mode Parking and back-up sensor control unit 16P connector: disconnected Right rear center sensor 6P connector: disconnected
B	B
Test point 1	Right rear center sensor 6P connector (female terminals) No. 5: ①
Test point 2	Right rear center sensor 6P connector (female terminals) No. 1: ①

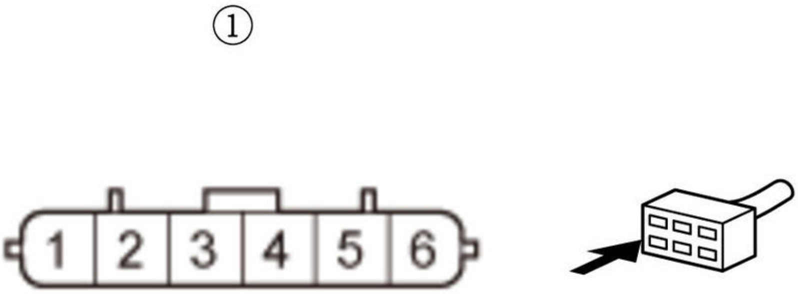

Is there 1.0 MΩ or more?

YES

Go to step 5.

NO

Go to step 4.

4. Shorted wire check (BOR SIDE R, E2 SIDE R lines) 2

-1. Disconnect the following connector.

Right rear corner sensor 6P connector

-2. Measure the resistance between test points 1 and 2.

Test condition	Vehicle OFF (LOCK) mode Parking and back-up sensor control unit 16P connector: disconnected Right rear center sensor 6P connector: disconnected Right rear corner sensor 6P connector: disconnected
B	B
Test point 1	Right rear center sensor 6P connector (female terminals) No. 5: ①
Test point 2	Right rear center sensor 6P connector (female terminals) No. 1: ①

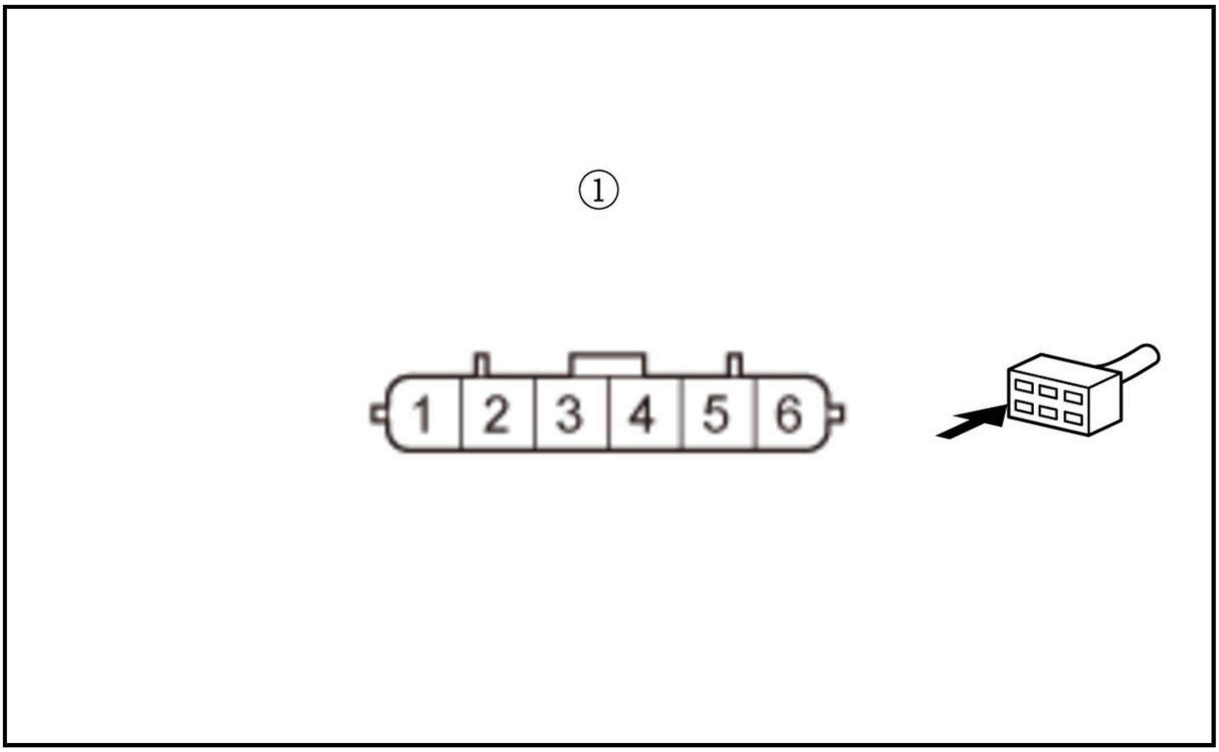

Is there 1.0 MΩ or more?

YES

Replace the right rear corner sensor .

NO

Repair a short in the BOR SIDE R and E2 SIDE R wires.

5. Shorted wire check (BOR CTR R, E2 CTR R lines) 1

-1. Reconnect the following connector.

Right rear center sensor 6P connector

-2. Disconnect the following connector.

Left rear center sensor 6P connector

-3. Measure the resistance between test points 1 and 2.

Test condition	Vehicle OFF (LOCK) mode Parking and back-up sensor control unit 16P connector: disconnected Left rear center sensor 6P connector: disconnected
B	B
Test point 1	Left rear center sensor 6P connector (female terminals) No. 5: ①
Test point 2	Left rear center sensor 6P connector (female terminals) No. 1: ①

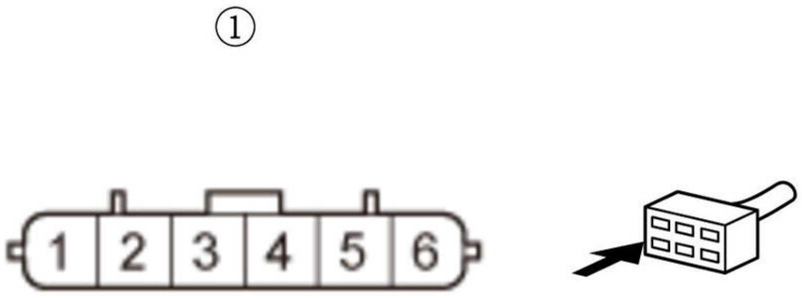

Is there 1.0 MΩ or more?

YES

Go to step 7.

NO

Go to step 6.

6. Shorted wire check (BOR CTR R, E2 CTR R lines) 2

-1. Disconnect the following connector.

Right rear center sensor 6P connector

-2. Measure the resistance between test points 1 and 2.

Test condition	Vehicle OFF (LOCK) mode Parking and back-up sensor control unit 16P connector: disconnected Left rear center sensor 6P connector: disconnected Right rear center

	sensor 6P connector: disconnected
B	B
Test point 1	Left rear center sensor 6P connector (female terminals) No. 5: ①
Test point 2	Left rear center sensor 6P connector (female terminals) No. 1: ①

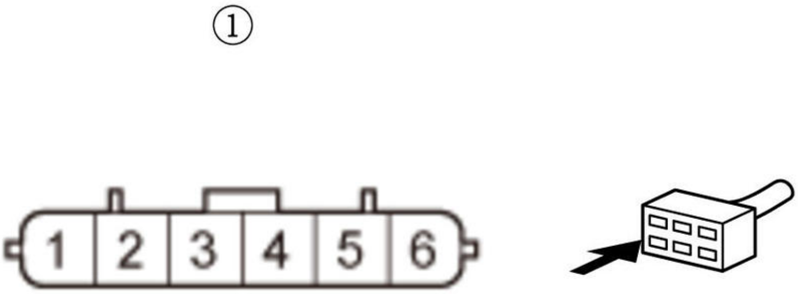

Is there 1.0 MΩ or more?

YES

Replace the right rear center sensor .

NO

Repair a short in the BOR CTR R and E2 CTR R wires.

7. Shorted wire check (BOR CTR L, E2 CTR L lines) 1

-1. Reconnect the following connector.

Left rear center sensor 6P connector

-2. Disconnect the following connector.

Left rear corner sensor 6P connector

-3. Measure the resistance between test points 1 and 2.

Test condition	Vehicle OFF (LOCK) mode Parking and back-up sensor control unit 16P connector: disconnected Left rear corner sensor 6P connector: disconnected
B	B
Test point 1	Left rear corner sensor 6P connector (female terminals) No. 5: ①
Test point 2	Left rear corner sensor 6P connector (female terminals) No. 1: ①

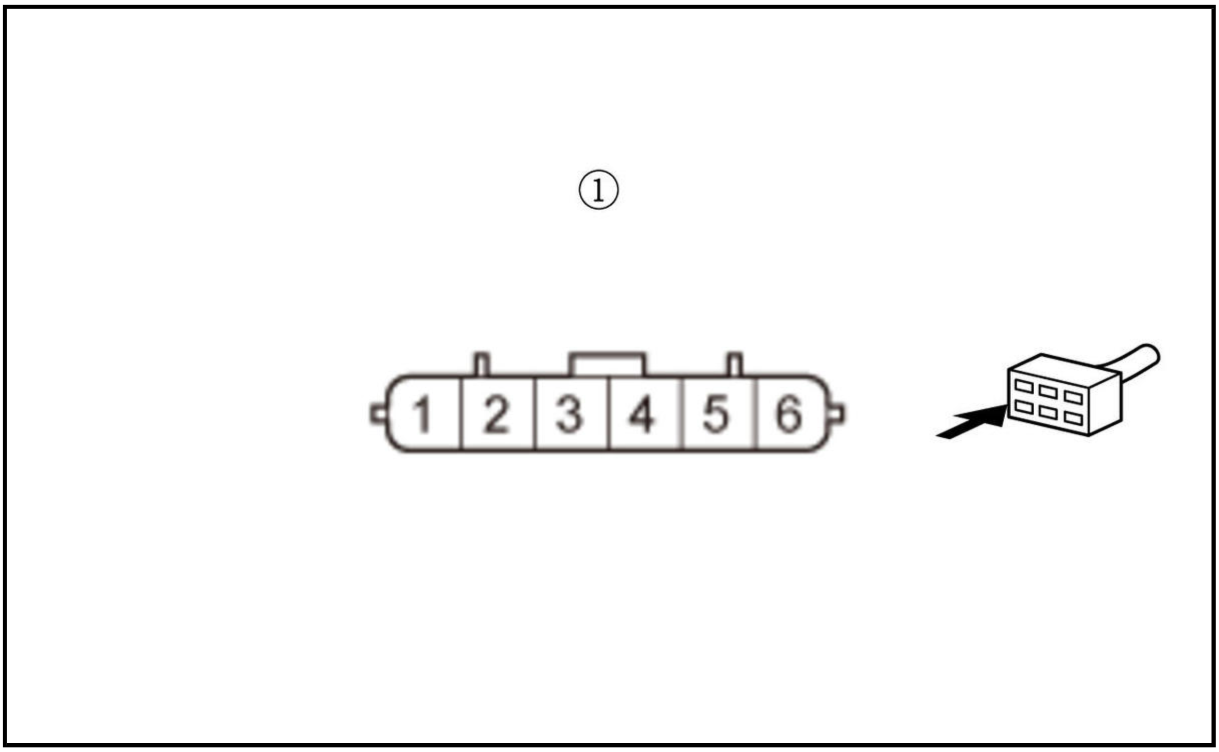

Is there 1.0 MΩ or more?

YES

Go to step 9.

NO

Go to step 8.

8. Shorted wire check (BOR CTR L, E2 CTR L lines) 2

-1. Disconnect the following connector.

Left rear center sensor 6P connector

-2. Measure the resistance between test points 1 and 2.

Test condition	Vehicle OFF (LOCK) mode Parking and back-up sensor control unit 16P connector: disconnected Left rear corner sensor 6P connector: disconnected Left rear center sensor 6P connector: disconnected
B	B
Test point 1	Left rear corner sensor 6P connector (female terminals) No. 5: ①
Test point 2	Left rear corner sensor 6P connector (female terminals) No. 1: ①

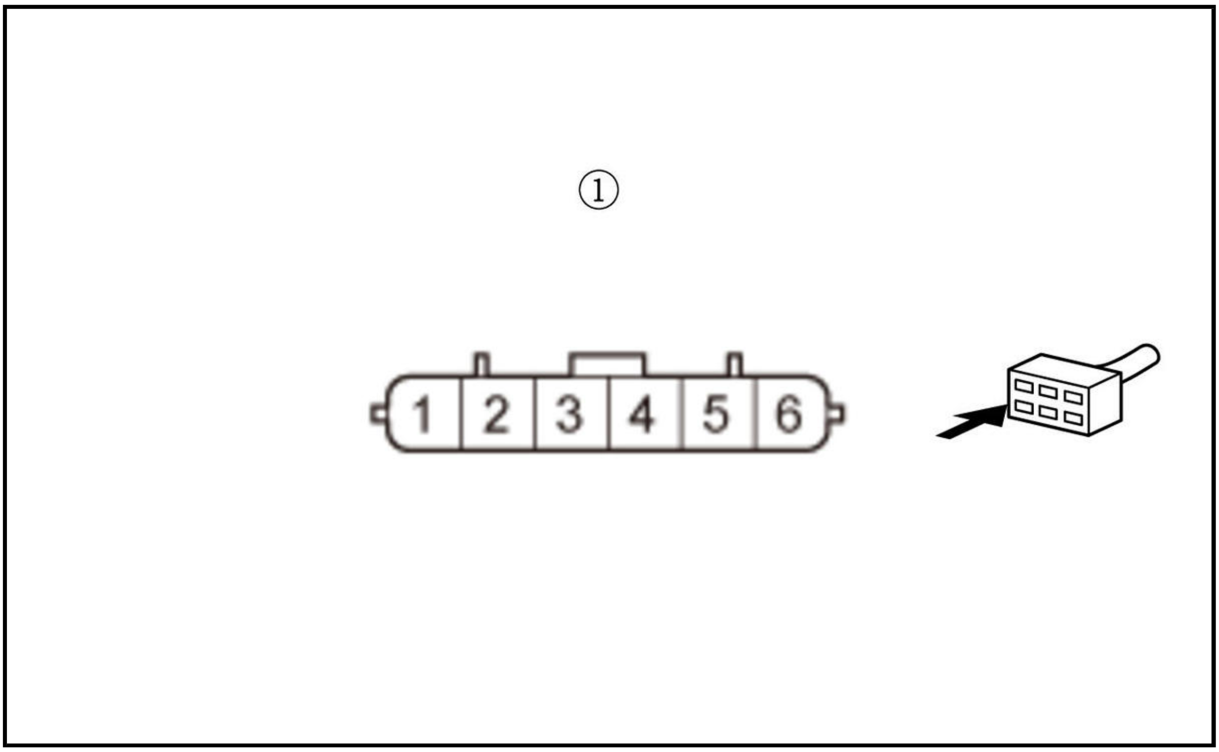

Is there 1.0 MΩ or more?

YES

Replace the left rear center sensor .

NO

Repair a short in the BOR CTR L and E2 CTR L wires.

9. Shorted wire check (BOR SIDE L, E2 SIDE L lines) 2

-1. Measure the resistance between test points 1 and 2.

Test condition	Vehicle OFF (LOCK) mode Parking and back-up sensor control unit 16P connector: disconnected Left rear corner sensor 6P connector: disconnected
B	B
Test point 1	**Parking and back-up sensor control unit 16P connector No. 16**
Test point 2	**Parking and back-up sensor control unit 16P connector No. 12**

Is there 1.0 MΩ or more?

YES

Replace the left rear corner sensor .

NO

Repair a short in the BOR SIDE L and E2 SIDE L wires.

10. Shorted wire check (BOR SIDE L line)

-1. Measure the resistance between test points 1 and 2.

Test condition	Vehicle OFF (LOCK) mode Parking and back-up sensor control unit 16P connector: disconnected
B	B

Test point 1	Parking and back-up sensor control unit 16P connector No. 16
Test point 2	Body ground

Is there 1.0 MΩ or more?

YES

Replace the parking and back-up sensor control unit .

NO

Repair a short to ground in the BOR SIDE L wire.

DTC B2648 (2020 2021)

DTC B2648 : Front sensor signal short to ground

NOTE:

- If you are troubleshooting multiple DTCs, be sure to follow the instructions in B-CAN System Diagnosis Test Mode A .
- The connection order of the sensor is 1st -> 2nd -> 3rd -> 4th from the side near the control unit.

DTC Description	DTC
B2648 Front sensor signal short to ground	B

DTC (Parking and Back-Up Sensor Control Unit)

1. Problem verification

   -1. Clear the DTCs with the HDS.

   -2. Turn the vehicle to the OFF (LOCK) mode and then the ON mode.

   -3. Wait for at least 6 seconds.

   -4. Check for DTCs with the HDS.

DTC Description	DTC
B2648 Front sensor signal short to ground	B

   Is DTC B2648 indicated?

   YES

   Go to step 2.

   NO

   Intermittent failure, the system is OK at this time. Check for loose or poor connections.

2. Shorted wire check (SOF SIDE L, E1 SIDE L lines) 1

   -1. Disconnect the following connector.

Parking and back-up sensor control unit 16P connector

   -2. Measure the resistance between test points 1 and 2.

Test condition	Vehicle OFF (LOCK) mode Parking and back-up sensor control unit 16P connector: disconnected
B	B
Test point 1	**Parking and back-up sensor control unit 16P connector No. 6**
Test point 2	**Parking and back-up sensor control unit 16P connector No. 13**

Is there 1.0 MΩ or more?

YES

Go to step 12.

NO: with front center sensor

Go to step 3.

NO: without front center sensor

Go to step 5.

3. Shorted wire check (SOF SIDE R, E1 SIDE R lines) 1

-1. Disconnect the following connector.

Right front center sensor 6P connector

-2. Measure the resistance between test points 1 and 2.

Test condition	Vehicle OFF (LOCK) mode Parking and back-up sensor control unit 16P connector: disconnected Right front center sensor 6P connector: disconnected
B	B
Test point 1	Right front center sensor 6P connector (female terminals) No. 3: ①
Test point 2	Right front center sensor 6P connector (female terminals) No. 1: ①

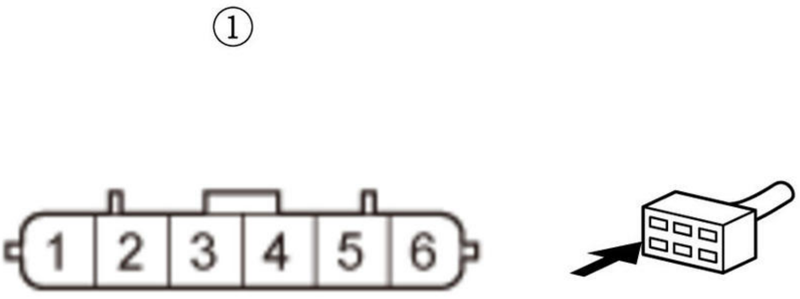

Is there 1.0 MΩ or more?

YES

Go to step 7.

NO

Go to step 4.

4. Shorted wire check (SOF SIDE R, E1 SIDE R lines) 2

-1. Disconnect the following connector.

Right front corner sensor 6P connector

-2. Measure the resistance between test points 1 and 2.

Test condition	Vehicle OFF (LOCK) mode Parking and back-up sensor control unit 16P connector: disconnected Right front center sensor 6P connector: disconnected Right front corner sensor 6P connector: disconnected
B	B
Test point 1	Right front center sensor 6P connector (female terminals) No. 3: ①
Test point 2	Right front center sensor 6P connector (female terminals) No. 1: ①

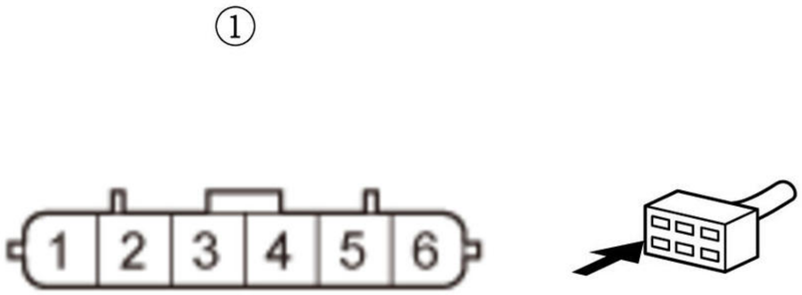

Is there 1.0 MΩ or more?

YES

Replace the right front corner sensor .

NO

Repair a short in the SOF SIDE R and E1 SIDE R wires.

5. Shorted wire check (SOF CTR L, E1 CTR L lines) 1

-1. Disconnect the following connector.

Left front corner sensor 6P connector

-2. Measure the resistance between test points 1 and 2.

Test condition	Vehicle OFF (LOCK) mode Parking and back-up sensor control unit 16P connector: disconnected Left front corner sensor 6P connector: disconnected
B	B
Test point 1	Left front corner sensor 6P connector (female terminals) No. 3: ①
Test point 2	Left front corner sensor 6P connector (female terminals) No. 1: ①

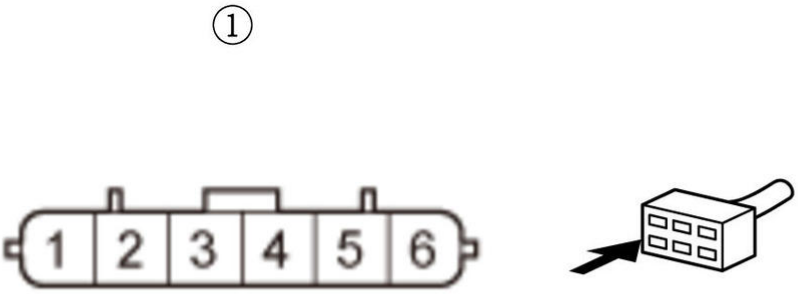

Is there 1.0 MΩ or more?

YES

Go to step 11.

NO

Go to step 6.

6. Shorted wire check (SOF SIDE R, E1 SIDE R lines) 2

-1. Disconnect the following connector.

Right front corner sensor 6P connector

-2. Measure the resistance between test points 1 and 2.

Test condition	Vehicle OFF (LOCK) mode Parking and back-up sensor control unit 16P connector: disconnected Left front corner sensor 6P connector: disconnected Right front corner

	sensor 6P connector: disconnected
B	B
Test point 1	Left front corner sensor 6P connector (female terminals) No. 3: ①
Test point 2	Left front corner sensor 6P connector (female terminals) No. 1: ①

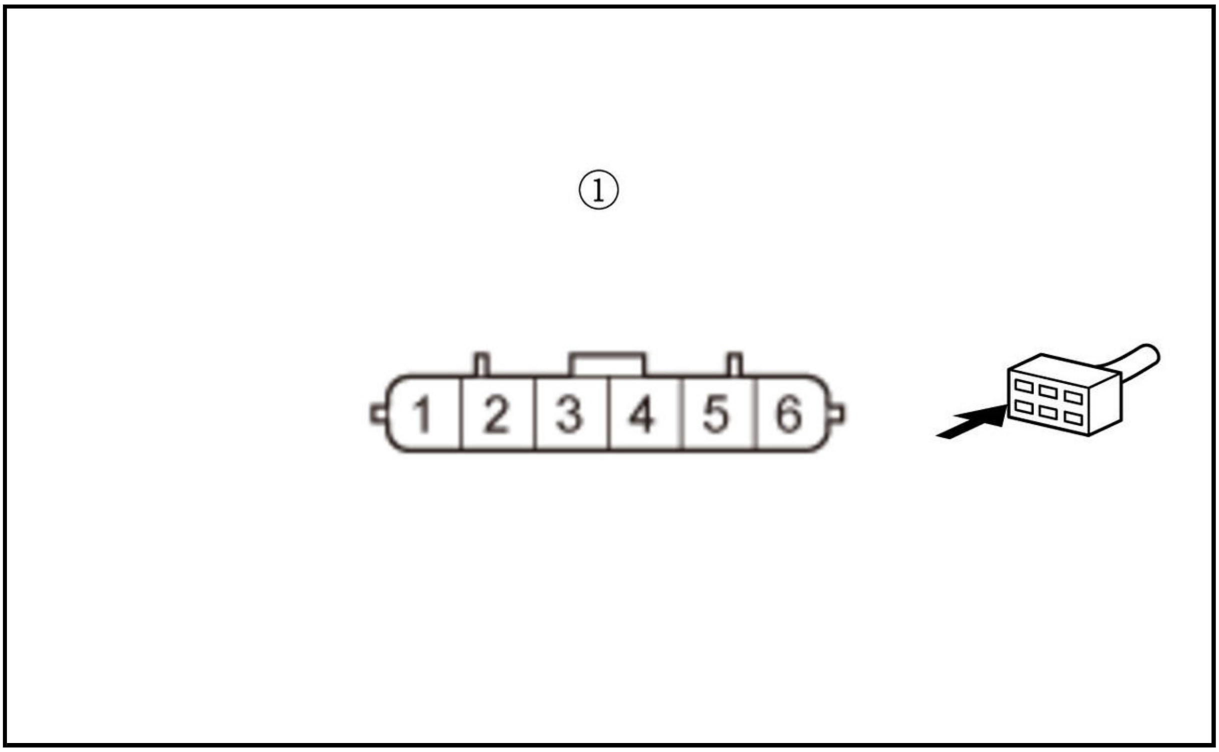

Is there 1.0 MΩ or more?

YES

Replace the right front corner sensor .

NO

Repair a short in the SOF SIDE R and E1 SIDE R wires.

7. Shorted wire check (SOF CTR R, E1 CTR R lines) 1

-1. Reconnect the following connector.

Right front center sensor 6P connector

-2. Disconnect the following connector.

Left front center sensor 6P connector

-3. Measure the resistance between test points 1 and 2.

Test condition	Vehicle OFF (LOCK) mode Parking and back-up sensor control unit 16P connector: disconnected Left front center sensor 6P connector: disconnected
B	B
Test point 1	Left front center sensor 6P connector (female terminals) No. 3: ①
Test point 2	Left front center sensor 6P connector (female terminals) No. 1: ①

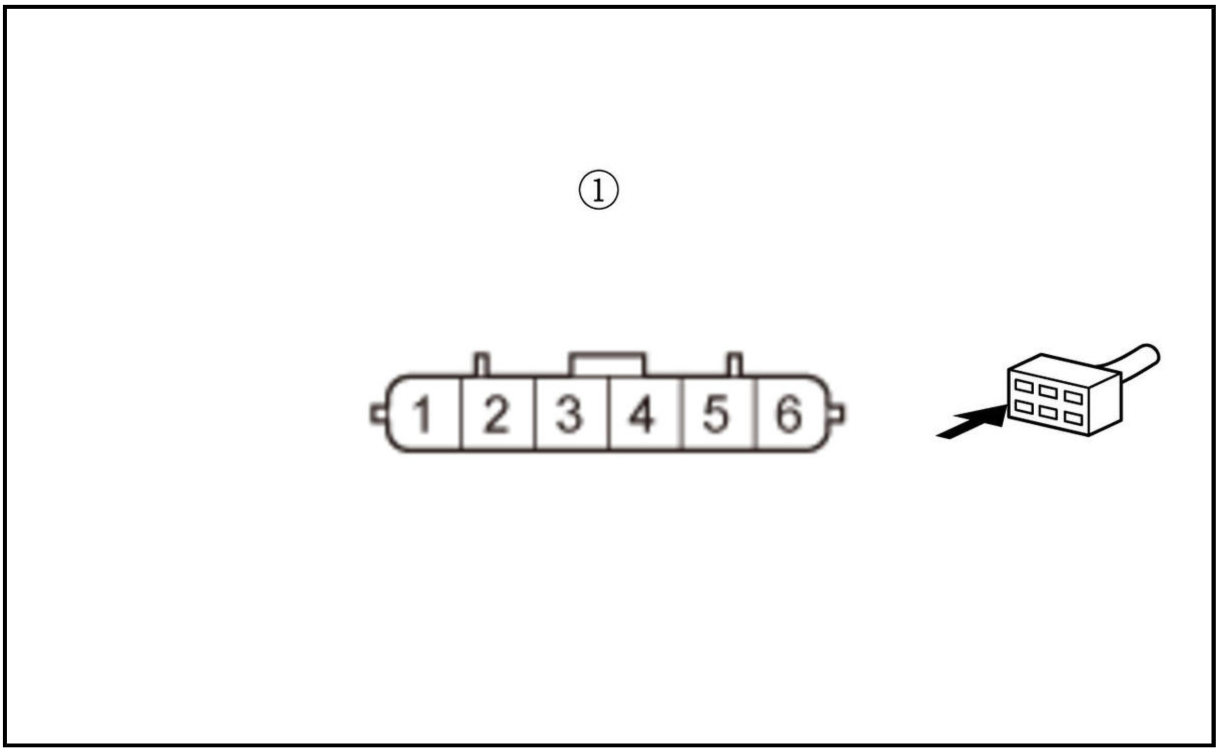

Is there 1.0 MΩ or more?

YES

Go to step 9.

NO

Go to step 8.

8. Shorted wire check (SOF CTR R, E1 CTR R lines) 2

-1. Disconnect the following connector.

Right front center sensor 6P connector

-2. Measure the resistance between test points 1 and 2.

Test condition	Vehicle OFF (LOCK) mode Parking and back-up sensor control unit 16P connector: disconnected Left front center sensor 6P connector: disconnected Right front center sensor 6P connector: disconnected
B	B
Test point 1	Left front center sensor 6P connector (female terminals) No. 3: ①
Test point 2	Left front center sensor 6P connector (female terminals) No. 1: ①

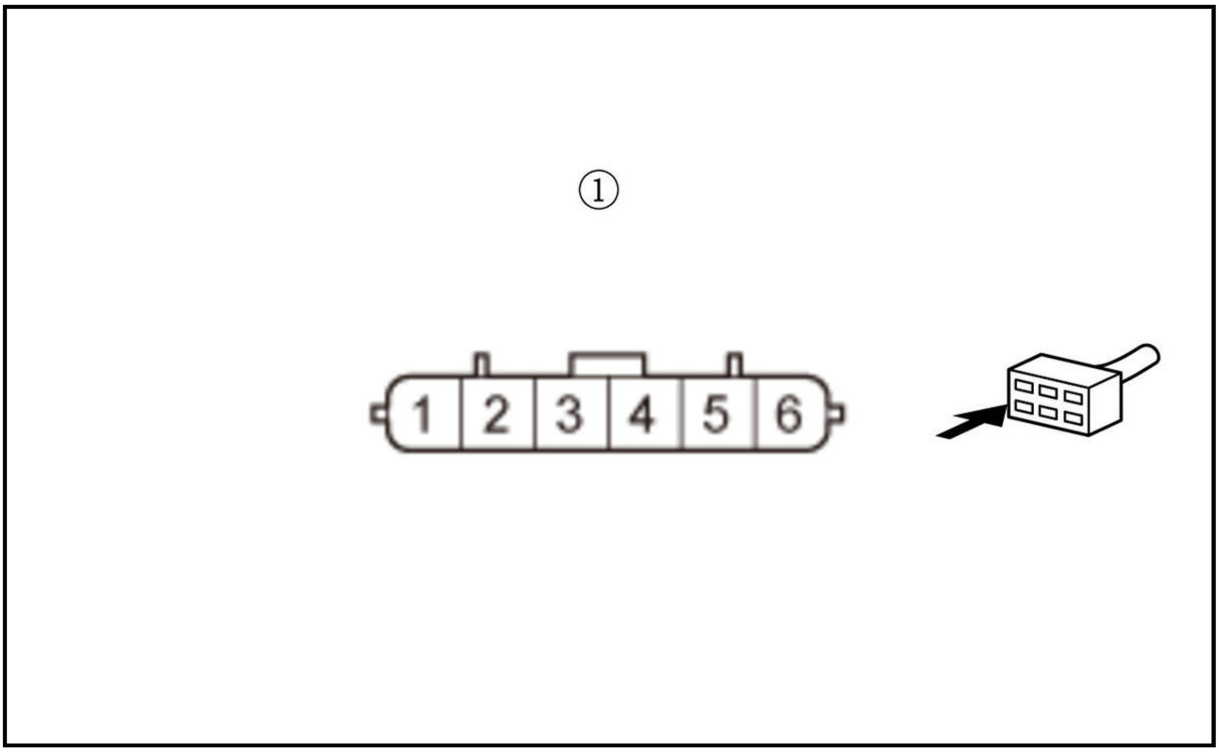

Is there 1.0 MΩ or more?

YES

Replace the right front center sensor .

NO

Repair a short in the SOF CTR R and E1 CTR R wires.

9. Shorted wire check (SOF CTR L, E1 CTR L lines) 1

-1. Reconnect the following connector.

Left front center sensor 6P connector

-2. Disconnect the following connector.

Left front corner sensor 6P connector

-3. Measure the resistance between test points 1 and 2.

Test condition	Vehicle OFF (LOCK) mode Parking and back-up sensor control unit 16P connector: disconnected Left front corner sensor 6P connector: disconnected
B	B
Test point 1	Left front corner sensor 6P connector (female terminals) No. 3: ①
Test point 2	Left front corner sensor 6P connector (female terminals) No. 1: ①

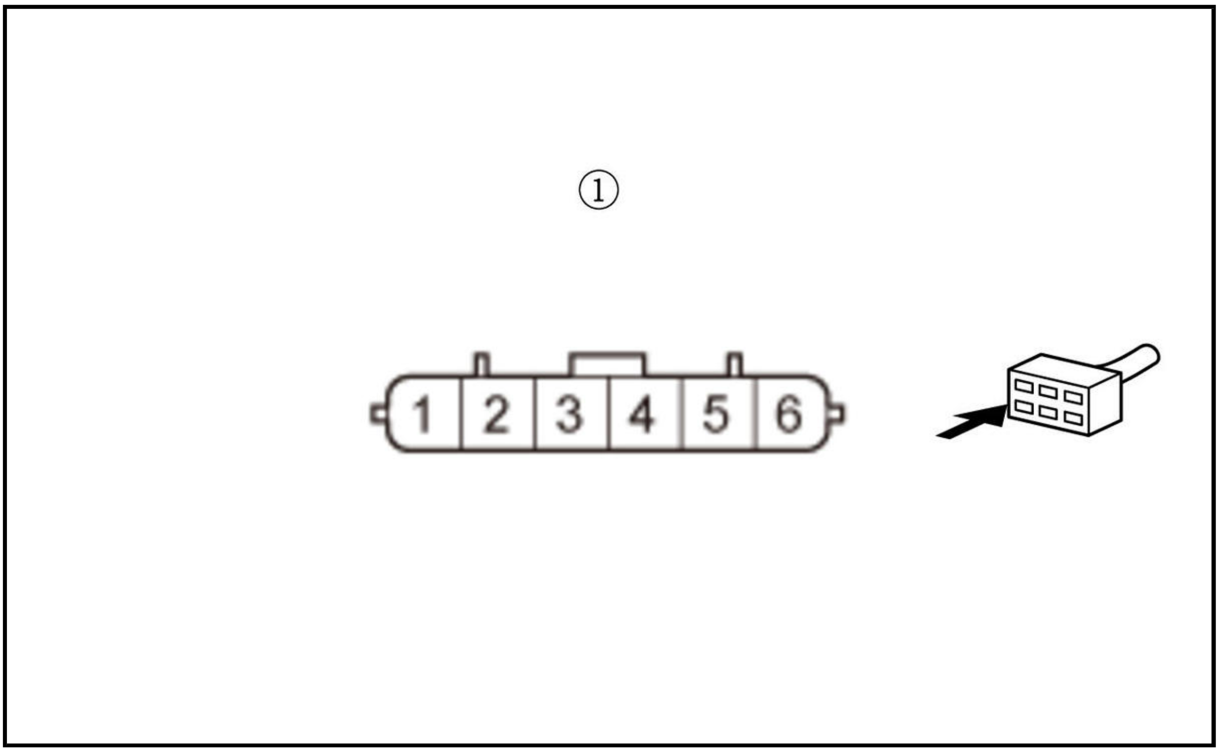

Is there 1.0 MΩ or more?

YES

Go to step 11.

NO

Go to step 10.

10. Shorted wire check (SOF CTR L, E1 CTR L lines) 2

-1. Disconnect the following connector.

Left front center sensor 6P connector

-2. Measure the resistance between test points 1 and 2.

Test condition	Vehicle OFF (LOCK) mode Parking and back-up sensor control unit 16P connector: disconnected Left front corner sensor 6P connector: disconnected Left front center sensor 6P connector: disconnected
B	B
Test point 1	Left front corner sensor 6P connector (female terminals) No. 3: ①
Test point 2	Left front corner sensor 6P connector (female terminals) No. 1: ①

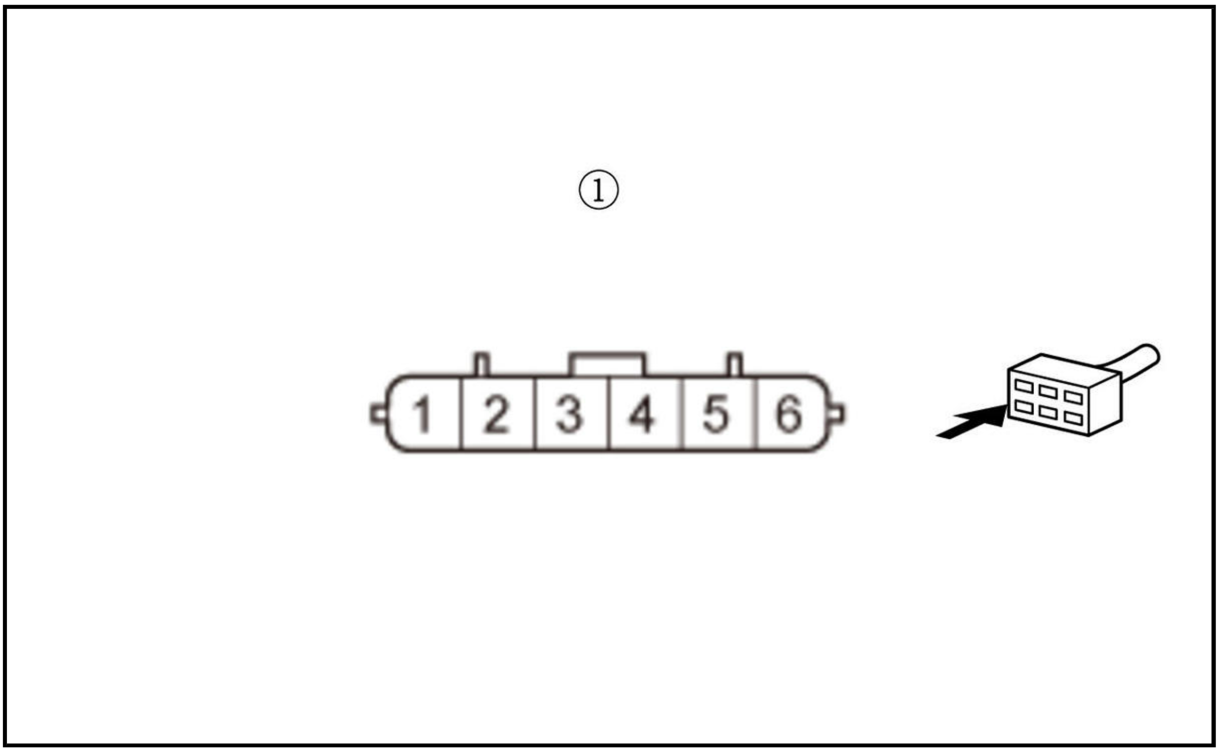

Is there 1.0 MΩ or more?

YES

Replace the left front center sensor .

NO

Repair a short in the SOF CTR L and E1 CTR L wires.

11. Shorted wire check (SOF SIDE L, E1 SIDE L lines) 2

-1. Measure the resistance between test points 1 and 2.

Test condition	Vehicle OFF (LOCK) mode Parking and back-up sensor control unit 16P connector: disconnected Left front corner sensor 6P connector: disconnected
B	B
Test point 1	**Parking and back-up sensor control unit 16P connector No. 6**
Test point 2	**Parking and back-up sensor control unit 16P connector No. 13**

Is there 1.0 MΩ or more?

YES

Replace the left front corner sensor .

NO

Repair a short in the SOF SIDE L and E1 SIDE L wires.

12. Shorted wire check (SOF SIDE L line)

-1. Measure the resistance between test points 1 and 2.

Test condition	Vehicle OFF (LOCK) mode Parking and back-up sensor control unit 16P connector: disconnected
B	B

Test point 1	Parking and back-up sensor control unit 16P connector No. 6
Test point 2	Body ground

Is there 1.0 MΩ or more?

YES

Replace the parking and back-up sensor control unit .

NO

Repair a short to ground in the SOF SIDE L wire.

DTC B2649 (2020 2021)

DTC B2649 : Rear sensor signal short to ground

NOTE:

- If you are troubleshooting multiple DTCs, be sure to follow the instructions in B-CAN System Diagnosis Test Mode A .
- The connection order of the sensor is 1st -> 2nd -> 3rd -> 4th from the side near the control unit.

DTC Description	DTC
B2649 Rear sensor signal short to ground	B

DTC (Parking and Back-Up Sensor Control Unit)

1. Problem verification

   -1. Clear the DTCs with the HDS.

   -2. Turn the vehicle to the OFF (LOCK) mode and then the ON mode.

   -3. Wait for at least 6 seconds.

   -4. Check for DTCs with the HDS.

DTC Description	DTC
B2649 Rear sensor signal short to ground	B

   Is DTC B2649 indicated?

   YES

   Go to step 2.

   NO

   Intermittent failure, the system is OK at this time. Check for loose or poor connections.

2. Shorted wire check (SOR SIDE L, E2 SIDE L lines) 1

   -1. Disconnect the following connector.

Parking and back-up sensor control unit 16P connector

   -2. Measure the resistance between test points 1 and 2.

Test condition	Vehicle OFF (LOCK) mode Parking and back-up sensor control unit 16P connector: disconnected
B	B
Test point 1	**Parking and back-up sensor control unit 16P connector No. 14**
Test point 2	**Parking and back-up sensor control unit 16P connector No. 12**

Is there 1.0 MΩ or more?

YES

Go to step 10.

NO

Go to step 3.

3. Shorted wire check (SOR SIDE R, E2 SIDE R lines) 1

-1. Disconnect the following connector.

Right rear center sensor 6P connector

-2. Measure the resistance between test points 1 and 2.

Test condition	Vehicle OFF (LOCK) mode Parking and back-up sensor control unit 16P connector: disconnected Right rear center sensor 6P connector: disconnected
B	B
Test point 1	Right rear center sensor 6P connector (female terminals) No. 3: ①
Test point 2	Right rear center sensor 6P connector (female terminals) No. 1: ①

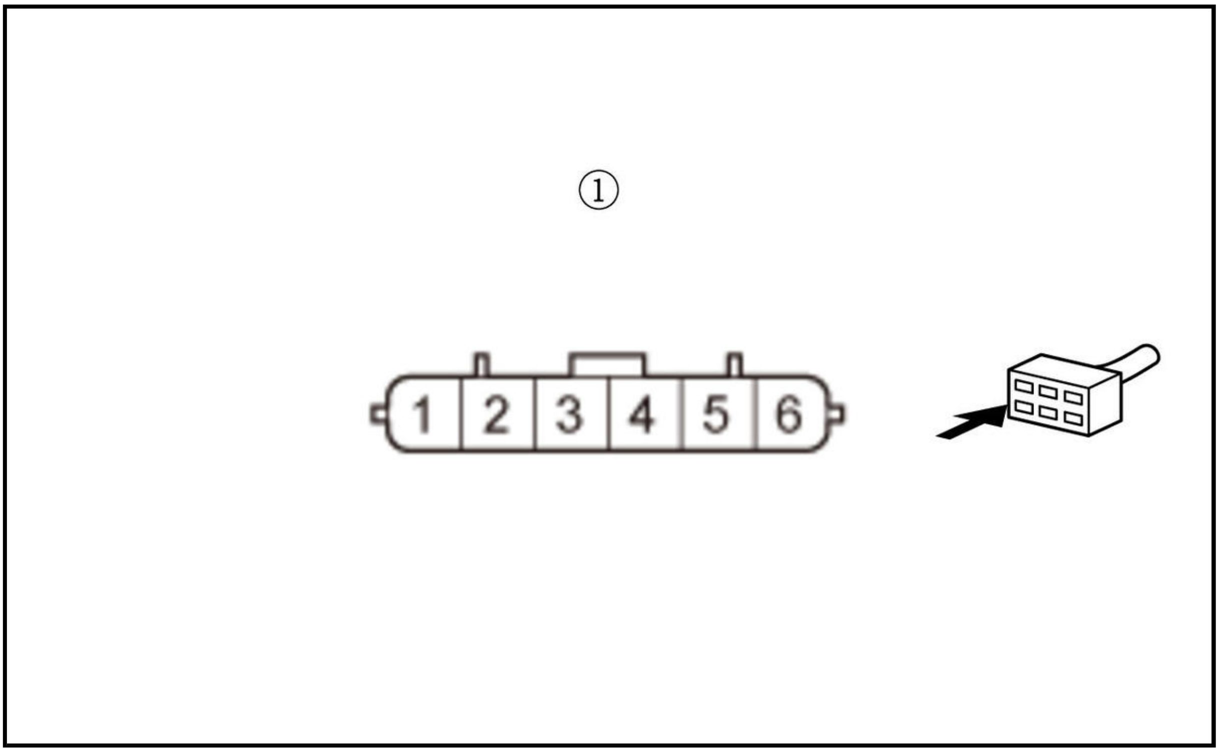

Is there 1.0 MΩ or more?

YES

Go to step 5.

NO

Go to step 4.

4. Shorted wire check (SOR SIDE R, E2 SIDE R lines) 2

-1. Disconnect the following connector.

Right rear corner sensor 6P connector

-2. Measure the resistance between test points 1 and 2.

Test condition	Vehicle OFF (LOCK) mode Parking and back-up sensor control unit 16P connector: disconnected Right rear center sensor 6P connector: disconnected Right rear corner sensor 6P connector: disconnected
B	B
Test point 1	Right rear center sensor 6P connector (female terminals) No. 3: ①
Test point 2	Right rear center sensor 6P connector (female terminals) No. 1: ①

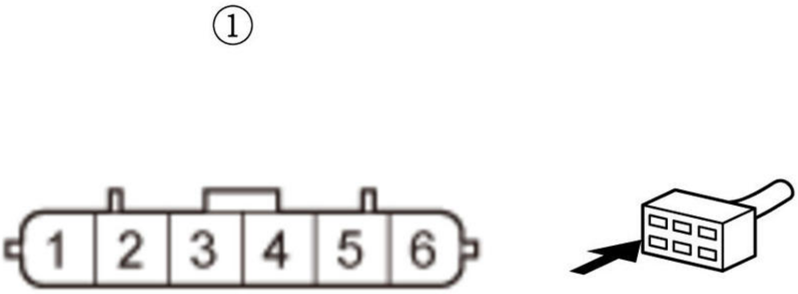

Is there 1.0 MΩ or more?

YES

Replace the right rear corner sensor .

NO

Repair a short in the SOR SIDE R and E2 SIDE R wires.

5. Shorted wire check (SOR CTR R, E2 CTR R lines) 1

-1. Reconnect the following connector.

Right rear center sensor 6P connector

-2. Disconnect the following connector.

Left rear center sensor 6P connector

-3. Measure the resistance between test points 1 and 2.

Test condition	Vehicle OFF (LOCK) mode Parking and back-up sensor control unit 16P connector: disconnected Left rear center sensor 6P connector: disconnected
B	B
Test point 1	Left rear center sensor 6P connector (female terminals) No. 3: ①
Test point 2	Left rear center sensor 6P connector (female terminals) No. 1: ①

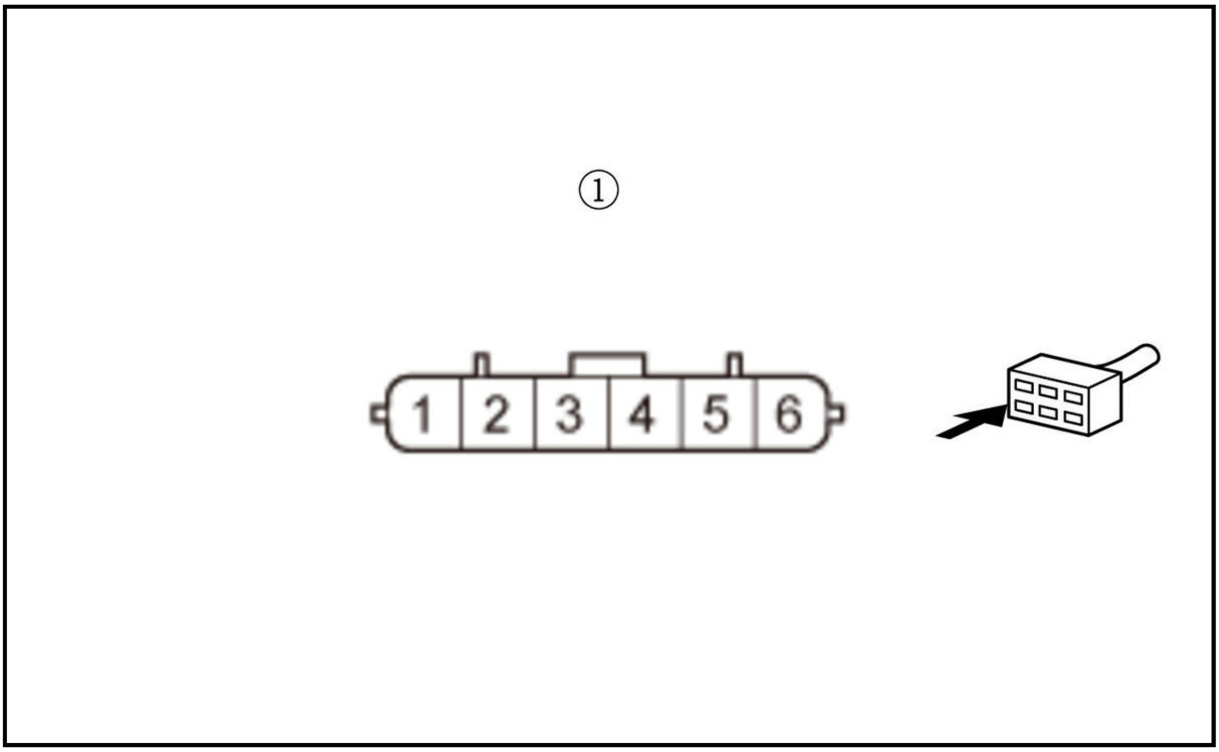

Is there 1.0 MΩ or more?

YES

Go to step 7.

NO

Go to step 6.

6. Shorted wire check (SOR CTR R, E2 CTR R lines) 2

-1. Disconnect the following connector.

Right rear center sensor 6P connector

-2. Measure the resistance between test points 1 and 2.

Test condition	Vehicle OFF (LOCK) mode Parking and back-up sensor control unit 16P connector: disconnected Left rear center sensor 6P connector: disconnected Right rear center

	sensor 6P connector: disconnected
B	B
Test point 1	Left rear center sensor 6P connector (female terminals) No. 3: ①
Test point 2	Left rear center sensor 6P connector (female terminals) No. 1: ①

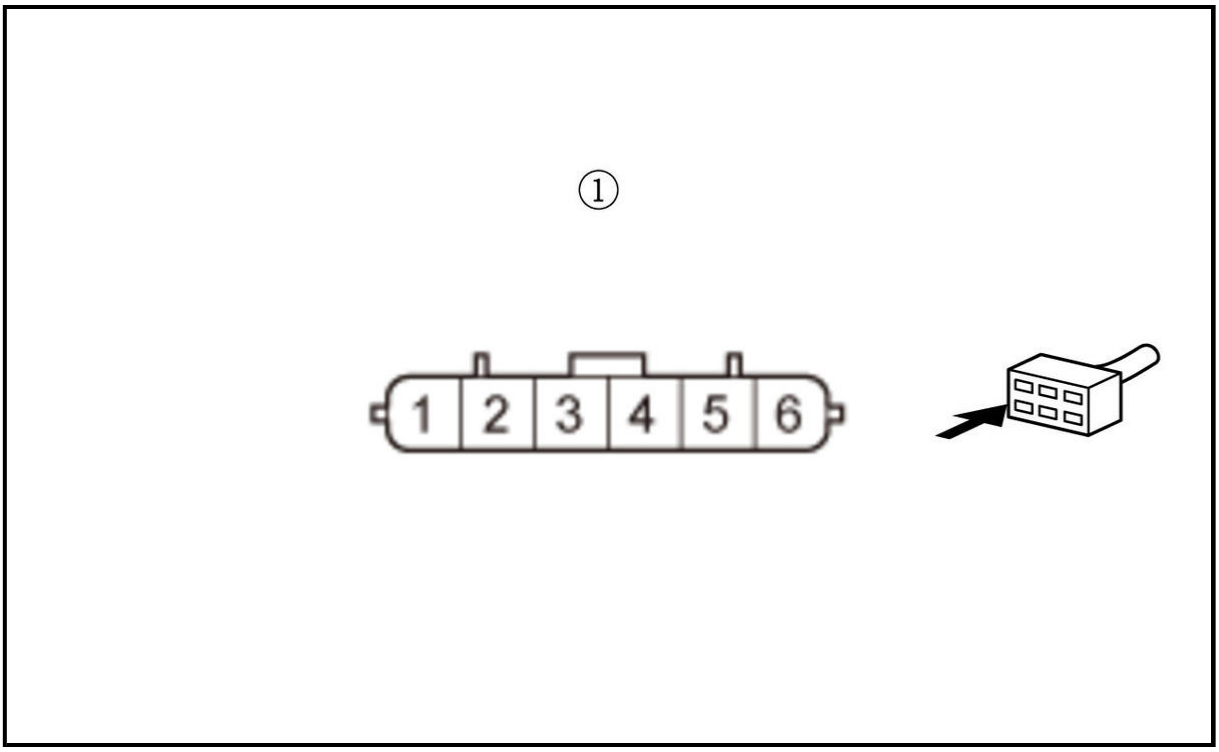

Is there 1.0 MΩ or more?

YES

Replace the right rear center sensor .

NO

Repair a short in the SOR CTR R and E2 CTR R wires.

7. Shorted wire check (SOR CTR L, E2 CTR L lines) 1

-1. Reconnect the following connector.

Left rear center sensor 6P connector

-2. Disconnect the following connector.

Left rear corner sensor 6P connector

-3. Measure the resistance between test points 1 and 2.

Test condition	Vehicle OFF (LOCK) mode Parking and back-up sensor control unit 16P connector: disconnected Left rear corner sensor 6P connector: disconnected
B	B
Test point 1	Left rear corner sensor 6P connector (female terminals) No. 3: ①
Test point 2	Left rear corner sensor 6P connector (female terminals) No. 1: ①

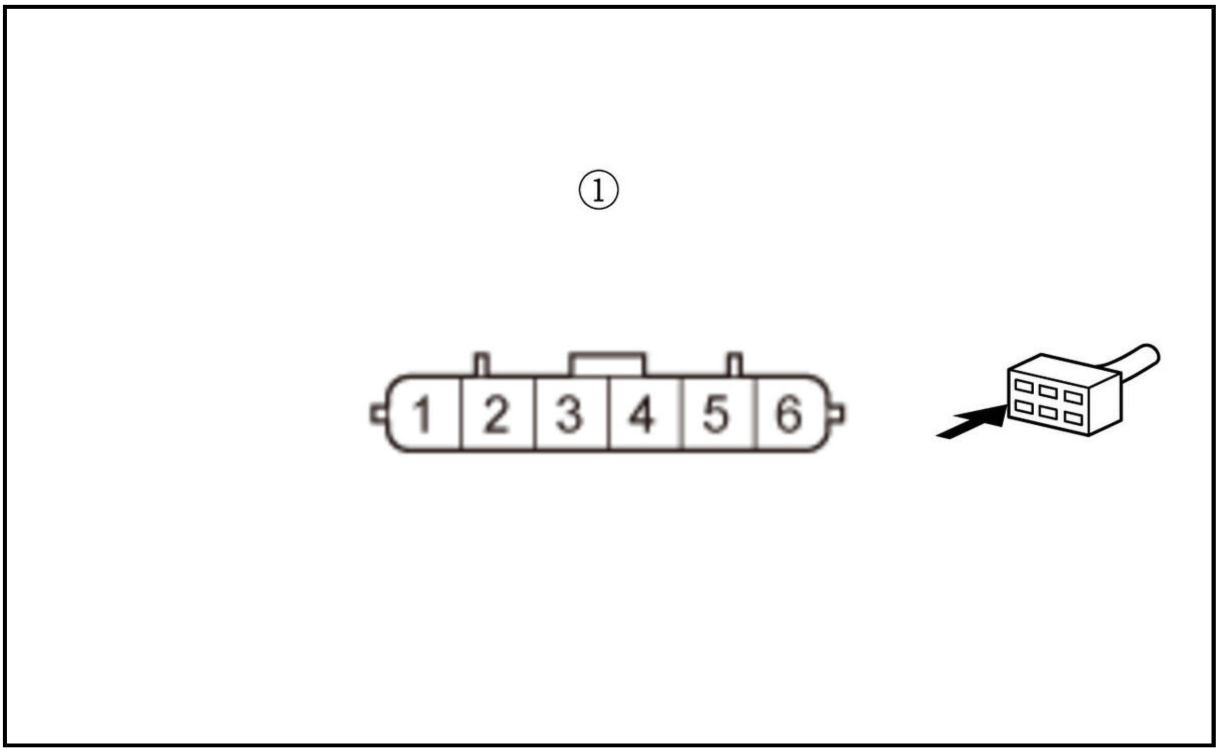

Is there 1.0 MΩ or more?

YES

Go to step 9.

NO

Go to step 8.

8. Shorted wire check (SOR CTR L, E2 CTR L lines) 2

-1. Disconnect the following connector.

Left rear center sensor 6P connector

-2. Measure the resistance between test points 1 and 2.

Test condition	Vehicle OFF (LOCK) mode Parking and back-up sensor control unit 16P connector: disconnected Left rear corner sensor 6P connector: disconnected Left rear center sensor 6P connector: disconnected
B	B
Test point 1	Left rear corner sensor 6P connector (female terminals) No. 3: ①
Test point 2	Left rear corner sensor 6P connector (female terminals) No. 1: ①

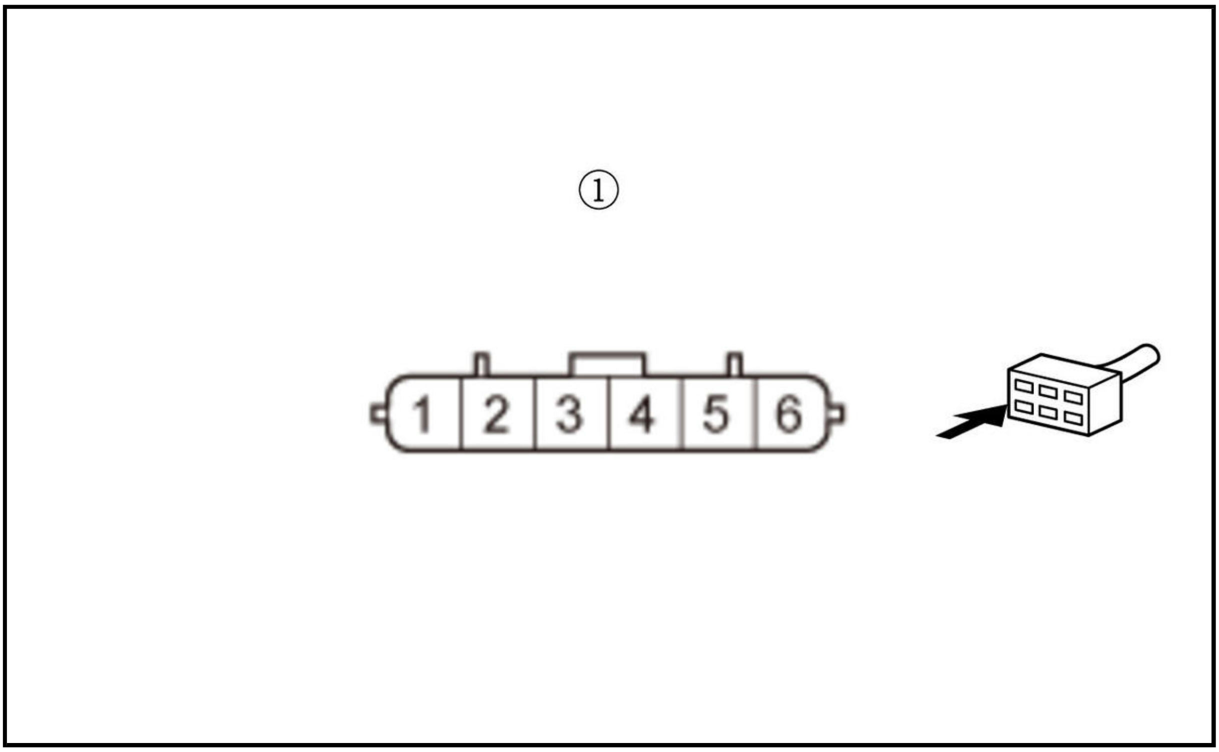

Is there 1.0 MΩ or more?

YES

Replace the left rear center sensor .

NO

Repair a short in the SOR CTR L and E2 CTR L wires.

9. Shorted wire check (SOR SIDE L, E2 SIDE L lines) 2

-1. Measure the resistance between test points 1 and 2.

Test condition	Vehicle OFF (LOCK) mode Parking and back-up sensor control unit 16P connector: disconnected Left rear corner sensor 6P connector: disconnected
B	B
Test point 1	**Parking and back-up sensor control unit 16P connector No. 14**
Test point 2	**Parking and back-up sensor control unit 16P connector No. 12**

Is there 1.0 MΩ or more?

YES

Replace the left rear corner sensor .

NO

Repair a short in the SOR SIDE L and E2 SIDE L wires.

10. Shorted wire check (SOR SIDE L line)

-1. Measure the resistance between test points 1 and 2.

Test condition	Vehicle OFF (LOCK) mode Parking and back-up sensor control unit 16P connector: disconnected
B	B

Test point 1	Parking and back-up sensor control unit 16P connector No. 14
Test point 2	Body ground

Is there 1.0 MΩ or more?

YES

Replace the parking and back-up sensor control unit .

NO

Repair a short to ground in the SOR SIDE L wire.

DTC B264A (2020 2021)

DTC B264A : Indicator circuit short to power

NOTE: If you are troubleshooting multiple DTCs, be sure to follow the instructions in B-CAN System Diagnosis Test Mode A .

DTC Description	DTC
B264A Indicator circuit short to power	B

DTC (Parking and Back-Up Sensor Control Unit)

1. Problem verification

   -1. Clear the DTCs with the HDS.

   -2. Turn the vehicle to the OFF (LOCK) mode and then the ON mode.

   -3. Wait for at least 6 seconds.

   -4. Check for DTCs with the HDS.

DTC Description	DTC
B264A Indicator circuit short to power	B

   Is DTC B264A indicated?

   YES

   Go to step 2.

   NO

   Intermittent failure, the system is OK at this time. Check for loose or poor connections.

2. Parking and back-up sensor switch check

   -1. Do the parking and back-up sensor switch test .

   Is the parking and back-up sensor switch OK?

   YES

   Go to step 3.

   NO

Replace the parking and back-up sensor switch .

3. Shorted wire check (C/SNSR IND line)

   -1. Turn the vehicle to the OFF (LOCK) mode.

   -2. Disconnect the following connector.

Parking and back-up sensor control unit 16P connector

   -3. Turn the vehicle to the ON mode.

   -4. Measure the voltage between test points 1 and 2.

Test condition	Vehicle ON mode Parking and back-up sensor control unit 16P connector: disconnected
B	B
Test point 1	Parking and back-up sensor control unit 16P connector No. 5
Test point 2	Body ground

Is there battery voltage?

YES

Repair a short to power in the C/SNSR IND wire.

NO

Replace the parking and back-up sensor control unit .

DTC B264B (2020 2021)

DTC B264B : Indicator circuit short to ground

NOTE: If you are troubleshooting multiple DTCs, be sure to follow the instructions in B-CAN System Diagnosis Test Mode A .

DTC Description	DTC
B264B Indicator circuit short to ground	B

DTC (Parking and Back-Up Sensor Control Unit)

1. Problem verification

   -1. Clear the DTCs with the HDS.

   -2. Turn the vehicle to the OFF (LOCK) mode and then the ON mode.

   -3. Wait for at least 6 seconds.

   -4. Check for DTCs with the HDS.

DTC Description	DTC
B264B Indicator circuit short to ground	B

Is DTC B264B indicated?

YES

Go to step 2.

NO

Intermittent failure, the system is OK at this time. Check for loose or poor connections.

2. Parking and back-up sensor switch check

-1. **Do the parking and back-up sensor switch test** .

Is the parking and back-up sensor switch OK?

YES

Go to step 3.

NO

Replace the parking and back-up sensor switch .

3. Shorted wire check (C/SNSR IND line)

-1. Turn the vehicle to the OFF (LOCK) mode.

-2. Disconnect the following connector.

Parking and back-up sensor control unit 16P connector

-3. Measure the resistance between test points 1 and 2.

Test condition	Vehicle OFF (LOCK) mode Parking and back-up sensor control unit 16P connector: disconnected
B	B
Test point 1	**Parking and back-up sensor control unit 16P connector No. 5**
Test point 2	Body ground

Is there 1.0 MΩ or more?

YES

Replace the parking and back-up sensor control unit .

NO

Repair a short to ground in the C/SNSR IND wire.

DTC B264D (2020 2021)

DTC B264D : Front sensor combination error

NOTE: If you are troubleshooting multiple DTCs, be sure to follow the instructions in **B-CAN System Diagnosis Test Mode A** .

DTC Description	DTC
B264D Front sensor combination error	B

DTC (Parking and Back-Up Sensor Control Unit)

1. Problem verification

-1. Clear the DTCs with the HDS.

-2. Turn the vehicle to the OFF (LOCK) mode and then the ON mode.

-3. Wait for at least 6 seconds.

-4. Check for DTCs with the HDS.

DTC Description	DTC
B264D Front sensor combination error	B

Is DTC B264D indicated?

YES

Replace the parking and back-up sensor control unit .

NO

Intermittent failure, the system is OK at this time. Check for loose or poor connections.

DTC U0155, U1281(PARKING/BACK-UP SENSOR CONTROL UNIT) (2020 2021)

DTC U0155 : Lost communication with Gauge Control Module

DTC U1281 : Lost communication with MICU

NOTE:

- If you are troubleshooting multiple DTCs, be sure to follow the instructions in **B-CAN System Diagnosis Test Mode A** .
- Refer to the DTC code shown on the display, and then inspect the connectors and terminals based on the instructions in the table below.
- The DTC may be stored due to the grounding failure or the power source failure at the transmitting control unit (the grounding inspection and the power source inspection on each control unit are required prior to this checking process).

DTC Description	DTC
U0155 Lost communication with Gauge Control Module	B
U1281 Lost communication with MICU	B

DTC (Parking and Back-Up Sensor Control Unit)

1. Problem verification

-1. Clear the DTC with the HDS.

-2. Turn the vehicle to the OFF (LOCK) mode and then the ON mode.

-3. Wait for at least 6 seconds.

-4. Check for DTCs with the HDS.

DTC Description	DTC
U0155 Lost communication with Gauge Control Module	B
U1281 Lost communication with MICU	B

Are any DTCs indicated?

YES

Go to step 2.

NO

Intermittent failure, the system is OK at this time. Check for poor connections or loose terminals.

2. Open wire check (B-CAN_H line, B-CAN_L line)

-1. Turn the vehicle to the OFF (LOCK) mode.

-2. Disconnect the receiving control unit connector.

Parking and back-up sensor control unit 16P connector

-3. Disconnect the transmitting control unit connector(s).

Refer to the DTC shown on the display, then disconnect the connector(s) based on the instructions (see table).

DTC	Connector
U0155	Gauge control module connector A (32P)
U1281	Body control module connector B (36P)

-4. Measure the resistance between the receiving control unit and the transmitting control unit on the B-CAN_H circuit and the B-CAN_L circuit.

Test condition	Vehicle OFF (LOCK) mode Parking and back-up sensor control unit 16P connector: disconnected Transmitting control unit connector(s) for indicated DTCs: disconnected

DTC	Circuit name	Receiving control unit		Transmitting control unit	
		Connector	Terminal	Connector	Terminal
U0155	B-CAN_H	**Parking and back-up sensor control unit 16P connector**	No. 9	**Gauge control module connector A (32P)**	No. 30
	B-CAN_L		No. 2		No. 31
U1281	B-CAN_H	**Parking and back-up sensor control unit 16P connector**	No. 9	**Body control module connector B (36P)**	No. 20
	B-CAN_L		No. 2		No. 21

Is there 1.0 Ω or less?

YES

The B-CAN_H wire and the B-CAN_L wire are OK. Refer to the DTC shown on the display, then replace the control unit based on the instructions (see table).

DTC	Operation for transmitting control unit
U0155	**Gauge control module**
U1281	**Body control module**

NO

Repair an open in the B-CAN_H wire and/or the B-CAN_L wire.

DTC U1280 (PARKING/BACK-UP SENSOR CONTROL UNIT) (2020 2021)

DTC U1280 : B-CAN communication bus line error (BUS-OFF)

NOTE: If you are troubleshooting multiple DTCs, be sure to follow the instructions in **B-CAN System Diagnosis Test Mode A** .

DTC Description	DTC
U1280 B-CAN communication bus line error (BUS-OFF)	B

DTC (Parking and Back-Up Sensor Control Unit)

1. Problem verification

   -1. Clear the DTCs with the HDS.

   -2. Turn the vehicle to the OFF (LOCK) mode and then the ON mode.

   -3. Wait for at least 6 seconds.

   -4. Check for DTCs with the HDS.

DTC Description	DTC
U1280 B-CAN communication bus line error (BUS-OFF)	B

   Is DTC U1280 indicated?

   YES

   Go to body control module DTC U1280 troubleshooting .

   NO

   Intermittent failure, the system is OK at this time. Check for loose or poor connections.

DTC TROUBLESHOOTING

DTC B1802

DTC B1802 : Power seat control unit internal (EEPROM) error

NOTE: If you are troubleshooting multiple DTCs, be sure to follow the instructions in B-CAN System Diagnosis Test Mode A .

DTC Description	DTC
B1802 Power seat control unit internal (EEPROM) error	B

DTC (Power Seat Control Unit)

1. Problem verification

   -1. Clear the DTCs with the HDS.

   -2. Turn the vehicle to the OFF (LOCK) mode and then the ON mode.

   -3. Wait for at least 6 seconds.

   -4. Check for DTCs with the HDS.

DTC Description	DTC
B1802 Power seat control unit internal (EEPROM) error	B

   Is DTC B1802 indicated?

   YES

   Replace the power seat control unit .

   NO

   Intermittent failure, the system is OK at this time.

DTC B1825

DTC B1825 : Slide pulse error (no change in pulse for 1 second)

NOTE:

- If you are troubleshooting multiple DTCs, be sure to follow the instructions in B-CAN System Diagnosis Test Mode A .
- Before troubleshooting, make sure the fuses and relays associated with the system is OK.

DTC Description	DTC
B1825 Slide pulse error (no change in pulse for 1 second)	B

DTC (Power Seat Control Unit)

1. Problem verification

-1. Clear the DTCs with the HDS.

-2. Press the power switch at least twenty times, then wait for at least 20 seconds.

-3. Operate the power seat adjustment switch for several seconds in each direction.

NOTE: DTC B1825 is stored when the slide switch is operated more than 1 second after the seat moves to the most forward or backward position, even when the system is OK.

-4. Check for DTCs with the HDS.

DTC Description	DTC
B1825 Slide pulse error (no change in pulse for 1 second)	B

Is DTC B1825 indicated?

YES

Go to step 2.

NO

Intermittent failure, the system is OK at this time. Check for loose or poor connections.

2. DTC check

-1. Check for DTCs with the HDS.

DTC Description	DTC
B1825 Slide pulse error (no change in pulse for 1 second)	B
B1826 Front height pulse error (no change in pulse for 1 second)	B
B1827 Rear height pulse error (no change in pulse for 1 second)	B
B1828 Driver seat recline motor pulse error	B
B1836 Power Seat Position Sensor circuit short	B

Any of DTC are indicated at the same time with DTC B1825?

DTC B1825 is indicated only

Go to step 3.

DTC B1836 is also indicated

Go to the DTC B1836 troubleshooting.

DTC B1826, B1827, and/or B1828 are also indicated

Go to step 7.

3. Determine possible failure area (motor operation, motor sensor)

-1. Turn the vehicle to the OFF (LOCK) mode and then the ON mode.

-2. Operate the slide switch for 2 seconds, and check the slide motor operation.

Does the slide motor run smoothly?

YES

Go to step 4.

NO

Go to step 10.

4. Open wire check (SLSE, SEG lines)

-1. Turn the vehicle to the OFF (LOCK) mode.

-2. Disconnect the following connectors.

Slide motor/position sensor 5P connector
Power seat control unit connector A (20P)

-3. Measure the resistance between test points 1 and 2.

Test condition	Vehicle OFF (LOCK) mode Slide motor/position sensor 5P connector: disconnected Power seat control unit connector A (20P): disconnected
Test point 1	Slide motor/position sensor 5P connector (female terminals) No. 2: ①
Test point 2	**Power seat control unit connector A (20P) No. 8**

Test point 1	Slide motor/position sensor 5P connector (female terminals) No. 3: ①
Test point 2	**Power seat control unit connector A (20P) No. 19**

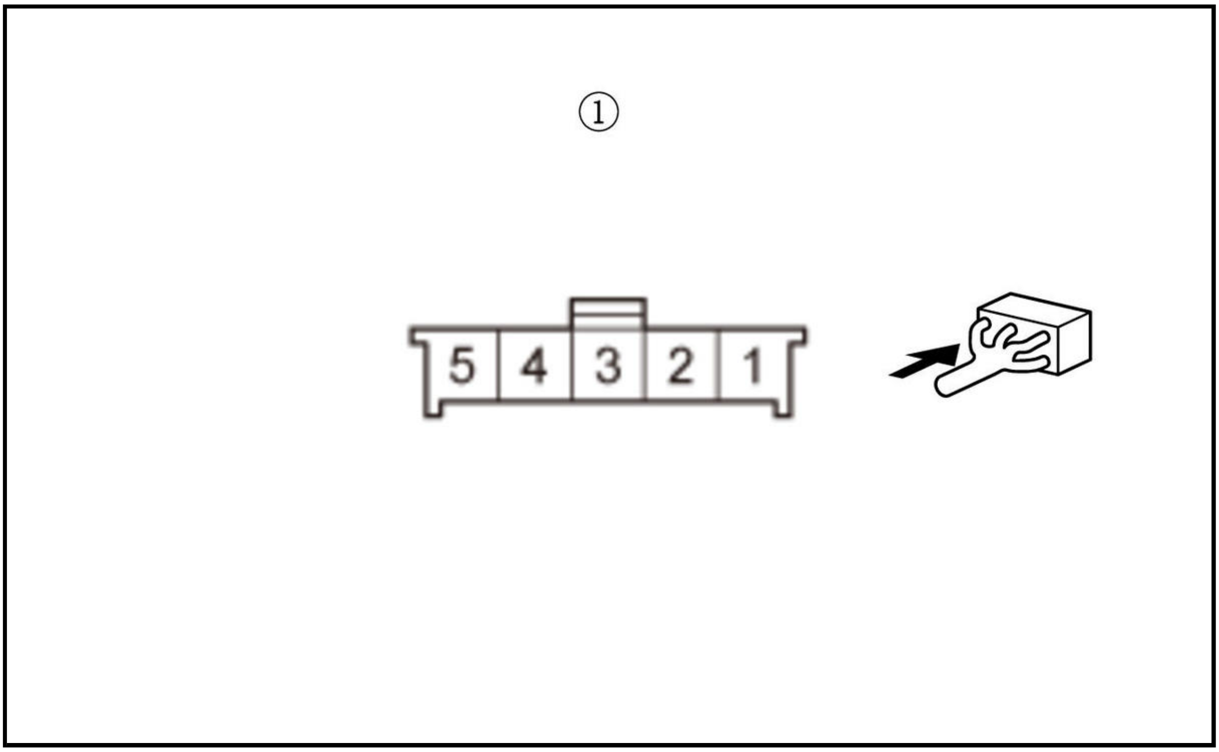

Is there 1.0 Ω or less?

YES

The SLSE, SEG wires are not open. Go to step 5.

NO

Repair an open or high resistance in the wire.

5. Shorted wire check (SLSE line)

-1. Measure the resistance between test points 1 and 2.

Test condition	Vehicle OFF (LOCK) mode Slide motor/position sensor 5P connector: disconnected Power seat control unit connector A (20P): disconnected
Test point 1	**Power seat control unit connector A (20P) No. 8**
Test point 2	Body ground

Is there 1.0 MΩ or more?

YES

The SLSE wire is not shorted. Go to step 6.

NO

Repair a short to ground in the wire.

6. Determine possible failure area (Power seat control unit, slide position sensor, SLSE line)

-1. Reconnect the following connector.

Power seat control unit connector A (20P)

-2. Turn the vehicle to the ON mode.

-3. Measure the voltage between test points 1 and 2.

Test condition	Vehicle ON mode Slide motor/position sensor 5P connector: disconnected
Test point 1	**Power seat control unit connector A (20P) No. 8**
Test point 2	**Power seat control unit connector A (20P) No. 19**

Is there voltage?

About 5 V

Faulty slide position sensor; **replace the seat frame assembly** .

No voltage

Replace the power seat control unit .

Battery voltage

Repair a short to power in the wire.

7. Open wire check (SEG line)

-1. Turn the vehicle to the OFF (LOCK) mode.

-2. Disconnect the following connectors.

Slide motor/position sensor 5P connector Front up-down motor/position sensor 6P connector Rear up-down motor/position sensor 6P connector

Recline motor/position sensor 6P connector
Power seat control unit connector A (20P)

-3. Measure the resistance between test points 1 and 2.

Test condition	Vehicle OFF (LOCK) mode Slide motor/position sensor 5P connector: disconnected Front up-down motor/position sensor 6P connector: disconnected Rear up-down motor/position sensor 6P connector: disconnected Recline motor/position sensor 6P connector: disconnected Power seat control unit connector A (20P): disconnected
Test point 1	Slide motor/position sensor 5P connector (female terminals) No. 3: ①
Test point 2	**Power seat control unit connector A (20P) No. 19**

Test point 1	Front up-down motor/position sensor 6P connector (female terminals) No. 2: ②
Test point 2	**Power seat control unit connector A (20P) No. 19**

Test point 1	Rear up-down motor/position sensor 6P connector (female terminals) No. 2: ③
Test point 2	**Power seat control unit connector A (20P) No. 19**

Test point 1	Recline motor/position sensor 6P connector (female terminals) No. 2: ④
Test point 2	**Power seat control unit connector A (20P) No. 19**

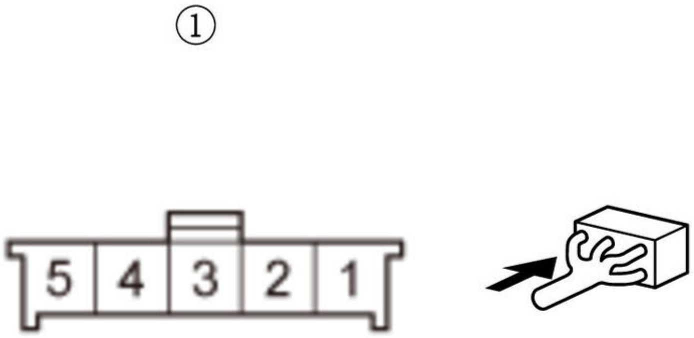

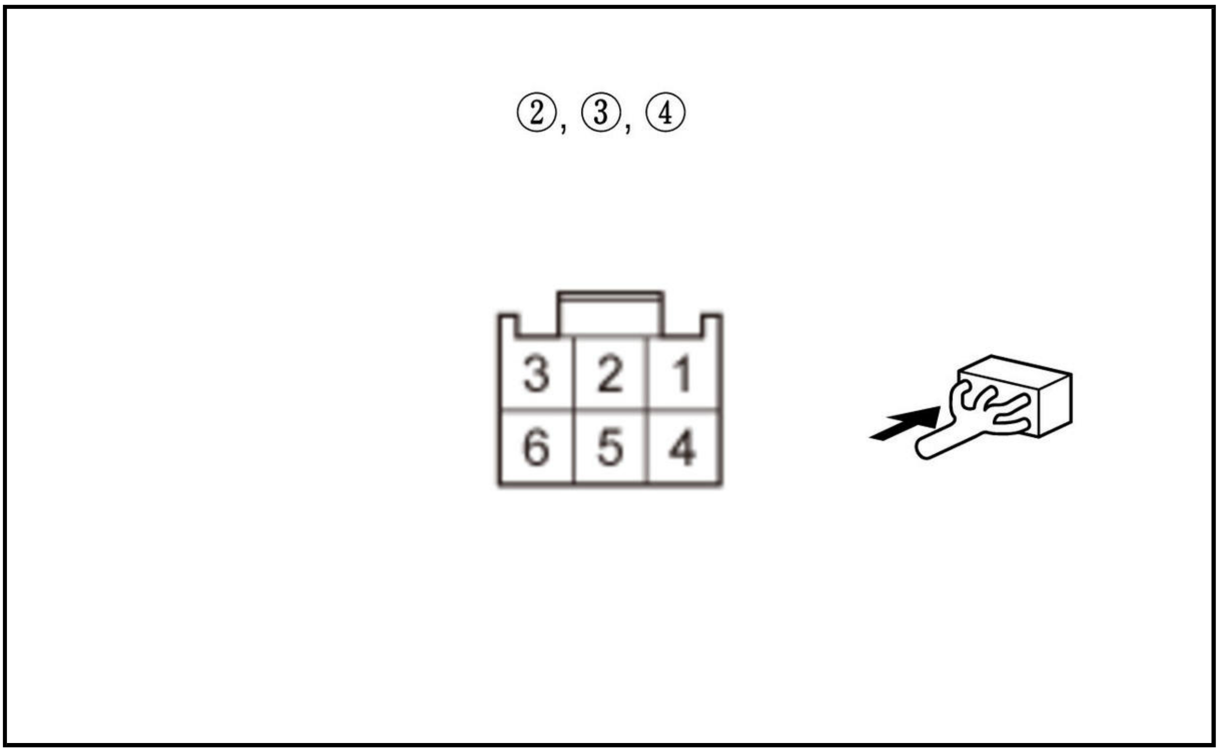

Is there 1.0 Ω or less?

YES

The SEG wire is OK. Go to step 8.

NO

Repair an open or high resistance in the wire.

8. Shorted wire check (VCC line)

-1. Measure the resistance between test points 1 and 2.

Test condition	Vehicle OFF (LOCK) mode Slide motor/position sensor 5P connector: disconnected Front up-down motor/position sensor 6P connector: disconnected Rear up-down motor/position sensor 6P connector: disconnected Recline motor/position sensor 6P connector: disconnected Power seat control unit connector A (20P): disconnected
Test point 1	**Power seat control unit connector A (20P) No. 6**
Test point 2	Body ground

Is there 1.0 MΩ or more?

YES

The VCC wire is not shorted. Go to step 9.

NO

Repair a short to ground in the wire.

9. Determine possible failure area (Power seat control unit, VCC line)

-1. Reconnect the following connector.

Power seat control unit connector A (20P)

-2. Turn the vehicle to the ON mode.

-3. Measure the voltage between test points 1 and 2.

Test condition	Vehicle ON mode Slide motor/position sensor 5P connector: disconnected Front up-down motor/position sensor 6P connector: disconnected Rear up-down motor/position sensor 6P connector: disconnected Recline motor/position sensor 6P connector: disconnected
Test point 1	**Power seat control unit connector A (20P) No. 6**
Test point 2	**Power seat control unit connector A (20P) No. 19**

Is there battery voltage when the slide switch is operated?

YES

Repair an open or high resistance in the wire.

NO

Replace the power seat control unit .

10. Open wire check (+B/P-SEAT1 line)

-1. Measure the voltage between test points 1 and 2.

Test condition	Vehicle OFF (LOCK) mode
Test point 1	**Power seat control unit connector B (12P) No. 6**
Test point 2	Body ground

Is there battery voltage?

YES

The +B/P-SEAT1 wire is not open. Go to step 11.

NO

Repair an open or high resistance in the wire.

11. Open wire check (GND lines)

-1. Measure the resistance between test points 1 and 2.

Test condition	Vehicle OFF (LOCK) mode
Test point 1	**Power seat control unit connector B (12P) No. 2**
Test point 2	Body ground

Test point 1	**Power seat control unit connector B (12P) No. 5**
Test point 2	Body ground

Test point 1	**Power seat control unit connector A (20P) No. 20**
Test point 2	Body ground

Is there 1.0 Ω or less?

YES

The GND wires are not open. Go to step 12.

NO

Repair an open or high resistance in the wire or poor ground (G501).

12. Open wire check (SLIDE FR, SLIDE RR lines)

-1. Disconnect the following connectors.

Slide motor/position sensor 5P connector
Power seat control unit connector B (12P)

-2. Measure the resistance between test points 1 and 2.

Test condition	Vehicle OFF (LOCK) mode Slide motor/position sensor 5P connector: disconnected Power seat control unit connector B (12P): disconnected
Test point 1	Slide motor/position sensor 5P connector (female terminals) No. 5: ①
Test point 2	**Power seat control unit connector B (12P) No. 3**

Test point 1	Slide motor/position sensor 5P connector (female terminals) No. 1: ①
Test point 2	**Power seat control unit connector B (12P) No. 1**

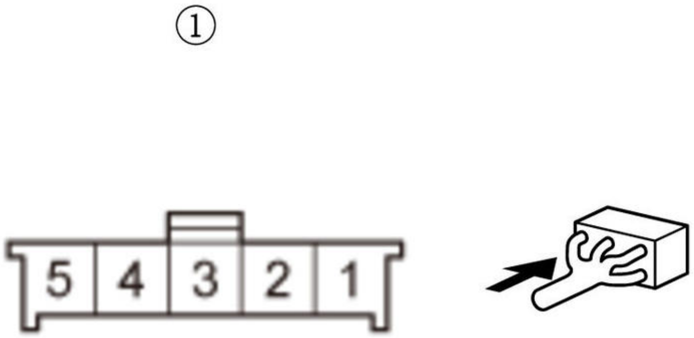

Is there 1.0 Ω or less?

YES

The SLIDE FR and SLIDE RR wires are not open. Go to step 13.

NO

Repair an open or high resistance in the wire.

13. Shorted wire check (SLIDE FR, SLIDE RR lines)

-1. Measure the resistance between test points 1 and 2.

Test condition	Vehicle OFF (LOCK) mode Slide motor/position sensor 5P connector: disconnected Power seat control unit connector B (12P): disconnected
Test point 1	**Power seat control unit connector B (12P) No. 3**
Test point 2	Body ground

Test point 1	**Power seat control unit connector B (12P) No. 1**
Test point 2	Body ground

Is there 1.0 MΩ or more?

YES

The SLIDE FR, SLIDE RR wires are OK. Go to step 14.

NO

Repair a short to ground in the wire.

14. Slide motor check

-1. **Test the slide motor** .

Is the motor OK?

YES

Replace the power seat control unit .

NO

Faulty slide motor/position sensor; **replace the seat frame assembly** .

DTC B1826

DTC B1826 : Front height pulse error (no change in pulse for 1 second)

NOTE:

- If you are troubleshooting multiple DTCs, be sure to follow the instructions in **B-CAN System Diagnosis Test Mode A** .
- Before troubleshooting, make sure the fuses and **relays** associated with the system is OK.

DTC Description	DTC
B1826 Front height pulse error (no change in pulse for 1 second)	B

DTC (Power Seat Control Unit)

1. Problem verification

-1. Clear the DTCs with the HDS.

-2. Press the power switch at least twenty times, then wait for at least 20 seconds.

-3. Operate the power seat adjustment switch for several seconds in each direction.

NOTE: DTC B1826 is stored when the front up-down switch is operated more than 1 second after the seat moves to the most up or down position, even when the system is OK.

-4. Check for DTCs with the HDS.

DTC Description	DTC
B1826 Front height pulse error (no change in pulse for 1 second)	B

Is DTC B1826 indicated?

YES

Go to step 2.

NO

Intermittent failure, the system is OK at this time. Check for loose or poor connections.

2. DTC check

-1. Check for DTCs with the HDS.

DTC Description	DTC
B1825 Slide pulse error (no change in pulse for 1 second)	B
B1826 Front height pulse error (no change in pulse for 1 second)	B
B1827 Rear height pulse error (no change in pulse for 1 second)	B
B1828 Driver seat recline motor pulse error	B
B1836 Power Seat Position Sensor circuit short	B

Any of DTC are indicated at the same time with DTC B1826?

DTC B1826 is indicated only

Go to step 3.

DTC B1836 is also indicated

Go to the DTC B1836 troubleshooting.

DTC B1825, B1827, and/or B1828 are also indicated

Go to step 7.

3. Determine possible failure area (motor operation, motor sensor)

-1. Turn the vehicle to the OFF (LOCK) mode and then the ON mode.

-2. Operate the front up-down switch for 2 seconds, and check the front up-down motor operation.

Does the front up-down motor run smoothly?

YES

Go to step 4.

NO

Go to step 10.

4. Open wire check (TISE, SEG lines)

-1. Turn the vehicle to the OFF (LOCK) mode.

-2. Disconnect the following connectors.

Front up-down motor/position sensor 6P connector
Power seat control unit connector A (20P)

-3. Measure the resistance between test points 1 and 2.

Test condition	Vehicle OFF (LOCK) mode Front up-down motor/position sensor 6P connector: disconnected Power seat control unit connector A (20P): disconnected
Test point 1	Front up-down motor/position sensor 6P connector (female terminals) No. 1: ①
Test point 2	**Power seat control unit connector A (20P) No. 7**

Test point 1	Front up-down motor/position sensor 6P connector (female terminals) No. 2: ①
Test point 2	**Power seat control unit connector A (20P) No. 19**

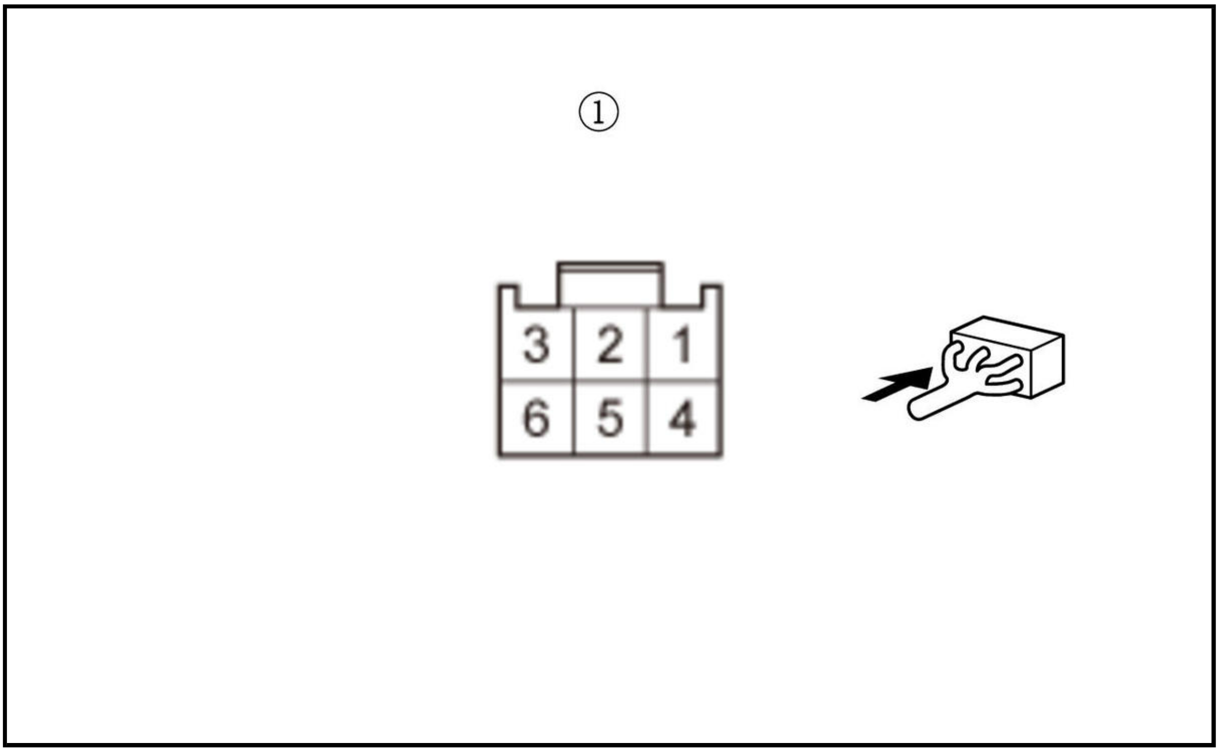

Is there 1.0 Ω or less?

YES

The TISE, SEG wires are not open. Go to step 5.

NO

Repair an open or high resistance in the wire.

5. Shorted wire check (TISE line)

-1. Measure the resistance between test points 1 and 2.

Test condition	Vehicle OFF (LOCK) mode Front up-down motor/position sensor 6P connector: disconnected Power seat control unit connector A (20P): disconnected
Test point 1	**Power seat control unit connector A (20P) No. 7**
Test point 2	Body ground

Is there 1.0 MΩ or more?

YES

The TISE wire is not shorted. Go to step 6.

NO

Repair a short to ground in the wire.

6. Determine possible failure area (Power seat control unit, front up-down position sensor, TISE line)

-1. Reconnect the following connector.

Power seat control unit connector A (20P)

-2. Turn the vehicle to the ON mode.

-3. Measure the voltage between test points 1 and 2.

Test condition	Vehicle ON mode Front up-down motor/position sensor 6P connector: disconnected
Test point 1	**Power seat control unit connector A (20P) No. 7**
Test point 2	**Power seat control unit connector A (20P) No. 19**

Is there voltage?

About 5 V

Faulty front up-down position sensor; **replace the seat frame assembly** .

No voltage

Replace the power seat control unit .

Battery voltage

Repair a short to power in the wire.

7. Open wire check (SEG line)

-1. Turn the vehicle to the OFF (LOCK) mode.

-2. Disconnect the following connectors.

Slide motor/position sensor 5P connector Front up-down motor/position sensor 6P connector Rear up-down motor/position sensor 6P connector Recline motor/position sensor 6P connector Power seat control unit connector A (20P)

-3. Measure the resistance between test points 1 and 2.

Test condition	Vehicle OFF (LOCK) mode Slide motor/position sensor 5P connector: disconnected Front up-down motor/position sensor 6P connector: disconnected Rear up-down motor/position sensor 6P connector: disconnected Recline motor/position sensor 6P connector: disconnected Power seat control unit connector A (20P): disconnected
Test point 1	Slide motor/position sensor 5P connector (female terminals) No. 3: ①
Test point 2	**Power seat control unit connector A (20P) No. 19**

Test point 1	Front up-down motor/position sensor 6P connector (female terminals) No. 2: ②
Test point 2	**Power seat control unit connector A (20P) No. 19**

Test point 1	Rear up-down motor/position sensor 6P connector (female terminals) No. 2: ③

Test point 2	**Power seat control unit connector A (20P) No. 19**

Test point 1	Recline motor/position sensor 6P connector (female terminals) No. 2: ④
Test point 2	**Power seat control unit connector A (20P) No. 19**

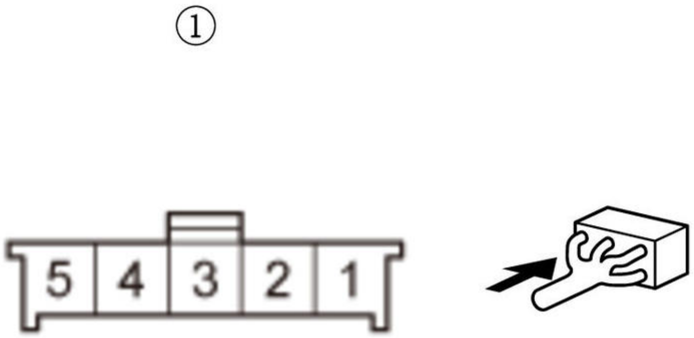

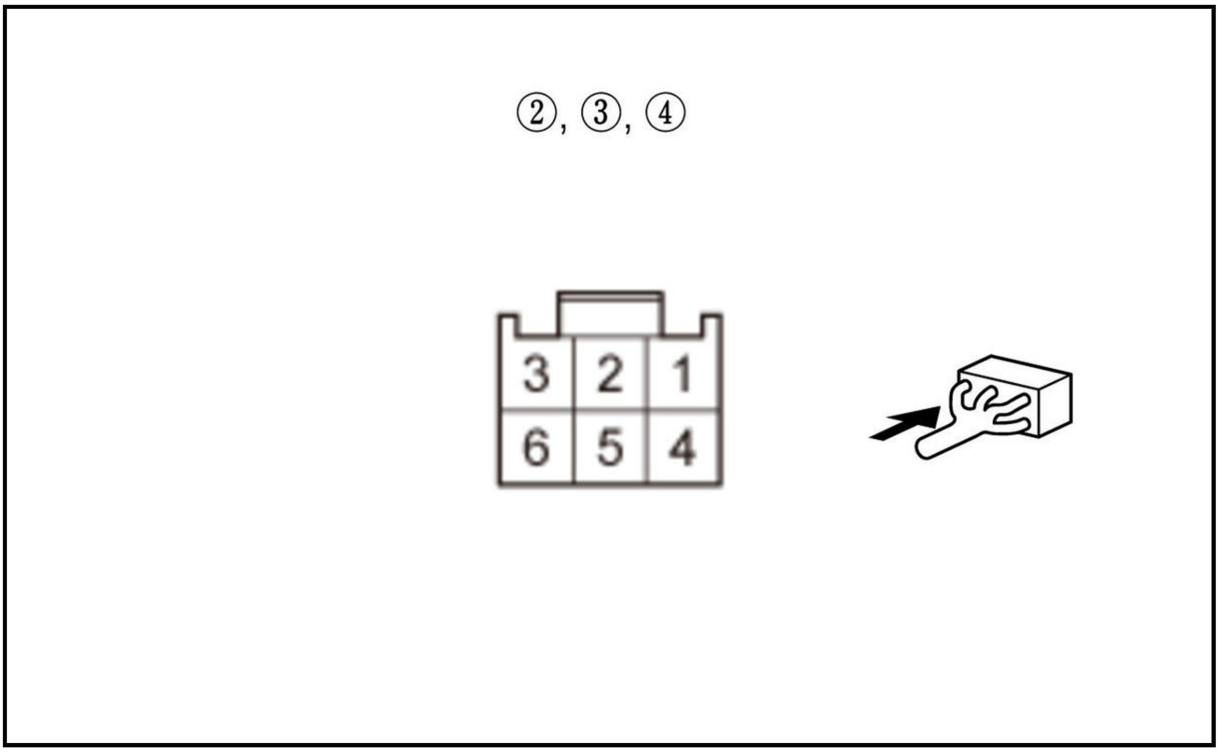

Is there 1.0 Ω or less?

YES

The SEG wire is OK. Go to step 8.

NO

Repair an open or high resistance in the wire.

8. Shorted wire check (VCC line)

-1. Measure the resistance between test points 1 and 2.

Test condition	Vehicle OFF (LOCK) mode Slide motor/position sensor 5P connector: disconnected Front up-down motor/position sensor 6P connector: disconnected Rear up-down motor/position sensor 6P connector: disconnected Recline motor/position sensor 6P connector: disconnected Power seat control unit connector A (20P): disconnected
Test point 1	**Power seat control unit connector A (20P) No. 6**
Test point 2	Body ground

Is there 1.0 MΩ or more?

YES

The VCC wire is not shorted. Go to step 9.

NO

Repair a short to ground in the wire.

9. Determine possible failure area (Power seat control unit, VCC line)

-1. Reconnect the following connector.

Power seat control unit connector A (20P)

-2. Turn the vehicle to the ON mode.

-3. Measure the voltage between test points 1 and 2.

Test condition	Vehicle ON mode Slide motor/position sensor 5P connector: disconnected Front up-down motor/position sensor 6P connector: disconnected Rear up-down motor/position sensor 6P connector: disconnected Recline motor/position sensor 6P connector: disconnected
Test point 1	**Power seat control unit connector A (20P) No. 6**
Test point 2	**Power seat control unit connector A (20P) No. 19**

Is there battery voltage when the front up-down switch is operated?

YES

Repair an open or high resistance in the wire.

NO

Replace the power seat control unit .

10. Open wire check (+B/P-SEAT1 line)

-1. Measure the voltage between test points 1 and 2.

Test condition	Vehicle OFF (LOCK) mode
Test point 1	**Power seat control unit connector B (12P) No. 6**
Test point 2	Body ground

Is there battery voltage?

YES

The +B/P-SEAT1 wire is not open. Go to step 11.

NO

Repair an open or high resistance in the wire.

11. Open wire check (GND lines)

-1. Measure the resistance between test points 1 and 2.

Test condition	Vehicle OFF (LOCK) mode
Test point 1	**Power seat control unit connector B (12P) No. 2**
Test point 2	Body ground

Test point 1	**Power seat control unit connector B (12P) No. 5**
Test point 2	Body ground

Test point 1	**Power seat control unit connector A (20P) No. 20**
Test point 2	Body ground

Is there 1.0 Ω or less?

YES

The GND wires are not open. Go to step 12.

NO

Repair an open or high resistance in the wire or poor ground (G501).

12. Open wire check (TILT UP, TILT DOWN lines)

-1. Disconnect the following connectors.

Front up-down motor/position sensor 6P connector
Power seat control unit connector B (12P)

-2. Measure the resistance between test points 1 and 2.

Test condition	Vehicle OFF (LOCK) mode Front up-down motor/position sensor 6P connector: disconnected Power seat control unit connector B (12P): disconnected
Test point 1	Front up-down motor/position sensor 6P connector (female terminals) No. 6: ①
Test point 2	**Power seat control unit connector B (12P) No. 10**

Test point 1	Front up-down motor/position sensor 6P connector (female terminals) No. 4: ①
Test point 2	**Power seat control unit connector B (12P) No. 7**

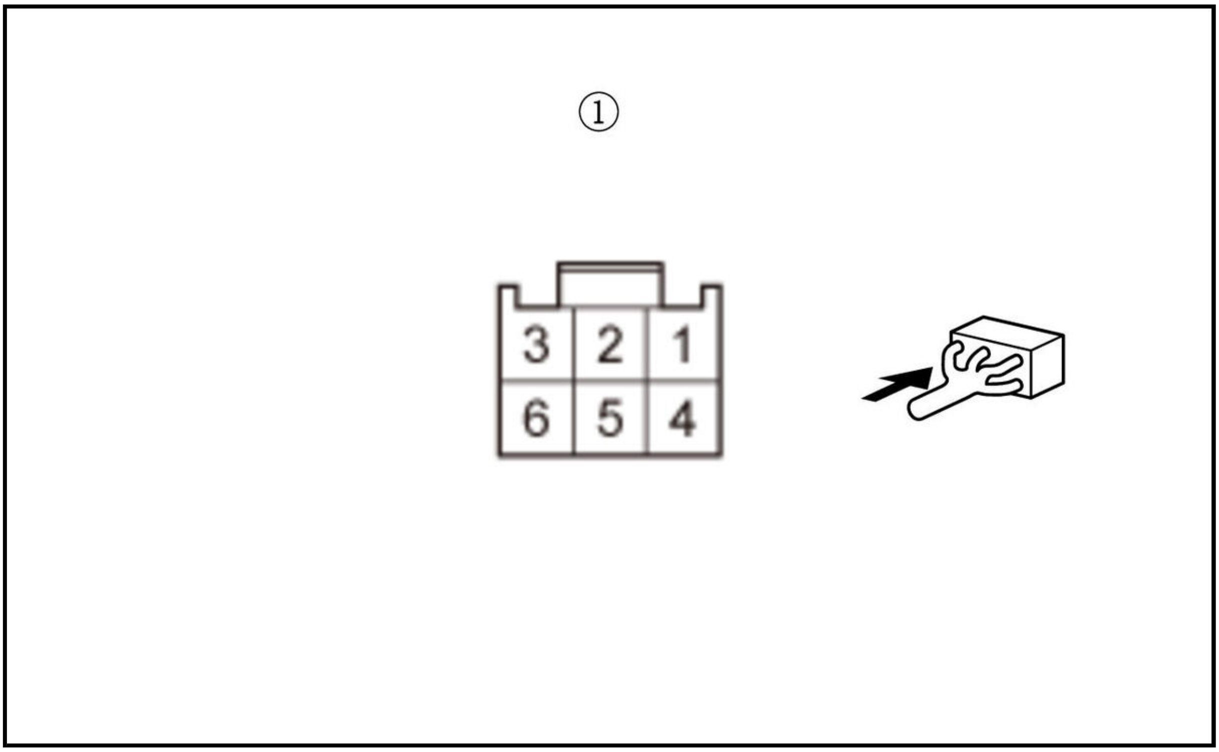

Is there 1.0 Ω or less?

YES

The TILT UP and TILT DOWN wires are not open. Go to step 13.

NO

Repair an open or high resistance in the wire.

13. Shorted wire check (TILT UP, TILT DOWN lines)

-1. Measure the resistance between test points 1 and 2.

Test condition	Vehicle OFF (LOCK) mode Front up-down motor/position sensor 6P connector: disconnected Power seat control unit connector B (12P): disconnected
Test point 1	**Power seat control unit connector B (12P) No. 10**
Test point 2	Body ground

Test point 1	**Power seat control unit connector B (12P) No. 7**
Test point 2	Body ground

Is there 1.0 MΩ or more?

YES

The TILT UP and TILT DOWN wires are OK. Go to step 14.

NO

Repair a short to ground in the wire.

14. Front up-down motor check

-1. **Test the front up-down motor** .

Is the motor OK?

YES

Replace the power seat control unit .

NO

Faulty front up-down motor/position sensor; **replace the seat frame assembly** .

DTC B1827

DTC B1827 : Rear height pulse error (no change in pulse for 1 second)

NOTE:

- If you are troubleshooting multiple DTCs, be sure to follow the instructions in **B-CAN System Diagnosis Test Mode A** .
- Before troubleshooting, make sure the fuses and **relays** associated with the system is OK.

DTC Description	DTC
B1827 Rear height pulse error (no change in pulse for 1 second)	B

DTC (Power Seat Control Unit)

1. Problem verification

-1. Clear the DTCs with the HDS.

-2. Press the power switch at least twenty times, then wait for at least 20 seconds.

-3. Operate the power seat adjustment switch for several seconds in each direction.

NOTE: DTC B1827 is stored when the rear up-down switch is operated more than 1 second after the seat moves to the most up or down position, even when the system is OK.

-4. Check for DTCs with the HDS.

DTC Description	DTC
B1827 Rear height pulse error (no change in pulse for 1 second)	B

Is DTC B1827 indicated?

YES

Go to step 2.

NO

Intermittent failure, the system is OK at this time. Check for loose or poor connections.

2. DTC check

-1. Check for DTCs with the HDS.

DTC Description	DTC
B1825 Slide pulse error (no change in pulse for 1 second)	B
B1826 Front height pulse error (no change in pulse for 1 second)	B
B1827 Rear height pulse error (no change in pulse for 1 second)	B
B1828 Driver seat recline motor pulse error	B
B1836 Power Seat Position Sensor circuit short	B

Any of DTC are indicated at the same time with DTC B1827?

DTC B1827 is indicated only

Go to step 3.

DTC B1836 is also indicated

Go to the DTC B1836 troubleshooting.

DTC B1825, B1826, and/or B1828 are also indicated

Go to step 7.

3. Determine possible failure area (motor operation, motor sensor)

-1. Turn the vehicle to the OFF (LOCK) mode and then the ON mode.

-2. Operate the rear up-down switch for 2 seconds, and check the rear up-down motor operation.

Does the rear up-down motor run smoothly?

YES

Go to step 4.

NO

Go to step 10.

4. Open wire check (HESE, SEG lines)

-1. Turn the vehicle to the OFF (LOCK) mode.

-2. Disconnect the following connectors.

Rear up-down motor/position sensor 6P connector
Power seat control unit connector A (20P)

-3. Measure the resistance between test points 1 and 2.

Test condition	Vehicle OFF (LOCK) mode Rear up-down motor/position sensor 6P connector: disconnected Power seat control unit connector A (20P): disconnected
Test point 1	Rear up-down motor/position sensor 6P connector (female terminals) No. 1: ①
Test point 2	**Power seat control unit connector A (20P) No. 9**

Test point 1	Rear up-down motor/position sensor 6P connector (female terminals) No. 2: ①
Test point 2	**Power seat control unit connector A (20P) No. 19**

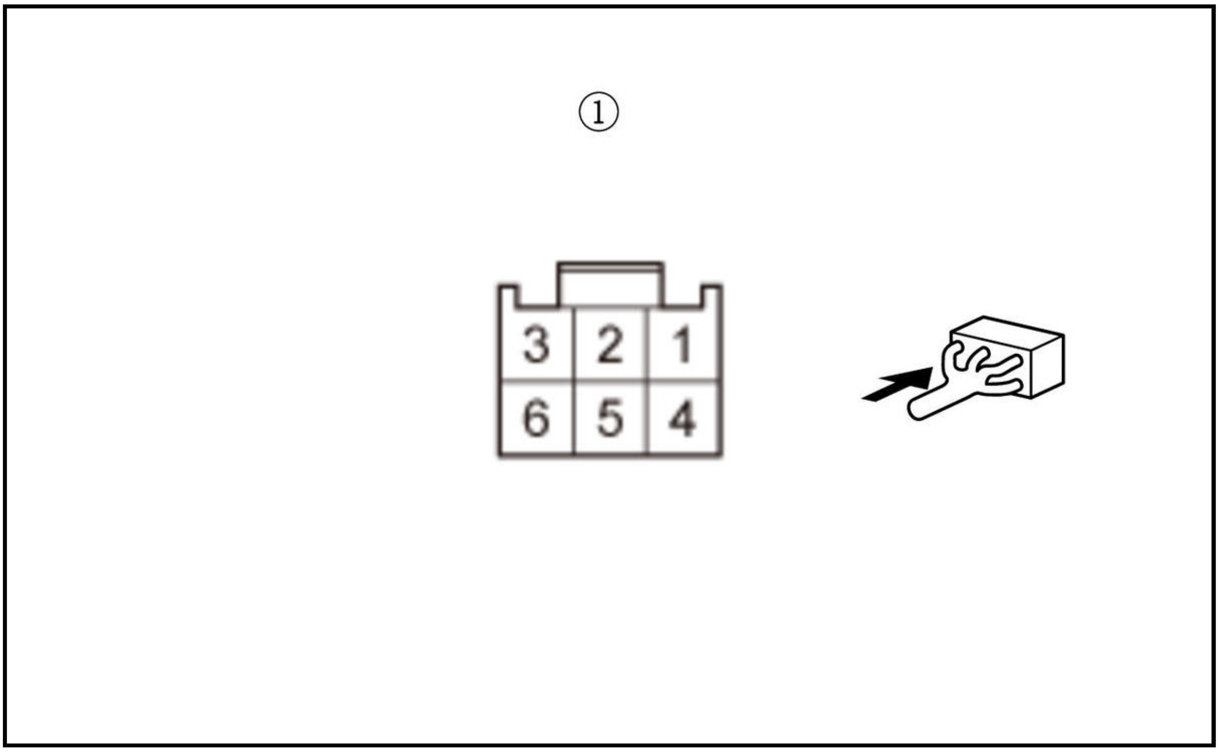

Is there 1.0 Ω or less?

YES

The HESE, SEG wires are not open. Go to step 5.

NO

Repair an open or high resistance in the wire.

5. Shorted wire check (HESE line)

-1. Measure the resistance between test points 1 and 2.

Test condition	Vehicle OFF (LOCK) mode Rear up-down motor/position sensor 6P connector: disconnected Power seat control unit connector A (20P): disconnected
Test point 1	**Power seat control unit connector A (20P) No. 9**
Test point 2	Body ground

Is there 1.0 MΩ or more?

YES

The HESE wire is not shorted. Go to step 6.

NO

Repair a short to ground in the wire.

6. Determine possible failure area (Power seat control unit, rear up-down position sensor, HESE line)

-1. Reconnect the following connector.

Power seat control unit connector A (20P)

-2. Turn the vehicle to the ON mode.

-3. Measure the voltage between test points 1 and 2.

Test condition	Vehicle ON mode Rear up-down motor/position sensor 6P connector: disconnected
Test point 1	**Power seat control unit connector A (20P) No. 9**
Test point 2	**Power seat control unit connector A (20P) No. 19**

Is there voltage?

About 5 V

Faulty rear up-down position sensor; **replace the seat frame assembly** .

No voltage

Replace the power seat control unit .

Battery voltage

Repair a short to power in the wire (sensor line).

7. Open wire check (SEG line)

-1. Turn the vehicle to the OFF (LOCK) mode.

-2. Disconnect the following connectors.

Slide motor/position sensor 5P connector Front up-down motor/position sensor 6P connector Rear up-down motor/position sensor 6P connector Recline motor/position sensor 6P connector Power seat control unit connector A (20P)

-3. Measure the resistance between test points 1 and 2.

Test condition	Vehicle OFF (LOCK) mode Slide motor/position sensor 5P connector: disconnected Front up-down motor/position sensor 6P connector: disconnected Rear up-down motor/position sensor 6P connector: disconnected Recline motor/position sensor 6P connector: disconnected Power seat control unit connector A (20P): disconnected
Test point 1	Slide motor/position sensor 5P connector (female terminals) No. 3: ①
Test point 2	**Power seat control unit connector A (20P) No. 19**

Test point 1	Front up-down motor/position sensor 6P connector (female terminals) No. 2: ②
Test point 2	**Power seat control unit connector A (20P) No. 19**

Test point 1	Rear up-down motor/position sensor 6P connector (female terminals) No. 2: ③

Test point 2	**Power seat control unit connector A (20P) No. 19**

Test point 1	Recline motor/position sensor 6P connector (female terminals) No. 2: ④
Test point 2	**Power seat control unit connector A (20P) No. 19**

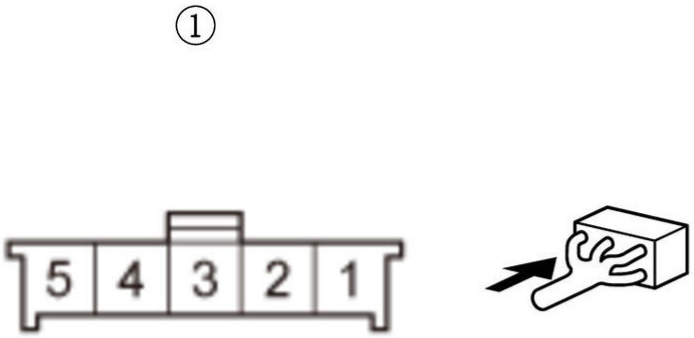

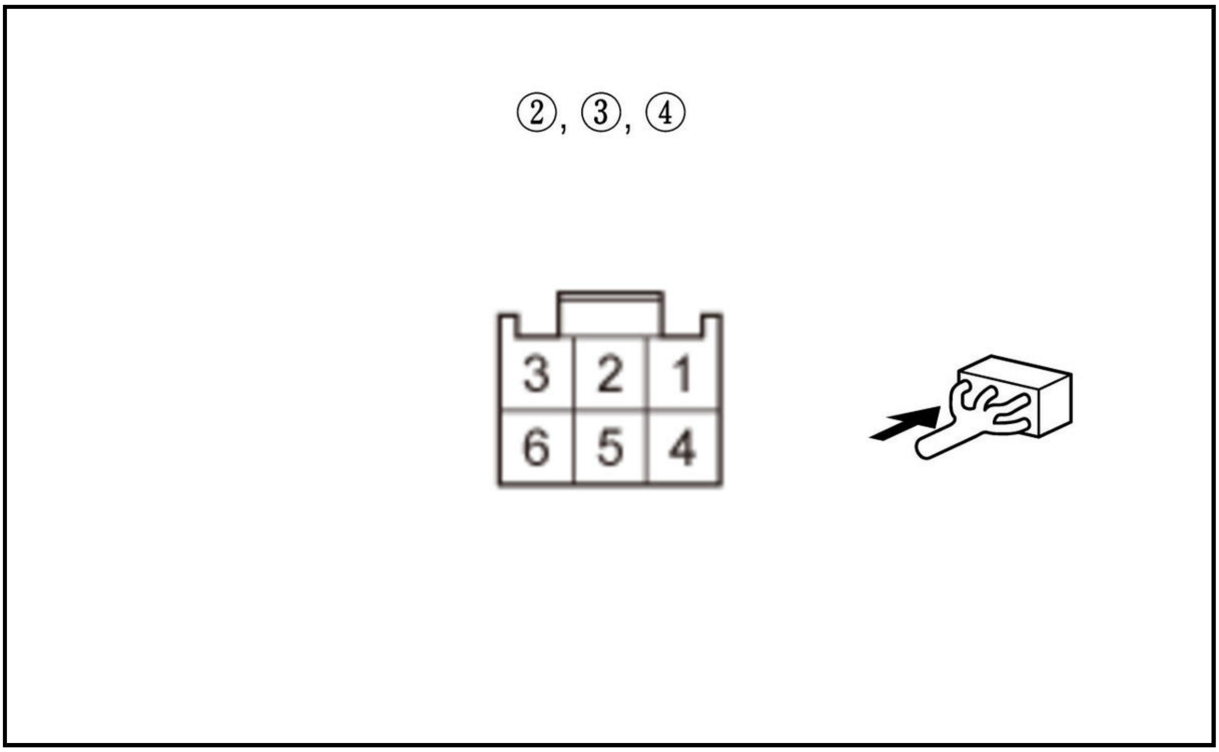

Is there 1.0 Ω or less?

YES

The SEG wire is OK. Go to step 8.

NO

Repair an open or high resistance in the wire.

8. Shorted wire check (VCC line)

-1. Measure the resistance between test points 1 and 2.

Test condition	Vehicle OFF (LOCK) mode Slide motor/position sensor 5P connector: disconnected Front up-down motor/position sensor 6P connector: disconnected Rear up-down motor/position sensor 6P connector: disconnected Recline motor/position sensor 6P connector: disconnected Power seat control unit connector A (20P): disconnected
Test point 1	**Power seat control unit connector A (20P) No. 6**
Test point 2	Body ground

Is there 1.0 MΩ or more?

YES

The VCC wire is not shorted. Go to step 9.

NO

Repair a short to ground in the wire.

9. Determine possible failure area (Power seat control unit, VCC line)

-1. Reconnect the following connector.

Power seat control unit connector A (20P)

-2. Turn the vehicle to the ON mode.

-3. Measure the voltage between test points 1 and 2.

Test condition	Vehicle ON mode Slide motor/position sensor 5P connector: disconnected Front up-down motor/position sensor 6P connector: disconnected Rear up-down motor/position sensor 6P connector: disconnected Recline motor/position sensor 6P connector: disconnected
Test point 1	**Power seat control unit connector A (20P) No. 6**
Test point 2	**Power seat control unit connector A (20P) No. 19**

Is there battery voltage when the rear up-down switch is operated?

YES

Repair an open or high resistance in the wire.

NO

Replace the power seat control unit .

10. Open wire check (+B/P-SEAT2 line)

-1. Measure the voltage between test points 1 and 2.

Test condition	Vehicle OFF (LOCK) mode
Test point 1	**Power seat control unit connector B (12P) No. 12**
Test point 2	Body ground

Is there battery voltage?

YES

The +B/P-SEAT2 wire is not open. Go to step 11.

NO

Repair an open or high resistance in the wire.

11. Open wire check (GND lines)

-1. Measure the resistance between test points 1 and 2.

Test condition	Vehicle OFF (LOCK) mode
Test point 1	**Power seat control unit connector B (12P) No. 2**
Test point 2	Body ground

Test point 1	**Power seat control unit connector B (12P) No. 5**
Test point 2	Body ground

Test point 1	**Power seat control unit connector A (20P) No. 20**
Test point 2	Body ground

Is there 1.0 Ω or less?

YES

The GND wires are not open. Go to step 12.

NO

Repair an open or high resistance in the wire or poor ground (G501).

12. Open wire check (HEIGHT UP, HEIGHT DOWN lines)

-1. Disconnect the following connectors.

Rear up-down motor/position sensor 6P connector
Power seat control unit connector B (12P)

-2. Measure the resistance between test points 1 and 2.

Test condition	Vehicle OFF (LOCK) mode Rear up-down motor/position sensor 6P connector: disconnected Power seat control unit connector B (12P): disconnected
Test point 1	Rear up-down motor/position sensor 6P connector (female terminals) No. 4: ①
Test point 2	**Power seat control unit connector B (12P) No. 9**

Test point 1	Rear up-down motor/position sensor 6P connector (female terminals) No. 6: ①
Test point 2	**Power seat control unit connector B (12P) No. 4**

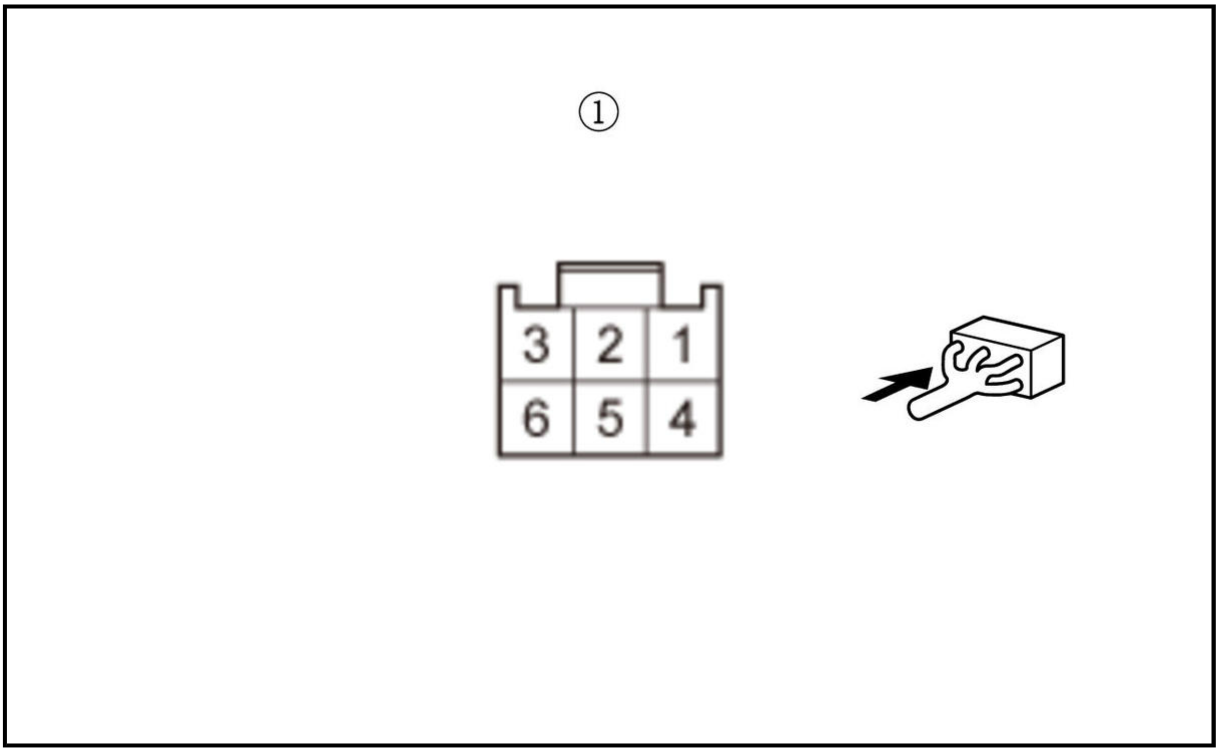

Is there 1.0 Ω or less?

YES

The HEIGHT UP and HEIGHT DOWN wires are not open. Go to step 13.

NO

Repair an open or high resistance in the wire.

13. Shorted wire check (HEIGHT UP, HEIGHT DOWN lines)

-1. Measure the resistance between test points 1 and 2.

Test condition	Vehicle OFF (LOCK) mode Rear up-down motor/position sensor 6P connector: disconnected Power seat control unit connector B (12P): disconnected
Test point 1	**Power seat control unit connector B (12P) No. 9**
Test point 2	Body ground

Test point 1	**Power seat control unit connector B (12P) No. 4**
Test point 2	Body ground

Is there 1.0 MΩ or more?

YES

The HEIGHT UP and HEIGHT DOWN wires are OK. Go to step 14.

NO

Repair a short to ground in the wire.

14. Rear up-down motor check

-1. **Test the rear up-down motor** .

Is the motor OK?

YES

Replace the power seat control unit .

NO

Faulty rear up-down motor/position sensor; **replace the seat frame assembly** .

DTC B1828

DTC B1828 : Driver seat recline motor pulse error

NOTE:

- If you are troubleshooting multiple DTCs, be sure to follow the instructions in **B-CAN System Diagnosis Test Mode A** .
- When check the REC FR line circuit, do not operate the rear seat access lever, because limit switch is located in the circuit.
- Before troubleshooting, make sure the fuses and **relays** associated with the system is OK.

DTC Description	DTC
B1828 Driver seat recline motor pulse error	B

DTC (Power Seat Control Unit)

1. Problem verification

-1. Clear the DTCs with the HDS.

-2. Press the power switch at least twenty times, then wait for at least 20 seconds.

-3. Operate the power seat adjustment switch for several seconds in each direction.

NOTE: DTC B1828 is stored when the recline switch is operated more than 1 second after the seat moves to the most forward or backward position, even when the system is OK.

-4. Check for DTCs with the HDS.

DTC Description	DTC
B1828 Driver seat recline motor pulse error	B

Is DTC B1828 indicated?

YES

Go to step 2.

NO

Intermittent failure, the system is OK at this time. Check for loose or poor connections.

2. DTC check

-1. Check for DTCs with the HDS.

DTC Description	DTC
B1825 Slide pulse error (no change in pulse for 1 second)	B
B1826 Front height pulse error (no change in pulse for 1 second)	B
B1827 Rear height pulse error (no change in pulse for 1 second)	B
B1828 Driver seat recline motor pulse error	B
B1836 Power Seat Position Sensor circuit short	B

Any of DTC are indicated at the same time with DTC B1828?

DTC B1828 is indicated only

Go to step 3.

DTC B1836 is also indicated

Go to the DTC B1836 troubleshooting.

DTC B1825, B1826, and/or B1827 are also indicated

Go to step 7.

3. Determine possible failure area (motor operation, motor sensor)

-1. Turn the vehicle to the OFF (LOCK) mode and then the ON mode.

-2. Operate the recline switch for 2 seconds, and check the recline motor operation.

Does the recline motor run smoothly?

YES

Go to step 4.

NO

Go to step 10.

4. Open wire check (RESE, SEG lines)

-1. Turn the vehicle to the OFF (LOCK) mode.

-2. Disconnect the following connectors.

Recline motor/position sensor 6P connector
Power seat control unit connector A (20P)

-3. Measure the resistance between test points 1 and 2.

Test condition	Vehicle OFF (LOCK) mode Recline motor/position sensor 6P connector: disconnected Power seat control unit connector A (20P): disconnected
Test point 1	Recline motor/position sensor 6P connector (female terminals) No. 1: ①
Test point 2	**Power seat control unit connector A (20P) No. 10**

Test point 1	Recline motor/position sensor 6P connector (female terminals) No. 2: ①
Test point 2	**Power seat control unit connector A (20P) No. 19**

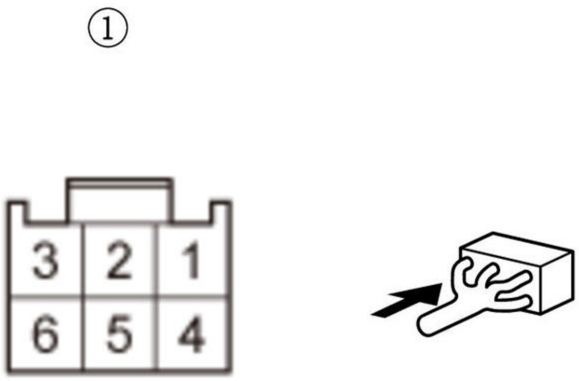

Is there 1.0 Ω or less?

YES

The RESE, SEG wires are not open. Go to step 5.

NO

Repair an open or high resistance in the wire.

5. Shorted wire check (RESE line)

-1. Measure the resistance between test points 1 and 2.

Test condition	Vehicle OFF (LOCK) mode Recline motor/position sensor 6P connector: disconnected Power seat control unit connector A (20P): disconnected
Test point 1	**Power seat control unit connector A (20P) No. 10**
Test point 2	Body ground

Is there 1.0 MΩ or more?

YES

The RESE wire is not shorted. Go to step 6.

NO

Repair a short to ground in the wire.

6. Determine possible failure area (Power seat control unit, recline position sensor, RESE line)

-1. Reconnect the following connector.

Power seat control unit connector A (20P)

-2. Turn the vehicle to the ON mode.

-3. Measure the voltage between test points 1 and 2.

Test condition	Vehicle ON mode Recline motor/position sensor 6P connector: disconnected
Test point 1	**Power seat control unit connector A (20P) No. 10**
Test point 2	**Power seat control unit connector A (20P) No. 19**

Is there about 5 V?

About 5 V

Faulty recline motor/position sensor; **replace the seat frame assembly** .

No voltage

Replace the power seat control unit .

Battery voltage

Repair a short to power in the wire (sensor line).

7. Open wire check (SEG line)

-1. Turn the vehicle to the OFF (LOCK) mode.

-2. Disconnect the following connectors.

Slide motor/position sensor 5P connector Front up-down motor/position sensor 6P connector Rear up-down motor/position sensor 6P connector Recline motor/position sensor 6P connector Power seat control unit connector A (20P)

-3. Measure the resistance between test points 1 and 2.

Test condition	Vehicle OFF (LOCK) mode Slide motor/position sensor 5P connector: disconnected Front up-down motor/position sensor 6P connector: disconnected Rear up-down motor/position sensor 6P connector: disconnected Recline motor/position sensor 6P connector: disconnected Power seat control unit connector A (20P): disconnected
Test point 1	Slide motor/position sensor 5P connector (female terminals) No. 3: ①
Test point 2	**Power seat control unit connector A (20P) No. 19**

Test point 1	Front up-down motor/position sensor 6P connector (female terminals) No. 2: ②
Test point 2	**Power seat control unit connector A (20P) No. 19**

Test point 1	Rear up-down motor/position sensor 6P connector (female terminals) No. 2: ③

Test point 2	**Power seat control unit connector A (20P) No. 19**

Test point 1	Recline motor/position sensor 6P connector (female terminals) No. 2: ④
Test point 2	**Power seat control unit connector A (20P) No. 19**

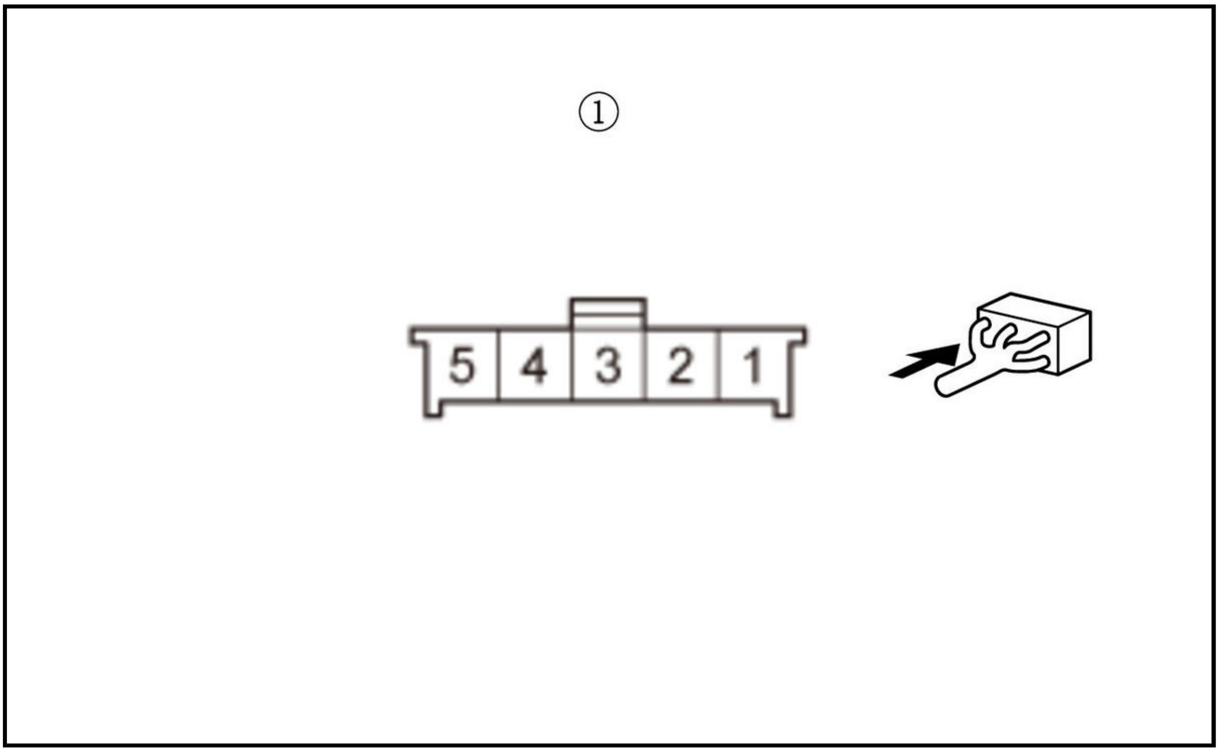

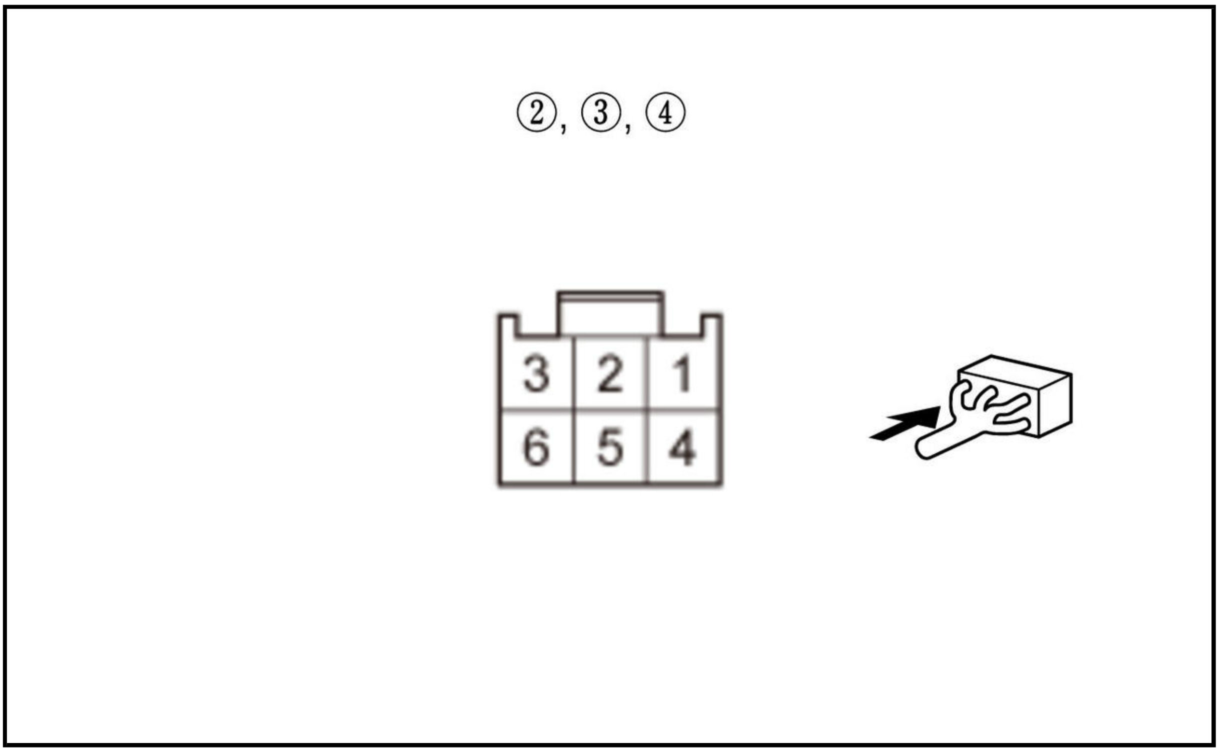

Is there 1.0 Ω or less?

YES

The SEG wire is OK. Go to step 8.

NO

Repair an open or high resistance in the wire.

8. Shorted wire check (VCC line)

-1. Measure the resistance between test points 1 and 2.

Test condition	Vehicle OFF (LOCK) mode Slide motor/position sensor 5P connector: disconnected Front up-down motor/position sensor 6P connector: disconnected Rear up-down motor/position sensor 6P connector: disconnected Recline motor/position sensor 6P connector: disconnected Power seat control unit connector A (20P): disconnected
Test point 1	**Power seat control unit connector A (20P) No. 6**
Test point 2	Body ground

Is there 1.0 MΩ or more?

YES

The VCC wire is not shorted. Go to step 9.

NO

Repair a short to ground in the wire.

9. Determine possible failure area (Power seat control unit, VCC line)

-1. Reconnect the following connector.

Power seat control unit connector A (20P)

-2. Turn the vehicle to the ON mode.

-3. Measure the voltage between test points 1 and 2.

Test condition	Vehicle ON mode Slide motor/position sensor 5P connector: disconnected Front up-down motor/position sensor 6P connector: disconnected Rear up-down motor/position sensor 6P connector: disconnected Recline motor/position sensor 6P connector: disconnected
Test point 1	**Power seat control unit connector A (20P) No. 6**
Test point 2	**Power seat control unit connector A (20P) No. 19**

Is there battery voltage when the recline switch is operated?

YES

Repair an open or high resistance in the wire.

NO

Replace the power seat control unit .

10. Open wire check (+B/P-SEAT2 line)

-1. Measure the voltage between test points 1 and 2.

Test condition	Vehicle OFF (LOCK) mode
Test point 1	**Power seat control unit connector B (12P) No. 12**
Test point 2	Body ground

Is there battery voltage?

YES

The +B/P-SEAT2 wire is not open. Go to step 11.

NO

Repair an open or high resistance in the wire.

11. Open wire check (GND lines)

-1. Measure the resistance between test points 1 and 2.

Test condition	Vehicle OFF (LOCK) mode
Test point 1	**Power seat control unit connector B (12P) No. 2**
Test point 2	Body ground

Test point 1	**Power seat control unit connector B (12P) No. 5**
Test point 2	Body ground

Test point 1	**Power seat control unit connector A (20P) No. 20**
Test point 2	Body ground

Is there 1.0 Ω or less?

YES

The GND wires are not open. Go to step 12.

NO

Repair an open or high resistance in the wire or poor ground (G501).

12. Open wire check (REC FR, REC RR lines)

-1. Disconnect the following connectors.

Recline motor/position sensor 6P connector
Power seat control unit connector B (12P)

-2. Measure the resistance between test points 1 and 2.

Test condition	Vehicle OFF (LOCK) mode Recline motor/position sensor 6P connector: disconnected Power seat control unit connector B (12P): disconnected
Test point 1	Recline motor/position sensor 6P connector (female terminals) No. 4: ①
Test point 2	**Power seat control unit connector B (12P) No. 8**

Test point 1	Recline motor/position sensor 6P connector (female terminals) No. 6: ①
Test point 2	**Power seat control unit connector B (12P) No. 11**

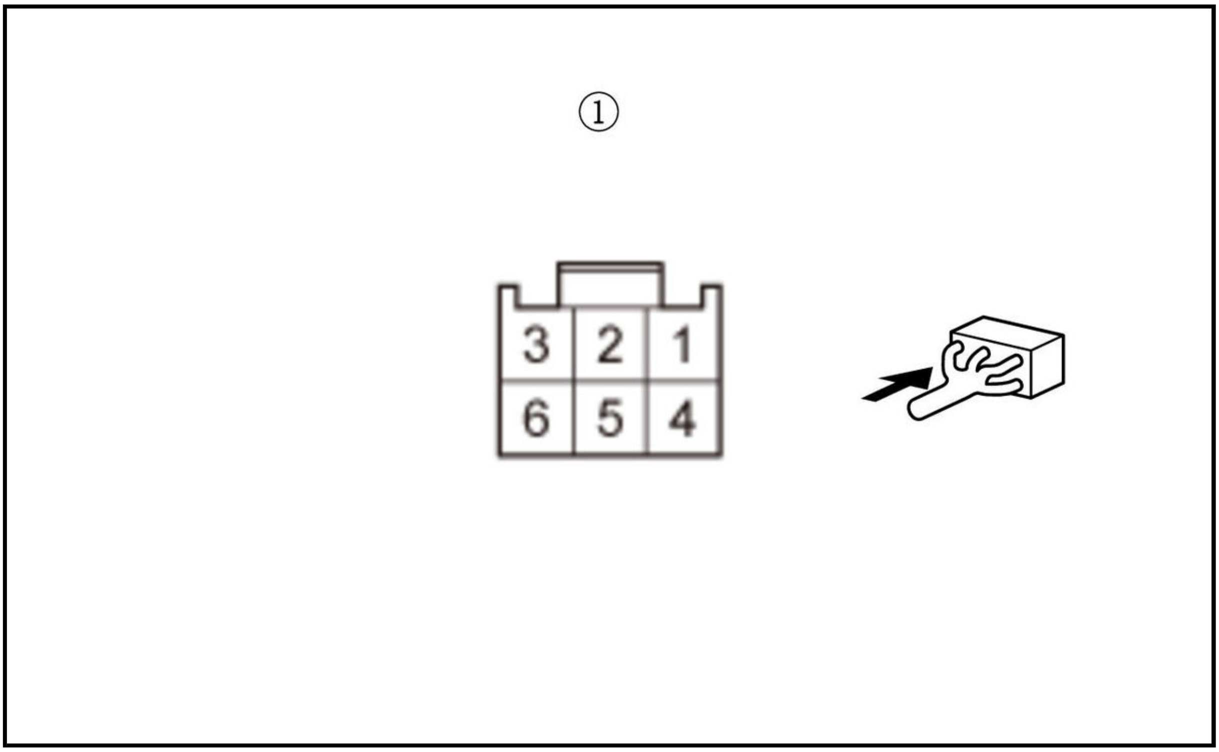

Is there 1.0 Ω or less?

YES

The REC FR and REC RR wires are not open. Go to step 13.

NO

Repair an open or high resistance in the wire.

13. Shorted wire check (REC FR, REC RR lines)

-1. Measure the resistance between test points 1 and 2.

Test condition	Vehicle OFF (LOCK) mode Recline motor/position sensor 6P connector: disconnected Power seat control unit connector B (12P): disconnected
Test point 1	**Power seat control unit connector B (12P) No. 8**
Test point 2	Body ground

Test point 1	**Power seat control unit connector B (12P) No. 11**
Test point 2	Body ground

Is there 1.0 MΩ or more?

YES

The REC FR and REC RR wires are OK. Go to step 14.

NO

Repair a short to ground in the wire.

14. Recline motor check

-1. **Test the recline motor** .

Is the motor OK?

YES

Replace the power seat control unit .

NO

Faulty recline motor/position sensor; **replace the seat frame assembly** .

DTC B1829

DTC B1829 : AT-P signal and VSP or ESL_WHEEL signal mismatch

NOTE: If you are troubleshooting multiple DTCs, be sure to follow the instructions in **B-CAN System Diagnosis Test Mode A** .

DTC Description	DTC
B1829 AT-P signal and VSP or ESL_WHEEL signal mismatch	B

DTC (Power Seat Control Unit)

1. Problem verification

-1. Clear the DTCs with the HDS.

-2. Start the engine.

-3. Test drive at 6 mph (10 km/h) for 10 seconds.

-4. Check for DTCs with the HDS.

DTC Description	DTC
B1829 AT-P signal and VSP or ESL_WHEEL signal mismatch	B

Is DTC B1829 indicated?

YES

Go to step 2.

NO

Intermittent failure, the system is OK at this time. Check for loose or poor connections.

2. DTC check

-1. Check for gauge control module DTCs with the HDS.

DTC Description	DTC
B	B

Are any DTCs indicated?

YES

Go to the indicated DTCs troubleshooting.

NO

Go to step 3.

3. Open wire check (ATP-PBK / ATP-P line)

-1. Turn the vehicle to the OFF (LOCK) mode.

-2. Disconnect the following connectors.

Power seat control unit connector A (20P) SBW shifter control module 20P connector

-3. Measure the resistance between test points 1 and 2.

Test condition	Vehicle OFF (LOCK) mode Power seat control unit connector A (20P): disconnected SBW shifter control module 20P connector: disconnected
Test point 1	**Power seat control unit connector A (20P) No. 1**
Test point 2	**SBW shifter control module 20P connector No. 14**

Is there 1.0 Ω or less?

YES

Go to step 4.

NO

Repair an open or high resistance in the wire.

4. Shorted wire check (ATP-PBK / ATP-P line)

-1. Measure the resistance between test points 1 and 2.

Test condition	Vehicle OFF (LOCK) mode Power seat control unit connector A (20P): disconnected SBW shifter control module 20P connector: disconnected
Test point 1	**Power seat control unit connector A (20P) No. 1**
Test point 2	Body ground

Is there 1.0 MΩ or more?

YES

The ATP-PBK / ATP-P wire is OK. **Replace the power seat control unit** .

NO

Repair a short to ground in the wire.

DTC B1836

DTC B1836 : Power Seat Position Sensor circuit short

NOTE: If you are troubleshooting multiple DTCs, be sure to follow the instructions in **B-CAN System Diagnosis Test Mode A** .

DTC Description	DTC
B1836 Power Seat Position Sensor circuit short	B

DTC (Power Seat Control Unit)

1. Problem verification

-1. Clear the DTCs with the HDS.

-2. Press the power switch at least twenty times, then wait for at least 20 seconds.

-3. Operate the power seat adjustment switch in all directions for more than 1 second each.

-4. Check for DTCs with the HDS.

DTC Description	DTC
B1836 Power Seat Position Sensor circuit short	B

Is DTC B1836 indicated?

YES

Go to step 2.

NO

Intermittent failure, the system is OK at this time. Check for loose or poor connections.

2. Shorted wire check (VCC line)

-1. Turn the vehicle to the OFF (LOCK) mode.

-2. Disconnect the following connectors.

Power seat control unit connector A (20P) Slide motor/position sensor 5P connector Front up-down motor/position sensor 6P connector Rear up-down motor/position sensor 6P connector Recline motor/position sensor 6P connector

-3. Measure the resistance between test points 1 and 2.

Test condition	Vehicle OFF (LOCK) mode Power seat control unit connector A (20P): disconnected Slide motor/position sensor 5P connector: disconnected Front up-down motor/position sensor 6P connector: disconnected Rear up-down motor/position sensor 6P connector: disconnected Recline motor/position sensor 6P connector: disconnected
Test point 1	**Power seat control unit connector A (20P) No. 6**
Test point 2	Body ground

Is there 1.0 MΩ or more?

YES

The VCC wire is not shorted. Go to step 3.

NO

Repair a short to ground in the wire.

3. Motor check (Slide, Front up-down, Rear up-down, Recline)

-1. Measure the resistance between test points 1 and 2.

Test condition	Vehicle OFF (LOCK) mode Power seat control unit connector A (20P): disconnected Slide motor/position sensor 5P connector: disconnected Front up-down motor/position sensor 6P connector: disconnected Rear up-down motor/position sensor 6P connector: disconnected Recline motor/position sensor 6P connector: disconnected
Test point 1	Slide motor/position sensor 5P connector (male terminals) No. 2: ①
Test point 2	Body ground (motor body)

Test point 1	Front up-down motor/position sensor 6P connector (male terminals) No. 1: ②
Test point 2	Body ground (motor body)

Test point 1	Rear up-down motor/position sensor 6P connector (male terminals) No. 1: ③
Test point 2	Body ground (motor body)

Test point 1	Recline motor/position sensor 6P connector (male terminals) No. 1: ④
Test point 2	Body ground (motor body)

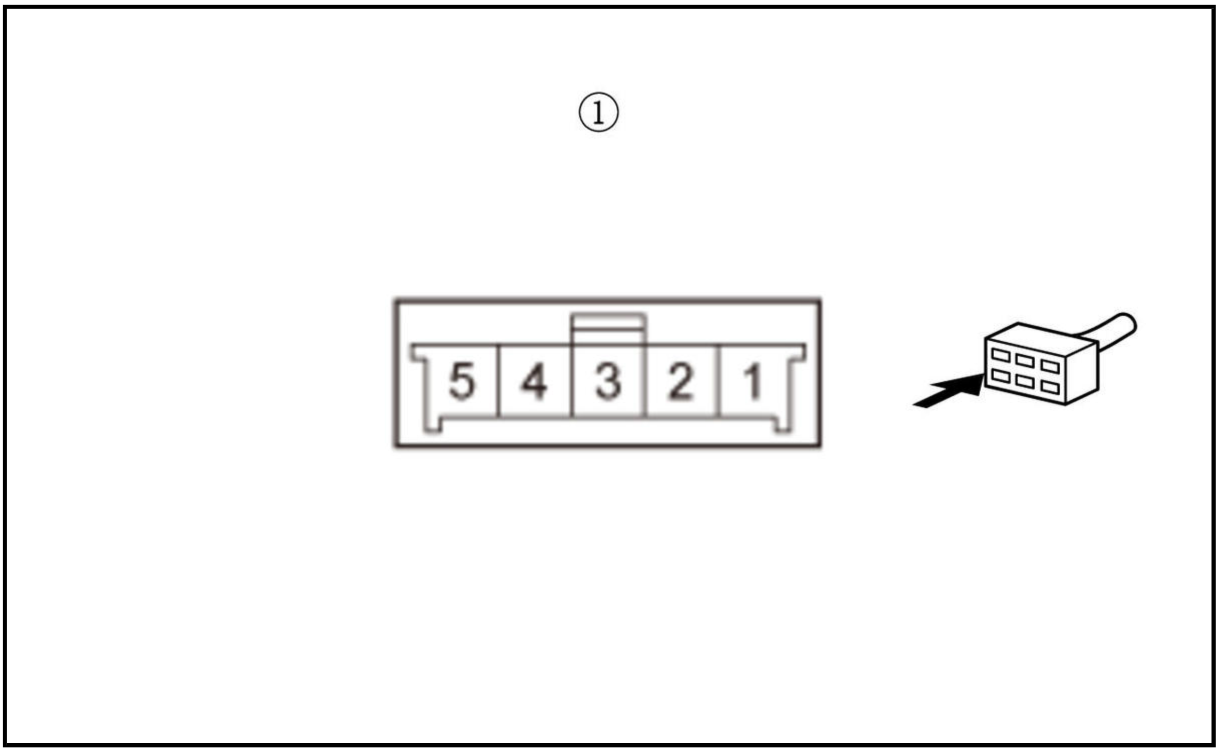

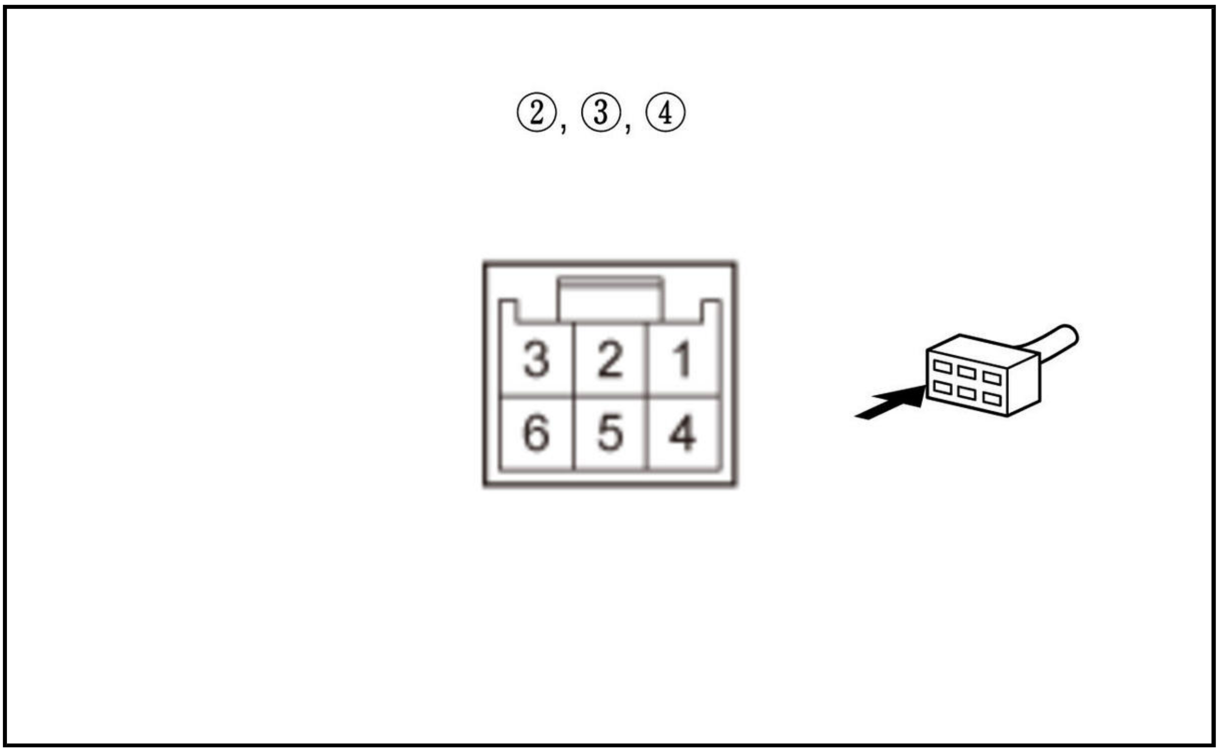

Is there 1.0 Ω or less?

Slide motor/position sensor is shorted

Faulty slide motor/position sensor; **replace the seat frame assembly** .

Front up-down motor/position sensor is shorted

Faulty front up-down motor/position sensor; **replace the seat frame assembly** .

Rear up-down motor/position sensor is shorted

Faulty rear up-down motor/position sensor; **replace the seat frame assembly** .

Recline motor/position sensor is shorted

Faulty recline motor/position sensor; **replace the seat frame assembly** .

NO

Replace the power seat control unit .

DTC B1837

DTC B1837 : Memory position calling timeout

NOTE: If you are troubleshooting multiple DTCs, be sure to follow the instructions in **B-CAN System Diagnosis Test Mode A** .

DTC Description	DTC
B1837 Memory position calling timeout	B

DTC (Power Seat Control Unit)

1. Problem verification

   -1. Clear the DTCs with the HDS.

   -2. Turn the vehicle to the OFF (LOCK) mode and then the ON mode.

   -3. Move the power seat to the full front up and full rear up positions, then slide the seat all the way back and completely recline the seat-back backward with the power seat adjustment switch.

   -4. Set the seating position into memory by pressing either the driving position memory switch POSITION 1 or POSITION 2 button.

   -5. Using the power seat switches, move the seat away from the position just memorized.

   -6. Recall the memory position with the driving position memory switch.

   -7. Wait for 2 minutes.

   -8. Check for DTCs with the HDS.

DTC Description	DTC
B1837 Memory position calling timeout	B

   Is DTC B1837 indicated?

   YES

   Go to step 2.

   NO

   Intermittent failure, the system is OK at this time. Check for loose or poor connections.

2. DTC check

   -1. Check for DTCs with the HDS.

DTC Description	DTC
B	B

   Any of DTC are indicated at the same time with DTC B1837?

YES

Go to the indicated DTCs troubleshooting.

NO

Go to step 3.

3. Motor operation check

-1. Clear the DTCs with the HDS.

-2. Wait for 6 seconds.

-3. Move the motors (power seat slide forward/backward, recline forward/backward, front up-down, and rear up-down) shown one at a time, and check the operation time.

Does any motor fail to run smoothly?

Motor fails to run smoothly

Go to the failed motor test .

Motor is OK, but fails to run smoothly

Check the engagement of the motor gear.

NO

Do the teat of terminals for power seat control unit .

DTC B1844

DTC B1844 : Power Seat Slide switch circuit malfunction

NOTE: If you are troubleshooting multiple DTCs, be sure to follow the instructions in **B-CAN System Diagnosis Test Mode A** .

DTC Description	DTC
B1844 Power Seat Slide switch circuit malfunction	B

DTC (Power Seat Control Unit)

1. Problem verification

-1. Clear the DTCs with the HDS.

-2. Operate the slide switch in each direction for more than 3 seconds.

-3. Wait for at least 3 seconds.

-4. Check for DTCs with the HDS.

DTC Description	DTC
B1844 Power Seat Slide switch circuit malfunction	B

Is DTC B1844 indicated?

YES

Replace the power seat control unit .

NO

Intermittent failure, the system is OK at this time. Check for loose or poor connections.

DTC B1845

DTC B1845 : Power Seat Recline switch circuit malfunction

NOTE: If you are troubleshooting multiple DTCs, be sure to follow the instructions in **B-CAN System Diagnosis Test Mode A** .

DTC Description	DTC
B1845 Power Seat Recline switch circuit malfunction	B

DTC (Power Seat Control Unit)

1. Problem verification

   -1. Clear the DTCs with the HDS.

   -2. Operate the recline switch in each direction for more than 3 seconds.

   -3. Wait for at least 3 seconds.

   -4. Check for DTCs with the HDS.

DTC Description	DTC
B1845 Power Seat Recline switch circuit malfunction	B

Is DTC B1845 indicated?

YES

Replace the power seat control unit .

NO

Intermittent failure, the system is OK at this time. Check for loose or poor connections.

DTC B1846

DTC B1846 : Power Seat Front Up-Down switch circuit malfunction

NOTE: If you are troubleshooting multiple DTCs, be sure to follow the instructions in **B-CAN System Diagnosis Test Mode A** .

DTC Description	DTC
B1846 Power Seat Front Up-Down switch circuit malfunction	B

DTC (Power Seat Control Unit)

1. Problem verification

   -1. Clear the DTCs with the HDS.

   -2. Operate the front up-down switch in each direction for more than 3 seconds.

-3. Wait for at least 3 seconds.

-4. Check for DTCs with the HDS.

DTC Description	DTC
B1846 Power Seat Front Up-Down switch circuit malfunction	B

Is DTC B1846 indicated?

YES

Replace the power seat control unit .

NO

Intermittent failure, the system is OK at this time. Check for loose or poor connections.

DTC B1847

DTC B1847 : Power Seat Rear Up-Down switch circuit malfunction

NOTE: If you are troubleshooting multiple DTCs, be sure to follow the instructions in **B-CAN System Diagnosis Test Mode A** .

DTC Description	DTC
B1847 Power Seat Rear Up-Down switch circuit malfunction	B

DTC (Power Seat Control Unit)

1. Problem verification

-1. Clear the DTCs with the HDS.

-2. Operate the rear up-down switch in each direction for more than 1 second.

-3. Wait for at least 3 seconds.

-4. Check for DTCs with the HDS.

DTC Description	DTC
B1847 Power Seat Rear Up-Down switch circuit malfunction	B

Is DTC B1847 indicated?

YES

Replace the power seat control unit .

NO

Intermittent failure, the system is OK at this time. Check for loose or poor connections.

DTC U0199, U1281, U128D (POWER SEAT CONTROL UNIT)

DTC U0199 : Power seat control unit lost communication with PW master SW

DTC U1281 : Power seat control unit lost communication with MICU (body control module) (MICU frame)

DTC U128D : Lost Communication With Gauge Control Module (VSP/NE or ESL_WHEEL frame)

NOTE:

- If you are troubleshooting multiple DTCs, be sure to follow the instructions in **B-CAN System Diagnosis Test Mode A** .
- Refer to the DTC code shown on the display, and then inspect the connectors and terminals based on the instructions in the table below.
- The DTC may be stored due to the grounding failure or the power source failure at the transmitting control unit (the grounding inspection and the power source inspection on each control unit are required prior to this checking process).

DTC Description	DTC
U0199 Power seat control unit lost communication with PW master SW	B
U1281 Power seat control unit lost communication with MICU (body control module) (MICU frame)	B
U128D Lost Communication With Gauge Control Module (VSP/NE or ESL_WHEEL frame)	B

DTC (Power Seat Control Unit)

1. Problem verification

   -1. Clear the DTC with the HDS.

   -2. Turn the vehicle to the OFF (LOCK) mode and then the ON mode.

   -3. Wait for at least 6 seconds.

   -4. Check for DTCs with the HDS.

DTC Description	DTC
U0199 Power seat control unit lost communication with PW master SW	B
U1281 Power seat control unit lost communication with MICU (body control module) (MICU frame)	B
U128D Lost Communication With Gauge Control Module (VSP/NE or ESL_WHEEL frame)	B

   Are any DTCs indicated?

   YES

   Go to step 2.

   NO

   Intermittent failure, the system is OK at this time. Check for poor connections or loose terminals.

2. Open wire check (B-CAN_H line, B-CAN_L line)

   -1. Turn the vehicle to the OFF (LOCK) mode.

   -2. Disconnect the receiving control unit connector.

Power seat control unit connector A (20P)

   -3. Disconnect the transmitting control unit connector(s).

Refer to the DTC shown on the display, then disconnect the connector(s) based on the instructions (see table).

DTC	Connector
U0199	Power window master switch 37P connector
U1281	Body control module connector B (36P)
U128D	Gauge control module connector A (32P)

-4. Measure the resistance between the receiving control unit and the transmitting control unit on the B-CAN_H circuit and the B-CAN_L circuit.

Test condition	Vehicle OFF (LOCK) mode Power seat control unit connector A (20P): disconnected Transmitting control unit connector(s) for indicated DTCs: disconnected

DTC	Circuit name	Receiving control unit		Transmitting control unit	
		Connector	Terminal	Connector	Terminal
U0199	B-CAN_H	Power seat control unit connector A (20P)	No. 16	Power window master switch 37P connector	No. 32
	B-CAN_L		No. 17		No. 31
U1281	B-CAN_H	Power seat control unit connector A (20P)	No. 16	Body control module connector B (36P)	No. 20
	B-CAN_L		No. 17		No. 21
U128D	B-CAN_H	Power seat control unit connector A (20P)	No. 16	Gauge control module connector A (32P)	No. 30
	B-CAN_L		No. 17		No. 31

Is there 1.0 Ω or less?

YES

The B-CAN_H wire and the B-CAN_L wire are OK.

Refer to the DTC shown on the display, then replace the control unit based on the instructions (see table).

DTC	Operation for transmitting control unit
U0199	Power window master switch
U1281	Body control module

DTC	Operation for transmitting control unit
U128D	Gauge control module

NO

Repair an open in the B-CAN_H wire and/or the B-CAN_L wire.

DTC U1280 (POWER SEAT CONTROL UNIT)

DTC U1280 : B-CAN communication bus line error (BUS-OFF)

NOTE: If you are troubleshooting multiple DTCs, be sure to follow the instructions in B-CAN System Diagnosis Test Mode A .

DTC Description	DTC
U1280 B-CAN communication bus line error (BUS-OFF)	B

DTC (Power Seat Control Unit)

1. Problem verification

   -1. Clear the DTCs with the HDS.

   -2. Turn the vehicle to the OFF (LOCK) mode and then the ON mode.

   -3. Wait for at least 6 seconds.

   -4. Check for DTCs with the HDS.

DTC Description	DTC
U1280 B-CAN communication bus line error (BUS-OFF)	B

Is DTC U1280 indicated?

YES

Go to body control module DTC U1280 troubleshooting .

NO

Intermittent failure, the system is OK at this time. Check for loose or poor connections.

DTC TROUBLESHOOTING

DTC B1802

DTC B1802 : Power seat control unit internal (EEPROM) error

NOTE: If you are troubleshooting multiple DTCs, be sure to follow the instructions in B-CAN System Diagnosis Test Mode A .

DTC Description	DTC
B1802 Power seat control unit internal (EEPROM) error	B

DTC (Power Seat Control Unit)

1. Problem verification

   -1. Clear the DTCs with the HDS.

   -2. Turn the vehicle to the OFF (LOCK) mode and then the ON mode.

   -3. Wait for at least 6 seconds.

   -4. Check for DTCs with the HDS.

DTC Description	DTC
B1802 Power seat control unit internal (EEPROM) error	B

Is DTC B1802 indicated?

YES

Replace the power seat control unit .

NO

Intermittent failure, the system is OK at this time.

DTC B1825

DTC B1825 : Slide pulse error (no change in pulse for 1 second)

NOTE:

- If you are troubleshooting multiple DTCs, be sure to follow the instructions in B-CAN System Diagnosis Test Mode A .
- Before troubleshooting, make sure the fuses associated with the system is OK.

DTC Description	DTC
B1825 Slide pulse error (no change in pulse for 1 second)	B

DTC (Power Seat Control Unit)

1. Problem verification

-1. Clear the DTCs with the HDS.

-2. Press the engine start/stop switch at least twenty times, then wait for at least 20 seconds.

-3. Operate the power seat adjustment switch for several seconds in each direction.

NOTE: DTC B1825 is stored when the slide switch is operated more than 1 second after the seat moves to the most forward or backward position, even when the system is OK.

-4. Check for DTCs with the HDS.

DTC Description	DTC
B1825 Slide pulse error (no change in pulse for 1 second)	B

Is DTC B1825 indicated?

YES

Go to step 2.

NO

Intermittent failure, the system is OK at this time. Check for loose or poor connections.

2. DTC check

-1. Check for DTCs with the HDS.

DTC Description	DTC
B1825 Slide pulse error (no change in pulse for 1 second)	B
B1826 Front height pulse error (no change in pulse for 1 second)	B
B1827 Rear height pulse error (no change in pulse for 1 second)	B
B1828 Recline pulse error (no change in pulse for 1 second)	B
B1836 Power Seat Position Sensor circuit short	B

Any of DTC are indicated at the same time with DTC B1825?

DTC B1825 is indicated only

Go to step 3.

DTC B1836 is also indicated

Go to the DTC B1836 troubleshooting.

DTC B1826, B1827, and/or B1828 are also indicated

Go to step 7.

3. Determine possible failure area (motor operation, motor sensor)

-1. Turn the vehicle to the OFF (LOCK) mode and then the ON mode.

-2. Operate the slide switch for 2 seconds, and check the slide motor operation.

Does the slide motor run smoothly?

YES

Go to step 4.

NO

Go to step 10.

4. Open wire check (SLSE, SEG lines)

-1. Turn the vehicle to the OFF (LOCK) mode.

-2. Disconnect the following connectors.

Slide motor/position sensor 5P connector
Power seat control unit connector A (20P)

-3. Check for continuity between test points 1 and 2.

Test condition	Vehicle OFF (LOCK) mode Slide motor/position sensor 5P connector: disconnected Power seat control unit connector A (20P): disconnected
Test point 1	Slide motor/position sensor 5P connector (female terminals) No. 2: ①
Test point 2	**Power seat control unit connector A (20P) No. 8**

Test point 1	Slide motor/position sensor 5P connector (female terminals) No. 3: ①
Test point 2	**Power seat control unit connector A (20P) No. 19**

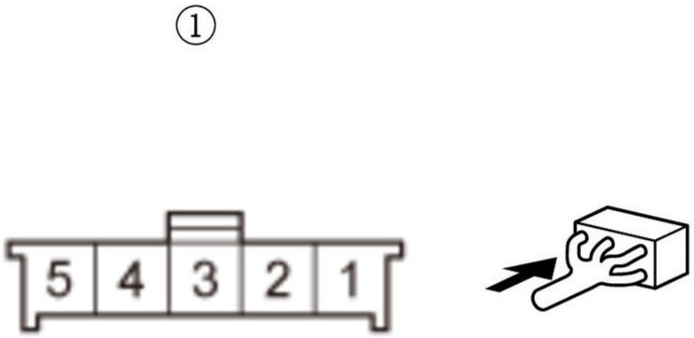

Is there continuity?

YES

The SLSE, SEG wires are not open. Go to step 5.

NO

Repair an open or high resistance in the wire.

5. Shorted wire check (SLSE line)

-1. Check for continuity between test points 1 and 2.

Test condition	Vehicle OFF (LOCK) mode Slide motor/position sensor 5P connector: disconnected Power seat control unit connector A (20P): disconnected
Test point 1	**Power seat control unit connector A (20P) No. 8**
Test point 2	Body ground

Is there continuity?

YES

Repair a short to ground in the wire.

NO

The SLSE wire is not shorted. Go to step 6.

6. Determine possible failure area (Power seat control unit, slide position sensor, SLSE line)

-1. Reconnect the following connector.

Power seat control unit connector A (20P)

-2. Turn the vehicle to the ON mode.

-3. Measure the voltage between test points 1 and 2.

Test condition	Vehicle ON mode Slide motor/position sensor 5P connector: disconnected
Test point 1	**Power seat control unit connector A (20P) No. 8**
Test point 2	**Power seat control unit connector A (20P) No. 19**

Is there voltage?

About 5 V

Faulty slide position sensor; **replace the seat frame assembly** .

No voltage

Replace the power seat control unit .

Battery voltage

Repair a short to power in the wire.

7. Open wire check (SEG line)

-1. Turn the vehicle to the OFF (LOCK) mode.

-2. Disconnect the following connectors.

Slide motor/position sensor 5P connector Front up-down motor/position sensor 6P connector Rear up-down motor/position sensor 6P connector

Recline motor/position sensor 6P connector Power seat control unit connector A (20P)

-3. Check for continuity between test points 1 and 2.

Test condition	Vehicle OFF (LOCK) mode Slide motor/position sensor 5P connector: disconnected Front up-down motor/position sensor 6P connector: disconnected Rear up-down motor/position sensor 6P connector: disconnected Recline motor/position sensor 6P connector: disconnected Power seat control unit connector A (20P): disconnected
Test point 1	Slide motor/position sensor 5P connector (female terminals) No. 3: ①
Test point 2	**Power seat control unit connector A (20P) No. 19**

Test point 1	Front up-down motor/position sensor 6P connector (female terminals) No. 2: ②
Test point 2	**Power seat control unit connector A (20P) No. 19**

Test point 1	Rear up-down motor/position sensor 6P connector (female terminals) No. 2: ③
Test point 2	**Power seat control unit connector A (20P) No. 19**

Test point 1	Recline motor/position sensor 6P connector (female terminals) No. 2: ④
Test point 2	**Power seat control unit connector A (20P) No. 19**

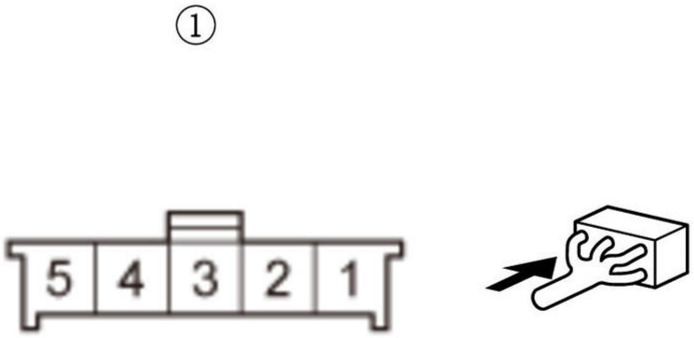

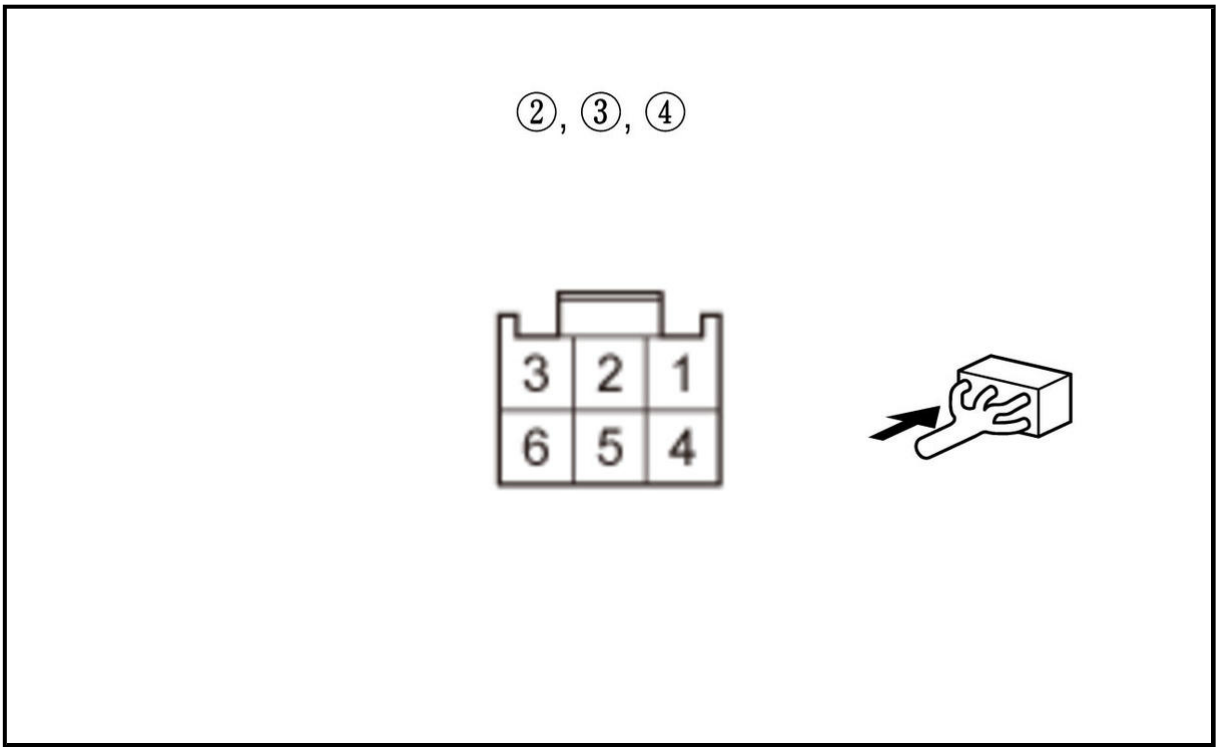

Is there continuity?

YES

The SEG wire is OK. Go to step 8.

NO

Repair an open or high resistance in the wire.

8. Shorted wire check (VCC line)

-1. Check for continuity between test points 1 and 2.

Test condition	Vehicle OFF (LOCK) mode Slide motor/position sensor 5P connector: disconnected Front up-down motor/position sensor 6P connector: disconnected Rear up-down motor/position sensor 6P connector: disconnected Recline motor/position sensor 6P connector: disconnected Power seat control unit connector A (20P): disconnected
Test point 1	**Power seat control unit connector A (20P) No. 6**
Test point 2	Body ground

Is there continuity?

YES

Repair a short to ground in the wire.

NO

The VCC wire is not shorted. Go to step 9.

9. Determine possible failure area (Power seat control unit, VCC line)

-1. Reconnect the following connector.

Power seat control unit connector A (20P)

-2. Turn the vehicle to the ON mode.

-3. Measure the voltage between test points 1 and 2.

Test condition	Vehicle ON mode Slide motor/position sensor 5P connector: disconnected Front up-down motor/position sensor 6P connector: disconnected Rear up-down motor/position sensor 6P connector: disconnected Recline motor/position sensor 6P connector: disconnected
Test point 1	**Power seat control unit connector A (20P) No. 6**
Test point 2	**Power seat control unit connector A (20P) No. 19**

Is there battery voltage when the slide switch is operated?

YES

Repair an open or high resistance in the wire.

NO

Replace the power seat control unit .

10. Open wire check (+B/P-SEAT1 line)

-1. Measure the voltage between test points 1 and 2.

Test condition	Vehicle OFF (LOCK) mode
Test point 1	**Power seat control unit connector B (12P) No. 6**
Test point 2	Body ground

Is there battery voltage?

YES

The +B/P-SEAT1 wire is not open. Go to step 11.

NO

Repair an open or high resistance in the wire.

11. Open wire check (GND lines)

-1. Measure the voltage between test points 1 and 2.

Test condition	Vehicle OFF (LOCK) mode
Test point 1	**Power seat control unit connector B (12P) No. 2**
Test point 2	Body ground

Test point 1	**Power seat control unit connector B (12P) No. 5**
Test point 2	Body ground

Test point 1	**Power seat control unit connector A (20P) No. 20**
Test point 2	Body ground

Is there 0.2 V or more?

YES

Repair an open or high resistance in the wire or poor ground (G501).

NO

The GND wires are not open. Go to step 12.

12. Open wire check (SLIDE FR, SLIDE RR lines)

-1. Disconnect the following connectors.

Slide motor/position sensor 5P connector
Power seat control unit connector B (12P)

-2. Check for continuity between test points 1 and 2.

Test condition	Vehicle OFF (LOCK) mode Slide motor/position sensor 5P connector: disconnected Power seat control unit connector B (12P): disconnected
Test point 1	Slide motor/position sensor 5P connector (female terminals) No. 5: ①
Test point 2	**Power seat control unit connector B (12P) No. 3**

Test point 1	Slide motor/position sensor 5P connector (female terminals) No. 1: ①
Test point 2	**Power seat control unit connector B (12P) No. 1**

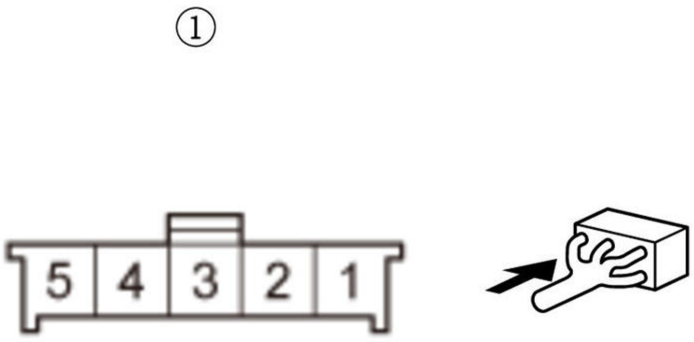

Is there continuity?

YES

The SLIDE FR and SLIDE RR wires are not open. Go to step 13.

NO

Repair an open or high resistance in the wire.

13. Shorted wire check (SLIDE FR, SLIDE RR lines)

    -1. Check for continuity between test points 1 and 2.

Test condition	Vehicle OFF (LOCK) mode Slide motor/position sensor 5P connector: disconnected Power seat control unit connector B (12P): disconnected
Test point 1	**Power seat control unit connector B (12P) No. 3**
Test point 2	Body ground

Test point 1	**Power seat control unit connector B (12P) No. 1**
Test point 2	Body ground

    Is there continuity?

    YES

    Repair a short to ground in the wire.

    NO

    The SLIDE FR, SLIDE RR wires are OK. Go to step 14.

14. Slide motor check

    -1. **Test the slide motor** .

    Is the motor OK?

    YES

    Replace the power seat control unit .

    NO

    Faulty slide motor/position sensor; **replace the seat frame assembly** .

DTC B1826

DTC B1826 : Front height pulse error (no change in pulse for 1 second)

NOTE:

- If you are troubleshooting multiple DTCs, be sure to follow the instructions in **B-CAN System Diagnosis Test Mode A** .
- Before troubleshooting, make sure the fuses associated with the system is OK.

DTC Description	DTC
B1826 Front height pulse error (no change in pulse for 1 second)	B

DTC (Power Seat Control Unit)

1. Problem verification

    -1. Clear the DTCs with the HDS.

    -2. Press the engine start/stop switch at least twenty times, then wait for at least 20 seconds.

-3. Operate the power seat adjustment switch for several seconds in each direction.

NOTE: DTC B1826 is stored when the front up-down switch is operated more than 1 second after the seat moves to the most up or down position, even when the system is OK.

-4. Check for DTCs with the HDS.

DTC Description	DTC
B1826 Front height pulse error (no change in pulse for 1 second)	B

Is DTC B1826 indicated?

YES

Go to step 2.

NO

Intermittent failure, the system is OK at this time. Check for loose or poor connections.

2. DTC check

-1. Check for DTCs with the HDS.

DTC Description	DTC
B1825 Slide pulse error (no change in pulse for 1 second)	B
B1826 Front height pulse error (no change in pulse for 1 second)	B
B1827 Rear height pulse error (no change in pulse for 1 second)	B
B1828 Recline pulse error (no change in pulse for 1 second)	B
B1836 Power Seat Position Sensor circuit short	B

Any of DTC are indicated at the same time with DTC B1826?

DTC B1826 is indicated only

Go to step 3.

DTC B1836 is also indicated

Go to the DTC B1836 troubleshooting.

DTC B1825, B1827, and/or B1828 are also indicated

Go to step 7.

3. Determine possible failure area (motor operation, motor sensor)

-1. Turn the vehicle to the OFF (LOCK) mode and then the ON mode.

-2. Operate the front up-down switch for 2 seconds, and check the front up-down motor operation.

Does the front up-down motor run smoothly?

YES

Go to step 4.

NO

Go to step 10.

4. Open wire check (TISE, SEG lines)

-1. Turn the vehicle to the OFF (LOCK) mode.

-2. Disconnect the following connectors.

Front up-down motor/position sensor 6P connector
Power seat control unit connector A (20P)

-3. Check for continuity between test points 1 and 2.

Test condition	Vehicle OFF (LOCK) mode Front up-down motor/position sensor 6P connector: disconnected Power seat control unit connector A (20P): disconnected
Test point 1	Front up-down motor/position sensor 6P connector (female terminals) No. 1: ①
Test point 2	**Power seat control unit connector A (20P) No. 7**

Test point 1	Front up-down motor/position sensor 6P connector (female terminals) No. 2: ①
Test point 2	**Power seat control unit connector A (20P) No. 19**

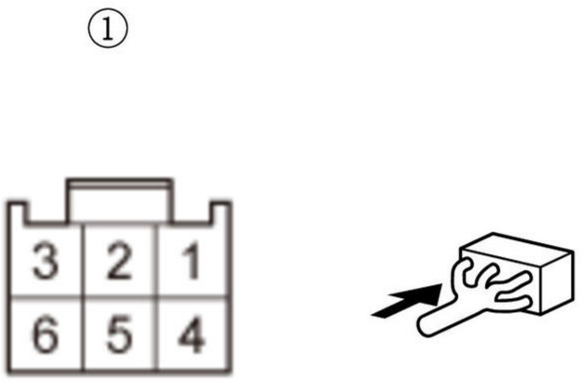

Is there continuity?

YES

The TISE, SEG wires are not open. Go to step 5.

NO

Repair an open or high resistance in the wire.

5. Shorted wire check (TISE line)

-1. Check for continuity between test points 1 and 2.

Test condition	Vehicle OFF (LOCK) mode Front up-down motor/position sensor 6P connector: disconnected Power seat control unit connector A (20P): disconnected
Test point 1	**Power seat control unit connector A (20P) No. 7**
Test point 2	Body ground

Is there continuity?

YES

Repair a short to ground in the wire.

NO

The TISE wire is not shorted. Go to step 6.

6. Determine possible failure area (Power seat control unit, front up-down position sensor, TISE line)

-1. Reconnect the following connector.

Power seat control unit connector A (20P)

-2. Turn the vehicle to the ON mode.

-3. Measure the voltage between test points 1 and 2.

Test condition	Vehicle ON mode Front up-down motor/position sensor 6P connector: disconnected
Test point 1	**Power seat control unit connector A (20P) No. 7**
Test point 2	**Power seat control unit connector A (20P) No. 19**

Is there voltage?

About 5 V

Faulty front up-down position sensor; **replace the seat frame assembly** .

No voltage

Replace the power seat control unit .

Battery voltage

Repair a short to power in the wire.

7. Open wire check (SEG line)

-1. Turn the vehicle to the OFF (LOCK) mode.

-2. Disconnect the following connectors.

Slide motor/position sensor 5P connector Front up-down motor/position sensor 6P connector Rear up-down motor/position sensor 6P connector Recline motor/position sensor 6P connector Power seat control unit connector A (20P)

-3. Check for continuity between test points 1 and 2.

Test condition	Vehicle OFF (LOCK) mode Slide motor/position sensor 5P connector: disconnected Front up-down motor/position sensor 6P connector: disconnected Rear up-down motor/position sensor 6P connector: disconnected Recline motor/position sensor 6P connector: disconnected Power seat control unit connector A (20P): disconnected
Test point 1	Slide motor/position sensor 5P connector (female terminals) No. 3: ①
Test point 2	**Power seat control unit connector A (20P) No. 19**

Test point 1	Front up-down motor/position sensor 6P connector (female terminals) No. 2: ②
Test point 2	**Power seat control unit connector A (20P) No. 19**

Test point 1	Rear up-down motor/position sensor 6P connector (female terminals) No. 2: ③

Test point 2	**Power seat control unit connector A (20P) No. 19**

Test point 1	Recline motor/position sensor 6P connector (female terminals) No. 2: ④
Test point 2	**Power seat control unit connector A (20P) No. 19**

①

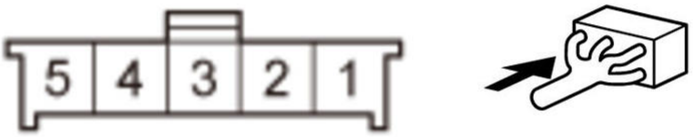

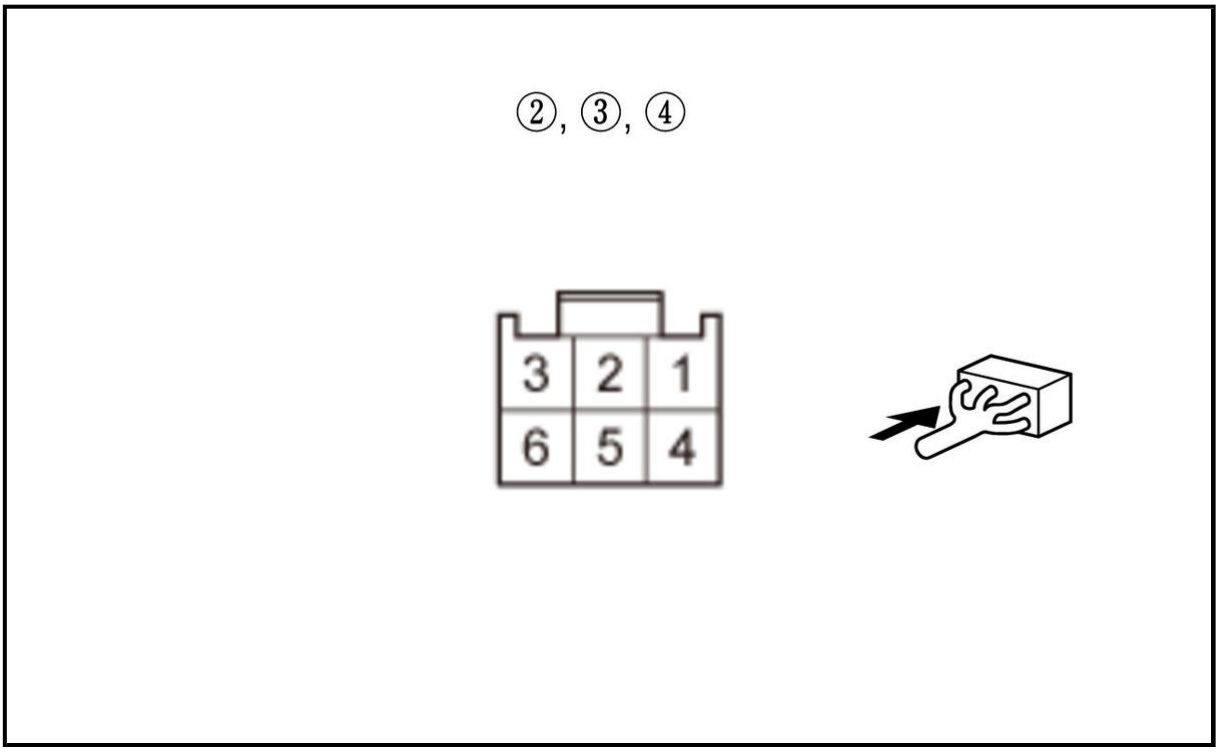

Is there continuity?

YES

The SEG wire is OK. Go to step 8.

NO

Repair an open or high resistance in the wire.

8. Shorted wire check (VCC line)

-1. Check for continuity between test points 1 and 2.

Test condition	Vehicle OFF (LOCK) mode Slide motor/position sensor 5P connector: disconnected Front up-down motor/position sensor 6P connector: disconnected Rear up-down motor/position sensor 6P connector: disconnected Recline motor/position sensor 6P connector: disconnected Power seat control unit connector A (20P): disconnected
Test point 1	**Power seat control unit connector A (20P) No. 6**
Test point 2	Body ground

Is there continuity?

YES

Repair a short to ground in the wire.

NO

The VCC wire is not shorted. Go to step 9.

9. Determine possible failure area (Power seat control unit, VCC line)

-1. Reconnect the following connector.

Power seat control unit connector A (20P)

-2. Turn the vehicle to the ON mode.

-3. Measure the voltage between test points 1 and 2.

Test condition	Vehicle ON mode Slide motor/position sensor 5P connector: disconnected Front up-down motor/position sensor 6P connector: disconnected Rear up-down motor/position sensor 6P connector: disconnected Recline motor/position sensor 6P connector: disconnected
Test point 1	**Power seat control unit connector A (20P) No. 6**
Test point 2	**Power seat control unit connector A (20P) No. 19**

Is there battery voltage when the front up-down switch is operated?

YES

Repair an open or high resistance in the wire.

NO

Replace the power seat control unit .

10. Open wire check (+B/P-SEAT1 line)

-1. Measure the voltage between test points 1 and 2.

Test condition	Vehicle OFF (LOCK) mode
Test point 1	**Power seat control unit connector B (12P) No. 6**
Test point 2	Body ground

Is there battery voltage?

YES

The +B/P-SEAT1 wire is not open. Go to step 11.

NO

Repair an open or high resistance in the wire.

11. Open wire check (GND lines)

-1. Measure the voltage between test points 1 and 2.

Test condition	Vehicle OFF (LOCK) mode
Test point 1	**Power seat control unit connector B (12P) No. 2**
Test point 2	Body ground

Test point 1	**Power seat control unit connector B (12P) No. 5**
Test point 2	Body ground

Test point 1	**Power seat control unit connector A (20P) No. 20**
Test point 2	Body ground

Is there 0.2 V or more?

YES

Repair an open or high resistance in the wire or poor ground (G501).

NO

The GND wires are not open. Go to step 12.

12. Open wire check (TILT UP, TILT DOWN lines)

-1. Disconnect the following connectors.

Front up-down motor/position sensor 6P connector
Power seat control unit connector B (12P)

-2. Check for continuity between test points 1 and 2.

Test condition	Vehicle OFF (LOCK) mode Front up-down motor/position sensor 6P connector: disconnected Power seat control unit connector B (12P): disconnected
Test point 1	Front up-down motor/position sensor 6P connector (female terminals) No. 6: ①
Test point 2	**Power seat control unit connector B (12P) No. 10**

Test point 1	Front up-down motor/position sensor 6P connector (female terminals) No. 4: ①
Test point 2	**Power seat control unit connector B (12P) No. 7**

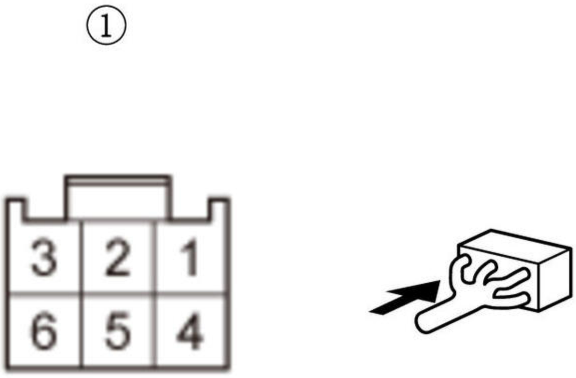

Is there continuity?

YES

The TILT UP and TILT DOWN wires are not open. Go to step 13.

NO

Repair an open or high resistance in the wire.

13. Shorted wire check (TILT UP, TILT DOWN lines)

-1. Check for continuity between test points 1 and 2.

Test condition	Vehicle OFF (LOCK) mode Front up-down motor/position sensor 6P connector: disconnected Power seat control unit connector B (12P): disconnected
Test point 1	**Power seat control unit connector B (12P) No. 10**
Test point 2	Body ground

Test point 1	**Power seat control unit connector B (12P) No. 7**
Test point 2	Body ground

Is there continuity?

YES

Repair a short to ground in the wire.

NO

The TILT UP and TILT DOWN wires are OK. Go to step 14.

14. Front up-down motor check

-1. **Test the front up-down motor** .

Is the motor OK?

YES

Replace the power seat control unit .

NO

Faulty front up-down motor/position sensor; **replace the seat frame assembly** .

DTC B1827

DTC B1827 : Rear height pulse error (no change in pulse for 1 second)

NOTE:

- If you are troubleshooting multiple DTCs, be sure to follow the instructions in **B-CAN System Diagnosis Test Mode A** .
- Before troubleshooting, make sure the fuses associated with the system is OK.

DTC Description	DTC
B1827 Rear height pulse error (no change in pulse for 1 second)	B

DTC (Power Seat Control Unit)

1. Problem verification

-1. Clear the DTCs with the HDS.

-2. Press the engine start/stop switch at least twenty times, then wait for at least 20 seconds.

-3. Operate the power seat adjustment switch for several seconds in each direction.

NOTE: DTC B1827 is stored when the rear up-down switch is operated more than 1 second after the seat moves to the most up or down position, even when the system is OK.

-4. Check for DTCs with the HDS.

DTC Description	DTC
B1827 Rear height pulse error (no change in pulse for 1 second)	B

Is DTC B1827 indicated?

YES

Go to step 2.

NO

Intermittent failure, the system is OK at this time. Check for loose or poor connections.

2. DTC check

-1. Check for DTCs with the HDS.

DTC Description	DTC
B1825 Slide pulse error (no change in pulse for 1 second)	B
B1826 Front height pulse error (no change in pulse for 1 second)	B
B1827 Rear height pulse error (no change in pulse for 1 second)	B
B1828 Recline pulse error (no change in pulse for 1 second)	B
B1836 Power Seat Position Sensor circuit short	B

Any of DTC are indicated at the same time with DTC B1827?

DTC B1827 is indicated only

Go to step 3.

DTC B1836 is also indicated

Go to the DTC B1836 troubleshooting.

DTC B1825, B1826, and/or B1828 are also indicated

Go to step 7.

3. Determine possible failure area (motor operation, motor sensor)

-1. Turn the vehicle to the OFF (LOCK) mode and then the ON mode.

-2. Operate the rear up-down switch for 2 seconds, and check the rear up-down motor operation.

Does the rear up-down motor run smoothly?

YES

Go to step 4.

NO

Go to step 10.

4. Open wire check (HESE, SEG lines)

-1. Turn the vehicle to the OFF (LOCK) mode.

-2. Disconnect the following connectors.

Rear up-down motor/position sensor 6P connector
Power seat control unit connector A (20P)

-3. Check for continuity between test points 1 and 2.

Test condition	Vehicle OFF (LOCK) mode Rear up-down motor/position sensor 6P connector: disconnected Power seat control unit connector A (20P): disconnected
Test point 1	Rear up-down motor/position sensor 6P connector (female terminals) No. 1: ①
Test point 2	**Power seat control unit connector A (20P) No. 9**

Test point 1	Rear up-down motor/position sensor 6P connector (female terminals) No. 2: ①
Test point 2	**Power seat control unit connector A (20P) No. 19**

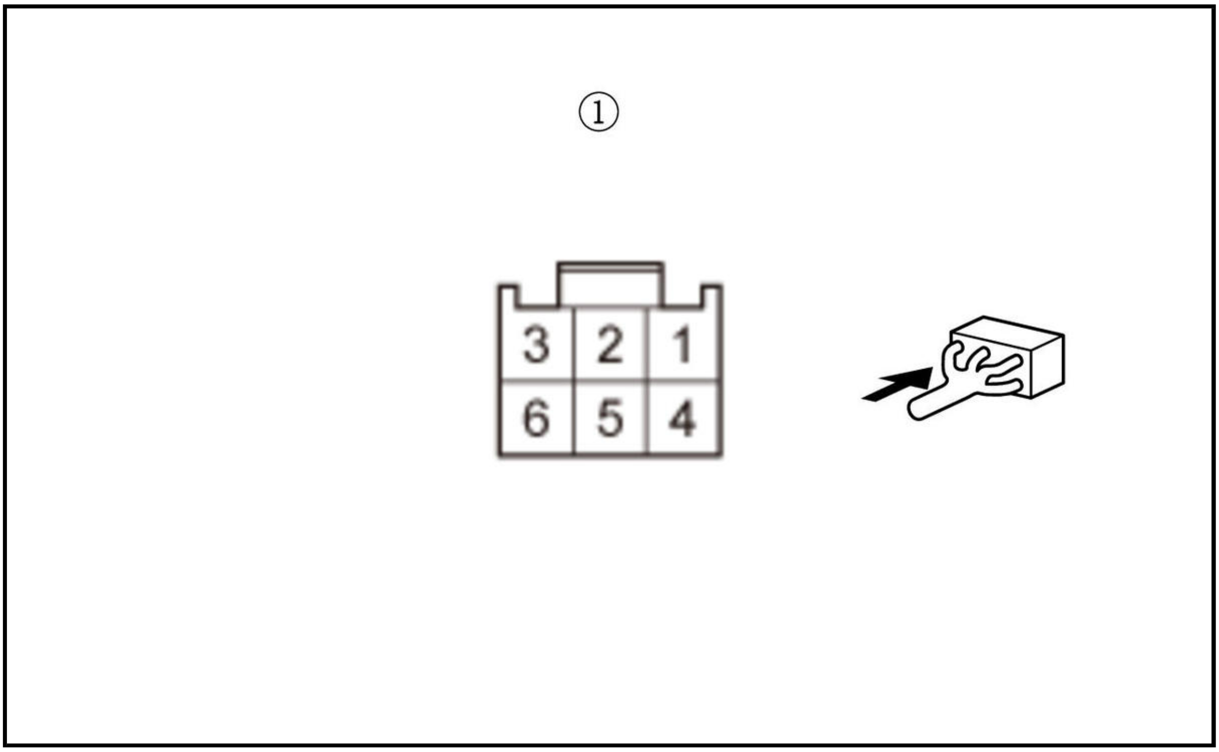

Is there continuity?

YES

The HESE, SEG wires are not open. Go to step 5.

NO

Repair an open or high resistance in the wire.

5. Shorted wire check (HESE line)

-1. Check for continuity between test points 1 and 2.

Test condition	Vehicle OFF (LOCK) mode Rear up-down motor/position sensor 6P connector: disconnected Power seat control unit connector A (20P): disconnected
Test point 1	**Power seat control unit connector A (20P) No. 9**
Test point 2	Body ground

Is there continuity?

YES

Repair a short to ground in the wire.

NO

The HESE wire is not shorted. Go to step 6.

6. Determine possible failure area (Power seat control unit, rear up-down position sensor, HESE line)

-1. Reconnect the following connector.

Power seat control unit connector A (20P)

-2. Turn the vehicle to the ON mode.

-3. Measure the voltage between test points 1 and 2.

Test condition	Vehicle ON mode Rear up-down motor/position sensor 6P connector: disconnected
Test point 1	**Power seat control unit connector A (20P) No. 9**
Test point 2	**Power seat control unit connector A (20P) No. 19**

Is there voltage?

About 5 V

Faulty rear up-down position sensor; **replace the seat frame assembly** .

No voltage

Replace the power seat control unit .

Battery voltage

Repair a short to power in the wire (sensor line).

7. Open wire check (SEG line)

-1. Turn the vehicle to the OFF (LOCK) mode.

-2. Disconnect the following connectors.

Slide motor/position sensor 5P connector Front up-down motor/position sensor 6P connector Rear up-down motor/position sensor 6P connector Recline motor/position sensor 6P connector Power seat control unit connector A (20P)

-3. Check for continuity between test points 1 and 2.

Test condition	Vehicle OFF (LOCK) mode Slide motor/position sensor 5P connector: disconnected Front up-down motor/position sensor 6P connector: disconnected Rear up-down motor/position sensor 6P connector: disconnected Recline motor/position sensor 6P connector: disconnected Power seat control unit connector A (20P): disconnected
Test point 1	Slide motor/position sensor 5P connector (female terminals) No. 3: ①
Test point 2	**Power seat control unit connector A (20P) No. 19**

Test point 1	Front up-down motor/position sensor 6P connector (female terminals) No. 2: ②
Test point 2	**Power seat control unit connector A (20P) No. 19**

Test point 1	Rear up-down motor/position sensor 6P connector (female terminals) No. 2: ③

Test point 2	**Power seat control unit connector A (20P) No. 19**

Test point 1	Recline motor/position sensor 6P connector (female terminals) No. 2: ④
Test point 2	**Power seat control unit connector A (20P) No. 19**

①

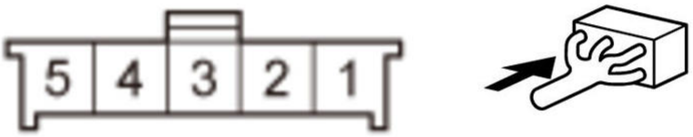

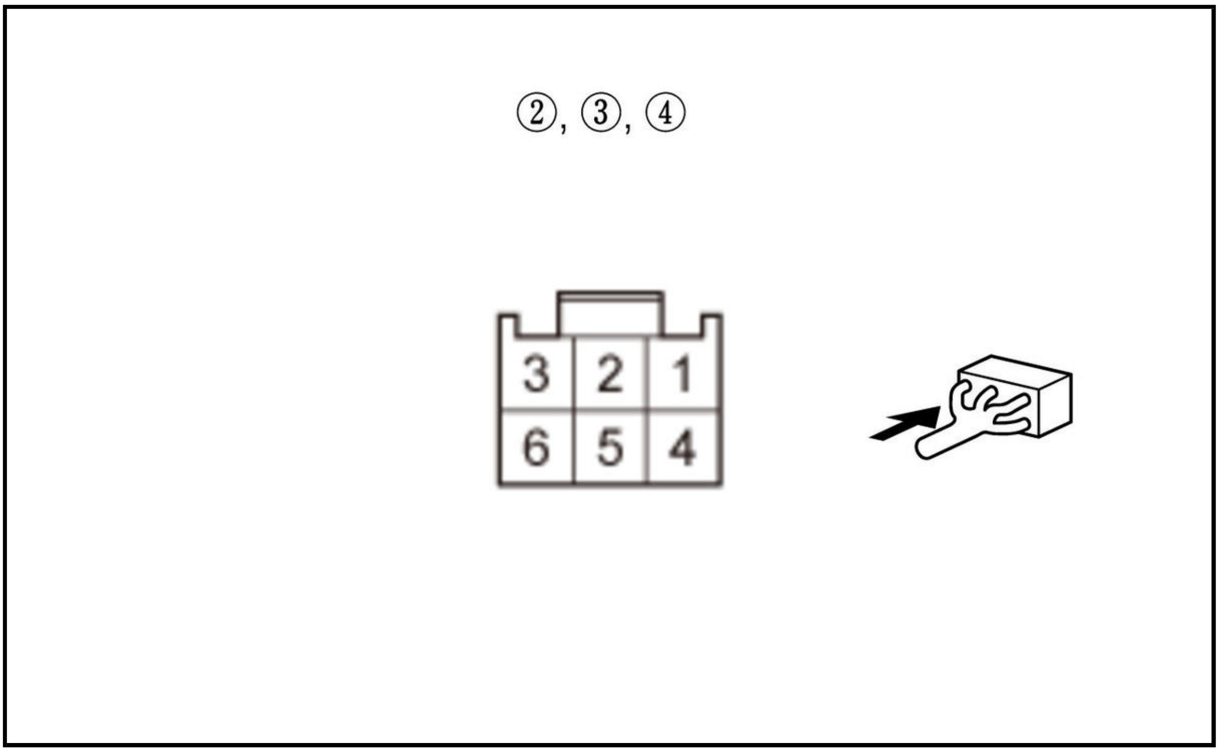

Is there continuity?

YES

The SEG wire is OK. Go to step 8.

NO

Repair an open or high resistance in the wire.

8. Shorted wire check (VCC line)

-1. Check for continuity between test points 1 and 2.

Test condition	Vehicle OFF (LOCK) mode Slide motor/position sensor 5P connector: disconnected Front up-down motor/position sensor 6P connector: disconnected Rear up-down motor/position sensor 6P connector: disconnected Recline motor/position sensor 6P connector: disconnected Power seat control unit connector A (20P): disconnected
Test point 1	**Power seat control unit connector A (20P) No. 6**
Test point 2	Body ground

Is there continuity?

YES

Repair a short to ground in the wire.

NO

The VCC wire is not shorted. Go to step 9.

9. Determine possible failure area (Power seat control unit, VCC line)

-1. Reconnect the following connector.

Power seat control unit connector A (20P)

-2. Turn the vehicle to the ON mode.

-3. Measure the voltage between test points 1 and 2.

Test condition	Vehicle ON mode Slide motor/position sensor 5P connector: disconnected Front up-down motor/position sensor 6P connector: disconnected Rear up-down motor/position sensor 6P connector: disconnected Recline motor/position sensor 6P connector: disconnected
Test point 1	**Power seat control unit connector A (20P) No. 6**
Test point 2	**Power seat control unit connector A (20P) No. 19**

Is there battery voltage when the rear up-down switch is operated?

YES

Repair an open or high resistance in the wire.

NO

Replace the power seat control unit .

10. Open wire check (+B/P-SEAT2 line)

-1. Measure the voltage between test points 1 and 2.

Test condition	Vehicle OFF (LOCK) mode
Test point 1	**Power seat control unit connector B (12P) No. 12**
Test point 2	Body ground

Is there battery voltage?

YES

The +B/P-SEAT2 wire is not open. Go to step 11.

NO

Repair an open or high resistance in the wire.

11. Open wire check (GND lines)

-1. Measure the voltage between test points 1 and 2.

Test condition	Vehicle OFF (LOCK) mode
Test point 1	**Power seat control unit connector B (12P) No. 2**
Test point 2	Body ground

Test point 1	**Power seat control unit connector B (12P) No. 5**
Test point 2	Body ground

Test point 1	**Power seat control unit connector A (20P) No. 20**
Test point 2	Body ground

Is there 0.2 V or more?

YES

Repair an open or high resistance in the wire or poor ground (G501).

NO

The GND wires are not open. Go to step 12.

12. Open wire check (HEIGHT UP, HEIGHT DOWN lines)

-1. Disconnect the following connectors.

Rear up-down motor/position sensor 6P connector
Power seat control unit connector B (12P)

-2. Check for continuity between test points 1 and 2.

Test condition	Vehicle OFF (LOCK) mode Rear up-down motor/position sensor 6P connector: disconnected Power seat control unit connector B (12P): disconnected
Test point 1	Rear up-down motor/position sensor 6P connector (female terminals) No. 4: ①
Test point 2	**Power seat control unit connector B (12P) No. 9**

Test point 1	Rear up-down motor/position sensor 6P connector (female terminals) No. 6: ①
Test point 2	**Power seat control unit connector B (12P) No. 4**

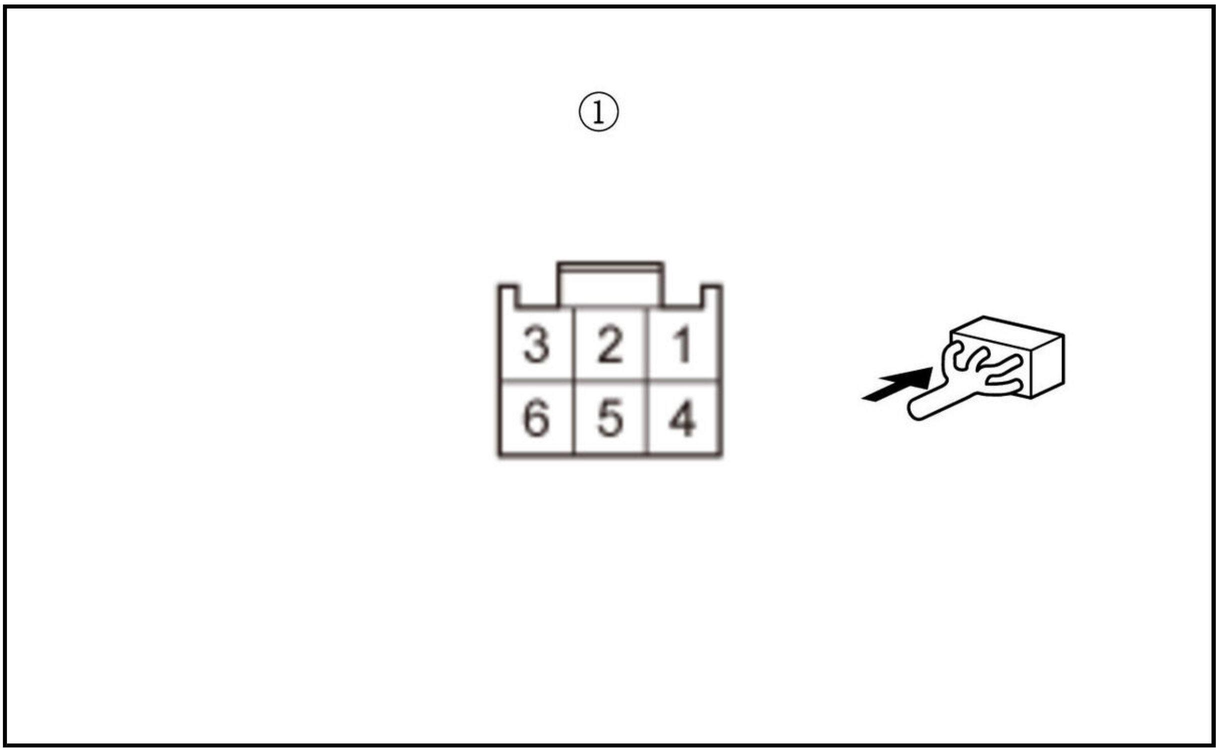

Is there continuity?

YES

The HEIGHT UP and HEIGHT DOWN wires are not open. Go to step 13.

NO

Repair an open or high resistance in the wire.

13. Shorted wire check (HEIGHT UP, HEIGHT DOWN lines)

-1. Check for continuity between test points 1 and 2.

Test condition	Vehicle OFF (LOCK) mode Rear up-down motor/position sensor 6P connector: disconnected Power seat control unit connector B (12P): disconnected
Test point 1	**Power seat control unit connector B (12P) No. 9**
Test point 2	Body ground

Test point 1	**Power seat control unit connector B (12P) No. 4**
Test point 2	Body ground

Is there continuity?

YES

Repair a short to ground in the wire.

NO

The HEIGHT UP and HEIGHT DOWN wires are OK. Go to step 14.

14. Rear up-down motor check

-1. **Test the rear up-down motor** .

Is the motor OK?

YES

Replace the power seat control unit .

NO

Faulty rear up-down motor/position sensor; **replace the seat frame assembly** .

DTC B1828

DTC B1828 : Recline pulse error (no change in pulse for 1 second)

NOTE:

- If you are troubleshooting multiple DTCs, be sure to follow the instructions in **B-CAN System Diagnosis Test Mode A** .
- When check the REC FR line circuit, do not operate the rear seat access lever, because limit switch is located in the circuit.
- Before troubleshooting, make sure the fuses associated with the system is OK.

DTC Description	DTC
B1828 Recline pulse error (no change in pulse for 1 second)	B

DTC (Power Seat Control Unit)

1. Problem verification

-1. Clear the DTCs with the HDS.

-2. Press the engine start/stop switch at least twenty times, then wait for at least 20 seconds.

-3. Operate the power seat adjustment switch for several seconds in each direction.

NOTE: DTC B1828 is stored when the recline switch is operated more than 1 second after the seat moves to the most forward or backward position, even when the system is OK.

-4. Check for DTCs with the HDS.

DTC Description	DTC
B1828 Recline pulse error (no change in pulse for 1 second)	B

Is DTC B1828 indicated?

YES

Go to step 2.

NO

Intermittent failure, the system is OK at this time. Check for loose or poor connections.

2. DTC check

-1. Check for DTCs with the HDS.

DTC Description	DTC
B1825 Slide pulse error (no change in pulse for 1 second)	B
B1826 Front height pulse error (no change in pulse for 1 second)	B
B1827 Rear height pulse error (no change in pulse for 1 second)	B
B1828 Recline pulse error (no change in pulse for 1 second)	B
B1836 Power Seat Position Sensor circuit short	B

Any of DTC are indicated at the same time with DTC B1828?

DTC B1828 is indicated only

Go to step 3.

DTC B1836 is also indicated

Go to the DTC B1836 troubleshooting.

DTC B1825, B1826, and/or B1827 are also indicated

Go to step 7.

3. Determine possible failure area (motor operation, motor sensor)

-1. Turn the vehicle to the OFF (LOCK) mode and then the ON mode.

-2. Operate the recline switch for 2 seconds, and check the recline motor operation.

Does the recline motor run smoothly?

YES

Go to step 4.

NO

Go to step 10.

4. Open wire check (RESE, SEG lines)

-1. Turn the vehicle to the OFF (LOCK) mode.

-2. Disconnect the following connectors.

Recline motor/position sensor 6P connector
Power seat control unit connector A (20P)

-3. Check for continuity between test points 1 and 2.

Test condition	Vehicle OFF (LOCK) mode Recline motor/position sensor 6P connector: disconnected Power seat control unit connector A (20P): disconnected
Test point 1	Recline motor/position sensor 6P connector (female terminals) No. 1: ①
Test point 2	**Power seat control unit connector A (20P) No. 10**

Test point 1	Recline motor/position sensor 6P connector (female terminals) No. 2: ①
Test point 2	**Power seat control unit connector A (20P) No. 19**

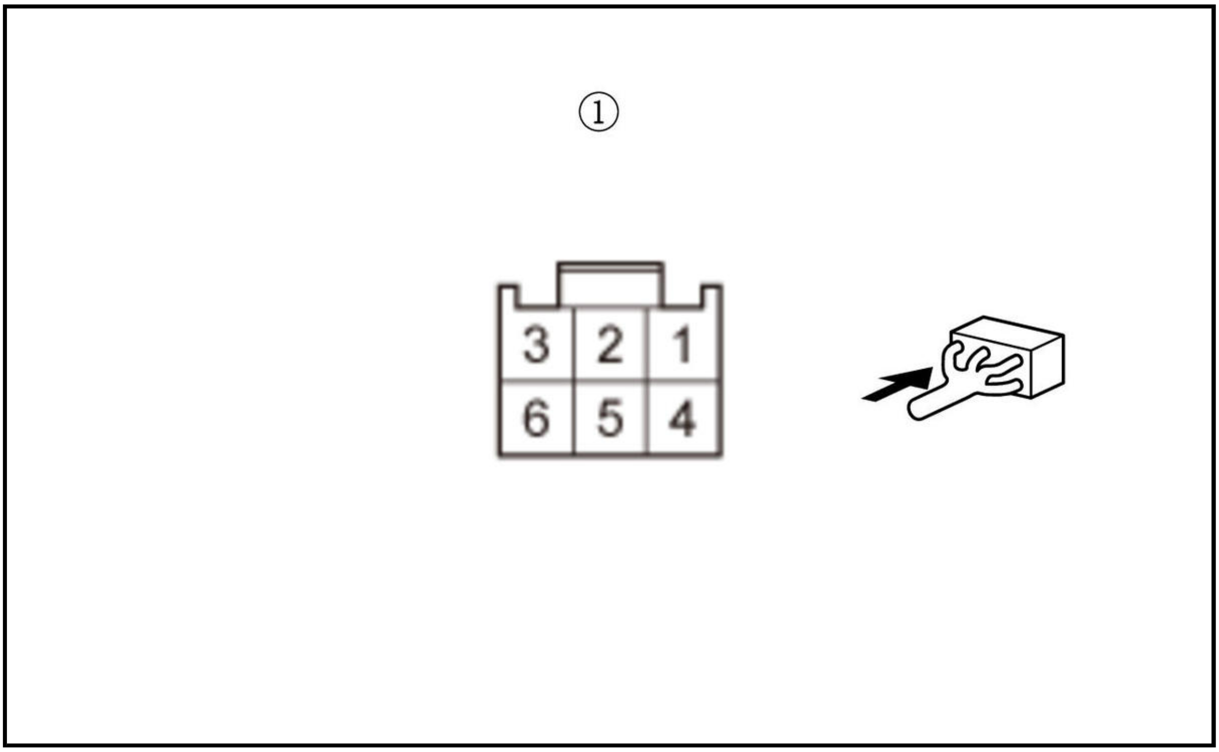

Is there continuity?

YES

The RESE, SEG wires are not open. Go to step 5.

NO

Repair an open or high resistance in the wire.

5. Shorted wire check (RESE line)

-1. Check for continuity between test points 1 and 2.

Test condition	Vehicle OFF (LOCK) mode Recline motor/position sensor 6P connector: disconnected Power seat control unit connector A (20P): disconnected
Test point 1	**Power seat control unit connector A (20P) No. 10**
Test point 2	Body ground

Is there continuity?

YES

Repair a short to ground in the wire.

NO

The RESE wire is not shorted. Go to step 6.

6. Determine possible failure area (Power seat control unit, recline position sensor, RESE line)

-1. Reconnect the following connector.

Power seat control unit connector A (20P)

-2. Turn the vehicle to the ON mode.

-3. Measure the voltage between test points 1 and 2.

Test condition	Vehicle ON mode Recline motor/position sensor 6P connector: disconnected
Test point 1	**Power seat control unit connector A (20P) No. 10**
Test point 2	**Power seat control unit connector A (20P) No. 19**

Is there about 5 V?

About 5 V

Faulty recline motor/position sensor; **replace the seat frame assembly** .

No voltage

Replace the power seat control unit .

Battery voltage

Repair a short to power in the wire (sensor line).

7. Open wire check (SEG line)

-1. Turn the vehicle to the OFF (LOCK) mode.

-2. Disconnect the following connectors.

Slide motor/position sensor 5P connector Front up-down motor/position sensor 6P connector Rear up-down motor/position sensor 6P connector Recline motor/position sensor 6P connector Power seat control unit connector A (20P)

-3. Check for continuity between test points 1 and 2.

Test condition	Vehicle OFF (LOCK) mode Slide motor/position sensor 5P connector: disconnected Front up-down motor/position sensor 6P connector: disconnected Rear up-down motor/position sensor 6P connector: disconnected Recline motor/position sensor 6P connector: disconnected Power seat control unit connector A (20P): disconnected
Test point 1	Slide motor/position sensor 5P connector (female terminals) No. 3: ①
Test point 2	**Power seat control unit connector A (20P) No. 19**

Test point 1	Front up-down motor/position sensor 6P connector (female terminals) No. 2: ②
Test point 2	**Power seat control unit connector A (20P) No. 19**

Test point 1	Rear up-down motor/position sensor 6P connector (female terminals) No. 2: ③

Test point 2	**Power seat control unit connector A (20P) No. 19**

Test point 1	Recline motor/position sensor 6P connector (female terminals) No. 2: ④
Test point 2	**Power seat control unit connector A (20P) No. 19**

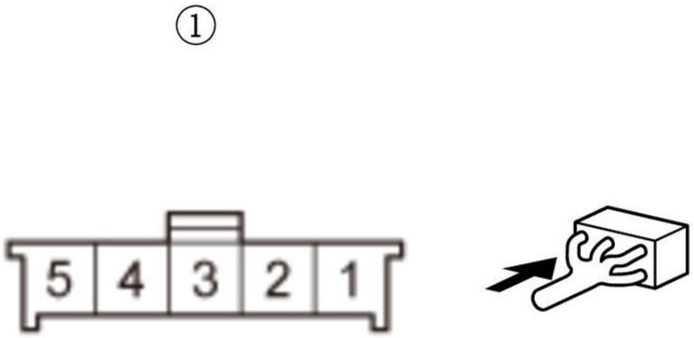

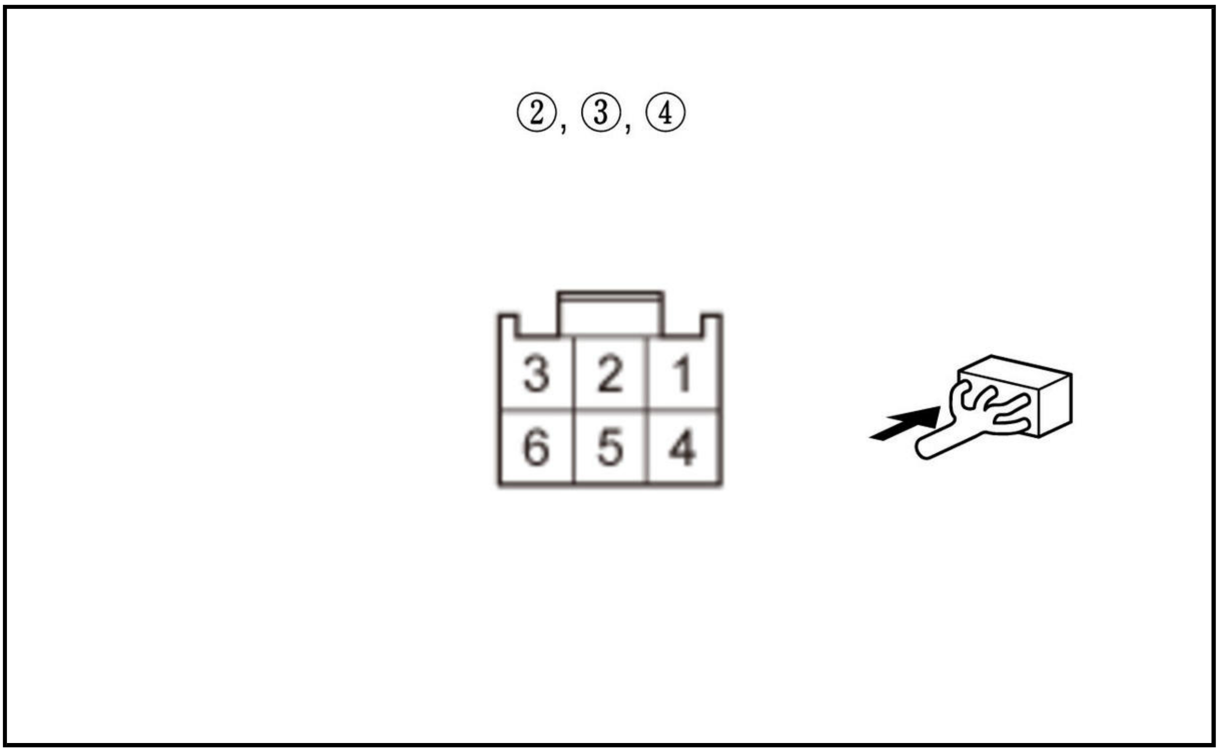

Is there continuity?

YES

The SEG wire is OK. Go to step 8.

NO

Repair an open or high resistance in the wire.

8. Shorted wire check (VCC line)

-1. Check for continuity between test points 1 and 2.

Test condition	Vehicle OFF (LOCK) mode Slide motor/position sensor 5P connector: disconnected Front up-down motor/position sensor 6P connector: disconnected Rear up-down motor/position sensor 6P connector: disconnected Recline motor/position sensor 6P connector: disconnected Power seat control unit connector A (20P): disconnected
Test point 1	**Power seat control unit connector A (20P) No. 6**
Test point 2	Body ground

Is there continuity?

YES

Repair a short to ground in the wire.

NO

The VCC wire is not shorted. Go to step 9.

9. Determine possible failure area (Power seat control unit, VCC line)

-1. Reconnect the following connector.

Power seat control unit connector A (20P)

-2. Turn the vehicle to the ON mode.

-3. Measure the voltage between test points 1 and 2.

Test condition	Vehicle ON mode Slide motor/position sensor 5P connector: disconnected Front up-down motor/position sensor 6P connector: disconnected Rear up-down motor/position sensor 6P connector: disconnected Recline motor/position sensor 6P connector: disconnected
Test point 1	**Power seat control unit connector A (20P) No. 6**
Test point 2	**Power seat control unit connector A (20P) No. 19**

Is there battery voltage when the recline switch is operated?

YES

Repair an open or high resistance in the wire.

NO

Replace the power seat control unit .

10. Open wire check (+B/P-SEAT2 line)

-1. Measure the voltage between test points 1 and 2.

Test condition	Vehicle OFF (LOCK) mode
Test point 1	**Power seat control unit connector B (12P) No. 12**
Test point 2	Body ground

Is there battery voltage?

YES

The +B/P-SEAT2 wire is not open. Go to step 11.

NO

Repair an open or high resistance in the wire.

11. Open wire check (GND lines)

-1. Measure the voltage between test points 1 and 2.

Test condition	Vehicle OFF (LOCK) mode
Test point 1	**Power seat control unit connector B (12P) No. 2**
Test point 2	Body ground

Test point 1	**Power seat control unit connector B (12P) No. 5**
Test point 2	Body ground

Test point 1	**Power seat control unit connector A (20P) No. 20**
Test point 2	Body ground

Is there 0.2 V or more?

YES

Repair an open or high resistance in the wire or poor ground (G501).

NO

The GND wires are not open. Go to step 12.

12. Open wire check (REC FR, REC RR lines)

-1. Disconnect the following connectors.

Recline motor/position sensor 6P connector
Power seat control unit connector B (12P)

-2. Check for continuity between test points 1 and 2.

Test condition	Vehicle OFF (LOCK) mode Recline motor/position sensor 6P connector: disconnected Power seat control unit connector B (12P): disconnected
Test point 1	Recline motor/position sensor 6P connector (female terminals) No. 4: ①
Test point 2	**Power seat control unit connector B (12P) No. 8**

Test point 1	Recline motor/position sensor 6P connector (female terminals) No. 6: ①
Test point 2	**Power seat control unit connector B (12P) No. 11**

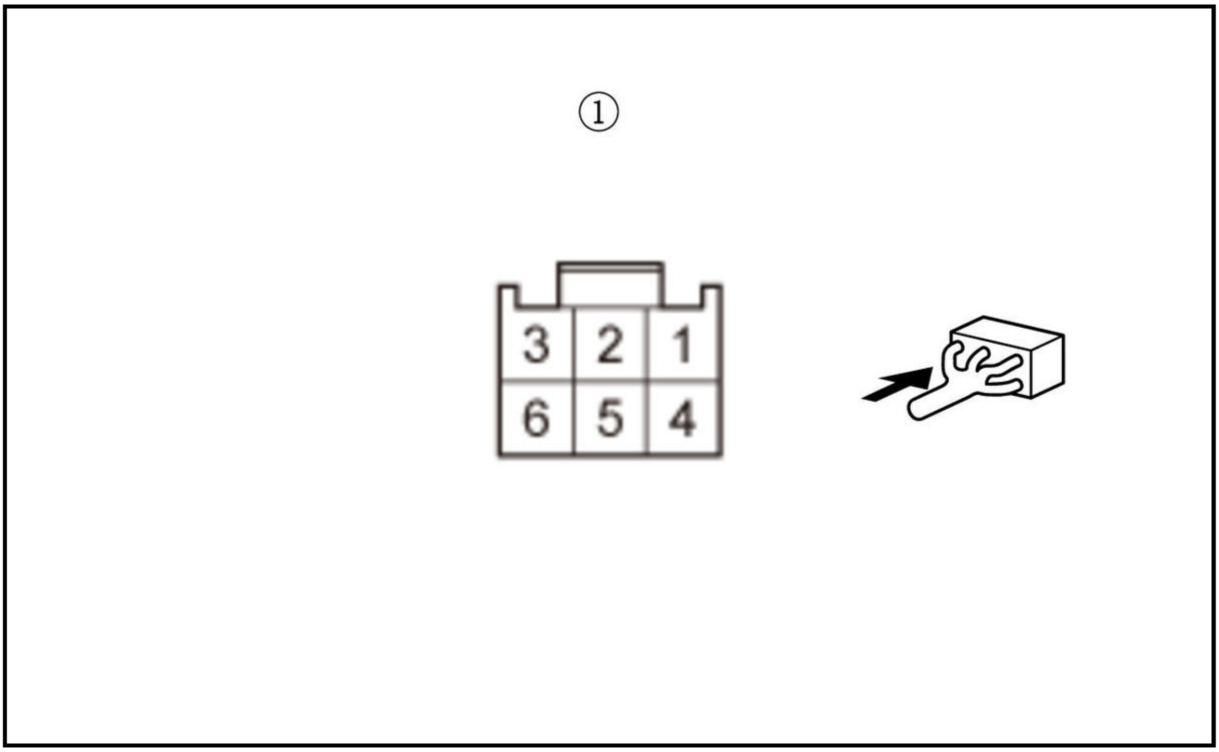

Is there continuity?

YES

The REC FR and REC RR wires are not open. Go to step 13.

NO

Repair an open or high resistance in the wire.

13. Shorted wire check (REC FR, REC RR lines)

-1. Check for continuity between test points 1 and 2.

Test condition	Vehicle OFF (LOCK) mode Recline motor/position sensor 6P connector: disconnected Power seat control unit connector B (12P): disconnected
Test point 1	**Power seat control unit connector B (12P) No. 8**
Test point 2	Body ground

Test point 1	**Power seat control unit connector B (12P) No. 11**
Test point 2	Body ground

Is there continuity?

YES

Repair a short to ground in the wire.

NO

The REC FR and REC RR wires are OK. Go to step 14.

14. Recline motor check

-1. **Test the recline motor** .

Is the motor OK?

YES

Replace the power seat control unit .

NO

Faulty recline motor/position sensor; **replace the seat frame assembly** .

DTC B1829

DTC B1829 : AT-P signal and VSP signal mismatch

NOTE: If you are troubleshooting multiple DTCs, be sure to follow the instructions in **B-CAN System Diagnosis Test Mode A** .

DTC Description	DTC
B1829 AT-P signal and VSP signal mismatch	B

DTC (Power Seat Control Unit)

1. Problem verification

-1. Clear the DTCs with the HDS.

-2. Start the engine.

-3. Test drive at 6 mph (10 km/h) for 10 seconds.

-4. Check for DTCs with the HDS.

DTC Description	DTC
B1829 AT-P signal and VSP signal mismatch	B

Is DTC B1829 indicated?

YES

Go to step 2.

NO

Intermittent failure, the system is OK at this time. Check for loose or poor connections.

2. A/T system check

-1. Check the P indicator of the shift position/mode indicator and the MIL.

Do the P indicator and MIL come on?

YES

Troubleshoot the A/T system.

NO

Go to step 3.

3. DTC check

-1. Check for gauge control module DTCs with the HDS.

DTC Description	DTC
B	B

Are any DTCs indicated?

YES

Go to the indicated DTCs troubleshooting.

NO

Replace the power seat control unit .

DTC B1836

DTC B1836 : Power Seat Position Sensor circuit short

NOTE: If you are troubleshooting multiple DTCs, be sure to follow the instructions in **B-CAN System Diagnosis Test Mode A** .

DTC Description	DTC
B1836 Power Seat Position Sensor circuit short	B

DTC (Power Seat Control Unit)

1. Problem verification

-1. Clear the DTCs with the HDS.

-2. Press the engine start/stop switch at least twenty times, then wait for at least 20 seconds.

-3. Operate the power seat adjustment switch in all directions for more than 1 second each.

-4. Check for DTCs with the HDS.

DTC Description	DTC
B1836 Power Seat Position Sensor circuit short	B

Is DTC B1836 indicated?

YES

Go to step 2.

NO

Intermittent failure, the system is OK at this time. Check for loose or poor connections.

2. Shorted wire check (VCC line)

-1. Turn the vehicle to the OFF (LOCK) mode.

-2. Disconnect the following connectors.

Power seat control unit connector A (20P) Slide motor/position sensor 5P connector Front up-down motor/position sensor 6P connector Rear up-down motor/position sensor 6P connector Recline motor/position sensor 6P connector

-3. Check for continuity between test points 1 and 2.

Test condition	Vehicle OFF (LOCK) mode Power seat control unit connector A (20P): disconnected Slide motor/position sensor 5P connector: disconnected Front up-down motor/position sensor 6P connector: disconnected Rear up-down motor/position sensor 6P connector: disconnected Recline motor/position sensor 6P connector: disconnected
Test point 1	**Power seat control unit connector A (20P) No. 6**
Test point 2	Body ground

Is there continuity?

YES

Repair a short to ground in the wire.

NO

The VCC wire is not shorted. Go to step 3.

3. Motor check (Slide, Front up-down, Rear up-down, Recline)

-1. Check for continuity between test points 1 and 2.

Test condition	Vehicle OFF (LOCK) mode Power seat control unit connector A (20P): disconnected Slide motor/position sensor 5P connector: disconnected

	Front up-down motor/position sensor 6P connector: disconnected Rear up-down motor/position sensor 6P connector: disconnected Recline motor/position sensor 6P connector: disconnected
Test point 1	Slide motor/position sensor 5P connector (male terminals) No. 2: ①
Test point 2	Body ground (motor body)

Test point 1	Front up-down motor/position sensor 6P connector (male terminals) No. 1: ②
Test point 2	Body ground (motor body)

Test point 1	Rear up-down motor/position sensor 6P connector (male terminals) No. 1: ③
Test point 2	Body ground (motor body)

Test point 1	Recline motor/position sensor 6P connector (male terminals) No. 1: ④
Test point 2	Body ground (motor body)

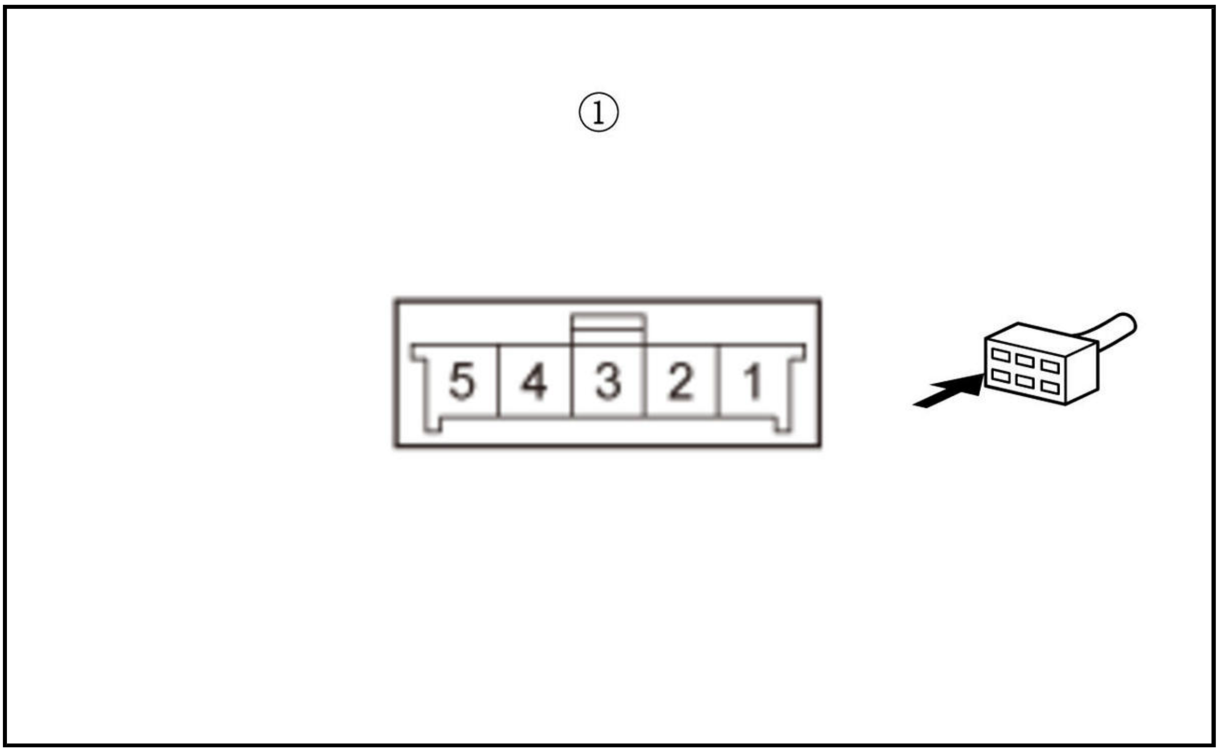

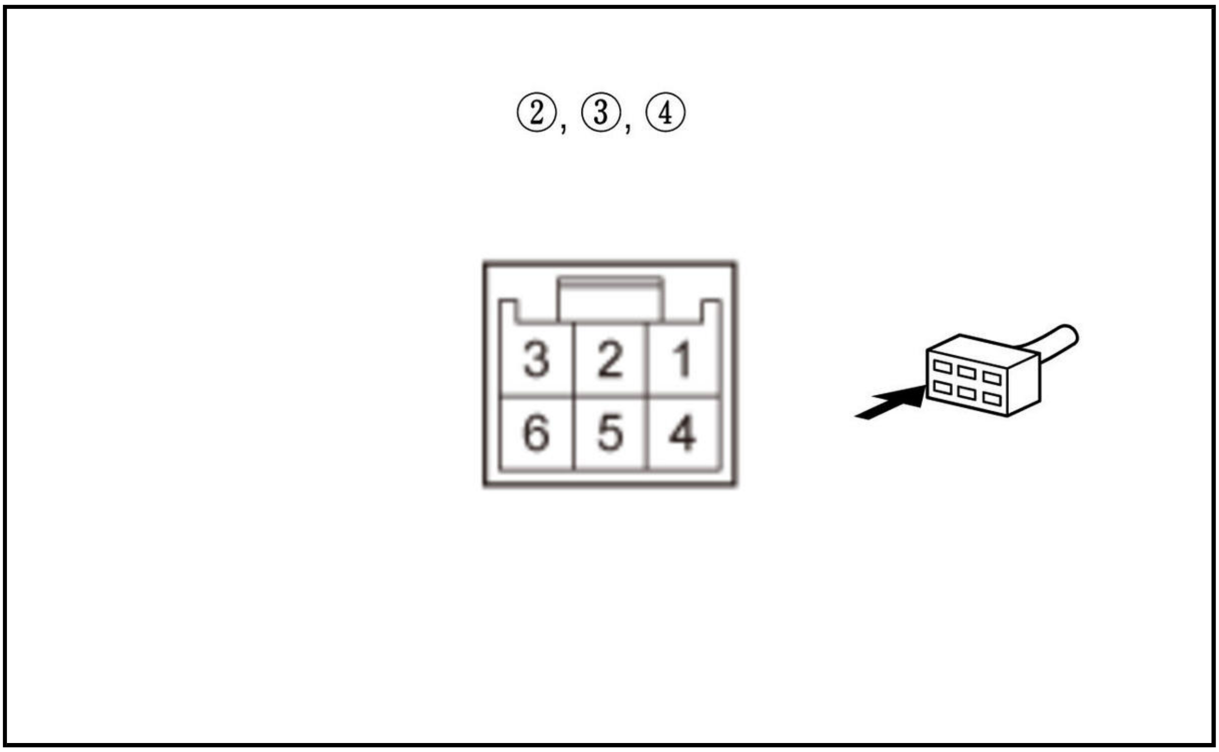

Is there continuity?

Slide motor/position sensor is shorted

Faulty slide motor/position sensor; **replace the seat frame assembly** .

Front up-down motor/position sensor is shorted

Faulty front up-down motor/position sensor; **replace the seat frame assembly** .

Rear up-down motor/position sensor is shorted

Faulty rear up-down motor/position sensor; **replace the seat frame assembly** .

Recline motor/position sensor is shorted

Faulty recline motor/position sensor; **replace the seat frame assembly** .

NO

Replace the power seat control unit .

DTC B1837

DTC B1837 : Memory position calling timeout

NOTE: If you are troubleshooting multiple DTCs, be sure to follow the instructions in **B-CAN System Diagnosis Test Mode A** .

DTC Description	DTC
B1837 Memory position calling timeout	B

DTC (Power Seat Control Unit)

1. Problem verification

-1. Clear the DTCs with the HDS.

-2. Turn the vehicle to the OFF (LOCK) mode and then the ON mode.

-3. Move the power seat to the full front up and full rear up positions, then slide the seat all the way back and completely recline the seat-back backward with the power seat adjustment switch.

-4. Set the seating position into memory by pressing either the driving position memory switch POSITION 1 or POSITION 2 button.

-5. Using the power seat switches, move the seat away from the position just memorized.

-6. Recall the memory position with the driving position memory switch.

-7. Wait for 2 minutes.

-8. Check for DTCs with the HDS.

DTC Description	DTC
B1837 Memory position calling timeout	B

Is DTC B1837 indicated?

YES

Go to step 2.

NO

Intermittent failure, the system is OK at this time. Check for loose or poor connections.

2. DTC check

-1. Check for DTCs with the HDS.

DTC Description	DTC
B	B

Any of DTC are indicated at the same time with DTC B1837?

YES

Go to the indicated DTCs troubleshooting.

NO

Go to step 3.

3. Motor operation check

-1. Clear the DTCs with the HDS.

-2. Wait for 6 seconds.

-3. Move the motors (power seat slide forward/backward, recline forward/backward, front up-down, and rear up-down) shown one at a time, and check the operation time.

Does any motor fail to run smoothly?

Motor fails to run smoothly

Go to the failed motor test .

Motor is OK, but fails to run smoothly

Check the engagement of the motor gear.

NO

Do the teat of terminals for power seat control unit .

DTC B1844

DTC B1844 : Power Seat Slide switch circuit malfunction

NOTE: If you are troubleshooting multiple DTCs, be sure to follow the instructions in **B-CAN System Diagnosis Test Mode A** .

DTC Description	DTC
B1844 Power Seat Slide switch circuit malfunction	B

DTC (Power Seat Control Unit)

1. Problem verification

   -1. Clear the DTCs with the HDS.

   -2. Operate the slide switch in each direction for more than 3 seconds.

   -3. Wait for at least 3 seconds.

   -4. Check for DTCs with the HDS.

DTC Description	DTC
B1844 Power Seat Slide switch circuit malfunction	B

Is DTC B1844 indicated?

YES

Replace the power seat control unit .

NO

Intermittent failure, the system is OK at this time. Check for loose or poor connections.

DTC B1845

DTC B1845 : Power Seat Recline switch circuit malfunction

NOTE: If you are troubleshooting multiple DTCs, be sure to follow the instructions in **B-CAN System Diagnosis Test Mode A** .

DTC Description	DTC
B1845 Power Seat Recline switch circuit malfunction	B

DTC (Power Seat Control Unit)

1. Problem verification

   -1. Clear the DTCs with the HDS.

-2. Operate the recline switch in each direction for more than 3 seconds.

-3. Wait for at least 3 seconds.

-4. Check for DTCs with the HDS.

DTC Description	DTC
B1845 Power Seat Recline switch circuit malfunction	B

Is DTC B1845 indicated?

YES

Replace the power seat control unit .

NO

Intermittent failure, the system is OK at this time. Check for loose or poor connections.

DTC B1846

DTC B1846 : Power Seat Front Up-Down switch circuit malfunction

NOTE: If you are troubleshooting multiple DTCs, be sure to follow the instructions in **B-CAN System Diagnosis Test Mode A** .

DTC Description	DTC
B1846 Power Seat Front Up-Down switch circuit malfunction	B

DTC (Power Seat Control Unit)

1. Problem verification

-1. Clear the DTCs with the HDS.

-2. Operate the front up-down switch in each direction for more than 3 seconds.

-3. Wait for at least 3 seconds.

-4. Check for DTCs with the HDS.

DTC Description	DTC
B1846 Power Seat Front Up-Down switch circuit malfunction	B

Is DTC B1846 indicated?

YES

Replace the power seat control unit .

NO

Intermittent failure, the system is OK at this time. Check for loose or poor connections.

DTC B1847

DTC B1847 : Power Seat Rear Up-Down switch circuit malfunction

NOTE: If you are troubleshooting multiple DTCs, be sure to follow the instructions in B-CAN System Diagnosis Test Mode A .

DTC Description	DTC
B1847 Power Seat Rear Up-Down switch circuit malfunction	B

DTC (Power Seat Control Unit)

1. Problem verification

   -1. Clear the DTCs with the HDS.

   -2. Operate the rear up-down switch in each direction for more than 1 second.

   -3. Wait for at least 3 seconds.

   -4. Check for DTCs with the HDS.

DTC Description	DTC
B1847 Power Seat Rear Up-Down switch circuit malfunction	B

   Is DTC B1847 indicated?

   YES

   Replace the power seat control unit .

   NO

   Intermittent failure, the system is OK at this time. Check for loose or poor connections.

DTC U0199, U1281, U128D (POWER SEAT CONTROL UNIT)

DTC U0199 : Power seat control unit lost communication with door multiplex control unit (DRLockSW frame)**DTC U1281** : Power seat control unit lost communication with MICU (MICU frame)**DTC U128D** : Lost Communication With Gauge Control Module (VSP/NE frame)

NOTE:

- If you are troubleshooting multiple DTCs, be sure to follow the instructions in B-CAN System Diagnosis Test Mode A .
- Refer to the DTC code shown on the display, and then inspect the connectors and terminals based on the instructions in the table below.
- The DTC may be stored due to the grounding failure or the power source failure at the transmitting control unit (the grounding inspection and the power source inspection on each control unit are required prior to this checking process).

DTC Description	DTC
U0199 Power seat control unit lost communication with door multiplex control unit (DRLockSW frame)	B
U1281 Power seat control unit lost communication with MICU (MICU frame)	B
U128D Lost Communication With Gauge Control Module (VSP/NE frame)	B

DTC (Power Seat Control Unit)

1. Problem verification

   -1. Clear the DTC with the HDS.

-2. Turn the vehicle to the OFF (LOCK) mode and then the ON mode.

-3. Wait for at least 6 seconds.

-4. Check for DTCs with the HDS.

DTC Description	DTC
U0199 Power seat control unit lost communication with door multiplex control unit (DRLockSW frame)	B
U1281 Power seat control unit lost communication with MICU (MICU frame)	B
U128D Lost Communication With Gauge Control Module (VSP/NE frame)	B

Are any DTCs indicated?

YES

Go to step 2.

NO

Intermittent failure, the system is OK at this time. Check for poor connections or loose terminals.

2. Open wire check (B-CAN H line, B-CAN L line)

-1. Turn the vehicle to the OFF (LOCK) mode.

-2. Disconnect the receiving control unit connector.

Power seat control unit connector A (20P)

-3. Disconnect the transmitting control unit connector (s).

Refer to the DTC shown on the display, then disconnect the connector (s) based on the instructions (see table).

DTC	Connector
U0199	Power window master switch 37P connector
U1281	Body control module connector B (36P)
U128D	Gauge control module connector A (32P)

-4. Check for continuity between the receiving control unit and the transmitting control unit on the B-CAN H circuit and the B-CAN L circuit.

Test condition	Vehicle OFF (LOCK) mode Power seat control unit connector A (20P): disconnected Transmitting control unit connector (s) for indicated DTCs: disconnected

DTC	Circuit name	Receiving control unit		Transmitting control unit	
		Connector	Terminal	Connector	Terminal
U0199	B-CAN H	**Power seat control unit connector A (20P)**	No. 16	**Power window master switch 37P connector**	No. 32
	B-CAN L		No. 17		No. 31
U1281	B-CAN H	**Power seat control unit connector A (20P)**	No. 16	**Body control module connector B (36P)**	No. 20
	B-CAN L		No. 17		No. 21
U128D	B-CAN H	**Power seat control unit connector A**	No. 16	**Gauge control module connector A**	No. 30

DTC	Circuit name	Receiving control unit		Transmitting control unit	
		Connector	Terminal	Connector	Terminal
	B-CAN L	(20P)	No. 17	(32P)	No. 31

Is there continuity?

YES

The B-CAN H wire and the B-CAN L wire are OK. Refer to the DTC shown on the display, then replace the control unit based on the instructions (see table).

DTC	Operation for transmitting control unit
U0199	Power window master switch
U1281	Body control module

DTC	Operation for transmitting control unit
U128D	Gauge control module

NO

Repair an open in the B-CAN H wire and/or the B-CAN L wire.

DTC U1280 (POWER SEAT CONTROL UNIT)

DTC U1280 : B-CAN communication bus line error (BUS-OFF)

NOTE: If you are troubleshooting multiple DTCs, be sure to follow the instructions in B-CAN System Diagnosis Test Mode A .

DTC Description	DTC
U1280 B-CAN communication bus line error (BUS-OFF)	B

DTC (Power Seat Control Unit)

1. Problem verification

-1. Clear the DTCs with the HDS.

-2. Turn the vehicle to the OFF (LOCK) mode and then the ON mode.

-3. Wait for at least 6 seconds.

-4. Check for DTCs with the HDS.

DTC Description	DTC
U1280 B-CAN communication bus line error (BUS-OFF)	B

Is DTC U1280 indicated?

YES

Go to body control module DTC U1280 troubleshooting .

NO

Intermittent failure, the system is OK at this time. Check for loose or poor connections.

TROUBLESHOOTING

DTC B1352

DTC B1352 : Power Tailgate Control Unit Internal error (EEPROM error)

NOTE: If you are troubleshooting multiple DTCs, be sure to follow the instructions in **B-CAN System Diagnosis Test Mode A** .

DTC Description	DTC
B1352 Power Tailgate Control Unit Internal error (EEPROM error)	B

DTC (Power Tailgate Control Unit)

1. Problem verification

   -1. Clear the DTCs with the HDS.

   -2. Turn the vehicle to the OFF (LOCK) mode and then the ON mode.

   -3. Wait for at least 6 seconds.

   -4. Check for DTCs with the HDS.

DTC Description	DTC
B1352 Power Tailgate Control Unit Internal error (EEPROM error)	B

   Is DTC B1352 indicated?

   YES

   Replace the power tailgate control unit .

   NO

   Intermittent failure, the system is OK at this time. Check for loose or poor connections at the power tailgate control unit.

DTC B1375

DTC B1375 : Driver's side PTG switch circuit malfunction

NOTE:

- If you are troubleshooting multiple DTCs, be sure to follow the instructions in **B-CAN System Diagnosis Test Mode A** .
- If the motor does not operate, **do the motor test first** .

DTC Description	DTC
B1375 Driver's side PTG switch circuit malfunction	B

DTC (Power Tailgate Control Unit)

1. Problem verification

-1. Clear the DTCs with the HDS.

-2. Operate the driver's power tailgate switch for more than 1 second.

-3. Check for DTCs with the HDS.

DTC Description	DTC
B1375 Driver's side PTG switch circuit malfunction	B

Is DTC B1375 indicated?

YES

Go to step 2.

NO

Intermittent failure, the system is OK at this time. Check for loose or poor connections.

2. Shorted wire check (T/G OPEN SW line)

-1. Turn the vehicle to the OFF (LOCK) mode.

-2. Disconnect the following connector.

Power tailgate control unit connector A (24P)

-3. Check for continuity between test points 1 and 2.

Test condition	Vehicle OFF (LOCK) modePower tailgate control unit connector A (24P): disconnected
Test point 1	**Power tailgate control unit connector A (24P) No. 8**

Test point 2	Body ground

Is there continuity?

YES

Repair a short to ground in the T/G OPEN SW wire.

NO

Repair a short to ground in the PTG/PTL SCOM wire.

DTC B1376

DTC B1376 : Tailgate Outer Handle switch circuit malfunction

NOTE:

- If you are troubleshooting multiple DTCs, be sure to follow the instructions in **B-CAN System Diagnosis Test Mode A** .
- If the motor does not operate, **do the motor test first** .

DTC Description	DTC
B1376 Tailgate Outer Handle switch circuit malfunction	B

1. Problem verification

   -1. Clear the DTCs with the HDS.

   -2. Press the tailgate outer handle switch for more than 1 second.

   -3. Check for DTCs with the HDS.

DTC Description	DTC
B1376 Tailgate Outer Handle switch circuit malfunction	B

   Is DTC B1376 indicated?

   YES

   Go to step 2.

   NO

   Intermittent failure, the system is OK at this time. Check for loose or poor connections.

2. Shorted wire check (T/G OPEN SW line)

   -1. Turn the vehicle to the OFF (LOCK) mode.

   -2. Disconnect the following connector.

Power tailgate control unit connector A (24P)

   -3. Check for continuity between test points 1 and 2.

Test condition	Vehicle OFF (LOCK) mode Power tailgate control unit connector A (24P): disconnected
B	B

Test point 1	**Power tailgate control unit connector A (24P) No. 23**
Test point 2	Body ground

   Is there continuity?

   YES

   Repair a short to ground in the T/G OPEN SW wire.

   NO

   Repair a short to ground in the PTG/PTL SCOM wire.

DTC B1377

DTC B1377 : Power Tailgate Inner switch circuit malfunction

NOTE: If you are troubleshooting multiple DTCs, be sure to follow the instructions in **B-CAN System Diagnosis Test Mode A** .

DTC Description	DTC
B1377 Power Tailgate Inner switch circuit malfunction	B

DTC (Power Tailgate Control Unit)

1. Problem verification

   -1. Clear the DTCs with the HDS.

   -2. Open the tailgate with the keyless transmitter.

   -3. Press the power tailgate inside switch for more than 1 second.

   -4. Check for DTCs with the HDS.

DTC Description	DTC
B1377 Power Tailgate Inner switch circuit malfunction	B

   Is DTC B1377 indicated?

   YES

   Go to step 2.

   NO

   Intermittent failure, the system is OK at this time. Check for loose or poor connections.

2. Shorted wire check (PTG/PTL CLOSE SW line)

   -1. Turn the vehicle to the OFF (LOCK) mode.

   -2. Disconnect the following connector.

Power tailgate control unit connector A (24P)

   -3. Check for continuity between test points 1 and 2.

Test condition	Vehicle OFF (LOCK) mode Power tailgate control unit connector A (24P): disconnected
Test point 1	**Power tailgate control unit connector A (24P) No. 24**

Test point 2	Body ground

   Is there continuity?

   YES

   Repair a short to ground in the PTG/PTL CLOSE SW wire.

   NO

   Repair a short to ground in the PTG/PTL SCOM wire.

DTC B1378

DTC B1378 : Power Tailgate Right Touch/Pinch sensor circuit malfunction

NOTE: If you are troubleshooting multiple DTCs, be sure to follow the instructions in **B-CAN System Diagnosis Test Mode A** .

DTC Description	DTC
B1378 Power Tailgate Right Touch/Pinch sensor circuit malfunction	B

DTC (Power Tailgate Control Unit)

1. Problem verification 1

   -1. Clear the DTCs with the HDS.

   -2. Open the tailgate manually or with the keyless transmitter.

   -3. Close the tailgate with the keyless transmitter or driver's power tailgate switch.

   -4. Check for DTCs with the HDS.

DTC Description	DTC
B1378 Power Tailgate Right Touch/Pinch sensor circuit malfunction	B

   Is DTC B1378 indicated?

   YES

   Go to step 2.

   NO

   Intermittent failure, the system is OK at this time. Check for loose or poor connections.

2. Problem verification 2

   -1. Check for DTCs with the HDS.

DTC Description	DTC
B1378 Power Tailgate Right Touch/Pinch sensor circuit malfunction	B
B1379 Power Tailgate Left Touch/Pinch sensor circuit malfunction	B
B1385 Power Tailgate temperature sensor malfunction	B

   Any of DTC are indicated at the same time with DTC B1378?

   YES

   Go to step 3.

   NO

   Go to step 4.

3. Open wire check (PTG/PTL SEG2 line)

   -1. Turn the vehicle to the OFF (LOCK) mode.

   -2. Disconnect the following connectors.

Power tailgate control unit connector B (10P)Right power tailgate pinch sensor 2P connector

   -3. Check for continuity between test points 1 and 2.

Test condition	Vehicle OFF (LOCK) mode Power tailgate control unit connector B (10P): disconnected Right power tailgate pinch sensor 2P connector: disconnected
Test point 1	**Power tailgate control unit connector B (10P) No. 8**
Test point 2	Right power tailgate pinch sensor 2P connector (male terminals) No. 2: ①

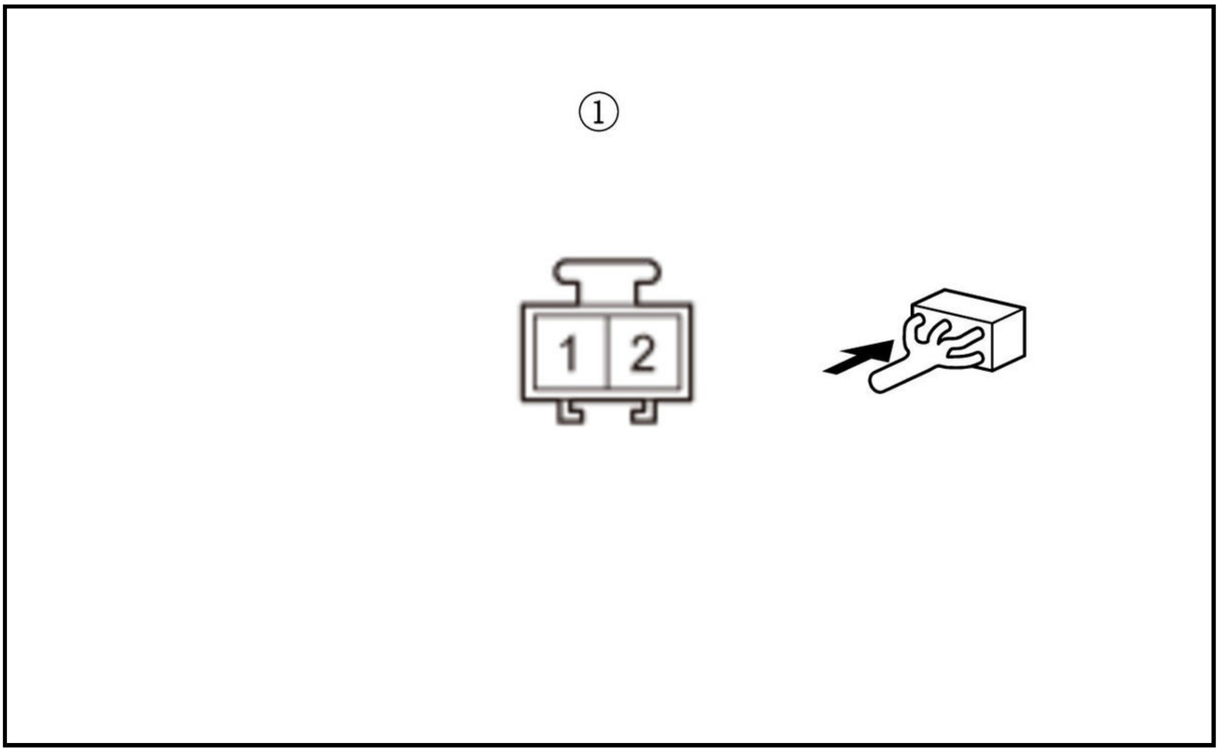

Is there continuity?

YES

Replace the power tailgate control unit .

NO

Repair an open or high resistance in the wire.

4. Determine possible failure area (right power tailgate pinch sensor, others)

-1. Disconnect the following connector.

Right power tailgate pinch sensor 2P connector

-2. Turn the vehicle to the ON mode.

-3. Measure the voltage between test points 1 and 2.

Test condition	Vehicle ON mode Right power tailgate pinch sensor 2P connector: disconnected
Test point 1	Right power tailgate pinch sensor 2P connector (male terminals) No. 1: ①
Test point 2	Body ground

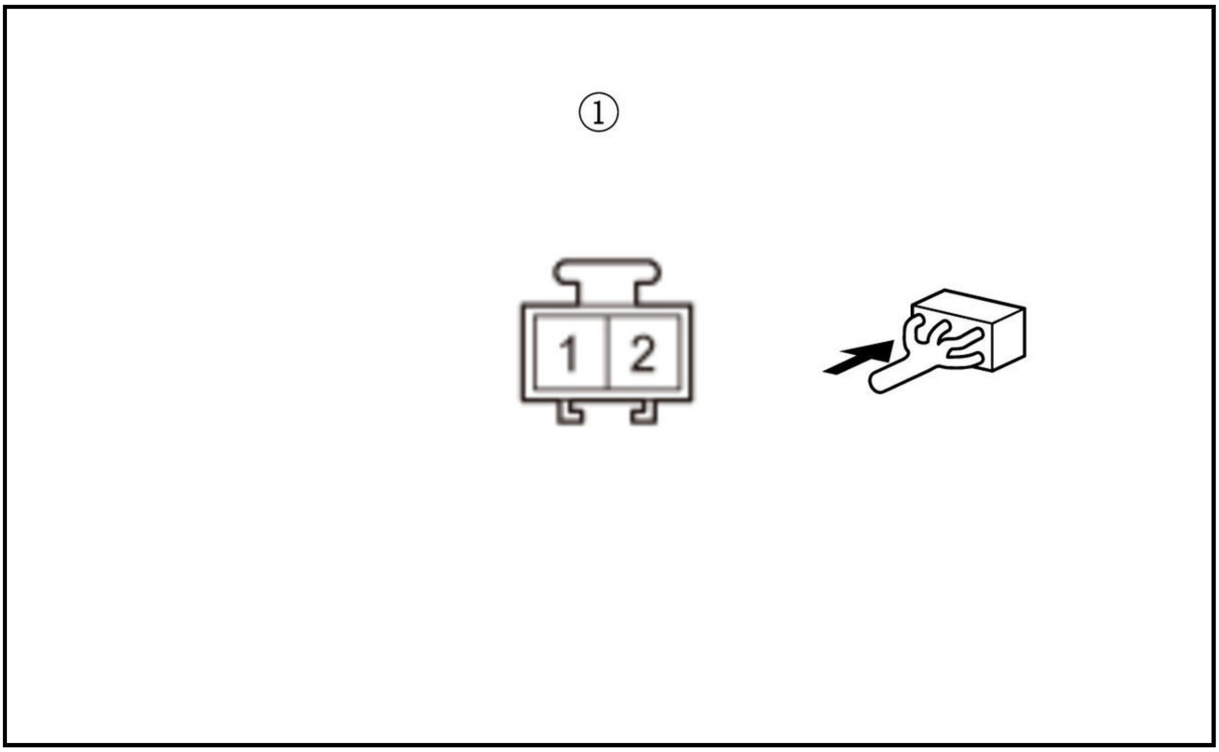

Is there battery voltage?

YES

Replace the right power tailgate pinch sensor .

NO

Go to step 5.

5. Open wire check (PTG/PTL TSLA line)

   -1. Measure the voltage between test points 1 and 2.

Test condition	Vehicle ON mode Right power tailgate pinch sensor 2P connector: disconnected
Test point 1	**Power tailgate control unit connector B (10P) No. 9**
Test point 2	Body ground

Is there battery voltage?

YES

Repair an open or high resistance in the wire.

NO

Replace the power tailgate control unit .

DTC B1379

DTC B1379 : Power Tailgate Left Touch/Pinch sensor circuit malfunction

NOTE: If you are troubleshooting multiple DTCs, be sure to follow the instructions in **B-CAN System Diagnosis Test Mode A** .

DTC Description	DTC
B1379 Power Tailgate Left Touch/Pinch sensor circuit malfunction	B

DTC (Power Tailgate Control Unit)

1. Problem verification 1

   -1. Clear the DTCs with the HDS.

   -2. Open the tailgate manually or with the keyless transmitter.

   -3. Close the tailgate with the keyless transmitter or driver's power tailgate switch.

   -4. Check for DTCs with the HDS.

DTC Description	DTC
B1379 Power Tailgate Left Touch/Pinch sensor circuit malfunction	B

   Is DTC B1379 indicated?

   YES

   Go to step 2.

   NO

   Intermittent failure, the system is OK at this time. Check for loose or poor connections.

2. Problem verification 2

   -1. Check for DTCs with the HDS.

DTC Description	DTC
B1378 Power Tailgate Right Touch/Pinch sensor circuit malfunction	B
B1379 Power Tailgate Left Touch/Pinch sensor circuit malfunction	B
B1385 Power Tailgate temperature sensor malfunction	B

   Any of DTC are indicated at the same time with DTC B1379?

   YES

   Go to step 3.

   NO

   Go to step 4.

3. Open wire check (PTG/PTL SEG2 line)

   -1. Turn the vehicle to the OFF (LOCK) mode.

   -2. Disconnect the following connectors.

Power tailgate control unit connector B (10P) Left power tailgate pinch sensor 4P connector

   -3. Check for continuity between test points 1 and 2.

Test condition	Vehicle OFF (LOCK) mode Power tailgate control unit connector B (10P): disconnected Left power tailgate pinch sensor 4P connector: disconnected
Test point 1	**Power tailgate control unit connector B (10P) No. 8**

Test point 2	Left power tailgate pinch sensor 4P connector (male terminals) No. 2: ①

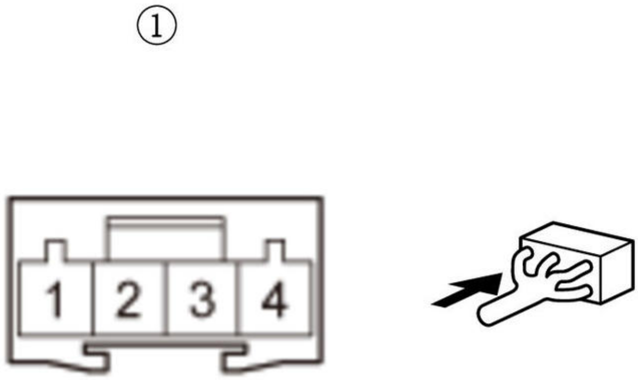

Is there continuity?

YES

Replace the power tailgate control unit .

NO

Repair an open or high resistance in the wire.

4. Determine possible failure area (left power tailgate pinch sensor, others)

-1. Disconnect the following connector.

Left power tailgate pinch sensor 4P connector

-2. Turn the vehicle to the ON mode.

-3. Measure the voltage between test points 1 and 2.

Test condition	Vehicle ON modeLeft power tailgate pinch sensor 4P connector: disconnected
Test point 1	Left power tailgate pinch sensor 4P connector (male terminals) No. 1: ①
Test point 2	Body ground

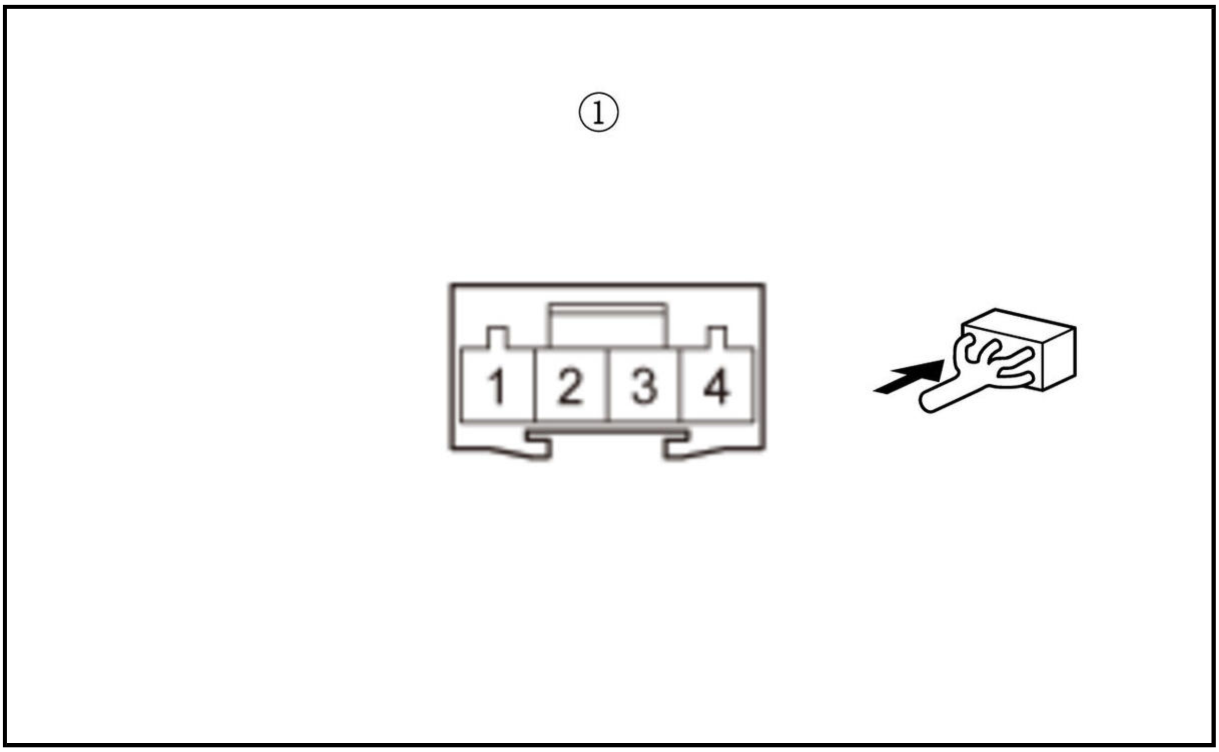

Is there battery voltage?

YES

Replace the left power tailgate pinch sensor .

NO

Go to step 5.

5. Open wire check (PTG/PTL TSLL line)

-1. Measure the voltage between test points 1 and 2.

Test condition	Vehicle ON mode Left power tailgate pinch sensor 4P connector: disconnected
Test point 1	Power tailgate control unit connector B (10P) No. 3
Test point 2	Body ground

Is there battery voltage?

YES

Repair an open or high resistance in the wire.

NO

Replace the power tailgate control unit .

DTC B1380

DTC B1380 : Tailgate Closer Unit Neutral switch circuit malfunction

NOTE: If you are troubleshooting multiple DTCs, be sure to follow the instructions in B-CAN System Diagnosis Test Mode A .

DTC Description	DTC
B1380 Tailgate Closer Unit Neutral switch circuit malfunction	B

DTC (Power Tailgate Control Unit)

1. Problem verification

   -1. Clear the DTCs with the HDS.

   -2. Open the tailgate with the tailgate outer handle switch.

   -3. Close the tailgate manually.

   -4. Check for DTCs with the HDS.

DTC Description	DTC
B1380 Tailgate Closer Unit Neutral switch circuit malfunction	B

   Is DTC B1380 indicated?

   YES

   Go to step 2.

   NO

   Intermittent failure, the system is OK at this time. Check for loose or poor connections.

2. Determine possible failure area (PTG/PTL CLCL line short, others)

   -1. Check the parameter(s) below with the HDS.

Signal	Current conditions	
	Values	Unit
Latch Gear Position Sw. neutral	B	B

   Is data list value ON?

   YES

   Go to step 3.

   NO

   Go to step 5.

3. Determine possible failure area (power tailgate closer unit, others)

   -1. Turn the vehicle to the OFF (LOCK) mode.

   -2. Disconnect the following connector.

Power tailgate closer unit connector B (6P)

   -3. Turn the vehicle to the ON mode.

   -4. Check the parameter(s) below with the HDS.

Signal	Current conditions	
	Values	Unit
Latch Gear Position Sw. neutral	B	B

Is data list value ON?

YES

Go to step 4.

NO

Faulty sector switch; **replace the tailgate latch** .

4. Shorted wire check (PTG/PTL CLCL line)

-1. Turn the vehicle to the OFF (LOCK) mode.

-2. Disconnect the following connector.

Power tailgate control unit connector A (24P)

-3. Check for continuity between test points 1 and 2.

Test condition	Vehicle OFF (LOCK) mode Power tailgate closer unit connector B (6P): disconnected Power tailgate control unit connector A (24P): disconnected
B	B
Test point 1	**Power tailgate control unit connector A (24P) No. 10**
Test point 2	Body ground

Is there continuity?

YES

Repair a short to ground in the wire.

NO

Replace the power tailgate control unit .

5. Determine possible failure area (power tailgate closer unit, others)

-1. Turn the vehicle to the OFF (LOCK) mode.

-2. Disconnect the following connector.

Power tailgate closer unit connector B (6P)

-3. Connect terminals A and B with a jumper wire.

Terminal A	Power tailgate closer unit connector B (6P) (female terminals) No. 2: ①
Terminal B	Power tailgate closer unit connector B (6P) (female terminals) No. 3: ①

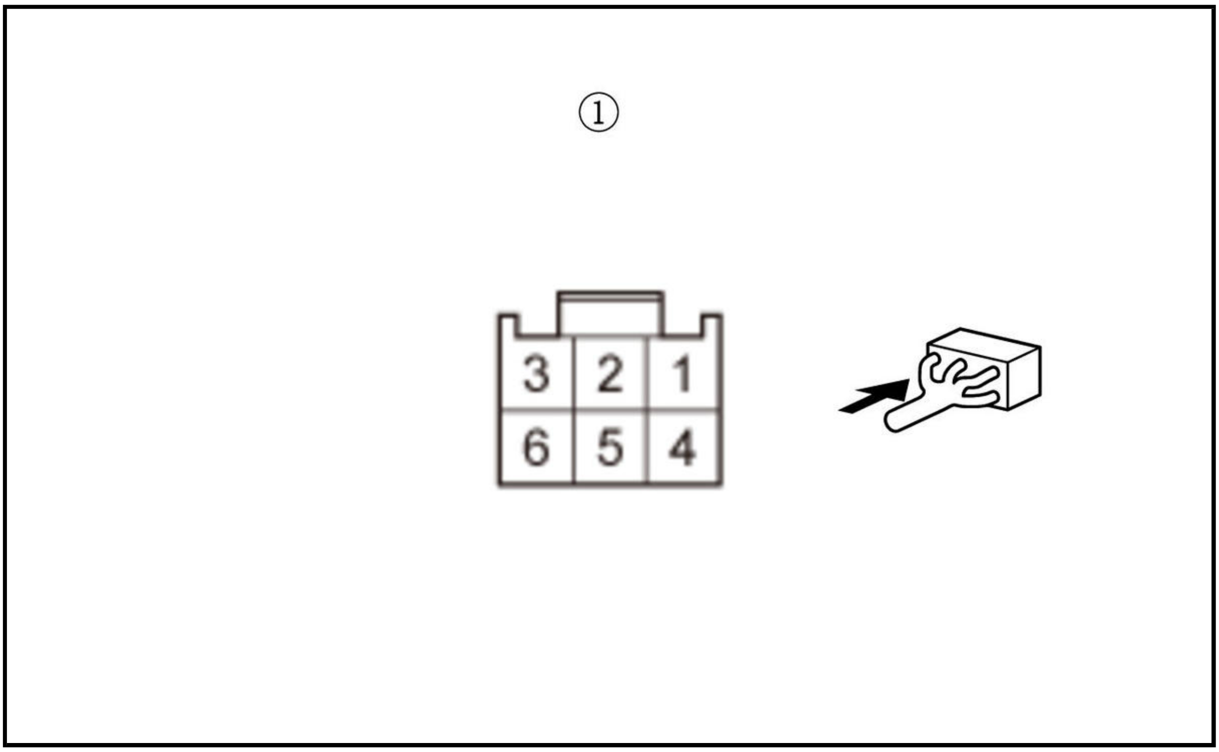

-4. Turn the vehicle to the ON mode.

-5. Check the parameter(s) below with the HDS.

Signal	Current conditions	
	Values	**Unit**
Latch Gear Position Sw. neutral	B	B

Is data list value ON?

YES

Faulty sector switch; **replace the tailgate latch** .

NO

Go to step 6.

6. Determine possible failure area (PTG/PTL CLCL line, PTG/PTL SEG3 line)

-1. Turn the vehicle to the OFF (LOCK) mode.

-2. Disconnect the jumper wire.

-3. Connect terminals A and B with a jumper wire.

Terminal A	Power tailgate closer unit connector B (6P) (female terminals) No. 3: ①
Terminal B	Body ground

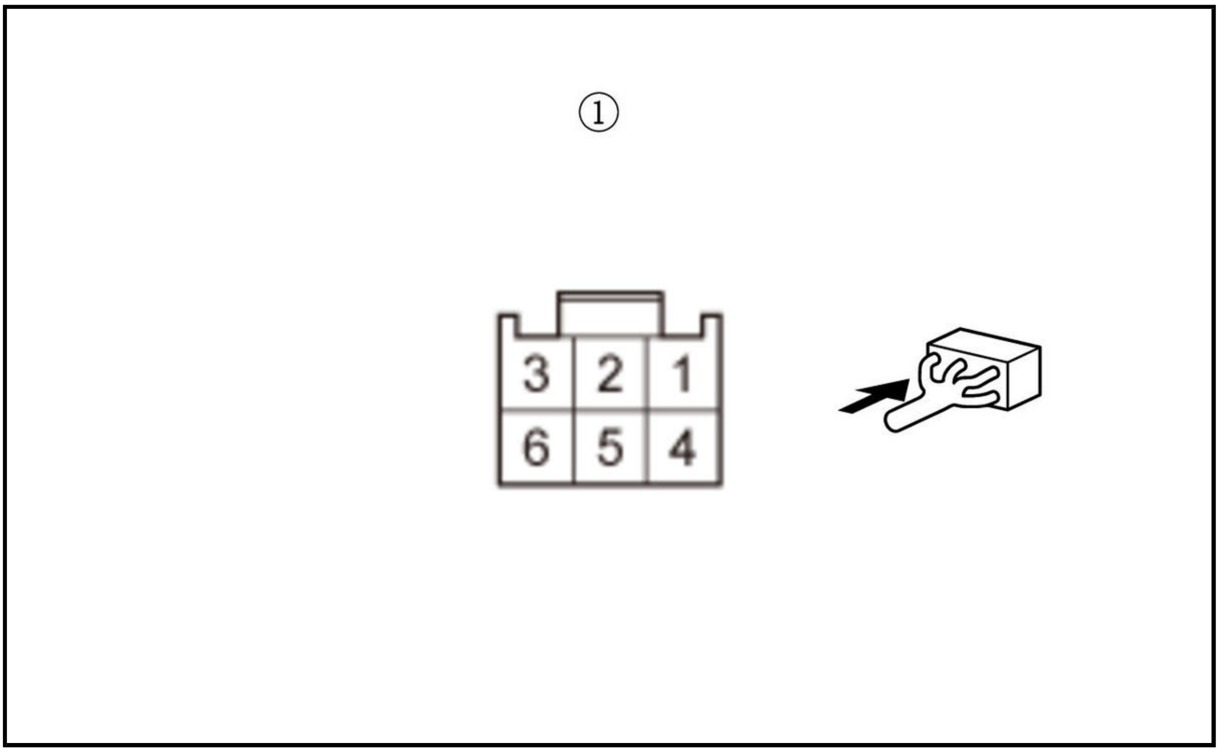

-4. Turn the vehicle to the ON mode.

-5. Check the parameter(s) below with the HDS.

Signal	Current conditions	
	Values	**Unit**
Latch Gear Position Sw. neutral	B	B

Is data list value ON?

YES

Go to step 7.

NO

Go to step 8.

7. Open wire check (PTG/PTL SEG3 line)

-1. Turn the vehicle to the OFF (LOCK) mode.

-2. Disconnect the jumper wire.

-3. Disconnect the following connector.

Power tailgate control unit connector A (24P)

-4. Check for continuity between test points 1 and 2.

Test condition	Vehicle OFF (LOCK) mode Power tailgate closer unit connector B (6P): disconnected Power tailgate control unit connector A (24P): disconnected
B	B
Test point 1	Power tailgate closer unit connector B (6P) (female terminals) No. 2: ①
Test point 2	**Power tailgate control unit connector A (24P) No. 21**

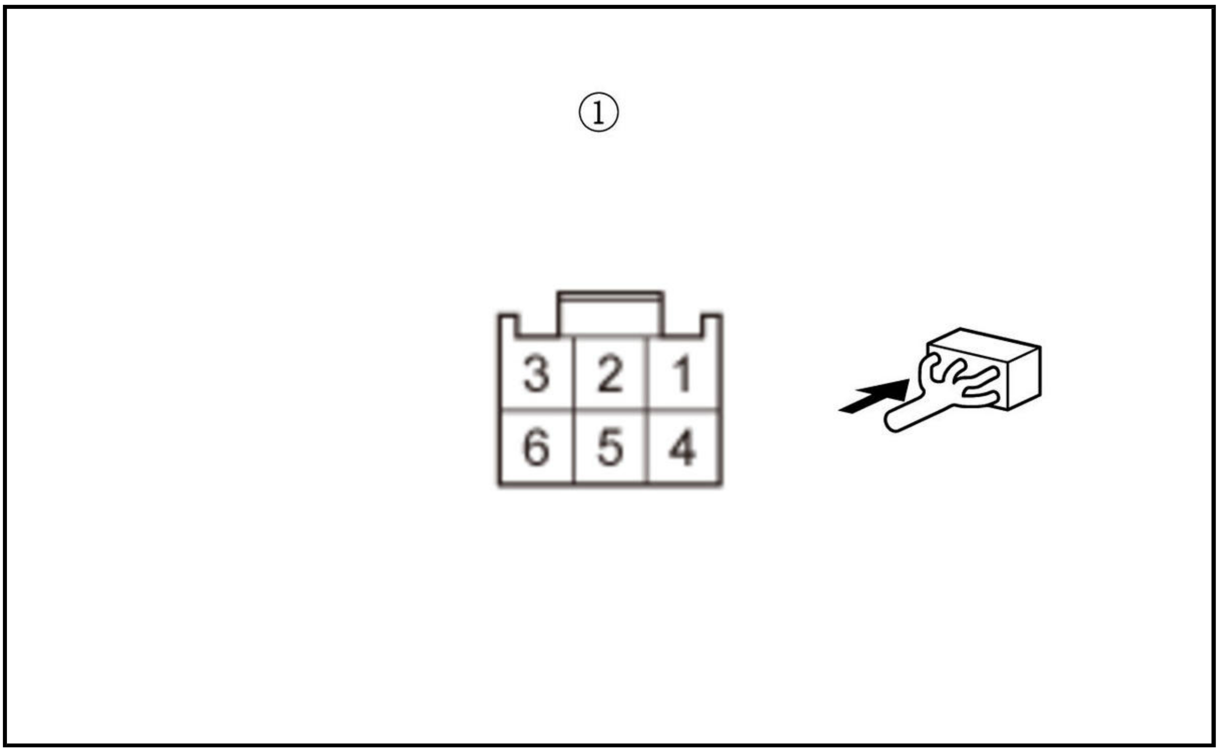

Is there continuity?

YES

Replace the power tailgate control unit .

NO

Repair an open or high resistance in the wire.

8. Open wire check (PTG/PTL CLCL line)

-1. Turn the vehicle to the OFF (LOCK) mode.

-2. Disconnect the jumper wire.

-3. Disconnect the following connector.

Power tailgate control unit connector A (24P)

-4. Check for continuity between test points 1 and 2.

Test condition	Vehicle OFF (LOCK) mode Power tailgate closer unit connector B (6P): disconnected Power tailgate control unit connector A (24P): disconnected
B	B
Test point 1	Power tailgate closer unit connector B (6P) (female terminals) No. 3: ①
Test point 2	Power tailgate control unit connector A (24P) No. 10

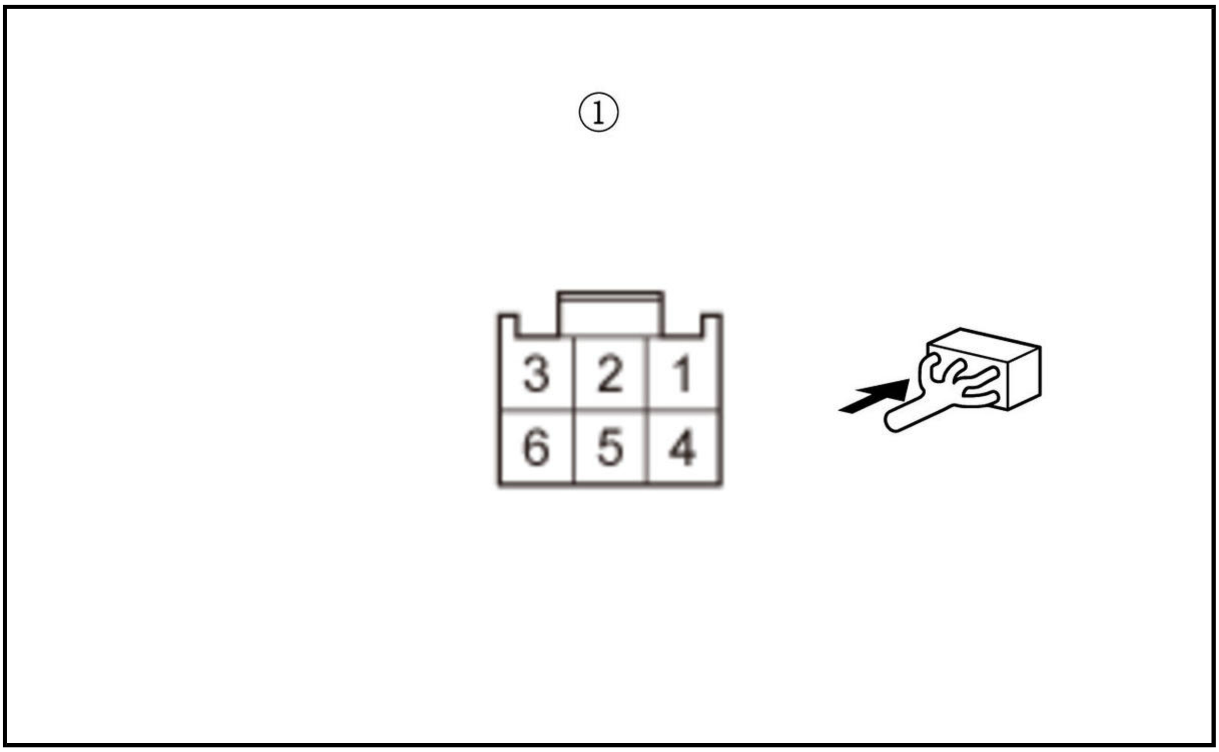

Is there continuity?

YES

Replace the power tailgate control unit .

NO

Repair an open or high resistance in the wire.

DTC B1382

DTC B1382 : Tailgate Closer Unit Full Latch switch circuit malfunction

NOTE: If you are troubleshooting multiple DTCs, be sure to follow the instructions in **B-CAN System Diagnosis Test Mode A** .

DTC Description	DTC
B1382 Tailgate Closer Unit Full Latch switch circuit malfunction	B

DTC (Power Tailgate Control Unit)

1. Problem verification 1

   -1. Clear the DTCs with the HDS.

   -2. Open the tailgate with the tailgate outer handle switch.

   -3. Close the tailgate manually.

   -4. Check for DTCs with the HDS.

DTC Description	DTC
B1382 Tailgate Closer Unit Full Latch switch circuit malfunction	B

Is DTC B1382 indicated?

YES

Go to step 2.

NO

Intermittent failure, the system is OK at this time. Check for loose or poor connections.

2. Problem verification 2

-1. Check for DTCs with the HDS.

DTC Description	DTC
B1384 Tailgate Closer Unit Half Latch switch circuit malfunction	B
B1390 Power Tailgate Closer Motor function error	B

Are DTC B1384 and/or B1390 indicated?

YES

Go to the indicated DTCs troubleshooting, then recheck.

NO

Go to step 3.

3. Determine possible failure area (T/G SW line short, others)

-1. Check the parameter(s) below with the HDS.

Signal	Current conditions	
	Values	Unit
Tailgate Lock Sw. Full Latch	B	B

Is data list value ON?

YES

Go to step 4.

NO

Go to step 6.

4. Determine possible failure area (power tailgate closer unit, others)

-1. Turn the vehicle to the OFF (LOCK) mode.

-2. Disconnect the following connector.

Power tailgate closer unit connector B (6P)

-3. Turn the vehicle to the ON mode.

-4. Check the parameter(s) below with the HDS.

Signal	Current conditions	
	Values	Unit
Tailgate Lock Sw. Full Latch	B	B

Is data list value ON?

YES

Go to step 5.

NO

Faulty full latch switch; **replace the tailgate latch** .

5. Shorted wire check (T/G SW line)

-1. Turn the vehicle to the OFF (LOCK) mode.

-2. Disconnect the following connector.

Power tailgate control unit connector A (24P)

-3. Check for continuity between test points 1 and 2.

Test condition	Vehicle OFF (LOCK) mode Power tailgate closer unit connector B (6P): disconnected Power tailgate control unit connector A (24P): disconnected
B	B
Test point 1	**Power tailgate control unit connector A (24P) No. 11**
Test point 2	Body ground

Is there continuity?

YES

Repair a short to ground in the wire.

NO

Replace the power tailgate control unit .

6. Determine possible failure area (power tailgate closer unit, others)

-1. Turn the vehicle to the OFF (LOCK) mode.

-2. Disconnect the following connector.

Power tailgate closer unit connector B (6P)

-3. Connect terminals A and B with a jumper wire.

Terminal A	Power tailgate closer unit connector B (6P) (female terminals) No. 1: ①
Terminal B	Power tailgate closer unit connector B (6P) (female terminals) No. 2: ①

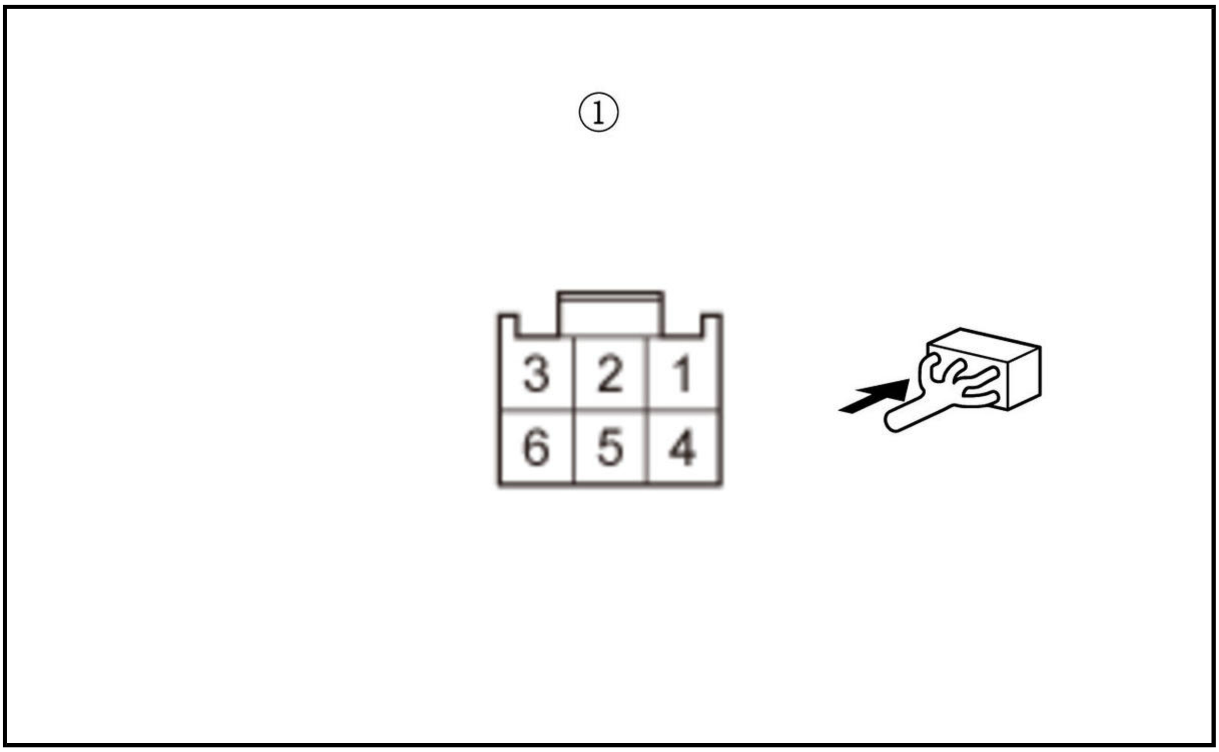

-4. Turn the vehicle to the ON mode.

-5. Check the parameter(s) below with the HDS.

Signal	Current conditions	
	Values	Unit
Tailgate Lock Sw. Full Latch	B	B

Is data list value ON?

YES

Faulty full latch switch; **replace the tailgate latch** .

NO

Go to step 7.

7. Determine possible failure area (T/G SW line, PTG/PTL SEG3 line)

-1. Turn the vehicle to the OFF (LOCK) mode.

-2. Disconnect the jumper wire.

-3. Connect terminals A and B with a jumper wire.

Terminal A	Power tailgate closer unit connector B (6P) (female terminals) No. 1: ①
Terminal B	Body ground

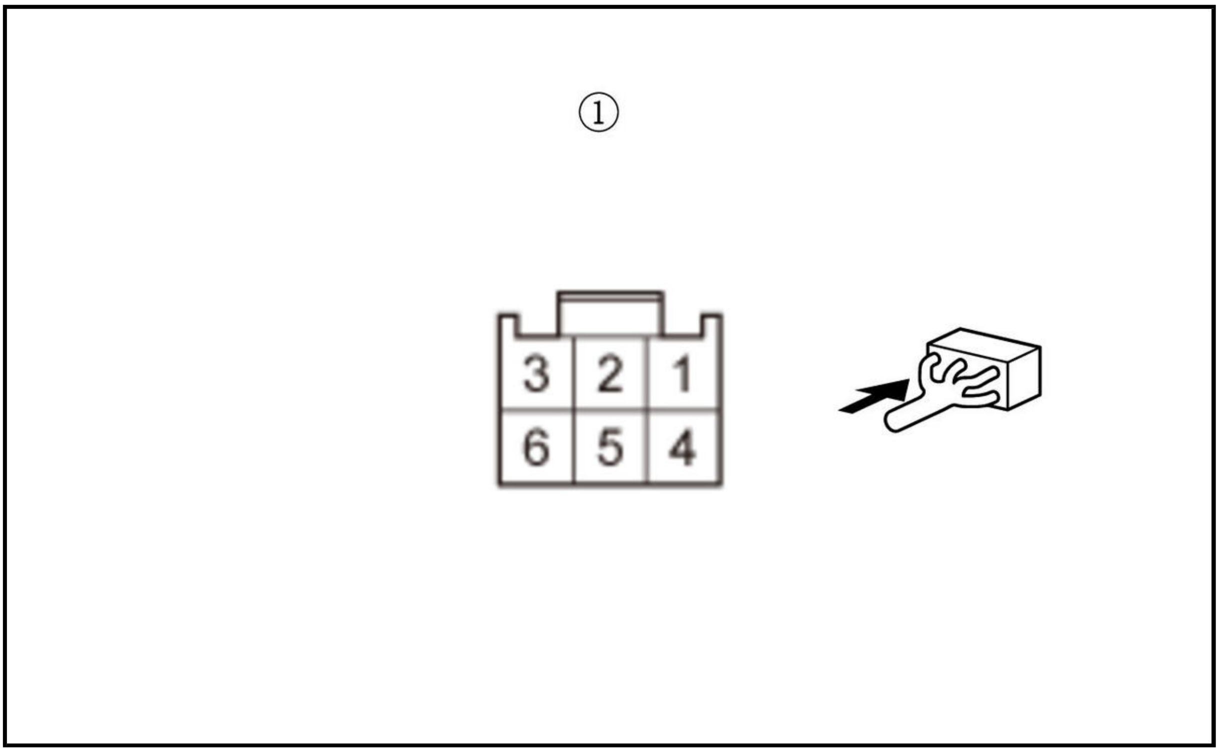

-4. Turn the vehicle to the ON mode.

-5. Check the parameter(s) below with the HDS.

Signal	**Current conditions**	
	Values	**Unit**
Tailgate Lock Sw. Full Latch	B	B

Is data list value ON?

YES

Go to step 8.

NO

Go to step 9.

8. Open wire check (PTG/PTL SEG3 line)

-1. Turn the vehicle to the OFF (LOCK) mode.

-2. Disconnect the jumper wire.

-3. Disconnect the following connector.

Power tailgate control unit connector A (24P)

-4. Check for continuity between test points 1 and 2.

Test condition	Vehicle OFF (LOCK) mode Power tailgate closer unit connector B (6P): disconnected Power tailgate control unit connector A (24P): disconnected
B	B
Test point 1	Power tailgate closer unit connector B (6P) (female terminals) No. 2: ①
Test point 2	**Power tailgate control unit connector A (24P) No. 21**

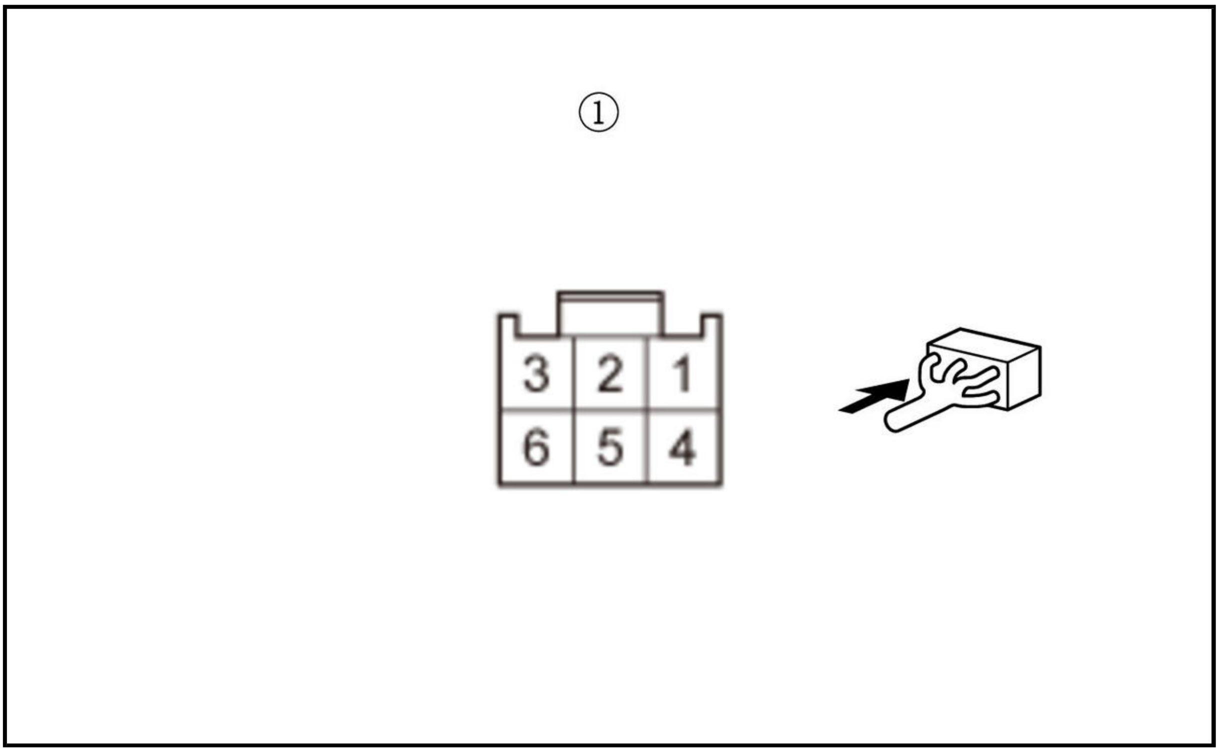

Is there continuity?

YES

Replace the power tailgate control unit .

NO

Repair an open or high resistance in the wire.

9. Open wire check (T/G SW line)

-1. Turn the vehicle to the OFF (LOCK) mode.

-2. Disconnect the jumper wire.

-3. Disconnect the following connector.

Power tailgate control unit connector A (24P)

-4. Check for continuity between test points 1 and 2.

Test condition	Vehicle OFF (LOCK) mode Power tailgate closer unit connector B (6P): disconnected Power tailgate control unit connector A (24P): disconnected
B	B
Test point 1	Power tailgate closer unit connector B (6P) (female terminals) No. 1: ①
Test point 2	**Power tailgate control unit connector A (24P) No. 11**

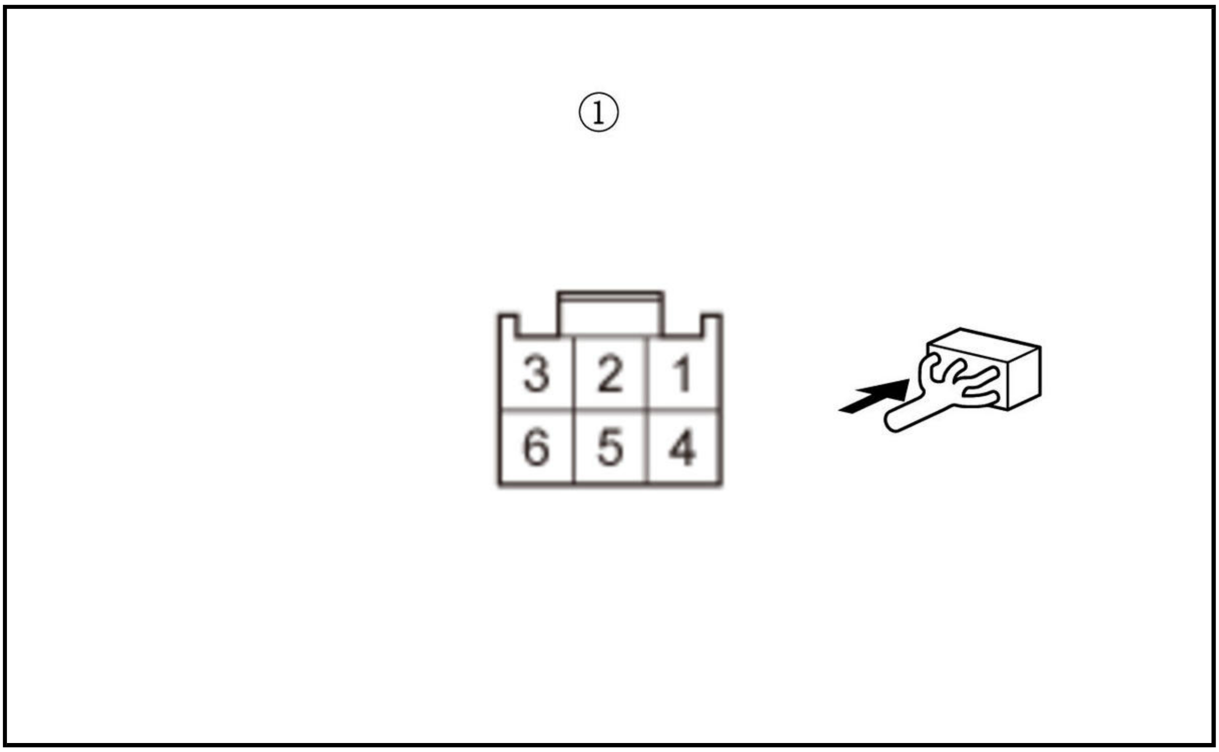

Is there continuity?

YES

Replace the power tailgate control unit .

NO

Repair an open or high resistance in the wire.

DTC B1383

DTC B1383 : Tailgate Closer Unit Ratchet switch circuit malfunction

NOTE: If you are troubleshooting multiple DTCs, be sure to follow the instructions in **B-CAN System Diagnosis Test Mode A** .

DTC Description	DTC
B1383 Tailgate Closer Unit Ratchet switch circuit malfunction	B

DTC (Power Tailgate Control Unit)

1. Problem verification

-1. Clear the DTCs with the HDS.

-2. Open the tailgate with the tailgate outer handle switch.

-3. Close the tailgate manually.

-4. Check for DTCs with the HDS.

DTC Description	DTC
B1383 Tailgate Closer Unit Ratchet switch circuit malfunction	B

Is DTC B1383 indicated?

YES

Go to step 2.

NO

Intermittent failure, the system is OK at this time. Check for loose or poor connections.

2. Determine possible failure area (PTG/PTL RACT line short, others)

-1. Check the parameter(s) below with the HDS.

Signal	Current conditions	
	Values	**Unit**
Tailgate Lock Sw. Ratchet	B	B

Is data list value ON?

YES

Go to step 3.

NO

Go to step 5.

3. Determine possible failure area (power tailgate closer unit, others)

-1. Turn the vehicle to the OFF (LOCK) mode.

-2. Disconnect the following connector.

Power tailgate closer unit connector B (6P)

-3. Turn the vehicle to the ON mode.

-4. Check the parameter(s) below with the HDS.

Signal	Current conditions	
	Values	**Unit**
Tailgate Lock Sw. Ratchet	B	B

Is data list value ON?

YES

Go to step 4.

NO

Faulty ratchet switch; **replace the tailgate latch** .

4. Shorted wire check (PTG/PTL RACT line)

-1. Turn the vehicle to the OFF (LOCK) mode.

-2. Disconnect the following connector.

Power tailgate control unit connector A (24P)

-3. Check for continuity between test points 1 and 2.

Test condition	Vehicle OFF (LOCK) mode Power tailgate closer unit connector B (6P): disconnected Power tailgate control unit connector A (24P): disconnected
B	B
Test point 1	**Power tailgate control unit connector A (24P) No. 22**
Test point 2	Body ground

Is there continuity?

YES

Repair a short to ground in the wire.

NO

Replace the power tailgate control unit .

5. Determine possible failure area (power tailgate closer unit, others)

-1. Turn the vehicle to the OFF (LOCK) mode.

-2. Disconnect the following connector.

Power tailgate closer unit connector B (6P)

-3. Connect terminals A and B with a jumper wire.

Terminal A	Power tailgate closer unit connector B (6P) (female terminals) No. 2: ①
Terminal B	Power tailgate closer unit connector B (6P) (female terminals) No. 6: ①

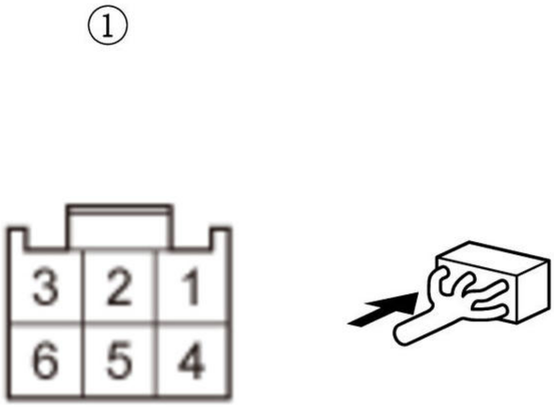

-4. Turn the vehicle to the ON mode.

-5. Check the parameter(s) below with the HDS.

Signal	Current conditions	
	Values	Unit
Tailgate Lock Sw. Ratchet	B	B

Is data list value ON?

YES

Faulty ratchet switch; **replace the tailgate latch** .

NO

Go to step 6.

6. Determine possible failure area (PTG/PTL RACT line, PTG/PTL SEG3 line)

-1. Turn the vehicle to the OFF (LOCK) mode.

-2. Disconnect the jumper wire.

-3. Connect terminals A and B with a jumper wire.

Terminal A	Power tailgate closer unit connector B (6P) (female terminals) No. 6: ①
Terminal B	Body ground

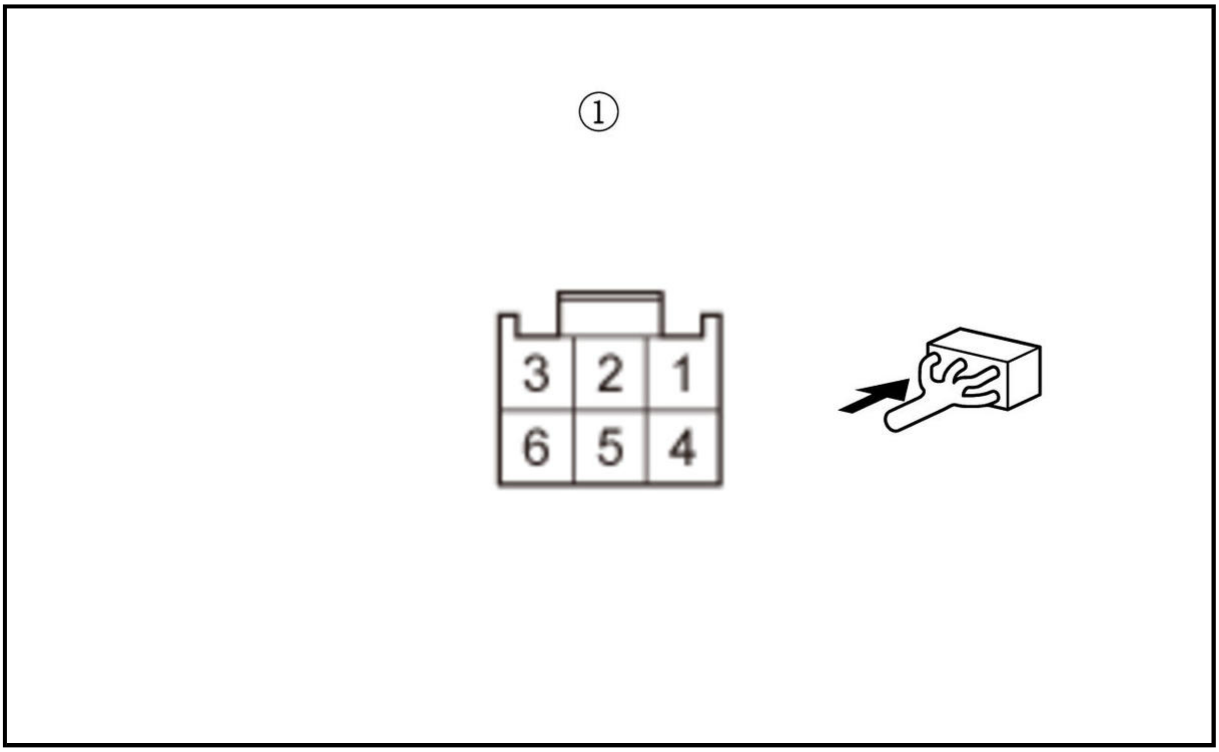

-4. Turn the vehicle to the ON mode.

-5. Check the parameter(s) below with the HDS.

Signal	Current conditions	
	Values	Unit
Tailgate Lock Sw. Ratchet	B	B

Is data list value ON?

YES

Go to step 7.

NO

Go to step 8.

7. Open wire check (PTG/PTL SEG3 line)

-1. Turn the vehicle to the OFF (LOCK) mode.

-2. Disconnect the jumper wire.

-3. Disconnect the following connector.

Power tailgate control unit connector A (24P)

-4. Check for continuity between test points 1 and 2.

Test condition	Vehicle OFF (LOCK) mode Power tailgate closer unit connector B (6P): disconnected Power tailgate control unit connector A (24P): disconnected
B	B
Test point 1	Power tailgate closer unit connector B (6P) (female terminals) No. 2: ①
Test point 2	**Power tailgate control unit connector A (24P) No. 21**

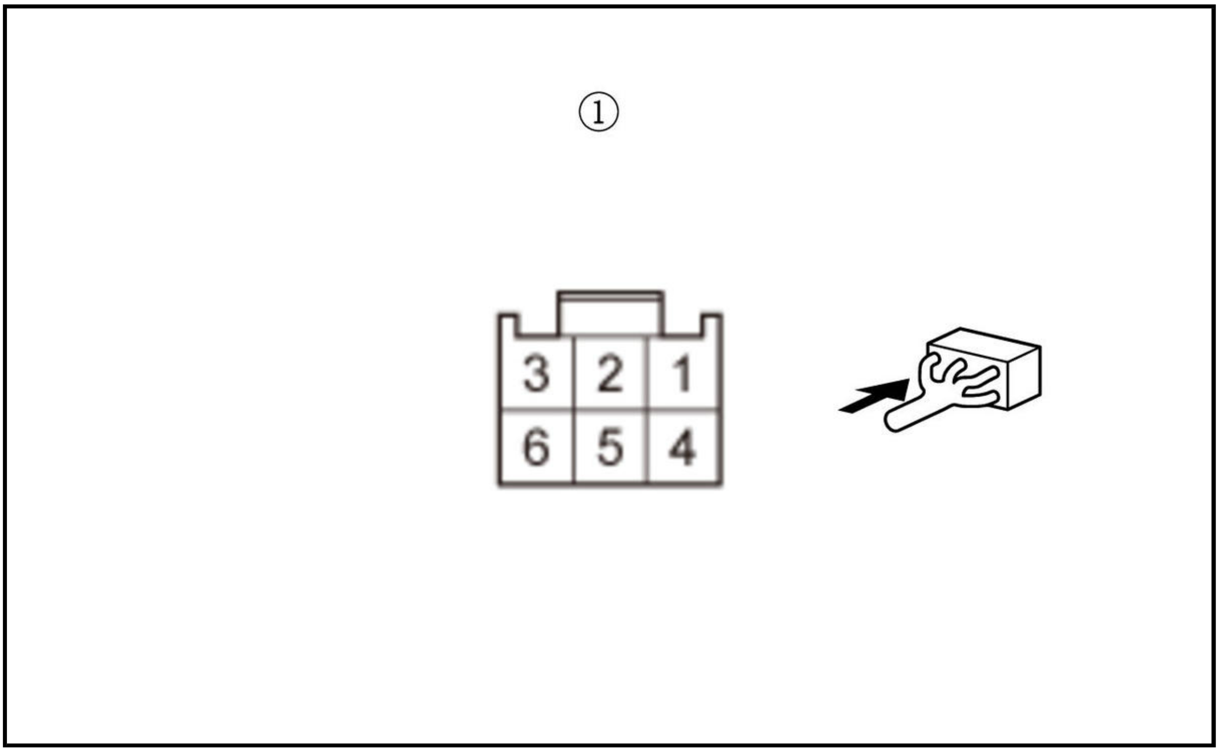

Is there continuity?

YES

Replace the power tailgate control unit .

NO

Repair an open or high resistance in the wire.

8. Open wire check (PTG/PTL RACT line)

-1. Turn the vehicle to the OFF (LOCK) mode.

-2. Disconnect the jumper wire.

-3. Disconnect the following connector.

Power tailgate control unit connector A (24P)

-4. Check for continuity between test points 1 and 2.

Test condition	Vehicle OFF (LOCK) mode Power tailgate closer unit connector B (6P): disconnected Power tailgate control unit connector A (24P): disconnected
B	B
Test point 1	Power tailgate closer unit connector B (6P) (female terminals) No. 6: ①
Test point 2	**Power tailgate control unit connector A (24P) No. 22**

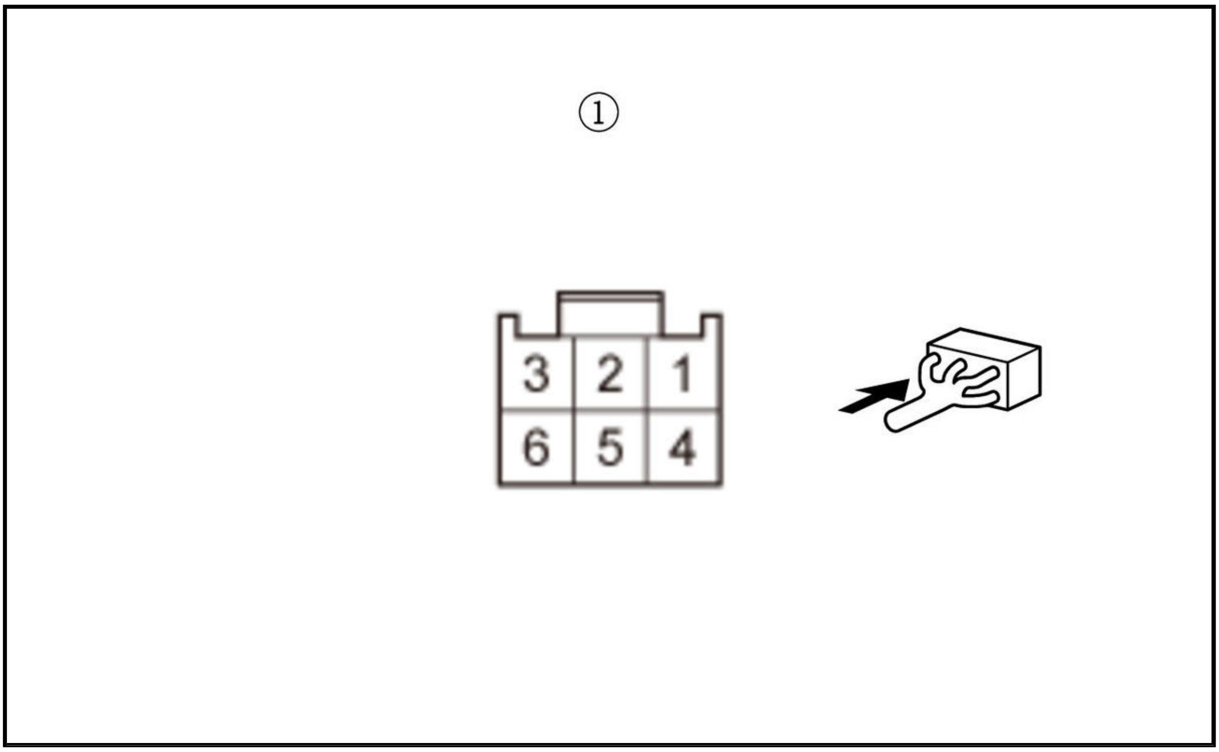

Is there continuity?

YES

Replace the power tailgate control unit .

NO

Repair an open or high resistance in the wire.

DTC B1384

DTC B1384 : Tailgate Closer Unit Half Latch switch circuit malfunction

NOTE: If you are troubleshooting multiple DTCs, be sure to follow the instructions in **B-CAN System Diagnosis Test Mode A** .

DTC Description	DTC
B1384 Tailgate Closer Unit Half Latch switch circuit malfunction	B

DTC (Power Tailgate Control Unit)

1. Problem verification

   -1. Clear the DTCs with the HDS.

   -2. Open the tailgate with the tailgate outer handle switch.

   -3. Close the tailgate manually.

   -4. Check for DTCs with the HDS.

DTC Description	DTC
B1384 Tailgate Closer Unit Half Latch switch circuit malfunction	B

   Is DTC B1384 indicated?

   YES

   Go to step 2.

   NO

   Intermittent failure, the system is OK at this time. Check for loose or poor connections.

2. Determine possible failure area (PTG/PTL HALF line short, others)

   -1. Check the parameter(s) below with the HDS.

Signal	Current conditions	
	Values	Unit
Tailgate Lock Sw. Half Latch	B	B

   Is data list value ON?

   YES

   Go to step 3.

   NO

   Go to step 5.

3. Determine possible failure area (power tailgate closer unit, others)

   -1. Turn the vehicle to the OFF (LOCK) mode.

   -2. Disconnect the following connector.

Power tailgate closer unit connector B (6P)

   -3. Turn the vehicle to the ON mode.

   -4. Check the parameter(s) below with the HDS.

Signal	Current conditions	
	Values	Unit
Tailgate Lock Sw. Half Latch	B	B

Is data list value ON?

YES

Go to step 4.

NO

Faulty half latch switch; **replace the tailgate latch** .

4. Shorted wire check (PTG/PTL HALF line)

-1. Turn the vehicle to the OFF (LOCK) mode.

-2. Disconnect the following connector.

Power tailgate control unit connector A (24P)

-3. Check for continuity between test points 1 and 2.

Test condition	Vehicle OFF (LOCK) mode Power tailgate closer unit connector B (6P): disconnected Power tailgate control unit connector A (24P): disconnected
B	B
Test point 1	**Power tailgate control unit connector A (24P) No. 12**
Test point 2	Body ground

Is there continuity?

YES

Repair a short to ground in the wire.

NO

Replace the power tailgate control unit .

5. Determine possible failure area (power tailgate closer unit, others)

-1. Turn the vehicle to the OFF (LOCK) mode.

-2. Disconnect the following connector.

Power tailgate closer unit connector B (6P)

-3. Connect terminals A and B with a jumper wire.

Terminal A	Power tailgate closer unit connector B (6P) (female terminals) No. 2: ①
Terminal B	Power tailgate closer unit connector B (6P) (female terminals) No. 4: ①

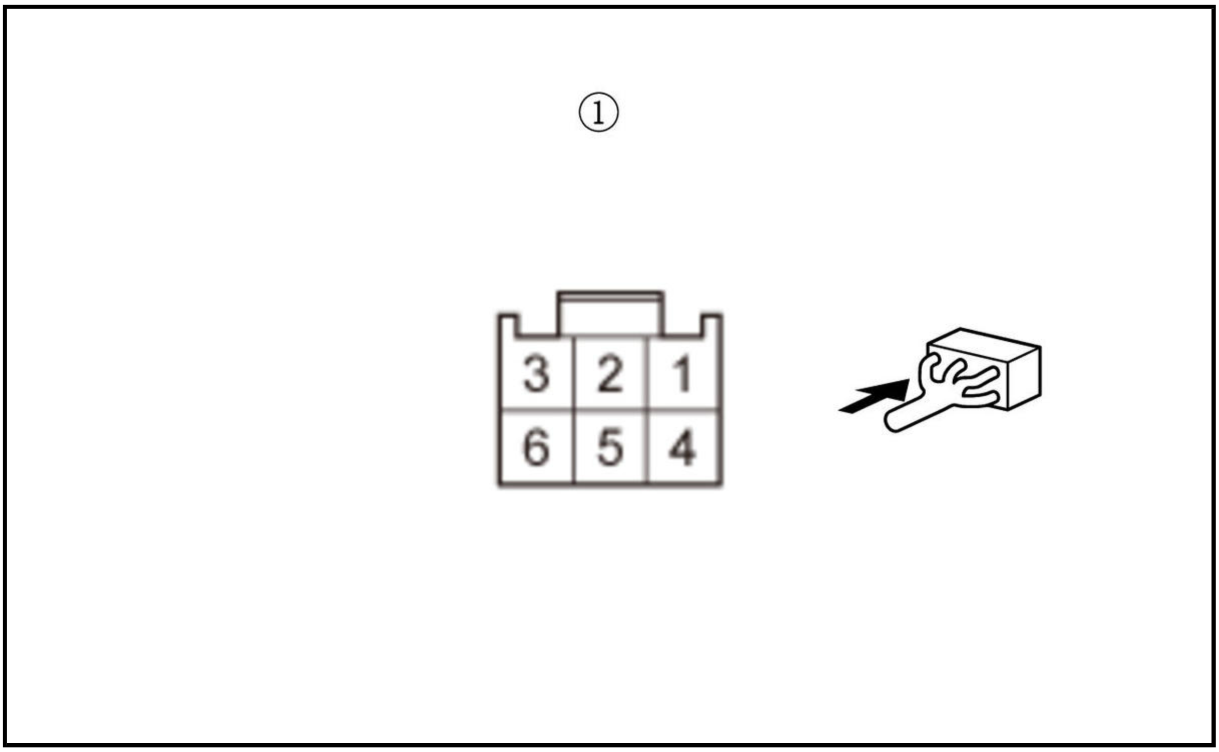

-4. Turn the vehicle to the ON mode.

-5. Check the parameter(s) below with the HDS.

Signal	Current conditions	
	Values	Unit
Tailgate Lock Sw. Half Latch	B	B

Is data list value ON?

YES

Faulty half latch switch; **replace the tailgate latch** .

NO

Go to step 6.

6. Determine possible failure area (PTG/PTL HALF line, PTG/PTL SEG3 line)

-1. Turn the vehicle to the OFF (LOCK) mode.

-2. Disconnect the jumper wire.

-3. Connect terminals A and B with a jumper wire.

Terminal A	Power tailgate closer unit connector B (6P) (female terminals) No. 4: ①
Terminal B	Body ground

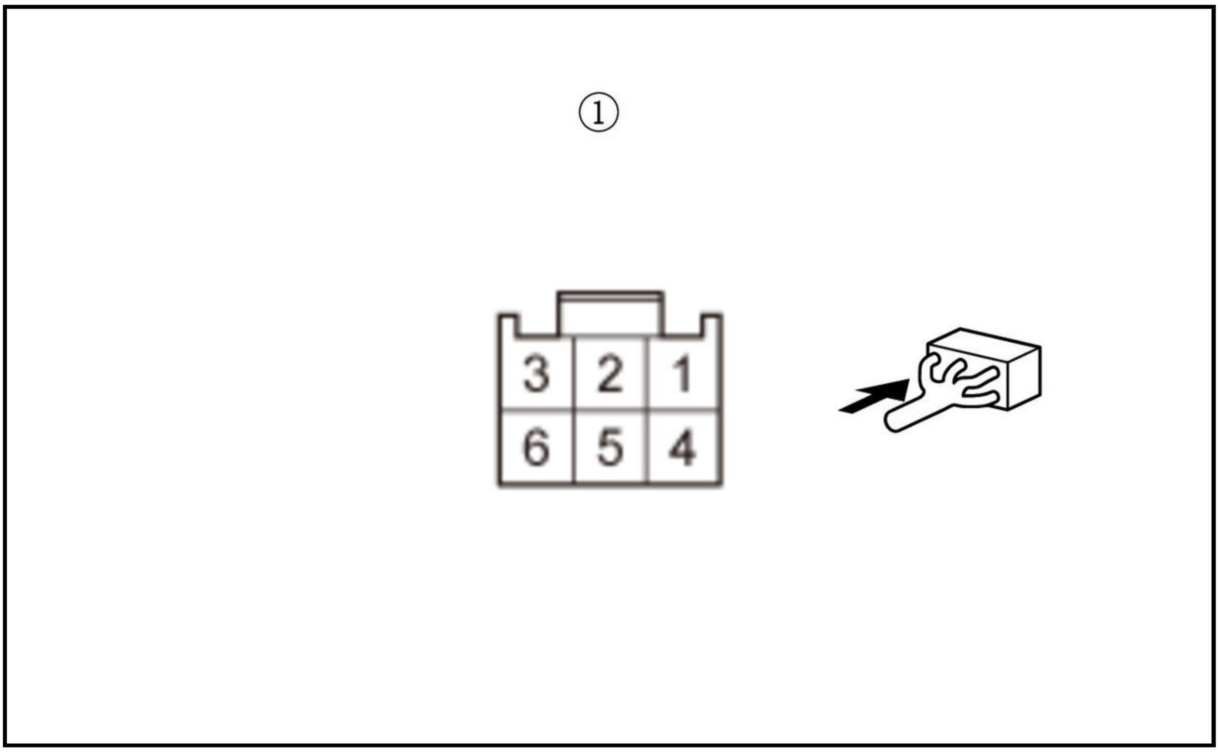

-4. Turn the vehicle to the ON mode.

-5. Check the parameter(s) below with the HDS.

Signal	Current conditions	
	Values	Unit
Tailgate Lock Sw. Half Latch	B	B

Is data list value ON?

YES

Go to step 7.

NO

Go to step 8.

7. Open wire check (PTG/PTL SEG3 line)

-1. Turn the vehicle to the OFF (LOCK) mode.

-2. Disconnect the jumper wire.

-3. Disconnect the following connector.

Power tailgate control unit connector A (24P)

-4. Check for continuity between test points 1 and 2.

Test condition	Vehicle OFF (LOCK) mode Power tailgate closer unit connector B (6P): disconnected Power tailgate control unit connector A (24P): disconnected
B	B
Test point 1	Power tailgate closer unit connector B (6P) (female terminals) No. 2: ①
Test point 2	**Power tailgate control unit connector A (24P) No. 21**

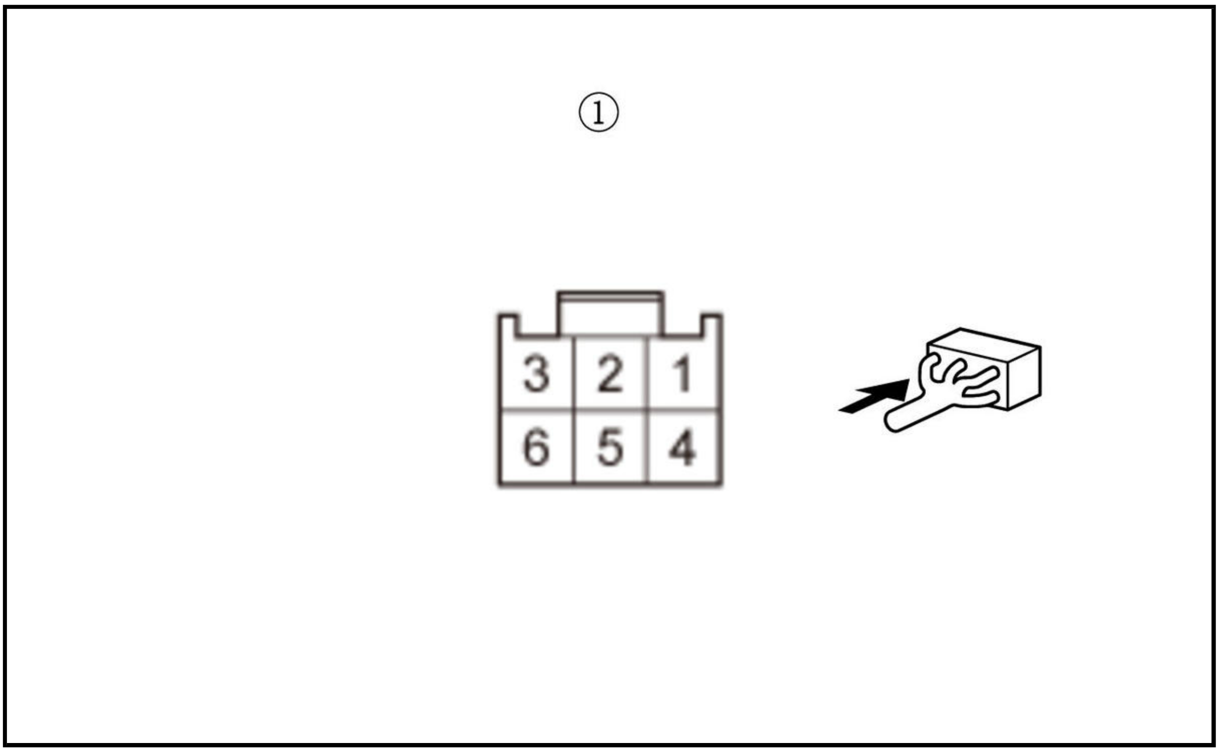

Is there continuity?

YES

Replace the power tailgate control unit .

NO

Repair an open or high resistance in the wire.

8. Open wire check (PTG/PTL HALF line)

-1. Turn the vehicle to the OFF (LOCK) mode.

-2. Disconnect the jumper wire.

-3. Disconnect the following connector.

Power tailgate control unit connector A (24P)

-4. Check for continuity between test points 1 and 2.

Test condition	Vehicle OFF (LOCK) mode Power tailgate closer unit connector B (6P): disconnected Power tailgate control unit connector A (24P): disconnected
B	B
Test point 1	Power tailgate closer unit connector B (6P) (female terminals) No. 4: ①
Test point 2	**Power tailgate control unit connector A (24P) No. 12**

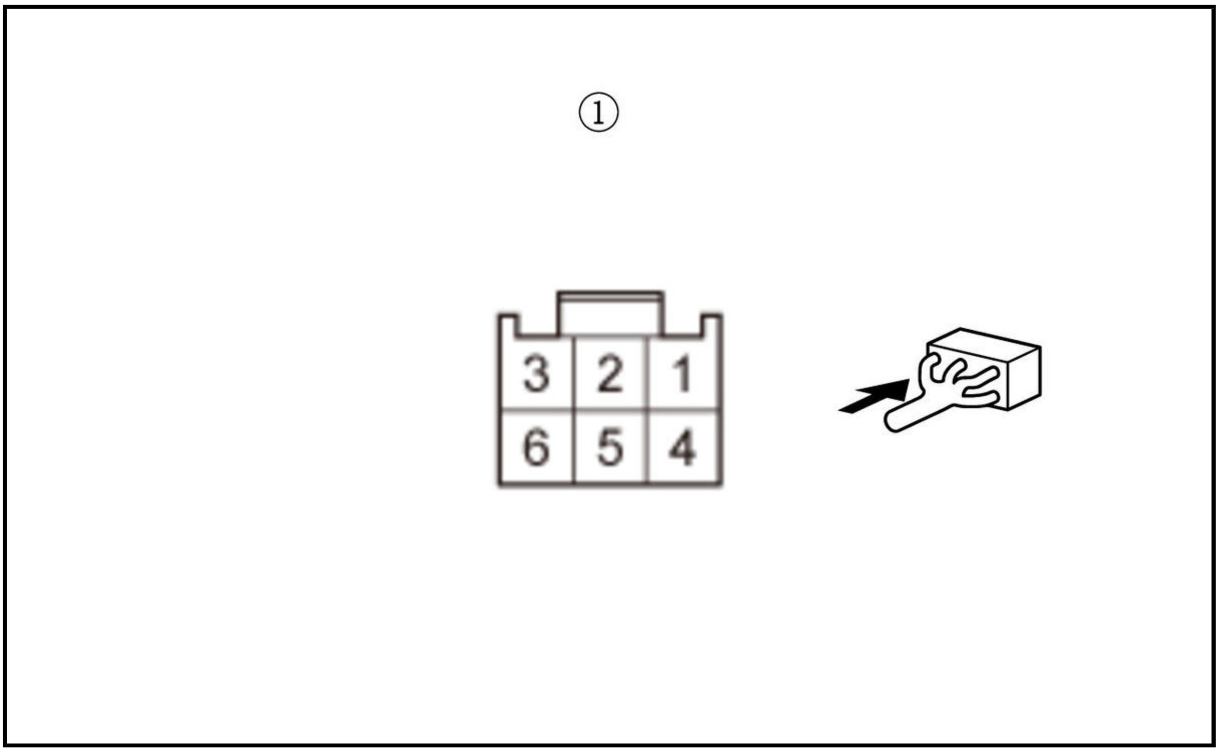

Is there continuity?

YES

Replace the power tailgate control unit .

NO

Repair an open or high resistance in the wire.

DTC B1385

DTC B1385 : Power Tailgate temperature sensor malfunction

NOTE: If you are troubleshooting multiple DTCs, be sure to follow the instructions in B-CAN System Diagnosis Test Mode A .

DTC Description	DTC
B1385 Power Tailgate temperature sensor malfunction	B

DTC (Power Tailgate Control Unit)

1. Problem verification 1

   -1. Clear the DTCs with the HDS.

   -2. Open the tailgate manually or with the keyless transmitter.

   -3. Close the tailgate with the keyless transmitter or driver's power tailgate switch.

   -4. Check for DTCs with the HDS.

DTC Description	DTC
B1385 Power Tailgate temperature sensor malfunction	B

   Is DTC B1385 indicated?

YES

Go to step 2.

NO

Intermittent failure, the system is OK at this time. Check for loose or poor connections.

2. Problem verification 2

-1. Check for DTCs with the HDS.

DTC Description	DTC
B1378 Power Tailgate Right Touch/Pinch sensor circuit malfunction	B
B1379 Power Tailgate Left Touch/Pinch sensor circuit malfunction	B
B1385 Power Tailgate temperature sensor malfunction	B

Any of DTC are indicated at the same time with DTC B1385?

YES

Go to step 3.

NO

Go to step 4.

3. Open wire check (PTG/PTL SEG2 line)

-1. Turn the vehicle to the OFF (LOCK) mode.

-2. Disconnect the following connectors.

Power tailgate control unit connector B (10P) Left power tailgate pinch sensor 4P connector

-3. Check for continuity between test points 1 and 2.

Test condition	Vehicle OFF (LOCK) mode Power tailgate control unit connector B (10P): disconnected Left power tailgate pinch sensor 4P connector: disconnected
Test point 1	**Power tailgate control unit connector B (10P) No. 8**
Test point 2	Left power tailgate pinch sensor 4P connector (male terminals) No. 2: ①

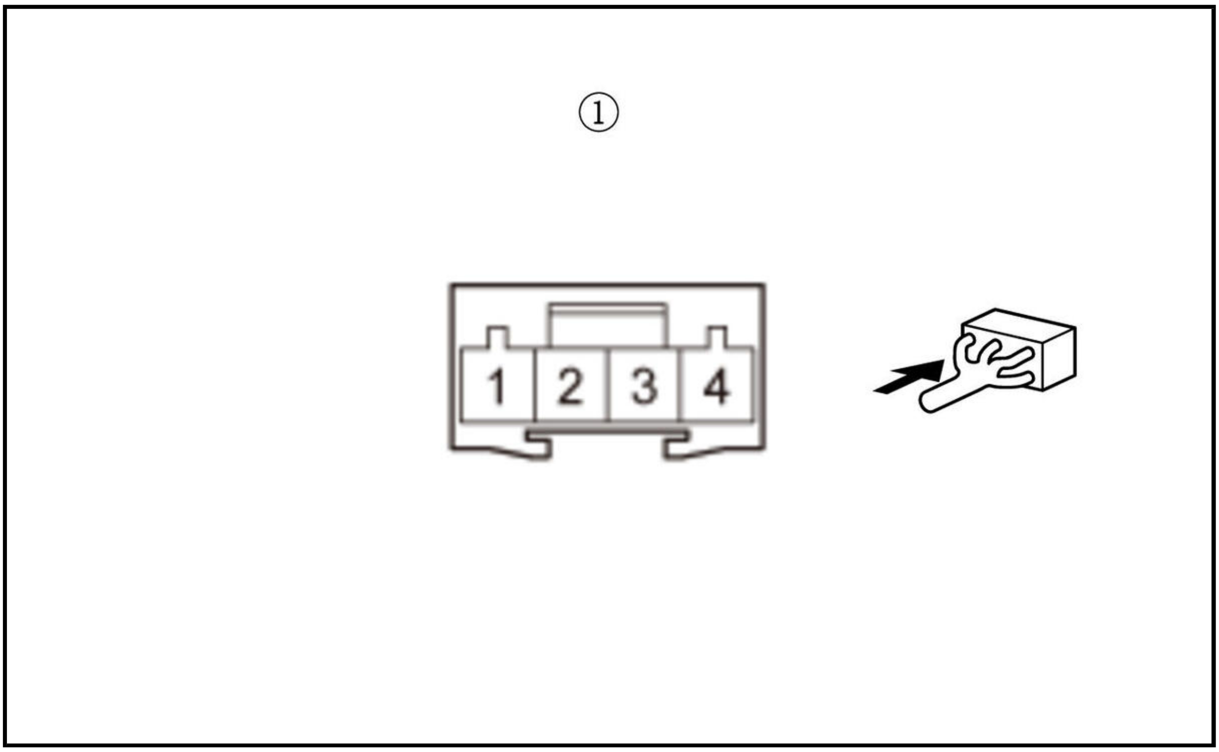

Is there continuity?

YES

Replace the power tailgate control unit .

NO

Repair an open or high resistance in the wire.

4. Determine possible failure area (left power tailgate pinch sensor thermistor, others)

-1. Disconnect the following connector.

Left power tailgate pinch sensor 4P connector

-2. Turn the vehicle to the ON mode.

-3. Measure the voltage between test points 1 and 2.

Test condition	Vehicle ON mode Left power tailgate pinch sensor 4P connector: disconnected
Test point 1	Left power tailgate pinch sensor 4P connector (male terminals) No. 4: ①
Test point 2	Body ground

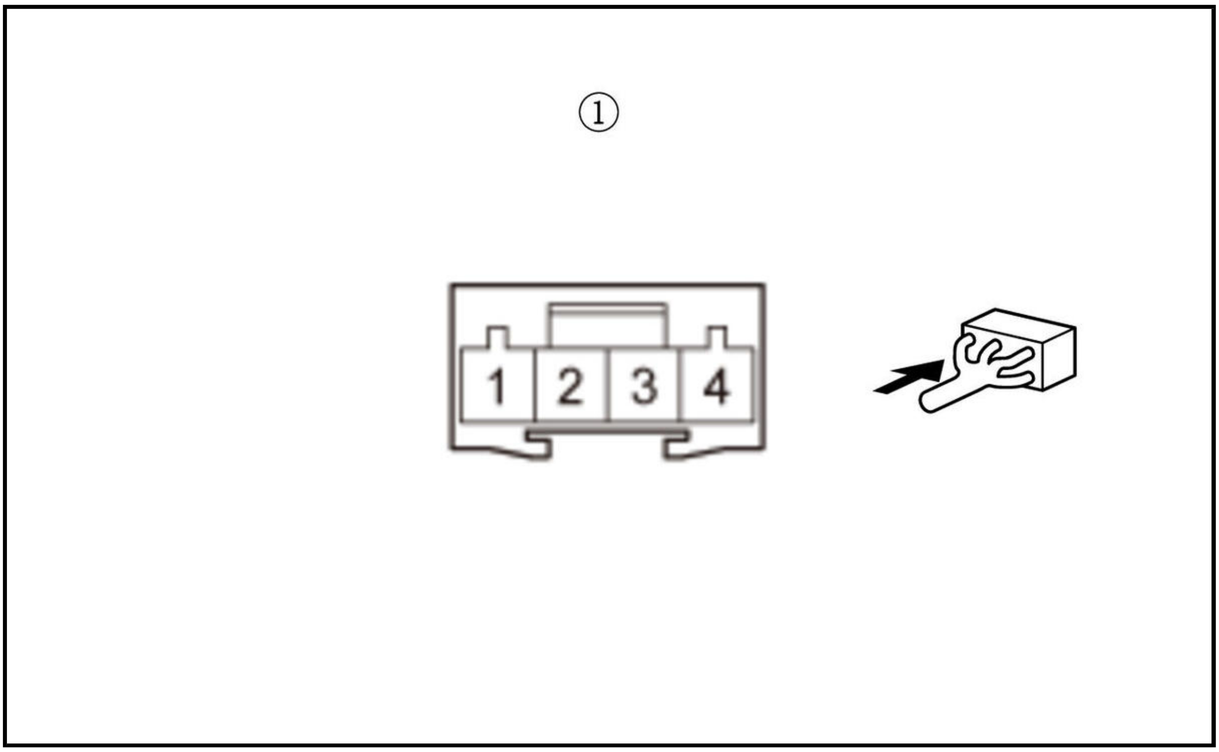

Is there battery voltage?

YES

Replace the left power tailgate pinch sensor .

NO

Go to step 5.

5. Open wire check (PTG/PTL THERMISTOR line)

   -1. Measure the voltage between test points 1 and 2.

Test condition	Vehicle ON mode Left power tailgate pinch sensor 4P connector: disconnected
Test point 1	**Power tailgate control unit connector B (10P) No. 1**
Test point 2	Body ground

Is there battery voltage?

YES

Repair an open or high resistance in the wire.

NO

Replace the power tailgate control unit .

DTC B1386

DTC B1386 : Power Tailgate sensor Pulse A circuit malfunction

NOTE:

- If you are troubleshooting multiple DTCs, be sure to follow the instructions in **B-CAN System Diagnosis Test Mode A** .
- If the motor does not operate, **do the motor test first** .

DTC Description	DTC
B1386 Power Tailgate sensor Pulse A circuit malfunction	B

DTC (Power Tailgate Control Unit)

1. Problem verification 1

   -1. Clear the DTCs with the HDS.

   -2. Open the tailgate with the tailgate outer handle switch.

   -3. Close the tailgate automatically with the keyless transmitter or power tailgate inside switch.

   -4. Check for DTCs with the HDS.

DTC Description	DTC
B1386 Power Tailgate sensor Pulse A circuit malfunction	B

   Is DTC B1386 indicated?

   YES

   Go to step 2.

   NO

   Intermittent failure, the system is OK at this time. Check for loose or poor connections.

2. Problem verification 2

   -1. Check for DTCs with the HDS.

DTC Description	DTC
B1387 Power Tailgate sensor Pulse B circuit malfunction	B

   Is DTC B1387 indicated?

   YES

   Go to step 3.

   NO

   Go to step 4.

3. Shorted wire check (PTG/PTL SVCC line)

   -1. Turn the vehicle to the OFF (LOCK) mode.

   -2. Disconnect the following connector.

Power tailgate drive unit connector B (6P)

   -3. Check for continuity between test points 1 and 2.

Test condition	Vehicle OFF(LOCK) mode Power tailgate drive unit connector B (6P): disconnected
B	B

Test point 1	Power tailgate drive unit connector B (6P) (male terminals) No. 4: ①
Test point 2	Body ground

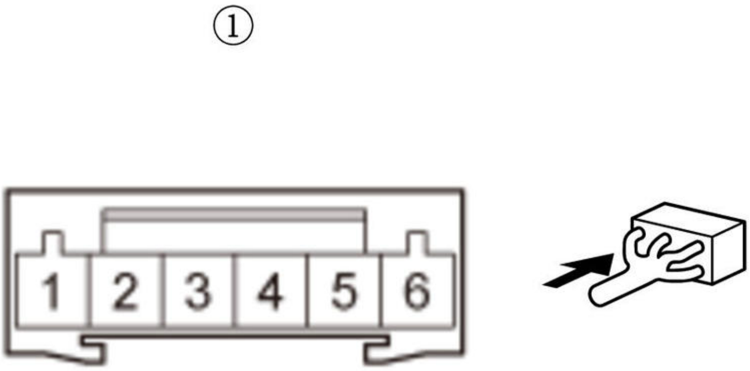

Is there continuity?

YES

Repair a short to ground in the wire.

NO

Replace the power tailgate control unit .

4. Determine possible failure area (power tailgate sensor, others)

-1. Turn the vehicle to the OFF (LOCK) mode.

-2. Disconnect the following connector.

Power tailgate drive unit connector B (6P)

-3. Turn the vehicle to the ON mode.

-4. Measure the voltage between test points 1 and 2.

Test condition	Vehicle ON mode Power tailgate drive unit connector B (6P): disconnected
B	B
Test point 1	Power tailgate drive unit connector B (6P) (male terminals) No. 1: ①
Test point 2	Body ground

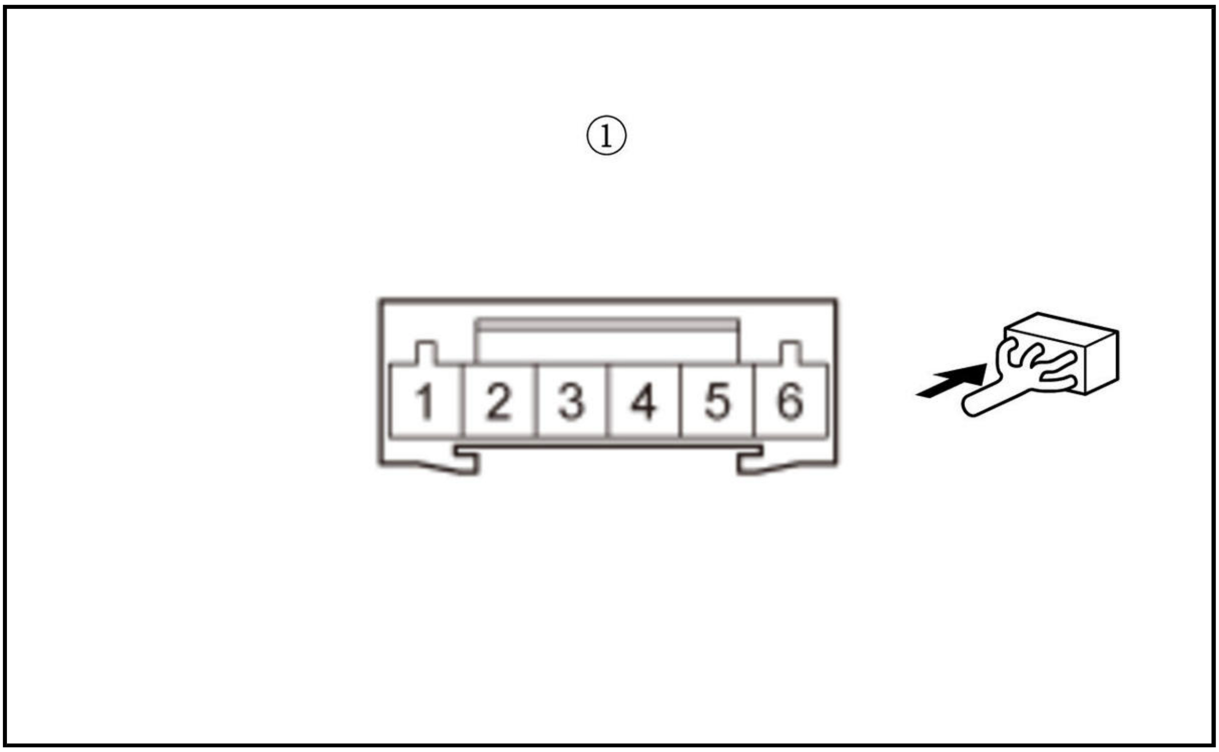

Is there about 5V?

YES

Faulty power tailgate sensor; **replace the power tailgate drive unit** .

NO

Go to step 5.

5. Shorted wire check (PTG/PTL SENA line)

-1. Turn the vehicle to the OFF (LOCK) mode.

-2. Check for continuity between test points 1 and 2.

Test condition	Vehicle OFF (LOCK) mode Power tailgate drive unit connector B (6P): disconnected
B	B
Test point 1	Power tailgate drive unit connector B (6P) (male terminals) No. 1: ①
Test point 2	Body ground

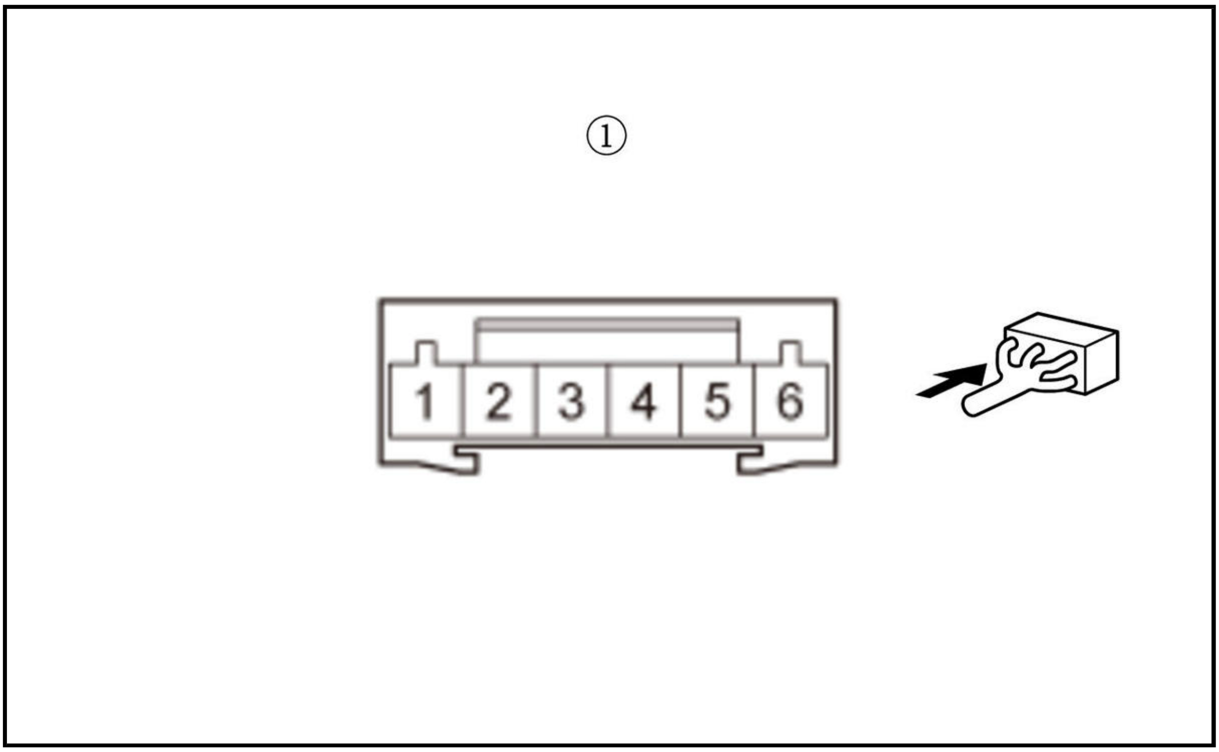

Is there continuity?

YES

Repair a short to ground in the wire.

NO

Go to step 6.

6. Open wire check (PTG/PTL SENA line)

-1. Disconnect the following connector.

Power tailgate control unit connector A (24P)

-2. Check for continuity between test points 1 and 2.

Test condition	Vehicle OFF (LOCK) mode Power tailgate drive unit connector B (6P): disconnected Power tailgate control unit connector A (24P): disconnected
B	B
Test point 1	Power tailgate drive unit connector B (6P) (male terminals) No. 1: ①
Test point 2	**Power tailgate control unit connector A (24P) No. 3**

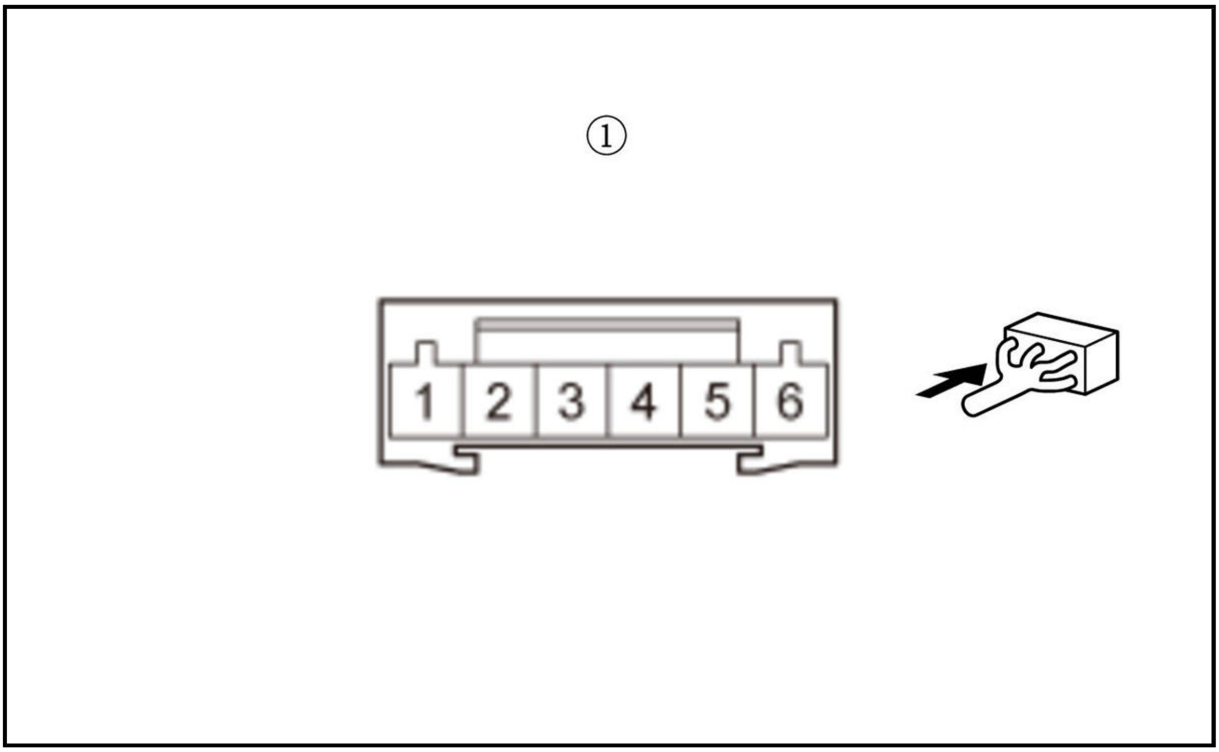

Is there continuity?

YES

Replace the power tailgate control unit .

NO

Repair an open or high resistance in the wire.

DTC B1387

DTC B1387 : Power Tailgate sensor Pulse B circuit malfunction

NOTE:

- If you are troubleshooting multiple DTCs, be sure to follow the instructions in **B-CAN System Diagnosis Test Mode A** .
- If the motor does not operate, **do the motor test first** .

DTC Description	DTC
B1387 Power Tailgate sensor Pulse B circuit malfunction	B

DTC (Power Tailgate Control Unit)

1. Problem verification 1

   -1. Clear the DTCs with the HDS.

   -2. Open the tailgate with the tailgate outer handle switch.

   -3. Close the tailgate automatically with the keyless transmitter or power tailgate inside switch.

   -4. Check for DTCs with the HDS.

DTC Description	DTC
B1387 Power Tailgate sensor Pulse B circuit malfunction	B

Is DTC B1387 indicated?

YES

Go to step 2.

NO

Intermittent failure, the system is OK at this time. Check for loose or poor connections.

2. Problem verification 2

-1. Check for DTCs with the HDS.

DTC Description	DTC
B1386 Power Tailgate sensor Pulse A circuit malfunction	B

Is DTC B1386 indicated?

YES

Go to step 3.

NO

Go to step 4.

3. Shorted wire check (PTG/PTL SVCC line)

-1. Turn the vehicle to the OFF (LOCK) mode.

-2. Disconnect the following connector.

Power tailgate drive unit connector B (6P)

-3. Check for continuity between test points 1 and 2.

Test condition	Vehicle OFF (LOCK) mode Power tailgate drive unit connector B (6P): disconnected
B	B
Test point 1	Power tailgate drive unit connector B (6P) (male terminals) No. 4: ①
Test point 2	Body ground

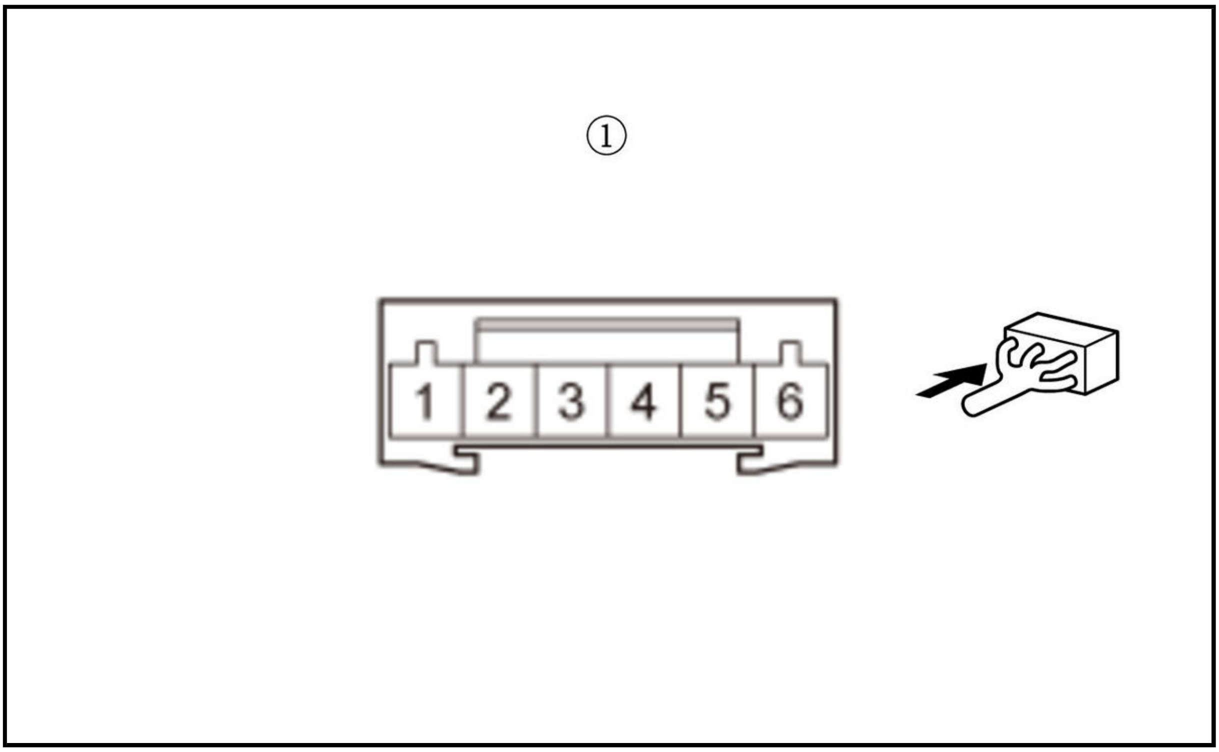

Is there continuity?

YES

Repair a short to ground in the wire.

NO

Replace the power tailgate control unit .

4. Determine possible failure area (power tailgate sensor, others)

-1. Turn the vehicle to the OFF (LOCK) mode.

-2. Disconnect the following connector.

Power tailgate drive unit connector B (6P)

-3. Turn the vehicle to the ON mode.

-4. Measure the voltage between test points 1 and 2.

Test condition	Vehicle ON mode Power tailgate drive unit connector B (6P): disconnected
B	B
Test point 1	Power tailgate drive unit connector B (6P) (male terminals) No. 3: ①
Test point 2	Body ground

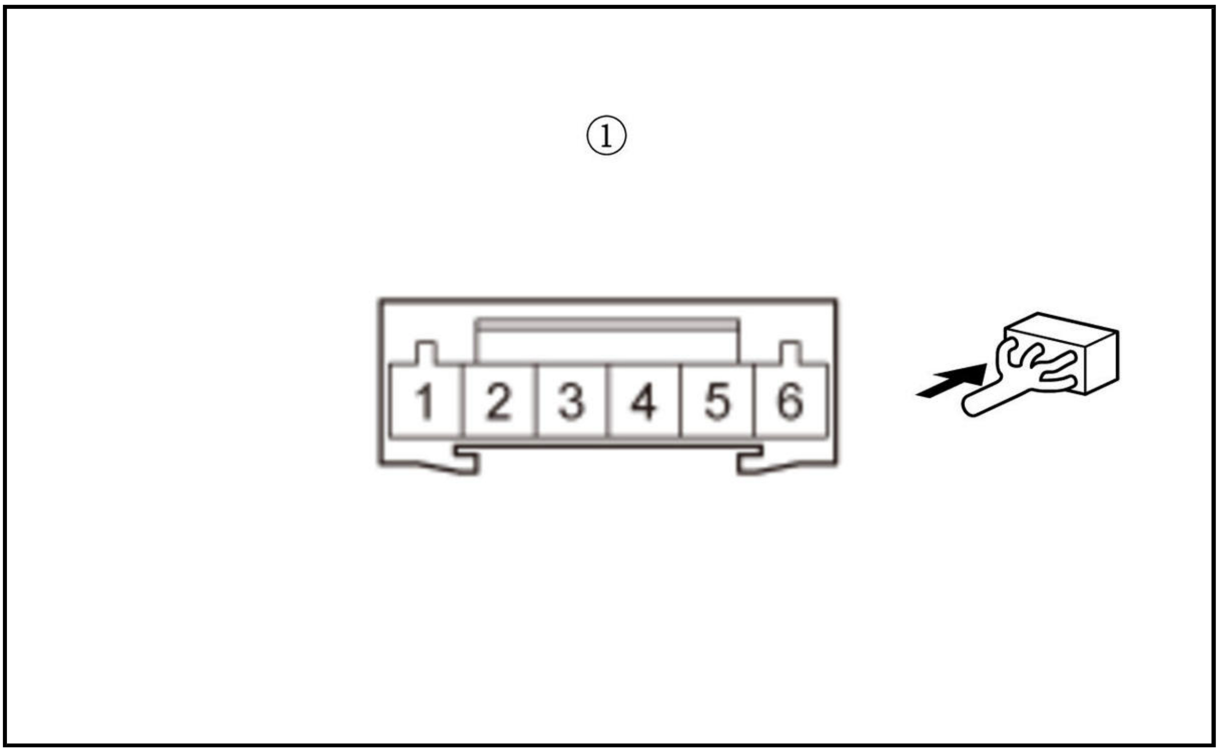

Is there about 5V?

YES

Faulty power tailgate sensor; **replace the power tailgate drive unit** .

NO

Go to step 5.

5. Shorted wire check (PTG/PTL SENB line)

 -1. Turn the vehicle to the OFF (LOCK) mode.

 -2. Check for continuity between test points 1 and 2.

Test condition	Vehicle OFF (LOCK) mode Power tailgate drive unit connector B (6P): disconnected
B	B
Test point 1	Power tailgate drive unit connector B (6P) (male terminals) No. 3: ①
Test point 2	Body ground

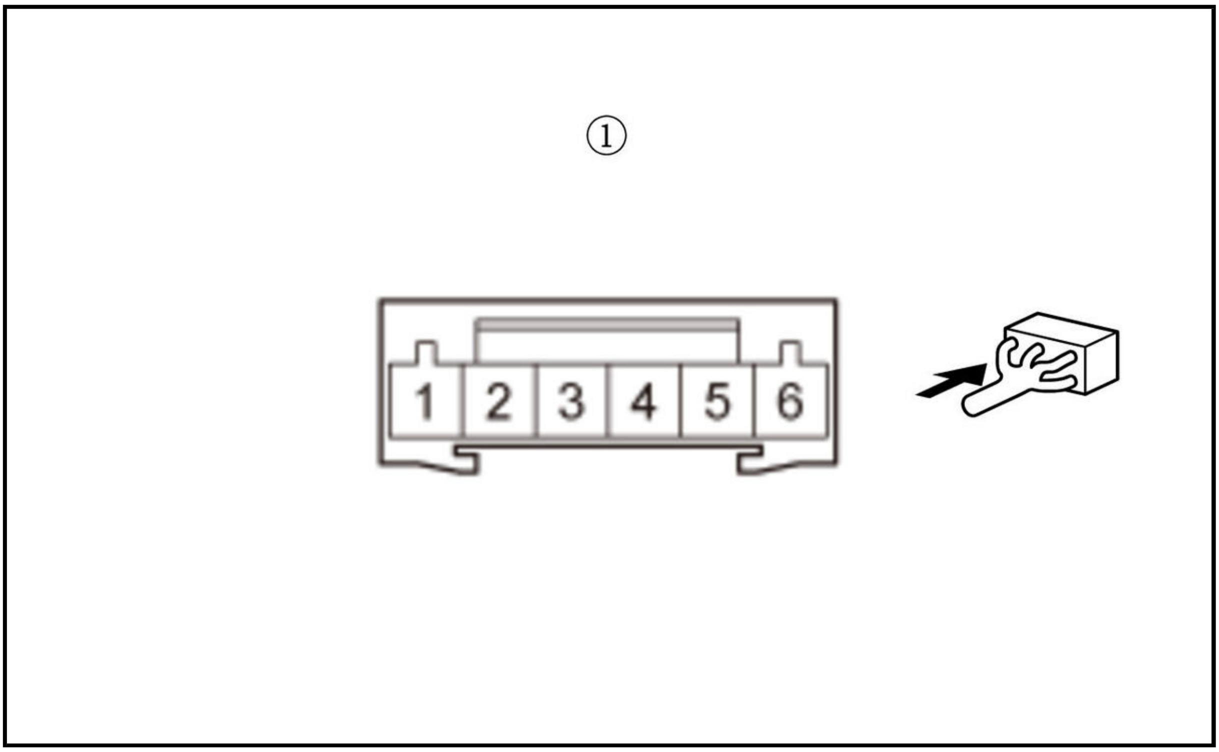

Is there continuity?

YES

Repair a short to ground in the wire.

NO

Go to step 6.

6. Open wire check (PTG/PTL SENB line)

-1. Disconnect the following connector.

Power tailgate control unit connector A (24P)

-2. Check for continuity between test points 1 and 2.

Test condition	Vehicle OFF (LOCK) mode Power tailgate drive unit connector B (6P): disconnected Power tailgate control unit connector A (24P): disconnected
B	B
Test point 1	Power tailgate drive unit connector B (6P) (male terminals) No. 3: ①
Test point 2	**Power tailgate control unit connector A (24P) No. 16**

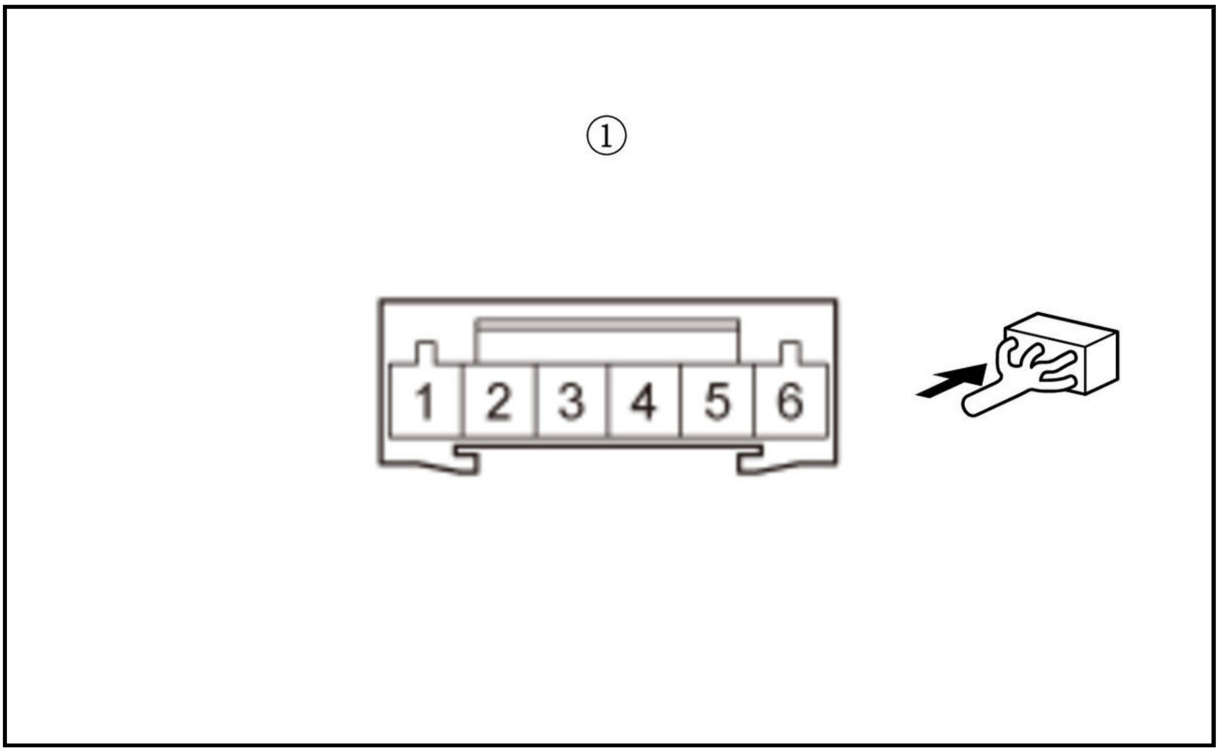

Is there continuity?

YES

Replace the power tailgate control unit .

NO

Repair an open or high resistance in the wire.

DTC B1388

DTC B1388 : Power Tailgate Drive Motor circuit malfunction

NOTE:

- If you are troubleshooting multiple DTCs, be sure to follow the instructions in B-CAN System Diagnosis Test Mode A .
- Before troubleshooting, make sure the fuses associated with the system is OK.

DTC Description	DTC
B1388 Power Tailgate Drive Motor circuit malfunction	B

DTC (Power Tailgate Control Unit)

1. Problem verification

   -1. Clear the DTCs with the HDS.

   -2. Open the tailgate.

   -3. Close the tailgate automatically with the keyless transmitter or power tailgate inside switch.

   -4. Check for DTCs with the HDS.

DTC Description	DTC
B1388 Power Tailgate Drive Motor circuit malfunction	B

Is DTC B1388 indicated?

YES

Go to step 2.

NO

Intermittent failure, the system is OK at this time. Check for loose or poor connections.

2. Power tailgate motor check

-1. Turn the vehicle to the OFF (LOCK) mode.

-2. **Test the power tailgate motor** .

Is the motor OK?

YES

Go to step 3.

NO

Faulty power tailgate motor; **replace the power tailgate drive unit** .

3. Shorted wire check (PTG/PTL PTM+ line)

-1. Disconnect the following connector.

Power tailgate control unit connector C (5P)

-2. Check for continuity between test points 1 and 2.

Test condition	Vehicle OFF (LOCK) mode Power tailgate control unit connector C (5P): disconnected Power tailgate drive unit connector A (2P): disconnected
B	B
Test point 1	Power tailgate drive unit connector A (2P) (male terminals) No. 1: ①
Test point 2	Body ground

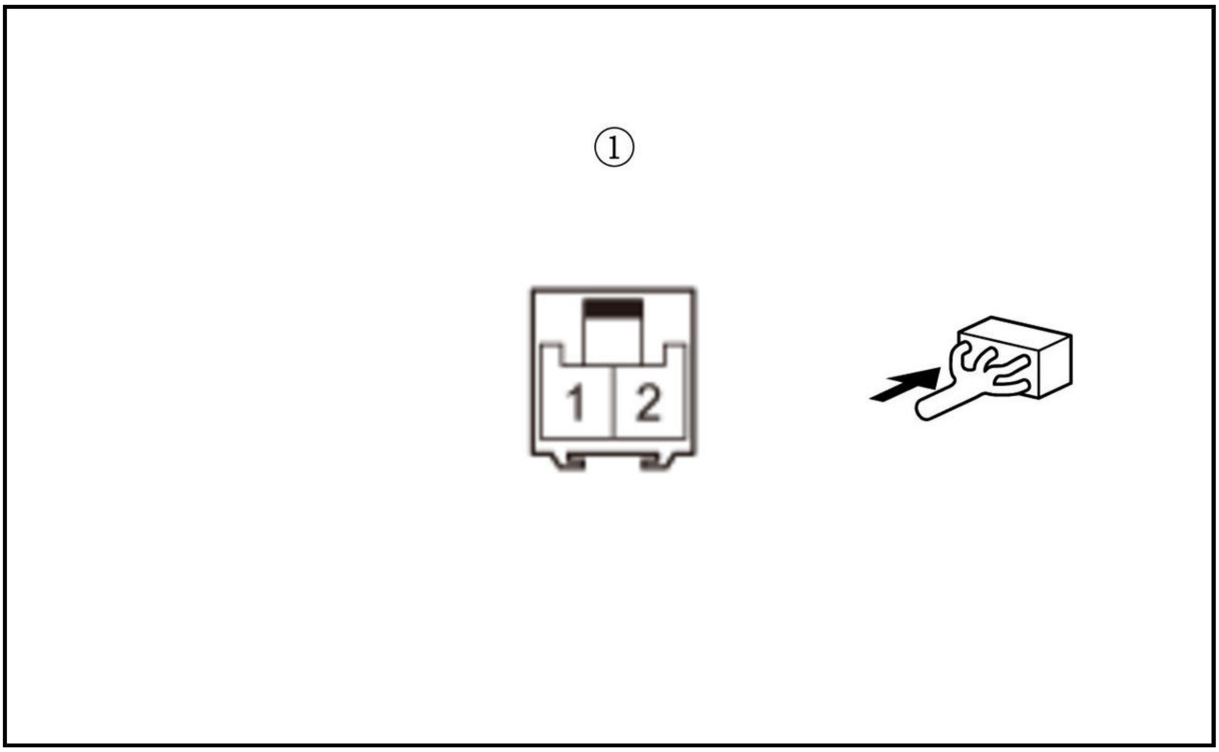

Is there continuity?

YES

Repair a short to ground in the wire.

NO

The PTG/PTL PTM+ wire is not shorted. Go to step 4.

4. Shorted wire check (PTG/PTL PTM- line)

-1. Check for continuity between test points 1 and 2.

Test condition	Vehicle OFF (LOCK) mode Power tailgate control unit connector C (5P): disconnected Power tailgate drive unit connector A (2P): disconnected
B	B
Test point 1	Power tailgate drive unit connector A (2P) (male terminals) No. 2: ①
Test point 2	Body ground

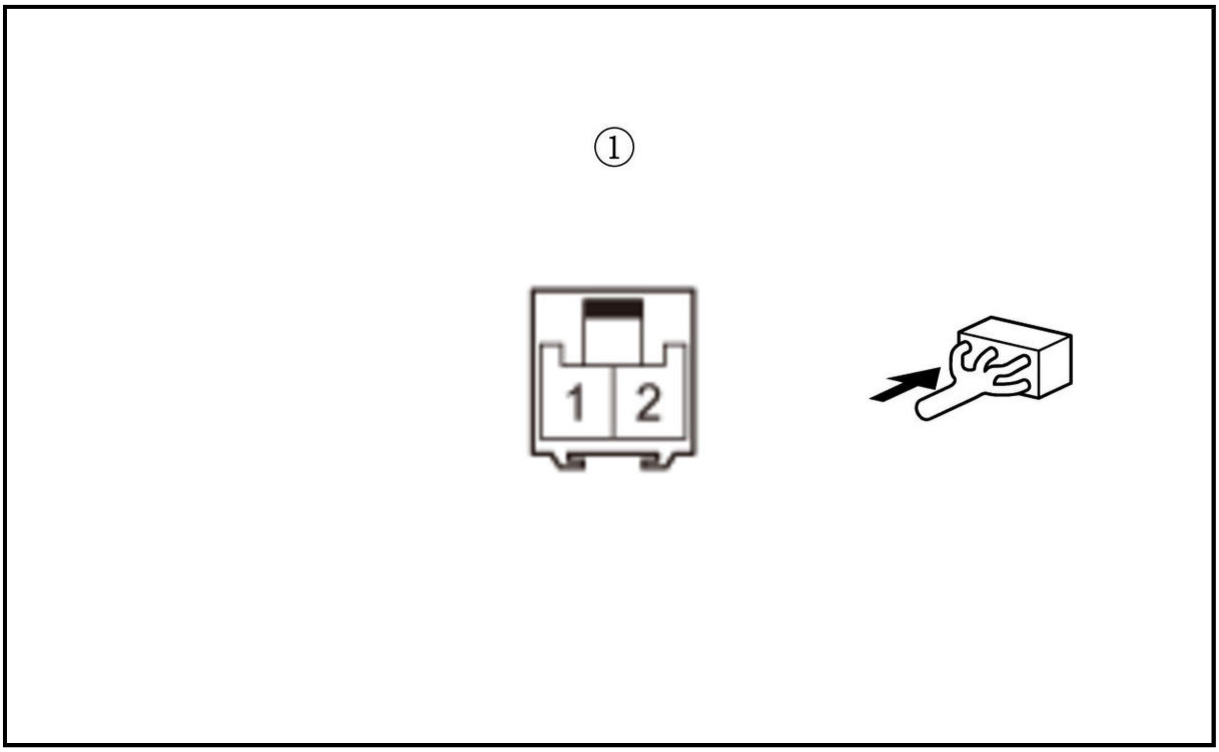

Is there continuity?

YES

Repair a short to ground in the wire.

NO

The PTG/PTL PTM- wire is not shorted. Go to step 5.

5. Open wire check (PTG/PTL PTM+ line)

-1. Check for continuity between test points 1 and 2.

Test condition	Vehicle OFF (LOCK) mode Power tailgate control unit connector C (5P): disconnected Power tailgate drive unit connector A (2P): disconnected
B	B
Test point 1	Power tailgate drive unit connector A (2P) (male terminals) No. 1: ①
Test point 2	**Power tailgate control unit connector C (5P) No. 3**

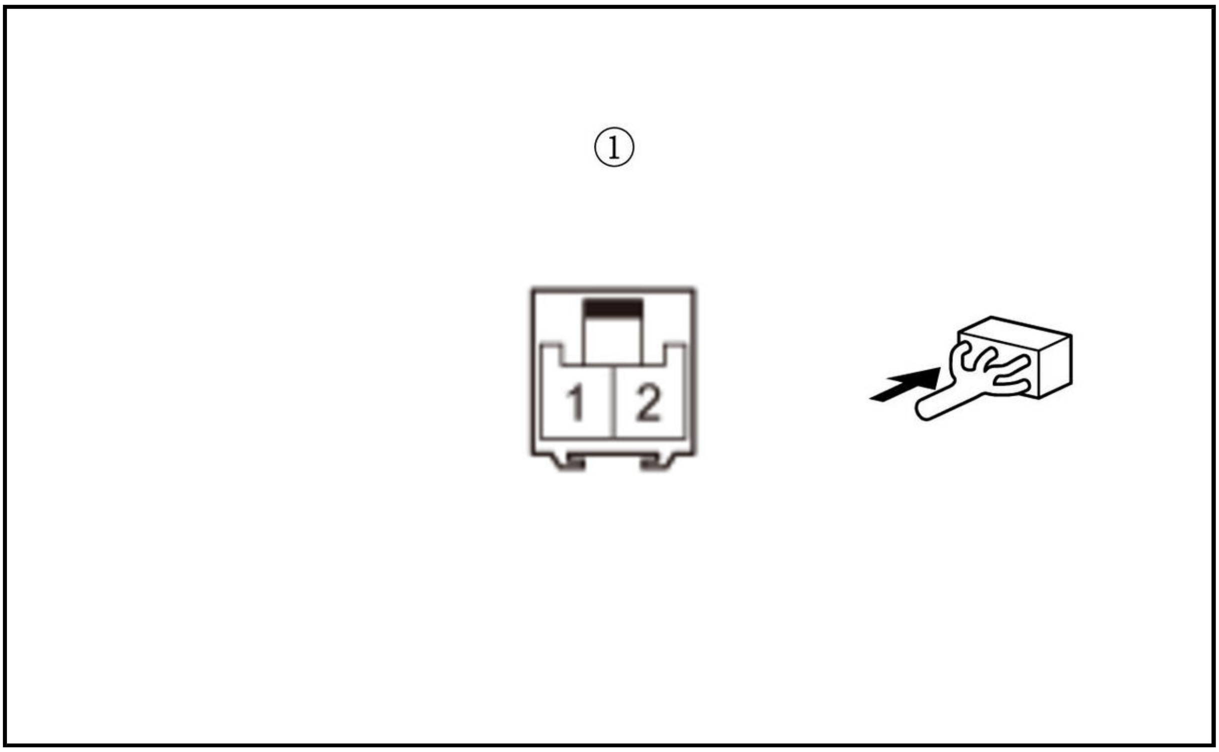

Is there continuity?

YES

The PTG/PTL PTM+ wire is not opened. Go to step 6.

NO

Repair an open or high resistance in the wire.

6. Open wire check (PTG/PTL PTM- line)

-1. Check for continuity between test points 1 and 2.

Test condition	Vehicle OFF (LOCK) mode Power tailgate control unit connector C (5P): disconnected Power tailgate drive unit connector A (2P): disconnected
B	B
Test point 1	Power tailgate drive unit connector A (2P) (male terminals) No. 2: ①
Test point 2	**Power tailgate control unit connector C (5P) No. 5**

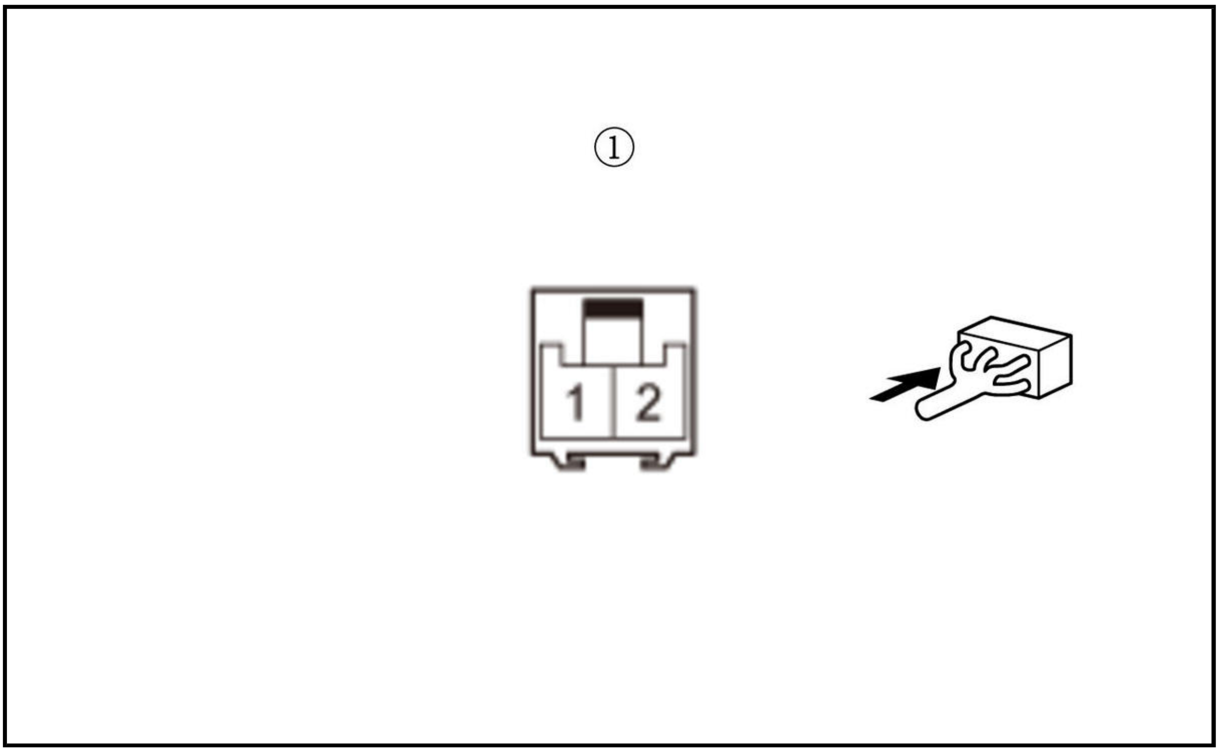

Is there continuity?

YES

Replace the power tailgate control unit .

NO

Repair an open or high resistance in the wire.

DTC B1390

DTC B1390 : Power Tailgate Closer Motor function error

NOTE:

- If you are troubleshooting multiple DTCs, be sure to follow the instructions in **B-CAN System Diagnosis Test Mode A** .
- Before troubleshooting, make sure the fuses associated with the system is OK.

DTC Description	DTC
B1390 Power Tailgate Closer Motor function error	B

DTC (Power Tailgate Control Unit)

1. Problem verification

   -1. Clear the DTCs with the HDS.

   -2. With the tailgate closed, press the tailgate outer handle switch and wait for 10 seconds.

   -3. Check for DTCs with the HDS.

DTC Description	DTC
B1390 Power Tailgate Closer Motor function error	B

Is DTC B1390 indicated?

YES

Go to step 2.

NO

Intermittent failure, the system is OK at this time. Check for loose or poor connections.

2. DTC check

-1. Check for power tailgate system DTCs with the HDS.

DTC Description	DTC
B	B

Are any DTCs indicated?

YES

Go to the indicated DTCs troubleshooting, then recheck.

NO

Go to step 3.

3. Open wire check (PTG/PTL CLM+ line)

-1. Turn the vehicle to the OFF (LOCK) mode.

-2. Disconnect the following connectors.

Power tailgate closer unit connector A (2P) Power tailgate control unit connector B (10P)

-3. Check for continuity between test points 1 and 2.

Test condition	Vehicle OFF (LOCK) mode Power tailgate closer unit connector A (2P): disconnected Power tailgate control unit connector B (10P): disconnected
Test point 1	Power tailgate closer unit connector A (2P) (female terminals) No. 2: ①
Test point 2	**Power tailgate control unit connector B (10P) No. 2**

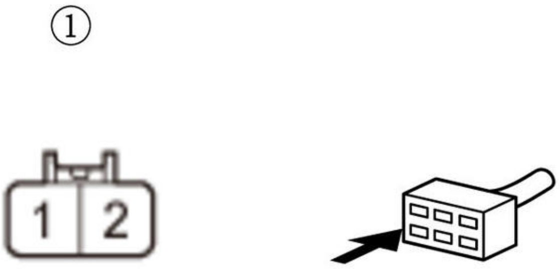

Is there continuity?

YES

The PTG/PTL CLM+ wire is OK. Go to step 4.

NO

Repair an open or high resistance in the wire.

4. Open wire check (PTG/PTL CLM- line)

-1. Check for continuity between test points 1 and 2.

Test condition	Vehicle OFF (LOCK) mode Power tailgate closer unit connector A (2P): disconnected Power tailgate control unit connector B (10P): disconnected
Test point 1	Power tailgate closer unit connector A (2P) (female terminals) No. 1: ①
Test point 2	Power tailgate control unit connector B (10P) No. 6

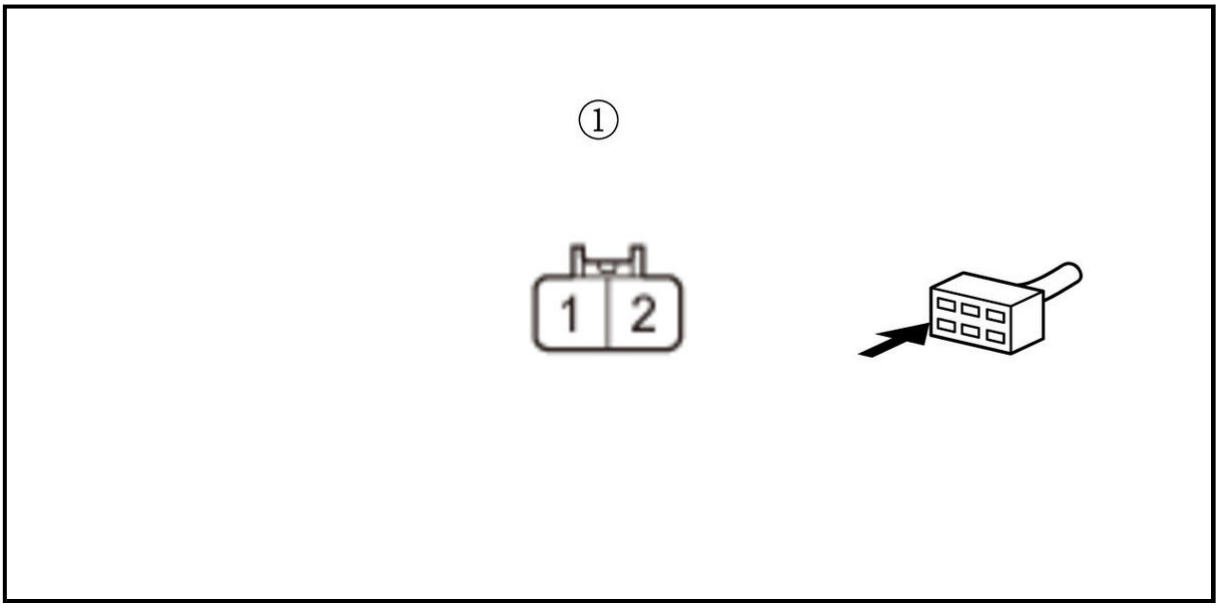

Is there continuity?

YES

Faulty closer motor; replace the power tailgate closer unit .

NO

Repair an open or high resistance in the wire.

DTC U0199, U1281, U128D (POWER TAILGATE CONTROL UNIT)

DTC U0199 : Lost communication with P/W (DRLOCKSW, KLDRLOCK frame)**DTC U1281** : Lost communication with MICU (MICU frame)**DTC U128D** : Power Tailgate Control Unit lost communication with GAUGE Control Module

NOTE:

- If you are troubleshooting multiple DTCs, be sure to follow the instructions in B-CAN System Diagnosis Test Mode A .
- Refer to the DTC code shown on the display, and then inspect the connectors and terminals based on the instructions in the chart below.

- The DTC may be stored due to the grounding failure or the power source failure at the transmitting control unit (the grounding inspection and the power source inspection on each control unit are required prior to this checking process).

DTC Description	DTC
U0199 Lost communication with P/W (DRLOCKSW, KLDRLOCK frame)	B
U1281 Lost communication with MICU (MICU frame)	B
U128D Power Tailgate Control Unit lost communication with GAUGE Control Module	B

DTC (Power Tailgate Control Unit)

1. Problem verification

   -1. Clear the DTC with the HDS.

   -2. Turn the vehicle to the OFF (LOCK) mode and then the ON mode.

   -3. Wait for at least 6 seconds.

   -4. Check for DTCs with the HDS.

DTC Description	DTC
U0199 Lost communication with P/W (DRLOCKSW, KLDRLOCK frame)	B

DTC Description	DTC
U1281 Lost communication with MICU (MICU frame)	B
U128D Power Tailgate Control Unit lost communication with GAUGE Control Module	B

   Are any DTCs indicated?

   YES

   Go to step 2.

   NO

   Intermittent failure, the system is OK at this time. Check for poor connections or loose terminals.

2. Open wire check (B-CAN_H line, B-CAN_L line)

   -1. Turn the vehicle to the OFF (LOCK) mode.

   -2. Disconnect the receiving control unit connector.

Power tailgate control unit connector A (24P)

   -3. Disconnect the transmitting control unit connector(s).

   Refer to the DTC shown on the display, then disconnect the connector(s) based on the instructions (see chart below).

DTC	Connector
U0199	Power window master switch 37P connector
U1281	Body control module connector B (36P)
U128D	Gauge control module connector A (32P)

-4. Check for continuity between the receiving control unit and the transmitting control unit on the B-CAN_H circuit and the B-CAN_L circuit.

Test condition	Vehicle OFF (LOCK) mode Power tailgate control unit connector A (24P): disconnected Transmitting control unit connector(s) for indicated DTCs: disconnected

DTC	Circuit name	Receiving control unit		Transmitting control unit	
		Connector	Terminal	Connector	Terminal
U0199	B-CAN_H	Power tailgate control unit connector A (24P)	No. 6	Power window master switch 37P connector	No. 32
	B-CAN_L		No. 7		No. 31
U1281	B-CAN_H	Power tailgate control unit connector A (24P)	No. 6	Body control module connector B (36P)	No. 20
	B-CAN_L		No. 7		No. 21
U128D	B-CAN_H	Power tailgate control unit connector A (24P)	No. 6	Gauge control module connector A (32P)	No. 30
	B-CAN_L		No. 7		No. 31

Is there continuity?

YES

The B-CAN_H wire and the B-CAN_L wire are OK.Refer to the DTC shown on the display, then replace the control unit based on the instructions (see chart below).

DTC	Operation for transmitting control unit
U0199	Power window master switch
U1281	Body control module
U128D	Gauge control module

NO

Repair an open in the B-CAN_H wire and/or the B-CAN_L wire.

DTC U1280 (POWER TAILGATE CONTROL UNIT)

DTC U1280 : Communication Bus line Error (a bus OFF state is detected by Power Tail Gate ECU)

NOTE: If you are troubleshooting multiple DTCs, be sure to follow the instructions in B-CAN System Diagnosis Test Mode A .

DTC Description	DTC
U1280 Communication Bus line Error (a bus OFF state is detected by Power Tail Gate ECU)	B

DTC (Power Tailgate Control Unit)

1. Problem verification

-1. Clear the DTCs with the HDS.

-2. Turn the vehicle to the OFF (LOCK) mode and then the ON mode.

-3. Wait for at least 6 seconds.

-4. Check for DTCs with the HDS.

DTC Description	DTC
U1280 Communication Bus line Error (a bus OFF state is detected by Power Tail Gate ECU)	B

Is DTC U1280 indicated?

YES

Go to body control module DTC U1280 troubleshooting .

NO

Intermittent failure, the system is OK at this time. Check for loose or poor connections.

DTC TROUBLESHOOTING

DTC B1352

DTC B1352 : Power Tailgate Control Unit Internal error (EEPROM error)

NOTE: If you are troubleshooting multiple DTCs, be sure to follow the instructions in **B-CAN System Diagnosis Test Mode A** .

DTC Description	DTC
B1352 Power Tailgate Control Unit Internal error (EEPROM error)	B

DTC (Power Tailgate Control Unit)

1. Problem verification

   -1. Clear the DTCs with the HDS.

   -2. Turn the vehicle to the OFF (LOCK) mode and then the ON mode.

   -3. Wait for at least 6 seconds.

   -4. Check for DTCs with the HDS.

DTC Description	DTC
B1352 Power Tailgate Control Unit Internal error (EEPROM error)	B

   Is DTC B1352 indicated?

   YES

   Replace the power tailgate control unit .

   NO

   Intermittent failure, the system is OK at this time. Check for loose or poor connections at the power tailgate control unit.

DTC B1375

DTC B1375 : Driver's side PTG switch circuit malfunction

NOTE:

- If you are troubleshooting multiple DTCs, be sure to follow the instructions in **B-CAN System Diagnosis Test Mode A** .
- If the motor does not operate, **do the motor test first** .

DTC Description	DTC
B1375 Driver's side PTG switch circuit malfunction	B

DTC (Power Tailgate Control Unit)

1. Problem verification

-1. Clear the DTCs with the HDS.

-2. Operate the driver's power tailgate switch for more than 1 second.

-3. Check for DTCs with the HDS.

DTC Description	DTC
B1375 Driver's side PTG switch circuit malfunction	B

Is DTC B1375 indicated?

YES

Go to step 2.

NO

Intermittent failure, the system is OK at this time. Check for loose or poor connections.

2. Shorted wire check (T/G_OPEN_SW line)

-1. Turn the vehicle to the OFF (LOCK) mode.

-2. Disconnect the following connector.

Power tailgate control unit connector A (24P)

-3. Measure the resistance between test points 1 and 2.

Test condition	Vehicle OFF (LOCK) mode Power tailgate control unit connector A (24P): disconnected
Test point 1	**Power tailgate control unit connector A (24P) No. 8**

Test point 2	Body ground

Is there 1.0 MΩ or more?

YES

Repair a short to ground in the PTG/PTL_SCOM wire.

NO

Repair a short to ground in the T/G_OPEN_SW wire.

DTC B1376

DTC B1376 : Tailgate Outer Handle switch circuit malfunction

NOTE:

- If you are troubleshooting multiple DTCs, be sure to follow the instructions in **B-CAN System Diagnosis Test Mode A** .
- If the motor does not operate, **do the motor test first** .

DTC Description	DTC
B1376 Tailgate Outer Handle switch circuit malfunction	B

DTC (Power Tailgate Control Unit)

1. Problem verification

   -1. Clear the DTCs with the HDS.

   -2. Press the tailgate outer handle switch for more than 1 second.

   -3. Check for DTCs with the HDS.

DTC Description	DTC
B1376 Tailgate Outer Handle switch circuit malfunction	B

   Is DTC B1376 indicated?

   YES

   Go to step 2.

   NO

   Intermittent failure, the system is OK at this time. Check for loose or poor connections.

2. Shorted wire check (T/G_OPEN_SW line)

   -1. Turn the vehicle to the OFF (LOCK) mode.

   -2. Disconnect the following connector.

Power tailgate control unit connector A (24P)

   -3. Measure the resistance between test points 1 and 2.

Test condition	Vehicle OFF (LOCK) mode Power tailgate control unit connector A (24P): disconnected
B	B

Test point 1	**Power tailgate control unit connector A (24P) No. 23**
Test point 2	Body ground

   Is there 1.0 MΩ or more?

   YES

   Repair a short to ground in the PTG/PTL_SCOM wire.

   NO

   Repair a short to ground in the T/G_OPEN_SW wire.

DTC B1377

DTC B1377 : Power Tailgate Inside switch circuit malfunction

NOTE: If you are troubleshooting multiple DTCs, be sure to follow the instructions in **B-CAN System Diagnosis Test Mode A** .

DTC Description	DTC
B1377 Power Tailgate Inside switch circuit malfunction	B

DTC (Power Tailgate Control Unit)

1. Problem verification

   -1. Clear the DTCs with the HDS.

   -2. Open the tailgate with the keyless transmitter.

   -3. Press the power tailgate inside switch for more than 1 second.

   -4. Check for DTCs with the HDS.

DTC Description	DTC
B1377 Power Tailgate Inside switch circuit malfunction	B

   Is DTC B1377 indicated?

   YES

   Go to step 2.

   NO

   Intermittent failure, the system is OK at this time. Check for loose or poor connections.

2. Shorted wire check (PTG/PTL_CLOSE_SW line)

   -1. Turn the vehicle to the OFF (LOCK) mode.

   -2. Disconnect the following connector.

Power tailgate control unit connector A (24P)

   -3. Measure the resistance between test points 1 and 2.

Test condition	Vehicle OFF (LOCK) mode Power tailgate control unit connector A (24P): disconnected

Test point 1	**Power tailgate control unit connector A (24P) No. 24**
Test point 2	Body ground

   Is there 1.0 MΩ or more?

   YES

   Repair a short to ground in the PTG/PTL_SCOM wire.

   NO

   Repair a short to ground in the PTG/PTL_CLOSE_SW wire.

DTC B1378

DTC B1378 : Power Tailgate Right Touch/Pinch sensor circuit malfunction

NOTE: If you are troubleshooting multiple DTCs, be sure to follow the instructions in **B-CAN System Diagnosis Test Mode A** .

DTC Description	DTC
B1378 Power Tailgate Right Touch/Pinch sensor circuit malfunction	B

DTC (Power Tailgate Control Unit)

1. Problem verification 1

   -1. Clear the DTCs with the HDS.

   -2. Open the tailgate manually or with the keyless transmitter.

   -3. Close the tailgate with the keyless transmitter or driver's power tailgate switch.

   -4. Check for DTCs with the HDS.

DTC Description	DTC
B1378 Power Tailgate Right Touch/Pinch sensor circuit malfunction	B

   Is DTC B1378 indicated?

   YES

   Go to step 2.

   NO

   Intermittent failure, the system is OK at this time. Check for loose or poor connections.

2. Problem verification 2

   -1. Check for DTCs with the HDS.

DTC Description	DTC
B1378 Power Tailgate Right Touch/Pinch sensor circuit malfunction	B
B1379 Power Tailgate Left Touch/Pinch sensor circuit malfunction	B
B1385 Power Tailgate temperature sensor malfunction	B

   Any of DTC are indicated at the same time with DTC B1378?

   YES

   Go to step 3.

   NO

   Go to step 4.

3. Open wire check (PTG/PTL_SEG2 line)

   -1. Turn the vehicle to the OFF (LOCK) mode.

   -2. Disconnect the following connectors.

Power tailgate control unit connector B (10P) Right power tailgate pinch sensor 2P connector

   -3. Measure the resistance between test points 1 and 2.

Test condition	Vehicle OFF (LOCK) mode Power tailgate control unit connector B (10P): disconnected Right power tailgate pinch sensor 2P connector: disconnected
Test point 1	**Power tailgate control unit connector B (10P) No. 8**
Test point 2	Right power tailgate pinch sensor 2P connector (male terminals) No. 2: ①

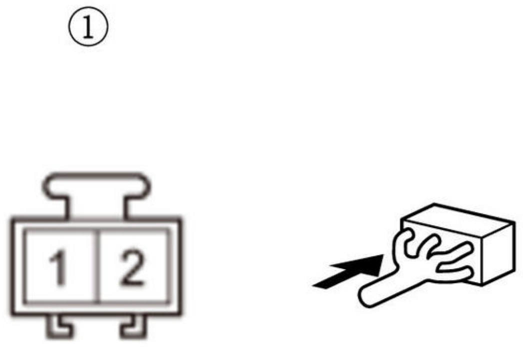

Is there 1.0 Ω or less?

YES

Replace the power tailgate control unit .

NO

Repair an open or high resistance in the wire.

4. Determine possible failure area (right power tailgate pinch sensor, others)

-1. Disconnect the following connector.

Right power tailgate pinch sensor 2P connector

-2. Turn the vehicle to the ON mode.

-3. Measure the voltage between test points 1 and 2.

Test condition	Vehicle ON mode Right power tailgate pinch sensor 2P connector: disconnected
Test point 1	Right power tailgate pinch sensor 2P connector (male terminals) No. 1: ①
Test point 2	Body ground

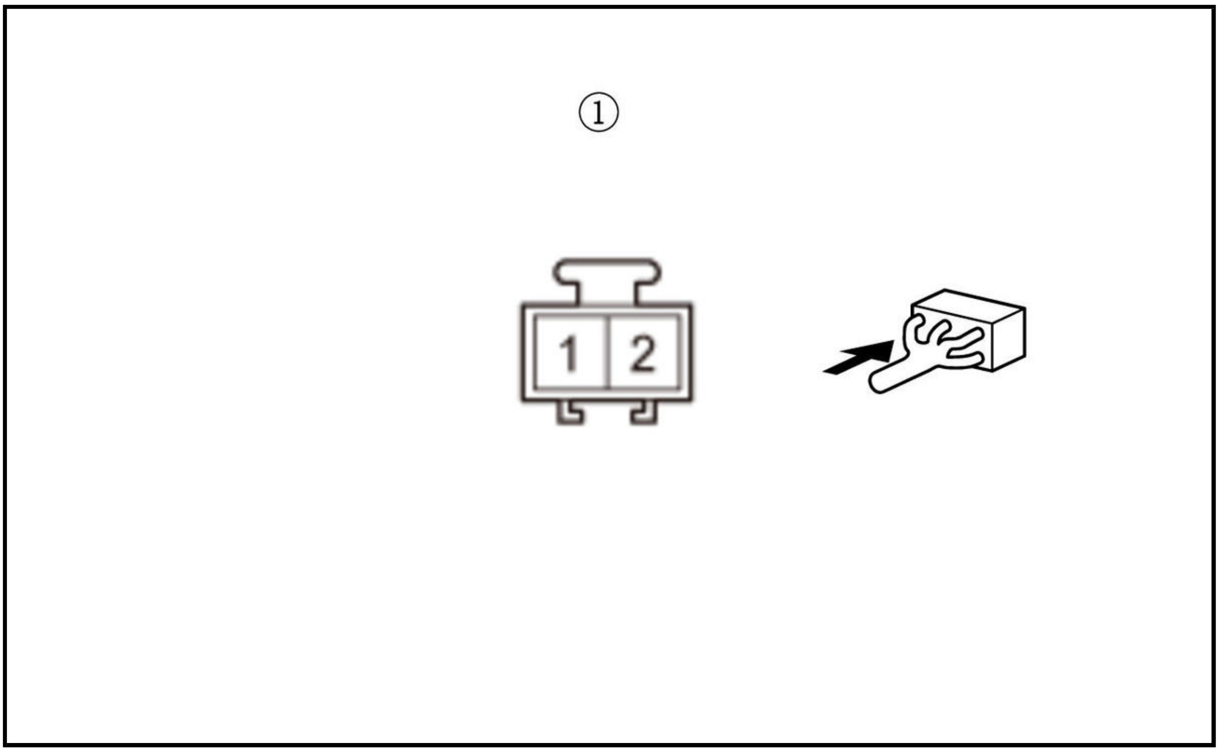

Is there battery voltage?

YES

Replace the right power tailgate pinch sensor .

NO

Go to step 5.

5. Open wire check (PTG/PTL_TSLA line)

   -1. Measure the voltage between test points 1 and 2.

Test condition	Vehicle ON mode Right power tailgate pinch sensor 2P connector: disconnected
Test point 1	**Power tailgate control unit connector B (10P) No. 9**
Test point 2	Body ground

Is there battery voltage?

YES

Repair an open or high resistance in the wire.

NO

Replace the power tailgate control unit .

DTC B1379

DTC B1379 : Power Tailgate Left Touch/Pinch sensor circuit malfunction

NOTE: If you are troubleshooting multiple DTCs, be sure to follow the instructions in **B-CAN System Diagnosis Test Mode A** .

DTC Description	DTC
B1379 Power Tailgate Left Touch/Pinch sensor circuit malfunction	B

DTC (Power Tailgate Control Unit)

1. Problem verification 1

   -1. Clear the DTCs with the HDS.

   -2. Open the tailgate manually or with the keyless transmitter.

   -3. Close the tailgate with the keyless transmitter or driver's power tailgate switch.

   -4. Check for DTCs with the HDS.

DTC Description	DTC
B1379 Power Tailgate Left Touch/Pinch sensor circuit malfunction	B

   Is DTC B1379 indicated?

   YES

   Go to step 2.

   NO

   Intermittent failure, the system is OK at this time. Check for loose or poor connections.

2. Problem verification 2

   -1. Check for DTCs with the HDS.

DTC Description	DTC
B1378 Power Tailgate Right Touch/Pinch sensor circuit malfunction	B
B1379 Power Tailgate Left Touch/Pinch sensor circuit malfunction	B
B1385 Power Tailgate temperature sensor malfunction	B

   Any of DTC are indicated at the same time with DTC B1379?

   YES

   Go to step 3.

   NO

   Go to step 4.

3. Open wire check (PTG/PTL_SEG2 line)

   -1. Turn the vehicle to the OFF (LOCK) mode.

   -2. Disconnect the following connectors.

Power tailgate control unit connector B (10P Left power tailgate pinch sensor 4P connector

   -3. Measure the resistance between test points 1 and 2.

Test condition	Vehicle OFF (LOCK) mode Power tailgate control unit connector B (10P): disconnected Left power tailgate pinch sensor 4P connector: disconnected
Test point 1	**Power tailgate control unit connector B (10P) No. 8**
Test point 2	Left power tailgate pinch sensor 4P connector (male terminals) No. 2: ①

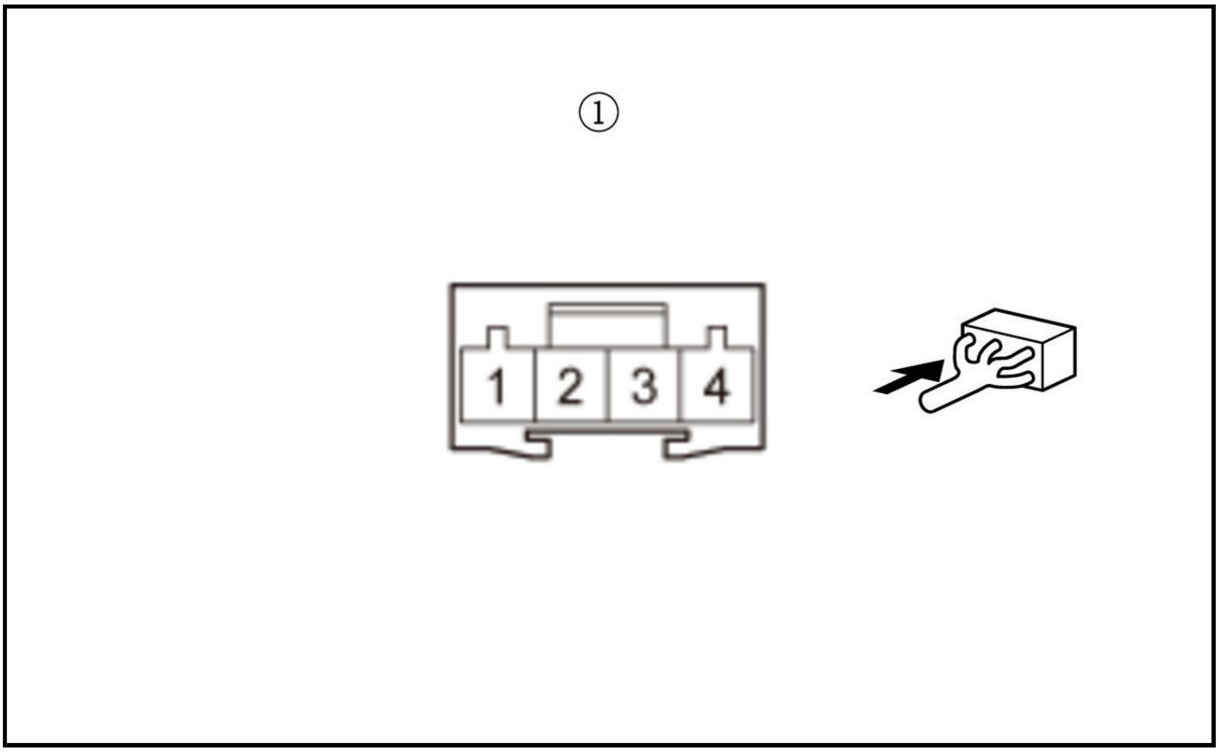

Is there 1.0 Ω or less?

YES

Replace the power tailgate control unit .

NO

Repair an open or high resistance in the wire.

4. Determine possible failure area (left power tailgate pinch sensor, others)

-1. Disconnect the following connector.

Left power tailgate pinch sensor 4P connector

-2. Turn the vehicle to the ON mode.

-3. Measure the voltage between test points 1 and 2.

Test condition	Vehicle ON mode Left power tailgate pinch sensor 4P connector: disconnected
Test point 1	Left power tailgate pinch sensor 4P connector (male terminals) No. 1: ①
Test point 2	Body ground

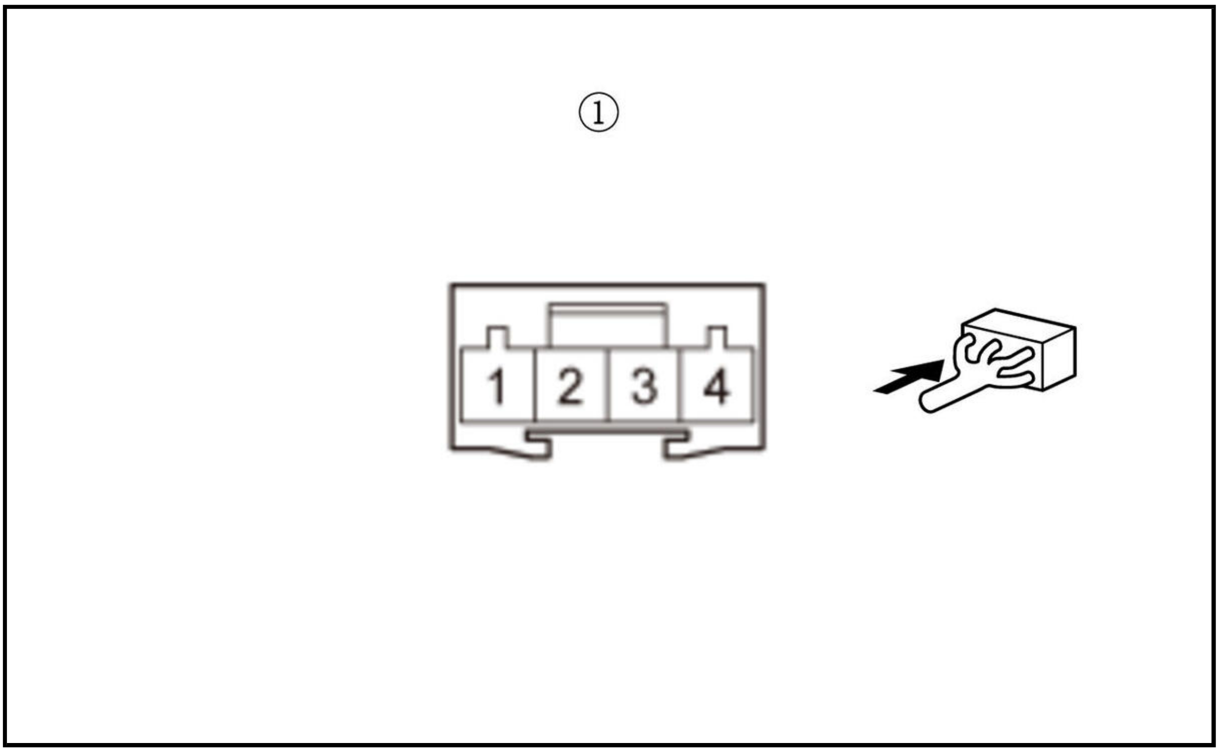

Is there battery voltage?

YES

Replace the left power tailgate pinch sensor .

NO

Go to step 5.

5. Open wire check (PTG/PTL_TSLL line)

-1. Measure the voltage between test points 1 and 2.

Test condition	Vehicle ON mode Left power tailgate pinch sensor 4P connector: disconnected
Test point 1	**Power tailgate control unit connector B (10P) No. 3**
Test point 2	Body ground

Is there battery voltage?

YES

Repair an open or high resistance in the wire.

NO

Replace the power tailgate control unit .

DTC B1380

DTC B1380 : Tailgate Closer Unit Neutral switch circuit malfunction

NOTE: If you are troubleshooting multiple DTCs, be sure to follow the instructions in **B-CAN System Diagnosis Test Mode A** .

DTC Description	DTC
B1380 Tailgate Closer Unit Neutral switch circuit malfunction	B

DTC (Power Tailgate Control Unit)

1. Problem verification

   -1. Clear the DTCs with the HDS.

   -2. Open the tailgate with the tailgate outer handle switch.

   -3. Close the tailgate manually.

   -4. Check for DTCs with the HDS.

DTC Description	DTC
B1380 Tailgate Closer Unit Neutral switch circuit malfunction	B

   Is DTC B1380 indicated?

   YES

   Go to step 2.

   NO

   Intermittent failure, the system is OK at this time. Check for loose or poor connections.

2. Determine possible failure area (PTG/PTL_CLCL line short, others)

   -1. Check the parameter(s) below with the HDS.

Signal	Current conditions	
	Values	Unit
Latch Gear Position Sw. neutral	B	B

   Is data list value ON?

   YES

   Go to step 3.

   NO

   Go to step 5.

3. Determine possible failure area (power tailgate closer unit, others)

   -1. Turn the vehicle to the OFF (LOCK) mode.

   -2. Disconnect the following connector.

Power tailgate closer unit connector B (6P)

   -3. Turn the vehicle to the ON mode.

   -4. Check the parameter(s) below with the HDS.

Signal	Current conditions	
	Values	Unit
Latch Gear Position Sw. neutral	B	B

Is data list value ON?

YES

Go to step 4.

NO

Faulty sector switch; **replace the tailgate latch** .

4. Shorted wire check (PTG/PTL_CLCL line)

-1. Turn the vehicle to the OFF (LOCK) mode.

-2. Disconnect the following connector.

Power tailgate control unit connector A (24P)

-3. Measure the resistance between test points 1 and 2.

Test condition	Vehicle OFF (LOCK) mode Power tailgate closer unit connector B (6P): disconnected Power tailgate control unit connector A (24P): disconnected
B	B
Test point 1	**Power tailgate control unit connector A (24P) No. 10**
Test point 2	Body ground

Is there 1.0 MΩ or more?

YES

Replace the power tailgate control unit .

NO

Repair a short to ground in the wire.

5. Determine possible failure area (power tailgate closer unit, others)

-1. Turn the vehicle to the OFF (LOCK) mode.

-2. Disconnect the following connector.

Power tailgate closer unit connector B (6P)

-3. Connect terminals A and B with a jumper wire.

Terminal A	Power tailgate closer unit connector B (6P) (female terminals) No. 2: ①
Terminal B	Power tailgate closer unit connector B (6P) (female terminals) No. 3: ①

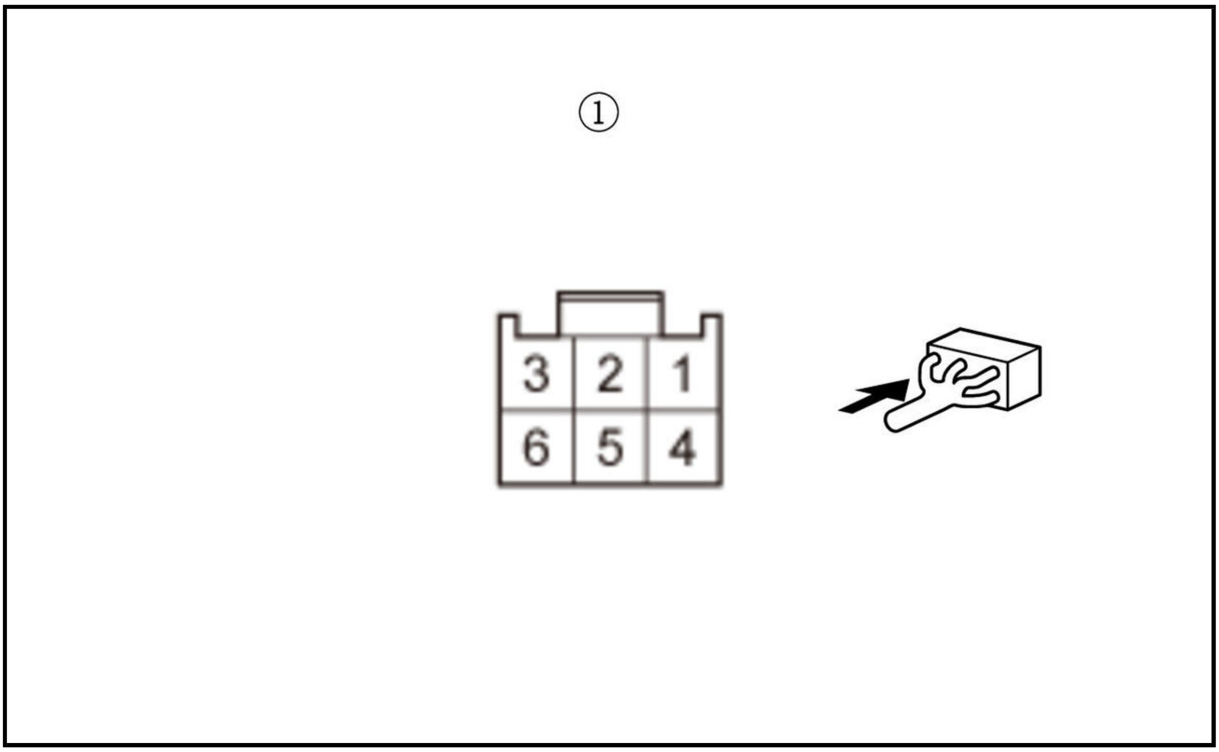

-4. Turn the vehicle to the ON mode.

-5. Check the parameter(s) below with the HDS.

Signal	Current conditions	
	Values	**Unit**
Latch Gear Position Sw. neutral	B	B

Is data list value ON?

YES

Faulty sector switch; replace the tailgate latch .

NO

Go to step 6.

6. Determine possible failure area (PTG/PTL_CLCL line, PTG/PTL_SEG3 line)

-1. Turn the vehicle to the OFF (LOCK) mode.

-2. Disconnect the jumper wire.

-3. Connect terminals A and B with a jumper wire.

Terminal A	Power tailgate closer unit connector B (6P) (female terminals) No. 3: ①
Terminal B	Body ground

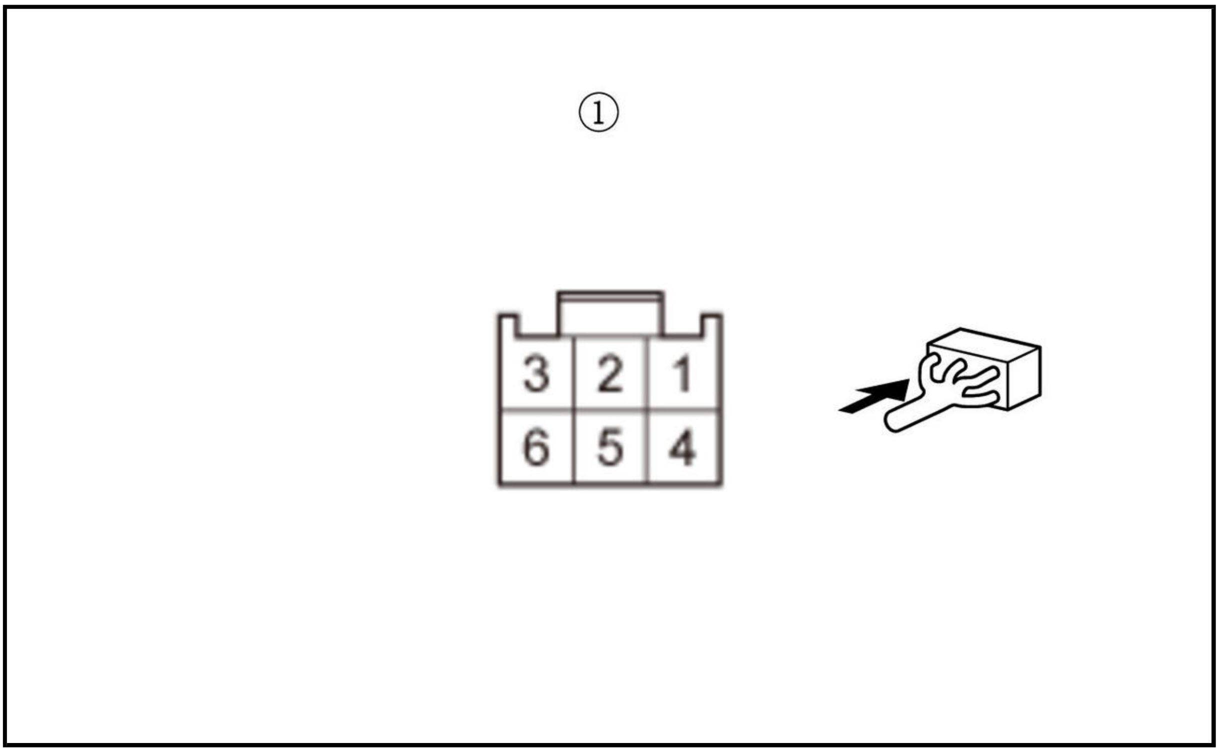

-4. Turn the vehicle to the ON mode.

-5. Check the parameter(s) below with the HDS.

Signal	Current conditions	
	Values	**Unit**
Latch Gear Position Sw. neutral	B	B

Is data list value ON?

YES

Go to step 7.

NO

Go to step 8.

7. Open wire check (PTG/PTL_SEG3 line)

-1. Turn the vehicle to the OFF (LOCK) mode.

-2. Disconnect the jumper wire.

-3. Disconnect the following connector.

Power tailgate control unit connector A (24P)

-4. Measure the resistance between test points 1 and 2.

Test condition	Vehicle OFF(LOCK) mode Power tailgate closer unit connector B (6P): disconnected Power tailgate control unit connector A (24P): disconnected
B	B
Test point 1	Power tailgate closer unit connector B (6P) (female terminals) No. 2: ①

Test point 2	Power tailgate control unit connector A (24P) No. 21

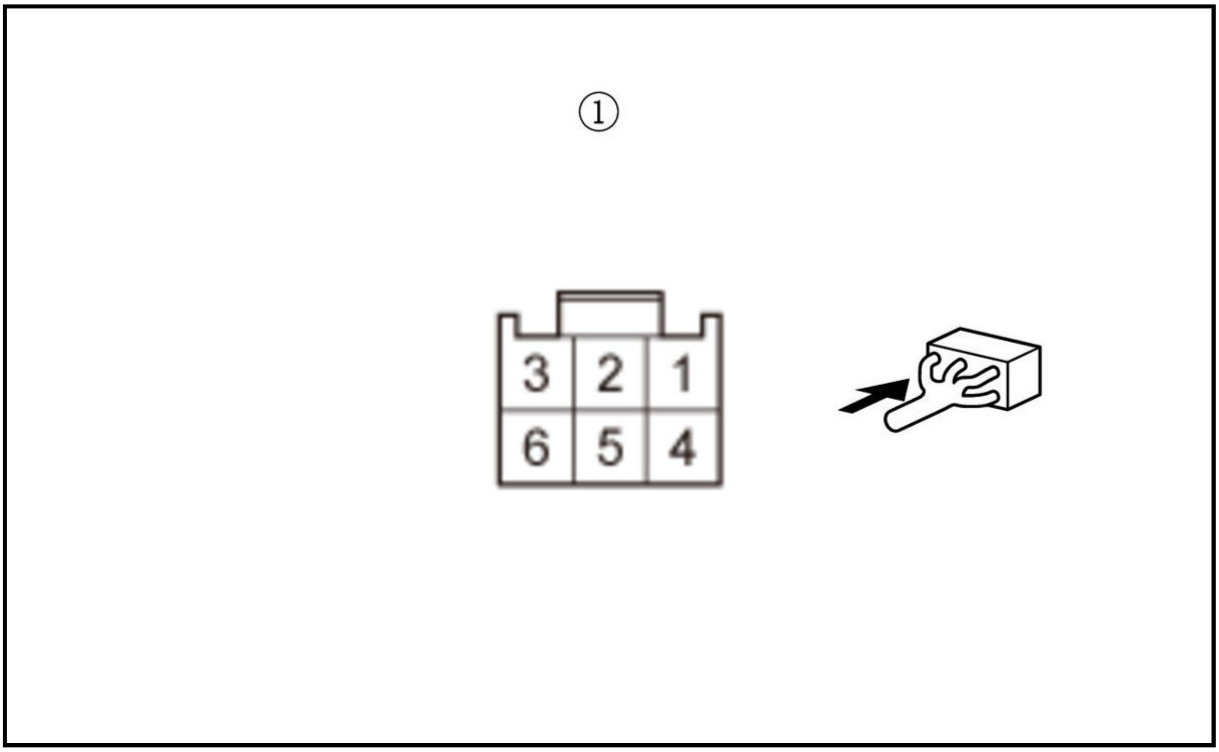

Is there 1.0 Ω or less?

YES

Replace the power tailgate control unit .

NO

Repair an open or high resistance in the wire.

8. Open wire check (PTG/PTL_CLCL line)

-1. Turn the vehicle to the OFF (LOCK) mode.

-2. Disconnect the jumper wire.

-3. Disconnect the following connector.

Power tailgate control unit connector A (24P)

-4. Measure the resistance between test points 1 and 2.

Test condition	Vehicle OFF (LOCK) mode Power tailgate closer unit connector B (6P): disconnected Power tailgate control unit connector A (24P): disconnected
B	B
Test point 1	Power tailgate closer unit connector B (6P) (female terminals) No. 3: ①
Test point 2	Power tailgate control unit connector A (24P) No. 10

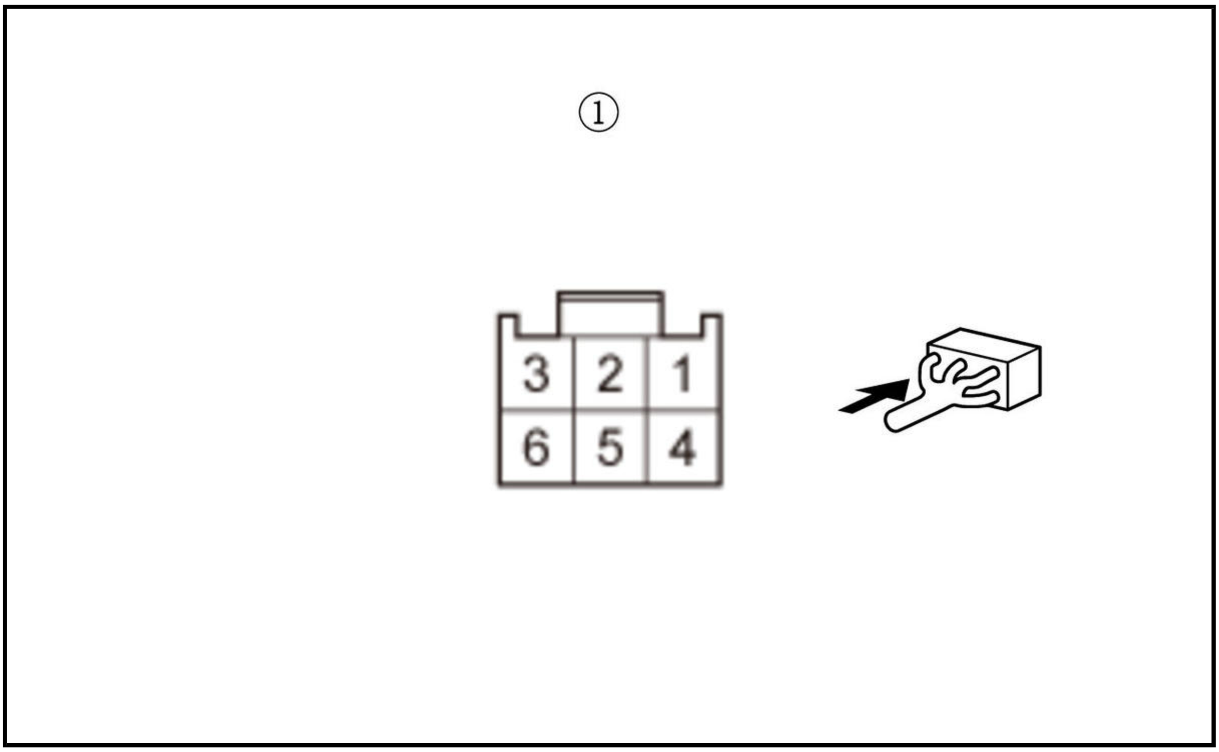

Is there 1.0 Ω or less?

YES

Replace the power tailgate control unit .

NO

Repair an open or high resistance in the wire.

DTC B1382

DTC B1382 : Tailgate Closer Unit Full Latch switch circuit malfunction

NOTE: If you are troubleshooting multiple DTCs, be sure to follow the instructions in **B-CAN System Diagnosis Test Mode A** .

DTC Description	DTC
B1382 Tailgate Closer Unit Full Latch switch circuit malfunction	B

DTC (Power Tailgate Control Unit)

1. Problem verification 1

   -1. Clear the DTCs with the HDS.

   -2. Open the tailgate with the tailgate outer handle switch.

   -3. Close the tailgate manually.

   -4. Check for DTCs with the HDS.

DTC Description	DTC
B1382 Tailgate Closer Unit Full Latch switch circuit malfunction	B

Is DTC B1382 indicated?

YES

Go to step 2.

NO

Intermittent failure, the system is OK at this time. Check for loose or poor connections.

2. Problem verification 2

-1. Check for DTCs with the HDS.

DTC Description	DTC
B1384 Tailgate Closer Unit Half Latch switch circuit malfunction	B
B1390 Power Tailgate Closer Motor circuit malfunction	B

Is DTC B1384 and/or B1390 indicated?

YES

Go to the indicated DTCs troubleshooting, then recheck.

NO

Go to step 3.

3. Determine possible failure area (T/G_SW line short, others)

-1. Check the parameter(s) below with the HDS.

Signal	Current conditions	
	Values	Unit
Tailgate Lock Sw. Full Latch	B	B

Is data list value ON?

YES

Go to step 4.

NO

Go to step 6.

4. Determine possible failure area (power tailgate closer unit, others)

-1. Turn the vehicle to the OFF (LOCK) mode.

-2. Disconnect the following connector.

Power tailgate closer unit connector B (6P)

-3. Turn the vehicle to the ON mode.

-4. Check the parameter(s) below with the HDS.

Signal	Current conditions	
	Values	Unit
Tailgate Lock Sw. Full Latch	B	B

Is data list value ON?

YES

Go to step 5.

NO

Faulty full latch switch; **replace the tailgate latch** .

5. Shorted wire check (T/G_SW line)

-1. Turn the vehicle to the OFF (LOCK) mode.

-2. Disconnect the following connector.

Power tailgate control unit connector A (24P)

-3. Measure the resistance between test points 1 and 2.

Test condition	Vehicle OFF (LOCK) mode Power tailgate closer unit connector B (6P): disconnected Power tailgate control unit connector A (24P): disconnected
B	B
Test point 1	**Power tailgate control unit connector A (24P) No. 11**
Test point 2	Body ground

Is there 1.0 MΩ or more?

YES

Replace the power tailgate control unit .

NO

Repair a short to ground in the wire.

6. Determine possible failure area (power tailgate closer unit, others)

-1. Turn the vehicle to the OFF (LOCK) mode.

-2. Disconnect the following connector.

Power tailgate closer unit connector B (6P)

-3. Connect terminals A and B with a jumper wire.

Terminal A	Power tailgate closer unit connector B (6P) (female terminals) No. 1: ①
Terminal B	Power tailgate closer unit connector B (6P) (female terminals) No. 2: ①

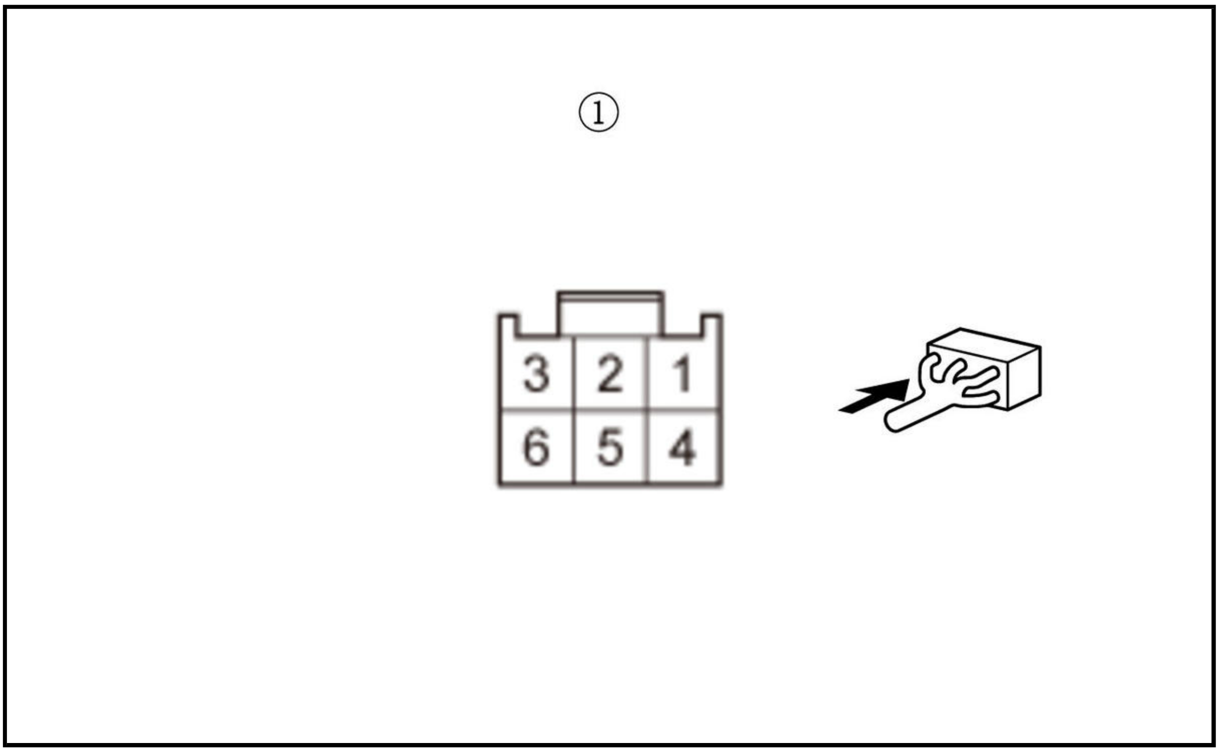

-4. Turn the vehicle to the ON mode.

-5. Check the parameter(s) below with the HDS.

Signal	Current conditions	
	Values	Unit
Tailgate Lock Sw. Full Latch	B	B

Is data list value ON?

YES

Faulty full latch switch; replace the tailgate latch .

NO

Go to step 7.

7. Determine possible failure area (T/G_SW line, PTG/PTL_SEG3 line)

-1. Turn the vehicle to the OFF (LOCK) mode.

-2. Disconnect the jumper wire.

-3. Connect terminals A and B with a jumper wire.

Terminal A	Power tailgate closer unit connector B (6P) (female terminals) No. 1: ①
Terminal B	Body ground

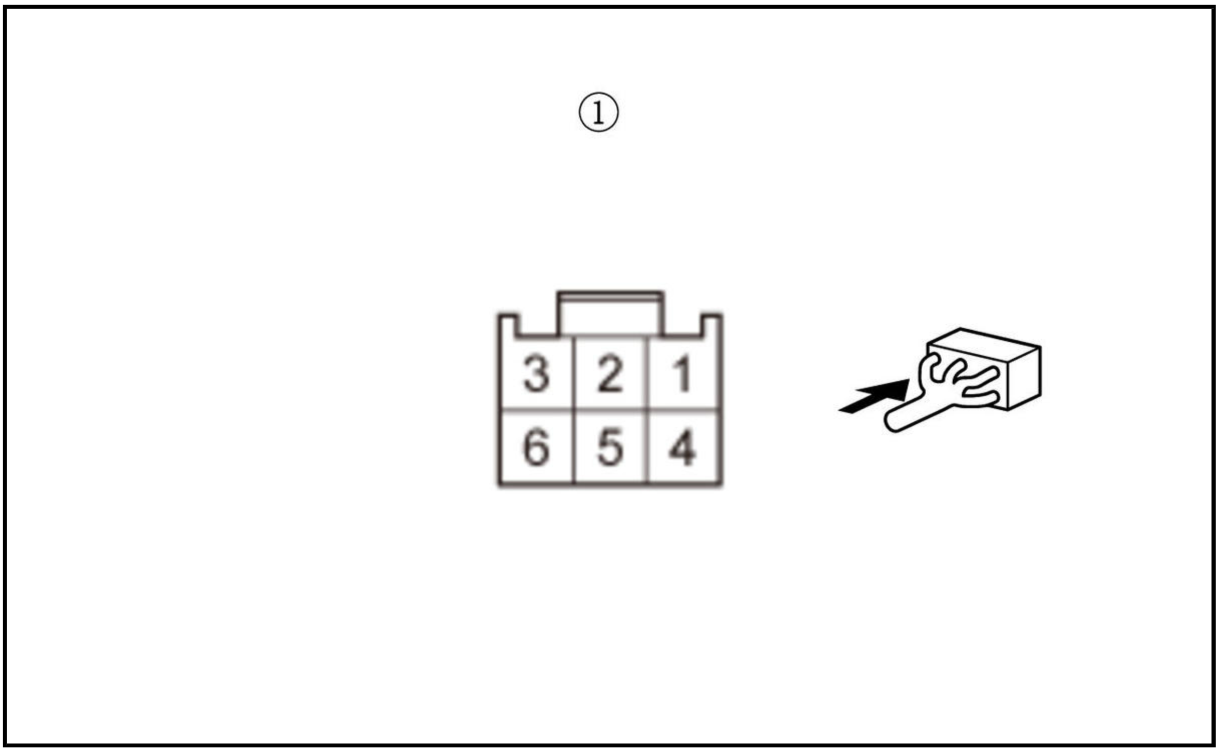

-4. Turn the vehicle to the ON mode.

-5. Check the parameter(s) below with the HDS.

Signal	Current conditions	
	Values	**Unit**
Tailgate Lock Sw. Full Latch	B	B

Is data list value ON?

YES

Go to step 8.

NO

Go to step 9.

8. Open wire check (PTG/PTL_SEG3 line)

-1. Turn the vehicle to the OFF (LOCK) mode.

-2. Disconnect the jumper wire.

-3. Disconnect the following connector.

Power tailgate control unit connector A (24P)

-4. Measure the resistance between test points 1 and 2.

Test condition	Vehicle OFF (LOCK) mode Power tailgate closer unit connector B (6P): disconnected Power tailgate control unit connector A (24P): disconnected
B	B
Test point 1	Power tailgate closer unit connector B (6P) (female terminals) No. 2: ①

Test point 2	**Power tailgate control unit connector A (24P) No. 21**

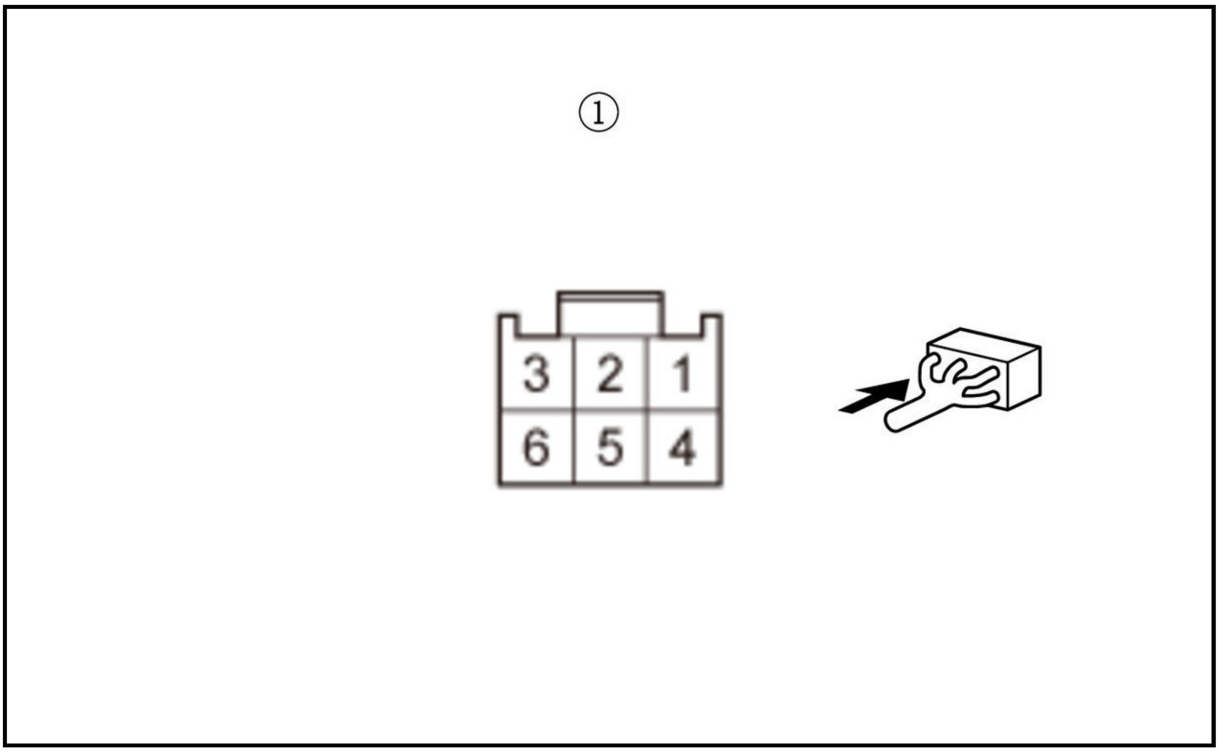

Is there 1.0 Ω or less?

YES

Replace the power tailgate control unit .

NO

Repair an open or high resistance in the wire.

9. Open wire check (T/G_SW line)

-1. Turn the vehicle to the OFF (LOCK) mode.

-2. Disconnect the jumper wire.

-3. Disconnect the following connector.

Power tailgate control unit connector A (24P)

-4. Measure the resistance between test points 1 and 2.

Test condition	Vehicle OFF (LOCK) mode Power tailgate closer unit connector B (6P): disconnected Power tailgate control unit connector A (24P): disconnected
B	B
Test point 1	Power tailgate closer unit connector B (6P) (female terminals) No. 1: ①
Test point 2	**Power tailgate control unit connector A (24P) No. 11**

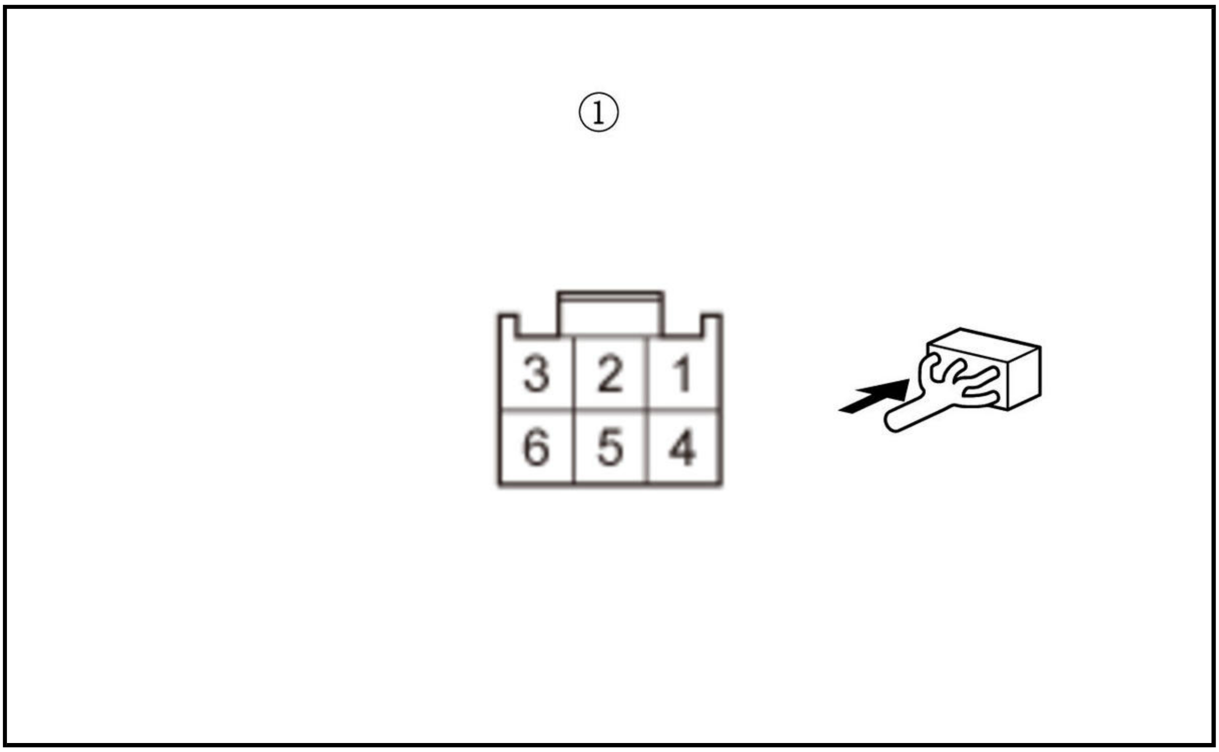

Is there 1.0 Ω or less?

YES

Replace the power tailgate control unit .

NO

Repair an open or high resistance in the wire.

DTC B1383

DTC B1383 : Tailgate Closer Unit Ratchet switch circuit malfunction

NOTE: If you are troubleshooting multiple DTCs, be sure to follow the instructions in **B-CAN System Diagnosis Test Mode A** .

DTC Description	DTC
B1383 Tailgate Closer Unit Ratchet switch circuit malfunction	B

DTC (Power Tailgate Control Unit)

1. Problem verification

   -1. Clear the DTCs with the HDS.

   -2. Open the tailgate with the tailgate outer handle switch.

   -3. Close the tailgate manually.

   -4. Check for DTCs with the HDS.

DTC Description	DTC
B1383 Tailgate Closer Unit Ratchet switch circuit malfunction	B

Is DTC B1383 indicated?

YES

Go to step 2.

NO

Intermittent failure, the system is OK at this time. Check for loose or poor connections.

2. Determine possible failure area (PTG/PTL_RACT line short, others)

-1. Check the parameter(s) below with the HDS.

Signal	Current conditions	
	Values	**Unit**
Tailgate Lock Sw. Ratchet	B	B

Is data list value ON?

YES

Go to step 3.

NO

Go to step 5.

3. Determine possible failure area (power tailgate closer unit, others)

-1. Turn the vehicle to the OFF (LOCK) mode.

-2. Disconnect the following connector.

Power tailgate closer unit connector B (6P)

-3. Turn the vehicle to the ON mode.

-4. Check the parameter(s) below with the HDS.

Signal	Current conditions	
	Values	**Unit**
Tailgate Lock Sw. Ratchet	B	B

Is data list value ON?

YES

Go to step 4.

NO

Faulty ratchet switch; **replace the tailgate latch** .

4. Shorted wire check (PTG/PTL_RACT line)

-1. Turn the vehicle to the OFF (LOCK) mode.

-2. Disconnect the following connector.

Power tailgate control unit connector A (24P)

-3. Measure the resistance between test points 1 and 2.

Test condition	Vehicle OFF (LOCK) mode Power tailgate closer unit connector B (6P): disconnected Power tailgate control unit connector A (24P): disconnected
B	B
Test point 1	**Power tailgate control unit connector A (24P) No. 22**
Test point 2	Body ground

Is there 1.0 MΩ or more?

YES

Replace the power tailgate control unit .

NO

Repair a short to ground in the wire.

5. Determine possible failure area (power tailgate closer unit, others)

-1. Turn the vehicle to the OFF (LOCK) mode.

-2. Disconnect the following connector.

Power tailgate closer unit connector B (6P)

-3. Connect terminals A and B with a jumper wire.

Terminal A	Power tailgate closer unit connector B (6P) (female terminals) No. 2: ①
Terminal B	Power tailgate closer unit connector B (6P) (female terminals) No. 6: ①

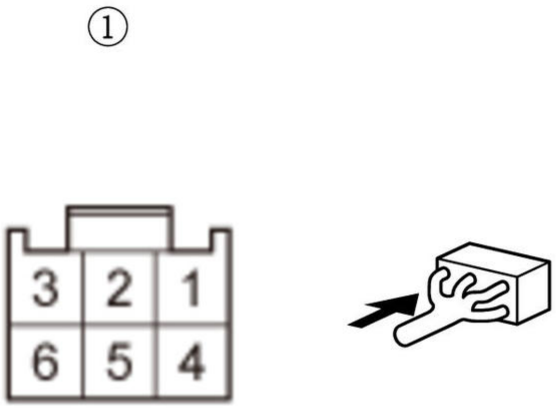

-4. Turn the vehicle to the ON mode.

-5. Check the parameter(s) below with the HDS.

Signal	Current conditions	
	Values	Unit
Tailgate Lock Sw. Ratchet	B	B

Is data list value ON?

YES

Faulty ratchet switch; **replace the tailgate latch** .

NO

Go to step 6.

6. Determine possible failure area (PTG/PTL_RACT line, PTG/PTL_SEG3 line)

-1. Turn the vehicle to the OFF (LOCK) mode.

-2. Disconnect the jumper wire.

-3. Connect terminals A and B with a jumper wire.

Terminal A	Power tailgate closer unit connector B (6P) (female terminals) No. 6: ①
Terminal B	Body ground

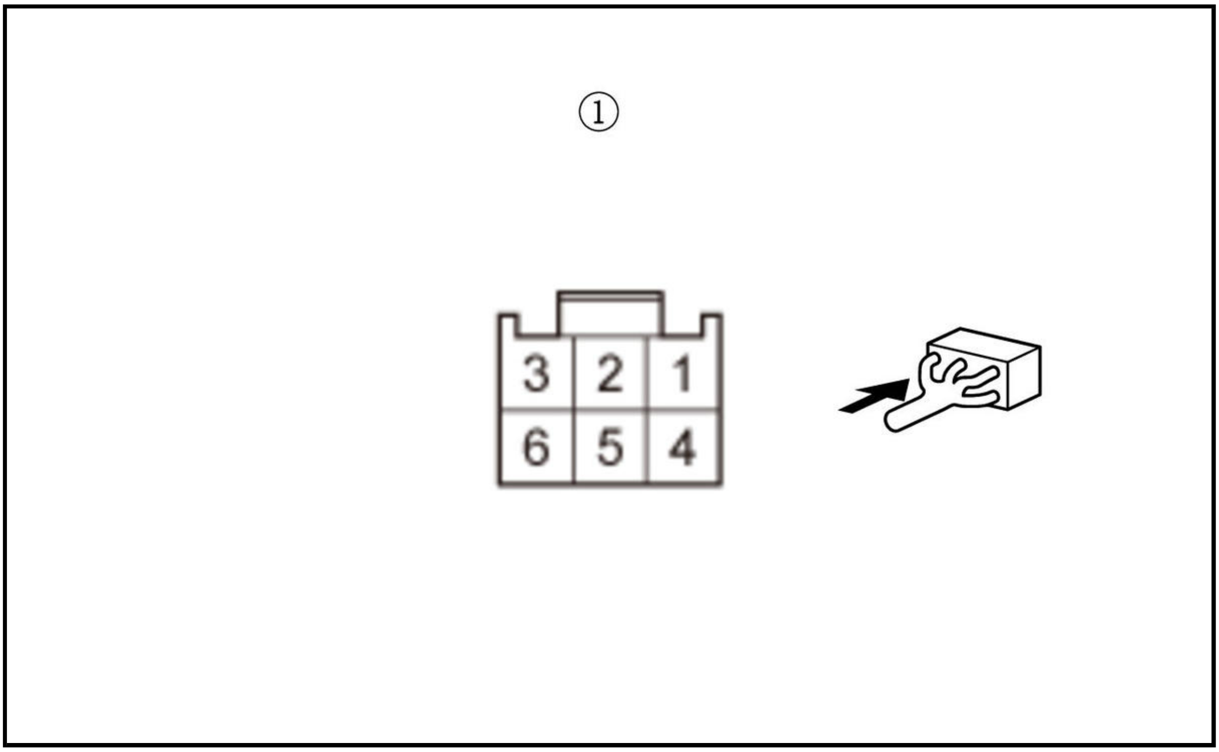

-4. Turn the vehicle to the ON mode.

-5. Check the parameter(s) below with the HDS.

Signal	Current conditions	
	Values	Unit
Tailgate Lock Sw. Ratchet	B	B

Is data list value ON?

YES

Go to step 7.

NO

Go to step 8.

7. Open wire check (PTG/PTL_SEG3 line)

-1. Turn the vehicle to the OFF (LOCK) mode.

-2. Disconnect the jumper wire.

-3. Disconnect the following connector.

Power tailgate control unit connector A (24P)

-4. Measure the resistance between test points 1 and 2.

Test condition	Vehicle OFF (LOCK) mode Power tailgate closer unit connector B (6P): disconnected Power tailgate control unit connector A (24P): disconnected
B	B
Test point 1	Power tailgate closer unit connector B (6P) (female terminals) No. 2: ①
Test point 2	**Power tailgate control unit connector A (24P) No. 21**

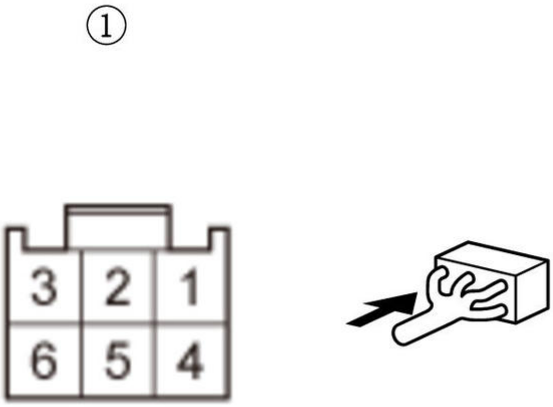

Is there 1.0 Ω or less?

YES

Replace the power tailgate control unit .

NO

Repair an open or high resistance in the wire.

8. Open wire check (PTG/PTL_RACT line)

-1. Turn the vehicle to the OFF (LOCK) mode.

-2. Disconnect the jumper wire.

-3. Disconnect the following connector.

Power tailgate control unit connector A (24P)

-4. Measure the resistance between test points 1 and 2.

Test condition	Vehicle OFF (LOCK) mode Power tailgate closer unit connector B (6P): disconnected Power tailgate control unit connector A (24P): disconnected
B	B
Test point 1	Power tailgate closer unit connector B (6P) (female terminals) No. 6: ①
Test point 2	**Power tailgate control unit connector A (24P) No. 22**

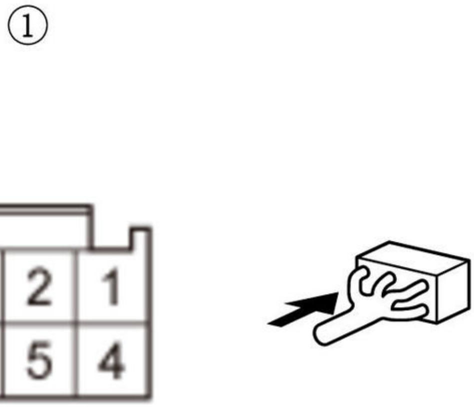

Is there 1.0 Ω or less?

YES

Replace the power tailgate control unit .

NO

Repair an open or high resistance in the wire.

DTC B1384

DTC B1384 : Tailgate Closer Unit Half Latch switch circuit malfunction

NOTE: If you are troubleshooting multiple DTCs, be sure to follow the instructions in **B-CAN System Diagnosis Test Mode A** .

DTC Description	DTC
B1384 Tailgate Closer Unit Half Latch switch circuit malfunction	B

DTC (Power Tailgate Control Unit)

1. Problem verification

   -1. Clear the DTCs with the HDS.

   -2. Open the tailgate with the tailgate outer handle switch.

   -3. Close the tailgate manually.

   -4. Check for DTCs with the HDS.

DTC Description	DTC
B1384 Tailgate Closer Unit Half Latch switch circuit malfunction	B

   Is DTC B1384 indicated?

   YES

   Go to step 2.

   NO

   Intermittent failure, the system is OK at this time. Check for loose or poor connections.

2. Determine possible failure area (PTG/PTL_HALF line short, others)

   -1. Check the parameter(s) below with the HDS.

Signal	Current conditions	
	Values	Unit
Tailgate Lock Sw. Half Latch	B	B

   Is data list value ON?

   YES

   Go to step 3.

   NO

   Go to step 5.

3. Determine possible failure area (power tailgate closer unit, others)

   -1. Turn the vehicle to the OFF (LOCK) mode.

   -2. Disconnect the following connector.

Power tailgate closer unit connector B (6P)

   -3. Turn the vehicle to the ON mode.

   -4. Check the parameter(s) below with the HDS.

Signal	Current conditions	
	Values	Unit
Tailgate Lock Sw. Half Latch	B	B

Is data list value ON?

YES

Go to step 4.

NO

Faulty half latch switch; **replace the tailgate latch** .

4. Shorted wire check (PTG/PTL_HALF line)

 -1. Turn the vehicle to the OFF (LOCK) mode.

 -2. Disconnect the following connector.

Power tailgate control unit connector A (24P)

 -3. Measure the resistance between test points 1 and 2.

Test condition	Vehicle OFF (LOCK) mode Power tailgate closer unit connector B (6P): disconnected Power tailgate control unit connector A (24P): disconnected
B	B
Test point 1	**Power tailgate control unit connector A (24P) No. 12**
Test point 2	Body ground

Is there 1.0 MΩ or more?

YES

Replace the power tailgate control unit .

NO

Repair a short to ground in the wire.

5. Determine possible failure area (power tailgate closer unit, others)

 -1. Turn the vehicle to the OFF (LOCK) mode.

 -2. Disconnect the following connector.

Power tailgate closer unit connector B (6P)

 -3. Connect terminals A and B with a jumper wire.

Terminal A	Power tailgate closer unit connector B (6P) (female terminals) No. 2: ①
Terminal B	Power tailgate closer unit connector B (6P) (female terminals) No. 4: ①

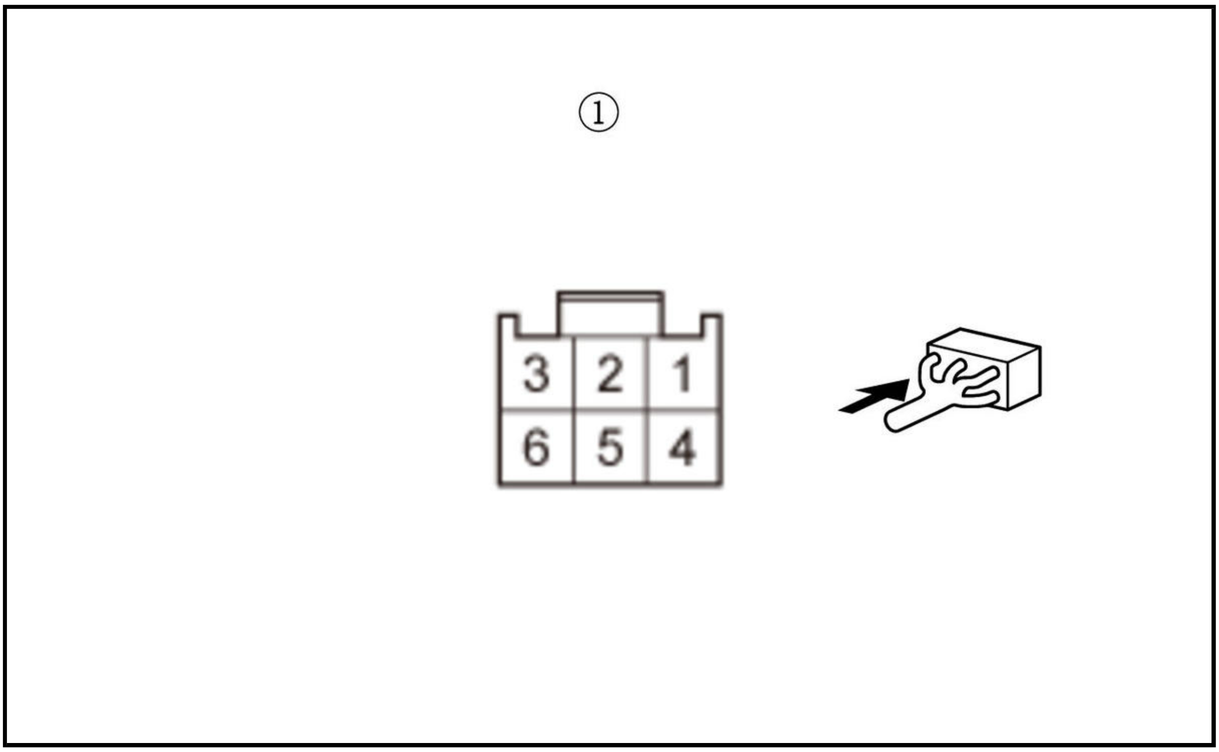

-4. Turn the vehicle to the ON mode.

-5. Check the parameter(s) below with the HDS.

Signal	Current conditions	
	Values	Unit
Tailgate Lock Sw. Half Latch	B	B

Is data list value ON?

YES

Faulty half latch switch; **replace the tailgate latch** .

NO

Go to step 6.

6. Determine possible failure area (PTG/PTL_HALF line, PTG/PTL_SEG3 line)

-1. Turn the vehicle to the OFF (LOCK) mode.

-2. Disconnect the jumper wire.

-3. Connect terminals A and B with a jumper wire.

Terminal A	Power tailgate closer unit connector B (6P) (female terminals) No. 4: ①
Terminal B	Body ground

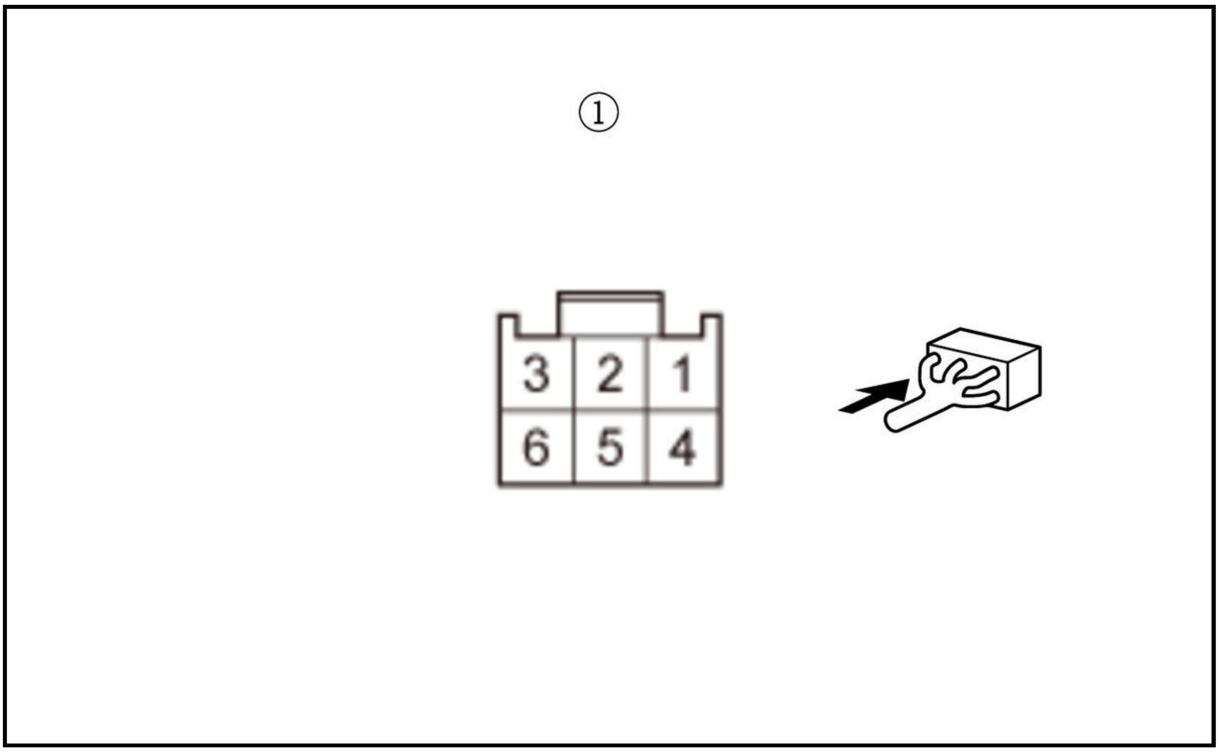

-4. Turn the vehicle to the ON mode.

-5. Check the parameter(s) below with the HDS.

Signal	Current conditions	
	Values	Unit
Tailgate Lock Sw. Half Latch	B	B

Is data list value ON?

YES

Go to step 7.

NO

Go to step 8.

7. Open wire check (PTG/PTL_SEG3 line)

-1. Turn the vehicle to the OFF (LOCK) mode.

-2. Disconnect the jumper wire.

-3. Disconnect the following connector.

Power tailgate control unit connector A (24P)

-4. Measure the resistance between test points 1 and 2.

Test condition	Vehicle OFF (LOCK) mode Power tailgate closer unit connector B (6P): disconnected Power tailgate control unit connector A (24P): disconnected
B	B
Test point 1	Power tailgate closer unit connector B (6P) (female terminals) No. 2: ①

Test point 2	**Power tailgate control unit connector A (24P) No. 21**

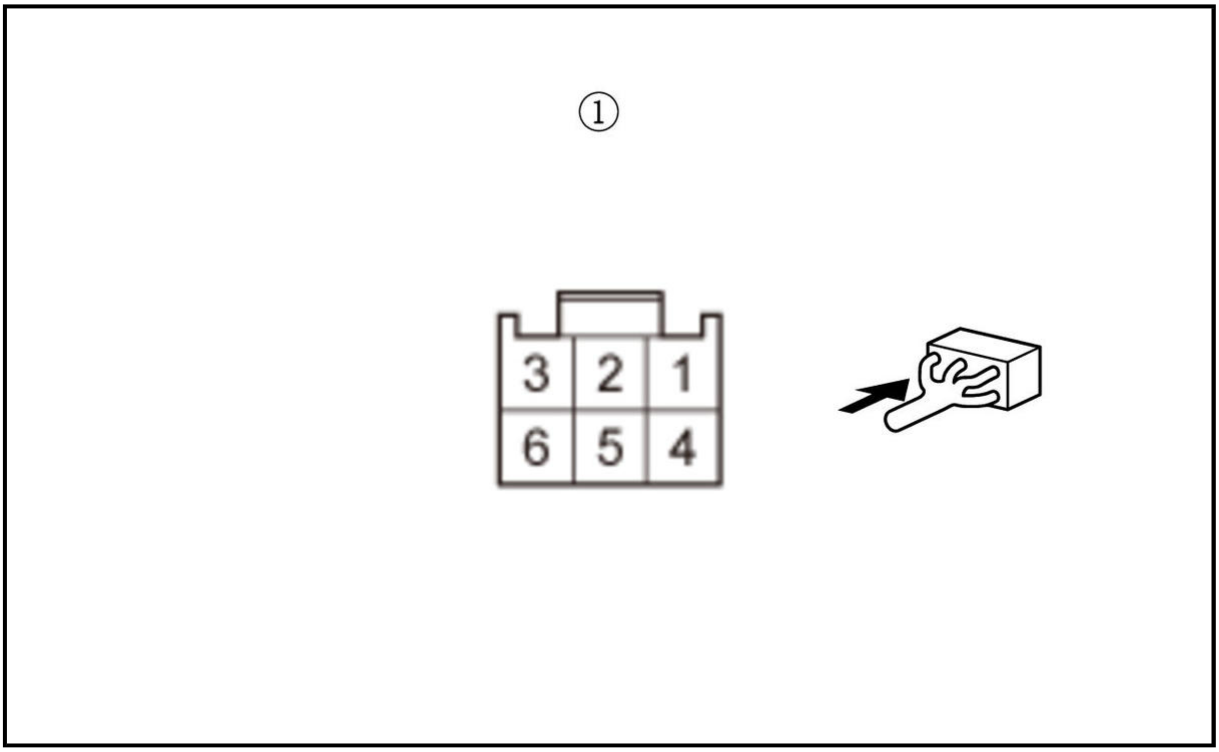

Is there 1.0 Ω or less?

YES

Replace the power tailgate control unit .

NO

Repair an open or high resistance in the wire.

8. Open wire check (PTG/PTL_HALF line)

-1. Turn the vehicle to the OFF (LOCK) mode.

-2. Disconnect the jumper wire.

-3. Disconnect the following connector.

Power tailgate control unit connector A (24P)

-4. Measure the resistance between test points 1 and 2.

Test condition	Vehicle OFF (LOCK) mode Power tailgate closer unit connector B (6P): disconnected Power tailgate control unit connector A (24P): disconnected
B	B
Test point 1	Power tailgate closer unit connector B (6P) (female terminals) No. 4: ①
Test point 2	**Power tailgate control unit connector A (24P) No. 12**

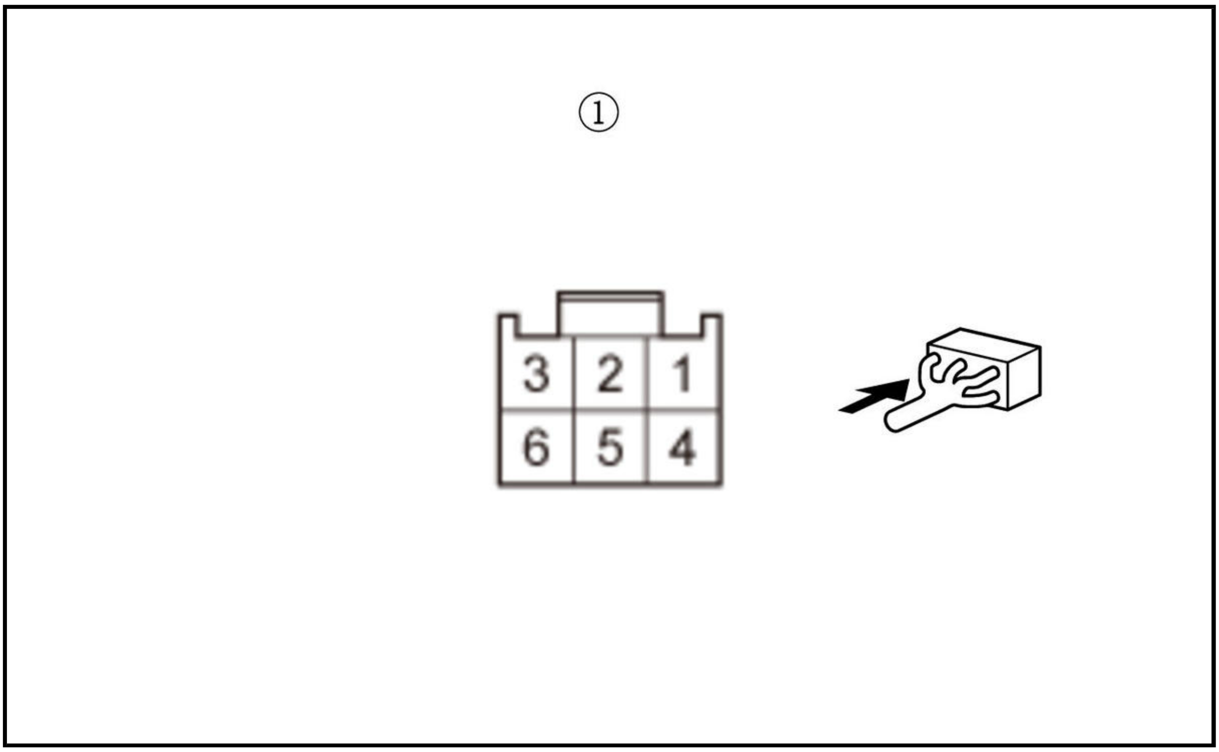

Is there 1.0 Ω or less?

YES

Replace the power tailgate control unit .

NO

Repair an open or high resistance in the wire.

DTC B1385

DTC B1385 : Power Tailgate temperature sensor malfunction

NOTE: If you are troubleshooting multiple DTCs, be sure to follow the instructions in B-CAN System Diagnosis Test Mode A .

DTC Description	DTC
B1385 Power Tailgate temperature sensor malfunction	B

DTC (Power Tailgate Control Unit)

1. Problem verification 1

   -1. Clear the DTCs with the HDS.

   -2. Open the tailgate manually or with the keyless transmitter.

   -3. Close the tailgate with the keyless transmitter or driver's power tailgate switch.

   -4. Check for DTCs with the HDS.

DTC Description	DTC
B1385 Power Tailgate temperature sensor malfunction	B

Is DTC B1385 indicated?

YES

Go to step 2.

NO

Intermittent failure, the system is OK at this time. Check for loose or poor connections.

2. Problem verification 2

-1. Check for DTCs with the HDS.

DTC Description	DTC
B1378 Power Tailgate Right Touch/Pinch sensor circuit malfunction	B
B1379 Power Tailgate Left Touch/Pinch sensor circuit malfunction	B
B1385 Power Tailgate temperature sensor malfunction	B

Any of DTC are indicated at the same time with DTC B1385?

YES

Go to step 3.

NO

Go to step 4.

3. Open wire check (PTG/PTL_SEG2 line)

-1. Turn the vehicle to the OFF (LOCK) mode.

-2. Disconnect the following connectors.

Power tailgate control unit connector B (10P) Left power tailgate pinch sensor 4P connector

-3. Measure the resistance between test points 1 and 2.

Test condition	Vehicle OFF (LOCK) mode Power tailgate control unit connector B (10P): disconnected Left power tailgate pinch sensor 4P connector: disconnected
Test point 1	**Power tailgate control unit connector B (10P) No. 8**
Test point 2	Left power tailgate pinch sensor 4P connector (male terminals) No. 2: ①

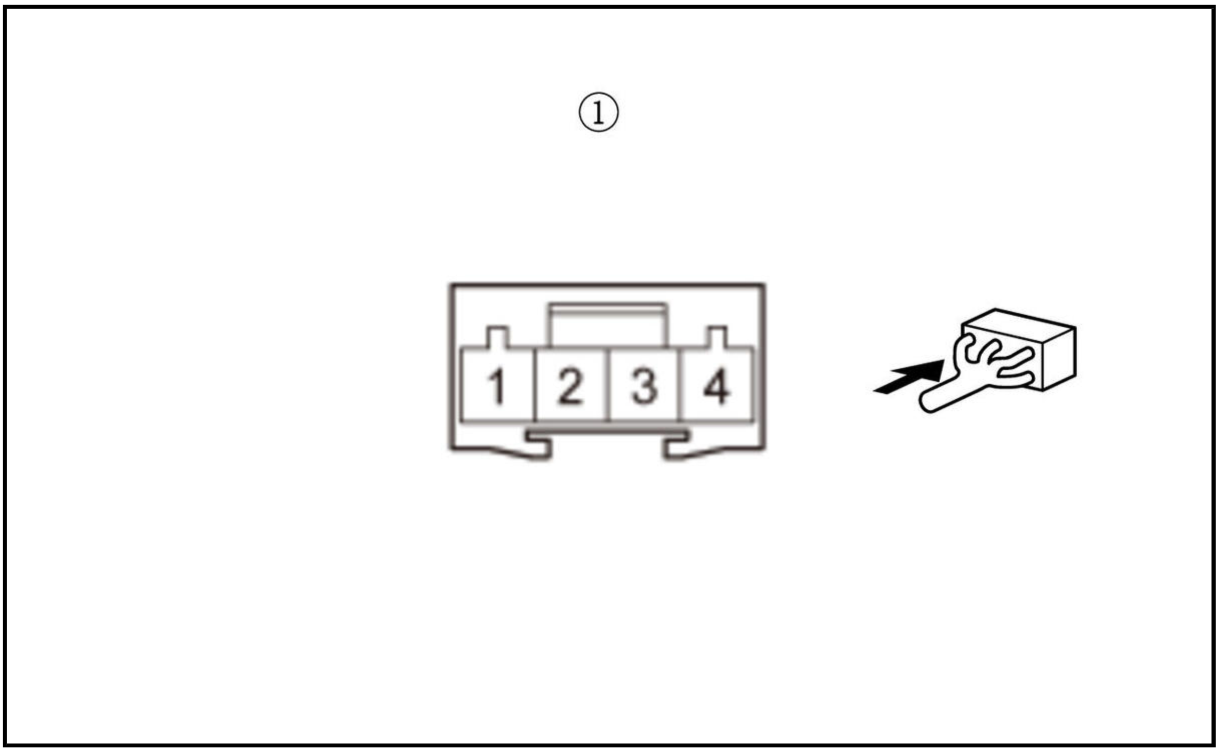

Is there 1.0 Ω or less?

YES

Replace the power tailgate control unit .

NO

Repair an open or high resistance in the wire.

4. Determine possible failure area (left power tailgate pinch sensor thermistor, others)

-1. Disconnect the following connector.

Left power tailgate pinch sensor 4P connector

-2. Turn the vehicle to the ON mode.

-3. Measure the voltage between test points 1 and 2.

Test condition	Vehicle ON mode Left power tailgate pinch sensor 4P connector: disconnected
Test point 1	Left power tailgate pinch sensor 4P connector (male terminals) No. 4: ①
Test point 2	Body ground

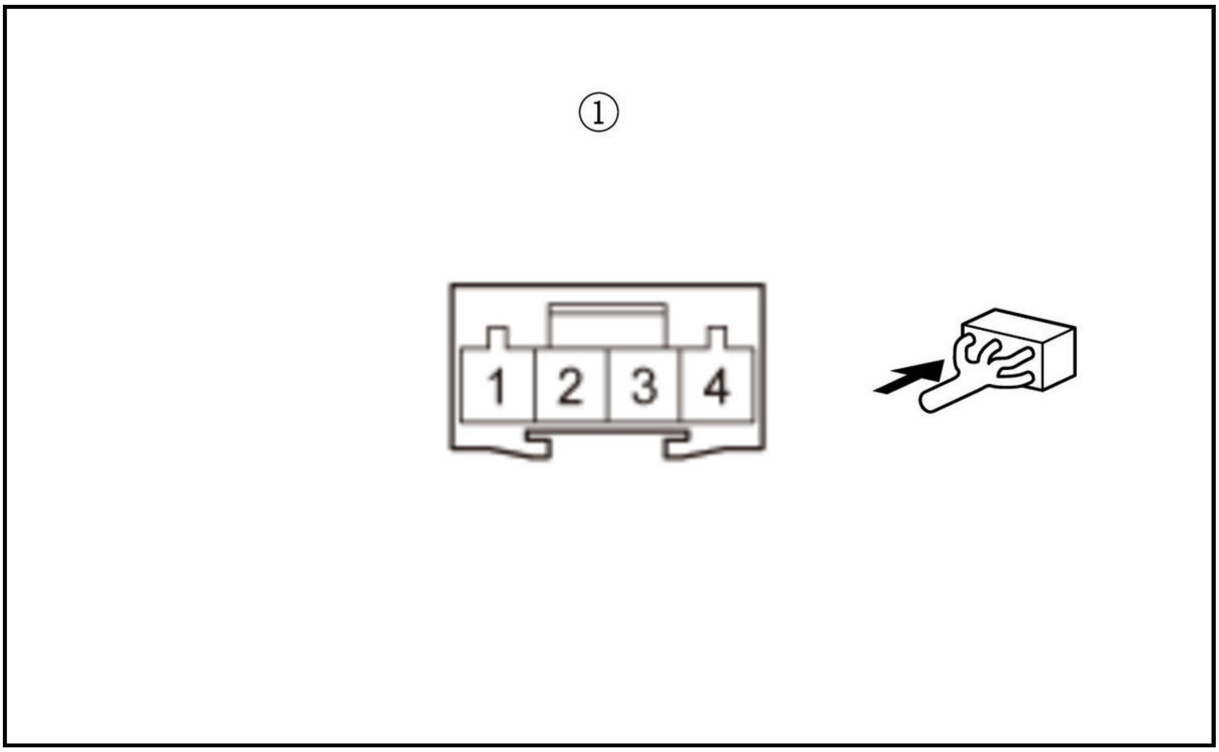

Is there battery voltage?

YES

Replace the left power tailgate pinch sensor .

NO

Go to step 5.

5. Open wire check (PTG/PTL_THERMISTOR line)

   -1. Measure the voltage between test points 1 and 2.

Test condition	Vehicle ON mode Left power tailgate pinch sensor 4P connector: disconnected
Test point 1	**Power tailgate control unit connector B (10P) No. 1**
Test point 2	Body ground

   Is there battery voltage?

   YES

   Repair an open or high resistance in the wire.

   NO

   Replace the power tailgate control unit .

DTC B1386

DTC B1386 : Power Tailgate sensor Pulse A circuit malfunction

NOTE:

- If you are troubleshooting multiple DTCs, be sure to follow the instructions in **B-CAN System Diagnosis Test Mode A** .
- If the motor does not operate, **do the motor test first** .

DTC Description	DTC
B1386 Power Tailgate sensor Pulse A circuit malfunction	B

DTC (Power Tailgate Control Unit)

1. Problem verification 1

   -1. Clear the DTCs with the HDS.

   -2. Open the tailgate with the tailgate outer handle switch.

   -3. Close the tailgate automatically with the keyless transmitter or power tailgate inside switch.

   -4. Check for DTCs with the HDS.

DTC Description	DTC
B1386 Power Tailgate sensor Pulse A circuit malfunction	B

   Is DTC B1386 indicated?

   YES

   Go to step 2.

   NO

   Intermittent failure, the system is OK at this time. Check for loose or poor connections.

2. Problem verification 2

   -1. Check for DTCs with the HDS.

DTC Description	DTC
B1387 Power Tailgate sensor Pulse B circuit malfunction	B

   Is DTC B1387 indicated?

   YES

   Go to step 3.

   NO

   Go to step 4.

3. Shorted wire check (PTG/PTL_SVCC line)

   -1. Turn the vehicle to the OFF (LOCK) mode.

   -2. Disconnect the following connector.

   Power tailgate drive unit connector B (6P)

   -3. Measure the resistance between test points 1 and 2.

Test condition	Vehicle OFF (LOCK) mode Power tailgate drive unit connector B (6P): disconnected
B	B

Test point 1	Power tailgate drive unit connector B (6P) (male terminals) No. 4: ①
Test point 2	Body ground

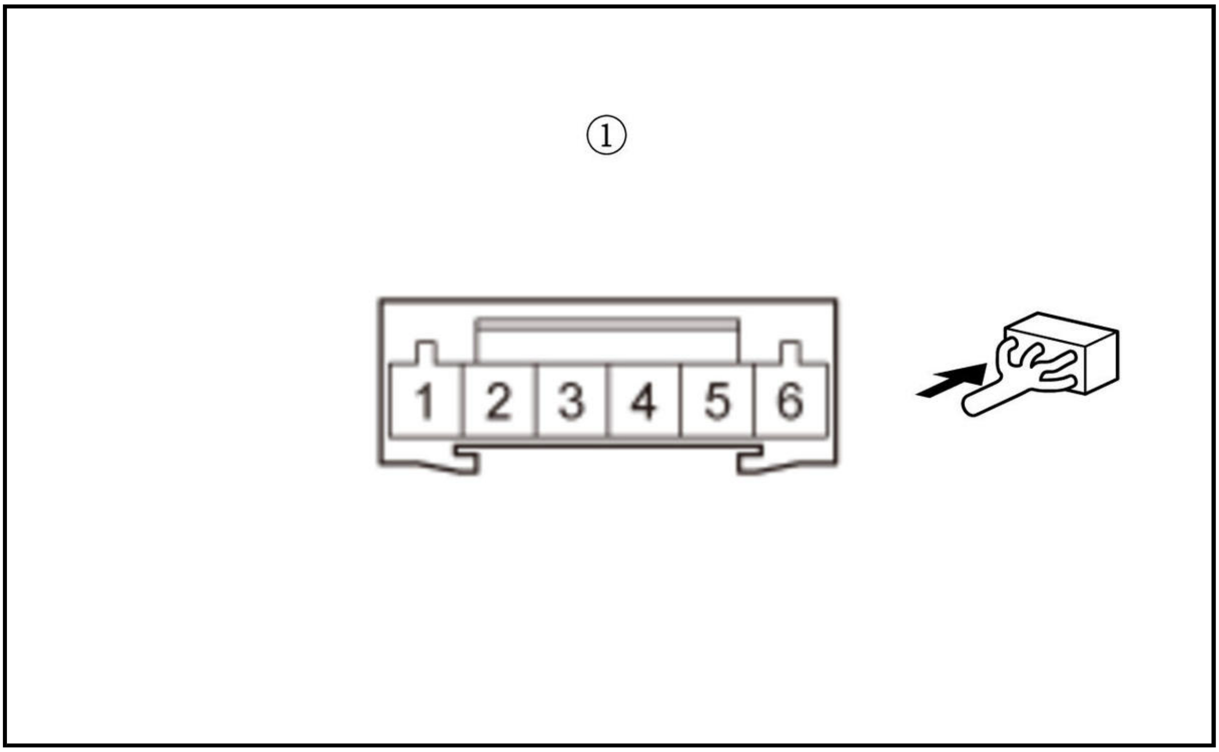

Is there 1.0 MΩ or more?

YES

Replace the power tailgate control unit .

NO

Repair a short to ground in the wire.

4. Determine possible failure area (power tailgate sensor, others)

-1. Turn the vehicle to the OFF (LOCK) mode.

-2. Disconnect the following connector.

Power tailgate drive unit connector B (6P)

-3. Turn the vehicle to the ON mode.

-4. Measure the voltage between test points 1 and 2.

Test condition	Vehicle ON mode Power tailgate drive unit connector B (6P): disconnected
B	B
Test point 1	Power tailgate drive unit connector B (6P) (male terminals) No. 1: ①
Test point 2	Body ground

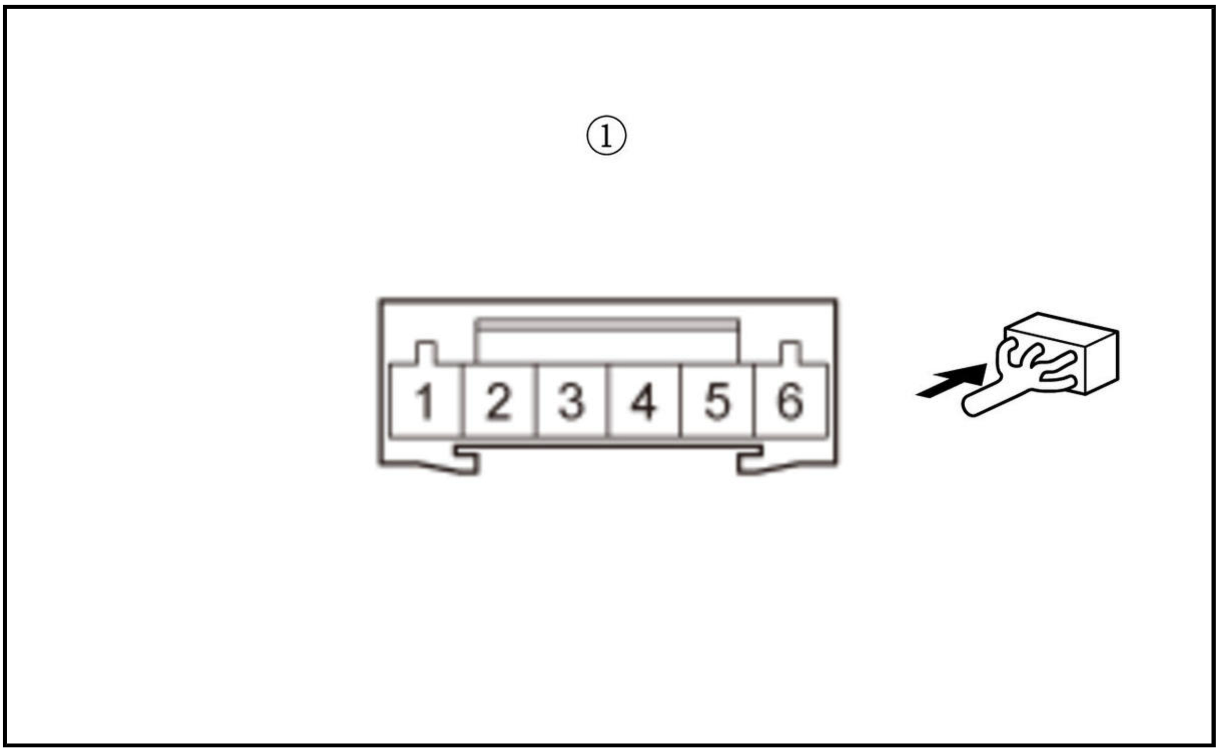

Is there about 5V?

YES

Faulty power tailgate sensor; **replace the power tailgate drive unit** .

NO

Go to step 5.

5. Shorted wire check (PTG/PTL_SENA line)

-1. Turn the vehicle to the OFF (LOCK) mode.

-2. Measure the resistance between test points 1 and 2.

Test condition	Vehicle OFF (LOCK) mode Power tailgate drive unit connector B (6P): disconnected
B	B
Test point 1	Power tailgate drive unit connector B (6P) (male terminals) No. 1: ①
Test point 2	Body ground

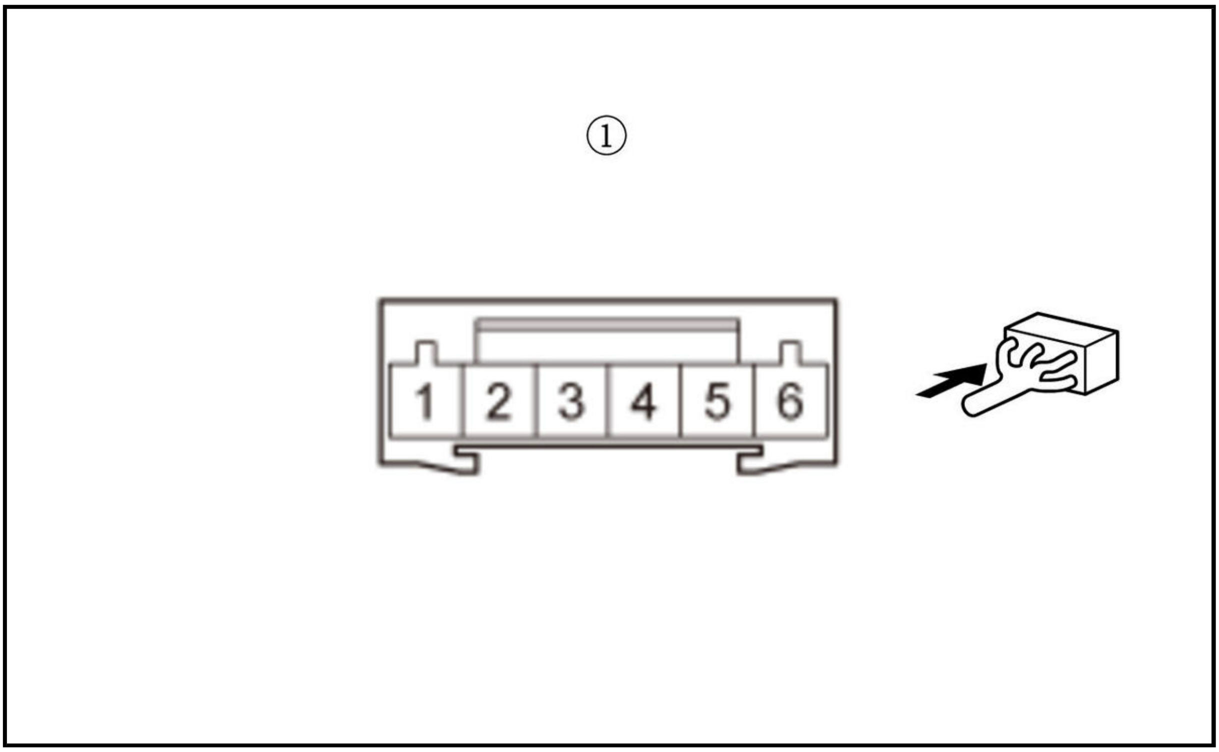

Is there 1.0 MΩ or more?

YES

Go to step 6.

NO

Repair a short to ground in the wire.

6. Open wire check (PTG/PTL_SENA line)

-1. Disconnect the following connector.

Power tailgate control unit connector A (24P)

-2. Measure the resistance between test points 1 and 2.

Test condition	Vehicle OFF (LOCK) mode Power tailgate drive unit connector B (6P): disconnected Power tailgate control unit connector A (24P): disconnected
B	B
Test point 1	Power tailgate drive unit connector B (6P) (male terminals) No. 1: ①
Test point 2	**Power tailgate control unit connector A (24P) No. 3**

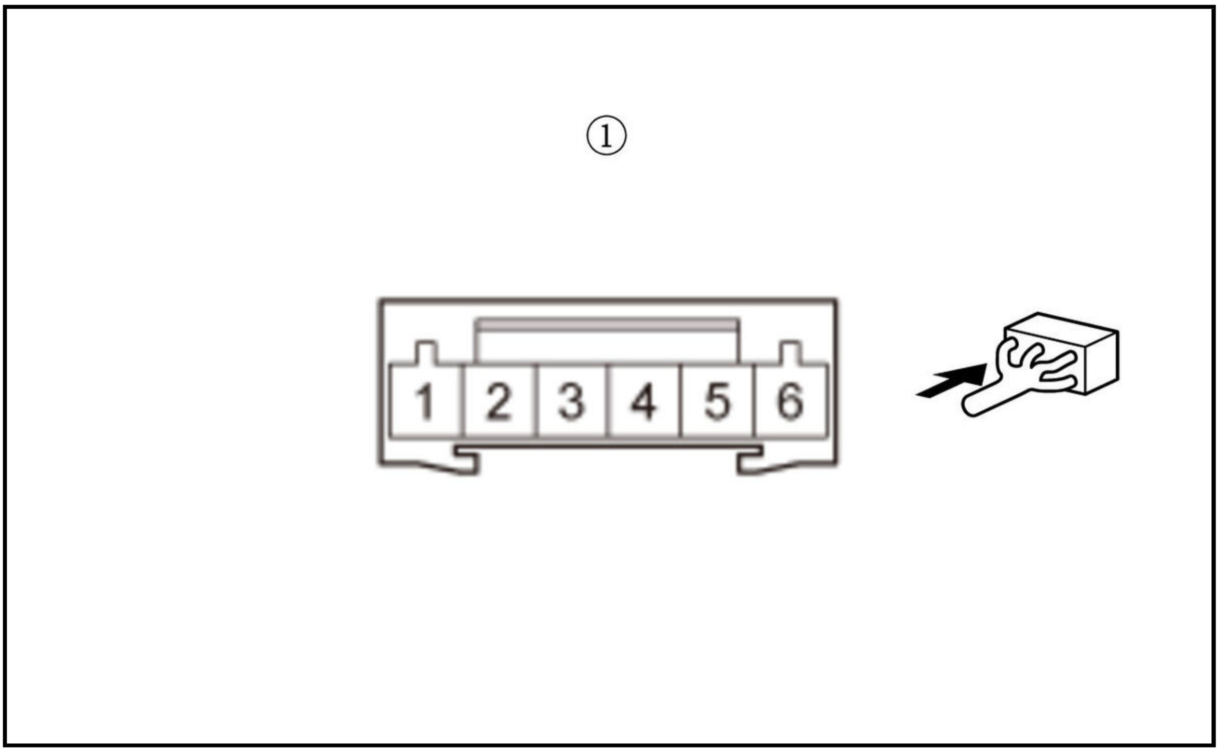

Is there 1.0 Ω or less?

YES

Replace the power tailgate control unit .

NO

Repair an open or high resistance in the wire.

DTC B1387

DTC B1387 : Power Tailgate sensor Pulse B circuit malfunction

NOTE:

- If you are troubleshooting multiple DTCs, be sure to follow the instructions in **B-CAN System Diagnosis Test Mode A** .
- If the motor does not operate, **do the motor test first** .

DTC Description	DTC
B1387 Power Tailgate sensor Pulse B circuit malfunction	B

DTC (Power Tailgate Control Unit)

1. Problem verification 1

   -1. Clear the DTCs with the HDS.

   -2. Open the tailgate with the tailgate outer handle switch.

   -3. Close the tailgate automatically with the keyless transmitter or power tailgate inside switch.

   -4. Check for DTCs with the HDS.

DTC Description	DTC
B1387 Power Tailgate sensor Pulse B circuit malfunction	B

Is DTC B1387 indicated?

YES

Go to step 2.

NO

Intermittent failure, the system is OK at this time. Check for loose or poor connections.

2. Problem verification 2

-1. Check for DTCs with the HDS.

DTC Description	DTC
B1386 Power Tailgate sensor Pulse A circuit malfunction	B

Is DTC B1386 indicated?

YES

Go to step 3.

NO

Go to step 4.

3. Shorted wire check (PTG/PTL_SVCC line)

-1. Turn the vehicle to the OFF (LOCK) mode.

-2. Disconnect the following connector.

Power tailgate drive unit connector B (6P)

-3. Measure the resistance between test points 1 and 2.

Test condition	Vehicle OFF(LOCK) mode Power tailgate drive unit connector B (6P): disconnected
B	B
Test point 1	Power tailgate drive unit connector B (6P) (male terminals) No. 4: ①
Test point 2	Body ground

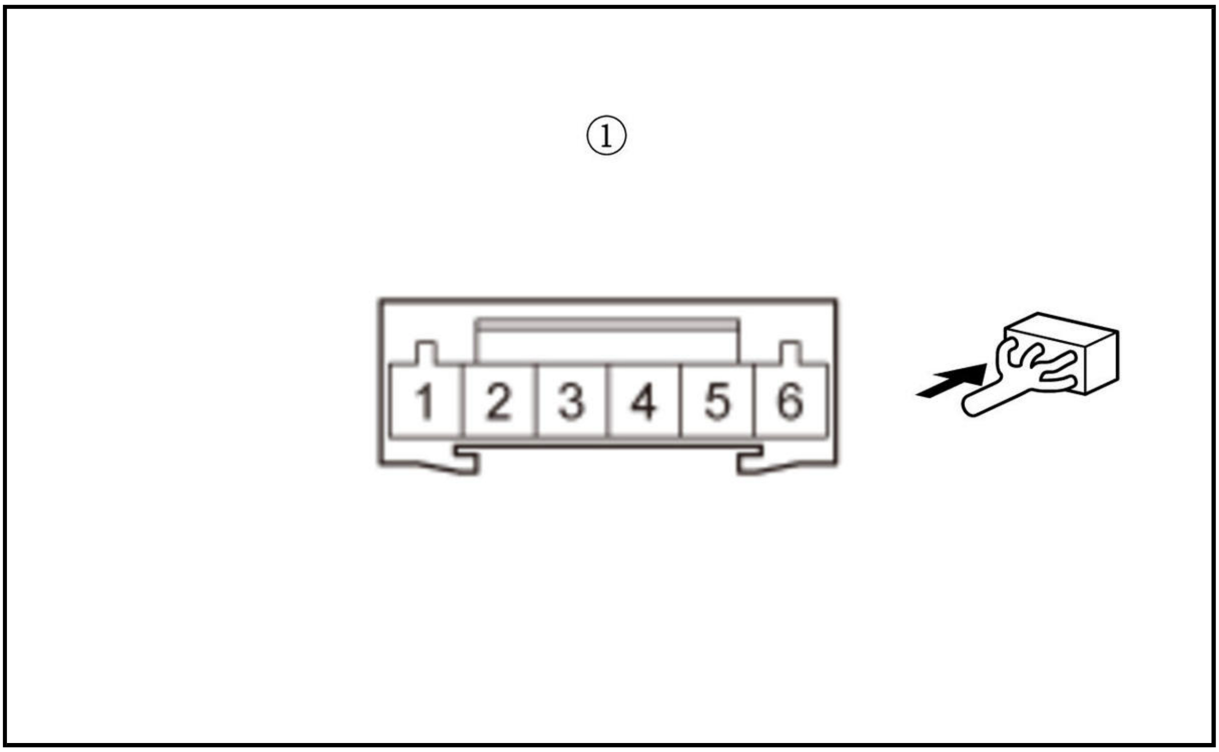

Is there 1.0 MΩ or more?

YES

Replace the power tailgate control unit .

NO

Repair a short to ground in the wire.

4. Determine possible failure area (power tailgate sensor, others)

-1. Turn the vehicle to the OFF (LOCK) mode.

-2. Disconnect the following connector.

Power tailgate drive unit connector B (6P)

-3. Turn the vehicle to the ON mode.

-4. Measure the voltage between test points 1 and 2.

Test condition	Vehicle ON mode Power tailgate drive unit connector B (6P): disconnected
B	B
Test point 1	Power tailgate drive unit connector B (6P) (male terminals) No. 3: ①
Test point 2	Body ground

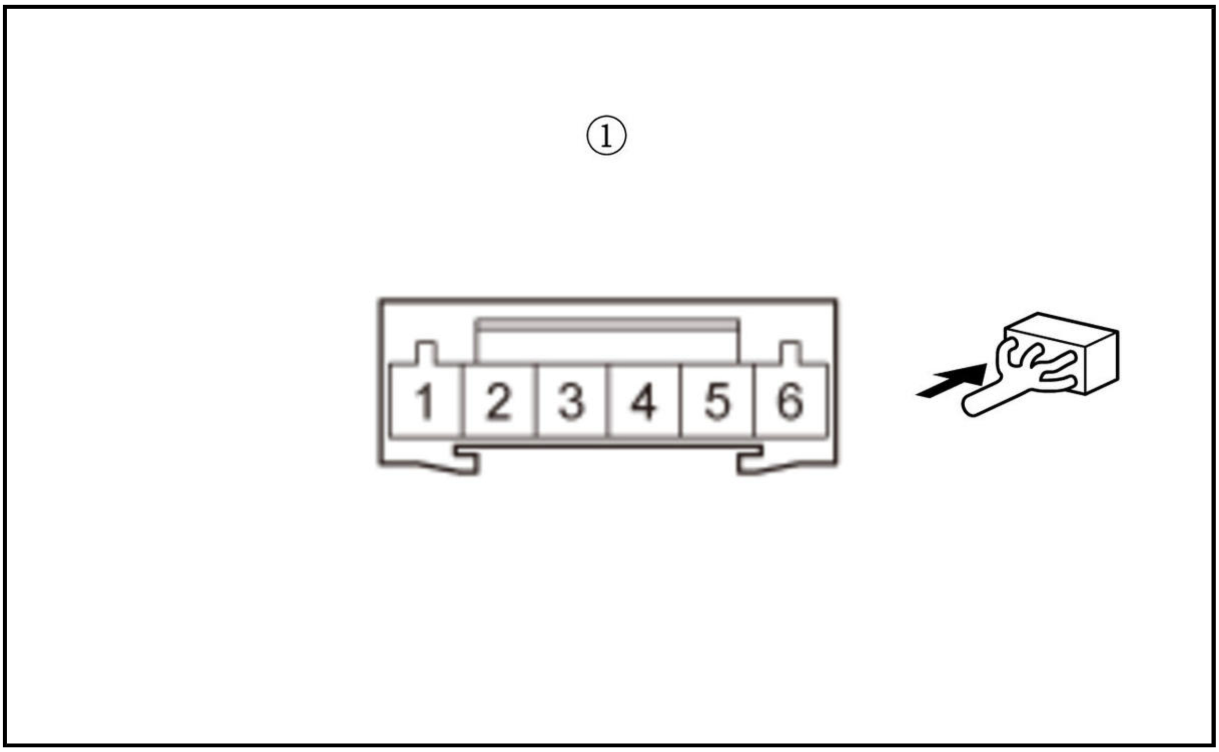

Is there about 5V?

YES

Faulty power tailgate sensor; **replace the power tailgate drive unit** .

NO

Go to step 5.

5. Shorted wire check (PTG/PTL_SENB line)

-1. Turn the vehicle to the OFF (LOCK) mode.

-2. Measure the resistance between test points 1 and 2.

Test condition	Vehicle OFF (LOCK) mode Power tailgate drive unit connector B (6P): disconnected
B	B
Test point 1	Power tailgate drive unit connector B (6P) (male terminals) No. 3: ①
Test point 2	Body ground

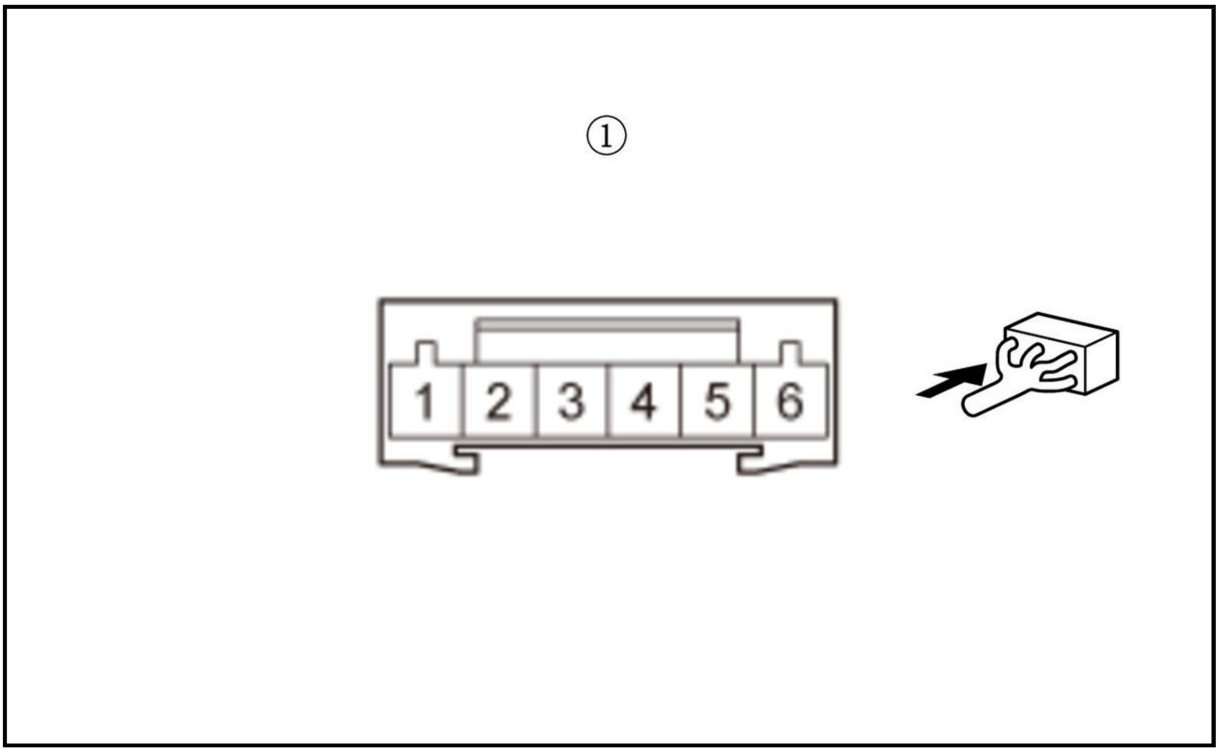

Is there 1.0 MΩ or more?

YES

Go to step 6.

NO

Repair a short to ground in the wire.

6. Open wire check (PTG/PTL_SENB line)

-1. Disconnect the following connector.

Power tailgate control unit connector A (24P)

-2. Measure the resistance between test points 1 and 2.

Test condition	Vehicle OFF (LOCK) mode Power tailgate drive unit connector B (6P): disconnected Power tailgate control unit connector A (24P): disconnected
B	B
Test point 1	Power tailgate drive unit connector B (6P) (male terminals) No. 3: ①
Test point 2	**Power tailgate control unit connector A (24P) No. 16**

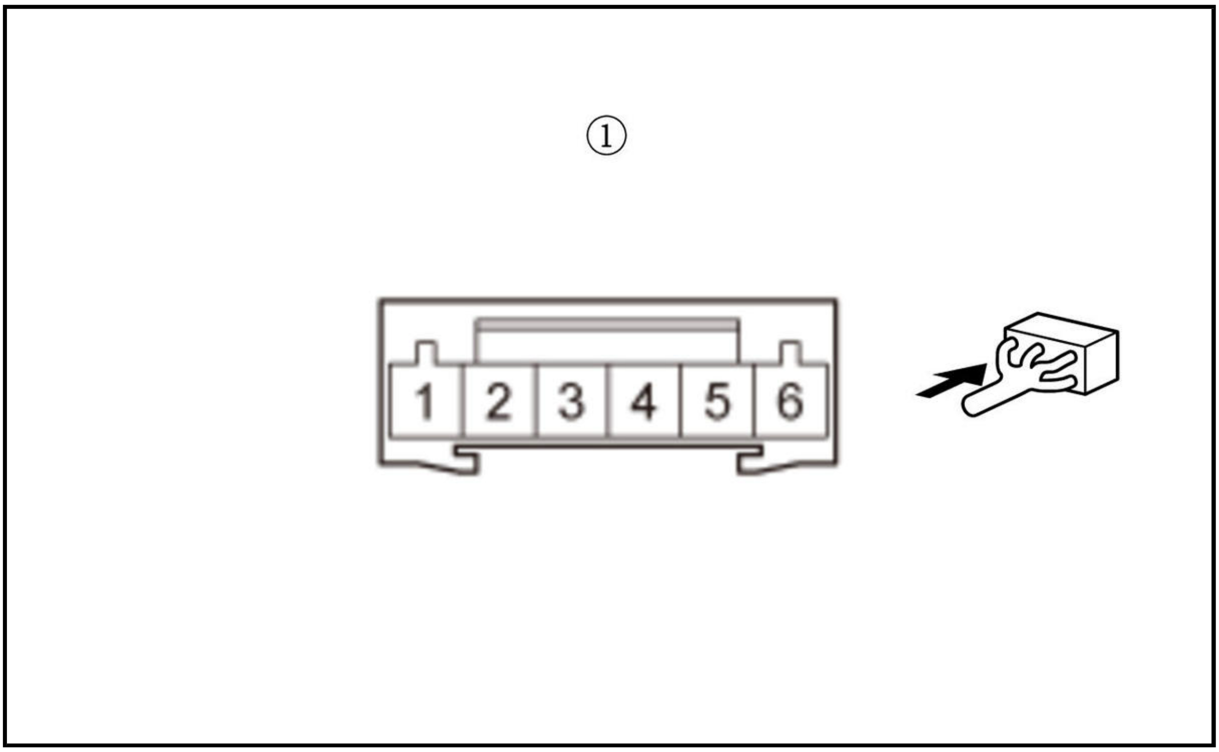

Is there 1.0 Ω or less?

YES

Replace the power tailgate control unit .

NO

Repair an open or high resistance in the wire.

DTC B1388

DTC B1388 : Power Tailgate Drive Motor circuit malfunction

NOTE:

- If you are troubleshooting multiple DTCs, be sure to follow the instructions in **B-CAN System Diagnosis Test Mode A** .
- Before troubleshooting, make sure the fuses and **relays** associated with the system is OK.

DTC Description	DTC
B1388 Power Tailgate Drive Motor circuit malfunction	B

DTC (Power Tailgate Control Unit)

1. Problem verification

   -1. Clear the DTCs with the HDS.

   -2. Open the tailgate.

   -3. Close the tailgate automatically with the keyless transmitter or power tailgate inside switch.

   -4. Check for DTCs with the HDS.

DTC Description	DTC
B1388 Power Tailgate Drive Motor circuit malfunction	B

Is DTC B1388 indicated?

YES

Go to step 2.

NO

Intermittent failure, the system is OK at this time. Check for loose or poor connections.

2. Power tailgate motor check

-1. Turn the vehicle to the OFF (LOCK) mode.

-2. **Test the power tailgate motor** .

Is the motor OK?

YES

Go to step 3.

NO

Faulty power tailgate motor; **replace the power tailgate drive unit** .

3. Shorted wire check (PTG/PTL_PTM+ line)

-1. Disconnect the following connector.

Power tailgate control unit connector C (5P)

-2. Measure the resistance between test points 1 and 2.

Test condition	Vehicle OFF (LOCK) mode Power tailgate control unit connector C (5P): disconnected Power tailgate drive unit connector A (2P): disconnected
B	B
Test point 1	Power tailgate drive unit connector A (2P) (male terminals) No. 1: ①
Test point 2	Body ground

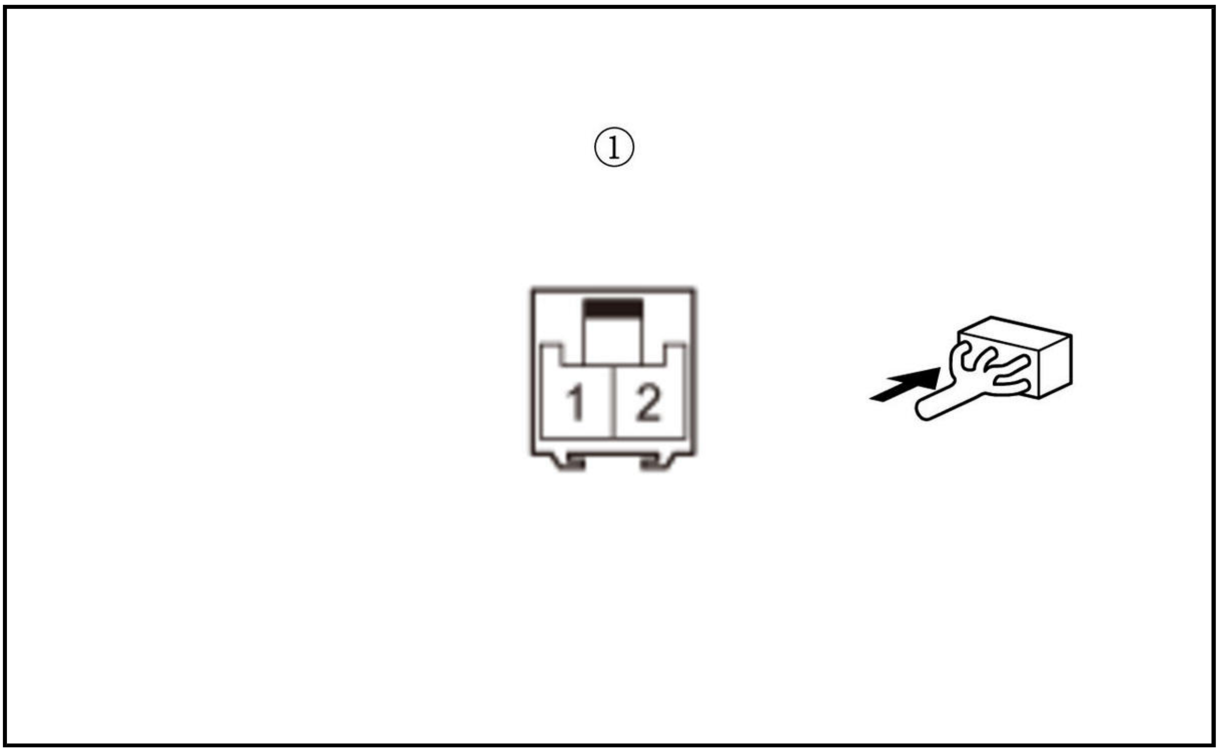

Is there 1.0 MΩ or more?

YES

The PTG/PTL_PTM+ wire is not shorted. Go to step 4.

NO

Repair a short to ground in the wire.

4. Shorted wire check (PTG/PTL_PTM- line)

-1. Measure the resistance between test points 1 and 2.

Test condition	Vehicle OFF (LOCK) mode Power tailgate control unit connector C (5P): disconnected Power tailgate drive unit connector A (2P): disconnected
B	B
Test point 1	Power tailgate drive unit connector A (2P) (male terminals) No. 2: ①
Test point 2	Body ground

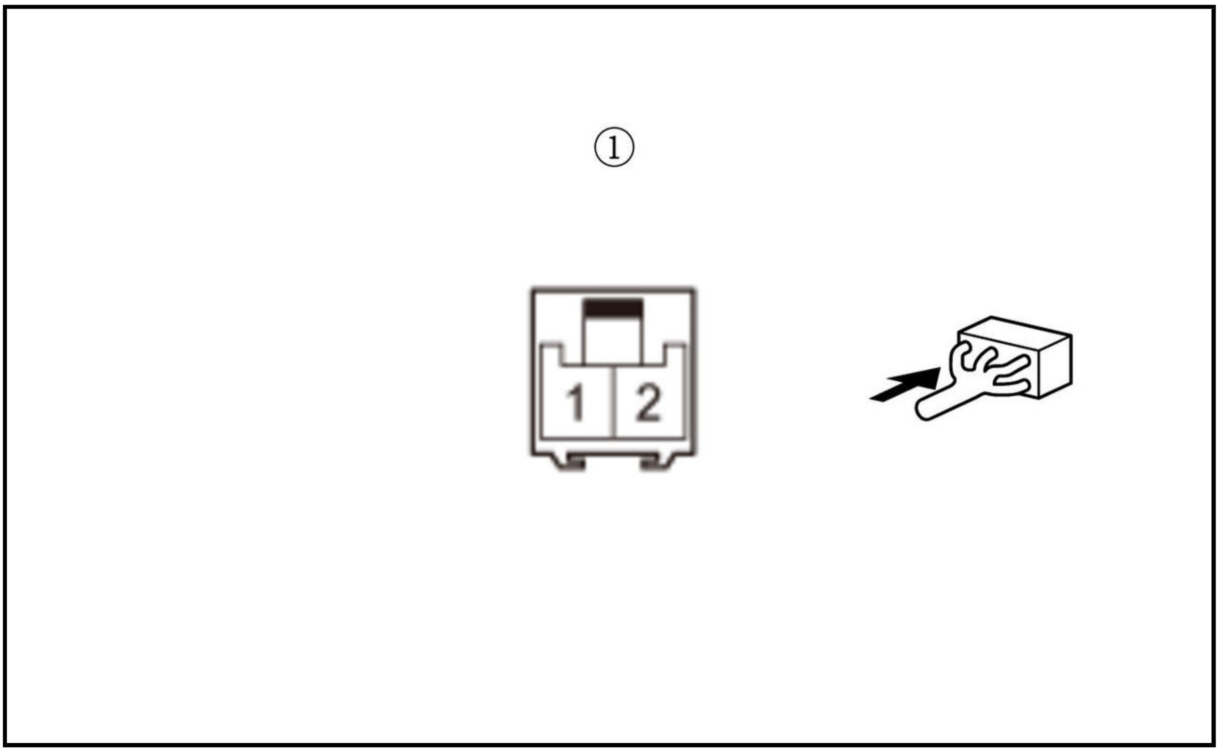

Is there 1.0 MΩ or more?

YES

The PTG/PTL_PTM- wire is not shorted. Go to step 5.

NO

Repair a short to ground in the wire.

5. Open wire check (PTG/PTL_PTM+ line)

-1. Measure the resistance between test points 1 and 2.

Test condition	Vehicle OFF (LOCK) mode Power tailgate control unit connector C (5P): disconnected Power tailgate drive unit connector A (2P): disconnected
B	B
Test point 1	Power tailgate drive unit connector A (2P) (male terminals) No. 1: ①
Test point 2	**Power tailgate control unit connector C (5P) No. 3**

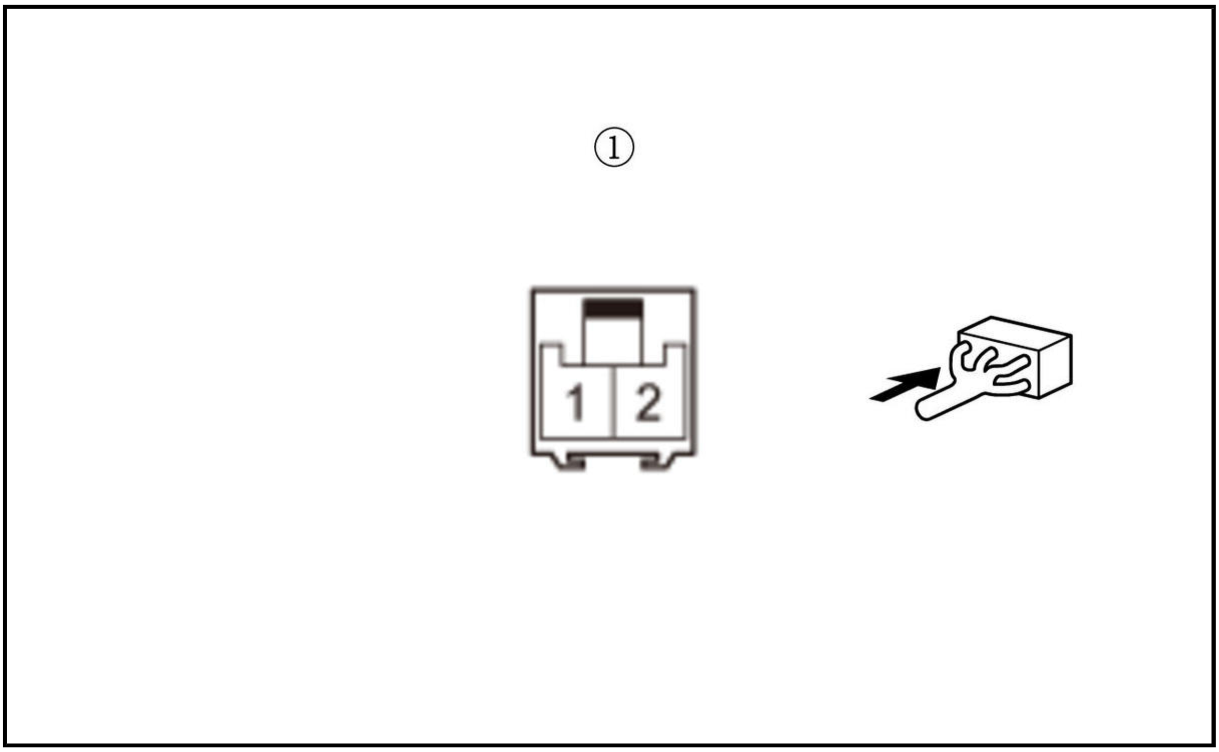

Is there 1.0 Ω or less?

YES

The PTG/PTL_PTM+ wire is not opened. Go to step 6.

NO

Repair an open or high resistance in the wire.

6. Open wire check (PTG/PTL_PTM- line)

-1. Measure the resistance between test points 1 and 2.

Test condition	Vehicle OFF (LOCK) mode Power tailgate control unit connector C (5P): disconnected Power tailgate drive unit connector A (2P): disconnected
B	B
Test point 1	Power tailgate drive unit connector A (2P) (male terminals) No. 2: ①
Test point 2	**Power tailgate control unit connector C (5P) No. 5**

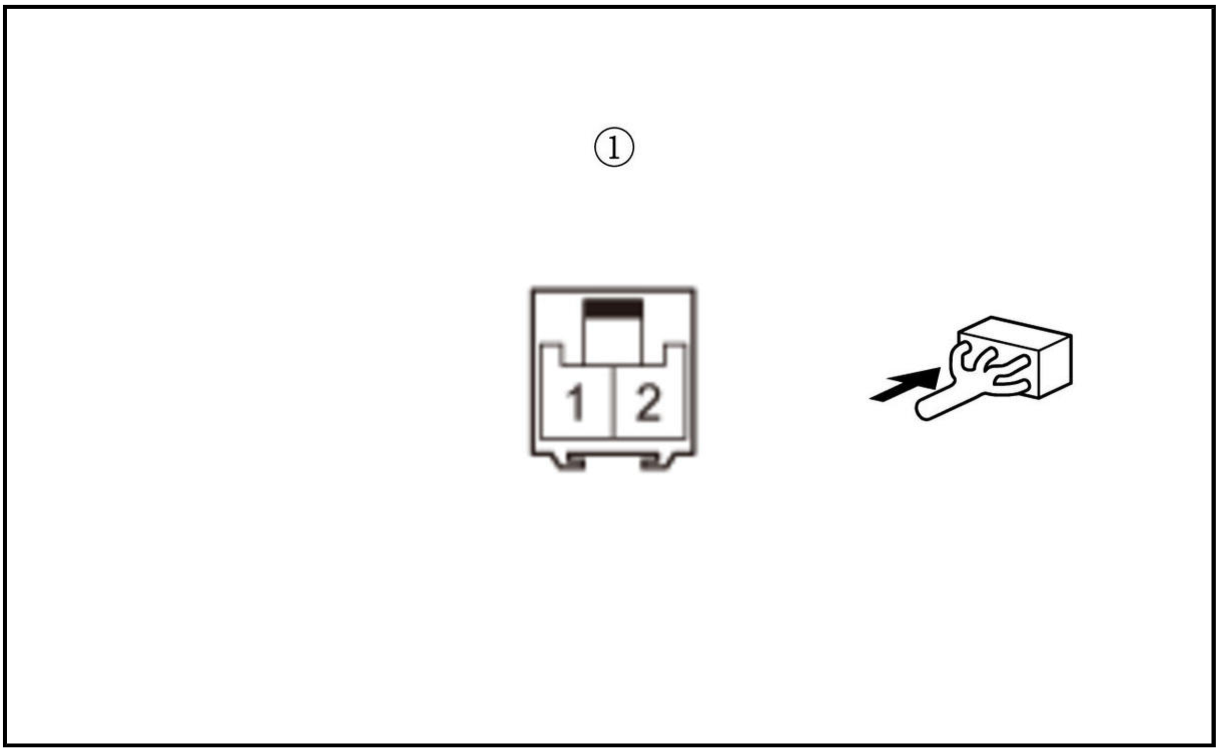

Is there 1.0 Ω or less?

YES

Replace the power tailgate control unit .

NO

Repair an open or high resistance in the wire.

DTC B1390

DTC B1390 : Power Tailgate Closer Motor circuit malfunction

NOTE:

- If you are troubleshooting multiple DTCs, be sure to follow the instructions in **B-CAN System Diagnosis Test Mode A** .
- Before troubleshooting, make sure the fuses and **relays** associated with the system is OK.

DTC Description	DTC
B1390 Power Tailgate Closer Motor circuit malfunction	B

DTC (Power Tailgate Control Unit)

1. Problem verification

-1. Clear the DTCs with the HDS.

-2. With the tailgate closed, press the tailgate outer handle switch and wait for 10 seconds.

-3. Check for DTCs with the HDS.

DTC Description	DTC
B1390 Power Tailgate Closer Motor circuit malfunction	B

Is DTC B1390 indicated?

YES

Go to step 2.

NO

Intermittent failure, the system is OK at this time. Check for loose or poor connections.

2. DTC check

-1. Check for power tailgate system DTCs with the HDS.

DTC Description	DTC
B	B

Are any DTCs indicated?

YES

Go to the indicated DTCs troubleshooting, then recheck.

NO

Go to step 3.

3. Open wire check (PTG/PTL_CLM+ line)

-1. Turn the vehicle to the OFF (LOCK) mode.

-2. Disconnect the following connectors.

Power tailgate closer unit connector A (2P) Power tailgate control unit connector B (10P)

-3. Measure the resistance between test points 1 and 2.

Test condition	Vehicle OFF (LOCK) mode Power tailgate closer unit connector A (2P): disconnected Power tailgate control unit connector B (10P): disconnected
Test point 1	Power tailgate closer unit connector A (2P) (female terminals) No. 2: ①
Test point 2	**Power tailgate control unit connector B (10P) No. 2**

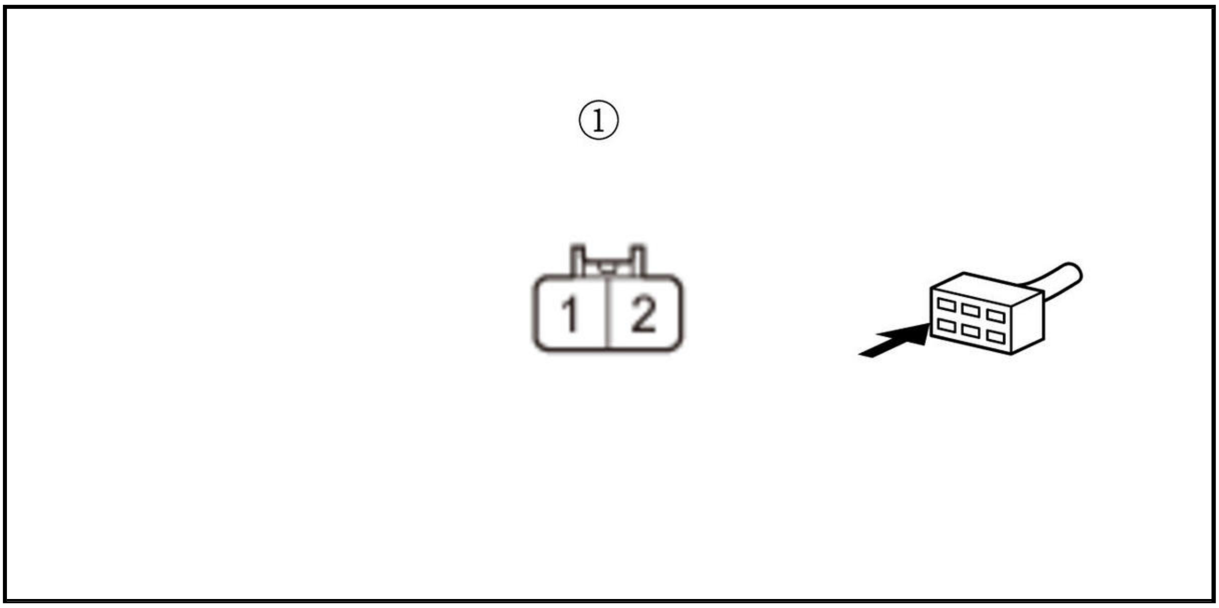

Is there 1.0 Ω or less?

YES

The PTG/PTL_CLM+ wire is OK. Go to step 4.

NO

Repair an open or high resistance in the wire.

4. Open wire check (PTG/PTL_CLM- line)

-1. Measure the resistance between test points 1 and 2.

Test condition	Vehicle OFF (LOCK) mode Power tailgate closer unit connector A (2P): disconnected Power tailgate control unit connector B (10P): disconnected
Test point 1	Power tailgate closer unit connector A (2P) (female terminals) No. 1: ①
Test point 2	**Power tailgate control unit connector B (10P) No. 6**

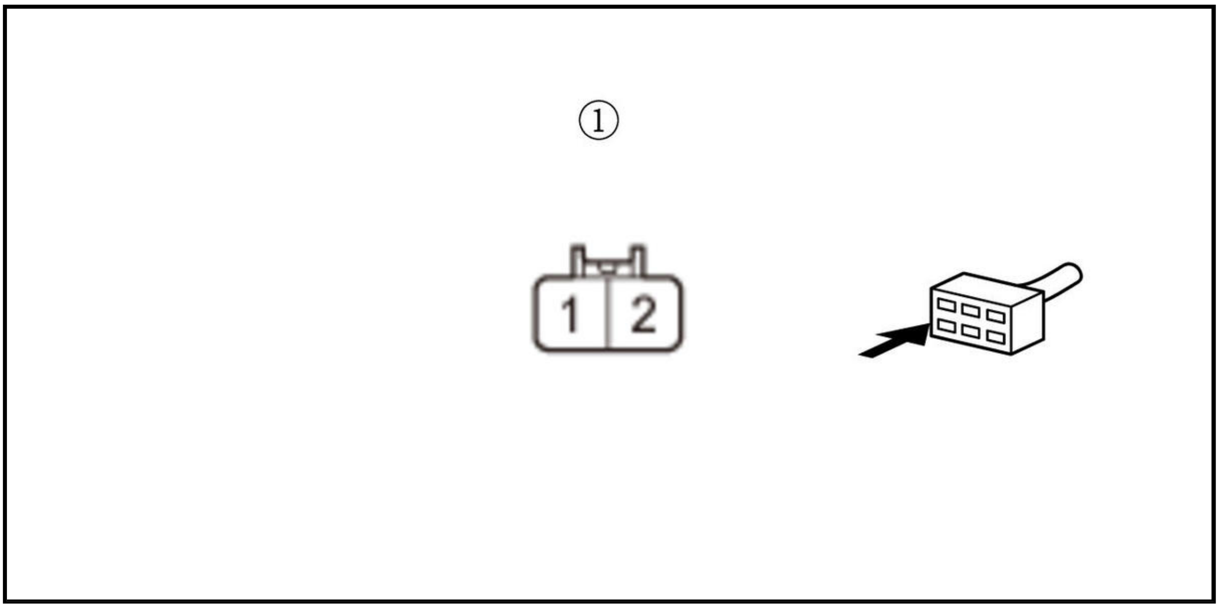

Is there 1.0 Ω or less?

YES

Faulty closer motor; replace the power tailgate closer unit .

NO

Repair an open or high resistance in the wire.

DTC U0199, U1281, U128D (POWER TAILGATE CONTROL UNIT)

DTC U0199 : Lost communication with P/W (DRLOCKSW, KLDRLOCK frame)

DTC U1281 : Lost communication with MICU (MICU frame)

DTC U128D : Power Tailgate Control Unit lost communication with GAUGE Control Module

NOTE:

- If you are troubleshooting multiple DTCs, be sure to follow the instructions in B-CAN System Diagnosis Test Mode A .
- Refer to the DTC code shown on the display, and then inspect the connectors and terminals based on the instructions in the table below.
- The DTC may be stored due to the grounding failure or the power source failure at the transmitting control unit(the grounding inspection and the power source inspection on each control unit are required prior to this checking process).

DTC Description	DTC
U0199 Lost communication with P/W (DRLOCKSW, KLDRLOCK frame)	B
U1281 Lost communication with MICU (MICU frame)	B
U128D Power Tailgate Control Unit lost communication with GAUGE Control Module	B

DTC (Power Tailgate Control Unit)

1. Problem verification

   -1. Clear the DTC with the HDS.

   -2. Turn the vehicle to the OFF (LOCK) mode and then the ON mode.

   -3. Wait for at least 6 seconds.

   -4. Check for DTCs with the HDS.

DTC Description	DTC
U0199 Lost communication with P/W (DRLOCKSW, KLDRLOCK frame)	B

DTC Description	DTC
U1281 Lost communication with MICU (MICU frame)	B
U128D Power Tailgate Control Unit lost communication with GAUGE Control Module	B

Are any DTCs indicated?

YES

Go to step 2.

NO

Intermittent failure, the system is OK at this time. Check for poor connections or loose terminals.

2. Open wire check (B-CAN_H line, B-CAN_L line)

-1. Turn the vehicle to the OFF (LOCK) mode.

-2. Disconnect the receiving control unit connector.

Power tailgate control unit connector A (24P)

-3. Disconnect the transmitting control unit connector(s).

Refer to the DTC shown on the display, then disconnect the connector(s) based on the instructions (see table).

DTC	Connector
U0199	Power window master switch 37P connector
U1281	Body control module connector B (36P)
U128D	Gauge control module connector A (32P)

-4. Measure the resistance between the receiving control unit and the transmitting control unit on the B-CAN_H circuit and the B-CAN_L circuit.

Test condition	Vehicle OFF (LOCK) mode Power tailgate control unit connector A (24P): disconnected Transmitting control unit connector(s) for indicated DTCs: disconnected

DTC	Circuit name	Receiving control unit		Transmitting control unit	
		Connector	Terminal	Connector	Terminal
U0199	B-CAN_H	Power tailgate control unit connector A (24P)	No. 6	Power window master switch 37P connector	No. 32
	B-CAN_L		No. 7		No. 31
U1281	B-CAN_H	Power tailgate control unit connector A (24P)	No. 6	Body control module connector B (36P)	No. 20
	B-CAN_L		No. 7		No. 21
U128D	B-CAN_H	Power tailgate control unit connector A (24P)	No. 6	Gauge control module connector A (32P)	No. 30
	B-CAN_L		No. 7		No. 31

Is there 1.0 Ω or less?

YES

The B-CAN_H wire and the B-CAN_L wire are OK. Refer to the DTC shown on the display, then replace the control unit based on the instructions (see table).

DTC	Operation for transmitting control unit
U0199	Power window master switch
U1281	Body control module
U128D	Gauge control module

NO

Repair an open in the B-CAN_H wire and/or the B-CAN_L wire.

DTC U1280 (POWER TAILGATE CONTROL UNIT)

DTC U1280 : Communication Bus line Error (a bus OFF state is detected by Power Tail Gate ECU)

NOTE: If you are troubleshooting multiple DTCs, be sure to follow the instructions in **B-CAN System Diagnosis Test Mode A** .

DTC Description	DTC
U1280 Communication Bus line Error(a bus OFF state is detected by Power Tail Gate ECU)	B

DTC (Power Tailgate Control Unit)

1. Problem verification

   -1. Clear the DTCs with the HDS.

   -2. Turn the vehicle to the OFF (LOCK) mode and then the ON mode.

   -3. Wait for at least 6 seconds.

   -4. Check for DTCs with the HDS.

DTC Description	DTC
U1280 Communication Bus line Error (a bus OFF state is detected by Power Tail Gate ECU)	B

   Is DTC U1280 indicated?

   YES

   Go to body control module DTC U1280 troubleshooting .

   NO

   Intermittent failure, the system is OK at this time. Check for loose or poor connections.

2017-22 ACCESSORIES AND BODY, CAB

Seat Heater System (Front) - Diagnostics - CR-V (Except Hybrid)

TROUBLESHOOTING

DTC B1C55

DTC B1C55 : Driver's heater thermistor circuit open

NOTE:

- If you are troubleshooting multiple DTCs, be sure to follow the instructions in **B-CAN System Diagnosis Test Mode A** .
- The front seat heater control unit does not turn on the front seat heater until the seat core temperature is 185B°F (85B°C) or less. Make sure the seat core temperature is below 185B°F (85B°C) before troubleshooting.

DTC Description	DTC
B1C55 Driver's heater thermistor circuit open	B

DTC (Front Seat Heater Control Unit)

1. Problem verification

   -1. Clear the DTCs with the HDS.

   -2. Turn the vehicle to the OFF (LOCK) mode and then the ON mode.

   -3. Wait for at least 90 seconds.

   -4. Check for DTCs with the HDS.

DTC Description	DTC
B1C55 Driver's heater thermistor circuit open	B

   Is DTC B1C55 indicated?

   YES

   Go to step 2.

   NO

   Intermittent failure, the system is OK at this time. Check for loose or poor connections.

2. Seat heater check 1

   -1. Disconnect the following connector.

Front seat heater control unit 24P connector

   -2. Measure the resistance between test points 1 and 2, refer to the following table.

Test condition	Vehicle OFF (LOCK) mode Front seat heater control unit 24P connector: disconnected
Test point 1	**Front seat heater control unit 24P connector No. 12**

Test point 2	Front seat heater control unit 24P connector No. 22

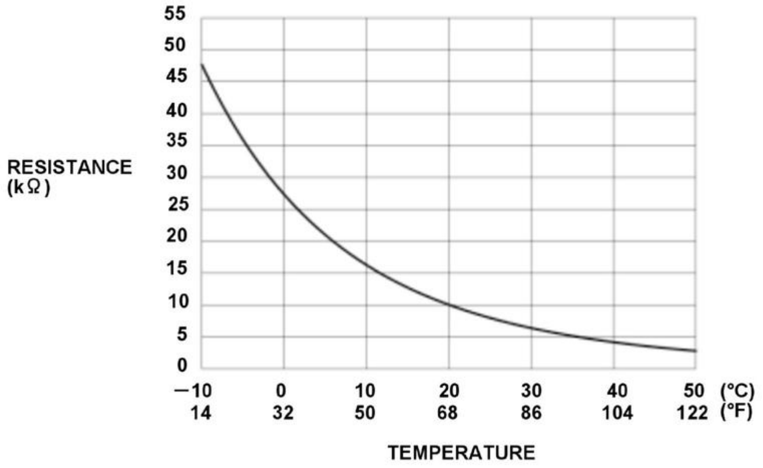

Is resistance value within the range?

YES

Replace the front seat heater control unit .

NO

Go to step 3.

3. Seat heater check 2

-1. Disconnect the following connector.

Driver's seat heater connector A (4P)

-2. Measure the resistance between test points 1 and 2, refer to the following table.

Test condition	Vehicle OFF (LOCK) mode Front seat heater control unit 24P connector: disconnected Driver's seat heater connector A (4P): disconnected
Test point 1	Driver's seat heater connector A (4P) (male terminals) No. 3: ①
Test point 2	Driver's seat heater connector A (4P) (male terminals) No. 4: ①

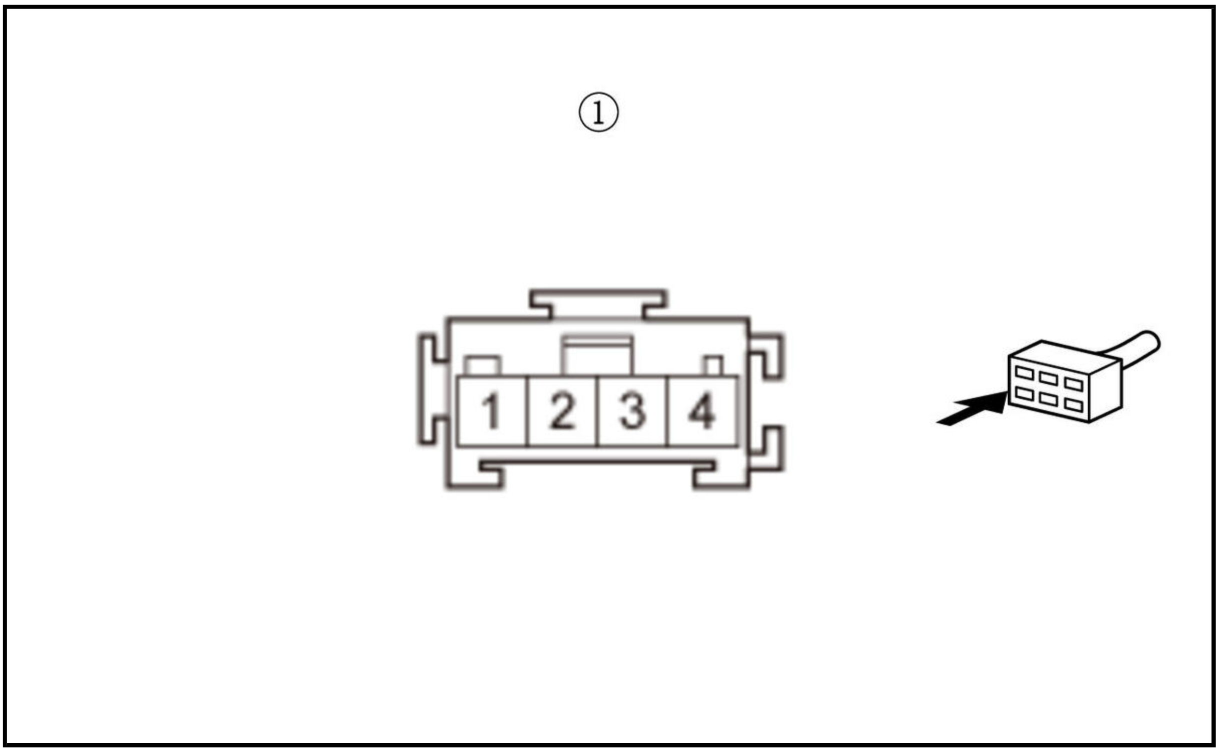

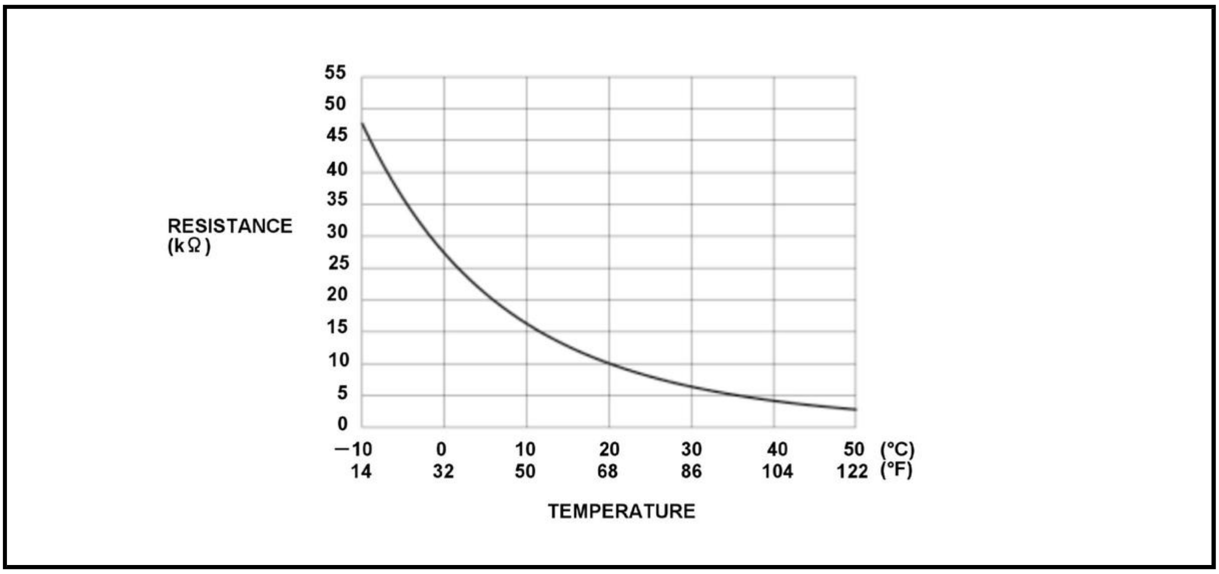

Is resistance value within the range?

YES

Go to step 4.

NO

Replace the driver's seat cushion heater .

4. Open wire check (TH+ DR line)

-1. Connect terminals A and B with a jumper wire.

Terminal A	Driver's seat heater connector A (4P) (female terminals) No. 3: ①
Terminal B	Body ground

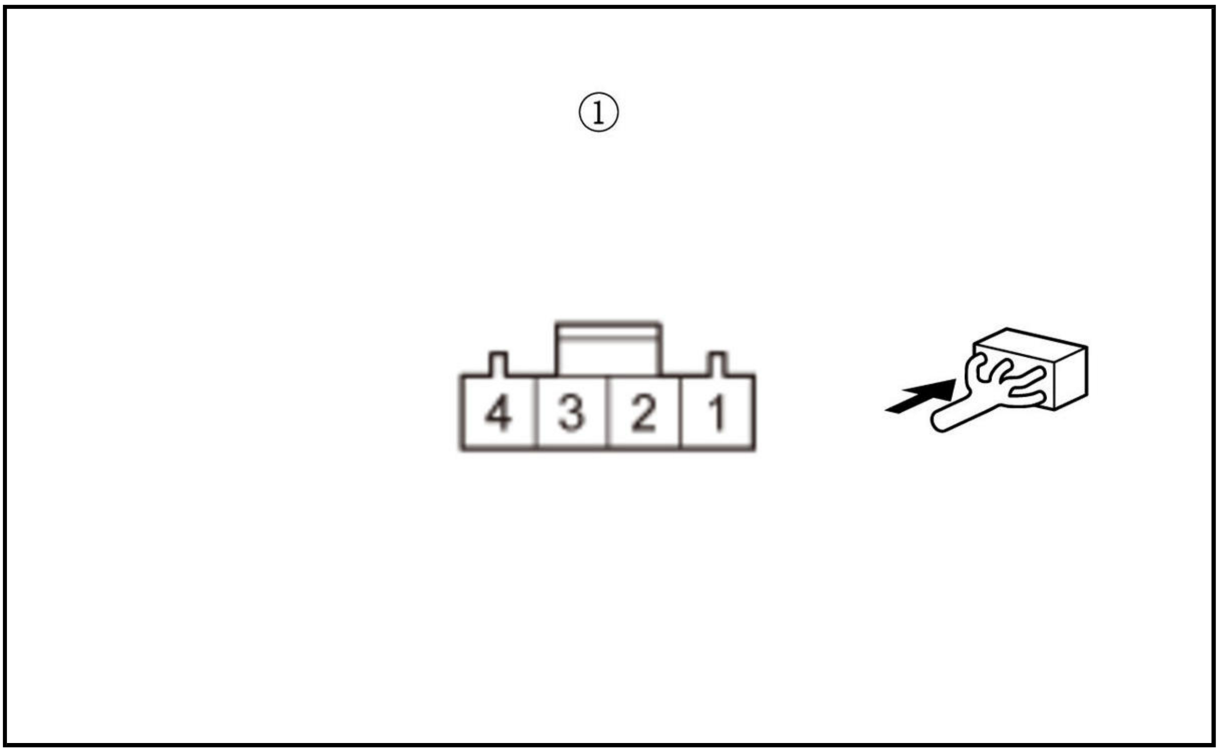

-2. Check for continuity between test points 1 and 2.

Test condition	Vehicle OFF (LOCK) mode Front seat heater control unit 24P connector: disconnected Driver's seat heater connector A (4P) : disconnected
Test point 1	**Front seat heater control unit 24P connector No. 12**
Test point 2	Body ground

Is there continuity?

YES

Repair an open or high resistance in the TH- DR wire.

NO

Repair an open or high resistance in the TH+ DR wire.

DTC B1C56

DTC B1C56 : Driver's heater thermistor circuit short

NOTE:

- If you are troubleshooting multiple DTCs, be sure to follow the instructions in **B-CAN System Diagnosis Test Mode A** .
- The front seat heater control unit does not turn on the front seat heater until the seat core temperature is 185B°F (85B°C) or less. Make sure the seat core temperature is below 185B°F (85B°C) before troubleshooting.

DTC Description	DTC
B1C56 Driver's heater thermistor circuit short	B

DTC (Front Seat Heater Control Unit)

1. Problem verification

-1. Clear the DTCs with the HDS.

-2. Turn the vehicle to the OFF (LOCK) mode and then the ON mode.

-3. Wait for at least 90 seconds.

-4. Check for DTCs with the HDS.

DTC Description	DTC
B1C56 Driver's heater thermistor circuit short	B

Is DTC B1C56 indicated?

YES

Go to step 2.

NO

Intermittent failure, the system is OK at this time. Check for loose or poor connections.

2. DTC check

-1. Turn the vehicle to the OFF (LOCK) mode.

-2. Disconnect the following connector.

Driver's seat heater connector A (4P)

-3. Turn the vehicle to the ON mode.

-4. Clear the DTCs with the HDS.

-5. Check for DTCs with the HDS.

DTC Description	DTC
B1C56 Driver's heater thermistor circuit short	B

Is DTC B1C56 indicated?

YES

Repair a short in the TH+ DR wire.

NO

Faulty driver's seat heater thermistor; **replace the driver's seat cushion heater** .

DTC B1C57

DTC B1C57 : Passenger's heater thermistor circuit open

NOTE:

- If you are troubleshooting multiple DTCs, be sure to follow the instructions in **B-CAN System Diagnosis Test Mode A** .
- The front seat heater control unit does not turn on the front seat heater until the seat core temperature is 185B°F (85B°C) or less. Make sure the seat core temperature is below 185B°F (85B°C) before troubleshooting.

DTC Description	DTC
B1C57 Passenger's heater thermistor circuit open	B

DTC (Front Seat Heater Control Unit)

1. Problem verification

   -1. Clear the DTCs with the HDS.

   -2. Turn the vehicle to the OFF (LOCK) mode and then the ON mode.

   -3. Wait for at least 90 seconds.

   -4. Check for DTCs with the HDS.

DTC Description	DTC
B1C57 Passenger's heater thermistor circuit open	B

Is DTC B1C57 indicated?

YES

Go to step 2.

NO

Intermittent failure, the system is OK at this time. Check for loose or poor connections.

2. Seat heater check 1

   -1. Disconnect the following connector.

Front seat heater control unit 24P connector

-2. Measure the resistance between test points 1 and 2, refer to the following table.

Test condition	Vehicle OFF (LOCK) mode Front seat heater control unit 24P connector: disconnected
Test point 1	**Front seat heater control unit 24P connector No. 13**
Test point 2	**Front seat heater control unit 24P connector No. 23**

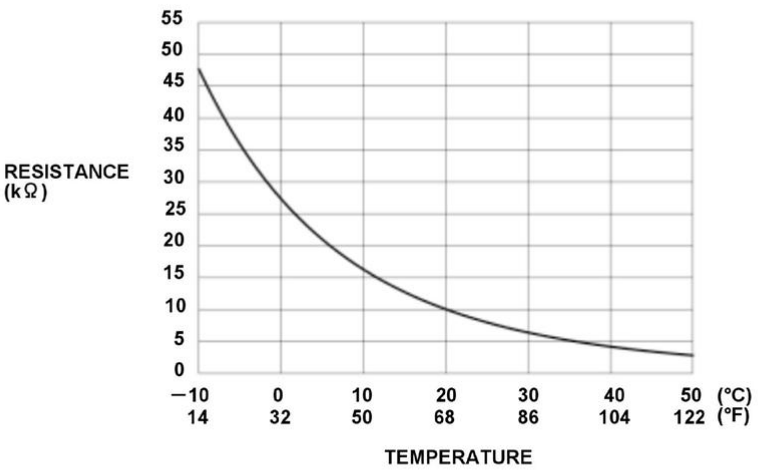

Is resistance value within the range?

YES

Replace the front seat heater control unit .

NO

Go to step 3.

3. Seat heater check 2

-1. Disconnect the following connector.

Front passenger's seat heater connector A (4P)

-2. Measure the resistance between test points 1 and 2, refer to the following table.

Test condition	Vehicle OFF (LOCK) mode Front seat heater control unit 24P connector: disconnected Front passenger's seat heater connector A (4P): disconnected
Test point 1	Front passenger's seat heater connector A (4P) (male terminals) No. 3: ①
Test point 2	Front passenger's seat heater connector A (4P) (male terminals) No. 4: ①

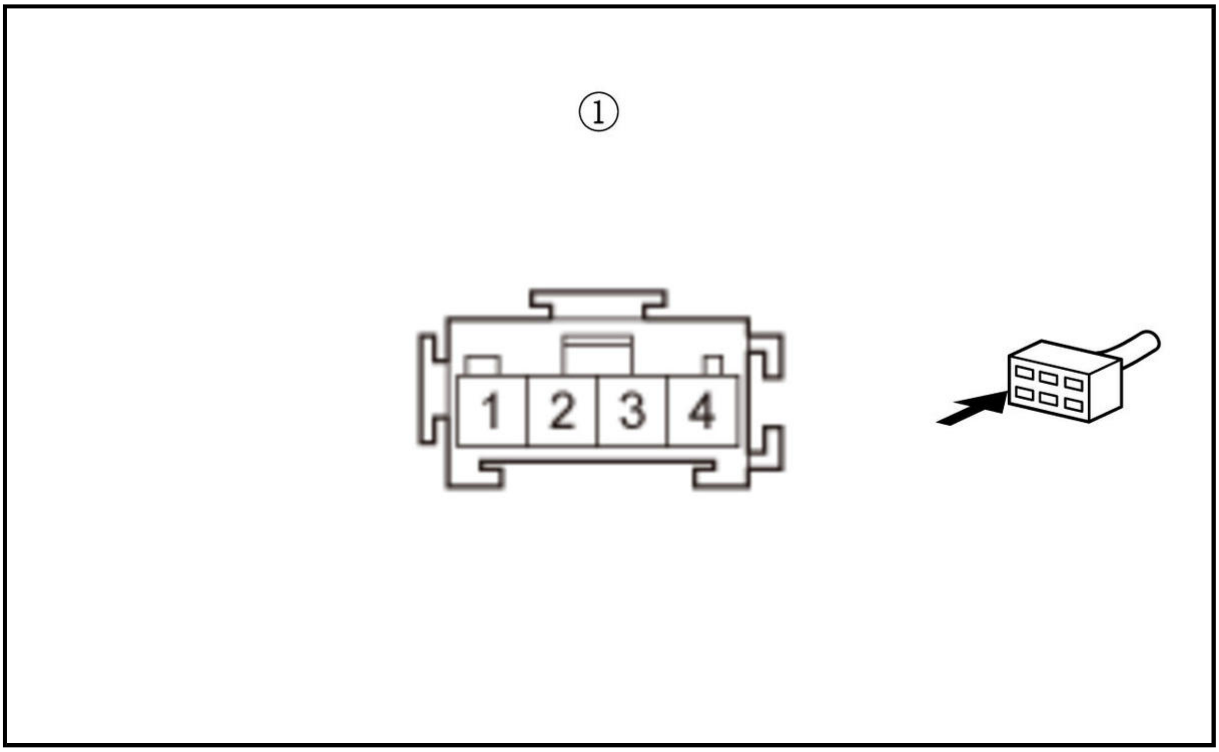

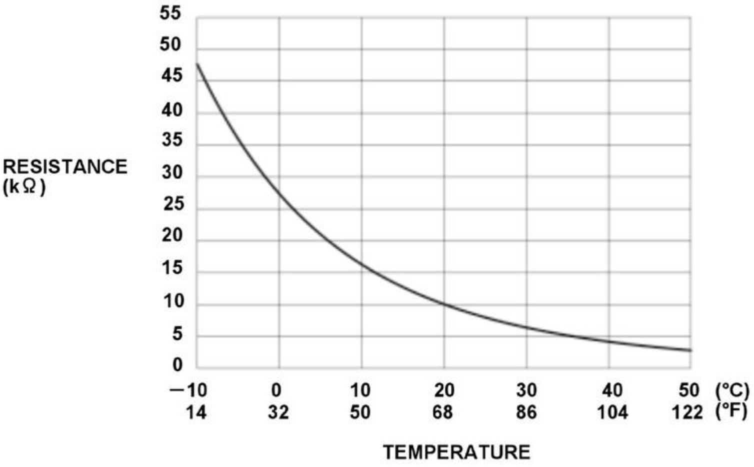

Is resistance value within the range?

YES

Go to step 4.

NO

Replace the front passenger's seat cushion heater .

4. Open wire check (TH+ AS line)

-1. Connect terminals A and B with a jumper wire.

Terminal A	Front passenger's seat heater connector A (4P) (female terminals) No. 3: ①
Terminal B	Body ground

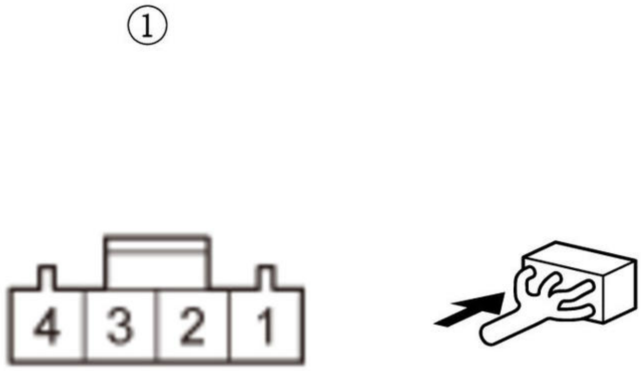

-2. Check for continuity between test points 1 and 2.

Test condition	Vehicle OFF (LOCK) mode Front seat heater control unit 24P connector: disconnected Front passenger's seat heater connector A (4P) : disconnected
Test point 1	**Front seat heater control unit 24P connector No. 13**
Test point 2	Body ground

Is there continuity?

YES

Repair an open or high resistance in the TH- AS wire.

NO

Repair an open or high resistance in the TH+ AS wire.

DTC B1C58

DTC B1C58 : Passenger's heater thermistor circuit short

NOTE:

- If you are troubleshooting multiple DTCs, be sure to follow the instructions in **B-CAN System Diagnosis Test Mode A** .
- The front seat heater control unit does not turn on the front seat heater until the seat core temperature is 185B°F (85B°C) or less. Make sure the seat core temperature is below 185B°F (85B°C) before troubleshooting.

DTC Description	DTC
B1C58 Passenger's heater thermistor circuit short	B

DTC (Front Seat Heater Control Unit)

1. Problem verification

   -1. Clear the DTCs with the HDS.

   -2. Turn the vehicle to the OFF (LOCK) mode and then the ON mode.

   -3. Wait for at least 90 seconds.

   -4. Check for DTCs with the HDS.

DTC Description	DTC
B1C58 Passenger's heater thermistor circuit short	B

   Is DTC B1C58 indicated?

   YES

   Go to step 2.

   NO

   Intermittent failure, the system is OK at this time. Check for loose or poor connections.

2. DTC check

   -1. Turn the vehicle to the OFF (LOCK) mode.

-2. Disconnect the following connector.

Front passenger's seat heater connector A (4P)

-3. Turn the vehicle to the ON mode.

-4. Clear the DTCs with the HDS.

-5. Check for DTCs with the HDS.

DTC Description	DTC
B1C58 Passenger's heater thermistor circuit short	B

Is DTC B1C58 indicated?

YES

Repair a short in the TH+ AS wire.

NO

Faulty front passenger's seat heater thermistor; **replace the front passenger's seat cushion heater** .

DTC B1C60

DTC B1C60 : Driver's heater current abnormal high

NOTE:

- If you are troubleshooting multiple DTCs, be sure to follow the instructions in **B-CAN System Diagnosis Test Mode A** .
- The front seat heater control unit does not turn on the front seat heater until the seat core temperature is 185B°F (85B°C) or less. Make sure the seat core temperature is below 185B°F (85B°C) before troubleshooting.

DTC Description	DTC
B1C60 Driver's heater current abnormal high	B

DTC (Front Seat Heater Control Unit)

1. Problem verification

-1. Clear the DTCs with the HDS.

-2. Turn the vehicle to the OFF (LOCK) mode and then the ON mode.

-3. Check for DTCs with the HDS.

DTC Description	DTC
B1C60 Driver's heater current abnormal high	B

Is DTC B1C60 indicated?

YES

Go to step 2.

NO

Intermittent failure, the system is OK at this time. Check for loose or poor connections.

2. DTC check 1

-1. Disconnect the following connector.

Driver's seat heater connector B (2P)

-2. Turn the vehicle to the ON mode.

-3. Clear the DTCs with the HDS.

-4. Check for DTCs with the HDS.

DTC Description	DTC
B1C60 Driver's heater current abnormal high	B

Is DTC B1C60 indicated?

YES

Go to step 3.

NO

Replace the driver's seat-back heater .

3. DTC check 2

-1. Disconnect the following connector.

Driver's seat heater connector A (4P)

-2. Turn the vehicle to the ON mode.

-3. Clear the DTCs with the HDS.

-4. Check for DTCs with the HDS.

DTC Description	DTC
B1C60 Driver's heater current abnormal high	B

Is DTC B1C60 indicated?

YES

Go to step 4.

NO

Replace the driver's seat cushion heater .

4. Shorted wire check (HEATER DR line)

-1. Disconnect the following connector.

Front seat heater control unit 24P connector

-2. Check for continuity between test points 1 and 2.

Test condition	Vehicle OFF (LOCK) mode Front seat heater control unit 24P connector: disconnected Driver's seat heater connector A (4P): disconnected
Test point 1	Front seat heater control unit 24P connector No. 1
Test point 2	Body ground

Is there continuity?

YES

Repair a short in the wire.

NO

Replace the front seat heater control unit .

DTC B1C61

DTC B1C61 : Driver's heater current abnormal low

NOTE:

- If you are troubleshooting multiple DTCs, be sure to follow the instructions in B-CAN System Diagnosis Test Mode A .
- The front seat heater control unit does not turn on the front seat heater until the seat core temperature is 185B°F (85B°C) or less. Make sure the seat core temperature is below 185B°F (85B°C) before troubleshooting.

DTC Description	DTC
B1C61 Driver's heater current abnormal low	B

DTC (Front Seat Heater Control Unit)

1. Problem verification

   -1. Clear the DTCs with the HDS.

   -2. Turn the vehicle to the OFF (LOCK) mode and then the ON mode.

   -3. Check for DTCs with the HDS.

DTC Description	DTC
B1C61 Driver's heater current abnormal low	B

   Is DTC B1C61 indicated?

   YES

   Go to step 2.

   NO

   Intermittent failure, the system is OK at this time. Check for loose or poor connections.

2. DTC check

   -1. Turn the vehicle to the OFF (LOCK) mode.

   -2. Disconnect the following connector.

Driver's seat heater connector A (4P)

-3. Connect terminals A and B with a jumper wire.

Terminal A	Driver's seat heater connector A (4P) (female terminals) No. 3: ①
Terminal B	Body ground

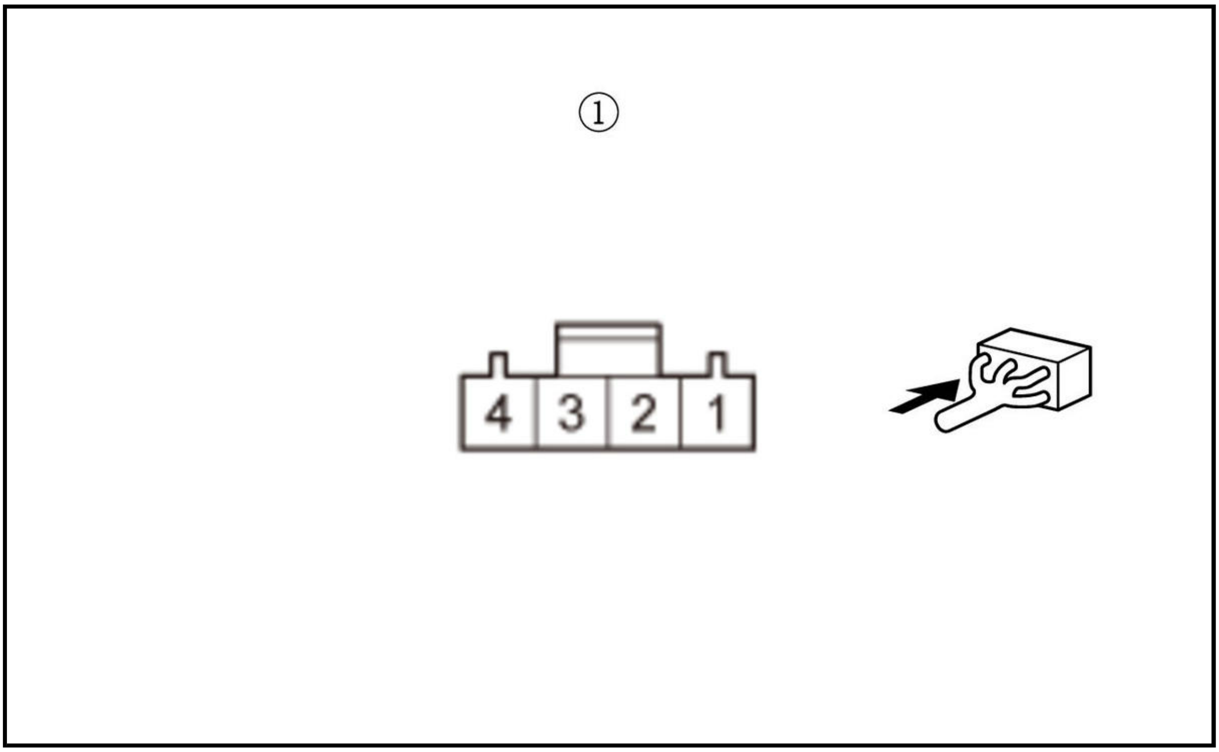

-4. Turn the vehicle to the ON mode.

-5. Clear the DTCs with the HDS.

-6. Check for DTCs with the HDS.

DTC Description	DTC
B1C61 Driver's heater current abnormal low	B

Is DTC B1C61 indicated?

YES

Repair an open or high resistance in the HEATER DR wire.

NO

Go to step 3.

3. Seat heater check

-1. **Test the driver's seat heater** .

Are the driver's seat cushion heater and driver's seat-back heater OK?

YES

Replace the front seat heater control unit .

NO

Replace the driver's seat cushion heater and/or the driver's seat-back heater .

DTC B1C62

DTC B1C62 : Passenger's heater current abnormal high

NOTE:

- If you are troubleshooting multiple DTCs, be sure to follow the instructions in **B-CAN System Diagnosis Test Mode A** .
- The front seat heater control unit does not turn on the front seat heater until the seat core temperature is 185B°F (85B°C) or less. Make sure the seat core temperature is below 185B°F (85B°C) before troubleshooting.

DTC Description	DTC
B1C62 Passenger's heater current abnormal high	B

DTC (Front Seat Heater Control Unit)

1. Problem verification

-1. Clear the DTCs with the HDS.

-2. Turn the vehicle to the OFF (LOCK) mode and then the ON mode.

-3. Check for DTCs with the HDS.

DTC Description	DTC
B1C62 Passenger's heater current abnormal high	B

Is DTC B1C62 indicated?

YES

Go to step 2.

NO

Intermittent failure, the system is OK at this time. Check for loose or poor connections.

2. DTC check 1

-1. Disconnect the following connector.

Front passenger's seat heater connector B (2P)

-2. Turn the vehicle to the ON mode.

-3. Clear the DTCs with the HDS.

-4. Check for DTCs with the HDS.

DTC Description	DTC
B1C62 Passenger's heater current abnormal high	B

Is DTC B1C62 indicated?

YES

Go to step 3.

NO

Replace the front passenger's seat-back heater .

3. DTC check 2

-1. Disconnect the following connector.

Front passenger's seat heater connector A (4P)

-2. Turn the vehicle to the ON mode.

-3. Clear the DTCs with the HDS.

-4. Check for DTCs with the HDS.

DTC Description	DTC
B1C62 Passenger's heater current abnormal high	B

Is DTC B1C62 indicated?

YES

Go to step 4.

NO

Replace the front passenger's seat cushion heater .

4. Shorted wire check (AS H/SEAT LO RLY COM line)

-1. Disconnect the following connector.

Front seat heater control unit 24P connector

-2. Check for continuity between test points 1 and 2.

Test condition	Vehicle OFF (LOCK) mode Front seat heater control unit 24P connector: disconnected Front passenger's seat heater connector A (4P): disconnected
Test point 1	**Front seat heater control unit 24P connector No. 3**
Test point 2	Body ground

Is there continuity?

YES

Repair a short in the wire.

NO

Replace the front seat heater control unit .

DTC B1C63

DTC B1C63 : Passenger's heater current abnormal low

NOTE:

- If you are troubleshooting multiple DTCs, be sure to follow the instructions in **B-CAN System Diagnosis Test Mode A** .
- The front seat heater control unit does not turn on the front seat heater until the seat core temperature is 185B°F (85B°C) or less. Make sure the seat core temperature is below 185B°F (85B°C) before troubleshooting.

DTC Description	DTC
B1C63 Passenger's heater current abnormal low	B

DTC (Front Seat Heater Control Unit)

1. Problem verification

   -1. Clear the DTCs with the HDS.

   -2. Turn the vehicle to the OFF (LOCK) mode and then the ON mode.

   -3. Check for DTCs with the HDS.

DTC Description	DTC
B1C63 Passenger's heater current abnormal low	B

   Is DTC B1C63 indicated?

   YES

   Go to step 2.

   NO

   Intermittent failure, the system is OK at this time. Check for loose or poor connections.

2. DTC check

   -1. Turn the vehicle to the OFF (LOCK) mode.

   -2. Disconnect the following connector.

Front passenger's seat heater connector A (4P)

   -3. Connect terminals A and B with a jumper wire.

Terminal A	Front passenger's seat heater connector A (4P) (female terminals) No. 3: ①
Terminal B	Body ground

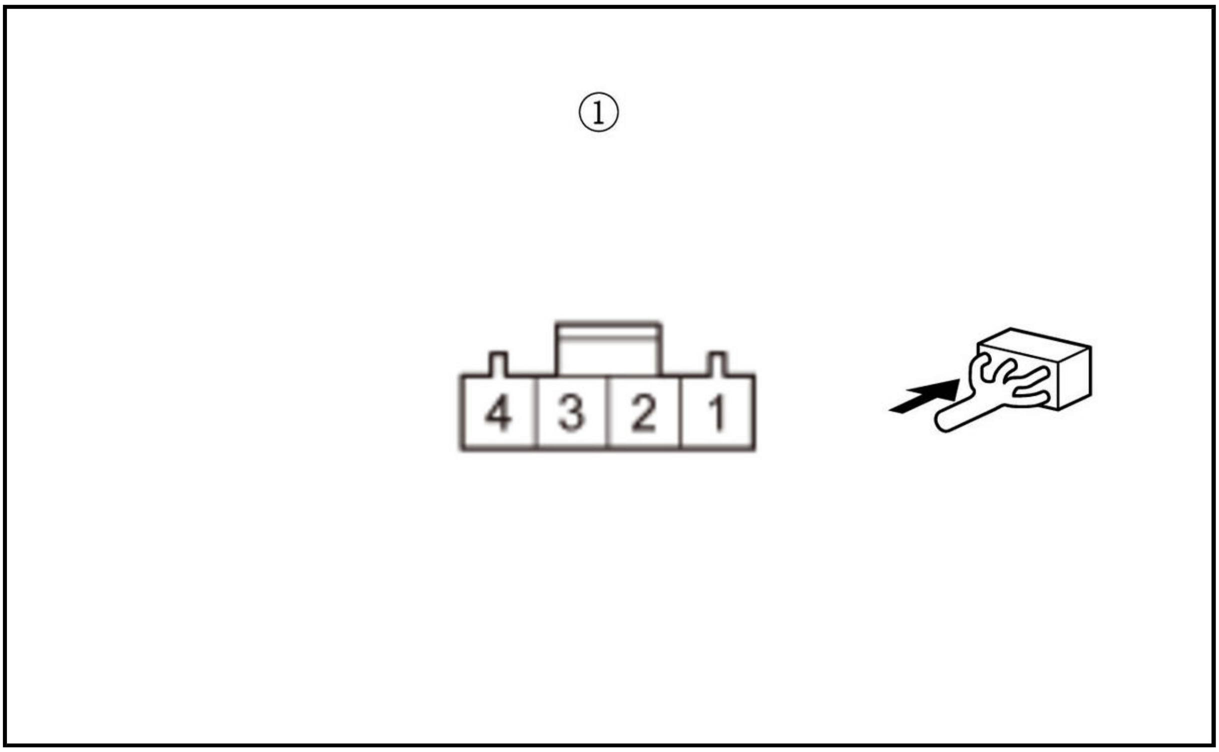

-4. Turn the vehicle to the ON mode.

-5. Clear the DTCs with the HDS.

-6. Check for DTCs with the HDS.

DTC Description	DTC
B1C63 Passenger's heater current abnormal low	B

Is DTC B1C63 indicated?

YES

Repair an open or high resistance in the AS H/SEAT LO RLY COM wire.

NO

Go to step 3.

3. Seat heater check

-1. **Test the driver's seat heater** .

Are the driver's seat cushion heater and driver's seat-back heater OK?

YES

Replace the front seat heater control unit .

NO

Replace the front passenger's seat cushion heater and/or the front passenger's seat-back heater .

DTC B1C68

DTC B1C68 : Driver's heater not heating

NOTE:

- If you are troubleshooting multiple DTCs, be sure to follow the instructions in B-CAN System Diagnosis Test Mode A .
- The front seat heater control unit does not turn on the front seat heater until the seat core temperature is 185B°F (85B°C) or less. Make sure the seat core temperature is below 185B°F (85B°C) before troubleshooting.

DTC Description	DTC
B1C68 Driver's heater not heating	B

DTC (Front Seat Heater Control Unit)

1. Problem verification

   -1. Clear the DTCs with the HDS.

   -2. Turn the vehicle to the OFF (LOCK) mode and then the ON mode.

   -3. Check for DTCs with the HDS.

DTC Description	DTC
B1C68 Driver's heater not heating	B

   Is DTC B1C68 indicated?

   YES

   Go to step 2.

   NO

   Intermittent failure, the system is OK at this time. Check for loose or poor connections.

2. DTC check

   -1. Check for DTCs with the HDS.

DTC Description	DTC
B1C55 Driver's heater thermistor circuit open	B
B1C56 Driver's heater thermistor circuit short	B
B1C60 Driver's heater current abnormal high	B
B1C61 Driver's heater current abnormal low	B

   Are DTCs B1C55, B1C56, B1C60, and/or B1C61 indicated?

   YES: DTC B1C55 is indicated

   Go to DTC B1C55 troubleshooting.

   YES: DTC B1C56 is indicated

   Go to DTC B1C56 troubleshooting.

   YES: DTC B1C60 is indicated

   Go to DTC B1C60 troubleshooting.

   YES: DTC B1C61 is indicated

Go to DTC B1C61 troubleshooting.

NO

Replace the driver's seat cushion heater .

DTC B1C69

DTC B1C69 : Passenger's heater not heating

NOTE:

- If you are troubleshooting multiple DTCs, be sure to follow the instructions in B-CAN System Diagnosis Test Mode A .
- The front seat heater control unit does not turn on the front seat heater until the seat core temperature is 185B°F (85B°C) or less. Make sure the seat core temperature is below 185B°F (85B°C) before troubleshooting.

DTC Description	DTC
B1C69 Passenger's heater not heating	B

DTC (Front Seat Heater Control Unit)

1. Problem verification

   -1. Clear the DTCs with the HDS.

   -2. Turn the vehicle to the OFF (LOCK) mode and then the ON mode.

   -3. Check for DTCs with the HDS.

DTC Description	DTC
B1C69 Passenger's heater not heating	B

   Is DTC B1C69 indicated?

   YES

   Go to step 2.

   NO

   Intermittent failure, the system is OK at this time. Check for loose or poor connections.

2. DTC check

   -1. Check for DTCs with the HDS.

DTC Description	DTC
B1C57 Passenger's heater thermistor circuit open	B
B1C58 Passenger's heater thermistor circuit short	B
B1C62 Passenger's heater current abnormal high	B
B1C63 Passenger's heater current abnormal low	B

   Are DTCs B1C57, B1C58, B1C62, and/or B1C63 indicated?

   YES: DTC B1C57 is indicated

Go to DTC B1C57 troubleshooting.

YES: DTC B1C58 is indicated

Go to DTC B1C58 troubleshooting.

YES: DTC B1C62 is indicated

Go to DTC B1C62 troubleshooting.

YES: DTC B1C63 is indicated

Go to DTC B1C63 troubleshooting.

NO

Replace the front passenger's seat cushion heater .

DTC B1C70

DTC B1C70 : Driver's main heater switch failure

NOTE:

- If you are troubleshooting multiple DTCs, be sure to follow the instructions in B-CAN System Diagnosis Test Mode A .
- The front seat heater control unit does not turn on the front seat heater until the seat core temperature is 185B°F (85B°C) or less. Make sure the seat core temperature is below 185B°F (85B°C) before troubleshooting.

DTC Description	DTC
B1C70 Driver's main heater switch failure	B

DTC (Front Seat Heater Control Unit)

1. Problem verification

   -1. Clear the DTCs with the HDS.

   -2. Turn the vehicle to the OFF (LOCK) mode and then the ON mode.

   -3. Check for DTCs with the HDS.

DTC Description	DTC
B1C70 Driver's main heater switch failure	B

   Is DTC B1C70 indicated?

   YES

   Replace the front seat heater control unit .

   NO

   Intermittent failure, the system is OK at this time. Check for loose or poor connections.

DTC B1C71

DTC B1C71 : Passenger's main heater switch failure

NOTE:

- If you are troubleshooting multiple DTCs, be sure to follow the instructions in **B-CAN System Diagnosis Test Mode A** .
- The front seat heater control unit does not turn on the front seat heater until the seat core temperature is 185B°F (85B°C) or less. Make sure the seat core temperature is below 185B°F (85B°C) before troubleshooting.

DTC Description	DTC
B1C71 Passenger's main heater switch failure	B

DTC (Front Seat Heater Control Unit)

1. Problem verification

   -1. Clear the DTCs with the HDS.

   -2. Turn the vehicle to the OFF (LOCK) mode and then the ON mode.

   -3. Check for DTCs with the HDS.

DTC Description	DTC
B1C71 Passenger's main heater switch failure	B

   Is DTC B1C71 indicated?

   YES

   Replace the front seat heater control unit .

   NO

   Intermittent failure, the system is OK at this time. Check for loose or poor connections.

DTC U1064 (FRONT SEAT HEATER CONTROL UNIT)

DTC U1064 : Seat heater control unit lost communication with climate control unit

NOTE:

- If you are troubleshooting multiple DTCs, be sure to follow the instructions in **B-CAN System Diagnosis Test Mode A** .
- Refer to the DTC code shown on the display, and then inspect the connectors and terminals based on the instructions in the table below.
- The DTC may be stored due to the grounding failure or the power source failure at the transmitting control unit (the grounding inspection and the power source inspection on each control unit are required prior to this checking process).
- The front seat heater control unit does not turn on the front seat heater until the seat core temperature is 185B°F (85B°C) or less. Make sure the seat core temperature is below 185B°F (85B°C) before troubleshooting.

DTC Description	DTC
U1064 Seat heater control unit lost communication with climate control unit	B

DTC (Front Seat Heater Control Unit)

1. Problem verification

-1. Clear the DTC with the HDS.

-2. Turn the vehicle to the OFF (LOCK) mode and then the ON mode.

-3. Wait for at least 6 seconds.

-4. Check for DTCs with the HDS.

DTC Description	DTC
U1064 Seat heater control unit lost communication with climate control unit	B

Are any DTCs indicated?

YES

Go to step 2.

NO

Intermittent failure, the system is OK at this time. Check for poor connections or loose terminals.

2. Open wire check (B-CAN_H line, B-CAN_L line)

-1. Turn the vehicle to the OFF (LOCK) mode.

-2. Disconnect the receiving control unit connector.

Front seat heater control unit 24P connector

-3. Disconnect the transmitting control unit connector(s).

Refer to the DTC shown on the display, then disconnect the connector(s) based on the instructions (see table).

DTC	Connector
U1064	Climate control unit connector A (32P)

-4. Check for continuity between the receiving control unit and the transmitting control unit on the B-CAN_H circuit and the B-CAN_L circuit.

Test condition	Vehicle OFF (LOCK) mode Front seat heater control unit 24P connector: disconnectedTransmitting control unit connector(s) for indicated DTCs: disconnected

DTC	Circuit name	Receiving control unit		Transmitting control unit	
		Connector	Terminal	Connector	Terminal
U1064	B-CAN_H	**Front seat heater control unit 24P connector**	No. 10	**Climate control unit connector A (32P)**	No. 25
	B-CAN_L		No. 9		No. 8

Is there continuity?

YES

The B-CAN_H wire and the B-CAN_L wire are OK.Refer to the DTC shown on the display, then replace the control unit based on the instructions (see chart below).

DTC	Operation for transmitting control unit
U1064	**Climate control unit**

NO

Repair an open in the B-CAN_H wire and/or the B-CAN_L wire.

DTC U1280 (FRONT SEAT HEATER CONTROL UNIT)

DTC U1280 : Seat heater control unit communication bus line error (BUS-OFF)

NOTE:

- If you are troubleshooting multiple DTCs, be sure to follow the instructions in **B-CAN System Diagnosis Test Mode A** .
- The front seat heater control unit does not turn on the front seat heater until the seat core temperature is 185B°F (85B°C) or less. Make sure the seat core temperature is below 185B°F (85B°C) before troubleshooting.

DTC Description	DTC
U1280 Seat heater control unit communication bus line error (BUS-OFF)	B

DTC (Front Seat Heater Control Unit)

1. Problem verification

   -1. Clear the DTCs with the HDS.

   -2. Turn the vehicle to the OFF (LOCK) mode and then the ON mode.

   -3. Wait for at least 6 seconds.

   -4. Check for DTCs with the HDS.

DTC Description	DTC
U1280 Seat heater control unit communication bus line error (BUS-OFF)	B

   Is DTC U1280 indicated?

   YES

   Go to body control module DTC U1280 troubleshooting .

   NO

   Intermittent failure, the system is OK at this time. Check for loose or poor connections.

DTC TROUBLESHOOTING

DTC B1C55

DTC B1C55 : Driver's heater thermistor circuit open

NOTE:

- If you are troubleshooting multiple DTCs, be sure to follow the instructions in **B-CAN System Diagnosis Test Mode A** .
- The front seat heater control unit does not turn on the front seat heater until the seat core temperature is 185B°F (85B°C) or less. Make sure the seat core temperature is below 185B°F (85B°C) before troubleshooting.

DTC Description	DTC
B1C55 Driver's heater thermistor circuit open	B

DTC (Front Seat Heater Control Unit)

1. Problem verification

   -1. Clear the DTCs with the HDS.

   -2. Turn the vehicle to the OFF (LOCK) mode and then the ON mode.

   -3. Wait for at least 90 seconds.

   -4. Check for DTCs with the HDS.

DTC Description	DTC
B1C55 Driver's heater thermistor circuit open	B

   Is DTC B1C55 indicated?

   YES

   Go to step 2.

   NO

   Intermittent failure, the system is OK at this time. Check for loose or poor connections.

2. Seat heater check 1

   -1. Disconnect the following connector.

Front seat heater control unit 24P connector

   -2. Measure the resistance between test points 1 and 2, refer to the following table.

Test condition	Vehicle OFF (LOCK) mode Front seat heater control unit 24P connector: disconnected
Test point 1	**Front seat heater control unit 24P connector No. 12**

Test point 2	Front seat heater control unit 24P connector No. 22

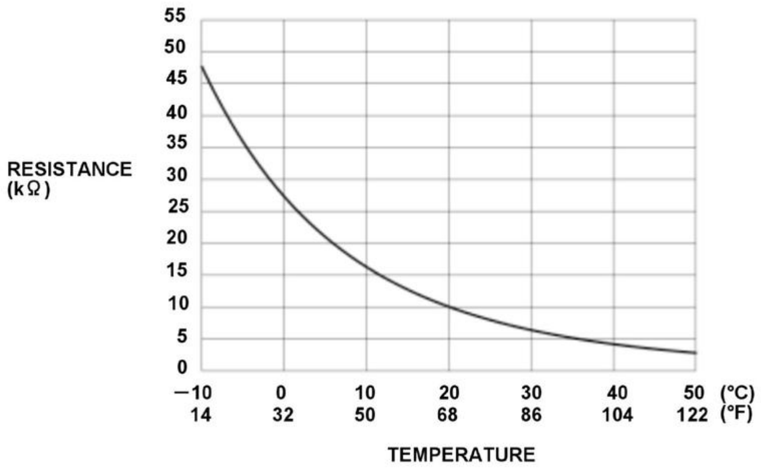

Is resistance value within the range?

YES

Replace the front seat heater control unit .

NO

Go to step 3.

3. Seat heater check 2

-1. Disconnect the following connector.

Driver's seat heater connector A (4P)

-2. Measure the resistance between test points 1 and 2, refer to the following table.

Test condition	Vehicle OFF (LOCK) mode Front seat heater control unit 24P connector: disconnected Driver's seat heater connector A (4P): disconnected
Test point 1	Driver's seat heater connector A (4P) (male terminals) No. 3: ①
Test point 2	Driver's seat heater connector A (4P) (male terminals) No. 4: ①

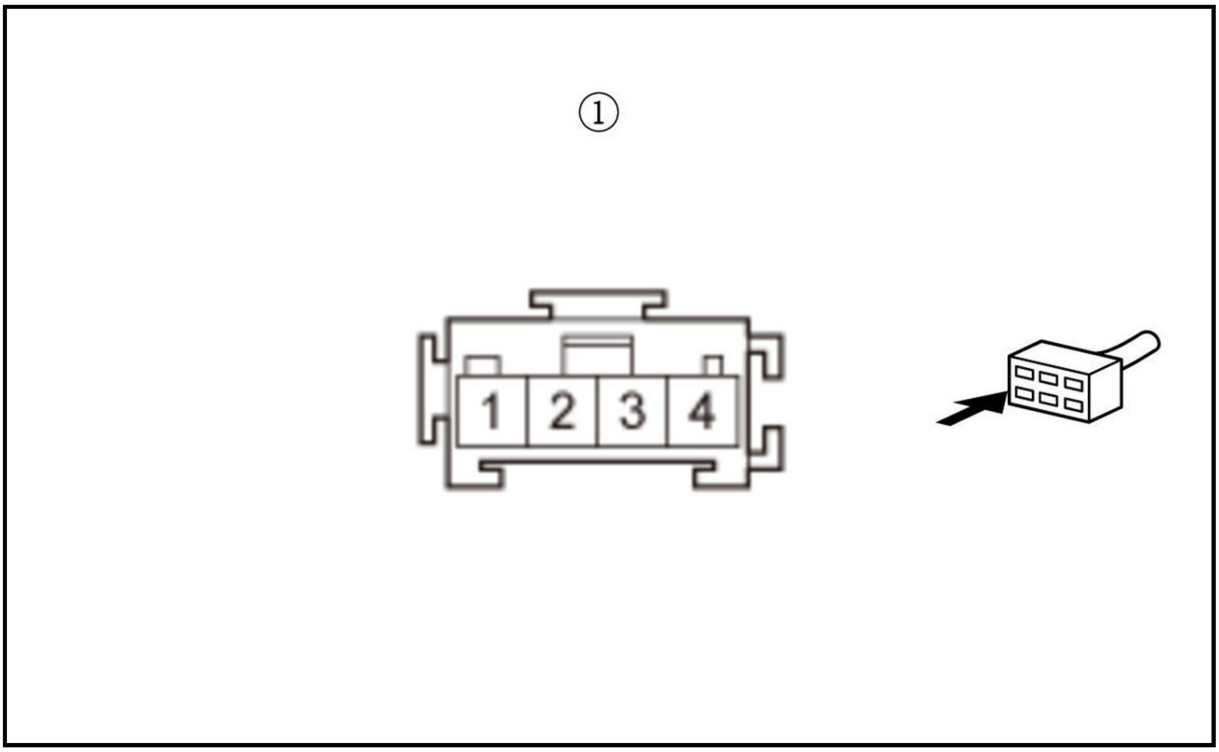

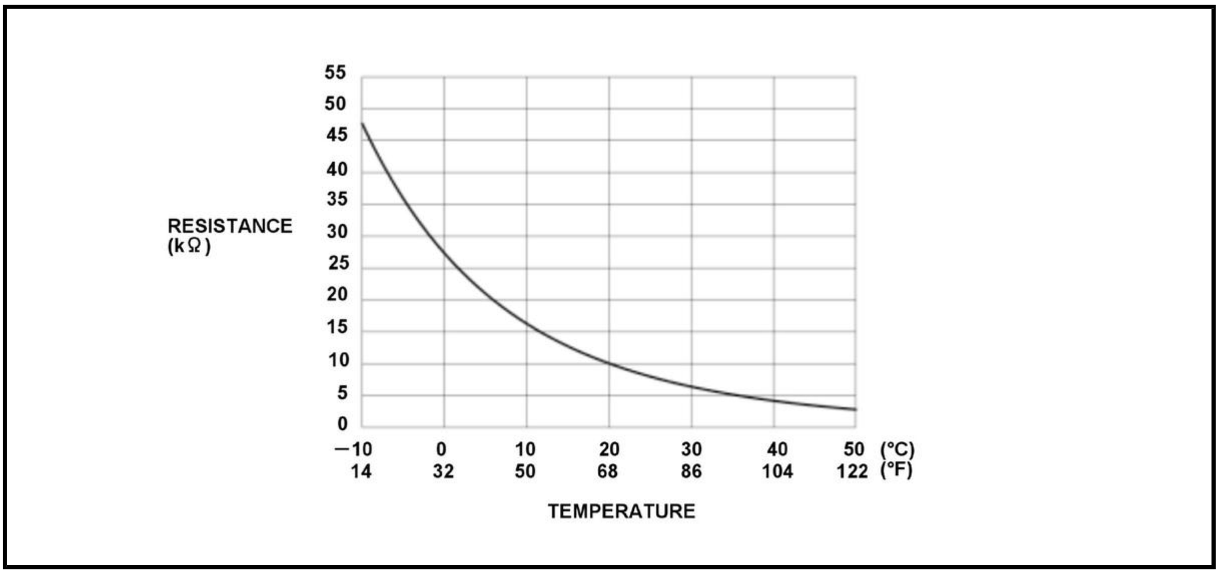

Is resistance value within the range?

YES

Go to step 4.

NO

Replace the driver's seat cushion heater .

4. Open wire check (TH+_DR line)

-1. Connect terminals A and B with a jumper wire.

Terminal A	Driver's seat heater connector A (4P) (female terminals) No. 3: ①
Terminal B	Body ground

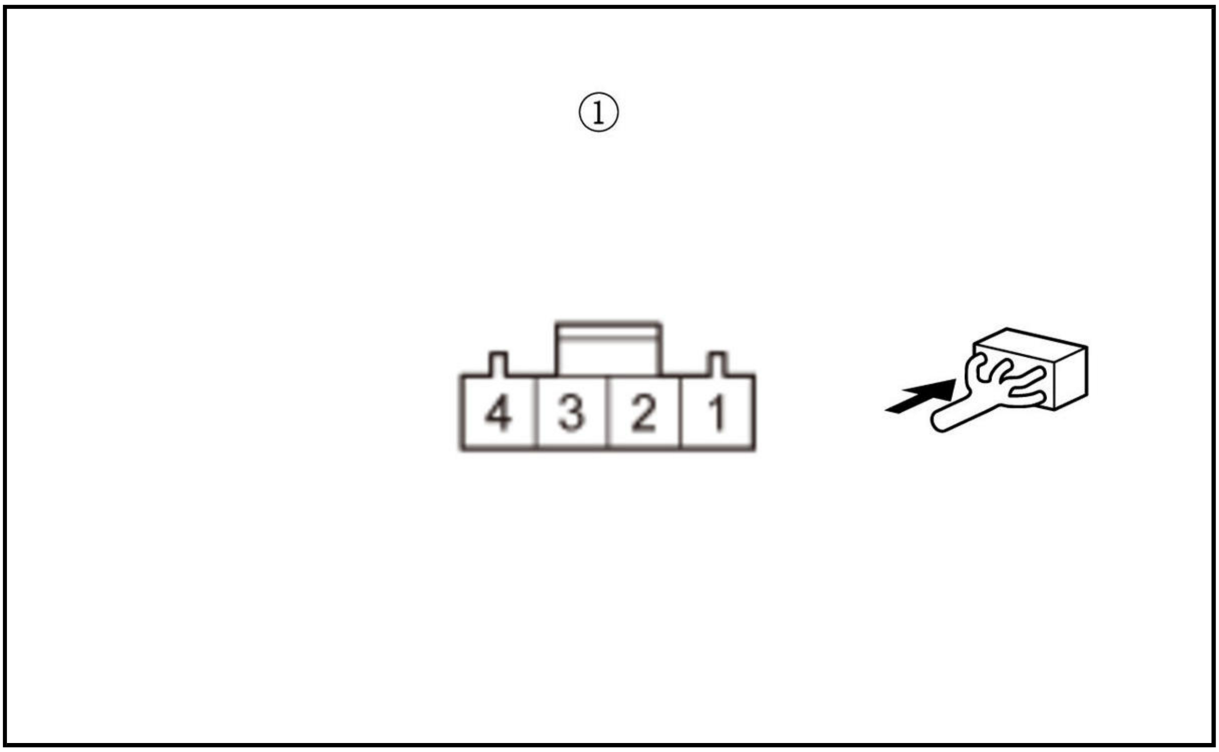

-2. Measure the resistance between test points 1 and 2.

Test condition	Vehicle OFF (LOCK) mode Front seat heater control unit 24P connector: disconnected Driver's seat heater connector A (4P) : disconnected
Test point 1	**Front seat heater control unit 24P connector No. 12**
Test point 2	Body ground

Is there 1.0 Ω or less?

YES

Repair an open or high resistance in the TH-_DR wire.

NO

Repair an open or high resistance in the TH+_DR wire.

DTC B1C56

DTC B1C56 : Driver's heater thermistor circuit short

NOTE:

- If you are troubleshooting multiple DTCs, be sure to follow the instructions in **B-CAN System Diagnosis Test Mode A** .
- The front seat heater control unit does not turn on the front seat heater until the seat core temperature is 185B°F (85B°C) or less. Make sure the seat core temperature is below 185B°F (85B°C) before troubleshooting.

DTC Description	DTC
B1C56 Driver's heater thermistor circuit short	B

DTC (Front Seat Heater Control Unit)

1. Problem verification

-1. Clear the DTCs with the HDS.

-2. Turn the vehicle to the OFF (LOCK) mode and then the ON mode.

-3. Wait for at least 90 seconds.

-4. Check for DTCs with the HDS.

DTC Description	DTC
B1C56 Driver's heater thermistor circuit short	B

Is DTC B1C56 indicated?

YES

Go to step 2.

NO

Intermittent failure, the system is OK at this time. Check for loose or poor connections.

2. DTC check

-1. Turn the vehicle to the OFF (LOCK) mode.

-2. Disconnect the following connector.

Driver's seat heater connector A (4P)

-3. Turn the vehicle to the ON mode.

-4. Clear the DTCs with the HDS.

-5. Check for DTCs with the HDS.

DTC Description	DTC
B1C56 Driver's heater thermistor circuit short	B

Is DTC B1C56 indicated?

YES

Repair a short in the TH+_DR wire.

NO

Faulty driver's seat heater thermistor; **replace the driver's seat cushion heater** .

DTC B1C57

DTC B1C57 : Passenger's heater thermistor circuit open

NOTE:

- If you are troubleshooting multiple DTCs, be sure to follow the instructions in **B-CAN System Diagnosis Test Mode A** .
- The front seat heater control unit does not turn on the front seat heater until the seat core temperature is 185B°F (85B°C) or less. Make sure the seat core temperature is below 185B°F (85B°C) before troubleshooting.

DTC Description	DTC
B1C57 Passenger's heater thermistor circuit open	B

DTC (Front Seat Heater Control Unit)

1. Problem verification

   -1. Clear the DTCs with the HDS.

   -2. Turn the vehicle to the OFF (LOCK) mode and then the ON mode.

   -3. Wait for at least 90 seconds.

   -4. Check for DTCs with the HDS.

DTC Description	DTC
B1C57 Passenger's heater thermistor circuit open	B

Is DTC B1C57 indicated?

YES

Go to step 2.

NO

Intermittent failure, the system is OK at this time. Check for loose or poor connections.

2. Seat heater check 1

   -1. Disconnect the following connector.

Front seat heater control unit 24P connector

-2. Measure the resistance between test points 1 and 2, refer to the following table.

Test condition	Vehicle OFF (LOCK) mode Front seat heater control unit 24P connector: disconnected
Test point 1	**Front seat heater control unit 24P connector No. 13**
Test point 2	**Front seat heater control unit 24P connector No. 23**

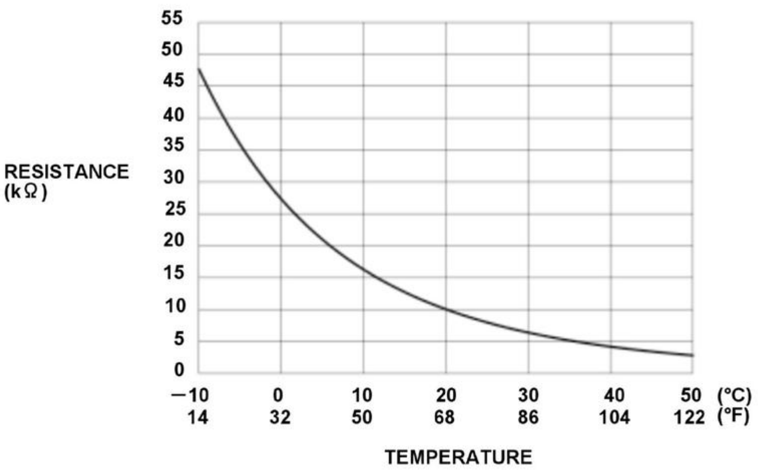

Is resistance value within the range?

YES

Replace the front seat heater control unit .

NO

Go to step 3.

3. Seat heater check 2

-1. Disconnect the following connector.

Front passenger's seat heater connector A (4P)

-2. Measure the resistance between test points 1 and 2, refer to the following table.

Test condition	Vehicle OFF (LOCK) mode Front seat heater control unit 24P connector: disconnected Front passenger's seat heater connector A (4P): disconnected
Test point 1	Front passenger's seat heater connector A (4P) (male terminals) No. 3: ①
Test point 2	Front passenger's seat heater connector A (4P) (male terminals) No. 4: ①

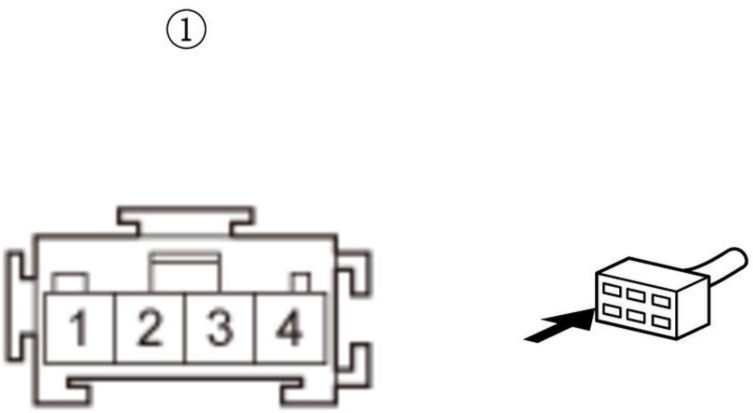

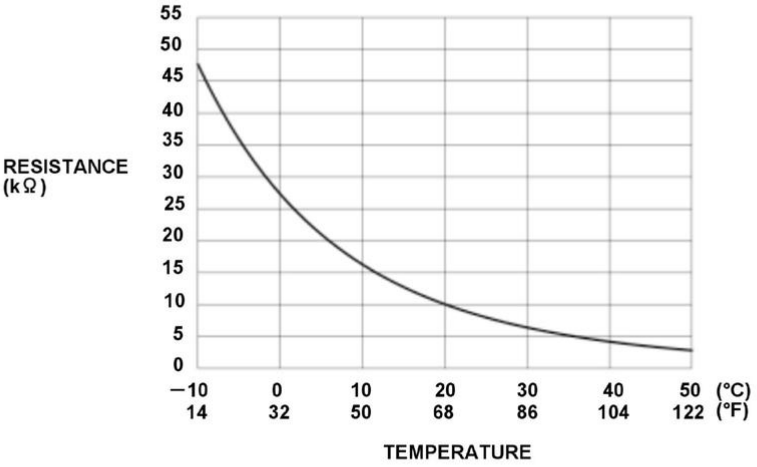

Is resistance value within the range?

YES

Go to step 4.

NO

Replace the front passenger's seat cushion heater .

4. Open wire check (TH+_AS line)

-1. Connect terminals A and B with a jumper wire.

Terminal A	Front passenger's seat heater connector A (4P) (female terminals) No. 3: ①
Terminal B	Body ground

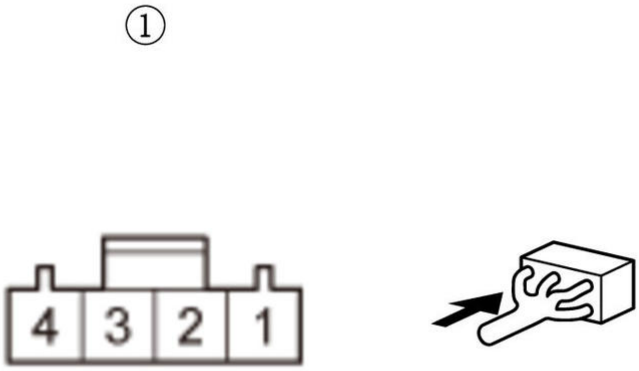

-2. Measure the resistance between test points 1 and 2.

Test condition	Vehicle OFF (LOCK) mode Front seat heater control unit 24P connector: disconnected Front passenger's seat heater connector A (4P) : disconnected
Test point 1	**Front seat heater control unit 24P connector No. 13**
Test point 2	Body ground

Is there 1.0 Ω or less?

YES

Repair an open or high resistance in the TH-_AS wire.

NO

Repair an open or high resistance in the TH+_AS wire.

DTC B1C58

DTC B1C58 : Passenger's heater thermistor circuit short

NOTE:

- If you are troubleshooting multiple DTCs, be sure to follow the instructions in **B-CAN System Diagnosis Test Mode A** .
- The front seat heater control unit does not turn on the front seat heater until the seat core temperature is 185B°F (85B°C) or less. Make sure the seat core temperature is below 185B°F (85B°C) before troubleshooting.

DTC Description	DTC
B1C58 Passenger's heater thermistor circuit short	B

DTC (Front Seat Heater Control Unit)

1. Problem verification

   -1. Clear the DTCs with the HDS.

   -2. Turn the vehicle to the OFF (LOCK) mode and then the ON mode.

   -3. Wait for at least 90 seconds.

   -4. Check for DTCs with the HDS.

DTC Description	DTC
B1C58 Passenger's heater thermistor circuit short	B

   Is DTC B1C58 indicated?

   YES

   Go to step 2.

   NO

   Intermittent failure, the system is OK at this time. Check for loose or poor connections.

2. DTC check

-1. Turn the vehicle to the OFF (LOCK) mode.

-2. Disconnect the following connector.

Front passenger's seat heater connector A (4P)

-3. Turn the vehicle to the ON mode.

-4. Clear the DTCs with the HDS.

-5. Check for DTCs with the HDS.

DTC Description	DTC
B1C58 Passenger's heater thermistor circuit short	B

Is DTC B1C58 indicated?

YES

Repair a short in the TH+_AS wire.

NO

Faulty front passenger's seat heater thermistor; **replace the front passenger's seat cushion heater** .

DTC B1C60

DTC B1C60 : Driver's heater current abnormal high

NOTE:

- If you are troubleshooting multiple DTCs, be sure to follow the instructions in **B-CAN System Diagnosis Test Mode A** .
- The front seat heater control unit does not turn on the front seat heater until the seat core temperature is 185B°F (85B°C) or less. Make sure the seat core temperature is below 185B°F (85B°C) before troubleshooting.

DTC Description	DTC
B1C60 Driver's heater current abnormal high	B

DTC (Front Seat Heater Control Unit)

1. Problem verification

-1. Clear the DTCs with the HDS.

-2. Turn the vehicle to the OFF (LOCK) mode and then the ON mode.

-3. Check for DTCs with the HDS.

DTC Description	DTC
B1C60 Driver's heater current abnormal high	B

Is DTC B1C60 indicated?

YES

Go to step 2.

NO

Intermittent failure, the system is OK at this time. Check for loose or poor connections.

2. DTC check 1

-1. Disconnect the following connector.

Driver's seat heater connector B (2P)

-2. Turn the vehicle to the ON mode.

-3. Clear the DTCs with the HDS.

-4. Check for DTCs with the HDS.

DTC Description	DTC
B1C60 Driver's heater current abnormal high	B

Is DTC B1C60 indicated?

YES

Go to step 3.

NO

Replace the driver's seat-back heater .

3. DTC check 2

-1. Disconnect the following connector.

Driver's seat heater connector A (4P)

-2. Turn the vehicle to the ON mode.

-3. Clear the DTCs with the HDS.

-4. Check for DTCs with the HDS.

DTC Description	DTC
B1C60 Driver's heater current abnormal high	B

Is DTC B1C60 indicated?

YES

Go to step 4.

NO

Replace the driver's seat cushion heater .

4. Shorted wire check (HEATER_DR line)

-1. Disconnect the following connector.

Front seat heater control unit 24P connector

-2. Measure the resistance between test points 1 and 2.

Test condition	Vehicle OFF (LOCK) mode Front seat heater control unit 24P connector: disconnected Driver's seat heater connector A (4P): disconnected
Test point 1	**Front seat heater control unit 24P connector No. 1**
Test point 2	Body ground

Is there 1.0 MΩ or more?

YES

Replace the front seat heater control unit .

NO

Repair a short in the wire.

DTC B1C61

DTC B1C61 : Driver's heater current abnormal low

NOTE:

- If you are troubleshooting multiple DTCs, be sure to follow the instructions in **B-CAN System Diagnosis Test Mode A** .
- The front seat heater control unit does not turn on the front seat heater until the seat core temperature is 185B°F (85B°C) or less. Make sure the seat core temperature is below 185B°F (85B°C) before troubleshooting.

DTC Description	DTC
B1C61 Driver's heater current abnormal low	B

DTC (Front Seat Heater Control Unit)

1. Problem verification

-1. Clear the DTCs with the HDS.

-2. Turn the vehicle to the OFF (LOCK) mode and then the ON mode.

-3. Check for DTCs with the HDS.

DTC Description	DTC
B1C61 Driver's heater current abnormal low	B

Is DTC B1C61 indicated?

YES

Go to step 2.

NO

Intermittent failure, the system is OK at this time. Check for loose or poor connections.

2. DTC check

-1. Turn the vehicle to the OFF (LOCK) mode.

-2. Disconnect the following connector.

Driver's seat heater connector A (4P)

-3. Connect terminals A and B with a jumper wire.

Terminal A	Driver's seat heater connector A (4P) (female terminals) No. 3: ①
Terminal B	Body ground

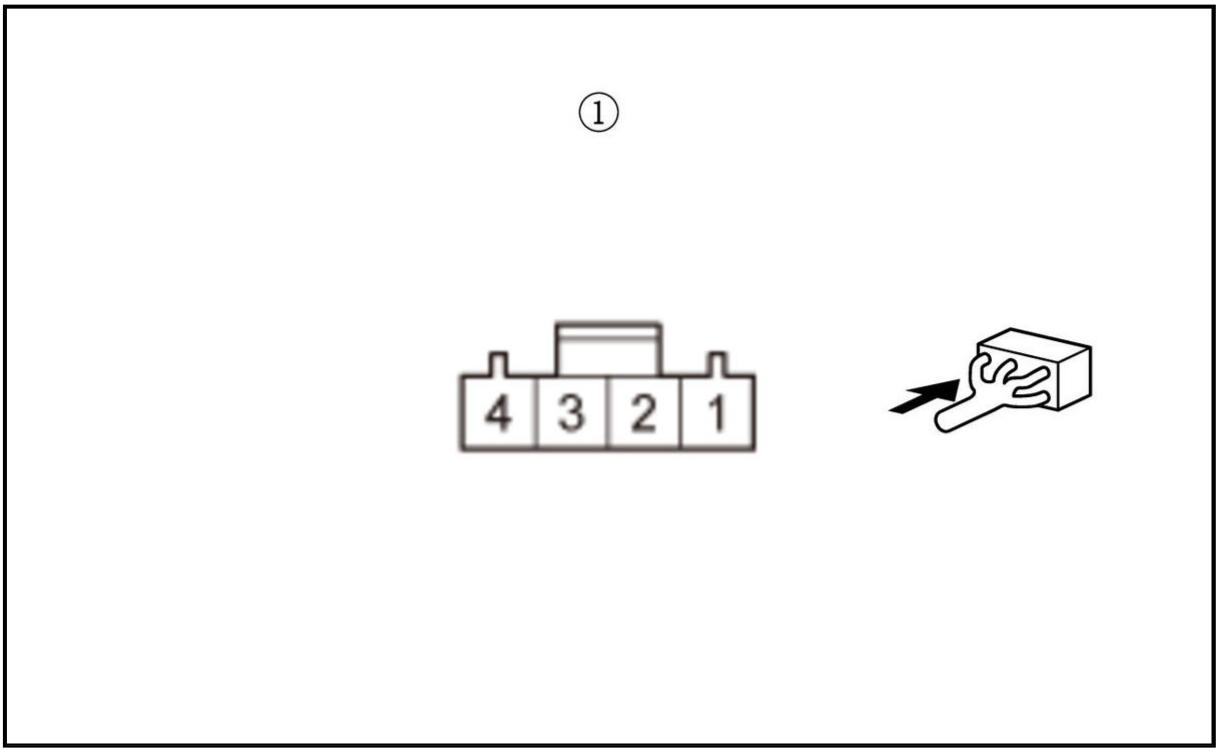

-4. Turn the vehicle to the ON mode.

-5. Clear the DTCs with the HDS.

-6. Check for DTCs with the HDS.

DTC Description	DTC
B1C61 Driver's heater current abnormal low	B

Is DTC B1C61 indicated?

YES

Repair an open or high resistance in the HEATER DR wire.

NO

Go to step 3.

3. Seat heater check

-1. **Test the driver's seat heater** .

Are the driver's seat cushion heater and driver's seat-back heater OK?

YES

Replace the front seat heater control unit .

NO

Replace the driver's seat cushion heater and/or the driver's seat-back heater .

DTC B1C62

DTC B1C62 : Passenger's heater current abnormal high

NOTE:

- If you are troubleshooting multiple DTCs, be sure to follow the instructions in **B-CAN System Diagnosis Test Mode A** .
- The front seat heater control unit does not turn on the front seat heater until the seat core temperature is 185B°F (85B°C) or less. Make sure the seat core temperature is below 185B°F (85B°C) before troubleshooting.

DTC Description	DTC
B1C62 Passenger's heater current abnormal high	B

DTC (Front Seat Heater Control Unit)

1. Problem verification

-1. Clear the DTCs with the HDS.

-2. Turn the vehicle to the OFF (LOCK) mode and then the ON mode.

-3. Check for DTCs with the HDS.

DTC Description	DTC
B1C62 Passenger's heater current abnormal high	B

Is DTC B1C62 indicated?

YES

Go to step 2.

NO

Intermittent failure, the system is OK at this time. Check for loose or poor connections.

2. DTC check 1

-1. Disconnect the following connector.

Front passenger's seat heater connector B (2P)

-2. Turn the vehicle to the ON mode.

-3. Clear the DTCs with the HDS.

-4. Check for DTCs with the HDS.

DTC Description	DTC
B1C62 Passenger's heater current abnormal high	B

Is DTC B1C62 indicated?

YES

Go to step 3.

NO

Replace the front passenger's seat-back heater .

3. DTC check 2

-1. Disconnect the following connector.

Front passenger's seat heater connector A (4P)

-2. Turn the vehicle to the ON mode.

-3. Clear the DTCs with the HDS.

-4. Check for DTCs with the HDS.

DTC Description	DTC
B1C62 Passenger's heater current abnormal high	B

Is DTC B1C62 indicated?

YES

Go to step 4.

NO

Replace the front passenger's seat cushion heater .

4. Shorted wire check (AS_H/SEAT_LO_RLY_COM line)

-1. Disconnect the following connector.

Front seat heater control unit 24P connector

-2. Measure the resistance between test points 1 and 2.

Test condition	Vehicle OFF (LOCK) mode Front seat heater control unit 24P connector: disconnected Front passenger's seat heater connector A (4P): disconnected
Test point 1	**Front seat heater control unit 24P connector No. 3**

Test point 2	Body ground

Is there 1.0 MΩ or more?

YES

Replace the front seat heater control unit .

NO

Repair a short in the wire.

DTC B1C63

DTC B1C63 : Passenger's heater current abnormal low

NOTE:

- If you are troubleshooting multiple DTCs, be sure to follow the instructions in **B-CAN System Diagnosis Test Mode A** .
- The front seat heater control unit does not turn on the front seat heater until the seat core temperature is 185B°F (85B°C) or less. Make sure the seat core temperature is below 185B°F (85B°C) before troubleshooting.

DTC Description	DTC
B1C63 Passenger's heater current abnormal low	B

DTC (Front Seat Heater Control Unit)

1. Problem verification

   -1. Clear the DTCs with the HDS.

   -2. Turn the vehicle to the OFF (LOCK) mode and then the ON mode.

   -3. Check for DTCs with the HDS.

DTC Description	DTC
B1C63 Passenger's heater current abnormal low	B

   Is DTC B1C63 indicated?

   YES

   Go to step 2.

   NO

   Intermittent failure, the system is OK at this time. Check for loose or poor connections.

2. DTC check

   -1. Turn the vehicle to the OFF (LOCK) mode.

   -2. Disconnect the following connector.

Front passenger's seat heater connector A (4P)

   -3. Connect terminals A and B with a jumper wire.

Terminal A	Front passenger's seat heater connector A (4P) (female terminals) No. 3: ①
Terminal B	Body ground

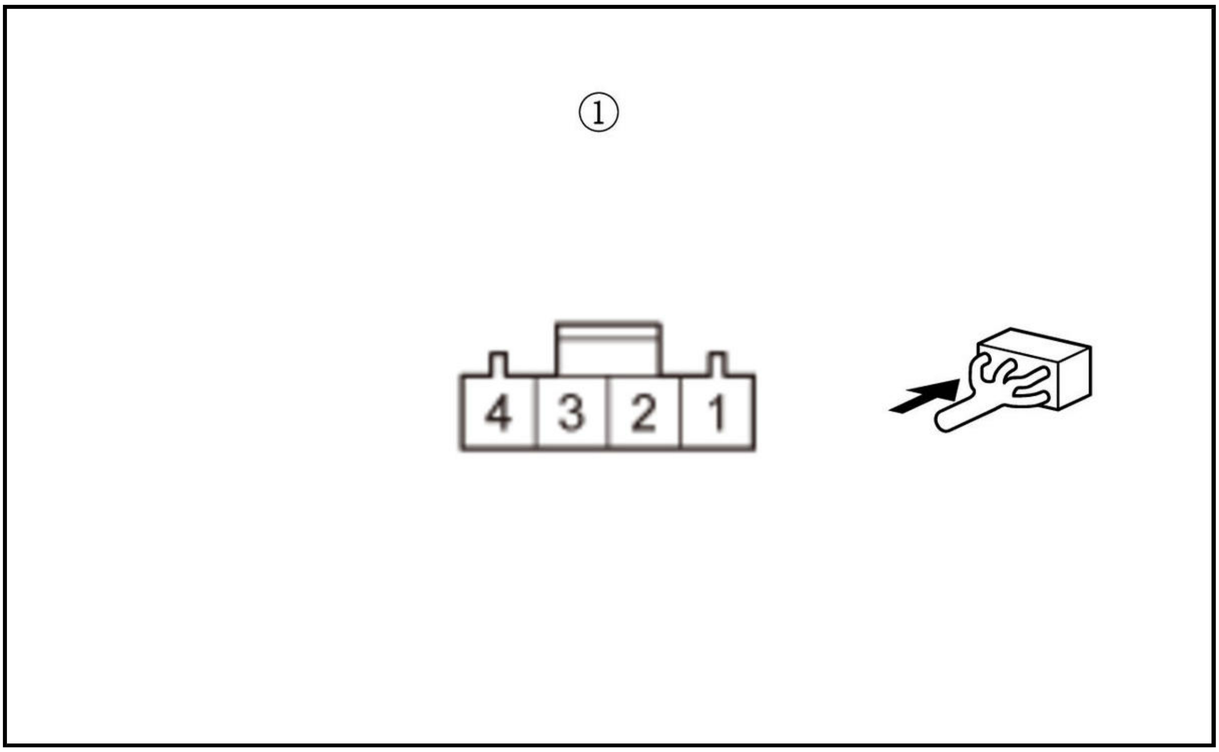

-4. Turn the vehicle to the ON mode.

-5. Clear the DTCs with the HDS.

-6. Check for DTCs with the HDS.

DTC Description	DTC
B1C63 Passenger's heater current abnormal low	B

Is DTC B1C63 indicated?

YES

Repair an open or high resistance in the AS H/SEAT LO RLY COM wire.

NO

Go to step 3.

3. Seat heater check

-1. **Test the front passenger's seat heater** .

Are the front passenger's seat cushion heater and front passenger's seat-back heater OK?

YES

Replace the front seat heater control unit .

NO

Replace the front passenger's seat cushion heater and/or the front passenger's seat-back heater .

DTC B1C68

DTC B1C68 : Driver's heater not heating

NOTE:

- If you are troubleshooting multiple DTCs, be sure to follow the instructions in **B-CAN System Diagnosis Test Mode A** .
- The front seat heater control unit does not turn on the front seat heater until the seat core temperature is 185B°F (85B°C) or less. Make sure the seat core temperature is below 185B°F (85B°C) before troubleshooting.

DTC Description	DTC
B1C68 Driver's heater not heating	B

DTC (Front Seat Heater Control Unit)

1. Problem verification

   -1. Clear the DTCs with the HDS.

   -2. Turn the vehicle to the OFF (LOCK) mode and then the ON mode.

   -3. Check for DTCs with the HDS.

DTC Description	DTC
B1C68 Driver's heater not heating	B

   Is DTC B1C68 indicated?

   YES

   Go to step 2.

   NO

   Intermittent failure, the system is OK at this time. Check for loose or poor connections.

2. DTC check

   -1. Check for DTCs with the HDS.

DTC Description	DTC
B1C55 Driver's heater thermistor circuit open	B
B1C56 Driver's heater thermistor circuit short	B
B1C60 Driver's heater current abnormal high	B
B1C61 Driver's heater current abnormal low	B

   Are DTCs B1C55, B1C56, B1C60, and/or B1C61 indicated?

   YES: DTC B1C55 is indicated

   Go to DTC B1C55 troubleshooting.

   YES: DTC B1C56 is indicated

   Go to DTC B1C56 troubleshooting.

   YES: DTC B1C60 is indicated

   Go to DTC B1C60 troubleshooting.

   YES: DTC B1C61 is indicated

Go to DTC B1C61 troubleshooting.

NO

Replace the driver's seat cushion heater .

DTC B1C69

DTC B1C69 : Passenger's heater not heating

NOTE:

- If you are troubleshooting multiple DTCs, be sure to follow the instructions in B-CAN System Diagnosis Test Mode A .
- The front seat heater control unit does not turn on the front seat heater until the seat core temperature is 185B°F (85B°C) or less. Make sure the seat core temperature is below 185B°F (85B°C) before troubleshooting.

DTC Description	DTC
B1C69 Passenger's heater not heating	B

DTC (Front Seat Heater Control Unit)

1. Problem verification

   -1. Clear the DTCs with the HDS.

   -2. Turn the vehicle to the OFF (LOCK) mode and then the ON mode.

   -3. Check for DTCs with the HDS.

DTC Description	DTC
B1C69 Passenger's heater not heating	B

   Is DTC B1C69 indicated?

   YES

   Go to step 2.

   NO

   Intermittent failure, the system is OK at this time. Check for loose or poor connections.

2. DTC check

   -1. Check for DTCs with the HDS.

DTC Description	DTC
B1C57 Passenger's heater thermistor circuit open	B
B1C58 Passenger's heater thermistor circuit short	B
B1C62 Passenger's heater current abnormal high	B
B1C63 Passenger's heater current abnormal low	B

   Are DTCs B1C57, B1C58, B1C62, and/or B1C63 indicated?

   YES: DTC B1C57 is indicated

Go to DTC B1C57 troubleshooting.

YES: DTC B1C58 is indicated

Go to DTC B1C58 troubleshooting.

YES: DTC B1C62 is indicated

Go to DTC B1C62 troubleshooting.

YES: DTC B1C63 is indicated

Go to DTC B1C63 troubleshooting.

NO

Replace the front passenger's seat cushion heater .

DTC B1C70

DTC B1C70 : Driver's main heater switch failure

NOTE:

- If you are troubleshooting multiple DTCs, be sure to follow the instructions in B-CAN System Diagnosis Test Mode A .
- The front seat heater control unit does not turn on the front seat heater until the seat core temperature is 185B°F (85B°C) or less. Make sure the seat core temperature is below 185B°F (85B°C) before troubleshooting.

DTC Description	DTC
B1C70 Driver's main heater switch failure	B

DTC (Front Seat Heater Control Unit)

1. Problem verification

   -1. Clear the DTCs with the HDS.

   -2. Turn the vehicle to the OFF (LOCK) mode and then the ON mode.

   -3. Check for DTCs with the HDS.

DTC Description	DTC
B1C70 Driver's main heater switch failure	B

   Is DTC B1C70 indicated?

   YES

   Replace the front seat heater control unit .

   NO

   Intermittent failure, the system is OK at this time. Check for loose or poor connections.

DTC B1C71

DTC B1C71 : Passenger's main heater switch failure

NOTE:

- If you are troubleshooting multiple DTCs, be sure to follow the instructions in **B-CAN System Diagnosis Test Mode A** .
- The front seat heater control unit does not turn on the front seat heater until the seat core temperature is 185B°F (85B°C) or less. Make sure the seat core temperature is below 185B°F (85B°C) before troubleshooting.

DTC Description	DTC
B1C71 Passenger's main heater switch failure	B

DTC (Front Seat Heater Control Unit)

1. Problem verification

   -1. Clear the DTCs with the HDS.

   -2. Turn the vehicle to the OFF (LOCK) mode and then the ON mode.

   -3. Check for DTCs with the HDS.

DTC Description	DTC
B1C71 Passenger's main heater switch failure	B

   Is DTC B1C71 indicated?

   YES

   Replace the front seat heater control unit .

   NO

   Intermittent failure, the system is OK at this time. Check for loose or poor connections.

DTC U1064 (FRONT SEAT HEATER CONTROL UNIT)

DTC U1064 : Seat heater control unit lost communication with climate control unit

NOTE:

- If you are troubleshooting multiple DTCs, be sure to follow the instructions in **B-CAN System Diagnosis Test Mode A** .
- Refer to the DTC code shown on the display, and then inspect the connectors and terminals based on the instructions in the table below.
- The DTC may be stored due to the grounding failure or the power source failure at the transmitting control unit (the grounding inspection and the power source inspection on each control unit are required prior to this checking process).
- The front seat heater control unit does not turn on the front seat heater until the seat core temperature is 185B°F (85B°C) or less. Make sure the seat core temperature is below 185B°F (85B°C) before troubleshooting.

DTC Description	DTC
U1064 Seat heater control unit lost communication with climate control unit	B

DTC (Front Seat Heater Control Unit)

1. Problem verification

-1. Clear the DTC with the HDS.

-2. Turn the vehicle to the OFF (LOCK) mode and then the ON mode.

-3. Wait for at least 6 seconds.

-4. Check for DTCs with the HDS.

DTC Description	DTC
U1064 Seat heater control unit lost communication with climate control unit	B

Are any DTCs indicated?

YES

Go to step 2.

NO

Intermittent failure, the system is OK at this time. Check for poor connections or loose terminals.

2. Open wire check (B-CAN_H line, B-CAN_L line)

-1. Turn the vehicle to the OFF (LOCK) mode.

-2. Disconnect the receiving control unit connector.

Front seat heater control unit 24P connector

-3. Disconnect the transmitting control unit connector(s).

Refer to the DTC shown on the display, then disconnect the connector(s) based on the instructions (see table).

DTC	Connector
U1064	Climate control unit connector A (32P)

-4. Measure the resistance between the receiving control unit and the transmitting control unit on the B-CAN_H circuit and the B-CAN_L circuit.

Test condition	Vehicle OFF (LOCK) mode Front seat heater control unit 24P connector: disconnected Transmitting control unit connector(s) for indicated DTCs: disconnected

DTC	Circuit name	Receiving control unit		Transmitting control unit	
		Connector	Terminal	Connector	Terminal
U1064	B-CAN_H	**Front seat heater control unit 24P connector**	No. 10	**Climate control unit connector A (32P)**	No. 25
	B-CAN_L		No. 9		No. 8

Is there 1.0 Ω or less?

YES

The B-CAN_H wire and the B-CAN_L wire are OK.

Refer to the DTC shown on the display, then replace the control unit based on the instructions (see table).

DTC	Operation for transmitting control unit
U1064	Climate control unit

NO

Repair an open in the B-CAN_H wire and/or the B-CAN_L wire.

DTC U1280 (FRONT SEAT HEATER CONTROL UNIT)

DTC U1280 : Seat heater control unit communication bus line error (BUS-OFF)

NOTE:

- If you are troubleshooting multiple DTCs, be sure to follow the instructions in **B-CAN System Diagnosis Test Mode A** .
- The front seat heater control unit does not turn on the front seat heater until the seat core temperature is 185B°F (85B°C) or less. Make sure the seat core temperature is below 185B°F (85B°C) before troubleshooting.

DTC Description	DTC
U1280 Seat heater control unit communication bus line error (BUS-OFF)	B

DTC (Front Seat Heater Control Unit)

1. Problem verification

   -1. Clear the DTCs with the HDS.

   -2. Turn the vehicle to the OFF (LOCK) mode and then the ON mode.

   -3. Wait for at least 6 seconds.

   -4. Check for DTCs with the HDS.

DTC Description	DTC
U1280 Seat heater control unit communication bus line error (BUS-OFF)	B

Is DTC U1280 indicated?

YES

Go to body control module DTC U1280 troubleshooting .

NO

Intermittent failure, the system is OK at this time. Check for loose or poor connections.

REMOVAL & INSTALLATION TEST

POWER LUMBAR SUPPORT SWITCH REMOVAL, INSTALLATION, AND TEST

Removal and Installation

1

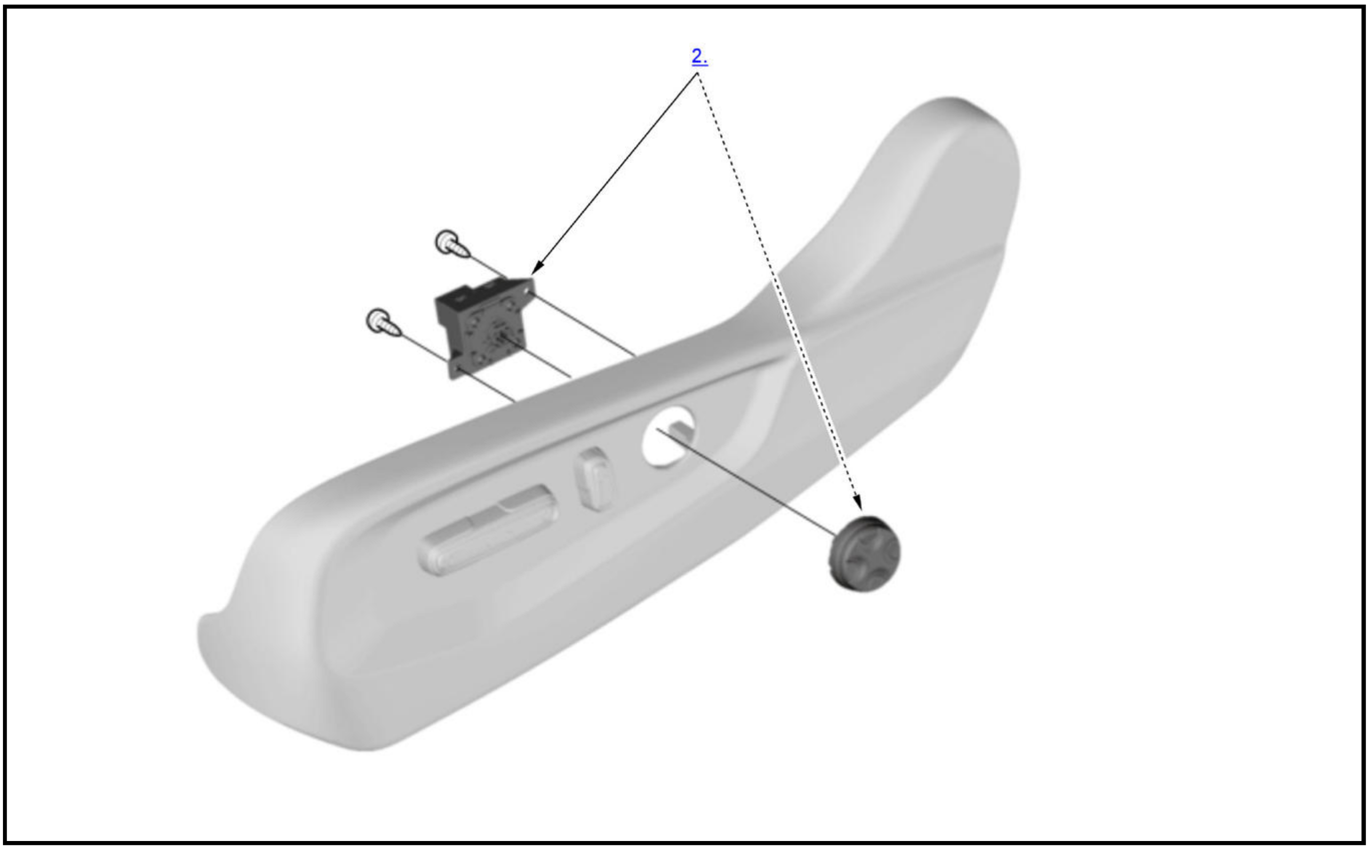

1. **Driver's Seat Recline Cover - Remove**

   NOTE: If removing the driver's seat recline cover, you do not need to remove the driver's seat.

2. Power Lumbar Support Switch - Remove
3. All Removed Parts - Install

   1. Install the parts in the reverse order of removal.

Test

1. Power Lumbar Support Switch - Test

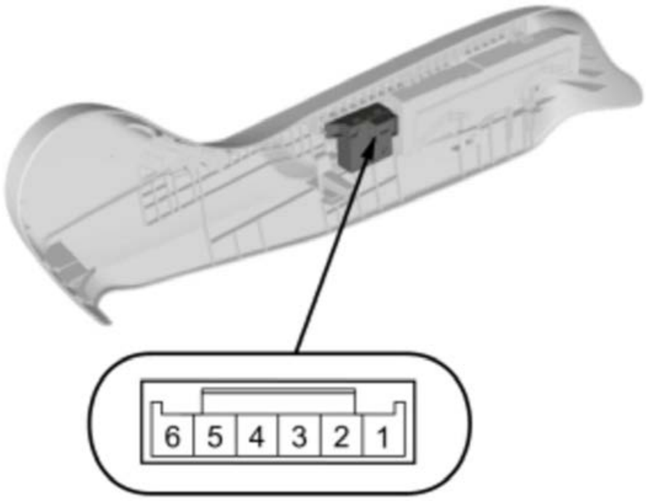

Position \ Terminal	6	5	4	3	2	1
UP	*○	—	○			
				○	—	○
DOWN	*○	—	—	○		
			○	—	—	○
FORWARD	*○	—	—	—	○	
		○	—	—	—	○
BACKWARD	*○	○				
					○	○

*: There is continuity when switch is not pressed.

1. Check for continuity between the terminals in each switch position according to the table in illustration.

2. If the continuity is not as specified, replace the power lumbar support switch.

POWER SEAT ADJUSTMENT SWITCH REMOVAL, INSTALLATION, AND TEST

Removal and Installation

1

Driver's (Without DPMS)

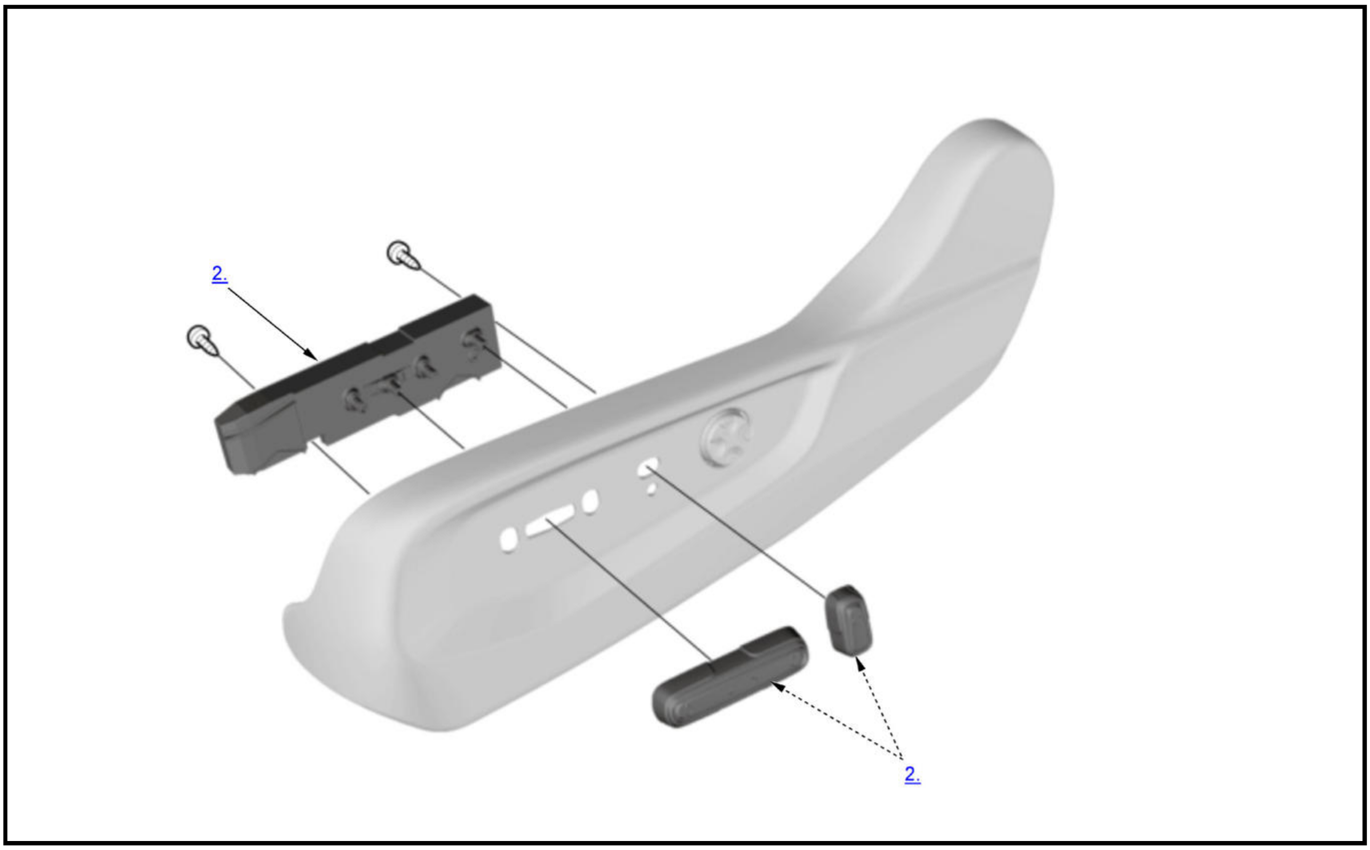

2

Front Passenger's

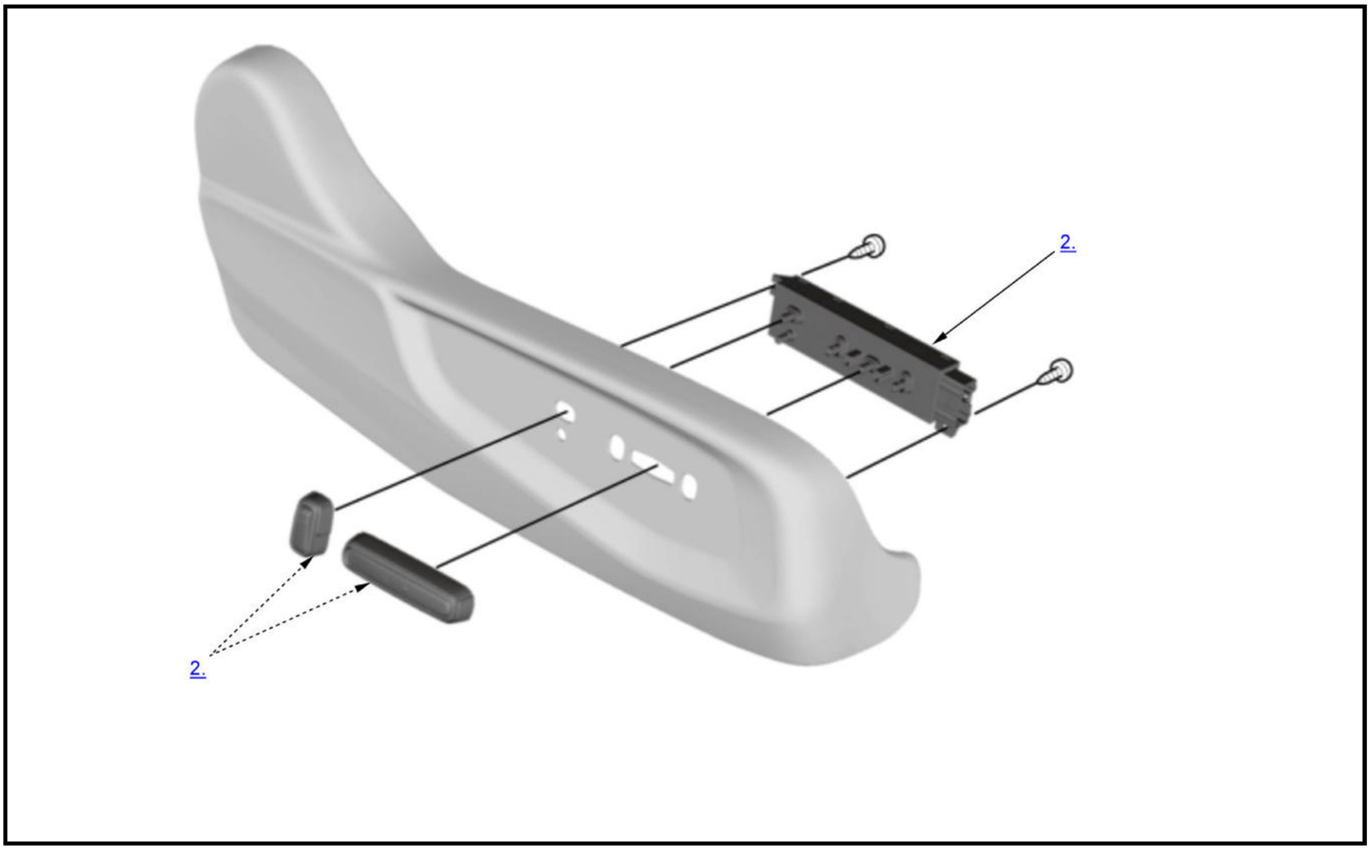

1. **Driver's/Front Passenger's Seat Recline Cover - Remove**

   NOTE: If you are only removing the driver's and/or front passenger's seat recline cover, you do not need to remove the driver's and/or front passenger's seat.

2. Driver's/Front Passenger's Power Seat Adjustment Switch - Remove

3. All Removed Parts - Install

   1. Install the parts in the reverse order of removal.

Test

1. Power Seat Adjustment Switch - Test

   Driver's (Without DPMS)

   1. Check for continuity between the terminals in each switch position according to the table in illustration.

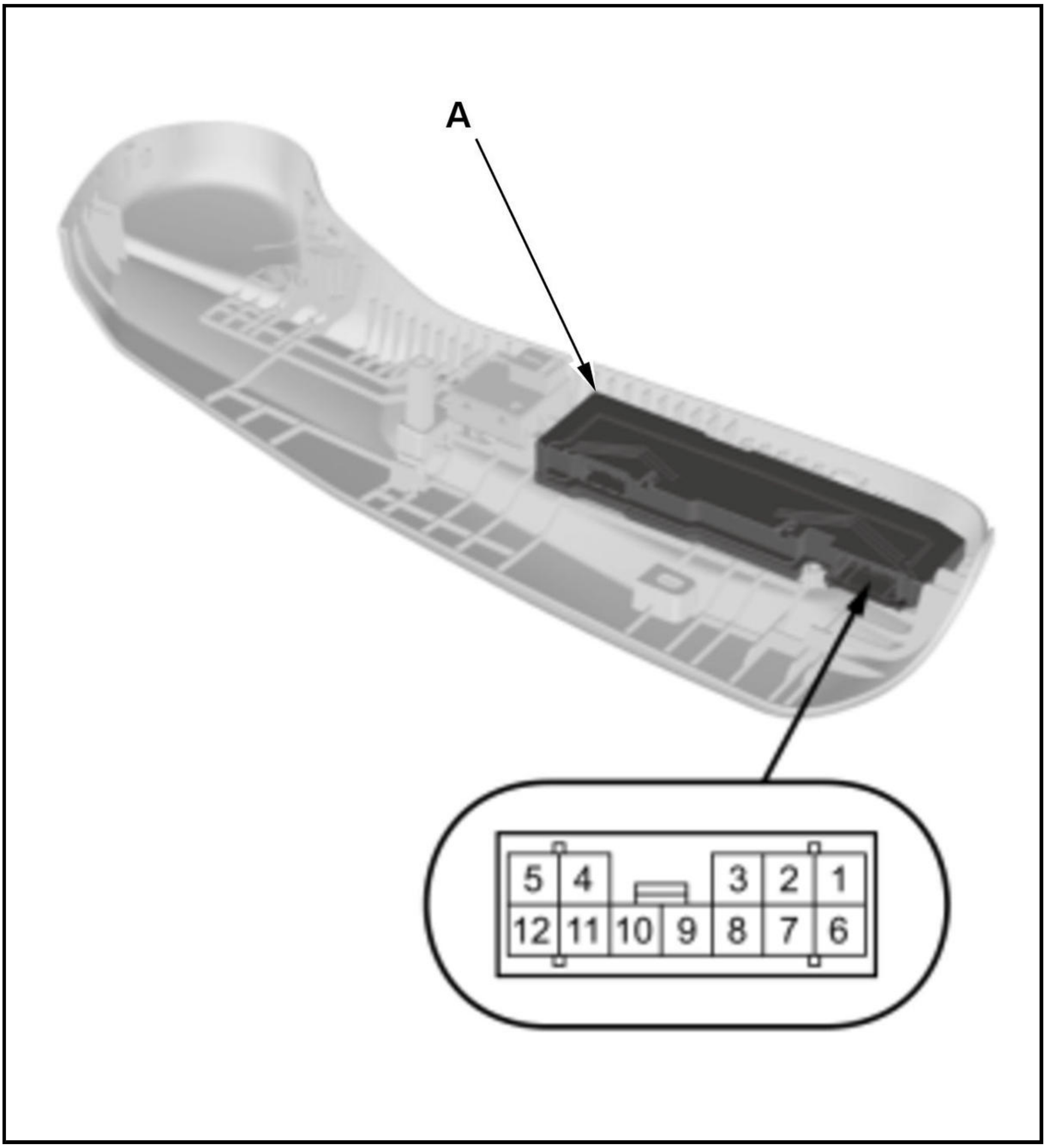

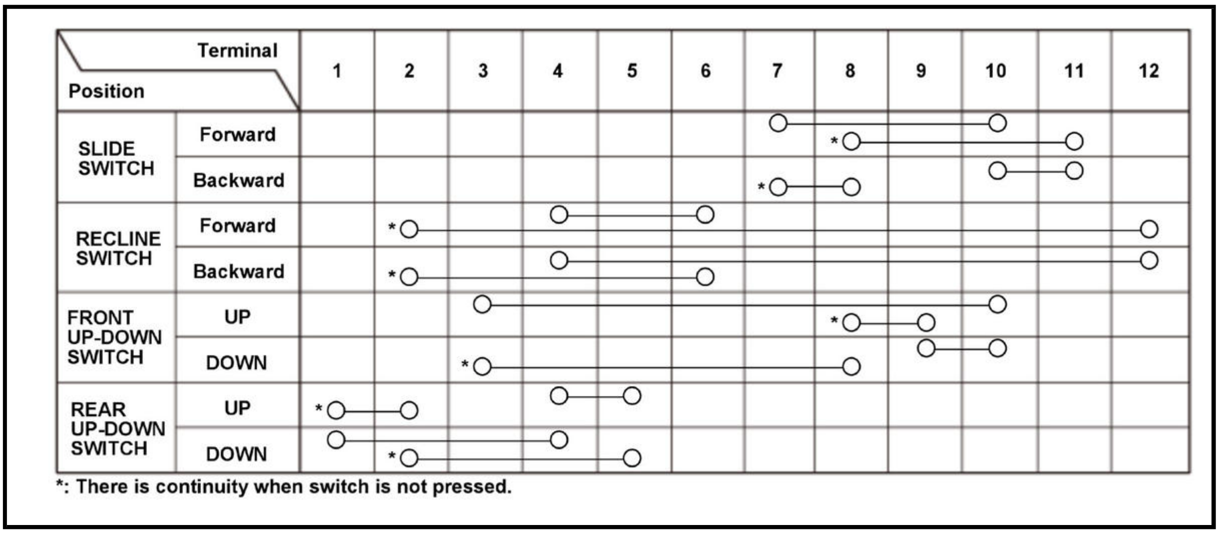

Position		1	2	3	4	5	6	7	8	9	10	11	12
SLIDE SWITCH	Forward							○			○		
									*○			○	
	Backward										○	○	
								*○	○				
RECLINE SWITCH	Forward				○		○						
			*○										○
	Backward				○								○
			*○				○						
FRONT UP-DOWN SWITCH	UP			○							○		
									*○	○			
	DOWN									○	○		
				*○					○				
REAR UP-DOWN SWITCH	UP				○	○							
		*○	○										
	DOWN	○			○								
			*○			○							

*: There is continuity when switch is not pressed.

2. If the continuity is not as specified, replace the driver's power seat adjustment switch (A).

Front Passenger's

3. Check for continuity between the terminals in each switch position according to the table in illustration.

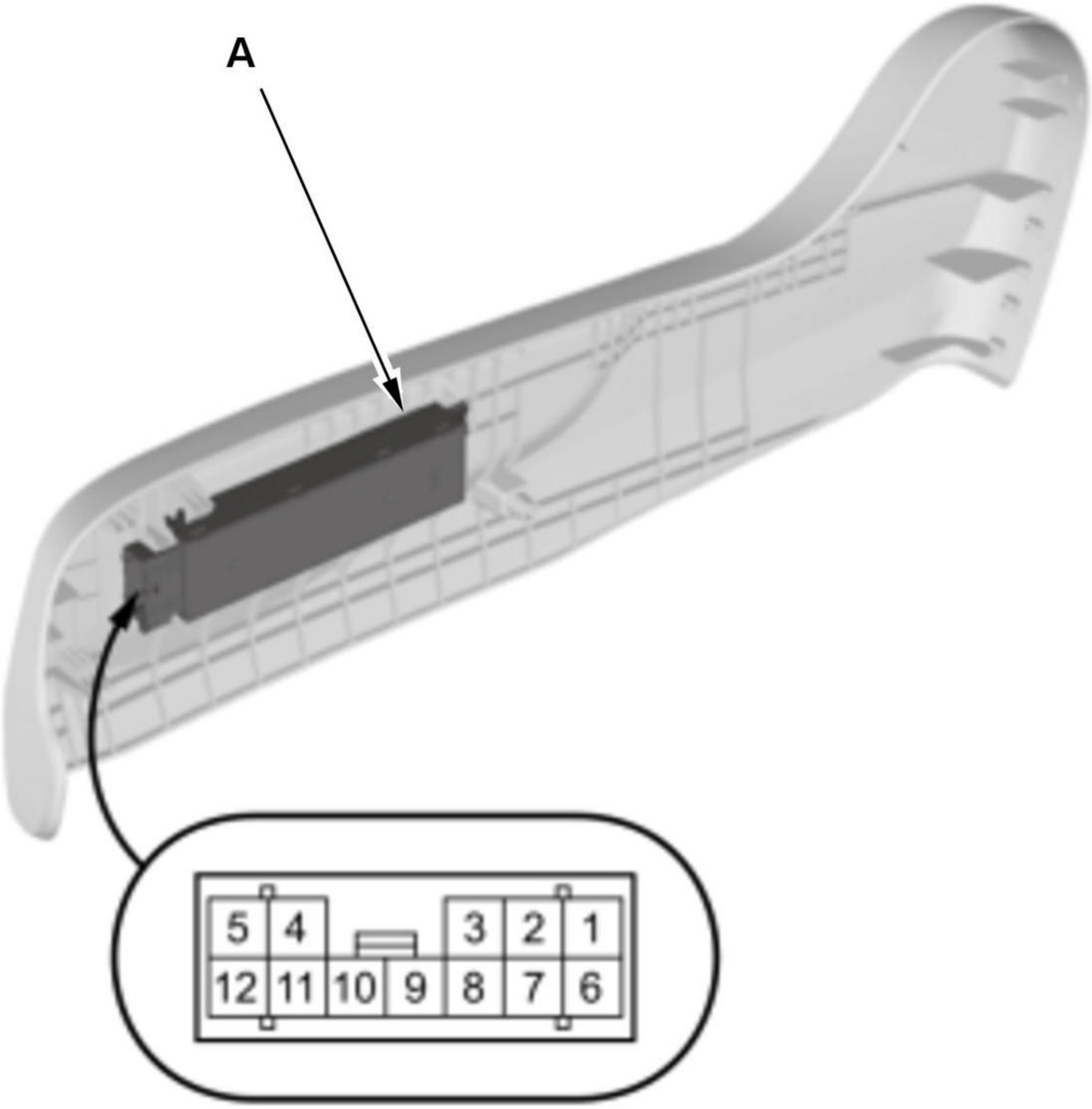

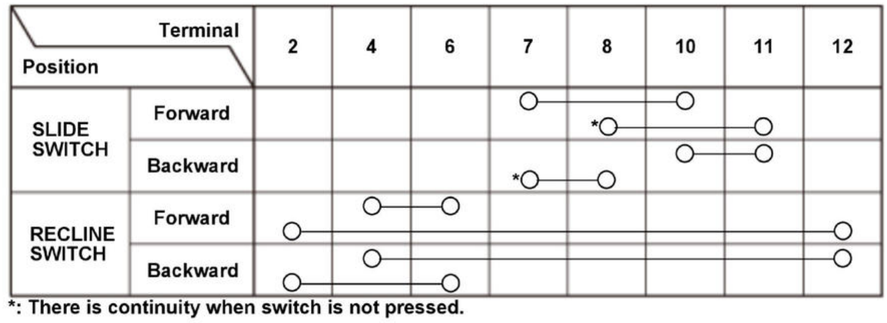

Position		Terminal 2	4	6	7	8	10	11	12
SLIDE SWITCH	Forward				○	—	○		
						*○	—	○	
	Backward						○	○	
					*○	○			
RECLINE SWITCH	Forward		○	○					
		○	—	—	—	—	—	—	○
	Backward		○	—	—	—	—	—	○
		○	—	○					

*: There is continuity when switch is not pressed.

4. If the continuity is not as specified, replace the front passenger's power seat adjustment switch (A).

SEAT HEATER SWITCH REMOVAL, INSTALLATION, AND TEST

Removal and Installation

1

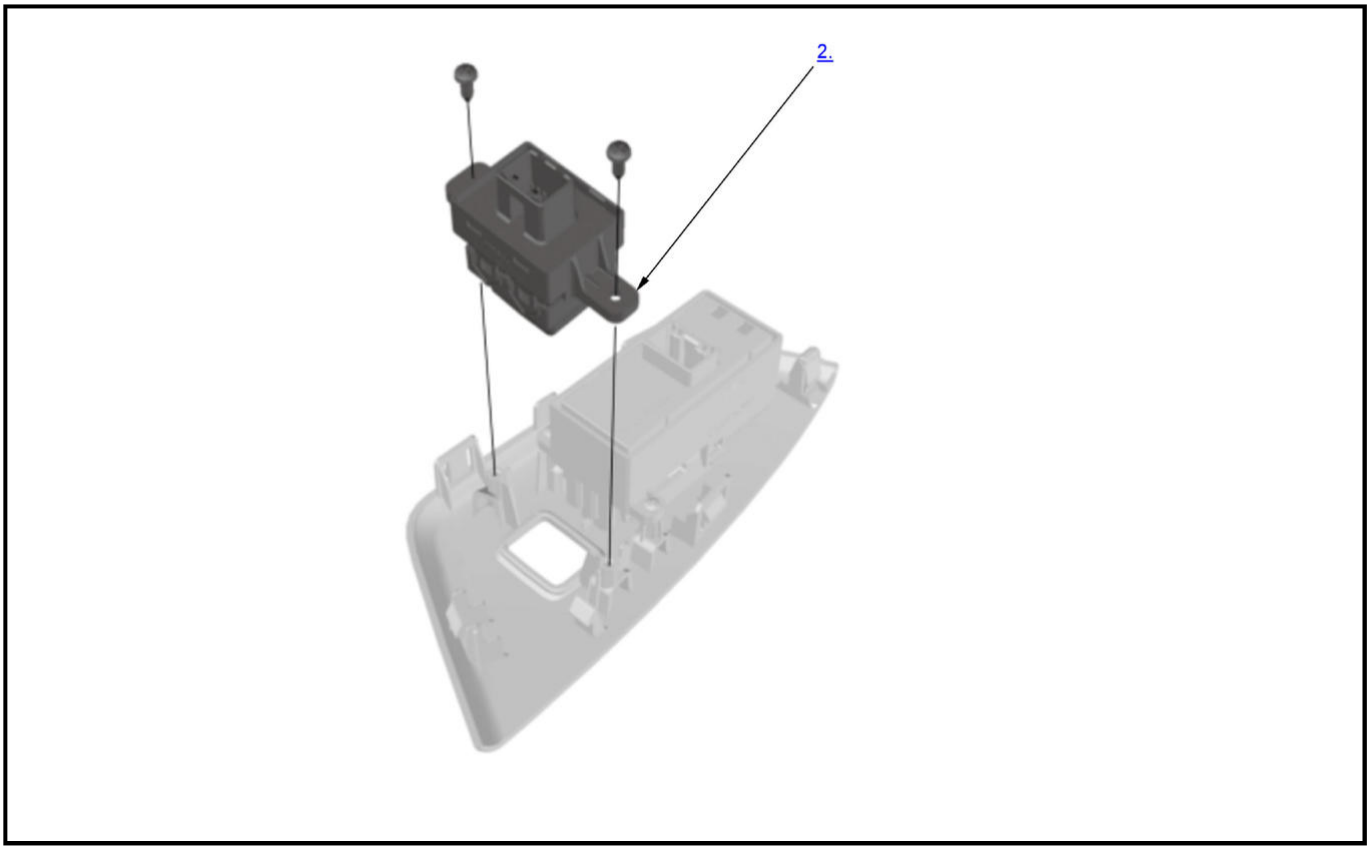

1. Rear Door Power Window Switch Panel - Remove
2. Rear Seat Heater Switch - Remove
3. All Removed Parts - Install

1. Install the parts in the reverse order of removal.

Test

1. Rear Seat heater Switch - Test

    1. Check the rear seat heater switch (A) according to the table in illustration.

NOTE:

- **When an LED is located between terminals, check if the LED illuminates by connecting power and ground to the LED.**
- **Note this important operating characteristic; diode bias causes a diode to fully conduct electricity in one direction (forward), while not at all in the opposite direction (reverse).**

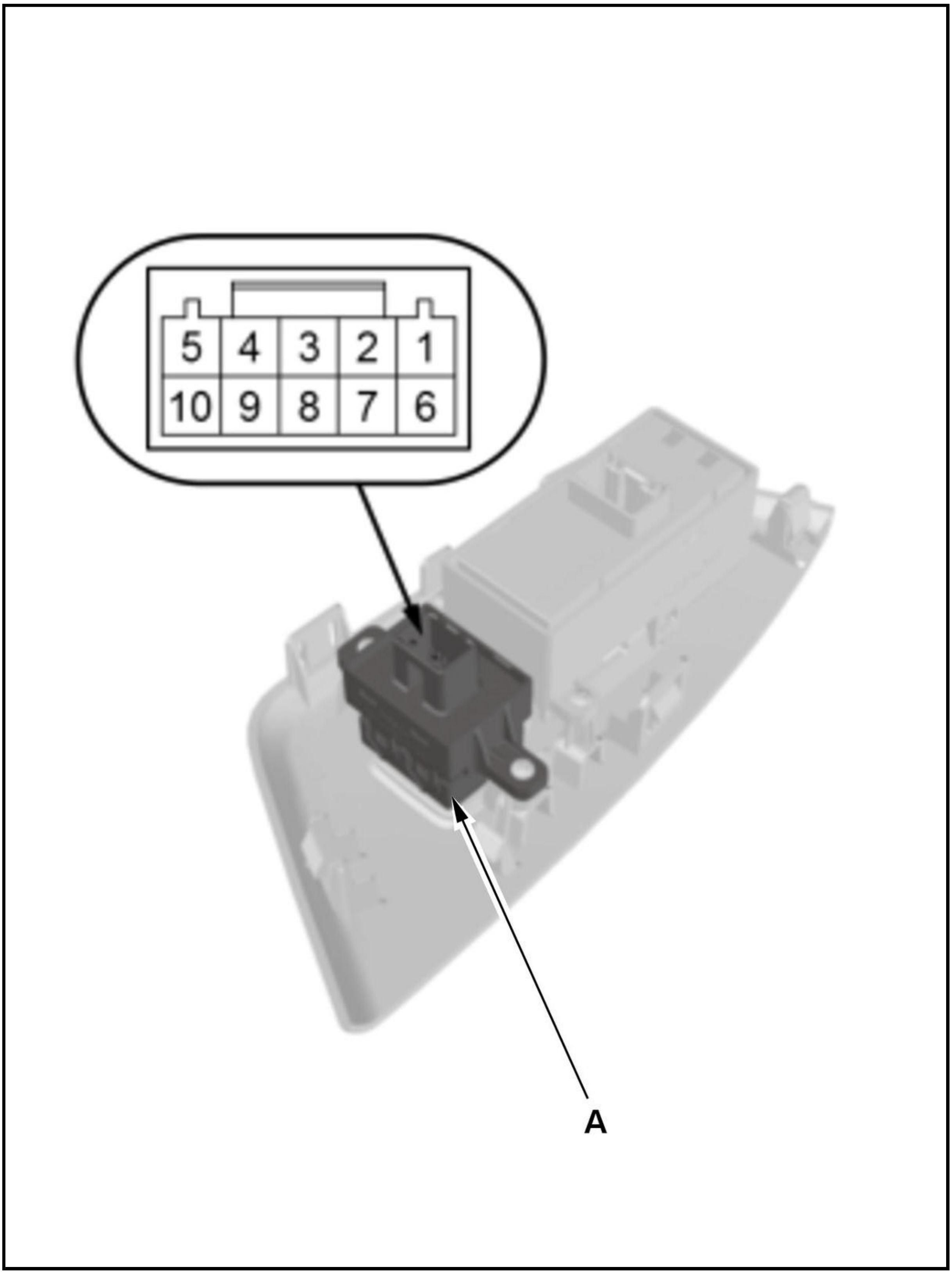
A

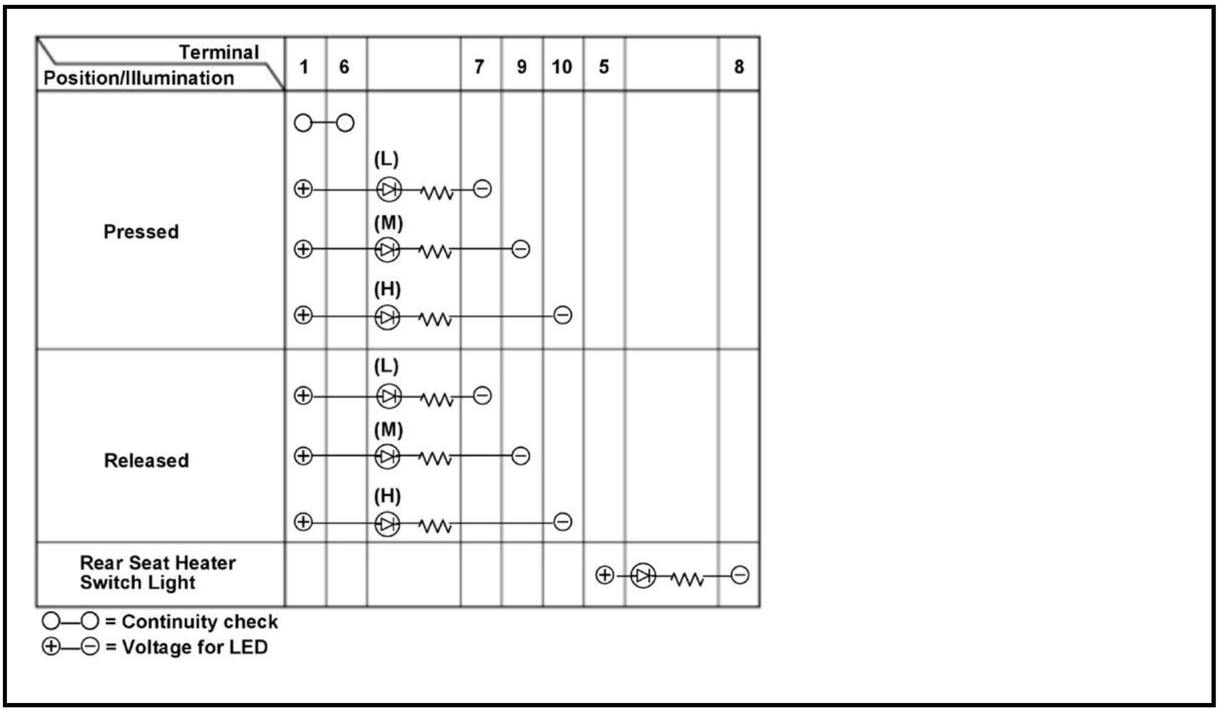
Terminal
Position/Illumination
1
6
7
9
10
5
8
Pressed
(L)
(M)
(H)
Released
(L)
(M)
(H)
Rear Seat Heater Switch Light
○—○ = Continuity check
⊕—⊖ = Voltage for LED

   2. If the result is not as specified, replace the rear seat heater switch.
2. All Removed Parts - Install

   1. Install the parts in the reverse order of removal.

DISASSEMBLY AND REASSEMBLY

REAR SEAT DISASSEMBLY AND REASSEMBLY

Disassembly and Reassembly

NOTE: The left rear seat is shown, the right rear seat is similar.

1

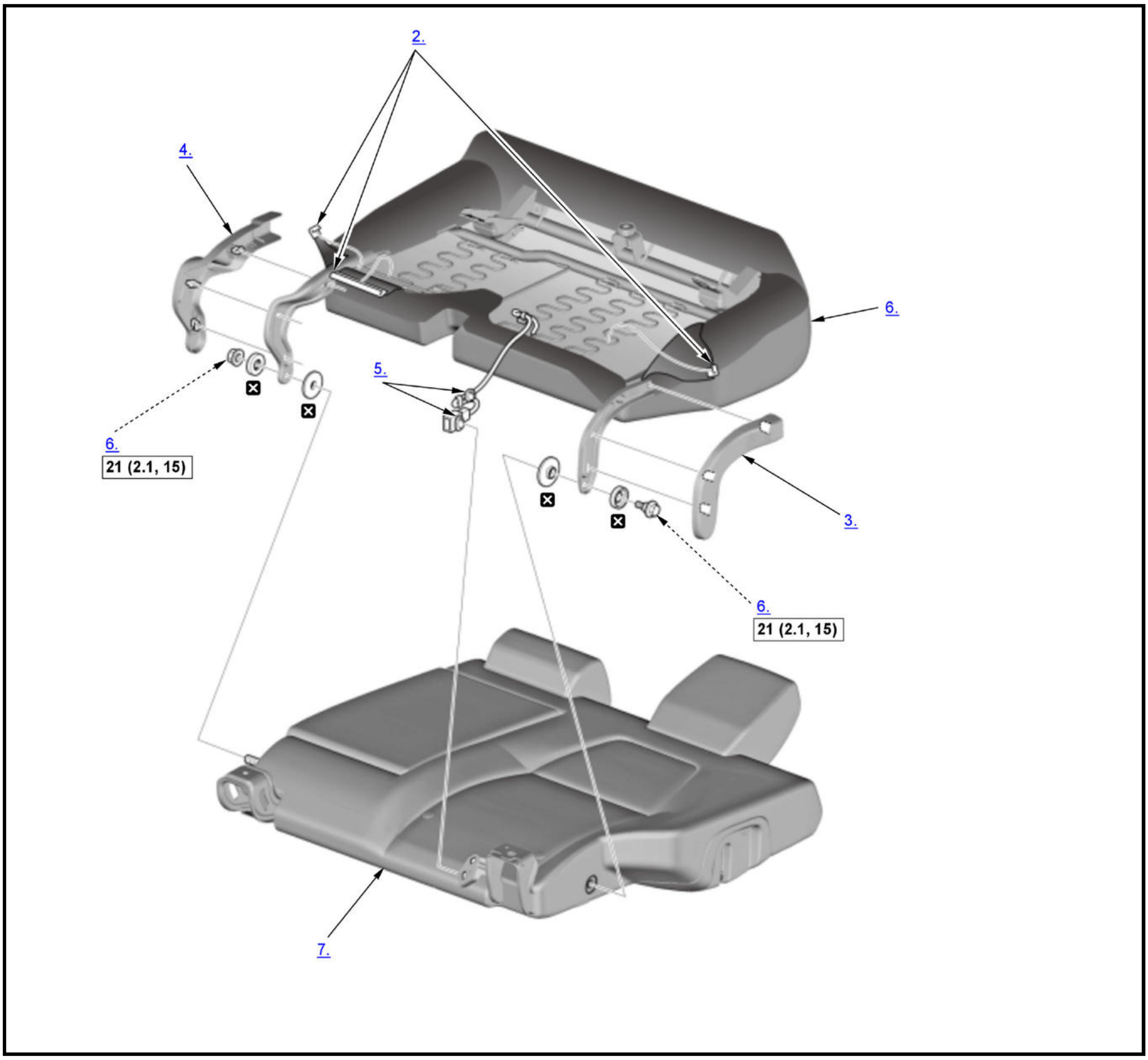

☐	Torque: N.m (kgf.m, lbf.ft)
☒	Replace

1. **Rear Seat - Remove**
2. Rear Seat Cushion Cover Hooks - Release
3. Rear Seat Outer Arm Cover - Remove
4. Rear Seat Inner Arm Cover - Remove
5. Rear Seat Cushion Heater Harness Clips - Remove (For Some Models)
6. Rear Seat Cushion - Remove
7. Rear Seat-Back - Remove
8. All Disassembled Parts - Reassemble

1. Reassemble the parts in the reverse order of disassembly.

REMOVAL AND INSTALLATION

FRONT PASSENGER'S SEAT RAIL REMOVAL AND INSTALLATION (POWER SEAT)

Removal and Installation

NOTE:

- **How to read the torque specifications** .
- SRS components are located in this area. Review the **SRS component locations** and the **precautions and procedures** before doing repairs or service.

1. **Front Passenger's Seat-Back Cover/Pad - Remove**
2. **Front Passenger's Seat Cushion Cover/Pad - Remove**
3. **Front Seat Outer/Inner Recline Inner Covers - Remove**
4. Front Passenger's Seat Rail - Remove (Power Seat)

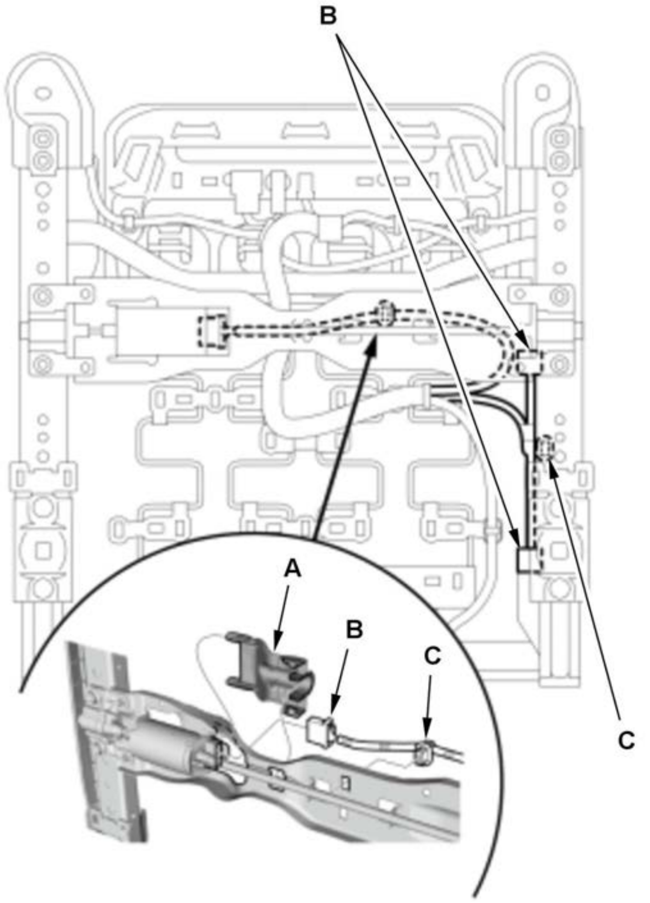

1. Remove the slide motor cover (A).

2. Disconnect the connectors (B), and remove the harness clips (C).

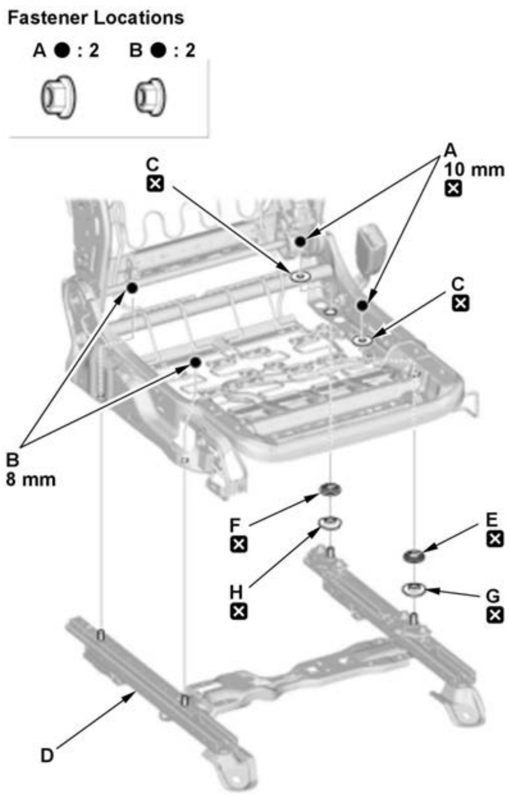 Fastener Locations A ● : 2 B ● : 2 C ☒ A 10 mm ☒ C ☒ B 8 mm F ☒ E ☒ H ☒ G ☒ D	3. Remove the nuts (A, B) and the washers (C), and then remove the front passenger's seat rail (D), the bushings (E, F), and the collars (G, H).

5. All Removed Parts - Install

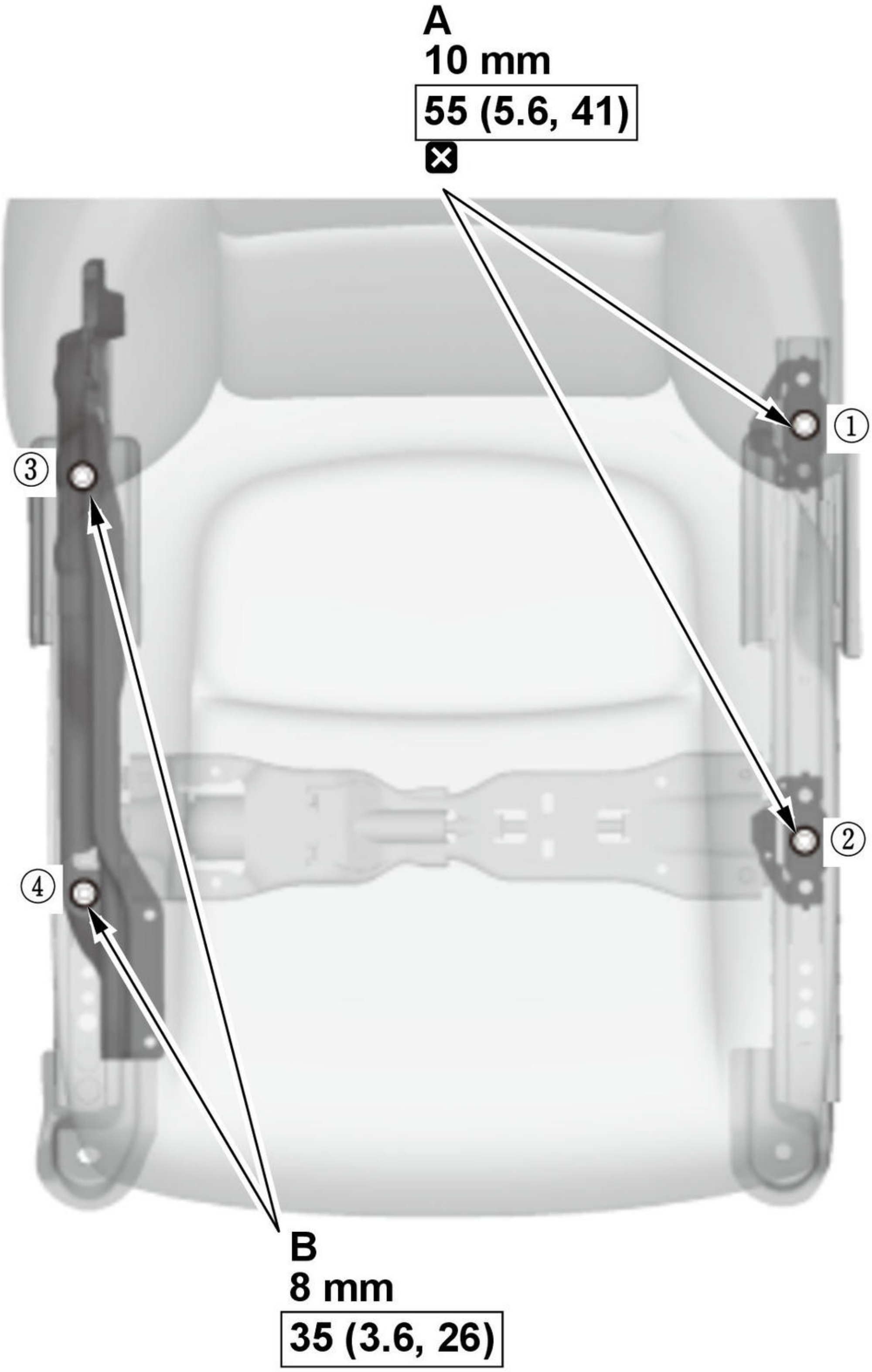
A
10 mm
55 (5.6, 41)
☒
①
②
③
④
B
8 mm
35 (3.6, 26)

Fig. 1: Tightening Seat Rail Nuts In Sequence With Torque Specifications
Courtesy of HONDA, U.S.A., INC.

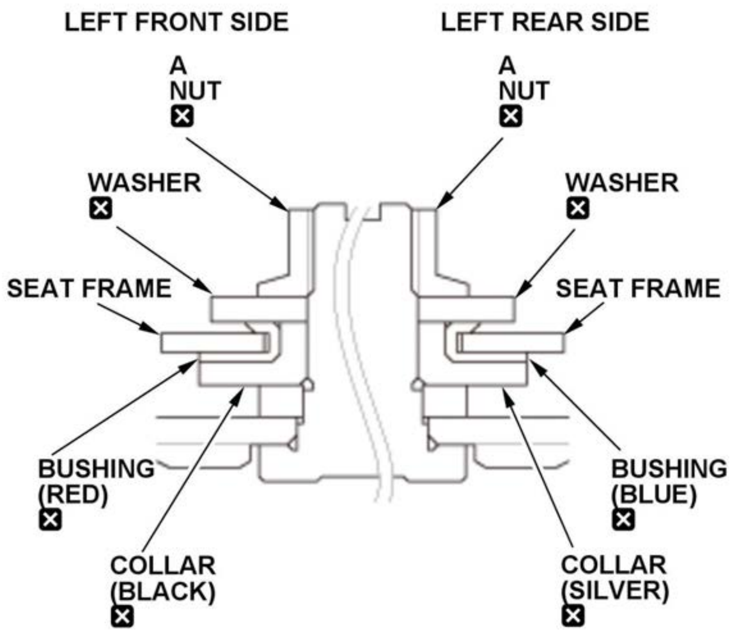
LEFT FRONT SIDE
LEFT REAR SIDE
A
NUT
☒
A
NUT
☒
WASHER
☒
WASHER
☒
SEAT FRAME
SEAT FRAME
BUSHING (RED)
☒
BUSHING (BLUE)
☒
COLLAR (BLACK)
☒
COLLAR (SILVER)
☒

1. Install the parts in the reverse order of removal.

NOTE:

- **The bushings and collars can be identified by their color. Make sure to install the bushings and collars as shown.**
- **Tighten the nuts (A, B) in the numbered sequence shown in illustration.**

6. Seat Operation - Confirm

1. Move the front seat and the seat-back through their full ranges of movement, making sure the harness is not pinched or interfering with other parts.

7. **Front Passenger's Weight Sensor - Initialize**
8. **Front Passenger's Weight Sensor - Operation Check**
9. SRS Operation - Confirm

1. Turn the vehicle to the ON mode, and check that the SRS indicator comes on for about 6 seconds and then goes off.

FRONT SEAT CUSHION COVER REMOVAL AND INSTALLATION

Removal and Installation

SRS components are located in this area. Review the **SRS component locations** and the **precautions and procedures** before doing repairs or service.

1. **Front Seat - Remove**
2. **Front Seat Outer Recline Cover - Remove**
3. **Front Seat Inner Recline Cover - Remove (Driver's Seat)**
4. Front Seat Cushion Cover/Pad - Remove

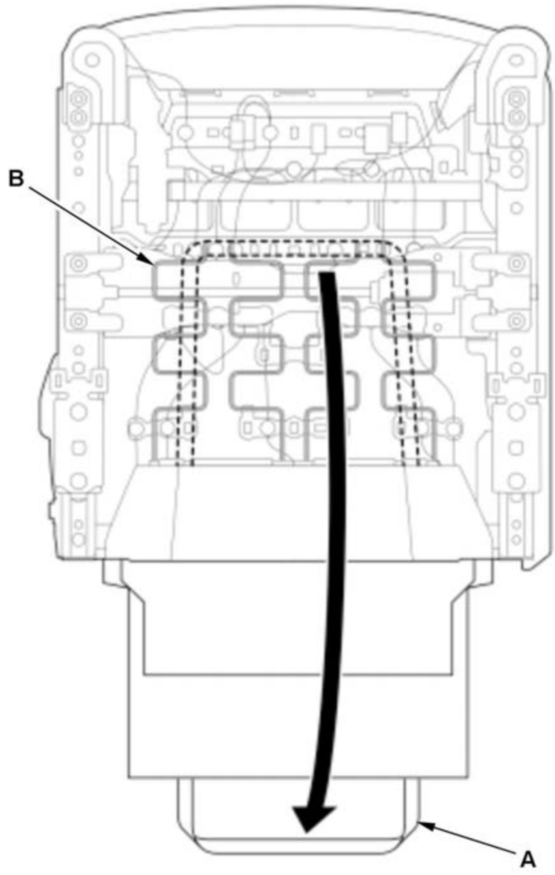	1. From under the seat cushion, release the elastic strap (A) from the seat cushion frame springs (B).

Driver's seat with seat heater 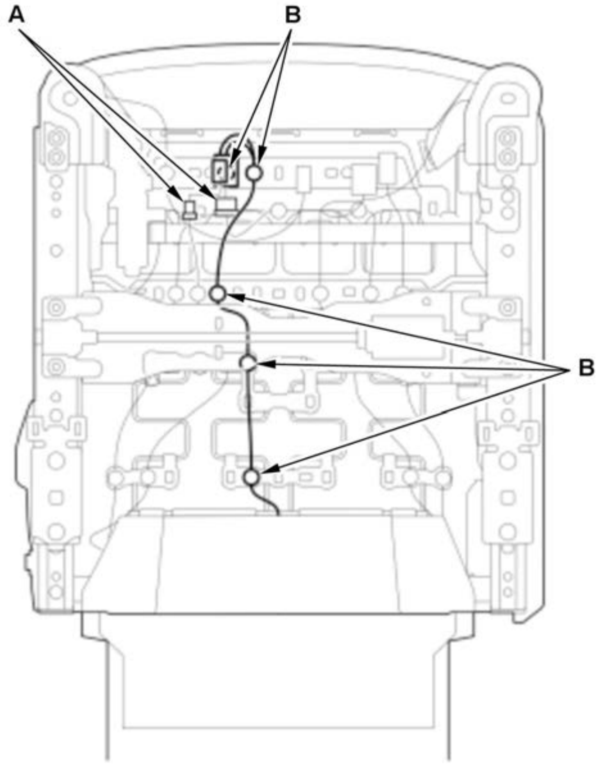 **Passenger's seat with seat heater**	2. For some models: From under the seat cushion, disconnect the connectors (A), and remove the harness clips (B).

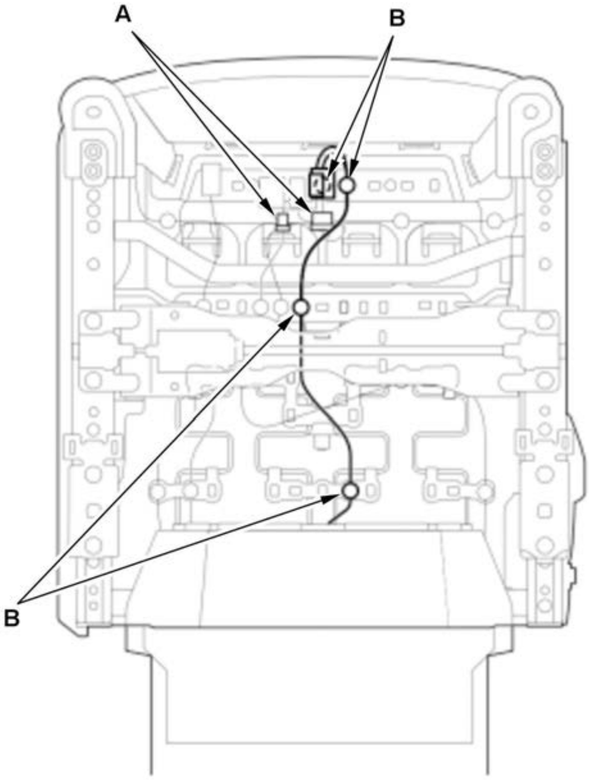

Passenger's seat with seat belt reminder

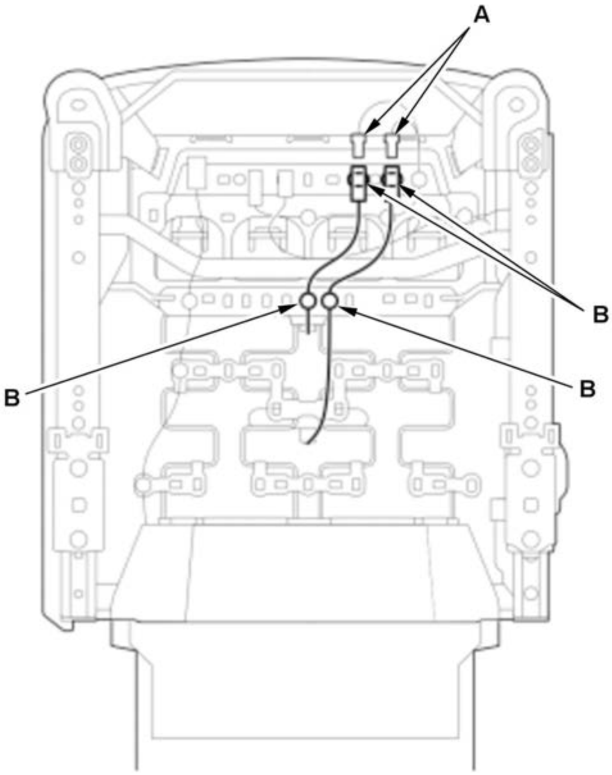

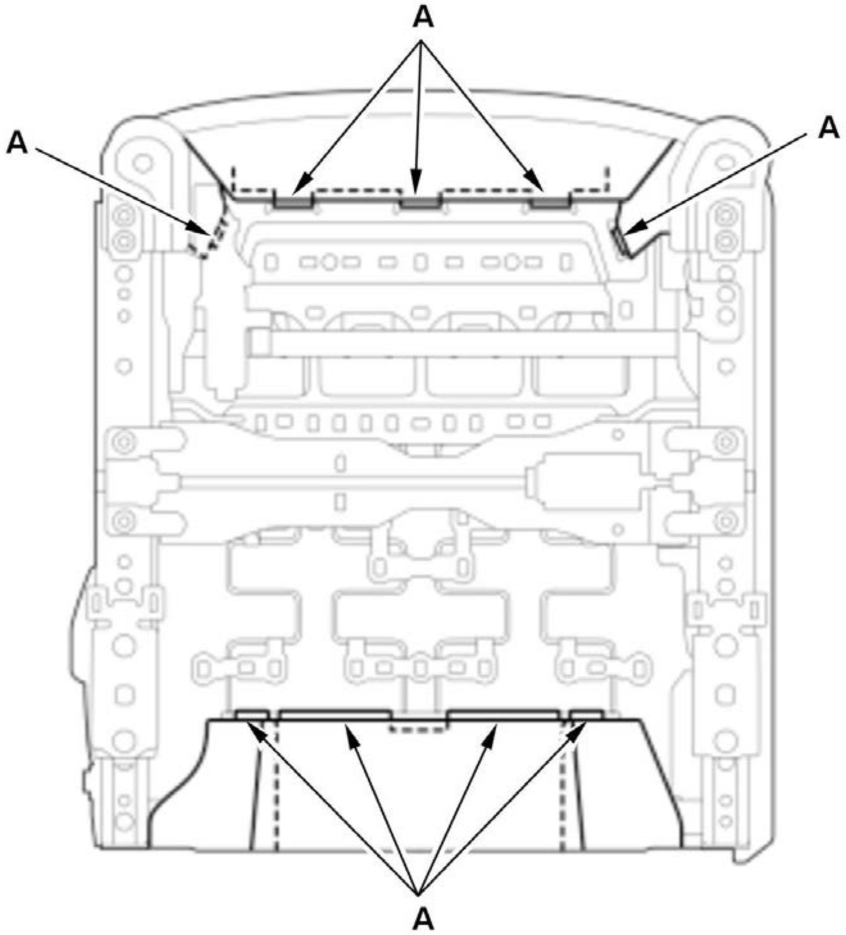	3. Release the hooks (A).

Driver's power seat

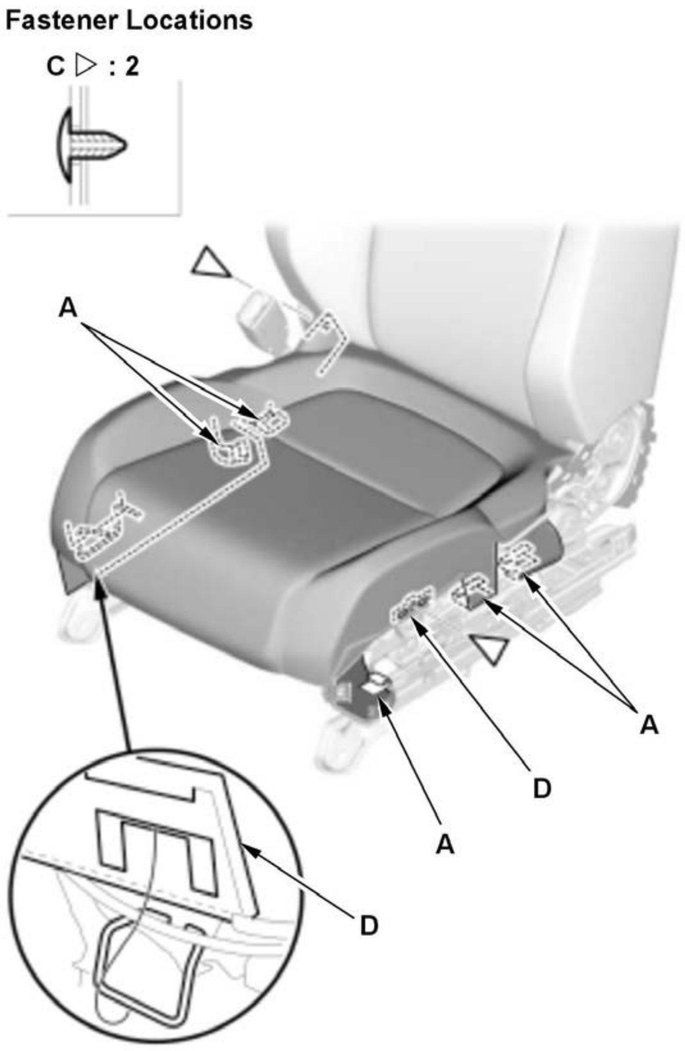
Fastener Locations
C ▷ : 2
A
A
D
A
D
A

4. Release the hooks (A) and the hook strip (B).

5. Driver's seat: Remove the clip(s) (C).

6. Power seat: Remove the retainer(s) (D) from the seat frame.

Driver's manual seat

Fastener Location

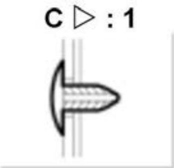

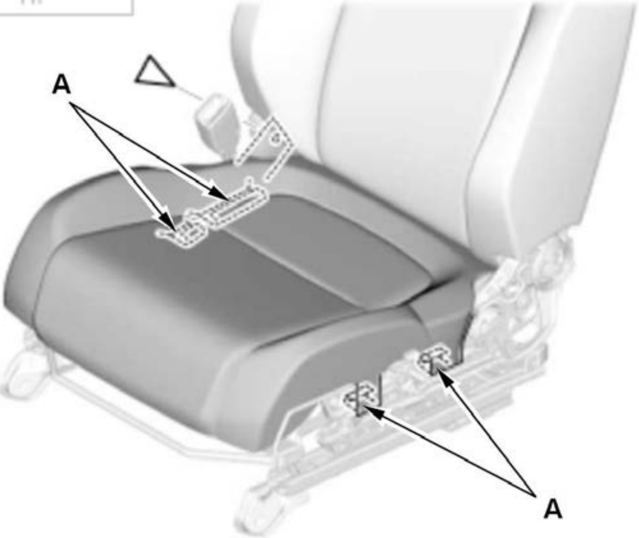

Passenger's power seat

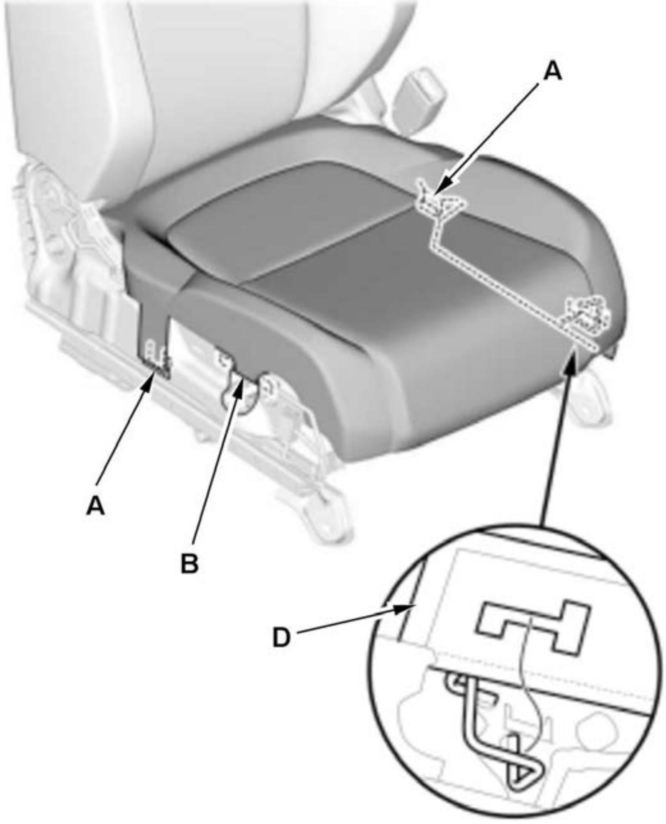

Passenger's manual seat

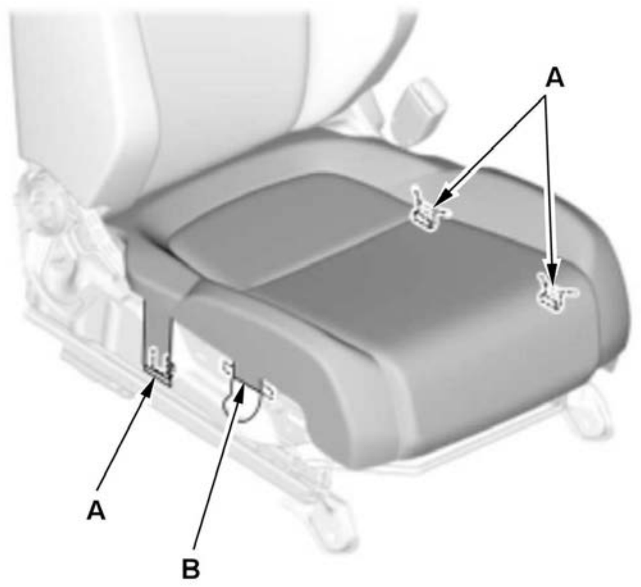	
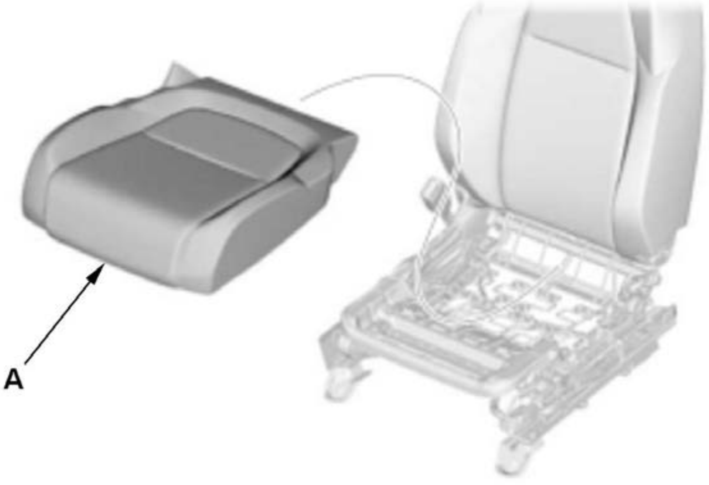	7. Remove the seat cushion cover/pad (A).

5. Front Seat Cushion Cover - Remove

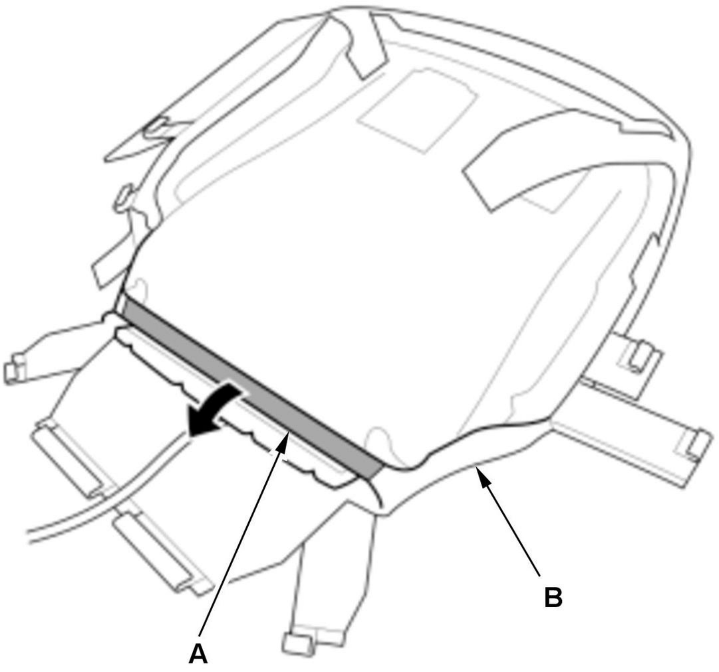 	1. Pull off the band (A) of the seat cushion cover (B).

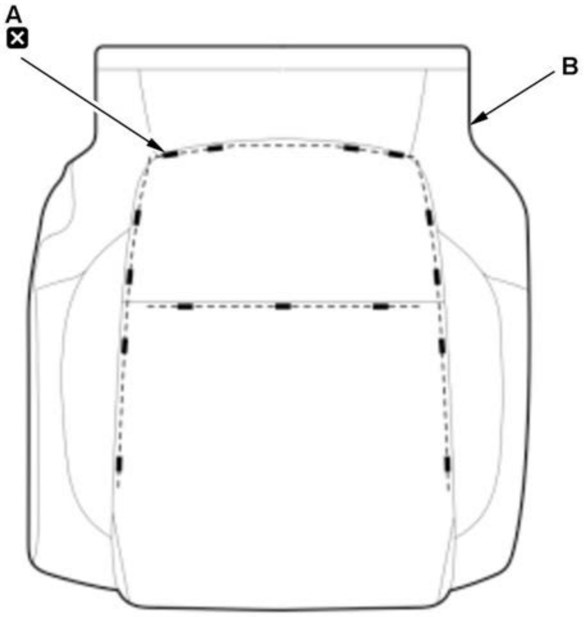 	2. Remove the upholstery rings (A), and then remove the seat cushion cover (B).

6. All Removed Parts - Install

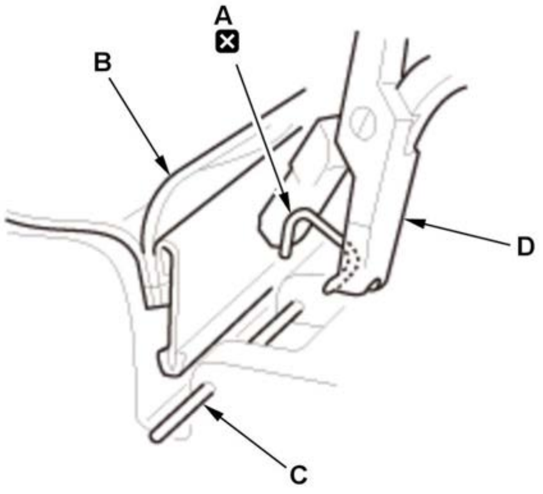	1. Install the parts in the reverse order of removal. **NOTE:** **Replace all of the upholstery rings (A) fastening the seat cushion cover (B) to the pad wires (C) with new ones using commercially available upholstery ring pliers (D).**

FRONT SEAT FRAME REMOVAL AND INSTALLATION

Removal and Installation

SRS components are located in this area. Review the SRS component locations and the precautions and procedures before doing repairs or service.

1. Front Seat-Back Cover/Pad - Remove
2. Front Seat Cushion Cover/Pad - Remove
3. Front Seat Inner Recline Cover - Remove (Passenger's Seat)
4. Front Seat Front Cushion Cover - Remove (Driver's Power Seat)

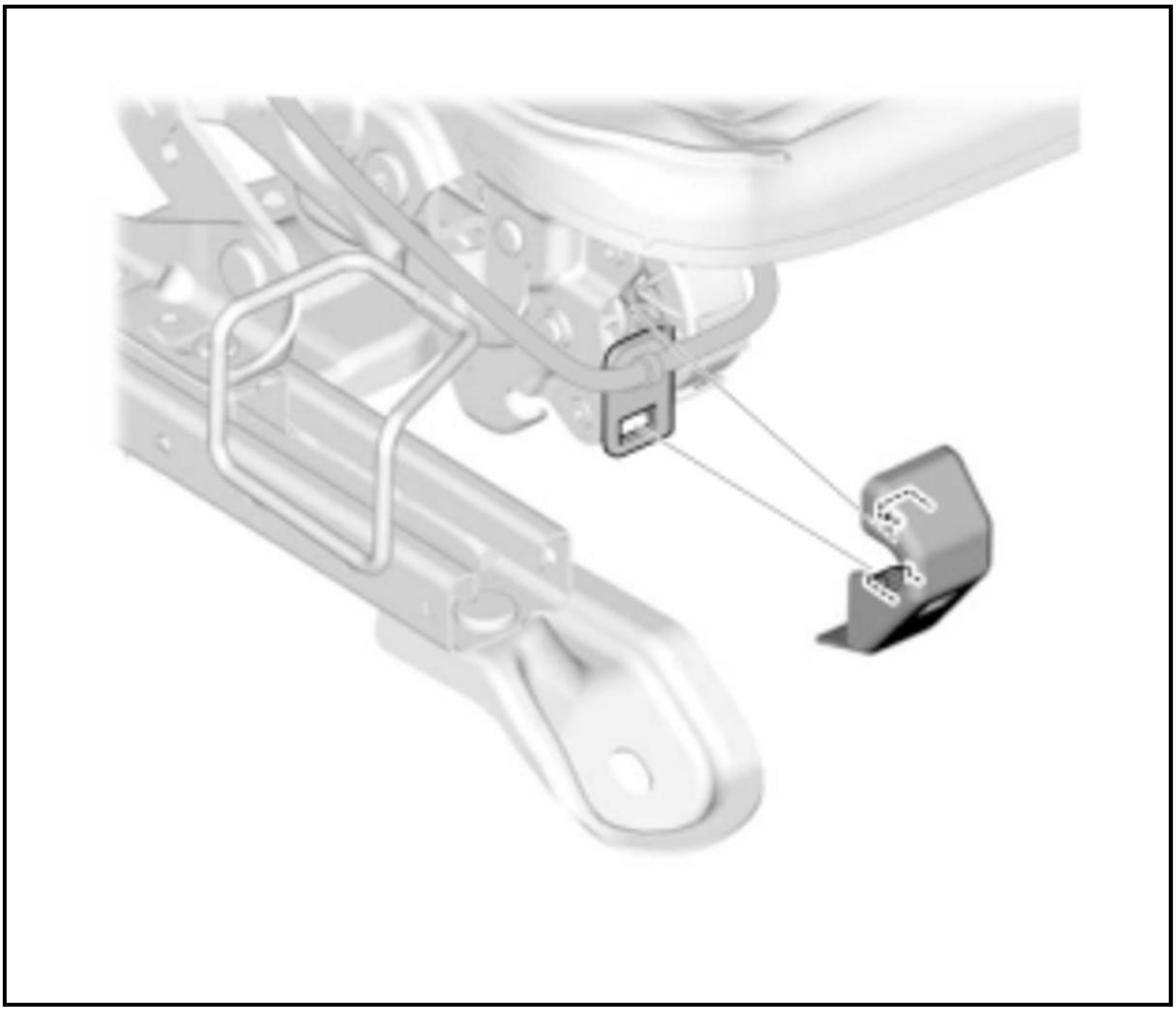

5. **Front Seat Belt Buckle - Remove**
6. Front Seat Slide Motor Cover - Remove (Power Seat)

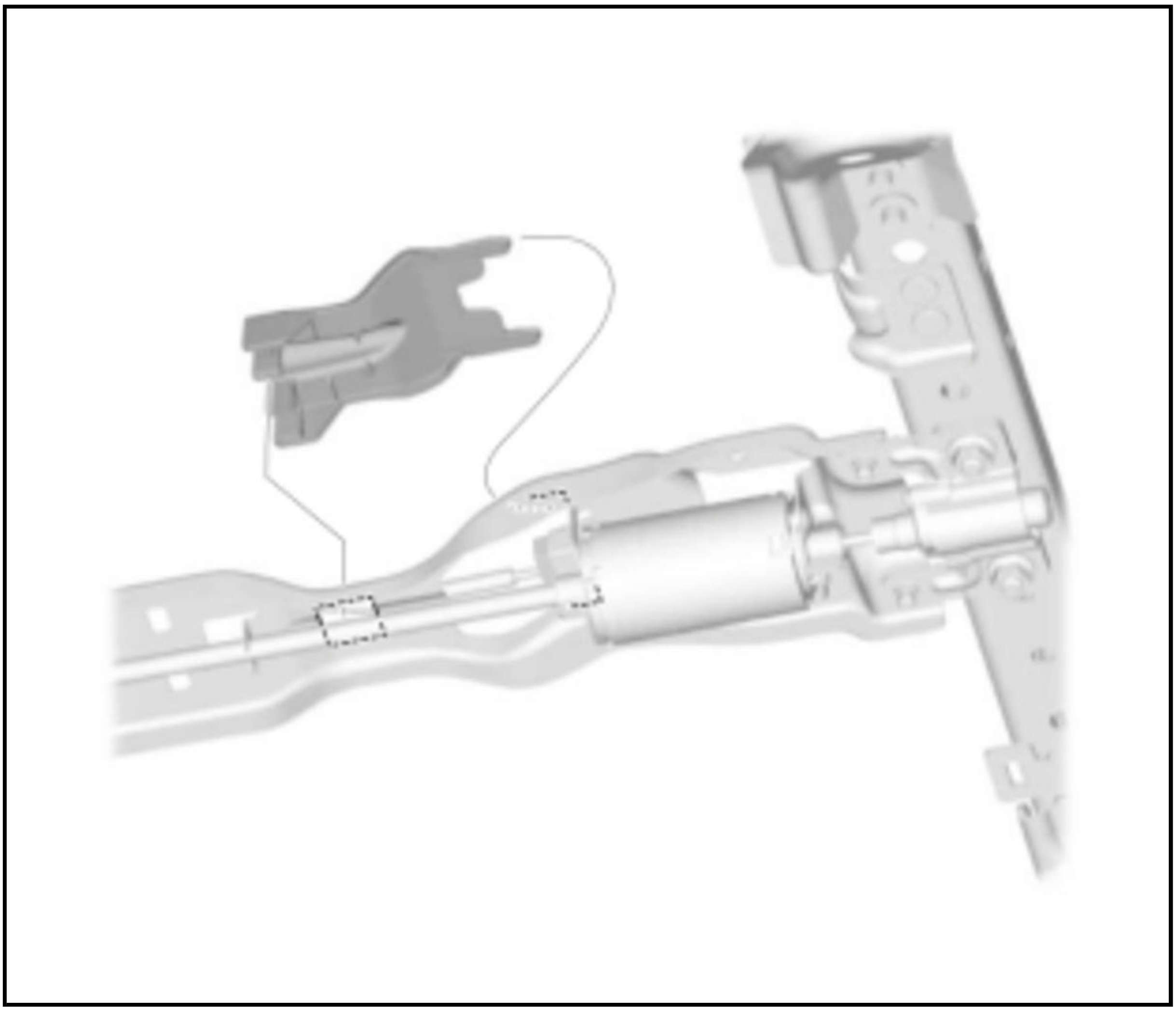

7. Front Seat Wire Harness - Remove
8. Upper Rail Outer Cover - Remove (Driver's Seat)

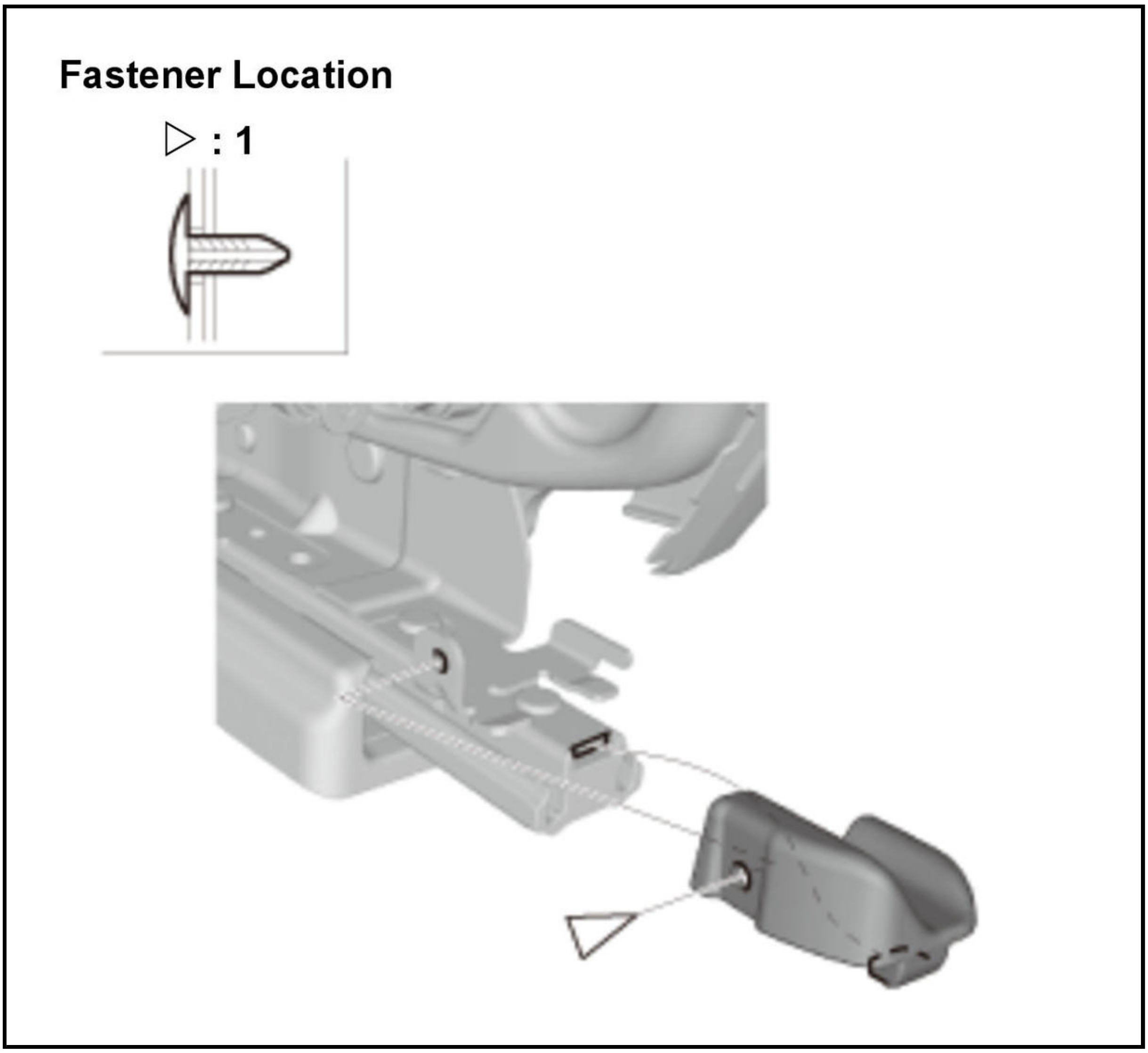
Fastener Location
▷ : 1

9. Upper Rail Inner Cover - Remove (Driver's Seat)

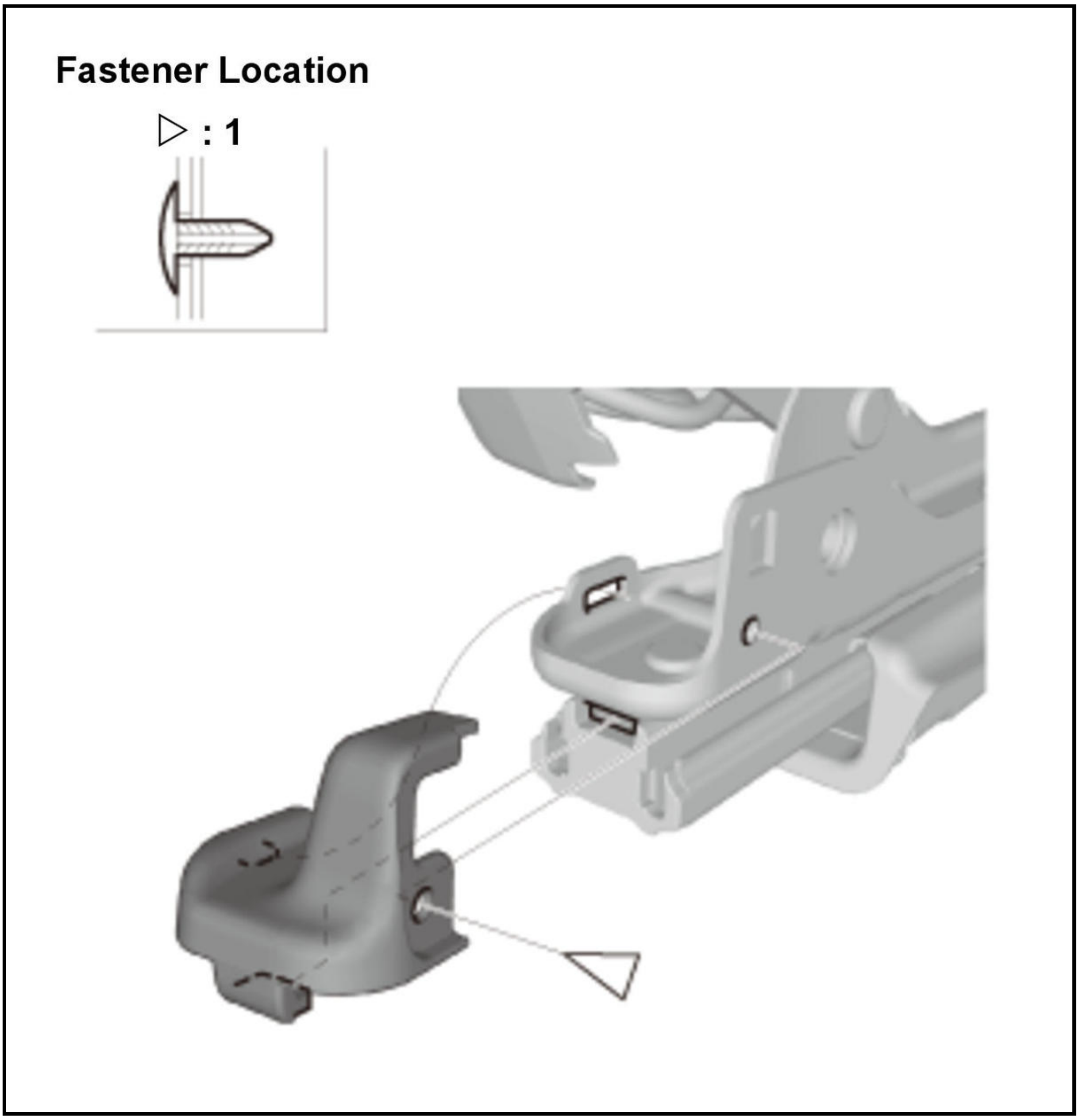
Fastener Location
▷ : 1

10. Front Seat Outer/Inner Recline Inner Covers - Remove

Driver's seat

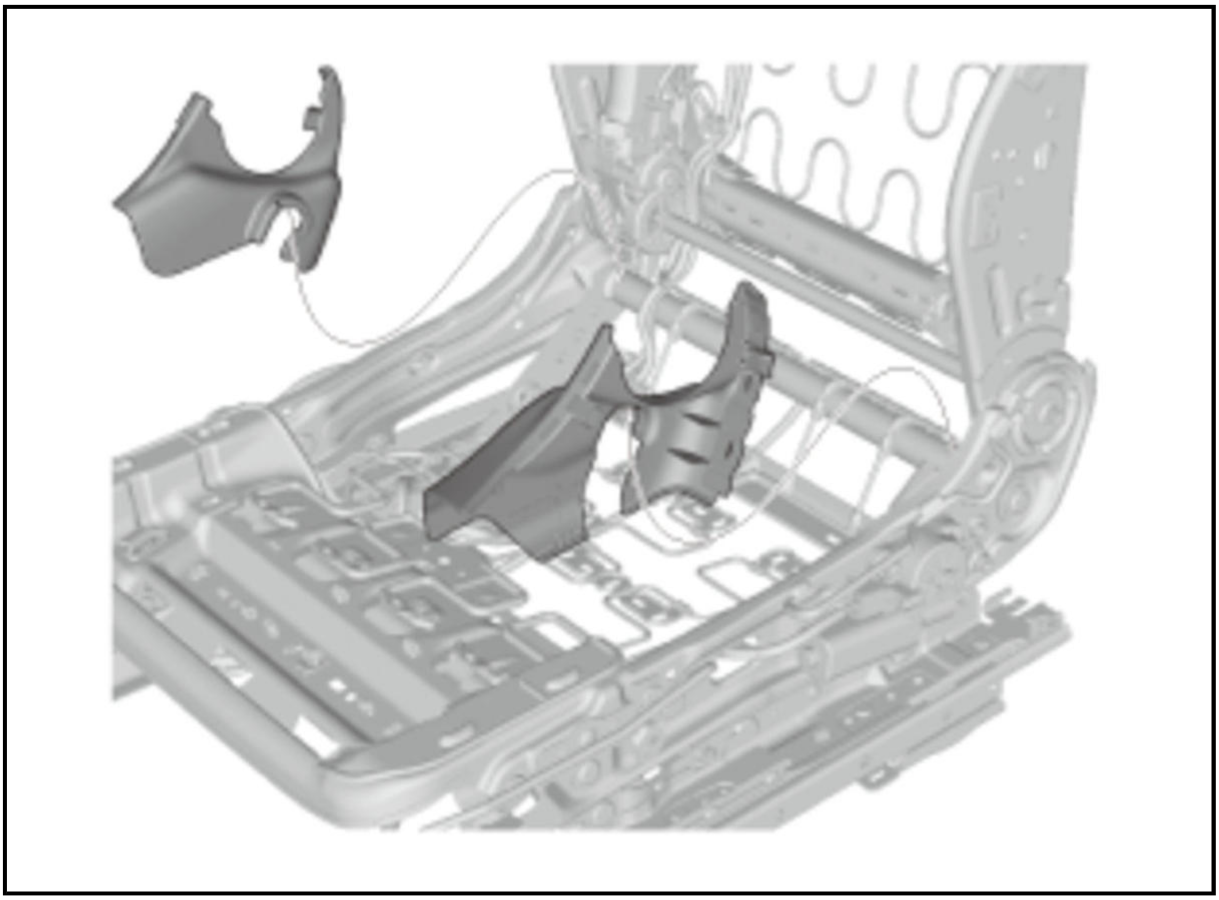

Passenger's seat

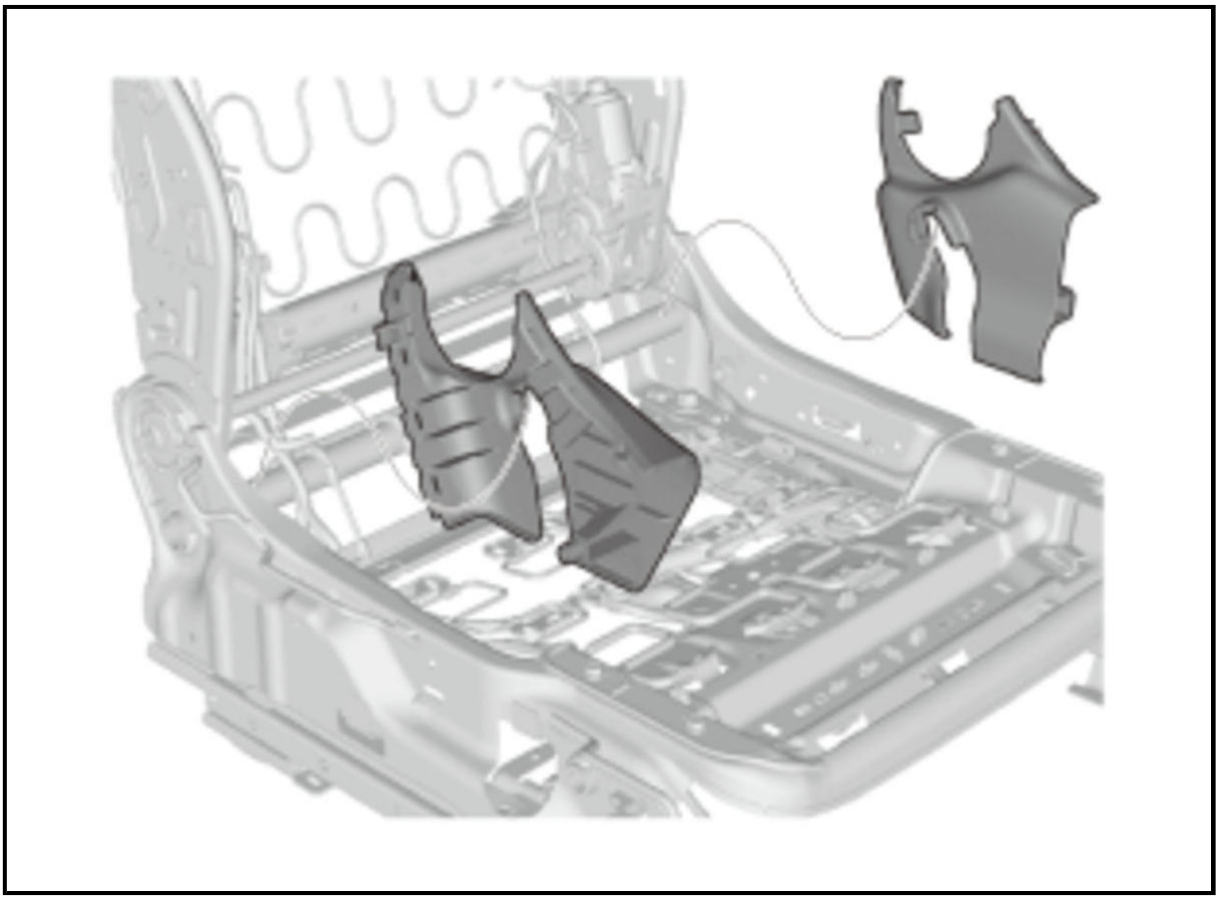

11. Front Seat Side Airbag Holder - Remove

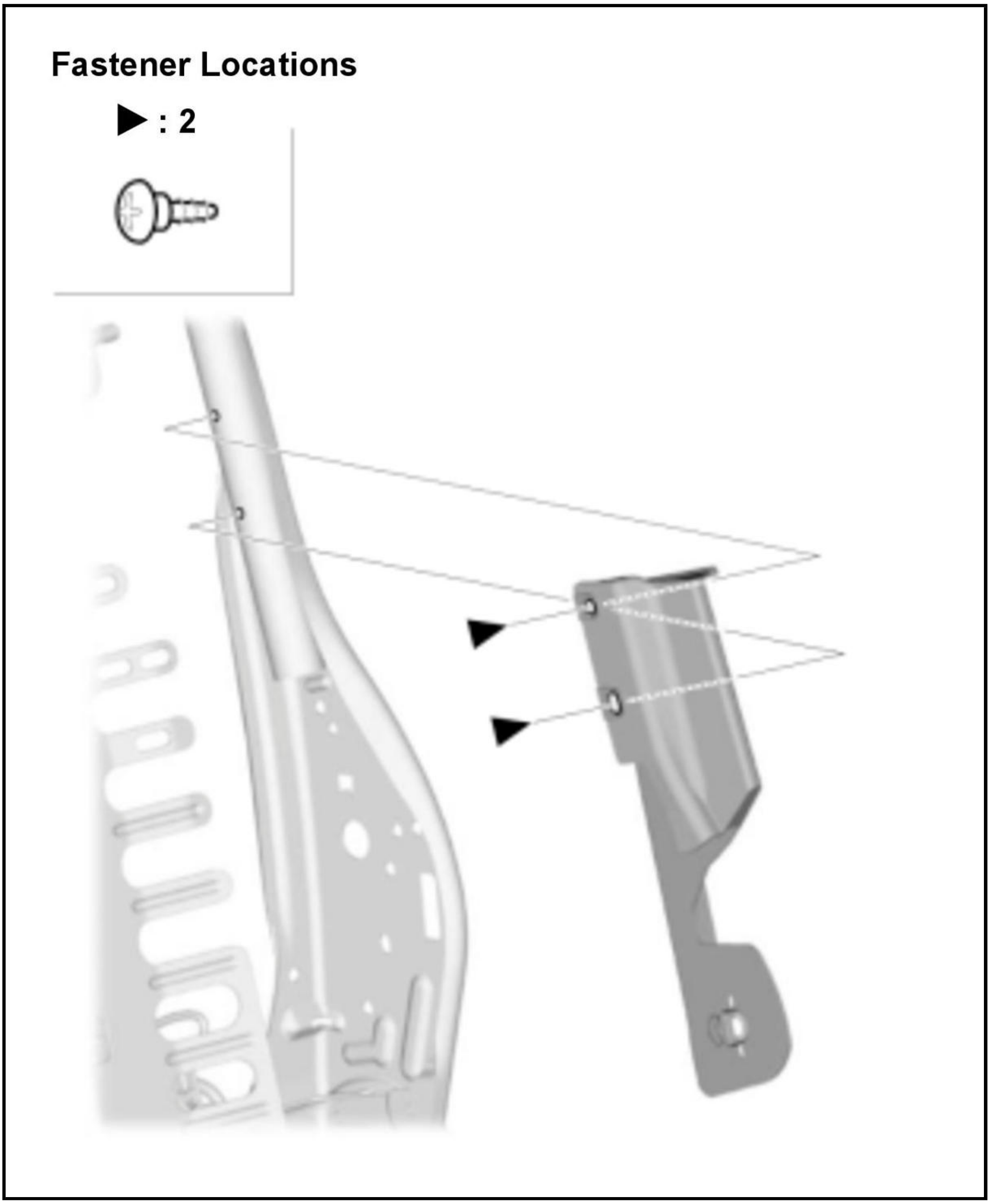
Fastener Locations
▶ : 2

12. Edge Protector(s) - Remove

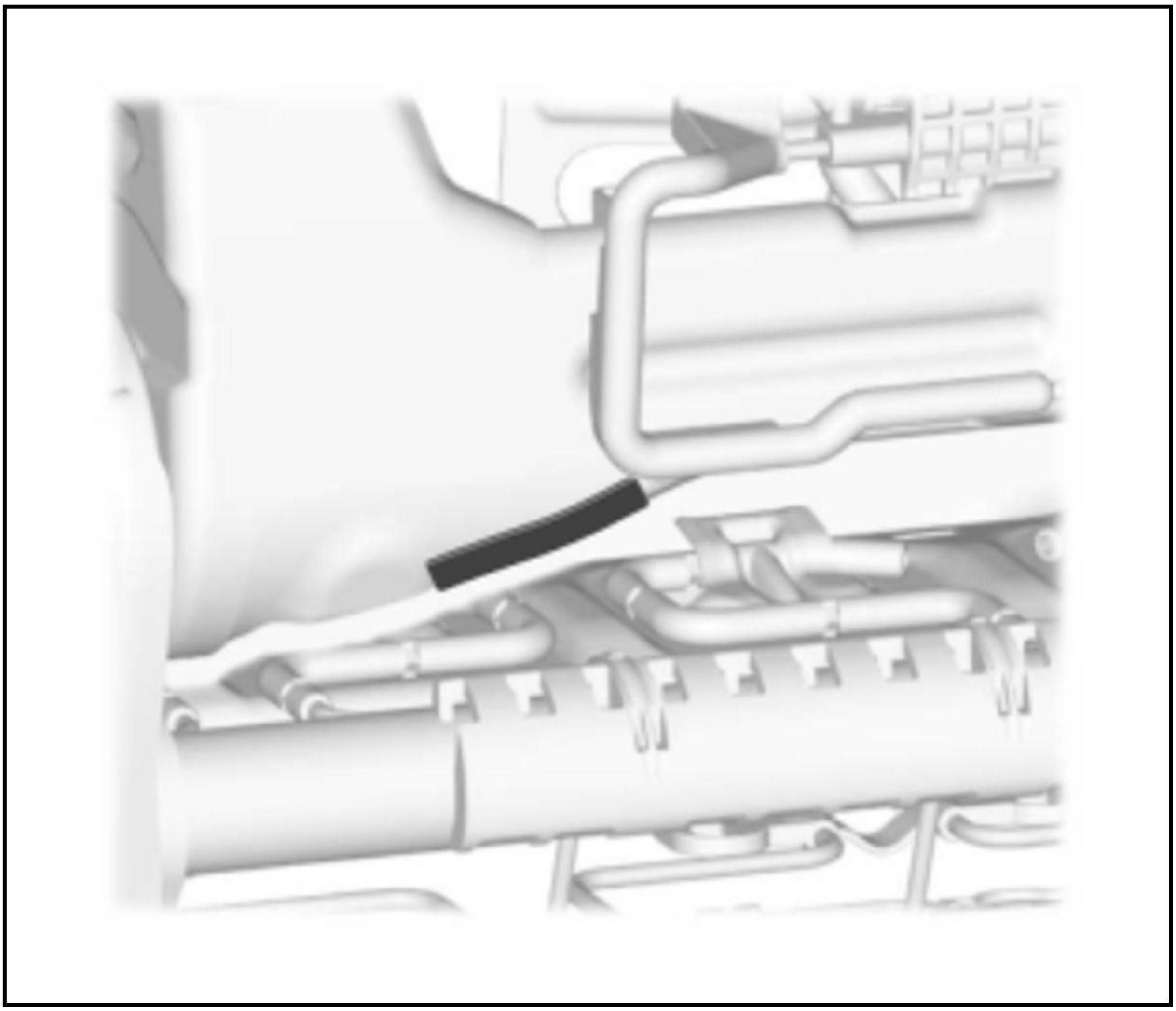

13. All Removed Parts - Install

    1. Install the parts in the reverse order of removal.

14. Driving Position Memory - Clear (For Some Models)

    NOTE: **Clear the driving position memory** after doing any of the following actions.

    - Replace the new front seat frame.
    - Substitute a known-good front seat frame.

15. **Front Passenger's Weight Sensor - Initialize (For Some Models)**
16. **Front Passenger's Weight Sensor - Operation Check (For Some Models)**

FRONT SEAT HEATER CONTROL UNIT REMOVAL AND INSTALLATION

Removal and Installation

1

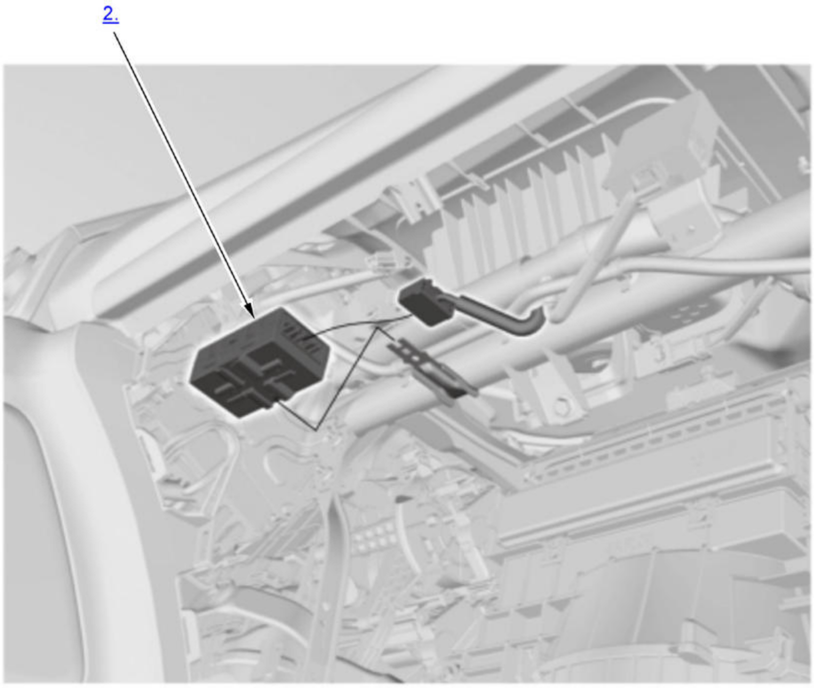

1. **Glove Box - Remove**
2. Front Seat Heater Control Unit - Remove
3. All Removed Parts - Install

1. Install the parts in the reverse order of removal.

FRONT SEAT LUMBAR SUPPORT REMOVAL AND INSTALLATION

Removal and Installation

SRS components are located in this area. Review the **SRS component locations** and the **precautions and procedures** before doing repairs or service.

1. **Front Seat - Remove**
2. Front Seat-Back Cover - Remove

1. **Remove the front seat-back cover as needed**.

3. Front Seat Lumbar Support - Remove

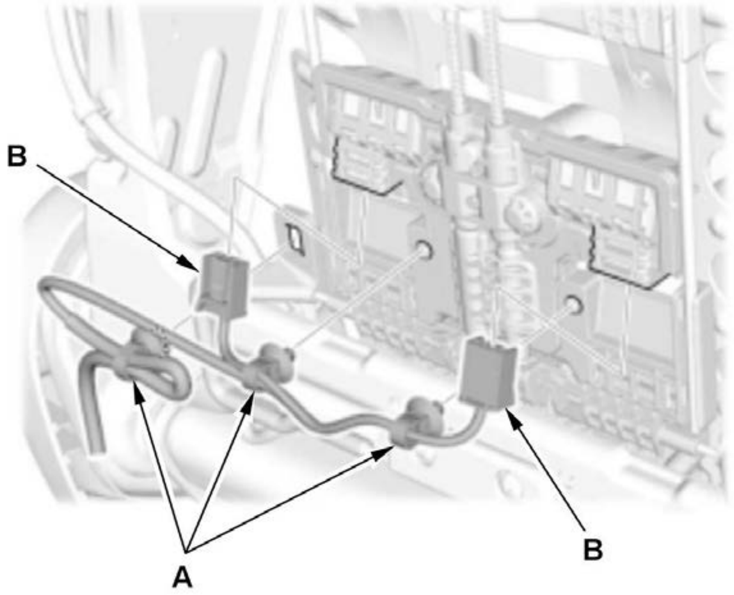	1. Remove the harness clips (A). 2. Disconnect the connectors (B).

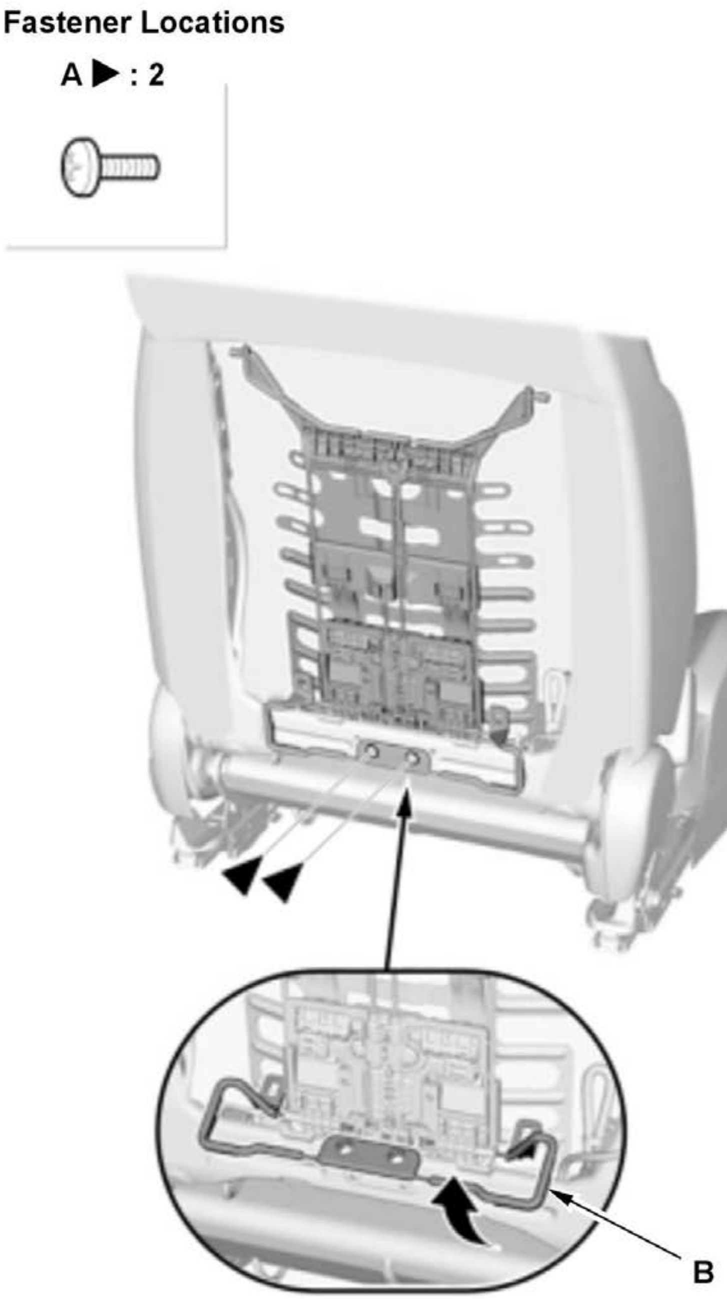
Fastener Locations
A ▶ : 2
B

3. Remove the screws (A).

4. Lift up the hook (B).

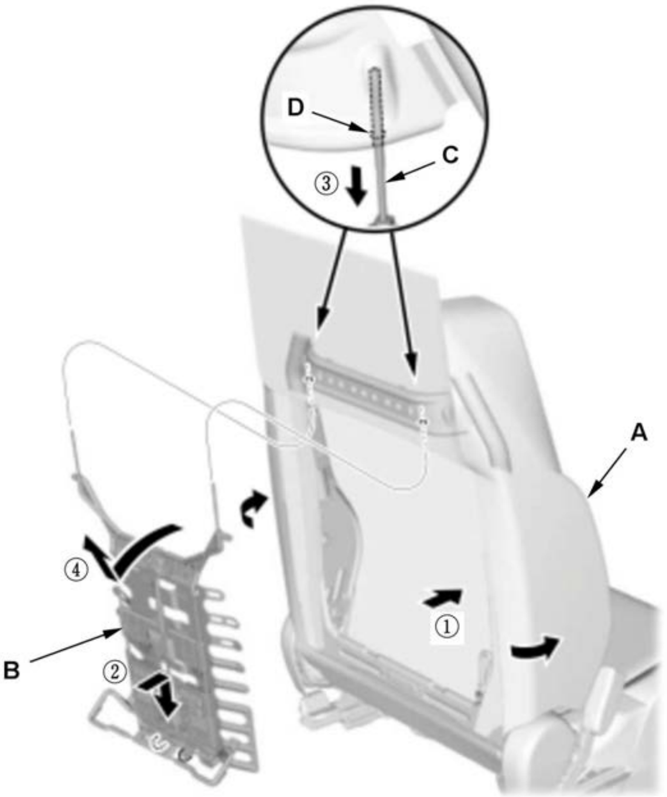 	5. Push the bottom area of the front seat-back cover/pad (A) forward as needed. 6. Move the front seat lumbar support (B) forward, and lower it. 7. Remove the top wires (C) from the holes (D). 8. Remove the front seat lumbar support.

4. All Removed Parts - Install

1. Install the parts in the reverse order of removal.

FRONT SEAT RECLINE COVER REMOVAL AND INSTALLATION

Removal and Installation

NOTE:

- **How to read the torque specifications** .
- SRS components are located in this area. Review the **SRS component locations** and the **precautions and procedures** before doing repairs or service.

1. **Front Seat - Remove**
2. Height Adjuster Handle - Remove (Driver's Manual Seat)

Fastener Location B ● : 1 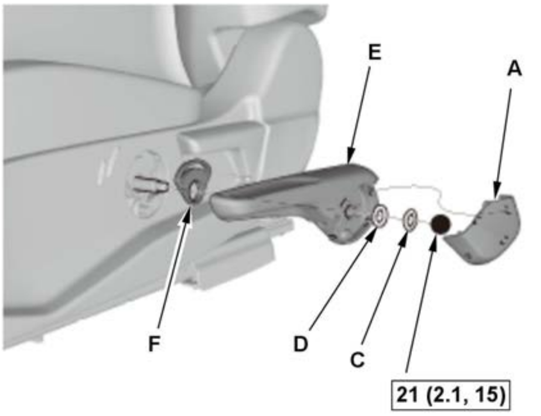 	1. Remove the cap (A). 2. Remove the nut (B), the wave washer (C), the washer (D), the height adjuster handle (E), and the detent plate (F).

3. Front Seat Outer Recline Cover - Remove

Driver's power seat **Fastener Location** ▷ : 1 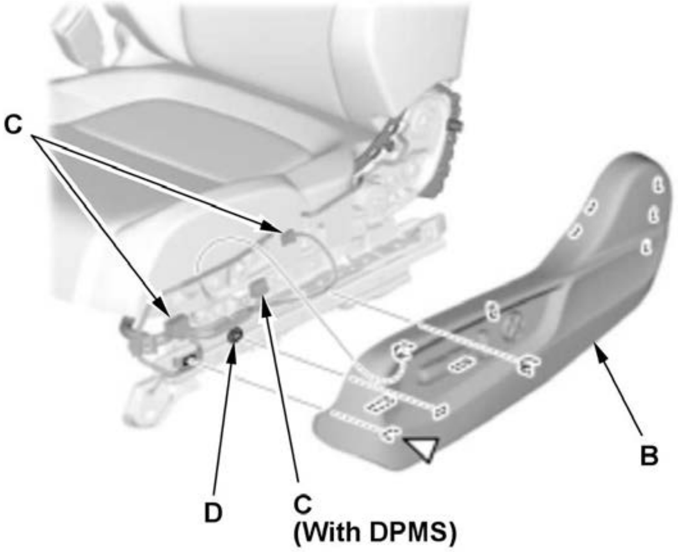 **Driver's manual seat**	1. Manual seat: Remove the front seat recline knob (A). 2. Remove the front seat outer recline cover (B). 3. Power seat: Disconnect the connector(s) (C). 4. Driver's power seat: Remove the harness clip (D).

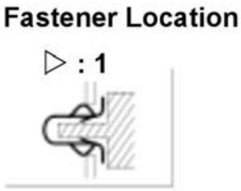
Fastener Location
▷ : 1

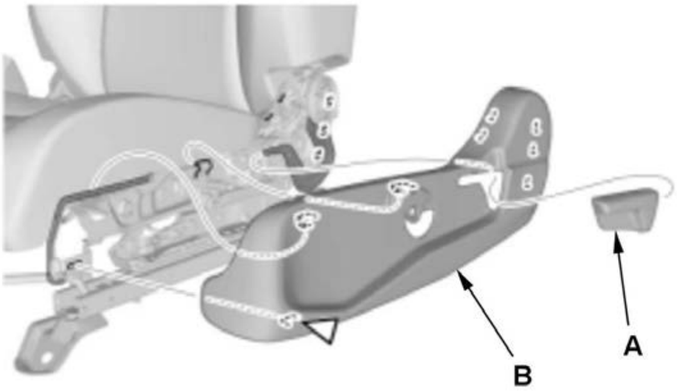

Passenger's power seat

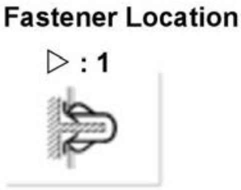
Fastener Location
▷ : 1

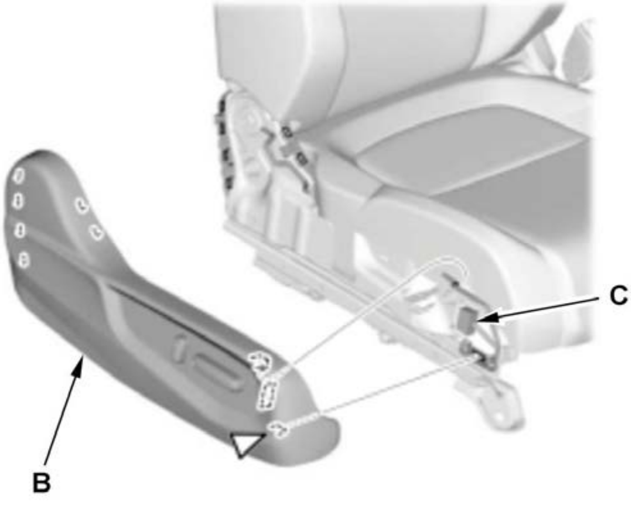

Passenger's manual seat

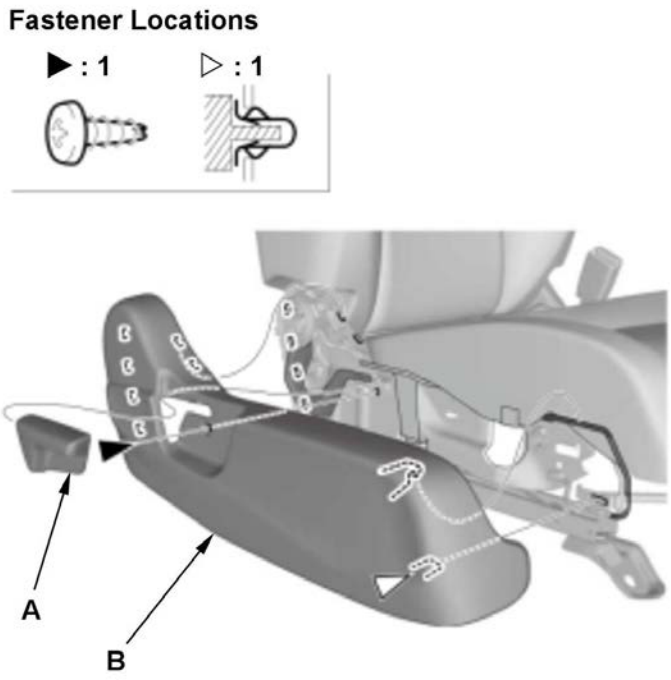
Fastener Locations
▶ : 1
▷ : 1
1
A
B

4. Front Seat Inner Recline Cover - Remove

Driver's seat

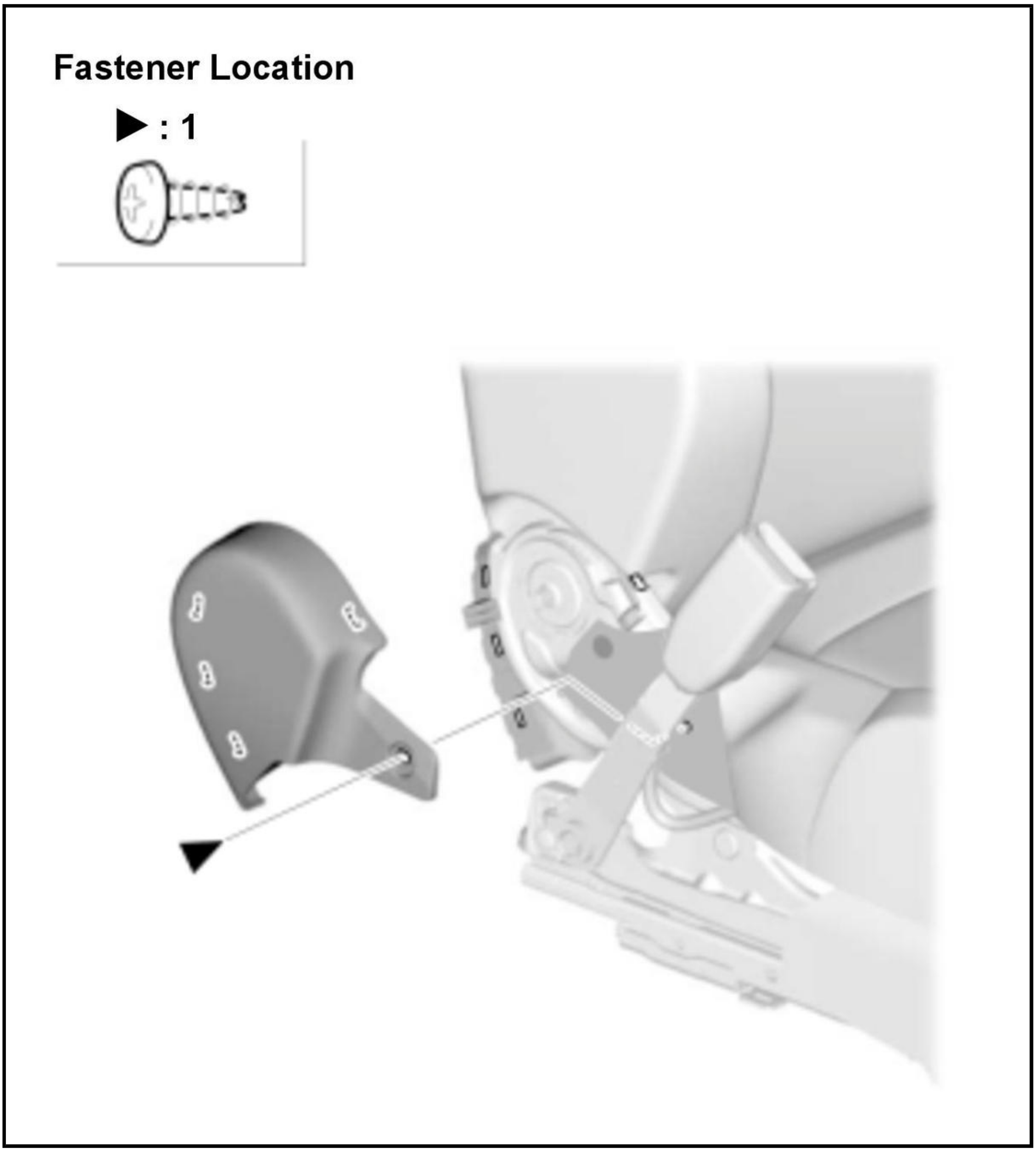
Fastener Location
▶ : 1

Passenger's seat

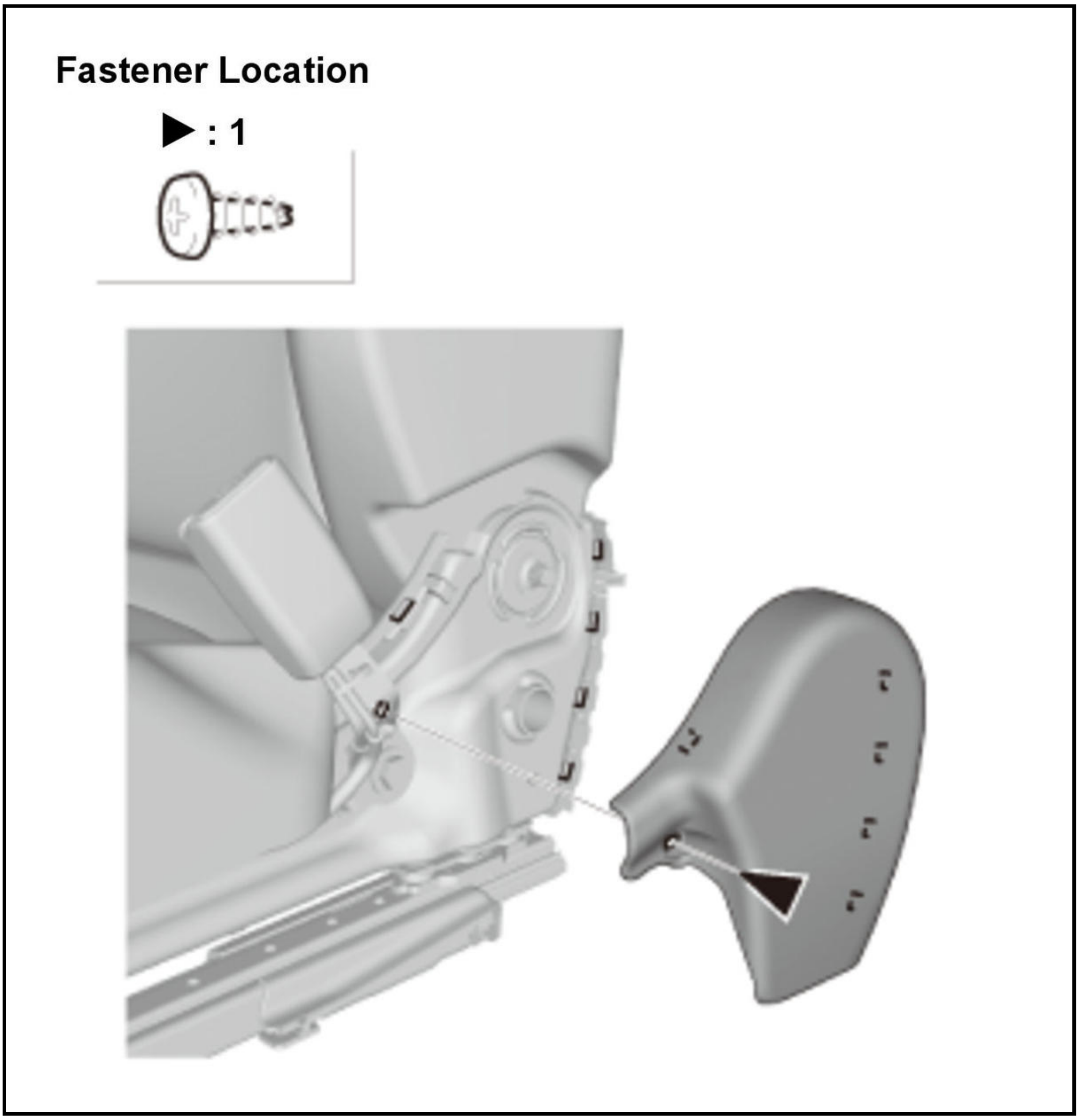

5. All Removed Parts - Install

1. Install the parts in the reverse order of removal.

FRONT SEAT REMOVAL AND INSTALLATION

Removal and Installation

NOTE:

- **How to read the torque specifications** .
- SRS components are located in this area. Review the **SRS component locations** and the **precautions and procedures** before doing repairs or service.

1. Front Seat Track End Covers - Remove

Front side

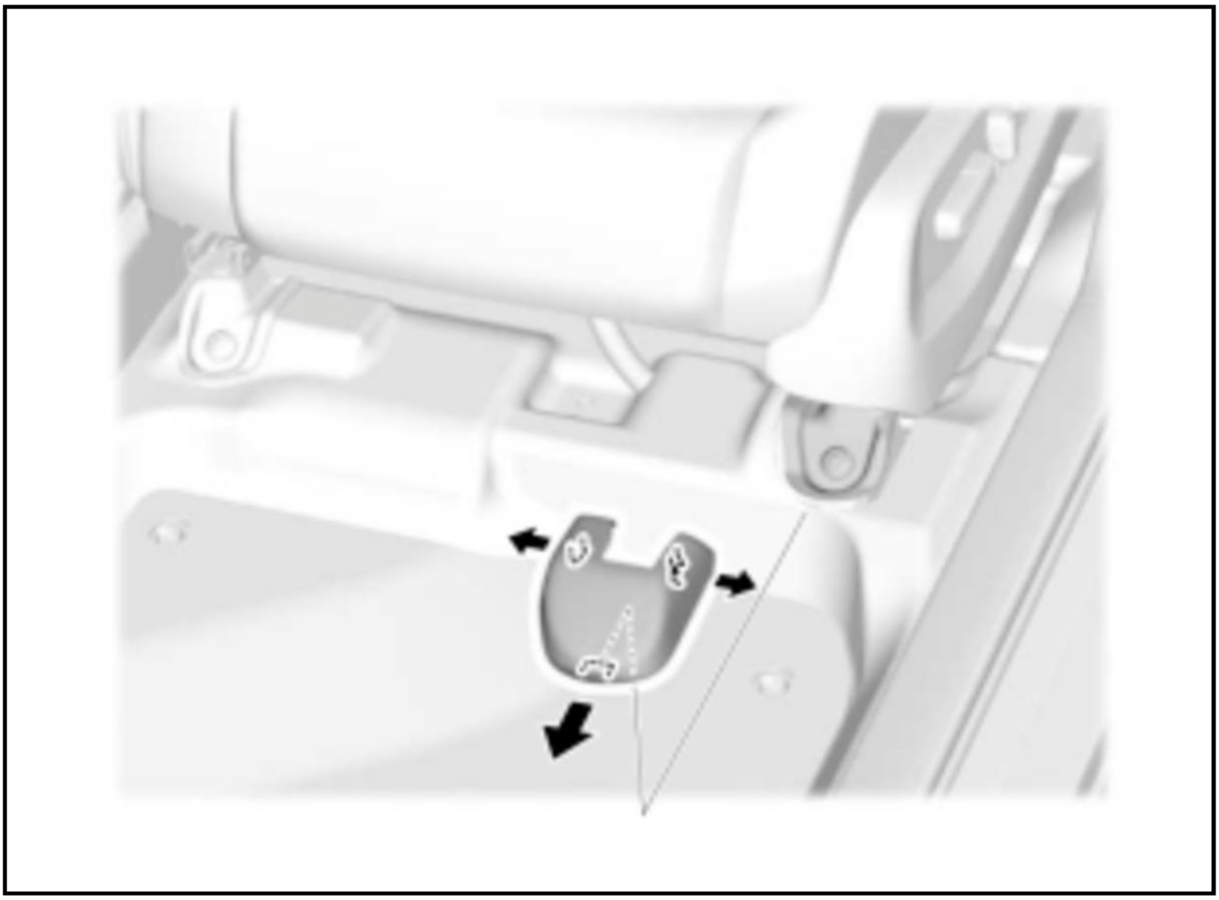

Rear side

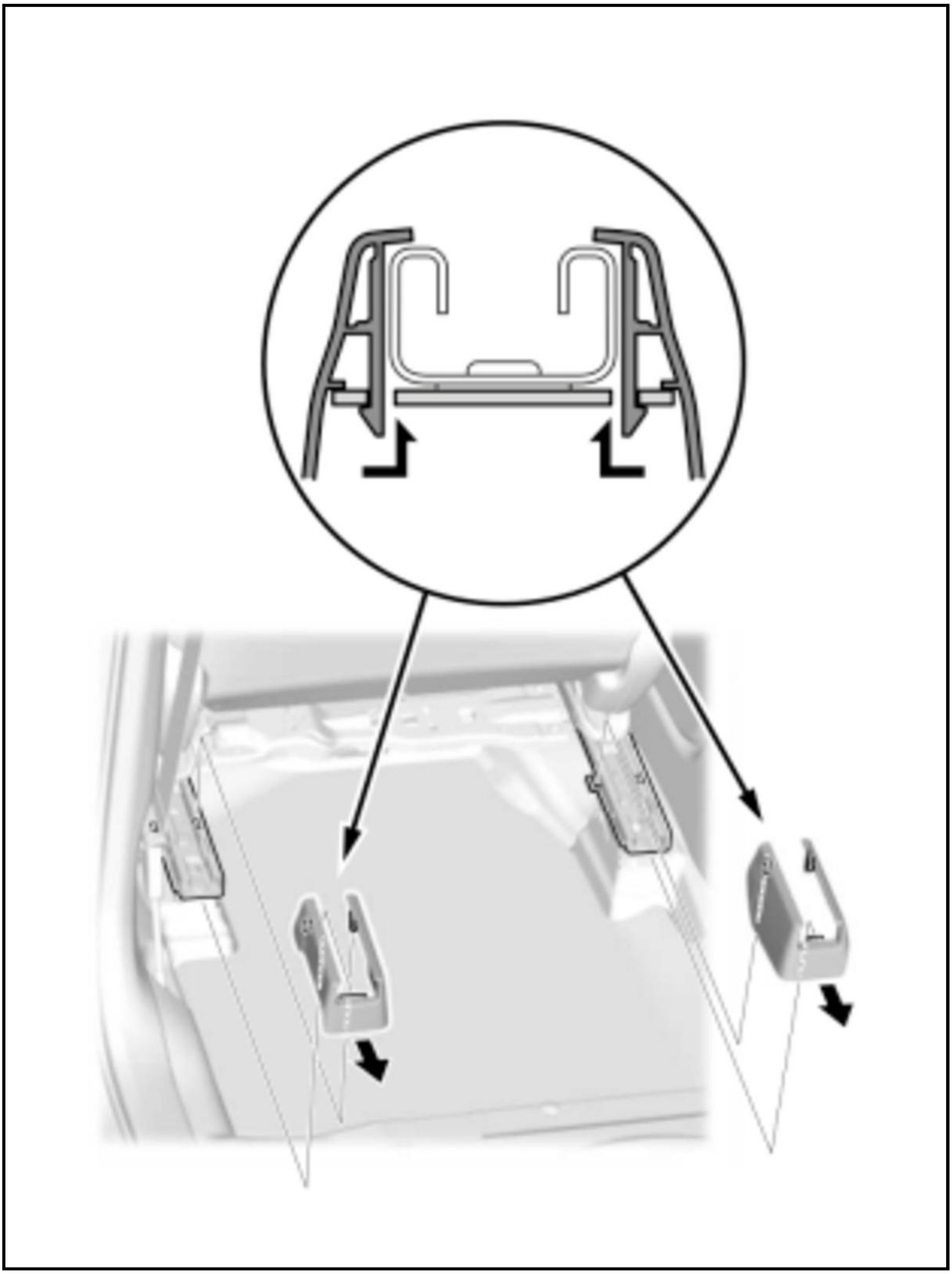

2. Front Seat Mounting Bolts - Remove

Rear side

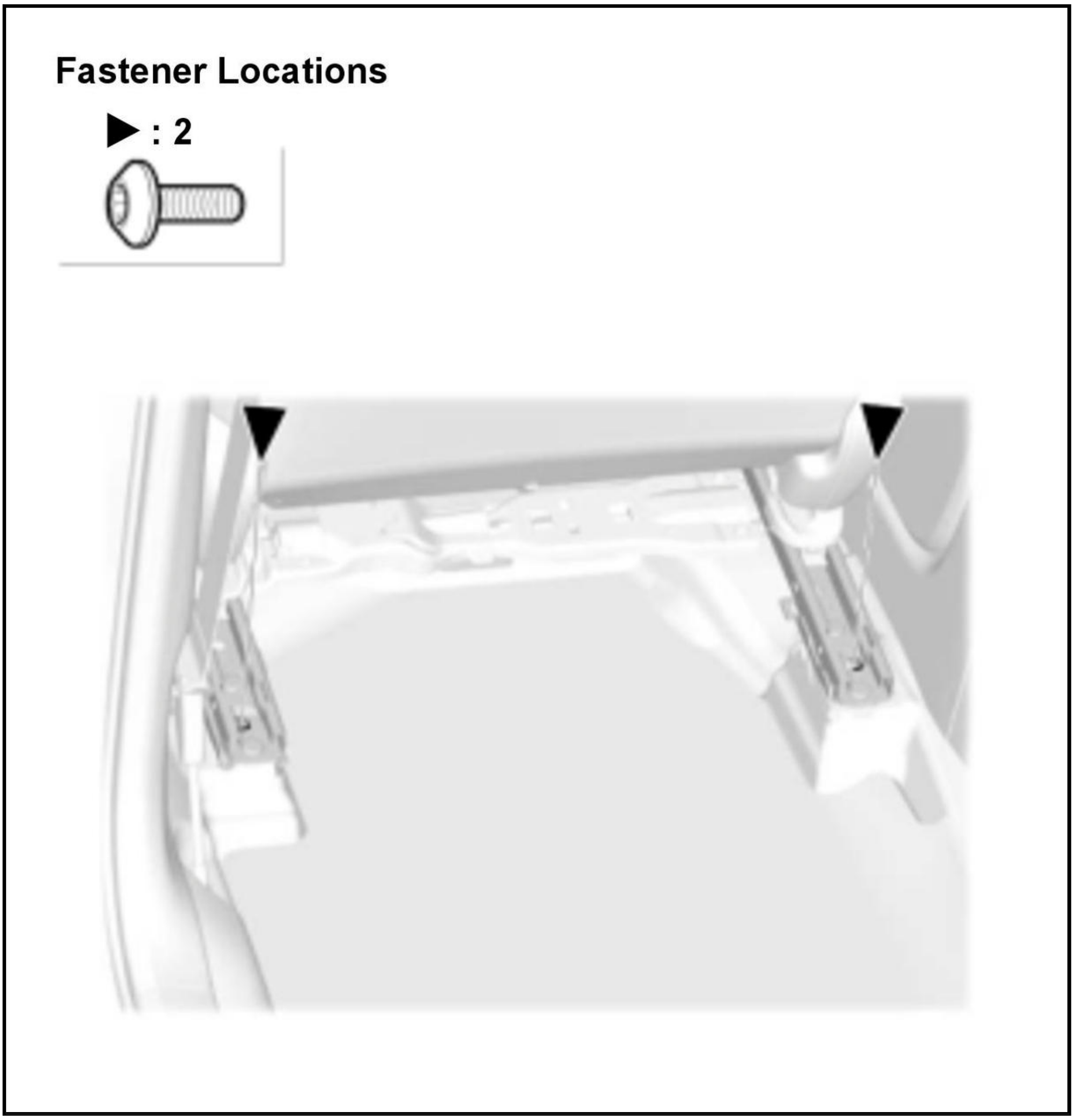
Fastener Locations
▶ : 2

Front side

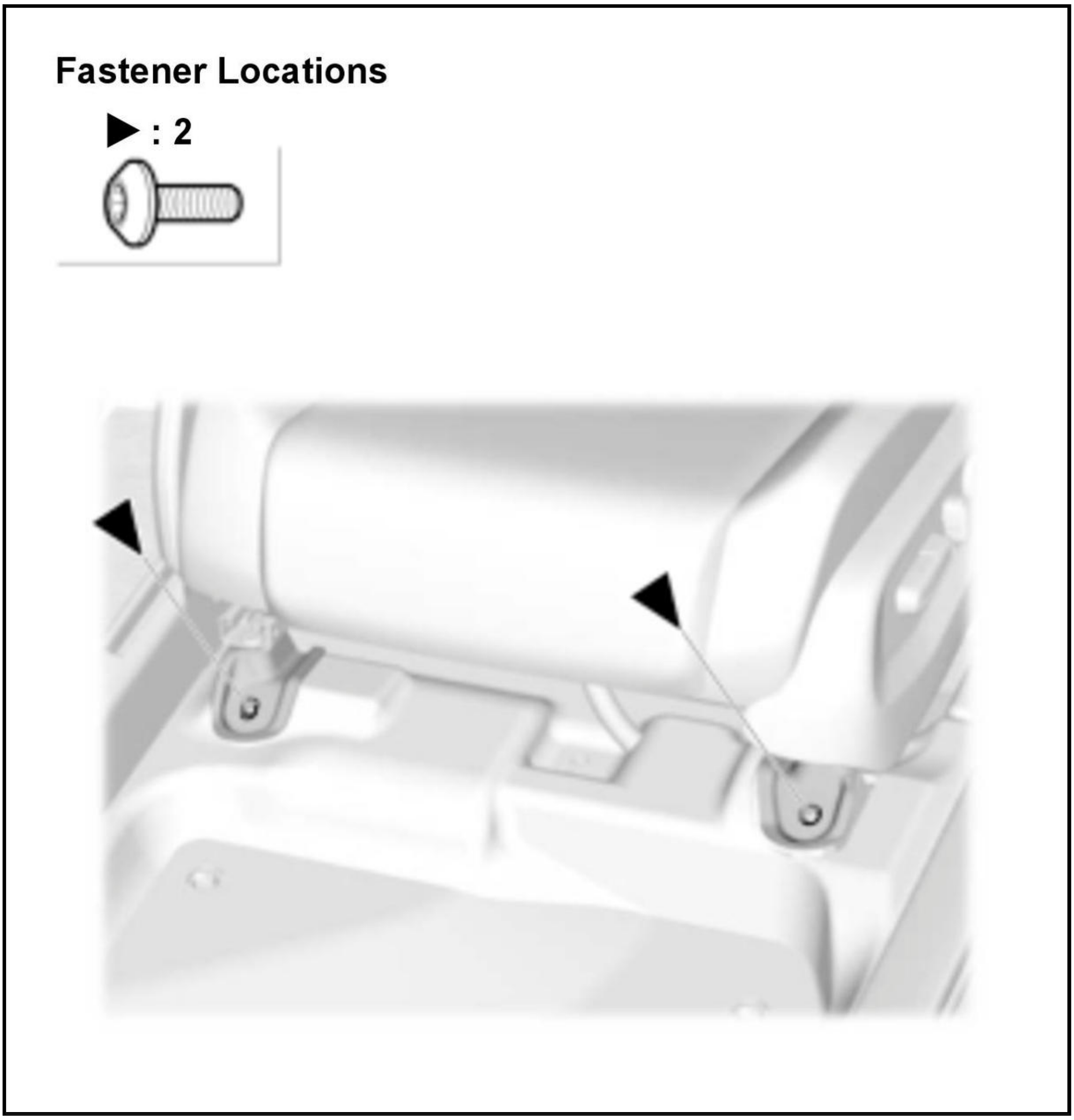
Fastener Locations
▶ : 2

3. 12 Volt Battery Terminal - Disconnect

   NOTE: Wait at least 3 minutes before starting work.

4. Front Seat - Remove

Driver's seat

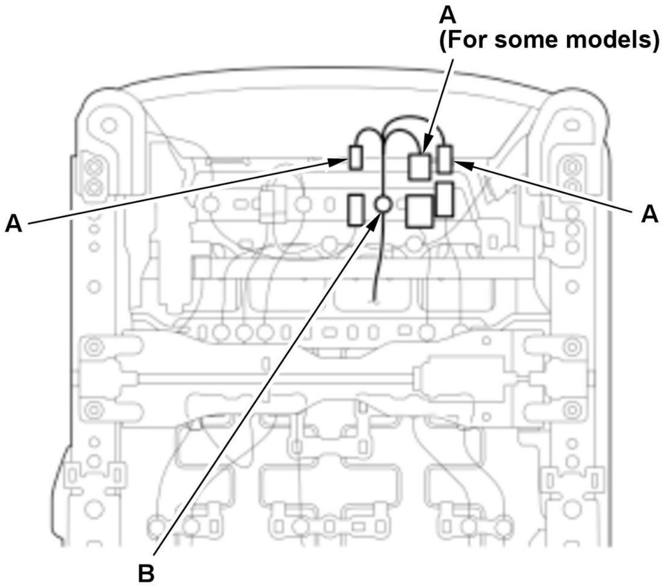

Passenger's seat

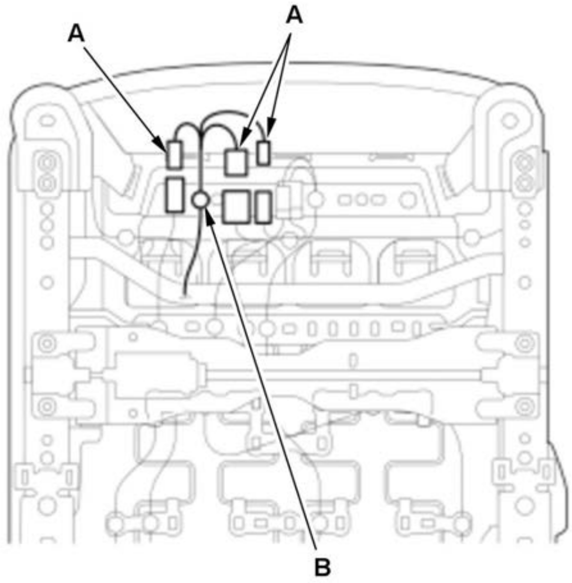

1. Lift up the front seat, disconnect the connectors (A), and remove the harness clip (B).

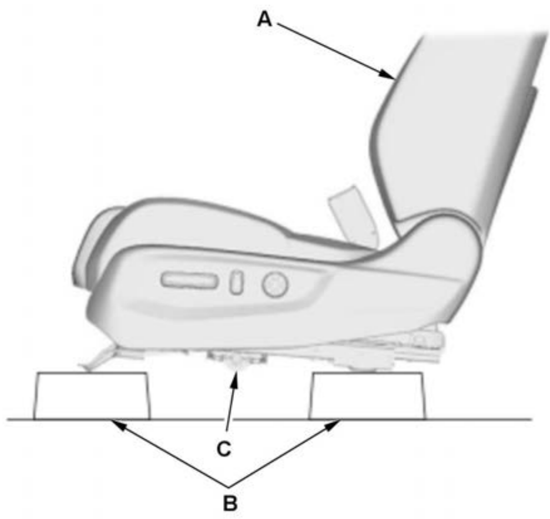

2. Remove the head restraint.

3. With the help of an assistant, carefully remove the front seat (A) through the front door opening.

NOTE:

- **Power seat: Use rubber pads (B) to support the front seat.**

	• Power seat: Take care not to damage the slide motor (C).

5. All Removed Parts - Install

Front side

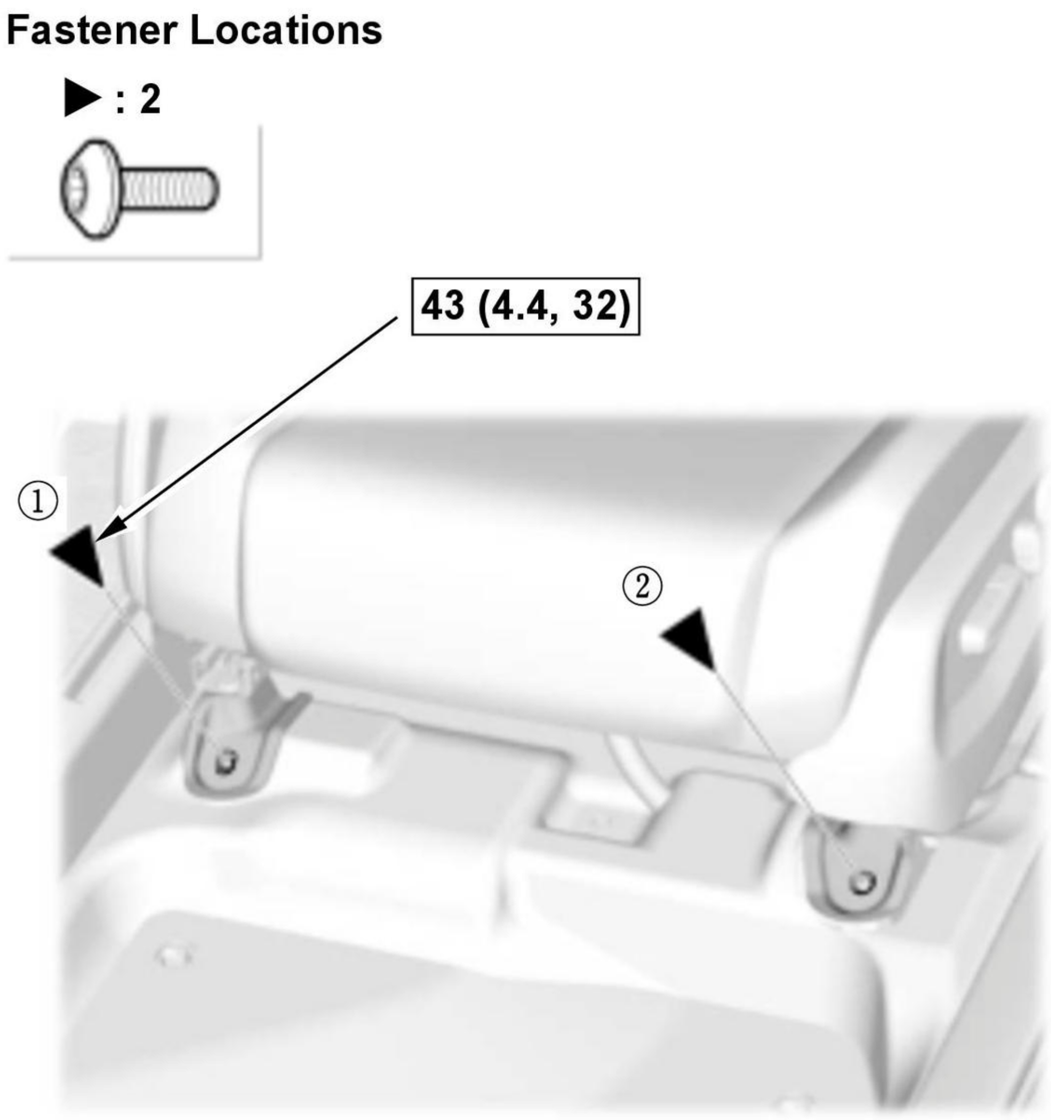
Fastener Locations
▶ : 2
43 (4.4, 32)
①
②

Fig. 2: Tightening Seat Bolts In Sequence With Torque Specifications
Courtesy of HONDA, U.S.A., INC.

Rear side

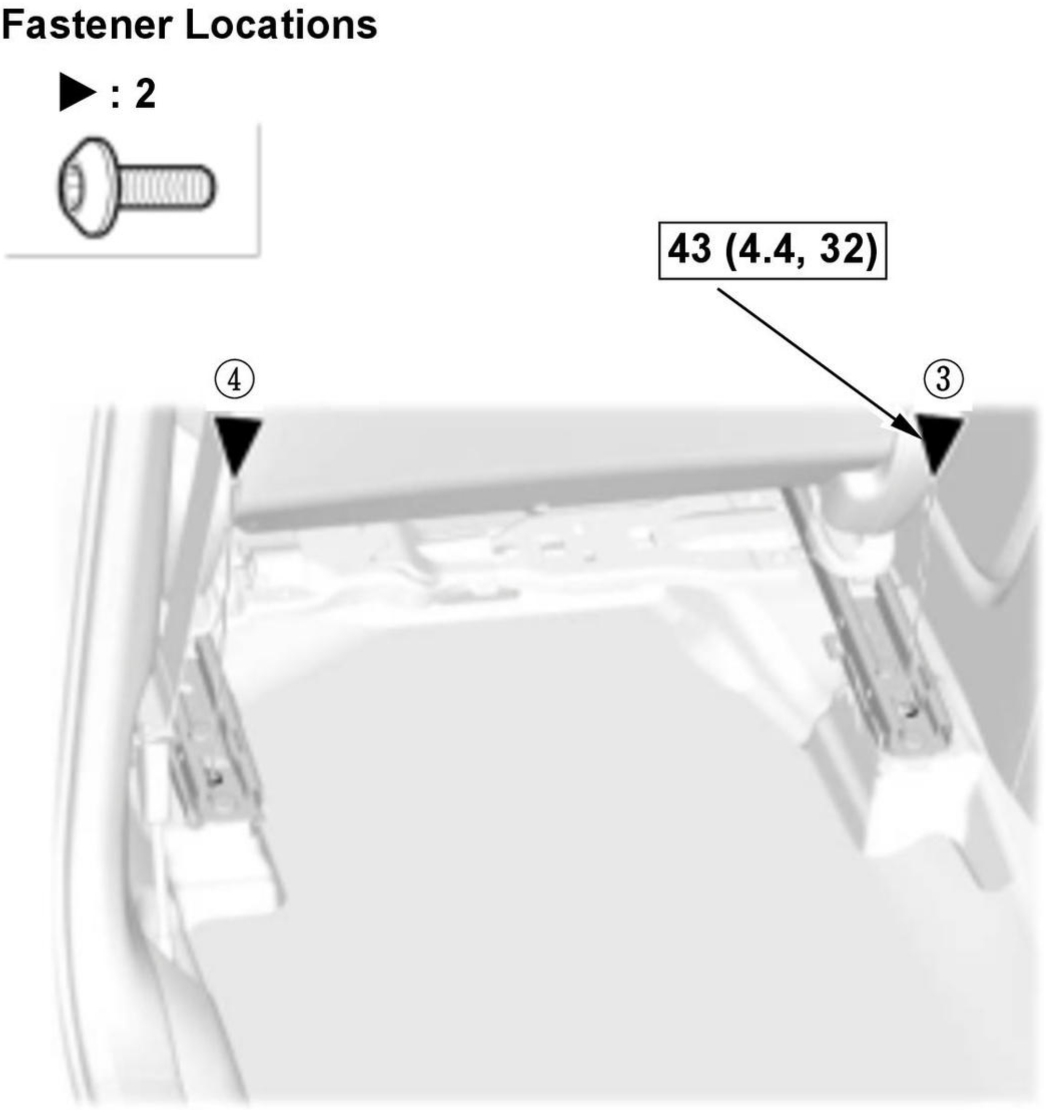

[Fig. 3: Tightening Seat Bolts In Sequence With Torque Specifications](#)
Courtesy of HONDA, U.S.A., INC.

1. Install the parts in the reverse order of removal.

NOTE:

- Do the 12 volt battery terminal reconnection procedure .
- **Tighten the bolts by hand first, and then tighten them to the specified torque in the sequence shown.**

6. **Front Passenger's Weight Sensor - Operation Check (For Some Models)**

How to Access the Front Seat Rear Mounting Bolts If the Seat Slide Motor Malfunctioned (If the seat is at its rear most position)

7. Front Seat Rear Mounting Bolts - Remove (Power Seat)

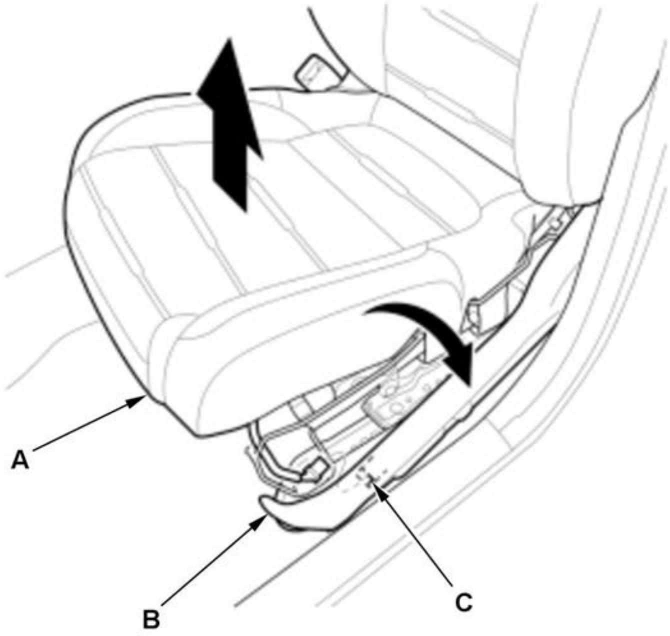	1. Adjust the front seat cushion (A) to the full tilt up position. 2. Remove the outer recline cover (B) as needed. 3. Disconnect the connector (C).

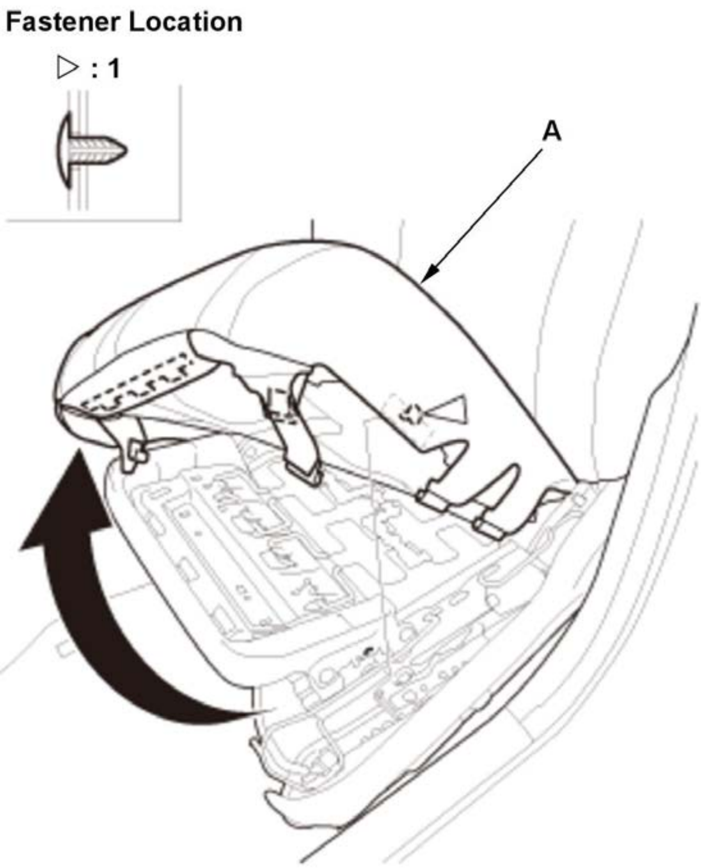	4. Remove the cushion cover/pad (A) as needed.

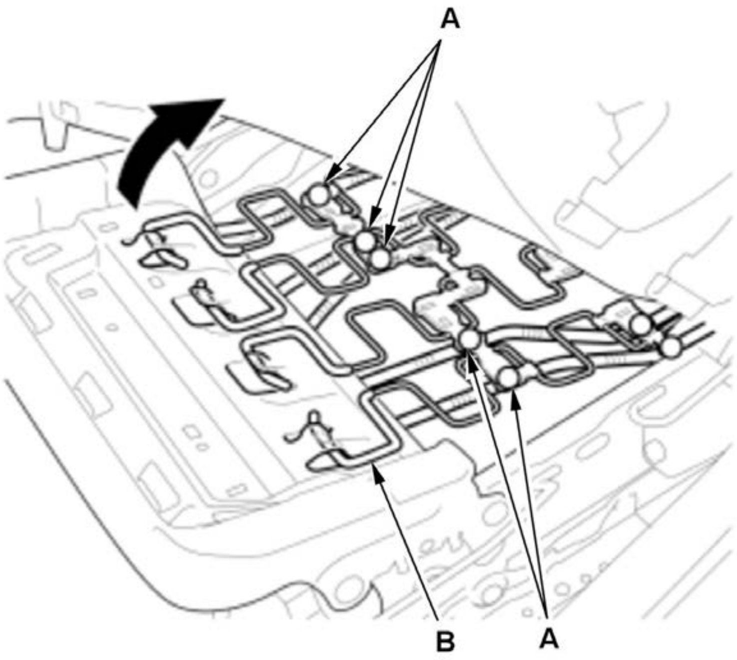

5. Remove the harness clips (A).

6. Remove the cushion spring (B) as needed.

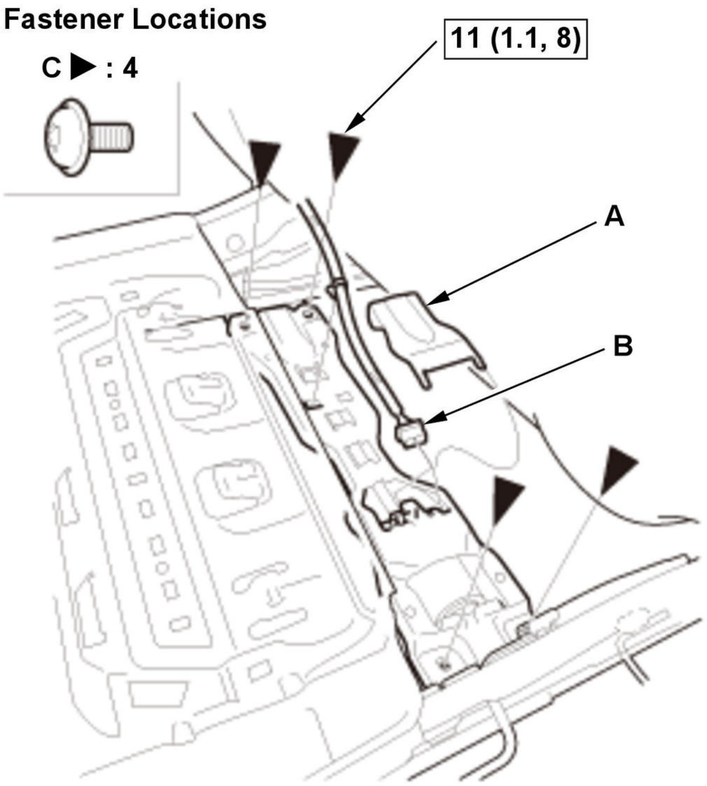
Fastener Locations
C ▶ : 4
11 (1.1, 8)
A
B

7. Remove the slide motor cover (A).

8. Disconnect the connector (B).

9. Remove the bolts (C).

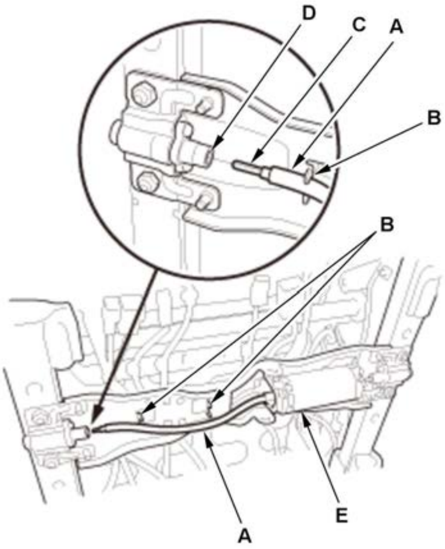	10. Release the cable housing (A) from the hooks (B). 11. Disconnect the slide motor cable (C) from the transmission (D) and the slide motor (E) for both the outer and inner seat rails. **NOTE:** **Take care not to kink the cable.**

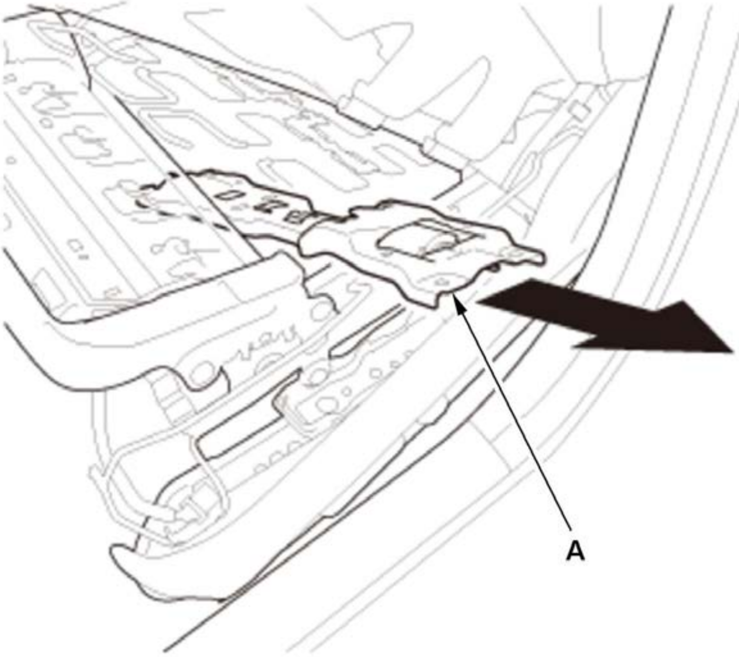	12. Remove the slide motor bracket assembly (A).

Inboard rail (driver's seat)/Outboard rail (passenger's seat)

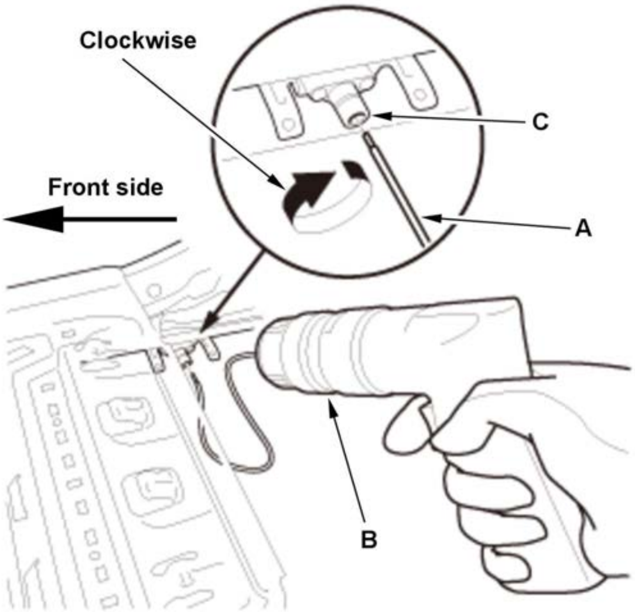

Outboard rail (driver's seat)/Inboard rail (passenger's seat)

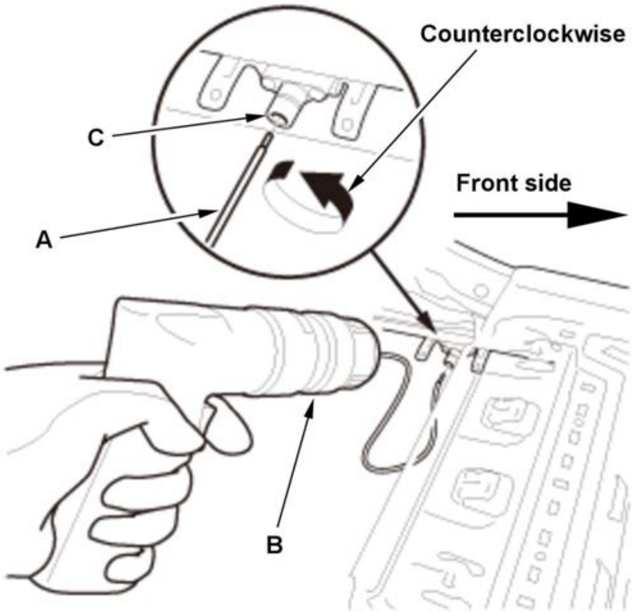

13. Connect one side of the slide motor cable (A) to a drill (B), and the other side of the cable to the transmission (C).

14. Operate the drill, alternating between the inboard and the outboard rails.

NOTE:

The drill direction is different between the inboard and outboard rails.

15. Remove the front seat rear mounting bolts.

FRONT SEAT SLIDE LEVER REMOVAL AND INSTALLATION

Removal and Installation

SRS components are located in this area. Review the SRS component locations and the precautions and procedures before doing repairs or service.

1. Front Seat - Remove
2. Front Seat Slide Lever - Remove

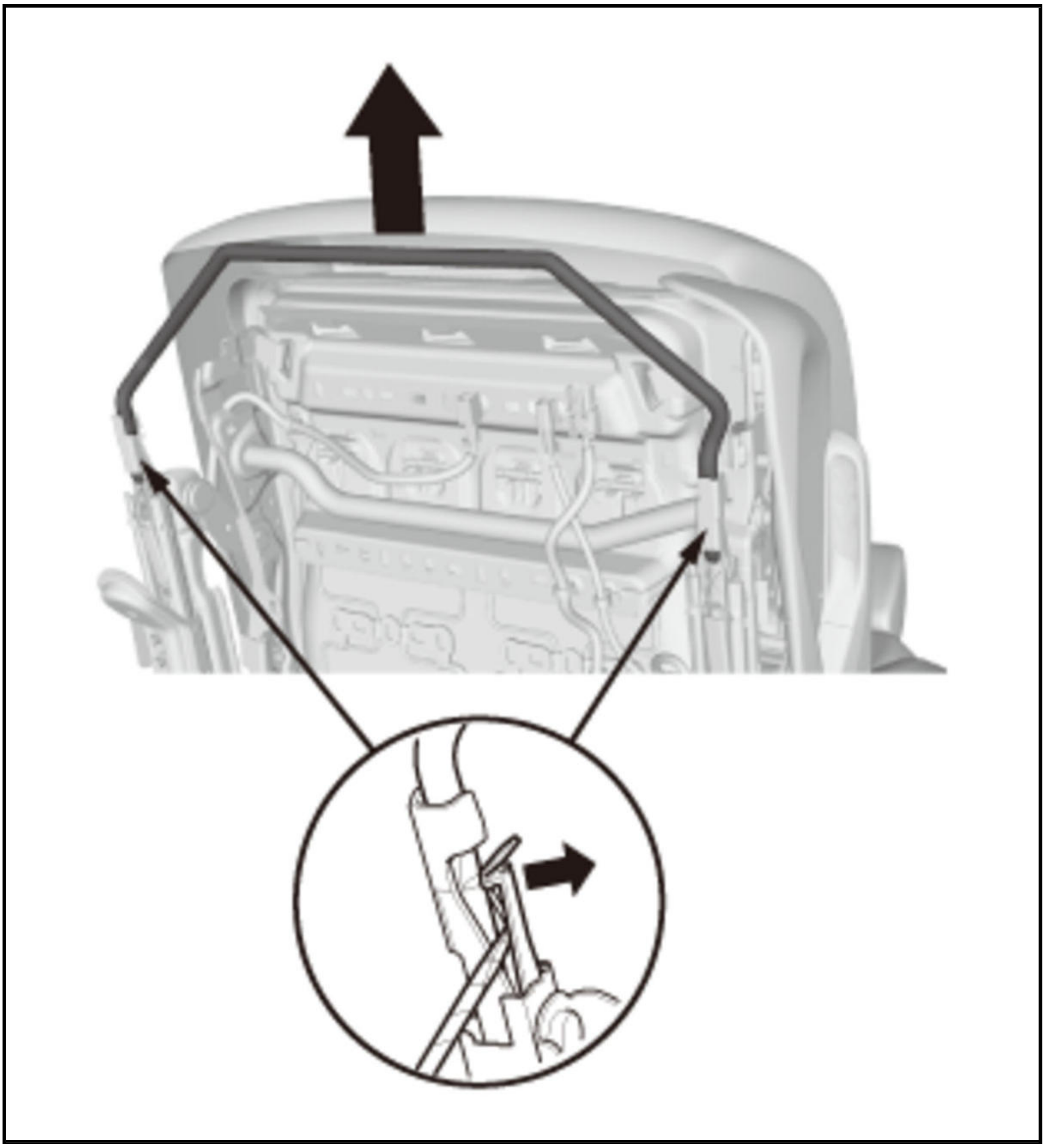

3. All Removed Parts - Install

    1. Install the parts in the reverse order of removal.

FRONT SEAT-BACK COVER REMOVAL AND INSTALLATION

Removal and Installation

SRS components are located in this area. Review the **SRS component locations** and the **precautions and procedures** before doing repairs or service.

1. **Front Seat - Remove**
2. Front Seat-Back Cover/Pad - Remove

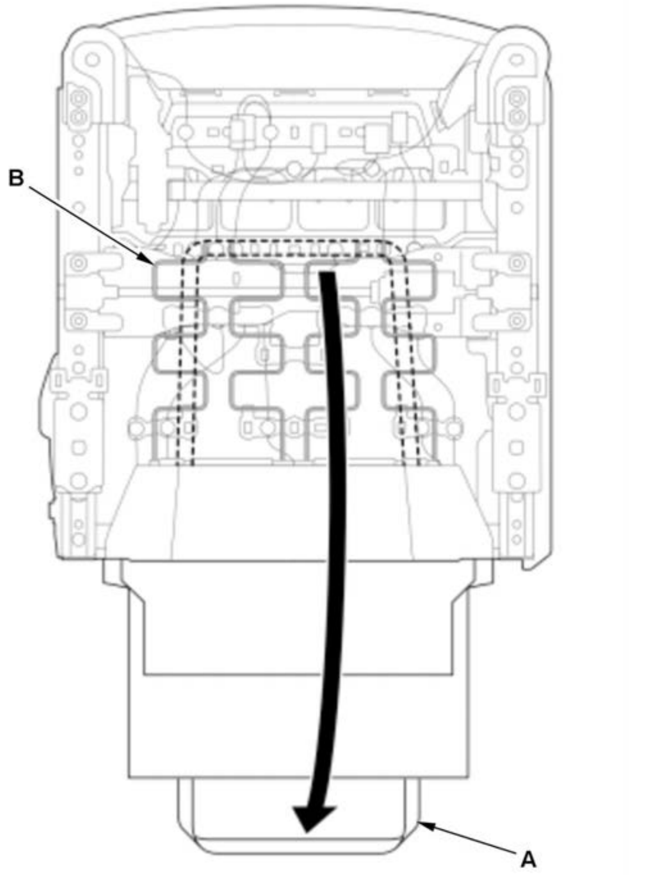

1. From under the seat cushion, release the elastic strap (A) from the seat cushion frame springs (B).

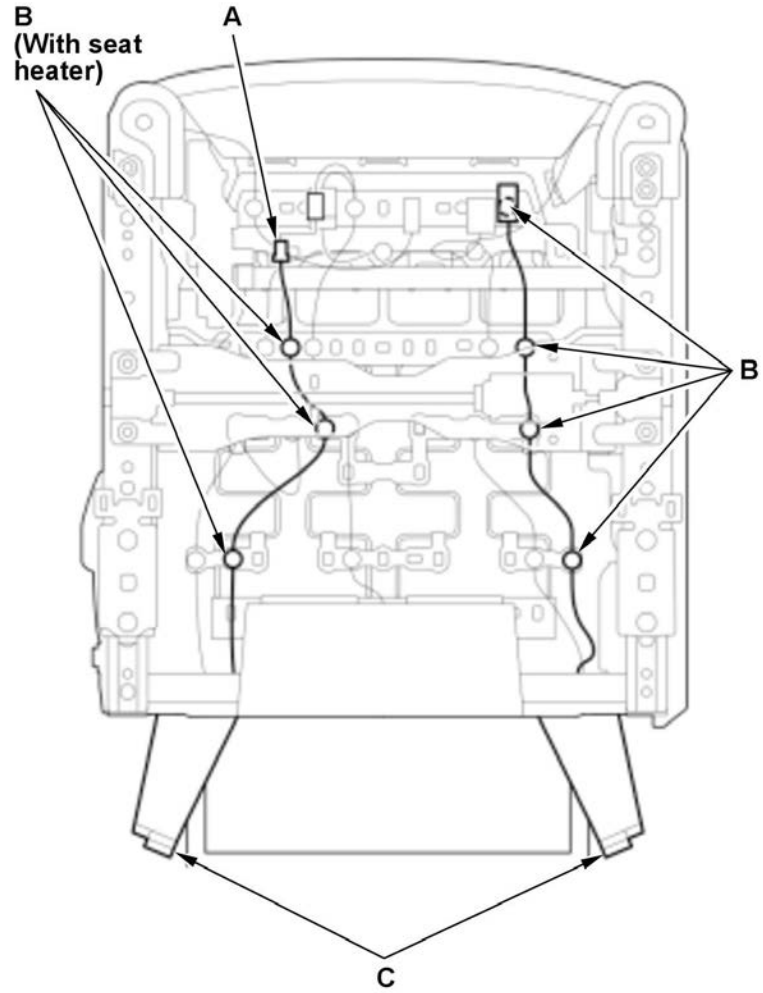

Driver's seat

2. With seat heater: Disconnect the connector (A).

3. From under the seat cushion, remove the harness clips (B).

4. Release the hooks (C) of the seat cushion cover.

Passenger's seat 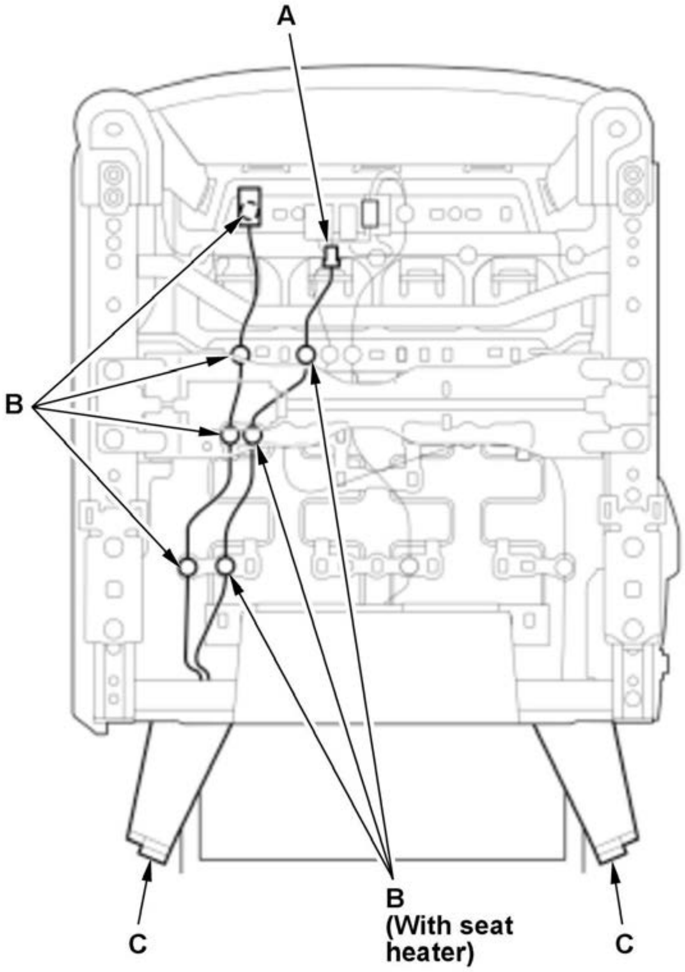 A B B (With seat heater) C C	

Driver's seat 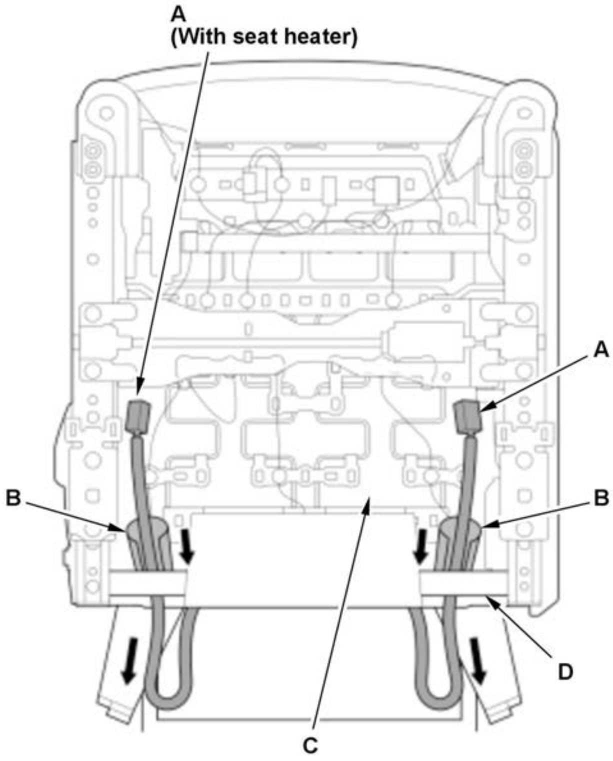 A (With seat heater) A B B D C **Passenger's seat**	5. Pull out the wire harness(es) (A) and the seat-back cover (B) between the seat cushion pad (C) and the seat frame (D).

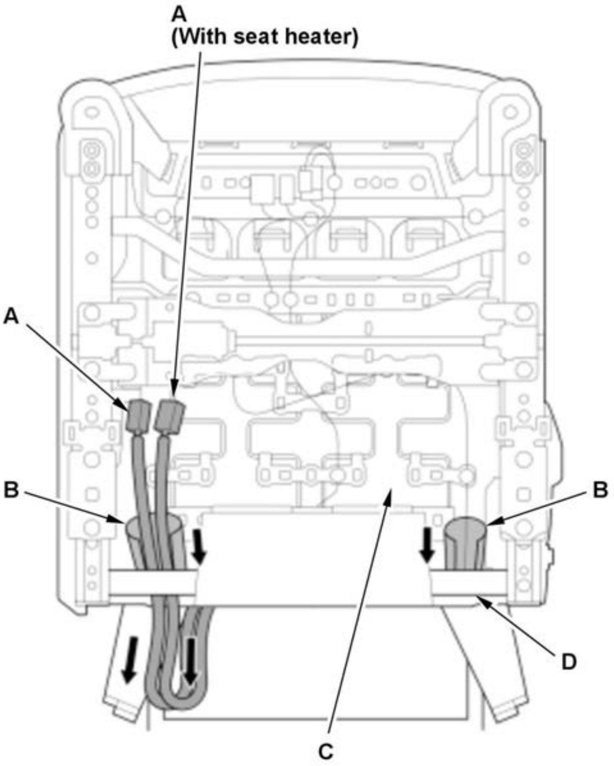
A
(With seat heater)
A
B
B
D
C

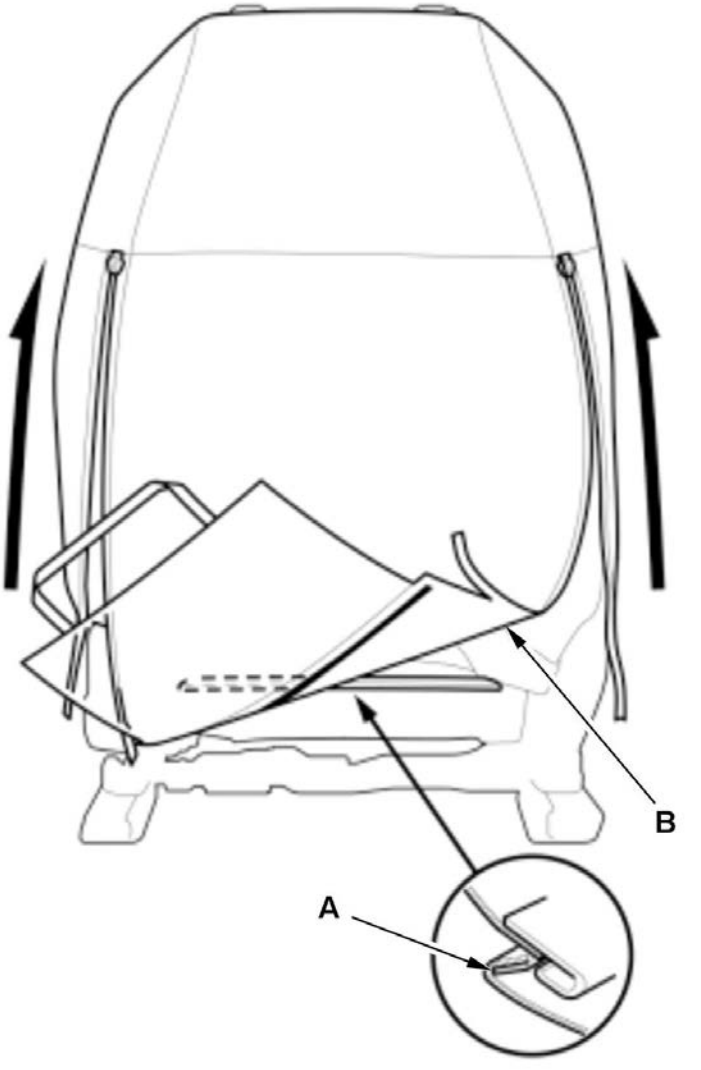

6. Release the hook strip (A).

7. Unzip the seat-back cover (B).

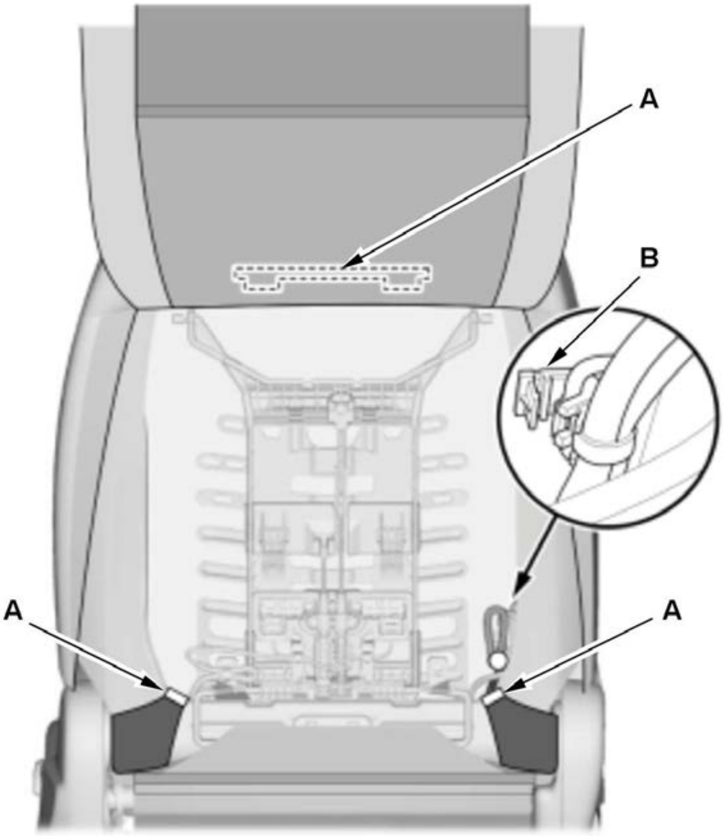 	8. Release the hooks (A). 9. With seat heater: Remove the harness holder (B). 10. **Remove the side airbag** .

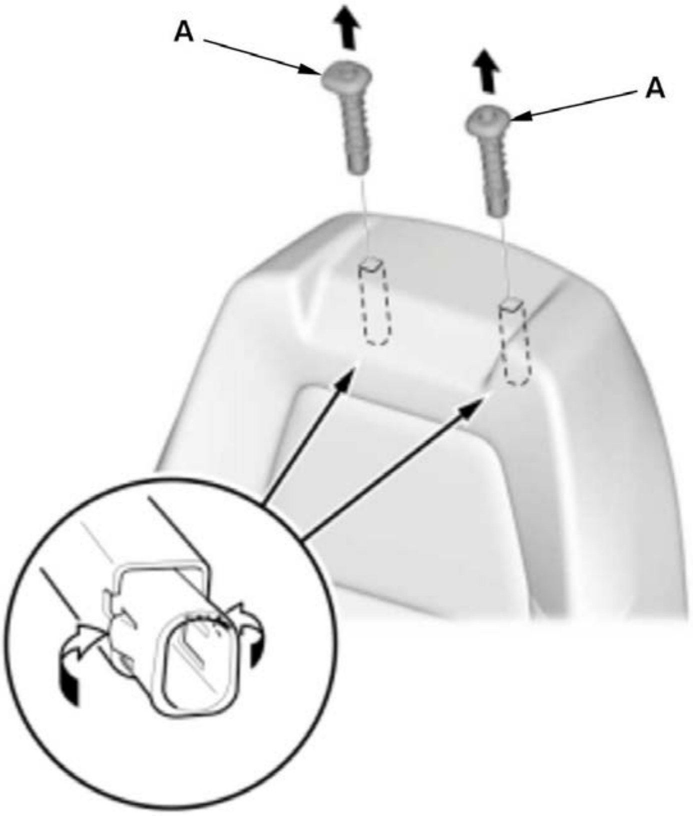 	11. Remove the head restraint guides (A).

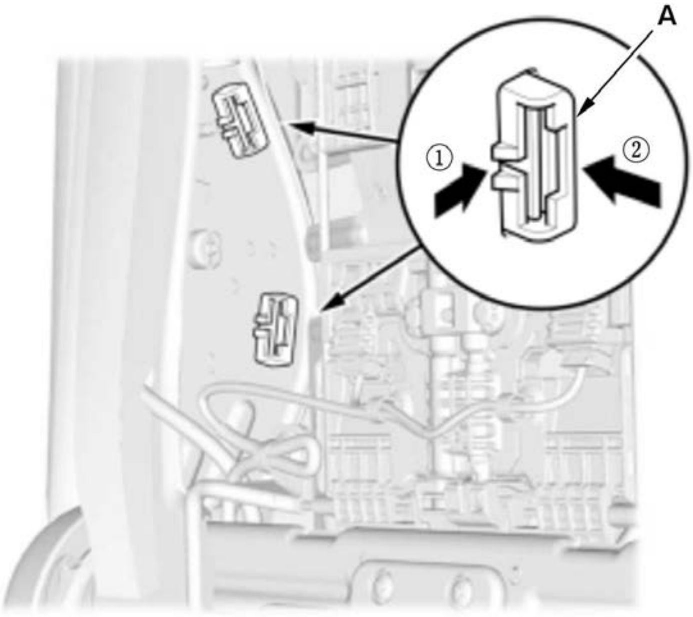	12. Remove the clips (A) of the reinforcing cloth.

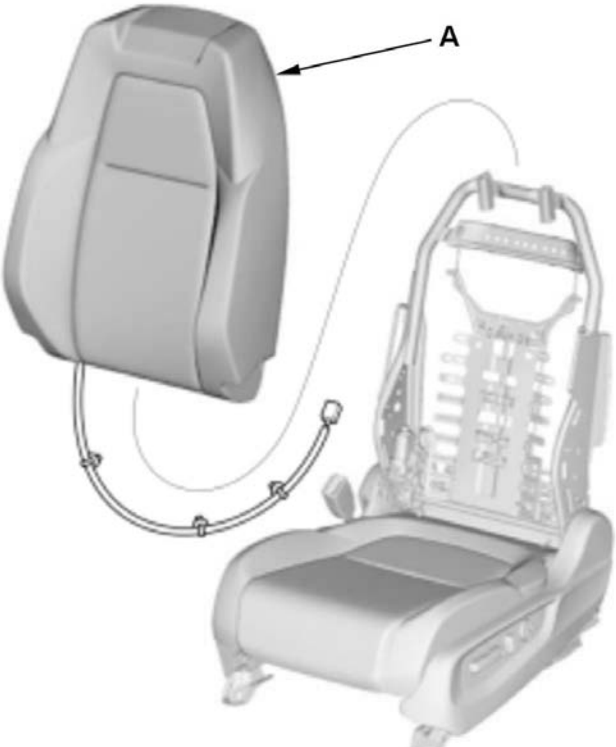	13. Remove the seat-back cover/pad (A).

3. Front Seat-Back Cover - Remove

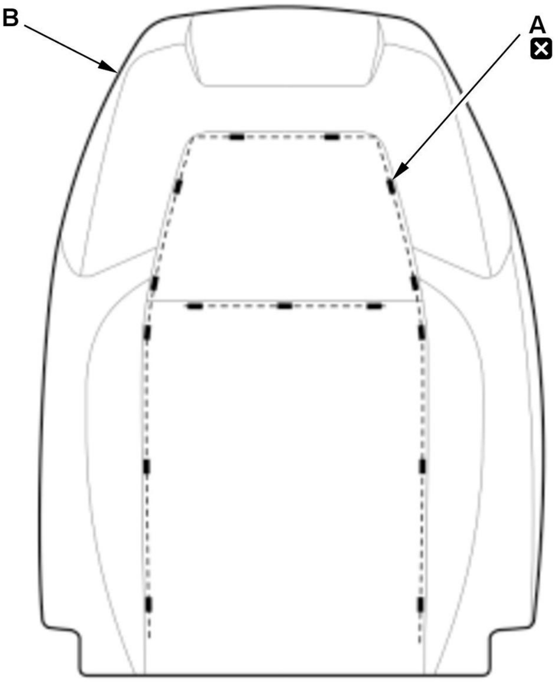

1. Remove the upholstery rings (A), and then remove the seat-back cover (B).

4. All Removed Parts - Install

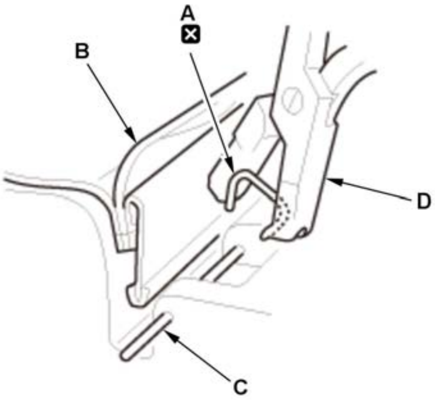

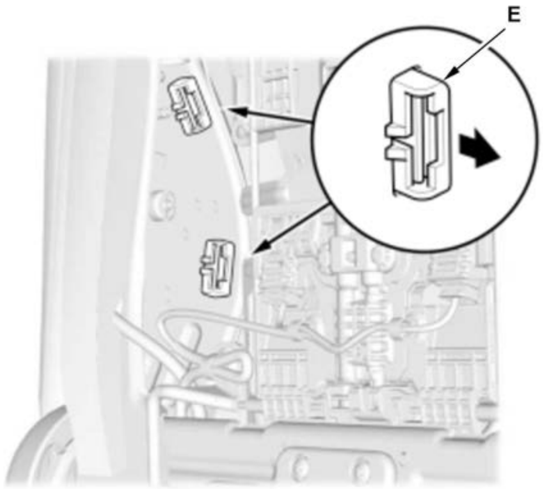

1. Install the parts in the reverse order of removal.
   - Replace all of the upholstery rings (A) fastening the seat-back cover (B) to the pad wires (C) with new ones using commercially available upholstery ring pliers (D).
   - Push the clips (E) of the reinforcing cloth until they snap into place securely.

REAR SEAT ARMREST BEVERAGE HOLDER REMOVAL AND INSTALLATION

Removal and Installation

1. Rear Seat Armrest Beverage Holder - Remove

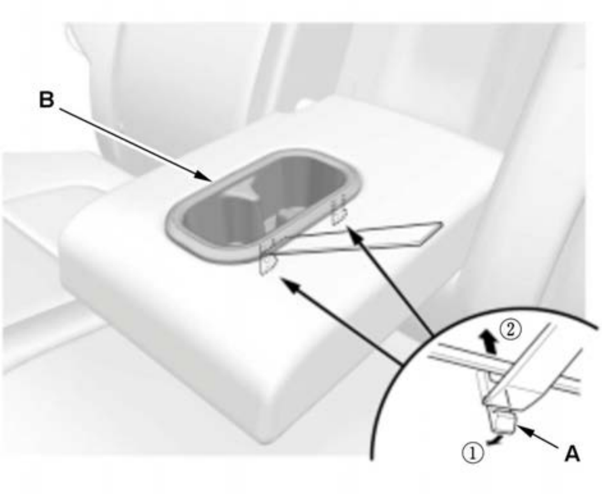	1. Release the hooks (A) of the rear seat armrest beverage holder (B) with the appropriate trim tool.
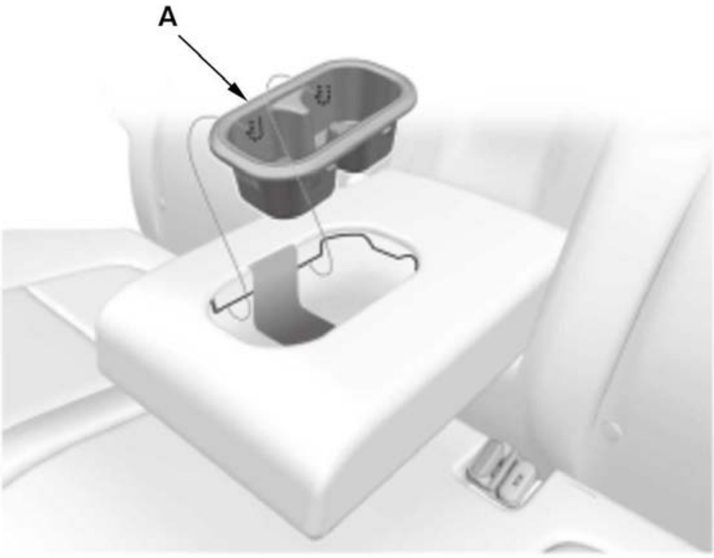	2. Remove the rear seat armrest beverage holder (A).

2. All Removed Parts - Install

1. Install the parts in the reverse order of removal.

REAR SEAT ARMREST REMOVAL AND INSTALLATION

Removal and Installation

NOTE: How to read the torque specifications .

1. Rear Seat Armrest - Remove

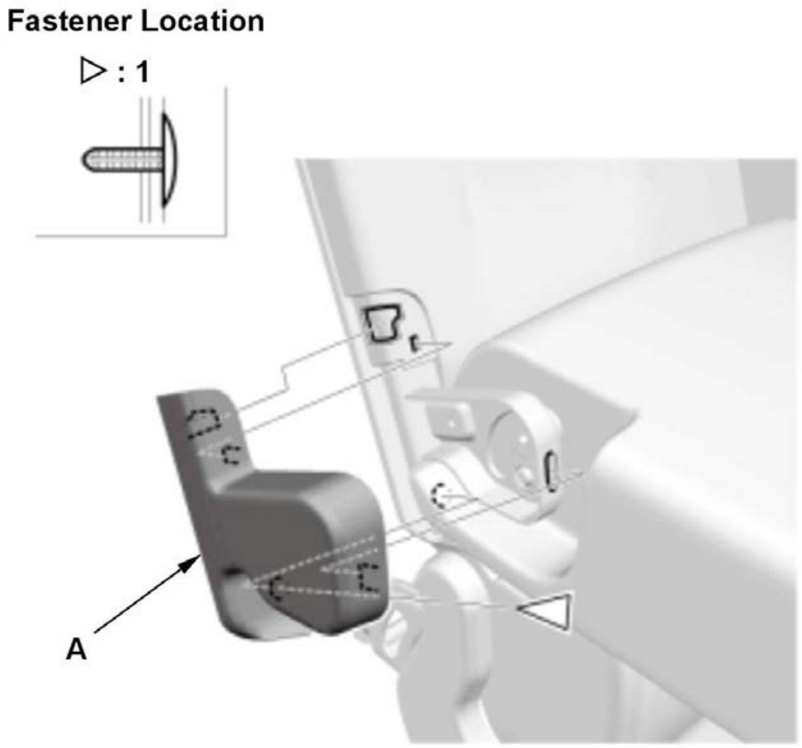
Fastener Location
▷ : 1
A

1. Remove the armrest trim (A).

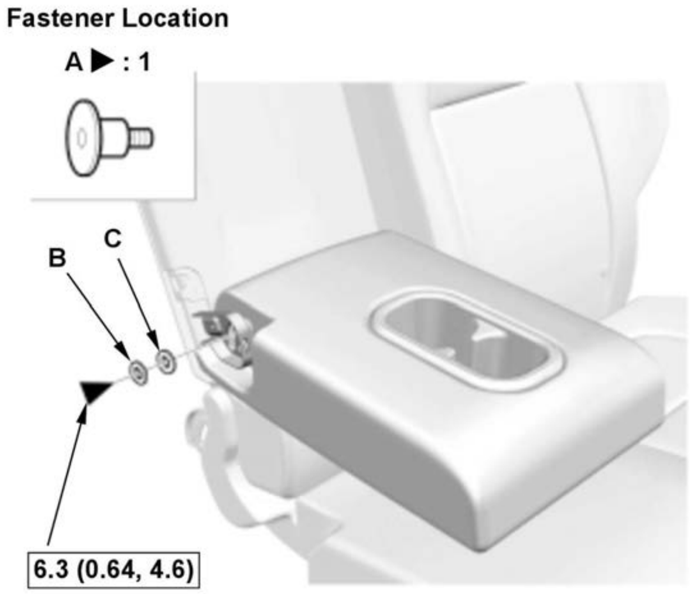
Fastener Location
A ▶ : 1
B
C
6.3 (0.64, 4.6)

2. Remove the bolt (A), the wave washer (B), and the washer (C).

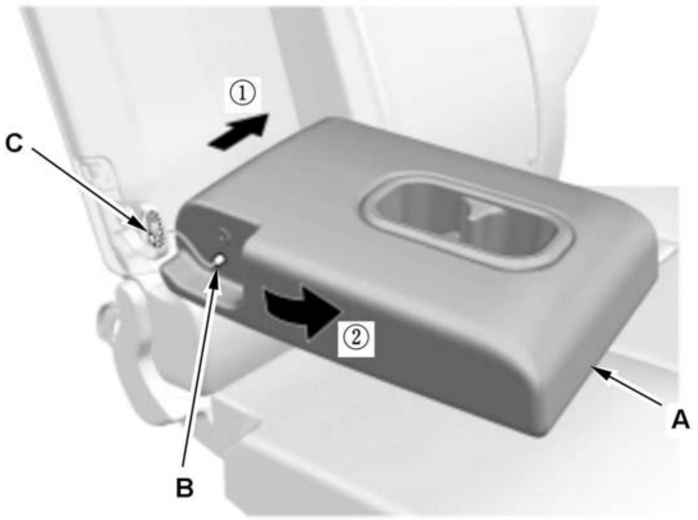	3. Slide the armrest (A) toward the left side. 4. Remove the right pivot shaft (B) from the friction plate (C).

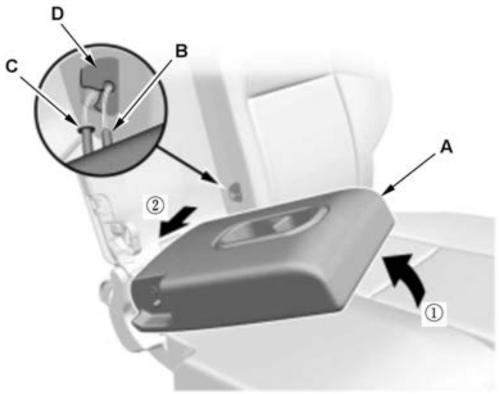	5. Raise the armrest (A) to its half range of movement, and pull out the left pivot shaft (B) and the armrest pin (C) from the collar (D), and then remove the armrest.

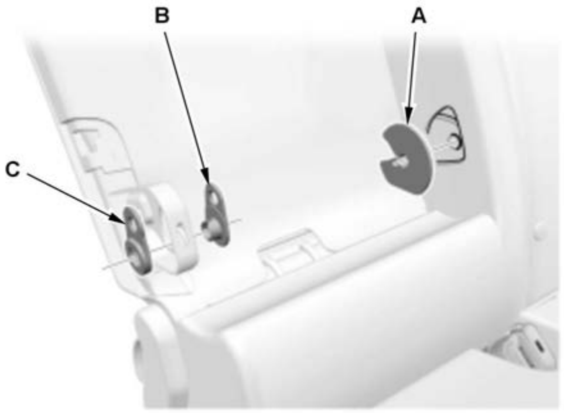	6. Remove the collar (A), the inner friction plate (B), and the outer friction plate (C) from the rear seat-back frame.

2. All Removed Parts - Install

1. Install the parts in the reverse order of removal.

REAR SEAT CUSHION COVER REMOVAL AND INSTALLATION

Removal and Installation

1. Rear Seat - Remove
2. Rear Seat Cushion Cover/Pad - Remove

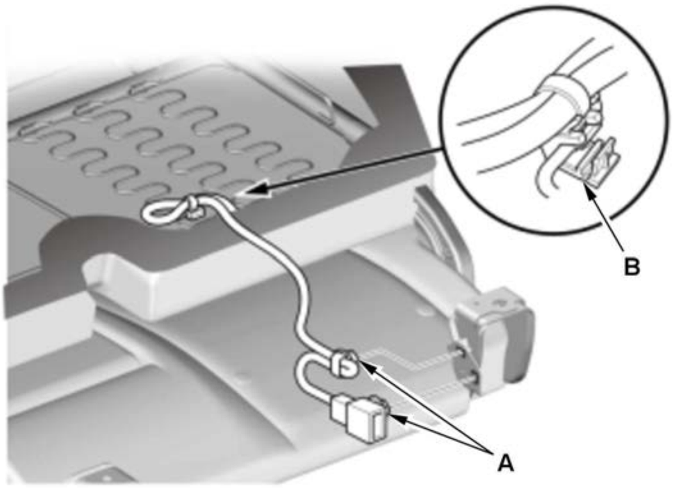	1. With seat cushion heater: Remove the harness clips (A) and the harness holder (B).

Left seat cushion 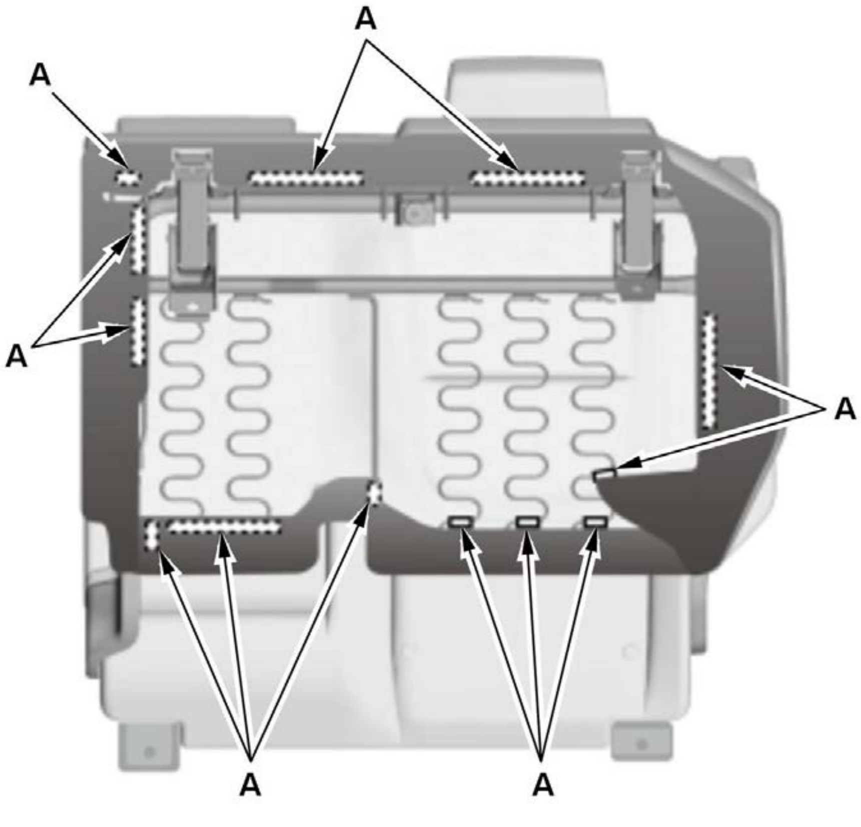 **Right seat cushion**	2. Release the hooks (A).

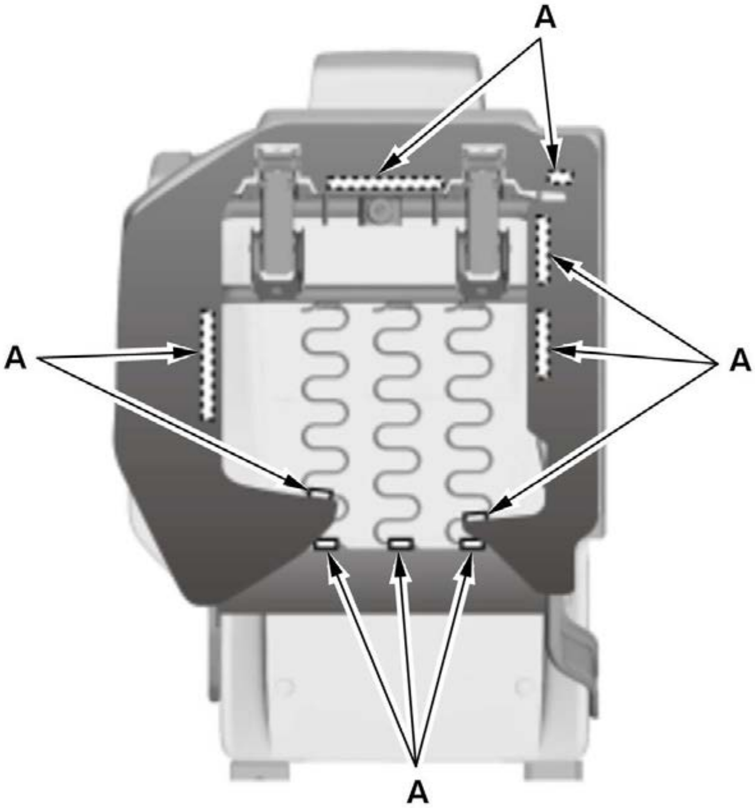	

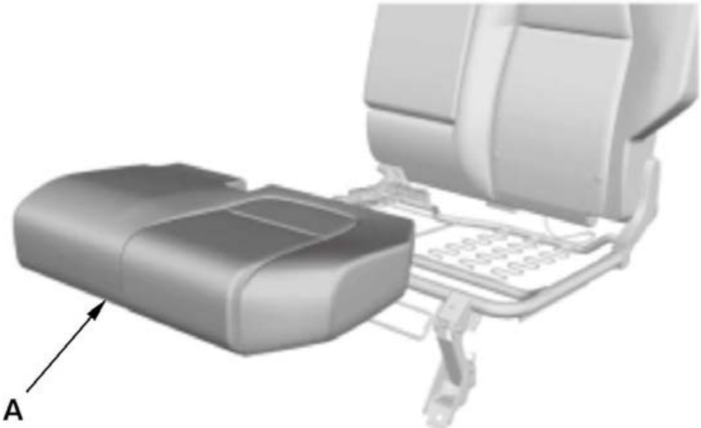	3. Remove the seat cushion cover/pad (A).

3. Rear Seat Cushion Cover - Remove

Left seat cushion 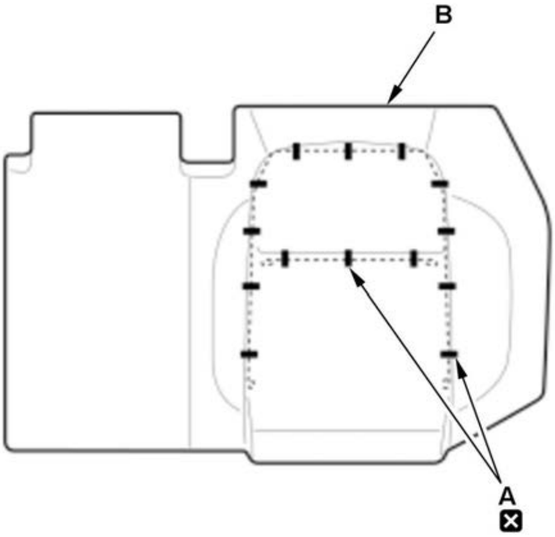 **Right seat cushion** 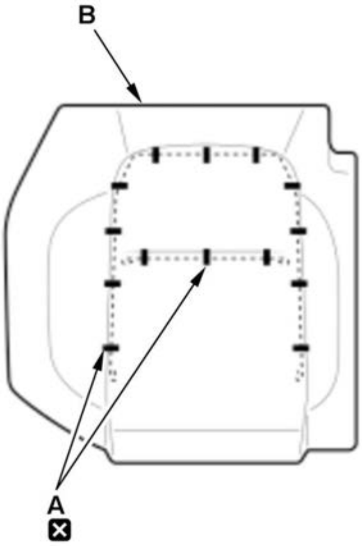 	1. Remove the upholstery rings (A), and then remove the seat cushion cover (B).

4. All Removed Parts - Install

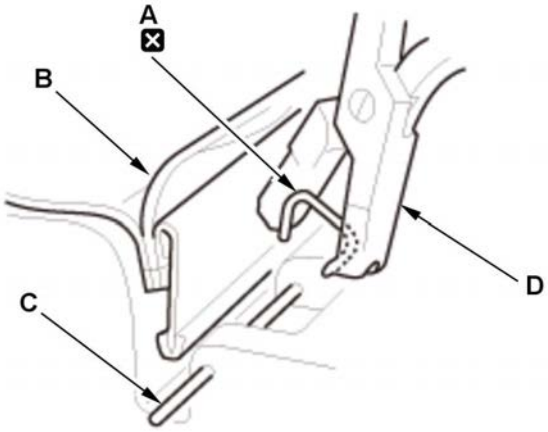 	1. Install the parts in the reverse order of removal. **NOTE:** **Replace all of the upholstery rings (A) fastening the seat cushion cover (B) to the pad wires (C) with new ones using commercially available**

	upholstery ring pliers (D).

REAR SEAT HEATER CONTROL UNIT REMOVAL AND INSTALLATION

Removal and Installation

1

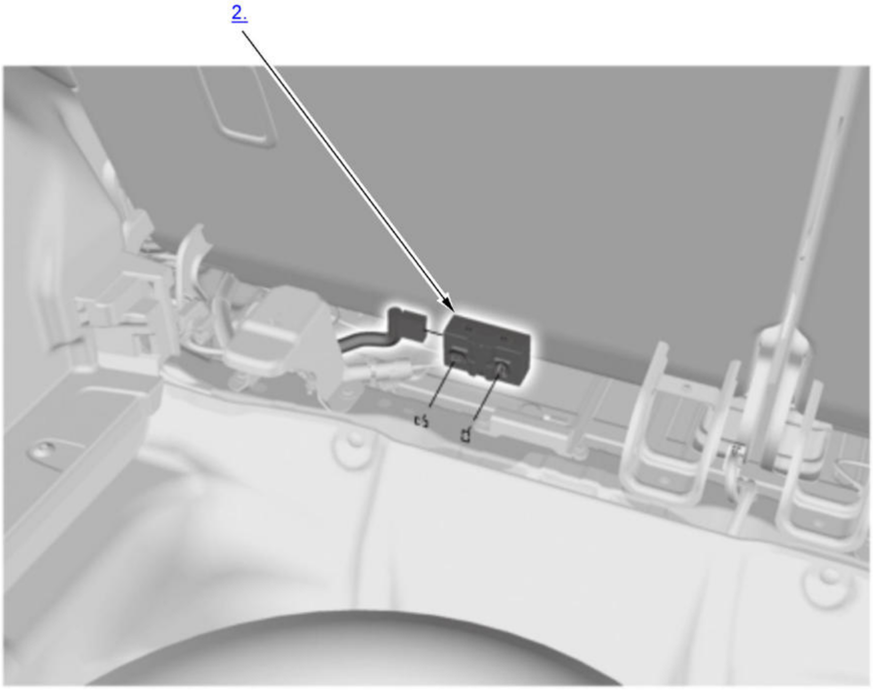

▭	Torque: N.m (kgf.m, lbf.ft)

1. Rear Carpet Trim - Remove
2. Rear Seat Heater Control Unit - Remove
3. All Removed Parts - Install

1. Install the parts in the reverse order of removal.

REAR SEAT RELEASE LEVER/CABLE REMOVAL AND INSTALLATION

Removal and Installation

Rear Seat Release Cable (Body Side)

1. Rear Side Trim Panel - Remove
2. Rear Seat Release Lever/Cable - Remove

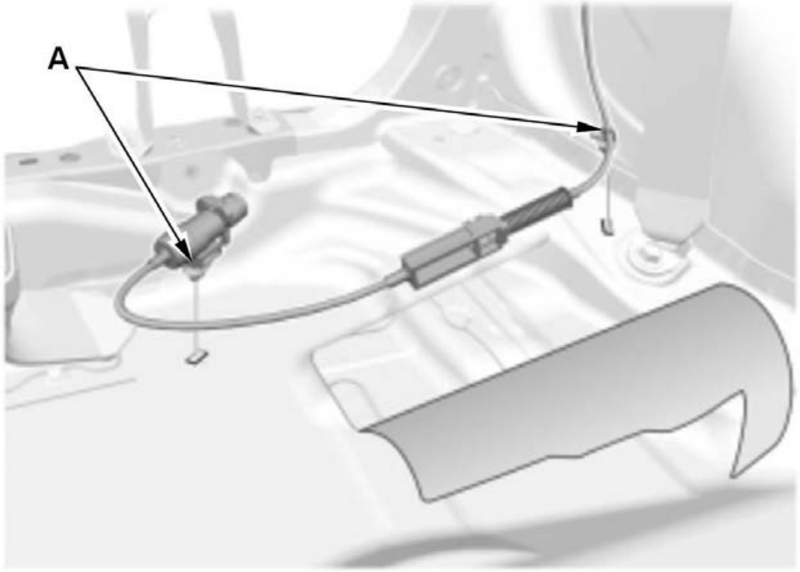	1. Remove the cable clips (A).

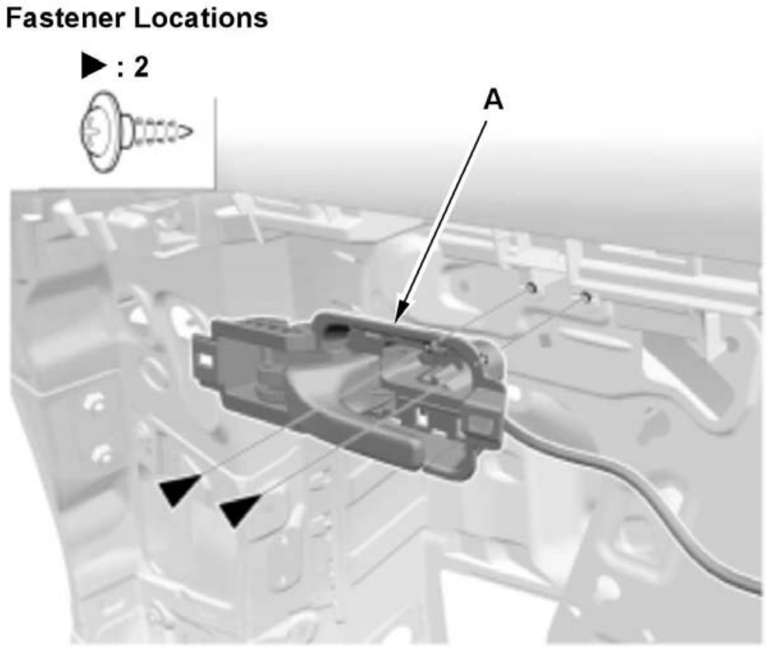 Fastener Locations ▶ : 2 A	2. Remove the rear seat release lever (A).

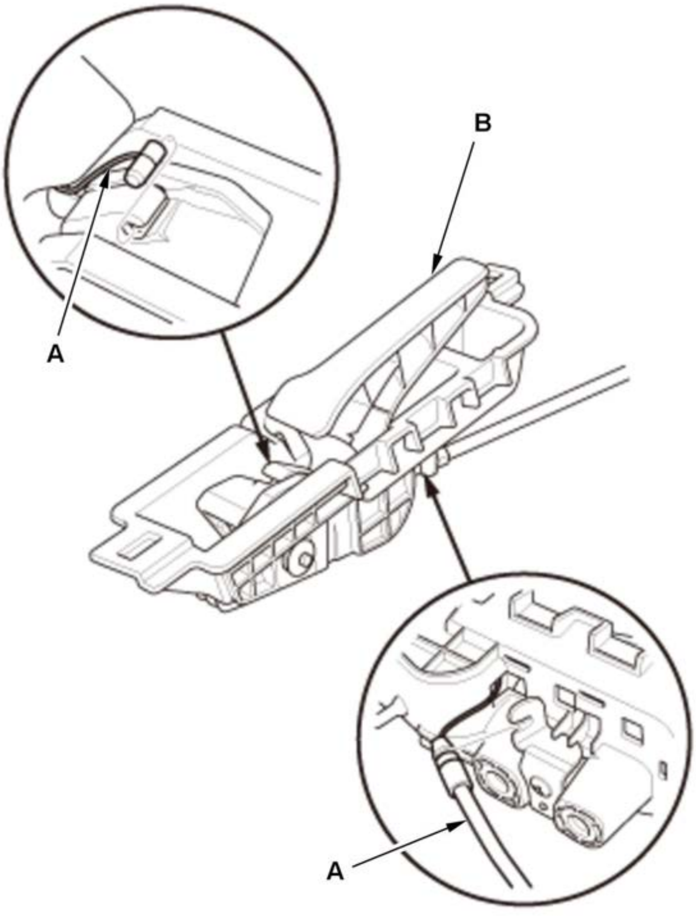	3. Disconnect the rear seat release cable (A) from the release lever (B).

3. All Removed Parts - Install

1. Install the parts in the reverse order of removal.

Rear Seat Upper Cable (Seat Side)

4. Rear Seat-Back Cover/Pad - Remove
5. Rear Seat Upper Cable - Remove

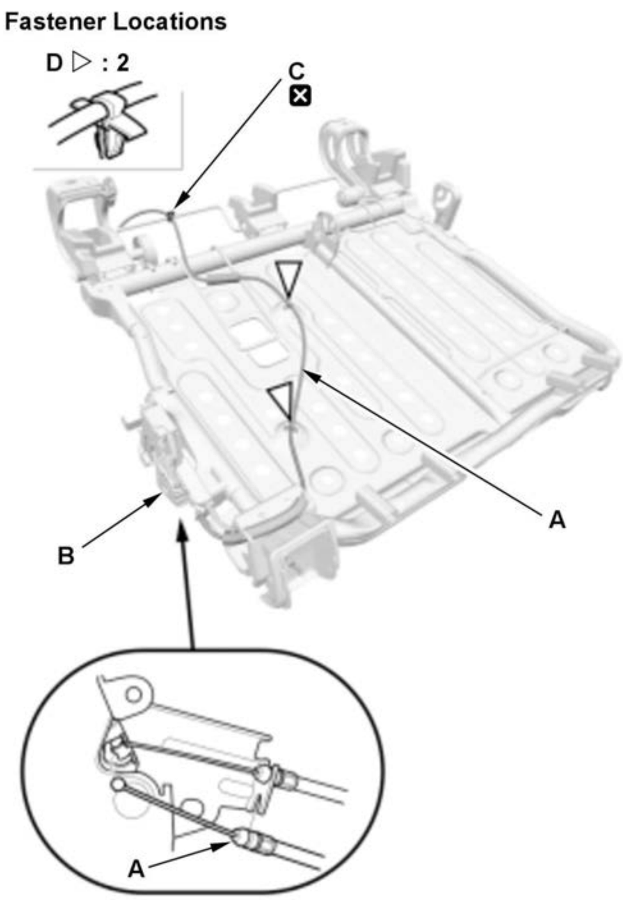	1. Disconnect the rear seat upper cable (A) from the rear seat-back latch (B). 2. Remove the wire tie (C) and the cable clips (D).

6. All Removed Parts - Install

1. Install the parts in the reverse order of removal.

NOTE:

Replace the wire tie fastening the rear seat upper cable with a new one.

REAR SEAT REMOVAL AND INSTALLATION

Removal and Installation

NOTE:

- How to read the torque specifications .
- The illustrations shown are for the left side. The right side is symmetrical.

1. Rear Seat Foot Covers - Remove

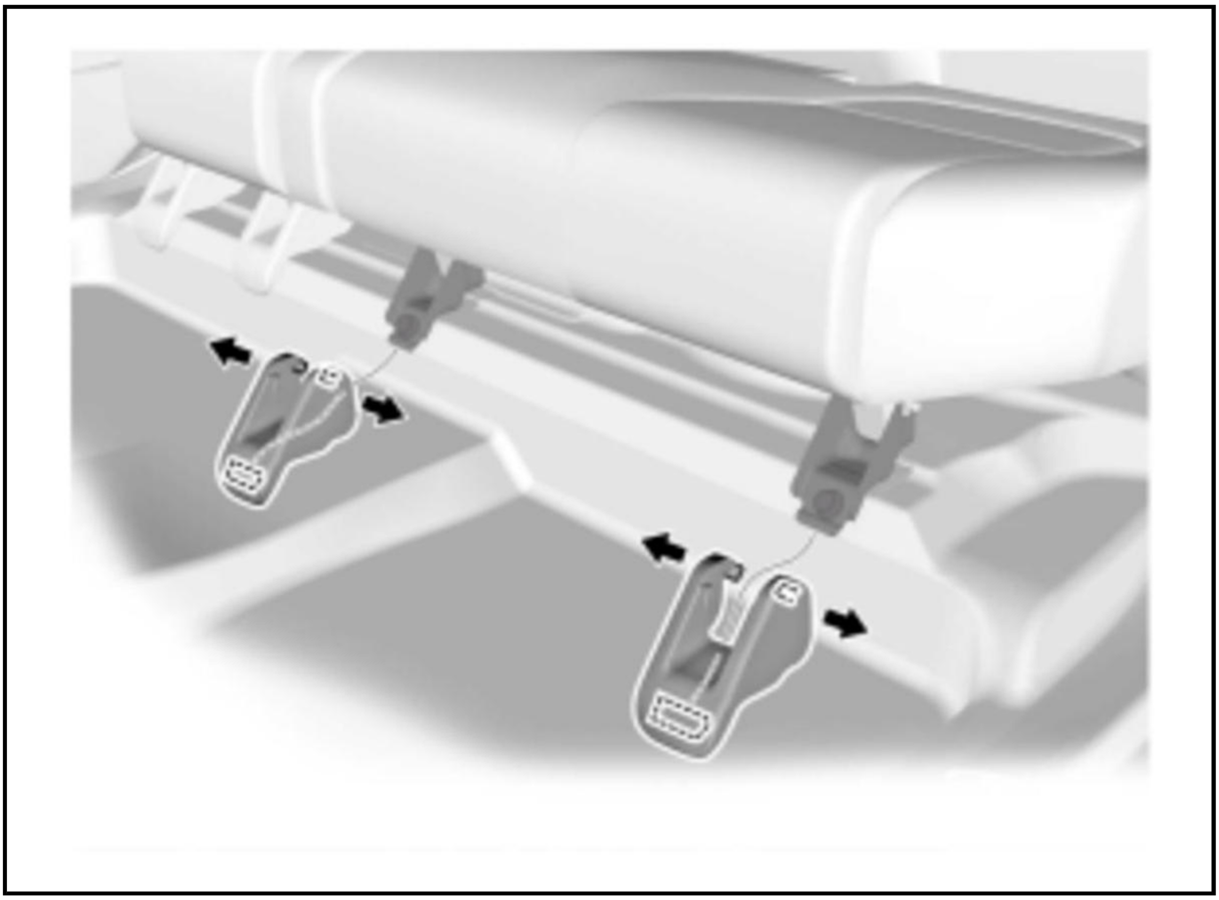

2. Rear Seat Front Mounting Bolts - Remove

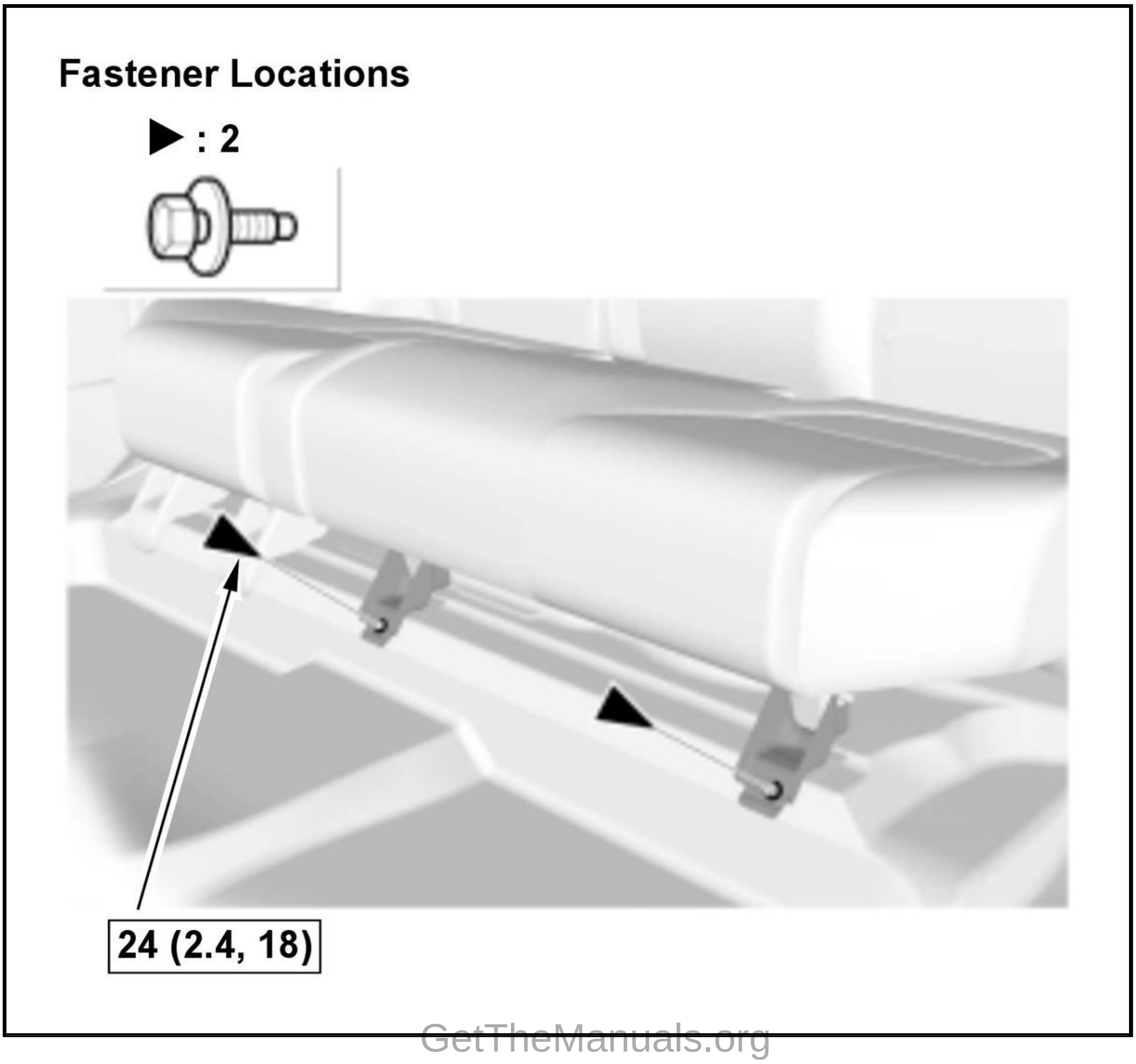
Fastener Locations
▶ : 2
24 (2.4, 18)

3. Rear Seat Cushion - Lift

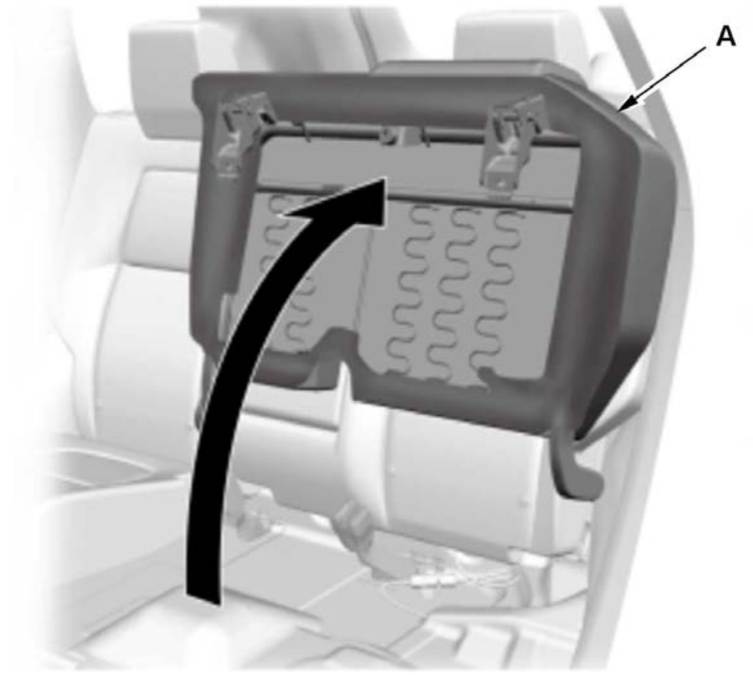	1. Lift up the rear seat cushion (A), and hold it.

4. Rear Seat Release Cable - Disconnect

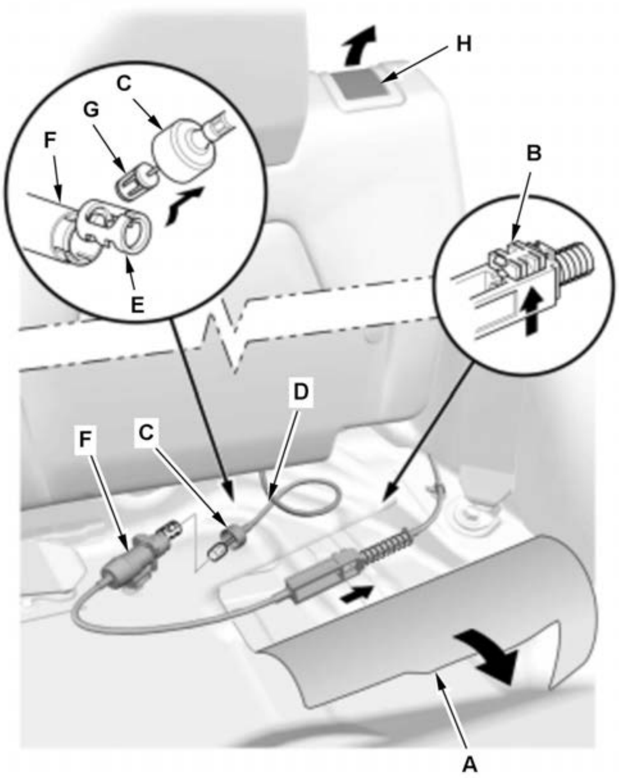	1. Turn over the carpet (A). 2. Pull up the rear seat release cable lock (B). 3. Pull out the junction cap (C). 4. Pull on cable (D) to pull out joint piece (E) and temporarily hang it on the edge of the junction (F). 5. Remove the rear seat upper cable end (G) from the joint piece. **NOTE:** **If additional slack is needed on the cable, pull the rear seat lock knob (H) while removing the cable end.**

5. Rear Seat-Back - Fold Down

6. Rear Carpet Trim - Remove

7. Rear Seat - Remove

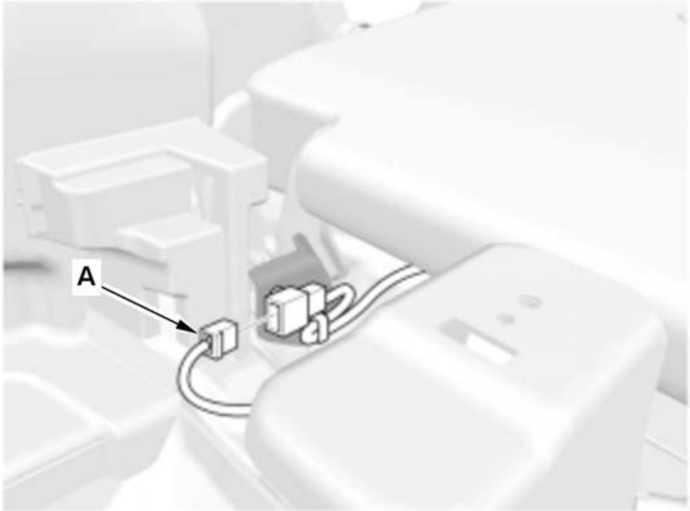	1. With seat cushion heater: Disconnect the connector (A).

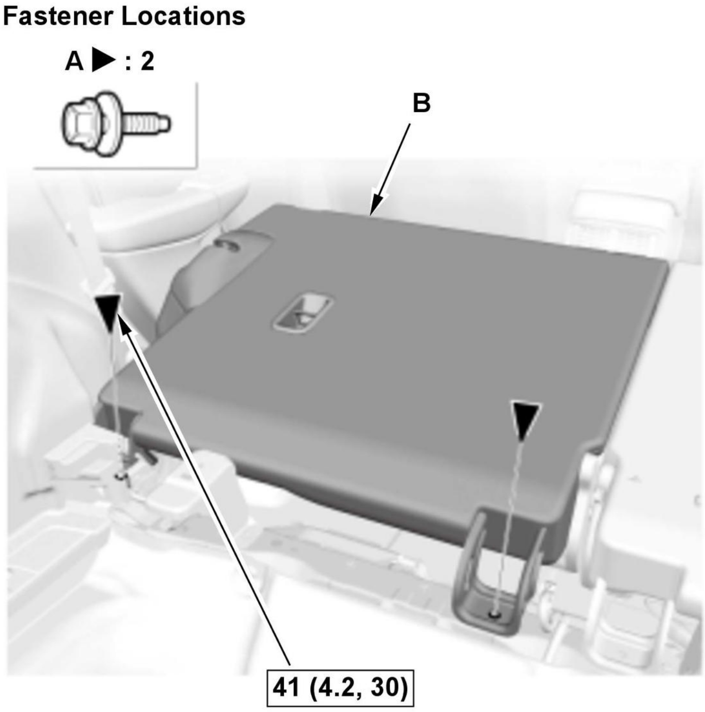	2. Remove the bolts (A). 3. Remove the rear seat (B) through the rear door opening.

8. All Removed Parts - Install

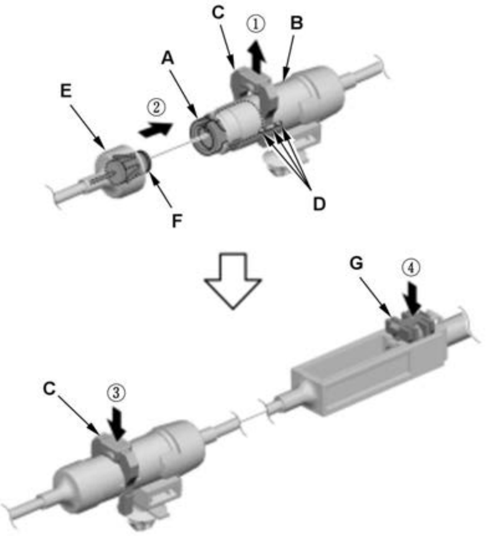	1. Install the parts in the reverse order of removal. **NOTE:** **To obtain proper cable tension, reconnect the rear seat release cable in following procedures.** -1. Pull the end of the joint piece (A) out of the junction (B), while pull up the rear seat release cable stopper (C) until the side marks (D) line up.

	-2. Push the junction cap (E) onto the junction until the upper cable end (F) and the joint piece are attached with a clicking sound. -3. Push back in the rear seat release cable stopper to stretch the rear seat release cable. -4. Push back in the rear seat release cable lock (G).

REAR SEAT-BACK COVER REMOVAL AND INSTALLATION

Removal and Installation

1. **Rear Seat-Back - Remove**
2. Rear Seat Head Restraint - Remove
3. Rear Seat Center Head Restraint - Remove (Left Seat-Back)
4. **Rear Seat Lock Knob Trim - Remove**
5. **Rear Seat-Back Latch Cover - Remove**
6. **Rear Seat Armrest - Remove (Left Seat-Back)**
7. Rear Seat-Back Cover/Pad - Remove

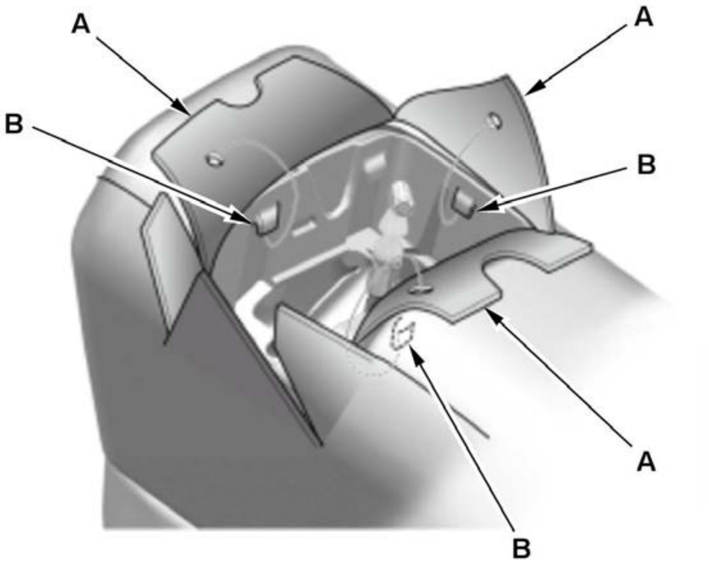	1. Release the seat-back cover (A) from the hooks (B).

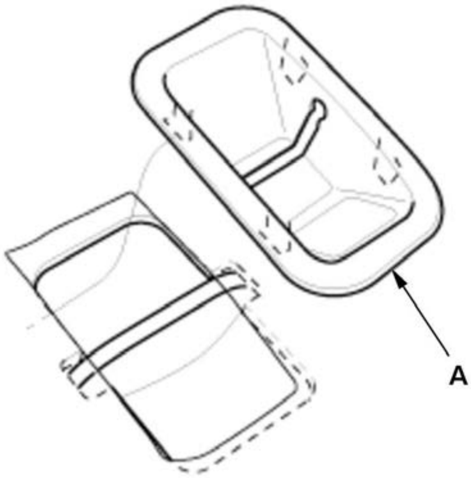	2. For some models: Remove the tether anchor cover (A).
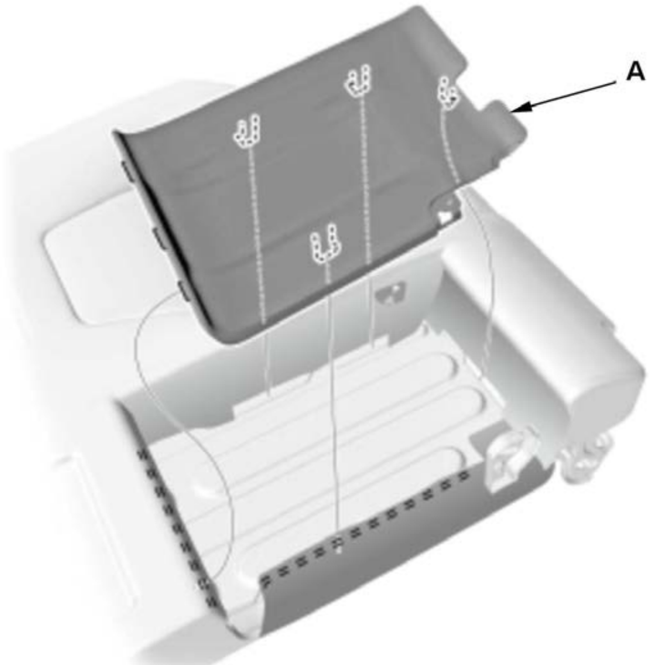	3. Left seat-back: Remove the armrest back panel (A).
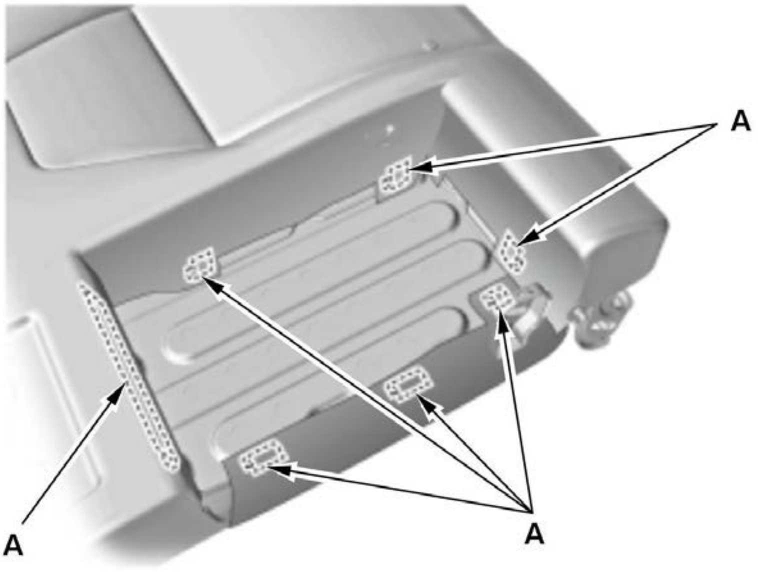	4. Left seat-back: Release the hooks (A).

Left seat-back

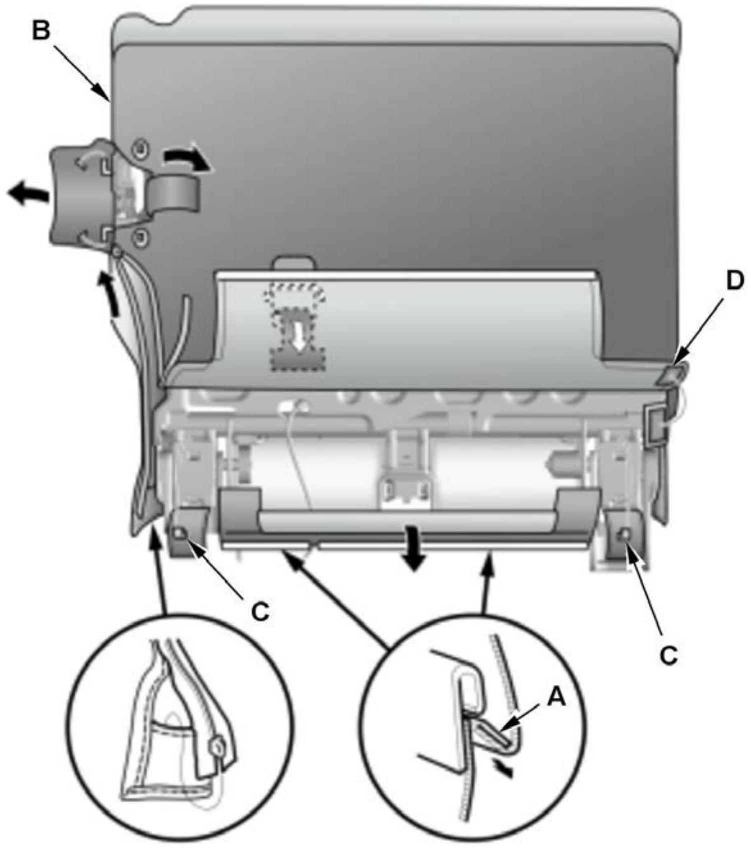

Right seat-back

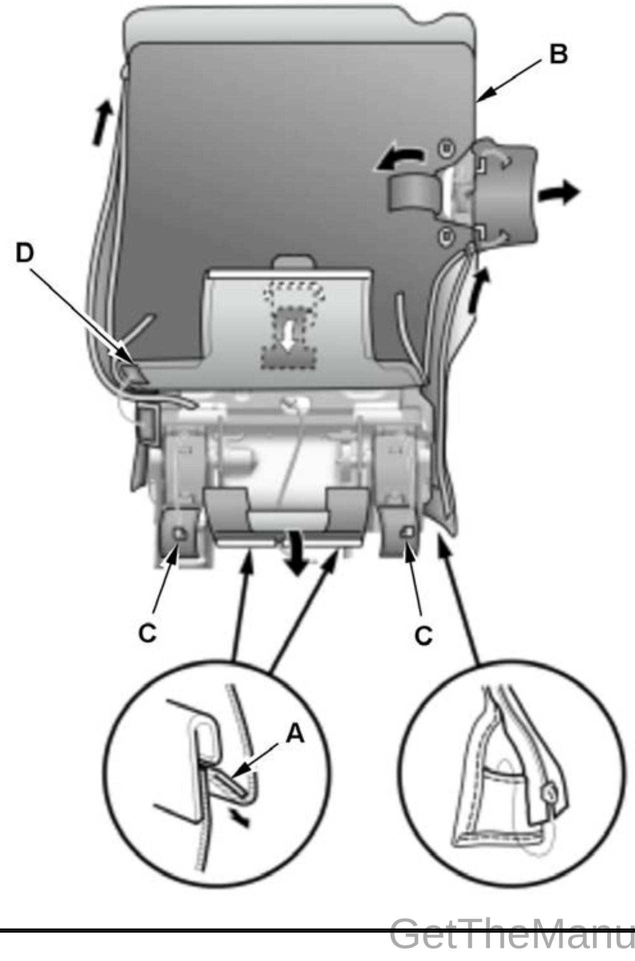

5. Release the hook strip (A).

6. Unzip the seat-back cover (B).

7. Release the hooks (C) and the hook and loop fastener (D).

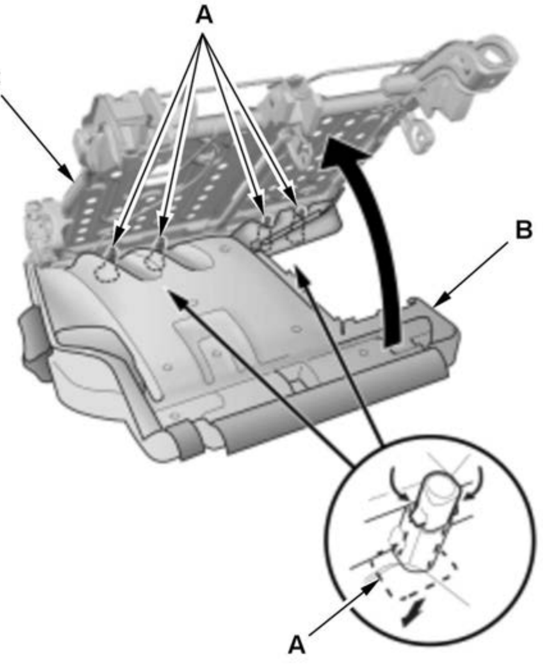	8. Remove the head restraint guides (A). 9. Remove the seat-back cover/pad (B) from the seat-back frame (C).

8. Rear Seat-Back Frame Covers - Remove

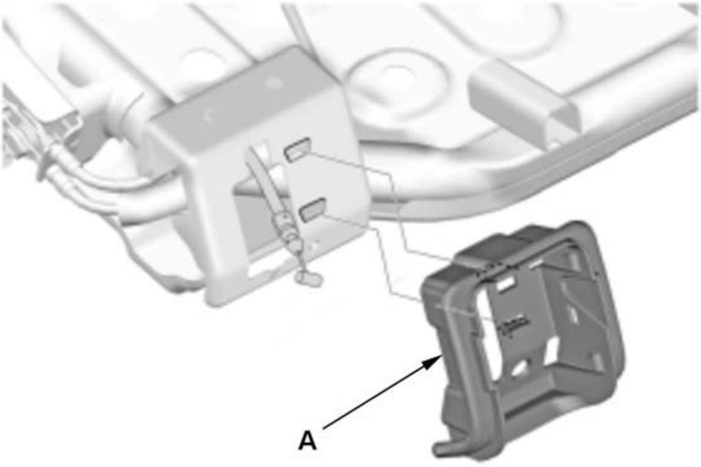	1. If necessary, remove the rear seat-back inner trim (A).

Outer bracket 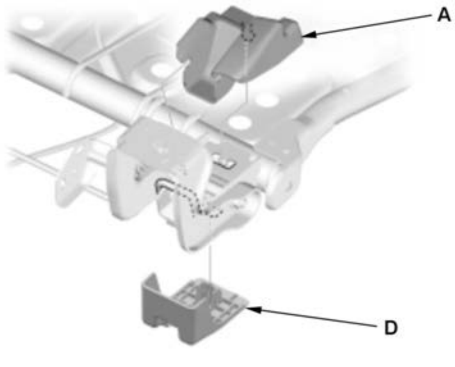 **Inner bracket**	2. If necessary, remove the rear seat-back outer bracket cover (A), the inner bracket cover (B), the center bracket cover (C), and the rear seat-back lower bracket covers (D).

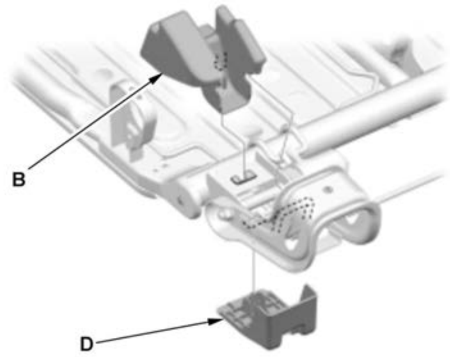 **Center bracket (Left seat-back)** 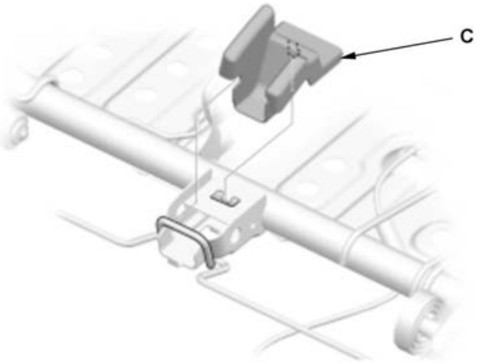	

9. Rear Seat-Back Cover - Remove

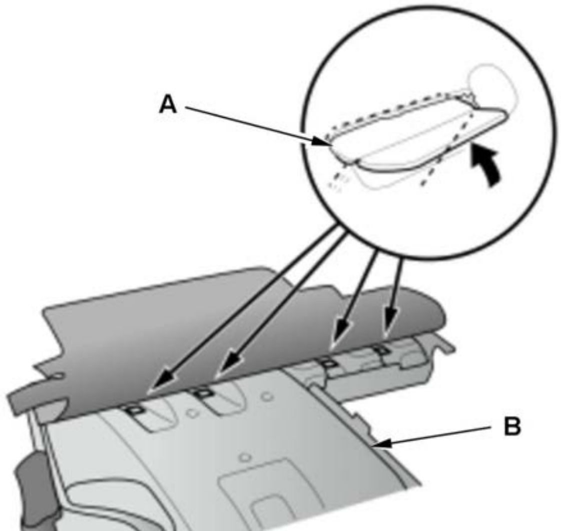	1. Pass the retainers (A) through the slots in the seat-back pad (B).

Left seat-back

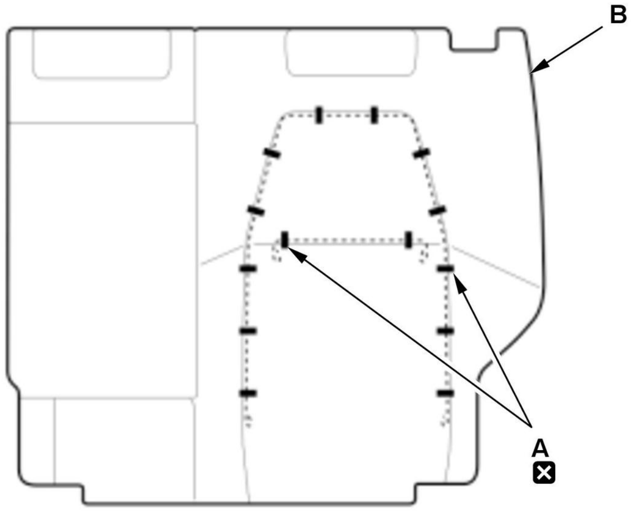

Right seat-back

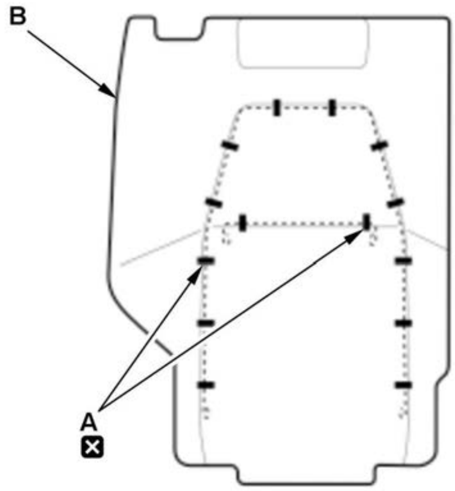

2. Remove the upholstery rings (A), and then remove the seat-back cover (B).

10. All Removed Parts - Install

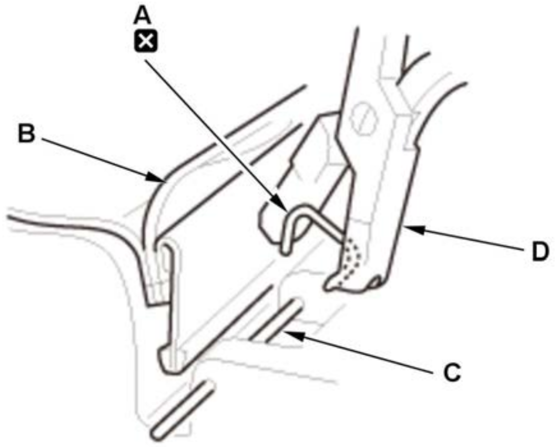

1. Install the parts in the reverse order of removal.

NOTE:

Replace all of the upholstery rings (A) fastening the seat-back cover (B) to the pad wires (C) with new ones using commercially available

	upholstery ring pliers (D).

REAR SEAT-BACK LATCH REMOVAL AND INSTALLATION

Removal and Installation

NOTE: How to read the torque specifications .

1. Rear Seat-Back - Fold Down

Rear Seat Lock Knob Trim Removal (If Necessary)

2. Rear Seat Lock Knob Trim - Remove

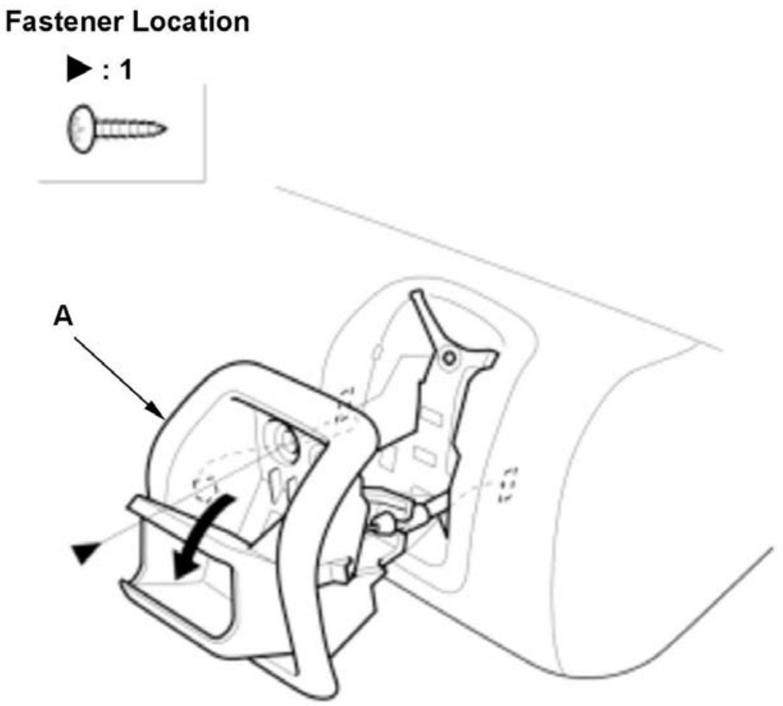	1. Remove the rear seat lock knob trim (A).

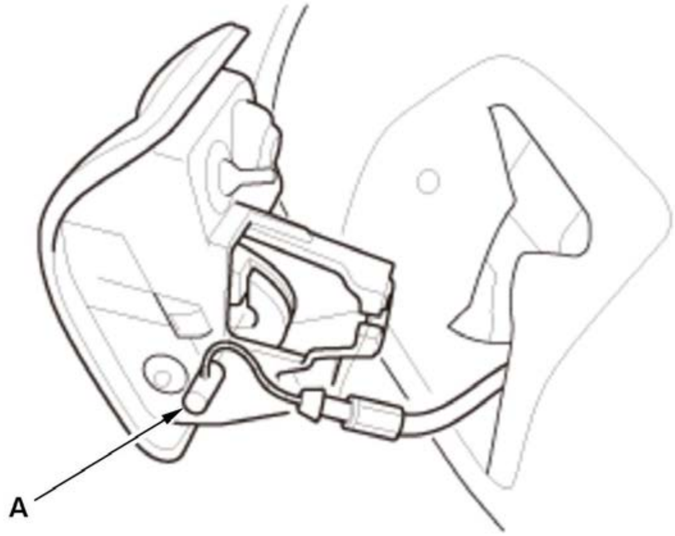	2. Disconnect the rear seat-back latch cable (A).

Rear Seat-Back Latch Removal

3. Rear Seat-Back Latch - Remove

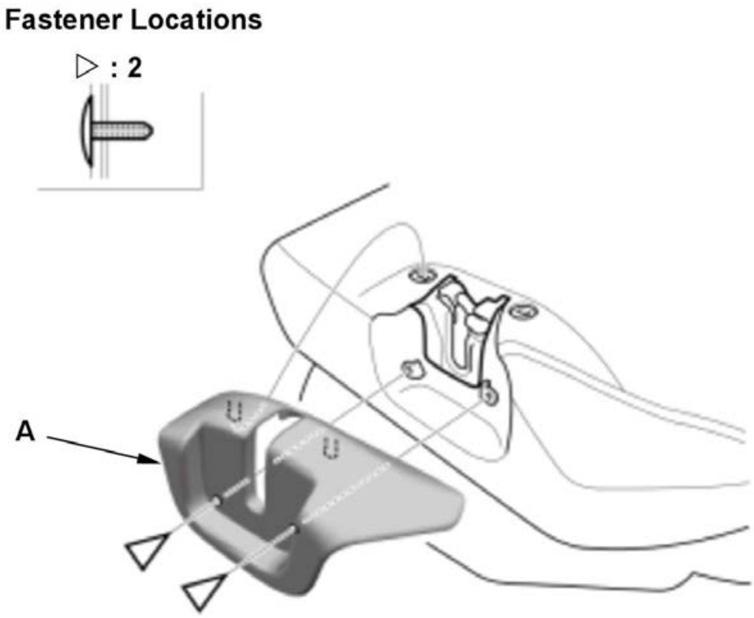 Fastener Locations ▷ : 2 A	1. Remove the rear seat-back latch cover (A).

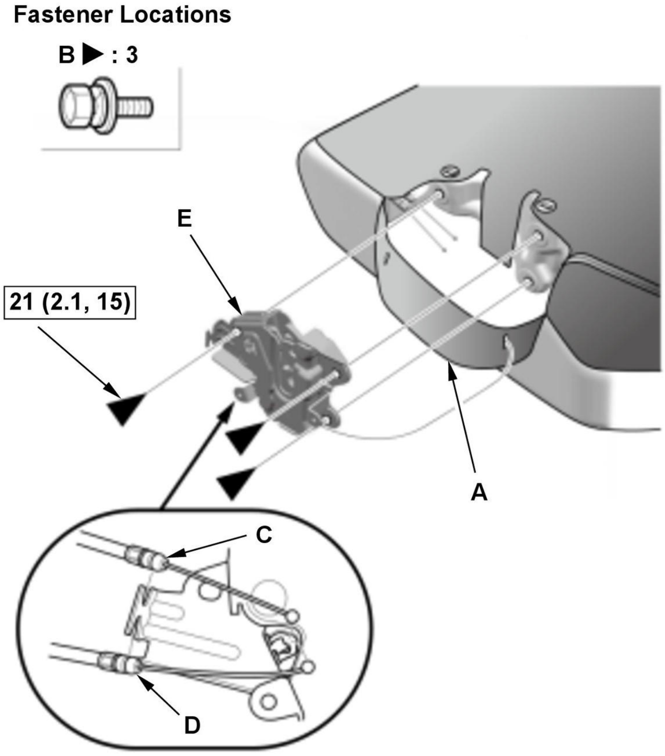 Fastener Locations B ▶ : 3 E 21 (2.1, 15) A C D	2. Pull back the seat-back cover (A) as needed, and remove the bolts (B). 3. Disconnect the rear seat upper cable (C) and the rear seat-back latch cable (D). 4. Remove the rear seat-back latch (E).

4. All Removed Parts - Install

1. Install the parts in the reverse order of removal.

REAR SEAT-BACK STRIKER REMOVAL AND INSTALLATION

Removal and Installation

NOTE: How to read the torque specifications .

1. **Rear Side Trim Panel - Remove**
2. Rear Seat-Back Striker - Remove

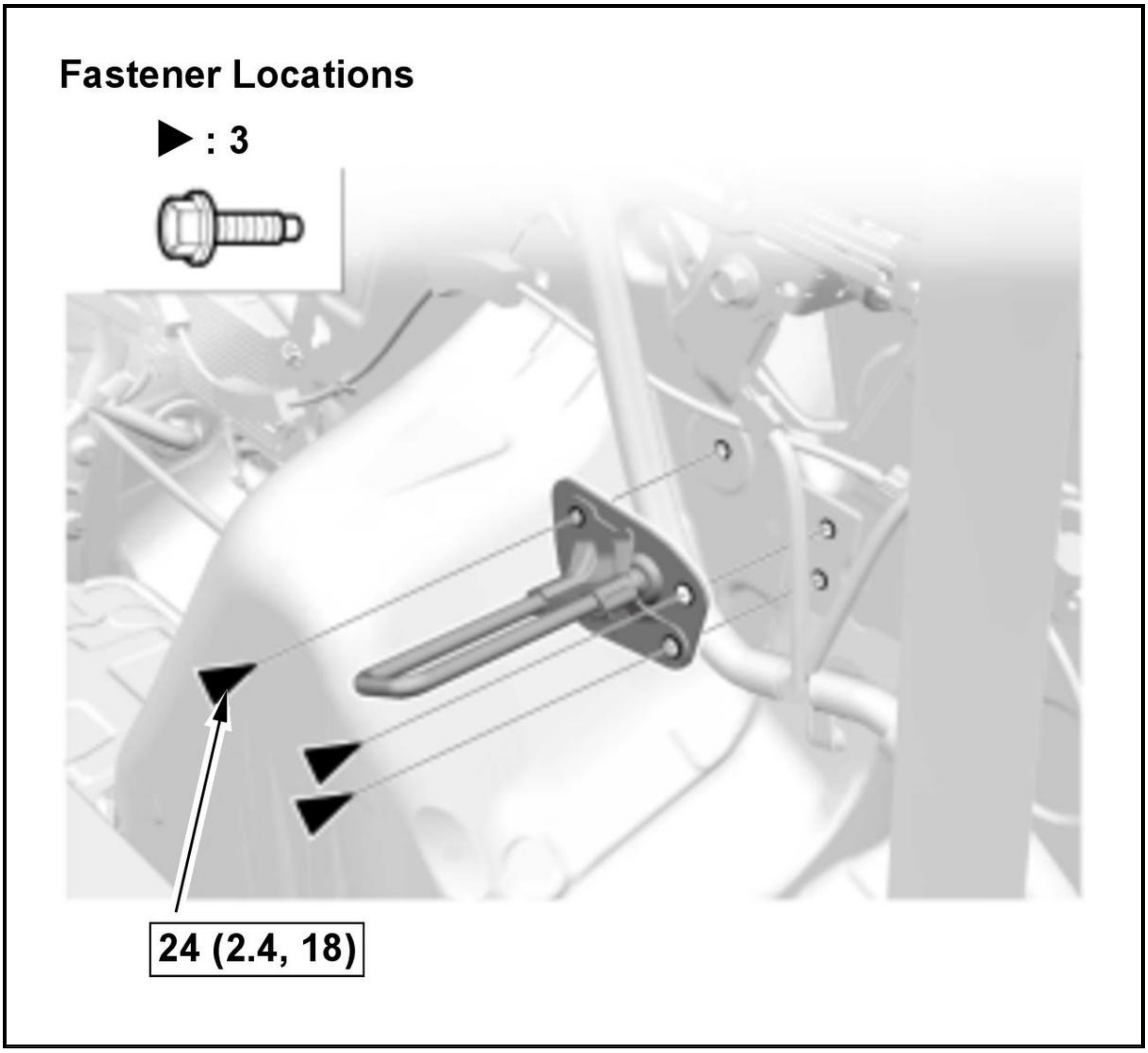
Fastener Locations
▶ : 3
24 (2.4, 18)

3. All Removed Parts - Install

1. Install the parts in the reverse order of removal.

DISASSEMBLY AND REASSEMBLY

REAR SEAT DISASSEMBLY AND REASSEMBLY

Disassembly and Reassembly

NOTE: The left rear seat is shown, the right rear seat is similar.

Procedure

NOTE: **Numbered call-outs in figure pertain to list numbers in following procedure.**

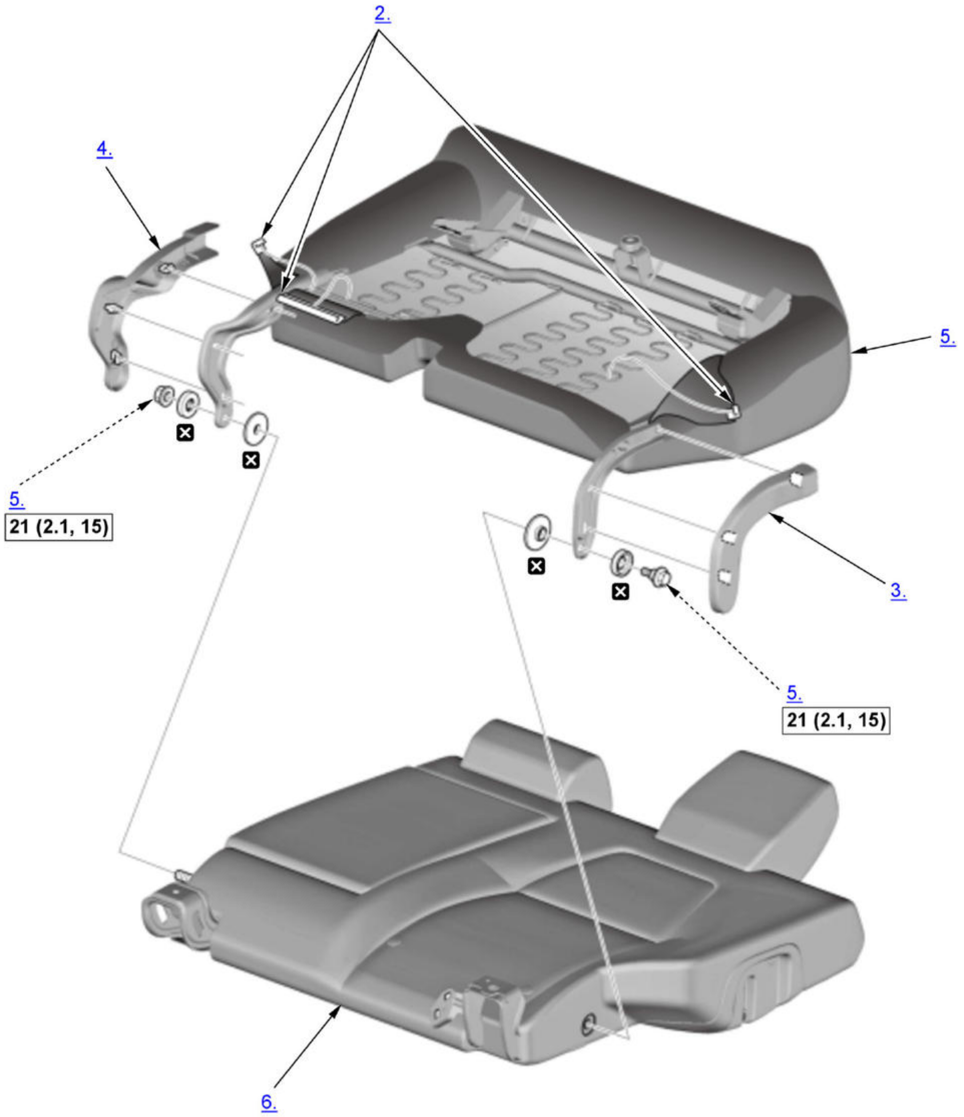

Fig. 1: Exploded View Of Rear Seat Components With Torque Specifications
Courtesy of HONDA, U.S.A., INC.

☐	Torque: N.m (kgf.m, lbf.ft)

✖	Replace

1. **Rear Seat - Remove**
2. Rear Seat Cushion Cover Hooks - Release
3. Rear Seat Outer Arm Cover - Remove
4. Rear Seat Inner Arm Cover - Remove
5. Rear Seat Cushion - Remove
6. Rear Seat-Back - Remove
7. All Disassembled Parts - Reassemble

1. Reassemble the parts in the reverse order of disassembly.

REMOVAL AND INSTALLATION

FRONT PASSENGER'S SEAT RAIL REMOVAL AND INSTALLATION

Removal and Installation

SRS components are located in this area. Review the **SRS component locations** and the **precautions and procedures** before doing repairs or service.

NOTE: **How to read the torque specifications** .

1. **Front Passenger's Seat-Back Cover/Pad - Remove**
2. **Front Passenger's Seat Cushion Cover/Pad - Remove**
3. **Front Seat Outer/Inner Recline Inner Covers - Remove**
4. Front Passenger's Seat Rail - Remove (Power Seat)

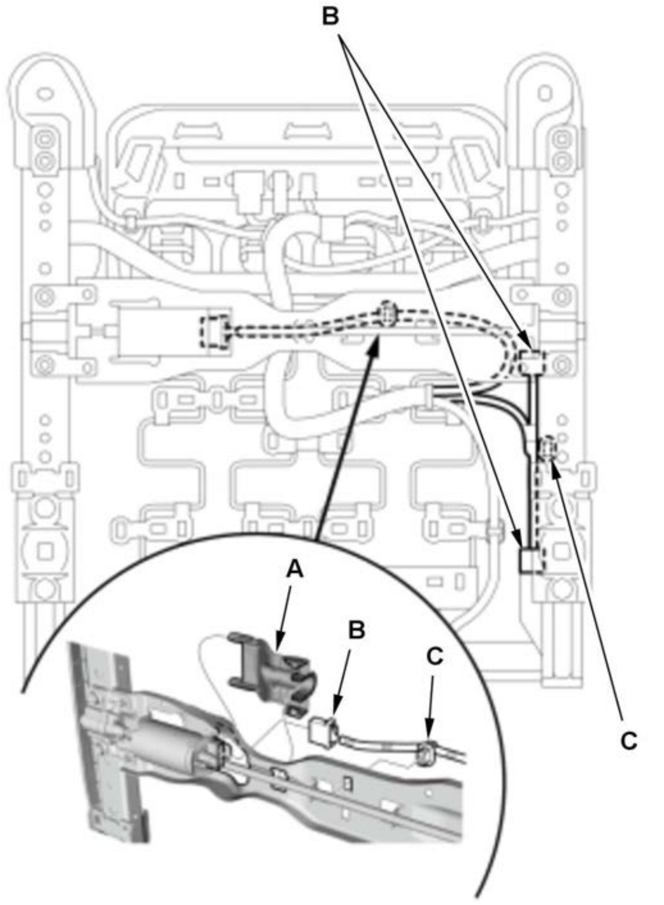	1. Remove the slide motor cover (A). 2. Disconnect the connectors (B), and remove the harness clips (C).

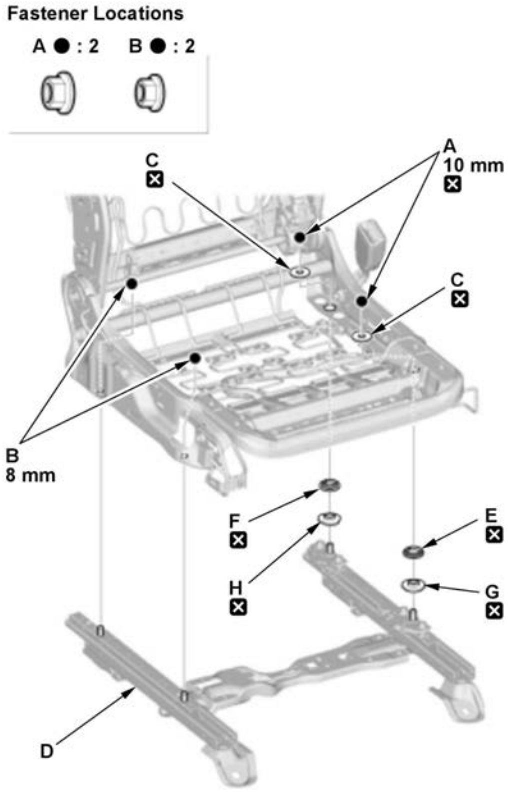 Fastener Locations A ● : 2 B ● : 2 C ☒ A 10 mm ☒ C ☒ B 8 mm F ☒ E ☒ H ☒ G ☒ D	3. Remove the nuts (A, B) and the washers (C), and then remove the front passenger's seat rail (D), the bushings (E, F), and the collars (G, H).

5. All Removed Parts - Install

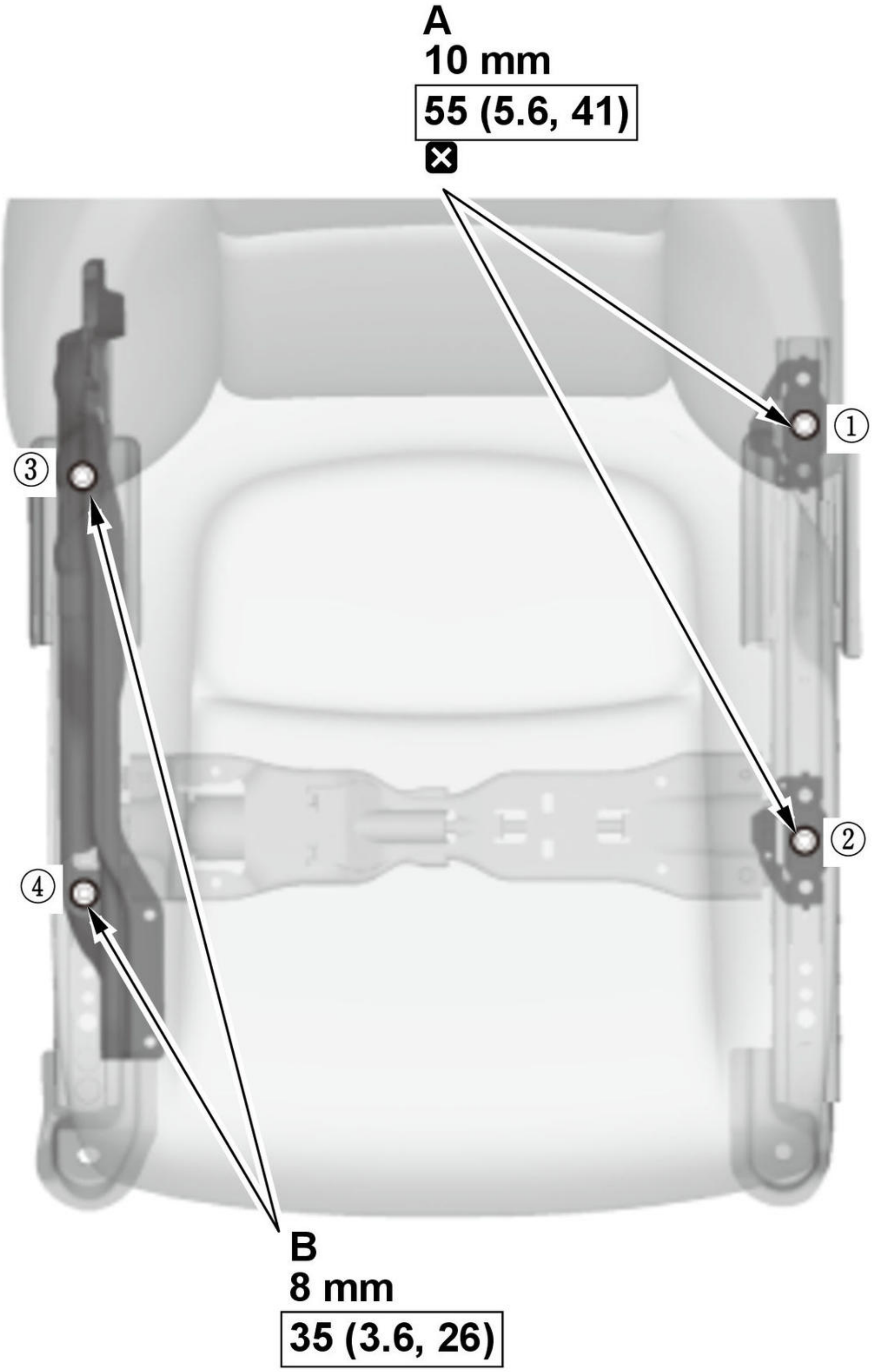
A
10 mm
55 (5.6, 41)
☒
①
②
③
④
B
8 mm
35 (3.6, 26)

Fig. 2: Front Passenger's Seat Rail Nuts With Tightening Sequence And Torque Specifications
Courtesy of HONDA, U.S.A., INC.

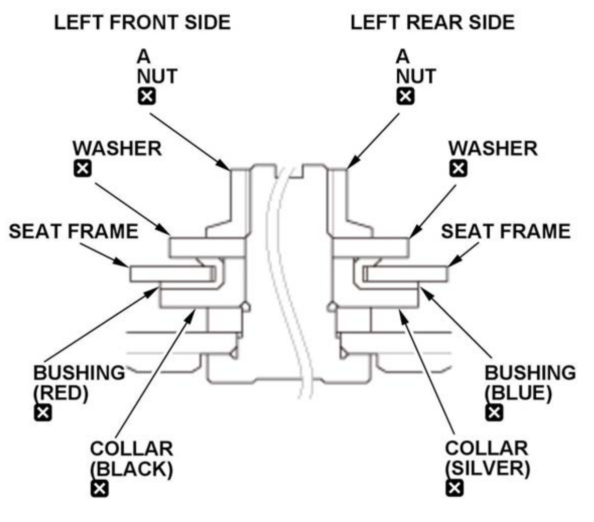 LEFT FRONT SIDE LEFT REAR SIDE A NUT ☒ A NUT ☒ WASHER ☒ WASHER ☒ SEAT FRAME SEAT FRAME BUSHING (RED) ☒ BUSHING (BLUE) ☒ COLLAR (BLACK) ☒ COLLAR (SILVER) ☒	1. Install the parts in the reverse order of removal. **NOTE:** • The bushings and collars can be identified by their color. Make sure to install the bushings and collars as shown. • Tighten the nuts (A, B) in the numbered sequence shown.

6. Seat Operation - Confirm

1. Move the front seat and the seat-back through their full ranges of movement, making sure the harness is not pinched or interfering with other parts.

7. **Front Passenger's Weight Sensor - Initialize**
8. **Front Passenger's Weight Sensor - Operation Check**
9. SRS Operation - Confirm

1. Turn the vehicle to the ON mode, and check that the SRS indicator comes on for about 6 seconds and then goes off.

FRONT SEAT CUSHION COVER REMOVAL AND INSTALLATION

Removal and Installation

SRS components are located in this area. Review the **SRS component locations** and the **precautions and procedures** before doing repairs or service.

1. **Front Seat - Remove**
2. **Front Seat Outer Recline Cover - Remove**
3. **Front Seat Inner Recline Cover - Remove (Driver's Seat)**
4. Front Seat Cushion Cover/Pad - Remove

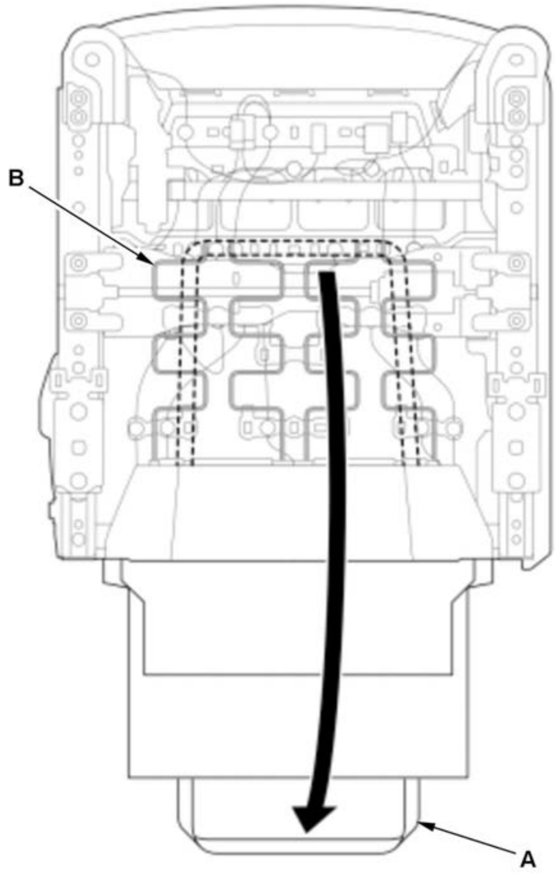	1. From under the seat cushion, release the elastic strap (A) from the seat cushion frame springs (B).

Driver's seat with seat heater 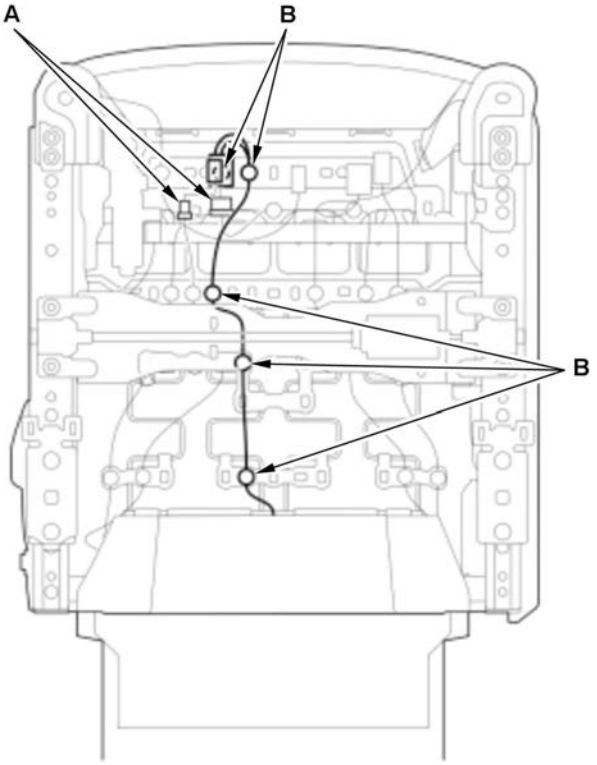 **Passenger's seat with seat heater**	2. For some models: From under the seat cushion, disconnect the connectors (A), and remove the harness clips (B).

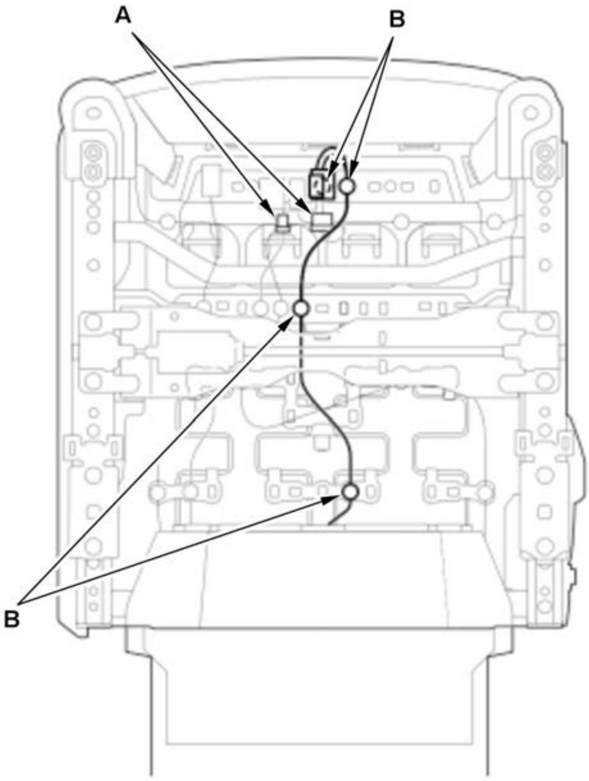	

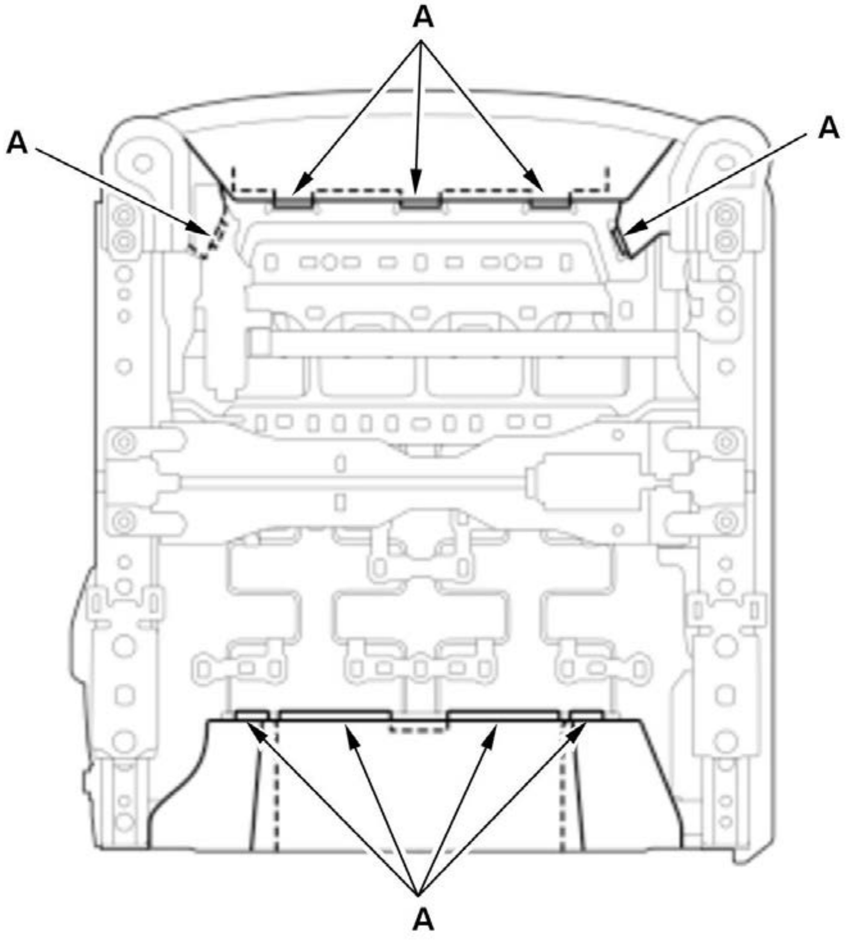	3. Release the hooks (A).

Driver's power seat

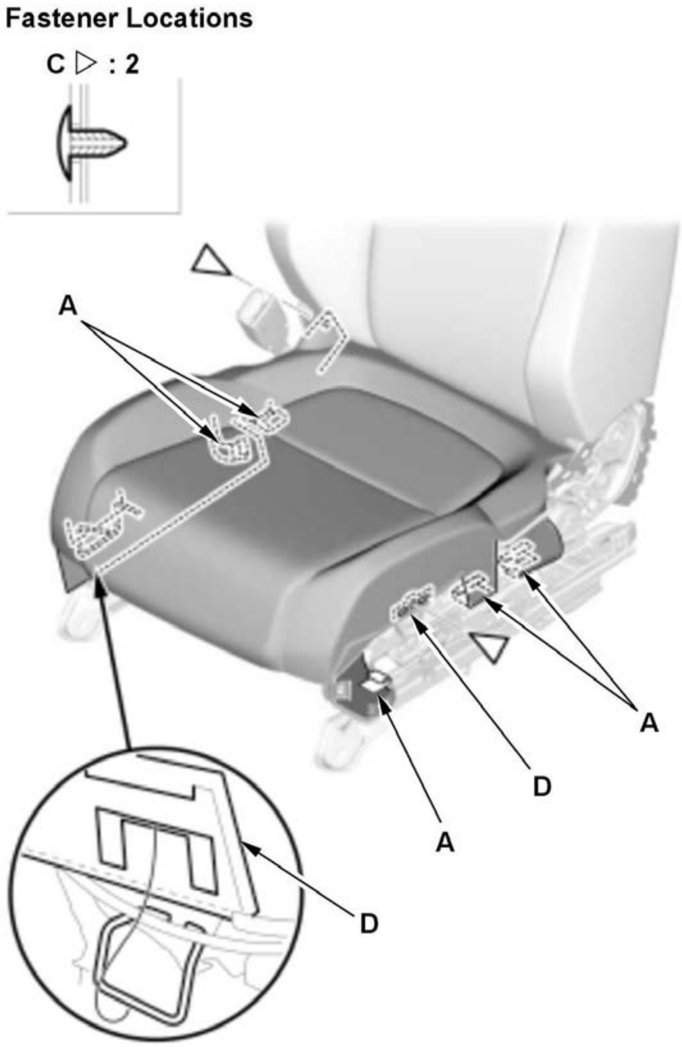
Fastener Locations
C ▷ : 2
A
A
D
A
D

Driver's manual seat

4. Release the hooks (A) and the hook strip (B).

5. Driver's seat: Remove the clip(s) (C).

6. Power seat: Remove the retainer(s) (D) from the seat frame.

Fastener Location

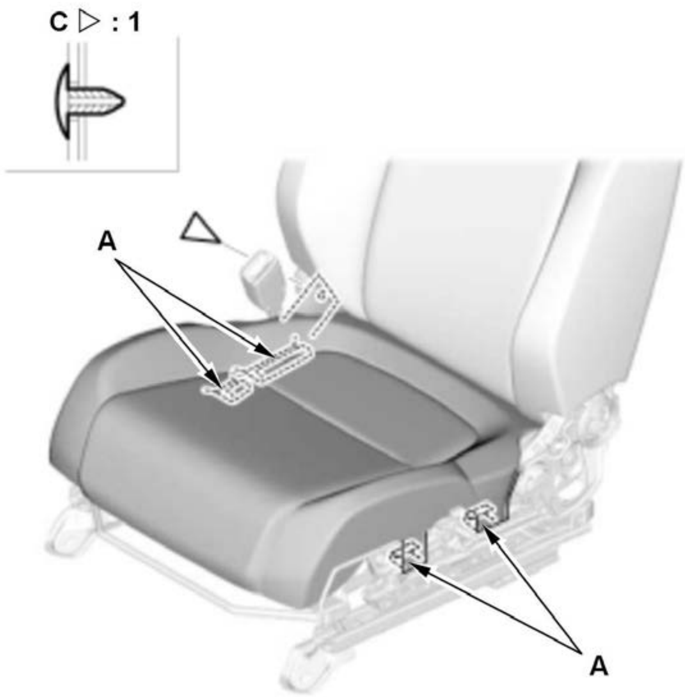

Passenger's power seat

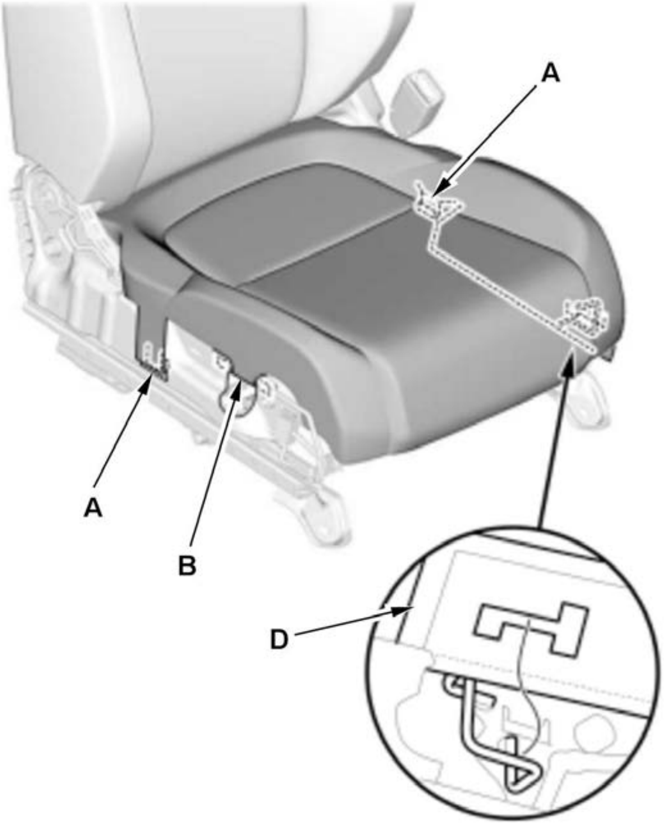

Passenger's manual seat

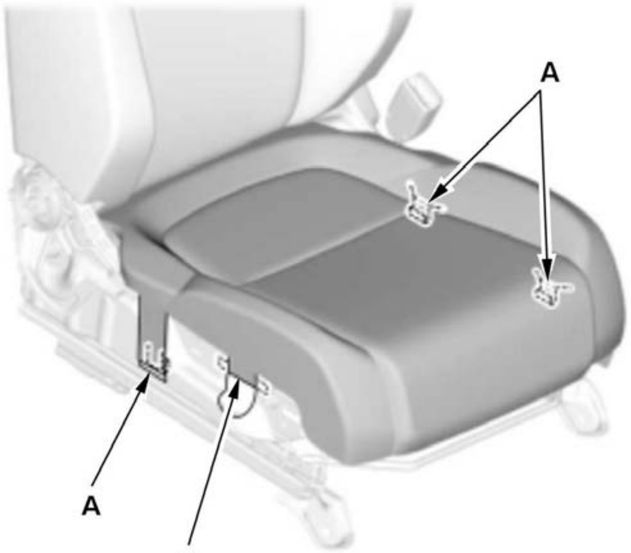	

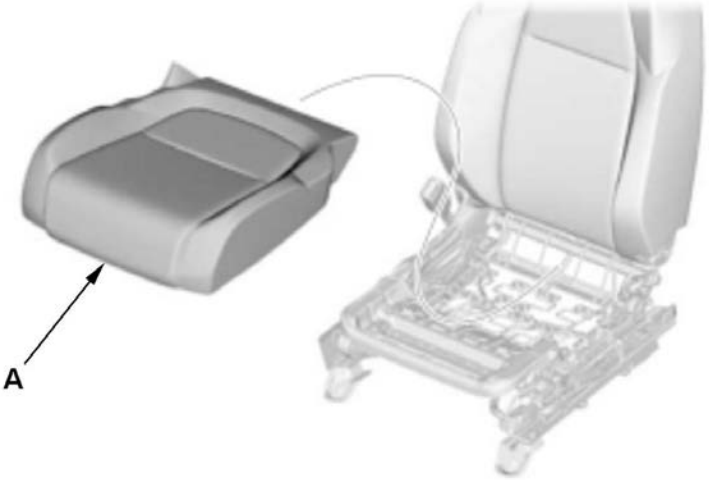	7. Remove the seat cushion cover/pad (A).

5. Front Seat Cushion Cover - Remove

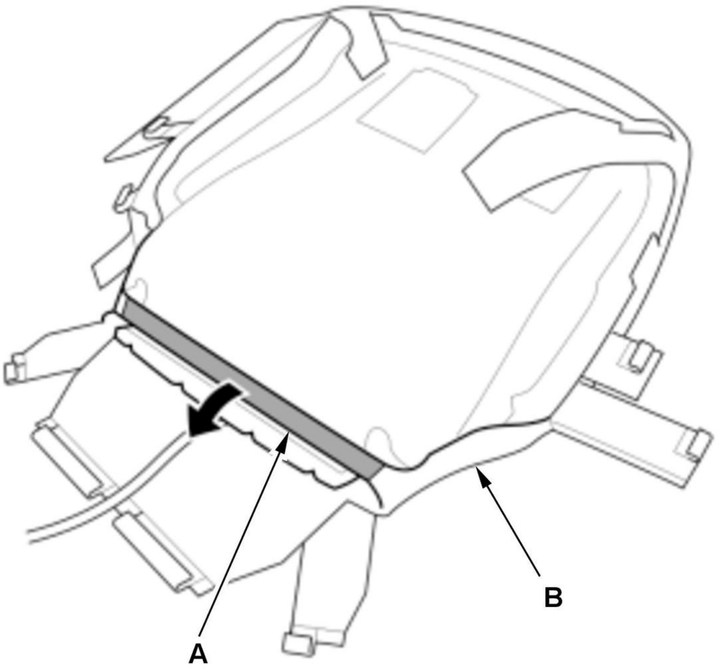	1. Pull off the band (A) of the seat cushion cover (B).

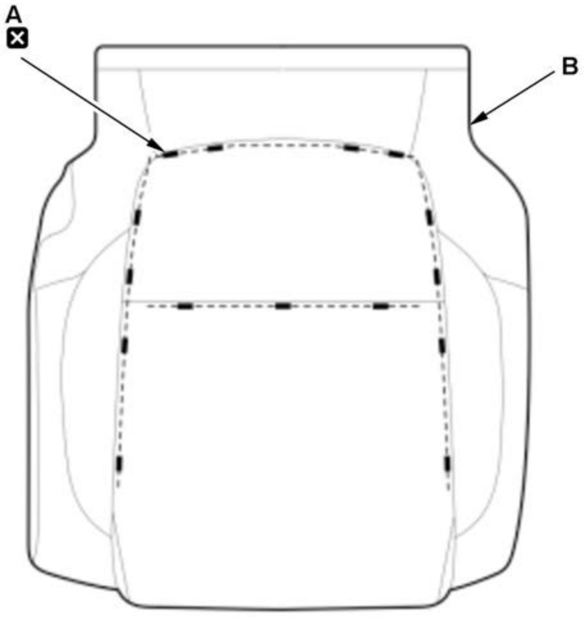	2. Remove the upholstery rings (A), and then remove the seat cushion cover (B).

6. All Removed Parts - Install

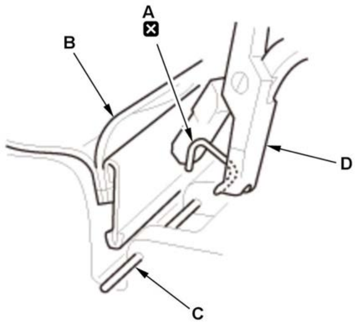	1. Install the parts in the reverse order of removal. **NOTE:** Replace all of the upholstery rings (A) fastening the seat cushion cover (B) to the pad wires (C) with new ones using commercially available upholstery ring pliers (D).

FRONT SEAT FRAME REMOVAL AND INSTALLATION

Removal and Installation

SRS components are located in this area. Review the **SRS component locations** and the **precautions and procedures** before doing repairs or service.

1. **Front Seat-Back Cover/Pad - Remove**
2. **Front Seat Cushion Cover/Pad - Remove**
3. **Front Seat Inner Recline Cover - Remove (Passenger's Seat)**
4. Front Seat Front Cushion Cover - Remove (Driver's Power Seat)

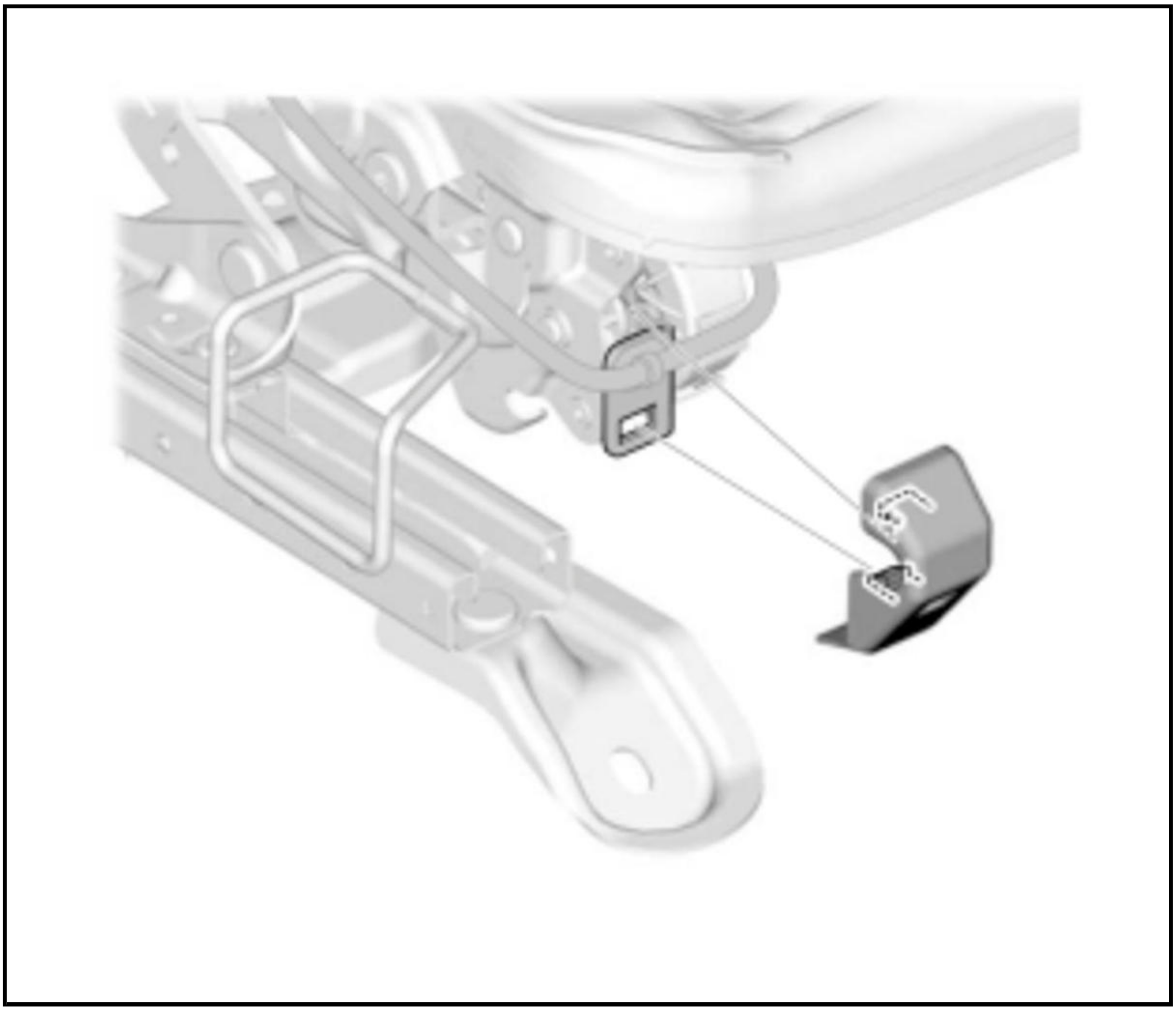

5. **Front Seat Belt Buckle - Remove**
6. Front Seat Slide Motor Cover - Remove (Power Seat)

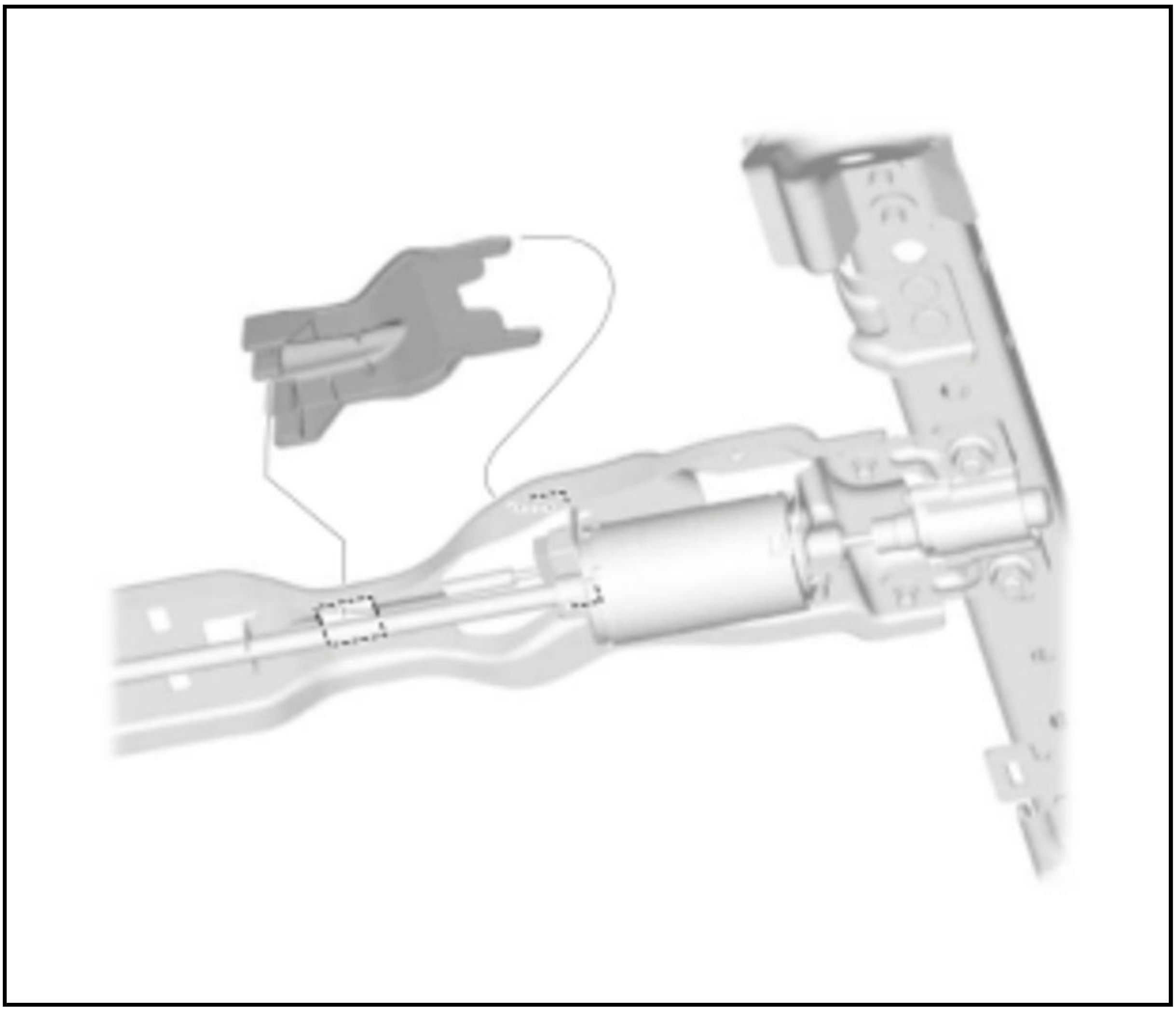

7. Front Seat Wire Harness - Remove
8. Upper Rail Outer Cover - Remove (Driver's Seat)

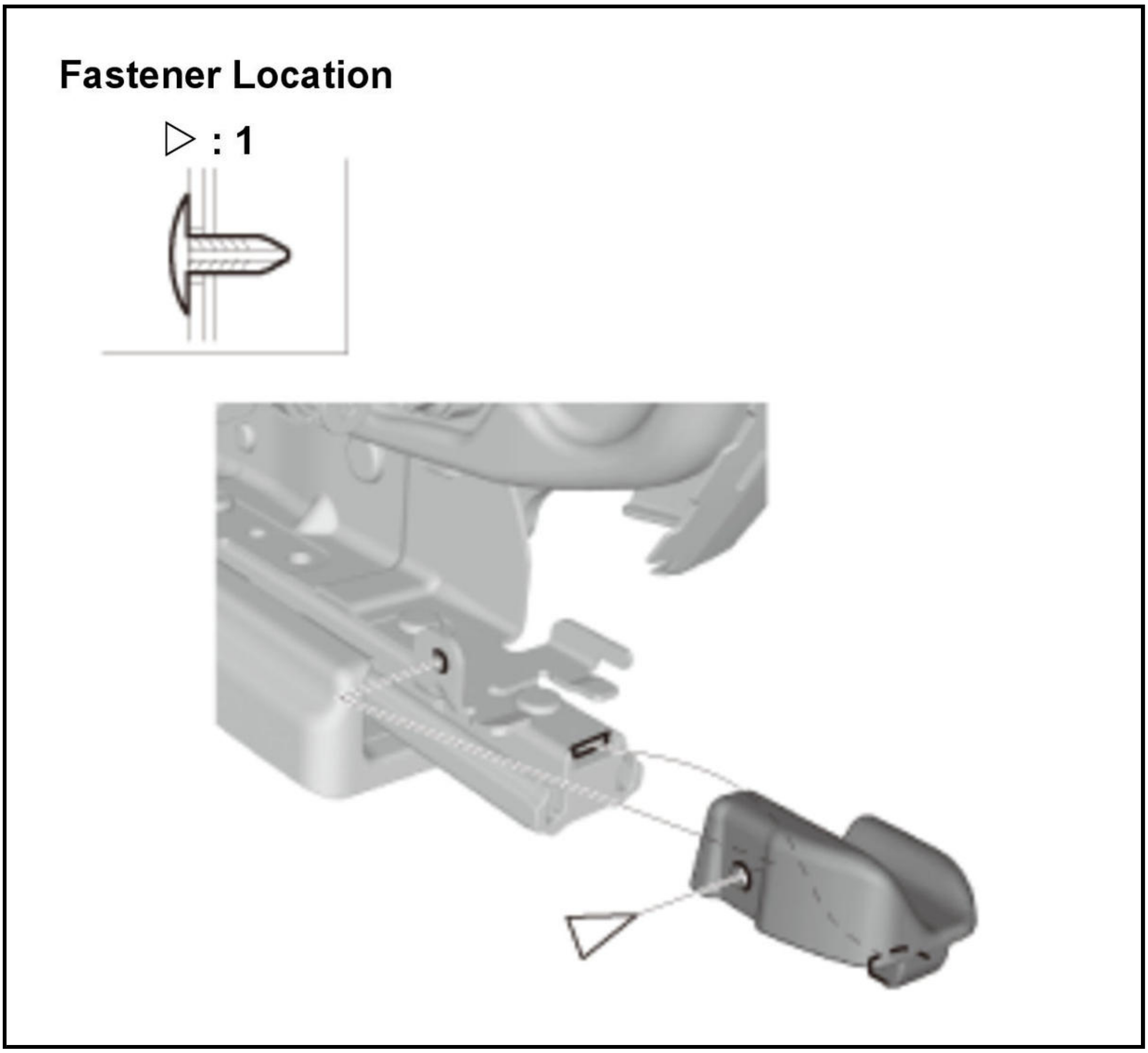
Fastener Location
▷ : 1

9. Upper Rail Inner Cover - Remove (Driver's Seat)

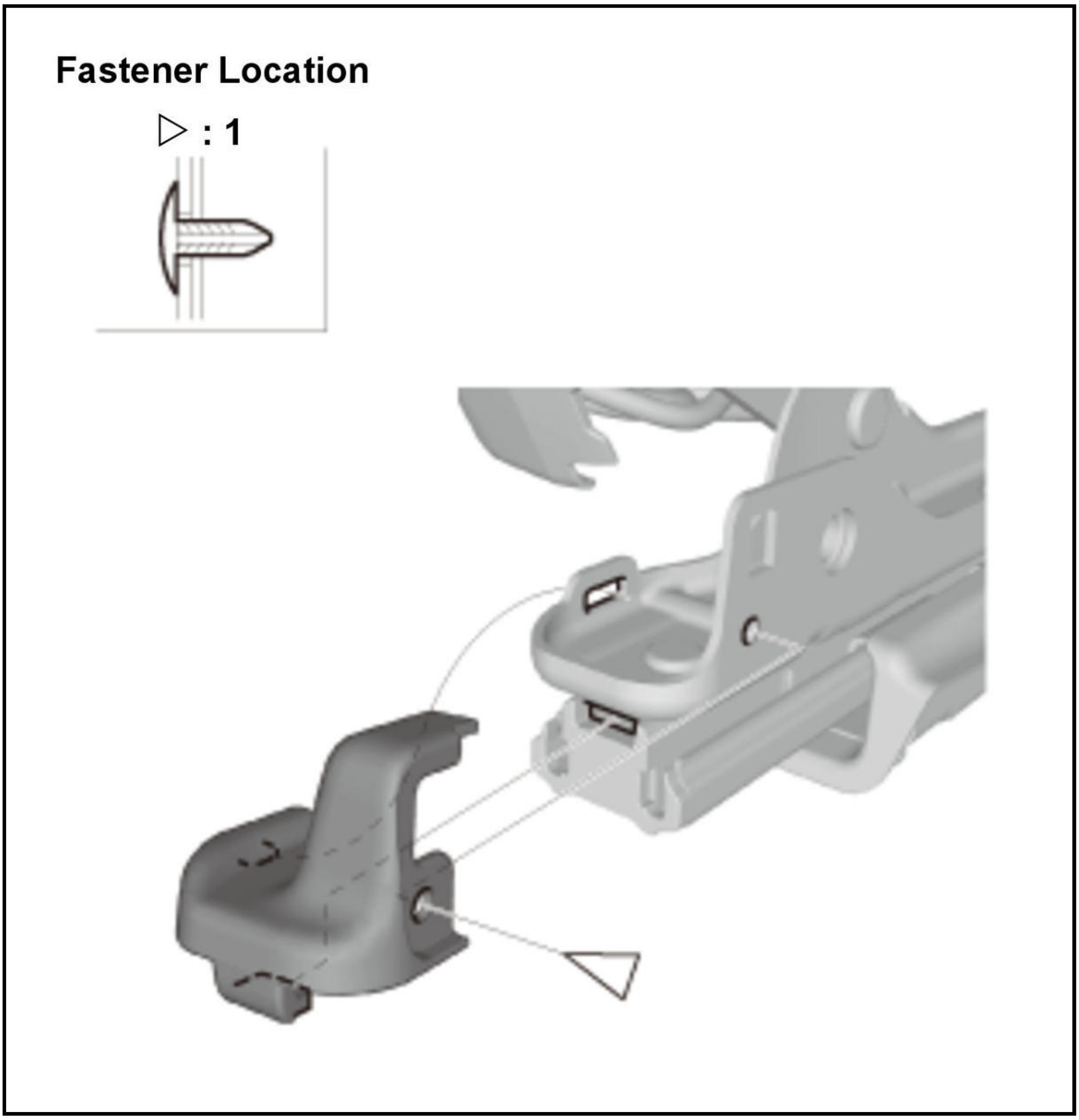
Fastener Location
▷ : 1

10. Front Seat Outer/Inner Recline Inner Covers - Remove

Driver's seat

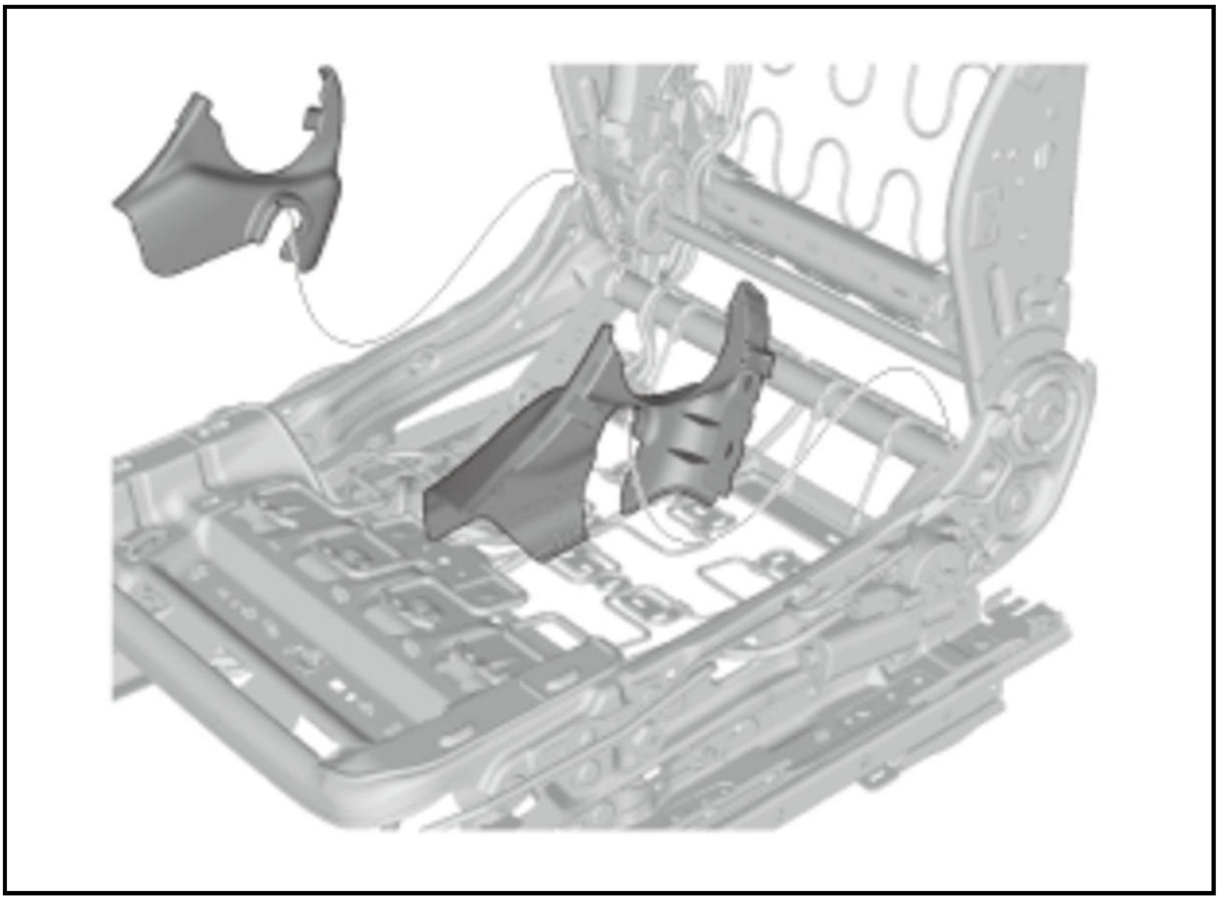

Passenger's seat

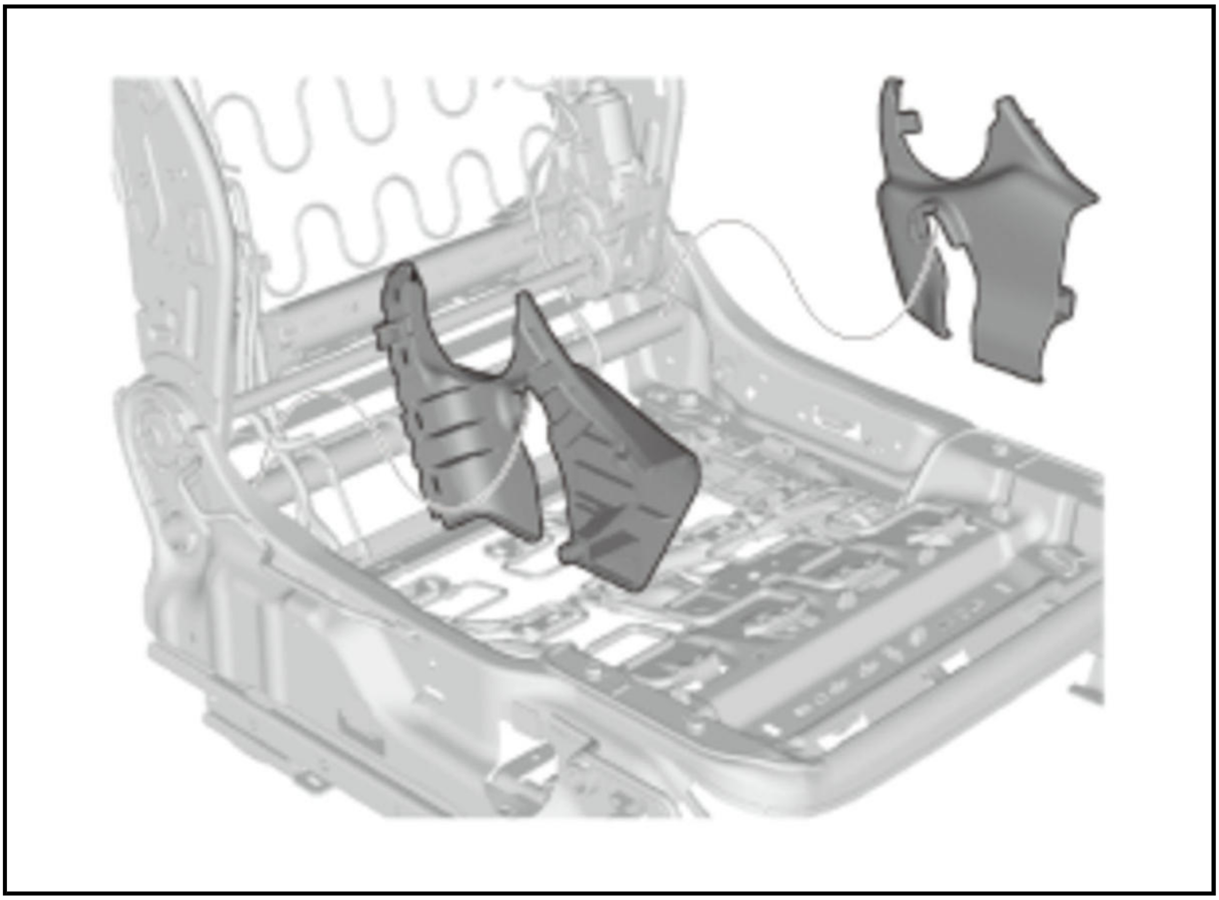

11. Front Seat Side Airbag Holder - Remove

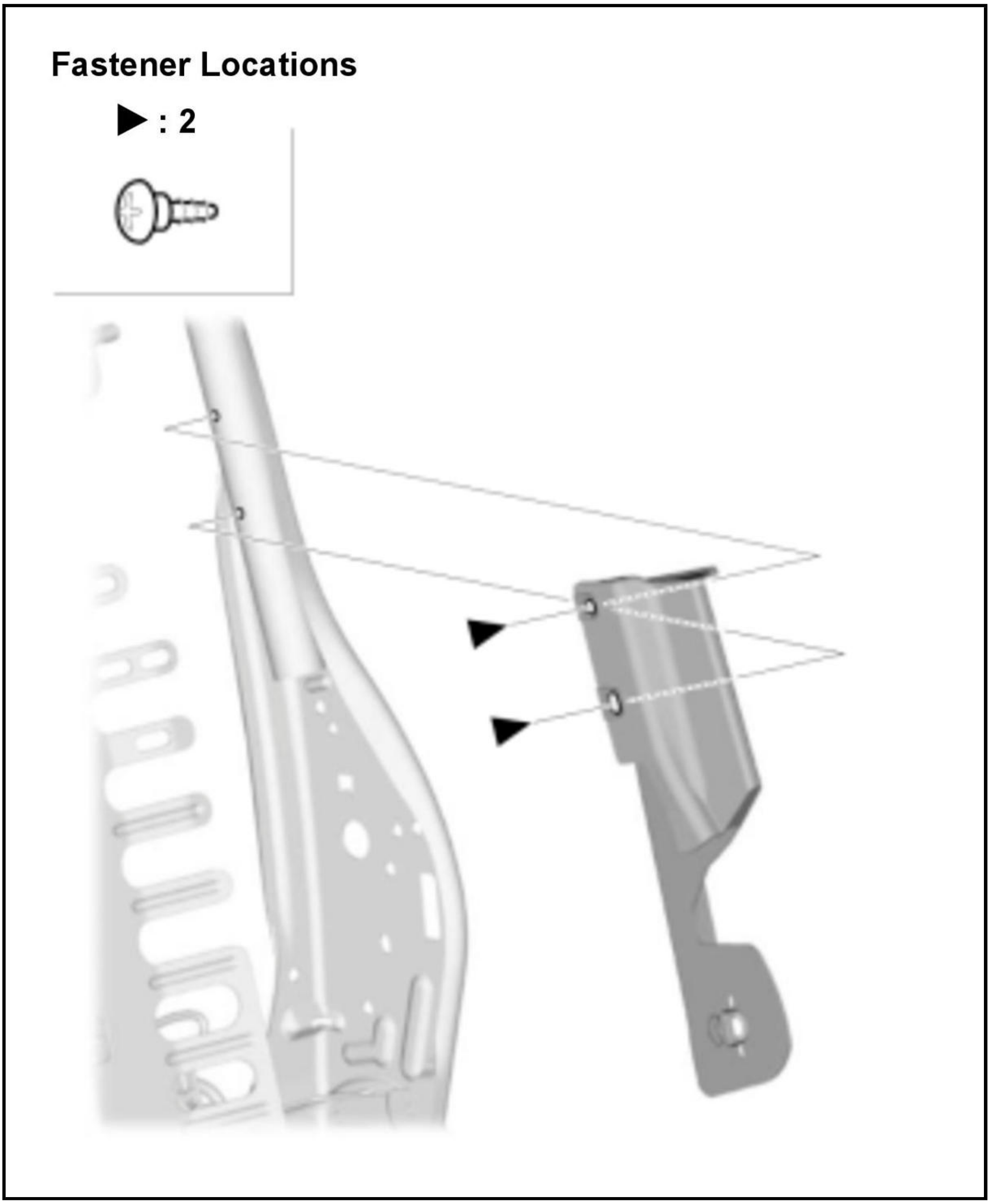
Fastener Locations
▶ : 2

12. Edge Protector(s) - Remove

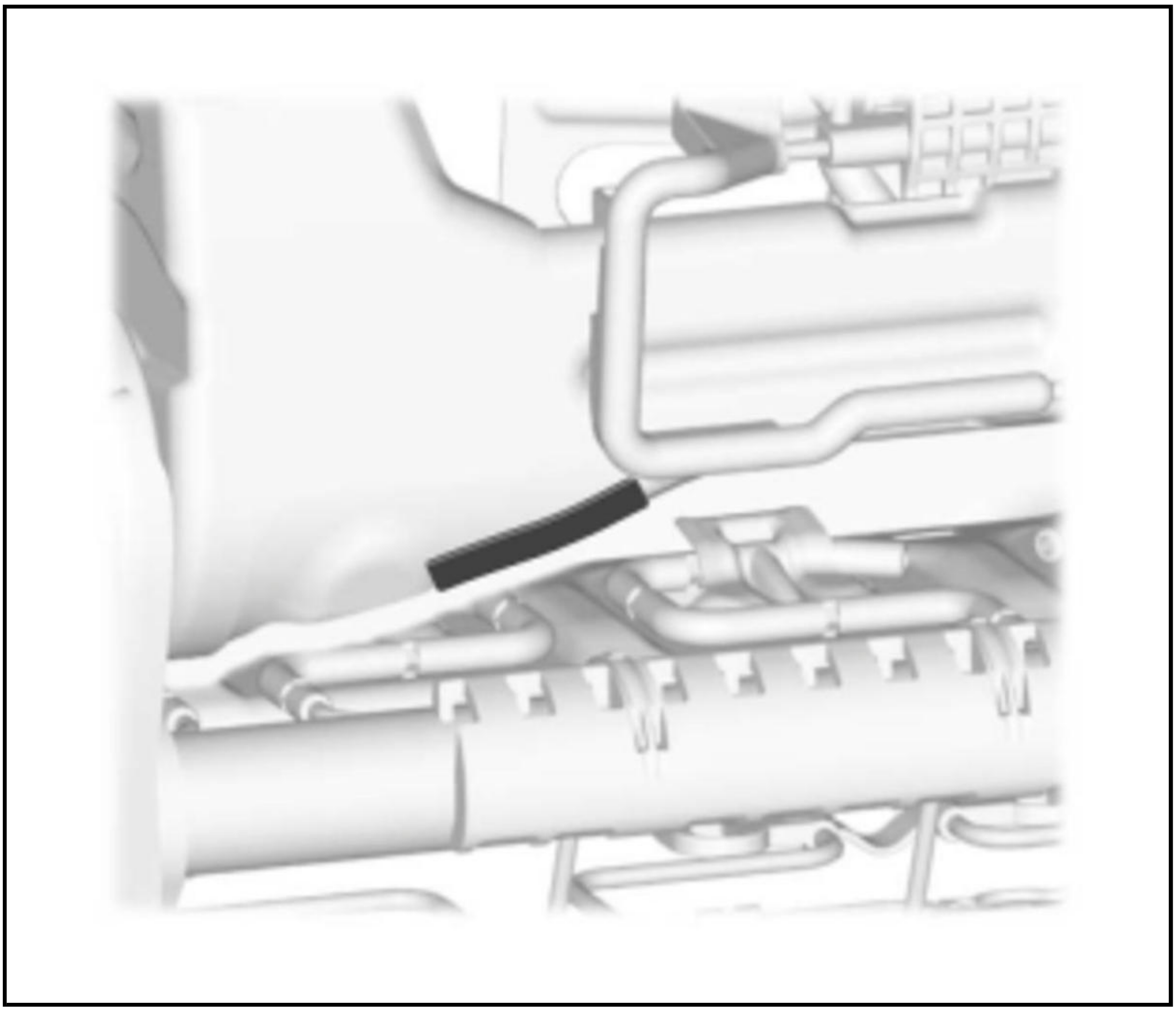

13. All Removed Parts - Install

    1. Install the parts in the reverse order of removal.

14. Driving Position Memory - Clear (For Some Models)

    NOTE: Clear the driving position memory after doing any of the following actions.

    - Replace the new front seat frame.
    - Substitute a known-good front seat frame.

15. Front Passenger's Weight Sensor - Initialize (For Some Models)
16. Front Passenger's Weight Sensor - Operation Check (For Some Models)

FRONT SEAT HEATER CONTROL UNIT REMOVAL AND INSTALLATION

Removal and Installation

Procedure

NOTE: **Numbered call-outs in figure pertain to list numbers in following procedure.**

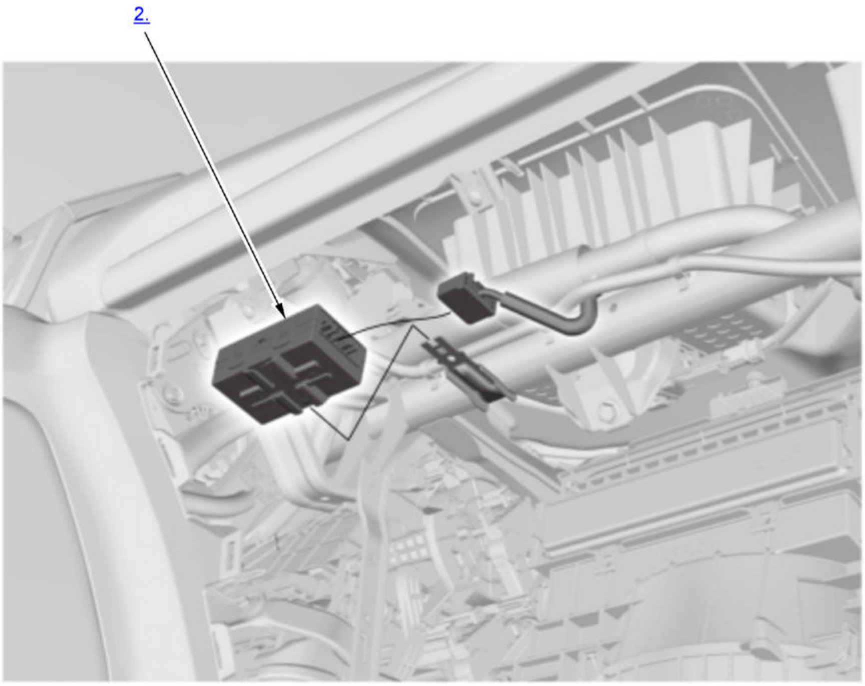

Fig. 3: Front Seat Heater Control Unit Components
Courtesy of HONDA, U.S.A., INC.

1. **Glove Box - Remove**
2. Front Seat Heater Control Unit - Remove
3. All Removed Parts - Install

1. Install the parts in the reverse order of removal.

FRONT SEAT LUMBAR SUPPORT REMOVAL AND INSTALLATION

Removal and Installation

SRS components are located in this area. Review the **SRS component locations** and the **precautions and procedures** before doing repairs or service.

1. **Front Seat - Remove**
2. Front Seat-Back Cover - Remove

1. **Remove the front seat-back cover as needed**.

3. Front Seat Lumbar Support - Remove

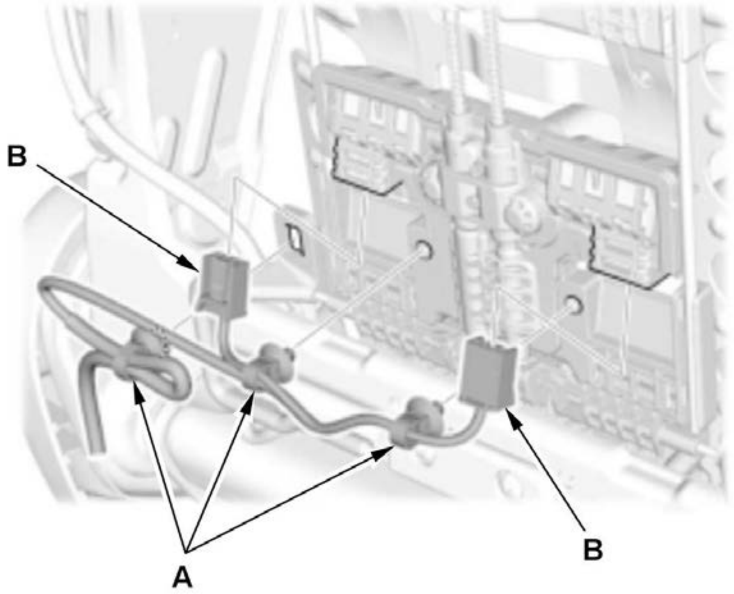	1. Remove the harness clips (A). 2. Disconnect the connectors (B).

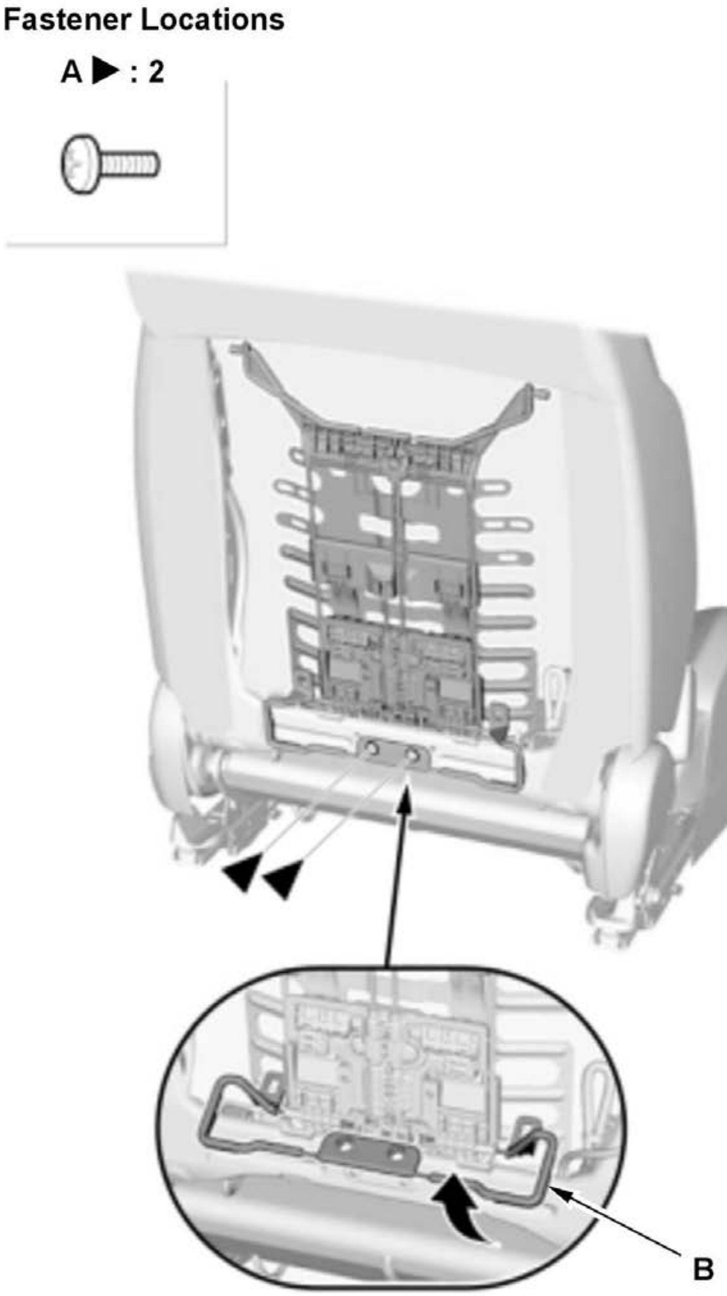	3. Remove the screws (A). 4. Lift up the hook (B).

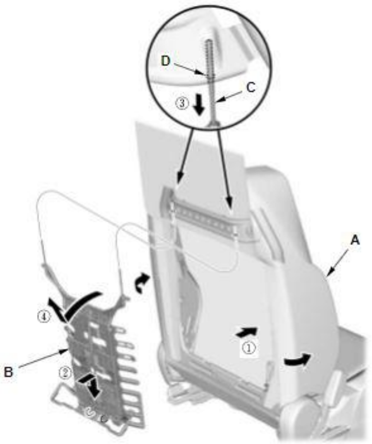	5. Push the bottom area of the front seat-back cover/pad (A) forward as needed. 6. Move the front seat lumbar support (B) forward, and lower it. 7. Remove the top wires (C) from the holes (D). 8. Remove the front seat lumbar support.

4. All Removed Parts - Install

1. Install the parts in the reverse order of removal.

FRONT SEAT RECLINE COVER REMOVAL AND INSTALLATION

Removal and Installation

SRS components are located in this area. Review the **SRS component locations** and the **precautions and procedures** before doing repairs or service.

NOTE: **How to read the torque specifications** .

1. **Front Seat - Remove**
2. Height Adjuster Handle - Remove (Driver's Manual Seat)

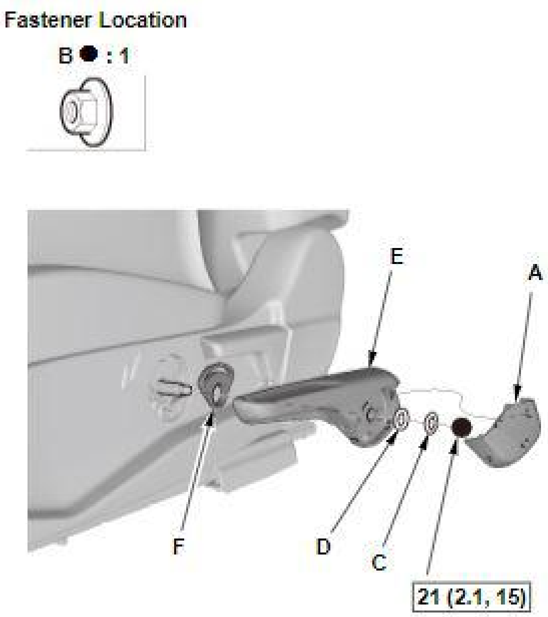

Fig. 4: Exploded View Of Height Adjuster Handle Components With Torque Specifications (Driver's Manual Seat)
Courtesy of HONDA, U.S.A., INC.

1. Remove the cap (A).

2. Remove the nut (B), the wave washer (C), the washer (D), the height adjuster handle (E), and the detent plate (F).

3. Front Seat Outer Recline Cover - Remove

Driver's power seat

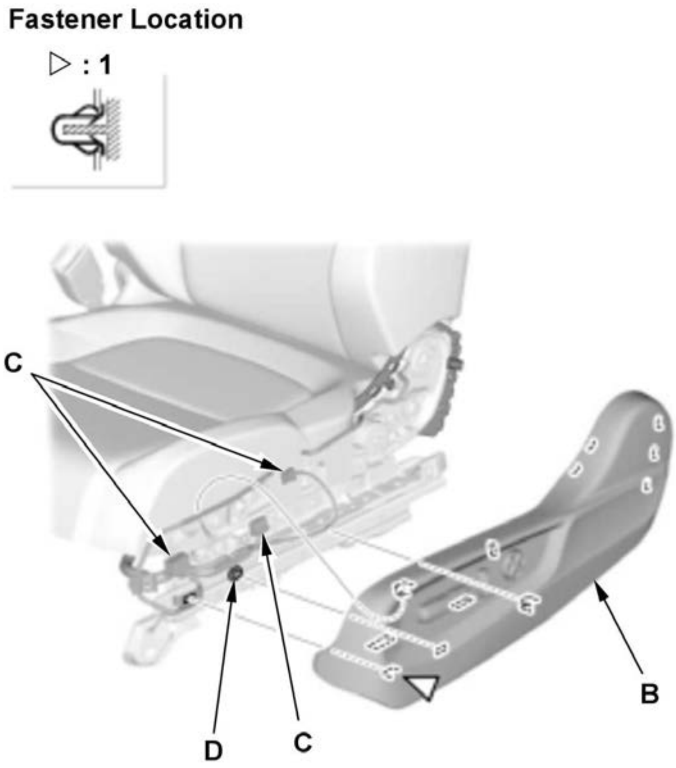
Fastener Location
▷ : 1
C
D
C
B

Driver's manual seat

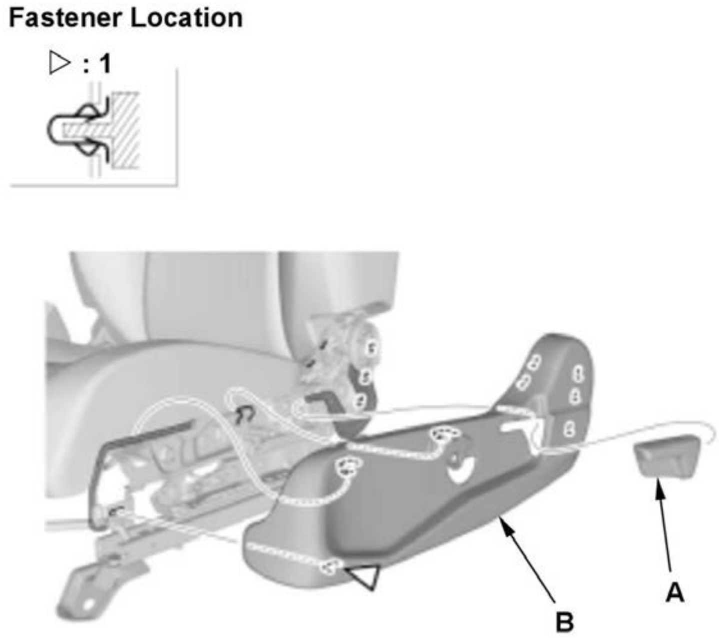
Fastener Location
▷ : 1
B
A

Passenger's power seat

1. Manual seat: Remove the front seat recline knob (A).

2. Remove the front seat outer recline cover (B).

3. Power seat: Disconnect the connector(s) (C).

4. Driver's power seat: Remove the harness clip (D).

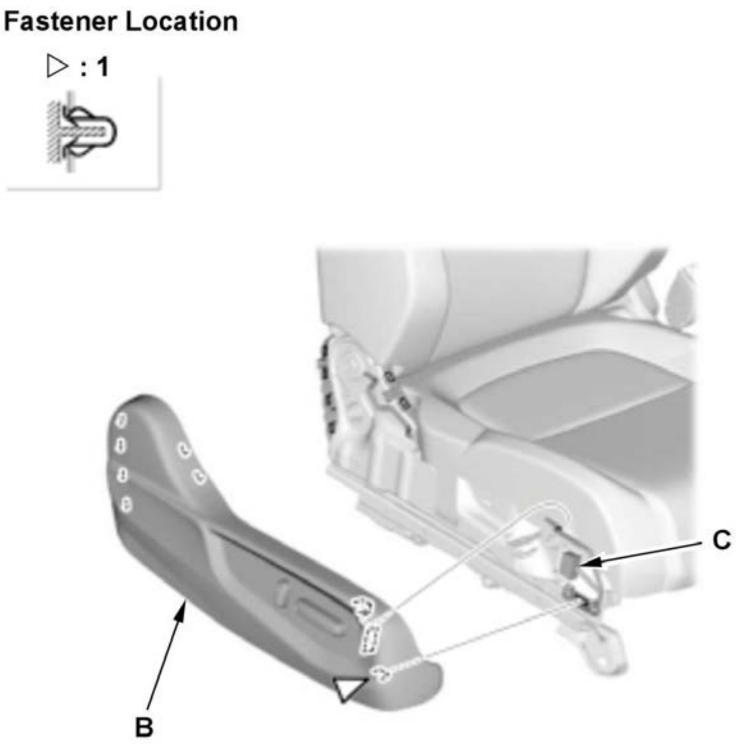
Fastener Location
▷ : 1
C
B

Passenger's manual seat

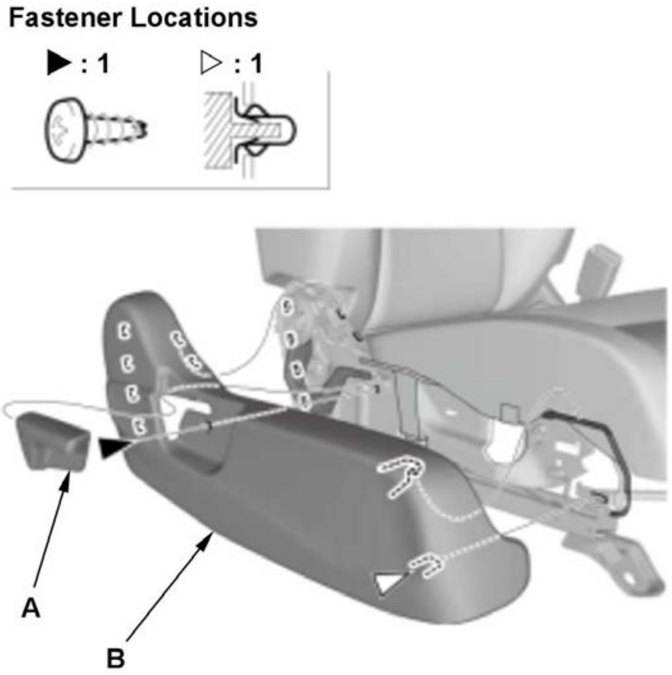
Fastener Locations
▶ : 1
▷ : 1
A
B

4. Front Seat Inner Recline Cover - Remove

Driver's seat

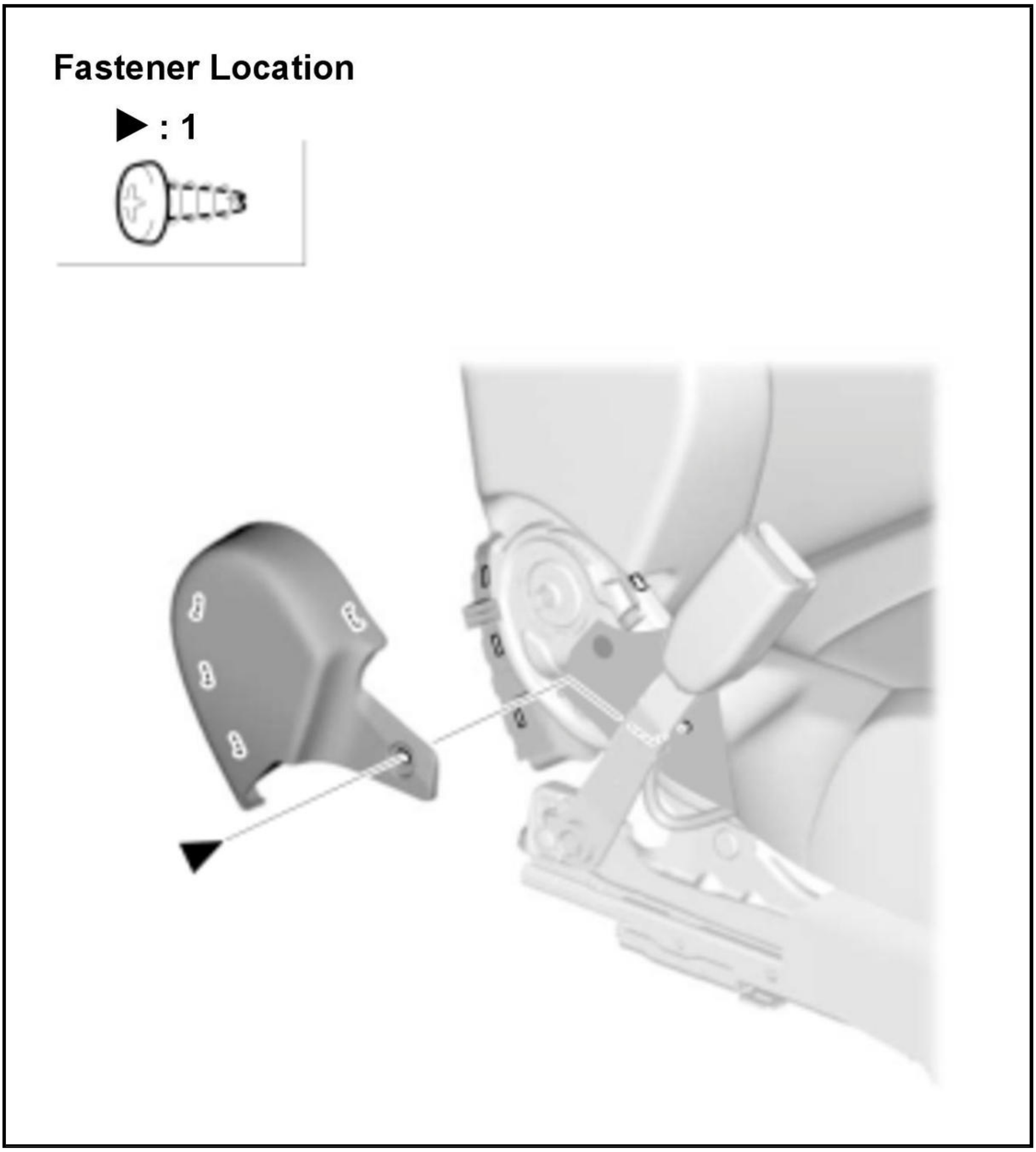
Fastener Location
▶ : 1

Passenger's seat

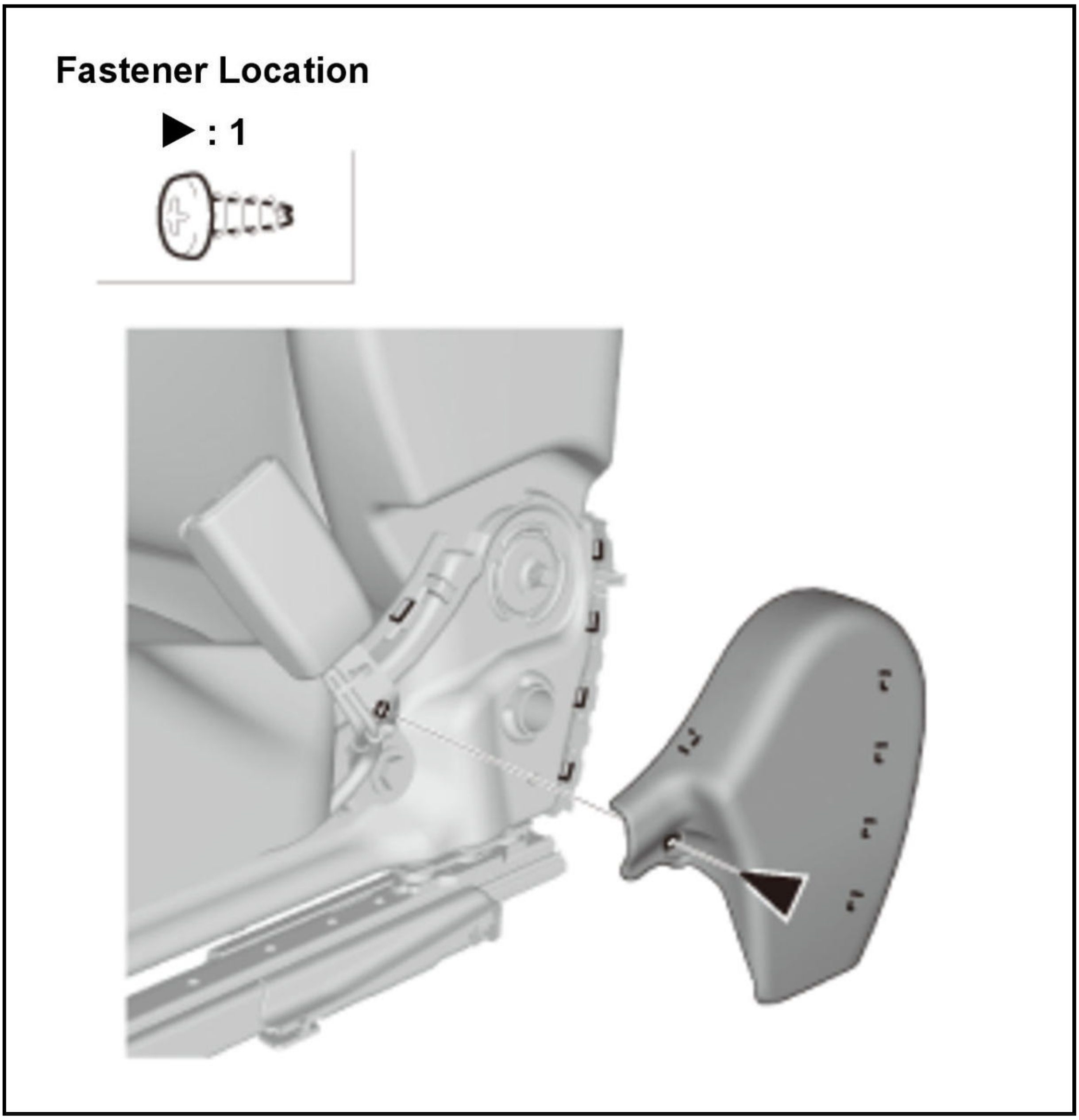

5. All Removed Parts - Install

1. Install the parts in the reverse order of removal.

FRONT SEAT REMOVAL AND INSTALLATION

Removal and Installation

SRS components are located in this area. Review the **SRS component locations** and the **precautions and procedures** before doing repairs or service.

NOTE: **How to read the torque specifications** .

1. Front Seat Track End Covers - Remove

Front side

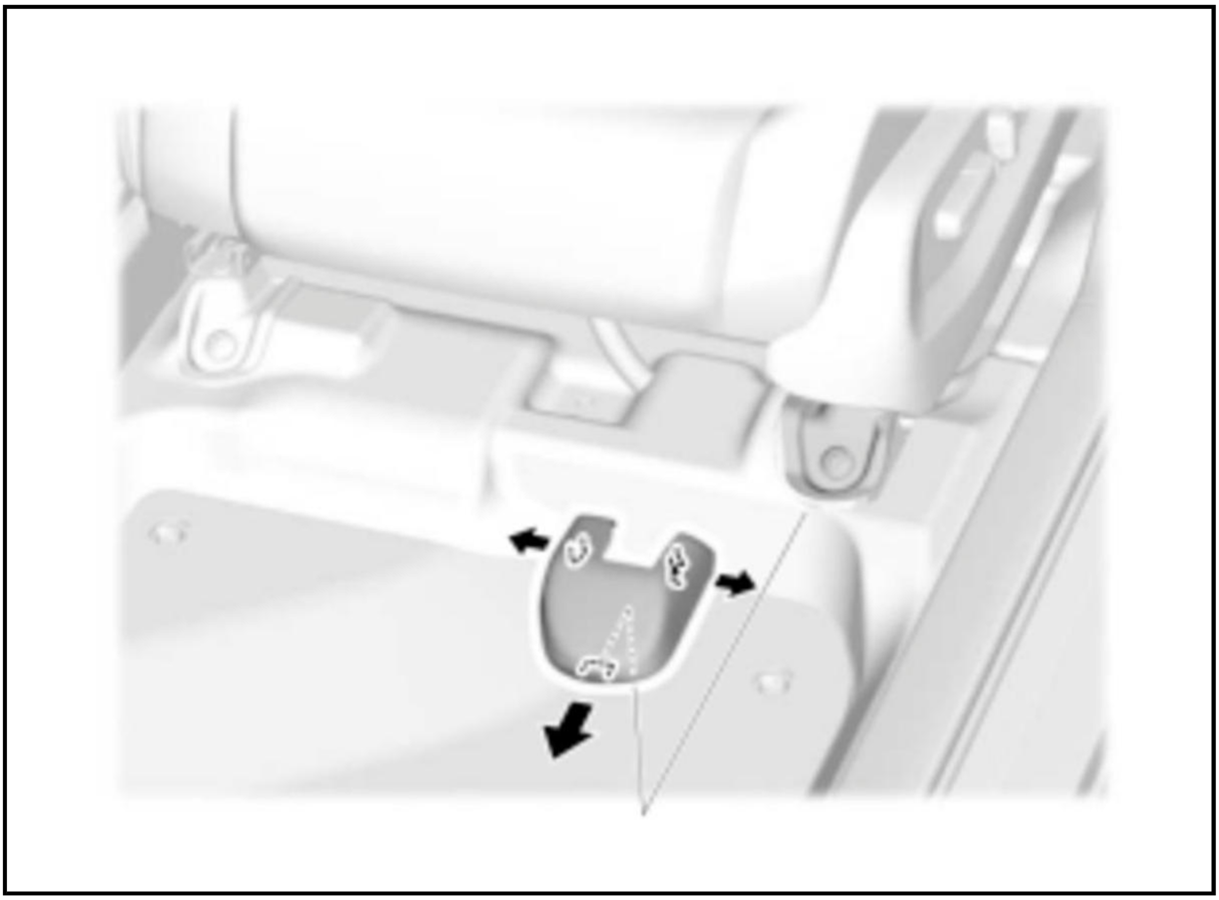

Rear side

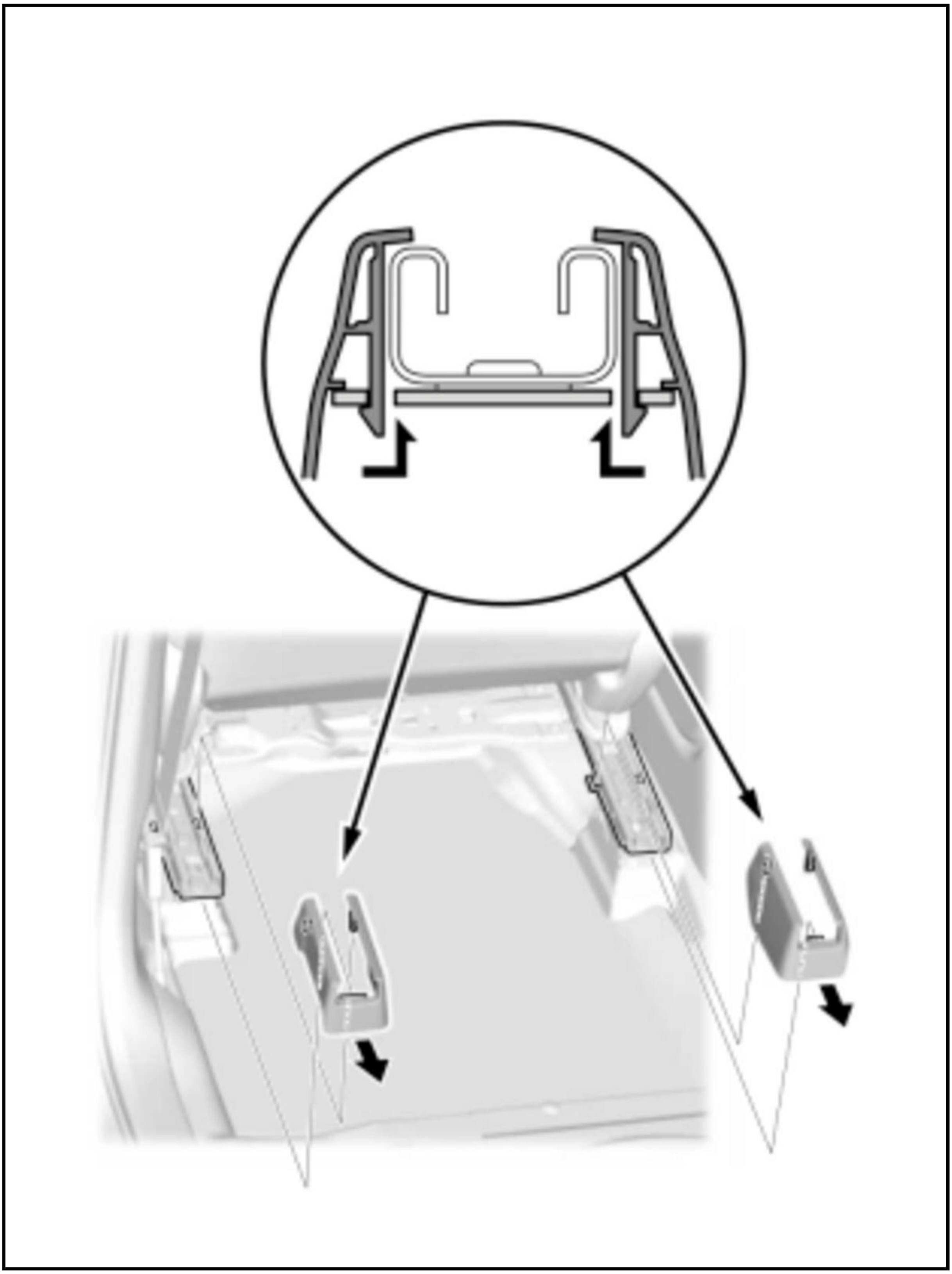

2. Front Seat Mounting Bolts - Remove

Rear side

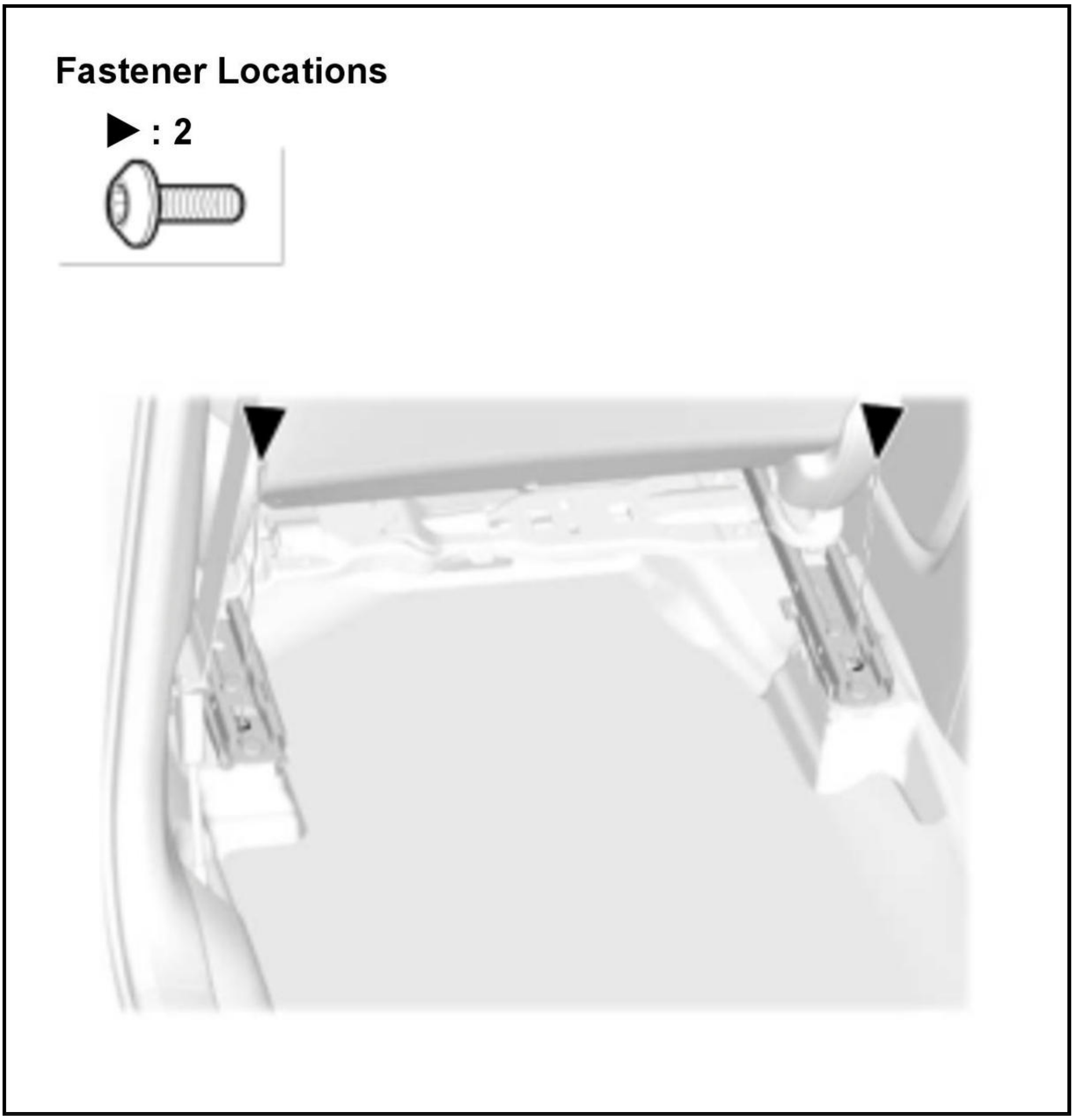
Fastener Locations
▶ : 2

Front side

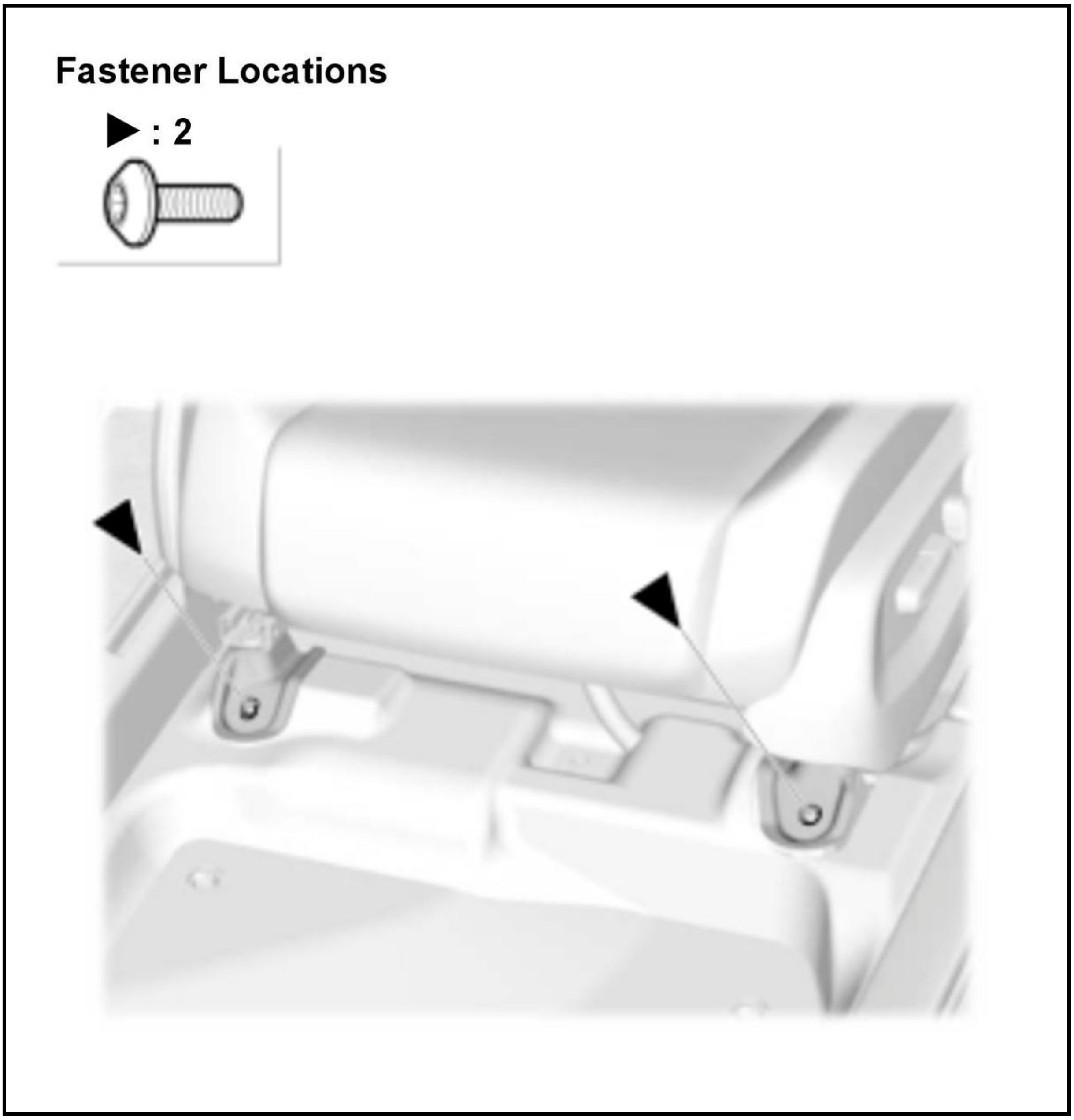
Fastener Locations
▶ : 2

3. **12 Volt Battery Terminal - Disconnect**

   NOTE: Wait at least 3 minutes before starting work.

4. Front Seat - Remove

Driver's seat

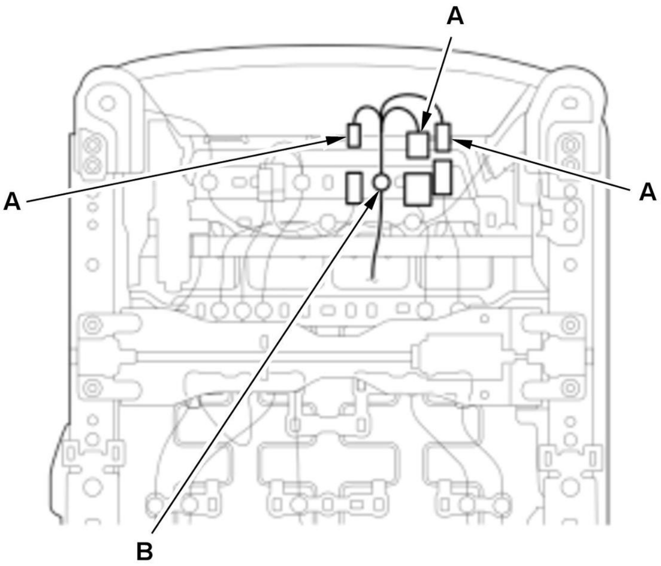

Passenger's seat

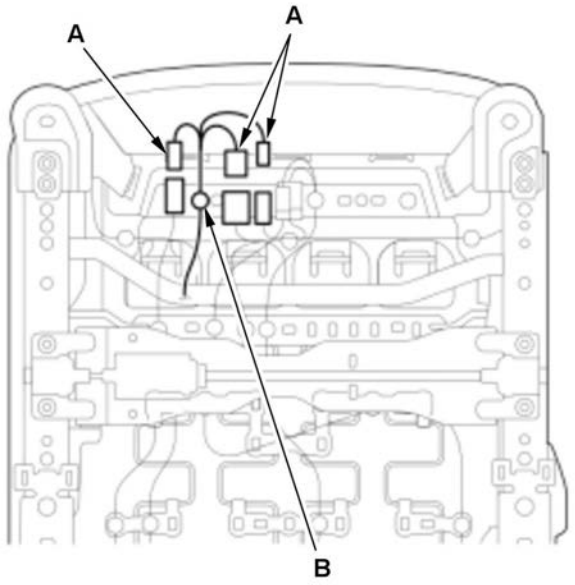

1. Lift up the front seat, disconnect the connectors (A), and remove the harness clip (B).

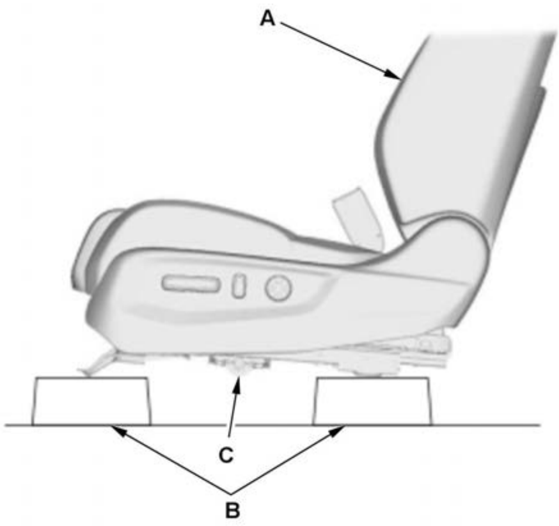

2. Remove the head restraint.

3. With the help of an assistant, carefully remove the front seat (A) through the front door opening.

NOTE:

- Power seat: Use rubber pads (B) to support the front seat.
- Power seat: Take care not to damage the slide motor (C).

5. All Removed Parts - Install

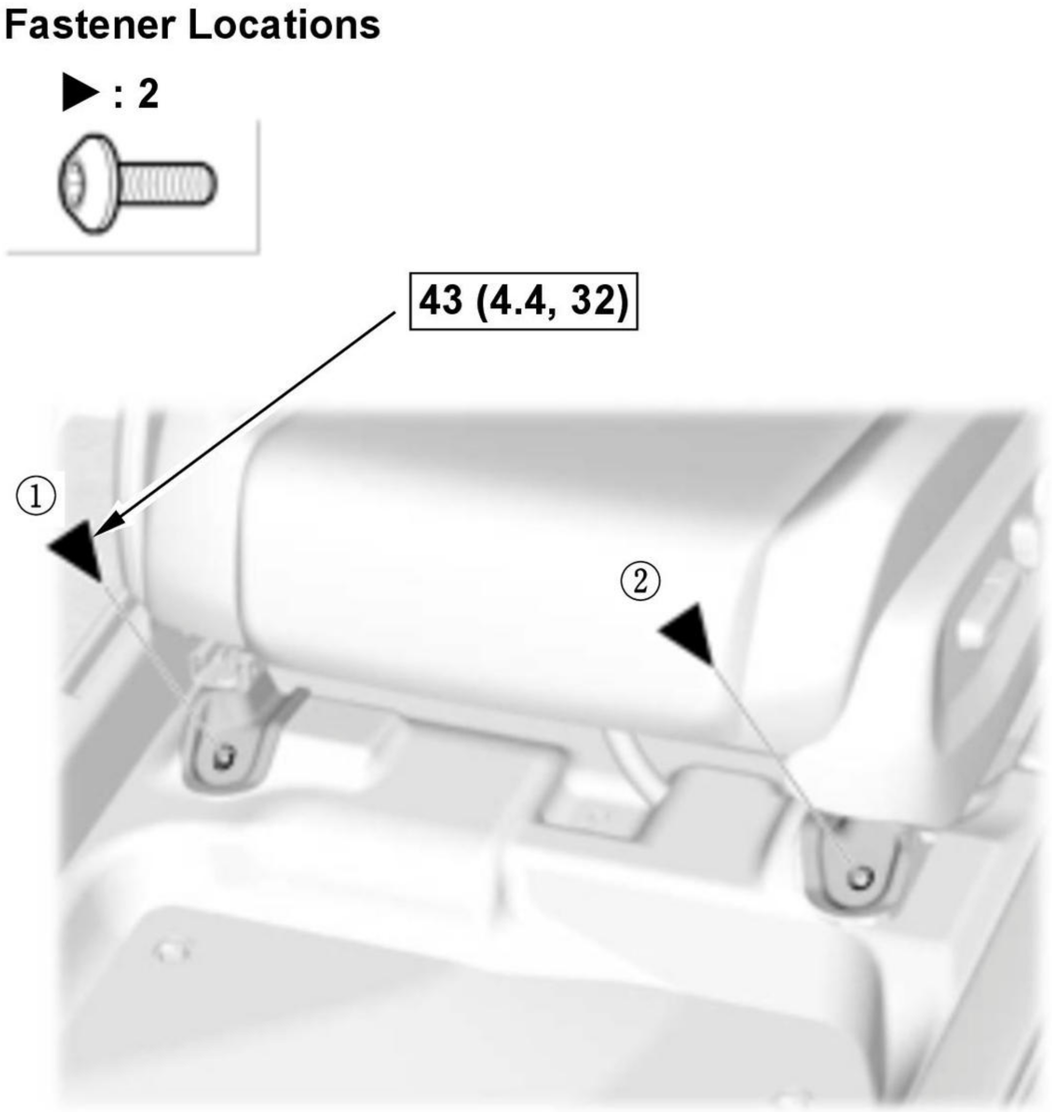
Fastener Locations
▶ : 2
43 (4.4, 32)
①
②

Fig. 5: Front Seat Front Side Bolts With Tightening Sequence And Torque Specifications
Courtesy of HONDA, U.S.A., INC.

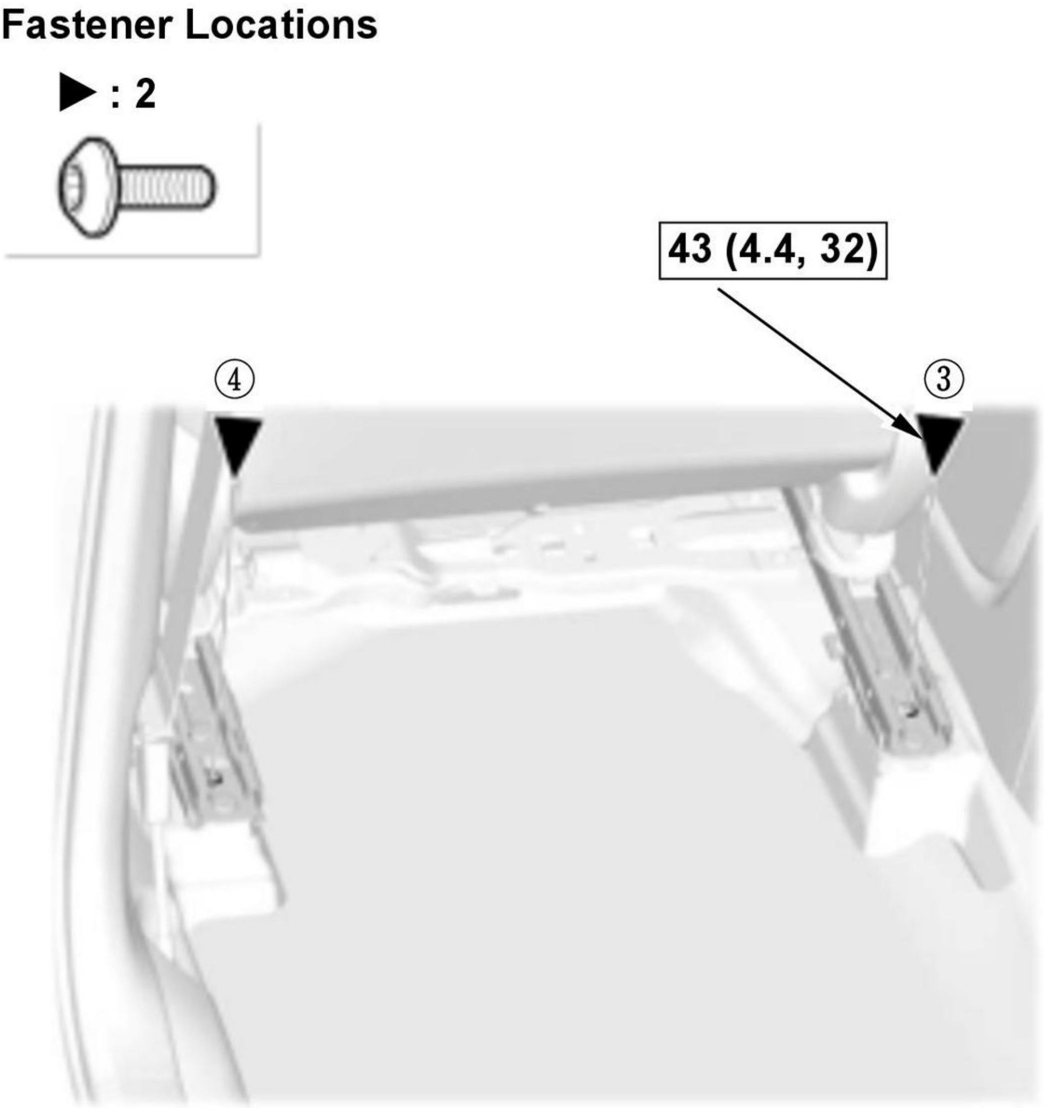

[Fig. 6: Front Seat Rear Side Bolts With Tightening Sequence And Torque Specifications](#)
Courtesy of HONDA, U.S.A., INC.

1. Install the parts in the reverse order of removal.
NOTE:

- **Do the 12 volt battery terminal reconnection procedure** .
- Tighten the bolts by hand first, and then tighten them to the specified torque in the sequence shown.

6. **Front Passenger's Weight Sensor - Operation Check (For Some Models)**

How to Access the Front Seat Rear Mounting Bolts If the Seat Slide Motor Malfunctioned (If the seat is at its rear most position)

7. Front Seat Rear Mounting Bolts - Remove (Power Seat)

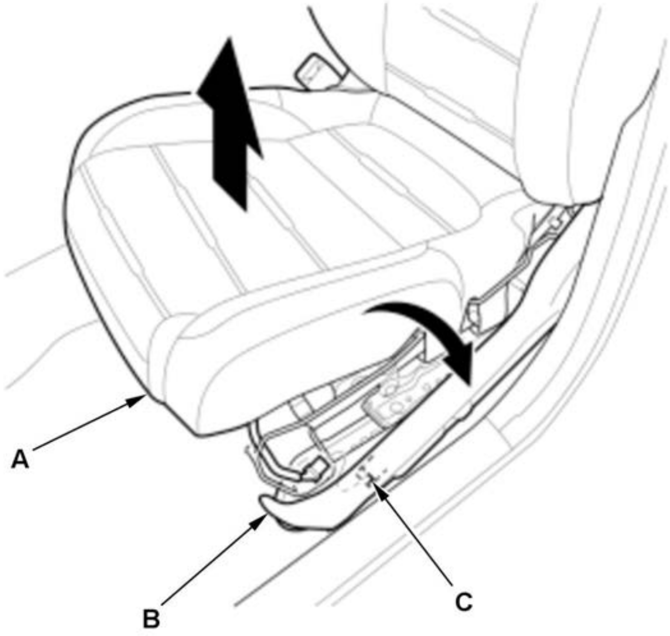

1. Adjust the front seat cushion (A) to the full tilt up position.

2. Remove the outer recline cover (B) as needed.

3. Disconnect the connector (C).

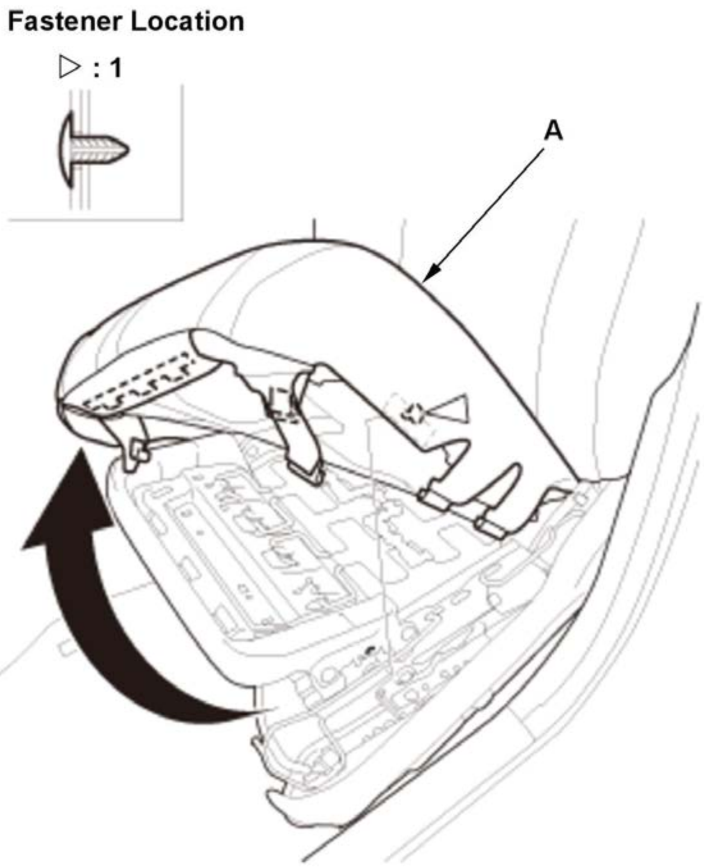
Fastener Location
▷ : 1
A

4. Remove the cushion cover/pad (A) as needed.

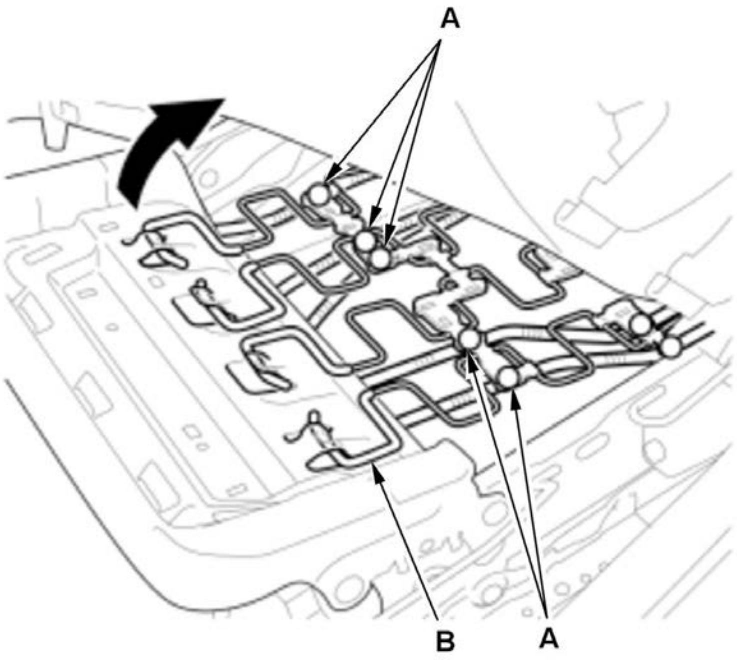

5. Remove the harness clips (A).

6. Remove the cushion spring (B) as needed.

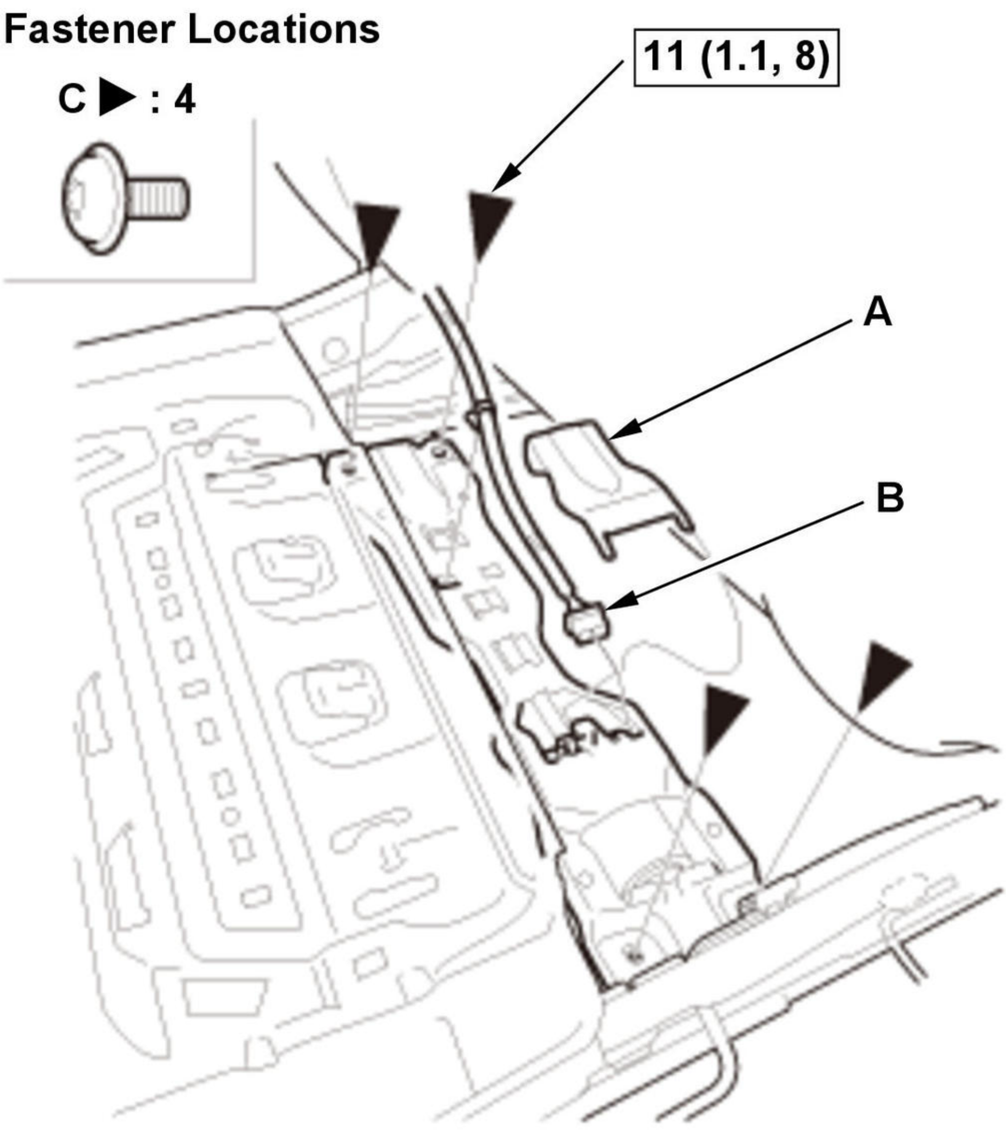
Fastener Locations
C ▶ : 4
11 (1.1, 8)
A
B

Fig. 7: Slide Motor Components And Bolts With Torque Specifications
Courtesy of HONDA, U.S.A., INC.

7. Remove the slide motor cover (A).

8. Disconnect the connector (B).

9. Remove the bolts (C).

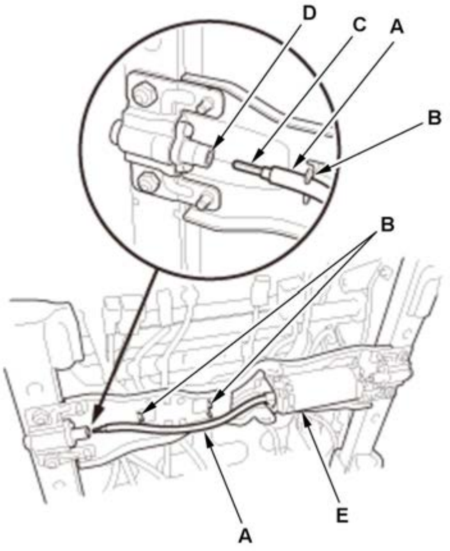

10. Release the cable housing (A) from the hooks (B).

11. Disconnect the slide motor cable (C) from the transmission (D) and the slide motor (E) for both the outer and inner seat rails.

NOTE: Take care not to kink the cable.

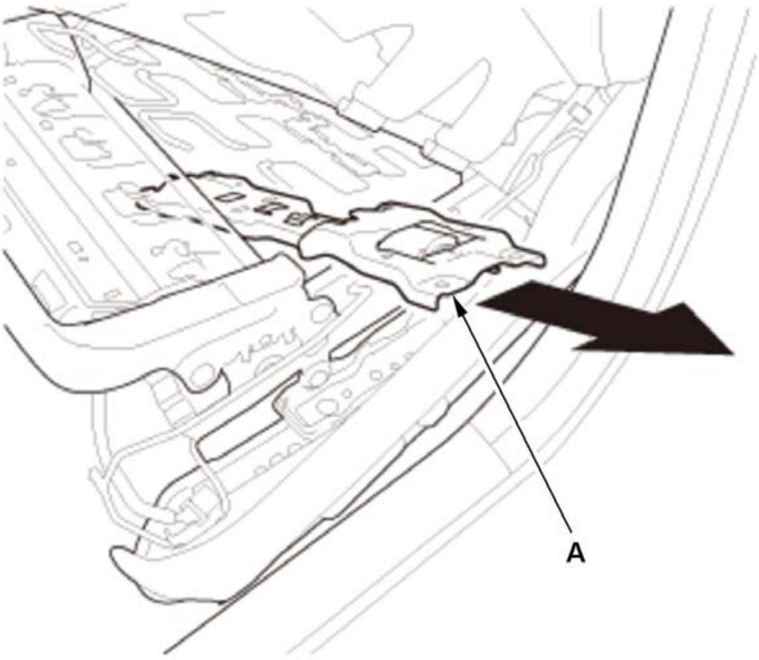

12. Remove the slide motor bracket assembly (A).

Inboard rail (driver's seat)/Outboard rail (passenger's seat)

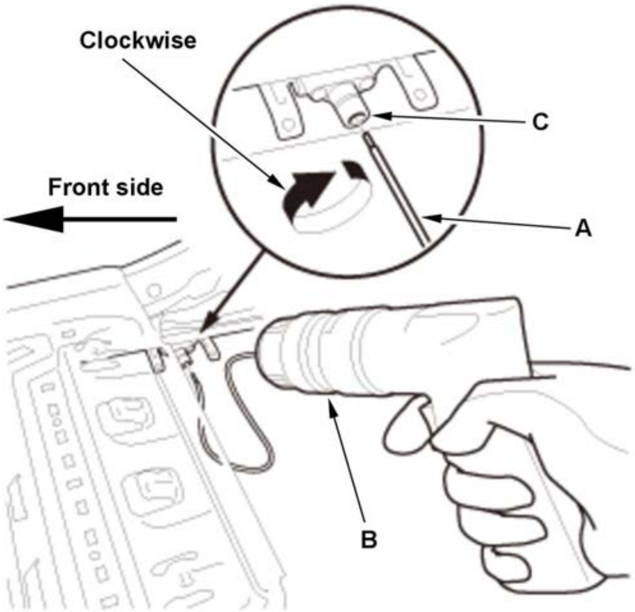

Outboard rail (driver's seat)/Inboard rail (passenger's seat)

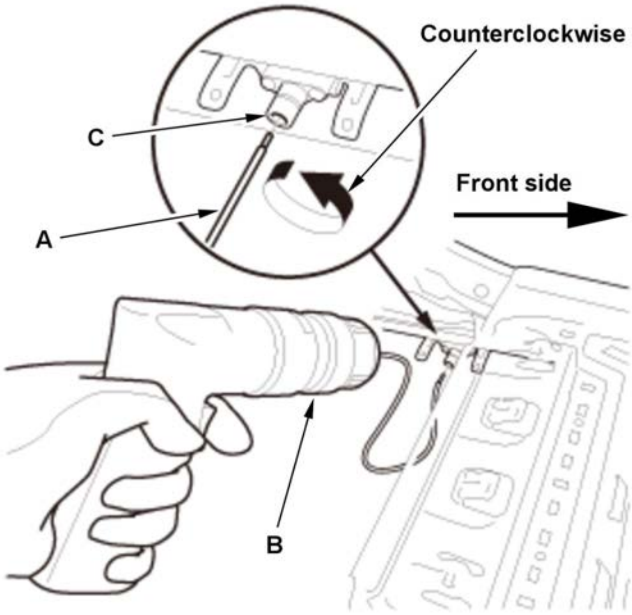

13. Connect one side of the slide motor cable (A) to a drill (B), and the other side of the cable to the transmission (C).

14. Operate the drill, alternating between the inboard and the outboard rails.

NOTE: The drill direction is different between the inboard and outboard rails.

15. Remove the front seat rear mounting bolts.

FRONT SEAT SLIDE LEVER REMOVAL AND INSTALLATION

Removal and Installation

SRS components are located in this area. Review the **SRS component locations** and the **precautions and procedures** before doing repairs or service.

1. **Front Seat - Remove**
2. Front Seat Slide Lever - Remove

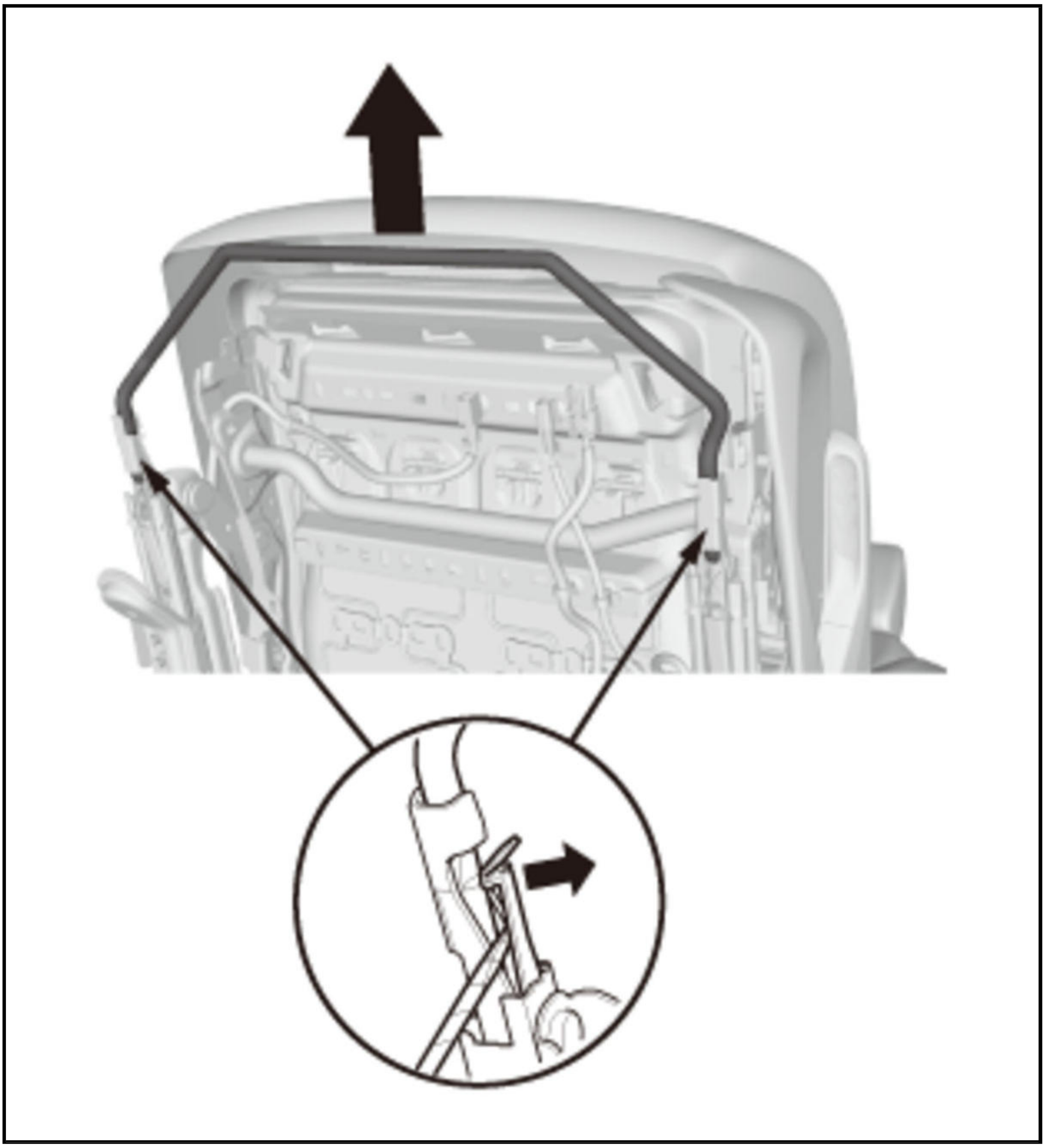

3. All Removed Parts - Install

    1. Install the parts in the reverse order of removal.

FRONT SEAT-BACK COVER REMOVAL AND INSTALLATION

Removal and Installation

SRS components are located in this area. Review the **SRS component locations** and the **precautions and procedures** before doing repairs or service.

1. **Front Seat - Remove**
2. Front Seat-Back Cover/Pad - Remove

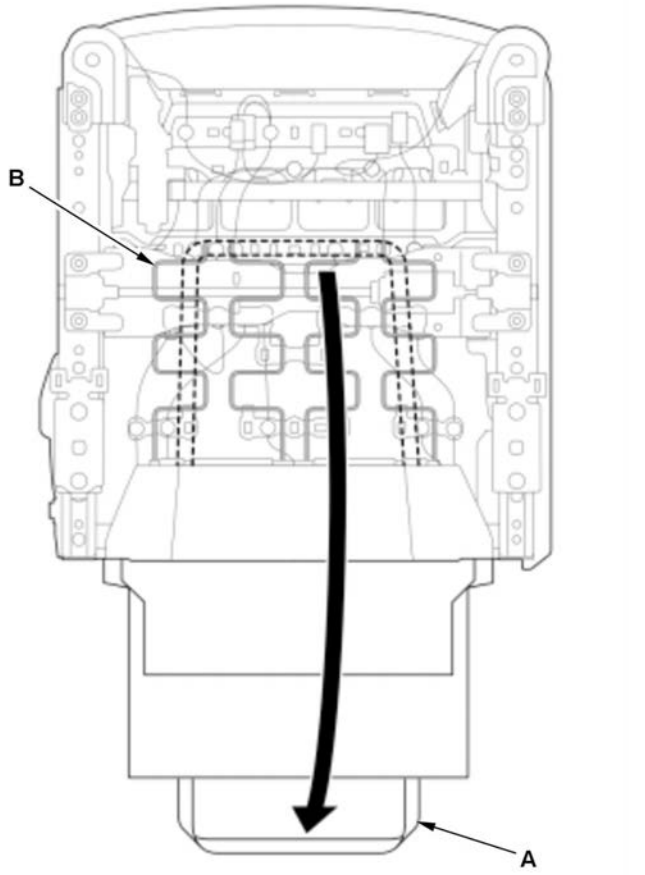

1. From under the seat cushion, release the elastic strap (A) from the seat cushion frame springs (B).

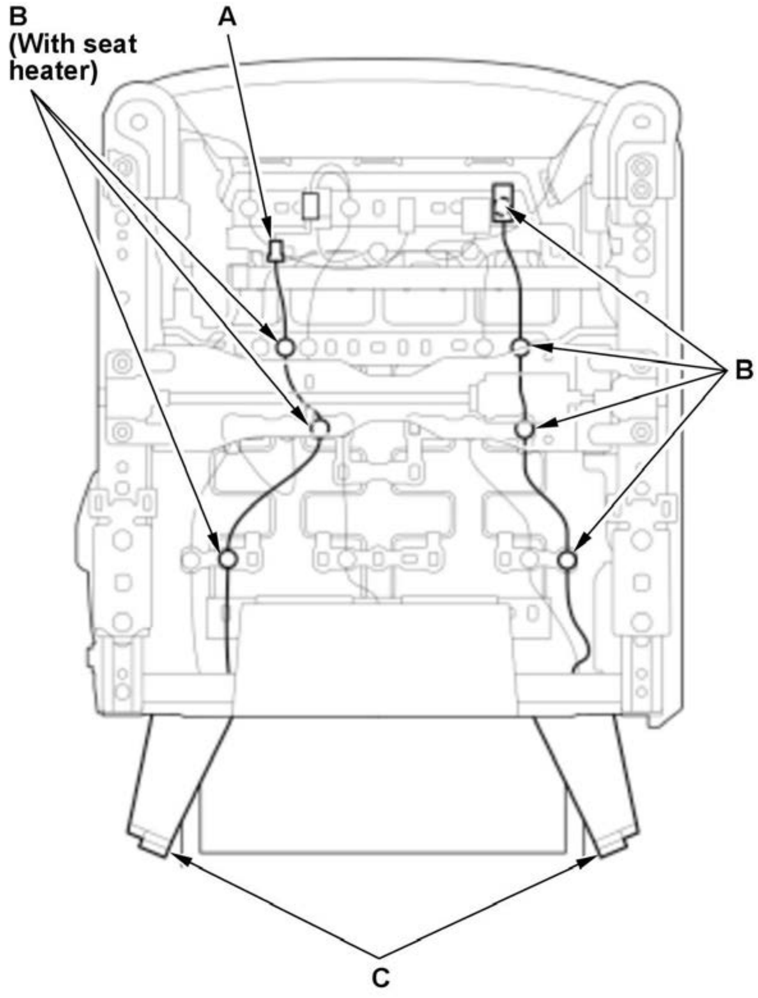

Driver's seat

2. With seat heater: Disconnect the connector (A).

3. From under the seat cushion, remove the harness clips (B).

4. Release the hooks (C) of the seat cushion cover.

Passenger's seat 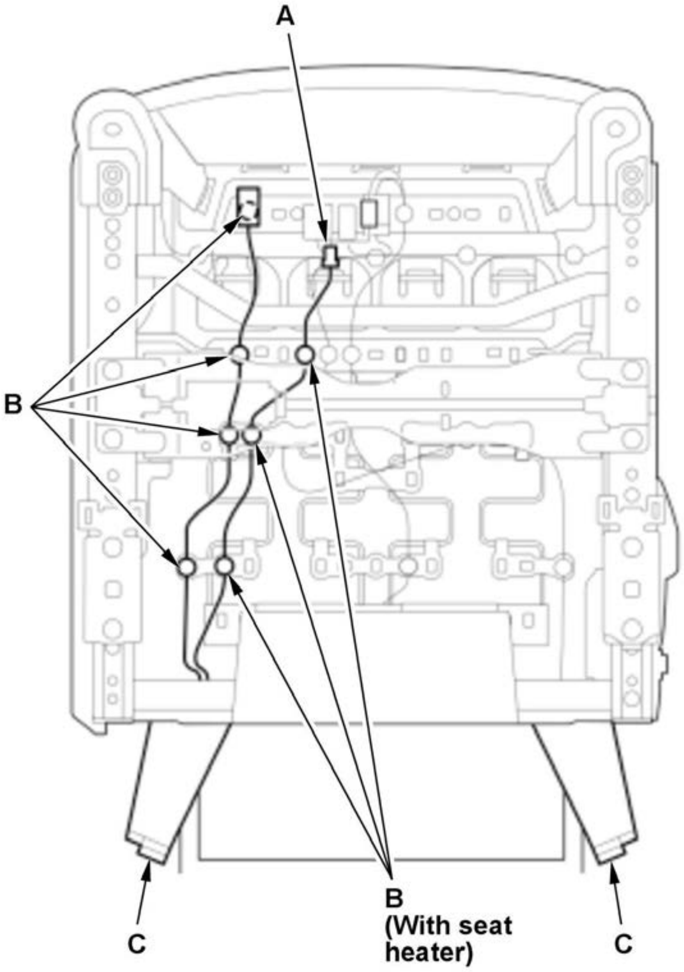 A B B (With seat heater) C C	

Driver's seat 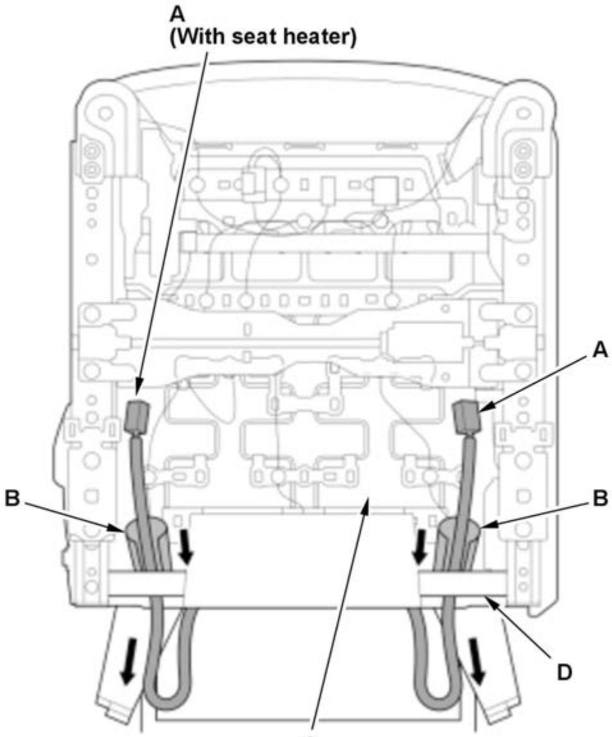 A (With seat heater) A B B D C **Passenger's seat**	5. Pull out the wire harness(es) (A) and the seat-back cover (B) between the seat cushion pad (C) and the seat frame (D).

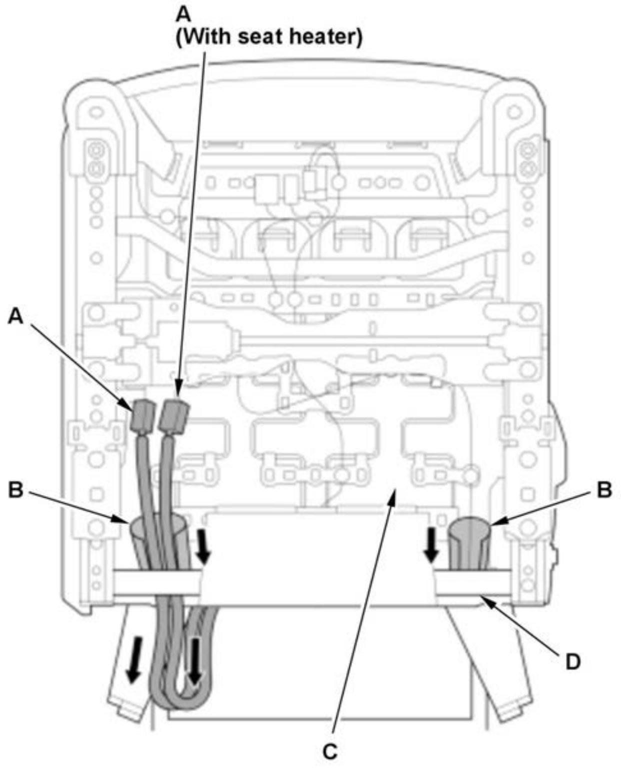
A
(With seat heater)
A
B
B
D
C

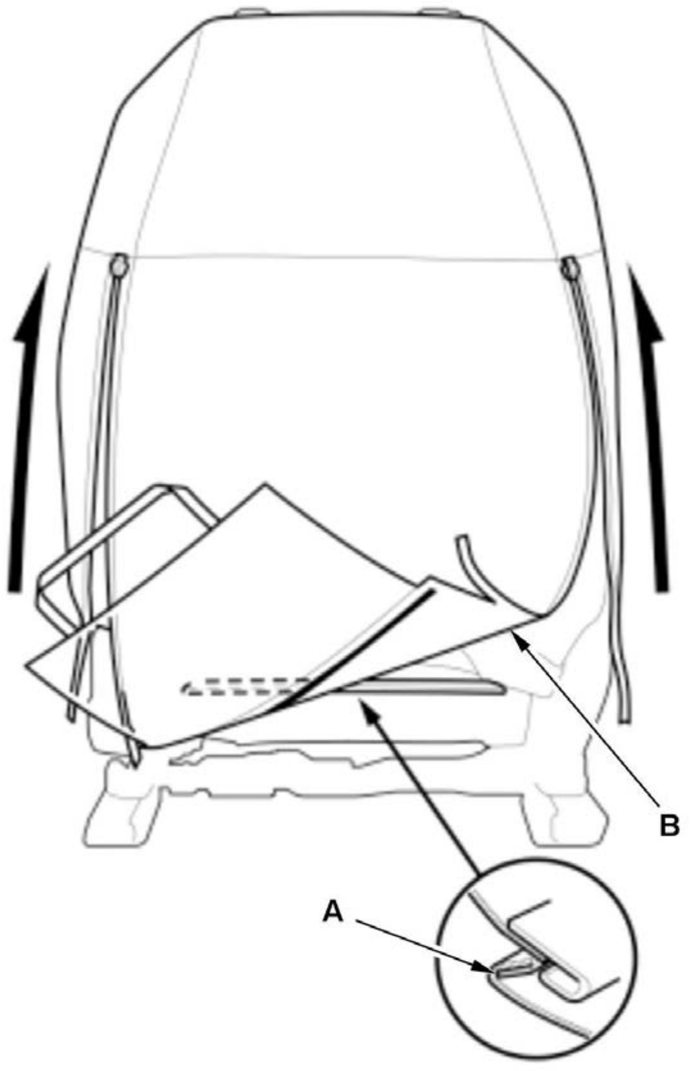

6. Release the hook strip (A).

7. Unzip the seat-back cover (B).

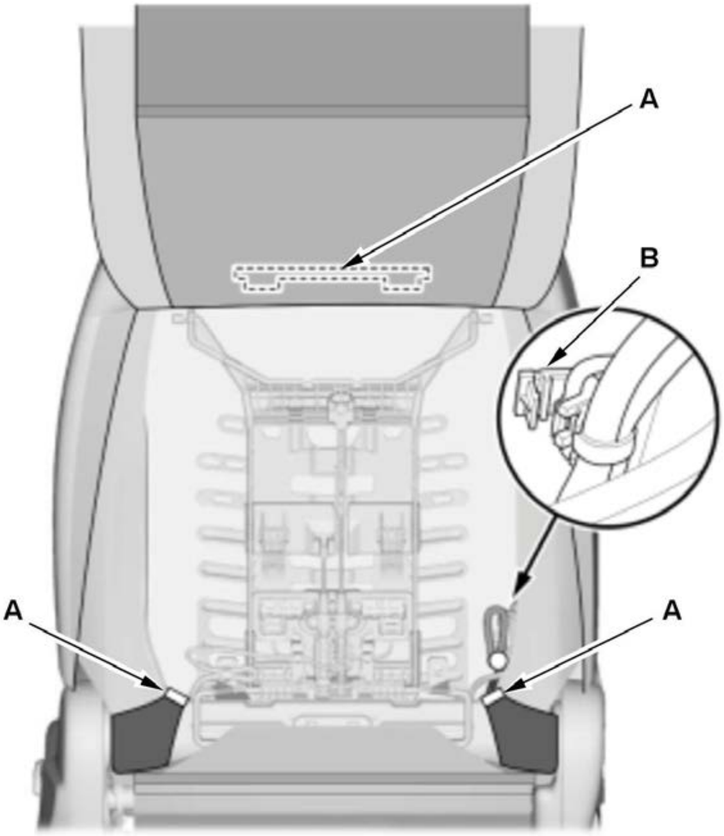	8. Release the hooks (A). 9. With seat heater: Remove the harness holder (B). 10. **Remove the side airbag** .

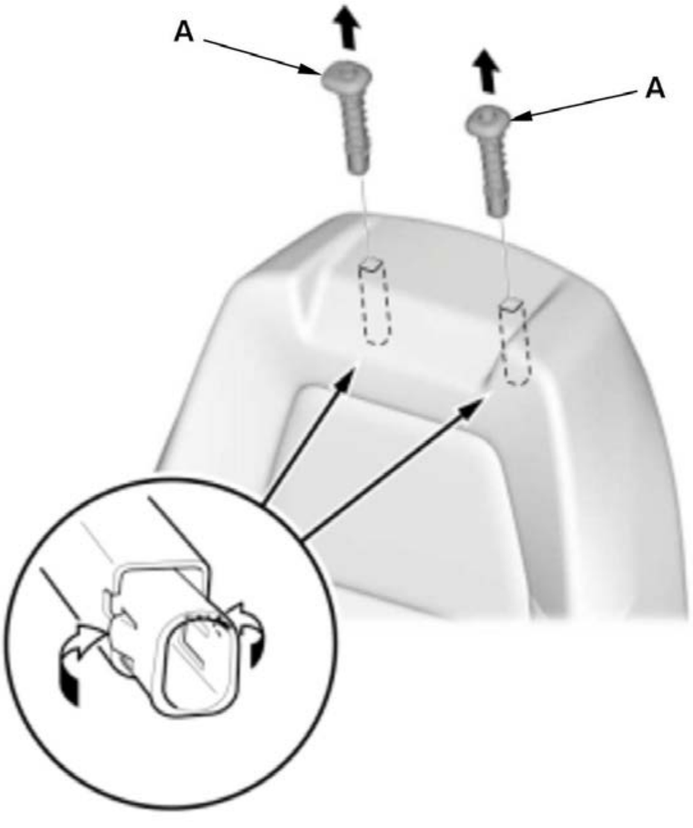	11. Remove the head restraint guides (A).

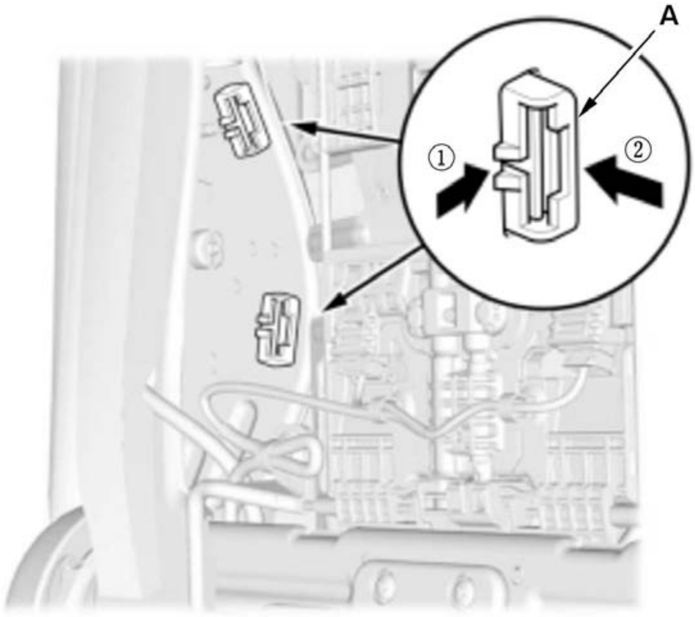 	12. Remove the clips (A) of the reinforcing cloth.
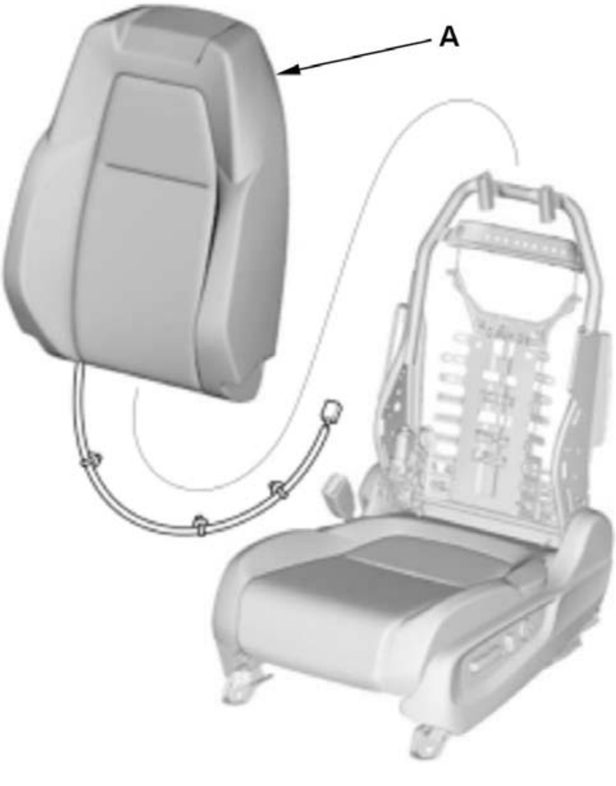 	13. Remove the seat-back cover/pad (A).

3. Front Seat-Back Cover - Remove

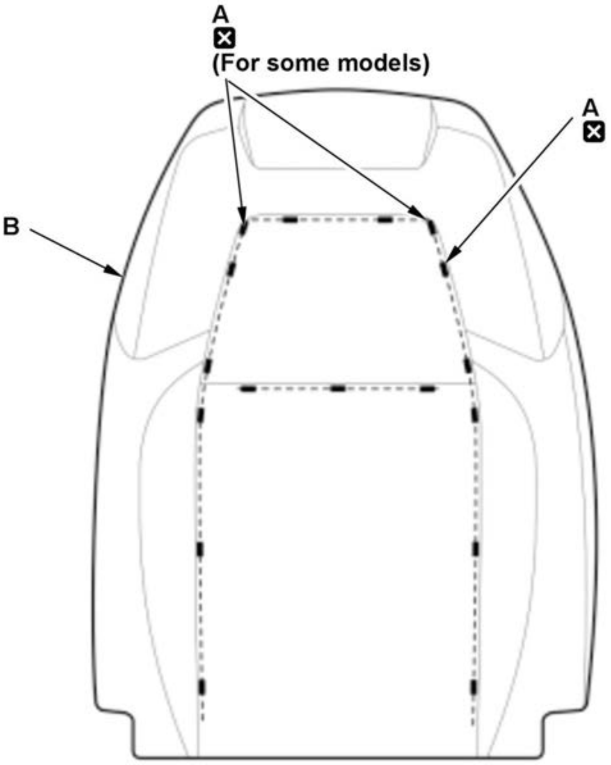	1. Remove the upholstery rings (A), and then remove the seat-back cover (B).

4. All Removed Parts - Install

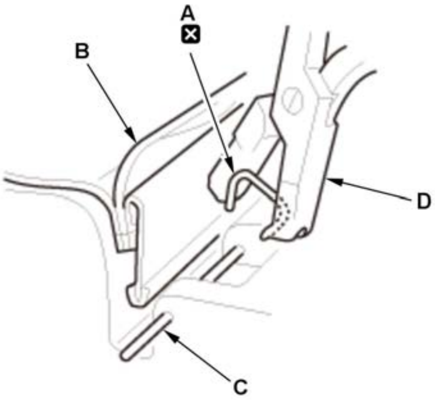 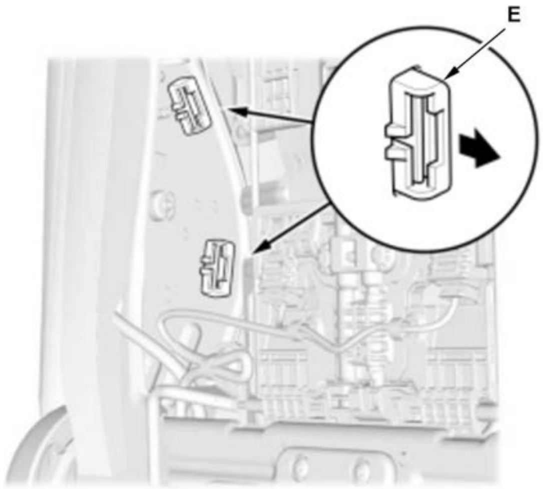	1. Install the parts in the reverse order of removal. • Replace all of the upholstery rings (A) fastening the seat-back cover (B) to the pad wires (C) with new ones using commercially available upholstery ring pliers (D). • Push the clips (E) of the reinforcing cloth until they snap into place securely.

REAR SEAT ARMREST BEVERAGE HOLDER REMOVAL AND INSTALLATION

Removal and Installation

1. Rear Seat Armrest Beverage Holder - Remove

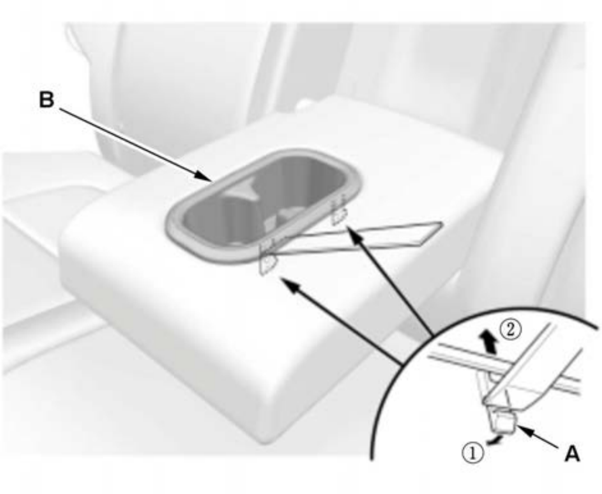	1. Release the hooks (A) of the rear seat armrest beverage holder (B) with the appropriate trim tool.

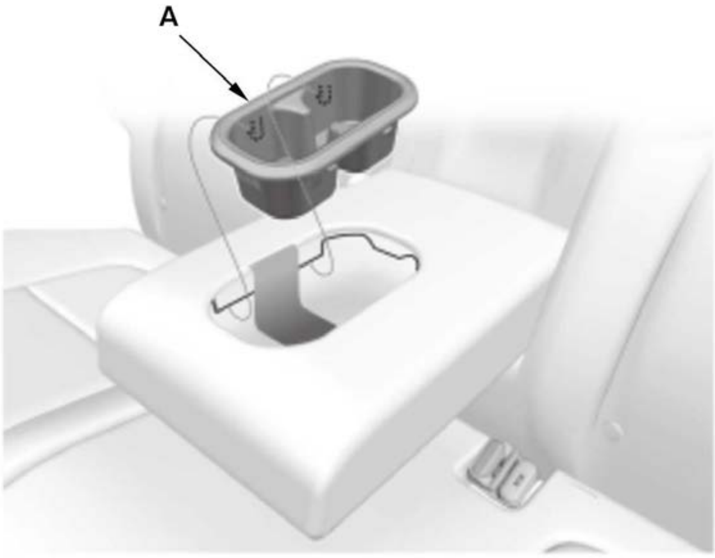	2. Remove the rear seat armrest beverage holder (A).

2. All Removed Parts - Install

1. Install the parts in the reverse order of removal.

REAR SEAT ARMREST REMOVAL AND INSTALLATION

Removal and Installation

NOTE: How to read the torque specifications .

1. Rear Seat Armrest - Remove

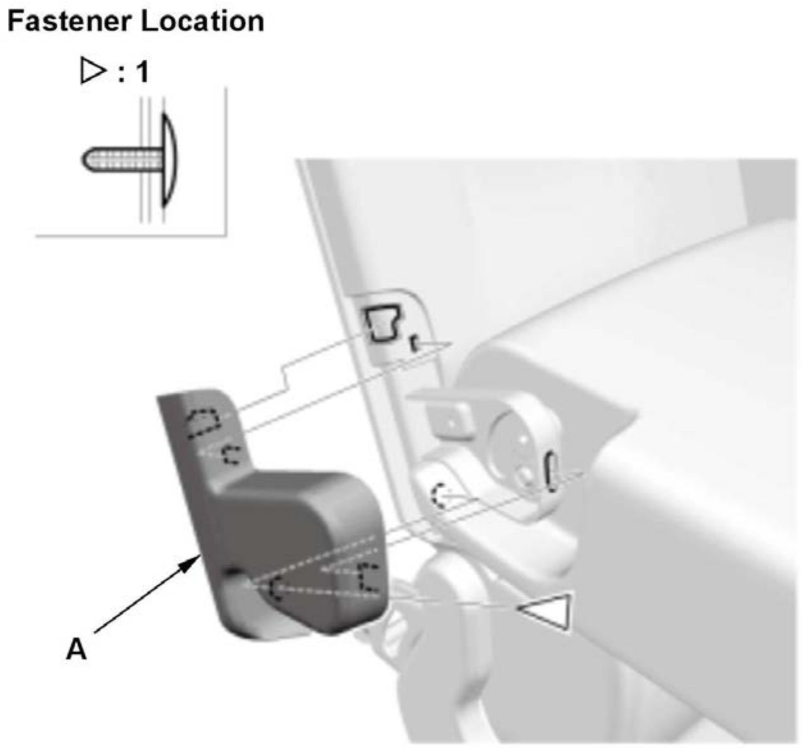 Fastener Location ▷ : 1 A	1. Remove the armrest trim (A).

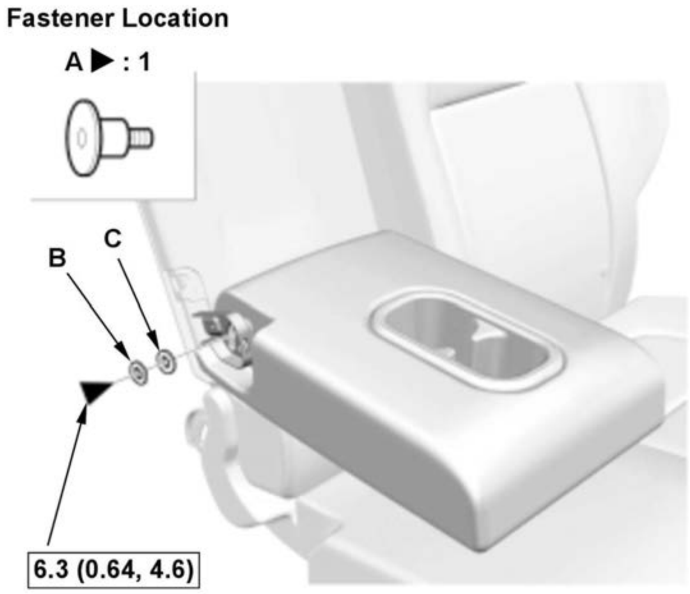 Fastener Location A ▶ : 1 B C 6.3 (0.64, 4.6)	2. Remove the bolt (A), the wave washer (B), and the washer (C).

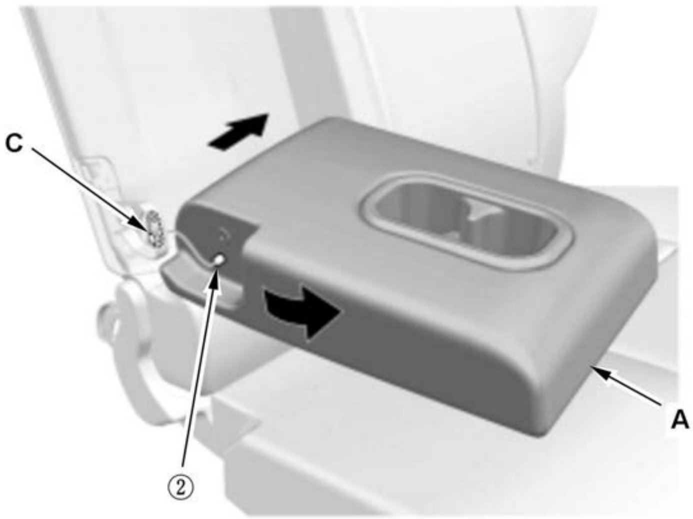

3. Slide the armrest (A) toward the left side.

4. Remove the right pivot shaft (B) from the friction plate (C).

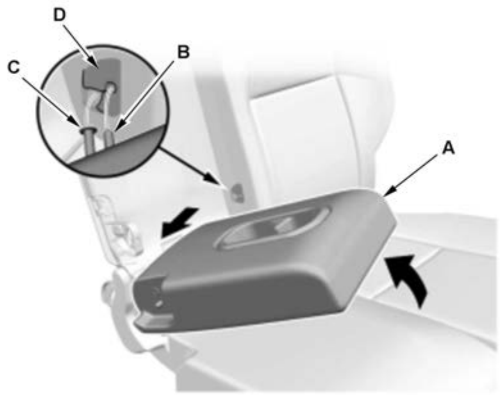

5. Raise the armrest (A) to its half range of movement, and pull out the left pivot shaft (B) and the armrest pin (C) from the collar (D), and then remove the armrest.

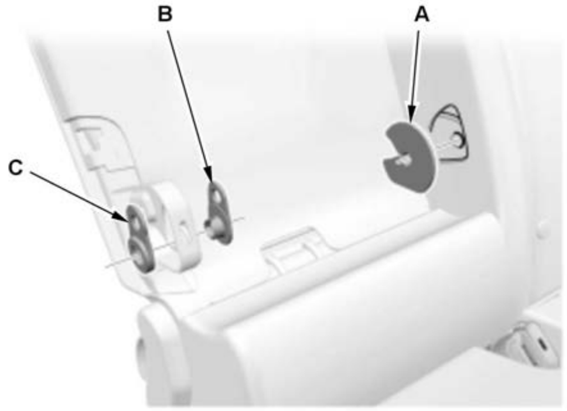

6. Remove the collar (A), the inner friction plate (B), and the outer friction plate (C) from the rear seat-back frame.

2. All Removed Parts - Install

1. Install the parts in the reverse order of removal.

REAR SEAT CUSHION COVER REMOVAL AND INSTALLATION

Removal and Installation

1. **Rear Seat - Remove**
2. Rear Seat Cushion Cover/Pad - Remove

Left seat cushion 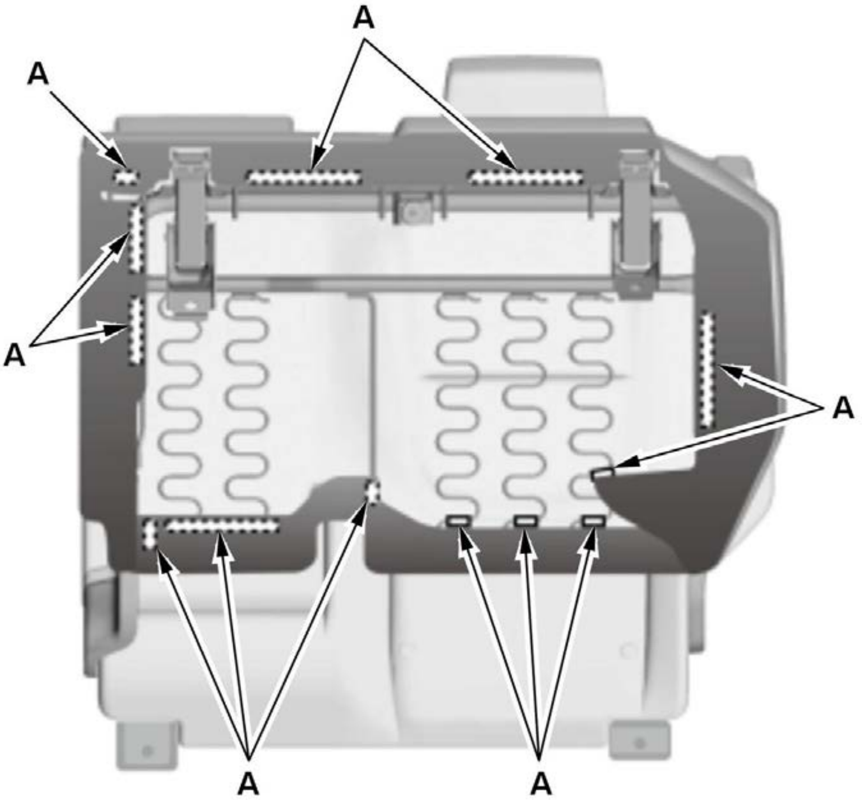 **Right seat cushion** 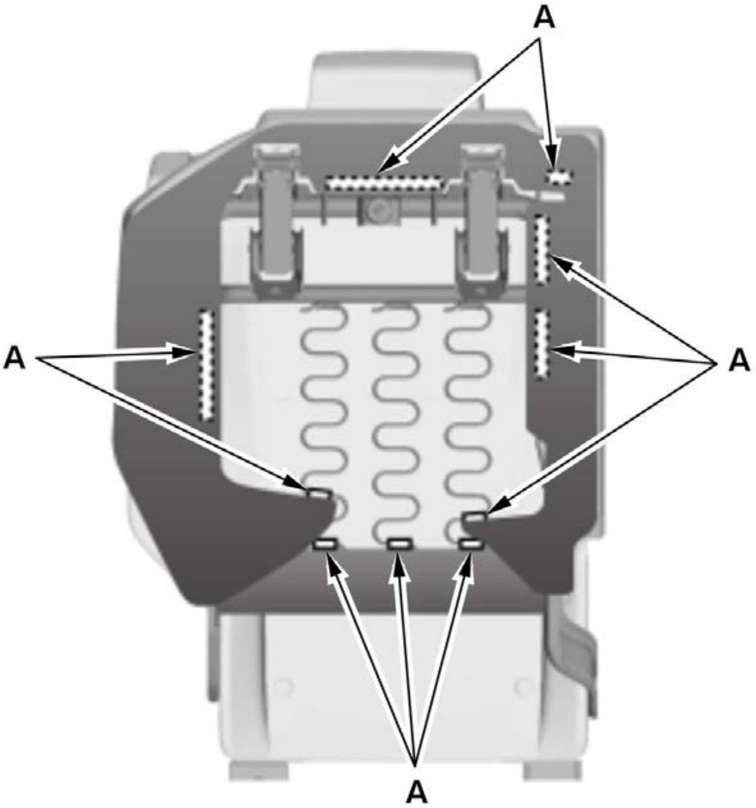 	1. Release the hooks (A).

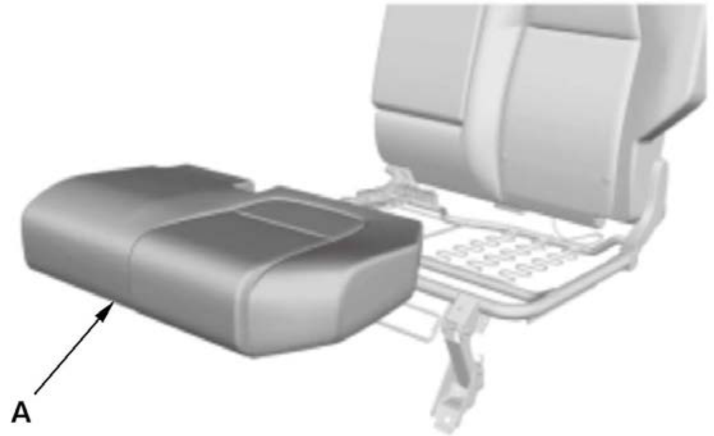	2. Remove the seat cushion cover/pad (A).

3. Rear Seat Cushion Cover - Remove

Left seat cushion 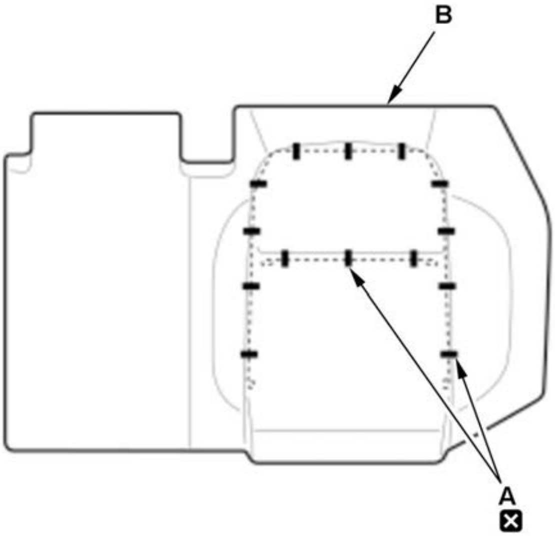 **Right seat cushion** 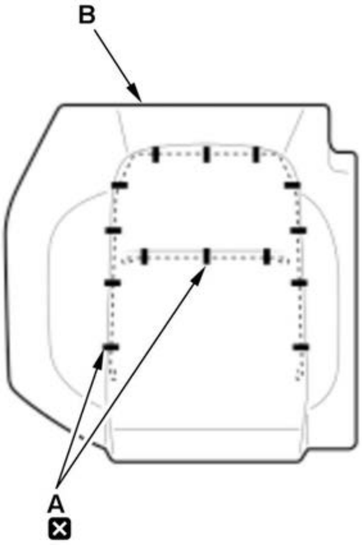	1. Remove the upholstery rings (A), and then remove the seat cushion cover (B).

4. All Removed Parts - Install

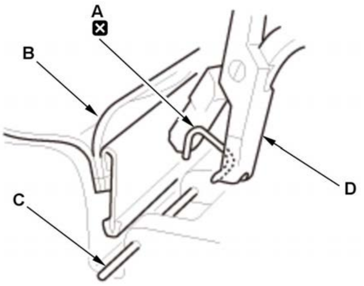	1. Install the parts in the reverse order of removal. **NOTE:** Replace all of the upholstery rings (A) fastening the seat cushion cover (B) to the pad wires (C) with new ones using commercially available upholstery ring pliers (D).

REAR SEAT RELEASE LEVER/CABLE REMOVAL AND INSTALLATION

Removal and Installation

Rear Seat Release Cable (Body Side)

1. [Rear Side Trim Panel - Remove]
2. Rear Seat Release Lever/Cable - Remove

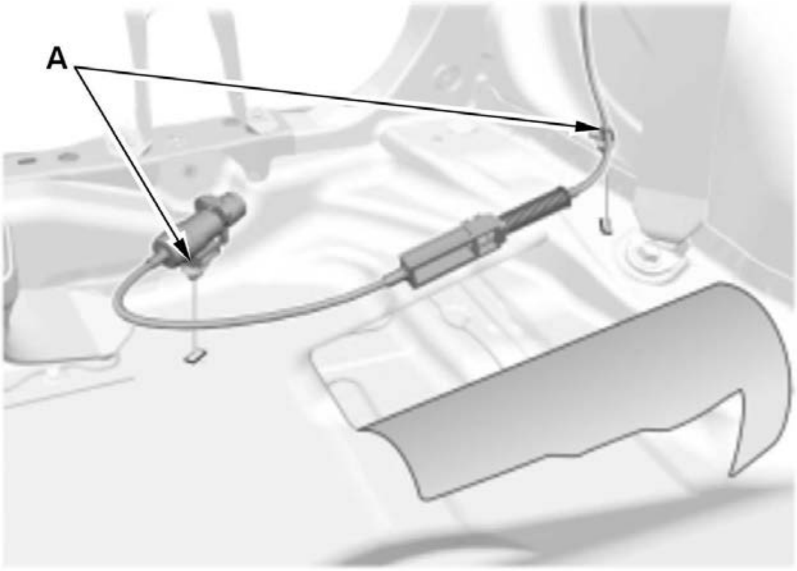	1. Remove the cable clips (A).

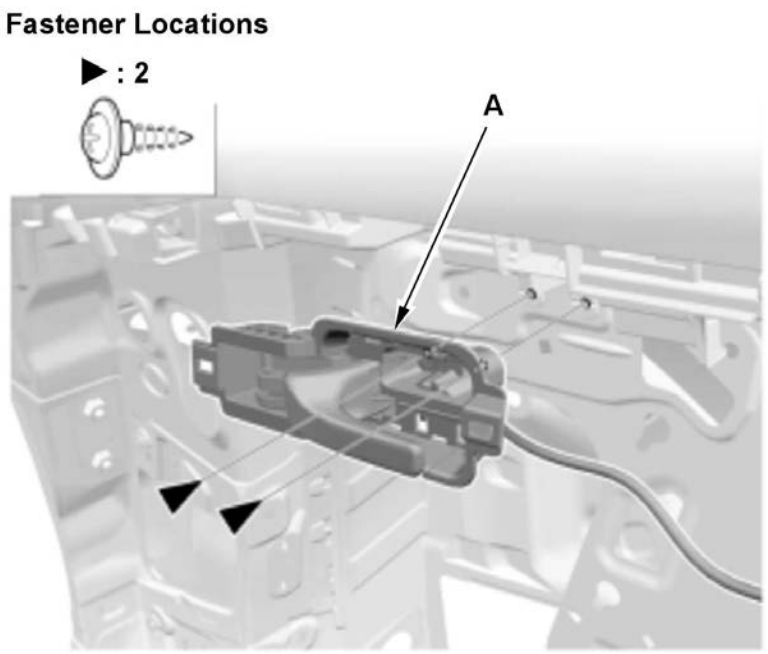	2. Remove the rear seat release lever (A).
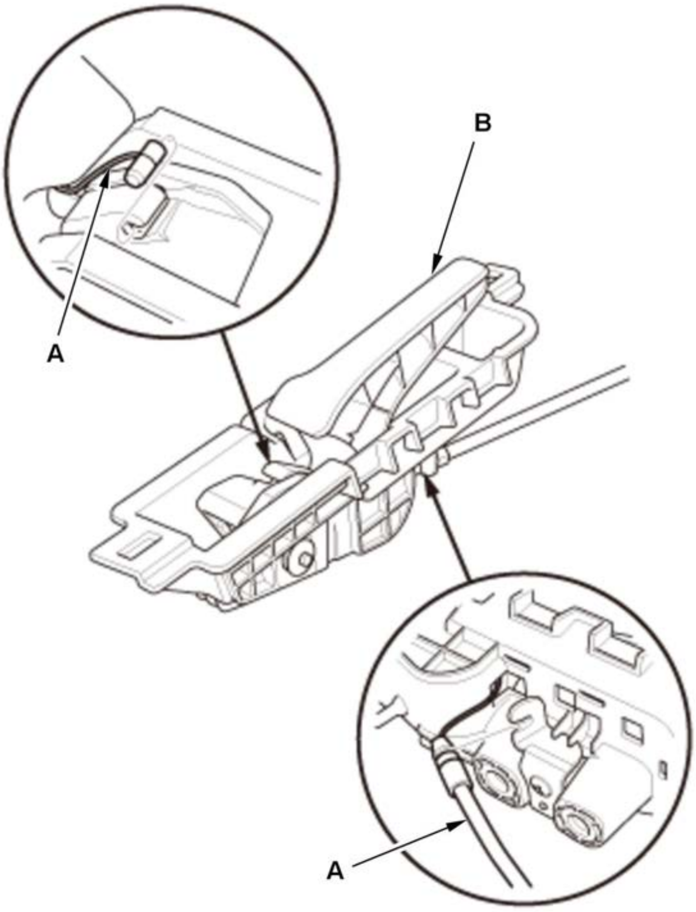	3. Disconnect the rear seat release cable (A) from the release lever (B).

3. All Removed Parts - Install

1. Install the parts in the reverse order of removal.

Rear Seat Upper Cable (Seat Side)

1. Rear Seat-Back Cover/Pad - Remove
2. Rear Seat Upper Cable - Remove

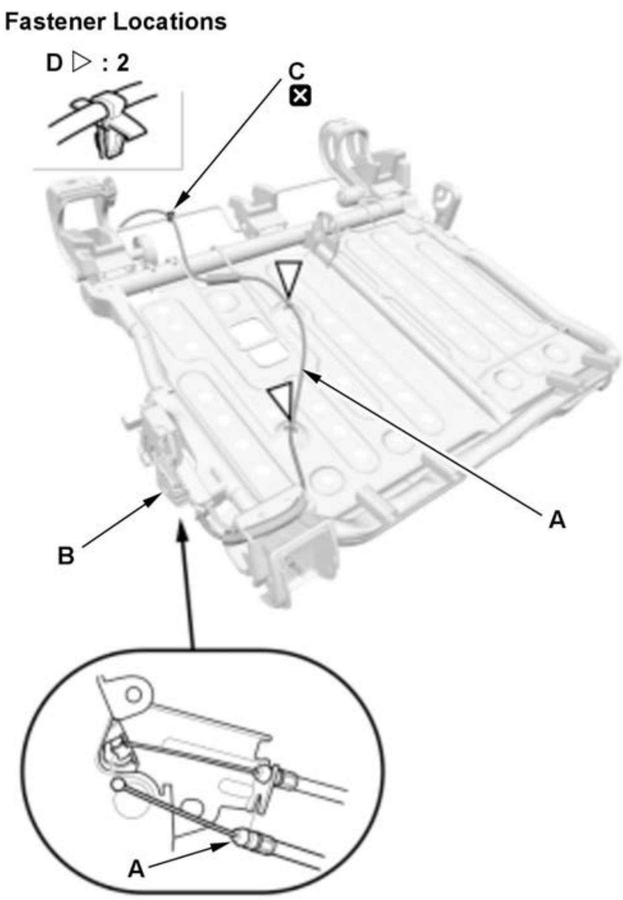	1. Disconnect the rear seat upper cable (A) from the rear seat-back latch (B). 2. Remove the wire tie (C) and the cable clips (D).

3. All Removed Parts - Install

1. Install the parts in the reverse order of removal. **NOTE:** Replace the wire tie fastening the rear seat upper cable with a new one.

REAR SEAT REMOVAL AND INSTALLATION

Removal and Installation

NOTE:

- **How to read the torque specifications** .
- The illustrations shown are for the left side. The right side is symmetrical.

1. Rear Seat Foot Covers - Remove

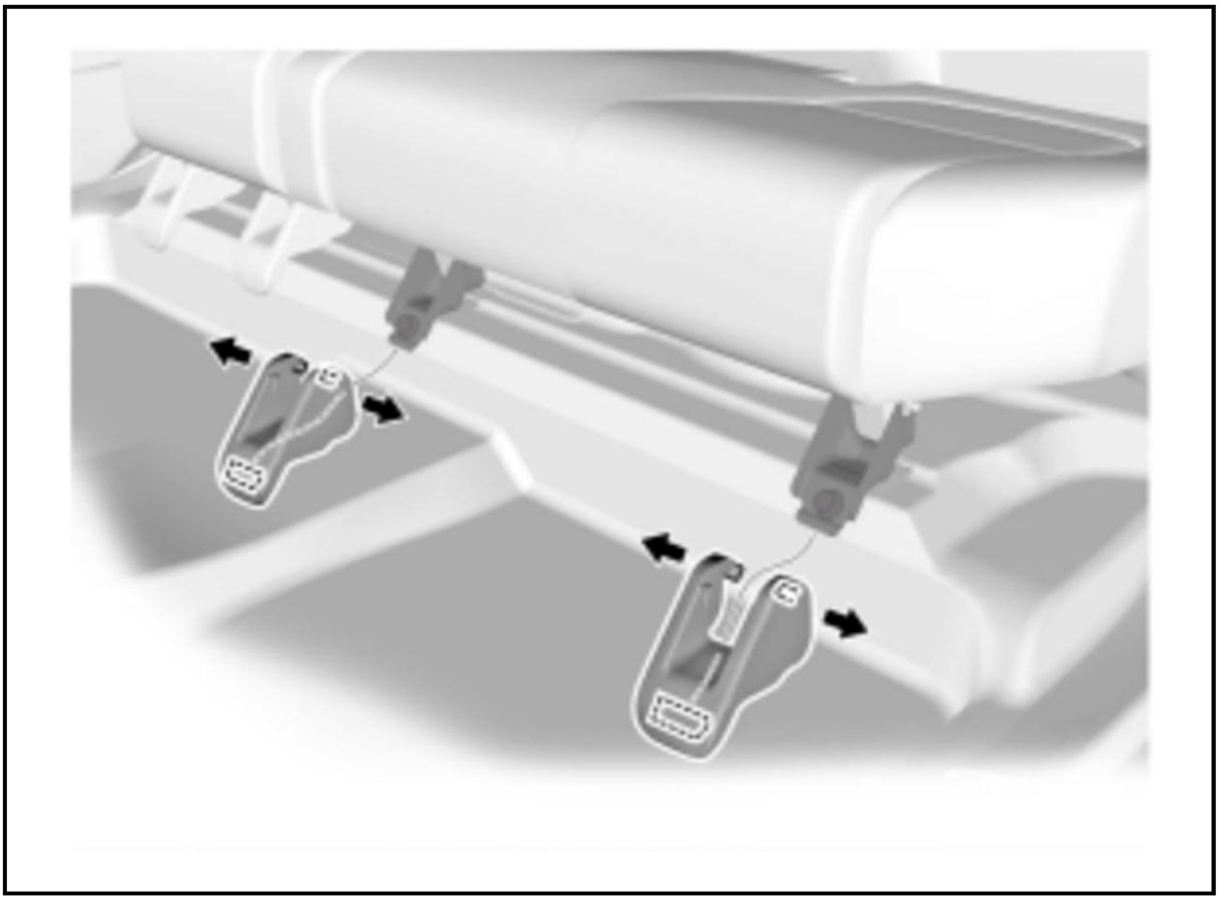

2. Rear Seat Front Mounting Bolts - Remove

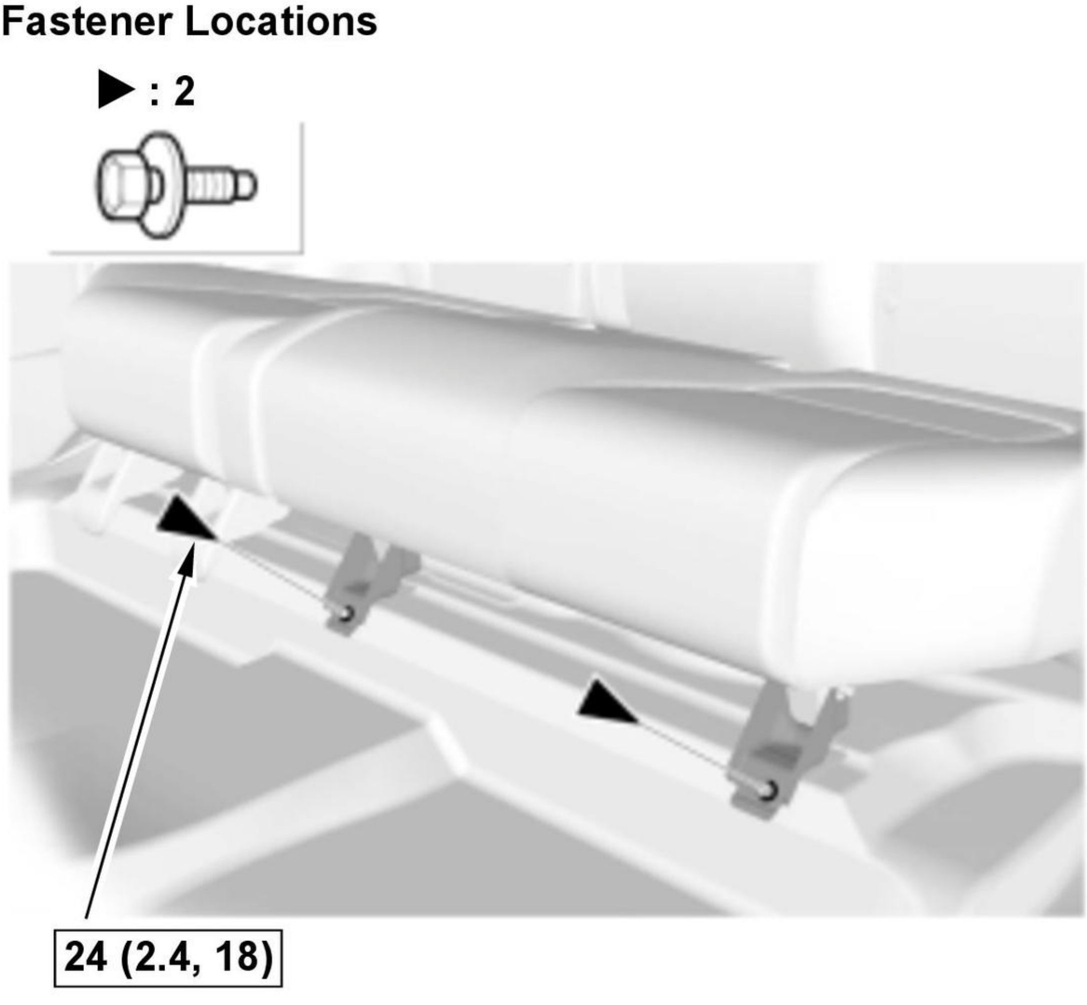
Fastener Locations
▶ : 2
24 (2.4, 18)

Fig. 8: Rear Seat Front Mounting Bolts With Torque Specifications
Courtesy of HONDA, U.S.A., INC.

3. Rear Seat Cushion - Lift

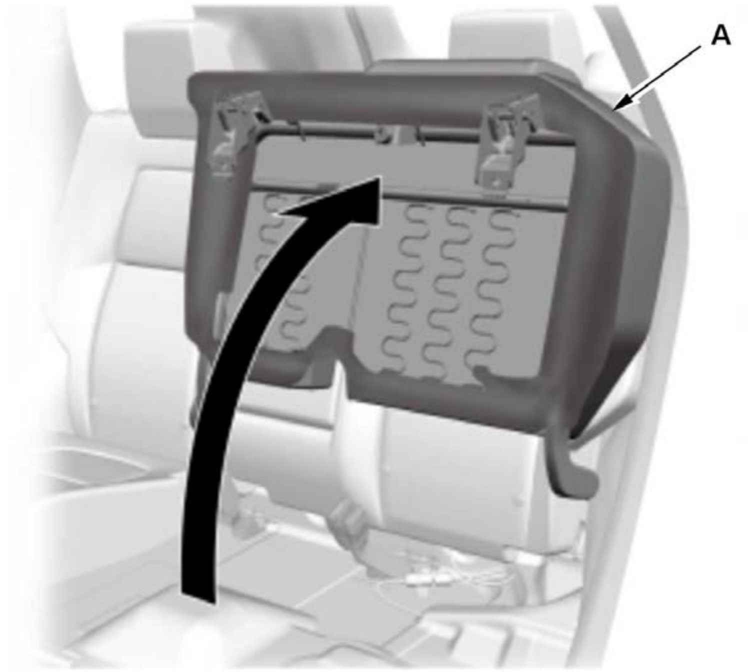 	1. Lift up the rear seat cushion (A), and hold it.

4. Rear Seat Release Cable - Disconnect

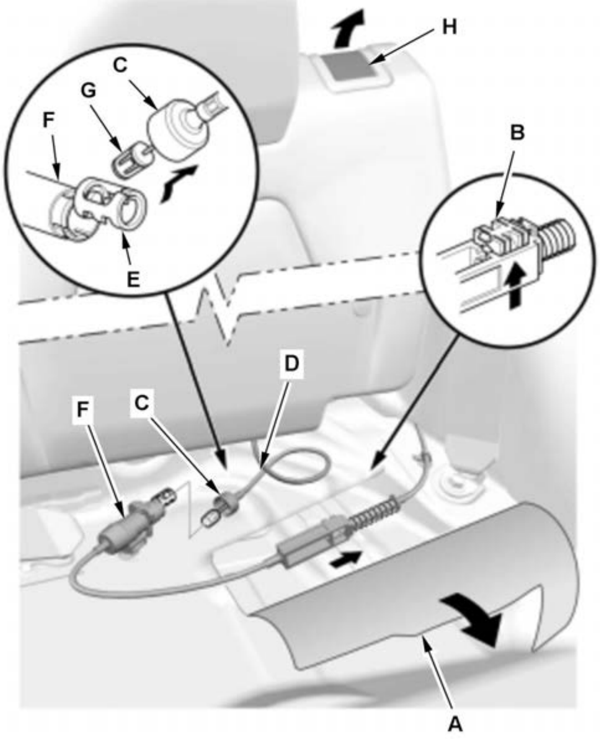 	1. Turn over the carpet (A). 2. Pull up the rear seat release cable lock (B). 3. Pull out the junction cap (C). 4. Pull on cable (D) to pull out joint piece (E) and temporarily hang it on the edge of the junction (F). 5. Remove the rear seat upper cable end (G) from the joint piece. **NOTE:** If additional slack is needed on the cable, pull the rear seat lock knob (H) while removing the cable end.

5. Rear Seat-Back - Fold Down
6. Rear Carpet Trim - Remove
7. Rear Seat - Remove

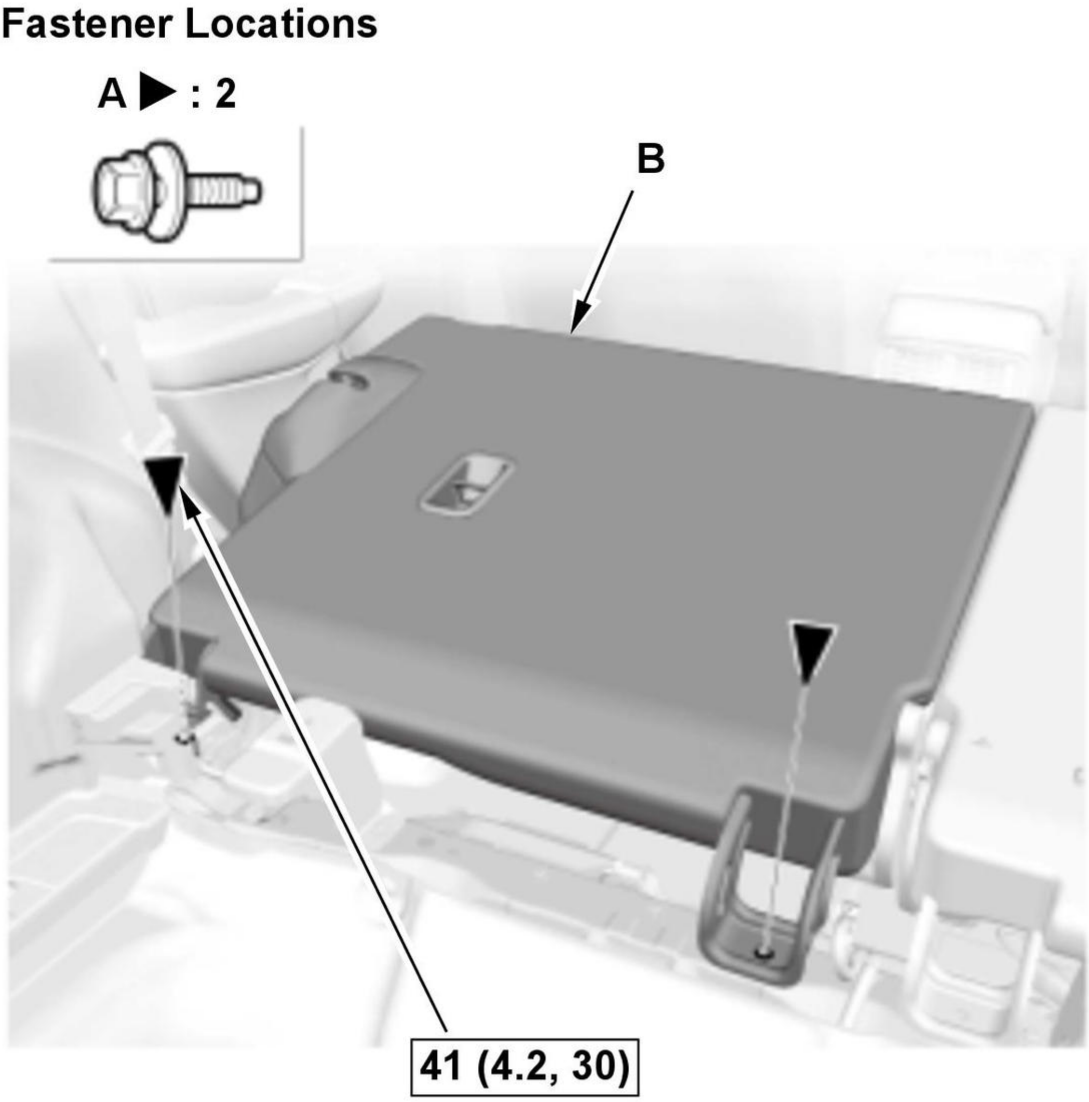
Fastener Locations
A ▶ : 2
B
41 (4.2, 30)

Fig. 9: Rear Seat Rear Mounting Bolts With Torque Specifications
Courtesy of HONDA, U.S.A., INC.

1. Remove the bolts (A).
2. Remove the rear seat (B) through the rear door opening.

8. All Removed Parts - Install

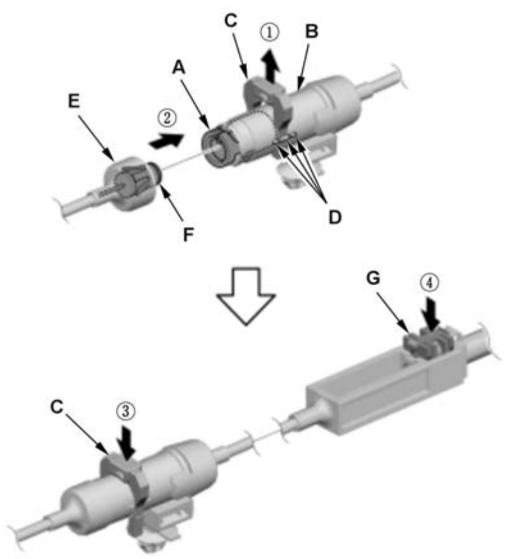	1. Install the parts in the reverse order of removal. **NOTE:** To obtain proper cable tension, reconnect the rear seat release cable in following procedures. -1. Pull the end of the joint piece (A) out of the junction (B), while pull up the rear seat release cable stopper (C) until the side marks (D) line up. -2. Push the junction cap (E) onto the junction until the upper cable end (F) and the joint piece are attached with a clicking sound. -3. Push back in the rear seat release cable stopper to stretch the rear seat release cable. -4. Push back in the rear seat release cable lock (G).

REAR SEAT-BACK COVER REMOVAL AND INSTALLATION

Removal and Installation

1. Rear Seat-Back - Remove
2. Rear Seat Head Restraint - Remove
3. Rear Seat Center Head Restraint - Remove (Left Seat-Back)
4. Rear Seat Lock Knob Trim - Remove
5. Rear Seat-Back Latch Cover - Remove
6. Rear Seat Armrest - Remove (Left Seat-Back)
7. Rear Seat-Back Cover/Pad - Remove

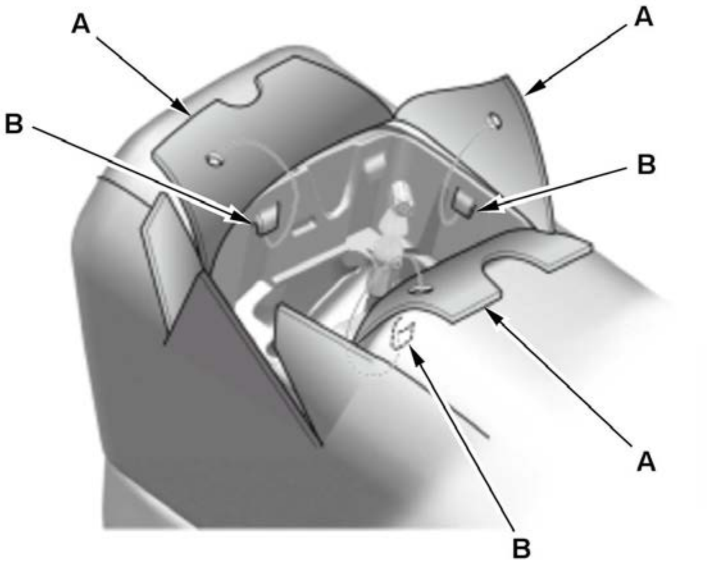	1. Release the seat-back cover (A) from the hooks (B).

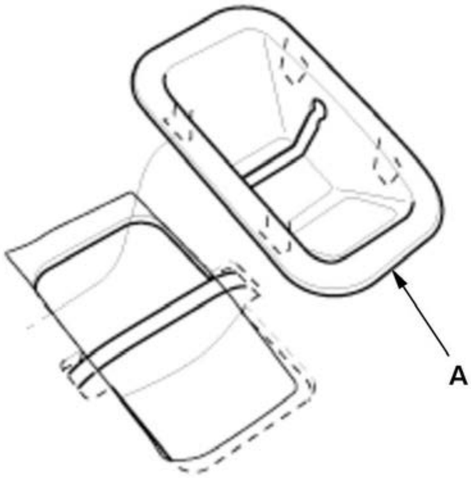

2. For some models: Remove the tether anchor cover (A).

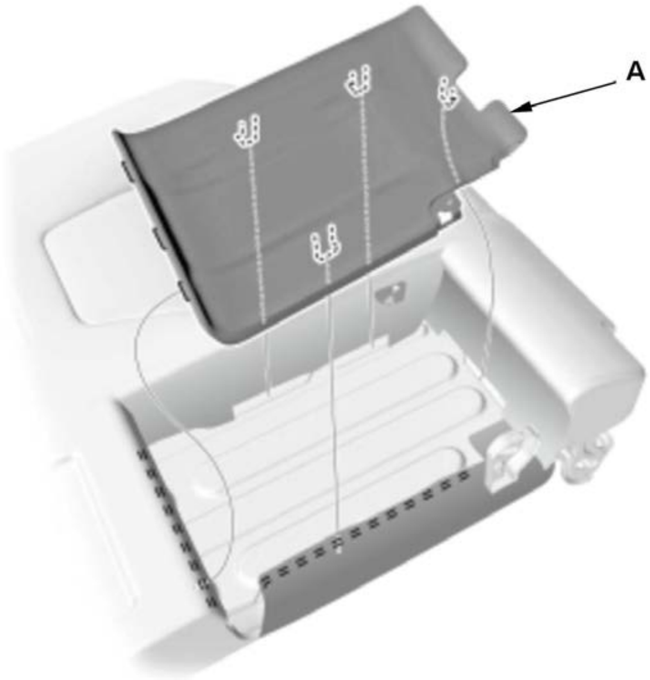

3. Left seat-back: Remove the armrest back panel (A).

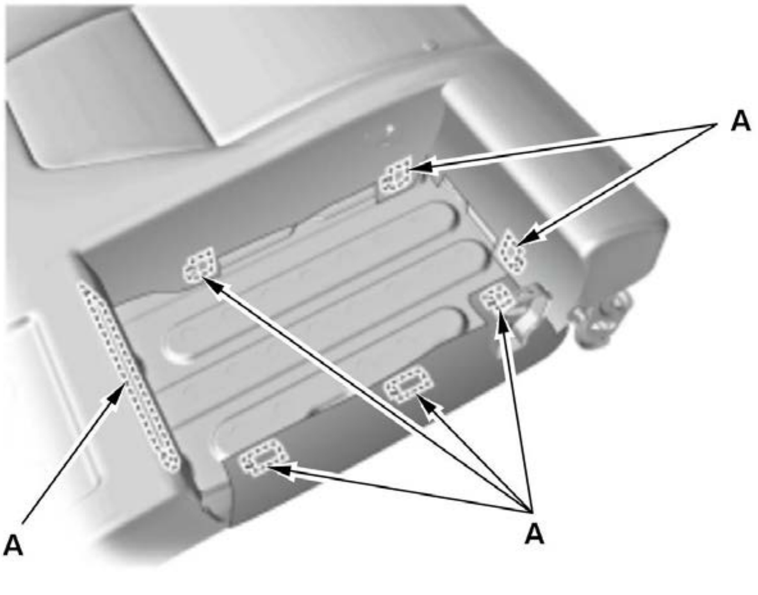

4. Left seat-back: Release the hooks (A).

Left seat-back

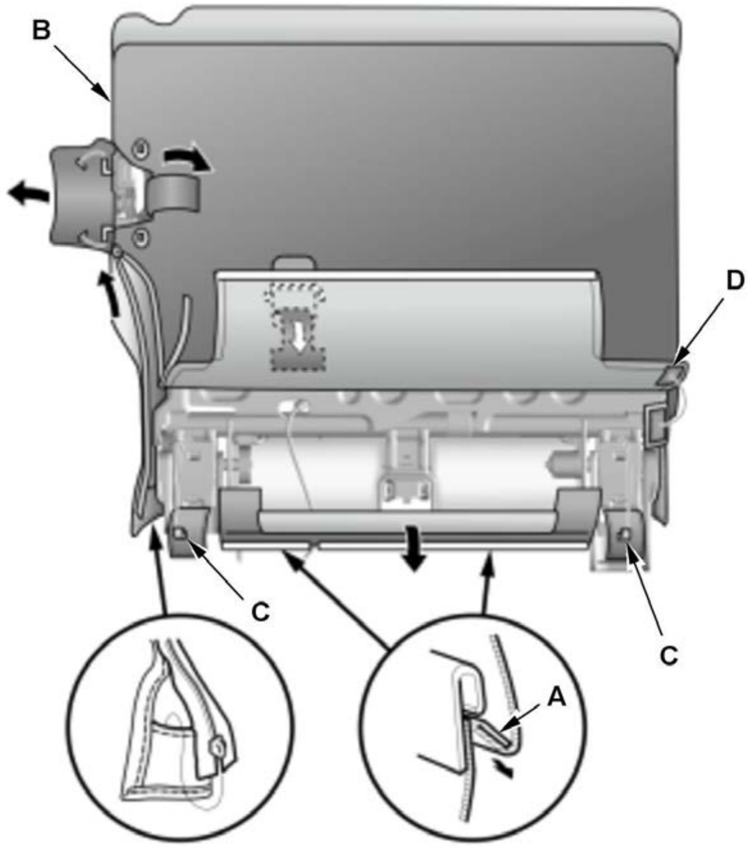

Right seat-back

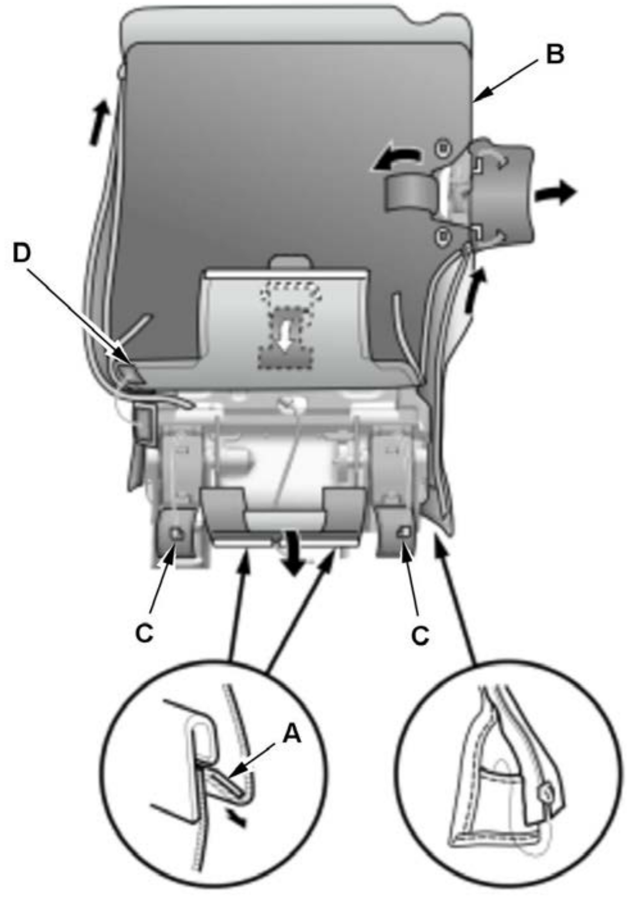

5. Release the hook strip (A).

6. Unzip the seat-back cover (B).

7. Release the hooks (C) and the hook and loop fastener (D).

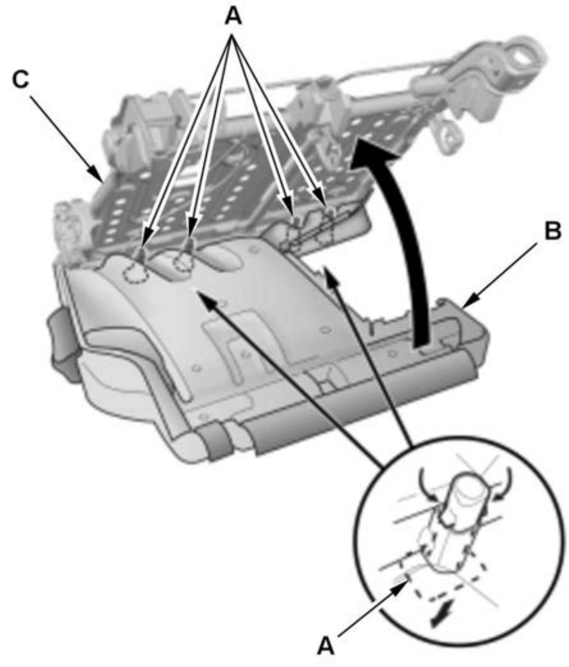	8. Remove the head restraint guides (A). 9. Remove the seat-back cover/pad (B) from the seat-back frame (C).

8. Rear Seat-Back Frame Covers - Remove

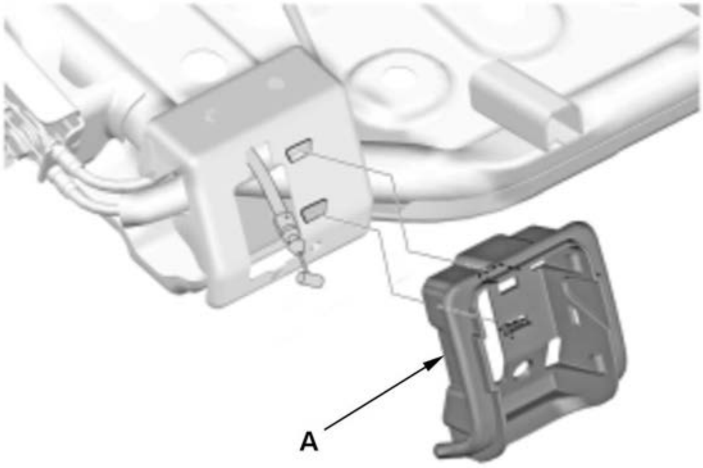	1. If necessary, remove the rear seat-back inner trim (A).

Outer bracket 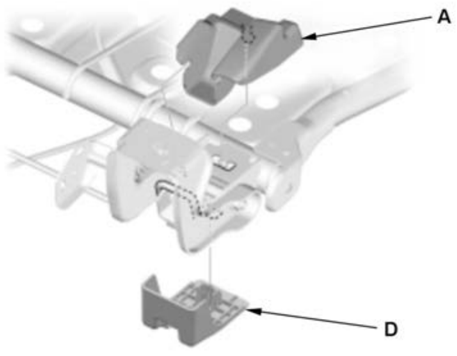 **Inner bracket**	2. If necessary, remove the rear seat-back outer bracket cover (A), the inner bracket cover (B), the center bracket cover (C), and the rear seat-back lower bracket covers (D).

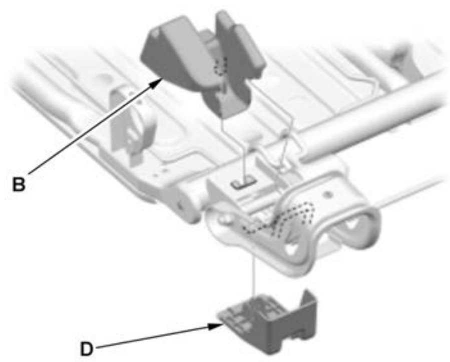 **Center bracket (Left seat-back)** 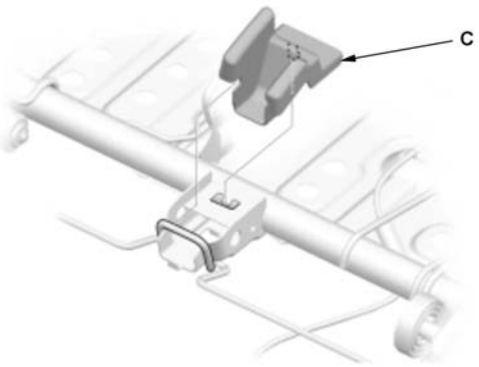	

9. Rear Seat-Back Cover - Remove

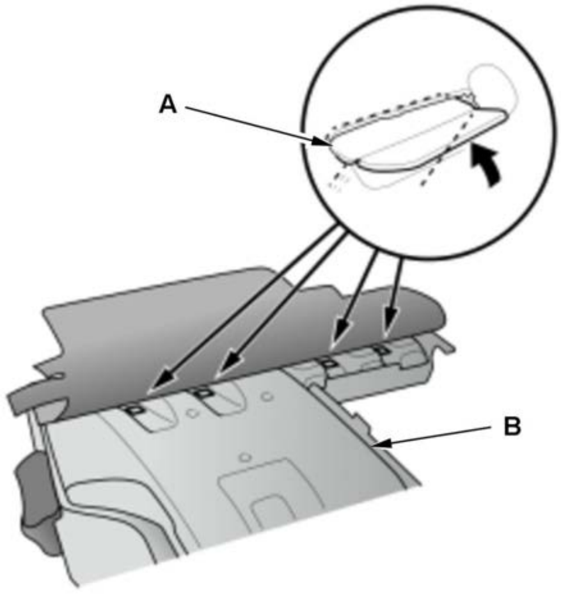	1. Pass the retainers (A) through the slots in the seat-back pad (B).

Left seat-back 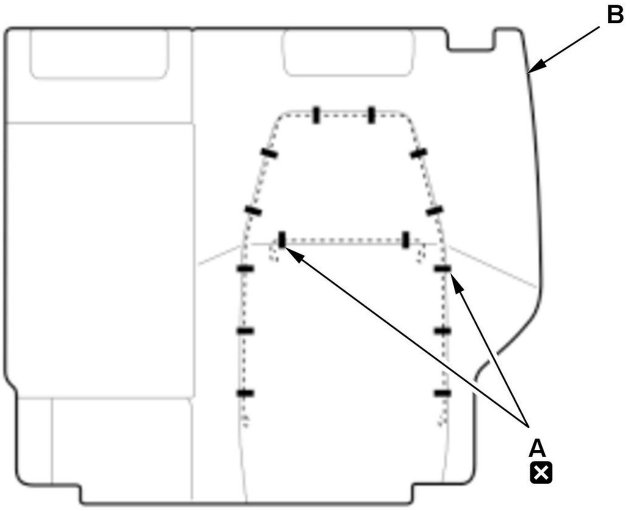 **Right seat-back** 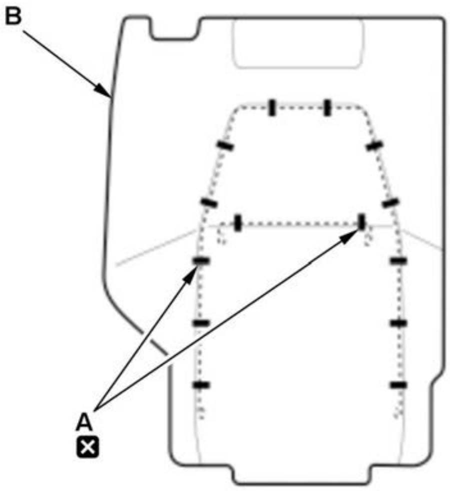 	2. Remove the upholstery rings (A), and then remove the seat-back cover (B).

10. All Removed Parts - Install

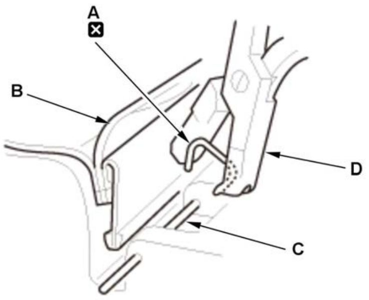 	1. Install the parts in the reverse order of removal. **NOTE:** Replace all of the upholstery rings (A) fastening the seat-back cover (B) to the pad wires (C) with new ones using commercially available upholstery ring pliers (D).

REAR SEAT-BACK LATCH REMOVAL AND INSTALLATION

Removal and Installation

NOTE: How to read the torque specifications .

1. Rear Seat-Back - Fold Down

Rear Seat Lock Knob Trim Removal (If Necessary)

2. Rear Seat Lock Knob Trim - Remove

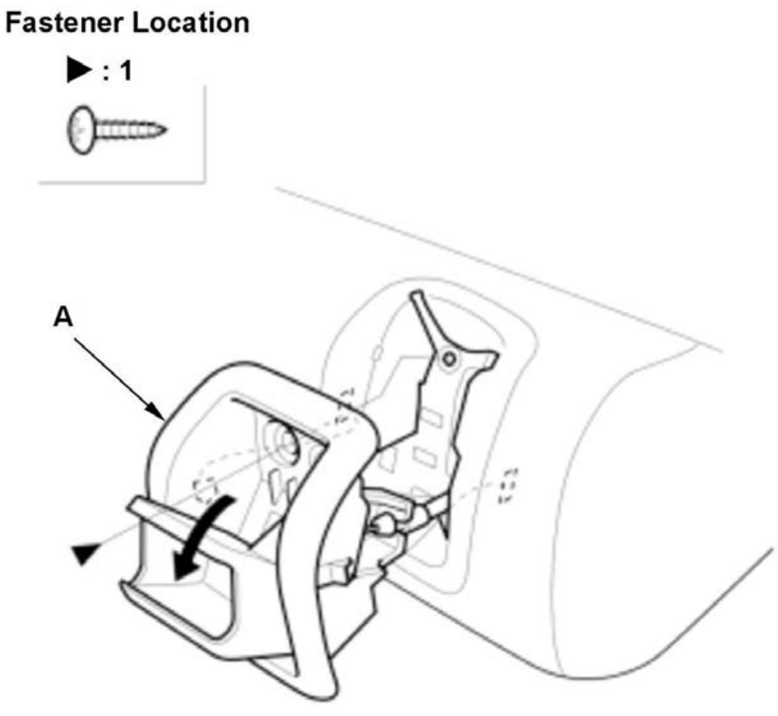	1. Remove the rear seat lock knob trim (A).
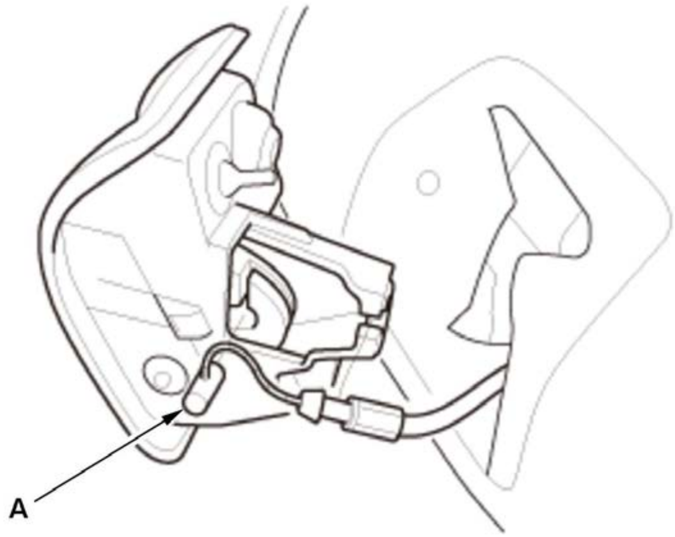	2. Disconnect the rear seat-back latch cable (A).

Rear Seat-Back Latch Removal

3. Rear Seat-Back Latch - Remove

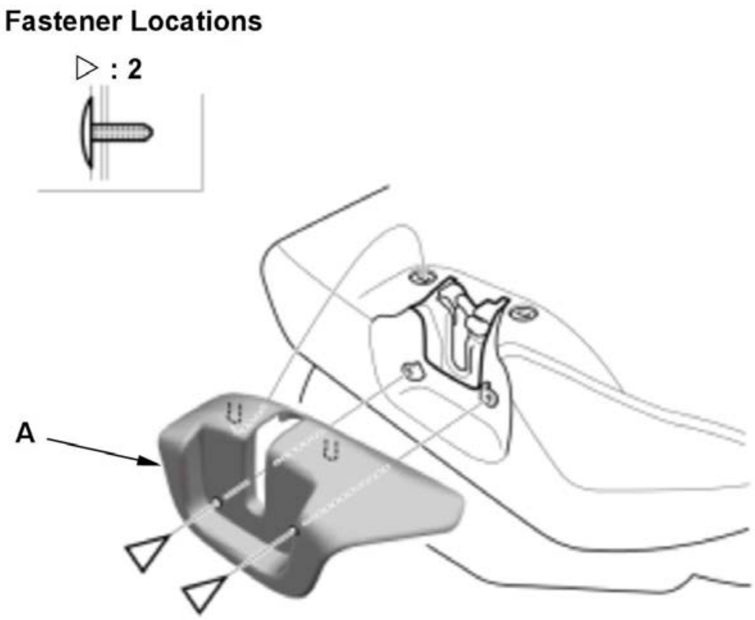 Fastener Locations ▷ : 2 A	1. Remove the rear seat-back latch cover (A).

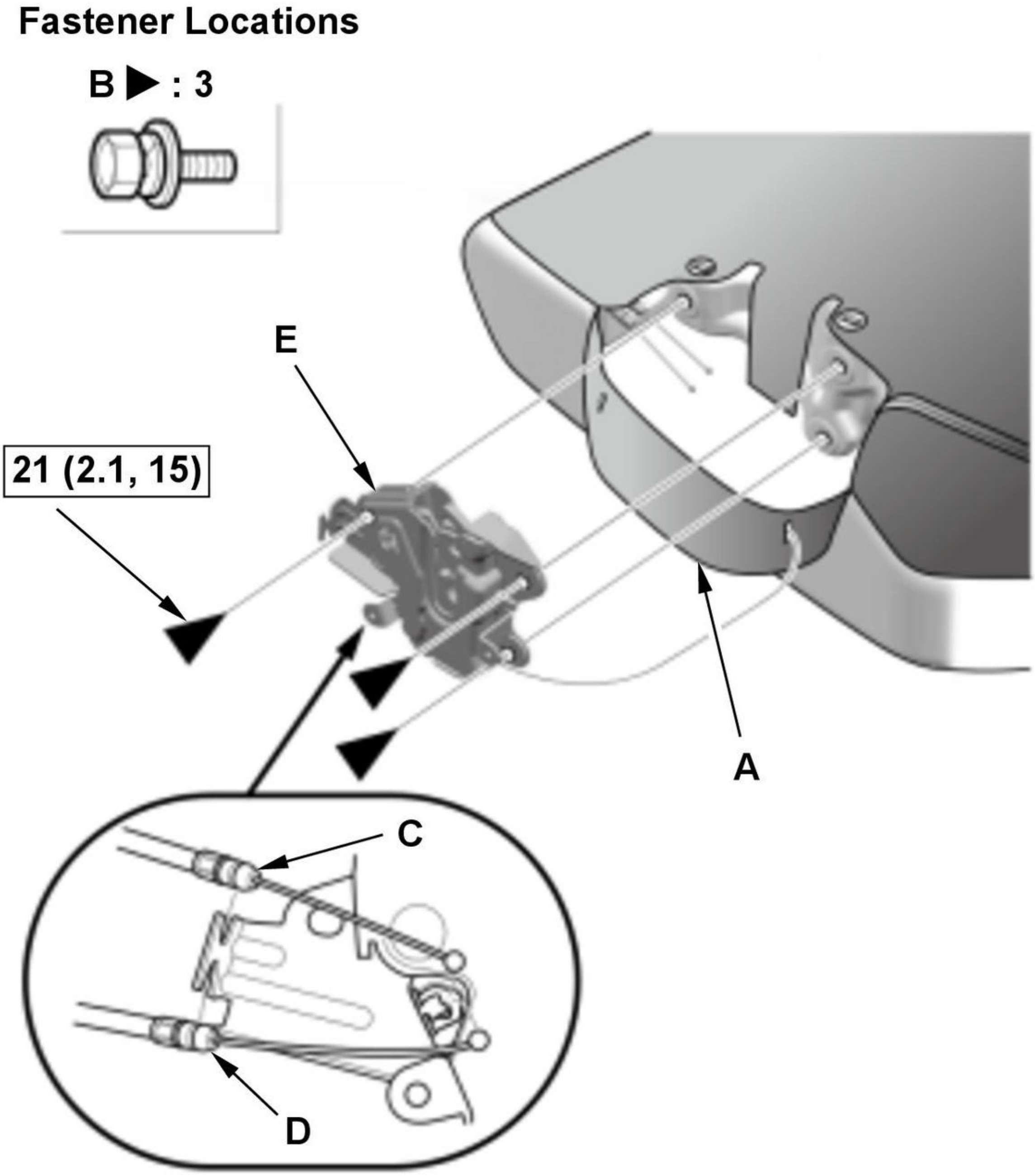

Fig. 10: Rear Seat-Back Latch Components With Torque Specifications
Courtesy of HONDA, U.S.A., INC.

2. Pull back the seat-back cover (A) as needed, and remove the bolts (B).

3. Disconnect the rear seat upper cable (C) and the rear seat-back latch cable (D).

4. Remove the rear seat-back latch (E).

4. All Removed Parts - Install

1. Install the parts in the reverse order of removal.

REAR SEAT-BACK STRIKER REMOVAL AND INSTALLATION

Removal and Installation

NOTE: How to read the torque specifications .

1. Rear Side Trim Panel - Remove
2. IPU Fan Inlet Upper Duct - Remove (Right Side)
3. Rear Seat-Back Striker - Remove

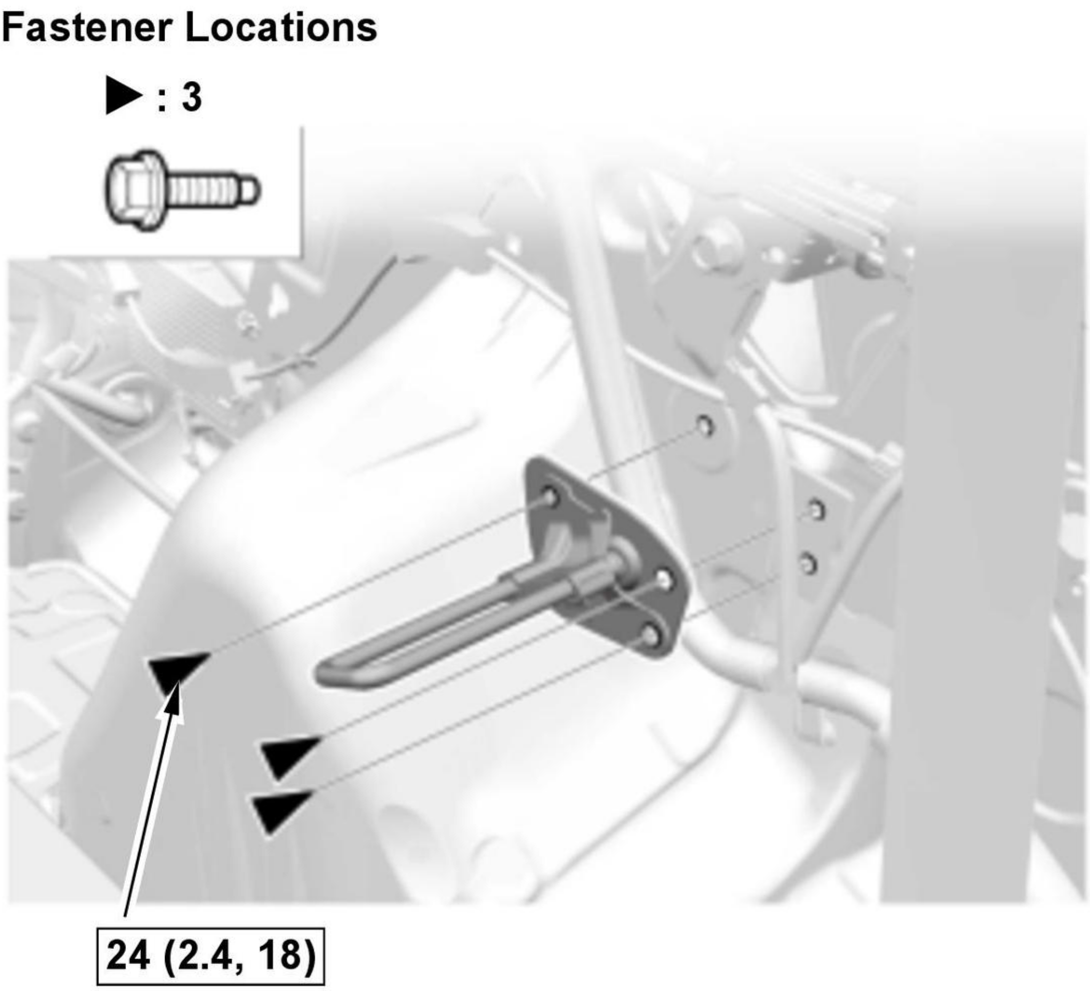

Fig. 11: Rear Seat-Back Striker And Bolts With Torque Specifications
Courtesy of HONDA, U.S.A., INC.

4. All Removed Parts - Install

1. Install the parts in the reverse order of removal.

REMOVAL, INSTALLATION & TEST

POWER LUMBAR SUPPORT SWITCH REMOVAL, INSTALLATION, AND TEST

Removal and Installation

Procedure

NOTE: **Numbered call-outs in figure pertain to list numbers in following procedure.**

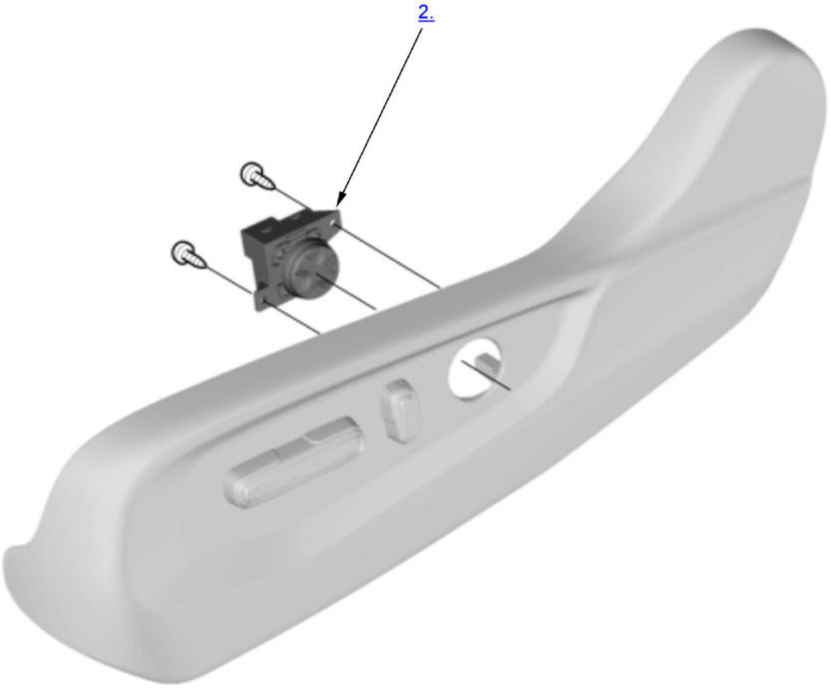

Fig. 12: Power Lumbar Support Switch Components
Courtesy of HONDA, U.S.A., INC.

1. Driver's Seat Recline Cover - Remove

   NOTE: If removing the driver's seat recline cover, you do not need to remove the driver's seat.

2. Power Lumbar Support Switch - Remove
3. All Removed Parts - Install

   1. Install the parts in the reverse order of removal.

Test

1. Power Lumbar Support Switch - Test

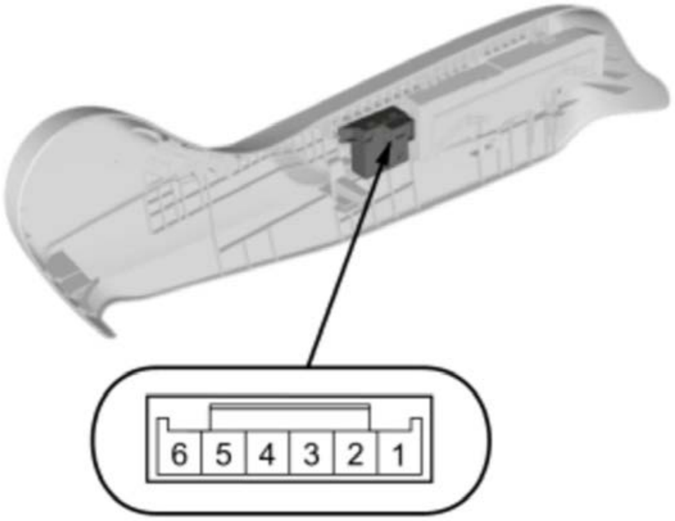

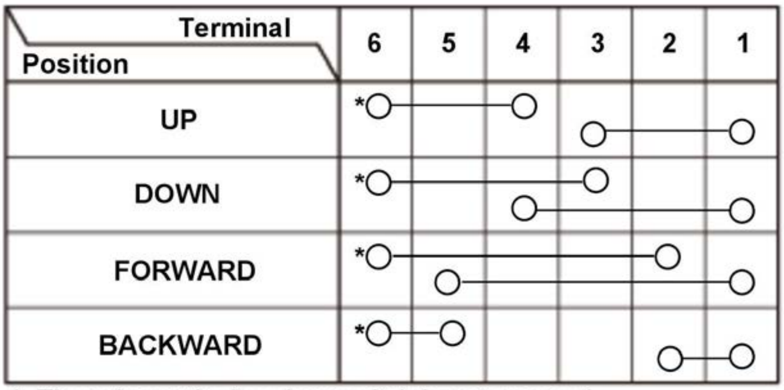

Position \ Terminal	6	5	4	3	2	1
UP	*○	—	○			
				○	—	○
DOWN	*○	—	—	○		
			○	—	—	○
FORWARD	*○	—	—	—	○	
		○	—	—	—	○
BACKWARD	*○	○				
					○	○

*: There is continuity when switch is not pressed.

1. Check for continuity between the terminals in each switch position according to the table.

2. If the continuity is not as specified, replace the power lumbar support switch.

POWER SEAT ADJUSTMENT SWITCH REMOVAL, INSTALLATION, AND TEST

Removal and Installation

Front Passenger's

NOTE: **Numbered call-outs in figure pertain to list numbers in following procedure.**

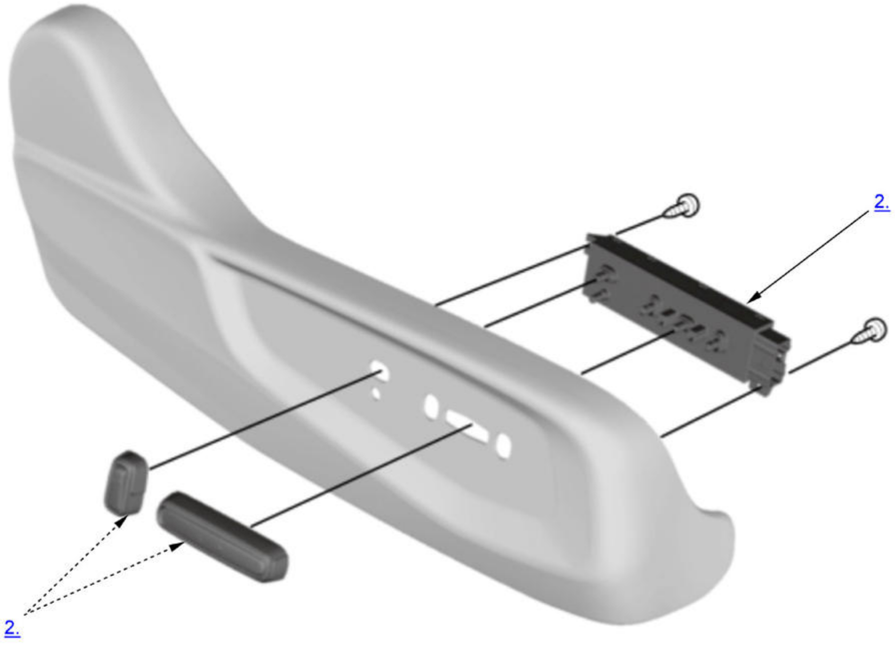

Fig. 13: Front Passenger's Power Seat Adjustment Switch Components
Courtesy of HONDA, U.S.A., INC.

1. **Front Passenger's Seat Recline Cover - Remove**

   NOTE: If you are only removing the front passenger's seat recline cover, you do not need to remove the front passenger's seat.

2. Front Passenger's Power Seat Adjustment Switch - Remove
3. All Removed Parts - Install

   1. Install the parts in the reverse order of removal.

Test

1. Front Passenger's Power Seat Adjustment Switch - Test

   1. Check for continuity between the terminals in each switch position according to the table.

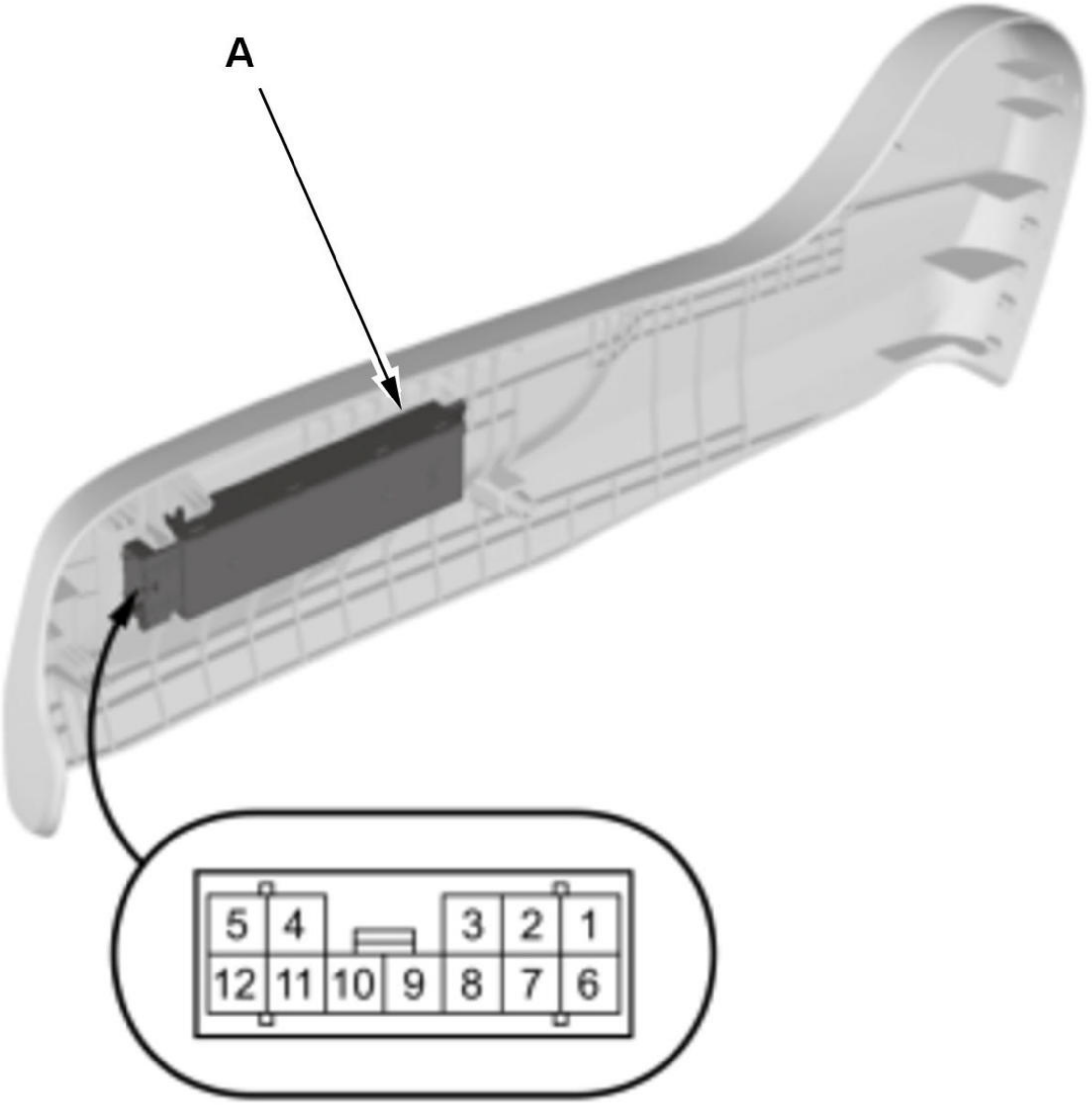

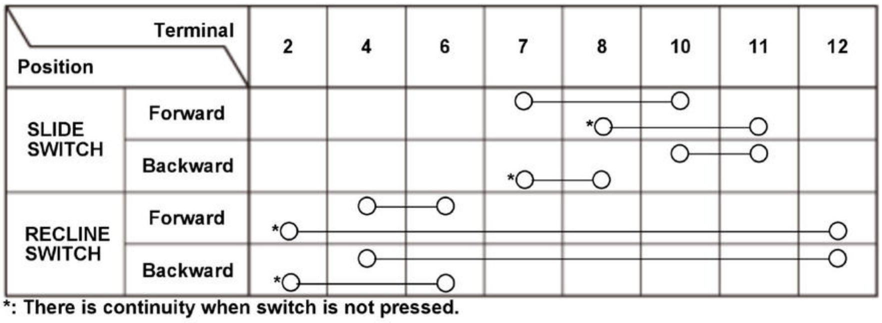

Position		Terminal 2	4	6	7	8	10	11	12
SLIDE SWITCH	Forward				○	—	○		
						*○	—	○	
	Backward						○	○	
					*○	○			
RECLINE SWITCH	Forward		○	○					
		*○	—	—	—	—	—	—	○
	Backward		○	—	—	—	—	—	○
		*○	—	○					

*: There is continuity when switch is not pressed.

2. If the continuity is not as specified, replace the front passenger's power seat adjustment switch (A).

DESCRIPTION & OPERATION

POWER LUMBAR SUPPORT SYSTEM DESCRIPTION

Overview

The power lumbar support motor winds up the wire connected to the lumbar support, then the shape of lumbar support is changed and pushed forward. The lumbar support wire pushes the wire out to return to the original position.

SEAT HEATERS SYSTEM DESCRIPTION

Control/Function

The front seat heater control unit sets the seat heater to High/Mid/Low or OFF based on the seat heater switch signals received from the climate control unit via B-CAN. The front seat heater control unit monitors the thermistor resistance, the voltage/current/temperature to the heater, and the presence of communication with the climate control unit. Also, the system stores DTCs when a malfunction is detected in the front seat heater control unit.

Automatic Operation

Based on the outside air temperature, A/C target temperature and other factors, the climate control unit calculates the optimal front seat heater setting. The climate control unit sends this setting request to the front seat heater control unit via B-CAN. When operating in auto mode or during remote engine start, the front seat heater control unit will operate per B-CAN setting request from the climate control unit.

Thermistor and Breaker

The seat cushion heater has a thermistor and breaker. The thermistor and breaker protect the seat heater circuit from overheating. The value of the thermistor is inputted to the control unit.

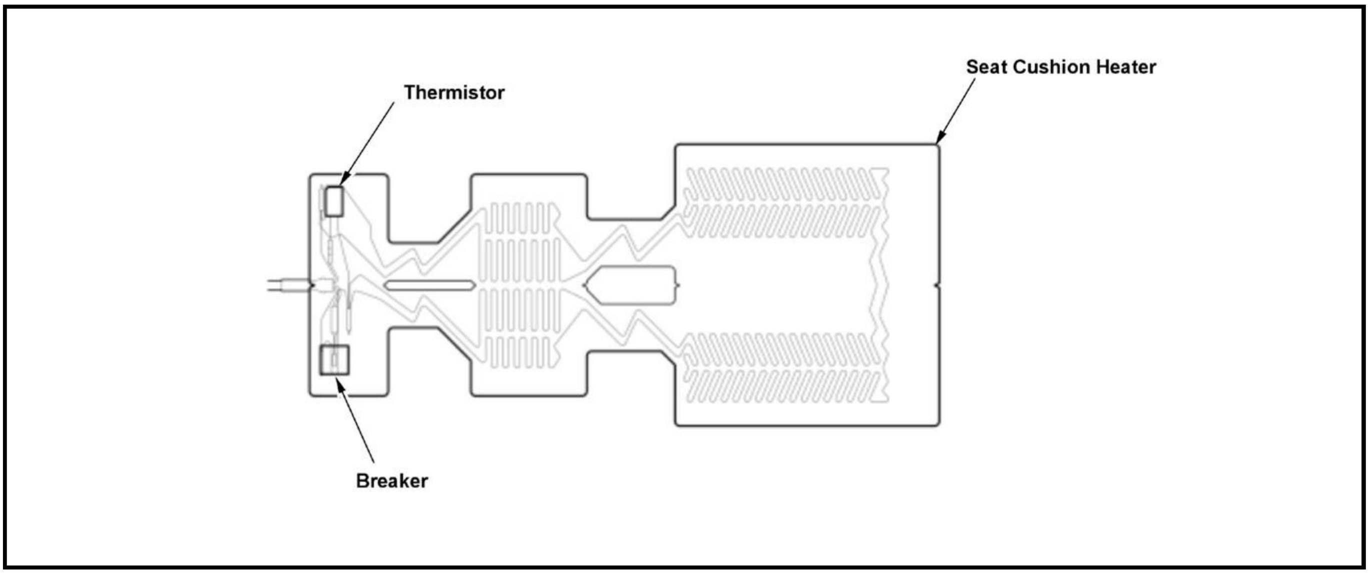

The seat heater temperature is controlled by breaker ON and OFF condition.

B	ON	OFF
Breaker	95 - 113 deg.F (35 - 45 deg.C)	115 - 129 deg.F (46 - 54 deg.C)

Failsafe Function

Thermistor Circuit Open Failure

Thermistor circuit open refers to a condition in which the value of the thermistor built in the seat cushion heater continues to be higher than the threshold value for a few seconds. When the control unit detects a shift from the normal operation condition to this condition, it stops the seat heater operation and turns off the seat heater switch indicators.

Thermistor Circuit Short Failure

Thermistor circuit short refers to a condition in which the value of the thermistor built in the seat cushion heater continues to be lower than the threshold value for a few seconds. When the control unit detects a shift from the normal operation condition to this condition, it stops the seat heater operation and turns off the seat heater switch indicators.

Heater Circuit Current Error

When the control unit detects an abnormal current value in the heater circuit, it stops the heater output immediately after detection and turns off the seat heater switch indicators.

SEAT HEATERS SYSTEM DESCRIPTION - SYSTEM DIAGRAM

For locations of each component on the vehicle, refer to Component Location Index

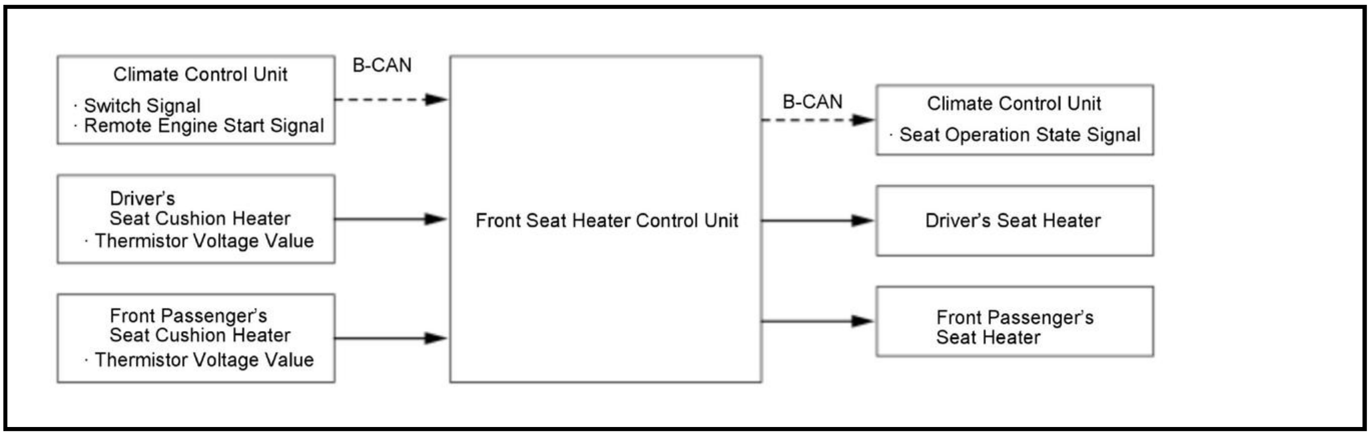
Climate Control Unit
· Switch Signal
· Remote Engine Start Signal
B-CAN
Driver's
Seat Cushion Heater
· Thermistor Voltage Value
Front Passenger's
Seat Cushion Heater
· Thermistor Voltage Value
Front Seat Heater Control Unit
B-CAN
Climate Control Unit
· Seat Operation State Signal
Driver's Seat Heater
Front Passenger's
Seat Heater

GENERAL INFORMATION

SEAT HEATERS SELF-DIAGNOSTIC FUNCTION

NOTE: The seat heater control unit has a thermistor self-diagnostic function. It indicates the result by lighting the LEDs of the seat heater switch.

- The seat heater control unit have a self-diagnostic function.
- The self-diagnosis is performed for control unit.
- Use the seat heater switch to perform the self-diagnosis and read the trouble history.

How to Use the Self-Diagnostic Function

NOTE: Do steps 2-3 within 10 seconds after doing step 1.

1. Turn the vehicle to the ON mode.

2. While pressing the left seat heater switch, press the right seat heater switch three times.

3. Release the left seat heater switch, and press the right seat heater switch three times.

4. When the system enters the self-diagnostic mode, all of the seat heater switch indicators turn on for 2 seconds.

5. All of the seat heater switch indicators alternatively turn on and off every 2 seconds during self-diagnosis. If any DTC is stored, the system shifts to the LED pattern, which will continue to blink every 2 seconds until the vehicle is turned to the OFF (LOCK) mode. If no DTCs are stored, the system shifts to the normal control.

- During self-diagnostic mode, the control unit blinks the seat heater switch indicators in a specific pattern corresponding to the failure.
- One DTC is displayed four times. If more than one failure exists, the next DTC is displayed after 2 seconds.
- After all patterns are displayed, the cycle will be repeated until the self-diagnostic mode is off.
- The DTC is displayed on either seat heater switch according to where the failure has occurred.
- The DTC is displayed using the seat heater switch indicator for the seat in which the failure has been detected.

How to Check for History DTCs

The seat heater control unit can record history DTCs. To read the history DTCs.

NOTE: Do steps 2-3 within 10 seconds after doing step 1.

1. Turn the vehicle to the ON mode.

2. Press the left seat heater switch three times.

3. Press the right seat heater switch six times.

4. Press the left seat heater switch three times.

5. When the system enters the trouble history read mode, all of the heater seat indicators turn on for 3 seconds. If any DTC is stored, the system shifts to the LED pattern, which will continue to blink every 2 seconds until the vehicle is turned to the OFF (LOCK) mode. If no DTCs are stored, the system shifts to the normal control.

- During self-diagnostic mode, the control unit blinks the seat heater switch indicators in a specific pattern corresponding to the failure.
- One DTC is displayed four times. If more than one failure exists, the next DTC is displayed after 2 seconds.
- After all patterns are displayed, the cycle will be repeated until the self-diagnostic mode is off.
- The DTC is displayed on either seat heater switch according to where the failure has occurred.
- The DTC is displayed using the seat heater switch indicator for the seat in which the failure has been detected.

Indicator Blink Patterns

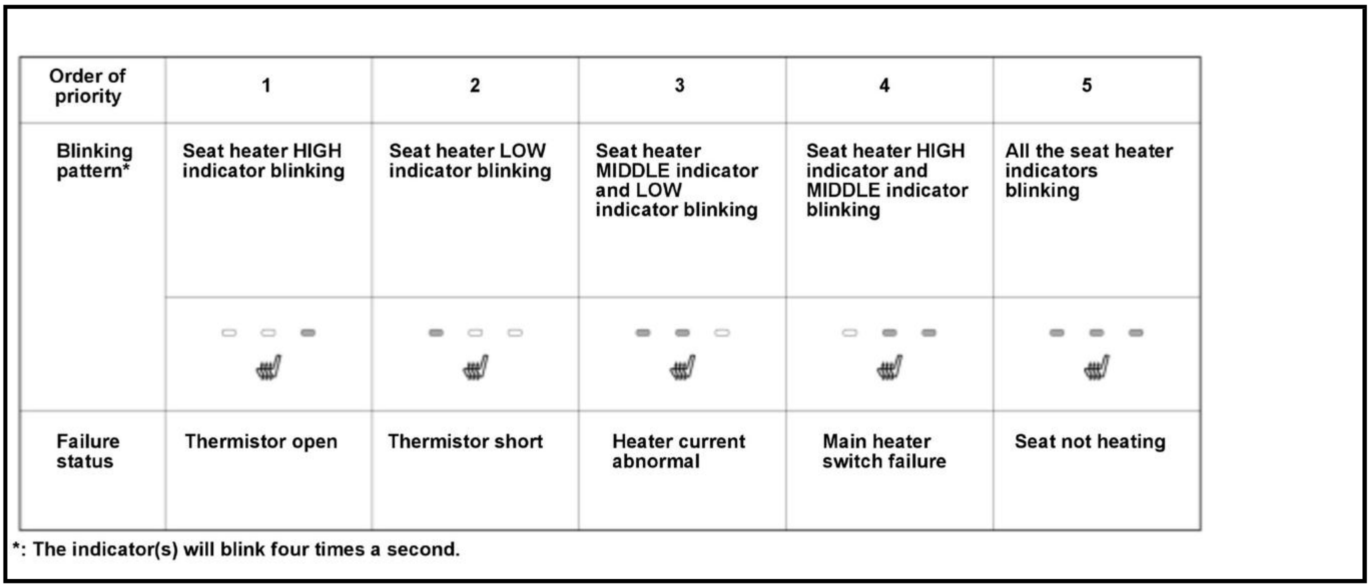

Order of priority	1	2	3	4	5
Blinking pattern*	Seat heater HIGH indicator blinking	Seat heater LOW indicator blinking	Seat heater MIDDLE indicator and LOW indicator blinking	Seat heater HIGH indicator and MIDDLE indicator blinking	All the seat heater indicators blinking
	○ ○ ●	● ○ ○	● ● ○	○ ● ●	● ● ●
Failure status	Thermistor open	Thermistor short	Heater current abnormal	Main heater switch failure	Seat not heating

*: The indicator(s) will blink four times a second.

How to Clear the DTCs

Whenever the control unit detects failures (failure main heater switch, abnormal heater current, and/or seat not heating), each failure is stored in the control unit.

To clear the DTCs, press and hold the switch for the seat to be cleared for 6 seconds.

NOTE:

- When the driver's side (or passenger's side) is cleared, only the DTCs for the applicable side will be cleared.
- After clearing the DTCs, all seat heater indicators will turn on for 2 seconds, and then go off.
- A thermistor open or a thermistor short failure is stored only when the vehicle ignition in the ON mode. After the vehicle turns to the OFF (LOCK) mode, it is cleared.
- If an open or short circuit failure occurs in the thermistor, the self-diagnostic mode display will be displayed after turning the vehicle to the ON mode.

Ending the Self-Diagnostic Function

Turn the vehicle to the OFF (LOCK) mode.

REPLACEMENT

SEAT HEATER REPLACEMENT

Replacement

SRS components are located in this area. Review the SRS component locations and the precautions and procedures before doing repairs or service.

NOTE: How to read the torque specifications .

Front Seat Cushion Heater

1. Front Seat Cushion Cover - Remove
2. Front Seat Cushion Heater - Remove

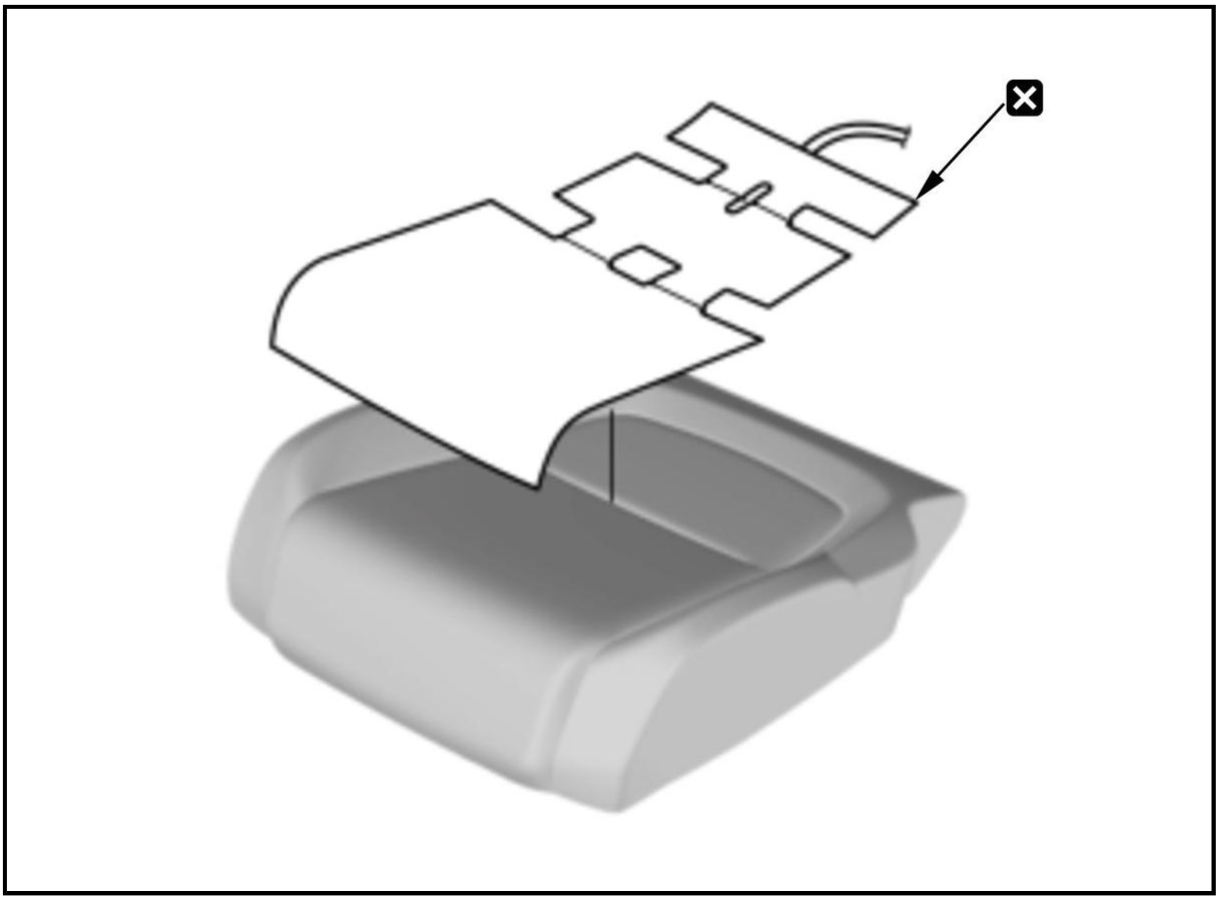

NOTE: The front seat cushion heater is glued to the front seat cushion pad. When removing it, take care not to damage the front seat cushion pad.

3. Front Seat Cushion Heater - Replacement

    1. Attach the new seat cushion heater to the reference position as shown:

        - Vertical adjustment: Overlap the positioning marks (A) on the seat cushion heater side and the location marks (B) on the seat cushion pad side
        - Horizontal adjustment: Overlap the positioning marks (C) on the seat cushion heater side and the location marks (D) on the seat cushion pad side
        - Once the seat cushion heater is in place on the seat cushion, tuck the bridge folds (E) of the seat cushion heater evenly into the grooves of the seat cushion pad.

Front Seat Cushion

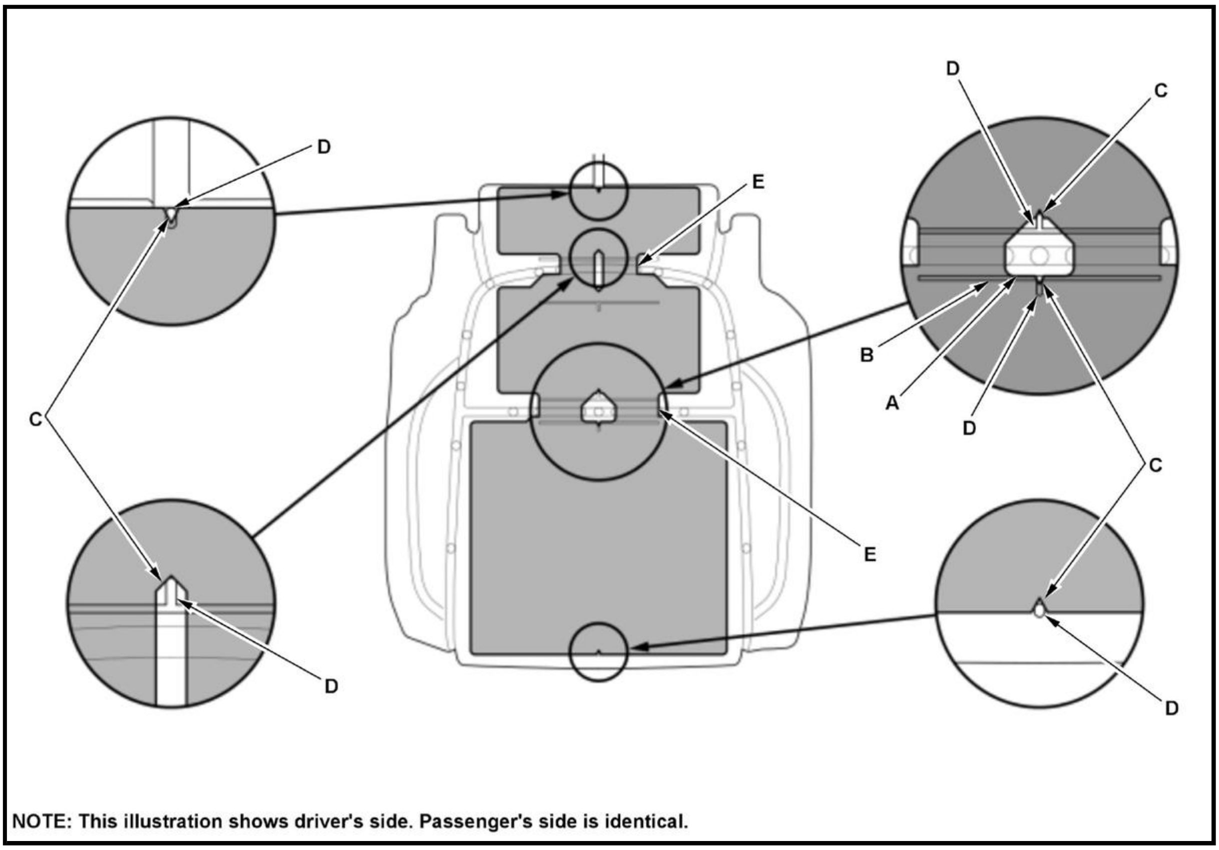

NOTE: This illustration shows driver's side. Passenger's side is identical.

4. All Removed Parts - Install

1. Install the parts in the reverse order of removal.

Front Seat-Back Heater

5. **Front Seat-Back Cover - Remove**
6. Front Seat-Back Heater - Remove

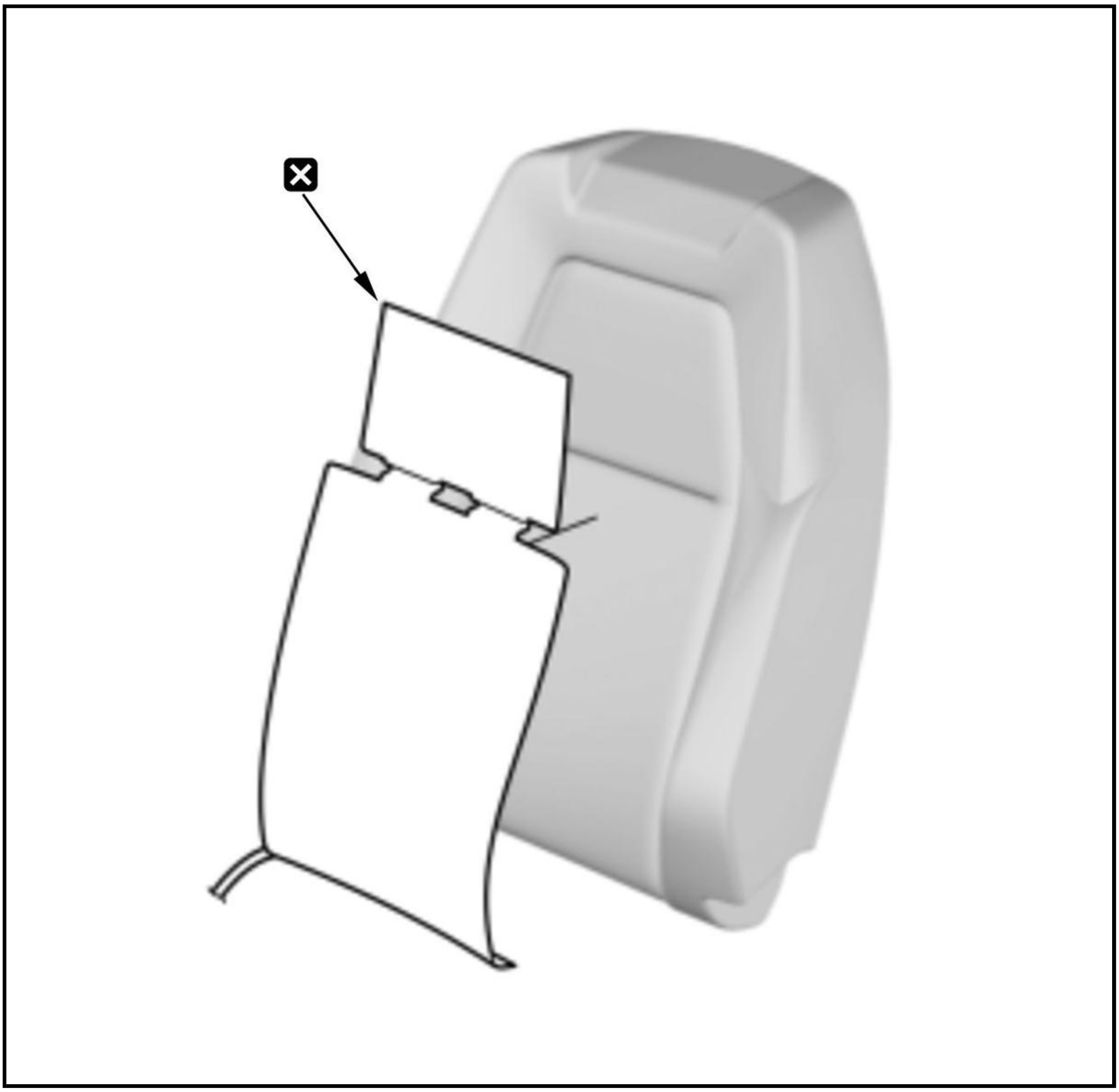

NOTE: The front seat-back heater is glued to the front seat-back pad. When removing it, take care not to damage the front seat-back pad.

7. Front Seat-back Heater - Replacement

    1. Attach the new seat-back heater to the reference position as shown:

        - Vertical adjustment: Overlap the positioning marks (A) on the seat-back heater side and the location marks (B) on the seat-back pad side
        - Horizontal adjustment: Overlap the positioning marks (C) on the seat-back heater side and the location marks (D) on the seat-back pad side
        - Once the seat-back heater is in place on the seat-back, tuck the bridge folds (E) of the seat-back heater evenly into the grooves of the seat-back pad.

Front Seat-back

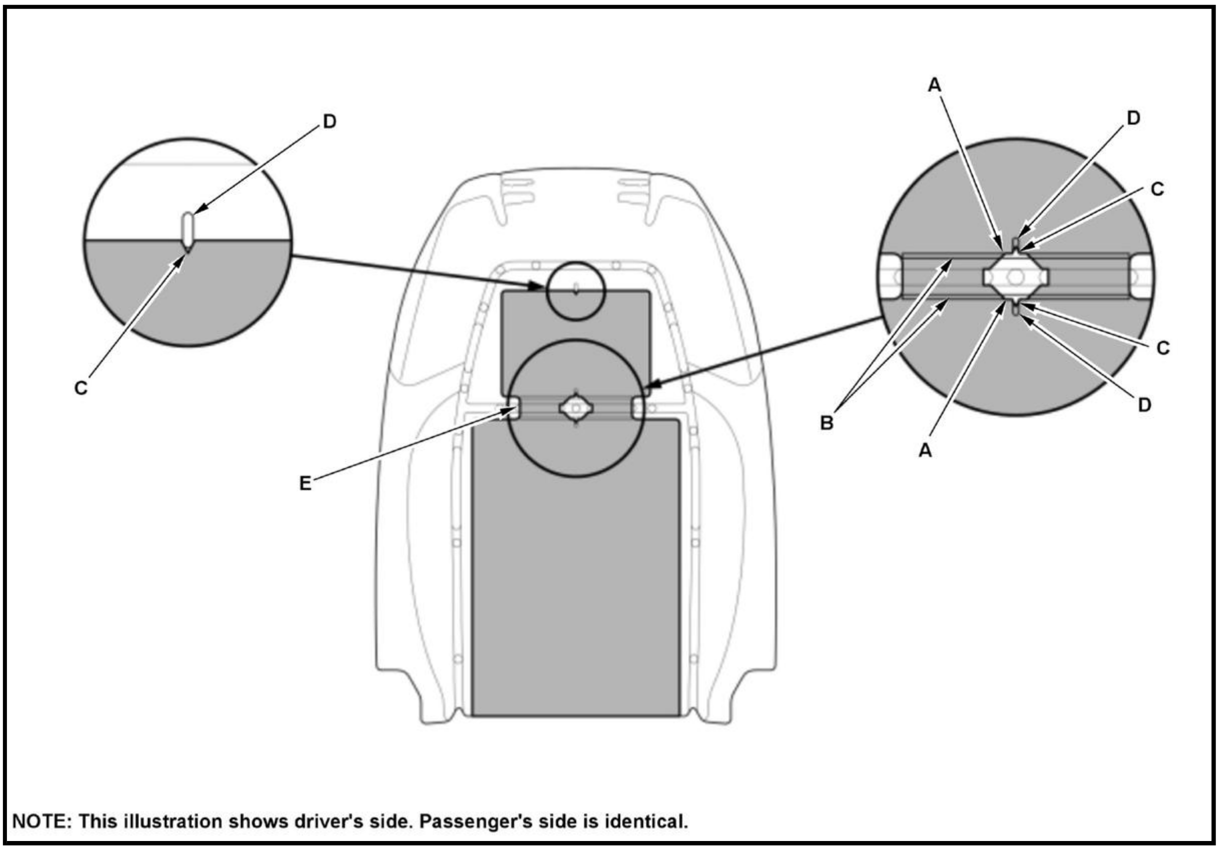

NOTE: This illustration shows driver's side. Passenger's side is identical.

8. All Removed Parts - Install

1. Install the parts in the reverse order of removal.

TEST

FRONT PASSENGER'S POWER SEAT MOTOR TEST

Test

SRS components are located in this area. Review the **SRS component locations** and the **precautions and procedures** before doing repairs or service.

1. **Front Passenger's Seat Recline Cover - Remove**
2. **Front Seat Slide Motor Cover - Remove**
3. Front Passenger's Power Seat Motor - Test

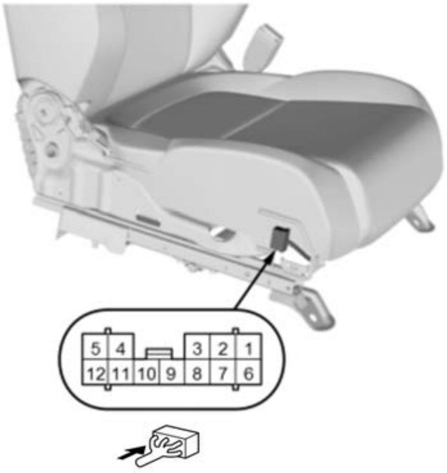

Slide Motor

Terminal / Direction	7	11
Forward	⊕	⊖
Backward	⊖	⊕

Recline Motor

Terminal / Direction	6	12
Forward	⊕	⊖
Backward	⊖	⊕

NOTE: Before testing, make sure not to short the front passenger's power seat adjustment switch circuit.

1. Test the motor by applying power and ground at the front passenger's power seat adjustment switch connector on the seat harness side according to the table. When the motor stops running, disconnect battery power immediately.

2. If the motor does not run or fails to run smoothly, **remove the front passenger's seat frame**

, go to step 3.

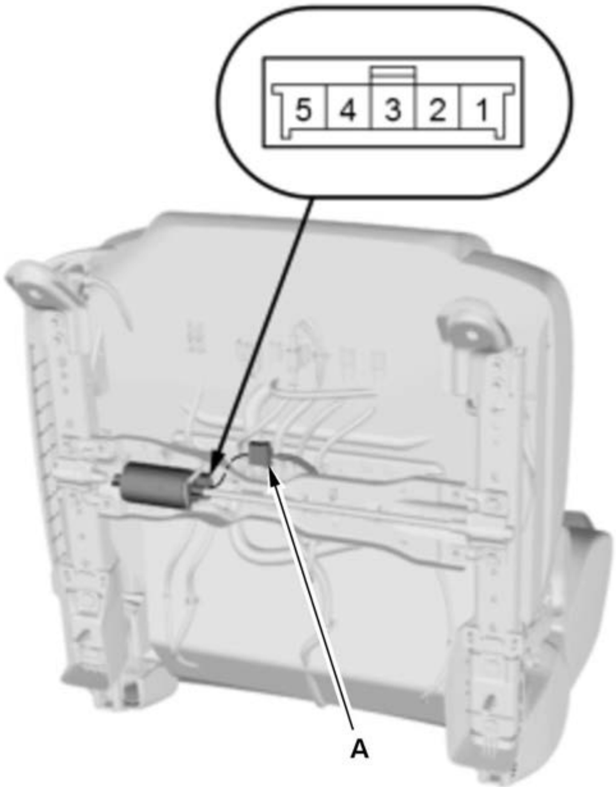

Slide Motor

Recline Motor

3. **Turn over the seat cushion cover/pad as needed** .

4. Disconnect these connectors:

- Slide motor connector (A)
- Recline motor connector (B)

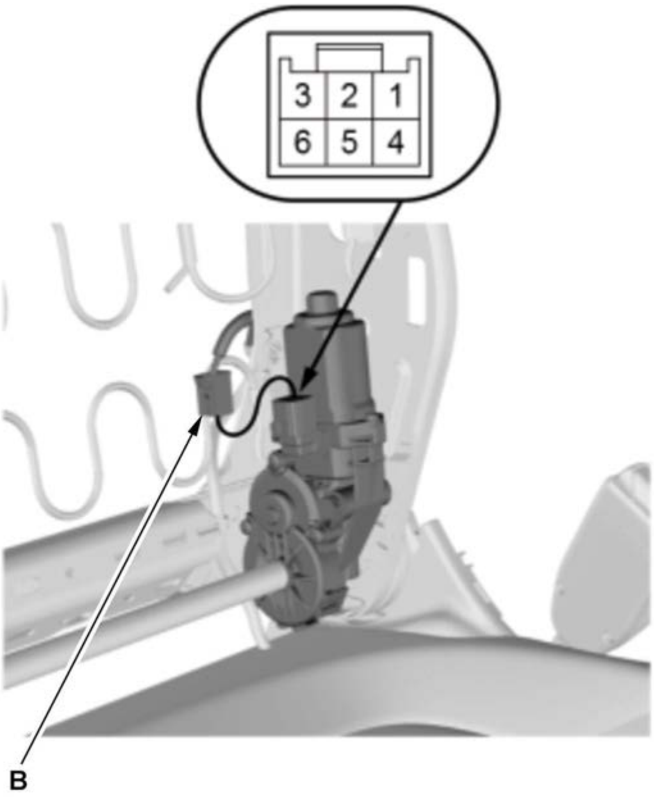

Slide Motor

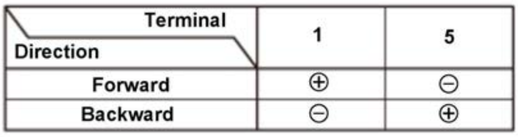

Terminal / Direction	1	5
Forward	⊕	⊖
Backward	⊖	⊕

Recline Motor

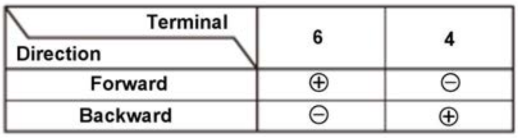

Terminal / Direction	6	4
Forward	⊕	⊖
Backward	⊖	⊕

5. Test each motor by connecting power and ground according to the table. When the motor stops running, disconnect battery power immediately.

6. If the motor does not run or fails to run smoothly, replace: **the front passenger's seat frame**

If the motor runs smoothly, replace the front passenger's seat wire harness.

7. Connect these connectors:

- Slide motor connector
- Recline motor connector

4. All Removed Parts - Install

1. Install the parts in the reverse order of removal.

POWER LUMBAR SUPPORT MOTOR TEST

Test

SRS components are located in this area. Review the **SRS component locations** and the **precautions and procedures** before doing repairs or service.

1. **Driver's Seat Recline Cover - Remove**
2. Power Lumbar Support Motors - Test

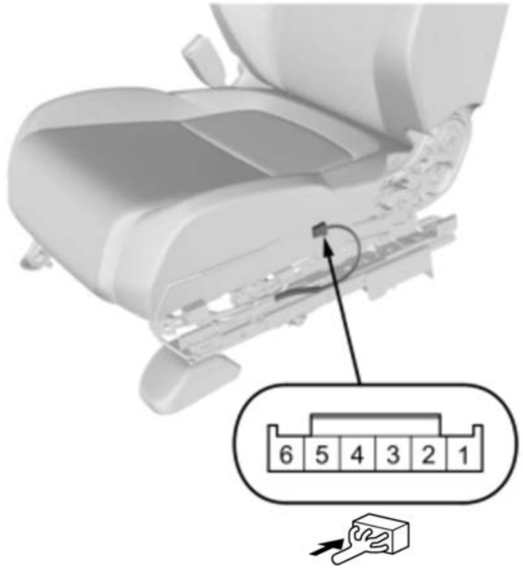

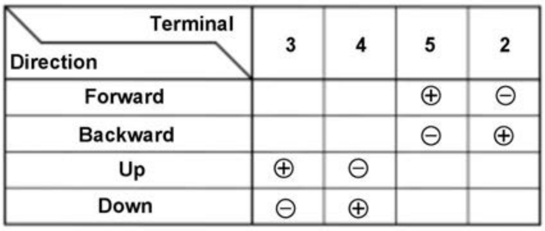

Direction \ Terminal	3	4	5	2
Forward			⊕	⊖
Backward			⊖	⊕
Up	⊕	⊖		
Down	⊖	⊕		

NOTE: Before testing, make sure not to short the power lumbar support motors circuit.

1. Test the power lumbar support motors by applying power and ground at the connector on the seat harness side according to the table. When the power lumbar support motors stops running, disconnect battery power immediately.

2. If the power lumbar support motors does not run or fails to run smoothly, then go to step 3.

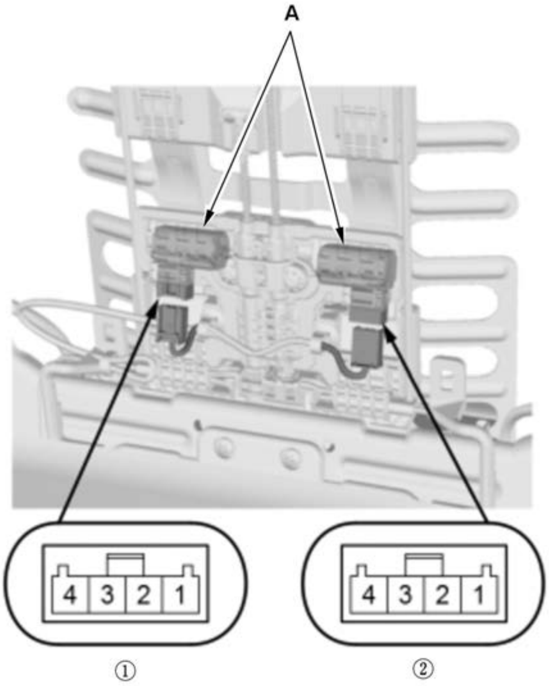

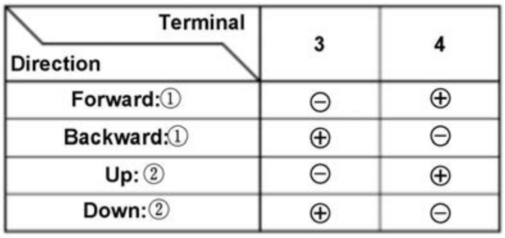

Direction \ Terminal	3	4
Forward:①	⊖	⊕
Backward:①	⊕	⊖
Up: ②	⊖	⊕
Down:②	⊕	⊖

3. **Remove the front seat-back panel**

4. Test the power lumbar support motors by applying battery power and ground to the terminals according to the table. When the power lumbar support motors stops running, disconnect battery power immediately.

5. If the power lumbar support motors does not run or fails to run smoothly, the power lumbar support motors (A) is faulty; **replace the power lumbar support assembly** .

If the power lumbar support motors runs smoothly, replace the front seat wire harness.

3. All Removed Parts - Install

1. Install the parts in the reverse order of removal.

SEAT HEATER TEST

Test

SRS components are located in this area. Review the SRS component locations and the precautions and procedures before doing repairs or service.

Driver's Seat

1. Driver's Seat - Remove
2. Driver's Seat Heater - Test

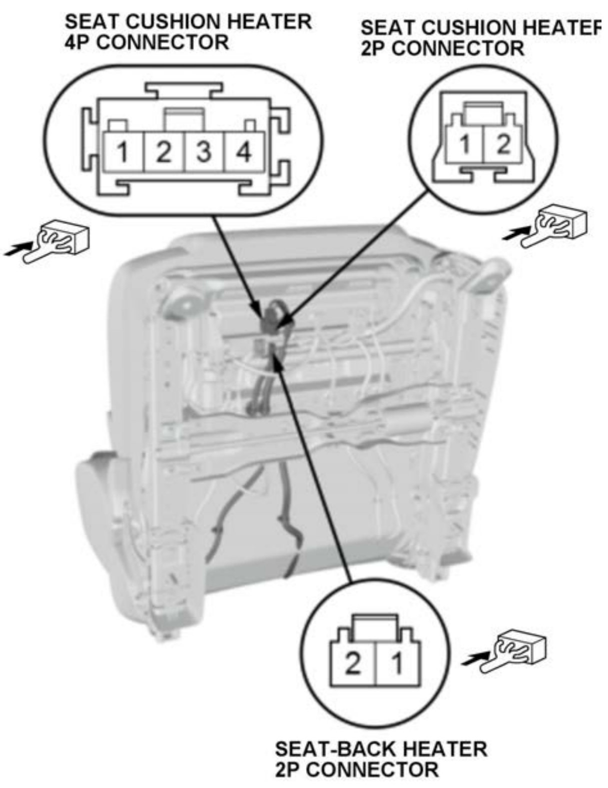 SEAT CUSHION HEATER 4P CONNECTOR 1 2 3 4 SEAT CUSHION HEATEF 2P CONNECTOR 1 2 2 1 SEAT-BACK HEATER 2P CONNECTOR	1. Check for continuity between the terminals according to the table. 2. If the continuity is not as specified, replace the driver's seat cushion heater or replace the driver's seat-back heater.

Driver's Seat-Back Heater 2P Connector	
No. 1	No. 2

Driver's Seat Cushion Heater 2P Connector	
No. 1	No. 2

Driver's Seat Cushion Heater 4P Connector	
No. 1	No. 2
No. 3	No. 4

3. All Removed Parts - Install

1. Install the parts in the reverse order of removal.

Front Passenger's Seat

4. Front Passenger's Seat - Remove
5. Front Passenger's Seat Heater - Test

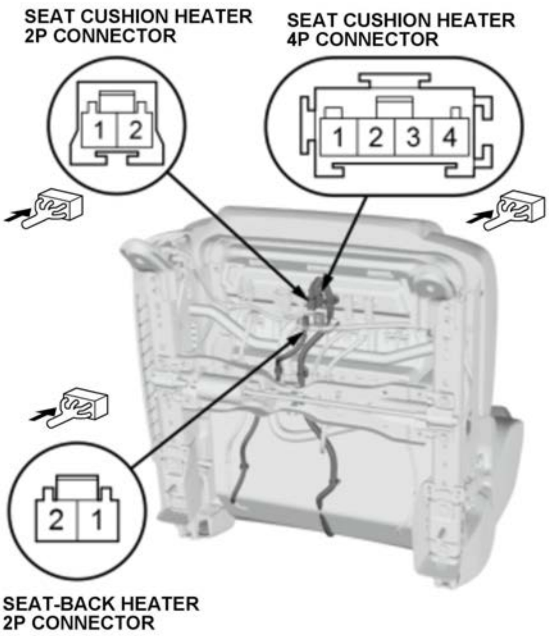 SEAT CUSHION HEATER 2P CONNECTOR 1 2 SEAT CUSHION HEATER 4P CONNECTOR 1 2 3 4 2 1 SEAT-BACK HEATER 2P CONNECTOR	1. Check for continuity between the terminals according to the table. 2. If the continuity is not as specified, replace the front passenger's seat cushion heater or replace the front passenger's seat-back heater.

Front Passenger's Seat-Back Heater Connector	
No. 1	No. 2

Front Passenger's Seat Cushion Heater 2P Connector	
No. 1	No. 2

Front Passenger's Seat Cushion Heater 4P Connector	
No. 1	No. 2
No. 3	No. 4

6. All Removed Parts - Install

1. Install the parts in the reverse order of removal.

CONNECTOR VIEW

FRONT SEAT HEATER CONTROL UNIT CONNECTOR FOR INPUTS AND OUTPUTS

Front Seat Heater Control Unit 24P Connector (female terminals)

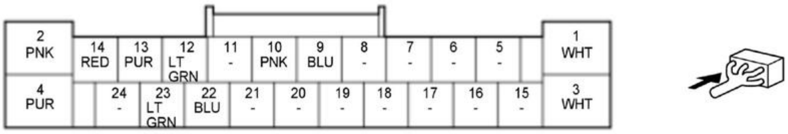

Terminal number	Terminal name	Description	Signal
1	HEATER_DR	Drives driver's seat heater	With driver's seat heater operation: pulse (depending on driver's seat temperature). If none of above conditions are met: less than 0.2 V
2	DR_H/SEAT_LO_RLY_COM	Detects front seat heater relay signal	With vehicle in ON mode: about battery voltage
3	AS_H/SEAT_LO_RLY_COM	Drives front passenger's seat heater	With front passenger's seat heater operation: pulse (depending on front passenger's seat temperature). If none of above conditions are met: less than 0.2 V
4	GND	Front seat heater control unit ground	Less than 0.2 V at all times
5	---	Not used	---
6	---	Not used	---
7	---	Not used	---
8	---	Not used	---
9	B-CAN_L	Communication line	---
10	B-CAN_H	Communication line	---
11	---	Not used	---
12	TH+_DR	Detects driver's seat heater thermistor signal	With vehicle in ON mode: about 0.4 - 4.9 V (depending on driver's seat temperature)
13	TH+_AS	Detects front passenger's seat heater thermistor signal	With vehicle in ON mode: about 0.4 - 4.9 V (depending on front passenger's seat temperature)
14	IG1_OPTION	IG1 power source	With vehicle in ON or START mode: about battery voltage
15	---	Not used	---
16	---	Not used	---
17	---	Not used	---
18	---	Not used	---
19	---	Not used	---
20	---	Not used	---
21	---	Not used	---

Terminal number	Terminal name	Description	Signal
22	TH-_DR	Ground for driver's seat heater thermistor signal	Less than 0.2 V at all times

Terminal number	Terminal name	Description	Signal
23	TH-_AS	Ground for front passenger's seat heater thermistor signal	Less than 0.2 V at all times
24	---	Not used	---

CIRCUIT DIAGRAM

POWER LUMBAR SUPPORT CIRCUIT DIAGRAM

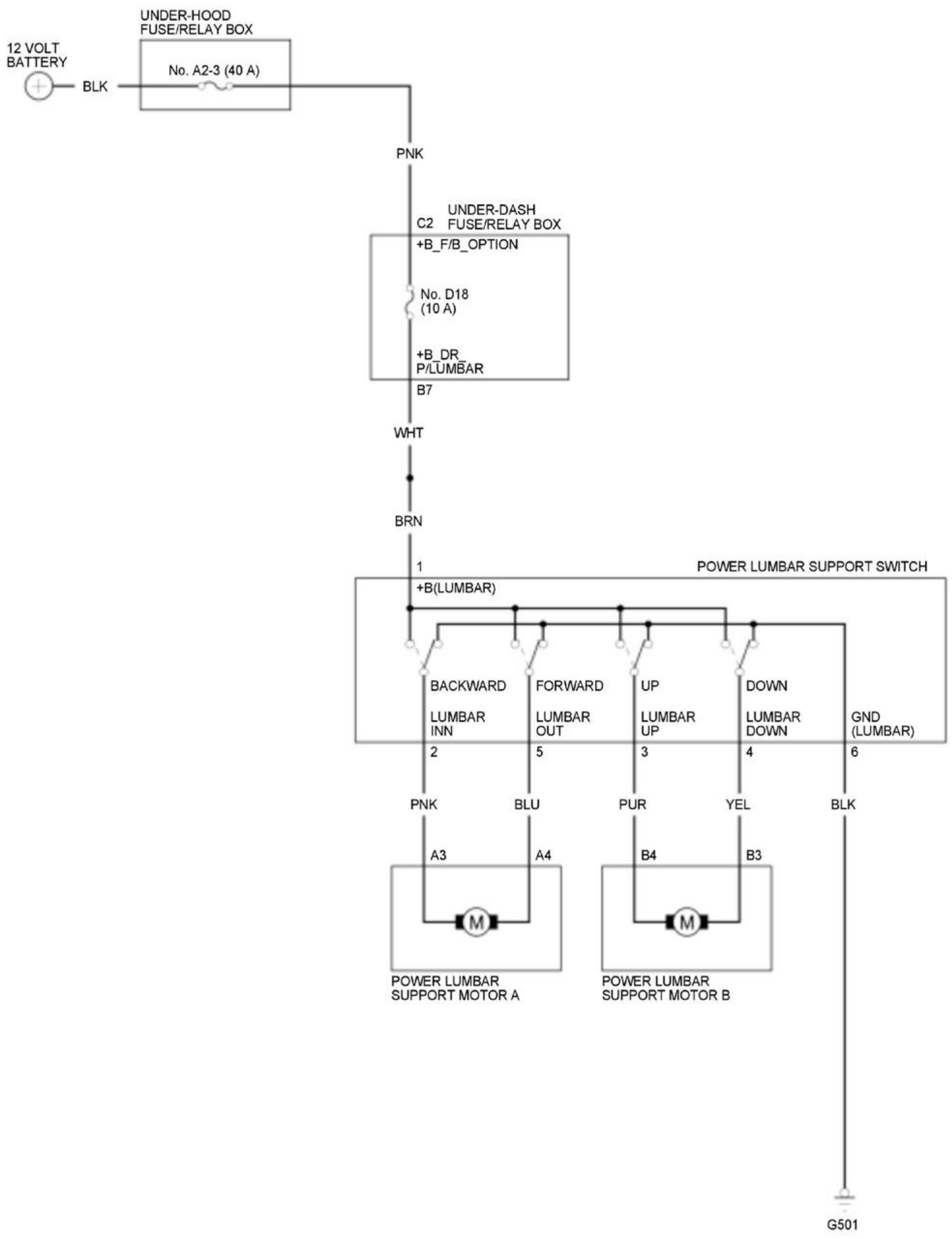
UNDER-HOOD FUSE/RELAY BOX
12 VOLT BATTERY
BLK
No. A2-3 (40 A)
PNK
C2
UNDER-DASH FUSE/RELAY BOX
+B_F/B_OPTION
No. D18 (10 A)
+B_DR_P/LUMBAR
B7
WHT
BRN
1
POWER LUMBAR SUPPORT SWITCH
+B(LUMBAR)
BACKWARD
FORWARD
UP
DOWN
LUMBAR INN
LUMBAR OUT
LUMBAR UP
LUMBAR DOWN
GND (LUMBAR)
2
5
3
4
6
PNK
BLU
PUR
YEL
BLK
A3
A4
B4
B3
M
M
POWER LUMBAR SUPPORT MOTOR A
POWER LUMBAR SUPPORT MOTOR B
G501

POWER SEATS CIRCUIT DIAGRAM

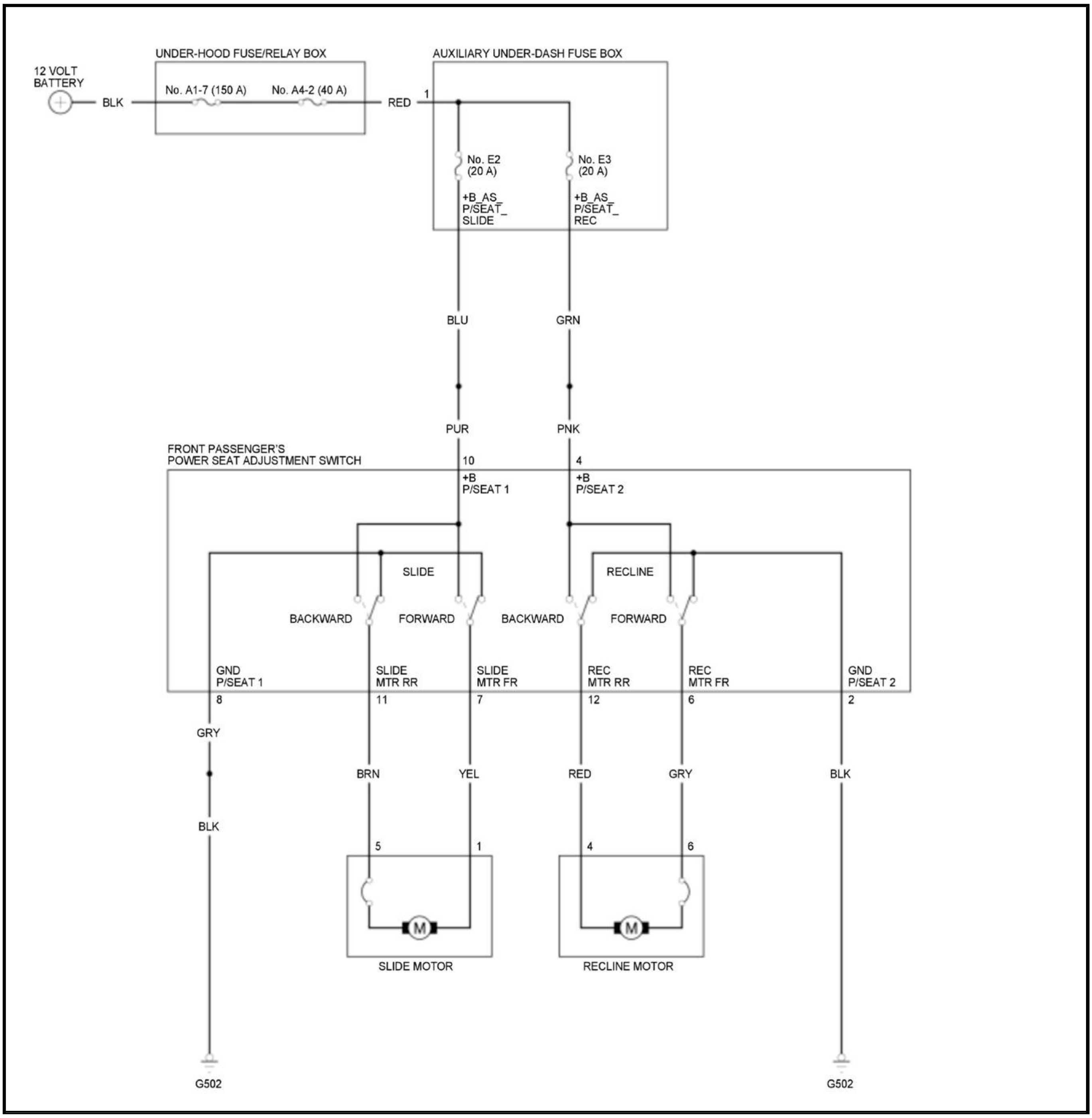
12 VOLT BATTERY
BLK
UNDER-HOOD FUSE/RELAY BOX
No. A1-7 (150 A)
No. A4-2 (40 A)
RED
1
AUXILIARY UNDER-DASH FUSE BOX
No. E2 (20 A)
No. E3 (20 A)
+B_AS_ P/SEAT_ SLIDE
+B_AS_ P/SEAT_ REC
BLU
GRN
PUR
PNK
FRONT PASSENGER'S POWER SEAT ADJUSTMENT SWITCH
10
4
+B P/SEAT 1
+B P/SEAT 2
SLIDE
RECLINE
BACKWARD
FORWARD
BACKWARD
FORWARD
GND P/SEAT 1
SLIDE MTR RR
SLIDE MTR FR
REC MTR RR
REC MTR FR
GND P/SEAT 2
8
11
7
12
6
2
GRY
BRN
YEL
RED
GRY
BLK
BLK
5
1
4
6
M
M
SLIDE MOTOR
RECLINE MOTOR
G502
G502

SEAT HEATERS CIRCUIT DIAGRAM

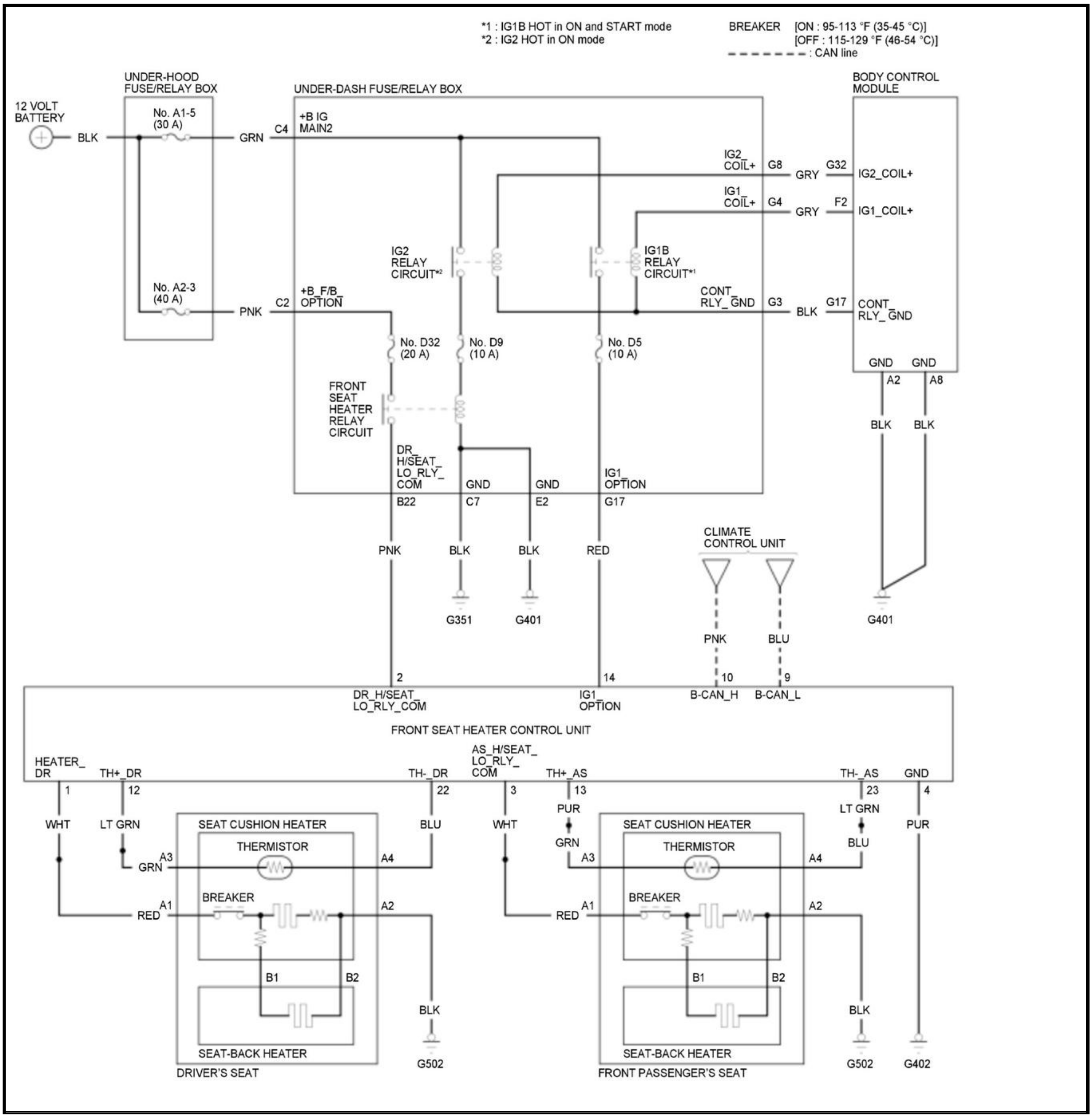
*1 : IG1B HOT in ON and START mode
*2 : IG2 HOT in ON mode
BREAKER [ON : 95-113 °F (35-45 °C)]
[OFF : 115-129 °F (46-54 °C)]
: CAN line
12 VOLT BATTERY
BLK
UNDER-HOOD FUSE/RELAY BOX
No. A1-5 (30 A)
No. A2-3 (40 A)
GRN
PNK
UNDER-DASH FUSE/RELAY BOX
C4
+B IG MAIN2
C2
+B_F/B_ OPTION
IG2 RELAY CIRCUIT*2
IG1B RELAY CIRCUIT*1
IG2_ COIL+
G8
GRY
G32
IG2_COIL+
IG1_ COIL+
G4
GRY
F2
IG1_COIL+
CONT_ RLY_GND
G3
BLK
G17
CONT_ RLY_GND
BODY CONTROL MODULE
GND
GND
A2
A8
BLK
BLK
G401
No. D32 (20 A)
No. D9 (10 A)
No. D5 (10 A)
FRONT SEAT HEATER RELAY CIRCUIT
DR_ H/SEAT_ LO_RLY_ COM
GND
GND
IG1_ OPTION
B22
C7
E2
G17
PNK
BLK
BLK
RED
G351
G401
CLIMATE CONTROL UNIT
PNK
BLU
2
14
10
9
DR_H/SEAT_ LO_RLY_COM
IG1_ OPTION
B-CAN_H
B-CAN_L
FRONT SEAT HEATER CONTROL UNIT
HEATER_ DR
TH+_DR
TH-_DR
AS_H/SEAT_ LO_RLY_ COM
TH+_AS
TH-_AS
GND
1
12
22
3
13
23
4
WHT
LT GRN
BLU
WHT
PUR
LT GRN
PUR
GRN
BLU
SEAT CUSHION HEATER
THERMISTOR
BREAKER
A3
A4
A1
A2
B1
B2
GRN
RED
RED
BLK
BLK
SEAT-BACK HEATER
DRIVER'S SEAT
FRONT PASSENGER'S SEAT
G502
G502
G402

COMPONENT LOCATION INDEX

POWER LUMBAR SUPPORT COMPONENT LOCATION INDEX

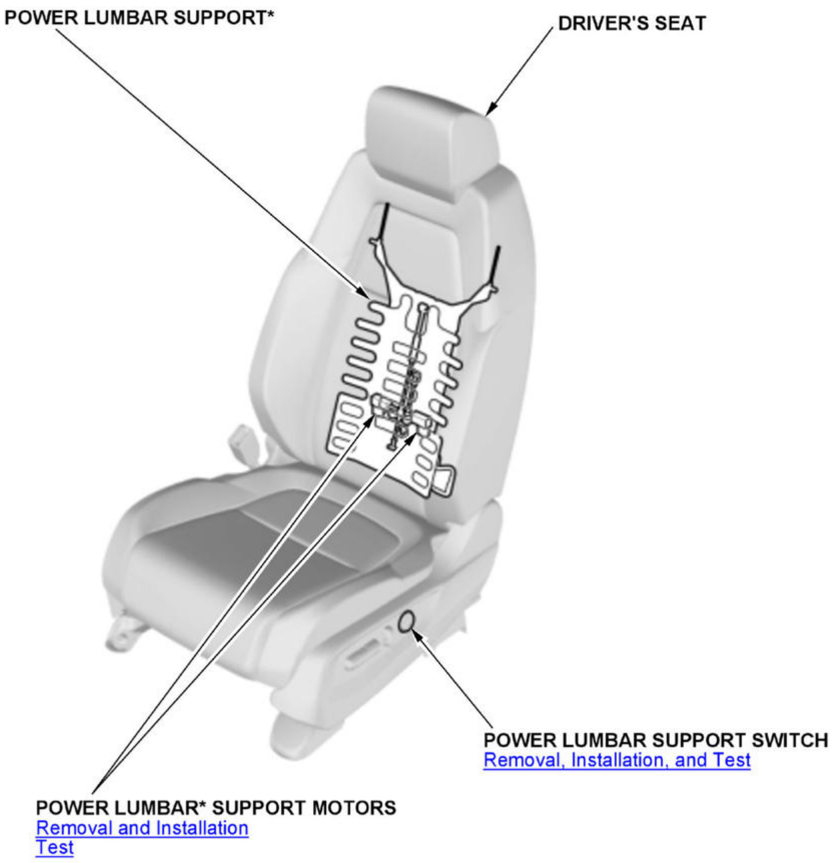
POWER LUMBAR SUPPORT*
DRIVER'S SEAT
POWER LUMBAR SUPPORT SWITCH
Removal, Installation, and Test
POWER LUMBAR* SUPPORT MOTORS
Removal and Installation
Test

*: The motor is part of the power lumbar support assembly and cannot be replaced as separate component.

POWER SEATS COMPONENT LOCATION INDEX

Front Passenger's Seat

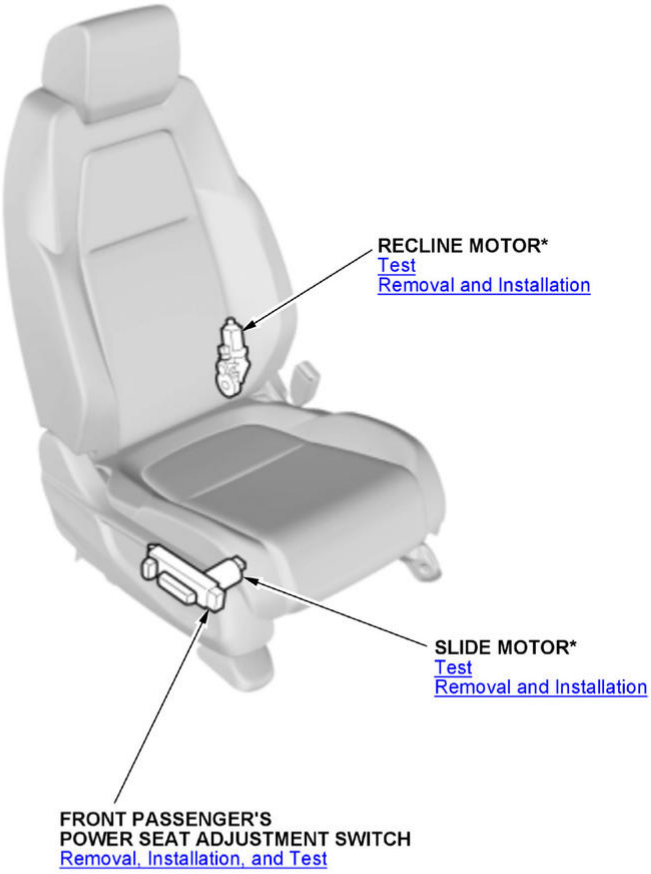
RECLINE MOTOR*
Test
Removal and Installation
SLIDE MOTOR*
Test
Removal and Installation
FRONT PASSENGER'S
POWER SEAT ADJUSTMENT SWITCH
Removal, Installation, and Test

*: The motor is part of the seat frame assembly and cannnot be replaced as a separate component.

SEAT HEATERS COMPONENT LOCATION INDEX

For relationships between signals in a system, refer to System Diagram.

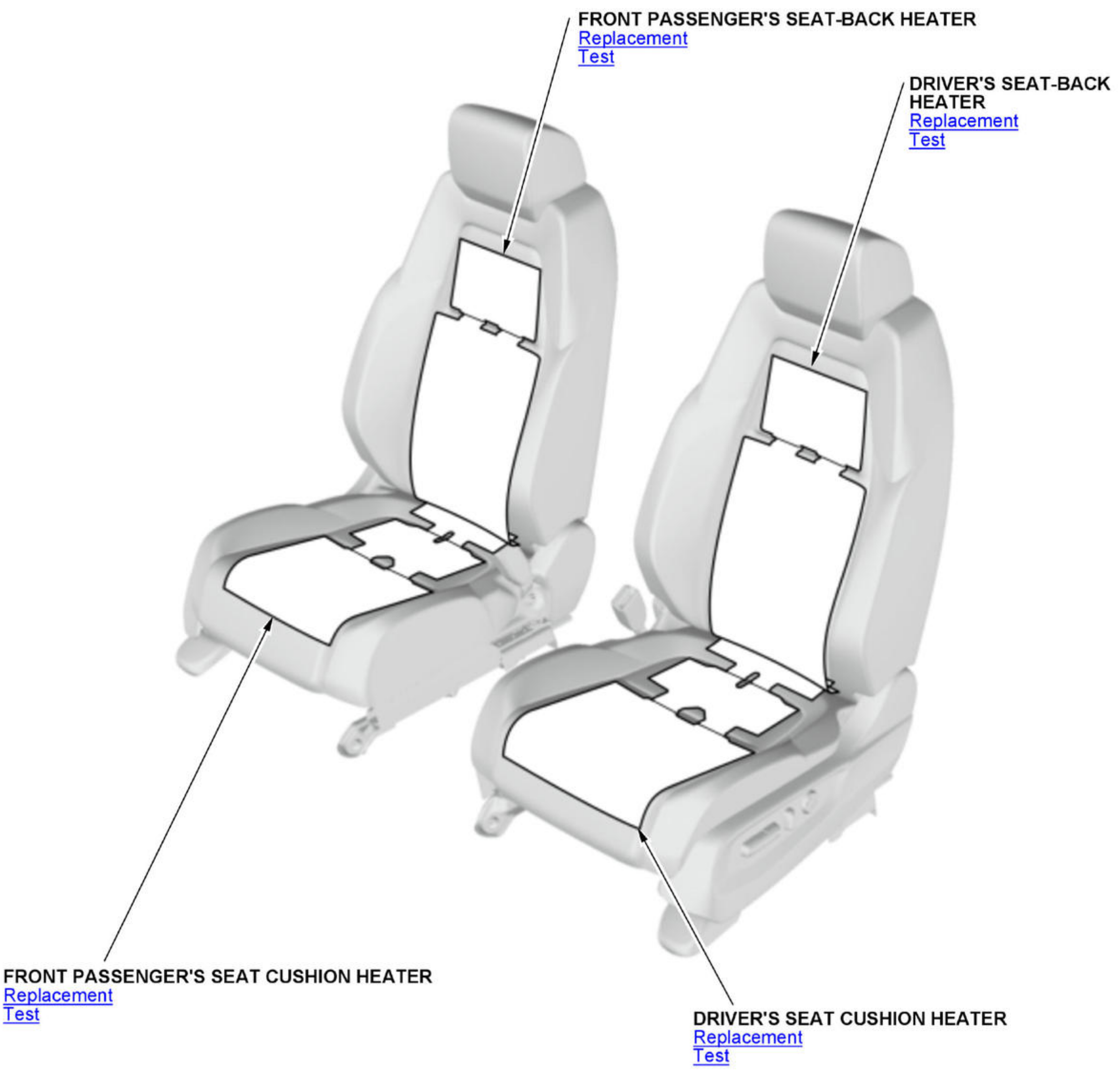
FRONT PASSENGER'S SEAT-BACK HEATER
Replacement
Test
DRIVER'S SEAT-BACK HEATER
Replacement
Test
FRONT PASSENGER'S SEAT CUSHION HEATER
Replacement
Test
DRIVER'S SEAT CUSHION HEATER
Replacement
Test

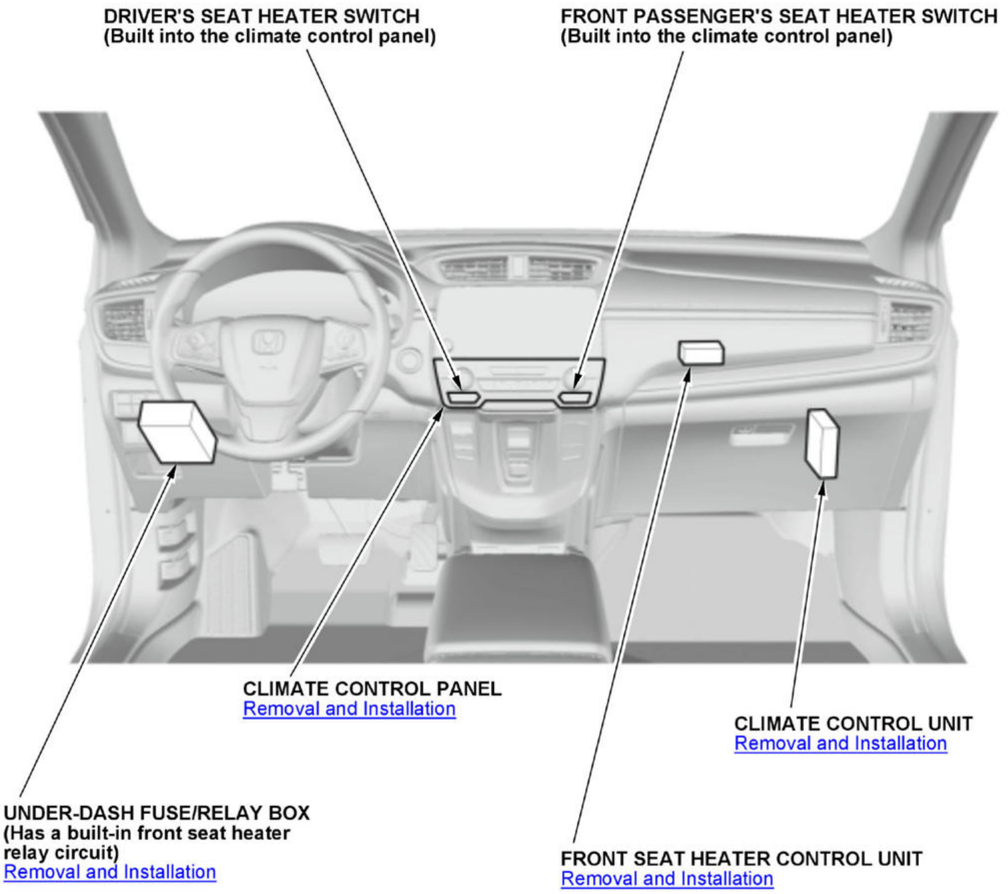
DRIVER'S SEAT HEATER SWITCH
(Built into the climate control panel)
FRONT PASSENGER'S SEAT HEATER SWITCH
(Built into the climate control panel)
CLIMATE CONTROL PANEL
Removal and Installation
CLIMATE CONTROL UNIT
Removal and Installation
UNDER-DASH FUSE/RELAY BOX
(Has a built-in front seat heater
relay circuit)
Removal and Installation
FRONT SEAT HEATER CONTROL UNIT
Removal and Installation

SEATS COMPONENT LOCATION INDEX

Front seat

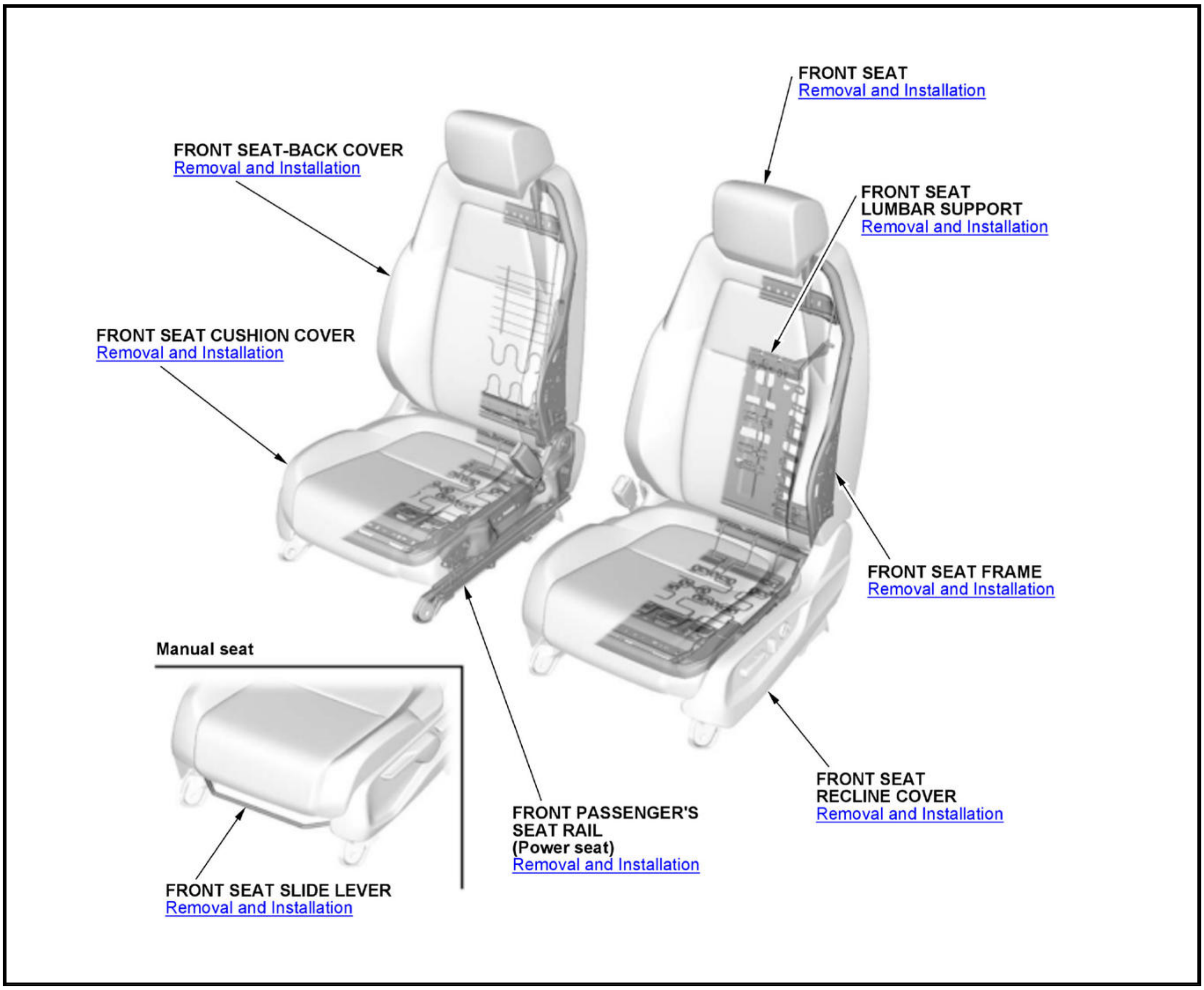
FRONT SEAT
Removal and Installation
FRONT SEAT-BACK COVER
Removal and Installation
FRONT SEAT LUMBAR SUPPORT
Removal and Installation
FRONT SEAT CUSHION COVER
Removal and Installation
FRONT SEAT FRAME
Removal and Installation
Manual seat
FRONT PASSENGER'S SEAT RAIL (Power seat)
Removal and Installation
FRONT SEAT RECLINE COVER
Removal and Installation
FRONT SEAT SLIDE LEVER
Removal and Installation

Rear seat

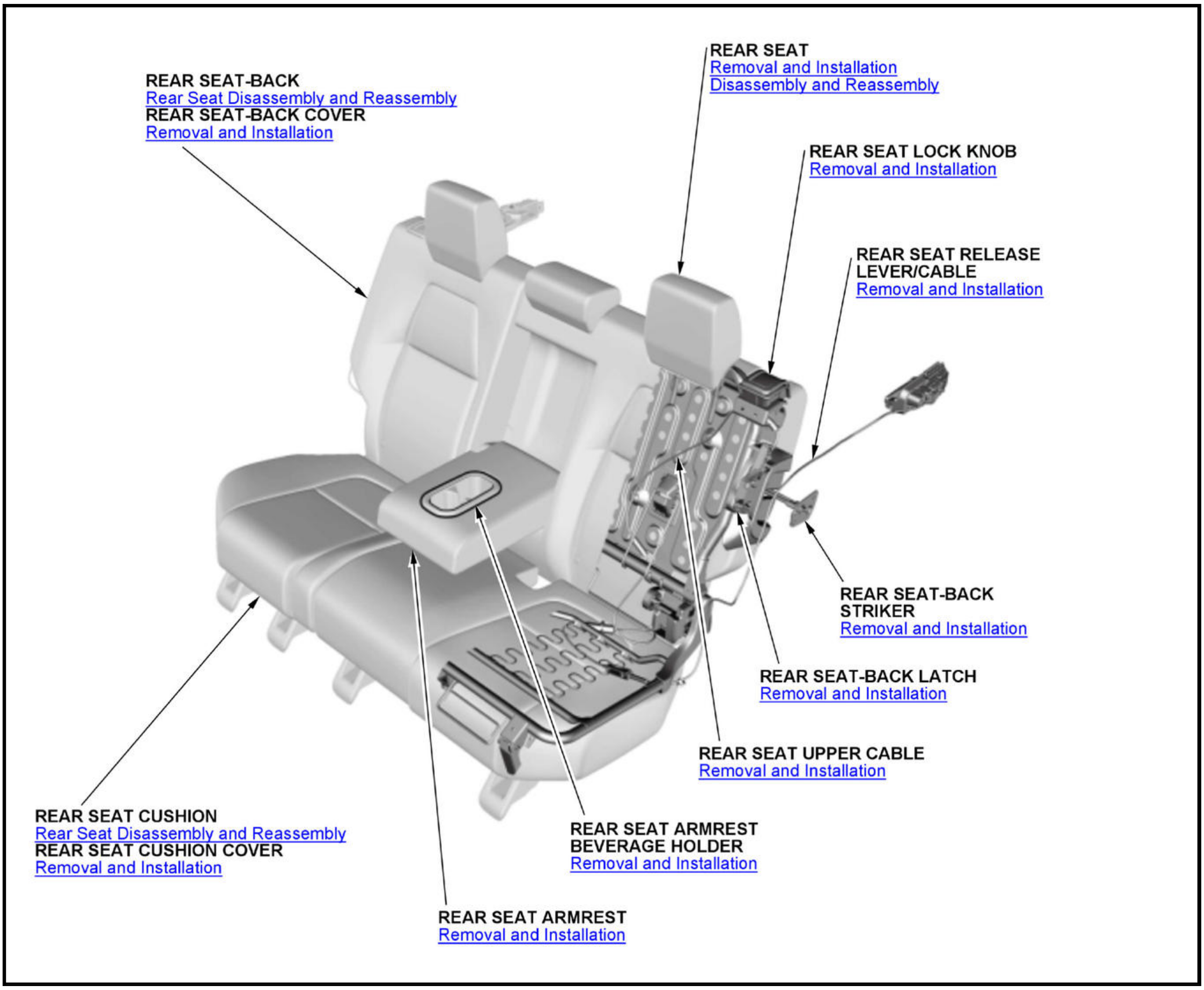
REAR SEAT-BACK
Rear Seat Disassembly and Reassembly
REAR SEAT-BACK COVER
Removal and Installation
REAR SEAT
Removal and Installation
Disassembly and Reassembly
REAR SEAT LOCK KNOB
Removal and Installation
REAR SEAT RELEASE LEVER/CABLE
Removal and Installation
REAR SEAT-BACK STRIKER
Removal and Installation
REAR SEAT-BACK LATCH
Removal and Installation
REAR SEAT UPPER CABLE
Removal and Installation
REAR SEAT CUSHION
Rear Seat Disassembly and Reassembly
REAR SEAT CUSHION COVER
Removal and Installation
REAR SEAT ARMREST BEVERAGE HOLDER
Removal and Installation
REAR SEAT ARMREST
Removal and Installation

REPLACEMENT

SEAT HEATER REPLACEMENT

Replacement

SRS components are located in this area. Review the SRS component locations and the precautions and procedures before doing repairs or service.

NOTE: How to read the torque specifications .

Front Seat Cushion Heater

1. Front Seat Cushion Cover - Remove
2. Front Seat Cushion Heater - Remove

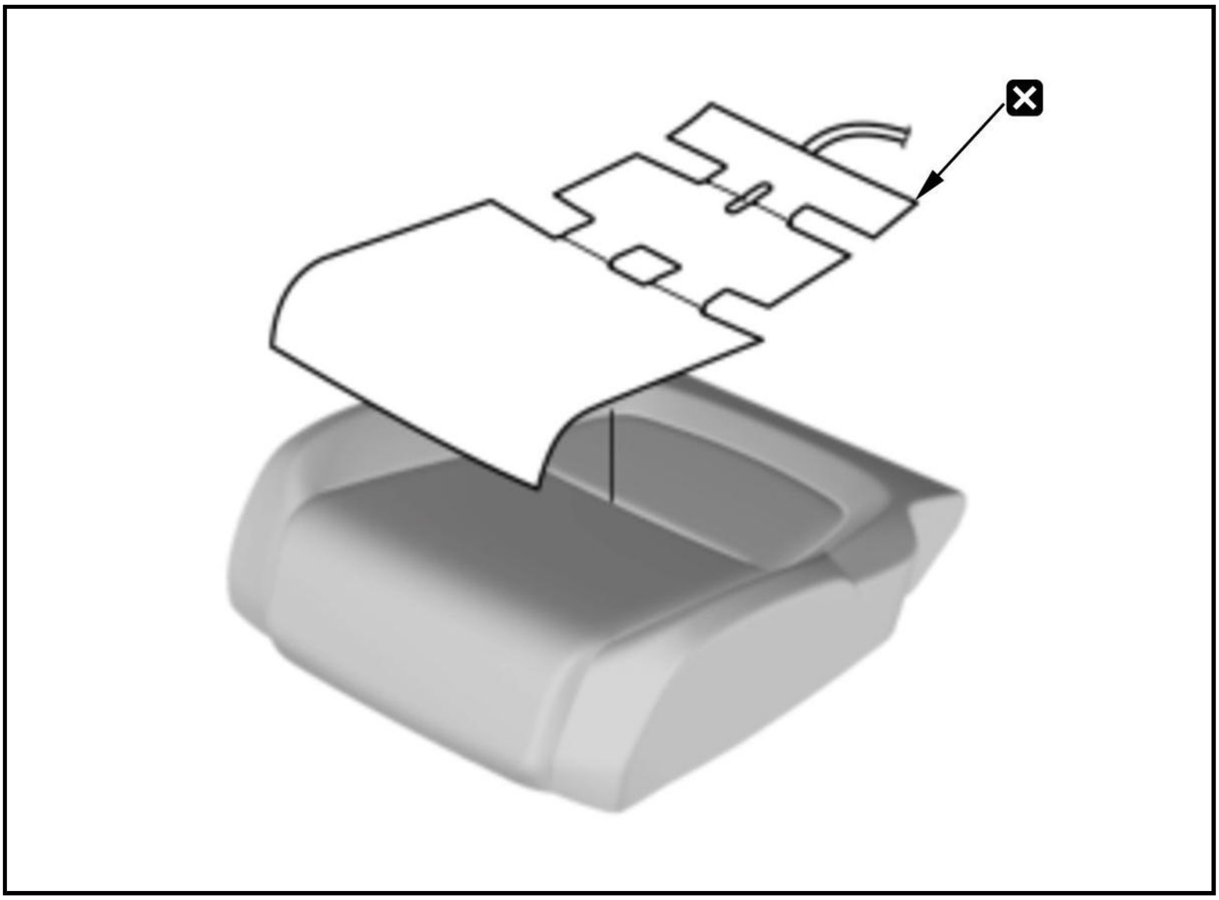

NOTE: The front seat cushion heater is glued to the front seat cushion pad. When removing it, take care not to damage the front seat cushion pad.

3. Front Seat Cushion Heater - Replacement

   1. Attach the new seat cushion heater to the reference position as shown:

      - Vertical adjustment: Overlap the positioning marks (A) on the seat cushion heater side and the location marks (B) on the seat cushion pad side
      - Horizontal adjustment: Overlap the positioning marks (C) on the seat cushion heater side and the location marks (D) on the seat cushion pad side

- Once the seat cushion heater is in place on the seat cushion, tuck the bridge folds (E) of the seat cushion heater evenly into the grooves of the seat cushion pad.

Front Seat Cushion (Type A)

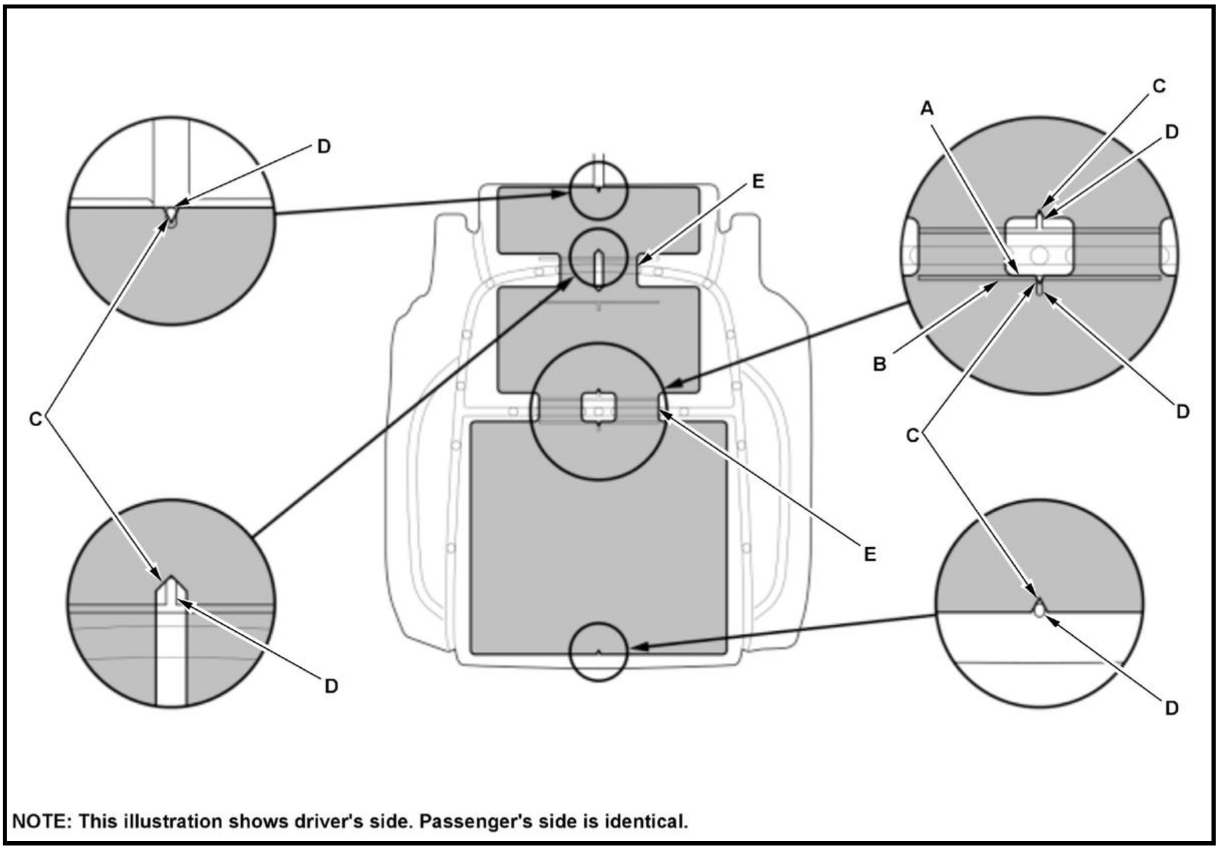

NOTE: This illustration shows driver's side. Passenger's side is identical.

Front Seat Cushion (Type B)

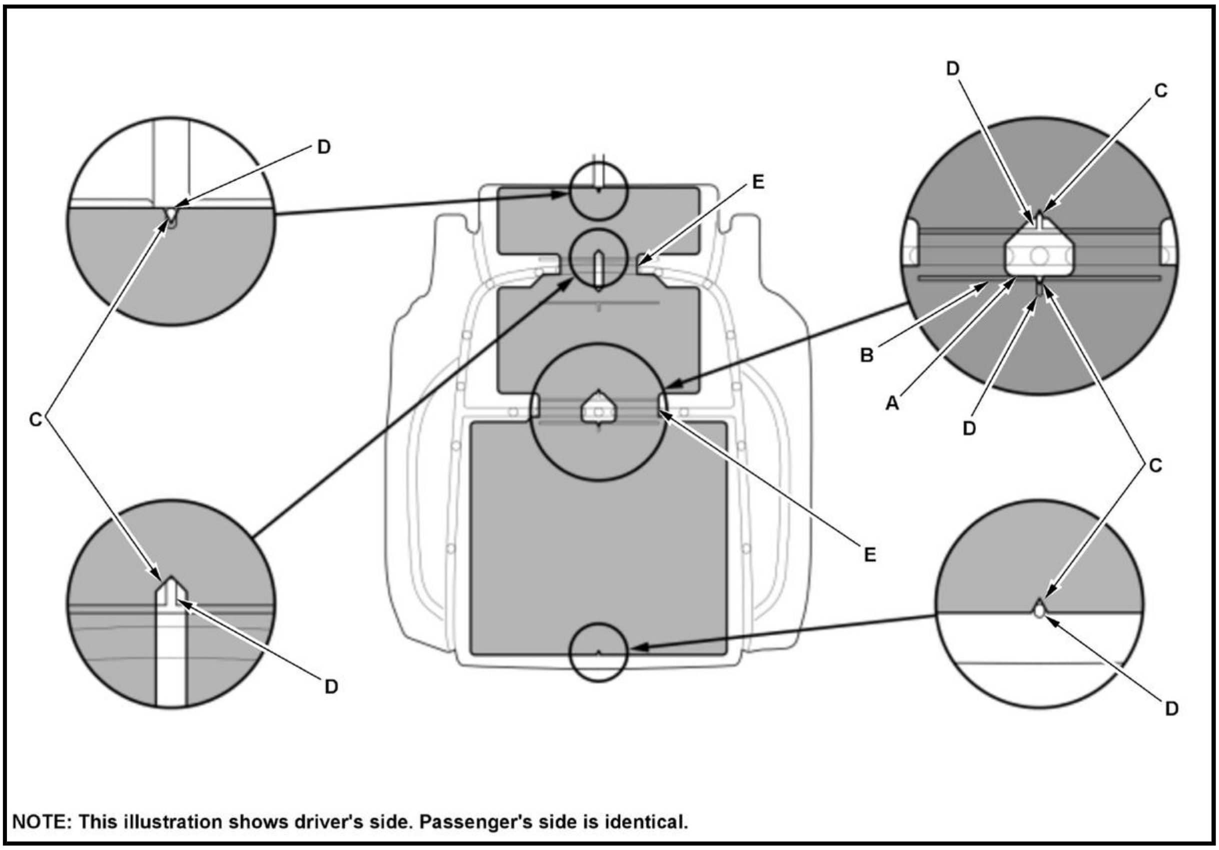

NOTE: This illustration shows driver's side. Passenger's side is identical.

4. All Removed Parts - Install

1. Install the parts in the reverse order of removal.

Front Seat-Back Heater

5. Front Seat-Back Cover - Remove
6. Front Seat-Back Heater - Remove

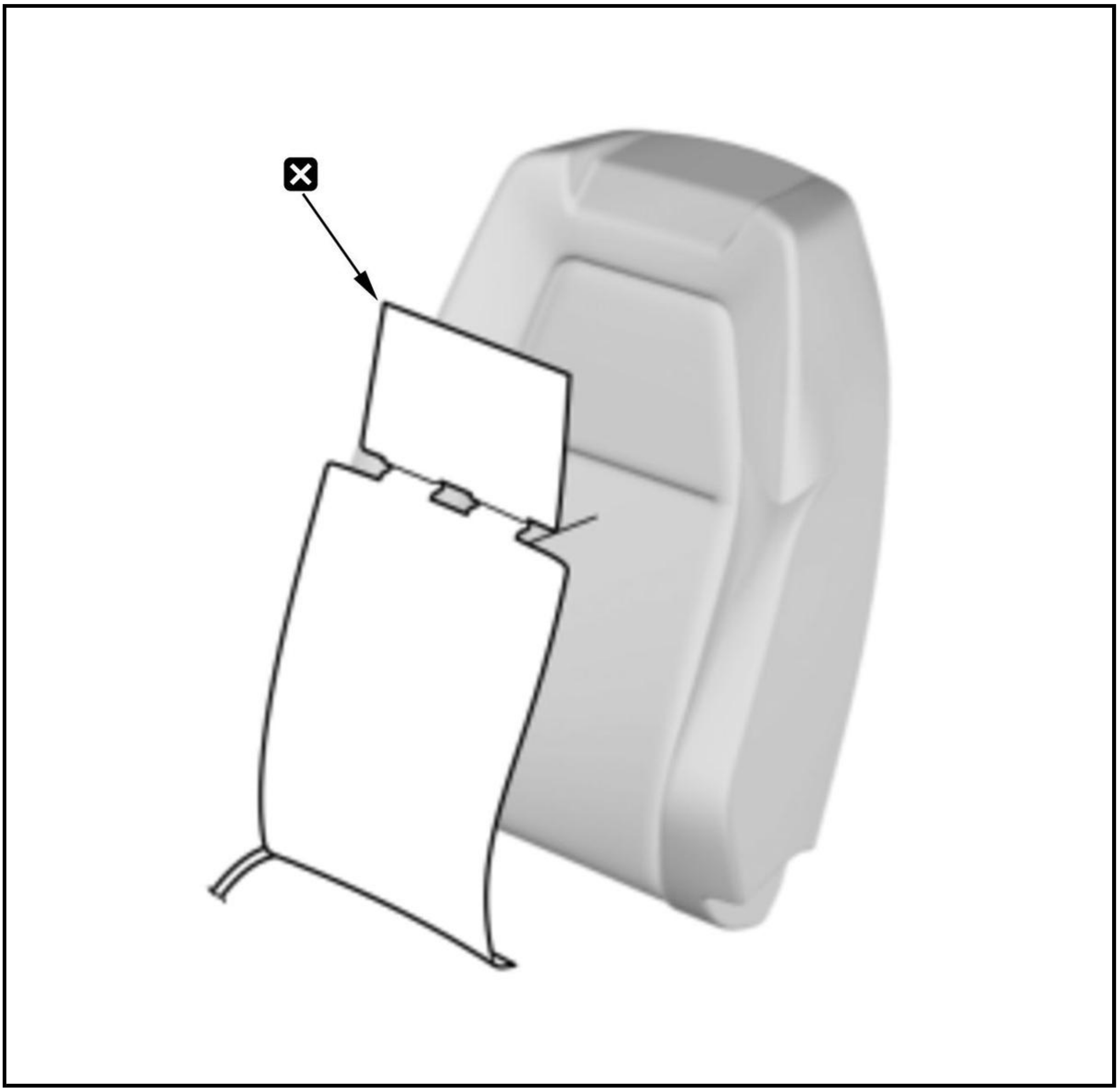

NOTE: The front seat-back heater is glued to the front seat-back pad. When removing it, take care not to damage the front seat-back pad.

7. Front Seat-back Heater - Replacement

   1. Attach the new seat-back heater to the reference position as shown:

      - Vertical adjustment: Overlap the positioning marks (A) on the seat-back heater side and the location marks (B) on the seat-back pad side
      - Horizontal adjustment: Overlap the positioning marks (C) on the seat-back heater side and the location marks (D) on the seat-back pad side
      - Once the seat-back heater is in place on the seat-back, tuck the bridge folds (E) of the seat-back heater evenly into the grooves of the seat-back pad.

Front Seat-back (Type A)

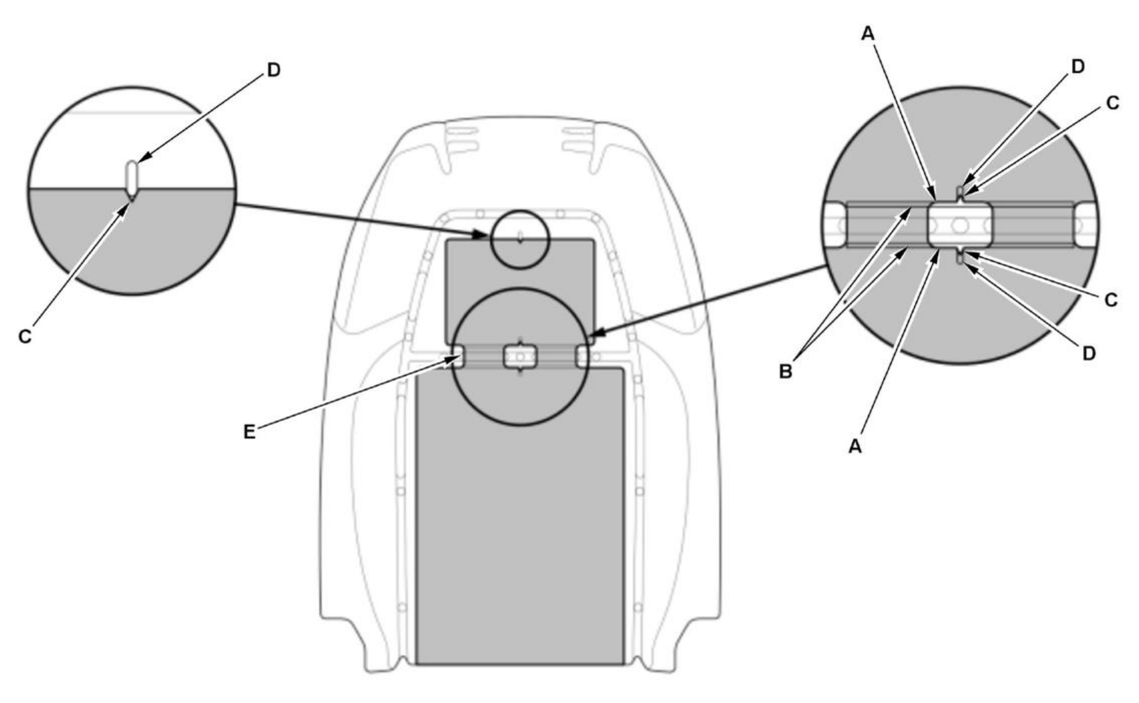

NOTE: This illustration shows driver's side. Passenger's side is identical.

Front Seat-back (Type B)

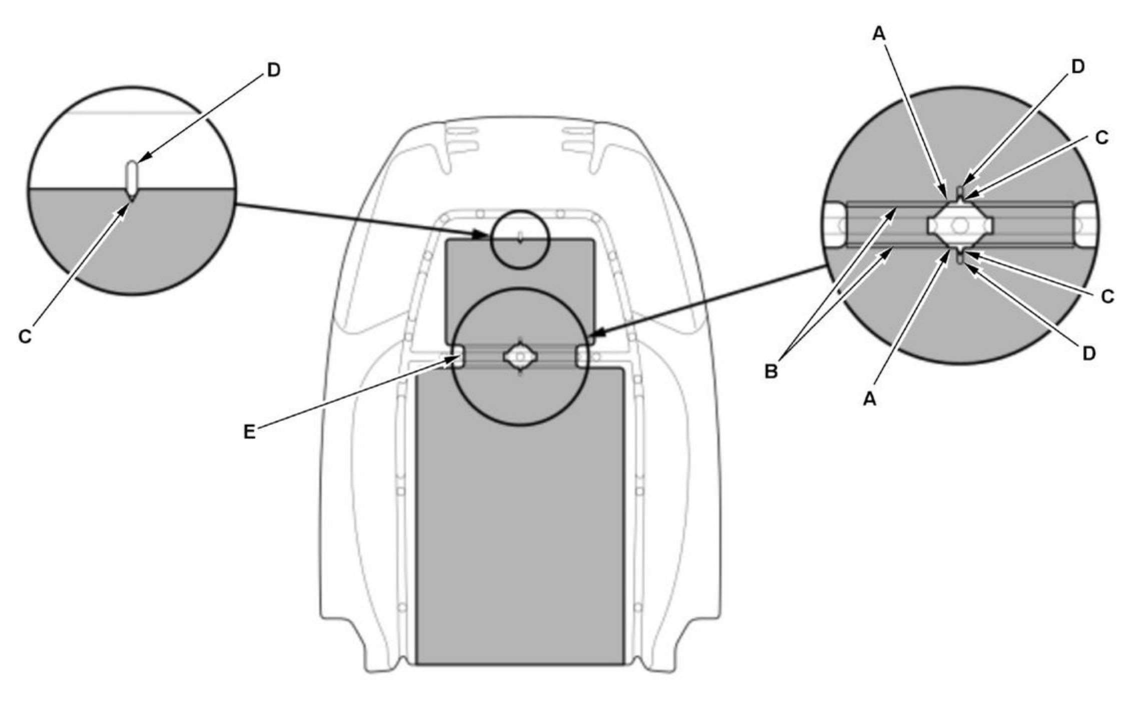

NOTE: This illustration shows driver's side. Passenger's side is identical.

8. All Removed Parts - Install

1. Install the parts in the reverse order of removal.

Rear Seat Cushion Heater

9. **Rear Seat - Remove**
10. **Rear Seat Cushion Cover - Remove**

11. Rear Seat Cushion Heater - Remove

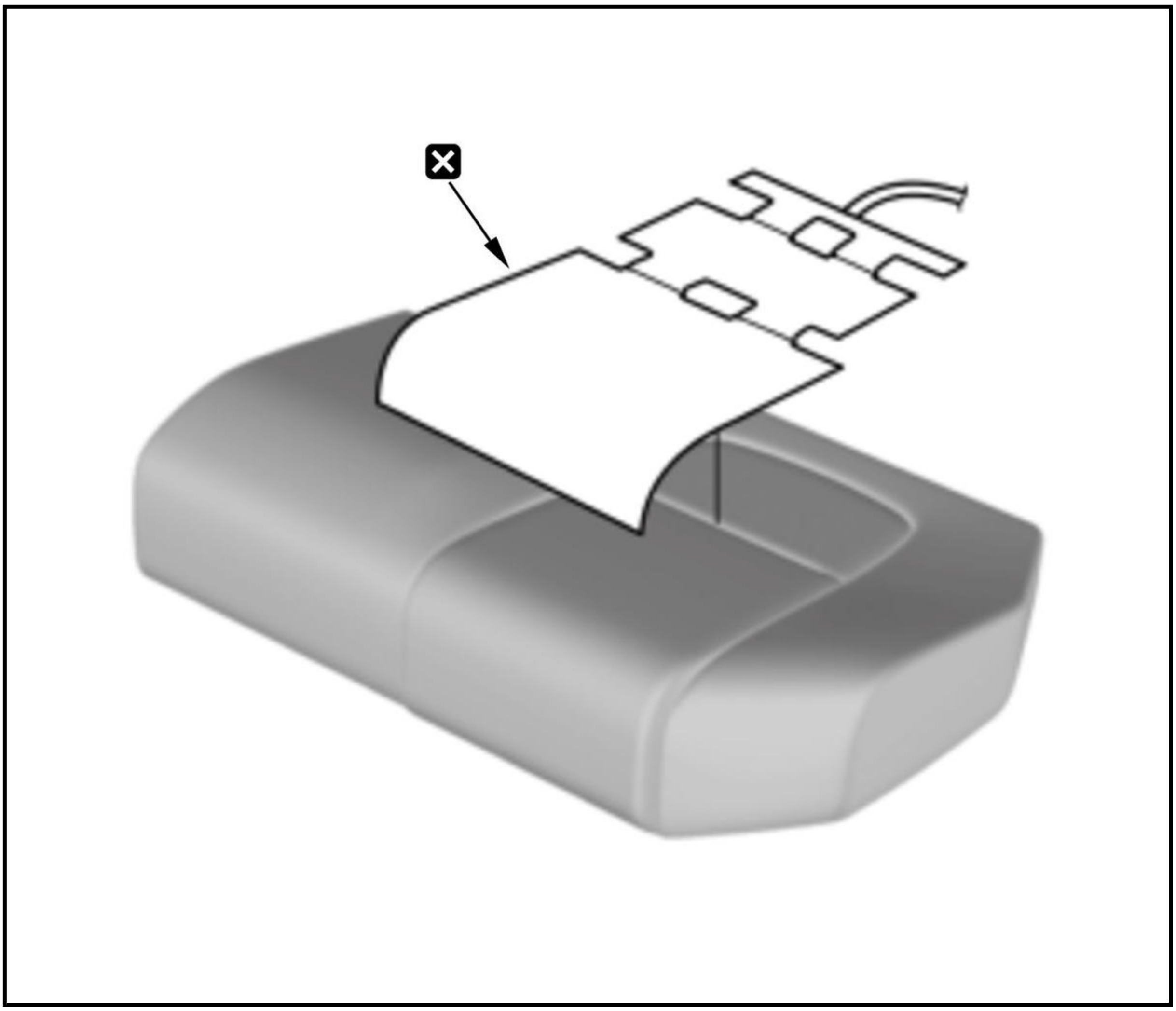

NOTE: The rear seat cushion heater is glued to the rear seat cushion pad. When removing it, take care not to damage the rear seat cushion pad.

12. Rear Seat Cushion Heater - Replacement

1. Attach the new seat cushion heater to the reference position as shown:

    - Vertical adjustment: Overlap the positioning marks (A) on the seat cushion heater side and the location marks (B) on the seat cushion pad side
    - Horizontal adjustment: Overlap the positioning marks (C) on the seat cushion heater side and the location marks (D) on the seat cushion pad side
    - Once the seat cushion heater is in place on the seat cushion, tuck the bridge folds (E) of the seat cushion heater evenly into the grooves of the seat cushion pad.

Left Rear (Type A)

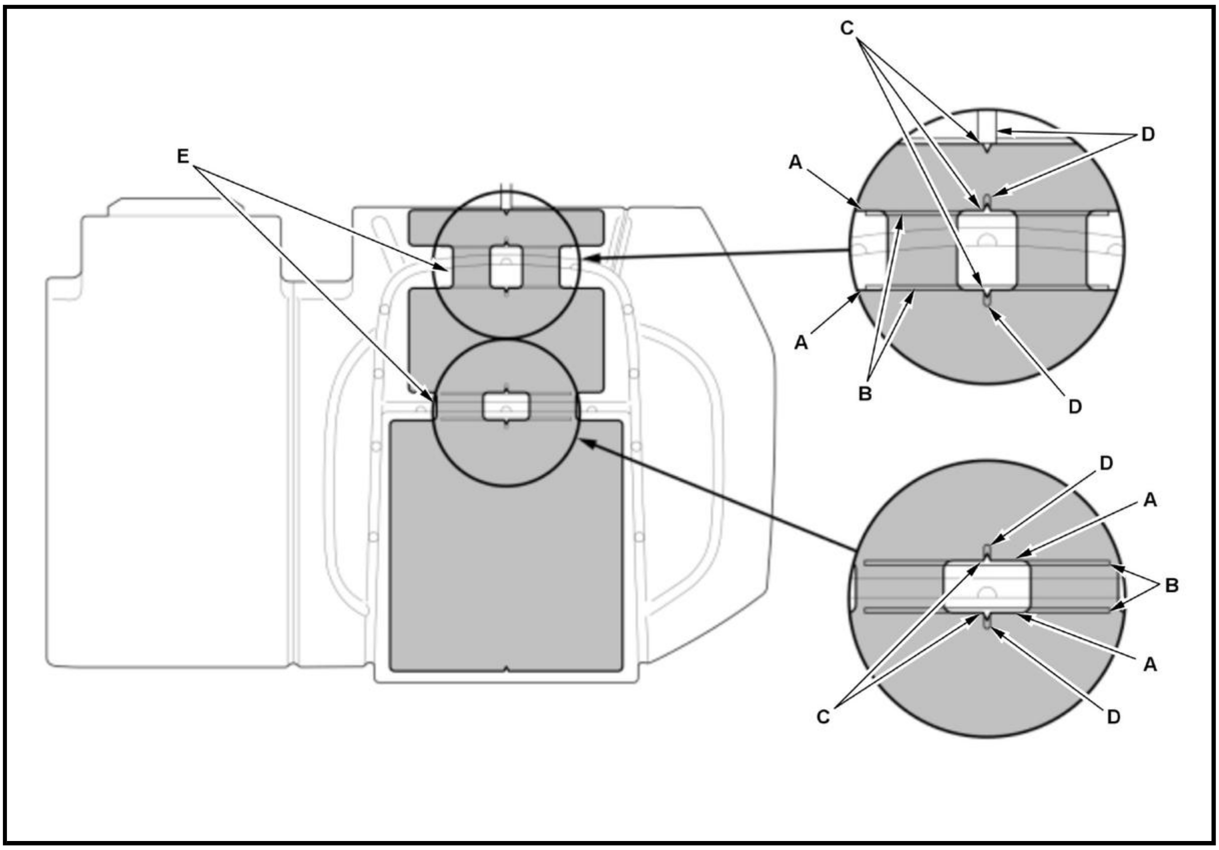
C
D
E
A
A
B
D
D
A
B
A
C
D

Left Rear (Type B)

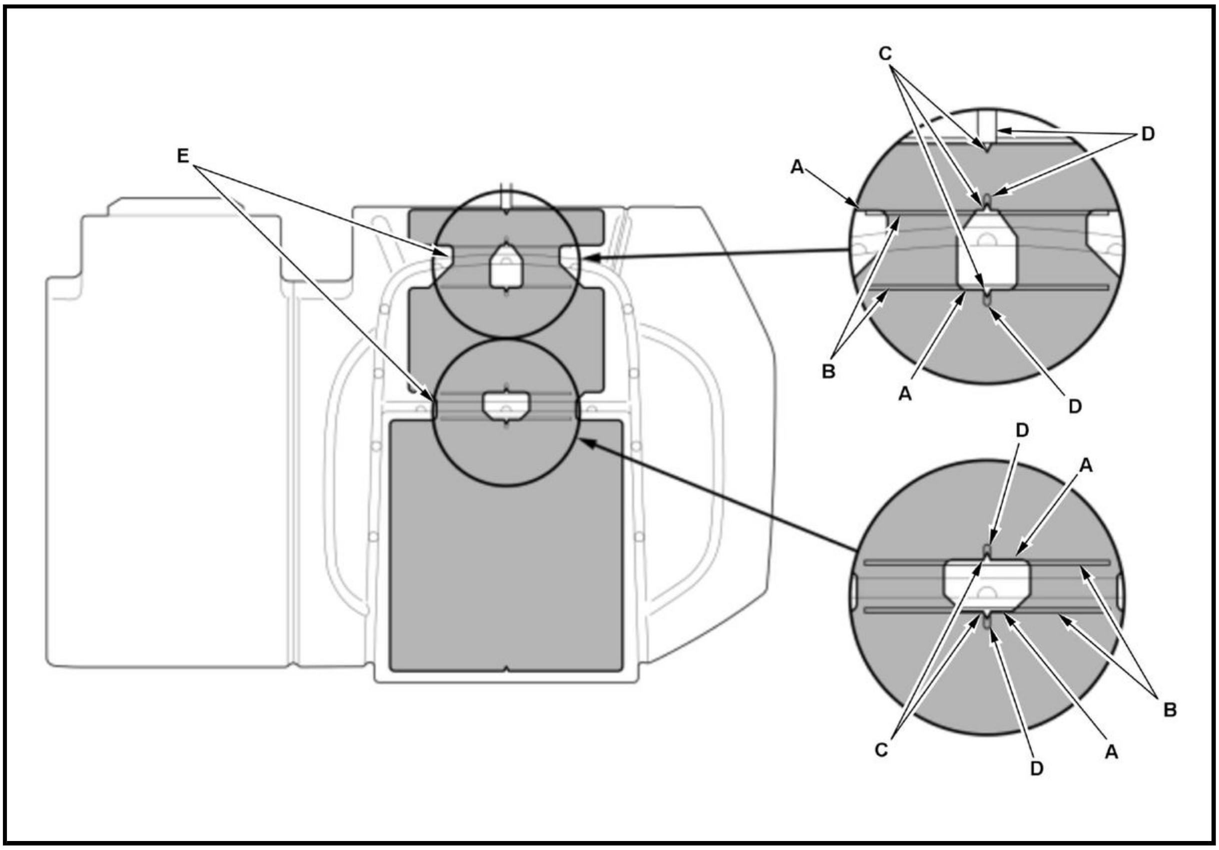
C
D
E
A
B
A
D
D
A
B
C
D
A

Right Rear (Type A)

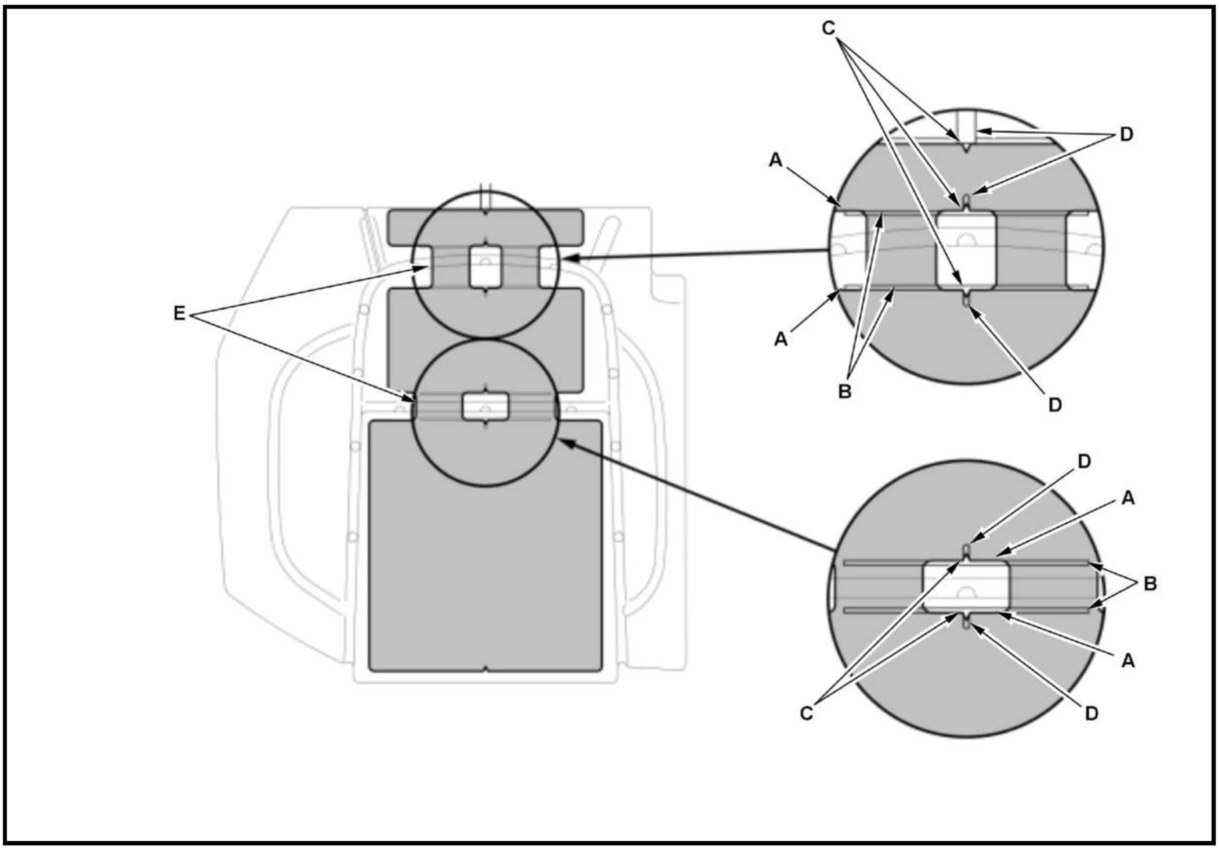
C
D
A
A
B
D
E
D
A
B
A
C
D

Right Rear (Type B)

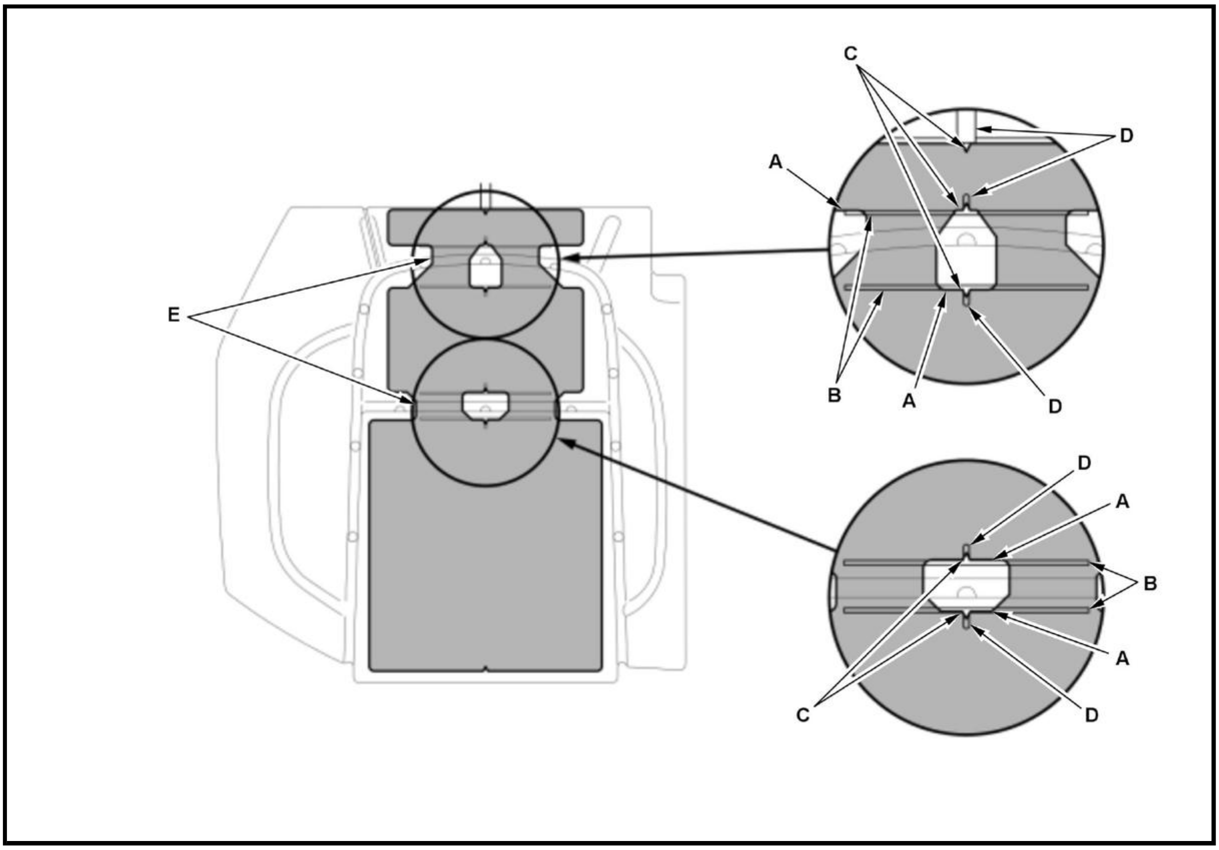
C
D
A
E
B
A
D
D
A
B
A
C
D

13. All Removed Parts - Install

1. Install the parts in the reverse order of removal.

DESCRIPTION AND OPERATION

POWER LUMBAR SUPPORT SYSTEM DESCRIPTION

Overview

The power lumbar support motor winds up the wire connected to the lumbar support, then the shape of lumbar support is changed and pushed forward. The lumbar support wire pushes the wire out to return to the original position.

SEAT HEATERS SYSTEM DESCRIPTION

Control/Function

Front Seat Heaters

The front seat heater control unit sets the seat heater to High/Mid/Low or OFF based on the seat heater switch signals received from the climate control unit via B-CAN. The front seat heater control unit monitors the thermistor resistance, the voltage/current/temperature to the heater, and the presence of communication with the climate control unit. Also, the system stores DTCs when a malfunction is detected in the front seat heater control unit.

Rear Seat Heaters

The rear seat heater control unit receives a switch signal and controls the temperature setting (High/Mid/Low) based on the value of thermistor built in the rear seat heater. When a certain period of time has elapsed after the thermistor value reaches the threshold value, the rear seat heater control unit automatically lowers the set temperature to one lower level.

Rear seat heater control unit has a self-diagnostic function related to the thermistor.

Automatic Operation

Based on the outside air temperature, A/C target temperature and other factors, the climate control unit calculates the optimal front seat heater setting. The climate control unit sends this setting request to the front seat heater control unit via B-CAN. When operating in auto mode or during remote engine start, the front seat heater control unit will operate per B-CAN setting request from the climate control unit.

Thermistor and Breaker

The seat cushion heater has a thermistor and breaker. The thermistor and breaker protect the seat heater circuit from overheating. The value of the thermistor is inputted to the control unit.

Front (Type A)

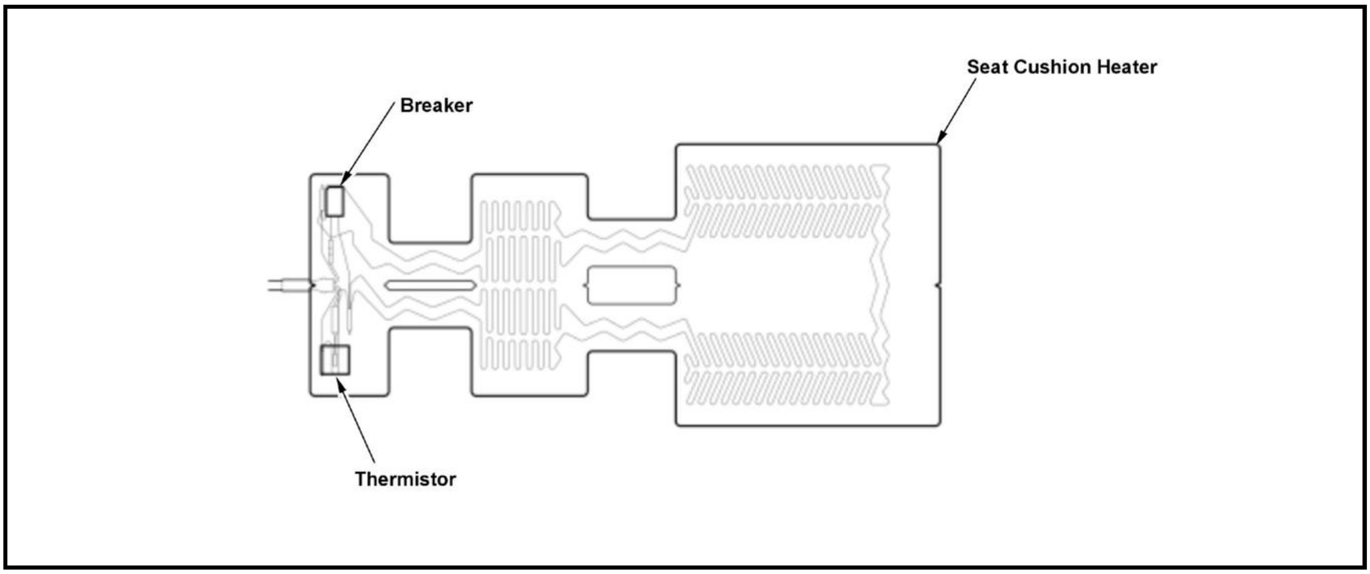

Front (Type B)

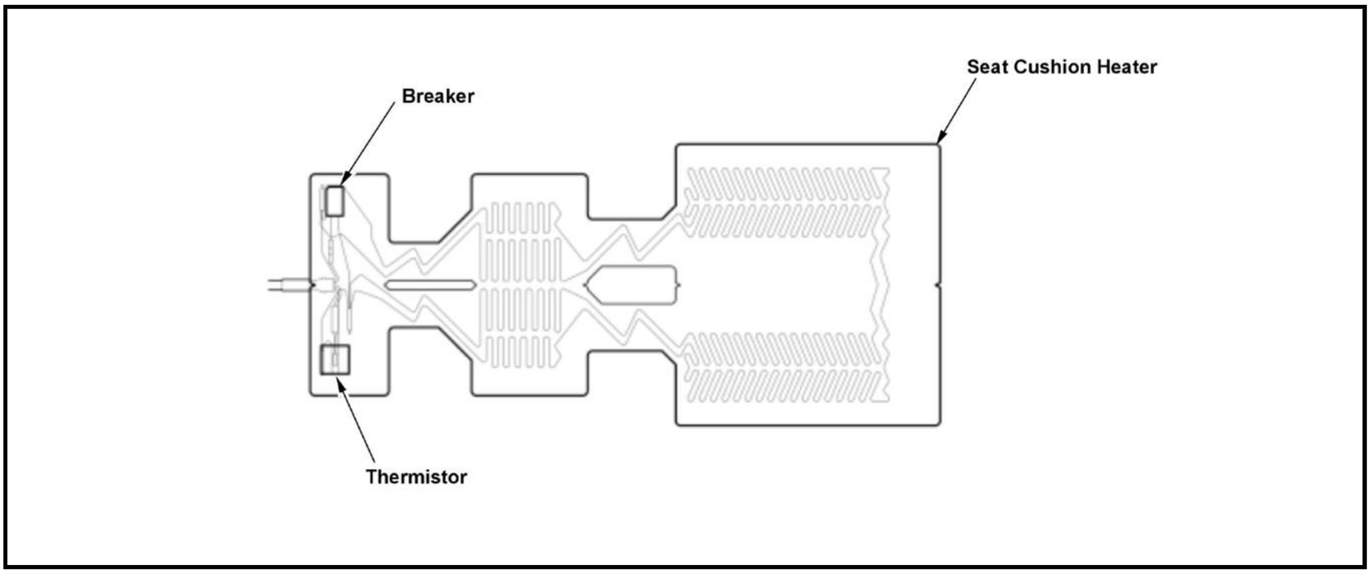
Seat Cushion Heater
Breaker
Thermistor

Rear (Type A)

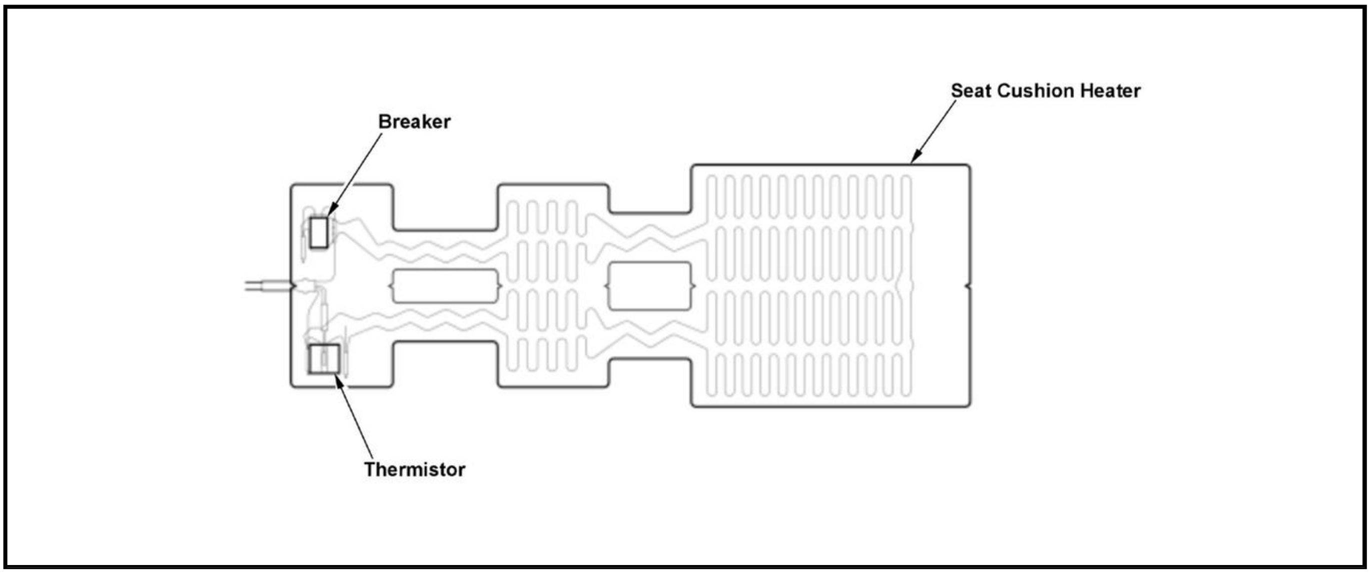
Seat Cushion Heater
Breaker
Thermistor

Rear (Type B)

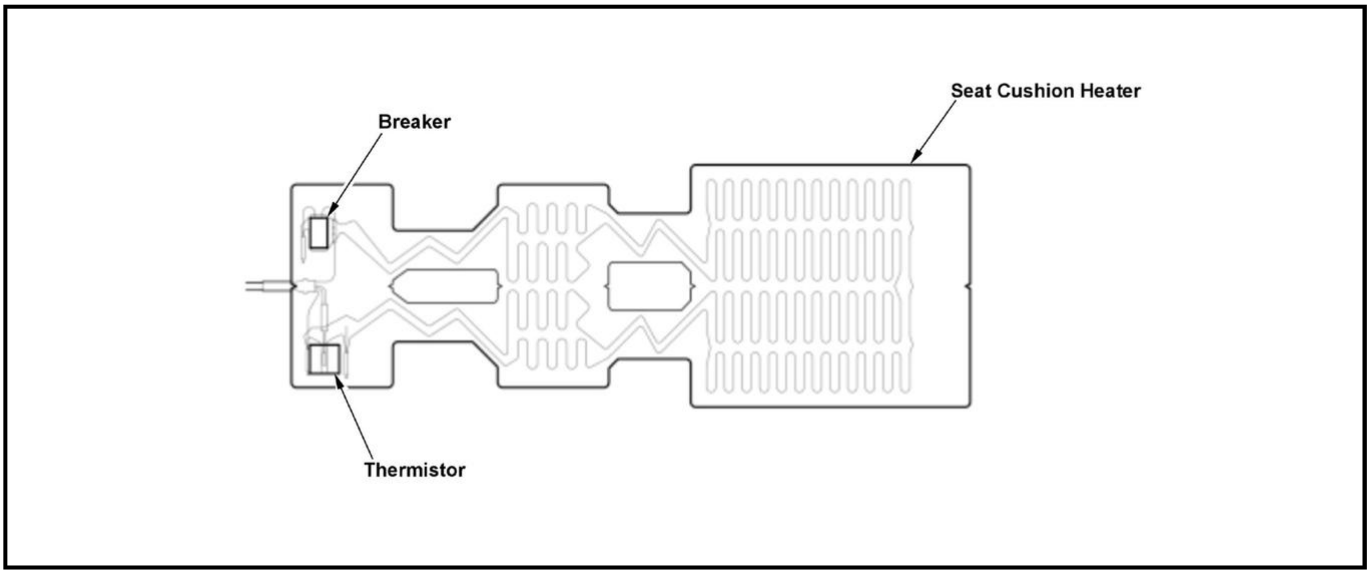
Seat Cushion Heater
Breaker
Thermistor

The seat heater temperature is controlled by breaker ON and OFF condition.

B	ON	OFF
Breaker	95 - 113 deg.F (35 - 45 deg.C)	115 - 129 deg.F (46 - 54 deg.C)

SEAT HEATERS SYSTEM DESCRIPTION - SYSTEM DIAGRAM

For locations of each component on the vehicle, refer to Component Location Index

Front

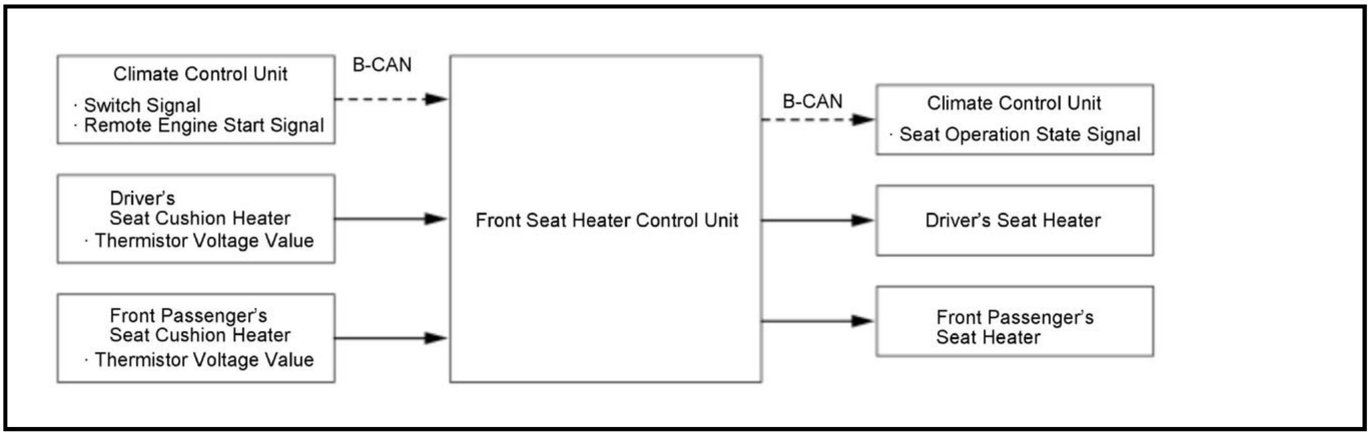
Climate Control Unit
· Switch Signal
· Remote Engine Start Signal
B-CAN
Driver's Seat Cushion Heater
· Thermistor Voltage Value
Front Passenger's Seat Cushion Heater
· Thermistor Voltage Value
Front Seat Heater Control Unit
B-CAN
Climate Control Unit
· Seat Operation State Signal
Driver's Seat Heater
Front Passenger's Seat Heater

Rear

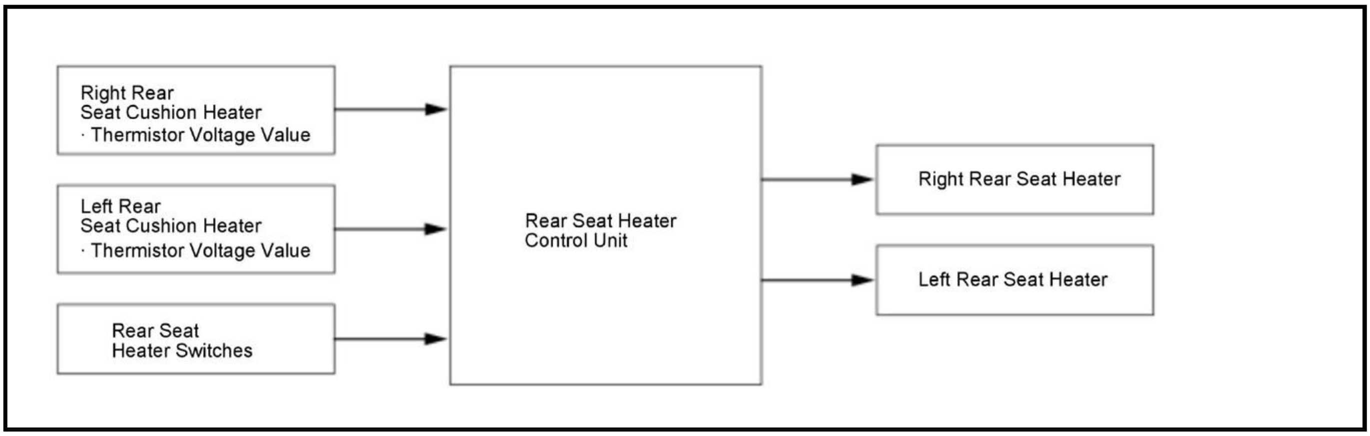
Right Rear Seat Cushion Heater
· Thermistor Voltage Value
Left Rear Seat Cushion Heater
· Thermistor Voltage Value
Rear Seat Heater Switches
Rear Seat Heater Control Unit
Right Rear Seat Heater
Left Rear Seat Heater

CONNECTOR VIEW

FRONT SEAT HEATER CONTROL UNIT CONNECTOR FOR INPUTS AND OUTPUTS

Connector Index
Front Seat Heater Control Unit 24P Connector (with auto idle stop system)
Front Seat Heater Control Unit 24P Connector (without auto idle stop system)

Front Seat Heater Control Unit 24P Connector (female terminals) (with auto idle stop system)

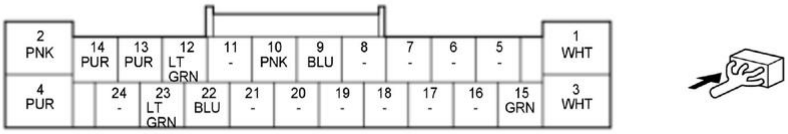
2 PNK
14 PUR
13 PUR
12 LT GRN
11 -
10 PNK
9 BLU
8 -
7 -
6 -
5 -
1 WHT
4 PUR
24 -
23 LT GRN
22 BLU
21 -
20 -
19 -
18 -
17 -
16 -
15 GRN
3 WHT

Front Seat Heater Control Unit 24P Connector (female terminals) (without auto idle stop system)

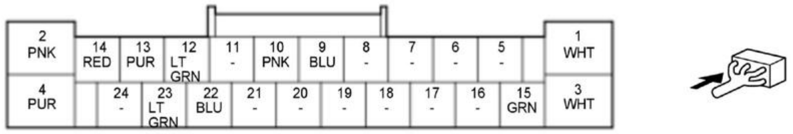

Terminal number	Terminal name	Description	Signal
1	HEATER DR	Drives driver's seat heater	With driver's seat heater operation: pulse (depending on driver's seat temperature) If none of above conditions are met: less than 0.2 V
2	DR H/SEAT LO RLY COM	Detects front seat heater relay signal	With vehicle in ON mode: about battery voltage
3	AS H/SEAT LO RLY COM	Drives front passenger's seat heater	With front passenger's seat heater operation: pulse (depending on front passenger's seat temperature) If none of above conditions are met: less than 0.2 V
4	GND	Front seat heater control unit ground	Less than 0.2 V at all times
5	---	Not used	---
6	---	Not used	---

*1: With auto idle stop system*2: Without auto idle stop system*3: With second row seat heater

Terminal number	Terminal name	Description	Signal
7	---	Not used	---
8	---	Not used	---
9	B-CAN_L	Communication line	---
10	B-CAN_H	Communication line	---
11	---	Not used	---
12	TH+ DR	Detects driver's seat heater thermistor signal	With vehicle in ON mode: about 0.4 - 4.9 V (depending on driver's seat temperature)
13	TH+ AS	Detects front passenger's seat heater thermistor signal	With vehicle in ON mode: about 0.4 - 4.9 V (depending on front passenger's seat temperature)
14	IG1 RELAY1* 1IG1 OPTION* 2	IG1 power source	With vehicle in ON or START mode: about battery voltage
15* 3	IND STATE	Outputs indicator dimming signal	---
16	---	Not used	---
17	---	Not used	---
18	---	Not used	---
19	---	Not used	---

Terminal number	Terminal name	Description	Signal
20	---	Not used	---
21	---	Not used	---
22	TH- DR	Ground for driver's seat heater thermistor signal	Less than 0.2 V at all times
23	TH- AS	Ground for front passenger's seat heater thermistor signal	Less than 0.2 V at all times
24	---	Not used	---

*1: With auto idle stop system

*2: Without auto idle stop system

*3: With second row seat heater

REAR SEAT HEATER CONTROL UNIT CONNECTOR FOR INPUTS AND OUTPUTS

Connector Index
Rear Seat Heater Control Unit 24P Connector (with auto idle stop system)
Rear Seat Heater Control Unit 24P Connector (without auto idle stop system)

Rear Seat Heater Control Unit 24P Connector (female terminals) (with auto idle stop system)

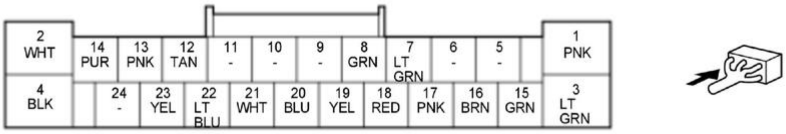
2 WHT
14 PUR
13 PNK
12 TAN
11 -
10 -
9 -
8 GRN
7 LT GRN
6 -
5 -
1 PNK
4 BLK
24 -
23 YEL
22 LT BLU
21 WHT
20 BLU
19 YEL
18 RED
17 PNK
16 BRN
15 GRN
3 LT GRN

Rear Seat Heater Control Unit 24P Connector (female terminals) (without auto idle stop system)

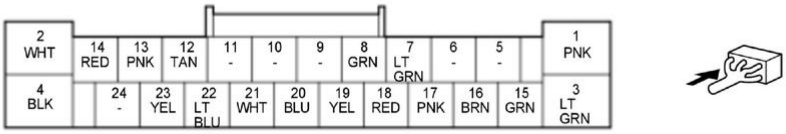
2 WHT
14 RED
13 PNK
12 TAN
11 -
10 -
9 -
8 GRN
7 LT GRN
6 -
5 -
1 PNK
4 BLK
24 -
23 YEL
22 LT BLU
21 WHT
20 BLU
19 YEL
18 RED
17 PNK
16 BRN
15 GRN
3 LT GRN

Terminal number	Terminal name	Description	Signal
1	RR L SEAT HEATER	Drives left rear seat heater	With left rear seat heater operation: pulse (depending on driver's seat

Terminal number	Terminal name	Description	Signal
			temperature) If none of above conditions are met: less than 0.2 V
2	RR H/SEAT RLY SW	Detects rear seat heater relay signal	With vehicle in ON mode: about battery voltage
3	RR R SEAT HEATER	Drives left rear seat heater	With left rear seat heater operation: pulse (depending on front passenger's seat temperature) If none of above conditions are met: less than 0.2 V
4	GND	Rear seat heater control unit ground	Less than 0.2 V at all times
5	---	Not used	---
6	---	Not used	---

*1: With auto idle stop system

*2: Without auto idle stop system

Terminal number	Terminal name	Description	Signal
7	HEAT IND SW RR L	Detects left rear seat heater switch signal	With vehicle in ON mode and left rear seat heater switch pressed: about battery voltage If none of above conditions are met: less than 0.2 V
8	HEAT IND SW RR R	Detects right rear seat heater switch signal	With vehicle in ON mode and right rear seat heater switch pressed: about battery voltage If none of above conditions are met: less than 0.2 V
9	---	Not used	---
10	---	Not used	---
11	---	Not used	---
12	RR L H/SEAT TH+	Detects left rear seat heater thermistor signal	With vehicle in ON mode: about 0.4 - 4.9 V (depending on left rear seat temperature)
13	RR R H/SEAT TH+	Detects right rear seat heater thermistor signal	With vehicle in ON mode: about 0.4 - 4.9 V (depending on right rear seat temperature)
14	IG1 RELAY1* 1IG1 OPTION* 2	IG1 power source	With vehicle in ON or START mode: about battery voltage
15	IND STATE	Detects indicator dimming signal	---
16	HEAT IND LO RR L	Outputs left rear seat heater switch LO indicator signal	With vehicle in ON mode and left rear seat heater switch LO indicator OFF: about battery voltage If none of above conditions are met: less than 0.2 V
17	HEAT IND MID RR L	Outputs left rear seat heater switch MID indicator signal	With vehicle in ON mode and left rear seat heater switch MID indicator OFF: about battery voltage If none of above conditions are met: less than 0.2 V
18	HEAT IND HI RR L	Outputs left rear seat heater switch HI indicator signal	With vehicle in ON mode and left rear seat heater switch HI indicator OFF: about battery voltage If none of

Terminal number	Terminal name	Description	Signal
			above conditions are met: less than 0.2 V
19	HEAT IND LO RR R	Outputs right rear seat heater switch LO indicator signal	With vehicle in ON mode and right rear seat heater switch LO indicator OFF: about battery voltage If none of above conditions are met: less than 0.2 V
20	HEAT IND MID RR R	Outputs right rear seat heater switch MID indicator signal	With vehicle in ON mode and right rear seat heater switch MID indicator OFF: about battery voltage If none of above conditions are met: less than 0.2 V
21	HEAT IND HI RR R	Outputs right rear seat heater switch HI indicator signal	With vehicle in ON mode and right rear seat heater switch HI indicator OFF: about battery voltage If none of above conditions are met: less than 0.2 V
22	RR L H/SEAT TH-	Ground for left rear seat heater thermistor signal	Less than 0.2 V at all times
23	RR R H/SEAT TH-	Ground for right rear seat heater thermistor signal	Less than 0.2 V at all times
24	---	Not used	---

*1: With auto idle stop system

*2: Without auto idle stop system

INPUT TEST

FRONT SEAT HEATER CONTROL UNIT INPUT TEST

NOTE:

- Make sure the fuses associated with the system are OK.
- If you are troubleshooting multiple DTCs, be sure to follow the instructions in **B-CAN System Diagnosis Test Mode A** .
- Before testing, do the **seat heater control unit self-diagnostic function**, and make sure the seat heater function is OK.

1. Turn the vehicle to the OFF (LOCK) mode.

2. Disconnect the front seat heater control unit 24P connector.

Front Seat Heater Control Unit 24P Connector (female terminals)

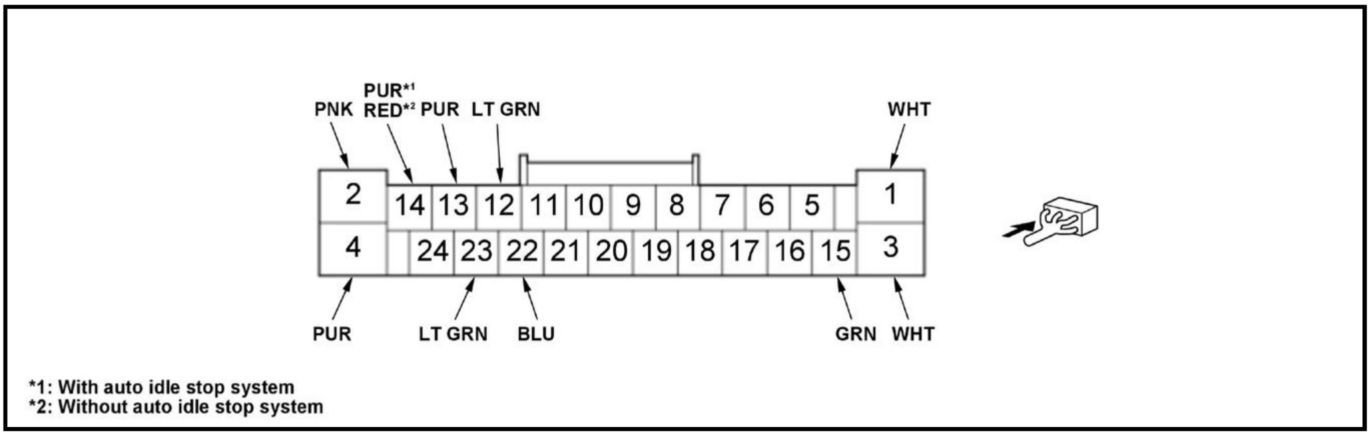

*1: With auto idle stop system
*2: Without auto idle stop system

Inspect the connector and socket terminals to be sure they are all making good contact:

- If the terminals are bent, loose or corroded, repair them as necessary, and recheck the system.
- If the terminals look OK, go to step 4.

Reconnect the front seat heater control unit 24P connector, and do the following input tests:

- If any test indicates a problem, find and correct the cause, then recheck the system.
- If all the input tests prove OK, go to step 5.

Cavity	Wire	Test condition	Test: Desired result	Possible cause if desired result is not obtained
2	PNK	Vehicle ON mode	Measure the voltage to ground: There should be battery voltage.	• Faulty front seat heater relay circuit • An open or high resistance in the wire
14	PUR* 1RED* 2	Vehicle ON mode	Measure the voltage to ground: There should be battery voltage.	An open or high resistance in the wire
4	PUR	In all power modes	Measure the voltage to ground: There should be less than 0.2 V.	• Poor ground (G402) • An open or high resistance in the ground wire
1	WHT	Vehicle ON mode, driver's seat heater ON mode	Measure the voltage to ground: There should be battery voltage.	• Faulty driver's seat heater • Poor ground (G502) or an open in the ground wire • An open or high resistance in the wire

*1: With auto idle stop system

*2: Without auto idle stop system

Cavity	Wire	Test condition	Test: Desired result	Possible cause if desired result is not obtained
3	WHT	Vehicle ON mode, front passenger's	Measure the voltage to ground: There should be	• Faulty front passenger's seat heater

Cavity	Wire	Test condition	Test: Desired result	Possible cause if desired result is not obtained
		seat heater ON mode	battery voltage.	- Poor ground (G502) or an open in the ground wire - An open or high resistance in the wire

*1: With auto idle stop system

*2: Without auto idle stop system

5. Turn the vehicle to the OFF (LOCK) mode. Disconnect the front seat heater control unit 24P connector, and do the following input tests:

- If any test indicates a problem, find and correct the cause, then recheck the system.
- If all the input tests prove OK, replace the front seat heater control unit .

Cavity	Wire	Test condition	Test: Desired result	Possible cause if desired result is not obtained
15*	GRN	Disconnect the rear seat heater control unit 24P connector	Check for continuity between terminal No. 15 and rear seat heater control unit 24P connector terminal No. 15: There should be continuity.	An open or high resistance in the wire
			Check for continuity to ground: There should be no continuity.	A short to ground in the wire
12	LT GRN	Under all conditions	Check for continuity between terminals No. 12 and No. 22: There should be continuity.	- Faulty driver's seat cushion heater - An open or high resistance in the wire
22	BLU			
13	PUR	Under all conditions	Check for continuity between terminals No. 13 and No. 23: There should be continuity.	- Faulty front passenger's seat cushion heater - An open or high resistance in the wire
23	LT GRN			

*: With rear seat heater

REAR SEAT HEATER CONTROL UNIT INPUT TEST

NOTE:

- Make sure the fuses associated with the system are OK.
- Before testing, do the seat heater control unit self-diagnostic function, and make sure the seat heater function is OK.

1. Turn the vehicle to the OFF (LOCK) mode.

2. Disconnect the rear seat heater control unit 24P connector.

Rear Seat Heater Control Unit 24P Connector (female terminals)

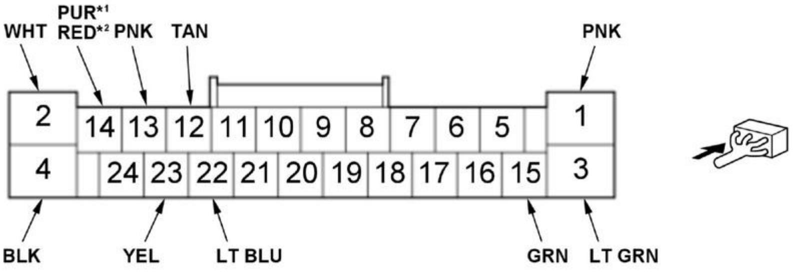

*1: With auto idle stop system
*2: Without auto idle stop system

3. Inspect the connector and socket terminals to be sure they are all making good contact:

- If the terminals are bent, loose or corroded, repair them as necessary, and recheck the system.
- If the terminals look OK, go to step 4.

4. Reconnect the rear seat heater control unit 24P connector, and do the following input tests:

- If any test indicates a problem, find and correct the cause, then recheck the system.
- If all the input tests prove OK, go to step 5.

Cavity	Wire	Test condition	Test: Desired result	Possible cause if desired result is not obtained
2	WHT	Vehicle ON mode	Measure the voltage to ground: There should be battery voltage.	• Faulty rear seat heater relay circuit • An open or high resistance in the wire
14	PUR* 1RED* 2	Vehicle ON mode	Measure the voltage to ground: There should be battery voltage.	An open or high resistance in the wire
4	BLK	In all power modes	Measure the voltage to ground: There should be less than 0.2 V.	• Poor ground (G505) • An open or high resistance in the ground wire
1	PNK	Vehicle ON mode, left rear seat heater ON mode	Measure the voltage to ground: There should be battery voltage.	• Faulty left rear seat heater • Poor ground (G505) or an open in the ground wire • An open or high resistance in the wire

*1: With auto idle stop system

*2: Without auto idle stop system

Cavity	Wire	Test condition	Test: Desired result	Possible cause if desired result is not obtained
3	LT GRN	Vehicle ON mode, right rear seat	Measure the voltage to ground: There should be	• Faulty right rear seat heater

Cavity	Wire	Test condition	Test: Desired result	Possible cause if desired result is not obtained
		heater ON mode	battery voltage.	• Poor ground (G505) or an open in the ground wire • An open or high resistance in the wire

*1: With auto idle stop system

*2: Without auto idle stop system

5. Turn the vehicle to the OFF (LOCK) mode. Disconnect the rear seat heater control unit 24P connector, and do the following input tests:

- If any test indicates a problem, find and correct the cause, then recheck the system.
- If all the input tests prove OK, **replace the rear seat heater control unit** .

Cavity	Wire	Test condition	Test: Desired result	Possible cause if desired result is not obtained
15	GRN	Disconnect the front seat heater control unit 24P connector	Check for continuity between terminal No. 15 and front seat heater control unit 24P connector terminal No. 15: There should be continuity.	An open or high resistance in the wire
			Check for continuity to ground: There should be no continuity.	A short to ground in the wire
12	TAN	Under all conditions	Check for continuity between terminals No. 12 and No. 22: There should be continuity.	• Faulty left rear seat cushion heater • An open or high resistance in the wire
22	LT BLU			
13	PNK	Under all conditions	Check for continuity between terminals No. 13 and No. 23: There should be continuity.	• Faulty right rear seat cushion heater • An open or high resistance in the wire
23	YEL			

TEST

DRIVER'S POWER SEAT MOTOR TEST

Test

NOTE: SRS components are located in this area. Review the **SRS component locations** and the **precautions and procedures** before doing repairs or service.

1. **Driver's Seat Recline Cover - Remove**

   NOTE: When removing the driver's seat recline cover, you do not need to remove the driver's seat.

2. Driver's Power Seat Motor - Test

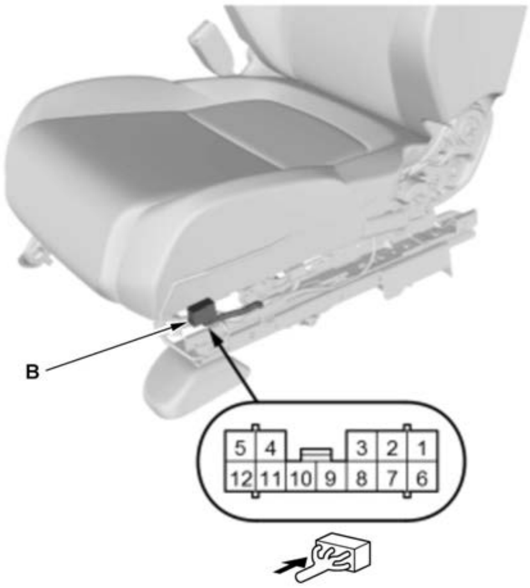

Terminal Direction		1	3
SLIDE MOTOR	Forward	⊖	⊕
	Backward	⊕	⊖

Terminal Direction		11	8
RECLINE MOTOR	Forward	⊖	⊕
	Backward	⊕	⊖

Terminal Direction		7	10
FRONT UP-DOWN MOTOR	UP	⊖	⊕
	DOWN	⊕	⊖

Terminal Direction		9	4
REAR UP-DOWN MOTOR	UP	⊕	⊖
	DOWN	⊖	⊕

NOTE: Before testing, make sure not to short the power seat circuit.

1. Test the motor by applying power and ground at the power seat control unit/power seat adjustment switch connector B (12P) on the seat harness according to the table. When the motor stops running, disconnect 12 volt battery power immediately.

2. If the motor does not run or fails to run smoothly, **remove the driver's seat** , go to step 3.

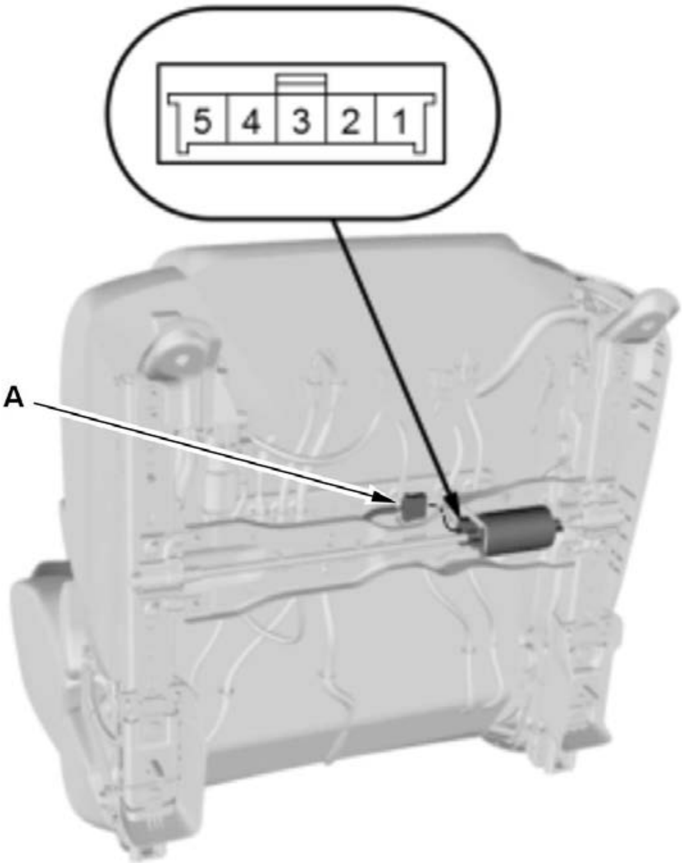

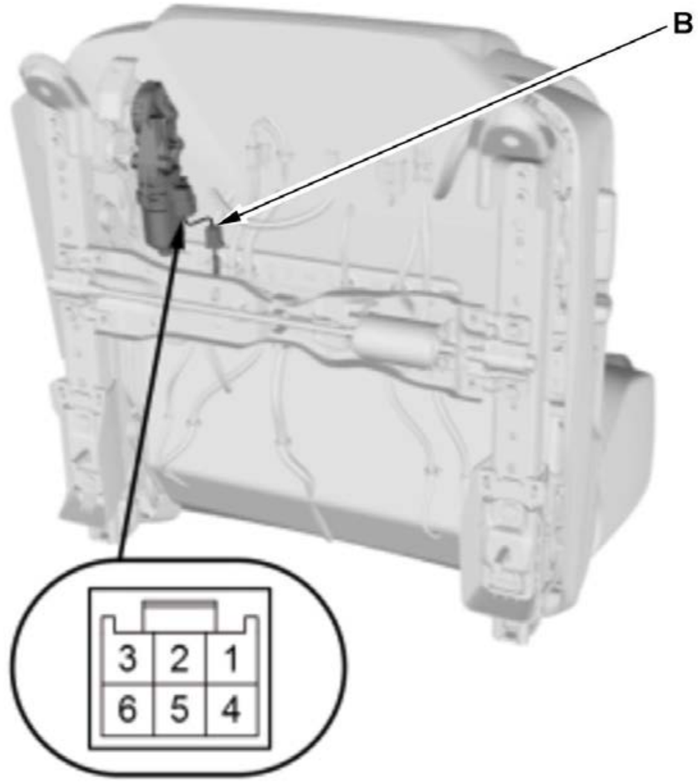

3. **Remove the driver's seat-back cover/pad as needed** .

4. Disconnect the following connectors:

- Slide motor 5P connector (A)
- Front up-down motor 6P connector (B)
- Rear up-down motor 6P connector (C)
- Recline motor 6P connector (D)

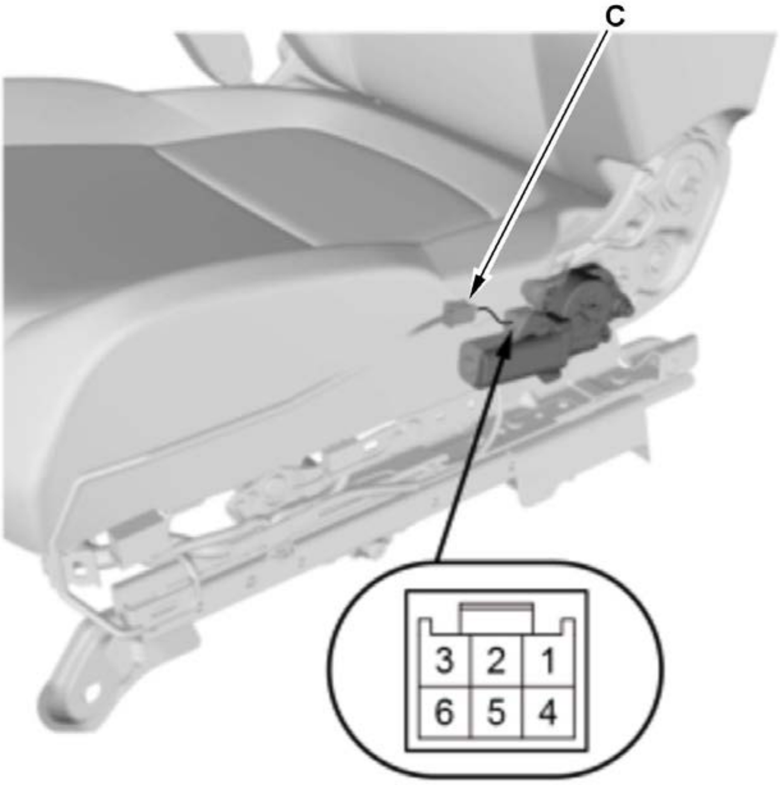
C

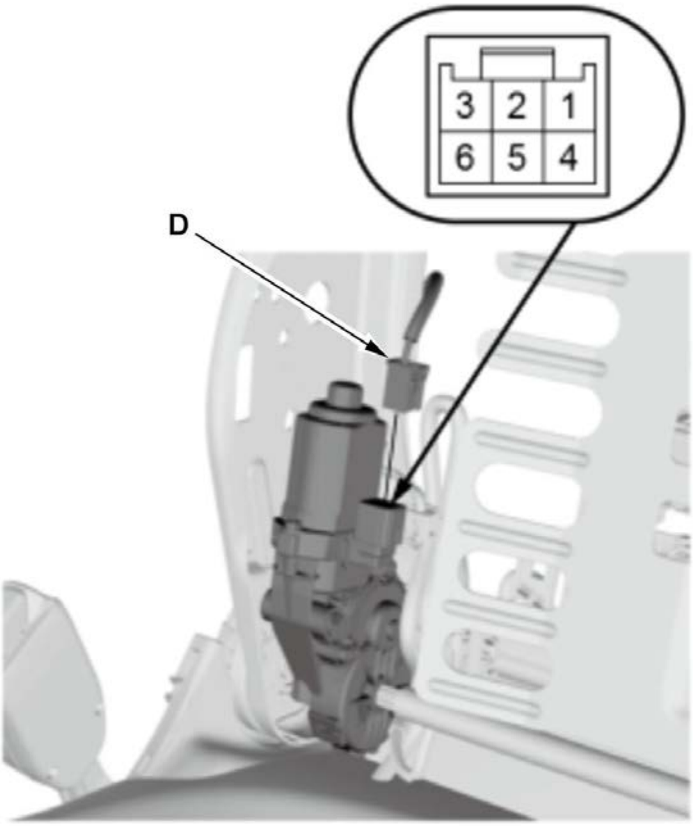
D

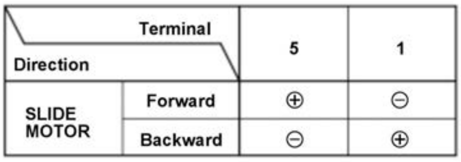

Direction \ Terminal		5	1
SLIDE MOTOR	Forward	⊕	⊖
	Backward	⊖	⊕

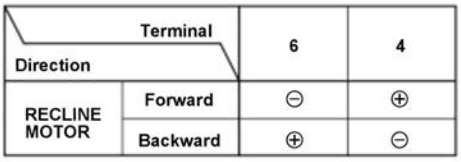

Direction \ Terminal		6	4
RECLINE MOTOR	Forward	⊖	⊕
	Backward	⊕	⊖

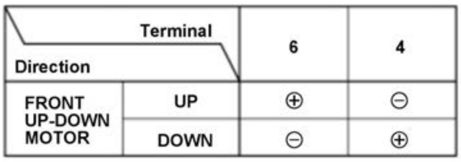

Direction \ Terminal		6	4
FRONT UP-DOWN MOTOR	UP	⊕	⊖
	DOWN	⊖	⊕

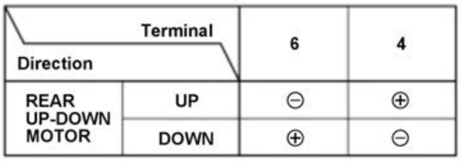

Direction \ Terminal		6	4
REAR UP-DOWN MOTOR	UP	⊖	⊕
	DOWN	⊕	⊖

5. Test each motor in each direction by connecting power and ground according to the table. When the motor stops running, disconnect 12 volt battery power immediately.

6. **If any motor fails to run or run smoothly, replace the seat frame**

If the motor runs smoothly, replace the driver's seat wire harness.

3. All Removed Parts - Install

1. Install the parts in the reverse order of removal.

4. Driving Position Memory - Clear

1. After testing, **clear the driving position memory** .

FRONT PASSENGER'S POWER SEAT MOTOR TEST

Test

NOTE: SRS components are located in this area. Review the **SRS component locations** and the **precautions and procedures** before doing repairs or service.

1. **Front Passenger's Seat Recline Cover - Remove**
2. **Front Seat Slide Motor Cover - Remove**
3. Front Passenger's Power Seat Motor - Test

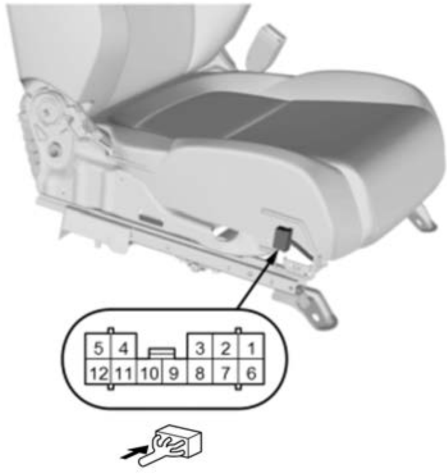

Slide Motor

Terminal / Direction	7	11
Forward	⊕	⊖
Backward	⊖	⊕

Recline Motor

Terminal / Direction	6	12
Forward	⊕	⊖
Backward	⊖	⊕

NOTE: Before testing, make sure not to short the front passenger's power seat adjustment switch circuit.

1. Test the motor by applying power and ground at the front passenger's power seat adjustment switch connector on the seat harness side according to the table. When the motor stops running, disconnect battery power immediately.

2. If the motor does not run or fails to run smoothly, **remove the front passenger's seat frame** , go to step 3.

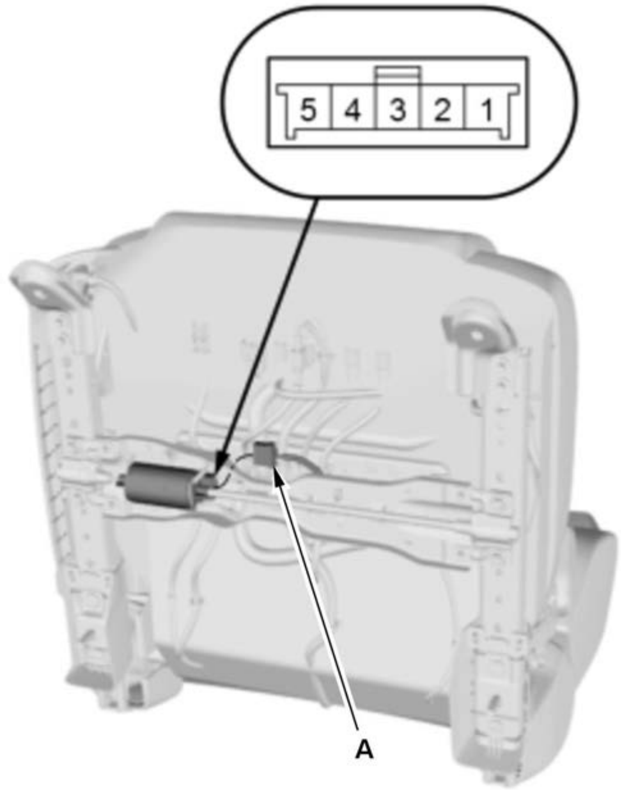

Slide Motor

Recline Motor

3. **Turn over the seat cushion cover/pad as needed** .
4. Disconnect these connectors:

- Slide motor connector (A)
- Recline motor connector (B)

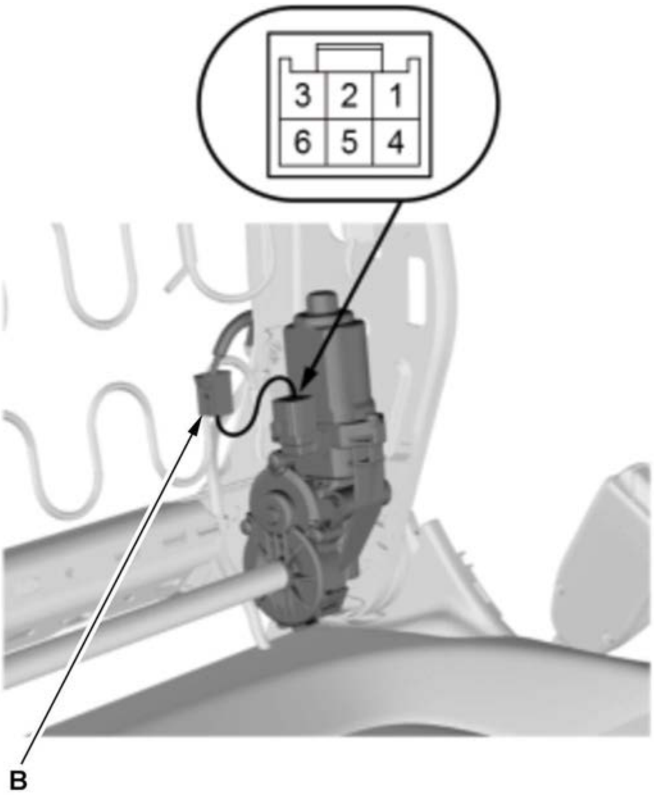

Slide Motor

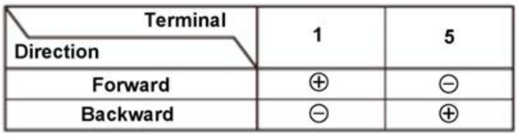

Terminal / Direction	1	5
Forward	⊕	⊖
Backward	⊖	⊕

Recline Motor

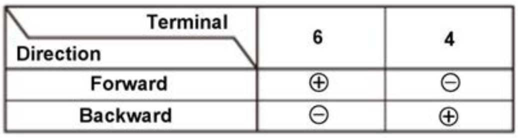

Terminal / Direction	6	4
Forward	⊕	⊖
Backward	⊖	⊕

5. Test each motor by connecting power and ground according to the table. When the motor stops running, disconnect battery power immediately.

6. If the motor does not run or fails to run smoothly, replace: **the front passenger's seat frame** .

If the motor runs smoothly, replace the front passenger's seat wire harness.

7. Connect these connectors:

- Slide motor connector
- Recline motor connector

4. All Removed Parts - Install

1. Install the parts in the reverse order of removal.

POWER LUMBAR SUPPORT MOTOR TEST

Test

NOTE: SRS components are located in this area. Review the **SRS component locations** and the **precautions and procedures** before doing repairs or service.

1. **Driver's Seat Recline Cover - Remove**
2. Power Lumbar Support Motors - Test

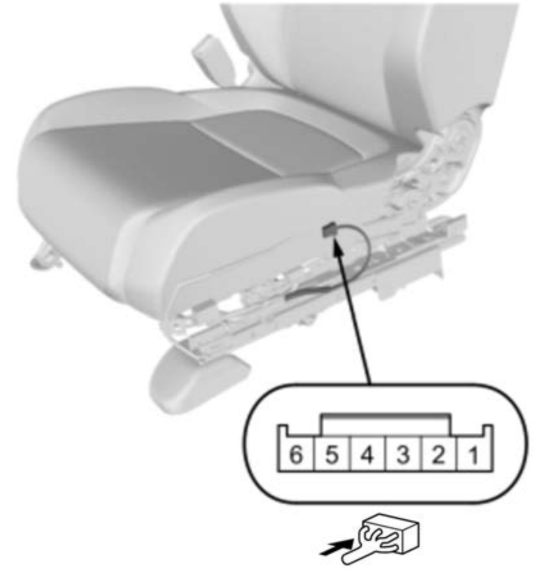

Terminal / Direction	3	4	5	2
Forward			⊕	⊖
Backward			⊖	⊕
Up	⊕	⊖		
Down	⊖	⊕		

NOTE: Before testing, make sure not to short the power lumbar support motors circuit.

1. Test the power lumbar support motors by applying power and ground at the connector on the seat harness side according to the table. When the power lumbar support motors stops running, disconnect battery power immediately.

2. If the power lumbar support motors does not run or fails to run smoothly, then go to step 3.

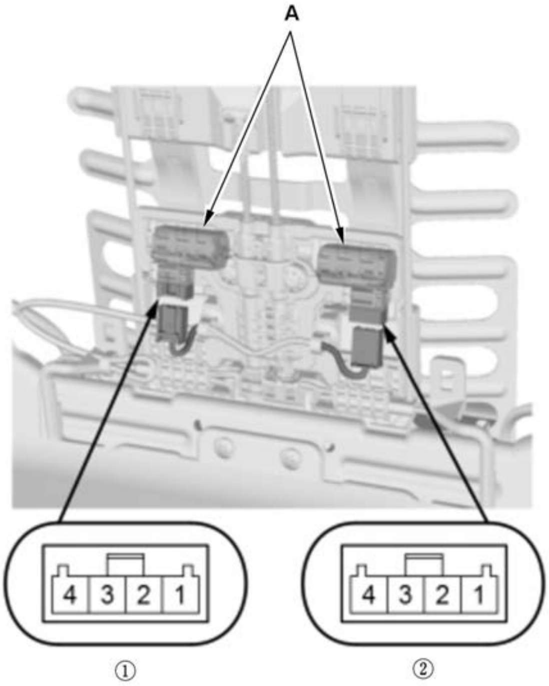

Terminal / Direction	3	4
Forward:①	⊖	⊕
Backward:①	⊕	⊖
Up:②	⊖	⊕
Down:②	⊕	⊖

3. **Remove the front seat-back panel**

4. Test the power lumbar support motors by applying battery power and ground to the terminals according to the table. When the power lumbar support motors stops running, disconnect battery power immediately.

5. If the power lumbar support motors does not run or fails to run smoothly, the power lumbar support motors (A) is faulty; **replace the power lumbar support assembly** .

If the power lumbar support motors runs smoothly, replace the front seat wire harness.

3. All Removed Parts - Install

1. Install the parts in the reverse order of removal.

SEAT HEATER TEST

Test

NOTE: SRS components are located in this area. Review the SRS component locations and the precautions and procedures before doing repairs or service.

Driver's Seat

1. Driver's Seat - Remove
2. Driver's Seat Heater - Test

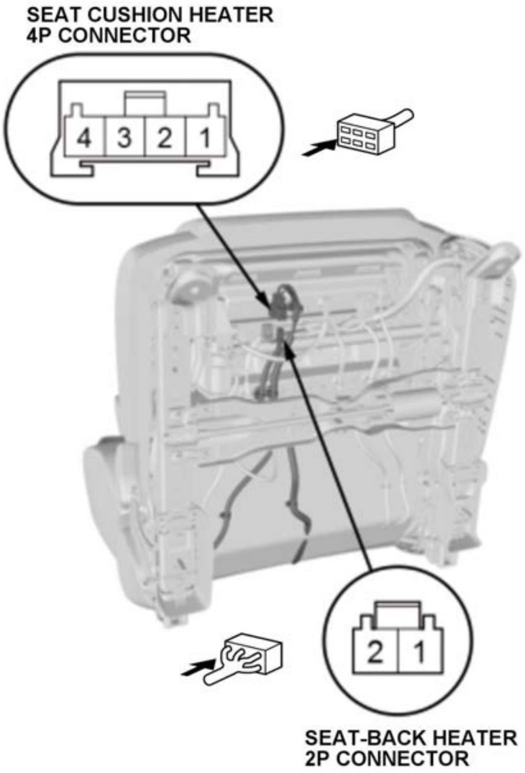 SEAT CUSHION HEATER 4P CONNECTOR 4 3 2 1 2 1 SEAT-BACK HEATER 2P CONNECTOR	1. Check for continuity between the terminals according to the table. 2. If the continuity is not as specified, replace the driver's seat cushion heater or replace the driver's seat-back heater.

Driver's Seat-Back Heater Connector	
No. 1	No. 2

Driver's Seat Cushion Heater Connector	
No. 1	No. 2
No. 3	No. 4

3. All Removed Parts - Install

1. Install the parts in the reverse order of removal.

Front Passenger's Seat

4. Front Passenger's Seat - Remove
5. Front Passenger's Seat Heater - Test

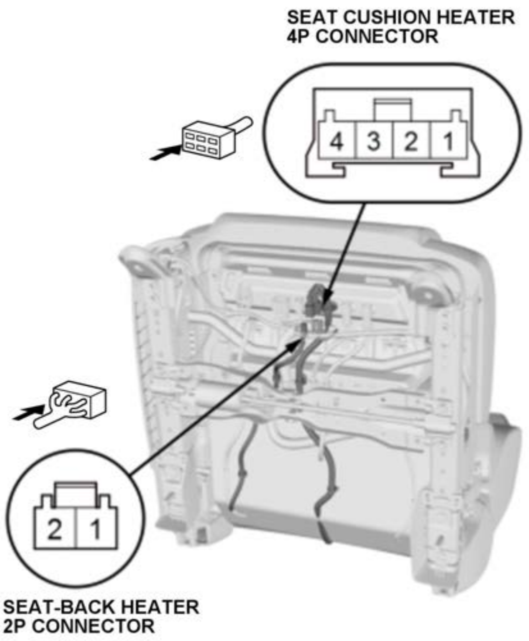 SEAT CUSHION HEATER 4P CONNECTOR 4 3 2 1 2 1 SEAT-BACK HEATER 2P CONNECTOR	1. Check for continuity between the terminals according to the table. 2. If the continuity is not as specified, **replace the front passenger's seat cushion heater** or **replace the front passenger's seat-back heater**.

Front Passenger's Seat-Back Heater Connector	
No. 1	No. 2

Front Passenger's Seat Cushion Heater Connector	
No. 1	No. 2
No. 3	No. 4

6. All Removed Parts - Install

1. Install the parts in the reverse order of removal.

Rear

7. **Rear Carpet Trim - Remove**
8. Driver's Seat Heater - Test

1. Check for continuity between the terminals according to the table.

Rear Seat Cushion Heater Connector	
No. 1	No. 4
No. 2	No. 3

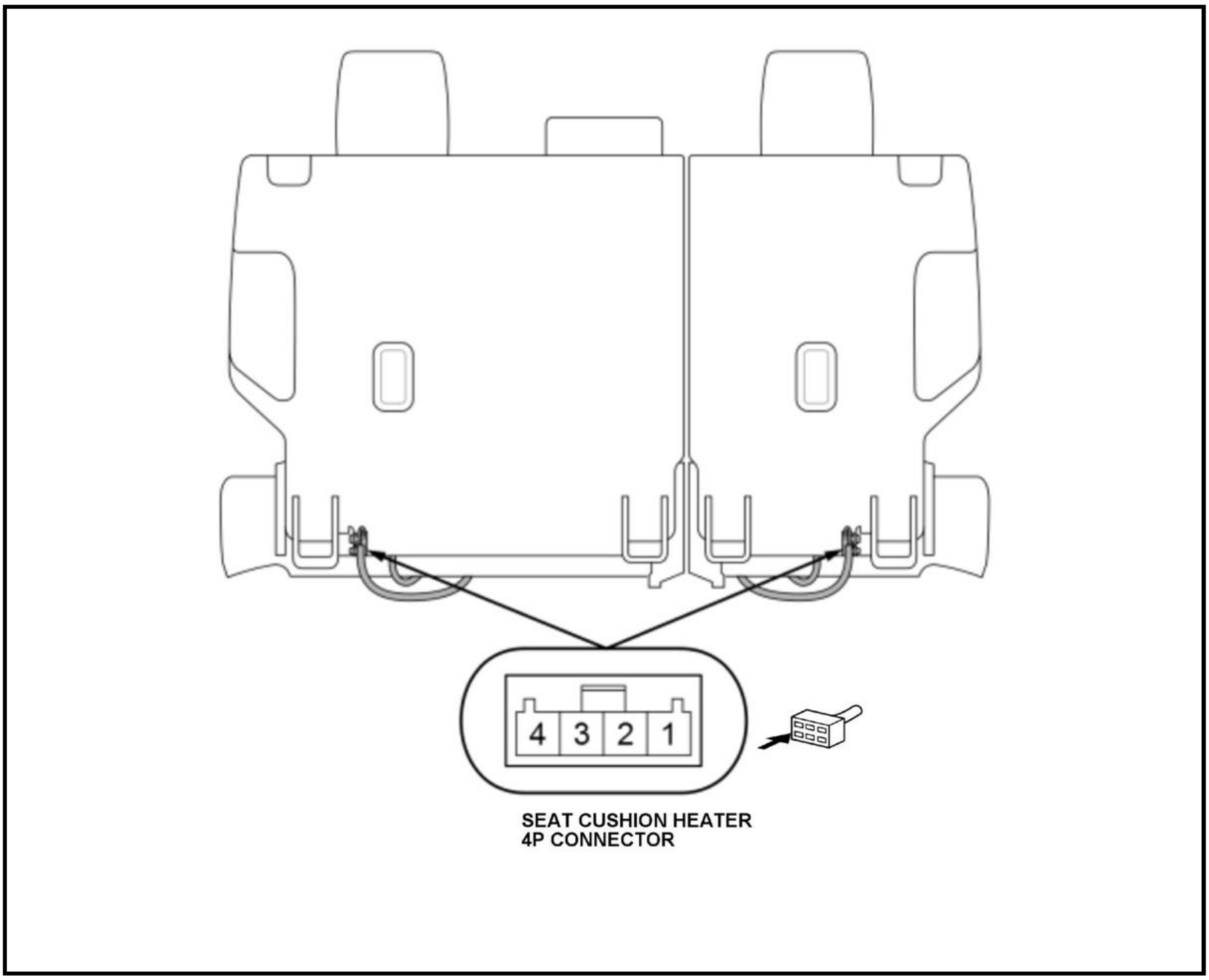
4
3
2
1
SEAT CUSHION HEATER
4P CONNECTOR

2. If the continuity is not as specified, **replace the rear seat cushion heater**.

9. All Removed Parts - Install

1. Install the parts in the reverse order of removal.

CIRCUIT DIAGRAM

POWER LUMBAR SUPPORT CIRCUIT DIAGRAM

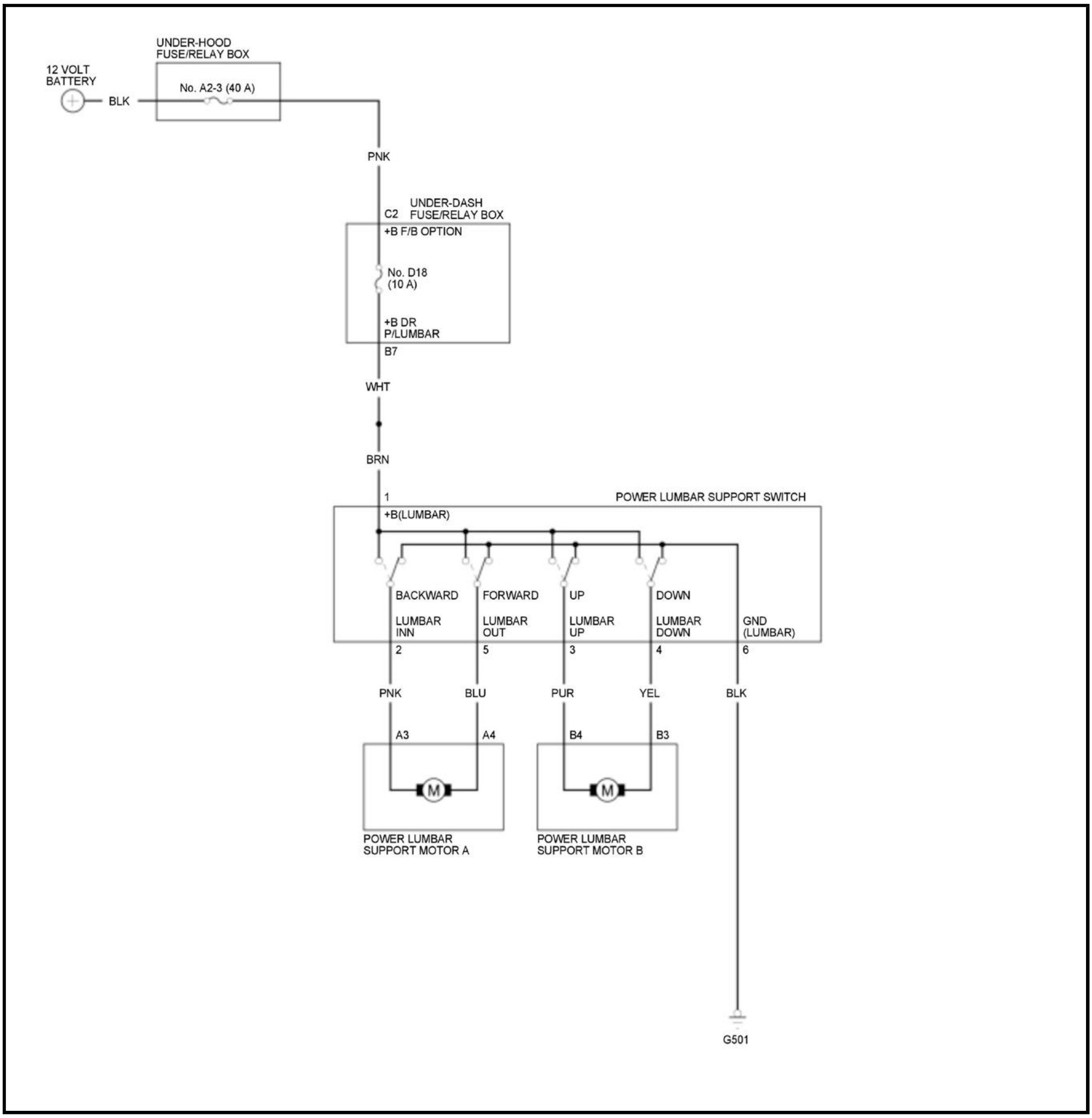

UNDER-HOOD FUSE/RELAY BOX
12 VOLT BATTERY
No. A2-3 (40 A)
BLK
PNK
C2
UNDER-DASH FUSE/RELAY BOX
+B F/B OPTION
No. D18 (10 A)
+B DR P/LUMBAR
B7
WHT
BRN
1
POWER LUMBAR SUPPORT SWITCH
+B(LUMBAR)
BACKWARD
FORWARD
UP
DOWN
LUMBAR INN
LUMBAR OUT
LUMBAR UP
LUMBAR DOWN
GND (LUMBAR)
2
5
3
4
6
PNK
BLU
PUR
YEL
BLK
A3
A4
B4
B3
M
M
POWER LUMBAR SUPPORT MOTOR A
POWER LUMBAR SUPPORT MOTOR B
G501

POWER SEATS CIRCUIT DIAGRAM

Driver's Power Seat

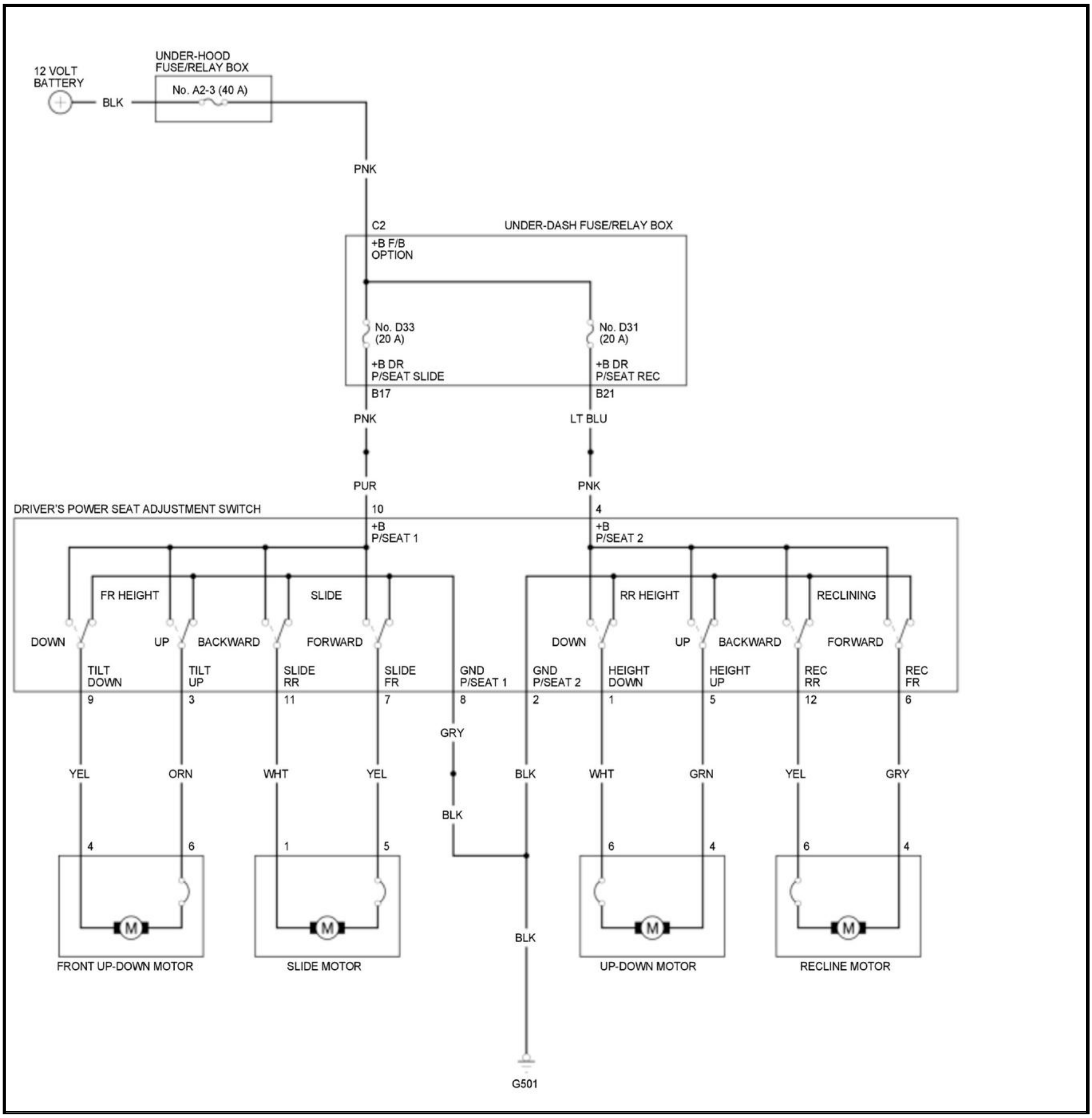
12 VOLT BATTERY
BLK
UNDER-HOOD FUSE/RELAY BOX
No. A2-3 (40 A)
PNK
C2
UNDER-DASH FUSE/RELAY BOX
+B F/B OPTION
No. D33 (20 A)
No. D31 (20 A)
+B DR P/SEAT SLIDE
+B DR P/SEAT REC
B17
B21
PNK
LT BLU
PUR
PNK
DRIVER'S POWER SEAT ADJUSTMENT SWITCH
10
+B P/SEAT 1
4
+B P/SEAT 2
FR HEIGHT
SLIDE
RR HEIGHT
RECLINING
DOWN
UP
BACKWARD
FORWARD
DOWN
UP
BACKWARD
FORWARD
TILT DOWN
TILT UP
SLIDE RR
SLIDE FR
GND P/SEAT 1
GND P/SEAT 2
HEIGHT DOWN
HEIGHT UP
REC RR
REC FR
9
3
11
7
8
2
1
5
12
6
GRY
YEL
ORN
WHT
YEL
BLK
BLK
WHT
GRN
YEL
GRY
4
6
1
5
6
4
6
4
M
FRONT UP-DOWN MOTOR
SLIDE MOTOR
BLK
UP-DOWN MOTOR
RECLINE MOTOR
G501

Front Passenger's Power Seat

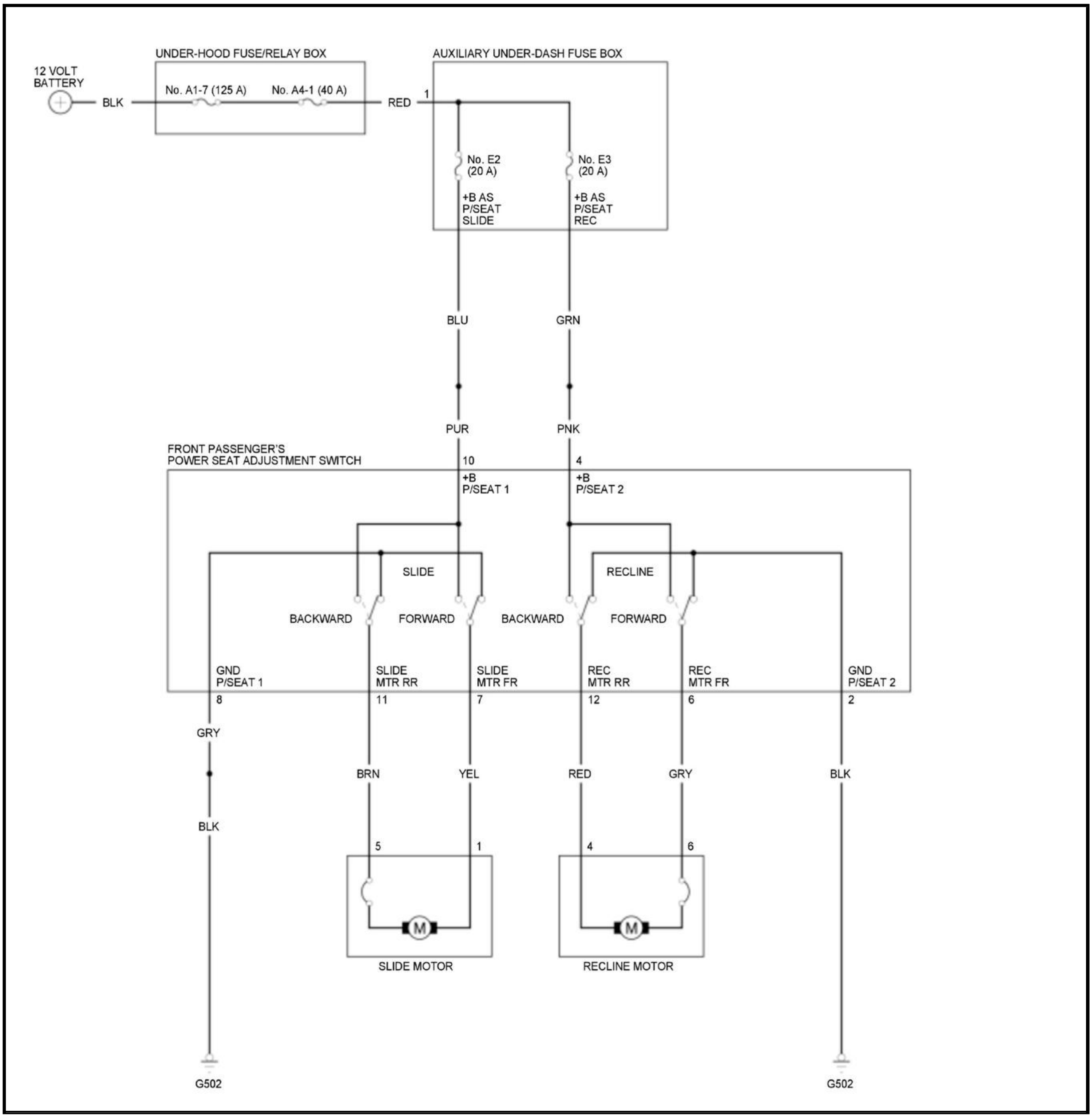
12 VOLT BATTERY
BLK
UNDER-HOOD FUSE/RELAY BOX
No. A1-7 (125 A)
No. A4-1 (40 A)
RED
1
AUXILIARY UNDER-DASH FUSE BOX
No. E2 (20 A)
No. E3 (20 A)
+B AS P/SEAT SLIDE
+B AS P/SEAT REC
BLU
GRN
PUR
PNK
FRONT PASSENGER'S POWER SEAT ADJUSTMENT SWITCH
10
4
+B P/SEAT 1
+B P/SEAT 2
SLIDE
RECLINE
BACKWARD
FORWARD
BACKWARD
FORWARD
GND P/SEAT 1
SLIDE MTR RR
SLIDE MTR FR
REC MTR RR
REC MTR FR
GND P/SEAT 2
8
11
7
12
6
2
GRY
BRN
YEL
RED
GRY
BLK
BLK
5
1
4
6
M
M
SLIDE MOTOR
RECLINE MOTOR
G502
G502

SEAT HEATERS CIRCUIT DIAGRAM

Front Seat Heater

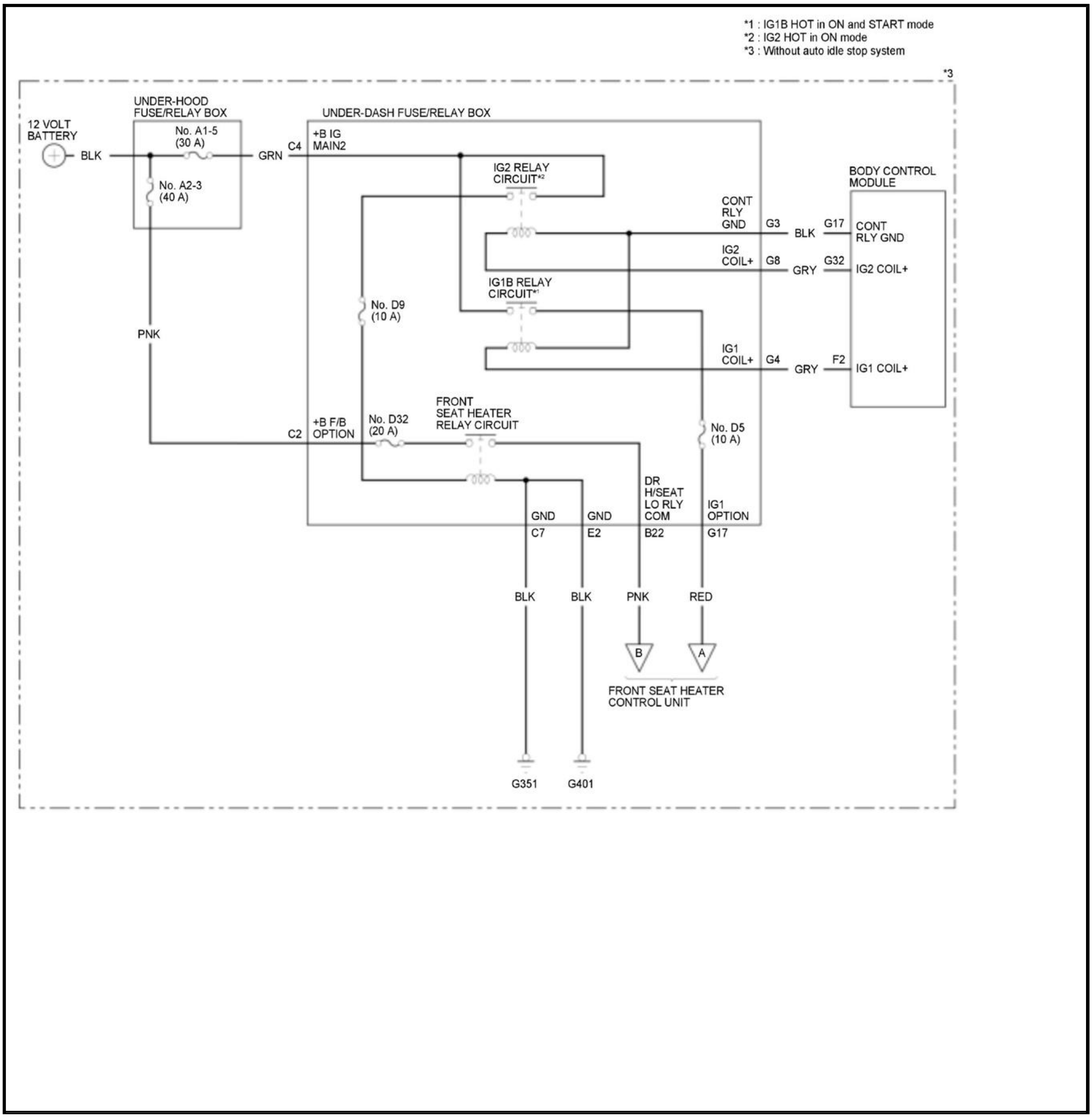

*1 : IG1B HOT in ON and START mode
*2 : IG2 HOT in ON mode
*3 : Without auto idle stop system

*3
12 VOLT BATTERY
BLK
UNDER-HOOD FUSE/RELAY BOX
No. A1-5 (30 A)
No. A2-3 (40 A)
GRN
C4
UNDER-DASH FUSE/RELAY BOX
+B IG MAIN2
IG2 RELAY CIRCUIT*2
BODY CONTROL MODULE
CONT RLY GND
G3
BLK
G17
CONT RLY GND
IG2 COIL+
G8
GRY
G32
IG2 COIL+
No. D9 (10 A)
IG1B RELAY CIRCUIT*1
PNK
IG1 COIL+
G4
GRY
F2
IG1 COIL+
C2
+B F/B OPTION
No. D32 (20 A)
FRONT SEAT HEATER RELAY CIRCUIT
No. D5 (10 A)
DR H/SEAT LO RLY COM
IG1 OPTION
GND
GND
C7
E2
B22
G17
BLK
BLK
PNK
RED
B
A
FRONT SEAT HEATER CONTROL UNIT
G351
G401

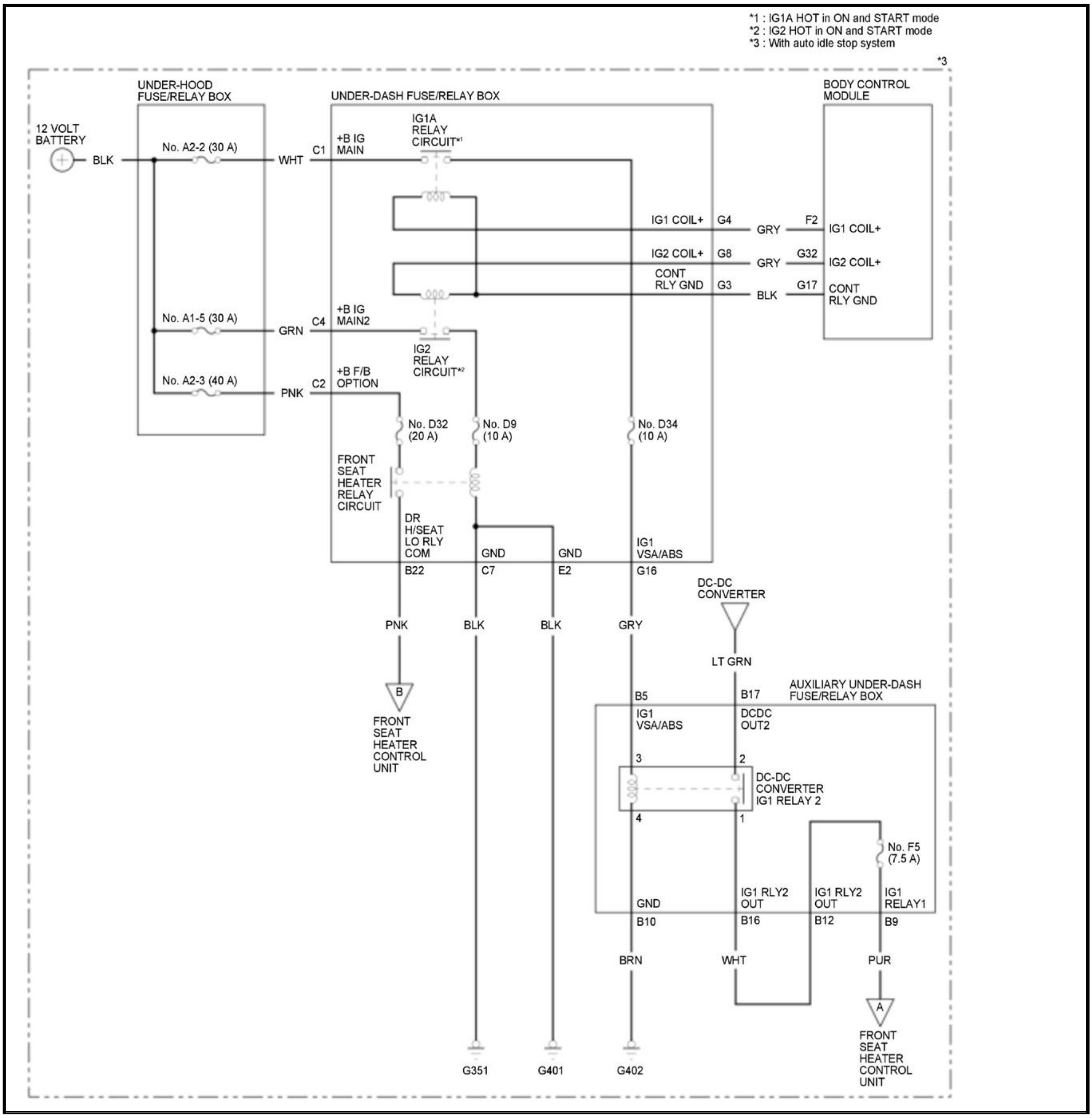
*1 : IG1A HOT in ON and START mode
*2 : IG2 HOT in ON and START mode
*3 : With auto idle stop system

*3
12 VOLT BATTERY
BLK
UNDER-HOOD FUSE/RELAY BOX
No. A2-2 (30 A)
No. A1-5 (30 A)
No. A2-3 (40 A)
WHT
GRN
PNK
UNDER-DASH FUSE/RELAY BOX
C1
+B IG MAIN
C4
+B IG MAIN2
C2
+B F/B OPTION
IG1A RELAY CIRCUIT*1
IG2 RELAY CIRCUIT*2
IG1 COIL+
G4
IG2 COIL+
G8
CONT RLY GND
G3
GRY
GRY
BLK
BODY CONTROL MODULE
F2
IG1 COIL+
G32
IG2 COIL+
G17
CONT RLY GND
No. D32 (20 A)
No. D9 (10 A)
No. D34 (10 A)
FRONT SEAT HEATER RELAY CIRCUIT
DR H/SEAT LO RLY COM
GND
GND
IG1 VSA/ABS
B22
C7
E2
G16
PNK
BLK
BLK
GRY
B
FRONT SEAT HEATER CONTROL UNIT
DC-DC CONVERTER
LT GRN
AUXILIARY UNDER-DASH FUSE/RELAY BOX
B5
IG1 VSA/ABS
B17
DCDC OUT2
3
2
DC-DC CONVERTER IG1 RELAY 2
4
1
No. F5 (7.5 A)
GND
IG1 RLY2 OUT
IG1 RLY2 OUT
IG1 RELAY1
B10
B16
B12
B9
BRN
WHT
PUR
A
FRONT SEAT HEATER CONTROL UNIT
G351
G401
G402

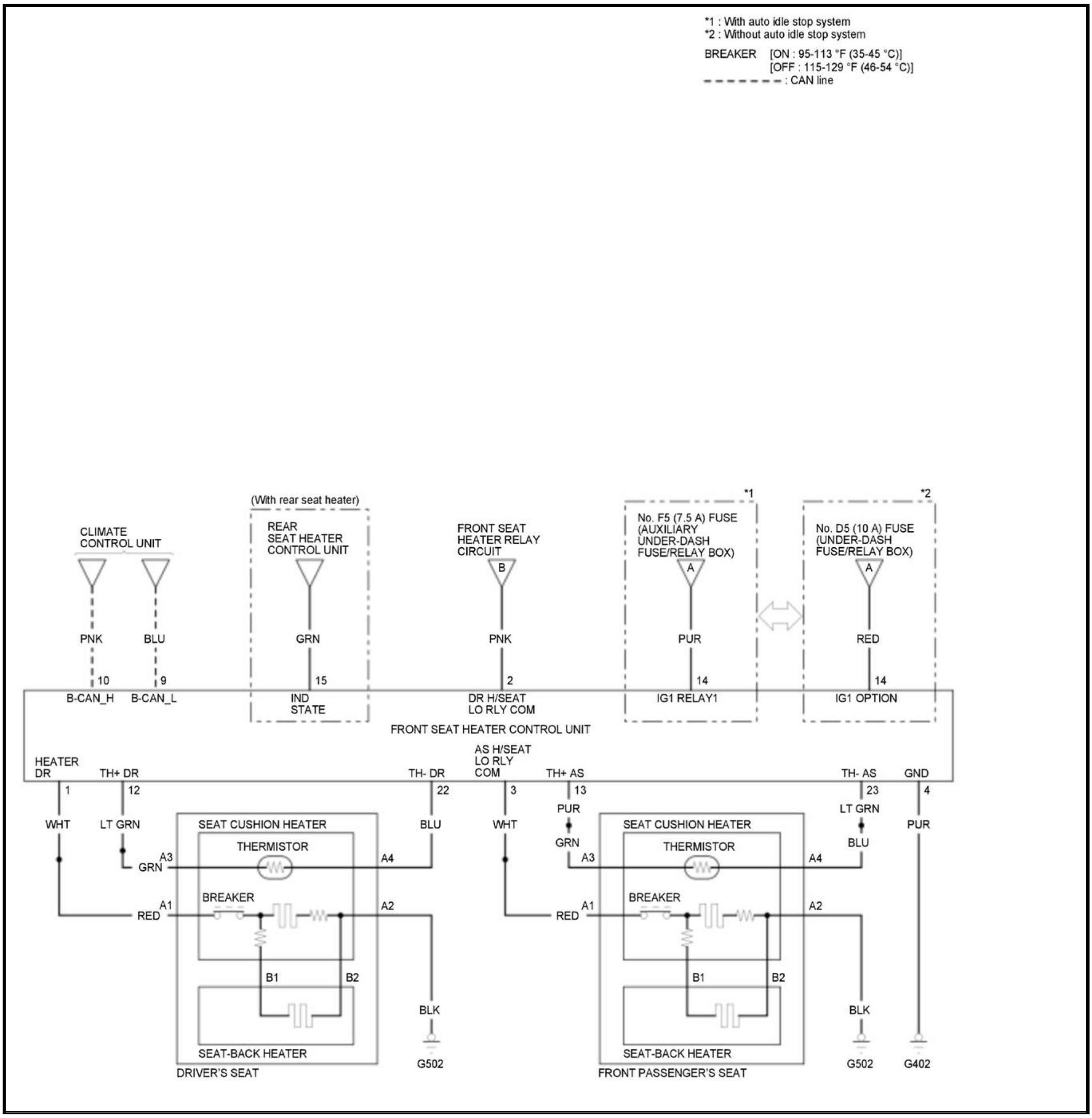
*1 : With auto idle stop system
*2 : Without auto idle stop system
BREAKER [ON : 95-113 °F (35-45 °C)]
[OFF : 115-129 °F (46-54 °C)]
: CAN line
CLIMATE CONTROL UNIT
(With rear seat heater)
REAR SEAT HEATER CONTROL UNIT
FRONT SEAT HEATER RELAY CIRCUIT
B
*1
No. F5 (7.5 A) FUSE (AUXILIARY UNDER-DASH FUSE/RELAY BOX)
A
*2
No. D5 (10 A) FUSE (UNDER-DASH FUSE/RELAY BOX)
A
PNK
BLU
GRN
PNK
PUR
RED
10
9
15
2
14
14
B-CAN_H
B-CAN_L
IND STATE
DR H/SEAT LO RLY COM
IG1 RELAY1
IG1 OPTION
FRONT SEAT HEATER CONTROL UNIT
HEATER DR
TH+ DR
TH- DR
AS H/SEAT LO RLY COM
TH+ AS
TH- AS
GND
1
12
22
3
13
23
4
WHT
LT GRN
BLU
WHT
PUR
LT GRN
PUR
GRN
BLU
SEAT CUSHION HEATER
THERMISTOR
A3
GRN
A4
BREAKER
A1
RED
A2
B1
B2
BLK
SEAT-BACK HEATER
DRIVER'S SEAT
G502
SEAT CUSHION HEATER
THERMISTOR
A3
A4
BREAKER
A1
RED
A2
B1
B2
BLK
SEAT-BACK HEATER
FRONT PASSENGER'S SEAT
G502
G402

Rear Seat Heater

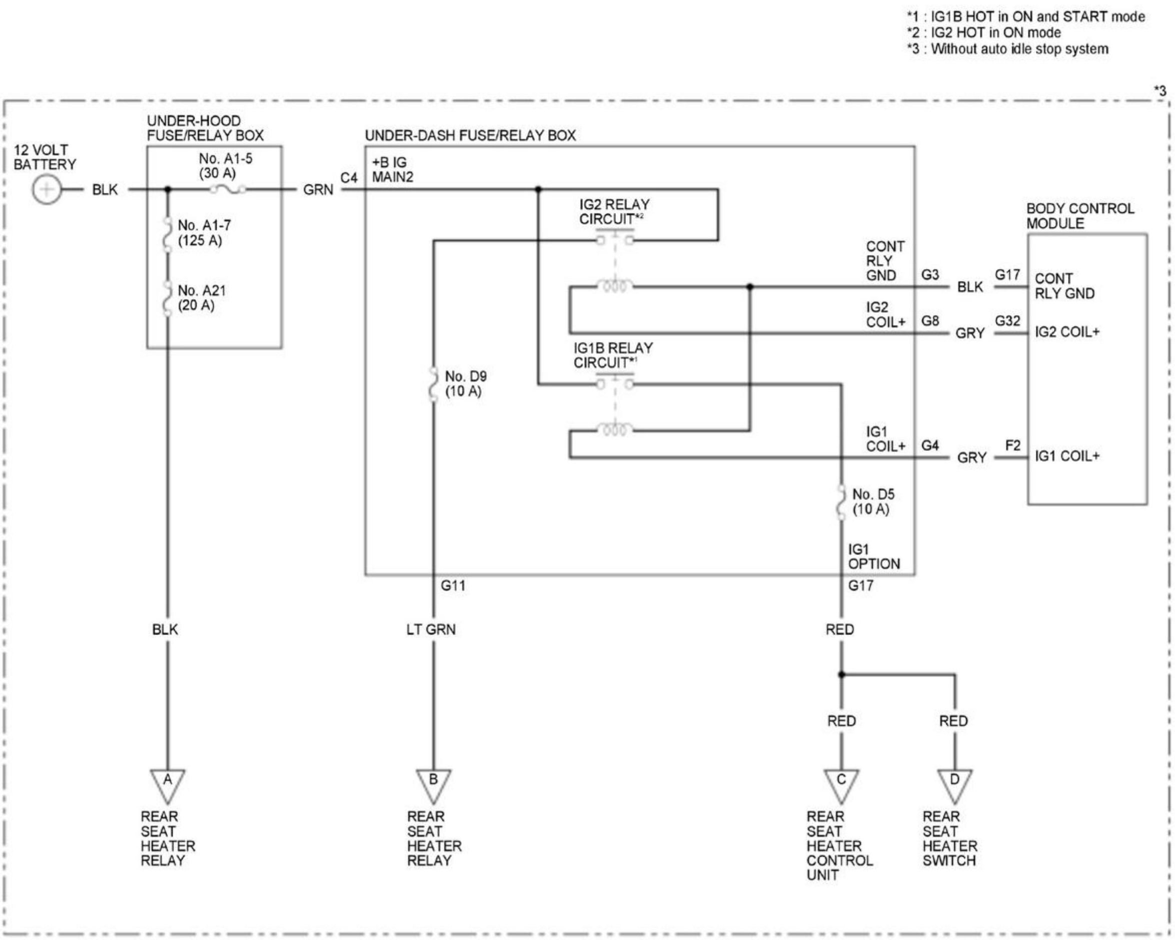

*1 : IG1B HOT in ON and START mode
*2 : IG2 HOT in ON mode
*3 : Without auto idle stop system
*3
12 VOLT BATTERY
BLK
UNDER-HOOD FUSE/RELAY BOX
No. A1-5 (30 A)
No. A1-7 (125 A)
No. A21 (20 A)
GRN
C4
UNDER-DASH FUSE/RELAY BOX
+B IG MAIN2
IG2 RELAY CIRCUIT*2
IG1B RELAY CIRCUIT*1
No. D9 (10 A)
No. D5 (10 A)
CONT RLY GND
G3
BLK
IG2 COIL+
G8
GRY
IG1 COIL+
G4
GRY
IG1 OPTION
G11
G17
BODY CONTROL MODULE
G17
CONT RLY GND
G32
IG2 COIL+
F2
IG1 COIL+
BLK
LT GRN
RED
RED
RED
A
REAR SEAT HEATER RELAY
B
REAR SEAT HEATER RELAY
C
REAR SEAT HEATER CONTROL UNIT
D
REAR SEAT HEATER SWITCH

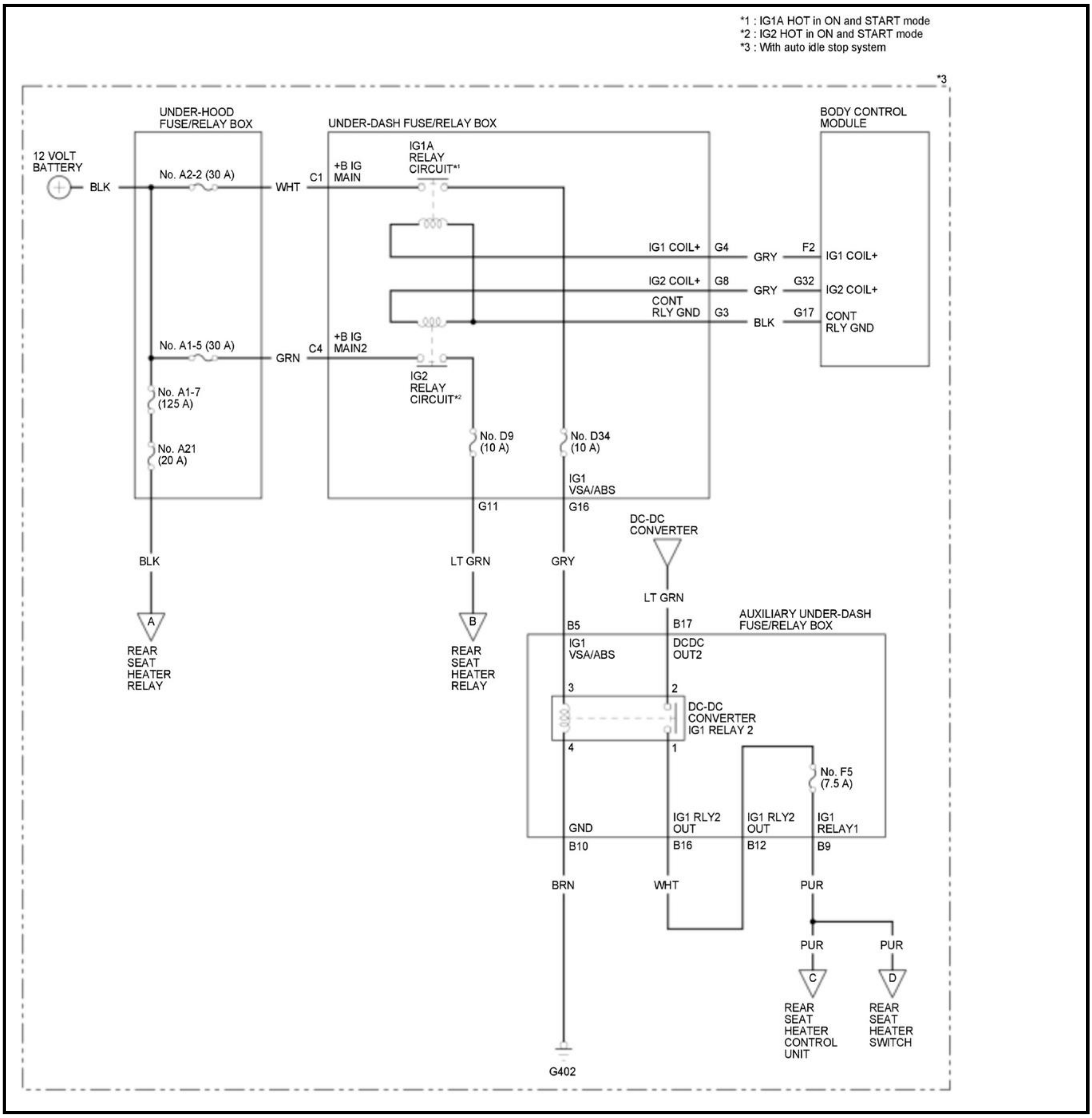

*1 : IG1A HOT in ON and START mode
*2 : IG2 HOT in ON and START mode
*3 : With auto idle stop system

*3
UNDER-HOOD FUSE/RELAY BOX
UNDER-DASH FUSE/RELAY BOX
BODY CONTROL MODULE
12 VOLT BATTERY
BLK
No. A2-2 (30 A)
WHT
C1
+B IG MAIN
IG1A RELAY CIRCUIT*1
IG1 COIL+
G4
GRY
F2
IG1 COIL+
IG2 COIL+
G8
GRY
G32
IG2 COIL+
CONT RLY GND
G3
BLK
G17
CONT RLY GND
No. A1-5 (30 A)
GRN
C4
+B IG MAIN2
IG2 RELAY CIRCUIT*2
No. A1-7 (125 A)
No. A21 (20 A)
No. D9 (10 A)
No. D34 (10 A)
IG1 VSA/ABS
G11
G16
DC-DC CONVERTER
BLK
LT GRN
GRY
LT GRN
A
REAR SEAT HEATER RELAY
B
REAR SEAT HEATER RELAY
B5
B17
AUXILIARY UNDER-DASH FUSE/RELAY BOX
IG1 VSA/ABS
DCDC OUT2
3
2
DC-DC CONVERTER IG1 RELAY 2
4
1
No. F5 (7.5 A)
GND
IG1 RLY2 OUT
IG1 RLY2 OUT
IG1 RELAY1
B10
B16
B12
B9
BRN
WHT
PUR
PUR
PUR
C
D
REAR SEAT HEATER CONTROL UNIT
REAR SEAT HEATER SWITCH
G402

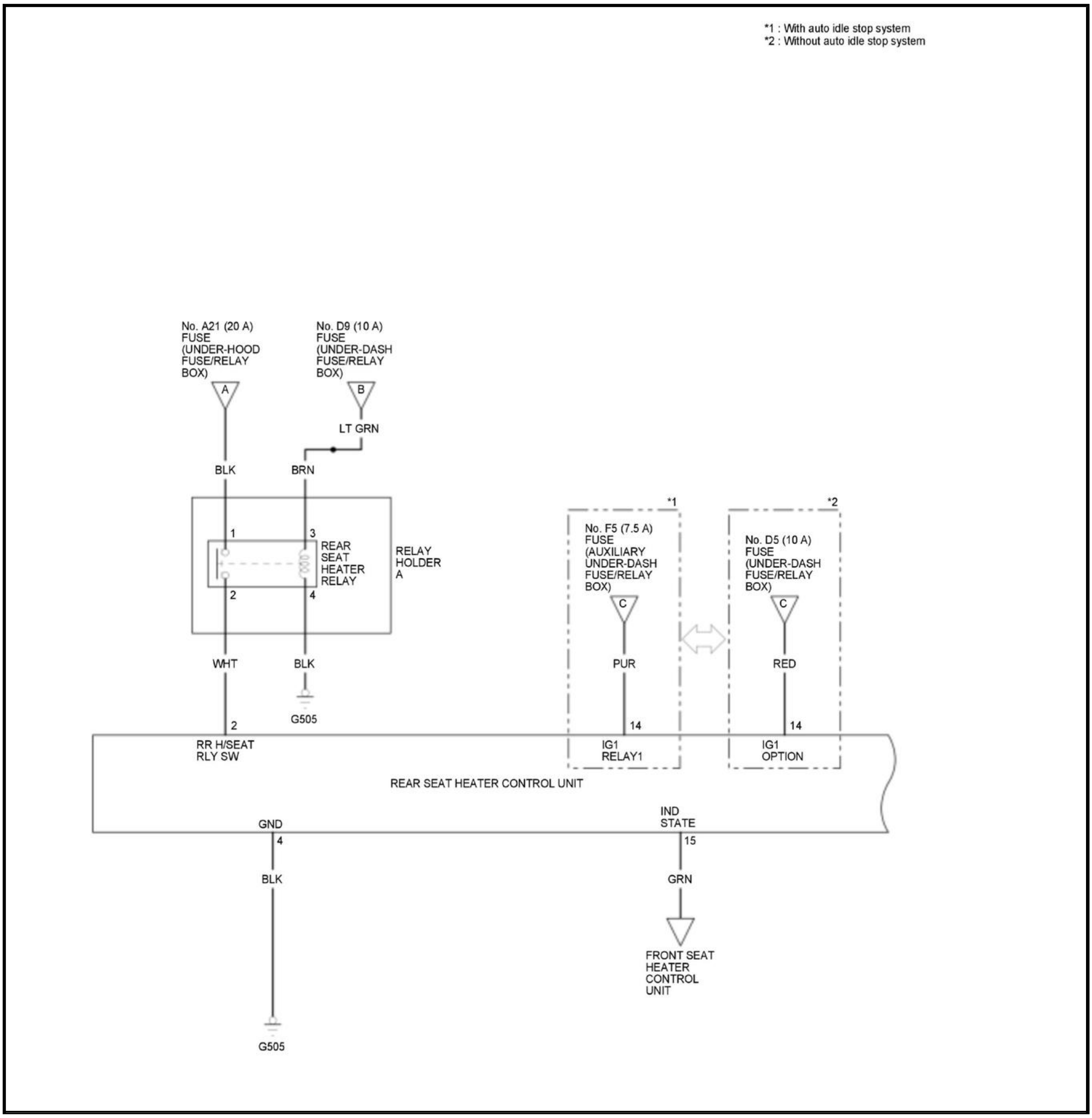
*1 : With auto idle stop system
*2 : Without auto idle stop system
No. A21 (20 A) FUSE (UNDER-HOOD FUSE/RELAY BOX)
A
No. D9 (10 A) FUSE (UNDER-DASH FUSE/RELAY BOX)
B
LT GRN
BLK
BRN
1
3
REAR SEAT HEATER RELAY
RELAY HOLDER A
2
4
WHT
BLK
G505
*1
No. F5 (7.5 A) FUSE (AUXILIARY UNDER-DASH FUSE/RELAY BOX)
C
PUR
14
IG1 RELAY1
*2
No. D5 (10 A) FUSE (UNDER-DASH FUSE/RELAY BOX)
C
RED
14
IG1 OPTION
2
RR H/SEAT RLY SW
REAR SEAT HEATER CONTROL UNIT
GND
4
BLK
G505
IND STATE
15
GRN
FRONT SEAT HEATER CONTROL UNIT

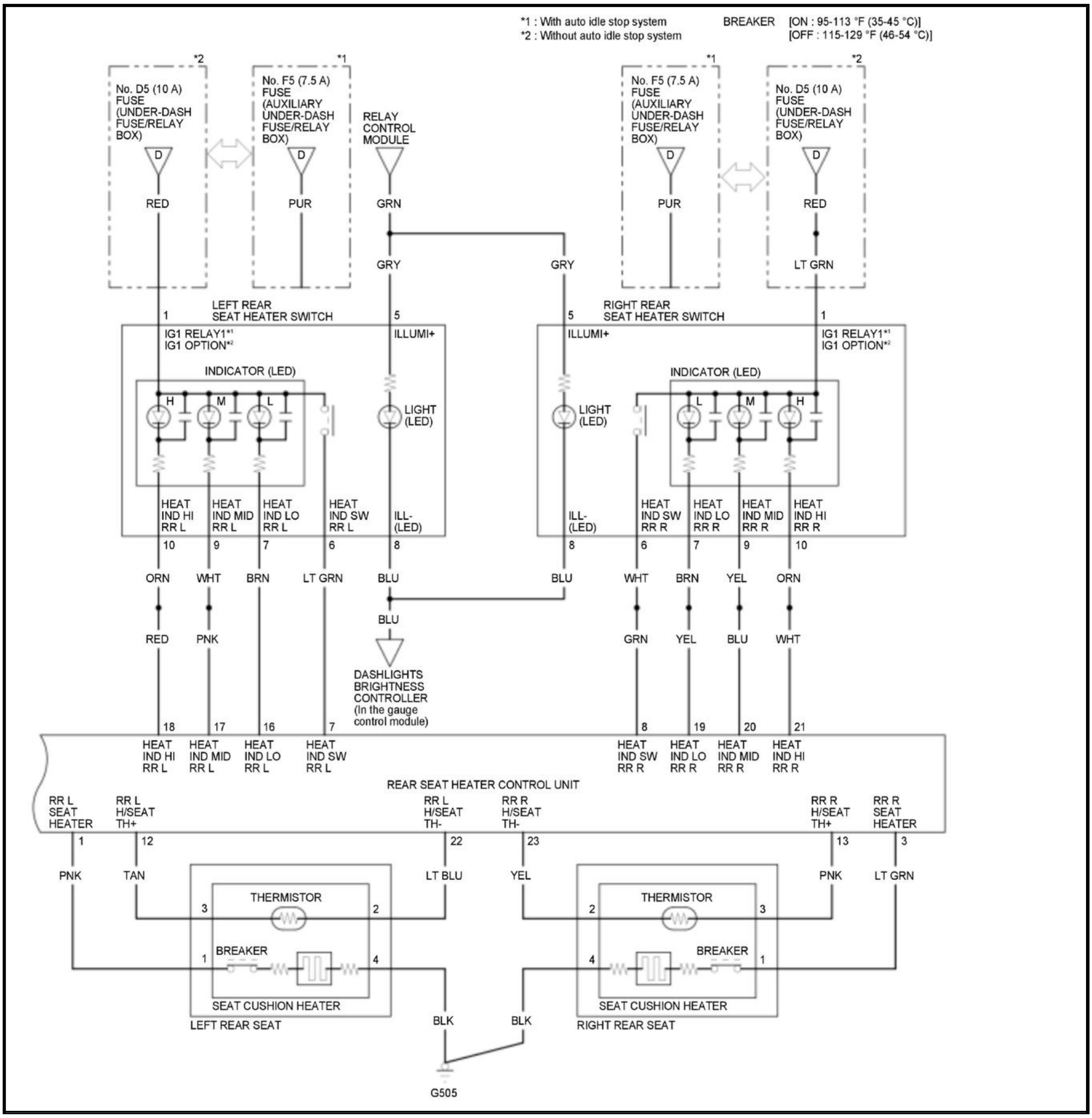
*1 : With auto idle stop system
*2 : Without auto idle stop system
BREAKER [ON : 95-113 °F (35-45 °C)] [OFF : 115-129 °F (46-54 °C)]
*2
No. D5 (10 A) FUSE (UNDER-DASH FUSE/RELAY BOX)
*1
No. F5 (7.5 A) FUSE (AUXILIARY UNDER-DASH FUSE/RELAY BOX)
RELAY CONTROL MODULE
D
RED
PUR
GRN
GRY
LT GRN
LEFT REAR SEAT HEATER SWITCH
RIGHT REAR SEAT HEATER SWITCH
IG1 RELAY1*1
IG1 OPTION*2
ILLUMI+
INDICATOR (LED)
H
M
L
LIGHT (LED)
HEAT IND HI RR L
HEAT IND MID RR L
HEAT IND LO RR L
HEAT IND SW RR L
ILL- (LED)
HEAT IND SW RR R
HEAT IND LO RR R
HEAT IND MID RR R
HEAT IND HI RR R
ORN
WHT
BRN
BLU
YEL
PNK
DASHLIGHTS BRIGHTNESS CONTROLLER (In the gauge control module)
REAR SEAT HEATER CONTROL UNIT
RR L SEAT HEATER
RR L H/SEAT TH+
RR L H/SEAT TH-
RR R H/SEAT TH-
RR R H/SEAT TH+
RR R SEAT HEATER
TAN
LT BLU
THERMISTOR
BREAKER
SEAT CUSHION HEATER
LEFT REAR SEAT
RIGHT REAR SEAT
BLK
G505

GENERAL INFORMATION

SEAT HEATERS SELF-DIAGNOSTIC FUNCTION

NOTE: The seat heater control unit has a thermistor self-diagnostic function. It indicates the result by lighting the LEDs of the seat heater switch.

- Both the front seat heater control unit and the rear seat heater control unit have a self-diagnostic function.
- The self-diagnosis is performed for each control unit.
- Use the front seat heater switch to perform the self-diagnosis and read the trouble history on the front side.
- Use the rear seat heater switch to perform the self-diagnosis and read the trouble history on the rear side.

How to Use the Self-Diagnostic Function

NOTE: Do steps 2-3 within 10 seconds after doing step 1.

1. Turn the vehicle to the ON mode.

2. While pressing the left seat heater switch, press the right seat heater switch three times.

3. Release the left seat heater switch, and press the right seat heater switch three times.

4. When the system enters the self-diagnostic mode, all of the seat heater switch indicators turn on for 2 seconds.

5. All of the seat heater switch indicators alternatively turn on and off every 2 seconds during self-diagnosis.

6. If any DTC is stored, the system shifts to the LED pattern, which will continue to blink every 2 seconds until the vehicle is turned to the OFF (LOCK) mode. If no DTCs are stored, the system shifts to the normal control.

- During self-diagnostic mode, the control unit blinks the seat heater switch indicators in a specific pattern corresponding to the failure.
- One DTC is displayed four times. If more than one failure exists, the next DTC is displayed after 2 seconds.
- After all patterns are displayed, the cycle will be repeated until the self-diagnostic mode is off.
- The DTC is displayed on either seat heater switch according to where the failure has occurred.
- The DTC is displayed using the seat heater switch indicator for the seat in which the failure has been detected.

How to Check for History DTCs

The seat heater control unit can record history DTCs. To read the history DTCs.

NOTE: Do steps 2-3 within 10 seconds after doing step 1.

1. Turn the vehicle to the ON mode.

2. Press the left seat heater switch three times.

3. Press the right seat heater switch six times.

4. Press the left seat heater switch three times.

5. When the system enters the trouble history read mode, all of the heater seat indicators turn on for 3 seconds.

6. If any DTC is stored, the system shifts to the LED pattern, which will continue to blink every 2 seconds until the vehicle is turned to the OFF (LOCK) mode. If no DTCs are stored, the system shifts to the normal control.

- During self-diagnostic mode, the control unit blinks the seat heater switch indicators in a specific pattern corresponding to the failure.
- One DTC is displayed four times. If more than one failure exists, the next DTC is displayed after 2 seconds.
- After all patterns are displayed, the cycle will be repeated until the self-diagnostic mode is off.
- The DTC is displayed on either seat heater switch according to where the failure has occurred.
- The DTC is displayed using the seat heater switch indicator for the seat in which the failure has been detected.

Indicator Blink Patterns

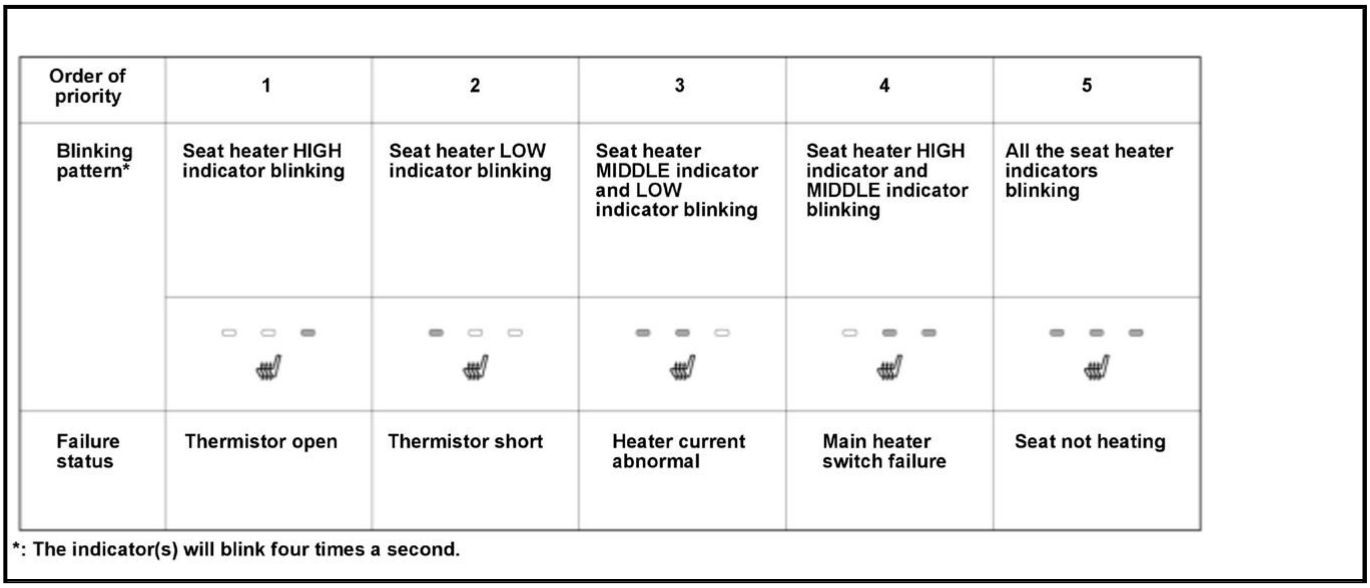

Order of priority	1	2	3	4	5
Blinking pattern*	Seat heater HIGH indicator blinking	Seat heater LOW indicator blinking	Seat heater MIDDLE indicator and LOW indicator blinking	Seat heater HIGH indicator and MIDDLE indicator blinking	All the seat heater indicators blinking
	○ ○ ●	● ○ ○	● ● ○	○ ● ●	● ● ●
Failure status	Thermistor open	Thermistor short	Heater current abnormal	Main heater switch failure	Seat not heating

*: The indicator(s) will blink four times a second.

How to Clear the DTCs

Whenever the control unit detects failures (failure main heater switch, abnormal heater current, and/or seat not heating), each failure is stored in the control unit.

To clear the DTCs, press and hold the switch for the seat to be cleared for 6 seconds.

NOTE:

- When the driver's side (or passenger's side) is cleared, only the DTCs for the applicable side will be cleared.
- After clearing the DTCs, all seat heater indicators will turn on for 2 seconds, and then go off.
- A thermistor open or a thermistor short failure is stored only when the vehicle ignition in the ON mode. After the vehicle turns to the OFF (LOCK) mode, it is cleared.
- If an open or short circuit failure occurs in the thermistor, the self-diagnostic mode display will be displayed after turning the vehicle to the ON mode.

Ending the Self-Diagnostic Function

Turn the vehicle to the OFF (LOCK) mode.

COMPONENT LOCATION INDEX

POWER LUMBAR SUPPORT COMPONENT LOCATION INDEX

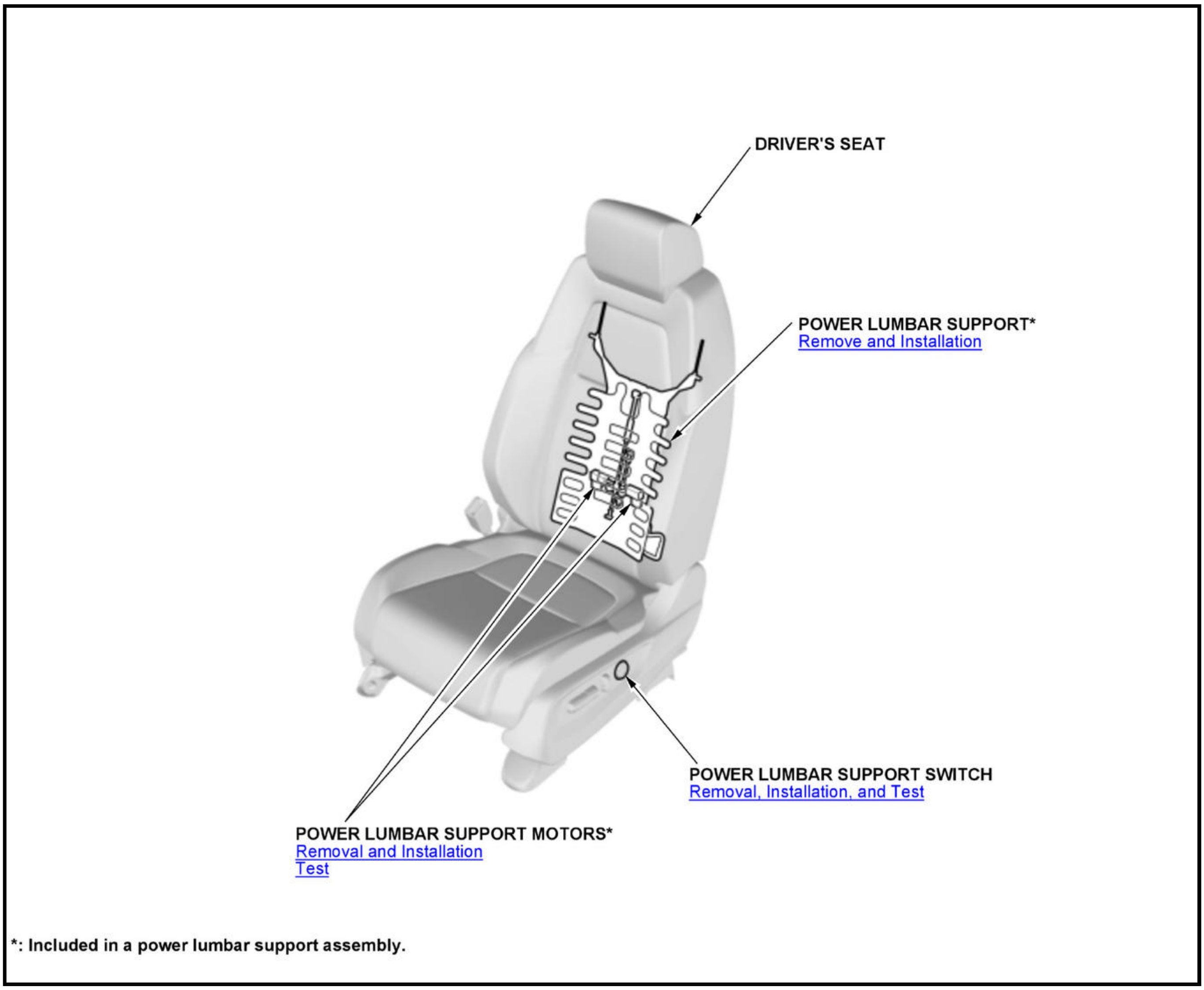
DRIVER'S SEAT
POWER LUMBAR SUPPORT*
Remove and Installation
POWER LUMBAR SUPPORT SWITCH
Removal, Installation, and Test
POWER LUMBAR SUPPORT MOTORS*
Removal and Installation
Test

*: Included in a power lumbar support assembly.

POWER SEATS COMPONENT LOCATION INDEX

Driver's Seat

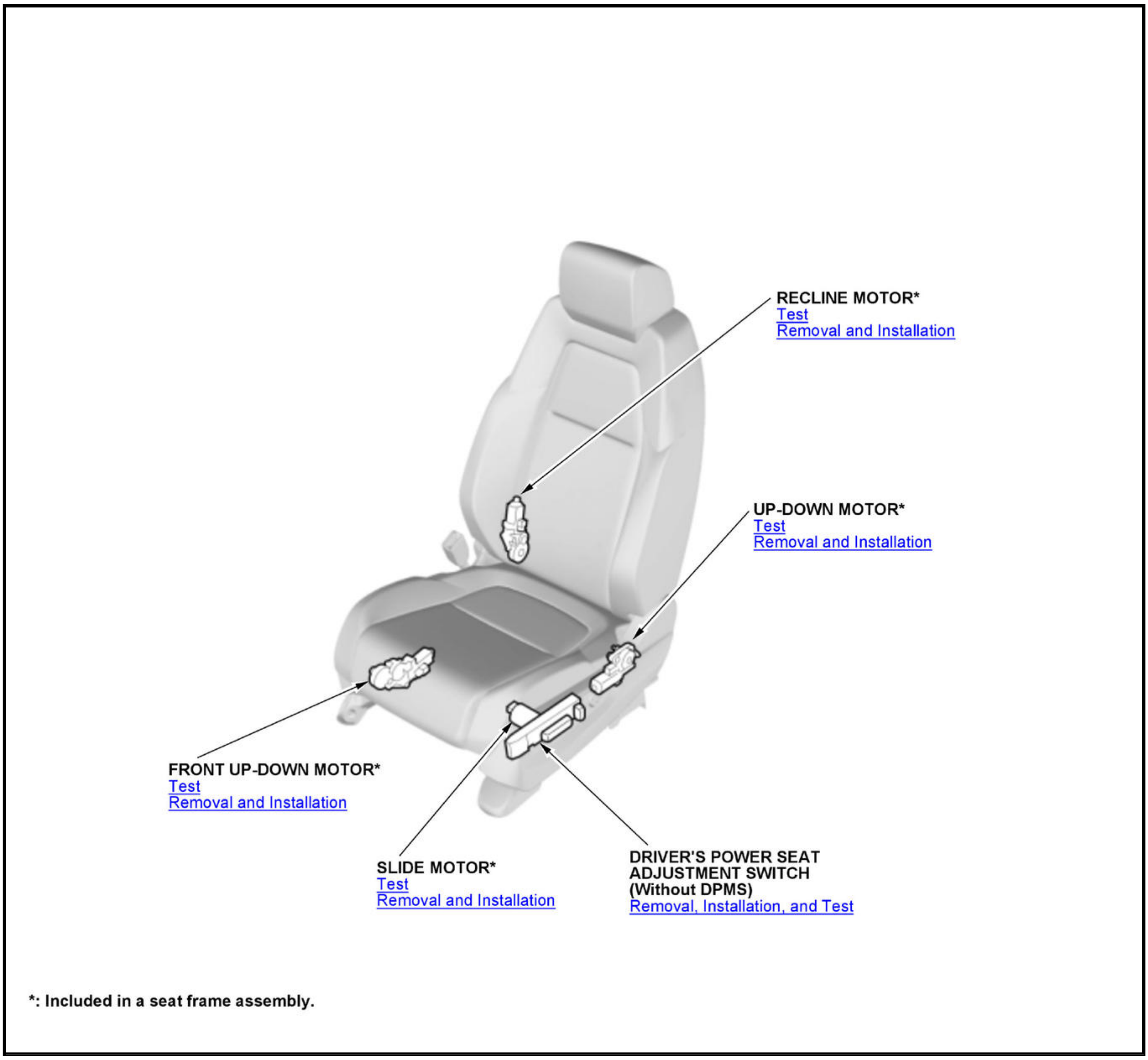
RECLINE MOTOR*
Test
Removal and Installation
UP-DOWN MOTOR*
Test
Removal and Installation
FRONT UP-DOWN MOTOR*
Test
Removal and Installation
SLIDE MOTOR*
Test
Removal and Installation
DRIVER'S POWER SEAT ADJUSTMENT SWITCH (Without DPMS)
Removal, Installation, and Test
*: Included in a seat frame assembly.

Front Passenger's Seat

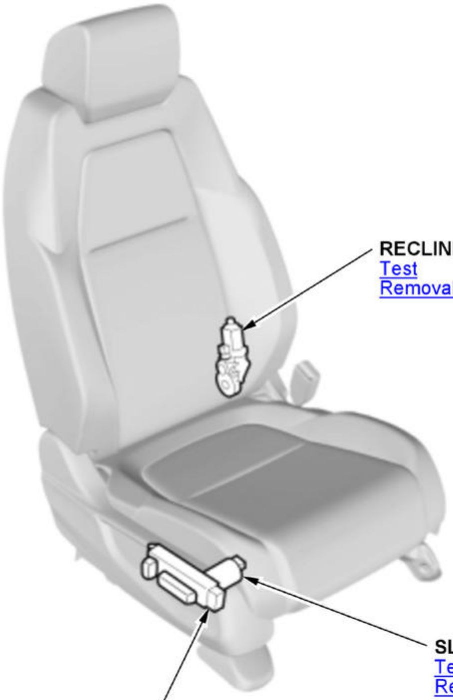
RECLINE MOTOR*
Test
Removal and Installation
SLIDE MOTOR*
Test
Removal and Installation
FRONT PASSENGER'S
POWER SEAT ADJUSTMENT SWITCH
Removal, Installation, and Test

*: Included in a seat frame assembly.

SEAT HEATERS COMPONENT LOCATION INDEX

For relationships between signals in a system, refer to System Diagram.

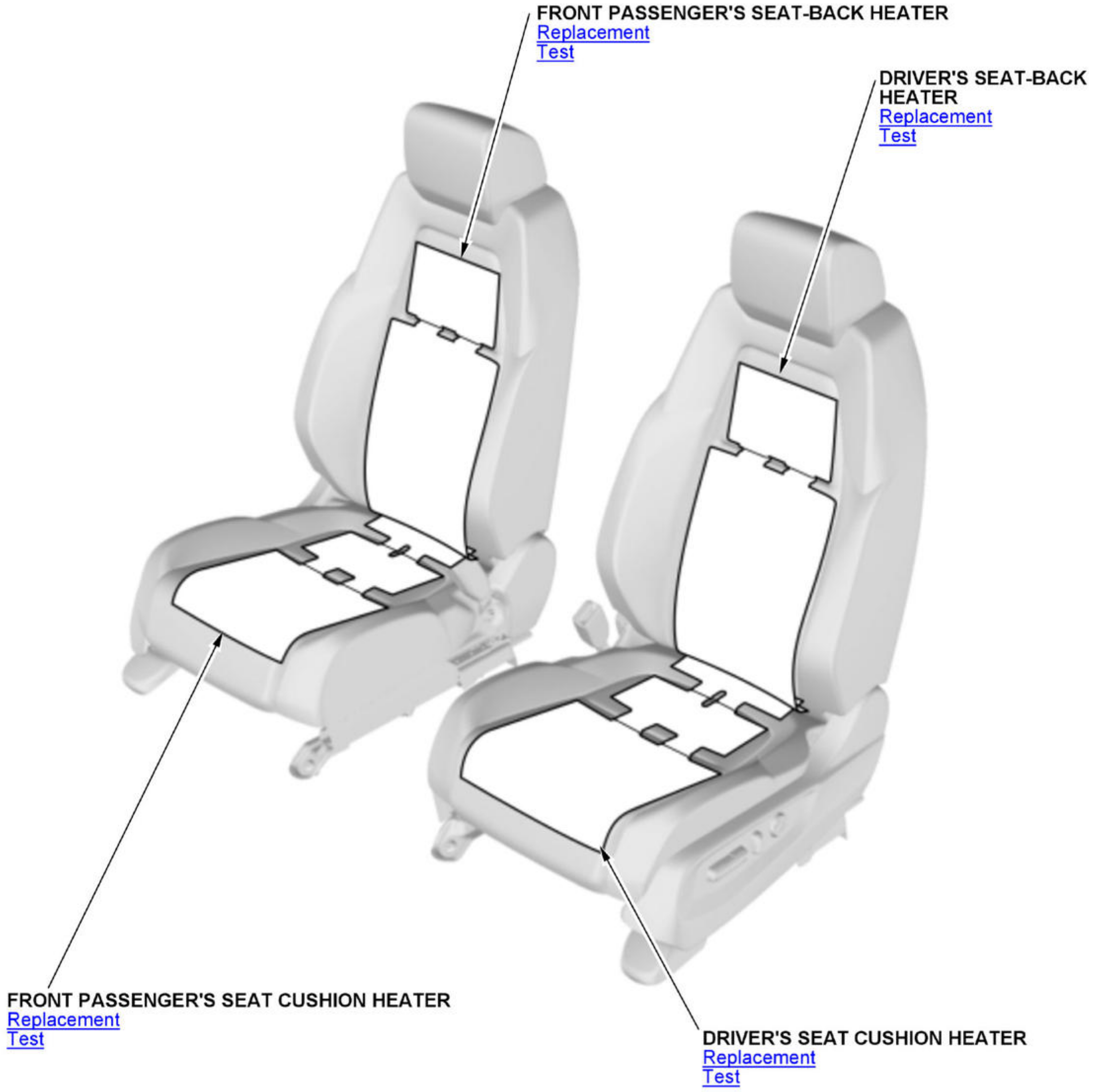
FRONT PASSENGER'S SEAT-BACK HEATER
Replacement
Test
DRIVER'S SEAT-BACK HEATER
Replacement
Test
FRONT PASSENGER'S SEAT CUSHION HEATER
Replacement
Test
DRIVER'S SEAT CUSHION HEATER
Replacement
Test

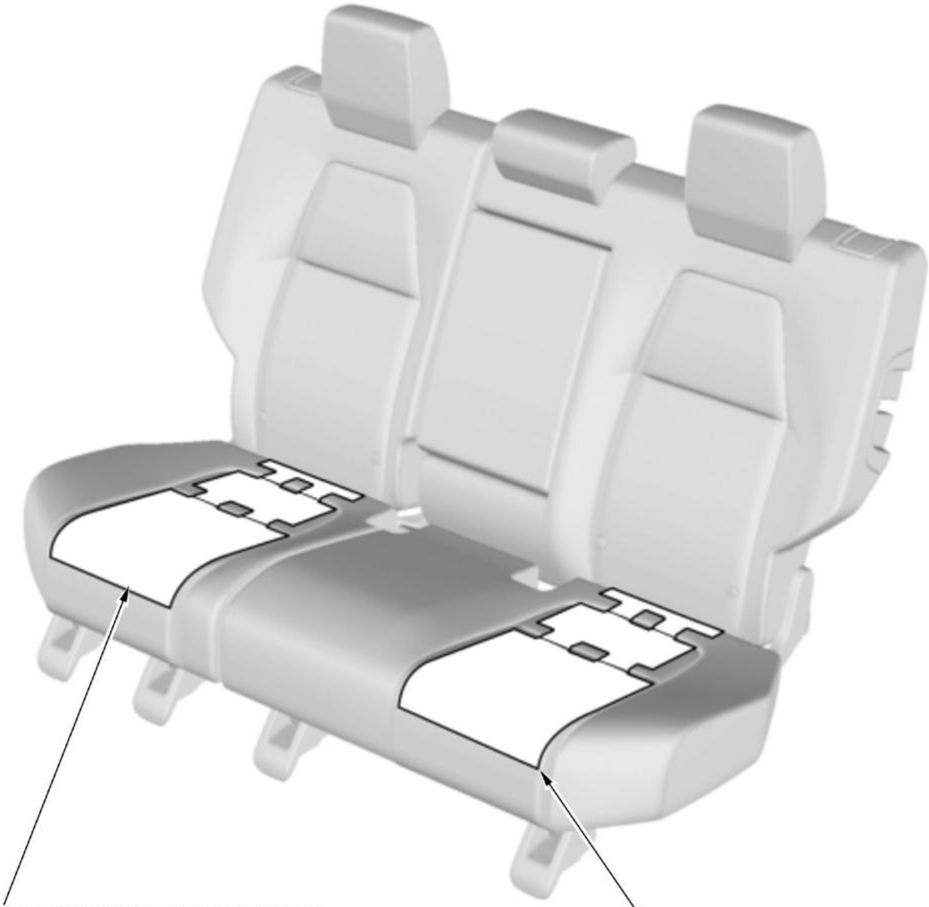

RIGHT REAR SEAT CUSHION HEATER
Replacement
Test

LEFT REAR SEAT CUSHION HEATER
Replacement
Test

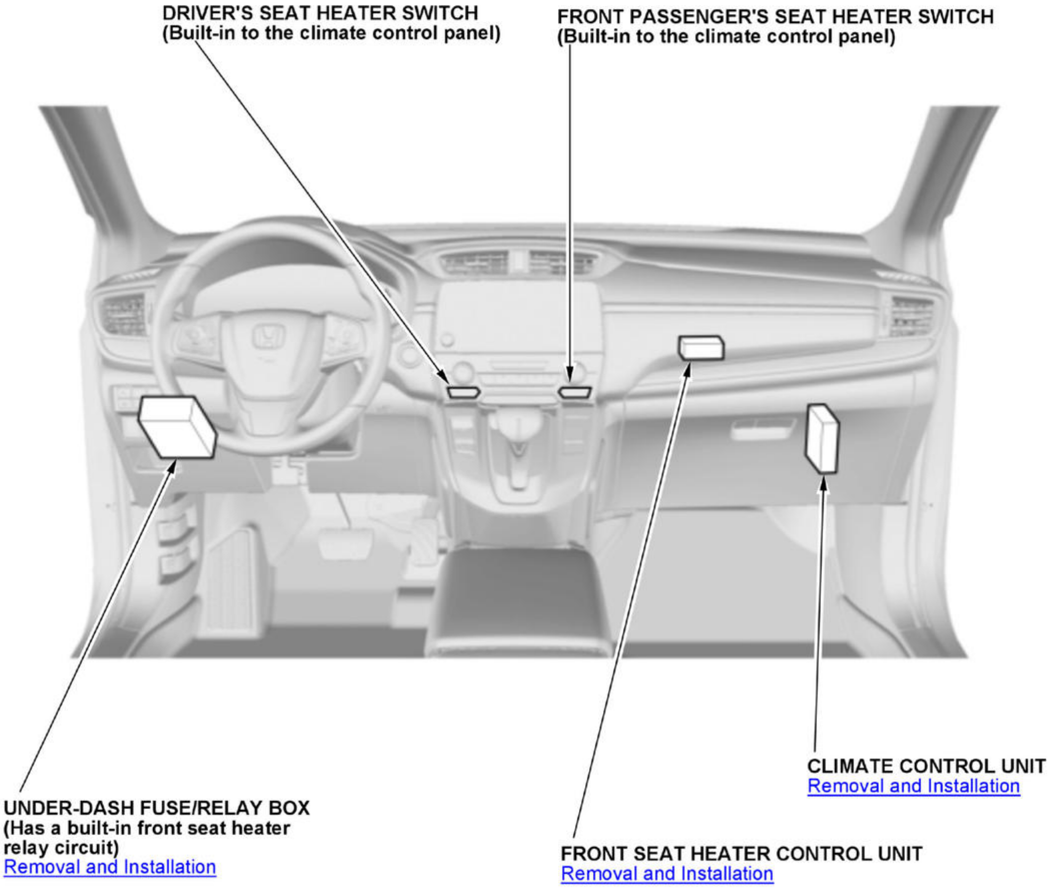
DRIVER'S SEAT HEATER SWITCH
(Built-in to the climate control panel)
FRONT PASSENGER'S SEAT HEATER SWITCH
(Built-in to the climate control panel)
CLIMATE CONTROL UNIT
Removal and Installation
UNDER-DASH FUSE/RELAY BOX
(Has a built-in front seat heater
relay circuit)
Removal and Installation
FRONT SEAT HEATER CONTROL UNIT
Removal and Installation

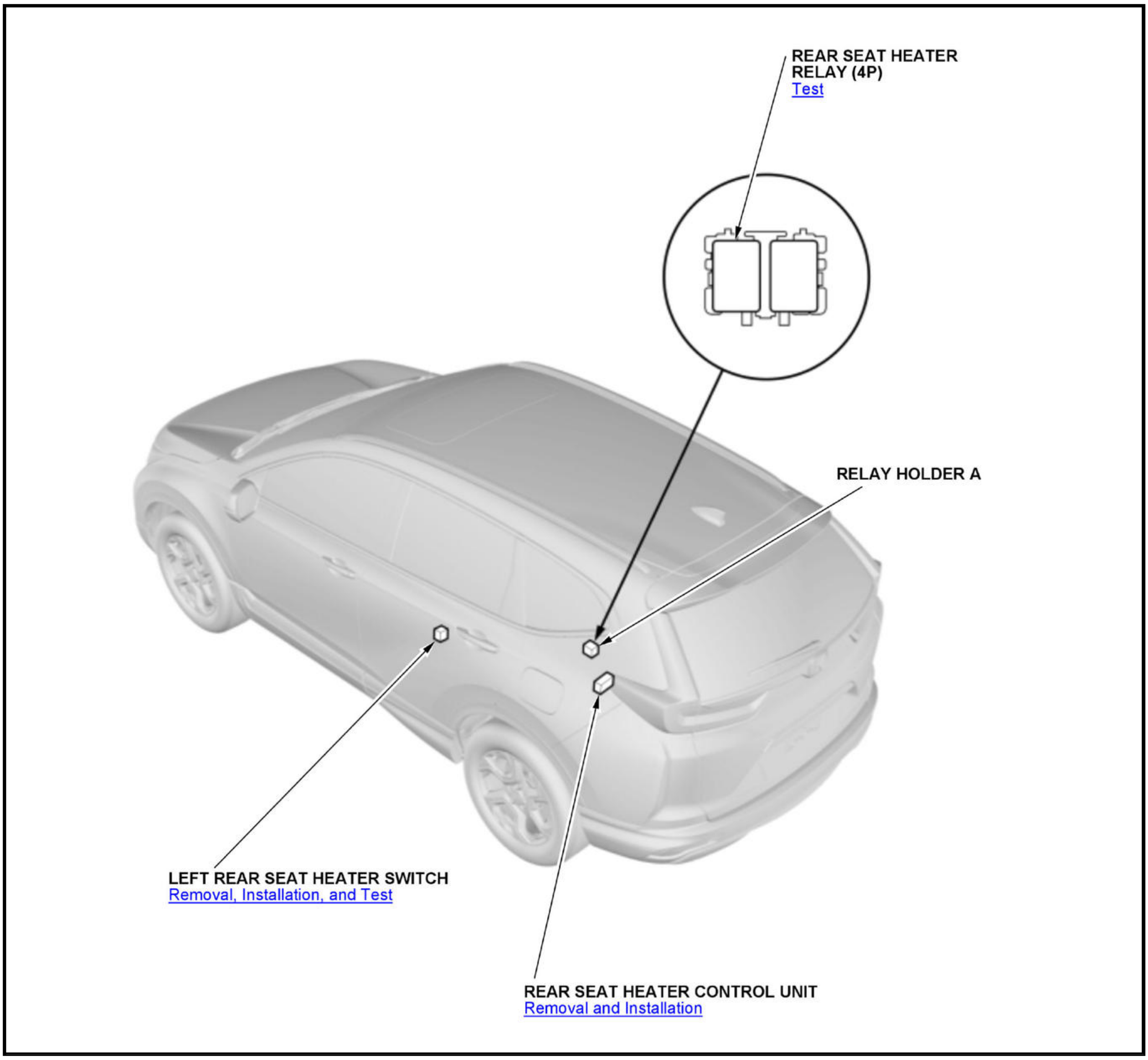
REAR SEAT HEATER RELAY (4P)
Test
RELAY HOLDER A
LEFT REAR SEAT HEATER SWITCH
Removal, Installation, and Test
REAR SEAT HEATER CONTROL UNIT
Removal and Installation

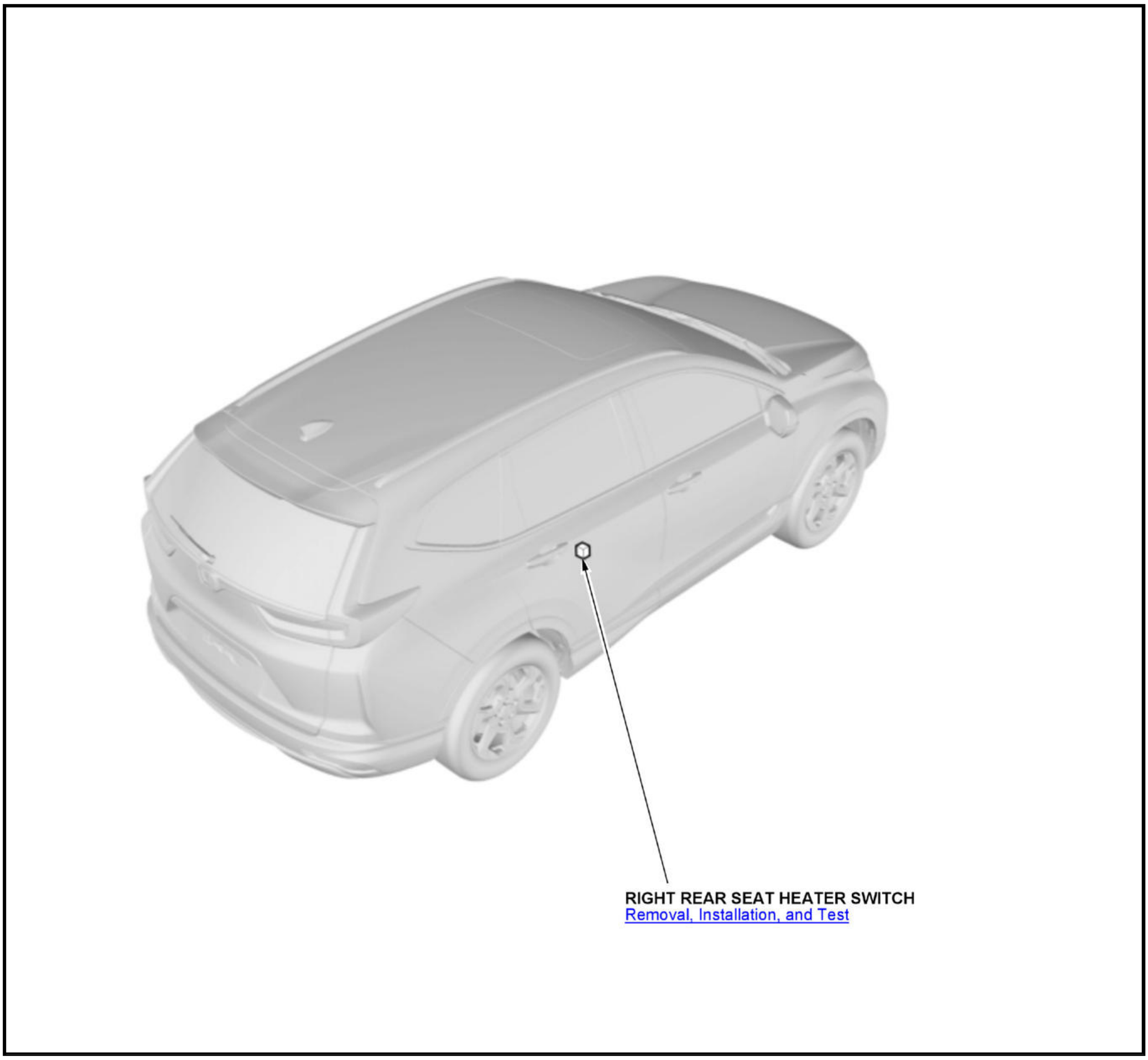
RIGHT REAR SEAT HEATER SWITCH
Removal, Installation, and Test

SEATS COMPONENT LOCATION INDEX (POWER SEAT)

Front seat

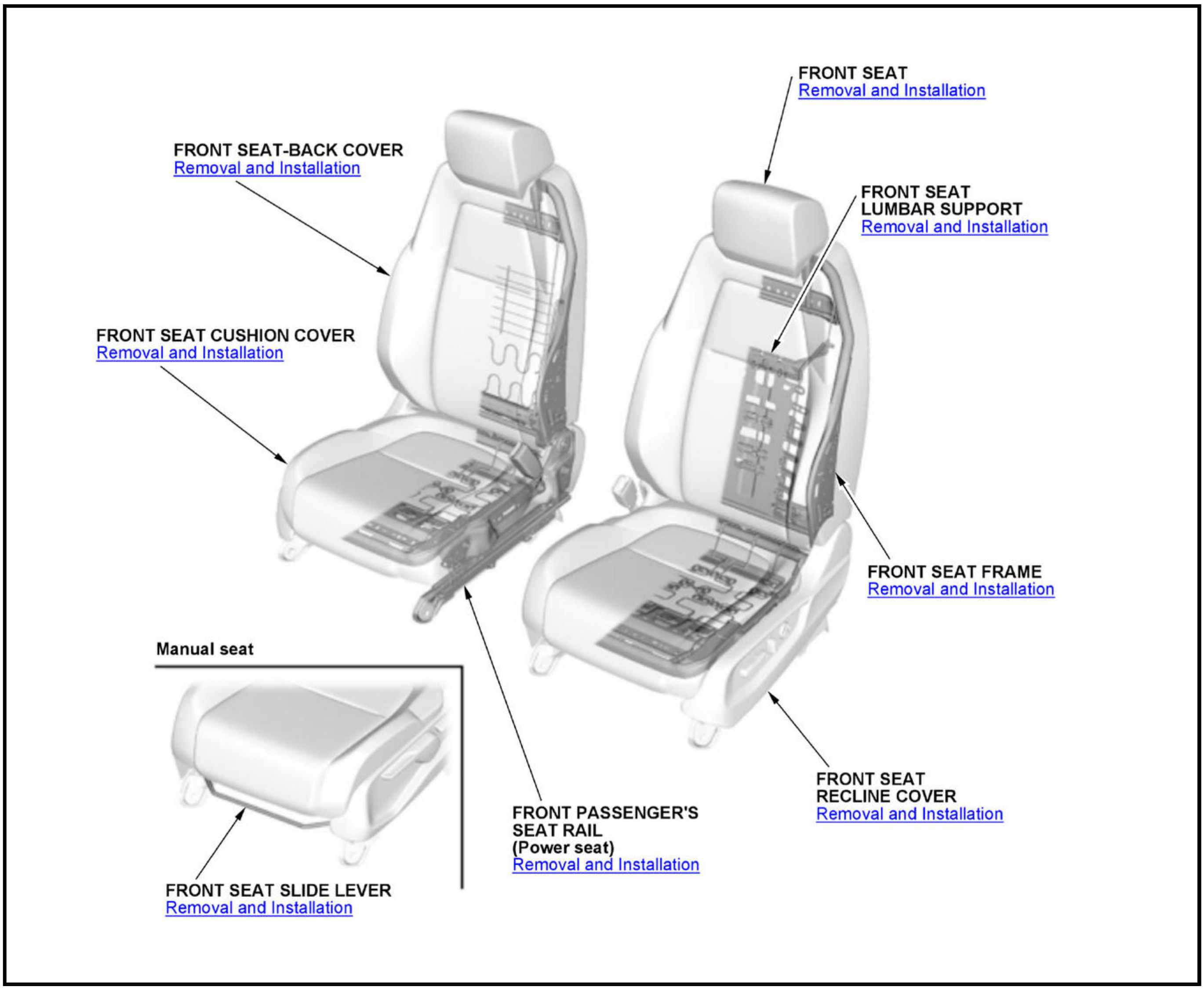
FRONT SEAT
Removal and Installation
FRONT SEAT-BACK COVER
Removal and Installation
FRONT SEAT
LUMBAR SUPPORT
Removal and Installation
FRONT SEAT CUSHION COVER
Removal and Installation
FRONT SEAT FRAME
Removal and Installation
Manual seat
FRONT SEAT
RECLINE COVER
Removal and Installation
FRONT PASSENGER'S
SEAT RAIL
(Power seat)
Removal and Installation
FRONT SEAT SLIDE LEVER
Removal and Installation

Rear seat

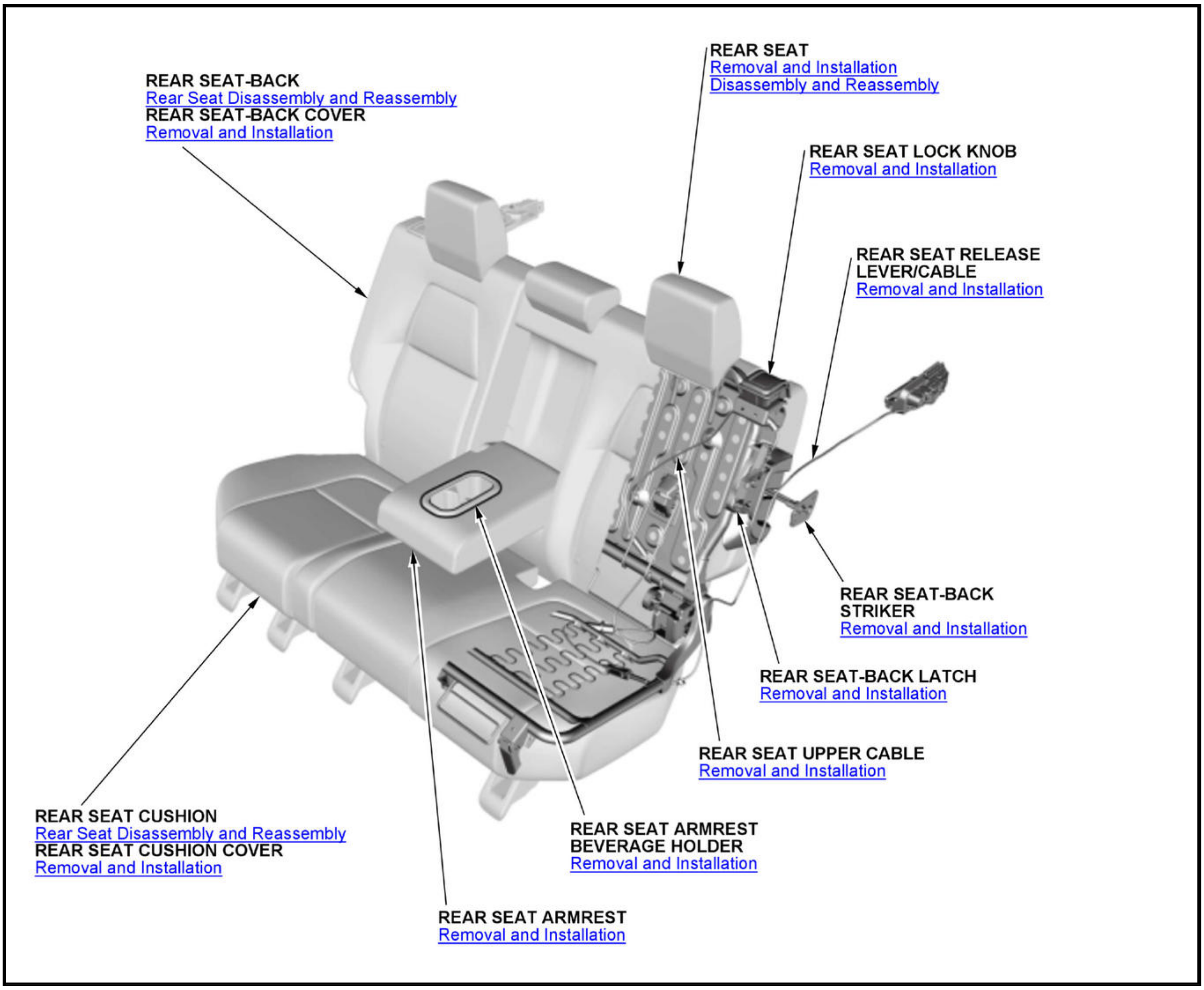
REAR SEAT-BACK
Rear Seat Disassembly and Reassembly
REAR SEAT-BACK COVER
Removal and Installation
REAR SEAT
Removal and Installation
Disassembly and Reassembly
REAR SEAT LOCK KNOB
Removal and Installation
REAR SEAT RELEASE LEVER/CABLE
Removal and Installation
REAR SEAT-BACK STRIKER
Removal and Installation
REAR SEAT-BACK LATCH
Removal and Installation
REAR SEAT UPPER CABLE
Removal and Installation
REAR SEAT CUSHION
Rear Seat Disassembly and Reassembly
REAR SEAT CUSHION COVER
Removal and Installation
REAR SEAT ARMREST BEVERAGE HOLDER
Removal and Installation
REAR SEAT ARMREST
Removal and Installation

REMOVAL AND INSTALLATION

HOMELINK UNIT REMOVAL AND INSTALLATION

Removal and Installation

Procedure

NOTE: Numbered call-outs in figure pertain to list numbers in following procedure.

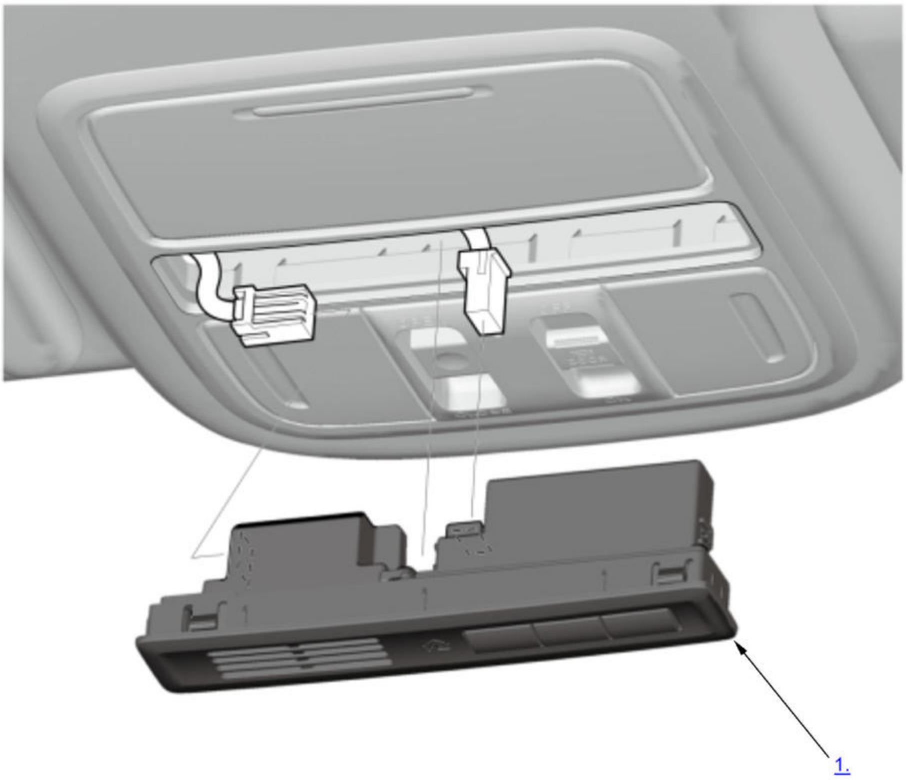

Fig. 1: HomeLink Unit Components (1 Of 2)
Courtesy of HONDA, U.S.A., INC.

NOTE: Numbered call-outs in figure pertain to list numbers in following procedure.

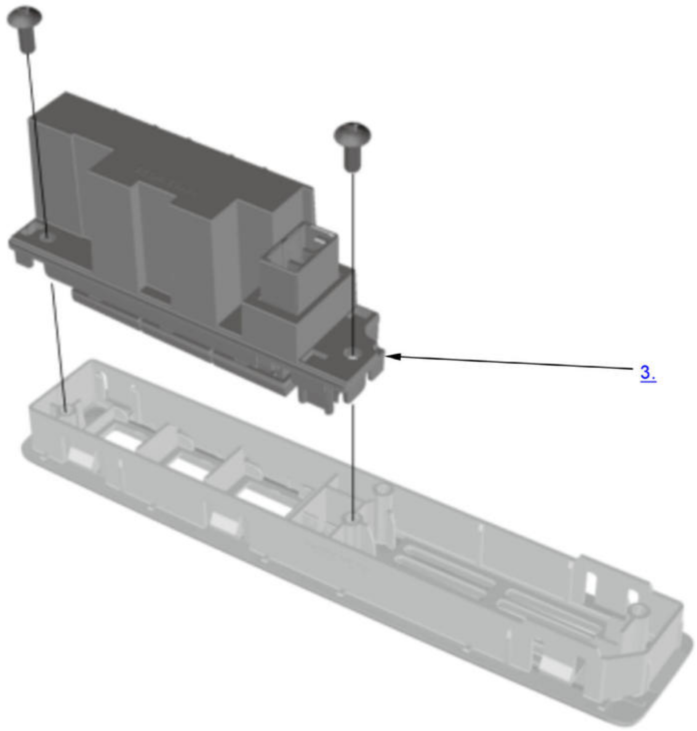

[Fig. 2: HomeLink Unit Components (2 Of 2)](#)
Courtesy of HONDA, U.S.A., INC.

1. HomeLink Module - Remove
2. [ANC/active Sound Control Microphone - Remove](#)
3. HomeLink Unit - Remove
4. All Parts Removed - Install

1. Install the parts in the reverse order of removal.

KEYLESS ACCESS LF ANTENNA REMOVAL AND INSTALLATION

Removal and Installation

Front Interior

NOTE: **Numbered call-outs in figure pertain to list numbers in following procedure.**

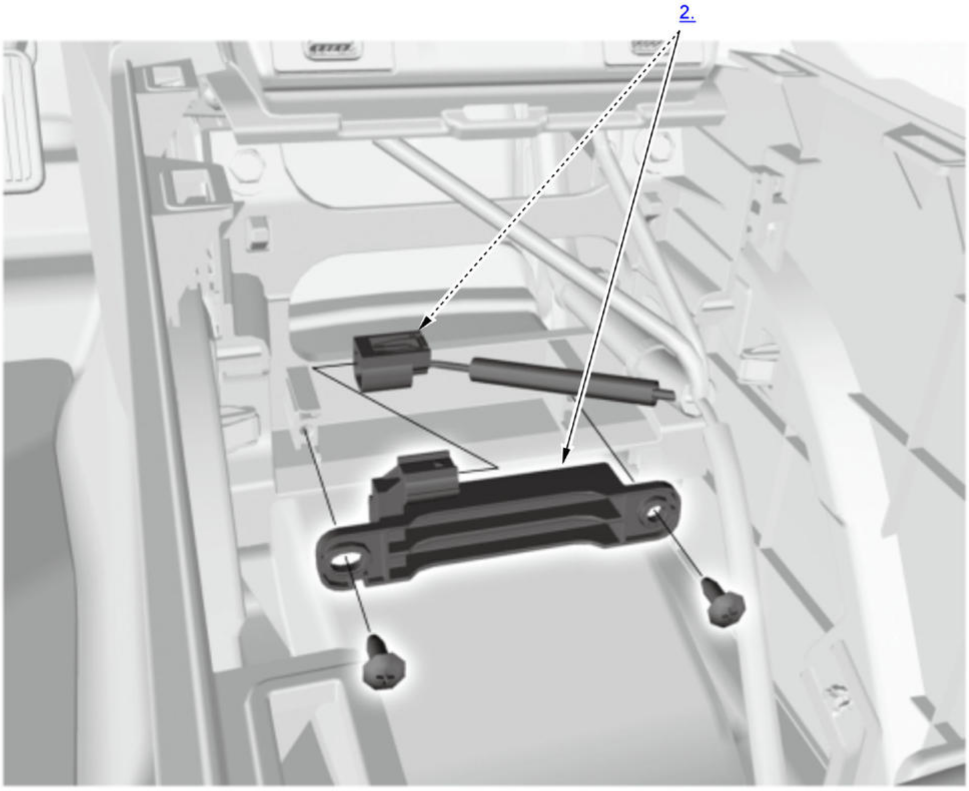

Fig. 3: Front Interior Keyless Access LF Antenna Components
Courtesy of HONDA, U.S.A., INC.

1. Center Console Panel - Remove
2. Front Interior LF Antenna - Remove
3. All Removed Parts - Install

1. Install the parts in the reverse order of removal.

Middle Interior

NOTE: **Numbered call-outs in figure pertain to list numbers in following procedure.**

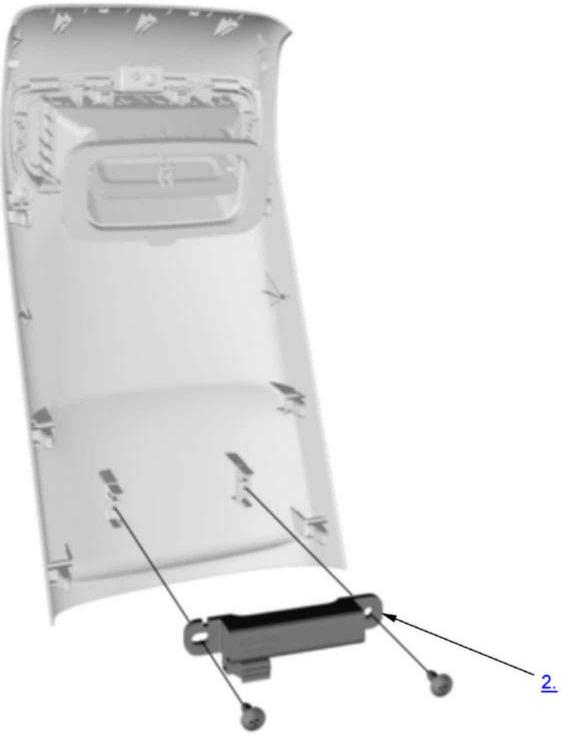

Fig. 4: Middle Interior Keyless Access LF Antenna Components
Courtesy of HONDA, U.S.A., INC.

1. Center Console Rear Trim - Remove
2. Middle Interior LF Antenna - Remove
3. All Removed Parts - Install

1. Install the parts in the reverse order of removal.

Rear Interior

NOTE: **Numbered call-outs in figure pertain to list numbers in following procedure.**

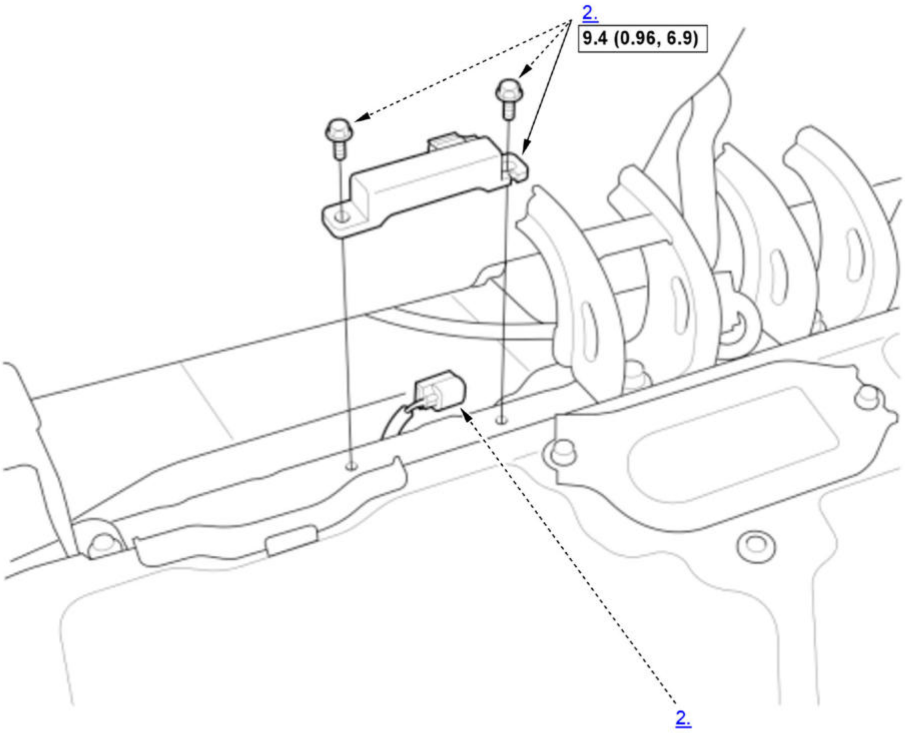

Fig. 5: Rear Interior Keyless Access LF Antenna Components
Courtesy of HONDA, U.S.A., INC.

☐	Torque: N.m (kgf.m, lbf.ft)

1. Rear Carpet Trim - Remove
2. Rear Interior LF Antenna - Remove
3. All Removed Parts - Install

   1. Install the parts in the reverse order of removal.

Rear Bumper

NOTE: **Numbered call-outs in figure pertain to list numbers in following procedure.**

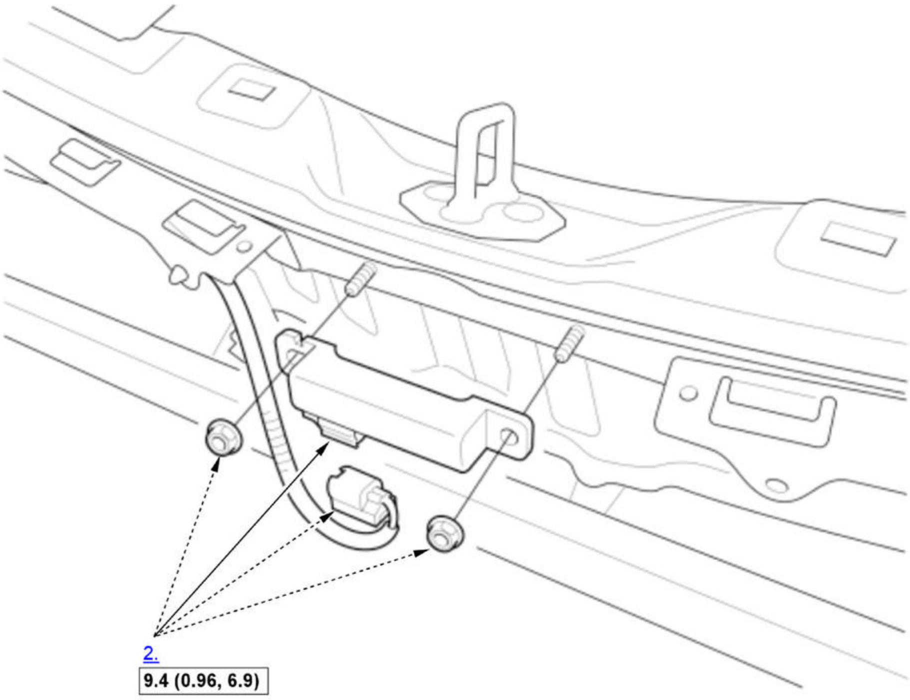

Fig. 6: Rear Bumper Keyless Access LF Antenna Components
Courtesy of HONDA, U.S.A., INC.

1. Rear Bumper - Remove
2. Rear Bumper LF Antenna - Remove
3. All Removed Parts - Install

> 1. Install the parts in the reverse order of removal.

KEYLESS BUZZER REMOVAL AND INSTALLATION

Removal and Installation

Procedure

NOTE: Numbered call-outs in figure pertain to list numbers in following procedure.

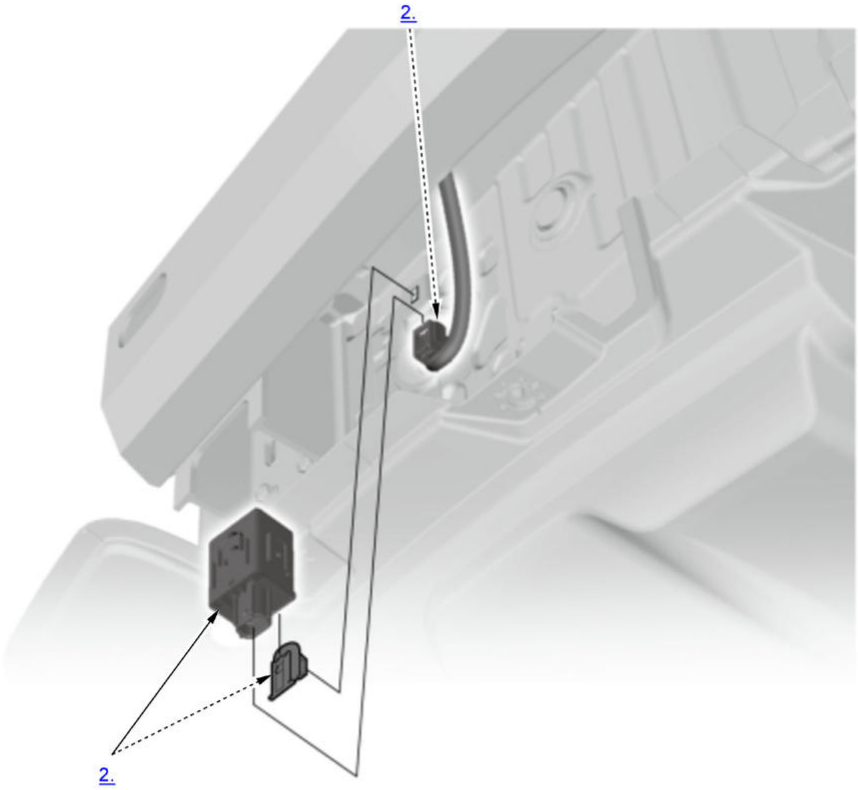

Fig. 7: Keyless Buzzer Components
Courtesy of HONDA, U.S.A., INC.

1. **Rear Bumper - Remove**
2. Keyless Buzzer - Remove
3. All Removed Parts - Install

1. Install the parts in the reverse order of removal.

REMOVAL, INSTALLATION & TEST

KEYLESS ACCESS REMOTE REMOVAL, INSTALLATION, AND TEST

Test

NOTE:

- If the doors do not lock or unlock with the remote, check the LED on the remote by pressing the lock or unlock button. If the LED does not come on, replace the remote battery.
- If the doors unlock or lock with the remote, but the LED on the remote does not come on, the LED is faulty; replace the remote.
- If any door is open, you cannot lock the doors with the remote.
- If you unlocked the doors with the remote, but do not open any of the doors within 30 seconds, the doors relock automatically.
- The doors will only lock or unlock with the exception of the remote if the power is in OFF mode.

1. Remote - Test

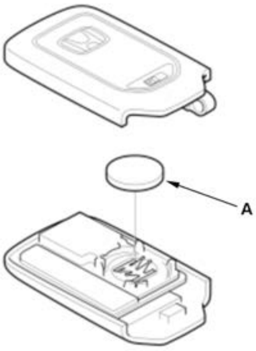	1. Open the remote and check for water damage.
	- If you find any water damage, replace the remote and **register the new remote** .
	- If there is no water damage, go to step 2.
	2. Replace the remote battery (A) with a new one (CR2032), and try to lock and unlock the doors with the remote by pressing the lock or unlock button at least 10 times:
	- If the doors lock and unlock, the remote is OK.
	- If the remote does not work after replacing the remote battery, verify that the correct battery was installed and the polarity is correct.
	- If the doors still do not lock and unlock, go to step 3.
	3. **Reprogram and register the remote** , then try to lock and unlock the doors.
	- If the doors do not lock and unlock, substitute a known-good remote and recheck. If it is still not operating, **replace the body control module** .
	- If the doors lock and unlock, the remote is OK.
	- If the doors do not lock and unlock, try to program another vehicle using the remote.
	-
	    - If the remote programs another vehicle, **go to B-CAN System Diagnosis Test Mode A** .
	    - If the remote will not program another vehicle, replace it.

POWER SWITCH REMOVAL, INSTALLATION, AND TEST

Removal and Installation

Procedure

NOTE: **Numbered call-outs in figure pertain to list numbers in following procedure.**

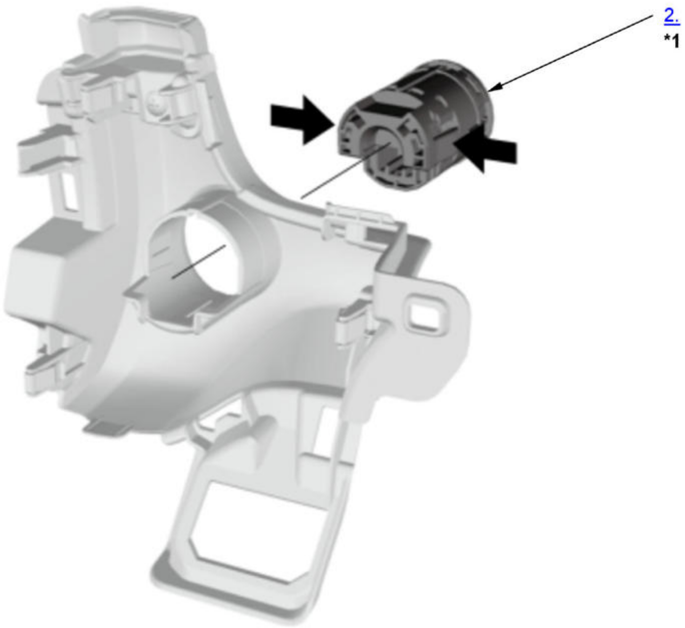

Fig. 8: Power Switch Components
Courtesy of HONDA, U.S.A., INC.

*1	Power Switch Light: LED

1. **Driver's Dashboard Inner Panel - Remove**
2. Power Switch - Remove
3. All Removed Parts - Install

   1. Install the parts in the reverse order of removal.

Test

1. Power Switch - Test

   1. Check the switch according to the table.

   NOTE:

   - When an LED is located between terminals, check if the LED illuminates by connecting power and ground to the LED.
   - Note this important operating characteristic; diode bias causes a diode to fully conduct electricity in one direction (forward), while not at all in the opposite direction (reverse).

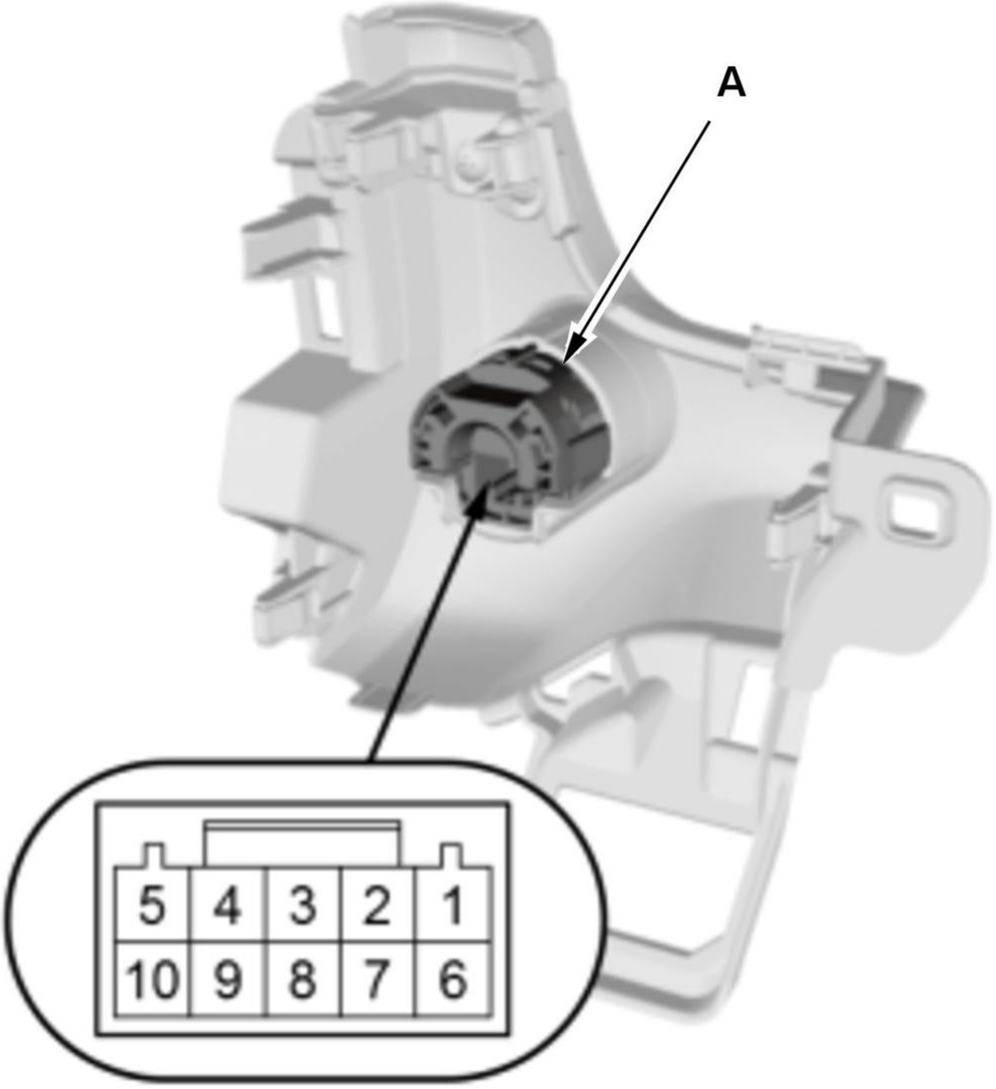

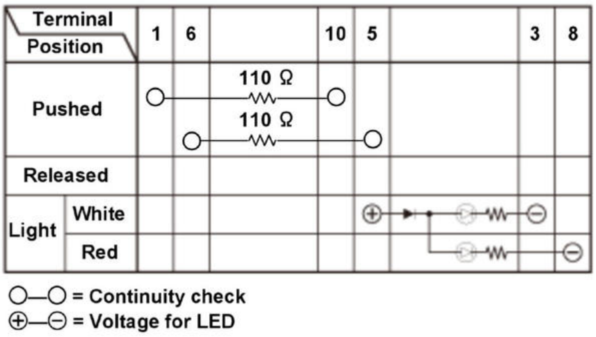

Terminal / Position		1	6		10	5		3	8
Pushed		○		110 Ω	○				
			○	110 Ω		○			
Released									
Light	White					⊕		⊖	
	Red								⊖

○—○ = Continuity check

⊕—⊖ = Voltage for LED

2. If the result is not as specified, replace the power switch (A).

LF Antenna Test

3. Check for continuity between the terminals according to the table. There should be continuity.

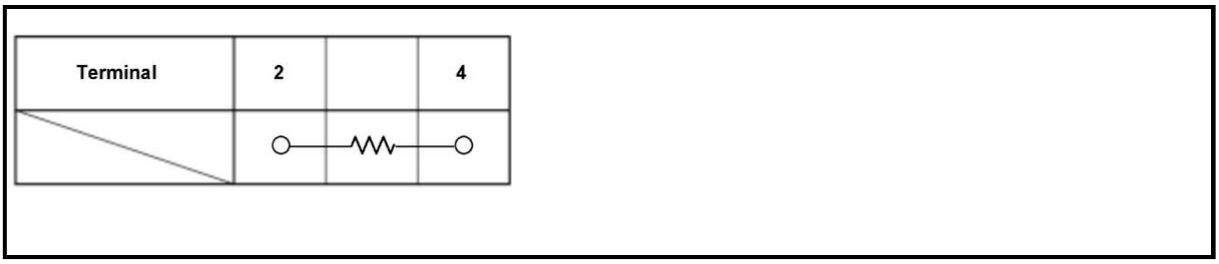

Terminal	2		4
	○	─⋀⋀⋀─	○

4. If the continuity is not as specified, replace the power switch.

REMOVAL INSTALLATION AND TEST

ENGINE START/STOP SWITCH REMOVAL, INSTALLATION, AND TEST

Removal and Installation

1

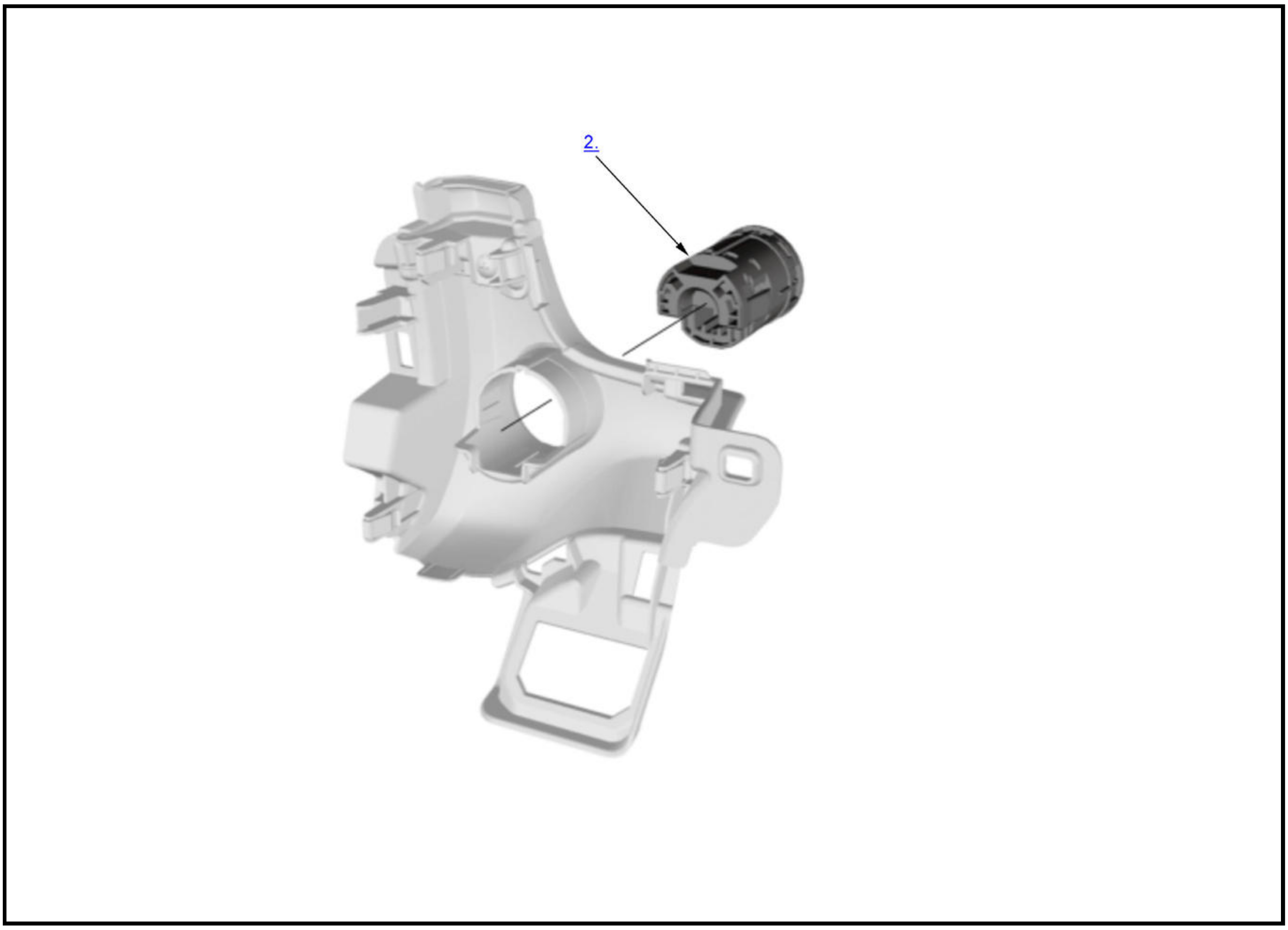

1. **Driver's Dashboard Inner Panel - Remove**
2. Engine Start/Stop Switch - Remove
3. All Removed Parts - Install

    1. Install the parts in the reverse order of removal.

Test

1. Engine Start/Stop Switch - Test

    1. Check the engine start/stop switch (A) according to the table.

    NOTE:

    - When an LED is located between terminals, check if the LED illuminates by connecting power and ground to the LED.

- Note this important operating characteristic; diode bias causes a diode to fully conduct electricity in one direction (forward), while not at all in the opposite direction (reverse).

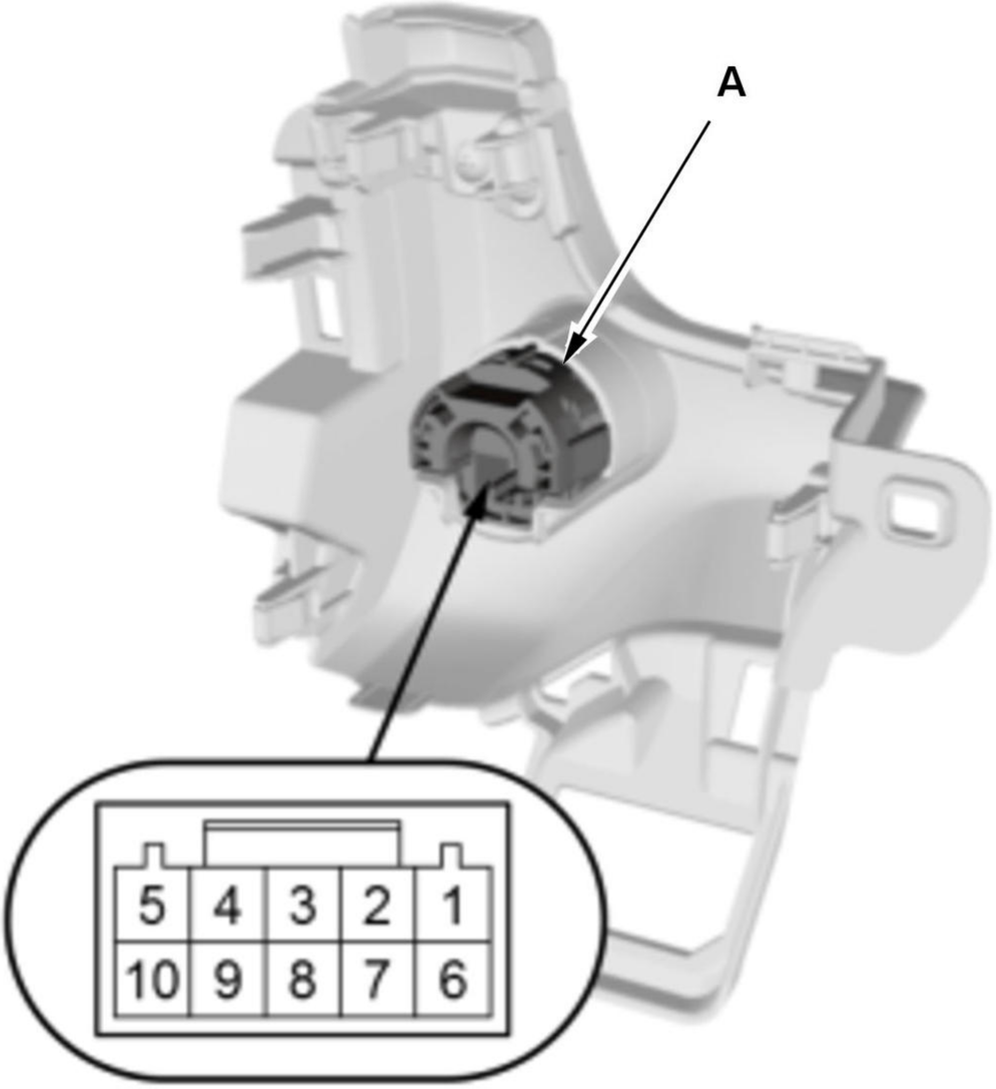
A
5
4
3
2
1
10
9
8
7
6

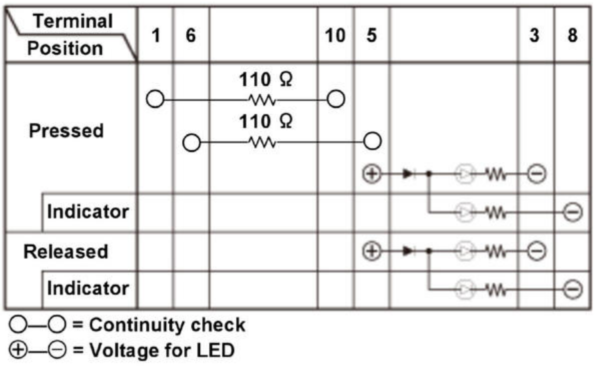
Terminal
Position
1
6
10
5
3
8
Pressed
110 Ω
110 Ω
Indicator
Released
Indicator
○—○ = Continuity check
⊕—⊖ = Voltage for LED

2. If the result is not as specified, replace the engine start/stop switch.

LF Antenna Test

3. Check for continuity between the terminals according to the table. There should be continuity.

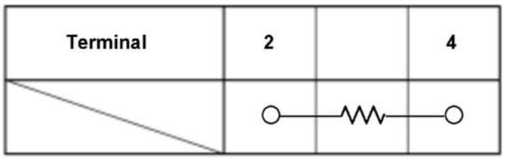

Terminal	2		4
	○—	—ʌʌʌ—	—○

4. If the continuity is not as specified, replace the engine start/stop switch.

KEYLESS ACCESS REMOTE REMOVAL, INSTALLATION, AND TEST

Test

NOTE:

- If the doors do not lock or unlock with the remote, check the LED on the remote by pressing the lock or unlock button. If the LED does not come on, replace the remote battery.
- If the doors unlock or lock with the remote, but the LED on the remote does not come on, the LED is faulty; replace the remote.
- If any door is open, you cannot lock the doors with the remote.
- If you unlocked the doors with the remote, but do not open any of the doors within 30 seconds, the doors relock automatically.
- The doors will only lock or unlock with the exception of the remote if the power is in OFF mode.

1. Remote - Test

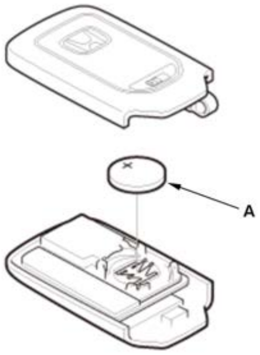

1. Open the remote and check for water damage.
   - If you find any water damage, replace the remote and **register the new remote** .
   - If there is no water damage, go to step 2.

2. Replace the remote battery (A) with a new one (CR2032), and try to lock and unlock the doors with the remote by pressing the lock or unlock button at least 10 times:

   - If the doors lock and unlock, the remote is OK.
   - If the remote does not work after replacing the remote battery, verify that the correct battery was installed and the polarity is correct.
   - If the doors still do not lock and unlock, go to step 3.

3. **Reprogram and register the remote** , then try to lock and unlock the doors.

   - If the doors do not lock and unlock, substitute a known-good remote and recheck. If it is still not operating, **replace the body control module** .
   - If the doors lock and unlock, the remote is OK.

- If the doors do not lock and unlock, try to program another vehicle using the remote.
-
  - -

    If the remote programs another vehicle, go to B-CAN System Diagnosis Test Mode A .
  - -

    If the remote will not program another vehicle, replace it.

KEYLESS ENTRY TRANSMITTER REMOVAL, INSTALLATION, AND TEST

Test

NOTE:

- If the doors do not lock or unlock with the transmitter, check the LED on the transmitter by pressing the lock or unlock button. If the LED does not come on, replace the transmitter battery.
- If the doors unlock or lock with the transmitter, but the LED on the transmitter does not come on, the LED is faulty; replace the transmitter.
- If any door is open, you cannot lock the doors with the transmitter.
- If you unlocked the doors with the transmitter, but do not open any of the doors within 30 seconds, the doors relock automatically.
- The doors will only lock or unlock with the transmitter if the ignition key is inserted in the ignition key cylinder.

Without HDS

1. Transmitter - Test

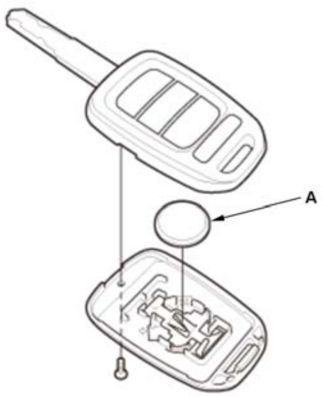

1. Open the keyless transmitter and check for water damage.

- If you find any water damage, replace the transmitter and register the new transmitter .
- If there is no water damage, go to step 2.

2. Replace the transmitter battery (A) with a new one (CR1620), and try to lock and unlock the doors with the transmitter by pressing the lock or unlock button at least 10 times:

- If the doors lock and unlock, the transmitter is OK.
- If the transmitter does not work after replacing the transmitter battery, verify that the correct battery was installed and the polarity is correct.
- If the doors still do not lock and unlock, go to step 3.

3. Reprogram and register the transmitter , then try to lock and unlock the doors.

- If the doors lock and unlock, the transmitter is OK.

	• If the doors do not lock and unlock, substitute a known-good transmitter, register it and recheck. If still not operating, replace the immobilizer-keyless control unit.

With HDS

2. Transmitter - Test

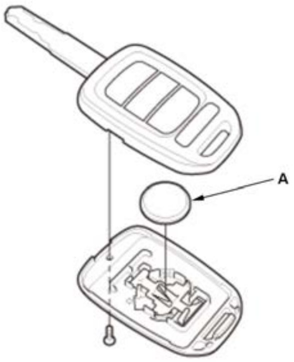	1. Press the transmitter lock or unlock button at least 10 times to reset the transmitter. • If the locks work, the transmitter is OK. • If the transmitter does not work after replacing the transmitter battery, verify that the correct battery was installed and the polarity is correct. • If any of the transmitter buttons do not work, replace the transmitter, then register the transmitter . • If the locks don't work, go to step 2. 2. Connect the HDS to the data link connector (DLC) 3. Select KEYLESS TRANSMITTER from the BODY ELECTRICAL menu, then select INSPECTION, then KEYLESS CHECK. 4. Press the lock, unlock, or HOLD button and check the response on the screen of the HDS. **NOTE:** The door lock actuators may or may not cycle when receiving input from the transmitter. • If KEYLESS ENTRY TRANSMITTER CODE IS RECEIVED is indicated, the transmitter is OK. • If DIFFERENT KEYLESS ENTRY TRANSMITTER CODE IS RECEIVED is working but indicated, the transmitter is not registered to the vehicle. If necessary, register the transmitter . • If KEYLESS ENTRY TRANSMITTER CODE IS NOT RECEIVED is indicated, go to step 5. 5. Open the transmitter and check for water damage. • If you find any water damage, replace the transmitter, then register the new transmitter . • If there is no water damage, go to step 6. 6. Replace the transmitter battery (A) with a new one (CR1620), and press the transmitter lock or unlock button and check the response on the screen of the HDS. • If KEYLESS ENTRY TRANSMITTER CODE IS RECEIVED is indicated, the transmitter is OK. • If KEYLESS ENTRY TRANSMITTER CODE IS NOT RECEIVED is indicated, go to step 7. 7. Use a different known-good transmitter and repeat steps 3 and 4.

	NOTE: The transmitter does not need to be programmed to the vehicle for this test. • If DIFFERENT KEYLESS ENTRY TRANSMITTER CODE WAS RECEIVED is indicated, replace the transmitter and, do the transmitter registration . • If KEYLESS ENTRY TRANSMITTER CODE WAS NOT RECEIVED is indicated, the immobilizer-keyless control unit is faulty, replace it and do the transmitter registration . **NOTE:** The transmitter is combined with the immobilizer transponder, so when the transponder is registered by the HDS, the transmitter programming is completed automatically.

REMOVAL AND INSTALLATION

HOMELINK UNIT REMOVAL AND INSTALLATION (WITH ROOF CONSOLE MODULE)

Removal and Installation

1

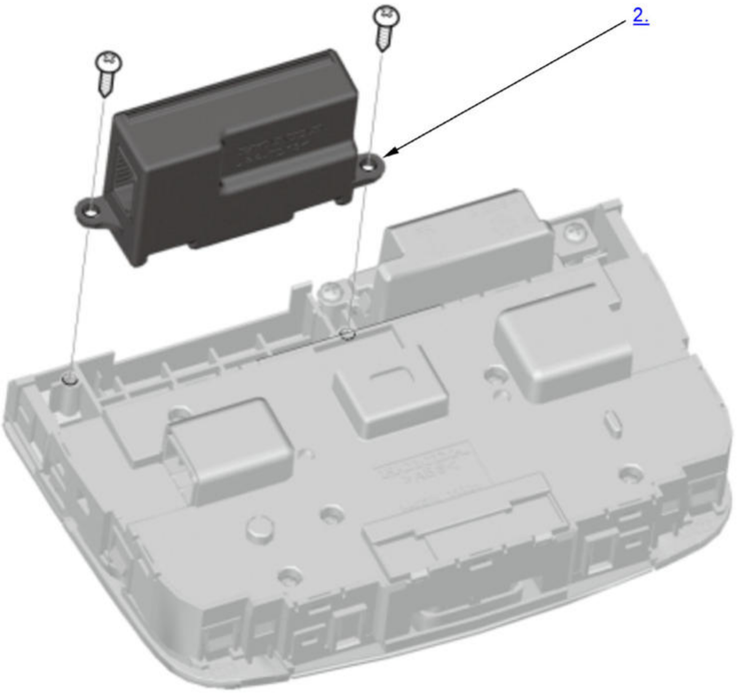

1. Roof Console Module - Remove
2. HomeLink Unit - Remove
3. All Parts Removed - Install

1. Install the parts in the reverse order of removal.

HOMELINK UNIT REMOVAL AND INSTALLATION(WITHOUT ROOF CONSOLE MODULE)

Removal and Installation

1

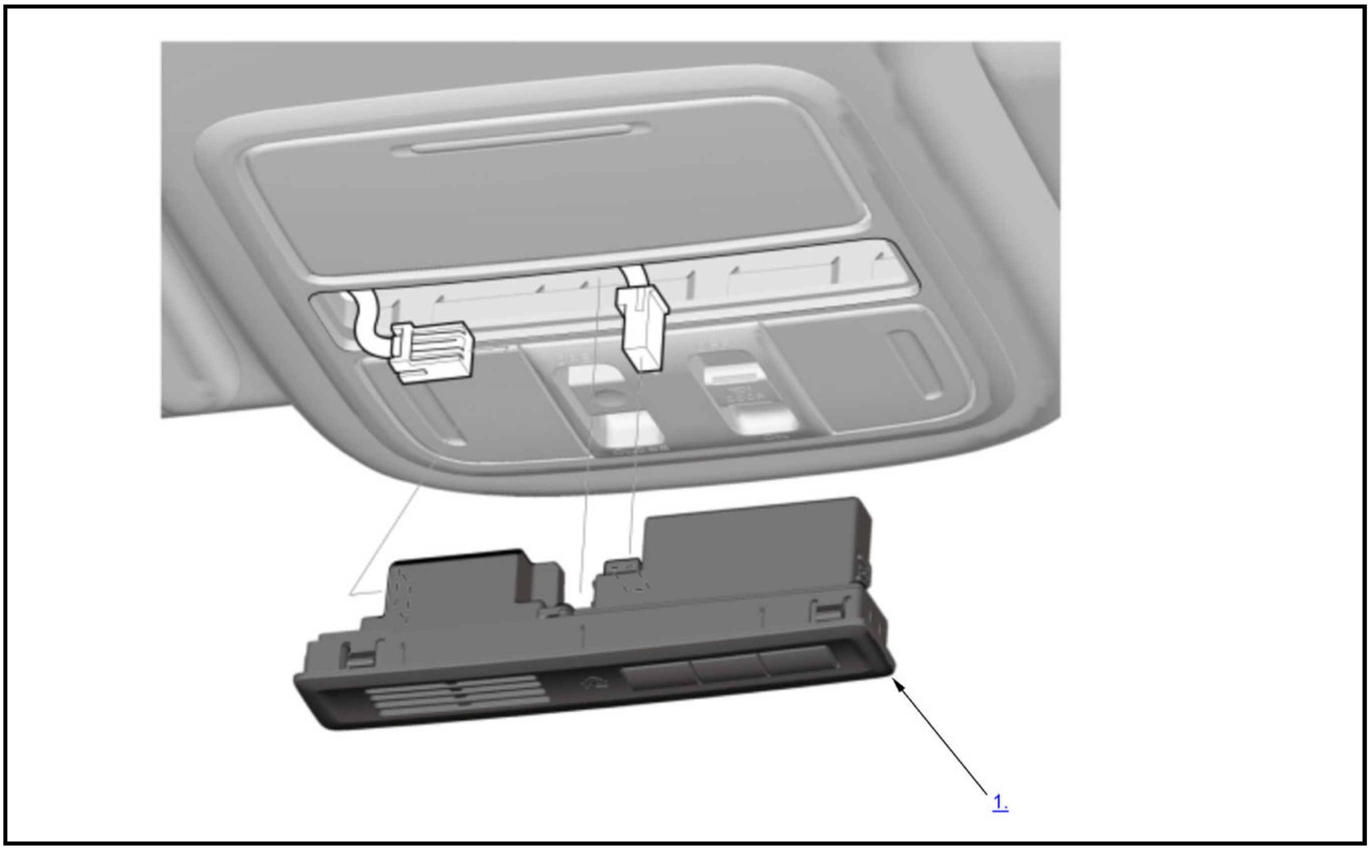

2

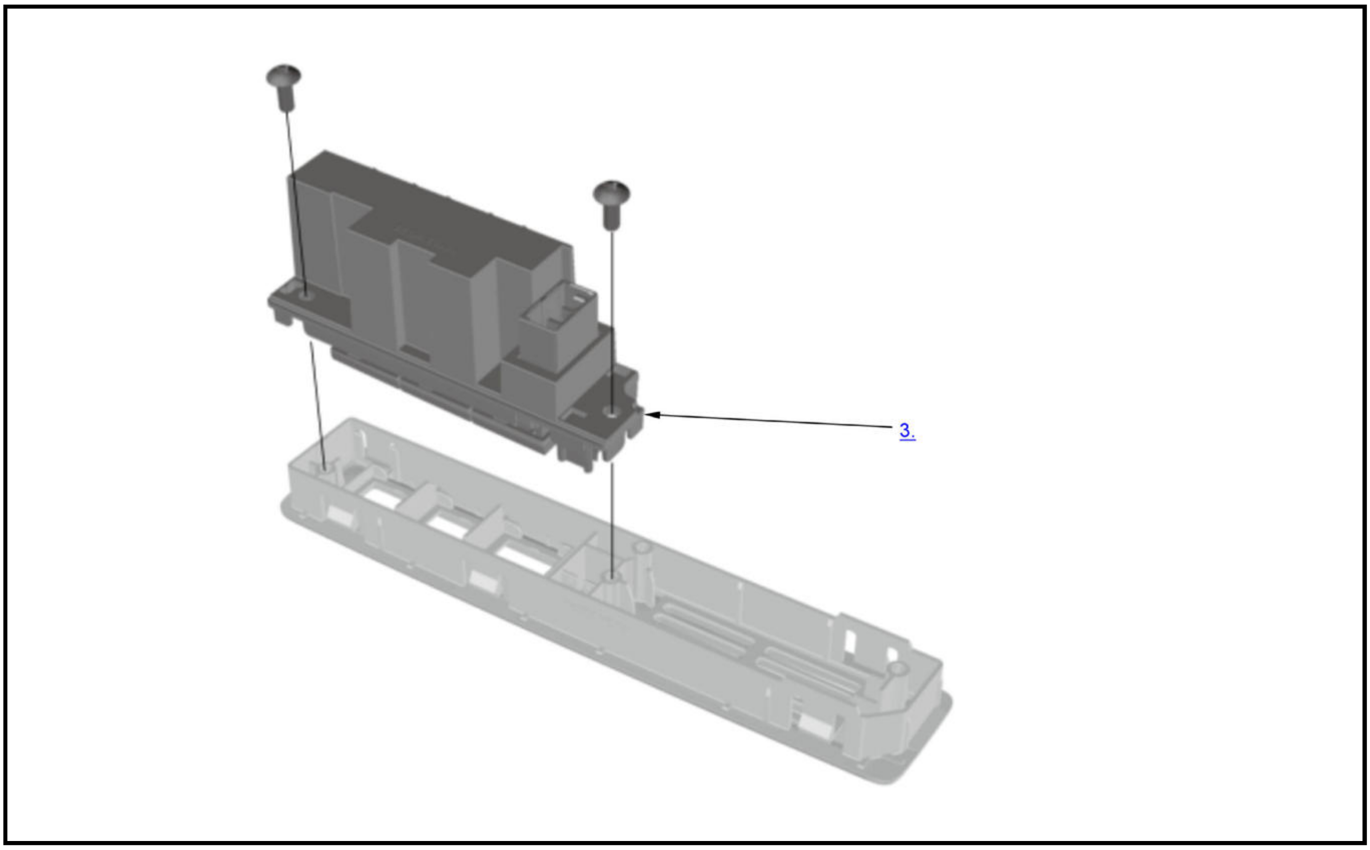

1. HomeLink Module - Remove
2. **ANC/active Sound Control Microphone - Remove**
3. HomeLink Unit - Remove
4. All Parts Removed - Install

1. Install the parts in the reverse order of removal.

IMMOBILIZER-KEYLESS CONTROL UNIT REMOVAL AND INSTALLATION

Removal and Installation

NOTE:

- SRS components are located in this area. Review the **SRS component locations** and the **precautions and procedures** before doing repairs or service.
- If the immobilizer-keyless control unit is replaced, **do the immobilizer system registration** . If the original immobilizer-keyless control unit is installed, confirm that all systems work properly.

1

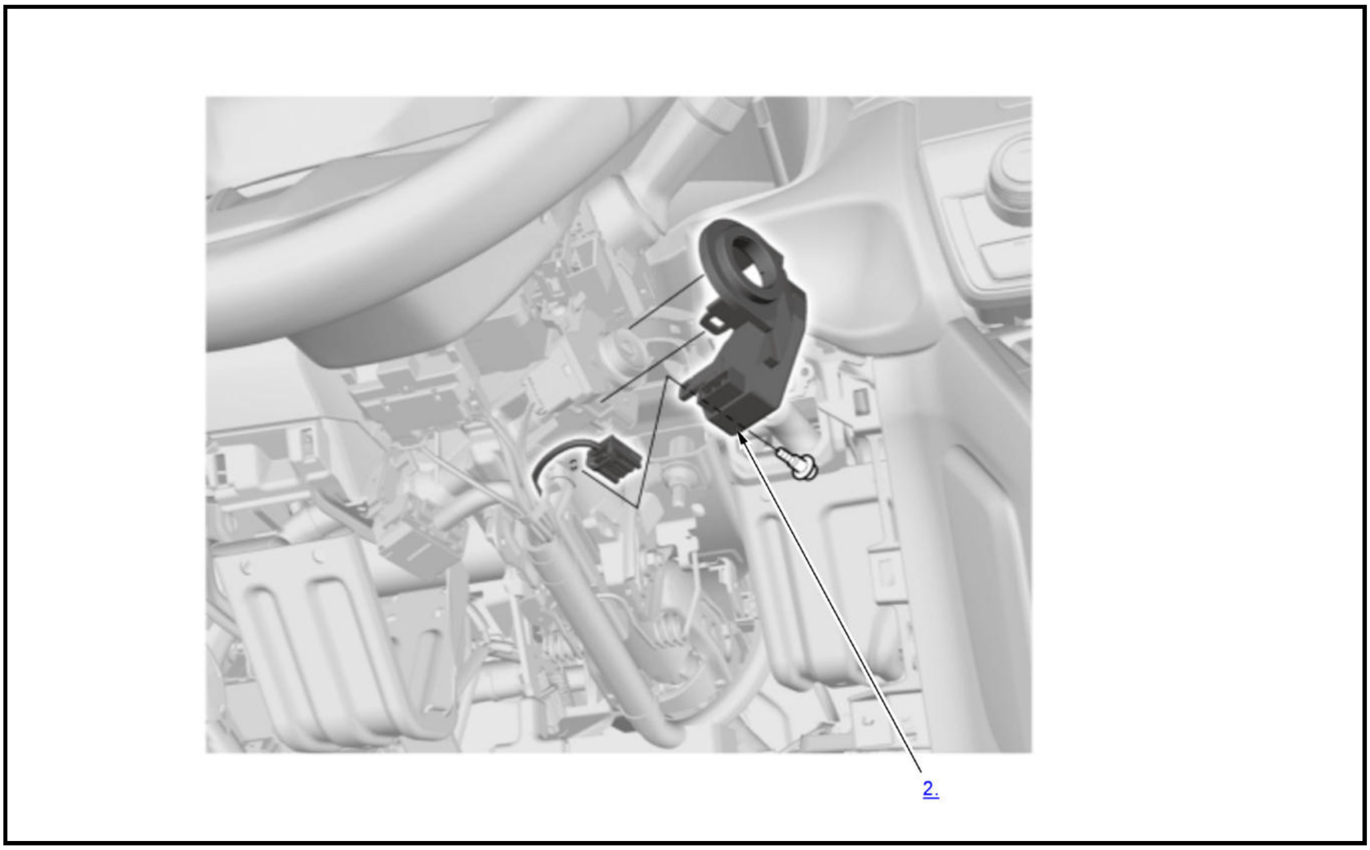

1. **Column Covers - Remove**
2. Immobilizer-Keyless Control Unit - Remove
3. All Removed Parts - Install

1. Install the parts in the reverse order of removal.

4. **Immobilizer System - Register**

KEYLESS ACCESS LF ANTENNA REMOVAL AND INSTALLATION

Removal and Installation

1

Front Interior (Type A)

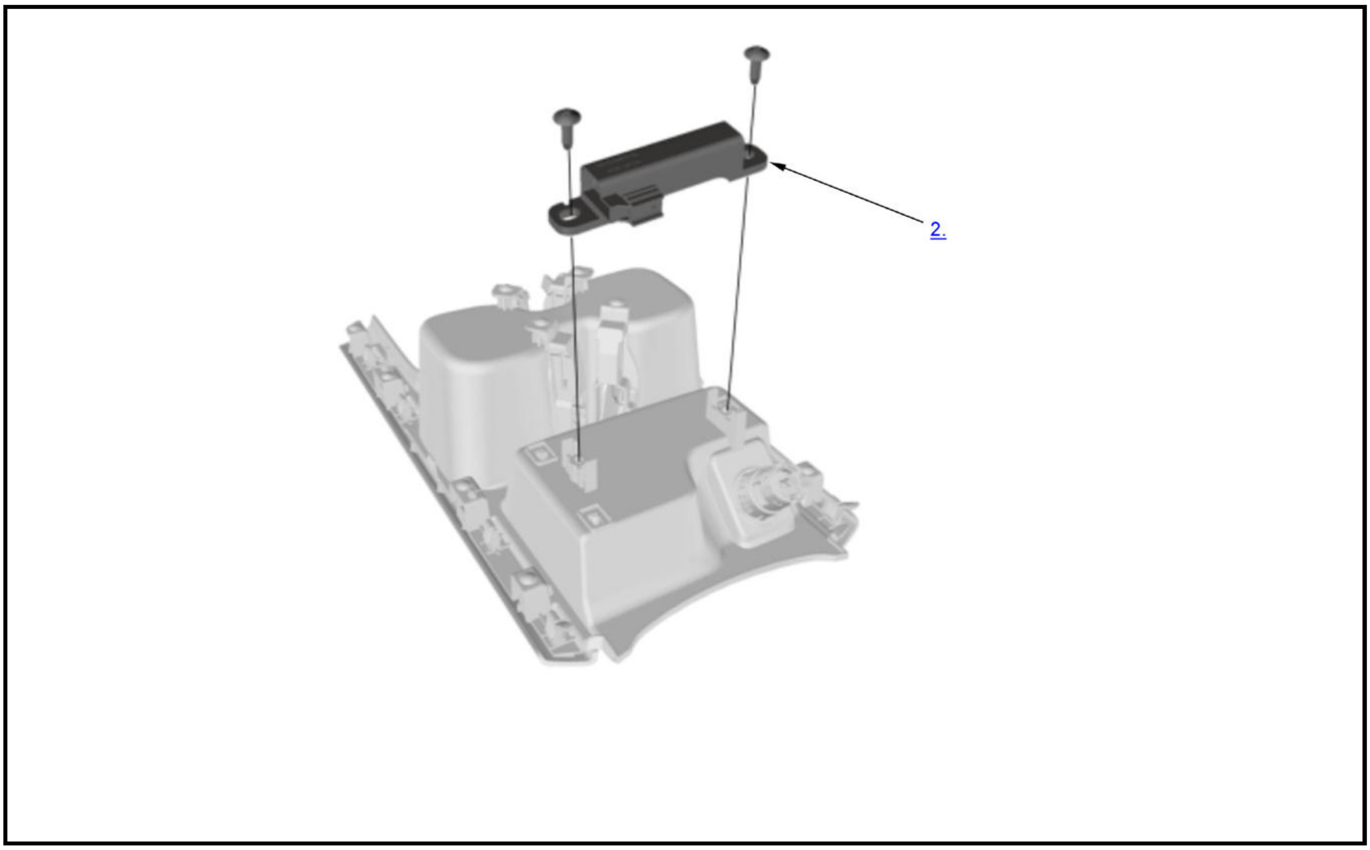

2

Front Interior (Type B)

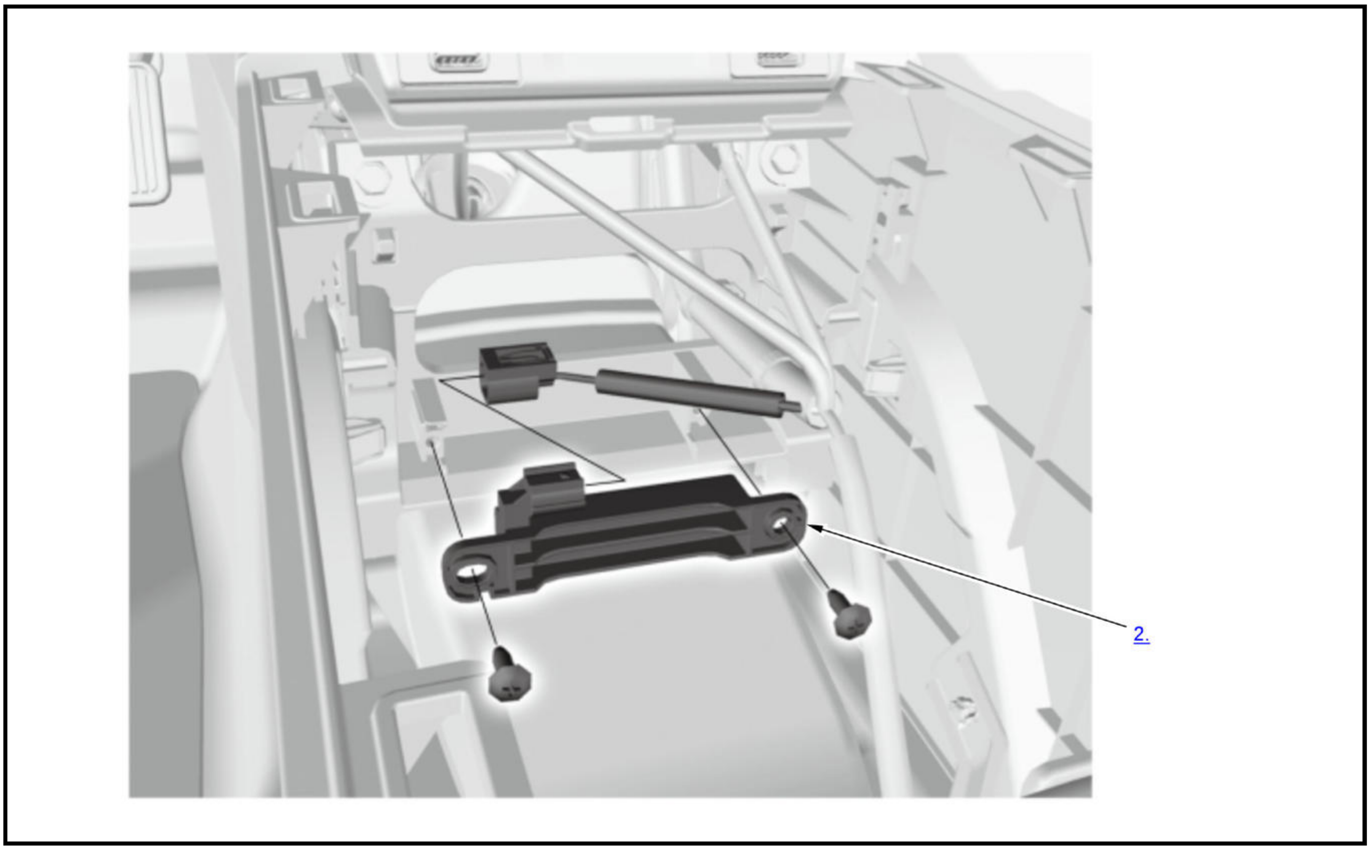

3

Middle Interior

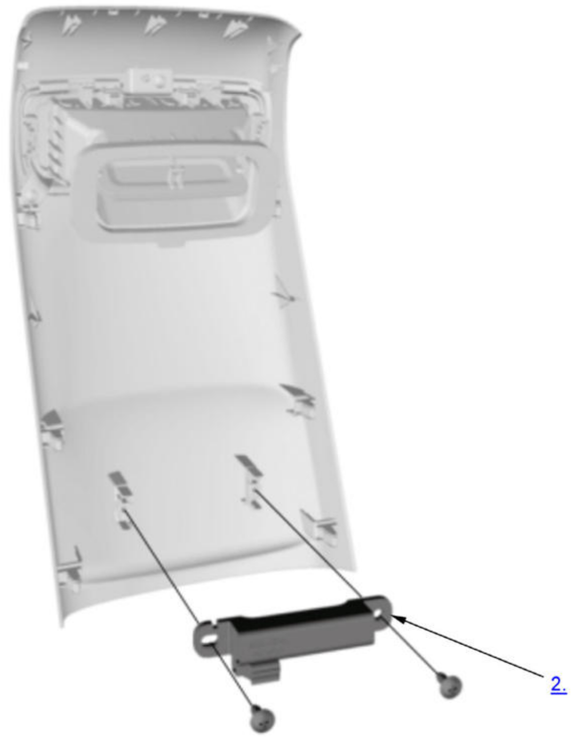

4

Rear Interior

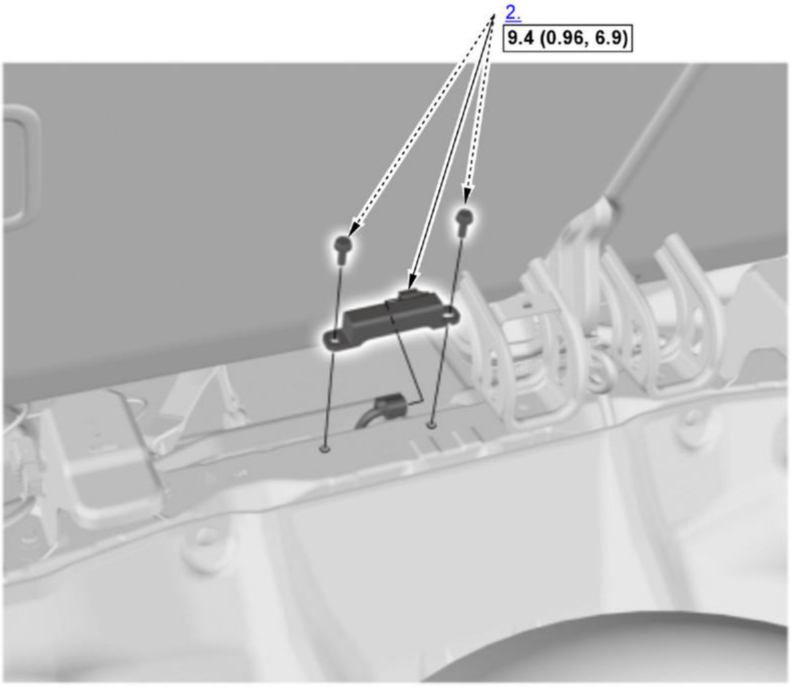

☐	Torque: N.m (kgf.m, lbf.ft)

5

Rear Bumper

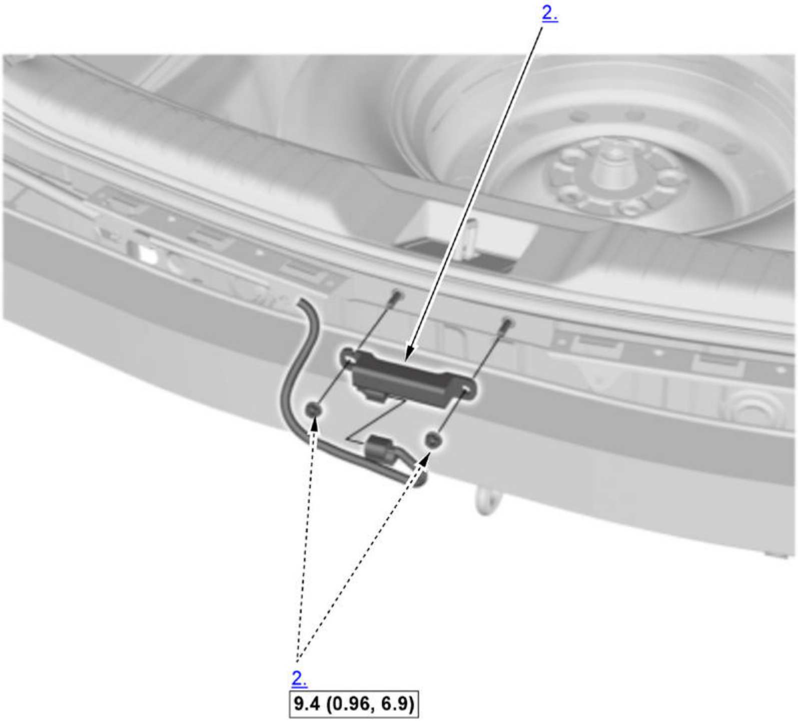

▭	Torque: N.m (kgf.m, lbf.ft)

Front Interior LF Antenna

1. Center Console Panel - Remove
2. Front Interior LF Antenna - Remove
3. All Removed Parts - Install

   1. Install the parts in the reverse order of removal.

Middle Interior LF Antenna

4. Center Console Rear Trim - Remove
5. Middle Interior LF Antenna - Remove
6. All Removed Parts - Install

   1. Install the parts in the reverse order of removal.

Rear Interior LF Antenna

7. Rear Carpet Trim - Remove
8. Rear Interior LF Antenna - Remove
9. All Removed Parts - Install

   1. Install the parts in the reverse order of removal.

Rear Bumper LF Antenna

10. Rear Bumper - Remove
11. Rear Bumper LF Antenna - Remove

12. All Removed Parts - Install

1. Install the parts in the reverse order of removal.

KEYLESS BUZZER REMOVAL AND INSTALLATION

Removal and Installation

1

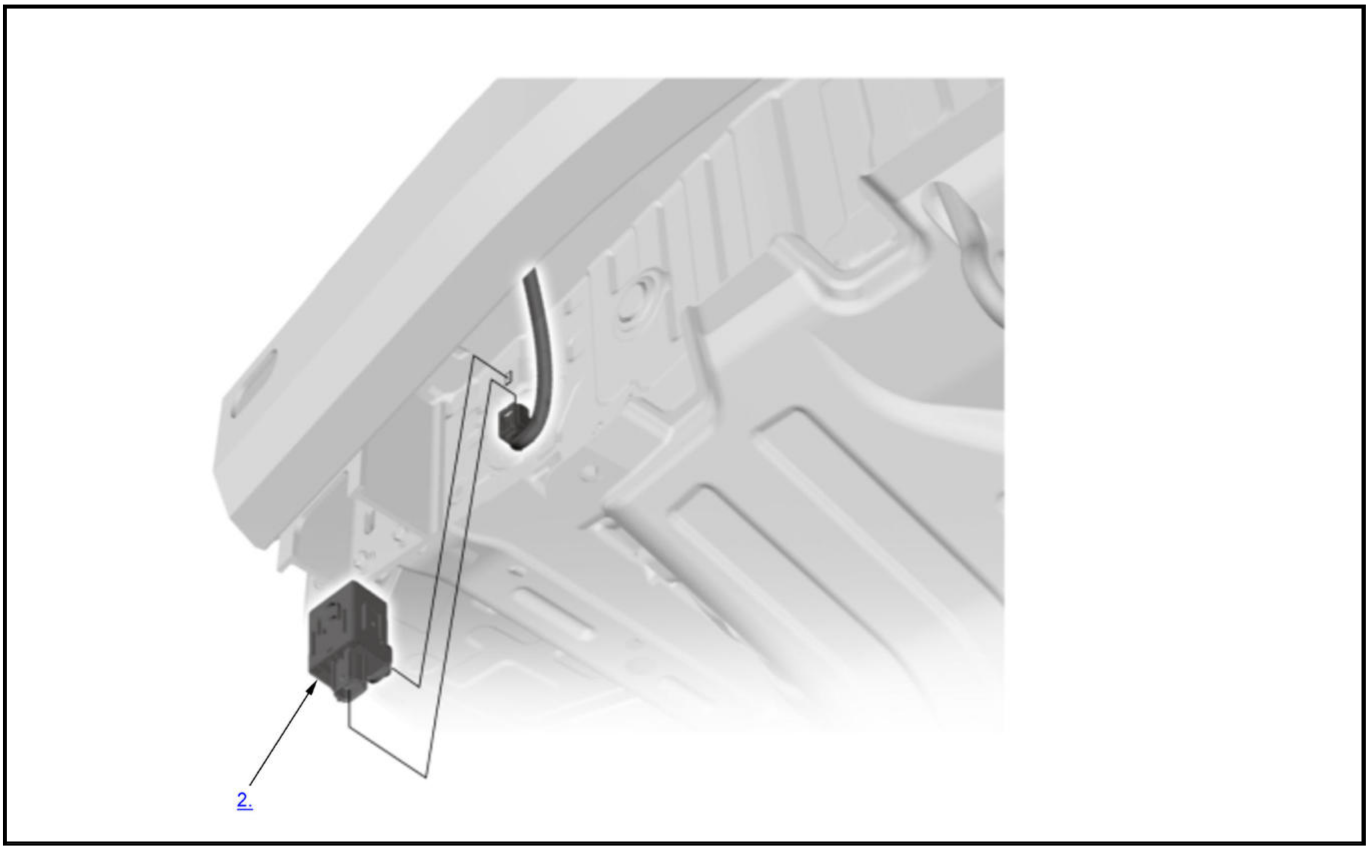

1. **Rear Bumper - Remove**
2. Keyless Buzzer - Remove
3. All Removed Parts - Install

1. Install the parts in the reverse order of removal.

SYMPTOM TROUBLESHOOTING INDEX FOR VIEWER

ALL THE DOORS WILL NOT LOCK AND UNLOCK

Diagnostic procedure

- **Symptom troubleshooting**

Also check for

- Body control module
- LF antenna
- Driver's door lock knob switch
- Door outer handle touch sensors
- Door lock actuators
- Keyless remote
- Low or weak keyless remote battery
- Not registered

ALL THE DOORS WILL NOT LOCK OR UNLOCK WITH DRIVER'S DOOR KEY CYLINDER OR DOOR LOCK SWITCH OR KEYLESS TRANSMITTER/REMOTE

Check Items

- Poor ground (G351, G401)
- Blown fuses associated with the system
- **Body control module input test**
- **Power window master switch input test**
- **Remote test**

AUTO DOOR UNLOCK DOES NOT WORK

Check Items

- **Symptom troubleshooting**

CANNOT SELECT ON MODE WITH KEYLESS ACCESS AND WITH THE KEYLESS REMOTE TOUCHING THE POWER SWITCH

Diagnostic procedure

- **Symptom troubleshooting**

Also check for

- Poor connections at the body control module
- Keyless remote
- Body control module
- Power switch
- Harness/connections

CANNOT SELECT ON MODE WITH KEYLESS ACCESS, BUT CAN SELECT ON MODE WITH THE KEYLESS REMOTE TOUCHING THE POWER SWITCH

Diagnostic procedure

- **Symptom troubleshooting**

Also check for

- Body control module
- LF antenna
- Keyless remote
- Low or weak keyless remote battery
- Harness/connections

CANNOT SELECT ON MODE WITH THE KEYLESS REMOTE TOUCHING THE POWER SWITCH, BUT CAN SELECT ON MODE WITH KEYLESS ACCESS

Diagnostic procedure

- Check the body control module

Also check for

- Body control module is not registered
- Body control module
- IGN_TRX line open/short
- Not registered
- Harness/connections

DOORS AUTOMATICALLY RELOCK 30 SECONDS AFTER BEING UNLOCKED WITH THE REMOTE EVEN THOUGH A DOOR HAS BEEN OPENED

Check Items

- **Symptom troubleshooting**

DRIVER'S DOOR WILL NOT LOCK OR UNLOCK

Check Items

- Poor ground (G401)
- Blown fuses associated with the system
- Door switch test (check the door switch ON/OFF information with the HDS)
- **Body control module input test**
- **Power window master switch input test**
- **Door lock actuator test**

ENGINE DOES NOT CRANK (POWER SUPPLY IS NORMAL)

Diagnostic procedure

- Check the brake pedal position switch
- Check the body control module

Also check for

- Body control module
- STS line open/short
- Brake pedal position switch
- STOP_SW line open/short

FRONT PASSENGER'S DOOR WILL NOT LOCK OR UNLOCK

Check Items

- Poor ground (G401)
- Blown fuses associated with the system
- **Body control module input test**
- Door switch test (check the door switch ON/OFF information with the HDS)
- **Door lock actuator test**

FRONT PASSENGER'S DOORS WILL NOT UNLOCK WITH THE REMOTE OR KEY CYLINDER SWITCH, BUT WILL UNLOCK WITH THE INSIDE DOOR UNLOCK SWITCH

Check Items

- **Driver's door lock knob switch test** (check for door lock knob switch ON/OFF information with the HDS)

KEYLESS ACCESS INDICATOR DOES NOT GO OFF OR DOES NOT COME ON

Diagnostic procedure

- **Symptom troubleshooting**

Also check for

- Gauge control module
- Body control module
- Harness/connections

LEFT REAR DOOR WILL NOT LOCK OR UNLOCK

Check Items

- Poor ground (G501)
- Blown fuses associated with the system
- **Body control module input test**
- Door switch test (check the door switch ON/OFF information with the HDS)
- **Door lock actuator test**

POWER SWITCH DOES NOT WORK

Diagnostic procedure

- Check for DTCs. If any DTC is indicated, go to the DTC troubleshooting

Also check for

- ACC relay circuit
- Body control module

- Power switch
- SS1(+) line short
- SS2(-) line short
- Harness

RIGHT REAR DOORS WILL NOT LOCK OR UNLOCK

Check Items

- Poor ground (G502)
- Blown fuses associated with the system
- **Body control module input test**
- Door switch test (check the door switch ON/OFF information with the HDS)
- **Door lock actuator test**

SECURITY ALARM SYSTEM WILL NOT ARM

Check Items

- **Symptom troubleshooting**

SECURITY INDICATOR BLINKS

Diagnostic procedure

- **Symptom troubleshooting**

Also check for

- Gauge control module
- Body control module
- PCM
- Harness/connections

THE DOORS WILL NOT UNLOCK OR LOCK WITH THE DOOR OUTER HANDLE TOUCH SENSORS, BUT WILL UNLOCK OR LOCK WITH THE KEYLESS REMOTE

Diagnostic procedure

- **Symptom troubleshooting**

Also check for

- Door outer handle touch sensors
- Body control module
- Keyless remote
- Not registered
- Harness/connections

THE DOORS WILL NOT UNLOCK OR LOCK WITH THE KEYLESS REMOTE, BUT WILL UNLOCK OR LOCK WITH THE DOOR OUTER HANDLES

Diagnostic procedure

- **Symptom troubleshooting**

Also check for

- Keyless remote battery dead
- Keyless remote
- Body control module
- Harness/connections
- B-CAN communication line

THE ENGINE STARTS, BUT STALLS IMMEDIATELY

Diagnostic procedure

- **Symptom troubleshooting**

Also check for

- No power to PCM
- No power to body control module
- Body control module
- Gauge control module
- Harness/connections

THE MODE CHANGES BETWEEN ACCESSORY AND ON, BUT IT DOES NOT CHANGE TO OFF (LOCK)

Diagnostic procedure

- Check the body control module
- Check the SBW shifter control module

Also check for

- Body control module
- ATP-P line open
- SBW shifter control module

THE MODE CHANGES BETWEEN ACCESSORY AND ON, BUT IT IS DIFFICULT TO CHANGE TO OFF (LOCK)

Diagnostic procedure

- Check the body control module
- Check the gauge control module

Also check for

- Gauge control module
- Body control module
- PCM
- B-CAN communication line open/short
- F-CAN communication line open/short
- Speed signal line open

THE SECURITY SYSTEM SOUNDS RANDOMLY WHILE THE DOORS ARE LOCKED

Check Items

- **Tripped sensor recall**

DESCRIPTION & OPERATION

KEYLESS ACCESS SYSTEM DESCRIPTION

Smart Entry Function

The body control module detects the input signal of the door outer handle touch sensor, the outer handle lock switch, the tailgate outer handle switch, or the tailgate lock switch, and authenticates 2-way communication with the remote. The body control module then activates the door lock actuators or tailgate release actuator, and an answer back. In addition, vehicles equipped with the power tailgate send the smart unlock permission signal. The body control module also activates the tailgate release actuator when the tailgate outer handle switch is pressed. For details on the illumination patterns of the warning lights and the functional check of the system, refer to **keyless access system symptom troubleshooting information**.

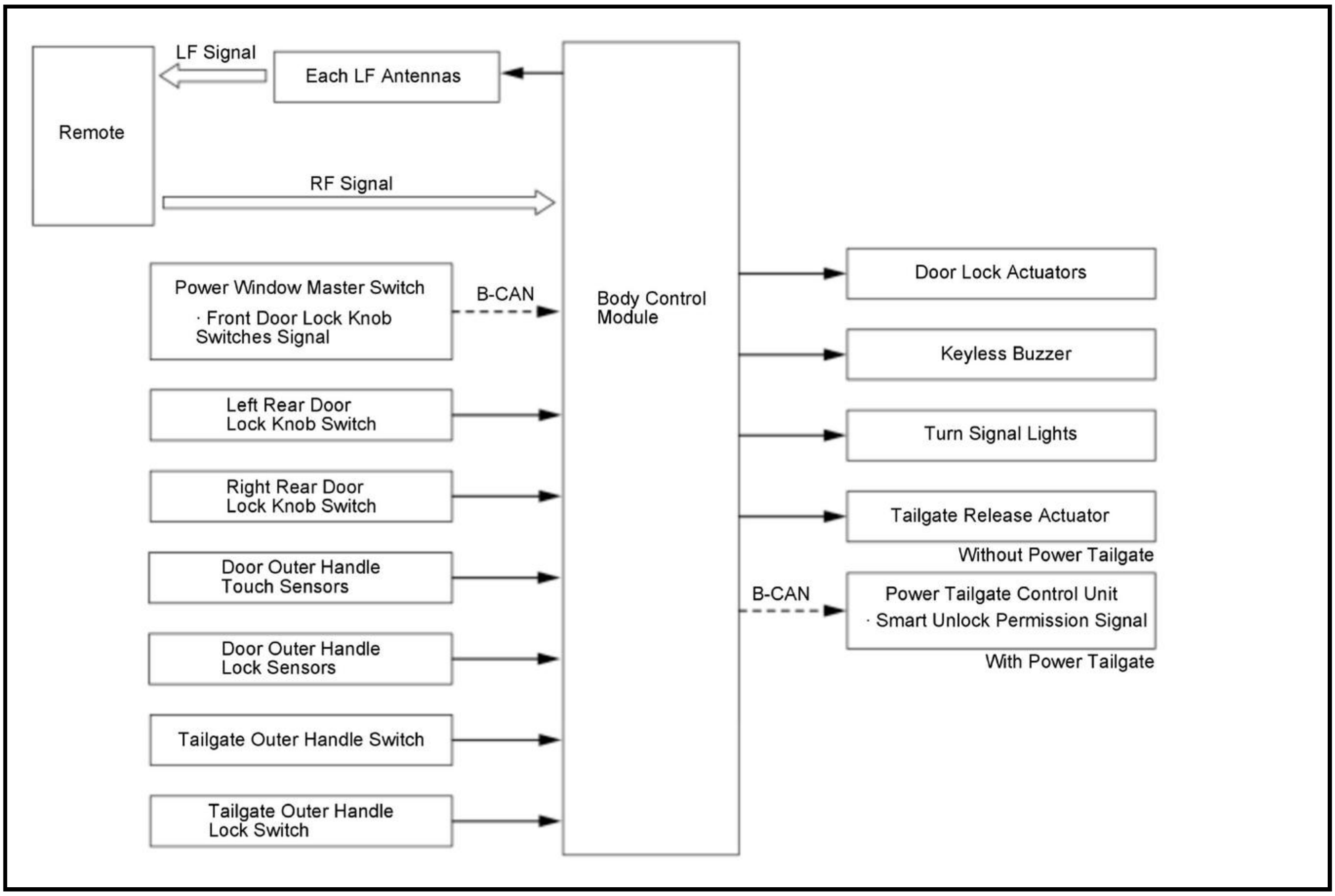
Remote
LF Signal
Each LF Antennas
RF Signal
Power Window Master Switch
· Front Door Lock Knob Switches Signal
B-CAN
Left Rear Door Lock Knob Switch
Right Rear Door Lock Knob Switch
Door Outer Handle Touch Sensors
Door Outer Handle Lock Sensors
Tailgate Outer Handle Switch
Tailgate Outer Handle Lock Switch
Body Control Module
Door Lock Actuators
Keyless Buzzer
Turn Signal Lights
Tailgate Release Actuator
Without Power Tailgate
B-CAN
Power Tailgate Control Unit
· Smart Unlock Permission Signal
With Power Tailgate

Smart Entry Answer Back Function

LOCK

When the body control module receives a lock signal, it sends a signal to the turn signal lights and the keyless buzzer sounds.

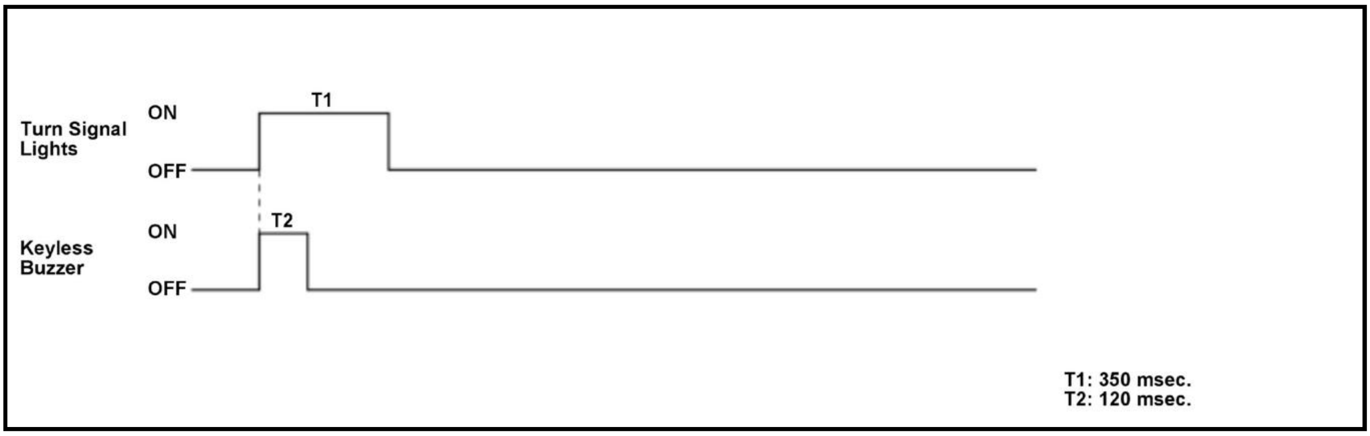
Turn Signal Lights
ON
OFF
T1
Keyless Buzzer
ON
OFF
T2
T1: 350 msec.
T2: 120 msec.

UNLOCK

When the body control module receives an unlock signal, it sends a signal two times to the turn signal lights and the keyless buzzer sounds.

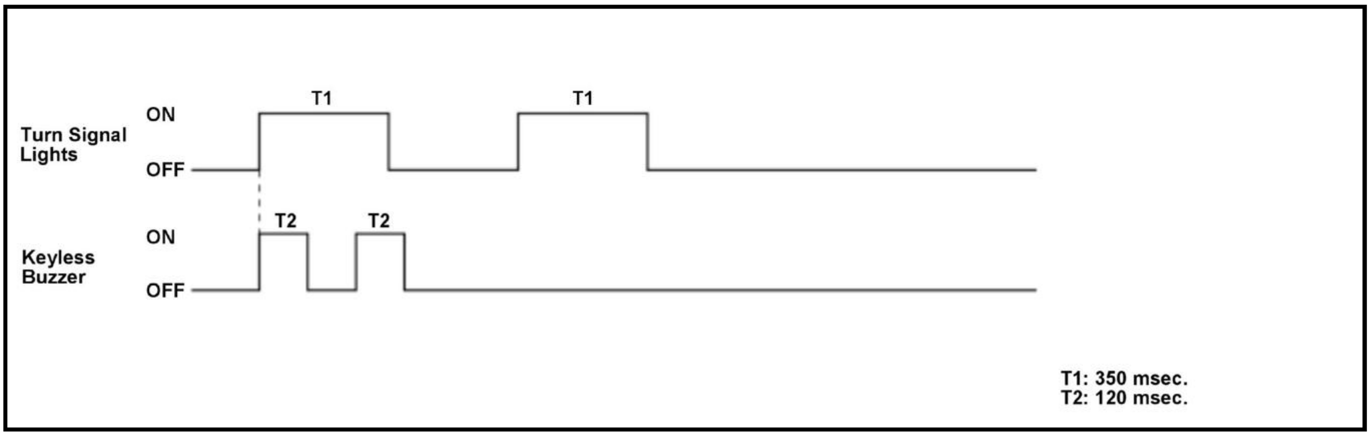
Turn Signal Lights
ON
OFF
T1
T1
Keyless Buzzer
ON
OFF
T2
T2
T1: 350 msec.
T2: 120 msec.

Remote Search Function

The function determines if the remote is present inside the vehicle during certain operations or functions. It also detects when the door is opened and closed with the vehicle in the ACCESSORY/ON mode. When the remote is taken out of the vehicle, the keyless buzzer will sound and the gauge control module (Only when the vehicle is in the ON mode) will show a warning.

Backup Communication Function

When key authentication between the remote and the body control module is not possible because of a system abnormality or a drop of the battery voltage of the remote, the immobilizer function can be canceled by pressing the power switch once and bringing the remote close to the power switch while the light (white) of the power switch is flashing. This causes the immobilizer signal to be sent to the body control module via the LF antenna of the power switch.

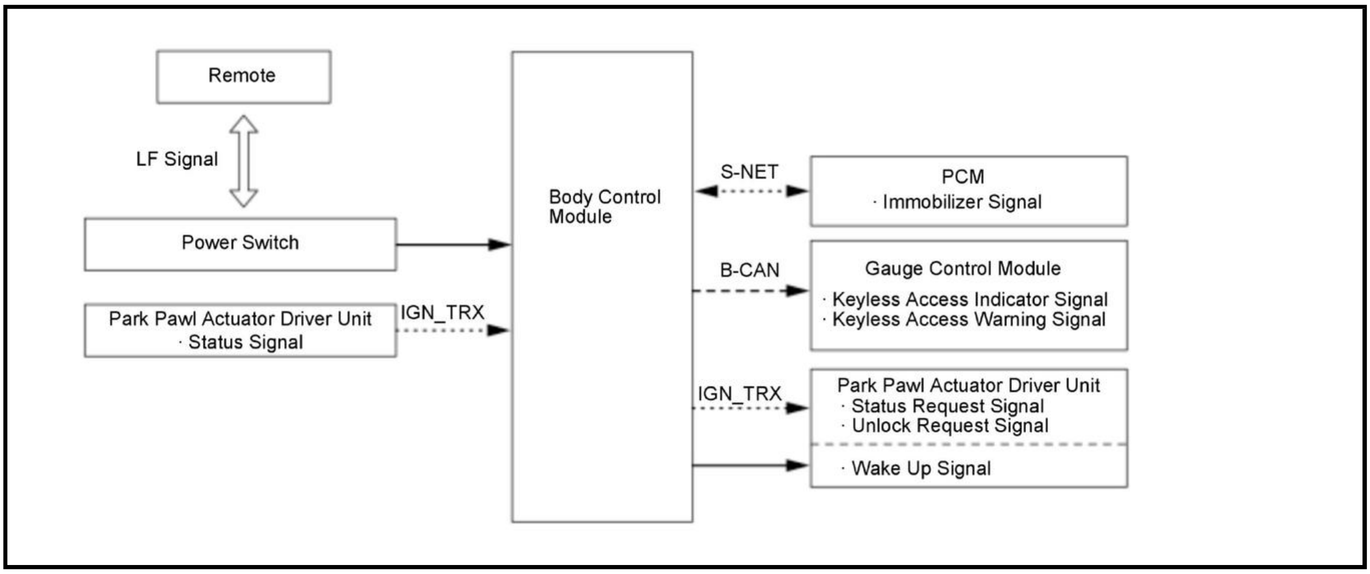
Remote
LF Signal
Power Switch
Park Pawl Actuator Driver Unit
· Status Signal
IGN_TRX
Body Control Module
S-NET
PCM
· Immobilizer Signal
B-CAN
Gauge Control Module
· Keyless Access Indicator Signal
· Keyless Access Warning Signal
IGN_TRX
Park Pawl Actuator Driver Unit
· Status Request Signal
· Unlock Request Signal
· Wake Up Signal

Remote Engine Start System

Start the Engine

The remote engine start feature is initiated by first pressing the lock button, then pressing and holding the "START" button within 5 seconds on the remote transmitter. An RF signal from the remote transmitter is received by the body control module, which then sends the request to start the engine to the PCM. At the same time, the body control module authenticates the key for the immobilizer system. The PCM starts the engine and sends feedback to the body control module indicating the status of the engine.

Remote Engine Start Link

According to outside air temperature, the climate control, the rear window defogger, the seat heater, and the mirror defogger* operate while the remote engine start is operating.

*: With mirror defogger

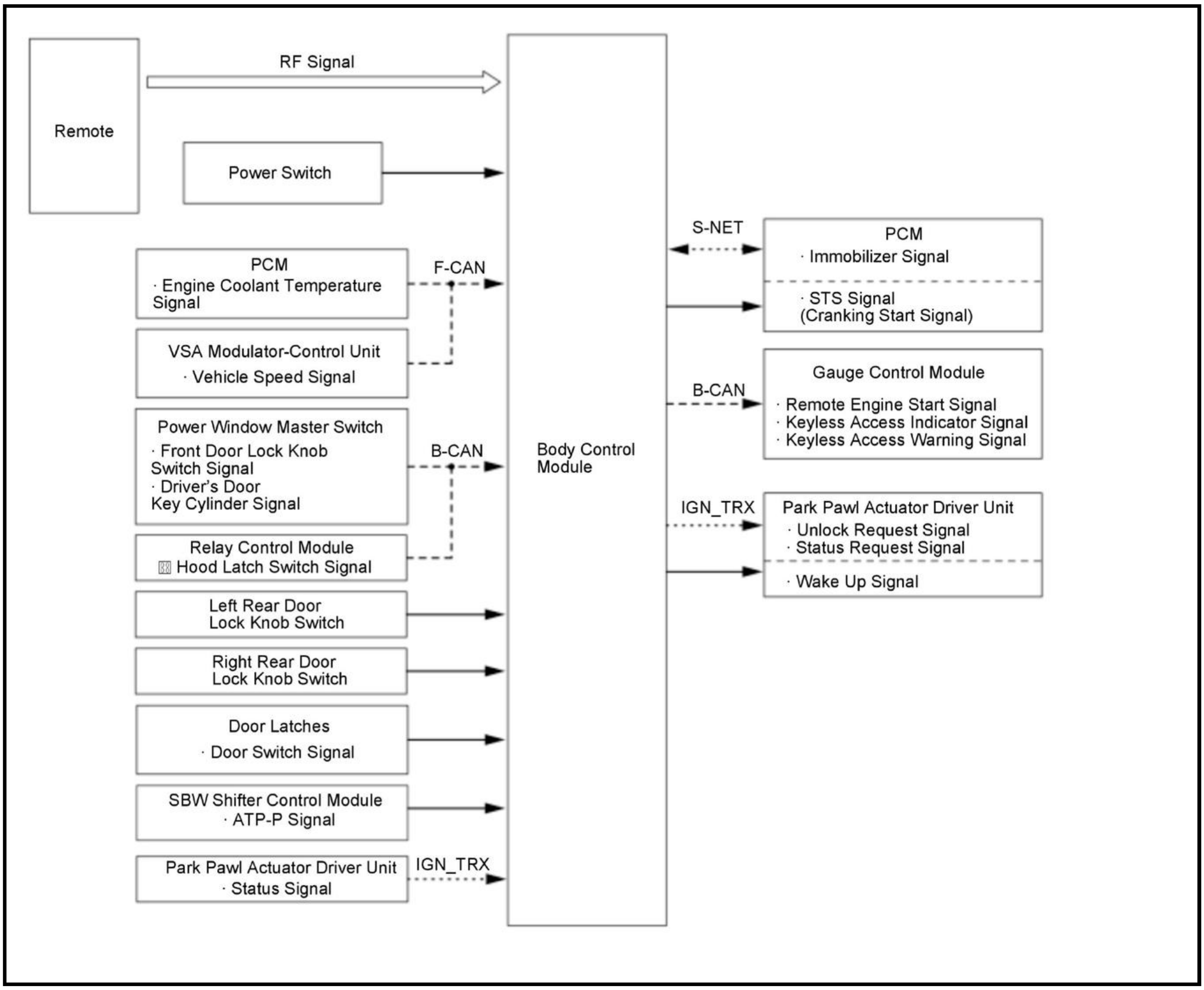
Remote
RF Signal
Power Switch
PCM
· Engine Coolant Temperature Signal
F-CAN
VSA Modulator-Control Unit
· Vehicle Speed Signal
Power Window Master Switch
· Front Door Lock Knob Switch Signal
· Driver's Door Key Cylinder Signal
B-CAN
Relay Control Module
⊠ Hood Latch Switch Signal
Left Rear Door Lock Knob Switch
Right Rear Door Lock Knob Switch
Door Latches
· Door Switch Signal
SBW Shifter Control Module
· ATP-P Signal
Park Pawl Actuator Driver Unit
· Status Signal
IGN_TRX
Body Control Module
S-NET
PCM
· Immobilizer Signal
· STS Signal (Cranking Start Signal)
B-CAN
Gauge Control Module
· Remote Engine Start Signal
· Keyless Access Indicator Signal
· Keyless Access Warning Signal
IGN_TRX
Park Pawl Actuator Driver Unit
· Unlock Request Signal
· Status Request Signal
· Wake Up Signal

Key Lockout Prevent Function

The body control module monitors whether or not there is the remote in the vehicle. If the remote is in the vehicle, the system will not lock the doors. The non-selectable unlock function: If the driver manually locks and closes the doors with the remote in the vehicle, the body control module energizes the all door lock actuators and unlocks the all doors. The selectable unlock function: If the driver manually locks and closes the doors with the remote in the vehicle, the body control module energizes the driver's door lock actuator and unlocks the driver's door. In addition, when the keyless lockout prevent function operates, the answer back is performed.

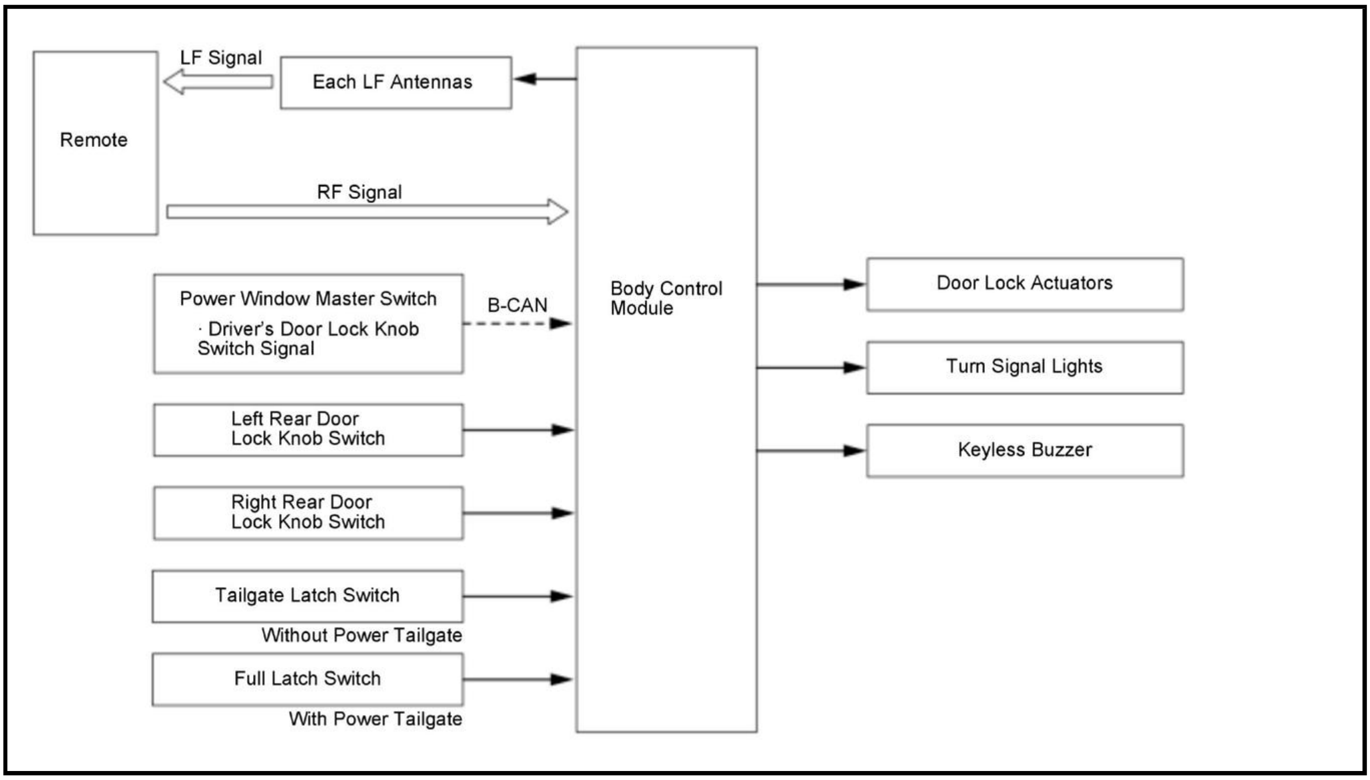
LF Signal
Remote
Each LF Antennas
RF Signal
Body Control Module
Power Window Master Switch
· Driver's Door Lock Knob Switch Signal
B-CAN
Left Rear Door Lock Knob Switch
Right Rear Door Lock Knob Switch
Tailgate Latch Switch
Without Power Tailgate
Full Latch Switch
With Power Tailgate
Door Lock Actuators
Turn Signal Lights
Keyless Buzzer

Immobilizer Function

The immobilizer function provides mutual authentication between the body control module, the PCM, and the VSA modulator-control unit in the turn the vehicle to the ON mode. The engine stays running after engine start-up if the immobilizer signal matches. The body control module authenticates the VSA modulator-control unit and the immobilizer signal only one time, when the vehicle is turned to the ON mode after resetting of the battery, removing and installing the back-up fuse or removing and installing the VSA modulator-control unit. For some model, the brake pedal must be depressed to perform the immobilizer authentication.

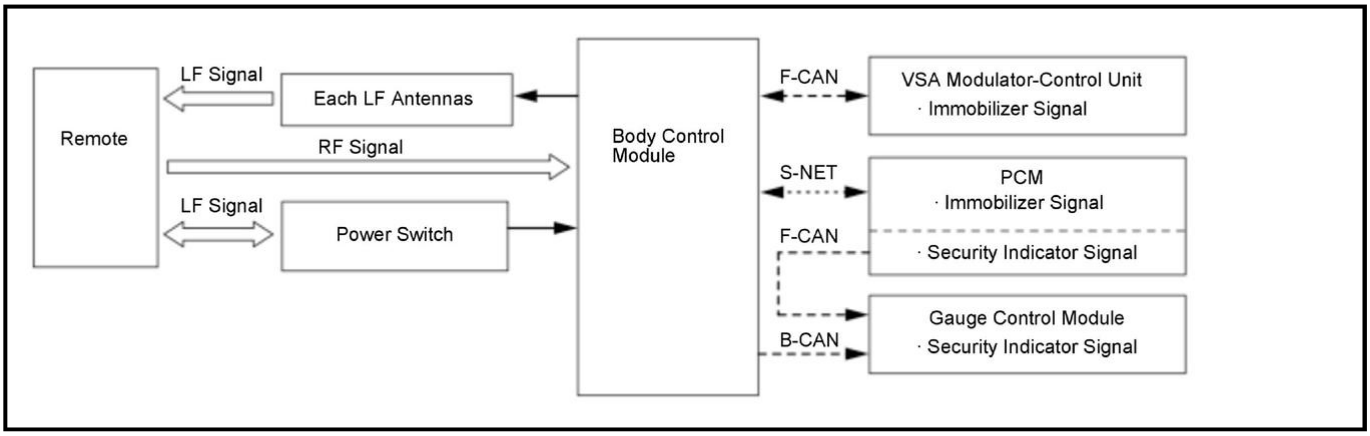
LF Signal
Remote
Each LF Antennas
RF Signal
LF Signal
Power Switch
Body Control Module
F-CAN
VSA Modulator-Control Unit
· Immobilizer Signal
S-NET
PCM
· Immobilizer Signal
F-CAN
· Security Indicator Signal
Gauge Control Module
B-CAN
· Security Indicator Signal

Alarm Function

Detects if the door is opened or closed while the vehicle in the ACCESSORY or ON mode. When the remote is taken out of the vehicle, the keyless buzzer will sound and the gauge control module (Only when the vehicle is in the ON mode) will show a warning. Before the remote battery level falls to the point where the remote cannot be detected, the gauge control module will show a warning and an alarm will sound.

Registration Facility

The body control module can store up to 6 remotes using the HDS.

Fault Diagnosis Function

The system has a fault diagnosis function. If any malfunction occurs, the keyless access indicator comes on in the gauge control module.

Customer Emergency

When the power switch is pressed continuously at least three times or once for 1.5 seconds or longer in an emergency while driving, the engine turns off, and the vehicle mode switches to the ACCESSORY mode. Furthermore, pressing the power switch while driving will set off a buzzer several times in order to avoid unintended operation of the power switch.

Panic Function

When you press the PANIC button on the remote, the body control module sounds the horn, and activates the exterior lights.

Walk Away Auto Lock Function (If Equipped)

The walk away auto lock system detects where the remote is and locks all doors and the tailgate when all the doors and the tailgate are closed and the remote is outside of the vehicle and out of the range. To operate the walk away auto lock system, it is necessary to enter the auto lock mode. To enter the auto lock mode, the following conditions must be met:

- The vehicle is turned to the OFF (LOCK) mode.
- All doors including the tailgate are closed.
- The remote is outside but within 1.5 m (5 ft) from the vehicle.

Once the system enters the auto lock mode, the keyless beeper sounds once. When the remote is carried beyond 1.5 m (5 ft) from the vehicle and remains outside of this range for more than 2 seconds, the system engages and locks all of the doors including the tailgate. At that time, the keyless buzzer sounds and some exterior lights will flash. However, if the remote remains within 1.5 m (5 ft) from the vehicle for 30 seconds or more after entering the auto lock mode, the doors and tailgate will automatically lock.

The system does not work under the following conditions:

- The remote is inside of the vehicle.
- If the remote is away more than 1.5 m (5 ft) from the vehicle after closing all the doors and tailgate.
- If a communication error occurs between the remote and the vehicle.

The following conditions will cause a delay for the system to engage:

- If a door or the tailgate is opened after the system enters the auto lock mode.
- If the power tailgate is not fully closed.

The walk away auto lock system can be cancelled temporarily by using the customized settings. See the owner's manual for more information.

Keyless Access System Operation Manual Customize

The keyless access system can be enabled and disabled by the operation shown in the table. The system is enabled and disabled each time the unlock button is pressed on the remote in customize mode.

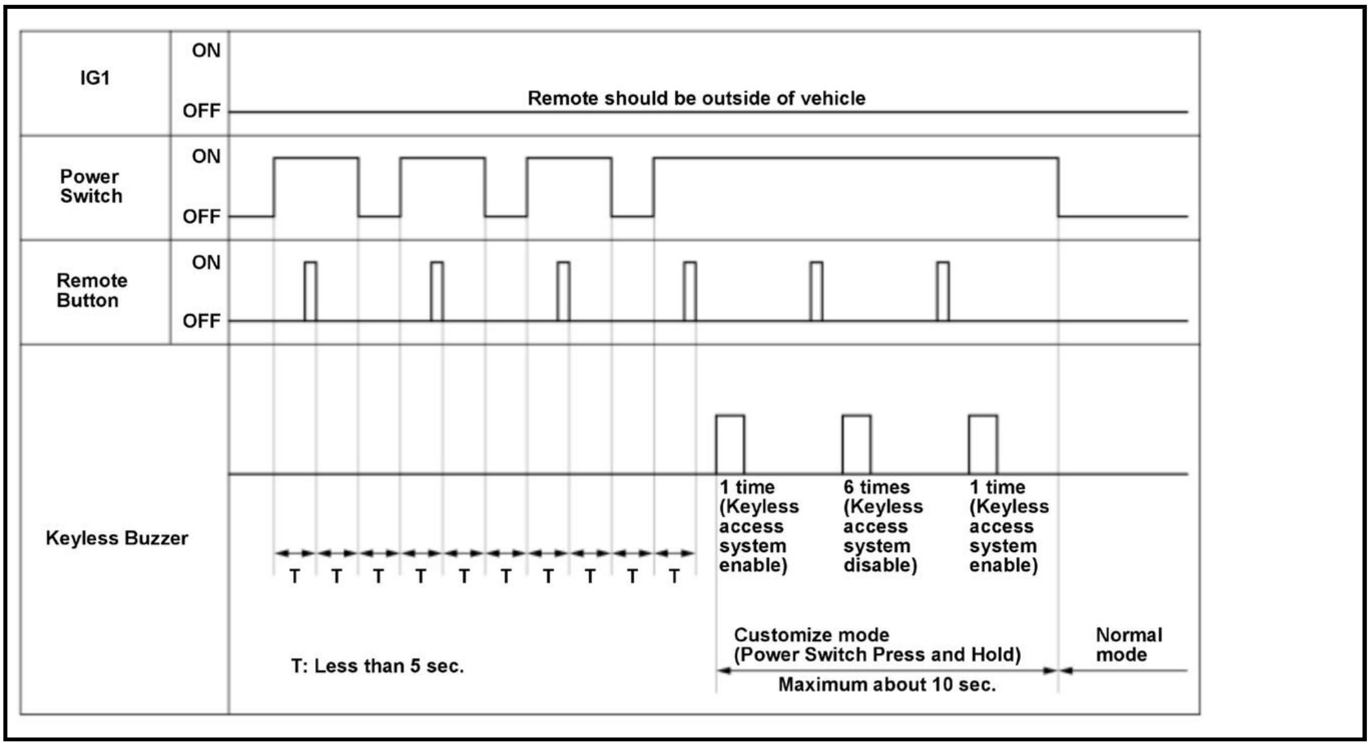
IG1
ON
OFF
Remote should be outside of vehicle
Power Switch
ON
OFF
Remote Button
ON
OFF
Keyless Buzzer
T T T T T T T T T T
1 time (Keyless access system enable)
6 times (Keyless access system disable)
1 time (Keyless access system enable)
T: Less than 5 sec.
Customize mode (Power Switch Press and Hold)
Maximum about 10 sec.
Normal mode

Failsafe Function

If there is a failure in the keyless access system that terminates the keyless access features, the system enters the failsafe mode and the keyless access indicator flashes.

KEYLESS ACCESS SYSTEM DESCRIPTION - COMPONENTS

Power Switch

When pressing the power switch, it changes the vehicle to the OFF (LOCK), ACCESSORY, or ON mode. The power switch also includes an LF antenna.

LF (Low Frequency) Antennas

The front interior, middle interior, rear interior, front door outer handle, and rear bumper LF antennas send the signals to the remote when the remote is outside out of the vehicle.

Remote

The remote is equipped with a keyless transmitter, and all the doors can be locked and unlocked by a lock/unlock button operation, even from a remote distance from the vehicle. When the lock button or unlock button is pressed, the keyless transmitter sends the applicable switch signal to the body control module. After receiving authentication, the body control module controls the door lock/unlock actuator.

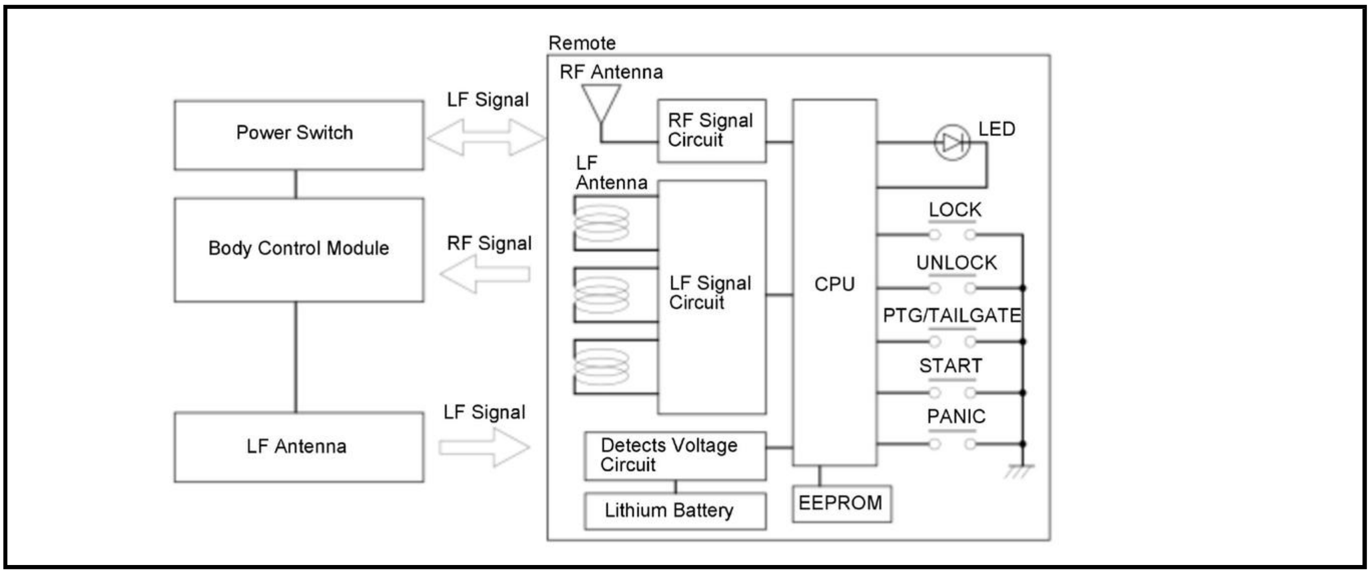
Remote
RF Antenna
LF Signal
Power Switch
RF Signal Circuit
LED
LF Antenna
LOCK
Body Control Module
RF Signal
UNLOCK
LF Signal Circuit
CPU
PTG/TAILGATE
START
LF Signal
PANIC
LF Antenna
Detects Voltage Circuit
Lithium Battery
EEPROM

Door Touch Sensors and Outer Handle Lock Sensers, Tailgate Outer Handle Switch and Lock Switch

The door touch sensors and the outer handle lock sensors are built into the driver's and front passenger's door outer handles. The tailgate outer handle switch is built into the tailgate outer handle. To operate the door locks without the built-in key while carrying the remote, grip the door outer handle to unlock the doors and press the outer handle lock switch on the door outer handle to lock the doors.

Keyless Buzzer

The keyless buzzer is located behind the rear bumper and sounds during smart entry functions.

KEYLESS ACCESS SYSTEM DESCRIPTION - SYSTEM DIAGRAM

For locations of each component on vehicle, refer to Component Location Index

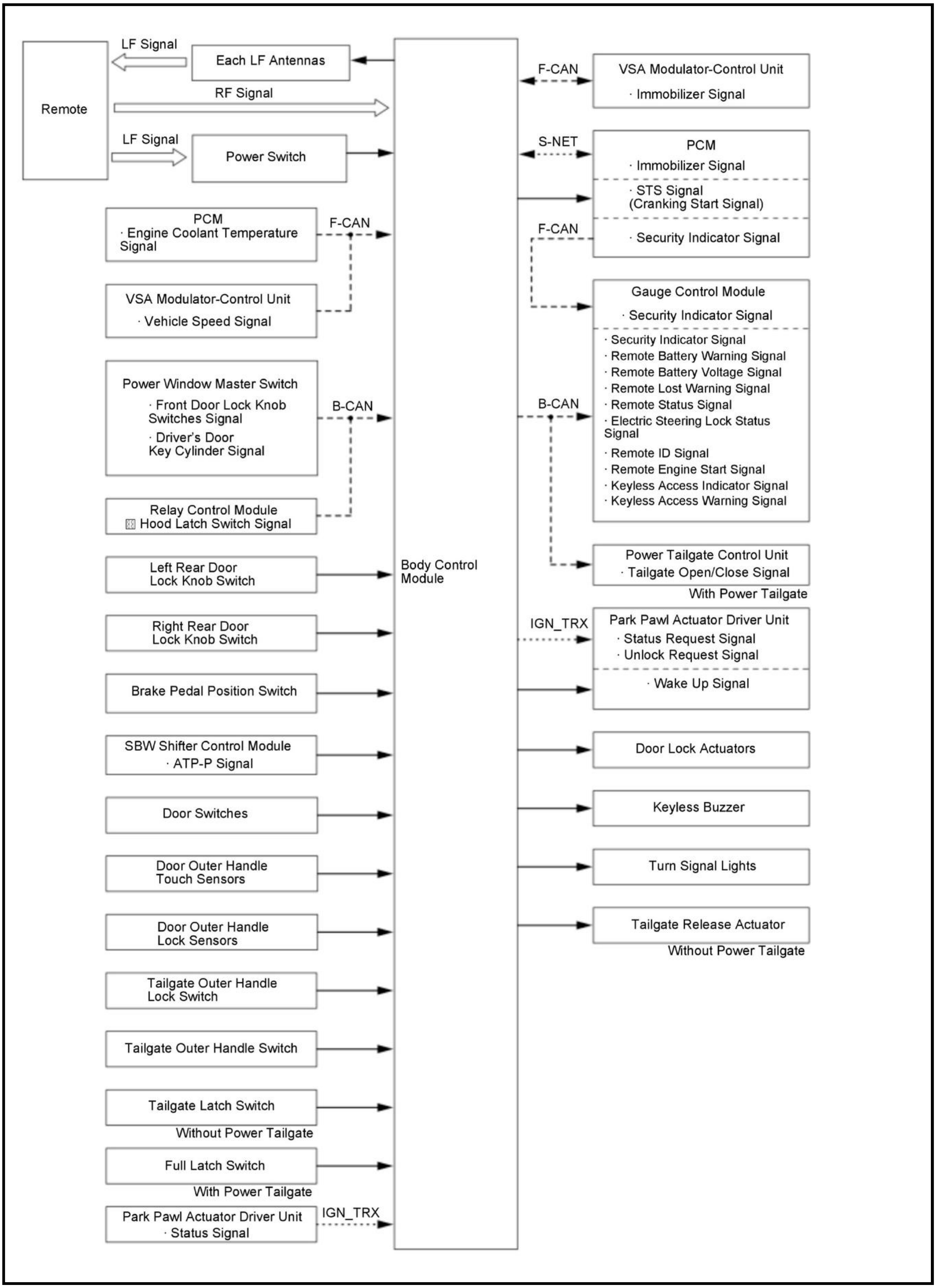

Remote
LF Signal
Each LF Antennas
RF Signal
LF Signal
Power Switch
PCM
· Engine Coolant Temperature Signal
F-CAN
VSA Modulator-Control Unit
· Vehicle Speed Signal
Power Window Master Switch
· Front Door Lock Knob Switches Signal
· Driver's Door Key Cylinder Signal
B-CAN
Relay Control Module
▨ Hood Latch Switch Signal
Left Rear Door Lock Knob Switch
Right Rear Door Lock Knob Switch
Brake Pedal Position Switch
SBW Shifter Control Module
· ATP-P Signal
Door Switches
Door Outer Handle Touch Sensors
Door Outer Handle Lock Sensors
Tailgate Outer Handle Lock Switch
Tailgate Outer Handle Switch
Tailgate Latch Switch
Without Power Tailgate
Full Latch Switch
With Power Tailgate
Park Pawl Actuator Driver Unit
· Status Signal
IGN_TRX
Body Control Module
F-CAN
VSA Modulator-Control Unit
· Immobilizer Signal
S-NET
PCM
· Immobilizer Signal
· STS Signal (Cranking Start Signal)
F-CAN
· Security Indicator Signal
Gauge Control Module
· Security Indicator Signal
· Security Indicator Signal
· Remote Battery Warning Signal
· Remote Battery Voltage Signal
· Remote Lost Warning Signal
· Remote Status Signal
· Electric Steering Lock Status Signal
· Remote ID Signal
· Remote Engine Start Signal
· Keyless Access Indicator Signal
· Keyless Access Warning Signal
B-CAN
Power Tailgate Control Unit
· Tailgate Open/Close Signal
With Power Tailgate
IGN_TRX
Park Pawl Actuator Driver Unit
· Status Request Signal
· Unlock Request Signal
· Wake Up Signal
Door Lock Actuators
Keyless Buzzer
Turn Signal Lights
Tailgate Release Actuator
Without Power Tailgate

KEYLESS/POWER DOOR LOCKS/SECURITY SYSTEM DESCRIPTION

Overview

Keyless Entry System

The non-selectable unlock function: When you press the LOCK button, all doors lock. When you press the UNLOCK button, all doors unlock. The doors will not lock with the remote if a door is not fully closed, or if the vehicle is in the ON mode. The selectable unlock function: When you press the LOCK button, all doors lock. When you press the UNLOCK button once, only the driver's door unlocks. The other doors will unlock when you press the button twice. (Depending on the settings in the multi-information display (MID) all the doors may unlock when you press the button the first time). The doors will not lock with the transmitter if a door is not fully closed, or if the vehicle is in the ON mode.

When the switch for the interior light is in the DOOR position, it comes on when the UNLOCK button is pressed. If a door is not opened, the light goes off and the doors will relock in about 30 seconds. If the doors are locked with the transmitter within 30 seconds, the light goes off immediately.

Door Lock Control

The door lock control function allows the body control module to detect the status of various switch signals and controls each actuator in order to lock and unlock the doors.

The system has three circuits between the door lock actuators and the body control module to improve safety of the system. One is for the driver's door lock actuator, and others are for the rear door lock actuators and passenger's side door lock actuators. The door lock actuator circuit has two fuses. When one fuse is blown, another fuse in the same circuit must be checked.

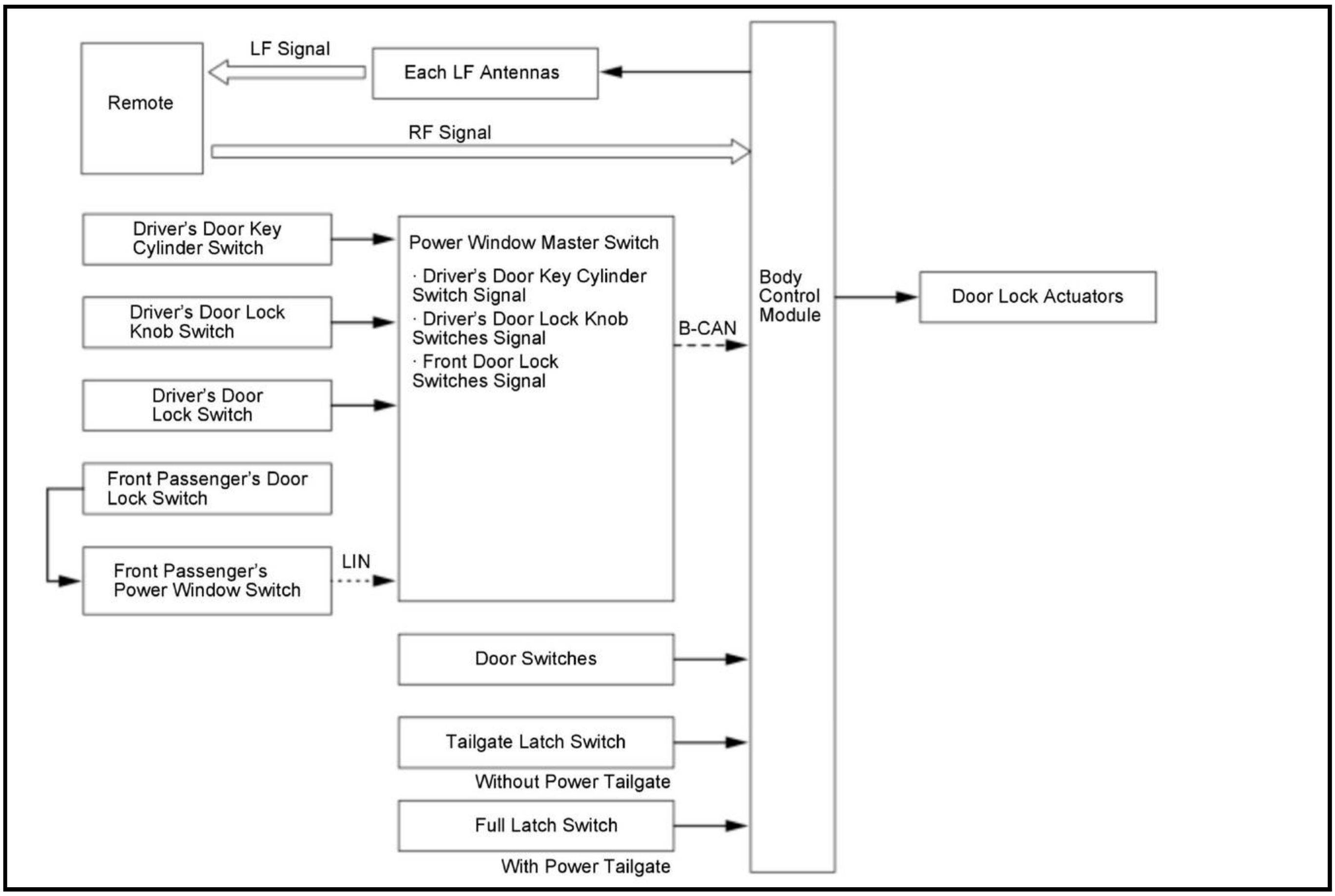

LF Signal
Remote
Each LF Antennas
RF Signal
Driver's Door Key Cylinder Switch
Driver's Door Lock Knob Switch
Driver's Door Lock Switch
Front Passenger's Door Lock Switch
Front Passenger's Power Window Switch
LIN
Power Window Master Switch
· Driver's Door Key Cylinder Switch Signal
· Driver's Door Lock Knob Switches Signal
· Front Door Lock Switches Signal
B-CAN
Body Control Module
Door Lock Actuators
Door Switches
Tailgate Latch Switch
Without Power Tailgate
Full Latch Switch
With Power Tailgate

Tailgate Release Control (Without Power Tailgate)

In the tailgate release function, the body control module activates the tailgate release actuator by the tailgate outer handle switch operation when the vehicle runs at a speed less than 1.2 mph (2 km/h). The tailgate can be unlocked by the tailgate outer handle switch operation without having the remote if all the doors are unlocked.

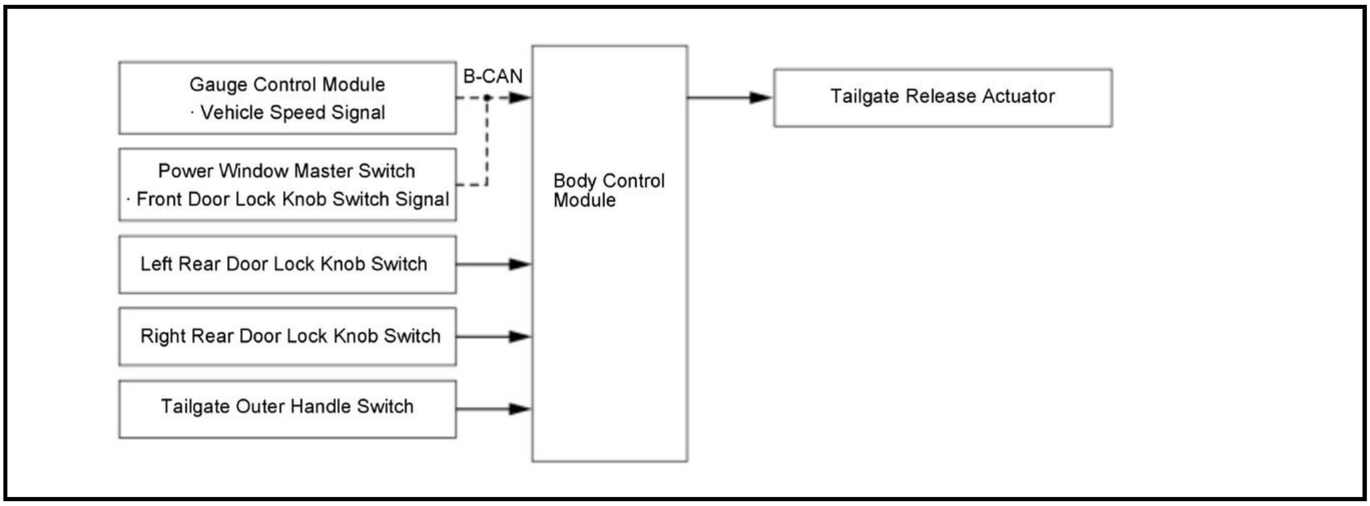
Gauge Control Module
· Vehicle Speed Signal
B-CAN
Power Window Master Switch
· Front Door Lock Knob Switch Signal
Left Rear Door Lock Knob Switch
Right Rear Door Lock Knob Switch
Tailgate Outer Handle Switch
Body Control Module
Tailgate Release Actuator

Tailgate Control (With Power Tailgate)

The tailgate control function allows the body control module to detect the status of various switch signals and sends the signals to the power tailgate control unit. The power tailgate control unit controls the power tailgate closer unit to lock or unlock the tailgate.

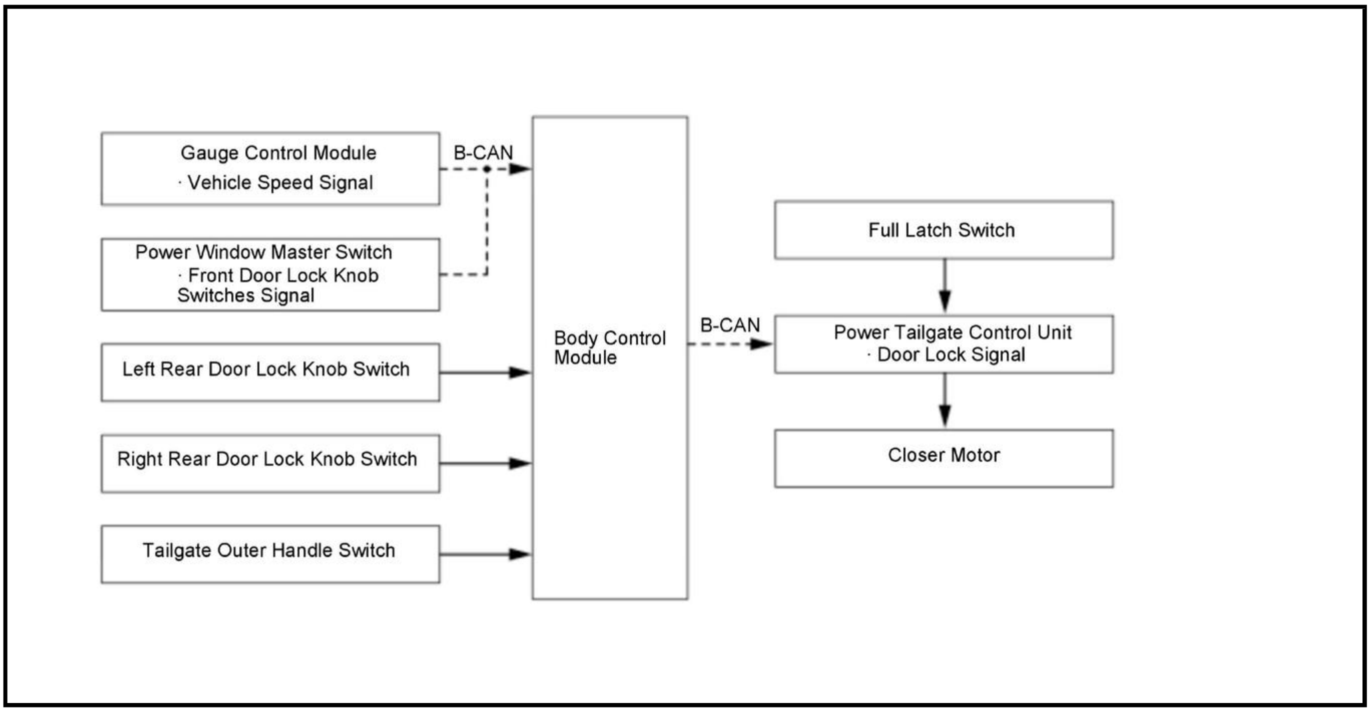
Gauge Control Module
· Vehicle Speed Signal
B-CAN
Power Window Master Switch
· Front Door Lock Knob Switches Signal
Left Rear Door Lock Knob Switch
Right Rear Door Lock Knob Switch
Tailgate Outer Handle Switch
Body Control Module
B-CAN
Full Latch Switch
Power Tailgate Control Unit
· Door Lock Signal
Closer Motor

Keyless Door Lock Control

The remote can transmit a lock or unlock signal to the body control module. The body control module then controls the door lock actuator by the B-CAN signal and various switch signals. The customization menu can also set the relock timer value.

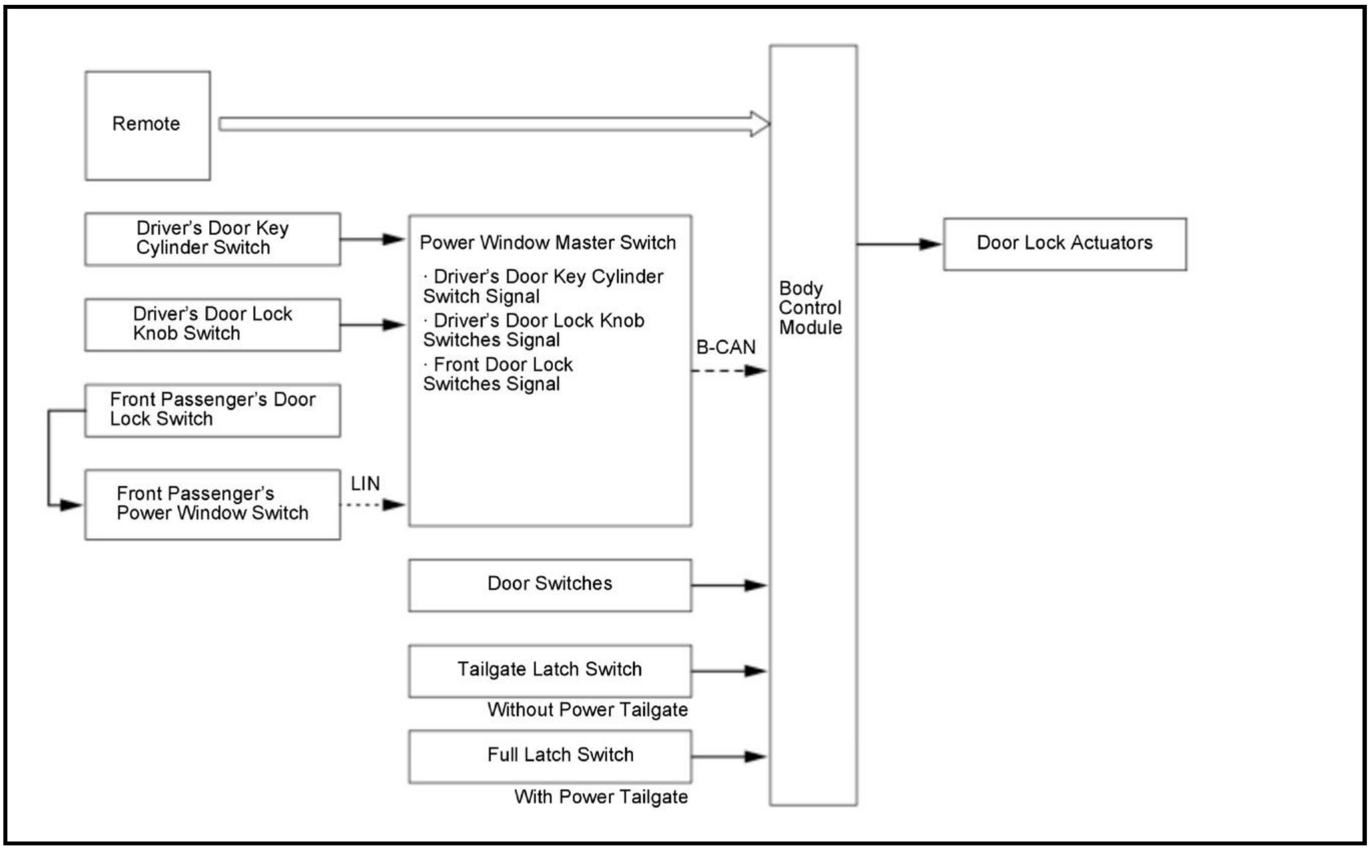
Remote
Driver's Door Key Cylinder Switch
Driver's Door Lock Knob Switch
Front Passenger's Door Lock Switch
Front Passenger's Power Window Switch
LIN
Power Window Master Switch
· Driver's Door Key Cylinder Switch Signal
· Driver's Door Lock Knob Switches Signal
· Front Door Lock Switches Signal
B-CAN
Body Control Module
Door Lock Actuators
Door Switches
Tailgate Latch Switch
Without Power Tailgate
Full Latch Switch
With Power Tailgate

Keyless Answer Back Function

LOCK

When the body control module receives a lock signal, it sends a signal to the turn signal lights and the keyless buzzer sounds.

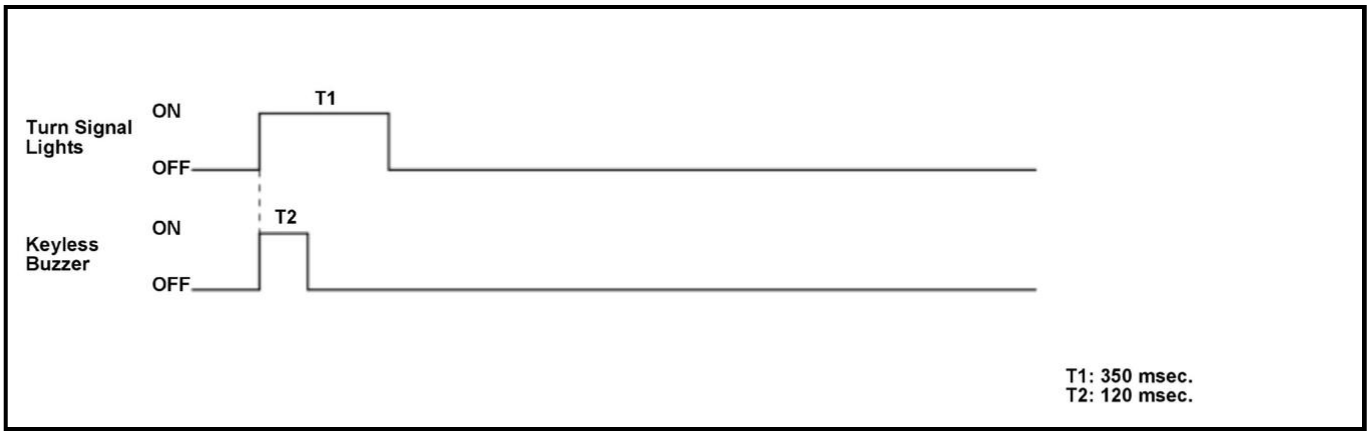

UNLOCK

When the body control module receives an unlock signal, it sends a signal two times to the turn signal lights and the keyless buzzer sounds.

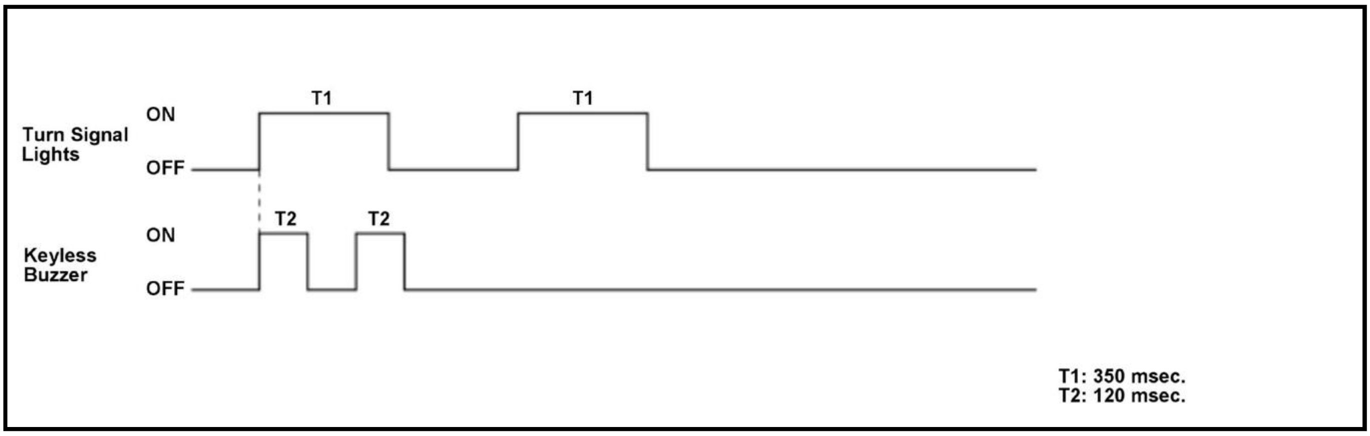

Automatic Door Lock/Unlock Control

The automatic door lock/unlock control function allows the body control module to detect the status of B-CAN signals and various switch signals and controls each actuator in order to automatically lock/unlock the doors.

Automatic Door Lock Function:

- When the vehicle speed exceeds 9 mph (15 km/h) (Default setting)
- When the shift position/mode is out of the P position/mode

Automatic Door Unlock Function:

- When the driver's door switch is ON (door open) (Default setting)
- When the vehicle mode is changed to the OFF (LOCK) mode from the ON mode
- When the shift position/mode is moved to the P position/mode from other than the P position/mode

Customizing Function:

The locking method can be set to non-link, link to vehicle speed, link to shift position/mode, or link to ignition switch or engine start/stop switch by the customizing function. For more information about customize options, refer to the Owner's Manual.

Key Lockout Prevent Function

The body control module monitors whether or not there is the remote in the vehicle. If the remote is in the vehicle, the system will not lock the doors. If the driver manually locks and closes the doors with the remote in the vehicle, the body control module energizes the door lock actuator and unlocks the doors. Also, if the tailgate is closed when the remote is left in the vehicle with all the door closed and the driver's door lock knob at lock position, the body control module energizes the door lock actuator and unlocks the doors. In addition, when the keyless lockout prevent function operates, the answer back is performed.

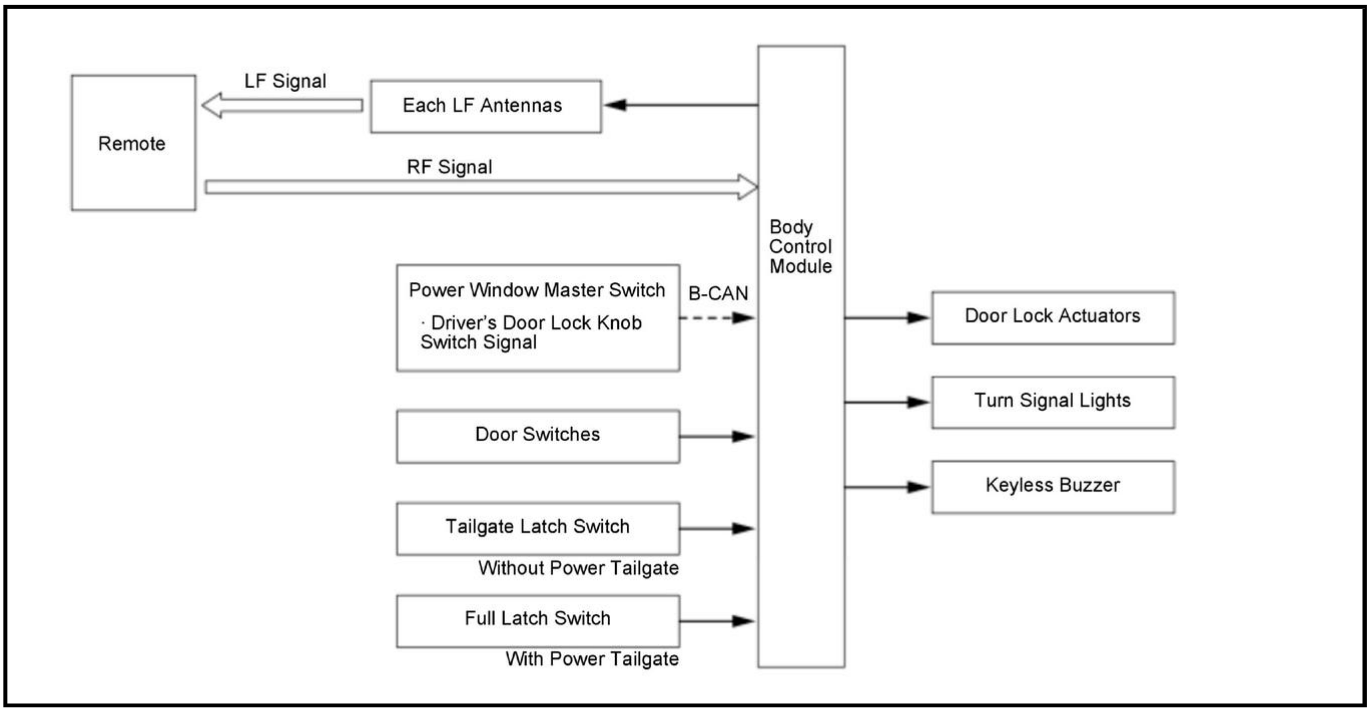
LF Signal
Each LF Antennas
Remote
RF Signal
Body Control Module
Power Window Master Switch
· Driver's Door Lock Knob Switch Signal
B-CAN
Door Lock Actuators
Turn Signal Lights
Door Switches
Keyless Buzzer
Tailgate Latch Switch
Without Power Tailgate
Full Latch Switch
With Power Tailgate

Security Control

When the security alarm is set, the body control module sends the security set signal using the B-CAN.

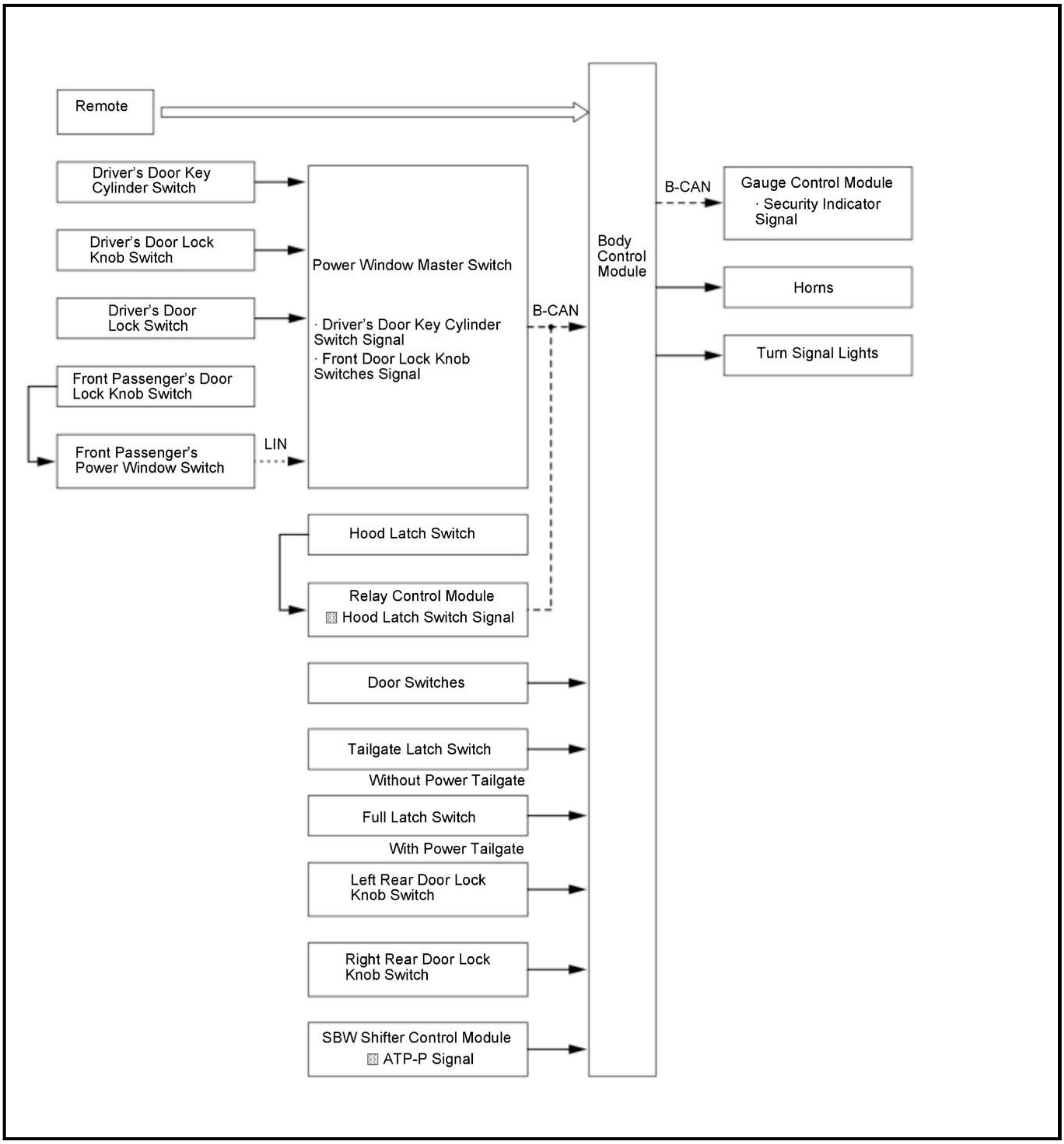
Remote
Driver's Door Key Cylinder Switch
Driver's Door Lock Knob Switch
Driver's Door Lock Switch
Front Passenger's Door Lock Knob Switch
Front Passenger's Power Window Switch
LIN
Power Window Master Switch
· Driver's Door Key Cylinder Switch Signal
· Front Door Lock Knob Switches Signal
B-CAN
Hood Latch Switch
Relay Control Module
▨ Hood Latch Switch Signal
Door Switches
Tailgate Latch Switch
Without Power Tailgate
Full Latch Switch
With Power Tailgate
Left Rear Door Lock Knob Switch
Right Rear Door Lock Knob Switch
SBW Shifter Control Module
▨ ATP-P Signal
Body Control Module
B-CAN
Gauge Control Module
· Security Indicator Signal
Horns
Turn Signal Lights

Security system operating term

Start setting	• Lock the door using a mechanical key • Lock the door by using the remote • Lock the door by pressing the door outer handle lock sensor while having the remote • Operate a keyless relock
Cancellation	• Unlock the door by using the remote • Unlock the door by smart entry function • Press the power switch while having the remote

Setting conditions (related systems are normally operated)	• Door switch OFF (Door close) • Door unlock knob switch OFF (LOCK) • Tailgate latch switch *1 or full latch switch *2 OFF (Tailgate close) • Driver's door key cylinder switch OFF • Hood latch switch ON (Hood close) • Vehicle OFF (LOCK) mode • Shift P position/mode
Start the alarm	When any of the monitoring switch signal inputs are received without the signal for cancelling setting
Cancel the alarm	Compliant with the conditions for cancelling setting

*1: Without power tailgate

*2: With power tailgate

Security Setting

When the security alarm is set, the body control module sends the security set signal using the B-CAN. When the gauge control module receives a security set signal from the body control module, the security indicator flashes at a slower pace to indicate the system has armed.

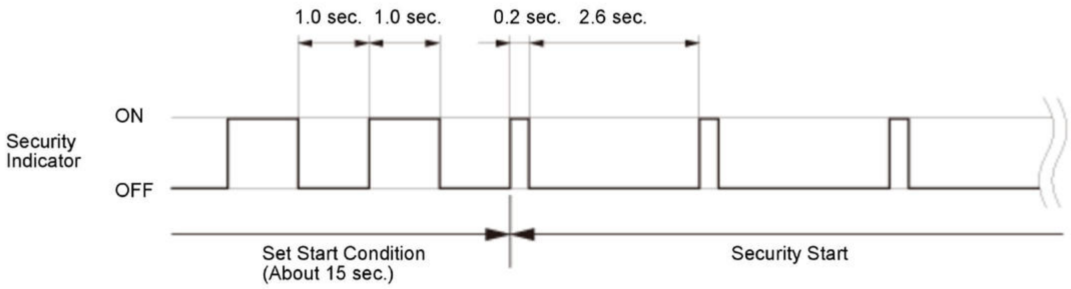

Security Alarm

With the security system armed, manually opening the hood, the tailgate, moving the door lock knob to the unlock position, or shift to other than the P position/mode activates the security alarm. During activation, the horn sounds repeating this alarm (one cycle is 120 seconds). Even if you remove the 12 volt battery, the alarming state cannot be changed. The alarm starts again when reinstalling the 12 volt battery.

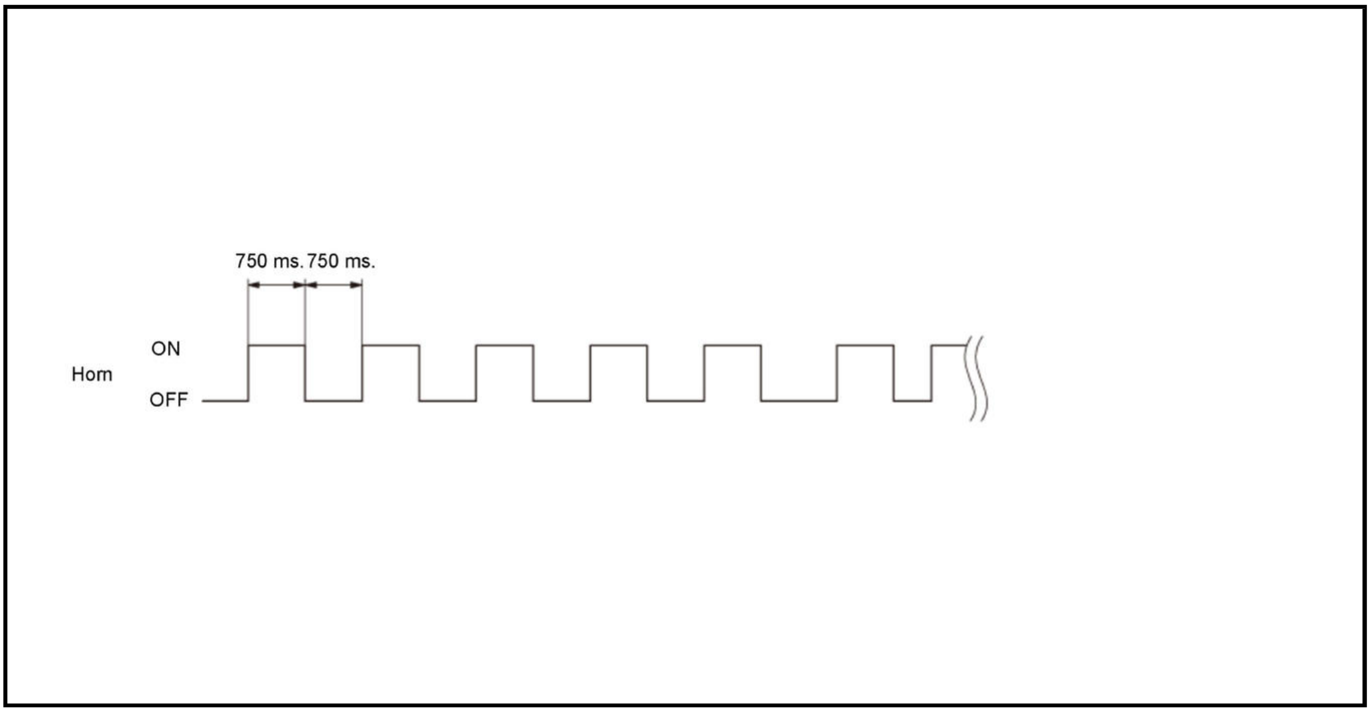

KEYLESS/POWER DOOR LOCKS/SECURITY SYSTEM DESCRIPTION - COMPONENTS

Door Lock Switches

The door lock switches are integrated into one unit to the power window master switch, and the front passenger's power window switch.

Door Lock Knob Switch/Door Lock Actuator/Driver's Door Key Cylinder Switch

The door lock knob switch and the door lock actuator are built into the door latch of each door. The door lock knob switch detects the lock and unlock states of the lock mechanism. The door lock actuator moves the lock mechanism back and forth between the lock and unlock position. The actuator receives lock and unlock commands from the body control module. The driver's door key cylinder switch is included in the driver's door latch assembly. In conjunction with the key cylinder, it detects the lock/unlock of the key cylinder.

Front Door Latch

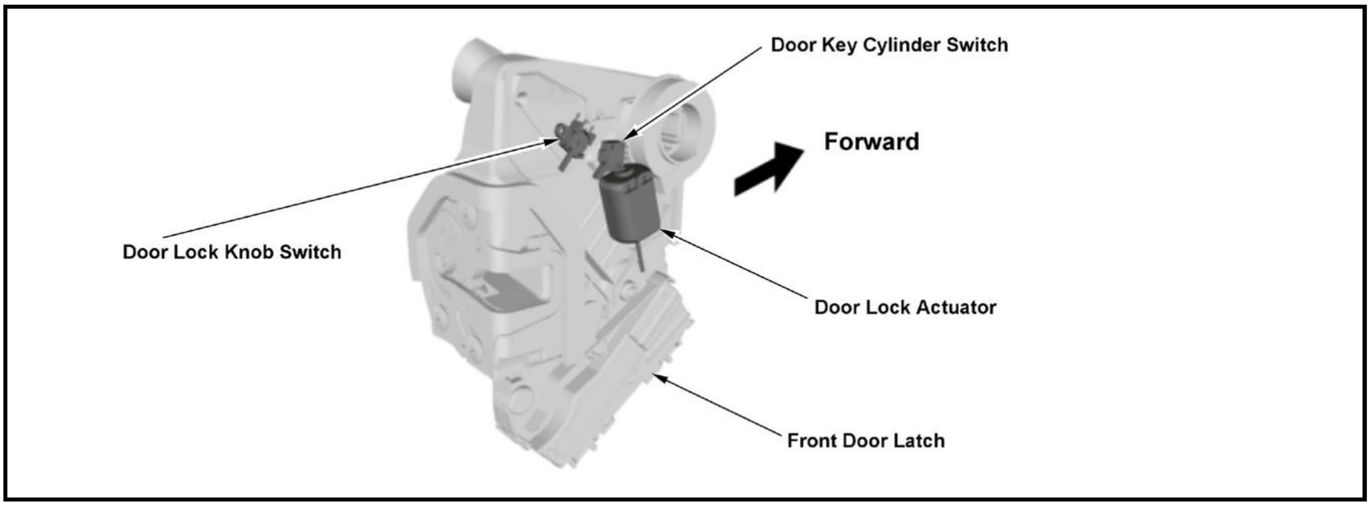

B	Driver's Door Key Cylinder Switch*		Door Lock Knob Switch	
	LOCK	UNLOCK	LOCK *	UNLOCK
LOCK	ON	OFF	ON	OFF
Neutral	OFF	OFF	---	---
UNLOCK	OFF	ON	OFF	ON

*: Only Driver's Door

Rear Door Latch

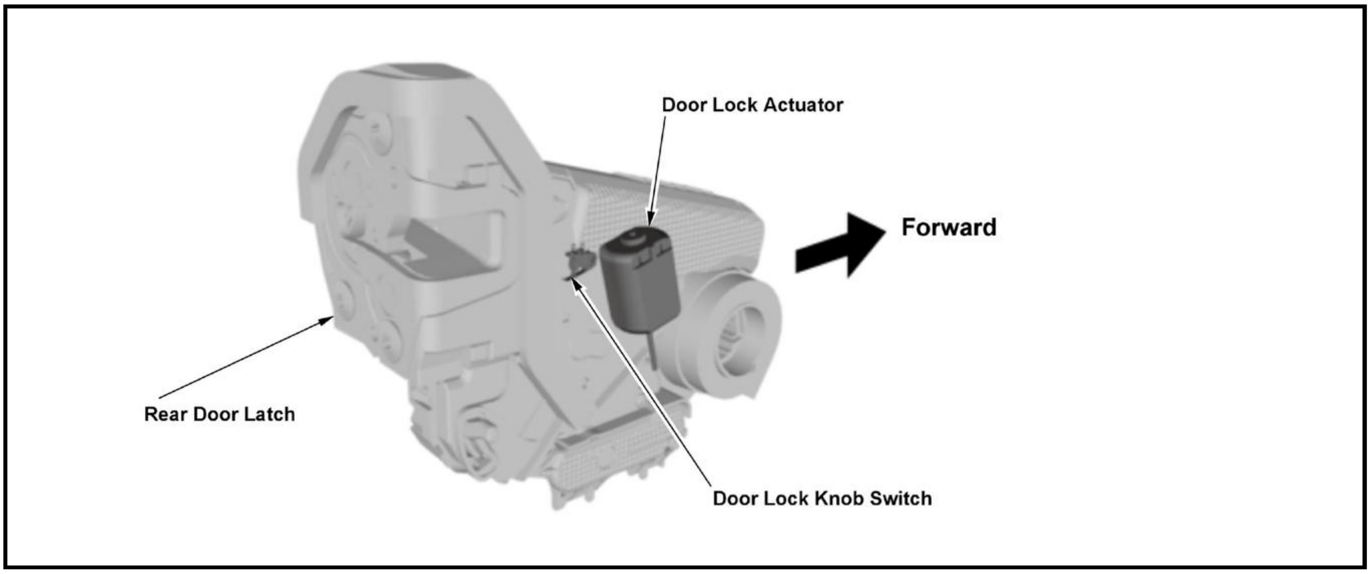
Door Lock Actuator
Forward
Rear Door Latch
Door Lock Knob Switch

B	Door Lock Knob Switch	
	LOCK	UNLOCK
LOCK	---	OFF
UNLOCK	---	ON

Tailgate Release Actuator/Tailgate Latch Switch (Without Power Tailgate)

The body control module receives an ON signal from the tailgate outer handle switch, which then outputs a signal to the tailgate release actuator, and unlocks the tailgate latch. The tailgate latch switch is the ON/OFF switch that detects the opening/closing of the tailgate. If the tailgate release actuator is bad, the tailgate may be opened manually with the lock lever.

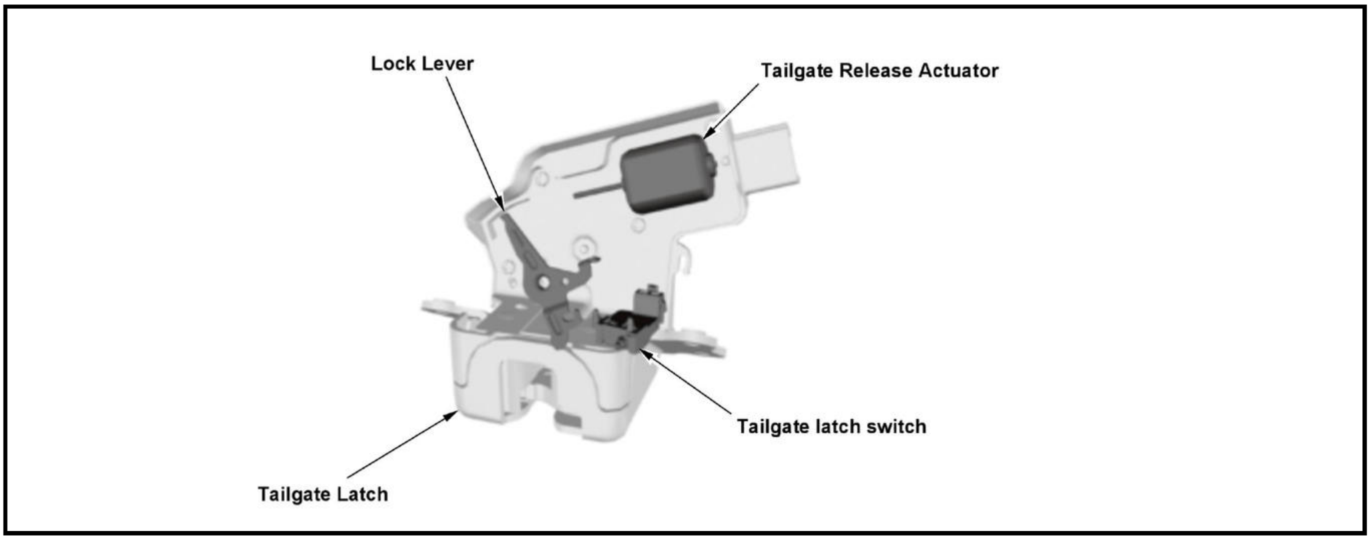
Lock Lever
Tailgate Release Actuator
Tailgate latch switch
Tailgate Latch

Tailgate	Tailgate Latch Switch
Open	ON
Close	OFF

Hood Latch Switch

The hood latch switch is built into the hood latch and it detects the opening/closing of the hood.

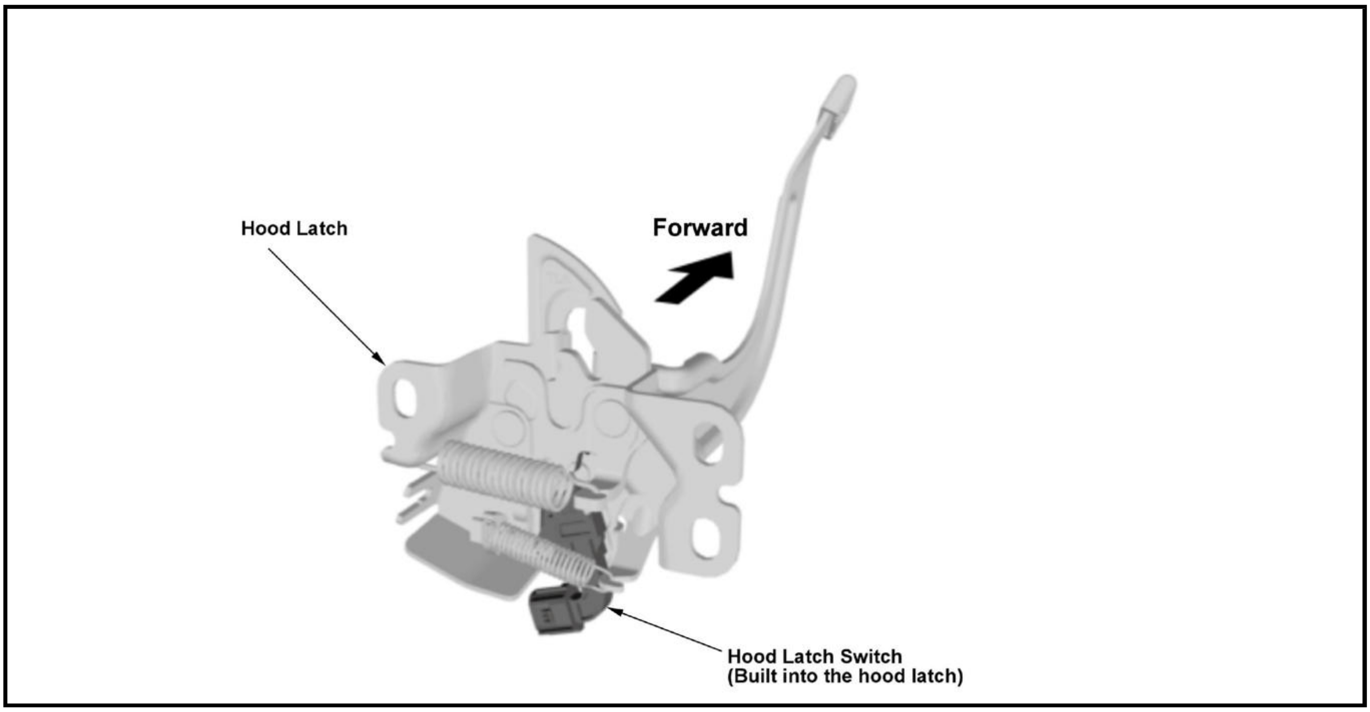
Hood Latch
Forward
Hood Latch Switch
(Built into the hood latch)

Hood	Hood Latch Switch
Open	OFF
Close	ON

Door Switch

The door switch is an ON/OFF type that detects the opening/closing of the door.

Door	Door Switch
Open	ON
Close	OFF

KEYLESS/POWER DOOR LOCKS/SECURITY SYSTEM DESCRIPTION - SYSTEM DIAGRAM

For locations of each component on the vehicle, refer to Component Location Index

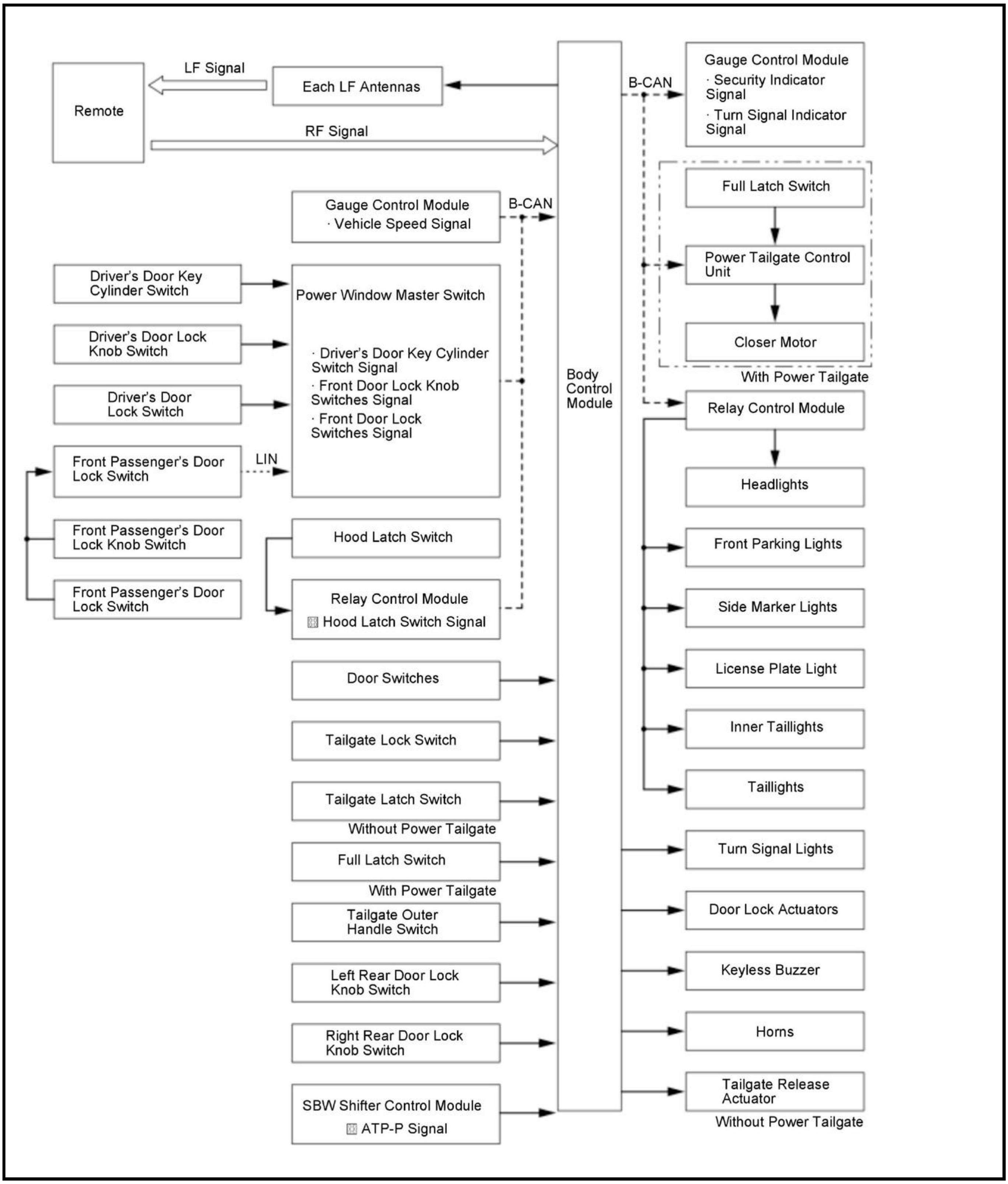
Remote
LF Signal
Each LF Antennas
RF Signal
B-CAN
Gauge Control Module
· Security Indicator Signal
· Turn Signal Indicator Signal
Full Latch Switch
Power Tailgate Control Unit
Closer Motor
With Power Tailgate
Gauge Control Module
· Vehicle Speed Signal
B-CAN
Driver's Door Key Cylinder Switch
Driver's Door Lock Knob Switch
Driver's Door Lock Switch
Power Window Master Switch
· Driver's Door Key Cylinder Switch Signal
· Front Door Lock Knob Switches Signal
· Front Door Lock Switches Signal
Front Passenger's Door Lock Switch
LIN
Front Passenger's Door Lock Knob Switch
Front Passenger's Door Lock Switch
Hood Latch Switch
Relay Control Module
▨ Hood Latch Switch Signal
Body Control Module
Relay Control Module
Headlights
Front Parking Lights
Side Marker Lights
License Plate Light
Inner Taillights
Taillights
Door Switches
Tailgate Lock Switch
Tailgate Latch Switch
Without Power Tailgate
Full Latch Switch
With Power Tailgate
Tailgate Outer Handle Switch
Left Rear Door Lock Knob Switch
Right Rear Door Lock Knob Switch
SBW Shifter Control Module
▨ ATP-P Signal
Turn Signal Lights
Door Lock Actuators
Keyless Buzzer
Horns
Tailgate Release Actuator
Without Power Tailgate

GENERAL INFORMATION

KEYLESS ACCESS SYSTEM SYMPTOM TROUBLESHOOTING INFORMATION

General Check Before Troubleshooting

NOTE: Before troubleshooting the keyless access system, check the following items and solve any applicable issues.

- Make sure that keyless access system is not disabled by the customization.
- Make sure the fuses and relays associated with the system is OK.
- Check for poor connection at the body control module.

- Check for DTCs with the HDS; if a DTC is indicated, troubleshoot the DTC first.
- Before testing, troubleshoot the keyless access system first using SELF CHECK, and if any malfunction is found, troubleshoot it first.
- Make sure the keyless remote is not in a purse with coins, wrapped with any metallic material, placed near a cell phone or computer.
- Make sure the vehicle 12 volt battery is fully charged.
- Make sure the keyless remote batteries are not low; if they are, replace keyless remote battery.
- Make sure a different keyless remote is not being used; only use a Honda-approved keyless remote.
- Make sure the keyless remote is not attached to a key ring or key case; if it is, remove the key from it.
- Make sure aftermarket accessories are not installed; remove any aftermarket accessories.
- Make sure aftermarket accessories are not connected to the S-NET or IGN_TRX line; disconnect any aftermarket accessories from the S-NET or IGN_TRX line.
- Make sure there is no electrical interference nearby; avoid areas with electrical or radio interference.

Symptom Troubleshooting Using the Security Indicator Lighting Pattern

The immobilizer and keyless access system condition can be checked by the security indicator lighting pattern.

Normal operation:

When turning the vehicle to the ON mode and the immobilizer code is identified, the security indicator is OFF.

Immobilizer code is not identified:

When turning the vehicle to the ON mode when the immobilizer code has not been identified, the security indicator blink until the OFF (LOCK) mode is selected. Then security indicator will come on for 1 second. The state of the keyless registration and the S-NET line can be checked by doing a **SYSTEM CHECK** and **STATUS LOG** with the HDS.

Security indicator turns on:

If the security indicator turns on, **do the gauge control module self-diagnostic function procedures** . If the indicator drive circuit is OK, do the **SYSTEM CHECK** and **STATUS LOG** procedures with the HDS.

System Check and Status Log

NOTE: The HDS can be used to:

- Check the state of the keyless remote registration and the S-NET line by doing a **SYSTEM CHECK**.
- Check the number of times the keyless access control unit or the backup control unit did not permit the engine to start by checking the **STATUS LOG**.

1. **Connect the HDS to the data link connector (DLC)**

2. At SYSTEM SELECTION MENU, enter ONE-PUSH START, then select KEYLESS ACCESS CONTROL UNIT or BACKUP CONTROL UNIT.

3. At KEYLESS ACCESS CONTROL UNIT, enter KEYLESS ACCESS SYSTEM INFORMATION, then select SYSTEM CHECK 1 or SYSTEM CHECK 2.

4. At BACKUP CONTROL UNIT, enter SYSTEM INFORMATION, then select SYSTEM CHECK.

5. Do the SYSTEM CHECK. If there is a system check number, do the troubleshooting for the item indicated.

6. **Check the STATUS LOG using the HDS**.

Troubleshoot the line with the highest counts first. If all the lines are 0 (zero), the problem may not be caused by the immobilizer system or keyless access system, check for ignition or fuel problems.**NOTE:** Once repaired, clear the status log by removing the BACK UP fuse in the under-hood fuse/relay box or disconnecting the 12 volt battery.

KEYLESS/POWER DOOR LOCKS/SECURITY SYSTEM TRIPPED SENSOR RECALL

The security system stores information on the last tripped sensor if the security system has been triggered. The information can be retrieved using the HDS.

1. **Connect the HDS to the data link connector (DLC)** .

2. Turn the vehicle to the ON mode. Select the following menu buttons on the HDS screen in sequence, retrieve the last tripped sensor data.

- Body Electrical
- Security
- History Data

Scroll through the data list.

- Sensors that were actuated will indicate the device that are set.
- Sensors that were not actuated will indicate NONE.

Inspect the Alarm Device circuit for:

- Misadjusted or damaged switch.
- Loose or corroded connections.
- Intermittent short to ground.

SYMPTOM TROUBLESHOOTING INDEX

KEYLESS ACCESS SYSTEM SYMPTOM TROUBLESHOOTING INDEX

NOTE: Before troubleshooting the keyless access system, make sure the fuses and **relays** associated with the system is OK.

Symptom	Diagnostic procedure	Also check for
Cannot select ON mode with keyless access and with the keyless remote touching the power switch	**Symptom troubleshooting**	• Poor connections at the body control module • Keyless remote • Body control module • Power switch • Harness/connections
Cannot select ON mode with keyless access, but can select ON mode with the keyless remote touching the power switch	**Symptom troubleshooting**	• Body control module • LF antenna • Keyless remote • Low or weak keyless remote battery • Harness/connections
Cannot select ON mode with the keyless remote touching the power	Check the body control module	• Body control module is not registered • Body control module

Symptom	Diagnostic procedure	Also check for
switch, but can select ON mode with keyless access		- IGN_TRX line open/short - Not registered - Harness/connections
The mode changes between ACCESSORY and ON, but it does not change to OFF (LOCK)	- Check the body control module - Check the SBW shifter control module	- Body control module - ATP-P line open - SBW shifter control module
The mode changes between ACCESSORY and ON, but it is difficult to change to OFF (LOCK)	- Check the body control module - Check the gauge control module	- Gauge control module - Body control module - PCM - B-CAN communication line open/short - F-CAN communication line open/short - Speed signal line open
Power switch does not work	Check for DTCs. If any DTC is indicated, go to the DTC troubleshooting	- ACC relay circuit - Body control module - Power switch - SS1(+) line short - SS2(-) line short - Harness
Engine does not crank (power supply is normal)	- Check the brake pedal position switch - Check the body control module	- Body control module - STS line open/short - Brake pedal position switch - STOP_SW line open/short
The engine starts, but stalls immediately	**Symptom troubleshooting**	- No power to PCM - No power to body control module - Body control module - Gauge control module - Harness/connections

Symptom	Diagnostic procedure	Also check for
Keyless access indicator does not go off or does not come on	**Symptom troubleshooting**	- Gauge control module - Body control module - Harness/connections
Security indicator blinks	**Symptom troubleshooting**	- Gauge control module - Body control module - PCM - Harness/connections

Symptom	Diagnostic procedure	Also check for
All the doors will not lock and unlock	Symptom troubleshooting	- Body control module - LF antenna - Driver's door lock knob switch - Door outer handle touch sensors - Door lock actuators - Keyless remote - Low or weak keyless remote battery - Not registered
The doors will not unlock or lock with the keyless remote, but will unlock or lock with the door outer handles	Symptom troubleshooting	- Keyless remote battery dead - Keyless remote - Body control module - Harness/connections - B-CAN communication line
The doors will not unlock or lock with the door outer handle touch sensors, but will unlock or lock with the keyless remote	Symptom troubleshooting	- Door outer handle touch sensors - Body control module - Keyless remote - Not registered - Harness/connections

KEYLESS/POWER DOOR LOCKS/SECURITY SYSTEM SYMPTOM TROUBLESHOOTING INDEX

NOTE:

- If the door lock system and the keyless operation do not work, troubleshoot the door locks first. The system does not function when turn the vehicle to the ON mode.
- Before troubleshooting, make sure the fuses and relays associated with the system is OK.

Symptom	Check Items	Also Check for
All the doors will not lock or unlock with driver's door key cylinder or door lock switch or keyless transmitter/remote	- Poor ground (G351, G401) - Blown fuses associated with the system - Body control module input test - Power window master switch input test - Remote test	B
Driver's door will not lock or unlock	- Poor ground (G401) - Blown fuses associated with the system - Door switch test (check the door switch ON/OFF information with the HDS) - Body control module input test	B

Symptom	Check Items	Also Check for
	- **Power window master switch input test** - **Door lock actuator test**	
Front passenger's door will not lock or unlock	- Poor ground (G401) - Blown fuses associated with the system - **Body control module input test** - Door switch test (check the door switch ON/OFF information with the HDS) - **Door lock actuator test**	B
Left rear door will not lock or unlock	- Poor ground (G501) - Blown fuses associated with the system - **Body control module input test** - Door switch test (check the door switch ON/OFF information with the HDS) - **Door lock actuator test**	B
Right rear doors will not lock or unlock	- Poor ground (G502) - Blown fuses associated with the system - **Body control module input test** - Door switch test (check the door switch ON/OFF information with the HDS) - **Door lock actuator test**	B
Front passenger's doors will not unlock with the remote or key cylinder switch, but will unlock with the inside door unlock switch	**Driver's door lock knob switch test** (check for door lock knob switch ON/OFF information with the HDS)	B
Doors automatically relock 30 seconds after being unlocked with the remote even though a door has been opened	**Symptom troubleshooting**	B
Auto door unlock does not work	**Symptom troubleshooting**	B
Security alarm system will not arm	**Symptom troubleshooting**	B
The security system sounds randomly while the doors are locked	**Tripped sensor recall**	B

SYMPTOM TROUBLESHOOTING

KEYLESS ACCESS SYSTEM SYMPTOM TROUBLESHOOTING - ALL THE DOORS WILL NOT LOCK AND UNLOCK

1. Door lock actuator operation check 1

-1. Put out all the keyless remotes from inside the vehicle, and close all doors and tailgate.

-2. Press each LOCK and UNLOCK buttons of the keyless remote, at least ten times.

Do the door lock actuators work normally?

YES

Go to step 2.

NO

Go to step 3.

2. Door lock actuator operation check 2

   -1. Lock and unlock the doors with touching the door outer handle.

   Do the door lock actuators work normally?

   YES

   Intermittent failure, the system is OK at this time. Check for loose or poor connections.

   NO

   Go to symptom trouble shooting "The doors will not unlock or lock with the door outer handle touch sensors, but will unlock or lock with the keyless remote".

3. Determine possible failure area (keyless remote, others)

   -1. Press the LOCK and the UNLOCK buttons of the keyless remote, and check if the LED on the keyless remote comes on.

   Does the LED come on?

   YES

   Go to step 4.

   NO

   Replace the keyless remote battery and recheck the system. If the symptom does not go away, replace the keyless remote .

4. Door lock actuator operation check 2

   -1. Lock and unlock the doors with touching the door outer handle.

   Do the door lock actuators work normally?

   YES

   Register the keyless remote, and recheck. If the symptom does not go away, **replace the keyless remote** .

   NO

   Go to step 5.

5. Door lock actuator operation check 3

   -1. Lock and unlock the doors with the driver's door touch sensors.

Do the door lock actuators work normally?

YES

Go to step 6.

NO

Check the B-CAN system DTCs. If not, check the door lock system.

6. Keyless access system check

   -1. Do the keyless access remote check using the all keyless remotes .

   Are the all keyless remotes OK?

   YES

   Do the SYSTEM CHECK 1 and SYSTEM CHECK 2 with the HDS. If the result is indicated, troubleshoot the items based on the SYSTEM CHECK table.

   NO

   Replace the keyless remote and recheck.

KEYLESS ACCESS SYSTEM SYMPTOM TROUBLESHOOTING - CANNOT SELECT ON MODE WITH KEYLESS ACCESS AND WITH THE KEYLESS REMOTE TOUCHING THE POWER SWITCH

1. Keyless access system check 1

   -1. Do this procedure ten times: Turn the vehicle to the ON mode.

   Does the system change to ON mode?

   YES

   Intermittent failure, the system is OK at this time. Check for loose or poor connection.

   NO

   Go to step 2.

2. Keyless access system check 2

   -1. Touch the power switch with the keyless remote. The buttons on the keyless remote should be facing you.

   -2. Turn the vehicle to the ON mode.

   Does the system change to ON mode?

   YES

   Go to keyless access system symptom troubleshooting "Cannot select ON mode with keyless access, but can select ON mode with the keyless remote touching the power switch".

   NO

   Go to step 3.

3. Keyless access system check 3

   -1. Select KEYLESS ACCESS CONTROL UNIT from the ONE-PUSH START system select menu with the HDS, and enter SELF CHECK.

   One-Push - KEYLESS ACCESS CONTROL UNIT - SELF CHECK

   Does the system communicate with the HDS?

   YES

   Go to step 4.

   NO

   Go to step 10.

4. Keyless access system check 4

   -1. Reboot the HDS.

   -2. Select model on the HDS screen.

   -3. When prompted by the HDS, select YES when asked if the vehicle has keyless access system, then press and hold the power switch for at least 2 minutes. This selects the forced ON mode.

   Does the system change to forced ON mode?

   YES

   Go to step 5.

   NO

   Go to step 15.

5. PCU DTC check

   -1. Check for PCU DTCs with the HDS.

DTC Description	DTC
B	B

   Are any DTCs indicated?

   YES

   Troubleshoot the PCU DTCs.

   NO

   Go to step 6.

6. Keyless access DTC check

   -1. Check for keyless access control unit DTCs with the HDS.

DTC Description	DTC
B	B

Are any DTCs indicated?

YES

Troubleshoot the keyless access control unit DTCs.

NO

Go to step 7.

7. Backup DTC check

-1. Check for backup control unit DTCs with the HDS.

DTC Description	DTC
B	B

Are any DTCs indicated?

YES

Troubleshoot the backup control unit DTCs.

NO

Go to step 8.

8. Keyless access system check 5

-1. **Do the keyless access remote check using the all keyless remotes** .

Are the all keyless remotes OK?

YES

Go to step 9.

NO

Replace the keyless remote and recheck.

9. Keyless access system check 6

-1. Turn the vehicle to the OFF (LOCK) mode.

-2. Remove all the keyless remotes from inside the vehicle. Place the keyless remotes more than 1.5 m (5.0 ft) away from the vehicle.

-3. Reboot the HDS without pressing the power switch.

-4. Do the registration of the body control module according to the instructions on the HDS screen.

-5. Select REGISTRATION from the ONE-PUSH START system select menu with the HDS, then select REPLACE PCU/BACKUP CONTROL/KEYLESS ACCESS CONTROL UNIT.

-6. Take the keyless remote into the vehicle, and clear the PCU DTCs with the HDS.

-7. Do this procedure ten times: Turn the vehicle to the ON mode.

Does the system change to ON mode?

YES

Intermittent failure, the system is OK at this time. Check for loose or poor connection.

NO

Replace the body control module .

10. L-line check

-1. **Do the DLC circuit troubleshooting** .

Is L-line OK?

YES

Go to step 11.

NO

Repair an L-line wire circuit.

11. Power switch operation check

-1. **Do the power switch test** .

Is the power switch OK?

YES

Go to step 12.

NO

Replace the power switch .

12. Open wire check (SS1(+), SS2(-) lines)

-1. Disconnect the following connectors.

Power switch 10P connector Body control module connector G (32P)

-2. Measure the resistance between test points 1 and 2 respectively.

Test condition	Vehicle OFF (LOCK) mode Power switch 10P connector: disconnected Body control module connector G (32P): disconnected

Test point 1	Power switch 10P connector (female terminals) No. 6: ①
Test point 2	**Body control module connector G (32P) No. 18**

Test point 1	Power switch 10P connector (female terminals) No. 10: ①
Test point 2	**Body control module connector G (32P) No. 9**

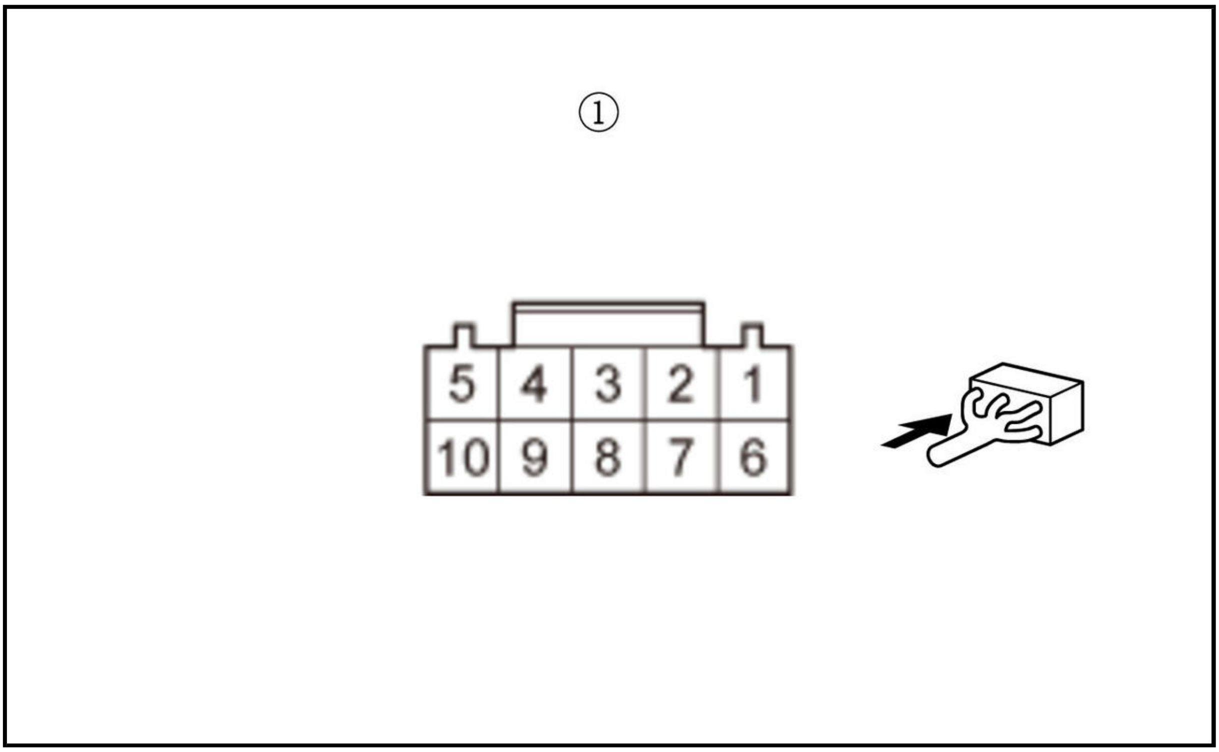

Is there 1.0 Ω or less?

YES

The SS1(+) and SS2(-) wires are OK. Go to step 13.

NO

Repair an open or high resistance in the wire.

13. Open wire check (+B_SMART line)

-1. Measure the voltage between test points 1 and 2.

Test condition	Vehicle OFF (LOCK) mode Power switch 10P connector: disconnected Body control module connector G (32P): disconnected
Test point 1	Power switch 10P connector (female terminals) No. 5: ①
Test point 2	Body ground

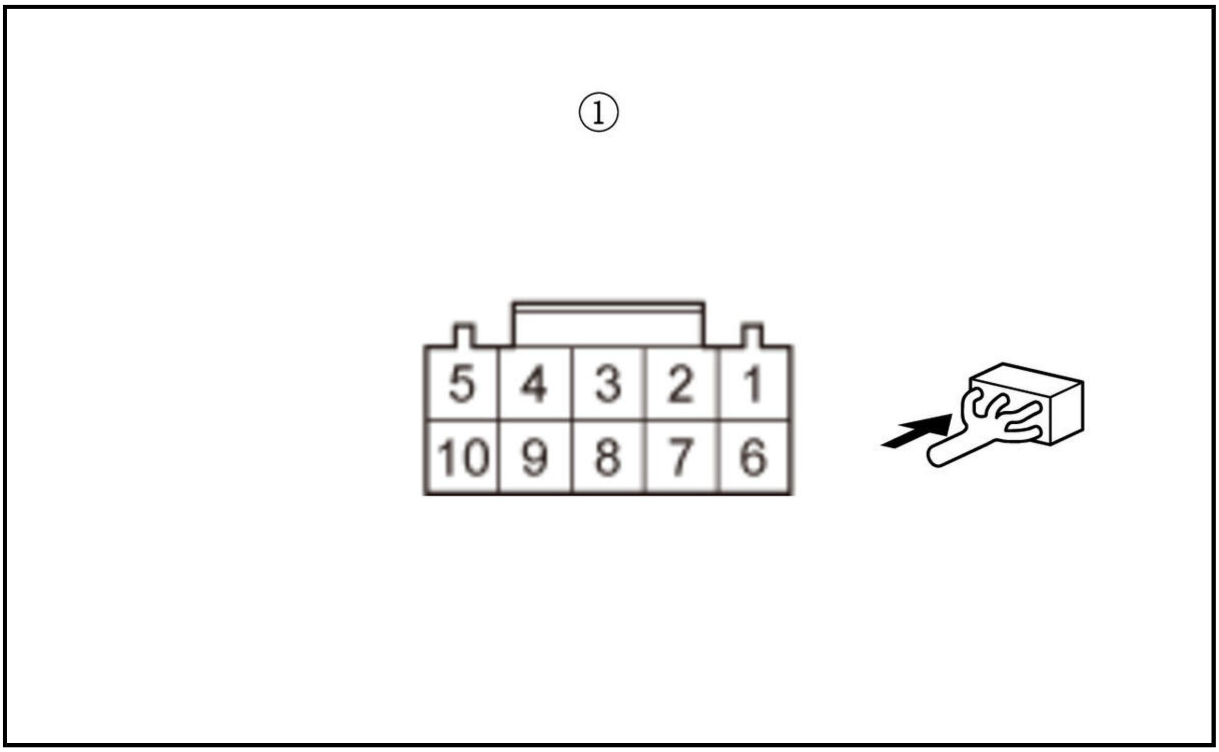

Is there battery voltage?

YES

The +B_SMART wire is OK. Go to step 14.

NO

Repair an open or high resistance in the wire.

14. Open wire check (GND line)

-1. Measure the resistance between test points 1 and 2.

Test condition	Vehicle OFF (LOCK) mode Power switch 10P connector: disconnected Body control module connector G (32P): disconnected
Test point 1	Power switch 10P connector (female terminals) No. 1: ①
Test point 2	Body ground

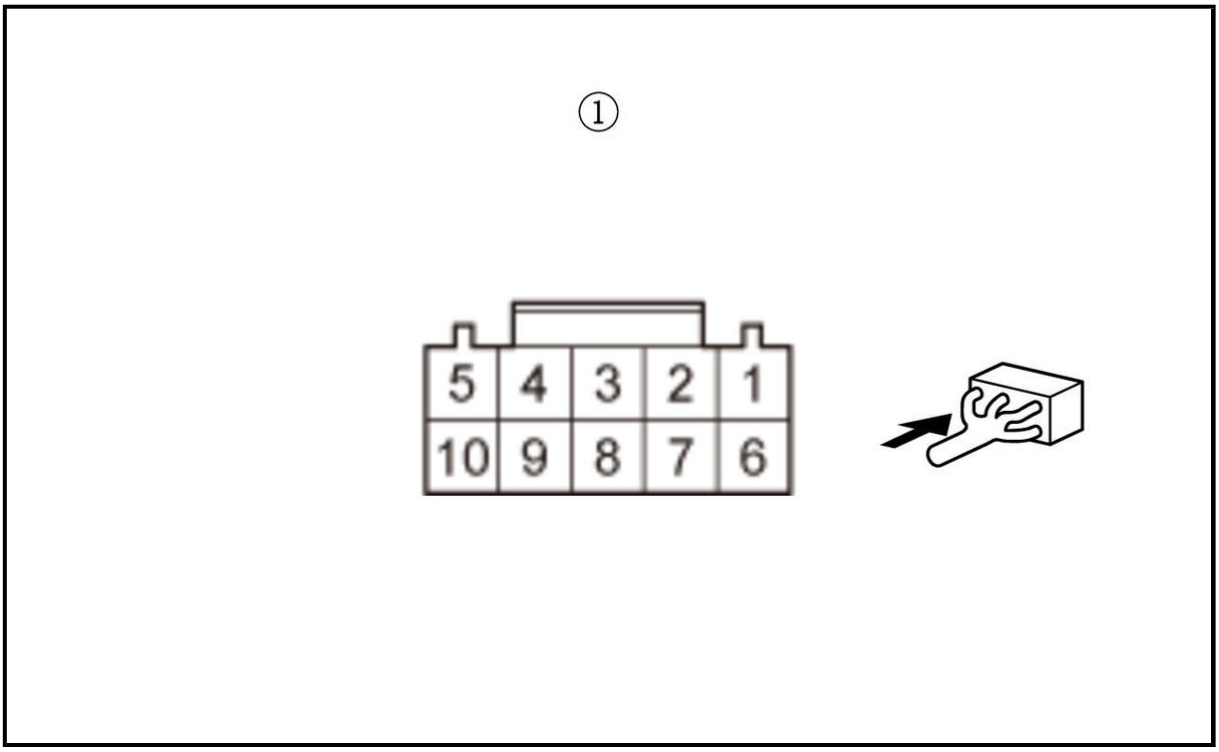

Is there 1.0 Ω or less?

YES

The GND wire is OK. Go to step 16.

NO

Repair an open or high resistance in the ground wire or poor ground (G401).

15. PCU DTC check

-1. Check for PCU DTCs with the HDS.

DTC Description	DTC
B	B

Are any DTCs indicated?

YES

Troubleshoot the PCU DTCs.

NO

Go to step 16.

16. Open wire check (+B_BACK_UP, +B_SMART lines)

-1. Disconnect the following connectors.

Body control module connector B (36P) Body control module connector C (28P)

-2. Measure the voltage between test points 1 and 2 individually.

Test condition	Vehicle OFF (LOCK) mode Power switch 10P connector: disconnected

	Body control module connector B (36P): disconnected Body control module connector C (28P): disconnected
Test point 1	**Body control module connector B (36P) No. 16**
Test point 2	Body ground

Test point 1	**Body control module connector C (28P) No. 27**
Test point 2	Body ground

Is there battery voltage?

YES

The +B_BACK_UP, and +B_SMART wires are OK. Go to step 17.

NO

Repair an open or high resistance in the wire.

17. Open wire check (GND line)

-1. Disconnect the following connector.

Body control module connector A (14P)

-2. Measure the resistance between test points 1 and 2 individually.

Test condition	Vehicle OFF (LOCK) mode Power switch 10P connector: disconnected Body control module connector A (14P): disconnected Body control module connector B (36P): disconnected Body control module connector C (28P): disconnected
Test point 1	**Body control module connector A (14P) No. 2**
Test point 2	Body ground

Test point 1	**Body control module connector A (14P) No. 8**
Test point 2	Body ground

Is there 1.0 Ω or less?

YES

The GND wires are OK. **Replace the body control module** .

NO

Repair an open or high resistance in the ground wire or poor ground (G401).

KEYLESS ACCESS SYSTEM SYMPTOM TROUBLESHOOTING - CANNOT SELECT ON MODE WITH KEYLESS ACCESS, BUT CAN SELECT ON MODE WITH THE KEYLESS REMOTE TOUCHING THE POWER SWITCH

1. Keyless access system check 1

-1. Press the LOCK and the UNLOCK buttons of the keyless remote, and check if the LED on the keyless remote comes on.

Does the LED come on?

YES

Go to step 2.

NO

Replace the keyless remote battery and recheck the system. If the symptom does not go away, replace the keyless remote .

2. Keyless access system check 2

   -1. Touch the power switch with the keyless remote. The buttons on the keyless remote should be facing you.

   -2. Turn the vehicle to the ON mode.

   -3. Select KEYLESS ACCESS CONTROL UNIT from the ONE-PUSH START system select menu with the HDS, and enter SELF CHECK.

   One-Push - KEYLESS ACCESS CONTROL UNIT - SELF CHECK

   Does the system communicate with the HDS?

   YES

   Go to step 3.

   NO

   Do the input test for the body control module .

3. PCU DTC check

   -1. Check for PCU DTCs with the HDS.

DTC Description	DTC
B	B

   Are any DTCs indicated?

   YES

   Troubleshoot the PCU DTCs.

   NO

   Go to step 4.

4. Keyless access DTC check

   -1. Check for keyless access control unit DTCs with the HDS.

DTC Description	DTC
B	B

   Are any DTCs indicated?

   YES

   Troubleshoot the keyless access control unit DTCs.

NO

Go to step 5.

5. Backup DTC check

-1. Check for backup control unit DTCs with the HDS.

DTC Description	DTC
B	B

Are any DTCs indicated?

YES

Troubleshoot the backup control unit DTCs.

NO

Go to step 6.

6. Keyless access system check 3

-1. Select HISTORY DATA from the KEYLESS ACCESS CONTROL UNIT mode menu with the HDS.

One-Push - KEYLESS ACCESS CONTROL UNIT - History data/Clear

Select HISTORY CLEAR, and back to TEST MODE MENU.

-3. Turn the vehicle to the OFF (LOCK) mode.

-4. Touch the power switch with the keyless remote. The buttons on the keyless remote should be facing you.

-5. Turn the vehicle to the ON mode.

-6. Select HISTORY DATA from the KEYLESS ACCESS CONTROL UNIT mode menu with the HDS.

One-Push - KEYLESS ACCESS CONTROL UNIT - History data/Clear

History Data

ENGINE START/STOP SWITCH 1 (+)	ON
ENGINE START/STOP SWITCH 2 (-)	ON

Is all the information ON?

YES

Go to step 8.

NO

Go to step 7.

7. Open wire check (SS1(+), SS2(-) lines)

-1. Turn the vehicle to the OFF (LOCK) mode.

-2. Disconnect the following connectors.

Power switch 10P connector Body control module connector G (32P)

-3. Measure the resistance between test points 1 and 2 respectively.

Test condition	Vehicle OFF (LOCK) mode Power switch 10P connector: disconnected Body control module connector G (32P): disconnected
Test point 1	**Body control module connector G (32P) No. 18**
Test point 2	Power switch 10P connector (female terminals) No. 6: ①

Test point 1	**Body control module connector G (32P) No. 9**
Test point 2	Power switch 10P connector (female terminals) No. 10: ①

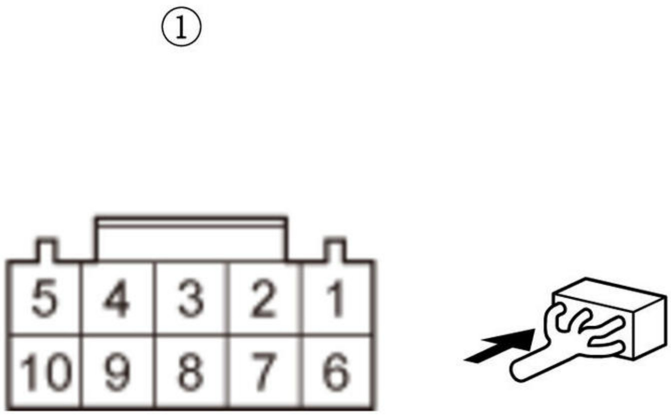

Is there 1.0 Ω or less?

YES

The SS1(+) and SS2(-) wires are OK. **Replace the body control module** .

NO

Repair an open or high resistance in the wire.

8. Keyless access system check 4

-1. **Do the keyless access remote check using the all keyless remotes** .

Are the all keyless remotes OK?

YES

Replace the body control module .

NO

Replace the keyless remote and recheck.

KEYLESS ACCESS SYSTEM SYMPTOM TROUBLESHOOTING - KEYLESS ACCESS INDICATOR DOES NOT GO OFF OR DOES NOT COME ON

1. Keyless access system check 1

-1. Turn the vehicle to the OFF (LOCK) mode.

-2. Turn the vehicle to the ON mode.

-3. Check the keyless access indicator.

Does the keyless access indicator come on for 2 seconds?

YES

Go to step 2.

NO

Do the gauge control module self-diagnostic function test . If the indicator does not come on, replace the gauge control module .

2. Keyless access system check 2

-1. Check the keyless access indicator.

Does the indicator blink once, then stay off?

YES

Intermittent failure, the system is OK at this time. Check for loose or poor connections.

NO

Go to step 3.

3. PCU, backup, and keyless access DTC check

-1. Check for DTCs in the PCU, backup control unit, and keyless access control unit with the HDS.

DTC Description	DTC
B	B

DTC Description	DTC
B	B

DTC Description	DTC
B	B

Are there any DTCs?

YES

Go to the indicated DTC troubleshooting.

NO

Replace the gauge control module .

KEYLESS ACCESS SYSTEM SYMPTOM TROUBLESHOOTING - SECURITY INDICATOR BLINKS

1. Keyless access system check 1

-1. Select KEYLESS ACCESS CONTROL UNIT from the ONE-PUSH START system select menu with HDS, and enter KEYLESS ACCESS SYSTEM INFORMATION.

One-Push - BACKUP CONTROL UNIT - SYSTEM CHECK 1

One-Push - BACKUP CONTROL UNIT - SYSTEM CHECK 2

Do the SYSTEM CHECK 1 and 2 with the HDS.

Is N-1 OK indicated?

YES

Go to step 2.

NO

Troubleshoot the keyless access system according to the result of the SYSTEM CHECK 1 and 2.

2. Keyless access system check 2

-1. With driver's power window open and all the doors closed, turn the vehicle to the OFF (LOCK) mode.

-2. Remove all the keyless remotes from inside the vehicle. Hold them outside the open driver's window, at least 20 cm (8.0 in) away from the vehicle.

-3. Press the power switch. The MID should request the keyless remote to touch the power switch. The LED on the power switch will flash for up to 30 seconds.

-4. Touch the power switch with the keyless remote. The buttons on the keyless remote should be facing you. The LED on the power switch will turn solid when detected.

-5. Turn the vehicle to the ON mode.

-6. Select BACKUP CONTROL UNIT from the ONE-PUSH START system select menu with the HDS, and enter SYSTEM INFORMATION.

One-Push - BACKUP CONTROL UNIT - SYSTEM CHECK

Do the SYSTEM CHECK with the HDS.

Is N-1 OK indicated?

YES

Go to step 3.

NO

Troubleshoot the keyless access system according to the result of the SYSTEM CHECK.

3. Gauge control module check

-1. Select GAUGES from the BODY ELECTRICAL SYSTEM SELECT menu with the HDS.

Self diagnostic function - GAUGES

Select FUNCTIONAL TESTS from the TEST MODE menu with the HDS, and enter SELF TEST.

Does the security indicator blinking?

YES

Go to the PGM-FI system troubleshooting.

NO

Replace the gauge control module .

KEYLESS ACCESS SYSTEM SYMPTOM TROUBLESHOOTING - THE DOORS WILL NOT UNLOCK OR LOCK WITH THE DOOR OUTER HANDLE TOUCH SENSORS, BUT WILL UNLOCK OR LOCK WITH THE KEYLESS REMOTE

NOTE: Before troubleshooting, make sure the BACK UP fuse in the under-hood fuse/relay box is OK.

1. Keyless access system check 1

   -1. Turn the vehicle to the ON mode.

   Does the system change to ON mode?

   YES

   Go to step 2.

   NO

   Go to keyless access system symptom troubleshooting "Cannot select ON mode with keyless access and with the keyless remote touching the power switch".

2. Keyless access DTC check

   -1. Select KEYLESS ACCESS CONTROL UNIT from the ONE-PUSH START system select menu with the HDS, and enter SELF CHECK.

   One-Push - KEYLESS ACCESS CONTROL UNIT - SELF CHECK

   Check for keyless access control unit DTCs with the HDS.

DTC Description	DTC
B	B

   Are any DTCs indicated?

   YES

   Troubleshoot the keyless access control unit DTCs.

   NO

   Go to step 3.

3. Keyless access system check 2

-1. Select KEYLESS ACCESS CONTROL UNIT from the ONE-PUSH START system select menu with the HDS, and enter HISTORY DATA.

One-Push - KEYLESS ACCESS CONTROL UNIT - History data/Clear

Select HISTORY CLEAR, and back to TEST MODE menu.

-3. Touch the each door outer handle touch sensors, then check the HISTORY DATA.

History Data

DRIVER DOOR UNLOCK SWITCH (OUTER HANDLE TOUCH SENSOR)	OK
FRONT PASSENGER DOOR UNLOCK SWITCH (OUTER HANDLE TOUCH SENSOR)	OK

Is all the information OK?

YES

Go to step 4.

NO

Go to step 6.

4. Keyless access system check 3

-1. Touch the each door outer handle lock sensors, then check the HISTORY DATA.

One-Push - KEYLESS ACCESS CONTROL UNIT - History data/Clear

History Data

DRIVER DOOR LOCK SWITCH (OUTER HANDLE TOUCH SENSOR)	OK
FRONT PASSENGER DOOR LOCK SWITCH (OUTER HANDLE TOUCH SENSOR)	OK

Is all the information OK?

YES

Go to step 5.

NO

Go to step 8.

5. Door lock actuator operation check

-1. Turn the vehicle to the OFF (LOCK) mode, and close all doors.

-2. Lock and unlock the doors with the driver's door touch sensors, and lock and unlock the doors with the front passenger's door touch sensors.

Do the door lock actuators work normally?

YES

Do the input test for the body control module , and do all power, ground, and communication input tests. If the body control module input tests prove OK, **replace the body control module** .

NO

Check the B-CAN system DTCs. If not, check the door lock system.

6. Door outer handle power circuit check

-1. Turn the vehicle to the OFF (LOCK) mode.

-2. Disconnect the following connectors.

Each door outer handle 8P connector

-3. Measure the voltage between test points 1 and 2 respectively.

Driver's door

Test condition	Vehicle OFF (LOCK) mode Driver's door outer handle 8P connector: disconnected
Test point 1	Driver's door outer handle 8P connector (female terminals) No. 4: ①
Test point 2	Driver's door outer handle 8P connector (female terminals) No. 8: ①

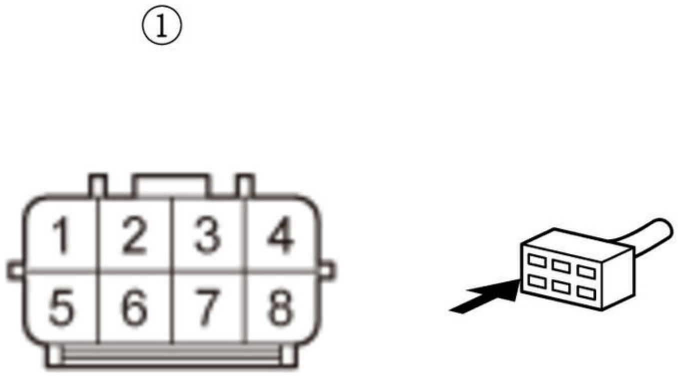

Front passenger's door

Test condition	Vehicle OFF (LOCK) mode Front passenger's door outer handle 8P connector: disconnected
Test point 1	Front passenger's door outer handle 8P connector (female terminals) No. 4: ①
Test point 2	Front passenger's door outer handle 8P connector (female terminals) No. 8: ①

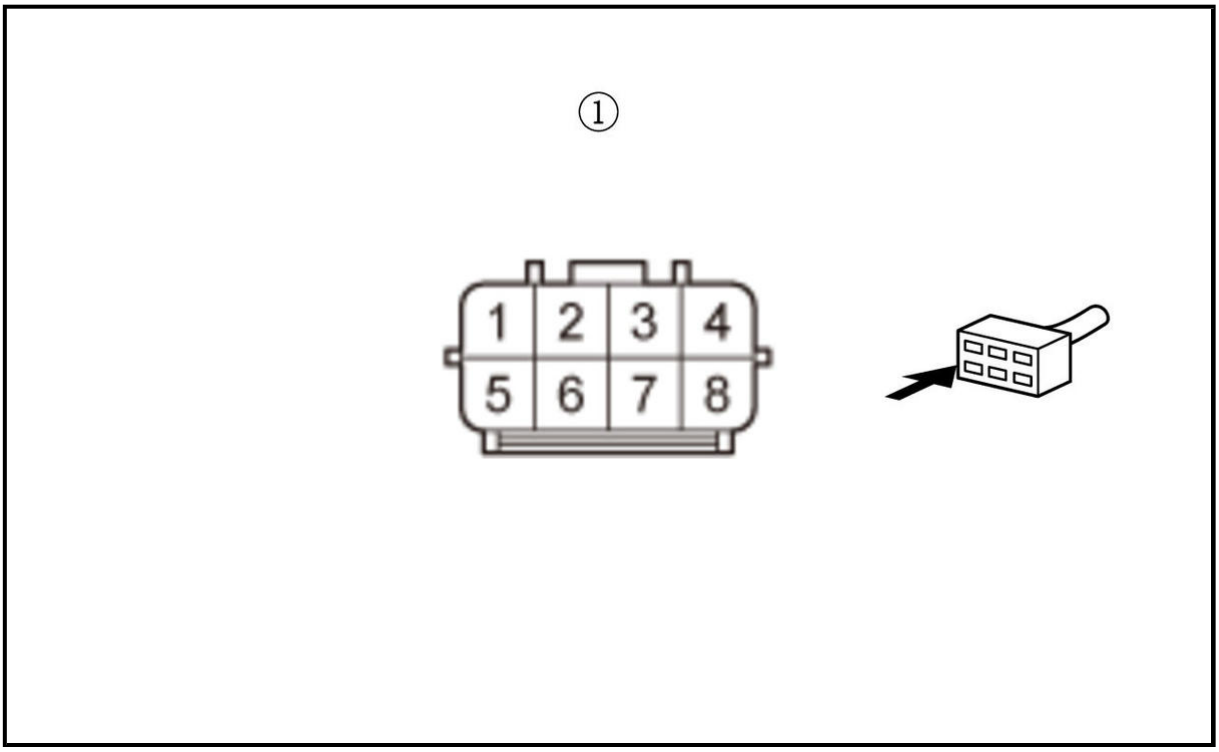

Is there battery voltage?

YES

Go to step 7.

NO

Go to step 10.

7. Determine possible failure area (door outer handle, others)

-1. Select KEYLESS ACCESS CONTROL UNIT from the ONE-PUSH START system select menu with the HDS, and enter HISTORY DATA, then enter the HISTORY CLEAR.

One-Push - KEYLESS ACCESS CONTROL UNIT - History data/Clear

Connect terminals A and B with a jumper wire.

Driver's door

Terminals A	Driver's door outer handle 8P connector (female terminals) No. 7: ①
Terminals B	Body ground

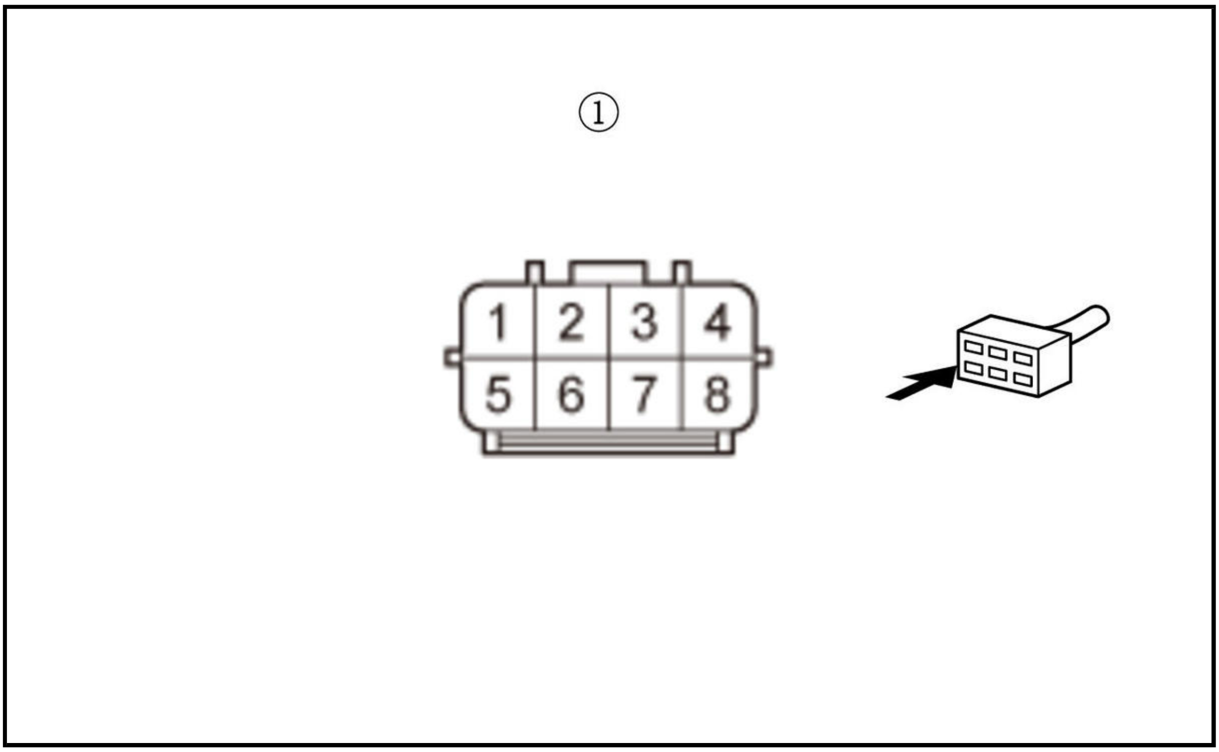

Front passenger's door

Terminals A	Front passenger's door outer handle 8P connector (female terminals) No. 7: ①
Terminals B	Body ground

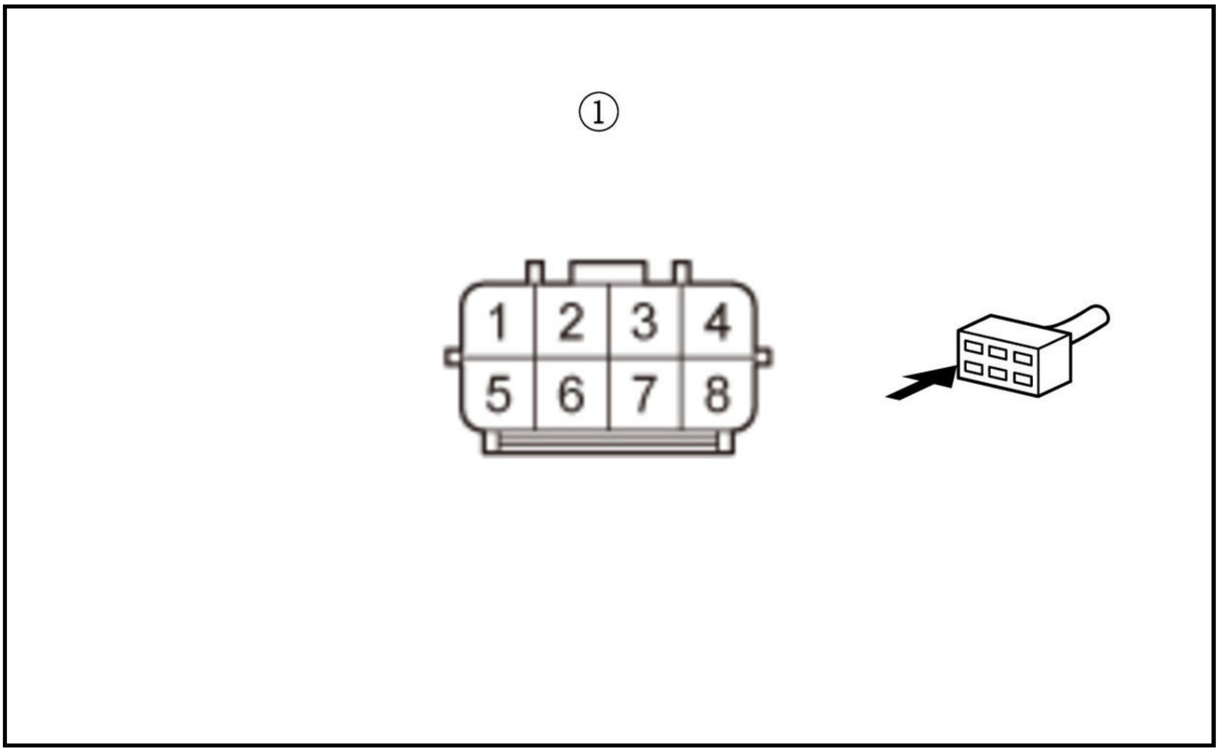

-3. Go back to TEST MODE menu, and recheck the HISTORY DATA.

History Data

DRIVER DOOR LOCK SWITCH (OUTER HANDLE TOUCH SENSOR)	OK
FRONT PASSENGER DOOR LOCK SWITCH (OUTER HANDLE TOUCH SENSOR)	OK

Is all the information OK?

YES

Replace the faulty door outer handle .

NO

Go to step 14.

8. Door outer handle power circuit check

-1. Turn the vehicle to the OFF (LOCK) mode.

-2. Disconnect the following connectors.

Each door outer handle 8P connector

-3. Measure the voltage between test points 1 and 2 respectively.

Driver's door

Test condition	Vehicle OFF (LOCK) mode Driver's door outer handle 8P connector: disconnected
Test point 1	Driver's door outer handle 8P connector (female terminals) No. 4: ①
Test point 2	Driver's door outer handle 8P connector (female terminals) No. 8: ①

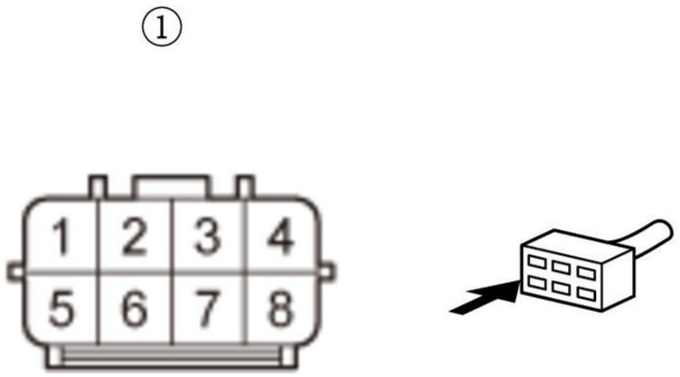

Front passenger's door

Test condition	Vehicle OFF (LOCK) mode Front passenger's door outer handle 8P connector: disconnected
Test point 1	Front passenger's door outer handle 8P connector (female terminals) No. 4: ①
Test point 2	Front passenger's door outer handle 8P connector (female terminals) No. 8: ①

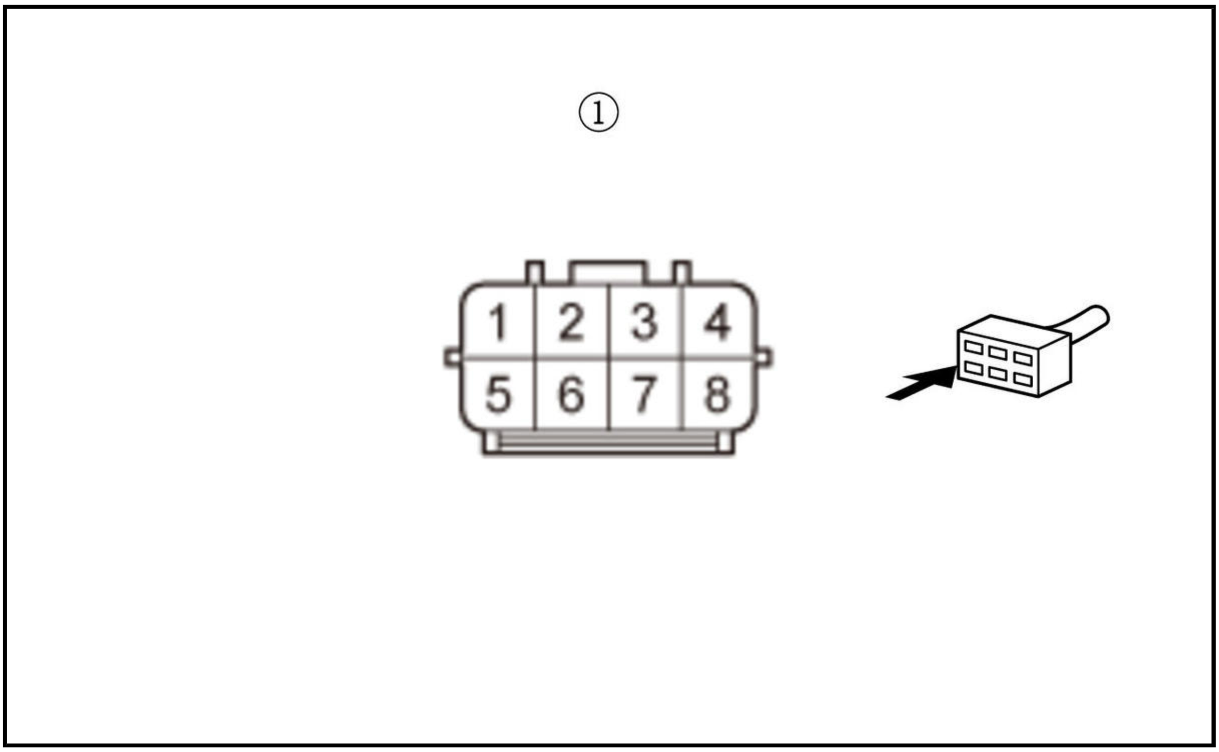

Is there battery voltage?

YES

Go to step 9.

NO

Go to step 10.

9. Determine possible failure area (door outer handle, others)

-1. Select KEYLESS ACCESS CONTROL UNIT from the ONE-PUSH START system select menu with the HDS, and enter HISTORY DATA, then enter the HISTORY CLEAR.

One-Push - KEYLESS ACCESS CONTROL UNIT - History data/Clear

Connect terminals A and B with a jumper wire.

Driver's door

Terminals A	Driver's door outer handle 8P connector (female terminals) No. 7: ①
Terminals B	Body ground

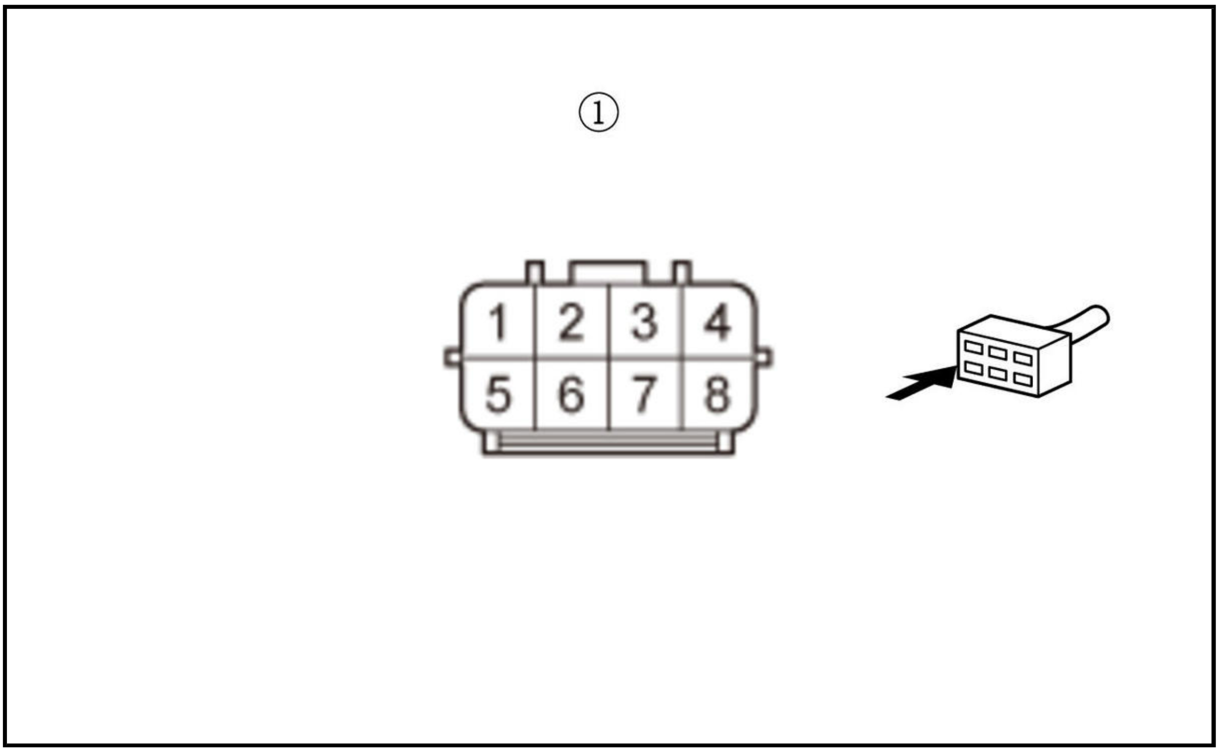

Front passenger's door

Terminals A	Front passenger's door outer handle 8P connector (female terminals) No. 7: ①
Terminals B	Body ground

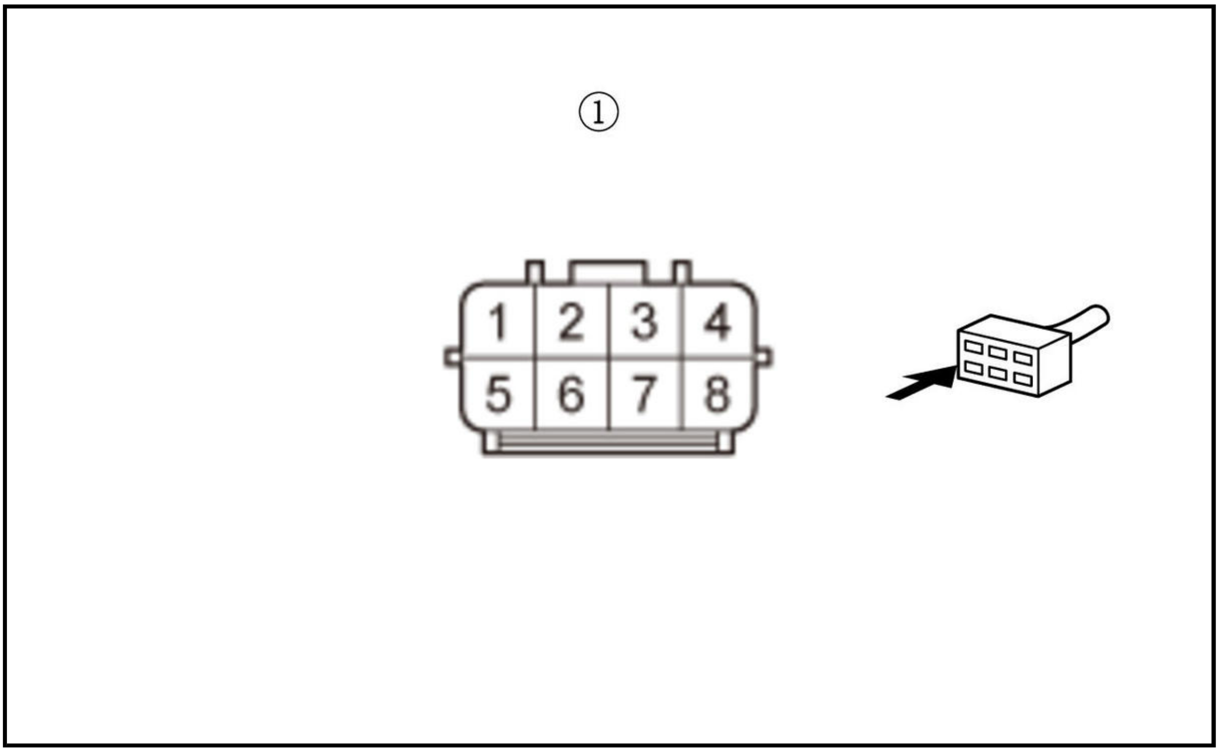

-3. Check the HISTORY DATA with the HDS.

History Data

DRIVER DOOR LOCK SWITCH (OUTER HANDLE TOUCH SENSOR)	OK
FRONT PASSENGER DOOR LOCK SWITCH (OUTER HANDLE TOUCH SENSOR)	OK

Is all the information OK?

YES

Replace the faulty door outer handle .

NO

Go to step 16.

10. Open wire check (GND line)

-1. Measure the resistance between test points 1 and 2 individually.

Driver's door

Test condition	Vehicle OFF (LOCK) mode Driver's door outer handle 8P connector: disconnected
Test point 1	Driver's door outer handle 8P connector (female terminals) No. 8: ①
Test point 2	Body ground

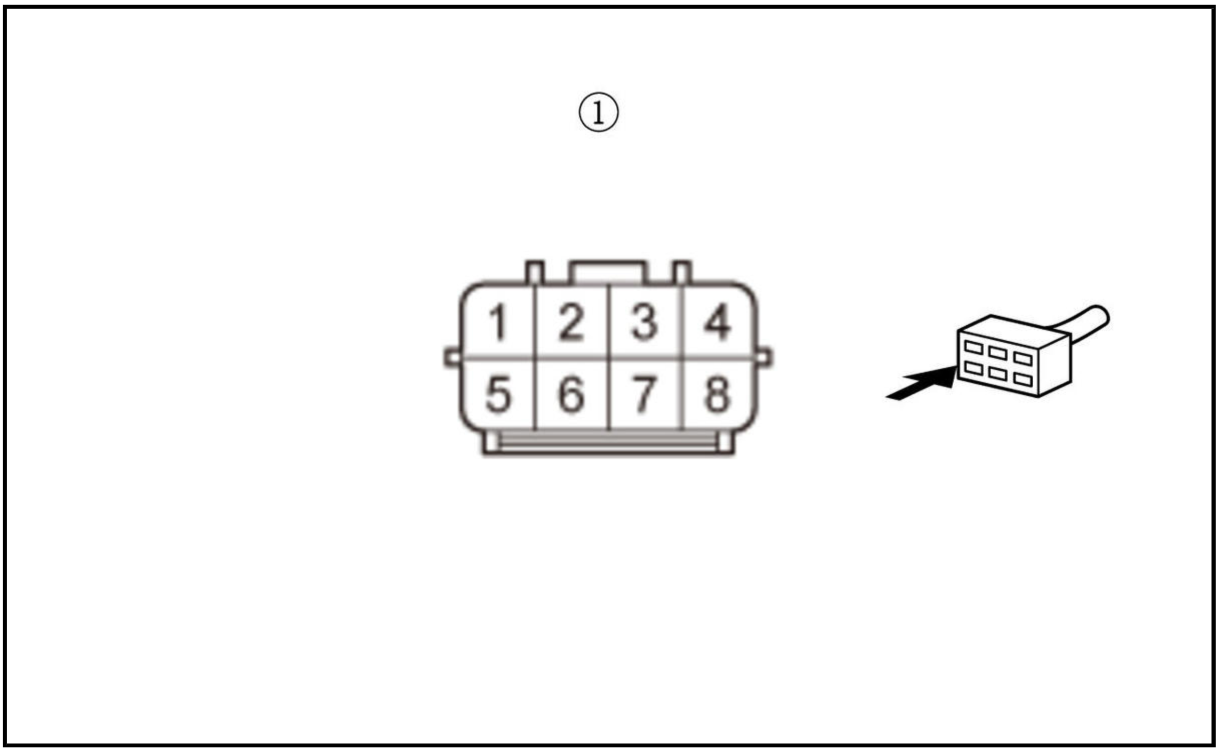

Front passenger's door

Test condition	Vehicle OFF (LOCK) mode Front passenger's door outer handle 8P connector: disconnected
Test point 1	Front passenger's door outer handle 8P connector (female terminals) No. 8: ①
Test point 2	Body ground

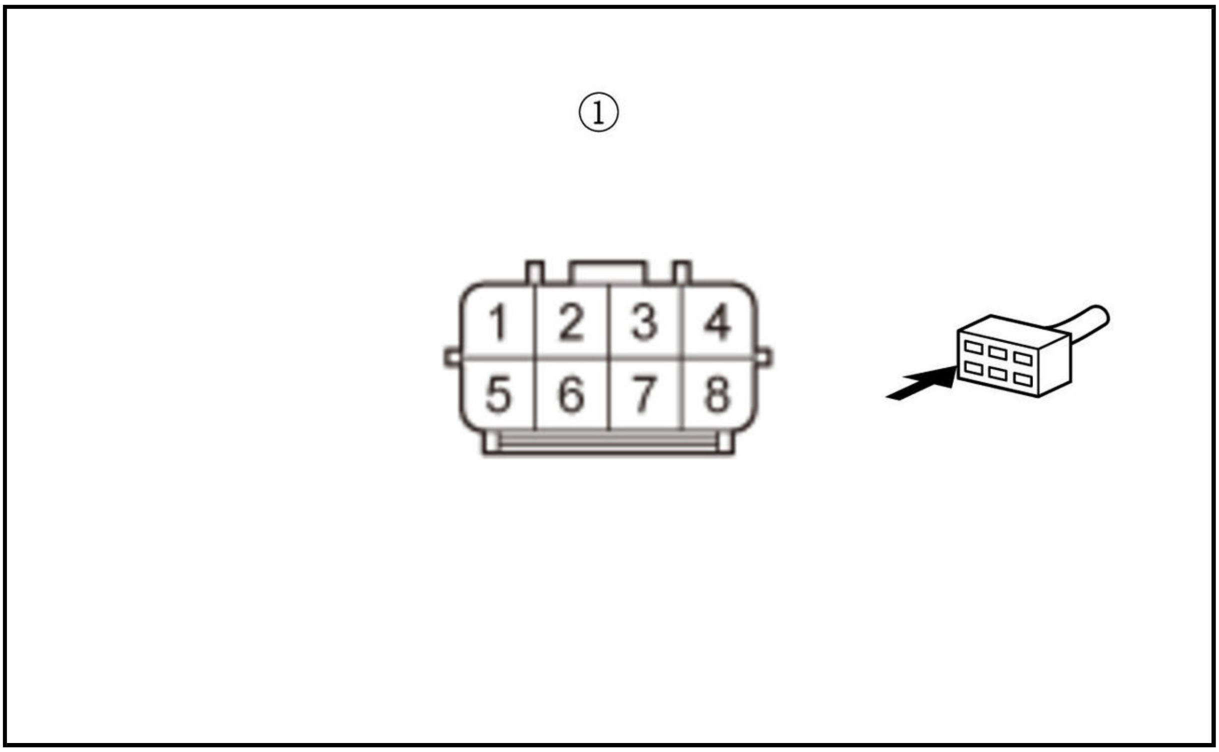

Is there 1.0 Ω or less?

YES

The GND wires are OK. Go to step 11.

NO

Repair an open or high resistance in the ground wire or poor ground (G401, G402).

11. Open wire check (VOUT_FR_DR, VOUT_FR_AS lines)

-1. Disconnect the following connector.

Body control module connector G (32P)

-2. Measure the resistance between test points 1 and 2 respectively.

Driver's door

Test condition	Vehicle OFF (LOCK) mode Driver's door outer handle 8P connector: disconnected Body control module connector G (32P): disconnected
Test point 1	**Body control module connector G (32P) No. 31**
Test point 2	Driver's door outer handle 8P connector (female terminals) No. 4: ①

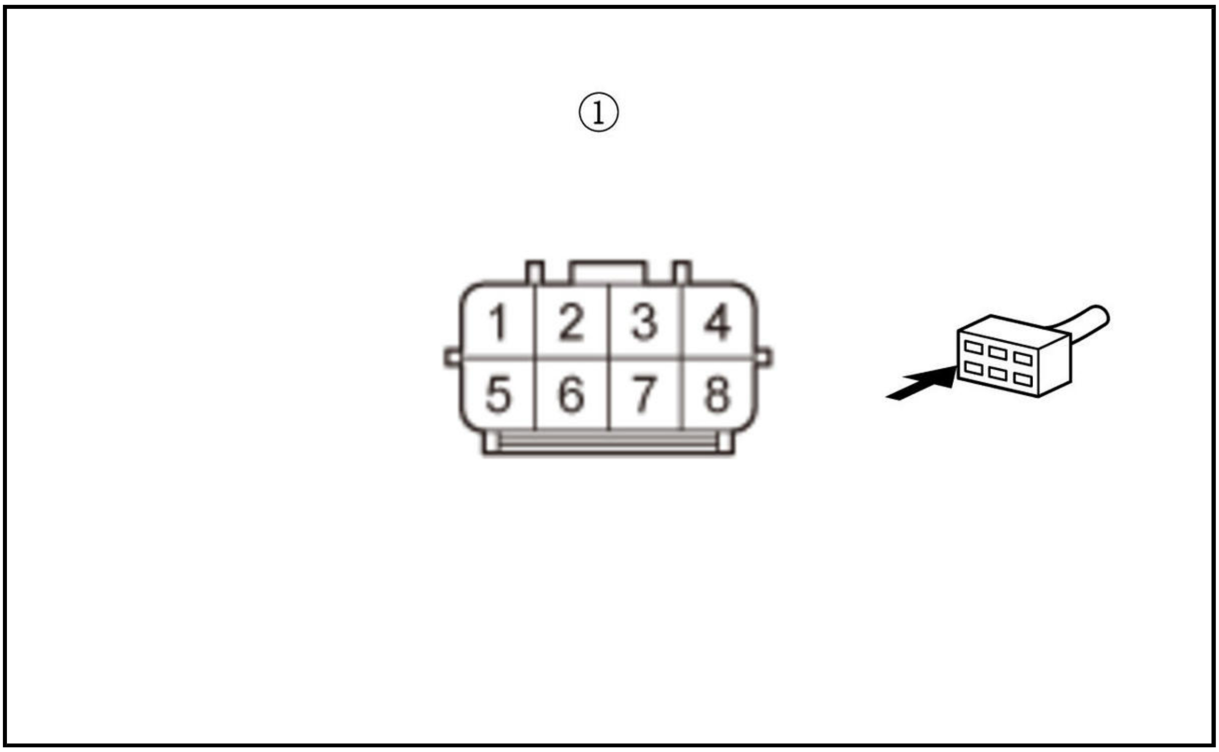

Front passenger's door

Test condition	Vehicle OFF (LOCK) mode Front passenger's door outer handle 8P connector: disconnected Body control module connector G (32P): disconnected
Test point 1	**Body control module connector G (32P) No. 30**
Test point 2	Front passenger's door outer handle 8P connector (female terminals) No. 4: ①

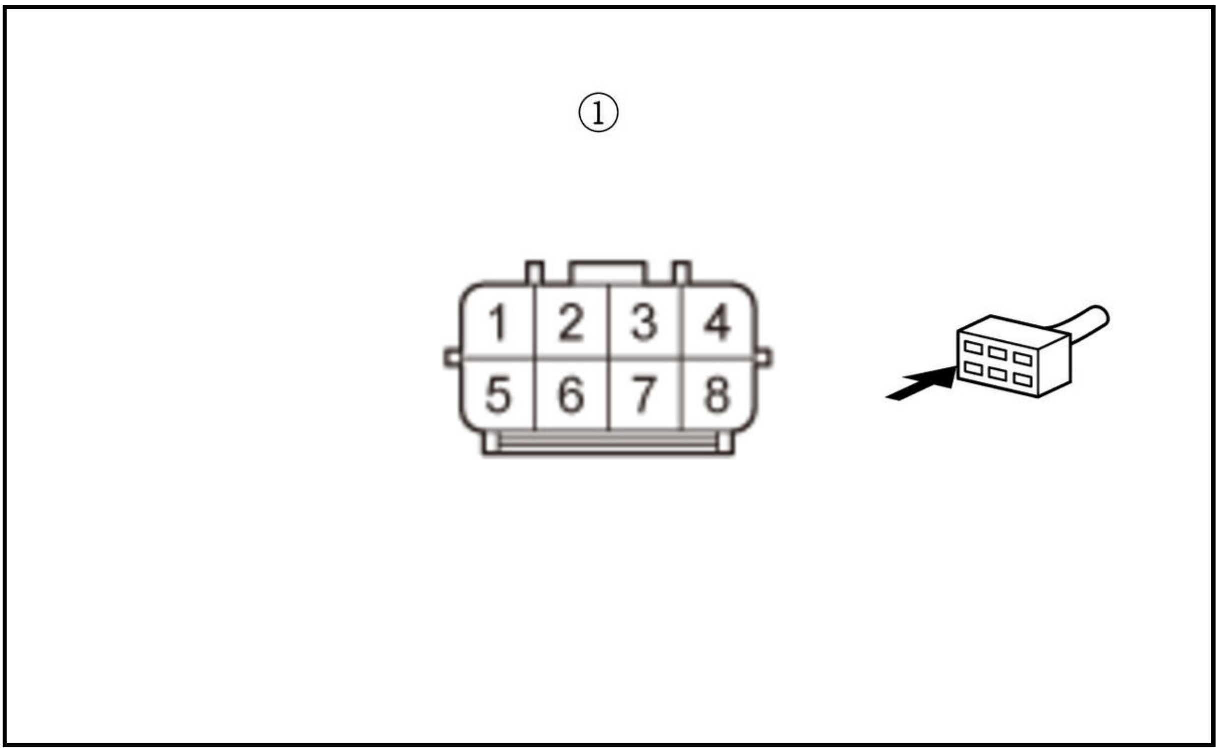

Is there 1.0 Ω or less?

YES

The VOUT_FR_DR and VOUT_FR_AS wires are not open. Go to step 12.

NO

Repair an open or high resistance in the wire.

12. Shorted wire check (VOUT_FR_DR, VOUT_FR_AS lines)

-1. Measure the resistance between test points 1 and 2 individually.

Driver's door

Test condition	Vehicle OFF (LOCK) mode Driver's door outer handle 8P connector: disconnected Body control module connector G (32P): disconnected
Test point 1	Driver's door outer handle 8P connector (female terminals) No. 4: ①
Test point 2	Body ground

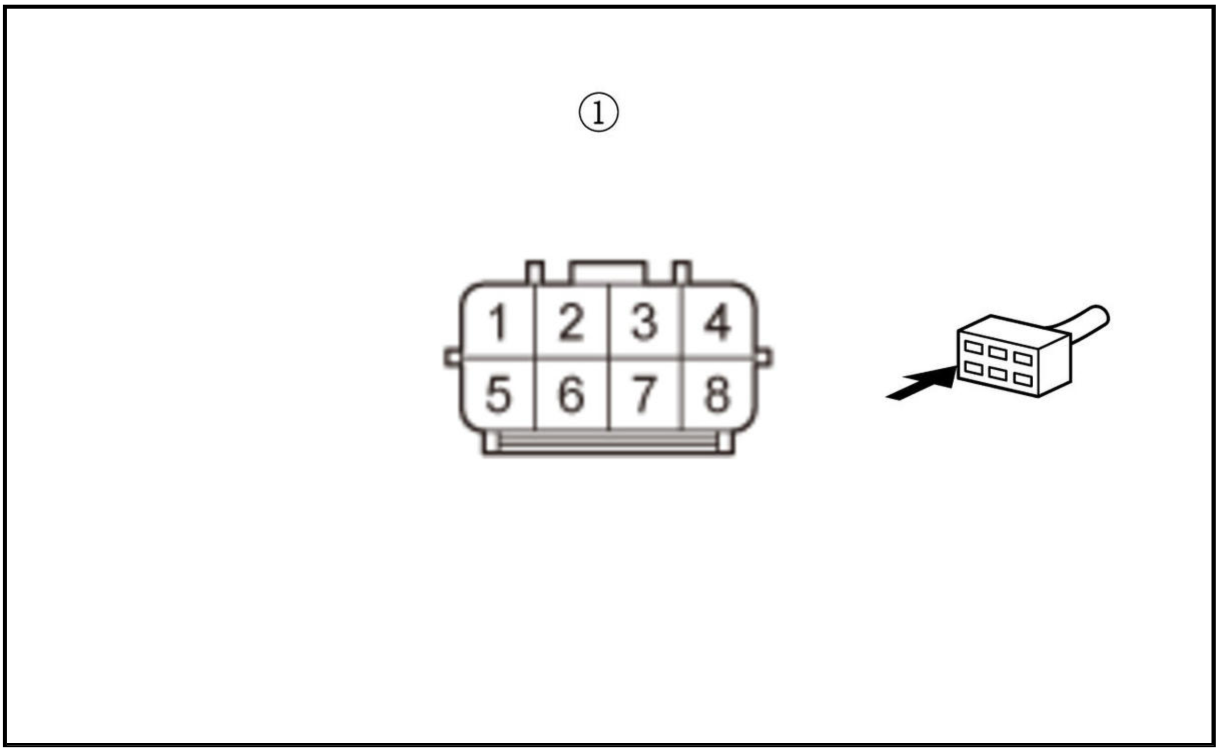

Front passenger's door

Test condition	Vehicle OFF (LOCK) mode Front passenger's door outer handle 8P connector: disconnected Body control module connector G (32P): disconnected
Test point 1	Front passenger's door outer handle 8P connector (female terminals) No. 4: ①
Test point 2	Body ground

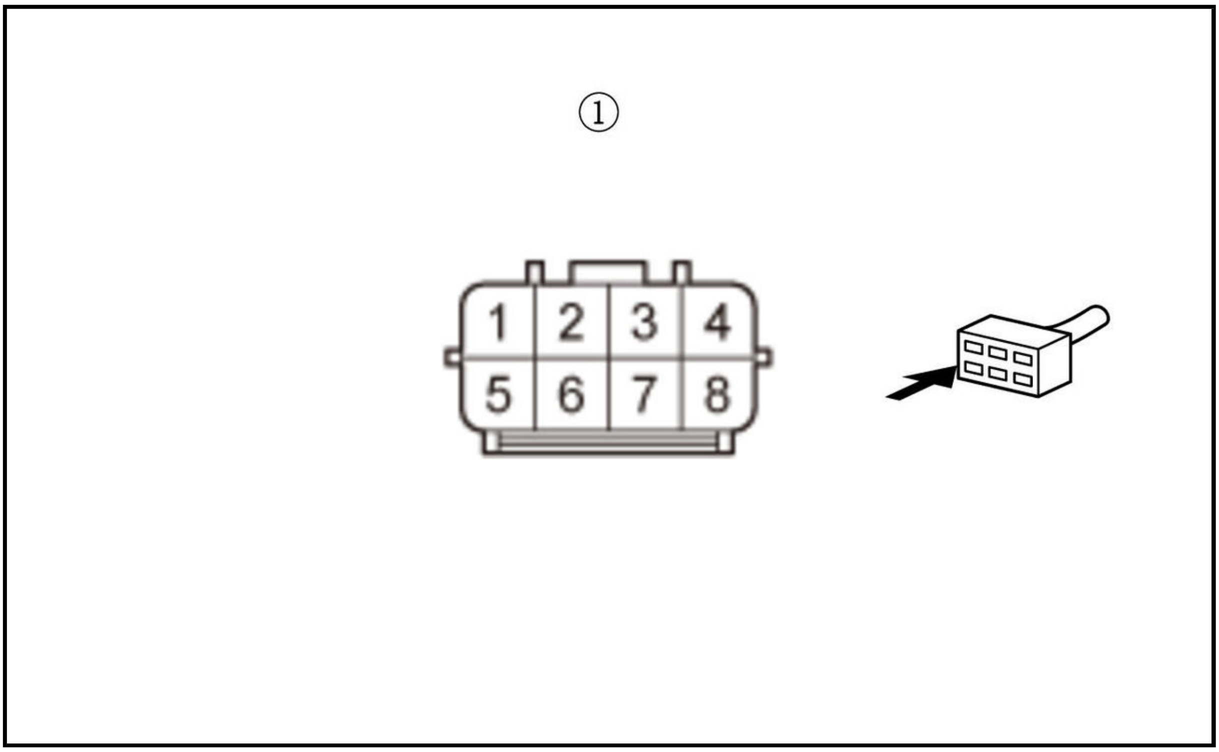

Is there 1.0 MΩ or more?

YES

The VOUT_FR_DR and VOUT_FR_AS wires are OK. Go to step 13.

NO

Repair a short to ground in the wire.

13. Open wire check (+B_BACK_UP line)

-1. Disconnect the following connector.

Body control module connector C (28P)

-2. Measure the voltage between test points 1 and 2.

Test condition	Vehicle OFF (LOCK) mode Each door outer handle 8P connectors: disconnected Body control module connector C (28P): disconnected Body control module connector G (32P): disconnected
Test point 1	**Body control module connector C (28P) No. 27**
Test point 2	Body ground

Is there battery voltage?

YES

The +B_BACK_UP wire is OK. **Replace the body control module** .

NO

Repair an open or high resistance in the wire.

14. Open wire check (TS_FR_DR, TS_FR_AS lines)

-1. Turn the vehicle to the OFF (LOCK) mode.

-2. Disconnect the following connector.

Body control module connector G (32P)

-3. Measure the resistance between test points 1 and 2 respectively.

Driver's door

Test condition	Vehicle OFF (LOCK) mode Driver's door outer handle 8P connector: disconnected Driver's door outer handle 8P connector: jumped to body ground Body control module connector G (32P): disconnected
Test point 1	**Body control module connector G (32P) No. 22**
Test point 2	Driver's door outer handle 8P connector (female terminals) No. 3: ①

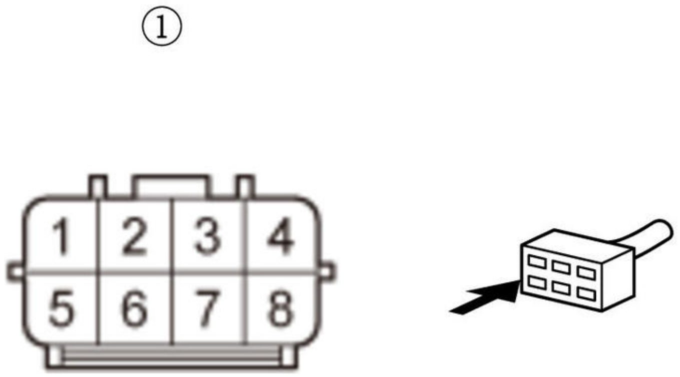

Front passenger's door

Test condition	Vehicle OFF (LOCK) mode Front passenger's door outer handle 8P connector: disconnected Front passenger's door outer handle 8P connector: jumped to body ground Body control module connector G (32P): disconnected
Test point 1	**Body control module connector G (32P) No. 25**
Test point 2	Front passenger's door outer handle 8P connector (female terminals) No. 3: ①

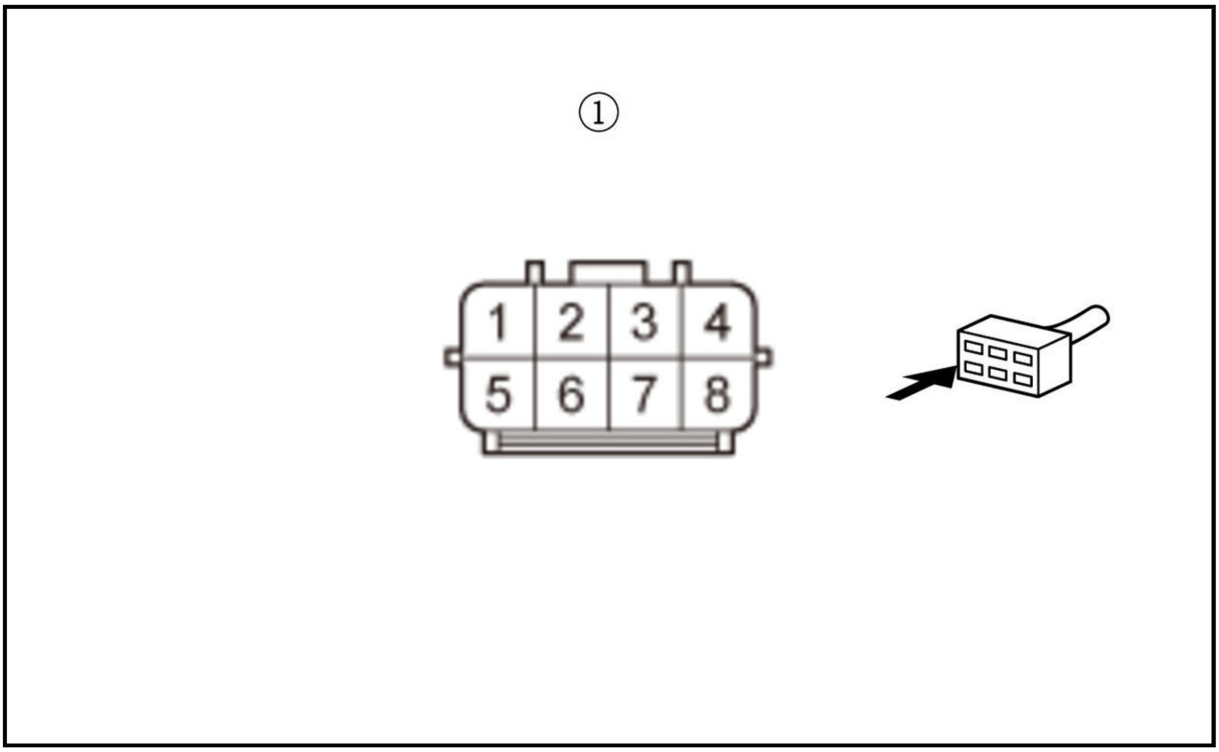

Is there 1.0 Ω or less?

YES

The TS_FR_DR and TS_FR_AS wires are OK. Go to step 15.

NO

Repair an open or high resistance in the wire.

15. Open wire check (+B_BACK_UP line)

-1. Disconnect the following connector.

Body control module connector C (28P)

-2. Measure the voltage between test points 1 and 2.

Test condition	Vehicle OFF (LOCK) mode Each door outer handle 8P connectors: disconnected Each door outer handle 8P connectors: jumped to body ground Body control module connector C (28P): disconnected Body control module connector G (32P): disconnected
Test point 1	**Body control module connector C (28P) No. 27**
Test point 2	Body ground

Is there battery voltage?

YES

The +B_BACK_UP wire is OK. **Replace the body control module** .

NO

Repair an open or high resistance in the wire.

16. Open wire check (DL_FR_DR, DL_FR_AS lines)

-1. Turn the vehicle to the OFF (LOCK) mode.

-2. Remove the jumper wires from the door outer handle connectors.

-3. Disconnect the following connector.

Body control module connector G (32P)

-4. Measure the resistance between test points 1 and 2 respectively.

Driver's door

Test condition	Vehicle OFF (LOCK) mode Driver's door outer handle 8P connector: disconnected Body control module connector G (32P): disconnected
Test point 1	**Body control module connector G (32P) No. 19**
Test point 2	Driver's door outer handle 8P connector (female terminals) No. 7: ①

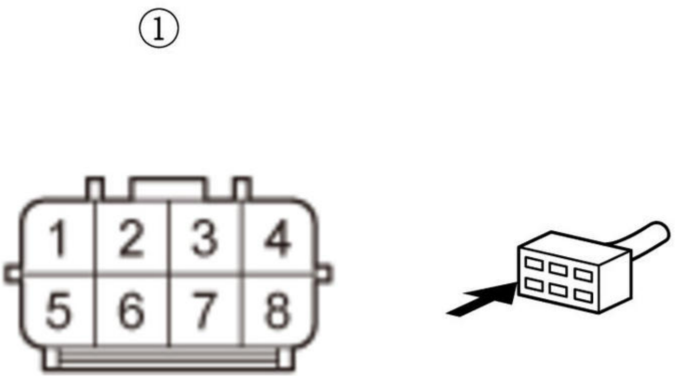

Front passenger's door

Test condition	Vehicle OFF (LOCK) mode Front passenger's door outer handle 8P connector: disconnected Body control module connector G (32P): disconnected
Test point 1	**Body control module connector G (32P) No. 1**
Test point 2	Front passenger's door outer handle 8P connector (female terminals) No. 7: ①

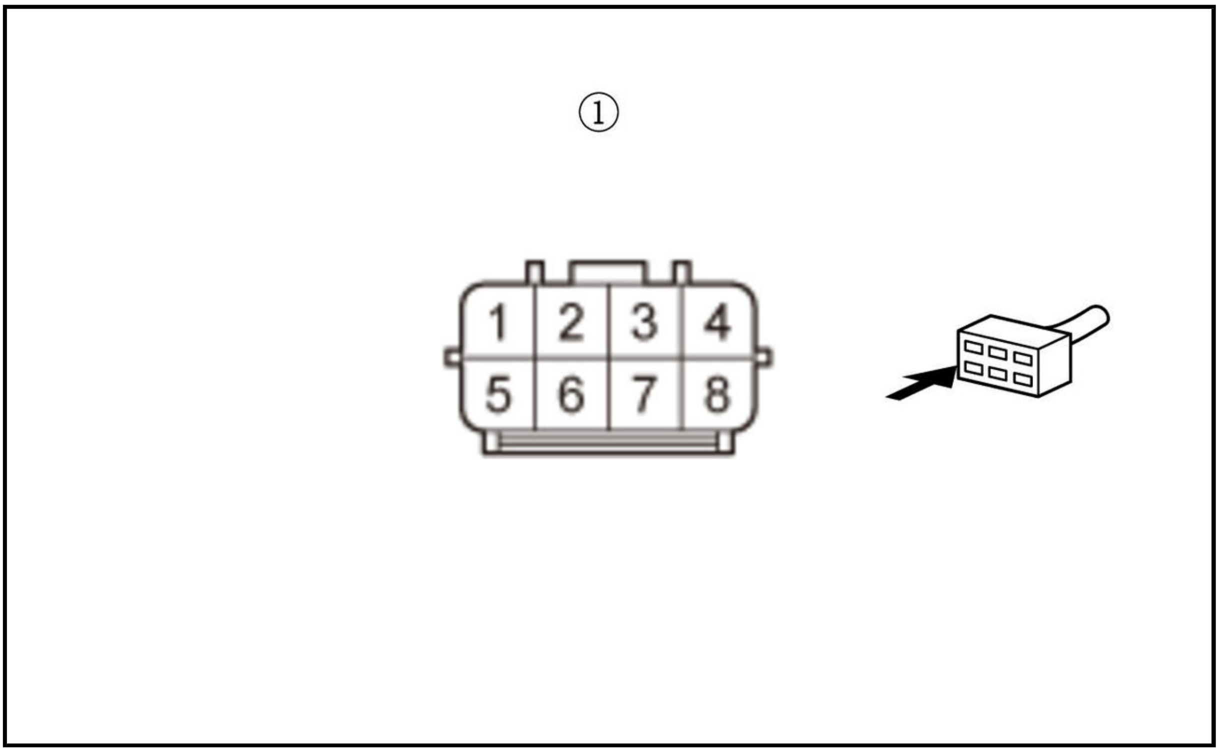

Is there 1.0 Ω or less?

YES

The DL_FR_DR and DL_FR_AS wires are OK. Go to step 17.

NO

Repair an open or high resistance in the wire.

17. Open wire check (+B_BACK_UP line)

-1. Disconnect the following connector.

Body control module connector C (28P)

-2. Measure the voltage between test points 1 and 2.

Test condition	Vehicle OFF (LOCK) mode Each door outer handle 8P connectors: disconnected Body control module connector C (28P): disconnected Body control module connector G (32P): disconnected
Test point 1	**Body control module connector C (28P) No. 27**
Test point 2	Body ground

Is there battery voltage?

YES

The +B_BACK_UP wire is OK. **Replace the body control module** .

NO

Repair an open or high resistance in the wire.

KEYLESS ACCESS SYSTEM SYMPTOM TROUBLESHOOTING - THE DOORS WILL NOT UNLOCK OR LOCK WITH THE KEYLESS REMOTE, BUT WILL UNLOCK OR LOCK WITH THE

DOOR OUTER HANDLES

1. Door lock actuator operation check 1

   -1. Put out all the keyless remotes from inside the vehicle, and close all doors and tailgate.

   -2. Press each LOCK and UNLOCK buttons of the keyless remote, at least ten times.

   Do the door lock actuators work normally?

   YES

   Intermittent failure, the system is OK at this time. Check for loose or poor connections.

   NO

   Go to step 2.

2. Keyless access system check 1

   -1. Open the driver's door.

   Does the key-in reminder sound?

   YES

   Replace the body control module .

   NO

   Go to step 3.

3. Keyless access system check 2

   -1. Turn the vehicle to the ON mode.

   Does the system change to ON mode?

   YES

   Go to step 5.

   NO

   Go to step 4.

4. Keyless access system check 3

   -1. With driver's power window open and all of the doors closed, turn the vehicle to the OFF (LOCK) mode.

   -2. Put out all the keyless remotes from inside the vehicle. Hold them outside the open driver's window, at least 20 cm (8.0 in) away from the vehicle.

   -3. Press the power switch. The MID should request the keyless remote to touch the power switch. The LED on the power switch will flash for up to 30 seconds.

   -4. Touch the power switch with the keyless remote. The buttons on the keyless remote should be facing you.

   Does the system change to ON mode?

YES

Go to keyless access system symptom troubleshooting "Cannot select ON mode with keyless access, but can select ON mode with the keyless remote touching the power switch".

NO

Go to keyless access system symptom troubleshooting "Cannot select ON mode with keyless access and with the keyless remote touching the power switch".

5. PCU and keyless access DTC check

-1. Check for PCU and keyless access control unit DTCs with the HDS.

DTC Description	DTC
B	B

DTC Description	DTC
B	B

Are any DTCs indicated?

YES

Go to indicated DTC troubleshooting.

NO

Go to step 6.

6. Determine possible failure area (keyless remote, others)

-1. **Do the keyless access remote check using the all keyless remotes** .

Are the all keyless remotes OK?

YES

Go to step 7.

NO

Replace the keyless remote and recheck.

7. Door lock actuator operation check 2

-1. Turn the vehicle to the OFF (LOCK) mode, and close all doors.

-2. Lock and unlock the doors with the driver's door touch sensors, and lock and unlock the doors with the front passenger's door touch sensors.

Do the door lock actuators work normally?

YES

Do the input test for the body control module , and do all power, ground, and communication input tests. If the body control module input tests prove OK, **replace the body control module** .

NO

Check the B-CAN system DTCs. If not, check the door lock system.

KEYLESS ACCESS SYSTEM SYMPTOM TROUBLESHOOTING - THE ENGINE STARTS BUT STALLS IMMEDIATELY

1. Keyless access system check 1

   -1. Check the security indicator.

   Does the security indicator blinking?

   YES

   Go to step 3.

   NO

   Go to step 2.

2. Gauge control module check

   -1. Select GAUGES from the BODY ELECTRICAL SYSTEM SELECT menu with the HDS.

   Self diagnostic function - GAUGES

   Select FUNCTIONAL TESTS from the TEST MODE menu with the HDS, and enter SELF TEST.

   Does the security indicator blinking?

   YES

   Go to the PGM-FI system troubleshooting.

   NO

   Replace the gauge control module .

3. Keyless access system check 2

   -1. Select KEYLESS ACCESS CONTROL UNIT from the ONE-PUSH START system select menu with the HDS, and enter KEYLESS ACCESS SYSTEM INFORMATION.

   One-Push - BACKUP CONTROL UNIT - SYSTEM CHECK 1

   One-Push - BACKUP CONTROL UNIT - SYSTEM CHECK 2

   Do the SYSTEM CHECK 1 and 2 with the HDS.

   Are N-1 OK and N-2 OK indicated?

   YES

   Go to step 4.

   NO

   Troubleshoot the keyless access system according to the result of the SYSTEM CHECK 1 and 2.

4. Keyless access system check 3

-1. With driver's power window open and all of the doors closed, turn the vehicle to the OFF (LOCK) mode.

-2. Put out all the keyless remotes from inside the vehicle. Hold them outside the open driver's window, at least 20 cm (8.0 in) away from the vehicle.

-3. Press the power switch. The MID should request the keyless remote to touch the power switch. The LED on the power switch will flash for up to 30 seconds.

-4. Touch the power switch with the keyless remote. The buttons on the keyless remote should be facing you.

-5. Try to start the engine.

Does the engine start?

YES

Go to step 5.

NO

Go to step 6.

5. PGM-FI DTC check

-1. Check for PGM-FI DTCs with the HDS.

DTC Description	Confirmed DTC	Pending DTC
B	B	B

Are any DTCs indicated?

YES

Troubleshoot the PGM-FI DTCs.

NO

Replace the body control module .

6. Keyless access system check 4

-1. Select BACKUP CONTROL UNIT from the ONE-PUSH START system select menu with the HDS, and enter SYSTEM INFORMATION.

One-Push - BACKUP CONTROL UNIT - SYSTEM CHECK

Do the SYSTEM CHECK with the HDS.

Is N-1 OK indicated?

YES

Go to step 7.

NO

Troubleshoot the backup control unit according to the result of the SYSTEM CHECK.

7. Body control module check (substitution)

-1. **Substitute a known-good body control module** .

-2. Select REGISTRATION from the ONE-PUSH START system select menu with the HDS, then select REPLACE KEYLESS ACCESS CONTROL UNIT.

-3. Turn the vehicle to the ON mode.

Does the system change to ON mode?

YES

Replace the original body control module .

NO

Go to the PGM-FI system troubleshooting.

KEYLESS/POWER DOOR LOCKS/SECURITY SYSTEM SYMPTOM TROUBLESHOOTING - AUTO DOOR UNLOCK DOES NOT WORK

NOTE:

- Before troubleshooting, make sure the fuses and **relays** associated with the system is OK.
- There are two pairs of fuses in the same circuit (L SIDE DOOR LOCK and UNLOCK circuits, R SIDE DOOR LOCK and UNLOCK circuits, DR DOOR LOCK and UNLOCK circuits). If one circuit's fuse is blown, make sure to check the other circuit's fuse in the same circuit. If necessary, replace the blown fuse(s).
- Check if Auto Door Unlock feature selected OFF, under MID customized settings for each remote transmitter: Driver 1 and 2. Make sure to test operation of each Auto Door Unlock setting to check function.

1. Abnormal circuit check 1

-1. **Connect the HDS to the data link connector (DLC)** .

-2. Select DOOR LOCKS from the BODY ELECTRICAL SYSTEM SELECT menu with the HDS, and enter FUNCTIONAL TESTS.

BODY ELECTRICAL - DOOR LOCKS - Functional Tests - Inspection

Select UNLOCK ALL DOORS with the HDS.

Do the door lock actuators work normally?

YES

Go to step 18.

NO

Driver's door lock circuit: go to step 2.

NO

Front passenger's door lock circuit: go to step 6.

NO

Left rear door lock circuit: go to step 10.

NO

Right rear door lock circuit: go to step 14.

2. Determine possible failure area (driver's door lock actuator, others)

-1. Disconnect the following connector.

Driver's door latch 10P connector

-2. **Test the driver's door lock actuator**.

Is the door lock actuator OK?

YES

Go to step 3.

NO

Faulty door lock actuator; **replace the driver's door latch** .

3. Open wire check (DR_DOOR_UNLOCK line)

-1. Disconnect the following connector.

Under-dash fuse/relay box connector E (18P)

-2. Measure the resistance between test points 1 and 2.

Test condition	Vehicle OFF (LOCK) mode Under-dash fuse/relay box connector E (18P): disconnected Driver's door latch 10P connector: disconnected
Test point 1	Under-dash fuse/relay box connector E (18P) (female terminals) No. 16: ①
Test point 2	Driver's door latch 10P connector (female terminals) No. 1: ②

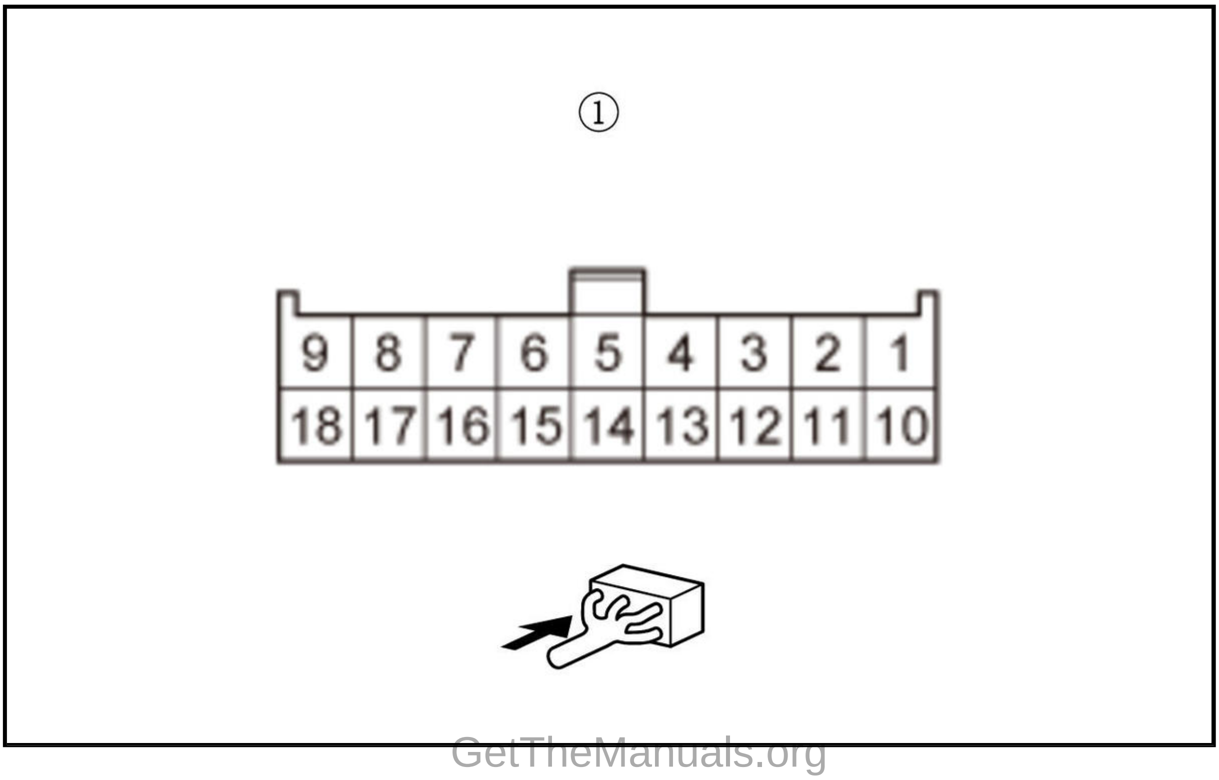

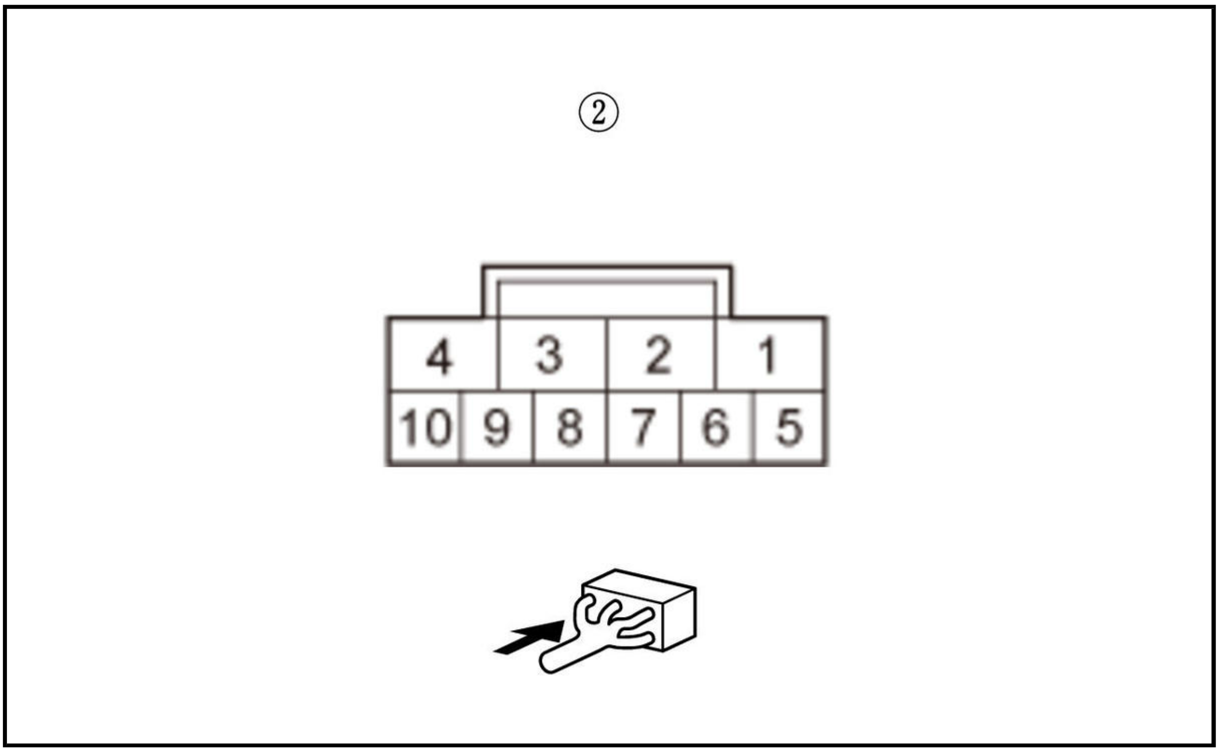

Is there 1.0 Ω or less?

YES

The DR_DOOR_UNLOCK wire is OK. Go to step 4.

NO

Repair an open or high resistance in the wire.

4. Open wire check (DR_DOOR_LOCK line)

-1. Measure the resistance between test points 1 and 2.

Test condition	Vehicle OFF (LOCK) mode Under-dash fuse/relay box connector E (18P): disconnected Driver's door latch 10P connector: disconnected
Test point 1	Under-dash fuse/relay box connector E (18P) (female terminals) No. 15: ①
Test point 2	Driver's door latch 10P connector (female terminals) No. 4: ②

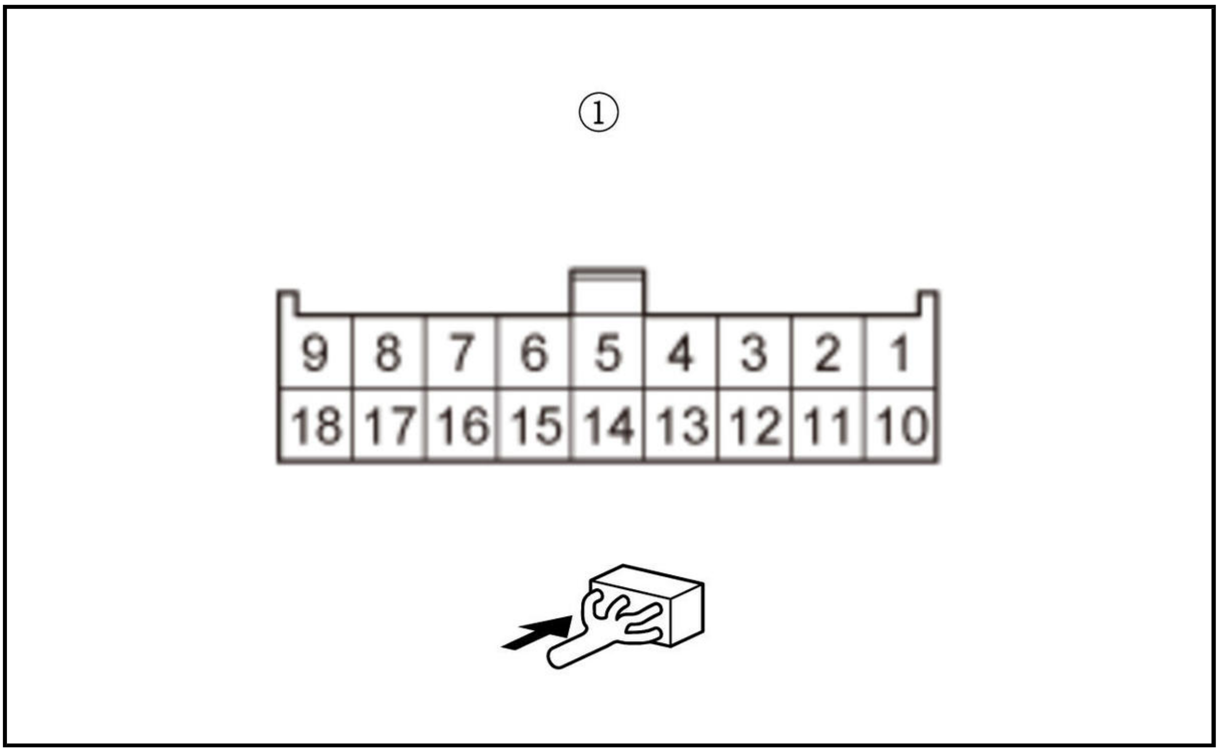
①
9
8
7
6
5
4
3
2
1
18
17
16
15
14
13
12
11
10

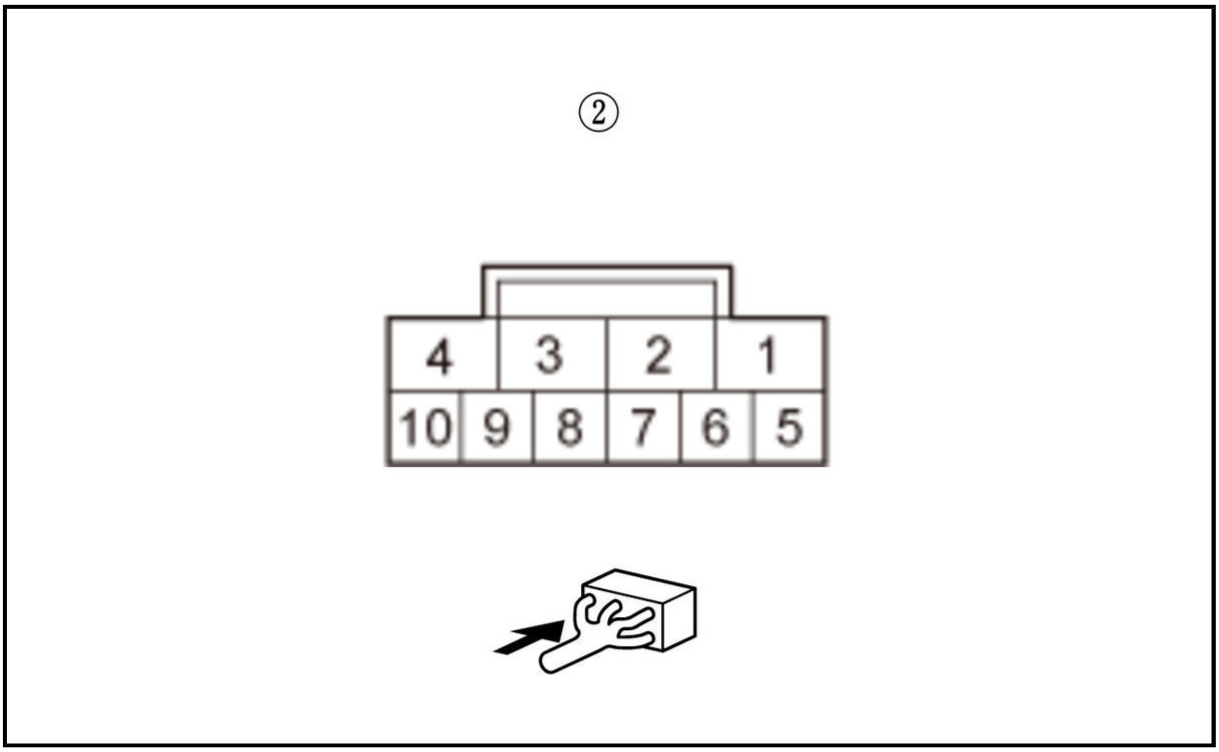
②
4
3
2
1
10
9
8
7
6
5

Is there 1.0 Ω or less?

YES

The DR_DOOR_LOCK wire is OK. Go to step 5.

NO

Repair an open or high resistance in the wire.

5. Open wire check (DR_DOOR_UNLOCK_RELAY_CL- line)

-1. Disconnect the following connectors.

Body control module connector B (36P) Under-dash fuse/relay box connector G (20P)

-2. Measure the resistance between test points 1 and 2.

Test condition	Vehicle OFF (LOCK) mode Under-dash fuse/relay box connector E (18P): disconnected Under-dash fuse/relay box connector G (20P): disconnected Body control module connector B (36P): disconnected Driver's door latch 10P connector: disconnected
Test point 1	**Body control module connector B (36P) No. 31**
Test point 2	Under-dash fuse/relay box connector G (20P) (female terminals) No. 9: ①

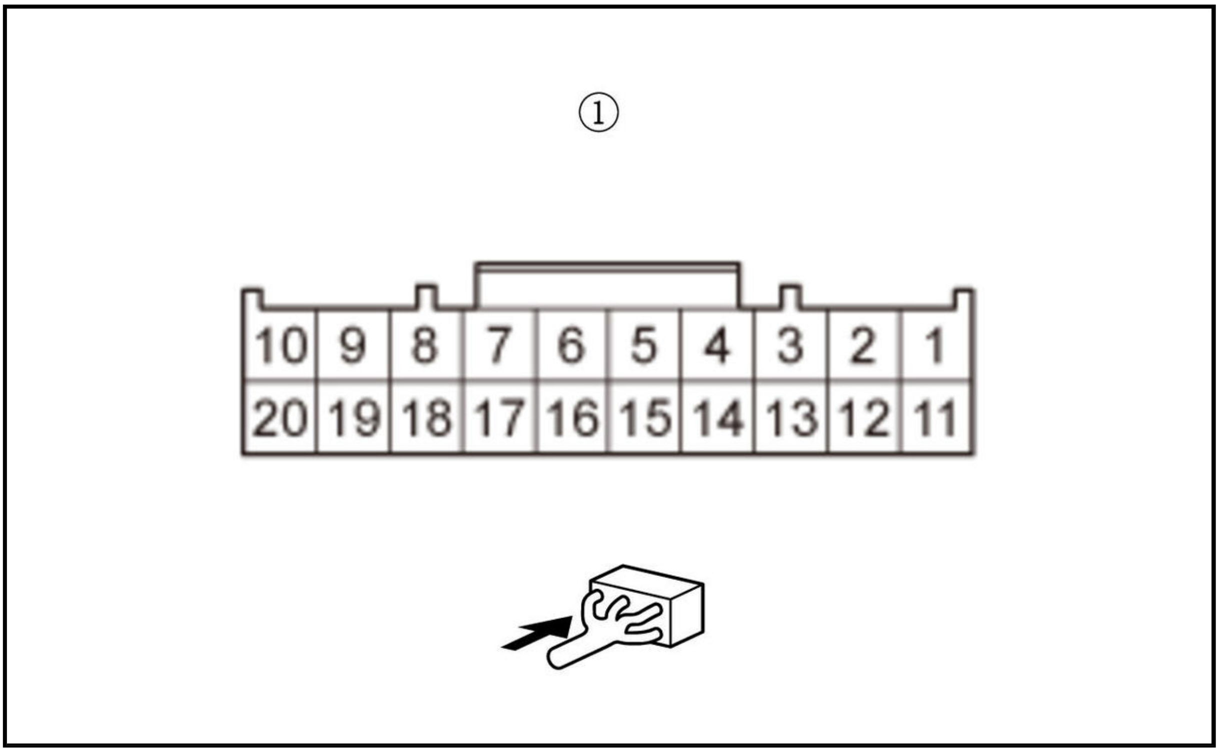

Is there 1.0 Ω or less?

YES

The DR_DOOR_UNLOCK_RELAY_CL- wire is OK. **Replace the body control module** .

NO

Repair an open or high resistance in the wire.

6. Determine possible failure area (front passenger's door lock actuator, others)

-1. Disconnect the following connector.

Front passenger's door latch 10P connector

-2. **Test the front passenger's door lock actuator**.

Is the door lock actuator OK?

YES

Go to step 7.

NO

Faulty door lock actuator; **replace the front passenger's door latch** .

7. Open wire check (R_SIDE_DOOR_UNLOCK line)

-1. Disconnect the following connector.

Under-dash fuse/relay box connector E (18P)

-2. Measure the resistance between test points 1 and 2.

Test condition	Vehicle OFF (LOCK) mode Under-dash fuse/relay box connector E (18P): disconnected Front passenger's door latch 10P connector: disconnected
Test point 1	Under-dash fuse/relay box connector E (18P) (female terminals) No. 9: ①
Test point 2	Front passenger's door latch 10P connector (female terminals) No. 1: ②

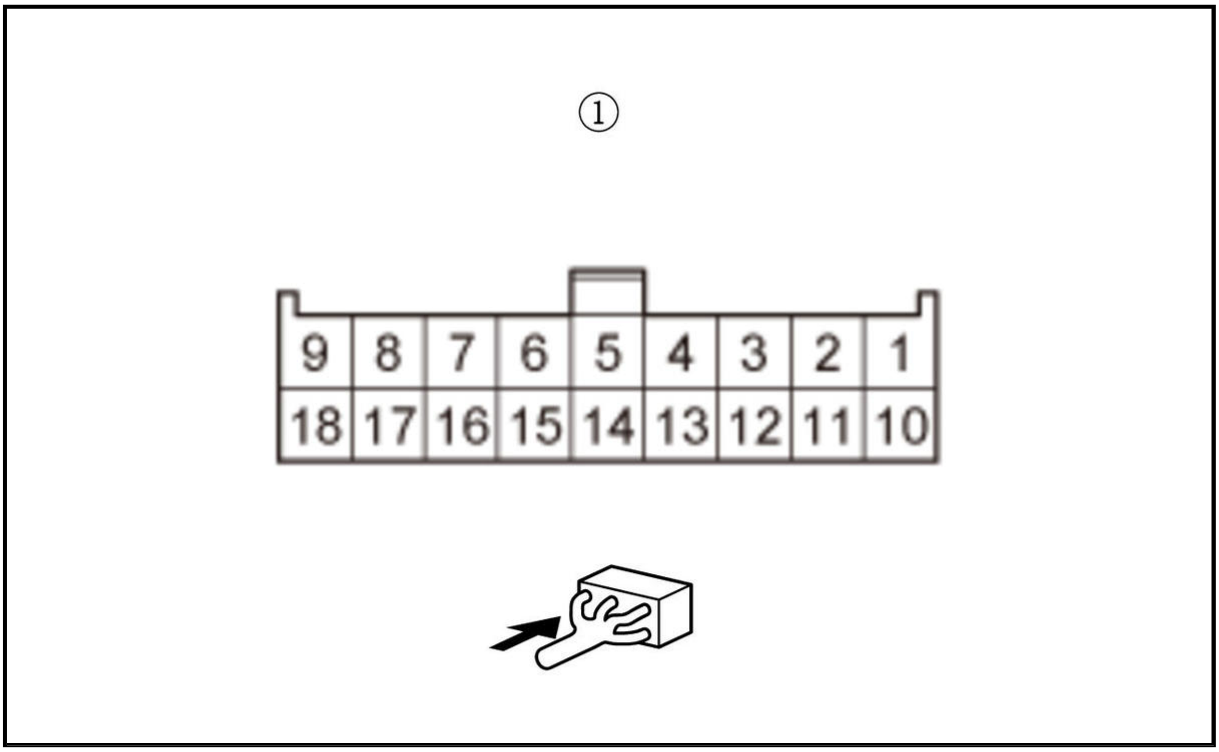

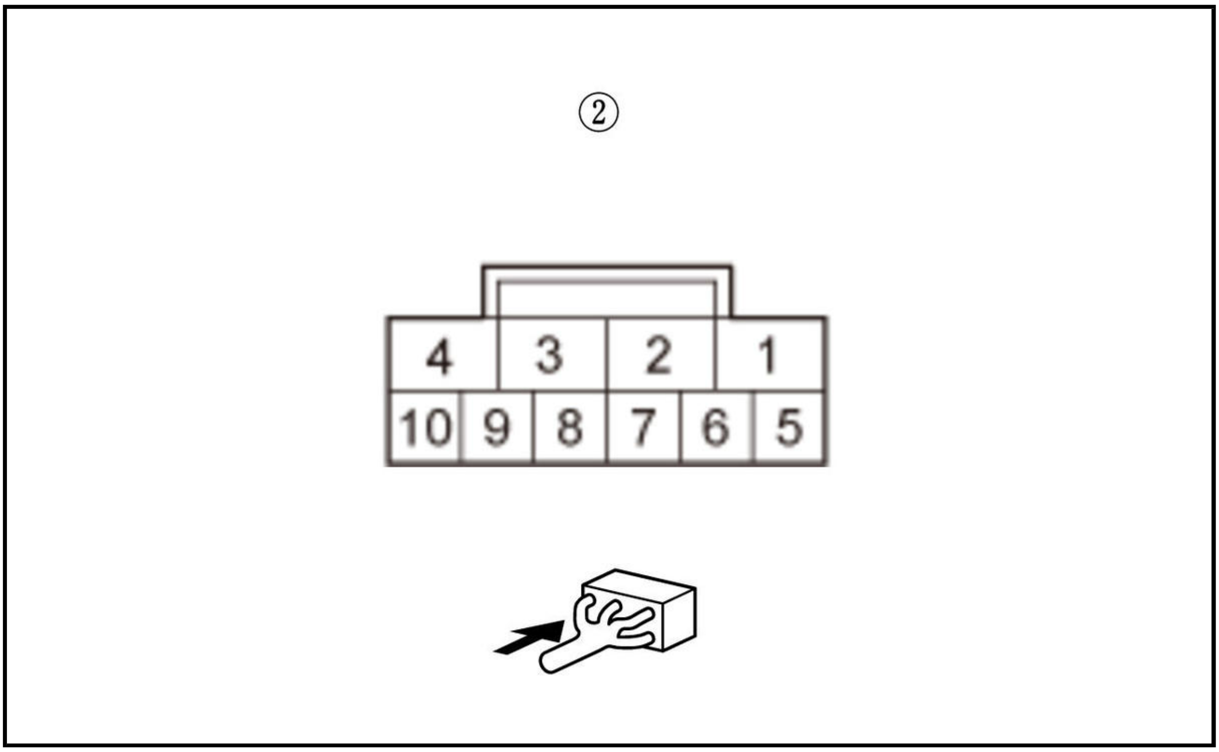

Is there 1.0 Ω or less?

YES

The R_SIDE_DOOR_UNLOCK wire is OK. Go to step 8.

NO

Repair an open or high resistance in the wire.

8. Open wire check (R_SIDE_DOOR_LOCK line)

-1. Measure the resistance between test points 1 and 2.

Test condition	Vehicle OFF (LOCK) mode Under-dash fuse/relay box connector E (18P): disconnected Front passenger's door latch 10P connector: disconnected
Test point 1	Under-dash fuse/relay box connector E (18P) (female terminals) No. 18: ①
Test point 2	Front passenger's door latch 10P connector (female terminals) No. 4: ②

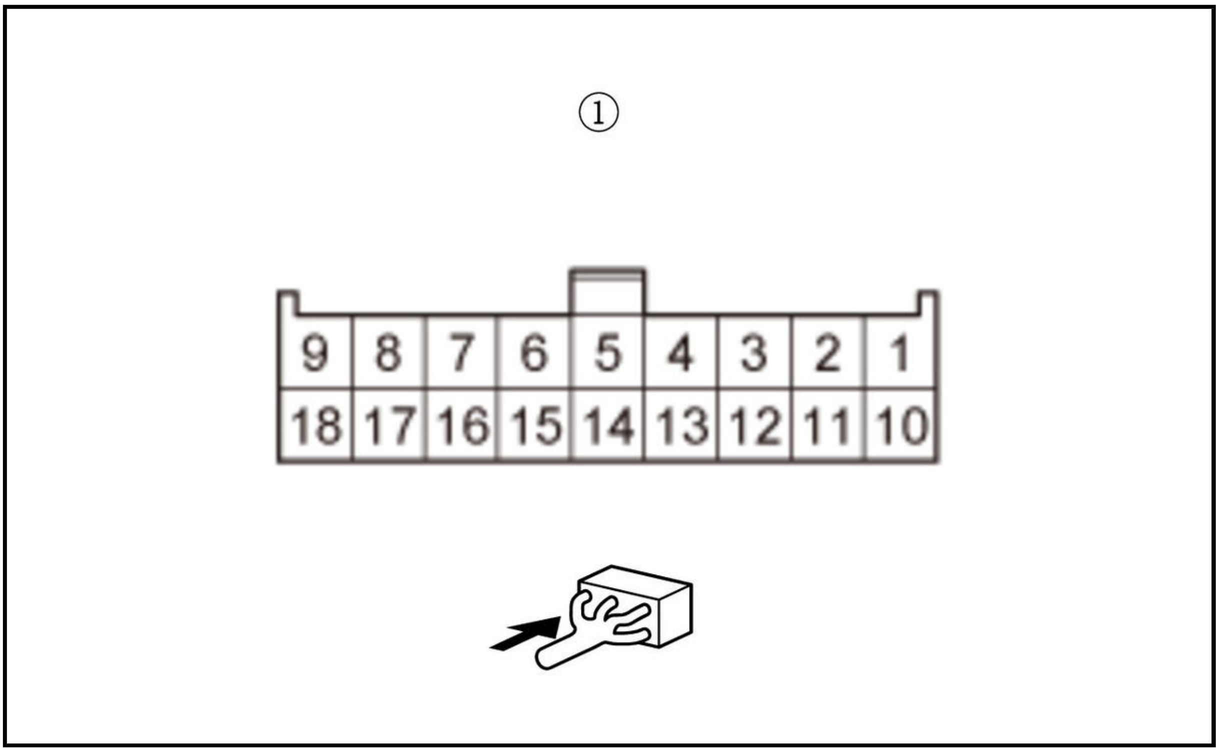
①
9
8
7
6
5
4
3
2
1
18
17
16
15
14
13
12
11
10

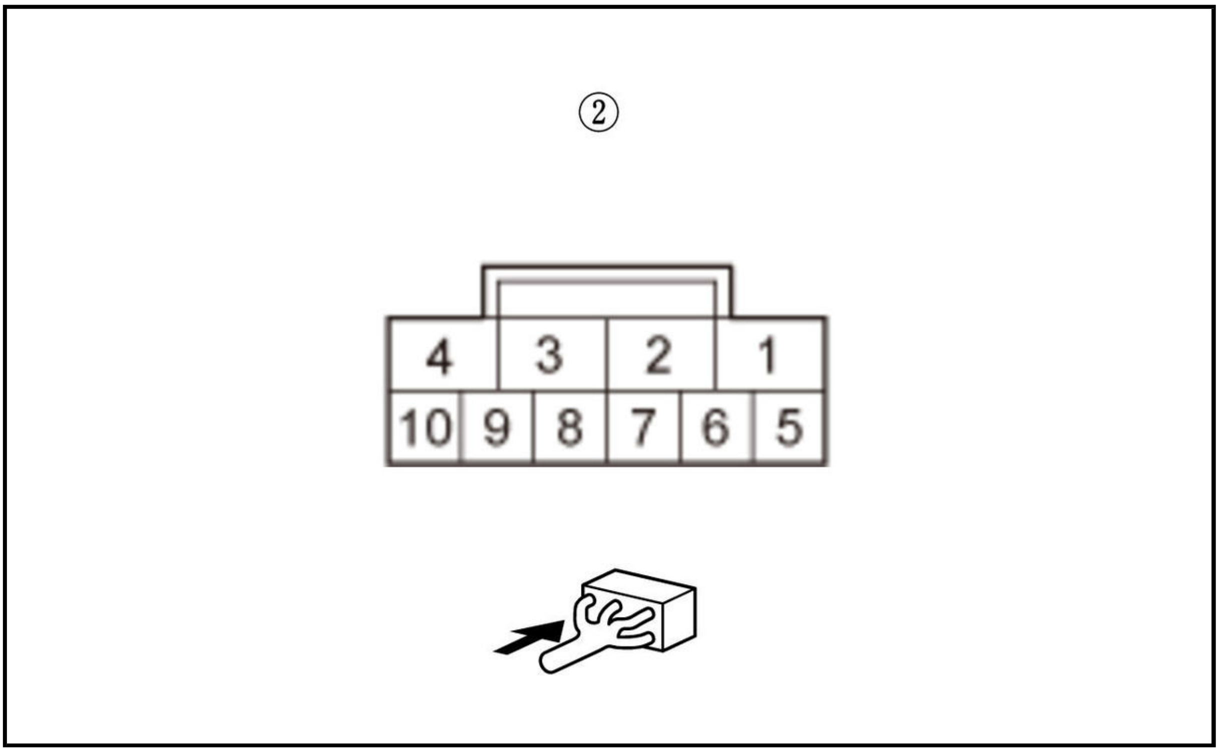
②
4
3
2
1
10
9
8
7
6
5

Is there 1.0 Ω or less?

YES

The R_SIDE_DOOR_LOCK wire is OK. Go to step 9.

NO

Repair an open or high resistance in the wire.

9. Open wire check (DOOR_UNLOCK_RELAY_CL- line)

-1. Disconnect the following connectors.

Body control module connector B (36P) Under-dash fuse/relay box connector F (12P)

-2. Measure the resistance between test points 1 and 2.

Test condition	Vehicle OFF (LOCK) mode Under-dash fuse/relay box connector E (18P): disconnected Under-dash fuse/relay box connector F (12P): disconnected Body control module connector B (36P): disconnected Front passenger's door latch 10P connector: disconnected
Test point 1	**Body control module connector B (36P) No. 32**
Test point 2	Under-dash fuse/relay box connector F (12P) (female terminals) No. 5: ①

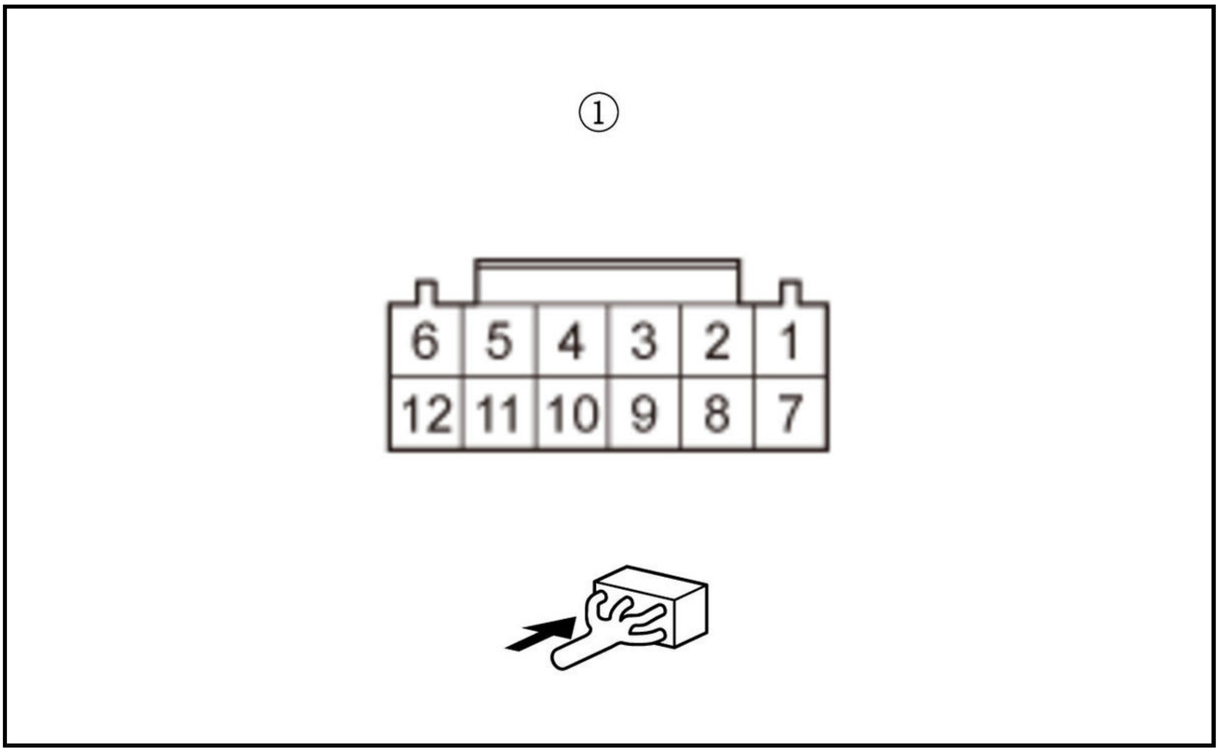

Is there 1.0 Ω or less?

YES

The DOOR_UNLOCK_RELAY_CL- wire is OK. **Replace the body control module** .

NO

Repair an open or high resistance in the wire.

10. Determine possible failure area (left rear door lock actuator, others)

-1. Disconnect the following connector.

Left rear door latch 10P connector

-2. **Test the left rear door lock actuator**.

Is the door lock actuator OK?

YES

Go to step 11.

NO

Faulty door lock actuator; **replace the left rear door latch** .

11. Open wire check (L_SIDE_DOOR_UNLOCK line)

-1. Disconnect the following connector.

Under-dash fuse/relay box connector B (22P)

-2. Measure the resistance between test points 1 and 2.

Test condition	Vehicle OFF (LOCK) mode Under-dash fuse/relay box connector B (22P): disconnected Left rear door latch 10P connector: disconnected
Test point 1	Under-dash fuse/relay box connector B (22P) (female terminals) No. 16: ①
Test point 2	Left rear door latch 10P connector (female terminals) No. 1: ②

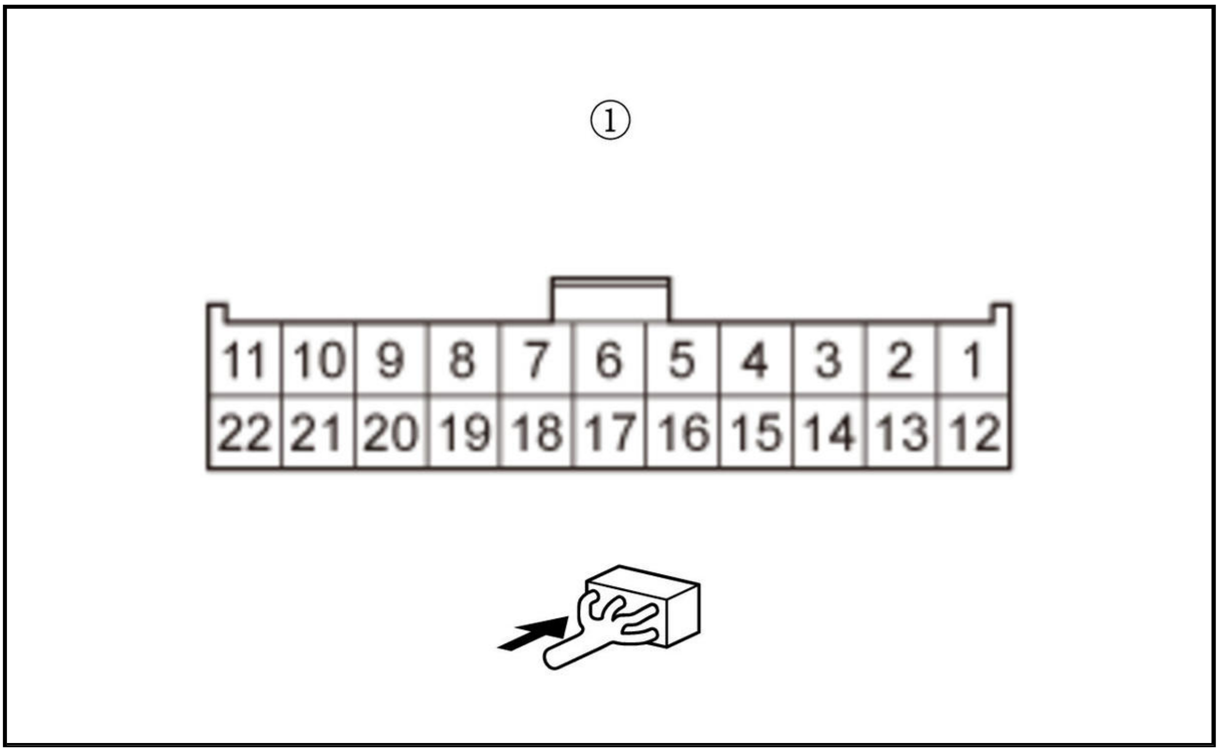

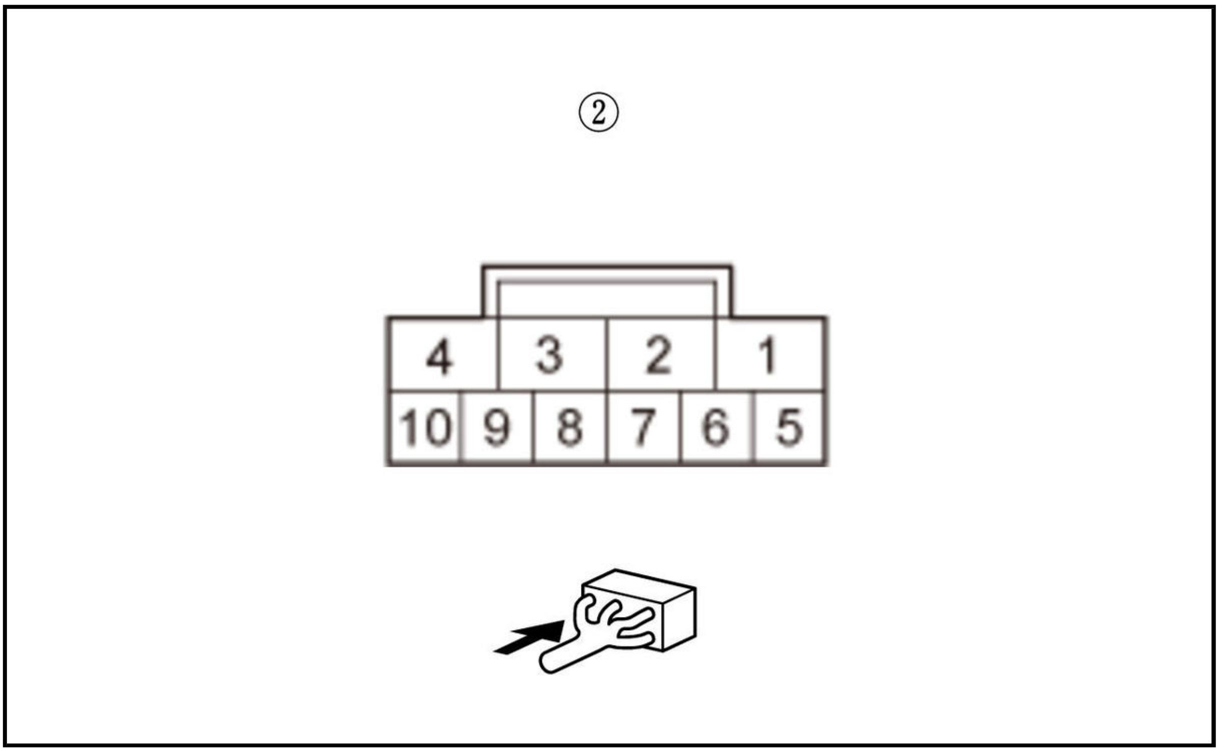

Is there 1.0 Ω or less?

YES

The L_SIDE_DOOR_UNLOCK wire is OK. Go to step 12.

NO

Repair an open or high resistance in the wire.

12. Open wire check (L_SIDE_DOOR_LOCK line)

-1. Measure the resistance between test points 1 and 2.

Test condition	Vehicle OFF (LOCK) mode Under-dash fuse/relay box connector B (22P): disconnected Left rear door latch 10P connector: disconnected
Test point 1	Under-dash fuse/relay box connector B (22P) (female terminals) No. 18: ①
Test point 2	Left rear door latch 10P connector (female terminals) No. 4: ②

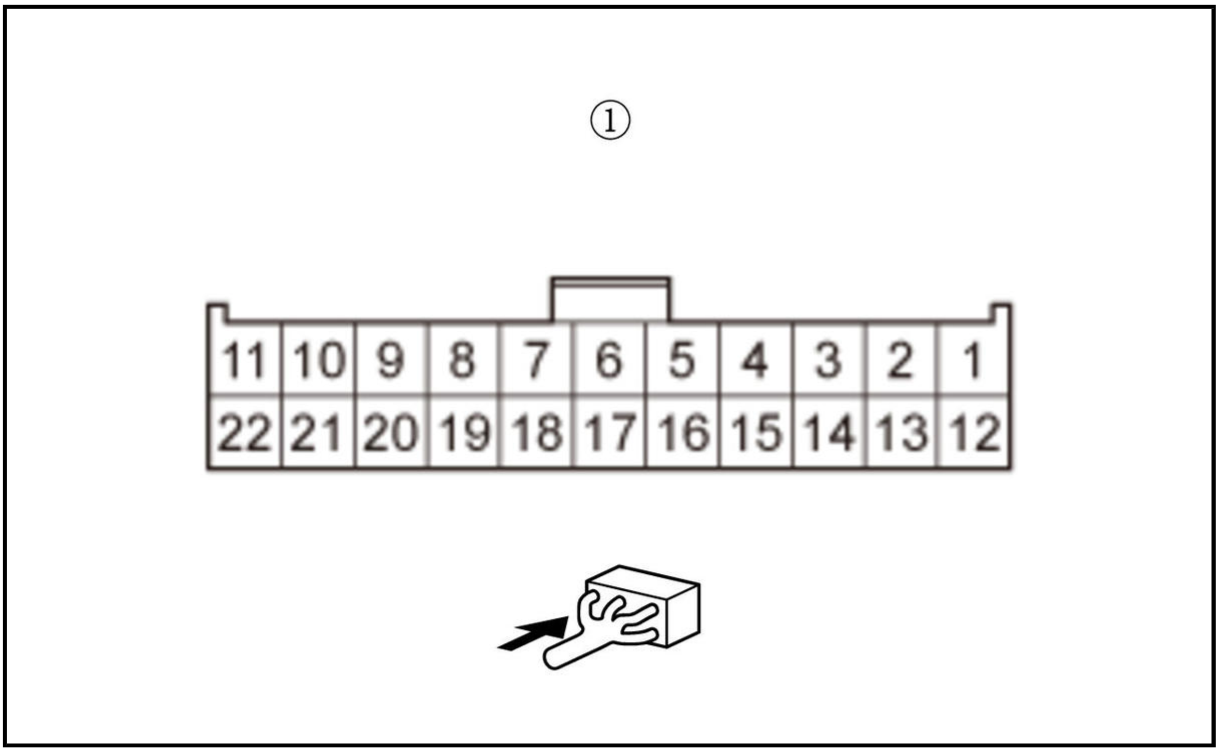
①
11
10
9
8
7
6
5
4
3
2
1
22
21
20
19
18
17
16
15
14
13
12

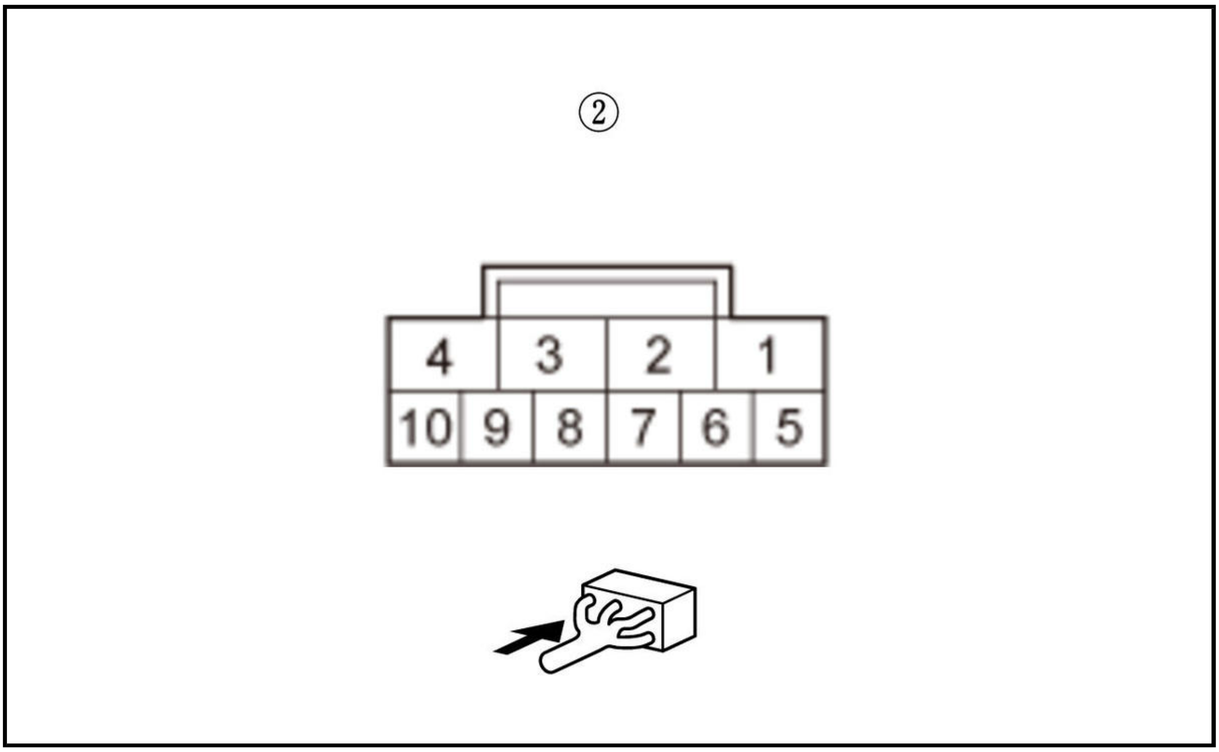
②
4
3
2
1
10
9
8
7
6
5

Is there 1.0 Ω or less?

YES

The L_SIDE_DOOR_LOCK wire is OK. Go to step 13.

NO

Repair an open or high resistance in the wire.

13. Open wire check (DOOR_UNLOCK_RELAY_CL- line)

-1. Disconnect the following connectors.

Body control module connector B (36P) Under-dash fuse/relay box connector F (12P)

-2. Measure the resistance between test points 1 and 2.

Test condition	Vehicle OFF (LOCK) mode Under-dash fuse/relay box connector B (22P): disconnected Under-dash fuse/relay box connector F (12P): disconnected Body control module connector B (36P): disconnected Left rear door latch 10P connector: disconnected
Test point 1	**Body control module connector B (36P) No. 32**
Test point 2	Under-dash fuse/relay box connector F (12P) (female terminals) No. 5: ①

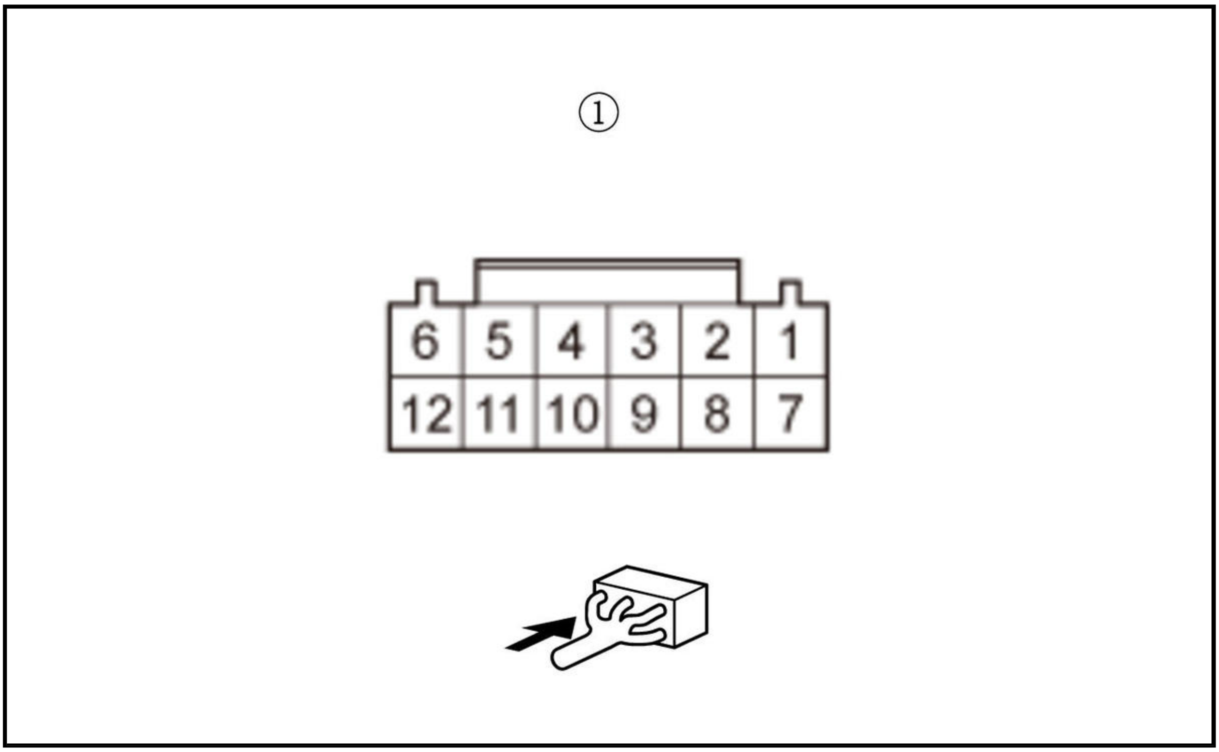

Is there 1.0 Ω or less?

YES

The DOOR_UNLOCK_RELAY_CL- wire is OK. **Replace the body control module** .

NO

Repair an open or high resistance in the wire.

14. Determine possible failure area (right rear door lock actuator, others)

-1. Reconnect the following connector.

Under-dash fuse/relay box connector C (27P)

-2. Disconnect the following connector.

Right rear door latch 10P connector

-3. **Test the right rear door lock actuator**.

Is the door lock actuator OK?

YES

Go to step 15.

NO

Faulty door lock actuator; **replace the right rear door latch** .

15. Open wire check (R_SIDE_DOOR_UNLOCK line)

-1. Disconnect the following connector.

Under-dash fuse/relay box connector B (22P)

-2. Measure the resistance between test points 1 and 2.

Test condition	Vehicle OFF (LOCK) mode Under-dash fuse/relay box connector B (22P): disconnected Right rear door latch 10P connector: disconnected
Test point 1	Under-dash fuse/relay box connector B (22P) (female terminals) No. 12: ①
Test point 2	Right rear door latch 10P connector (female terminals) No. 1: ②

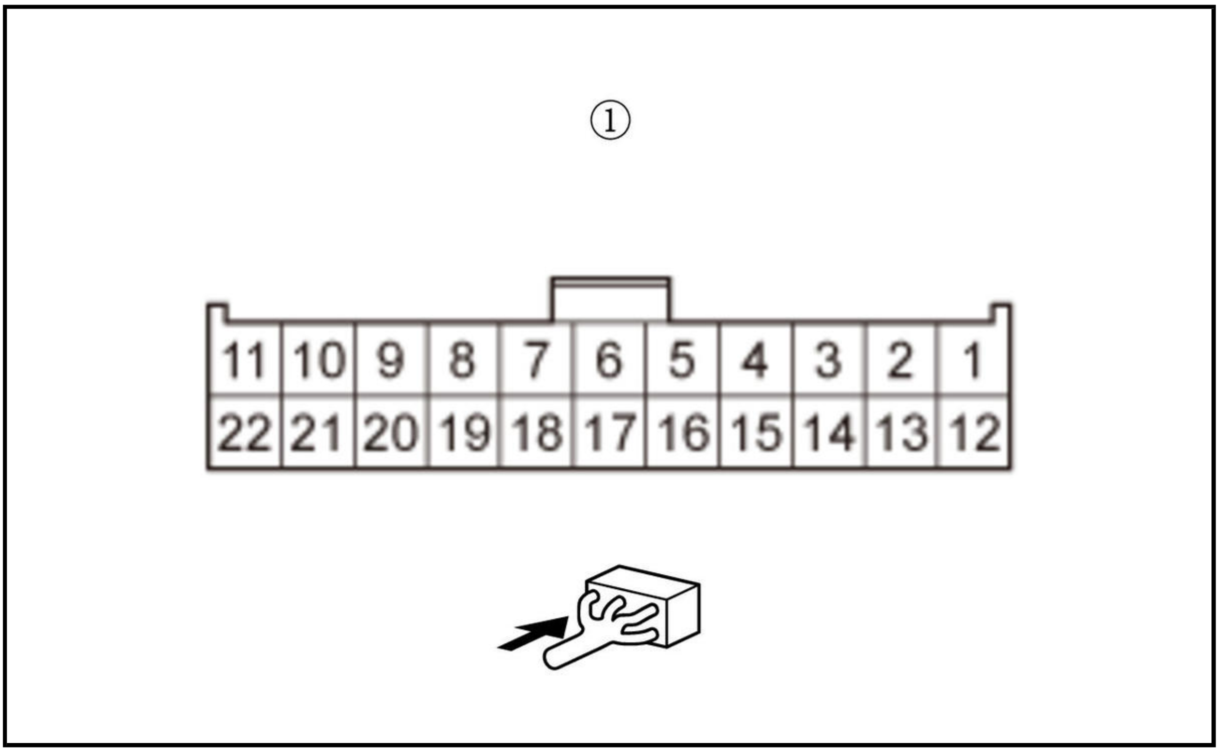

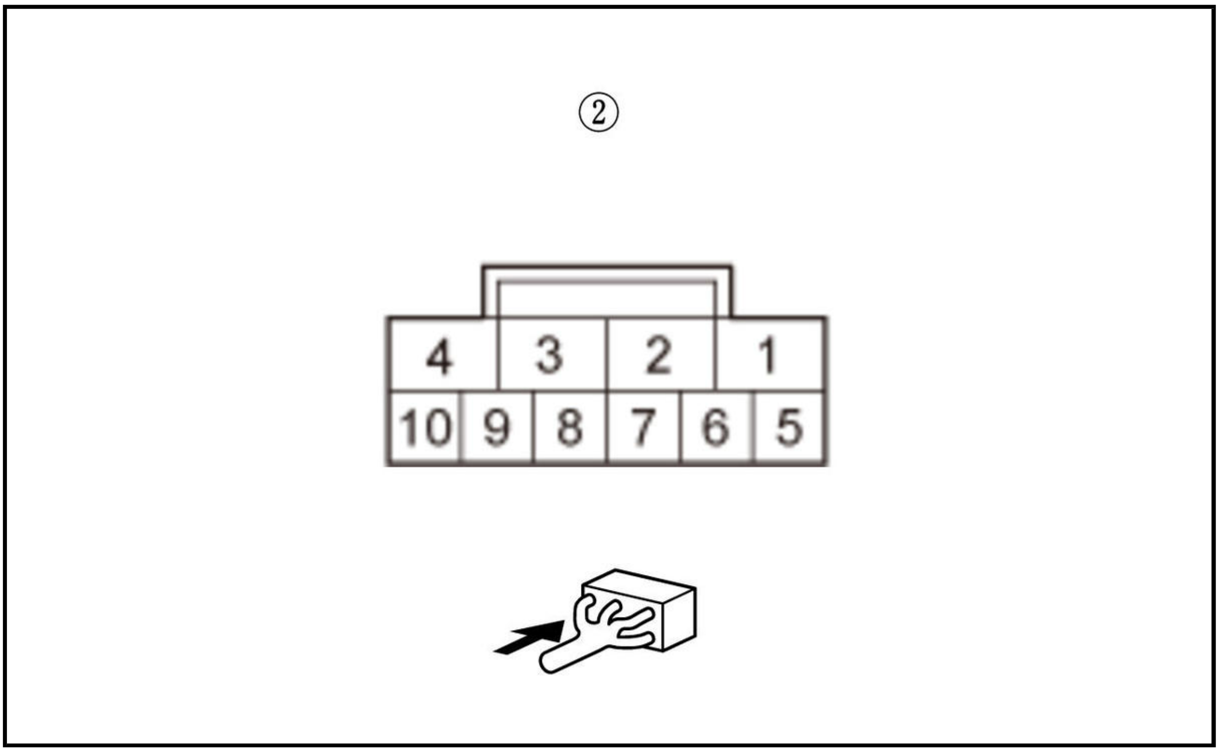

Is there 1.0 Ω or less?

YES

The R_SIDE_DOOR_UNLOCK wire is OK. Go to step 16.

NO

Repair an open or high resistance in the wire.

16. Open wire check (R_SIDE_DOOR_LOCK line)

-1. Measure the resistance between test points 1 and 2.

Test condition	Vehicle OFF (LOCK) mode Under-dash fuse/relay box connector B (22P): disconnected Right rear door latch 10P connector: disconnected
Test point 1	Under-dash fuse/relay box connector B (22P) (female terminals) No. 1: ①
Test point 2	Right rear door latch 10P connector (female terminals) No. 4: ②

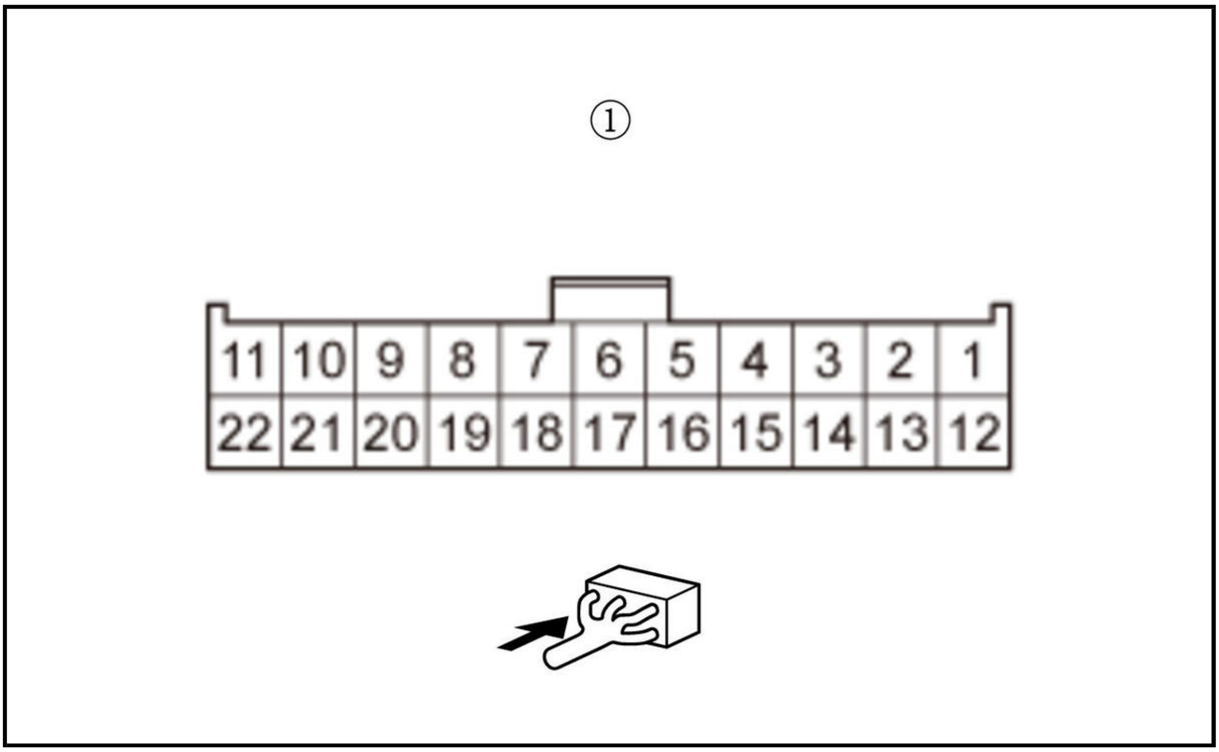
①
11
10
9
8
7
6
5
4
3
2
1
22
21
20
19
18
17
16
15
14
13
12

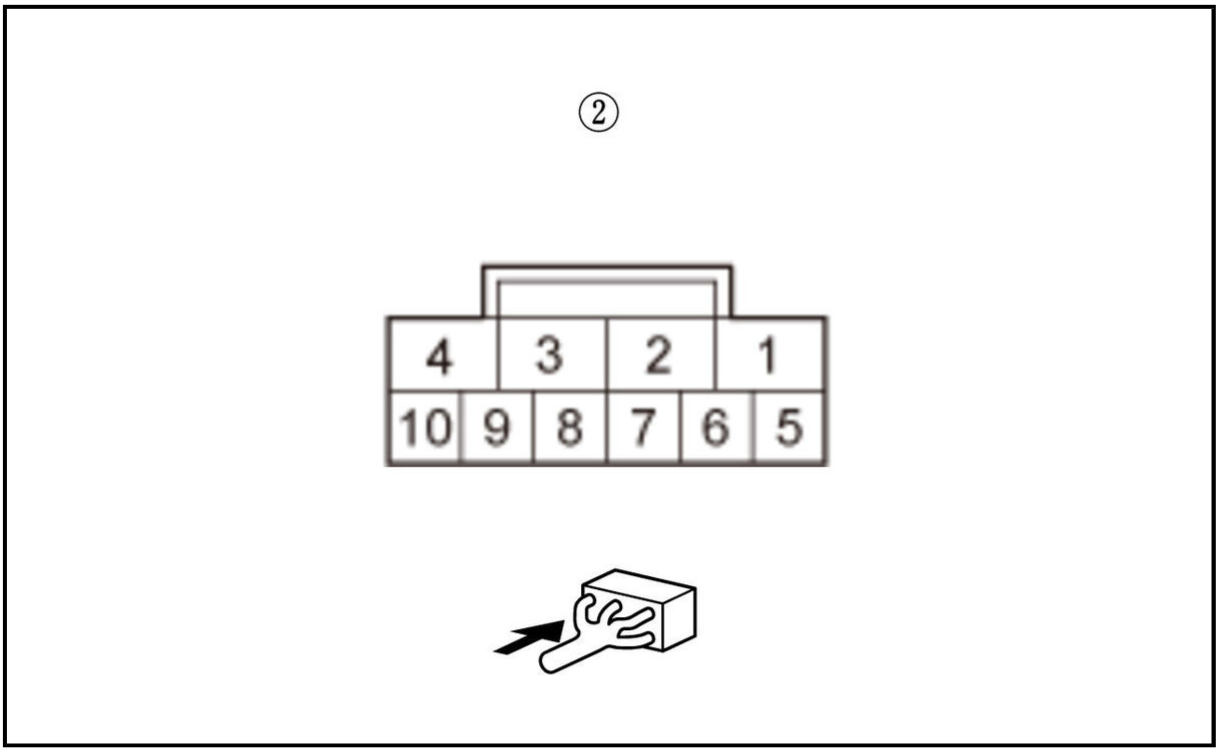
②
4
3
2
1
10
9
8
7
6
5

Is there 1.0 Ω or less?

YES

The R_SIDE_DOOR_LOCK wire is OK. Go to step 17.

NO

Repair an open or high resistance in the wire.

17. Open wire check (DOOR_UNLOCK_RELAY_CL- line)

-1. Disconnect the following connector.

Body control module connector B (36P) Under-dash fuse/relay box connector F (12P)

-2. Measure the resistance between test points 1 and 2.

Test condition	Vehicle OFF (LOCK) mode Under-dash fuse/relay box connector B (22P): disconnected Under-dash fuse/relay box connector F (12P): disconnected Body control module connector B (36P): disconnected Right rear door latch 10P connector: disconnected
Test point 1	**Body control module connector B (36P) No. 32**
Test point 2	Under-dash fuse/relay box connector F (12P) (female terminals) No. 5: ①

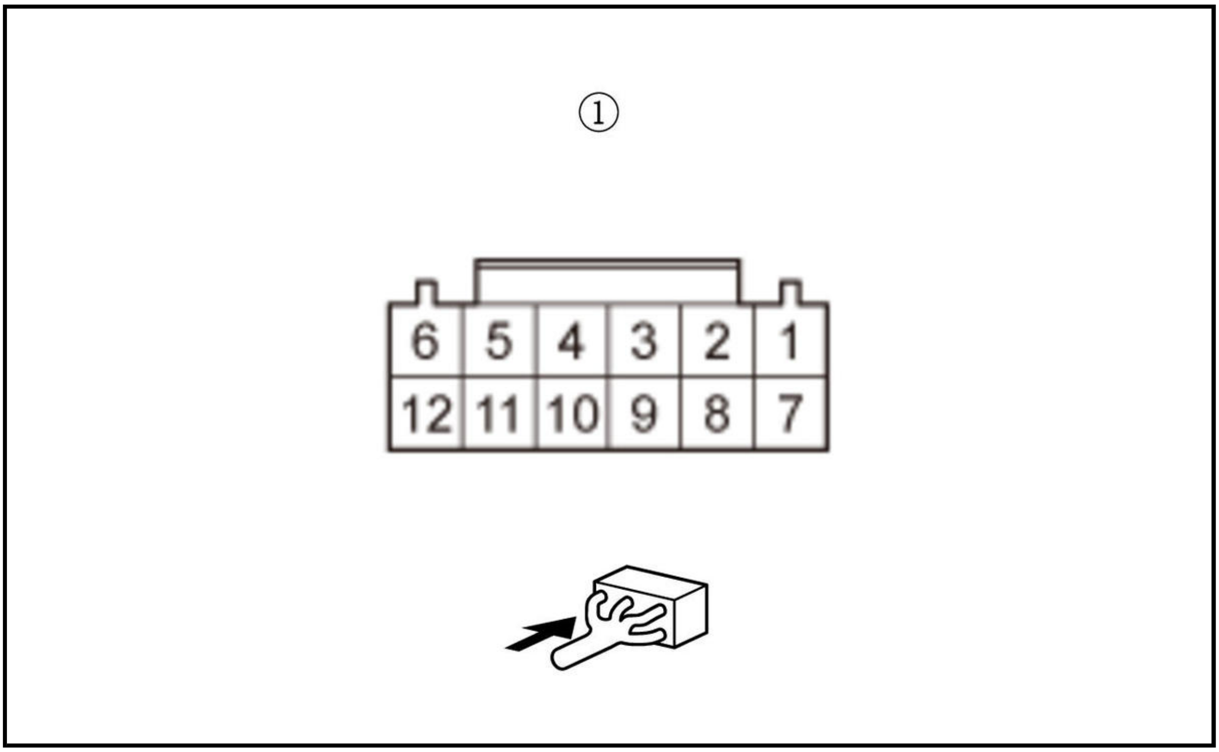

Is there 1.0 Ω or less?

YES

The DOOR_UNLOCK_RELAY_CL- wire is OK. **Replace the body control module** .

NO

Repair an open or high resistance in the wire.

18. Abnormal circuit check 2

-1. Check the parameter(s) below with the HDS when each switch is operating.

Multiplex Control Unit, Door (Power Window Master Switch)

Signal	Current conditions	
	Value	Unit
Driver's Door Lock Knob Switch (UNLOCK)	B	B
Passenger's Door Lock Knob Switch (UNLOCK)	B	B

Body Control Module

Signal	Current conditions	
	Value	Unit
Driver's Door Switch	B	B
Driver's Rear Door Lock Knob Switch (UNLOCK)	B	B
Passenger's Rear Door Lock Knob Sw. (UNLOCK)	B	B

Is each switch information OK?

YES

Replace the body control module .

NO

Driver's door switch circuit: go to step 19.

NO

Driver's door lock knob switch circuit: go to step 21.

NO

Front passenger's door lock knob switch circuit: go to step 27.

NO

Left rear door lock knob switch circuit: go to step 33.

NO

Right rear door lock knob switch circuit: go to step 39.

19. Driver's door switch operation check

-1. Turn the vehicle to the OFF (LOCK) mode.

-2. Remove the driver's door switch.

-3. Disconnect the following connector.

Driver's door switch 1P connector

-4. Measure the resistance between test points 1 and 2.

Test point 1	Driver's door switch 1P connector: ①
Test point 2	Switch ground: ②

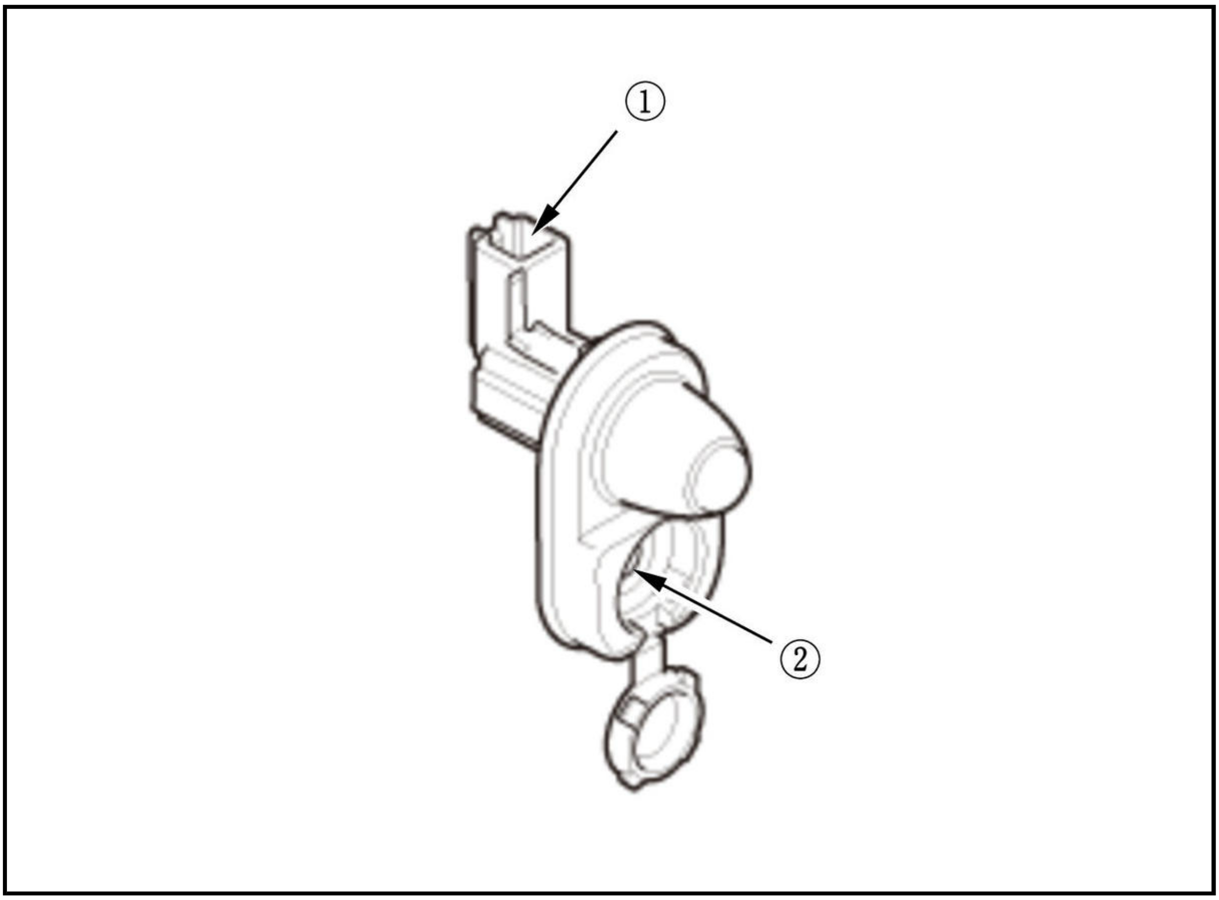

Is there 1.0 MΩ or more when you press the switch and is there 1.0 Ω or less when you release the switch?

YES

Go to step 20.

NO

Replace the driver's door switch.

20. Shorted wire check (FL_DOOR_SW line)

-1. Disconnect the following connector.

Body control module connector D (40P)

-2. Measure the resistance between test points 1 and 2.

Test condition	Vehicle OFF (LOCK) mode Body control module connector D (40P): disconnected Driver's door switch 1P connector: disconnected
Test point 1	**Body control module connector D (40P) No. 22**
Test point 2	Body ground

Is there 1.0 MΩ or more?

YES

The FL_DOOR_SW wire is OK. **Replace the body control module** .

NO

Repair a short to ground in the wire.

21. Keyless/power door locks/security system check 1

-1. With the driver's door lock knob switch in UNLOCK position, check the parameter(s) below with the HDS.

Signal	Current conditions	
	Value	Unit
Driver's Door Lock Knob Switch (UNLOCK)	B	B

Is information value ON?

YES

Go to step 22.

NO

Go to step 24.

22. Determine possible failure area (driver's door lock knob switch, others)

-1. Turn the vehicle to the OFF (LOCK) mode.

-2. Disconnect the following connector.

Driver's door latch 10P connector

-3. Check the parameter(s) below with the HDS.

Signal	Current conditions	
	Value	Unit
Driver's Door Lock Knob Switch (UNLOCK)	B	B

Is information value OFF?

YES

Faulty driver's door lock knob switch; **replace the driver's door latch** .

NO

Go to step 23.

23. Shorted wire check (DR_SILCON_UNLOCK line)

-1. Turn the vehicle to the OFF (LOCK) mode.

-2. Disconnect the following connector.

Power window master switch 37P connector

-3. Measure the resistance between test points 1 and 2.

Test condition	Vehicle OFF (LOCK) mode Driver's door latch 10P connector: disconnected Power window master switch 37P connector: disconnected
Test point 1	**Power window master switch 37P connector No. 20**

Test point 2	Body ground

Is there 1.0 MΩ or more?

YES

The DR_SILCON_UNLOCK wire is OK. **Replace the power window master switch** .

NO

Repair a short to ground in the wire.

24. Keyless/power door locks/security system check 2

-1. Turn the vehicle to the OFF (LOCK) mode.

-2. Disconnect the following connector.

Driver's door latch 10P connector

-3. Connect terminals A and B with a jumper wire.

Terminal A	Driver's door latch 10P connector (female terminals) No. 5: ①
Terminal B	Body ground

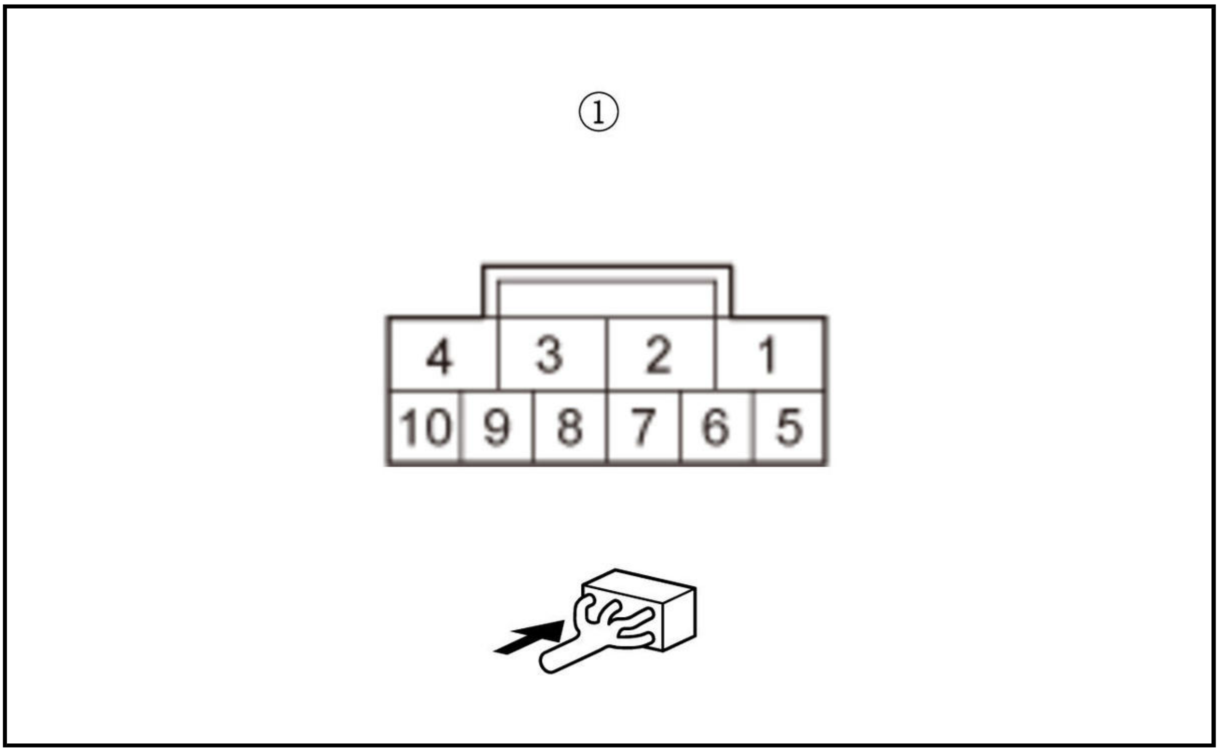

-4. Check the parameter(s) below with the HDS.

Signal	Current conditions	
	Value	Unit
Driver's Door Lock Knob Switch (UNLOCK)	B	B

Is information value ON?

YES

Go to step 25.

NO

Go to step 26.

25. Open wire check (GND line)

-1. Turn the vehicle to the OFF (LOCK) mode.

-2. Remove the jumper wire.

-3. Measure the resistance between test points 1 and 2.

Test condition	Vehicle OFF (LOCK) mode Driver's door latch 10P connector: disconnected
Test point 1	Driver's door latch 10P connector (female terminals) No. 7: ①
Test point 2	Body ground

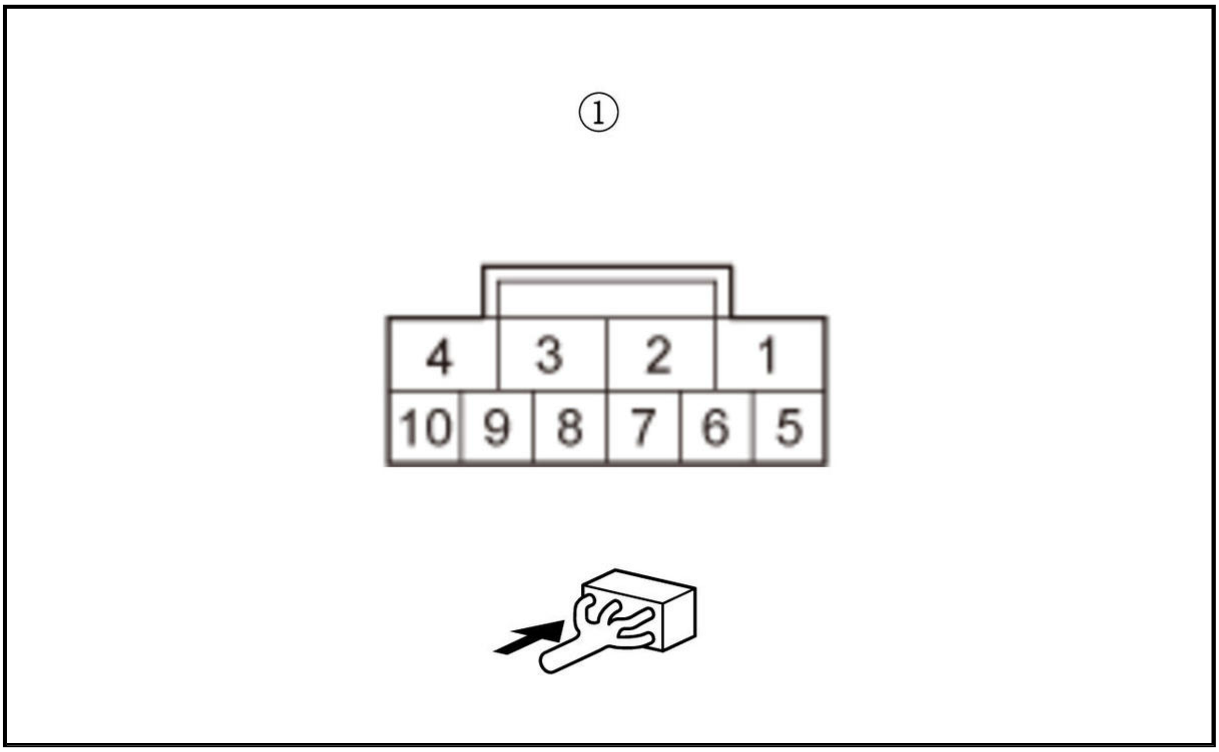

Is there 1.0 Ω or less?

YES

The GND wire is OK. Faulty driver's door lock knob switch; **replace the driver's door latch** .

NO

Repair an open or high resistance in the wire or poor ground (G401).

26. Open wire check (DR_SILCON_UNLOCK line)

-1. Remove the jumper wire.

-2. Connect terminals A and B with a jumper wire.

Terminal A	**Power window master switch 37P connector No. 20**
Terminal B	Body ground

-3. Check the parameter(s) below with the HDS.

Signal	Current conditions	
	Value	**Unit**
Driver's Door Lock Knob Switch (UNLOCK)	B	B

Is information value ON?

YES

Repair an open or high resistance in the wire.

NO

The DR_SILCON_UNLOCK wire is OK. **Replace the power window master switch** .

27. Keyless/power door locks/security system check 1

-1. With the front passenger's door lock knob switch in UNLOCK position, check the parameter(s) below with the HDS.

Signal	Current conditions	
	Value	**Unit**
Passenger's Door Lock Knob Switch (UNLOCK)	B	B

Is information indicator ON?

YES

Go to step 28.

NO

Go to step 30.

28. Determine possible failure area (front passenger's door lock knob switch, others)

-1. Turn the vehicle to the OFF (LOCK) mode.

-2. Disconnect the following connector.

Front passenger's door latch 10P connector

-3. Check the parameter(s) below with the HDS.

Signal	Current conditions	
	Value	**Unit**
Passenger's Door Lock Knob Switch (UNLOCK)	B	B

Is information value OFF?

YES

Faulty front passenger's door lock knob switch; **replace the front passenger's door latch** .

NO

Go to step 29.

29. Shorted wire check (AS_SILCON_UNLOCK line)

-1. Turn the vehicle to the OFF (LOCK) mode.

-2. Disconnect the following connector.

Front passenger's power window switch 37P connector

-3. Measure the resistance between test points 1 and 2.

Test condition	Vehicle OFF (LOCK) mode Front passenger's door latch 10P connector: disconnected Front passenger's power window switch 37P connector: disconnected
Test point 1	**Front passenger's power window switch 37P connector No. 36**
Test point 2	Body ground

Is there 1.0 MΩ or more?

YES

The AS_SILCON_UNLOCK wire is OK. **Replace the front passenger's power window switch** .

NO

Repair a short to ground in the wire.

30. Keyless/power door locks/security system check 2

-1. Turn the vehicle to the OFF (LOCK) mode.

-2. Disconnect the following connector.

Front passenger's door latch 10P connector

-3. Connect terminals A and B with a jumper wire.

Terminal A	Front passenger's door latch 10P connector (female terminals) No. 10: ①
Terminal B	Body ground

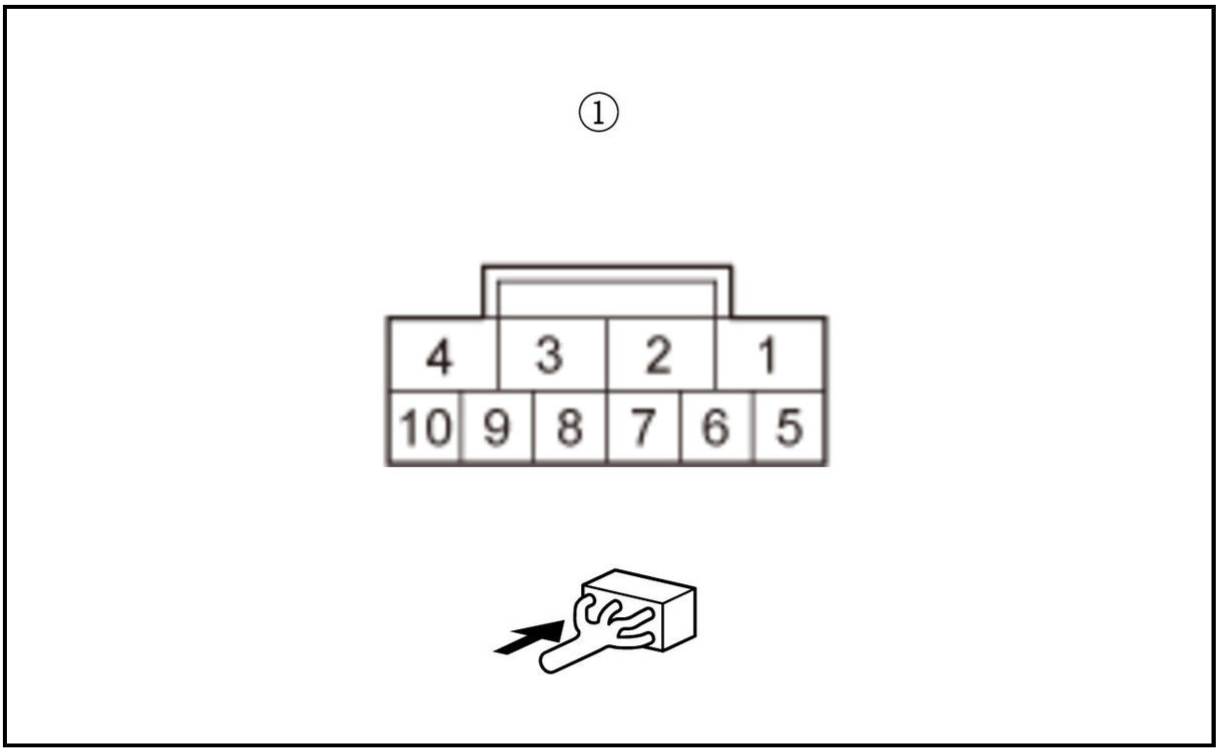

-4. Check the parameter(s) below with the HDS.

Signal	Current conditions	
	Value	Unit
Passenger's Door Lock Knob Switch (UNLOCK)	B	B

Is information value ON?

YES

Go to step 31.

NO

Go to step 32.

31. Open wire check (GND line)

-1. Turn the vehicle to the OFF (LOCK) mode.

-2. Remove the jumper wire.

-3. Measure the resistance between test points 1 and 2.

Test condition	Vehicle OFF (LOCK) mode Front passenger's door latch 10P connector: disconnected

Test point 1	Front passenger's door latch 10P connector (female terminals) No. 8: ①
Test point 2	Body ground

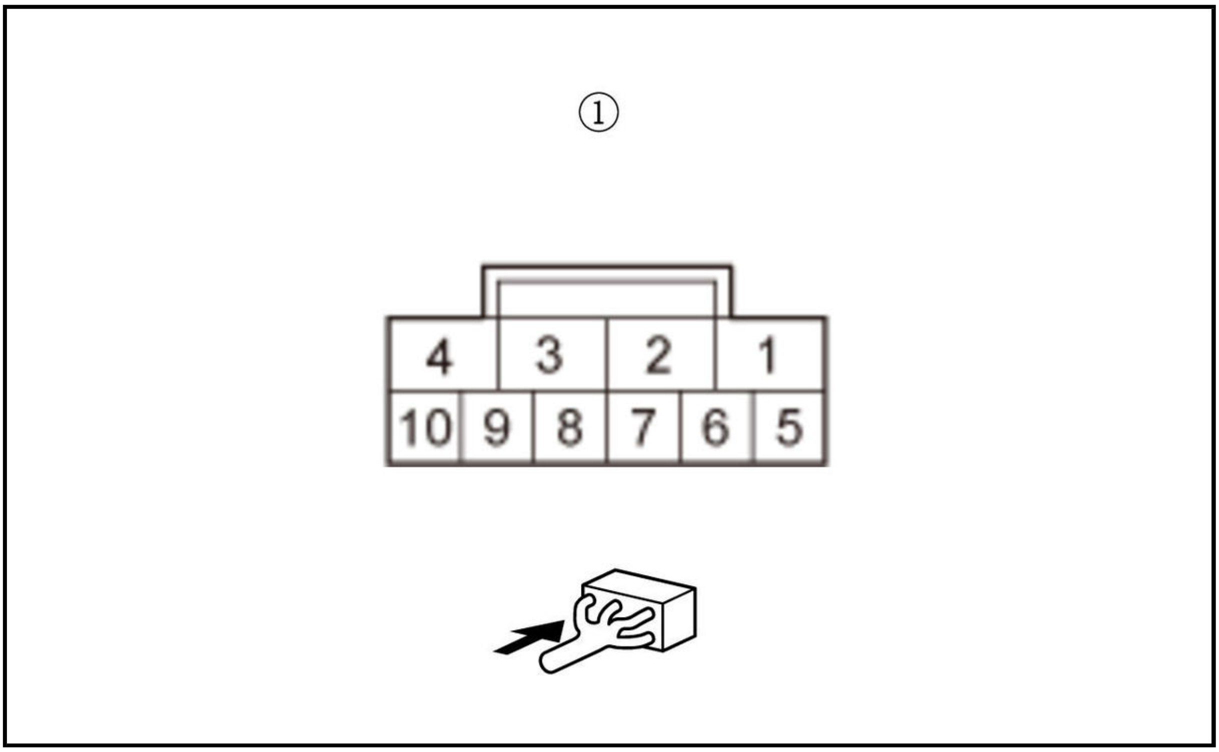

Is there 1.0 Ω or less?

YES

The GND wire is OK. Faulty front passenger's door lock knob switch; **replace the front passenger's door latch** .

NO

Repair an open or high resistance in the ground wire or poor ground (G401).

32. Open wire check (AS_SILCON_UNLOCK line)

-1. Remove the jumper wire.

-2. Connect terminals A and B with a jumper wire.

Terminal A	**Front passenger's power window switch 37P connector No. 36**
Terminal B	Body ground

-3. Check the parameter(s) below with the HDS.

Signal	**Current conditions**	
	Value	**Unit**
Passenger's Door Lock Knob Switch (UNLOCK)	B	B

Is information value ON?

YES

Repair an open or high resistance in the wire.

NO

The AS_SILCON_UNLOCK wire is OK. **Replace the front passenger's power window switch** .

33. Keyless/power door locks/security system check 1

-1. With the left rear door lock knob switch in UNLOCK position, check the parameter(s) below with the HDS.

Signal	Current conditions	
	Value	Unit
Driver's Rear Door Lock Knob Switch (UNLOCK)	B	B

Is information value ON?

YES

Go to step 34.

NO

Go to step 36.

34. Determine possible failure area (left rear door lock knob switch, others)

-1. Turn the vehicle to the OFF (LOCK) mode.

-2. Disconnect the following connector.

Left rear door latch 10P connector

-3. Check the parameter(s) below with the HDS.

Signal	Current conditions	
	Value	Unit
Driver's Rear Door Lock Knob Switch (UNLOCK)	B	B

Is information value OFF?

YES

Faulty left rear door lock knob switch; **replace the left rear door latch** .

NO

Go to step 35.

35. Shorted wire check (RR_L_SILCON_UNLOCK line)

-1. Disconnect the following connector.

Body control module connector C (28P)

-2. Measure the resistance between test points 1 and 2.

Test condition	Vehicle OFF (LOCK) mode Body control module connector C (28P): disconnected Left rear door latch 10P connector: disconnected
Test point 1	**Body control module connector C (28P) No. 15**
Test point 2	Body ground

Is there 1.0 MΩ or more?

YES

The RR_L_SILCON_UNLOCK wire is OK. **Replace the body control module** .

NO

Repair a short to ground in the wire.

36. Keyless/power door locks/security system check 2

-1. Turn the vehicle to the OFF (LOCK) mode.

-2. Disconnect the following connector.

Left rear door latch 10P connector

-3. Connect terminals A and B with a jumper wire.

Terminal A	Left rear door latch 10P connector (female terminals) No. 9: ①
Terminal B	Body ground

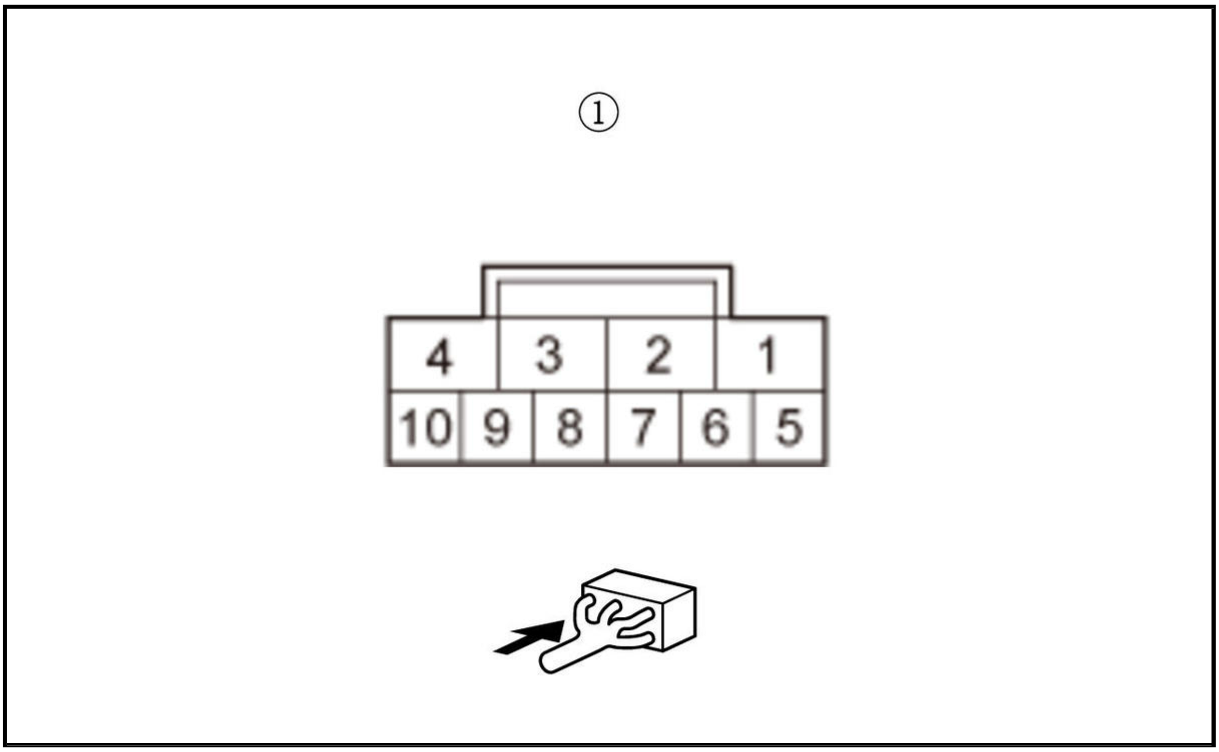

-4. Check the parameter(s) below with the HDS.

Signal	Current conditions	
	Value	Unit
Driver's Rear Door Lock Knob Switch (UNLOCK)	B	B

Is information value ON?

YES

Go to step 37.

NO

Go to step 38.

37. Open wire check (GND line)

-1. Turn the vehicle to the OFF (LOCK) mode.

-2. Remove the jumper wire.

-3. Measure the resistance between test points 1 and 2.

Test condition	Vehicle OFF (LOCK) mode Left rear door latch 10P connector: disconnected
Test point 1	Left rear door latch 10P connector (female terminals) No. 6: ①
Test point 2	Body ground

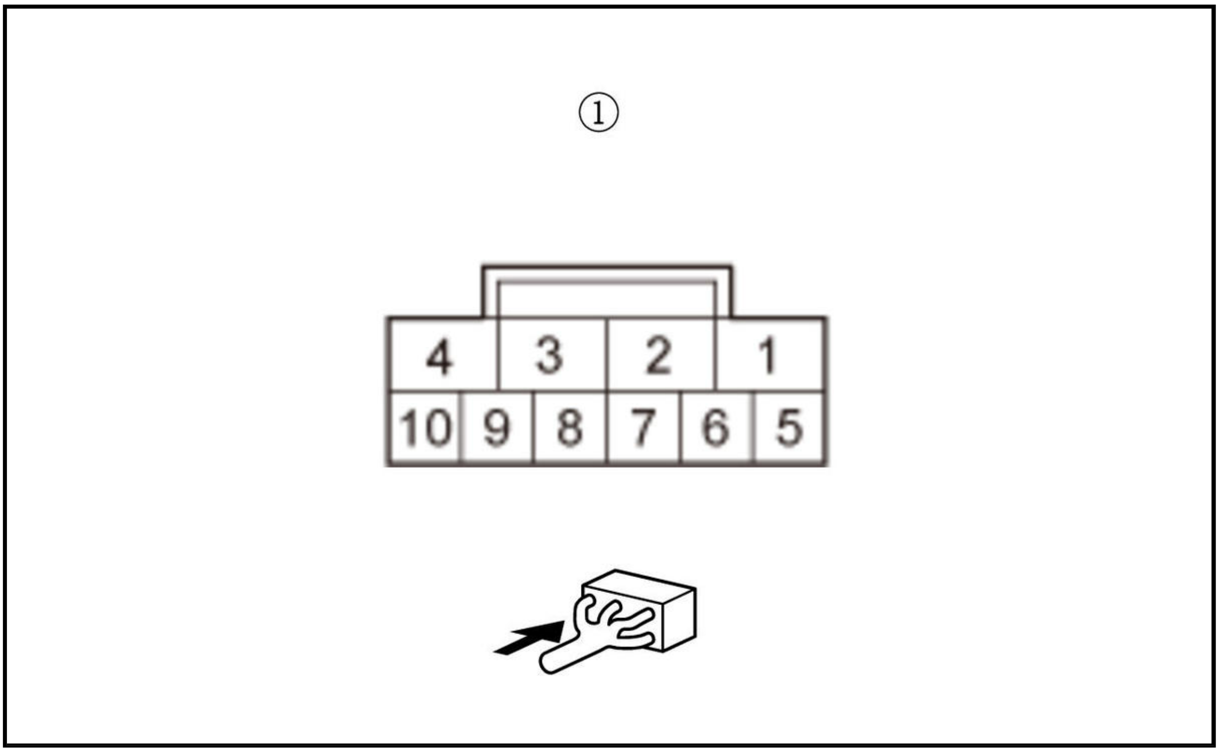

Is there 1.0 Ω or less?

YES

The GND wire is OK. Faulty left rear door lock knob switch; replace the left rear door latch .

NO

Repair an open or high resistance in the ground wire or poor ground (G501).

38. Open wire check (RR_L_SILCON_UNLOCK line)

-1. Remove the jumper wire.

-2. Connect terminals A and B with a jumper wire.

Terminal A	Body control module connector C (28P) No. 15
Terminal B	Body ground

-3. Check the parameter(s) below with the HDS.

Signal	Current conditions	
	Value	Unit
Driver's Rear Door Lock Knob Switch (UNLOCK)	B	B

Is information value ON?

YES

Repair an open or high resistance in the wire.

NO

The RR_L_SILCON_UNLOCK wire is OK. **Replace the body control module** .

39. Keyless/power door locks/security system check 1

-1. With the right rear door lock knob switch in UNLOCK position, check the parameter(s) below with the HDS.

Signal	Current conditions	
	Value	Unit
Passenger's Rear Door Lock Knob Sw. (UNLOCK)	B	B

Is information value ON?

YES

Go to step 40.

NO

Go to step 42.

40. Determine possible failure area (right rear door lock knob switch, others)

-1. Disconnect the following connector.

Right rear door latch 10P connector

-2. Check the parameter(s) below with the HDS.

Signal	Current conditions	
	Value	Unit
Passenger's Rear Door Lock Knob Sw. (UNLOCK)	B	B

Is information value OFF?

YES

Faulty right rear door lock knob switch; **replace the right rear door latch** .

NO

Go to step 41.

41. Shorted wire check (RR_R_SILCON_UNLOCK line)

-1. Turn the vehicle to the OFF (LOCK) mode.

-2. Disconnect the following connector.

Body control module connector C (28P)

-3. Measure the resistance between test points 1 and 2.

Test condition	Vehicle OFF (LOCK) mode Body control module connector C (28P): disconnected Right rear door latch 10P connector: disconnected
Test point 1	**Body control module connector C (28P) No. 16**
Test point 2	Body ground

Is there 1.0 MΩ or more?

YES

The RR_R_SILCON_UNLOCK wire is OK. **Replace the body control module** .

NO

Repair a short to ground in the wire.

42. Keyless/power door locks/security system check 2

-1. Turn the vehicle to the OFF (LOCK) mode.

-2. Disconnect the following connector.

Right rear door latch 10P connector

-3. Connect terminals A and B with a jumper wire.

Terminal A	Right rear door latch 10P connector (female terminals) No. 6: ①
Terminal B	Body ground

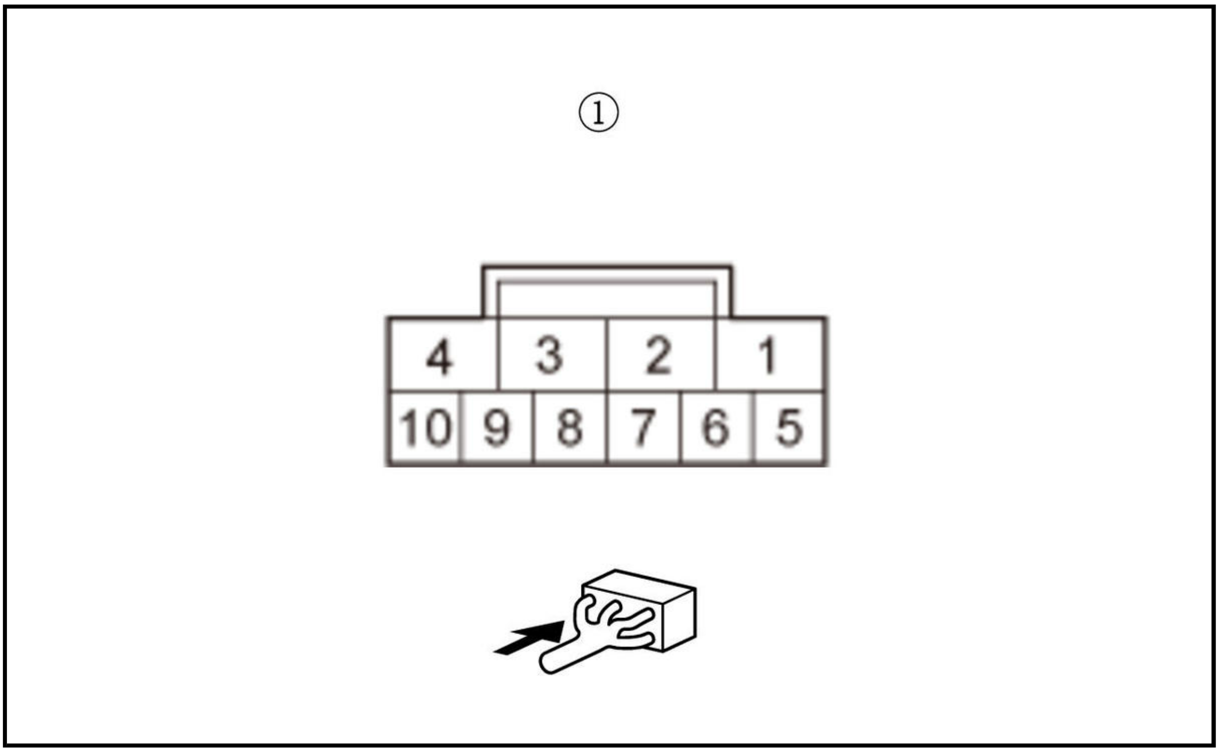

-4. Check the parameter(s) below with the HDS.

Signal	Current conditions	
	Value	Unit
Passenger's Rear Door Lock Knob Sw. (UNLOCK)	B	B

Is information value ON?

YES

Go to step 43.

NO

Go to step 44.

43. Open wire check (GND line)

-1. Turn the vehicle to the OFF (LOCK) mode.

-2. Remove the jumper wire.

-3. Measure the resistance between test points 1 and 2.

Test condition	Vehicle OFF (LOCK) mode Right rear door latch 10P connector: disconnected
Test point 1	Right rear door latch 10P connector (female terminals) No. 9: ①
Test point 2	Body ground

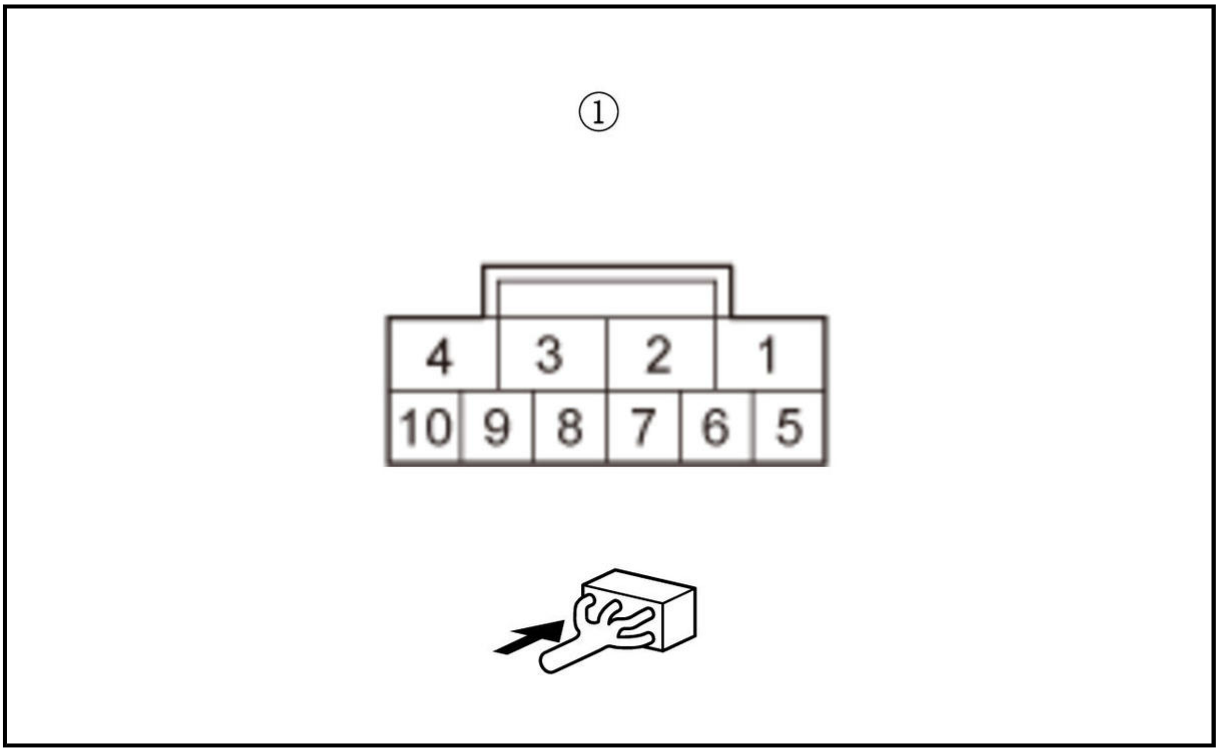

Is there 1.0 Ω or less?

YES

The GND wire is OK. Faulty right rear door lock knob switch; replace the right rear door latch .

NO

Repair an open or high resistance in the ground wire or poor ground (G502).

44. Open wire check (RR_R_SILCON_UNLOCK line)

-1. Remove the jumper wire.

-2. Connect terminals A and B with a jumper wire.

Terminal A	**Body control module connector C (28P) No. 16**
Terminal B	Body ground

-3. Check the parameter(s) below with the HDS.

Signal	Current conditions	
	Value	Unit
Passenger's Rear Door Lock Knob Sw. (UNLOCK)	B	B

Is information value ON?

YES

Repair an open or high resistance in the wire.

NO

The RR_R_SILCON_UNLOCK wire is OK. **Replace the body control module** .

KEYLESS/POWER DOOR LOCKS/SECURITY SYSTEM SYMPTOM TROUBLESHOOTING - DOORS AUTOMATICALLY RELOCK 30 SECONDS AFTER BEING UNLOCKED WITH THE REMOTE EVEN THOUGH A DOOR HAS BEEN OPENED

NOTE: Before troubleshooting, check for B-CAN DTCs. If any DTC is indicated, troubleshoot the indicated DTC first.

1. Determine possible failure area (body control module, others)

-1. With interior light switch: Turn the interior light switch to the DOOR position and ceiling light switch to the MIDDLE position.

-2. Without interior light switch: Turn the ceiling light switch to the MIDDLE position.

-3. Turn the vehicle to the OFF (LOCK) mode.

-4. Watch the individual map lights, the ceiling light, and the door indicators on the gauge control module.

Do the individual map lights and door indicators come on when the door is open, and go off when the door is closed?

YES

Replace the body control module .

NO

Go to step 2.

2. Open wire check (FL_DOOR_SW, FR_DOOR_SW, RL_DOOR_SW, RR_DOOR_SW, T/G_SW lines)

-1. Disconnect the following connectors.

Body control module connector D (40P)
Each door switch 1P connector
Power tailgate closer unit connector B (6P) (with power tailgate)
Tailgate latch 4P connector (without power tailgate)

-2. Measure the resistance between test points 1 and 2 respectively.

Driver's door switch

Test condition	Vehicle OFF (LOCK) mode Body control module connector D (40P): disconnected Driver's door switch 1P connector: disconnected
Test point 1	**Body control module connector D (40P) No. 22**
Test point 2	Driver's door switch 1P connector (female terminals) No. 1: ①

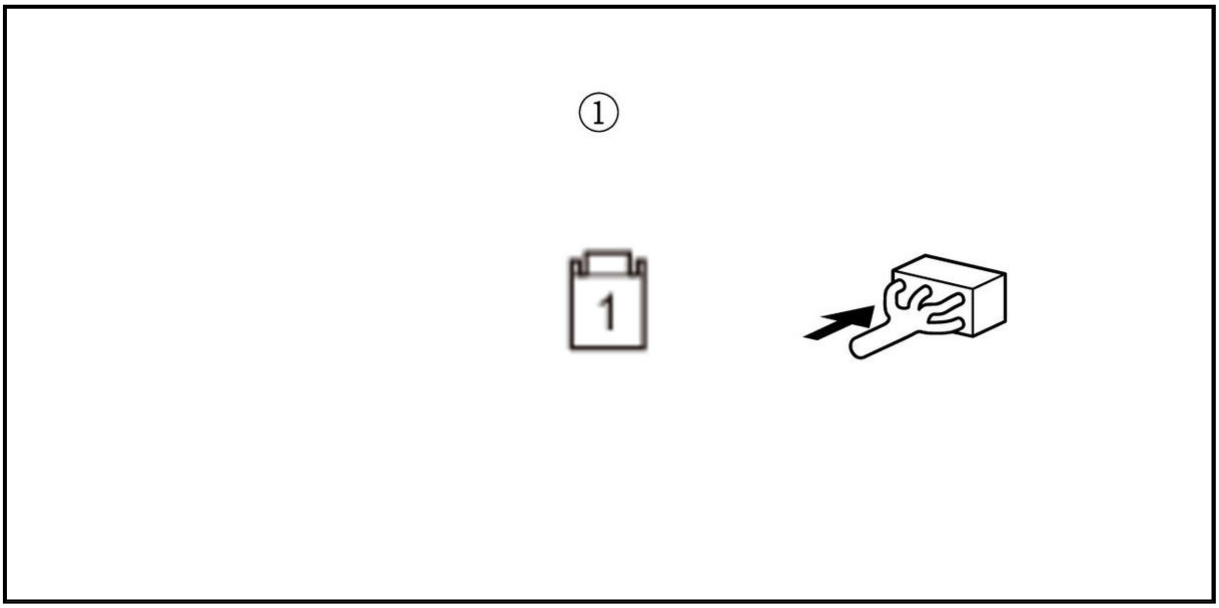

Front passenger's door switch

Test condition	Vehicle OFF (LOCK) mode Body control module connector D (40P): disconnected Front passenger's door switch 1P connector: disconnected
Test point 1	**Body control module connector D (40P) No. 23**
Test point 2	Front passenger's door switch 1P connector (female terminals) No. 1: ①

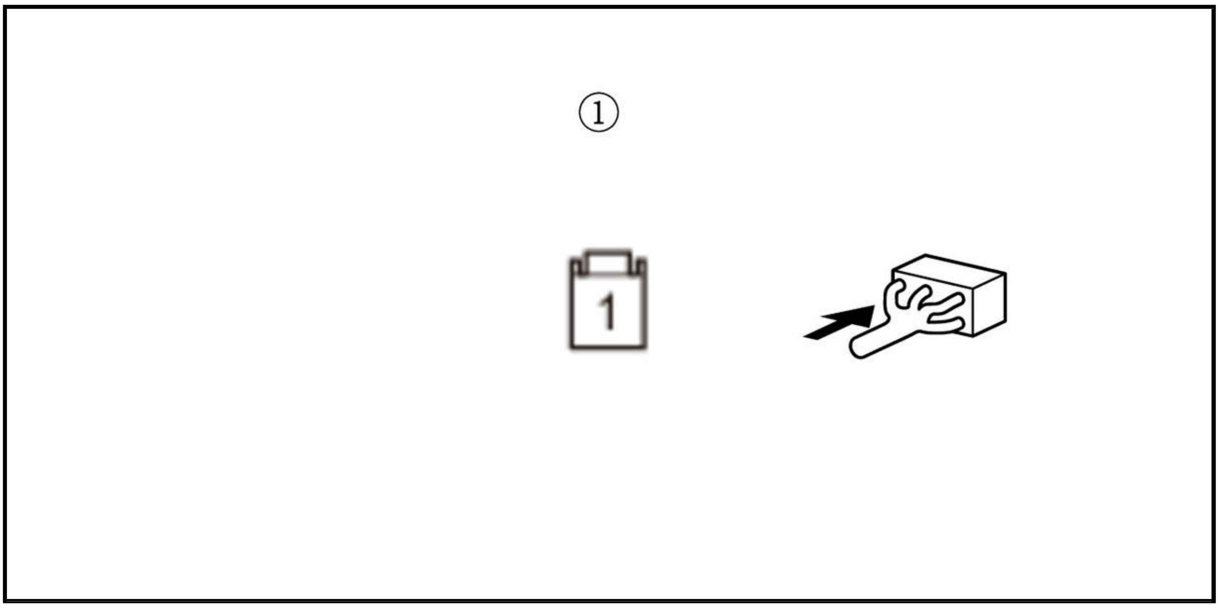

Left rear door switch

Test condition	Vehicle OFF (LOCK) mode Body control module connector D (40P): disconnected Left rear door switch 1P connector: disconnected
Test point 1	**Body control module connector D (40P) No. 24**
Test point 2	Left rear door switch 1P connector (female terminals) No. 1: ①

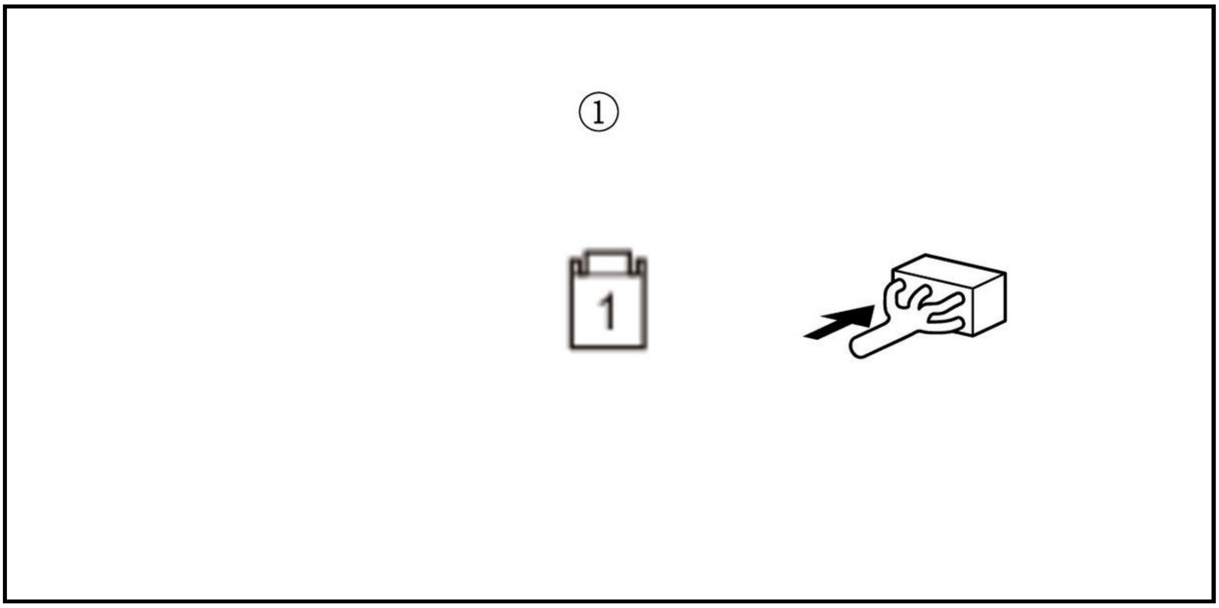

Right rear door switch

Test condition	Vehicle OFF (LOCK) mode Body control module connector D (40P): disconnected Right rear door switch 1P connector: disconnected
Test point 1	**Body control module connector D (40P) No. 28**
Test point 2	Right rear door switch 1P connector (female terminals) No. 1: ①

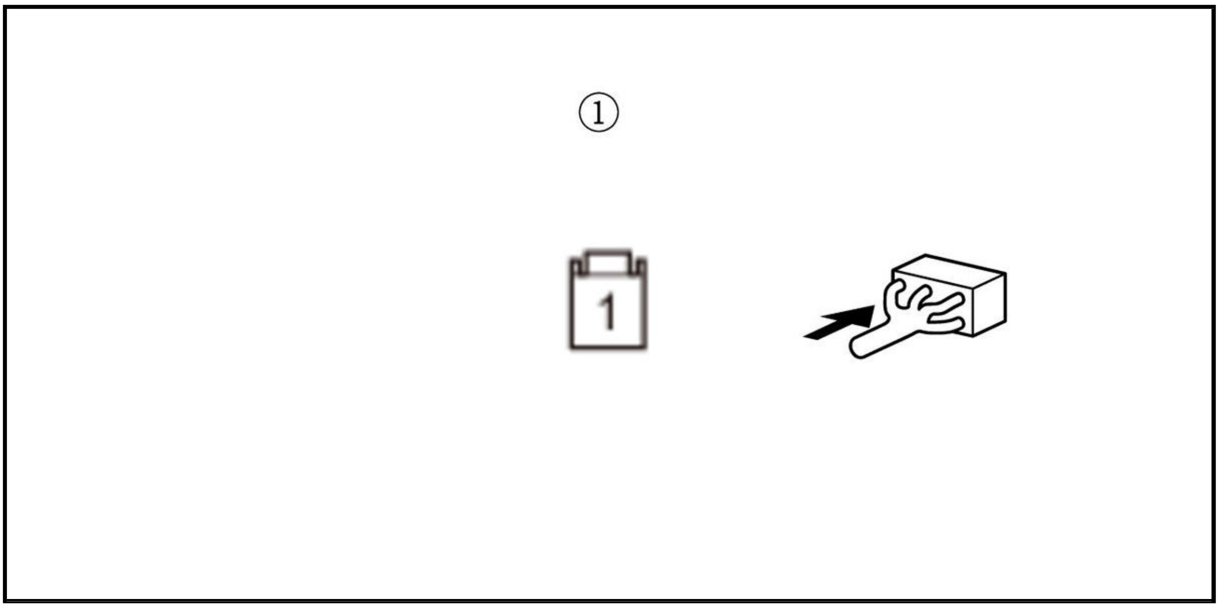

Power tailgate closer unit (with power tailgate)

Test condition	Vehicle OFF (LOCK) mode Body control module connector D (40P): disconnected Power tailgate closer unit connector B (6P): disconnected
Test point 1	**Body control module connector D (40P) No. 27**
Test point 2	Power tailgate closer unit connector B (6P) (female terminals) No. 1: ①

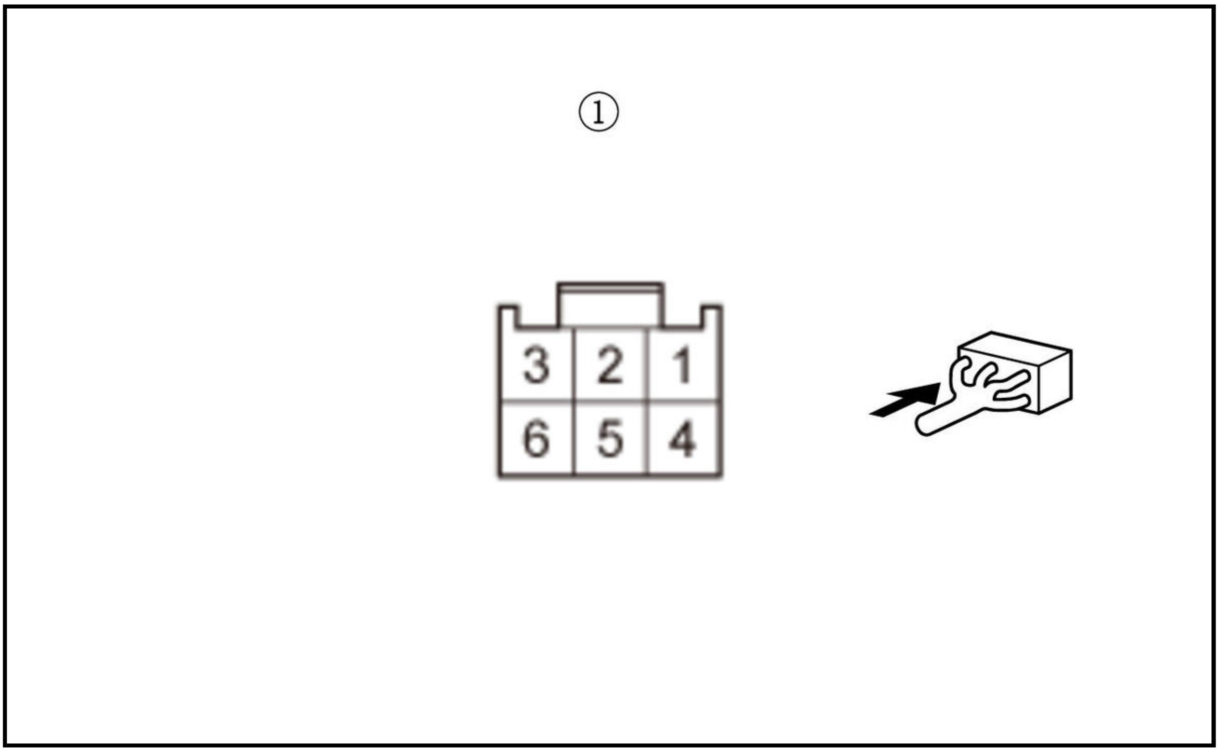

Tailgate latch switch (without power tailgate)

Test condition	Vehicle OFF (LOCK) mode Body control module connector D (40P): disconnected Tailgate latch 4P connector: disconnected
Test point 1	**Body control module connector D (40P) No. 27**
Test point 2	Tailgate latch 4P connector (female terminals) No. 1: ①

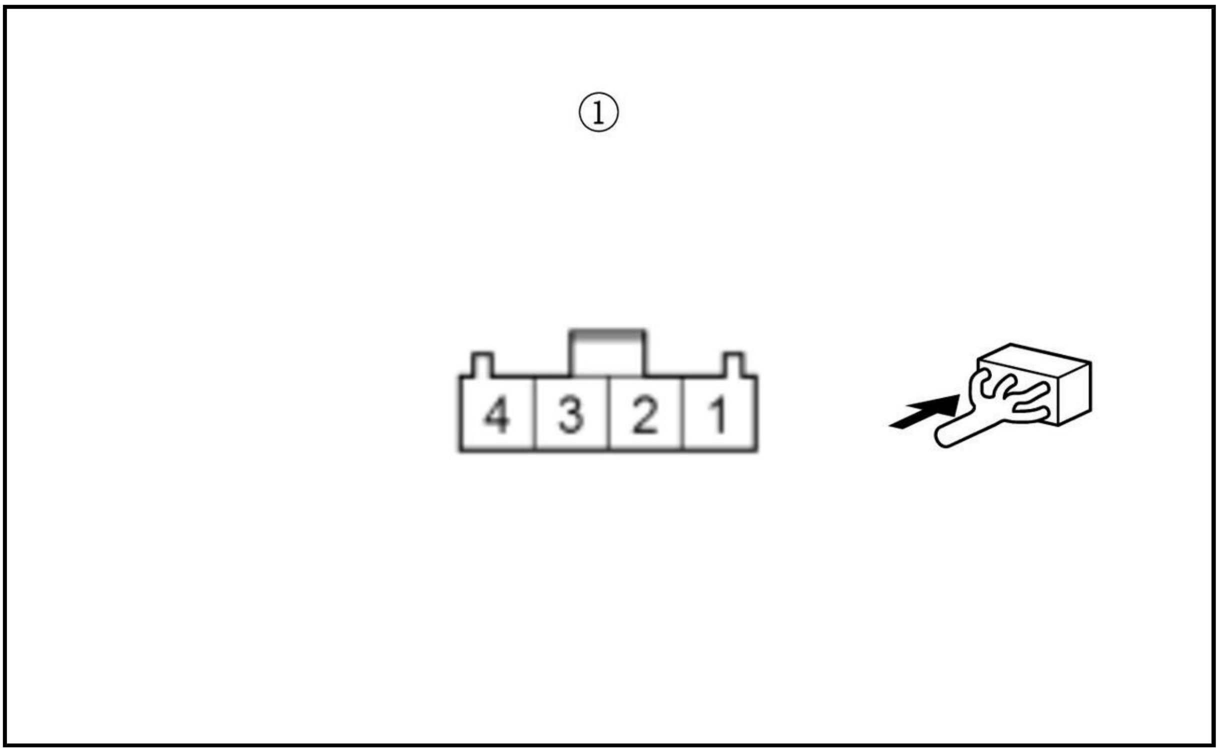

Is there 1.0 Ω or less?

YES: Door switch

The FL_DOOR_SW, FR_DOOR_SW, RL_DOOR_SW, and RR_DOOR_SW wires are OK. Replace the bad door switch.

YES: Power tailgate closer unit (with power tailgate)

The T/G_SW wire is OK. Faulty Power tailgate closer unit circuit. Check for Power tailgate control unit DTCs.

YES: Tailgate latch switch (without power tailgate)

The T/G_SW wire is OK. Faulty tailgate latch switch or GND line, go to step 3.

NO

Repair an open or high resistance in the wire.

3. Open wire check (GND line)

   -1. Measure the resistance between test points 1 and 2.

Test condition	Vehicle OFF (LOCK) mode Body control module connector D (40P): disconnected Tailgate latch 4P connector: disconnected
Test point 1	Tailgate latch 4P connector (female terminals) No. 2: ①
Test point 2	Body ground

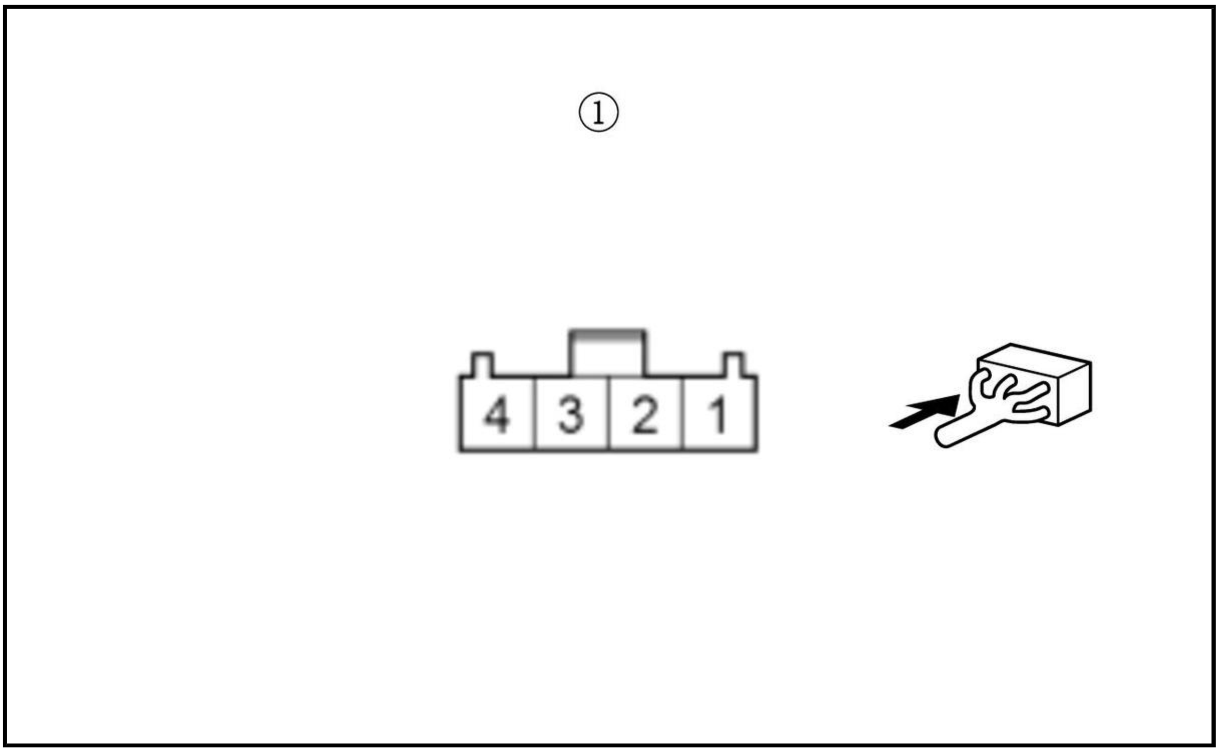

Is there 1.0 Ω or less?

YES

The GND wire is OK. Faulty tailgate latch switch; **replace the tailgate latch** .

NO

Repair an open or high resistance in the ground wire or poor ground (G505).

KEYLESS/POWER DOOR LOCKS/SECURITY SYSTEM SYMPTOM TROUBLESHOOTING - SECURITY ALARM SYSTEM WILL NOT ARM

NOTE: Before troubleshooting, check for B-CAN DTCs. If any DTC is indicated, troubleshoot the indicated DTC first.

1. Switch information check

-1. Turn the vehicle to the ON mode.

-2. Check the parameter(s) below with the HDS.

Multiplex Control Unit, Door (Power Window Master Switch)

Signal	Current conditions	
	Value	Unit
Driver's Door Lock Knob Switch (UNLOCK)	B	B
Passenger's Door Lock Knob Switch (UNLOCK)	B	B
Driver's Door Key Cylinder Switch (LOCK)	B	B

Body Control Module

Signal	Current conditions	
	Value	Unit
Trunk Lid/Tailgate Switch	B	B
Passenger's Rear Door Lock Knob Sw. (UNLOCK)	B	B

Signal	Current conditions	
	Value	Unit
Driver's Rear Door Lock Knob Switch (UNLOCK)	B	B
Driver's Door Switch	B	B
Front Passenger's Door Switch	B	B
Driver's Rear Door Switch	B	B
Passenger's Rear Door Switch	B	B

Relay Control Module

Signal	Current conditions	
	Value	Unit
Security Hood Switch	B	B

Is each switch information value OK?

YES

Intermittent failure, the system is OK at this time.

NO

Power tailgate closer unit circuit troubleshooting: go to step 2.

NO

Tailgate latch switch circuit troubleshooting: go to step 9.

NO

Hood latch switch circuit troubleshooting: go to step 15.

NO

Driver's door lock knob switch circuit troubleshooting: go to step 21.

NO

Front passenger's door lock knob switch circuit troubleshooting: go to step 27.

NO

Left rear door lock knob switch circuit troubleshooting: go to step 33.

NO

Right rear door lock knob switch circuit troubleshooting: go to step 39.

NO

Driver's door switch circuit troubleshooting: go to step 45.

NO

Front passenger's door switch circuit troubleshooting: go to step 50.

NO

Left rear door switch circuit troubleshooting: go to step 55.

NO

Right rear door switch circuit troubleshooting: go to step 60.

NO

Driver's door key cylinder switch circuit troubleshooting: go to step 65.

2. Keyless/power door locks/security system check 1

   -1. With the power tailgate closed, check the parameter(s) below with the HDS.

Signal	Current conditions	
	Value	**Unit**
Trunk Lid/Tailgate Switch	B	B

Is information value ON?

YES

Go to step 3.

NO

Go to step 5.

3. Determine possible failure area (full latch switch, others)

   -1. Disconnect the following connector.

Power tailgate closer unit connector B (6P)

-2. Check the parameter(s) below with the HDS.

Signal	Current conditions	
	Value	**Unit**
Trunk Lid/Tailgate Switch	B	B

Is information value OFF?

YES

Faulty power tailgate full latch switch; **replace the power tailgate closer unit** .

NO

Go to step 4.

4. Shorted wire check (T/G_SW line)

   -1. Turn the vehicle to the OFF (LOCK) mode.

   -2. Disconnect the following connector.

Body control module connector D (40P)

-3. Measure the resistance between test points 1 and 2.

Test condition	Vehicle OFF (LOCK) mode Power tailgate closer unit connector B (6P): disconnected Body control module connector D (40P): disconnected
Test point 1	**Body control module connector D (40P) No. 27**
Test point 2	Body ground

Is there 1.0 MΩ or more?

YES

The T/G_SW wire is OK. Faulty body control module; **replace the body control module** .

NO

Repair a short to ground in the wire.

5. Keyless/power door locks/security system check 2

-1. Turn the vehicle to the OFF (LOCK) mode.

-2. Disconnect the following connector.

Power tailgate closer unit connector B (6P)

-3. Connect terminals A and B with a jumper wire.

Terminal A	Power tailgate closer unit connector B (6P) (female terminals) No. 1: ①
Terminal B	Body ground

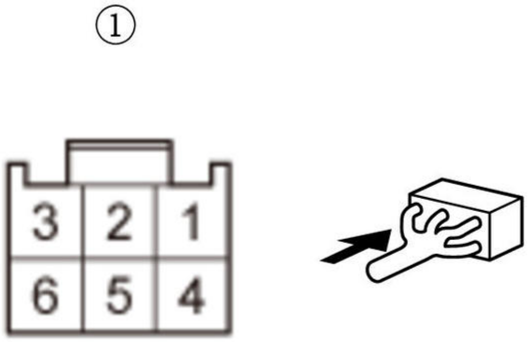

-4. Check the parameter(s) below with the HDS.

Signal	Current conditions	
	Value	Unit
Trunk Lid/Tailgate Switch	B	B

Is information value ON?

YES

Go to step 6.

NO

Go to step 8.

6. Open wire check (PTG/PTL_SEG3 line)

-1. Turn the vehicle to the OFF (LOCK) mode.

-2. Remove the jumper wire.

-3. Disconnect the following connector.

Power tailgate control unit connector A (24P)

-4. Measure the resistance between test points 1 and 2.

Test condition	Vehicle OFF (LOCK) mode Power tailgate closer unit connector B (6P): disconnected Power tailgate control unit connector A (24P): disconnected
Test point 1	Power tailgate closer unit connector B (6P) (female terminals) No. 2: ①
Test point 2	**Power tailgate control unit connector A (24P) No. 21**

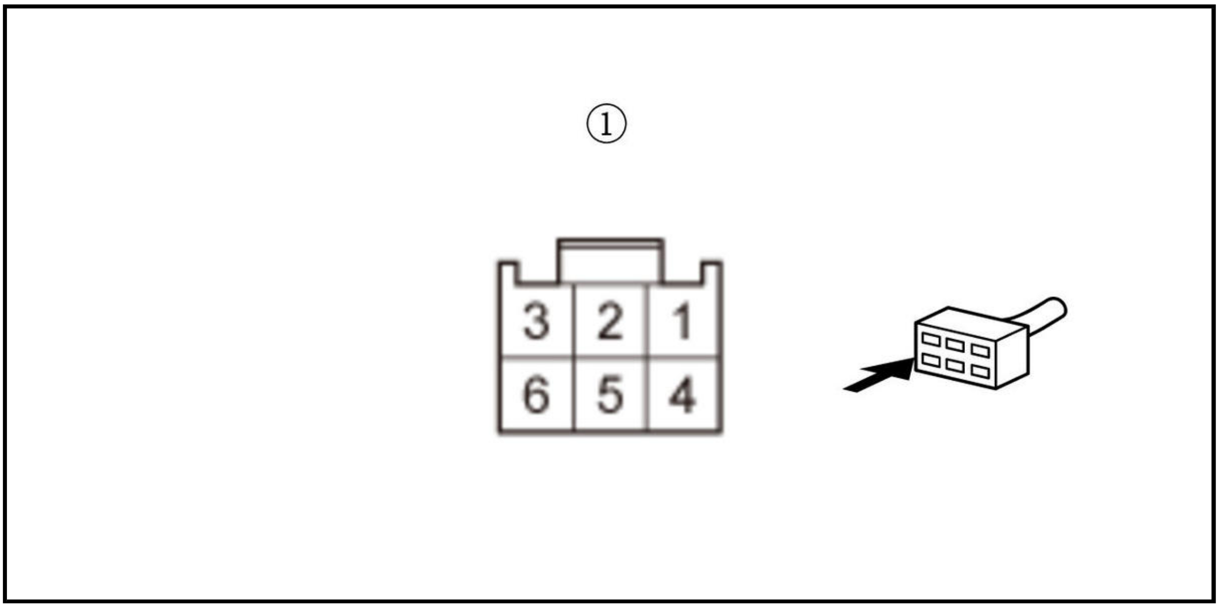

Is there 1.0 Ω or less?

YES

Go to step 7.

NO

Repair an open or high resistance in the wire.

7. Power Tailgate Latch/Ratchet Switch check

-1. Do the Power Tailgate Latch/Ratchet Switch test

Is the switch OK?

YES

Replace the power tailgate control unit .

NO

Replace the power tailgate closer unit .

8. Open wire check (T/G_SW line)

   -1. Turn the vehicle to the OFF (LOCK) mode.

   -2. Remove the jumper wire.

   -3. Connect terminals A and B with a jumper wire.

Terminal A	Body control module connector D (40P) No. 27
Terminal B	Body ground

   -4. Check the parameter(s) below with the HDS.

Signal	Current conditions	
	Value	**Unit**
Trunk Lid/Tailgate Switch	B	B

   Is information value ON?

   YES

   Repair an open or high resistance in the wire.

   NO

   The T/G_SW wire is OK. Faulty body control module; replace the body control module .

9. Keyless/power door locks/security system check 1

   -1. With the tailgate closed, check the parameter(s) below with the HDS.

Signal	Current conditions	
	Value	**Unit**
Trunk Lid/Tailgate Switch	B	B

   Is information value ON?

   YES

   Go to step 10.

   NO

   Go to step 12.

10. Determine possible failure area (tailgate latch switch, others)

   -1. Turn the vehicle to the OFF (LOCK) mode.

   -2. Disconnect the following connector.

Tailgate latch 4P connector

-3. Check the parameter(s) below with the HDS.

Signal	**Current conditions**	
	Value	**Unit**
Trunk Lid/Tailgate Switch	B	B

Is information value OFF?

YES

Faulty tailgate latch switch; **replace the tailgate latch** .

NO

Go to step 11.

11. Shorted wire check (T/G_SW line)

-1. Turn the vehicle to the OFF (LOCK) mode.

-2. Disconnect the following connector.

Body control module connector D (40P)

-3. Measure the resistance between test points 1 and 2.

Test condition	Vehicle OFF (LOCK) mode Body control module connector D (40P): disconnected Tailgate latch 4P connector: disconnected
Test point 1	**Body control module connector D (40P) No. 27**
Test point 2	Body ground

Is there 1.0 MΩ or more?

YES

The T/G_SW wire is OK. Faulty body control module; **replace the body control module** .

NO

Repair a short to ground in the wire.

12. Keyless/power door locks/security system check 2

-1. Turn the vehicle to the OFF (LOCK) mode.

-2. Disconnect the following connector.

Tailgate latch 4P connector

-3. Connect terminals A and B with a jumper wire.

Terminal A	Tailgate latch 4P connector (female terminals) No. 1: ①

Terminal B	Body ground

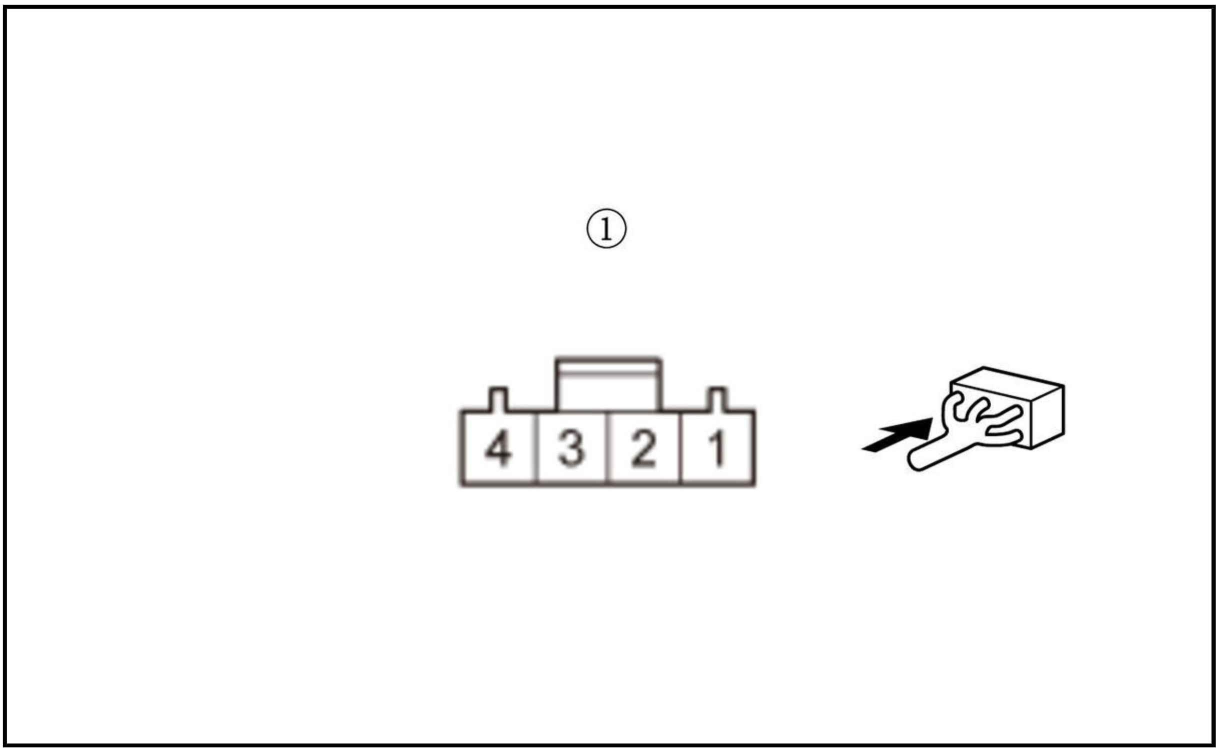

-4. Check the parameter(s) below with the HDS.

Signal	Current conditions	
	Value	**Unit**
Trunk Lid/Tailgate Switch	B	B

Is information value ON?

YES

Go to step 13.

NO

Go to step 14.

13. Open wire check (GND line)

-1. Turn the vehicle to the OFF (LOCK) mode.

-2. Remove the jumper wire.

-3. Measure the resistance between test points 1 and 2.

Test condition	Vehicle OFF (LOCK) mode Tailgate latch 4P connector: disconnected
Test point 1	Tailgate latch 4P connector (female terminals) No. 2: ①
Test point 2	Body ground

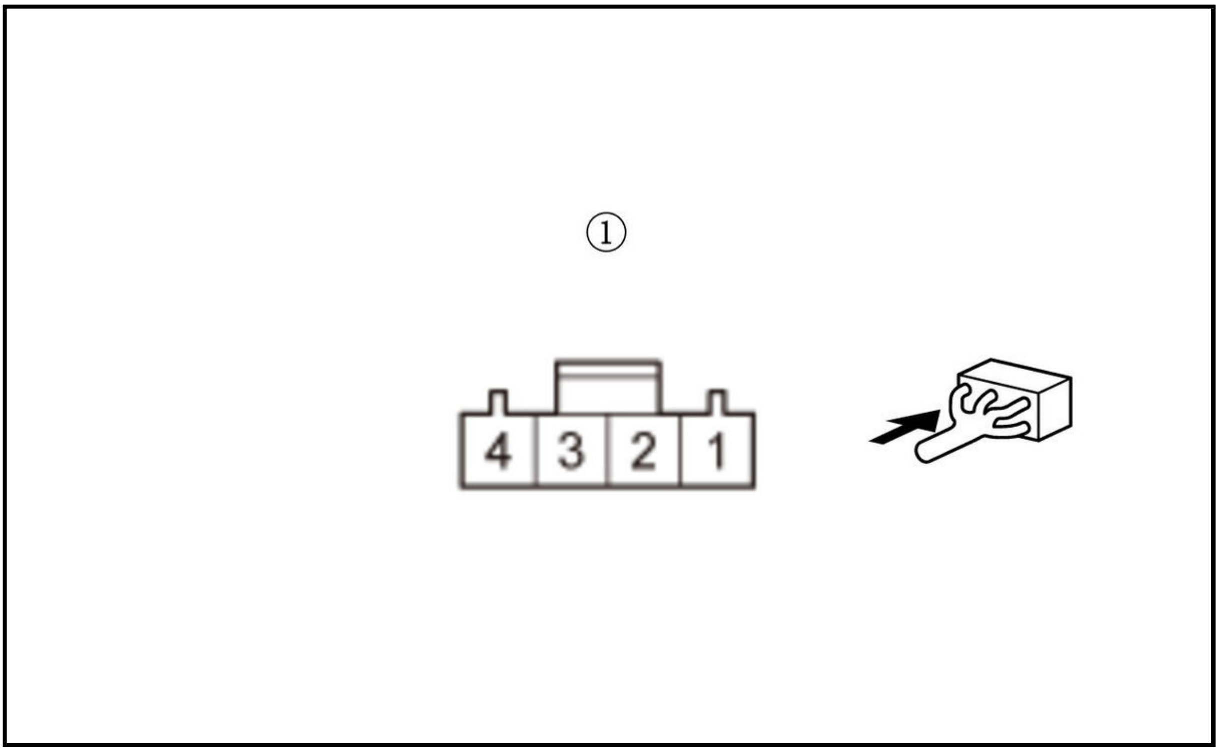

Is there 1.0 Ω or less?

YES

The GND wire is OK. Faulty tailgate latch switch; **replace the tailgate latch** .

NO

Repair an open or high resistance in the ground wire or poor ground (G505).

14. Open wire check (T/G_SW line)

-1. Remove the jumper wire.

-2. Connect terminals A and B with a jumper wire.

Terminal A	**Body control module connector D (40P) No. 27**
Terminal B	Body ground

-3. Check the parameter(s) below with the HDS.

Signal	**Current conditions**	
	Value	**Unit**
Trunk Lid/Tailgate Switch	B	B

Is information value ON?

YES

Repair an open or high resistance in the wire.

NO

The T/G_SW wire is OK. Faulty body control module; **replace the body control module** .

15. Keyless/power door locks/security system check 1

-1. With the hood opened, check the parameter(s) below with the HDS.

Signal	Current conditions	
	Value	**Unit**
Security Hood Switch	B	B

Is information value OFF?

YES

Go to step 16.

NO

Go to step 18.

16. Determine possible failure area (hood latch, others)

-1. Turn the vehicle to the OFF (LOCK) mode.

-2. Disconnect the following connector.

Hood latch switch 2P connector

-3. Check the parameter(s) below with the HDS.

Signal	Current conditions	
	Value	**Unit**
Security Hood Switch	B	B

Is information value ON?

YES

Faulty hood latch switch; replace the hood latch .

NO

Go to step 17.

17. Shorted wire check (HOOD_SW line)

-1. Turn the vehicle to the OFF (LOCK) mode.

-2. Disconnect the following connector.

Relay control module connector A (6P)

-3. Measure the resistance between test points 1 and 2.

Test condition	Vehicle OFF (LOCK) mode Relay control module connector A (6P): disconnected Hood latch switch 2P connector: disconnected

Test point 1	Relay control module connector A (6P) No. 5
Test point 2	Body ground

Is there 1.0 MΩ or more?

YES

The HOOD_SW wire is OK. Faulty relay control module; **replace the relay control module** .

NO

Repair a short to ground in the wire.

18. Keyless/power door locks/security system check 2

-1. Turn the vehicle to the OFF (LOCK) mode.

-2. Disconnect the following connector.

Hood latch switch 2P connector

-3. Connect terminals A and B with a jumper wire.

Terminal A	Hood latch switch 2P connector (female terminals) No. 1: ①
Terminal B	Body ground

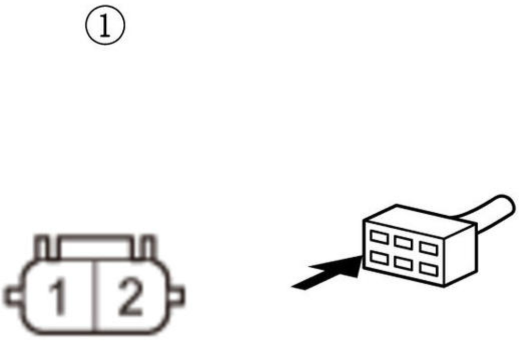

-4. Check the parameter(s) below with the HDS.

Signal	Current conditions	
	Value	Unit
Security Hood Switch	B	B

Is information value OFF?

YES

Go to step 19.

NO

Go to step 20.

19. Open wire check (GND line)

-1. Turn the vehicle to the OFF (LOCK) mode.

-2. Remove the jumper wire.

-3. Measure the resistance between test points 1 and 2.

Test condition	Vehicle OFF (LOCK) mode Hood latch switch 2P connector: disconnected
Test point 1	Hood latch switch 2P connector (female terminals) No. 2: ①
Test point 2	Body ground

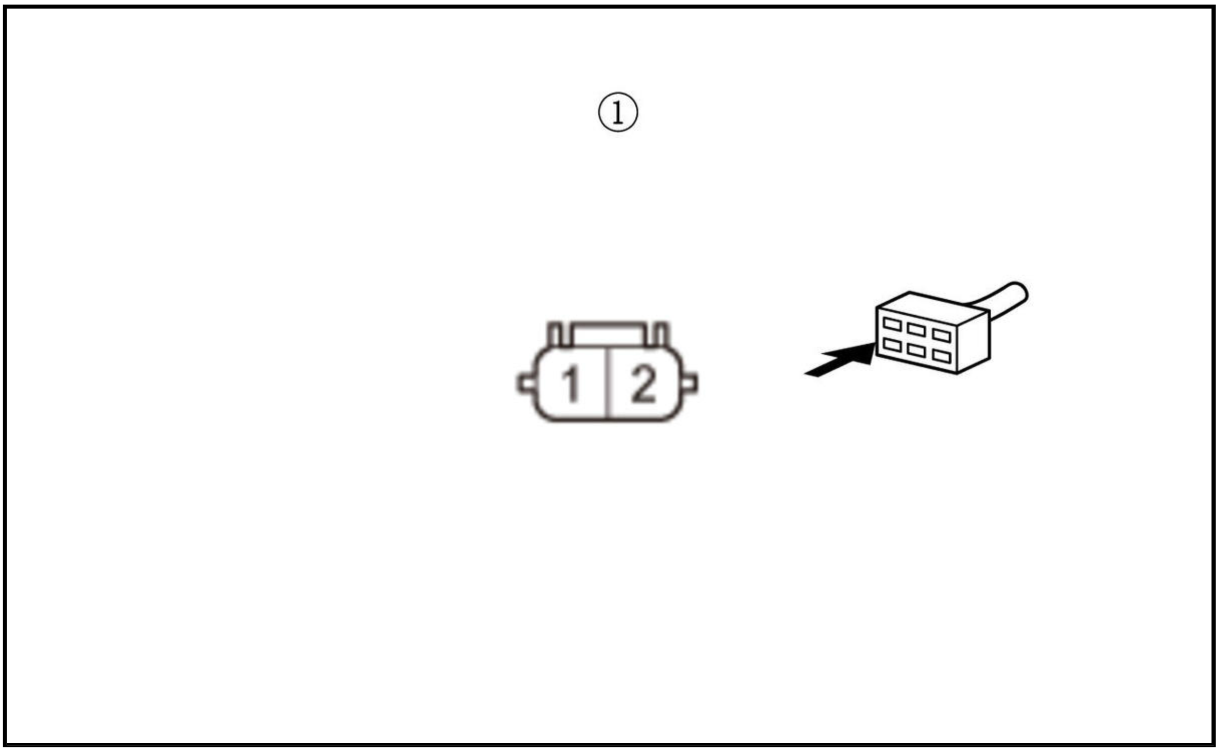

Is there 1.0 Ω or less?

YES

The GND wire is OK. Faulty hood latch switch; **replace the hood latch** .

NO

Repair an open or high resistance in the ground wire or poor ground (G251).

20. Open wire check (HOOD_SW line)

-1. Remove the jumper wire.

-2. Connect terminals A and B with a jumper wire.

Terminal A	**Relay control module connector A (6P) No. 5**
Terminal B	Body ground

-3. Check the parameter(s) below with the HDS.

Signal	Current conditions	
	Value	Unit
Security Hood Switch	B	B

Is information value OFF?

YES

Repair an open or high resistance in the wire.

NO

The HOOD_SW wire is OK. Faulty relay control module; **replace the relay control module** .

21. Keyless/power door locks/security system check 1

    -1. With the driver's door lock knob switch in LOCK position, check the parameter(s) below with the HDS.

Signal	Current conditions	
	Value	Unit
Driver's Door Lock Knob Switch (UNLOCK)	B	B

    Is information value ON?

    YES

    Go to step 22.

    NO

    Go to step 24.

22. Determine possible failure area (driver's door latch, others)

    -1. Turn the vehicle to the OFF (LOCK) mode.

    -2. Disconnect the following connector.

Driver's door latch 10P connector

    -3. Check the parameter(s) below with the HDS.

Signal	Current conditions	
	Value	Unit
Driver's Door Lock Knob Switch (UNLOCK)	B	B

    Is information value OFF?

    YES

    Faulty driver's door lock knob switch; **replace the driver's door latch** .

    NO

    Go to step 23.

23. Shorted wire check (DR_SILCON_UNLOCK line)

-1. Turn the vehicle to the OFF (LOCK) mode.

-2. Disconnect the following connector.

Power window master switch 37P connector

-3. Measure the resistance between test points 1 and 2.

Test condition	Vehicle OFF (LOCK) mode Power window master switch 37P connector: disconnected Driver's door latch 10P connector: disconnected
Test point 1	**Power window master switch 37P connector No. 20**
Test point 2	Body ground

Is there 1.0 MΩ or more?

YES

The DR_SILCON_UNLOCK wire is OK. **Replace the power window master switch** .

NO

Repair a short to ground in the wire.

24. Keyless/power door locks/security system check 2

-1. Turn the vehicle to the OFF (LOCK) mode.

-2. Disconnect the following connector.

Driver's door latch 10P connector

-3. Connect terminals A and B with a jumper wire.

Terminal A	Driver's door latch 10P connector (female terminals) No. 5: ①
Terminal B	Body ground

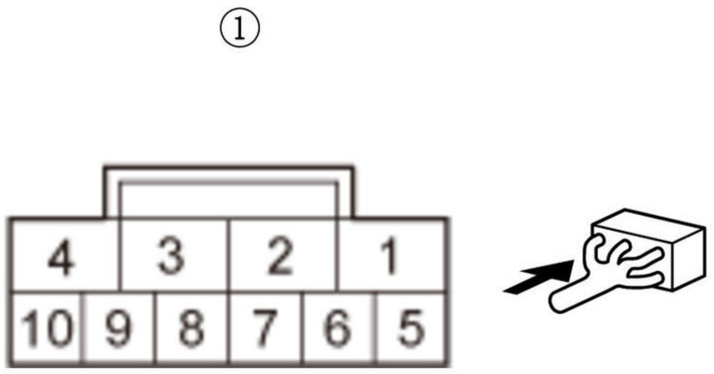

-4. Check the parameter(s) below with the HDS.

Signal	Current conditions	
	Value	**Unit**
Driver's Door Lock Knob Switch (UNLOCK)	B	B

Is information value ON?

YES

Go to step 25.

NO

Go to step 26.

25. Open wire check (GND line)

-1. Turn the vehicle to the OFF (LOCK) mode.

-2. Remove the jumper wire.

-3. Measure the resistance between test points 1 and 2.

Test condition	Vehicle OFF (LOCK) mode Driver's door latch 10P connector: disconnected
Test point 1	Driver's door latch 10P connector (female terminals) No. 7: ①
Test point 2	Body ground

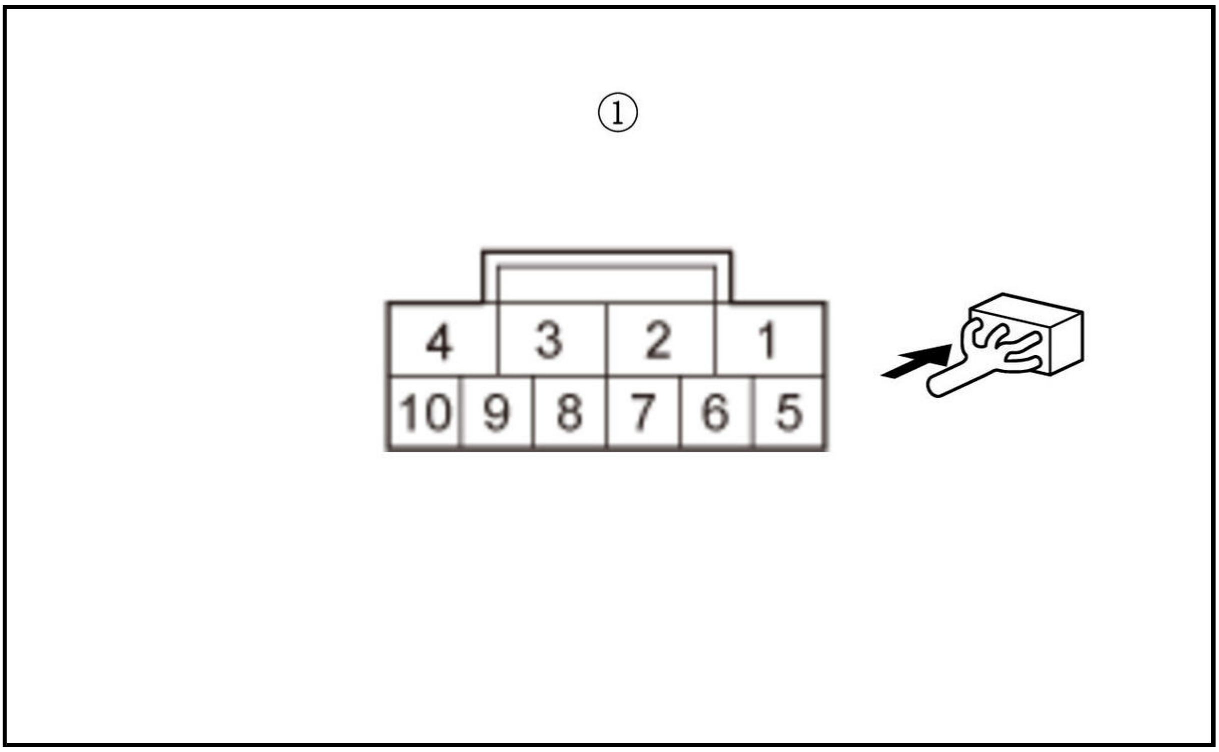

Is there 1.0 Ω or less?

YES

The GND wire is OK. Faulty driver's door lock knob switch; **replace the driver's door latch** .

NO

Repair an open or high resistance in the ground wire or poor ground (G401).

26. Open wire check (DR_SILCON_UNLOCK line)

-1. Remove the jumper wire.

-2. Connect terminals A and B with a jumper wire.

Terminal A	**Power window master switch 37P connector No. 20**
Terminal B	Body ground

-3. Check the parameter(s) below with the HDS.

Signal	Current conditions	
	Value	**Unit**
Driver's Door Lock Knob Switch (UNLOCK)	B	B

Is information value ON?

YES

Repair an open or high resistance in the wire.

NO

The DR_SILCON_UNLOCK wire is OK. **Replace the power window master switch** .

27. Keyless/power door locks/security system check 1

-1. With the front passenger's door lock knob switch in LOCK position, check the parameter(s) below with the HDS.

Signal	Current conditions	
	Value	**Unit**
Passenger's Door Lock Knob Switch (UNLOCK)	B	B

Is information value ON?

YES

Go to step 28.

NO

Go to step 30.

28. Determine possible failure area (front passenger's door latch, others)

-1. Turn the vehicle to the OFF (LOCK) mode.

-2. Disconnect the following connector.

Front passenger's door latch 10P connector

-3. Check the parameter(s) below with the HDS.

Signal	Current conditions	
	Value	Unit
Passenger's Door Lock Knob Switch (UNLOCK)	B	B

Is information value OFF?

YES

Faulty front passenger's door lock knob switch; **replace the front passenger's door latch** .

NO

Go to step 29.

29. Shorted wire check (AS_SILCON_UNLOCK line)

-1. Turn the vehicle to the OFF (LOCK) mode.

-2. Disconnect the following connector.

Front passenger's power window switch 37P connector

-3. Measure the resistance between test points 1 and 2.

Test condition	Vehicle OFF (LOCK) mode Front passenger's power window switch 37P connector: disconnected Front passenger's door latch 10P connector: disconnected
Test point 1	**Front passenger's power window switch 37P connector No. 36**
Test point 2	Body ground

Is there 1.0 MΩ or more?

YES

The AS_SILCON_UNLOCK wire is OK. **Replace the front passenger's power window switch** .

NO

Repair a short to ground in the wire.

30. Keyless/power door locks/security system check 2

-1. Turn the vehicle to the OFF (LOCK) mode.

-2. Disconnect the following connector.

Front passenger's door latch 10P connector

-3. Connect terminals A and B with a jumper wire.

Terminal A	Front passenger's door latch 10P connector (female terminals) No. 10: ①
Terminal B	Body ground

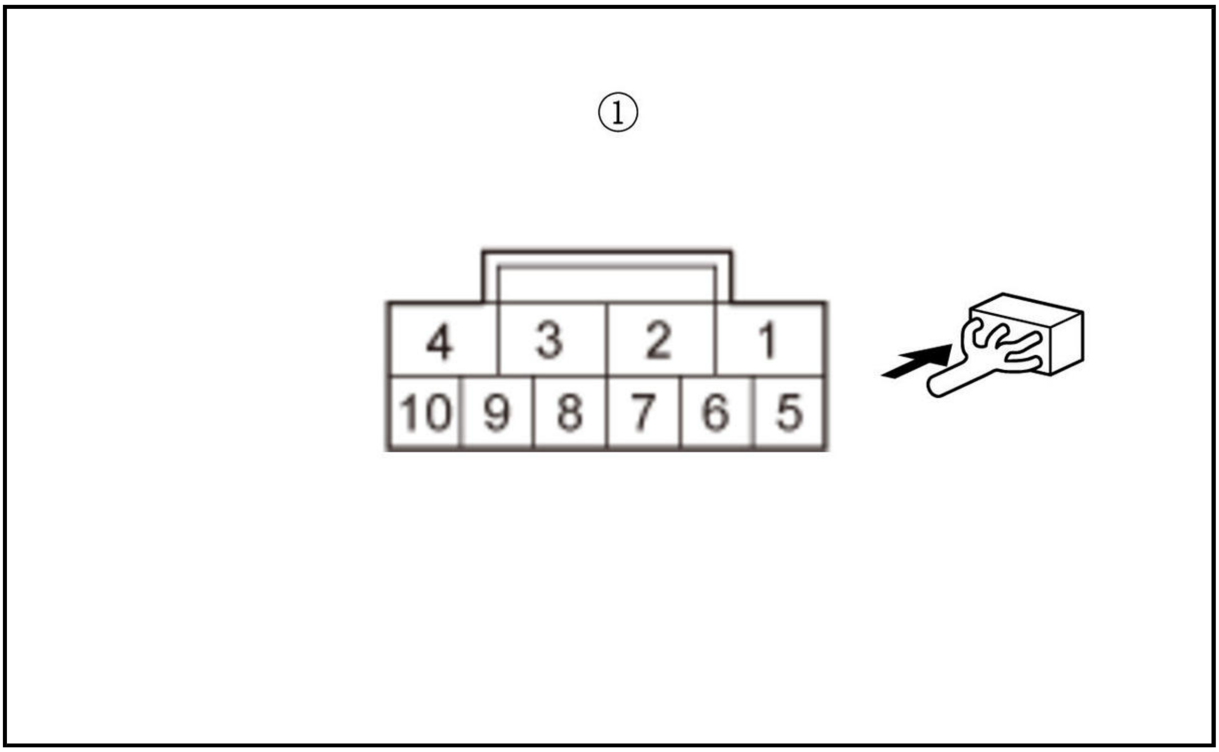

-4. Check the parameter(s) below with the HDS.

Signal	Current conditions	
	Value	Unit
Passenger's Door Lock Knob Switch (UNLOCK)	B	B

Is information value ON?

YES

Go to step 31.

NO

Go to step 32.

31. Open wire check (GND line)

-1. Turn the vehicle to the OFF (LOCK) mode.

-2. Remove the jumper wire.

-3. Measure the resistance between test points 1 and 2.

Test condition	Vehicle OFF (LOCK) mode Front passenger's door latch 10P connector: disconnected
Test point 1	Front passenger's door latch 10P connector (female terminals) No. 8: ①
Test point 2	Body ground

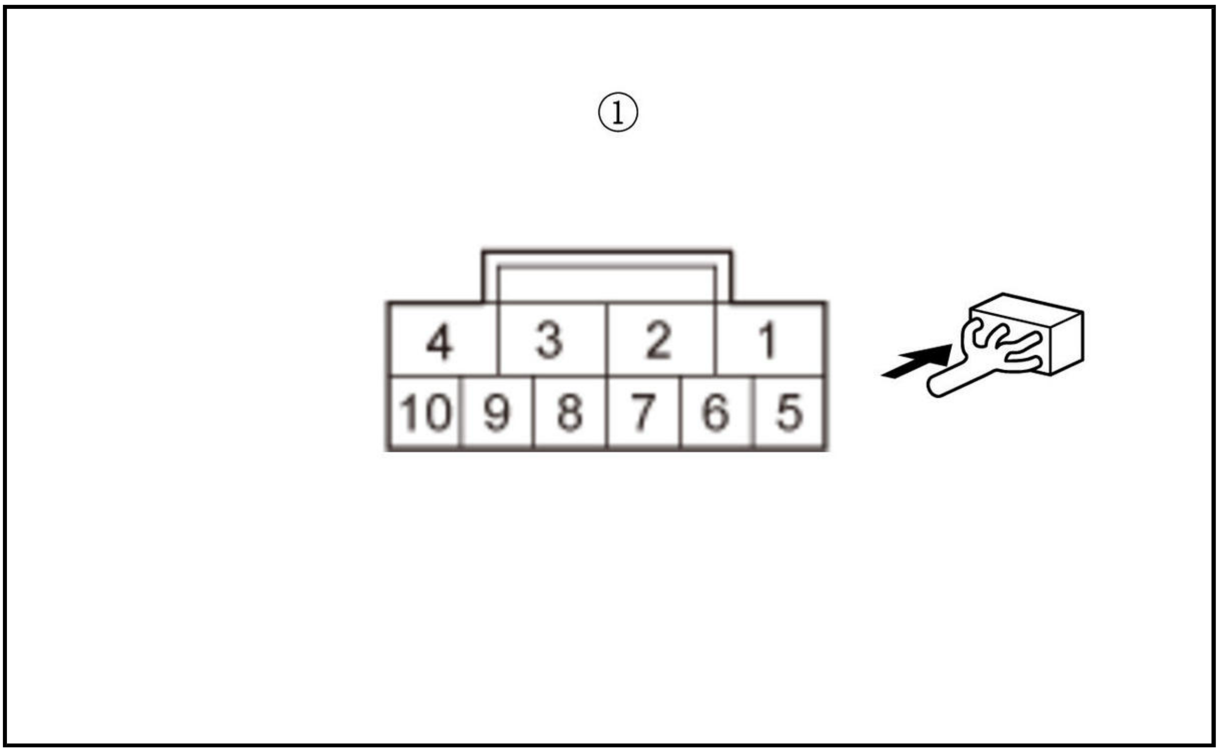

Is there 1.0 Ω or less?

YES

The GND wire is OK. Faulty front passenger's door lock knob switch; **replace the front passenger's door latch** .

NO

Repair an open or high resistance in the ground wire or poor ground (G401).

32. Open wire check (AS_SILCON_UNLOCK line)

-1. Remove the jumper wire.

-2. Connect terminals A and B with a jumper wire.

Terminal A	**Front passenger's power window switch 37P connector No. 36**
Terminal B	Body ground

-3. Check the parameter(s) below with the HDS.

Signal	**Current conditions**	
	Value	**Unit**
Passenger's Door Lock Knob Switch (UNLOCK)	B	B

Is information value ON?

YES

Repair an open or high resistance in the wire.

NO

The AS_SILCON_UNLOCK wire is OK. **Replace the front passenger's power window switch** .

33. Keyless/power door locks/security system check 1

-1. With the left rear door lock knob switch in LOCK position, check the parameter(s) below with the HDS.

Signal	Current conditions	
	Value	**Unit**
Driver's Rear Door Lock Knob Switch (UNLOCK)	B	B

Is information indicator ON?

YES

Go to step 34.

NO

Go to step 36.

34. Determine possible failure area (left rear door latch, others)

-1. Turn the vehicle to the OFF (LOCK) mode.

-2. Disconnect the following connector.

Left rear door latch 10P connector

-3. Check the parameter(s) below with the HDS.

Signal	Current conditions	
	Value	**Unit**
Driver's Rear Door Lock Knob Switch (UNLOCK)	B	B

Is information indicator OFF?

YES

Faulty left rear door lock knob switch; **replace the left rear door latch** .

NO

Go to step 35.

35. Shorted wire check (RR_L_SILCON_UNLOCK line)

-1. Turn the vehicle to the OFF (LOCK) mode.

-2. Disconnect the following connector.

Body control module connector C (28P)

-3. Measure the resistance between test points 1 and 2.

Test condition	Vehicle OFF (LOCK) mode Body control module connector C (28P): disconnected Left rear door latch 10P connector: disconnected
Test point 1	**Body control module connector C (28P) No. 15**
Test point 2	Body ground

Is there 1.0 MΩ or more?

YES

The RR_L_SILCON_UNLOCK wire is OK. Faulty body control module; **replace the body control module** .

NO

Repair a short to ground in the wire.

36. Keyless/power door locks/security system check 2

-1. Turn the vehicle to the OFF (LOCK) mode.

-2. Disconnect the following connector.

Left rear door latch 10P connector

-3. Connect terminals A and B with a jumper wire.

Terminal A	Left rear door latch 10P connector (female terminals) No. 9: ①
Terminal B	Body ground

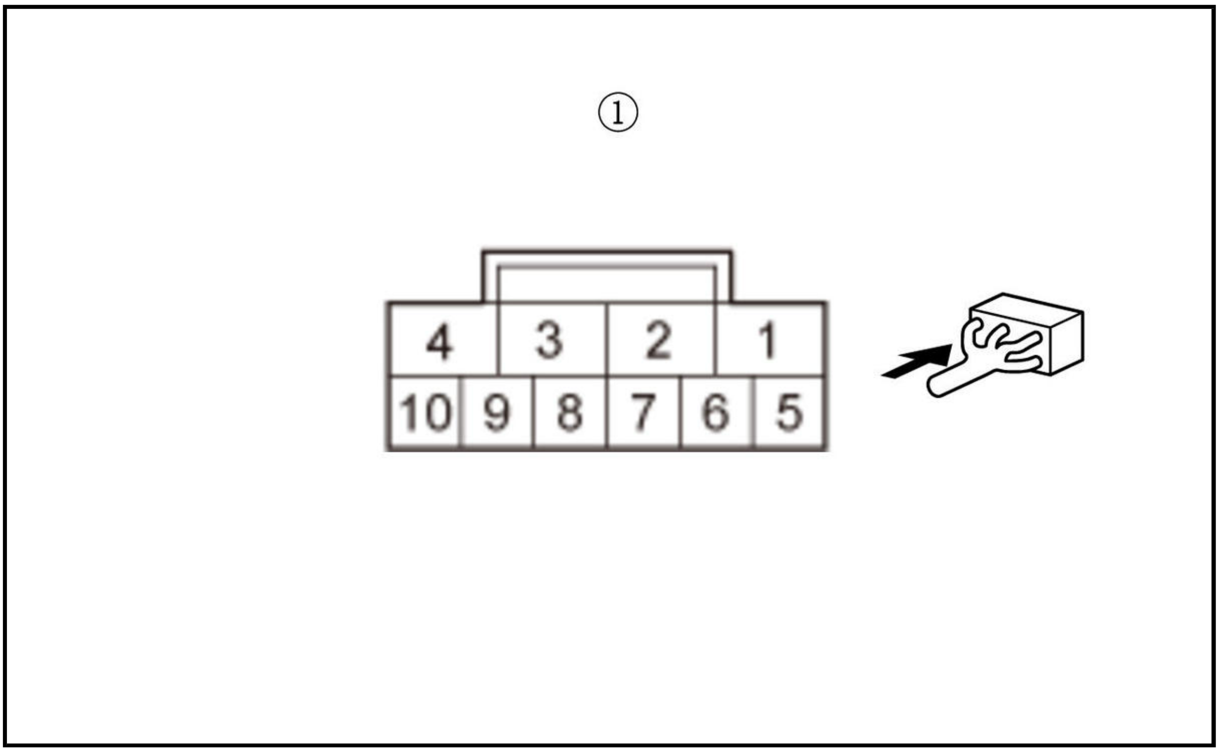

-4. Check the parameter(s) below with the HDS.

Signal	Current conditions	
	Value	Unit
Driver's Rear Door Lock Knob Switch (UNLOCK)	B	B

Is information value ON?

YES

Go to step 37.

NO

Go to step 38.

37. Open wire check (GND line)

-1. Turn the vehicle to the OFF (LOCK) mode.

-2. Remove the jumper wire.

-3. Measure the resistance between test points 1 and 2.

Test condition	Vehicle OFF (LOCK) mode Left rear door latch 10P connector: disconnected
Test point 1	Left rear door latch 10P connector (female terminals) No. 6: ①
Test point 2	Body ground

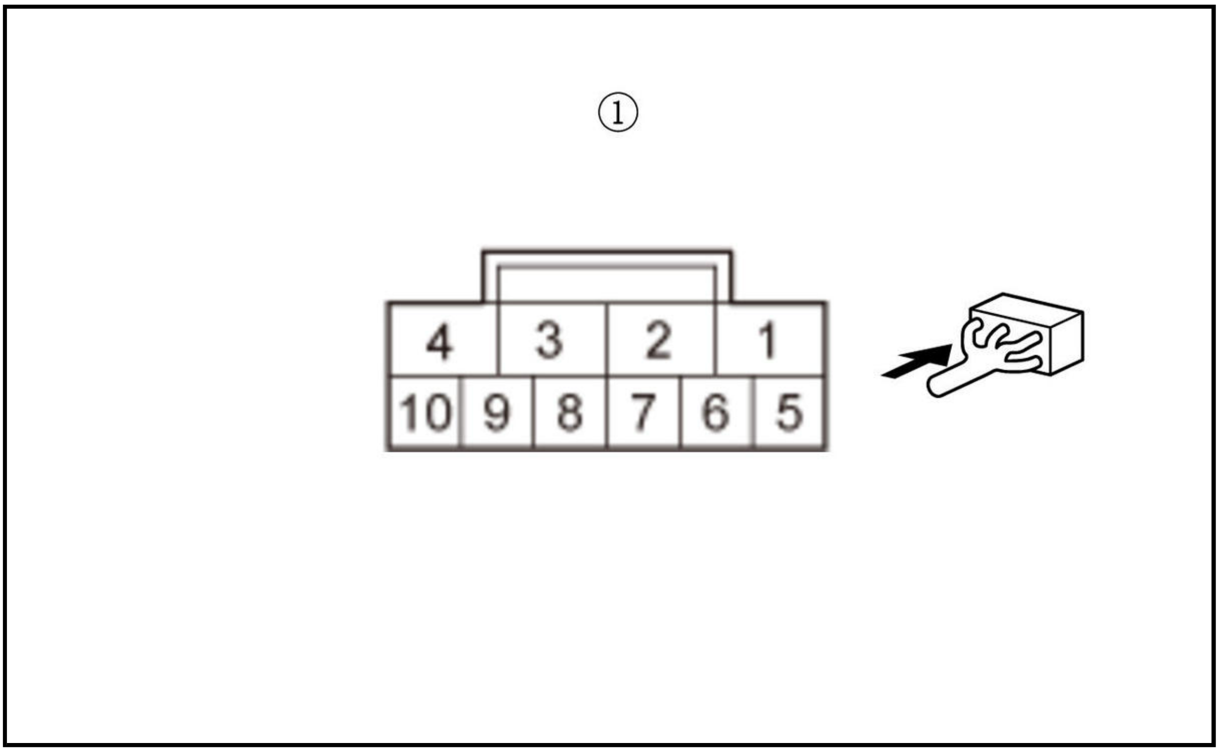

Is there 1.0 Ω or less?

YES

The GND wire is OK. Faulty left rear door lock knob switch; replace the left rear door latch .

NO

Repair an open or high resistance in the ground wire or poor ground (G501).

38. Open wire check (RR_L_SILCON_UNLOCK line)

-1. Remove the jumper wire.

-2. Connect terminals A and B with a jumper wire.

Terminal A	**Body control module connector C (28P) No. 15**
Terminal B	Body ground

-3. Check the parameter(s) below with the HDS.

Signal	**Current conditions**	
	Value	**Unit**
Driver's Rear Door Lock Knob Switch (UNLOCK)	B	B

Is information value ON?

YES

Repair an open or high resistance in the wire.

NO

The RR_L_SILCON_UNLOCK wire is OK. Faulty body control module; **replace the body control module** .

39. Keyless/power door locks/security system check 1

    -1. With the right rear door lock knob switch in LOCK position, check the parameter(s) below with the HDS.

Signal	**Current conditions**	
	Value	**Unit**
Driver's Rear Door Lock Knob Switch (UNLOCK)	B	B

    Is information value ON?

    YES

    Go to step 40.

    NO

    Go to step 42.

40. Determine possible failure area (right rear door latch, others)

    -1. Turn the vehicle to the OFF (LOCK) mode.

    -2. Disconnect the following connector.

Right rear door latch 10P connector

    -3. Check the parameter(s) below with the HDS.

Signal	**Current conditions**	
	Value	**Unit**
Passenger's Rear Door Lock Knob Sw. (UNLOCK)	B	B

    Is information value OFF?

    YES

    Faulty right rear door lock knob switch; **replace the right rear door latch** .

    NO

    Go to step 41.

41. Shorted wire check (RR_R_SILCON_UNLOCK line)

-1. Turn the vehicle to the OFF (LOCK) mode.

-2. Disconnect the following connector.

Body control module connector C (28P)

-3. Measure the resistance between test points 1 and 2.

Test condition	Vehicle OFF (LOCK) mode Body control module connector C (28P): disconnected Right rear door latch 10P connector: disconnected
Test point 1	**Body control module connector C (28P) No. 16**
Test point 2	Body ground

Is there 1.0 MΩ or more?

YES

The RR_R_SILCON_UNLOCK wire is OK. Faulty body control module; **replace the body control module** .

NO

Repair a short to ground in the wire.

42. Keyless/power door locks/security system check 2

-1. Turn the vehicle to the OFF (LOCK) mode.

-2. Disconnect the following connector.

Right rear door latch 10P connector

-3. Connect terminals A and B with a jumper wire.

Terminal A	Right rear door latch 10P connector (female terminals) No. 6: ①
Terminal B	Body ground

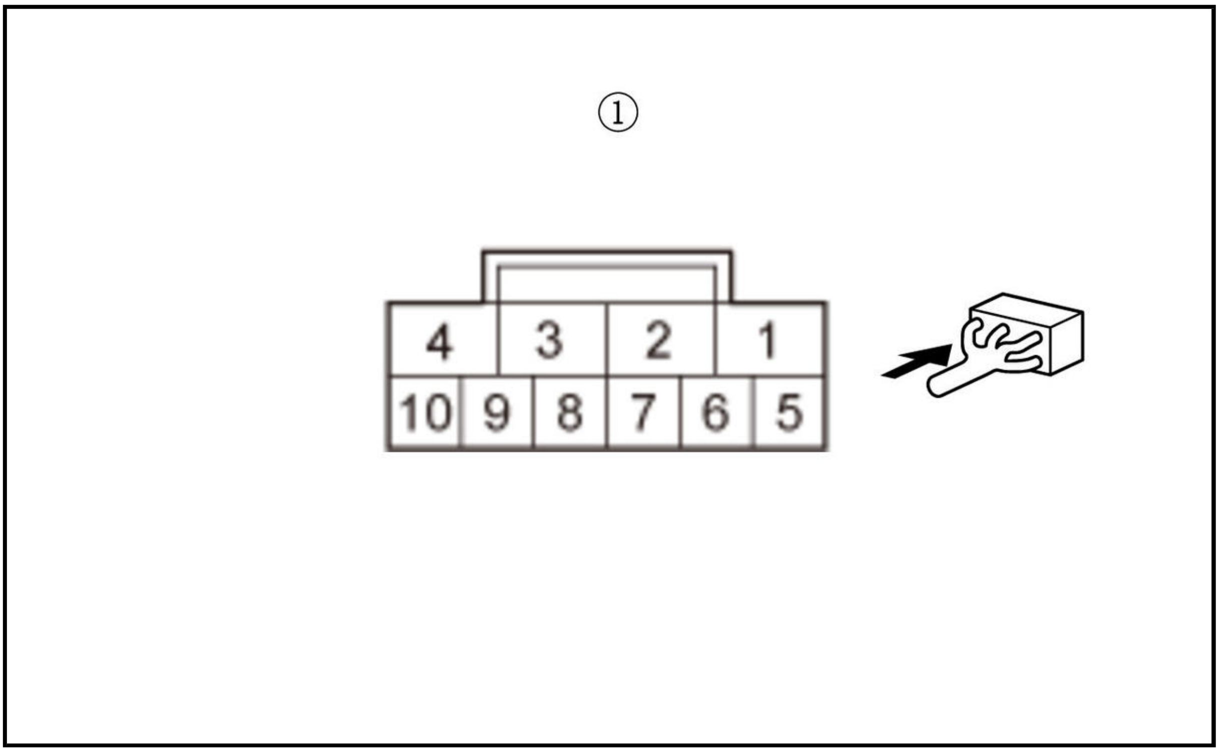

-4. Check the parameter(s) below with the HDS.

Signal	Current conditions	
	Value	**Unit**
Passenger's Rear Door Lock Knob Sw. (UNLOCK)	B	B

Is information value ON?

YES

Go to step 43.

NO

Go to step 44.

43. Open wire check (GND line)

-1. Turn the vehicle to the OFF (LOCK) mode.

-2. Remove the jumper wire.

-3. Measure the resistance between test points 1 and 2.

Test condition	Vehicle OFF (LOCK) mode Right rear door latch 10P connector: disconnected
Test point 1	Right rear door latch 10P connector (female terminals) No. 9: ①
Test point 2	Body ground

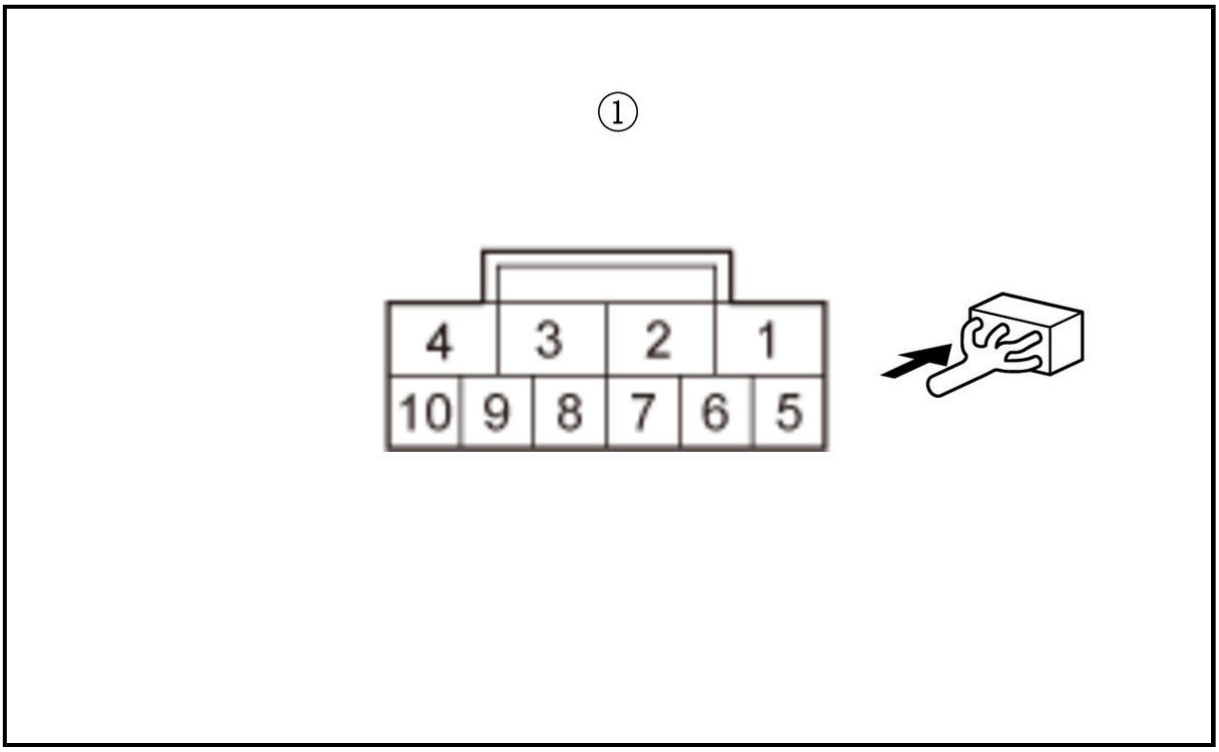

Is there 1.0 Ω or less?

YES

The GND wire is OK. Faulty right rear door lock knob switch; **replace the right rear door latch** .

NO

Repair an open or high resistance in the ground wire or poor ground (G502).

44. Open wire check (RR_R_SILCON_UNLOCK line)

-1. Remove the jumper wire.

-2. Connect terminals A and B with a jumper wire.

Terminal A	**Body control module connector C (28P) No. 16**
Terminal B	Body ground

-3. Check the parameter(s) below with the HDS.

Signal	**Current conditions**	
	Value	**Unit**
Passenger's Rear Door Lock Knob Sw. (UNLOCK)	B	B

Is information value ON?

YES

Repair an open or high resistance in the wire.

NO

The RR_R_SILCON_UNLOCK wire is OK. Faulty body control module; **replace the body control module** .

45. Keyless/power door locks/security system check

-1. With the driver's door closed, check the parameter(s) below with the HDS.

Signal	Current conditions	
	Value	**Unit**
Driver's Door Switch	B	B

Is information value ON?

YES

Go to step 46.

NO

Go to step 48.

46. Driver's door switch operation check

-1. Turn the vehicle to the OFF (LOCK) mode.

-2. Remove the driver's door switch.

-3. Disconnect the following connector.

Driver's door switch 1P connector

-4. Measure the resistance between test points 1 and 2.

Test point 1	Driver's door switch 1P connector: ①
Test point 2	Switch ground: ②

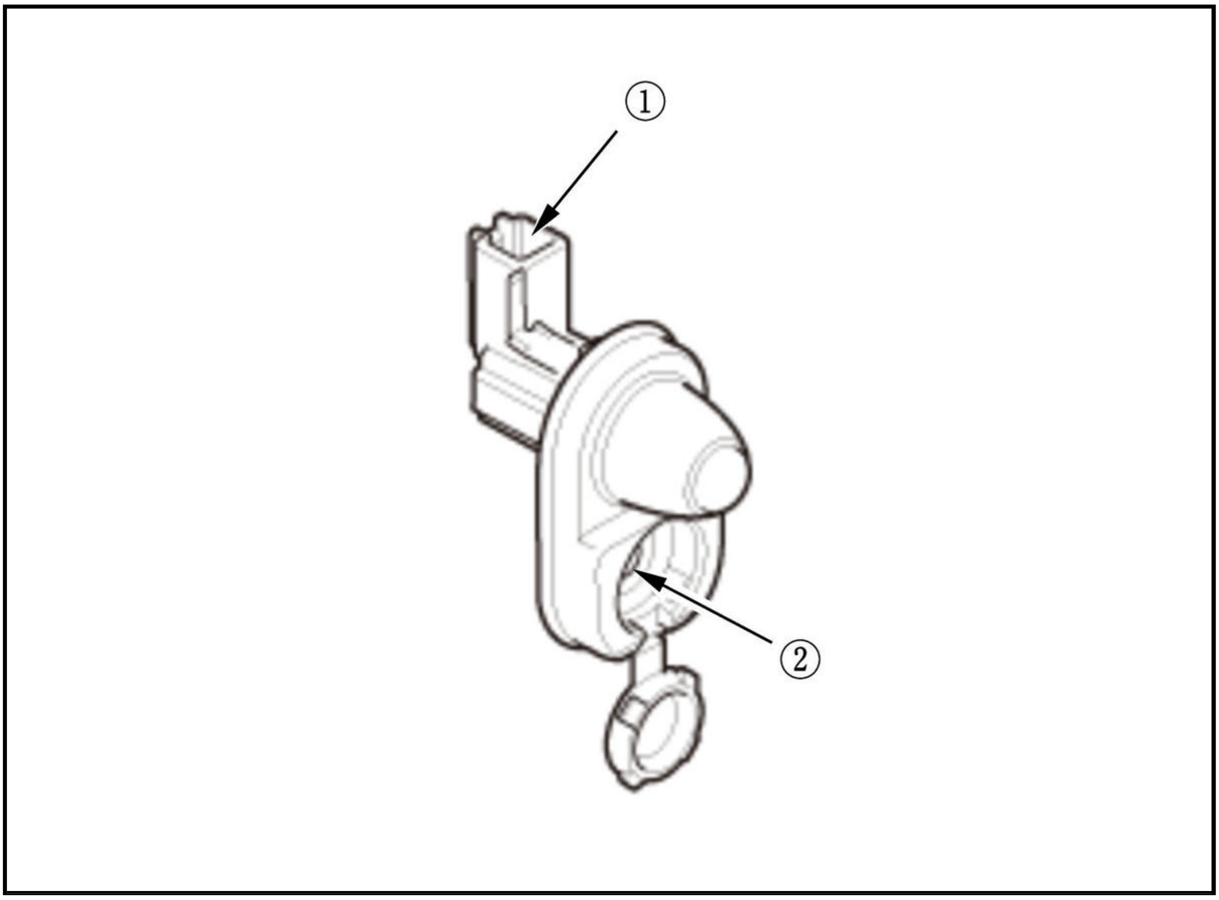

Is there 1.0 MΩ or more when you press the switch and is there 1.0 Ω or less when you release the switch?

YES

Go to step 47.

NO

Replace the driver's door switch.

47. Shorted wire check (FL_DOOR_SW line)

-1. Disconnect the following connector.

Body control module connector D (40P)

-2. Measure the resistance between test points 1 and 2.

Test condition	Vehicle OFF (LOCK) mode Body control module connector D (40P): disconnected Driver's door switch 1P connector: disconnected
Test point 1	**Body control module connector D (40P) No. 22**
Test point 2	Body ground

Is there 1.0 MΩ or more?

YES

The FL_DOOR_SW wire is OK. Faulty body control module; **replace the body control module** .

NO

Repair a short to ground in the wire.

48. Driver's door switch operation check

-1. Turn the vehicle to the OFF (LOCK) mode.

-2. Remove the driver's door switch.

-3. Disconnect the following connector.

Driver's door switch 1P connector

-4. Measure the resistance between test points 1 and 2.

Test point 1	Driver's door switch 1P connector: ①
Test point 2	Switch ground: ②

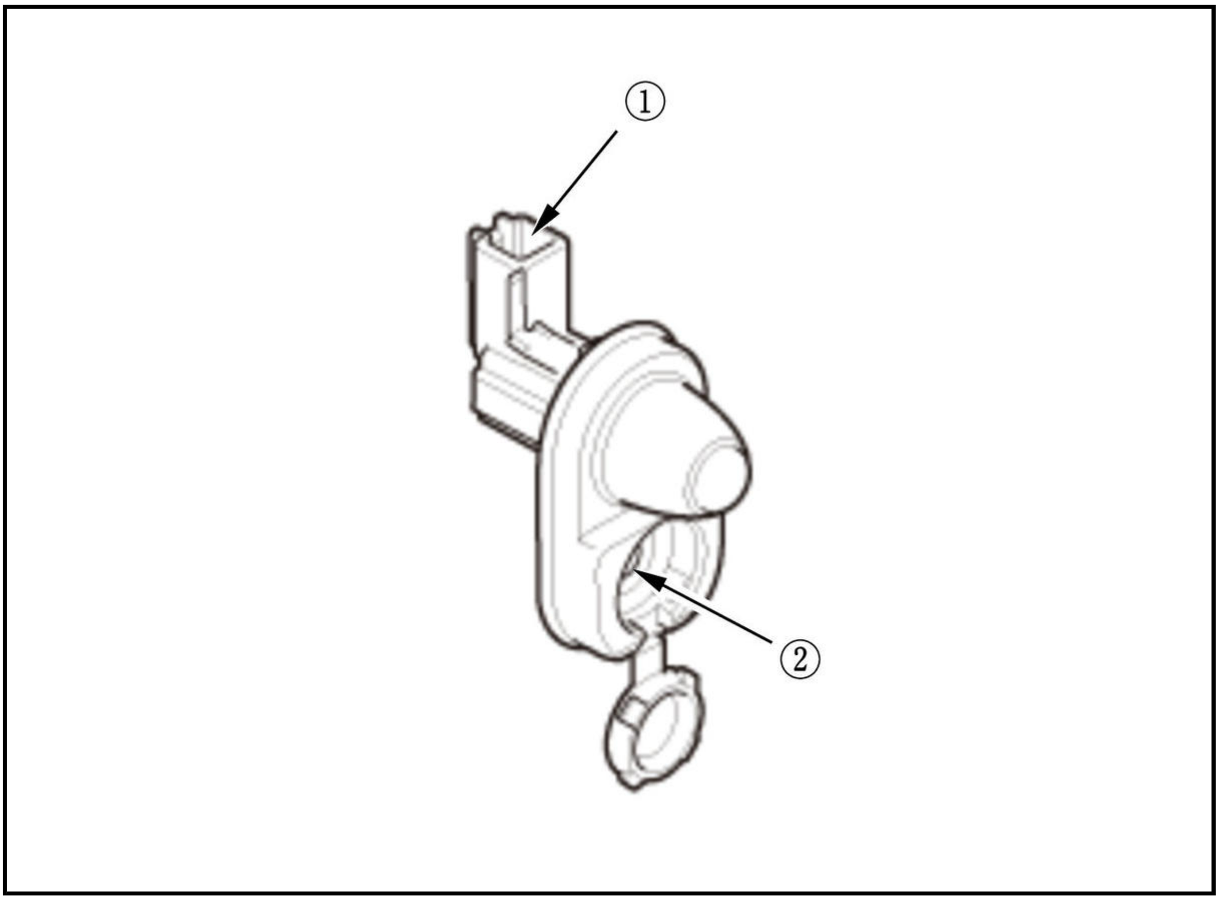

Is there 1.0 MΩ or more when you press the switch and is there 1.0 Ω or less when you release the switch?

YES

Go to step 49.

NO

Replace the driver's door switch.

49. Open wire check (FL_DOOR_SW line)

-1. Connect terminals A and B with a jumper wire.

Terminal A	**Body control module connector D (40P) No. 22**
Terminal B	Body ground

-2. Check the parameter(s) below with the HDS.

Signal	**Current conditions**	
	Value	**Unit**
Driver's Door Switch	B	B

Is information value ON?

YES

Repair an open or high resistance in the wire.

NO

The FL_DOOR_SW wire is OK. Faulty body control module; **replace the body control module** .

50. Keyless/power door locks/security system check

-1. With the front passenger's door closed, check the parameter(s) below with the HDS.

Signal	Current conditions	
	Value	Unit
Front Passenger's Door Switch	B	B

Is information value ON?

YES

Go to step 51.

NO

Go to step 53.

51. Front passenger's door switch operation check

-1. Turn the vehicle to the OFF (LOCK) mode.

-2. Remove the front passenger's door switch.

-3. Disconnect the following connector.

Front passenger's door switch 1P connector

-4. Measure the resistance between test points 1 and 2.

Test point 1	Front passenger's door switch 1P connector: ①
Test point 2	Switch ground: ②

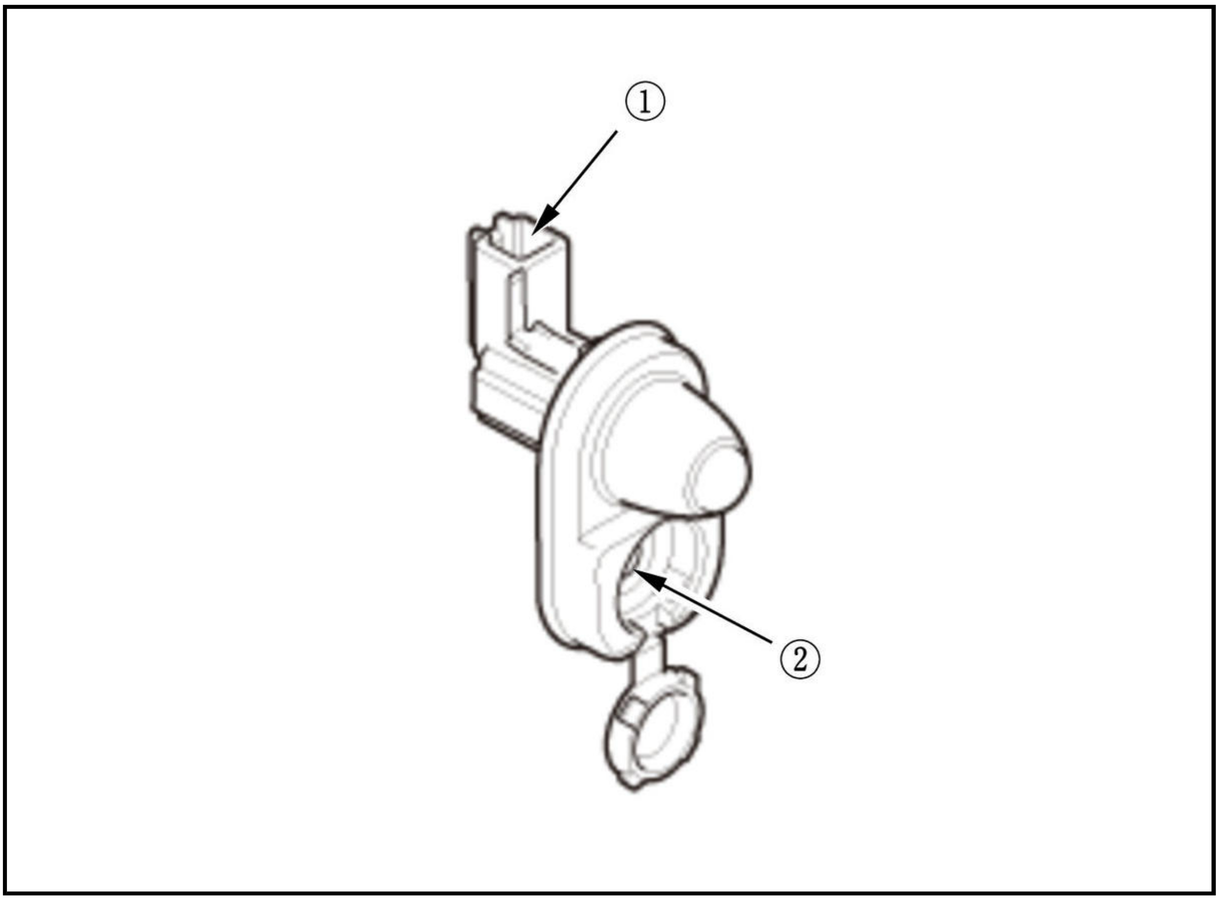

Is there 1.0 MΩ or more when you press the switch and is there 1.0 Ω or less when you release the switch?

YES

Go to step 52.

NO

Replace the front passenger's door switch.

52. Shorted wire check (FR_DOOR_SW line)

-1. Disconnect the following connector.

Body control module connector D (40P)

-2. Measure the resistance between test points 1 and 2.

Test condition	Vehicle OFF (LOCK) mode Body control module connector D (40P): disconnected Front passenger's door switch 1P connector: disconnected
Test point 1	**Body control module connector D (40P) No. 23**
Test point 2	Body ground

Is there 1.0 MΩ or more?

YES

The FR_DOOR_SW wire is OK. Faulty body control module; **replace the body control module** .

NO

Repair a short to ground in the wire.

53. Front passenger's door switch operation check

-1. Turn the vehicle to the OFF (LOCK) mode.

-2. Remove the front passenger's door switch.

-3. Disconnect the following connector.

Front passenger's door switch 1P connector

-4. Measure the resistance between test points 1 and 2.

Test point 1	Front passenger's door switch 1P connector: ①
Test point 2	Switch ground: ②

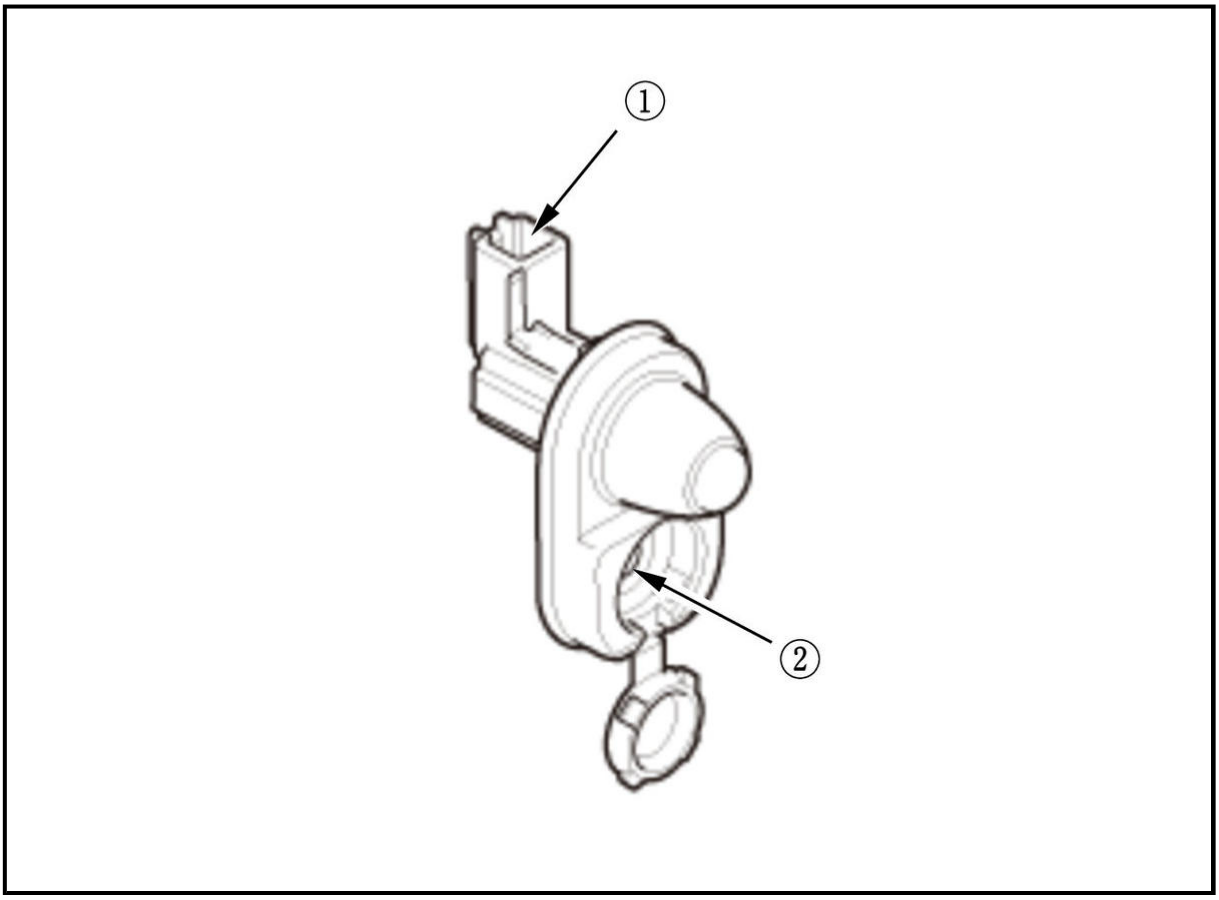

Is there 1.0 MΩ or more when you press the switch and is there 1.0 Ω or less when you release the switch?

YES

Go to step 54.

NO

Replace the front passenger's door switch.

54. Open wire check (FR_DOOR_SW line)

-1. Connect terminals A and B with a jumper wire.

Terminal A	Body control module connector D (40P) No. 23
Terminal B	Body ground

-2. Check the parameter(s) below with the HDS.

Signal	Current conditions	
	Value	Unit
Front Passenger's Door Switch	B	B

Is information value ON?

YES

Repair an open or high resistance in the wire.

NO

The FR_DOOR_SW wire is OK. Faulty body control module; replace the body control module .

55. Keyless/power door locks/security system check

-1. With the left rear door closed, check the parameter(s) below with the HDS.

Signal	Current conditions	
	Value	Unit
Driver's Rear Door Switch	B	B

Is information value ON?

YES

Go to step 56.

NO

Go to step 58.

56. Left rear door switch operation check

-1. Turn the vehicle to the OFF (LOCK) mode.

-2. Remove the left rear door switch.

-3. Disconnect the following connector.

Left rear door switch 1P connector

-4. Measure the resistance between test points 1 and 2.

Test point 1	Left rear door switch 1P connector: ①
Test point 2	Switch ground: ②

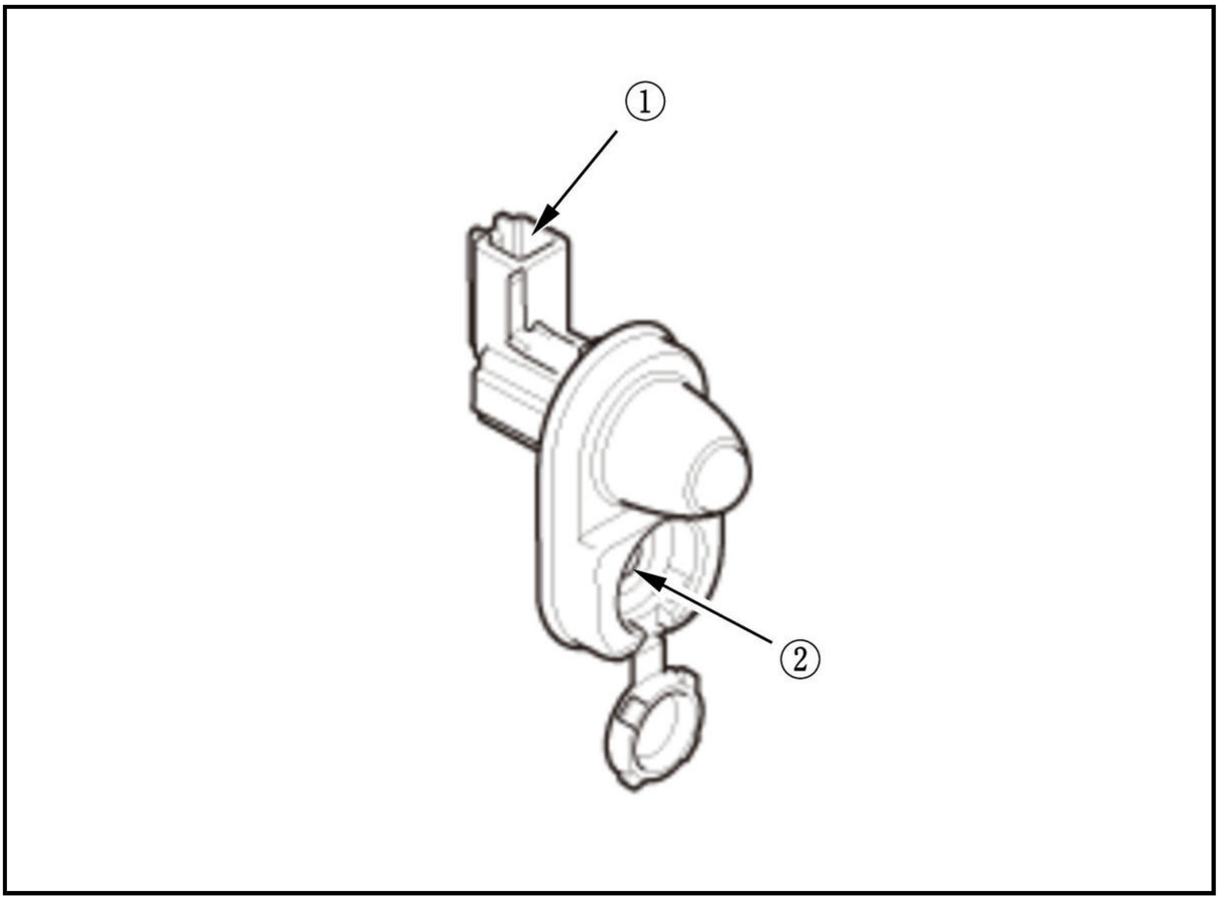

Is there 1.0 MΩ or more when you press the switch and is there 1.0 Ω or less when you release the switch?

YES

Go to step 57.

NO

Replace the left rear door switch.

57. Shorted wire check (RL_DOOR_SW line)

-1. Disconnect the following connector.

Body control module connector D (40P)

-2. Measure the resistance between test points 1 and 2.

Test condition	Vehicle OFF (LOCK) mode Body control module connector D (40P): disconnected Left rear door switch 1P connector: disconnected
Test point 1	**Body control module connector D (40P) No. 24**
Test point 2	Body ground

Is there 1.0 MΩ or more?

YES

The RL_DOOR_SW wire is OK. Faulty body control module; **replace the body control module** .

NO

Repair a short to ground in the wire.

58. Left rear door switch operation check

-1. Turn the vehicle to the OFF (LOCK) mode.

-2. Remove the left rear door switch.

-3. Disconnect the following connector.

Left rear door switch 1P connector

-4. Measure the resistance between test points 1 and 2.

Test point 1	Left rear door switch 1P connector: ①
Test point 2	Switch ground: ②

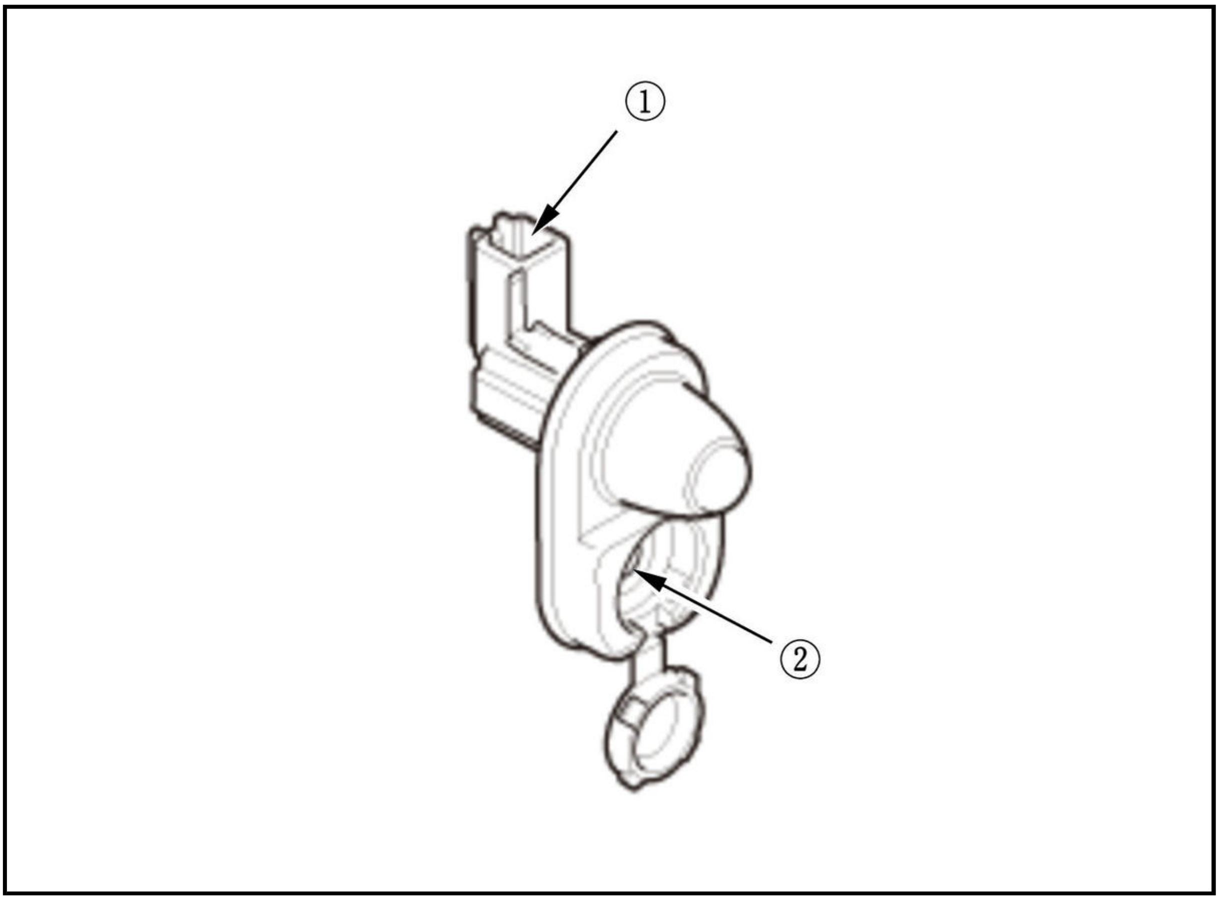

Is there 1.0 MΩ or more when you press the switch and is there 1.0 Ω or less when you release the switch?

YES

Go to step 59.

NO

Replace the left rear door switch.

59. Open wire check (RL_DOOR_SW line)

-1. Connect terminals A and B with a jumper wire.

Terminal A	Body control module connector D (40P) No. 24
Terminal B	Body ground

-2. Check the parameter(s) below with the HDS.

Signal	Current conditions	
	Value	Unit
Driver's Rear Door Switch	B	B

Is information value ON?

YES

Repair an open or high resistance in the wire.

NO

The RL_DOOR_SW wire is OK. Faulty body control module; replace the body control module .

60. Keyless/power door locks/security system check

-1. With the right rear door closed, check the parameter(s) below with the HDS.

Signal	Current conditions	
	Value	Unit
Passenger's Rear Door Switch	B	B

Is information value ON?

YES

Go to step 61.

NO

Go to step 63.

61. Right rear door switch operation check

-1. Turn the vehicle to the OFF (LOCK) mode.

-2. Remove the right rear door switch.

-3. Disconnect the following connector.

Right rear door switch 1P connector

-4. Measure the resistance between test points 1 and 2.

Test point 1	Right rear door switch 1P connector: ①
Test point 2	Switch ground: ②

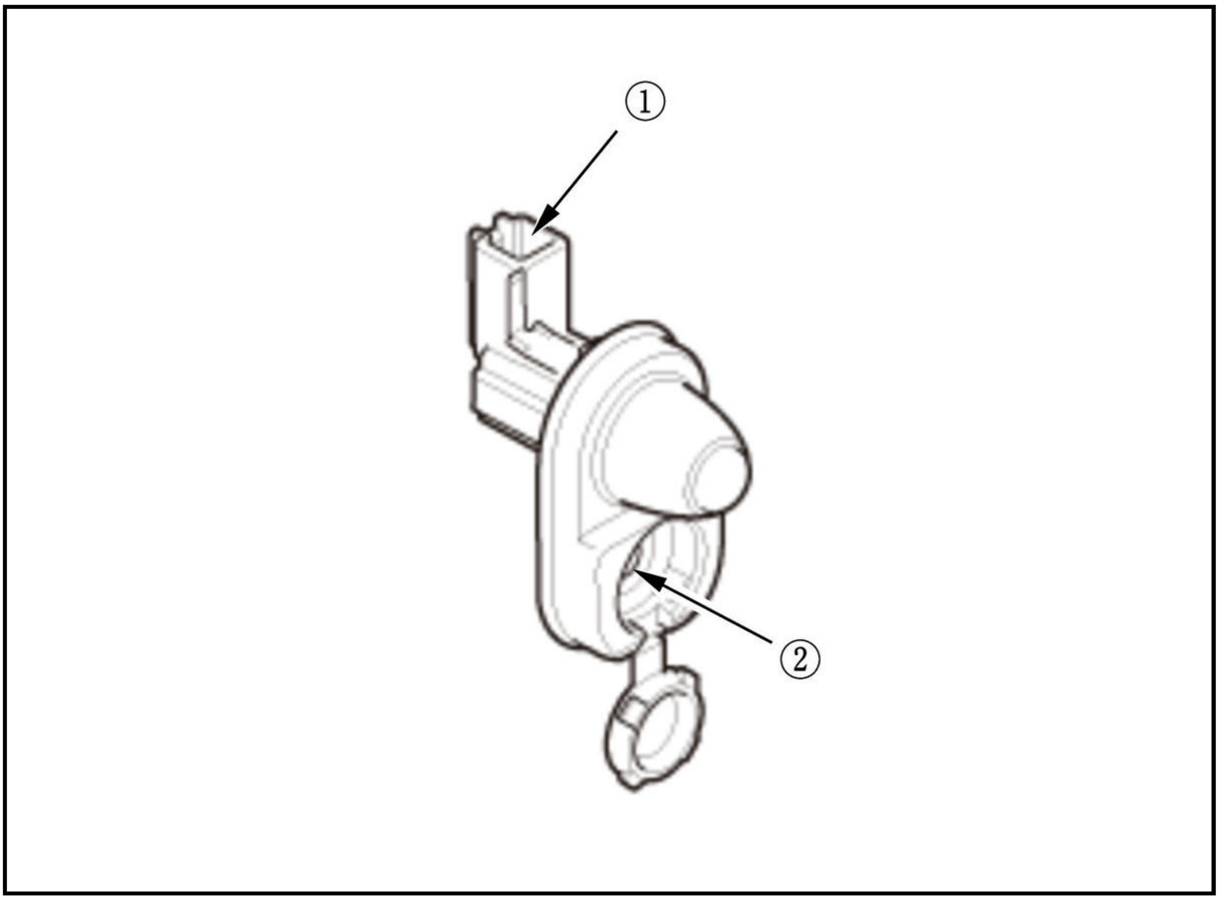

Is there 1.0 MΩ or more when you press the switch and is there 1.0 Ω or less when you release the switch?

YES

Go to step 62.

NO

Replace the right rear door switch.

62. Shorted wire check (RR_DOOR_SW line)

-1. Disconnect the following connector.

Body control module connector D (40P)

-2. Measure the resistance between test points 1 and 2.

Test condition	Vehicle OFF (LOCK) mode Body control module connector D (40P): disconnected Right rear door switch 1P connector: disconnected
Test point 1	**Body control module connector D (40P) No. 28**
Test point 2	Body ground

Is there 1.0 MΩ or more?

YES

The RR_DOOR_SW wire is OK. Faulty body control module; **replace the body control module** .

NO

Repair a short to ground in the wire.

63. Right rear door switch operation check

-1. Turn the vehicle to the OFF (LOCK) mode.

-2. Remove the right rear door switch.

-3. Disconnect the following connector.

Right rear door switch 1P connector

-4. Measure the resistance between test points 1 and 2.

Test point 1	Right rear door switch 1P connector: ①
Test point 2	Switch ground: ②

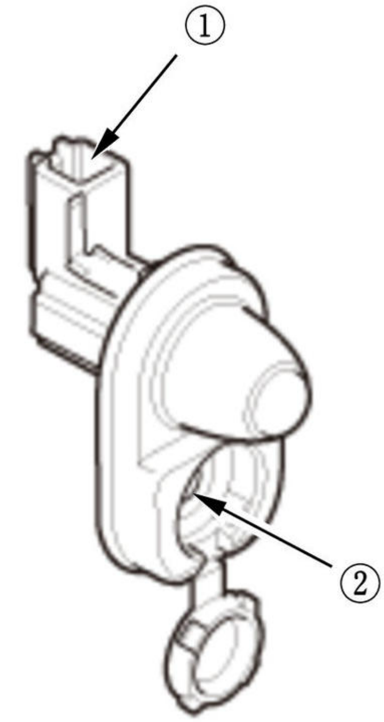

Is there 1.0 MΩ or more when you press the switch and is there 1.0 Ω or less when you release the switch?

YES

Go to step 64.

NO

Replace the right rear door switch.

64. Open wire check (RR_DOOR_SW line)

-1. Connect terminals A and B with a jumper wire.

Terminal A	**Body control module connector D (40P) No. 28**
Terminal B	Body ground

-2. Check the parameter(s) below with the HDS.

Signal	**Current conditions**	
	Value	**Unit**
Passenger's Rear Door Switch	B	B

Is information value ON?

YES

Repair an open or high resistance in the wire.

NO

The RR_DOOR_SW wire is OK. Faulty body control module; **replace the body control module** .

65. Keyless/power door locks/security system check

-1. Turn the vehicle to the OFF (LOCK) mode.

-2. Disconnect the following connector.

Driver's door latch 10P connector

-3. Connect terminals A and B with a jumper wire.

Terminal A	Driver's door latch 10P connector (female terminals) No. 9: ①
Terminal B	Body ground

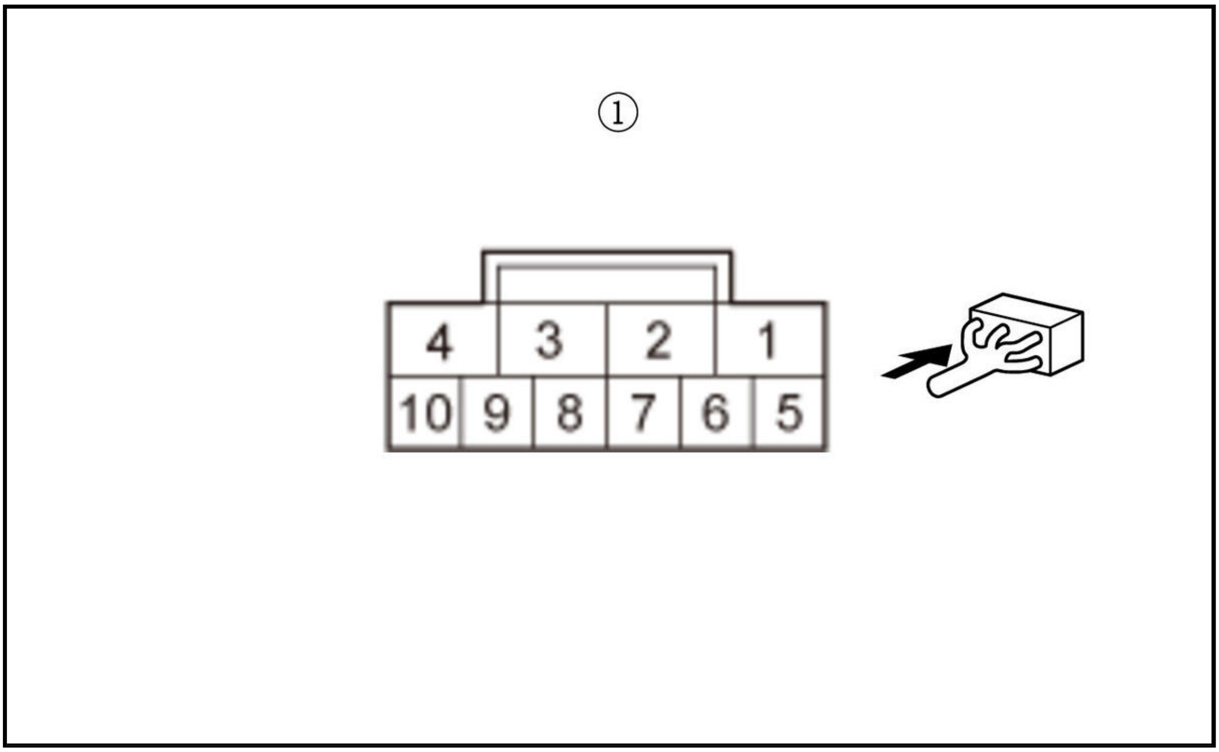

-4. Check the parameter(s) below with the HDS.

Signal	Current conditions	
	Value	Unit
Driver's Door Key Cylinder Switch(LOCK)	B	B

Is information value ON?

YES

Go to step 66.

NO

Go to step 68.

66. Driver's door key cylinder switch operation check

-1. Turn the vehicle to the OFF (LOCK) mode.

-2. **Test the driver's door key cylinder switch**.

Is the switch OK?

YES

Go to step 67.

NO

Faulty driver's door key cylinder switch; **replace the driver's door latch** .

67. Open wire check (GND line)

-1. Measure the resistance between test points 1 and 2.

Test condition	Vehicle OFF (LOCK) mode Driver's door latch 10P connector: disconnected
Test point 1	Driver's door latch 10P connector (female terminals) No. 7: ①
Test point 2	Body ground

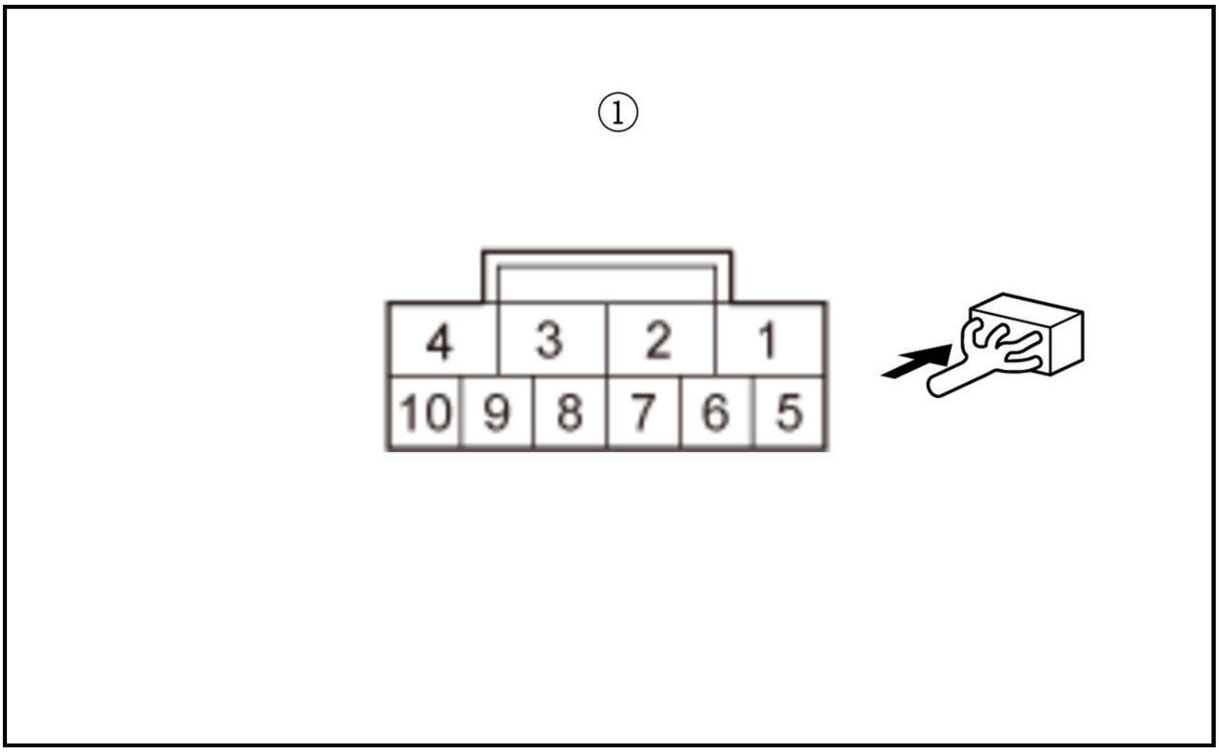

Is there 1.0 Ω or less?

YES

The GND wire is OK. **Replace the power window master switch** .

NO

Repair an open or high resistance in the ground wire or poor ground (G401).

68. Open wire check (DR_KEY_CYL_LOCK line)

-1. Connect terminals A and B with a jumper wire.

Terminal A	**Power window master switch 37P connector No. 7**
Terminal B	Body ground

-2. Check the parameter(s) below with the HDS.

Signal	Current conditions	
	Value	Unit
Driver's Door Key Cylinder Switch(LOCK)	B	B

Is information value ON?

YES

Repair an open or high resistance in the wire.

NO

The DR_KEY_CYL_LOCK wire is OK. **Replace the power window master switch** .

SERVICE PROCEDURE

KEYLESS ACCESS SYSTEM REGISTRATION

Procedure

NOTE: If the body control module or the park pawl actuator driver unit is replaced, the vehicle will not turn to the ON mode. Follow the registration procedure of the corresponding unit.

1. Keyless Access System - Register

   NOTE:

   - Check for aftermarket electrical equipment that could cause problems with keyless access operation.
   - While doing the registration, keep the remote away from computers.
   - Programming the remote also programs the keyless transmitter.
   - The body control module can store codes up to 6 remotes.
   - When each unit is replaced, such as updating and learning may be necessary in some cases, also make sure the removal and installation procedure of each unit.

   When Replacing the Body Control Module

   1. Connect the HDS to the data link connector

   2. Do the registration according to the "Immobilizer Setup Tool" screen.

   3. After registration, verify all remote related systems work normally with all remotes.

   When Replacing the PCM, the VSA Modulator-Control Unit, or Registration of the Remote(s)

   NOTE: If replacing the body control module, register the body control module first.

   1. Connect the HDS to the data link connector

   2. When all remotes are lost, select "Immobilizer Setup Tool", and turn the vehicle to ON mode according to the instructions on the HDS screen, then go to step 5.

   3. Turn the vehicle to the ON mode.

   4. Select "Immobilizer Setup Tool".

   5. Select the appropriate items, and do the registration according to the instructions on the HDS screen.

   6. After registration, verify systems work normally with all remotes. If the PCM is replaced, do the procedure after replacing PCM

   .

   When Replacing the Park Pawl Actuator Driver Unit

   1. Connect the HDS to the data link connector .

   2. Do the registration according to the "Immobilizer Setup Tool" screen.

   NOTE: Select "Replace Transmission Control Module"

   3. After registration, verify all remote related systems work normally with all remotes.

TEST

DOOR KEY CYLINDER SWITCH TEST

Test

1. **Driver's Door Panel - Remove**
2. Door Key Cylinder Switch - Test

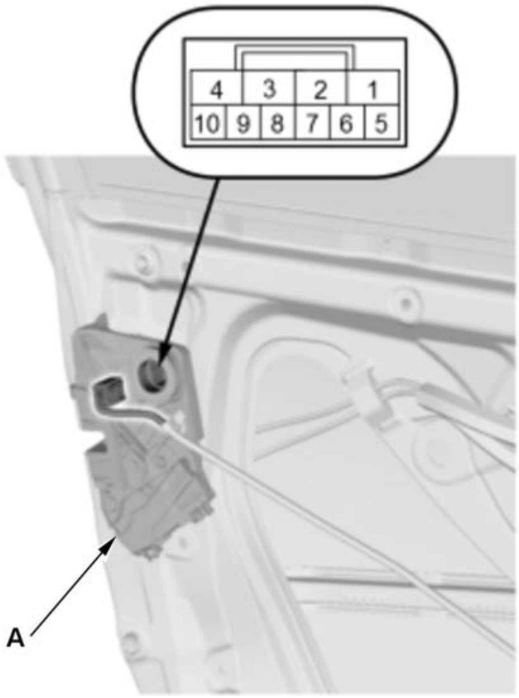

Position \ Terminal	7	9	10
LOCK	○	○	
NEUTRAL			
UNLOCK	○		○

1. Disconnect the connector.

2. Check for continuity between the terminals in each switch position according to the table.

3. If the continuity is not as specified, the door key cylinder switch is faulty; **replace the driver's door latch**

(A).

3. All Removed Parts - Install

1. Install the parts in the reverse order of removal.

DOOR LOCK ACTUATOR TEST

Test

Front Door

1. **Front Door Panel - Remove**
2. Front Door Lock Actuator - Test

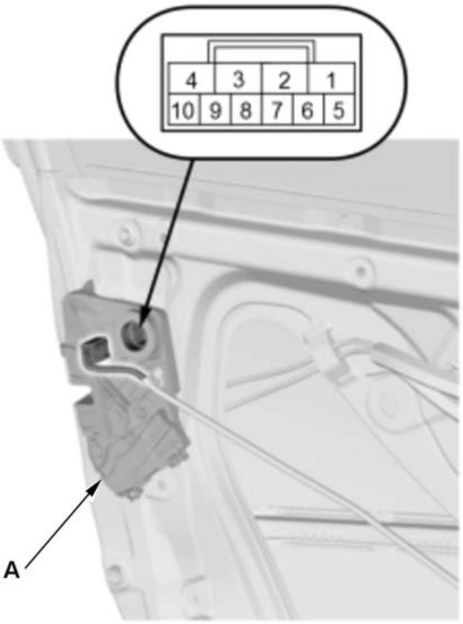

Driver's and Front Passenger's Door

Terminal / Operation	1	4
LOCK	⊖	⊕
UNLOCK	⊕	⊖

1. Disconnect the connector.

2. Check the actuator operation by connecting power and ground according to the table.

NOTE: To prevent damage to the actuator, apply battery voltage only momentarily.

3. If the actuator does not operate as specified, the front door lock actuator is faulty; **replace the front door latch**

(A).

3. All Removed Parts - Install

1. Install the parts in the reverse order of removal.

Rear Door

4. **Rear Door Panel - Remove**
5. Rear Door Lock Actuator - Test

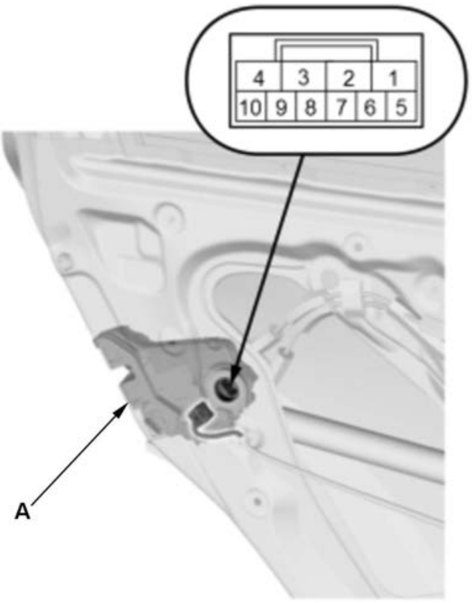

Left and Right Rear Door

1. Disconnect the connector.

2. Check the actuator operation by connecting power and ground according to the table.

NOTE: To prevent damage to the actuator, apply battery voltage only momentarily.

3. If the actuator does not operate as specified, the rear door lock actuator is faulty; **replace the rear door latch**

(A).

Terminal / Operation	1	4
LOCK	⊖	⊕
UNLOCK	⊕	⊖

6. All Removed Parts - Install

1. Install the parts in the reverse order of removal.

DOOR LOCK KNOB SWITCH TEST

Test

Front Door

1. Front Door Panel - Remove
2. Front Door Lock Knob Switch - Test

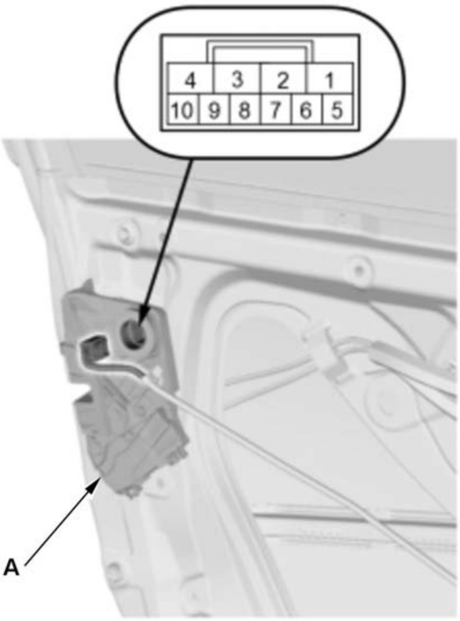

Driver's Door

Terminal / Position	5	6	7
LOCK		○	○
UNLOCK	○		○

Front Passenger's Door

Terminal / Position	8	10
LOCK		
UNLOCK	○	○

1. Disconnect the connector.

2. Check for continuity between the terminals in each switch position according to the table.

3. If the continuity is not as specified, the front door lock knob switch is faulty; replace the front door latch

(A).

3. All Removed Parts - Install

1. Install the parts in the reverse order of removal.

Rear Door

4. **Rear Door Panel - Remove**
5. Rear Door Lock Knob Switch - Test

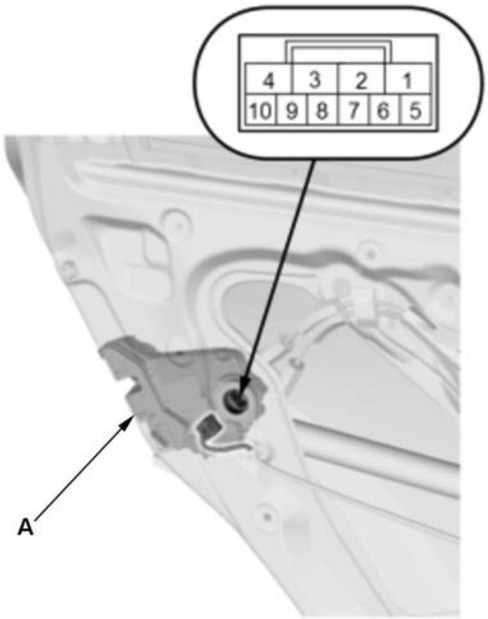

Left and Right Rear Door

Position \ Terminal	6	9
LOCK		
UNLOCK	○	○

1. Disconnect the connector.

2. Check for continuity between the terminals in each switch position according to the table.

3. If the continuity is not as specified, the rear door lock knob switch is faulty; **replace the rear door latch**

(A).

6. All Removed Parts - Install

1. Install the parts in the reverse order of removal.

KEYLESS ACCESS LF ANTENNA FUNCTION TEST

NOTE: Before testing, check for DTCs. If any DTCs are indicated, troubleshoot the indicated DTCs first.

1. **Connect the HDS to the data link connector (DLC)**

2. Turn the vehicle to the ON mode.

3. Select KEYLESS ACCESS CONTROL UNIT from the ONE-PUSH START system select menu with the HDS.

4. Select the SELF CHECK and if any malfunction is found, troubleshoot it first. Select the FUNCTIONAL TESTS, and do the antenna driving test by checking the transmitting areas between the LF antenna and the keyless remote (inside of the vehicle; except on the dashboard, in the glove box, door pockets, console box, and other enclosed areas.).

Outside of the vehicle

Transmitting Area	LF Antenna Location	HDS Indication (Functional Tests)
A	Driver's door LF Antenna	Driver (Door) Antenna Driving
B	Front passenger's door LF Antenna	Front Passenger (Door) Antenna Driving
C	Rear bumper LF Antenna	Trunk/Tailgate/Rear Bumper Antenna Driving

Inside of the vehicle

Transmitting Area	LF Antenna Location	HDS Indication (Functional Tests)
D	Front interior LF antenna	Front Interior Antenna Driving
E	Middle interior LF antenna	Middle Interior Antenna Driving
F	Rear interior LF antenna	Rear Interior Antenna Driving

NOTE:

- Functional Tests cannot operate at the same time, check the LF antennas one at a time.
- Outside of the vehicle; test the transmitting area at about 90 cm (35.4 in) height from the ground.
- The LED will blink when the keyless remote is within the shaded areas.

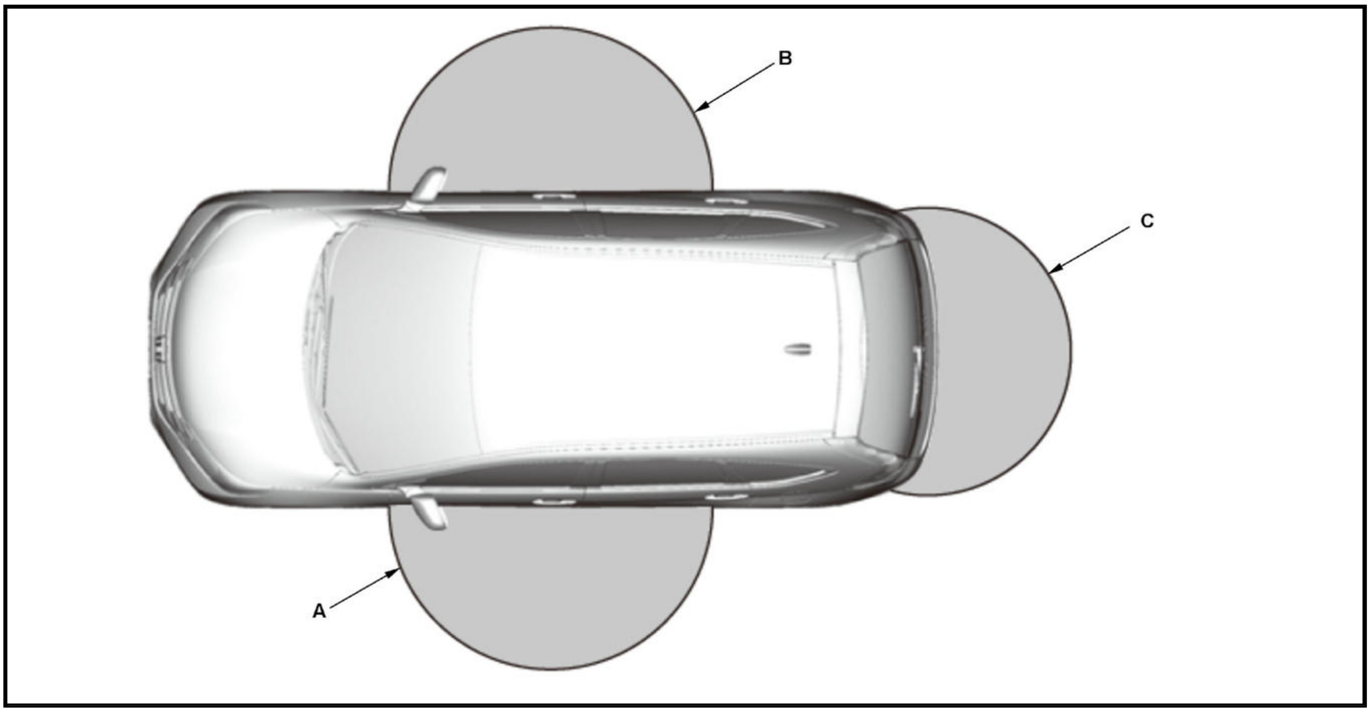

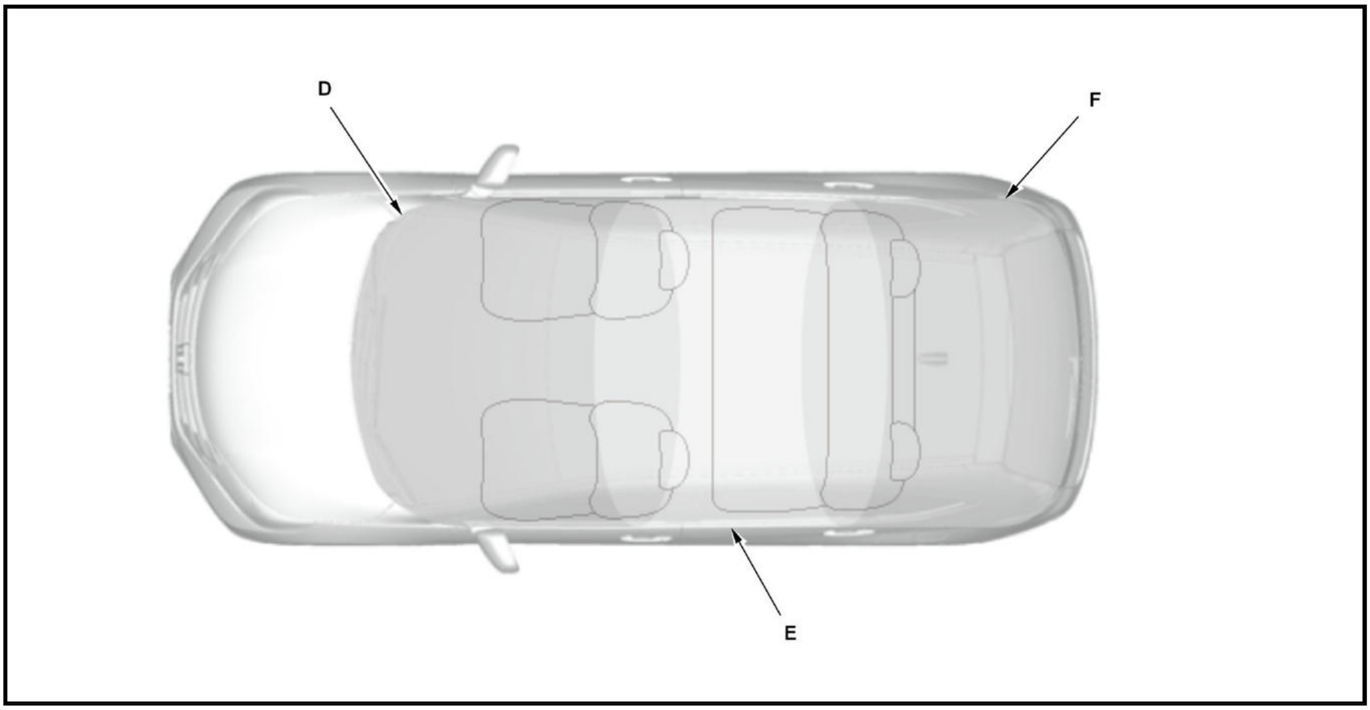

KEYLESS ACCESS SYSTEM STATUS LOG

If you suspect there is an immobilizer system problem, check the status log in the HDS.

1. Connect the HDS to the data link connector (DLC)

2. Turn the vehicle to the ON mode.

3. On the HDS screen, at SYSTEM SELECTION MENU, enter ONE-PUSH START, then select KEYLESS ACCESS CONTROL UNIT or BACKUP CONTROL UNIT.

NOTE: If the HDS does not communicate, check the body control module power, ground, K-line, and L-line connectors.

4. At KEYLESS ACCESS CONTROL UNIT, enter KEYLESS ACCESS SYSTEM INFORMATION, then select KEYLESS ACCESS STATUS LOG.

5. At BACKUP CONTROL UNIT, enter SYSTEM INFORMATION, then select STATUS LOG. Check the STATUS LOG count. Troubleshoot the status with the highest count first. If no counts are listed, the immobilizer system is OK. Continue with normal symptom troubleshooting.

Status Log (Keyless Access Control Unit)

Status Log No.	Possible cause
B-1B-2	• PCM was not registered correctly • Body control module was registered correctly • Poor connections or loose terminals between body control module and PCM • Poor connections or loose terminals in the IG1 line • Low 12 volt battery voltage • Electrical noise
C-1C-2	• Poor connections or loose terminals in the IG1 line • Body control module was not registered • Low 12 volt battery voltage • Electrical noise
D-1D-2D-3	• Poor connections or loose terminals between body control module and PCM • Low 12 volt battery voltage • Electrical noise • Blown fuse

Status Log (Backup Control Unit)

Status Log No.	Possible cause
A-1A-2A-3	• Keyless remote was not registered correctly • Power switch failure
B-1B-2	• PCM was not registered correctly • Communication error between body control module and PCM • Low 12 volt battery voltage • Electrical noise
C-1C-2	• Body control module was not registered correctly

Status Log No.	Possible cause
	• Poor connections or loose terminals in the IG1 line • Low 12 volt battery voltage • Electrical noise

Status Log No.	Possible cause
D-1D-2D-3	• Poor connections or loose terminals between body control module and PCM • S-NET line short • Low 12 volt battery voltage • Electrical noise • Blown fuse

CONNECTOR VIEW

HOMELINK UNIT CONNECTOR FOR INPUTS AND OUTPUTS

HomeLink B® Unit 5P Connector (female terminals)

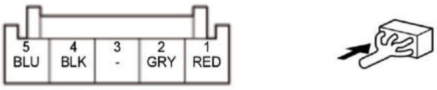

Terminal number	Terminal name	Description	Signal
1	+B_BACK_UP	+B power source	About battery voltage at all times
2	ILLUMI+	Detects illumination signal	With combination light switch PARKING: about battery voltage With combination light switch OFF: less than 0.2 V
3	---	Not used	---
4	GND	HomeLink B® unit ground	Less than 0.2 V at all times
5	ILL-(LED)	Outputs illumination signal	---

CHECK

KEYLESS ACCESS SYSTEM CHECK

1. Connect the HDS to the data link connector (DLC)

2. Turn the vehicle to the ON mode.

3. On the HDS screen, at SYSTEM SELECTION MENU, enter ONE-PUSH START, then select KEYLESS ACCESS CONTROL UNIT or BACKUP CONTROL UNIT.

NOTE: If the HDS does not communicate, check the body control module power, ground, K-line, and L-line connectors.

4. At KEYLESS ACCESS CONTROL UNIT, enter KEYLESS ACCESS SYSTEM INFORMATION, then select SYSTEM CHECK 1 or SYSTEM CHECK 2.

5. At BACKUP CONTROL UNIT, enter SYSTEM INFORMATION, then select SYSTEM CHECK. If the HDS displays NORMAL N-1, the immobilizer system is OK at this time, refer to the STATUS LOG. If the HDS displays any other messages, check as follows:

System Check 1 (Keyless Access Control Unit)

System Check No.	Possible cause	Check items
A-1A-2A-3G-4	• Keyless remote is mismatched • No communication between body control module and keyless remote • Keyless remote is not registered	• Register the keyless remote • LF antenna test • Check antenna level with the HDS
B-1B-2G-1	• PCM is not registered • No communication between body control module and PCM • Body control module is replaced	• Register the PCM • Check PCM • Check for an open in the S-NET lines • Register the body control module
C-1C-2G-2G-3	• Body control module is not registered • Body control module is replaced	• Register the body control module • Check body control module • Check for an open in the S-NET lines
C-3C-4G-5	• Body control module is replaced • Communication error between body control module and park pawl actuator drive unit	• Register the body control module • Check for an open or short in the IGN_TRX line • Check park pawl actuator drive unit

System Check 2 (Keyless Access Control Unit)

System Check No.	Possible cause	Check items
D-1D-2D-3	• S-NET line is open or short • No communication between body control module and PCM	• Check for an open or short in the S-NET lines • Check body control module • Check PCM
D-4D-5	IGN_TRX line is open or short	Check for an open or short in the IGN_TRX line

System Check (Backup Control Unit)

System Check No.	Possible cause	Check items
A-1A-2A-3	• Keyless remote is mismatched	• Register the keyless remote

System Check No.	Possible cause	Check items
	- Keyless remote is not registered - Power switch failure	- Check power switch

System Check No.	Possible cause	Check items
B-1B-2	- PCM is replaced - Communication error between body control module and PCM	- Register the PCM - Check PCM
C-1C-2	Body control module is replaced	- Register the body control module - Check body control module - Check for an open in the S-NET lines
D-1D-2D-3	- S-NET line is open or short - No communication between body control module and PCM	- Check for an open or short in the S-NET lines - Check body control module - Check PCM
E-1E-2E-3E-4E-5	- Body control module is not registered - PCM is not registered - Keyless remote is not registered	- Register the body control module - Register the PCM - Register the keyless remote
F-1F-2F-3F-4F-5	Special mode	Turn the vehicle to the ON mode and then select the OFF (LOCK) mode with a registered keyless remote

TROUBLESHOOTING

KEYLESS ACCESS SYSTEM TOUCH SENSOR CIRCUIT TROUBLESHOOTING

1. Keyless access system check

-1. Select KEYLESS ACCESS CONTROL UNIT from the ONE-PUSH START system select menu with the HDS, and enter HISTORY DATA.

One-Push - KEYLESS ACCESS CONTROL UNIT - History data/Clear

Select HISTORY CLEAR, and back to TEST MODE menu:

NOTE: When the freeze data is cleared, the information indicates "NOT CONFIRMED".

- DRIVER DOOR UNLOCK SWITCH
- DRIVER DOOR LOCK SWITCH
- FRONT PASSENGER DOOR UNLOCK SWITCH
- FRONT PASSENGER DOOR LOCK SWITCH

-3. Turn the vehicle to the OFF (LOCK) mode.

-4. Get out of the vehicle with the keyless remote, and touch the each door outer handle touch sensors.

-5. Select KEYLESS ACCESS CONTROL UNIT from the ONE-PUSH START system select menu with the HDS, and enter HISTORY DATA.

One-Push - KEYLESS ACCESS CONTROL UNIT - History data/Clear

Recheck HISTORY DATA.

- DRIVER DOOR UNLOCK SWITCH
- DRIVER DOOR LOCK SWITCH
- FRONT PASSENGER DOOR UNLOCK SWITCH
- FRONT PASSENGER DOOR LOCK SWITCH

Is all the information OK?

YES

Intermittent failure, the system is OK at this time.

NO

Go to step 2.

2. Open wire check (GND line)

-1. Disconnect the following connectors.

Each door outer handle 8P connectors

-2. Measure the resistance between test points 1 and 2 individually.

Driver's door

Test condition	Vehicle OFF (LOCK) mode Driver's door outer handle 8P connector: disconnected
Test point 1	Driver's door outer handle 8P connector (female terminals) No. 8: ①
Test point 2	Body ground

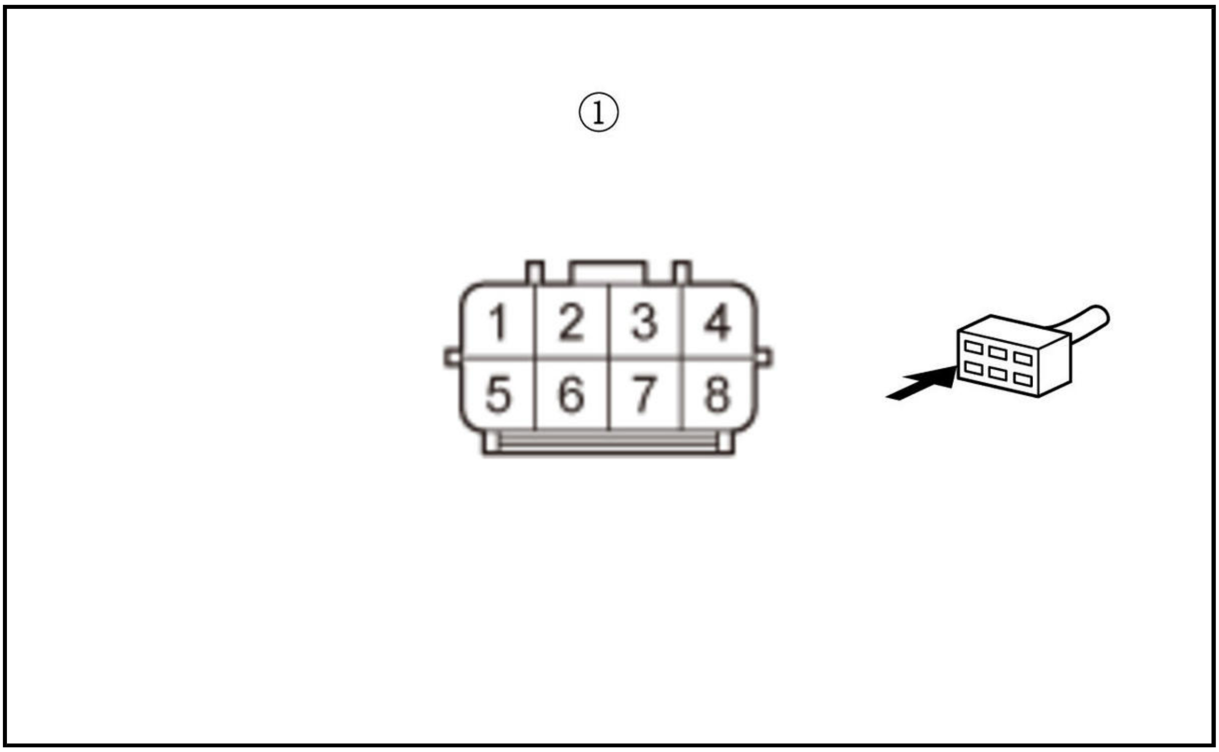

Front passenger's door

Test condition	Vehicle OFF (LOCK) mode Front passenger's door outer handle 8P connector: disconnected
Test point 1	Front passenger's door outer handle 8P connector (female terminals) No. 8: ①
Test point 2	Body ground

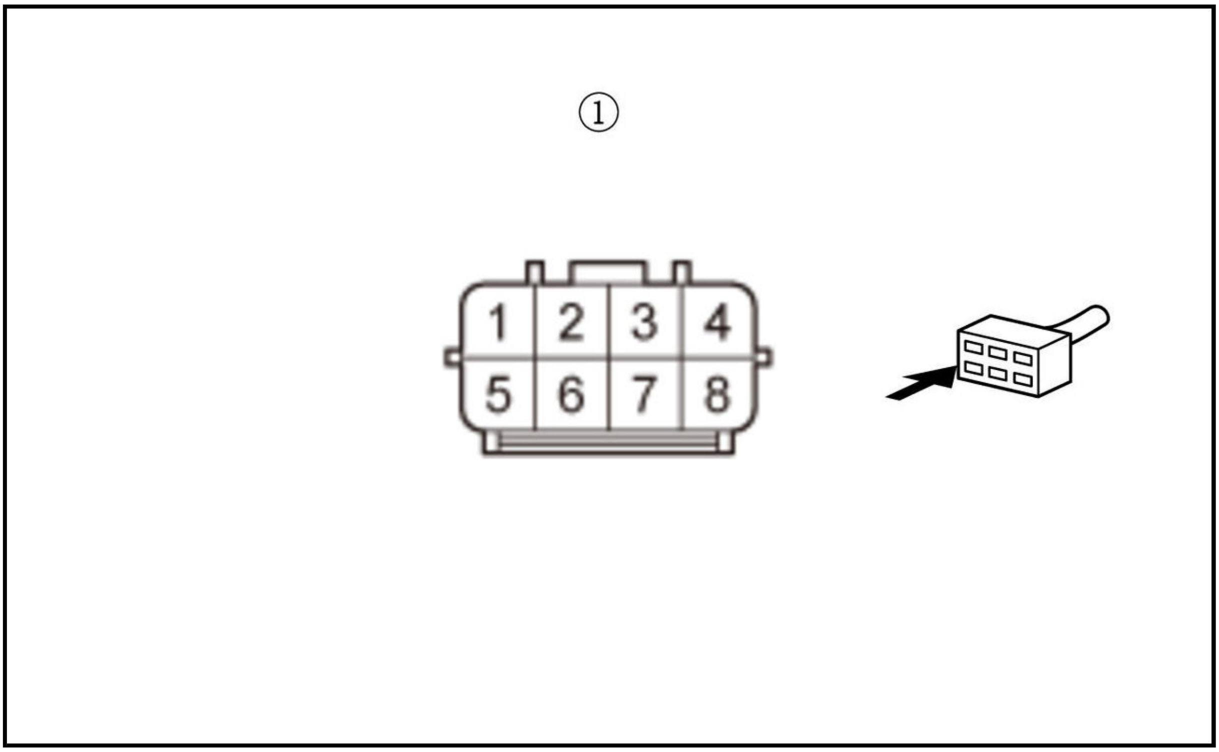

Is there 1.0 Ω or less?

YES

The GND wires are OK. Go to step 3.

NO

Repair an open or high resistance in the ground wire or poor ground (G401, G402).

3. Determine possible failure area (TS lines, DL lines, VOUT lines)

-1. Measure the voltage between test points 1 and 2 individually.

Driver's door

Test condition	Vehicle OFF (LOCK) mode Driver's door outer handle 8P connector: disconnected
Test point 1	Driver's door outer handle 8P connector (female terminals) No. 4: ①
Test point 2	Body ground

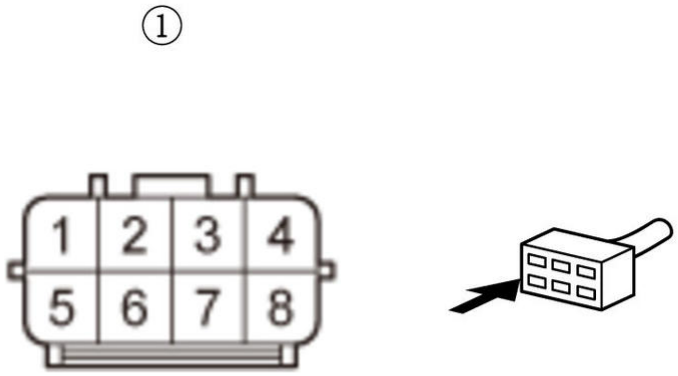

Front passenger's door

Test condition	Vehicle OFF (LOCK) mode Front passenger's door outer handle 8P connector: disconnected
Test point 1	Front passenger's door outer handle 8P connector (female terminals) No. 4: ①
Test point 2	Body ground

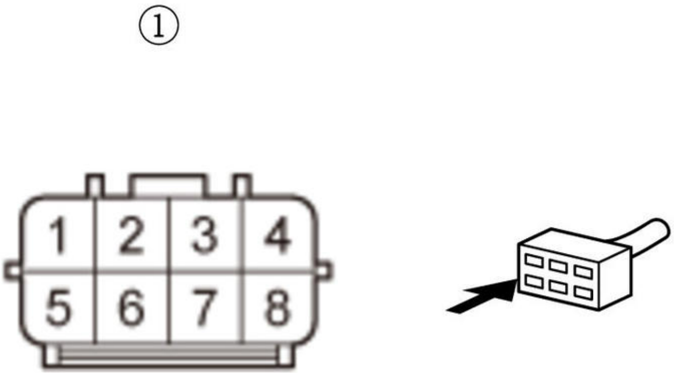

Is there battery voltage?

YES

Go to step 4.

NO

Go to step 7.

4. Open wire check (TS lines, DL lines)

-1. Disconnect the following connector.

Body control module connector G (32P)

-2. Measure the resistance between test points 1 and 2 individually.

Driver's door

Test condition	Vehicle OFF (LOCK) mode Driver's door outer handle 8P connector: disconnected
Test point 1	Driver's door outer handle 8P connector (female terminals) No. 3: ①
Test point 2	**Body control module connector G (32P) No. 22**

Test point 1	Driver's door outer handle 8P connector (female terminals) No. 7: ①
Test point 2	**Body control module connector G (32P) No. 19**

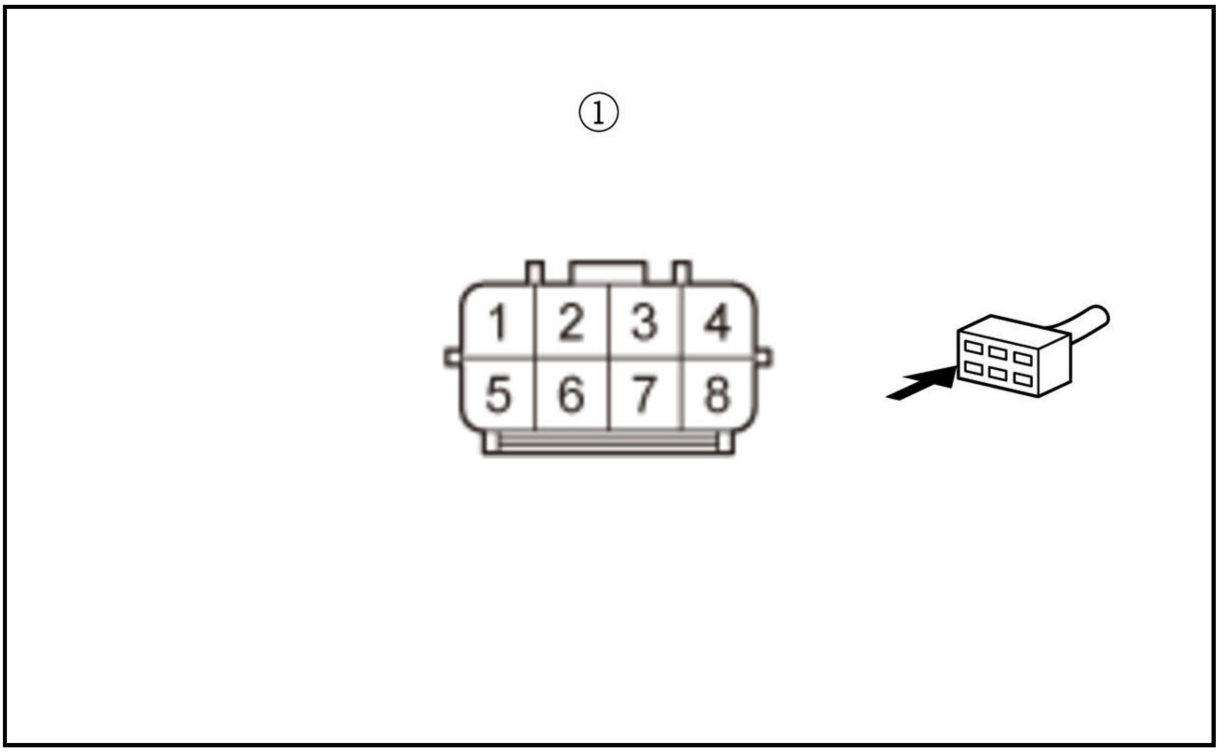

Front passenger's door

Test condition	Vehicle OFF (LOCK) mode Front passenger's door outer handle 8P connector: disconnected
Test point 1	Front passenger's door outer handle 8P connector (female terminals) No. 3: ①
Test point 2	**Body control module connector G (32P) No. 25**

Test point 1	Front passenger's door outer handle 8P connector (female terminals) No. 7: ①
Test point 2	**Body control module connector G (32P) No. 1**

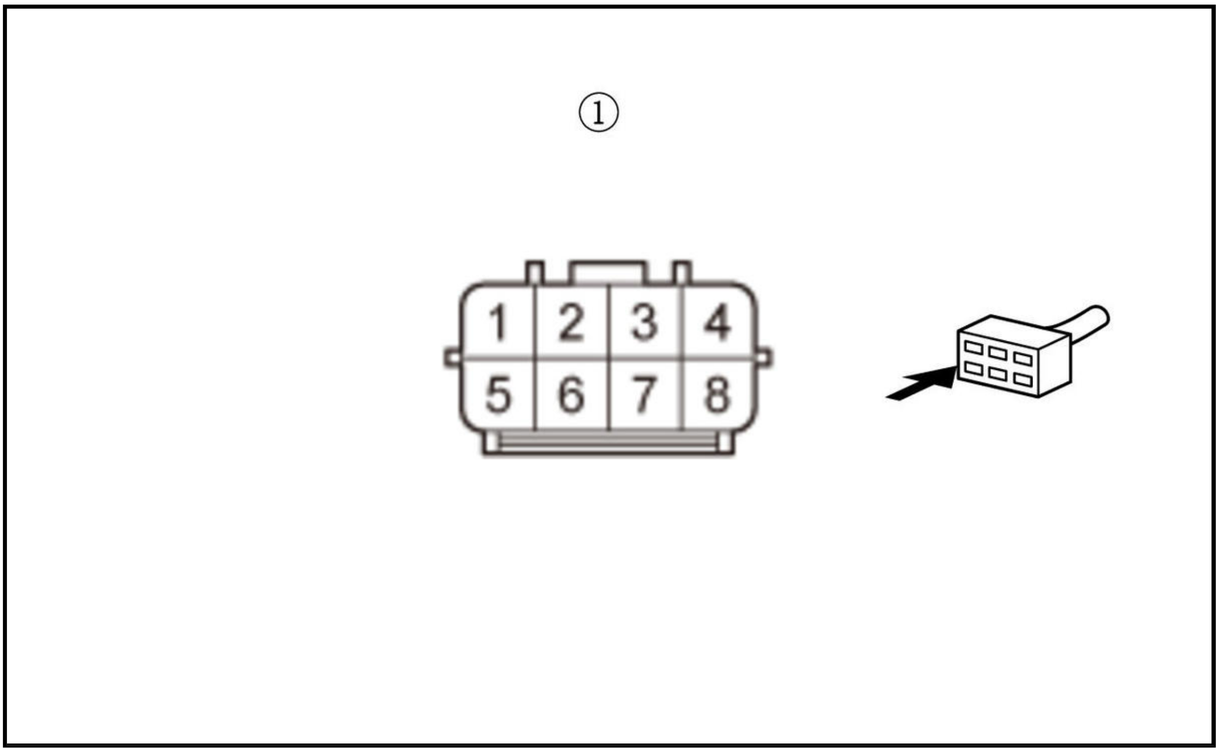

Is there 1.0 Ω or less?

YES

The TS and DL wires are not open. Go to step 5.

NO

Repair an open or high resistance in the wire.

5. Shorted wire check (TS lines, DL lines)

-1. Measure the resistance between test points 1 and 2 individually.

Test condition	Vehicle OFF (LOCK) mode Each door outer handle 8P connectors: disconnected Body control module connector G (32P): disconnected
Test point 1	**Body control module connector G (32P) No. 22**
Test point 2	Body ground

Test point 1	**Body control module connector G (32P) No. 19**
Test point 2	Body ground

Test point 1	**Body control module connector G (32P) No. 25**
Test point 2	Body ground

Test point 1	**Body control module connector G (32P) No. 1**
Test point 2	Body ground

Is there 1.0 MΩ or more?

YES

The TS and DL wires are OK. Go to step 6.

NO

Repair a short to ground in the wire.

6. Door outer handle touch sensor check (substitution)

-1. **Substitute a known-good door outer handle touch sensors** , and recheck.

Is the system OK?

YES

Faulty the original door outer handle touch sensor; **replace the door outer handle** .

NO

Replace the body control module .

7. Open wire check (VOUT lines)

-1. Measure the voltage between test points 1 and 2 individually.

Test condition	Vehicle OFF (LOCK) mode Each door outer handle 8P connectors: disconnected
Test point 1	**Body control module connector G (32P) No. 31**

Test point 2	Body ground

Test point 1	**Body control module connector G (32P) No. 30**
Test point 2	Body ground

Is there battery voltage?

YES

Repair an open or high resistance in the wire.

NO

The VOUT wires are OK. **Replace the body control module** .

KEYLESS BUZZER CIRCUIT TROUBLESHOOTING

1. Open wire check (GND line)

-1. Turn the vehicle to the OFF (LOCK) mode.

-2. Disconnect the following connector.

Keyless buzzer 3P connector

-3. Measure the resistance between test points 1 and 2.

Test condition	Vehicle OFF (LOCK) mode Keyless buzzer 3P connector: disconnected
Test point 1	Keyless buzzer 3P connector (female terminals) No. 3: ①
Test point 2	Body ground

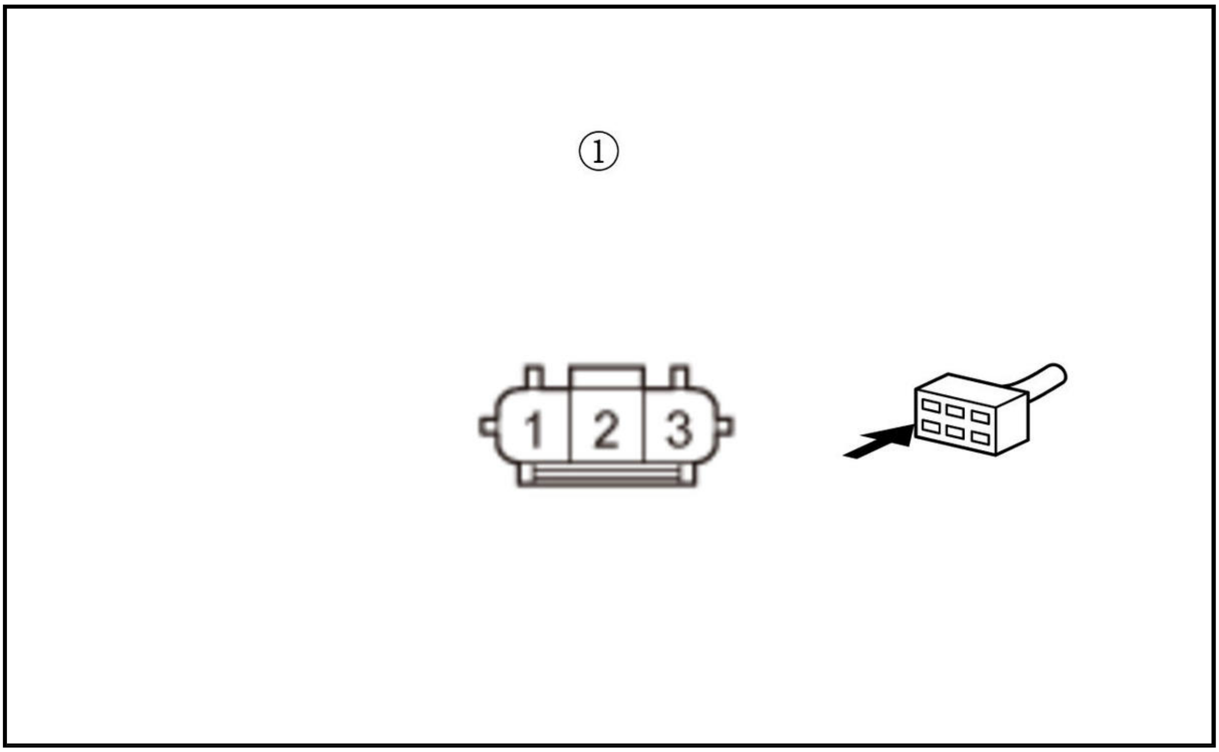

Is there 1.0 Ω or less?

YES

The GND wire is OK. Go to step 2.

NO

Repair an open or high resistance in the ground wire or poor ground (G505).

2. Open wire check (SMART_BUZZER line)

-1. Disconnect the following connector.

Body control module connector E (24P)

-2. Measure the resistance between test points 1 and 2.

Test condition	Vehicle OFF (LOCK) mode Keyless buzzer 3P connector: disconnected Body control module connector E (24P): disconnected
Test point 1	**Body control module connector E (24P) No. 22**
Test point 2	Keyless buzzer 3P connector (female terminals) No. 2: ①

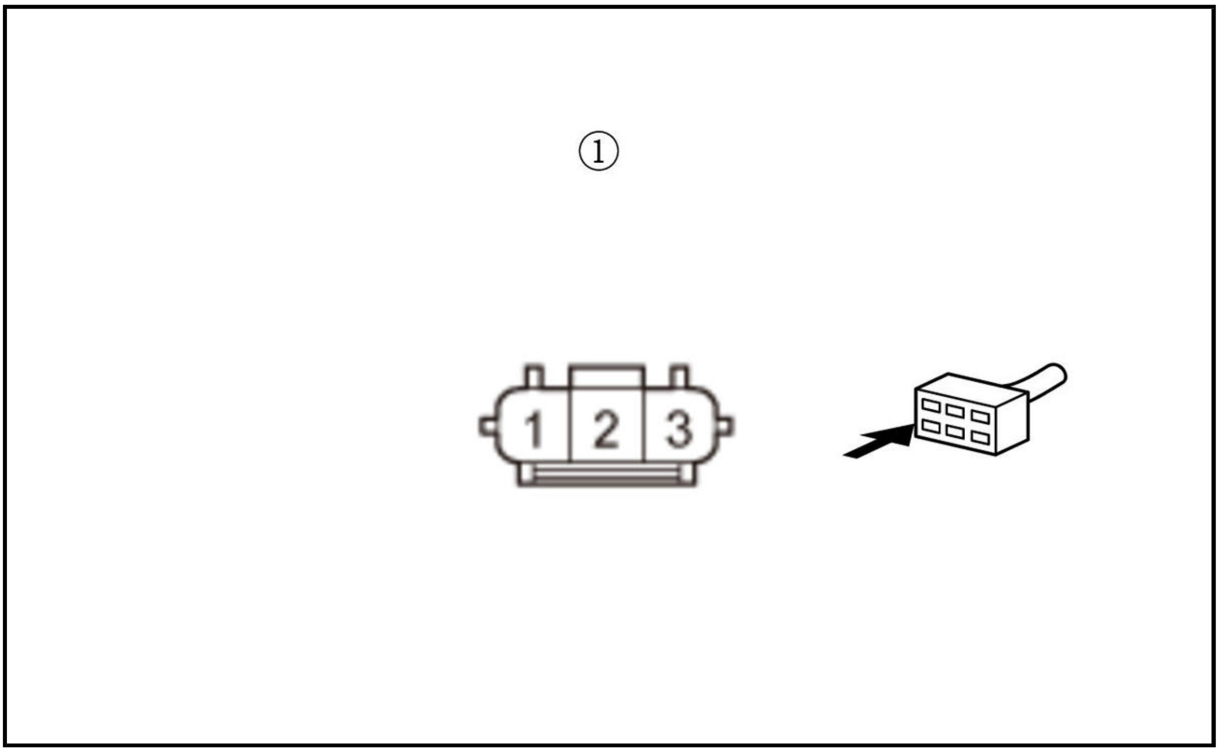

Is there 1.0 Ω or less?

YES

The SMART_BUZZER wire is not open. Go to step 3.

NO

Repair an open or high resistance in the wire.

3. Shorted wire check (SMART_BUZZER line)

-1. Remove the jumper wire from the keyless buzzer 3P connector.

-2. Measure the resistance between test points 1 and 2.

Test condition	Vehicle OFF (LOCK) mode Keyless buzzer 3P connector: disconnected Body control module connector E (24P): disconnected
Test point 1	**Body control module connector E (24P) No. 22**
Test point 2	Body ground

Is there 1.0 MΩ or more?

YES

The SMART_BUZZER wire is OK. Go to step 4.

NO

Repair a short to ground in the wire.

4. Keyless buzzer check (substitution)

-1. **Substitute a known-good keyless buzzer** .

-2. Check the keyless buzzer function.

Does the keyless buzzer sound?

YES

Replace the original keyless buzzer .

NO

Replace the body control module .

CIRCUIT DIAGRAM

HOMELINK REMOTE CONTROL SYSTEM CIRCUIT DIAGRAM

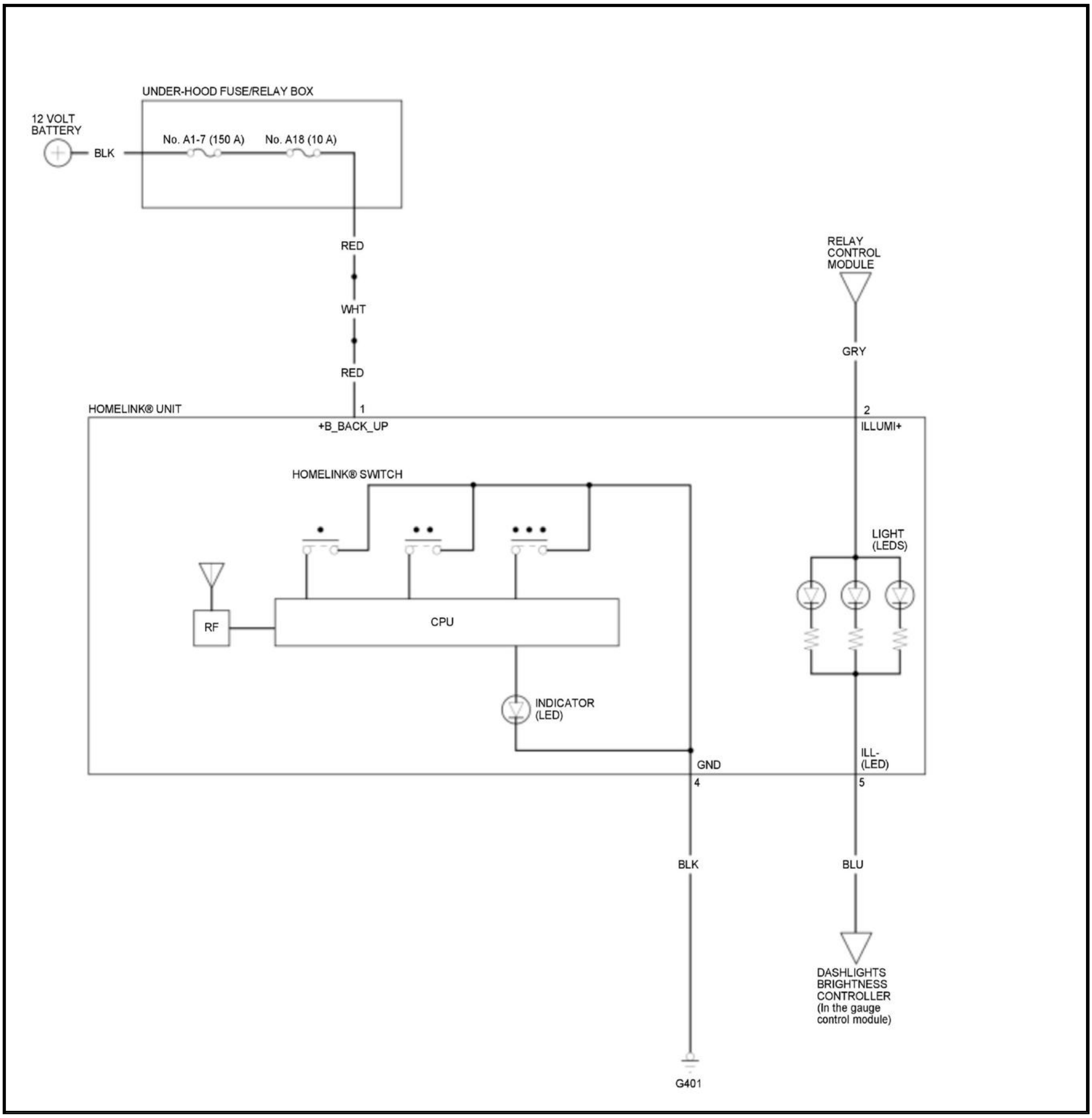
UNDER-HOOD FUSE/RELAY BOX
12 VOLT BATTERY
BLK
No. A1-7 (150 A)
No. A18 (10 A)
RED
WHT
RED
RELAY CONTROL MODULE
GRY
HOMELINK® UNIT
1
+B_BACK_UP
2
ILLUMI+
HOMELINK® SWITCH
LIGHT (LEDS)
RF
CPU
INDICATOR (LED)
GND
ILL- (LED)
4
5
BLK
BLU
DASHLIGHTS BRIGHTNESS CONTROLLER (In the gauge control module)
G401

KEYLESS ACCESS SYSTEM CIRCUIT DIAGRAM

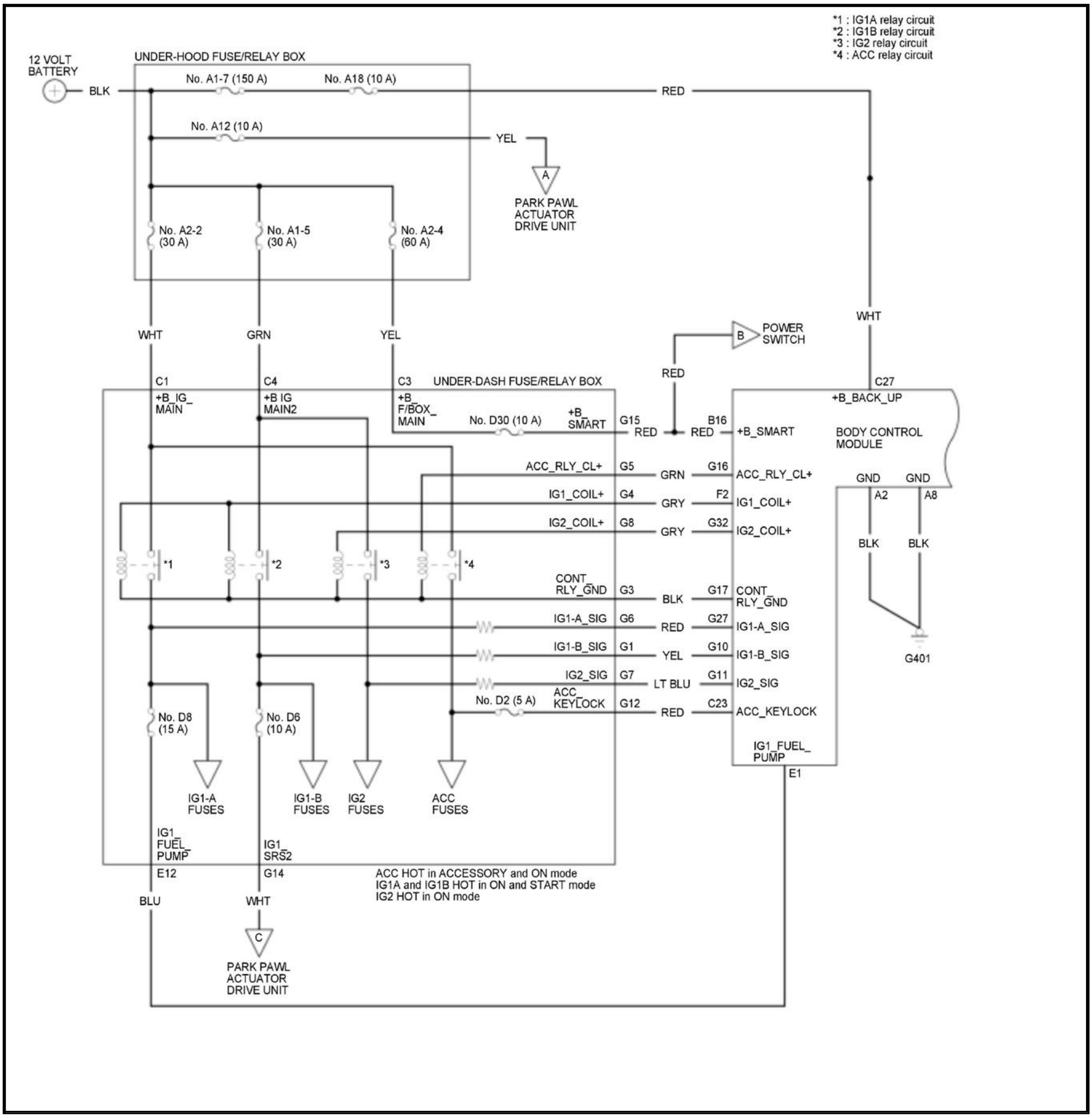

*1 : IG1A relay circuit
*2 : IG1B relay circuit
*3 : IG2 relay circuit
*4 : ACC relay circuit

ACC HOT in ACCESSORY and ON mode
IG1A and IG1B HOT in ON and START mode
IG2 HOT in ON mode

12 VOLT BATTERY
BLK
UNDER-HOOD FUSE/RELAY BOX
No. A1-7 (150 A)
No. A18 (10 A)
RED
No. A12 (10 A)
YEL
A
PARK PAWL ACTUATOR DRIVE UNIT
No. A2-2 (30 A)
No. A1-5 (30 A)
No. A2-4 (60 A)
WHT
GRN
YEL
WHT
B
POWER SWITCH
RED
C1
C4
C3
UNDER-DASH FUSE/RELAY BOX
C27
+B_IG_MAIN
+B IG MAIN2
+B_F/BOX_MAIN
No. D30 (10 A)
+B_SMART
G15
RED
RED
B16
+B_SMART
+B_BACK_UP
BODY CONTROL MODULE
ACC_RLY_CL+
G5
GRN
G16
ACC_RLY_CL+
GND
GND
IG1_COIL+
G4
GRY
F2
IG1_COIL+
A2
A8
IG2_COIL+
G8
GRY
G32
IG2_COIL+
BLK
BLK
*1
*2
*3
*4
CONT_RLY_GND
G3
BLK
G17
CONT_RLY_GND
IG1-A_SIG
G6
RED
G27
IG1-A_SIG
G401
IG1-B_SIG
G1
YEL
G10
IG1-B_SIG
IG2_SIG
G7
LT BLU
G11
IG2_SIG
No. D2 (5 A)
ACC_KEYLOCK
G12
RED
C23
ACC_KEYLOCK
No. D8 (15 A)
No. D6 (10 A)
IG1_FUEL_PUMP
E1
IG1-A FUSES
IG1-B FUSES
IG2 FUSES
ACC FUSES
IG1_FUEL_PUMP
IG1_SRS2
E12
G14
BLU
WHT
C
PARK PAWL ACTUATOR DRIVE UNIT

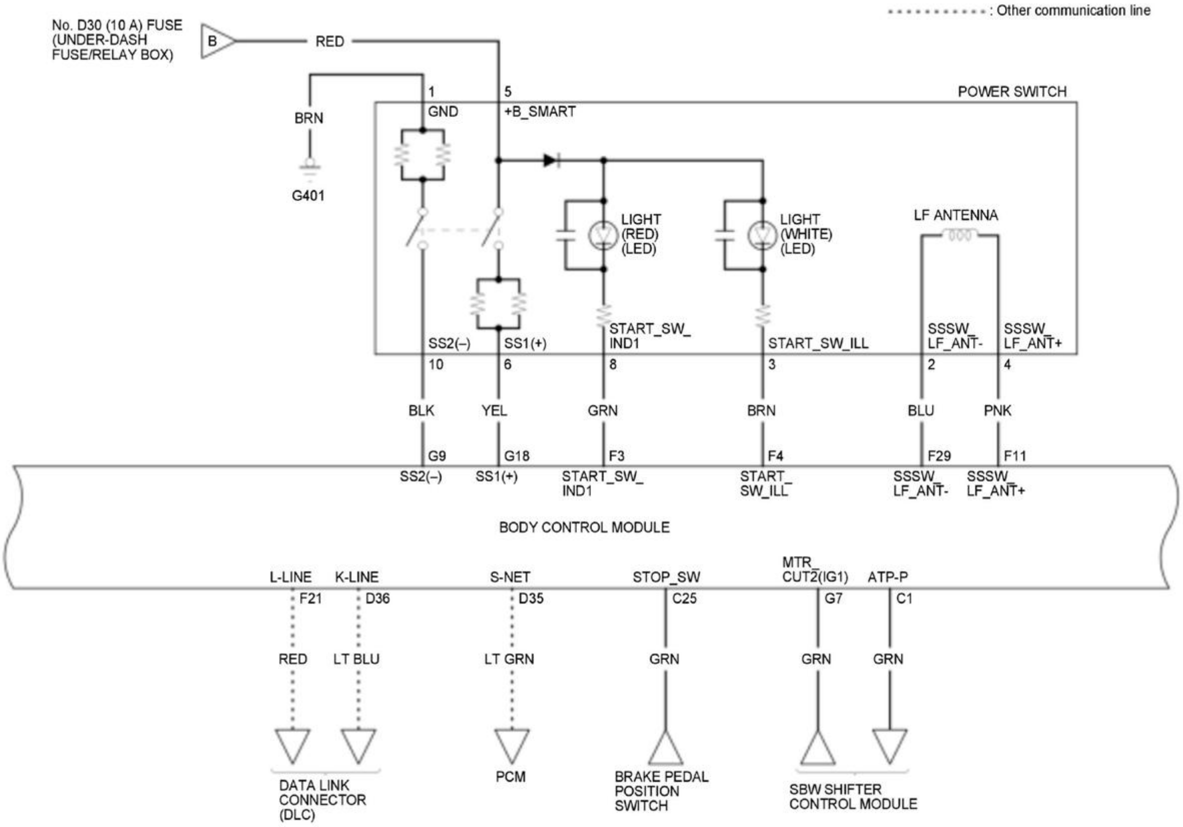
: Other communication line
No. D30 (10 A) FUSE (UNDER-DASH FUSE/RELAY BOX)
B
RED
BRN
G401
1
GND
5
+B_SMART
POWER SWITCH
LIGHT (RED) (LED)
LIGHT (WHITE) (LED)
LF ANTENNA
SS2(–)
SS1(+)
START_SW_ IND1
START_SW_ILL
SSSW_ LF_ANT-
SSSW_ LF_ANT+
10
6
8
3
2
4
BLK
YEL
GRN
BRN
BLU
PNK
G9
G18
F3
F4
F29
F11
SS2(–)
SS1(+)
START_SW_ IND1
START_ SW_ILL
SSSW_ LF_ANT-
SSSW_ LF_ANT+
BODY CONTROL MODULE
L-LINE
K-LINE
S-NET
STOP_SW
MTR_ CUT2(IG1)
ATP-P
F21
D36
D35
C25
G7
C1
RED
LT BLU
LT GRN
GRN
GRN
GRN
DATA LINK CONNECTOR (DLC)
PCM
BRAKE PEDAL POSITION SWITCH
SBW SHIFTER CONTROL MODULE

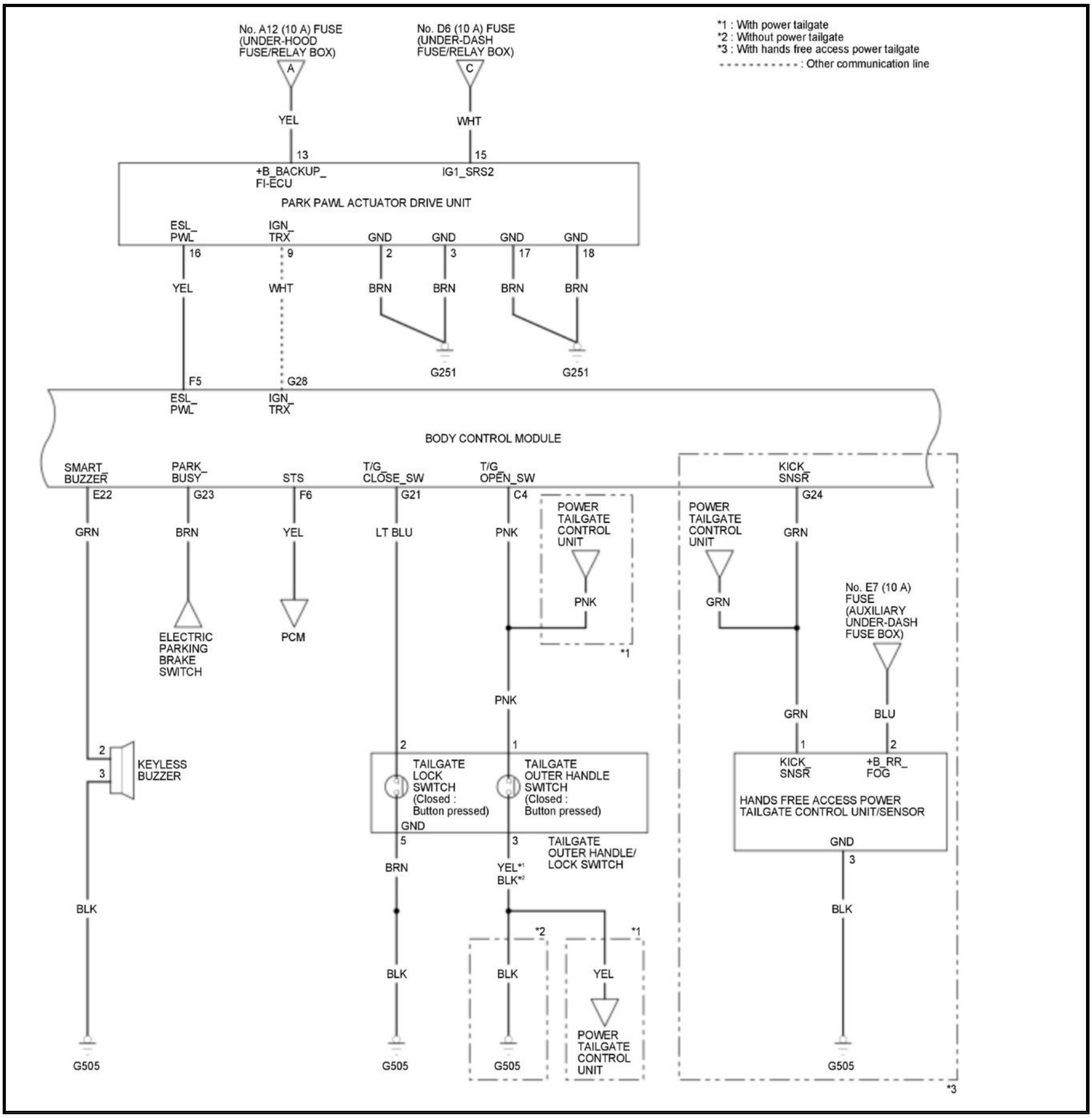
*1 : With power tailgate
*2 : Without power tailgate
*3 : With hands free access power tailgate
: Other communication line
No. A12 (10 A) FUSE (UNDER-HOOD FUSE/RELAY BOX)
A
No. D6 (10 A) FUSE (UNDER-DASH FUSE/RELAY BOX)
C
YEL
WHT
13
15
+B_BACKUP_ FI-ECU
IG1_SRS2
PARK PAWL ACTUATOR DRIVE UNIT
ESL_ PWL
IGN_ TRX
GND
GND
GND
GND
16
9
2
3
17
18
YEL
WHT
BRN
BRN
BRN
BRN
G251
G251
F5
G28
ESL_ PWL
IGN_ TRX
BODY CONTROL MODULE
SMART_ BUZZER
PARK_ BUSY
STS
T/G_ CLOSE_SW
T/G_ OPEN_SW
KICK_ SNSR
E22
G23
F6
G21
C4
G24
GRN
BRN
YEL
LT BLU
PNK
POWER TAILGATE CONTROL UNIT
PNK
*1
POWER TAILGATE CONTROL UNIT
GRN
GRN
ELECTRIC PARKING BRAKE SWITCH
PCM
PNK
No. E7 (10 A) FUSE (AUXILIARY UNDER-DASH FUSE BOX)
GRN
BLU
2
3
KEYLESS BUZZER
2
1
TAILGATE LOCK SWITCH (Closed : Button pressed)
TAILGATE OUTER HANDLE SWITCH (Closed : Button pressed)
GND
5
3
TAILGATE OUTER HANDLE/ LOCK SWITCH
1
2
KICK_ SNSR
+B_RR_ FOG
HANDS FREE ACCESS POWER TAILGATE CONTROL UNIT/SENSOR
GND
3
BRN
YEL*1
BLK*2
BLK
BLK
*2
*1
BLK
BLK
YEL
BLK
POWER TAILGATE CONTROL UNIT
G505
G505
G505
G505
*3

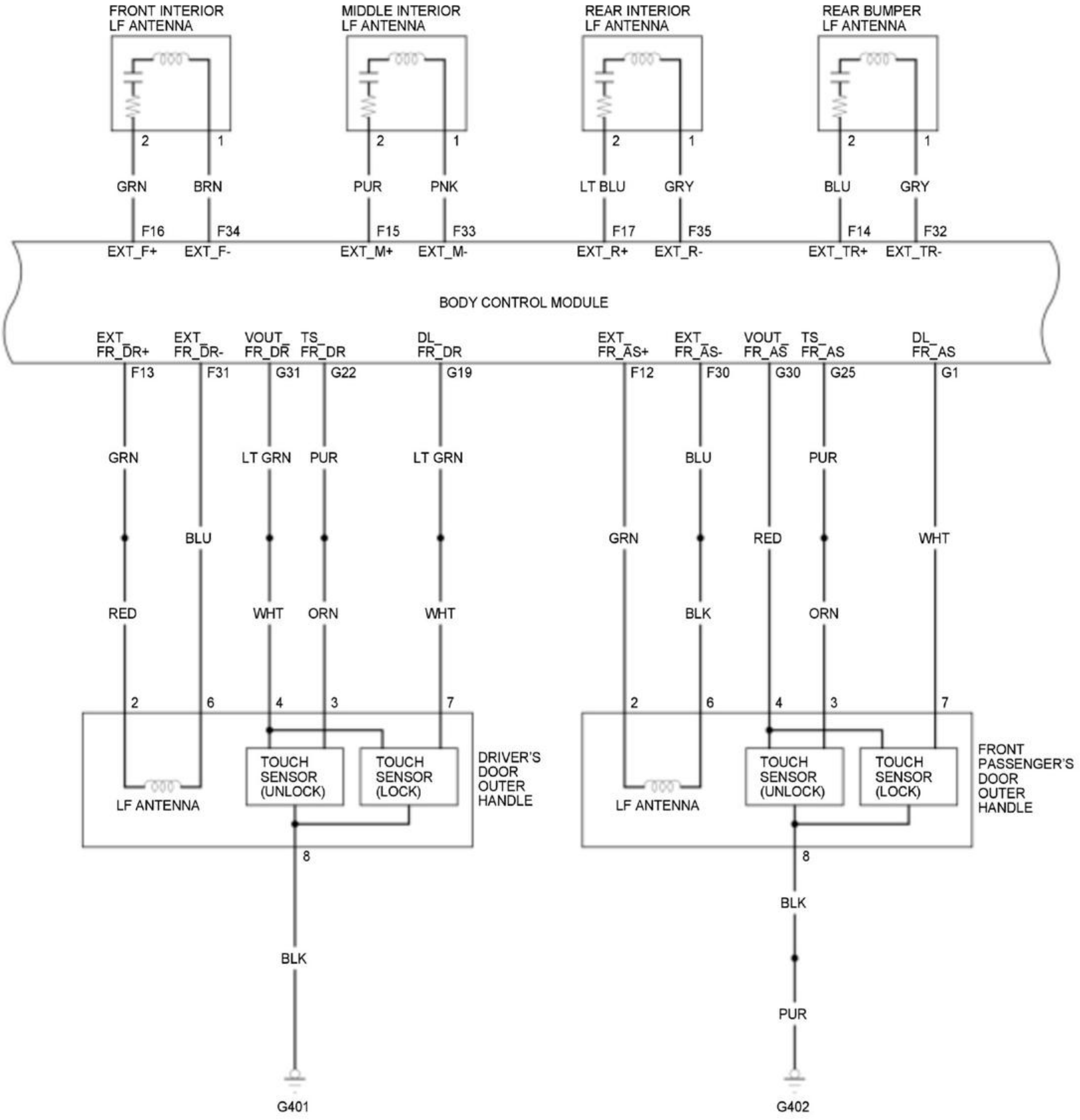
FRONT INTERIOR LF ANTENNA
MIDDLE INTERIOR LF ANTENNA
REAR INTERIOR LF ANTENNA
REAR BUMPER LF ANTENNA
2
1
GRN
BRN
PUR
PNK
LT BLU
GRY
BLU
GRY
F16
F34
F15
F33
F17
F35
F14
F32
EXT_F+
EXT_F-
EXT_M+
EXT_M-
EXT_R+
EXT_R-
EXT_TR+
EXT_TR-
BODY CONTROL MODULE
EXT_FR_DR+
EXT_FR_DR-
VOUT_FR_DR
TS_FR_DR
DL_FR_DR
EXT_FR_AS+
EXT_FR_AS-
VOUT_FR_AS
TS_FR_AS
DL_FR_AS
F13
F31
G31
G22
G19
F12
F30
G30
G25
G1
GRN
LT GRN
PUR
LT GRN
BLU
PUR
BLU
GRN
RED
WHT
RED
WHT
ORN
WHT
BLK
ORN
2
6
4
3
7
TOUCH SENSOR (UNLOCK)
TOUCH SENSOR (LOCK)
LF ANTENNA
DRIVER'S DOOR OUTER HANDLE
FRONT PASSENGER'S DOOR OUTER HANDLE
8
BLK
BLK
PUR
G401
G402

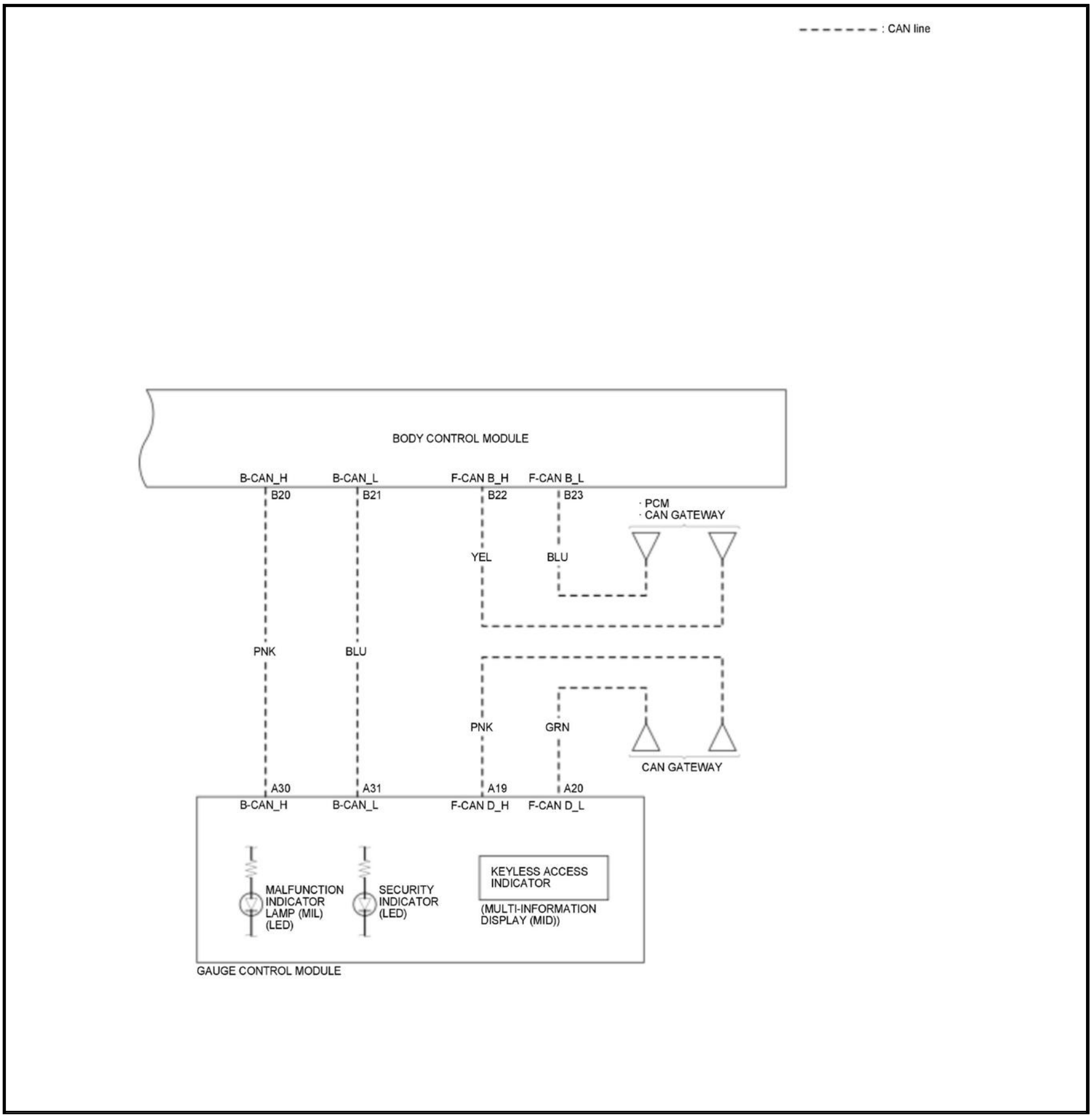

: CAN line
BODY CONTROL MODULE
B-CAN_H
B-CAN_L
F-CAN B_H
F-CAN B_L
B20
B21
B22
B23
· PCM
· CAN GATEWAY
YEL
BLU
PNK
BLU
PNK
GRN
CAN GATEWAY
A30
A31
A19
A20
B-CAN_H
B-CAN_L
F-CAN D_H
F-CAN D_L
MALFUNCTION INDICATOR LAMP (MIL) (LED)
SECURITY INDICATOR (LED)
KEYLESS ACCESS INDICATOR
(MULTI-INFORMATION DISPLAY (MID))
GAUGE CONTROL MODULE

KEYLESS/POWER DOOR LOCKS/SECURITY SYSTEM CIRCUIT DIAGRAM

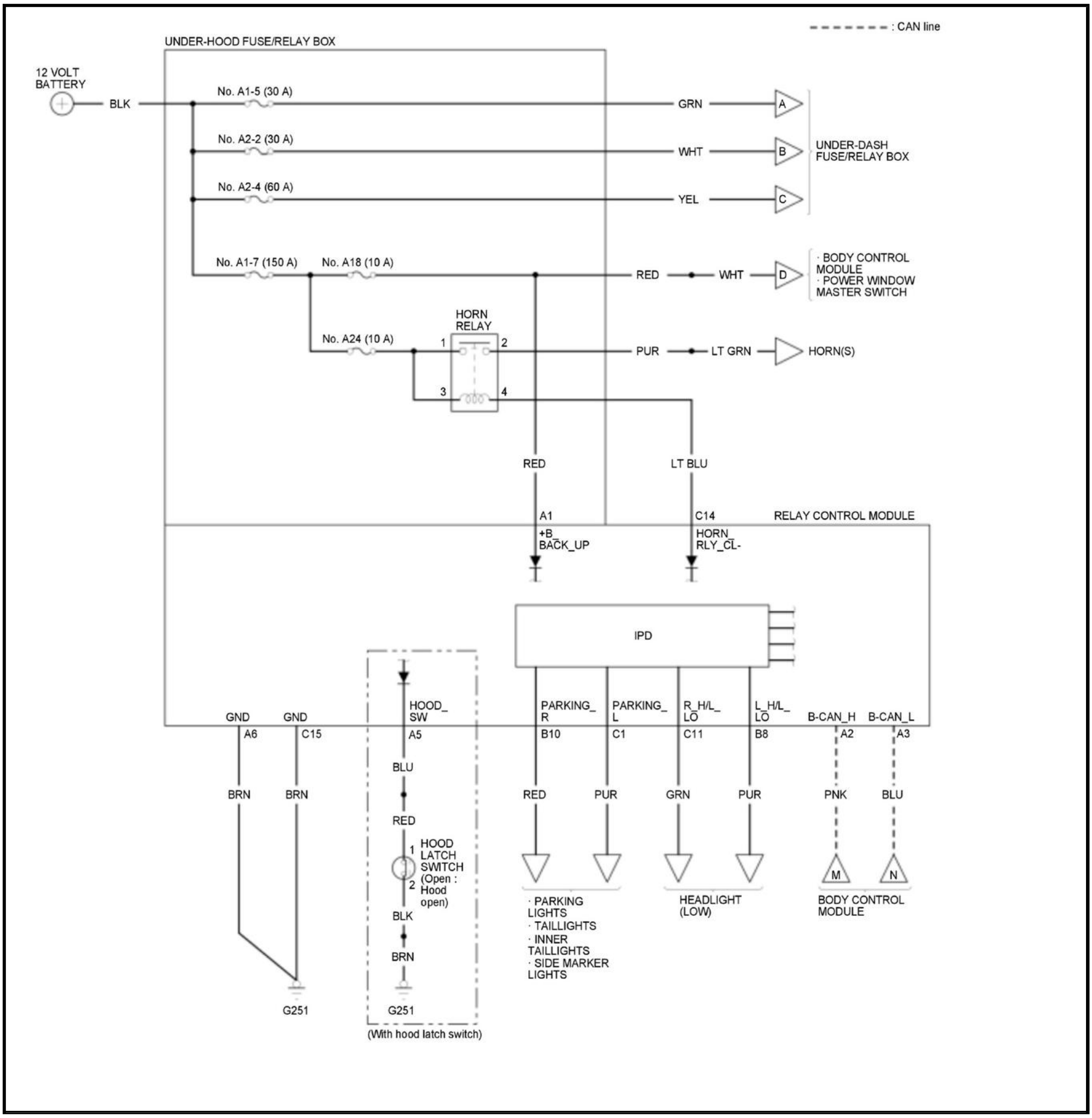
: CAN line
UNDER-HOOD FUSE/RELAY BOX
12 VOLT BATTERY
BLK
No. A1-5 (30 A)
GRN
A
No. A2-2 (30 A)
WHT
B
UNDER-DASH FUSE/RELAY BOX
No. A2-4 (60 A)
YEL
C
No. A1-7 (150 A)
No. A18 (10 A)
RED
WHT
D
· BODY CONTROL MODULE
· POWER WINDOW MASTER SWITCH
HORN RELAY
No. A24 (10 A)
1
2
3
4
PUR
LT GRN
HORN(S)
RED
LT BLU
A1
+B_ BACK_UP
C14
HORN_ RLY_CL-
RELAY CONTROL MODULE
IPD
GND
GND
HOOD_ SW
PARKING_ R
PARKING_ L
R_H/L_ LO
L_H/L_ LO
B-CAN_H
B-CAN_L
A6
C15
A5
B10
C1
C11
B8
A2
A3
BLU
BRN
BRN
RED
PUR
GRN
PUR
PNK
BLU
RED
HOOD LATCH SWITCH (Open : Hood open)
1
2
BLK
BRN
M
N
· PARKING LIGHTS
· TAILLIGHTS
· INNER TAILLIGHTS
· SIDE MARKER LIGHTS
HEADLIGHT (LOW)
BODY CONTROL MODULE
G251
G251
(With hood latch switch)

*1 : IG1A HOT in ON and START mode
*2 : IG2 HOT in ON mode

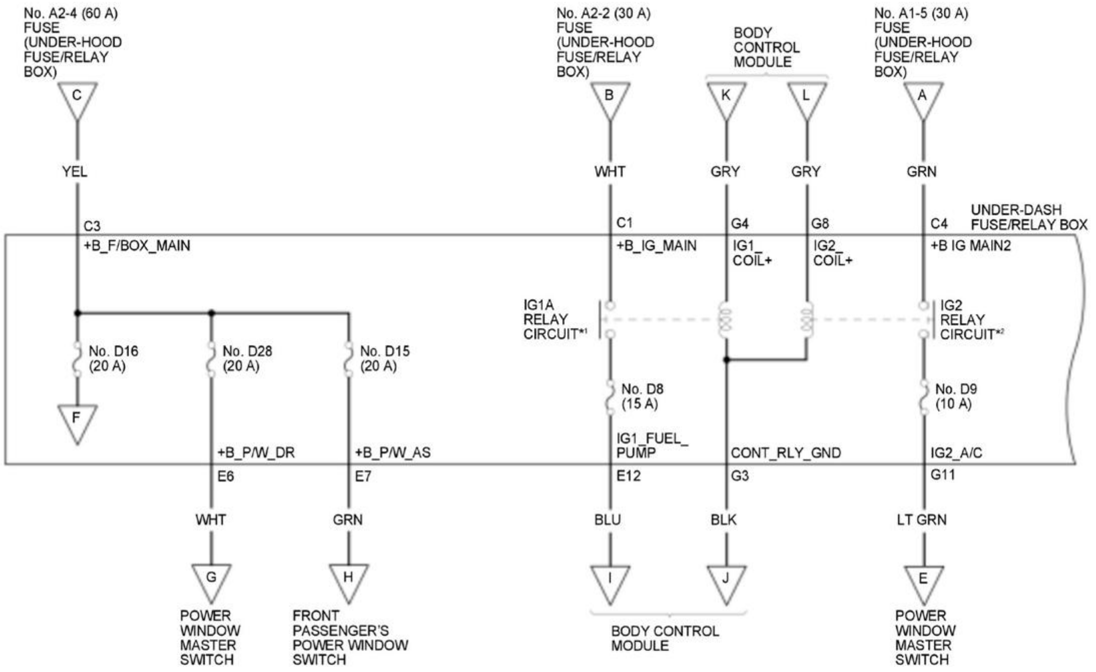
No. A2-4 (60 A) FUSE (UNDER-HOOD FUSE/RELAY BOX)
C
YEL
No. A2-2 (30 A) FUSE (UNDER-HOOD FUSE/RELAY BOX)
B
WHT
BODY CONTROL MODULE
K
L
GRY
GRY
No. A1-5 (30 A) FUSE (UNDER-HOOD FUSE/RELAY BOX)
A
GRN
UNDER-DASH FUSE/RELAY BOX
C3
+B_F/BOX_MAIN
C1
+B_IG_MAIN
G4
IG1_ COIL+
G8
IG2_ COIL+
C4
+B IG MAIN2
IG1A RELAY CIRCUIT*1
IG2 RELAY CIRCUIT*2
No. D16 (20 A)
No. D28 (20 A)
No. D15 (20 A)
No. D8 (15 A)
No. D9 (10 A)
F
+B_P/W_DR
+B_P/W_AS
IG1_FUEL_ PUMP
CONT_RLY_GND
IG2_A/C
E6
E7
E12
G3
G11
WHT
GRN
BLU
BLK
LT GRN
G
H
I
J
E
POWER WINDOW MASTER SWITCH
FRONT PASSENGER'S POWER WINDOW SWITCH
BODY CONTROL MODULE
POWER WINDOW MASTER SWITCH

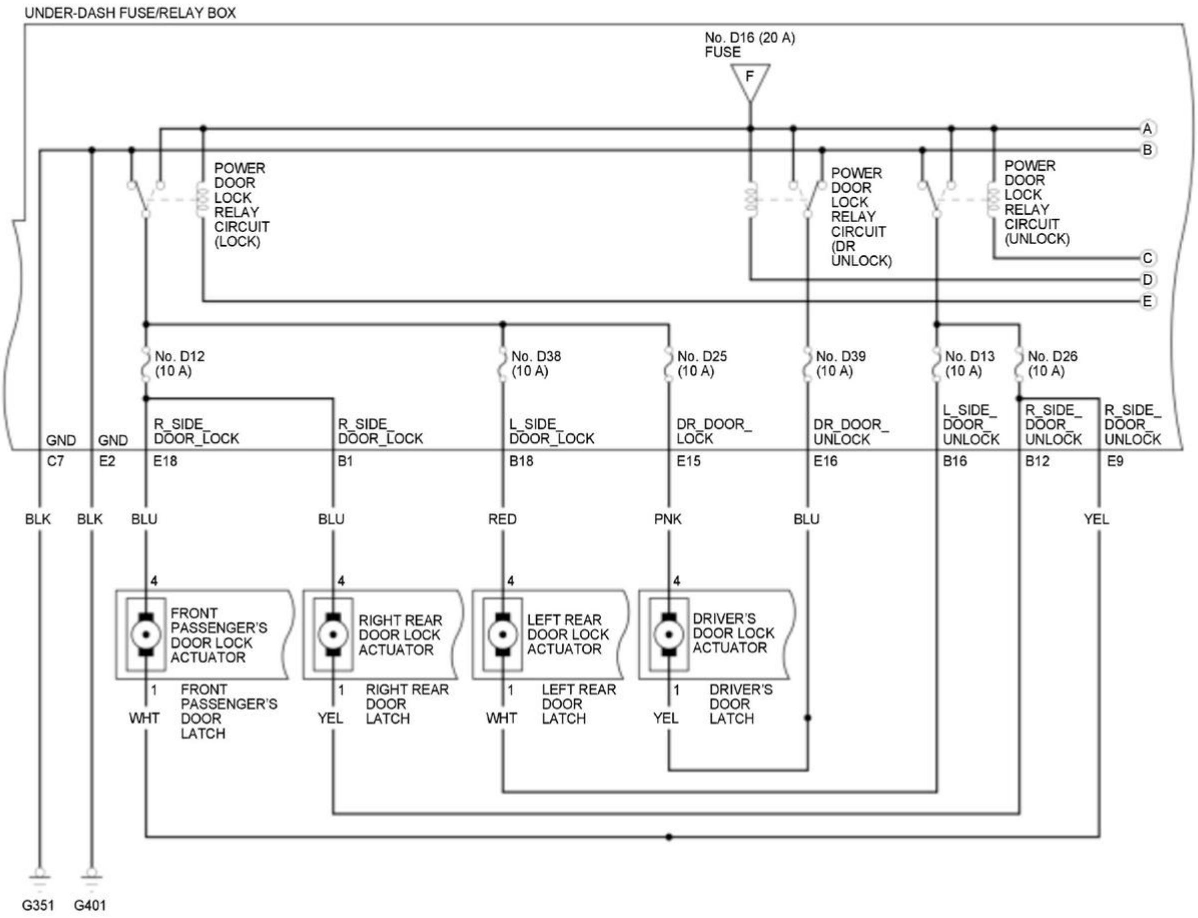
UNDER-DASH FUSE/RELAY BOX
No. D16 (20 A)
FUSE
F
A
B
C
D
E
POWER DOOR LOCK RELAY CIRCUIT (LOCK)
POWER DOOR LOCK RELAY CIRCUIT (DR UNLOCK)
POWER DOOR LOCK RELAY CIRCUIT (UNLOCK)
No. D12 (10 A)
No. D38 (10 A)
No. D25 (10 A)
No. D39 (10 A)
No. D13 (10 A)
No. D26 (10 A)
GND
C7
GND
E2
R_SIDE_DOOR_LOCK
E18
R_SIDE_DOOR_LOCK
B1
L_SIDE_DOOR_LOCK
B18
DR_DOOR_LOCK
E15
DR_DOOR_UNLOCK
E16
L_SIDE_DOOR_UNLOCK
B16
R_SIDE_DOOR_UNLOCK
B12
R_SIDE_DOOR_UNLOCK
E9
BLK
BLK
BLU
BLU
RED
PNK
BLU
YEL
4
FRONT PASSENGER'S DOOR LOCK ACTUATOR
4
RIGHT REAR DOOR LOCK ACTUATOR
4
LEFT REAR DOOR LOCK ACTUATOR
4
DRIVER'S DOOR LOCK ACTUATOR
1
FRONT PASSENGER'S DOOR LATCH
WHT
1
RIGHT REAR DOOR LATCH
YEL
1
LEFT REAR DOOR LATCH
WHT
1
DRIVER'S DOOR LATCH
YEL
G351
G401

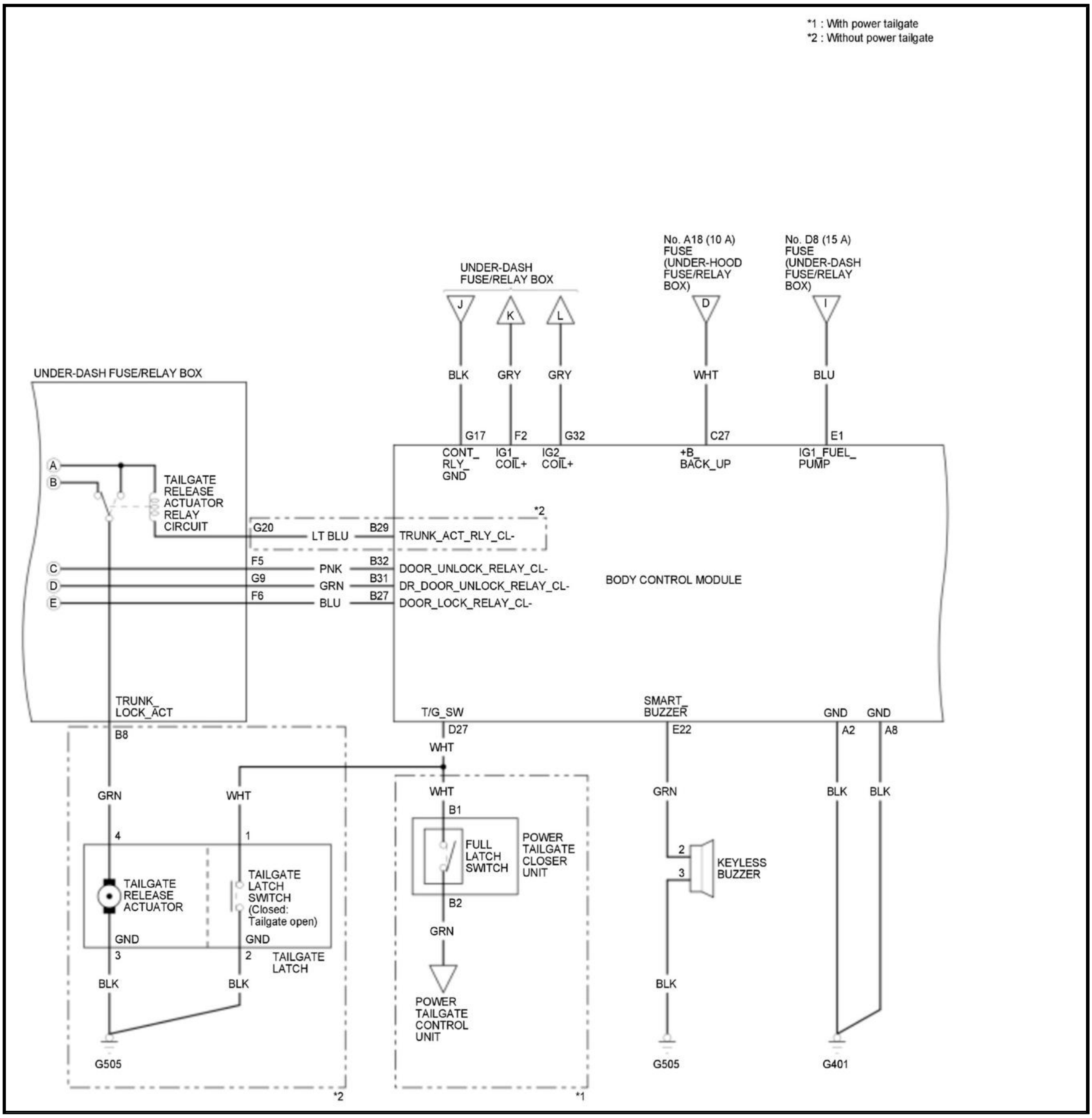
*1 : With power tailgate
*2 : Without power tailgate
UNDER-DASH FUSE/RELAY BOX
J
K
L
No. A18 (10 A) FUSE (UNDER-HOOD FUSE/RELAY BOX)
D
No. D8 (15 A) FUSE (UNDER-DASH FUSE/RELAY BOX)
I
BLK
GRY
GRY
WHT
BLU
G17
F2
G32
C27
E1
CONT_ RLY_ GND
IG1_ COIL+
IG2_ COIL+
+B_ BACK_UP
IG1_FUEL_ PUMP
UNDER-DASH FUSE/RELAY BOX
A
B
TAILGATE RELEASE ACTUATOR RELAY CIRCUIT
*2
G20
LT BLU
B29
TRUNK_ACT_RLY_CL-
C
D
E
F5
PNK
B32
DOOR_UNLOCK_RELAY_CL-
G9
GRN
B31
DR_DOOR_UNLOCK_RELAY_CL-
F6
BLU
B27
DOOR_LOCK_RELAY_CL-
BODY CONTROL MODULE
TRUNK_ LOCK_ACT
B8
T/G_SW
D27
WHT
SMART_ BUZZER
E22
GND
A2
GND
A8
GRN
WHT
4
1
TAILGATE RELEASE ACTUATOR
TAILGATE LATCH SWITCH (Closed: Tailgate open)
GND
GND
3
2
TAILGATE LATCH
BLK
BLK
G505
*2
WHT
B1
FULL LATCH SWITCH
POWER TAILGATE CLOSER UNIT
B2
GRN
POWER TAILGATE CONTROL UNIT
*1
GRN
2
3
KEYLESS BUZZER
BLK
G505
BLK
BLK
G401

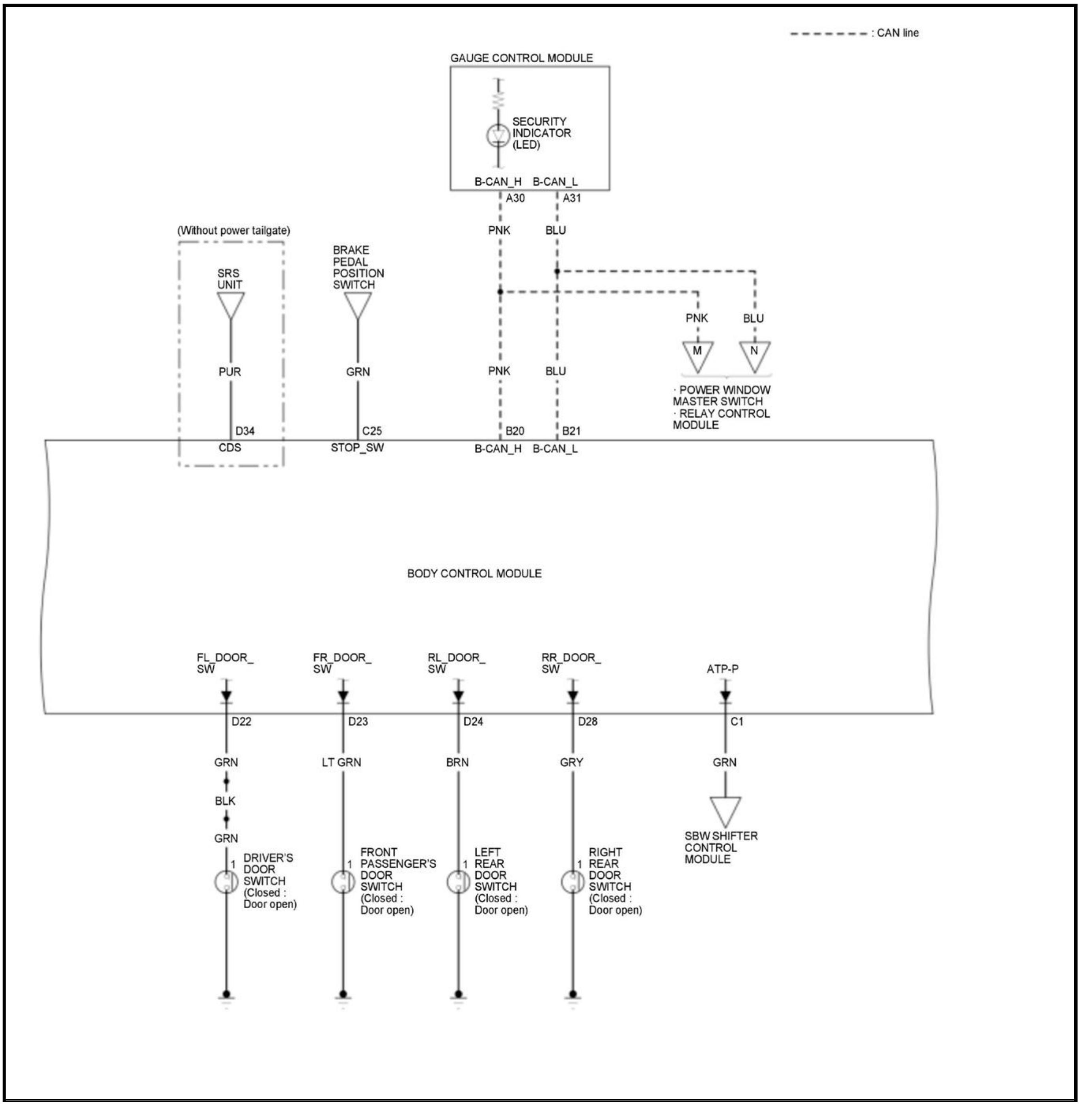
: CAN line
GAUGE CONTROL MODULE
SECURITY INDICATOR (LED)
B-CAN_H
B-CAN_L
A30
A31
PNK
BLU
(Without power tailgate)
SRS UNIT
BRAKE PEDAL POSITION SWITCH
PNK
BLU
M
N
PUR
GRN
PNK
BLU
· POWER WINDOW MASTER SWITCH
· RELAY CONTROL MODULE
D34
CDS
C25
STOP_SW
B20
B-CAN_H
B21
B-CAN_L
BODY CONTROL MODULE
FL_DOOR_SW
FR_DOOR_SW
RL_DOOR_SW
RR_DOOR_SW
ATP-P
D22
D23
D24
D28
C1
GRN
LT GRN
BRN
GRY
GRN
BLK
GRN
SBW SHIFTER CONTROL MODULE
1
DRIVER'S DOOR SWITCH (Closed : Door open)
1
FRONT PASSENGER'S DOOR SWITCH (Closed : Door open)
1
LEFT REAR DOOR SWITCH (Closed : Door open)
1
RIGHT REAR DOOR SWITCH (Closed : Door open)

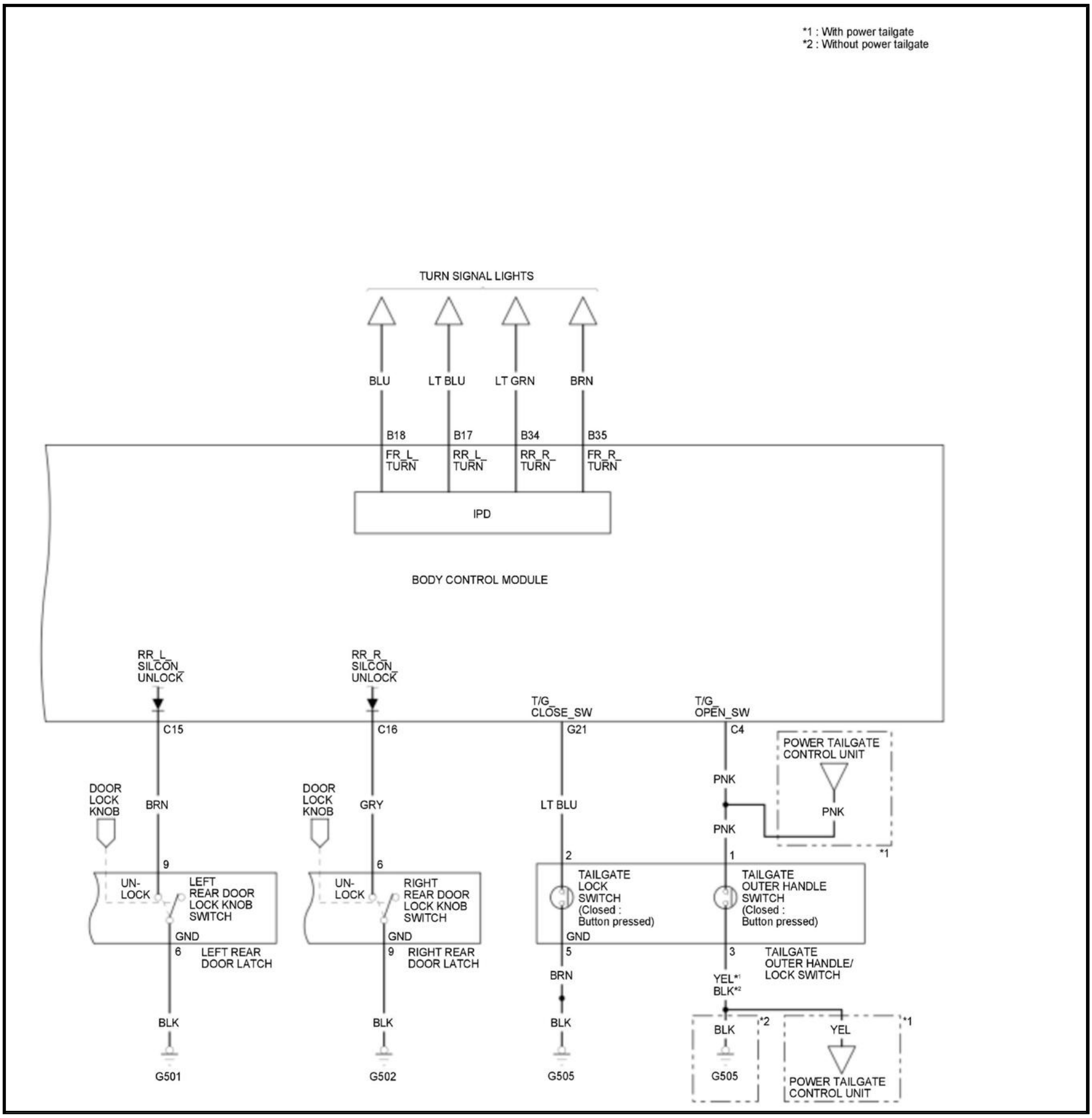
*1 : With power tailgate
*2 : Without power tailgate
TURN SIGNAL LIGHTS
BLU
LT BLU
LT GRN
BRN
B18
B17
B34
B35
FR_L_ TURN
RR_L_ TURN
RR_R_ TURN
FR_R_ TURN
IPD
BODY CONTROL MODULE
RR_L_ SILCON_ UNLOCK
RR_R_ SILCON_ UNLOCK
T/G_ CLOSE_SW
T/G_ OPEN_SW
C15
C16
G21
C4
POWER TAILGATE CONTROL UNIT
PNK
PNK
PNK
*1
DOOR LOCK KNOB
BRN
DOOR LOCK KNOB
GRY
LT BLU
9
UN-LOCK
LEFT REAR DOOR LOCK KNOB SWITCH
GND
6
LEFT REAR DOOR LATCH
6
UN-LOCK
RIGHT REAR DOOR LOCK KNOB SWITCH
GND
9
RIGHT REAR DOOR LATCH
2
TAILGATE LOCK SWITCH (Closed : Button pressed)
GND
5
1
TAILGATE OUTER HANDLE SWITCH (Closed : Button pressed)
3
TAILGATE OUTER HANDLE/ LOCK SWITCH
BLK
G501
BLK
G502
BRN
BLK
G505
YEL*1
BLK*2
BLK
*2
G505
YEL
*1
POWER TAILGATE CONTROL UNIT

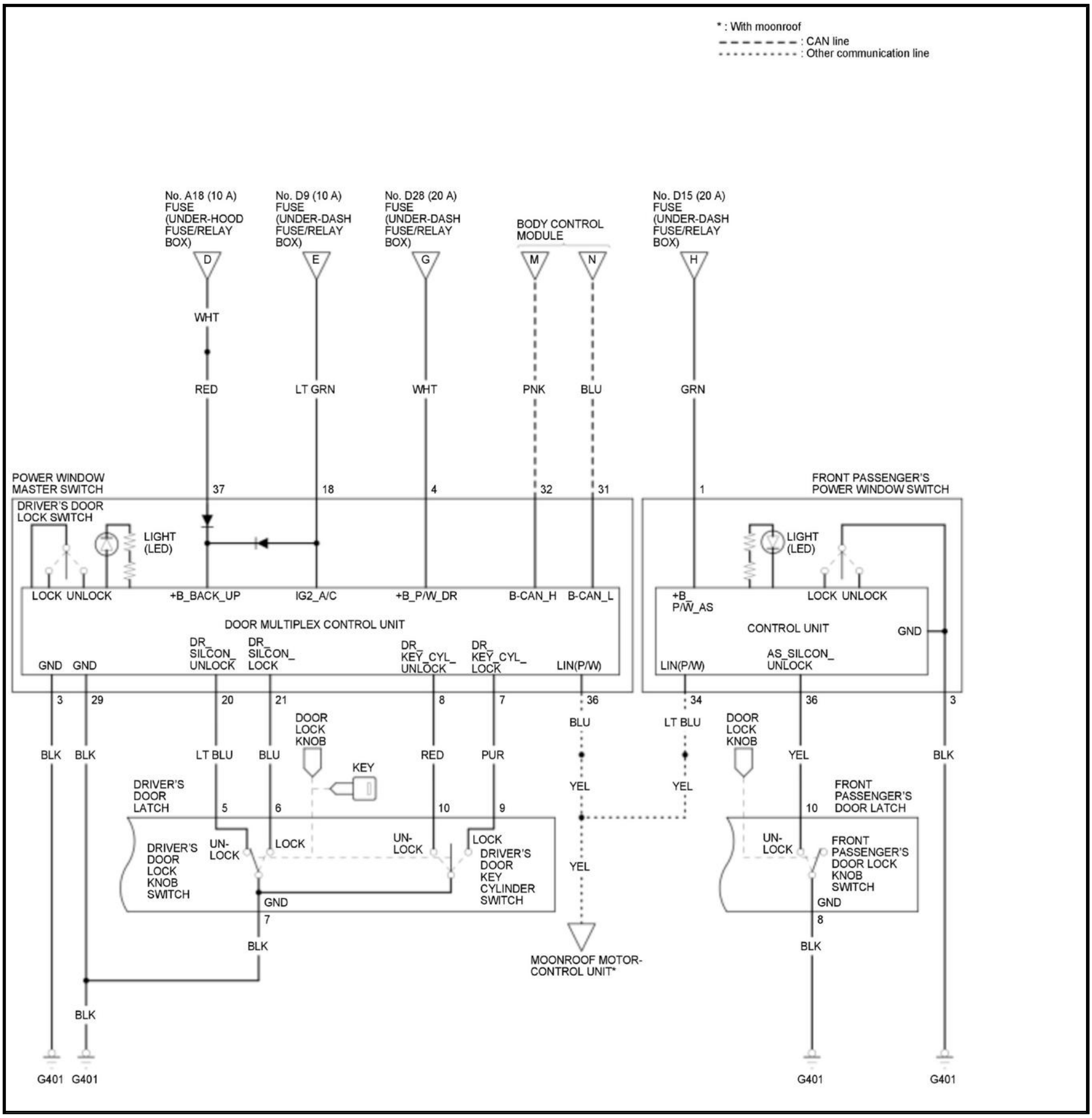
* : With moonroof
: CAN line
: Other communication line
No. A18 (10 A) FUSE (UNDER-HOOD FUSE/RELAY BOX)
No. D9 (10 A) FUSE (UNDER-DASH FUSE/RELAY BOX)
No. D28 (20 A) FUSE (UNDER-DASH FUSE/RELAY BOX)
BODY CONTROL MODULE
No. D15 (20 A) FUSE (UNDER-DASH FUSE/RELAY BOX)
D
E
G
M
N
H
WHT
RED
LT GRN
WHT
PNK
BLU
GRN
POWER WINDOW MASTER SWITCH
DRIVER'S DOOR LOCK SWITCH
LIGHT (LED)
37
18
4
32
31
1
FRONT PASSENGER'S POWER WINDOW SWITCH
LIGHT (LED)
LOCK UNLOCK
+B_BACK_UP
IG2_A/C
+B_P/W_DR
B-CAN_H
B-CAN_L
+B_P/W_AS
LOCK UNLOCK
DOOR MULTIPLEX CONTROL UNIT
CONTROL UNIT
GND
GND GND
DR_SILCON_UNLOCK
DR_SILCON_LOCK
DR_KEY_CYL_UNLOCK
DR_KEY_CYL_LOCK
LIN(P/W)
LIN(P/W)
AS_SILCON_UNLOCK
3
29
20
21
8
7
36
34
36
3
DOOR LOCK KNOB
DOOR LOCK KNOB
BLK
BLK
LT BLU
BLU
RED
PUR
BLU
LT BLU
YEL
BLK
KEY
YEL
YEL
DRIVER'S DOOR LATCH
FRONT PASSENGER'S DOOR LATCH
5
6
10
9
10
DRIVER'S DOOR LOCK KNOB SWITCH
UN-LOCK
LOCK
UN-LOCK
LOCK
DRIVER'S DOOR KEY CYLINDER SWITCH
UN-LOCK
FRONT PASSENGER'S DOOR LOCK KNOB SWITCH
GND
GND
YEL
7
8
BLK
BLK
MOONROOF MOTOR-CONTROL UNIT*
BLK
G401
G401
G401
G401

COMPONENT LOCATION INDEX

HOMELINK REMOTE CONTROL SYSTEM COMPONENT LOCATION INDEX

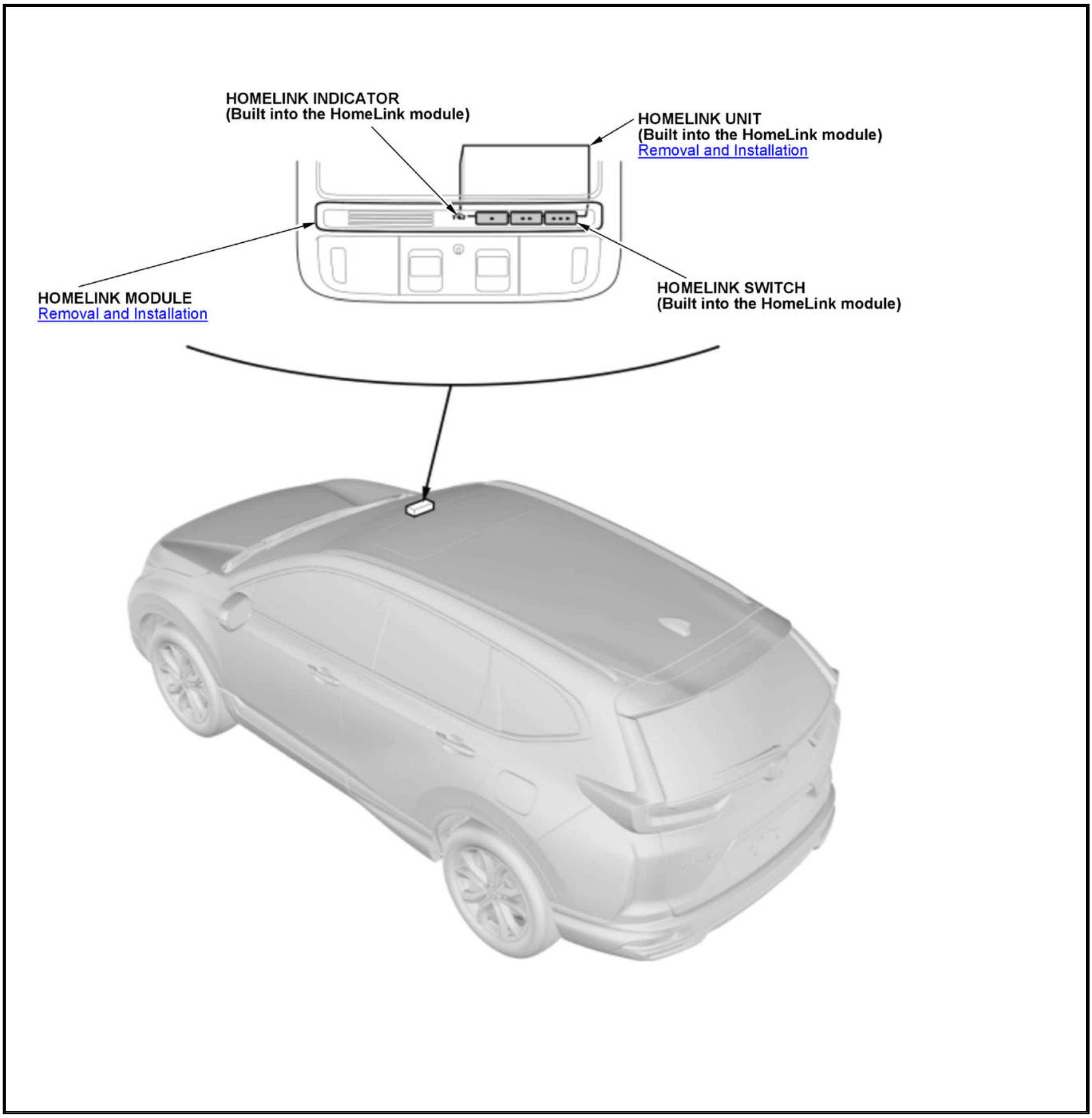
HOMELINK INDICATOR
(Built into the HomeLink module)
HOMELINK UNIT
(Built into the HomeLink module)
Removal and Installation
HOMELINK MODULE
Removal and Installation
HOMELINK SWITCH
(Built into the HomeLink module)

KEYLESS ACCESS SYSTEM COMPONENT LOCATION INDEX

For relationships between signals in a system,

refer to System Diagram.

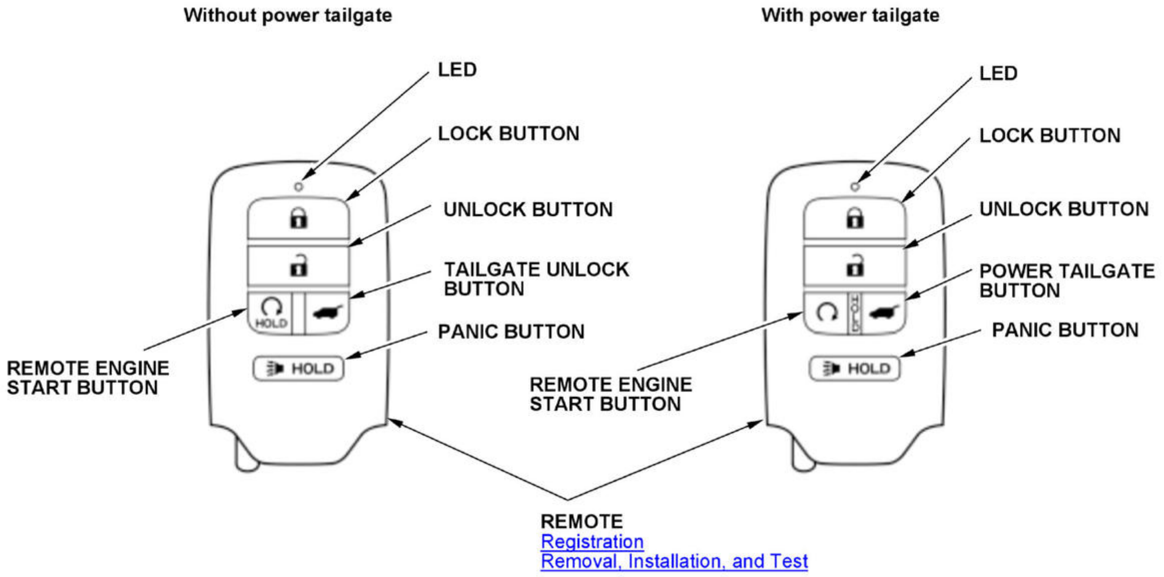
Without power tailgate
With power tailgate
LED
LOCK BUTTON
UNLOCK BUTTON
TAILGATE UNLOCK BUTTON
PANIC BUTTON
REMOTE ENGINE START BUTTON
HOLD
LED
LOCK BUTTON
UNLOCK BUTTON
POWER TAILGATE BUTTON
PANIC BUTTON
REMOTE ENGINE START BUTTON
REMOTE
Registration
Removal, Installation, and Test

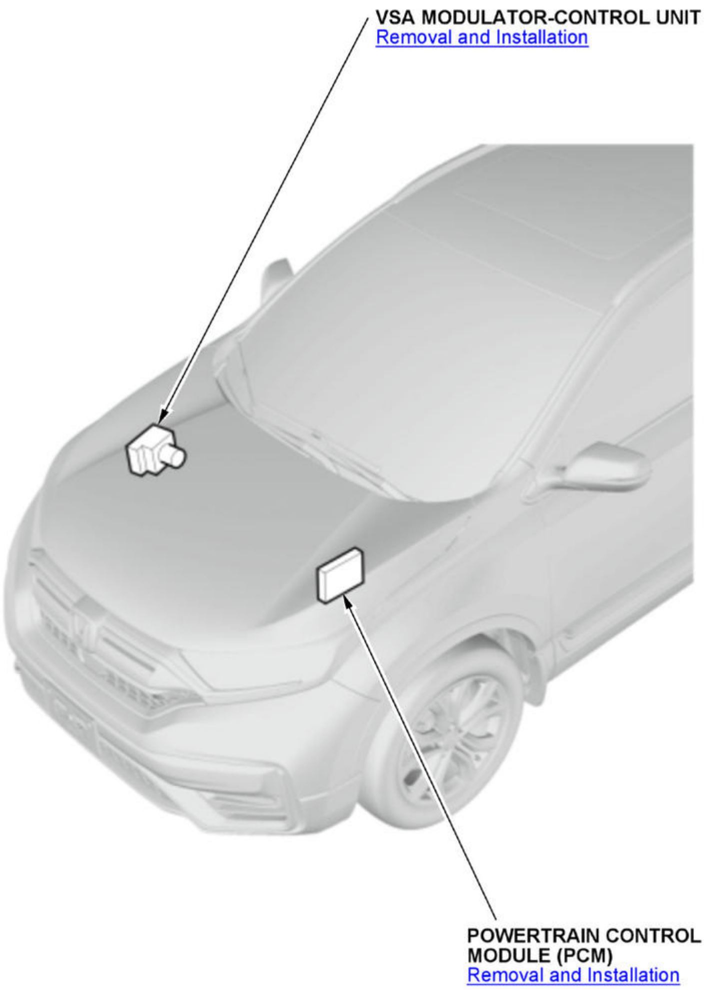
VSA MODULATOR-CONTROL UNIT
Removal and Installation
POWERTRAIN CONTROL MODULE (PCM)
Removal and Installation

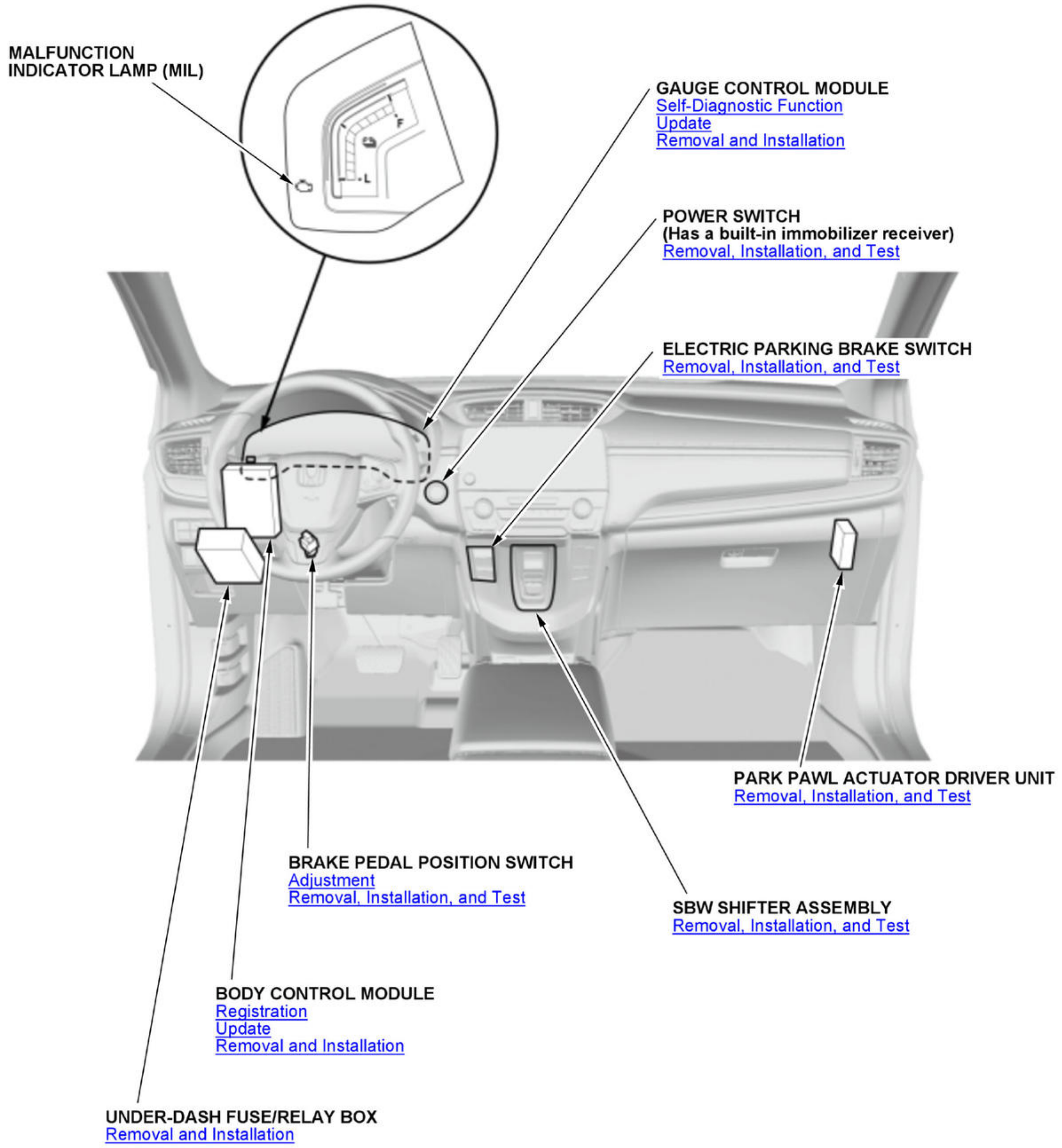
MALFUNCTION INDICATOR LAMP (MIL)
F
L
GAUGE CONTROL MODULE
Self-Diagnostic Function
Update
Removal and Installation
POWER SWITCH
(Has a built-in immobilizer receiver)
Removal, Installation, and Test
ELECTRIC PARKING BRAKE SWITCH
Removal, Installation, and Test
PARK PAWL ACTUATOR DRIVER UNIT
Removal, Installation, and Test
BRAKE PEDAL POSITION SWITCH
Adjustment
Removal, Installation, and Test
SBW SHIFTER ASSEMBLY
Removal, Installation, and Test
BODY CONTROL MODULE
Registration
Update
Removal and Installation
UNDER-DASH FUSE/RELAY BOX
Removal and Installation

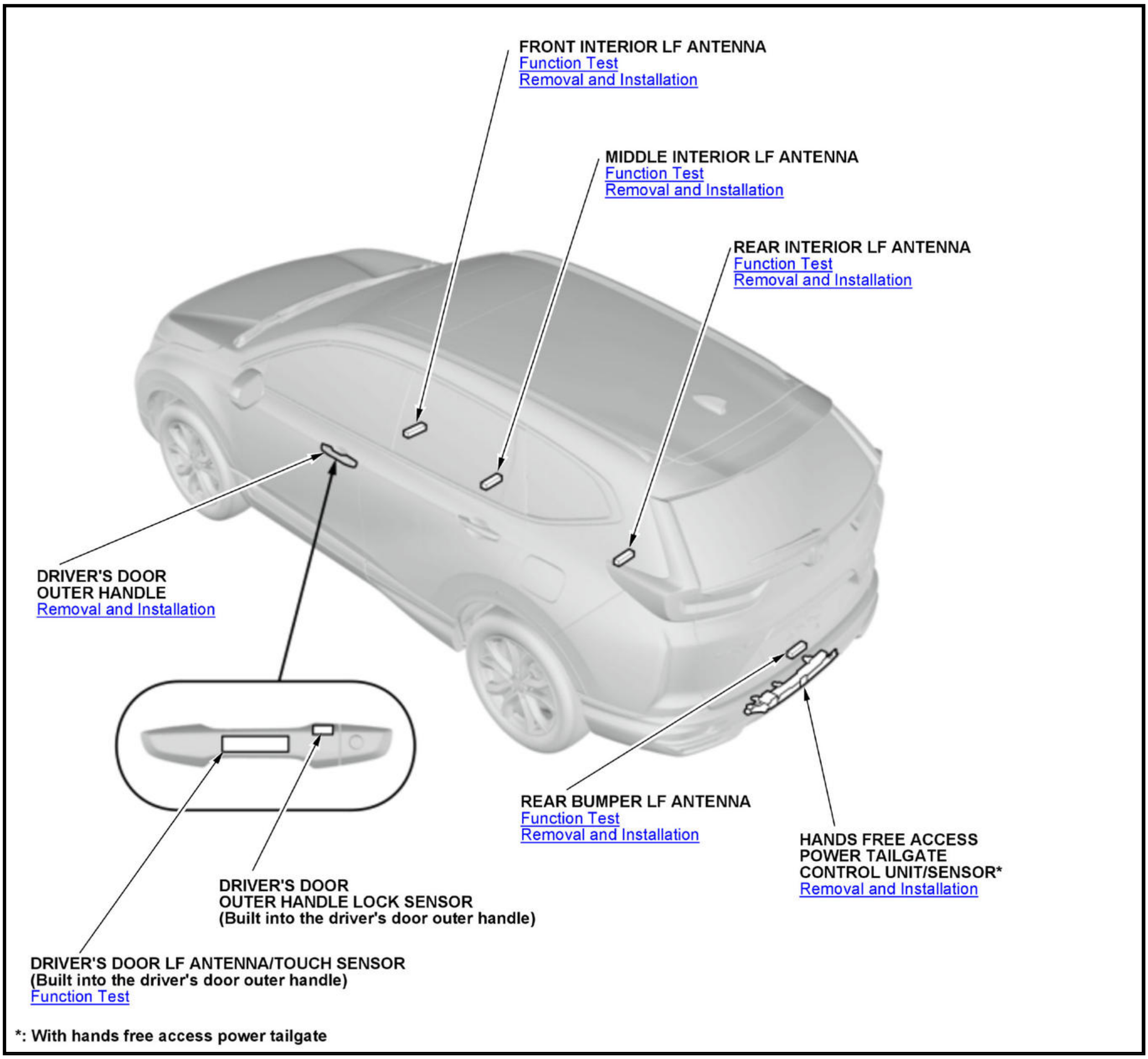
FRONT INTERIOR LF ANTENNA
Function Test
Removal and Installation
MIDDLE INTERIOR LF ANTENNA
Function Test
Removal and Installation
REAR INTERIOR LF ANTENNA
Function Test
Removal and Installation
DRIVER'S DOOR OUTER HANDLE
Removal and Installation
REAR BUMPER LF ANTENNA
Function Test
Removal and Installation
HANDS FREE ACCESS POWER TAILGATE CONTROL UNIT/SENSOR*
Removal and Installation
DRIVER'S DOOR OUTER HANDLE LOCK SENSOR
(Built into the driver's door outer handle)
DRIVER'S DOOR LF ANTENNA/TOUCH SENSOR
(Built into the driver's door outer handle)
Function Test

*: With hands free access power tailgate

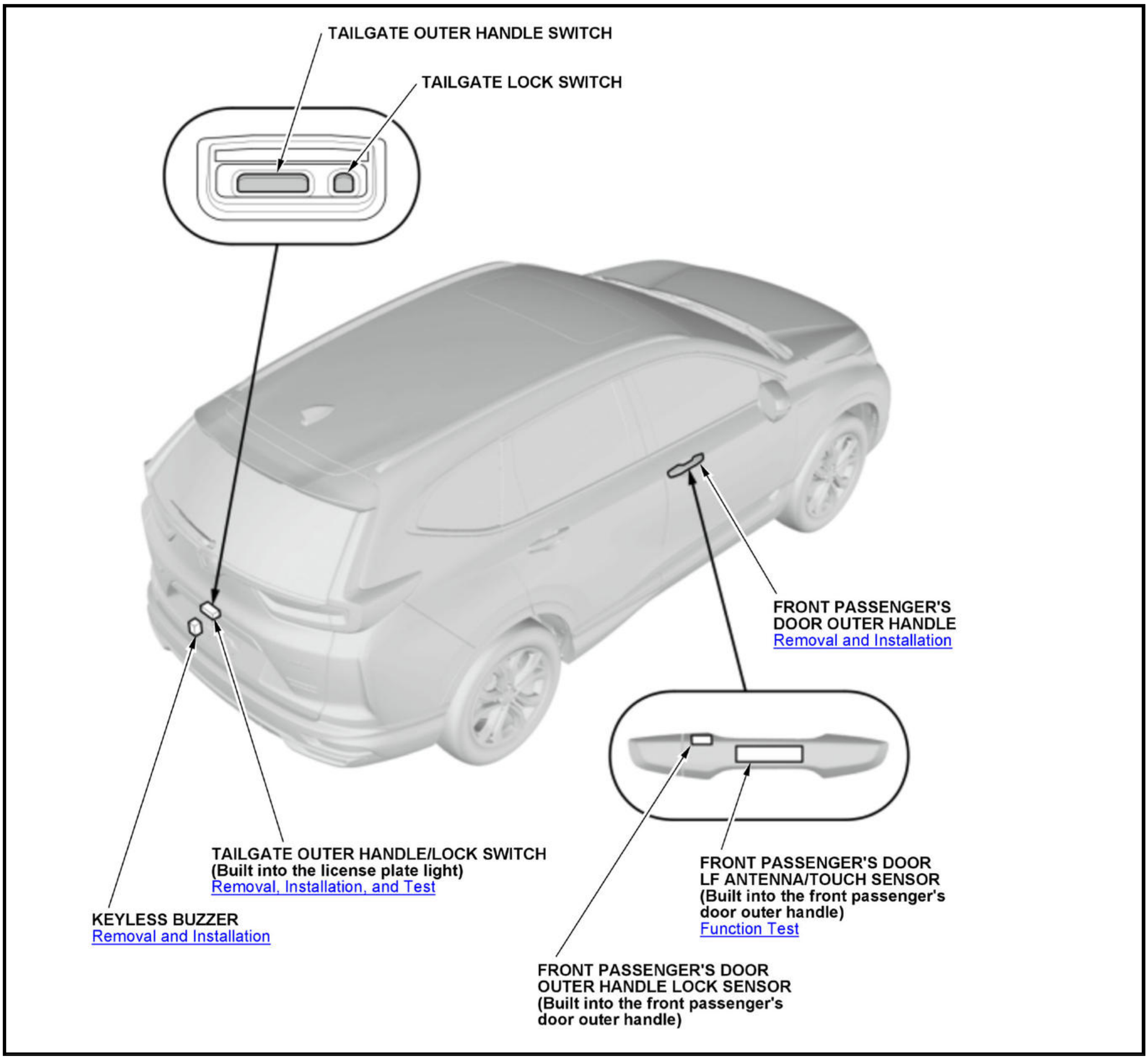
TAILGATE OUTER HANDLE SWITCH
TAILGATE LOCK SWITCH
FRONT PASSENGER'S DOOR OUTER HANDLE
Removal and Installation
TAILGATE OUTER HANDLE/LOCK SWITCH (Built into the license plate light)
Removal, Installation, and Test
KEYLESS BUZZER
Removal and Installation
FRONT PASSENGER'S DOOR LF ANTENNA/TOUCH SENSOR (Built into the front passenger's door outer handle)
Function Test
FRONT PASSENGER'S DOOR OUTER HANDLE LOCK SENSOR (Built into the front passenger's door outer handle)

KEYLESS/POWER DOOR LOCKS/SECURITY SYSTEM COMPONENT LOCATION INDEX

For relationships between signals in a system,

refer to System Diagram.

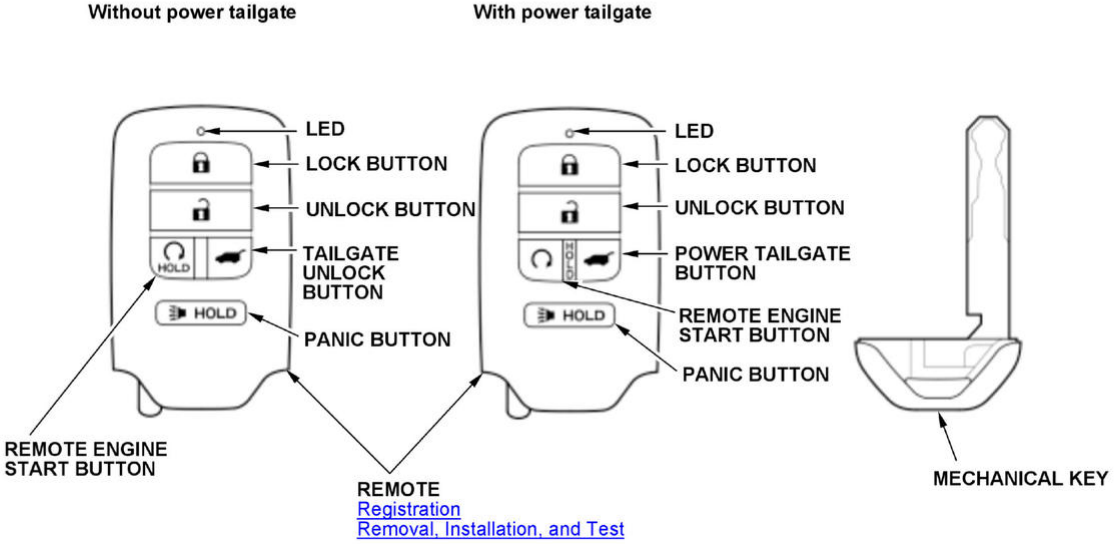
Without power tailgate
With power tailgate
LED
LOCK BUTTON
UNLOCK BUTTON
TAILGATE UNLOCK BUTTON
PANIC BUTTON
REMOTE ENGINE START BUTTON
HOLD
LED
LOCK BUTTON
UNLOCK BUTTON
POWER TAILGATE BUTTON
REMOTE ENGINE START BUTTON
PANIC BUTTON
HOLD
REMOTE
Registration
Removal, Installation, and Test
MECHANICAL KEY

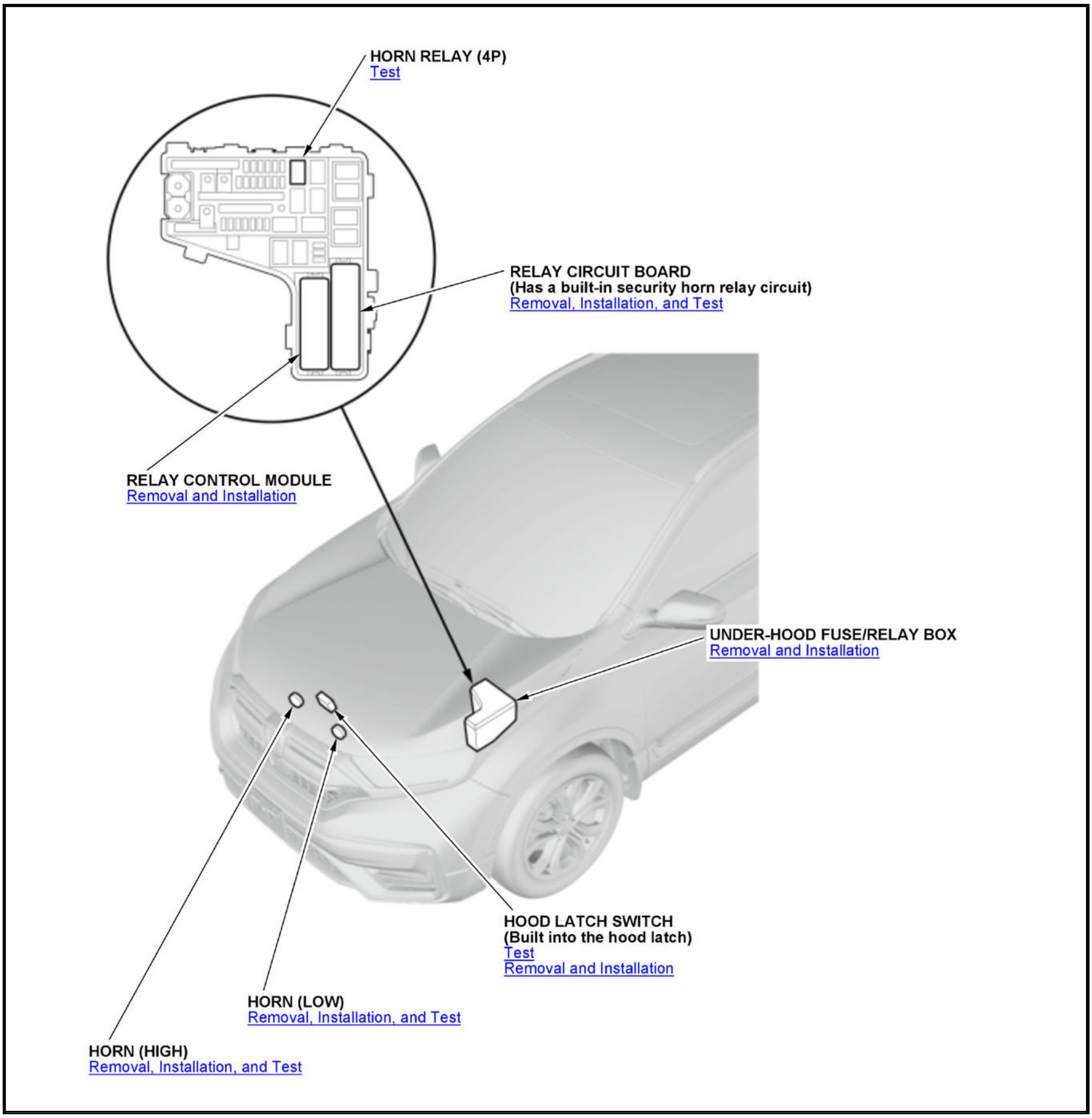
HORN RELAY (4P)
Test
RELAY CIRCUIT BOARD
(Has a built-in security horn relay circuit)
Removal, Installation, and Test
RELAY CONTROL MODULE
Removal and Installation
UNDER-HOOD FUSE/RELAY BOX
Removal and Installation
HOOD LATCH SWITCH
(Built into the hood latch)
Test
Removal and Installation
HORN (LOW)
Removal, Installation, and Test
HORN (HIGH)
Removal, Installation, and Test

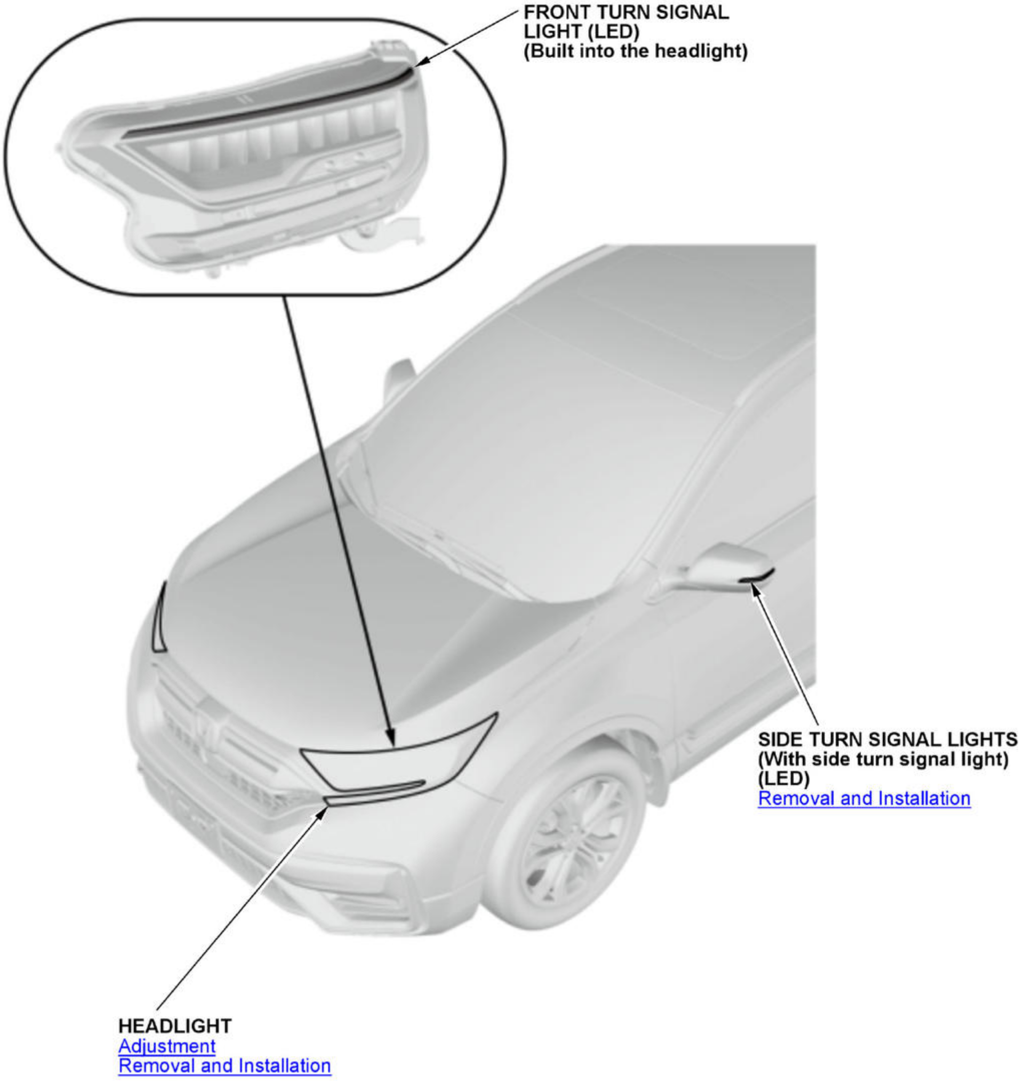
FRONT TURN SIGNAL LIGHT (LED)
(Built into the headlight)
SIDE TURN SIGNAL LIGHTS
(With side turn signal light)
(LED)
Removal and Installation
HEADLIGHT
Adjustment
Removal and Installation

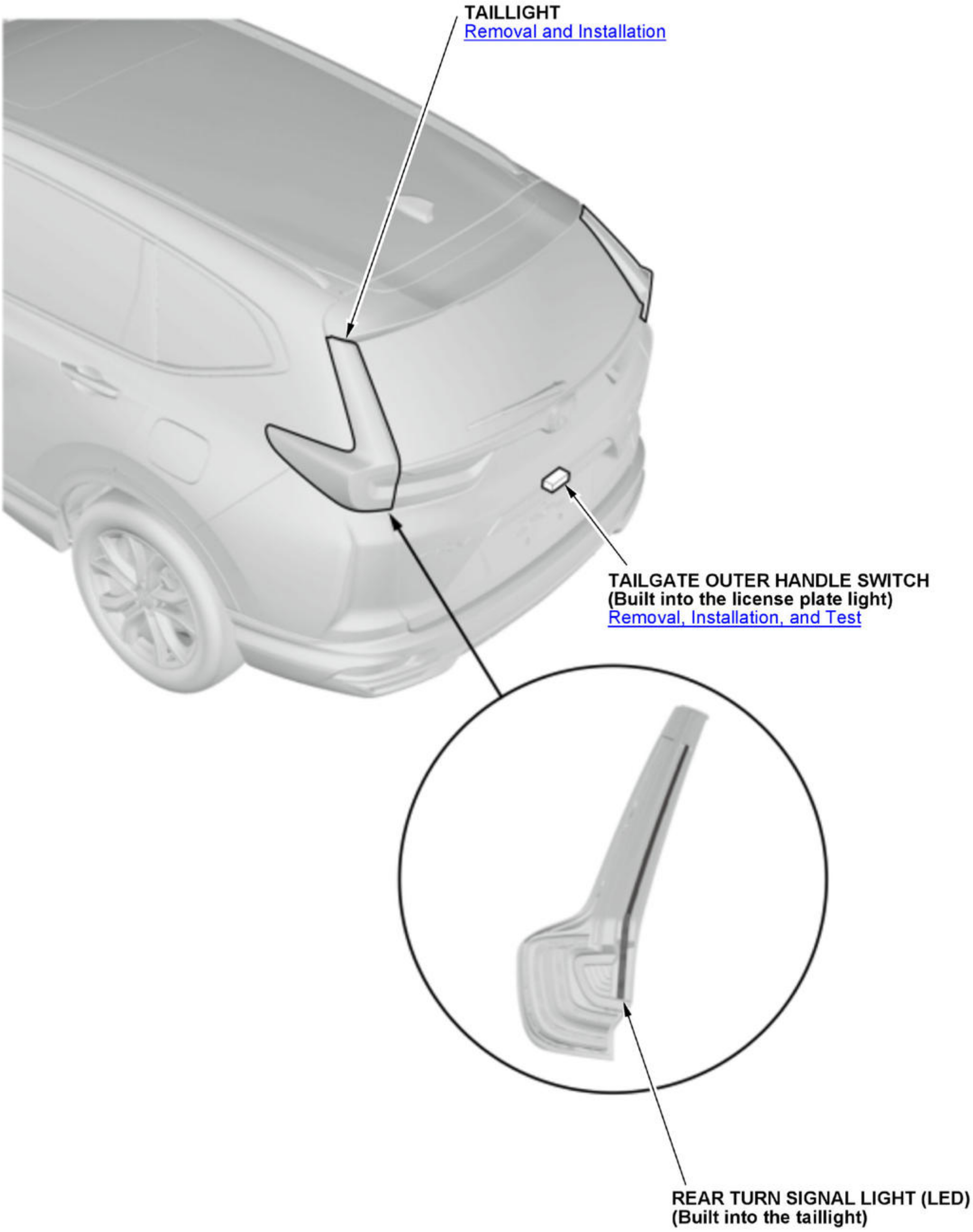
TAILLIGHT
Removal and Installation
TAILGATE OUTER HANDLE SWITCH
(Built into the license plate light)
Removal, Installation, and Test
REAR TURN SIGNAL LIGHT (LED)
(Built into the taillight)

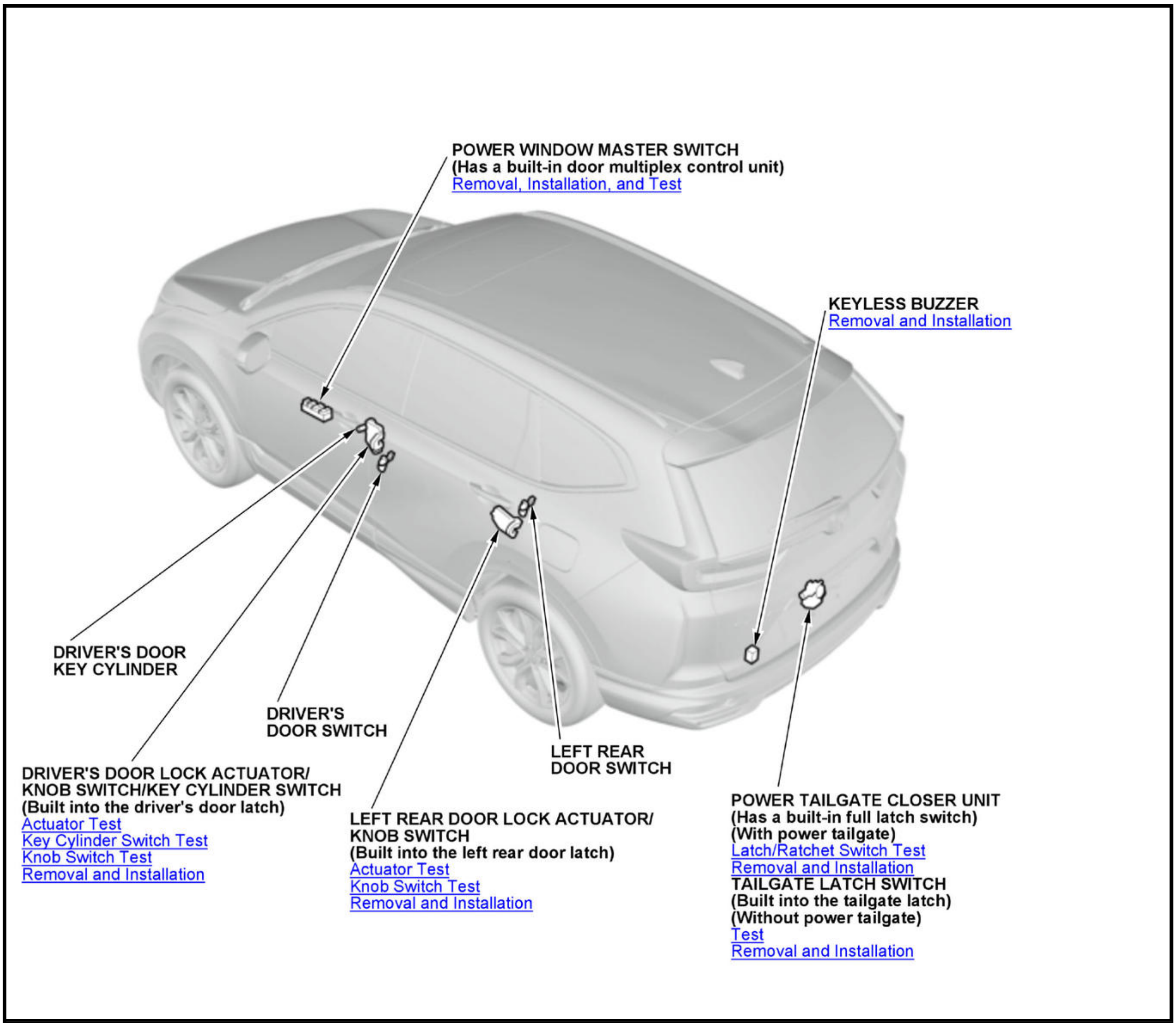
POWER WINDOW MASTER SWITCH
(Has a built-in door multiplex control unit)
Removal, Installation, and Test
KEYLESS BUZZER
Removal and Installation
DRIVER'S DOOR KEY CYLINDER
DRIVER'S DOOR SWITCH
LEFT REAR DOOR SWITCH
DRIVER'S DOOR LOCK ACTUATOR/ KNOB SWITCH/KEY CYLINDER SWITCH
(Built into the driver's door latch)
Actuator Test
Key Cylinder Switch Test
Knob Switch Test
Removal and Installation
LEFT REAR DOOR LOCK ACTUATOR/ KNOB SWITCH
(Built into the left rear door latch)
Actuator Test
Knob Switch Test
Removal and Installation
POWER TAILGATE CLOSER UNIT
(Has a built-in full latch switch)
(With power tailgate)
Latch/Ratchet Switch Test
Removal and Installation
TAILGATE LATCH SWITCH
(Built into the tailgate latch)
(Without power tailgate)
Test
Removal and Installation

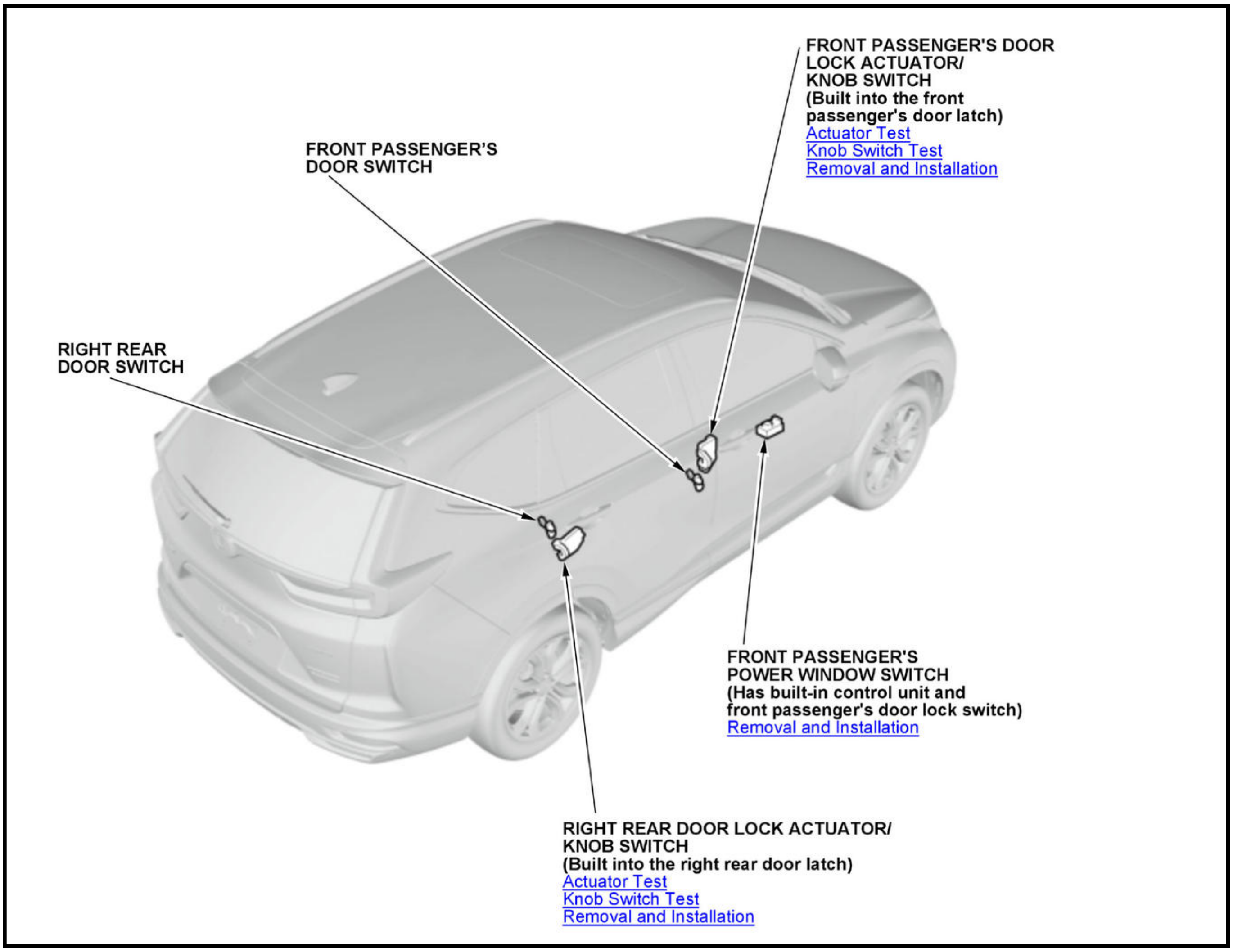
FRONT PASSENGER'S DOOR LOCK ACTUATOR/ KNOB SWITCH
(Built into the front passenger's door latch)
Actuator Test
Knob Switch Test
Removal and Installation
FRONT PASSENGER'S DOOR SWITCH
RIGHT REAR DOOR SWITCH
FRONT PASSENGER'S POWER WINDOW SWITCH
(Has built-in control unit and front passenger's door lock switch)
Removal and Installation
RIGHT REAR DOOR LOCK ACTUATOR/ KNOB SWITCH
(Built into the right rear door latch)
Actuator Test
Knob Switch Test
Removal and Installation

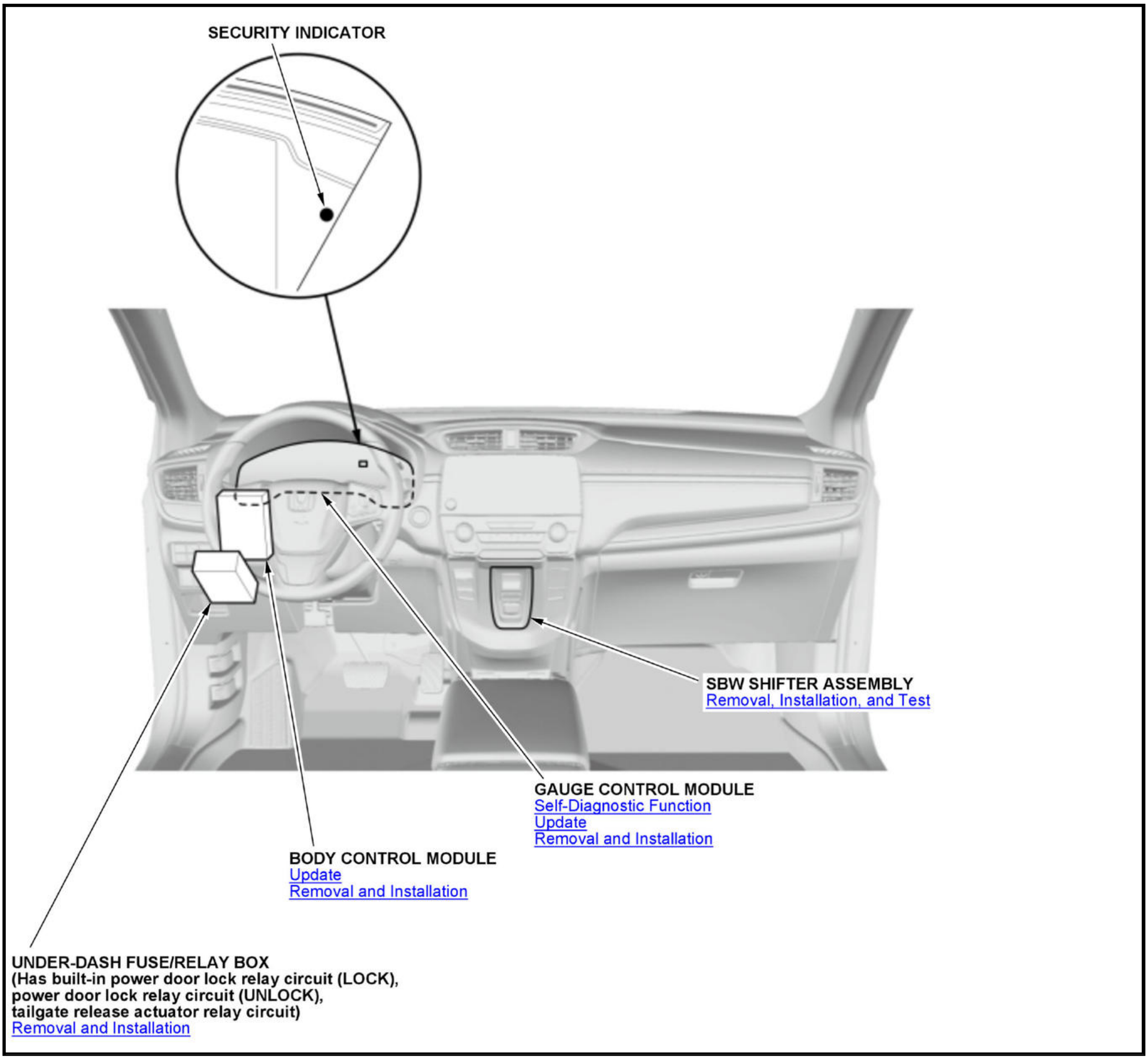
SECURITY INDICATOR
SBW SHIFTER ASSEMBLY
Removal, Installation, and Test
GAUGE CONTROL MODULE
Self-Diagnostic Function
Update
Removal and Installation
BODY CONTROL MODULE
Update
Removal and Installation
UNDER-DASH FUSE/RELAY BOX
(Has built-in power door lock relay circuit (LOCK), power door lock relay circuit (UNLOCK), tailgate release actuator relay circuit)
Removal and Installation

2017-22 ACCESSORIES AND BODY, CAB

Security System / Keyless Entry System - Testing & Troubleshooting (Except Hybrid) - CR-V

DESCRIPTION AND OPERATION

IMMOBILIZER SYSTEM

Immobilizer System Description

Immobilizer Function

An immobilizer system adds a second electronic layer of security to the vehicle. If the key matches mechanically, but the electronic check does not match, the PCM suspends fuel delivery and shuts down the engine. For models with keyless access, refer to the keyless access description as the immobilizer function is integrated into the remotes.

The system provides mutual authentication between the immobilizer-keyless control unit, the PCM, and the body control module when turning the vehicle to the ON mode. The engine stays running after the engine start-up if the correct key is inserted. The body control module authenticates the VSA modulator-control unit and the immobilizer signal only one time by request of the immobilizer-keyless control unit, when the vehicle is turned to the ON mode after resetting of the battery, removal and installation of the back-up fuse, or removal and installation of the VSA modulator-control unit.For some models, the brake pedal must be depressed to perform the immobilizer authentication.

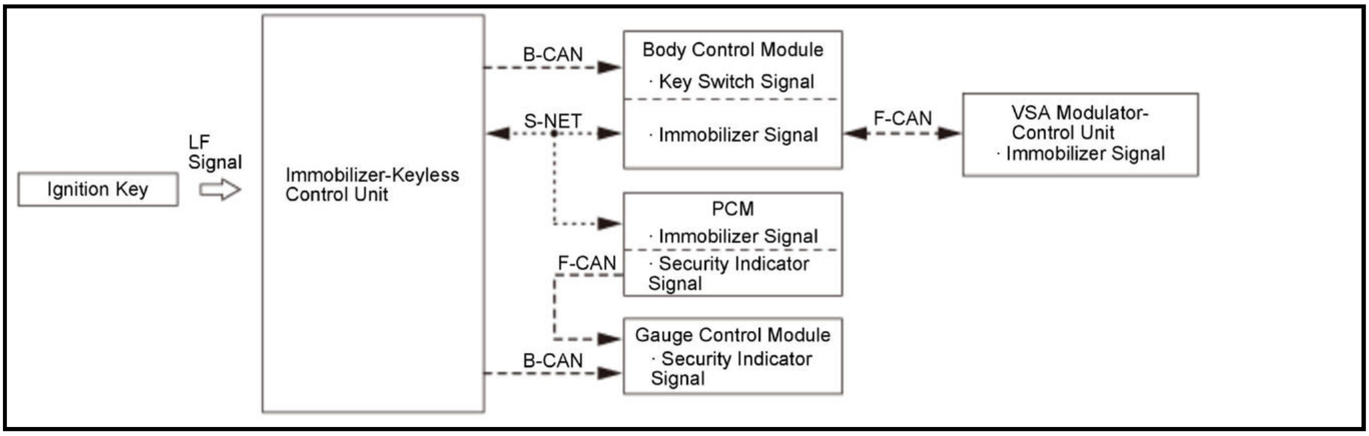
Ignition Key
LF Signal
Immobilizer-Keyless Control Unit
B-CAN
S-NET
F-CAN
B-CAN
Body Control Module
· Key Switch Signal
· Immobilizer Signal
F-CAN
VSA Modulator-Control Unit
· Immobilizer Signal
PCM
· Immobilizer Signal
· Security Indicator Signal
Gauge Control Module
· Security Indicator Signal

Immobilizer System Description - Components

Security Indicator

When vehicle ON mode is entered, the authentication of the immobilizer key starts and the indicator is off. When the key is successfully authenticated, the indicator stays off. When the key is not successfully authenticated, the indicator blinks, the vehicle is turned to the OFF (LOCK) mode, and then the indicator goes off after blinking several times. For details on the illumination pattern, refer to **immobilizer system symptom troubleshooting information**.

Ignition Key

Vehicles equipped with the immobilizer system have an identification marking on the mechanical key. Consider this identification marking as a proof of the vehicle having the immobilizer system.

Immobilizer System Description - System Diagram

For locations of each component on vehicle, refer to Component Location Index

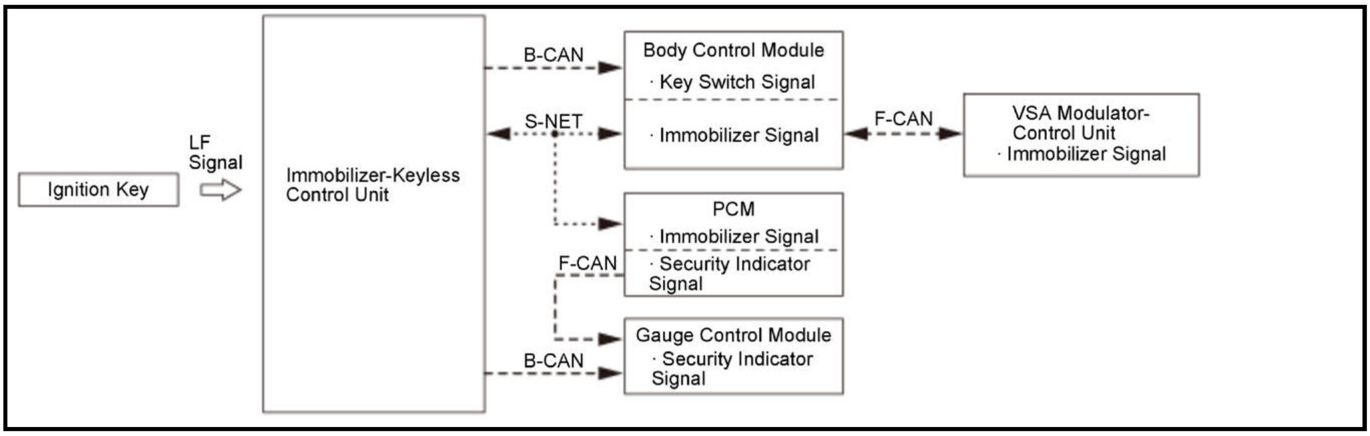
Ignition Key
LF Signal
Immobilizer-Keyless Control Unit
B-CAN
S-NET
F-CAN
B-CAN
Body Control Module
· Key Switch Signal
· Immobilizer Signal
PCM
· Immobilizer Signal
· Security Indicator Signal
Gauge Control Module
· Security Indicator Signal
F-CAN
VSA Modulator-Control Unit
· Immobilizer Signal

KEYLESS ACCESS SYSTEM

Keyless Access System Description

Smart Entry Function

The body control module detects the input signal of the door outer handle touch sensor, the outer handle lock sensor, or the tailgate outer handle switch, the tailgate lock switch, and authenticates 2-way communication with the remote. The body control module then activates the door lock/unlock actuator or tailgate release actuator and an answer back. For details on the illumination patterns of the warning lights and the functional check of the system, refer to keyless access system symptom troubleshooting information.

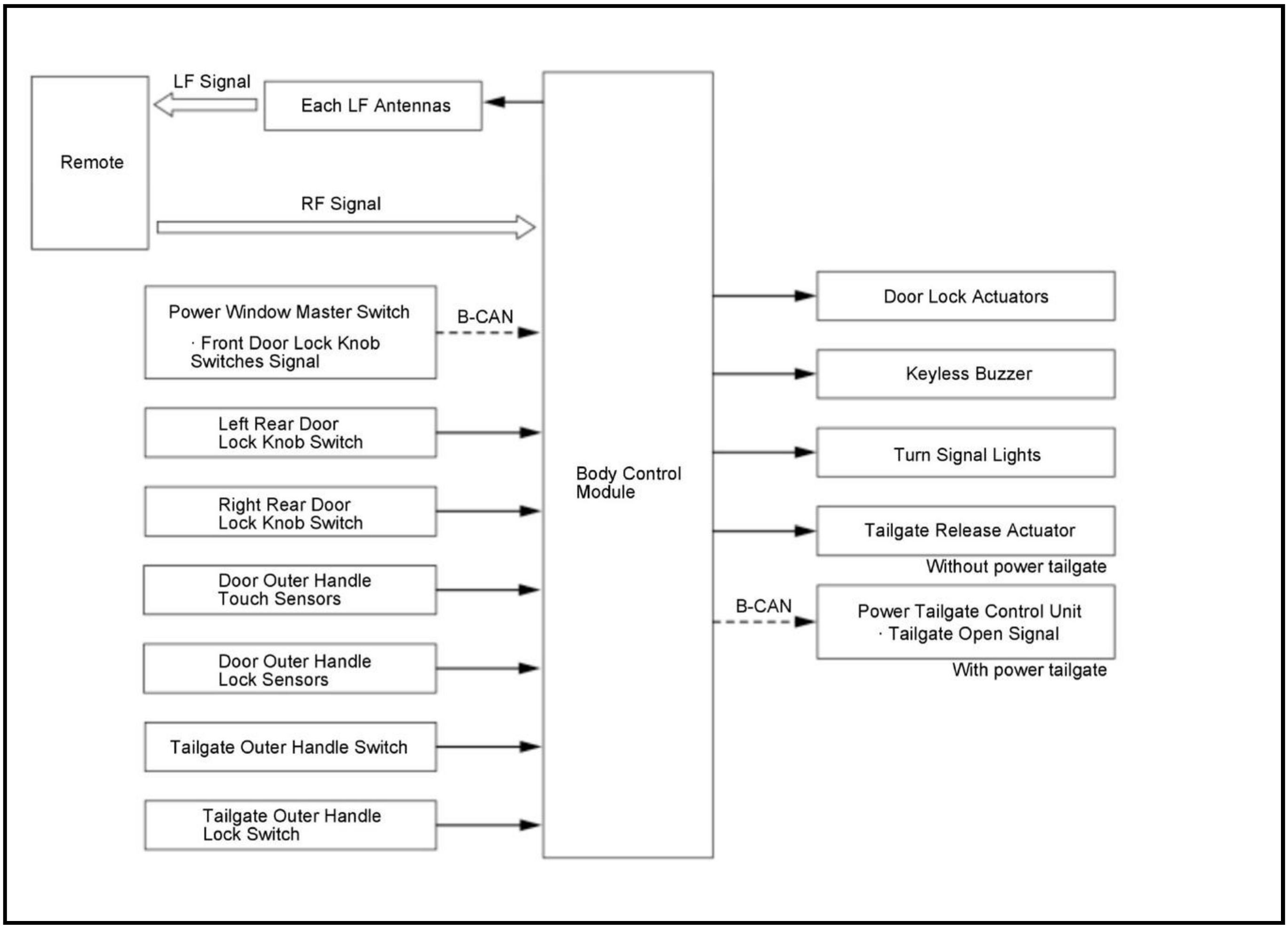
Remote
LF Signal
Each LF Antennas
RF Signal
Power Window Master Switch
· Front Door Lock Knob Switches Signal
B-CAN
Left Rear Door Lock Knob Switch
Right Rear Door Lock Knob Switch
Door Outer Handle Touch Sensors
Door Outer Handle Lock Sensors
Tailgate Outer Handle Switch
Tailgate Outer Handle Lock Switch
Body Control Module
Door Lock Actuators
Keyless Buzzer
Turn Signal Lights
Tailgate Release Actuator
Without power tailgate
B-CAN
Power Tailgate Control Unit
· Tailgate Open Signal
With power tailgate

Keyless Entry Function

The body control module receives the keyless transmitter LOCK/UNLOCK signals from the remote. The body control module authenticates the RF signal from the remote, then activates the door and tailgate release actuator (without power tailgate), and the power tailgate control unit (with power tailgate) via B-CAN.

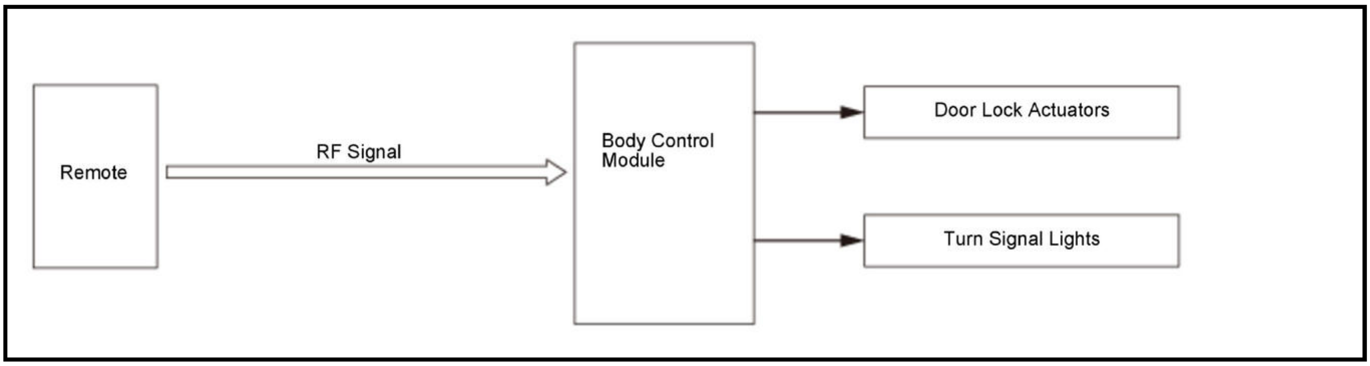
Remote
RF Signal
Body Control Module
Door Lock Actuators
Turn Signal Lights

Lighting and Indicator Function

The body control module controls the engine start/stop switch light, displays information on the information display *1 or the multi-information display (MID) *2, and illuminates the keyless access indicators in the gauge control module.

*1: Without multi-information display (MID)

*2: With multi-information display (MID)

Remote Search Function

The function determines if the remote is present inside the vehicle during certain operations or functions. It also detects when the door is opened and closed with the vehicle in the ACCESSORY/ON mode. When the remote is taken out of the vehicle, the keyless buzzer will sound and the gauge control module (Only when the vehicle is in the ON mode) will show a warning.

Backup Communication Function

When key authentication between the remote and the body control module is not possible because of a system abnormality or a drop of the battery voltage of the remote, the immobilizer function can be canceled by pressing the engine start/stop switch once and bringing the remote close to the engine start/stop switch while the light (white) of the engine start/stop switch is flashing. This causes the immobilizer signal to be sent to the body control module via the LF antenna of the engine start/stop switch.

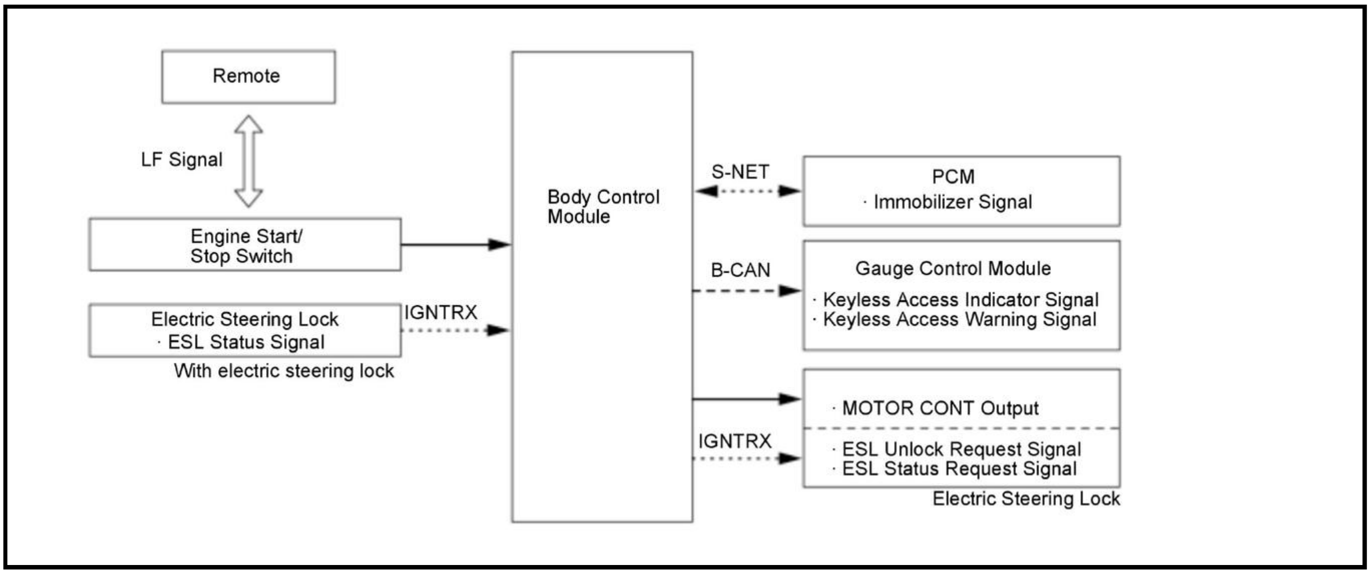
Remote
LF Signal
Engine Start/ Stop Switch
Electric Steering Lock
· ESL Status Signal
With electric steering lock
IGNTRX
Body Control Module
S-NET
PCM
· Immobilizer Signal
B-CAN
Gauge Control Module
· Keyless Access Indicator Signal
· Keyless Access Warning Signal
· MOTOR CONT Output
IGNTRX
· ESL Unlock Request Signal
· ESL Status Request Signal
Electric Steering Lock

Remote Engine Start System (With Remote Engine Start)

Start the Engine

The remote engine start feature is initiated by first pressing the lock button, then pressing and holding the "START" button within 5 seconds on the remote transmitter. An RF signal from the remote transmitter is received by the body control module, which then sends the request to start the engine to the PCM. At the same time, the body control module authenticates the key for the immobilizer system. The PCM starts the engine and sends feedback to the body control module indicating the status of the engine.

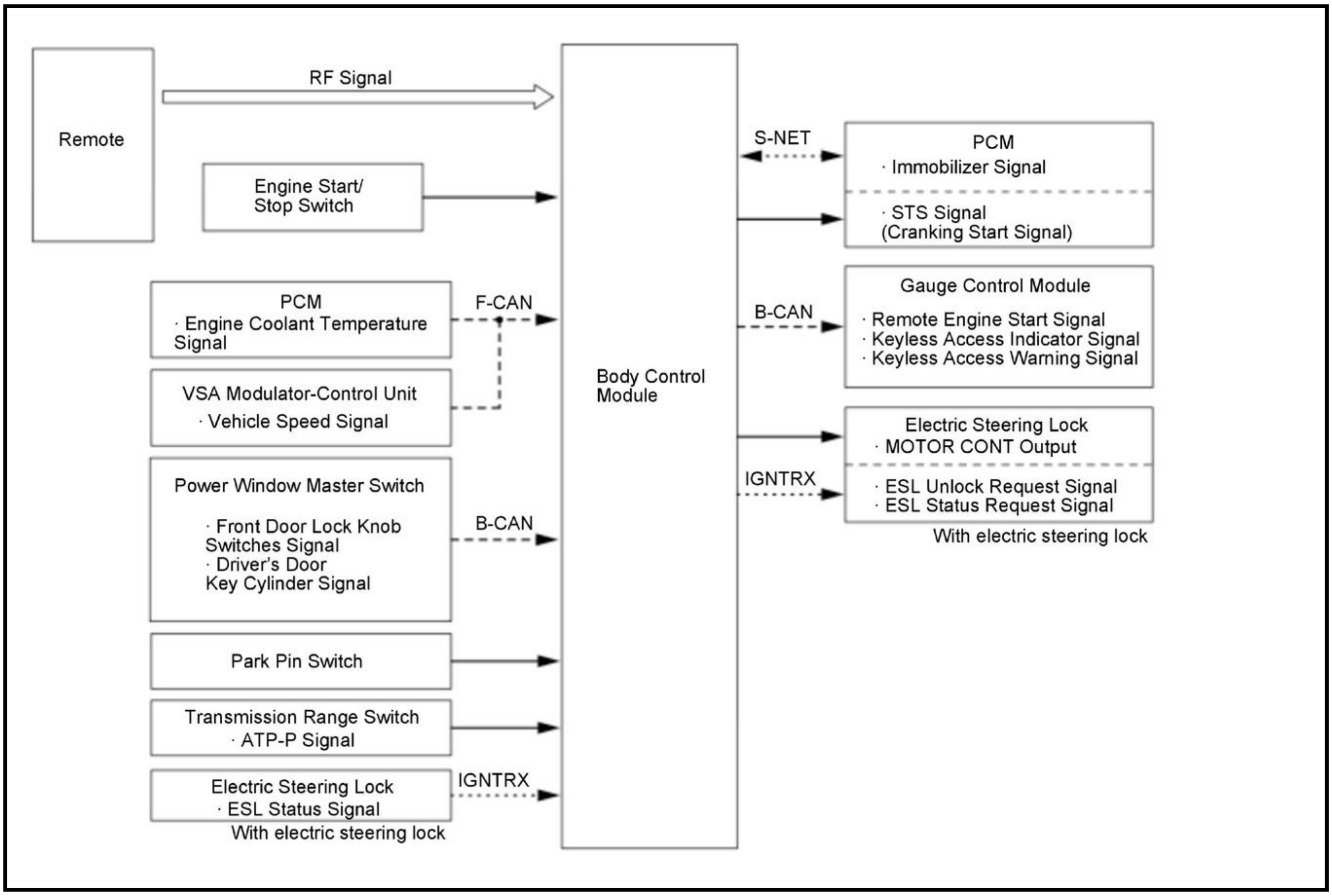

Remote
RF Signal
Engine Start/ Stop Switch
PCM
· Engine Coolant Temperature Signal
F-CAN
VSA Modulator-Control Unit
· Vehicle Speed Signal
Power Window Master Switch
· Front Door Lock Knob Switches Signal
· Driver's Door Key Cylinder Signal
B-CAN
Park Pin Switch
Transmission Range Switch
· ATP-P Signal
Electric Steering Lock
· ESL Status Signal
IGNTRX
With electric steering lock
Body Control Module
S-NET
PCM
· Immobilizer Signal
· STS Signal (Cranking Start Signal)
B-CAN
Gauge Control Module
· Remote Engine Start Signal
· Keyless Access Indicator Signal
· Keyless Access Warning Signal
Electric Steering Lock
· MOTOR CONT Output
IGNTRX
· ESL Unlock Request Signal
· ESL Status Request Signal
With electric steering lock

Electric Steering Lock (For some models)

The electric steering lock control unit is built into the electric steering lock and controls the steering lock motor. When the remote code is identified, the electric steering lock control unit unlocks the steering lock by controlling the steering lock motor.

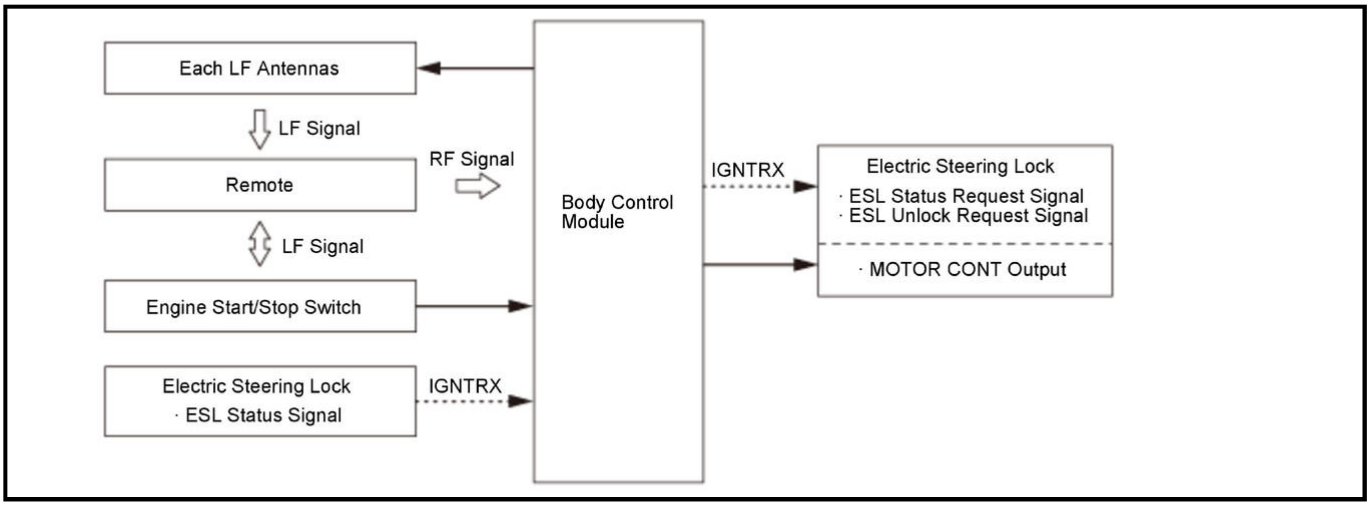

Each LF Antennas
LF Signal
Remote
RF Signal
LF Signal
Engine Start/Stop Switch
Electric Steering Lock
· ESL Status Signal
IGNTRX
Body Control Module
IGNTRX
Electric Steering Lock
· ESL Status Request Signal
· ESL Unlock Request Signal
· MOTOR CONT Output

Key Lockout Prevent Function

The lockout prevent function monitors whether or not there is a remote in the vehicle. If the remote is inside the vehicle, the system will not lock the doors. If the driver manually locks and closes the doors with the remote in the vehicle, the body control module energizes the driver's door lock actuator and unlocks the driver's door. Additionally, if the tailgate is closed with the remote left in the rear cargo area, the external RF unit detects its location and does not lock the tailgate.

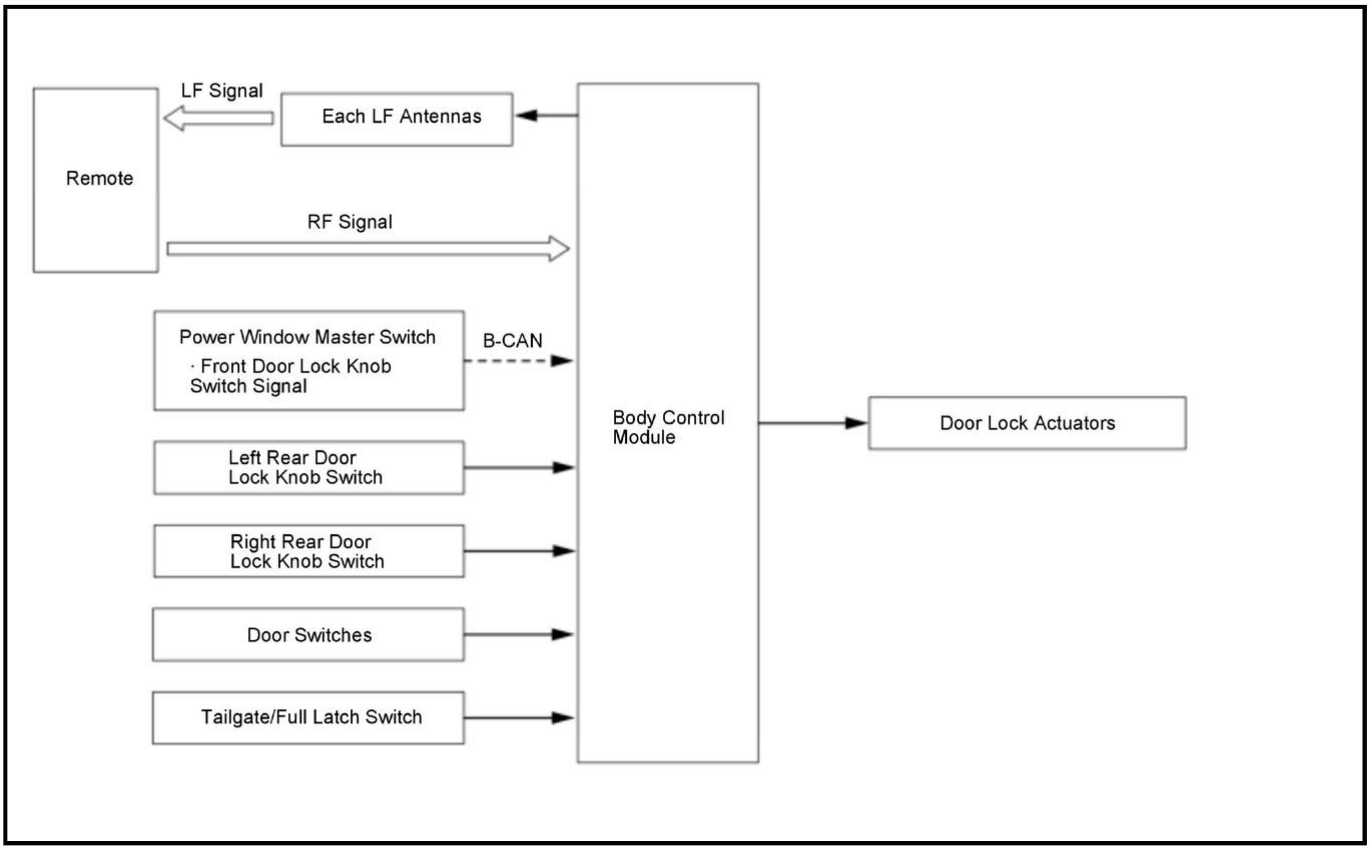
LF Signal
Each LF Antennas
Remote
RF Signal
Power Window Master Switch
· Front Door Lock Knob Switch Signal
B-CAN
Body Control Module
Door Lock Actuators
Left Rear Door Lock Knob Switch
Right Rear Door Lock Knob Switch
Door Switches
Tailgate/Full Latch Switch

Immobilizer Function

The immobilizer function provides mutual authentication between the body control module, the PCM, and the VSA modulator-control unit the vehicle is turned to the ON mode. The engine stays running after engine start-up if the immobilizer signal matches. The body control module authenticates the VSA modulator-control unit and the immobilizer signal only one time, when the vehicle is turned to the ON mode after resetting of the battery, removing and installing the back-up fuse or removing and installing the VSA modulator-control unit.For some models, the brake pedal must be depressed to perform the immobilizer authentication.

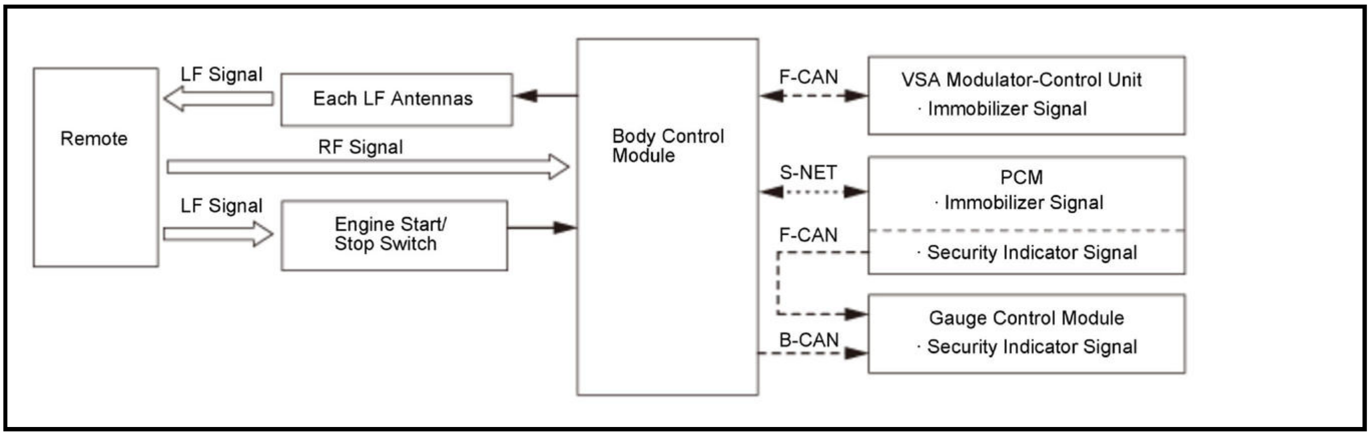
Remote
LF Signal
Each LF Antennas
RF Signal
LF Signal
Engine Start/ Stop Switch
Body Control Module
F-CAN
VSA Modulator-Control Unit
· Immobilizer Signal
S-NET
PCM
· Immobilizer Signal
F-CAN
· Security Indicator Signal
Gauge Control Module
· Security Indicator Signal
B-CAN

Alarm Function

Detects if the doors are opened or closed with the vehicle in the ACCESSORY/ON mode. When the remote is taken out of the vehicle, the keyless buzzer will sound and the gauge control module (during vehicle ON mode) will show a warning. Before the remote battery level falls to the point where the remote cannot be detected, the gauge control module will show a warning and an alarm will sound.

Registration Facility

The body control module can store up to 6 remotes with the HDS.

Fault Diagnosis Function

The system has a fault diagnosis function. If any malfunction occurs, the keyless access indicator comes on in the gauge control module.

Customer Emergency

When the engine start/stop switch is pressed continuously at least twice or once for 1.5 seconds or longer in an emergency while driving, the engine turns off, and the vehicle mode switches to ACCESSORY. In this mode, the steering wheel remains unlocked.

Panic Function

When you press the PANIC button on the remote, the body control module sounds the horn, and activates the exterior lights.

Walk Away Auto Lock Function (If Equipped)

The walk away auto lock system detects where the remote is and locks all doors and the tailgate when all the doors and the tailgate are closed and the remote is outside of the vehicle and out of the range. To operate the walk away auto lock system, it is necessary to enter the auto lock mode. To enter the auto lock mode, the following conditions must be met:

- The vehicle is turned to the OFF (LOCK) mode.
- All doors including the tailgate are closed.
- The remote is outside but within 2 m (6 ft) from the vehicle.

Once the system enters the auto lock mode, the keyless beeper sounds once. When the remote is carried beyond 2 m (6 ft) from the vehicle and remains outside of this range for more than 2 seconds, the system engages and locks all of the doors including the tailgate. At that time, the keyless buzzer sounds and some exterior lights will flash. However, if the remote remains within 2 m (6 ft) from the vehicle for 30 seconds or more after entering the auto lock mode, the doors and tailgate will automatically lock.

The system does not work under the following conditions:

- The remote is inside of the vehicle.
- If the remote is away more than 2 m (6 ft) from the vehicle after closing all the doors and tailgate.
- If a communication error occurs between the remote and the vehicle.

The following conditions will cause a delay for the system to engage:

- If a door or the tailgate is opened after the system enters the auto lock mode.
- If the power tailgate is not fully closed.

The walk away auto lock system can be cancelled temporarily by using the customized settings. See the owner's manual for more information.

Keyless Access System Operation Manual Customize

The keyless access system can be enabled and disabled by the operation according to the table shown below. The system is enabled and disabled each time the unlock button is pressed on the remote during the customize mode.

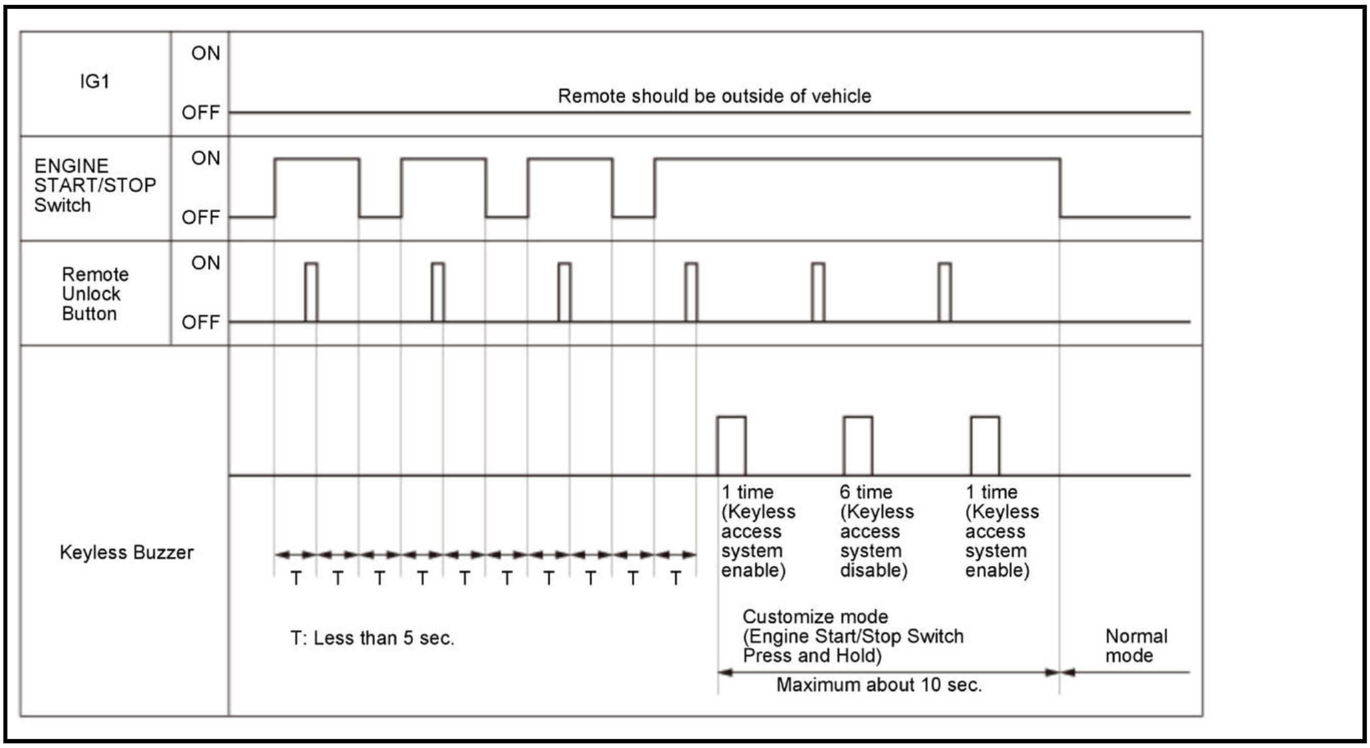
IG1
ON
OFF
Remote should be outside of vehicle
ENGINE START/STOP Switch
ON
OFF
Remote Unlock Button
ON
OFF
Keyless Buzzer
T T T T T T T T T T
T: Less than 5 sec.
1 time (Keyless access system enable)
6 time (Keyless access system disable)
1 time (Keyless access system enable)
Customize mode (Engine Start/Stop Switch Press and Hold)
Maximum about 10 sec.
Normal mode

Failsafe Function

If there is a failure in the keyless access system that terminates the keyless access features, the system enters the failsafe mode and the keyless access indicator flashes.

Keyless Access System Description - Components

Engine Start/Stop Switch

When pressing the engine start/stop switch, it changes the vehicle to the OFF (LOCK), ACCESSORY, or ON mode. The engine start/stop switch also includes an LF antenna and receives the immobilizer signal from the keyless access control unit.

LF (Low Frequency) Antennas

The front interior, middle interior, rear interior, front door outer handle, and rear bumper LF antennas send the signals to the remote when the remote is outside out of the vehicle.

Remote

The remote is equipped with a keyless transmitter, and all the doors can be locked and unlocked by a lock/unlock button operation, even from a remote distance from the vehicle. When the lock button or unlock button is pressed, the keyless transmitter sends the applicable switch signal to the body control module. After receiving authentication, the body control module controls the door lock/unlock actuator.

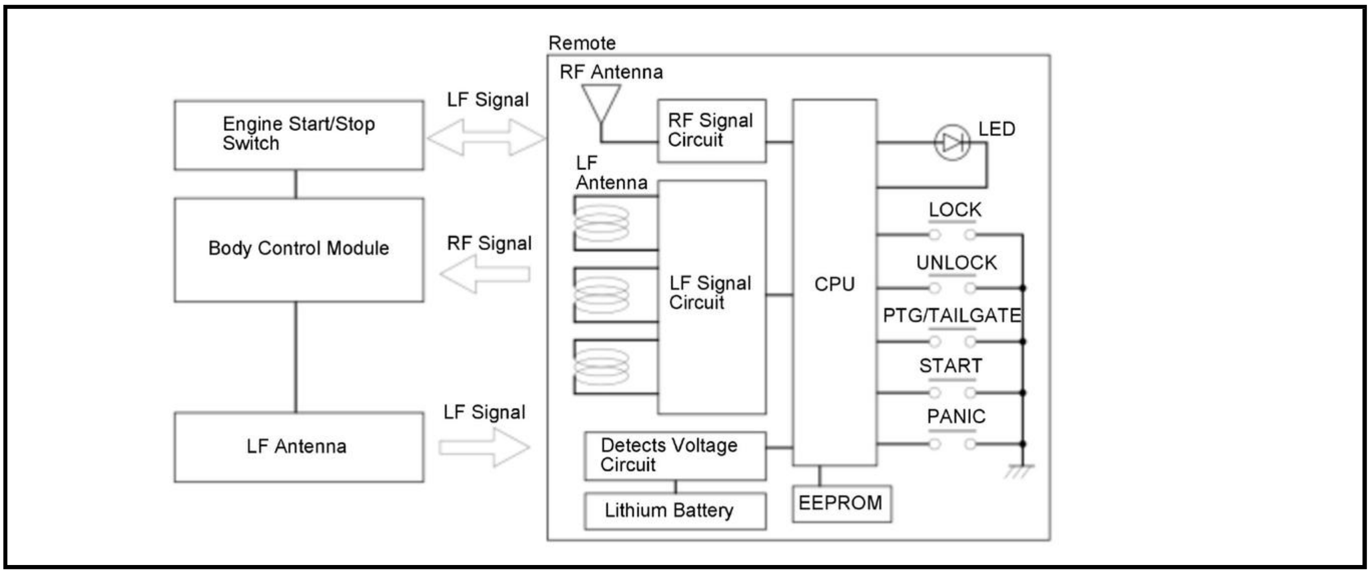
Remote
RF Antenna
LF Signal
Engine Start/Stop Switch
RF Signal Circuit
LED
LF Antenna
Body Control Module
RF Signal
LOCK
UNLOCK
LF Signal Circuit
CPU
PTG/TAILGATE
START
PANIC
LF Signal
LF Antenna
Detects Voltage Circuit
Lithium Battery
EEPROM

Door Touch Sensors and Outer Handle Lock Sensers, Tailgate Outer Handle Switch and Lock Switch

The door touch sensors and the outer handle lock sensors are built into the driver's and front passenger's door outer handles. The tailgate outer handle switch is built into the tailgate outer handle. To operate the door locks without the built-in key while carrying the remote, grip the door outer handle to unlock the doors and press the outer handle lock switch on the door outer handle to lock the doors.

Electric Steering Lock (with electric steering lock)

Pressing the engine start/stop switch changes the vehicle mode to the OFF (LOCK), ACCESSORY, ON, or START mode. The engine start/stop switch also includes an LF antenna. When operating the backup function, the engine start/stop switch receives the immobilizer signal from the remote, and sends an immobilizer signal to the body control module.

Keyless Buzzer

The keyless buzzer is located behind the rear bumper and sounds during smart entry functions.

Keyless Access System Description - System Diagram

For locations of each component on vehicle, refer to Component Location Index

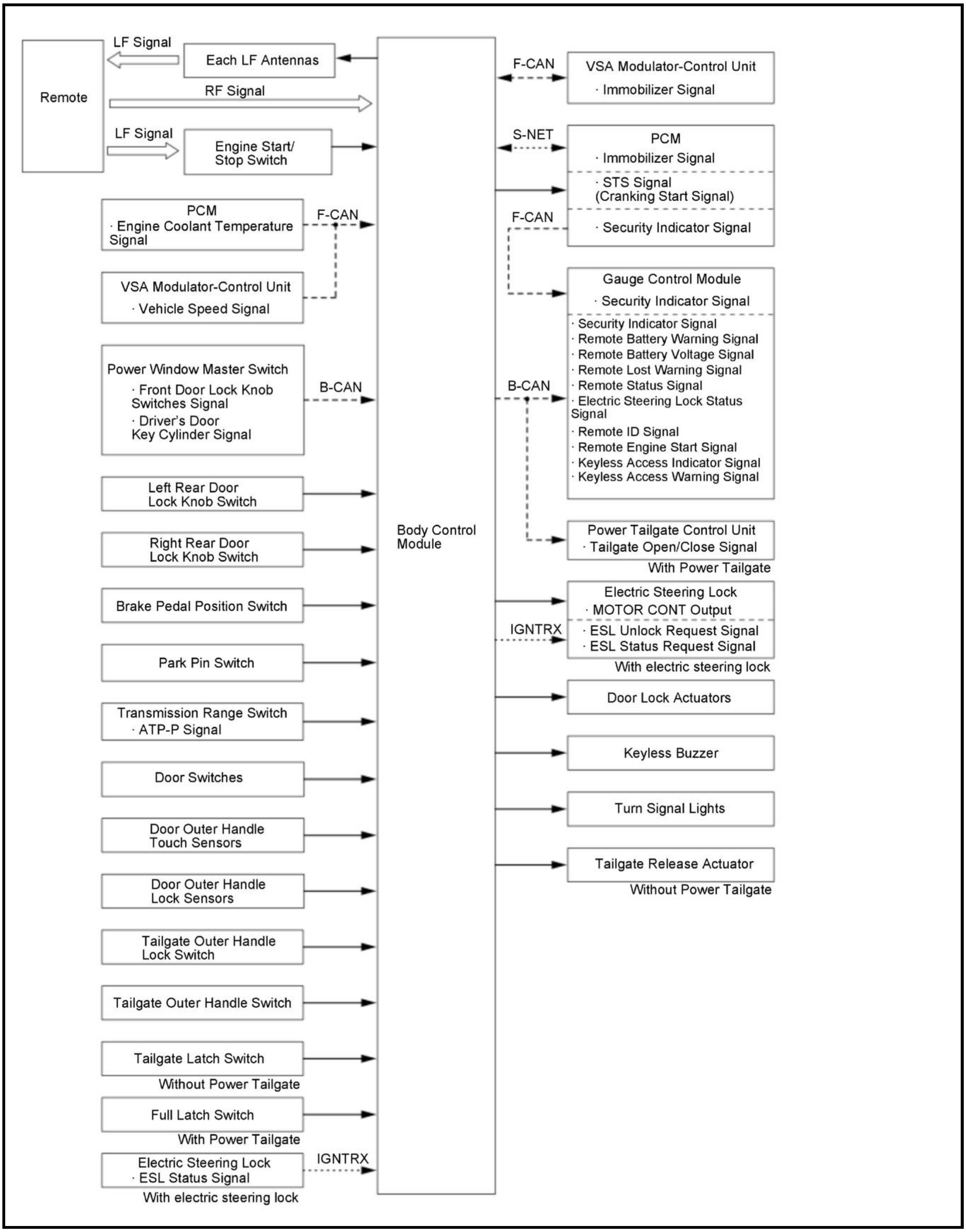
Remote
LF Signal
Each LF Antennas
RF Signal
LF Signal
Engine Start/ Stop Switch
PCM
· Engine Coolant Temperature Signal
F-CAN
VSA Modulator-Control Unit
· Vehicle Speed Signal
Power Window Master Switch
· Front Door Lock Knob Switches Signal
· Driver's Door Key Cylinder Signal
B-CAN
Left Rear Door Lock Knob Switch
Right Rear Door Lock Knob Switch
Brake Pedal Position Switch
Park Pin Switch
Transmission Range Switch
· ATP-P Signal
Door Switches
Door Outer Handle Touch Sensors
Door Outer Handle Lock Sensors
Tailgate Outer Handle Lock Switch
Tailgate Outer Handle Switch
Tailgate Latch Switch
Without Power Tailgate
Full Latch Switch
With Power Tailgate
Electric Steering Lock
· ESL Status Signal
With electric steering lock
IGNTRX
Body Control Module
F-CAN
VSA Modulator-Control Unit
· Immobilizer Signal
S-NET
PCM
· Immobilizer Signal
· STS Signal (Cranking Start Signal)
F-CAN
· Security Indicator Signal
Gauge Control Module
· Security Indicator Signal
· Security Indicator Signal
· Remote Battery Warning Signal
· Remote Battery Voltage Signal
· Remote Lost Warning Signal
· Remote Status Signal
· Electric Steering Lock Status Signal
· Remote ID Signal
· Remote Engine Start Signal
· Keyless Access Indicator Signal
· Keyless Access Warning Signal
B-CAN
Power Tailgate Control Unit
· Tailgate Open/Close Signal
With Power Tailgate
Electric Steering Lock
· MOTOR CONT Output
IGNTRX
· ESL Unlock Request Signal
· ESL Status Request Signal
With electric steering lock
Door Lock Actuators
Keyless Buzzer
Turn Signal Lights
Tailgate Release Actuator
Without Power Tailgate

KEYLESS/POWER DOOR LOCKS/SECURITY SYSTEM

Keyless/Power Door Locks/Security System Description

Overview

Keyless Entry System

The keyless entry system allows you to press the LOCK button to lock all the doors. When you press the UNLOCK button once, only the driver's door unlocks. The other doors will unlock when you press the button a second time. (Depending on the settings all the doors may unlock, when you press the button the first time). The doors will not lock with the transmitter if a door is not fully closed, or if the vehicle is turned to the ON mode.

When the switch for the interior light is in the DOOR position, it comes on when the UNLOCK button is pressed.If a door is not opened, the light goes off and the doors will relock in about 30 seconds. If the doors are locked with the transmitter within 30 seconds, the light goes off immediately.

Door Lock Control

The door lock control function allows the body control module to detect the status of various switch signals and controls each actuator in order to lock and unlock the doors.

The system has three circuits between door lock actuators and the body control module to improve safety of the system. One is for the driver's door lock actuator, and others are for the left rear door lock actuator and the passenger's side door lock actuators. The door lock actuator circuit has two fuses. When one fuse is blown, another fuse in the same circuit must be checked.

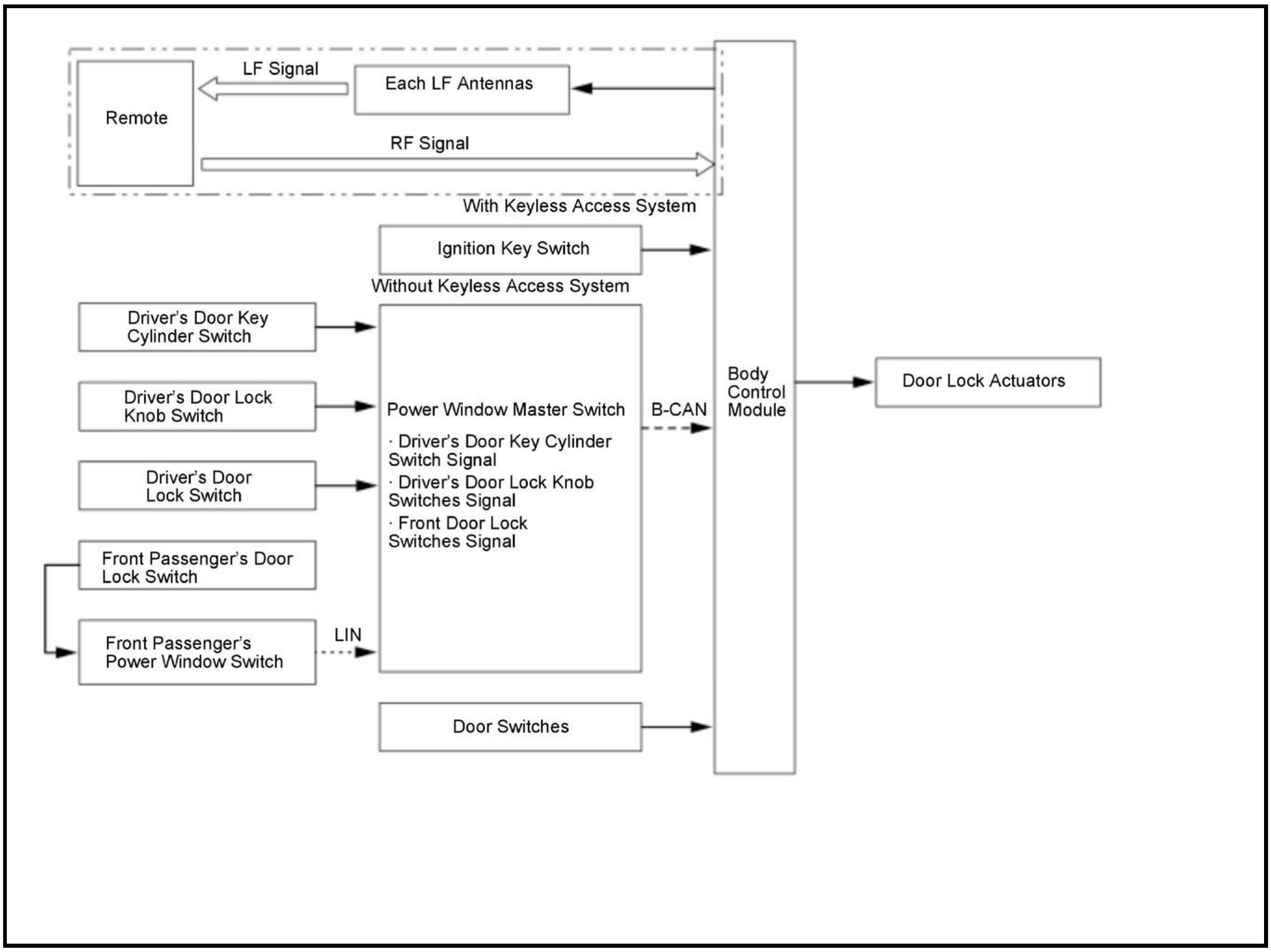
LF Signal
Remote
Each LF Antennas
RF Signal
With Keyless Access System
Ignition Key Switch
Without Keyless Access System
Driver's Door Key Cylinder Switch
Driver's Door Lock Knob Switch
Driver's Door Lock Switch
Front Passenger's Door Lock Switch
Front Passenger's Power Window Switch
LIN
Power Window Master Switch
· Driver's Door Key Cylinder Switch Signal
· Driver's Door Lock Knob Switches Signal
· Front Door Lock Switches Signal
B-CAN
Body Control Module
Door Lock Actuators
Door Switches

Tailgate Release Control (Without power tailgate)

The body control module activates the tailgate release actuator by operating the tailgate outer handle switch when the vehicle speed is less than 2 km/h (1.2 mph). The tailgate can be unlocked by the tailgate outer handle switch operation without having the remote if all the doors are unlocked.

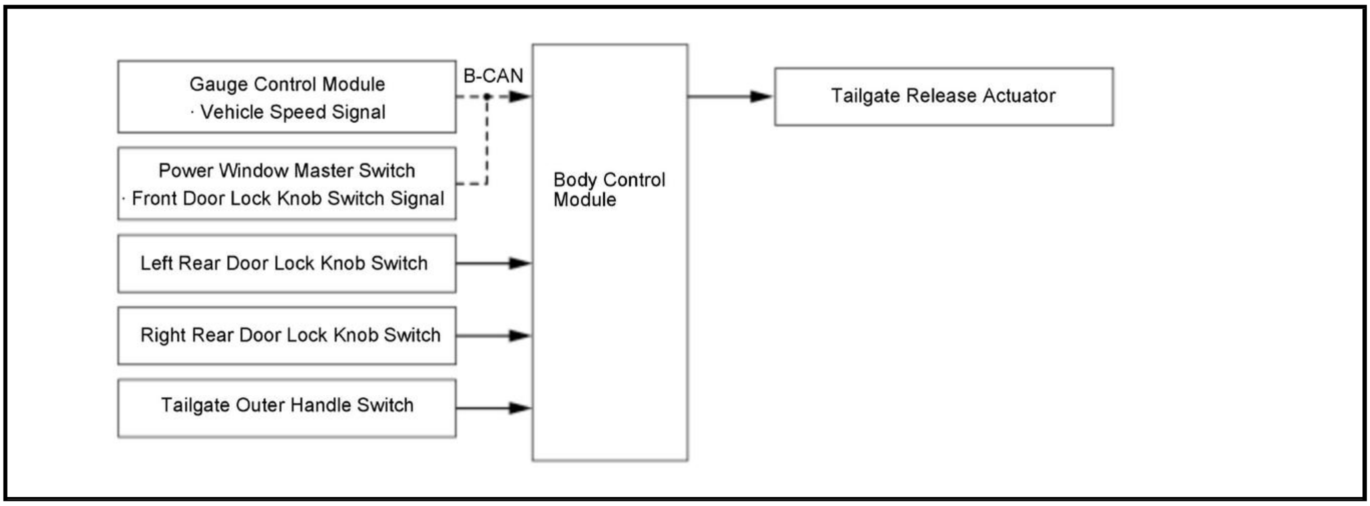
Gauge Control Module
· Vehicle Speed Signal
B-CAN
Power Window Master Switch
· Front Door Lock Knob Switch Signal
Left Rear Door Lock Knob Switch
Right Rear Door Lock Knob Switch
Tailgate Outer Handle Switch
Body Control Module
Tailgate Release Actuator

Tailgate Control (With Power Tailgate)

The tailgate control function allows the body control module to detect the status of various switch signals and sends the signals to the power tailgate control unit. The power tailgate control unit controls the power tailgate closer unit to lock or unlock the tailgate.

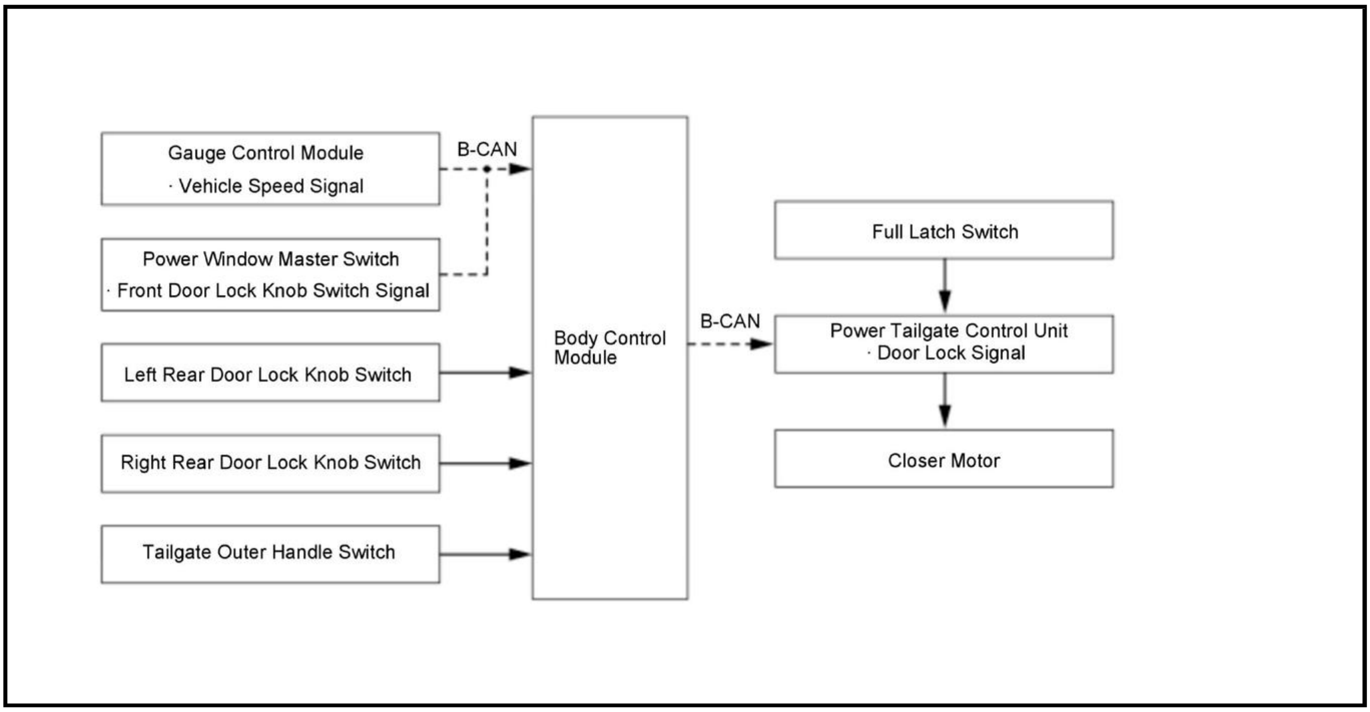
Gauge Control Module
· Vehicle Speed Signal
B-CAN
Power Window Master Switch
· Front Door Lock Knob Switch Signal
Left Rear Door Lock Knob Switch
Right Rear Door Lock Knob Switch
Tailgate Outer Handle Switch
Body Control Module
B-CAN
Full Latch Switch
Power Tailgate Control Unit
· Door Lock Signal
Closer Motor

Keyless Door Lock Control

The keyless transmitter or the remote can transmit a lock or unlock signal to the immobilizer-keyless control unit or the body control module. The body control module then controls the door lock actuator by the B-CAN signal and various other switch signals. The relock timer value can be set under the customization menu.

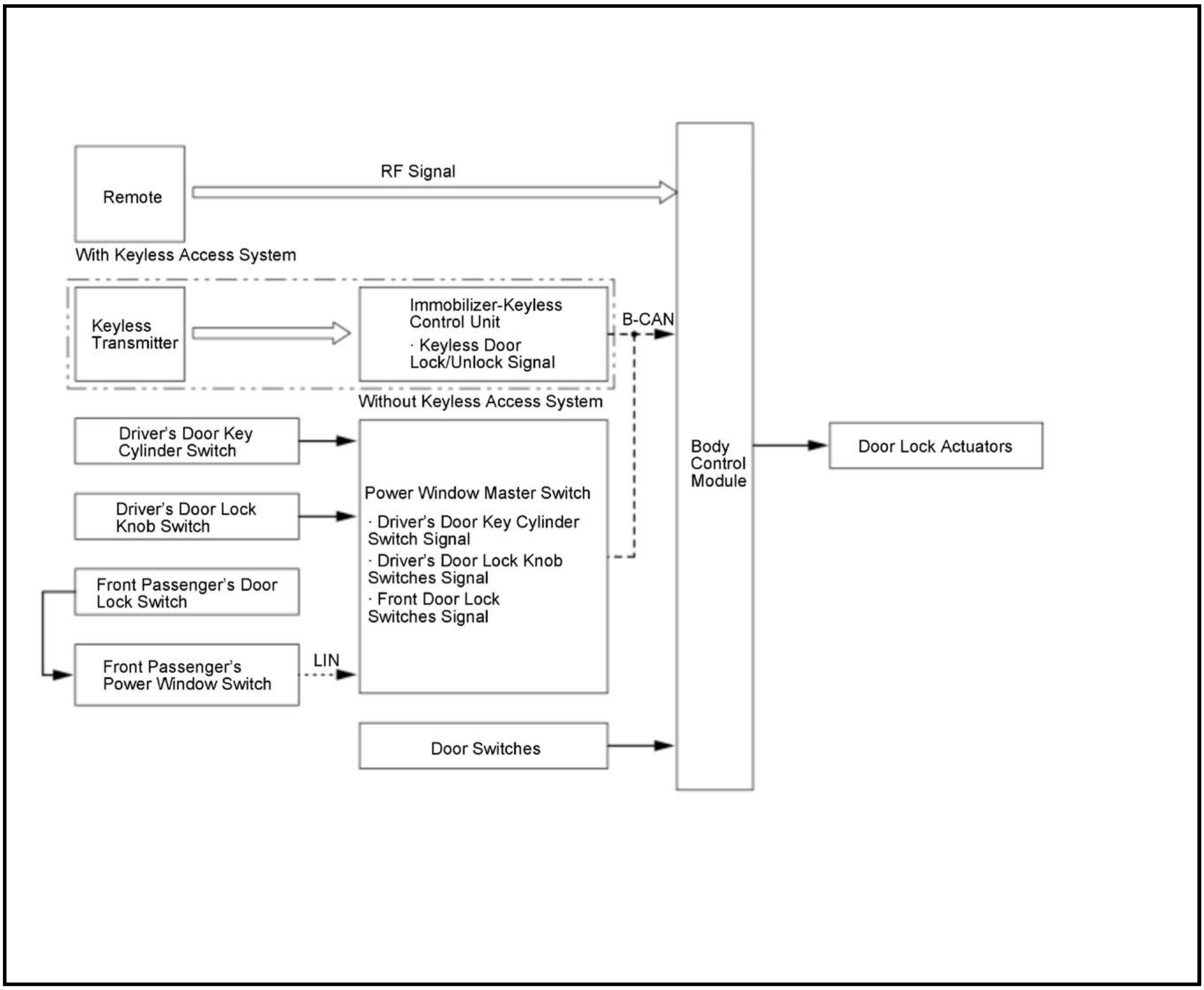
RF Signal
Remote
With Keyless Access System
Keyless Transmitter
Immobilizer-Keyless Control Unit
· Keyless Door Lock/Unlock Signal
B-CAN
Without Keyless Access System
Driver's Door Key Cylinder Switch
Driver's Door Lock Knob Switch
Front Passenger's Door Lock Switch
Front Passenger's Power Window Switch
LIN
Power Window Master Switch
· Driver's Door Key Cylinder Switch Signal
· Driver's Door Lock Knob Switches Signal
· Front Door Lock Switches Signal
Door Switches
Body Control Module
Door Lock Actuators

Keyless Door Lock Control (Tailgate)

The keyless transmitter or the remote can transmit a lock or unlock signal to the immobilizer-keyless control unit or the body control module, which sends the keyless request to the body control module using the B-CAN network. The control unit then controls the tailgate release function by a B-CAN signal and various other switch signals.

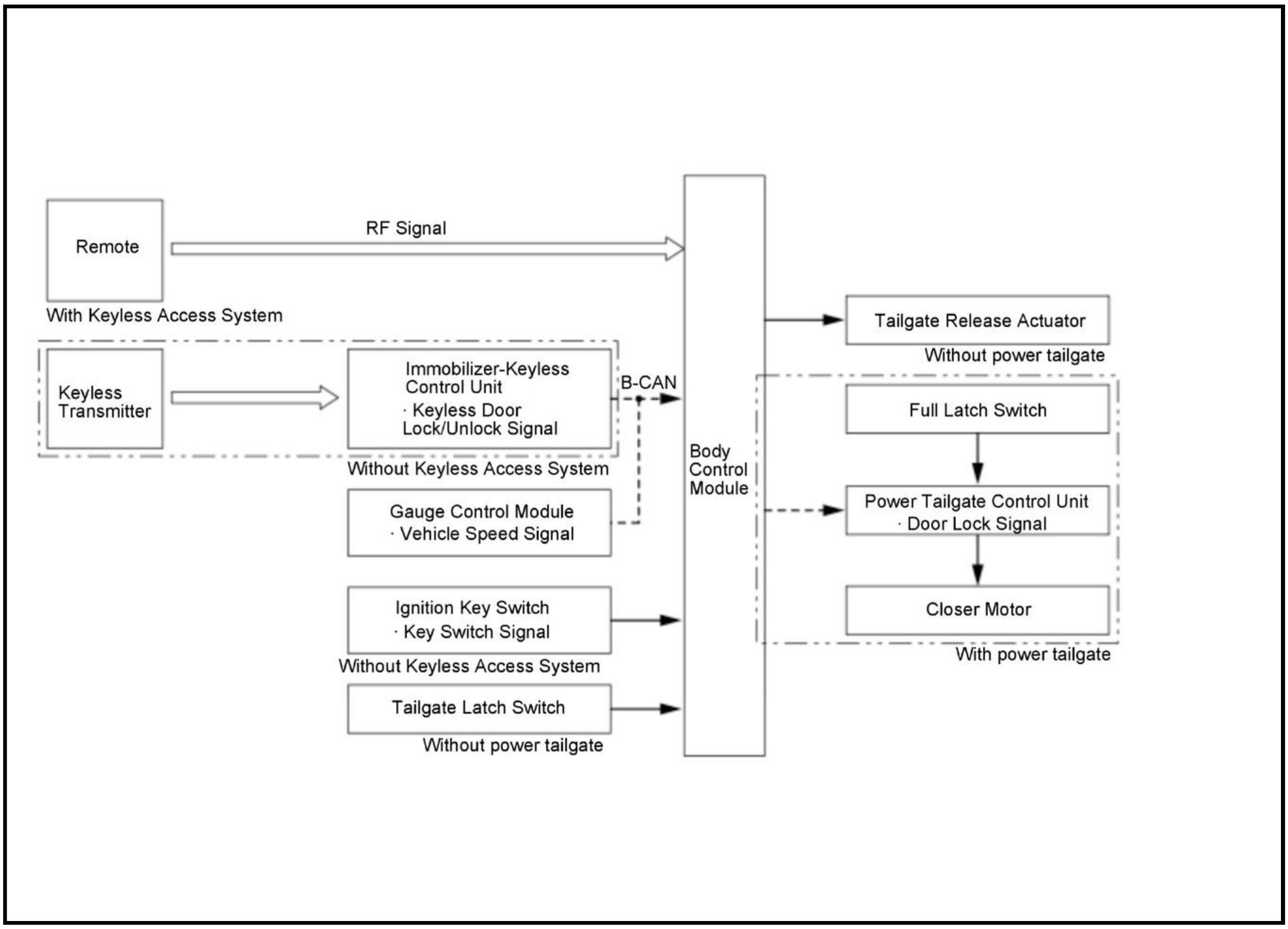
Remote
RF Signal
With Keyless Access System
Keyless Transmitter
Immobilizer-Keyless Control Unit
· Keyless Door Lock/Unlock Signal
B-CAN
Without Keyless Access System
Gauge Control Module
· Vehicle Speed Signal
Ignition Key Switch
· Key Switch Signal
Without Keyless Access System
Tailgate Latch Switch
Without power tailgate
Body Control Module
Tailgate Release Actuator
Without power tailgate
Full Latch Switch
Power Tailgate Control Unit
· Door Lock Signal
Closer Motor
With power tailgate

Automatic Door Lock/Unlock Control (For some models)

The automatic door lock/unlock control function allows the body control module to detect the status of B-CAN signals and various switch signals and controls each actuator in order to automatically lock/unlock the doors.

Automatic Door Lock Function:

- When the vehicle speed exceeds 9 mph (15 km/h) (Default setting)
- When the shift position/mode is out of the P position/mode

Automatic Door Unlock Function:

- When the driver's door switch is ON (door open) (Default setting)
- When the vehicle mode is changed to the OFF (LOCK) mode from the ON mode
- When the shift position/mode is moved to the P position/mode from other than the P position/mode

Customizing Function:

The locking method can be set to non-link, link to vehicle speed, link to shift position/mode, or link to ignition switch or engine start/stop switch by the customizing function. For more information about customize options, refer to the Owner's Manual.

Key Lockout Prevent Function

The body control module monitors whether or not there is a remote in the vehicle or a key inserted into the ignition key cylinder. If the remote is in the vehicle or the key is inserted into the ignition key cylinder, the body control module energizes the door lock actuator and unlocks the door.

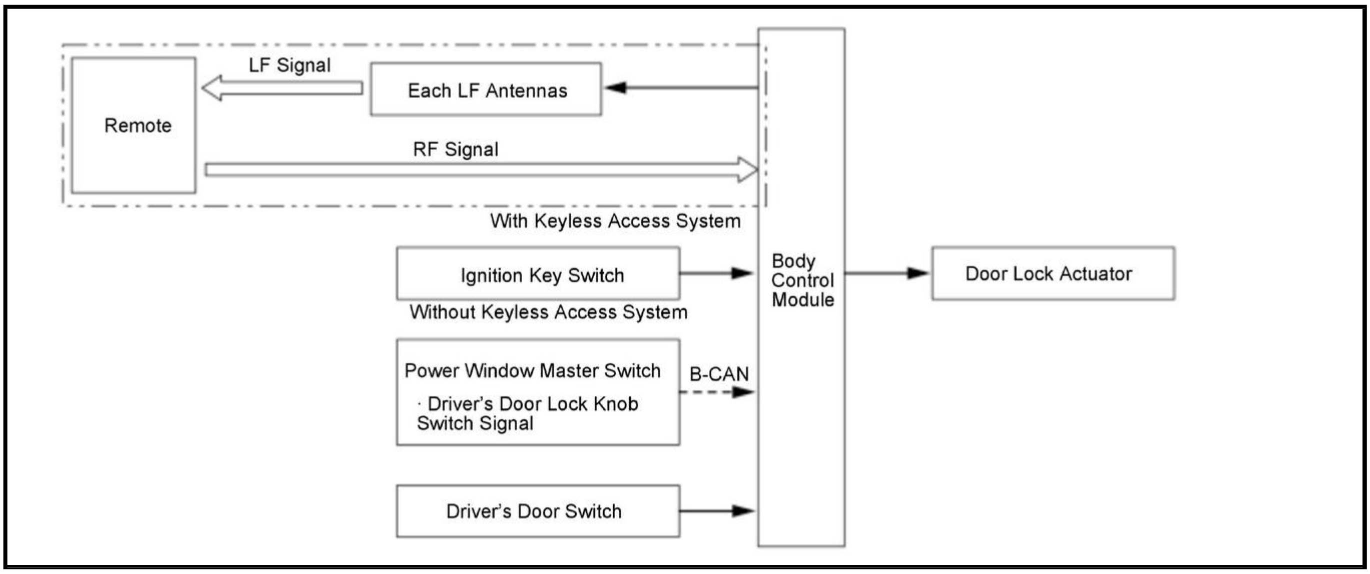
LF Signal
Remote
Each LF Antennas
RF Signal
With Keyless Access System
Ignition Key Switch
Without Keyless Access System
Body Control Module
Door Lock Actuator
Power Window Master Switch
· Driver's Door Lock Knob Switch Signal
B-CAN
Driver's Door Switch

Security Control

When the security alarm is set, the body control module sends the security set signal using the B-CAN.

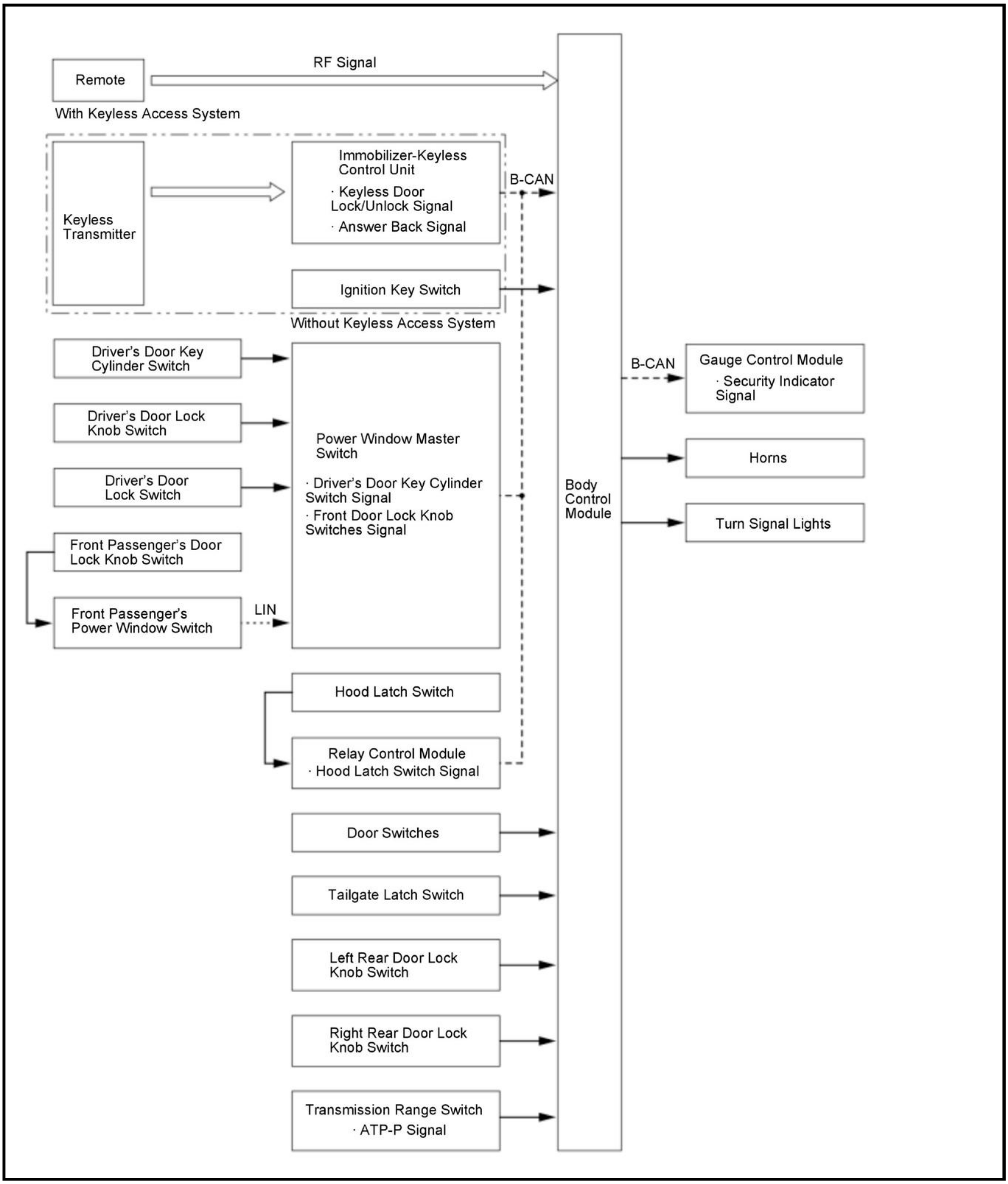
Remote
RF Signal
With Keyless Access System
Keyless Transmitter
Immobilizer-Keyless Control Unit
· Keyless Door Lock/Unlock Signal
· Answer Back Signal
B-CAN
Ignition Key Switch
Without Keyless Access System
Driver's Door Key Cylinder Switch
Driver's Door Lock Knob Switch
Driver's Door Lock Switch
Front Passenger's Door Lock Knob Switch
Front Passenger's Power Window Switch
LIN
Power Window Master Switch
· Driver's Door Key Cylinder Switch Signal
· Front Door Lock Knob Switches Signal
Hood Latch Switch
Relay Control Module
· Hood Latch Switch Signal
Door Switches
Tailgate Latch Switch
Left Rear Door Lock Knob Switch
Right Rear Door Lock Knob Switch
Transmission Range Switch
· ATP-P Signal
Body Control Module
B-CAN
Gauge Control Module
· Security Indicator Signal
Horns
Turn Signal Lights

Security system operating term

Start setting	- Lock the door using a mechanical key - Lock the door by using the keyless transmitter *1 or the remote *2 - Lock the door by pressing the door outer handle lock sensor while having the remote *2 - Operate a keyless relock
Cancellation	- Unlock the door by using the mechanical key - Unlock the door by using the keyless transmitter *1 or the remote *2

	• Unlock the door by smart function *2 • Press the engine start/stop switch while having the remote
Setting conditions (related systems are normally operated)	• Door switch OFF (Door close) • Door unlock knob switch OFF (Lock) • Tailgate latch switch *3 or full latch switch *4 OFF (Tailgate close) • Driver's door key cylinder switch OFF • Hood latch switch ON (Hood close) • Vehicle OFF (LOCK) mode • Shift P position/mode
Start the alarm	When any of the monitoring switch signal inputs are received without the signal for cancelling setting
Cancel the alarm	Compliant with the conditions for cancelling setting

*1: Without keyless access system

*2: With keyless access system

*4: Without power tailgate

*5: With power tailgate

Security Setting

When the security alarm is set, the body control module sends the security set signal using the B-CAN. When the gauge control module receives a security set signal from the body control module, the security indicator flashes at a slower pace to indicate the system has armed.

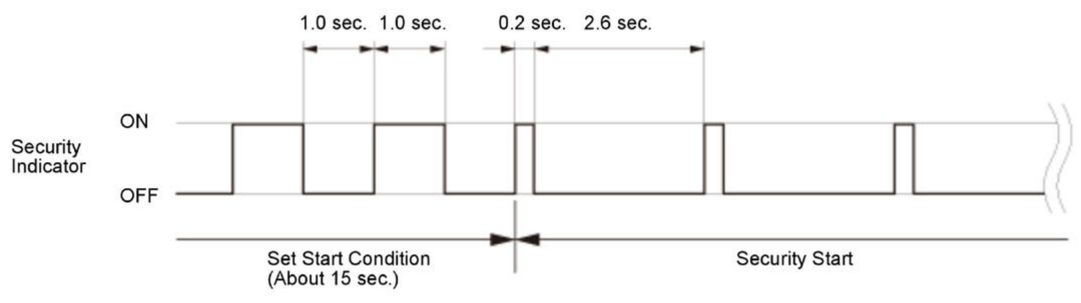

Security Alarm

With the security system armed, manually opening the hood, the tailgate, moving the door lock knob to the unlock position, or shift to other than the P position/mode activates the security alarm. During activation, the horn sounds, the turn signal lighs blink, repeating this alarm (one cycle is 120 seconds). Even if you remove the 12 volt battery, the alarming state cannot be changed. The alarm starts again when reinstalling the 12 volt battery.

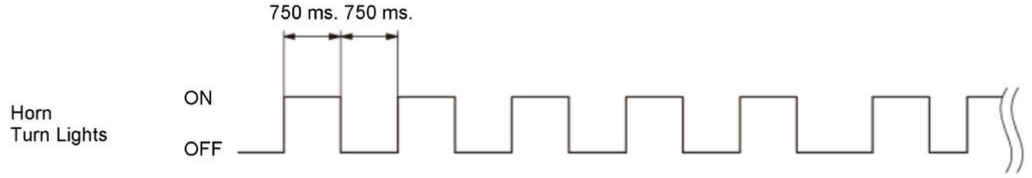

Answer Back Control

When using the remote, the body control module provides an answer back function to alert the customer that the body control module received a lock or unlock command from the remote or the immobilizer-keyless control unit. When the body control module receives a lock signal, the body control module outputs once to turn on the turn signal lights, and the keyless buzzer will sound. When the body control module receives an unlock signal, the body control module outputs two times to turn on the turn signal lights, and the keyless buzzer will sound.

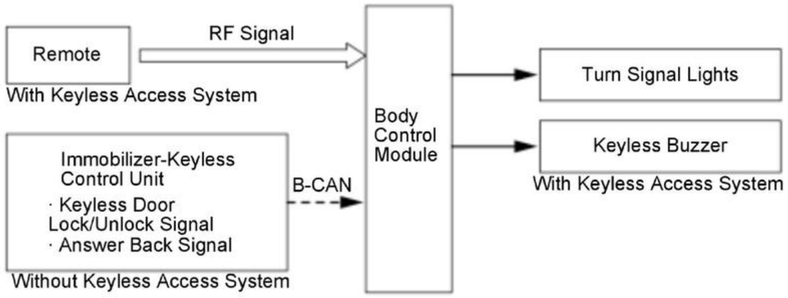
Remote
With Keyless Access System
RF Signal
Immobilizer-Keyless
Control Unit
· Keyless Door
Lock/Unlock Signal
· Answer Back Signal
Without Keyless Access System
B-CAN
Body
Control
Module
Turn Signal Lights
Keyless Buzzer
With Keyless Access System

When the body control module receives a lock signal, the body control module sends signals once to the turn signal lights, and the keyless buzzer will sound once when you press the lock button again within 5 seconds.

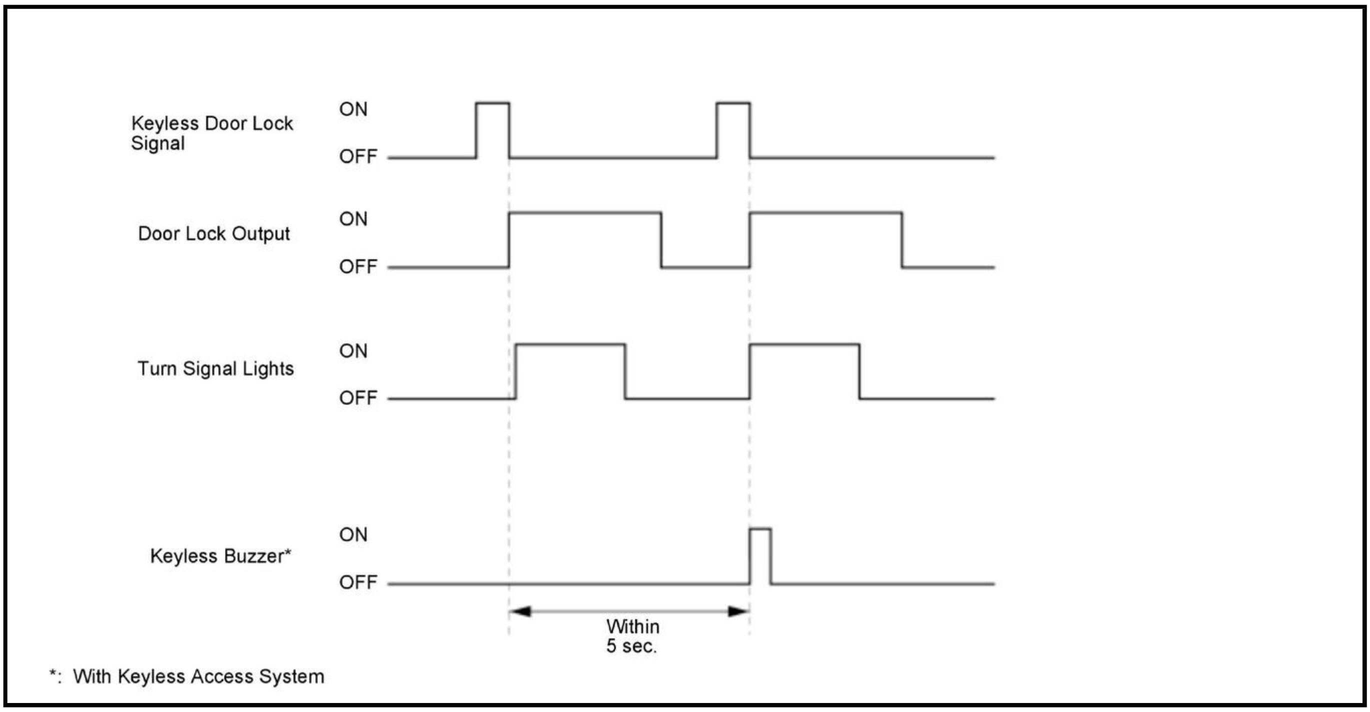

When the body control module receives an unlock signal, the body control module sends signals two times to the turn signal lights.

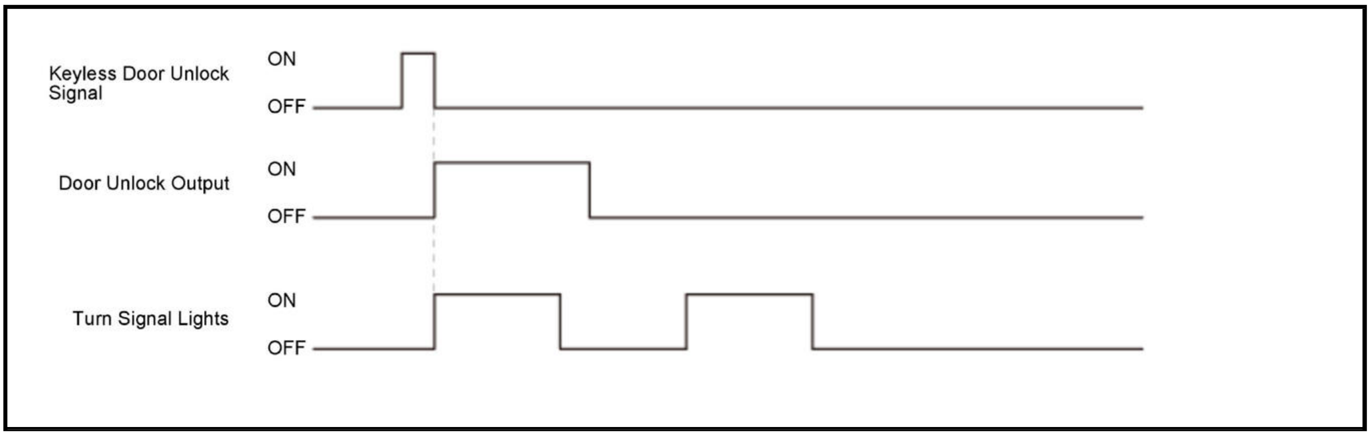

Keyless/Power Door Locks/Security System Description - Components

Door Lock Switches

The door lock switches are integrated into one unit to the power window master switch, and the front passenger's power window switch.

Door Lock Knob Switch/Door Lock Actuator/Driver's Door Key Cylinder Switch

The door lock knob switch and the door lock actuator are built into the door latch of each door. The door lock knob switch detects the lock and unlock states of the lock mechanism. The door lock actuator moves the lock mechanism back and forth between the lock and unlock position. The actuator receives lock and unlock commands from the body control module. The driver's door key cylinder switch is included in the driver's door latch assembly. In conjunction with the key cylinder, it detects the lock/unlock of the key cylinder.

Front Door Latch

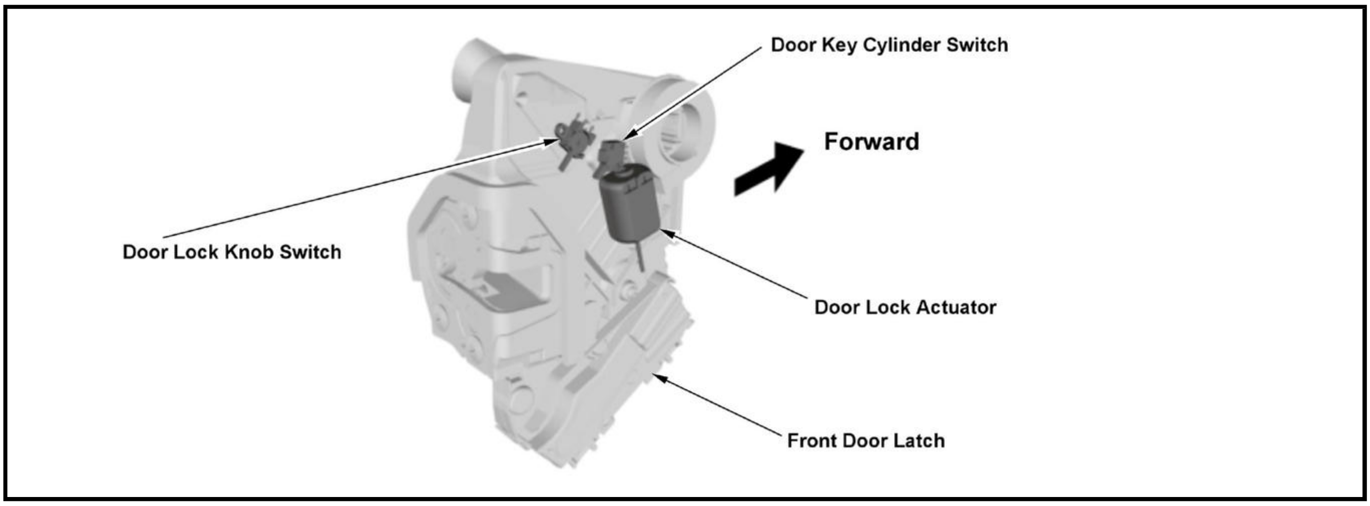
Door Key Cylinder Switch
Forward
Door Lock Knob Switch
Door Lock Actuator
Front Door Latch

B	Driver's Door Key Cylinder Switch*		Door Lock Knob Switch	
	LOCK	UNLOCK	LOCK *	UNLOCK
LOCK	ON	OFF	ON	OFF
Neutral	OFF	OFF	---	---
UNLOCK	OFF	ON	OFF	ON

*: Only Driver's Door

Rear Door Latch

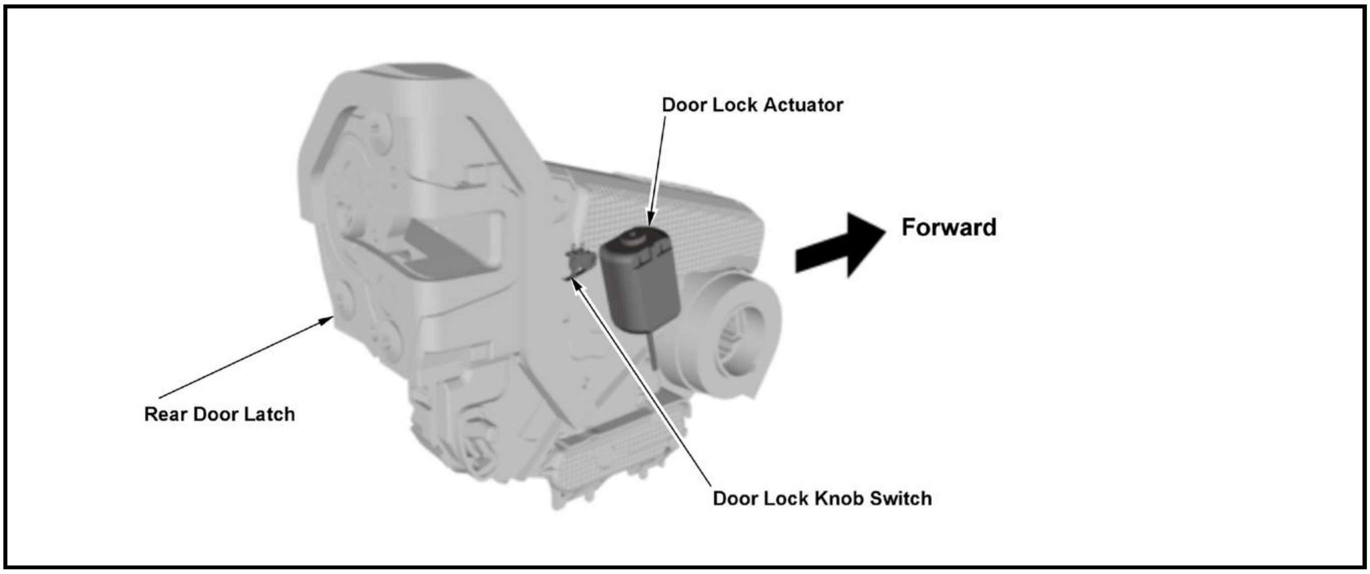
Door Lock Actuator
Forward
Rear Door Latch
Door Lock Knob Switch

B	Door Lock Knob Switch	
	LOCK	UNLOCK
LOCK	---	OFF
UNLOCK	---	ON

Tailgate Release Actuator/Tailgate Latch Switch (Without Power Tailgate)

The body control module receives an ON signal from the tailgate outer handle switch, which then outputs a signal to the tailgate release actuator, and unlocks the tailgate latch. The tailgate latch switch is the ON/OFF switch that detects the opening/closing of the tailgate. If the tailgate release actuator is bad, the tailgate may be opened manually with the lock lever.

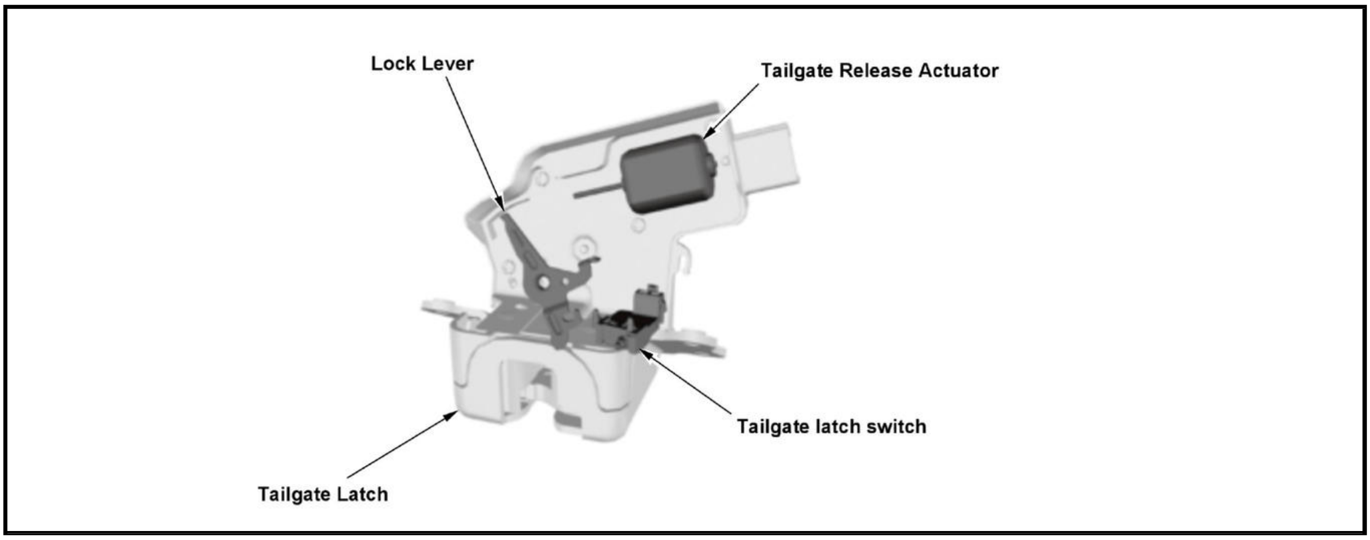
Lock Lever
Tailgate Release Actuator
Tailgate latch switch
Tailgate Latch

Tailgate	Tailgate Latch Switch
Open	ON
Close	OFF

Hood Latch Switch

The hood latch switch is built into the hood latch and it detects the opening/closing of the hood.

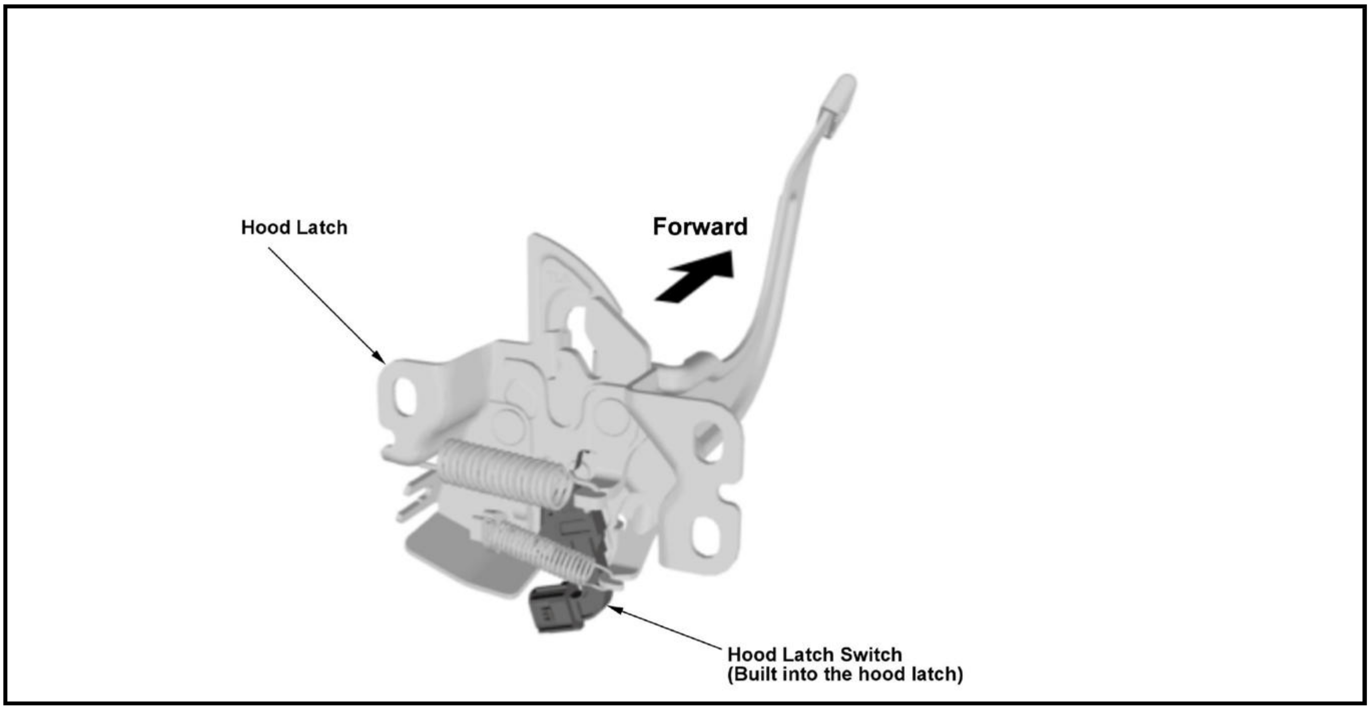
Hood Latch
Forward
Hood Latch Switch
(Built into the hood latch)

Hood	Hood Latch Switch
Open	OFF
Close	ON

Door Switch

The door switch is an ON/OFF type that detects the opening/closing of the door.

Door	Door Switch
Open	ON
Close	OFF

Keyless/Power Door Locks/Security System Description - System Diagram

For locations of each component on the vehicle, refer to Component Location Index

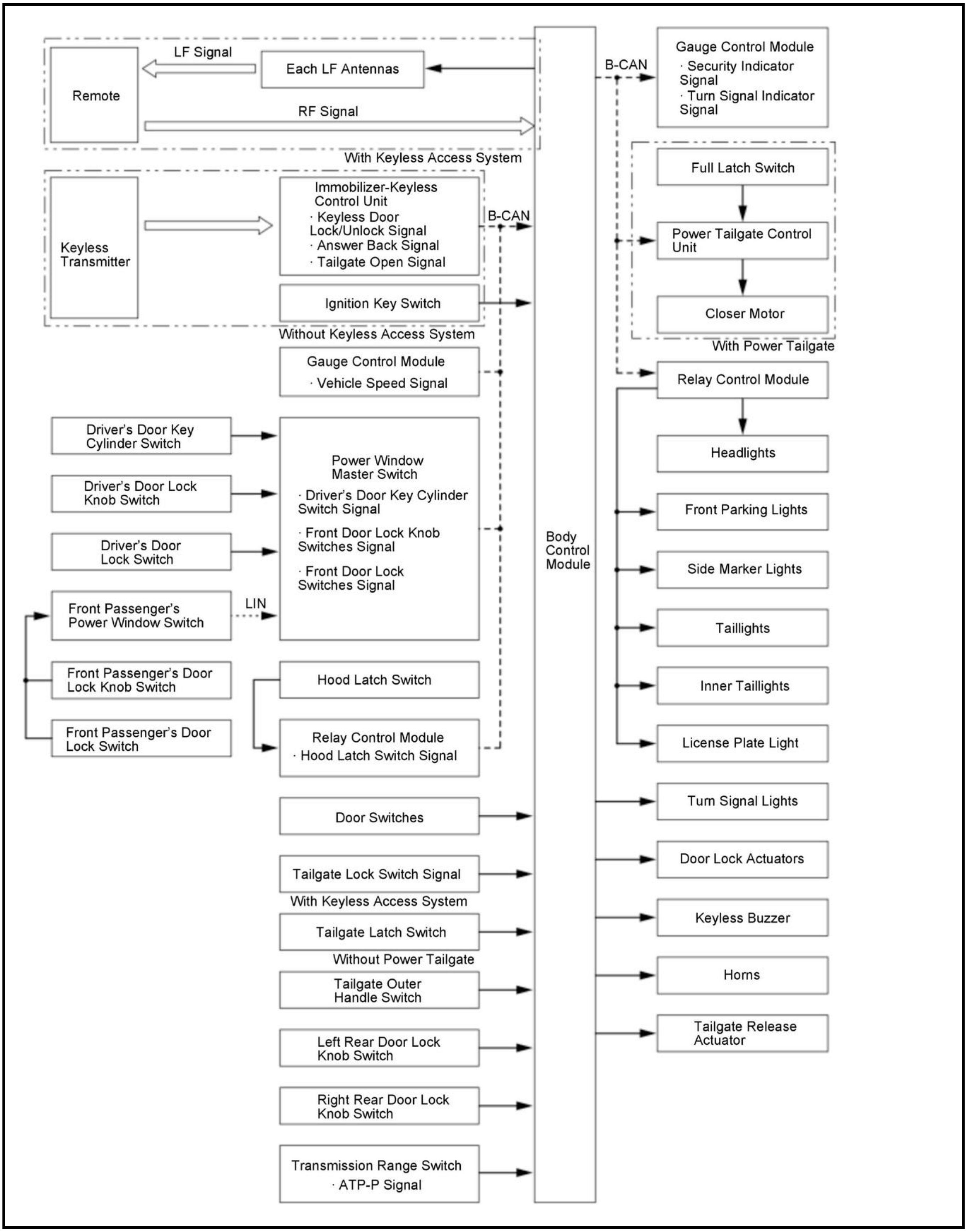
LF Signal
Remote
Each LF Antennas
RF Signal
With Keyless Access System
Keyless Transmitter
Immobilizer-Keyless Control Unit
· Keyless Door Lock/Unlock Signal
· Answer Back Signal
· Tailgate Open Signal
B-CAN
Ignition Key Switch
Without Keyless Access System
Gauge Control Module
· Vehicle Speed Signal
Driver's Door Key Cylinder Switch
Driver's Door Lock Knob Switch
Driver's Door Lock Switch
Front Passenger's Power Window Switch
LIN
Power Window Master Switch
· Driver's Door Key Cylinder Switch Signal
· Front Door Lock Knob Switches Signal
· Front Door Lock Switches Signal
Front Passenger's Door Lock Knob Switch
Front Passenger's Door Lock Switch
Hood Latch Switch
Relay Control Module
· Hood Latch Switch Signal
Door Switches
Tailgate Lock Switch Signal
With Keyless Access System
Tailgate Latch Switch
Without Power Tailgate
Tailgate Outer Handle Switch
Left Rear Door Lock Knob Switch
Right Rear Door Lock Knob Switch
Transmission Range Switch
· ATP-P Signal
Body Control Module
B-CAN
Gauge Control Module
· Security Indicator Signal
· Turn Signal Indicator Signal
Full Latch Switch
Power Tailgate Control Unit
Closer Motor
With Power Tailgate
Relay Control Module
Headlights
Front Parking Lights
Side Marker Lights
Taillights
Inner Taillights
License Plate Light
Turn Signal Lights
Door Lock Actuators
Keyless Buzzer
Horns
Tailgate Release Actuator

CONNECTOR VIEW

HOMELINK UNIT CONNECTOR FOR INPUTS AND OUTPUTS

Connector Index
HomeLink B® Unit 12P Connector (with panoramic glass roof)
HomeLink B® Unit 5P Connector (without panoramic glass roof)

HomeLink B® Unit 12P Connector (female terminals) (with panoramic glass roof)

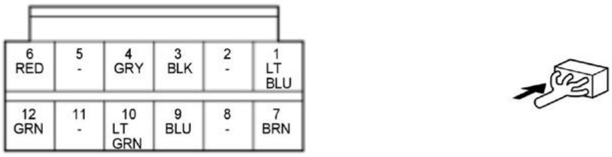

Terminal number	Terminal name	Description	Signal
1	VSW	Power source for HomeLink B® switch	About battery voltage at all times
2	---	Not used	---
3	GND	HomeLink B® unit ground	Less than 0.2 V at all times
4	SW3	Detects HomeLink B® switch (SW3) signal	---
5	---	Not used	---
6	+B BACK UP	+B power source	About battery voltage at all times
7	SW1	Detects HomeLink B® switch (SW1) signal	---
8	---	Not used	---
9	LED+	Outputs HomeLink B® switch indicator signal	---
10	SW2	Detects HomeLink B® switch (SW2) signal	---
11	---	Not used	---
12	LED-	Ground for HomeLink B® switch indicator signal	---

HomeLink B® Unit 5P Connector (female terminals) (without panoramic glass roof)

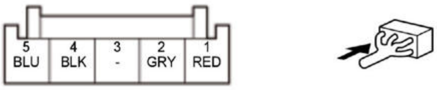

Terminal number	Terminal name	Description	Signal
1	+B BACK UP	+B power source	About battery voltage at all times
2	ILLUMI+	Detects illumination signal	With combination light switch PARKING: about battery voltageWith combination light switch OFF: less than 0.2 V
3	---	Not used	---
4	GND	HomeLink B® unit ground	Less than 0.2 V at all times
5	ILL-(LED)	Outputs illumination signal	---

IMMOBILIZER-KEYLESS CONTROL UNIT CONNECTOR FOR INPUTS AND OUTPUTS

Connector Index
Immobilizer-Keyless Control Unit 7P Connector (1.5L engine)
Immobilizer-Keyless Control Unit 7P Connector (2.4L engine)

Immobilizer-Keyless Control Unit 7P Connector (female terminals) (1.5L engine)

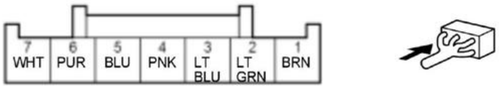

Immobilizer-Keyless Control Unit 7P Connector (female terminals) (2.4L engine)

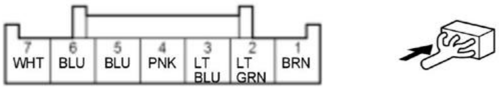

Terminal number	Terminal name	Description	Signal
1	GND	Immobilizer-keyless control unit ground	Less than 0.2 V at all times
2	S-NET	Communication line	---
3	K LINE	Communication line	---
4	B-CAN_H	Communication line	---
5	B-CAN_L	Communication line	---

Terminal number	Terminal name	Description	Signal
6	IG1 MON* 1IG1 FUEL PUMP* 2	IG1 power source	With vehicle in ON or START mode: about battery voltage
7	+B BACK UP	+B power source	About battery voltage at all times

*1: 1.5 L engine

*2: 2.4 L engine

CHECK

IMMOBILIZER SYSTEM CHECK

1. Connect the HDS to the data link connector (DLC)

2. Turn the vehicle to the ON mode.

3. Monitor the SYSTEM CHECK in IMMOBILIZER INFO with the HDS.

NOTE: If the HDS does not communicate with the immobilizer-keyless control unit, check the power, ground, and K LINE connections.If the HDS displays NORMAL N-1, the immobilizer system is OK at this time. If the HDS displays any messages, check as follows:

System Check No.	System Check	Possible Cause
A-1	The key is not registered(Incorrect key code)	• This key is not registered in the immobilizer-keyless control unit. Try to register keys using the HDS. • No communication between the antenna and the immobilizer key because of interference from metal such as key chains/key rings/other keys. • Low 12 volt battery voltage.
A-2	Communication error between the key and immobilizer-keyless control unit(Incorrect key code format)	• Intermittent interruption between transponder and immobilizer-keyless control unit. • The immobilizer key type is different. It is not for this vehicle but for another vehicle or for another company's vehicle. • Key failure (transponder failure). • No communication between the antenna and the immobilizer key because of interference from metal such as key chains/key rings/other keys. • Low 12 volt battery voltage.
A-3	No communication between the key and immobilizer-keyless control unit(No transponder detected)	• The vehicle was turned to the ON mode with a non-immobilizer key. • The immobilizer key type is different. It is not for this vehicle but for another vehicle or for another company's vehicle. • Key failure (transponder failure). • No communication between the antenna and the immobilizer key because of interference from metal such as key chains/key rings/other keys. • Low 12 volt battery voltage.

System Check No.	System Check	Possible Cause
		• Immobilizer-keyless control unit failure.
B-1	The PCM is not registered	• The PCM was not registered. Try to register the PCM using the HDS. • No communication between the PCM and the immobilizer-keyless control unit because of low 12 volt battery voltage. • No communication between the immobilizer-keyless control unit and the PCM because of electrical interference. • Open in the IG1 line.
B-2	Error of communication format in PCM(Incorrect registration format)	• The PCM was not registered. Try to register the PCM using the HDS. • No communication between the PCM and the immobilizer-keyless control unit because of low 12 volt battery voltage. • No communication between the immobilizer-keyless control unit and the PCM because of electrical interference.

System Check No.	System Check	Possible Cause
C-1	Imoes unit is not registered	• Imoes unit was not registered. • No communication between the imoes unit and the immobilizer-keyless control unit because of low 12 volt battery voltage. • No communication between the imoes unit and the immobilizer-keyless control unit because of interference. • Try to register the imoes unit with the HDS.
C-2	Error of communication format in imoes unit	• Imoes unit was not registered. • No communication between the imoes unit and the immobilizer-keyless control unit because of low 12 volt battery voltage. • No communication between the imoes unit and the immobilizer-keyless control unit because of electrical interference. • Try to register the imoes unit with the HDS.
D-1	S-NET line short	• S-NET line short from the PCM to the imoes unit or the immobilizer-keyless control unit. • No communication between the PCM and the immobilizer-keyless control unit because of low 12 volt battery voltage. • No communication between the immobilizer-keyless control unit and the PCM because of electrical interference.

System Check No.	System Check	Possible Cause
		• Immobilizer-keyless control unit failure. • PCM failure.
D-2	No communication between imoes unit and immobilizer-keyless control unit(S-NET line)	• Blown fuse. • S-NET line open from the imoes unit to the immobilizer-keyless control unit. • No communication between the imoes unit and the immobilizer-keyless control unit because of low 12 volt battery voltage. • No communication between the imoes unit and the immobilizer-keyless control unit because of electrical interference. • Immobilizer-keyless control unit failure. • Imoes unit failure.
D-3	No communication between PCM and immobilizer-keyless control unit(S-NET line)	• Blown fuse. • S-NET line open from the PCM to the immobilizer-keyless control unit. • No communication between the PCM and the immobilizer-keyless control unit because of low 12 volt battery voltage. • No communication between the immobilizer-keyless control unit and the PCM because of electrical interference. • Immobilizer-keyless control unit failure. • PCM failure.
E-1	Initial registration of immobilizer-keyless control unit is not completed	The immobilizer-keyless control unit is not registered. Try to register the immobilizer-keyless control unit using the HDS.
E-2		
E-3		
E-4		
E-5		
F-1	Special Mode	The vehicle is turned to the ON mode and to the OFF (LOCK) mode with the registered key.
F-2		
F-3		
F-4		
F-5		

KEYLESS ACCESS SYSTEM CHECK

1. Connect the HDS to the data link connector (DLC)

2. Turn the vehicle to the ON mode.

3. On the HDS screen, at SYSTEM SELECTION MENU, enter ONE-PUSH START, then select KEYLESS ACCESS CONTROL UNIT or BACKUP CONTROL UNIT.

NOTE: If the HDS does not communicate, check the body control module power, ground, K line, and L-line connectors.

4. At KEYLESS ACCESS CONTROL UNIT, enter KEYLESS ACCESS SYSTEM INFORMATION, then select SYSTEM CHECK 1 or SYSTEM CHECK 2.

5. At BACKUP CONTROL UNIT, enter SYSTEM INFORMATION, then select SYSTEM CHECK.If the HDS displays NORMAL N-1, the immobilizer system is OK at this time, refer to the STATUS LOG. If the HDS displays any other messages, check as follows:

System Check 1 (Keyless Access Control Unit)

System Check No.	Possible cause	Check items
A-1A-2A-3G-4	• Keyless remote is mismatched • No communication between body control module and keyless remote • Keyless remote is not registered	• Register the keyless remote • LF antenna test • Check antenna level with the HDS
B-1B-2G-1	• PCM is not registered • No communication between body control module and PCM • Body control module is replaced	• Register the PCM • Check PCM • Check for an open in the S-NET lines • Register the body control module
C-1C-2G-2G-3	• Body control module is not registered • Body control module is replaced	• Register the body control module • Check body control module • Check for an open in the S-NET lines
C-3C-4G-5	• Body control module is replaced • Communication error between body control module and electric steering lock • Electric steering lock is not registered	• Register the body control module • Check for an open or short in the IGN TRX line • Check electric steering lock • Register the electric steering lock

System Check 2 (Keyless Access Control Unit)

System Check No.	Possible cause	Check items
D-1D-2D-3	• S-NET line is open or short • No communication between body control module and PCM	• Check for an open or short in the S-NET lines • Check body control module • Check PCM
D-4D-5	IGN TRX line is open or short	Check for an open or short in the IGN TRX line

System Check (Backup Control Unit)

System Check No.	Possible cause	Check items
A-1A-2A-3	• Keyless remote is mismatched • Keyless remote is not registered • Engine start/stop switch failure	• Register the keyless remote • Check engine start/stop switch

System Check No.	Possible cause	Check items
B-1B-2	• PCM is replaced • Communication error between body control module and PCM	• Register the PCM • Check PCM
C-1C-2	Body control module is replaced	• Register the body control module • Check body control module • Check for an open in the S-NET lines
D-1D-2D-3	• S-NET line is open or short • No communication between body control module and PCM	• Check for an open or short in the S-NET lines • Check body control module • Check PCM
E-1E-2E-3E-4E-5	• Body control module is not registered • PCM is not registered • Keyless remote is not registered	• Register the body control module • Register the PCM • Register the keyless remote
F-1F-2F-3F-4F-5	Special mode	Turn the vehicle to the ON mode and then select the OFF (LOCK) mode with a registered keyless remote

INPUT TEST

IMMOBILIZER-KEYLESS CONTROL UNIT INPUT TEST

SRS components are located in this area. Review the **SRS component locations** and the **precautions and procedures** before doing repairs or service.

NOTE:

- Make sure the fuses associated with the system are OK.
- If you are troubleshooting multiple DTCs, be sure to follow the instructions in **B-CAN System Diagnosis Test Mode A** .

1. Turn the vehicle to the OFF (LOCK) mode.

2. Disconnect the immobilizer-keyless control unit 7P connector.

Immobilizer-Keyless Control Unit 7P Connector (female terminals)

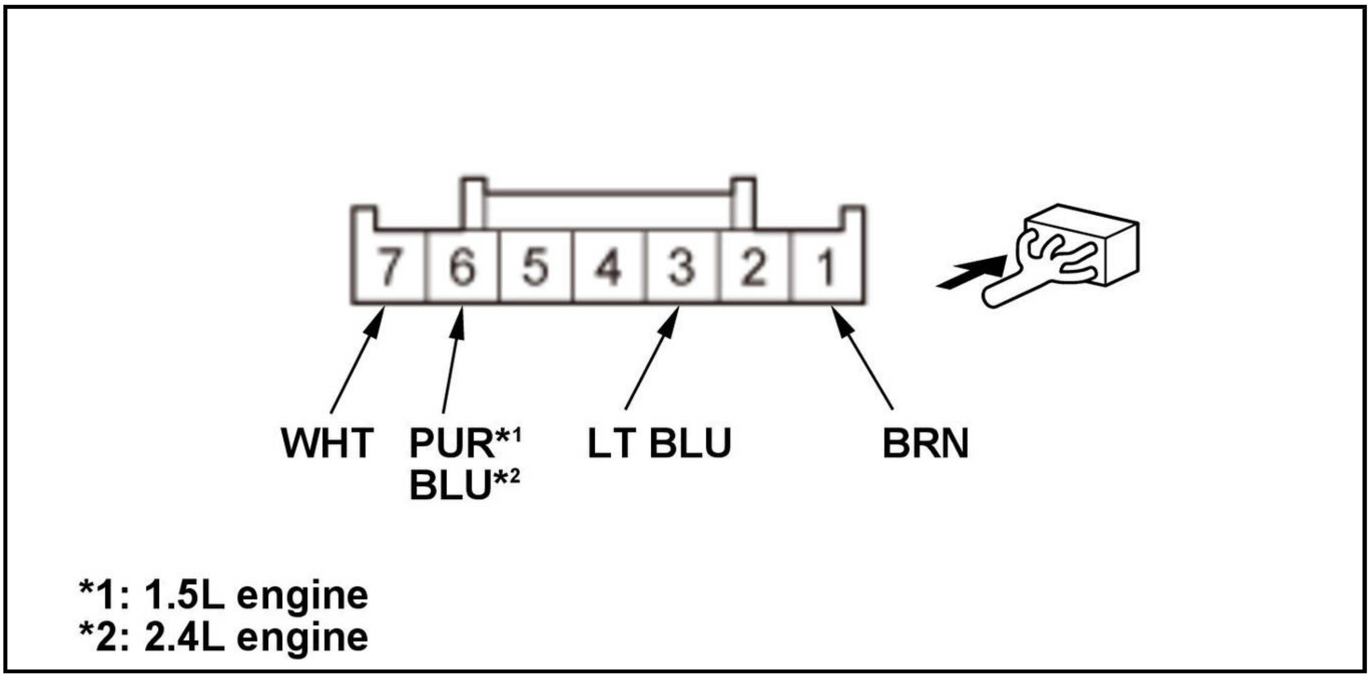

Inspect the connector and socket terminals to be sure they are all making good contact:

- If the terminals are bent, loose, or corroded, repair them as necessary, and recheck the system.
- If the terminals are OK, go to step 4.

Reconnect the connector to the immobilizer-keyless control unit, do the following input tests:

- If any test indicates a problem, find and correct the cause, then recheck the system.
- If all the input tests prove OK, replace the immobilizer-keyless control unit .

NOTE: After replacing the immobilizer-keyless control unit, and do the immobilizer key registration.

Cavity	Wire	Test condition	Test: Desired result	Possible cause if desired result is not obtained
7	WHT	Under all conditions	Measure the voltage to ground:There should be battery voltage.	An open or high resistance in the wire
6	PUR* 1BLU* 2	Vehicle ON mode	Measure the voltage to ground:There should be battery voltage.	An open or high resistance in the wire
1	BRN	In all power modes	Measure the voltage to ground:There should be less than 0.2 V.	• Poor ground (G401) • An open or high resistance in the ground wire
3	LT BLU	Under all conditions	Measure the voltage to ground:There should be pulse voltage (digital signal).	• Faulty control unit on the K LINE • Short to ground in the K LINE wire

*1: 1.5L engine

*2: 2.4L engine

KEYLESS ACCESS SYSTEM (BODY CONTROL MODULE AND ELECTRIC STEERING LOCK) INPUT TEST

SRS components are located in this area. Review the **SRS component locations** and the **precautions and procedures** before doing repairs or service.

NOTE:

- Make sure the fuses associated with the system is OK.
- If you are troubleshooting multiple DTCs, be sure to follow the instructions in **B-CAN System Diagnosis Test Mode A** .

Body Control Module

1. Turn the vehicle to the OFF (LOCK) mode.

2. Disconnect the body control module connectors.

Body Control Module Connector A (14P) (female terminals): ① Body Control Module Connector B (36P) (female terminals): ② Body Control Module Connector C (28P) (female terminals): ③ Body Control Module Connector D (40P) (female terminals): ④ Body Control Module Connector E (24P) (female terminals): ⑤ Body Control Module Connector F (36P) (female terminals): ⑥ Body Control Module Connector G (32P) (female terminals): ⑦

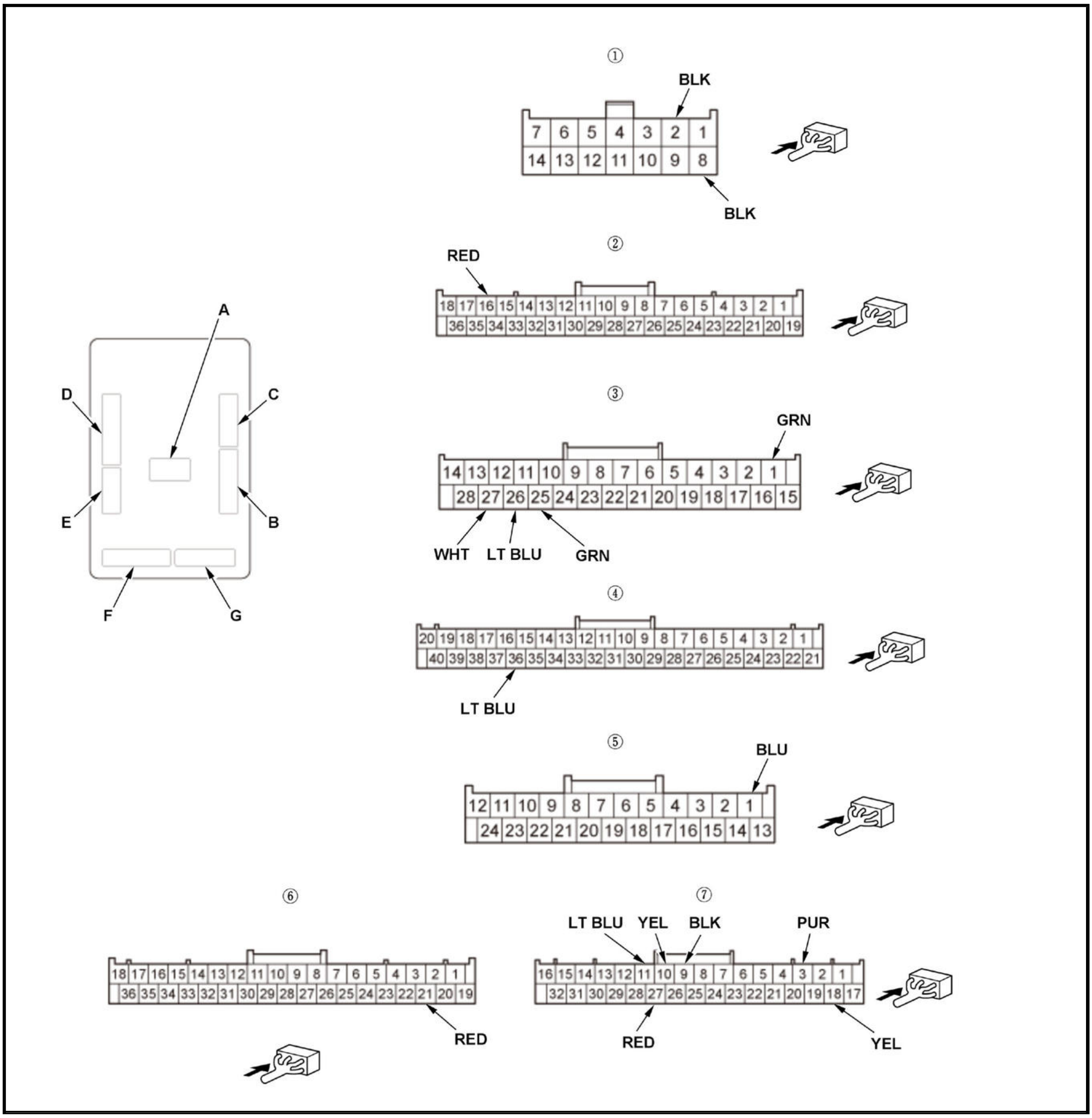
①
BLK
7 6 5 4 3 2 1
14 13 12 11 10 9 8
BLK
②
RED
18 17 16 15 14 13 12 11 10 9 8 7 6 5 4 3 2 1
36 35 34 33 32 31 30 29 28 27 26 25 24 23 22 21 20 19
A
D
C
E
B
F
G
③
GRN
14 13 12 11 10 9 8 7 6 5 4 3 2 1
28 27 26 25 24 23 22 21 20 19 18 17 16 15
WHT
LT BLU
GRN
④
20 19 18 17 16 15 14 13 12 11 10 9 8 7 6 5 4 3 2 1
40 39 38 37 36 35 34 33 32 31 30 29 28 27 26 25 24 23 22 21
LT BLU
⑤
BLU
12 11 10 9 8 7 6 5 4 3 2 1
24 23 22 21 20 19 18 17 16 15 14 13
⑥
18 17 16 15 14 13 12 11 10 9 8 7 6 5 4 3 2 1
36 35 34 33 32 31 30 29 28 27 26 25 24 23 22 21 20 19
RED
⑦
LT BLU
YEL
BLK
PUR
16 15 14 13 12 11 10 9 8 7 6 5 4 3 2 1
32 31 30 29 28 27 26 25 24 23 22 21 20 19 18 17
RED
YEL

Inspect the connectors and socket terminals to be sure they are all making good contact:

- If the terminals are bent, loose, or corroded, repair them as necessary, and recheck the system.
- If the terminals look OK, go to step 4.

With the connectors still disconnected, do the following input tests:

- If any test indicates a problem, find and correct the cause, then recheck the system.
- If all the input tests prove OK, then go to step 5.

Cavity	Wire	Test condition	Test: Desired result	Possible cause if desired result is not obtained
D36	LT BLU	Under all conditions	Check for continuity between terminal D36 and data link connector (DLC) terminal No. 7: There should be continuity.	An open or high resistance in the K LINE wire

Cavity	Wire	Test condition	Test: Desired result	Possible cause if desired result is not obtained
			Check for continuity between terminal D36 and body ground: There should be no continuity.	A short to ground in the K LINE wire
F21	RED	Under all conditions	Check for continuity between terminal F21 and data link connector (DLC) terminal No. 15: There should be continuity.	An open or high resistance in the L-LINE wire
			Check for continuity between terminal F21 and body ground:There should be no continuity.	A short to ground in the L-LINE wire
G18	YEL	Press the engine start/stop switch	Measure the voltage to ground:There should be battery voltage.	Faulty engine start/stop switch An open or high resistance in the wire
G9	BLK	Press the engine start/stop switch	Check for continuity to ground:There should be continuity.	Faulty engine start/stop switch Poor ground (G401) or an open in the ground wire An open or high resistance in the wire

Reconnect the connectors, and do the following input tests:

- If any test indicates a problem, find and correct the cause, then recheck the system.
- With electric steering lock: If all the input tests prove OK, then go to step 6.
- Without electric steering lock: If all the input tests prove OK, replace the body control module .

Cavity	Wire	Test condition	Test: Desired result	Possible cause if desired result is not obtained
B16	RED	Under all conditions	Measure the voltage to ground:There should be battery voltage.	An open or high resistance in the wire
C27	WHT	Under all conditions	Measure the voltage to ground:There should be battery voltage.	An open or high resistance in the wire
A2	BLK	In all power modes	Measure the voltage to ground:There should be less than 0.2 V.	Poor ground (G401) An open or high resistance in the ground wire
A8	BLK	In all power modes	Measure the voltage to ground:There should be less than 0.2 V.	Poor ground (G401) An open or high resistance in the ground wire

Cavity	Wire	Test condition	Test: Desired result	Possible cause if desired result is not obtained
G27	RED	Vehicle ON mode	Measure the voltage to ground:There should be battery voltage.	An open or high resistance in the wire
E1	BLU	Vehicle ON mode	Measure the voltage to ground:There should be battery voltage.	An open or high resistance in the wire

Cavity	Wire	Test condition	Test: Desired result	Possible cause if desired result is not obtained
G10	YEL	Vehicle ON mode	Measure the voltage to ground:There should be battery voltage.	An open or high resistance in the wire
G11	LT BLU	Vehicle ON mode	Measure the voltage to ground:There should be battery voltage.	An open or high resistance in the wire
C1	GRN	Shift lever in P position/mode	Measure the voltage to ground:There should be less than 0.2 V.	• Faulty transmission range switch • An open or high resistance in the wire
		Shift lever in any other position/mode other than P	Measure the voltage to ground:There should be battery voltage.	• Faulty transmission range switch • A short to ground in the wire
C26	LT BLU	Shift lever in P position/mode	Measure the voltage to ground:There should be battery voltage.	• Faulty park pin switch • A short to ground in the wire
		Shift lever in any other position/mode than P	Measure the voltage to ground:There should be less than 0.2 V.	• Faulty park pin switch • Poor ground (G402) or an open in the ground wire • An open or high resistance in the wire
C25	GRN	Brake pedal pressed	Measure the voltage to ground:There should be battery voltage.	• Faulty brake pedal position switch • An open or high resistance in the wire
G3*	PUR	Electric steering lock (LOCK)	Measure the voltage to ground:There should be about 5 V.	• Faulty electric steering lock • A short to ground in the wire
		Electric steering lock (UNLOCK)	Measure the voltage to ground:There should be less than 0.2 V.	• Faulty electric steering lock • An open or high resistance in the wire

*: With electric steering lock

Electric Steering Lock

6. Turn the vehicle to the OFF (LOCK) mode.

7. Disconnect the electric steering lock 12P connector.

Electric Steering Lock 12P Connector (female terminals)

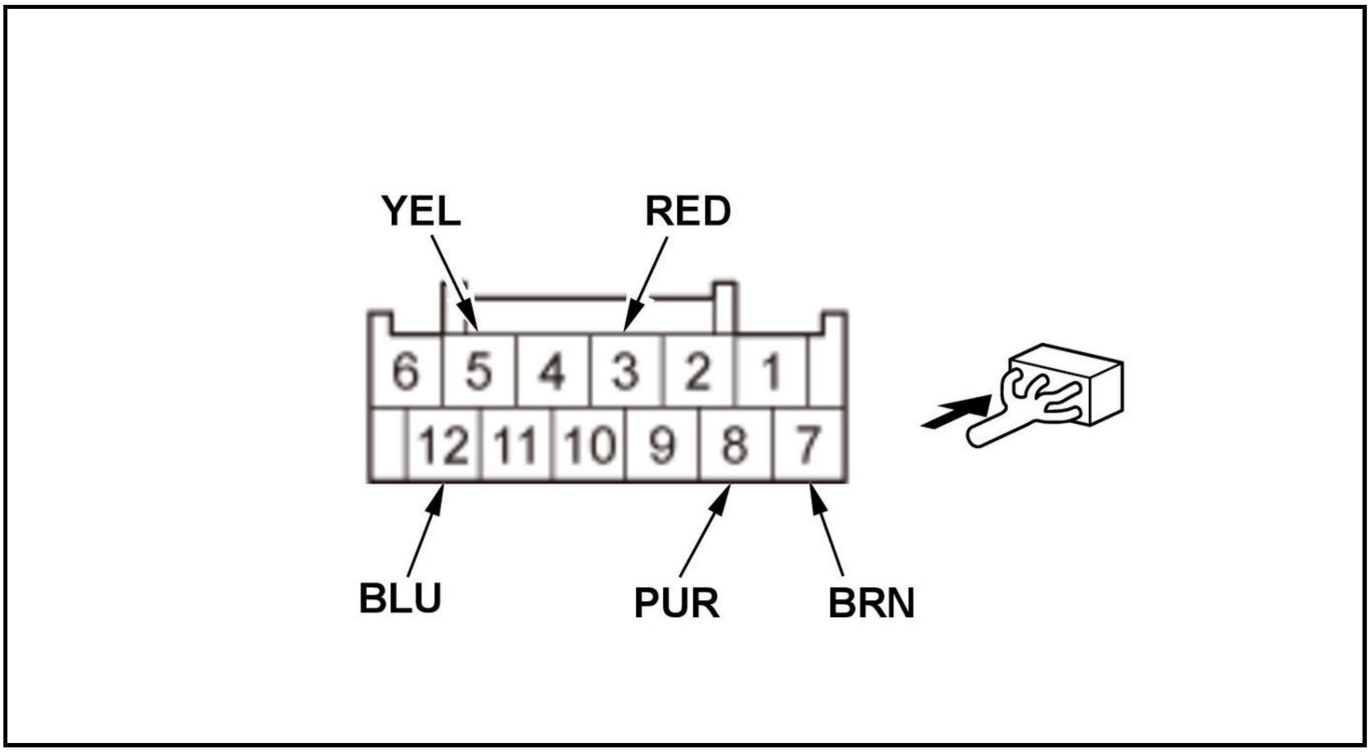

Inspect the connector and socket terminals to be sure they are all making good contact:

- If the terminals are bent, loose, or corroded, repair them as necessary, and recheck the system.
- If the terminals look OK, then go to step 9.

Reconnect the connector, and do the following input tests:

- If any test indicates a problem, find and correct the cause, then recheck the system.
- If all the input tests prove OK, go to step 10.

Cavity	Wire	Test condition	Test: Desired result	Possible cause if desired result is not obtained
3	RED	Under all conditions	Measure the voltage to ground:There should be battery voltage.	An open or high resistance in the wire
12	BLU	Vehicle ON mode	Measure the voltage to ground:There should be battery voltage.	An open or high resistance in the wire
7	BRN	In all power modes	Measure the voltage to ground:There should be less than 0.2 V.	• Poor ground (G401) • An open or high resistance in the ground wire
8	PUR	Electric steering lock (LOCK)	Measure the voltage to ground:There should be about 5 V.	• Faulty body control module • A short to ground in the wire
		Electric steering lock (UNLOCK)	Measure the voltage to ground:There should be less than 0.2 V.	• Faulty electric steering lock • An open or high resistance in the wire
5	YEL	Vehicle ON mode	Measure the voltage to ground:There should be battery voltage.	• Faulty body control module • An open or high resistance in the wire • A short to ground in the wire

10. If multiple failures are found on more than one control unit, replace the body control module . If input failures are related to a particular control unit, replace the control unit.

KEYLESS/POWER DOOR LOCKS/SECURITY SYSTEM (BODY CONTROL MODULE, DOOR MULTIPLEX CONTROL UNIT, AND FRONT PASSENGER'S POWER WINDOW SWITCH) INPUT TEST

- Make sure the fuses associated with the system is OK.
- If you are troubleshooting multiple DTCs, be sure to follow the instructions in B-CAN System Diagnosis Test Mode A .
- Before testing, make sure the headlights, parking lights, side marker lights, taillights, and horns work properly.

Body Control Module

1. Turn the vehicle to the OFF (LOCK) mode.

2. Disconnect body control module connectors.

Body Control Module Connector A (14P) (female terminals): ① Body Control Module Connector B (36P) (female terminals): ② Body Control Module Connector C (28P) (female terminals): ③ Body Control

Module Connector D (40P) (female terminals): ④ Body Control Module Connector E (24P) (female terminals): ⑤

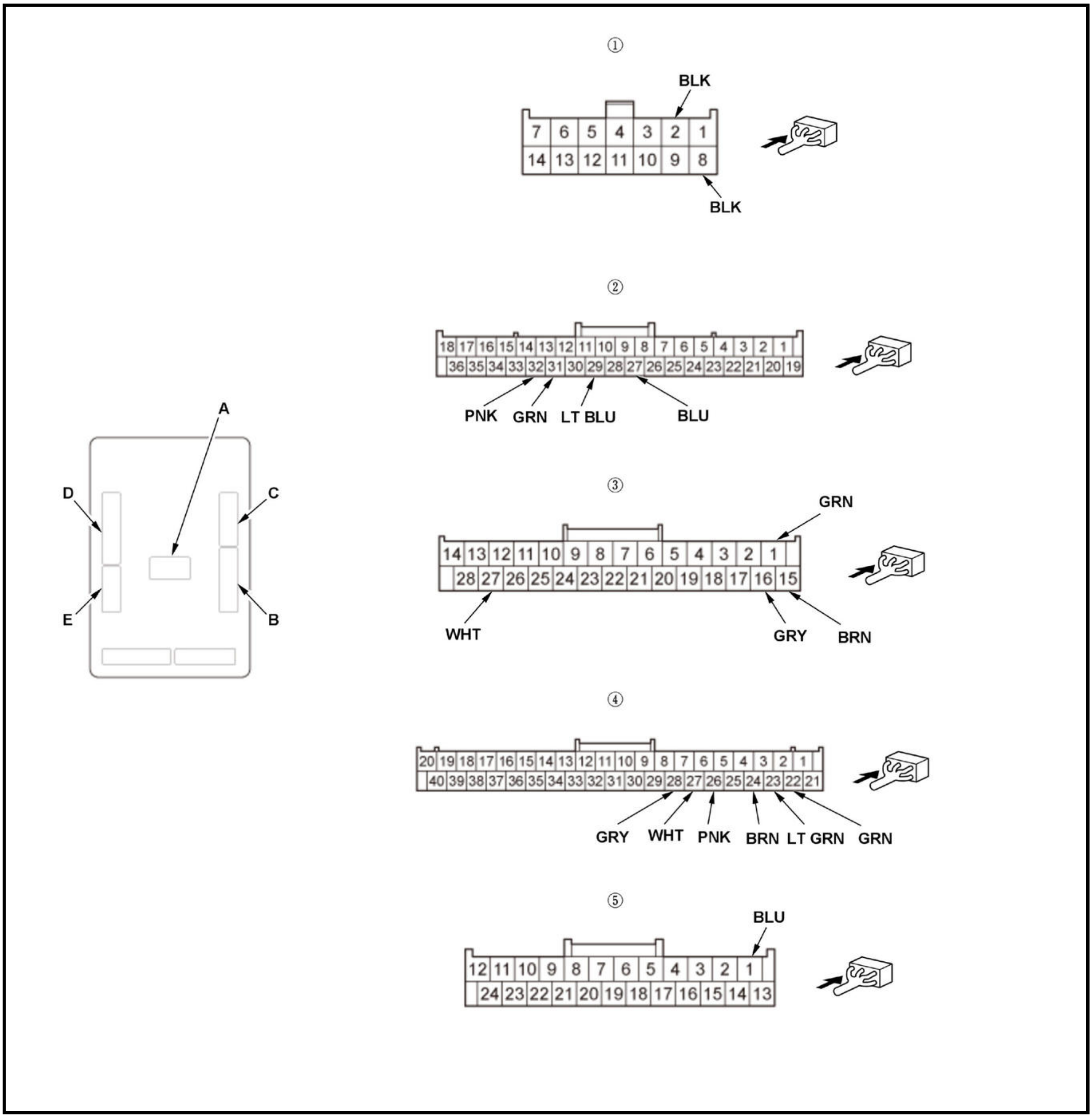
①
BLK
BLK
②
PNK
GRN
LT BLU
BLU
A
D
C
E
B
③
GRN
WHT
GRY
BRN
④
GRY
WHT
PNK
BRN
LT GRN
GRN
⑤
BLU

Inspect the connectors and socket terminals to be sure they are all making good contact:

- If the terminals are bent, loose, or corroded, repair them as necessary, and recheck the system.
- If the terminals look OK, go to step 4.

With the connectors still disconnected, do the following input tests:

- If any test indicates a problem, find and correct the cause, then recheck the system.
- If all the input tests prove OK, go to step 5.

NOTE: These are door lock actuator operation tests for keyless entry.

Cavity	Wire	Test condition	Test: Desired result	Possible cause if desired result is not obtained
D26*	PNK	Ignition key inserted into the ignition key switch	Measure the voltage to ground:There should be less than 0.2 V.	- Faulty ignition key switch - An open or high resistance in the wire - Poor ground (G401)
		Ignition key removed from the ignition key switch	Measure the voltage to ground:There should be battery voltage.	- Faulty ignition key switch - A short to ground in the wire

*: Without keyless access system

Reconnect the connectors to the body control module, do the following input tests:

- If any test indicates a problem, find and correct the cause, then recheck the system.
- If all the input tests prove OK, go to step 6.

Cavity	Wire	Test condition	Test: Desired result	Possible cause if desired result is not obtained
C27	WHT	Under all conditions	Measure the voltage to ground:There should be battery voltage.	An open or high resistance in the wire
E1	BLU	Vehicle ON mode	Measure the voltage to ground:There should be battery voltage.	An open or high resistance in the wire
A2	BLK	In all power modes	Measure the voltage to ground:There should be less than 0.2 V.	- Poor ground (G401) - An open or high resistance in the ground wire
A8	BLK	In all power modes	Measure the voltage to ground:There should be less than 0.2 V.	- Poor ground (G401) - An open or high resistance in the ground wire
B27	BLU	In all power modes	Connect to ground with a jumper wire:The driver's door lock actuator, the front passenger's door lock actuator, the left rear door lock actuator, and the right rear door lock actuator should LOCK.	- Faulty power door lock relay circuit (LOCK) - Faulty driver's door lock actuator - Faulty front passenger's door lock actuator - Faulty left rear door lock actuator - Faulty right rear door lock actuator - An open or high resistance in the wire

Cavity	Wire	Test condition	Test: Desired result	Possible cause if desired result is not obtained
B31	GRN	In all power modes	Connect to ground with a jumper wire:The driver's door lock actuator should UNLOCK.	• Faulty power door lock relay circuit (DR UNLOCK) • Faulty driver's door lock actuator • An open or high resistance in the wire

Cavity	Wire	Test condition	Test: Desired result	Possible cause if desired result is not obtained
B32	PNK	In all power modes	Connect to ground with a jumper wire:The front passenger's door lock actuator, the left rear door lock actuator, and the right rear door lock actuator should UNLOCK.	• Faulty power door lock relay circuit (UNLOCK) • Faulty front passenger's door lock actuator • Faulty left rear door lock actuator • Faulty right rear door lock actuator • An open or high resistance in the wire
B29	LT BLU	In all power modes	Connect to ground with a jumper wire:The tailgate release actuator should work.	• Faulty tailgate release actuator relay circuit • Faulty tailgate release actuator • Poor ground (G505) or an open in the ground wire • An open or high resistance in the wire
D22	GRN	Driver's door open	Measure the voltage to ground:There should be less than 0.2 V.	• Faulty driver's door switch • Faulty driver's door switch ground • An open or high resistance in the wire
		Driver's door closed	Measure the voltage to ground:There should be battery voltage.	• Faulty driver's door switch • A short to ground in the wire
D23	LT GRN	Front passenger's door open	Measure the voltage to ground:There should be less than 0.2 V.	• Faulty front passenger's door switch • Faulty front passenger's door switch ground

Cavity	Wire	Test condition	Test: Desired result	Possible cause if desired result is not obtained
				• An open or high resistance in the wire
		Front passenger's door closed	Measure the voltage to ground:There should be battery voltage.	• Faulty front passenger's door switch • A short to ground in the wire
D24	BRN	Left rear door open	Measure the voltage to ground:There should be less than 0.2 V.	• Faulty left rear door switch • Faulty left rear door switch ground • An open or high resistance in the wire
		Left rear door closed	Measure the voltage to ground:There should be battery voltage.	• Faulty left rear door switch • A short to ground in the wire

Cavity	Wire	Test condition	Test: Desired result	Possible cause if desired result is not obtained
D28	GRY	Right rear door open	Measure the voltage to ground:There should be less than 0.2 V.	• Faulty right rear door switch • Faulty right rear door switch ground • An open or high resistance in the wire
		Right rear door closed	Measure the voltage to ground:There should be battery voltage.	• Faulty right rear door switch • A short to ground in the wire
C15	BRN	Left rear door lock knob switch in UNLOCK	Measure the voltage to ground:There should be less than 0.2 V.	• Faulty left rear door lock knob switch • Poor ground (G501) or an open in the ground wire • An open or high resistance in the wire
		Left rear door lock knob switch in LOCK	Measure the voltage to ground:There should be battery voltage.	• Faulty left rear door lock knob switch • A short to ground in the wire
C16	GRY	Right rear door lock knob switch in	Measure the voltage to ground:There should be	• Faulty right rear door lock knob switch

Cavity	Wire	Test condition	Test: Desired result	Possible cause if desired result is not obtained
		UNLOCK	less than 0.2 V.	• Poor ground (G502) or an open in the ground wire • An open or high resistance in the wire
		Right rear door lock knob switch in LOCK	Measure the voltage to ground:There should be battery voltage.	• Faulty right rear door lock knob switch • A short to ground in the wire
D27	WHT	Tailgate open	Measure the voltage to ground:There should be less than 0.2 V.	• Faulty power tailgate closer unit or faulty tailgate latch switch • Poor ground (G505) or an open in the ground wire • An open or high resistance in the wire
		Tailgate closed	Measure the voltage to ground:There should be battery voltage.	• Faulty power tailgate closer unit or faulty tailgate latch switch • A short to ground in the wire
C1	GRN	Shift lever in P position/mode	Measure the voltage to ground:There should be less than 0.2 V.	• Faulty transmission range switch • An open or high resistance in the wire
		Shift lever in any other position/mode than P	Measure the voltage to ground:There should be battery voltage.	• Faulty transmission range switch • A short to ground in the wire

Door Multiplex Control Unit

6. Turn the vehicle to the OFF (LOCK) mode.

7. Disconnect the power window master switch 37P connector.

Power Window Master Switch 37P Connector (female terminals)

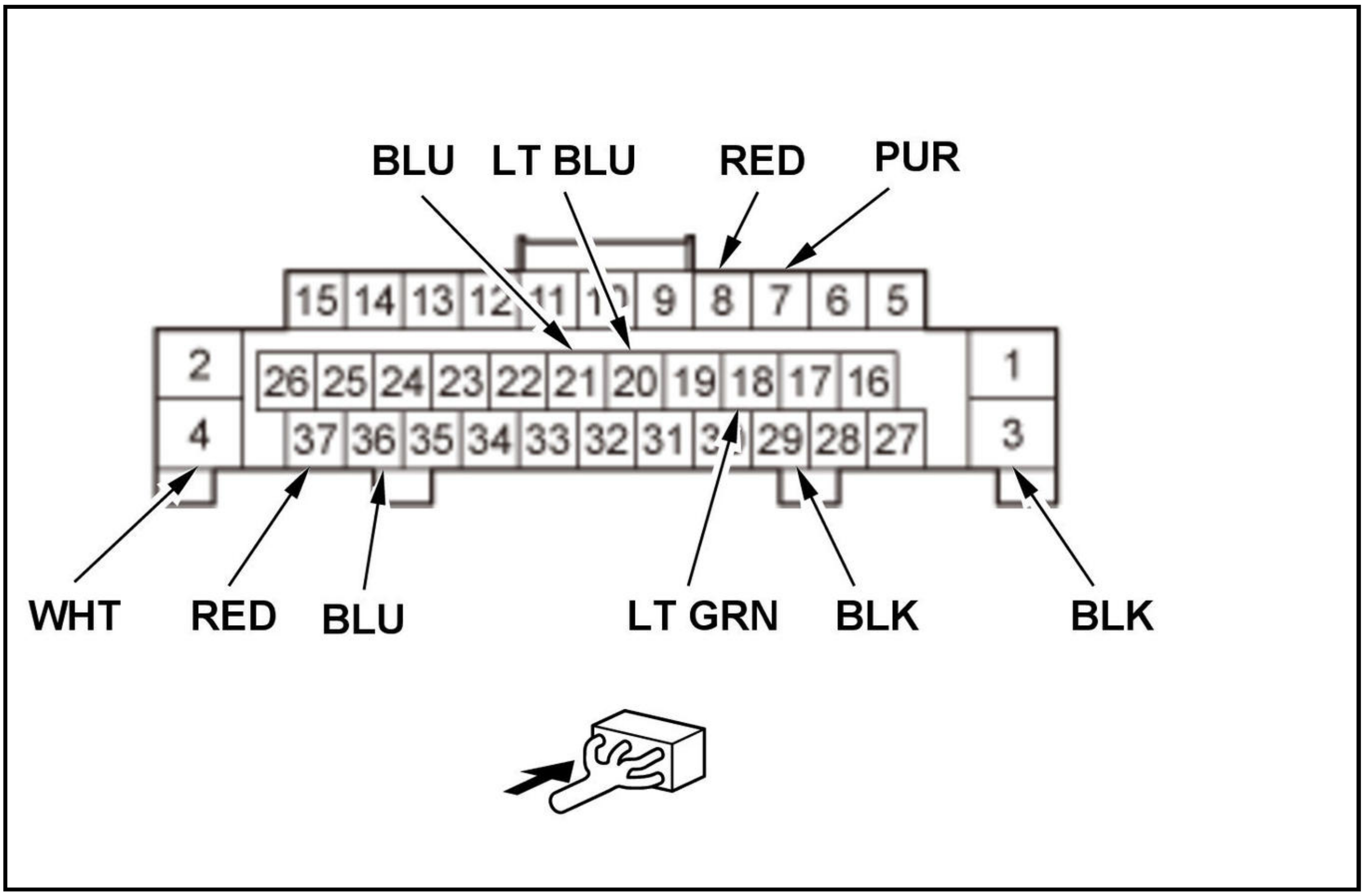

Inspect the connector and socket terminals to be sure they are all making good contact:

- If any test indicates a problem, find and correct the cause, then recheck the system.
- If all the input tests prove OK, go to step 9.

With the connector still disconnected, do the following input tests:

- If any test indicates a problem, find and correct the cause, then recheck the system.
- If all the input tests prove OK, go to step 10.

Cavity	Wire	Test condition	Test: Desired result	Possible cause if desired result is not obtained
36	BLU	Disconnect these connectors: • Front passenger's power window switch 37P connector • Panoramic glass roof motor-control unit 14P connector* 1 • Moonroof motor-control unit 14P connector* 2	Check for continuity between terminal No. 36 and front passenger's power window switch 37P connector terminal No. 34:There should be continuity.	An open in the LIN(P/W) wire
			Check for continuity between terminal No. 36 and panoramic glass roof motor-control unit 14P connector terminal No. 12:There should be continuity.	An open in the LIN(P/W) wire
			Check for continuity between terminal No. 36 and moonroof motor-control unit 14P connector	An open in the LIN(P/W) wire

Cavity	Wire	Test condition	Test: Desired result	Possible cause if desired result is not obtained
			terminal No. 12:There should be continuity.	
			Check for continuity to ground:There should be no continuity.	A short to ground in the LIN(P/W) wire

*1: With panoramic glass roof*2: With moonroof

Reconnect the connector, do the following input tests:

- If any test indicates a problem, find and correct the cause, then recheck the system.
- If all the input tests prove OK, go to step 11.

Cavity	Wire	Test condition	Test: Desired result	Possible cause if desired result is not obtained
18	LT GRN	Vehicle ON mode	Measure the voltage to ground:There should be battery voltage.	An open or high resistance in the wire

Cavity	Wire	Test condition	Test: Desired result	Possible cause if desired result is not obtained
37	RED	Under all conditions	Measure the voltage to ground:There should be battery voltage.	An open or high resistance in the wire
4	WHT	Under all conditions	Measure the voltage to ground:There should be battery voltage.	An open or high resistance in the wire
3	BLK	In all power modes	Measure the voltage to ground:There should be less than 0.2 V.	• Poor ground (G401) • An open or high resistance in the ground wire
29	BLK	In all power modes	Measure the voltage to ground:There should be less than 0.2 V.	• Poor ground (G401) • An open or high resistance in the ground wire
7	PUR	Driver's door key cylinder switch in LOCK	Measure the voltage to ground:There should be less than 0.2 V.	• Faulty driver's door key cylinder switch • Poor ground (G401) or an open in the ground wire • An open or high resistance in the wire
		Driver's door key cylinder switch in neutral or UNLOCK	Measure the voltage to ground:There should be battery voltage.	• Faulty driver's door key cylinder switch • A short to ground in the wire

Cavity	Wire	Test condition	Test: Desired result	Possible cause if desired result is not obtained
8	RED	Driver's door key cylinder switch in UNLOCK	Measure the voltage to ground:There should be less than 0.2 V.	• Faulty driver's door key cylinder switch • Poor ground (G401) or an open in the ground wire • An open or high resistance in the wire
		Driver's door key cylinder switch in neutral or LOCK	Measure the voltage to ground:There should be battery voltage.	• Faulty driver's door key cylinder switch • An open or high resistance in the wire
21	BLU	Driver's door lock knob switch in LOCK	Measure the voltage to ground:There should be less than 0.2 V.	• Faulty driver's door lock knob switch • Poor ground (G401) or an open in the ground wire • An open or high resistance in the wire
		Driver's door lock knob switch in UNLOCK	Measure the voltage to ground:There should be battery voltage.	• Faulty driver's door lock knob switch • A short to ground in the wire

Cavity	Wire	Test condition	Test: Desired result	Possible cause if desired result is not obtained
20	LT BLU	Driver's door lock knob switch in UNLOCK	Measure the voltage to ground:There should be less than 0.2 V.	• Faulty driver's door lock knob switch • Poor ground (G401) or an open in the ground wire • An open or high resistance in the wire
		Driver's door lock knob switch in LOCK	Measure the voltage to ground:There should be battery voltage.	• Faulty driver's door lock knob switch • A short to ground in the wire

Front Passenger's Power Window Switch

11. Turn the vehicle to the OFF (LOCK) mode, open and close the driver's door.

12. Disconnect the front passenger's power window switch 37P connector.

Front Passenger's Power Window Switch 37P Connector (female terminals)

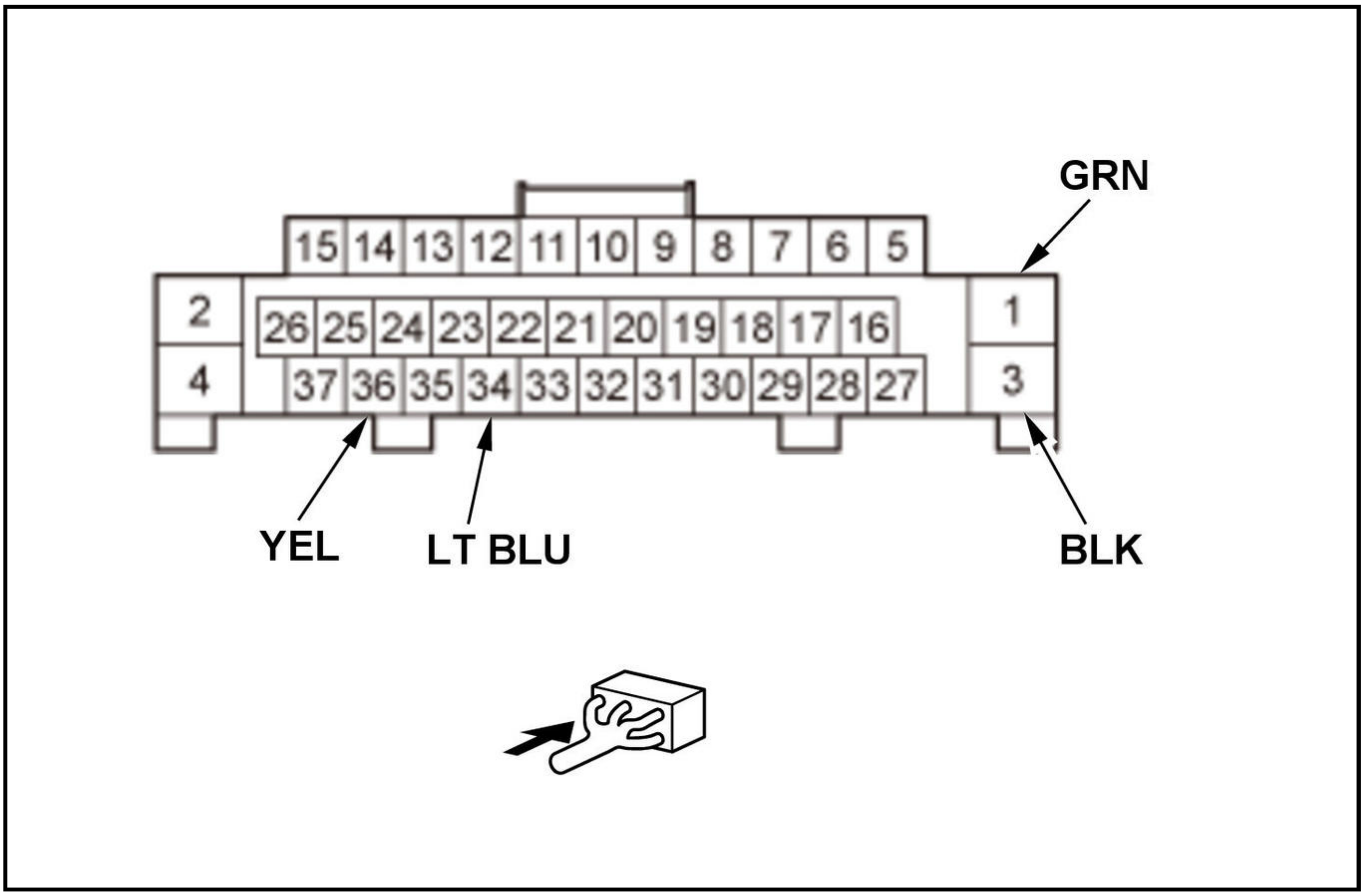

Inspect the connector and socket terminals to be sure they are all making good contact:

- If the terminals are bent, loose, or corroded, repair them as necessary, and recheck the system.
- If the terminals look OK, go to step 14.

With the connector still disconnected, do the following input tests:

- If any test indicates a problem, find and correct the cause, then recheck the system.
- If all the input tests prove OK, go to step 15.

Cavity	Wire	Test condition	Test: Desired result	Possible cause if desired result is not obtained
34	LT BLU	Disconnect these connectors: • Power window master switch 37P connector • Panoramic glass roof motor-control unit 14P connector* 1 • Moonroof motor-control unit 14P connector* 2	Check for continuity between terminal No. 34 and power window master switch 37P connector terminal No. 36:There should be continuity.	An open in the LIN(P/W) wire
			Check for continuity between terminal No. 34 and panoramic glass roof motor-control unit 14P connector terminal No. 12:There should be continuity.	An open in the LIN(P/W) wire
			Check for continuity between terminal No. 34 and moonroof motor-control unit 14P connector terminal No. 12:There should be continuity.	An open in the LIN(P/W) wire

Cavity	Wire	Test condition	Test: Desired result	Possible cause if desired result is not obtained
			Check for continuity to ground:There should be no continuity.	A short to ground in the LIN(P/W) wire

*1: With panoramic glass roof*2: With moonroof

Reconnect the connector, do the following input tests:

- If any test indicates a problem, find and correct the cause, then recheck the system.
- If all the input tests prove OK, go to step 16.

Cavity	Wire	Test condition	Test: Desired result	Possible cause if desired result is not obtained
1	GRN	Under all conditions	Measure the voltage to ground:There should be battery voltage.	An open or high resistance in the wire
3	BLK	In all power modes	Measure the voltage to ground:There should be less than 0.2 V.	Poor ground (G401) An open or high resistance in the ground wire
36	YEL	Front passenger's door lock knob switch in UNLOCK	Measure the voltage to ground:There should be less than 0.2 V.	Front passenger's door lock knob switch Poor ground (G401) or an open in the ground wire An open or high resistance in the wire
		Front passenger's door lock knob switch in LOCK	Measure the voltage to ground:There should be battery voltage.	Front passenger's door lock knob switch A short to ground in the wire

16. If multiple failures are found on more than one control unit, replace the body control module . If input failures are related to a particular control unit, replace the control unit.

TROUBLESHOOTING

KEYLESS ACCESS SYSTEM TOUCH SENSOR CIRCUIT TROUBLESHOOTING

Touch Sensor Circuit Troubleshooting

1. Keyless access system check

   -1. Select KEYLESS ACCESS CONTROL UNIT from the ONE-PUSH START system select menu with the HDS, and enter HISTORY DATA.

   One-Push - KEYLESS ACCESS CONTROL UNIT - History data/Clear

   Select HISTORY CLEAR, and back to TEST MODE menu:

NOTE: When the freeze data is cleared, the information indicates "NOT CONFIRMED".

- DRIVER DOOR UNLOCK SWITCH
- DRIVER DOOR LOCK SWITCH
- FRONT PASSENGER DOOR UNLOCK SWITCH
- FRONT PASSENGER DOOR LOCK SWITCH

-3. Turn the vehicle to the OFF (LOCK) mode.

-4. Get out of the vehicle with the keyless remote, and touch the each door outer handle touch sensors.

-5. Select KEYLESS ACCESS CONTROL UNIT from the ONE-PUSH START system select menu with the HDS, and enter HISTORY DATA.

One-Push - KEYLESS ACCESS CONTROL UNIT - History data/Clear

Recheck HISTORY DATA.

- DRIVER DOOR UNLOCK SWITCH
- DRIVER DOOR LOCK SWITCH
- FRONT PASSENGER DOOR UNLOCK SWITCH
- FRONT PASSENGER DOOR LOCK SWITCH

Is all the information OK?

YES

Intermittent failure, the system is OK at this time.

NO

Go to step 2.

2. Open wire check (GND line)

-1. Disconnect the following connectors.

Each door outer handle 8P connectors

-2. Check for continuity between test points 1 and 2 individually.

Driver's door

Test condition	Vehicle OFF (LOCK) modeDriver's door outer handle 8P connector: disconnected
Test point 1	Driver's door outer handle 8P connector (female terminals) No. 8: ①
Test point 2	Body ground

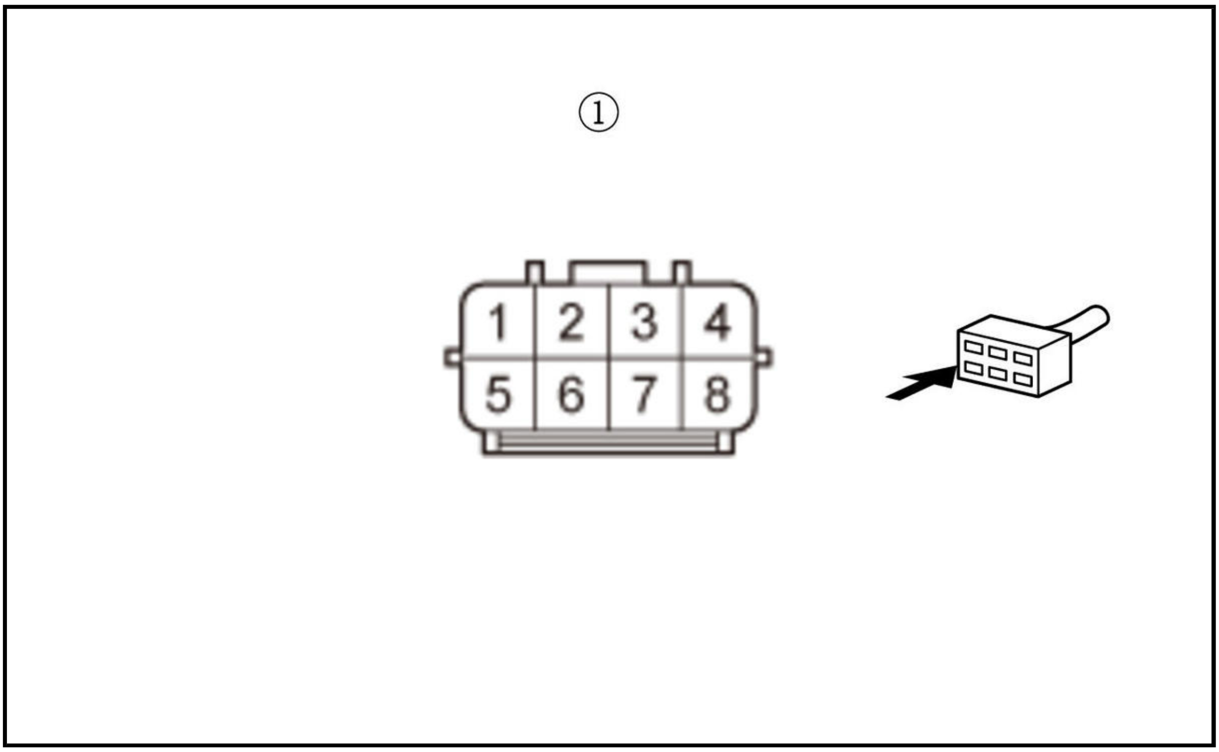

Front passenger's door

Test condition	Vehicle OFF (LOCK) modeFront passenger's door outer handle 8P connector: disconnected
Test point 1	Front passenger's door outer handle 8P connector (female terminals) No. 8: ①
Test point 2	Body ground

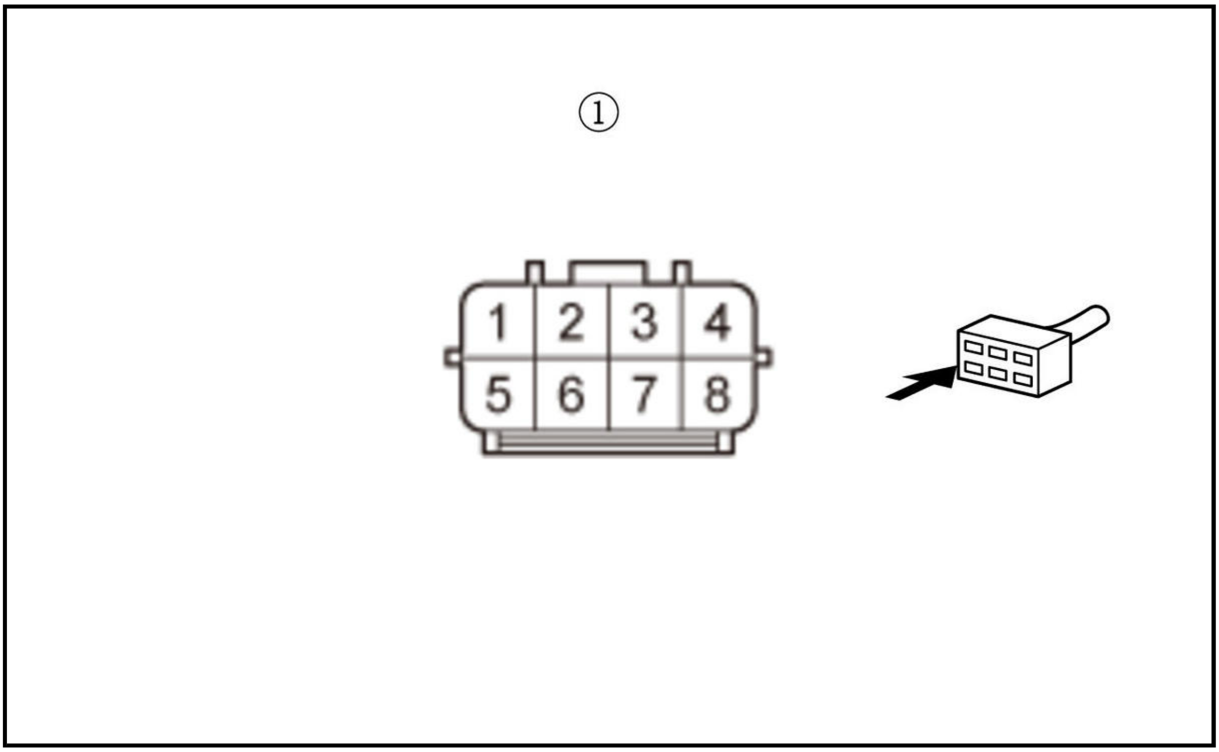

Is there continuity?

YES

The GND wires are OK. Go to step 3.

NO

Repair an open or high resistance in the ground wire or poor ground (G401, G402).

3. Determine possible failure area (TS lines, DL lines, VOUT lines)

-1. Measure the voltage between test points 1 and 2 individually.

Driver's door

Test condition	Vehicle OFF (LOCK) modeDriver's door outer handle 8P connector: disconnected
Test point 1	Driver's door outer handle 8P connector (female terminals) No. 4: ①
Test point 2	Body ground

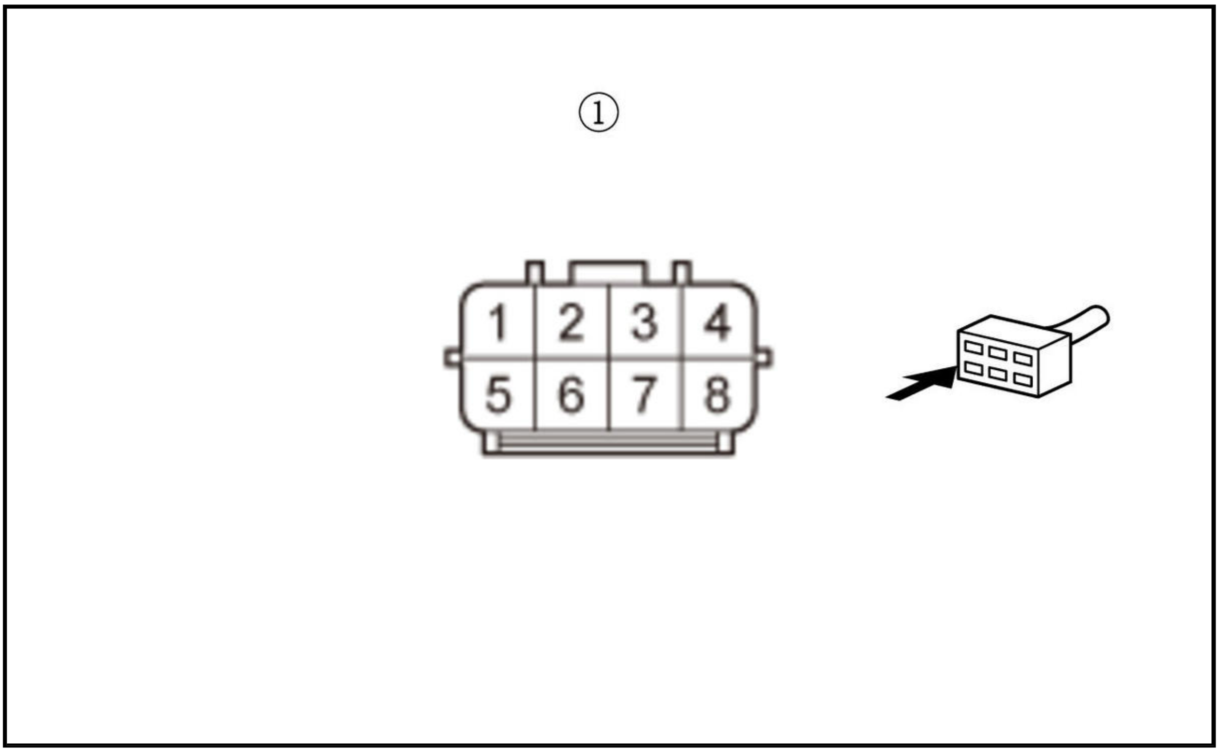

Front passenger's door

Test condition	Vehicle OFF (LOCK) modeFront passenger's door outer handle 8P connector: disconnected
Test point 1	Front passenger's door outer handle 8P connector (female terminals) No. 4: ①
Test point 2	Body ground

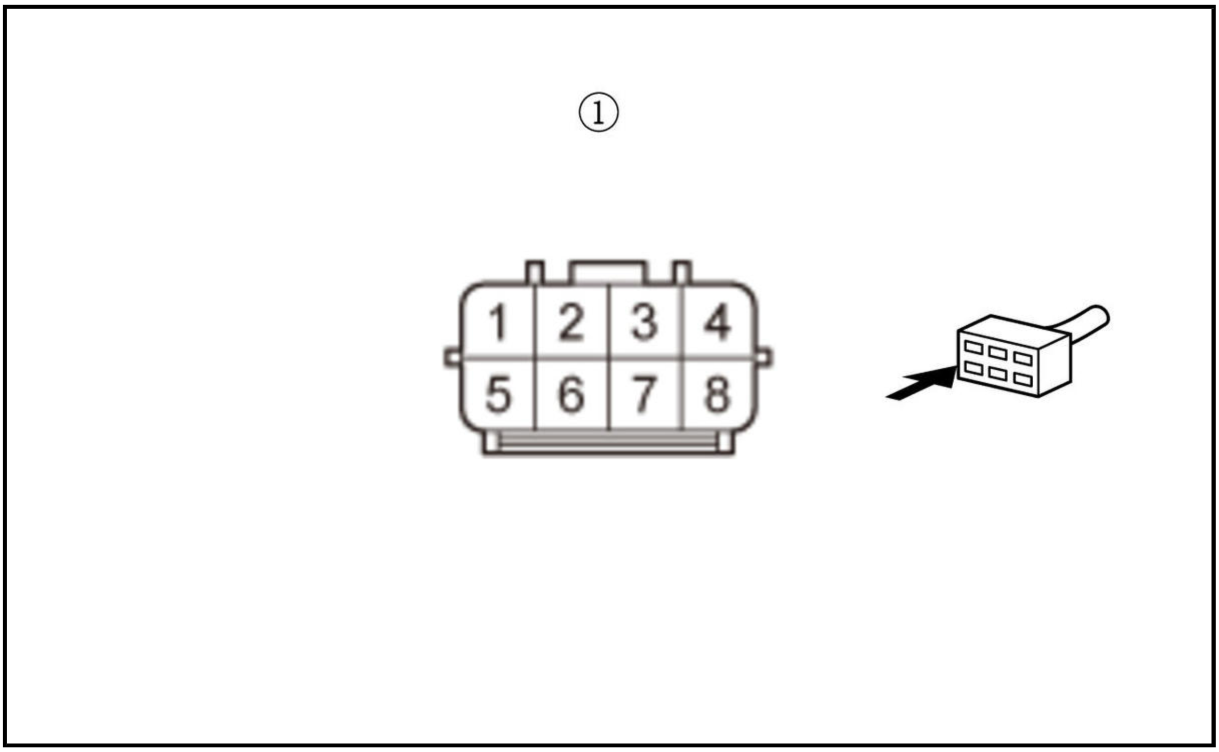

Is there battery voltage?

YES

Go to step 4.

NO

Go to step 7.

4. Open wire check (TS lines, DL lines)

-1. Disconnect the following connector.

Body control module connector G (32P)

-2. Check for continuity between test points 1 and 2 individually.

Driver's door

Test condition	Vehicle OFF (LOCK) modeDriver's door outer handle 8P connector: disconnected
Test point 1	Driver's door outer handle 8P connector (female terminals) No. 3: ①
Test point 2	**Body control module connector G (32P) No. 22**

Test point 1	Driver's door outer handle 8P connector (female terminals) No. 7: ①
Test point 2	**Body control module connector G (32P) No. 19**

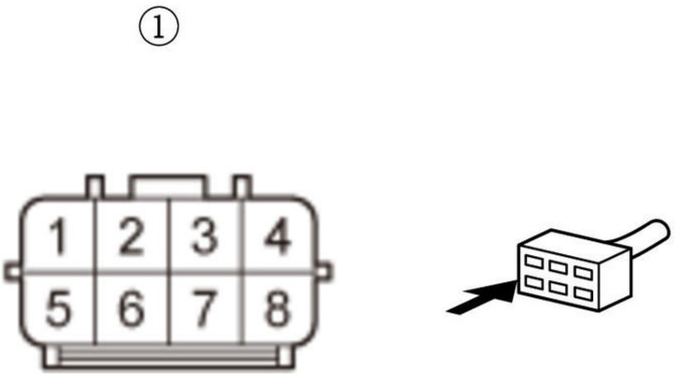

Front passenger's door

Test condition	Vehicle OFF (LOCK) modeFront passenger's door outer handle 8P connector: disconnected
Test point 1	Front passenger's door outer handle 8P connector (female terminals) No. 3: ①
Test point 2	**Body control module connector G (32P) No. 25**

Test point 1	Front passenger's door outer handle 8P connector (female terminals) No. 7: ①
Test point 2	**Body control module connector G (32P) No. 1**

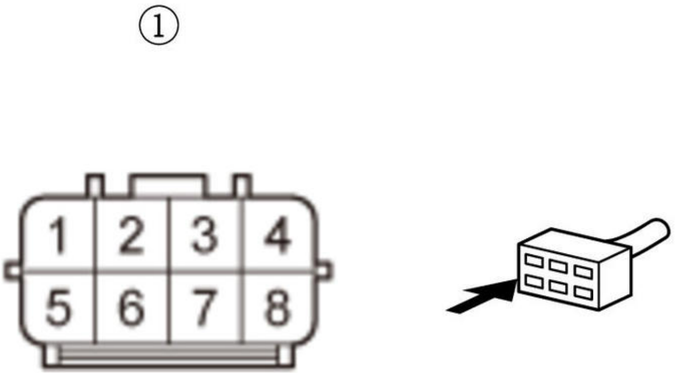

Is there continuity?

YES

The TS and DL wires are not open. Go to step 5.

NO

Repair an open or high resistance in the wire.

5. Shorted wire check (TS lines, DL lines)

-1. Check for continuity between test points 1 and 2 individually.

Test condition	Vehicle OFF (LOCK) modeEach door outer handle 8P connectors: disconnectedBody control module connector G (32P): disconnected
Test point 1	**Body control module connector G (32P) No. 22**
Test point 2	Body ground

Test point 1	**Body control module connector G (32P) No. 19**
Test point 2	Body ground

Test point 1	**Body control module connector G (32P) No. 25**
Test point 2	Body ground

Test point 1	**Body control module connector G (32P) No. 1**
Test point 2	Body ground

Is there continuity?

YES

Repair a short to ground in the wire.

NO

The TS and DL wires are OK. Go to step 6.

6. Door outer handle touch sensor check (substitution)

-1. **Substitute a known-good door outer handle touch sensors** , and recheck.

Is the system OK?

YES

Faulty the original door outer handle touch sensor; **replace the door outer handle** .

NO

Replace the body control module .

7. Open wire check (VOUT lines)

-1. Measure the voltage between test points 1 and 2 individually.

Test condition	Vehicle OFF (LOCK) modeEach door outer handle 8P connectors: disconnected
Test point 1	**Body control module connector G (32P) No. 31**
Test point 2	Body ground

Test point 1	**Body control module connector G (32P) No. 30**
Test point 2	Body ground

Is there battery voltage?

YES

Repair an open or high resistance in the wire.

NO

The VOUT wires are OK. **Replace the body control module** .

KEYLESS BUZZER CIRCUIT TROUBLESHOOTING

Keyless Buzzer Circuit Troubleshooting

1. Open wire check (GND line)

-1. Turn the vehicle to the OFF (LOCK) mode.

-2. Disconnect the following connector.

Keyless buzzer 3P connector

-3. Check for continuity between test points 1 and 2.

Test condition	Vehicle OFF (LOCK) modeKeyless buzzer 3P connector: disconnected
Test point 1	Keyless buzzer 3P connector (female terminals) No. 3: ①
Test point 2	Body ground

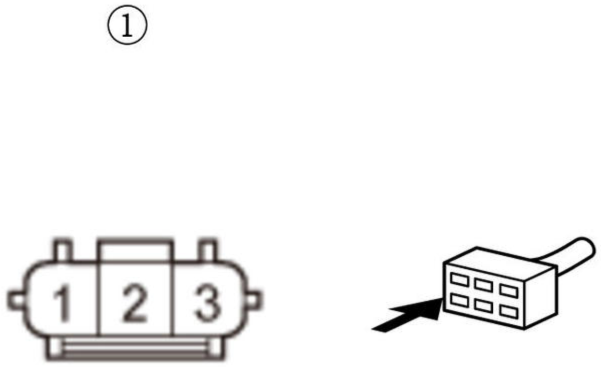

Is there continuity?

YES

The GND wire is OK. Go to step 2.

NO

Repair an open or high resistance in the ground wire or poor ground (G505 (except japan production) / G506 (japan production)).

2. Open wire check (SMART BUZZER line)

-1. Disconnect the following connector.

Body control module connector E (24P)

-2. Check for continuity between test points 1 and 2.

Test condition	Vehicle OFF (LOCK) modeKeyless buzzer 3P connector: disconnectedBody control module connector E (24P): disconnected
Test point 1	**Body control module connector E (24P) No. 22**
Test point 2	Keyless buzzer 3P connector (female terminals) No. 2: ①

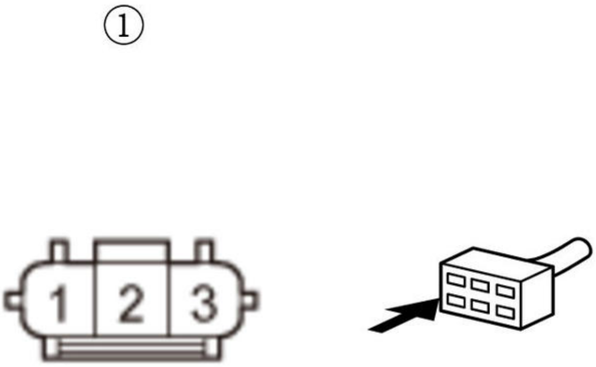

Is there continuity?

YES

The SMART BUZZER wire is not open. Go to step 3.

NO

Repair an open or high resistance in the wire.

3. Shorted wire check (SMART BUZZER line)

-1. Remove the jumper wire from the keyless buzzer 3P connector.

-2. Check for continuity between test points 1 and 2.

Test condition	Vehicle OFF (LOCK) modeKeyless buzzer 3P connector: disconnectedBody control module connector E (24P): disconnected
Test point 1	**Body control module connector E (24P) No. 22**
Test point 2	Body ground

Is there continuity?

YES

Repair a short to ground in the wire.

NO

The SMART BUZZER wire is OK. Go to step 4.

4. Keyless buzzer check (substitution)

-1. **Substitute a known-good keyless buzzer** .

-2. Check the keyless buzzer function.

Does the keyless buzzer sound?

YES

Replace the original keyless buzzer .

NO

Replace the body control module .

REPAIR PROCEDURES, TESTS

IMMOBILIZER KEY REGISTRATION

Procedure

1. Immobilizer Key - Register

NOTE:

- The HDS is required for registration of the immobilizer keys.
- Programming the immobilizer also programs the keyless transmitter.
- Check for aftermarket electrical equipment that can cause problems with transponder operation.
- The immobilizer-keyless control unit can store up to six immobilizer keys.

Replace any of the Keys

NOTE: If any of the registered keys were lost, do the following procedure to delete the lost registered key.

1. Have at least one original key, all other keys to be registered and the first password.

2. **Connect the HDS to the data link connector (DLC)**

3. Turn the vehicle to the ON mode.

4. Select "Immobilizer Setup Tool".

5. Select the appropriate items, and do the registration according to the instructions on the HDS screen.

6. After registration, verify systems work normally with all keys.

All Keys are Lost

1. Prepare all new keys and have the immobilizer PCM code.

2. Connect the HDS to the data link connector (DLC)

3. Select "Immobilizer Setup Tool", and turn the vehicle to ON mode according to the instructions on the HDS screen.

4. Select the appropriate items, and do the registration according to the instructions on the HDS screen.

5. After registration, verify systems work normally with all keys.

IMMOBILIZER SYSTEM REGISTRATION

Procedure

1. Immobilizer System - Register

NOTE:

- The HDS is required for registration of the immobilizer keys.
- Programming the immobilizer also programs the keyless transmitter.
- Check for aftermarket electrical equipment that can cause problems with transponder operation.
- The immobilizer-keyless control unit can store up to six immobilizer keys.

When Replacing the Immobilizer-Keyless Control Unit

1. Have all registered keys and the PCM code.

2. Connect the HDS to the data link connector (DLC)

3. Turn the vehicle to the ON mode.

4. Select "Immobilizer Setup Tool".

5. Select the appropriate items, and do the registration according to the instructions on the HDS screen.

NOTE: Program all of the customer's keys.

6. After registration, verify systems work normally with all keys.

When Replacing the PCM, the Body Control Module, or the VSA Modulator-Control Unit

1. Have the PCM code.

2. Connect the HDS to the data link connector (DLC)

3. Turn the vehicle to the ON mode.

4. Select "Immobilizer Setup Tool".

5. Select the appropriate items, and do the registration according to the instructions on the HDS screen.

6. After registration, verify systems work normally with all keys. If the PCM is replaced, do the procedure after replacing PCM .

KEYLESS ACCESS SYSTEM REGISTRATION

Procedure

NOTE: If you replace the body control module or the steering lock, the vehicle will not turn to the ON mode. Follow the registration procedure of the corresponding unit.

1. Keyless Access System - Register

   NOTE:

   - Check for aftermarket electrical equipment that could cause problems with keyless access operation.
   - While doing the registration, keep the remote away from computers.
   - While doing the registration, make sure the doors are closed.
   - Programming the remote also programs the keyless transmitter.
   - The body control module can store codes up to 6 remotes.

   When Replacing the Body Control Module or the Electric Steering Lock Control Unit

   1. **Connect the HDS to the data link connector (DLC)**

   2. Do the registration according to the "Immobilizer Setup Tool" screen.

   3. After registration, verify all remote related systems work normally with all remotes.

   When Replacing the PCM, the VSA Modulator-Control Unit, or Registration of the Remote(s)

   NOTE: If the body control module was replaced, register the body control module first.

   1. **Connect the HDS to the data link connector (DLC)**

   2. When all remotes are lost, select "Immobilizer Setup Tool", and turn the vehicle to ON mode according to the instructions on the HDS screen, then go to step 5.

   3. Turn the vehicle to the ON mode.

   4. Select "Immobilizer Setup Tool".

   5. Select the appropriate items, and do the registration according to the instructions on the HDS screen.

   6. After registration, verify systems work normally with all remotes. If the PCM is replaced, **do the procedure after replacing PCM** .

TEST

DOOR KEY CYLINDER SWITCH TEST

Test

1. **Driver's Door Panel - Remove**
2. Door Key Cylinder Switch - Test

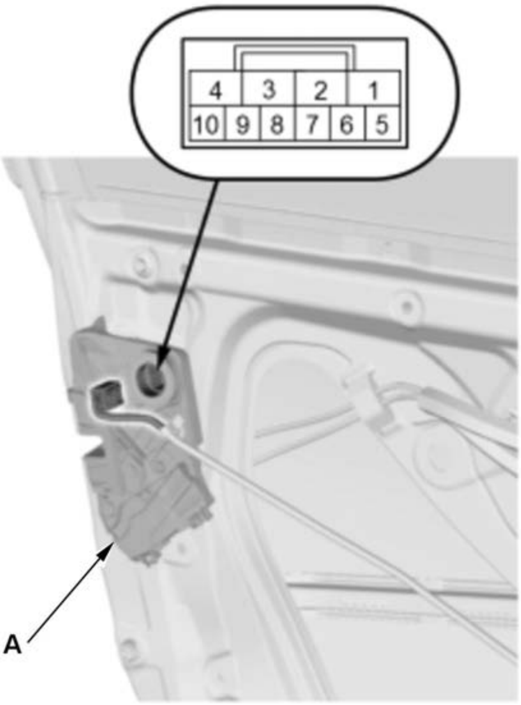

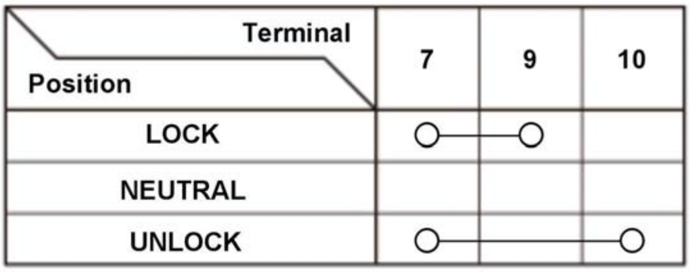

Position \ Terminal	7	9	10
LOCK	○	○	
NEUTRAL			
UNLOCK	○		○

1. Check for continuity between the terminals in each switch position according to the table.

2. If the continuity is not as specified, the door key cylinder switch is faulty; **replace the driver's door latch**

(A).

3. All Removed Parts - Install

1. Install the parts in the reverse order of removal.

DOOR LOCK ACTUATOR TEST

Test

Front Door

1. **Front Door Panel - Remove**
2. Front Door Lock Actuator - Test

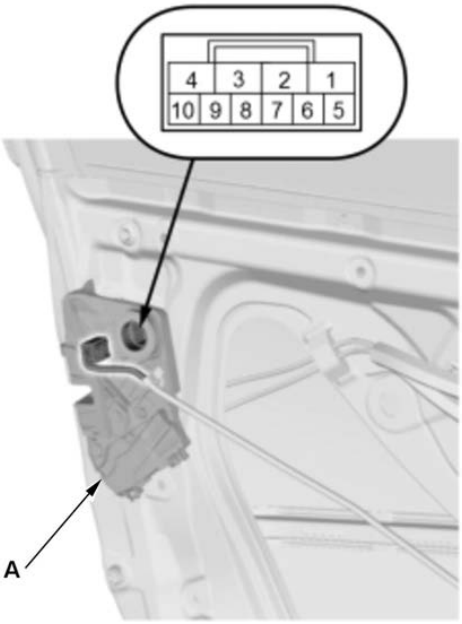

Driver's and Front Passenger's Door

Terminal / Operation	1	4
LOCK	⊖	⊕
UNLOCK	⊕	⊖

1. Check the actuator operation by connecting power and ground according to the table.

NOTE: To prevent damage to the actuator, apply battery voltage only momentarily.

2. If the actuator does not operate as specified, the front door lock actuator is faulty; **replace the front door latch**

(A).

3. All Removed Parts - Install

1. Install the parts in the reverse order of removal.

Rear Door

4. **Rear Door Panel - Remove**
5. Rear Door Lock Actuator - Test

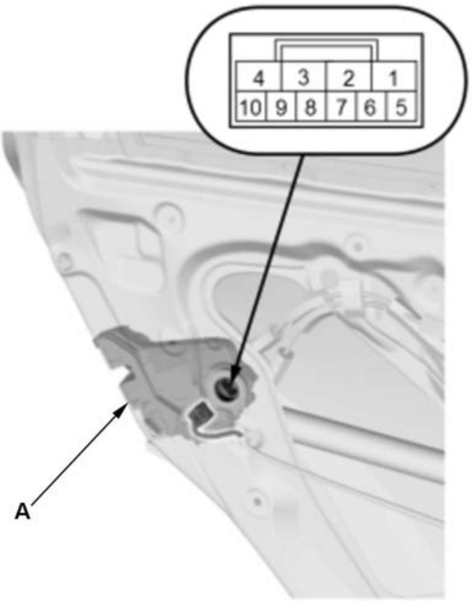

Left and Right Rear Door

1. Check the actuator operation by connecting power and ground according to the table.

NOTE: To prevent damage to the actuator, apply battery voltage only momentarily.

2. If the actuator does not operate as specified, the rear door lock actuator is faulty; **replace the rear door latch**

(A).

Operation \ Terminal	1	4
LOCK	⊖	⊕
UNLOCK	⊕	⊖

6. All Removed Parts - Install

1. Install the parts in the reverse order of removal.

DOOR LOCK KNOB SWITCH TEST

Test

Front Door

1. Front Door Panel - Remove
2. Front Door Lock Knob Switch - Test

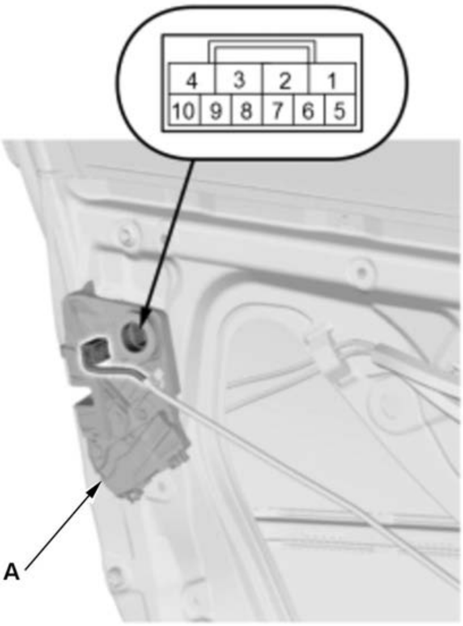

Driver's Door

Position \ Terminal	5	6	7
LOCK		○	○
UNLOCK	○		○

Front Passenger's Door

Position \ Terminal	8	10
LOCK		
UNLOCK	○	○

1. Check for continuity between the terminals in each switch position according to the table.

2. If the continuity is not as specified, the front door lock knob switch is faulty; replace the front door latch

(A).

3. All Removed Parts - Install

1. Install the parts in the reverse order of removal.

Rear Door

4. [Rear Door Panel - Remove]
5. Rear Door Lock Knob Switch - Test

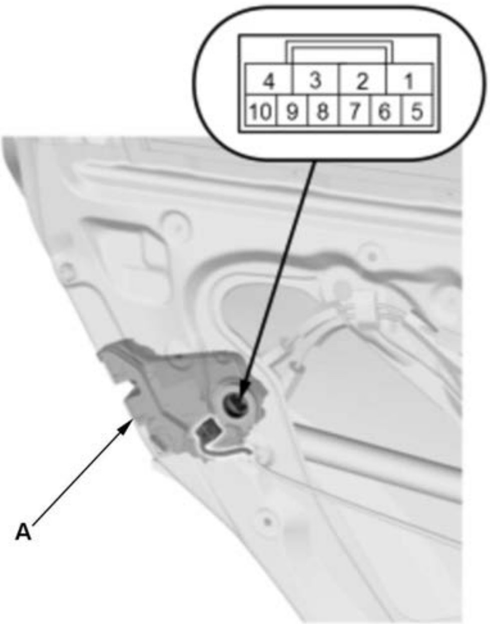

Left and Right Rear Door

Terminal / Position	6	9
LOCK		
UNLOCK	○	○

1. Check for continuity between the terminals in each switch position according to the table.

2. If the continuity is not as specified, the rear door lock knob switch is faulty; **replace the rear door latch**

(A).

6. All Removed Parts - Install

1. Install the parts in the reverse order of removal.

HOMELINK REMOTE CONTROL SYSTEM TEST

NOTE:

- Explain to the customer that garage door remote transmitters come in two types: Fixed code and rolling code. Each type has its own programming method, and each method is covered in the Owner's Manual. If the customer has concerns about the HomeLink B® unit, have the customer contact the HomeLink B® assistance desk at 800-355-3515.
- If HomeLink B® will not open the customer's garage, do the following procedures.
- Before testing, make sure the fuses associated with the system is OK.

With Panoramic Glass Roof

Press any of the buttons on the HomeLink B® unit.

- If the red indicator comes on, go to step 6.
- If the red indicator does not come on, go to step 2.

Do the HomeLinkB® switch test.

- If the switch is OK, go to step 3.
- If the switch is faulty, **replace the roof console module** .

3. Disconnect the HomeLink B® unit 12P connector.Check for continuity between the HomeLink B® unit and the HomeLink B® switch (built into the roof console module).

- If there is continuity, go to step 5.
- If there is no continuity, repair an open or high resistance in the wire.

Test circuit	**HomeLinkB® unit12P connector**	**Roof console module connector B (12P) (female terminals):** ①
VSW	1	8
SW1	7	9
SW2	10	10
SW3	4	11
LED+	9	7
LED-	12	12

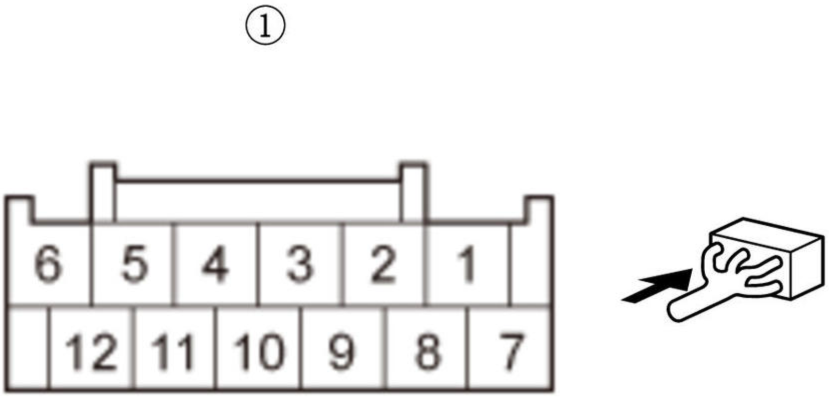

Measure the voltage between **HomeLinkB® unit 12P connector terminals No. 6 (+) and No. 3 (-)**. There should be battery voltage.

- If the voltage is not as specified, check for these problems:
-
    - An open or high resistance in the wire.
    - Poor ground (G401).
- If the voltage is as specified, go to step 6.

6. Make sure the customer's remote transmitter (or a test remote) has fresh batteries.

7. Clear any previously learned codes by pressing and holding the two outside buttons (A) on the roof console module (B) until the red indicator (C) on the unit starts blinking (about 20 seconds), then release the buttons.

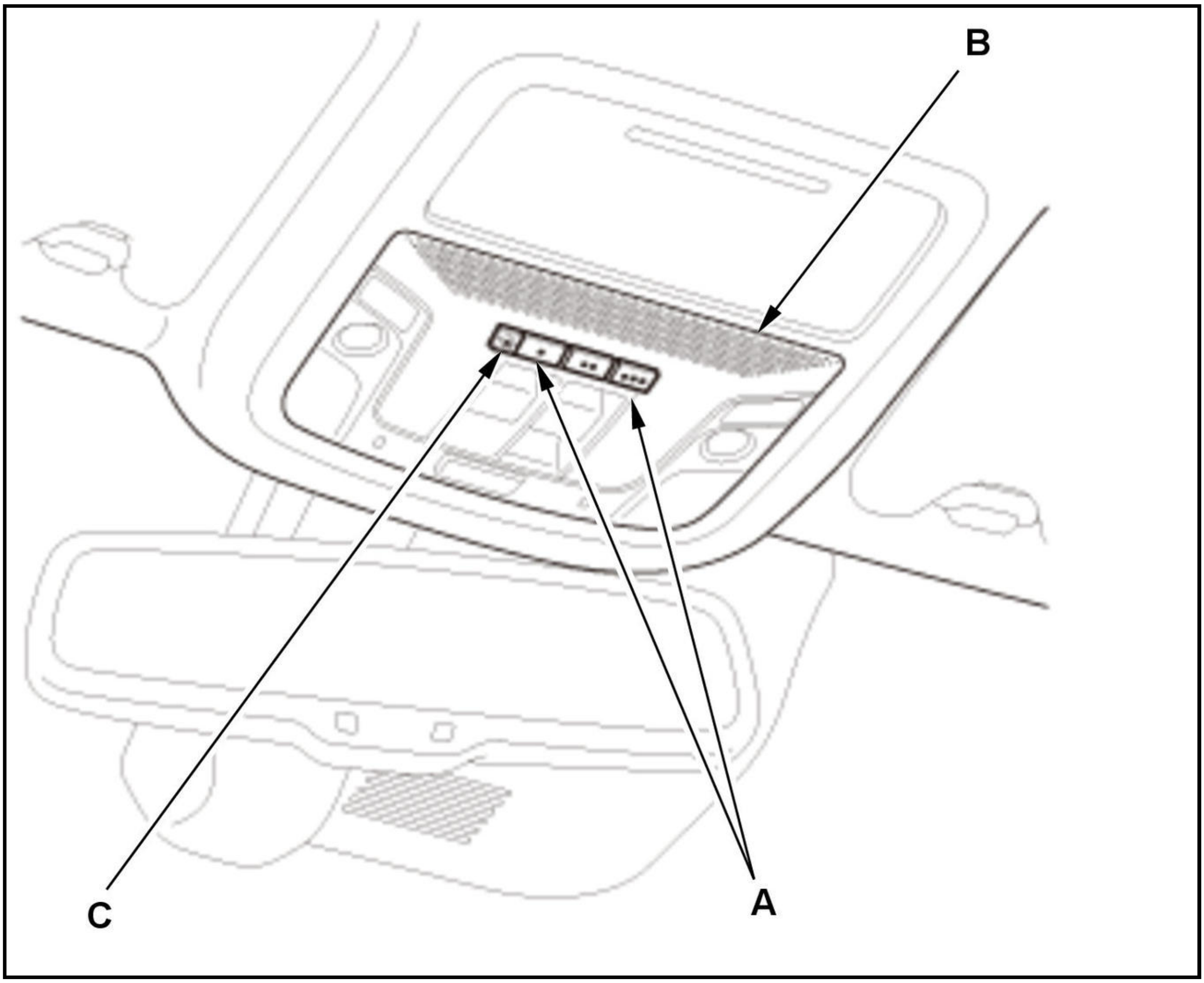

8. Point the test remote transmitter (A) straight up exactly 101.6 mm (4.0 in) away from the HomeLink B® unit (B).

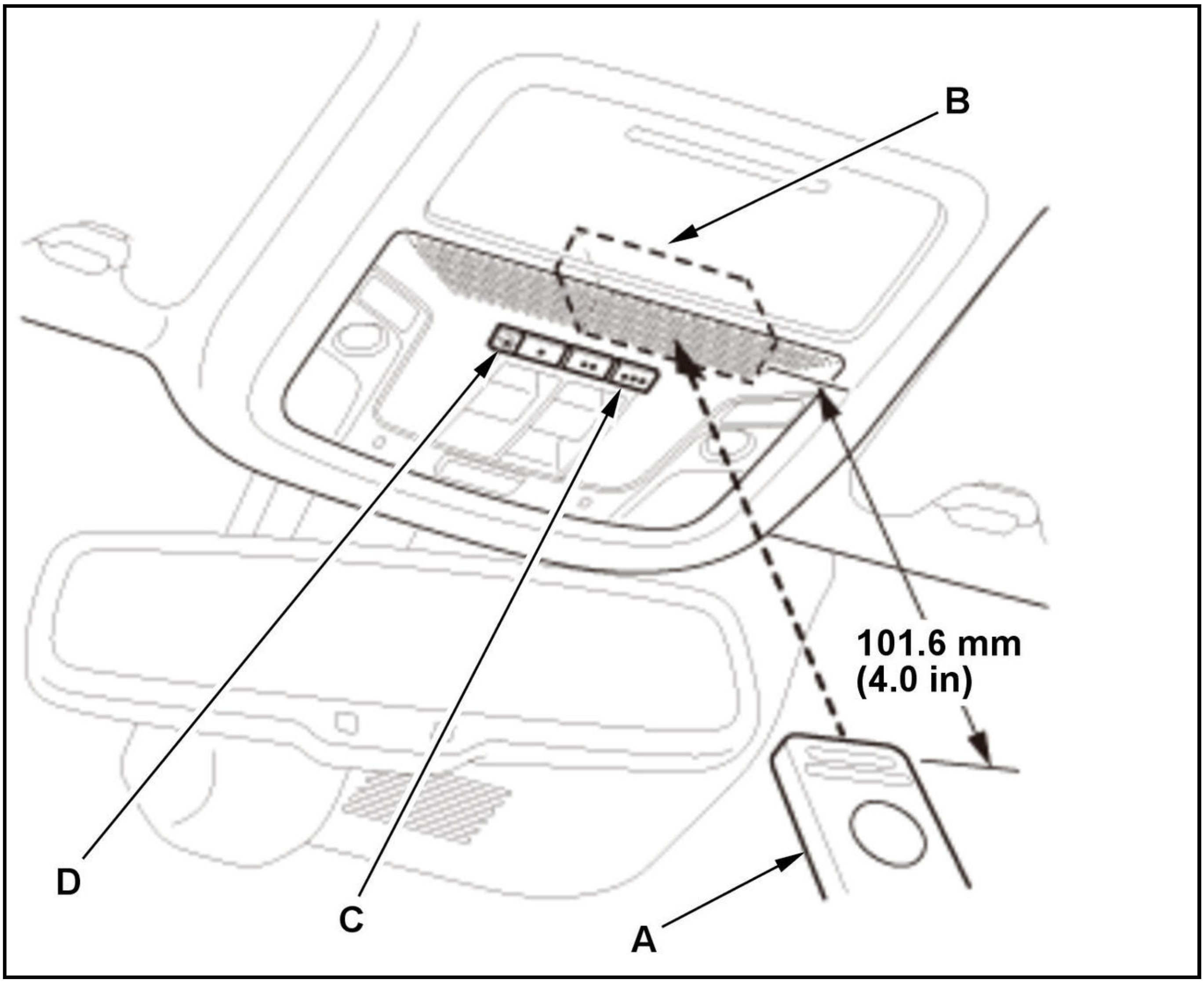

9. Press and hold the test transmitter button and one of the HomeLink B® switch (C) at the same time.Wait for about 20 seconds while watching the red indicator (D) on the HomeLink B® switch.

- If the red indicator starts out blinking slowly and then blinks faster, the unit is OK. Release the buttons, then clear the learned code (see step 1). For more information, contact the HomeLink B® assistance desk at 800-355-3515 or go online to www.homelink.com.
- If the red indicator does not blink, the HomeLink B® unit is faulty; **replace it** .

Without Panoramic Glass Roof

Press any of the buttons on the HomeLink B® unit.

- If the red indicator comes on, go to step 4.
- If the red indicator does not come on, go to step 2.

2. Disconnect the HomeLink B® unit 5P connector.Measure the voltage between **HomeLinkB® unit 5P connector terminals No. 1 (+) and No. 4 (-)**. There should be battery voltage.

- If the voltage is not as specified, check for these problems:
-
    - An open or high resistance in the wire.
    - Poor ground (G401).
- If the voltage is as specified, go to step 4.

4. Make sure the customer's remote transmitter (or a test remote) has fresh batteries.

5. Clear any previously learned codes by pressing and holding the two outside switches (A) on the roof console (B) until the red indicator (C) on the unit starts blinking (about 20 seconds), then release the switches.

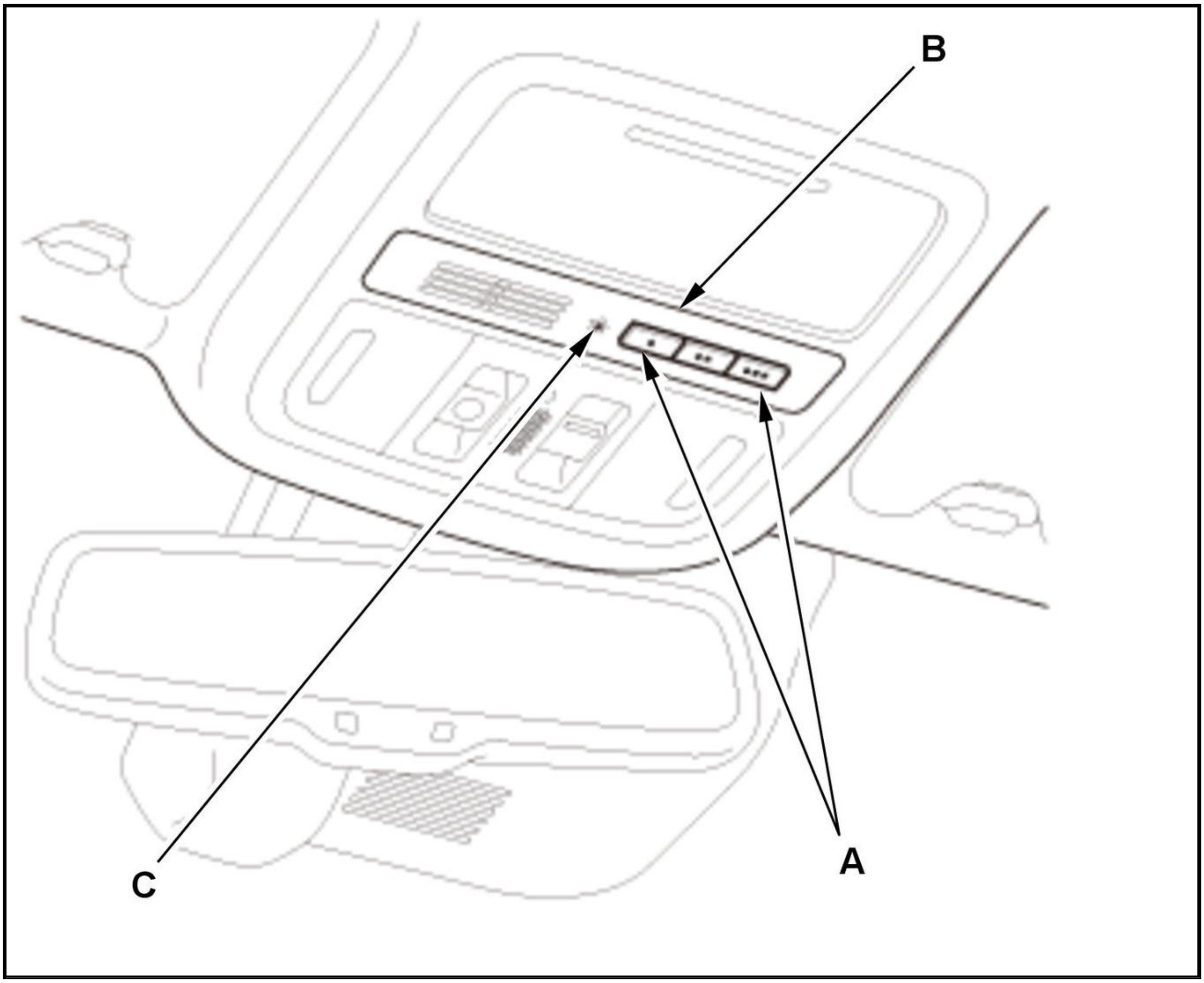

6. Point the test remote transmitter (A) straight up exactly 101.6 mm (4.0 in) away from the HomeLink B® unit (B).

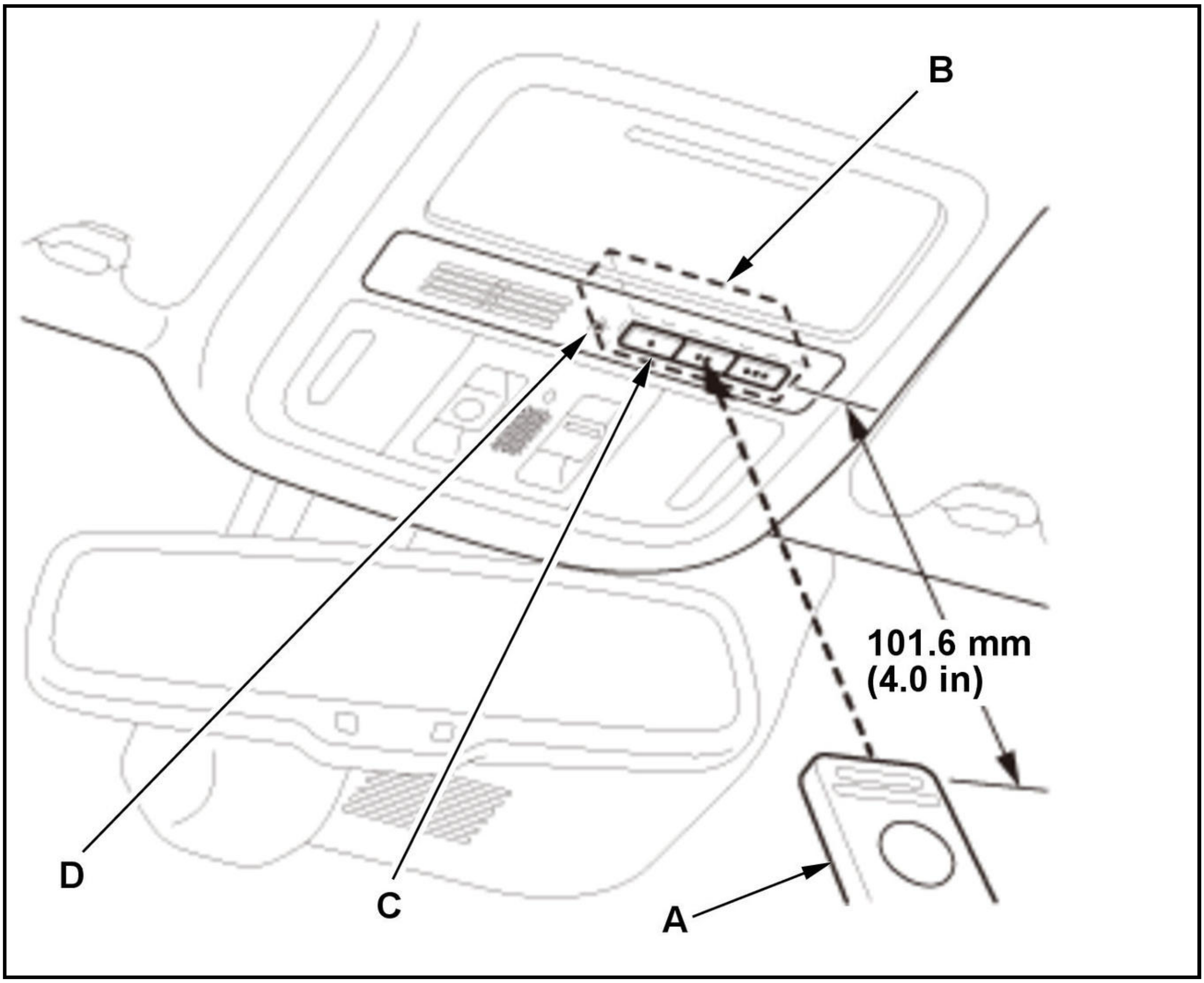

7. Press and hold the test transmitter button and one of the HomeLink B® switch (C) at the same time.Wait for about 20 seconds while watching the red indicator (D) on the HomeLink B® switch.

- If the red indicator starts out blinking slowly and then blinks faster, the unit is OK. Release the switches, then clear the learned code (see step 1). For more information, contact the HomeLink B® assistance desk at 800-355-3515 or go online to www.homelink.com.
- If the red indicator does not blink, the HomeLink B® unit is faulty; **replace it** .

HOMELINK SWITCH TEST(WITH ROOF CONSOLE MODULE)

Test

1. **Roof Console Module - Remove**
2. HomeLink Switch - Test

   NOTE: The HomeLink switch is built into the roof console module (A).

   1. Check for continuity between the terminals in each switch position according to the table.

   NOTE:

   - When an LED is located between terminals, check if the LED illuminates by connecting power and ground to the LED.
   - Note this important operating characteristic; diode bias causes a diode to fully conduct electricity in one direction (forward), while not at all in the opposite direction (reverse).

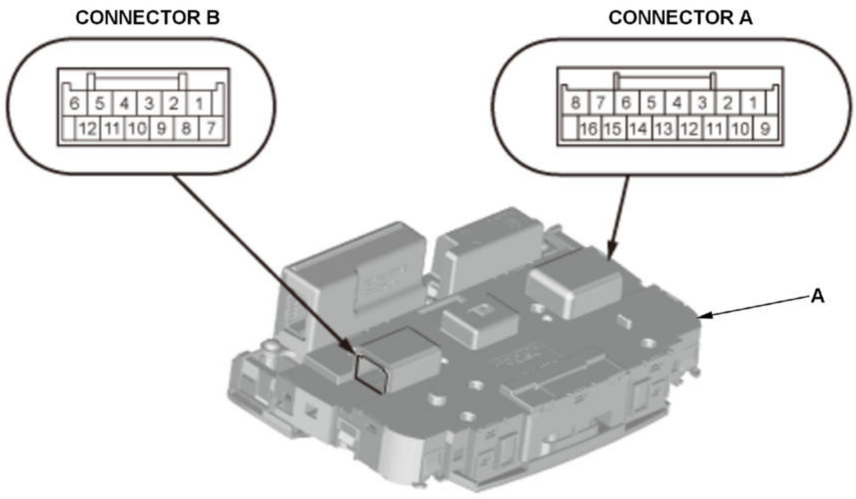
CONNECTOR B
6 5 4 3 2 1
12 11 10 9 8 7
CONNECTOR A
8 7 6 5 4 3 2 1
16 15 14 13 12 11 10 9
A

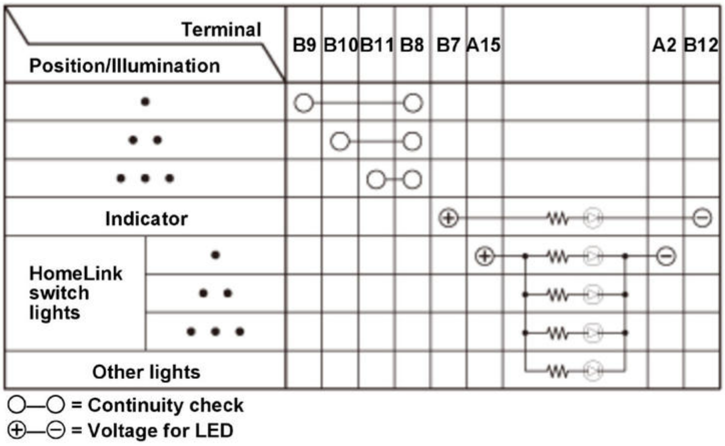

Position/Illumination (Terminal)		B9	B10	B11	B8	B7	A15		A2	B12
•		○			○					
• •			○		○					
• • •				○	○					
Indicator						⊕				⊖
HomeLink switch lights	•						⊕		⊖	
	• •									
	• • •									
Other lights										

○—○ = Continuity check
⊕—⊖ = Voltage for LED

2. If the result is not as specified, the HomeLink switch is faulty; **replace the roof console module** .

3. All Parts Removed - Install

1. Install the parts in the reverse order of removal.

HOOD LATCH SWITCH TEST

Test

1. **Front Bulkhead Cover - Remove**
2. Hood Latch Switch - Test

<table>
<tr>
<td>
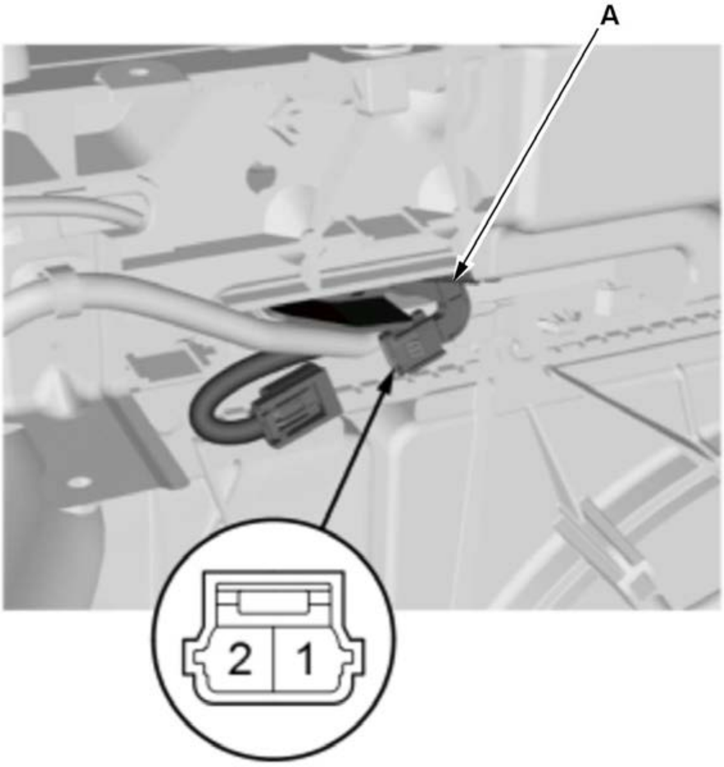

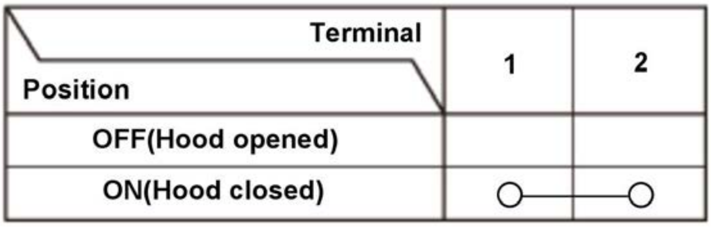
<table>
<tr><th>Terminal
Position</th><th>1</th><th>2</th></tr>
<tr><td>OFF(Hood opened)</td><td></td><td></td></tr>
<tr><td>ON(Hood closed)</td><td>○</td><td>○</td></tr>
</table>
</td>
<td>
1. Check for continuity between the terminals in each switch position according to the table.

2. If the continuity is not as specified, the hood latch switch is faulty; **replace the hood latch**

(A).
</td>
</tr>
</table>

3. All Removed Parts - Install

1. Install the parts in the reverse order of removal.

IMMOBILIZER SYSTEM STATUS LOG

If you suspect there is an immobilizer system problem, check the status log in the HDS.

1. **Connect the HDS to the data link connector (DLC)**

2. Turn the vehicle to the ON mode.

3. On the HDS screen, at SYSTEM SELECTION MENU, enter IMMOBI, then select IMMOBILIZER SETUP, select SYSTEM CHECK, NUMBER of KEYS and STATUS LOG, then select STATUS LOG.Check the STATUS LOG count. Troubleshoot the status with the highest count first. If no counts are listed, the immobilizer system is OK. Continue with normal symptom troubleshooting.

Status Log No.	Detected Item	Probable Cause
A-1	KEY CODE MISMATCH 1(Code format correct, but code data does not match)	• The key was not registered • Interference from metal such as key chains • Low 12 volt battery voltage

Status Log No.	Detected Item	Probable Cause
A-2	KEY CODE MISMATCH 2(Incorrect code format)	• The vehicle was turned to ON mode with another type of immobilizer key or aftermarket key • Interference from metal such as key chains • Low 12 volt battery voltage
A-3	KEY CODE MISMATCH 3(No transponder detected)	• The vehicle was turned to ON mode with another type of immobilizer key or aftermarket key • Interference from metal such as key chains • Low 12 volt battery voltage • Key failure • Immobilizer-keyless control unit failure
B-1	PCM CODE MISMATCH 1(Code format correct, but code data does not match)	• PCM was not registered correctly • Low 12 volt battery voltage • Poor or loose terminal connections at the immobilizer-keyless control unit • Communication line electrical noise
B-2	PCM MISMATCH 2(Incorrect code format)	• PCM was not registered correctly • Low 12 volt battery voltage • Poor or loose terminal connections at the immobilizer-keyless control unit • Communication line electrical noise
C-1	IMOES UNIT MISMATCH 1(Code format correct, but data does not match)	• Imoes unit was not registered correctly • Communication was not good between the imoes unit and the immobilizer-keyless control unit because of low 12 volt battery voltage • Communication was not good between the imoes unit and the immobilizer-keyless control unit because of electrical noise
C-2	IMOES UNIT MISMATCH 2(Incorrect code format)	• Imoes unit was not registered correctly • Communication was not good between the imoes unit and the immobilizer-keyless control unit because of low 12 volt battery voltage • Communication was not good between the imoes unit and the immobilizer-keyless control unit because of electrical noise

Status Log No.	Detected Item	Probable Cause
D-1	S-NET LINE PROBLEM 1(Short to ground)	• Low 12 volt battery voltage • Poor or loose terminal connections at the immobilizer-keyless control unit and the PCM • Communication line electrical noise
D-2	S-NET LINE PROBLEM 2(No communication)	• Blown fuse

Status Log No.	Detected Item	Probable Cause
		• Harness open from imoes unit to immobilizer-keyless control unit • Communication was not good between the imoes unit and the immobilizer-keyless control unit because of low 12 volt battery voltage • Communication was not good between the imoes unit and the immobilizer-keyless control unit because of electrical interference • Imoes unit failure • Immobilizer-keyless control unit failure
D-3	S-NET LINE PROBLEM 3(Open line or PCM failure)	• Open or short in the harness from the PCM to the immobilizer-keyless control unit • Low 12 volt battery voltage • Poor or loose terminal connections at the immobilizer-keyless control unit and the PCM • Poor S-NET data communication due to electrical interference

KEYLESS ACCESS LF ANTENNA FUNCTION TEST

NOTE: Before testing, check for DTCs. If any DTCs are indicated, troubleshoot the indicated DTCs first.

1. Connect the HDS to the data link connector (DLC)

2. Turn the vehicle to the ON mode.

3. Select KEYLESS ACCESS CONTROL UNIT from the ONE-PUSH START system select menu with the HDS.

4. Select the SELF CHECK and if any malfunction is found, troubleshoot it first.Select the FUNCTIONAL TESTS, and do the antenna driving test by checking the transmitting areas between the LF antenna and the keyless remote (inside of the vehicle; except on the dashboard, in the glove box, door pockets, console box, and other enclosed areas.).

Outside of the vehicle

Transmitting Area	LF Antenna Location	HDS Indication (Functional Tests)
A	Driver's door LF Antenna	Driver (Door) Antenna Driving
B	Front passenger's door LF Antenna	Front Passenger (Door) Antenna Driving
C	Rear bumper LF Antenna	Trunk/Tailgate/Rear Bumper Antenna Driving

Inside of the vehicle

Transmitting Area	LF Antenna Location	HDS Indication (Functional Tests)
D	Front interior LF antenna	Front Interior Antenna Driving
E	Middle interior LF antenna	Middle Interior Antenna Driving
F	Rear interior LF antenna	Rear Interior Antenna Driving

NOTE:

- Functional Tests cannot operate at the same time, check the LF antennas one at a time.

- Outside of the vehicle; test the transmitting area at about 90 cm (35.4 in) height from the ground.
- The LED will blink when the keyless remote is within the shaded areas.

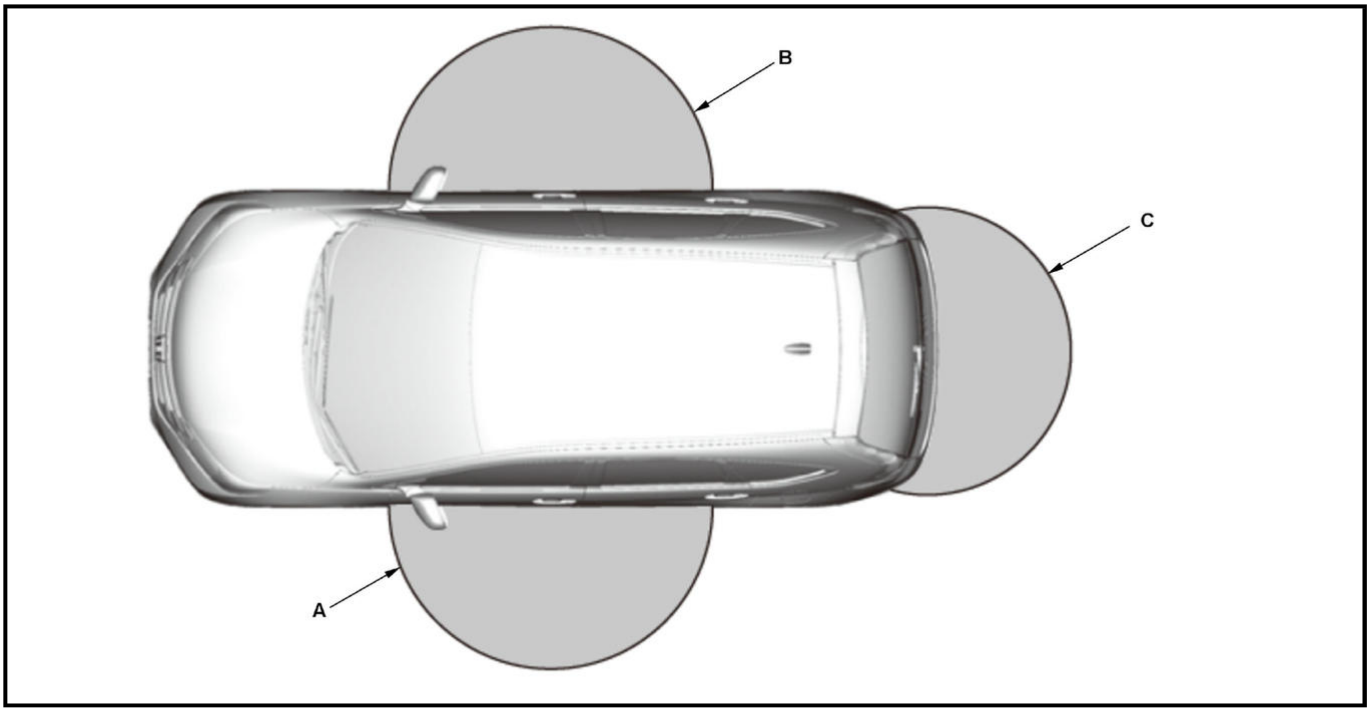

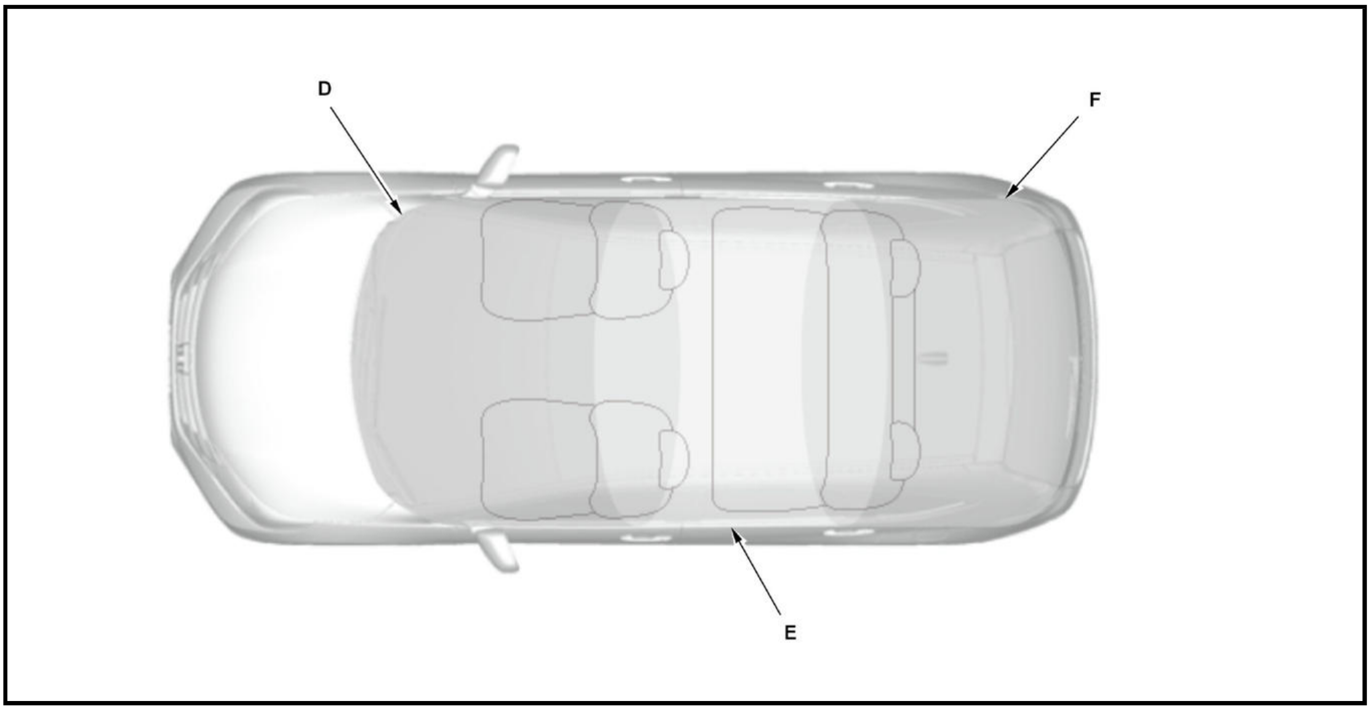

KEYLESS ACCESS SYSTEM STATUS LOG

If you suspect there is an immobilizer system problem, check the status log in the HDS.

1. Connect the HDS to the data link connector (DLC)

2. Turn the vehicle to the ON mode.

3. On the HDS screen, at SYSTEM SELECTION MENU, enter ONE-PUSH START, then select KEYLESS ACCESS CONTROL UNIT or BACKUP CONTROL UNIT.

NOTE: If the HDS does not communicate, check the body control module power, ground, K line, and L-line connectors.

4. At KEYLESS ACCESS CONTROL UNIT, enter KEYLESS ACCESS SYSTEM INFORMATION, then select KEYLESS ACCESS STATUS LOG.

5. At BACKUP CONTROL UNIT, enter SYSTEM INFORMATION, then select STATUS LOG.Check the STATUS LOG count. Troubleshoot the status with the highest count first. If no counts are listed, the immobilizer system is OK. Continue with normal symptom troubleshooting.

Status Log (Keyless Access Control Unit)

Status Log No.	Possible cause
B-1B-2	• PCM was not registered correctly • Body control module was registered correctly • Poor connections or loose terminals between body control module and PCM • Poor connections or loose terminals in the IG1 line • Low 12 volt battery voltage • Electrical noise
C-1C-2	• Poor connections or loose terminals in the IG1 line • Body control module was not registered • Low 12 volt battery voltage • Electrical noise
D-1D-2D-3	• Poor connections or loose terminals between body control module and PCM • Low 12 volt battery voltage • Electrical noise • Blown fuse

Status Log (Backup Control Unit)

Status Log No.	Possible cause
A-1A-2A-3	• Keyless remote was not registered correctly • Engine start/stop switch failure
B-1B-2	• PCM was not registered correctly • Communication error between body control module and PCM • Low 12 volt battery voltage • Electrical noise
C-1C-2	• Body control module was not registered correctly • Poor connections or loose terminals in the IG1 line • Low 12 volt battery voltage • Electrical noise

Status Log No.	Possible cause
D-1D-2D-3	• Poor connections or loose terminals between body control module and PCM

Status Log No.	Possible cause
	- S-NET line short - Low 12 volt battery voltage - Electrical noise - Blown fuse

TAILGATE RELEASE ACTUATOR TEST

Test

1. Tailgate Lower Trim Panel - Remove
2. Tailgate Release Actuator - Test

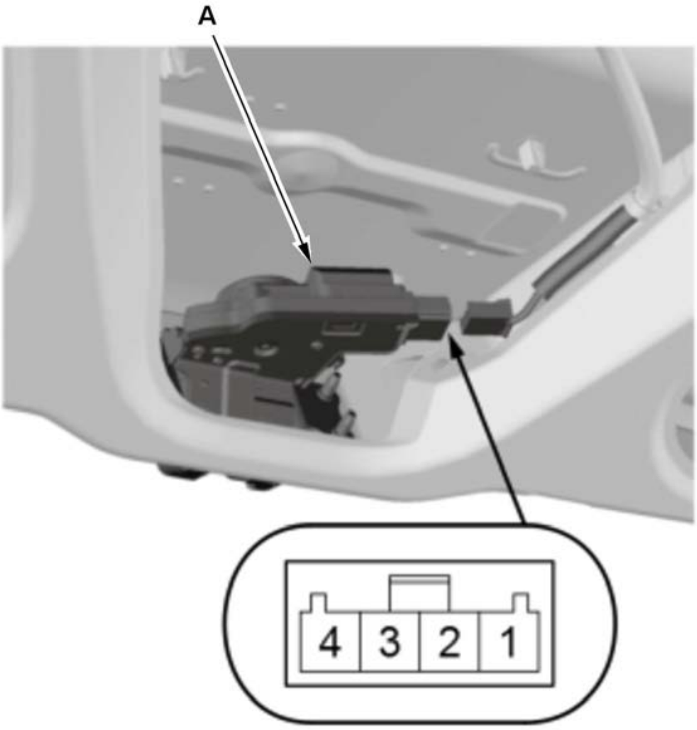

Terminal / Operation	3	4
Release	⊖	⊕

1. Disconnect the connector.

2. Check the actuator operation by connecting 12 volt power and ground according to the table.

NOTE: To prevent damage to the actuator, apply 12 volt battery voltage only momentarily.

3. If the actuator does not operate, the tailgate release actuator is faulty; replace the tailgate latch

(A).

3. All Removed Parts - Install

1. Install the parts in the reverse order of removal.

CIRCUIT DIAGRAM

HOMELINK REMOTE CONTROL SYSTEM CIRCUIT DIAGRAM

With panoramic glass roof

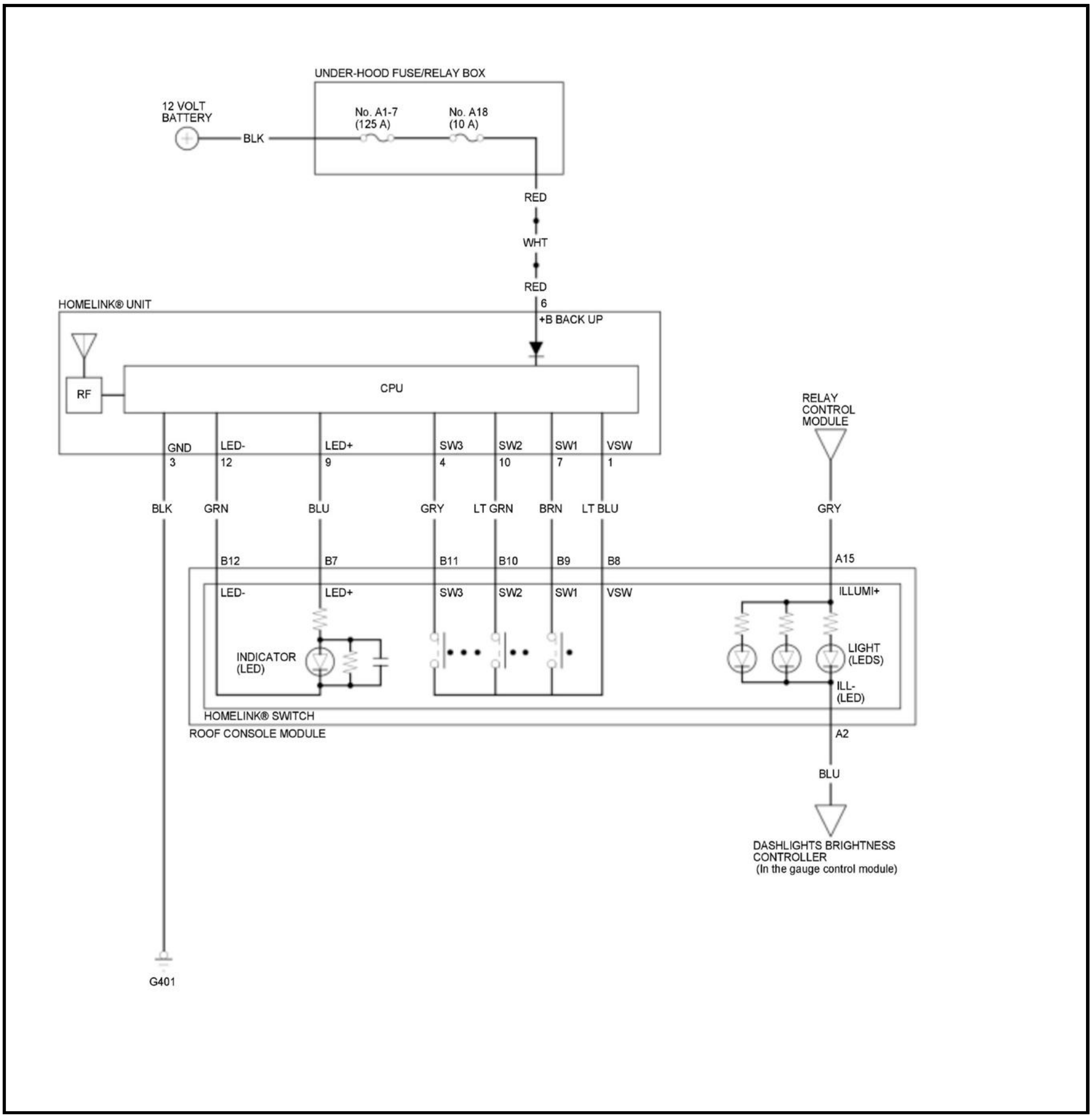
UNDER-HOOD FUSE/RELAY BOX
12 VOLT BATTERY
BLK
No. A1-7 (125 A)
No. A18 (10 A)
RED
WHT
RED
6
+B BACK UP
HOMELINK® UNIT
RF
CPU
GND 3
LED- 12
LED+ 9
SW3 4
SW2 10
SW1 7
VSW 1
BLK
GRN
BLU
GRY
LT GRN
BRN
LT BLU
RELAY CONTROL MODULE
GRY
A15
B12
B7
B11
B10
B9
B8
LED-
LED+
SW3
SW2
SW1
VSW
ILLUMI+
INDICATOR (LED)
LIGHT (LEDS)
ILL- (LED)
HOMELINK® SWITCH
ROOF CONSOLE MODULE
A2
BLU
DASHLIGHTS BRIGHTNESS CONTROLLER (In the gauge control module)
G401

Without panoramic glass roof

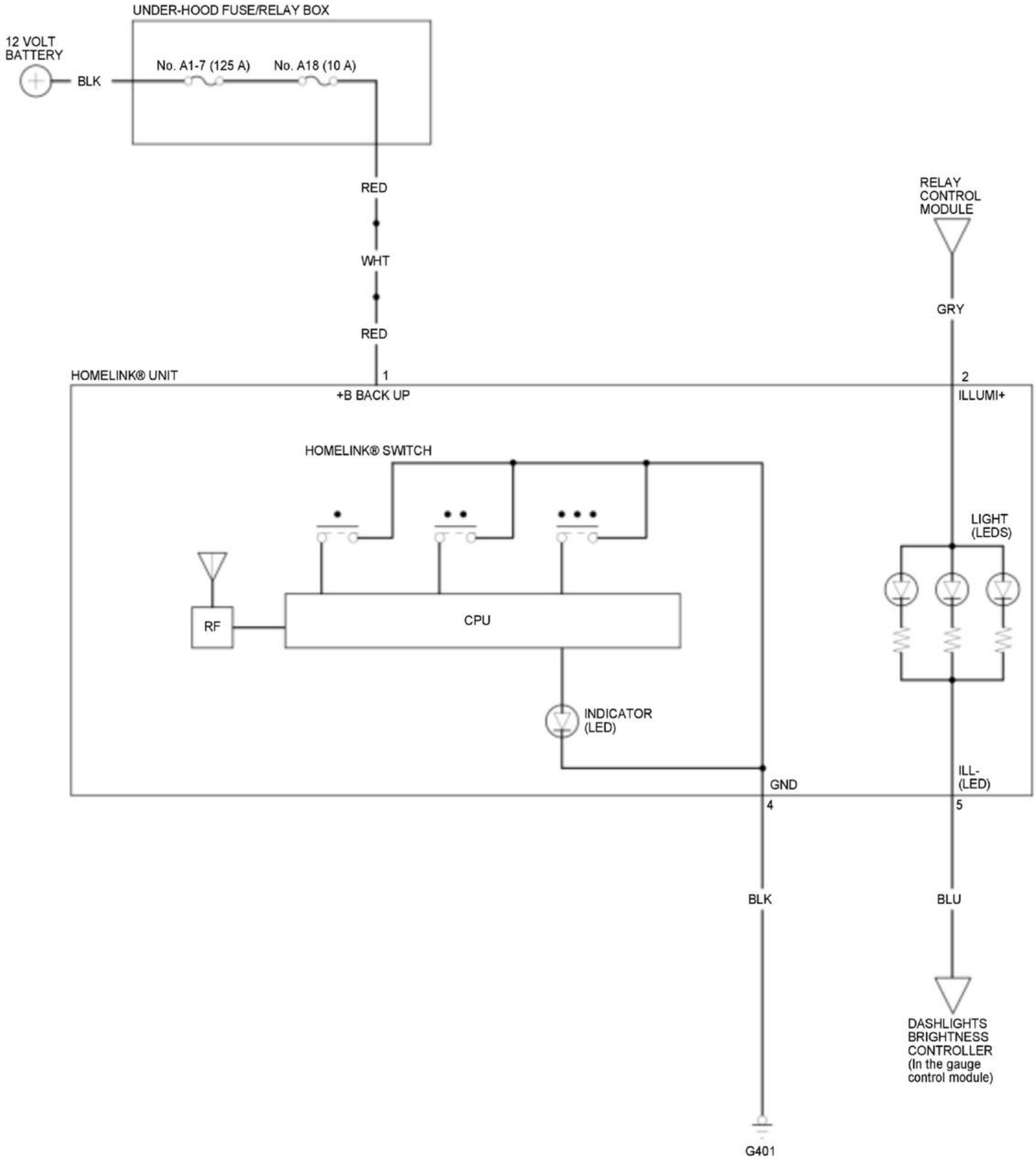
UNDER-HOOD FUSE/RELAY BOX
12 VOLT
BATTERY
BLK
No. A1-7 (125 A)
No. A18 (10 A)
RED
WHT
RED
RELAY
CONTROL
MODULE
GRY
HOMELINK® UNIT
1
+B BACK UP
2
ILLUMI+
HOMELINK® SWITCH
LIGHT
(LEDS)
RF
CPU
INDICATOR
(LED)
GND
ILL-
(LED)
4
5
BLK
BLU
DASHLIGHTS
BRIGHTNESS
CONTROLLER
(In the gauge
control module)
G401

IMMOBILIZER SYSTEM CIRCUIT DIAGRAM

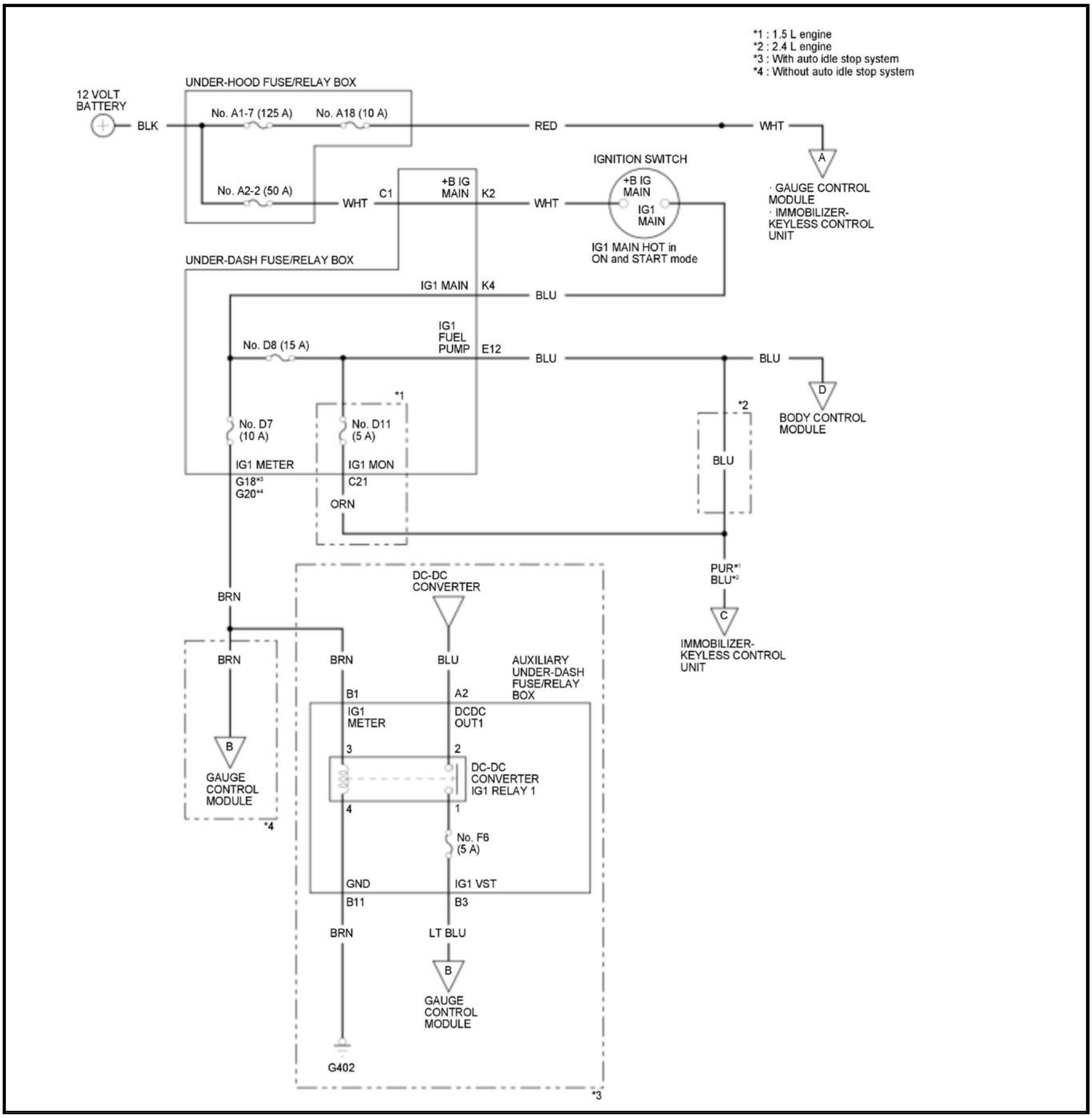

*1 : 1.5 L engine
*2 : 2.4 L engine
*3 : With auto idle stop system
*4 : Without auto idle stop system

12 VOLT BATTERY
BLK
UNDER-HOOD FUSE/RELAY BOX
No. A1-7 (125 A)
No. A18 (10 A)
RED
WHT
A
· GAUGE CONTROL MODULE
· IMMOBILIZER-KEYLESS CONTROL UNIT
No. A2-2 (50 A)
WHT
C1
+B IG MAIN
K2
WHT
IGNITION SWITCH
+B IG MAIN
IG1 MAIN
IG1 MAIN HOT in ON and START mode
UNDER-DASH FUSE/RELAY BOX
IG1 MAIN
K4
BLU
IG1 FUEL PUMP
No. D8 (15 A)
E12
BLU
BLU
D
BODY CONTROL MODULE
*1
No. D7 (10 A)
No. D11 (5 A)
*2
BLU
IG1 METER
IG1 MON
G18*3
G20*4
C21
ORN
PUR*1
BLU*2
C
IMMOBILIZER-KEYLESS CONTROL UNIT
BRN
DC-DC CONVERTER
BRN
BRN
BLU
AUXILIARY UNDER-DASH FUSE/RELAY BOX
B1
A2
IG1 METER
DCDC OUT1
3
2
B
GAUGE CONTROL MODULE
DC-DC CONVERTER IG1 RELAY 1
4
1
*4
No. F6 (5 A)
GND
IG1 VST
B11
B3
BRN
LT BLU
B
GAUGE CONTROL MODULE
G402
*3

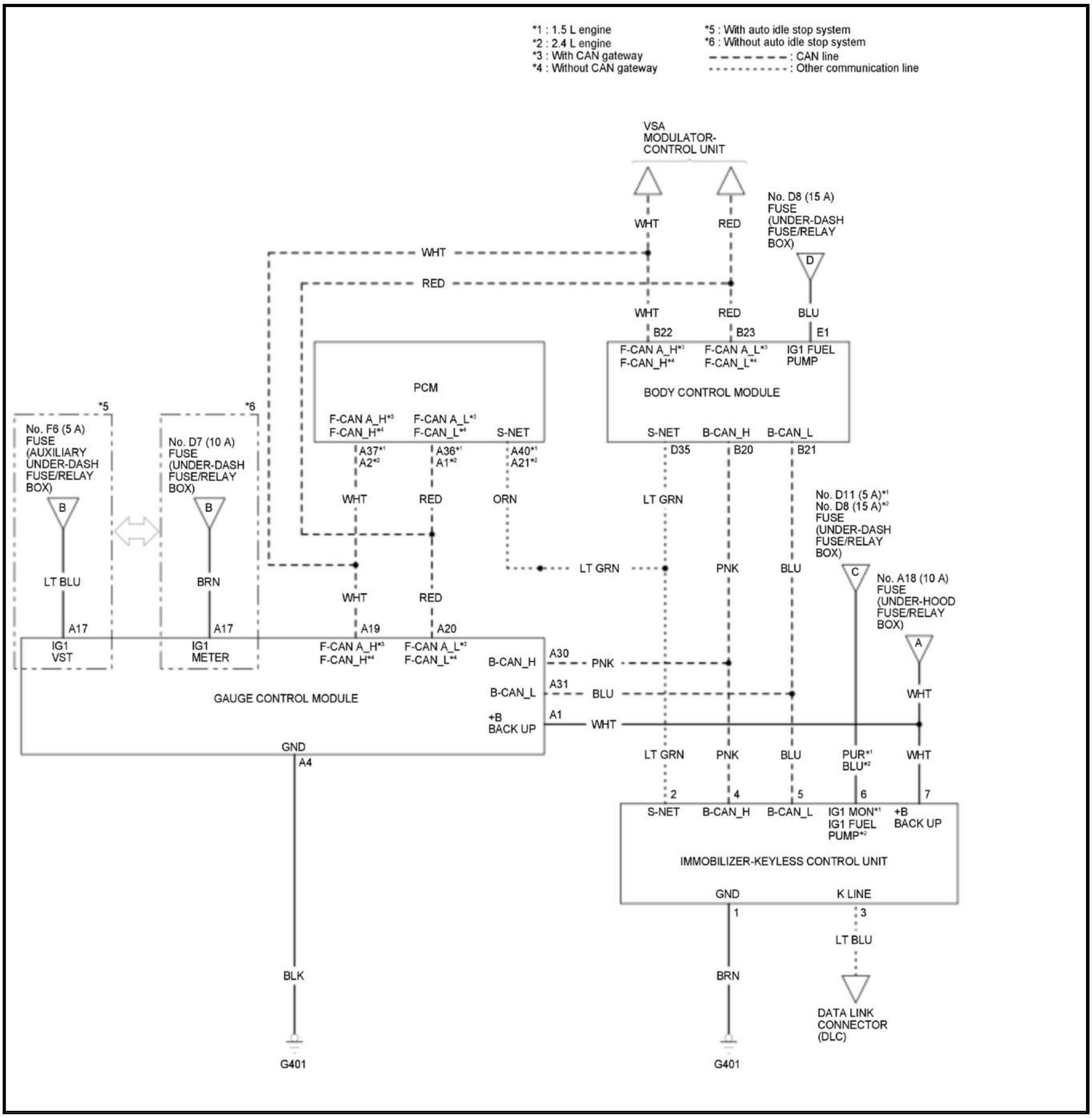
*1 : 1.5 L engine
*2 : 2.4 L engine
*3 : With CAN gateway
*4 : Without CAN gateway
*5 : With auto idle stop system
*6 : Without auto idle stop system
: CAN line
: Other communication line
VSA MODULATOR-CONTROL UNIT
WHT
RED
No. D8 (15 A) FUSE (UNDER-DASH FUSE/RELAY BOX)
D
WHT
RED
BLU
B22
B23
E1
F-CAN A_H*3 F-CAN_H*4
F-CAN A_L*3 F-CAN_L*4
IG1 FUEL PUMP
BODY CONTROL MODULE
S-NET
B-CAN_H
B-CAN_L
D35
B20
B21
PCM
F-CAN A_H*3 F-CAN_H*4
F-CAN A_L*3 F-CAN_L*4
S-NET
A37*1 A2*2
A36*1 A1*2
A40*1 A21*2
WHT
RED
ORN
LT GRN
LT GRN
PNK
BLU
*5
No. F6 (5 A) FUSE (AUXILIARY UNDER-DASH FUSE/RELAY BOX)
B
LT BLU
*6
No. D7 (10 A) FUSE (UNDER-DASH FUSE/RELAY BOX)
B
BRN
No. D11 (5 A)*1 No. D8 (15 A)*2 FUSE (UNDER-DASH FUSE/RELAY BOX)
C
No. A18 (10 A) FUSE (UNDER-HOOD FUSE/RELAY BOX)
A
WHT
A17
A17
A19
A20
IG1 VST
IG1 METER
F-CAN A_H*3 F-CAN_H*4
F-CAN A_L*3 F-CAN_L*4
B-CAN_H
A30
PNK
B-CAN_L
A31
BLU
+B BACK UP
A1
WHT
GAUGE CONTROL MODULE
GND
A4
LT GRN
PNK
BLU
PUR*1 BLU*2
WHT
2
4
5
6
7
S-NET
B-CAN_H
B-CAN_L
IG1 MON*1 IG1 FUEL PUMP*2
+B BACK UP
IMMOBILIZER-KEYLESS CONTROL UNIT
GND
K LINE
1
3
LT BLU
DATA LINK CONNECTOR (DLC)
BLK
BRN
G401
G401

KEYLESS ACCESS SYSTEM CIRCUIT DIAGRAM

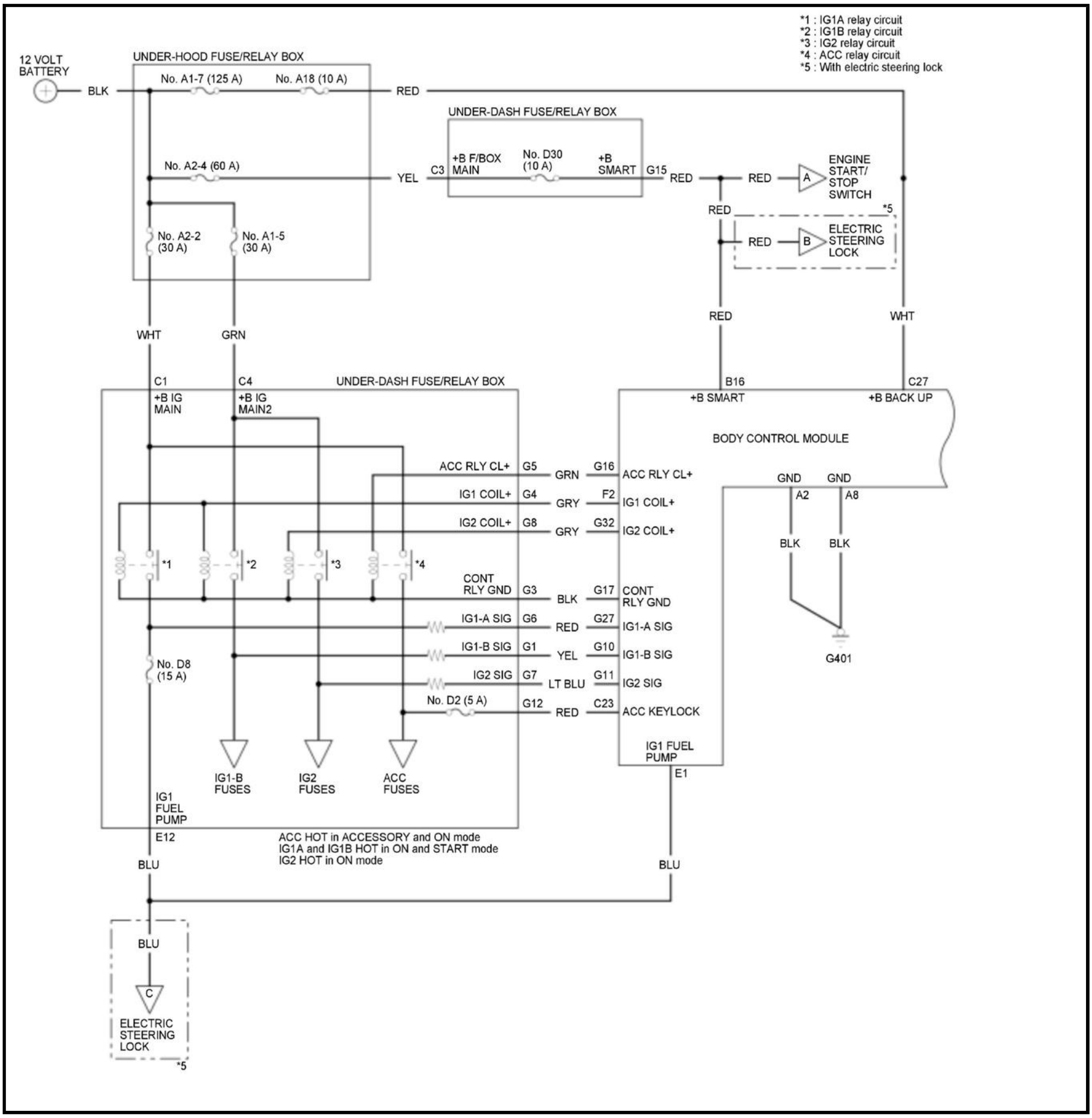
*1 : IG1A relay circuit
*2 : IG1B relay circuit
*3 : IG2 relay circuit
*4 : ACC relay circuit
*5 : With electric steering lock
12 VOLT BATTERY
BLK
UNDER-HOOD FUSE/RELAY BOX
No. A1-7 (125 A)
No. A18 (10 A)
RED
No. A2-4 (60 A)
YEL
No. A2-2 (30 A)
No. A1-5 (30 A)
UNDER-DASH FUSE/RELAY BOX
C3
+B F/BOX MAIN
No. D30 (10 A)
+B SMART
G15
RED
RED
A
ENGINE START/ STOP SWITCH
RED
*5
RED
B
ELECTRIC STEERING LOCK
RED
WHT
WHT
GRN
C1
+B IG MAIN
C4
+B IG MAIN2
UNDER-DASH FUSE/RELAY BOX
B16
+B SMART
C27
+B BACK UP
BODY CONTROL MODULE
ACC RLY CL+
G5
GRN
G16
ACC RLY CL+
GND
GND
IG1 COIL+
G4
GRY
F2
IG1 COIL+
A2
A8
IG2 COIL+
G8
GRY
G32
IG2 COIL+
BLK
BLK
*1
*2
*3
*4
CONT RLY GND
G3
BLK
G17
CONT RLY GND
IG1-A SIG
G6
RED
G27
IG1-A SIG
G401
IG1-B SIG
G1
YEL
G10
IG1-B SIG
No. D8 (15 A)
IG2 SIG
G7
LT BLU
G11
IG2 SIG
No. D2 (5 A)
G12
RED
C23
ACC KEYLOCK
IG1 FUEL PUMP
E1
IG1-B FUSES
IG2 FUSES
ACC FUSES
IG1 FUEL PUMP
E12
ACC HOT in ACCESSORY and ON mode
IG1A and IG1B HOT in ON and START mode
IG2 HOT in ON mode
BLU
BLU
BLU
C
ELECTRIC STEERING LOCK
*5

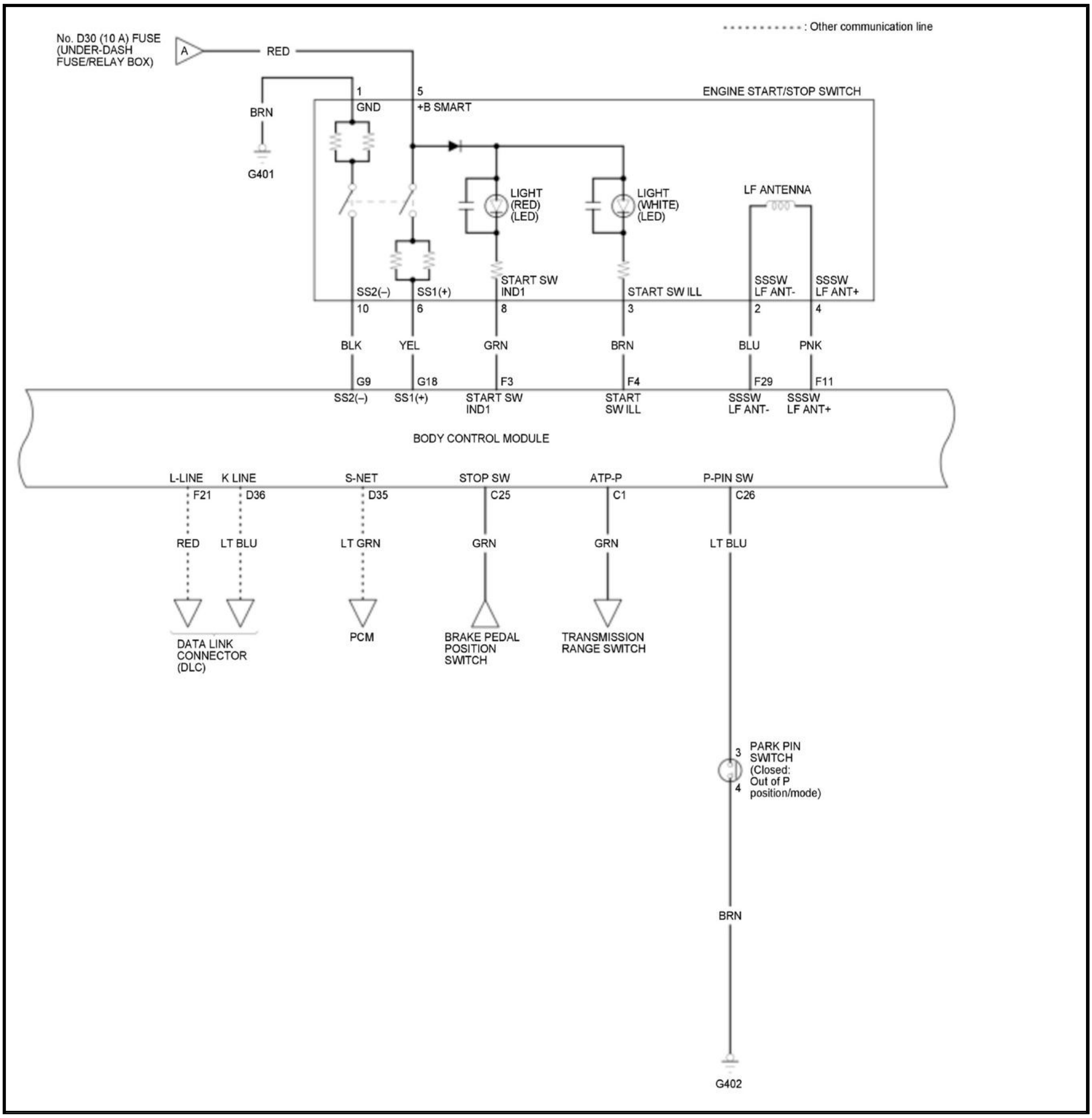
: Other communication line
No. D30 (10 A) FUSE (UNDER-DASH FUSE/RELAY BOX)
A
RED
1
5
GND
+B SMART
ENGINE START/STOP SWITCH
BRN
G401
LIGHT (RED) (LED)
LIGHT (WHITE) (LED)
LF ANTENNA
SS2(–)
SS1(+)
START SW IND1
START SW ILL
SSSW LF ANT-
SSSW LF ANT+
10
6
8
3
2
4
BLK
YEL
GRN
BRN
BLU
PNK
G9
G18
F3
F4
F29
F11
SS2(–)
SS1(+)
START SW IND1
START SW ILL
SSSW LF ANT-
SSSW LF ANT+
BODY CONTROL MODULE
L-LINE
K LINE
S-NET
STOP SW
ATP-P
P-PIN SW
F21
D36
D35
C25
C1
C26
RED
LT BLU
LT GRN
GRN
GRN
LT BLU
DATA LINK CONNECTOR (DLC)
PCM
BRAKE PEDAL POSITION SWITCH
TRANSMISSION RANGE SWITCH
3
4
PARK PIN SWITCH (Closed: Out of P position/mode)
BRN
G402

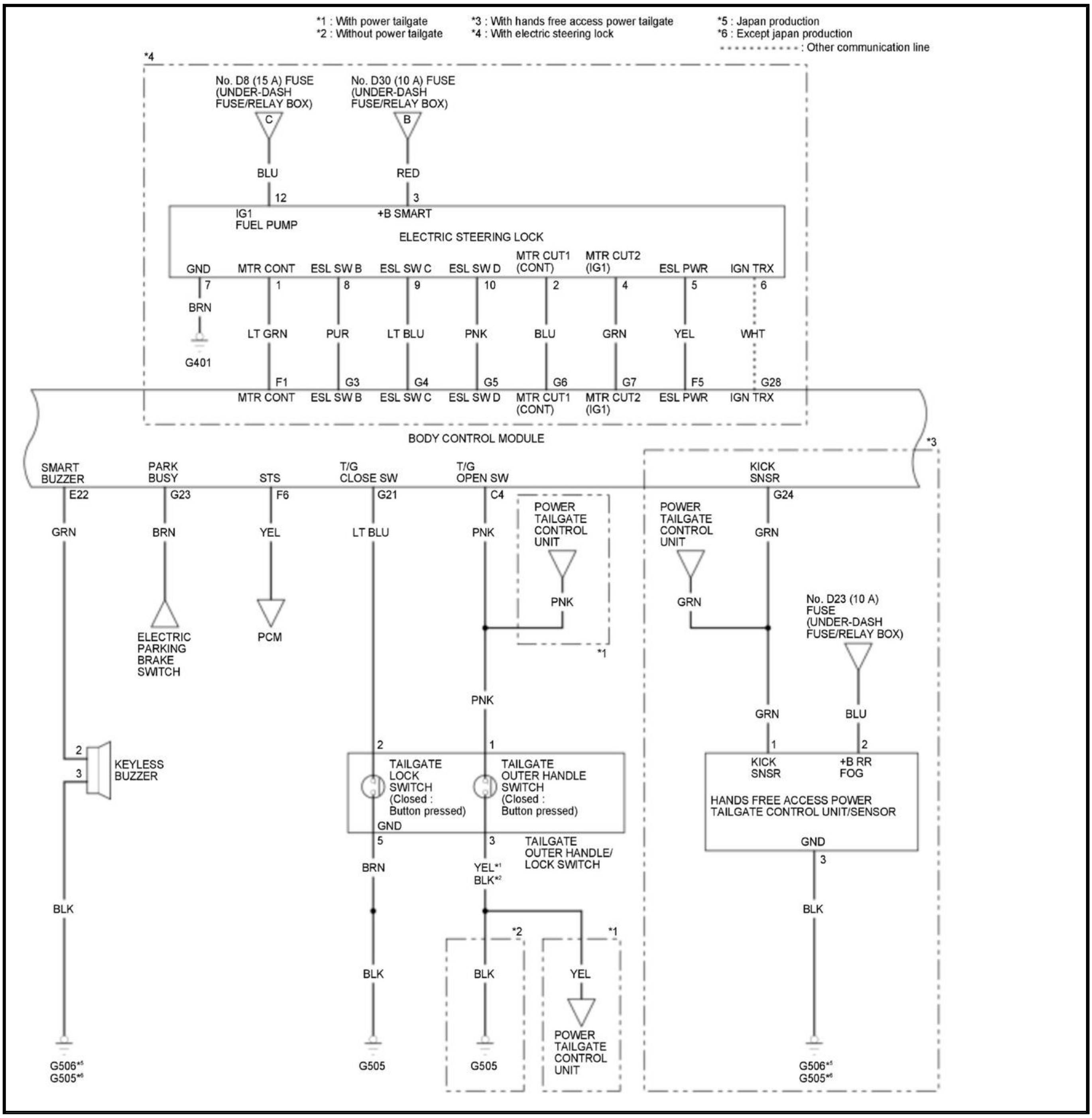
*1 : With power tailgate
*2 : Without power tailgate
*3 : With hands free access power tailgate
*4 : With electric steering lock
*5 : Japan production
*6 : Except japan production
: Other communication line
*4
No. D8 (15 A) FUSE (UNDER-DASH FUSE/RELAY BOX)
C
No. D30 (10 A) FUSE (UNDER-DASH FUSE/RELAY BOX)
B
BLU
RED
12
3
IG1 FUEL PUMP
+B SMART
ELECTRIC STEERING LOCK
GND
MTR CONT
ESL SW B
ESL SW C
ESL SW D
MTR CUT1 (CONT)
MTR CUT2 (IG1)
ESL PWR
IGN TRX
7
1
8
9
10
2
4
5
6
BRN
G401
LT GRN
PUR
LT BLU
PNK
BLU
GRN
YEL
WHT
F1
G3
G4
G5
G6
G7
F5
G28
MTR CONT
ESL SW B
ESL SW C
ESL SW D
MTR CUT1 (CONT)
MTR CUT2 (IG1)
ESL PWR
IGN TRX
BODY CONTROL MODULE
*3
SMART BUZZER
PARK BUSY
STS
T/G CLOSE SW
T/G OPEN SW
KICK SNSR
E22
G23
F6
G21
C4
G24
GRN
BRN
YEL
LT BLU
PNK
GRN
POWER TAILGATE CONTROL UNIT
PNK
*1
POWER TAILGATE CONTROL UNIT
GRN
ELECTRIC PARKING BRAKE SWITCH
PCM
PNK
No. D23 (10 A) FUSE (UNDER-DASH FUSE/RELAY BOX)
GRN
BLU
2
3
KEYLESS BUZZER
2
1
TAILGATE LOCK SWITCH (Closed : Button pressed)
TAILGATE OUTER HANDLE SWITCH (Closed : Button pressed)
GND
5
3
TAILGATE OUTER HANDLE/ LOCK SWITCH
1
2
KICK SNSR
+B RR FOG
HANDS FREE ACCESS POWER TAILGATE CONTROL UNIT/SENSOR
GND
3
BRN
YEL*1
BLK*2
BLK
BLK
*2
*1
BLK
BLK
YEL
BLK
POWER TAILGATE CONTROL UNIT
G506*5
G505*6
G505
G505
G506*5
G505*6

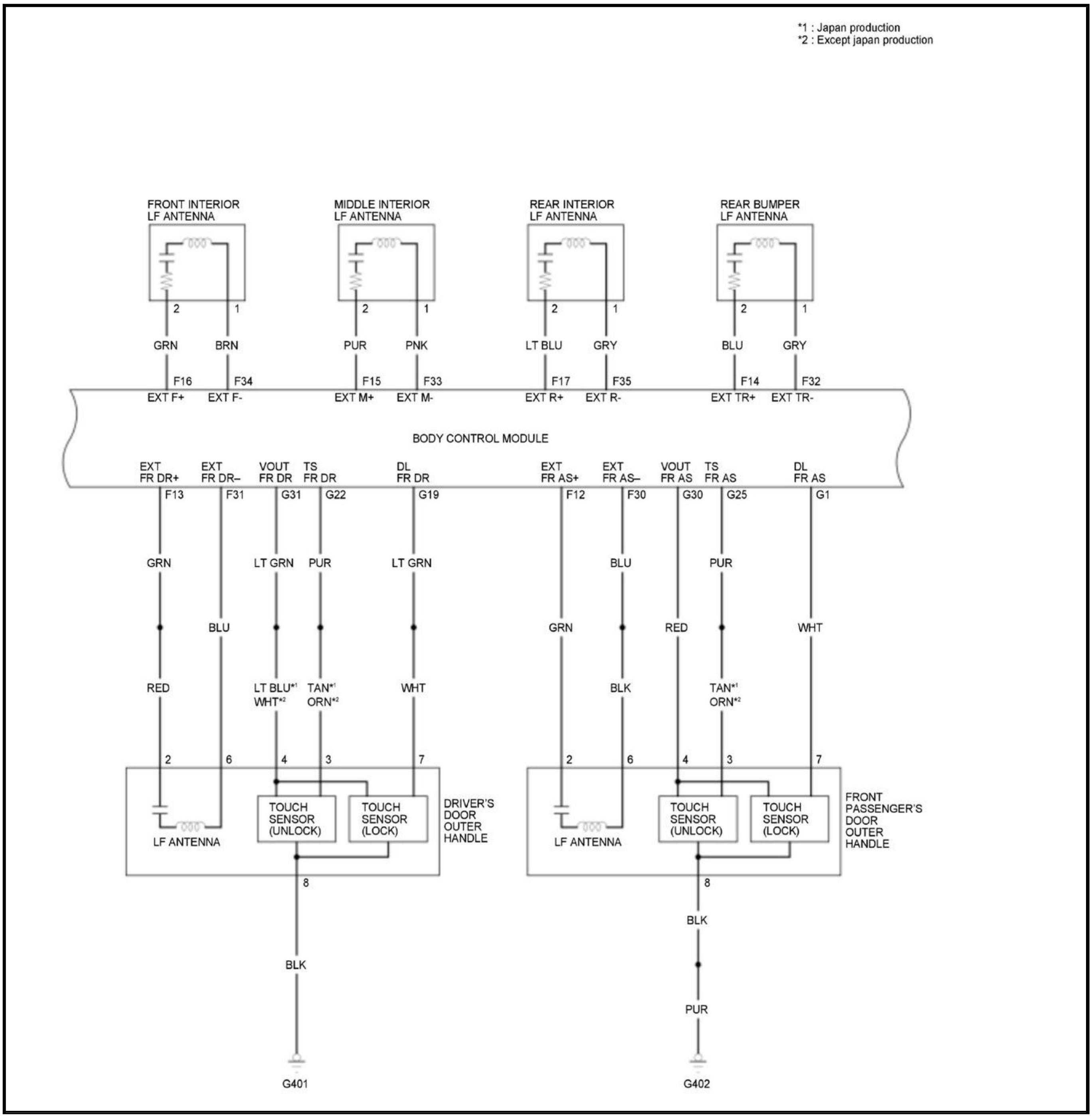
FRONT INTERIOR LF ANTENNA
MIDDLE INTERIOR LF ANTENNA
REAR INTERIOR LF ANTENNA
REAR BUMPER LF ANTENNA
2
1
GRN
BRN
PUR
PNK
LT BLU
GRY
BLU
GRY
F16
F34
F15
F33
F17
F35
F14
F32
EXT F+
EXT F-
EXT M+
EXT M-
EXT R+
EXT R-
EXT TR+
EXT TR-
BODY CONTROL MODULE
EXT FR DR+
EXT FR DR–
VOUT FR DR
TS FR DR
DL FR DR
EXT FR AS+
EXT FR AS–
VOUT FR AS
TS FR AS
DL FR AS
F13
F31
G31
G22
G19
F12
F30
G30
G25
G1
GRN
LT GRN
PUR
LT GRN
BLU
PUR
BLU
GRN
RED
WHT
RED
LT BLU*1
WHT*2
TAN*1
ORN*2
WHT
BLK
TAN*1
ORN*2
2
6
4
3
7
TOUCH SENSOR (UNLOCK)
TOUCH SENSOR (LOCK)
LF ANTENNA
DRIVER'S DOOR OUTER HANDLE
FRONT PASSENGER'S DOOR OUTER HANDLE
8
BLK
BLK
PUR
G401
G402

*1 : Japan production
*2 : Except japan production

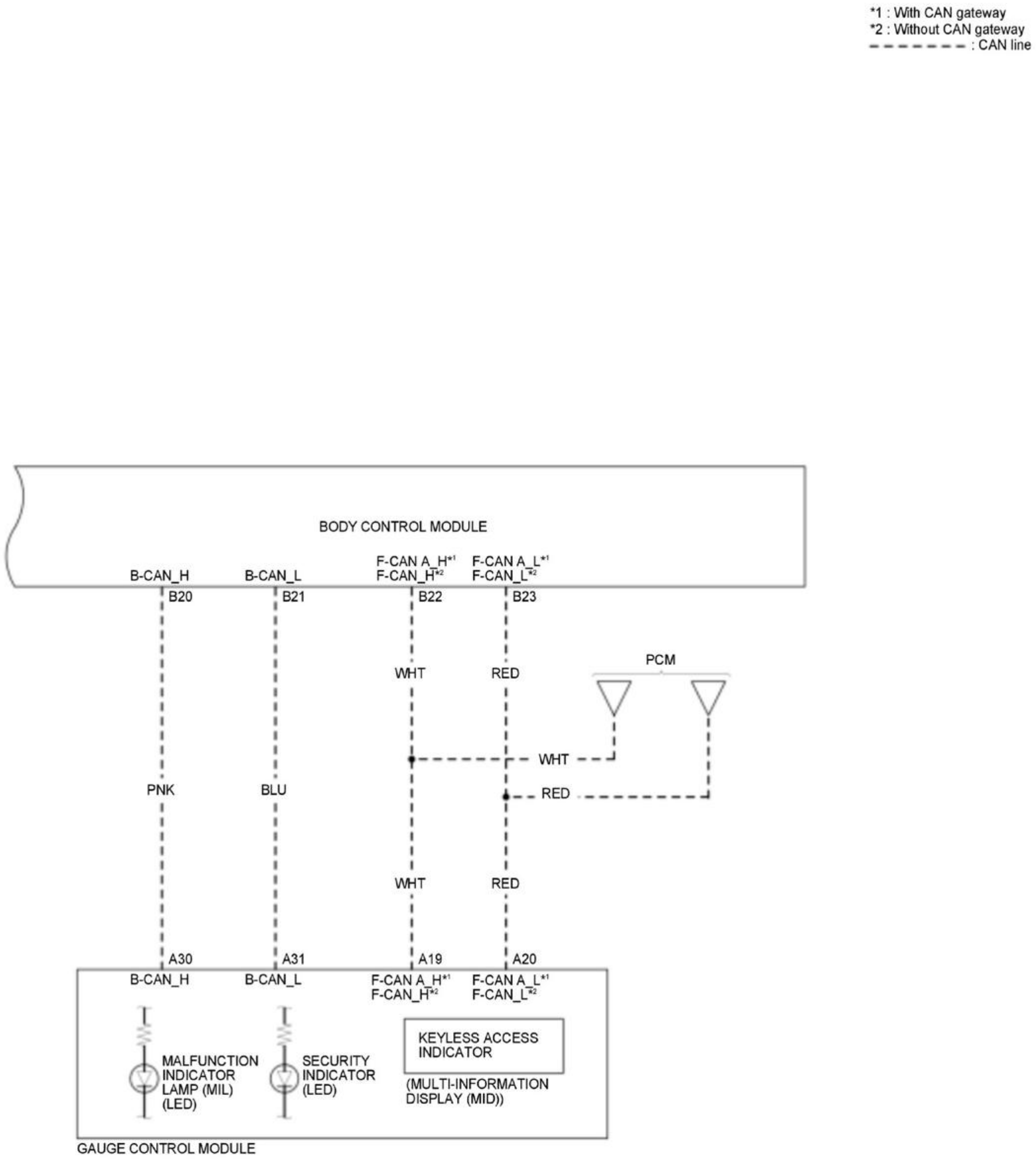
*1 : With CAN gateway
*2 : Without CAN gateway
: CAN line
BODY CONTROL MODULE
B-CAN_H
B-CAN_L
F-CAN A_H*1
F-CAN_H*2
F-CAN A_L*1
F-CAN_L*2
B20
B21
B22
B23
WHT
RED
PCM
WHT
RED
PNK
BLU
WHT
RED
A30
A31
A19
A20
B-CAN_H
B-CAN_L
F-CAN A_H*1
F-CAN_H*2
F-CAN A_L*1
F-CAN_L*2
KEYLESS ACCESS INDICATOR
MALFUNCTION INDICATOR LAMP (MIL) (LED)
SECURITY INDICATOR (LED)
(MULTI-INFORMATION DISPLAY (MID))
GAUGE CONTROL MODULE

KEYLESS/POWER DOOR LOCKS/SECURITY SYSTEM CIRCUIT DIAGRAM

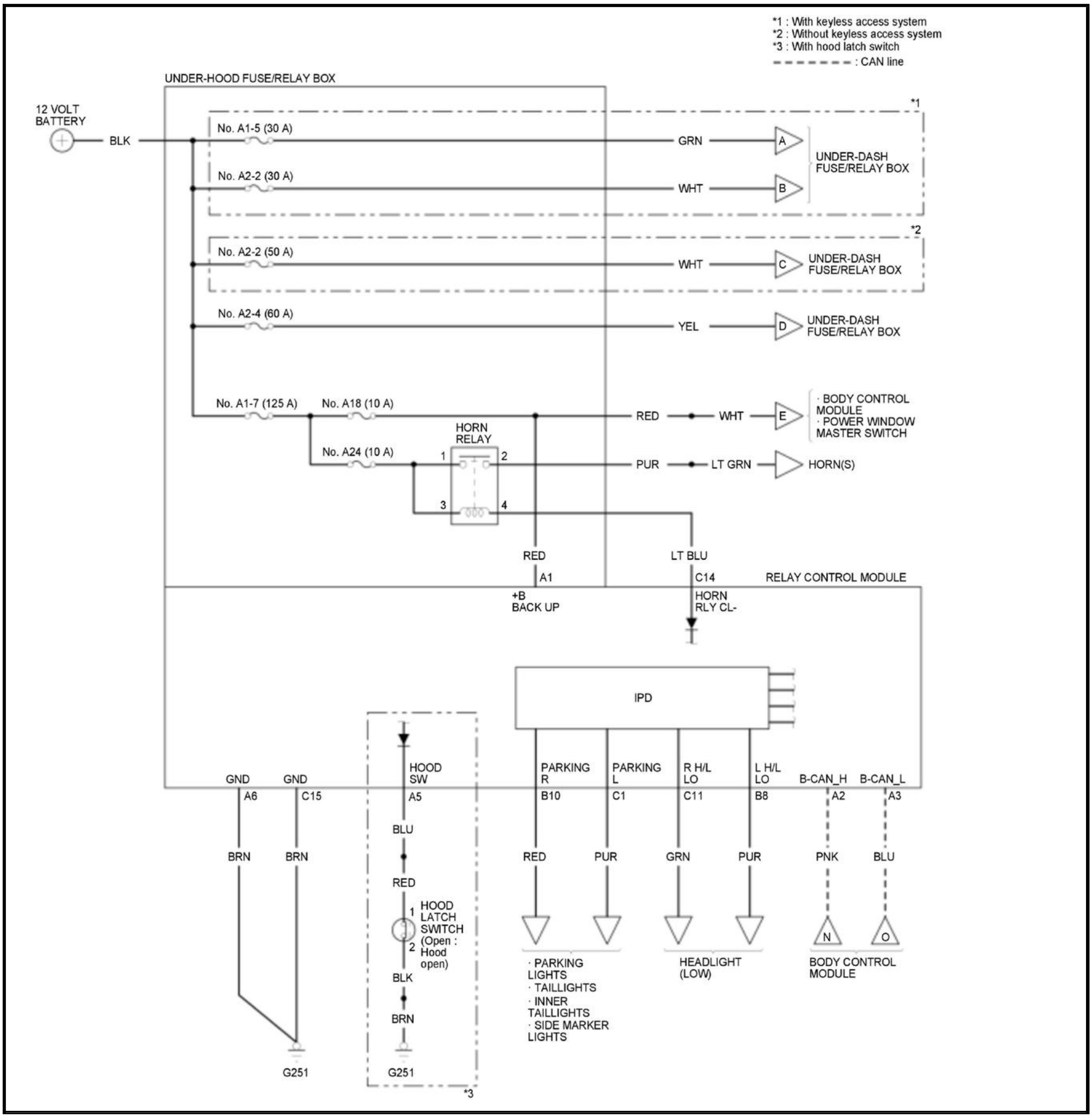
*1 : With keyless access system
*2 : Without keyless access system
*3 : With hood latch switch
: CAN line
UNDER-HOOD FUSE/RELAY BOX
12 VOLT BATTERY
BLK
*1
No. A1-5 (30 A)
GRN
A
UNDER-DASH FUSE/RELAY BOX
No. A2-2 (30 A)
WHT
B
*2
No. A2-2 (50 A)
WHT
C
UNDER-DASH FUSE/RELAY BOX
No. A2-4 (60 A)
YEL
D
UNDER-DASH FUSE/RELAY BOX
No. A1-7 (125 A)
No. A18 (10 A)
RED
WHT
E
· BODY CONTROL MODULE
· POWER WINDOW MASTER SWITCH
HORN RELAY
No. A24 (10 A)
1
2
3
4
PUR
LT GRN
HORN(S)
RED
LT BLU
A1
C14
RELAY CONTROL MODULE
+B BACK UP
HORN RLY CL-
IPD
GND
GND
HOOD SW
PARKING R
PARKING L
R H/L LO
L H/L LO
B-CAN_H
B-CAN_L
A6
C15
A5
B10
C1
C11
B8
A2
A3
BRN
BRN
BLU
RED
RED
PUR
GRN
PUR
PNK
BLU
HOOD LATCH SWITCH (Open : Hood open)
1
2
BLK
BRN
N
O
· PARKING LIGHTS
· TAILLIGHTS
· INNER TAILLIGHTS
· SIDE MARKER LIGHTS
HEADLIGHT (LOW)
BODY CONTROL MODULE
G251
G251
*3

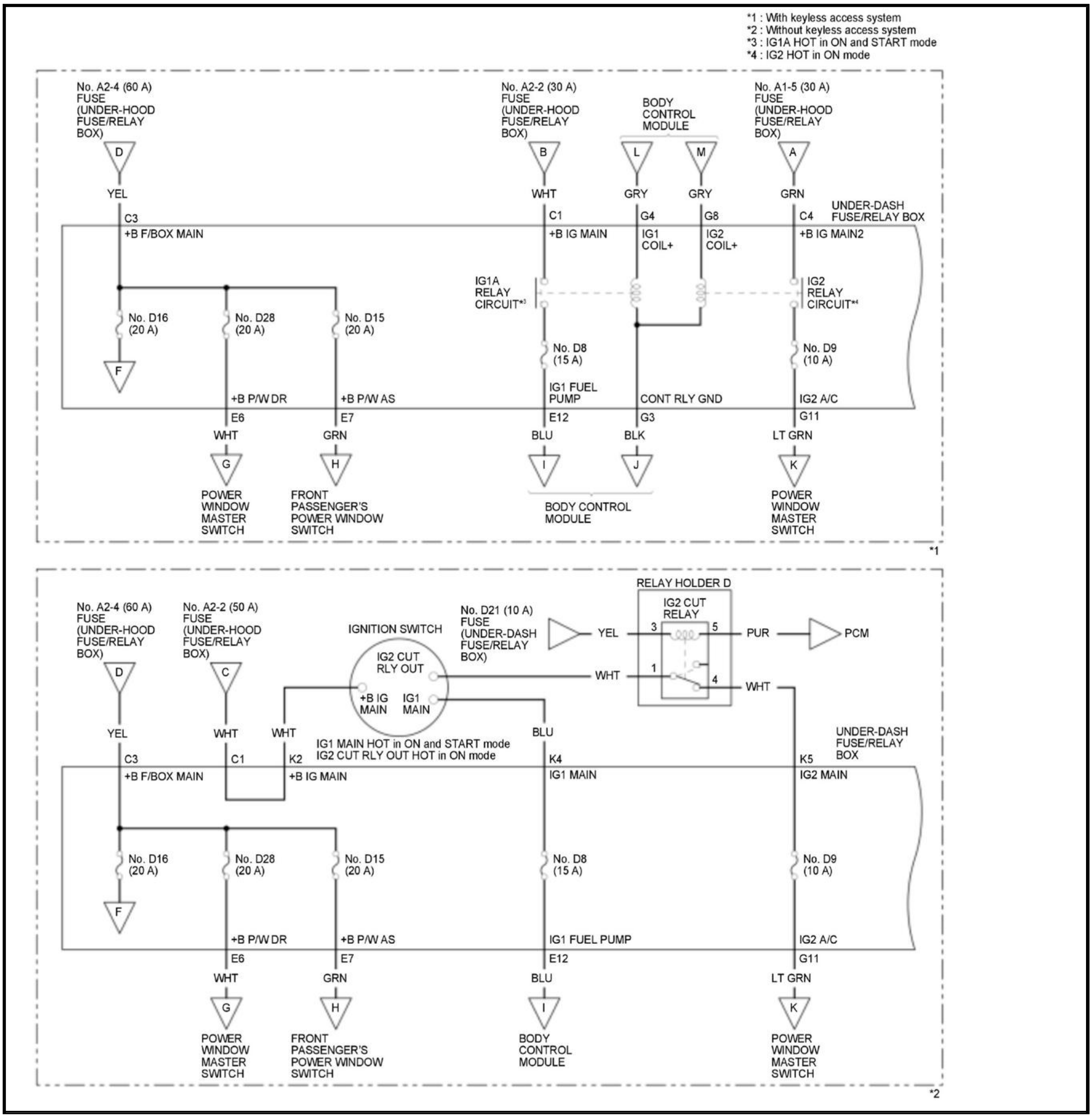
*1 : With keyless access system
*2 : Without keyless access system
*3 : IG1A HOT in ON and START mode
*4 : IG2 HOT in ON mode

No. A2-4 (60 A) FUSE (UNDER-HOOD FUSE/RELAY BOX)
D
YEL
C3
+B F/BOX MAIN
No. D16 (20 A)
F
No. D28 (20 A)
No. D15 (20 A)
+B P/W DR
E6
WHT
G
POWER WINDOW MASTER SWITCH
+B P/W AS
E7
GRN
H
FRONT PASSENGER'S POWER WINDOW SWITCH
No. A2-2 (30 A) FUSE (UNDER-HOOD FUSE/RELAY BOX)
B
WHT
C1
+B IG MAIN
IG1A RELAY CIRCUIT*3
No. D8 (15 A)
IG1 FUEL PUMP
E12
BLU
I
BODY CONTROL MODULE
L
M
GRY
GRY
G4
G8
IG1 COIL+
IG2 COIL+
CONT RLY GND
G3
BLK
J
BODY CONTROL MODULE
No. A1-5 (30 A) FUSE (UNDER-HOOD FUSE/RELAY BOX)
A
GRN
C4
UNDER-DASH FUSE/RELAY BOX
+B IG MAIN2
IG2 RELAY CIRCUIT*4
No. D9 (10 A)
IG2 A/C
G11
LT GRN
K
POWER WINDOW MASTER SWITCH
*1
No. A2-4 (60 A) FUSE (UNDER-HOOD FUSE/RELAY BOX)
D
YEL
No. A2-2 (50 A) FUSE (UNDER-HOOD FUSE/RELAY BOX)
C
WHT
WHT
IGNITION SWITCH
IG2 CUT RLY OUT
+B IG MAIN
IG1 MAIN
IG1 MAIN HOT in ON and START mode
IG2 CUT RLY OUT HOT in ON mode
No. D21 (10 A) FUSE (UNDER-DASH FUSE/RELAY BOX)
YEL
RELAY HOLDER D
IG2 CUT RELAY
3
5
1
4
PUR
PCM
WHT
WHT
BLU
C3
+B F/BOX MAIN
C1
K2
+B IG MAIN
K4
IG1 MAIN
K5
IG2 MAIN
UNDER-DASH FUSE/RELAY BOX
No. D16 (20 A)
F
No. D28 (20 A)
No. D15 (20 A)
No. D8 (15 A)
No. D9 (10 A)
+B P/W DR
+B P/W AS
IG1 FUEL PUMP
IG2 A/C
E6
E7
E12
G11
WHT
GRN
BLU
LT GRN
G
H
I
K
POWER WINDOW MASTER SWITCH
FRONT PASSENGER'S POWER WINDOW SWITCH
BODY CONTROL MODULE
POWER WINDOW MASTER SWITCH
*2

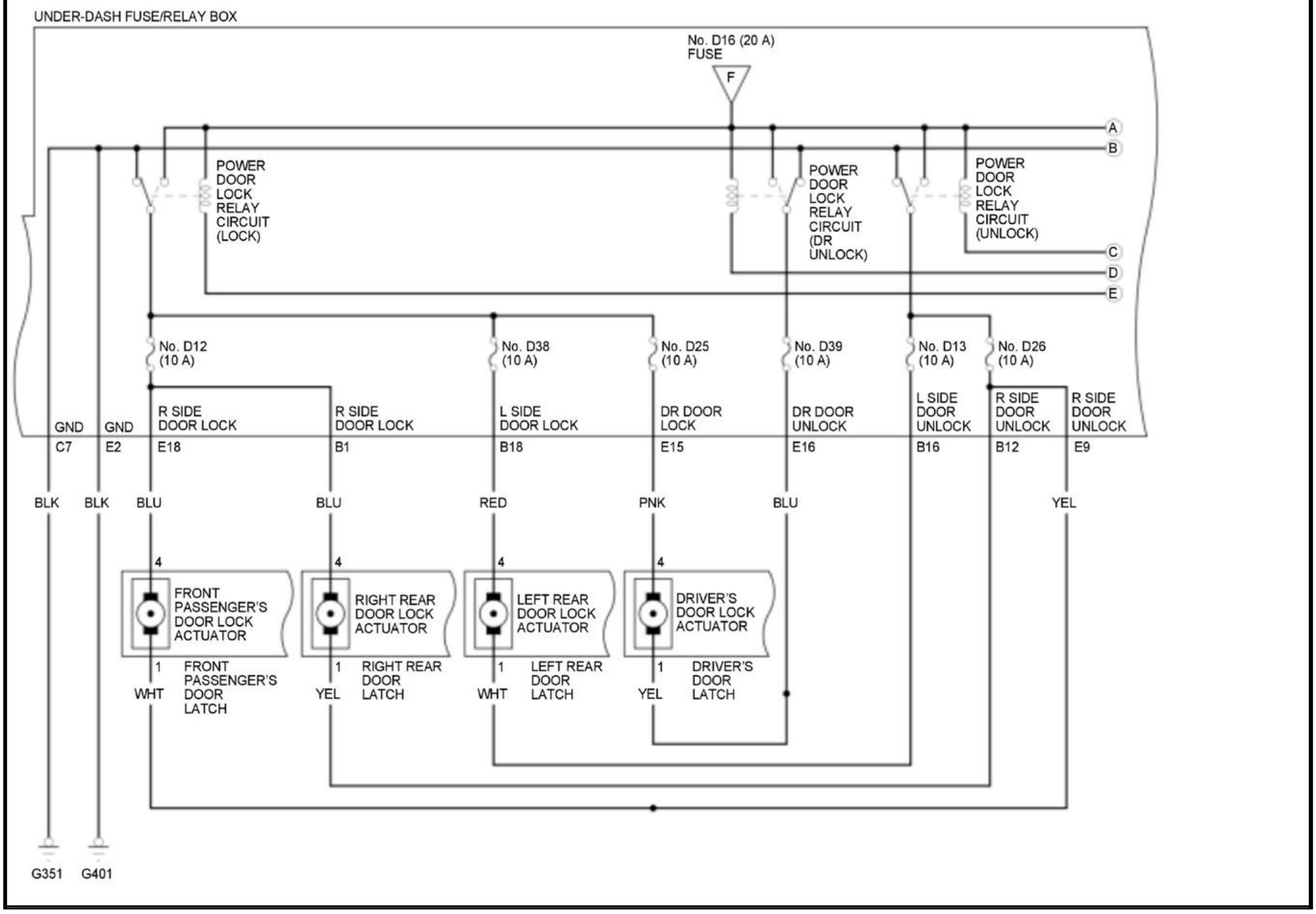
UNDER-DASH FUSE/RELAY BOX
No. D16 (20 A) FUSE
F
A
B
C
D
E
POWER DOOR LOCK RELAY CIRCUIT (LOCK)
POWER DOOR LOCK RELAY CIRCUIT (DR UNLOCK)
POWER DOOR LOCK RELAY CIRCUIT (UNLOCK)
No. D12 (10 A)
No. D38 (10 A)
No. D25 (10 A)
No. D39 (10 A)
No. D13 (10 A)
No. D26 (10 A)
GND C7
GND E2
R SIDE DOOR LOCK E18
R SIDE DOOR LOCK B1
L SIDE DOOR LOCK B18
DR DOOR LOCK E15
DR DOOR UNLOCK E16
L SIDE DOOR UNLOCK B16
R SIDE DOOR UNLOCK B12
R SIDE DOOR UNLOCK E9
BLK
BLK
BLU
BLU
RED
PNK
BLU
YEL
4
FRONT PASSENGER'S DOOR LOCK ACTUATOR
4
RIGHT REAR DOOR LOCK ACTUATOR
4
LEFT REAR DOOR LOCK ACTUATOR
4
DRIVER'S DOOR LOCK ACTUATOR
1
FRONT PASSENGER'S DOOR LATCH
WHT
1
RIGHT REAR DOOR LATCH
YEL
1
LEFT REAR DOOR LATCH
WHT
1
DRIVER'S DOOR LATCH
YEL
G351
G401

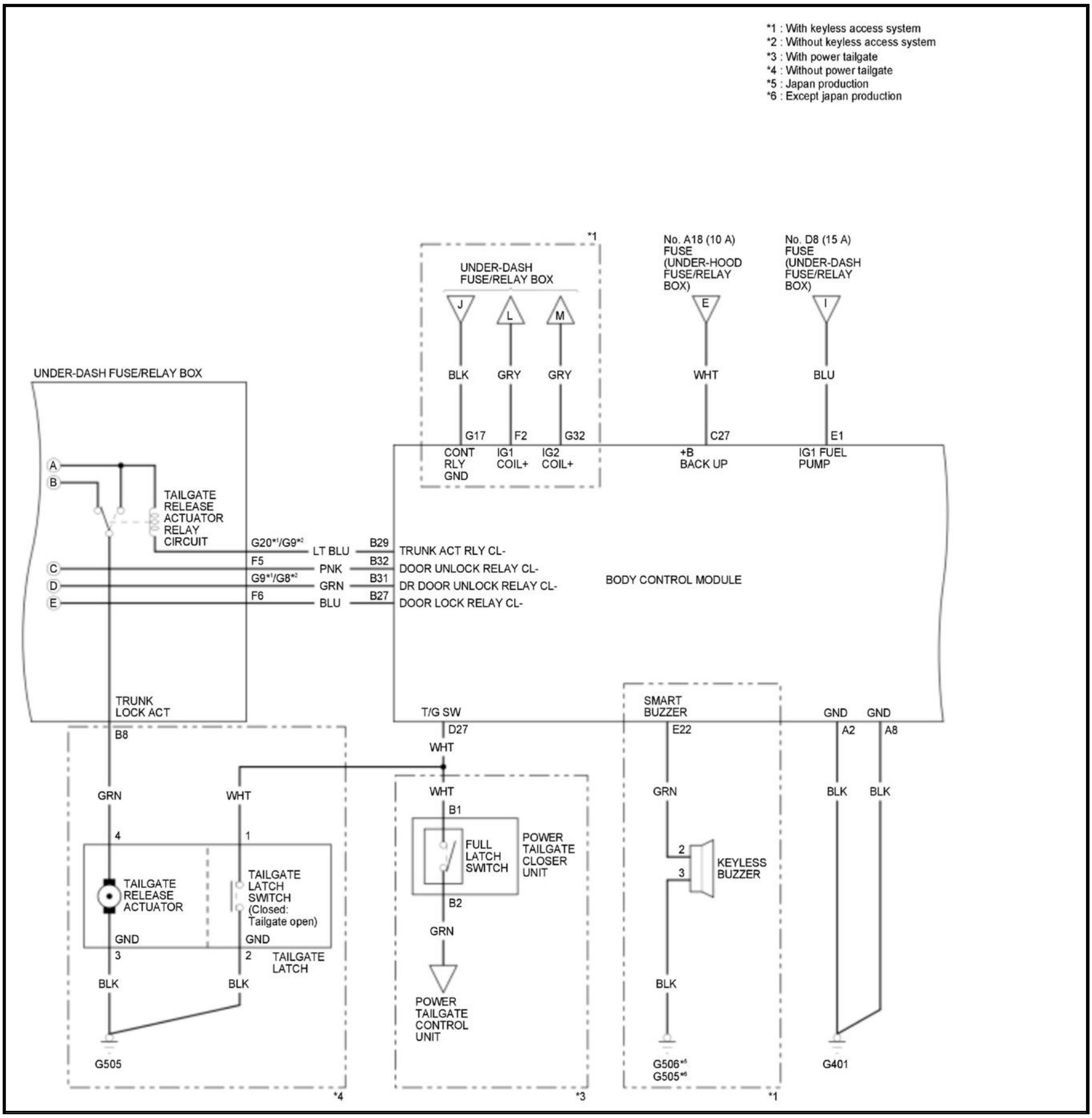
*1 : With keyless access system
*2 : Without keyless access system
*3 : With power tailgate
*4 : Without power tailgate
*5 : Japan production
*6 : Except japan production
UNDER-DASH FUSE/RELAY BOX
J
L
M
BLK
GRY
GRY
No. A18 (10 A) FUSE (UNDER-HOOD FUSE/RELAY BOX)
E
WHT
No. D8 (15 A) FUSE (UNDER-DASH FUSE/RELAY BOX)
I
BLU
G17
F2
G32
C27
E1
CONT RLY GND
IG1 COIL+
IG2 COIL+
+B BACK UP
IG1 FUEL PUMP
UNDER-DASH FUSE/RELAY BOX
A
B
C
D
E
TAILGATE RELEASE ACTUATOR RELAY CIRCUIT
G20*1/G9*2
LT BLU
B29
TRUNK ACT RLY CL-
F5
PNK
B32
DOOR UNLOCK RELAY CL-
G9*1/G8*2
GRN
B31
DR DOOR UNLOCK RELAY CL-
F6
BLU
B27
DOOR LOCK RELAY CL-
BODY CONTROL MODULE
TRUNK LOCK ACT
B8
T/G SW
D27
WHT
SMART BUZZER
E22
GND
GND
A2
A8
GRN
WHT
WHT
B1
GRN
BLK
BLK
4
1
FULL LATCH SWITCH
POWER TAILGATE CLOSER UNIT
2
3
KEYLESS BUZZER
TAILGATE RELEASE ACTUATOR
TAILGATE LATCH SWITCH (Closed: Tailgate open)
B2
GND
GND
3
2
TAILGATE LATCH
GRN
BLK
BLK
POWER TAILGATE CONTROL UNIT
BLK
G505
G506*5
G505*6
G401
*4
*3
*1
*1

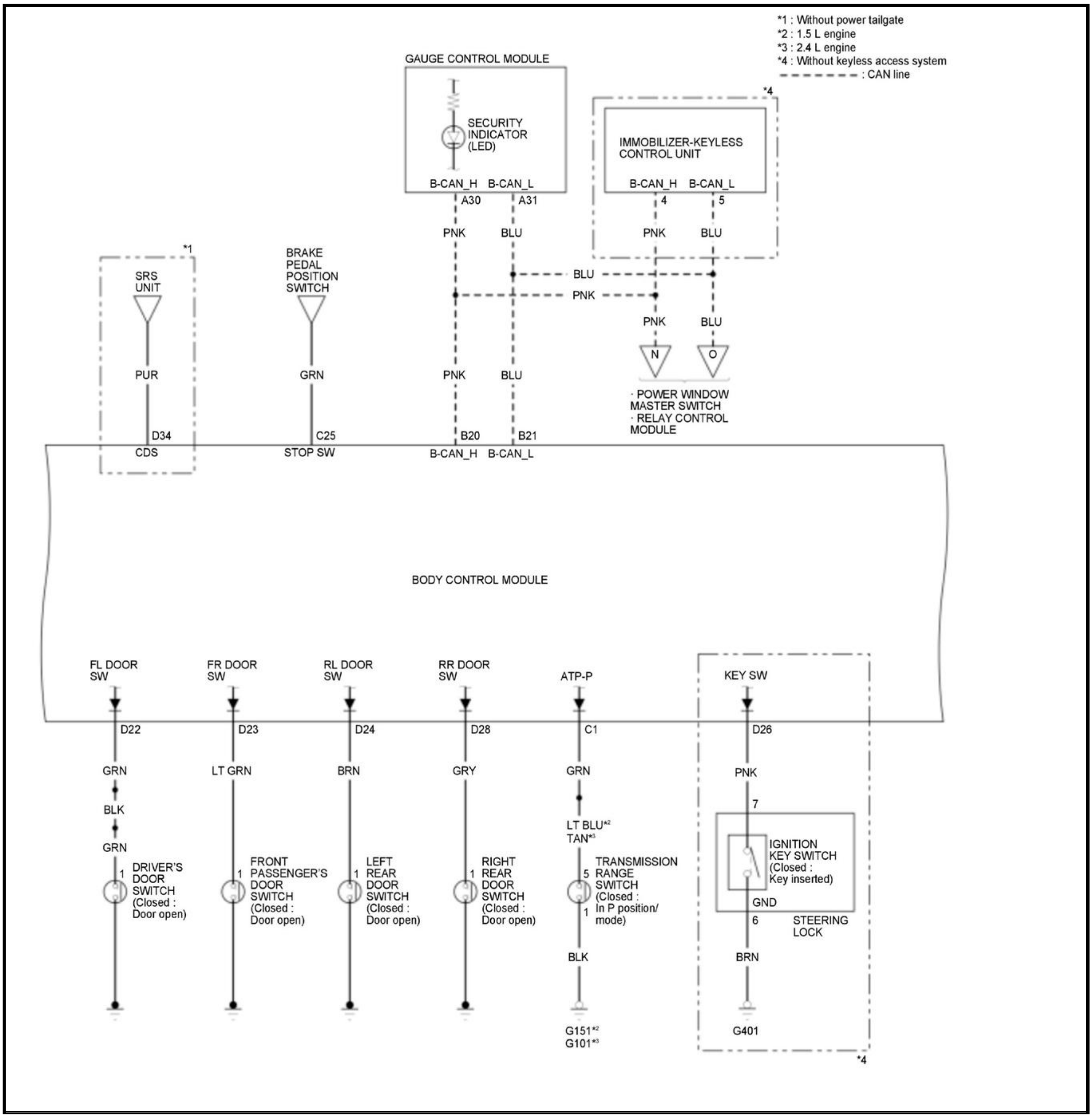
*1 : Without power tailgate
*2 : 1.5 L engine
*3 : 2.4 L engine
*4 : Without keyless access system
: CAN line
GAUGE CONTROL MODULE
SECURITY INDICATOR (LED)
B-CAN_H
B-CAN_L
A30
A31
*4
IMMOBILIZER-KEYLESS CONTROL UNIT
B-CAN_H
B-CAN_L
4
5
PNK
BLU
PNK
BLU
BLU
PNK
PNK
BLU
N
O
· POWER WINDOW MASTER SWITCH
· RELAY CONTROL MODULE
*1
SRS UNIT
BRAKE PEDAL POSITION SWITCH
PUR
GRN
PNK
BLU
D34
CDS
C25
STOP SW
B20
B-CAN_H
B21
B-CAN_L
BODY CONTROL MODULE
FL DOOR SW
FR DOOR SW
RL DOOR SW
RR DOOR SW
ATP-P
KEY SW
D22
D23
D24
D28
C1
D26
GRN
BLK
GRN
LT GRN
BRN
GRY
GRN
LT BLU*2
TAN*3
PNK
7
1
DRIVER'S DOOR SWITCH (Closed : Door open)
1
FRONT PASSENGER'S DOOR SWITCH (Closed : Door open)
1
LEFT REAR DOOR SWITCH (Closed : Door open)
1
RIGHT REAR DOOR SWITCH (Closed : Door open)
5
TRANSMISSION RANGE SWITCH (Closed : In P position/ mode)
1
IGNITION KEY SWITCH (Closed : Key inserted)
GND
6
STEERING LOCK
BLK
BRN
G151*2
G101*3
G401
*4

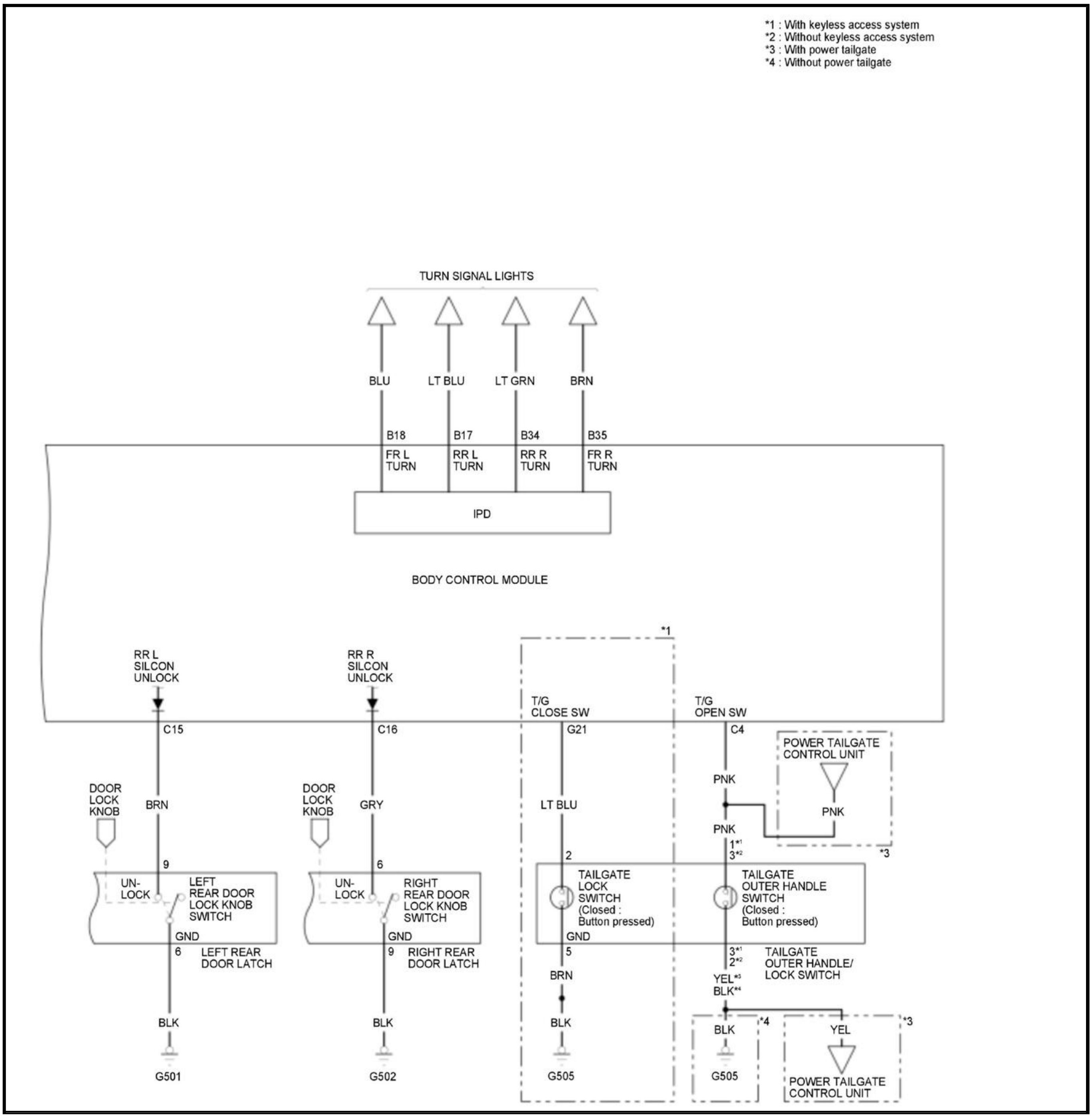
*1 : With keyless access system
*2 : Without keyless access system
*3 : With power tailgate
*4 : Without power tailgate
TURN SIGNAL LIGHTS
BLU
LT BLU
LT GRN
BRN
B18
FR L TURN
B17
RR L TURN
B34
RR R TURN
B35
FR R TURN
IPD
BODY CONTROL MODULE
RR L SILCON UNLOCK
RR R SILCON UNLOCK
*1
T/G CLOSE SW
T/G OPEN SW
C15
C16
G21
C4
POWER TAILGATE CONTROL UNIT
PNK
PNK
PNK
*3
DOOR LOCK KNOB
BRN
DOOR LOCK KNOB
GRY
LT BLU
9
6
2
1*1
3*2
UN-LOCK
LEFT REAR DOOR LOCK KNOB SWITCH
UN-LOCK
RIGHT REAR DOOR LOCK KNOB SWITCH
TAILGATE LOCK SWITCH (Closed : Button pressed)
TAILGATE OUTER HANDLE SWITCH (Closed : Button pressed)
GND
GND
GND
6
LEFT REAR DOOR LATCH
9
RIGHT REAR DOOR LATCH
5
3*1
2*2
TAILGATE OUTER HANDLE/ LOCK SWITCH
BRN
YEL*3
BLK*4
BLK
BLK
BLK
BLK
*4
YEL
*3
G501
G502
G505
G505
POWER TAILGATE CONTROL UNIT

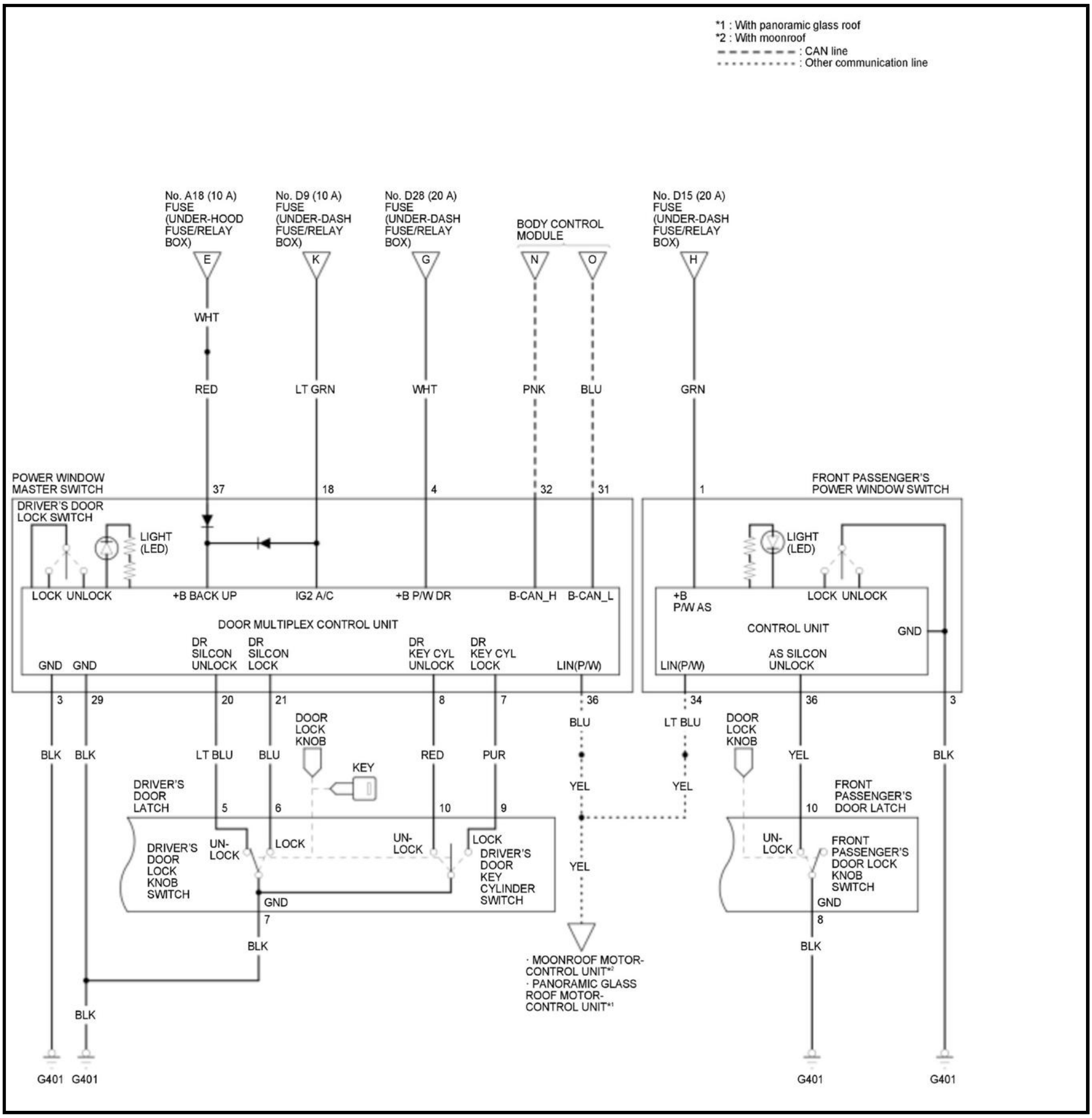
*1 : With panoramic glass roof
*2 : With moonroof
: CAN line
: Other communication line
No. A18 (10 A) FUSE (UNDER-HOOD FUSE/RELAY BOX)
No. D9 (10 A) FUSE (UNDER-DASH FUSE/RELAY BOX)
No. D28 (20 A) FUSE (UNDER-DASH FUSE/RELAY BOX)
BODY CONTROL MODULE
No. D15 (20 A) FUSE (UNDER-DASH FUSE/RELAY BOX)
E
K
G
N
O
H
WHT
RED
LT GRN
WHT
PNK
BLU
GRN
POWER WINDOW MASTER SWITCH
DRIVER'S DOOR LOCK SWITCH
LIGHT (LED)
37
18
4
32
31
1
FRONT PASSENGER'S POWER WINDOW SWITCH
LIGHT (LED)
LOCK UNLOCK
+B BACK UP
IG2 A/C
+B P/W DR
B-CAN_H
B-CAN_L
DOOR MULTIPLEX CONTROL UNIT
GND GND
DR SILCON UNLOCK
DR SILCON LOCK
DR KEY CYL UNLOCK
DR KEY CYL LOCK
LIN(P/W)
+B P/W AS
LOCK UNLOCK
CONTROL UNIT
GND
AS SILCON UNLOCK
LIN(P/W)
3
29
20
21
8
7
36
34
36
3
DOOR LOCK KNOB
KEY
BLK
BLK
LT BLU
BLU
RED
PUR
BLU
LT BLU
DOOR LOCK KNOB
YEL
BLK
DRIVER'S DOOR LATCH
5
6
10
9
YEL
YEL
10
FRONT PASSENGER'S DOOR LATCH
DRIVER'S DOOR LOCK KNOB SWITCH
UN-LOCK
LOCK
UN-LOCK
LOCK
DRIVER'S DOOR KEY CYLINDER SWITCH
GND
7
BLK
YEL
UN-LOCK
FRONT PASSENGER'S DOOR LOCK KNOB SWITCH
GND
8
BLK
· MOONROOF MOTOR-CONTROL UNIT*2
· PANORAMIC GLASS ROOF MOTOR-CONTROL UNIT*1
BLK
G401 G401
G401
G401

GENERAL INFORMATION

IMMOBILIZER SYSTEM SYMPTOM TROUBLESHOOTING INFORMATION

General Check Before Troubleshooting

Before troubleshooting the immobilizer system, check the following general items and resolve any issues, if applicable:

- The 12 volt battery is low; charge the 12 volt battery fully, then troubleshoot the immobilizer system.
- The ignition key is not a genuine Honda part; use a Honda-approved key blank, register the key, then troubleshoot the immobilizer system.
- If a key ring or a key case is used; remove the key from it, and troubleshoot the immobilizer system with the key only.
- An aftermarket electrical part is installed; remove it, then troubleshoot the immobilizer system.

Symptom Troubleshooting Using the Security Indicator Lighting Pattern

The pattern of the security indicator can help troubleshoot the condition of the immobilizer system. Here are descriptions of the four possible patterns:

Normal operation:

When turning the vehicle to the ON mode and the immobilizer code is identified, the security indicator is OFF.

Immobilizer code is not identified:

When turning the vehicle to the ON mode when the immobilizer code has not been identified, the security indicator blink until the OFF (LOCK) mode is selected. Then security indicator will come on for 1 second. The state of the keyless registration and the S-NET line can be checked by doing a **SYSTEM CHECK** and **STATUS LOG** with the HDS.

Security indicator turns on:

If the security indicator turns on, **do the gauge control module self-diagnostic function** . If the indicator drive circuit is OK, do the **SYSTEM CHECK** and **STATUS LOG** with the HDS.

Symptom Troubleshooting Using Malfunctioning Circuit Functions

If a malfunction occurs in the immobilizer circuit, use the table to cross-reference the malfunction criteria to the line(s) that should be checked in the table:

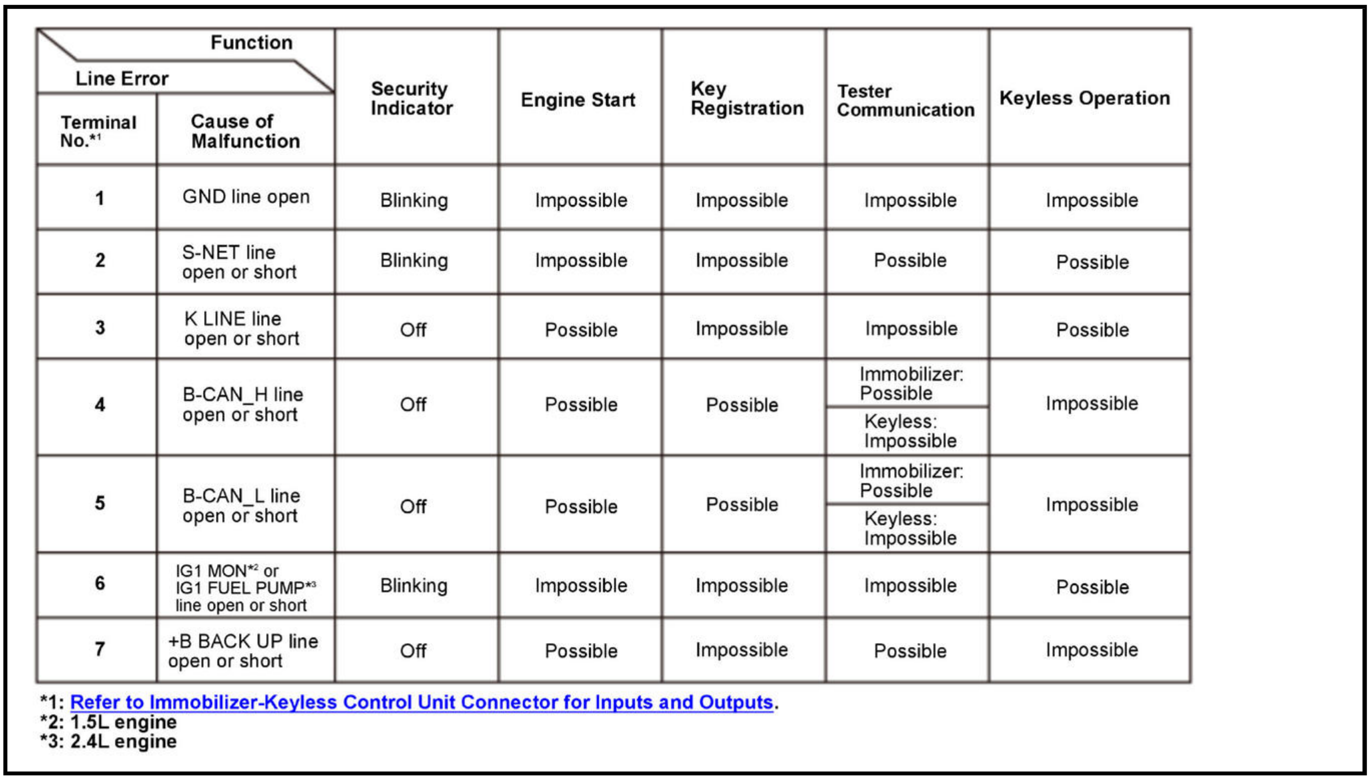

Function Line Error		Security Indicator	Engine Start	Key Registration	Tester Communication	Keyless Operation
Terminal No.*1	Cause of Malfunction					
1	GND line open	Blinking	Impossible	Impossible	Impossible	Impossible
2	S-NET line open or short	Blinking	Impossible	Impossible	Possible	Possible
3	K LINE line open or short	Off	Possible	Impossible	Impossible	Possible
4	B-CAN_H line open or short	Off	Possible	Possible	Immobilizer: Possible Keyless: Impossible	Impossible
5	B-CAN_L line open or short	Off	Possible	Possible	Immobilizer: Possible Keyless: Impossible	Impossible
6	IG1 MON*2 or IG1 FUEL PUMP*3 line open or short	Blinking	Impossible	Impossible	Impossible	Possible
7	+B BACK UP line open or short	Off	Possible	Impossible	Possible	Impossible

*1: Refer to Immobilizer-Keyless Control Unit Connector for Inputs and Outputs.
*2: 1.5L engine
*3: 2.4L engine

System Check

NOTE: The HDS can be used to check the state of the immobilizer key registration and the S-NET line by doing a SYSTEM CHECK.

1. **Connect the HDS to the data link connector (DLC)**

2. The vehicle is turned to the ON mode and follow the prompts to the SYSTEM SELECTION MENU.

3. At SYSTEM SELECTION MENU, enter IMMOBI, then select the IMMOBILIZER SETUP.

4. **Do the SYSTEM CHECK**. If there is a system check number, do the troubleshooting for the item indicated.

KEYLESS ACCESS SYSTEM SYMPTOM TROUBLESHOOTING INFORMATION

General Check Before Troubleshooting

NOTE: Before troubleshooting the keyless access system, check the following items and solve any applicable issues.

- Make sure that keyless access system is not disabled by the customization.
- Make sure the fuses associated with the system is OK.
- Check for poor connection at the body control module.
- Check for DTCs with the HDS; if a DTC is indicated, troubleshoot the DTC first.
- Before testing, troubleshoot the keyless access system first using SELF CHECK, and if any malfunction is found, troubleshoot it first.
- Make sure the keyless remote is not in a purse with coins, wrapped with any metallic material, placed near a cell phone or computer.
- Make sure the vehicle 12 volt battery is fully charged.
- Make sure the keyless remote batteries are not low; if they are, replace keyless remote battery.
- Make sure a different keyless remote is not being used; only use a Honda-approved keyless remote.
- Make sure the keyless remote is not attached to a key ring or key case; if it is, remove the key from it.
- Make sure aftermarket accessories are not installed; remove any aftermarket accessories.
- Make sure aftermarket accessories are not connected to the S-NET or IGN TRX line; disconnect any aftermarket accessories from the S-NET or IGN TRX line.
- Make sure there is no electrical interference nearby; avoid areas with electrical or radio interference.

Symptom Troubleshooting Using the Security Indicator Lighting Pattern

The immobilizer and keyless access system condition can be checked by the security indicator lighting pattern.

Normal operation:

When turning the vehicle to the ON mode and the immobilizer code is identified, the security indicator is OFF.

Immobilizer code is not identified:

When turning the vehicle to the ON mode when the immobilizer code has not been identified, the security indicator blink until the OFF (LOCK) mode is selected. Then security indicator will come on for 1 second. The state of the keyless registration and the S-NET line can be checked by doing a **SYSTEM CHECK** and **STATUS LOG** with the HDS.

Security indicator turns on:

If the security indicator turns on, **do the gauge control module self-diagnostic function procedures** . If the indicator drive circuit is OK, do the **SYSTEM CHECK** and **STATUS LOG** procedures with the HDS.

System Check and Status Log

NOTE: The HDS can be used to:

- Check the state of the keyless remote registration and the S-NET line by doing a **SYSTEM CHECK**.
- Check the number of times the keyless access control unit or the backup control unit did not permit the engine to start by checking the **STATUS LOG**.

1. **Connect the HDS to the data link connector (DLC)**

2. At SYSTEM SELECTION MENU, enter ONE-PUSH START, then select KEYLESS ACCESS CONTROL UNIT or BACKUP CONTROL UNIT.

3. At KEYLESS ACCESS CONTROL UNIT, enter KEYLESS ACCESS SYSTEM INFORMATION, then select SYSTEM CHECK 1 or SYSTEM CHECK 2.

4. At BACKUP CONTROL UNIT, enter SYSTEM INFORMATION, then select SYSTEM CHECK.

5. Do the SYSTEM CHECK. If there is a system check number, do the troubleshooting for the item indicated.

6. **Check the STATUS LOG using the HDS**. Troubleshoot the line with the highest counts first. If all the lines are 0 (zero), the problem may not be caused by the immobilizer system or keyless access system, check for ignition or fuel problems.

NOTE: Once repaired, clear the status log by removing the BACK UP fuse in the under-hood fuse/relay box or disconnecting the 12 volt battery.

KEYLESS/POWER DOOR LOCKS/SECURITY SYSTEM TRIPPED SENSOR RECALL

The security system stores information on the last tripped sensor if the security system has been actuated. The information can be retrieved using the HDS.

To retrieve the last tripped sensor data, do this:

1. Select HISTORY DATA from the SECURITY MODE MENU.Scroll through the data list.

- Sensors that were actuated will indicate DETECT.
- Sensors that were not actuated will indicate NONE.

Inspect the DETECT circuit for:

- Misadjusted or damaged switch.
- Loose or corroded connections.
- Intermittent short to ground.

COMPONENT LOCATION INDEX

HOMELINK REMOTE CONTROL SYSTEM COMPONENT LOCATION INDEX(WITH ROOF CONSOLE MODULE)

With roof console module

For the HomeLink Remote Control System, refer to System Test.

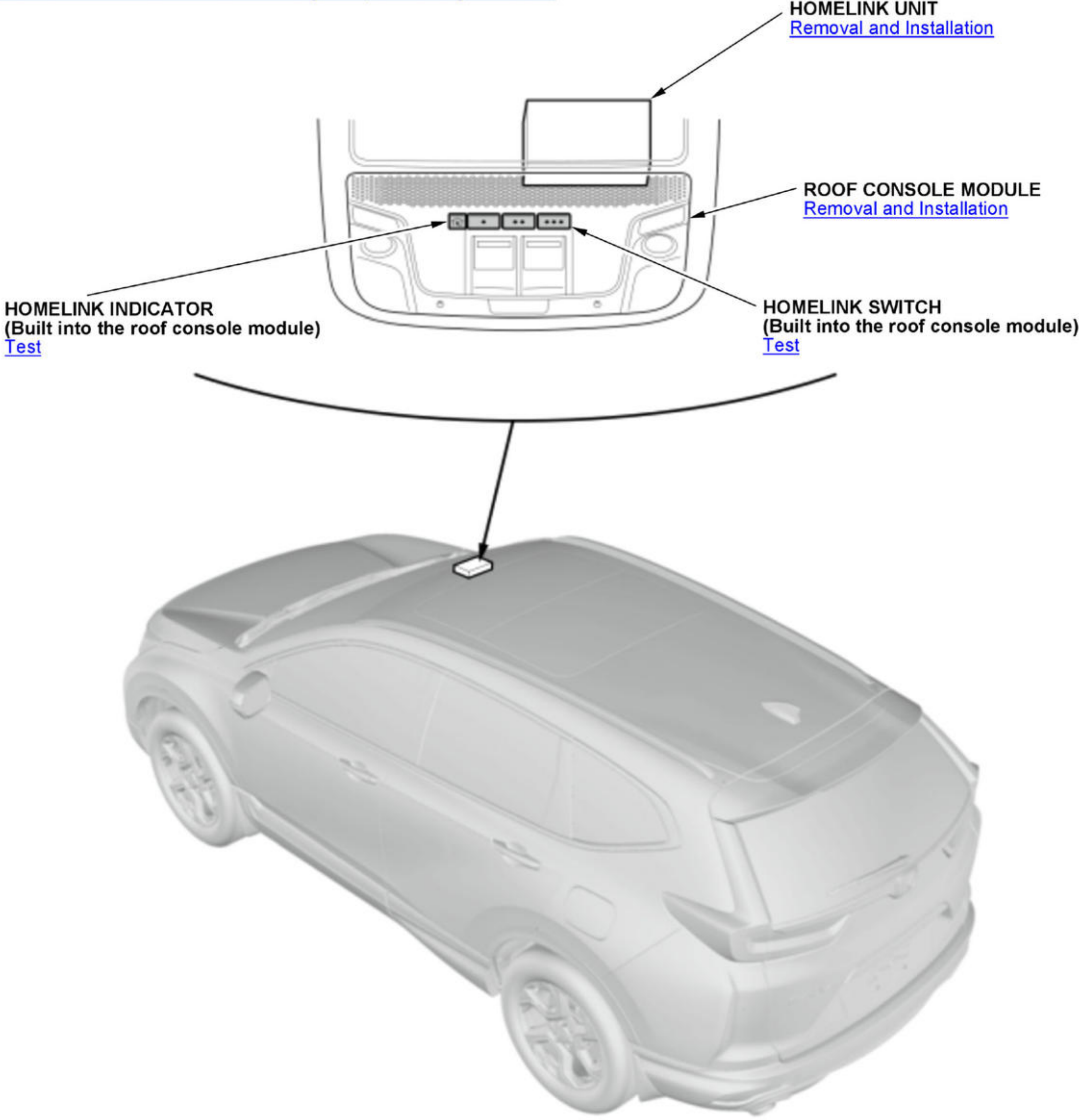
HOMELINK UNIT
Removal and Installation
ROOF CONSOLE MODULE
Removal and Installation
HOMELINK INDICATOR
(Built into the roof console module)
Test
HOMELINK SWITCH
(Built into the roof console module)
Test

Without roof console module

For the HomeLink Remote Control System, refer to System Test.

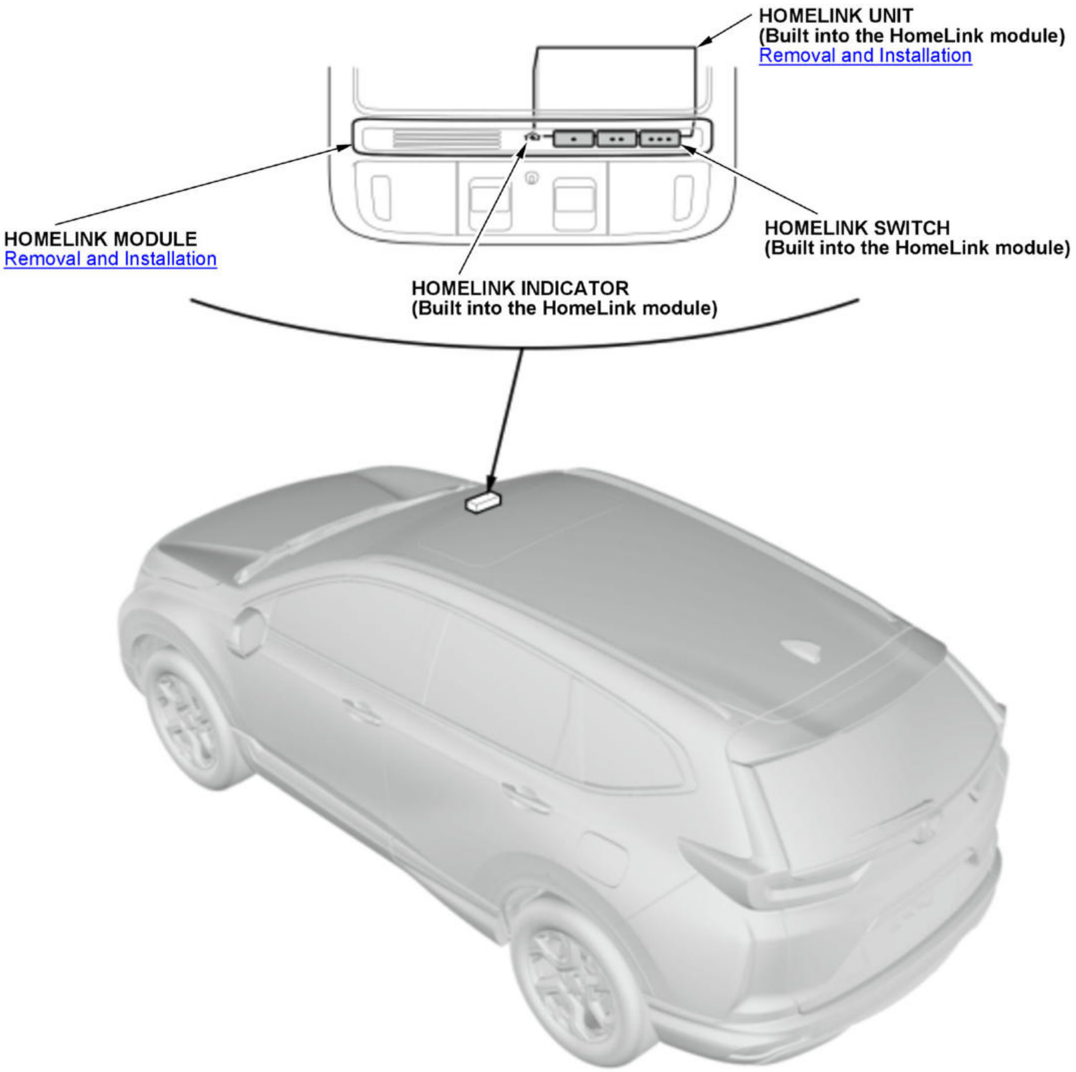
HOMELINK UNIT
(Built into the HomeLink module)
Removal and Installation
HOMELINK MODULE
Removal and Installation
HOMELINK SWITCH
(Built into the HomeLink module)
HOMELINK INDICATOR
(Built into the HomeLink module)

IMMOBILIZER SYSTEM COMPONENT LOCATION INDEX

For relationships between signals in a system, refer to System Diagram.

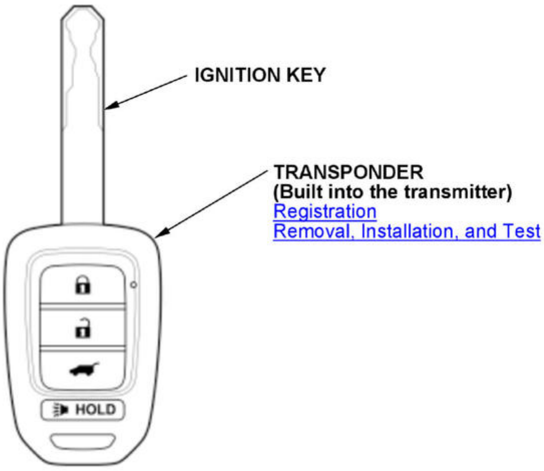
IGNITION KEY
TRANSPONDER
(Built into the transmitter)
Registration
Removal, Installation, and Test
HOLD

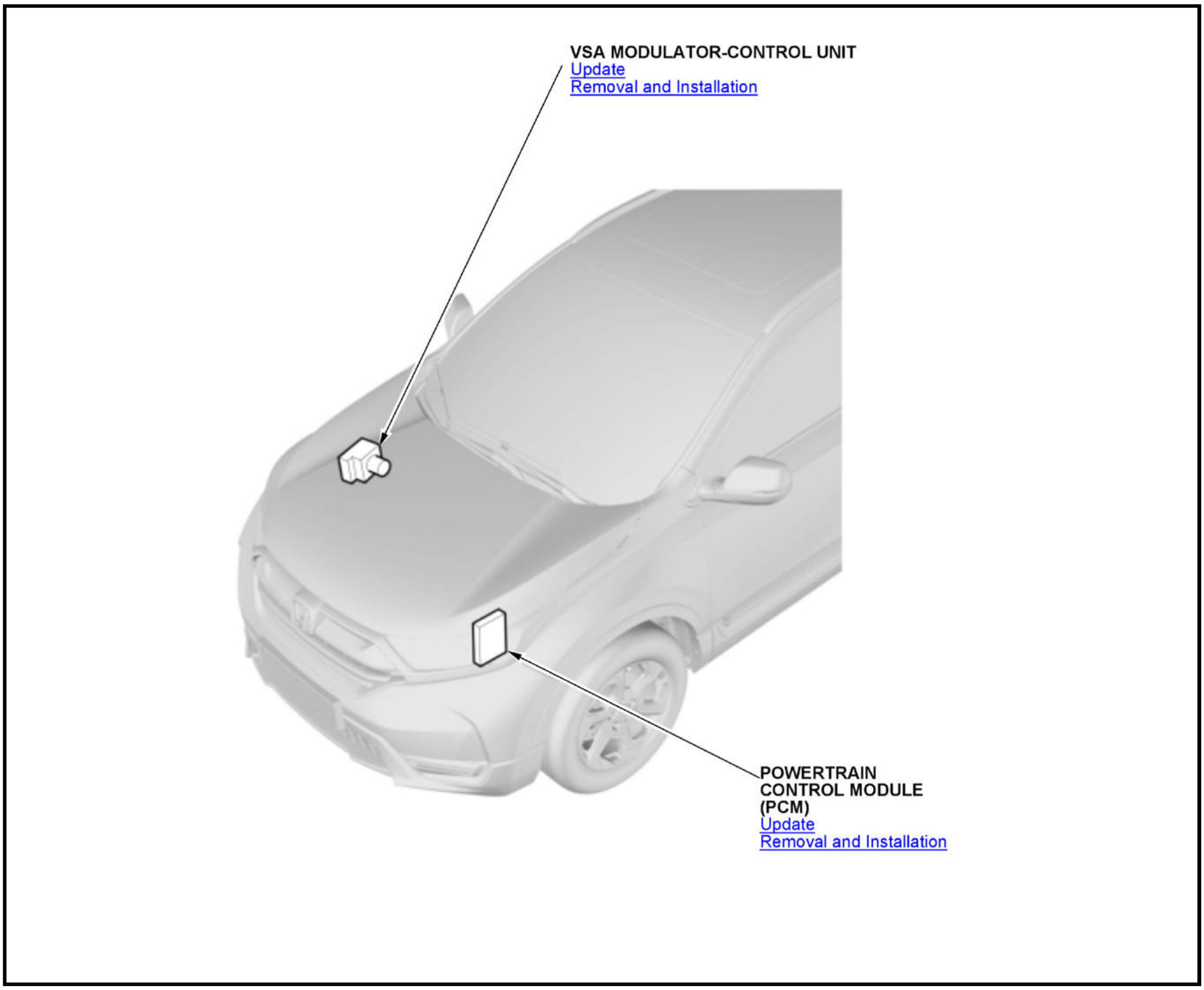
VSA MODULATOR-CONTROL UNIT
Update
Removal and Installation
POWERTRAIN CONTROL MODULE (PCM)
Update
Removal and Installation

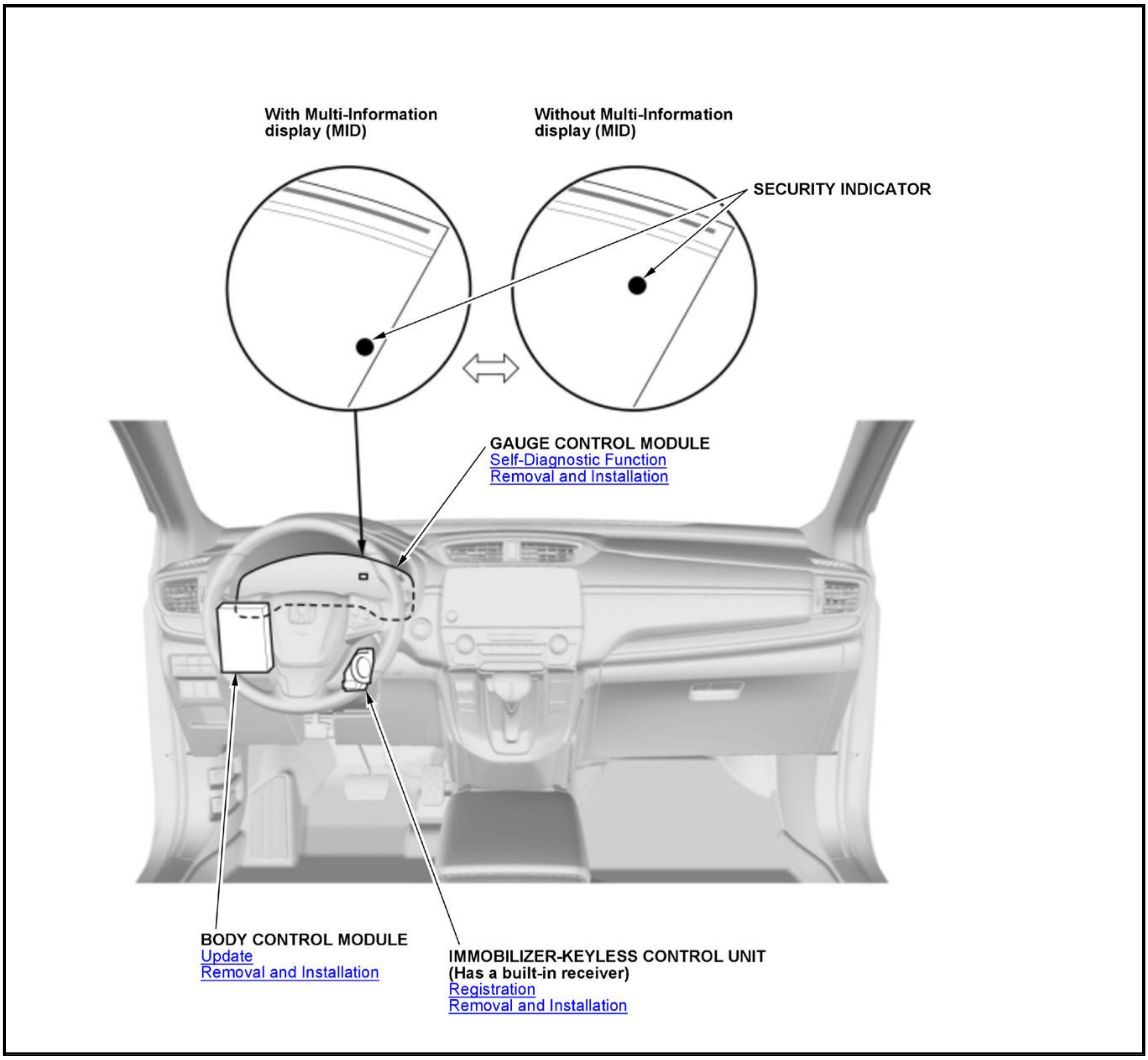
With Multi-Information display (MID)
Without Multi-Information display (MID)
SECURITY INDICATOR
GAUGE CONTROL MODULE
Self-Diagnostic Function
Removal and Installation
BODY CONTROL MODULE
Update
Removal and Installation
IMMOBILIZER-KEYLESS CONTROL UNIT
(Has a built-in receiver)
Registration
Removal and Installation

KEYLESS ACCESS SYSTEM COMPONENT LOCATION INDEX

For relationships between signals in a system,

refer to System Diagram.With remote engine start

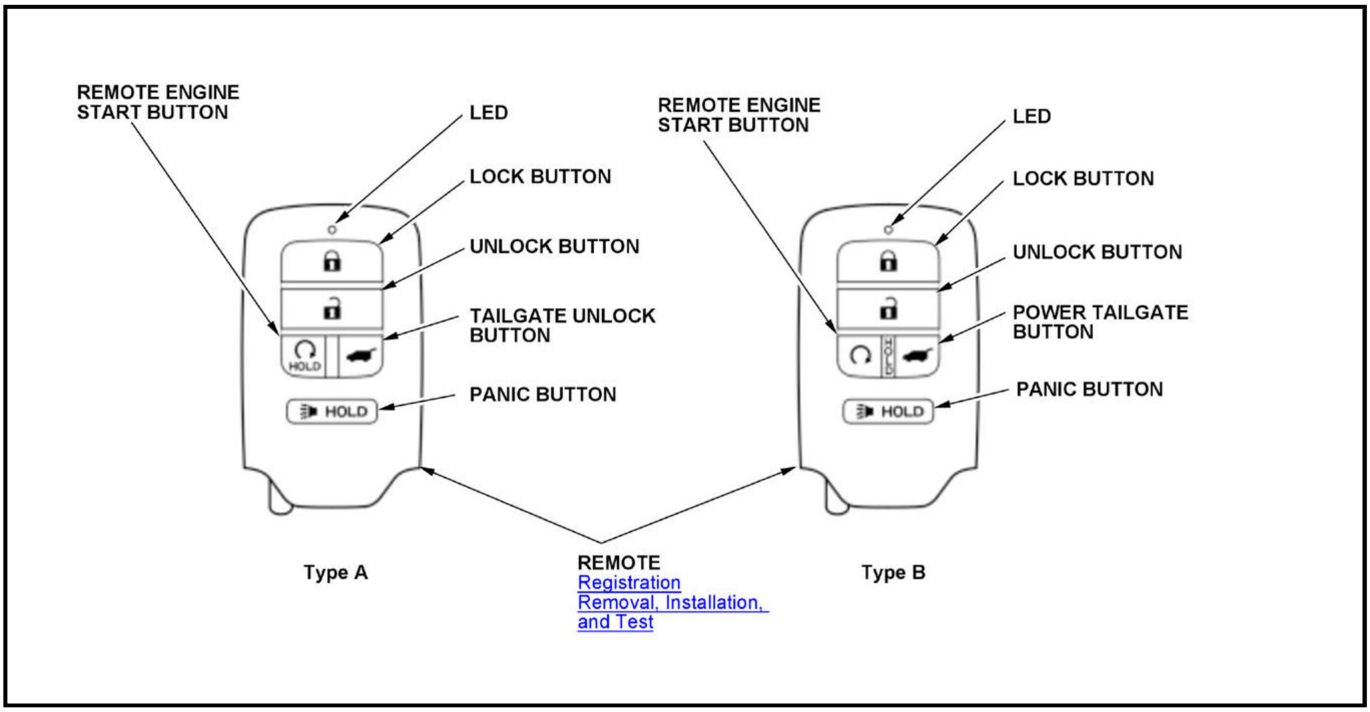
REMOTE ENGINE START BUTTON
LED
LOCK BUTTON
UNLOCK BUTTON
TAILGATE UNLOCK BUTTON
PANIC BUTTON
HOLD
HOLD
REMOTE ENGINE START BUTTON
LED
LOCK BUTTON
UNLOCK BUTTON
POWER TAILGATE BUTTON
PANIC BUTTON
HOLD
HOLD
Type A
REMOTE
Registration
Removal, Installation, and Test
Type B

Without remote engine start

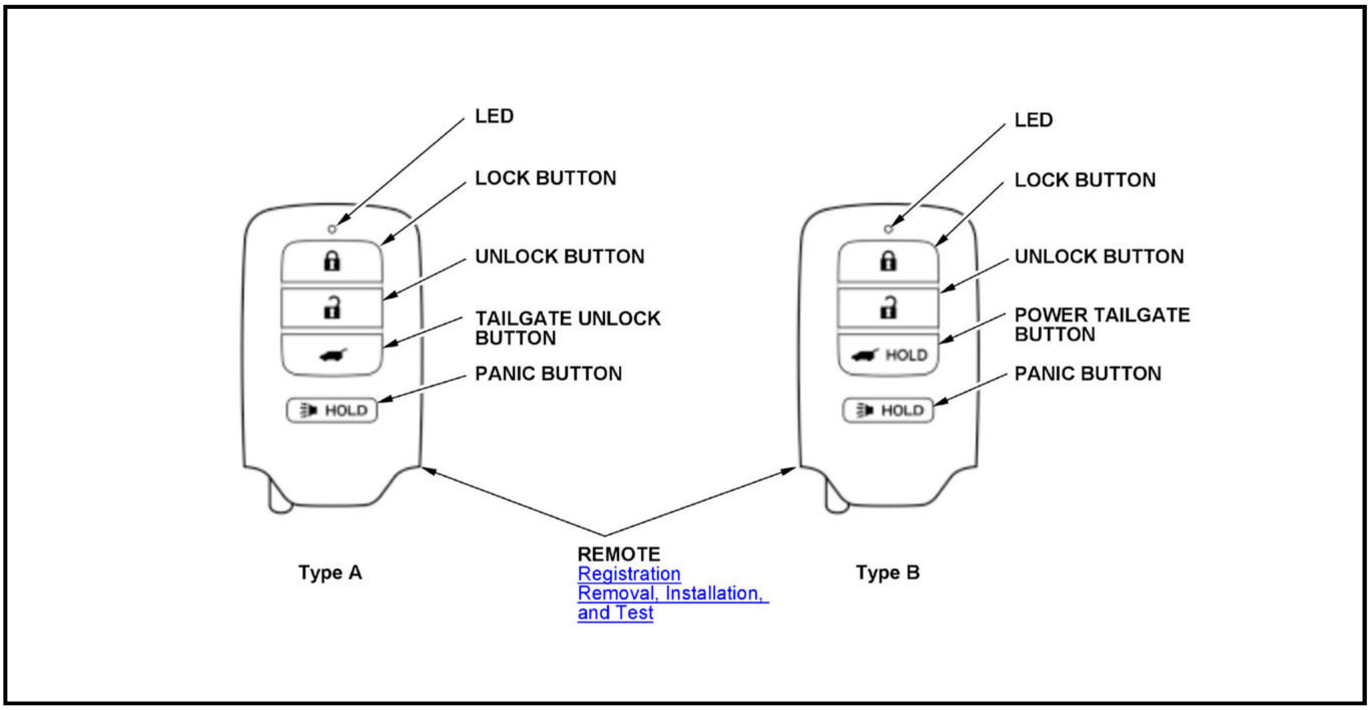
LED
LOCK BUTTON
UNLOCK BUTTON
TAILGATE UNLOCK BUTTON
PANIC BUTTON
HOLD
LED
LOCK BUTTON
UNLOCK BUTTON
POWER TAILGATE BUTTON
PANIC BUTTON
HOLD
HOLD
Type A
REMOTE
Registration
Removal, Installation, and Test
Type B

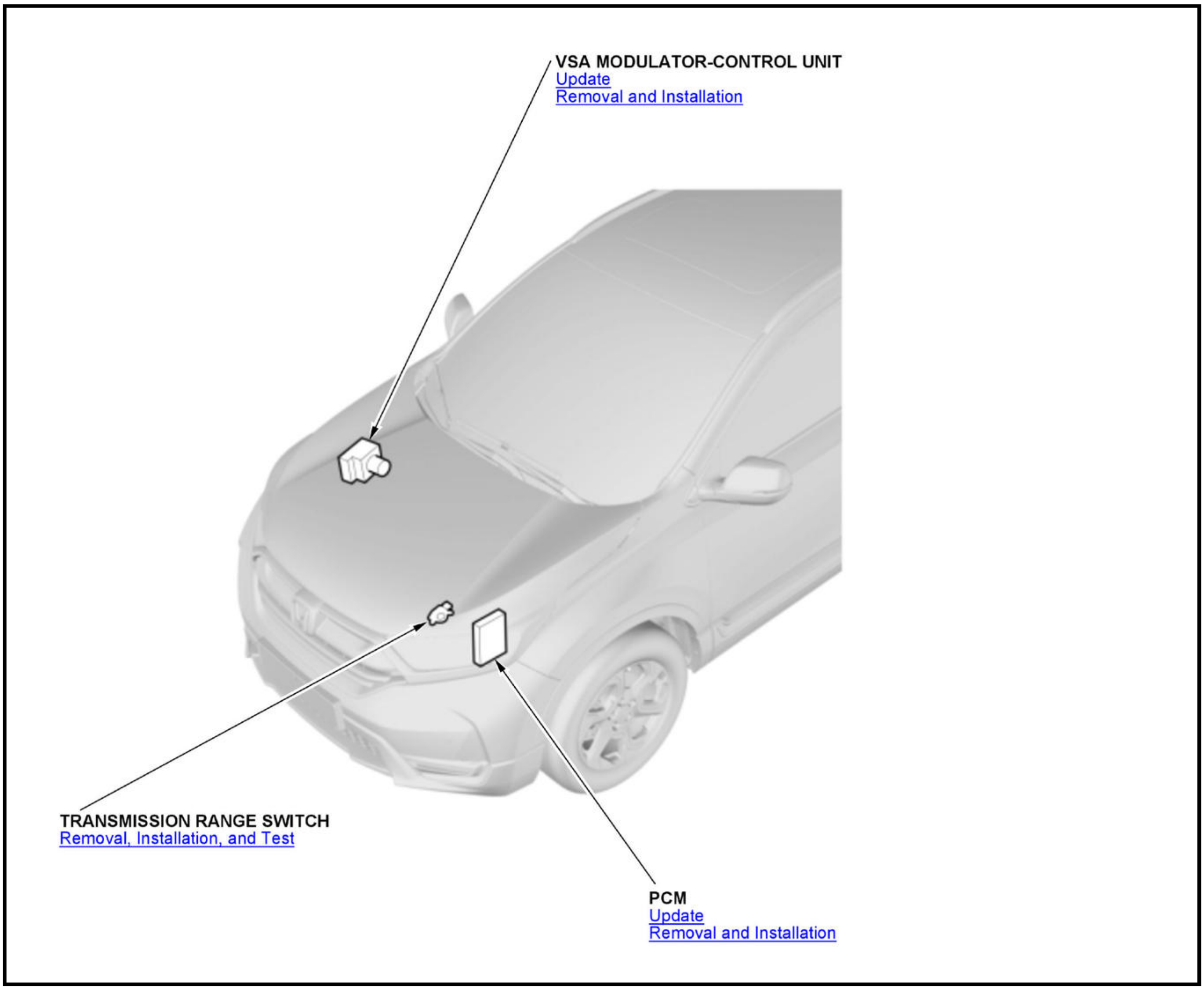
VSA MODULATOR-CONTROL UNIT
Update
Removal and Installation
TRANSMISSION RANGE SWITCH
Removal, Installation, and Test
PCM
Update
Removal and Installation

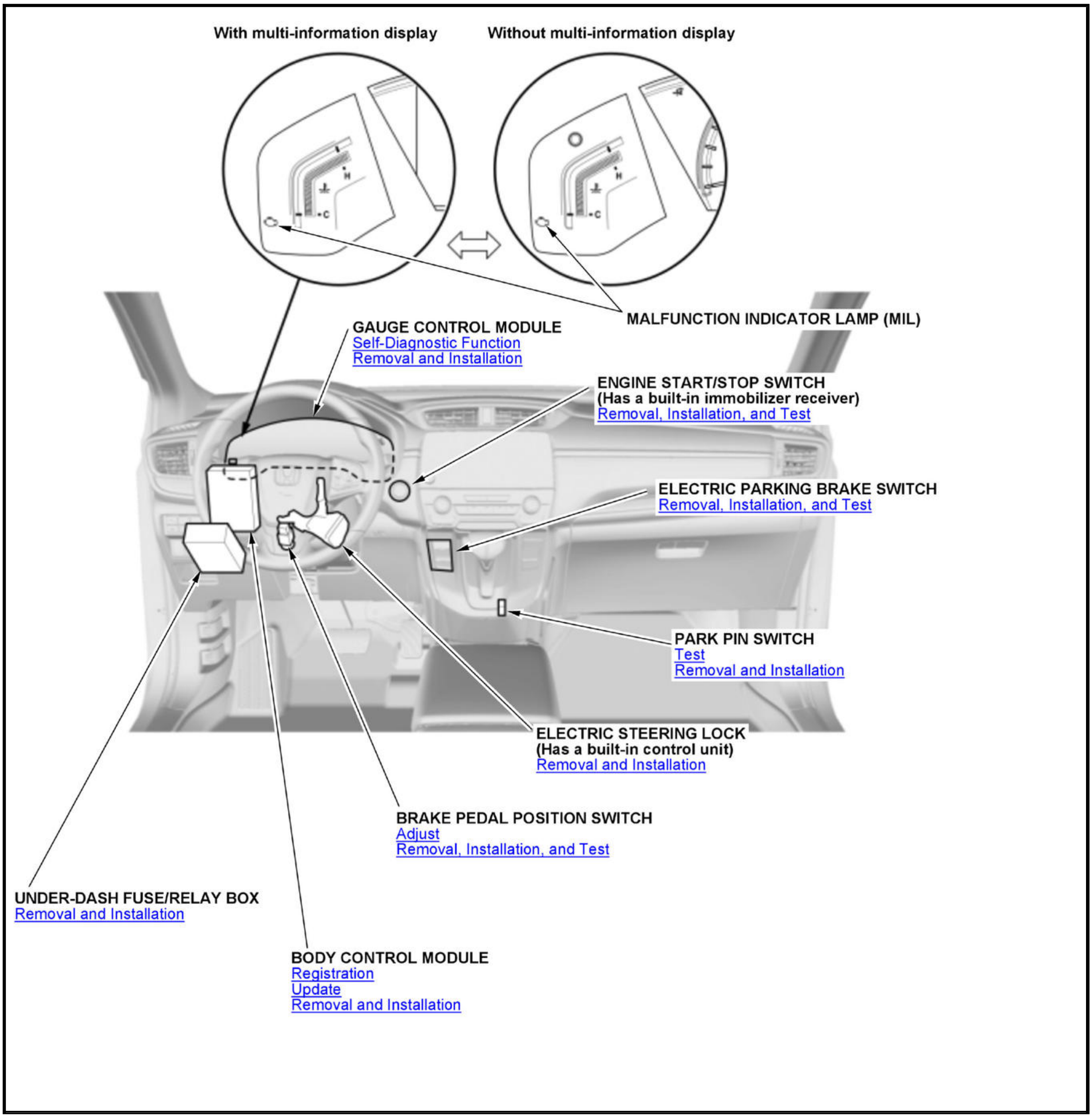
With multi-information display
Without multi-information display

MALFUNCTION INDICATOR LAMP (MIL)

GAUGE CONTROL MODULE
Self-Diagnostic Function
Removal and Installation

ENGINE START/STOP SWITCH
(Has a built-in immobilizer receiver)
Removal, Installation, and Test

ELECTRIC PARKING BRAKE SWITCH
Removal, Installation, and Test

PARK PIN SWITCH
Test
Removal and Installation

ELECTRIC STEERING LOCK
(Has a built-in control unit)
Removal and Installation

BRAKE PEDAL POSITION SWITCH
Adjust
Removal, Installation, and Test

UNDER-DASH FUSE/RELAY BOX
Removal and Installation

BODY CONTROL MODULE
Registration
Update
Removal and Installation

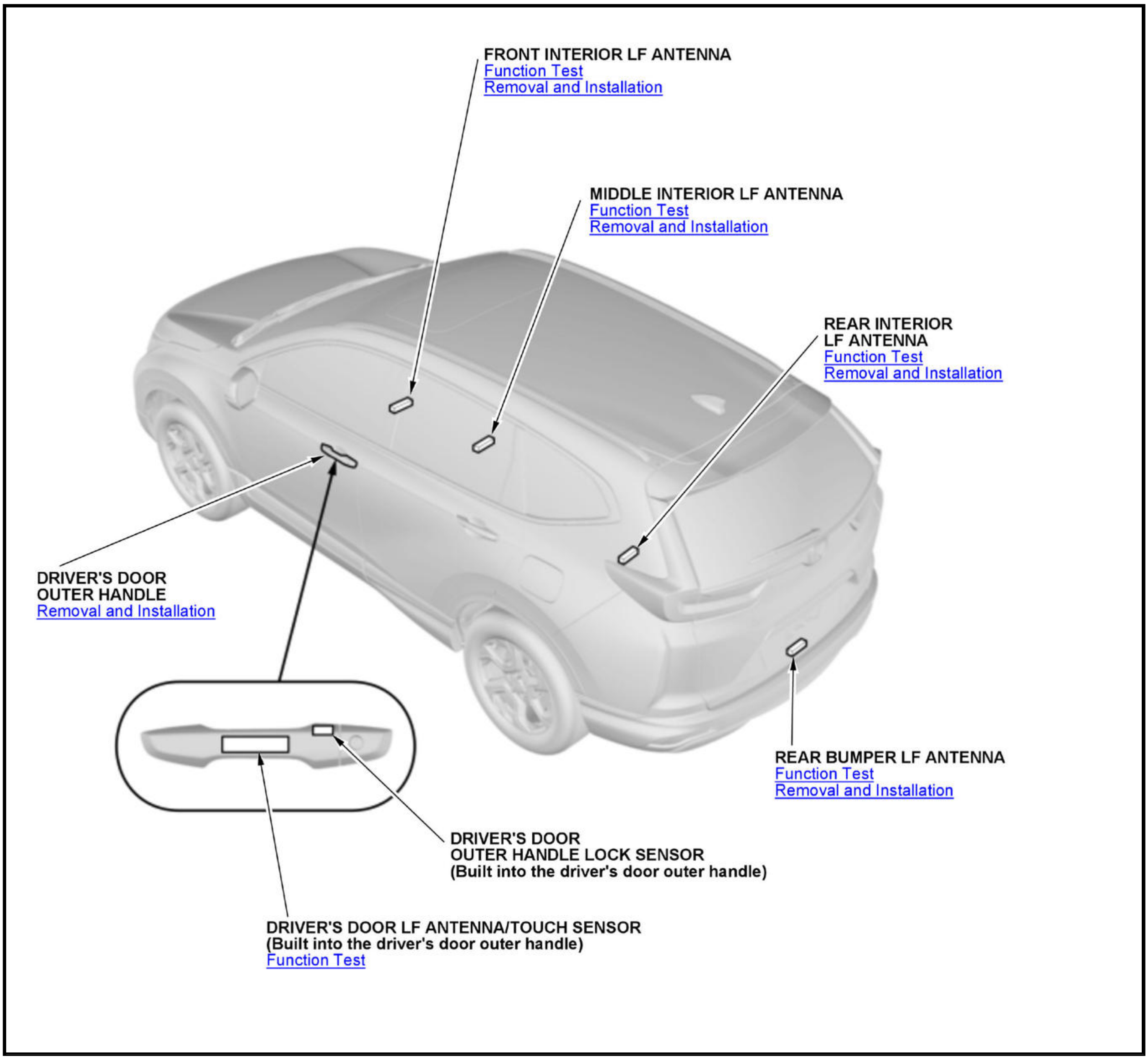
FRONT INTERIOR LF ANTENNA
Function Test
Removal and Installation
MIDDLE INTERIOR LF ANTENNA
Function Test
Removal and Installation
REAR INTERIOR LF ANTENNA
Function Test
Removal and Installation
DRIVER'S DOOR OUTER HANDLE
Removal and Installation
REAR BUMPER LF ANTENNA
Function Test
Removal and Installation
DRIVER'S DOOR OUTER HANDLE LOCK SENSOR
(Built into the driver's door outer handle)
DRIVER'S DOOR LF ANTENNA/TOUCH SENSOR
(Built into the driver's door outer handle)
Function Test

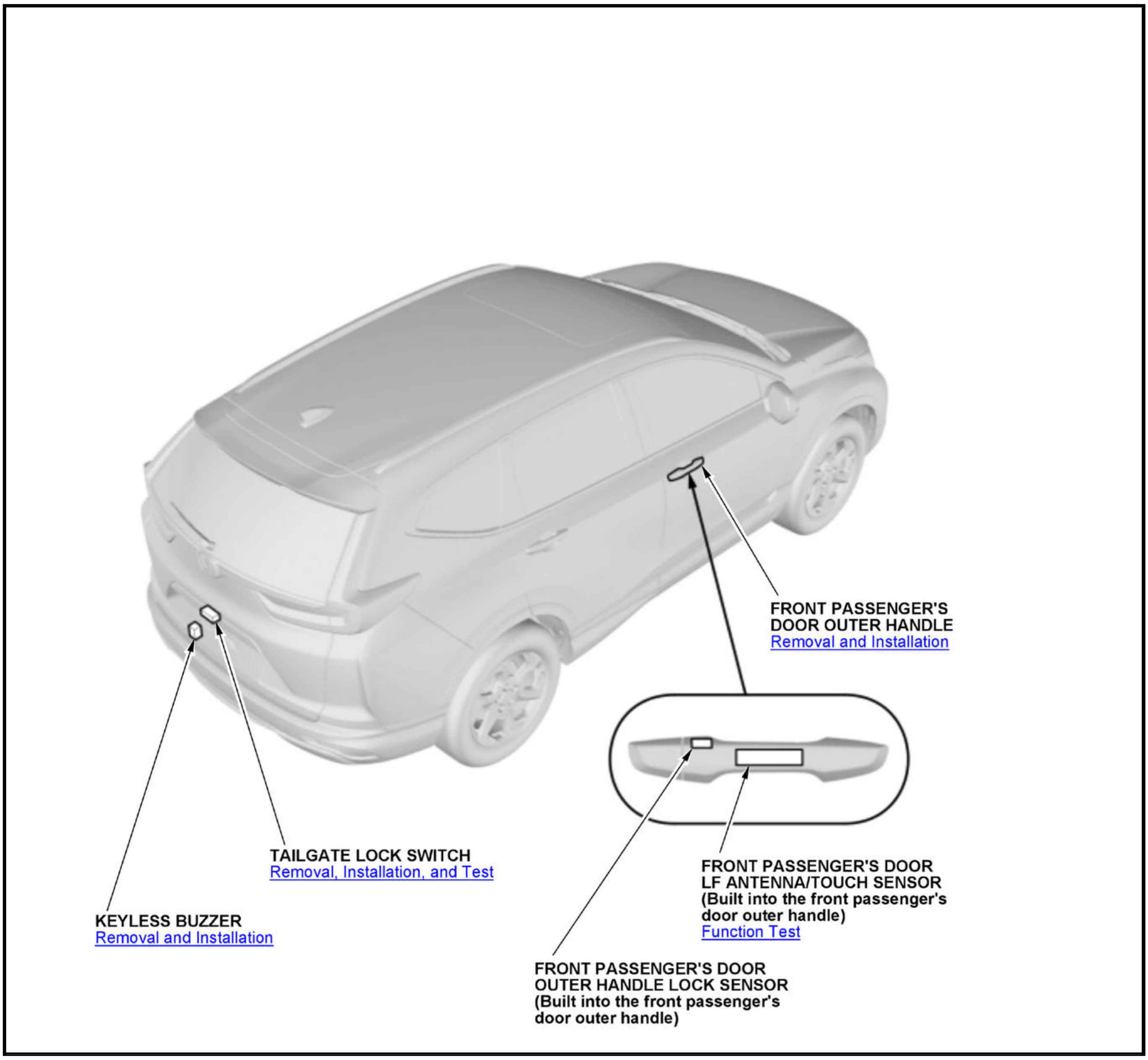
FRONT PASSENGER'S DOOR OUTER HANDLE
Removal and Installation
TAILGATE LOCK SWITCH
Removal, Installation, and Test
KEYLESS BUZZER
Removal and Installation
FRONT PASSENGER'S DOOR LF ANTENNA/TOUCH SENSOR (Built into the front passenger's door outer handle)
Function Test
FRONT PASSENGER'S DOOR OUTER HANDLE LOCK SENSOR (Built into the front passenger's door outer handle)

KEYLESS/POWER DOOR LOCKS/SECURITY SYSTEM COMPONENT LOCATION INDEX

For relationships between signals in a system,

refer to System Diagram.Without Keyless Access System

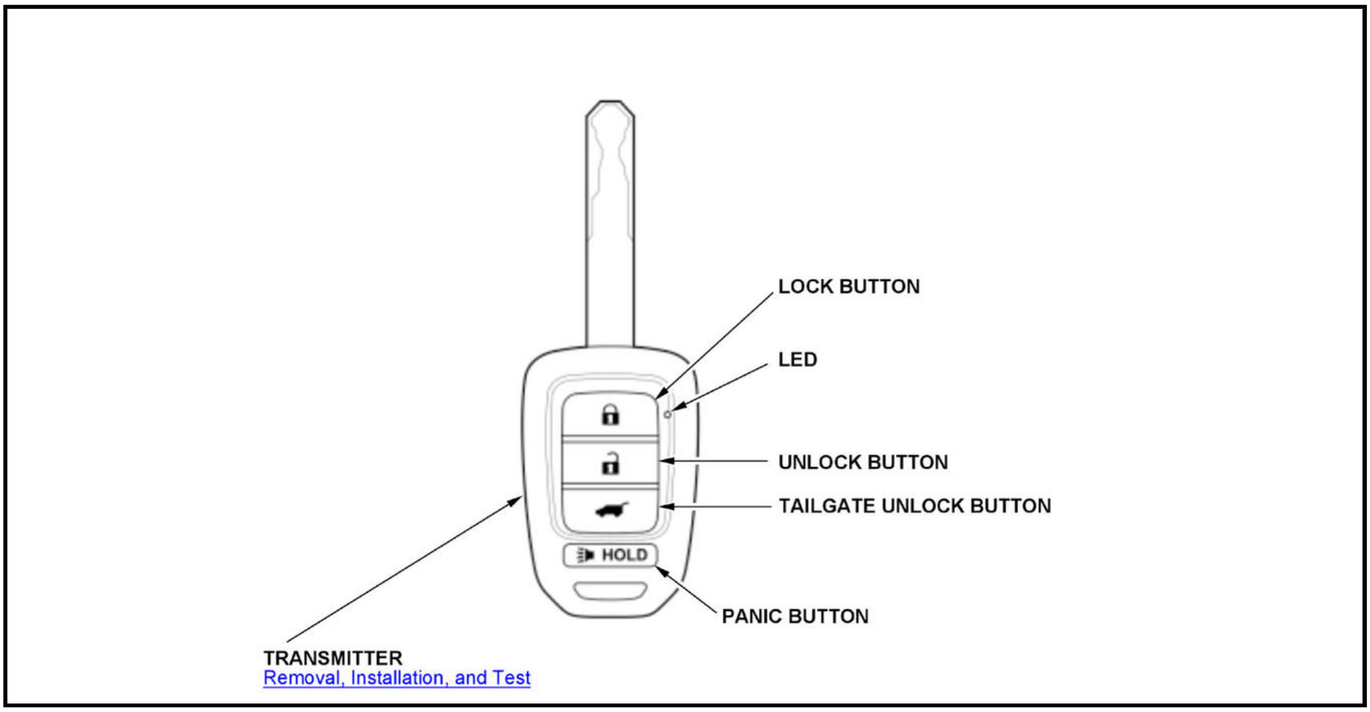
LOCK BUTTON
LED
UNLOCK BUTTON
TAILGATE UNLOCK BUTTON
PANIC BUTTON
HOLD
TRANSMITTER
Removal, Installation, and Test

With keyless access system and remote engine start

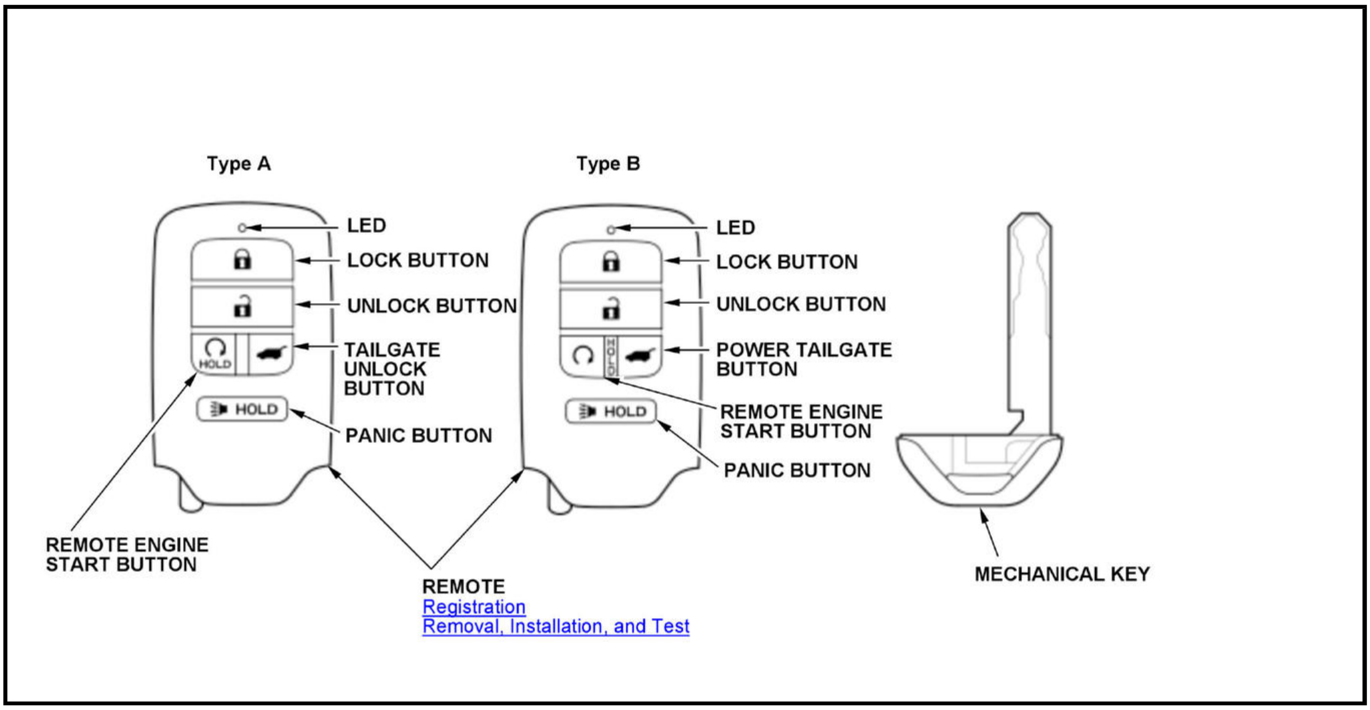
Type A
LED
LOCK BUTTON
UNLOCK BUTTON
TAILGATE UNLOCK BUTTON
PANIC BUTTON
HOLD
REMOTE ENGINE START BUTTON
Type B
LED
LOCK BUTTON
UNLOCK BUTTON
POWER TAILGATE BUTTON
REMOTE ENGINE START BUTTON
PANIC BUTTON
REMOTE
Registration
Removal, Installation, and Test
MECHANICAL KEY

With keyless access system and without remote engine start

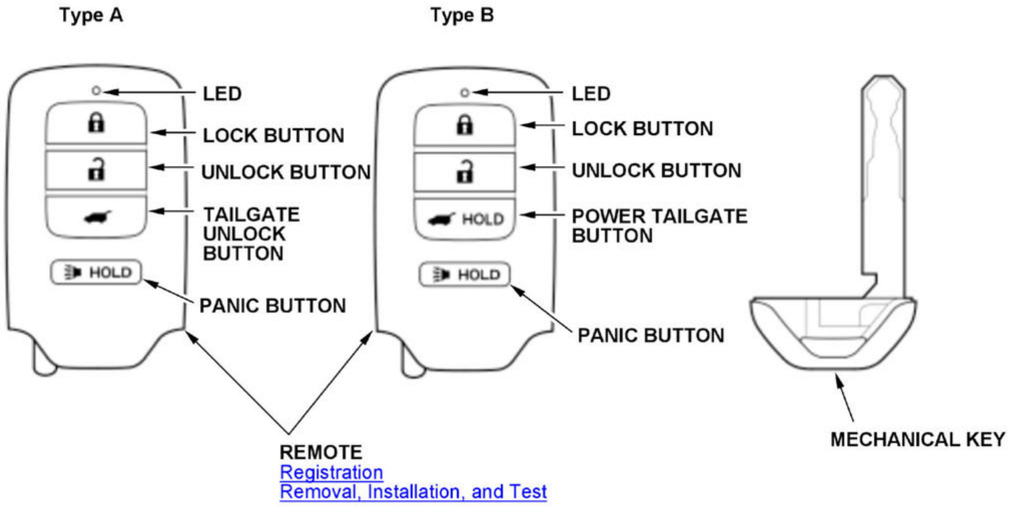
Type A
Type B
LED
LOCK BUTTON
UNLOCK BUTTON
TAILGATE UNLOCK BUTTON
PANIC BUTTON
HOLD
LED
LOCK BUTTON
UNLOCK BUTTON
POWER TAILGATE BUTTON
PANIC BUTTON
HOLD
REMOTE
Registration
Removal, Installation, and Test
MECHANICAL KEY

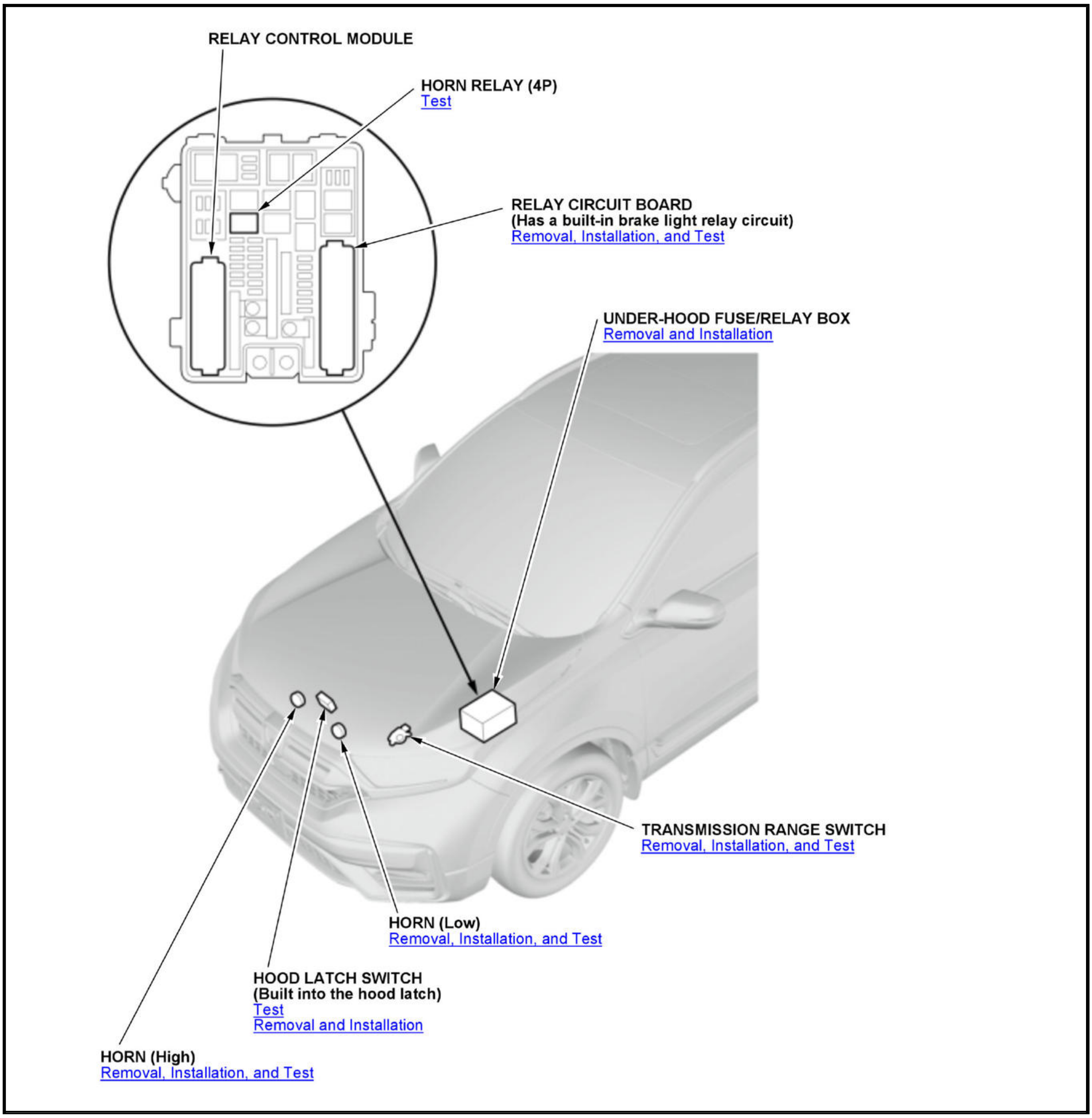
RELAY CONTROL MODULE
HORN RELAY (4P)
Test
RELAY CIRCUIT BOARD
(Has a built-in brake light relay circuit)
Removal, Installation, and Test
UNDER-HOOD FUSE/RELAY BOX
Removal and Installation
TRANSMISSION RANGE SWITCH
Removal, Installation, and Test
HORN (Low)
Removal, Installation, and Test
HOOD LATCH SWITCH
(Built into the hood latch)
Test
Removal and Installation
HORN (High)
Removal, Installation, and Test

Headlight (HIGH/LOW) (Halogen type)

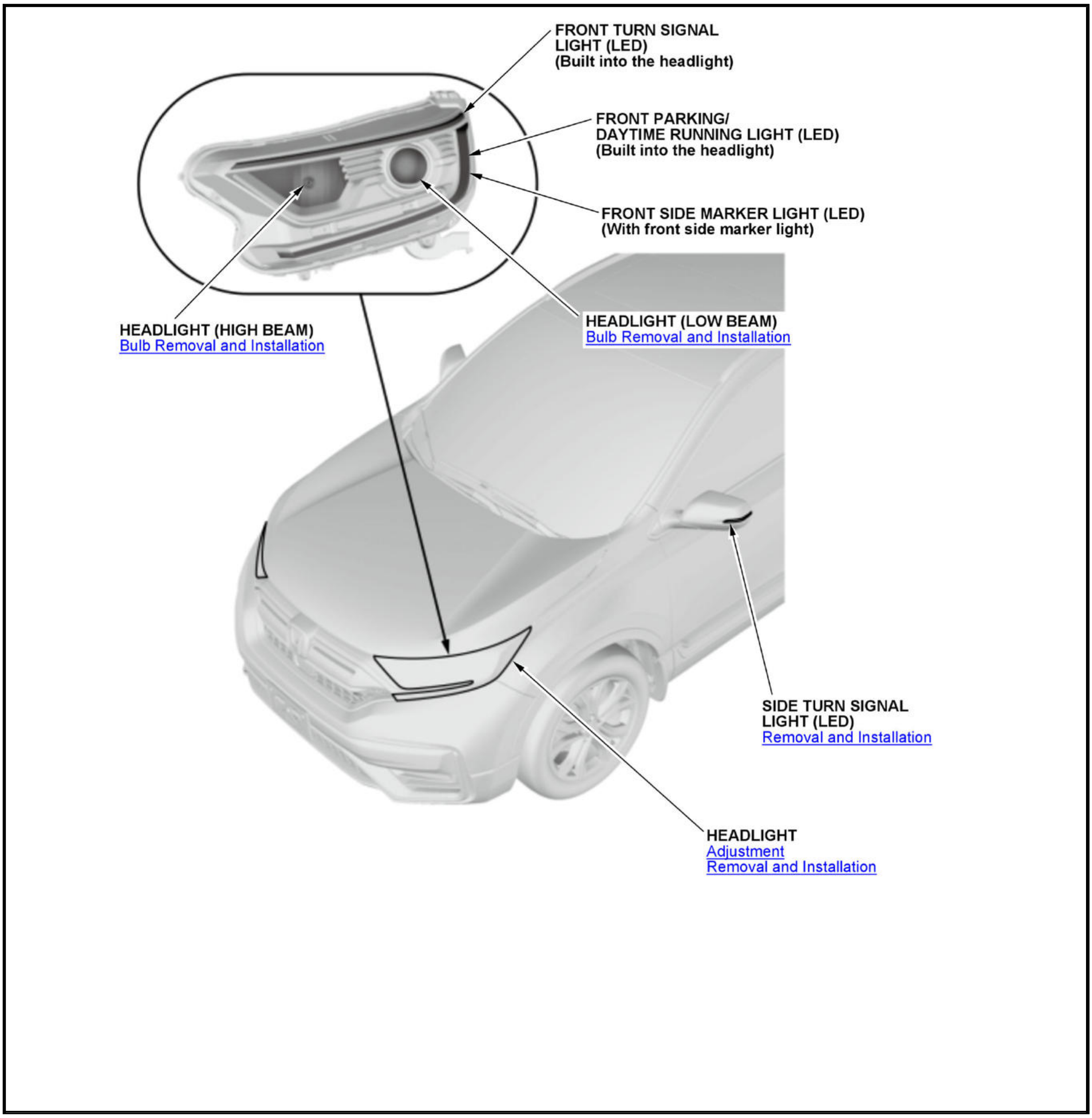
FRONT TURN SIGNAL LIGHT (LED) (Built into the headlight)
FRONT PARKING/ DAYTIME RUNNING LIGHT (LED) (Built into the headlight)
FRONT SIDE MARKER LIGHT (LED) (With front side marker light)
HEADLIGHT (HIGH BEAM)
Bulb Removal and Installation
HEADLIGHT (LOW BEAM)
Bulb Removal and Installation
SIDE TURN SIGNAL LIGHT (LED)
Removal and Installation
HEADLIGHT
Adjustment
Removal and Installation

Headlight (HIGH/LOW) (LED type)

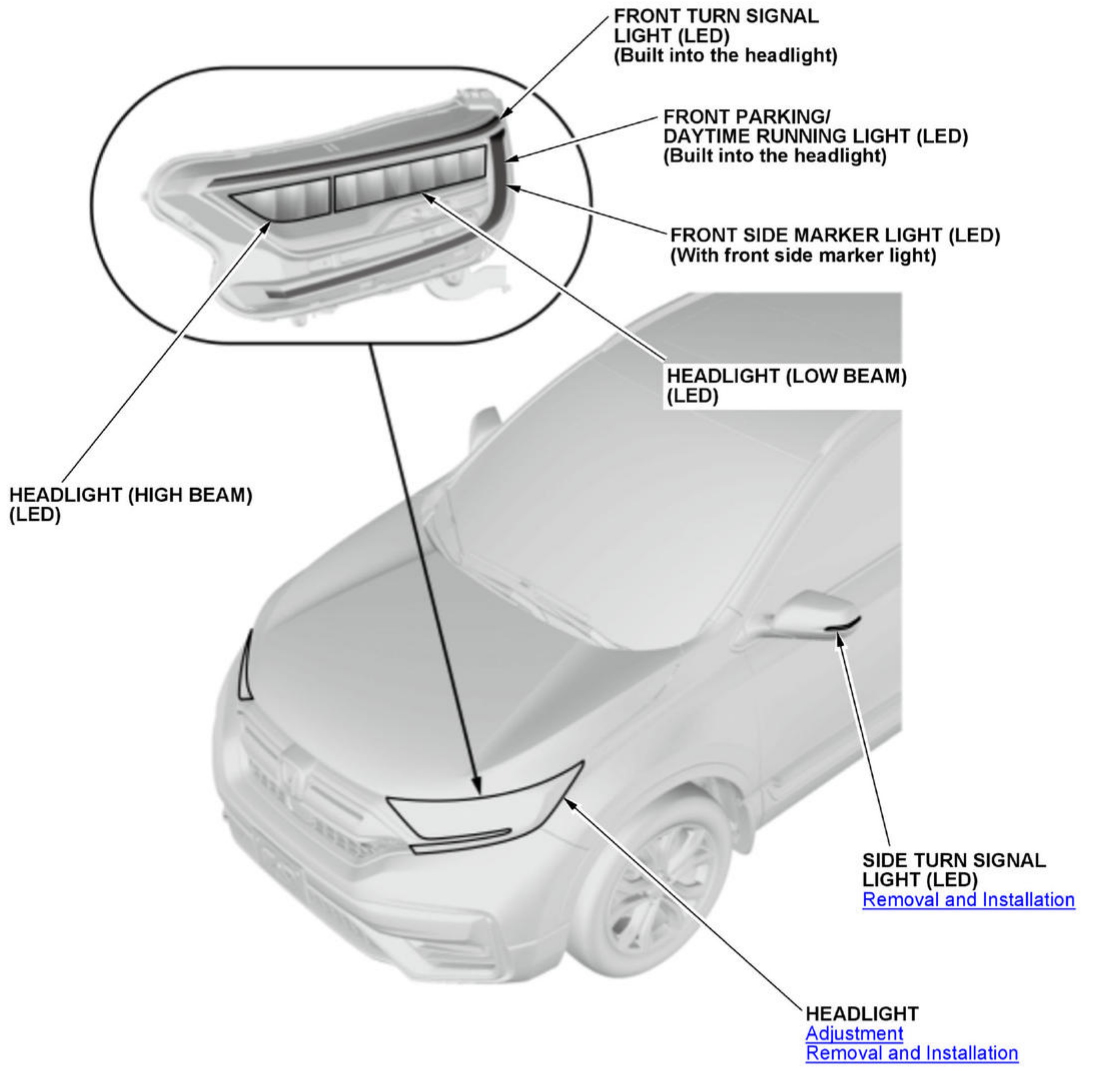
FRONT TURN SIGNAL
LIGHT (LED)
(Built into the headlight)
FRONT PARKING/
DAYTIME RUNNING LIGHT (LED)
(Built into the headlight)
FRONT SIDE MARKER LIGHT (LED)
(With front side marker light)
HEADLIGHT (LOW BEAM)
(LED)
HEADLIGHT (HIGH BEAM)
(LED)
SIDE TURN SIGNAL
LIGHT (LED)
Removal and Installation
HEADLIGHT
Adjustment
Removal and Installation

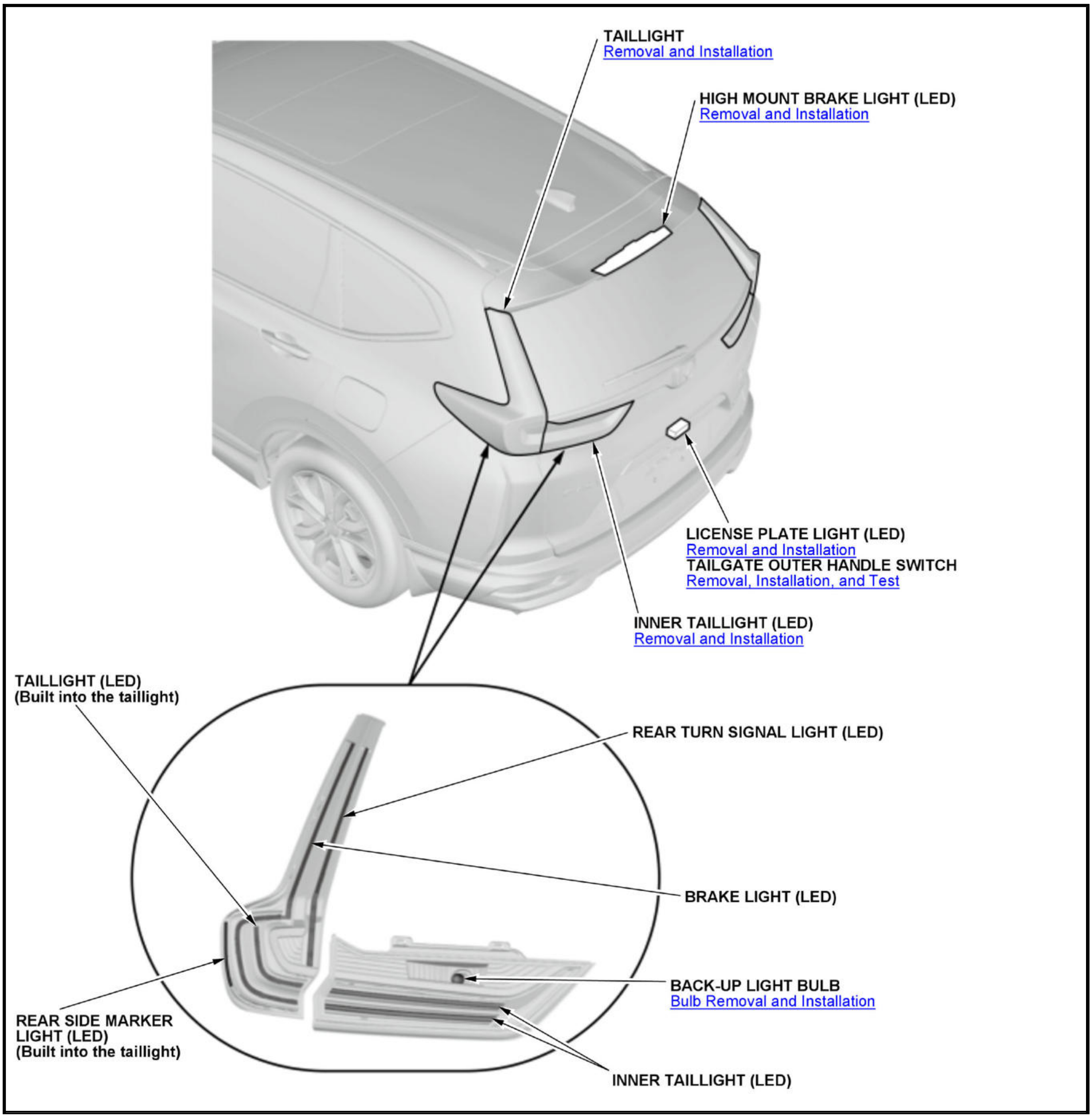
TAILLIGHT
Removal and Installation
HIGH MOUNT BRAKE LIGHT (LED)
Removal and Installation
LICENSE PLATE LIGHT (LED)
Removal and Installation
TAILGATE OUTER HANDLE SWITCH
Removal, Installation, and Test
INNER TAILLIGHT (LED)
Removal and Installation
TAILLIGHT (LED)
(Built into the taillight)
REAR TURN SIGNAL LIGHT (LED)
BRAKE LIGHT (LED)
BACK-UP LIGHT BULB
Bulb Removal and Installation
REAR SIDE MARKER
LIGHT (LED)
(Built into the taillight)
INNER TAILLIGHT (LED)

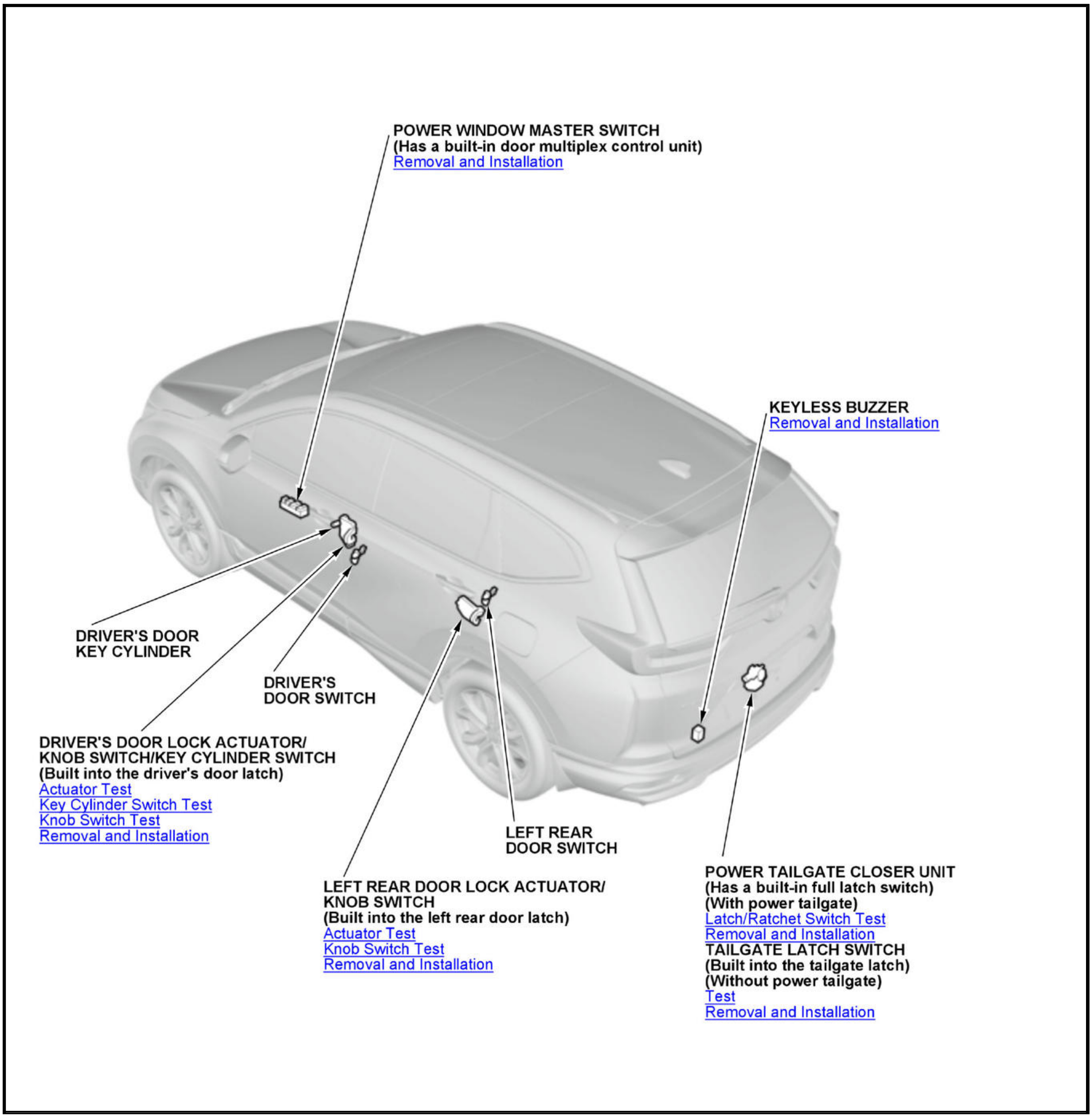
POWER WINDOW MASTER SWITCH
(Has a built-in door multiplex control unit)
Removal and Installation
KEYLESS BUZZER
Removal and Installation
DRIVER'S DOOR
KEY CYLINDER
DRIVER'S
DOOR SWITCH
DRIVER'S DOOR LOCK ACTUATOR/
KNOB SWITCH/KEY CYLINDER SWITCH
(Built into the driver's door latch)
Actuator Test
Key Cylinder Switch Test
Knob Switch Test
Removal and Installation
LEFT REAR
DOOR SWITCH
LEFT REAR DOOR LOCK ACTUATOR/
KNOB SWITCH
(Built into the left rear door latch)
Actuator Test
Knob Switch Test
Removal and Installation
POWER TAILGATE CLOSER UNIT
(Has a built-in full latch switch)
(With power tailgate)
Latch/Ratchet Switch Test
Removal and Installation
TAILGATE LATCH SWITCH
(Built into the tailgate latch)
(Without power tailgate)
Test
Removal and Installation

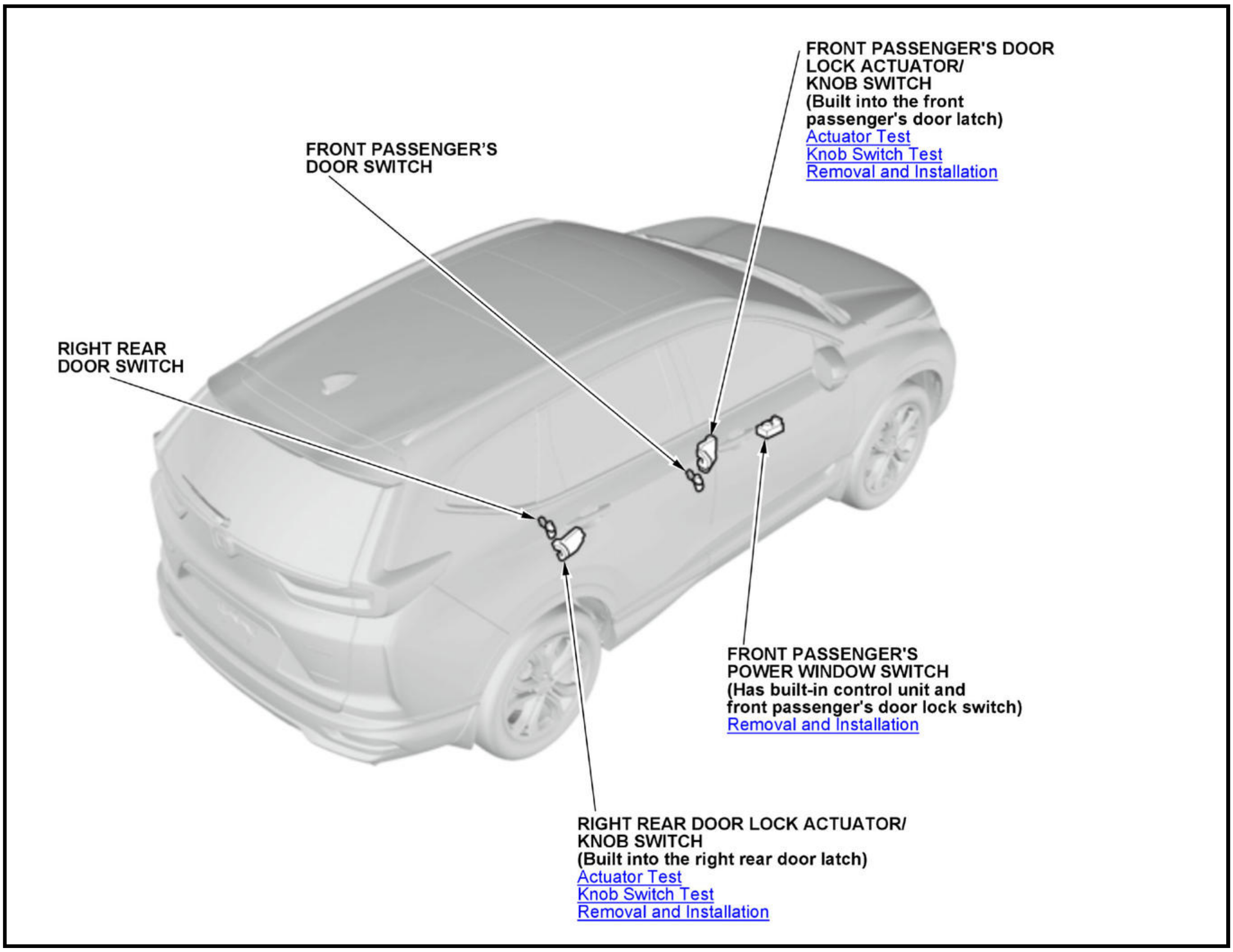
FRONT PASSENGER'S DOOR LOCK ACTUATOR/ KNOB SWITCH
(Built into the front passenger's door latch)
Actuator Test
Knob Switch Test
Removal and Installation
FRONT PASSENGER'S DOOR SWITCH
RIGHT REAR DOOR SWITCH
FRONT PASSENGER'S POWER WINDOW SWITCH
(Has built-in control unit and front passenger's door lock switch)
Removal and Installation
RIGHT REAR DOOR LOCK ACTUATOR/ KNOB SWITCH
(Built into the right rear door latch)
Actuator Test
Knob Switch Test
Removal and Installation

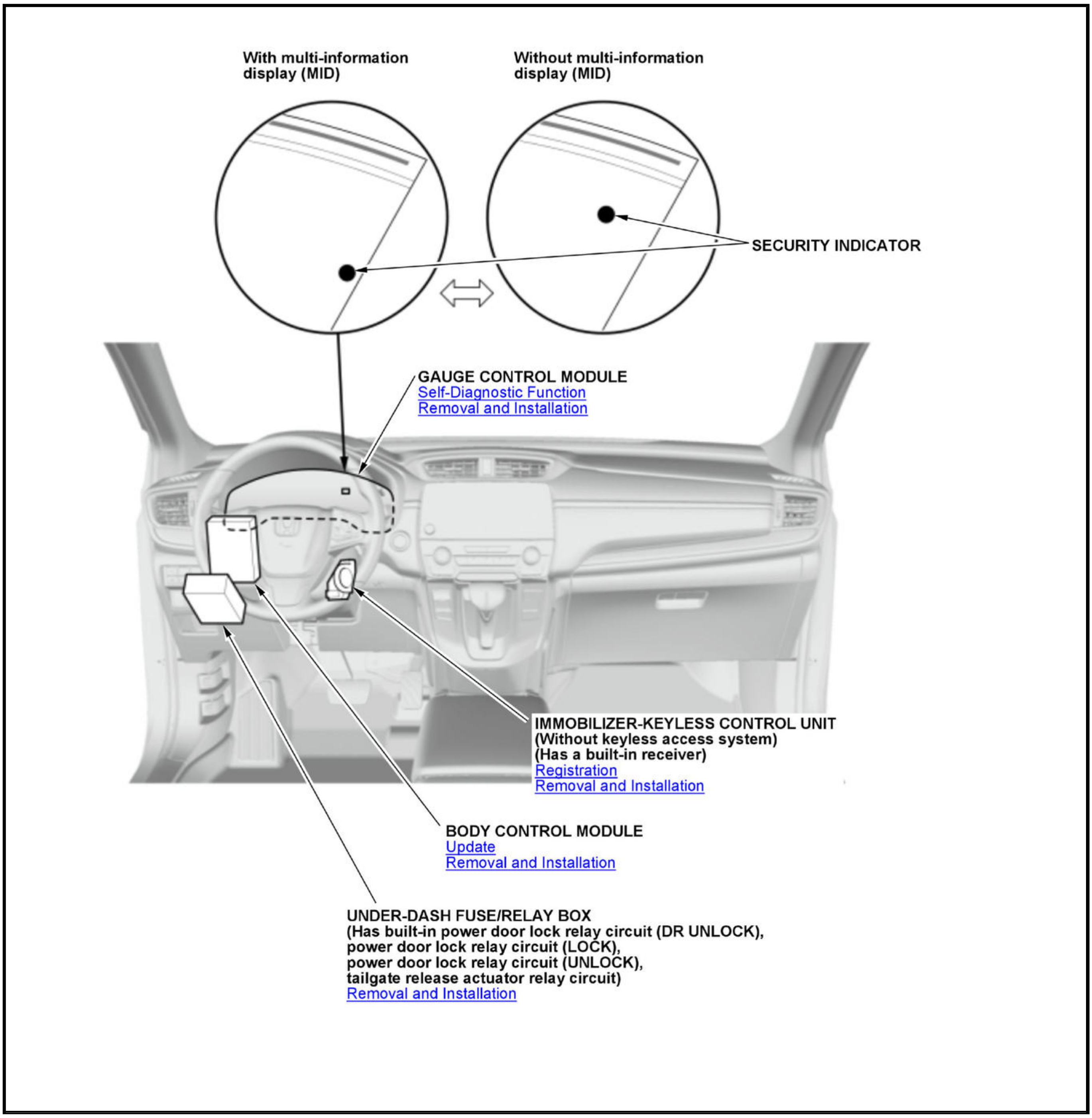
With multi-information display (MID)
Without multi-information display (MID)
SECURITY INDICATOR
GAUGE CONTROL MODULE
Self-Diagnostic Function
Removal and Installation
IMMOBILIZER-KEYLESS CONTROL UNIT (Without keyless access system) (Has a built-in receiver)
Registration
Removal and Installation
BODY CONTROL MODULE
Update
Removal and Installation
UNDER-DASH FUSE/RELAY BOX (Has built-in power door lock relay circuit (DR UNLOCK), power door lock relay circuit (LOCK), power door lock relay circuit (UNLOCK), tailgate release actuator relay circuit)
Removal and Installation

SYMPTOM TROUBLESHOOTING

IMMOBILIZER SYSTEM SYMPTOM TROUBLESHOOTING

Engine does not start with the immobilizer key

Engine does not start with the immobilizer key

NOTE: Before troubleshooting, check the items listed in General Check before Troubleshooting.

1. Problem verification

   -1. Try to start the engine.

   Does the engine start?

   YES

   Intermittent failure, the vehicle is OK at this time.

NO

Go to step 2.

2. Immobilizer system check

-1. Turn the vehicle to the OFF (LOCK) mode.

-2. Turn the vehicle to the ON mode, and check the security indicator.

Does the indicator off?

YES

Go to step 3.

NO

Go to the security indicator blinks troubleshooting.

3. Starting system check

-1. Turn the vehicle to the START mode.

Does the starter motor run?

YES

Go to step 4.

NO

Go to starting system, and **check the starter motor** .

4. PGM-FI system check 1

-1. Try to start the engine with the immobilizer key.

Does the engine start?

YES

Go to step 5.

NO

Go to the PGM-FI system symptom troubleshooting .

5. PGM-FI system check 2

-1. Wait for a few minutes with the engine running.

Does the engine stop?

YES

Go to the PGM-FI system symptom troubleshooting .

NO

The system is OK at this time.

Security indicator blinks

NOTE: Before troubleshooting, check the items listed in General Check before Troubleshooting.

1. Immobilizer system check

   -1. Connect the HDS to the data link connector (DLC) .

   -2. Turn the vehicle to the ON mode.

   -3. From the SYSTEM SELECTION MENU, enter IMMOBI, then select IMMOBILIZER SETUP.

   NOTE: If the HDS does not communicate with the immobilizer-keyless control unit, check the power, ground, and K line connections.

   -4. Select the SYSTEM CHECK from the IMMOBILIZER INFO.

   Is SYSTEM CHECK indicated?

   YES

   Troubleshoot the immobilizer system according to the results of the SYSTEM CHECK.

   NO

   Go to step 2.

2. Open wire check (GND line)

   -1. Turn the vehicle to the OFF (LOCK) mode.

   -2. Enter the vehicle, and remove the ignition key from the ignition switch, then close all the doors and tailgate.

   -3. Operate the keyless transmitter LOCK and UNLOCK several times in the vehicle.

   Do the door lock actuators work normally?

   YES

   The GND wire is OK. Go to step 3.

   NO

   Repair an open or high resistance in the ground wire or poor ground (G401).

3. Open wire check (IG1 MON or IG1 FUEL PUMP line)

   -1. Turn the vehicle to the ON mode.

   -2. Measure the voltage between test points 1 and 2.

Test condition	Vehicle ON mode
Test point 1	Immobilizer-keyless control unit 7P connector No. 6
Test point 2	Body ground

   Is there battery voltage?

YES

The IG1 MON or IG1 FUEL PUMP wire is OK. **Replace the immobilizer-keyless control unit** .

NO

Repair an open or high resistance in the wire.

Security indicator turns on

Security indicator turns on

1. Immobilizer system check

   -1. **Connect the HDS to the data link connector (DLC)** .

   -2. Turn the vehicle to the ON mode.

   -3. From the SYSTEM SELECTION MENU, enter IMMOBI, then select IMMOBILIZER INFO.

   NOTE: If the HDS does not communicate with the immobilizer-keyless control unit, check the power, ground, and K-line connections.

   -4. Do the SYSTEM CHECK from the IMMOBILIZER INFO.

   Is N-1 OK indicated?

   YES

   Replace the gauge control module .

   NO

   Replace the immobilizer-keyless control unit .

KEYLESS ACCESS SYSTEM SYMPTOM TROUBLESHOOTING

All the doors will not lock and unlock

All the doors will not lock and unlock

1. Door lock actuator operation check 1

   -1. Put out all the keyless remotes from inside the vehicle, and close all doors and tailgate.

   -2. Press each LOCK and UNLOCK buttons of the keyless remote, at least ten times.

   Do the door lock actuators work normally?

   YES

   Go to step 2.

   NO

   Go to step 3.

2. Door lock actuator operation check 2

   -1. Lock and unlock the doors with touching the door outer handle.

Do the door lock actuators work normally?

YES

Intermittent failure, the system is OK at this time. Check for loose or poor connections.

NO

Go to symptom trouble shooting "The doors will not unlock or lock with the door outer handle touch sensors, but will unlock or lock with the keyless remote".

3. Determine possible failure area (keyless remote, others)

   -1. Press the LOCK and the UNLOCK buttons of the keyless remote, and check if the LED on the keyless remote comes on.

   Does the LED come on?

   YES

   Go to step 4.

   NO

   Replace the keyless remote battery and recheck the system. If the symptom does not go away, replace the keyless remote .

4. Door lock actuator operation check 2

   -1. Lock and unlock the doors with touching the door outer handle.

   Do the door lock actuators work normally?

   YES

   Register the keyless remote, and recheck. If the symptom does not go away, **replace the keyless remote** .

   NO

   Go to step 5.

5. Door lock actuator operation check 3

   -1. Lock and unlock the doors with the driver's door touch sensors.

   Do the door lock actuators work normally?

   YES

   Go to step 6.

   NO

   Check the B-CAN system DTCs. If not, check the door lock system.

6. Keyless access system check

   -1. **Do the keyless access remote check using the all keyless remotes** .

   Are the all keyless remotes OK?

YES

Do the SYSTEM CHECK 1 and SYSTEM CHECK 2 with the HDS. If the result is indicated, troubleshoot the items based on the SYSTEM CHECK table.

NO

Replace the keyless remote and recheck.

Cannot select ON mode with keyless access and with the keyless remote touching the engine start/stop switch

Cannot select ON mode with keyless access and with the keyless remote touching the engine start/stop switch

1. Keyless access system check 1

   -1. Do this procedure ten times: Turn the vehicle to the ON mode while turning the steering wheel to the left and to the right.

   Does the system change to ON mode?

   YES

   Intermittent failure, the system is OK at this time. Check for loose or poor connection.

   NO

   Go to step 2.

2. Keyless access system check 2

   -1. Touch the engine start/stop switch with the keyless remote. The buttons on the keyless remote should be facing you.

   -2. Turn the vehicle to the ON mode while turning the steering wheel to the left and to the right.

   Does the system change to ON mode?

   YES

   Go to keyless access system symptom troubleshooting "Cannot select ON mode with keyless access, but can select ON mode with the keyless remote touching the engine start/stop switch".

   NO

   Go to step 3.

3. Keyless access system check 3

   -1. Select KEYLESS ACCESS CONTROL UNIT from the ONE-PUSH START system select menu with the HDS, and enter SELF CHECK.

   One-Push - KEYLESS ACCESS CONTROL UNIT - SELF CHECK

   Does the system communicate with the HDS?

   YES

   Go to step 4.

   NO

Go to step 11.

4. Keyless access system check 4

   -1. Reboot the HDS.

   -2. Select model on the HDS screen.

   -3. When prompted by the HDS, select YES when asked if the vehicle has keyless access system, then press and hold the engine start/stop switch for at least 2 minutes. This selects the forced ON mode.

   Does the system change to forced ON mode?

   YES

   Go to step 5.

   NO

   Go to step 16.

5. PCU DTC check

   -1. Check for PCU DTCs with the HDS.

DTC Description	DTC
B	B

Are any DTCs indicated?

YES

Troubleshoot the PCU DTCs.

NO

Go to step 6.

6. Keyless access DTC check

   -1. Check for keyless access control unit DTCs with the HDS.

DTC Description	DTC
B	B

Are any DTCs indicated?

YES

Troubleshoot the keyless access control unit DTCs.

NO

Go to step 7.

7. Backup DTC check

   -1. Check for backup control unit DTCs with the HDS.

DTC Description	DTC
B	B

Are any DTCs indicated?

YES

Troubleshoot the backup control unit DTCs.

NO

Go to step 8.

8. Keyless access system check 5

-1. **Do the keyless access remote check using the all keyless remotes** .

Are the all keyless remotes OK?

YES

Go to step 9.

NO

Replace the keyless remote and recheck.

9. Keyless access system check 6

-1. Turn the vehicle to the OFF (LOCK) mode.

-2. Remove all the keyless remotes from inside the vehicle. Place the keyless remotes more than 1.5 m (5.0 ft) away from the vehicle.

-3. With electric steering lock: Disconnect the electric steering lock 12P connector.

-4. Reboot the HDS without pressing the engine start/stop switch.

-5. Do the registration of the body control module according to the instructions on the HDS screen.

-6. Select REGISTRATION from the ONE-PUSH START system select menu with the HDS, then select REPLACE PCU/BACKUP CONTROL/KEYLESS ACCESS CONTROL UNIT.

-7. With electric steering lock: Reconnect the electric steering lock 12P connector.

-8. Take the keyless remote into the vehicle, and clear the PCU DTCs with the HDS.

-9. Do this procedure ten times: Turn the vehicle to the ON mode while turning the steering wheel to the left and to the right.

Does the system change to ON mode?

YES

Intermittent failure, the system is OK at this time. Check for loose or poor connection.

NO

Go to step 10.

NO

Replace the body control module .

10. Body control module check (substitution)

    -1. **Substitute a known-good body control module** .

    -2. Do the registration of the body control module according to the instructions on the HDS screen.

    -3. Select REGISTRATION from the ONE-PUSH START system select menu with the HDS, then select REPLACE PCU/BACKUP CONTROL/KEYLESS ACCESS CONTROL UNIT.

    -4. Recheck the system.

    Is the system normal?

    YES

    Replace the original body control module .

    NO

    Replace the steering lock .

11. L-line check

    -1. **Do the DLC circuit troubleshooting** .

    Is L-line OK?

    YES

    Go to step 12.

    NO

    Repair an L-line wire circuit.

12. Engine start/stop switch operation check

    -1. **Do the engine start/stop switch test** .

    Is the engine start/stop switch OK?

    YES

    Go to step 13.

    NO

    Replace the engine start/stop switch .

13. Open wire check (SS1(+), SS2(-) lines)

    -1. Disconnect the following connectors.

Engine start/stop switch 10P connectorBody control module connector G (32P)

-2. Check for continuity between test points 1 and 2 respectively.

Test condition	Vehicle OFF (LOCK) modeEngine start/stop switch 10P connector: disconnectedBody control module connector G (32P): disconnected

Test point 1	Engine start/stop switch 10P connector (female terminals) No. 6: ①
Test point 2	**Body control module connector G (32P) No. 18**

Test point 1	Engine start/stop switch 10P connector (female terminals) No. 10: ①
Test point 2	**Body control module connector G (32P) No. 9**

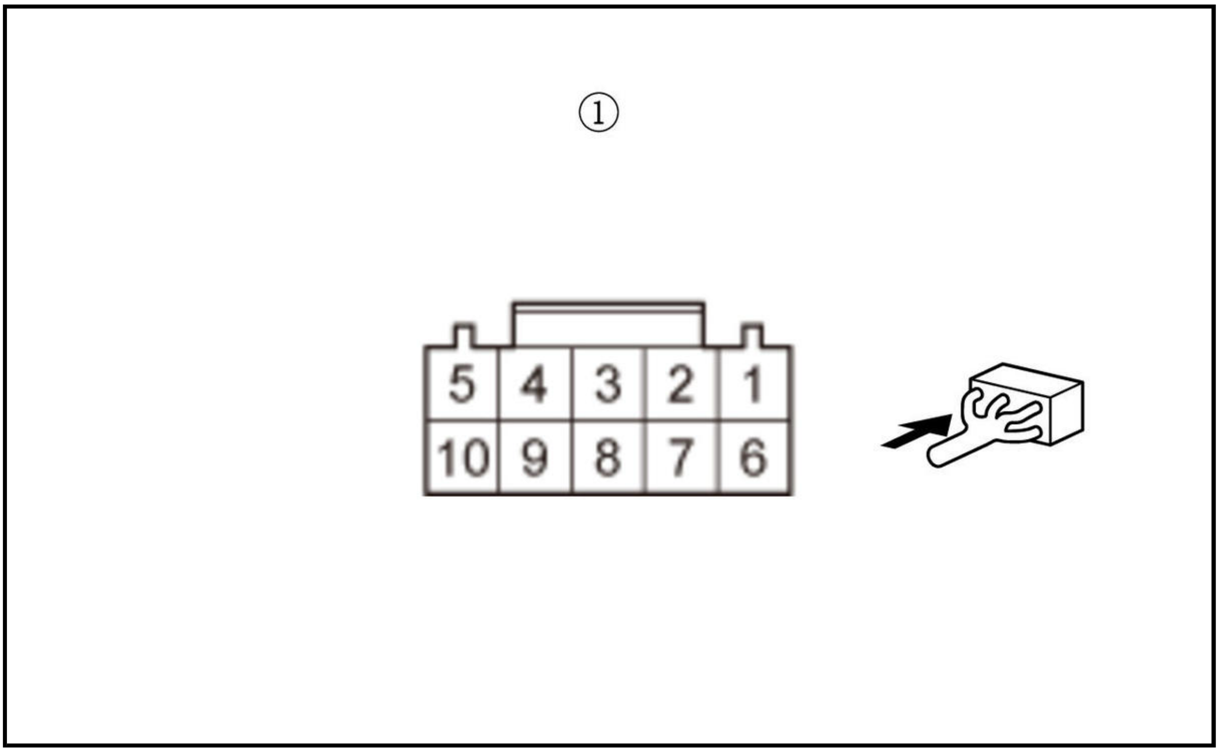

Is there continuity?

YES

The SS1(+) and SS2(-) wires are OK. Go to step 14.

NO

Repair an open or high resistance in the wire.

14. Open wire check (+B SMART line)

-1. Measure the voltage between test points 1 and 2.

Test condition	Vehicle OFF (LOCK) modeEngine start/stop switch 10P connector: disconnectedBody control module connector G (32P): disconnected
Test point 1	Engine start/stop switch 10P connector (female terminals) No. 5: ①
Test point 2	Body ground

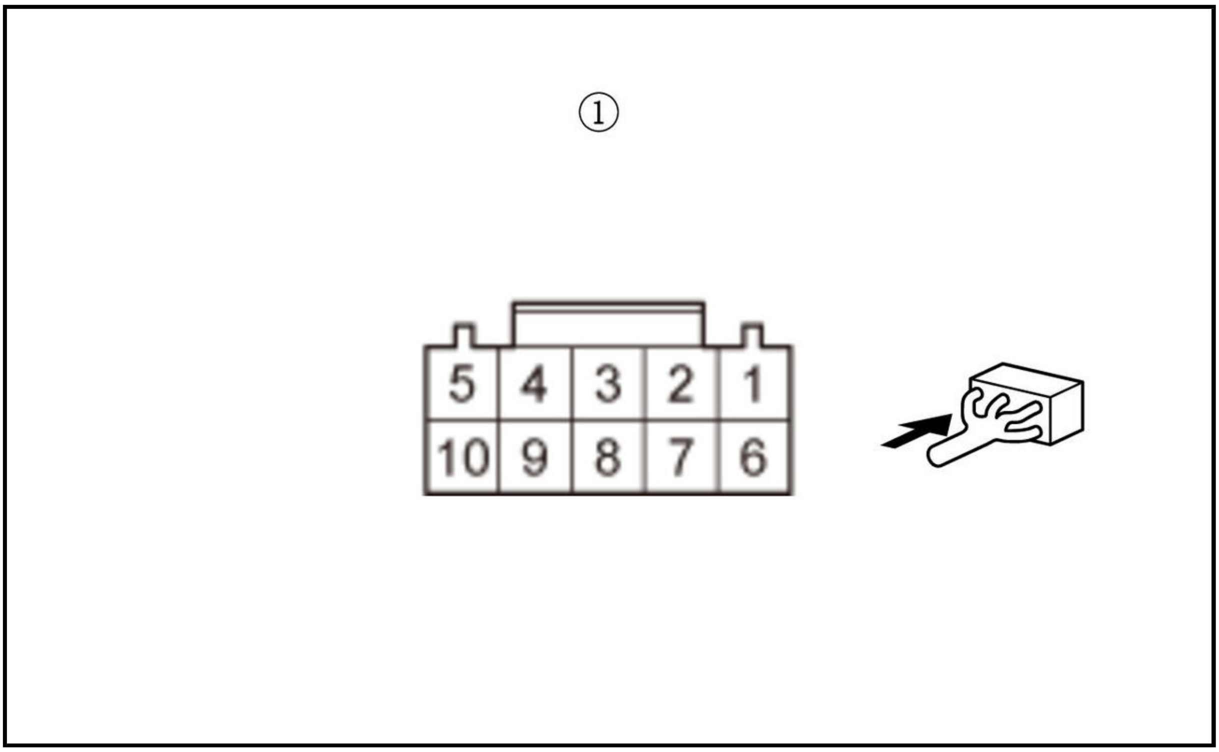

Is there battery voltage?

YES

The +B SMART wire is OK. Go to step 15.

NO

Repair an open or high resistance in the wire.

15. Open wire check (GND line)

-1. Check for continuity between test points 1 and 2.

Test condition	Vehicle OFF (LOCK) modeEngine start/stop switch 10P connector: disconnectedBody control module connector G (32P): disconnected
Test point 1	Engine start/stop switch 10P connector (female terminals) No. 1: ①
Test point 2	Body ground

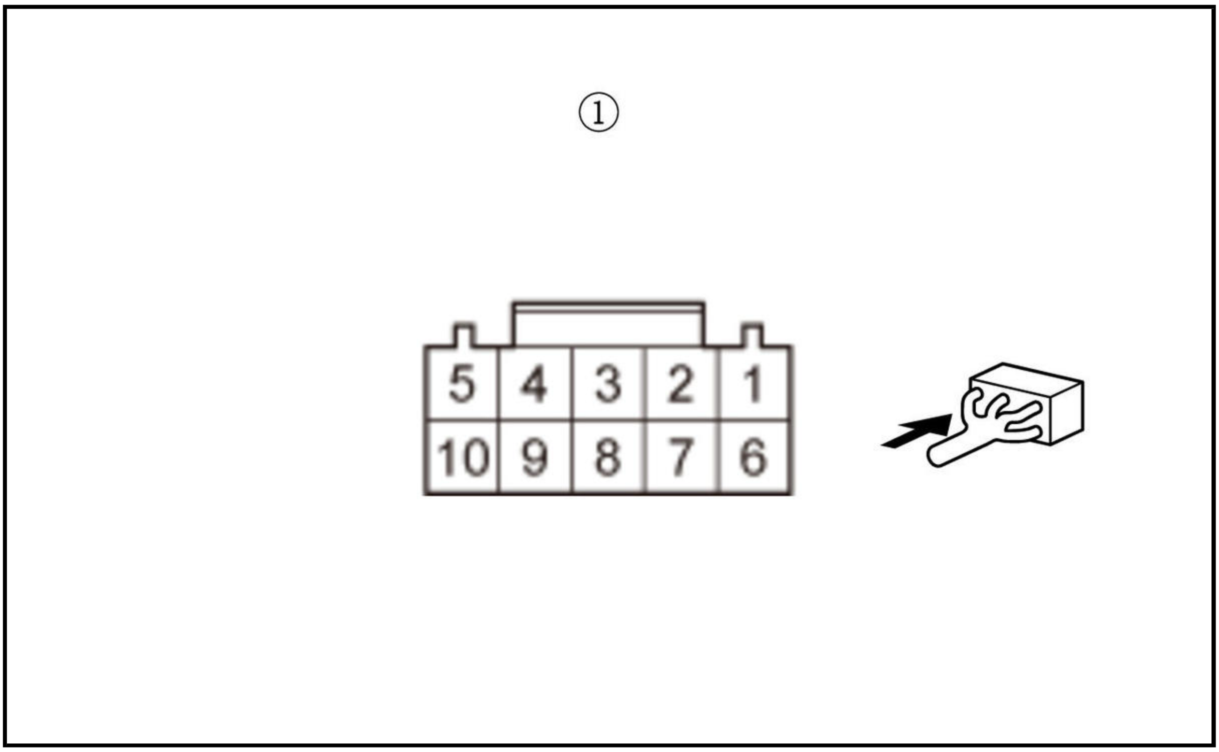

Is there continuity?

YES

The GND wire is OK. Go to step 17.

NO

Repair an open or high resistance in the ground wire or poor ground (G401).

16. PCU DTC check

-1. Check for PCU DTCs with the HDS.

DTC Description	DTC
B	B

Are any DTCs indicated?

YES

Troubleshoot the PCU DTCs.

NO

Go to step 17.

17. Open wire check (+B BACK UP, +B SMART lines)

-1. Disconnect the following connectors.

Body control module connector B (36P)Body control module connector C (28P)

-2. Measure the voltage between test points 1 and 2 individually.

Test condition	Vehicle OFF (LOCK) modeEngine start/stop switch 10P connector: disconnectedBody control module connector B (36P): disconnectedBody control module connector C (28P): disconnected

Test point 1	**Body control module connector B (36P) No. 16**
Test point 2	Body ground

Test point 1	**Body control module connector C (28P) No. 27**

Test point 2	Body ground

Is there battery voltage?

YES

The +B BACK UP, and +B SMART wires are OK. Go to step 18.

NO

Repair an open or high resistance in the wire.

18. Open wire check (GND line)

-1. Disconnect the following connector.

Body control module connector A (14P)

-2. Check for continuity between test points 1 and 2 individually.

Test condition	Vehicle OFF (LOCK) modeEngine start/stop switch 10P connector: disconnectedBody control module connector A (14P): disconnectedBody control module connector B (36P): disconnectedBody control module connector C (28P): disconnected
Test point 1	**Body control module connector A (14P) No. 2**
Test point 2	Body ground

Test point 1	**Body control module connector A (14P) No. 8**
Test point 2	Body ground

Is there continuity?

YES

The GND wires are OK. Go to step 19.

YES

The GND wires are OK. **Replace the body control module** .

NO

Repair an open or high resistance in the ground wire or poor ground (G401).

19. Open wire check (between body control module and electric steering lock lines)

-1. Disconnect the following connectors.

Body control module connector F (36P)Body control module connector G (32P)Electric steering lock 12P connector

-2. Check for continuity between test points 1 and 2 as shown.

Test condition	Vehicle OFF (LOCK) modeEngine start/stop switch 10P connector: disconnectedBody control module connector A (14P): disconnectedBody control module connector B (36P): disconnectedBody control module connector C (28P): disconnectedBody control module connector F (36P): disconnectedBody control module connector G (32P): disconnectedElectric steering lock 12P connector: disconnected

Test circuit	**Test point 1: Body control module connector**	**Test point 2: Electric steering lock 12P connector (female terminals): ①**
MTR CUT1 (CONT)	G6	2
MTR CUT2 (IG1)	G7	4
ESL PWR	F5	5
IGN TRX	G28	6
ESL SW C	G4	9
ESL SW D	G5	10

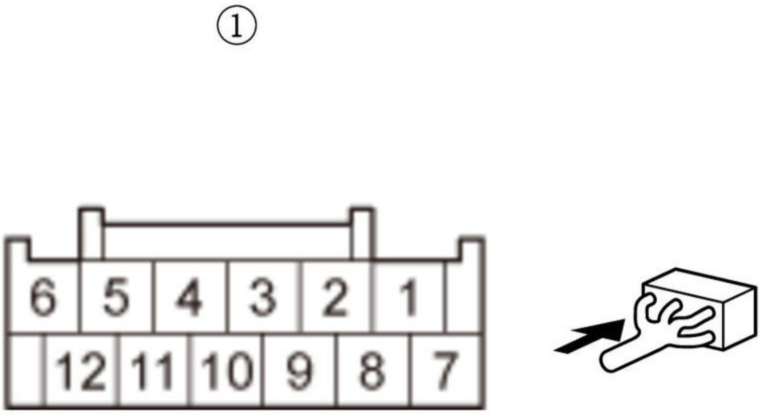

Is there continuity?

YES

The wires are not open. Go to step 20.

NO

Repair an open or high resistance in the wire.

20. Shorted wire check (between electric steering lock and body ground)

-1. Check for continuity between the following test points and body ground individually.

Test condition	Vehicle OFF (LOCK) modeEngine start/stop switch 10P connector: disconnectedBody control module connector A (14P): disconnectedBody control module connector B (36P): disconnectedBody control module connector C (28P): disconnectedBody control module connector F (36P): disconnectedBody control

	module connector G (32P): disconnectedElectric steering lock 12P connector: disconnected

Connector	Test circuit	Terminal
Electric steering lock 12P connector (female terminals): ①	MTR CUT1 (CONT)	2
	MTR CUT2 (IG1)	4
	ESL PWR	5
	IGN TRX	6
	ESL SW C	9
	ESL SW D	10

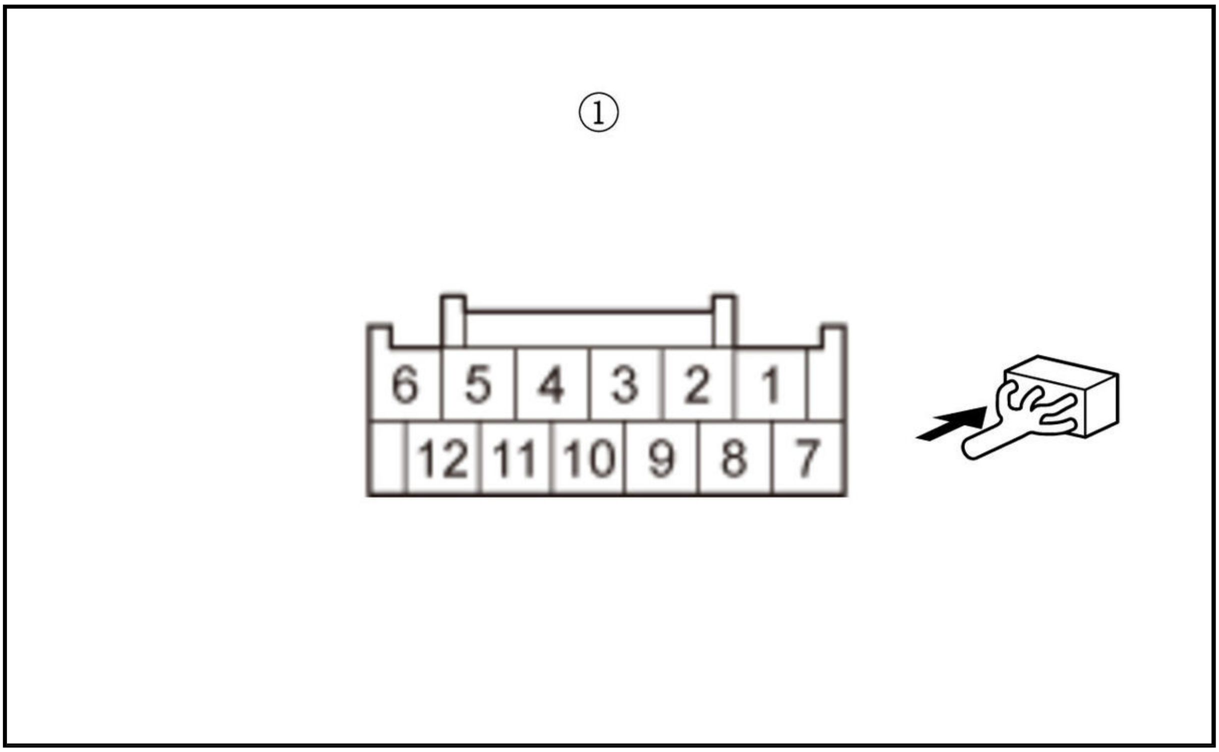

Is there continuity?

YES

Repair a short to ground in the wire.

NO

The wires are OK. Go to step 21.

21. Open wire check (+B SMART line)

-1. Measure the voltage between test points 1 and 2.

Test condition	Vehicle OFF (LOCK) modeEngine start/stop switch 10P connector: disconnectedBody control module connector A (14P): disconnectedBody control module connector B (36P): disconnectedBody control module connector C (28P): disconnectedBody control module connector F (36P): disconnectedBody control module connector G (32P): disconnectedElectric steering lock 12P connector: disconnected
Test point 1	Electric steering lock 12P connector (female terminals) No. 3: ①
Test point 2	Body ground

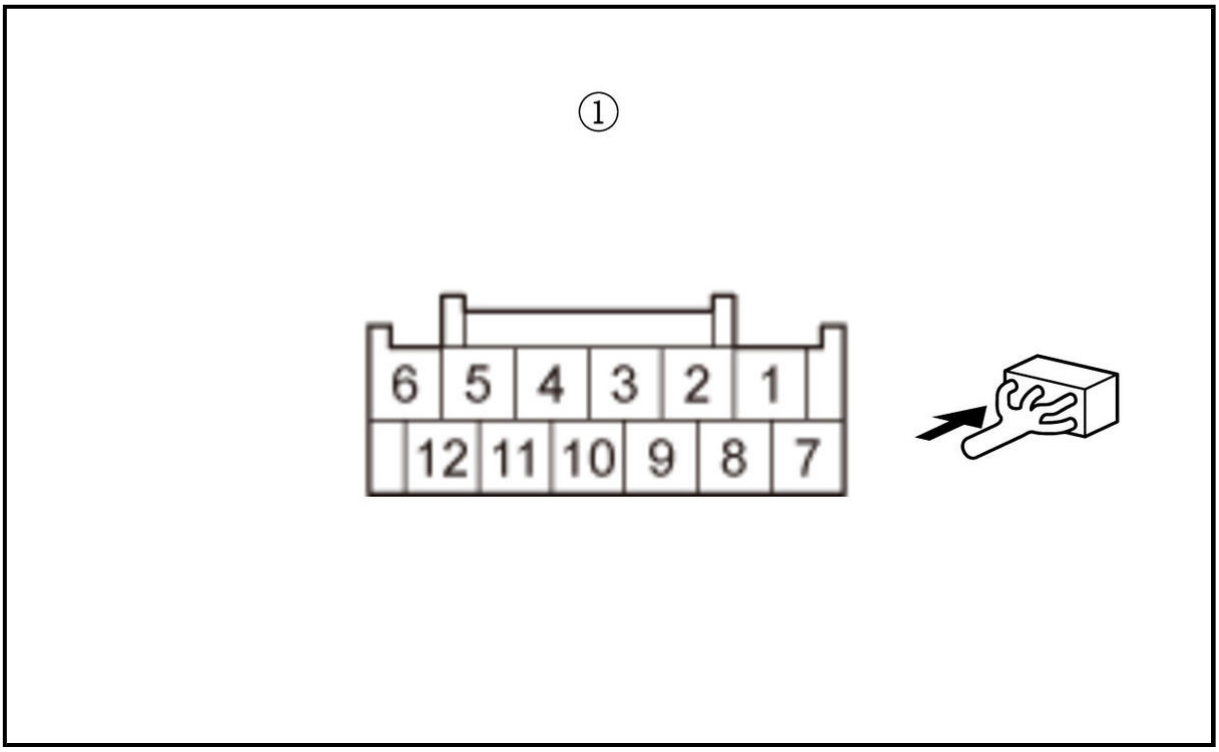

Is there battery voltage?

YES

The +B SMART wire is OK. Go to step 22.

NO

Repair an open or high resistance in the wire.

22. Open wire check (GND line)

-1. Check for continuity between test points 1 and 2.

Test condition	Vehicle OFF (LOCK) modeEngine start/stop switch 10P connector: disconnectedBody control module connector A (14P): disconnectedBody control module connector B (36P): disconnectedBody control module connector C (28P): disconnectedBody control module connector F (36P): disconnectedBody control module connector G (32P): disconnectedElectric steering lock 12P connector: disconnected
Test point 1	Electric steering lock 12P connector (female terminals) No. 7: ①
Test point 2	Body ground

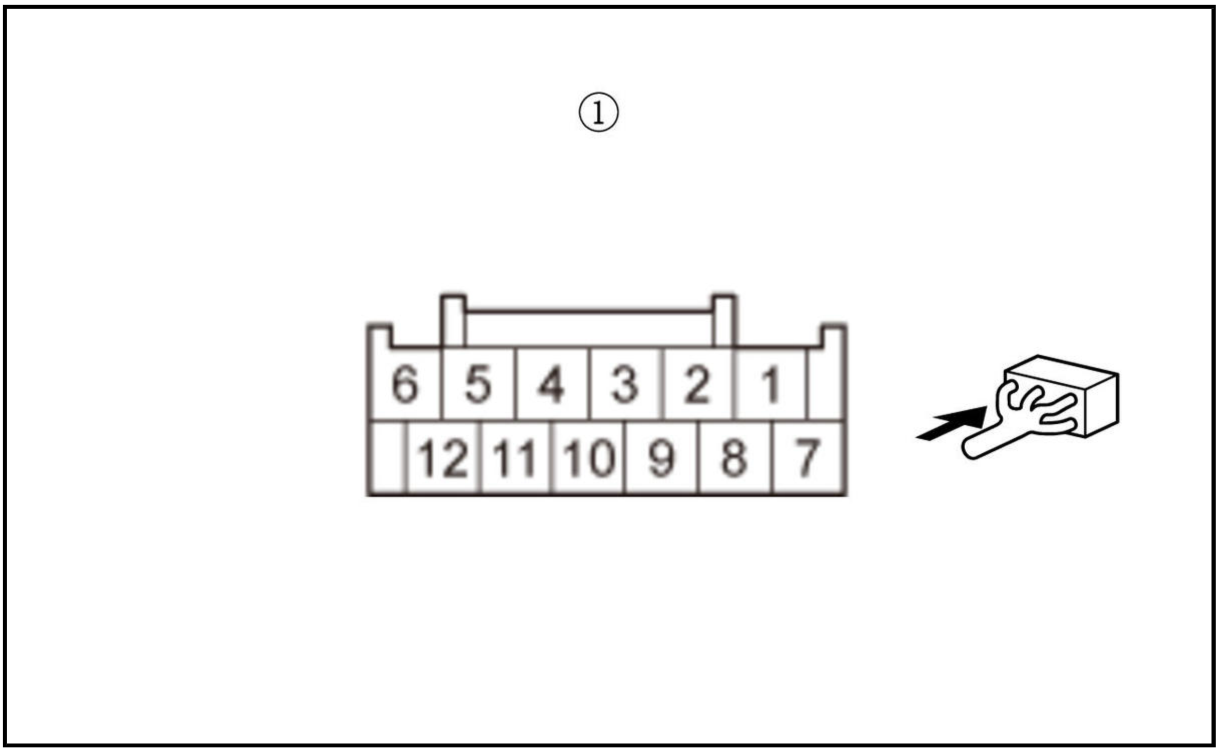

Is there continuity?

YES

The GND wire is OK. Go to step 23.

NO

Repair an open or high resistance in the ground wire or poor ground (G401).

23. Body control module check (substitution)

-1. Substitute a known-good body control module .

-2. Reconnect these items:

Engine start/stop switch 10P connectorBody control module connector A (14P)Body control module connector B (36P)Body control module connector C (28P)Body control module connector F (36P)Body control module connector G (32P)Electric steering lock 12P connector

-3. Do the registration of the body control module according to the instructions on the HDS screen.

-4. Select REGISTRATION from the ONE-PUSH START system select menu with the HDS, then select REPLACE PCU/BACKUP CONTROL/KEYLESS ACCESS CONTROL UNIT.

-5. Turn the vehicle to the ON mode while turning the steering wheel to the left and to the right.

Does the system change to ON mode?

YES

Replace the original body control module .

NO

Replace the steering lock .

Cannot select ON mode with keyless access, but can select ON mode with the keyless remote touching the engine start/stop switch

Cannot select ON mode with keyless access, but can select ON mode with the keyless remote touching the engine start/stop switch

1. Keyless access system check 1

   -1. Press the LOCK and the UNLOCK buttons of the keyless remote, and check if the LED on the keyless remote comes on.

   Does the LED come on?

   YES

   Go to step 2.

   NO

   Replace the keyless remote battery and recheck the system. If the symptom does not go away, replace the keyless remote .

2. Keyless access system check 2

   -1. Touch the engine start/stop switch with the keyless remote. The buttons on the keyless remote should be facing you.

   -2. Turn the vehicle to the ON mode.

   -3. Select KEYLESS ACCESS CONTROL UNIT from the ONE-PUSH START system select menu with the HDS, and enter SELF CHECK.

   One-Push - KEYLESS ACCESS CONTROL UNIT - SELF CHECK

   Does the system communicate with the HDS?

   YES

   Go to step 3.

   NO

   Do the input test for the body control module .

3. PCU DTC check

   -1. Check for PCU DTCs with the HDS.

DTC Description	DTC
B	B

   Are any DTCs indicated?

   YES

   Troubleshoot the PCU DTCs.

   NO

   Go to step 4.

4. Keyless access DTC check

-1. Check for keyless access control unit DTCs with the HDS.

DTC Description	DTC
B	B

Are any DTCs indicated?

YES

Troubleshoot the keyless access control unit DTCs.

NO

Go to step 5.

5. Backup DTC check

-1. Check for backup control unit DTCs with the HDS.

DTC Description	DTC
B	B

Are any DTCs indicated?

YES

Troubleshoot the backup control unit DTCs.

NO

Go to step 6.

6. Keyless access system check 3

-1. Select HISTORY DATA from the KEYLESS ACCESS CONTROL UNIT mode menu with the HDS.

One-Push - KEYLESS ACCESS CONTROL UNIT - History data/Clear

Select HISTORY CLEAR, and back to TEST MODE MENU.

-3. Turn the vehicle to the OFF (LOCK) mode.

-4. Touch the engine start/stop switch with the keyless remote. The buttons on the keyless remote should be facing you.

-5. Turn the vehicle to the ON mode.

-6. Select HISTORY DATA from the KEYLESS ACCESS CONTROL UNIT mode menu with the HDS.

One-Push - KEYLESS ACCESS CONTROL UNIT - History data/Clear

History Data

ENGINE START/STOP SWITCH 1 (+)	ON
ENGINE START/STOP SWITCH 2 (-)	ON

Is all the information ON?

YES

Go to step 8.

NO

Go to step 7.

7. Open wire check (SS1(+), SS2(-) lines)

-1. Turn the vehicle to the OFF (LOCK) mode.

-2. Disconnect the following connectors.

Engine start/stop switch 10P connectorBody control module connector G (32P)

-3. Check for continuity between test points 1 and 2 respectively.

Test condition	Vehicle OFF (LOCK) mode Engine start/stop switch 10P connector: disconnectedBody control module connector G (32P): disconnected
Test point 1	**Body control module connector G (32P) No. 18**
Test point 2	Engine start/stop switch 10P connector (female terminals) No. 6: ①

Test point 1	**Body control module connector G (32P) No. 9**
Test point 2	Engine start/stop switch 10P connector (female terminals) No. 10: ①

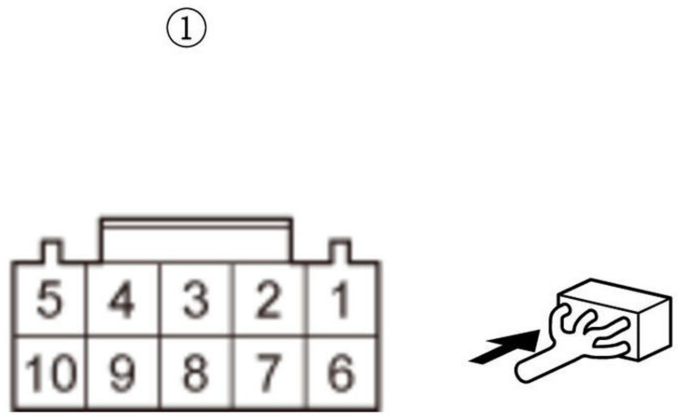

Is there continuity?

YES

The SS1(+) and SS2(-) wires are OK. **Replace the body control module** .

NO

Repair an open or high resistance in the wire.

8. Keyless access system check 4

-1. Do the keyless access remote check using the all keyless remotes .

Are the all keyless remotes OK?

YES

Replace the body control module .

NO

Replace the keyless remote and recheck.

Keyless access indicator does not go off or does not come on

Keyless access indicator does not go off or does not come on

1. Keyless access system check 1

   -1. Turn the vehicle to the OFF (LOCK) mode.

   -2. Turn the vehicle to the ON mode.

   -3. Check the keyless access indicator.

   Does the keyless access indicator come on for 2 seconds?

   YES

   Go to step 2.

   NO

   Do the gauge control module self-diagnostic function test . If the indicator does not come on, replace the gauge control module .

2. Keyless access system check 2

   -1. Check the keyless access indicator.

   Does the indicator blink once, then stay off?

   YES

   Intermittent failure, the system is OK at this time. Check for loose or poor connections.

   NO

   Go to step 3.

3. PCU, backup, and keyless access DTC check

   -1. Check for DTCs in the PCU, backup control unit, and keyless access control unit with the HDS.

DTC Description	DTC
B	B

DTC Description	DTC
B	B

DTC Description	DTC
B	B

Are there any DTCs?

YES

Go to the indicated DTC troubleshooting.

NO

Replace the gauge control module .

Security indicator blinks

Security indicator blinks

1. Keyless access system check 1

   -1. Select KEYLESS ACCESS CONTROL UNIT from the ONE-PUSH START system select menu with HDS, and enter KEYLESS ACCESS SYSTEM INFORMATION.

   One-Push - BACKUP CONTROL UNIT - SYSTEM CHECK

   Do the SYSTEM CHECK 1 and 2 with the HDS.

   Is N-1 OK indicated?

   YES

   Go to step 2.

   NO

   Troubleshoot the keyless access system according to the result of the SYSTEM CHECK 1 and 2.

2. Keyless access system check 2

   -1. With driver's power window open and all the doors closed, turn the vehicle to the OFF (LOCK) mode.

   -2. Remove all the keyless remotes from inside the vehicle. Hold them outside the open driver's window, at least 20 cm (8.0 in) away from the vehicle.

   -3. Press the engine start/stop switch. The MID should request the keyless remote to touch the engine start/stop switch. The LED on the engine start/stop switch will flash for up to 30 seconds.

   -4. Touch the engine start/stop switch with the keyless remote. The buttons on the keyless remote should be facing you. The LED on the engine start/stop switch will turn solid when detected.

   -5. Turn the vehicle to the ON mode.

   -6. Select BACKUP CONTROL UNIT from the ONE-PUSH START system select menu with the HDS, and enter SYSTEM INFORMATION.

   -7. Do the SYSTEM CHECK with the HDS.

   Is N-1 OK indicated?

   YES

Go to step 3.

NO

Troubleshoot the keyless access system according to the result of the SYSTEM CHECK.

3. Gauge control module check

   -1. Select GAUGES from the BODY ELECTRICAL SYSTEM SELECT menu with the HDS.

   Self diagnostic function - GAUGES

   Select FUNCTIONAL TESTS from the TEST MODE menu with the HDS, and enter SELF TEST.

   Does the security indicator blinking?

   YES

   Go to the PGM-FI system troubleshooting.

   NO

   Replace the gauge control module .

The doors will not unlock or lock with the door outer handle touch sensors, but will unlock or lock with the keyless remote

The doors will not unlock or lock with the door outer handle touch sensors, but will unlock or lock with the keyless remote

NOTE: Before troubleshooting, make sure the BACK UP fuse in the under-hood fuse/relay box is OK.

1. Keyless access system check 1

   -1. Turn the vehicle to the ON mode.

   Does the system change to ON mode?

   YES

   Go to step 2.

   NO

   Go to keyless access system symptom troubleshooting "Cannot select ON mode with keyless access and with the keyless remote touching the engine start/stop switch".

2. Keyless access DTC check

   -1. Select KEYLESS ACCESS CONTROL UNIT from the ONE-PUSH START system select menu with the HDS, and enter SELF CHECK.

   One-Push - KEYLESS ACCESS CONTROL UNIT - SELF CHECK

   Check for keyless access control unit DTCs with the HDS.

DTC Description	DTC
B	B

Are any DTCs indicated?

YES

Troubleshoot the keyless access control unit DTCs.

NO

Go to step 3.

3. Keyless access system check 2

-1. Select KEYLESS ACCESS CONTROL UNIT from the ONE-PUSH START system select menu with the HDS, and enter HISTORY DATA.

One-Push - KEYLESS ACCESS CONTROL UNIT - History data/Clear

Select HISTORY CLEAR, and back to TEST MODE menu.

-3. Touch the each door outer handle touch sensors, then check the HISTORY DATA.

History Data

DRIVER DOOR UNLOCK SWITCH(OUTER HANDLE TOUCH SENSOR)	OK
FRONT PASSENGER DOOR UNLOCK SWITCH(OUTER HANDLE TOUCH SENSOR)	OK

Is all the information OK?

YES

Go to step 4.

NO

Go to step 6.

4. Keyless access system check 3

-1. Touch the each door outer handle lock sensors, then check the HISTORY DATA.

One-Push - KEYLESS ACCESS CONTROL UNIT - History data/Clear

History Data

DRIVER DOOR LOCK SWITCH(OUTER HANDLE TOUCH SENSOR)	OK
FRONT PASSENGER DOOR LOCK SWITCH(OUTER HANDLE TOUCH SENSOR)	OK

Is all the information OK?

YES

Go to step 5.

NO

Go to step 8.

5. Door lock actuator operation check

-1. Turn the vehicle to the OFF (LOCK) mode, and close all doors.

-2. Lock and unlock the doors with the driver's door touch sensors, and lock and unlock the doors with the front passenger's door touch sensors.

Do the door lock actuators work normally?

YES

Do the input test for the body control module , and do all power, ground, and communication input tests. If the body control module input tests prove OK, **replace the body control module** .

NO

Check the B-CAN system DTCs. If not, check the door lock system.

6. Door outer handle power circuit check

-1. Turn the vehicle to the OFF (LOCK) mode.

-2. Disconnect the following connectors.

Each door outer handle 8P connector

-3. Measure the voltage between test points 1 and 2 respectively.

Driver's door

Test condition	Vehicle OFF (LOCK) modeDriver's door outer handle 8P connector: disconnected
Test point 1	Driver's door outer handle 8P connector (female terminals) No. 4: ①
Test point 2	Driver's door outer handle 8P connector (female terminals) No. 8: ①

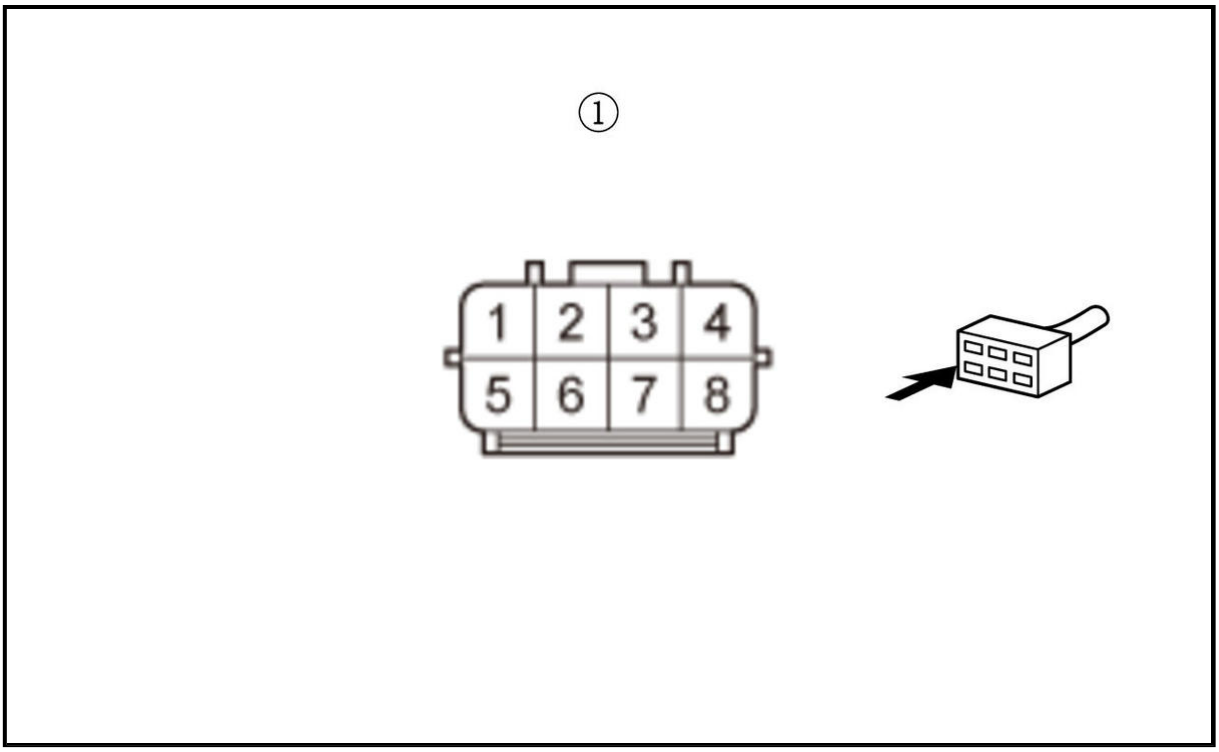

Front passenger's door

Test condition	Vehicle OFF (LOCK) modeFront passenger's door outer handle 8P connector: disconnected
Test point 1	Front passenger's door outer handle 8P connector (female terminals) No. 4: ①
Test point 2	Front passenger's door outer handle 8P connector (female terminals) No. 8: ①

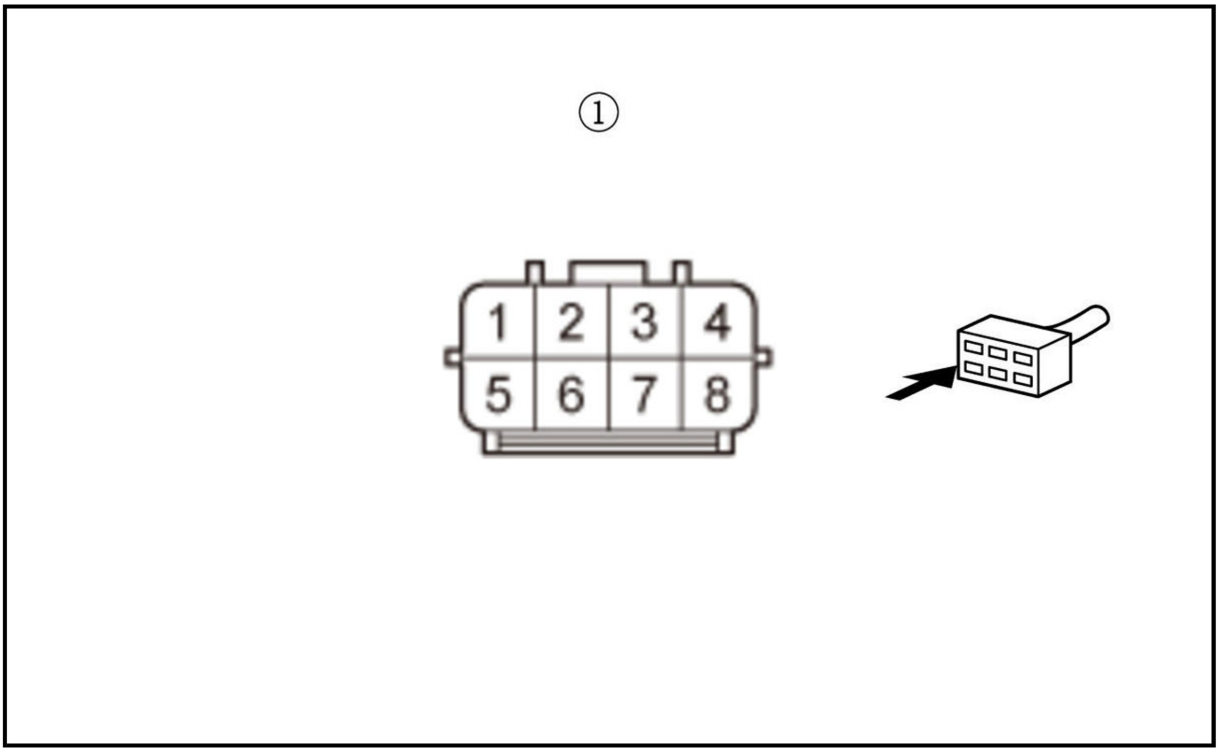

Is there battery voltage?

YES

Go to step 7.

NO

Go to step 10.

7. Determine possible failure area (door outer handle, others)

-1. Select KEYLESS ACCESS CONTROL UNIT from the ONE-PUSH START system select menu with the HDS, and enter HISTORY DATA, then enter the HISTORY CLEAR.

One-Push - KEYLESS ACCESS CONTROL UNIT - History data/Clear

Connect terminals A and B with a jumper wire.

Driver's door

Terminals A	Driver's door outer handle 8P connector (female terminals) No. 7: ①
Terminals B	Body ground

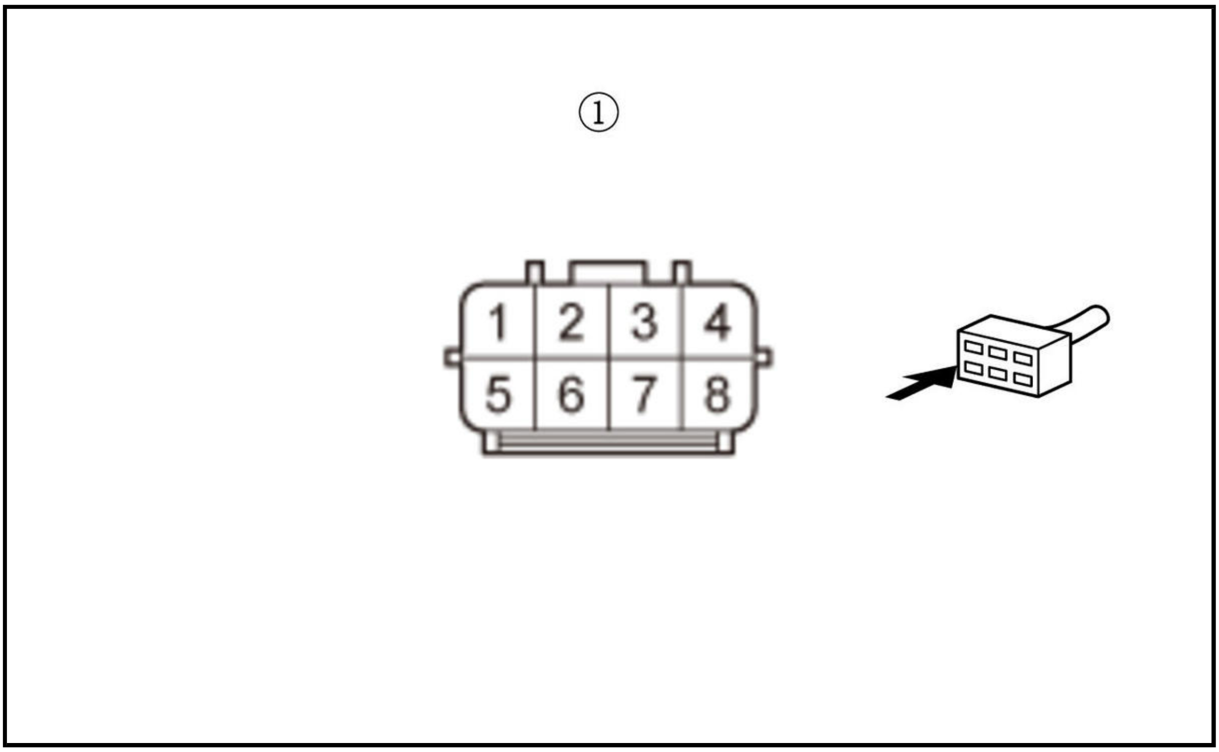

Front passenger's door

Terminals A	Front passenger's door outer handle 8P connector (female terminals) No. 7: ①
Terminals B	Body ground

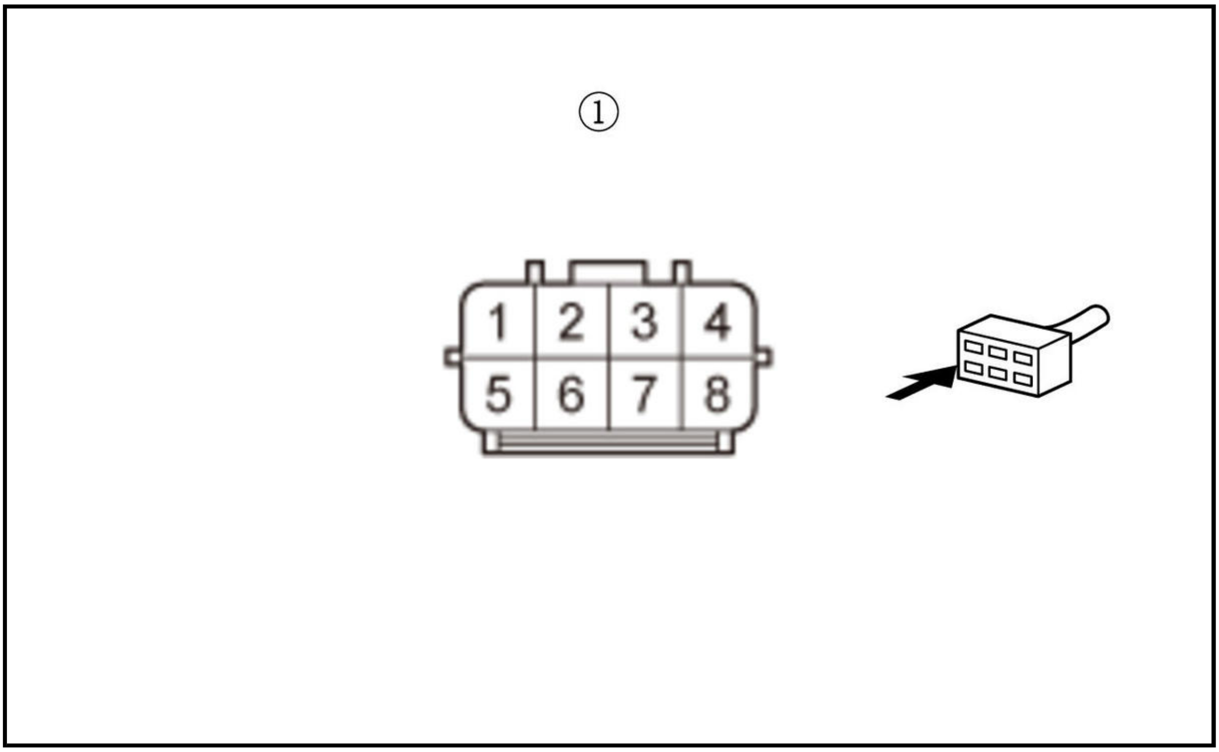

-3. Go back to TEST MODE menu, and recheck the HISTORY DATA.

History Data

DRIVER DOOR LOCK SWITCH(OUTER HANDLE TOUCH SENSOR)	OK
FRONT PASSENGER DOOR LOCK SWITCH(OUTER HANDLE TOUCH SENSOR)	OK

Is all the information OK?

YES

Replace the faulty door outer handle .

NO

Go to step 14.

8. Door outer handle power circuit check

-1. Turn the vehicle to the OFF (LOCK) mode.

-2. Disconnect the following connectors.

Each door outer handle 8P connector

-3. Measure the voltage between test points 1 and 2 respectively.

Driver's door

Test condition	Vehicle OFF (LOCK) modeDriver's door outer handle 8P connector: disconnected
Test point 1	Driver's door outer handle 8P connector (female terminals) No. 4: ①
Test point 2	Driver's door outer handle 8P connector (female terminals) No. 8: ①

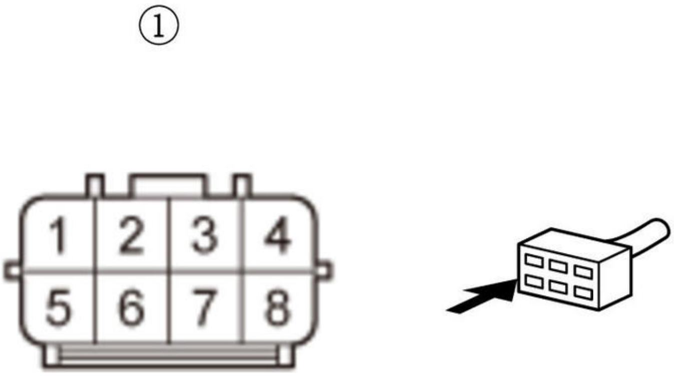

Front passenger's door

Test condition	Vehicle OFF (LOCK) modeFront passenger's door outer handle 8P connector: disconnected
Test point 1	Front passenger's door outer handle 8P connector (female terminals) No. 4: ①
Test point 2	Front passenger's door outer handle 8P connector (female terminals) No. 8: ①

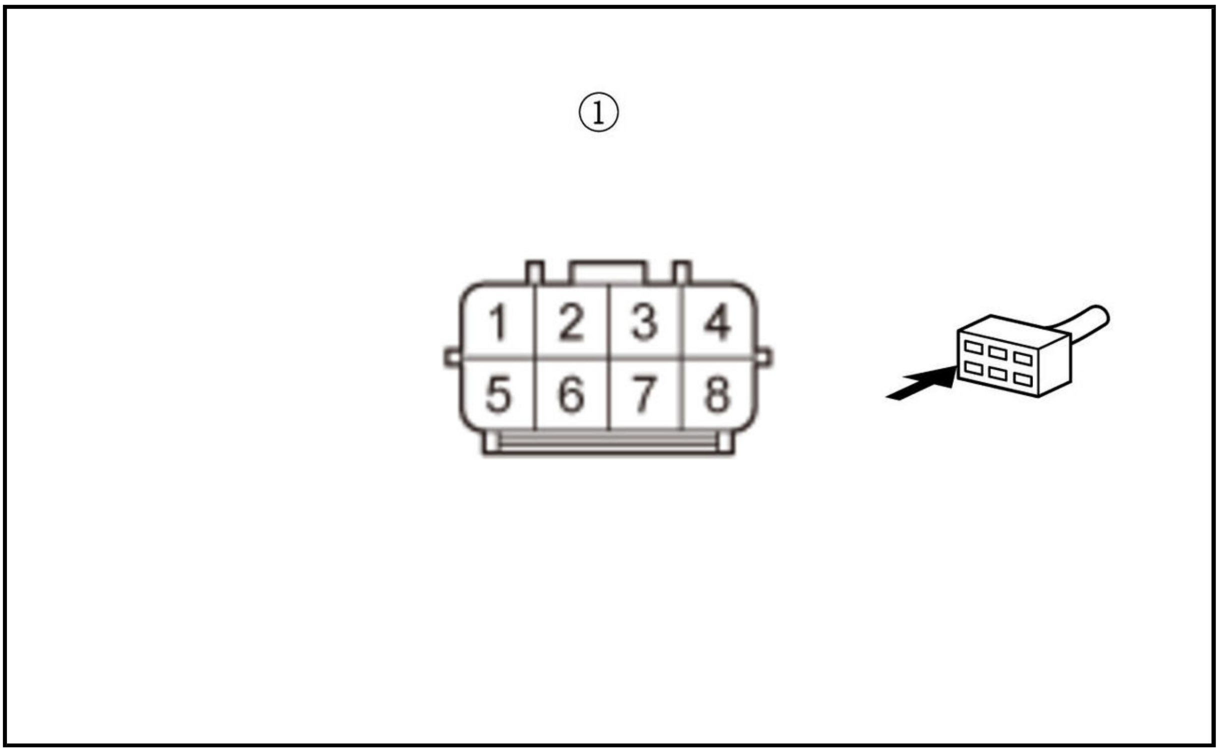

Is there battery voltage?

YES

Go to step 9.

NO

Go to step 10.

9. Determine possible failure area (door outer handle, others)

-1. Select KEYLESS ACCESS CONTROL UNIT from the ONE-PUSH START system select menu with the HDS, and enter HISTORY DATA, then enter the HISTORY CLEAR.

One-Push - KEYLESS ACCESS CONTROL UNIT - History data/Clear

Connect terminals A and B with a jumper wire.

Driver's door

Terminals A	Driver's door outer handle 8P connector (female terminals) No. 7: ①
Terminals B	Body ground

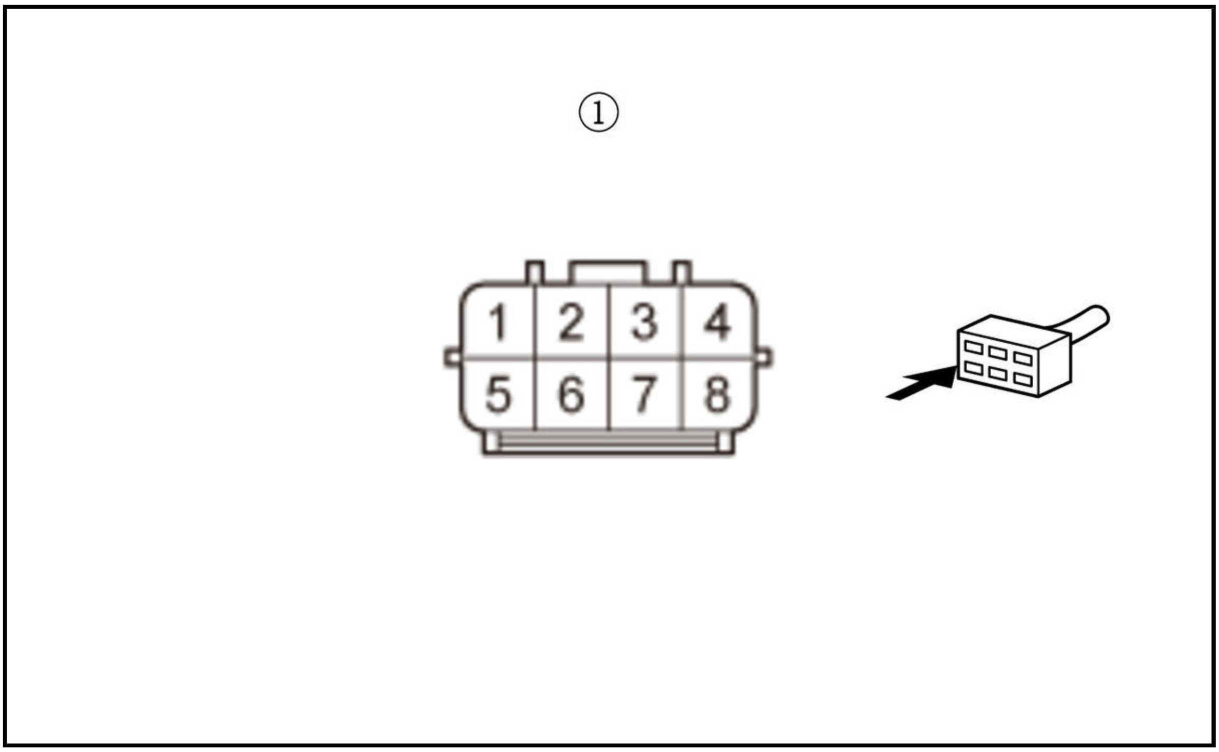

Front passenger's door

Terminals A	Front passenger's door outer handle 8P connector (female terminals) No. 7: ①
Terminals B	Body ground

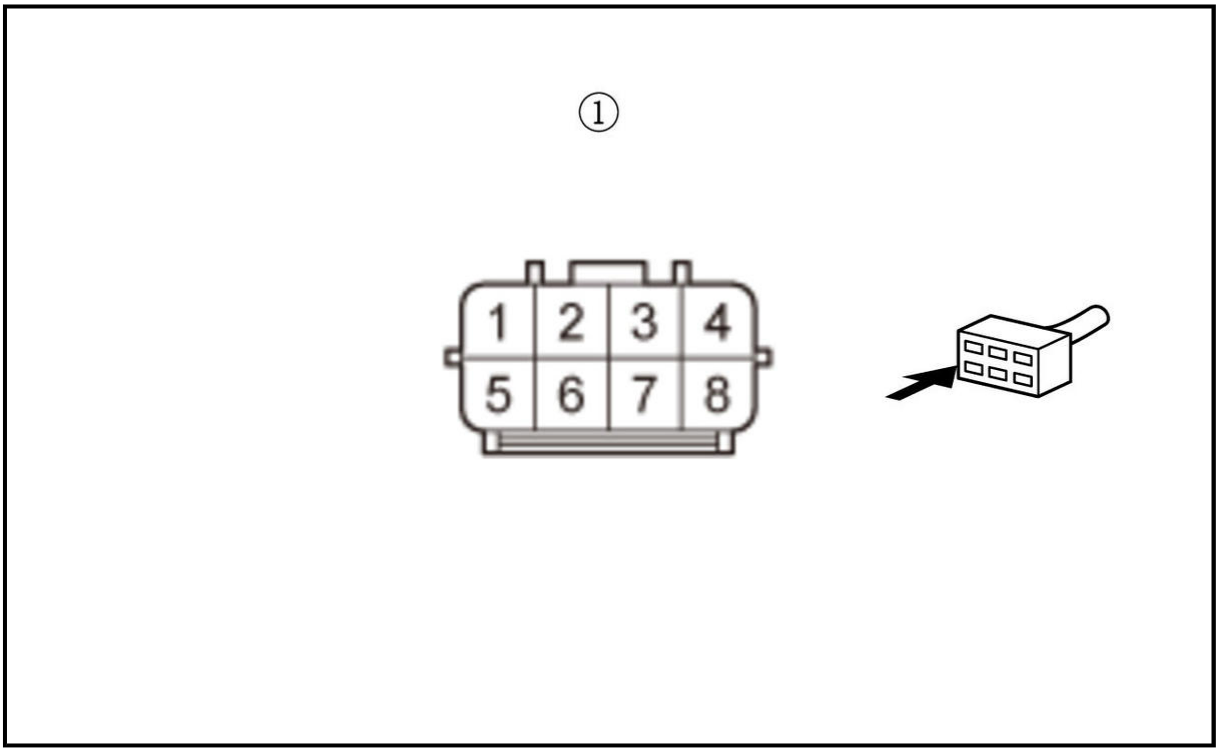

-3. Check the HISTORY DATA with the HDS.

History Data

DRIVER DOOR LOCK SWITCH(OUTER HANDLE TOUCH SENSOR)	OK
FRONT PASSENGER DOOR LOCK SWITCH(OUTER HANDLE TOUCH SENSOR)	OK

Is all the information OK?

YES

Replace the faulty door outer handle .

NO

Go to step 16.

10. Open wire check (GND line)

-1. Check for continuity between test points 1 and 2 individually.

Driver's door

Test condition	Vehicle OFF (LOCK) modeDriver's door outer handle 8P connector: disconnected
Test point 1	Driver's door outer handle 8P connector (female terminals) No. 8: ①
Test point 2	Body ground

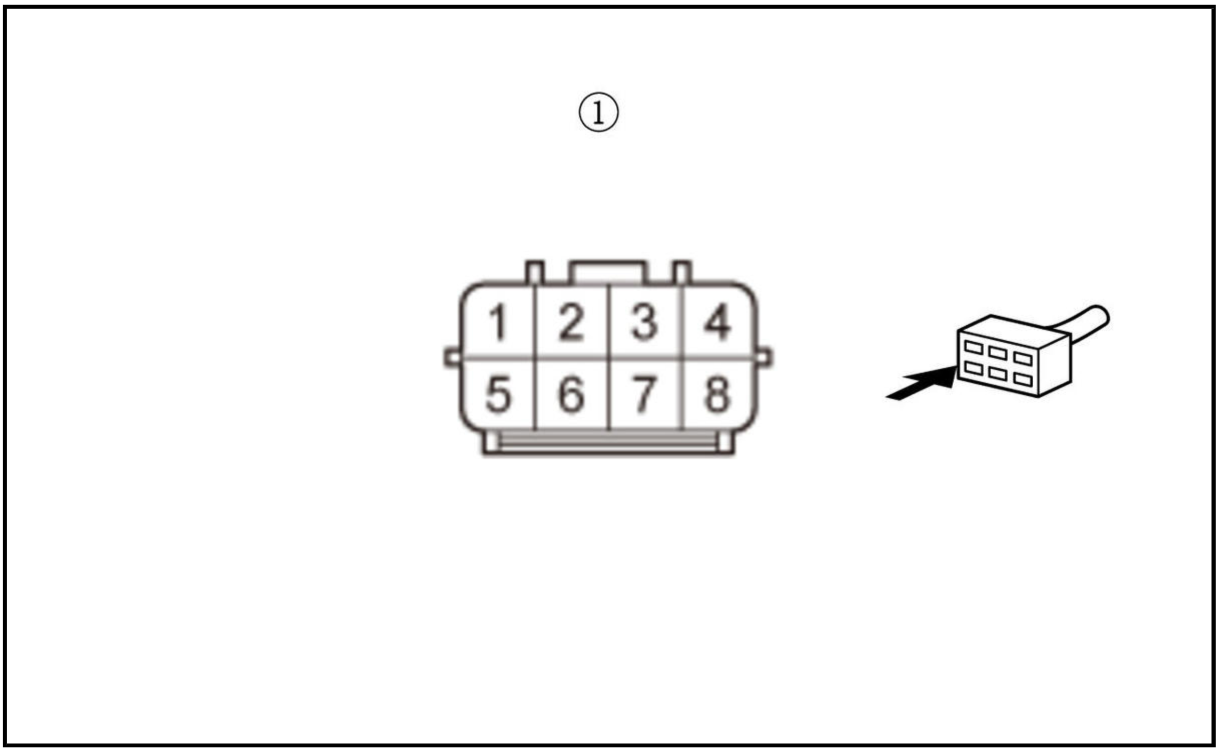

Front passenger's door

Test condition	Vehicle OFF (LOCK) modeFront passenger's door outer handle 8P connector: disconnected
Test point 1	Front passenger's door outer handle 8P connector (female terminals) No. 8: ①
Test point 2	Body ground

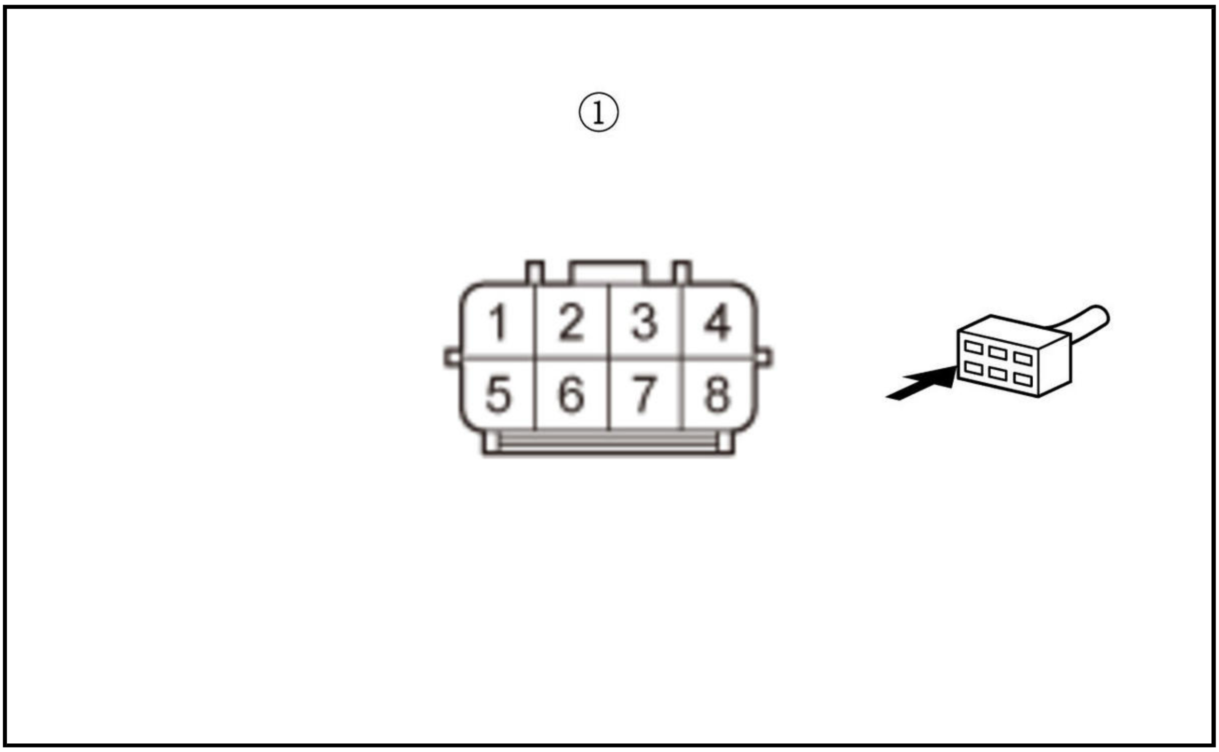

Is there continuity?

YES

The GND wires are OK. Go to step 11.

NO

Repair an open or high resistance in the ground wire or poor ground (G401, G402).

11. Open wire check (VOUT FR DR, VOUT FR AS lines)

-1. Disconnect the following connector.

Body control module connector G (32P)

-2. Check for continuity between test points 1 and 2 respectively.

Driver's door

Test condition	Vehicle OFF (LOCK) modeDriver's door outer handle 8P connector: disconnectedBody control module connector G (32P): disconnected
Test point 1	**Body control module connector G (32P) No. 31**
Test point 2	Driver's door outer handle 8P connector (female terminals) No. 4: ①

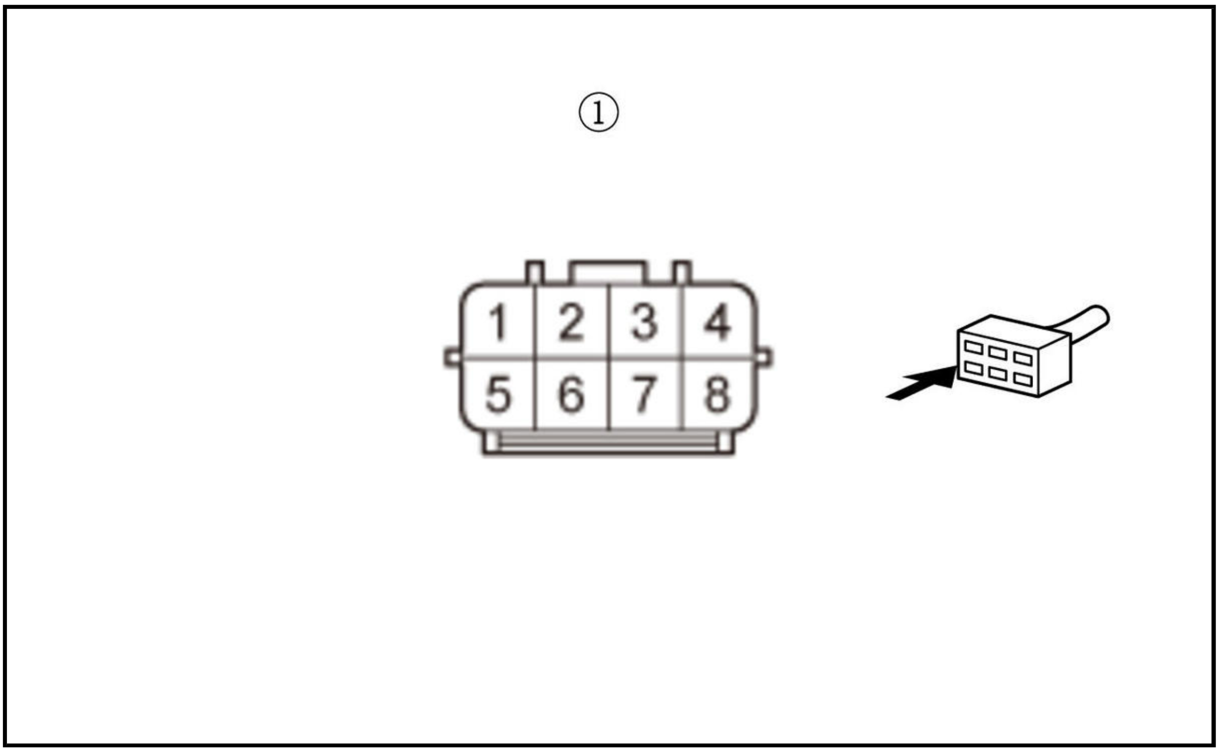

Front passenger's door

Test condition	Vehicle OFF (LOCK) modeFront passenger's door outer handle 8P connector: disconnectedBody control module connector G (32P): disconnected
Test point 1	**Body control module connector G (32P) No. 30**
Test point 2	Front passenger's door outer handle 8P connector (female terminals) No. 4: ①

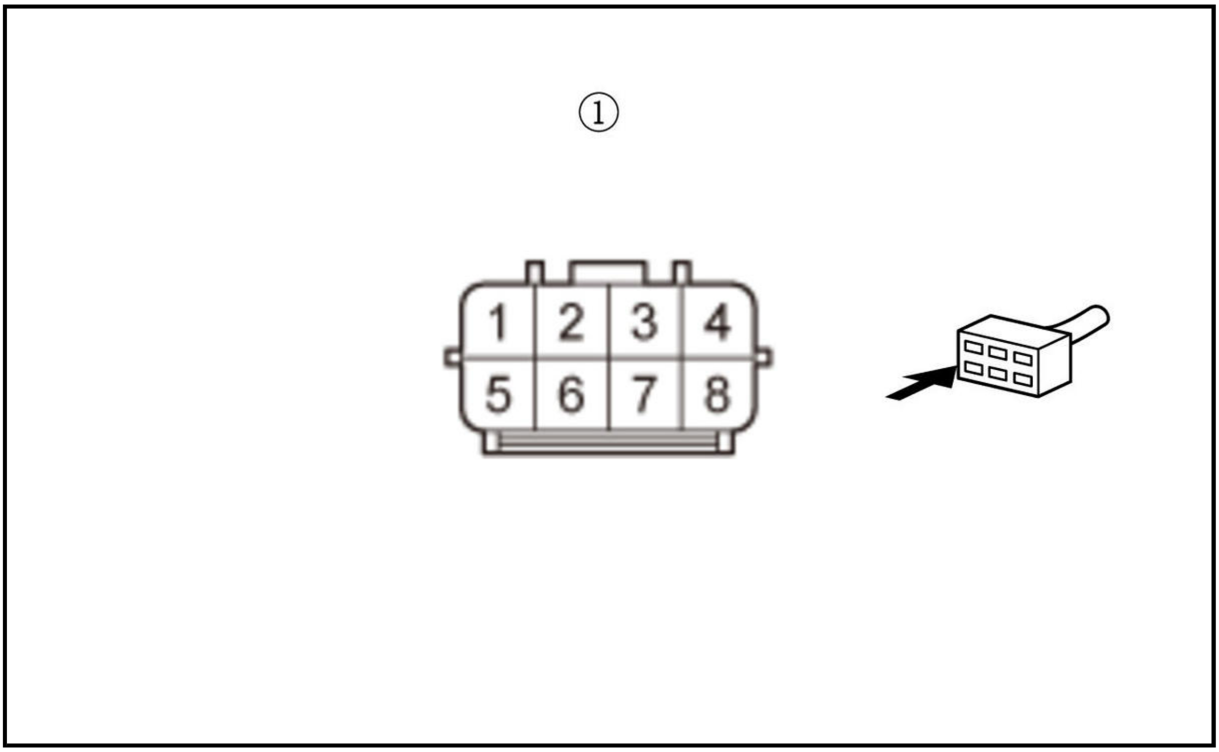

Is there continuity?

YES

The VOUT FR DR and VOUT FR AS wires are not open. Go to step 12.

NO

Repair an open or high resistance in the wire.

12. Shorted wire check (VOUT FR DR, VOUT FR AS lines)

-1. Check for continuity between test points 1 and 2 individually.

Driver's door

Test condition	Vehicle OFF (LOCK) modeDriver's door outer handle 8P connector: disconnectedBody control module connector G (32P): disconnected
Test point 1	Driver's door outer handle 8P connector (female terminals) No. 4: ①
Test point 2	Body ground

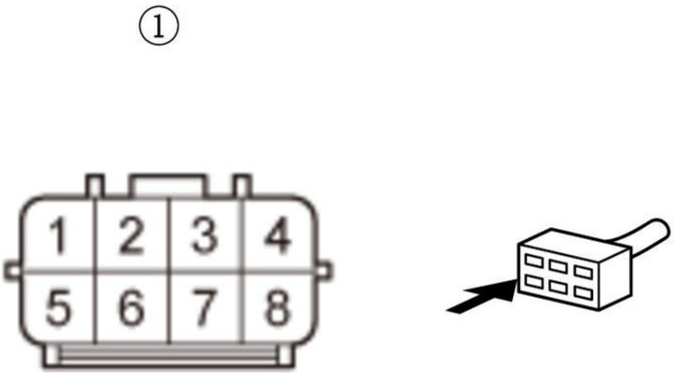

Front passenger's door

Test condition	Vehicle OFF (LOCK) modeFront passenger's door outer handle 8P connector: disconnectedBody control module connector G (32P): disconnected
Test point 1	Front passenger's door outer handle 8P connector (female terminals) No. 4: ①
Test point 2	Body ground

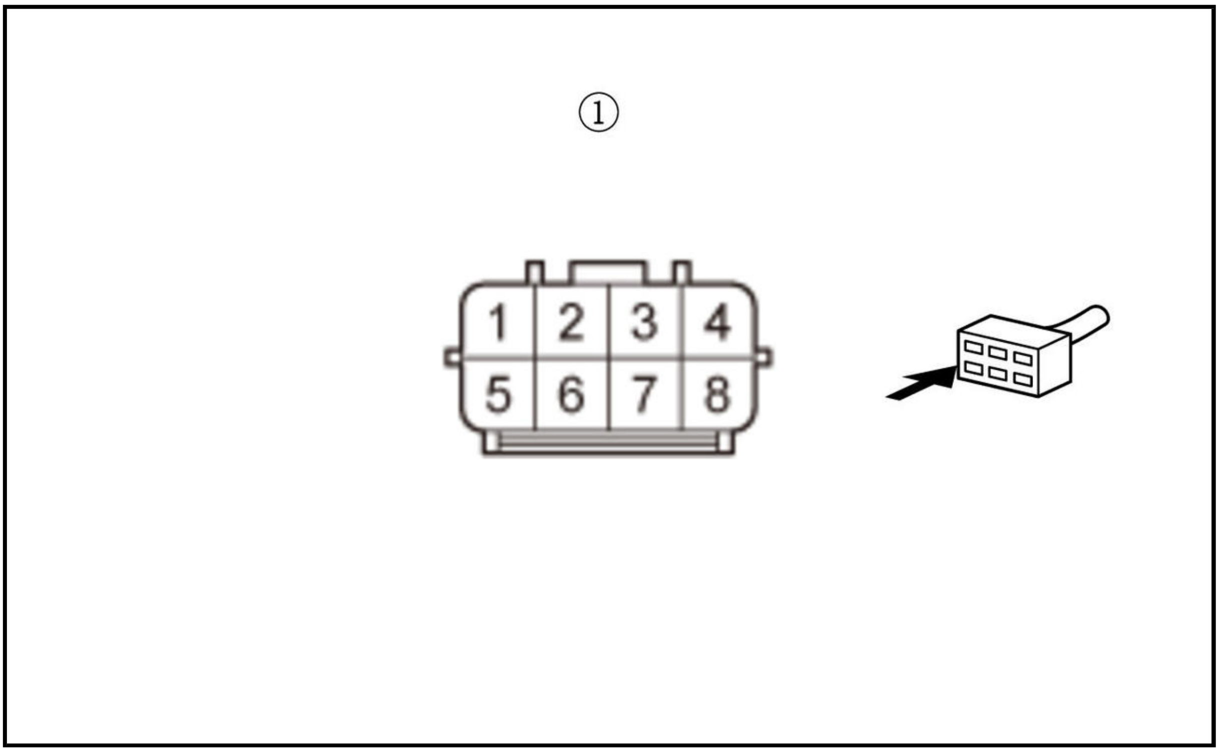

Is there continuity?

YES

Repair a short to ground in the wire.

NO

The VOUT FR DR and VOUT FR AS wires are OK. Go to step 13.

13. Open wire check (+B BACK UP line)

-1. Disconnect the following connector.

Body control module connector C (28P)

-2. Measure the voltage between test points 1 and 2.

Test condition	Vehicle OFF (LOCK) modeEach door outer handle 8P connectors: disconnectedBody control module connector C (28P): disconnectedBody control module connector G (32P): disconnected
Test point 1	**Body control module connector C (28P) No. 27**
Test point 2	Body ground

Is there battery voltage?

YES

The +B BACK UP wire is OK. **Replace the body control module** .

NO

Repair an open or high resistance in the wire.

14. Open wire check (TS FR DR, TS FR AS lines)

-1. Turn the vehicle to the OFF (LOCK) mode.

-2. Disconnect the following connector.

Body control module connector G (32P)

-3. Check for continuity between test points 1 and 2 respectively.

Driver's door

Test condition	Vehicle OFF (LOCK) modeDriver's door outer handle 8P connector: disconnectedDriver's door outer handle 8P connector: jumped to body groundBody control module connector G (32P): disconnected
Test point 1	**Body control module connector G (32P) No. 22**
Test point 2	Driver's door outer handle 8P connector (female terminals) No. 3: ①

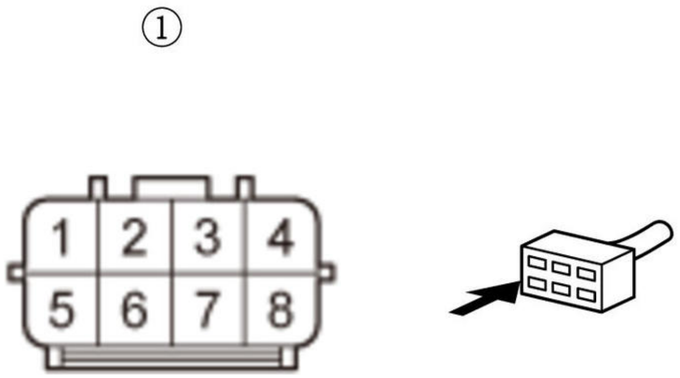

Front passenger's door

Test condition	Vehicle OFF (LOCK) modeFront passenger's door outer handle 8P connector: disconnectedFront passenger's door outer handle 8P connector: jumped to body groundBody control module connector G (32P): disconnected
Test point 1	**Body control module connector G (32P) No. 25**
Test point 2	Front passenger's door outer handle 8P connector (female terminals) No. 3: ①

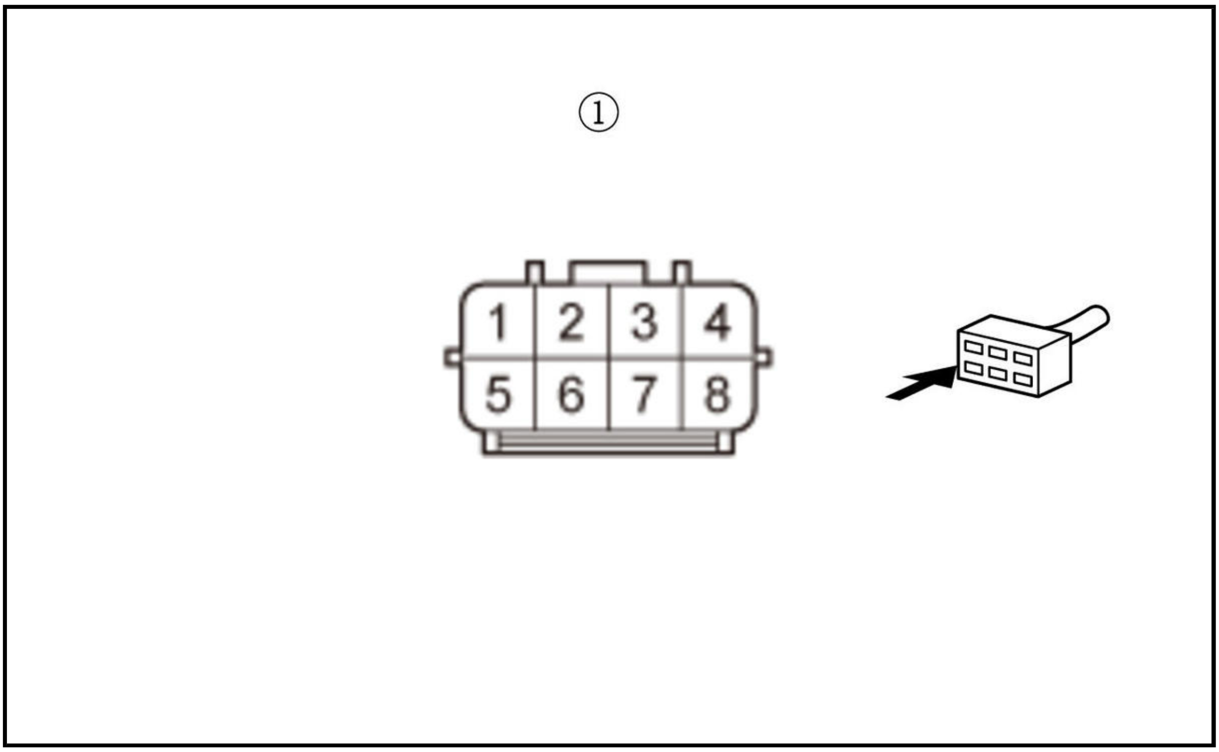

Is there continuity?

YES

The TS FR DR and TS FR AS wires are OK. Go to step 15.

NO

Repair an open or high resistance in the wire.

15. Open wire check (+B BACK UP line)

-1. Disconnect the following connector.

Body control module connector C (28P)

-2. Measure the voltage between test points 1 and 2.

Test condition	Vehicle OFF (LOCK) modeEach door outer handle 8P connectors: disconnectedEach door outer handle 8P connectors: jumped to body groundBody control module connector C (28P): disconnectedBody control module connector G (32P): disconnected
Test point 1	Body control module connector C (28P) No. 27
Test point 2	Body ground

Is there battery voltage?

YES

The +B BACK UP wire is OK. Replace the body control module .

NO

Repair an open or high resistance in the wire.

16. Open wire check (DL FR DR, DL FR AS lines)

-1. Turn the vehicle to the OFF (LOCK) mode.

-2. Remove the jumper wires from the door outer handle connectors.

-3. Disconnect the following connector.

Body control module connector G (32P)

-4. Check for continuity between test points 1 and 2 respectively.

Driver's door

Test condition	Vehicle OFF (LOCK) modeDriver's door outer handle 8P connector: disconnectedBody control module connector G (32P): disconnected
Test point 1	**Body control module connector G (32P) No. 19**
Test point 2	Driver's door outer handle 8P connector (female terminals) No. 7: ①

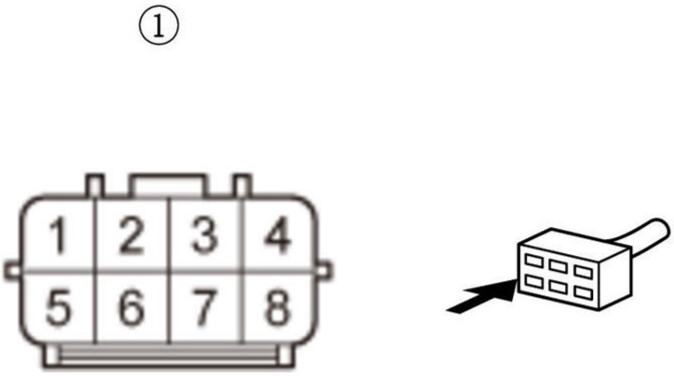

Front passenger's door

Test condition	Vehicle OFF (LOCK) modeFront passenger's door outer handle 8P connector: disconnectedBody control module connector G (32P): disconnected
Test point 1	**Body control module connector G (32P) No. 1**
Test point 2	Front passenger's door outer handle 8P connector (female terminals) No. 7: ①

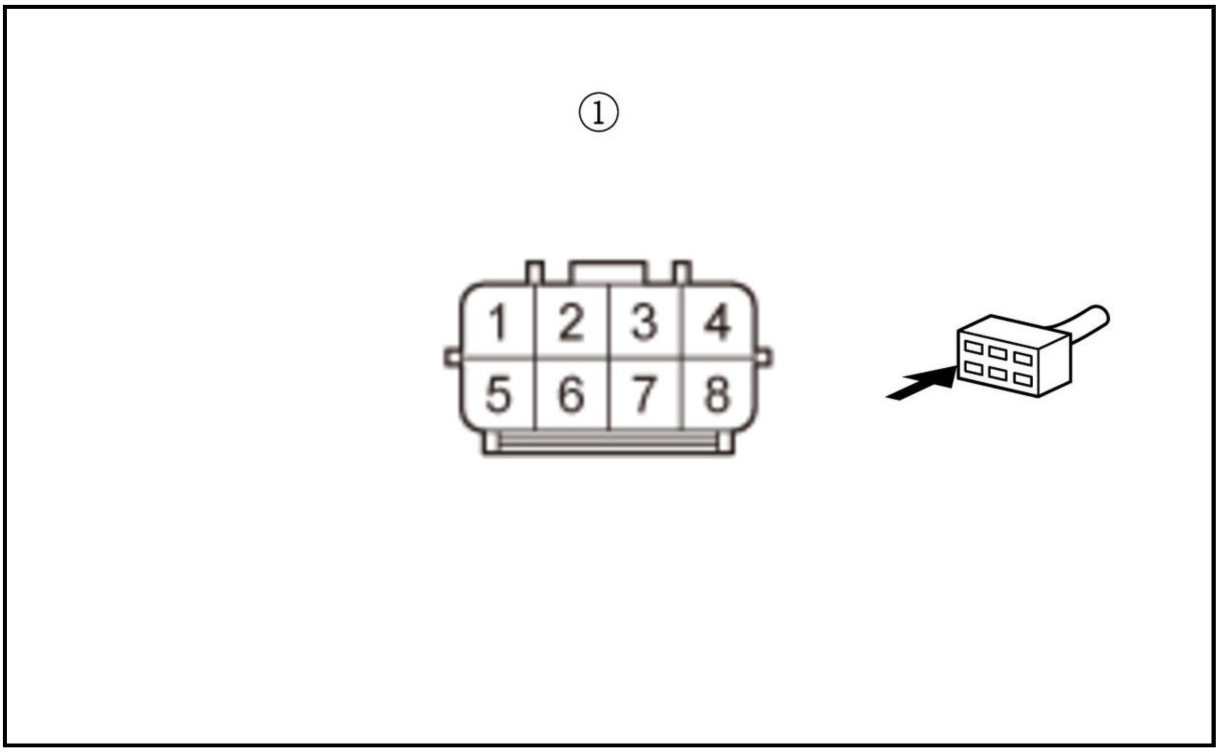

Is there continuity?

YES

The DL FR DR and DL FR AS wires are OK. Go to step 17.

NO

Repair an open or high resistance in the wire.

17. Open wire check (+B BACK UP line)

-1. Disconnect the following connector.

Body control module connector C (28P)

-2. Measure the voltage between test points 1 and 2.

Test condition	Vehicle OFF (LOCK) modeEach door outer handle 8P connectors: disconnectedBody control module connector C (28P): disconnectedBody control module connector G (32P): disconnected
Test point 1	**Body control module connector C (28P) No. 27**
Test point 2	Body ground

Is there battery voltage?

YES

The +B BACK UP wire is OK. **Replace the body control module** .

NO

Repair an open or high resistance in the wire.

The doors will not unlock or lock with the keyless remote, but will unlock or lock with the door outer handles

The doors will not unlock or lock with the keyless remote, but will unlock or lock with the door outer handles

1. Door lock actuator operation check 1

   -1. Put out all the keyless remotes from inside the vehicle, and close all doors and tailgate.

   -2. Press each LOCK and UNLOCK buttons of the keyless remote, at least ten times.

   Do the door lock actuators work normally?

   YES

   Intermittent failure, the system is OK at this time. Check for loose or poor connections.

   NO

   Go to step 2.

2. Keyless access system check 1

   -1. Open the driver's door.

   Does the key-in reminder sound?

   YES

   Replace the body control module .

   NO

   Go to step 3.

3. Keyless access system check 2

   -1. Turn the vehicle to the ON mode.

   Does the system change to ON mode?

   YES

   Go to step 5.

   NO

   Go to step 4.

4. Keyless access system check 3

   -1. With driver's power window open and all of the doors closed, turn the vehicle to the OFF (LOCK) mode.

   -2. Put out all the keyless remotes from inside the vehicle. Hold them outside the open driver's window, at least 20 cm (8.0 in) away from the vehicle.

   -3. Press the engine start/stop switch. The MID should request the keyless remote to touch the engine start/stop switch. The LED on the engine start/stop switch will flash for up to 30 seconds.

   -4. Touch the engine start/stop switch with the keyless remote. The buttons on the keyless remote should be facing you.

   Does the system change to ON mode?

YES

Go to keyless access system symptom troubleshooting "Cannot select ON mode with keyless access, but can select ON mode with the keyless remote touching the engine start/stop switch".

NO

Go to keyless access system symptom troubleshooting "Cannot select ON mode with keyless access and with the keyless remote touching the engine start/stop switch".

5. PCU and keyless access DTC check

-1. Check for PCU and keyless access control unit DTCs with the HDS.

DTC Description	DTC
B	B

DTC Description	DTC
B	B

Are any DTCs indicated?

YES

Go to indicated DTC troubleshooting.

NO

Go to step 6.

6. Determine possible failure area (keyless remote, others)

-1. **Do the keyless access remote check using the all keyless remotes** .

Are the all keyless remotes OK?

YES

Go to step 7.

NO

Replace the keyless remote and recheck.

7. Door lock actuator operation check 2

-1. Turn the vehicle to the OFF (LOCK) mode, and close all doors.

-2. Lock and unlock the doors with the driver's door touch sensors, and lock and unlock the doors with the front passenger's door touch sensors.

Do the door lock actuators work normally?

YES

Do the input test for the body control module , and do all power, ground, and communication input tests. If the body control module input tests prove OK, **replace the body control module** .

NO

Check the B-CAN system DTCs. If not, check the door lock system.

The engine starts but stalls immediately

The engine starts but stalls immediately

1. Keyless access system check 1

   -1. Check the security indicator.

   Does the security indicator blinking?

   YES

   Go to step 2.

   NO

   Go to step 5.

2. Keyless access system check 2

   -1. Select KEYLESS ACCESS CONTROL UNIT from the ONE-PUSH START system select menu with the HDS, and enter KEYLESS ACCESS SYSTEM INFORMATION.

   One-Push - BACKUP CONTROL UNIT - SYSTEM CHECK

   Do the SYSTEM CHECK 1 and 2 with the HDS.

   Are N-1 OK and N-2 OK indicated?

   YES

   Go to step 3.

   YES

   Go to step 6.

   NO

   Troubleshoot the keyless access system according to the result of the SYSTEM CHECK 1 and 2.

3. Keyless access system check 3

   -1. Check the parameter(s) below with the HDS.

Signal	Current conditions	
	Value	Unit
Electrical Steering Lock SWITCH B	B	B

   Is the indicator ON?

   YES

   Go to step 6.

   NO

   Go to step 4.

4. Open wire check (ESL SW B line)

-1. Turn the vehicle to the OFF (LOCK) mode.

-2. Disconnect the following connectors.

Body control module connector G (32P)Electric steering lock 12P connector

-3. Check for continuity between test points 1 and 2.

Test condition	Vehicle OFF (LOCK) modeBody control module connector G (32P): disconnectedElectric steering lock 12P connector: disconnected
Test point 1	Electric steering lock 12P connector (female terminals) No. 8: ①
Test point 2	**Body control module connector G (32P) No. 3**

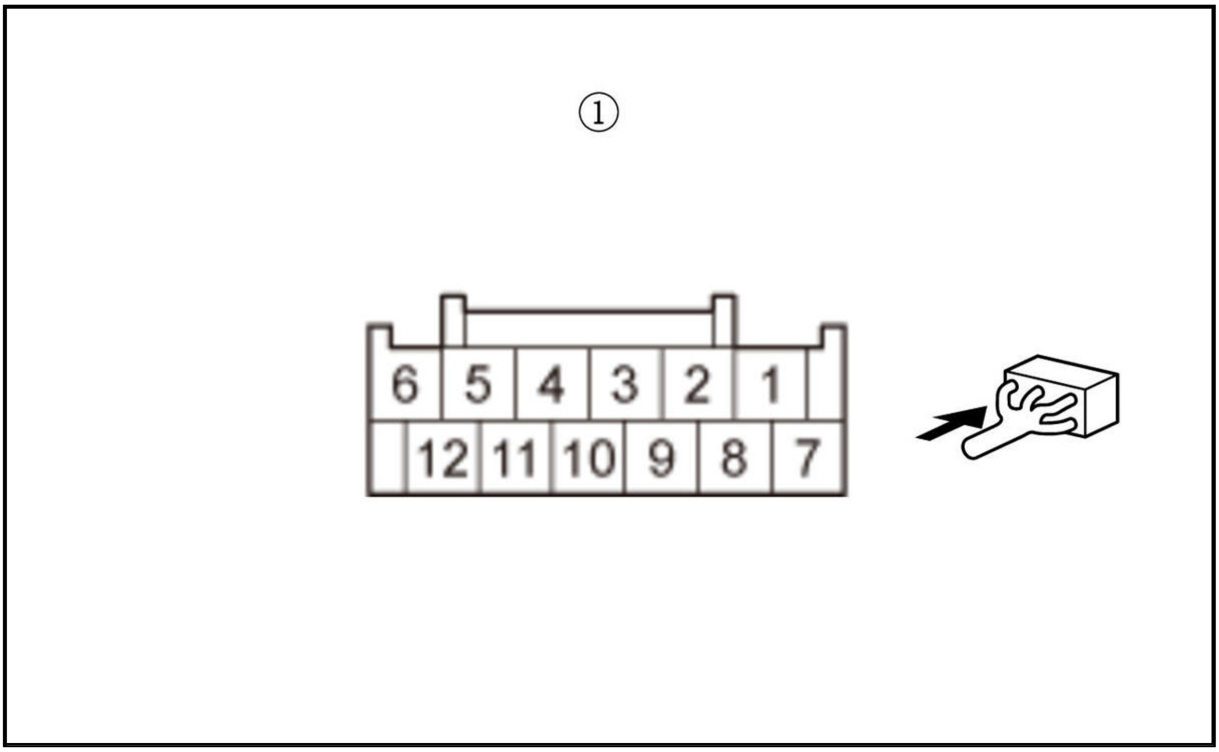

Is there continuity?

YES

The ESL SW B wire is OK. **Replace the body control module** .

NO

Repair an open or high resistance in the wire.

5. Gauge control module check

-1. Select GAUGES from the BODY ELECTRICAL SYSTEM SELECT menu with the HDS.

Self diagnostic function - GAUGES

Select FUNCTIONAL TESTS from the TEST MODE menu with the HDS, and enter SELF TEST.

Does the security indicator blinking?

YES

Go to the PGM-FI system troubleshooting.

NO

Replace the gauge control module .

6. Keyless access system check 4

   -1. With driver's power window open and all of the doors closed, turn the vehicle to the OFF (LOCK) mode.

   -2. Put out all the keyless remotes from inside the vehicle. Hold them outside the open driver's window, at least 20 cm (8.0 in) away from the vehicle.

   -3. Press the engine start/stop switch. The MID should request the keyless remote to touch the engine start/stop switch. The LED on the engine start/stop switch will flash for up to 30 seconds.

   -4. Touch the engine start/stop switch with the keyless remote. The buttons on the keyless remote should be facing you.

   -5. Try to start the engine.

   Does the engine start?

   YES

   Go to step 7.

   NO

   Go to step 8.

7. PGM-FI DTC check

   -1. Check for PGM-FI DTCs with the HDS.

DTC Description	Confirmed DTC	Pending DTC
B	B	B

   Are any DTCs indicated?

   YES

   Troubleshoot the PGM-FI DTCs.

   NO

   Replace the body control module .

8. Keyless access system check 5

   -1. Select BACKUP CONTROL UNIT from the ONE-PUSH START system select menu with the HDS, and enter SYSTEM INFORMATION.

   One-Push - BACKUP CONTROL UNIT - SYSTEM CHECK

   Do the SYSTEM CHECK with the HDS.

   Is N-1 OK indicated?

   YES

Go to step 9.

YES

Go to step 10.

NO

Troubleshoot the backup control unit according to the result of the SYSTEM CHECK.

9. Keyless access system check 6

   -1. Check the parameter(s) below with the HDS.

Signal	**Current conditions**	
	Value	**Unit**
Electrical Steering Lock SWITCH B	B	B

   Is the indicator ON?

   YES

   Troubleshoot the PGM-FI symptom troubleshooting.

   NO

   Go to step 10.

10. Body control module check (substitution)

   -1. **Substitute a known-good body control module** .

   -2. Select REGISTRATION from the ONE-PUSH START system select menu with the HDS, then select REPLACE KEYLESS ACCESS CONTROL UNIT.

   -3. Turn the vehicle to the ON mode.

   Does the system change to ON mode?

   YES

   Replace the original body control module .

   NO

   Go to the PGM-FI system troubleshooting.

KEYLESS/POWER DOOR LOCKS/SECURITY SYSTEM SYMPTOM TROUBLESHOOTING

AUTO DOOR UNLOCK does not work

AUTO DOOR UNLOCK does not work

NOTE:

- Before troubleshooting, make sure the fuses associated with the system is OK.
- There are two pairs of fuses in the same circuit (L SIDE DOOR LOCK and UNLOCK circuits, R SIDE DOOR LOCK and UNLOCK circuits, DR DOOR LOCK and UNLOCK circuits). If one circuit's fuse is blown, make sure to check the other circuit's fuse in the same circuit. If necessary, replace the blown fuse(s).

- Check if Auto Door Unlock feature selected OFF, under MID customized settings for each remote transmitter: Driver 1 and 2.Make sure to test operation of each Auto Door Unlock setting to check function.

1. Abnormal circuit check 1

   -1. Connect the HDS to the data link connector (DLC) .

   -2. Select DOOR LOCKS from the BODY ELECTRICAL SYSTEM SELECT menu with the HDS, and enter FUNCTIONAL TESTS.

   BODY ELECTRICAL - DOOR LOCKS - Functional Tests - Inspection

   Select UNLOCK ALL DOORS with the HDS.

   Do the door lock actuators work normally?

   YES

   Go to step 18.

   NO

   Driver's door lock circuit: go to step 2.

   NO

   Front passenger's door lock circuit: go to step 6.

   NO

   Left rear door lock circuit: go to step 10.

   NO

   Right rear door lock circuit: go to step 14.

2. Determine possible failure area (driver's door lock actuator, others)

   -1. Disconnect the following connector.

Driver's door latch 10P connector

   -2. Test the driver's door lock actuator.

   Is the door lock actuator OK?

   YES

   Go to step 3.

   NO

   Faulty door lock actuator; replace the driver's door latch .

3. Open wire check (DR DOOR UNLOCK line)

   -1. Disconnect the following connector.

Under-dash fuse/relay box connector E (18P)

-2. Check for continuity between test points 1 and 2.

Test condition	Vehicle OFF (LOCK) modeUnder-dash fuse/relay box connector E (18P): disconnectedDriver's door latch 10P connector: disconnected
Test point 1	Under-dash fuse/relay box connector E (18P) (female terminals) No. 16: ①
Test point 2	Driver's door latch 10P connector (female terminals) No. 1: ②

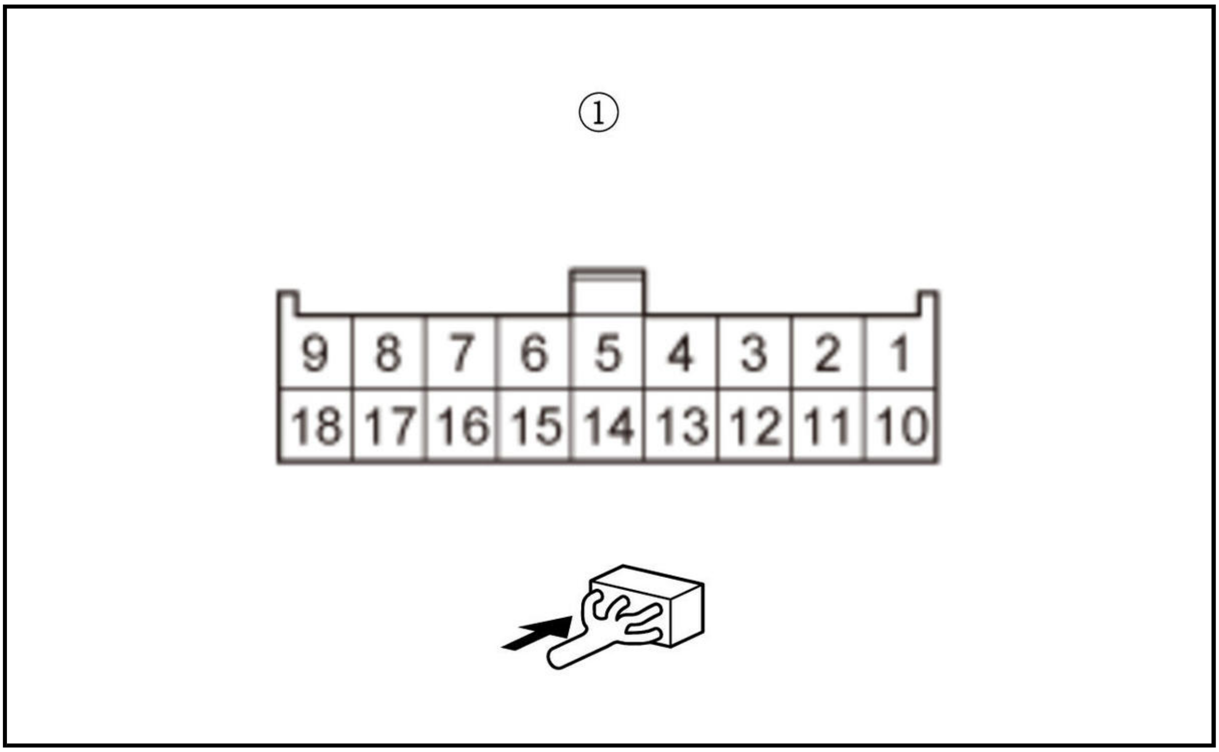
①
9 8 7 6 5 4 3 2 1
18 17 16 15 14 13 12 11 10

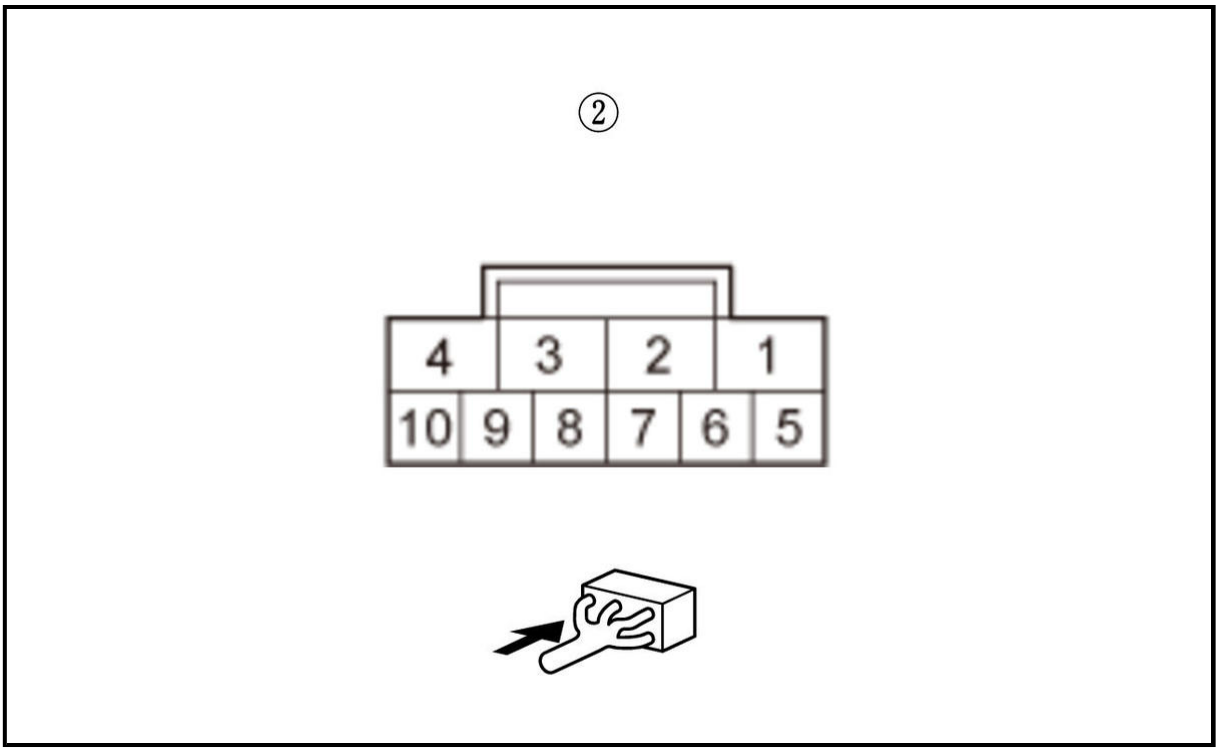
②
4 3 2 1
10 9 8 7 6 5

Is there continuity?

YES

The DR DOOR UNLOCK wire is OK. Go to step 4.

NO

Repair an open or high resistance in the wire.

4. Open wire check (DR DOOR LOCK line)

-1. Check for continuity between test points 1 and 2.

Test condition	Vehicle OFF (LOCK) modeUnder-dash fuse/relay box connector E (18P): disconnectedDriver's door latch 10P connector: disconnected
Test point 1	Under-dash fuse/relay box connector E (18P) (female terminals) No. 15: ①
Test point 2	Driver's door latch 10P connector (female terminals) No. 4: ②

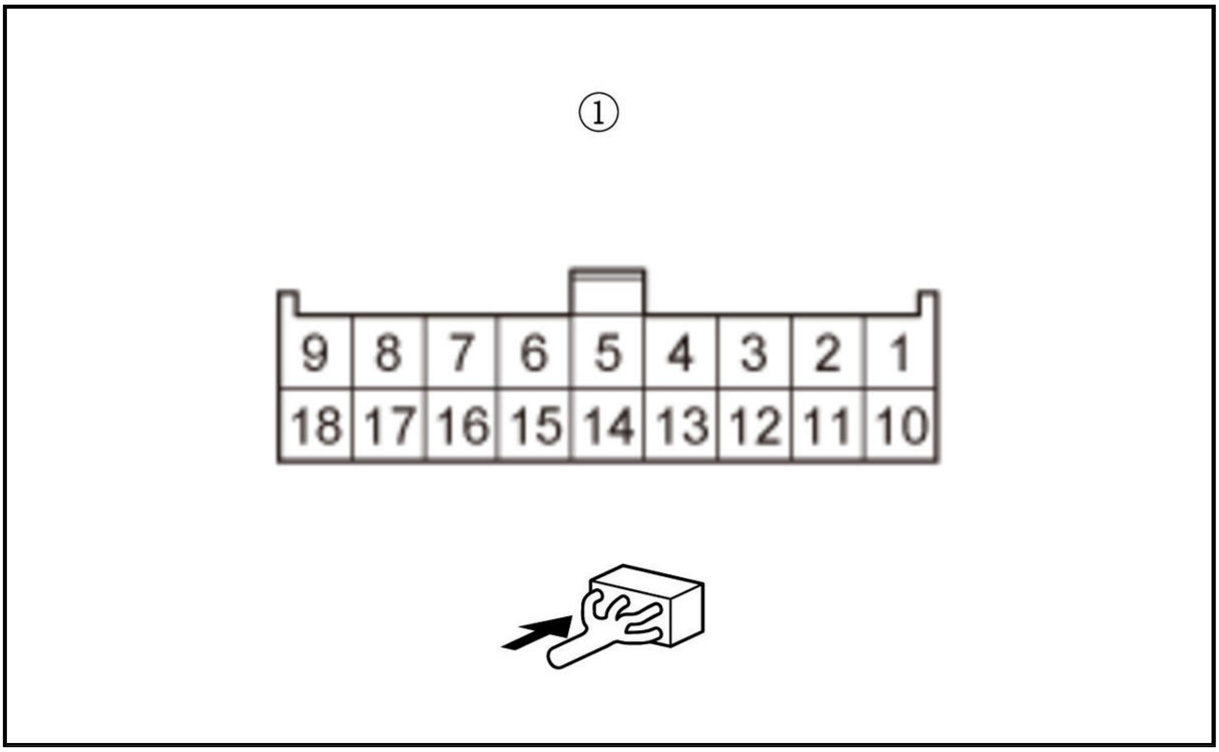
①
9
8
7
6
5
4
3
2
1
18
17
16
15
14
13
12
11
10

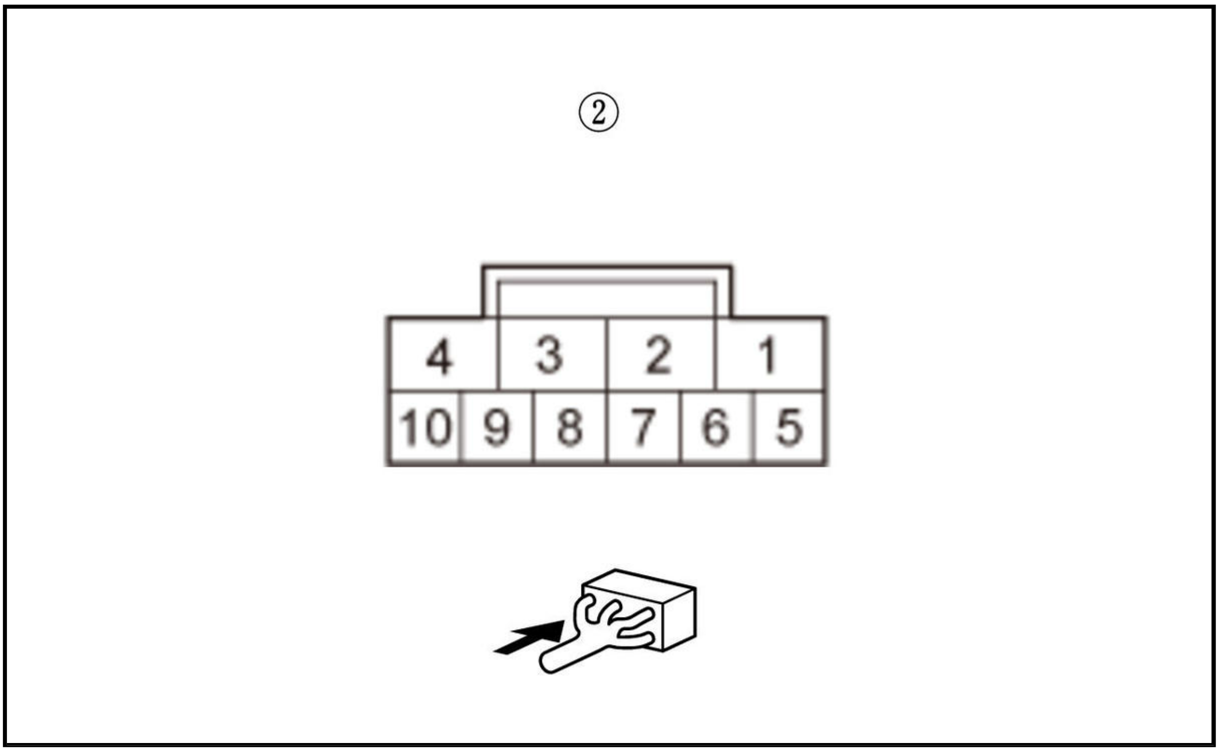
②
4
3
2
1
10
9
8
7
6
5

Is there continuity?

YES

The DR DOOR LOCK wire is OK. Go to step 5.

NO

Repair an open or high resistance in the wire.

5. Open wire check (DR DOOR UNLOCK RELAY CL- line, DOOR UNLOCK RELAY CL- line)

-1. Disconnect the following connectors.

Body control module connector B (36P)Under-dash fuse/relay box connector G (20P)

-2. Check for continuity between test points 1 and 2.

Test condition	Vehicle OFF (LOCK) modeUnder-dash fuse/relay box connector E (18P): disconnectedUnder-dash fuse/relay box connector G (20P): disconnectedBody control module connector B (36P): disconnectedDriver's door latch 10P connector: disconnected
Test point 1	**Body control module connector B (36P) No. 31**
Test point 2	Under-dash fuse/relay box connector G (20P) (female terminals) (with keyless access system) No. 9: ① Under-dash fuse/relay box connector G (20P) (female terminals) (without keyless access system) No. 8: ①

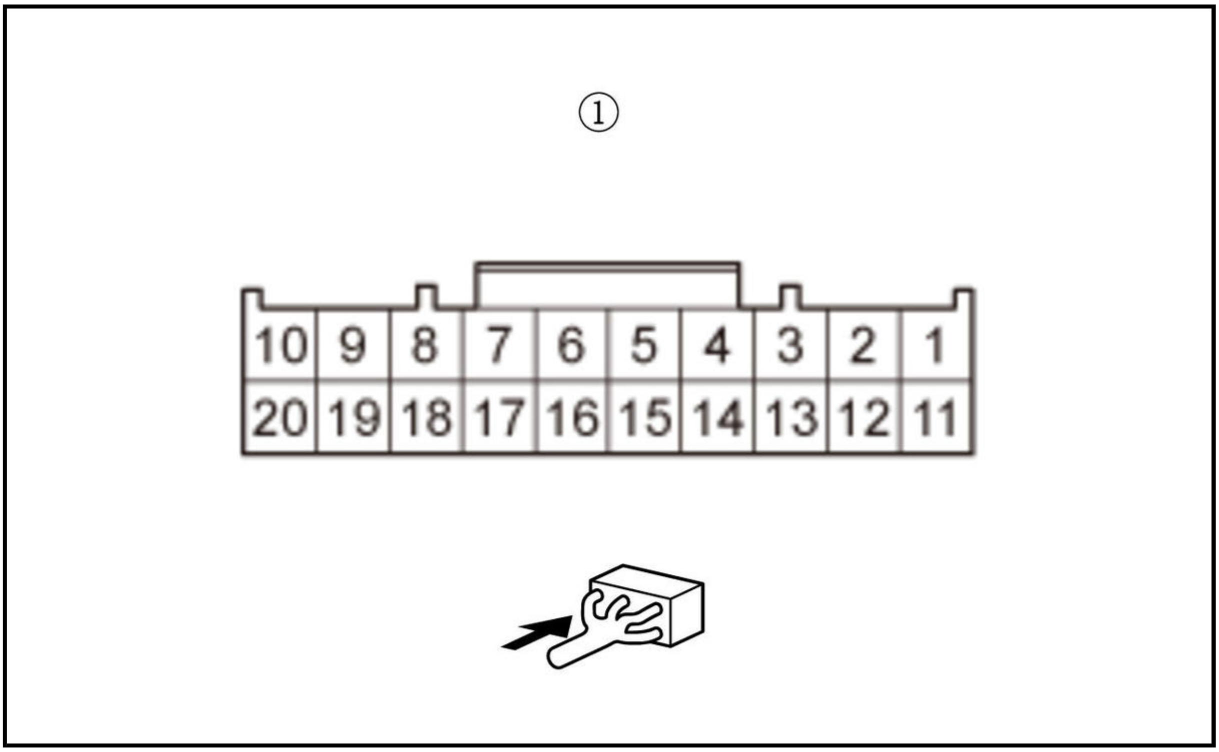

Is there continuity?

YES

The DR DOOR UNLOCK RELAY CL- wire is OK. **Replace the body control module** .

NO

Repair an open or high resistance in the wire.

6. Determine possible failure area (front passenger's door lock actuator, others)

-1. Disconnect the following connector.

Front passenger's door latch 10P connector

-2. **Test the front passenger's door lock actuator**.

Is the door lock actuator OK?

YES

Go to step 7.

NO

Faulty door lock actuator; **replace the front passenger's door latch** .

7. Open wire check (R SIDE DOOR UNLOCK line)

-1. Disconnect the following connector.

Under-dash fuse/relay box connector E (18P)

-2. Check for continuity between test points 1 and 2.

Test condition	Vehicle OFF (LOCK) modeUnder-dash fuse/relay box connector E (18P): disconnectedFront passenger's door latch 10P connector: disconnected
Test point 1	Under-dash fuse/relay box connector E (18P) (female terminals) No. 9: ①
Test point 2	Front passenger's door latch 10P connector (female terminals) No. 1: ②

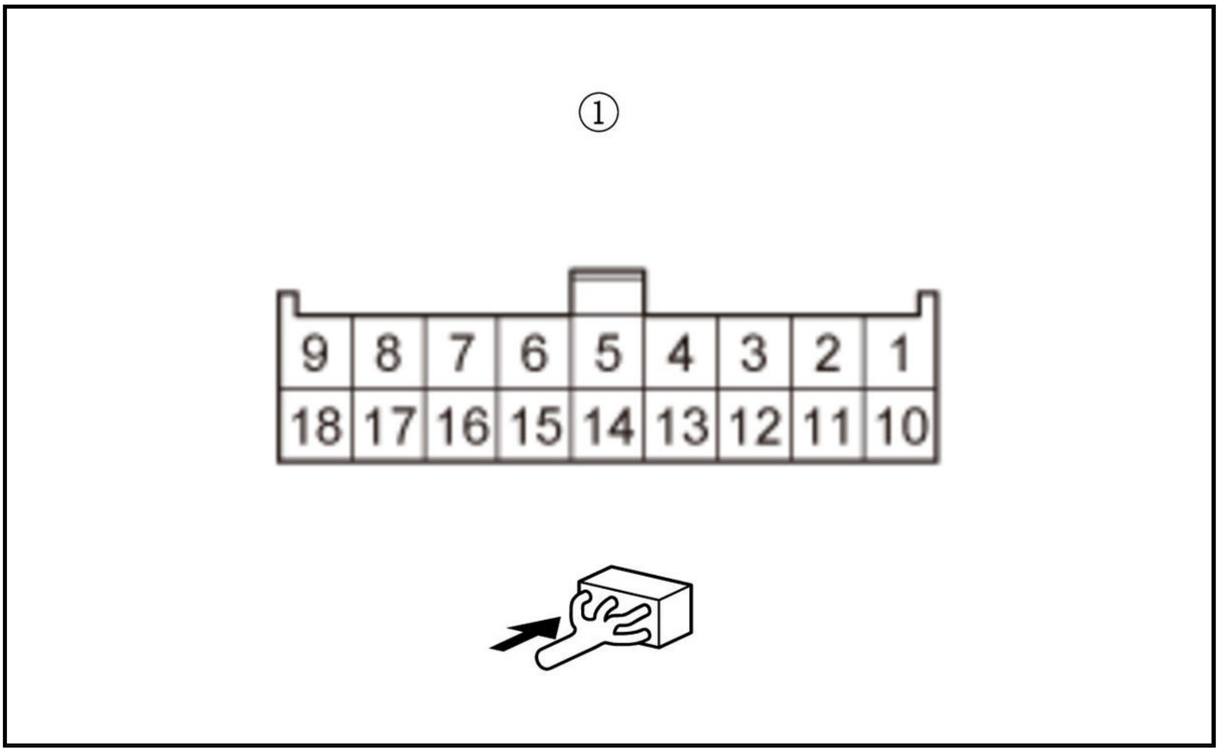

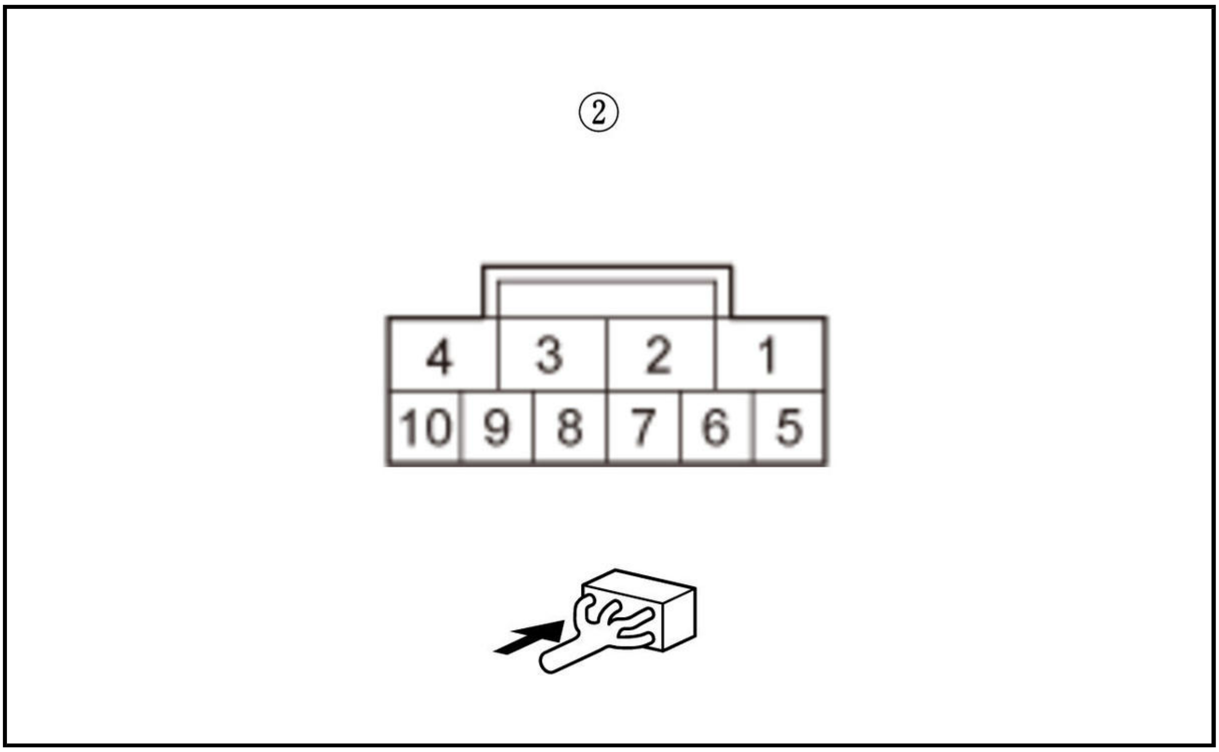

Is there continuity?

YES

The R SIDE DOOR UNLOCK wire is OK. Go to step 8.

NO

Repair an open or high resistance in the wire.

8. Open wire check (R SIDE DOOR LOCK line)

-1. Check for continuity between test points 1 and 2.

Test condition	Vehicle OFF (LOCK) modeUnder-dash fuse/relay box connector E (18P): disconnectedFront passenger's door latch 10P connector: disconnected
Test point 1	Under-dash fuse/relay box connector E (18P) (female terminals) No. 18: ①
Test point 2	Front passenger's door latch 10P connector (female terminals) No. 4: ②

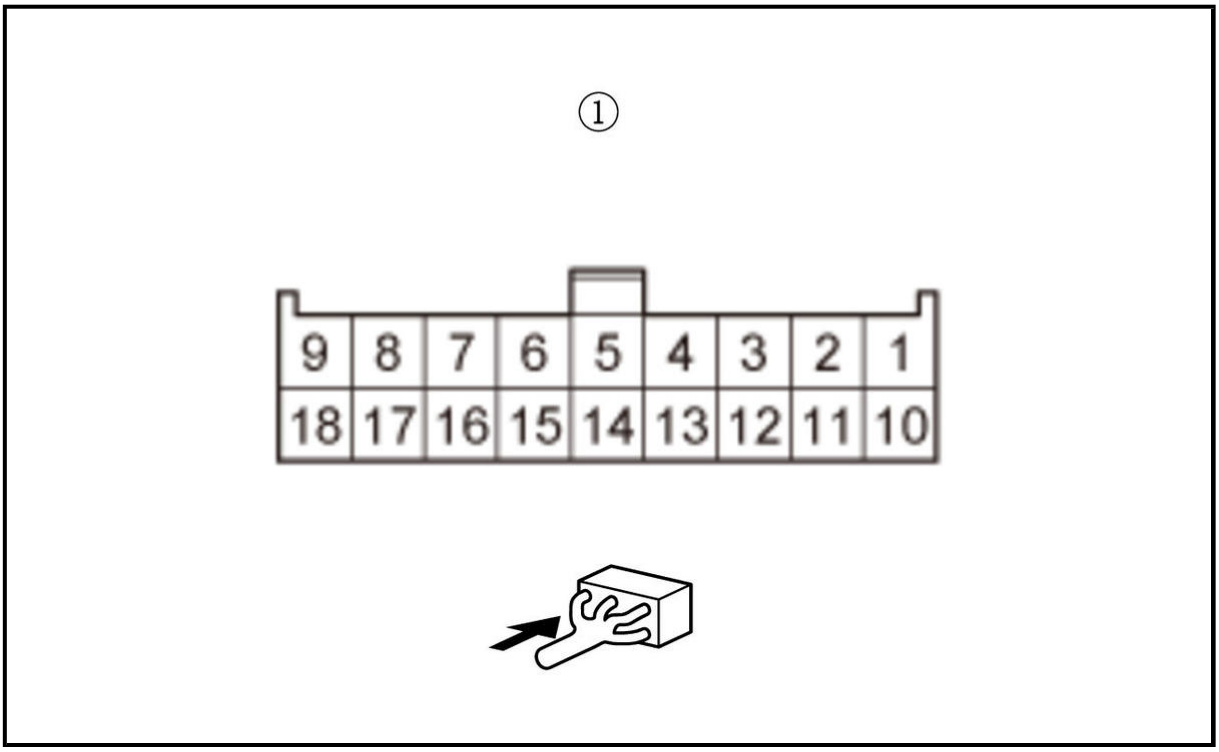
①
9
8
7
6
5
4
3
2
1
18
17
16
15
14
13
12
11
10

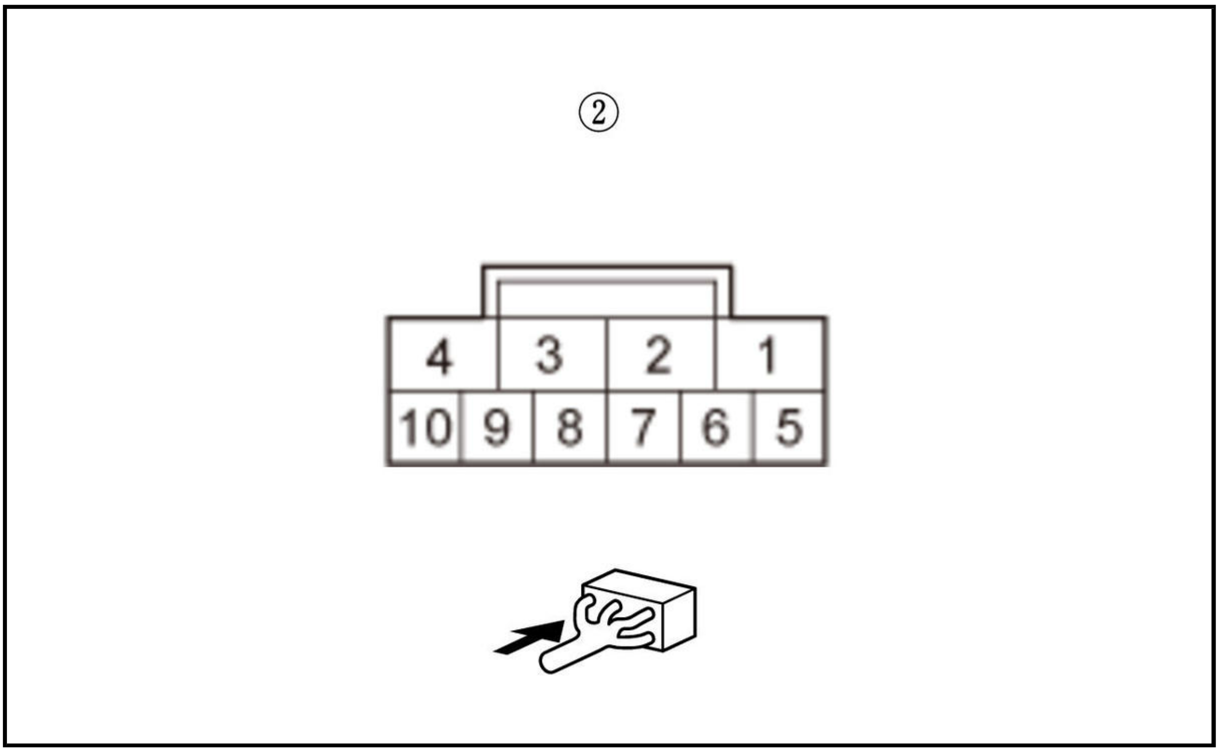
②
4
3
2
1
10
9
8
7
6
5

Is there continuity?

YES

The R SIDE DOOR LOCK wire is OK. Go to step 9.

NO

Repair an open or high resistance in the wire.

9. Open wire check (DOOR UNLOCK RELAY CL- line)

-1. Disconnect the following connectors.

Body control module connector B (36P)Under-dash fuse/relay box connector F (12P)

-2. Check for continuity between test points 1 and 2.

Test condition	Vehicle OFF (LOCK) modeUnder-dash fuse/relay box connector E (18P): disconnectedUnder-dash fuse/relay box connector F (12P): disconnectedBody control module connector B (36P): disconnectedFront passenger's door latch 10P connector: disconnected
Test point 1	**Body control module connector B (36P) No. 32**
Test point 2	Under-dash fuse/relay box connector F (12P) (female terminals) No. 5: ①

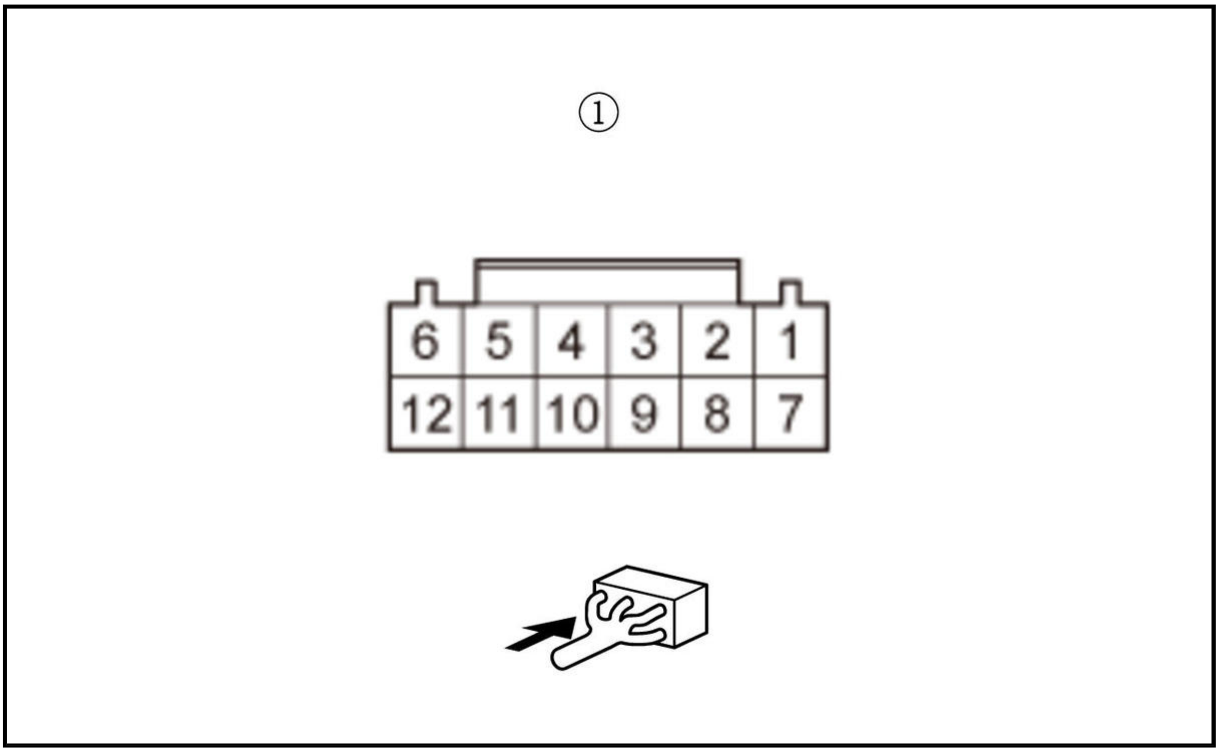

Is there continuity?

YES

The DOOR UNLOCK RELAY CL- wire is OK. **Replace the body control module** .

NO

Repair an open or high resistance in the wire.

10. Determine possible failure area (left rear door lock actuator, others)

-1. Disconnect the following connector.

Left rear door latch 10P connector

-2. **Test the left rear door lock actuator**.

Is the door lock actuator OK?

YES

Go to step 11.

NO

Faulty door lock actuator; **replace the left rear door latch** .

11. Open wire check (L SIDE DOOR UNLOCK line)

-1. Disconnect the following connector.

Under-dash fuse/relay box connector B (22P)

-2. Check for continuity between test points 1 and 2.

Test condition	Vehicle OFF (LOCK) modeUnder-dash fuse/relay box connector B (22P): disconnectedLeft rear door latch 10P connector: disconnected
Test point 1	Under-dash fuse/relay box connector B (22P) (female terminals) No. 16: ①
Test point 2	Left rear door latch 10P connector (female terminals) No. 1: ②

①

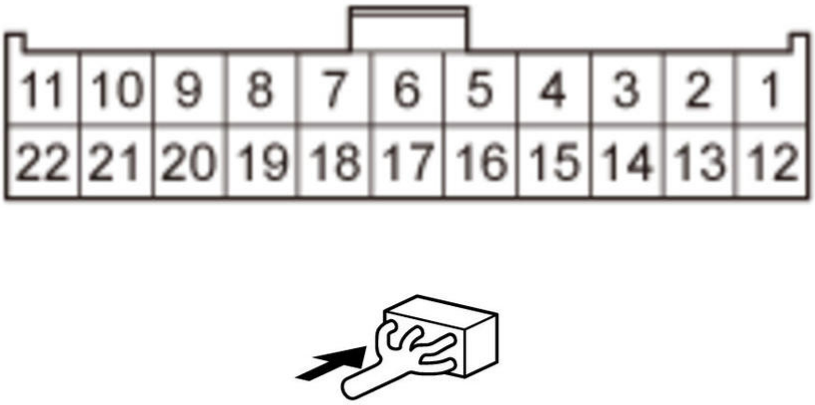
11
10
9
8
7
6
5
4
3
2
1
22
21
20
19
18
17
16
15
14
13
12

②

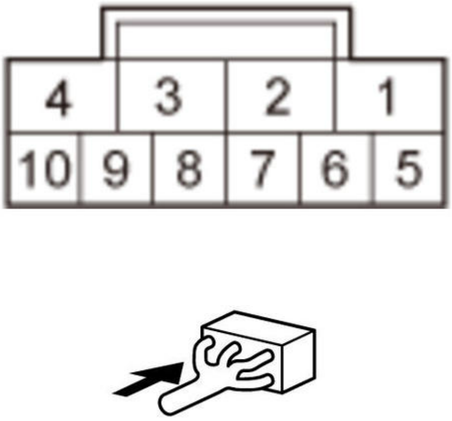
4
3
2
1
10
9
8
7
6
5

Is there continuity?

YES

The L SIDE DOOR UNLOCK wire is OK. Go to step 12.

NO

Repair an open or high resistance in the wire.

12. Open wire check (L SIDE DOOR LOCK line)

-1. Check for continuity between test points 1 and 2.

Test condition	Vehicle OFF (LOCK) modeUnder-dash fuse/relay box connector B (22P): disconnectedLeft rear door latch 10P connector: disconnected
Test point 1	Under-dash fuse/relay box connector B (22P) (female terminals) No. 18: ①
Test point 2	Left rear door latch 10P connector (female terminals) No. 4: ②

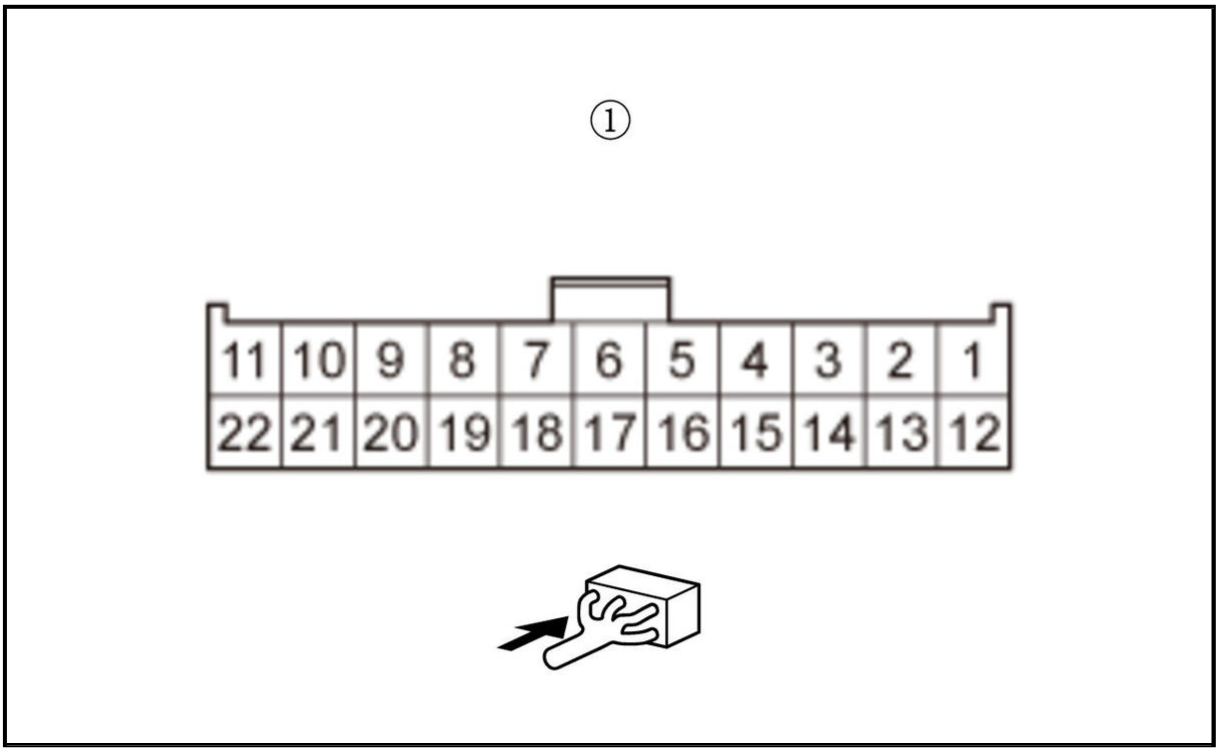

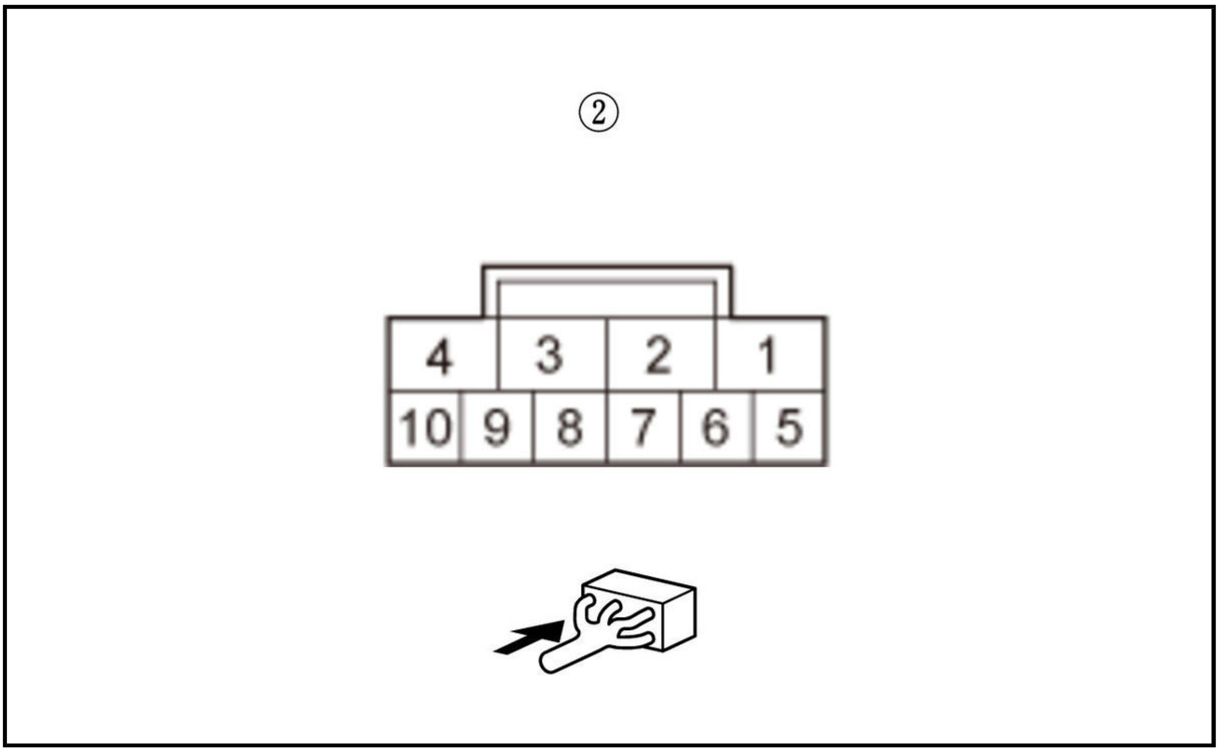

Is there continuity?

YES

The L SIDE DOOR LOCK wire is OK. Go to step 13.

NO

Repair an open or high resistance in the wire.

13. Open wire check (DOOR UNLOCK RELAY CL- line)

-1. Disconnect the following connectors.

Body control module connector B (36P)Under-dash fuse/relay box connector F (12P)

-2. Check for continuity between test points 1 and 2.

Test condition	Vehicle OFF (LOCK) modeUnder-dash fuse/relay box connector B (22P): disconnectedUnder-dash fuse/relay box connector F (12P): disconnectedBody control module connector B (36P): disconnectedLeft rear door latch 10P connector: disconnected
Test point 1	**Body control module connector B (36P) No. 32**
Test point 2	Under-dash fuse/relay box connector F (12P) (female terminals) No. 5: ①

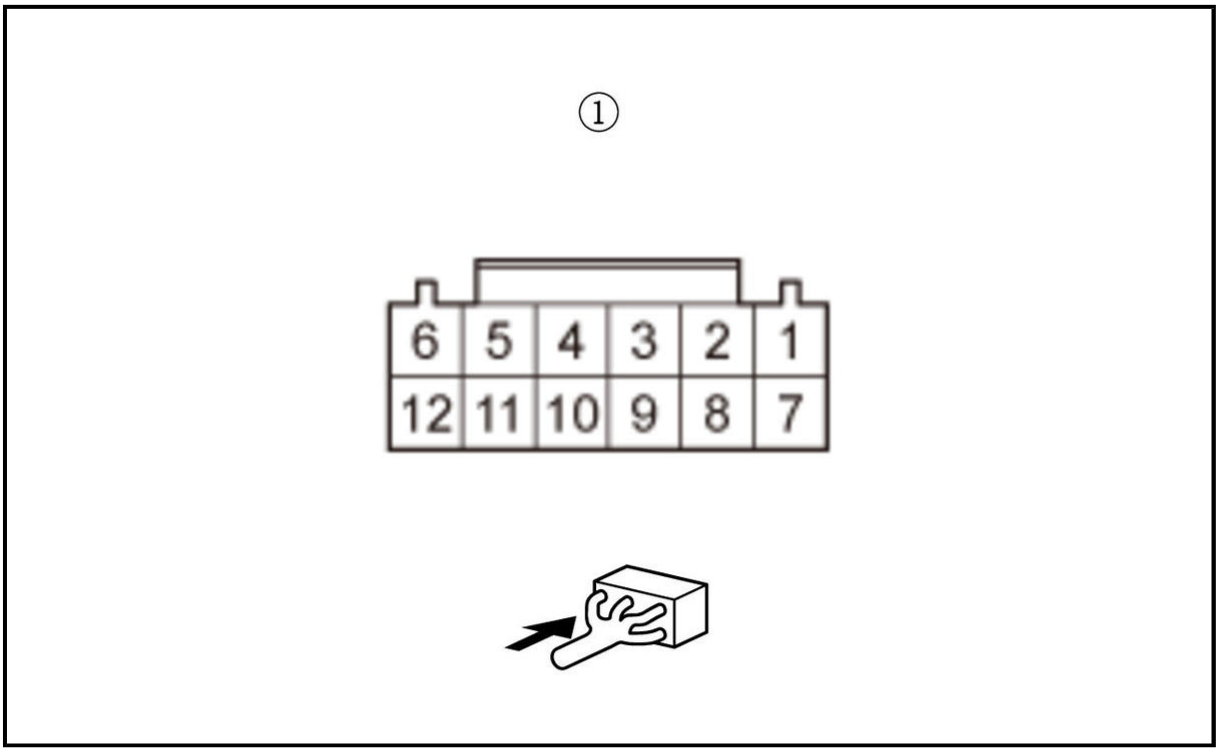

Is there continuity?

YES

The DOOR UNLOCK RELAY CL- wire is OK. **Replace the body control module** .

NO

Repair an open or high resistance in the wire.

14. Determine possible failure area (right rear door lock actuator, others)

-1. Reconnect the following connector.

Under-dash fuse/relay box connector C (27P)

-2. Disconnect the following connector.

Right rear door latch 10P connector

-3. **Test the right rear door lock actuator**.

Is the door lock actuator OK?

YES

Go to step 15.

NO

Faulty door lock actuator; **replace the right rear door latch** .

15. Open wire check (R SIDE DOOR UNLOCK line)

-1. Disconnect the following connector.

Under-dash fuse/relay box connector B (22P)

-2. Check for continuity between test points 1 and 2.

Test condition	Vehicle OFF (LOCK) modeUnder-dash fuse/relay box connector B (22P): disconnectedRight rear door latch 10P connector: disconnected
Test point 1	Under-dash fuse/relay box connector B (22P) (female terminals) No. 12: ①
Test point 2	Right rear door latch 10P connector (female terminals) No. 1: ②

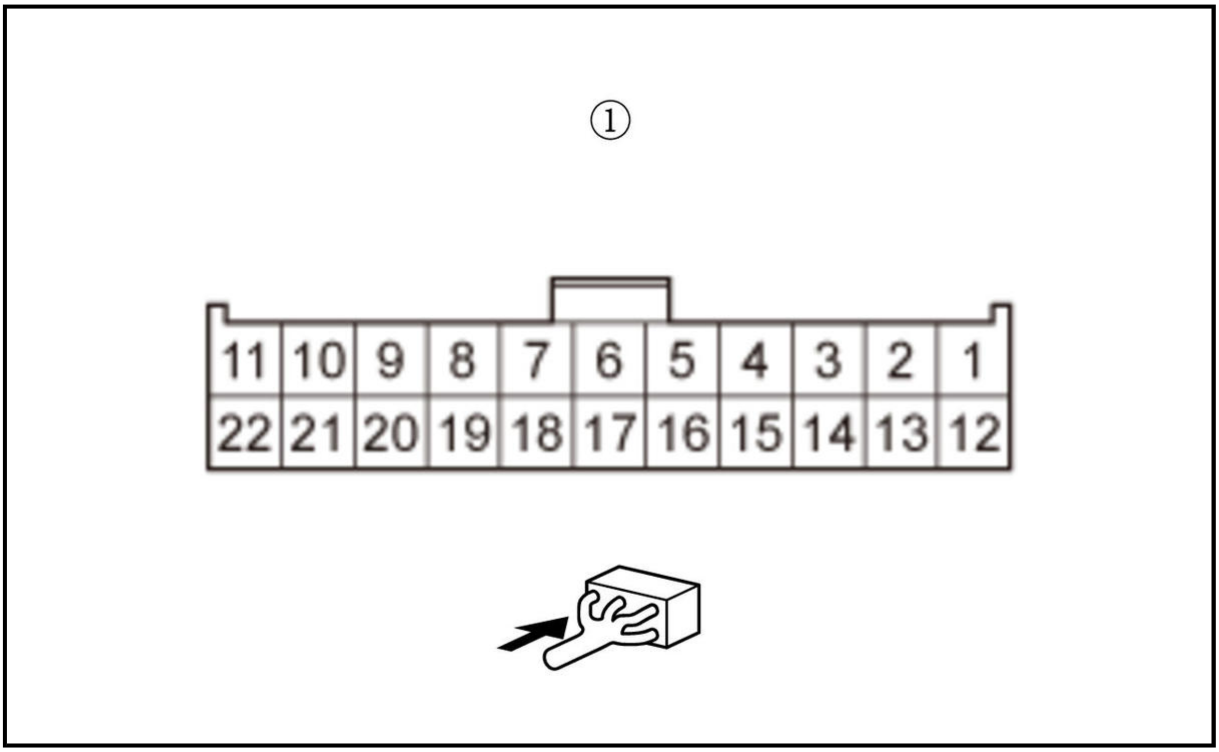
①
11
10
9
8
7
6
5
4
3
2
1
22
21
20
19
18
17
16
15
14
13
12

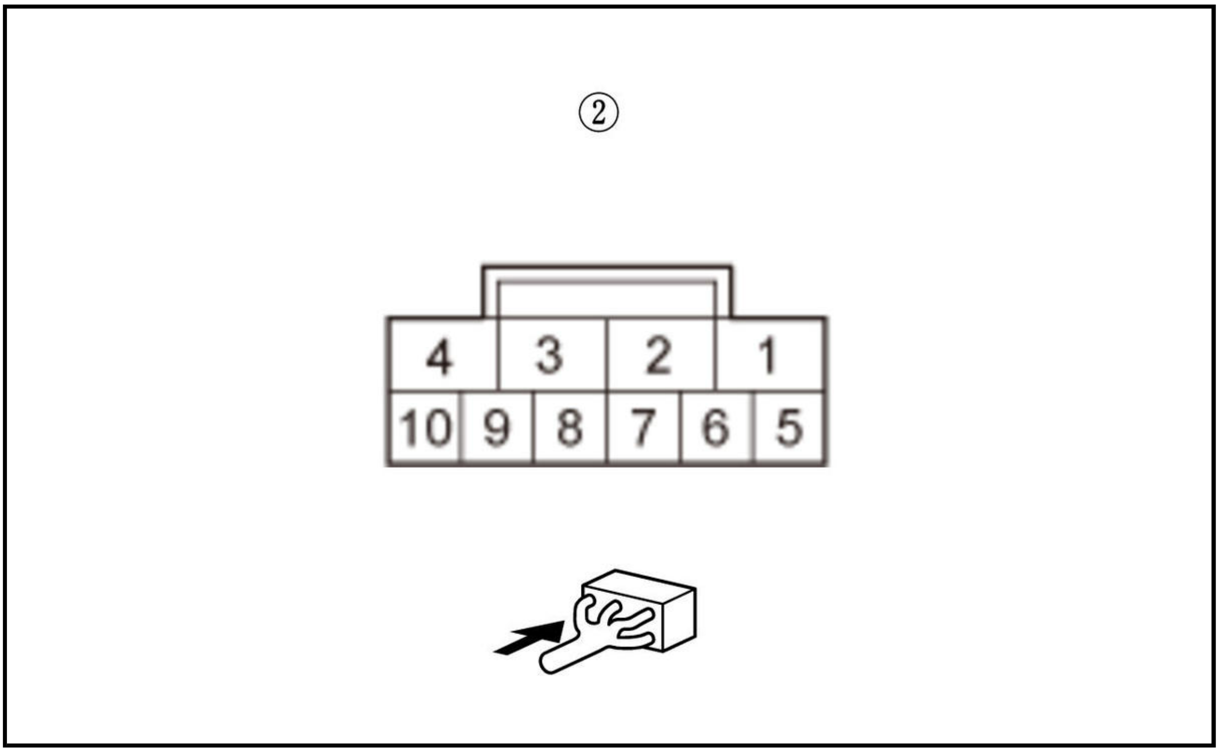
②
4
3
2
1
10
9
8
7
6
5

Is there continuity?

YES

The R SIDE DOOR UNLOCK wire is OK. Go to step 16.

NO

Repair an open or high resistance in the wire.

16. Open wire check (R SIDE DOOR LOCK line)

-1. Check for continuity between test points 1 and 2.

Test condition	Vehicle OFF (LOCK) modeUnder-dash fuse/relay box connector B (22P): disconnectedRight rear door latch 10P connector: disconnected
Test point 1	Under-dash fuse/relay box connector B (22P) (female terminals) No. 1: ①
Test point 2	Right rear door latch 10P connector (female terminals) No. 4: ②

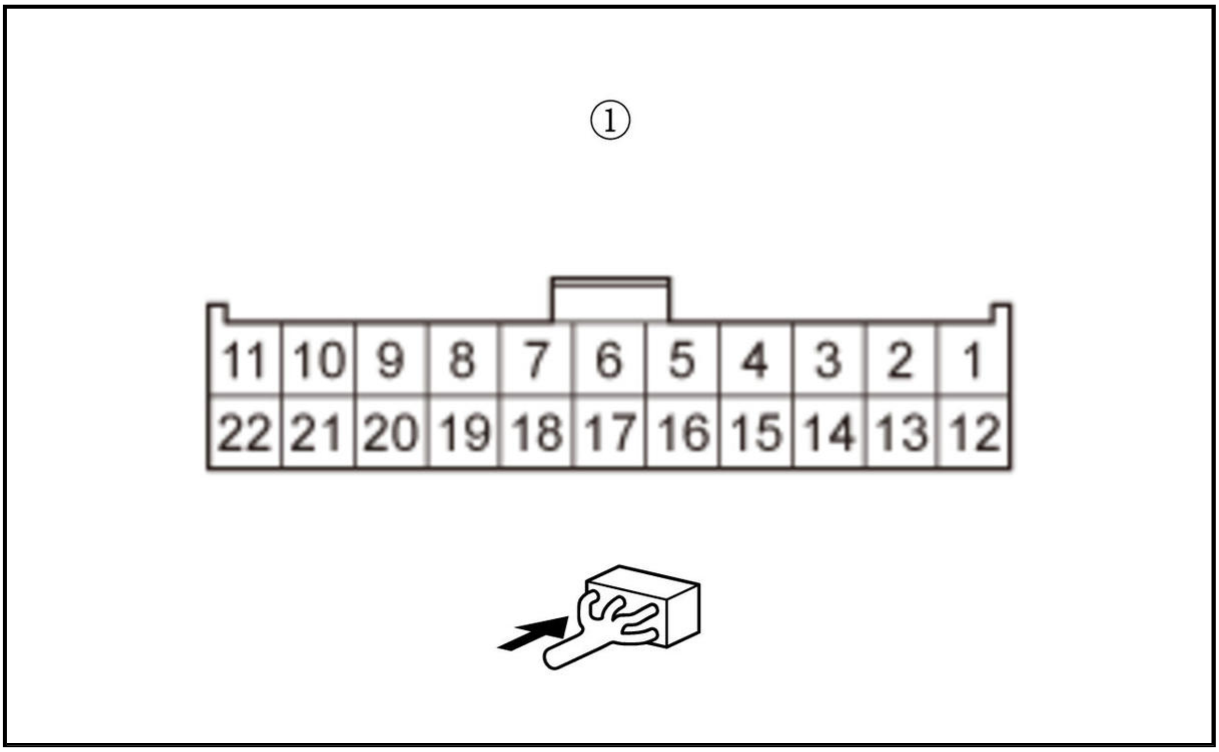
①
11 10 9 8 7 6 5 4 3 2 1
22 21 20 19 18 17 16 15 14 13 12

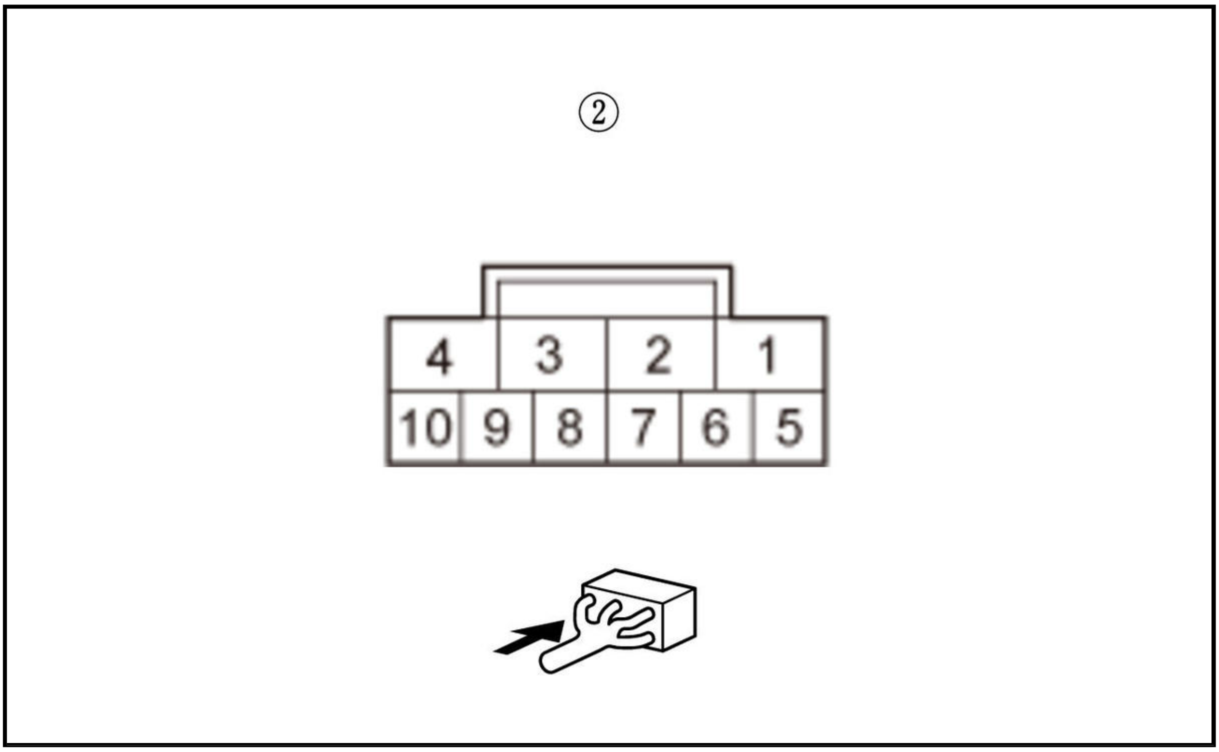
②
4 3 2 1
10 9 8 7 6 5

Is there continuity?

YES

The R SIDE DOOR LOCK wire is OK. Go to step 17.

NO

Repair an open or high resistance in the wire.

17. Open wire check (DOOR UNLOCK RELAY CL- line)

-1. Disconnect the following connector.

Body control module connector B (36P)Under-dash fuse/relay box connector F (12P)

-2. Check for continuity between test points 1 and 2.

Test condition	Vehicle OFF (LOCK) modeUnder-dash fuse/relay box connector B (22P): disconnectedUnder-dash fuse/relay box connector F (12P): disconnectedBody control module connector B (36P): disconnectedRight rear door latch 10P connector: disconnected
Test point 1	**Body control module connector B (36P) No. 32**
Test point 2	Under-dash fuse/relay box connector F (12P) (female terminals) No. 5: ①

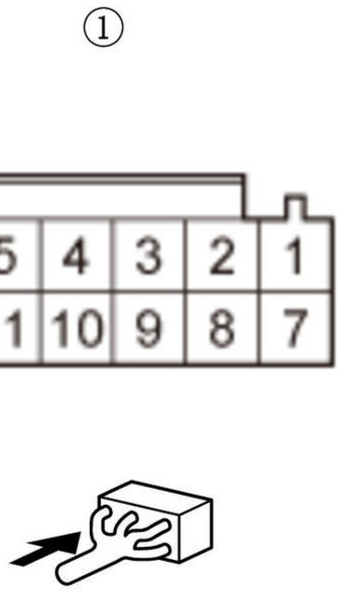

Is there continuity?

YES

The DOOR UNLOCK RELAY CL- wire is OK. **Replace the body control module** .

NO

Repair an open or high resistance in the wire.

18. Abnormal circuit check 2

-1. Check the parameter(s) below with the HDS when each switch is operating.

Multiplex Control Unit, Door (Power Window Master Switch)

Signal	Current conditions	
	Value	Unit
Driver's Door Lock Knob Switch(UNLOCK)	B	B
Passenger's Door Lock Knob Switch(UNLOCK)	B	B

Body Control Module

Signal	Current conditions	
	Value	Unit
Driver's Door Switch	B	B
Driver's Rear Door Lock Knob Switch(UNLOCK)	B	B
Passenger's Rear Door Lock Knob Sw. (UNLOCK)	B	B

Is each switch information OK?

YES

Replace the body control module .

NO

Driver's door switch circuit: go to step 19.

NO

Driver's door lock knob switch circuit: go to step 21.

NO

Front passenger's door lock knob switch circuit: go to step 27.

NO

Left rear door lock knob switch circuit: go to step 33.

NO

Right rear door lock knob switch circuit: go to step 39.

19. Driver's door switch operation check

-1. Turn the vehicle to the OFF (LOCK) mode.

-2. Remove the driver's door switch.

-3. Disconnect the following connector.

Driver's door switch 1P connector

-4. Check for continuity between test points 1 and 2.

Test point 1	Driver's door switch 1P connector: ①

Test point 2	Switch ground: ②

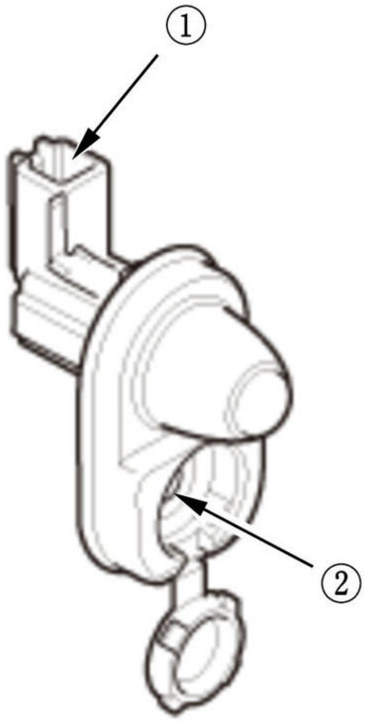

Is there no continuity when you press the switch and is there continuity when you release the switch?

YES

Go to step 20.

NO

Replace the driver's door switch.

20. Shorted wire check (FL DOOR SW line)

-1. Disconnect the following connector.

Body control module connector D (40P)

-2. Check for continuity between test points 1 and 2.

Test condition	Vehicle OFF (LOCK) modeBody control module connector D (40P): disconnectedDriver's door switch 1P connector: disconnected
Test point 1	**Body control module connector D (40P) No. 22**
Test point 2	Body ground

Is there continuity?

YES

Repair a short to ground in the wire.

NO

The FL DOOR SW wire is OK. **Replace the body control module** .

21. Keyless/power door locks/security system check 1

-1. With the driver's door lock knob switch in UNLOCK position, check the parameter(s) below with the HDS.

Signal	Current conditions	
	Value	Unit
Driver's Door Lock Knob Switch(UNLOCK)	B	B

Is information value ON?

YES

Go to step 22.

NO

Go to step 24.

22. Determine possible failure area (driver's door lock knob switch, others)

-1. Turn the vehicle to the OFF (LOCK) mode.

-2. Disconnect the following connector.

Driver's door latch 10P connector

-3. Check the parameter(s) below with the HDS.

Signal	Current conditions	
	Value	Unit
Driver's Door Lock Knob Switch(UNLOCK)	B	B

Is information value OFF?

YES

Faulty driver's door lock knob switch; **replace the driver's door latch** .

NO

Go to step 23.

23. Shorted wire check (DR SILCON UNLOCK line)

-1. Turn the vehicle to the OFF (LOCK) mode.

-2. Disconnect the following connector.

Power window master switch 37P connector

-3. Check for continuity between test points 1 and 2.

Test condition	Vehicle OFF (LOCK) modeDriver's door latch 10P connector: disconnectedPower window master switch 37P connector: disconnected
Test point 1	**Power window master switch 37P connector No. 20**

Test point 2	Body ground

Is there continuity?

YES

Repair a short to ground in the wire.

NO

The DR SILCON UNLOCK wire is OK. **Replace the power window master switch** .

24. Keyless/power door locks/security system check 2

-1. Turn the vehicle to the OFF (LOCK) mode.

-2. Disconnect the following connector.

Driver's door latch 10P connector

-3. Connect terminals A and B with a jumper wire.

Terminal A	Driver's door latch 10P connector (female terminals) No. 5: ①
Terminal B	Body ground

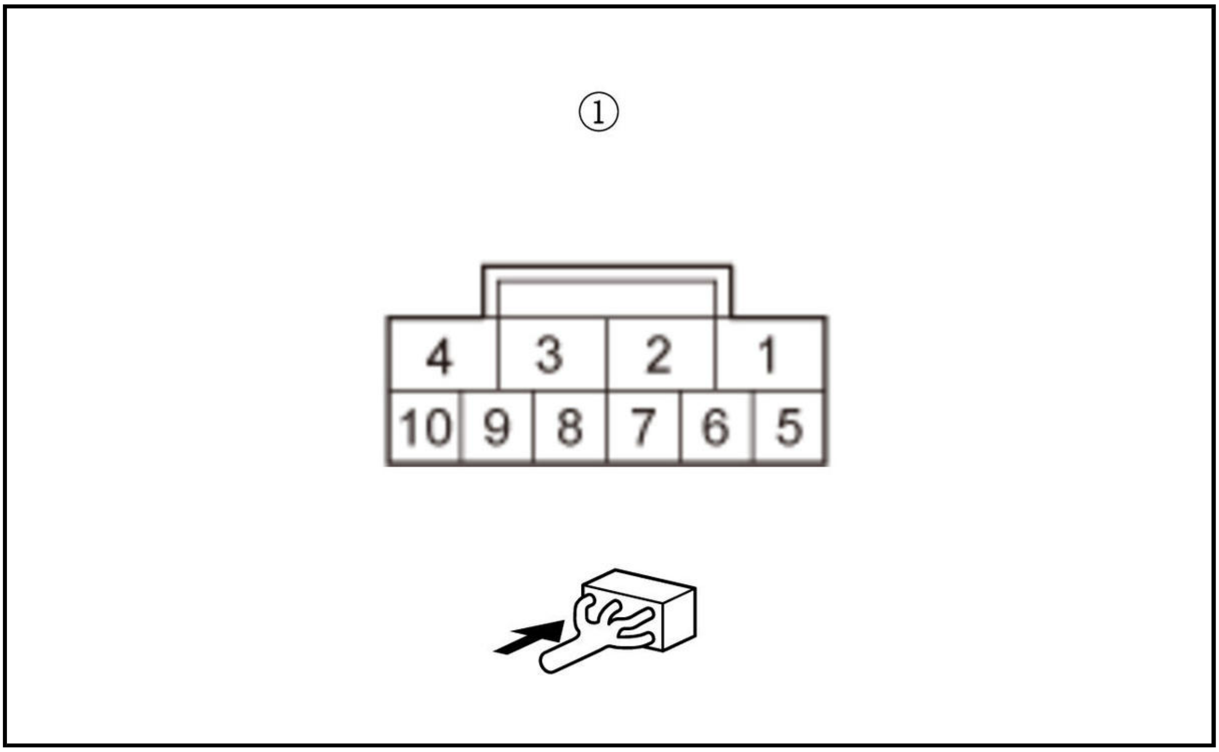

-4. Check the parameter(s) below with the HDS.

Signal	Current conditions	
	Value	Unit
Driver's Door Lock Knob Switch(UNLOCK)	B	B

Is information value ON?

YES

Go to step 25.

NO

Go to step 26.

25. Open wire check (GND line)

-1. Turn the vehicle to the OFF (LOCK) mode.

-2. Remove the jumper wire.

-3. Check for continuity between test points 1 and 2.

Test condition	Vehicle OFF (LOCK) modeDriver's door latch 10P connector: disconnected
Test point 1	Driver's door latch 10P connector (female terminals) No. 7: ①
Test point 2	Body ground

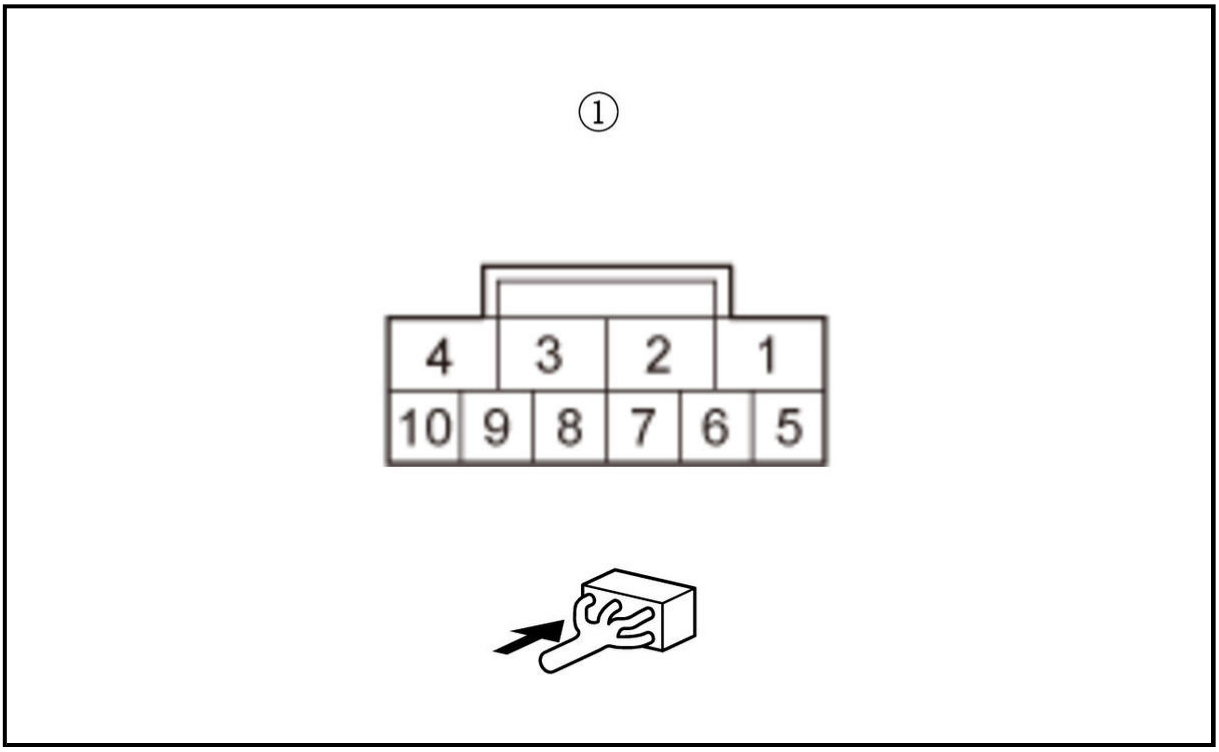

Is there continuity?

YES

The GND wire is OK. Faulty driver's door lock knob switch; **replace the driver's door latch** .

NO

Repair an open or high resistance in the wire or poor ground (G401).

26. Open wire check (DR SILCON UNLOCK line)

-1. Remove the jumper wire.

-2. Connect terminals A and B with a jumper wire.

Terminal A	**Power window master switch 37P connector No. 20**
Terminal B	Body ground

-3. Check the parameter(s) below with the HDS.

Signal	Current conditions	
	Value	Unit
Driver's Door Lock Knob Switch(UNLOCK)	B	B

Is information value ON?

YES

Repair an open or high resistance in the wire.

NO

The DR SILCON UNLOCK wire is OK. **Replace the power window master switch** .

27. Keyless/power door locks/security system check 1

-1. With the front passenger's door lock knob switch in UNLOCK position, check the parameter(s) below with the HDS.

Signal	Current conditions	
	Value	Unit
Passenger's Door Lock Knob Switch(UNLOCK)	B	B

Is information indicator ON?

YES

Go to step 28.

NO

Go to step 30.

28. Determine possible failure area (front passenger's door lock knob switch, others)

-1. Turn the vehicle to the OFF (LOCK) mode.

-2. Disconnect the following connector.

Front passenger's door latch 10P connector

-3. Check the parameter(s) below with the HDS.

Signal	Current conditions	
	Value	Unit
Passenger's Door Lock Knob Switch(UNLOCK)	B	B

Is information value OFF?

YES

Faulty front passenger's door lock knob switch; **replace the front passenger's door latch** .

NO

Go to step 29.

29. Shorted wire check (AS SILCON UNLOCK line)

-1. Turn the vehicle to the OFF (LOCK) mode.

-2. Disconnect the following connector.

Front passenger's power window switch 37P connector

-3. Check for continuity between test points 1 and 2.

Test condition	Vehicle OFF (LOCK) modeFront passenger's door latch 10P connector: disconnectedFront passenger's power window switch 37P connector: disconnected
Test point 1	**Front passenger's power window switch 37P connector No. 36**
Test point 2	Body ground

Is there continuity?

YES

Repair a short to ground in the wire.

NO

The AS SILCON UNLOCK wire is OK. **Replace the front passenger's power window switch** .

30. Keyless/power door locks/security system check 2

-1. Turn the vehicle to the OFF (LOCK) mode.

-2. Disconnect the following connector.

Front passenger's door latch 10P connector

-3. Connect terminals A and B with a jumper wire.

Terminal A	Front passenger's door latch 10P connector (female terminals) No. 10: ①
Terminal B	Body ground

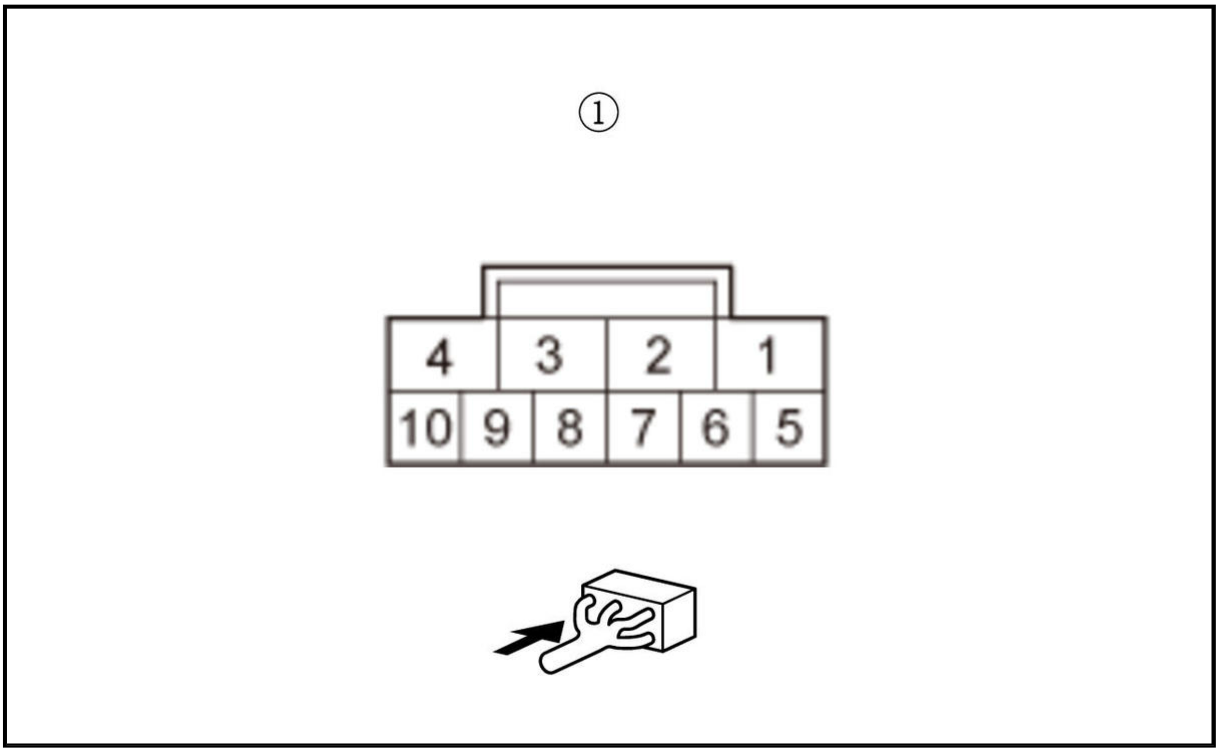

-4. Check the parameter(s) below with the HDS.

Signal	Current conditions	
	Value	Unit
Passenger's Door Lock Knob Switch(UNLOCK)	B	B

Is information value ON?

YES

Go to step 31.

NO

Go to step 32.

31. Open wire check (GND line)

-1. Turn the vehicle to the OFF (LOCK) mode.

-2. Remove the jumper wire.

-3. Check for continuity between test points 1 and 2.

Test condition	Vehicle OFF (LOCK) modeFront passenger's door latch 10P connector: disconnected
Test point 1	Front passenger's door latch 10P connector (female terminals) No. 8: ①
Test point 2	Body ground

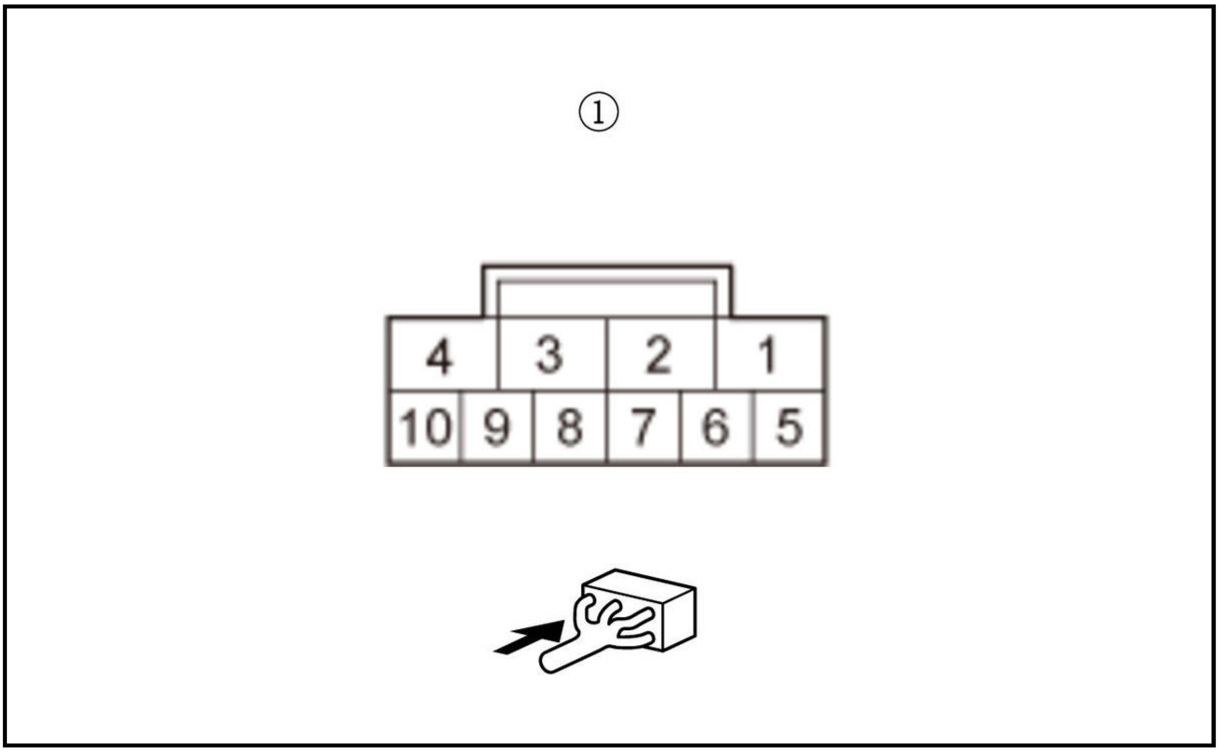

Is there continuity?

YES

The GND wire is OK. Faulty front passenger's door lock knob switch; **replace the front passenger's door latch** .

NO

Repair an open or high resistance in the ground wire or poor ground (G401).

32. Open wire check (AS SILCON UNLOCK line)

    -1. Remove the jumper wire.

    -2. Connect terminals A and B with a jumper wire.

Terminal A	**Front passenger's power window switch 37P connector No. 36**
Terminal B	Body ground

    -3. Check the parameter(s) below with the HDS.

Signal	Current conditions	
	Value	Unit
Passenger's Door Lock Knob Switch(UNLOCK)	B	B

Is information value ON?

YES

Repair an open or high resistance in the wire.

NO

The AS SILCON UNLOCK wire is OK. **Replace the front passenger's power window switch** .

33. Keyless/power door locks/security system check 1

    -1. With the left rear door lock knob switch in UNLOCK position, check the parameter(s) below with the HDS.

Signal	Current conditions	
	Value	Unit
Driver's Rear Door Lock Knob Switch(UNLOCK)	B	B

Is information value ON?

YES

Go to step 34.

NO

Go to step 36.

34. Determine possible failure area (left rear door lock knob switch, others)

    -1. Turn the vehicle to the OFF (LOCK) mode.

    -2. Disconnect the following connector.

Left rear door latch 10P connector

    -3. Check the parameter(s) below with the HDS.

Signal	Current conditions	
	Value	Unit
Driver's Rear Door Lock Knob Switch(UNLOCK)	B	B

Is information value OFF?

YES

Faulty left rear door lock knob switch; **replace the left rear door latch** .

NO

Go to step 35.

35. Shorted wire check (RR L SILCON UNLOCK line)

-1. Disconnect the following connector.

Body control module connector C (28P)

-2. Check for continuity between test points 1 and 2.

Test condition	Vehicle OFF (LOCK) modeBody control module connector C (28P): disconnectedLeft rear door latch 10P connector: disconnected
Test point 1	**Body control module connector C (28P) No. 15**
Test point 2	Body ground

Is there continuity?

YES

Repair a short to ground in the wire.

NO

The RR L SILCON UNLOCK wire is OK. **Replace the body control module** .

36. Keyless/power door locks/security system check 2

-1. Turn the vehicle to the OFF (LOCK) mode.

-2. Disconnect the following connector.

Left rear door latch 10P connector

-3. Connect terminals A and B with a jumper wire.

Terminal A	Left rear door latch 10P connector (female terminals) No. 9: ①
Terminal B	Body ground

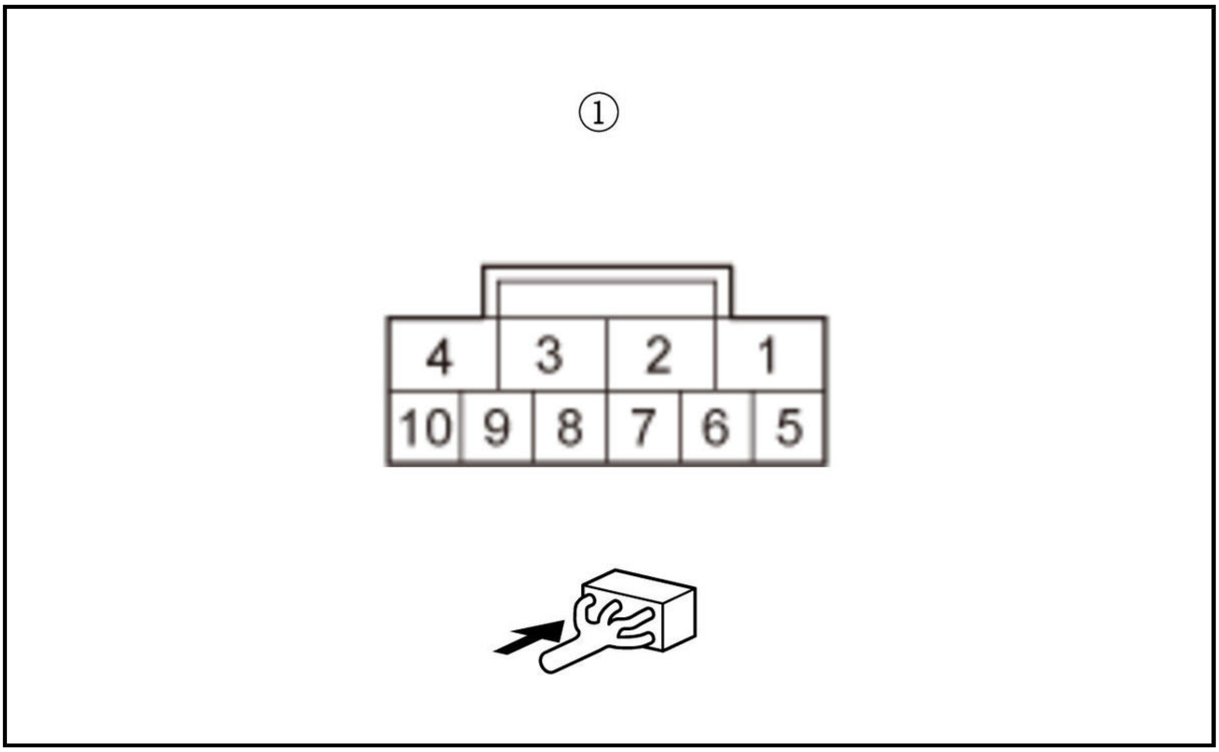

-4. Check the parameter(s) below with the HDS.

Signal	Current conditions	
	Value	**Unit**
Driver's Rear Door Lock Knob Switch(UNLOCK)	B	B

Is information value ON?

YES

Go to step 37.

NO

Go to step 38.

37. Open wire check (GND line)

-1. Turn the vehicle to the OFF (LOCK) mode.

-2. Remove the jumper wire.

-3. Check for continuity between test points 1 and 2.

Test condition	Vehicle OFF (LOCK) modeLeft rear door latch 10P connector: disconnected
Test point 1	Left rear door latch 10P connector (female terminals) No. 6: ①
Test point 2	Body ground

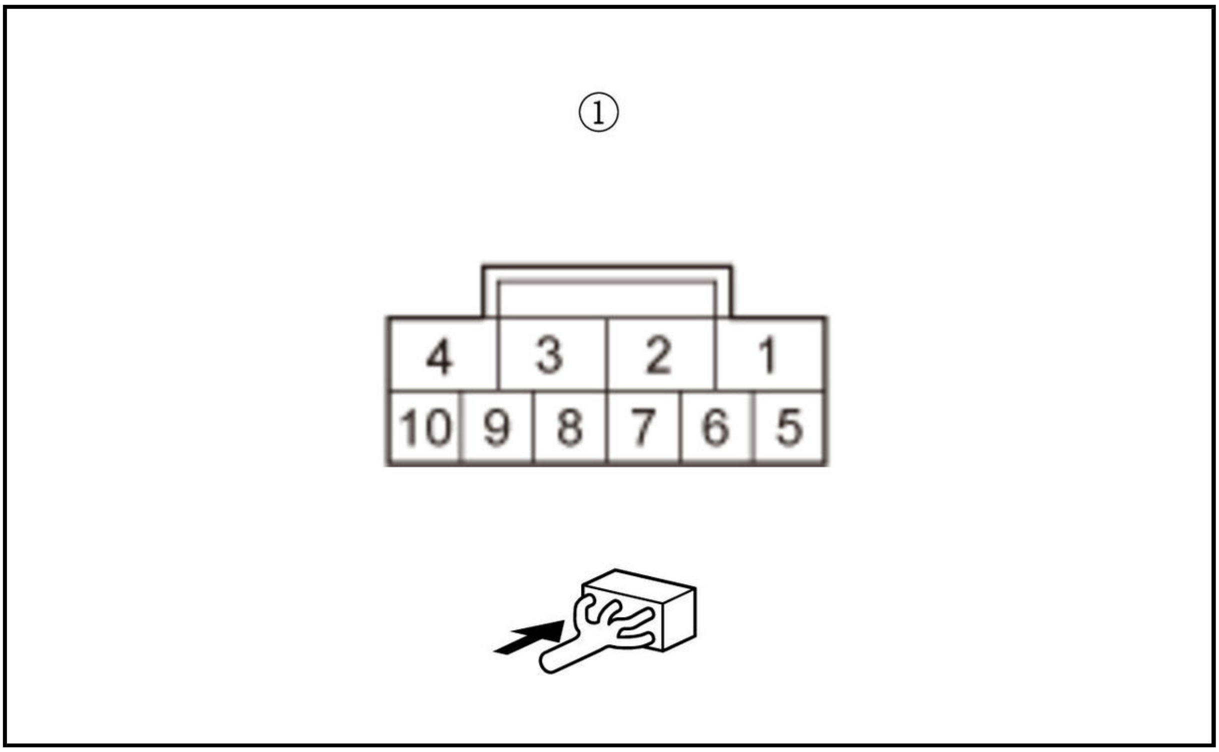

Is there continuity?

YES

The GND wire is OK. Faulty left rear door lock knob switch; replace the left rear door latch .

NO

Repair an open or high resistance in the ground wire or poor ground (G501).

38. Open wire check (RR L SILCON UNLOCK line)

-1. Remove the jumper wire.

-2. Connect terminals A and B with a jumper wire.

Terminal A	Body control module connector C (28P) No. 15
Terminal B	Body ground

-3. Check the parameter(s) below with the HDS.

Signal	**Current conditions**	
	Value	**Unit**
Driver's Rear Door Lock Knob Switch(UNLOCK)	B	B

Is information value ON?

YES

Repair an open or high resistance in the wire.

NO

The RR L SILCON UNLOCK wire is OK. Replace the body control module .

39. Keyless/power door locks/security system check 1

-1. With the right rear door lock knob switch in UNLOCK position, check the parameter(s) below with the HDS.

Signal	Current conditions	
	Value	**Unit**
Passenger's Rear Door Lock Knob Sw. (UNLOCK)	B	B

Is information value ON?

YES

Go to step 40.

NO

Go to step 42.

40. Determine possible failure area (right rear door lock knob switch, others)

-1. Disconnect the following connector.

Right rear door latch 10P connector

-2. Check the parameter(s) below with the HDS.

Signal	Current conditions	
	Value	**Unit**
Passenger's Rear Door Lock Knob Sw. (UNLOCK)	B	B

Is information value OFF?

YES

Faulty right rear door lock knob switch; **replace the right rear door latch** .

NO

Go to step 41.

41. Shorted wire check (RR R SILCON UNLOCK line)

-1. Turn the vehicle to the OFF (LOCK) mode.

-2. Disconnect the following connector.

Body control module connector C (28P)

-3. Check for continuity between test points 1 and 2.

Test condition	Vehicle OFF (LOCK) modeBody control module connector C (28P): disconnectedRight rear door latch 10P connector: disconnected
Test point 1	**Body control module connector C (28P) No. 16**
Test point 2	Body ground

Is there continuity?

YES

Repair a short to ground in the wire.

NO

The RR R SILCON UNLOCK wire is OK. **Replace the body control module** .

42. Keyless/power door locks/security system check 2

-1. Turn the vehicle to the OFF (LOCK) mode.

-2. Disconnect the following connector.

Right rear door latch 10P connector

-3. Connect terminals A and B with a jumper wire.

Terminal A	Right rear door latch 10P connector (female terminals) No. 6: ①
Terminal B	Body ground

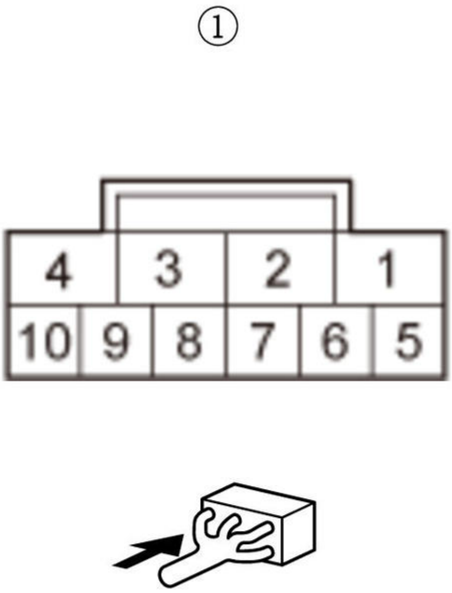

-4. Check the parameter(s) below with the HDS.

Signal	Current conditions	
	Value	Unit
Passenger's Rear Door Lock Knob Sw. (UNLOCK)	B	B

Is information value ON?

YES

Go to step 43.

NO

Go to step 44.

43. Open wire check (GND line)

-1. Turn the vehicle to the OFF (LOCK) mode.

-2. Remove the jumper wire.

-3. Check for continuity between test points 1 and 2.

Test condition	Vehicle OFF (LOCK) modeRight rear door latch 10P connector: disconnected
Test point 1	Right rear door latch 10P connector (female terminals) No. 9: ①
Test point 2	Body ground

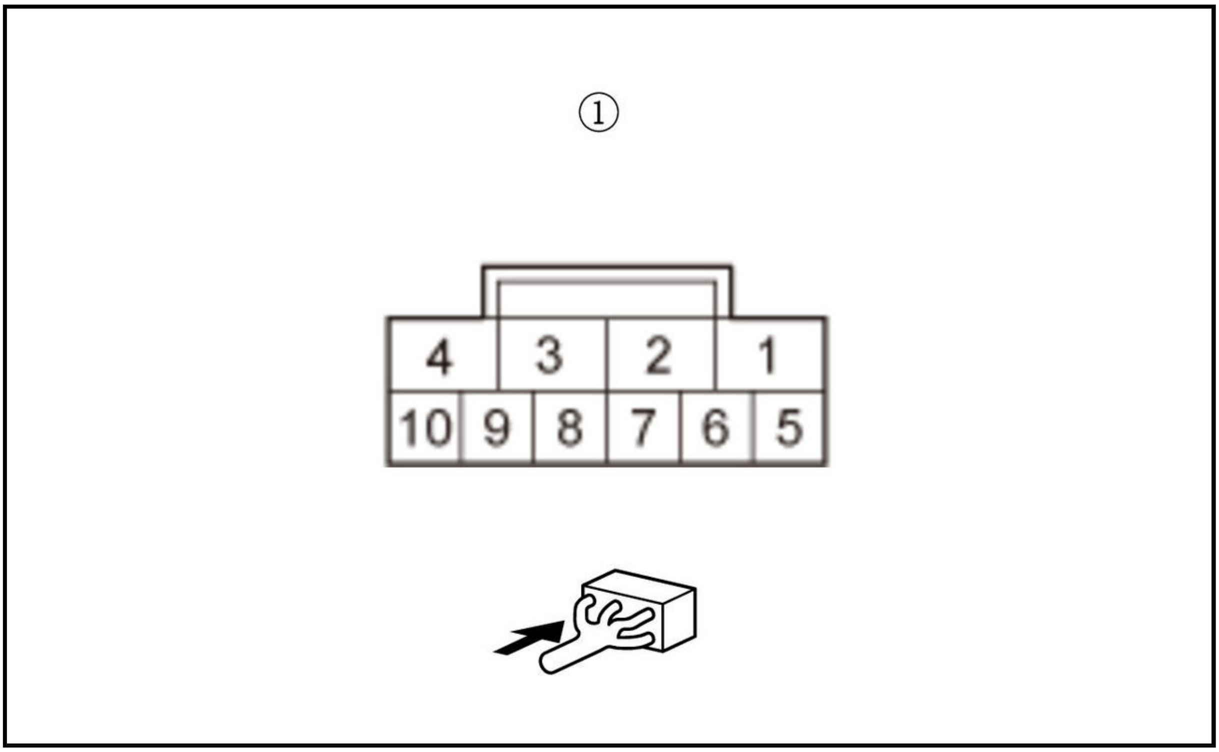

Is there continuity?

YES

The GND wire is OK. Faulty right rear door lock knob switch; **replace the right rear door latch** .

NO

Repair an open or high resistance in the ground wire or poor ground (G502).

44. Open wire check (RR R SILCON UNLOCK line)

-1. Remove the jumper wire.

-2. Connect terminals A and B with a jumper wire.

Terminal A	**Body control module connector C (28P) No. 16**
Terminal B	Body ground

-3. Check the parameter(s) below with the HDS.

Signal	**Current conditions**	
	Value	**Unit**
Passenger's Rear Door Lock Knob Sw. (UNLOCK)	B	B

Is information value ON?

YES

Repair an open or high resistance in the wire.

NO

The RR R SILCON UNLOCK wire is OK. **Replace the body control module** .

Doors automatically relock 30 seconds after being unlocked with the remote even though a door has been opened

NOTE: Before troubleshooting, check the B-CAN DTCs. If any DTC is indicated, troubleshoot the indicated DTC first.

1. Determine possible failure area (body control module, others)

   -1. With interior light switch: Turn the interior light switch to the DOOR position and ceiling light switch to the MIDDLE position.

   -2. Without interior light switch: Turn the ceiling light switch to the MIDDLE position.

   -3. Turn the vehicle to the OFF (LOCK) mode.

   -4. Watch the individual map lights, the ceiling light, and the door indicators on the gauge control module.

   Do the individual map lights and door indicators come on when the door is open, and go off when the door is closed?

   YES

   Replace the body control module .

   NO

   Go to step 2.

2. Open wire check (FL DOOR SW, FR DOOR SW, RL DOOR SW, RR DOOR SW, T/G SW lines)

   -1. Disconnect the following connectors.

Body control module connector D (40P) Each door switch 1P connector Power tailgate closer unit connector B (6P) (with power tailgate) Tailgate latch 4P connector (without power tailgate)

   -2. Check for continuity between test points 1 and 2 respectively.

   Driver's door switch

Test condition	Vehicle OFF (LOCK) mode Body control module connector D (40P): disconnected Driver's door switch 1P connector: disconnected
Test point 1	**Body control module connector D (40P) No. 22**
Test point 2	Driver's door switch 1P connector (female terminals) No. 1: ①

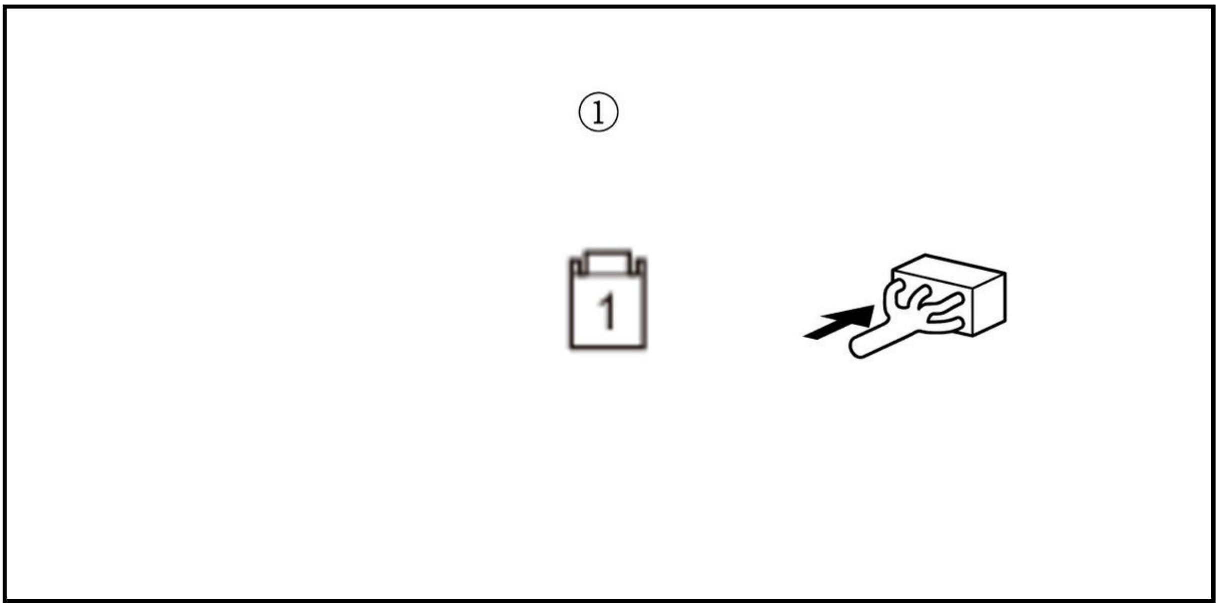

Front passenger's door switch

Test condition	Vehicle OFF (LOCK) modeBody control module connector D (40P): disconnectedFront passenger's door switch 1P connector: disconnected
Test point 1	**Body control module connector D (40P) No. 23**
Test point 2	Front passenger's door switch 1P connector (female terminals) No. 1: ①

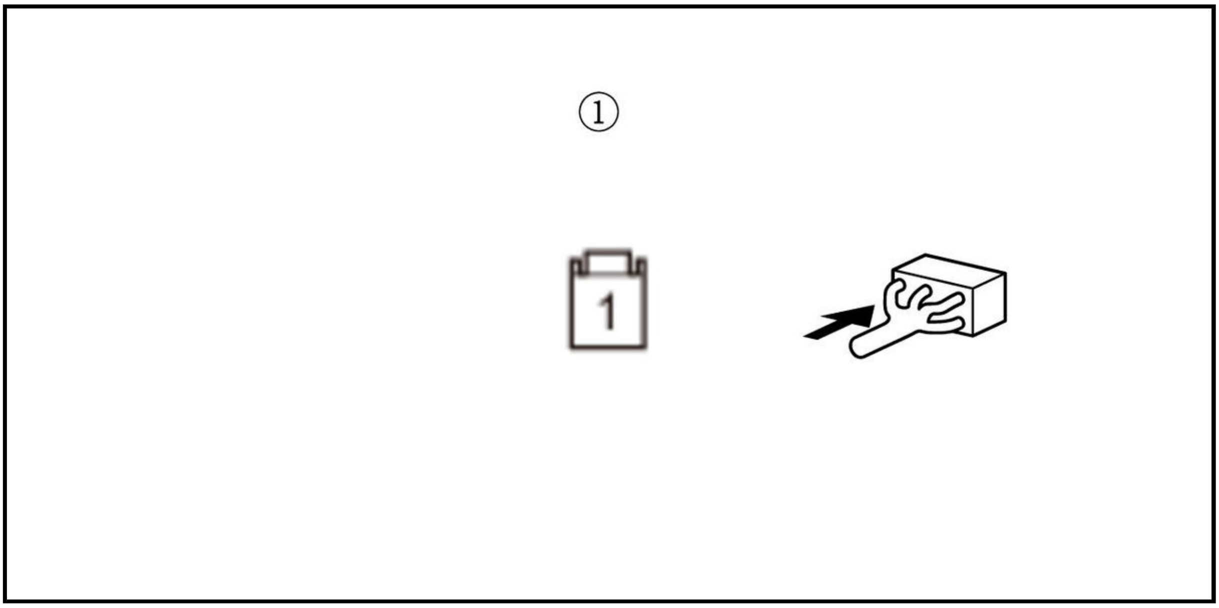

Left rear door switch

Test condition	Vehicle OFF (LOCK) modeBody control module connector D (40P): disconnectedLeft rear door switch 1P connector: disconnected
Test point 1	**Body control module connector D (40P) No. 24**
Test point 2	Left rear door switch 1P connector (female terminals) No. 1: ①

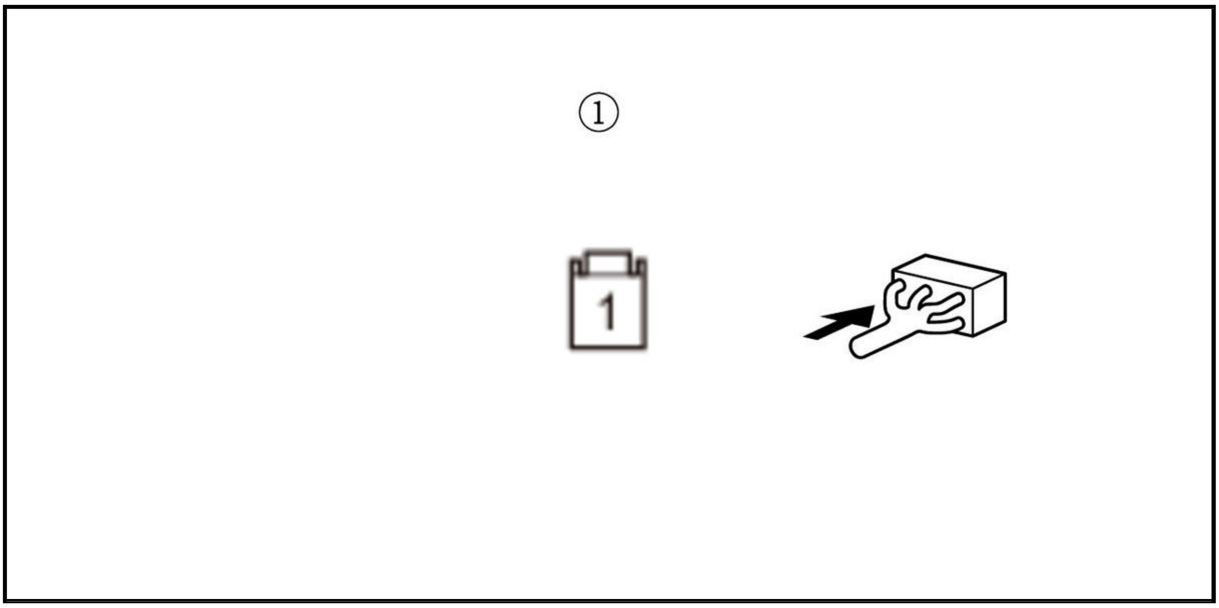

Right rear door switch

Test condition	Vehicle OFF (LOCK) modeBody control module connector D (40P): disconnectedRight rear door switch 1P connector: disconnected
Test point 1	**Body control module connector D (40P) No. 28**
Test point 2	Right rear door switch 1P connector (female terminals) No. 1: ①

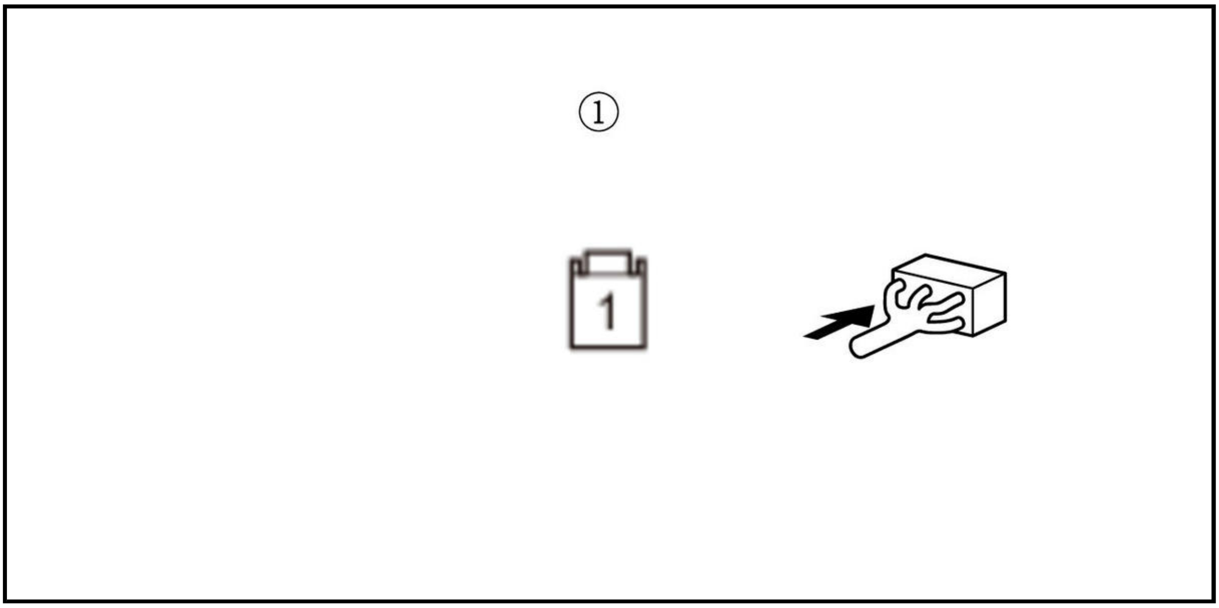

Power tailgate closer unit (with power tailgate)

Test condition	Vehicle OFF (LOCK) modeBody control module connector D (40P): disconnectedPower tailgate closer unit connector B (6P): disconnected
Test point 1	**Body control module connector D (40P) No. 27**
Test point 2	Power tailgate closer unit connector B (6P) (female terminals) No. 1: ①

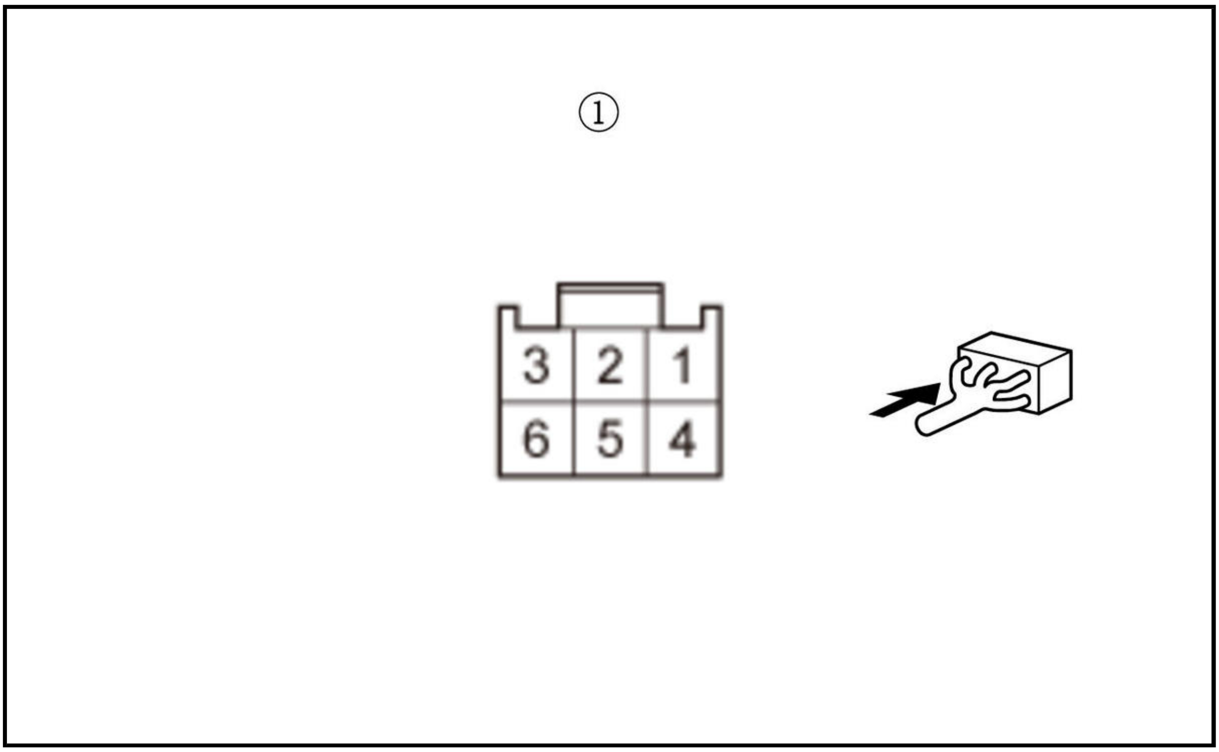

Tailgate latch switch (without power tailgate)

Test condition	Vehicle OFF (LOCK) modeBody control module connector D (40P): disconnectedTailgate latch 4P connector: disconnected
Test point 1	**Body control module connector D (40P) No. 27**
Test point 2	Tailgate latch 4P connector (female terminals) No. 1: ①

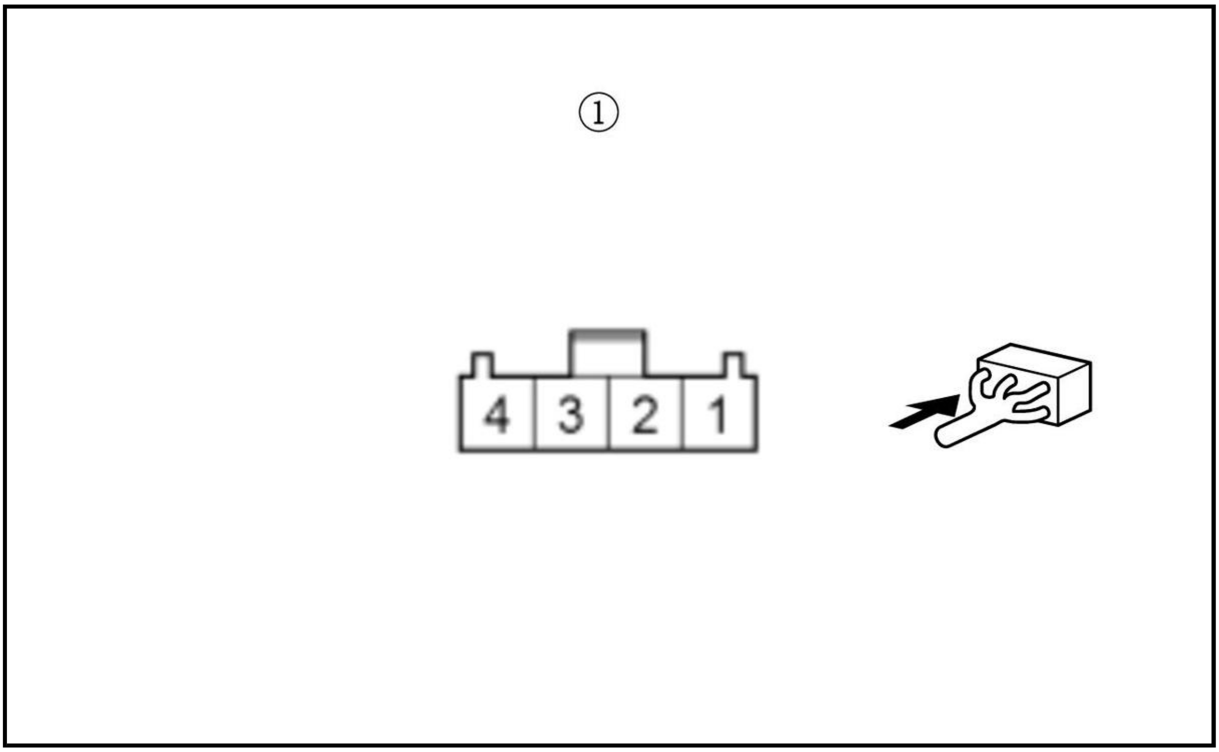

Is there continuity?

YES: Door switch

The FL DOOR SW, FR DOOR SW, RL DOOR SW, and RR DOOR SW wires are OK. Replace the bad door switch.

YES: Power tailgate closer unit (with power tailgate)

The T/G SW wire is OK. Faulty Power tailgate closer unit circuit. Check for Power tailgate control unit DTCs.

YES: Tailgate latch switch (without power tailgate)

The T/G SW wire is OK. Faulty tailgate latch switch or GND line, go to step 3.

NO

Repair an open or high resistance in the wire.

3. Open wire check (GND line)

-1. Check for continuity between test points 1 and 2.

Test condition	Vehicle OFF (LOCK) modeBody control module connector D (40P): disconnectedTailgate latch 4P connector: disconnected
Test point 1	Tailgate latch 4P connector (female terminals) No. 2: ①
Test point 2	Body ground

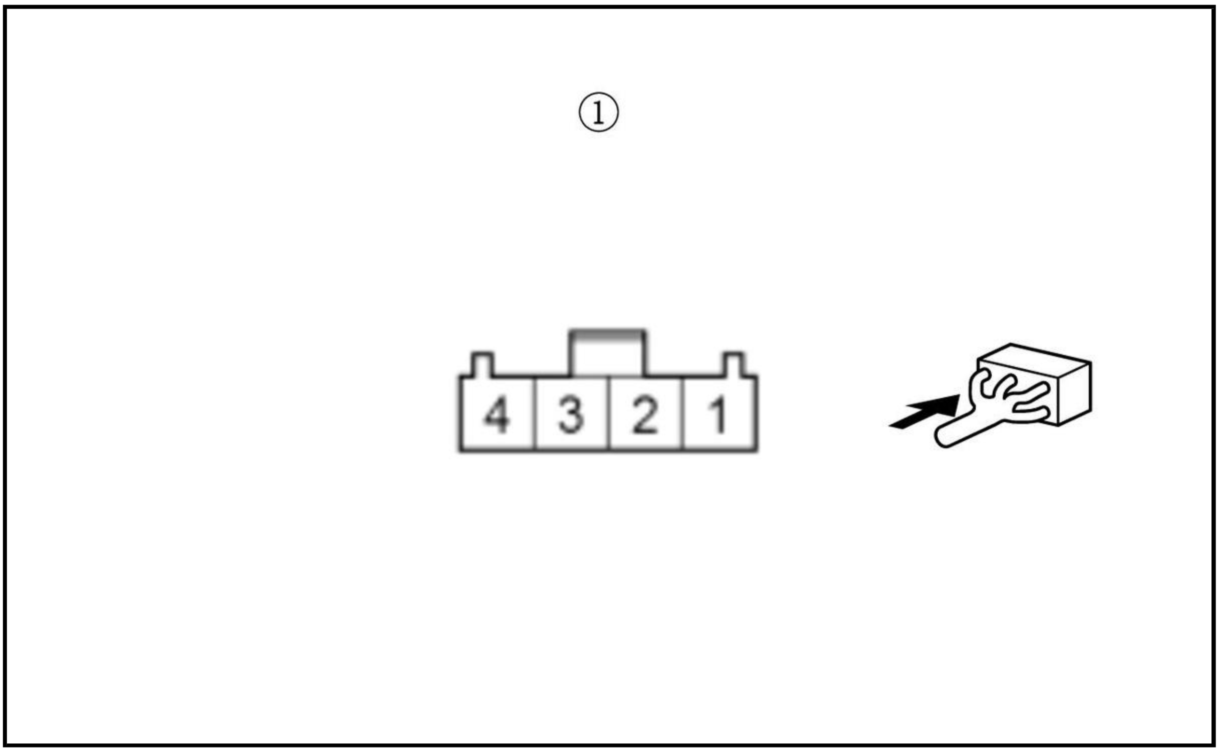

Is there continuity?

YES

The GND wire is OK. Faulty tailgate latch switch; **replace the tailgate latch** .

NO

Repair an open or high resistance in the ground wire or poor ground (G505).

Security alarm system will not arm

Security alarm system will not arm

NOTE: Before troubleshooting, check the B-CAN DTCs. If any DTC is indicated, troubleshoot the indicated DTC first.

1. Switch information check

-1. Turn the vehicle to the ON mode.

-2. Check the parameter(s) below with the HDS.

Multiplex Control Unit, Door (Power Window Master Switch)

Signal	Current conditions	
	Value	Unit
Driver's Door Lock Knob Switch(UNLOCK)	B	B
Passenger's Door Lock Knob Switch(UNLOCK)	B	B
Driver's Door Key Cylinder Switch(LOCK)	B	B

Body Control Module

Signal	Current conditions	
	Value	Unit
Trunk Lid/Tailgate Switch	B	B
Passenger's Rear Door Lock Knob Sw. (UNLOCK)	B	B
Driver's Rear Door Lock Knob Switch(UNLOCK)	B	B
Driver's Door Switch	B	B
Front Passenger's Door Switch	B	B
Driver's Rear Door Switch	B	B
Passenger's Rear Door Switch	B	B

Relay Control Module

Signal	Current conditions	
	Value	Unit
Security Hood Switch	B	B

Is each switch information value OK?

YES

Intermittent failure, the system is OK at this time.

NO

Power tailgate closer unit circuit troubleshooting: go to step 2.

NO

Tailgate latch switch circuit troubleshooting: go to step 9.

NO

Hood latch switch circuit troubleshooting: go to step 15.

NO

Driver's door lock knob switch circuit troubleshooting: go to step 21.

NO

Front passenger's door lock knob switch circuit troubleshooting: go to step 27.

NO

Left rear door lock knob switch circuit troubleshooting: go to step 33.

NO

Right rear door lock knob switch circuit troubleshooting: go to step 39.

NO

Driver's door switch circuit troubleshooting: go to step 45.

NO

Front passenger's door switch circuit troubleshooting: go to step 50.

NO

Left rear door switch circuit troubleshooting: go to step 55.

NO

Right rear door switch circuit troubleshooting: go to step 60.

NO

Driver's door key cylinder switch circuit troubleshooting: go to step 65.

2. Keyless/power door locks/security system check 1

-1. With the power tailgate closed, check the parameter(s) below with the HDS.

Signal	**Current conditions**	
	Value	**Unit**
Trunk Lid/Tailgate Switch	B	B

Is information value ON?

YES

Go to step 3.

NO

Go to step 5.

3. Determine possible failure area (full latch switch, others)

-1. Disconnect the following connector.

Power tailgate closer unit connector B (6P)

-2. Check the parameter(s) below with the HDS.

Signal	Current conditions	
	Value	Unit
Trunk Lid/Tailgate Switch	B	B

Is information value OFF?

YES

Faulty power tailgate full latch switch; replace the power tailgate closer unit .

NO

Go to step 4.

4. Shorted wire check (T/G SW line)

-1. Turn the vehicle to the OFF (LOCK) mode.

-2. Disconnect the following connector.

Body control module connector D (40P)

-3. Check for continuity between test points 1 and 2.

Test condition	Vehicle OFF (LOCK) modePower tailgate closer unit connector B (6P): disconnectedBody control module connector D (40P): disconnected
Test point 1	**Body control module connector D (40P) No. 27**
Test point 2	Body ground

Is there continuity?

YES

Repair a short to ground in the wire.

NO

The T/G SW wire is OK. Faulty body control module; replace the body control module .

5. Keyless/power door locks/security system check 2

-1. Turn the vehicle to the OFF (LOCK) mode.

-2. Disconnect the following connector.

Power tailgate closer unit connector B (6P)

-3. Connect terminals A and B with a jumper wire.

Terminal A	Power tailgate closer unit connector B (6P) (female terminals) No. 1: ①
Terminal B	Body ground

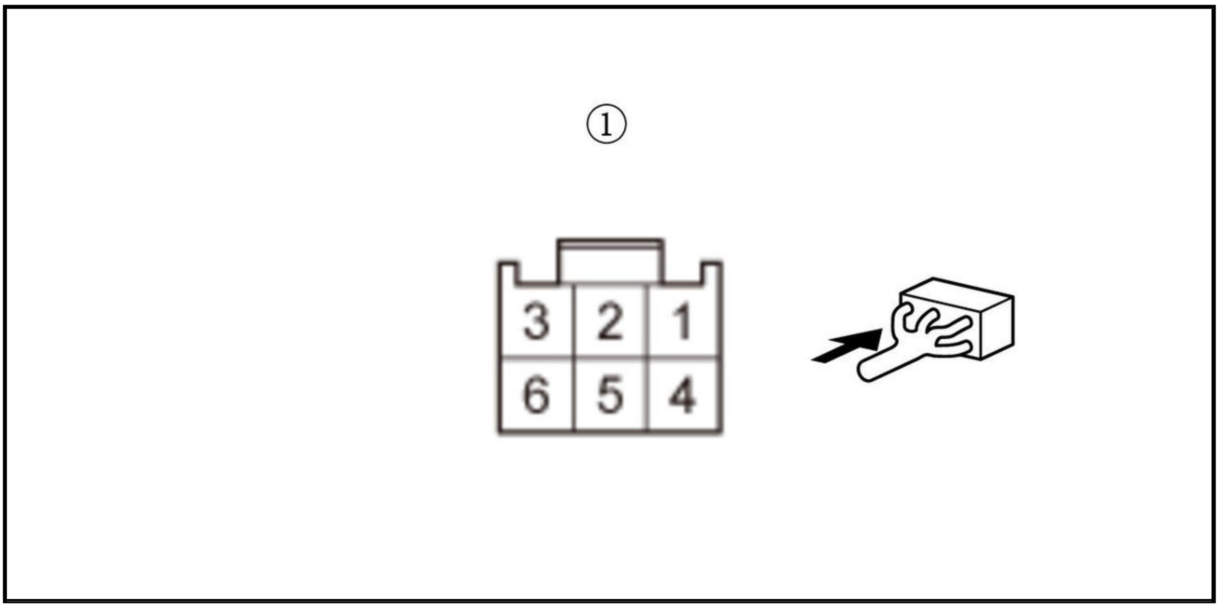

-4. Check the parameter(s) below with the HDS.

Signal	Current conditions	
	Value	Unit
Trunk Lid/Tailgate Switch	B	B

Is information value ON?

YES

Go to step 6.

NO

Go to step 8.

6. Open wire check (PTG/PTL SEG3 line)

-1. Turn the vehicle to the OFF (LOCK) mode.

-2. Remove the jumper wire.

-3. Disconnect the following connector.

Power tailgate control unit connector A (24P)

-4. Check for continuity between test points 1 and 2.

Test condition	Vehicle OFF (LOCK) modePower tailgate closer unit connector B (6P): disconnectedPower tailgate control unit connector A (24P): disconnected
Test point 1	Power tailgate closer unit connector B (6P) (female terminals) No. 2: ①
Test point 2	**Power tailgate control unit connector A (24P) No. 21**

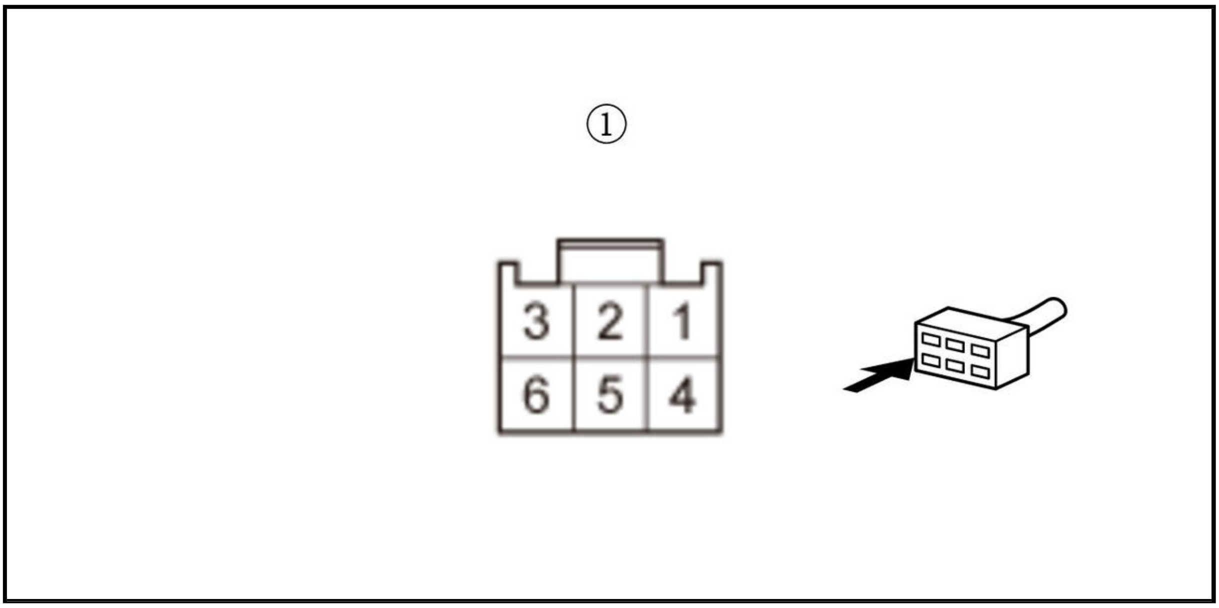

Is there continuity?

YES

Go to step 7.

NO

Repair an open or high resistance in the wire.

7. Power Tailgate Latch/Ratchet Switch check

-1. Do the Power Tailgate Latch/Ratchet Switch test

Is the switch OK?

YES

Replace the power tailgate control unit .

NO

Replace the power tailgate closer unit .

8. Open wire check (T/G SW line)

-1. Turn the vehicle to the OFF (LOCK) mode.

-2. Remove the jumper wire.

-3. Connect terminals A and B with a jumper wire.

Terminal A	**Body control module connector D (40P) No. 27**
Terminal B	Body ground

-4. Check the parameter(s) below with the HDS.

Signal	**Current conditions**	
	Value	**Unit**
Trunk Lid/Tailgate Switch	B	B

Is information value ON?

YES

Repair an open or high resistance in the wire.

NO

The T/G SW wire is OK. Faulty body control module; **replace the body control module** .

9. Keyless/power door locks/security system check 1

-1. With the tailgate closed, check the parameter(s) below with the HDS.

Signal	**Current conditions**	
	Value	**Unit**
Trunk Lid/Tailgate Switch	B	B

Is information value ON?

YES

Go to step 10.

NO

Go to step 12.

10. Determine possible failure area (tailgate latch switch, others)

-1. Turn the vehicle to the OFF (LOCK) mode.

-2. Disconnect the following connector.

Tailgate latch 4P connector

-3. Check the parameter(s) below with the HDS.

Signal	**Current conditions**	
	Value	**Unit**
Trunk Lid/Tailgate Switch	B	B

Is information value OFF?

YES

Faulty tailgate latch switch; **replace the tailgate latch** .

NO

Go to step 11.

11. Shorted wire check (T/G SW line)

-1. Turn the vehicle to the OFF (LOCK) mode.

-2. Disconnect the following connector.

Body control module connector D (40P)

-3. Check for continuity between test points 1 and 2.

Test condition	Vehicle OFF (LOCK) modeBody control module connector D (40P): disconnectedTailgate latch 4P connector: disconnected
Test point 1	**Body control module connector D (40P) No. 27**
Test point 2	Body ground

Is there continuity?

YES

Repair a short to ground in the wire.

NO

The T/G SW wire is OK. Faulty body control module; **replace the body control module** .

12. Keyless/power door locks/security system check 2

-1. Turn the vehicle to the OFF (LOCK) mode.

-2. Disconnect the following connector.

Tailgate latch 4P connector

-3. Connect terminals A and B with a jumper wire.

Terminal A	Tailgate latch 4P connector (female terminals) No. 1: ①

Terminal B	Body ground

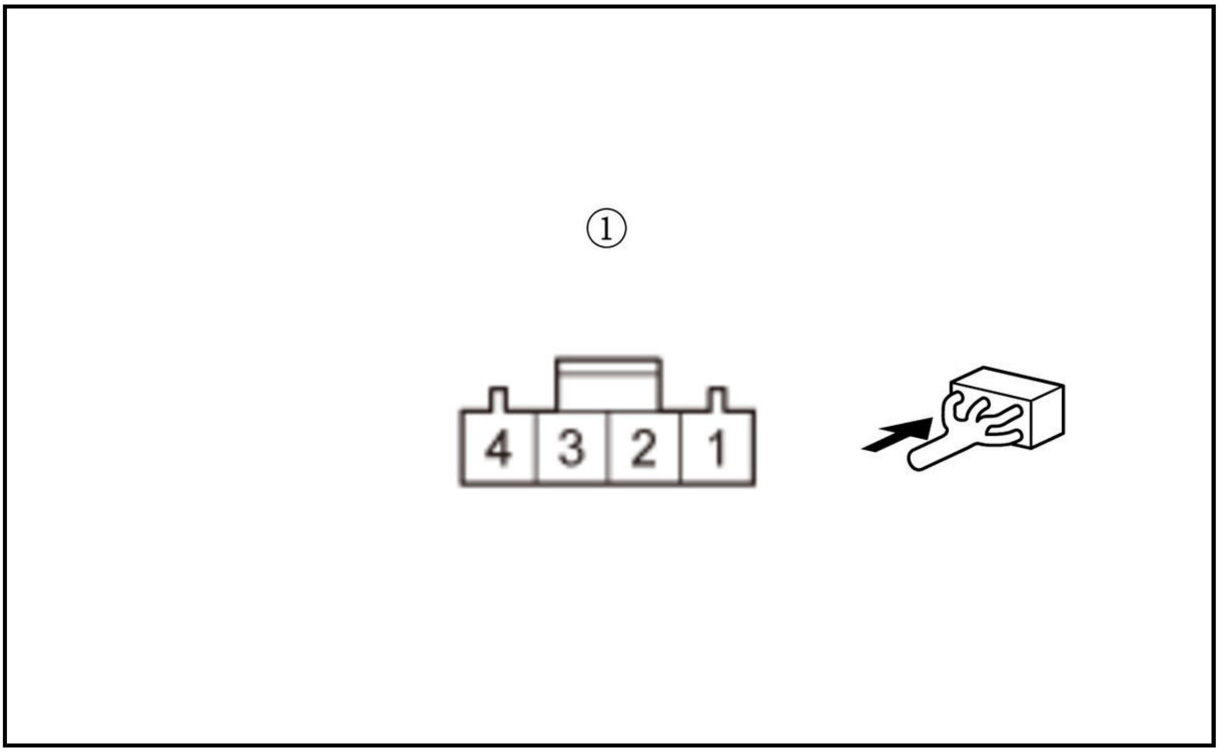

-4. Check the parameter(s) below with the HDS.

Signal	Current conditions	
	Value	Unit
Trunk Lid/Tailgate Switch	B	B

Is information value ON?

YES

Go to step 13.

NO

Go to step 14.

13. Open wire check (GND line)

-1. Turn the vehicle to the OFF (LOCK) mode.

-2. Remove the jumper wire.

-3. Check for continuity between test points 1 and 2.

Test condition	Vehicle OFF (LOCK) modeTailgate latch 4P connector: disconnected
Test point 1	Tailgate latch 4P connector (female terminals) No. 2: ①
Test point 2	Body ground

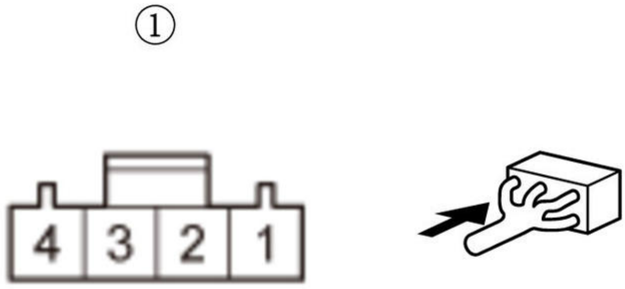

Is there continuity?

YES

The GND wire is OK. Faulty tailgate latch switch; **replace the tailgate latch** .

NO

Repair an open or high resistance in the ground wire or poor ground (G505).

14. Open wire check (T/G SW line)

-1. Remove the jumper wire.

-2. Connect terminals A and B with a jumper wire.

Terminal A	Body control module connector D (40P) No. 27
Terminal B	Body ground

-3. Check the parameter(s) below with the HDS.

Signal	Current conditions	
	Value	Unit
Trunk Lid/Tailgate Switch	B	B

Is information value ON?

YES

Repair an open or high resistance in the wire.

NO

The T/G SW wire is OK. Faulty body control module; **replace the body control module** .

15. Keyless/power door locks/security system check 1

-1. With the hood opened, check the parameter(s) below with the HDS.

Signal	Current conditions	
	Value	Unit
Security Hood Switch	B	B

Is information value OFF?

YES

Go to step 16.

NO

Go to step 18.

16. Determine possible failure area (hood latch, others)

-1. Turn the vehicle to the OFF (LOCK) mode.

-2. Disconnect the following connector.

Hood latch switch 2P connector

-3. Check the parameter(s) below with the HDS.

Signal	Current conditions	
	Value	Unit
Security Hood Switch	B	B

Is information value ON?

YES

Faulty hood latch switch; **replace the hood latch** .

NO

Go to step 17.

17. Shorted wire check (HOOD SW line)

-1. Turn the vehicle to the OFF (LOCK) mode.

-2. Disconnect the following connector.

Relay control module connector A (6P)

-3. Check for continuity between test points 1 and 2.

Test condition	Vehicle OFF (LOCK) modeRelay control module connector A (6P): disconnectedHood latch switch 2P connector: disconnected

Test point 1	**Relay control module connector A (6P) No. 5**
Test point 2	Body ground

Is there continuity?

YES

Repair a short to ground in the wire.

NO

The HOOD SW wire is OK. Faulty relay control module; **replace the relay control module** .

18. Keyless/power door locks/security system check 2

-1. Turn the vehicle to the OFF (LOCK) mode.

-2. Disconnect the following connector.

Hood latch switch 2P connector

-3. Connect terminals A and B with a jumper wire.

Terminal A	Hood latch switch 2P connector (female terminals) No. 1: ①
Terminal B	Body ground

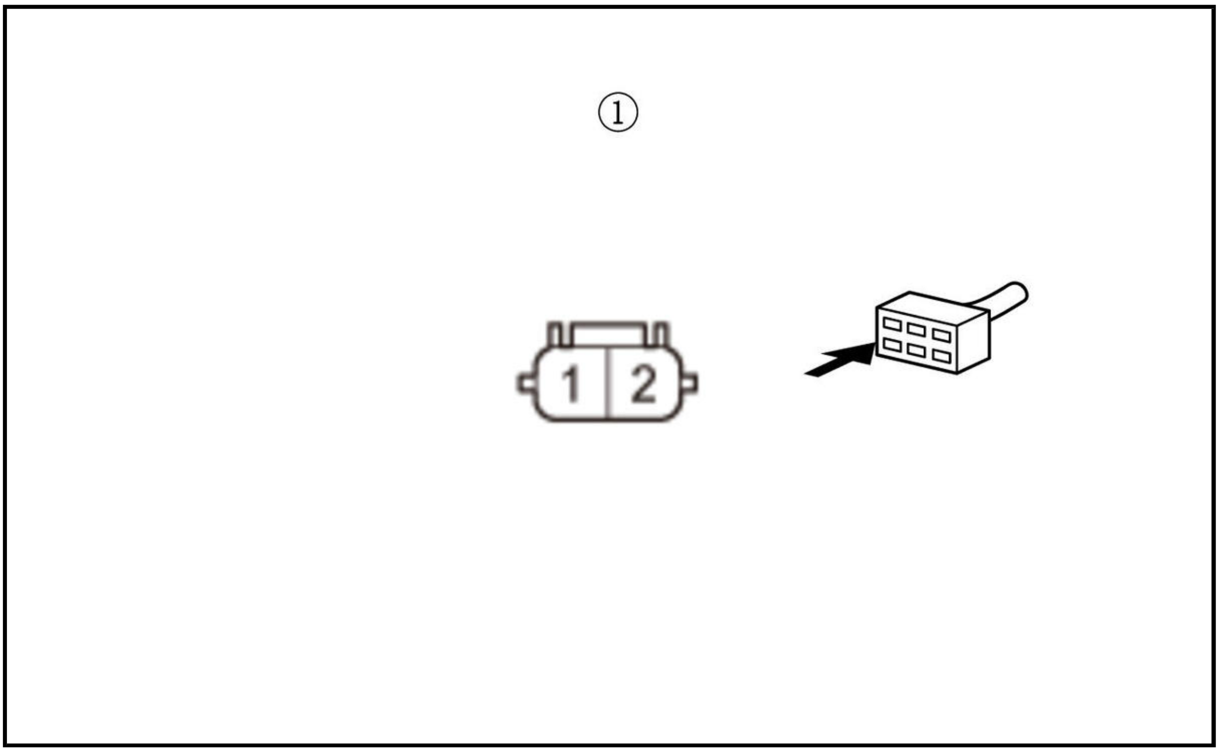

-4. Check the parameter(s) below with the HDS.

Signal	Current conditions	
	Value	**Unit**
Security Hood Switch	B	B

Is information value OFF?

YES

Go to step 19.

NO

Go to step 20.

19. Open wire check (GND line)

-1. Turn the vehicle to the OFF (LOCK) mode.

-2. Remove the jumper wire.

-3. Check for continuity between test points 1 and 2.

Test condition	Vehicle OFF (LOCK) modeHood latch switch 2P connector: disconnected
Test point 1	Hood latch switch 2P connector (female terminals) No. 2: ①
Test point 2	Body ground

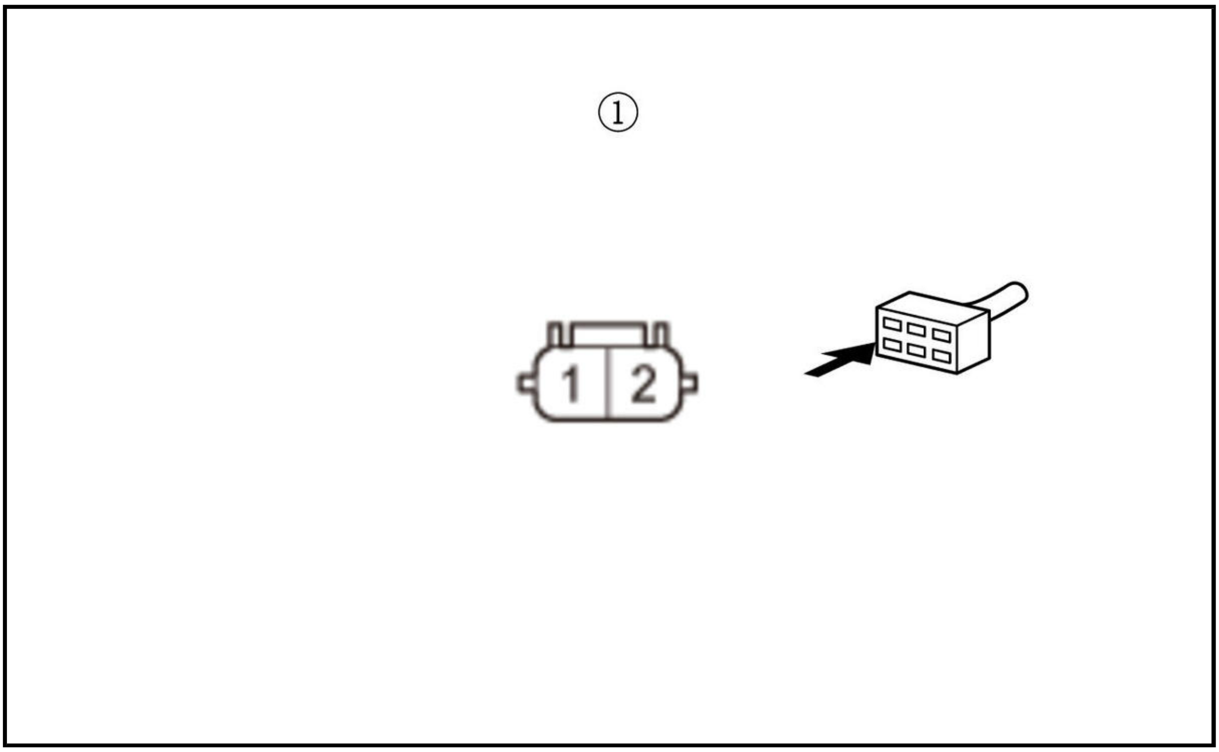

Is there continuity?

YES

The GND wire is OK. Faulty hood latch switch; **replace the hood latch** .

NO

Repair an open or high resistance in the ground wire or poor ground (G251).

20. Open wire check (HOOD SW line)

-1. Remove the jumper wire.

-2. Connect terminals A and B with a jumper wire.

Terminal A	**Relay control module connector A (6P) No. 5**
Terminal B	Body ground

-3. Check the parameter(s) below with the HDS.

Signal	**Current conditions**	
	Value	**Unit**
Security Hood Switch	B	B

Is information value OFF?

YES

Repair an open or high resistance in the wire.

NO

The HOOD SW wire is OK. Faulty relay control module; **replace the relay control module** .

21. Keyless/power door locks/security system check 1

-1. With the driver's door lock knob switch in LOCK position, check the parameter(s) below with the HDS.

Signal	**Current conditions**	
	Value	**Unit**
Driver's Door Lock Knob Switch(UNLOCK)	B	B

Is information value ON?

YES

Go to step 22.

NO

Go to step 24.

22. Determine possible failure area (driver's door latch, others)

-1. Turn the vehicle to the OFF (LOCK) mode.

-2. Disconnect the following connector.

Driver's door latch 10P connector

-3. Check the parameter(s) below with the HDS.

Signal	**Current conditions**	
	Value	**Unit**
Driver's Door Lock Knob Switch(UNLOCK)	B	B

Is information value OFF?

YES

Faulty driver's door lock knob switch; **replace the driver's door latch** .

NO

Go to step 23.

23. Shorted wire check (DR SILCON UNLOCK line)

-1. Turn the vehicle to the OFF (LOCK) mode.

-2. Disconnect the following connector.

Power window master switch 37P connector

-3. Check for continuity between test points 1 and 2.

Test condition	Vehicle OFF (LOCK) modePower window master switch 37P connector: disconnectedDriver's door latch 10P connector: disconnected
Test point 1	**Power window master switch 37P connector No. 20**
Test point 2	Body ground

Is there continuity?

YES

Repair a short to ground in the wire.

NO

The DR SILCON UNLOCK wire is OK. **Replace the power window master switch** .

24. Keyless/power door locks/security system check 2

-1. Turn the vehicle to the OFF (LOCK) mode.

-2. Disconnect the following connector.

Driver's door latch 10P connector

-3. Connect terminals A and B with a jumper wire.

Terminal A	Driver's door latch 10P connector (female terminals) No. 5: ①
Terminal B	Body ground

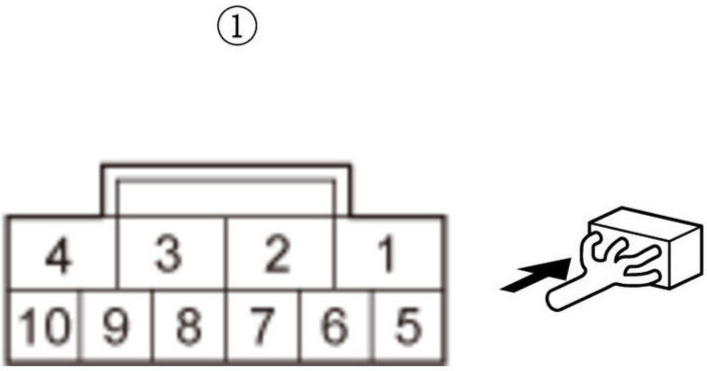

-4. Check the parameter(s) below with the HDS.

Signal	Current conditions	
	Value	Unit
Driver's Door Lock Knob Switch(UNLOCK)	B	B

Is information value ON?

YES

Go to step 25.

NO

Go to step 26.

25. Open wire check (GND line)

-1. Turn the vehicle to the OFF (LOCK) mode.

-2. Remove the jumper wire.

-3. Check for continuity between test points 1 and 2.

Test condition	Vehicle OFF (LOCK) modeDriver's door latch 10P connector: disconnected
Test point 1	Driver's door latch 10P connector (female terminals) No. 7: ①
Test point 2	Body ground

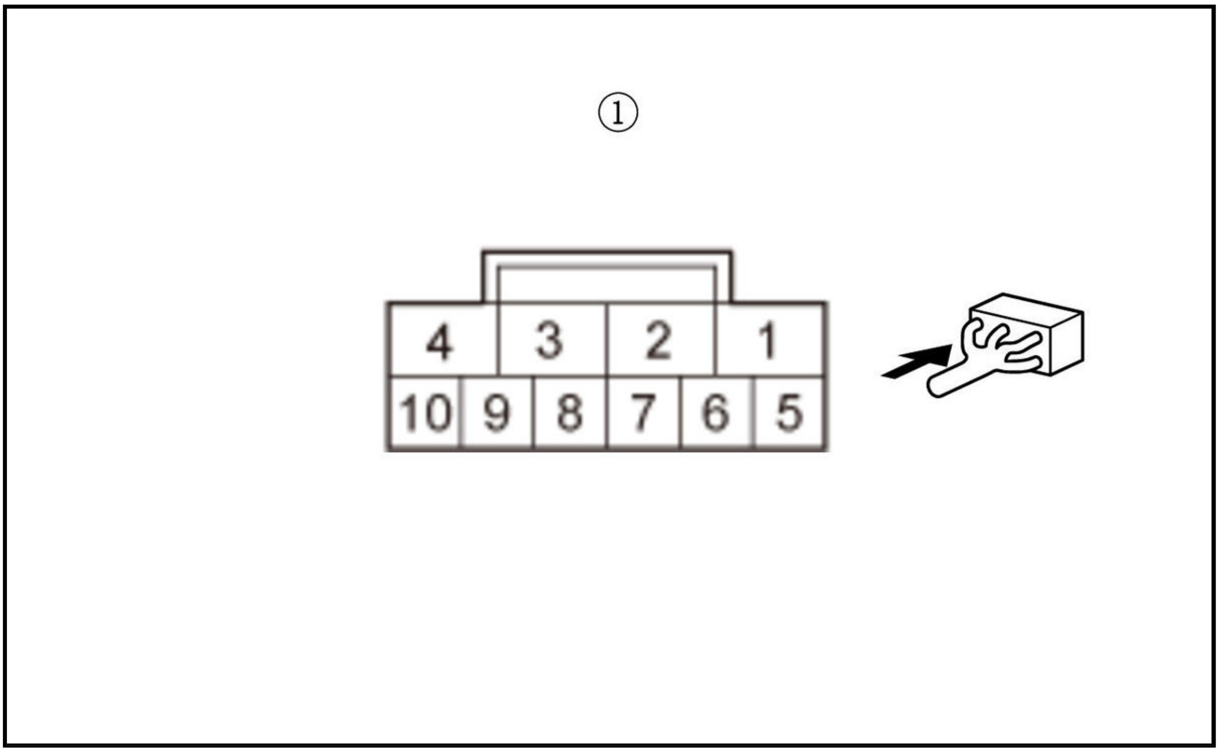

Is there continuity?

YES

The GND wire is OK. Faulty driver's door lock knob switch; replace the driver's door latch .

NO

Repair an open or high resistance in the ground wire or poor ground (G401).

26. Open wire check (DR SILCON UNLOCK line)

-1. Remove the jumper wire.

-2. Connect terminals A and B with a jumper wire.

Terminal A	Power window master switch 37P connector No. 20
Terminal B	Body ground

-3. Check the parameter(s) below with the HDS.

Signal	Current conditions	
	Value	Unit
Driver's Door Lock Knob Switch(UNLOCK)	B	B

Is information value ON?

YES

Repair an open or high resistance in the wire.

NO

The DR SILCON UNLOCK wire is OK. **Replace the power window master switch** .

27. Keyless/power door locks/security system check 1

    -1. With the front passenger's door lock knob switch in LOCK position, check the parameter(s) below with the HDS.

Signal	Current conditions	
	Value	Unit
Passenger's Door Lock Knob Switch(UNLOCK)	B	B

    Is information value ON?

    YES

    Go to step 28.

    NO

    Go to step 30.

28. Determine possible failure area (front passenger's door latch, others)

    -1. Turn the vehicle to the OFF (LOCK) mode.

    -2. Disconnect the following connector.

Front passenger's door latch 10P connector

    -3. Check the parameter(s) below with the HDS.

Signal	Current conditions	
	Value	Unit
Passenger's Door Lock Knob Switch(UNLOCK)	B	B

    Is information value OFF?

    YES

    Faulty front passenger's door lock knob switch; **replace the front passenger's door latch** .

    NO

    Go to step 29.

29. Shorted wire check (AS SILCON UNLOCK line)

-1. Turn the vehicle to the OFF (LOCK) mode.

-2. Disconnect the following connector.

Front passenger's power window switch 37P connector

-3. Check for continuity between test points 1 and 2.

Test condition	Vehicle OFF (LOCK) modeFront passenger's power window switch 37P connector: disconnectedFront passenger's door latch 10P connector: disconnected
Test point 1	**Front passenger's power window switch 37P connector No. 36**
Test point 2	Body ground

Is there continuity?

YES

Repair a short to ground in the wire.

NO

The AS SILCON UNLOCK wire is OK. **Replace the front passenger's power window switch** .

30. Keyless/power door locks/security system check 2

-1. Turn the vehicle to the OFF (LOCK) mode.

-2. Disconnect the following connector.

Front passenger's door latch 10P connector

-3. Connect terminals A and B with a jumper wire.

Terminal A	Front passenger's door latch 10P connector (female terminals) No. 10: ①
Terminal B	Body ground

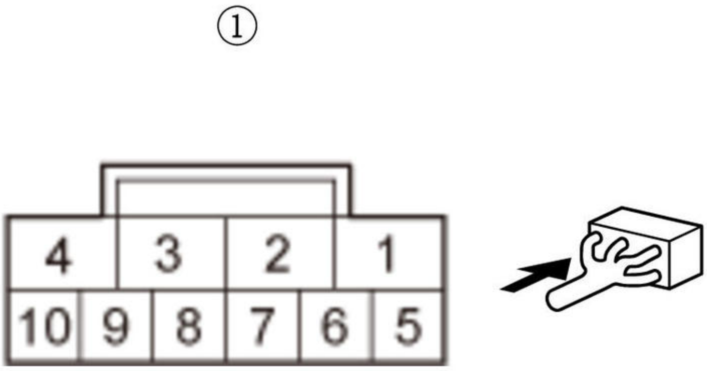

-4. Check the parameter(s) below with the HDS.

Signal	Current conditions	
	Value	**Unit**
Passenger's Door Lock Knob Switch(UNLOCK)	B	B

Is information value ON?

YES

Go to step 31.

NO

Go to step 32.

31. Open wire check (GND line)

-1. Turn the vehicle to the OFF (LOCK) mode.

-2. Remove the jumper wire.

-3. Check for continuity between test points 1 and 2.

Test condition	Vehicle OFF (LOCK) modeFront passenger's door latch 10P connector: disconnected
Test point 1	Front passenger's door latch 10P connector (female terminals) No. 8: ①
Test point 2	Body ground

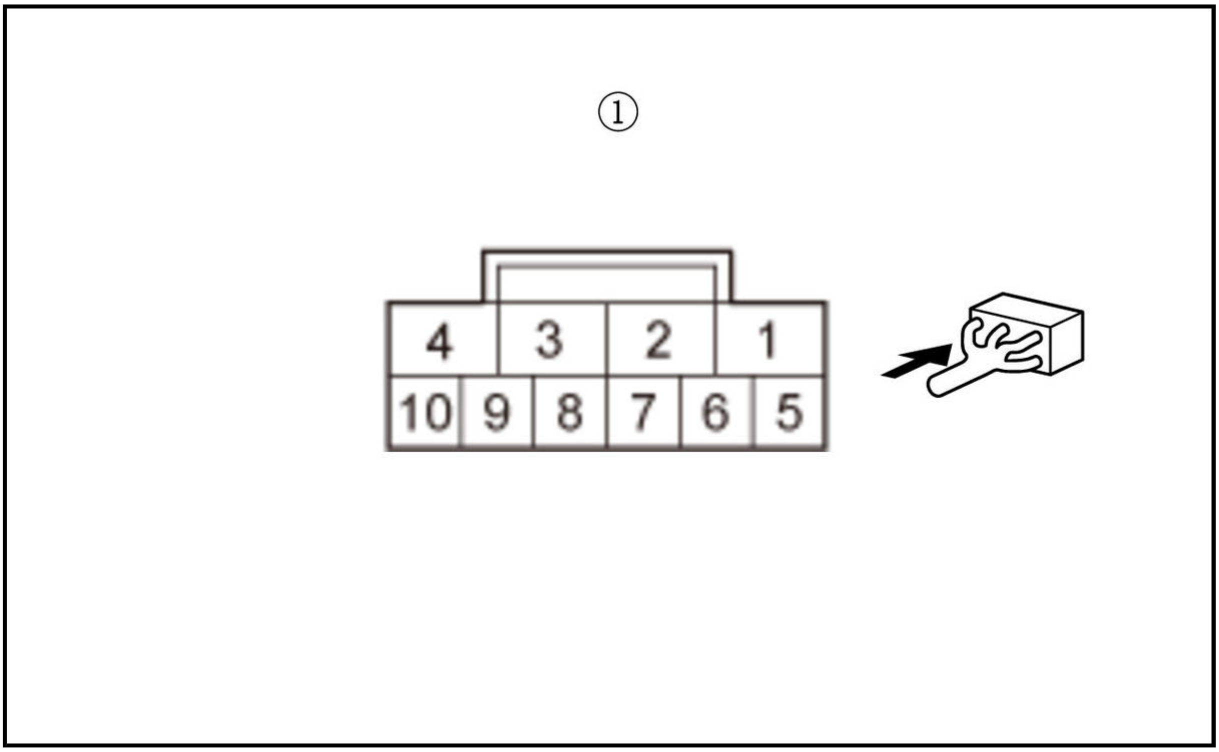

Is there continuity?

YES

The GND wire is OK. Faulty front passenger's door lock knob switch; **replace the front passenger's door latch** .

NO

Repair an open or high resistance in the ground wire or poor ground (G401).

32. Open wire check (AS SILCON UNLOCK line)

-1. Remove the jumper wire.

-2. Connect terminals A and B with a jumper wire.

Terminal A	**Front passenger's power window switch 37P connector No. 36**
Terminal B	Body ground

-3. Check the parameter(s) below with the HDS.

Signal	Current conditions	
	Value	Unit
Passenger's Door Lock Knob Switch(UNLOCK)	B	B

Is information value ON?

YES

Repair an open or high resistance in the wire.

NO

The AS SILCON UNLOCK wire is OK. **Replace the front passenger's power window switch** .

33. Keyless/power door locks/security system check 1

-1. With the left rear door lock knob switch in LOCK position, check the parameter(s) below with the HDS.

Signal	Current conditions	
	Value	Unit
Driver's Rear Door Lock Knob Switch(UNLOCK)	B	B

Is information indicator ON?

YES

Go to step 34.

NO

Go to step 36.

34. Determine possible failure area (left rear door latch, others)

-1. Turn the vehicle to the OFF (LOCK) mode.

-2. Disconnect the following connector.

Left rear door latch 10P connector

-3. Check the parameter(s) below with the HDS.

Signal	Current conditions	
	Value	Unit
Driver's Rear Door Lock Knob Switch(UNLOCK)	B	B

Is information indicator OFF?

YES

Faulty left rear door lock knob switch; **replace the left rear door latch** .

NO

Go to step 35.

35. Shorted wire check (RR L SILCON UNLOCK line)

-1. Turn the vehicle to the OFF (LOCK) mode.

-2. Disconnect the following connector.

Body control module connector C (28P)

-3. Check for continuity between test points 1 and 2.

Test condition	Vehicle OFF (LOCK) modeBody control module connector C (28P): disconnectedLeft rear door latch 10P connector: disconnected
Test point 1	**Body control module connector C (28P) No. 15**
Test point 2	Body ground

Is there continuity?

YES

Repair a short to ground in the wire.

NO

The RR L SILCON UNLOCK wire is OK. Faulty body control module; **replace the body control module** .

36. Keyless/power door locks/security system check 2

-1. Turn the vehicle to the OFF (LOCK) mode.

-2. Disconnect the following connector.

Left rear door latch 10P connector

-3. Connect terminals A and B with a jumper wire.

Terminal A	Left rear door latch 10P connector (female terminals) No. 9: ①
Terminal B	Body ground

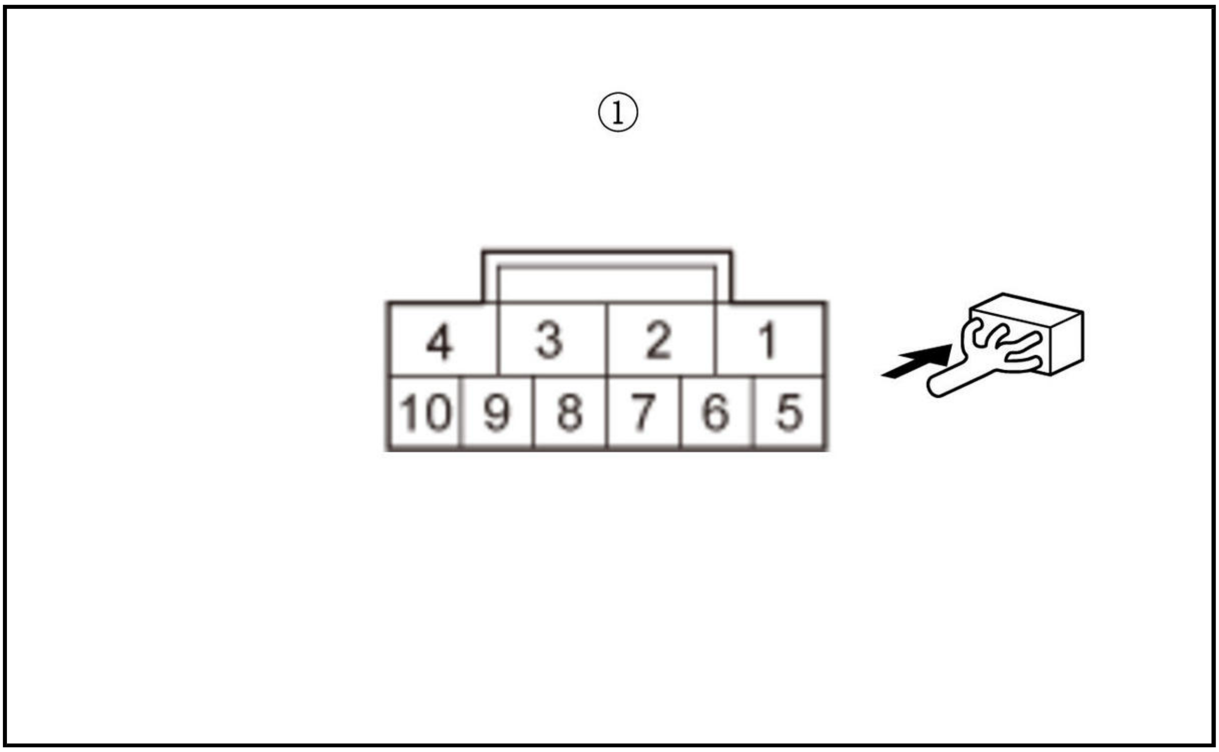

-4. Check the parameter(s) below with the HDS.

Signal	Current conditions	
	Value	Unit
Driver's Rear Door Lock Knob Switch(UNLOCK)	B	B

Is information value ON?

YES

Go to step 37.

NO

Go to step 38.

37. Open wire check (GND line)

-1. Turn the vehicle to the OFF (LOCK) mode.

-2. Remove the jumper wire.

-3. Check for continuity between test points 1 and 2.

Test condition	Vehicle OFF (LOCK) modeLeft rear door latch 10P connector: disconnected
Test point 1	Left rear door latch 10P connector (female terminals) No. 6: ①
Test point 2	Body ground

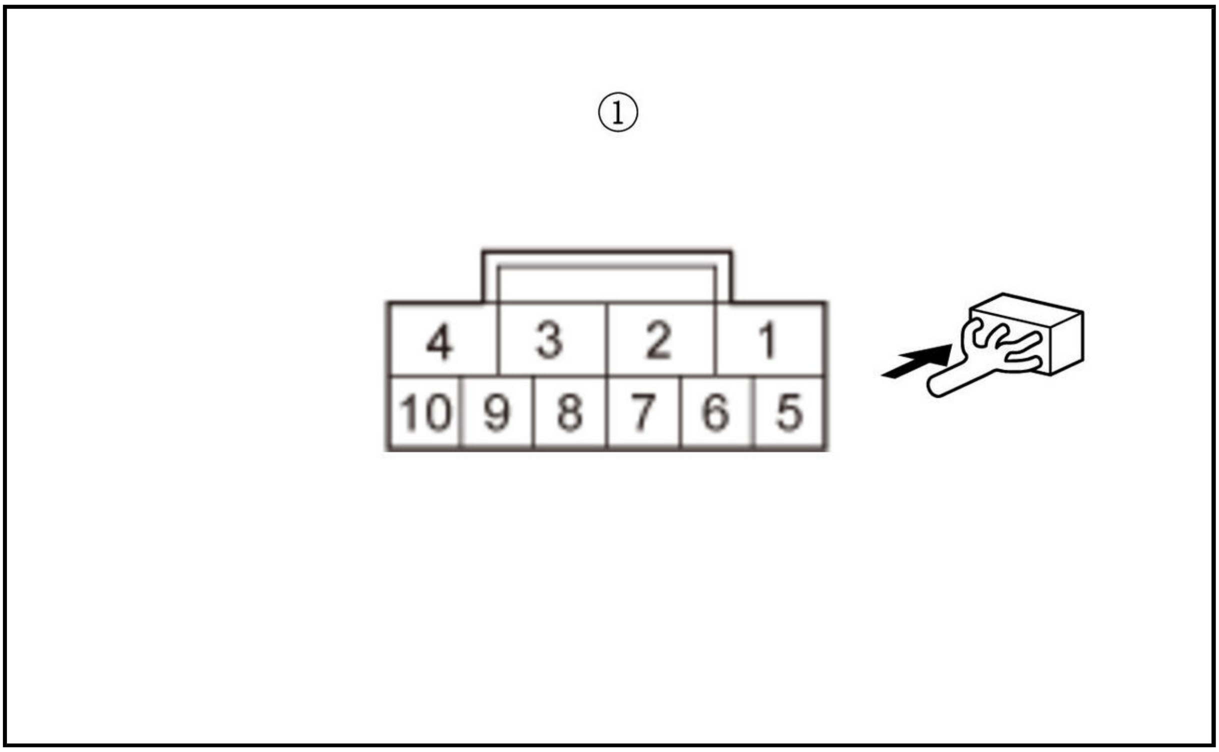

Is there continuity?

YES

The GND wire is OK. Faulty left rear door lock knob switch; **replace the left rear door latch** .

NO

Repair an open or high resistance in the ground wire or poor ground (G501).

38. Open wire check (RR L SILCON UNLOCK line)

-1. Remove the jumper wire.

-2. Connect terminals A and B with a jumper wire.

Terminal A	**Body control module connector C (28P) No. 15**
Terminal B	Body ground

-3. Check the parameter(s) below with the HDS.

Signal	**Current conditions**	
	Value	**Unit**
Driver's Rear Door Lock Knob Switch(UNLOCK)	B	B

Is information value ON?

YES

Repair an open or high resistance in the wire.

NO

The RR L SILCON UNLOCK wire is OK. Faulty body control module; **replace the body control module** .

39. Keyless/power door locks/security system check 1

-1. With the right rear door lock knob switch in LOCK position, check the parameter(s) below with the HDS.

Signal	Current conditions	
	Value	**Unit**
Driver's Rear Door Lock Knob Switch(UNLOCK)	B	B

Is information value ON?

YES

Go to step 40.

NO

Go to step 42.

40. Determine possible failure area (right rear door latch, others)

-1. Turn the vehicle to the OFF (LOCK) mode.

-2. Disconnect the following connector.

Right rear door latch 10P connector

-3. Check the parameter(s) below with the HDS.

Signal	Current conditions	
	Value	**Unit**
Passenger's Rear Door Lock Knob Sw. (UNLOCK)	B	B

Is information value OFF?

YES

Faulty right rear door lock knob switch; **replace the right rear door latch** .

NO

Go to step 41.

41. Shorted wire check (RR R SILCON UNLOCK line)

-1. Turn the vehicle to the OFF (LOCK) mode.

-2. Disconnect the following connector.

Body control module connector C (28P)

-3. Check for continuity between test points 1 and 2.

Test condition	Vehicle OFF (LOCK) modeBody control module connector C (28P): disconnectedRight rear door latch 10P connector: disconnected
Test point 1	**Body control module connector C (28P) No. 16**
Test point 2	Body ground

Is there continuity?

YES

Repair a short to ground in the wire.

NO

The RR R SILCON UNLOCK wire is OK. Faulty body control module; **replace the body control module** .

42. Keyless/power door locks/security system check 2

-1. Turn the vehicle to the OFF (LOCK) mode.

-2. Disconnect the following connector.

Right rear door latch 10P connector

-3. Connect terminals A and B with a jumper wire.

Terminal A	Right rear door latch 10P connector (female terminals) No. 6: ①
Terminal B	Body ground

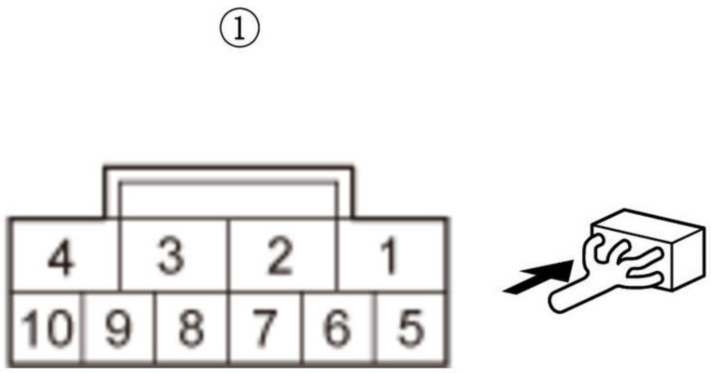

-4. Check the parameter(s) below with the HDS.

Signal	Current conditions	
	Value	Unit
Passenger's Rear Door Lock Knob Sw. (UNLOCK)	B	B

Is information value ON?

YES

Go to step 43.

NO

Go to step 44.

43. Open wire check (GND line)

-1. Turn the vehicle to the OFF (LOCK) mode.

-2. Remove the jumper wire.

-3. Check for continuity between test points 1 and 2.

Test condition	Vehicle OFF (LOCK) modeRight rear door latch 10P connector: disconnected
Test point 1	Right rear door latch 10P connector (female terminals) No. 9: ①
Test point 2	Body ground

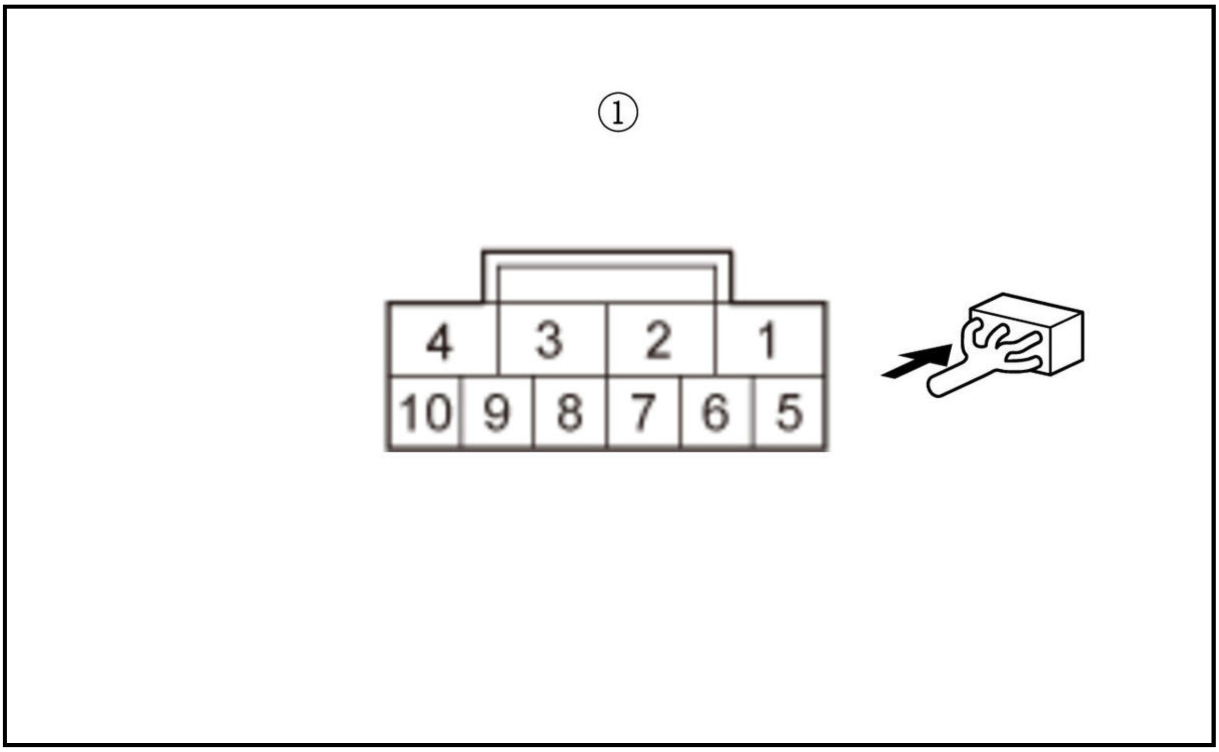

Is there continuity?

YES

The GND wire is OK. Faulty right rear door lock knob switch; **replace the right rear door latch** .

NO

Repair an open or high resistance in the ground wire or poor ground (G502).

44. Open wire check (RR R SILCON UNLOCK line)

-1. Remove the jumper wire.

-2. Connect terminals A and B with a jumper wire.

Terminal A	**Body control module connector C (28P) No. 16**
Terminal B	Body ground

-3. Check the parameter(s) below with the HDS.

Signal	Current conditions	
	Value	Unit
Passenger's Rear Door Lock Knob Sw. (UNLOCK)	B	B

Is information value ON?

YES

Repair an open or high resistance in the wire.

NO

The RR R SILCON UNLOCK wire is OK. Faulty body control module; **replace the body control module** .

45. Keyless/power door locks/security system check

-1. With the driver's door closed, check the parameter(s) below with the HDS.

Signal	Current conditions	
	Value	Unit
Driver's Door Switch	B	B

Is information value ON?

YES

Go to step 46.

NO

Go to step 48.

46. Driver's door switch operation check

-1. Turn the vehicle to the OFF (LOCK) mode.

-2. Remove the driver's door switch.

-3. Disconnect the following connector.

Driver's door switch 1P connector

-4. Check for continuity between test points 1 and 2.

Test point 1	Driver's door switch 1P connector: ①
Test point 2	Switch ground: ②

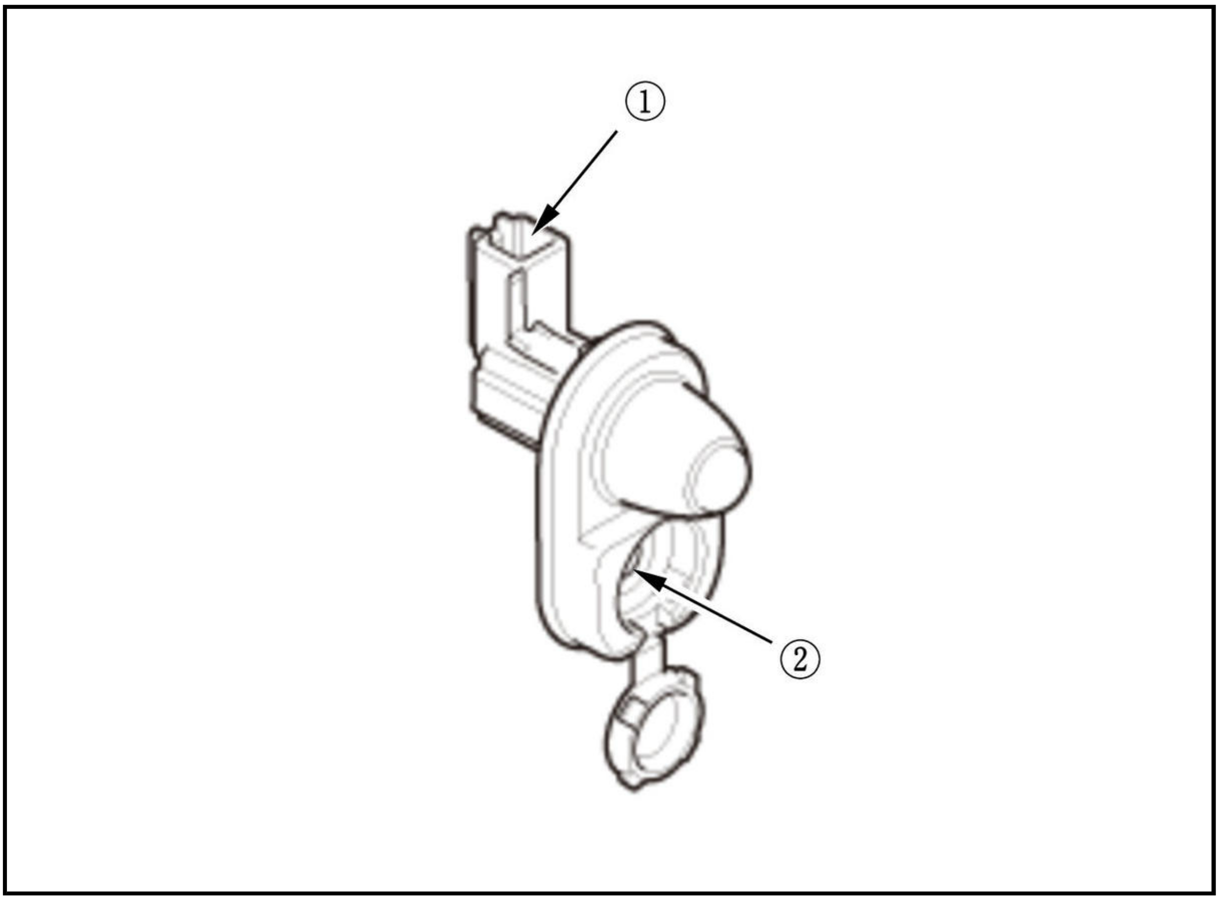

Is there no continuity when you press the switch and is there continuity when you release the switch?

YES

Go to step 47.

NO

Replace the driver's door switch.

47. Shorted wire check (FL DOOR SW line)

-1. Disconnect the following connector.

Body control module connector D (40P)

-2. Check for continuity between test points 1 and 2.

Test condition	Vehicle OFF (LOCK) mode Body control module connector D (40P): disconnected Driver's door switch 1P connector: disconnected
Test point 1	**Body control module connector D (40P) No. 22**
Test point 2	Body ground

Is there continuity?

YES

Repair a short to ground in the wire.

NO

The FL DOOR SW wire is OK. Faulty body control module; **replace the body control module** .

48. Driver's door switch operation check

-1. Turn the vehicle to the OFF (LOCK) mode.

-2. Remove the driver's door switch.

-3. Disconnect the following connector.

Driver's door switch 1P connector

-4. Check for continuity between test points 1 and 2.

Test point 1	Driver's door switch 1P connector: ①
Test point 2	Switch ground: ②

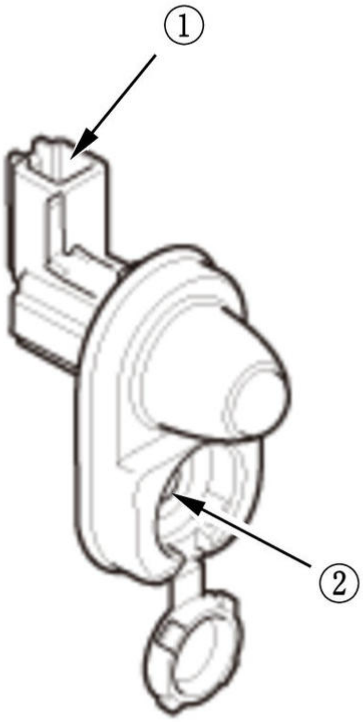

Is there no continuity when you press the switch and is there continuity when you release the switch?

YES

Go to step 49.

NO

Replace the driver's door switch.

49. Open wire check (FL DOOR SW line)

-1. Connect terminals A and B with a jumper wire.

Terminal A	**Body control module connector D (40P) No. 22**

Terminal B	Body ground

-2. Check the parameter(s) below with the HDS.

Signal	Current conditions	
	Value	**Unit**
Driver's Door Switch	B	B

Is information value ON?

YES

Repair an open or high resistance in the wire.

NO

The FL DOOR SW wire is OK. Faulty body control module; **replace the body control module** .

50. Keyless/power door locks/security system check

-1. With the front passenger's door closed, check the parameter(s) below with the HDS.

Signal	Current conditions	
	Value	**Unit**
Front Passenger's Door Switch	B	B

Is information value ON?

YES

Go to step 51.

NO

Go to step 53.

51. Front passenger's door switch operation check

-1. Turn the vehicle to the OFF (LOCK) mode.

-2. Remove the front passenger's door switch.

-3. Disconnect the following connector.

Front passenger's door switch 1P connector

-4. Check for continuity between test points 1 and 2.

Test point 1	Front passenger's door switch 1P connector: ①
Test point 2	Switch ground: ②

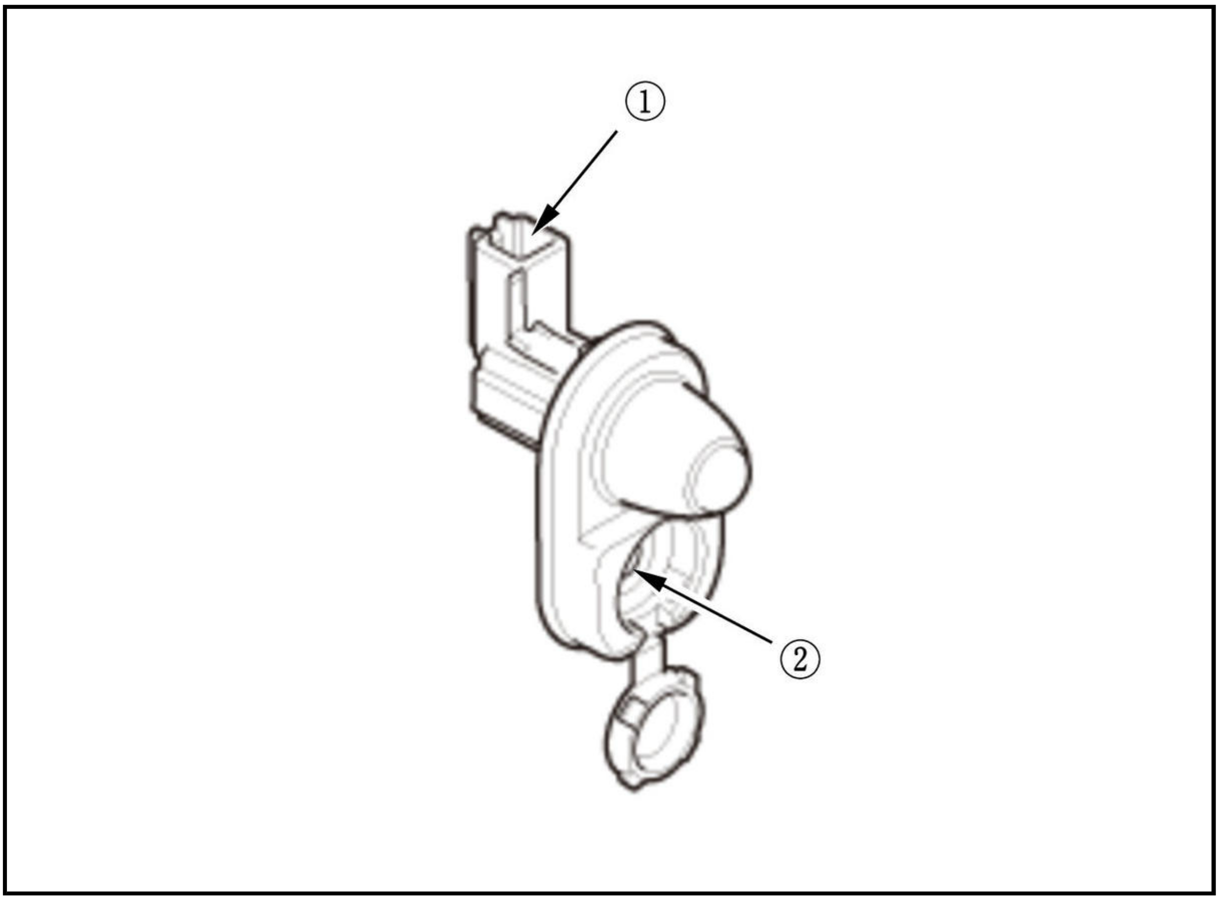

Is there no continuity when you press the switch and is there continuity when you release the switch?

YES

Go to step 52.

NO

Replace the front passenger's door switch.

52. Shorted wire check (FR DOOR SW line)

-1. Disconnect the following connector.

Body control module connector D (40P)

-2. Check for continuity between test points 1 and 2.

Test condition	Vehicle OFF (LOCK) modeBody control module connector D (40P): disconnectedFront passenger's door switch 1P connector: disconnected
Test point 1	**Body control module connector D (40P) No. 23**
Test point 2	Body ground

Is there continuity?

YES

Repair a short to ground in the wire.

NO

The FR DOOR SW wire is OK. Faulty body control module; **replace the body control module** .

53. Front passenger's door switch operation check

-1. Turn the vehicle to the OFF (LOCK) mode.

-2. Remove the front passenger's door switch.

-3. Disconnect the following connector.

Front passenger's door switch 1P connector

-4. Check for continuity between test points 1 and 2.

Test point 1	Front passenger's door switch 1P connector: ①
Test point 2	Switch ground: ②

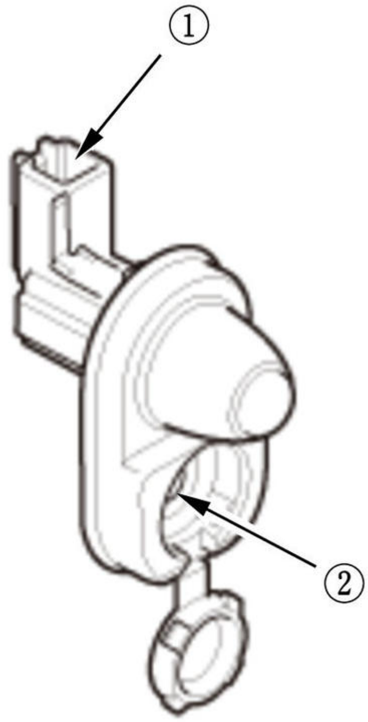

Is there no continuity when you press the switch and is there continuity when you release the switch?

YES

Go to step 54.

NO

Replace the front passenger's door switch.

54. Open wire check (FR DOOR SW line)

-1. Connect terminals A and B with a jumper wire.

Terminal A	**Body control module connector D (40P) No. 23**

Terminal B	Body ground

-2. Check the parameter(s) below with the HDS.

Signal	Current conditions	
	Value	Unit
Front Passenger's Door Switch	B	B

Is information value ON?

YES

Repair an open or high resistance in the wire.

NO

The FR DOOR SW wire is OK. Faulty body control module; **replace the body control module** .

55. Keyless/power door locks/security system check

-1. With the left rear door closed, check the parameter(s) below with the HDS.

Signal	Current conditions	
	Value	Unit
Driver's Rear Door Switch	B	B

Is information value ON?

YES

Go to step 56.

NO

Go to step 58.

56. Left rear door switch operation check

-1. Turn the vehicle to the OFF (LOCK) mode.

-2. Remove the left rear door switch.

-3. Disconnect the following connector.

Left rear door switch 1P connector

-4. Check for continuity between test points 1 and 2.

Test point 1	Left rear door switch 1P connector: ①
Test point 2	Switch ground: ②

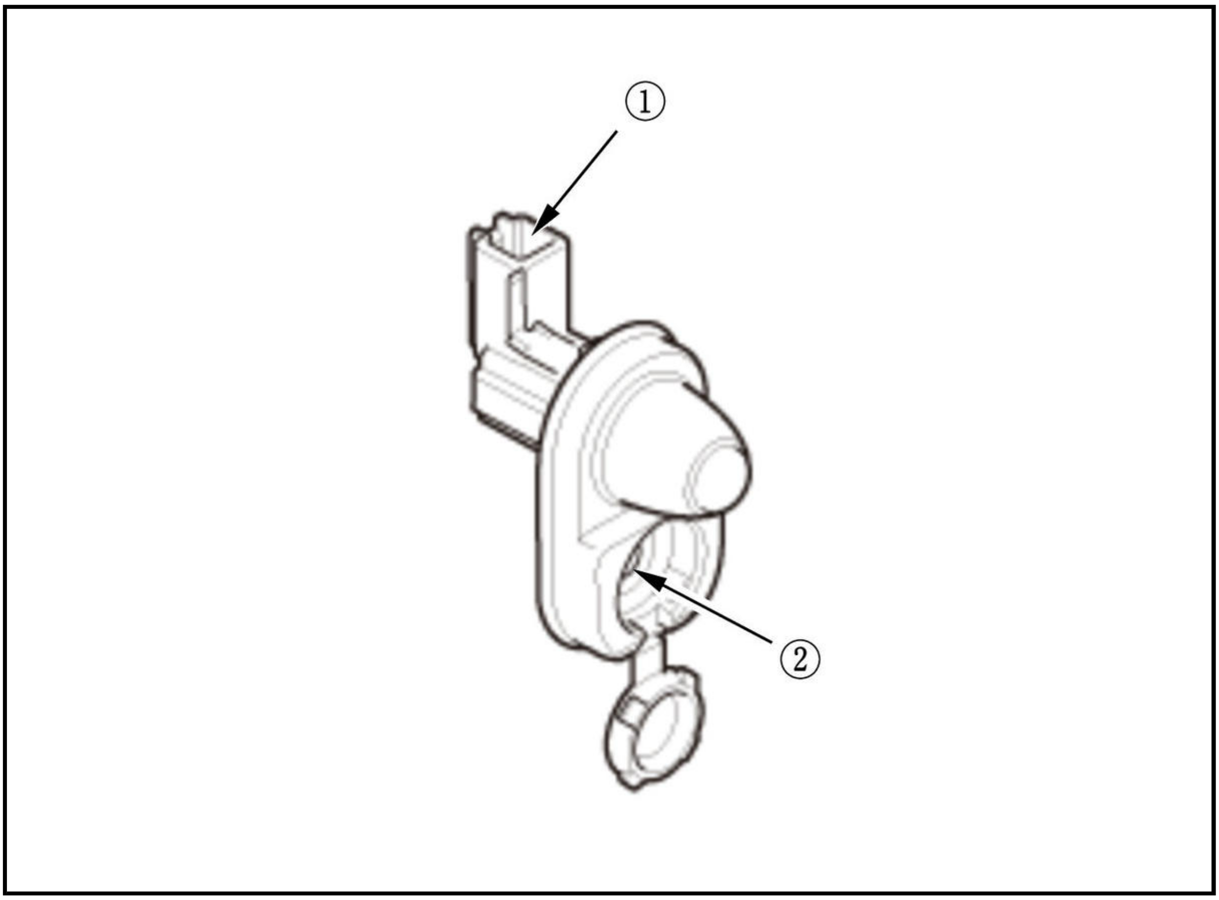

Is there no continuity when you press the switch and is there continuity when you release the switch?

YES

Go to step 57.

NO

Replace the left rear door switch.

57. Shorted wire check (RL DOOR SW line)

-1. Disconnect the following connector.

Body control module connector D (40P)

-2. Check for continuity between test points 1 and 2.

Test condition	Vehicle OFF (LOCK) modeBody control module connector D (40P): disconnectedLeft rear door switch 1P connector: disconnected
Test point 1	**Body control module connector D (40P) No. 24**
Test point 2	Body ground

Is there continuity?

YES

Repair a short to ground in the wire.

NO

The RL DOOR SW wire is OK. Faulty body control module; **replace the body control module** .

58. Left rear door switch operation check

-1. Turn the vehicle to the OFF (LOCK) mode.

-2. Remove the left rear door switch.

-3. Disconnect the following connector.

Left rear door switch 1P connector

-4. Check for continuity between test points 1 and 2.

Test point 1	Left rear door switch 1P connector: ①
Test point 2	Switch ground: ②

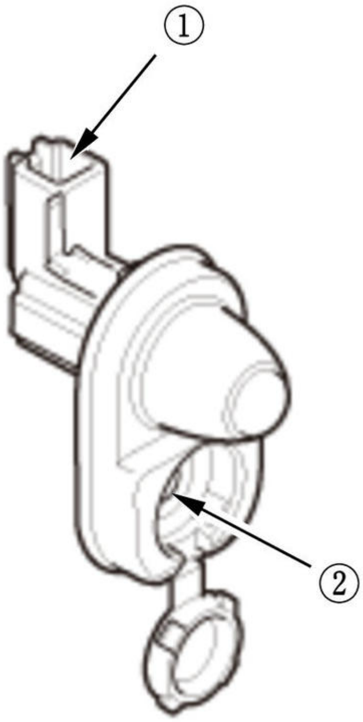

Is there no continuity when you press the switch and is there continuity when you release the switch?

YES

Go to step 59.

NO

Replace the left rear door switch.

59. Open wire check (RL DOOR SW line)

-1. Connect terminals A and B with a jumper wire.

Terminal A	**Body control module connector D (40P) No. 24**

Terminal B	Body ground

-2. Check the parameter(s) below with the HDS.

Signal	Current conditions	
	Value	Unit
Driver's Rear Door Switch	B	B

Is information value ON?

YES

Repair an open or high resistance in the wire.

NO

The RL DOOR SW wire is OK. Faulty body control module; **replace the body control module** .

60. Keyless/power door locks/security system check

-1. With the right rear door closed, check the parameter(s) below with the HDS.

Signal	Current conditions	
	Value	Unit
Passenger's Rear Door Switch	B	B

Is information value ON?

YES

Go to step 61.

NO

Go to step 63.

61. Right rear door switch operation check

-1. Turn the vehicle to the OFF (LOCK) mode.

-2. Remove the right rear door switch.

-3. Disconnect the following connector.

Right rear door switch 1P connector

-4. Check for continuity between test points 1 and 2.

Test point 1	Right rear door switch 1P connector: ①
Test point 2	Switch ground: ②

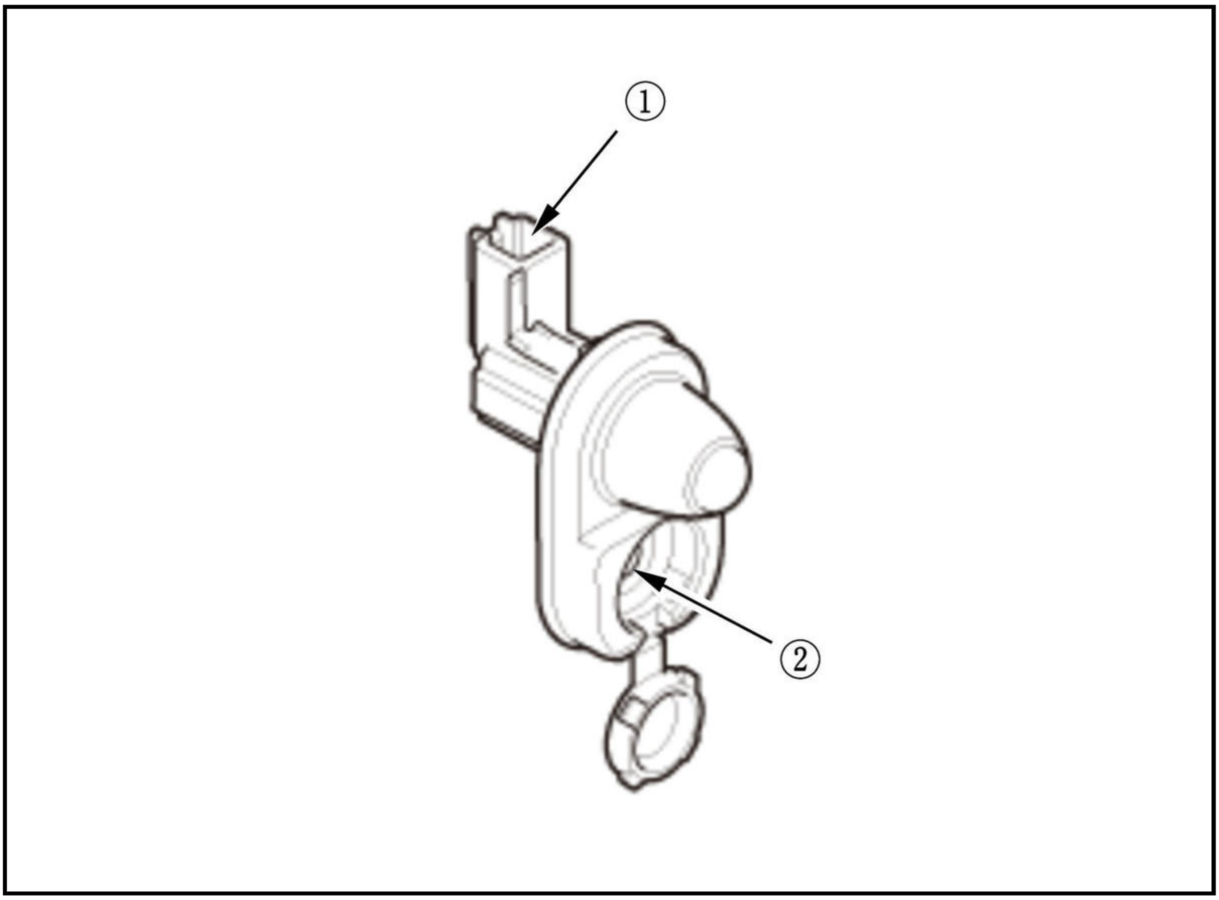

Is there no continuity when you press the switch and is there continuity when you release the switch?

YES

Go to step 62.

NO

Replace the right rear door switch.

62. Shorted wire check (RR DOOR SW line)

-1. Disconnect the following connector.

Body control module connector D (40P)

-2. Check for continuity between test points 1 and 2.

Test condition	Vehicle OFF (LOCK) modeBody control module connector D (40P): disconnectedRight rear door switch 1P connector: disconnected
Test point 1	**Body control module connector D (40P) No. 28**
Test point 2	Body ground

Is there continuity?

YES

Repair a short to ground in the wire.

NO

The RL DOOR SW wire is OK. Faulty body control module; **replace the body control module** .

63. Right rear door switch operation check

-1. Turn the vehicle to the OFF (LOCK) mode.

-2. Remove the right rear door switch.

-3. Disconnect the following connector.

Right rear door switch 1P connector

-4. Check for continuity between test points 1 and 2.

Test point 1	Right rear door switch 1P connector: ①
Test point 2	Switch ground: ②

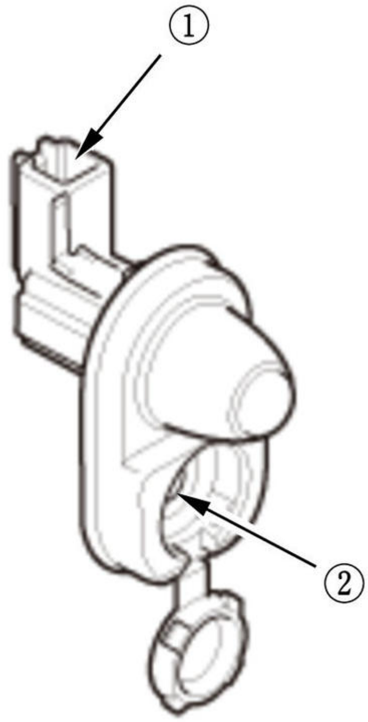

Is there no continuity when you press the switch and is there continuity when you release the switch?

YES

Go to step 64.

NO

Replace the right rear door switch.

64. Open wire check (RR DOOR SW line)

-1. Connect terminals A and B with a jumper wire.

Terminal A	**Body control module connector D (40P) No. 28**

Terminal B	Body ground

-2. Check the parameter(s) below with the HDS.

Signal	Current conditions	
	Value	Unit
Passenger's Rear Door Switch	B	B

Is information value ON?

YES

Repair an open or high resistance in the wire.

NO

The RR DOOR SW wire is OK. Faulty body control module; **replace the body control module** .

65. Keyless/power door locks/security system check

-1. Turn the vehicle to the OFF (LOCK) mode.

-2. Disconnect the following connector.

Driver's door latch 10P connector

-3. Connect terminals A and B with a jumper wire.

Terminal A	Driver's door latch 10P connector (female terminals) No. 9: ①
Terminal B	Body ground

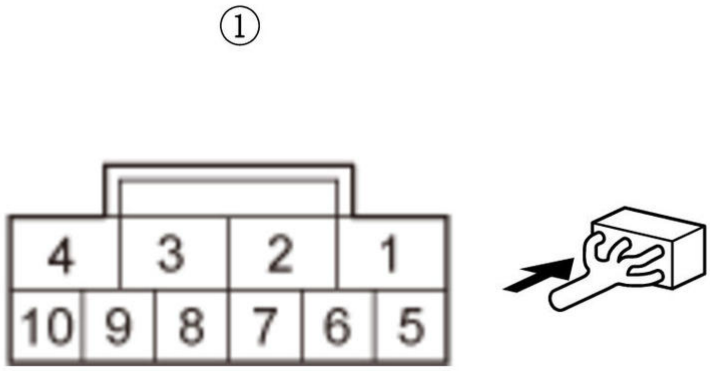

-4. Check the parameter(s) below with the HDS.

Signal	Current conditions	
	Value	**Unit**
Driver's Door Key Cylinder Switch(LOCK)	B	B

Is information value ON?

YES

Go to step 66.

NO

Go to step 68.

66. Driver's door key cylinder switch operation check

-1. Turn the vehicle to the OFF (LOCK) mode.

-2. **Test the driver's door key cylinder switch**.

Is the switch OK?

YES

Go to step 67.

NO

Faulty driver's door key cylinder switch; **replace the driver's door latch** .

67. Open wire check (GND line)

-1. Check for continuity between test points 1 and 2.

Test condition	Vehicle OFF (LOCK) modeDriver's door latch 10P connector: disconnected
Test point 1	Driver's door latch 10P connector (female terminals) No. 7: ①
Test point 2	Body ground

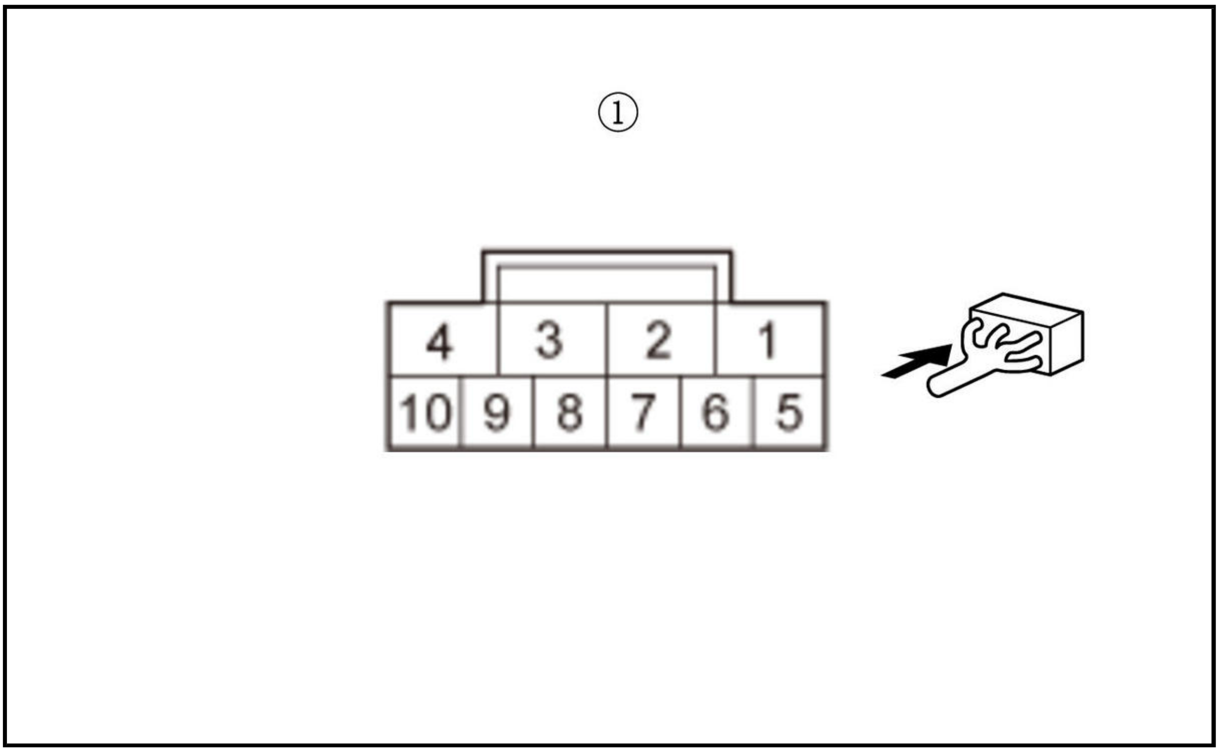

Is there continuity?

YES

The GND wire is OK. **Replace the power window master switch** .

NO

Repair an open or high resistance in the ground wire or poor ground (G401).

68. Open wire check (DR KEY CYL LOCK line)

-1. Connect terminals A and B with a jumper wire.

Terminal A	**Power window master switch 37P connector No. 7**
Terminal B	Body ground

-2. Check the parameter(s) below with the HDS.

Signal	**Current conditions**	
	Value	**Unit**
Driver's Door Key Cylinder Switch(LOCK)	B	B

Is information value ON?

YES

Repair an open or high resistance in the wire.

NO

The DR KEY CYL LOCK wire is OK. **Replace the power window master switch** .

SYMPTOM TROUBLESHOOTING INDEX

IMMOBILIZER SYSTEM SYMPTOM TROUBLESHOOTING INDEX

Troubleshoot the immobilizer system in the order shown:

Order of Priority	Symptom	Possible cause
1	Security indicator blinks.	Symptom troubleshooting.
2	Engine does not start with the immobilizer key.	Symptom troubleshooting.
3	Security indicator turns on.	Symptom troubleshooting.

KEYLESS ACCESS SYSTEM SYMPTOM TROUBLESHOOTING INDEX

NOTE: Before troubleshooting the keyless access system, make sure the fuses associated with the system is OK.

Symptom	Diagnostic procedure	Also check for
Cannot select ON mode with keyless access and with the keyless remote touching the engine start/stop switch	Symptom troubleshooting	• Poor connections at the body control module • Keyless remote • Body control module • Electric steering lock* • Engine start/stop switch • Harness/connections
Cannot select ON mode with keyless access, but can select ON mode with the keyless remote touching the engine start/stop switch	Symptom troubleshooting	• Body control module • LF antenna • Keyless remote • Low or weak keyless remote battery • Harness/connections
Cannot select ON mode with the keyless remote touching the engine start/stop switch, but can select ON mode with keyless access	Check the body control module	• Body control module is not registered • Body control module • MTR CONT line power short* • ESL ID mismatch* • MTR CONT line open/short* • IGN TRX line open/short* • Not registered • Harness/connections
The mode changes between ACCESSORY and ON, but it does not change to OFF (LOCK)	• Check the body control module • Check the park pin switch • Check the transmission range switch	• Body control module • ATP-P line open • Transmission range switch • Park pin switch • P-PIN SW line open
The mode changes between ACCESSORY and ON, but it is difficult to change to OFF (LOCK)	• Check the body control module • Check the gauge control module	• Gauge control module • Body control module • PCM

Symptom	Diagnostic procedure	Also check for
	• Check the park pin switch	• B-CAN communication line open/short • F-CAN communication line open/short • Speed signal line open • Park pin switch • P-PIN SW line open
Engine start/stop switch does not work	Check for DTCs. If any DTC is indicated, go to the DTC troubleshooting	• ACC relay circuit • Body control module • Engine start/stop switch • SS1(+) line short • SS2(-) line short • Harness

Symptom	Diagnostic procedure	Also check for
Engine does not crank (power supply is normal)	- Check the brake pedal position switch - Check the body control module	- Body control module - STS line open/short - Brake pedal position switch - STOP SW line open/short
The engine starts, but stalls immediately	**Symptom troubleshooting**	- No power to PCM - No power to body control module - Body control module - Gauge control module - Electric steering lock* - Harness/connections
Keyless access indicator does not go off or does not come on	**Symptom troubleshooting**	- Gauge control module - Body control module - Harness/connections
Security indicator blinks	**Symptom troubleshooting**	- Gauge control module - Body control module - PCM - Harness/connections
All the doors will not lock and unlock	**Symptom troubleshooting**	- Body control module - LF antenna - Driver's door lock knob switch - Door outer handle touch sensors - Door lock actuators - Keyless remote - Low or weak keyless remote battery - Not registered
The doors will not unlock or lock with the keyless remote, but will unlock or lock with the door outer handles	**Symptom troubleshooting**	- Keyless remote battery dead - Keyless remote - Body control module - Harness/connections - B-CAN communication line
The doors will not unlock or lock with the door outer handle touch sensors, but will unlock or lock with the keyless remote	**Symptom troubleshooting**	- Door outer handle touch sensors - Body control module - Keyless remote - Not registered - Harness/connections

*: With electric steering lock

KEYLESS/POWER DOOR LOCKS/SECURITY SYSTEM SYMPTOM TROUBLESHOOTING INDEX

NOTE:

- If the door lock system and the keyless operation do not work, troubleshoot the door locks first. The system does not function when turn the vehicle to the ON mode.
- Before troubleshooting, make sure the fuses associated with the system is OK.

Symptom	Check Items	Also Check for
All the doors will not lock or unlock with driver's door key cylinder or door lock switch or keyless transmitter/remote	Poor ground (G351, G401) Blown the fuses associated with the system **Body control module input test** **Power window master switch input test** **Keyless transmitter test** **Remote test**	B
Driver's door will not lock or unlock	Poor ground (G401) Blown the fuses associated with the system Door switch test (check the door switch ON/OFF information with the HDS) **Body control module input test** **Power window master switch input test** **Door lock actuator test**	B
Front passenger's door will not lock or unlock	Poor ground (G401) Blown the fuses associated with the system **Body control module input test** Door switch test (check the door switch ON/OFF information with the HDS) **Door lock actuator test**	B
Left rear door will not lock or unlock	Poor ground (G501) Blown the fuses associated with the system **Body control module input test** Door switch test (check the door switch ON/OFF information with the HDS) **Door lock actuator test**	B
Right rear doors will not lock or unlock	Poor ground (G502)	B

Symptom	Check Items	Also Check for
	• Blown the fuses associated with the system • **Body control module input test** • Door switch test (check the door switch ON/OFF information with the HDS) • **Door lock actuator test**	
Front passenger's doors will not unlock with the remote or key cylinder switch, but will unlock with the inside door unlock switch	**Driver's door lock knob switch test** (check for door lock knob switch ON/OFF information with the HDS)	B
Doors automatically relock 30 seconds after being unlocked with the remote even though a door has been opened	**Symptom troubleshooting**	B
Auto door unlock does not work	**Symptom troubleshooting**	B

Symptom	Check Items	Also Check for
Security alarm system will not arm	**Symptom troubleshooting**	B
The security system sounds randomly while the doors are locked	**Tripped sensor recall**	B

SYMPTOM TROUBLESHOOTING INDEX FOR VIEWER

ALL THE DOORS WILL NOT LOCK AND UNLOCK

Diagnostic procedure

- **Symptom troubleshooting**

Also check for

- Body control module
- LF antenna
- Driver's door lock knob switch
- Door outer handle touch sensors
- Door lock actuators
- Keyless remote
- Low or weak keyless remote battery
- Not registered

ALL THE DOORS WILL NOT LOCK OR UNLOCK WITH DRIVER'S DOOR KEY CYLINDER OR DOOR LOCK SWITCH OR KEYLESS TRANSMITTER/REMOTE

Check Items

- Poor ground (G351, G401)
- Blown the fuses associated with the system
- **Body control module input test**
- **Power window master switch input test**
- **Keyless transmitter test**
- **Remote test**

AUTO DOOR UNLOCK DOES NOT WORK

Check Items

- **Symptom troubleshooting**

CANNOT SELECT ON MODE WITH KEYLESS ACCESS AND WITH THE KEYLESS REMOTE TOUCHING THE ENGINE START/STOP SWITCH

Diagnostic procedure

- **Symptom troubleshooting**

Also check for

- Poor connections at the body control module
- Keyless remote
- Body control module
- Electric steering lock*
- Engine start/stop switch
- Harness/connections

CANNOT SELECT ON MODE WITH KEYLESS ACCESS, BUT CAN SELECT ON MODE WITH THE KEYLESS REMOTE TOUCHING THE ENGINE START/STOP SWITCH

Diagnostic procedure

- **Symptom troubleshooting**

Also check for

- Body control module
- LF antenna
- Keyless remote
- Low or weak keyless remote battery
- Harness/connections

CANNOT SELECT ON MODE WITH THE KEYLESS REMOTE TOUCHING THE ENGINE START/STOP SWITCH, BUT CAN SELECT ON MODE WITH KEYLESS ACCESS

Diagnostic procedure

- Check the body control module

Also check for

- Body control module is not registered
- Body control module
- MTR CONT line power short*
- ESL ID mismatch*
- MTR CONT line open/short*
- IGN TRX line open/short*
- Not registered
- Harness/connections

DOORS AUTOMATICALLY RELOCK 30 SECONDS AFTER BEING UNLOCKED WITH THE REMOTE EVEN THOUGH A DOOR HAS BEEN OPENED

Check Items

- **Symptom troubleshooting**

DRIVER'S DOOR WILL NOT LOCK OR UNLOCK

Check Items

- Poor ground (G401)
- Blown the fuses associated with the system
- Door switch test (check the door switch ON/OFF information with the HDS)
- **Body control module input test**
- **Power window master switch input test**
- **Door lock actuator test**

ENGINE DOES NOT CRANK (POWER SUPPLY IS NORMAL)

Diagnostic procedure

- Check the brake pedal position switch
- Check the body control module

Also check for

- Body control module
- STS line open/short
- Brake pedal position switch
- STOP SW line open/short

ENGINE START/STOP SWITCH DOES NOT WORK

Diagnostic procedure

- Check for DTCs. If any DTC is indicated, go to the DTC troubleshooting

Also check for

- ACC relay circuit
- Body control module
- Engine start/stop switch
- SS1(+) line short
- SS2(-) line short
- Harness

FRONT PASSENGER'S DOOR WILL NOT LOCK OR UNLOCK

Check Items

- Poor ground (G401)
- Blown the fuses associated with the system
- **Body control module input test**
- Door switch test (check the door switch ON/OFF information with the HDS)

- **Door lock actuator test**

FRONT PASSENGER'S DOORS WILL NOT UNLOCK WITH THE REMOTE OR KEY CYLINDER SWITCH, BUT WILL UNLOCK WITH THE INSIDE DOOR UNLOCK SWITCH

Check Items

- **Driver's door lock knob switch test** (check for door lock knob switch ON/OFF information with the HDS)

KEYLESS ACCESS INDICATOR DOES NOT GO OFF OR DOES NOT COME ON

Diagnostic procedure

- **Symptom troubleshooting**

Also check for

- Gauge control module
- Body control module
- Harness/connections

LEFT REAR DOOR WILL NOT LOCK OR UNLOCK

Check Items

- Poor ground (G501)
- Blown the fuses associated with the system
- **Body control module input test**
- Door switch test (check the door switch ON/OFF information with the HDS)
- **Door lock actuator test**

RIGHT REAR DOORS WILL NOT LOCK OR UNLOCK

Check Items

- Poor ground (G502)
- Blown the fuses associated with the system
- **Body control module input test**
- Door switch test (check the door switch ON/OFF information with the HDS)
- **Door lock actuator test**

SECURITY ALARM SYSTEM WILL NOT ARM

Check Items

- **Symptom troubleshooting**

SECURITY INDICATOR BLINKS

Diagnostic procedure

- **Symptom troubleshooting**

Also check for

- Gauge control module

- Body control module
- PCM
- Harness/connections

THE DOORS WILL NOT UNLOCK OR LOCK WITH THE DOOR OUTER HANDLE TOUCH SENSORS, BUT WILL UNLOCK OR LOCK WITH THE KEYLESS REMOTE

Diagnostic procedure

- **Symptom troubleshooting**

Also check for

- Door outer handle touch sensors
- Body control module
- Keyless remote
- Not registered
- Harness/connections

THE DOORS WILL NOT UNLOCK OR LOCK WITH THE KEYLESS REMOTE, BUT WILL UNLOCK OR LOCK WITH THE DOOR OUTER HANDLES

Diagnostic procedure

- **Symptom troubleshooting**

Also check for

- Keyless remote battery dead
- Keyless remote
- Body control module
- Harness/connections
- B-CAN communication line

THE ENGINE STARTS, BUT STALLS IMMEDIATELY

Diagnostic procedure

- **Symptom troubleshooting**

Also check for

- No power to PCM
- No power to body control module
- Body control module
- Gauge control module
- Electric steering lock*
- Harness/connections

THE MODE CHANGES BETWEEN ACCESSORY AND ON, BUT IT DOES NOT CHANGE TO OFF (LOCK)

Diagnostic procedure

- Check the body control module

- Check the park pin switch
- Check the transmission range switch

Also check for

- Body control module
- ATP-P line open
- Transmission range switch
- Park pin switch
- P-PIN SW line open

THE MODE CHANGES BETWEEN ACCESSORY AND ON, BUT IT IS DIFFICULT TO CHANGE TO OFF (LOCK)

Diagnostic procedure

- Check the body control module
- Check the gauge control module
- Check the park pin switch

Also check for

- Gauge control module
- Body control module
- PCM
- B-CAN communication line open/short
- F-CAN communication line open/short
- Speed signal line open
- Park pin switch
- P-PIN SW line open

THE SECURITY SYSTEM SOUNDS RANDOMLY WHILE THE DOORS ARE LOCKED

Check Items

- **Tripped sensor recall**

REMOVAL AND INSTALLATION

BSI RADAR UNIT REMOVAL AND INSTALLATION

Removal and Installation

NOTE:

- How to read the torque specifications .
- Unless otherwise indicated, illustration shows left of the vehicle; right of the vehicle is symmetrical.

1. Rear Bumper - Remove
2. BSI Radar Unit - Remove

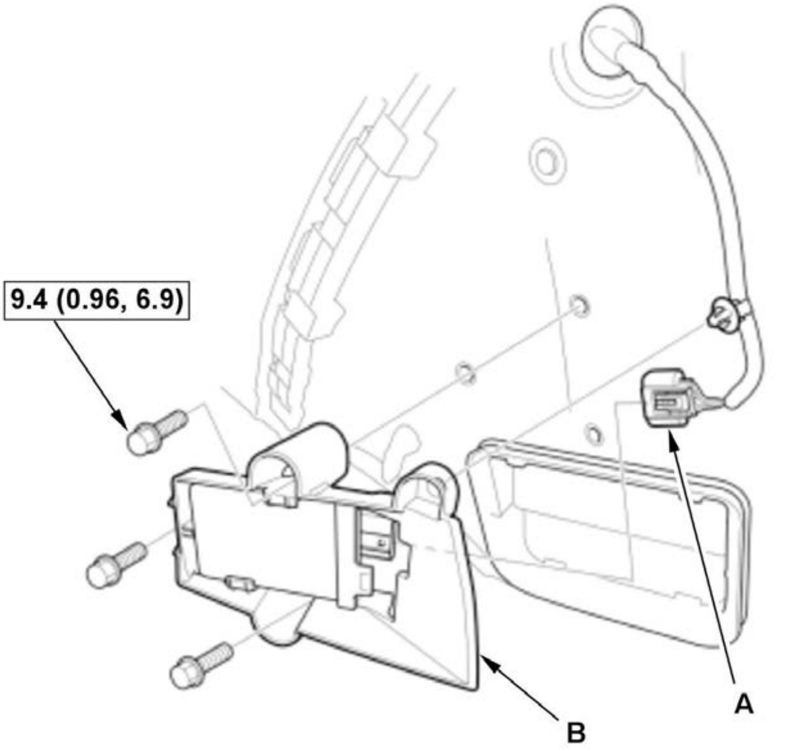	1. Disconnect the connector (A). 2. Remove the BSI radar unit assembly (B).

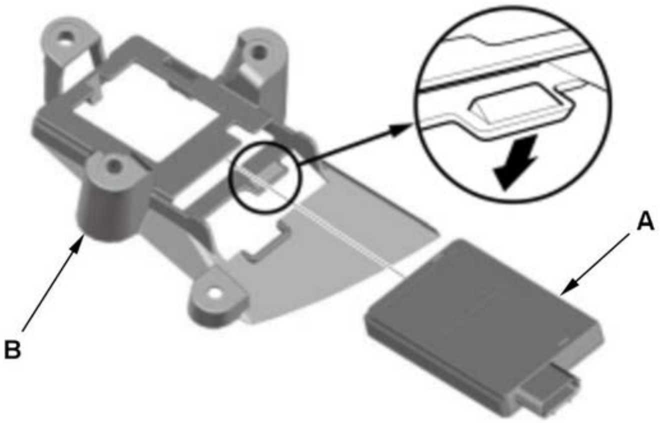	3. If necessary, remove the BSI radar unit (A) from the bracket (B).

3. All Removed Parts - Install

1. Install the parts in the reverse order of removal.

4. **BSI Radar Unit Aiming - Inspect**
5. **Rear Bumper - Install**

REMOVAL AND INSTALLATION

QUARTER GLASS REMOVAL AND INSTALLATION

Removal

1. Quarter Pillar Trim - Remove
2. Quarter Glass - Remove

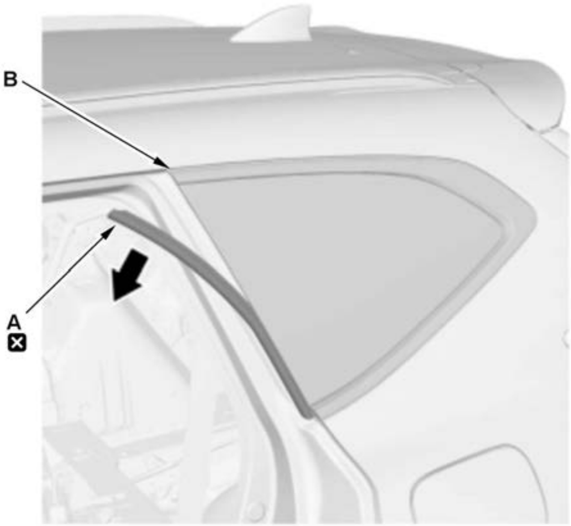	1. Remove the front seal (A) from the front edge of the quarter glass (B). If necessary, cut the front seal with a utility knife.

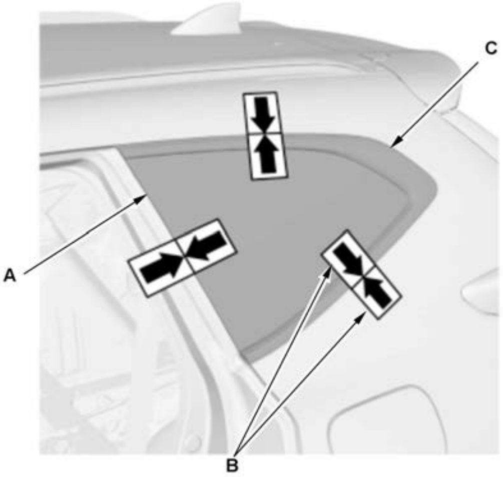	2. If the original quarter glass (A) will be reinstalled, make alignment marks (B) across the glass and the body with a grease pencil over the quarter glass molding (C).

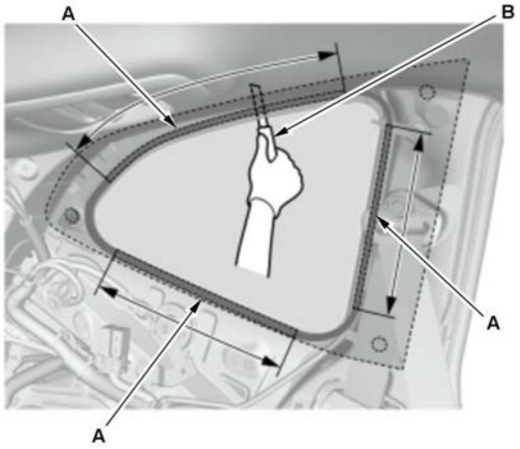	3. Apply protective tape along the inside and outside edges of the body. From the pillar side of the vehicle, to cut the adhesive (A) with a utility knife (B).

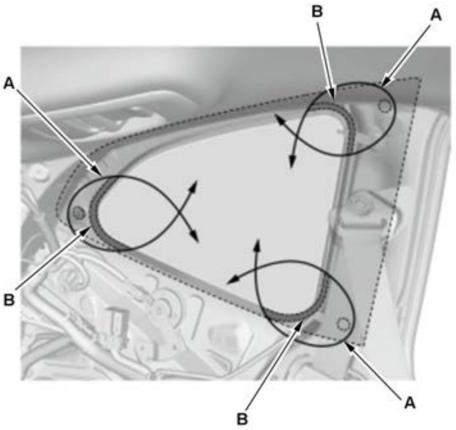	4. Pass a piano wire (A) from the inside of the vehicle at the place where the corner portion of the quarter glass ends, and wrap each end around a piece of wood. 5. Pull the piano wire back and forth in a sawing motion. 6. Repeat these procedure, cut through the rubber dam and the adhesive (B) of the quarter glass. **NOTE:** - If the quarter glass will be reinstalled, take care not to damage the molding. - If the molding is damaged, replace the quarter glass, the molding, and the clips as an assembly. 7. Carefully remove the quarter glass with suction cups. 8. If a new quarter glass will be installed, remove the clips from the body. 9. Scrape the original adhesive smooth to a thickness of about 1 mm (0.04 in) - 2 mm (0.08 in) on the bonding surface around the entire quarter glass opening flange with a putty knife. **NOTE:** Do not scrape down to the painted surface of the body; damaged paint will interfere with proper bonding.

Installation

1. Quarter Glass - Install

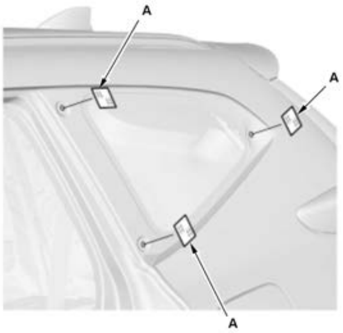

1. Clean the body bonding surface with a shop towel dampened with isopropyl alcohol. After cleaning, keep oil, grease, and water from getting on the surface.

2. If you are reinstalling the original quarter glass, scrape off the original adhesive from the quarter glass with a putty knife. Clean the bonding surfaces on the inside face and the edge of the quarter glass with isopropyl alcohol. Make sure the bonding surface is kept free of water, oil, and grease.

3. If the original quarter glass will be reinstalled (and either clip is broken off the molding), seal the body holes with pieces of urethane tapes (A).

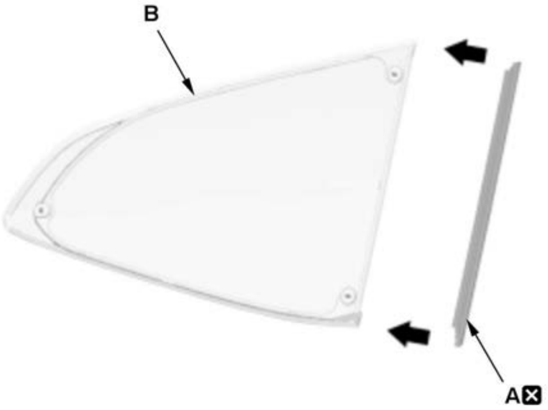

4. Install the front seal (A) with adhesive tape to the inside face of the quarter glass (B) as shown.

NOTE:

- Before installing the front seal, apply primer to the inside face of the quarter glass.
- Be careful not to touch the quarter glass where the adhesive will be applied.

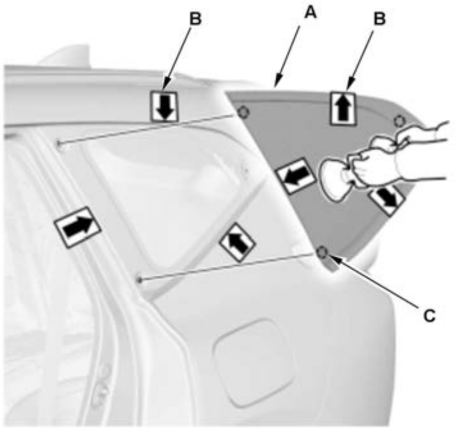

5. Set the quarter glass (A) in the opening, and make alignment marks (B) across the quarter glass and the body with a grease pencil at the three points shown.

NOTE:

- Make sure the clips (C) contact with the edge of the body holes.
- Be careful not to touch the quarter glass where the adhesive will be applied.

6. Apply a light coat of primer to the quarter glass (A) along the edge of the front seal (B) and the quarter glass molding (C) as shown, then lightly wipe it off with gauze or cheesecloth.

NOTE:

- Apply the primer to the rear corner, upper corner, and lower corner areas of the quarter glass using the printed dots (D) on the quarter glass as a guide.
- Do not apply body primer to the quarter glass, and do not mix up the body and the glass primer applicators.
- Never touch the primed surfaces with your hands. If you do, adhesive may not bond to the quarter glass properly, causing a leak after the quarter glass is installed.
- Keep water, dust, and abrasive materials away from the primed surfaces.

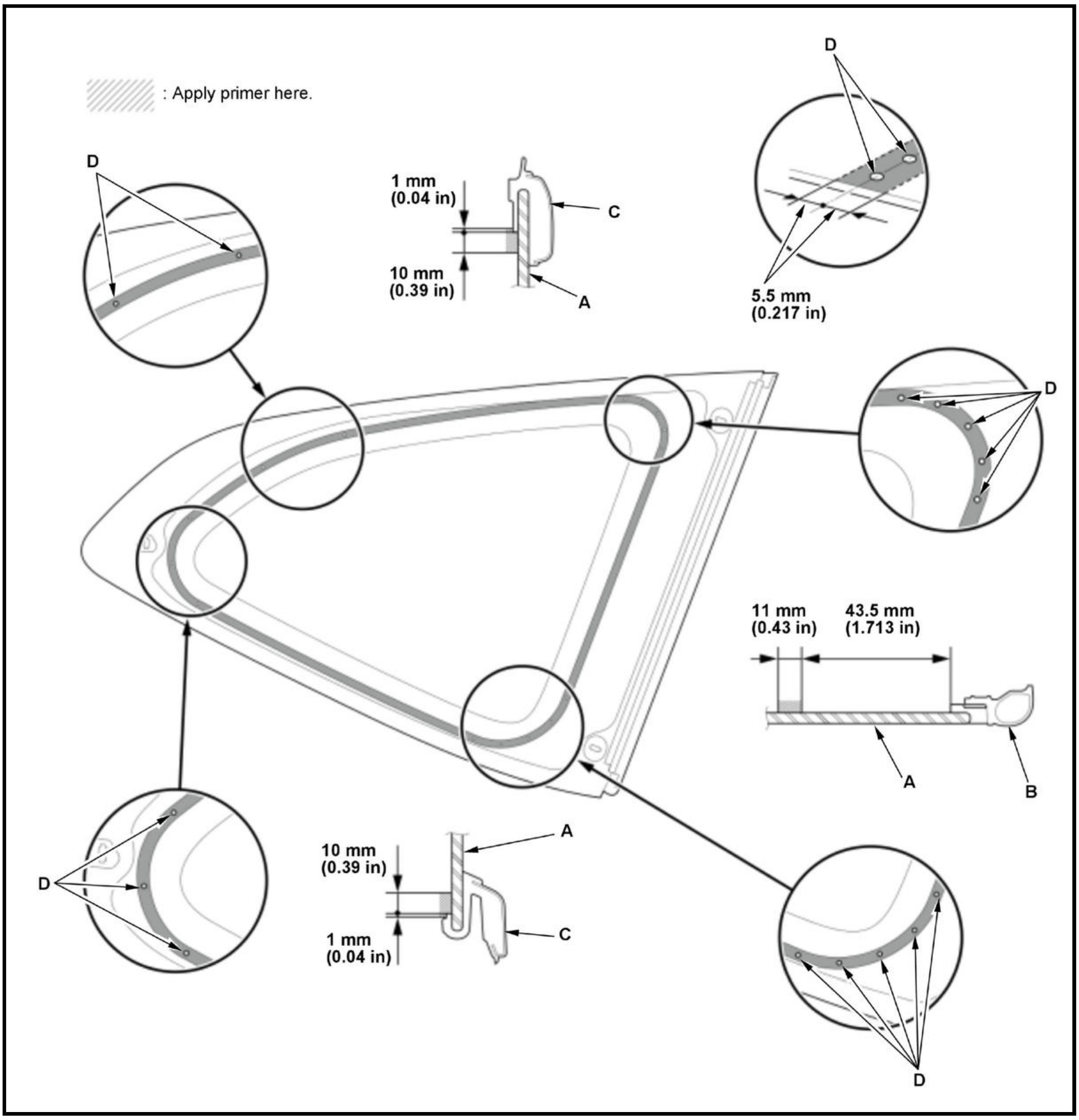
▨ : Apply primer here.
D
1 mm
(0.04 in)
10 mm
(0.39 in)
C
A
D
5.5 mm
(0.217 in)
D
11 mm
(0.43 in)
43.5 mm
(1.713 in)
A
B
D
10 mm
(0.39 in)
1 mm
(0.04 in)
A
C
D

7. Apply a light coat of body primer to any exposed paint or metal around the flange where new adhesive will be applied. Let the primer dry for at least 10 minutes:

NOTE:

- Do not apply the glass primer to the body.
- Do not apply body primer to any remaining original adhesive on the flange.
- Be careful not to mix up the body and the glass primer sponges.
- Never touch the primed surfaces with your hands.

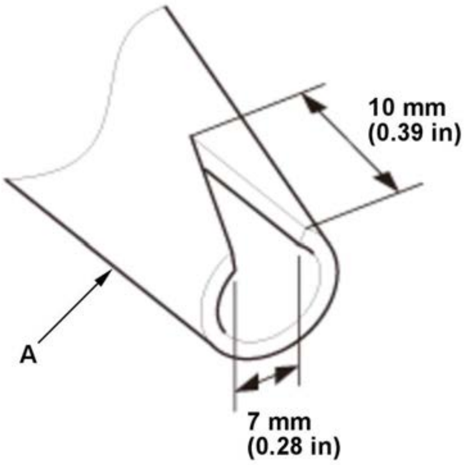 10 mm (0.39 in) A 7 mm (0.28 in)	8. Cut a "V" in the end of the nozzle (A) on the adhesive cartridge as shown.

9. Put the cartridge in a caulking gun, and run a continuous bead of adhesive (A) on the quarter glass (B) edge of the front seal (C) and the quarter glass molding (D) as shown.

NOTE:

- Apply the adhesive to the using the printed dots (E) on the quarter glass as a guide.
- Apply the adhesive within 30 minutes after applying the glass primer.
- Make a slightly thicker bead at each corner.

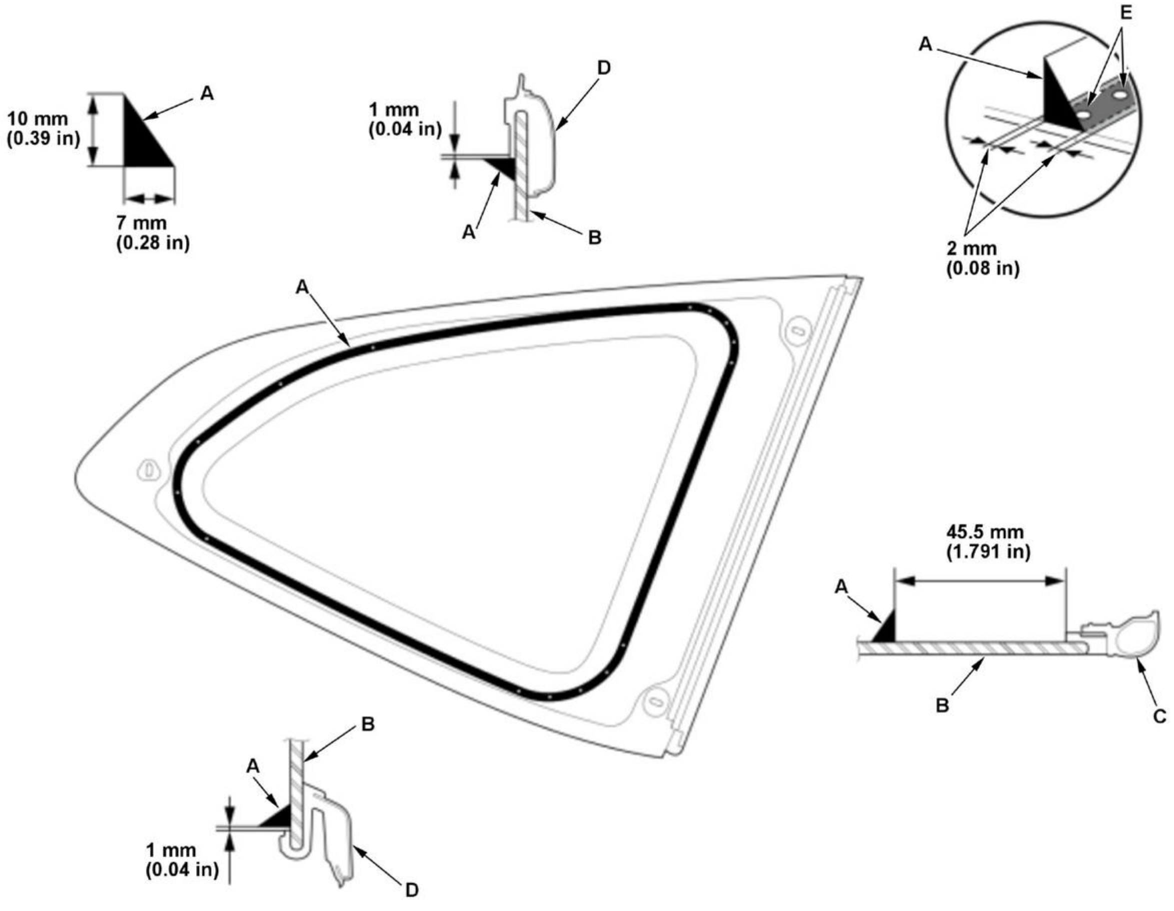
10 mm
(0.39 in)
A
7 mm
(0.28 in)
1 mm
(0.04 in)
D
A
B
A
E
2 mm
(0.08 in)
A
45.5 mm
(1.791 in)
A
B
C
B
A
1 mm
(0.04 in)
D

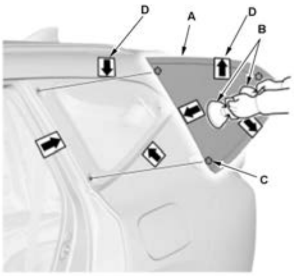	10. Hold the quarter glass (A) with suction cups (B) over the opening, align the clips (C) or the alignment marks (D) made in step 5, and set it down on the adhesive. Lightly push on the quarter glass until its edges are fully seated on the adhesive all the way around. **NOTE:** Do not open or close any of the doors for about an hour until the adhesive is dry. 11. Remove the excess adhesive with a putty knife or a shop towel dampened with isopropyl alcohol. 12. Wait at least an hour for the adhesive to dry, then spray water over the quarter glass and check for leaks. Mark the leaking areas, let the quarter glass dry, then seal with sealant. Let the vehicle stand for at least 4 hours after quarter glass installation. If the vehicle has to be used within the first 4 hours, it must be driven slowly. 13. Advise the customer not to do the following things for 2 to 3 days: • Slam the doors with all the windows rolled up. • Twist the body excessively (such as when going in and out of driveways at an angle or driving over rough, uneven roads).

2. Quarter Pillar Trim - Install

REAR WINDOW REMOVAL AND INSTALLATION

Removal

1. Tailgate Spoiler Trim - Remove
2. Tailgate Trim - Remove
3. Rear Window Wiper Motor - Remove
4. Rear Window - Remove

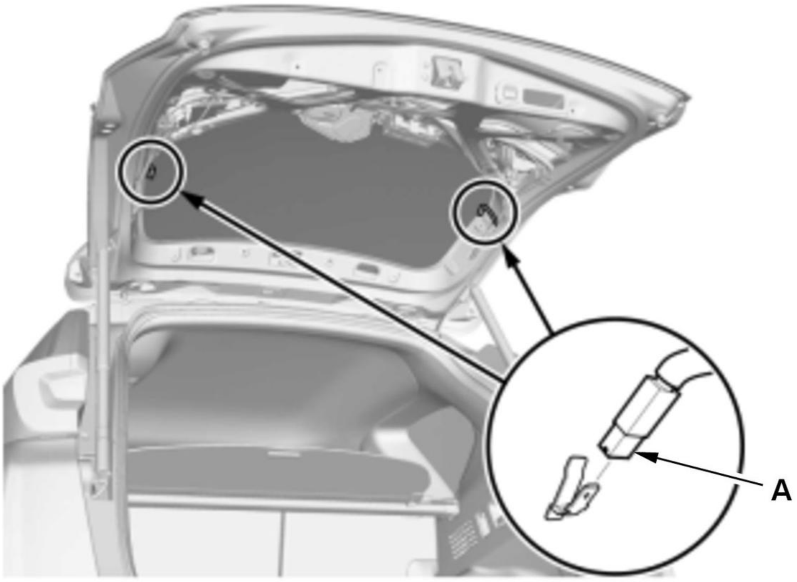	1. Disconnect the connectors (A).

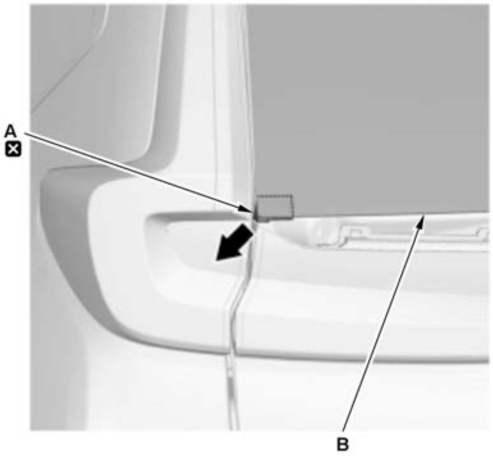	2. Remove the rear windshield corner moldings (A) from the corner of the rear window (B). If necessary, cut the rear windshield corner moldings with a utility knife.

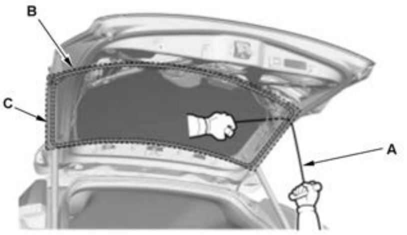 **Cutting positions** 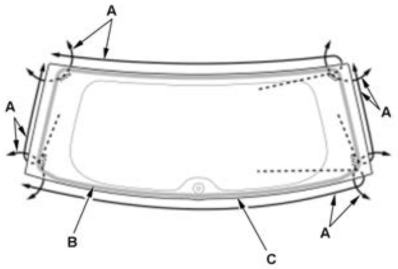	3. Apply protective tape along the inside and the outside edges of the tailgate. Make a hole with an awl through the adhesive from inside of the vehicle at the corner portion of the rear window. Push a piece of piano wire through the hole, and wrap each end around a piece of wood. 4. With a helper on the outside, pull the piano wire (A) back and forth in a sawing motion. Hold the piano wire as close to the rear window (B) as possible to prevent damage to the tailgate, and carefully cut through the adhesive (C) around the entire rear window. 5. Carefully remove the rear window. 6. Scrape the original adhesive smooth to a thickness of about 1 mm (0.04 in) - 2 mm (0.08 in) on the bonding surface around the entire rear window opening flange with a knife. **NOTE:** • Do not scrape down to the painted surface of the body; damaged paint will interfere with proper bonding. • Remove the fasteners from the body. 7. Clean the body bonding surface with a shop towel dampened in isopropyl alcohol. After cleaning, keep oil, grease, and water from getting on the surface. 8. If you are reinstalling the original rear window, scrape off all of the original adhesive, the fasteners, and the rubber dams from the rear window with a putty knife. Clean the bonding surface on the inside face and the edge of the rear window with isopropyl alcohol. Make sure the bonding surface is kept free of water, oil, and grease.

Installation

1. Rear Window - Install

1. Clean the body bonding surface with a shop towel dampened with isopropyl alcohol. After cleaning, do not allow oil, grease, and water to contact on the clean surface.

2. If you are reinstalling the original rear window, scrape off the original adhesive, the fasteners, and the rubber dam from the rear window with a putty knife. Clean the bonding surface on the inside face and the edge of the rear window with isopropyl alcohol. Make sure the bonding surface is kept free of water, oil, and grease.

3. Install the fasteners (A) with the adhesive tape to the inside face of the rear window (B) as shown.

NOTE:

- Be careful not to touch the rear window where the adhesive will be applied.
- Before installing the spacer and the fasteners, apply glass primer to the area where the adhesive tape will be applied.
- Make sure the spacer and the fasteners line up with the alignment marks (C).

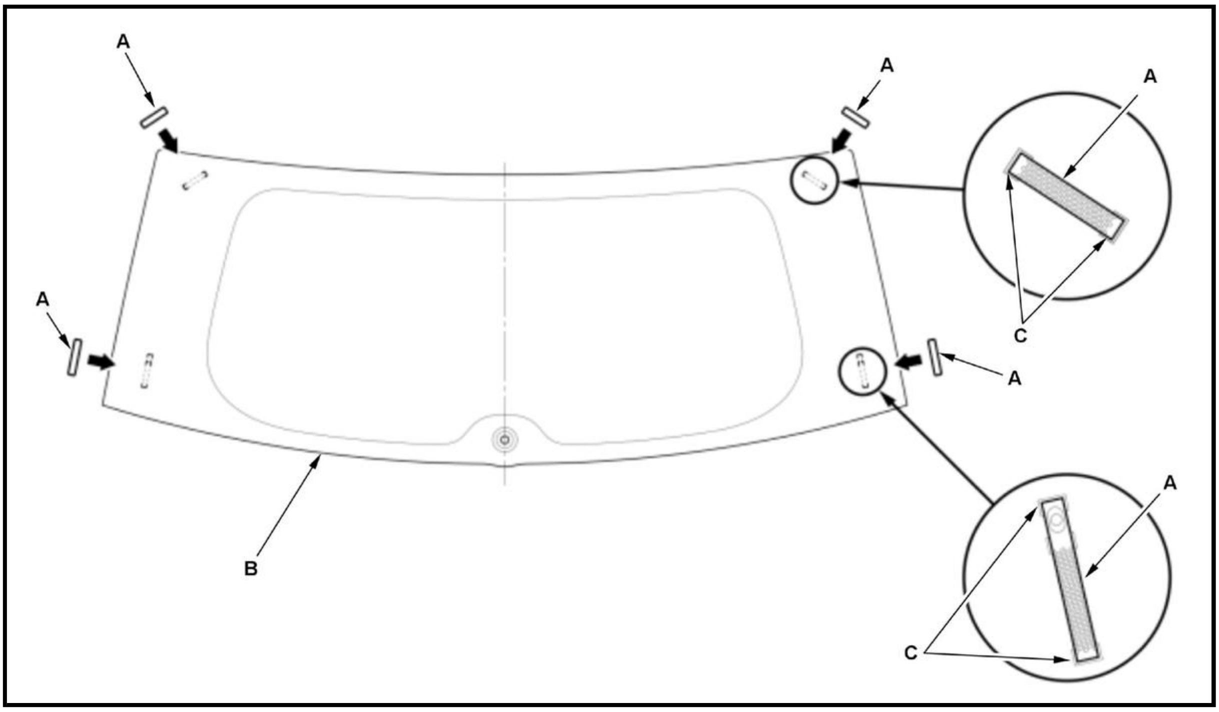

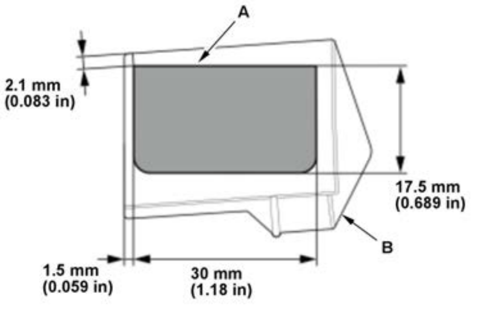 A 2.1 mm (0.083 in) 17.5 mm (0.689 in) B 1.5 mm (0.059 in) 30 mm (1.18 in)	4. Apply adhesive primer to the areas where the new double-sided adhesive tapes (A) will be applied, then attach the new double-sided adhesive tapes to the rear windshield corner moldings (B) as shown.

5. Install the rear windshield corner moldings (A) with the adhesive tape to the inside face of the rear window (B) as shown. Before installing the rear windshield corner moldings, apply a primer to the area where the adhesive tape will be applied to the inside face of the rear window.

NOTE: Be careful not to touch the rear window where the adhesive will be applied.

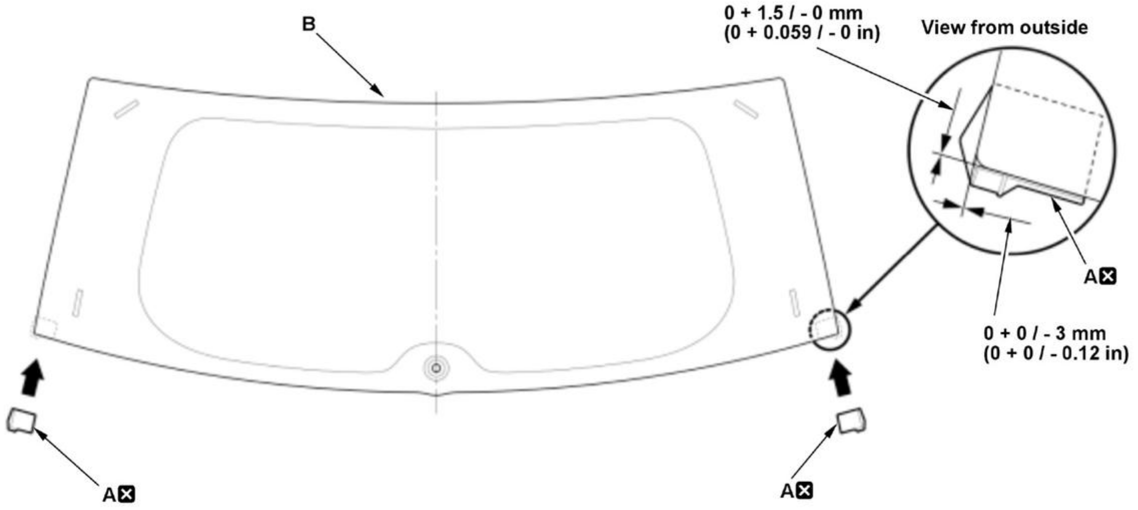
B
0 + 1.5 / - 0 mm
(0 + 0.059 / - 0 in)
View from outside
A☒
0 + 0 / - 3 mm
(0 + 0 / - 0.12 in)
A☒
A☒

6. Install the rubber dams (A, B, C) with the adhesive tape to the inside face of the rear window (D) as shown. Before installing the rubber dams, apply a primer to the area where the adhesive tape will be applied to the inside face of the rear window.

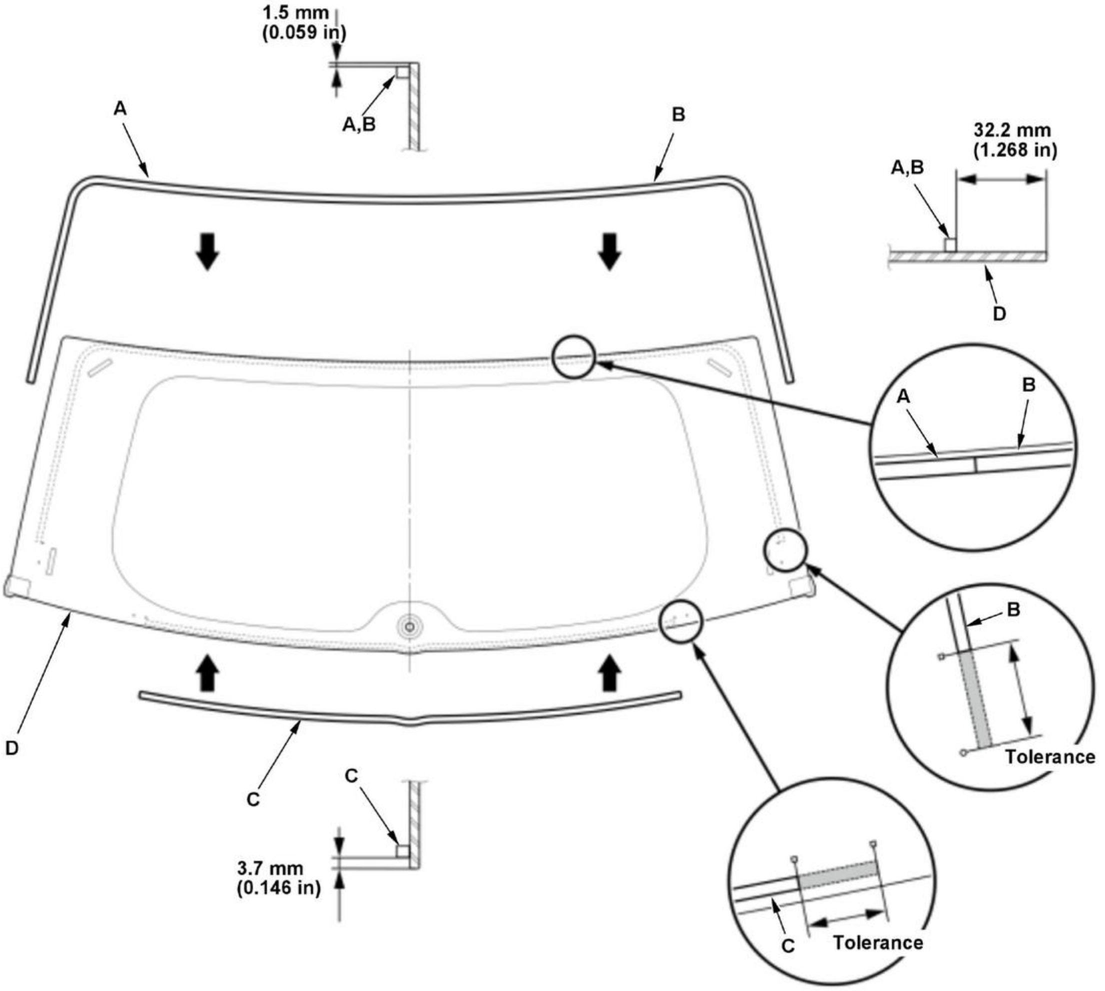
1.5 mm
(0.059 in)
A,B
A
B
A,B
32.2 mm
(1.268 in)
D
A
B
B
Tolerance
D
C
C
3.7 mm
(0.146 in)
C
Tolerance

7. Cut the rubber dams to the length, then install the new rubber dams

Lower seal length:		
B	**Rubber dam A**	**1100 mm (43.31 in)**
B	**Rubber dam B**	**534 mm (21.02 in)**
B	**Rubber dam C**	**830 mm (32.68 in)**

NOTE:

- After installing the new rubber dam, cut the both ends of rubber dam flush with the edges of the glass as shown.
- Be careful not to touch the rear window where the adhesive will be applied.

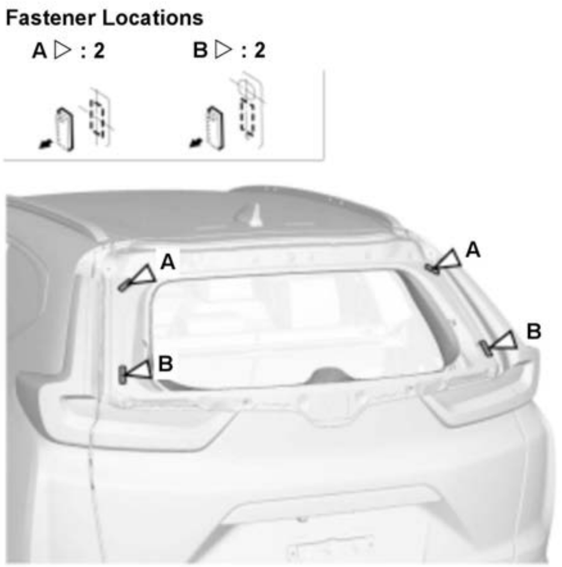

8. Attach the fasteners (A, B) with the adhesive tape to the rear window opening flange of the tailgate as shown.

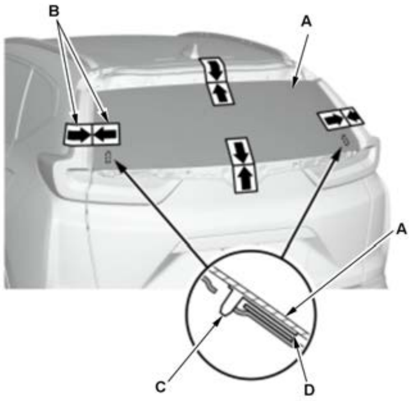

9. If you are installing the new rear window (A), set the rear window in the opening, and center it. Make the alignment marks (B) across the rear window and the body with a grease pencil at the four points shown.

NOTE:

- Be careful not to touch the rear window where the adhesive will be applied.
- Make sure the pins (C) of the fasteners (D) contact with the edge of the body holes.

10. Remove the rear window.

11. Apply a light coat of primer to the rear window (A) along the edge of the rubber dams (B) as shown, then lightly wipe it off with gauze or cheesecloth.

- Apply the primer to the rear window using the printed dots (C) on the rear window as a guide.
- Do not apply body primer to the rear window, and do not mix up the body and the glass primer applicators.
- Never touch the primed surfaces with your hands. If you do, the adhesive may not bond to the rear window properly, causing a leak after the rear window is installed.
- Keep water, dust, and abrasive materials away from primed surfaces.

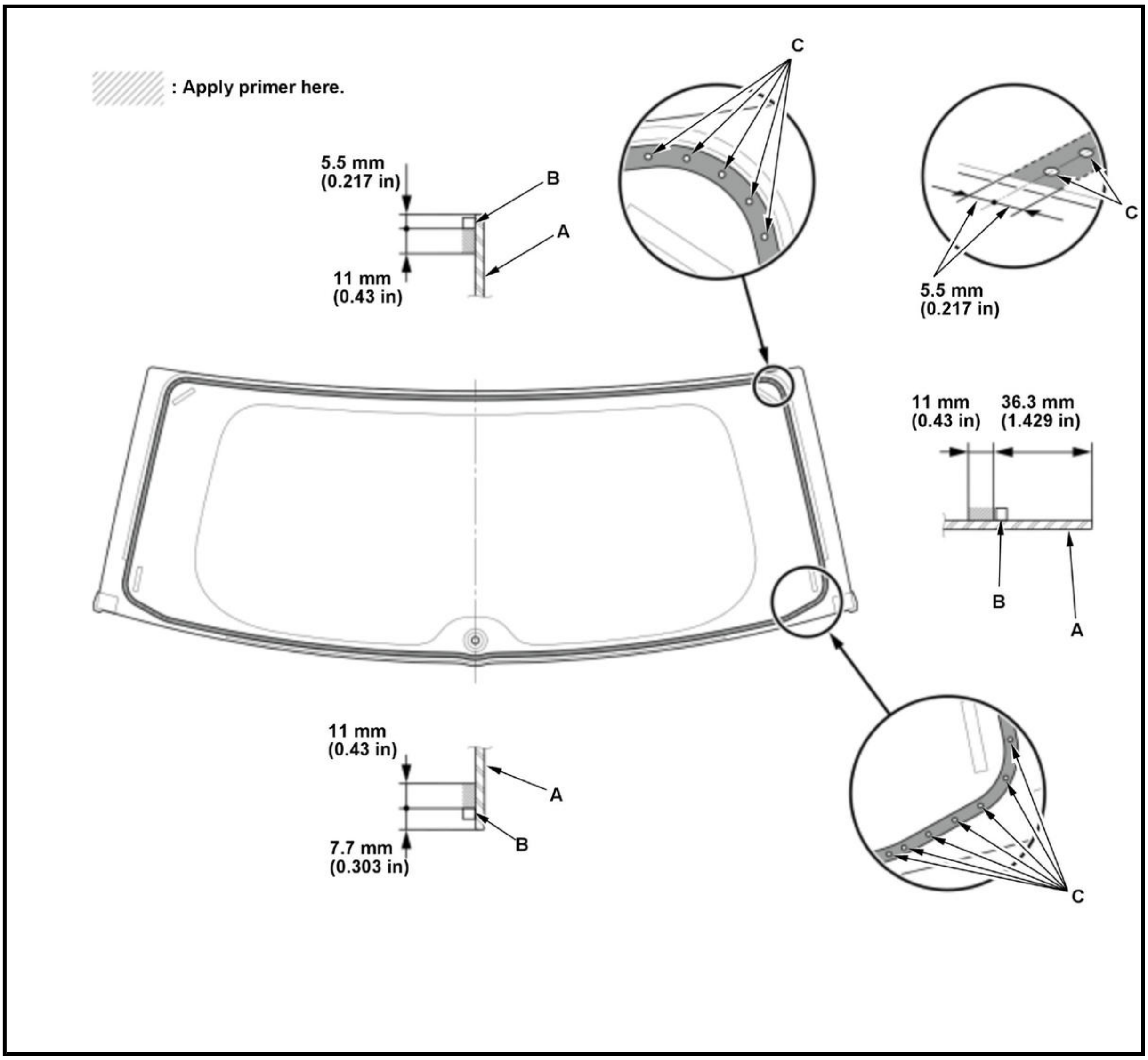
▨ : Apply primer here.
5.5 mm
(0.217 in)
11 mm
(0.43 in)
B
A
C
C
5.5 mm
(0.217 in)
11 mm
(0.43 in)
36.3 mm
(1.429 in)
B
A
11 mm
(0.43 in)
7.7 mm
(0.303 in)
A
B
C

12. Apply a light coat of the body primer to any exposed paint or metal around the flange where the new adhesive will be applied. Let the body primer dry for at least 10 minutes.

NOTE:

- Do not apply the glass primer to the body.
- Do not apply the body primer to any remaining original adhesive on the flange.
- Be careful not to mix up the body and the glass primer applicators.
- Never touch the primed surfaces with your hands.

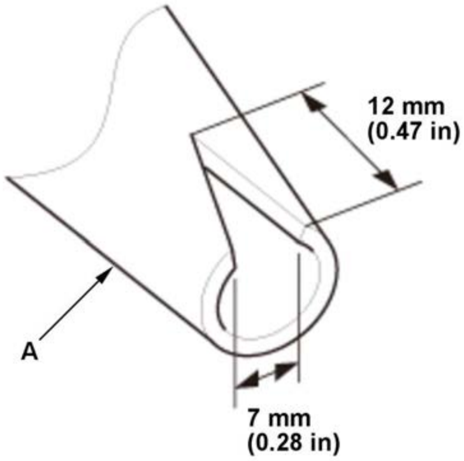 12 mm (0.47 in) A 7 mm (0.28 in)	13. Cut a "V" in the end of the nozzle (A) on the adhesive cartridge as shown.

14. Put the cartridge in a caulking gun, and run a continuous bead of adhesive (A) on the rear window (B) along the edge of the rubber dams (C) as shown.

NOTE:

- Apply the adhesive to the corner areas (D) using the printed dots (E) on the rear window as a guide.
- Apply the adhesive within 30 minutes after applying the glass primer.
- Make a slightly thicker bead at each corner.

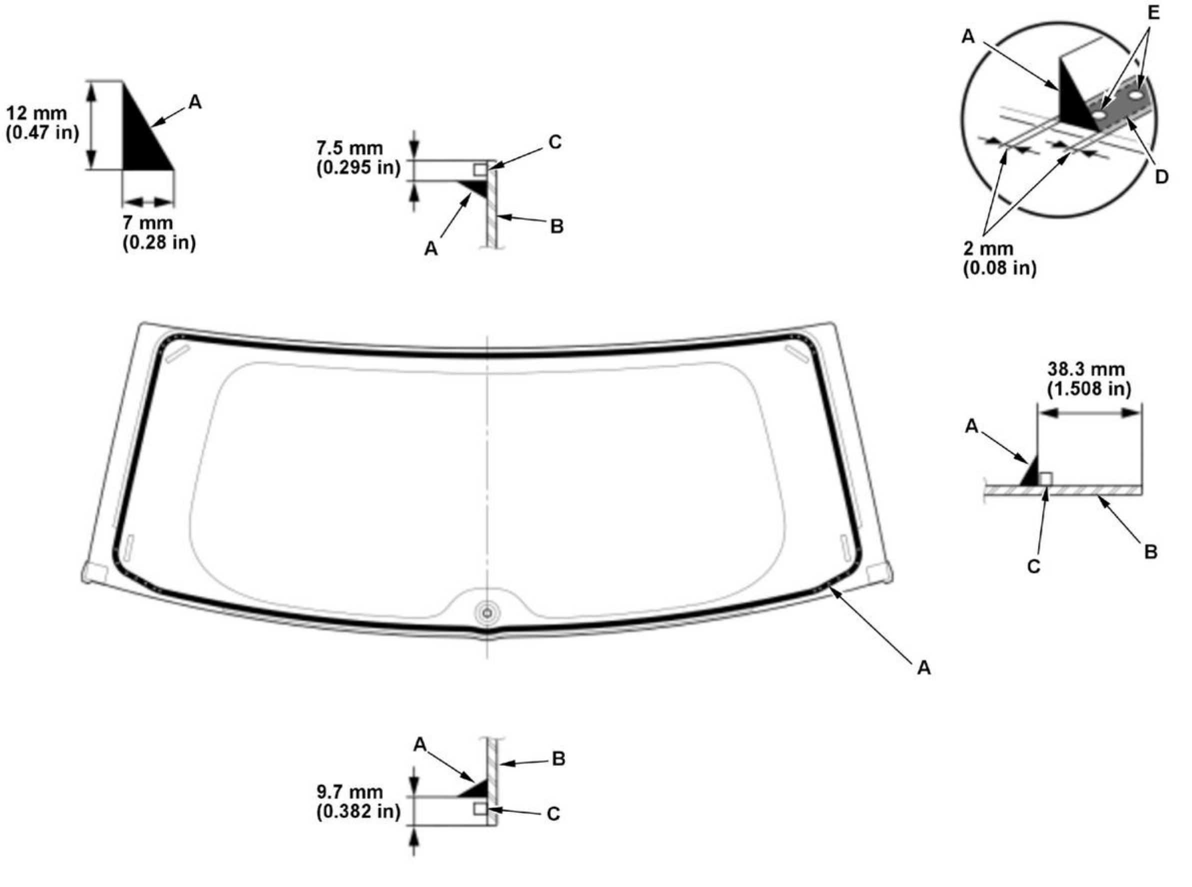
12 mm
(0.47 in)
A
7 mm
(0.28 in)
7.5 mm
(0.295 in)
C
A
B
A
E
D
2 mm
(0.08 in)
38.3 mm
(1.508 in)
A
C
B
A
A
B
9.7 mm
(0.382 in)
C

15. Hold the rear window with suction cups over the opening, align it with the alignment marks you made in step 6, and set it down on the adhesive. Lightly push on the rear window until its edges are fully seated on the adhesive all the way around.

NOTE: Do not open or close any of the doors for about an hour until the adhesive is dry.

16. Remove the excess adhesive with a putty knife or a shop towel dampened with isopropyl alcohol.

17. Wait at least an hour for the adhesive to dry, then spray water over the rear window and check for leaks. Mark the leaking areas, let the rear window dry, then seal with sealant. Let the vehicle stand for at least 4 hours after rear window installation. If the vehicle has to be used within the first 4 hours, it must be driven slowly.

18. Advise the client not to do the following things for 2 to 3 days:

    - Slam the doors with all the windows rolled up.
    - Twist the body excessively (such as when going in and out of driveways at an angle or driving over rough, uneven roads).

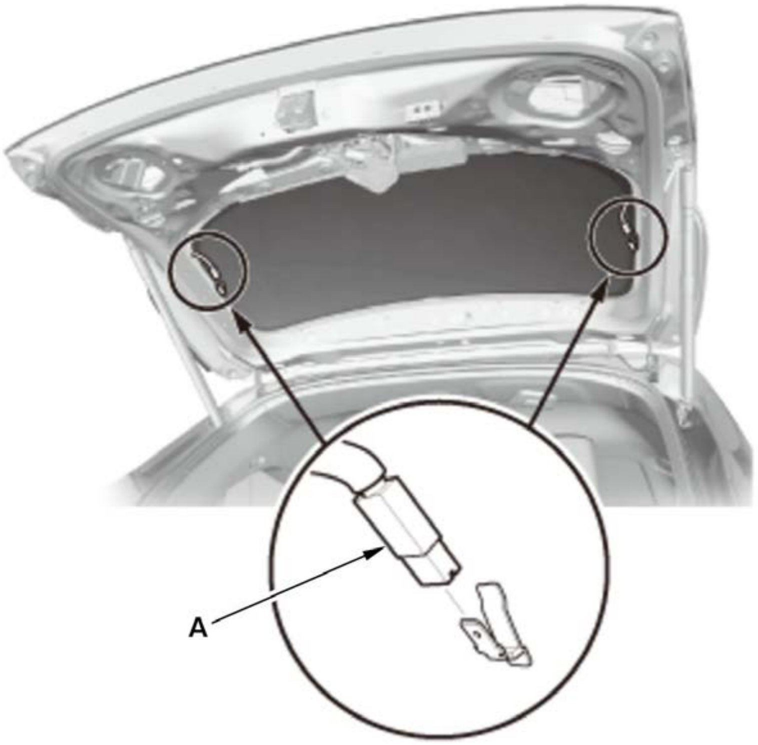	19. Connect the rear window defogger terminals (A).

2. Rear Wiper Motor - Install
3. Tailgate Trim - Install
4. Tailgate Spoiler Trim - Install

WINDSHIELD REMOVAL AND INSTALLATION

Removal

SRS components are located in this area. Review the SRS component locations and the precautions and procedures before doing repairs or service.

1. Center Cowl Cover - Remove
2. Both A-Pillar Trims - Remove
3. Rearview Mirror - Remove
4. Both Sunvisors - Remove
5. Roof Console Assembly - Remove

6. **Both Side Windshield Trims - Remove**
7. **Automatic Lighting/Rain Sensor - Remove (For Some Models)**
8. **Multipurpose Camera Unit - Remove**
9. Front Area of the Headliner - Lower

1. **Lower the front area of the headliner as needed** .

10. Windshield - Remove

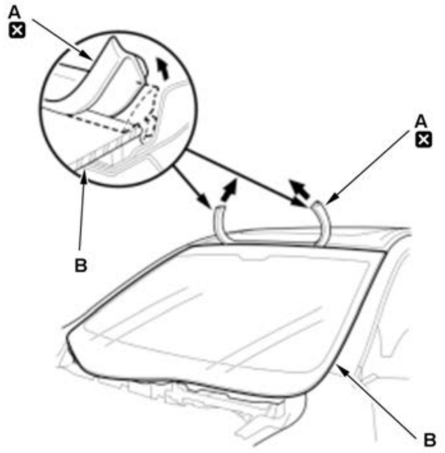	1. Remove the windshield upper molding (A) from the upper edge of the windshield (B). If necessary, cut the windshield upper molding with a utility knife.

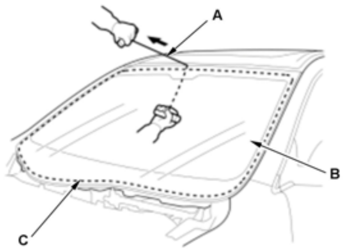 **Cutting positions** 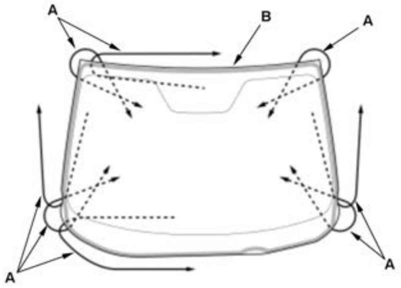	2. Apply protective tape along the edge of the dashboard and the body. Make a hole with an awl through the rubber dam, the adhesive, and the dashboard seal from inside of the vehicle at a corner portion of the windshield. Push a piece of piano wire through the hole, and wrap each end around a piece of wood. 3. With a helper on the outside, pull the piano wire (A) back and forth in a sawing motion. Hold the piano wire as close to the windshield (B) as possible to prevent damage to the body and the dashboard. Carefully cut through the rubber dam and the adhesive (C) around the entire windshield. 4. Carefully remove the windshield. 5. Scrape the original adhesive smooth to a thickness of about 1 mm (0.04 in) - 2 mm (0.08 in) on the bonding surface around the entire windshield opening flange with a knife. **NOTE:** Do not scrape down to the painted surface of the body; damaged paint will interfere with proper bonding. 6. Clean the body bonding surface with a shop towel dampened in isopropyl alcohol. After cleaning, keep oil, grease, and water from getting on the clean surface. 7. If you are reinstalling the original windshield, scrape off the original adhesive, the clips, the rubber dams, and the windshield moldings from the windshield with a putty knife. Clean the bonding surfaces on the inside face and the edge of

	the windshield with isopropyl alcohol. Make sure the bonding surface is kept free of water, oil, and grease.

Installation

NOTE: SRS components are located in this area. Review the **SRS component locations** and the **precautions and procedures** before doing repairs or service.

1. Windshield - Install

    1. Install the new windshield upper molding (A), the clips (B) with the adhesive tape on the inside face of the windshield (C) as shown.

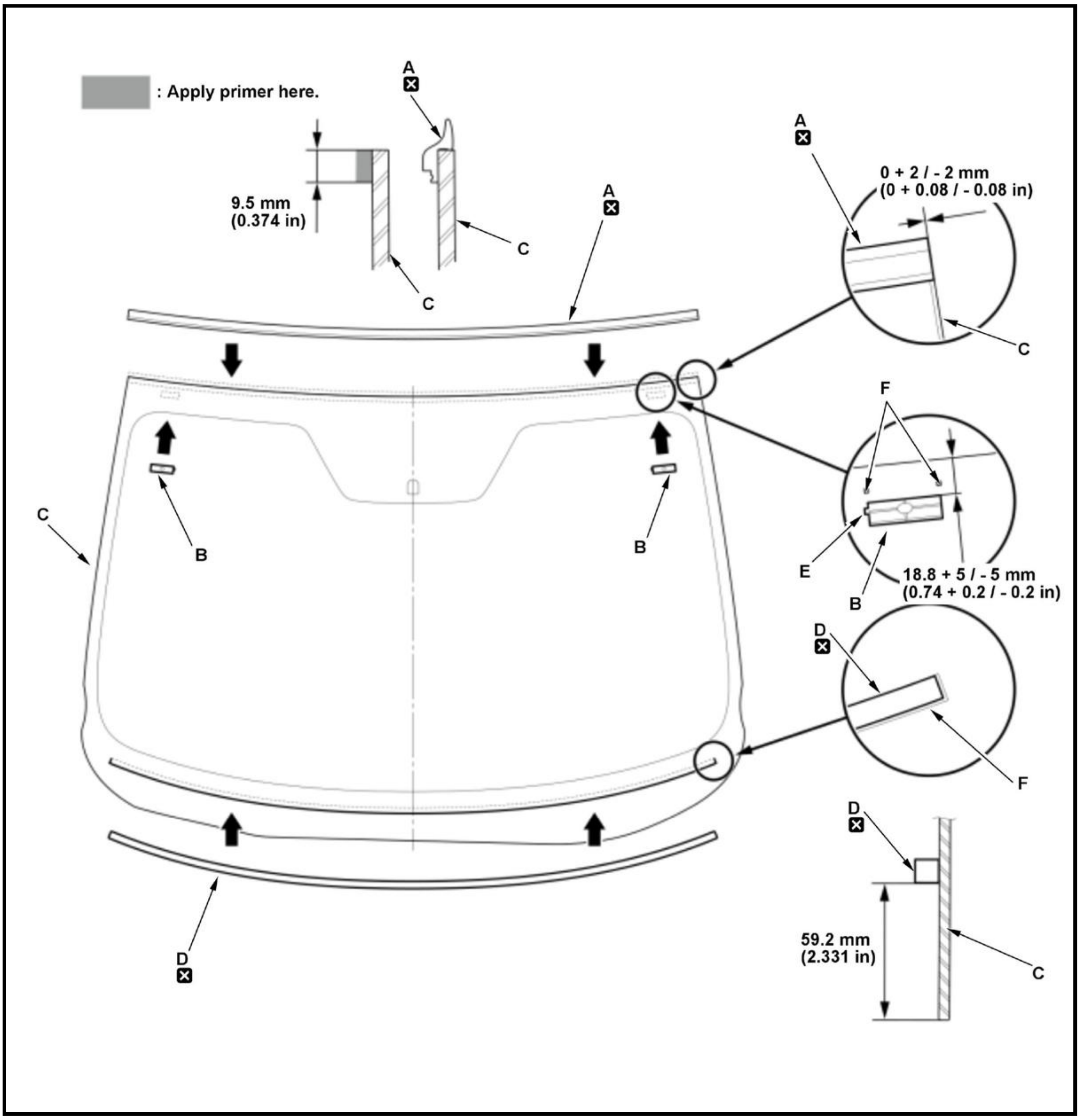

▨ : Apply primer here.
A ☒
9.5 mm
(0.374 in)
C
C
A ☒
A ☒
0 + 2 / - 2 mm
(0 + 0.08 / - 0.08 in)
C
F
C
B
B
E
B
18.8 + 5 / - 5 mm
(0.74 + 0.2 / - 0.2 in)
D ☒
F
D ☒
59.2 mm
(2.331 in)
C
D ☒

    2. Cut the rubber dam to the length, then install the new lower seal (D).

Lower seal length:		
B	**Lower seal :**	**1345 mm (52.95 in)**

NOTE:

- Before installing the new windshield upper molding, apply a glass primer to the area where the adhesive tape will be applied.

- Be careful not to touch the windshield where the adhesive will be applied.
- Make sure the index tabs (E) on the clips face the right side.
- Make sure the clips and the lower seal line up with the alignment marks (F).

3. Cut the rubber dam to the length, then install the side rubber dams (A) and the lower rubber dam (B).

Rubber dam length:		
B	**Rubber dam A:**	**970 mm (38.19 in)**
B	**Rubber dam B:**	**1076 mm (42.36 in)**

NOTE:

- Be careful not to touch the windshield (C) where the adhesive will be applied.
- Make sure the lower seal line up with the alignment marks (D).

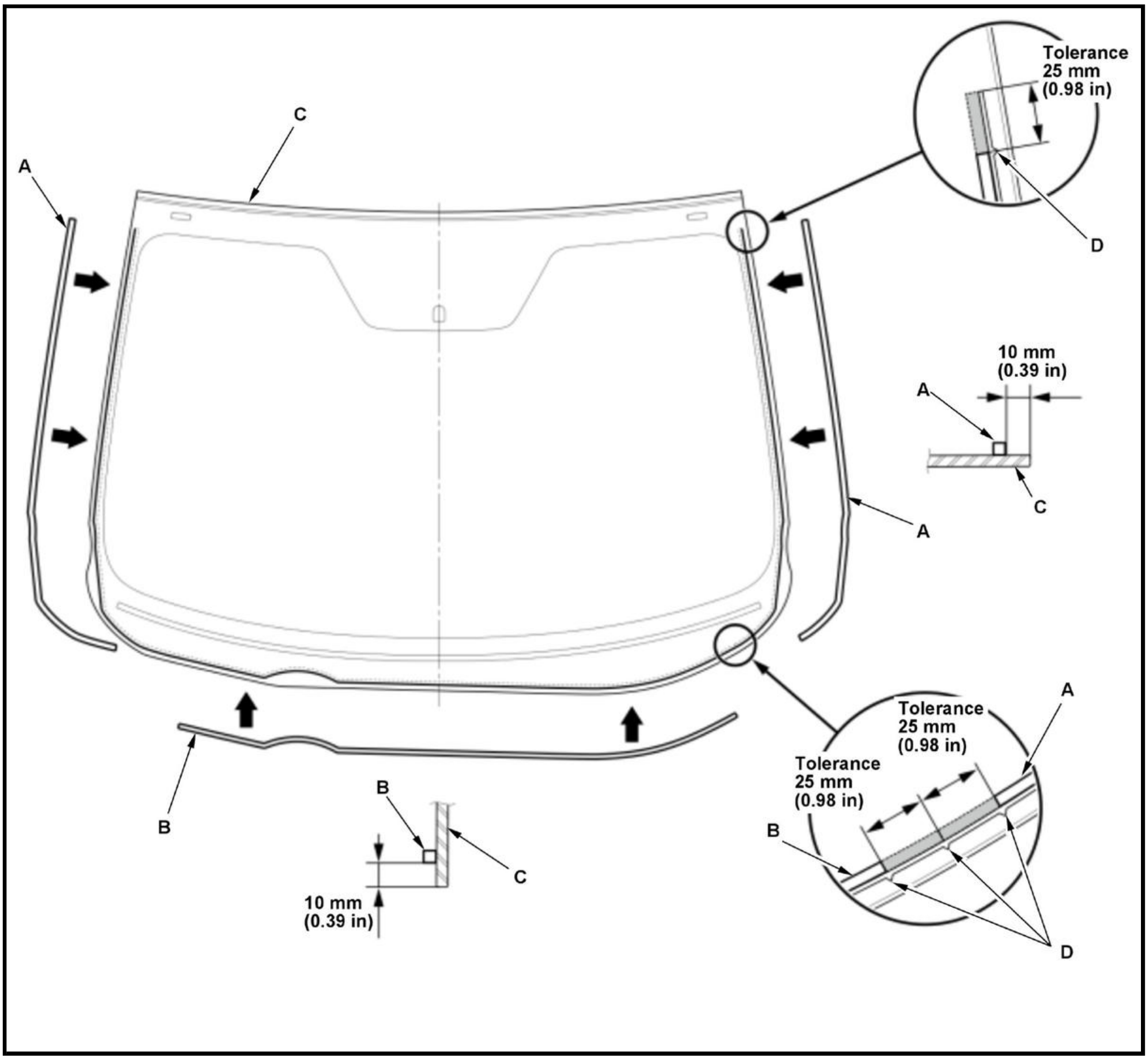
Tolerance
25 mm
(0.98 in)
C
A
D
10 mm
(0.39 in)
A
C
A
A
Tolerance
25 mm
(0.98 in)
Tolerance
25 mm
(0.98 in)
B
B
C
B
10 mm
(0.39 in)
D

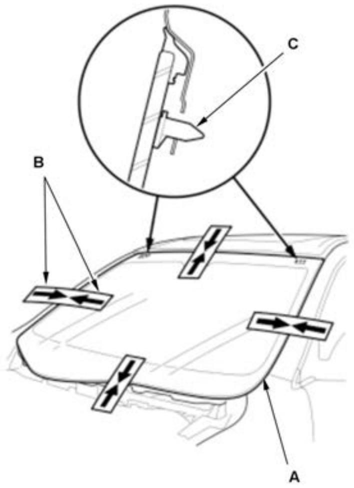	4. If you are installing the new windshield (A), set the windshield in the opening, and center it. Make the alignment marks (B) across the windshield and the body with a grease pencil at the four points shown. **NOTE:** • Be careful not to touch the windshield where the adhesive will be applied. • Make sure the clips (C) contact with the edge of the body holes. 5. Remove the windshield.

6. Apply a light coat of primer to the windshield (A) along the edge of the rubber dams (B) and the windshield upper molding (C) as shown, then lightly wipe it off with gauze or cheesecloth.

NOTE:

- Apply the primer to the corner areas (D) using the printed lines (E) on the windshield as a guide.
- Do not apply the body primer to the windshield, and do not mix up the body and the glass primer applicators.
- Never touch the primed surfaces with your hands. If you do, the adhesive may not bond to the windshield properly, causing a leak after the windshield is installed.
- Keep water, dust, and abrasive materials away from primed surfaces.

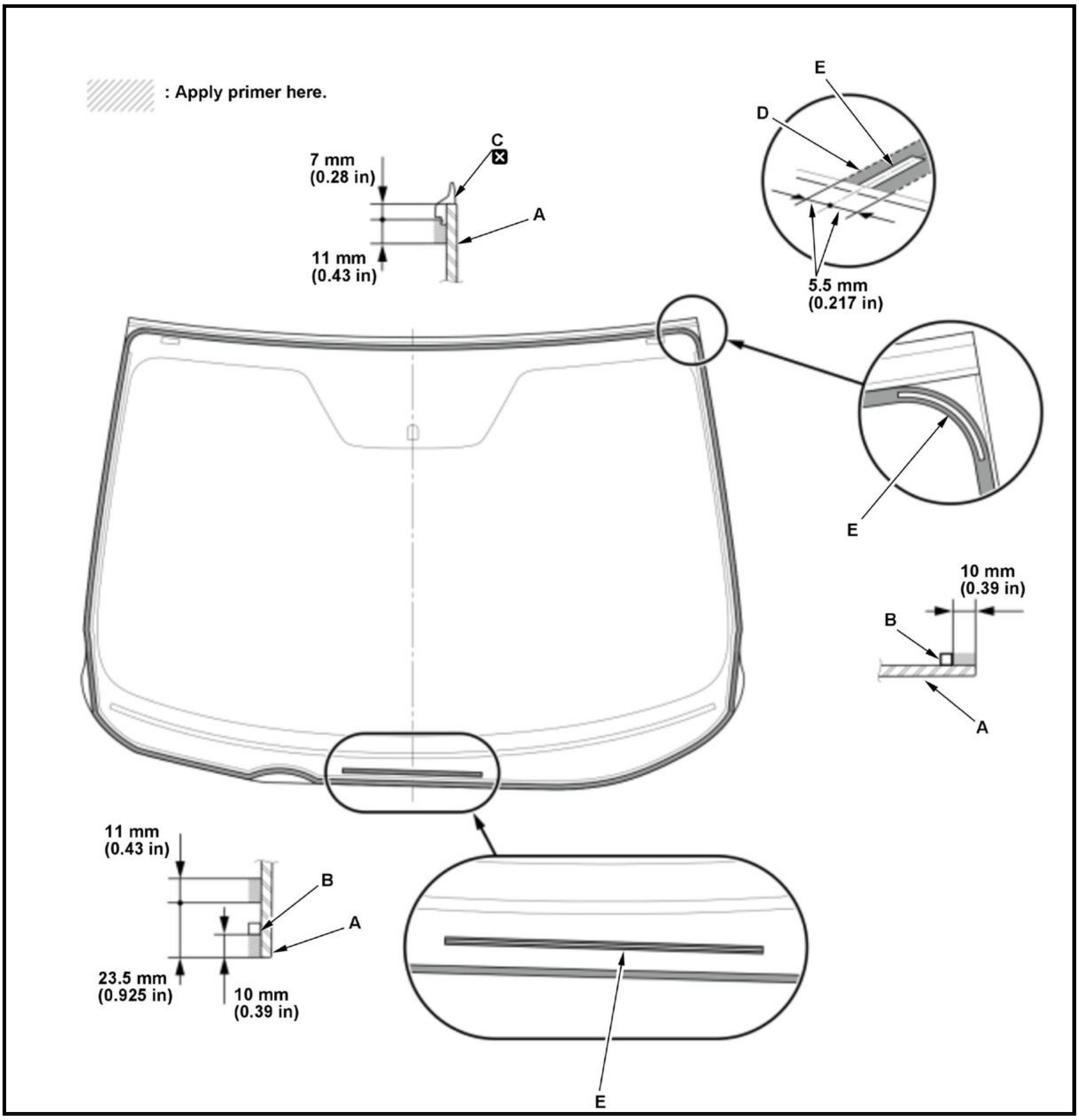
: Apply primer here.
E
D
C
7 mm
(0.28 in)
A
11 mm
(0.43 in)
5.5 mm
(0.217 in)
E
10 mm
(0.39 in)
B
A
11 mm
(0.43 in)
B
A
23.5 mm
(0.925 in)
10 mm
(0.39 in)
E

7. Apply a light coat of the body primer to any exposed paint or metal on the windshield mounting flange. Let the body primer dry for at least 10 minutes.

NOTE:

- Do not apply the glass primer to the body.
- Do not apply the body primer to any remaining original adhesive on the flange.
- Cover on the dashboard before applying the body primer.
- Be careful not to mix up the body and the glass primer applicators.
- Never touch the primed surfaces with your hands.

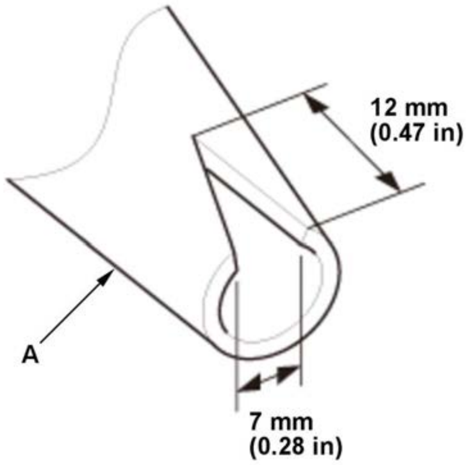 	8. Cut a "V" in the end of the nozzle (A) on the adhesive cartridge as shown.

9. Put the cartridge in a caulking gun, and run a continuous bead of adhesive (A) on the windshield (B) along the edge of the windshield upper molding (C) and the rubber dams (D) as shown.

NOTE:

- Apply the adhesive to the corner areas (E) using the printed line (F) on the windshield as a guide.
- Apply the adhesive within 30 minutes after applying the primer.
- Make a slightly thicker bead at each corner.

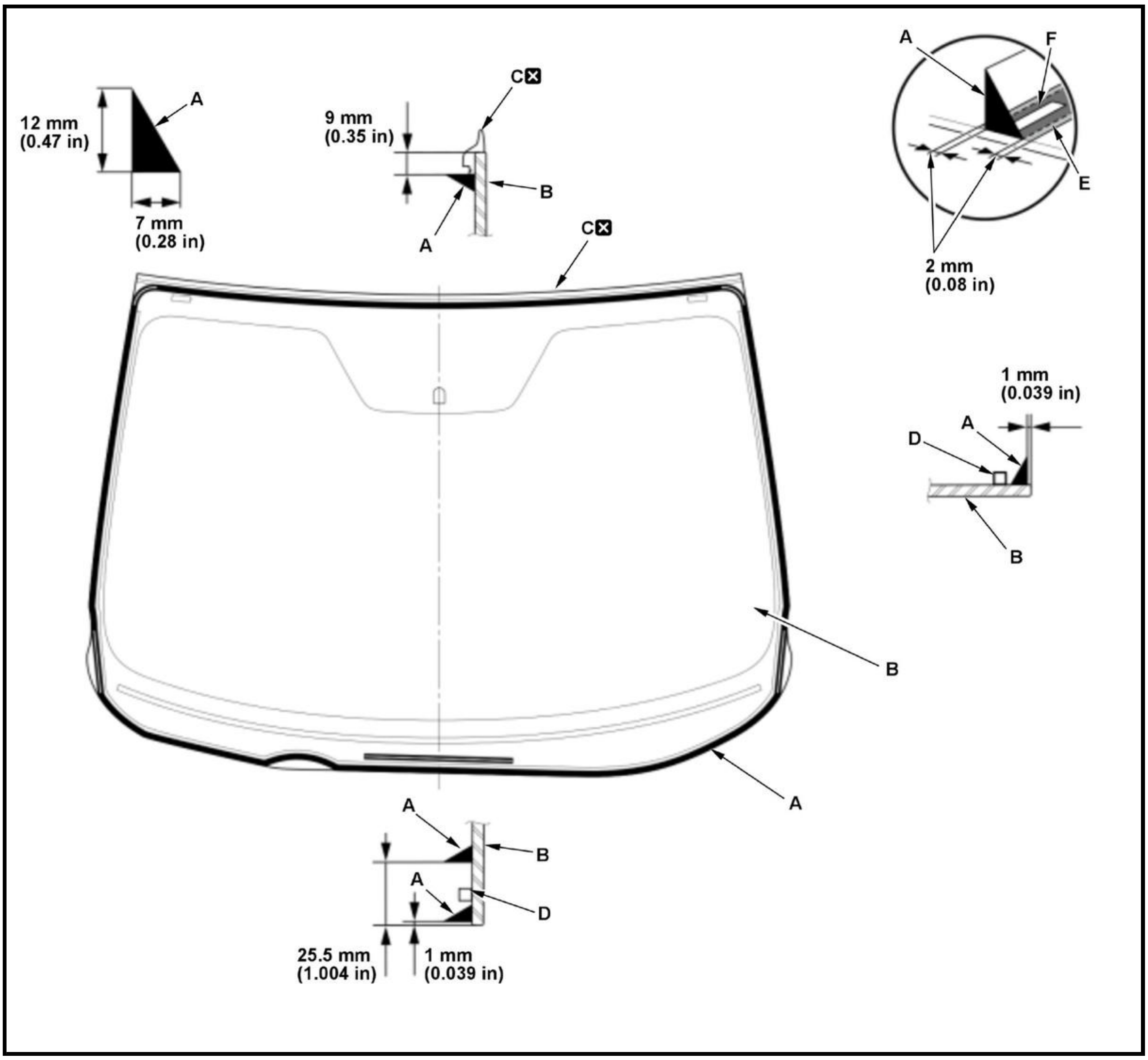

10. Hold the windshield with the suction cups over the opening, align it with the alignment marks made in step 2, and set it down on the adhesive. Lightly push on the windshield until its edges are fully seated on the adhesive all the way around. Carefully remove the suction cups.

NOTE: Do not open or close any of the doors for about an hour until the adhesive is dry.

11. Remove the excess adhesive with a putty knife or a shop towel dampened with isopropyl alcohol.

12. Wait at least an hour for the adhesive to dry, then spray water over the windshield and check for leaks. Mark the leaking areas, let the windshield dry, then seal with sealant: Let the vehicle stand for at least 4 hours after windshield installation. If the vehicle has to be used within the first 4 hours, it must be driven slowly.

13. Advise the client not to do the following things for 2 to 3 days:

- Slam the doors with all the windows rolled up.
- Twist the body excessively (such as when going in and out of driveways at an angle or driving over rough, uneven roads).

2. **Headliner - Install**
3. **Multipurpose Camera Unit - Install**
4. **Automatic Lighting/Rain Sensor - Install (For Some Models)**
5. **Both Side Windshield Trims - Install**
6. **Roof Console Assembly - Install**
7. **Both Sunvisors - Install**

8. Rearview Mirror - Install
9. Both A-Pillar Trims - Install
10. Center Cowl Cover - Install

REMOVAL, INSTALLATION & TEST

POWER WINDOW SWITCH REMOVAL, INSTALLATION, AND TEST

Removal and Installation

NOTE: If the power window switch is replaced, reset the power window control unit . If the original power window switch is installed, confirm that the power window works properly.

Driver's

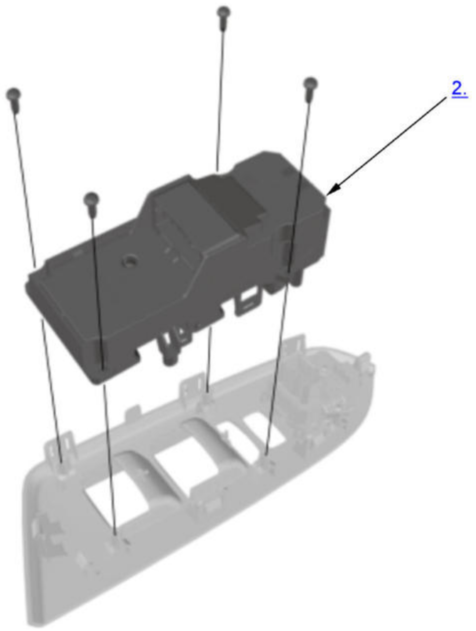

Fig. 1: Driver's Power Window Switch Components
Courtesy of HONDA, U.S.A., INC.

1. Front Door Power Window Switch Panel - Remove
2. Power Window Master Switch - Remove
3. All Removed Parts - Install

1. Install the parts in the reverse order of removal.

4. Power Window Control Unit - Reset

Front Passenger's

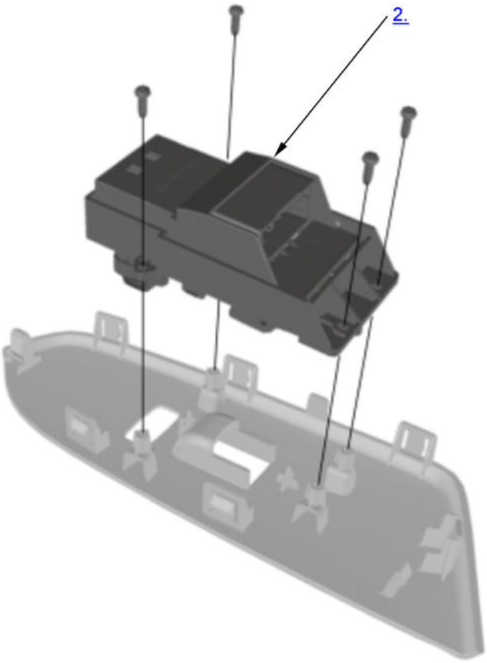

[Fig. 2: Front Passenger's Power Window Switch Components](#)
Courtesy of HONDA, U.S.A., INC.

1. Front Door Power Window Switch Panel - Remove
2. Front Passenger's Power Window Switch - Remove
3. All Removed Parts - Install

    1. Install the parts in the reverse order of removal.

4. Power Window Control Unit - Reset

Rear

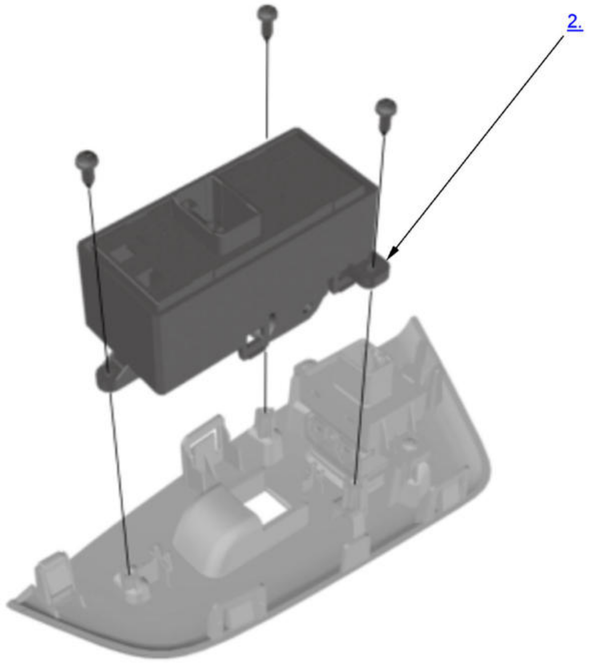

Fig. 3: Rear Power Window Switch Components
Courtesy of HONDA, U.S.A., INC.

1. Rear Door Power Window Switch Panel - Remove
2. Rear Power Window Switch - Remove
3. All Removed Parts - Install

1. Install the parts in the reverse order of removal.

Test

NOTE: If the power window switch is replaced, reset the power window control unit . If the original power window switch is installed, confirm that the power window works properly.

Driver's

1. Power Window Master Switch - Test

   The power window master switch has a built-in control unit. Therefore it cannot be tested by itself. Go to power window master switch connector for inputs and outputs , if all the input tests prove OK, replace it.

Front Passenger's

1. Front Passenger's Power Window Switch - Test

   The front passenger's power window switch has a built-in control unit. Therefore it cannot be tested by itself. Go to front passenger's power window switch connector for inputs and outputs , if all the input tests prove OK, replace it.

Rear

1. Rear Power Window Switch - Test

1. Swap the rear power window switch with another known-good power window switch and test. If the original power window switch is faulty; replace it.

REMOVAL INSTALLATION AND TEST

POWER WINDOW SWITCH REMOVAL, INSTALLATION, AND TEST

Removal and Installation

NOTE: If the power window switch is replaced, reset the power window control unit . If the original power window switch is installed, confirm that the power window works properly.

1

Driver's

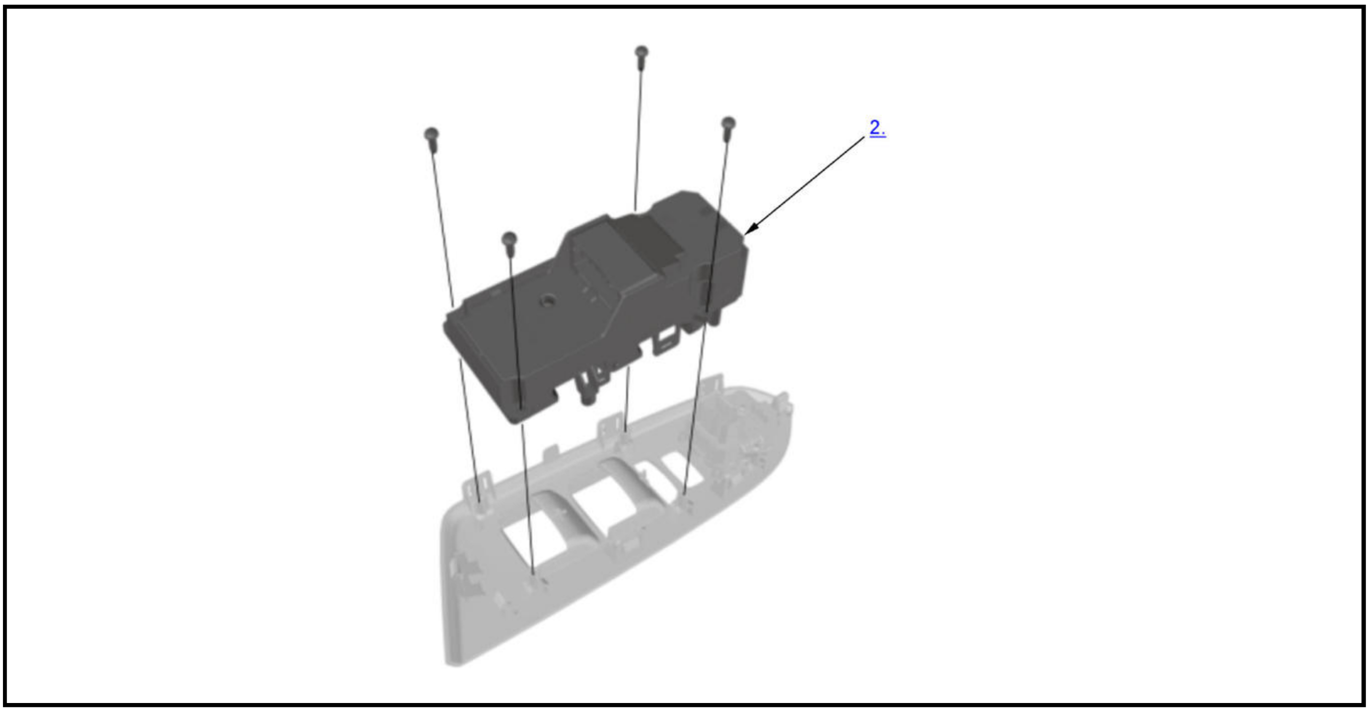

2

Front Passenger's

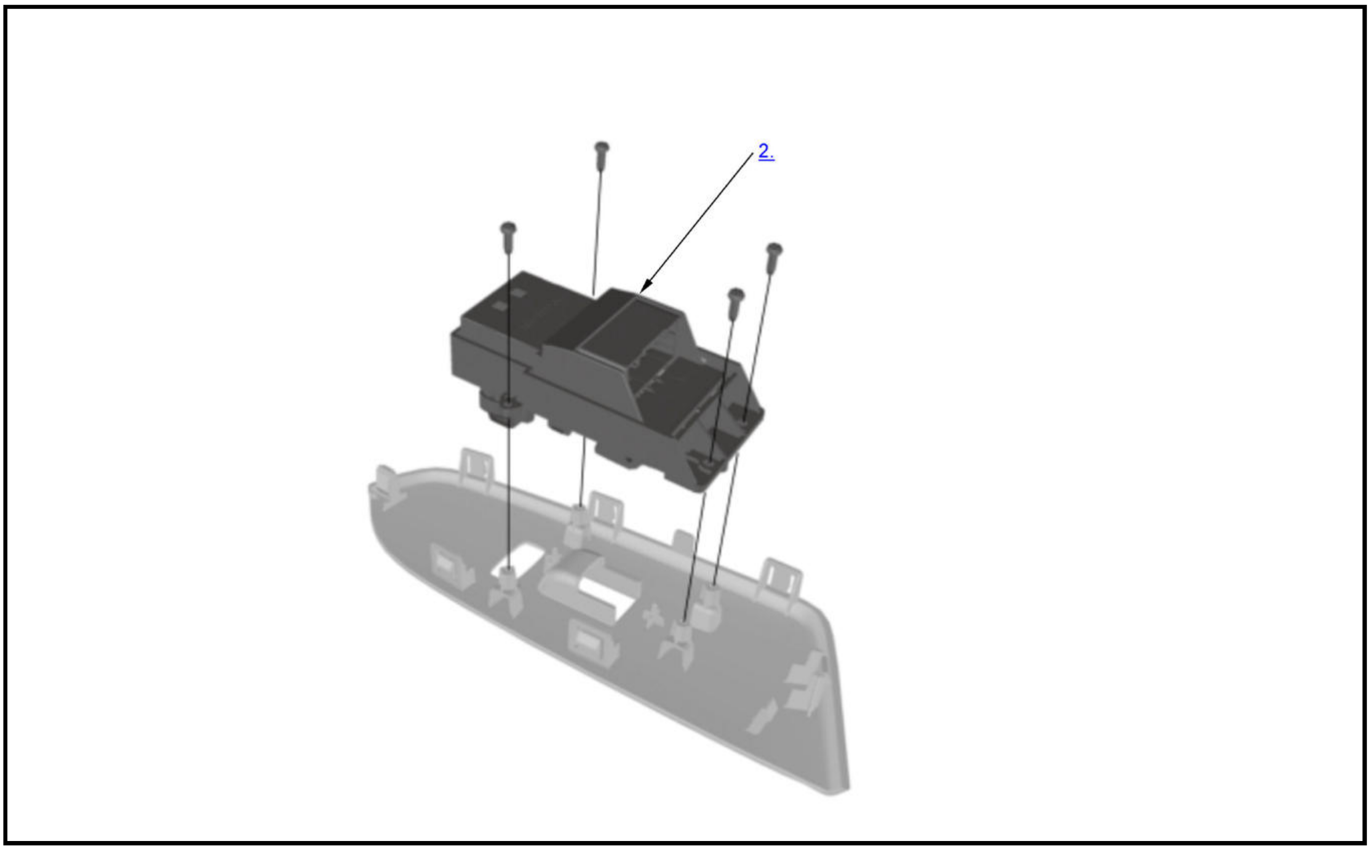

3

Rear

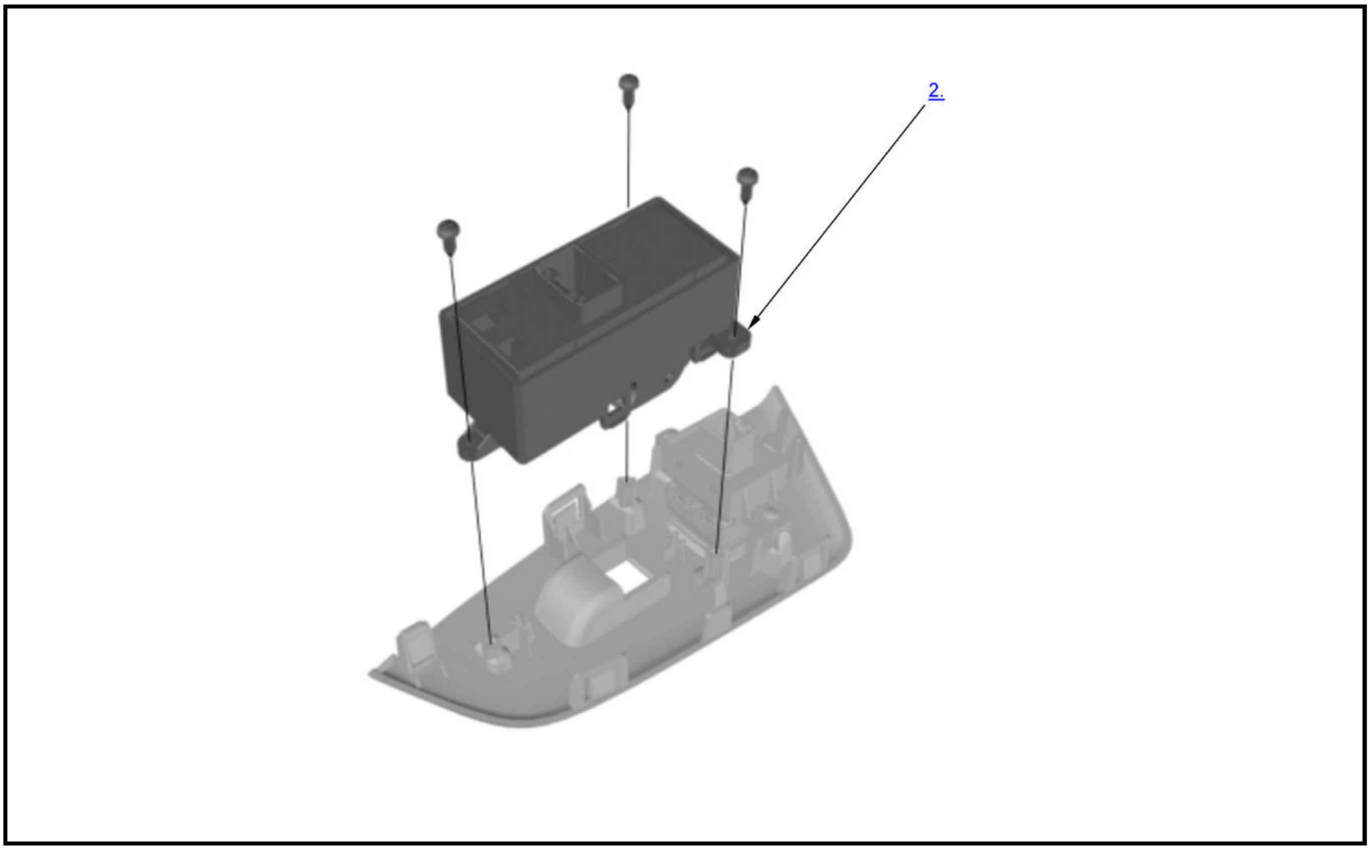

Driver's

1. **Front Door Power Window Switch Panel - Remove**
2. Power Window Master Switch - Remove
3. All Removed Parts - Install

1. Install the parts in the reverse order of removal.

4. **Power Window Control Unit - Reset**

Front Passenger's

5. **Front Door Power Window Switch Panel - Remove**
6. Front Passenger's Power Window Switch - Remove
7. All Removed Parts - Install

1. Install the parts in the reverse order of removal.

8. **Power Window Control Unit - Reset**

Rear

9. **Rear Door Power Window Switch Panel - Remove**
10. Rear Power Window Switch - Remove
11. All Removed Parts - Install

1. Install the parts in the reverse order of removal.

Test

NOTE: If the power window switch is replaced, **reset the power window control unit** . If the original power window switch is installed, confirm that the power window works properly.

Driver's

1. Power Window Master Switch - Test

The power window master switch has a built-in control unit. Therefore it cannot be tested by itself. **Go to power window master switch connector for inputs and outputs** , if all the input tests prove OK, replace it.

Front Passenger's

2. Front Passenger's Power Window Switch - Test

The front passenger's power window switch has a built-in control unit. Therefore it cannot be tested by itself. **Go to front passenger's power window switch connector for inputs and outputs** , if all the input tests prove OK, replace it.

Rear

3. Rear Power Window Switch - Test

1. Swap the rear power window switch with another known-good power window switch and test. If the original power window switch is faulty; replace it.

REMOVAL AND INSTALLATION

EMBLEM/STICKER REMOVAL AND INSTALLATION

Removal and Installation

1. **Front Grille - Remove**
2. **Tailgate Trim - Remove**

3. Rear Emblem/Sticker - Install

NOTE: The emblems vary according to the model and trim.

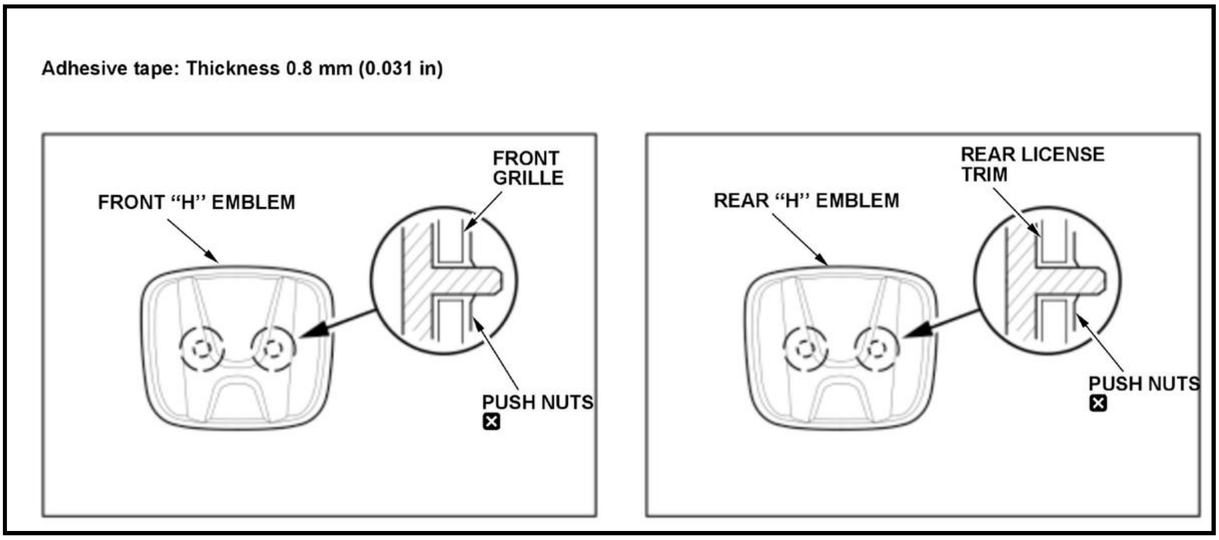
Adhesive tape: Thickness 0.8 mm (0.031 in)

FRONT "H" EMBLEM
FRONT GRILLE
PUSH NUTS
☒
REAR "H" EMBLEM
REAR LICENSE TRIM
PUSH NUTS
☒

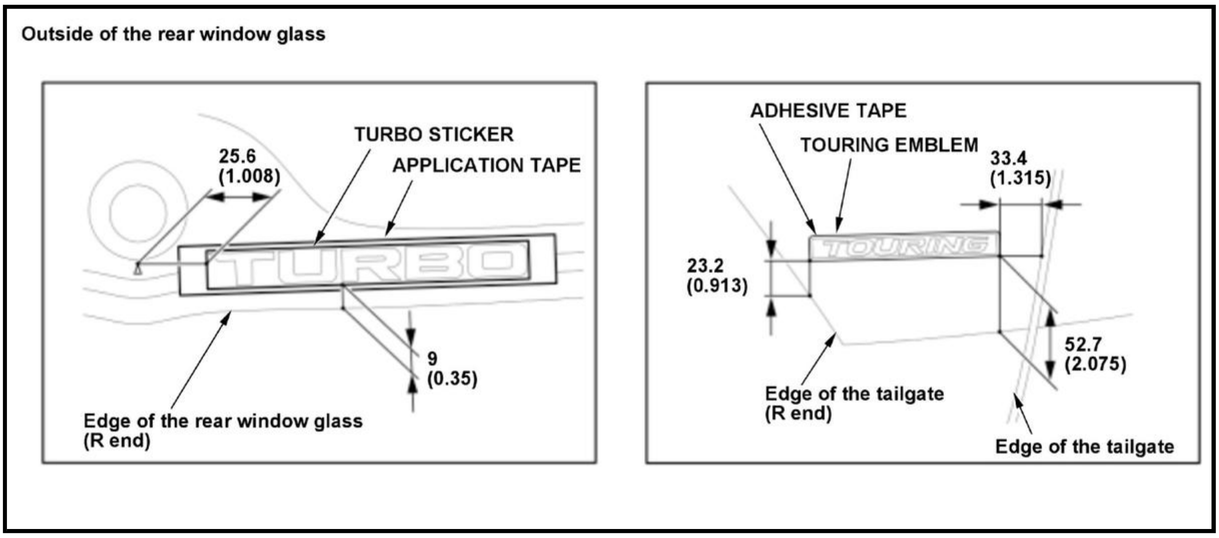
Outside of the rear window glass

TURBO STICKER
APPLICATION TAPE
25.6
(1.008)
9
(0.35)
Edge of the rear window glass
(R end)
ADHESIVE TAPE
TOURING EMBLEM
33.4
(1.315)
23.2
(0.913)
52.7
(2.075)
Edge of the tailgate
(R end)
Edge of the tailgate

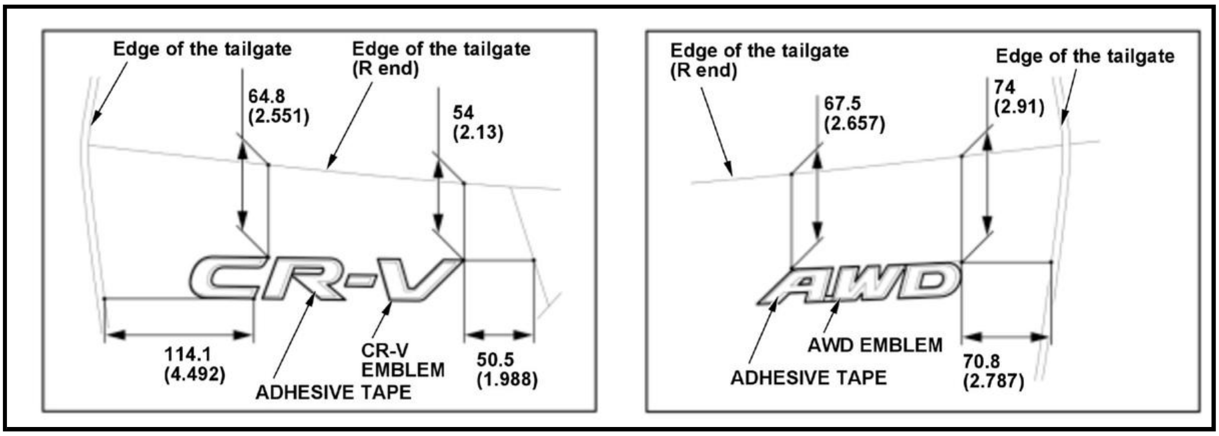
Edge of the tailgate
Edge of the tailgate
(R end)
64.8
(2.551)
54
(2.13)
114.1
(4.492)
CR-V
EMBLEM
ADHESIVE TAPE
50.5
(1.988)
Edge of the tailgate
(R end)
Edge of the tailgate
67.5
(2.657)
74
(2.91)
AWD EMBLEM
ADHESIVE TAPE
70.8
(2.787)

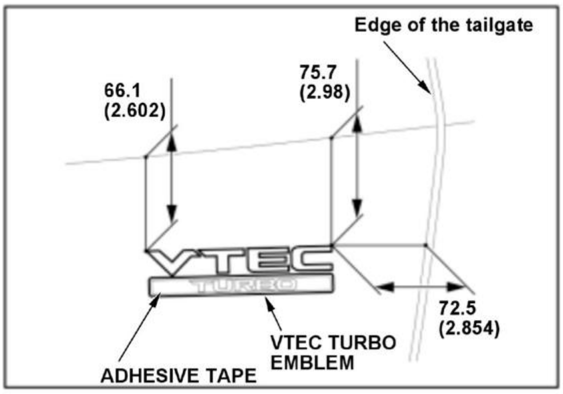
Edge of the tailgate
66.1
(2.602)
75.7
(2.98)
72.5
(2.854)
VTEC TURBO
EMBLEM
ADHESIVE TAPE

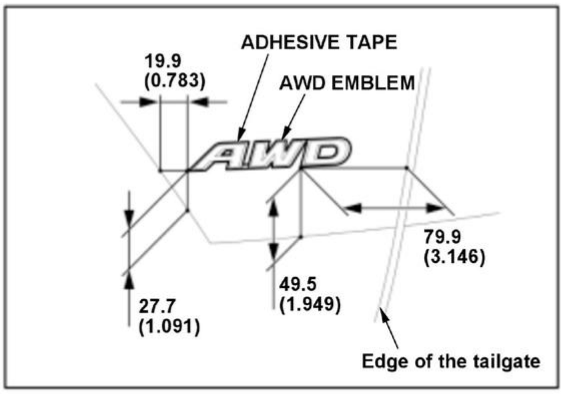
ADHESIVE TAPE
19.9
(0.783)
AWD EMBLEM
79.9
(3.146)
49.5
(1.949)
27.7
(1.091)
Edge of the tailgate

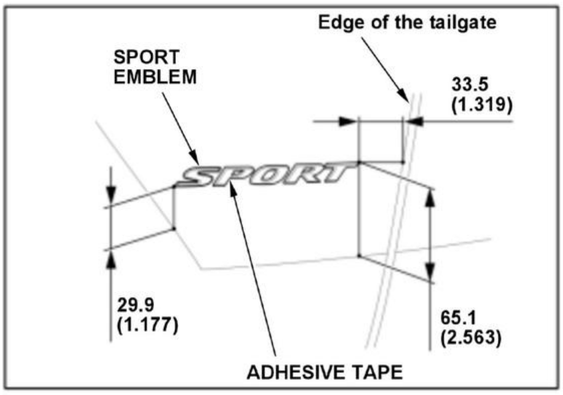
Edge of the tailgate
SPORT
EMBLEM
33.5
(1.319)
29.9
(1.177)
65.1
(2.563)
ADHESIVE TAPE

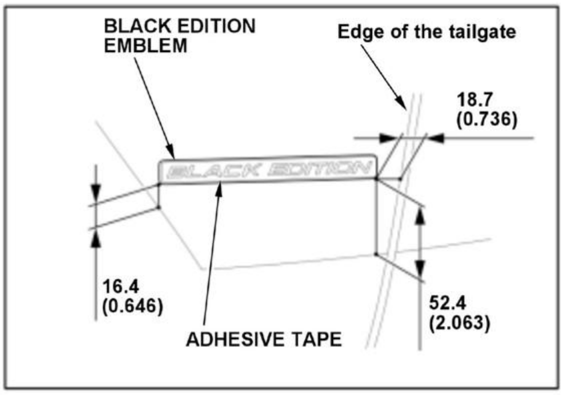
BLACK EDITION
EMBLEM
Edge of the tailgate
18.7
(0.736)
16.4
(0.646)
ADHESIVE TAPE
52.4
(2.063)

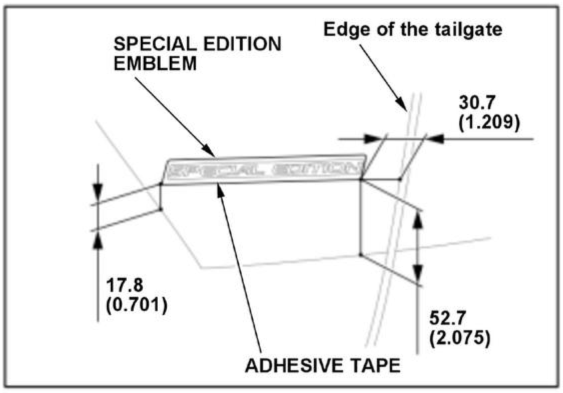
SPECIAL EDITION
EMBLEM
Edge of the tailgate
30.7
(1.209)
17.8
(0.701)
52.7
(2.075)
ADHESIVE TAPE

NOTE: Some emblems may not apply to your market.

4. All Removed Parts - Install

1. Install the parts in the reverse order of removal.
NOTE: Clean the body surfaces where the emblems are applied with a shop towel dampened with isopropyl alcohol. After cleaning, keep oil, grease, and water from getting on the surface.

FRONT DOOR GLASS REMOVAL AND INSTALLATION

Removal and Installation

NOTE: How to read the torque specifications

1. Front Door Panel - Remove
2. Mirror Housing Cover - Remove (For Some Models)

3. Front Door Inner Handle - Remove

1. **Remove the front door inner handle as needed** .

4. Front Door Plastic Cover - Remove

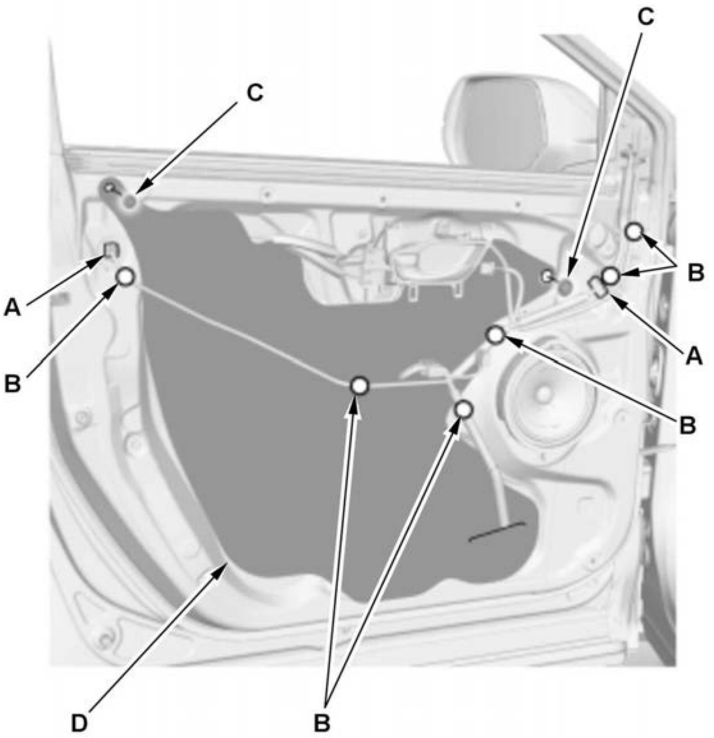	1. Disconnect the connectors (A), and remove the harness clips (B). 2. Remove the plug caps (C), then carefully remove the plastic cover (D). **NOTE:** If the plastic cover is damaged or torn, replace it with a new one.

5. Front Door Glass - Remove

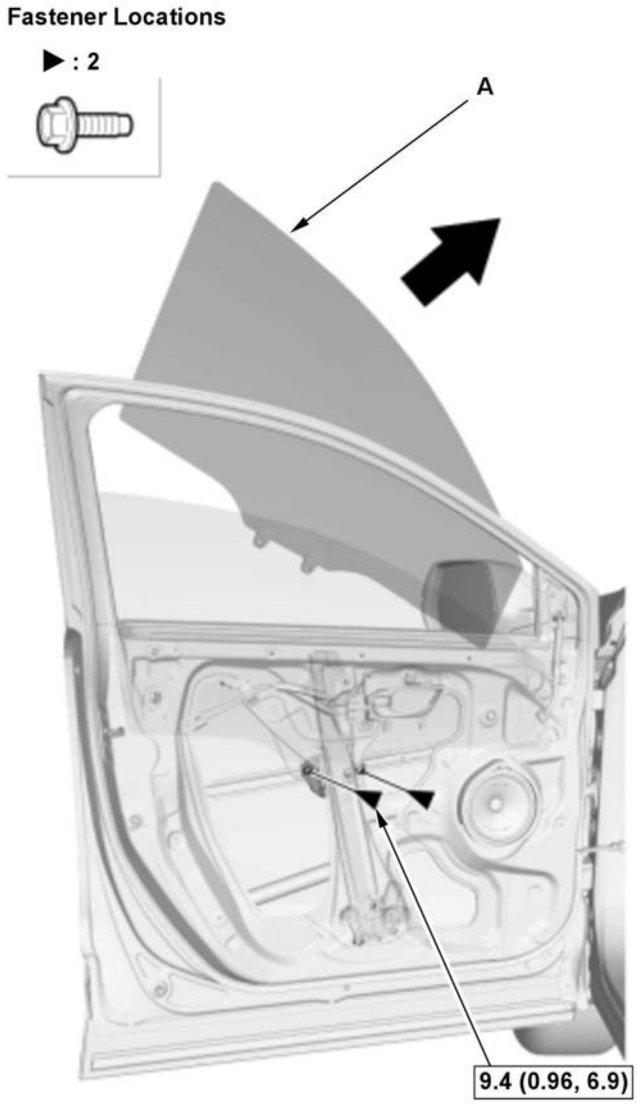
Fastener Locations
▶ : 2
A
9.4 (0.96, 6.9)

1. Lower the front door glass (A) until you can see the bolts, and then remove them.

2. Carefully pull out the front door glass through the window slot.

NOTE: Be careful not to drop the front door glass inside the door.

6. Front Door Center Lower Channel - Remove

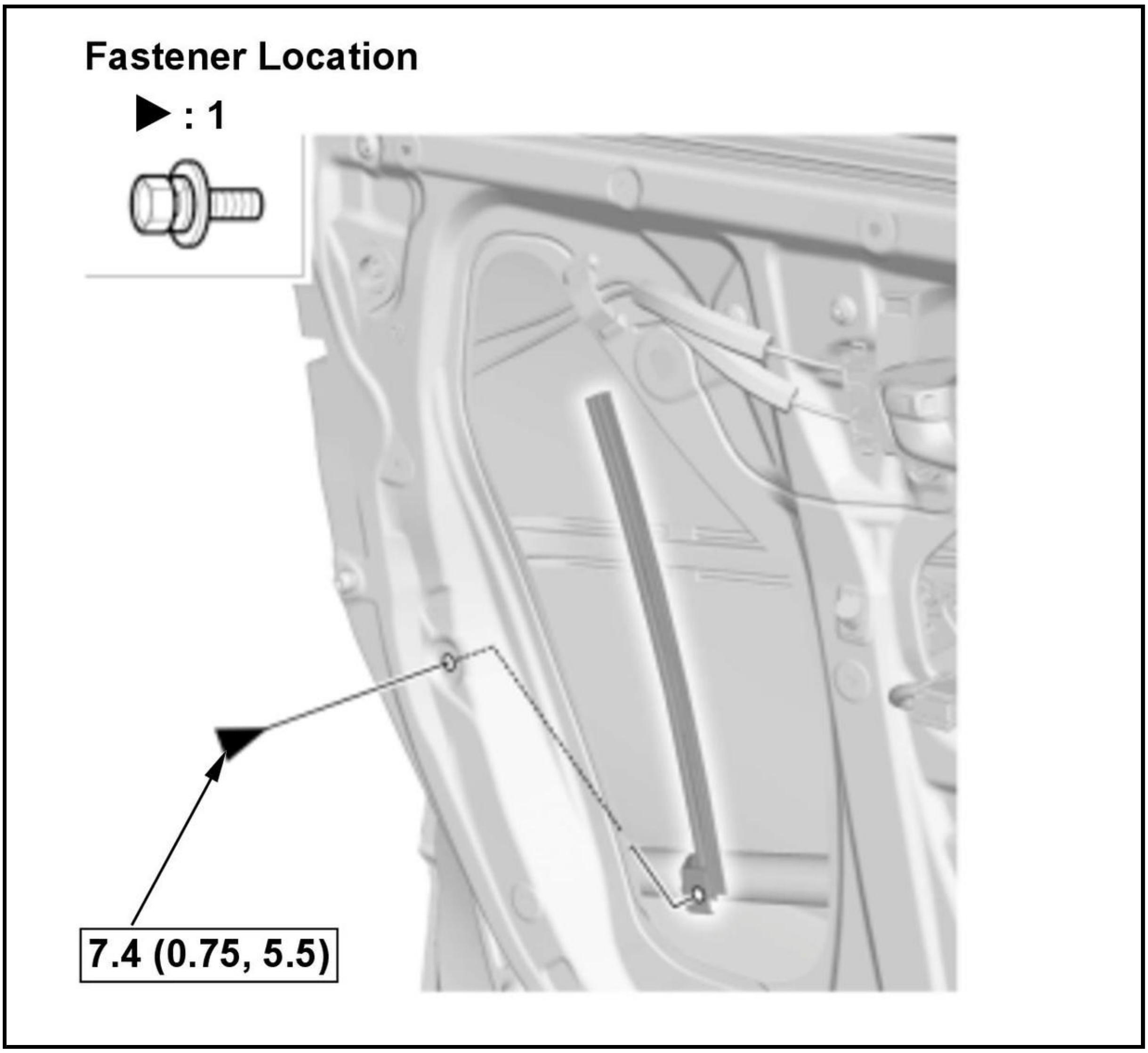
Fastener Location
▶ : 1
7.4 (0.75, 5.5)

7. Front Door Glass Run Channel - Remove

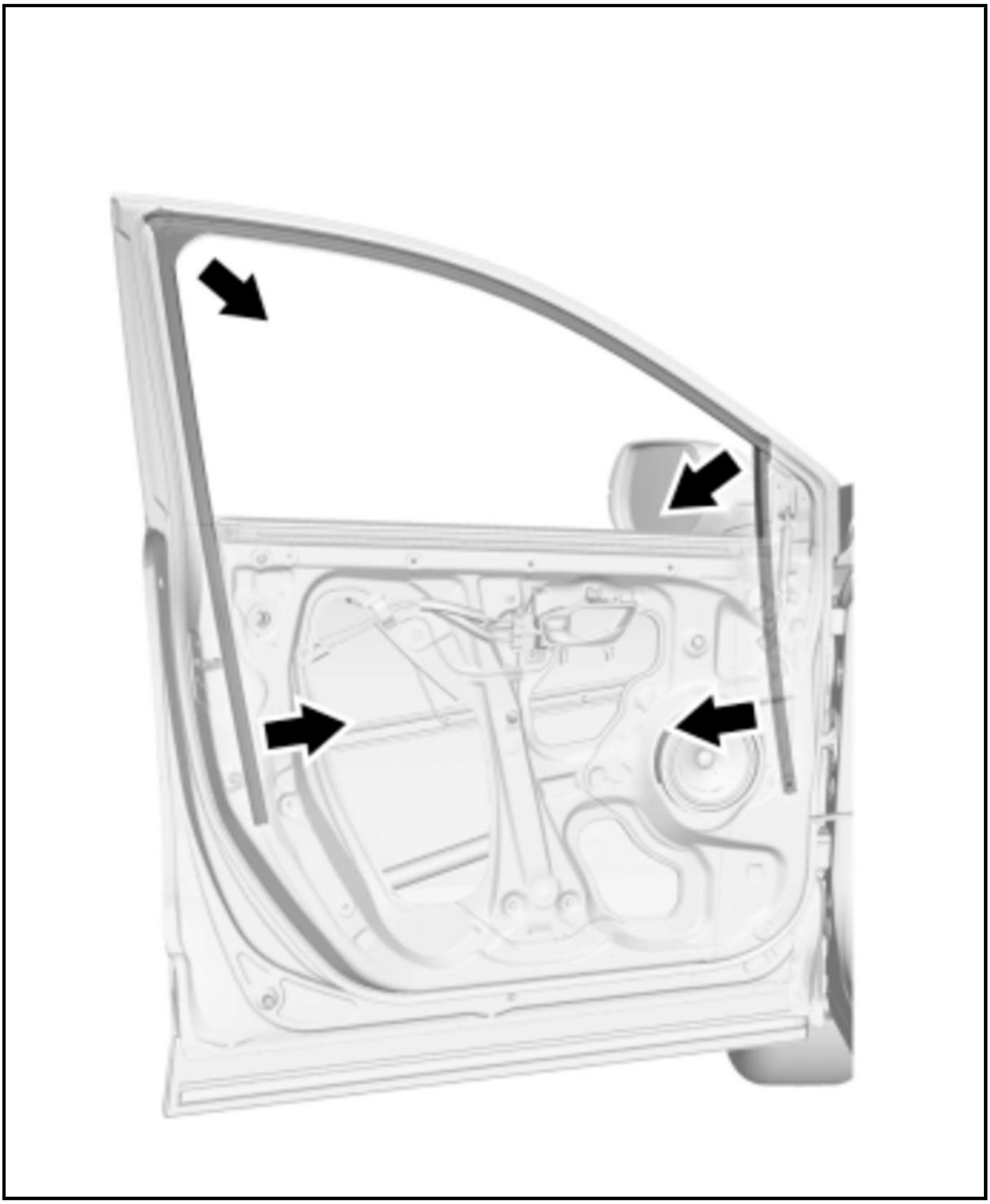

8. All Removed Parts - Install

   1. Install the parts in the reverse order of removal.

9. Door Glass - Adjustment
10. Power Window Control Unit - Reset

QUARTER GLASS REMOVAL AND INSTALLATION

Removal

1. Quarter Pillar Trim - Remove
2. Quarter Glass - Remove

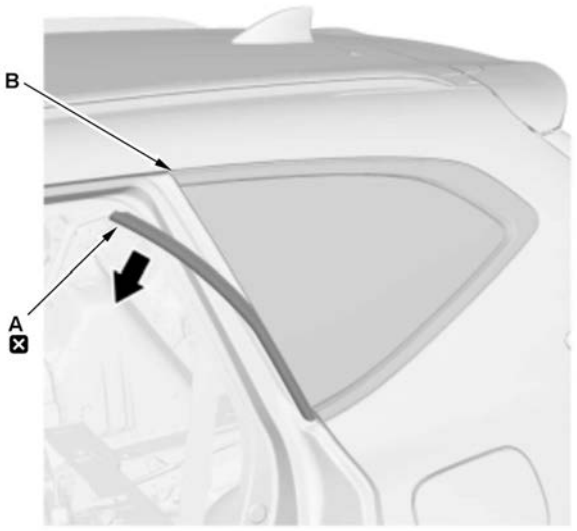

1. Remove the front seal (A) from the front edge of the quarter glass (B). If necessary, cut the front seal with a utility knife.

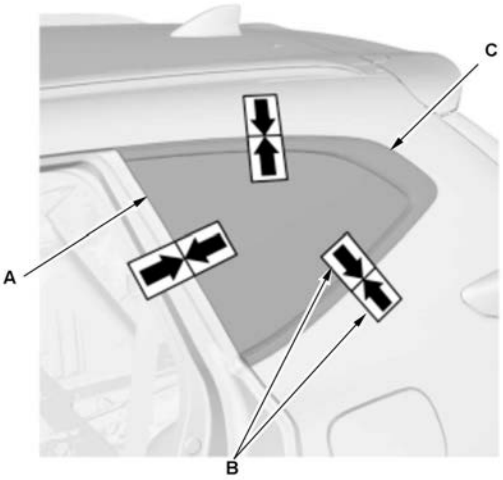

2. If the original quarter glass (A) will be reinstalled, make alignment marks (B) across the glass and the body with a grease pencil over the quarter glass molding (C).

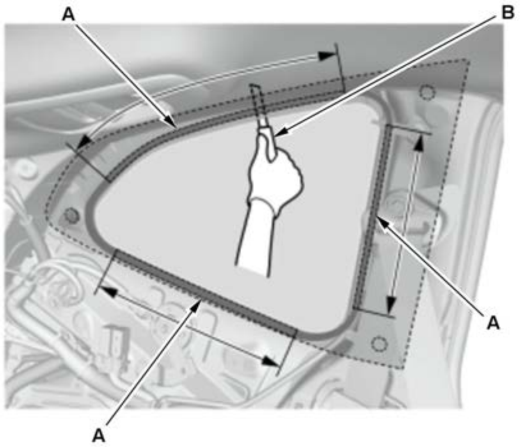

3. Apply protective tape along the inside and outside edges of the body. From the pillar side of the vehicle, to cut the adhesive (A) with a utility knife (B).

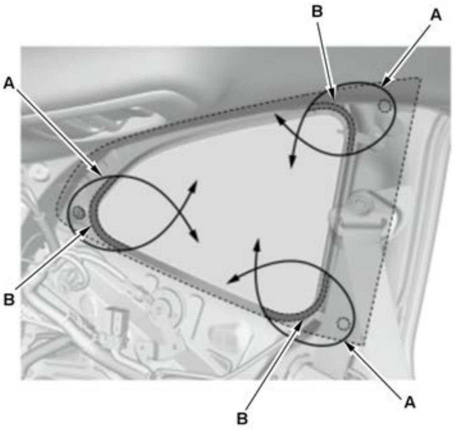	4. Pass a piano wire (A) from the inside of the vehicle at the place where the corner portion of the quarter glass ends, and wrap each end around a piece of wood. 5. Pull the piano wire back and forth in a sawing motion. 6. Repeat these procedure, cut through the rubber dam and the adhesive (B) of the quarter glass. **NOTE:** • If the quarter glass will be reinstalled, take care not to damage the molding. • If the molding is damaged, replace the quarter glass, the molding, and the clips as an assembly. 7. Carefully remove the quarter glass with suction cups. 8. If a new quarter glass will be installed, remove the clips from the body. 9. Scrape the original adhesive smooth to a thickness of about 1 mm (0.04 in) - 2 mm (0.08 in) on the bonding surface around the entire quarter glass opening flange with a putty knife. **NOTE:** Do not scrape down to the painted surface of the body; damaged paint will interfere with proper bonding.

Installation

1. Quarter Glass - Install

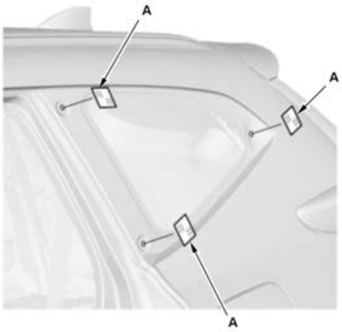	1. Clean the body bonding surface with a shop towel dampened with isopropyl alcohol. After cleaning, keep oil, grease, and water from getting on the surface. 2. If you are reinstalling the original quarter glass, scrape off the original adhesive from the quarter glass with a putty knife. Clean the bonding surfaces on the inside face and the edge of the quarter glass with isopropyl alcohol. Make sure the bonding surface is kept free of water, oil, and grease. 3. If the original quarter glass will be reinstalled (and either clip is broken off the molding), seal the body holes with pieces of urethane tapes (A).

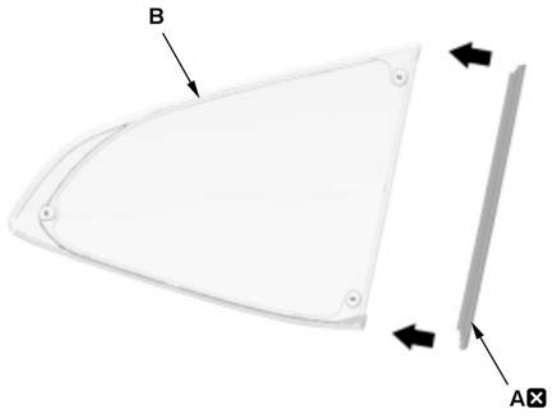

4. Install the front seal (A) with adhesive tape to the inside face of the quarter glass (B) as shown.

NOTE:

- Before installing the front seal, apply primer to the inside face of the quarter glass.
- Be careful not to touch the quarter glass where the adhesive will be applied.

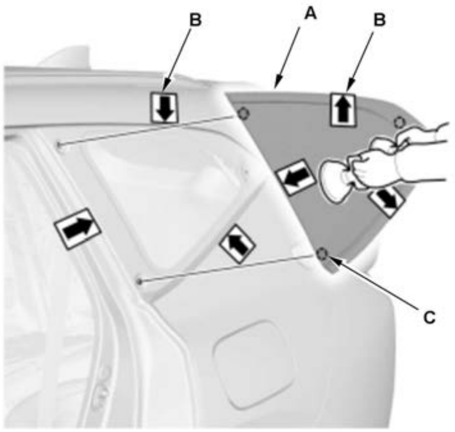

5. Set the quarter glass (A) in the opening, and make alignment marks (B) across the quarter glass and the body with a grease pencil at the three points shown.

NOTE:

- Make sure the clips (C) contact with the edge of the body holes.
- Be careful not to touch the quarter glass where the adhesive will be applied.

6. Apply a light coat of primer to the quarter glass (A) along the edge of the front seal (B) and the quarter glass molding (C) as shown, then lightly wipe it off with gauze or cheesecloth.

NOTE:

- Apply the primer to the rear corner, upper corner, and lower corner areas of the quarter glass using the printed dots (D) on the quarter glass as a guide.
- Do not apply body primer to the quarter glass, and do not mix up the body and glass primer applicators.
- Never touch the primed surfaces with your hands. If you do, adhesive may not bond to the quarter glass properly, causing a leak after the quarter glass is installed.
- Keep water, dust, and abrasive materials away from the primed surfaces.

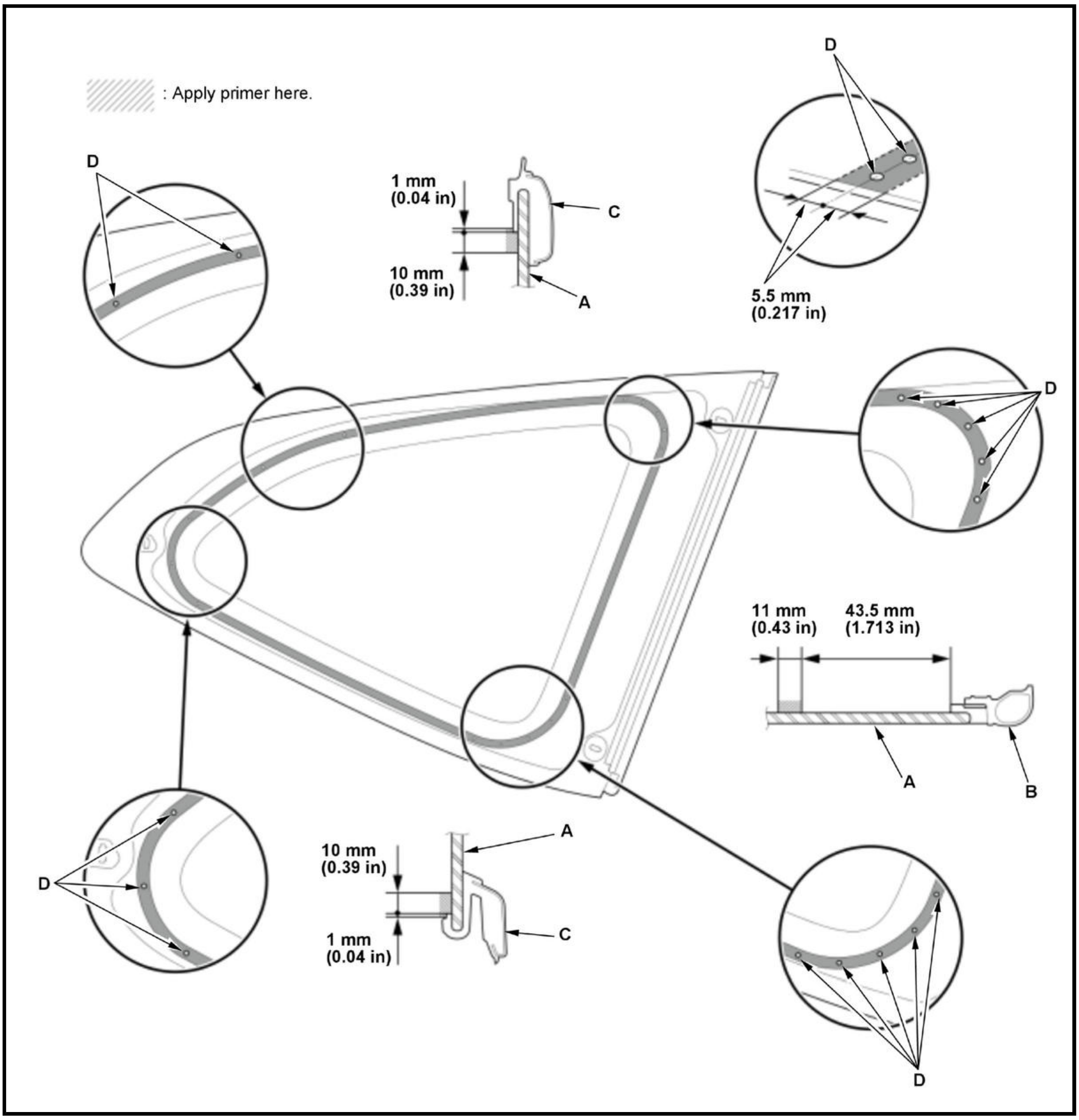
▨ : Apply primer here.
D
1 mm
(0.04 in)
10 mm
(0.39 in)
C
A
D
5.5 mm
(0.217 in)
D
11 mm
(0.43 in)
43.5 mm
(1.713 in)
A
B
D
10 mm
(0.39 in)
A
C
1 mm
(0.04 in)
D

7. Apply a light coat of body primer to any exposed paint or metal around the flange where new adhesive will be applied. Let the primer dry for at least 10 minutes:

NOTE:

- Do not apply the glass primer to the body.
- Do not apply body primer to any remaining original adhesive on the flange.
- Be careful not to mix up the body and glass primer sponges.
- Never touch the primed surfaces with your hands.

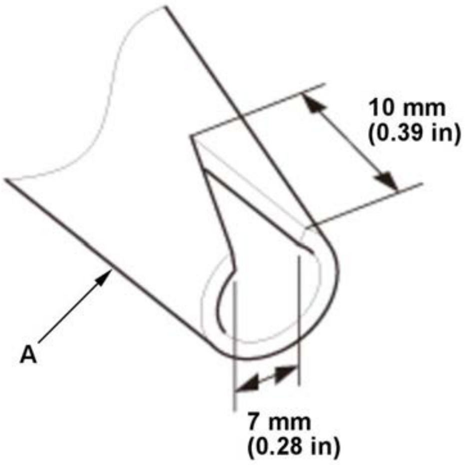 10 mm (0.39 in) A 7 mm (0.28 in)	8. Cut a "V" in the end of the nozzle (A) on the adhesive cartridge as shown.

9. Put the cartridge in a caulking gun, and run a continuous bead of adhesive (A) on the quarter glass (B) edge of the front seal (C) and the quarter glass molding (D) as shown.

NOTE:

- Apply the adhesive to the using the printed dots (E) on the quarter glass as a guide.
- Apply the adhesive within 30 minutes after applying the glass primer.
- Make a slightly thicker bead at each corner.

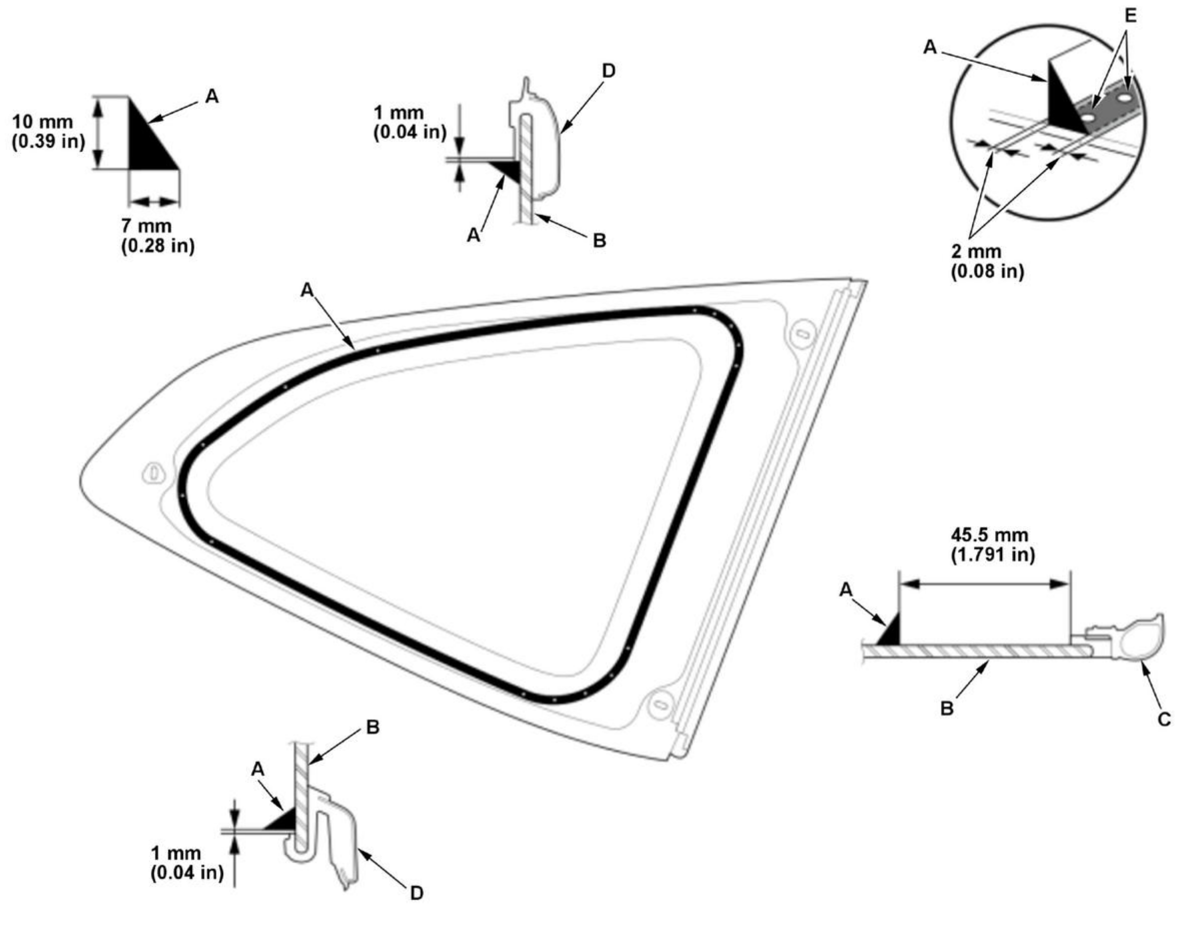
10 mm
(0.39 in)
A
7 mm
(0.28 in)
1 mm
(0.04 in)
D
A
B
A
E
2 mm
(0.08 in)
A
45.5 mm
(1.791 in)
A
B
C
B
A
1 mm
(0.04 in)
D

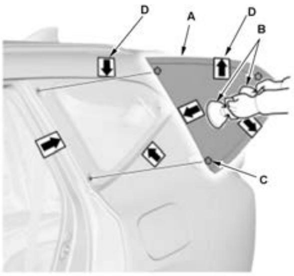	10. Hold the quarter glass (A) with suction cups (B) over the opening, align the clips (C) or the alignment marks (D) made in step 5, and set it down on the adhesive. Lightly push on the quarter glass until its edges are fully seated on the adhesive all the way around. **NOTE:** Do not open or close any of the doors for about an hour until the adhesive is dry. 11. Remove the excess adhesive with a putty knife or a shop towel dampened with isopropyl alcohol. 12. Wait at least an hour for the adhesive to dry, then spray water over the quarter glass and check for leaks. Mark the leaking areas, let the quarter glass dry, then seal with sealant. Let the vehicle stand for at least 4 hours after quarter glass installation. If the vehicle has to be used within the first 4 hours, it must be driven slowly. 13. Advise the customer not to do the following things for 2 to 3 days: • Slam the doors with all the windows rolled up. • Twist the body excessively (such as when going in and out of driveways at an angle or driving over rough, uneven roads).

2. Quarter Pillar Trim - Install

REAR WINDOW REMOVAL AND INSTALLATION

Removal

1. Tailgate Spoiler Trim - Remove
2. Tailgate Trim - Remove
3. Rear Window Wiper Motor - Remove
4. Rear Window - Remove

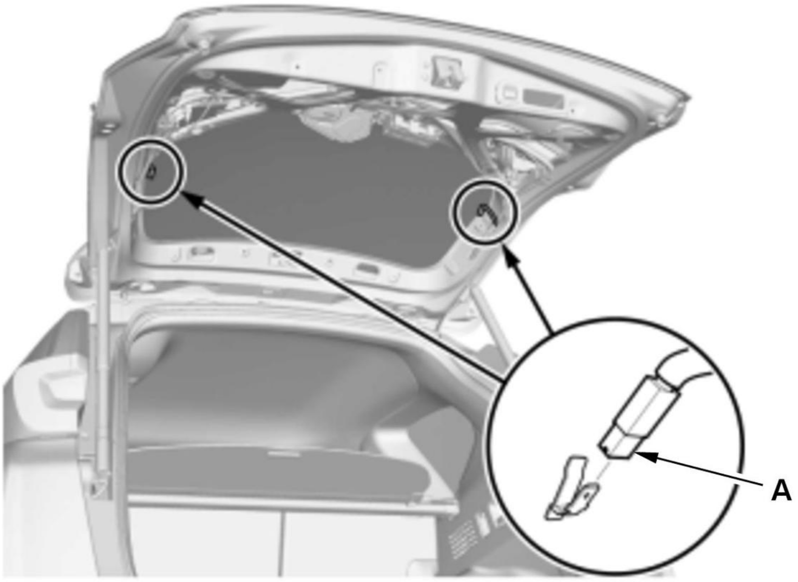	1. Disconnect the connectors (A).

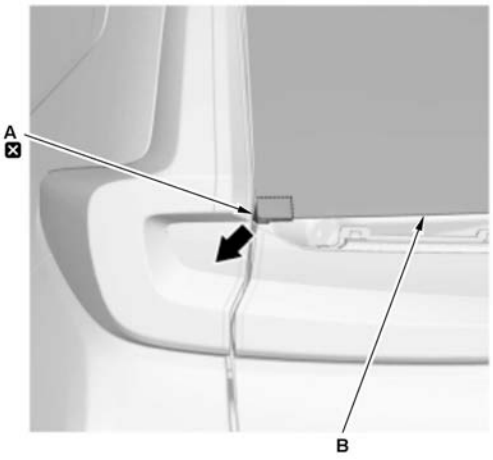

2. Remove the rear windshield corner moldings (A) from the corner of the rear window (B). If necessary, cut the rear windshield corner moldings with a utility knife.

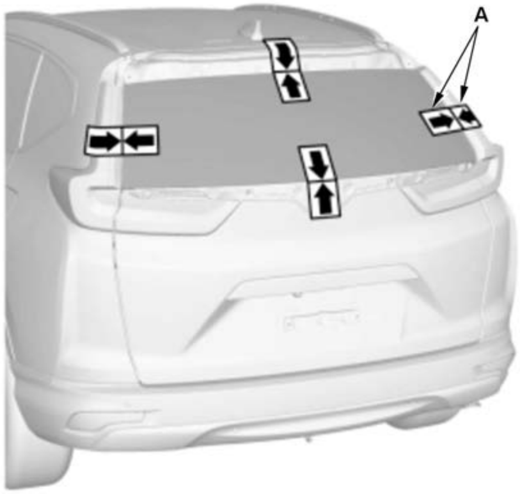

3. If the original rear window will be reinstalled, make alignment marks (A) across the glass and the body with a grease pencil.

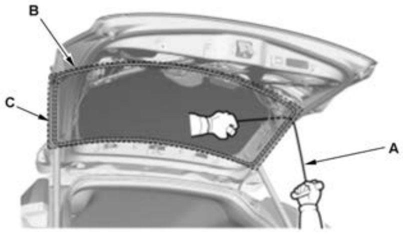

Cutting positions

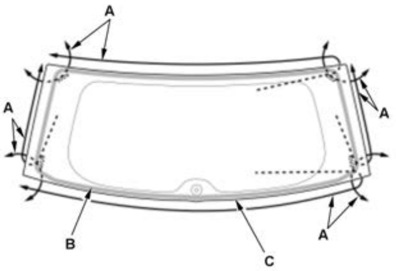

4. Apply protective tape along the inside and the outside edges of the tailgate. Make a hole with an awl through the adhesive from inside of the vehicle at the corner portion of the rear window. Push a piece of piano wire through the hole, and wrap each end around a piece of wood.

5. With a helper on the outside, pull the piano wire (A) back and forth in a sawing motion. Hold the piano wire as close to the rear window (B) as possible to prevent damage to the tailgate, and carefully cut through the adhesive (C) around the entire rear window.

6. Carefully remove the rear window.

7. Scrape the original adhesive smooth to a thickness of about 1 mm (0.04 in) - 2 mm (0.08 in) on the bonding surface around the entire rear window opening flange with a knife.

NOTE:

- Do not scrape down to the painted surface of the body; damaged paint will interfere with proper bonding.
- Remove the fasteners from the body.

	8. Clean the body bonding surface with a shop towel dampened in isopropyl alcohol. After cleaning, keep oil, grease, and water from getting on the surface. 9. If you are reinstalling the original rear window, scrape off all of the original adhesive, the fasteners, and the rubber dams from the rear window with a putty knife. Clean the bonding surface on the inside face and the edge of the rear window with isopropyl alcohol. Make sure the bonding surface is kept free of water, oil, and grease.

Installation

1. Rear Window - Install

1. Clean the body bonding surface with a shop towel dampened with isopropyl alcohol. After cleaning, do not allow oil, grease, and water to contact on the clean surface.

2. If you are reinstalling the original rear window, scrape off the original adhesive, the fasteners, and the rubber dam from the rear window with a putty knife. Clean the bonding surface on the inside face and the edge of the rear window with isopropyl alcohol. Make sure the bonding surface is kept free of water, oil, and grease.

3. Install the spacer (A) or the fasteners (B) with the adhesive tape to the inside face of the rear window (C) as shown.

NOTE:

- Be careful not to touch the rear window where the adhesive will be applied.
- Before installing the spacer and the fasteners, apply glass primer to the area where the adhesive tape will be applied.
- Make sure the spacer and the fasteners line up with the alignment marks (D).

Rear Window Type 1

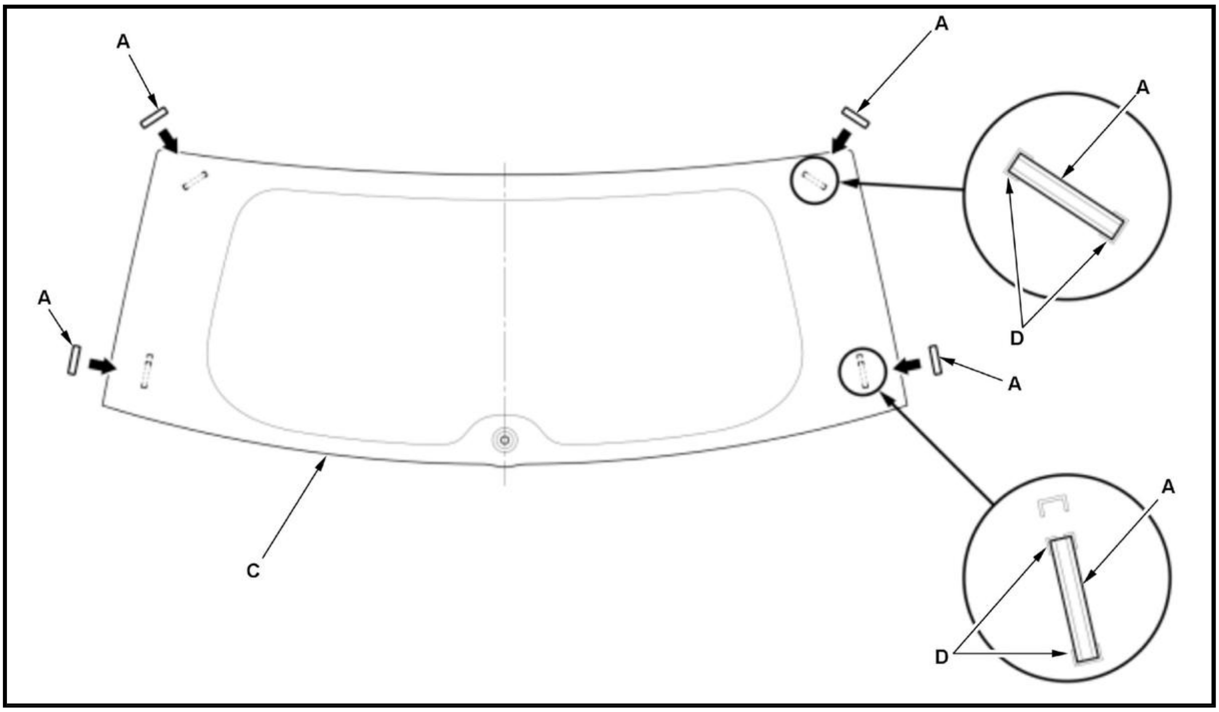

Rear Window Type 2

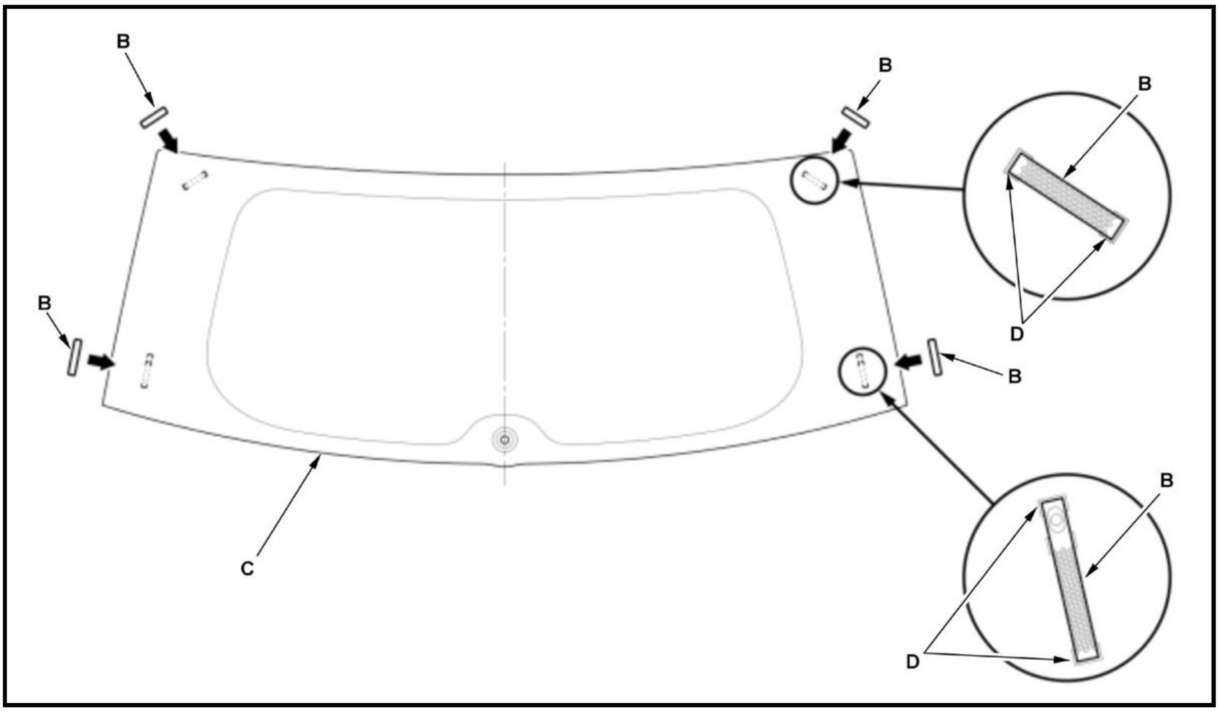
B
B
B
B
D
B
B
B
C
D

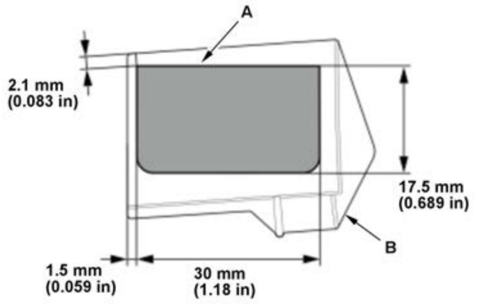
A
2.1 mm
(0.083 in)
17.5 mm
(0.689 in)
B
1.5 mm
(0.059 in)
30 mm
(1.18 in)

4. Apply adhesive primer to the areas where the new double-sided adhesive tapes (A) will be applied, then attach the new double-sided adhesive tapes to the rear windshield corner moldings (B) as shown.

5. Install the rear windshield corner moldings (A) with the adhesive tape to the inside face of the rear window (B) as shown. Before installing the rear windshield corner moldings, apply a primer to the area where the adhesive tape will be applied to the inside face of the rear window.

NOTE: Be careful not to touch the rear window where the adhesive will be applied.

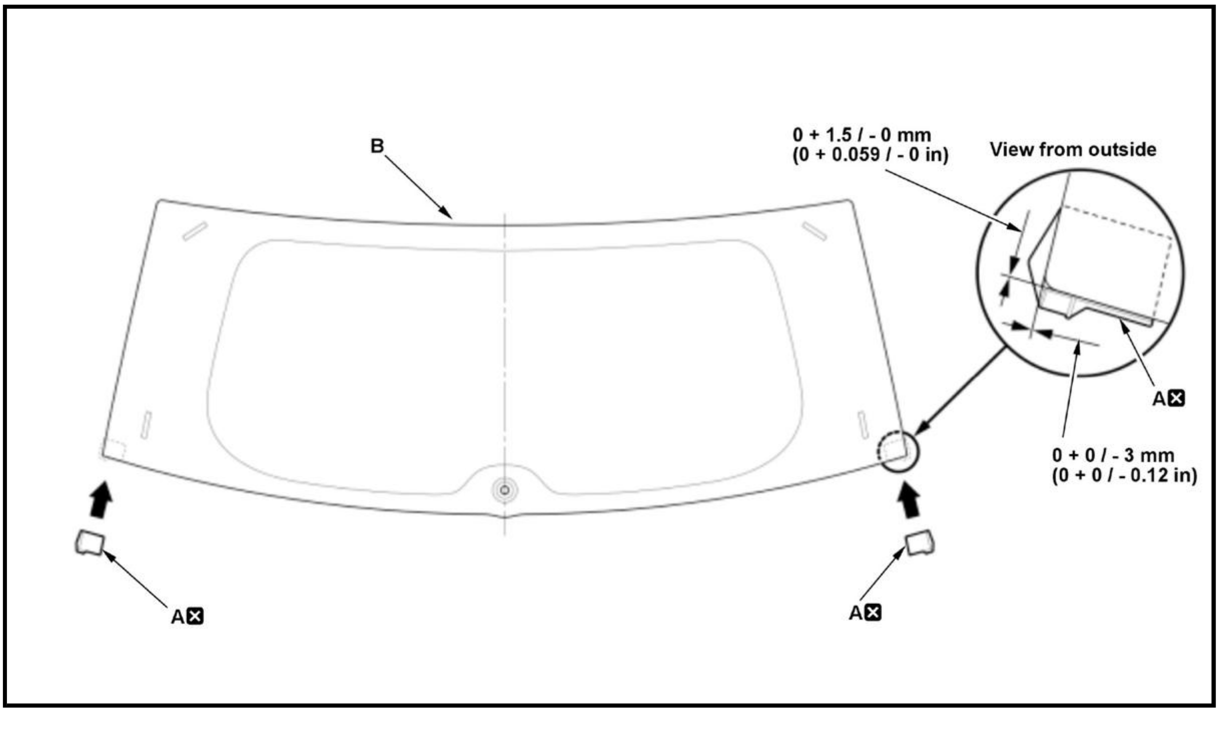
0 + 1.5 / - 0 mm
(0 + 0.059 / - 0 in)
View from outside
B
A☒
0 + 0 / - 3 mm
(0 + 0 / - 0.12 in)
A☒
A☒

6. Install the rubber dams (A, B, C) with the adhesive tape to the inside face of the rear window (D) as shown. Before installing the rubber dams, apply a primer to the area where the adhesive tape will be applied to the inside face of the rear window.

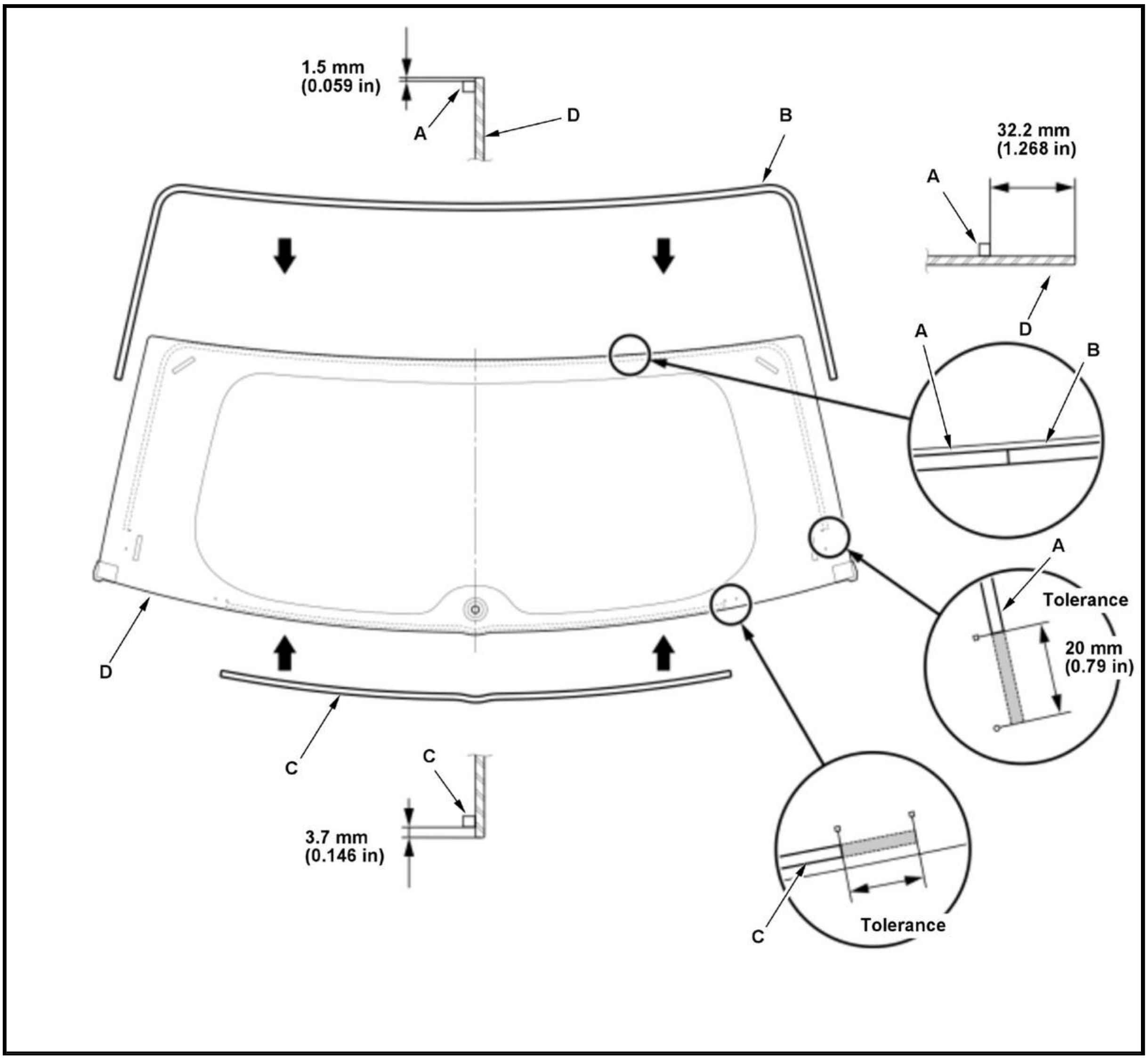
1.5 mm
(0.059 in)
A
D
B
32.2 mm
(1.268 in)
A
D
A
B
A
Tolerance
20 mm
(0.79 in)
D
C
C
3.7 mm
(0.146 in)
Tolerance
C

7. Cut the rubber dams to the length, then install the new rubber dams.

Lower seal length:		
B	**Rubber dam B**	**534 mm (21.02 in)**
B	**Rubber dam C**	**830 mm (32.68 in)**

NOTE:

- After installing the new rubber dam, cut the both ends of rubber dam flush with the edges of the glass as shown.
- Be careful not to touch the rear window where the adhesive will be applied.

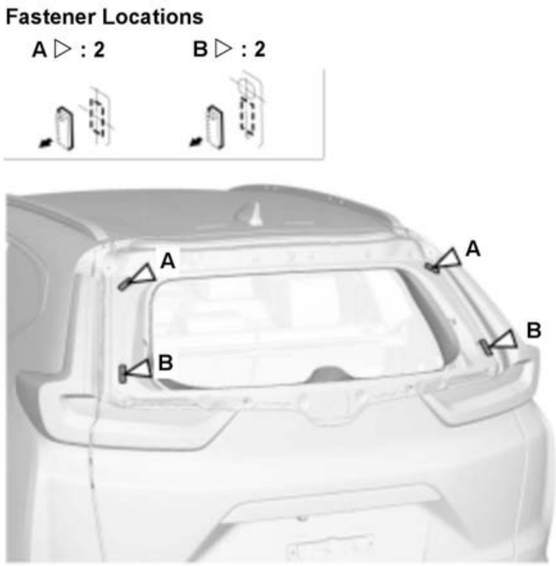

8. Attach the fasteners (A, B) with the adhesive tape to the rear window opening flange of the tailgate as shown.

Rear Window Type 1

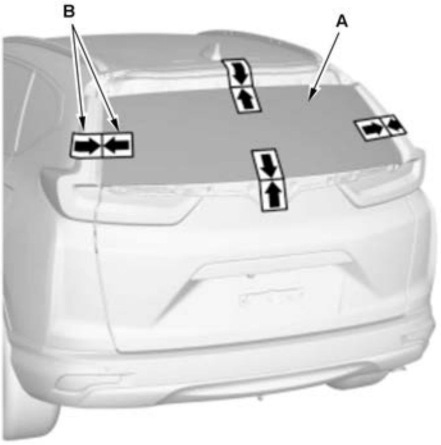

Rear Window Type 2

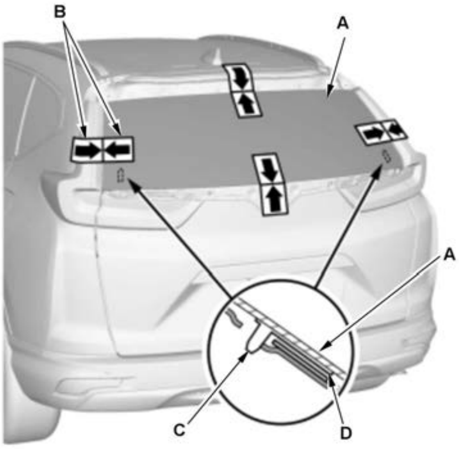

9. If you are installing the new rear window (A), set the rear window in the opening, and center it. Make the alignment marks (B) across the rear window and the body with a grease pencil at the four points shown.**NOTE:**

- Be careful not to touch the rear window where the adhesive will be applied.
- Rear Window Type 2: Make sure the pins (C) of the fasteners (D) contact with the edge of the body holes.

10. Remove the rear window.

11. Apply a light coat of primer to the rear window (A) along the edge of the rubber dams (B) as shown, then lightly wipe it off with gauze or cheesecloth.

- Apply the glass primer to the rear window using the printed dots (C) on the rear window as a guide.
- Do not apply body primer to the rear window, and do not mix up the body and glass primer applicators.
- Never touch the primed surfaces with your hands. If you do, the adhesive may not bond to the rear window properly, causing a leak after the rear window is installed.
- Keep water, dust, and abrasive materials away from primed surfaces.

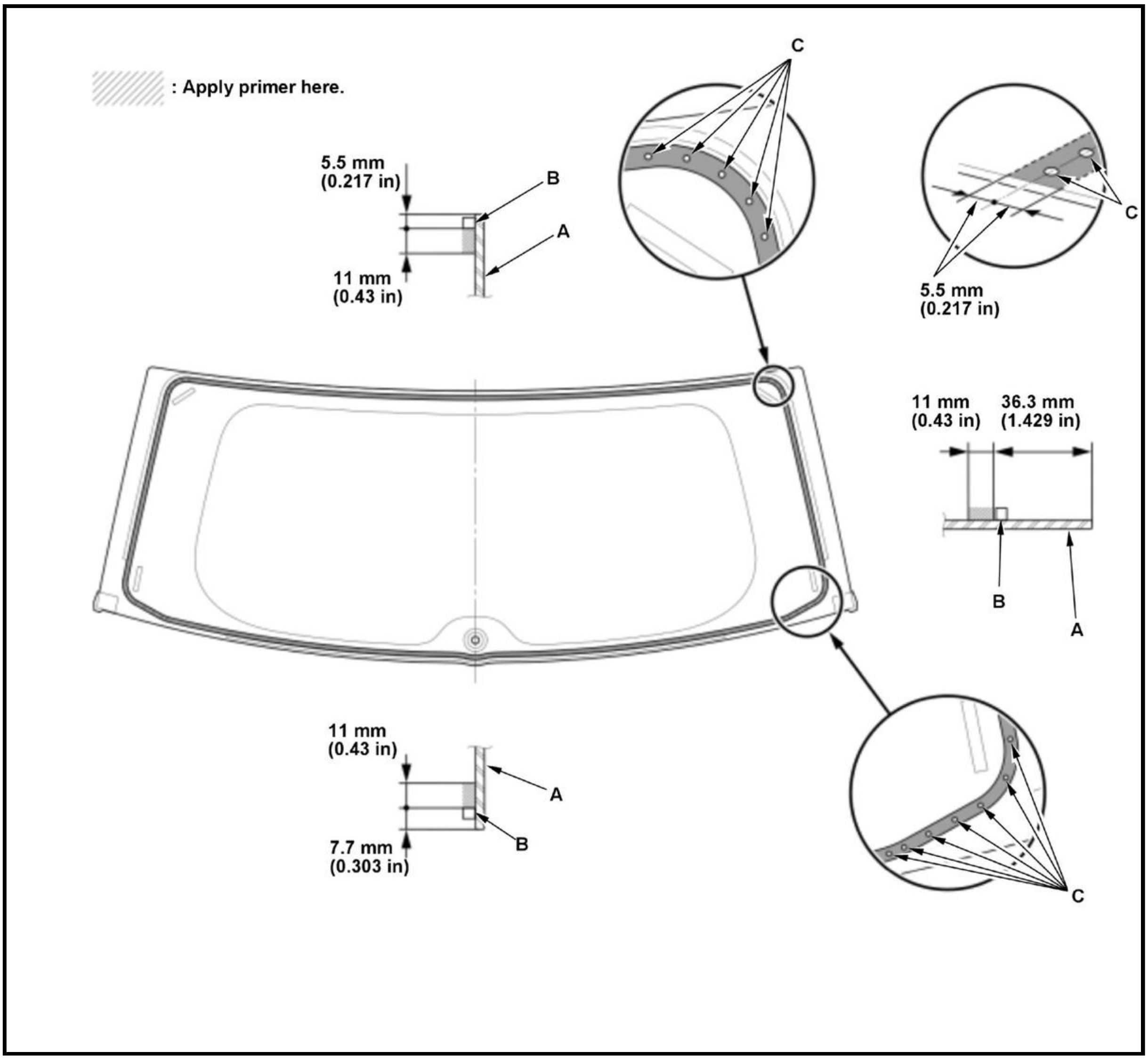

▨ : Apply primer here.
5.5 mm
(0.217 in)
B
A
11 mm
(0.43 in)
C
C
5.5 mm
(0.217 in)
11 mm
(0.43 in)
36.3 mm
(1.429 in)
B
A
11 mm
(0.43 in)
A
7.7 mm
(0.303 in)
B
C

12. Apply a light coat of the body primer to any exposed paint or metal around the flange where the new adhesive will be applied. Let the body primer dry for at least 10 minutes.

NOTE:

- Do not apply the glass primer to the body.
- Do not apply the body primer to any remaining original adhesive on the flange.
- Be careful not to mix up the body and glass primer applicators.
- Never touch the primed surfaces with your hands.

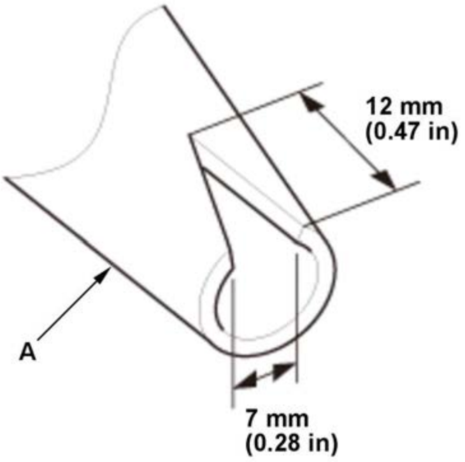 12 mm (0.47 in) A 7 mm (0.28 in)	13. Cut a "V" in the end of the nozzle (A) on the adhesive cartridge as shown.

14. Put the cartridge in a caulking gun, and run a continuous bead of adhesive (A) on the rear window (B) along the edge of the rubber dams (C) as shown.

NOTE:

- Apply the adhesive to the corner areas (D) using the printed dots (E) on the rear window as a guide.
- Apply the adhesive within 30 minutes after applying the glass primer.
- Make a slightly thicker bead at each corner.

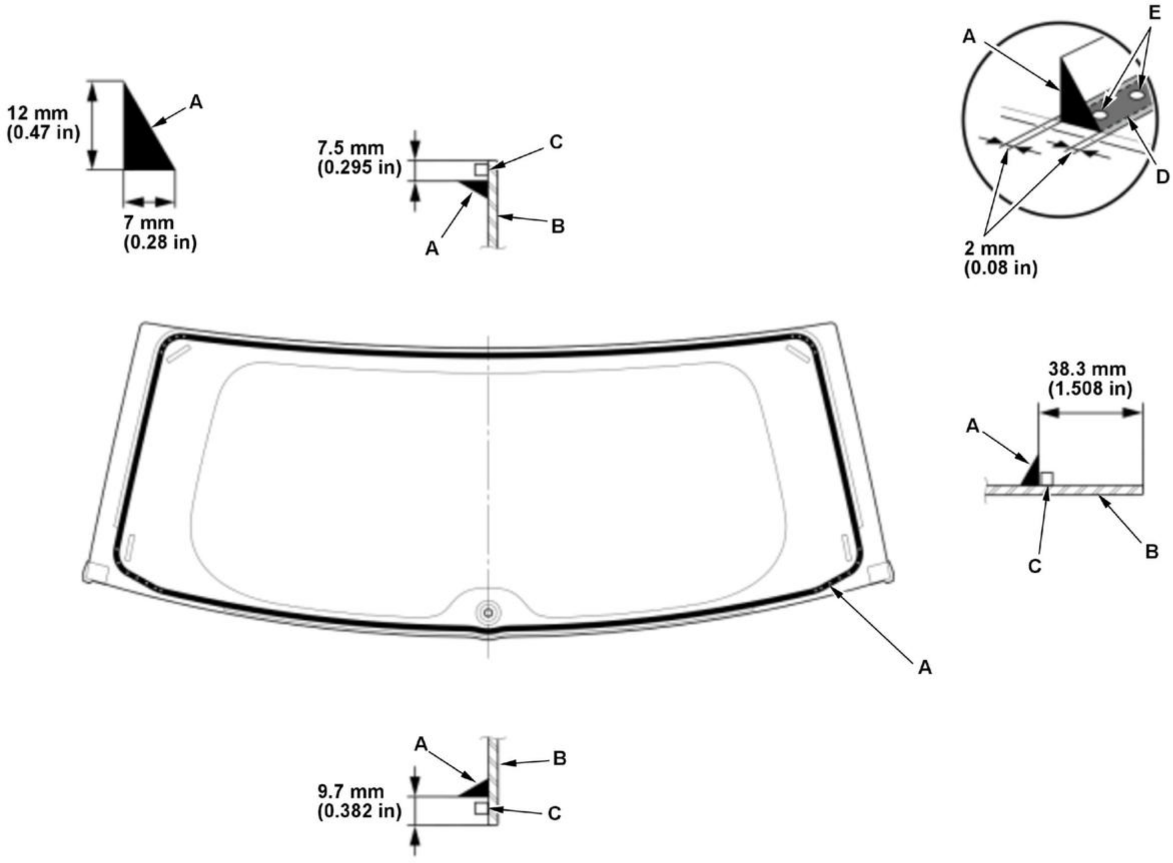
12 mm
(0.47 in)
A
7 mm
(0.28 in)
7.5 mm
(0.295 in)
C
B
A
A
E
D
2 mm
(0.08 in)
38.3 mm
(1.508 in)
A
C
B
A
A
B
9.7 mm
(0.382 in)
C

15. Hold the rear window with suction cups over the opening, align it with the alignment marks you made in step 6, and set it down on the adhesive. Lightly push on the rear window until its edges are fully seated on the adhesive all the way around.

NOTE: Do not open or close any of the doors for about an hour until the adhesive is dry.

16. Remove the excess adhesive with a putty knife or a shop towel dampened with isopropyl alcohol.

17. Wait at least an hour for the adhesive to dry, then spray water over the rear window and check for leaks. Mark the leaking areas, let the rear window dry, then seal with sealant. Let the vehicle stand for at least 4 hours after rear window installation. If the vehicle has to be used within the first 4 hours, it must be driven slowly.

18. Advise the client not to do the following things for 2 to 3 days:

- Do not slam the doors with all the windows rolled up.
- Do not twist the body excessively (such as when going in and out of driveways at an angle or driving over rough, uneven roads).

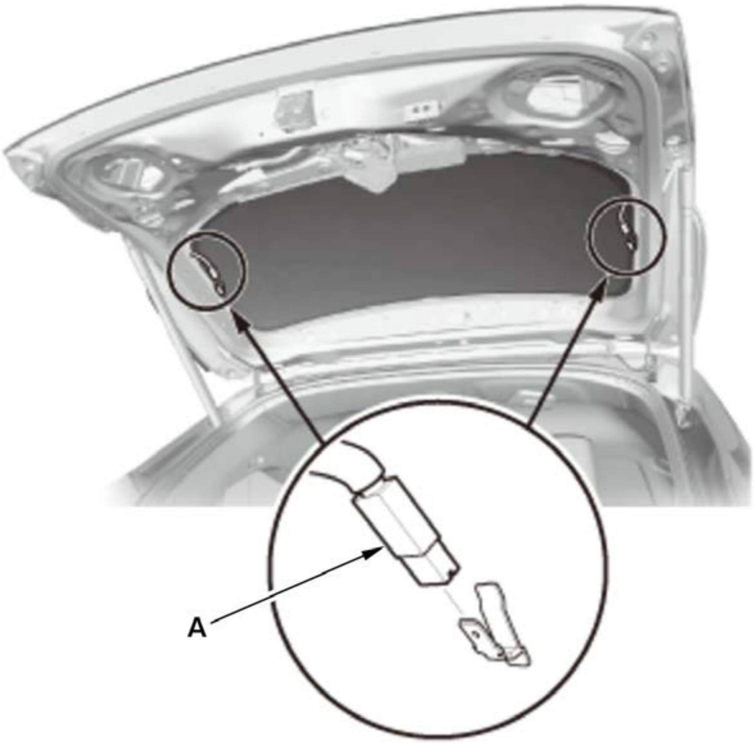	19. Connect the rear window defogger terminals (A).

2. Rear Wiper Motor - Install
3. Tailgate Trim - Install
4. Tailgate Spoiler Trim - Install

SIDE WINDSHIELD TRIM REMOVAL AND INSTALLATION

Removal

1. Side Cowl Cover - Remove
2. Windshield Side Trim - Remove

1. Insert a wide-tip trim tool (A) and a small-tip trim tool (B) between the windshield side trim (C) and the windshield so it contacts the clips (D).

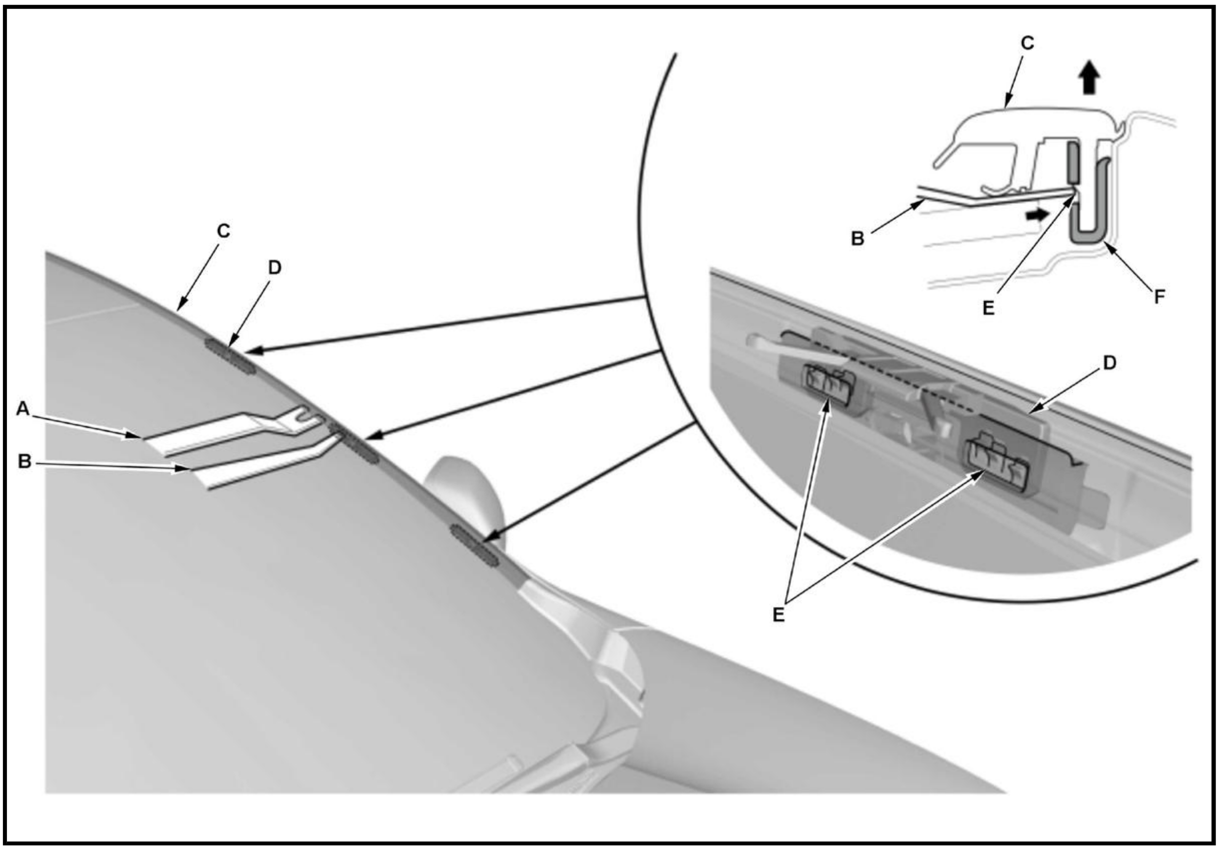

2. Pull up the windshield side trim with the wide-tip trim tool and push the hooks (E) on the clips with the small-tip trim tool to remove the clips from the retainers (F) as shown.

NOTE: Do not break the hooks with the trim tool for removal.

Without Roof Rail

3. Release the clips (A, B).

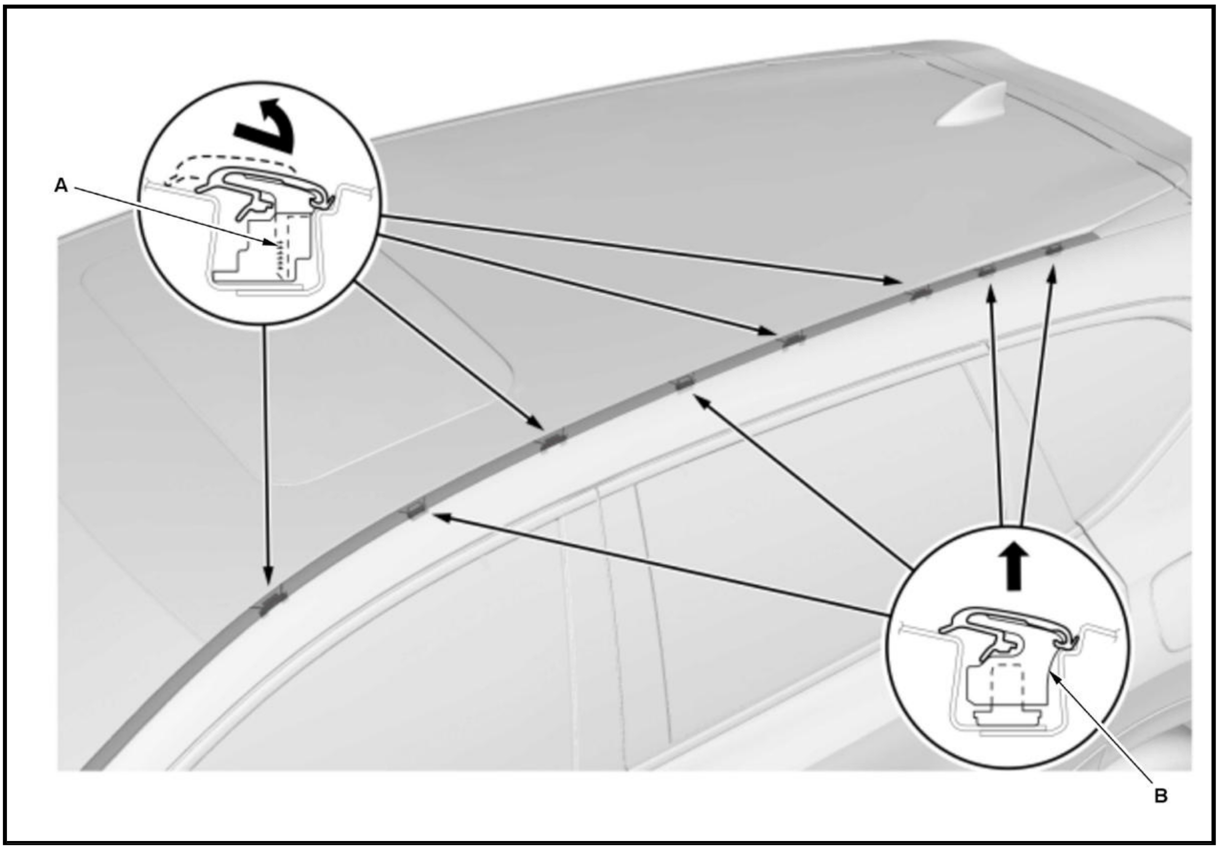

3. Retainer - Remove

1. Release the hooks (A) and remove the retainers (B) as shown.

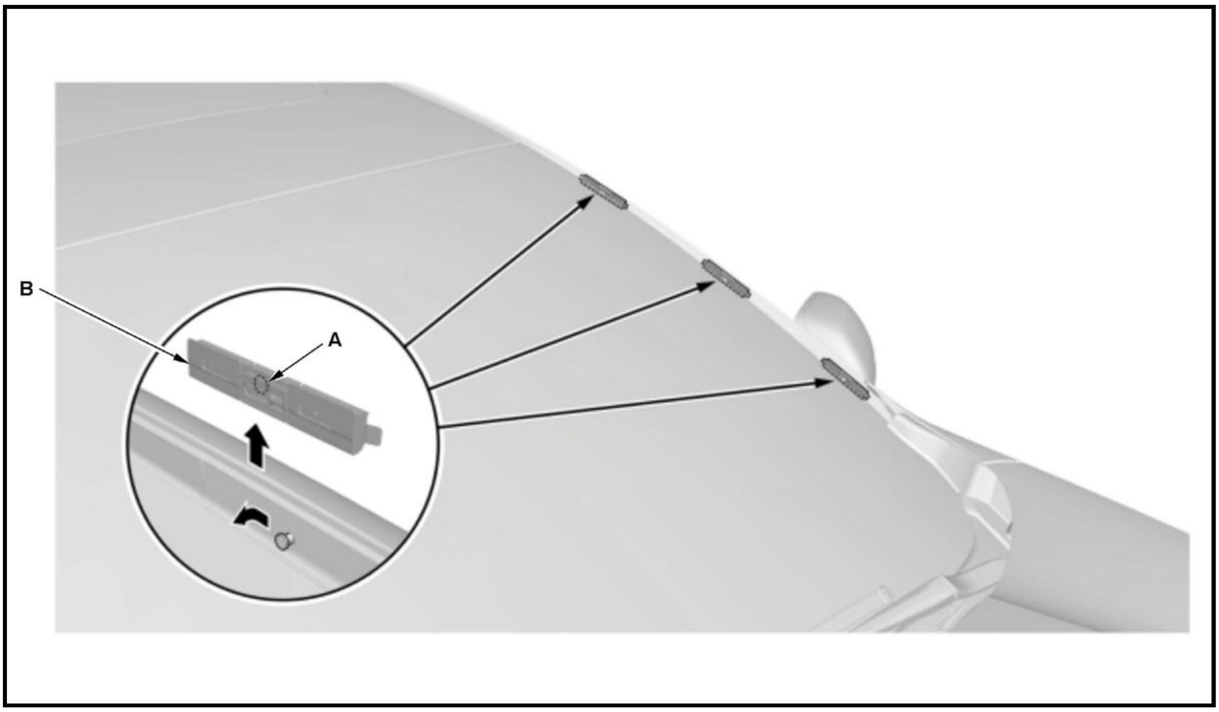

Without Roof Rail

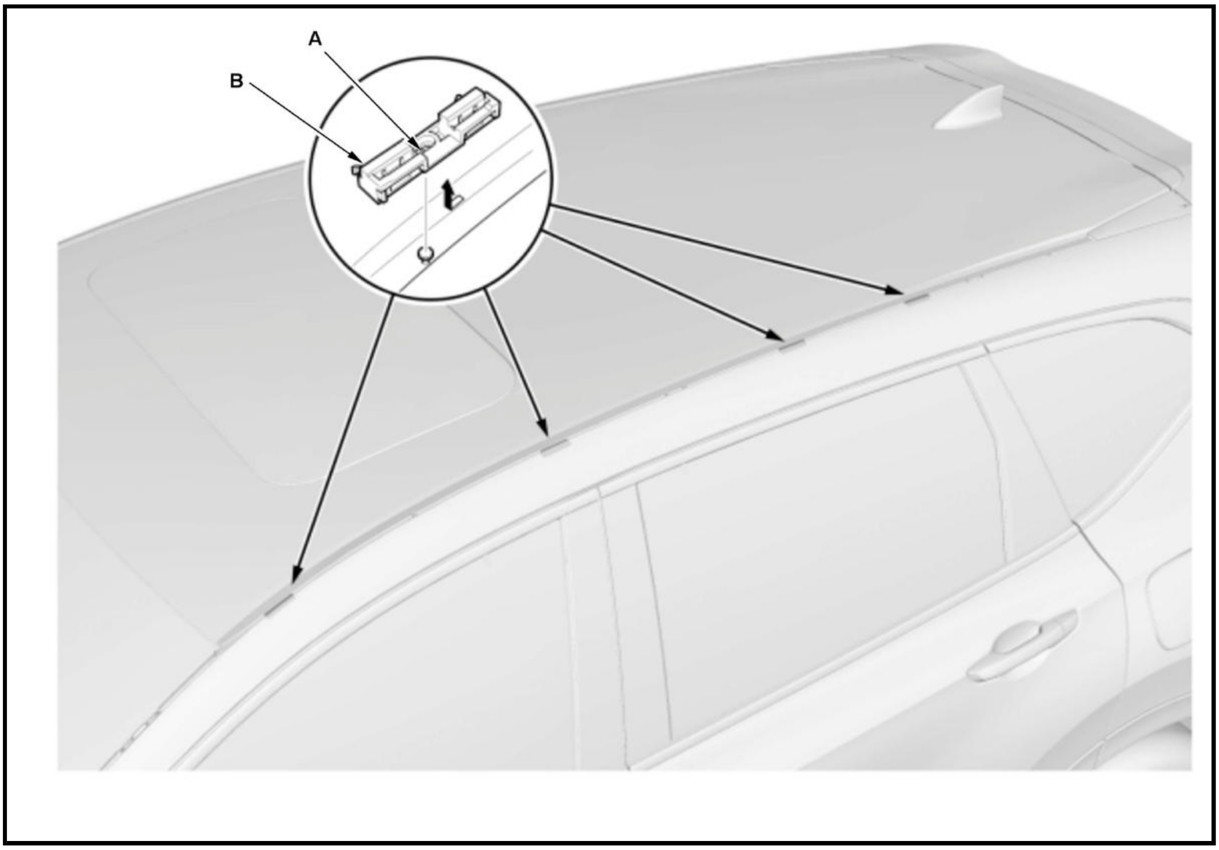

Installation

1. Retainer - Install

   1. Install the retainers (A, B) to the pins (C).

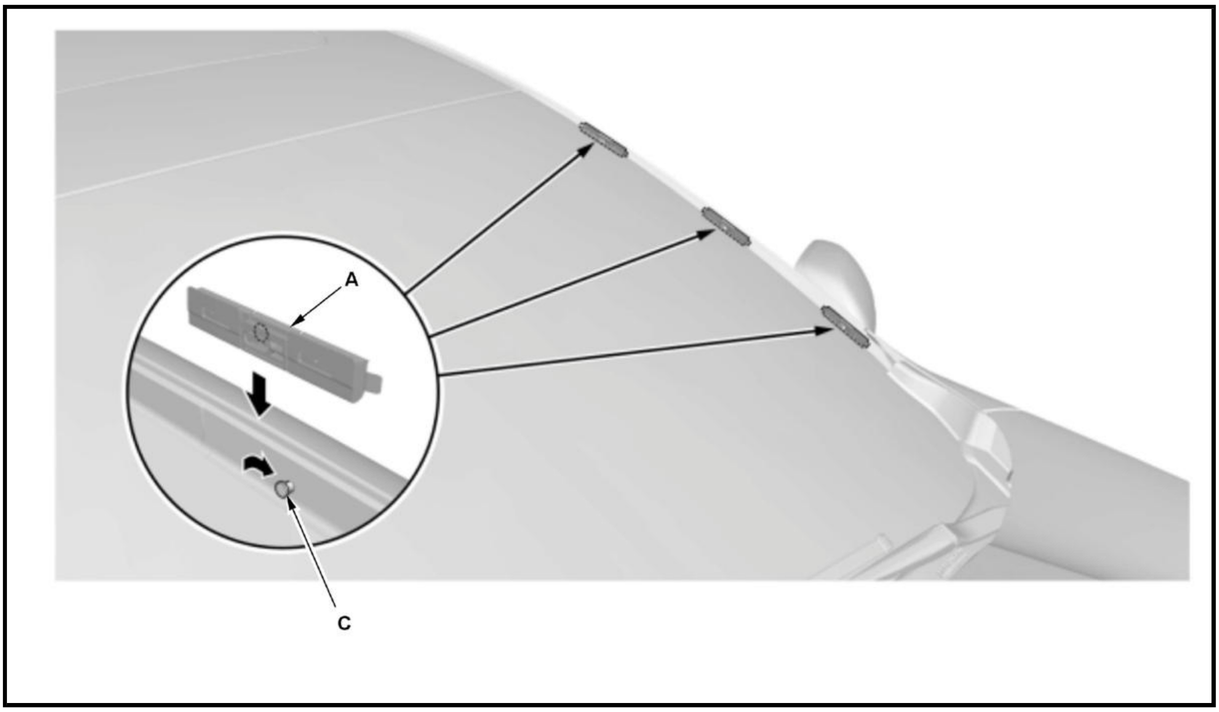

Without Roof Rail

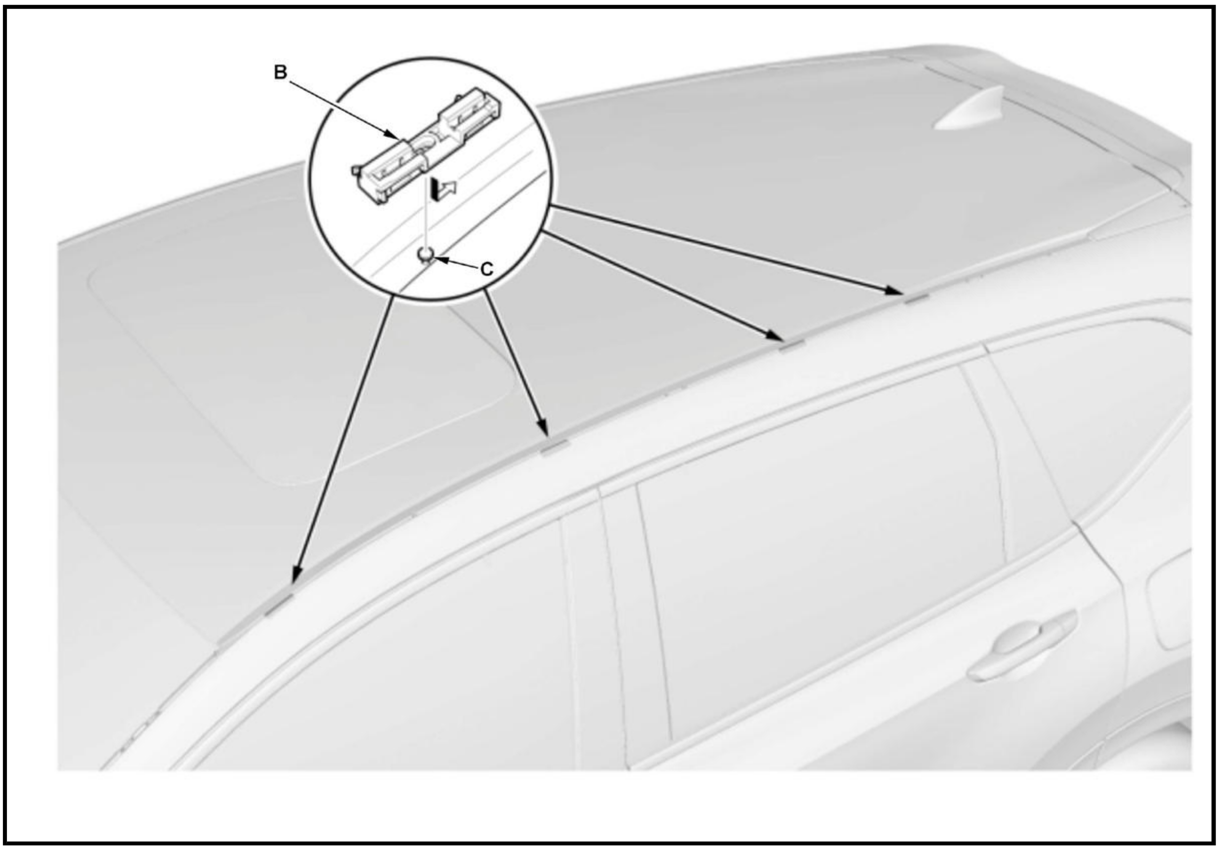

2. Windshield Side Trim - Install

   1. Without roof rail : From the rear to the front, fit the clips (A, B) to the stud bolts (C) and the retainers (D), then push on the molding until they snap into place.

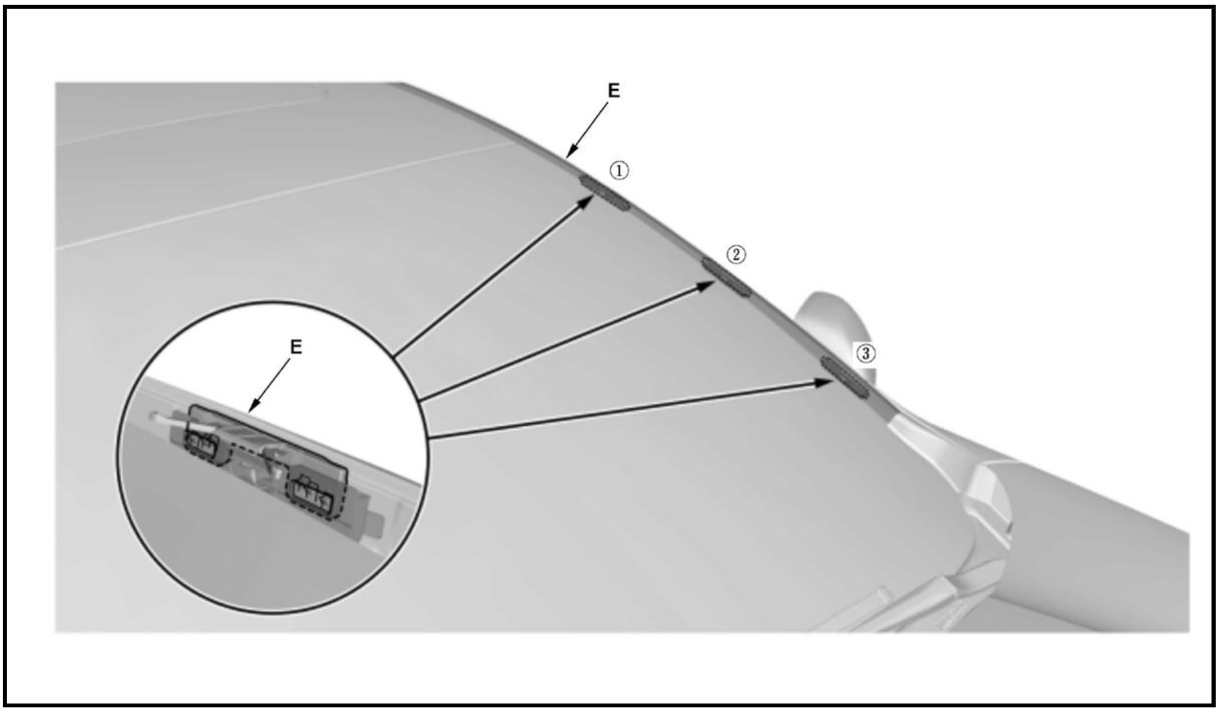

Without Roof Rail

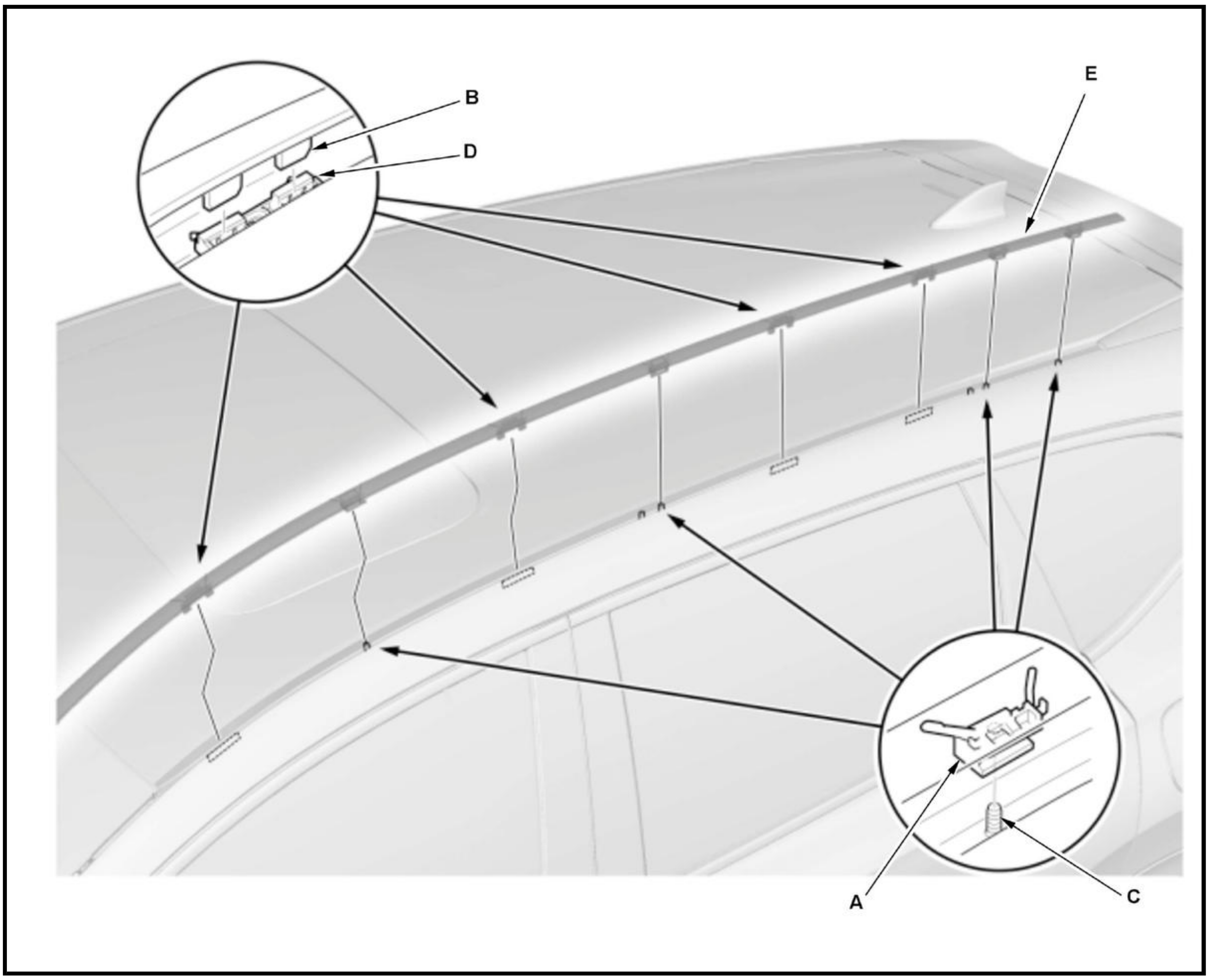

2. Install the windshield side trim (E) in the sequence shown.

3. Side Cowl Cover - Install

WINDSHIELD REMOVAL AND INSTALLATION

Removal

SRS components are located in this area. Review the **SRS component locations** and the **precautions and procedures** before doing repairs or service.

1. **Center Cowl Cover - Remove**
2. **Both A-Pillar Trims - Remove**
3. **Rearview Mirror - Remove**
4. **Both Sunvisors - Remove**
5. **Roof Console Assembly - Remove**
6. **Both Side Windshield Trims - Remove**
7. **Automatic Lighting/Rain Sensor - Remove (For Some Models)**
8. **Multipurpose Camera Unit - Remove (For Some Models)**
9. Front Area of the Headliner - Lower

   1. **Lower the front area of the headliner as needed** .

10. Windshield - Remove

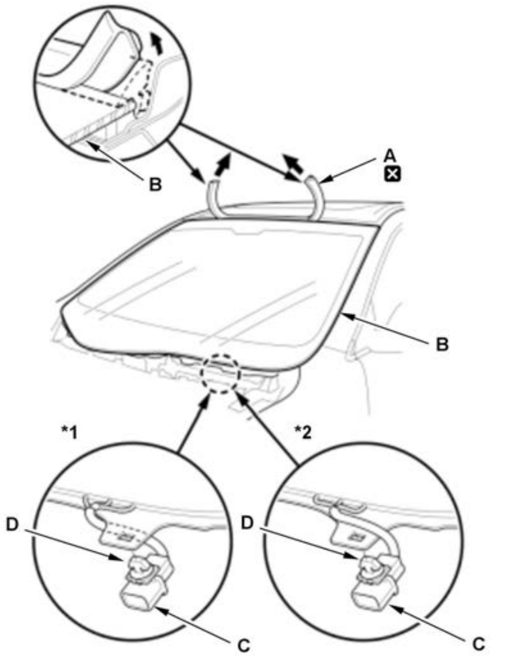 *1: Heated windshield wiper area harness type 1 *2: Heated windshield wiper area harness type 2	1. Remove the windshield upper molding (A) from the upper edge of the windshield (B). If necessary, cut the windshield upper molding with a utility knife. 2. With heated windshield wiper area: Disconnect the connector (C), and remove the connector clip (D). **NOTE:** If you are reusing the windshield you are removing, note the routing of the harness (Type 1 or 2) before removing the connector clip.

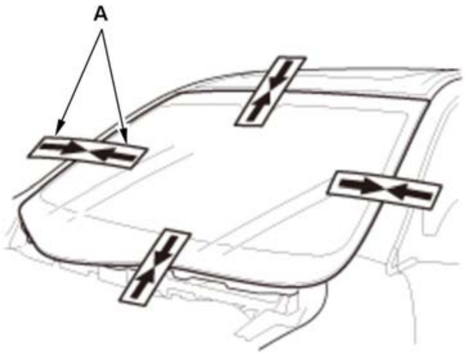	3. If the original windshield will be reinstalled, make alignment marks (A) across the glass and the body with a grease pencil.

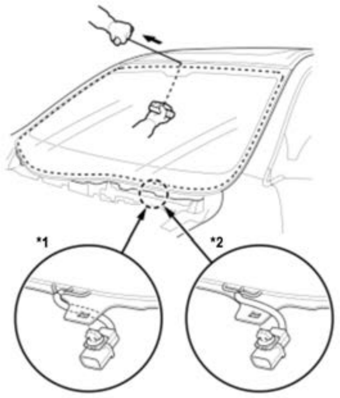 *1: Heated windshield wiper area harness type 1 *2: Heated windshield wiper area harness type 2 **Cutting positions** 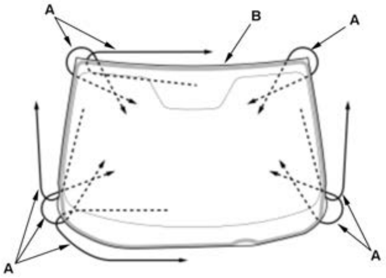	4. Apply protective tape along the edge of the dashboard and the body. Make a hole with an awl through the rubber dam, the adhesive, and the dashboard seal from inside of the vehicle at a corner portion of the windshield. Push a piece of piano wire through the hole, and wrap each end around a piece of wood. 5. With a helper on the outside, pull the piano wire (A) back and forth in a sawing motion. Hold the piano wire as close to the windshield (B) as possible to prevent damage to the body and the dashboard. Carefully cut through the rubber dam and the adhesive (C) around the entire windshield. 6. Carefully remove the windshield. 7. Scrape the original adhesive smooth to a thickness of about 1 mm (0.04 in) - 2 mm (0.08 in) on the bonding surface around the entire windshield opening flange with a knife: **NOTE:** • Do not scrape down to the painted surface of the body; damaged paint will interfere with proper bonding. • Remove the rubber dams, the dashboard seal, and the fasteners from the body. 8. Clean the body bonding surface with a shop towel dampened in isopropyl alcohol. After cleaning, keep oil, grease, and water from getting on the clean surface. 9. If you are reinstalling the original windshield, scrape off all of the original adhesive, the clips, the dashboard seal, and the rubber dam from the windshield with a putty knife. Clean the boning surface on the inside face and the edge of the windshield with isopropyl alcohol. Make sure the bonding surface is kept free of water, oil, and grease.

Installation

NOTE: SRS components are located in this area. Review the SRS component locations and the precautions and procedures before doing repairs or service.

1. Windshield - Install

    1. Install the new windshield upper molding (A), the clips (B) with the adhesive tape on the inside face of the windshield (C) as shown.

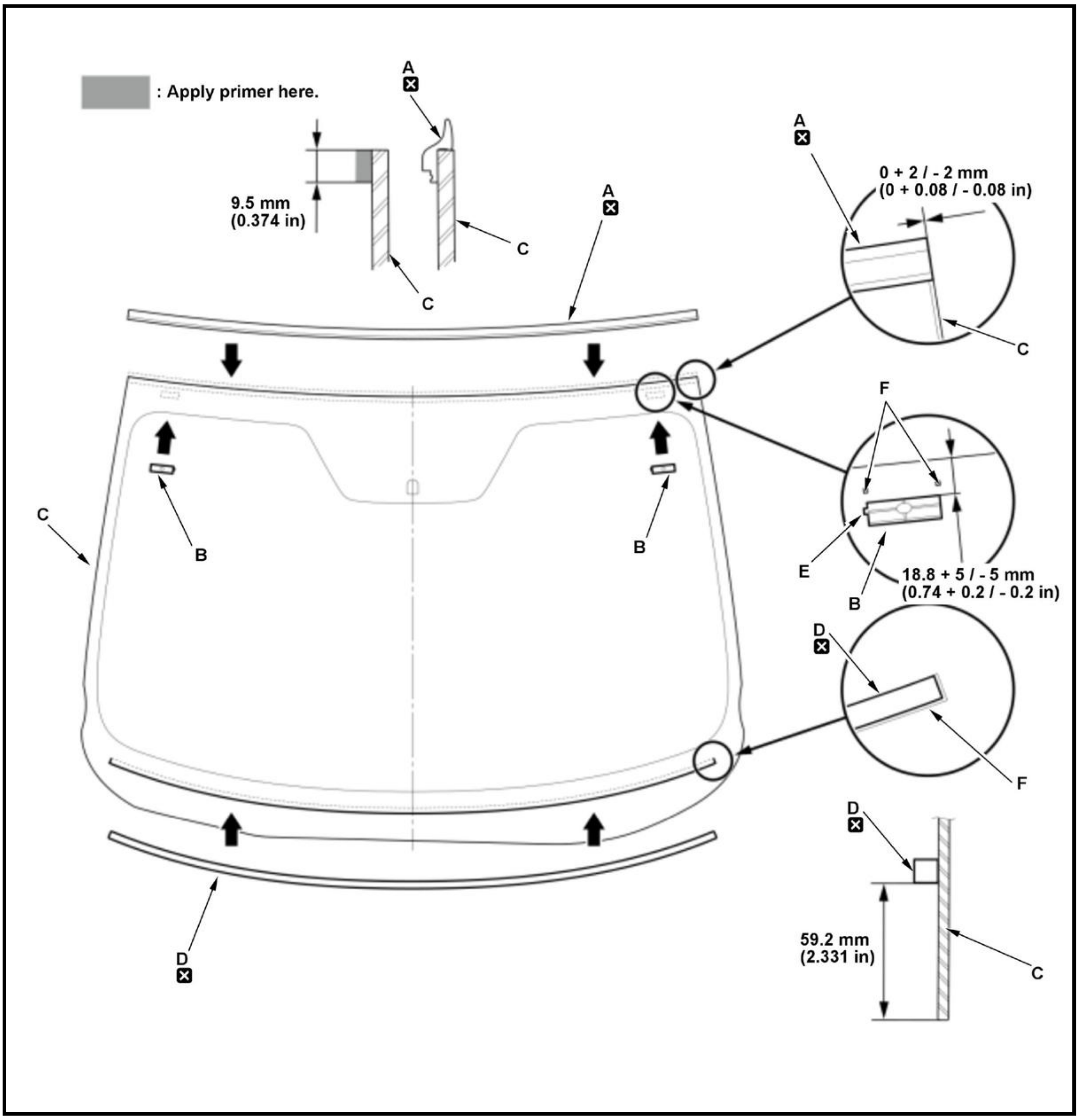
▨ : Apply primer here.
A ☒
9.5 mm
(0.374 in)
C
A ☒
C
A ☒
A ☒
0 + 2 / - 2 mm
(0 + 0.08 / - 0.08 in)
C
F
C
B
B
E
B
18.8 + 5 / - 5 mm
(0.74 + 0.2 / - 0.2 in)
D ☒
F
D ☒
59.2 mm
(2.331 in)
C
D ☒

2. Cut the rubber dam to the length, then install the new lower seal (D).

Lower seal length:		
B	**Lower seal :**	**1345 mm (52.95 in)**

NOTE:

- Before installing the new windshield upper molding, apply a glass primer to the area where the adhesive tape will be applied.
- Be careful not to touch the windshield where the adhesive will be applied.
- Make sure the index tabs (E) on the clips face the right side.
- Make sure the clips and the lower seal line up with the alignment marks (F).

3. Cut the rubber dam to the length, then install the new side rubber dams (A) and the new lower rubber dam (B).

Rubber dam length:		
B	**Side rubber dam A:**	**970 mm (38.19 in)**
B	**Lower rubber dam B:**	**1076 mm (42.36 in)**

NOTE:

- Be careful not to touch the windshield (C) where the adhesive will be applied.
- Make sure the lower seal line up with the alignment marks (D).

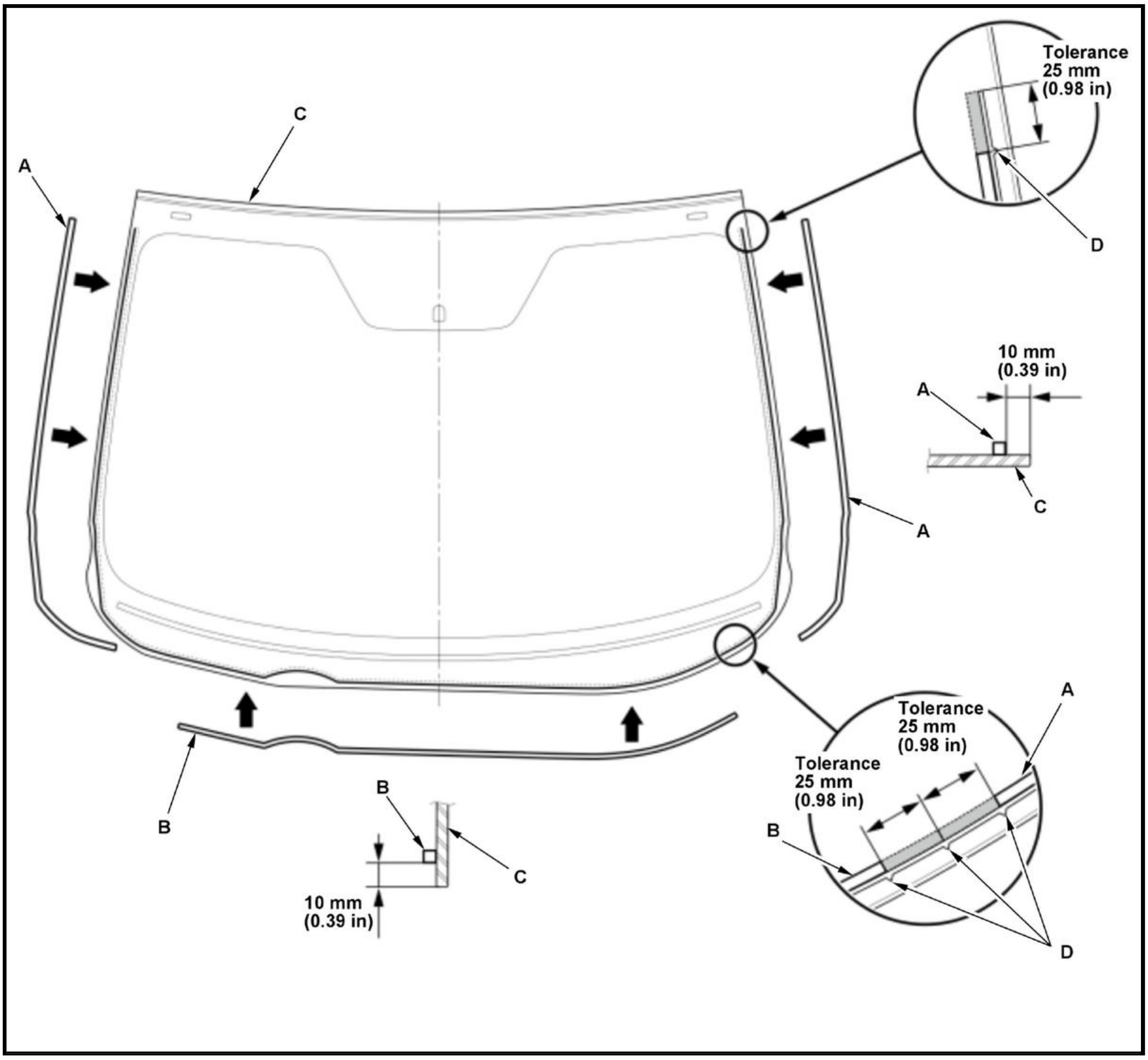
Tolerance
25 mm
(0.98 in)
C
A
D
10 mm
(0.39 in)
A
C
A
Tolerance
25 mm
(0.98 in)
A
Tolerance
25 mm
(0.98 in)
B
B
B
C
10 mm
(0.39 in)
D

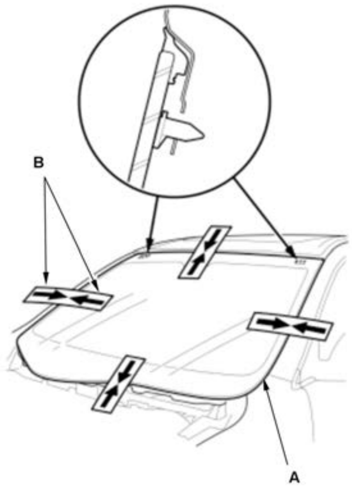	4. If you are installing the new windshield (A), set the windshield in the opening, and center it. Make the alignment marks (B) across the windshield and the body with a grease pencil at the four points shown. **NOTE:** - Be careful not to touch the windshield where the adhesive will be applied. - Make sure the clips (C) contact with the edge of the body holes. 5. Remove the windshield.

6. Apply a light coat of primer to the windshield (A) along the edge of the rubber dams (B) and the windshield upper molding (C) as shown, then lightly wipe it off with gauze or cheesecloth.

NOTE:

- Apply the primer to the corner areas (D) using the printed lines (E) on the windshield as a guide.

- Do not apply the body primer to the windshield, and do not mix up the body and glass primer applicators.
- Never touch the primed surfaces with your hands. If you do, the adhesive may not bond to the windshield properly, causing a leak after the windshield is installed.
- Keep water, dust, and abrasive materials away from primed surfaces.

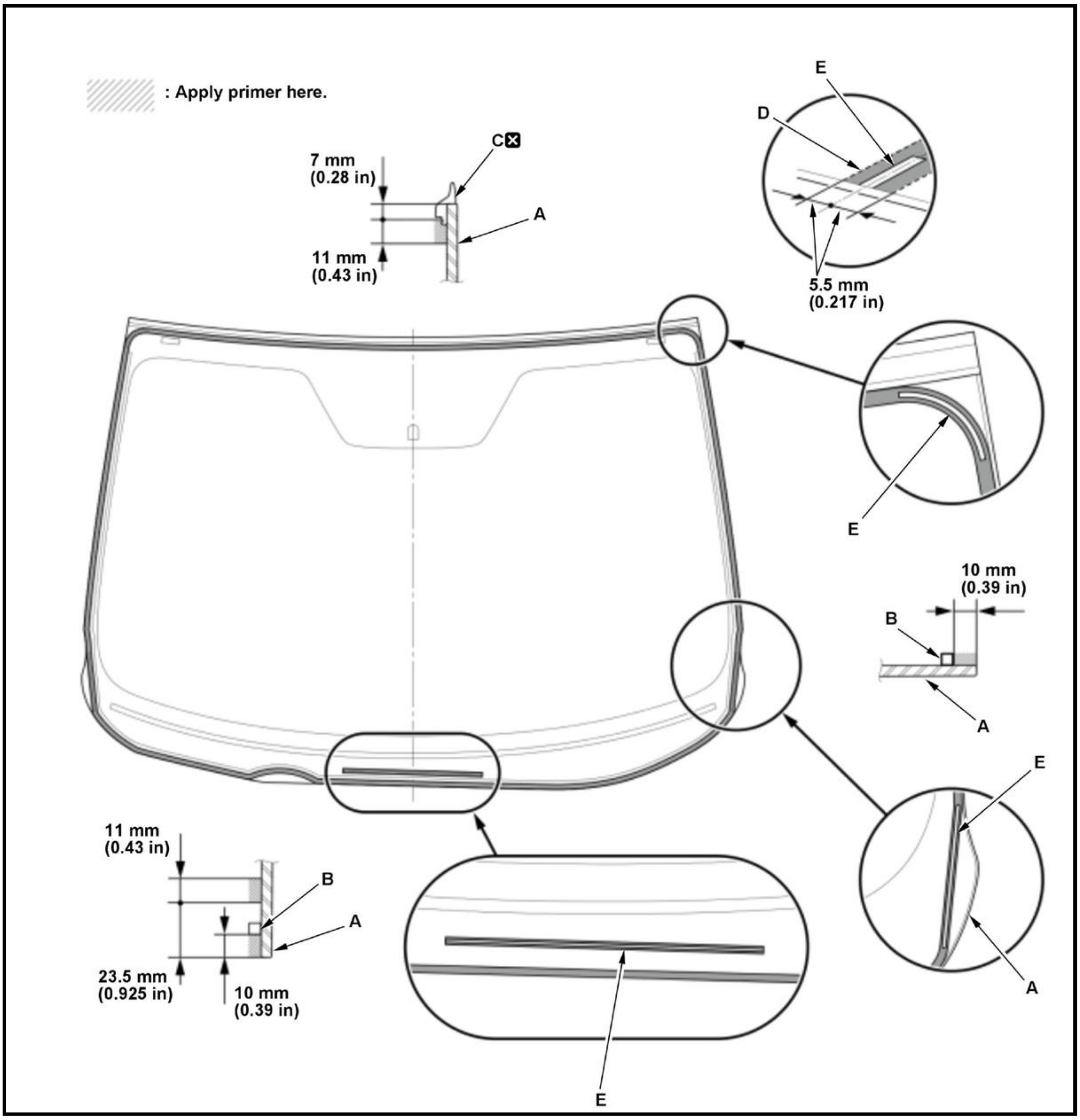
▨ : Apply primer here.
7 mm
(0.28 in)
C
A
11 mm
(0.43 in)
E
D
5.5 mm
(0.217 in)
E
10 mm
(0.39 in)
B
A
E
A
11 mm
(0.43 in)
B
A
23.5 mm
(0.925 in)
10 mm
(0.39 in)
E

7. Apply a light coat of the body primer to any exposed paint or metal on the windshield mounting flange. Let the body primer dry for at least 10 minutes.

NOTE:

- Do not apply the glass primer to the body.
- Do not apply the body primer to any remaining original adhesive on the flange.
- Cover on the dashboard before applying the body primer.
- Be careful not to mix up the body and glass primer applicators.
- Never touch the primed surfaces with your hands.

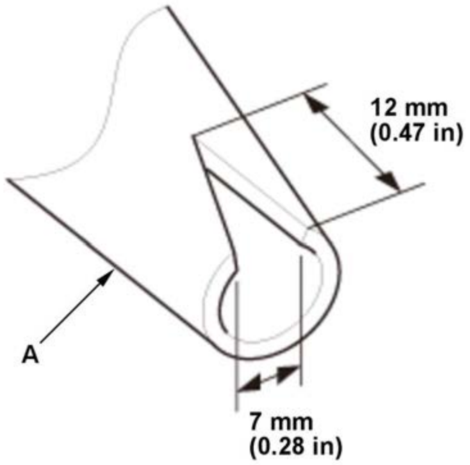	8. Cut a "V" in the end of the nozzle (A) on the adhesive cartridge as shown.

9. Put the cartridge in a caulking gun, and run a continuous bead of adhesive (A) on the windshield (B) along the edge of the windshield upper molding (C) and the rubber dams (D) as shown.

NOTE:

- Apply the adhesive to the corner areas (E) using the printed line (F) on the windshield as a guide.
- Apply the adhesive within 30 minutes after applying the glass primer.
- Make a slightly thicker bead at each corner.

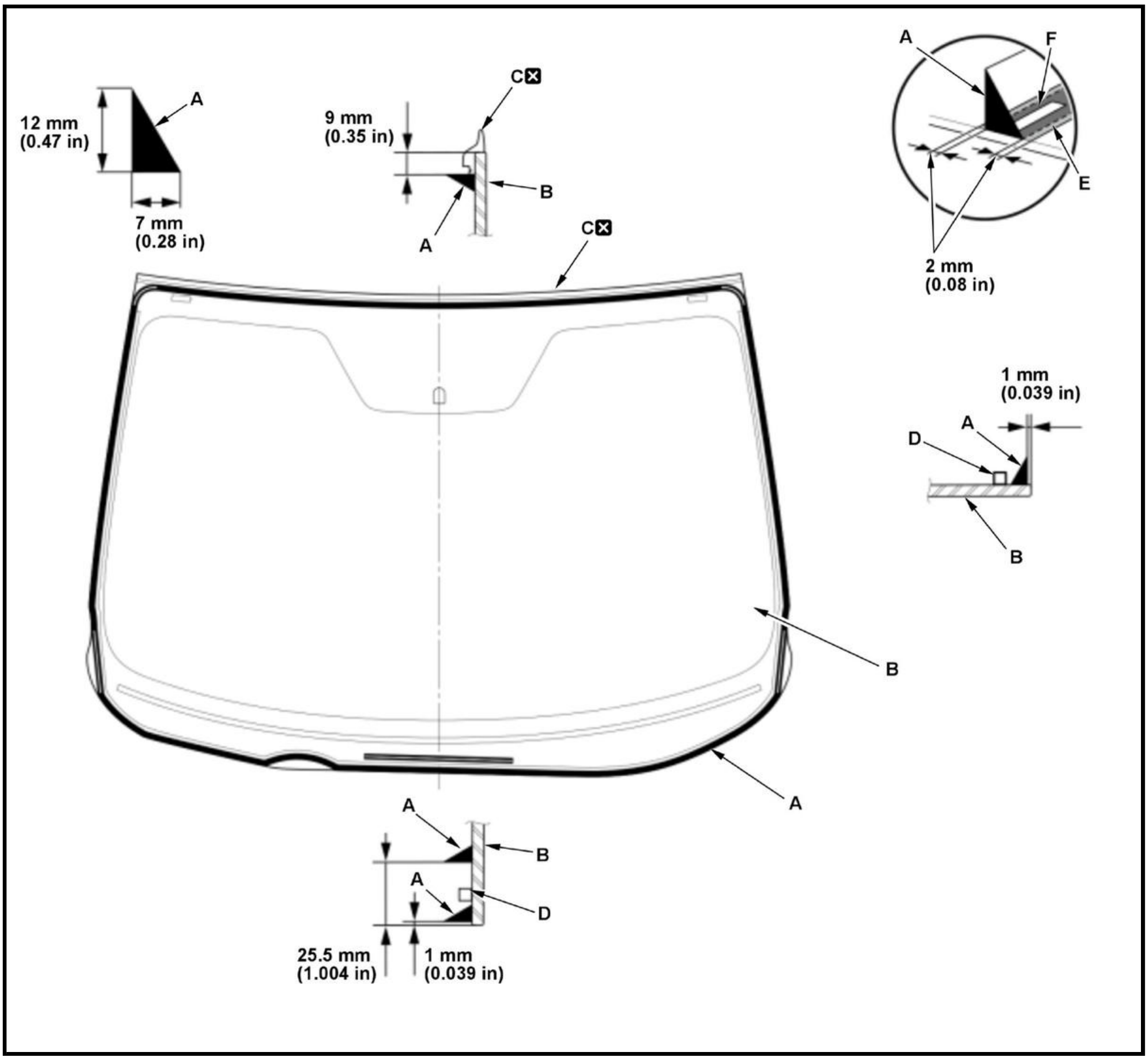

10. Hold the windshield with the suction cups over the opening, align it with the alignment marks made in step 2, and set it down on the adhesive. Lightly push on the windshield until its edges are fully seated on the adhesive all the way around. Carefully remove the suction cups.

NOTE: Do not open or close any of the doors for about an hour until the adhesive is dry.

11. Remove the excess adhesive with a putty knife or a shop towel dampened with isopropyl alcohol.

12. Wait at least an hour for the adhesive to dry, then spray water over the windshield and check for leaks. Mark the leaking areas, let the windshield dry, then seal with sealant: Let the vehicle stand for at least 4 hours after windshield installation. If the vehicle has to be used within the first 4 hours, it must be driven slowly.

13. Advise the client not to do the following things for 2 to 3 days:

- Do not slam the doors with all the windows rolled up.
- Do not twist the body excessively (such as when going in and out of driveways at an angle or driving over rough, uneven roads).

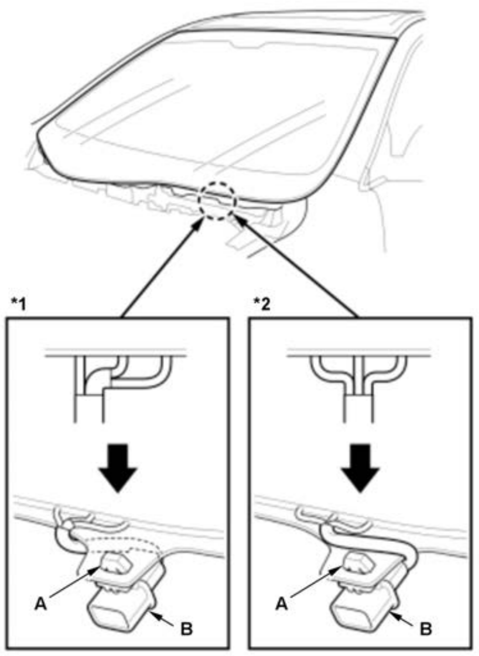 *1: Heated windshield wiper area harness type 1 *2: Heated windshield wiper area harness type 2	14. With heated windshield wiper area: Install the connector clip (A) as shown. **NOTE:** If you are reusing the windshield you removed, route the harness as it was removed. If you are replacing the windshield, route the harness to a type 2 as shown. 15. Connect the connector (B).

2. Headliner - Install
3. Automatic Lighting/Rain Sensor - Install (For Some Models)
4. Multipurpose Camera Unit - Install (For Some Models)
5. Both Side Windshield Trims - Install
6. Roof Console Assembly - Install
7. Both Sunvisors - Install
8. Rearview Mirror - Install
9. Both A-Pillar Trims - Install
10. Center Cowl Cover - Install

DESCRIPTION & OPERATION

POWER WINDOWS SYSTEM DESCRIPTION

Basic Control/Function

- Manual Up/Down Function

  The 1-step operation of the power window switch moves the window up or down. This is available during the vehicle in the ON mode or the vehicle OFF operation.

- Auto Up/Down Function

  The 2-step operation of the power window switch moves the window up or down. This is available during the vehicle in the ON mode or the vehicle OFF operation.

Auto Reverse Power Window Function

When an object is detected during the auto up operation, the window stops closing and reverses about 70 mm (2.76 in). If the window is less than halfway opened (about 220 mm (8.66 in)), it will reverse to the half open position (about 220 mm (8.66 in)). In manual operation, this function is active only during the vehicle OFF operation. This function is activated based on the calculation of the rotation speed and load change of the motor's pulse A.

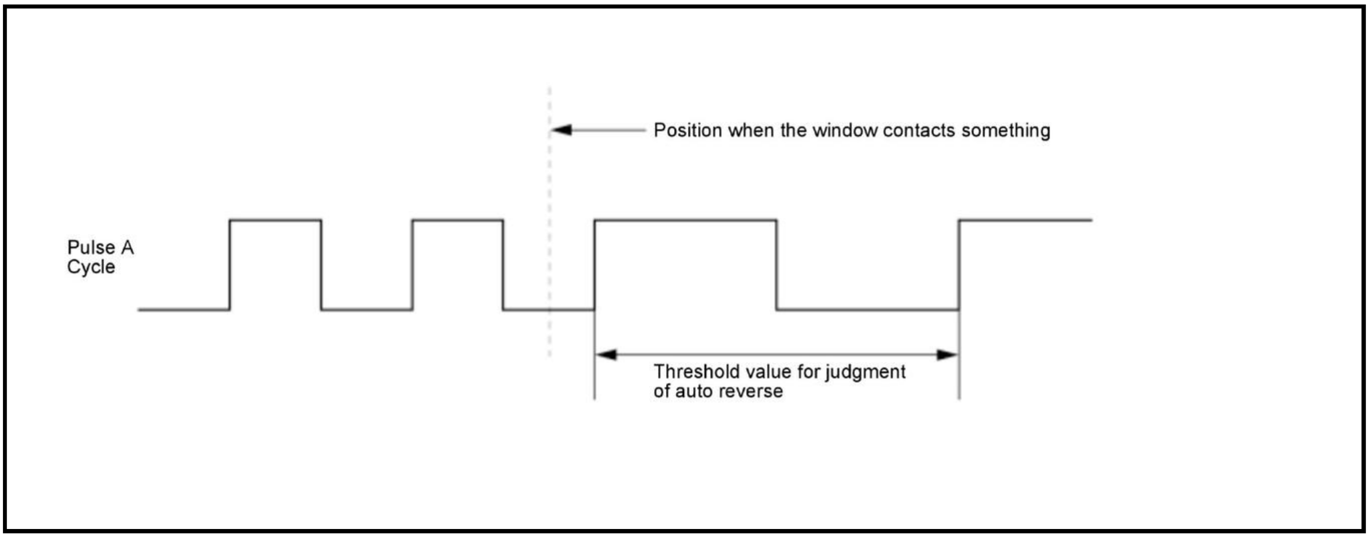
Position when the window contacts something
Pulse A Cycle
Threshold value for judgment of auto reverse

Vehicle OFF Operation

For about 10 minutes after the vehicle is turned to the OFF (LOCK) mode, the window's open/close operation with the power window switches is available.

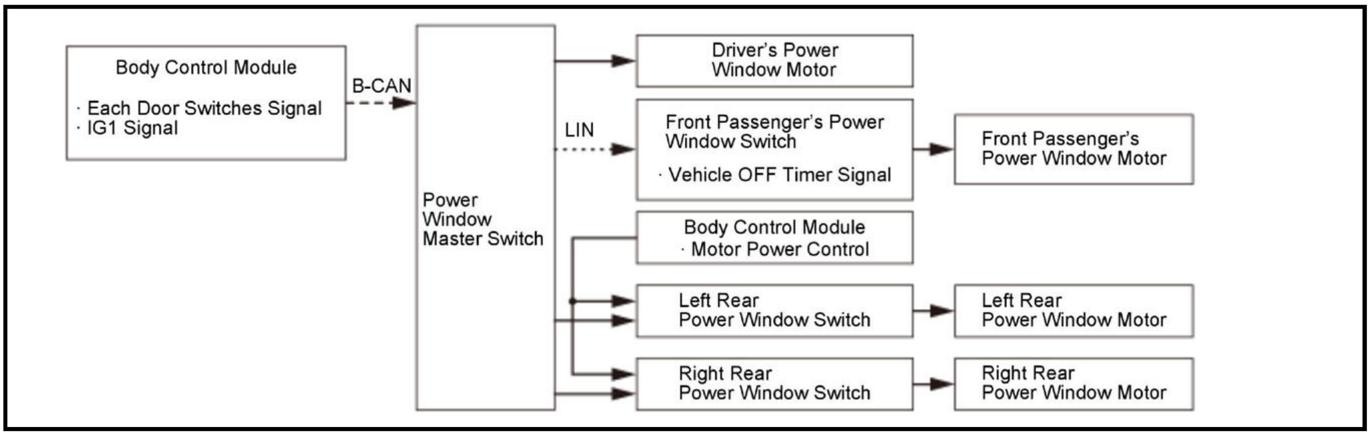
Body Control Module
· Each Door Switches Signal
· IG1 Signal
B-CAN
Power Window Master Switch
LIN
Driver's Power Window Motor
Front Passenger's Power Window Switch
· Vehicle OFF Timer Signal
Front Passenger's Power Window Motor
Body Control Module
· Motor Power Control
Left Rear Power Window Switch
Left Rear Power Window Motor
Right Rear Power Window Switch
Right Rear Power Window Motor

Vehicle OFF Operation Start Condition	• Vehicle ON mode -> OFF (LOCK) mode • Driver's door switch OFF (Door close) • Front Passenger's door switch OFF (Door close)

Vehicle OFF Operation Cancel Condition	Timer	Vehicle ON mode -> OFF (LOCK) mode and past 10 minutes
	Door	• Driver's door switch ON (Door open) • Front Passenger's door switch ON (Door open)

Keyless/Key Cylinder Operation

By turning the key a second time and holding it with the key inserted into the driver's door key cylinder, the windows and moonroof close (or open) (turning the key clockwise to open, turning the key counterclockwise to close). The windows and moonroof stop moving when the key is returned to the neutral position.

By pressing and holding the UNLOCK button of the remote a second time, the windows and moonroof open. The windows and moonroof stop moving when the UNLOCK button is released. For some models, by pressing and holding the LOCK button of the remote a second time, the windows and moonroof close. The windows and moonroof stop moving when the LOCK button is released.

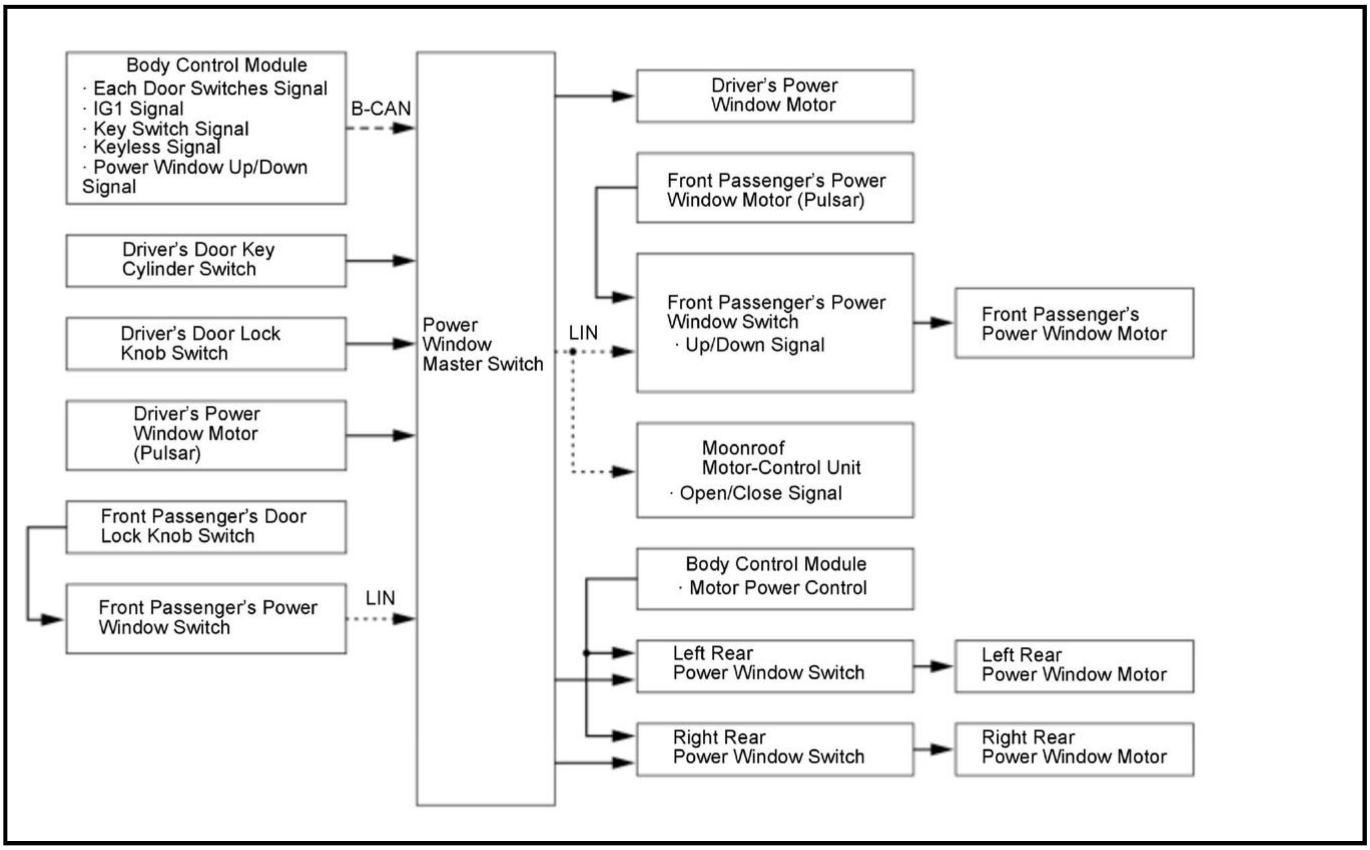
Body Control Module
· Each Door Switches Signal
· IG1 Signal
· Key Switch Signal
· Keyless Signal
· Power Window Up/Down Signal
B-CAN
Driver's Door Key Cylinder Switch
Driver's Door Lock Knob Switch
Driver's Power Window Motor (Pulsar)
Front Passenger's Door Lock Knob Switch
Front Passenger's Power Window Switch
LIN
Power Window Master Switch
LIN
Driver's Power Window Motor
Front Passenger's Power Window Motor (Pulsar)
Front Passenger's Power Window Switch
· Up/Down Signal
Front Passenger's Power Window Motor
Moonroof Motor-Control Unit
· Open/Close Signal
Body Control Module
· Motor Power Control
Left Rear Power Window Switch
Left Rear Power Window Motor
Right Rear Power Window Switch
Right Rear Power Window Motor

Keyless Operation	Open	Possible
	Close	Impossible
Key Cylinder Operation	Open	Possible
	Close	Possible

Continuous Operation Stop Function

With the vehicle in the ON mode, when reciprocating movement "upper end -> lower end -> upper end" is repeated 5 times by the AUTO or MANUAL operation of each seat, the DOWN operation is prohibited while about 30 seconds lapse.

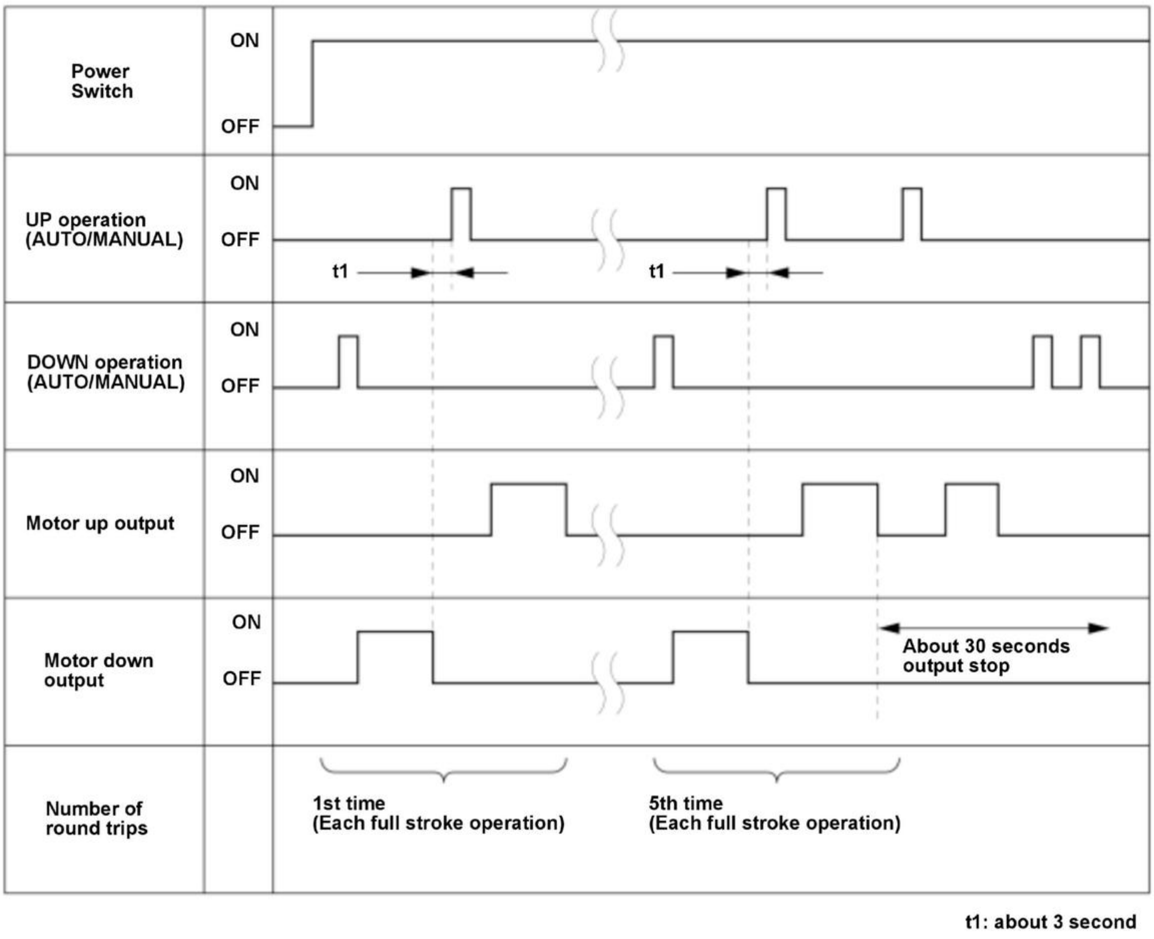

Failsafe Function

When a failure occurs in the inputs of the motor pulses and power window switches, the failsafe function stops the control of each function.

POWER WINDOWS SYSTEM DESCRIPTION - COMPONENTS

Power Window Master Switch

The power window master switch has a built-in B-CAN transceiver and a LIN transceiver. The power window master switch sends signals from LIN to front passenger's power window switch, and to the moonroof motor-control unit *.

*: With moonroof

Front Passenger's Power Window Switch

The front passenger's power window switch has a built-in control unit. Control is performed by receiving signals from the power window master switch via LIN.

Power Window Motors

The motor includes the pulse sensors that detect window's position and direction with the motor rotation. The rotating direction (up/down) is detected with the rotating cycles from the 2 pulse sensors and the moving amount (window position) is also detected by considering 4 pulses as one rotation pulse.

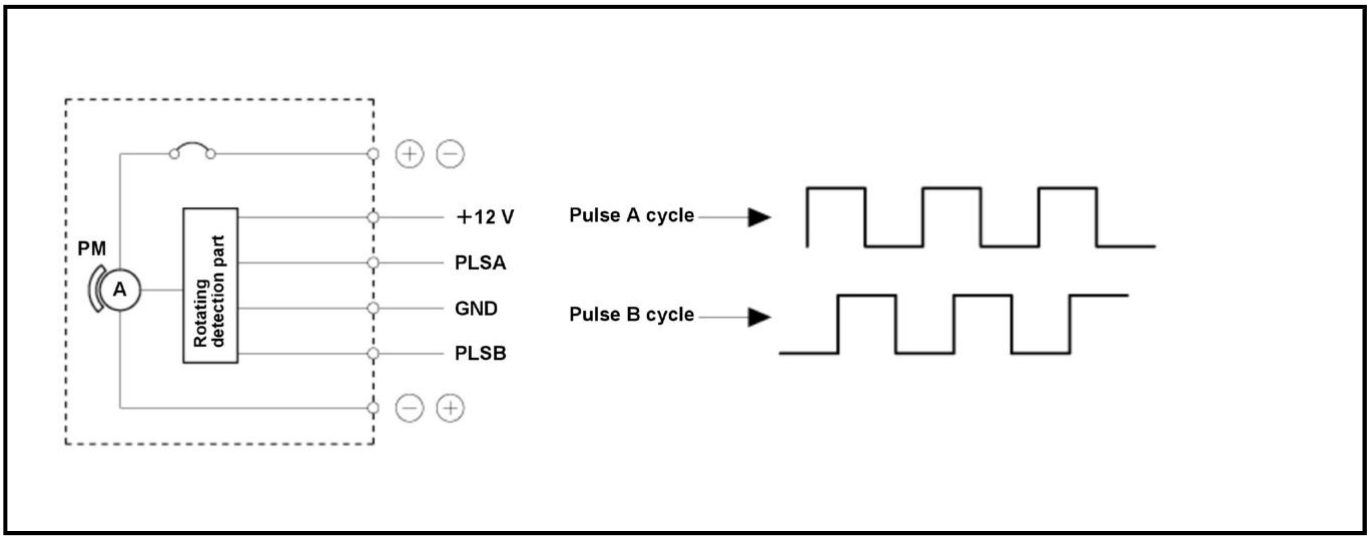
PM
A
Rotating detection part
+12 V
PLSA
GND
PLSB
Pulse A cycle
Pulse B cycle

POWER WINDOWS SYSTEM DESCRIPTION - SYSTEM DIAGRAM

For locations of each component on the vehicle, refer to Component Location Index

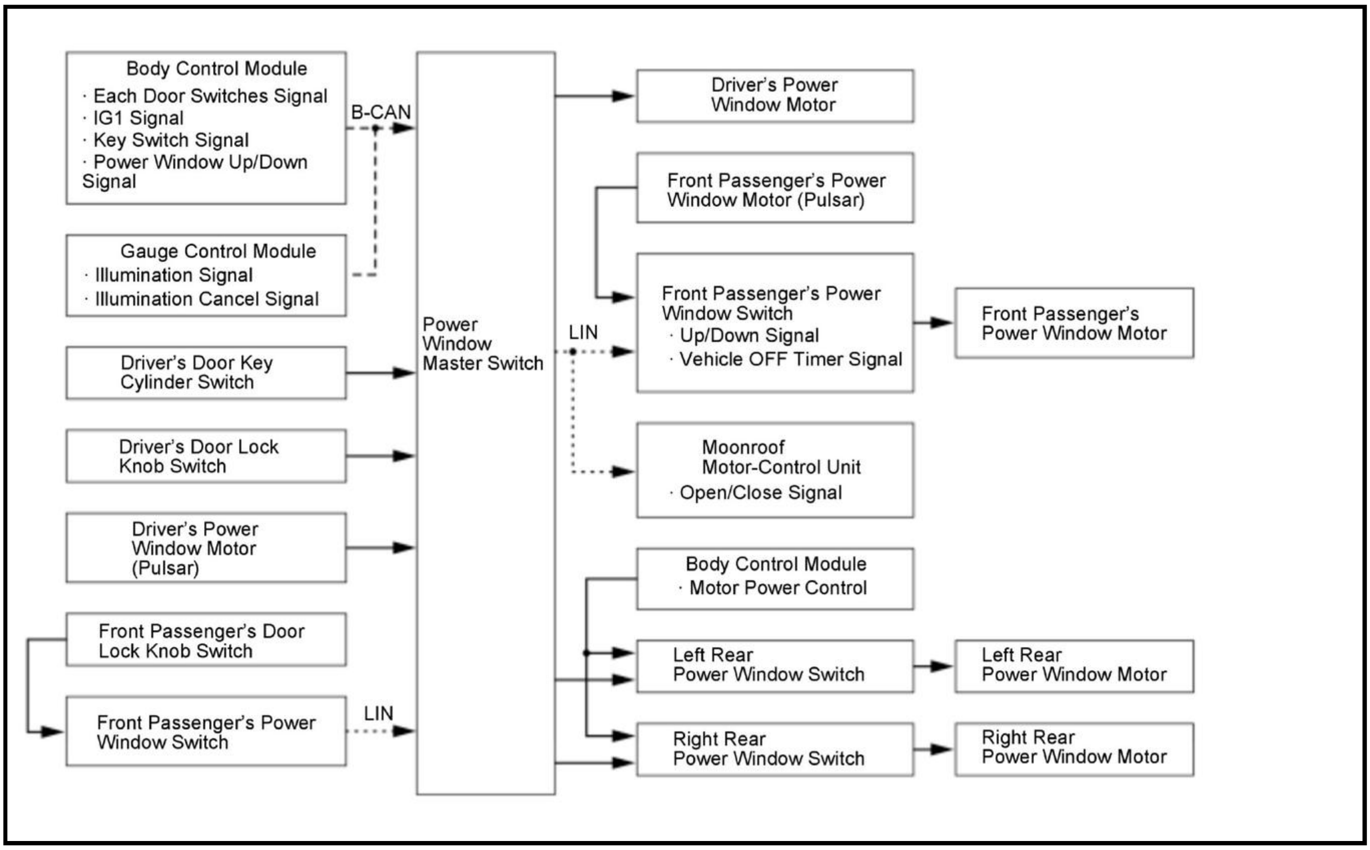
Body Control Module
· Each Door Switches Signal
· IG1 Signal
· Key Switch Signal
· Power Window Up/Down Signal
B-CAN
Gauge Control Module
· Illumination Signal
· Illumination Cancel Signal
Driver's Door Key Cylinder Switch
Driver's Door Lock Knob Switch
Driver's Power Window Motor (Pulsar)
Front Passenger's Door Lock Knob Switch
Front Passenger's Power Window Switch
LIN
Power Window Master Switch
Driver's Power Window Motor
Front Passenger's Power Window Motor (Pulsar)
LIN
Front Passenger's Power Window Switch
· Up/Down Signal
· Vehicle OFF Timer Signal
Front Passenger's Power Window Motor
Moonroof Motor-Control Unit
· Open/Close Signal
Body Control Module
· Motor Power Control
Left Rear Power Window Switch
Left Rear Power Window Motor
Right Rear Power Window Switch
Right Rear Power Window Motor

TEST

POWER WINDOW MOTOR TEST

Test

Driver's

1. Driver's Door Power Window Switch Panel - Remove
2. Driver's Power Window Motor - Test

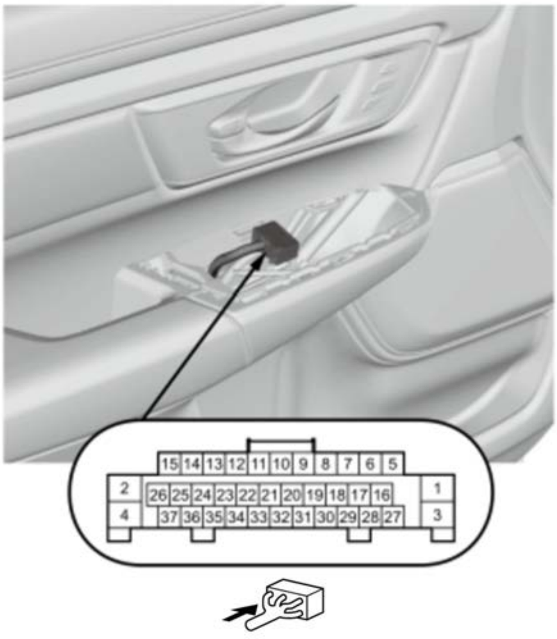

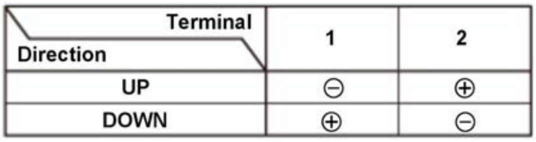

Terminal Direction	1	2
UP	⊖	⊕
DOWN	⊕	⊖

NOTE: Before testing, make sure not to short the power window motor circuit.

1. Remove the harness clips from the door panel as needed.

2. Test the motor in each direction by connecting 12 volt battery power and ground to the power window master switch connector according to the table. When the motor stops running, disconnect battery power immediately.

If the motor does not run or fails to run smoothly, **remove the driver's door regulator** , then go to step 3.

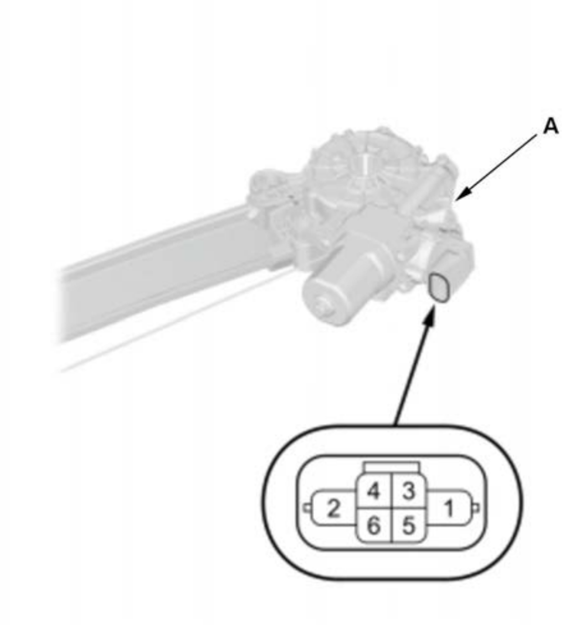

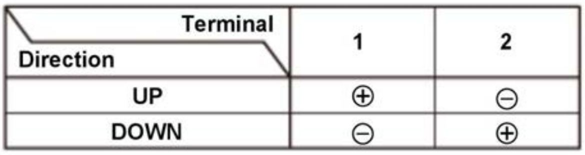

Terminal Direction	1	2
UP	⊕	⊖
DOWN	⊖	⊕

3. **Remove the driver's door panel**

4. Test the driver's power window motor (A) by connecting battery power and ground according to the table. When the motor stops running, disconnect battery power immediately.

5. If the motor does not run or fails to run smoothly, the driver's power window motor is faulty; **replace the driver's door regulator** .

If the motor runs smoothly, replace the wire harnesses or **adjust the driver's door glass** .

3. All Removed Parts - Install

1. Install the parts in the reverse order of removal.

4. **Power Window Control Unit - Reset**

Front Passenger's

5. **Front Passenger's Door Power Window Switch Panel - Remove**
6. Front Passenger's Power Window Motor - Test

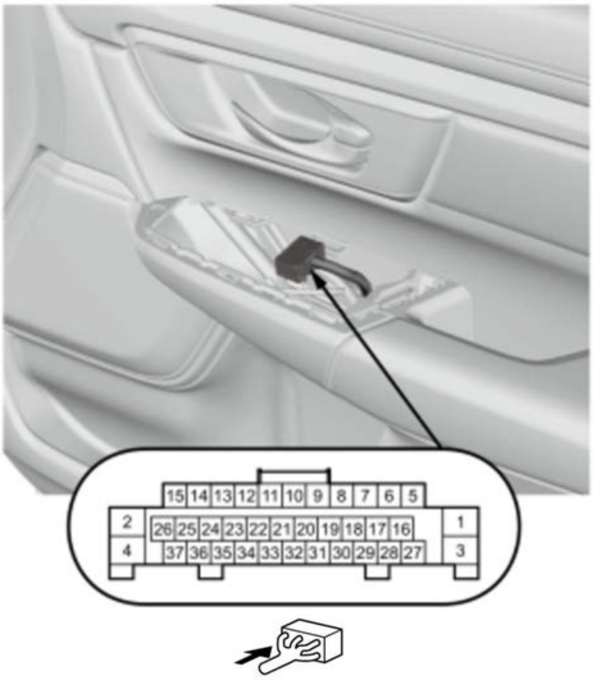
15 14 13 12 11 10 9 8 7 6 5
2 26 25 24 23 22 21 20 19 18 17 16 1
4 37 36 35 34 33 32 31 30 29 28 27 3

Terminal / Direction	2	4
UP	⊖	⊕
DOWN	⊕	⊖

NOTE: Before testing, make sure not to short the power window motor circuit.

1. Remove the harness clips from the door panel as needed.

2. Test the motor in each direction by connecting battery power and ground to the connector according to the table. When the motor stops running, disconnect battery power immediately.

If the motor does not run or fails to run smoothly, **remove the front passenger's door regulator** , then go to step 3.

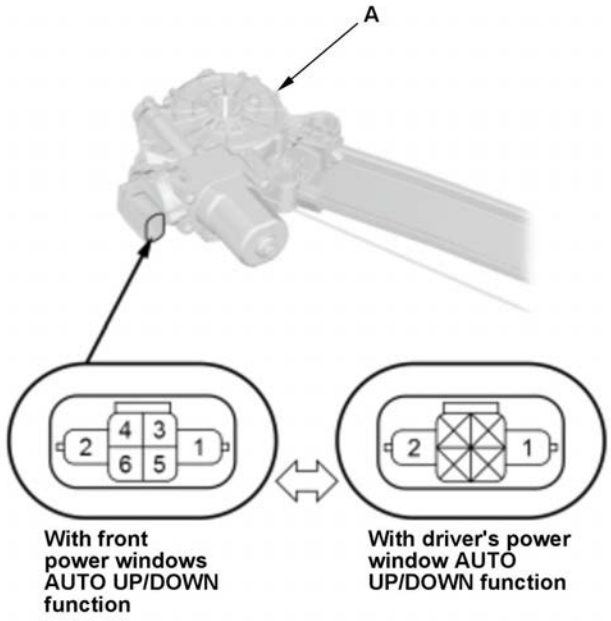
A
2
4
3
6
5
1
With front power windows AUTO UP/DOWN function
2
1
With driver's power window AUTO UP/DOWN function

Terminal / Direction	1	2
UP	⊕	⊖
DOWN	⊖	⊕

3. **Remove the front passenger's door panel**

4. Test the front passenger's power window motor (A) by connecting battery power and ground according to the table. When the motor stops running, disconnect battery power immediately.

5. If the motor does not run or fails to run smoothly, the front passenger's power window motor is faulty; **replace the front passenger's door regulator** .

If the motor runs smoothly, replace the wire harnesses or **adjust the front passenger's door glass** .

7. All Removed Parts - Install

1. Install the parts in the reverse order of removal.

8. **Power Window Control Unit - Reset**

Rear

9. **Rear Door Power Window Switch Panel - Remove**
10. Rear Power Window Motor - Test

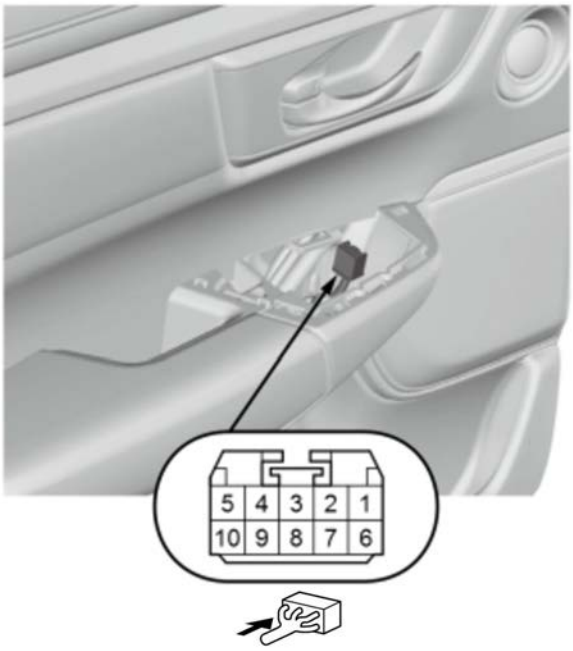

Direction \ Terminal	6	1
UP	⊕	⊖
DOWN	⊖	⊕

NOTE: Before testing, make sure not to short the power window motor circuit.

1. Test the motor rear power window in each direction by connecting battery power and ground at the connector according to the table. When the motor stops running, disconnect battery power immediately.

If the motor does not run or fails to run smoothly, **remove the rear door regulator** , go to step 2.

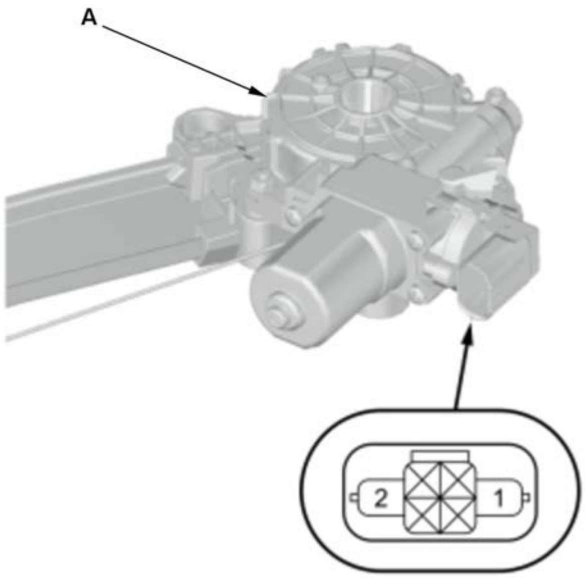

Direction \ Terminal	1	2
UP	⊕	⊖
DOWN	⊖	⊕

2. **Remove the rear door panel**

3. Test the rear power window motor (A) by connecting power and ground according to the table. When the motor stops running, disconnect battery power immediately.

4. If the motor does not run or fails to run smoothly, the rear power window motor is faulty; **replace the rear door regulator** .

If the motor runs smoothly, replace the wire harnesses or **adjust the rear door glass** .

11. All Removed Parts - Install

1. Install the parts in the reverse order of removal.

12. **Power Window Control Unit - Reset**

CONNECTOR VIEW

FRONT PASSENGER'S POWER WINDOW SWITCH CONNECTOR FOR INPUTS AND OUTPUTS

Front Passenger's Power Window Switch 37P Connector (female terminals)

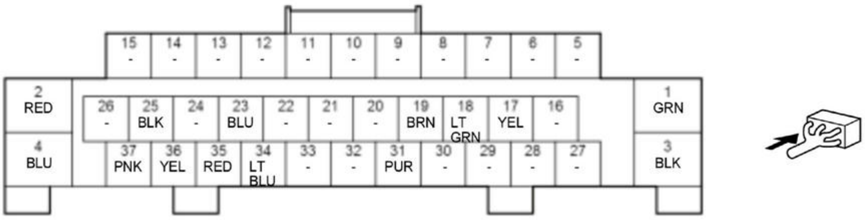
15 -
14 -
13 -
12 -
11 -
10 -
9 -
8 -
7 -
6 -
5 -
2 RED
26 -
25 BLK
24 -
23 BLU
22 -
21 -
20 -
19 BRN
18 LT GRN
17 YEL
16 -
1 GRN
4 BLU
37 PNK
36 YEL
35 RED
34 LT BLU
33 -
32 -
31 PUR
30 -
29 -
28 -
27 -
3 BLK

Terminal number	Terminal name	Description	Signal
1	+B_P/W_AS	+B power source	About battery voltage at all times
2	P/W_AS_MTR_DOWN	Drives front passenger's power window motor	With front passenger's power window motor DOWN operation: about battery voltage If none of above conditions are met: less than 0.2 V
3	GND	Front passenger's power window switch ground	Less than 0.2 V at all times
4	P/W_AS_MTR_UP	Drives front passenger's power window motor	With front passenger's power window motor UP operation: about battery voltage If none of above conditions are met: less than 0.2 V
5	---	Not used	---
6	---	Not used	---
7	---	Not used	---
8	---	Not used	---
9	---	Not used	---
10	---	Not used	---
11	---	Not used	---
12	---	Not used	---
13	---	Not used	---
14	---	Not used	---
15	---	Not used	---
16	---	Not used	---
17	AS_MIRROR_COM	Detects power mirror DOWN or LEFT function	With vehicle in ON mode and power mirror DOWN or LEFT

Terminal number	Terminal name	Description	Signal
		signal	function: about battery voltage
18	AS_MIRROR_UD	Detects power mirror UP or LEFT function signal	With vehicle in ON mode and power mirror UP or LEFT function: about battery voltage
19	AS_MIRROR_LR	Detects power mirror DOWN or RIGHT function signal	With vehicle in ON mode and power mirror DOWN or RIGHT function: about battery voltage
20	---	Not used	---
21	---	Not used	---
22	---	Not used (reservation)	---

*1: With mirror defogger

*2: With front power window AUTO UP/DOWN function

Terminal number	Terminal name	Description	Signal
23* 1	H/MIRROR_AS	Drives right power mirror defogger	With power mirror defogger ON: about battery voltage
24	---	Not used	---
25* 2	P/W_AS_MTR_SGND	Ground for front passenger's power window motor pulser	Less than 0.2 V at all times
26	---	Not used (reservation)	---
27	---	Drives retract actuator	---
28	---	Drives retract actuator	---
29	---	Not used (reservation)	---
30	---	Not used (reservation)	---
31* 2	P/W_AS_MTR_VCC	Drives front passenger's power window motor hall IC (pulser) unit	With front passenger's power window control unit is wakeup mode and front passenger's power window motor operation: about battery voltage If none of above conditions are met: less than 0.2 V
32	---	Not used	---
33	---	Not used	---
34	LIN (P/W)	Communication line	---
35* 2	P/W_AS_MTR_PLSA	Detects front passenger's power window motor hall IC (pulser) unit signal	---
36	AS_SILCON_UNLOCK	Detects front passenger's door lock knob switch (UNLOCK) signal	With front passenger's door lock knob switch LOCK: about battery voltage With front passenger's door lock knob switch UNLOCK: less than 0.2 V
37* 2	P/W_AS_MTR_PLSB	Detects front passenger's power window motor hall IC (pulser) unit signal	---

*1: With mirror defogger

*2: With front power window AUTO UP/DOWN function

POWER WINDOW MASTER SWITCH CONNECTOR FOR INPUTS AND OUTPUTS

Power Window Master Switch 37P Connector (female terminals)

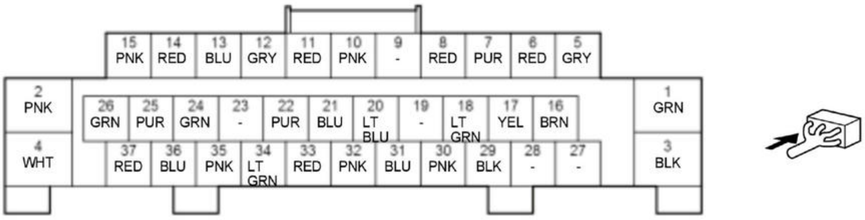
15 PNK
14 RED
13 BLU
12 GRY
11 RED
10 PNK
9 -
8 RED
7 PUR
6 RED
5 GRY
2 PNK
4 WHT
26 GRN
25 PUR
24 GRN
23 -
22 PUR
21 BLU
20 LT BLU
19 -
18 LT GRN
17 YEL
16 BRN
37 RED
36 BLU
35 PNK
34 LT GRN
33 RED
32 PNK
31 BLU
30 PNK
29 BLK
28 -
27 -
1 GRN
3 BLK

Terminal number	Terminal name	Description	Signal
1	P/W_DR_MTR_DOWN	Drives driver's power window motor	With driver's power window motor DOWN operation: about battery voltage If none of above conditions are met: less than 0.2 V
2	P/W_DR_MTR_UP	Drives driver's power window motor	With driver's power window motor UP operation: about battery voltage If none of above conditions are met: less than 0.2 V
3	GND	Power window master switch ground	Less than 0.2 V at all times
4	+B_P/W_DR	+B power source	About battery voltage at all times
5* 1	DR_MEMORY_SEAT_SW_POS1	Detects driving position memory switch position 1 signal	With driving position memory switch 1 ON: less than 0.2 V With driving position memory switch 1 OFF: about 5 V
6* 1	DR_MEMORY_SEAT_SW_POS2	Detects driving position memory switch position 2 signal	With driving position memory switch 2 ON: less than 0.2 V With driving position memory switch 2 OFF: about 5 V
7	DR_KEY_CYL_LOCK	Detects driver's door key cylinder switch (LOCK) signal	With driver's door key cylinder switch UNLOCK: about battery voltage With driver's door key cylinder switch LOCK: less than 0.2 V
8	DR_KEY_CYL_UNLOCK	Detects driver's door key cylinder switch (UNLOCK) signal	With driver's door key cylinder switch LOCK: about battery voltage With driver's door key

Terminal number	Terminal name	Description	Signal
			cylinder switch UNLOCK: less than 0.2 V
9	---	Not used	---
10	MIRROR_R_COM	Detects power mirror DOWN or LEFT function signal	With vehicle in ON mode and power mirror DOWN or LEFT function: about battery voltage
11	MIRROR_R_LR	Detects power mirror DOWN or RIGHT function signal	With vehicle in ON mode and power mirror DOWN or RIGHT function: about battery voltage
12	MIRROR_UD	Detects power mirror UP or LEFT function signal	With vehicle in ON mode and power mirror UP or LEFT function: about battery voltage

*1: With DPMS

*2: With mirror defogger

Terminal number	Terminal name	Description	Signal
13	P/W_RR_L_SW_RLY_UP	Drives left rear power window motor	With left rear power window moving to UP using power window master switch: about battery voltage If none of above conditions are met: less than 0.2 V
14	P/W_RR_L_SW_RLY_DOWN	Drives left rear power window motor	With left rear power window moving to DOWN using power window master switch: about battery voltage If none of above conditions are met: less than 0.2 V
15* 2	H/MIRROR	Drives left power mirror defogger	With mirror defogger ON mode: about battery voltage
16	R/C_MIRROR_SEL_L-R	Detects power mirror reverse tilt function signal	With vehicle in ON mode and power mirror reverse tilt function: about battery voltage
17* 1	DR_MEMORY_SEAT_SW_MEMORY	Detects driving position memory switch (SET) signal	With driving position memory set switch ON: less than 0.2 V With driving position memory set switch OFF: about 5 V
18	IG2_A/C	IG2 power source	With vehicle in ON mode: about battery voltage
19	---	Not used	---

Terminal number	Terminal name	Description	Signal
20	DR_SILCON_UNLOCK	Detects driver's door lock knob switch (UNLOCK) signal	With driver's door lock knob switch LOCK: about battery voltage With driver's door lock knob switch UNLOCK: less than 0.2 V
21	DR_SILCON_LOCK	Detects driver's door lock knob switch (LOCK) signal	With driver's door lock knob switch UNLOCK: about battery voltage With driver's door lock knob switch LOCK: less than 0.2 V
22* 1	DR_MEMORY_SEAT_SW_IND1	Outputs driving position memory switch indicator 1 signal	Indicator 1 ON: pulse (depending on indicator brightness) Indicator 1 OFF: less than 0.2 V
23	---	Not used	---
24* 1	DR_MEMORY_SEAT_SW_IND2	Outputs driving position memory switch indicator 2 signal	Indicator 2 ON: pulse (depending on indicator brightness) Indicator 2 OFF: less than 0.2 V
25	P/W_RR_R_SW_RLY_DOWN	Drives right rear power window motor	With right rear power window moving to DOWN using power window master switch: about battery voltage If none of above conditions are met: less than 0.2 V
26	P/W_RR_R_SW_RLY_UP	Drives right rear power window motor	With right rear power window moving to UP using power window master switch: about battery voltage If none of above conditions are met: less than 0.2 V
27	---	Not used	---
28	---	Not used	---
29	GND	Power window master switch ground	Less than 0.2 V at all times
30	P/W_SW_ILLUMI	Outputs illumination signal	With combination light switch PARKING: about battery voltage With combination light switch OFF: less than 0.2 V

*1: With DPMS

*2: With mirror defogger

Terminal number	Terminal name	Description	Signal
31	B-CAN_L	Communication line	---
32	B-CAN_H	Communication line	---
33	P/W_DR_MTR_PLSA	Detects driver's power window motor hall IC unit (pulser) signal	---
34	P/W_DR_MTR_VCC	Drives driver's power window motor hall IC (pulser) unit	With door multiplex control unit is wakeup mode and driver's power window motor operation: about battery voltage If none of above conditions are met: less than 0.2 V
35	P/W_DR_MTR_PLSB	Detects driver's power window motor hall IC unit (pulser) signal	---
36	LIN (P/W)	Communication line	---
37	+B_BACK_UP	+B power source	About battery voltage at all times

*1: With DPMS

*2: With mirror defogger

REAR POWER WINDOW SWITCH CONNECTOR FOR INPUTS AND OUTPUTS

Connector Index
Left Rear Power Window Switch 10P Connector
Right Rear Power Window Switch 10P Connector

Left Rear Power Window Switch Connector (female terminals)

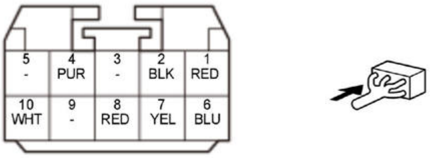

Terminal number	Terminal name	Description	Signal
1	P/W_RR_L_MTR_DOWN	Drives left rear power window motor	With left rear power window motor DOWN operation: about battery voltage If none of above conditions are met: less than 0.2 V
2	GND	Left rear power window switch ground	Less than 0.2 V at all times
3	---	Not used	---

Terminal number	Terminal name	Description	Signal
4	+B_P/W_RR_L	+B power source	About battery voltage at all times
5	---	Not used	---
6	P/W_RR_L_MTR_UP	Drives left rear power window motor	With left rear power window motor UP operation: about battery voltage If none of above conditions are met: less than 0.2 V
7	P/W_RR_L_SW_RLY_UP	Drives left rear power window motor	With left rear power window moving to UP using power window master switch: about battery voltage If none of above conditions are met: less than 0.2 V
8	P/W_RR_L_SW_RLY_DOWN	Drives left rear power window motor	With left rear power window moving to DOWN using power window master switch: about battery voltage If none of above conditions are met: less than 0.2 V
9	---	Not used	---
10	P/W_SW_ILLUMI	Detects illumination signal	With combination light switch PARKING: about battery voltage With combination light switch OFF: less than 0.2 V

Right Rear Power Window Switch Connector (female terminals)

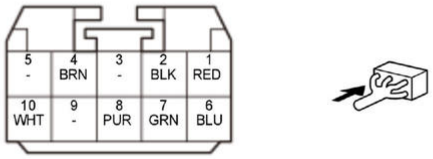

Terminal number	Terminal name	Description	Signal
1	P/W_RR_R_MTR_DOWN	Drives right rear power window motor	With right rear power window motor DOWN operation: about battery voltage If none of above conditions are met: less than 0.2 V
2	GND	Right rear power window switch ground	Less than 0.2 V at all times
3	---	Not used	---
4	+B_P/W_RR_R	+B power source	About battery voltage at all times

Terminal number	Terminal name	Description	Signal
5	---	Not used	---
6	P/W_RR_R_MTR_UP	Drives right rear power window motor	With right rear power window motor UP operation: about battery voltage If none of above conditions are met: less than 0.2 V
7	P/W_RR_R_SW_RLY_UP	Drives right rear power window motor	With right rear power window moving to UP using power window master switch: about battery voltage If none of above conditions are met: less than 0.2 V
8	P/W_RR_R_SW_RLY_DOWN	Drives right rear power window motor	With right rear power window moving to DOWN using power window master switch: about battery voltage If none of above conditions are met: less than 0.2 V
9	---	Not used	---
10	P/W_SW_ILLUMI	Detects illumination signal	With combination light switch PARKING: about battery voltage With combination light switch OFF: less than 0.2 V

CIRCUIT DIAGRAM

POWER WINDOWS CIRCUIT DIAGRAM

With front power windows AUTO UP/DOWN function

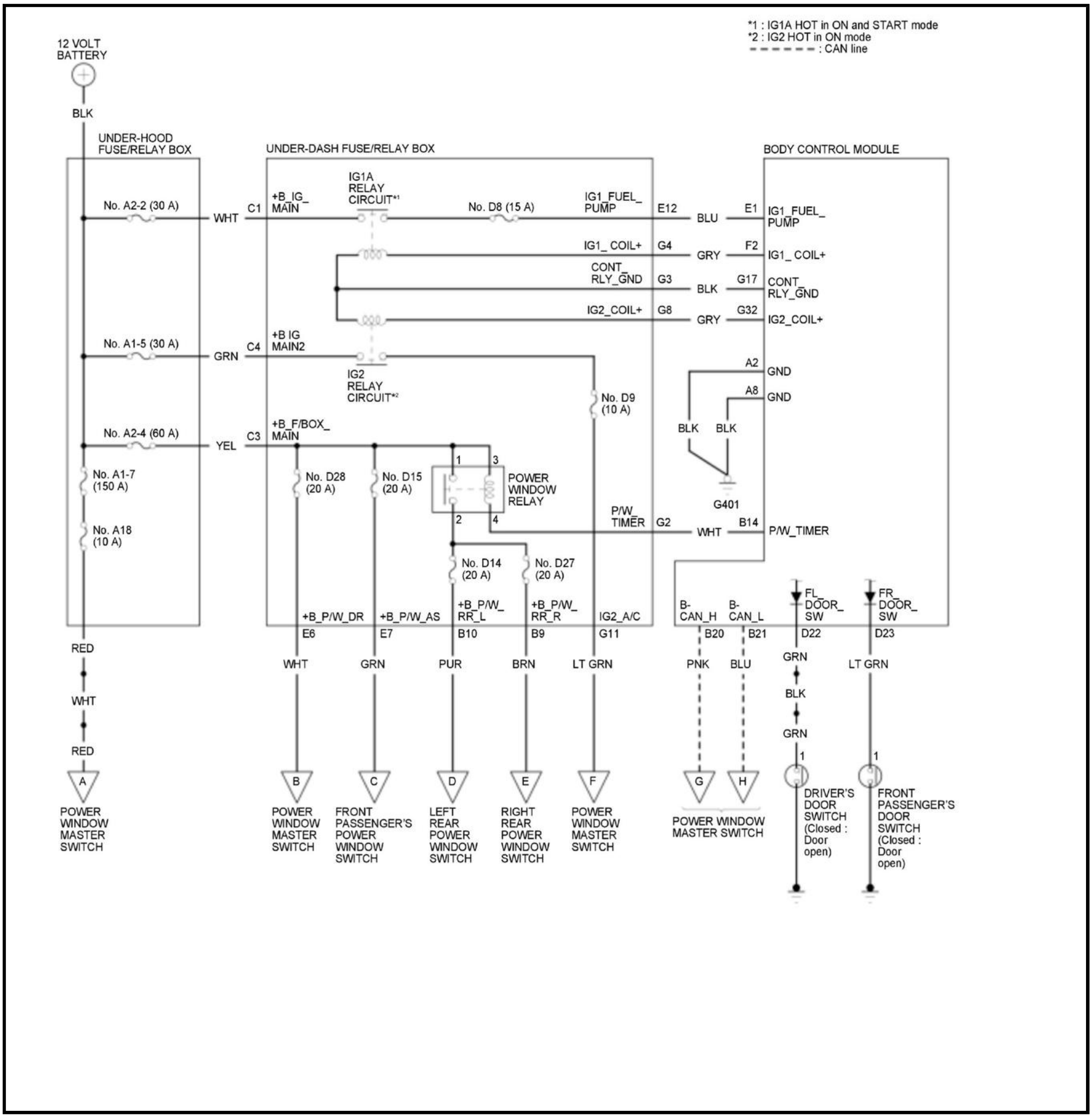
*1 : IG1A HOT in ON and START mode
*2 : IG2 HOT in ON mode
- - - - - - : CAN line

12 VOLT BATTERY
BLK
UNDER-HOOD FUSE/RELAY BOX
No. A2-2 (30 A)
No. A1-5 (30 A)
No. A2-4 (60 A)
No. A1-7 (150 A)
No. A18 (10 A)
WHT
GRN
YEL
C1
C4
C3
UNDER-DASH FUSE/RELAY BOX
+B_IG_ MAIN
+B IG MAIN2
+B_F/BOX_ MAIN
IG1A RELAY CIRCUIT*1
IG2 RELAY CIRCUIT*2
No. D8 (15 A)
No. D9 (10 A)
No. D28 (20 A)
No. D15 (20 A)
No. D14 (20 A)
No. D27 (20 A)
1
3
2
4
POWER WINDOW RELAY
P/W_ TIMER
G2
IG1_FUEL_ PUMP
E12
IG1_ COIL+
G4
CONT_ RLY_GND
G3
IG2_COIL+
G8
BLU
GRY
BLK
GRY
WHT
BODY CONTROL MODULE
E1
IG1_FUEL_ PUMP
F2
IG1_ COIL+
G17
CONT_ RLY_GND
G32
IG2_COIL+
A2
GND
A8
GND
BLK
BLK
G401
B14
P/W_TIMER
+B_P/W_DR
+B_P/W_AS
+B_P/W_ RR_L
+B_P/W_ RR_R
IG2_A/C
E6
E7
B10
B9
G11
B- CAN_H
B- CAN_L
B20
B21
FL_ DOOR_ SW
FR_ DOOR_ SW
D22
D23
RED
WHT
RED
WHT
GRN
PUR
BRN
LT GRN
PNK
BLU
GRN
BLK
GRN
LT GRN
A
B
C
D
E
F
G
H
1
1
POWER WINDOW MASTER SWITCH
POWER WINDOW MASTER SWITCH
FRONT PASSENGER'S POWER WINDOW SWITCH
LEFT REAR POWER WINDOW SWITCH
RIGHT REAR POWER WINDOW SWITCH
POWER WINDOW MASTER SWITCH
POWER WINDOW MASTER SWITCH
DRIVER'S DOOR SWITCH (Closed : Door open)
FRONT PASSENGER'S DOOR SWITCH (Closed : Door open)

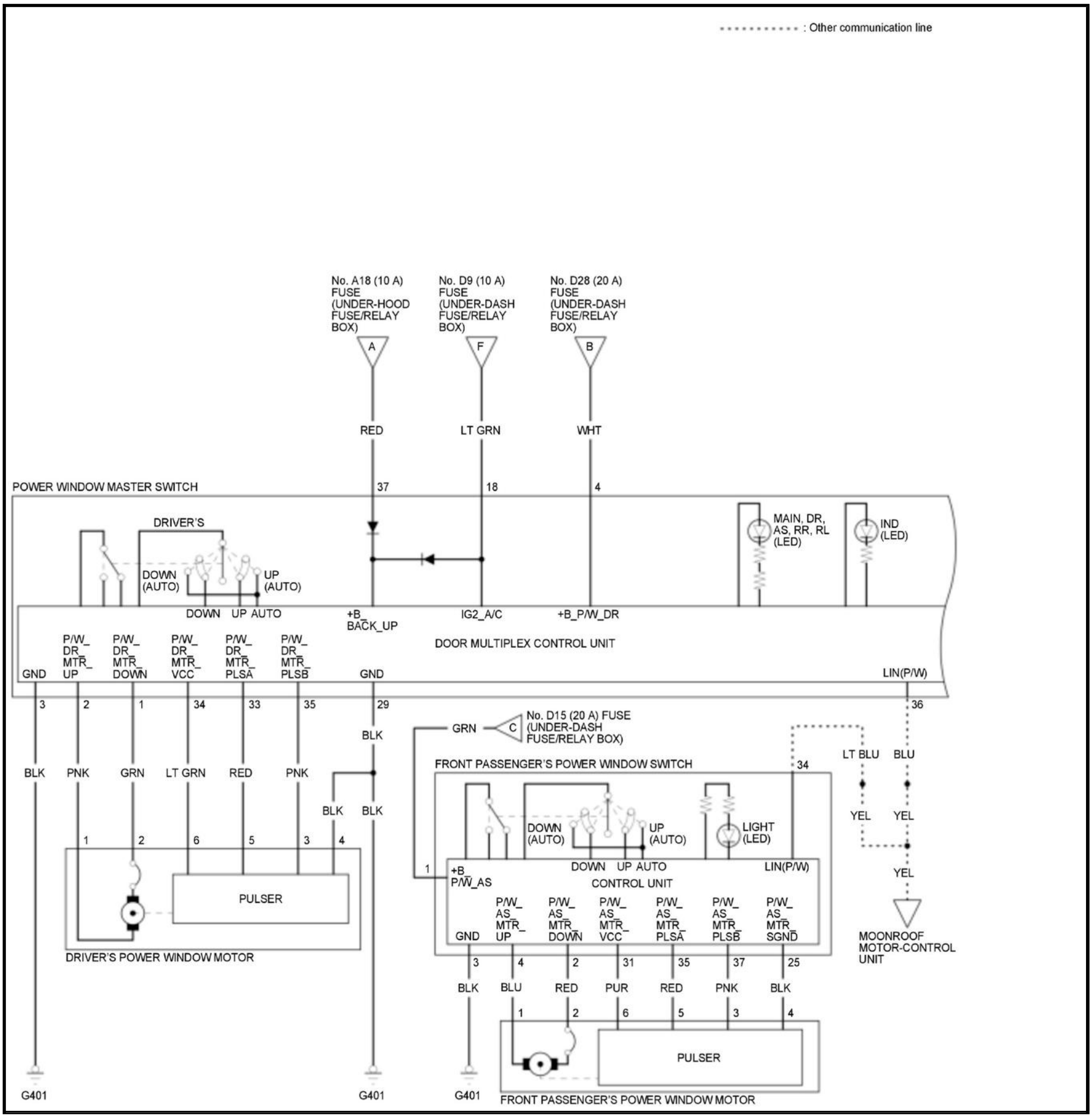

: Other communication line
No. A18 (10 A) FUSE (UNDER-HOOD FUSE/RELAY BOX)
A
No. D9 (10 A) FUSE (UNDER-DASH FUSE/RELAY BOX)
F
No. D28 (20 A) FUSE (UNDER-DASH FUSE/RELAY BOX)
B
RED
LT GRN
WHT
POWER WINDOW MASTER SWITCH
37
18
4
DRIVER'S
DOWN (AUTO)
UP (AUTO)
DOWN
UP
AUTO
+B_BACK_UP
IG2_A/C
+B_P/W_DR
MAIN, DR, AS, RR, RL (LED)
IND (LED)
DOOR MULTIPLEX CONTROL UNIT
GND
P/W_DR_MTR_UP
P/W_DR_MTR_DOWN
P/W_DR_MTR_VCC
P/W_DR_MTR_PLSA
P/W_DR_MTR_PLSB
GND
LIN(P/W)
3
2
1
34
33
35
29
36
BLK
No. D15 (20 A) FUSE (UNDER-DASH FUSE/RELAY BOX)
C
GRN
BLK
PNK
GRN
LT GRN
RED
PNK
FRONT PASSENGER'S POWER WINDOW SWITCH
34
LT BLU
BLU
BLK
BLK
YEL
YEL
1
2
6
5
3
4
PULSER
DRIVER'S POWER WINDOW MOTOR
DOWN (AUTO)
UP (AUTO)
LIGHT (LED)
1
+B_P/W_AS
DOWN
UP
AUTO
CONTROL UNIT
LIN(P/W)
YEL
GND
P/W_AS_MTR_UP
P/W_AS_MTR_DOWN
P/W_AS_MTR_VCC
P/W_AS_MTR_PLSA
P/W_AS_MTR_PLSB
P/W_AS_MTR_SGND
MOONROOF MOTOR-CONTROL UNIT
3
4
2
31
35
37
25
BLK
BLU
RED
PUR
RED
PNK
BLK
1
2
6
5
3
4
PULSER
G401
G401
G401
FRONT PASSENGER'S POWER WINDOW MOTOR

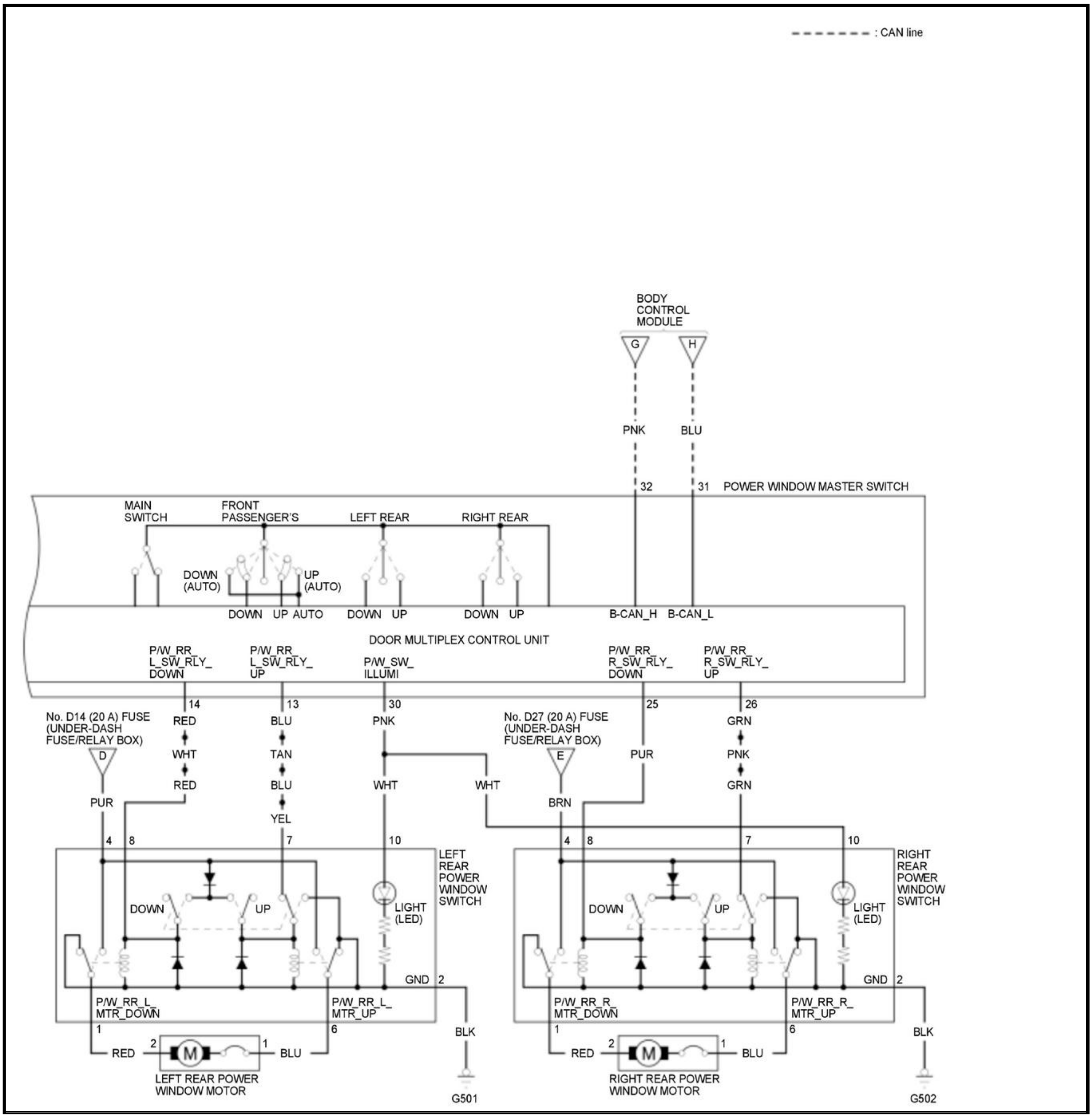
: CAN line
BODY CONTROL MODULE
G
H
PNK
BLU
32
31
POWER WINDOW MASTER SWITCH
MAIN SWITCH
FRONT PASSENGER'S
LEFT REAR
RIGHT REAR
DOWN (AUTO)
UP (AUTO)
DOWN
UP
AUTO
DOWN
UP
DOWN
UP
B-CAN_H
B-CAN_L
DOOR MULTIPLEX CONTROL UNIT
P/W_RR_L_SW_RLY_DOWN
P/W_RR_L_SW_RLY_UP
P/W_SW_ILLUMI
P/W_RR_R_SW_RLY_DOWN
P/W_RR_R_SW_RLY_UP
14
13
30
25
26
No. D14 (20 A) FUSE (UNDER-DASH FUSE/RELAY BOX)
D
RED
WHT
RED
BLU
TAN
BLU
YEL
PNK
WHT
WHT
No. D27 (20 A) FUSE (UNDER-DASH FUSE/RELAY BOX)
E
PUR
GRN
PNK
GRN
PUR
BRN
4
8
7
10
LEFT REAR POWER WINDOW SWITCH
DOWN
UP
LIGHT (LED)
GND
2
P/W_RR_L_MTR_DOWN
P/W_RR_L_MTR_UP
1
6
BLK
RED
2
M
1
BLU
LEFT REAR POWER WINDOW MOTOR
G501
4
8
7
10
RIGHT REAR POWER WINDOW SWITCH
DOWN
UP
LIGHT (LED)
GND
2
P/W_RR_R_MTR_DOWN
P/W_RR_R_MTR_UP
1
6
BLK
RED
2
M
1
BLU
RIGHT REAR POWER WINDOW MOTOR
G502

With driver's power window AUTO UP/DOWN function

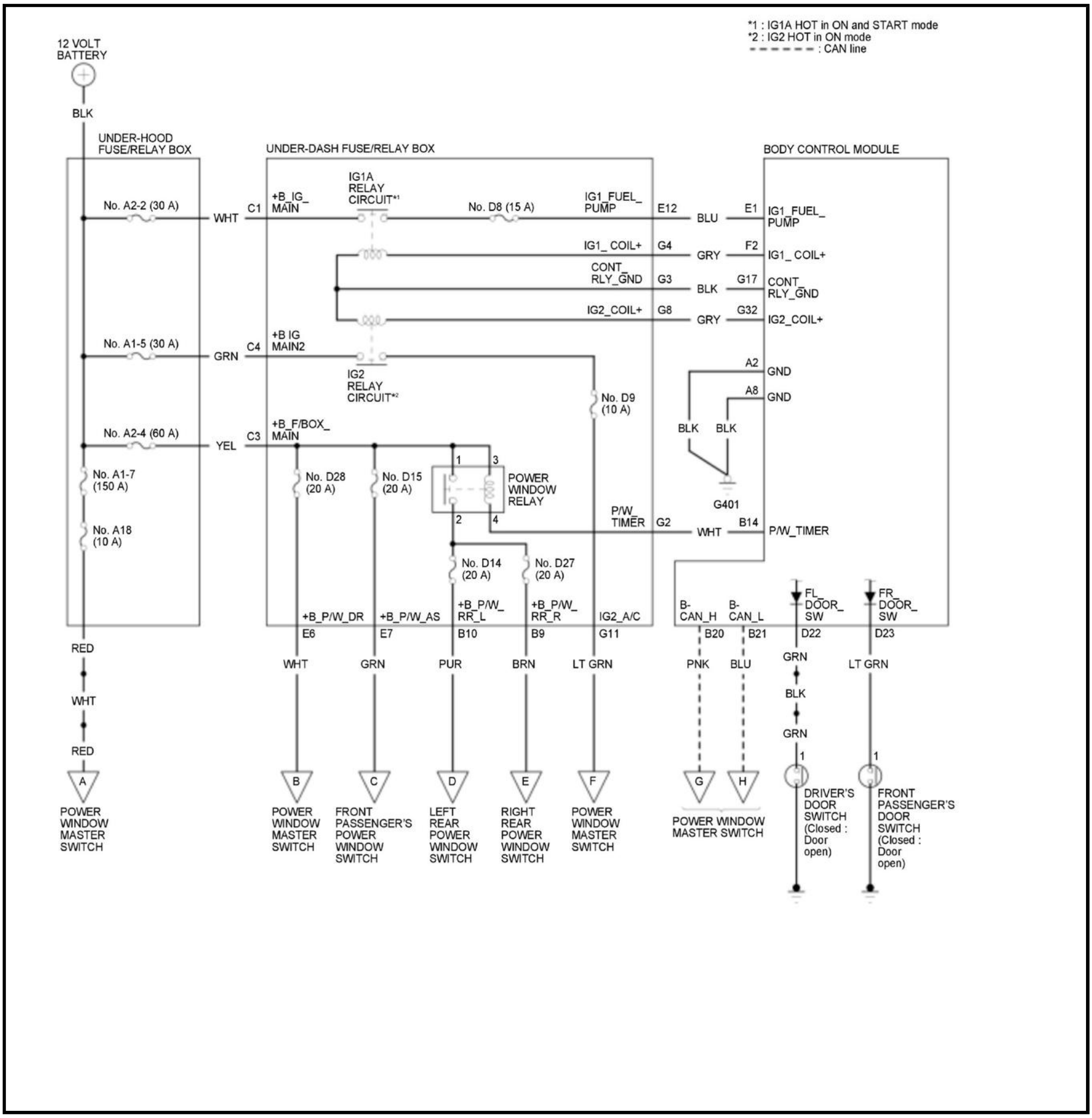
*1 : IG1A HOT in ON and START mode
*2 : IG2 HOT in ON mode
: CAN line
12 VOLT BATTERY
BLK
UNDER-HOOD FUSE/RELAY BOX
UNDER-DASH FUSE/RELAY BOX
BODY CONTROL MODULE
No. A2-2 (30 A)
WHT
C1
+B_IG_MAIN
IG1A RELAY CIRCUIT*1
No. D8 (15 A)
IG1_FUEL_PUMP
E12
BLU
E1
IG1_FUEL_PUMP
IG1_COIL+
G4
GRY
F2
IG1_COIL+
CONT_RLY_GND
G3
BLK
G17
CONT_RLY_GND
IG2_COIL+
G8
GRY
G32
IG2_COIL+
No. A1-5 (30 A)
GRN
C4
+B IG MAIN2
IG2 RELAY CIRCUIT*2
No. D9 (10 A)
A2
GND
A8
GND
BLK
BLK
G401
No. A2-4 (60 A)
YEL
C3
+B_F/BOX_MAIN
No. A1-7 (150 A)
No. A18 (10 A)
No. D28 (20 A)
No. D15 (20 A)
1
3
2
4
POWER WINDOW RELAY
P/W_TIMER
G2
WHT
B14
P/W_TIMER
No. D14 (20 A)
No. D27 (20 A)
+B_P/W_DR
+B_P/W_AS
+B_P/W_RR_L
+B_P/W_RR_R
IG2_A/C
B-CAN_H
B-CAN_L
FL_DOOR_SW
FR_DOOR_SW
E6
E7
B10
B9
G11
B20
B21
D22
D23
RED
WHT
RED
WHT
GRN
PUR
BRN
LT GRN
PNK
BLU
GRN
BLK
GRN
LT GRN
A
POWER WINDOW MASTER SWITCH
B
POWER WINDOW MASTER SWITCH
C
FRONT PASSENGER'S POWER WINDOW SWITCH
D
LEFT REAR POWER WINDOW SWITCH
E
RIGHT REAR POWER WINDOW SWITCH
F
POWER WINDOW MASTER SWITCH
G
H
POWER WINDOW MASTER SWITCH
1
DRIVER'S DOOR SWITCH (Closed : Door open)
1
FRONT PASSENGER'S DOOR SWITCH (Closed : Door open)

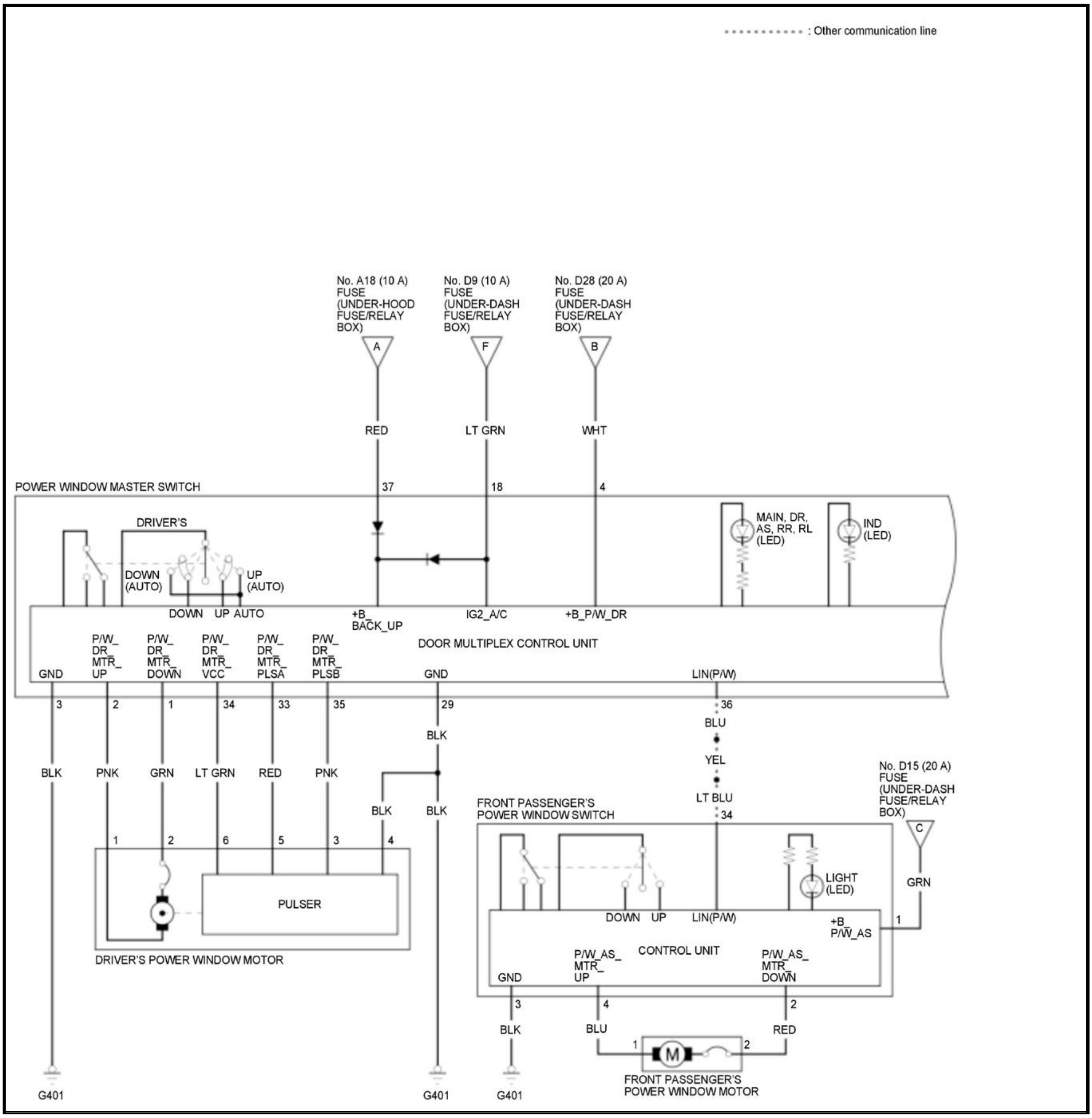
: Other communication line
No. A18 (10 A) FUSE (UNDER-HOOD FUSE/RELAY BOX)
No. D9 (10 A) FUSE (UNDER-DASH FUSE/RELAY BOX)
No. D28 (20 A) FUSE (UNDER-DASH FUSE/RELAY BOX)
A
F
B
RED
LT GRN
WHT
POWER WINDOW MASTER SWITCH
37
18
4
DRIVER'S
DOWN (AUTO)
UP (AUTO)
DOWN
UP
AUTO
MAIN, DR, AS, RR, RL (LED)
IND (LED)
+B_BACK_UP
IG2_A/C
+B_P/W_DR
DOOR MULTIPLEX CONTROL UNIT
GND
P/W_DR_MTR_UP
P/W_DR_MTR_DOWN
P/W_DR_MTR_VCC
P/W_DR_MTR_PLSA
P/W_DR_MTR_PLSB
GND
LIN(P/W)
3
2
1
34
33
35
29
36
BLU
BLK
YEL
BLK
PNK
GRN
LT GRN
RED
PNK
LT BLU
BLK
BLK
34
No. D15 (20 A) FUSE (UNDER-DASH FUSE/RELAY BOX)
FRONT PASSENGER'S POWER WINDOW SWITCH
C
1
2
6
5
3
4
PULSER
DRIVER'S POWER WINDOW MOTOR
GRN
LIGHT (LED)
DOWN
UP
LIN(P/W)
+B_P/W_AS
1
CONTROL UNIT
GND
P/W_AS_MTR_UP
P/W_AS_MTR_DOWN
3
4
2
BLK
BLU
RED
1
M
2
FRONT PASSENGER'S POWER WINDOW MOTOR
G401
G401
G401

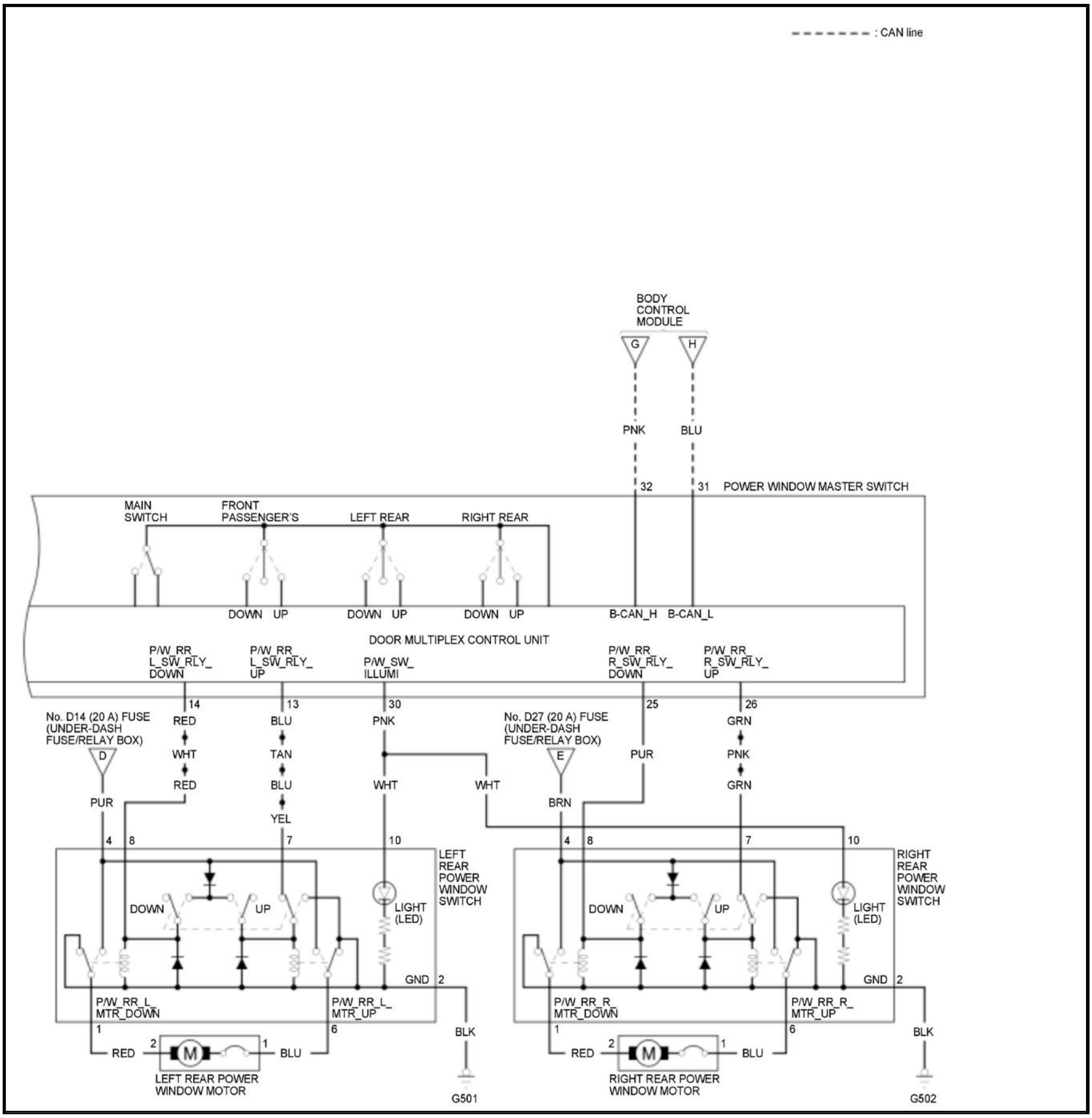
: CAN line
BODY CONTROL MODULE
G
H
PNK
BLU
32
31
POWER WINDOW MASTER SWITCH
MAIN SWITCH
FRONT PASSENGER'S
LEFT REAR
RIGHT REAR
DOWN
UP
B-CAN_H
B-CAN_L
DOOR MULTIPLEX CONTROL UNIT
P/W_RR_L_SW_RLY_DOWN
P/W_RR_L_SW_RLY_UP
P/W_SW_ILLUMI
P/W_RR_R_SW_RLY_DOWN
P/W_RR_R_SW_RLY_UP
14
13
30
25
26
No. D14 (20 A) FUSE (UNDER-DASH FUSE/RELAY BOX)
D
No. D27 (20 A) FUSE (UNDER-DASH FUSE/RELAY BOX)
E
RED
WHT
BLU
TAN
YEL
PNK
PUR
GRN
BRN
4
8
7
10
LEFT REAR POWER WINDOW SWITCH
RIGHT REAR POWER WINDOW SWITCH
LIGHT (LED)
GND
2
P/W_RR_L_MTR_DOWN
P/W_RR_L_MTR_UP
P/W_RR_R_MTR_DOWN
P/W_RR_R_MTR_UP
1
6
BLK
M
LEFT REAR POWER WINDOW MOTOR
RIGHT REAR POWER WINDOW MOTOR
G501
G502

COMPONENT LOCATION INDEX

GLASS COMPONENT LOCATION INDEX

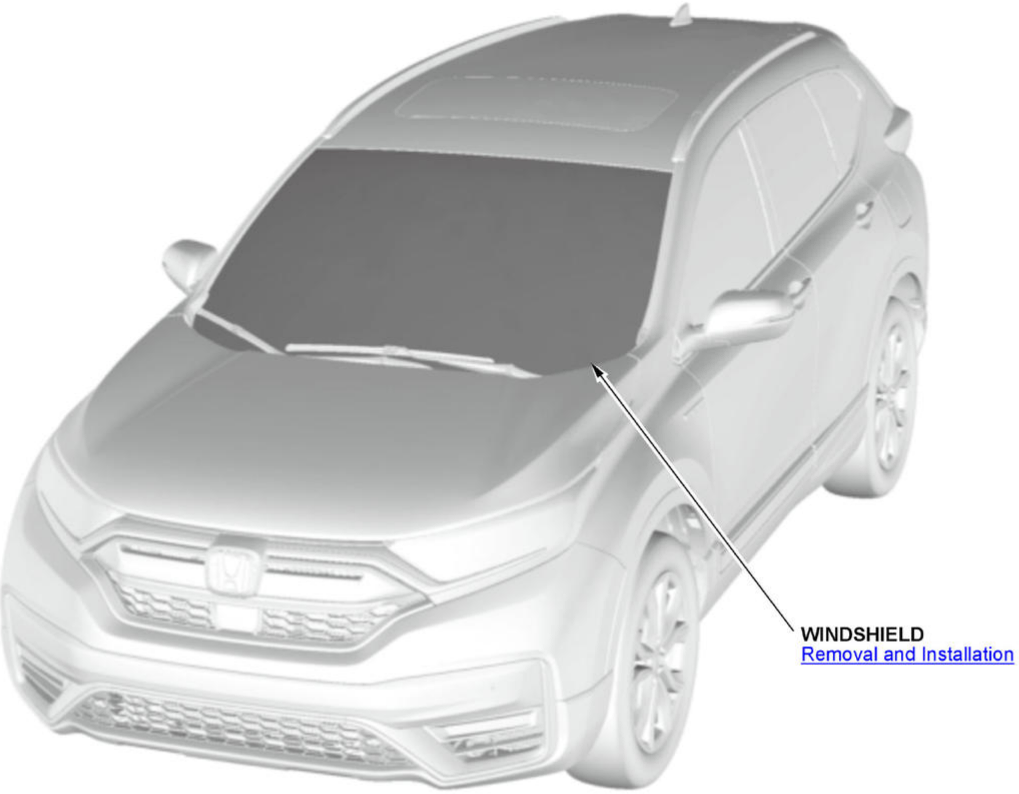
WINDSHIELD
Removal and Installation

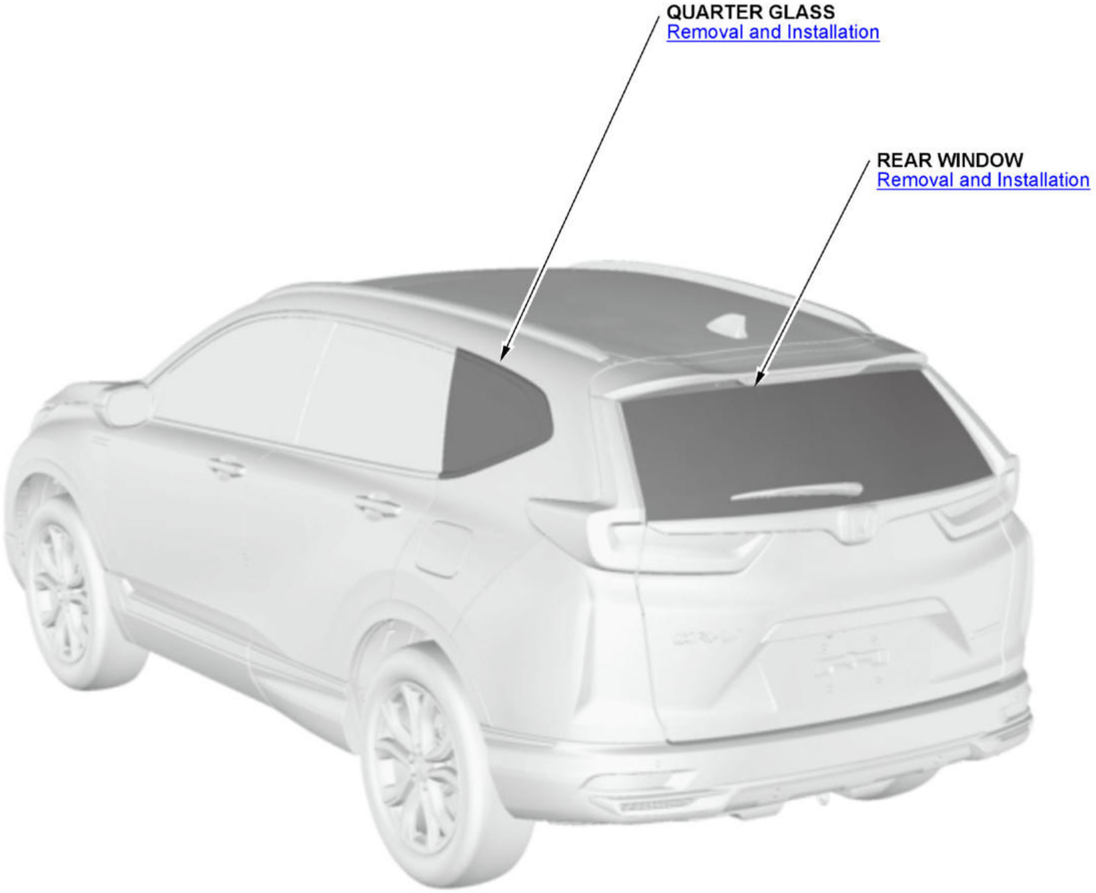
QUARTER GLASS
Removal and Installation
REAR WINDOW
Removal and Installation

POWER WINDOWS COMPONENT LOCATION INDEX

For relationships between signals in a system, refer to System Diagram.

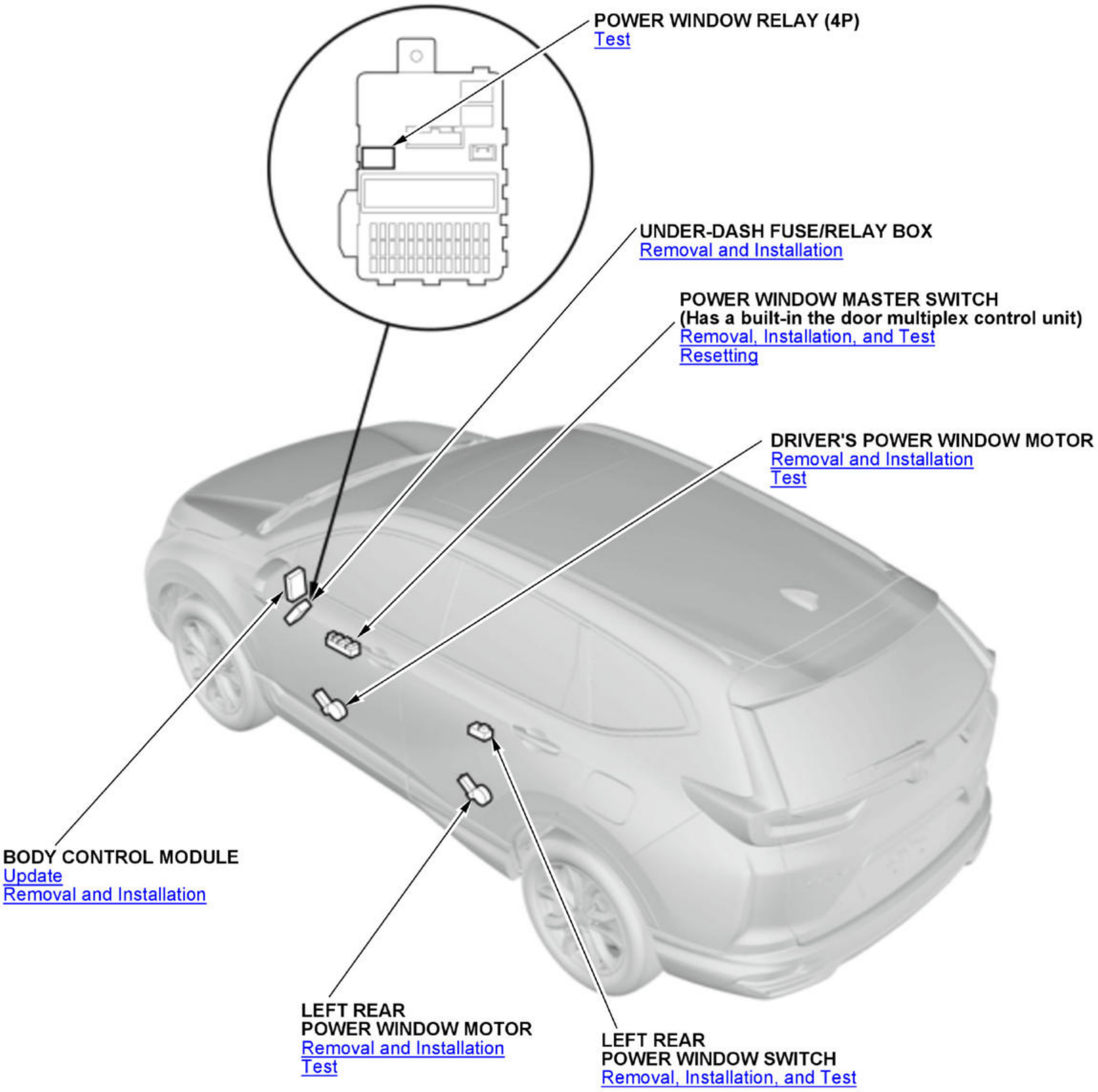
POWER WINDOW RELAY (4P)
Test
UNDER-DASH FUSE/RELAY BOX
Removal and Installation
POWER WINDOW MASTER SWITCH
(Has a built-in the door multiplex control unit)
Removal, Installation, and Test
Resetting
DRIVER'S POWER WINDOW MOTOR
Removal and Installation
Test
BODY CONTROL MODULE
Update
Removal and Installation
LEFT REAR
POWER WINDOW MOTOR
Removal and Installation
Test
LEFT REAR
POWER WINDOW SWITCH
Removal, Installation, and Test

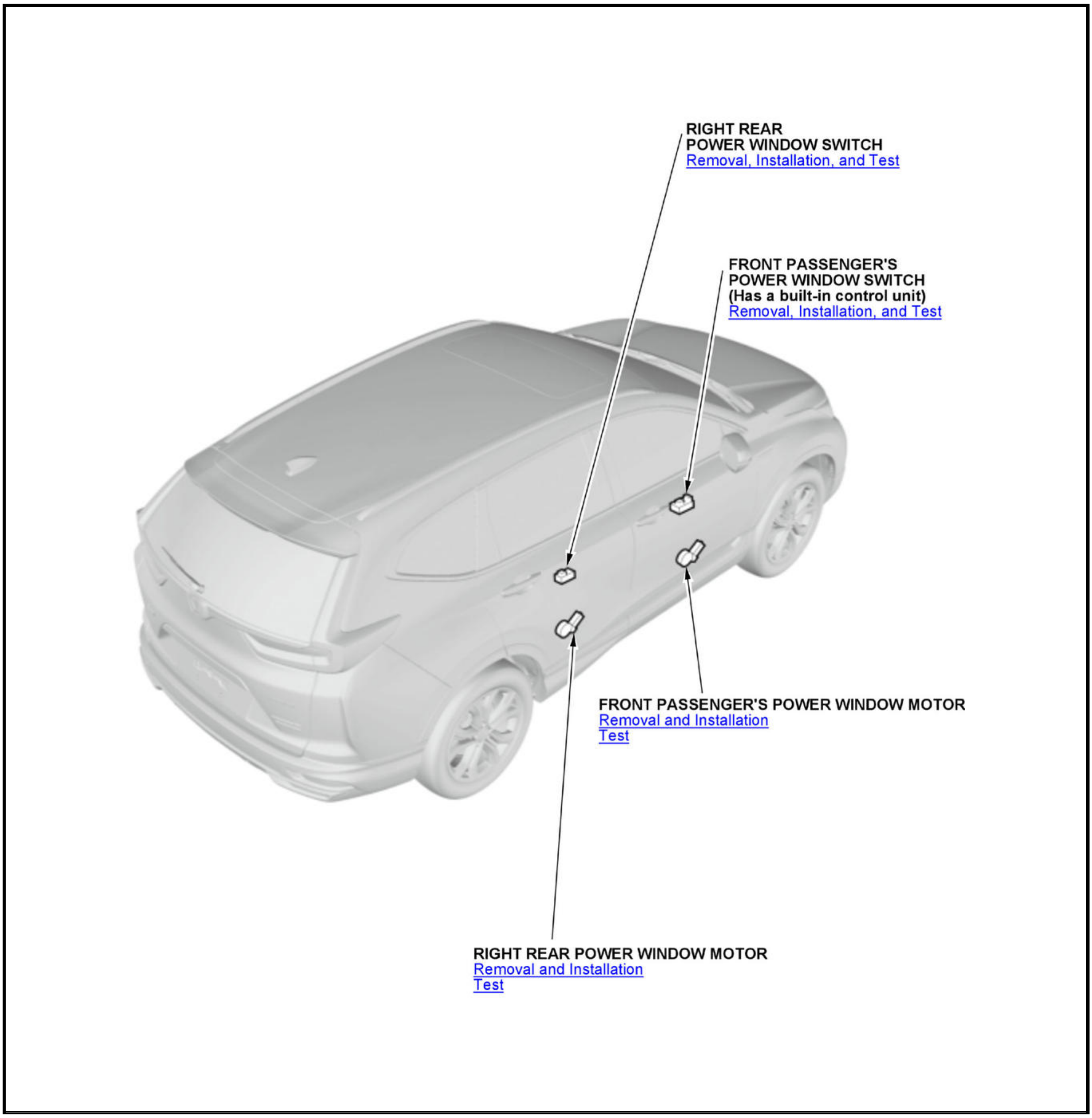
RIGHT REAR
POWER WINDOW SWITCH
Removal, Installation, and Test
FRONT PASSENGER'S
POWER WINDOW SWITCH
(Has a built-in control unit)
Removal, Installation, and Test
FRONT PASSENGER'S POWER WINDOW MOTOR
Removal and Installation
Test
RIGHT REAR POWER WINDOW MOTOR
Removal and Installation
Test

LEARNING, RESET & CLEAR

RESETTING THE POWER WINDOW CONTROL UNIT

Procedure

Reset the power window control unit after doing any of the following actions:

- Power window regulator replacement, removal, or installation.
- Glass run channel replacement, removal, or installation.
- Door glass replacement, removal, or installation.
- Power window master switch replacement.
- Front passenger's power window switch replacement*.
- Power is disconnected from the power window master switch or front passenger's power window switch* while the power window timer is ON.

NOTE:

- Steps 3-9 shows the procedure of clearing of the power window control unit, and steps 10-11 shows the procedure of learning. When clearing, use the target power window switch on the power window master switch. When learning, power windows can not be operated from the power window master switch, so use the power window switch of each seat.
- If the front passenger's power window has lost power when the vehicle off timer is ON, it cannot be operated from the driver's switch and must be reset from the front passenger's power window switch*.

*: With front power windows AUTO UP/DOWN function

Without HDS

1. Power Window Control Unit - Reset

   NOTE: Close the door and leave it closed until the procedure is complete.

   1. Turn the vehicle to the ON mode.

   2. Move the power window all the way down with the driver's window DOWN switch.

   NOTE: Steps 3-6 must be done within 5 seconds of each other.

   3. Turn the vehicle to the OFF (LOCK) mode.

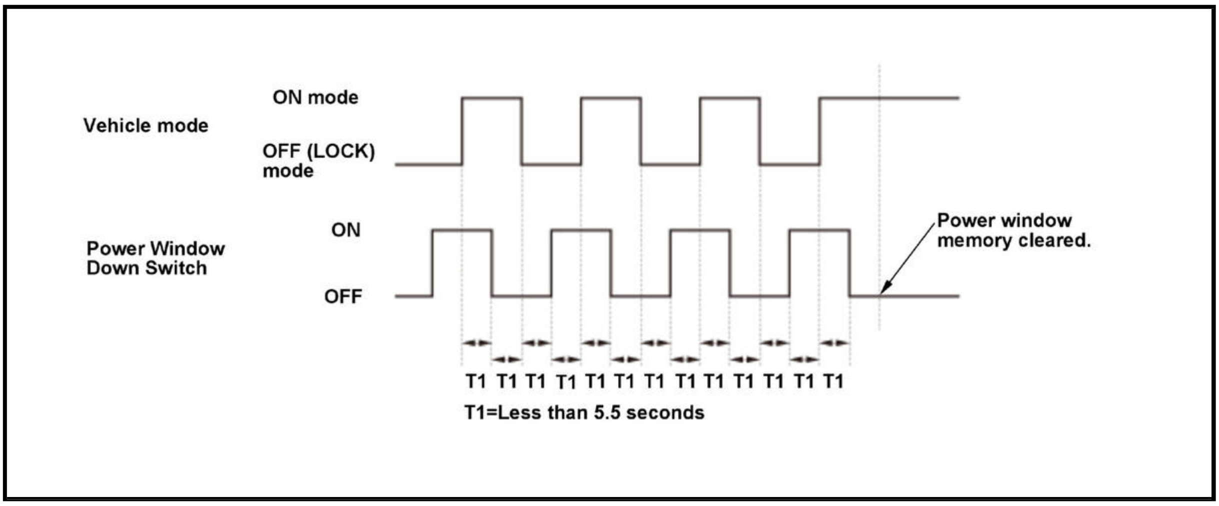

   4. Press and hold the power window DOWN switch.

   5. Turn the vehicle to the ON mode.

   6. Release the power window DOWN switch.

   7. Repeat step 3-6 three more times.

   8. Wait at least 1 second.

   9. Confirm that AUTO UP and AUTO DOWN do not work. If AUTO UP and DOWN work, go back to step 1.

   10. Move the power window all the way down with the power window DOWN switch of the seat to be reset.

   11. Pull up and hold the power window UP switch of the seat to be reset until the window reaches the fully closed position, then continue to hold the switch for at least 1 second.

   12. Confirm that the power window control unit is reset by using the driver's window AUTO UP and AUTO DOWN functions:

- If the window still does not work in AUTO, repeat the procedure several times, paying close attention to the 5 seconds time limit between steps.
- If the window still does not work, refer to the power window master switch input test and/or front passenger's power window switch input test*.

*: With front power windows AUTO UP/DOWN function

With HDS

1. Power Window Control Unit - Reset

1. **Connect the HDS to the data link connector**

2. Turn the vehicle to the ON mode.

3. Select the following menu buttons on the HDS screen in sequence.

   - (1) Body Electrical (System Selection Menu)
   - (2) Power Window
   - (3) Adjustment
   - (4) Driver Side Power Window Auto Position Reset

4. Confirm that the power window control unit is reset by using the power window AUTO UP and AUTO DOWN function.

DESCRIPTION AND OPERATION

POWER WINDOWS SYSTEM DESCRIPTION

Basic Control/Function

- Manual Up/Down Function

  The 1-step operation of the power window switch moves the window up or down. This is available during the vehicle in the ON mode or the vehicle OFF operation.

- Auto Up/Down Function

  The 2-step operation of the power window switch moves the window up or down. This is available during the vehicle in the ON mode or the vehicle OFF operation.

Auto Reverse Power Window Function

When an object is detected during the auto up operation, the window stops closing and reverses about 70 mm (2.76 in). If the window is less than halfway opened (about 220 mm (8.66 in)), it will reverse to the half open position (about 220 mm (8.66 in)). In manual operation, this function is active only during the vehicle OFF operation. This function is activated based on the calculation of the rotation speed and load change of the motor's pulse A.

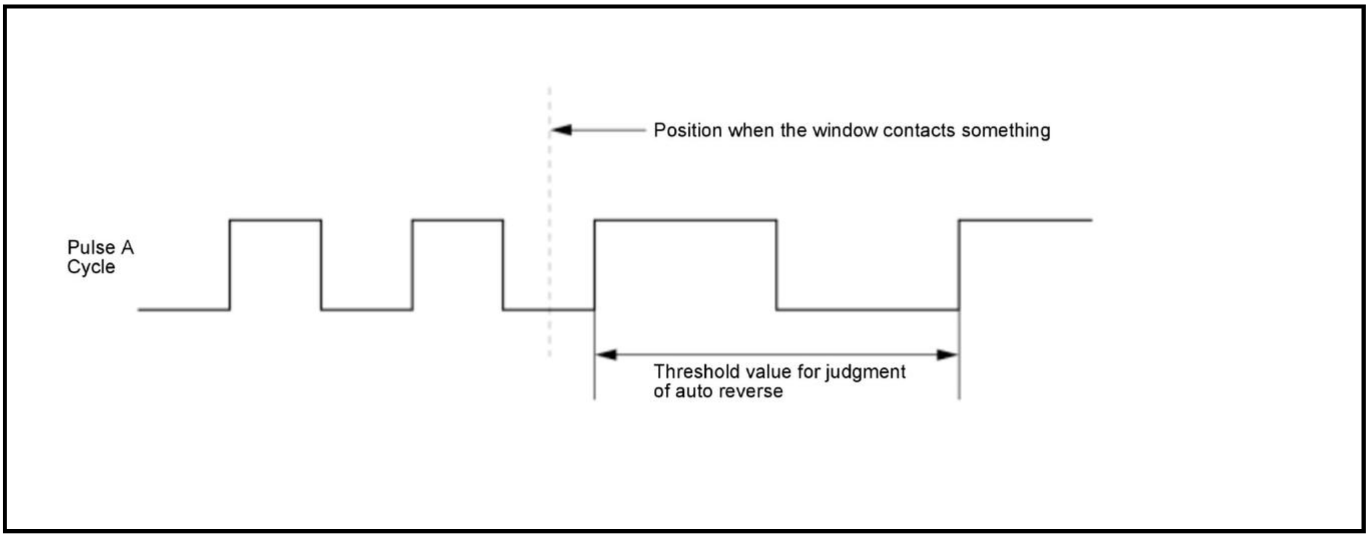
Position when the window contacts something
Pulse A Cycle
Threshold value for judgment of auto reverse

Vehicle OFF Operation

For about 10 minutes after the vehicle is turned to the OFF (LOCK) mode, the window's open/close operation with the power window switches is available.

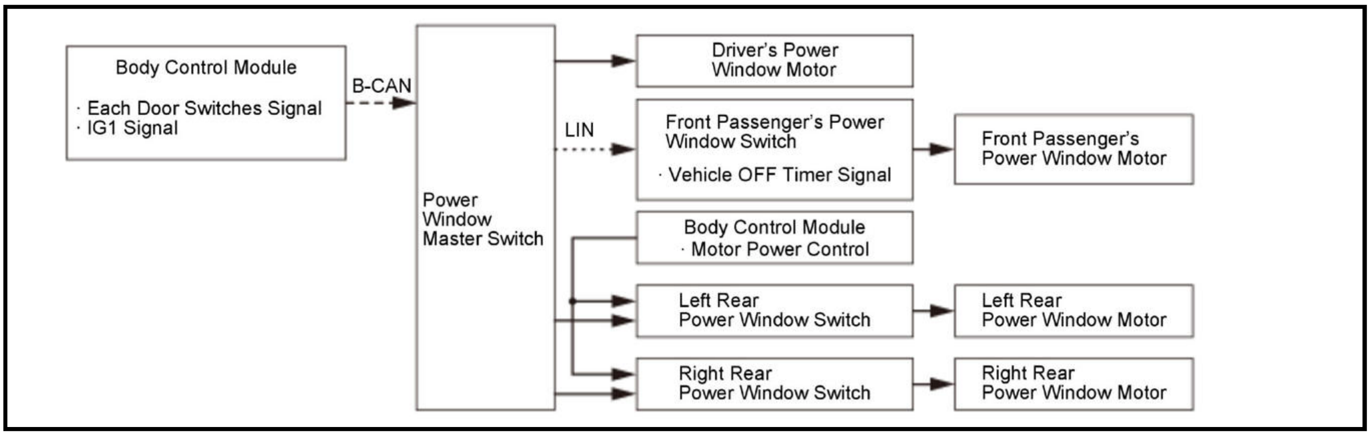
Body Control Module
· Each Door Switches Signal
· IG1 Signal
B-CAN
Power Window Master Switch
LIN
Driver's Power Window Motor
Front Passenger's Power Window Switch
· Vehicle OFF Timer Signal
Front Passenger's Power Window Motor
Body Control Module
· Motor Power Control
Left Rear Power Window Switch
Left Rear Power Window Motor
Right Rear Power Window Switch
Right Rear Power Window Motor

Vehicle OFF Operation Start Condition	• Vehicle ON mode -> OFF (LOCK) mode • Driver's door switch OFF (Door close) • Front Passenger's door switch OFF (Door close)

Vehicle OFF Operation Cancel Condition	Timer	Vehicle ON mode -> OFF (LOCK) mode and past 10 minutes
	Door	• Driver's door switch ON (Door open) • Front Passenger's door switch ON (Door open)

Keyless/Key Cylinder Operation

By turning the key a second time and holding it with the key inserted into the driver's door key cylinder, the windows and moonroof close (or open) (turning the key clockwise to open, turning the key counterclockwise to close). The windows and moonroof stop moving when the key is returned to the neutral position.

By pressing and holding the UNLOCK button of the remote a second time, the windows and moonroof open. The windows and moonroof stop moving when the UNLOCK button is released. For some models, by pressing and holding the LOCK button of the remote a second time, the windows and moonroof close. The windows and moonroof stop moving when the LOCK button is released.

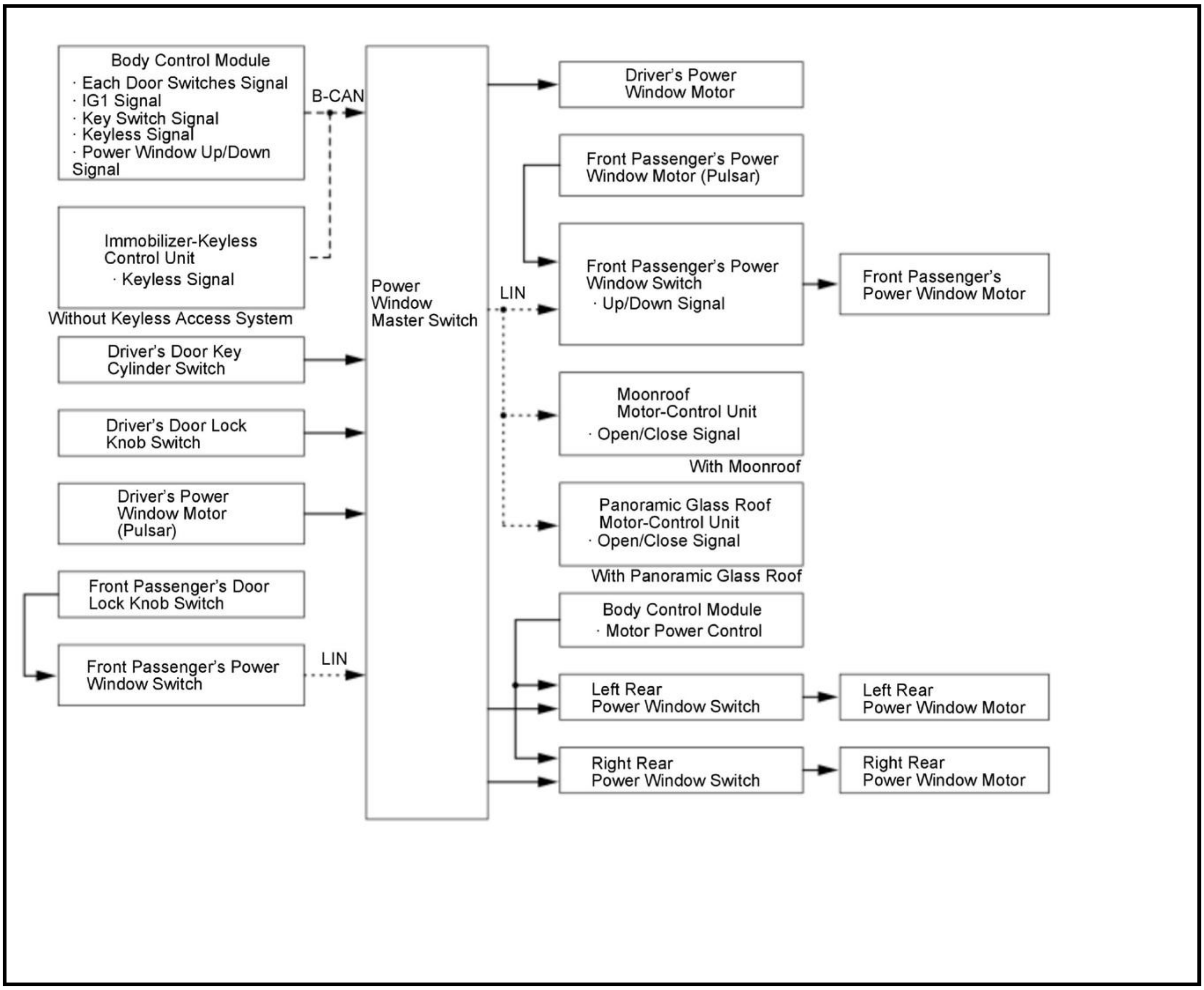
Body Control Module
· Each Door Switches Signal
· IG1 Signal
· Key Switch Signal
· Keyless Signal
· Power Window Up/Down Signal
B-CAN
Immobilizer-Keyless Control Unit
· Keyless Signal
Without Keyless Access System
Driver's Door Key Cylinder Switch
Driver's Door Lock Knob Switch
Driver's Power Window Motor (Pulsar)
Front Passenger's Door Lock Knob Switch
Front Passenger's Power Window Switch
LIN
Power Window Master Switch
Driver's Power Window Motor
Front Passenger's Power Window Motor (Pulsar)
LIN
Front Passenger's Power Window Switch
· Up/Down Signal
Front Passenger's Power Window Motor
Moonroof Motor-Control Unit
· Open/Close Signal
With Moonroof
Panoramic Glass Roof Motor-Control Unit
· Open/Close Signal
With Panoramic Glass Roof
Body Control Module
· Motor Power Control
Left Rear Power Window Switch
Left Rear Power Window Motor
Right Rear Power Window Switch
Right Rear Power Window Motor

Keyless Operation	Open	Possible
	Close	Impossible
Key Cylinder Operation	Open	Possible
	Close	Possible

Failsafe Function

When a failure occurs in the inputs of the motor pulses and power window switches, the failsafe function stops the control of each function.

POWER WINDOWS SYSTEM DESCRIPTION - COMPONENTS

Power Window Master Switch

The power window master switch has a built-in B-CAN transceiver and a LIN transceiver. The power window master switch sends signals from LIN to front passenger's power window switch, panoramic glass roof motor-control unit *1, and to the moonroof motor-control unit *2.

*1: With panoramic glass roof

*2: With moonroof

Front Passenger's Power Window Switch

The front passenger's power window switch has a built-in control unit. Control is performed by receiving signals from the power window master switch via LIN.

Power Window Motors

The motor includes the pulse sensors that detect window's position and direction with the motor rotation. The rotating direction (up/down) is detected with the rotating cycles from the 2 pulse sensors and the moving amount (window position) is also detected by considering 4 pulses as one rotation pulse.

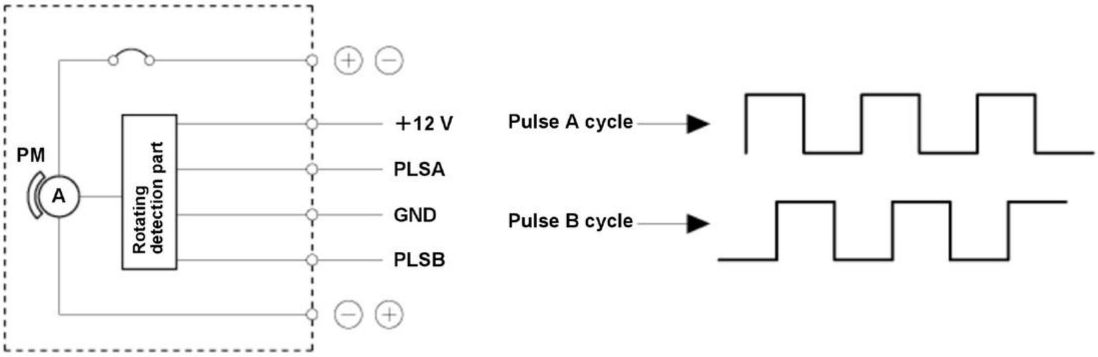
PM
A
Rotating detection part
⊕ ⊖
+12 V
PLSA
GND
PLSB
⊖ ⊕
Pulse A cycle
Pulse B cycle

POWER WINDOWS SYSTEM DESCRIPTION - SYSTEM DIAGRAM

For locations of each component on the vehicle, refer to Component Location Index

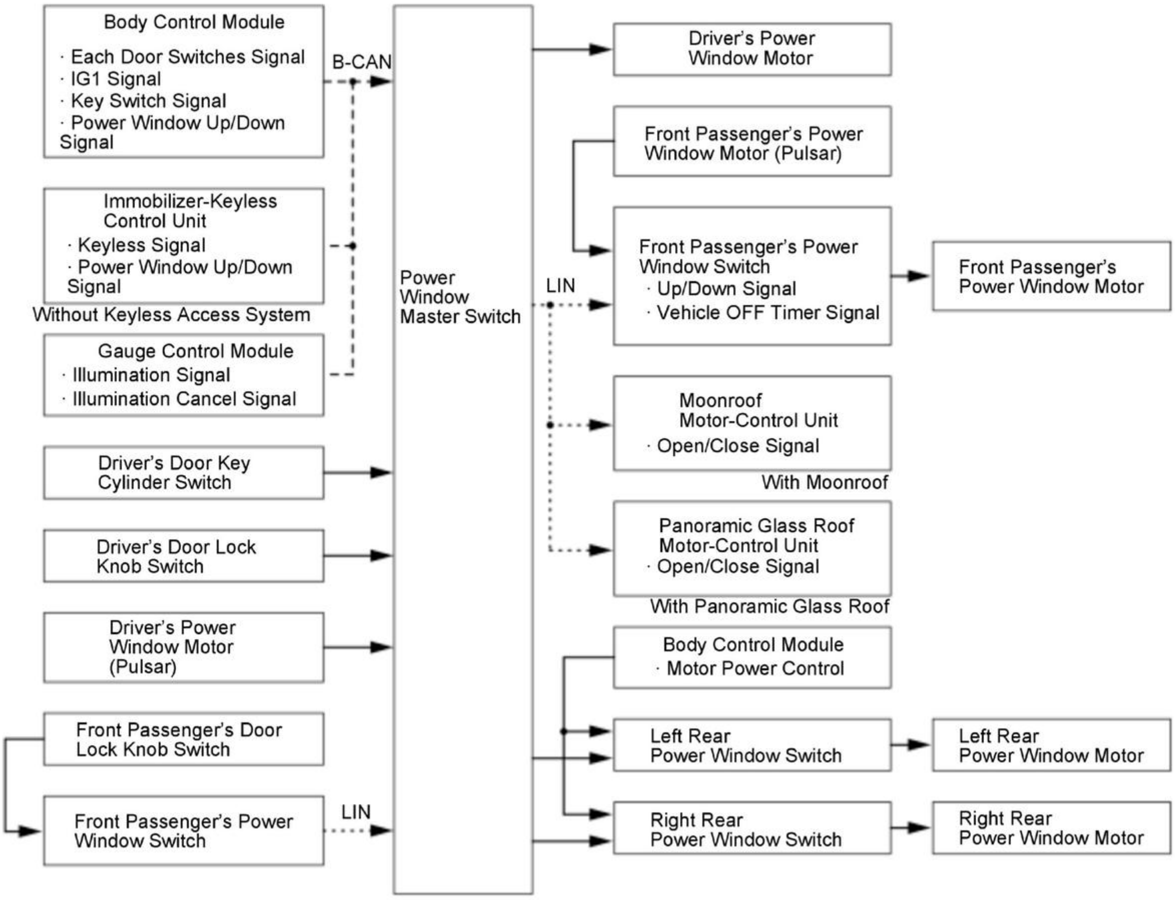
Body Control Module
· Each Door Switches Signal
· IG1 Signal
· Key Switch Signal
· Power Window Up/Down Signal
B-CAN
Immobilizer-Keyless Control Unit
· Keyless Signal
· Power Window Up/Down Signal
Without Keyless Access System
Gauge Control Module
· Illumination Signal
· Illumination Cancel Signal
Driver's Door Key Cylinder Switch
Driver's Door Lock Knob Switch
Driver's Power Window Motor (Pulsar)
Front Passenger's Door Lock Knob Switch
Front Passenger's Power Window Switch
LIN
Power Window Master Switch
Driver's Power Window Motor
Front Passenger's Power Window Motor (Pulsar)
LIN
Front Passenger's Power Window Switch
· Up/Down Signal
· Vehicle OFF Timer Signal
Front Passenger's Power Window Motor
Moonroof Motor-Control Unit
· Open/Close Signal
With Moonroof
Panoramic Glass Roof Motor-Control Unit
· Open/Close Signal
With Panoramic Glass Roof
Body Control Module
· Motor Power Control
Left Rear Power Window Switch
Left Rear Power Window Motor
Right Rear Power Window Switch
Right Rear Power Window Motor

CONNECTOR VIEW

FRONT PASSENGER'S POWER WINDOW SWITCH CONNECTOR FOR INPUTS AND OUTPUTS

Front Passenger's Power Window Switch 37P Connector (female terminals)

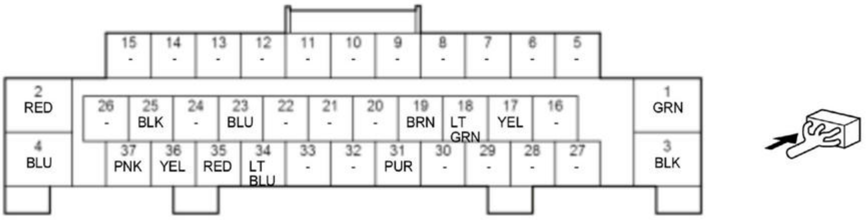

Terminal number	Terminal name	Description	Signal
1	+B P/W AS	+B power source	About battery voltage at all times
2	P/W AS MTR DOWN	Drives front passenger's power window motor	With front passenger's power window motor DOWN operation: about battery voltage If none of above conditions are met: less than 0.2 V
3	GND	Front passenger's power window switch ground	Less than 0.2 V at all times
4	P/W AS MTR UP	Drives front passenger's power window motor	With front passenger's power window motor UP operation: about battery voltage If none of above conditions are met: less than 0.2 V
5	---	Not used	---
6	---	Not used	---
7	---	Not used	---
8	---	Not used	---
9	---	Not used	---
10	---	Not used	---
11	---	Not used	---
12	---	Not used	---
13	---	Not used	---
14	---	Not used	---
15	---	Not used	---
16	---	Not used	---
17	AS MIRROR COM	Detects power mirror DOWN or LEFT function signal	With vehicle in ON mode and power mirror DOWN or LEFT function: about battery voltage
18	AS MIRROR UD	Detects power mirror UP or LEFT function signal	With vehicle in ON mode and power mirror UP or LEFT function: about battery voltage
19	AS MIRROR LR	Detects mirror DOWN or RIGHT function signal	With vehicle in ON mode and power mirror DOWN or RIGHT function: about battery voltage

Terminal number	Terminal name	Description	Signal
20	---	Not used	---
21	---	Not used	---
22	---	Not used (reservation)	---
23	H/MIRROR AS	Drives right power mirror defogger	With power mirror defogger ON: about battery voltage

Terminal number	Terminal name	Description	Signal
24	---	Not used	---
25*	P/W AS MTR SGND	Ground for front passenger's power window motor pulser	Less than 0.2 V at all times
26	---	Not used (reservation)	---
27	---	Drives retract actuator	---
28	---	Drives retract actuator	---
29	---	Not used (reservation)	---
30	---	Not used (reservation)	---
31*	P/W AS MTR VCC	Drives front passenger's power window motor hall IC (pulser) unit	With front passenger's power window control unit is wakeup mode and front passenger's power window motor operation: about battery voltage If none of above conditions are met: less than 0.2 V
32	---	Not used	---
33	---	Not used	---
34	LIN (P/W)	Communication line	---
35	P/W AS MTR PLSA	Detects front passenger's power window motor hall IC (pulser) unit signal	---
36	AS SILCON UNLOCK	Detects front passenger's door lock knob switch (UNLOCK) signal	With front passenger's door lock knob switch LOCK: about battery voltage With front passenger's door lock knob switch UNLOCK: less than 0.2 V
37	P/W AS MTR PLSB	Detects front passenger's power window motor hall IC (pulser) unit signal	---

*: With front power window AUTO UP/DOWN function

POWER WINDOW MASTER SWITCH CONNECTOR FOR INPUTS AND OUTPUTS

Power Window Master Switch 37P Connector (female terminals)

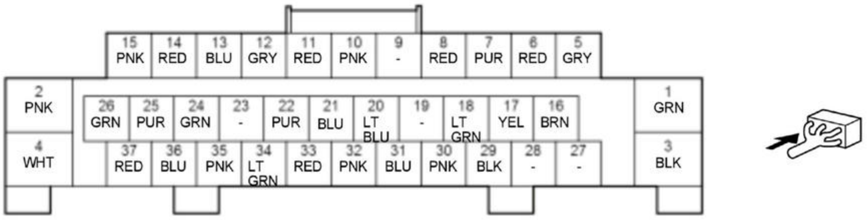
15 PNK
14 RED
13 BLU
12 GRY
11 RED
10 PNK
9 -
8 RED
7 PUR
6 RED
5 GRY
2 PNK
26 GRN
25 PUR
24 GRN
23 -
22 PUR
21 BLU
20 LT BLU
19 -
18 LT GRN
17 YEL
16 BRN
1 GRN
4 WHT
37 RED
36 BLU
35 PNK
34 LT GRN
33 RED
32 PNK
31 BLU
30 PNK
29 BLK
28 -
27 -
3 BLK

Terminal number	Terminal name	Description	Signal
1	P/W DR MTR DOWN	Drives driver's power window motor	With driver's power window motor DOWN operation: about battery voltage If none of above conditions are met: less than 0.2 V
2	P/W DR MTR UP	Drives driver's power window motor	With driver's power window motor UP operation: about battery voltage If none of above conditions are met: less than 0.2 V
3	GND	Power window master switch ground	Less than 0.2 V at all times
4	+B P/W DR	+B power source	About battery voltage at all times
5* 1	DR MEMORY SEAT SW POS1	Detects driving position memory switch position 1 signal	With driving position memory switch 1 ON: less than 0.2 V With driving position memory switch 1 OFF: about 5 V
6* 1	DR MEMORY SEAT SW POS2	Detects driving position memory switch position 2 signal	With driving position memory switch 2 ON: less than 0.2 V With driving position memory switch 2 OFF: about 5 V
7	DR KEY CYL LOCK	Detects driver's door key cylinder switch (LOCK) signal	With driver's door key cylinder switch UNLOCK: about battery voltage With driver's door key cylinder switch LOCK: less than 0.2 V
8	DR KEY CYL UNLOCK	Detects driver's door key cylinder switch (UNLOCK) signal	With driver's door key cylinder switch LOCK: about battery voltage With driver's door key cylinder switch UNLOCK: less than 0.2 V
9	---	Not used	---
10	MIRROR R COM	Detects power mirror DOWN or LEFT function signal	With vehicle in ON mode and power mirror DOWN or LEFT function: about battery voltage
11	MIRROR R LR	Detects mirror DOWN or RIGHT function signal	With vehicle in ON mode and power mirror DOWN or RIGHT function: about battery voltage
12	MIRROR UD	Detects power mirror UP or LEFT function signal	With vehicle in ON mode and power mirror UP or LEFT function: about battery voltage

Terminal number	Terminal name	Description	Signal
13	P/W RR L SW RLY UP	Drives left rear power window motor	With left rear power window moving to UP using power window master switch: about battery voltage If none of above conditions are met: less than 0.2 V
14	P/W RR L SW RLY DOWN	Drives left rear power window motor	With left rear power window moving to DOWN using power window master switch: about battery voltage If none of above conditions are met: less than 0.2 V
15* 2	H/MIRROR	Drives left power mirror defogger	With mirror defogger ON mode: about battery voltage
16	R/C MIRROR SEL L-R	Detects power mirror reverse tilt function signal	With vehicle in ON mode and power mirror reverse tilt function: about battery voltage
17* 1	DR MEMORY SEAT SW MEMORY	Detects driving position memory switch (SET) signal	With driving position memory set switch ON: less than 0.2 V With driving position memory set switch OFF: about 5 V
18	IG2 A/C	IG2 power source	With vehicle in ON mode: about battery voltage
19	---	Not used	---
20	DR SILCON UNLOCK	Detects driver's door lock knob switch (UNLOCK) signal	With driver's door lock knob switch LOCK: about battery voltage With driver's door lock knob switch UNLOCK: less than 0.2 V
21	DR SILCON LOCK	Detects driver's door lock knob switch (LOCK) signal	With driver's door lock knob switch UNLOCK: about battery voltage With driver's door lock knob switch LOCK: less than 0.2 V
22* 1	DR MEMORY SEAT SW IND1	Outputs driving position memory switch indicator 1 signal	Indicator 1 ON: pulse (depending on indicator brightness)Indicator 1 OFF: less than 0.2 V
23	---	Not used	---
24* 1	DR MEMORY SEAT SW IND2	Outputs driving position memory switch indicator 2 signal	Indicator 2 ON: pulse (depending on indicator brightness)Indicator 2 OFF: less than 0.2 V
25	P/W RR R SW RLY DOWN	Drives right rear power window motor	With right rear power window moving to DOWN using power window master switch: about battery voltage If none of above conditions are met: less than 0.2 V
26	P/W RR R SW RLY UP	Drives right rear power window motor	With right rear power window moving to UP using power window master switch: about battery voltage If none of above conditions are met: less than 0.2 V
27	---	Not used	---
28	---	Not used	---
29	GND	Power window master switch ground	Less than 0.2 V at all times

Terminal number	Terminal name	Description	Signal
30	P/W SW ILLUMI	Outputs illumination signal	With combination light switch PARKING: about battery voltage With combination light switch OFF: less than 0.2 V
31	B-CAN_L	Communication line	---
32	B-CAN_H	Communication line	---

Terminal number	Terminal name	Description	Signal
33	P/W DR MTR PLSA	Detects driver's power window motor hall IC unit (pulser) signal	---
34	P/W DR MTR VCC	Drives driver's power window motor hall IC (pulser) unit	With door multiplex control unit is wakeup mode and driver's power window motor operation: about battery voltage If none of above conditions are met: less than 0.2 V
35	P/W DR MTR PLSB	Detects driver's power window motor hall IC unit (pulser) signal	---
36	LIN(P/W)	Communication line	---
37	+B BACK UP	+B power source	About battery voltage at all times

*1: With DPMS

*2: With mirror defogger

REAR POWER WINDOW SWITCH CONNECTOR FOR INPUTS AND OUTPUTS

Connector Index
Left Rear Power Window Switch 10P Connector
Right Rear Power Window Switch 10P Connector

Left Rear Power Window Switch Connector (female terminals)

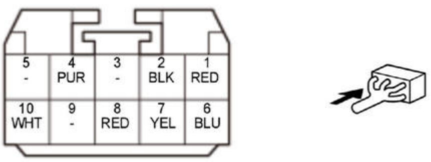

Terminal number	Terminal name	Description	Signal
1	P/W RR L MTR DOWN	Drives left rear power window motor	With left rear power window motor DOWN operation: about battery voltage If none of above conditions are met: less than 0.2 V

Terminal number	Terminal name	Description	Signal
2	GND	Left rear power window switch ground	Less than 0.2 V at all times
3	---	Not used	---
4	+B P/W RR L	+B power source	About battery voltage at all times
5	---	Not used	---
6	P/W RR L MTR UP	Drives left rear power window motor	With left rear power window motor UP operation: about battery voltage If none of above conditions are met: less than 0.2 V
7	P/W RR L SW RLY UP	Drives left rear power window motor	With left rear power window moving to UP using power window master switch: about battery voltage If none of above conditions are met: less than 0.2 V
8	P/W RR L SW RLY DOWN	Drives left rear power window motor	With left rear power window moving to DOWN using power window master switch: about battery voltage If none of above conditions are met: less than 0.2 V
9	---	Not used	---
10	P/W SW ILLUMI	Detects illumination signal	With combination light switch PARKING: about battery voltage With combination light switch OFF: less than 0.2 V

Right Rear Power Window Switch Connector (female terminals)

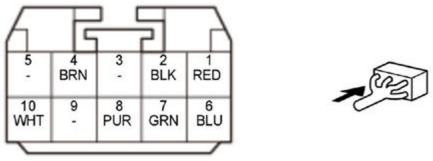

Terminal number	Terminal name	Description	Signal
1	P/W RR R MTR DOWN	Drives right rear power window motor	With right rear power window motor DOWN operation: about battery voltage If none of above conditions are met: less than 0.2 V
2	GND	Right rear power window switch ground	Less than 0.2 V at all times
3	---	Not used	---
4	+B P/W RR R	+B power source	About battery voltage at all times
5	---	Not used	---
6	P/W RR R MTR UP	Drives right rear power window motor	With right rear power window motor UP operation: about battery voltage If

Terminal number	Terminal name	Description	Signal
			none of above conditions are met: less than 0.2 V
7	P/W RR R SW RLY UP	Drives right rear power window motor	With right rear power window moving to UP using power window master switch: about battery voltage If none of above conditions are met: less than 0.2 V
8	P/W RR R SW RLY DOWN	Drives right rear power window motor	With right rear power window moving to DOWN using power window master switch: about battery voltage If none of above conditions are met: less than 0.2 V
9	---	Not used	---
10	P/W SW ILLUMI	Detects illumination signal	With combination light switch PARKING: about battery voltage With combination light switch OFF: less than 0.2 V

INPUT TEST

FRONT PASSENGER'S POWER WINDOW SWITCH INPUT TEST

NOTE:

- Make sure the fuses associated with the system is OK.
- If you are troubleshooting multiple DTCs, be sure to follow the instructions in **B-CAN System Diagnosis Test Mode A** .

1. Turn the vehicle to the OFF (LOCK) mode.

2. Disconnect the front passenger's power window switch 37P connector.

Front Passenger's Power Window Switch 37P Connector (female terminals)

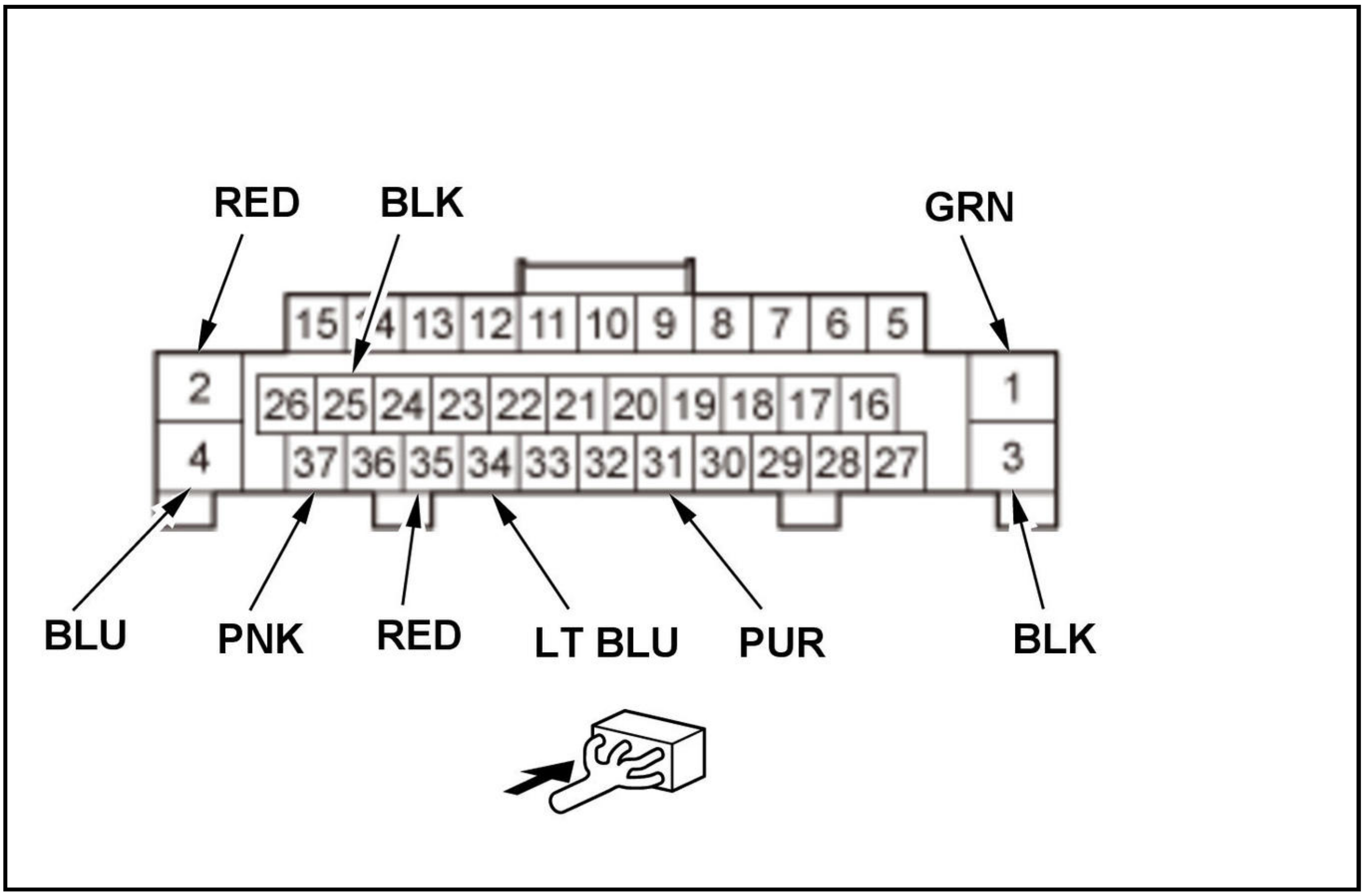

3. Inspect the connector and socket terminals to be sure they are all making good contact:

- If the terminals are bent, loose, or corroded, repair them as necessary, and recheck the system.
- If the terminals are OK, go to step 4.

4. With the connector still disconnected, do the following input tests:

- If any test indicates a problem, find and correct the cause, then recheck the system.
- If all the input tests prove OK, go to step 5.

Cavity	Wire	Test condition	Test: Desired result	Possible cause if desired result is not obtained
4*2	BLU*RED	Connect terminals No. 4 and No. 1, and terminals No. 2 and No. 3 with jumper wires.	Check front passenger's power window motor operation: The front passenger's power window should close.	• Faulty front passenger's power window motor • Poor ground (G401) • An open or high resistance in the wire
		Connect terminals No. 2 and No. 1, and terminals No. 4 and No. 3 with jumper wires.	Check front passenger's power window motor operation: The front passenger's power window should open.	
25* 1	BLK	Disconnect the front passenger's power window motor 6P connector	Check for continuity between terminal No. 25 and front passenger's power window motor 6P connector terminal No. 4: There should be continuity.	An open or high resistance in the wire

Cavity	Wire	Test condition	Test: Desired result	Possible cause if desired result is not obtained
34	LT BLU	Disconnect these connectors: • Power window master switch 37P connector • Panoramic glass roof motor-control unit 14P connector* 2 • Moonroof motor-control unit 14P connector* 3	Check for continuity between terminal No. 34 and power window master switch 37P connector terminal No. 36: There should be continuity.	An open in the LIN(P/W) wire
			Check for continuity between terminal No. 34 and panoramic glass roof motor-control unit 14P connector terminal No. 12: There should be continuity.	An open in the LIN(P/W) wire
			Check for continuity between terminal No. 34 and moonroof motor-control unit 14P connector terminal No. 12: There should be continuity.	An open in the LIN(P/W) wire
			Check for continuity to ground: There should be no continuity.	A short to ground in the LIN(P/W) wire

*1: With front power windows AUTO UP/DOWN function

*2: With panoramic glass roof

*3: With moonroof

5. Reconnect the connector, and do the following input tests:

- If any test indicates a problem, find and correct the cause, then recheck the system.
- If all the input tests prove OK, replace the front passenger's power window switch .

NOTE: After replacing the front passenger's power window switch, do the resetting the power window control unit.

Cavity	Wire	Test condition	Test: Desired result	Possible cause if desired result is not obtained
1	GRN	Under all conditions	Measure the voltage to ground: There should be battery voltage.	An open or high resistance in the wire
3	BLK	In all power modes	Measure the voltage to ground: There should be less than 0.2 V.	• Poor ground (G401) • An open or high resistance in the ground wire
31*	PUR	Vehicle ON mode	Measure the voltage to ground: There should be battery voltage.	• Faulty front passenger's power window motor • A short to ground in the wire

Cavity	Wire	Test condition	Test: Desired result	Possible cause if desired result is not obtained
35*	RED	Vehicle ON mode, and front passenger's power window moving up or down	Measure the voltage between terminals No. 35 and No. 3:An analog meter should alternate between 0 V and 5 V (a digital voltmeter should read about 2.5 V while the window moves).	• Faulty front passenger's power window motor • An open or high resistance in the wire • A short to ground in the wire
37*	PNK	Vehicle ON mode, and front passenger's power window moving up or down	Measure the voltage between terminals No. 37 and No. 3:An analog meter should alternate between 0 V and 5 V (a digital voltmeter should read about 2.5 V while the window moves).	• Faulty front passenger's power window motor • An open or high resistance in the wire • A short to ground in the wire

*: With front power windows AUTO UP/DOWN function

POWER WINDOW MASTER SWITCH INPUT TEST

NOTE:

- Make sure the fuses associated with the system is OK.
- If you are troubleshooting multiple DTCs, be sure to follow the instructions in **B-CAN System Diagnosis Test Mode A** .

1. Turn the vehicle to the OFF (LOCK) mode.

2. Disconnect the power window master switch 37P connector.

Power Window Master Switch 37P Connector (female terminals)

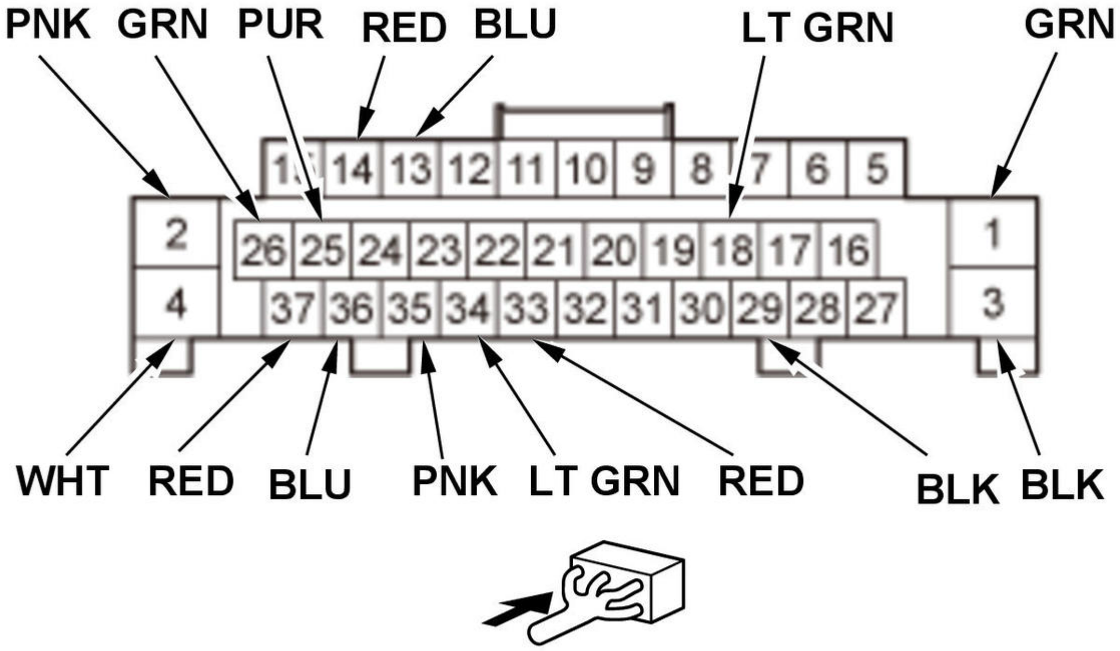

3. Inspect the connector and socket terminals to be sure they are all making good contact:

- If the terminals are bent, loose, or corroded, repair them as necessary, and recheck the system.
- If the terminals are OK, go to step 4.

4. With the connector still disconnected, do the following input tests:

- If any test indicates a problem, find and correct the cause, then recheck the system.
- If all the input tests prove OK, go to step 5.

Cavity	Wire	Test condition	Test: Desired result	Possible cause if desired result is not obtained
2*1	PNK*GRN	Connect terminals No. 2 and No. 4, and terminals No. 1 and No. 3 with jumper wires.	Check driver's power window motor operation: The driver's power window should close.	Faulty driver's power window motor Poor ground (G401) An open or high resistance in the wire
		Connect terminals No. 1 and No. 4, and terminals No. 2 and No. 3 with jumper wires.	Check driver's power window motor operation: The driver's power window should open.	
13*14	BLU*RED	Connect terminals No. 13 and No. 4 with a jumper wire.	Check left rear power window motor operation: The left rear power window should close.	Faulty left rear power window switch Faulty left rear power window motor Poor ground (G501) An open or high resistance in the wire
		Connect terminals No. 14 and No. 4 with a jumper wire.	Check left rear power window motor operation: The left rear	

Cavity	Wire	Test condition	Test: Desired result	Possible cause if desired result is not obtained
			power window should open.	

Cavity	Wire	Test condition	Test: Desired result	Possible cause if desired result is not obtained
26*25	GRN*PUR	Connect terminals No. 26 and No. 4 with a jumper wire.	Check right rear power window motor operation: The right rear power window should close.	• Faulty right rear power window switch • Faulty right rear power window motor • Poor ground (G502) • An open or high resistance in the wire
		Connect terminals No. 25 and No. 4 with a jumper wire.	Check right rear power window motor operation: The right rear power window should open.	
36	BLU	Disconnect these connectors: • Front passenger's power window switch 37P connector • Panoramic glass roof motor-control unit 14P connector* 1 • Moonroof motor-control unit 14P connector* 2	Check for continuity between terminal No. 36 and front passenger's power window switch 37P connector terminal No. 34: There should be continuity.	An open in the LIN(P/W) wire
			Check for continuity between terminal No. 36 and panoramic glass roof motor-control unit 14P connector terminal No. 12: There should be continuity.	An open in the LIN(P/W) wire
			Check for continuity between terminal No. 36 and moonroof motor-control unit 14P connector terminal No. 12: There should be continuity.	An open in the LIN(P/W) wire
			Check for continuity to ground: There should be no continuity.	A short to ground in the LIN(P/W) wire

*1: With panoramic glass roof

*2: With moonroof

Reconnect the connector, and do the following input tests:

- If any test indicates a problem, find and correct the cause, then recheck the system.
- If all the input tests prove OK, replace the power window master switch .

NOTE: After replacing the power window master switch, do the resetting the power window control unit.

Cavity	Wire	Test condition	Test: Desired result	Possible cause if desired result is not obtained
4	WHT	Under all conditions	Measure the voltage to ground: There should be battery voltage.	An open or high resistance in the wire
37	RED	Under all conditions	Measure the voltage to ground: There should be battery voltage.	An open or high resistance in the wire
18	LT GRN	Vehicle ON mode	Measure the voltage to ground: There should be battery voltage.	An open or high resistance in the wire
3	BLK	In all power modes	Measure the voltage to ground: There should be less than 0.2 V.	• Poor ground (G401) • An open or high resistance in the ground wire
29	BLK	In all power modes, disconnect the driver's power window motor 6P connector	Measure the voltage to ground: There should be less than 0.2 V.	• Poor ground (G401) • An open or high resistance in the ground wire

Cavity	Wire	Test condition	Test: Desired result	Possible cause if desired result is not obtained
34	LT GRN	Vehicle ON mode	Measure the voltage to ground: There should be battery voltage.	• Faulty driver's power window motor • An open or high resistance in the wire
33	RED	Vehicle ON mode, and driver's power window moving up or down	Measure the voltage between terminals No. 33 and No. 29:An analog meter should alternate between 0 V and 5 V (a digital voltmeter should read about 2.5 V while the window moves).	• Faulty driver's power window motor • An open or high resistance in the wire • A short to ground in the wire
35	PNK	Vehicle ON mode, and driver's power window moving up or down	Measure the voltage between terminals No. 35 and No. 29:An analog meter should alternate between 0 V and 5 V (a digital voltmeter should read about 2.5 V while the window moves).	• Faulty driver's power window motor • An open or high resistance in the wire • A short to ground in the wire

ADJUSTMENT

DOOR GLASS ADJUSTMENT

Adjustment

NOTE:

- How to read the torque specifications

- Check the door weatherstrip and the glass run channel for damage or deterioration, and replace them if necessary.

1. Door Panel - Remove
    - **Front**
    - **Rear**
2. Plastic Cover - Remove
    - **Front**
    - **Rear**
3. Door Glass - Adjustment

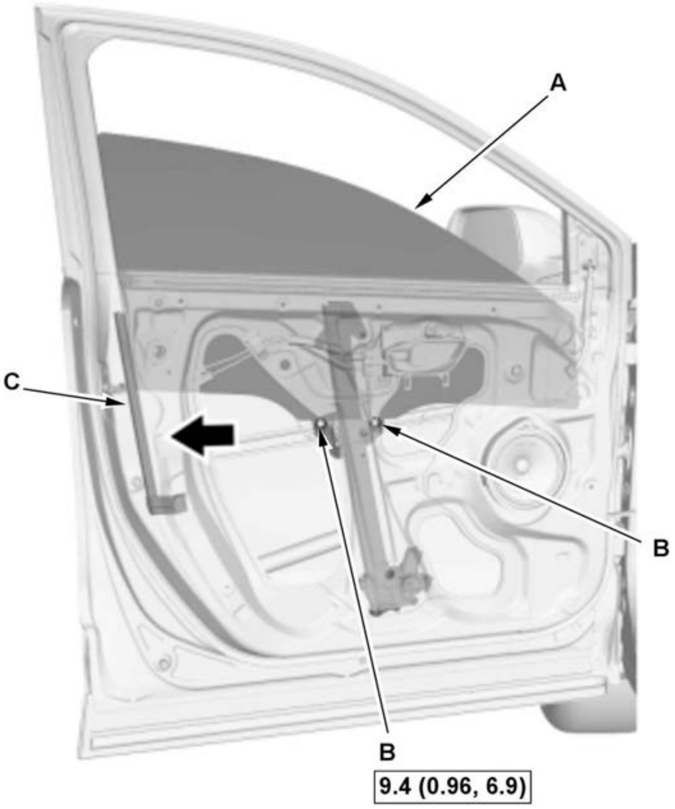 **Front Door** **Rear Door**	**NOTE:** Place the vehicle on a firm, level surface when adjusting the door glass. 1. Carefully lower the glass (A) until you can see the glass mounting bolts (B), then loosen them. 2. Push the glass against the glass run channel (C), then tighten the glass mounting bolts. 3. Check that the glass moves smoothly.

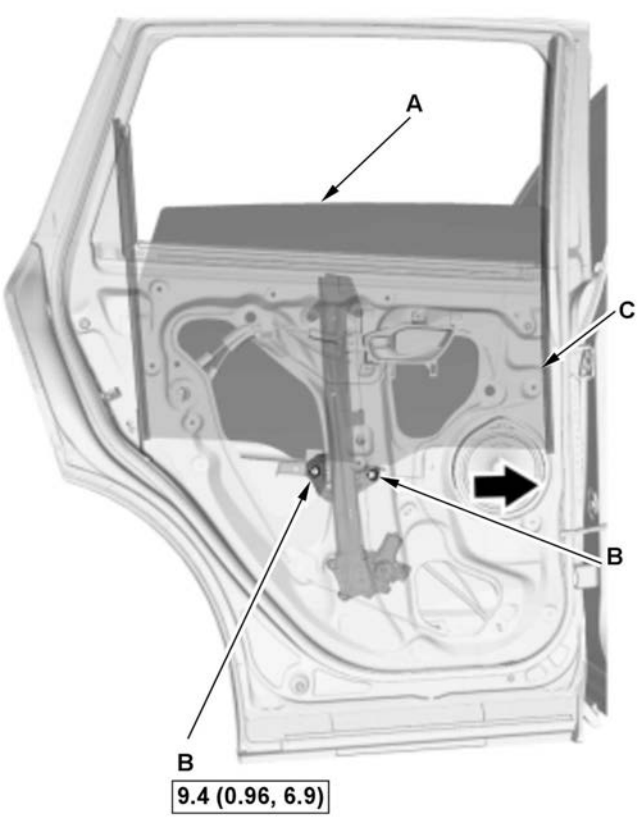	

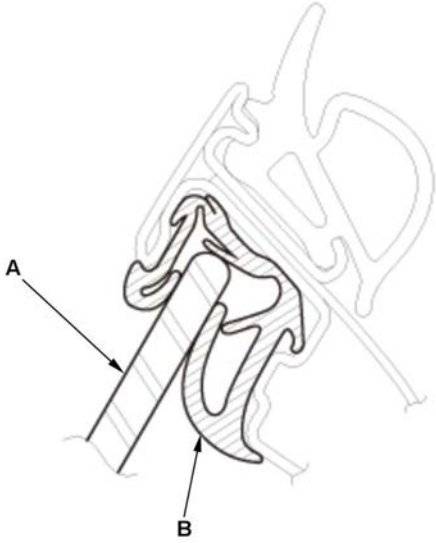	4. Raise the glass fully, and check for gaps. Also make sure that the glass (A) contacts the glass run channel (B) evenly.

4. Plastic Cover - Install
    - **Front**
    - **Rear**
5. Door Panel - Install
    - **Front**
    - **Rear**
6. Water Leaks - Check

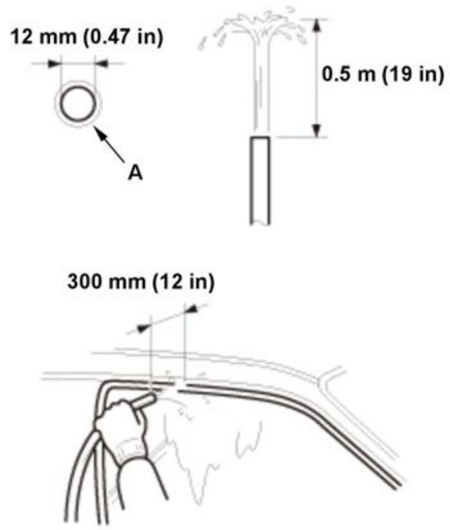
12 mm (0.47 in)
0.5 m (19 in)
A
300 mm (12 in)

1. Check for water leaks. Run water over the roof and on the sealing area as shown, and note these items:

- Use a 12 mm (0.47 in) diameter hose (A).
- Adjust the rate of water flow as shown.
- Do not use a nozzle.
- Hold the hose about 300 mm (12 in) away from the door.

7. **Power Window Control Unit - Reset**

TEST

POWER WINDOW MOTOR TEST

Test

Driver's

1. **Driver's Door Power Window Switch Panel - Remove**
2. Driver's Power Window Motor - Test

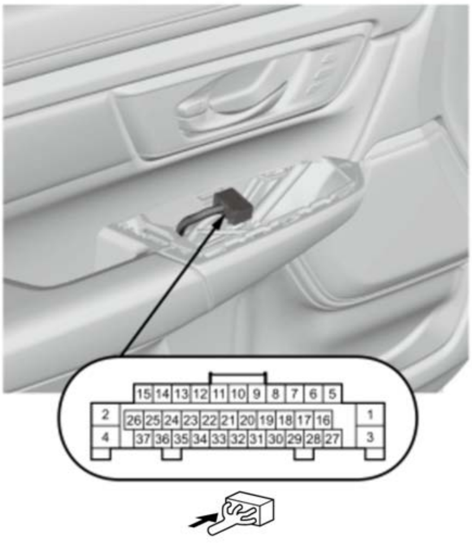
15 14 13 12 11 10 9 8 7 6 5
2 26 25 24 23 22 21 20 19 18 17 16 1
4 37 36 35 34 33 32 31 30 29 28 27 3

Direction \ Terminal	1	2
UP	⊖	⊕
DOWN	⊕	⊖

NOTE: Before testing, make sure not to short the power window motor circuit.

1. Remove the harness clips from the door panel as needed.

2. Test the motor in each direction by connecting 12 volt battery power and ground to the power window master switch connector according to the table. When the motor stops running, disconnect battery power immediately. If the motor does not run or fails to run smoothly, **remove the driver's door regulator** , then go to step 3.

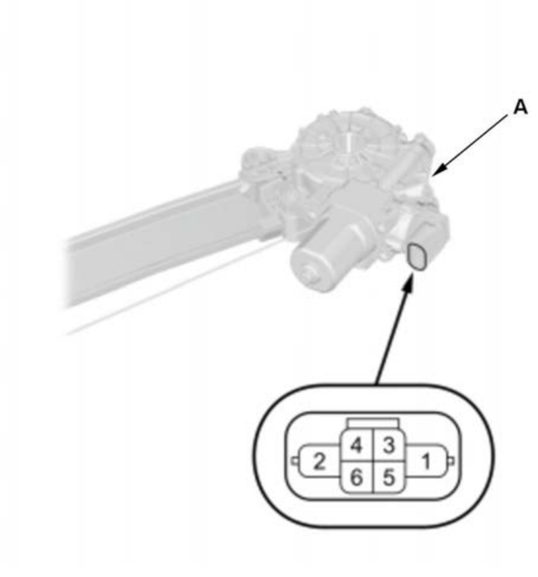

Terminal / Direction	1	2
UP	⊕	⊖
DOWN	⊖	⊕

3. **Remove the driver's door panel**

4. Test the driver's power window motor (A) by connecting battery power and ground according to the table. When the motor stops running, disconnect battery power immediately.

5. If the motor does not run or fails to run smoothly, the driver's power window motor is faulty; **replace the driver's door regulator** . If the motor runs smoothly, replace the wire harnesses or **adjust the driver's door glass**.

3. All Removed Parts - Install

1. Install the parts in the reverse order of removal.

4. **Power Window Control Unit - Reset**

Front Passenger's

5. **Front Passenger's Door Power Window Switch Panel - Remove**
6. Front Passenger's Power Window Motor - Test

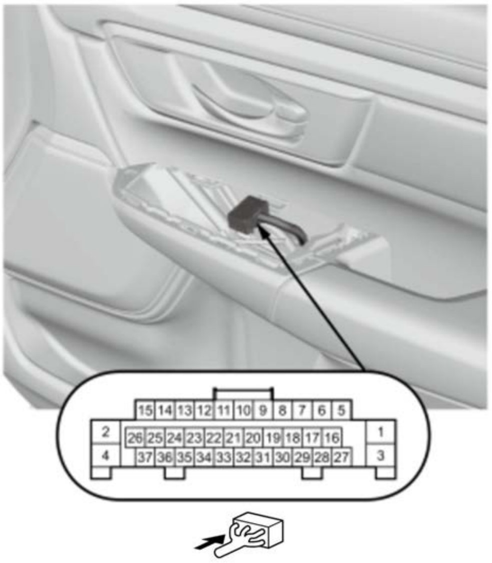

Terminal / Direction	2	4
UP	⊖	⊕
DOWN	⊕	⊖

NOTE: Before testing, make sure not to short the power window motor circuit.

1. Remove the harness clips from the door panel as needed.

2. Test the motor in each direction by connecting battery power and ground to the connector according to the table. When the motor stops running, disconnect battery power immediately. If the motor does not run or fails to run smoothly, **remove the front passenger's door regulator** , then go to step 3.

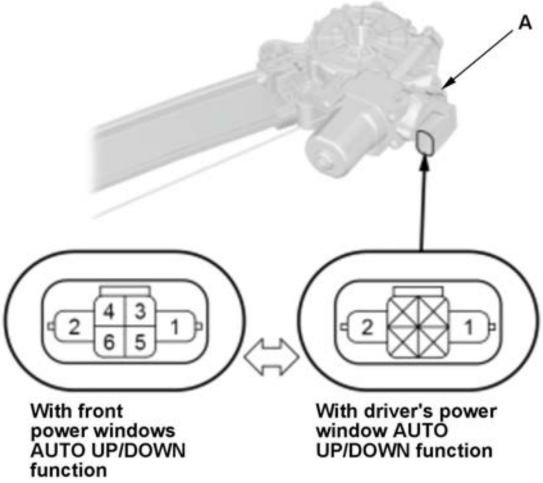
A
2
4
3
6
5
1
2
1
With front power windows AUTO UP/DOWN function
With driver's power window AUTO UP/DOWN function

Terminal Direction	1	2
UP	⊕	⊖
DOWN	⊖	⊕

3. **[Remove the front passenger's door panel]**

4. Test the front passenger's power window motor (A) by connecting battery power and ground according to the table. When the motor stops running, disconnect battery power immediately.

5. If the motor does not run or fails to run smoothly, the front passenger's power window motor is faulty; **replace the front passenger's door regulator** . If the motor runs smoothly, replace the wire harnesses or **adjust the front passenger's door glass**.

7. All Removed Parts - Install

1. Install the parts in the reverse order of removal.

8. **Power Window Control Unit - Reset**

Rear

9. **Rear Door Power Window Switch Panel - Remove**
10. Rear Power Window Motor - Test

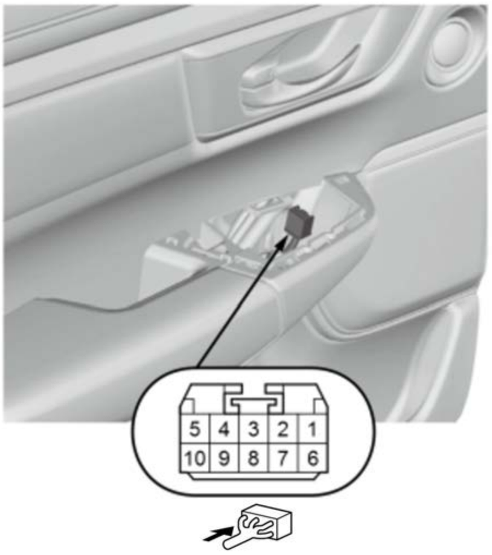

Terminal Direction	6	1
UP	⊕	⊖
DOWN	⊖	⊕

NOTE: Before testing, make sure not to short the power window motor circuit.

1. Test the motor rear power window in each direction by connecting battery power and ground at the connector according to the table. When the motor stops running, disconnect battery power immediately. If the motor does not run or fails to run smoothly, **remove the rear door regulator** , go to step 2.

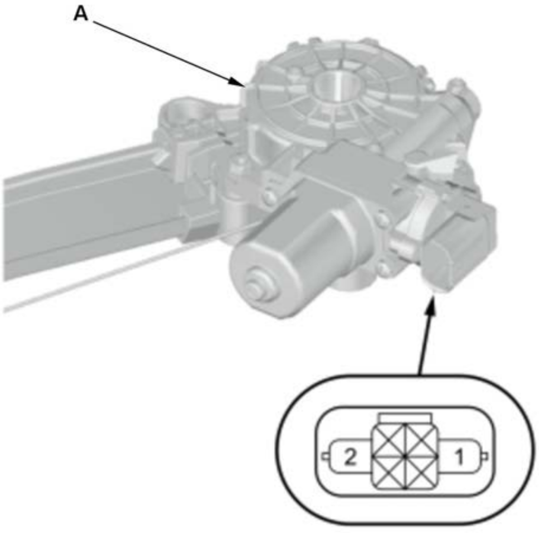

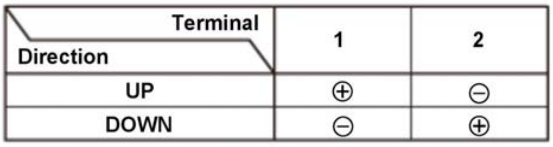

Terminal / Direction	1	2
UP	⊕	⊖
DOWN	⊖	⊕

2. **Remove the rear door panel**

3. Test the rear power window motor (A) by connecting power and ground according to the table. When the motor stops running, disconnect battery power immediately.

4. If the motor does not run or fails to run smoothly, the rear power window motor is faulty; **replace the rear door regulator** . If the motor runs smoothly, replace the wire harnesses or **adjust the rear door glass**.

11. All Removed Parts - Install

1. Install the parts in the reverse order of removal.

12. **Power Window Control Unit - Reset**

CIRCUIT DIAGRAM

POWER WINDOWS CIRCUIT DIAGRAM

With front power windows AUTO UP/DOWN function

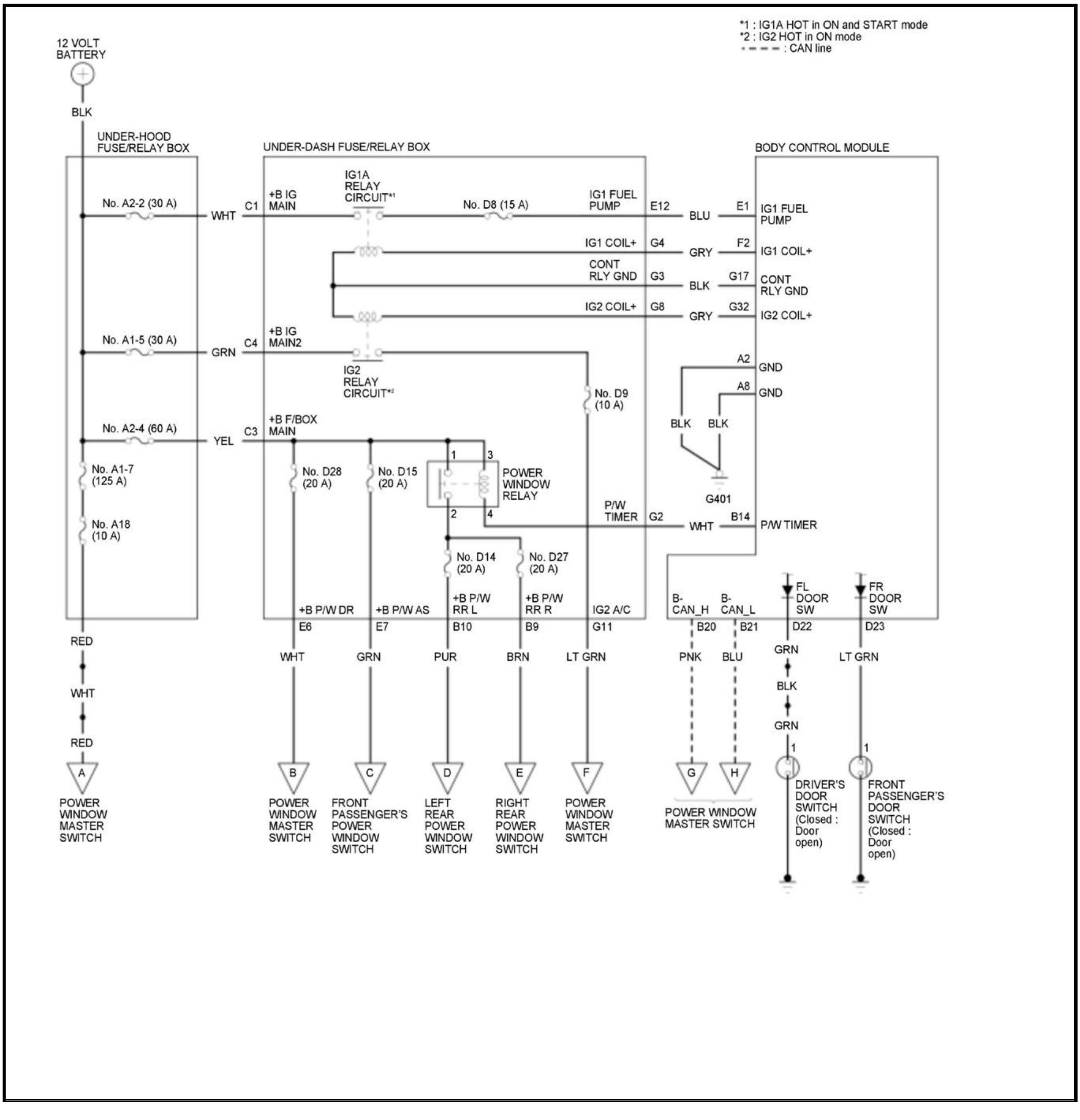
*1 : IG1A HOT in ON and START mode
*2 : IG2 HOT in ON mode
- - - - : CAN line
12 VOLT BATTERY
BLK
UNDER-HOOD FUSE/RELAY BOX
UNDER-DASH FUSE/RELAY BOX
BODY CONTROL MODULE
No. A2-2 (30 A)
WHT
C1
+B IG MAIN
IG1A RELAY CIRCUIT*1
No. D8 (15 A)
IG1 FUEL PUMP
E12
BLU
E1
IG1 FUEL PUMP
IG1 COIL+
G4
GRY
F2
IG1 COIL+
CONT RLY GND
G3
BLK
G17
CONT RLY GND
IG2 COIL+
G8
GRY
G32
IG2 COIL+
No. A1-5 (30 A)
GRN
C4
+B IG MAIN2
IG2 RELAY CIRCUIT*2
No. D9 (10 A)
A2
GND
A8
GND
BLK
BLK
G401
No. A2-4 (60 A)
YEL
C3
+B F/BOX MAIN
No. A1-7 (125 A)
No. A18 (10 A)
No. D28 (20 A)
No. D15 (20 A)
1
3
2
4
POWER WINDOW RELAY
P/W TIMER
G2
WHT
B14
P/W TIMER
No. D14 (20 A)
No. D27 (20 A)
+B P/W DR
+B P/W AS
+B P/W RR L
+B P/W RR R
IG2 A/C
E6
E7
B10
B9
G11
B-CAN_H
B-CAN_L
B20
B21
FL DOOR SW
FR DOOR SW
D22
D23
RED
WHT
RED
WHT
GRN
PUR
BRN
LT GRN
PNK
BLU
GRN
BLK
GRN
LT GRN
1
1
A
B
C
D
E
F
G
H
POWER WINDOW MASTER SWITCH
POWER WINDOW MASTER SWITCH
FRONT PASSENGER'S POWER WINDOW SWITCH
LEFT REAR POWER WINDOW SWITCH
RIGHT REAR POWER WINDOW SWITCH
POWER WINDOW MASTER SWITCH
POWER WINDOW MASTER SWITCH
DRIVER'S DOOR SWITCH (Closed : Door open)
FRONT PASSENGER'S DOOR SWITCH (Closed : Door open)

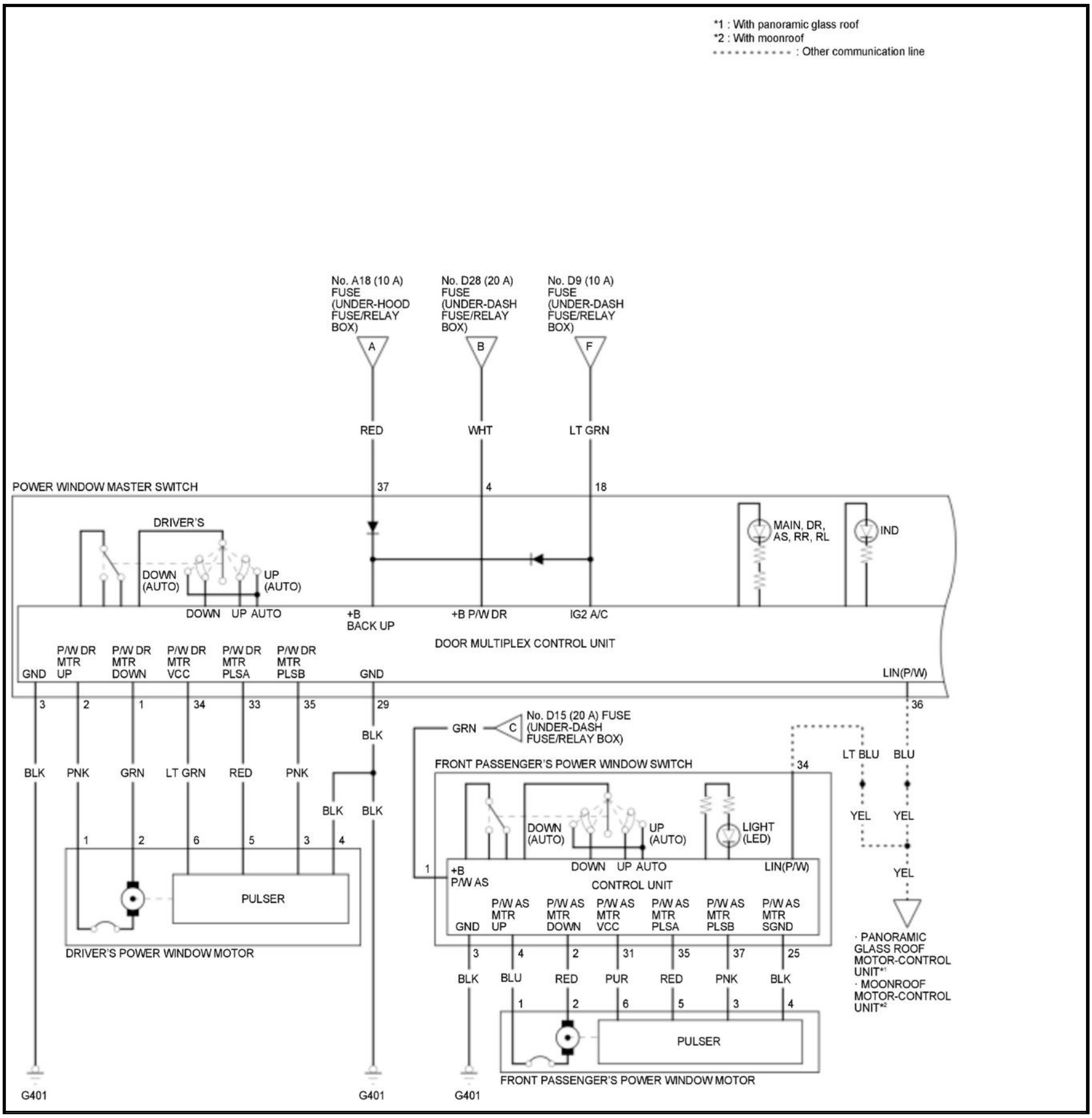
*1 : With panoramic glass roof
*2 : With moonroof
: Other communication line
No. A18 (10 A) FUSE (UNDER-HOOD FUSE/RELAY BOX)
No. D28 (20 A) FUSE (UNDER-DASH FUSE/RELAY BOX)
No. D9 (10 A) FUSE (UNDER-DASH FUSE/RELAY BOX)
A
B
F
RED
WHT
LT GRN
POWER WINDOW MASTER SWITCH
37
4
18
DRIVER'S
DOWN (AUTO)
UP (AUTO)
MAIN, DR, AS, RR, RL
IND
DOWN UP AUTO
+B BACK UP
+B P/W DR
IG2 A/C
DOOR MULTIPLEX CONTROL UNIT
GND
P/W DR MTR UP
P/W DR MTR DOWN
P/W DR MTR VCC
P/W DR MTR PLSA
P/W DR MTR PLSB
GND
LIN(P/W)
3
2
1
34
33
35
29
36
BLK
GRN
C
No. D15 (20 A) FUSE (UNDER-DASH FUSE/RELAY BOX)
BLK
PNK
GRN
LT GRN
RED
PNK
FRONT PASSENGER'S POWER WINDOW SWITCH
34
LT BLU
BLU
BLK
BLK
YEL
YEL
1
2
6
5
3
4
DOWN (AUTO)
UP (AUTO)
LIGHT (LED)
1
+B P/W AS
DOWN UP AUTO
LIN(P/W)
CONTROL UNIT
PULSER
YEL
DRIVER'S POWER WINDOW MOTOR
GND
P/W AS MTR UP
P/W AS MTR DOWN
P/W AS MTR VCC
P/W AS MTR PLSA
P/W AS MTR PLSB
P/W AS MTR SGND
3
4
2
31
35
37
25
BLK
BLU
RED
PUR
RED
PNK
BLK
· PANORAMIC GLASS ROOF MOTOR-CONTROL UNIT*1
· MOONROOF MOTOR-CONTROL UNIT*2
1
2
6
5
3
4
PULSER
FRONT PASSENGER'S POWER WINDOW MOTOR
G401
G401
G401

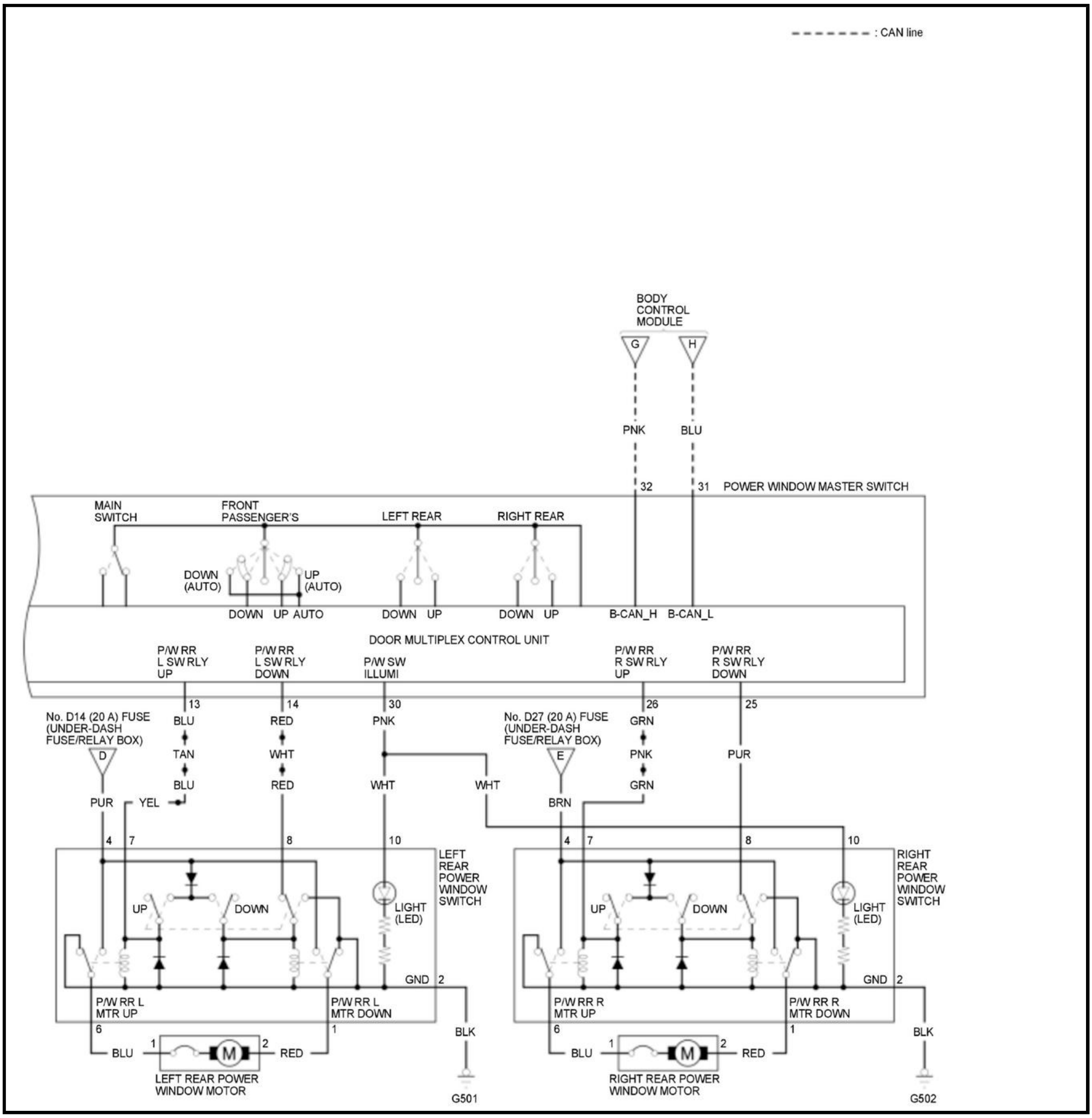
: CAN line
BODY CONTROL MODULE
G
H
PNK
BLU
32
31
POWER WINDOW MASTER SWITCH
MAIN SWITCH
FRONT PASSENGER'S
LEFT REAR
RIGHT REAR
DOWN (AUTO)
UP (AUTO)
DOWN
UP
AUTO
DOWN
UP
DOWN
UP
B-CAN_H
B-CAN_L
DOOR MULTIPLEX CONTROL UNIT
P/W RR L SW RLY UP
P/W RR L SW RLY DOWN
P/W SW ILLUMI
P/W RR R SW RLY UP
P/W RR R SW RLY DOWN
13
14
30
26
25
No. D14 (20 A) FUSE (UNDER-DASH FUSE/RELAY BOX)
No. D27 (20 A) FUSE (UNDER-DASH FUSE/RELAY BOX)
D
E
BLU
TAN
BLU
RED
WHT
RED
PNK
WHT
WHT
GRN
PNK
GRN
PUR
PUR
YEL
BRN
4
7
8
10
4
7
8
10
LEFT REAR POWER WINDOW SWITCH
RIGHT REAR POWER WINDOW SWITCH
UP
DOWN
UP
DOWN
LIGHT (LED)
LIGHT (LED)
GND
2
GND
2
P/W RR L MTR UP
P/W RR L MTR DOWN
P/W RR R MTR UP
P/W RR R MTR DOWN
6
1
6
1
BLU
1
M
2
RED
BLU
1
M
2
RED
LEFT REAR POWER WINDOW MOTOR
RIGHT REAR POWER WINDOW MOTOR
BLK
BLK
G501
G502

With driver's power window AUTO UP/DOWN function

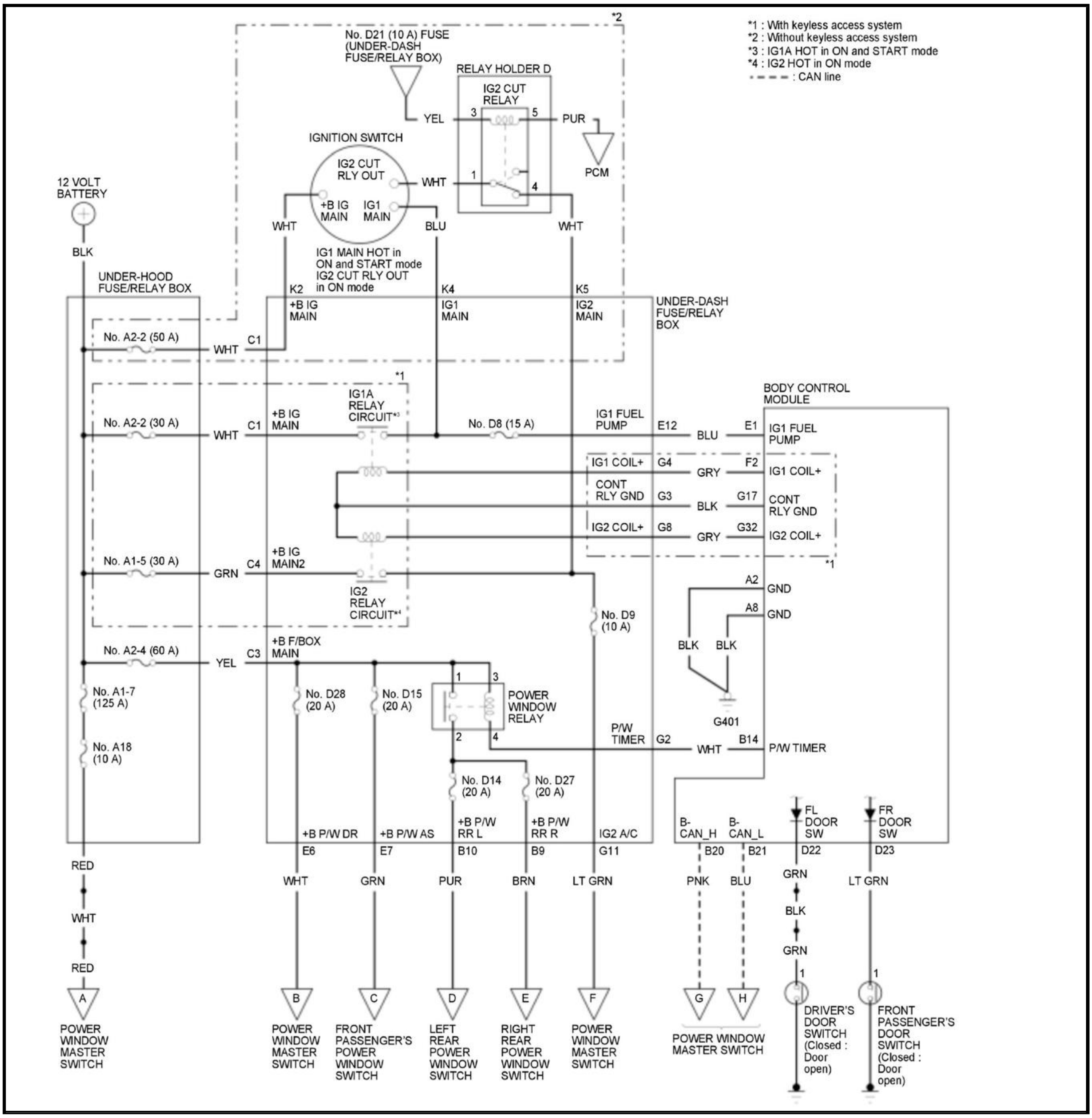
*1 : With keyless access system
*2 : Without keyless access system
*3 : IG1A HOT in ON and START mode
*4 : IG2 HOT in ON mode
: CAN line
*2
No. D21 (10 A) FUSE (UNDER-DASH FUSE/RELAY BOX)
RELAY HOLDER D
IG2 CUT RELAY
YEL
3
5
PUR
PCM
IGNITION SWITCH
IG2 CUT RLY OUT
WHT
1
4
+B IG MAIN
IG1 MAIN
WHT
BLU
WHT
12 VOLT BATTERY
BLK
IG1 MAIN HOT in ON and START mode
IG2 CUT RLY OUT in ON mode
UNDER-HOOD FUSE/RELAY BOX
K2
+B IG MAIN
K4
IG1 MAIN
K5
IG2 MAIN
UNDER-DASH FUSE/RELAY BOX
No. A2-2 (50 A)
WHT
C1
*1
IG1A RELAY CIRCUIT*3
BODY CONTROL MODULE
No. A2-2 (30 A)
WHT
C1
+B IG MAIN
No. D8 (15 A)
IG1 FUEL PUMP
E12
BLU
E1
IG1 FUEL PUMP
IG1 COIL+
G4
GRY
F2
IG1 COIL+
CONT RLY GND
G3
BLK
G17
CONT RLY GND
IG2 COIL+
G8
GRY
G32
IG2 COIL+
*1
No. A1-5 (30 A)
GRN
C4
+B IG MAIN2
IG2 RELAY CIRCUIT*4
A2
GND
A8
GND
No. D9 (10 A)
BLK
BLK
G401
No. A2-4 (60 A)
YEL
C3
+B F/BOX MAIN
1
3
POWER WINDOW RELAY
No. A1-7 (125 A)
No. D28 (20 A)
No. D15 (20 A)
2
4
P/W TIMER
G2
WHT
B14
P/W TIMER
No. A18 (10 A)
No. D14 (20 A)
No. D27 (20 A)
+B P/W DR
+B P/W AS
+B P/W RR L
+B P/W RR R
IG2 A/C
B-CAN_H
B-CAN_L
FL DOOR SW
FR DOOR SW
E6
E7
B10
B9
G11
B20
B21
D22
D23
RED
WHT
PUR
GRN
BRN
LT GRN
PNK
BLU
GRN
LT GRN
WHT
BLK
RED
GRN
1
1
A
B
C
D
E
F
G
H
POWER WINDOW MASTER SWITCH
POWER WINDOW MASTER SWITCH
FRONT PASSENGER'S POWER WINDOW SWITCH
LEFT REAR POWER WINDOW SWITCH
RIGHT REAR POWER WINDOW SWITCH
POWER WINDOW MASTER SWITCH
POWER WINDOW MASTER SWITCH
DRIVER'S DOOR SWITCH (Closed : Door open)
FRONT PASSENGER'S DOOR SWITCH (Closed : Door open)

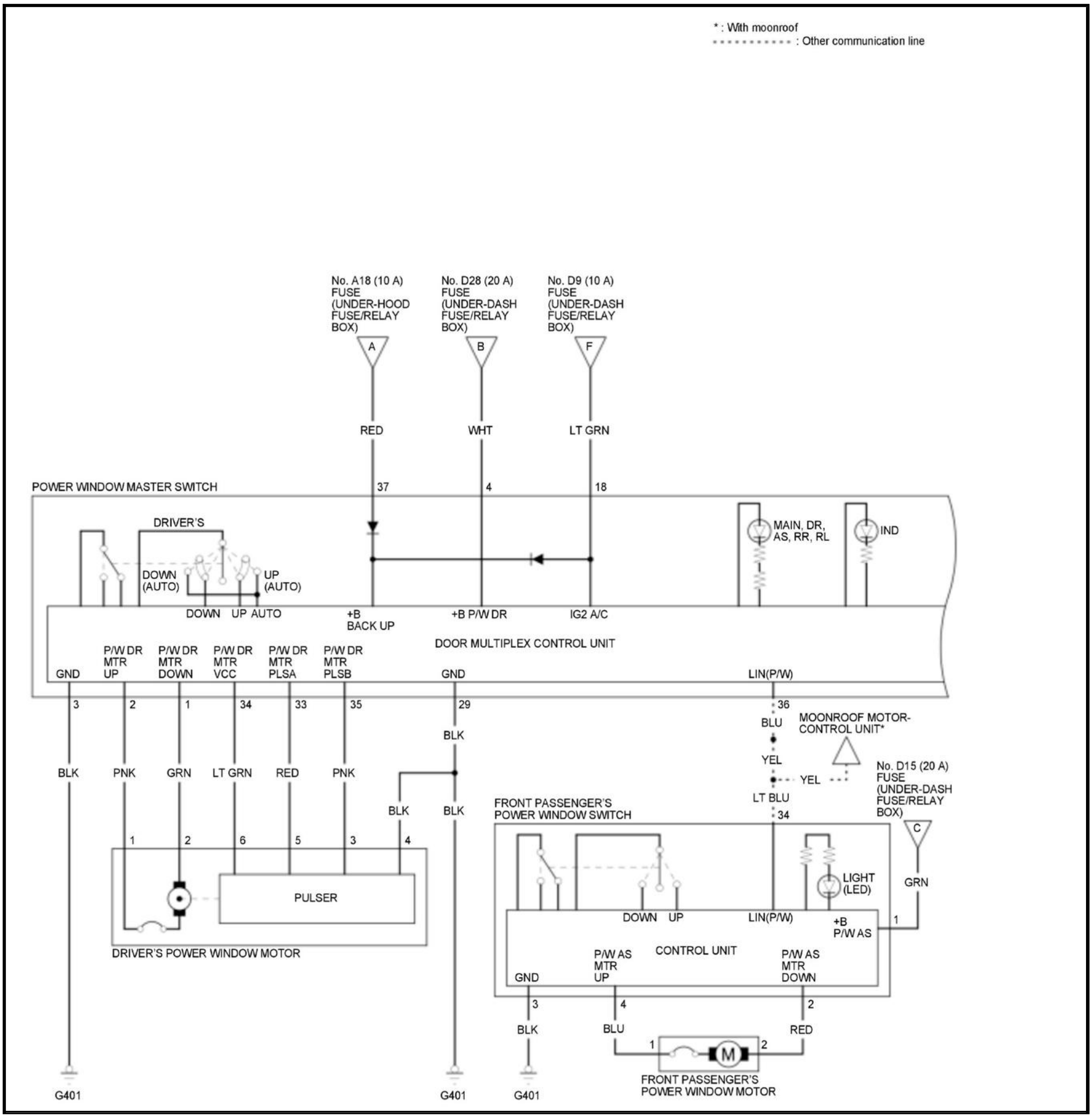
* : With moonroof
: Other communication line
No. A18 (10 A) FUSE (UNDER-HOOD FUSE/RELAY BOX)
No. D28 (20 A) FUSE (UNDER-DASH FUSE/RELAY BOX)
No. D9 (10 A) FUSE (UNDER-DASH FUSE/RELAY BOX)
A
B
F
RED
WHT
LT GRN
POWER WINDOW MASTER SWITCH
37
4
18
DRIVER'S
DOWN (AUTO)
UP (AUTO)
MAIN, DR, AS, RR, RL
IND
DOWN
UP
AUTO
+B BACK UP
+B P/W DR
IG2 A/C
DOOR MULTIPLEX CONTROL UNIT
GND
P/W DR MTR UP
P/W DR MTR DOWN
P/W DR MTR VCC
P/W DR MTR PLSA
P/W DR MTR PLSB
GND
LIN(P/W)
3
2
1
34
33
35
29
36
BLU
MOONROOF MOTOR-CONTROL UNIT*
YEL
YEL
LT BLU
No. D15 (20 A) FUSE (UNDER-DASH FUSE/RELAY BOX)
C
BLK
PNK
GRN
LT GRN
RED
PNK
BLK
BLK
FRONT PASSENGER'S POWER WINDOW SWITCH
34
1
2
6
5
3
4
PULSER
DRIVER'S POWER WINDOW MOTOR
LIGHT (LED)
GRN
DOWN
UP
LIN(P/W)
+B P/W AS
1
CONTROL UNIT
GND
P/W AS MTR UP
P/W AS MTR DOWN
3
4
2
BLK
BLU
RED
1
M
2
FRONT PASSENGER'S POWER WINDOW MOTOR
G401
G401
G401

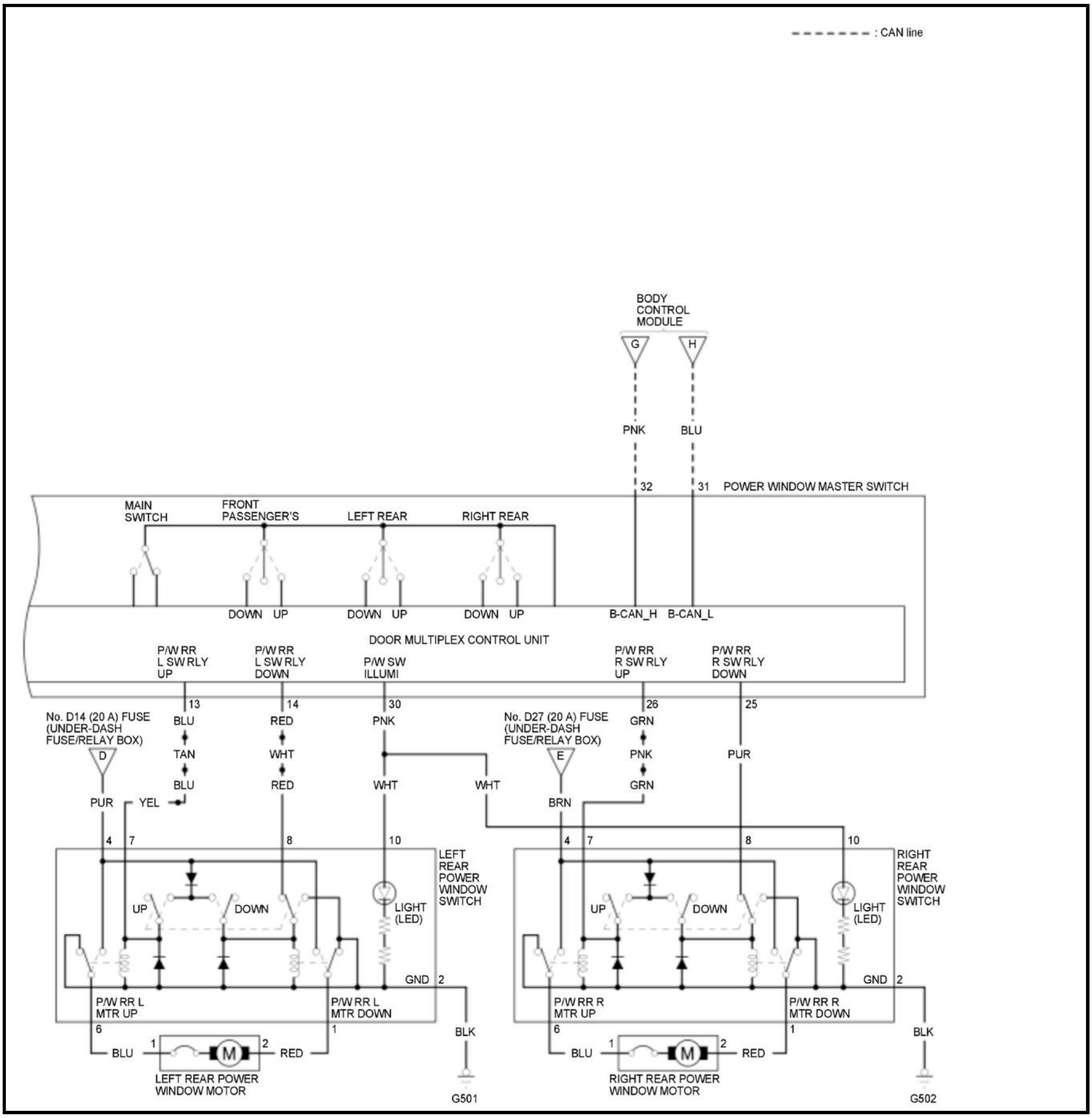

- - - - - - - : CAN line
BODY CONTROL MODULE
G
H
PNK
BLU
32
31
POWER WINDOW MASTER SWITCH
MAIN SWITCH
FRONT PASSENGER'S
LEFT REAR
RIGHT REAR
DOWN
UP
DOWN
UP
DOWN
UP
B-CAN_H
B-CAN_L
DOOR MULTIPLEX CONTROL UNIT
P/W RR L SW RLY UP
P/W RR L SW RLY DOWN
P/W SW ILLUMI
P/W RR R SW RLY UP
P/W RR R SW RLY DOWN
13
14
30
26
25
No. D14 (20 A) FUSE (UNDER-DASH FUSE/RELAY BOX)
D
BLU
TAN
BLU
RED
WHT
RED
PNK
WHT
WHT
No. D27 (20 A) FUSE (UNDER-DASH FUSE/RELAY BOX)
E
GRN
PNK
GRN
PUR
BRN
PUR
YEL
4
7
8
10
4
7
8
10
LEFT REAR POWER WINDOW SWITCH
UP
DOWN
LIGHT (LED)
GND
2
P/W RR L MTR UP
P/W RR L MTR DOWN
6
1
BLK
BLU
1
M
2
RED
LEFT REAR POWER WINDOW MOTOR
G501
RIGHT REAR POWER WINDOW SWITCH
UP
DOWN
LIGHT (LED)
GND
2
P/W RR R MTR UP
P/W RR R MTR DOWN
6
1
BLK
BLU
1
M
2
RED
RIGHT REAR POWER WINDOW MOTOR
G502

LEARNING RESET CLEAR

RESETTING THE POWER WINDOW CONTROL UNIT

Procedure

Reset the power window control unit after doing any of the following actions:

- Power window regulator replacement, removal, or installation.
- Glass run channel replacement, removal, or installation.
- Door glass replacement, removal, or installation.
- Power window master switch replacement.
- Front passenger's power window switch replacement*.
- Power is disconnected from the power window master switch or front passenger's power window switch* while the power window timer is ON.

NOTE: If the front passenger's power window has lost power when the vehicle off timer is ON, it cannot be operated from the driver's switch and must be reset from the front passenger's power window switch*.

*: With front power windows AUTO UP/DOWN function

Without HDS

1. Power Window Control Unit - Reset

    1. Turn the vehicle to the ON mode.

    2. Move the power window all the way down with the driver's window DOWN switch.

    NOTE: Steps must be done within 5 seconds of each other.

    3. Turn the vehicle to the OFF (LOCK) mode.

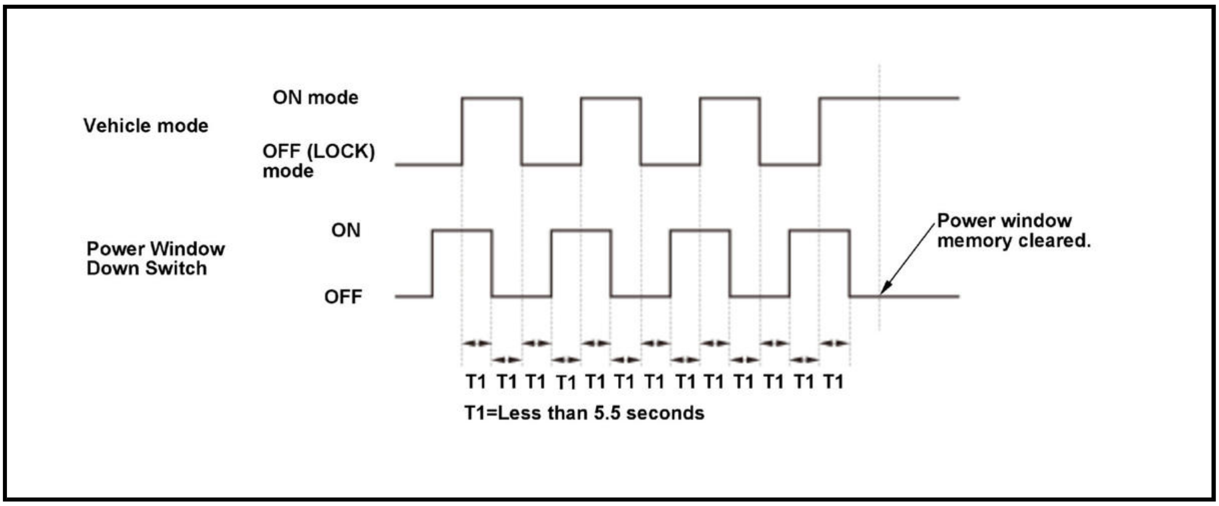
Vehicle mode
ON mode
OFF (LOCK) mode
Power Window Down Switch
ON
OFF
Power window memory cleared.
T1 T1 T1 T1 T1 T1 T1 T1 T1 T1 T1 T1 T1
T1=Less than 5.5 seconds

    4. Press and hold the power window DOWN switch.

    5. Turn the vehicle to the ON mode.

    6. Release the power window DOWN switch.

    7. Repeat step 3-6 three more times.

    8. Wait at least 1 second.

    9. Confirm that AUTO UP and AUTO DOWN do not work. If AUTO UP and DOWN work, go back to step 1.

    10. Move the power window all the way down with the power window DOWN switch.

    11. Pull up and hold the power window UP switch until the window reaches the fully closed position, then continue to hold the switch for at least 1 second.

    12. Confirm that the power window control unit is reset by using the driver's window AUTO UP and AUTO DOWN functions:

        - If the window still does not work in AUTO, repeat the procedure several times, paying close attention to the 5 seconds time limit between steps.
        - If the window still does not work, refer to the master switch input test.

    With HDS

2. Power Window Control Unit - Reset

1. **Connect the HDS to the data link connector**

2. Select BODY ELECTRICAL from the SYSTEM SELECTION MENU.

3. From the BODY ELECTRICAL SYSTEM SELECT menu, select POWER WINDOWS.

4. From the MODE MENU, select ADJUSTMENT.

5. From the ADJUSTMENT MENU, select POWER WINDOW RESET FOR DRIVER SIDE (PASSENGER'S SIDE).

6. Follow the prompts on the screen.

7. Confirm that the power window control unit is reset by using the power window AUTO UP and AUTO DOWN function.

COMPONENT LOCATION INDEX

GLASS COMPONENT LOCATION INDEX

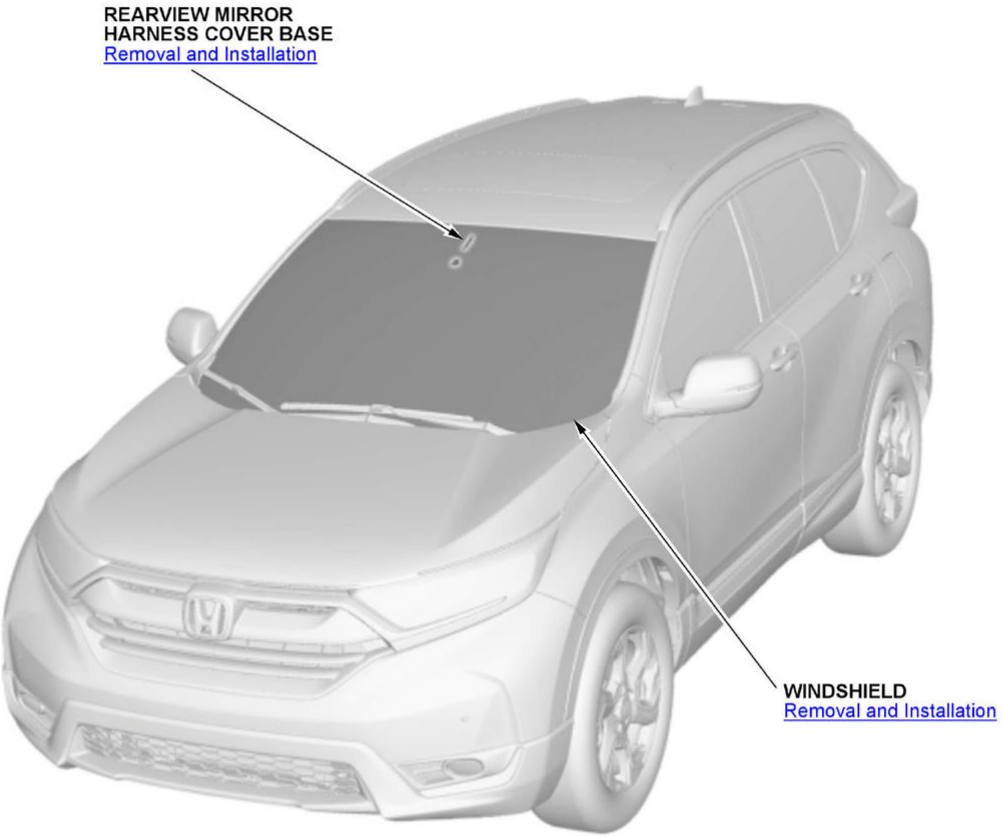
REARVIEW MIRROR
HARNESS COVER BASE
Removal and Installation
WINDSHIELD
Removal and Installation

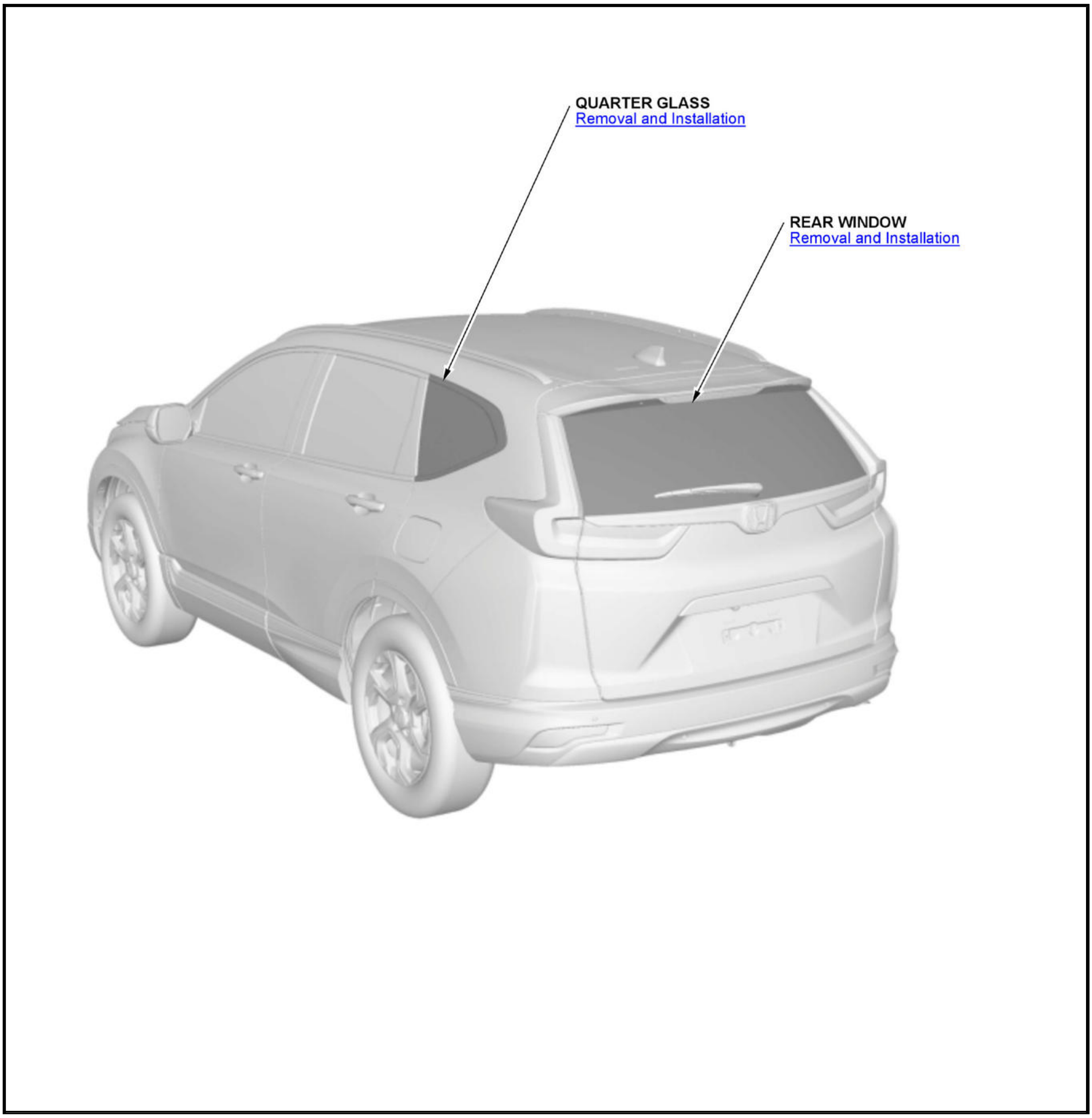
QUARTER GLASS
Removal and Installation
REAR WINDOW
Removal and Installation

POWER WINDOWS COMPONENT LOCATION INDEX

For relationships between signals in a system, refer to System Diagram.

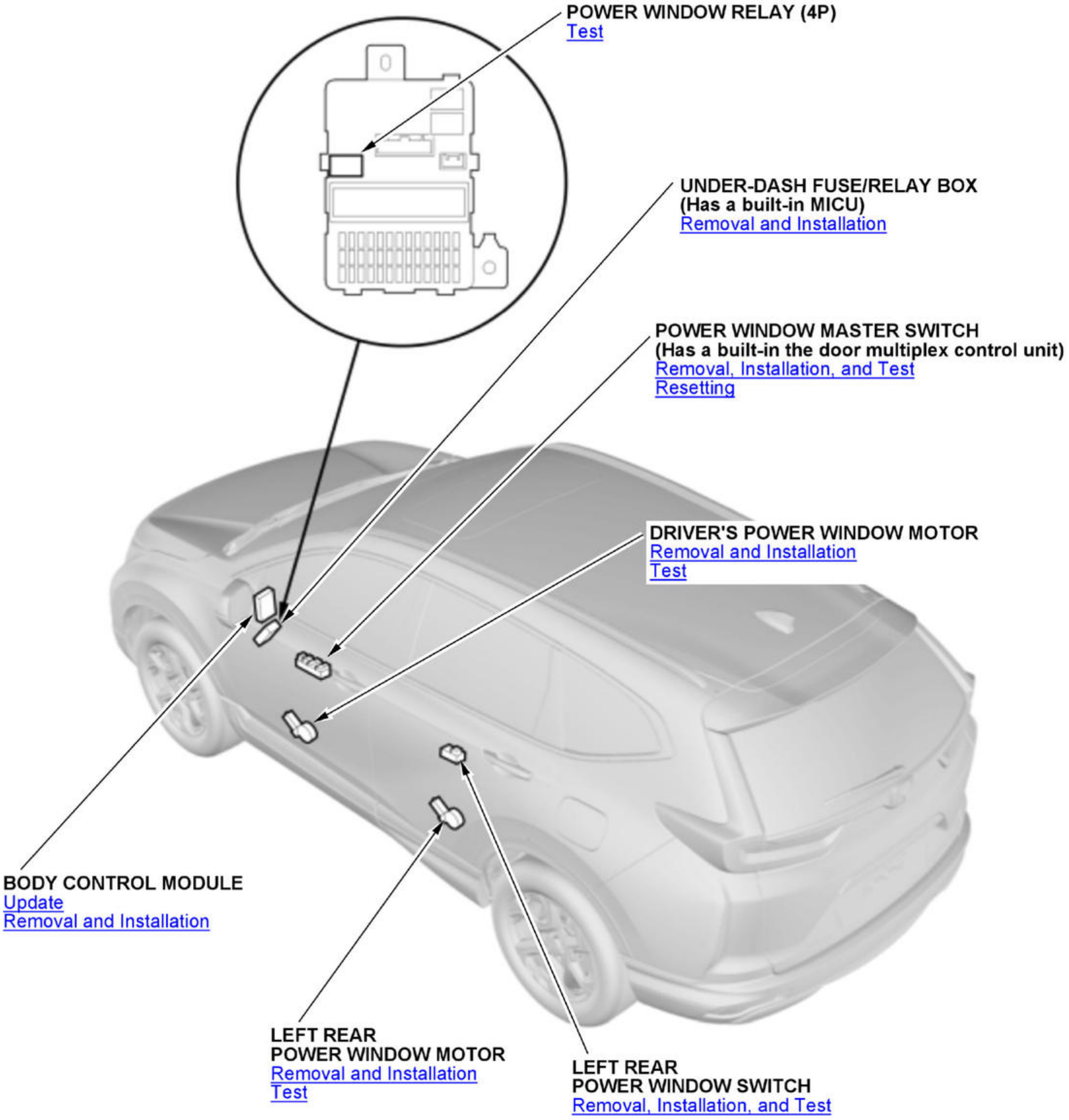
POWER WINDOW RELAY (4P)
Test
UNDER-DASH FUSE/RELAY BOX
(Has a built-in MICU)
Removal and Installation
POWER WINDOW MASTER SWITCH
(Has a built-in the door multiplex control unit)
Removal, Installation, and Test
Resetting
DRIVER'S POWER WINDOW MOTOR
Removal and Installation
Test
BODY CONTROL MODULE
Update
Removal and Installation
LEFT REAR
POWER WINDOW MOTOR
Removal and Installation
Test
LEFT REAR
POWER WINDOW SWITCH
Removal, Installation, and Test

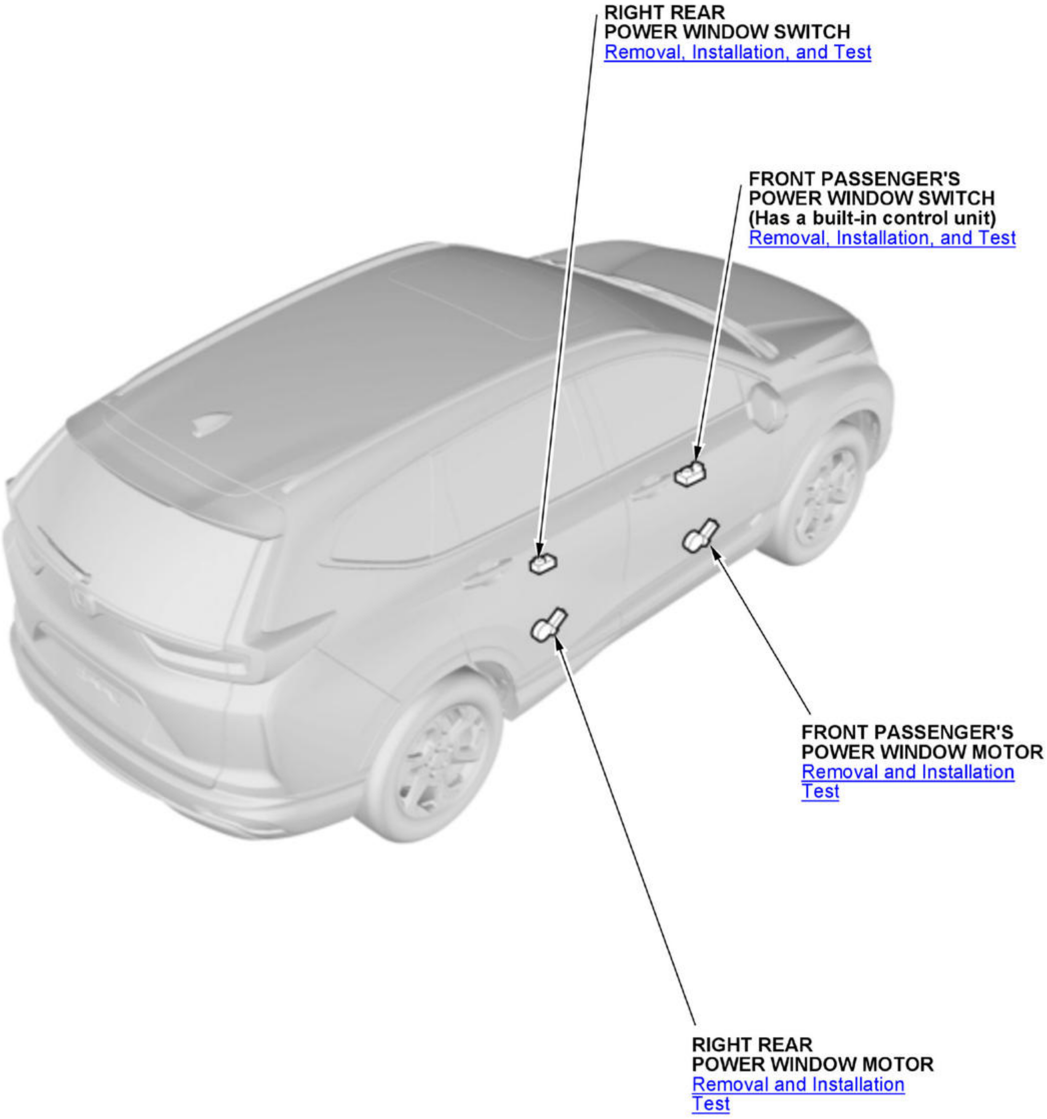
RIGHT REAR
POWER WINDOW SWITCH
Removal, Installation, and Test
FRONT PASSENGER'S
POWER WINDOW SWITCH
(Has a built-in control unit)
Removal, Installation, and Test
FRONT PASSENGER'S
POWER WINDOW MOTOR
Removal and Installation
Test
RIGHT REAR
POWER WINDOW MOTOR
Removal and Installation
Test

DTC ADVANCED DIAGNOSTICS

DTC C0049-7A (ELECTRIC BRAKE BOOSTER CONTROL UNIT TYPE A) (2017 2018 2019)

DTC C0049-7A : Brake Fluid Leak or Seal Failure

NOTE

- Initial Diagnosis:

  The initial on-board diagnosis occurs right after the vehicle condition is turned to the ON mode, and the brake system indicator (red or amber) comes on, and continues until the indicator goes off.

- Regular Diagnosis:

  The regular on-board diagnosis begins right after the brake system indicator (red or amber) goes off, and it continues until the vehicle condition is turned to the OFF (LOCK) mode.

- Review "How to Troubleshoot the Electric Brake Booster System" before doing the DTC troubleshooting procedure.
- Test-drive the vehicle according to local traffic conditions and regulations. Do not test-drive on a lift unless specified.
- The possible causes shown may not be a complete list of all potential problems, and it is possible that there may be other causes.

Confirmation Procedure	With the Driving Pattern: • Start the engine. • Press the brake pedal several times.
Execution	Regular Diagnosis
Duration	About 1 second
DTC Type	• 1 drive cycle
Fail Safe Action	• Stop automatic brake hold function • Stop ACC function* • Stop CMBS function*
Possible Cause	• Master cylinder internal failure • Brake fluid leakage

*: With ACC

DTC C1250-98 (ELECTRIC BRAKE BOOSTER CONTROL UNIT TYPE A) (2017 2018 2019)

DTC C1250-98 : ECU Internal Malfunction (Over Temperature)

NOTE

- Initial Diagnosis:

The initial on-board diagnosis occurs right after the vehicle condition is turned to the ON mode, and the brake system indicator (red or amber) comes on, and continues until the indicator goes off.

- Regular Diagnosis:

  The regular on-board diagnosis begins right after the brake system indicator (red or amber) goes off, and it continues until the vehicle condition is turned to the OFF (LOCK) mode.

- Review "How to Troubleshoot the Electric Brake Booster System" before doing the DTC troubleshooting procedure.
- Test-drive the vehicle according to local traffic conditions and regulations. Do not test-drive on a lift unless specified.
- The possible causes shown may not be a complete list of all potential problems, and it is possible that there may be other causes.

Confirmation Procedure	With the Driving Pattern: • Turn the vehicle to the ON mode.
Execution	Initial Diagnosis/Regular Diagnosis
Duration	About 1 second
DTC Type	• 1 drive cycle • Brake system indicator (amber) on
Fail Safe Action	• Degrade servo control performance
Possible Cause	• Electric brake booster overheating • Electric brake booster internal failure

DTC C1250-98 (ELECTRIC BRAKE BOOSTER CONTROL UNIT TYPE B) (2020 2021)

DTC C1250-98 : ECU Internal Malfunction (Over Temperature)

NOTE

- Initial Diagnosis:

  The initial on-board diagnosis occurs right after the vehicle condition is turned to the ON mode, and the brake system indicator (red or amber) comes on, and continues until the indicator goes off.

- Regular Diagnosis:

  The regular on-board diagnosis begins right after the brake system indicator (red or amber) goes off, and it continues until the vehicle condition is turned to the OFF (LOCK) mode.

- Review "How to Troubleshoot the Electric Brake Booster System" before doing the DTC troubleshooting procedure.
- Test-drive the vehicle according to local traffic conditions and regulations. Do not test-drive on a lift unless specified.
- The possible causes shown may not be a complete list of all potential problems, and it is possible that there may be other causes.

Confirmation Procedure	With the Driving Pattern: • Turn the vehicle to the ON mode.

Execution	Initial Diagnosis/Regular Diagnosis
Duration	About 1 second
DTC Type	• 1 drive cycle • Brake system indicator (red) on (Dependant upon the conditions) • Brake system indicator (amber) on
Fail Safe Action	• Stop servo control function or degrade servo control performance (Dependant upon the conditions) • Stop automatic brake hold function or degrade automatic brake hold performance (Dependant upon the conditions) • Stop LSF function or degrade LSF performance (Dependant upon the conditions) • Stop ACC function or degrade ACC performance (Dependant upon the conditions) • Stop CMBS function or degrade CMBS performance (Dependant upon the conditions)
Possible Cause	• Electric brake booster overheating • Electric brake booster internal failure

DTC C1C01-96 (ELECTRIC BRAKE BOOSTER CONTROL UNIT TYPE A) (2017 2018 2019)

DTC C1C01-96 : Brake Pedal Stroke Sensor Component Internal Failure

NOTE

- Initial Diagnosis:

  The initial on-board diagnosis occurs right after the vehicle condition is turned to the ON mode, and the brake system indicator (red or amber) comes on, and continues until the indicator goes off.

- Regular Diagnosis:

  The regular on-board diagnosis begins right after the brake system indicator (red or amber) goes off, and it continues until the vehicle condition is turned to the OFF (LOCK) mode.

- Review "How to Troubleshoot the Electric Brake Booster System" before doing the DTC troubleshooting procedure.
- Test-drive the vehicle according to local traffic conditions and regulations. Do not test-drive on a lift unless specified.
- The possible causes shown may not be a complete list of all potential problems, and it is possible that there may be other causes.

Confirmation Procedure	With the Driving Pattern: • Turn the vehicle to the ON mode.
Execution	Initial Diagnosis/Regular Diagnosis
Duration	About 1 second
DTC Type	• 1 drive cycle • Brake system indicator (red) on

	- Brake system indicator (amber) on
Fail Safe Action	- Stop servo control function - Stop automatic brake hold function - Stop ACC function* - Stop CMBS function*
Possible Cause	- Electric brake booster internal failure (Brake pedal stroke sensor)

*: With ACC

DTC C1C01-96 (ELECTRIC BRAKE BOOSTER CONTROL UNIT TYPE B) (2020 2021)

DTC C1C01-96 : Brake Pedal Stroke Sensor Component Internal Failure

NOTE

- Initial Diagnosis:

  The initial on-board diagnosis occurs right after the vehicle condition is turned to the ON mode, and the brake system indicator (red or amber) comes on, and continues until the indicator goes off.

- Regular Diagnosis:

  The regular on-board diagnosis begins right after the brake system indicator (red or amber) goes off, and it continues until the vehicle condition is turned to the OFF (LOCK) mode.

- Review "How to Troubleshoot the Electric Brake Booster System" before doing the DTC troubleshooting procedure.
- Test-drive the vehicle according to local traffic conditions and regulations. Do not test-drive on a lift unless specified.
- The possible causes shown may not be a complete list of all potential problems, and it is possible that there may be other causes.

Confirmation Procedure	With the Driving Pattern: - Start the engine. - Test-drive the vehicle without pressing the brake pedal for 1 minute or more. (Be careful of the surrounding traffic conditions.) - Turn the vehicle to the OFF (LOCK) mode, then wait for 3 minutes or more. - Turn the vehicle to the ON mode, then wait for 1 minute or more. (Do not press the brake pedal during 1 minute elapse.)
Execution	Initial Diagnosis/Regular Diagnosis
Duration	-
DTC Type	- 1 drive cycle or 2 drive cycle (Dependant upon the conditions) - Brake system indicator (red) on - Brake system indicator (amber) on
Fail Safe Action	- Stop servo control function - Stop automatic brake hold function

	- Stop LSF function - Stop ACC function - Stop CMBS function
Possible Cause	- Electric brake booster internal failure (Brake pedal stroke sensor)

DTC C1C02-11 (ELECTRIC BRAKE BOOSTER CONTROL UNIT TYPE B) (2020 2021)

DTC C1C02-11 : Brake Pedal Stroke Sensor Signal Circuit 1 Short To Ground

NOTE

- Initial Diagnosis:

  The initial on-board diagnosis occurs right after the vehicle condition is turned to the ON mode, and the brake system indicator (red or amber) comes on, and continues until the indicator goes off.

- Regular Diagnosis:

  The regular on-board diagnosis begins right after the brake system indicator (red or amber) goes off, and it continues until the vehicle condition is turned to the OFF (LOCK) mode.

- Review "How to Troubleshoot the Electric Brake Booster System" before doing the DTC troubleshooting procedure.
- Test-drive the vehicle according to local traffic conditions and regulations. Do not test-drive on a lift unless specified.
- The possible causes shown may not be a complete list of all potential problems, and it is possible that there may be other causes.

Confirmation Procedure	With the Driving Pattern: - Turn the vehicle to the ON mode.
Execution	Initial Diagnosis/Regular Diagnosis
Duration	About 1 second
DTC Type	- 1 drive cycle - Brake system indicator (red) on - Brake system indicator (amber) on
Fail Safe Action	- Stop servo control function - Stop automatic brake hold function - Stop LSF function - Stop ACC function - Stop CMBS function
Possible Cause	- Short to ground between the electric brake booster and the brake pedal stroke sensor (PTS1 line) - Electric brake booster internal failure

DTC C1C02-12 (ELECTRIC BRAKE BOOSTER CONTROL UNIT TYPE A) (2017 2018 2019)

DTC C1C02-12 : Brake Pedal Stroke Sensor Signal Circuit 1 Short To Battery

NOTE

- Initial Diagnosis:

  The initial on-board diagnosis occurs right after the vehicle condition is turned to the ON mode, and the brake system indicator (red or amber) comes on, and continues until the indicator goes off.

- Regular Diagnosis:

  The regular on-board diagnosis begins right after the brake system indicator (red or amber) goes off, and it continues until the vehicle condition is turned to the OFF (LOCK) mode.

- Review "How to Troubleshoot the Electric Brake Booster System" before doing the DTC troubleshooting procedure.
- Test-drive the vehicle according to local traffic conditions and regulations. Do not test-drive on a lift unless specified.
- The possible causes shown may not be a complete list of all potential problems, and it is possible that there may be other causes.

Confirmation Procedure	With the Driving Pattern: • Turn the vehicle to the ON mode.
Execution	Initial Diagnosis/Regular Diagnosis
Duration	About 1 second
DTC Type	• 1 drive cycle • Brake system indicator (red) on • Brake system indicator (amber) on
Fail Safe Action	• Stop servo control function • Stop automatic brake hold function • Stop ACC function* • Stop CMBS function*
Possible Cause	• Short to power between the electric brake booster and the brake pedal stroke sensor (PTS1 line) • Electric brake booster internal failure

*: With ACC

DTC C1C02-14 (ELECTRIC BRAKE BOOSTER CONTROL UNIT TYPE A) (2017 2018 2019)

DTC C1C02-14 : Brake Pedal Stroke Sensor Signal Circuit 1 Short To Ground or Open

NOTE

- Initial Diagnosis:

  The initial on-board diagnosis occurs right after the vehicle condition is turned to the ON mode, and the brake system indicator (red or amber) comes on, and continues until the indicator goes off.

- Regular Diagnosis:

  The regular on-board diagnosis begins right after the brake system indicator (red or amber) goes off, and it continues until the vehicle condition is turned to the OFF (LOCK) mode.

- Review "How to Troubleshoot the Electric Brake Booster System" before doing the DTC troubleshooting procedure.
- Test-drive the vehicle according to local traffic conditions and regulations. Do not test-drive on a lift unless specified.
- The possible causes shown may not be a complete list of all potential problems, and it is possible that there may be other causes.

Confirmation Procedure	With the Driving Pattern: • Turn the vehicle to the ON mode.
Execution	Initial Diagnosis/Regular Diagnosis
Duration	About 1 second
DTC Type	• 1 drive cycle • Brake system indicator (red) on • Brake system indicator (amber) on
Fail Safe Action	• Stop servo control function • Stop automatic brake hold function • Stop ACC function* • Stop CMBS function*
Possible Cause	• Open or Short to ground between the electric brake booster and the brake pedal stroke sensor (PTS1 line) • Open between the electric brake booster and the brake pedal stroke sensor (PTS VS line) • Open between the electric brake booster and the brake pedal stroke sensor (PTS GND line) • Electric brake booster internal failure

*: With ACC

DTC C1C02-15 (ELECTRIC BRAKE BOOSTER CONTROL UNIT TYPE B) (2020 2021)

DTC C1C02-15 : Brake Pedal Stroke Sensor Signal Circuit 1 Short To Battery or Open

NOTE

- Initial Diagnosis:

  The initial on-board diagnosis occurs right after the vehicle condition is turned to the ON mode, and the brake system indicator (red or amber) comes on, and continues until the indicator goes off.

- Regular Diagnosis:

  The regular on-board diagnosis begins right after the brake system indicator (red or amber) goes off, and it continues until the vehicle condition is turned to the OFF (LOCK) mode.

- Review "How to Troubleshoot the Electric Brake Booster System" before doing the DTC troubleshooting procedure.
- Test-drive the vehicle according to local traffic conditions and regulations. Do not test-drive on a lift unless specified.

- The possible causes shown may not be a complete list of all potential problems, and it is possible that there may be other causes.

Confirmation Procedure	With the Driving Pattern: • Turn the vehicle to the ON mode.
Execution	Initial Diagnosis/Regular Diagnosis
Duration	About 1 second
DTC Type	• 1 drive cycle • Brake system indicator (red) on • Brake system indicator (amber) on
Fail Safe Action	• Stop servo control function • Stop automatic brake hold function • Stop LSF function • Stop ACC function • Stop CMBS function
Possible Cause	• Open or short to power between the electric brake booster and the brake pedal stroke sensor (PTS1 line) • Open between the electric brake booster and the brake pedal stroke sensor (PTS VS line) • Open between the electric brake booster and the brake pedal stroke sensor (PTS GND line) • Electric brake booster internal failure

DTC C1C03-11 (ELECTRIC BRAKE BOOSTER CONTROL UNIT TYPE A) (2017 2018 2019)

DTC C1C03-11 : Brake Pedal Stroke Sensor Signal Circuit 2 Short To Ground

NOTE

- Initial Diagnosis:

  The initial on-board diagnosis occurs right after the vehicle condition is turned to the ON mode, and the brake system indicator (red or amber) comes on, and continues until the indicator goes off.

- Regular Diagnosis:

  The regular on-board diagnosis begins right after the brake system indicator (red or amber) goes off, and it continues until the vehicle condition is turned to the OFF (LOCK) mode.

- Review "How to Troubleshoot the Electric Brake Booster System" before doing the DTC troubleshooting procedure.
- Test-drive the vehicle according to local traffic conditions and regulations. Do not test-drive on a lift unless specified.
- The possible causes shown may not be a complete list of all potential problems, and it is possible that there may be other causes.

Confirmation Procedure	With the Driving Pattern: • Turn the vehicle to the ON mode.
Execution	Initial Diagnosis/Regular Diagnosis
Duration	About 1 second
DTC Type	• 1 drive cycle • Brake system indicator (red) on • Brake system indicator (amber) on
Fail Safe Action	• Stop servo control function • Stop automatic brake hold function • Stop ACC function* • Stop CMBS function*
Possible Cause	• Short to ground between the electric brake booster and the brake pedal stroke sensor (PTS2 line) • Electric brake booster internal failure

*: With ACC

DTC C1C03-11 (ELECTRIC BRAKE BOOSTER CONTROL UNIT TYPE B) (2020 2021)

DTC C1C03-11 : Brake Pedal Stroke Sensor Signal Circuit 2 Short To Ground

NOTE

- Initial Diagnosis:

  The initial on-board diagnosis occurs right after the vehicle condition is turned to the ON mode, and the brake system indicator (red or amber) comes on, and continues until the indicator goes off.

- Regular Diagnosis:

  The regular on-board diagnosis begins right after the brake system indicator (red or amber) goes off, and it continues until the vehicle condition is turned to the OFF (LOCK) mode.

- Review "How to Troubleshoot the Electric Brake Booster System" before doing the DTC troubleshooting procedure.
- Test-drive the vehicle according to local traffic conditions and regulations. Do not test-drive on a lift unless specified.
- The possible causes shown may not be a complete list of all potential problems, and it is possible that there may be other causes.

Confirmation Procedure	With the Driving Pattern: - Turn the vehicle to the ON mode.
Execution	Initial Diagnosis/Regular Diagnosis
Duration	About 1 second
DTC Type	- 1 drive cycle - Brake system indicator (red) on - Brake system indicator (amber) on
Fail Safe Action	- Stop servo control function - Stop automatic brake hold function - Stop LSF function - Stop ACC function - Stop CMBS function
Possible Cause	- Short to ground between the electric brake booster and the brake pedal stroke sensor (PTS2 line) - Electric brake booster internal failure

DTC C1C03-15 (ELECTRIC BRAKE BOOSTER CONTROL UNIT TYPE A) (2017 2018 2019)

DTC C1C03-15 : Brake Pedal Stroke Sensor Signal Circuit 2 Short To Battery or Open

NOTE

- Initial Diagnosis:

  The initial on-board diagnosis occurs right after the vehicle condition is turned to the ON mode, and the brake system indicator (red or amber) comes on, and continues until the indicator goes off.

- Regular Diagnosis:

  The regular on-board diagnosis begins right after the brake system indicator (red or amber) goes off, and it continues until the vehicle condition is turned to the OFF (LOCK) mode.

- Review "How to Troubleshoot the Electric Brake Booster System" before doing the DTC troubleshooting procedure.
- Test-drive the vehicle according to local traffic conditions and regulations. Do not test-drive on a lift unless specified.
- The possible causes shown may not be a complete list of all potential problems, and it is possible that there may be other causes.

Confirmation Procedure	With the Driving Pattern: - Turn the vehicle to the ON mode.
Execution	Initial Diagnosis/Regular Diagnosis
Duration	About 1 second
DTC Type	- 1 drive cycle - Brake system indicator (red) on

	- Brake system indicator (amber) on
Fail Safe Action	- Stop servo control function - Stop automatic brake hold function - Stop ACC function* - Stop CMBS function*
Possible Cause	- Open or Short to power between the electric brake booster and the brake pedal stroke sensor (PTS2 line) - Open between the electric brake booster and the brake pedal stroke sensor (PTS VS line) - Open between the electric brake booster and the brake pedal stroke sensor (PTS GND line) - Electric brake booster internal failure

*: With ACC

DTC C1C03-15 (ELECTRIC BRAKE BOOSTER CONTROL UNIT TYPE B) (2020 2021)

DTC C1C03-15 : Brake Pedal Stroke Sensor Signal Circuit 2 Short To Battery or Open

NOTE

- Initial Diagnosis:

  The initial on-board diagnosis occurs right after the vehicle condition is turned to the ON mode, and the brake system indicator (red or amber) comes on, and continues until the indicator goes off.

- Regular Diagnosis:

  The regular on-board diagnosis begins right after the brake system indicator (red or amber) goes off, and it continues until the vehicle condition is turned to the OFF (LOCK) mode.

- Review "How to Troubleshoot the Electric Brake Booster System" before doing the DTC troubleshooting procedure.
- Test-drive the vehicle according to local traffic conditions and regulations. Do not test-drive on a lift unless specified.
- The possible causes shown may not be a complete list of all potential problems, and it is possible that there may be other causes.

Confirmation Procedure	With the Driving Pattern: - Turn the vehicle to the ON mode.
Execution	Initial Diagnosis/Regular Diagnosis
Duration	About 1 second
DTC Type	- 1 drive cycle - Brake system indicator (red) on - Brake system indicator (amber) on
Fail Safe Action	- Stop servo control function - Stop automatic brake hold function - Stop LSF function

	• Stop ACC function • Stop CMBS function
Possible Cause	• Open or short to power between the electric brake booster and the brake pedal stroke sensor (PTS2 line) • Open between the electric brake booster and the brake pedal stroke sensor (PTS VS line) • Open between the electric brake booster and the brake pedal stroke sensor (PTS GND line) • Electric brake booster internal failure

DTC C1C04-11 (ELECTRIC BRAKE BOOSTER CONTROL UNIT TYPE A) (2017 2018 2019)

DTC C1C04-11 : Brake Pedal Stroke Sensor Power Circuit Short To Ground or Battery

NOTE

- Initial Diagnosis:

  The initial on-board diagnosis occurs right after the vehicle condition is turned to the ON mode, and the brake system indicator (red or amber) comes on, and continues until the indicator goes off.

- Regular Diagnosis:

  The regular on-board diagnosis begins right after the brake system indicator (red or amber) goes off, and it continues until the vehicle condition is turned to the OFF (LOCK) mode.

- Review "How to Troubleshoot the Electric Brake Booster System" before doing the DTC troubleshooting procedure.
- Test-drive the vehicle according to local traffic conditions and regulations. Do not test-drive on a lift unless specified.
- The possible causes shown may not be a complete list of all potential problems, and it is possible that there may be other causes.

Confirmation Procedure	Basic Condition: • 12 volt battery voltage 6.0 - 18.9 V With the Driving Pattern: • Turn the vehicle to the ON mode.
Execution	Initial Diagnosis/Regular Diagnosis
Duration	About 1 second
DTC Type	• 1 drive cycle • Brake system indicator (red) on • Brake system indicator (amber) on
Fail Safe Action	• Stop servo control function • Stop automatic brake hold function • Stop ACC function* • Stop CMBS function*

Possible Cause	- Short to power between the electric brake booster and the brake pedal stroke sensor (PTS VS line) - Short to ground between the electric brake booster and the brake pedal stroke sensor (PTS VS line) - Electric brake booster internal failure

*: With ACC

DTC C1C04-11 (ELECTRIC BRAKE BOOSTER CONTROL UNIT TYPE B) (2020 2021)

DTC C1C04-11 : Brake Pedal Stroke Sensor Power Circuit Short To Ground or Battery

NOTE

- Initial Diagnosis:

  The initial on-board diagnosis occurs right after the vehicle condition is turned to the ON mode, and the brake system indicator (red or amber) comes on, and continues until the indicator goes off.

- Regular Diagnosis:

  The regular on-board diagnosis begins right after the brake system indicator (red or amber) goes off, and it continues until the vehicle condition is turned to the OFF (LOCK) mode.

- Review "How to Troubleshoot the Electric Brake Booster System" before doing the DTC troubleshooting procedure.
- Test-drive the vehicle according to local traffic conditions and regulations. Do not test-drive on a lift unless specified.
- The possible causes shown may not be a complete list of all potential problems, and it is possible that there may be other causes.

Confirmation Procedure	Basic Condition: - 12 volt battery voltage 6.0 - 18.9 V With the Driving Pattern: - Turn the vehicle to the ON mode.
Execution	Initial Diagnosis/Regular Diagnosis
Duration	About 1 second
DTC Type	- 1 drive cycle - Brake system indicator (red) on - Brake system indicator (amber) on
Fail Safe Action	- Stop servo control function - Stop automatic brake hold function - Stop LSF function - Stop ACC function - Stop CMBS function
Possible Cause	- Short to power or short to ground between the electric brake booster and the brake pedal stroke sensor (PTS VS line)

	- Electric brake booster internal failure

DTC U0029-00 (ELECTRIC BRAKE BOOSTER CONTROL UNIT TYPE A) (2017 2018 2019)

DTC U0029-00 : CAN Communication Failure (Ch1 Bus OFF)

NOTE

- Initial Diagnosis:

  The initial on-board diagnosis occurs right after the vehicle condition is turned to the ON mode, and the brake system indicator (red or amber) comes on, and continues until the indicator goes off.

- Regular Diagnosis:

  The regular on-board diagnosis begins right after the brake system indicator (red or amber) goes off, and it continues until the vehicle condition is turned to the OFF (LOCK) mode.

- Review "How to Troubleshoot the Electric Brake Booster System" before doing the DTC troubleshooting procedure.
- Test-drive the vehicle according to local traffic conditions and regulations. Do not test-drive on a lift unless specified.
- The possible causes shown may not be a complete list of all potential problems, and it is possible that there may be other causes.

Confirmation Procedure	Basic Condition: • 12 volt battery voltage 6.0 - 18.9 V With the Driving Pattern: • Turn the vehicle to the ON mode.
Execution	Regular Diagnosis
Duration	About 1 second
DTC Type	• 1 drive cycle • Brake system indicator (amber) on
Fail Safe Action	• Stop automatic brake hold function • Stop ACC function *1 • Stop CMBS function *1
Possible Cause	• Open, Short to ground, Short to power, or Short to another line between the electric brake booster and other control units (F-CAN lines) *2 • Open, Short to ground, Short to power, or Short to another line between the electric brake booster and other control units (F-CAN A lines) *3 • Internal failure of other unit on F-CAN lines *2 • Internal failure of other unit on F-CAN A lines *3 • Electric brake booster internal failure

*1: With ACC

*2: Without CAN gateway

*3: With CAN gateway

DTC U0029-00 (ELECTRIC BRAKE BOOSTER CONTROL UNIT TYPE B) (2020 2021)

DTC U0029-00 : CAN Communication Failure (Ch1 Bus OFF)

NOTE

- Initial Diagnosis:

  The initial on-board diagnosis occurs right after the vehicle condition is turned to the ON mode, and the brake system indicator (red or amber) comes on, and continues until the indicator goes off.

- Regular Diagnosis:

  The regular on-board diagnosis begins right after the brake system indicator (red or amber) goes off, and it continues until the vehicle condition is turned to the OFF (LOCK) mode.

- Review "How to Troubleshoot the Electric Brake Booster System" before doing the DTC troubleshooting procedure.
- Test-drive the vehicle according to local traffic conditions and regulations. Do not test-drive on a lift unless specified.
- The possible causes shown may not be a complete list of all potential problems, and it is possible that there may be other causes.

Confirmation Procedure	Basic Condition: • 12 volt battery voltage 6.0 - 18.9 V With the Driving Pattern: • Turn the vehicle to the ON mode.
Execution	Regular Diagnosis
Duration	About 1 second
DTC Type	• 1 drive cycle • Brake system indicator (amber) on
Fail Safe Action	• Degrade servo control performance • Stop automatic brake hold function • Stop LSF function • Stop ACC function • Stop CMBS function
Possible Cause	• Open, short to ground, short to power, or short to another line between the electric brake booster and other control units (F-CAN lines) • Internal failure of other unit on F-CAN lines • Electric brake booster internal failure

DTC U0047-00 (ELECTRIC BRAKE BOOSTER CONTROL UNIT TYPE A) (2017 2018 2019)

DTC U0047-00 : CAN Communication Failure (Ch2 Bus OFF)

NOTE

- Initial Diagnosis:

  The initial on-board diagnosis occurs right after the vehicle condition is turned to the ON mode, and the brake system indicator (red or amber) comes on, and continues until the indicator goes off.

- Regular Diagnosis:

  The regular on-board diagnosis begins right after the brake system indicator (red or amber) goes off, and it continues until the vehicle condition is turned to the OFF (LOCK) mode.

- Review "How to Troubleshoot the Electric Brake Booster System" before doing the DTC troubleshooting procedure.
- Test-drive the vehicle according to local traffic conditions and regulations. Do not test-drive on a lift unless specified.
- The possible causes shown may not be a complete list of all potential problems, and it is possible that there may be other causes.

Confirmation Procedure	Basic Condition: • 12 volt battery voltage 6.0 - 18.9 V With the Driving Pattern: • Turn the vehicle to the ON mode.
Execution	Regular Diagnosis
Duration	About 1 second
DTC Type	• 1 drive cycle • Brake system indicator (amber) on
Fail Safe Action	• Stop automatic brake hold function • Stop ACC function *1 • Stop CMBS function *1
Possible Cause	• Open, Short to ground, Short to power, or Short to another line between the electric brake booster and other control units (EBB CAN lines) *2 • Open, Short to ground, Short to power, or Short to another line between the electric brake booster and other control units (F-CAN B lines) *3 • Internal failure of other unit on EBB CAN lines *2 • Internal failure of other unit on F-CAN B lines *3 • Electric brake booster internal failure

*1: With ACC

*2: Without CAN gateway

*3: With CAN gateway

DTC U0047-00 (ELECTRIC BRAKE BOOSTER CONTROL UNIT TYPE B) (2020 2021)

DTC U0047-00 : CAN Communication Failure (Ch2 Bus OFF)

NOTE

- Initial Diagnosis:

  The initial on-board diagnosis occurs right after the vehicle condition is turned to the ON mode, and the brake system indicator (red or amber) comes on, and continues until the indicator goes off.

- Regular Diagnosis:

  The regular on-board diagnosis begins right after the brake system indicator (red or amber) goes off, and it continues until the vehicle condition is turned to the OFF (LOCK) mode.

- Review "How to Troubleshoot the Electric Brake Booster System" before doing the DTC troubleshooting procedure.
- Test-drive the vehicle according to local traffic conditions and regulations. Do not test-drive on a lift unless specified.
- The possible causes shown may not be a complete list of all potential problems, and it is possible that there may be other causes.

Confirmation Procedure	Basic Condition: • 12 volt battery voltage 6.0 - 18.9 V With the Driving Pattern: • Turn the vehicle to the ON mode.
Execution	Regular Diagnosis
Duration	About 1 second
DTC Type	• 1 drive cycle • Brake system indicator (amber) on
Fail Safe Action	• Degrade servo control performance • Stop automatic brake hold function • Stop LSF function • Stop ACC function • Stop CMBS function
Possible Cause	• Open, short to ground, short to power, or short to another line between the electric brake booster and other control units (F-CAN lines) • Internal failure of other unit on F-CAN lines • Electric brake booster internal failure

DTC U0100-00 (ELECTRIC BRAKE BOOSTER CONTROL UNIT TYPE A) (2017 2018 2019)

DTC U0100-00 : CAN Communication Failure With ECM/PCM

NOTE

- Initial Diagnosis:

  The initial on-board diagnosis occurs right after the vehicle condition is turned to the ON mode, and the brake system indicator (red or amber) comes on, and continues until the indicator goes off.

- Regular Diagnosis:

The regular on-board diagnosis begins right after the brake system indicator (red or amber) goes off, and it continues until the vehicle condition is turned to the OFF (LOCK) mode.

- Review "How to Troubleshoot the Electric Brake Booster System" before doing the DTC troubleshooting procedure.
- Test-drive the vehicle according to local traffic conditions and regulations. Do not test-drive on a lift unless specified.
- The possible causes shown may not be a complete list of all potential problems, and it is possible that there may be other causes.

Confirmation Procedure	Basic Condition: • 12 volt battery voltage 6.0 - 18.9 V With the Driving Pattern: • Turn the vehicle to the ON mode.
Execution	Regular Diagnosis
Duration	About 1 second
DTC Type	• 1 drive cycle
Fail Safe Action	• None
Possible Cause	• Open, Short to ground, Short to power, or Short to another line between the electric brake booster and the PCM (F-CAN lines) *1 • Open, Short to ground, Short to power, or Short to another line between the electric brake booster and the PCM (F-CAN A lines) *2 • PCM internal failure • Electric brake booster internal failure

*1: Without CAN gateway

*2: With CAN gateway

DTC U0100-00 (ELECTRIC BRAKE BOOSTER CONTROL UNIT TYPE B) (2020 2021)

DTC U0100-00 : CAN Communication Failure With ECM/PCM

NOTE

- Initial Diagnosis:

  The initial on-board diagnosis occurs right after the vehicle condition is turned to the ON mode, and the brake system indicator (red or amber) comes on, and continues until the indicator goes off.

- Regular Diagnosis:

  The regular on-board diagnosis begins right after the brake system indicator (red or amber) goes off, and it continues until the vehicle condition is turned to the OFF (LOCK) mode.

- Review "How to Troubleshoot the Electric Brake Booster System" before doing the DTC troubleshooting procedure.
- Test-drive the vehicle according to local traffic conditions and regulations. Do not test-drive on a lift unless specified.

- The possible causes shown may not be a complete list of all potential problems, and it is possible that there may be other causes.

Confirmation Procedure	Basic Condition: • 12 volt battery voltage 6.0 - 18.9 V With the Driving Pattern: • Turn the vehicle to the ON mode.
Execution	Regular Diagnosis
Duration	About 1 second
DTC Type	• 1 drive cycle
Fail Safe Action	• None
Possible Cause	• Open, short to ground, short to power, or short to another line between the electric brake booster and the PCM (F-CAN lines) • PCM internal failure • Electric brake booster internal failure

DTC U0104-00 (ELECTRIC BRAKE BOOSTER CONTROL UNIT TYPE B) (2020 2021)

DTC U0104-00 : CAN Communication Failure With Driving Support System Control Unit

NOTE

- Initial Diagnosis:

  The initial on-board diagnosis occurs right after the vehicle condition is turned to the ON mode, and the brake system indicator (red or amber) comes on, and continues until the indicator goes off.

- Regular Diagnosis:

  The regular on-board diagnosis begins right after the brake system indicator (red or amber) goes off, and it continues until the vehicle condition is turned to the OFF (LOCK) mode.

- Review "How to Troubleshoot the Electric Brake Booster System" before doing the DTC troubleshooting procedure.
- Test-drive the vehicle according to local traffic conditions and regulations. Do not test-drive on a lift unless specified.
- The possible causes shown may not be a complete list of all potential problems, and it is possible that there may be other causes.

Confirmation Procedure	Basic Condition: • 12 volt battery voltage 6.0 - 18.9 V With the Driving Pattern: • Turn the vehicle to the ON mode.
Execution	Regular Diagnosis
Duration	About 1 second

DTC Type	- 1 drive cycle
Fail Safe Action	- None
Possible Cause	- Open, short to ground, short to power, or short to another line between the electric brake booster and the millimeter wave radar (F-CAN lines) - Millimeter wave radar internal failure - Electric brake booster internal failure

DTC U0122-00 (ELECTRIC BRAKE BOOSTER CONTROL UNIT TYPE A) (2017 2018 2019)

DTC U0122-00 : CAN Communication Failure With VSA (CAN Ch1)

NOTE

- Initial Diagnosis:

  The initial on-board diagnosis occurs right after the vehicle condition is turned to the ON mode, and the brake system indicator (red or amber) comes on, and continues until the indicator goes off.

- Regular Diagnosis:

  The regular on-board diagnosis begins right after the brake system indicator (red or amber) goes off, and it continues until the vehicle condition is turned to the OFF (LOCK) mode.

- Review "How to Troubleshoot the Electric Brake Booster System" before doing the DTC troubleshooting procedure.
- Test-drive the vehicle according to local traffic conditions and regulations. Do not test-drive on a lift unless specified.
- The possible causes shown may not be a complete list of all potential problems, and it is possible that there may be other causes.

Confirmation Procedure	Basic Condition: - 12 volt battery voltage 6.0 - 18.9 V With the Driving Pattern: - Turn the vehicle to the ON mode.
Execution	Regular Diagnosis
Duration	About 1 second
DTC Type	- 1 drive cycle - Brake system indicator (amber) on
Fail Safe Action	- Stop automatic brake hold function - Stop ACC function *1 - Stop CMBS function *1
Possible Cause	- Open, Short to ground, Short to power, or Short to another line between the electric brake booster and the VSA modulator-control unit (F-CAN lines) *2 - Open, Short to ground, Short to power, or Short to another line between the electric brake booster and the VSA modulator-control unit (F-CAN A lines) *3

	- VSA modulator-control unit internal failure - Electric brake booster internal failure

*1: With ACC

*2: Without CAN gateway

*3: With CAN gateway

DTC U0122-00 (ELECTRIC BRAKE BOOSTER CONTROL UNIT TYPE B) (2020 2021)

DTC U0122-00 : CAN Communication Failure With VSA

NOTE

- Initial Diagnosis:

  The initial on-board diagnosis occurs right after the vehicle condition is turned to the ON mode, and the brake system indicator (red or amber) comes on, and continues until the indicator goes off.

- Regular Diagnosis:

  The regular on-board diagnosis begins right after the brake system indicator (red or amber) goes off, and it continues until the vehicle condition is turned to the OFF (LOCK) mode.

- Review "How to Troubleshoot the Electric Brake Booster System" before doing the DTC troubleshooting procedure.
- Test-drive the vehicle according to local traffic conditions and regulations. Do not test-drive on a lift unless specified.
- The possible causes shown may not be a complete list of all potential problems, and it is possible that there may be other causes.

Confirmation Procedure	Basic Condition: - 12 volt battery voltage 6.0 - 18.9 V With the Driving Pattern: - Turn the vehicle to the ON mode.
Execution	Regular Diagnosis
Duration	About 1 second
DTC Type	- 1 drive cycle - Brake system indicator (amber) on
Fail Safe Action	- Degrade servo control performance - Stop automatic brake hold function - Stop LSF function - Stop ACC function - Stop CMBS function
Possible Cause	- Open, short to ground, short to power, or short to another line between the electric brake booster and the VSA modulator-control unit (F-CAN lines) - VSA modulator-control unit internal failure

	- Electric brake booster internal failure

DTC U0416-68 (ELECTRIC BRAKE BOOSTER CONTROL UNIT TYPE A) (2017 2018 2019)

DTC U0416-68 : VSA System Malfunction

NOTE

- Initial Diagnosis:

  The initial on-board diagnosis occurs right after the vehicle condition is turned to the ON mode, and the brake system indicator (red or amber) comes on, and continues until the indicator goes off.

- Regular Diagnosis:

  The regular on-board diagnosis begins right after the brake system indicator (red or amber) goes off, and it continues until the vehicle condition is turned to the OFF (LOCK) mode.

- Review "How to Troubleshoot the Electric Brake Booster System" before doing the DTC troubleshooting procedure.
- Test-drive the vehicle according to local traffic conditions and regulations. Do not test-drive on a lift unless specified.
- The possible causes shown may not be a complete list of all potential problems, and it is possible that there may be other causes.

Confirmation Procedure	Basic Condition: • 12 volt battery voltage 6.0 - 18.9 V With the Driving Pattern: • Turn the vehicle to the ON mode.
Execution	Regular Diagnosis
Duration	About 1 second
DTC Type	• 1 drive cycle • Brake system indicator (amber) on (Dependant upon the conditions)
Fail Safe Action	• Stop automatic brake hold function (Dependant upon the conditions) • Stop ACC function (Dependant upon the conditions)* • Stop CMBS function (Dependant upon the conditions)*
Possible Cause	• VSA system failure

*: With ACC

DTC U0416-68 (ELECTRIC BRAKE BOOSTER CONTROL UNIT TYPE B) (2020 2021)

DTC U0416-68 : (VSA System Malfunction)

NOTE

- Initial Diagnosis:

The initial on-board diagnosis occurs right after the vehicle condition is turned to the ON mode, and the brake system indicator (red or amber) comes on, and continues until the indicator goes off.

- Regular Diagnosis:

  The regular on-board diagnosis begins right after the brake system indicator (red or amber) goes off, and it continues until the vehicle condition is turned to the OFF (LOCK) mode.

- Review "How to Troubleshoot the Electric Brake Booster System" before doing the DTC troubleshooting procedure.
- Test-drive the vehicle according to local traffic conditions and regulations. Do not test-drive on a lift unless specified.
- The possible causes shown may not be a complete list of all potential problems, and it is possible that there may be other causes.

Confirmation Procedure	Basic Condition: • 12 volt battery voltage 6.0 - 18.9 V With the Driving Pattern: • Turn the vehicle to the ON mode.
Execution	Regular Diagnosis
Duration	About 1 second
DTC Type	• 1 drive cycle • Brake system indicator (amber) on (Dependant upon the conditions)
Fail Safe Action	• Degrade servo control performance (Dependant upon the conditions) • Stop automatic brake hold function (Dependant upon the conditions) • Stop LSF function (Dependant upon the conditions) • Stop ACC function (Dependant upon the conditions) • Stop CMBS function (Dependant upon the conditions)
Possible Cause	• VSA system failure

DTC U12B5-00 (ELECTRIC BRAKE BOOSTER CONTROL UNIT TYPE A) (2017 2018 2019)

DTC U12B5-00 : CAN Communication Failure With VSA (CAN Ch2)

NOTE

- Initial Diagnosis:

  The initial on-board diagnosis occurs right after the vehicle condition is turned to the ON mode, and the brake system indicator (red or amber) comes on, and continues until the indicator goes off.

- Regular Diagnosis:

  The regular on-board diagnosis begins right after the brake system indicator (red or amber) goes off, and it continues until the vehicle condition is turned to the OFF (LOCK) mode.

- Review "How to Troubleshoot the Electric Brake Booster System" before doing the DTC troubleshooting procedure.

- Test-drive the vehicle according to local traffic conditions and regulations. Do not test-drive on a lift unless specified.
- The possible causes shown may not be a complete list of all potential problems, and it is possible that there may be other causes.

Confirmation Procedure	Basic Condition: • 12 volt battery voltage 6.0 - 18.9 V With the Driving Pattern: • Turn the vehicle to the ON mode.
Execution	Regular Diagnosis
Duration	About 1 second
DTC Type	• 1 drive cycle • Brake system indicator (amber) on
Fail Safe Action	• Stop automatic brake hold function • Stop ACC function *1 • Stop CMBS function *1
Possible Cause	• Open, Short to ground, Short to power, or Short to another line between the electric brake booster and the VSA modulator-control unit (EBB CAN lines) *2 • Open, Short to ground, Short to power, or Short to another line between the electric brake booster and the VSA modulator-control unit (F-CAN B lines) *3 • VSA modulator-control unit internal failure • Electric brake booster internal failure

*1: With ACC

*2: Without CAN gateway

*3: With CAN gateway

DTC U3000-49 (ELECTRIC BRAKE BOOSTER CONTROL UNIT TYPE A) (2017 2018 2019)

DTC U3000-49 : ECU Internal Malfunction

NOTE

- Initial Diagnosis:

  The initial on-board diagnosis occurs right after the vehicle condition is turned to the ON mode, and the brake system indicator (red or amber) comes on, and continues until the indicator goes off.

- Regular Diagnosis:

  The regular on-board diagnosis begins right after the brake system indicator (red or amber) goes off, and it continues until the vehicle condition is turned to the OFF (LOCK) mode.

- Review "How to Troubleshoot the Electric Brake Booster System" before doing the DTC troubleshooting procedure.

- Test-drive the vehicle according to local traffic conditions and regulations. Do not test-drive on a lift unless specified.
- The possible causes shown may not be a complete list of all potential problems, and it is possible that there may be other causes.

Confirmation Procedure	Basic Condition: • 12 volt battery voltage 6.0 - 18.9 V With the Driving Pattern: • Turn the vehicle to the ON mode.
Execution	Initial Diagnosis/Regular Diagnosis
Duration	About 1 second
DTC Type	• 1 drive cycle • Brake system indicator (red) on (Dependant upon the conditions) • Brake system indicator (amber) on
Fail Safe Action	• Stop servo control function (Dependant upon the conditions) • Stop automatic brake hold function (Dependant upon the conditions) • Stop ACC function (Dependant upon the conditions)* • Stop CMBS function (Dependant upon the conditions)*
Possible Cause	• Electric brake booster internal failure

*: With ACC

DTC U3000-49 (ELECTRIC BRAKE BOOSTER CONTROL UNIT TYPE B) (2020 2021)

DTC U3000-49 : ECU Internal Malfunction

NOTE

- Initial Diagnosis:

  The initial on-board diagnosis occurs right after the vehicle condition is turned to the ON mode, and the brake system indicator (red or amber) comes on, and continues until the indicator goes off.

- Regular Diagnosis:

  The regular on-board diagnosis begins right after the brake system indicator (red or amber) goes off, and it continues until the vehicle condition is turned to the OFF (LOCK) mode.

- Review "How to Troubleshoot the Electric Brake Booster System" before doing the DTC troubleshooting procedure.
- Test-drive the vehicle according to local traffic conditions and regulations. Do not test-drive on a lift unless specified.
- The possible causes shown may not be a complete list of all potential problems, and it is possible that there may be other causes.

Confirmation Procedure	Basic Condition: • 12 volt battery voltage 6.0 - 18.9 V

	With the Driving Pattern: - Turn the vehicle to the ON mode.
Execution	Initial Diagnosis/Regular Diagnosis
Duration	About 1 second
DTC Type	- 1 drive cycle - Brake system indicator (red) on (Dependant upon the conditions) - Brake system indicator (amber) on
Fail Safe Action	- Stop servo control function or degrade servo control performance (Dependant upon the conditions) - Stop automatic brake hold function or degrade automatic brake hold performance (Dependant upon the conditions) - Stop LSF function or degrade LSF performance (Dependant upon the conditions) - Stop ACC function or degrade ACC performance (Dependant upon the conditions) - Stop CMBS function or degrade CMBS performance (Dependant upon the conditions)
Possible Cause	- Electric brake booster internal failure

DTC U3000-51 (ELECTRIC BRAKE BOOSTER CONTROL UNIT TYPE A) (2017 2018 2019)

DTC U3000-51 : ECU Software Update Failure

NOTE

- Initial Diagnosis:

  The initial on-board diagnosis occurs right after the vehicle condition is turned to the ON mode, and the brake system indicator (red or amber) comes on, and continues until the indicator goes off.

- Regular Diagnosis:

  The regular on-board diagnosis begins right after the brake system indicator (red or amber) goes off, and it continues until the vehicle condition is turned to the OFF (LOCK) mode.

- Review "How to Troubleshoot the Electric Brake Booster System" before doing the DTC troubleshooting procedure.
- Test-drive the vehicle according to local traffic conditions and regulations. Do not test-drive on a lift unless specified.
- The possible causes shown may not be a complete list of all potential problems, and it is possible that there may be other causes.

Confirmation Procedure	With the Driving Pattern: - Turn the vehicle to the ON mode.
Execution	Regular Diagnosis
Duration	About 1 second
DTC Type	- 1 drive cycle

	• Brake system indicator (red) on (Dependant upon the conditions) • Brake system indicator (amber) on (Dependant upon the conditions)
Fail Safe Action	• Stop servo control function • Stop automatic brake hold function • Stop ACC function* • Stop CMBS function*
Possible Cause	• Electric brake booster program not the latest • Electric brake booster internal failure

*: With ACC

DTC U3000-51 (ELECTRIC BRAKE BOOSTER CONTROL UNIT TYPE B) (2020 2021)

DTC U3000-51 : ECU Software Update Failure

NOTE

- Initial Diagnosis:

  The initial on-board diagnosis occurs right after the vehicle condition is turned to the ON mode, and the brake system indicator (red or amber) comes on, and continues until the indicator goes off.

- Regular Diagnosis:

  The regular on-board diagnosis begins right after the brake system indicator (red or amber) goes off, and it continues until the vehicle condition is turned to the OFF (LOCK) mode.

- Review "How to Troubleshoot the Electric Brake Booster System" before doing the DTC troubleshooting procedure.
- Test-drive the vehicle according to local traffic conditions and regulations. Do not test-drive on a lift unless specified.
- The possible causes shown may not be a complete list of all potential problems, and it is possible that there may be other causes.

Confirmation Procedure	With the Driving Pattern: • Turn the vehicle to the ON mode.
Execution	Regular Diagnosis
Duration	About 1 second
DTC Type	• 1 drive cycle • Brake system indicator (red) on (Dependant upon the conditions) • Brake system indicator (amber) on (Dependant upon the conditions)
Fail Safe Action	• Stop servo control function • Stop automatic brake hold function • Stop LSF function • Stop ACC function • Stop CMBS function

Possible Cause	- Electric brake booster program not the latest - Electric brake booster internal failure

DTC U3000-55 (ELECTRIC BRAKE BOOSTER CONTROL UNIT TYPE B) (2020 2021)

DTC U3000-55 : Variant Code Undefined

NOTE

- Initial Diagnosis:

  The initial on-board diagnosis occurs right after the vehicle condition is turned to the ON mode, and the brake system indicator (red or amber) comes on, and continues until the indicator goes off.

- Regular Diagnosis:

  The regular on-board diagnosis begins right after the brake system indicator (red or amber) goes off, and it continues until the vehicle condition is turned to the OFF (LOCK) mode.

- Review "How to Troubleshoot the Electric Brake Booster System" before doing the DTC troubleshooting procedure.
- Test-drive the vehicle according to local traffic conditions and regulations. Do not test-drive on a lift unless specified.
- The possible causes shown may not be a complete list of all potential problems, and it is possible that there may be other causes.

Confirmation Procedure	Basic Condition: - 12 volt battery voltage 6.0 - 18.9 V With the Driving Pattern: - Turn the vehicle to the ON mode.
Execution	Initial Diagnosis
Duration	About 1 second
DTC Type	- 1 drive cycle - Brake system indicator (red) on or blink (Dependant upon the conditions) - Brake system indicator (amber) on
Fail Safe Action	- Degrade servo control performance - Stop automatic brake hold function - Stop LSF function - Stop ACC function - Stop CMBS function
Possible Cause	- Electric brake booster internal failure

DTC U3003-16 (ELECTRIC BRAKE BOOSTER CONTROL UNIT TYPE A) (2017 2018 2019)

DTC U3003-16 : Brake Booster Control Unit Power Circuit (+B) Low Voltage

NOTE

- Initial Diagnosis:

  The initial on-board diagnosis occurs right after the vehicle condition is turned to the ON mode, and the brake system indicator (red or amber) comes on, and continues until the indicator goes off.

- Regular Diagnosis:

  The regular on-board diagnosis begins right after the brake system indicator (red or amber) goes off, and it continues until the vehicle condition is turned to the OFF (LOCK) mode.

- Review "How to Troubleshoot the Electric Brake Booster System" before doing the DTC troubleshooting procedure.
- Test-drive the vehicle according to local traffic conditions and regulations. Do not test-drive on a lift unless specified.
- The possible causes shown may not be a complete list of all potential problems, and it is possible that there may be other causes.

Confirmation Procedure	With the Driving Pattern: • Turn the vehicle to the ON mode.
Execution	Initial Diagnosis/Regular Diagnosis
Duration	About 1 second
DTC Type	• 1 drive cycle • Brake system indicator (red) on (Dependant upon the conditions) • Brake system indicator (amber) on (Dependant upon the conditions)
Fail Safe Action	• Stop servo control function (Dependant upon the conditions) • Stop automatic brake hold function (Dependant upon the conditions) • Stop ACC function (Dependant upon the conditions)* • Stop CMBS function (Dependant upon the conditions)*
Possible Cause	• Open or Short to ground between the electric brake booster and the under-hood fuse/relay box (+B EBB line) • Fuse failure (Under-hood fuse/relay box No. A1-2 (40 A)) • Open or Short to ground between the electric brake booster and the under-dash fuse/relay box (+B OPTION line) • Fuse failure (Under-dash fuse/relay box No. D24 (5 A)) • Alternator failure • Abnormal 12 volt battery • Electric brake booster internal failure

*: With ACC

DTC U3003-16 (ELECTRIC BRAKE BOOSTER CONTROL UNIT TYPE B) (2020 2021)

DTC U3003-16 : Brake Booster Control Unit Power Circuit (+B) Low Voltage

NOTE

- Initial Diagnosis:

The initial on-board diagnosis occurs right after the vehicle condition is turned to the ON mode, and the brake system indicator (red or amber) comes on, and continues until the indicator goes off.

- Regular Diagnosis:

  The regular on-board diagnosis begins right after the brake system indicator (red or amber) goes off, and it continues until the vehicle condition is turned to the OFF (LOCK) mode.

- Review "How to Troubleshoot the Electric Brake Booster System" before doing the DTC troubleshooting procedure.
- Test-drive the vehicle according to local traffic conditions and regulations. Do not test-drive on a lift unless specified.
- The possible causes shown may not be a complete list of all potential problems, and it is possible that there may be other causes.

Confirmation Procedure	With the Driving Pattern: • Turn the vehicle to the ON mode.
Execution	Initial Diagnosis/Regular Diagnosis
Duration	About 1 second
DTC Type	• 1 drive cycle • Brake system indicator (red) on (Dependant upon the conditions) • Brake system indicator (amber) on (Dependant upon the conditions)
Fail Safe Action	• Stop servo control function or degrade servo control performance (Dependant upon the conditions) • Stop automatic brake hold function or degrade automatic brake hold performance (Dependant upon the conditions) • Stop LSF function or degrade LSF performance (Dependant upon the conditions) • Stop ACC function or degrade ACC performance (Dependant upon the conditions) • Stop CMBS function or degrade CMBS performance (Dependant upon the conditions)
Possible Cause	• Open or short to ground between the electric brake booster and the under-hood fuse/relay box (+B EBB line) • Fuse failure (under-hood fuse/relay box No. A1-2) • Alternator failure • Abnormal 12 volt battery • Electric brake booster internal failure

DTC U3003-17 (ELECTRIC BRAKE BOOSTER CONTROL UNIT TYPE A) (2017 2018 2019)

DTC U3003-17 : Brake Booster Control Unit Power Circuit (+B) High Voltage

NOTE

- Initial Diagnosis:

  The initial on-board diagnosis occurs right after the vehicle condition is turned to the ON mode, and the brake system indicator (red or amber) comes on, and continues until the indicator goes off.

- Regular Diagnosis:

  The regular on-board diagnosis begins right after the brake system indicator (red or amber) goes off, and it continues until the vehicle condition is turned to the OFF (LOCK) mode.

- Review "How to Troubleshoot the Electric Brake Booster System" before doing the DTC troubleshooting procedure.
- Test-drive the vehicle according to local traffic conditions and regulations. Do not test-drive on a lift unless specified.
- The possible causes shown may not be a complete list of all potential problems, and it is possible that there may be other causes.

Confirmation Procedure	With the Driving Pattern: • Turn the vehicle to the ON mode.
Execution	Regular Diagnosis
Duration	About 2 seconds
DTC Type	• 1 drive cycle • Brake system indicator (red) on (Dependant upon the conditions) • Brake system indicator (amber) on
Fail Safe Action	• Stop servo control function (Dependant upon the conditions) • Stop automatic brake hold function (Dependant upon the conditions) • Stop ACC function (Dependant upon the conditions)* • Stop CMBS function (Dependant upon the conditions)*
Possible Cause	• Alternator failure • Abnormal 12 volt battery • Electric brake booster internal failure

*: With ACC

DTC U3003-17 (ELECTRIC BRAKE BOOSTER CONTROL UNIT TYPE B) (2020 2021)

DTC U3003-17 : Brake Booster Control Unit Power Circuit (+B) High Voltage

NOTE

- Initial Diagnosis:

  The initial on-board diagnosis occurs right after the vehicle condition is turned to the ON mode, and the brake system indicator (red or amber) comes on, and continues until the indicator goes off.

- Regular Diagnosis:

  The regular on-board diagnosis begins right after the brake system indicator (red or amber) goes off, and it continues until the vehicle condition is turned to the OFF (LOCK) mode.

- Review "How to Troubleshoot the Electric Brake Booster System" before doing the DTC troubleshooting procedure.
- Test-drive the vehicle according to local traffic conditions and regulations. Do not test-drive on a lift unless specified.

- The possible causes shown may not be a complete list of all potential problems, and it is possible that there may be other causes.

Confirmation Procedure	With the Driving Pattern: - Turn the vehicle to the ON mode.
Execution	Regular Diagnosis
Duration	About 2 seconds
DTC Type	- 1 drive cycle - Brake system indicator (red) on (Dependant upon the conditions) - Brake system indicator (amber) on
Fail Safe Action	- Stop servo control function or degrade servo control performance (Dependant upon the conditions) - Stop automatic brake hold function or degrade automatic brake hold performance (Dependant upon the conditions) - Stop LSF function or degrade LSF performance (Dependant upon the conditions) - Stop ACC function or degrade ACC performance (Dependant upon the conditions) - Stop CMBS function or degrade CMBS performance (Dependant upon the conditions)
Possible Cause	- Alternator failure - Abnormal 12 volt battery - Electric brake booster internal failure

DTC U3006-13 (ELECTRIC BRAKE BOOSTER CONTROL UNIT TYPE A) (2017 2018 2019)

DTC U3006-13 : IG1 Circuit Open

NOTE

- Initial Diagnosis:

  The initial on-board diagnosis occurs right after the vehicle condition is turned to the ON mode, and the brake system indicator (red or amber) comes on, and continues until the indicator goes off.

- Regular Diagnosis:

  The regular on-board diagnosis begins right after the brake system indicator (red or amber) goes off, and it continues until the vehicle condition is turned to the OFF (LOCK) mode.

- Review "How to Troubleshoot the Electric Brake Booster System" before doing the DTC troubleshooting procedure.
- Test-drive the vehicle according to local traffic conditions and regulations. Do not test-drive on a lift unless specified.
- The possible causes shown may not be a complete list of all potential problems, and it is possible that there may be other causes.

Confirmation Procedure	With the Driving Pattern:

	- Turn the vehicle to the ON mode.
Execution	Regular Diagnosis
Duration	About 2 seconds
DTC Type	- 1 drive cycle - Brake system indicator (amber) on
Fail Safe Action	- None
Possible Cause	- Open or Short to ground between the electric brake booster and the under-dash fuse/relay box (IG1 OPTION line) - Fuse failure (Under-dash fuse/relay box No. D5 (10 A)) - Electric brake booster internal failure

DTC U3006-13 (ELECTRIC BRAKE BOOSTER CONTROL UNIT TYPE B) (2020 2021)

DTC U3006-13 : IG1 Circuit Open

NOTE

- Initial Diagnosis:

  The initial on-board diagnosis occurs right after the vehicle condition is turned to the ON mode, and the brake system indicator (red or amber) comes on, and continues until the indicator goes off.

- Regular Diagnosis:

  The regular on-board diagnosis begins right after the brake system indicator (red or amber) goes off, and it continues until the vehicle condition is turned to the OFF (LOCK) mode.

- Review "How to Troubleshoot the Electric Brake Booster System" before doing the DTC troubleshooting procedure.
- Test-drive the vehicle according to local traffic conditions and regulations. Do not test-drive on a lift unless specified.
- The possible causes shown may not be a complete list of all potential problems, and it is possible that there may be other causes.

Confirmation Procedure	With the Driving Pattern: • Turn the vehicle to the ON mode.
Execution	Regular Diagnosis
Duration	About 2 seconds
DTC Type	• 1 drive cycle • Brake system indicator (amber) on
Fail Safe Action	• None
Possible Cause	• Open or short to ground between the electric brake booster and the under-dash fuse/relay box (IG1 OPTION line) • Fuse failure (under-dash fuse/relay box No. D5) • Electric brake booster internal failure

REMOVAL, INSTALLATION & TEST

AUTOMATIC BRAKE HOLD SWITCH REMOVAL, INSTALLATION, AND TEST

Removal and Installation

1. Shift Lever Panel - Remove
2. Automatic Brake Hold Switch - Remove

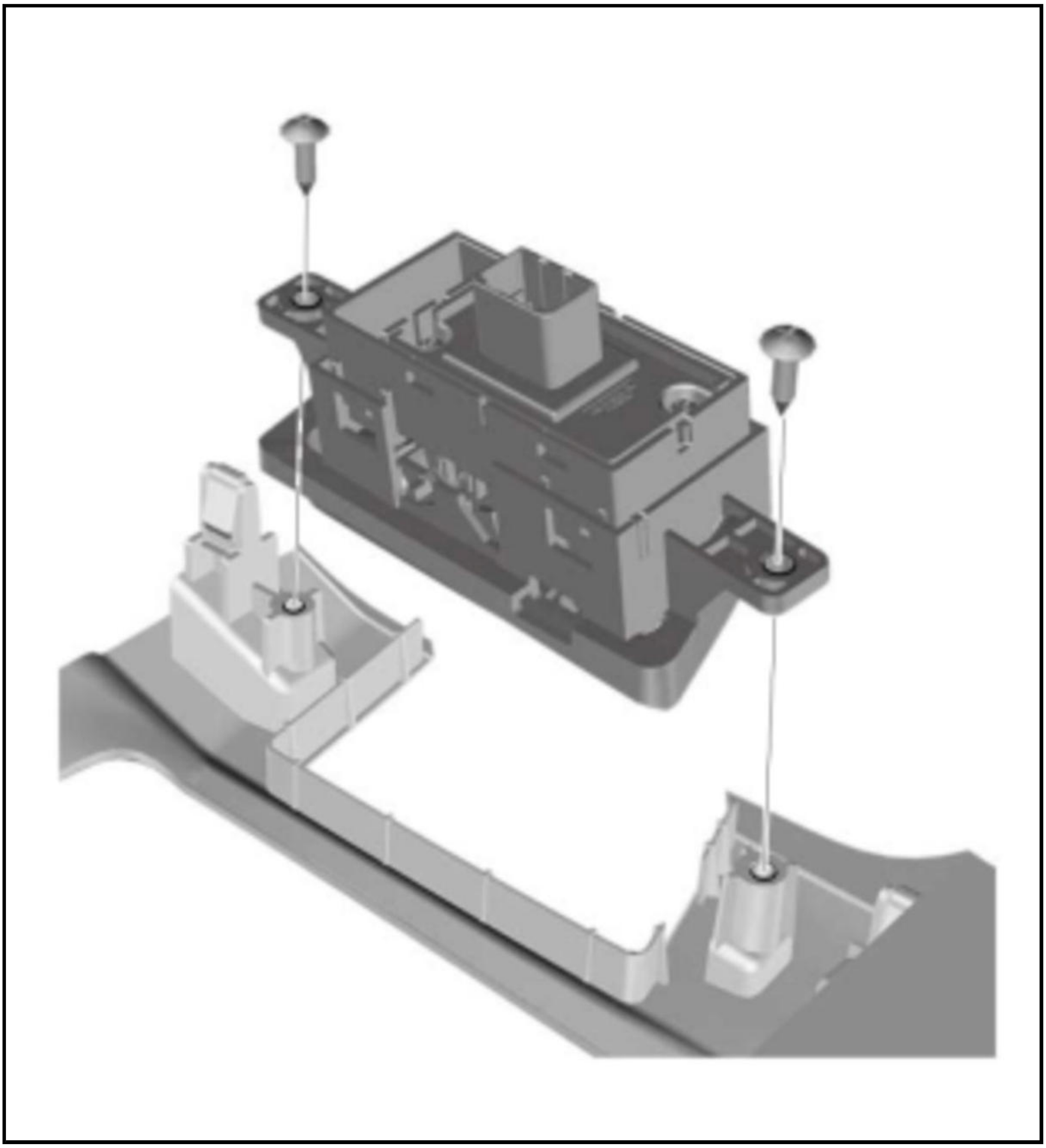

3. All Removed Parts - Install

1. Install all removed parts in the reverse order of removal.

Test

1. Automatic Brake Hold Switch - Test

Electric parking brake/automatic brake hold switch 12P connector (male terminals) 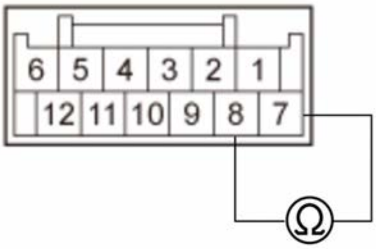	1. On the switch side, measure the resistance between the connector terminal in each switch position according to the table. 2. If the switch does not work as described in the table, replace the switch.

Position	Resistance
RELEASED	About 2200 ohms

Position	Resistance
PRESSED	About 559 ohms

REMOVAL AND INSTALLATION

BRAKE HOSE REMOVAL AND INSTALLATION

Removal

NOTE: Review the Service Precautions before doing repairs or service .

Front

1. Vehicle - Lift
2. Front Wheel - Remove
3. Brake Hose - Remove

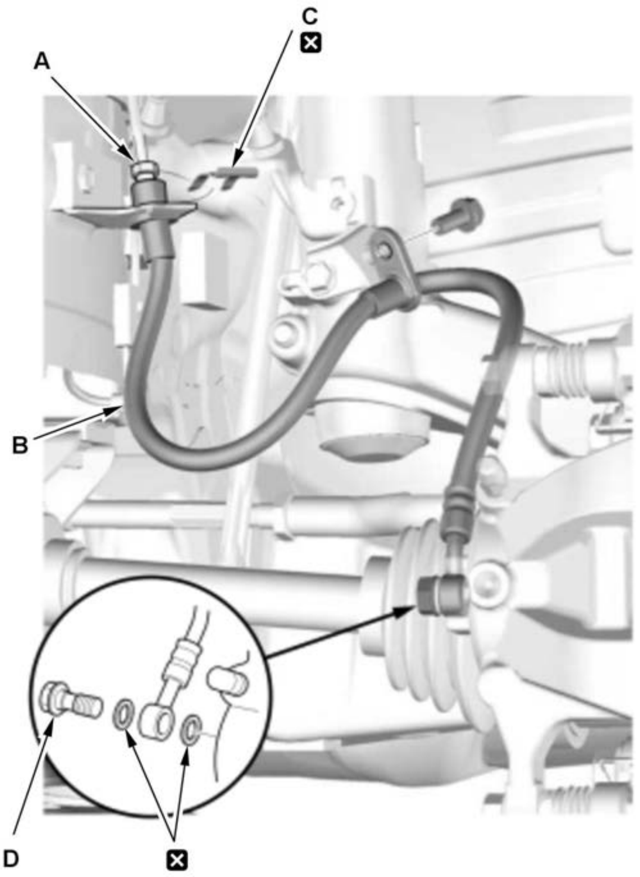

1. Disconnect the brake line (A) from the brake hose (B).

2. Remove the brake hose clip (C).

3. Remove the banjo bolt (D), and disconnect the brake hose from the caliper body.

4. Remove the brake hose.

Rear

4. Vehicle - Lift
5. Rear Wheel - Remove
6. Brake Hose - Remove

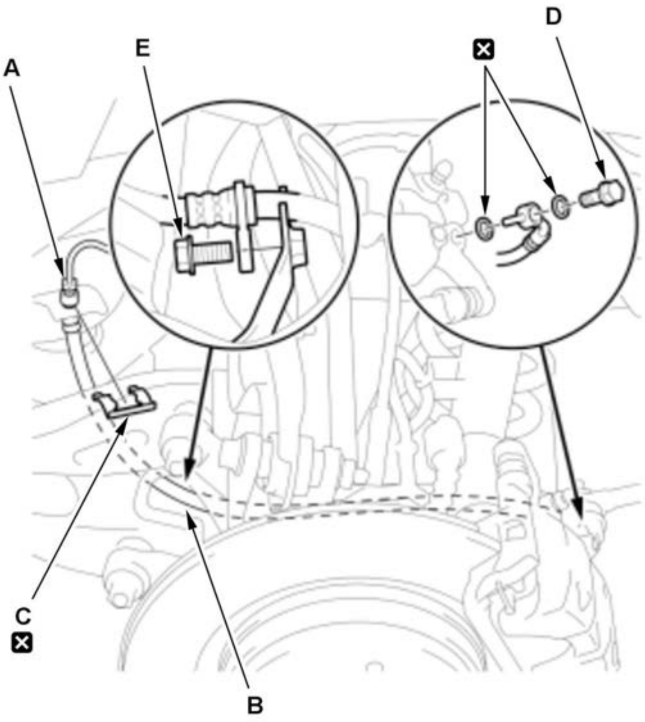

1. Disconnect the brake line (A) from the brake hose (B).

2. Remove the brake hose clip (C).

3. Remove the banjo bolt (D), and disconnect the brake hose from the caliper body.

4. Remove the brake hose mounting bolt (E).

Installation

NOTE:

- How to read the torque specifications .
- Review the Service Precautions before doing repairs or service .

Front

1. Brake Hose - Install

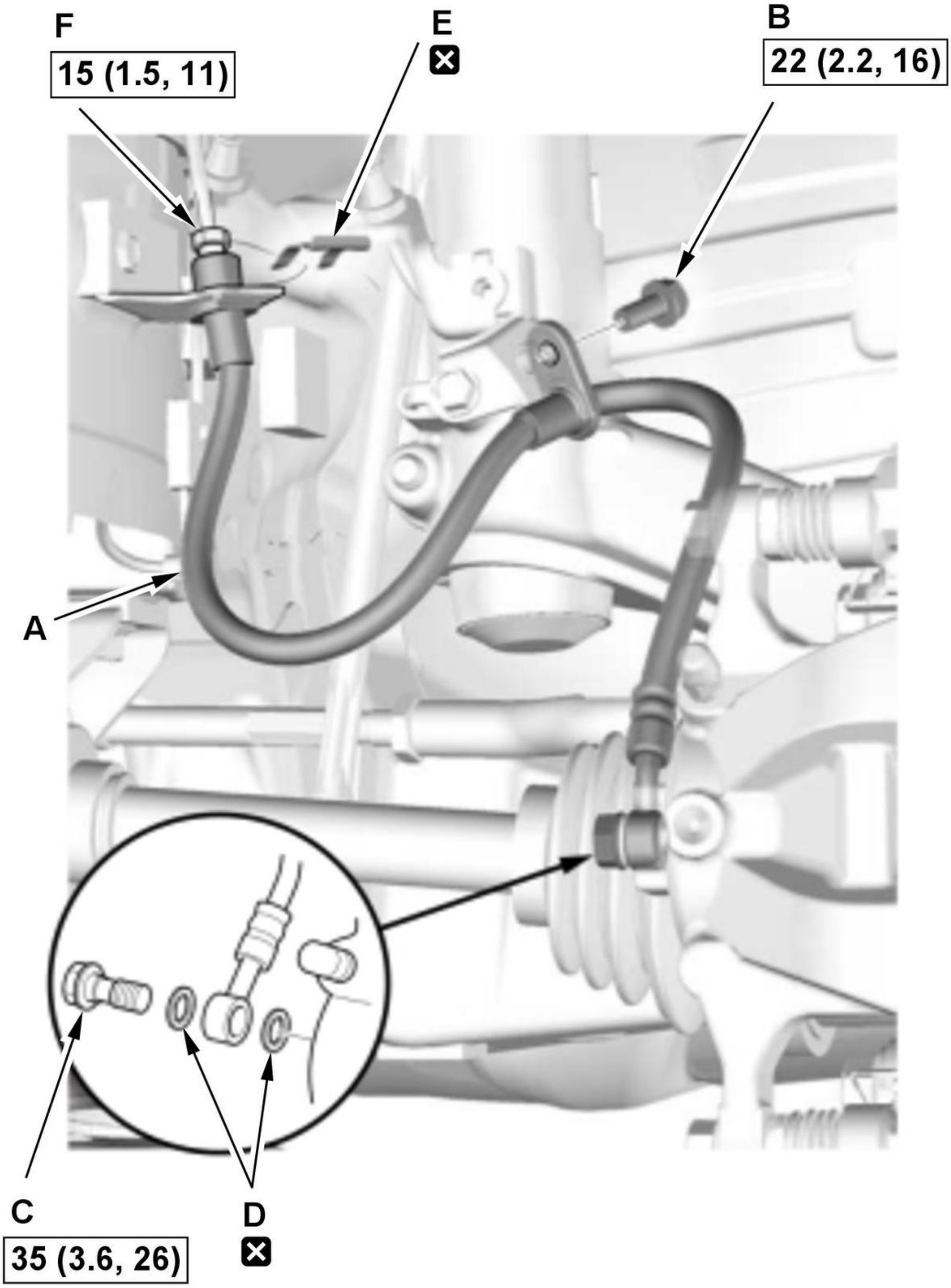
F
15 (1.5, 11)
E
☒
B
22 (2.2, 16)
A
C
35 (3.6, 26)
D
☒

Fig. 1: Brake Hose Torque Specifications
Courtesy of HONDA, U.S.A., INC.

1. Install the brake hose (A) with the brake hose mounting bolt (B).

2. Connect the brake hose to the caliper body with the banjo bolt (C) and new sealing washers (D).

3. Install a new brake hose clip (E) to the brake hose.

4. Connect the brake line (F) to the brake hose.

2. **Brake System - Bleed**
3. **Brake Hose and Line - Check**
4. **Front Wheel - Install**

Rear

5. Brake Hose - Install

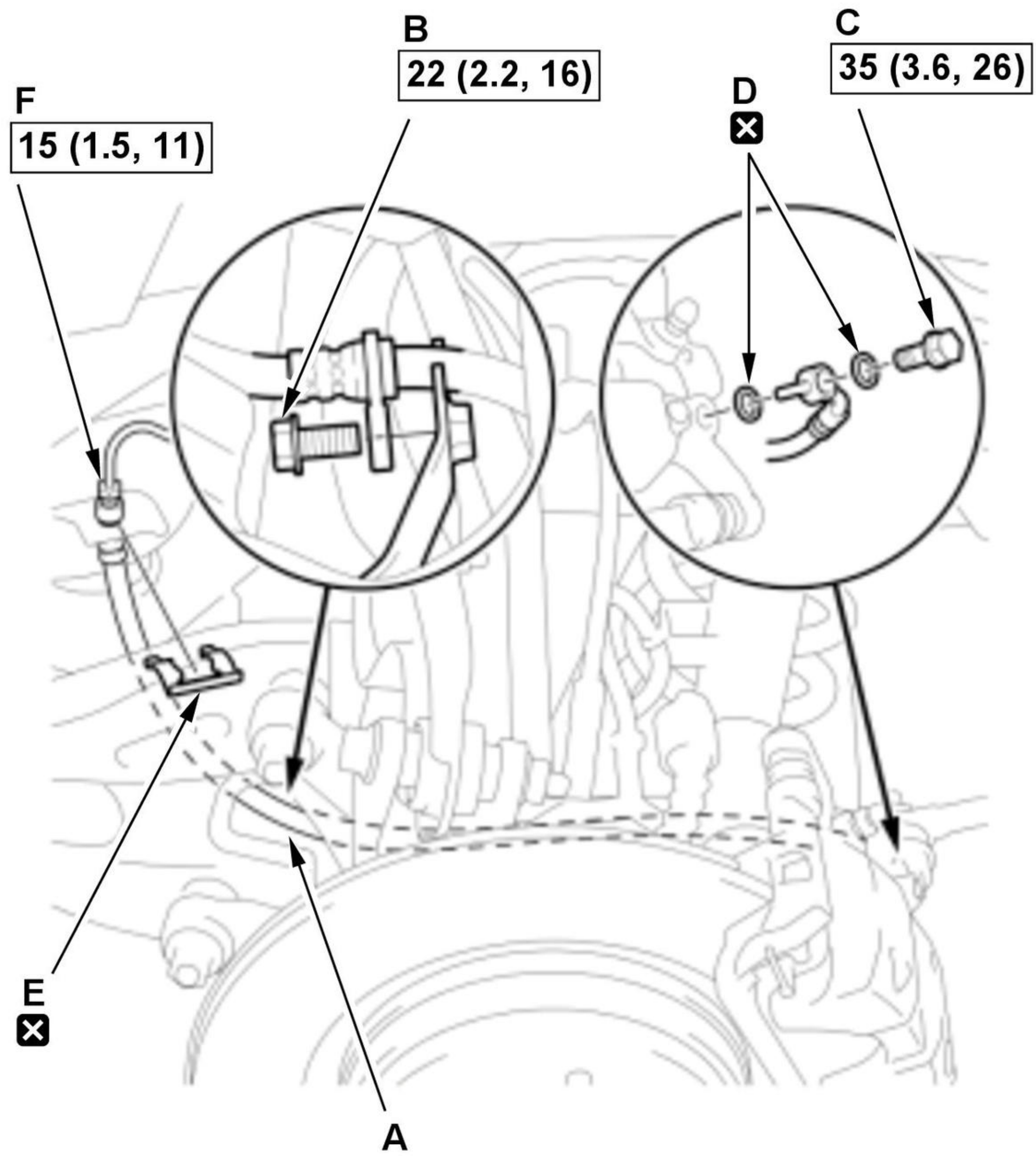

Fig. 2: Brake Hose Torque Specifications
Courtesy of HONDA, U.S.A., INC.

1. Install the brake hose (A) with the brake hose mounting bolt (B).

2. Connect the brake hose to the caliper body with the banjo bolt (C) and new sealing washers (D).

3. Install a new brake hose clip (E) to the brake hose.

4. Connect the brake line (F) to the brake hose.

6. **Brake System - Bleed**
7. **Brake Hose and Line - Check**
8. **Rear Wheel - Install**

BRAKE MASTER CYLINDER REMOVAL AND INSTALLATION (WITH ELECTRIC BRAKE BOOSTER TYPE A) (2017 2018 2019)

Removal and Installation

NOTE:

- **How to read the torque specifications** .
- **Review the Service Precautions before doing repairs or service** .
- There are two types of electric brake boosters (type A or B) that can be differentiated visually. **Make sure which booster type is equipped before doing any repairs or service** .
- Be careful when handling the master cylinder. Do not hold it at the piston, or the piston may separate from the body. If the piston separates from the body, the master cylinder must be replaced. Do not reinsert the piston back into the master cylinder body.
- Unless otherwise indicated, illustrations used in the procedure are for the L15BE engine model.

1. Brake Fluid - Remove

1. Remove the brake fluid from the master cylinder reservoir with a syringe.

2. **Air Cleaner - Remove**
3. 12 Volt Battery - Remove

1. Open the driver's door, and wait 3 minutes or more.

NOTE: Do not turn the vehicle to the ON mode.

2. **Do the 12 volt battery terminal disconnection procedure**

3. **Remove the 12 volt battery** .

4. Master Cylinder Reservoir Bracket - Remove

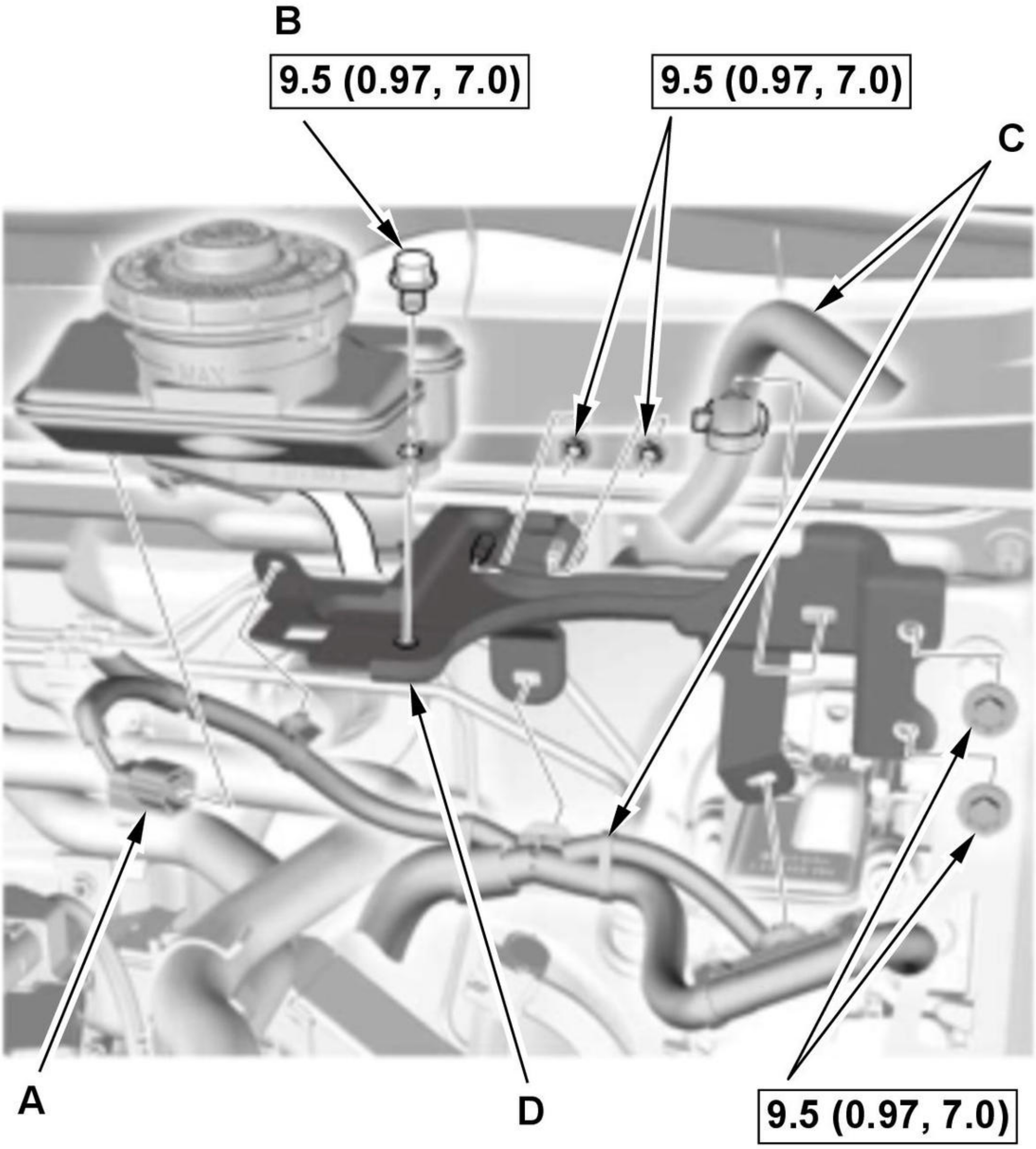
B
9.5 (0.97, 7.0)
9.5 (0.97, 7.0)
C
A
D
9.5 (0.97, 7.0)

Fig. 3: Master Cylinder Reservoir Bracket Torque Specifications
Courtesy of HONDA, U.S.A., INC.

1. Disconnect the connector (A).

2. Remove the reservoir mounting bolt (B).

3. Remove the wire harness (C).

4. Remove the master cylinder reservoir bracket (D).

5. 12 Volt Battery Base - Remove

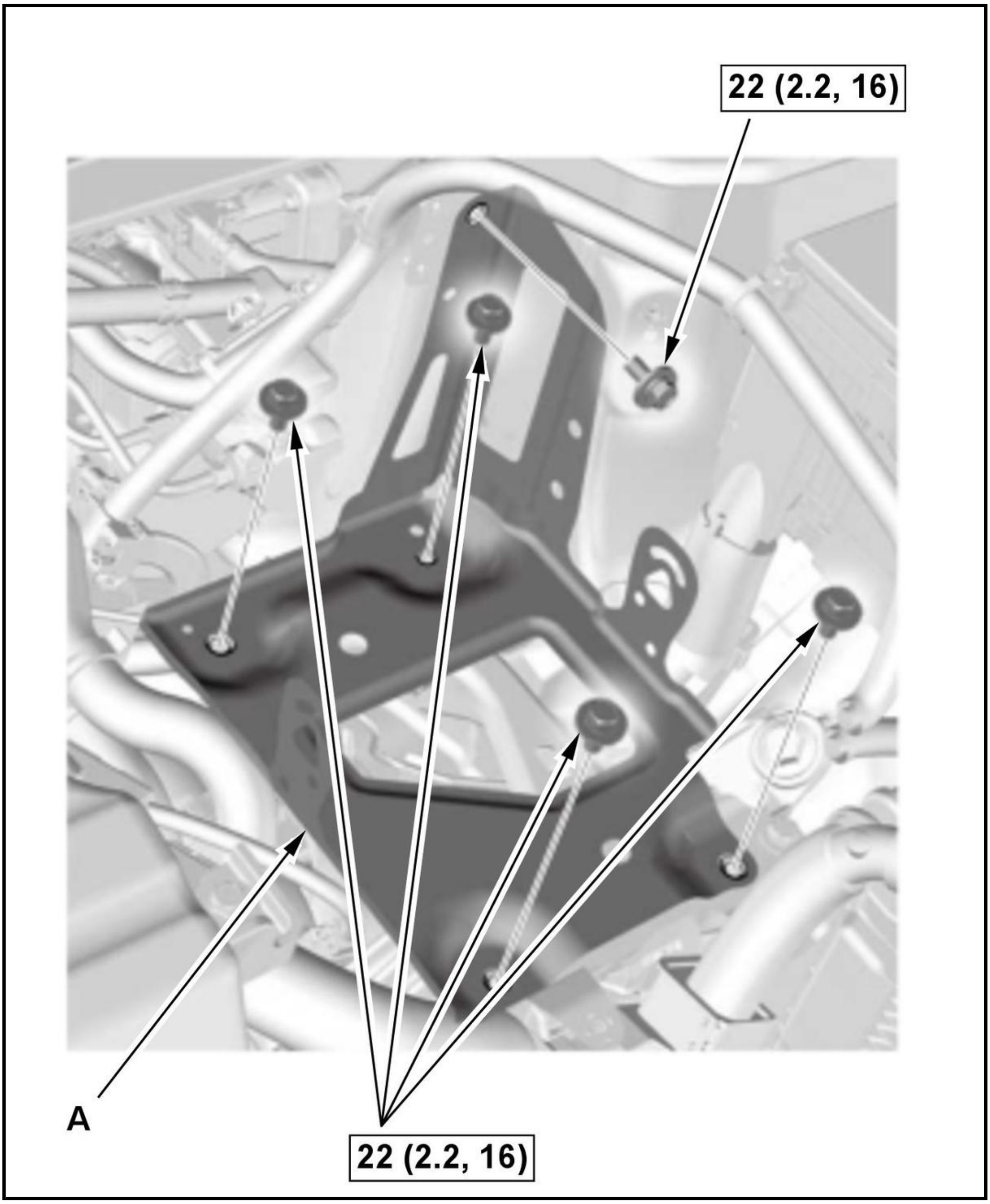
22 (2.2, 16)
A
22 (2.2, 16)

USA and Canada production model

1. Remove the 12 volt battery base (A).

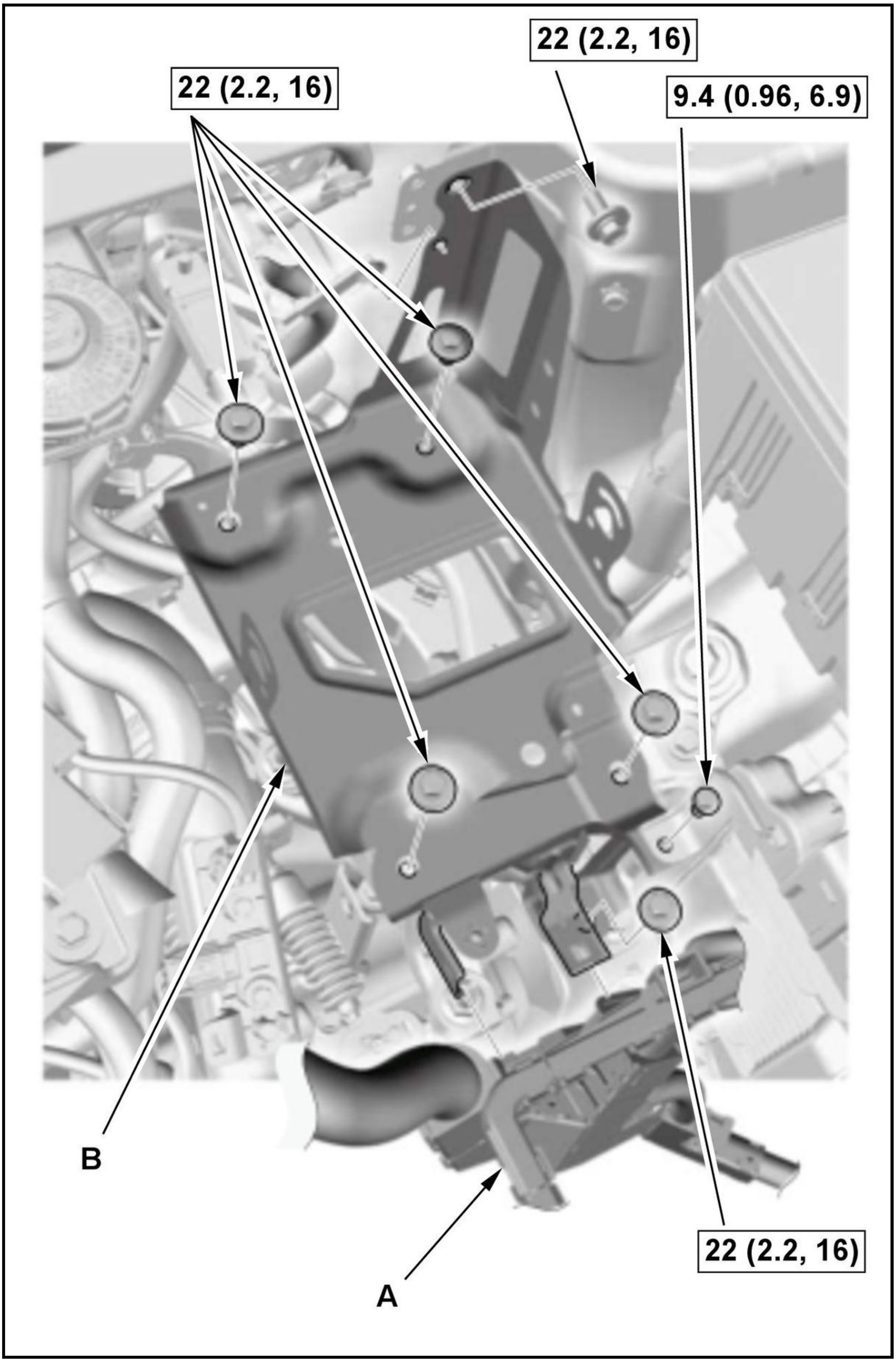
22 (2.2, 16)
22 (2.2, 16)
9.4 (0.96, 6.9)
B
A
22 (2.2, 16)

Except USA and Canada production model

1. Remove the wire harness (A).

2. Remove the 12 volt battery base (B).

6. 12 Volt Battery Base Bracket - Remove

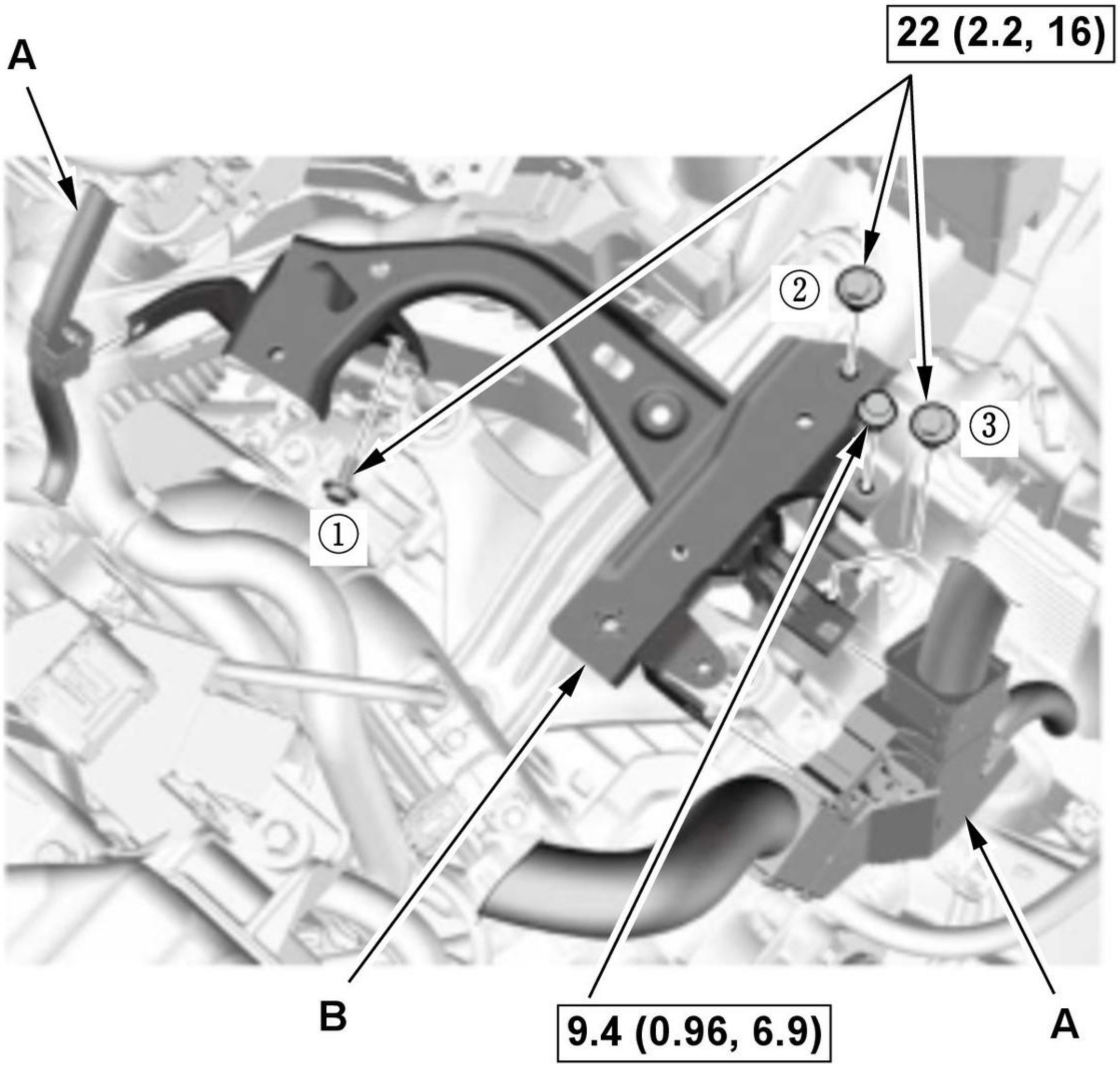

Fig. 4: 12 Volt Battery Base Bracket Torque Specifications & Tightening Sequence
Courtesy of HONDA, U.S.A., INC.

USA and Canada production model

1. Remove the wire harness (A).

2. Remove the 12 volt battery base bracket (B).

NOTE: During installation, loosely install the bolts and tighten it to the specified torque in the numbered sequence shown.

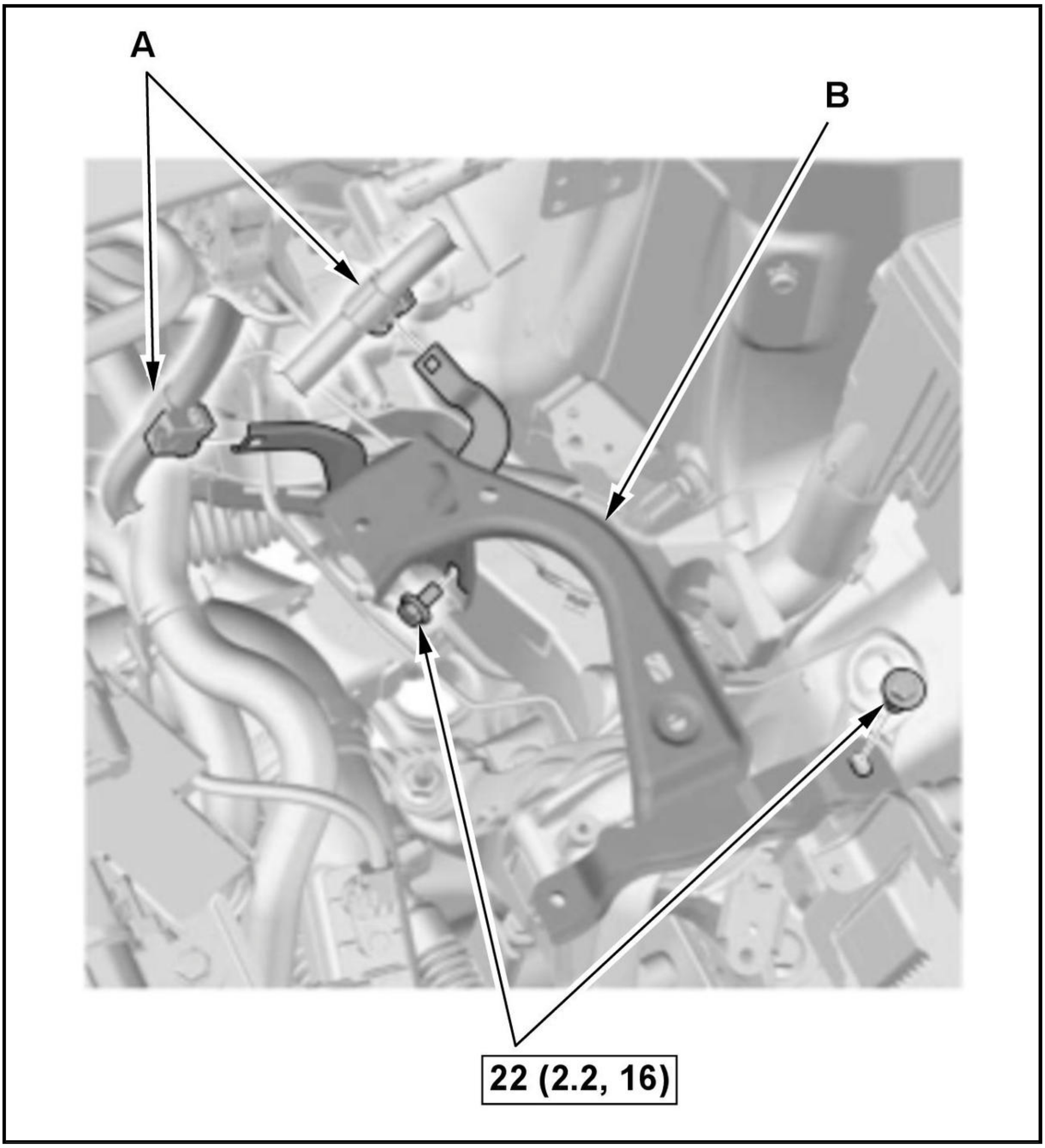

Except USA and Canada production model

1. Remove the wire harness (A).

2. Remove the 12 volt battery base bracket (B).

7. Master Cylinder - Remove

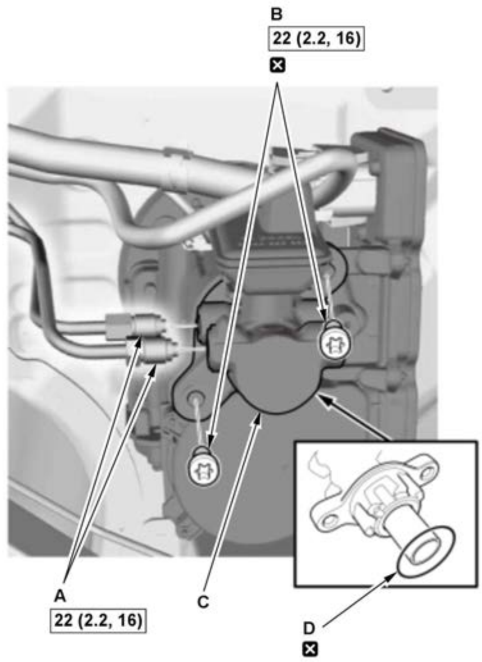

1. Disconnect the brake lines (A) from the master cylinder. To prevent spills, cover the brake line joints with clean rags or shop towels.

2. Using a T45 TORX plus driver, remove the master cylinder mounting bolts (B).

NOTE: Use new mounting bolts during reassembly.

3. Remove the master cylinder (C).

4. Remove the O-ring (D) from the master cylinder.

- Replace the O-ring whenever the master cylinder is removed.
- Make sure not to get any silicone grease on the terminal part of the connectors and switches, especially if you have silicone grease on your hands or gloves.

8. All Removed Parts - Install

1. Install all removed parts in the reverse order of removal.

9. **Brake System - Bleed**
10. **Brake Pedal Height and Free Play - Check**
11. Brake Drag - Check

1. Spin the wheels to check for brake drag.

BRAKE MASTER CYLINDER REMOVAL AND INSTALLATION (WITH ELECTRIC BRAKE BOOSTER TYPE B) (2020 2021)

Removal and Installation

NOTE:

- **How to read the torque specifications** .
- **Review the Service Precautions before doing repairs or service** .
- There are two types of electric brake boosters (type A or B) that can be differentiated visually. **Make sure which booster type is equipped before doing any repairs or service** .
- Be careful when handling the master cylinder. Do not hold it at the piston, or the piston may separate from the body. If the piston separates from the body, the master cylinder must be replaced. Do not reinsert the piston back into the master cylinder body.

1. Brake Fluid - Remove

1. Remove the brake fluid from the master cylinder reservoir with a syringe.

2. **Air Cleaner - Remove**
3. 12 Volt Battery - Remove

1. Open the driver's door, and wait 3 minutes or more.

NOTE: Do not turn the vehicle to the ON mode.

2. **Do the 12 volt battery terminal disconnection procedure**

3. **Remove the 12 volt battery** .

4. Master Cylinder Reservoir Bracket - Remove

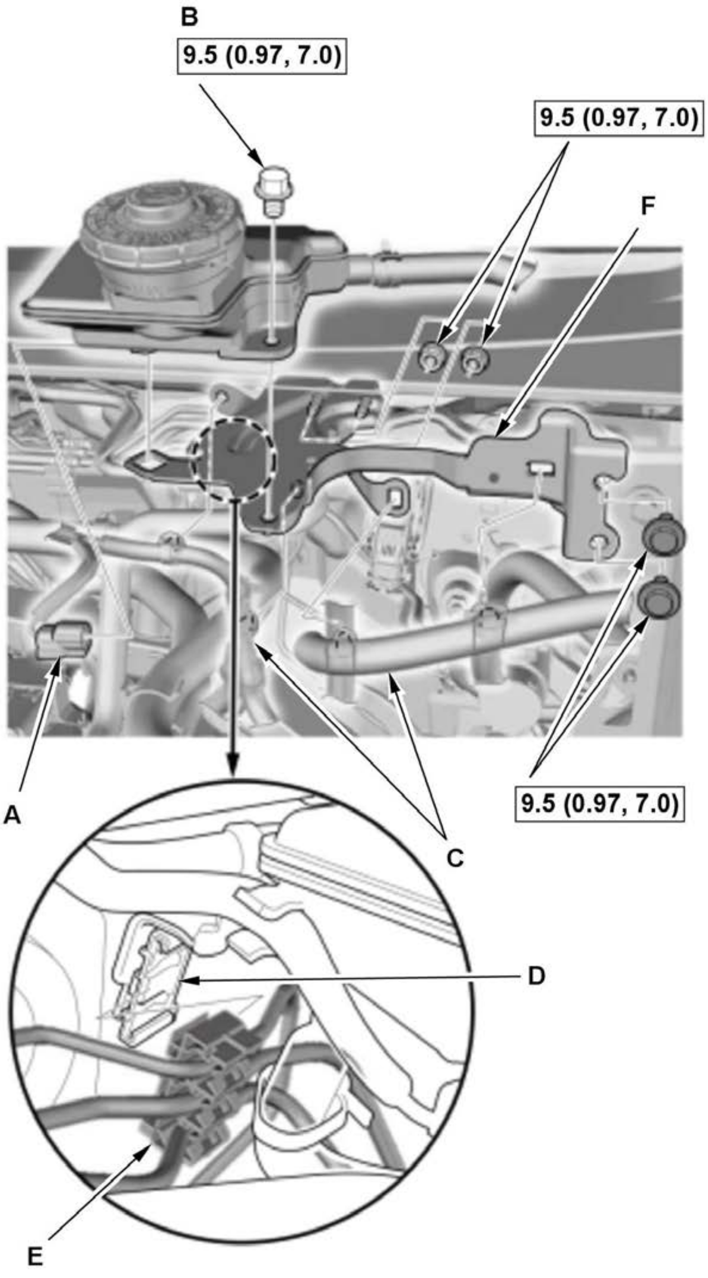

1. Disconnect the connector (A).
2. Remove the reservoir mounting bolt (B).
3. Remove the wire harness (C).
4. Slide off the brake line clip (D) from the brake line clamp (E).
5. Remove the master cylinder reservoir bracket (F).

5. 12 Volt Battery Base - Remove

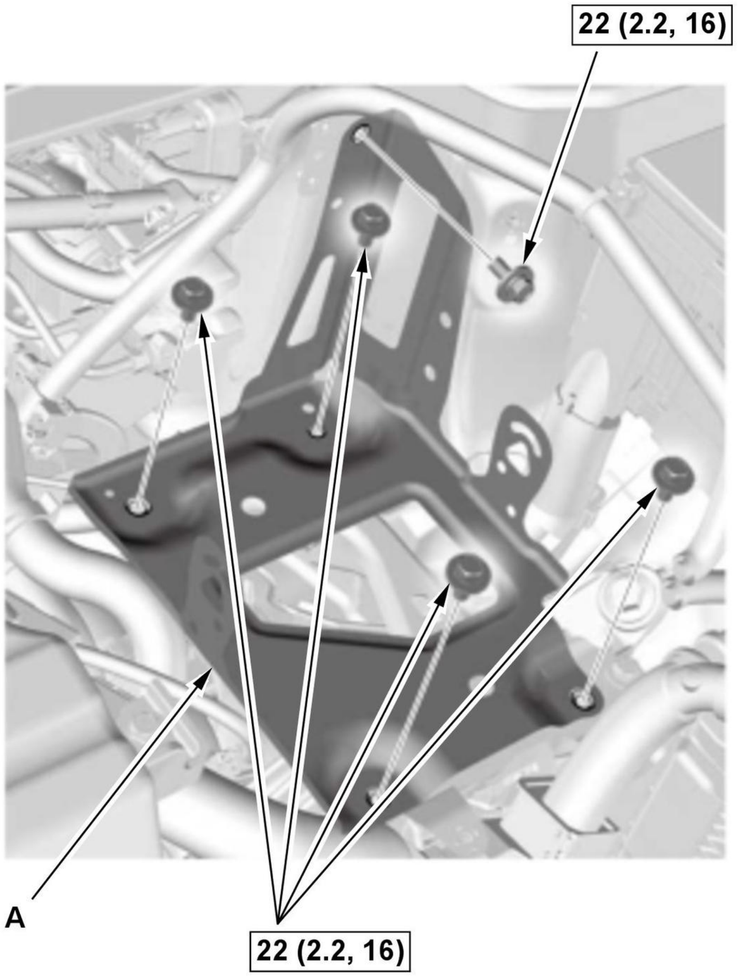 22 (2.2, 16) A 22 (2.2, 16)	1. Remove the 12 volt battery base (A).

6. 12 Volt Battery Base Bracket - Remove

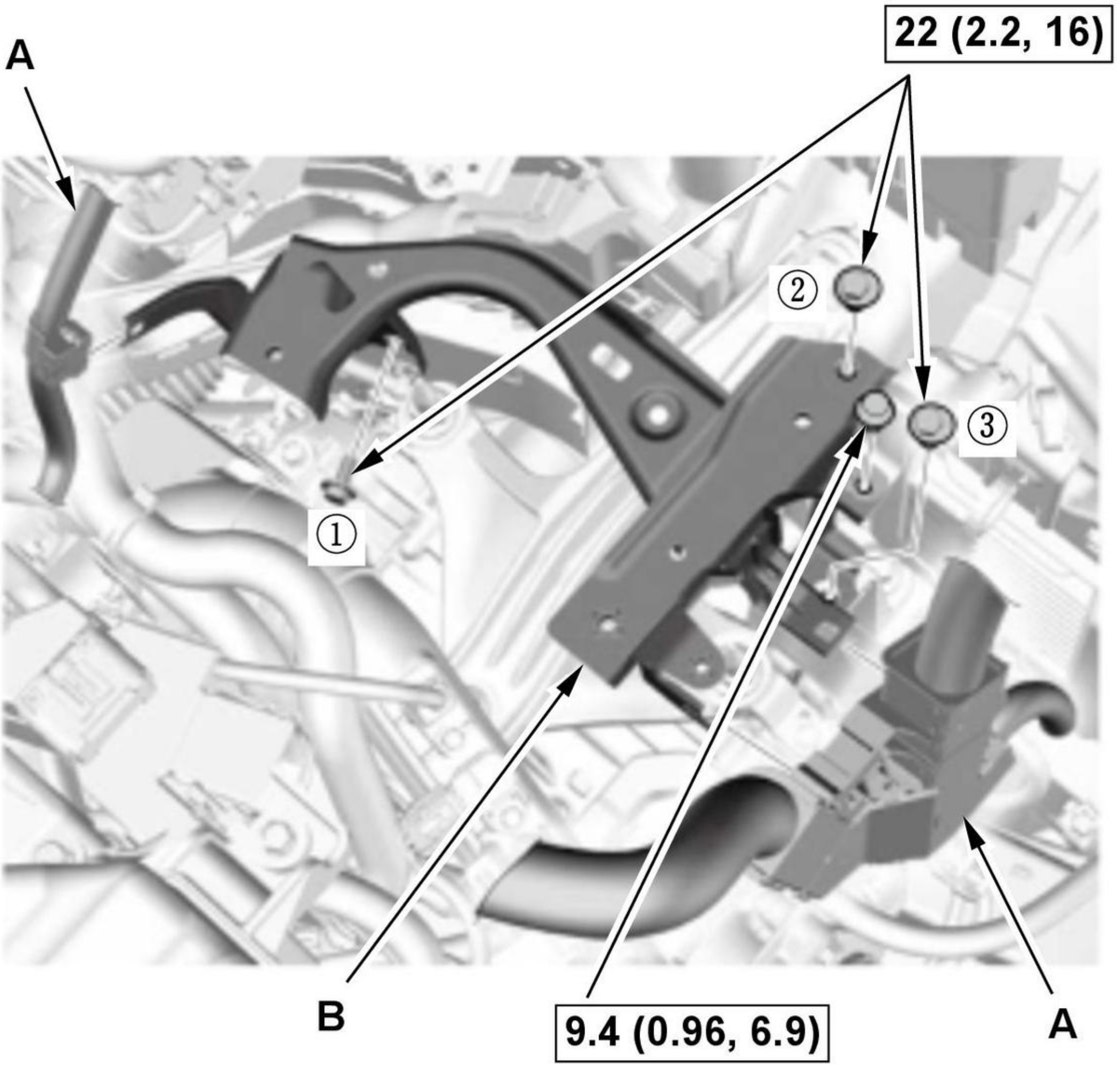

Fig. 5: 12 Volt Battery Base Bracket Torque Specifications & Tightening Sequence
Courtesy of HONDA, U.S.A., INC.

1. Remove the wire harness (A).

2. Remove the 12 volt battery base bracket (B).

NOTE: During installation, loosely install the bolts and tighten it to the specified torque in the numbered sequence shown.

7. Master Cylinder - Remove

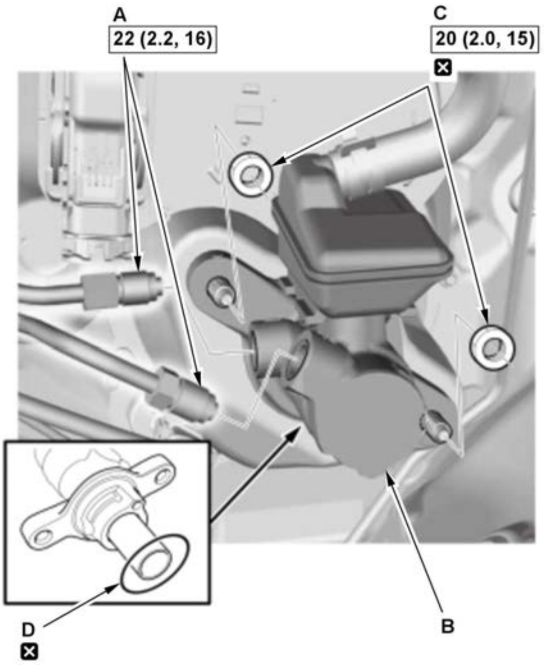	1. Disconnect the brake lines (A) from the master cylinder (B). To prevent spills, cover the brake line joints with clean rags or shop towels. 2. Remove the nuts (C). 3. Remove the master cylinder. 4. Remove the O-ring (D) from the master cylinder. **NOTE:** Use the new O-ring during reassembly.

8. All Removed Parts - Install

1. Install all removed parts in the reverse order of removal.

9. **Brake System - Bleed**
10. **Brake Pedal Height and Free Play - Check**
11. Brake Drag - Check

1. Spin the wheels to check for brake drag.

BRAKE PEDAL REMOVAL AND INSTALLATION

Removal and Installation

NOTE: **How to read the torque specifications** .

1. **Driver's Dashboard Undercover - Remove**
2. **Driver's Dashboard Lower Cover - Remove**
3. **Brake Pedal Position Switch - Remove**
4. Brake Pedal - Remove

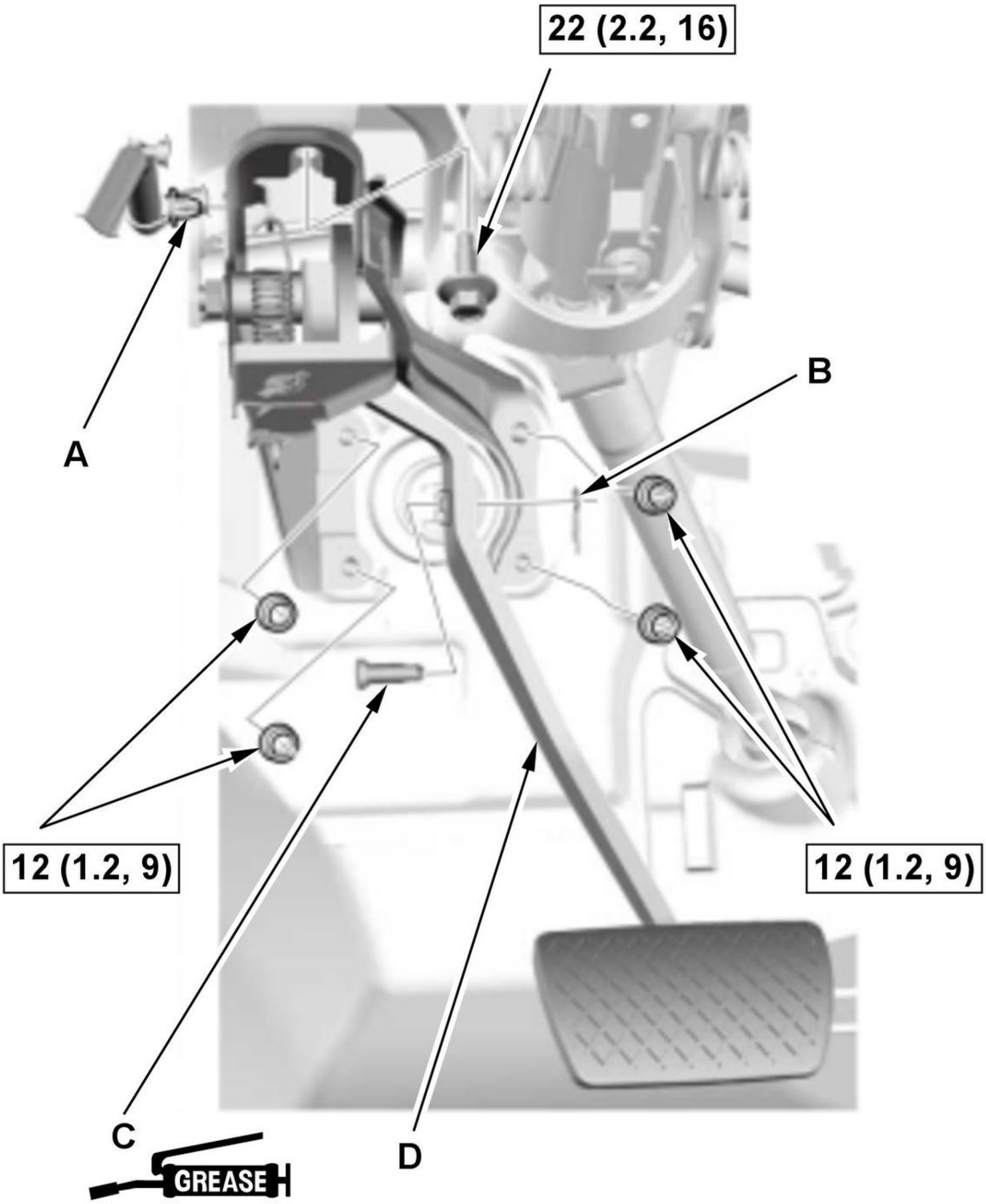

Fig. 6: Brake Pedal Torque Specifications
Courtesy of HONDA, U.S.A., INC.

1. Remove the harness clip (A).

2. Remove the lock pin (B).

3. Remove the clevis pin (C).

NOTE: During installation, apply multipurpose grease to the clevis pin in the brake pedal.

4. Remove the brake pedal with the bracket (D).

5. All Removed Parts - Install

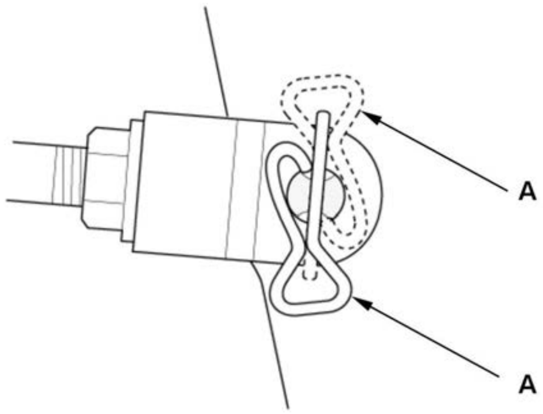	1. Install all removed parts in the reverse order of removal. **NOTE:** The lock pin (A) can be installed from the top or bottom.

6. Brake Pedal and Brake Pedal Position Switch - Adjust

ELECTRIC BRAKE BOOSTER REMOVAL AND INSTALLATION (ELECTRIC BRAKE BOOSTER CONTROL UNIT TYPE A) (2017 2018 2019)

Removal and Installation

NOTE:

- How to read the torque specifications .
- Review the Service Precautions before doing repairs or service .
- There are two types of electric brake boosters (type A or B) that can be differentiated visually. Make sure which booster type is equipped before doing any repairs or service .
- Unless otherwise indicated, illustrations used in the procedure are for the L15BE model.

1. Brake Fluid - Remove

1. Remove the brake fluid from the master cylinder reservoir with a syringe.

2. Air Cleaner - Remove
3. 12 Volt Battery - Remove

1. Open the driver's door, and wait 3 minutes or more. **NOTE:** Do not turn the vehicle to the ON mode. 2. Do the 12 volt battery terminal disconnection procedure 3. Remove the 12 Volt Battery .

4. Master Cylinder Reservoir Bracket - Remove

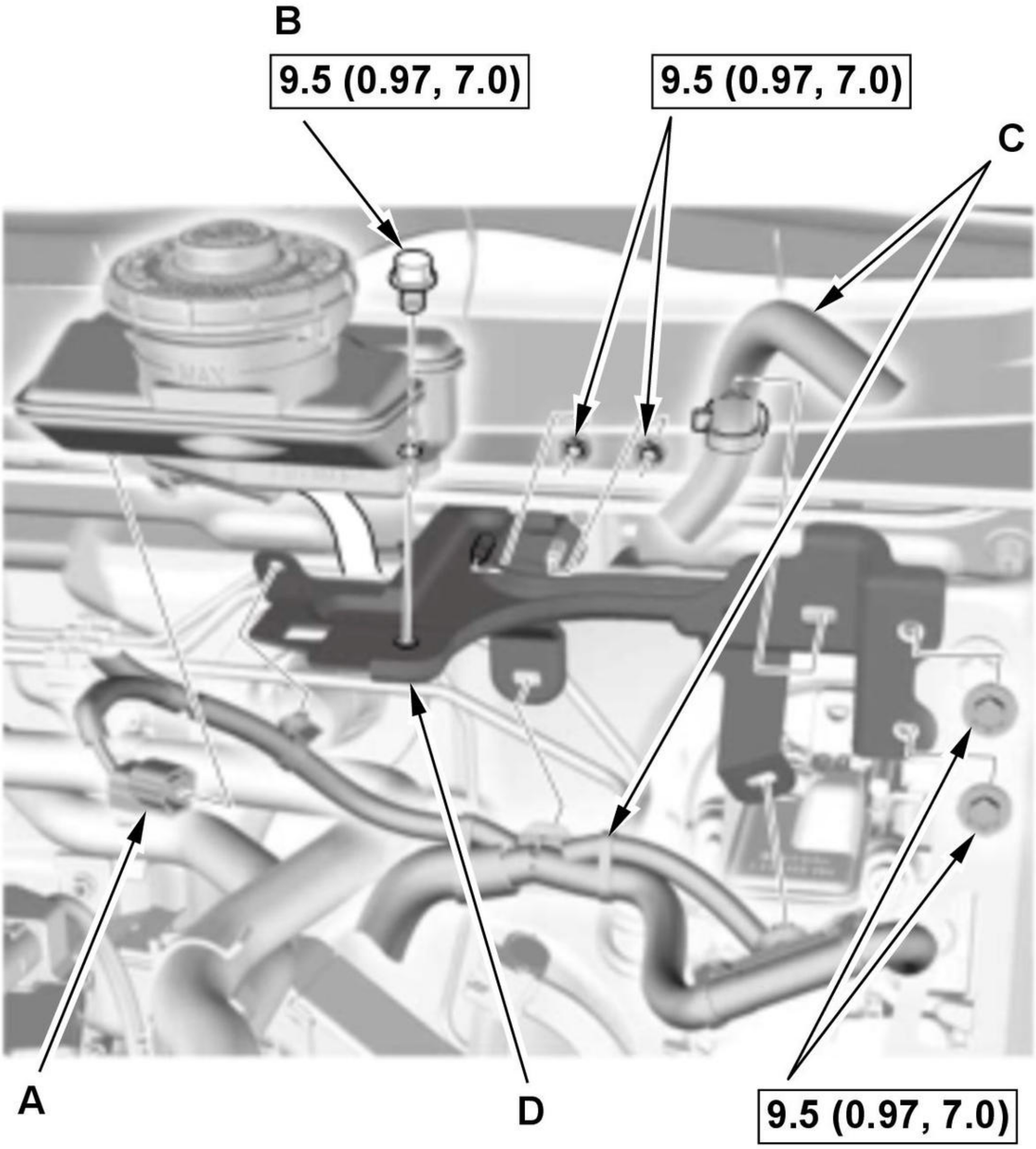
B
9.5 (0.97, 7.0)
9.5 (0.97, 7.0)
C
A
D
9.5 (0.97, 7.0)

Fig. 7: Master Cylinder Reservoir Bracket Torque Specifications
Courtesy of HONDA, U.S.A., INC.

1. Disconnect the connector (A).
2. Remove the reservoir mounting bolt (B).
3. Remove the wire harness (C).
4. Remove the master cylinder reservoir bracket (D).

5. 12 Volt Battery Base - Remove

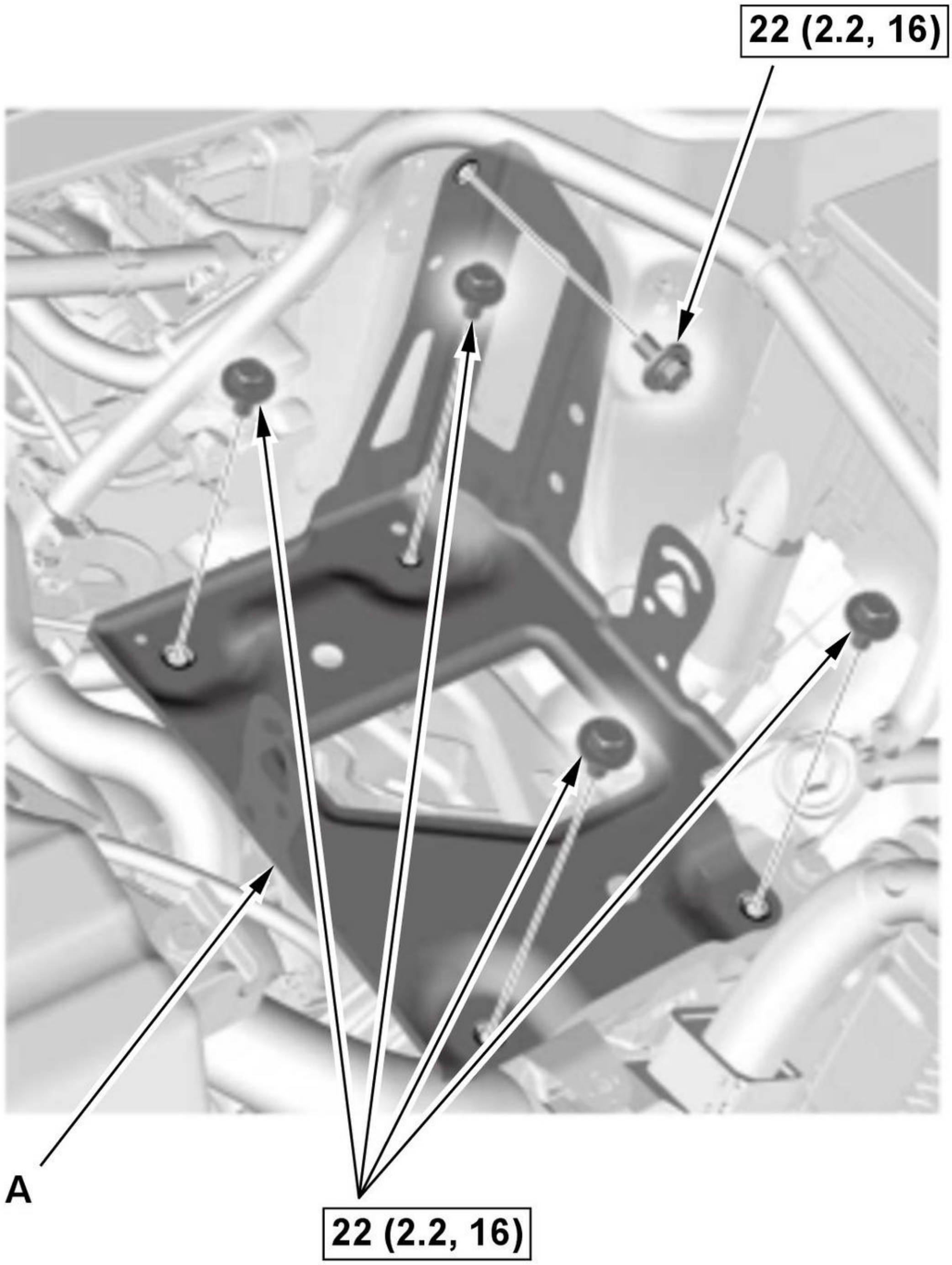

Fig. 8: 12 Volt Battery Base Bolt Torque Specifications
Courtesy of HONDA, U.S.A., INC.

USA and Canada production model

1. Remove the 12 volt battery base (A).

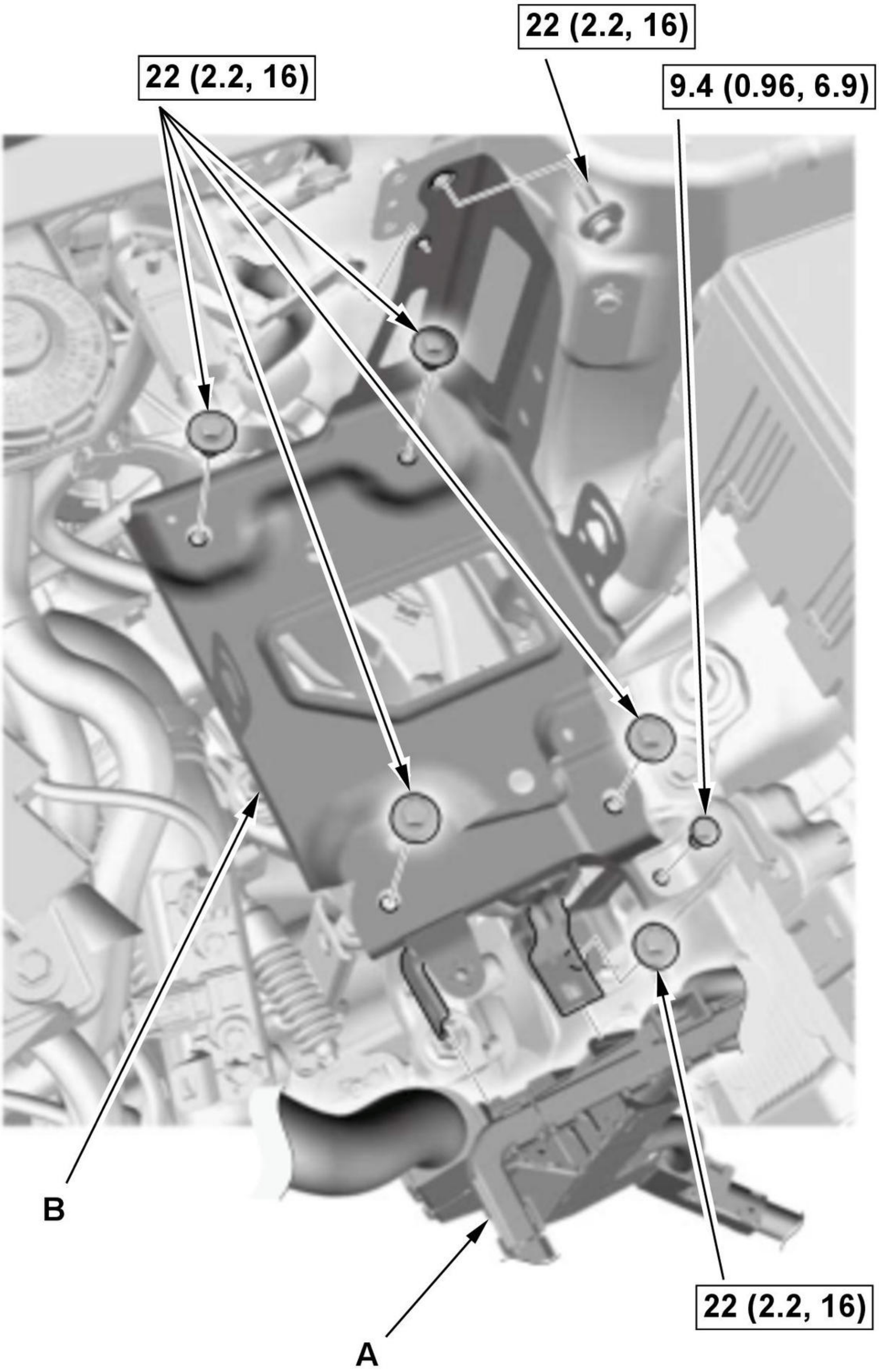
22 (2.2, 16)
22 (2.2, 16)
9.4 (0.96, 6.9)
B
22 (2.2, 16)
A

Fig. 9: 12 Volt Battery Base Bolt Torque Specifications
Courtesy of HONDA, U.S.A., INC.

Except USA and Canada production model

1. Remove the wire harness (A).

2. Remove the 12 volt battery base (B).

6. 12 Volt Battery Base Bracket - Remove

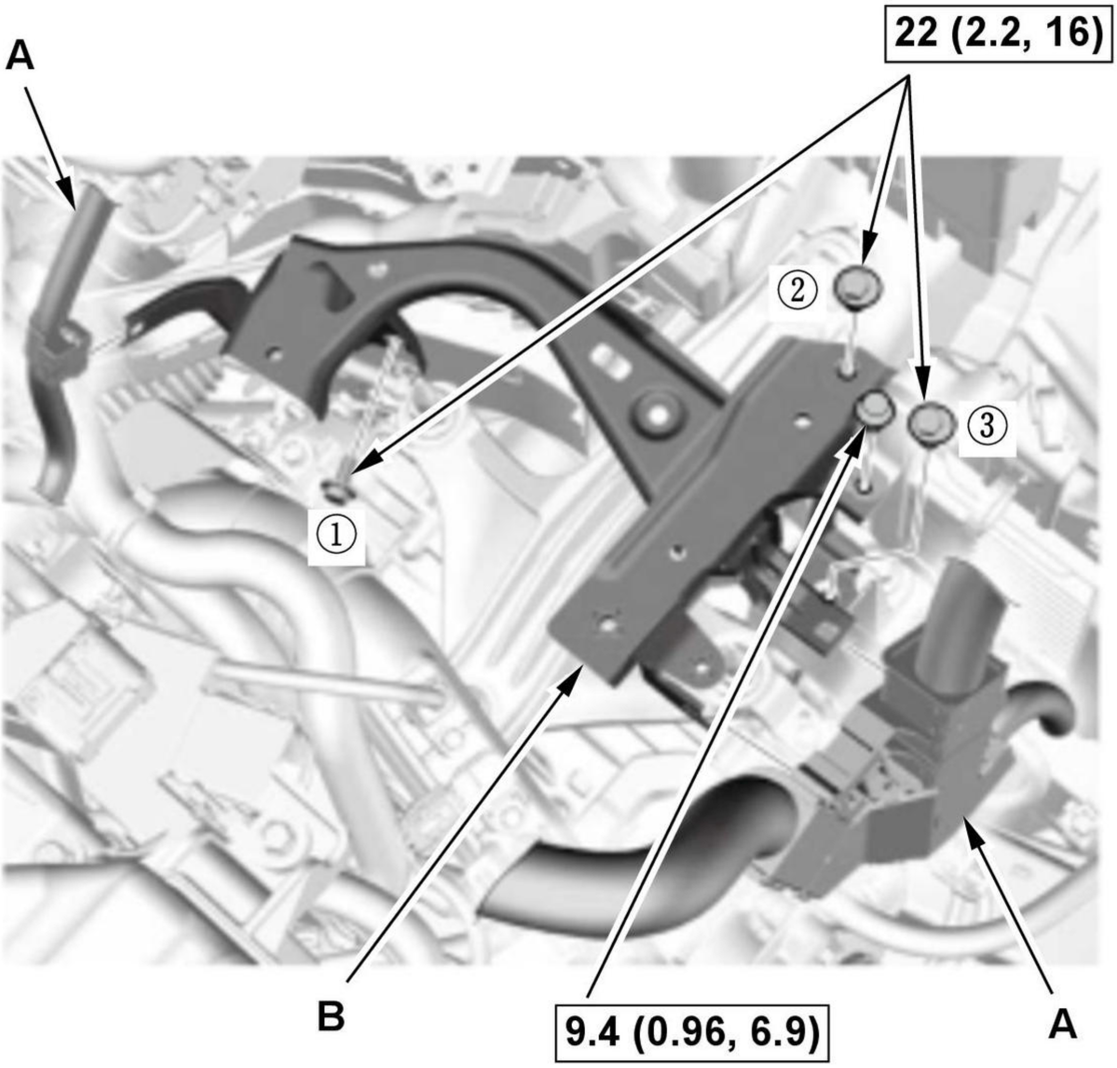

Fig. 10: 12 Volt Battery Base Bracket Torque Specifications & Tightening Sequence
Courtesy of HONDA, U.S.A., INC.

USA and Canada production model

1. Remove the wire harness (A).

2. Remove the 12 volt battery base bracket (B).

NOTE: During installation, loosely install the bolts and tighten it to the specified torque in the numbered sequence shown.

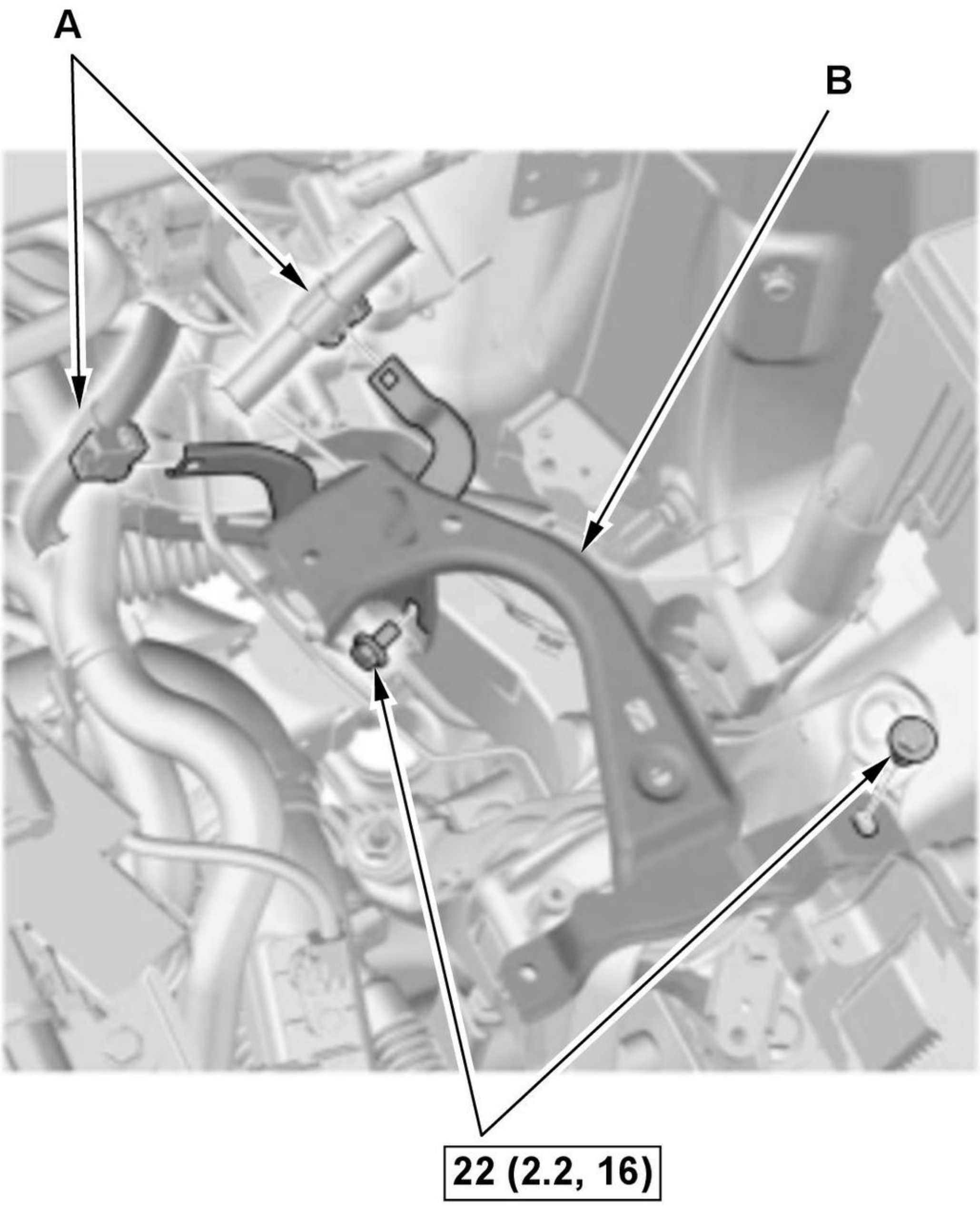

Fig. 11: 12 Volt Battery Base Bracket Torque Specifications
Courtesy of HONDA, U.S.A., INC.

Except USA and Canada production model

1. Remove the wire harness (A).

2. Remove the 12 volt battery base bracket (B).

7. Electric Brake Booster - Remove

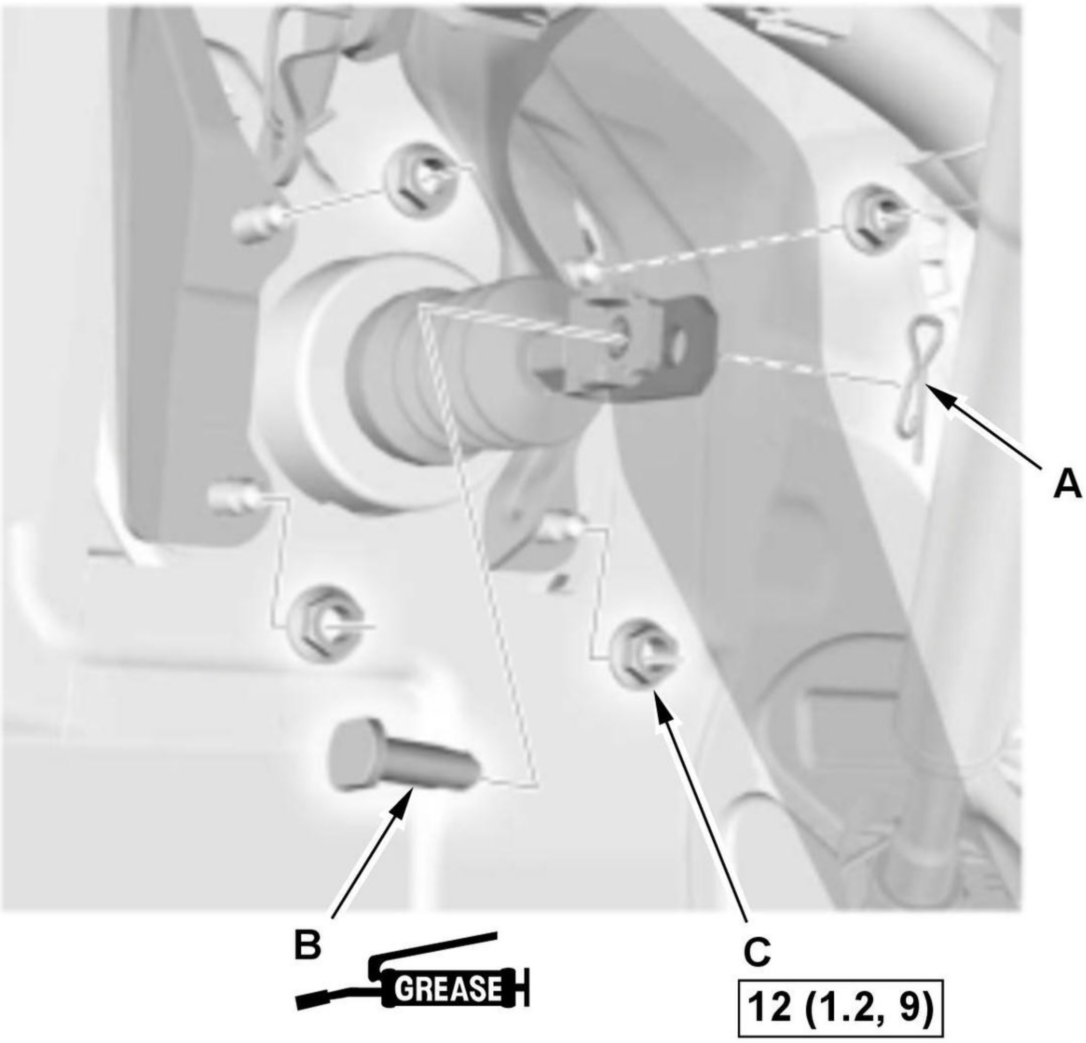

Fig. 12: Electric Brake Booster Mounting Nuts Torque Specifications
Courtesy of HONDA, U.S.A., INC.

1. Remove the lock pin (A).

2. Remove the clevis pin (B).

NOTE: During installation, apply multipurpose grease to the clevis pin in the brake pedal.

3. Remove the electric brake booster mounting nuts (C).

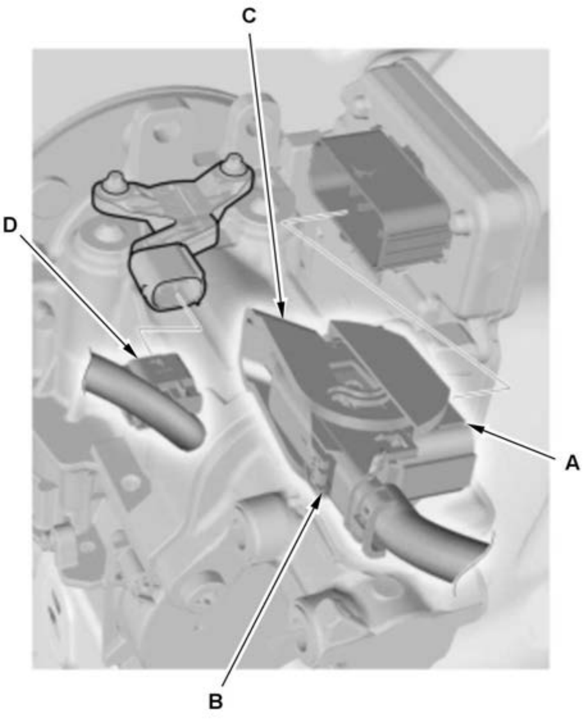

4. **Disconnect the brake lines from the master cylinder**

5. Disconnect the connector (A) by pushing the lock (B) and pulling up the lever (C); the connector disconnects itself.

6. Disconnect the connector (D).

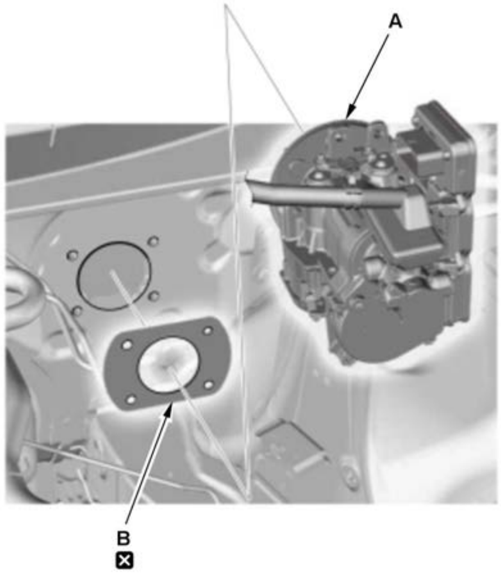

7. Remove the electric brake booster (A) from the engine compartment.

NOTE:

- Be careful not to damage the electric brake booster surfaces and threads of the electric brake booster stud bolts.
- Be careful not to bend or damage the other components hoses and lines.

8. Remove the gasket (B).

NOTE: Use a new electric brake booster gasket during reassembly.

8. All Removed Parts - Install

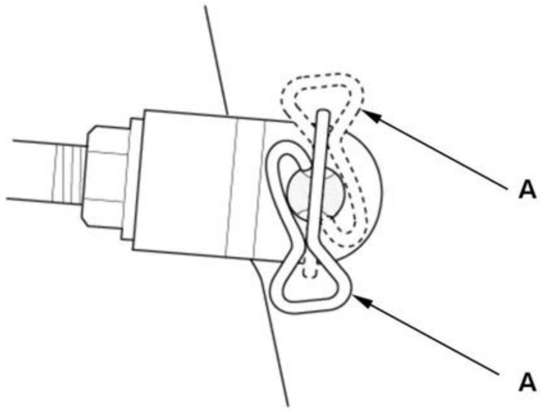

1. Install all removed parts in the reverse order of removal.

NOTE: The lock pin (A) can be installed from the top or bottom.

9. **Brake System - Bleed**
10. **Brake Pedal Height and Free Play - Check**
11. Electric Brake Booster Software - Check

> 1. Make sure the electric brake booster has the latest software. If it does not have the latest, **update the software in the electric brake booster** .

ELECTRIC BRAKE BOOSTER REMOVAL AND INSTALLATION (ELECTRIC BRAKE BOOSTER CONTROL UNIT TYPE B) (2020 2021)

Removal and Installation

NOTE:

- **How to read the torque specifications** .
- **Review the Service Precautions before doing repairs or service** .
- There are two types of electric brake boosters (type A or B) that can be differentiated visually. **Make sure which booster type is equipped before doing any repairs or service** .

1. Brake Fluid - Remove

> 1. Remove the brake fluid from the master cylinder reservoir with a syringe.

2. **Air Cleaner - Remove**
3. 12 Volt Battery - Remove

> 1. Open the driver's door, and wait 3 minutes or more.
>
> **NOTE:** Do not turn the vehicle to the ON mode.
>
> 2. **Do the 12 volt battery terminal disconnection procedure**
>
> 3. **Remove the 12 Volt Battery** .

4. Master Cylinder Reservoir Bracket - Remove

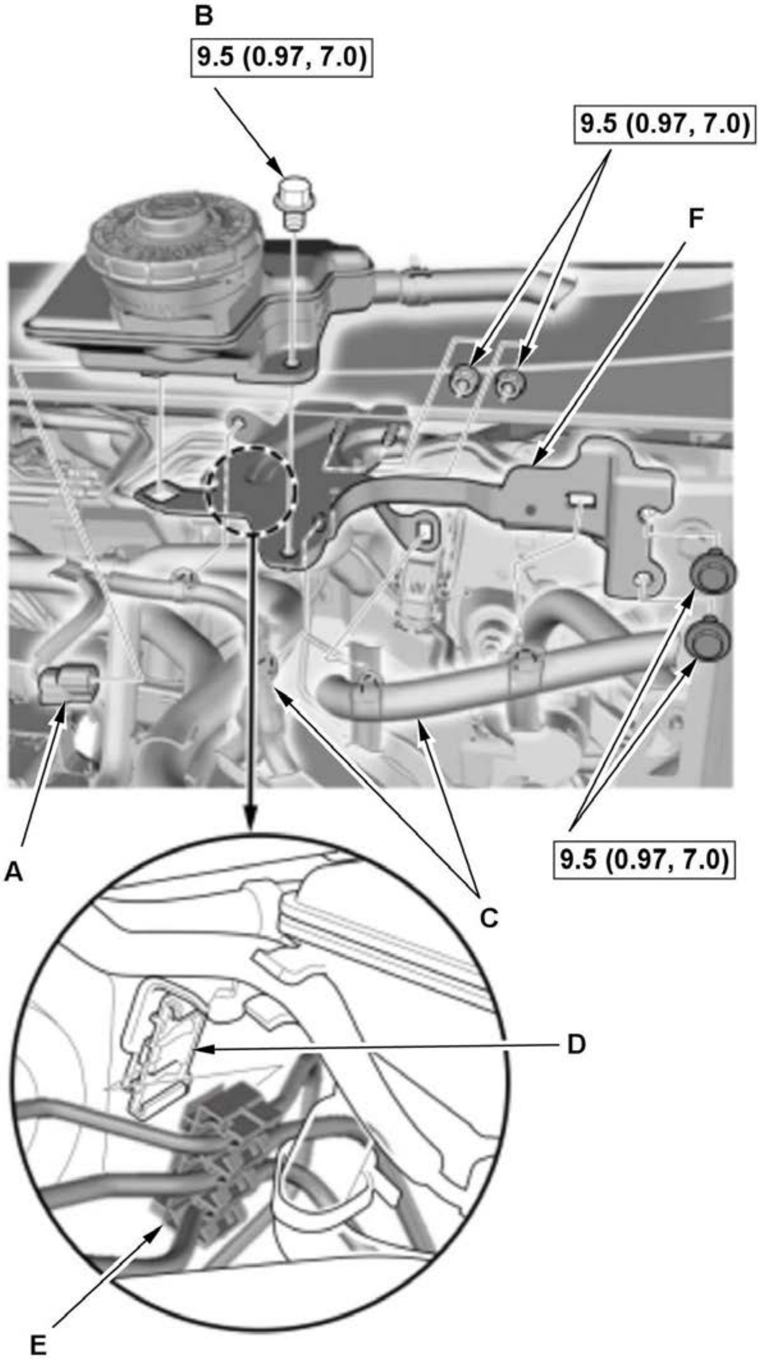
B
9.5 (0.97, 7.0)
9.5 (0.97, 7.0)
F
A
C
9.5 (0.97, 7.0)
D
E

Fig. 13: Master Cylinder Reservoir Bracket Torque Specifications

Courtesy of HONDA, U.S.A., INC.

1. Disconnect the connector (A).
2. Remove the reservoir mounting bolt (B).
3. Remove the wire harness (C).
4. Slide off the brake line clip (D) from the brake line clamp (E).
5. Remove the master cylinder reservoir bracket (F).

5. 12 Volt Battery Base - Remove

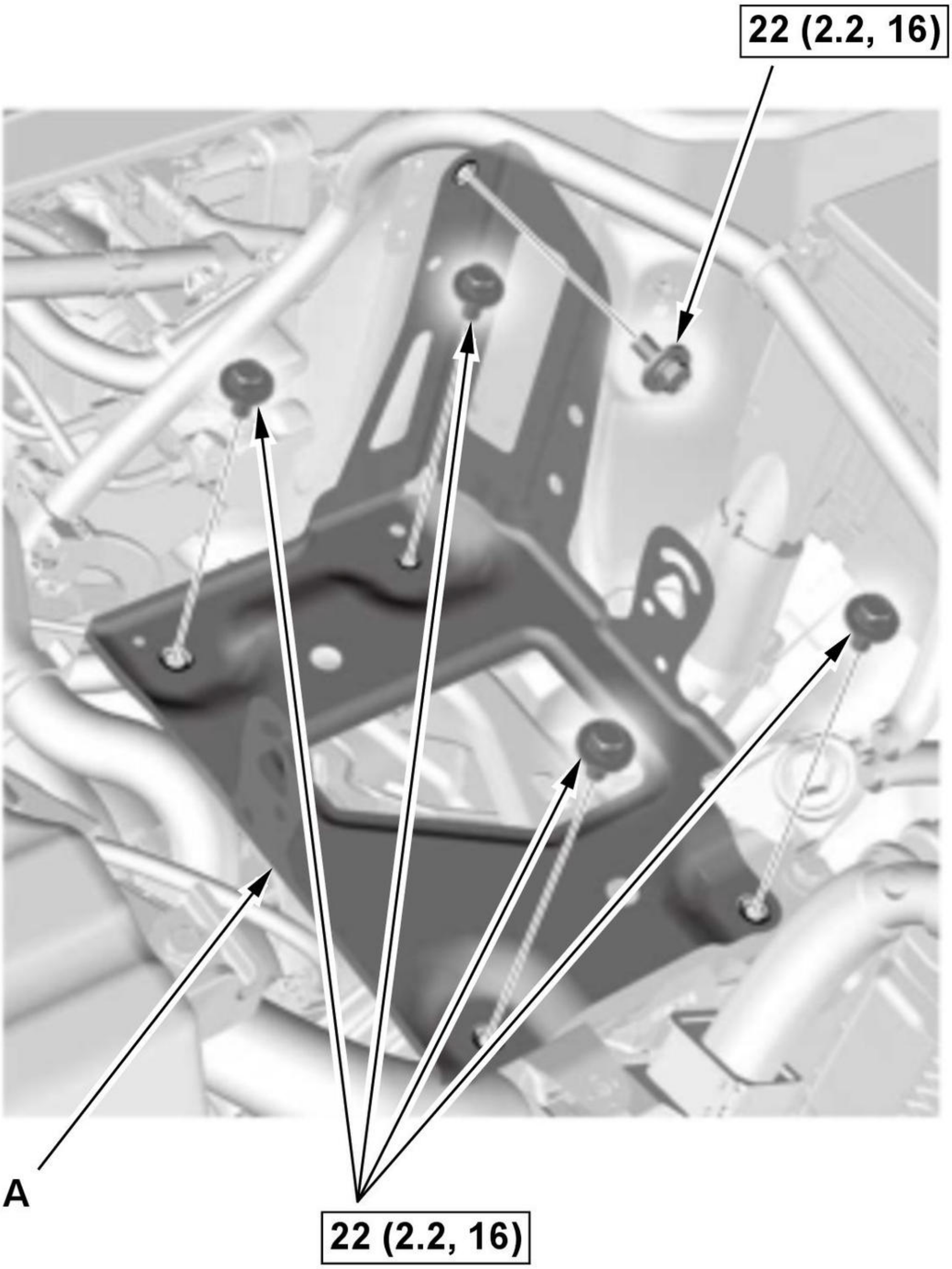

Fig. 14: 12 Volt Battery Base Torque Specifications
Courtesy of HONDA, U.S.A., INC.

1. Remove the 12 volt battery base (A).

6. 12 Volt Battery Base Bracket - Remove

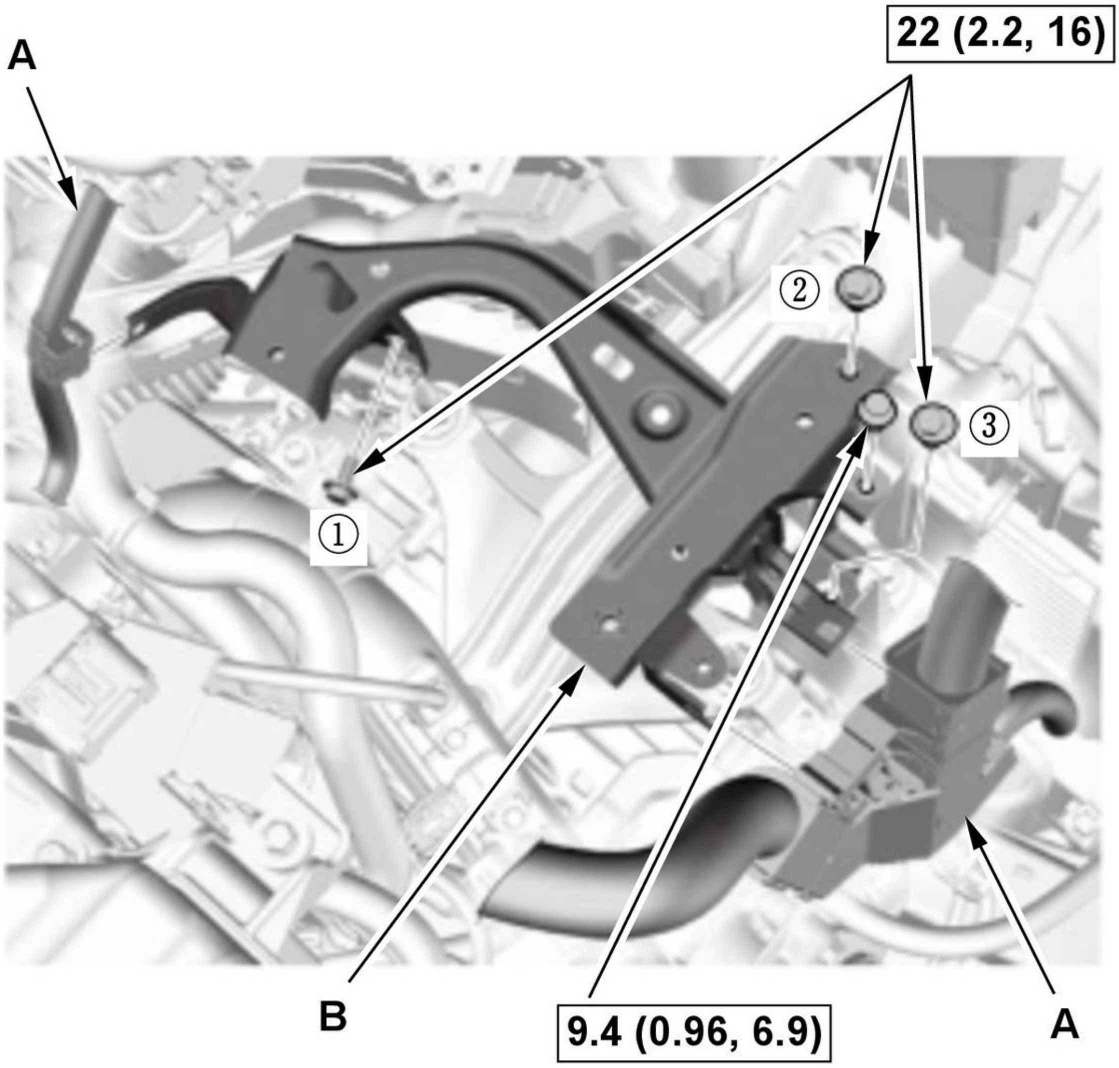

Fig. 15: 12 Volt Battery Base Bracket Torque Specifications & Tightening Sequence
Courtesy of HONDA, U.S.A., INC.

1. Remove the wire harness (A).
2. Remove the 12 volt battery base bracket (B).
NOTE: During installation, loosely install the bolts and tighten it to the specified torque in the numbered sequence shown.

7. Electric Brake Booster - Remove

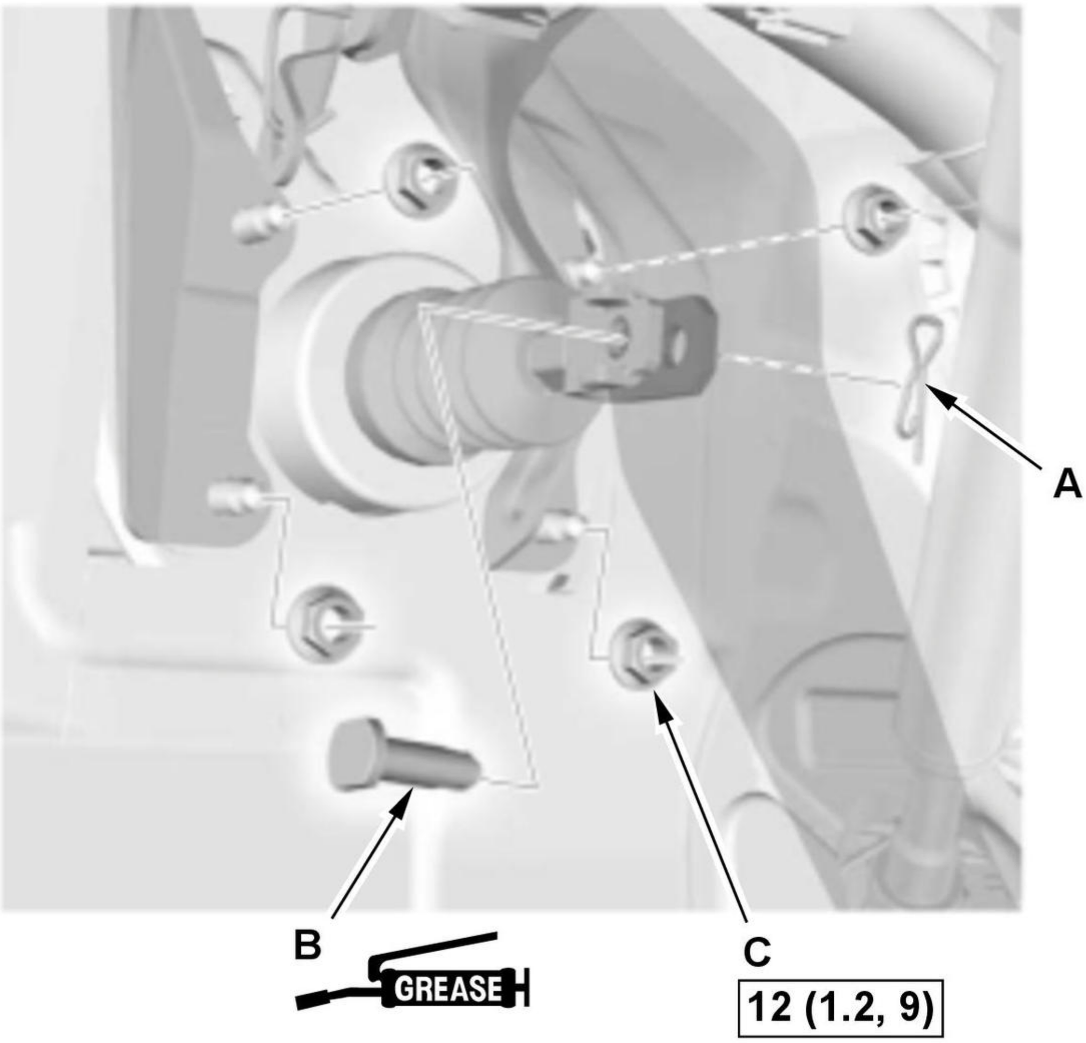

Fig. 16: Brake Booster Mounting Nuts Torque Specifications
Courtesy of HONDA, U.S.A., INC.

1. Remove the lock pin (A).

2. Remove the yoke pin (B).

NOTE: During installation, apply multipurpose grease to the yoke pin in the brake pedal.

3. Remove the electric brake booster mounting nuts (C).

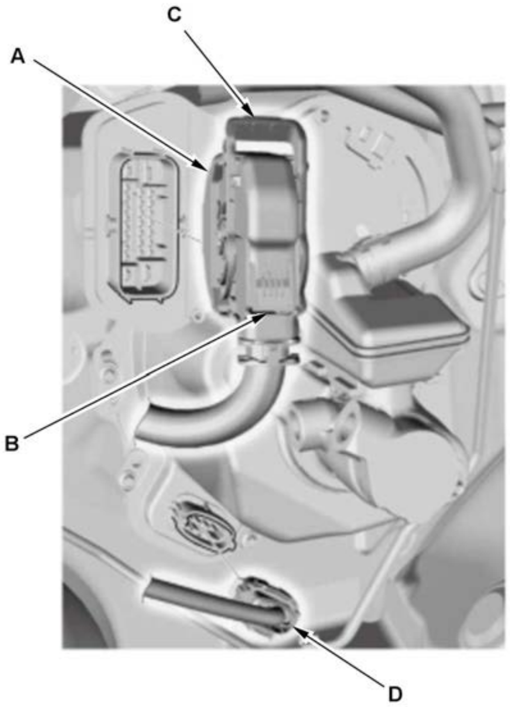

4. Disconnect the brake lines from the master cylinder

5. Disconnect the connector (A) by pushing the lock (B) and pulling up the lever (C); the connector disconnects itself.

6. Disconnect the connector (D).

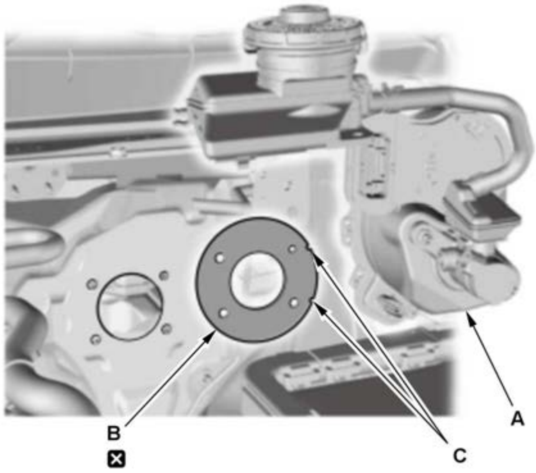

7. Remove the electric brake booster (A) from the engine compartment.

NOTE:

- Be careful not to damage the electric brake booster surfaces and threads of the electric brake booster stud bolts.
- Be careful not to bend or damage the other components hoses and lines.

8. Remove the gasket (B).

NOTE:

- Use a new gasket during reassembly.
- The cutout portion (C) of the gasket must face the driver's side.

8. All Removed Parts - Install

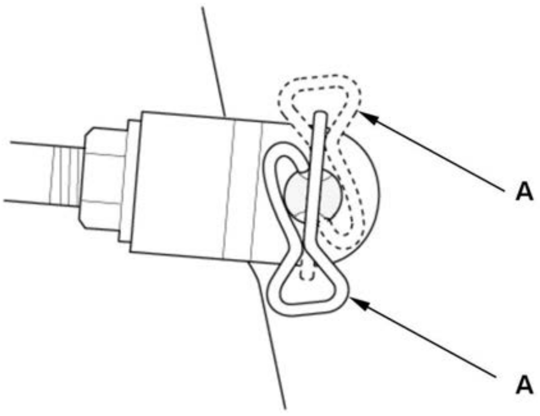

1. Install all removed parts in the reverse order of removal.
NOTE: The lock pin (A) can be installed from the top or bottom.

9. Brake System - Bleed
10. Brake Pedal Height and Free Play - Check
11. Electric Brake Booster Software - Check

> 1. Make sure the electric brake booster has the latest software. If it does not have the latest, update the software in the electric brake booster .

FRONT BRAKE CALIPER REMOVAL AND INSTALLATION

Removal and Installation

NOTE:

- How to read the torque specifications .
- Review the Service Precautions before doing repairs or service .

1. Vehicle - Lift
2. Front Wheel - Remove
3. Brake Hose - Remove

> 1. Disconnect the brake hose from the caliper body.

4. Brake Caliper Body - Remove (If necessary)

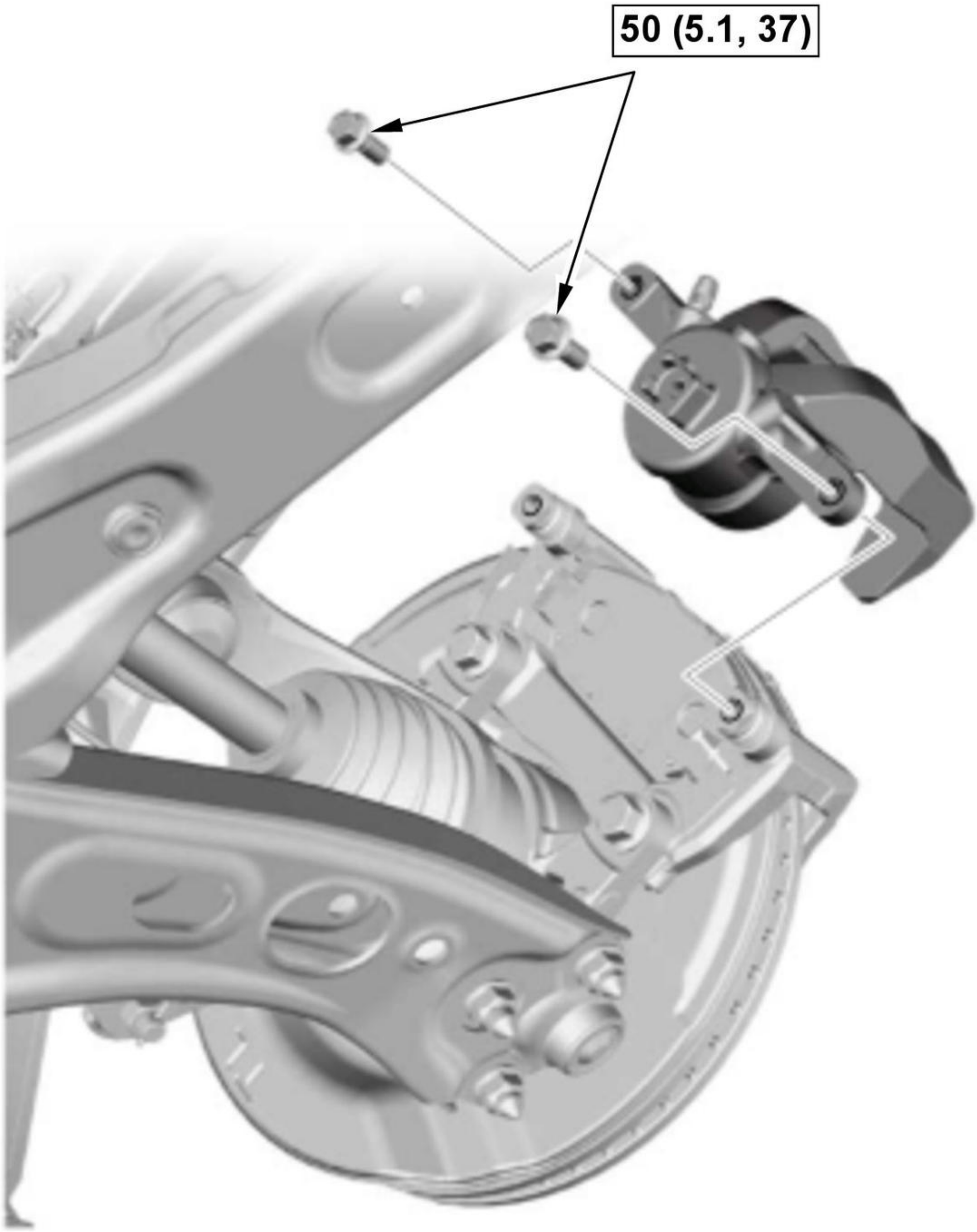

Fig. 17: Brake Caliper Body Bolt Torque Specifications
Courtesy of HONDA, U.S.A., INC.

5. Brake Caliper - Remove

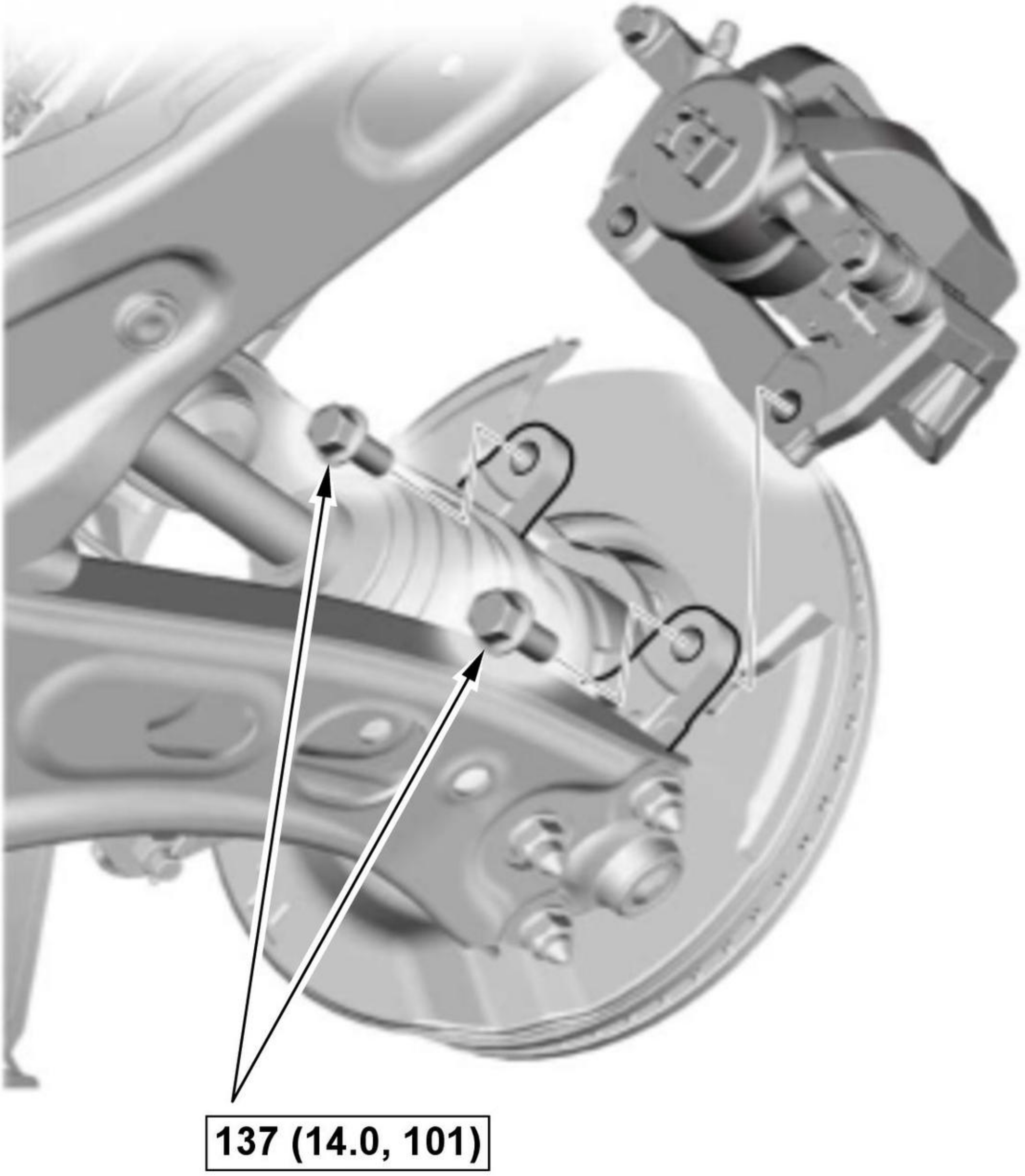

Fig. 18: Brake Caliper Bolt Torque Specifications
Courtesy of HONDA, U.S.A., INC.

6. All Removed Parts - Install

1. Install all removed parts in the reverse order of removal.

7. Brake System - Bleed

REAR BRAKE CALIPER REMOVAL AND INSTALLATION

Removal and Installation

NOTE:

- How to read the torque specifications .
- Review the Service Precautions before doing repairs or service .

1. Vehicle - Lift
2. Rear Wheel - Remove
3. Parking Brake - Release

   NOTE: Only necessary if the automatic parking brake function is turned on.

4. Connector (Electric Parking Brake Actuator) - Disconnect
5. Brake Hose - Remove

   1. Disconnect the brake hose from the caliper body.

6. Brake Caliper Body - Remove (If necessary)

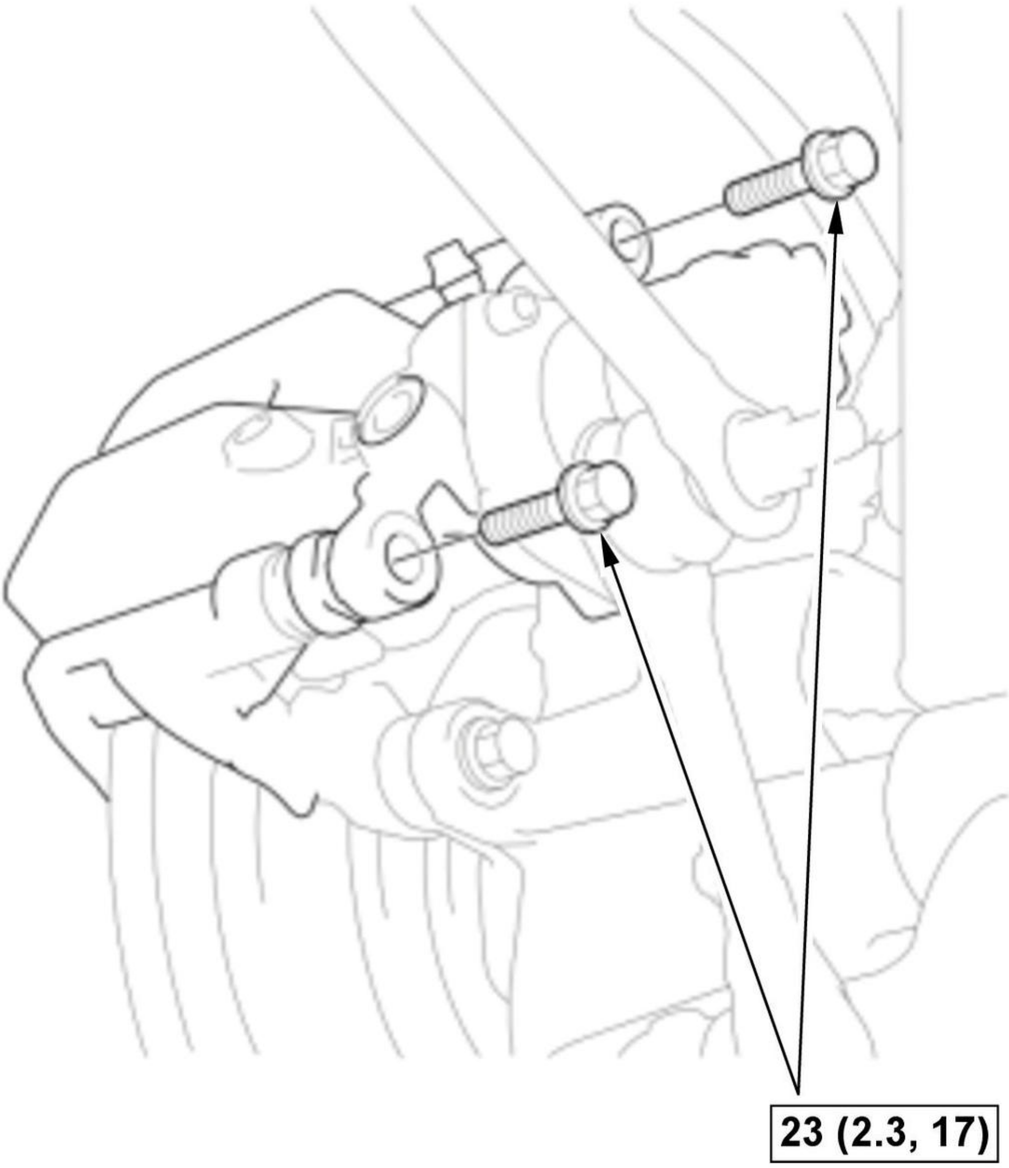

Fig. 19: Brake Caliper Body Torque Specifications
Courtesy of HONDA, U.S.A., INC.

7. Brake Caliper - Remove

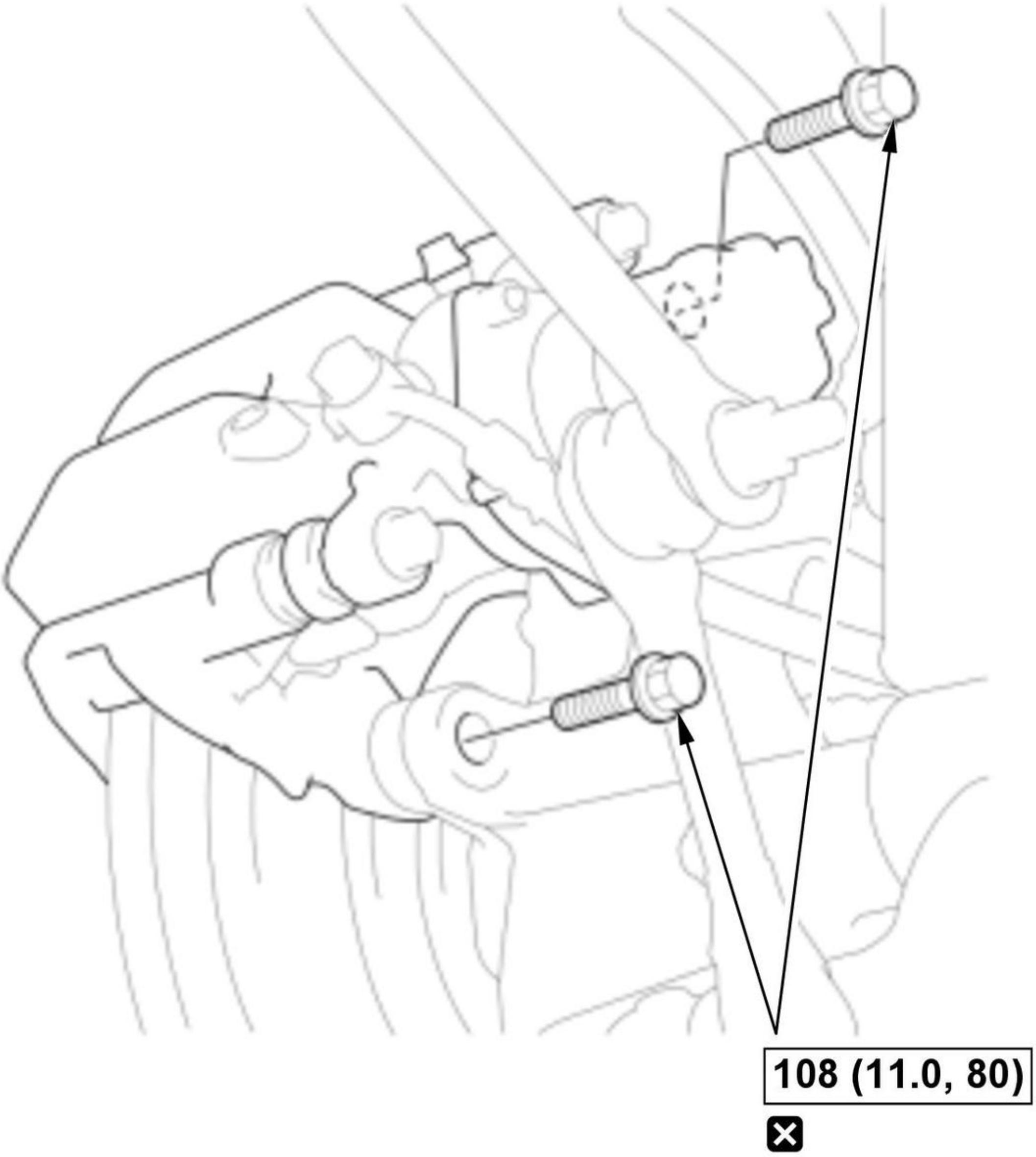

Fig. 20: Brake Caliper Torque Specifications
Courtesy of HONDA, U.S.A., INC.

8. Electric Parking Brake Actuator - Remove (If necessary)
9. All Removed Parts - Install

1. Install all removed parts in the reverse order of removal.

10. Brake System - Bleed
11. Brake Caliper After Install - Check

1. Turn the vehicle to the ON mode.

2. Apply and release the parking brake 2 times, then make sure that the brake system indicator (red) goes OFF.

NOTE: If the brake system indicator (red) does not go OFF, check for a poor connection at the electric parking brake actuator connector.

3. Turn the vehicle to the OFF (LOCK) mode.

OVERHAUL

FRONT BRAKE CALIPER OVERHAUL

Special Tools Required

Image	Description/Tool Number
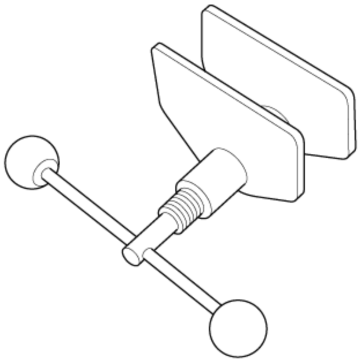	Brake Caliper Piston Compressor 07AAE-SEPA101

Disassembly

NOTE:

- 🕮i Where icon is shown, see below for further information.
- **Review the Service Precautions before doing repairs or service** .

1

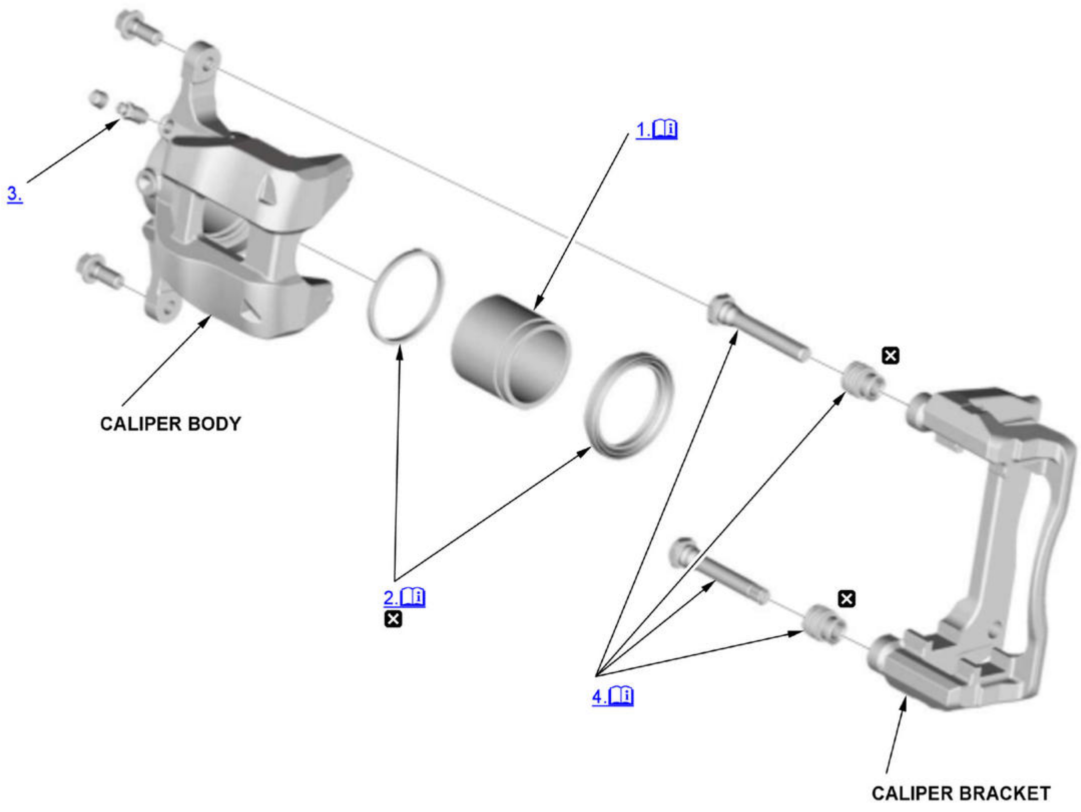
1.
3.
CALIPER BODY
2.
☒
☒
☒
4.
CALIPER BRACKET

📖	Detailed information, notes, and precautions
☒	Replace

1. Piston - Remove

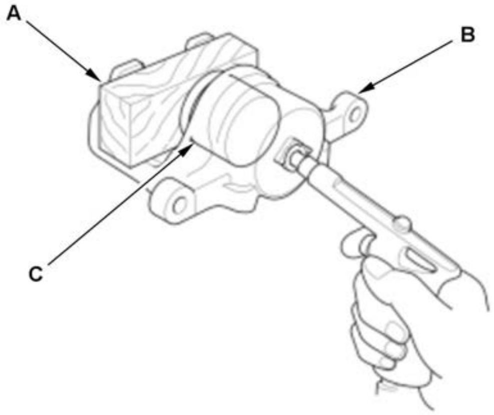	1. Set the wooden block (A) or several shop towels in the caliper body (B) as shown. 2. Blow out the piston (C) with compressed air gradually, and remove the piston from the caliper body. **NOTE:** Do not put your hand into the caliper body because the piston will come out forcibly from the caliper body.

2. Piston Boot and Piston Seal - Remove

   NOTE: Be careful not to damage the inner surface of the cylinder wall with the tool.

3. Bleed Screw - Remove
4. Caliper Pin and Pin Boot - Remove

   NOTE: The upper and lower caliper pins are different. During installation, make sure the caliper pins are in the proper positions.

Reassembly

NOTE:

- 📖 Where icon is shown, see below for further information.
- **Review the Service Precautions before doing repairs or service** .
- Coat the piston, the piston seal groove, and the caliper bore with clean brake fluid.
- Use recommended greases in the front caliper set.

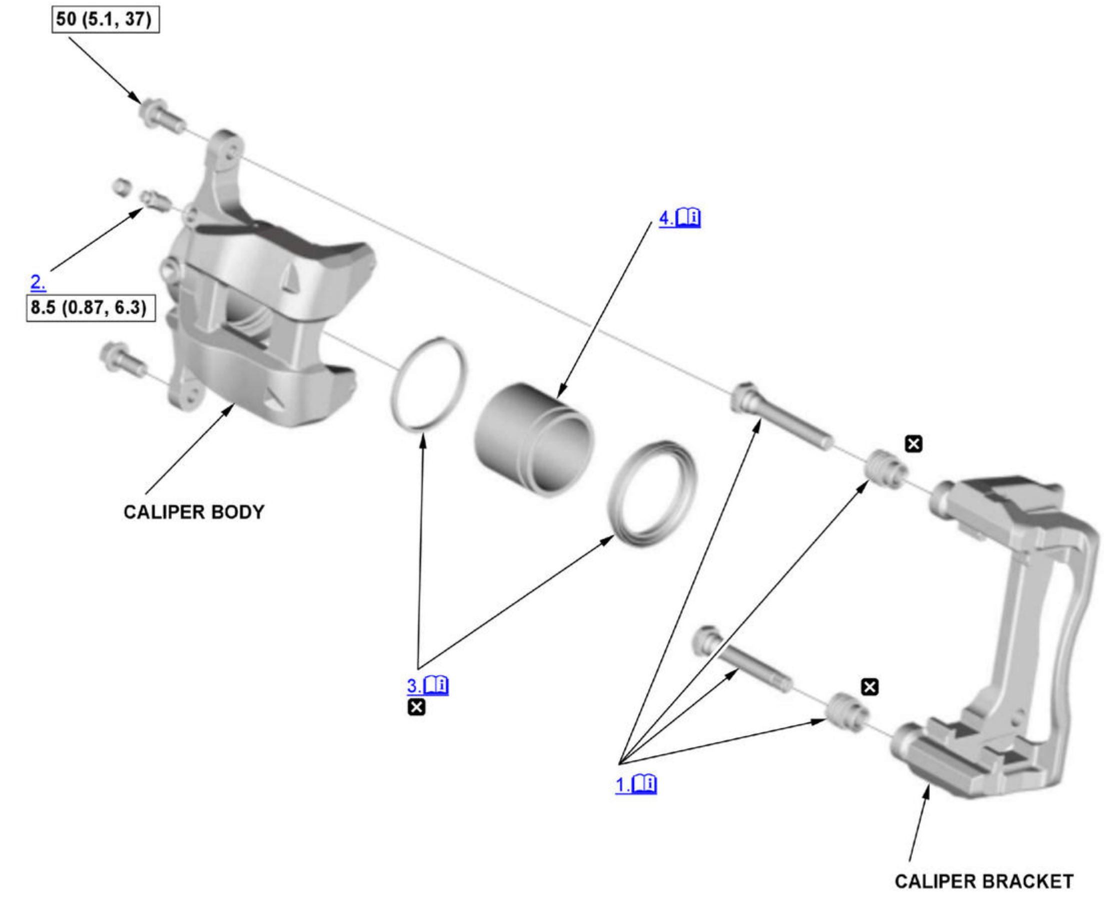

Fig. 21: Caliper Bolt Torque Specifications
Courtesy of HONDA, U.S.A., INC.

ℹ	Detailed information, notes, and precautions
☐	Torque: N.m (kgf.m, lbf.ft)
☒	Replace

1. Caliper Pin and Pin Boot - Install

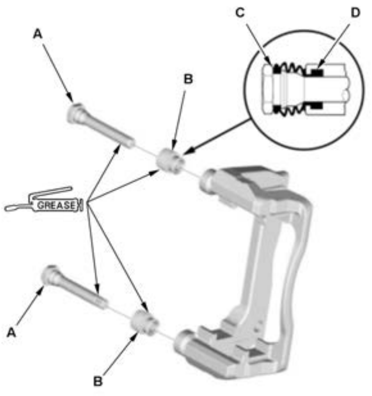	1. Apply a thin coat of Honda silicone grease (P/N 08C30-B0234M) or service set grease (NIGLUBE RM) to the caliper pins (A) and new pin boots (B). 2. Install the pin boots. 3. Install the caliper pins. **NOTE:** - Make sure that the caliper pins are installed correctly. The upper caliper pin and the lower caliper pin are different. If these caliper pins are installed in the wrong location, it will cause vibration, uneven or rapid brake pad wear, and possibly uneven tire wear. - Make sure that the pin boots are properly positioned into the grooves (C) of the caliper pin and the grooves (D) of the caliper bracket.

	• Remove the air from inside the pin boots.

2. Bleed Screw - Install
3. Piston Boot and Piston Seal - Install

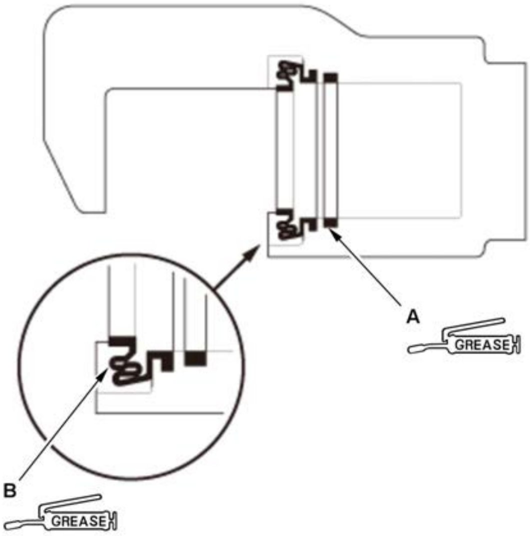	1. Apply a thin coat of Honda silicone grease (P/N 08C30-B0234M) or service set grease (Shin-Etsu Chemical KS62M) to a new piston seal (A). 2. Install the piston seal. 3. Apply a thin coat of Honda silicone grease (P/N 08C30-B0234M) or service set grease (Cosmo Rubber Grease) to a new piston boot (B). 4. Install the piston boot.

4. Piston - Install

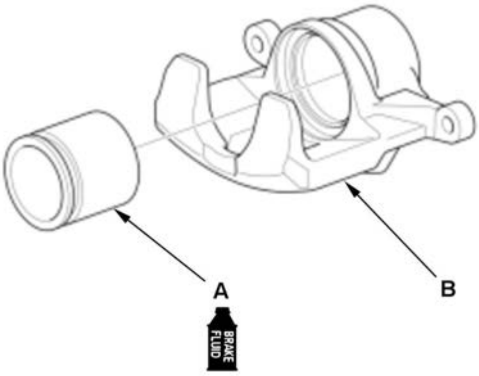	1. Apply brake fluid to the outer surface of the piston (A), then set the piston in place on the caliper body (B).

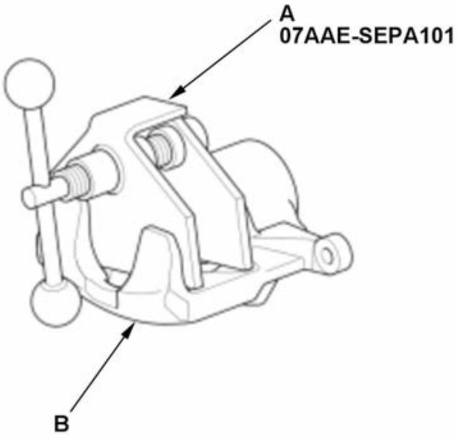	2. Install the brake caliper piston compressor tool (A) on the caliper body (B). 3. Press in the piston with the brake caliper piston compressor tool. **NOTE:** • Make sure that the piston boot is properly positioned into the groove of the piston. • Do not press the piston diagonally, and do not force it. • Be careful not to damage the piston boot when pressing in the piston.

REAR BRAKE CALIPER OVERHAUL

Special Tools Required

Image	Description/Tool Number
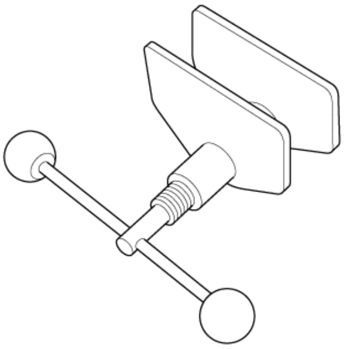	Brake Caliper Piston Compressor 07AAE-SEPA101
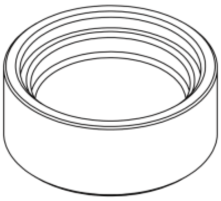	Installer, Rear Brake Caliper Dust Boot 070AD-TLA0100

Disassembly

NOTE:

- ℹ Where icon is shown, see below for further information.
- **Review the Service Precautions before doing repairs or service** .
- **Do the brake pad maintenance mode with the HDS before the brake caliper removal** .

1

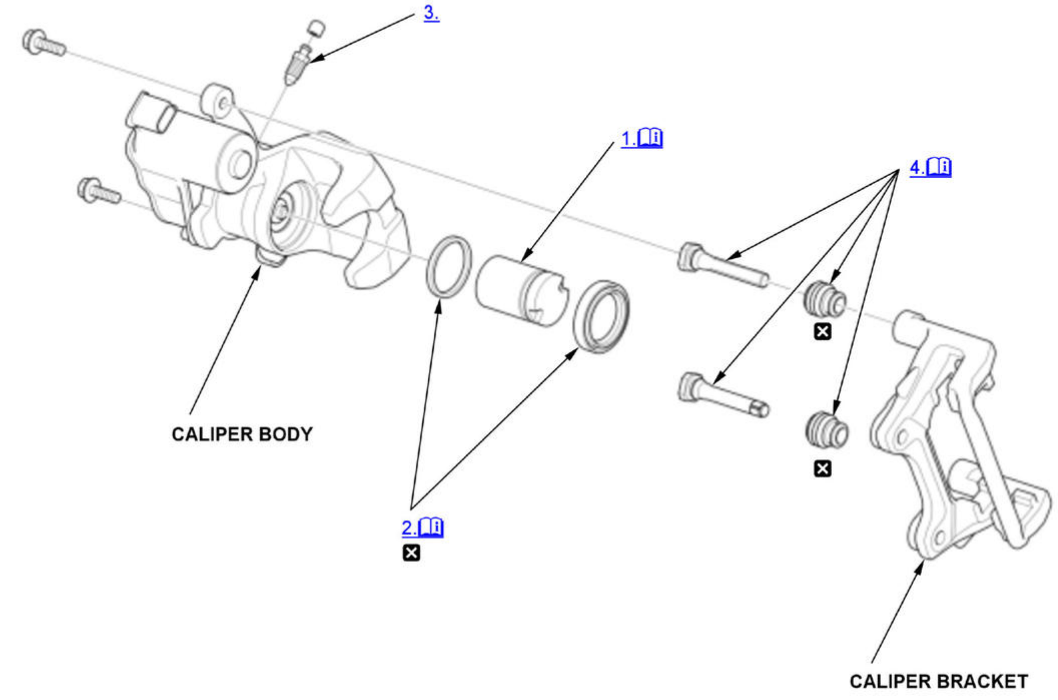

ℹ	Detailed information, notes, and precautions
☒	Replace

1. Piston - Remove

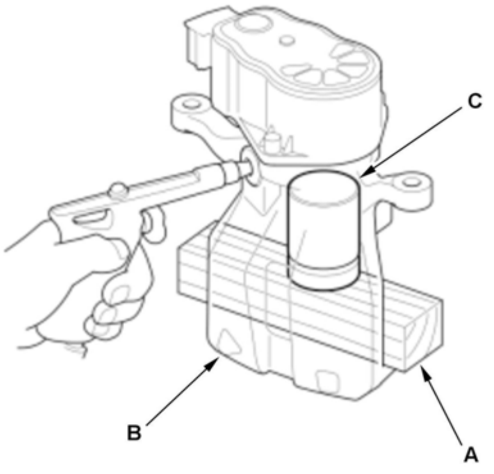	1. Set the wooden block (A) or several shop towels in the caliper body (B) as shown. 2. Blow out the piston (C) with compressed air gradually, and remove the piston from the caliper body. **NOTE:** Do not put your hand into the caliper body because the piston will come out forcibly from the caliper body.

2. Piston Boot and Piston Seal - Remove

   NOTE: Be careful not to damage the inner surface of the cylinder wall with the tool.

3. Bleed Screw - Remove
4. Caliper Pin and Pin Boot - Remove

NOTE: The upper and lower caliper pins are different. During installation, make sure the caliper pins are in the proper positions.

Reassembly

NOTE:

- 📖 Where icon is shown, see below for further information.
- **Review the Service Precautions before doing repairs or service** .
- Use recommended greases in the rear caliper set.

1

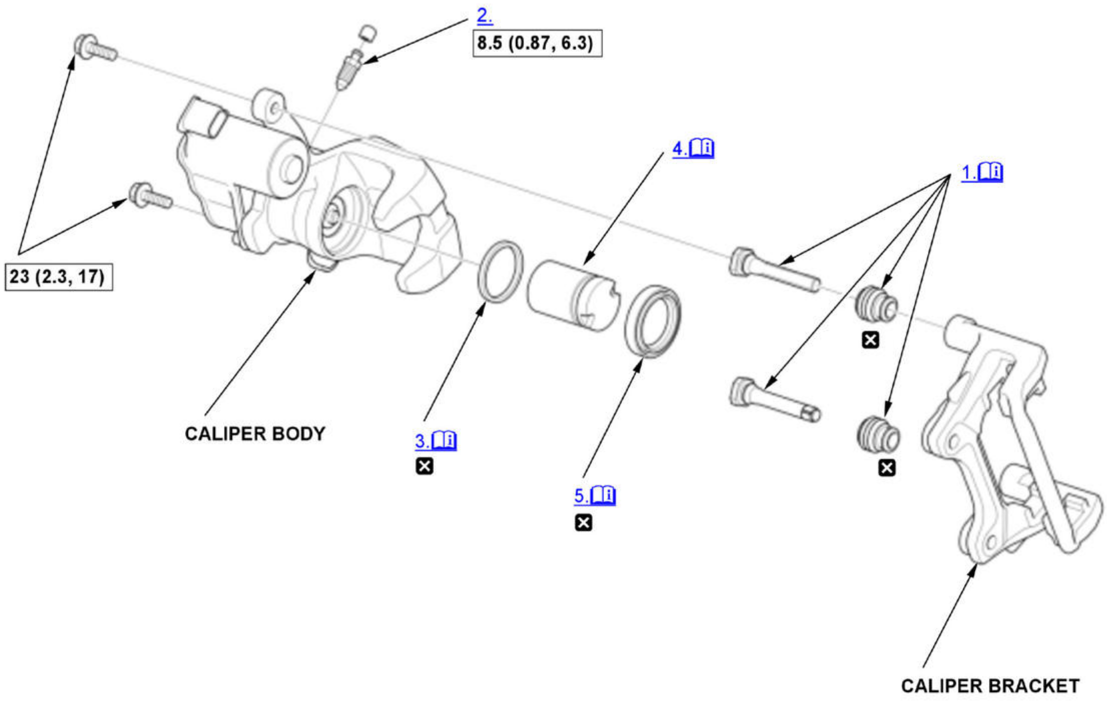

Fig. 22: Brake Caliper Torque Specifications
Courtesy of HONDA, U.S.A., INC.

📖	Detailed information, notes, and precautions
☐	Torque: N.m (kgf.m, lbf.ft)
☒	Replace

1. Caliper Pin and Pin Boot - Install

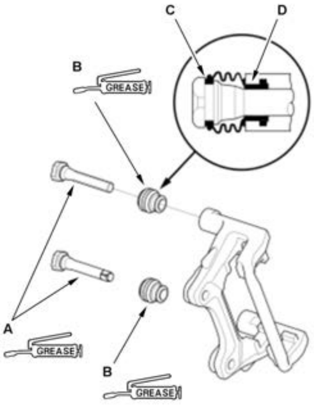 	1. Apply a thin coat of Honda silicone grease (P/N 08C30-B0234M) or caliper set grease to the caliper pins (A) and the pin boots (B). **NOTE:** Use the grease (NIGLUBE RM) that is included in the caliper set. 2. Install the pin boots. 3. Install the caliper pins. • Make sure that the caliper pins are installed correctly. The upper caliper pin and the lower caliper pin are different. If these caliper pins are installed in the wrong location, it will cause vibration, uneven or rapid brake pad wear, and possibly uneven tyre wear. • Make sure that the pin boots are properly positioned into the grooves (C) of the caliper pin and the grooves (D) of the caliper body. • Remove air from within the pin boots.

2. Bleed Screw - Install
3. Piston Seal - Install

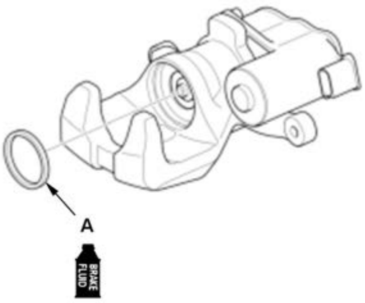 	1. Apply brake fluid to the piston seal (A). 2. Install the piston seal. **NOTE:** If necessary, remove the adjuster nut before installing the piston seal. When installing the adjuster nut, turn the adjuster nut until it comes to a lock.

4. Piston - Install

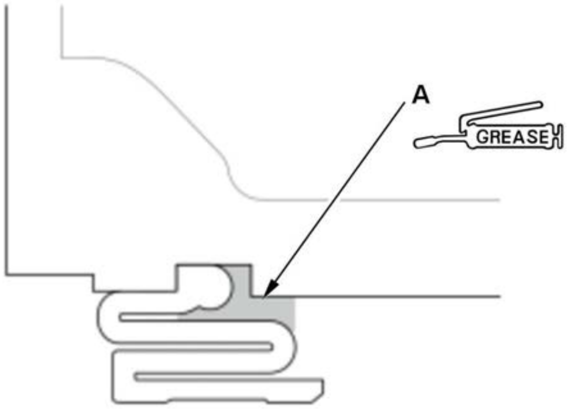 	1. Install the piston boot to the piston. 2. Apply caliper set grease (GB3G) (A) to the piston boot as shown. **NOTE:** Use the grease that is included in the caliper set.

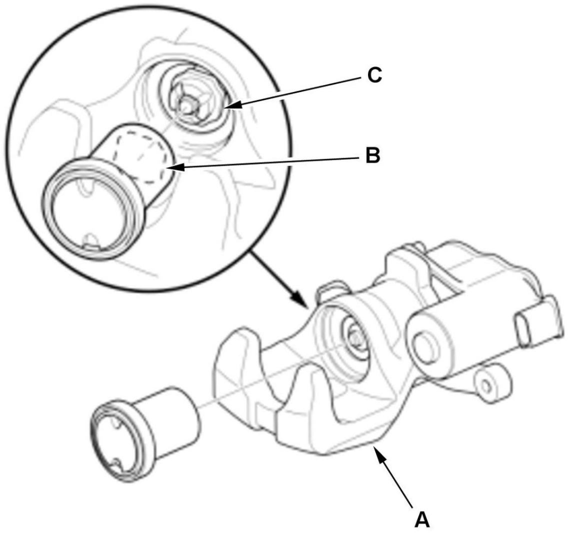

3. Set the piston in place on the caliper body (A) and align the groove (B) of the piston and the adjuster nut (C).

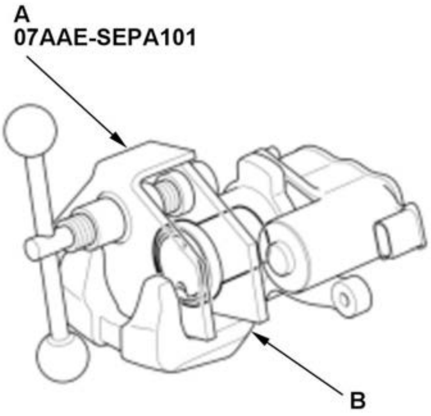

4. Install the brake caliper piston compressor tool (A) on the caliper body (B).

5. Press in the piston with the brake caliper piston compressor tool.

NOTE:

- Do not press the piston diagonally, and do not force it.
- Be careful not to damage the piston boot when pressing in the piston.

5. Piston Boot - Install

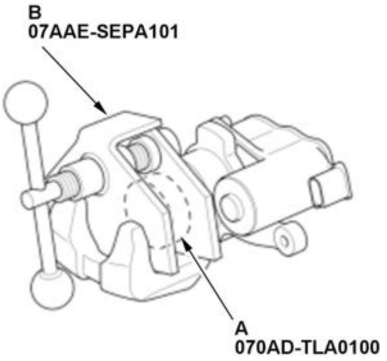

1. Press the piston boot into the caliper body using the rear brake caliper dust boot installer (A) and the brake caliper piston compressor tool (B).

NOTE: Make sure that the piston boot is properly positioned into the groove of the caliper body.

DISASSEMBLY AND REASSEMBLY

BRAKE TANDEM MOTOR CYLINDER DISASSEMBLY AND REASSEMBLY

Disassembly

NOTE:

- Review the Service Precautions before doing repairs or service .
- Do not try to disassemble the slave cylinder. Replace the slave cylinder with a new part if necessary.
- Check for deterioration and damage to each part during removal.

Procedure

NOTE: **Numbered call-outs in figure pertain to list numbers in following procedure.**

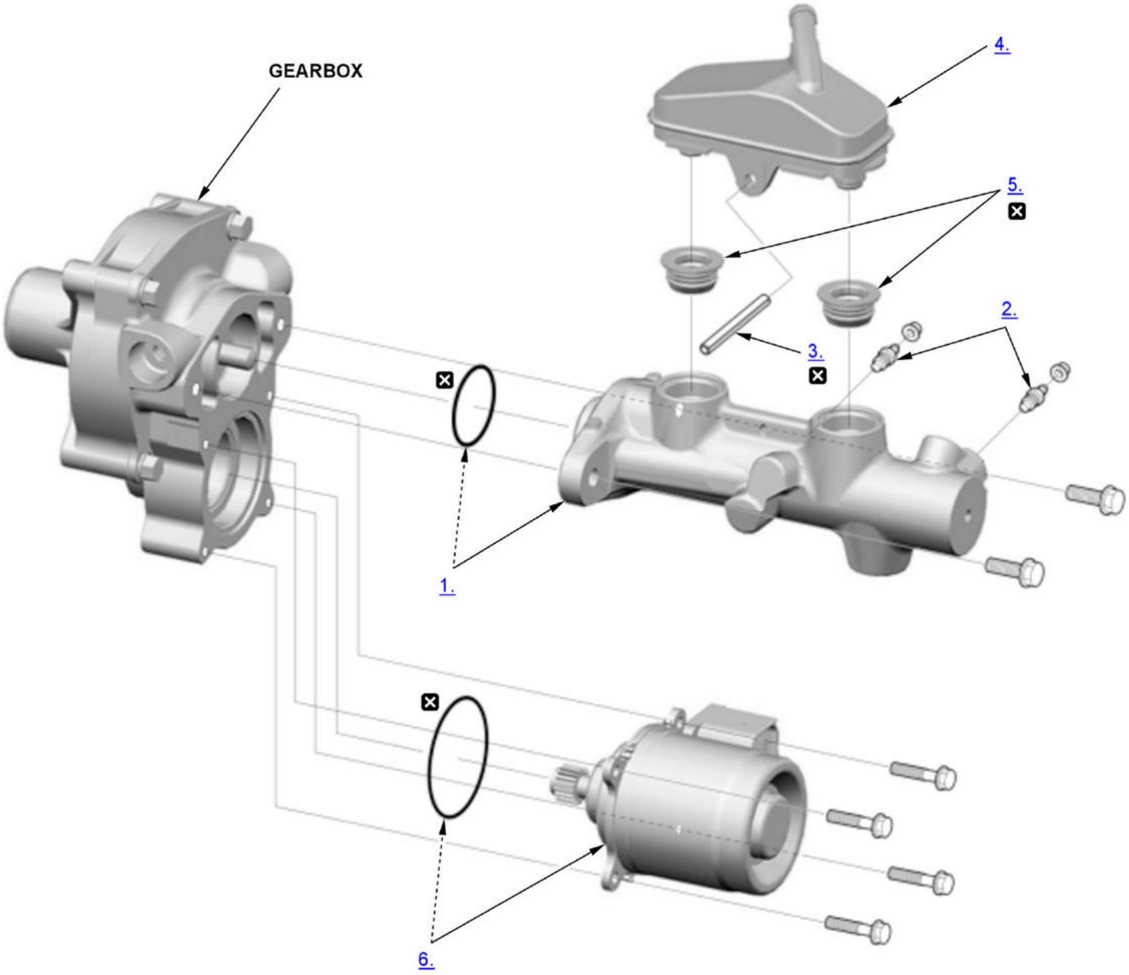

Fig. 1: Exploded View Of Brake Tandem Motor Cylinder Components For Disassembly
Courtesy of HONDA, U.S.A., INC.

☒	Replace

1. Slave Cylinder - Remove
2. Bleed Screw - Remove
3. Spring Pin - Remove
4. Reservoir Union - Remove
5. Grommet - Remove
6. Motor - Remove

Reassembly

NOTE:

- ℹ Where icon is shown, for further information see below.
- **Review the Service Precautions before doing repairs or service** .
- Do not try to disassemble the slave cylinder. Replace the slave cylinder with a new part if necessary.

Procedure

NOTE: **Numbered call-outs in figure pertain to list numbers in following procedure.**

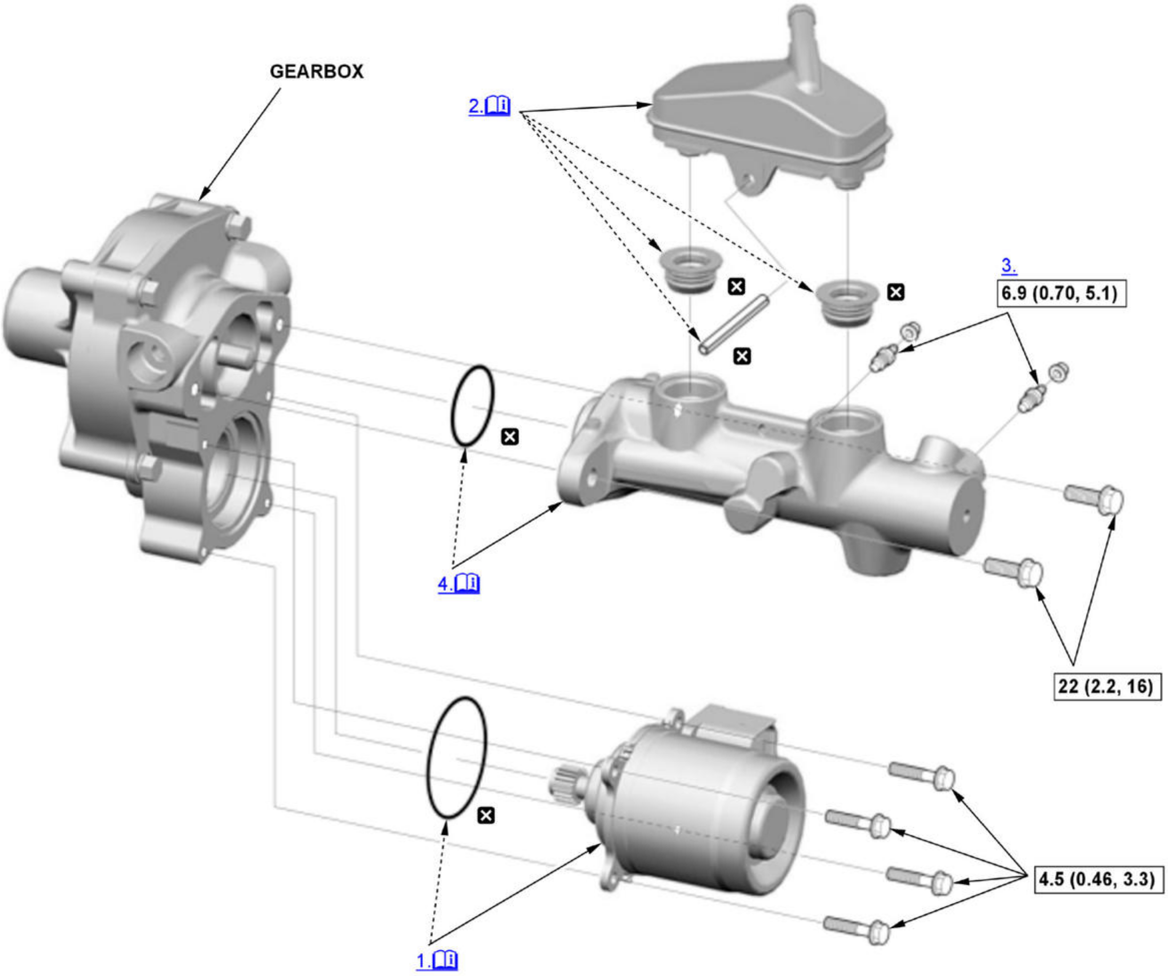
GEARBOX
2.
3.
6.9 (0.70, 5.1)
4.
22 (2.2, 16)
4.5 (0.46, 3.3)
1.

Fig. 2: Exploded View Of Brake Tandem Motor Cylinder Components With Torque Specifications For Reassembly
Courtesy of HONDA, U.S.A., INC.

ℹ	Detailed information, notes, and precautions
▭	Torque: N.m (kgf.m, lbf.ft)
☒	Replace

1. Motor - Install

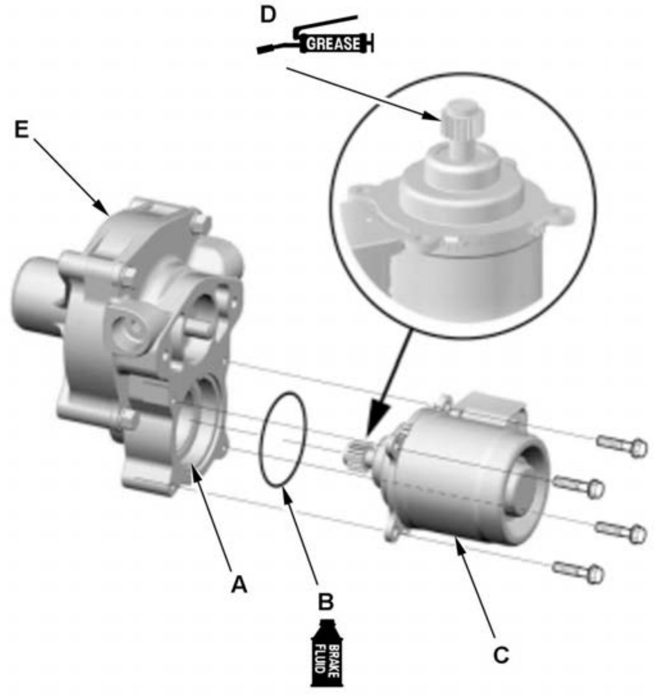

1. Clean off any rust or contamination around the gearbox mating surfaces (A).

2. Apply brake fluid to the O-ring (B).

3. Install the O-ring to the motor (C).

4. Apply multipurpose grease included in the motor set to the motor shaft (D).

5. Install the motor to the gearbox (E).

2. Reservoir Union - Install

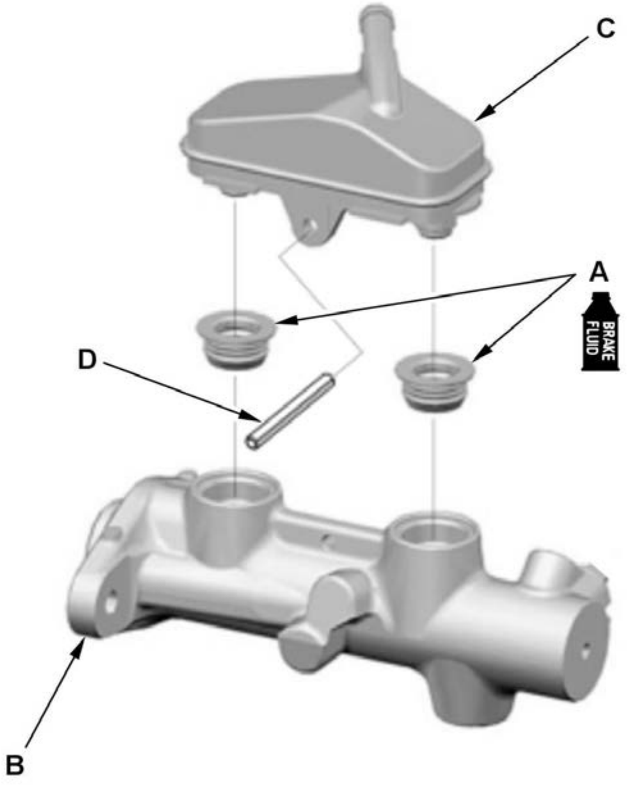

1. Apply brake fluid to the grommets (A).

2. Install the grommets to the slave cylinder (B).

3. Install the reservoir union (C).

4. Install the spring pin (D).

3. Bleed Screw - Install

4. Slave Cylinder - Install

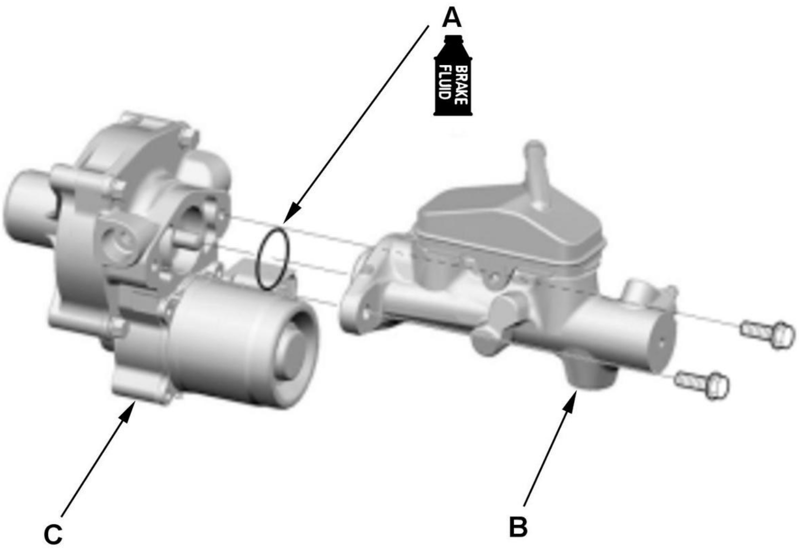	1. Apply brake fluid to the O-ring (A). 2. Install the O-ring to the slave cylinder (B). 3. Install the slave cylinder to the gearbox (C).

OVERHAUL

FRONT BRAKE CALIPER OVERHAUL

Special Tools Required

Image	Description/Tool Number
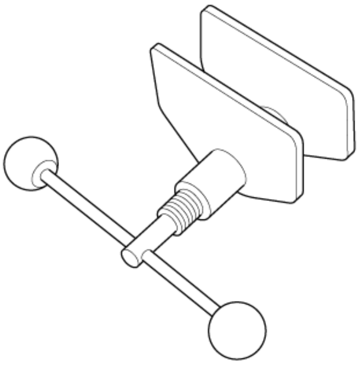	Brake Caliper Piston Compressor 07AAE-SEPA101

Disassembly

NOTE:

- ℹ Where icon is shown, for further information see below.
- Review the Service Precautions before doing repairs or service .

Procedure

NOTE: **Numbered call-outs in figure pertain to list numbers in following procedure.**

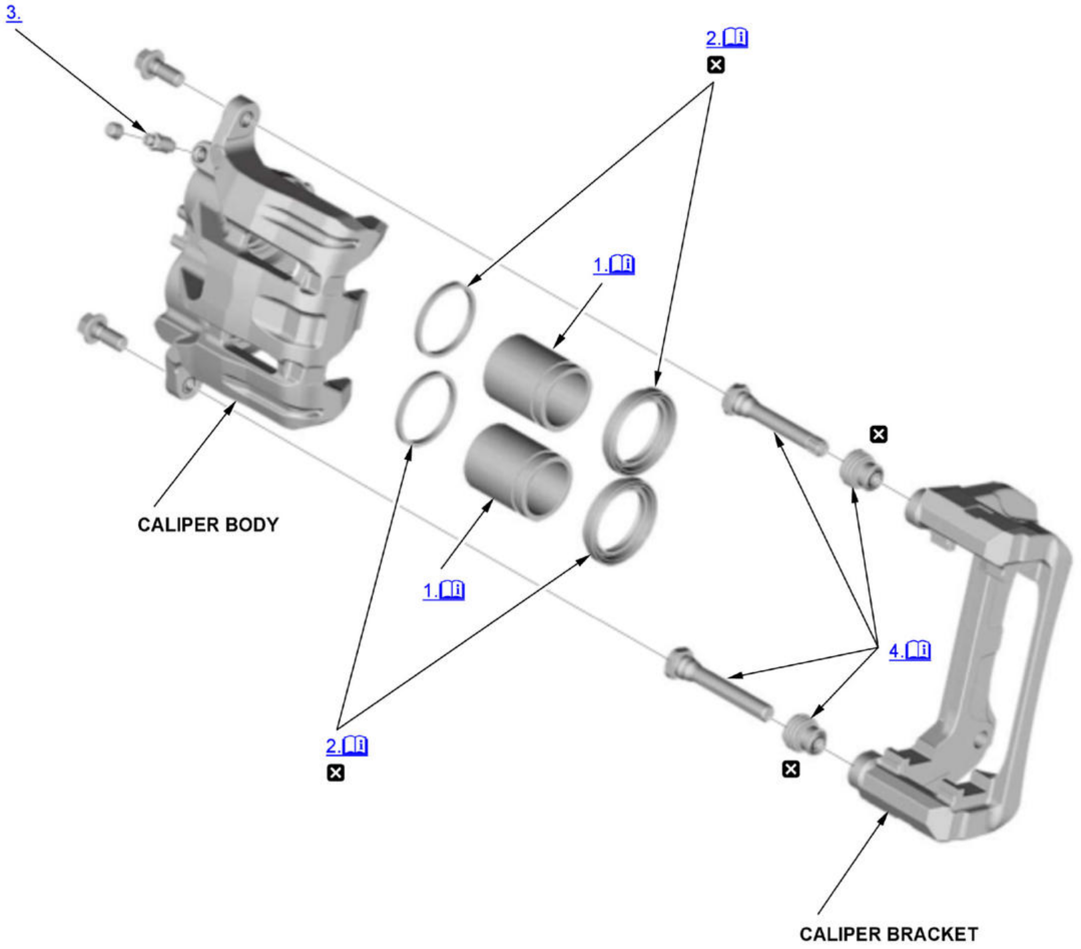

[Fig. 3: Exploded View Of Front Brake Caliper Components For Disassembly]
Courtesy of HONDA, U.S.A., INC.

🕮	Detailed information, notes, and precautions
☒	Replace

1. Pistons - Remove

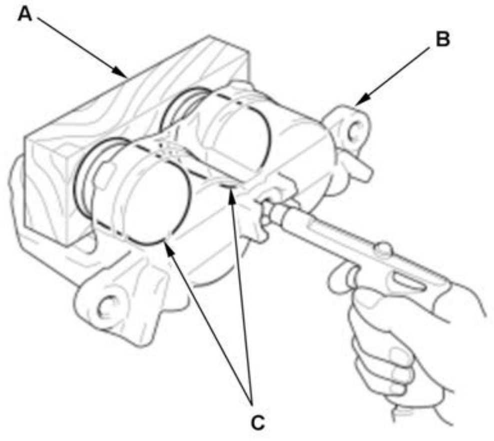	1. Set the wooden block (A) or several shop towels in the caliper body (B) as shown. 2. Blow out the pistons (C) with compressed air gradually, and remove the piston from the caliper body. **NOTE:** Do not put your hand into the caliper body because the piston will come out forcibly from the caliper body.

2. Piston Boots and Piston Seals - Remove

NOTE: Be careful not to damage the inner surface of the cylinder wall with the tool.

3. Bleed Screw - Remove
4. Caliper Pins and Pin Boots - Remove

NOTE: The upper and lower caliper pins are different. During installation, make sure the caliper pins are in the proper positions.

Reassembly

NOTE:

- ℹ Where icon is shown, for further information see below.
- **Review the Service Precautions before doing repairs or service** .
- Coat the piston, the piston seal groove, and the caliper bore with clean brake fluid.
- Use recommended greases in the front caliper set.

Procedure

NOTE: **Numbered call-outs in figure pertain to list numbers in following procedure.**

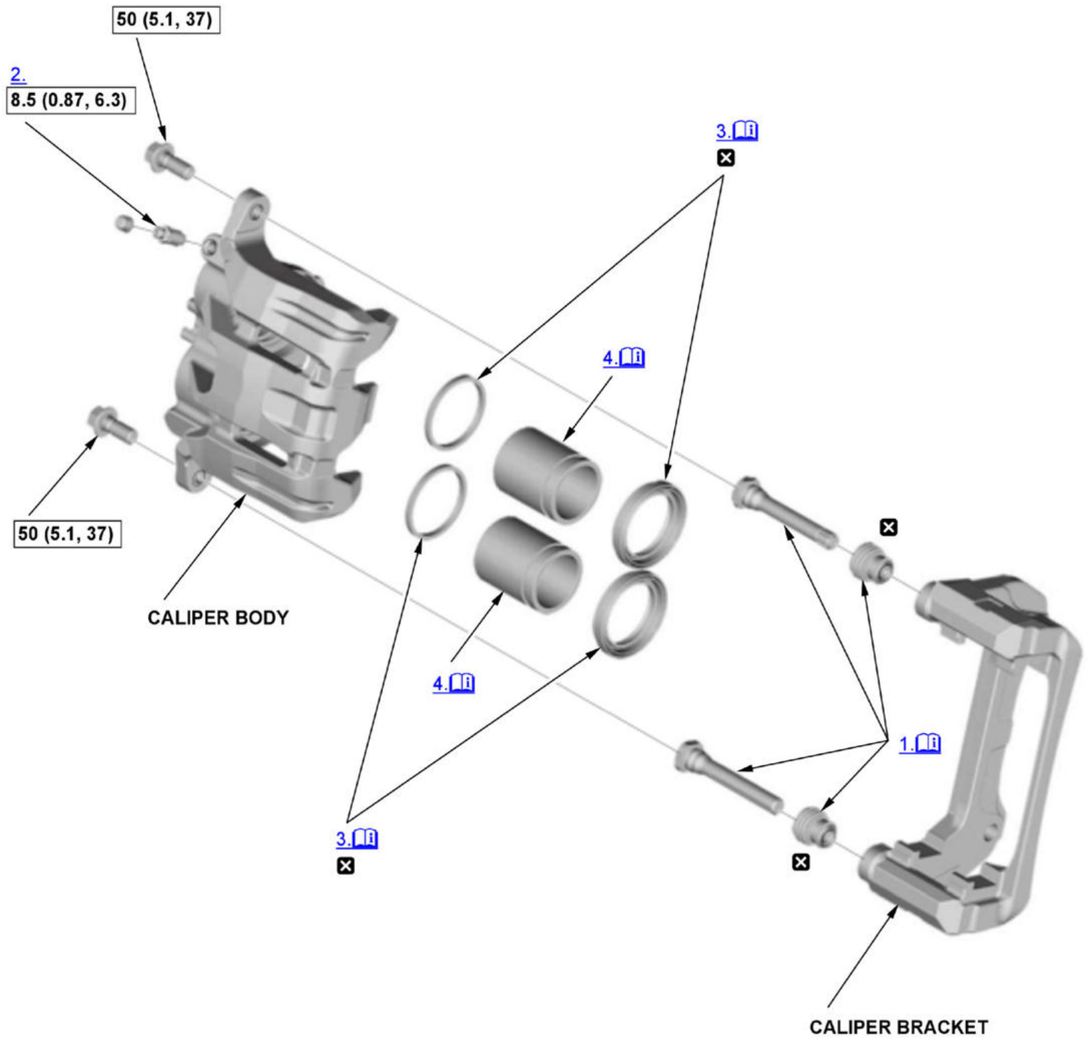

Fig. 4: Exploded View Of Front Brake Caliper Components With Torque Specifications For Reassembly
Courtesy of HONDA, U.S.A., INC.

ℹ	Detailed information, notes, and precautions
☐	Torque: N.m (kgf.m, lbf.ft)
☒	Replace

1. Caliper Pins and Pin Boots - Install

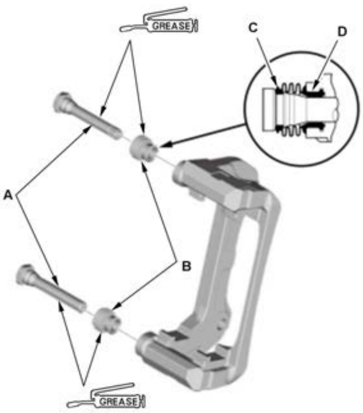	1. Apply a thin coat of Honda silicone grease (P/N 08C30-B0234M) or caliper set grease (NIGLUBE RM) to the caliper pins (A) and new pin boots (B). **NOTE:** Use the grease that is included in the caliper set. 2. Install the pin boots. 3. Install the caliper pins. • Make sure that the caliper pins are installed correctly. The upper caliper pin and the lower caliper pin are different. If these caliper pins are installed in the wrong location, it will cause vibration, uneven or rapid brake pad wear, and possibly uneven tire wear. • Make sure that the pin boots are properly positioned into the grooves (C) of the caliper pin and the grooves (D) of the caliper bracket. • Remove the air from inside the pin boots.

2. Bleed Screw - Install

3. Pistons Boots and Piston Seals - Install

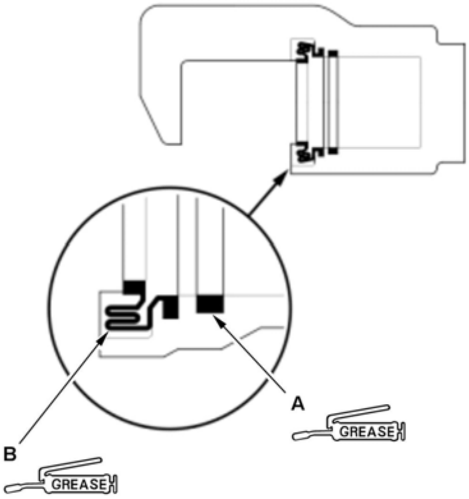	1. Apply a thin coat of Honda silicone grease (P/N 08C30-B0234M) or service set grease (Shin-Etsu Chemical KS62M) to new piston seals (A). **NOTE:** Use the grease that is included in the caliper set. 2. Install the piston seals. 3. Apply a thin coat of Honda silicone grease (P/N 08C30-B0234M) or service set grease (Cosmo Rubber Grease) to new piston boots (B). **NOTE:** Use the grease that is included in the caliper set. 4. Install the piston boots.

4. Pistons - Install

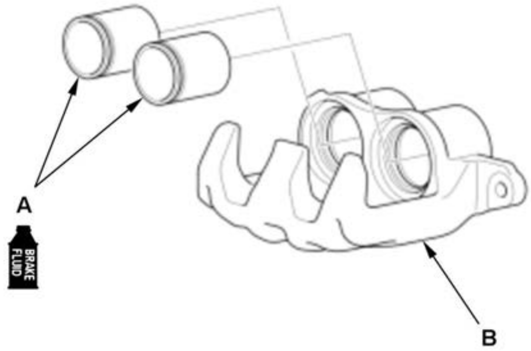	1. Apply brake fluid to the outer surface of the pistons (A), then set the piston in place on the caliper body (B).

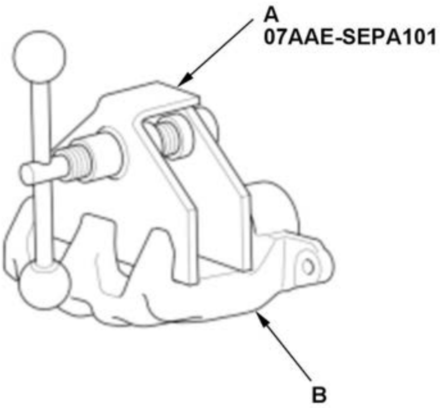	2. Install the brake caliper piston compressor tool (A) on the caliper body (B). 3. Press in the piston with the brake caliper piston compressor tool. **NOTE:** - Make sure that the piston boots is properly positioned into the grooves of the pistons. - Do not press the pistons diagonally, and do not force it. - Be careful not to damage the piston boots when pressing in the pistons.

REAR BRAKE CALIPER OVERHAUL

Special Tools Required

Image	Description/Tool Number
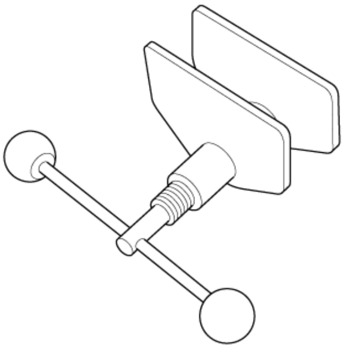	Brake Caliper Piston Compressor 07AAE-SEPA101

Image	Description/Tool Number
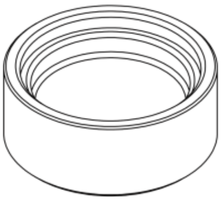	Installer, Rear Brake Caliper Dust Boot 070AD-TLA0100

Disassembly

NOTE:

- 📖 Where icon is shown, for further information see below.
- **Review the Service Precautions before doing repairs or service** .
- **Do the brake pad maintenance mode with the HDS before the brake caliper removal** .

Procedure

NOTE: **Numbered call-outs in figure pertain to list numbers in following procedure.**

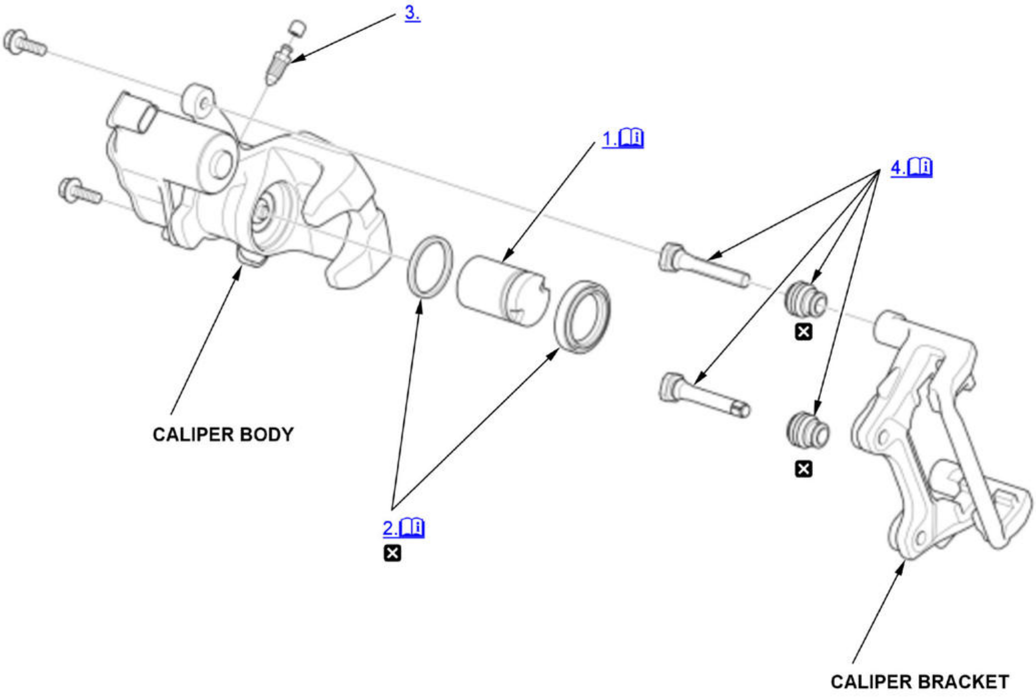

Fig. 5: Exploded View Of Rear Brake Caliper Components For Disassembly
Courtesy of HONDA, U.S.A., INC.

ℹ	Detailed information, notes, and precautions
✖	Replace

1. Piston - Remove

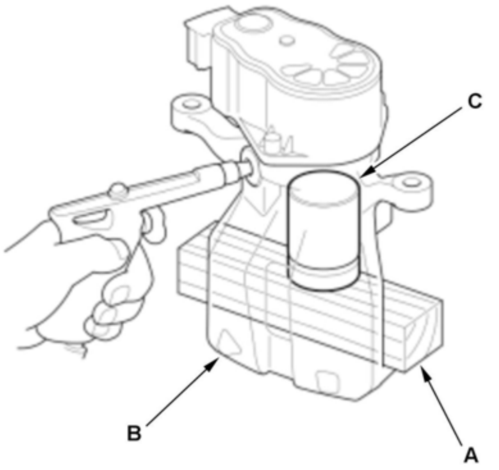	1. Set the wooden block (A) or several shop towels in the caliper body (B) as shown. 2. Blow out the piston (C) with compressed air gradually, and remove the piston from the caliper body. **NOTE:** Do not put your hand into the caliper body because the piston will come out forcibly from the caliper body.

2. Piston Boot and Piston Seal - Remove

   NOTE: Be careful not to damage the inner surface of the cylinder wall with the tool.

3. Bleed Screw - Remove
4. Caliper Pin and Pin Boot - Remove

   NOTE: The upper and lower caliper pins are different. During installation, make sure the caliper pins are in the proper positions.

Reassembly

NOTE:

- ℹ Where icon is shown, for further information see below.
- **Review the Service Precautions before doing repairs or service** .
- Use recommended greases in the rear caliper set.

Procedure

NOTE: **Numbered call-outs in figure pertain to list numbers in following procedure.**

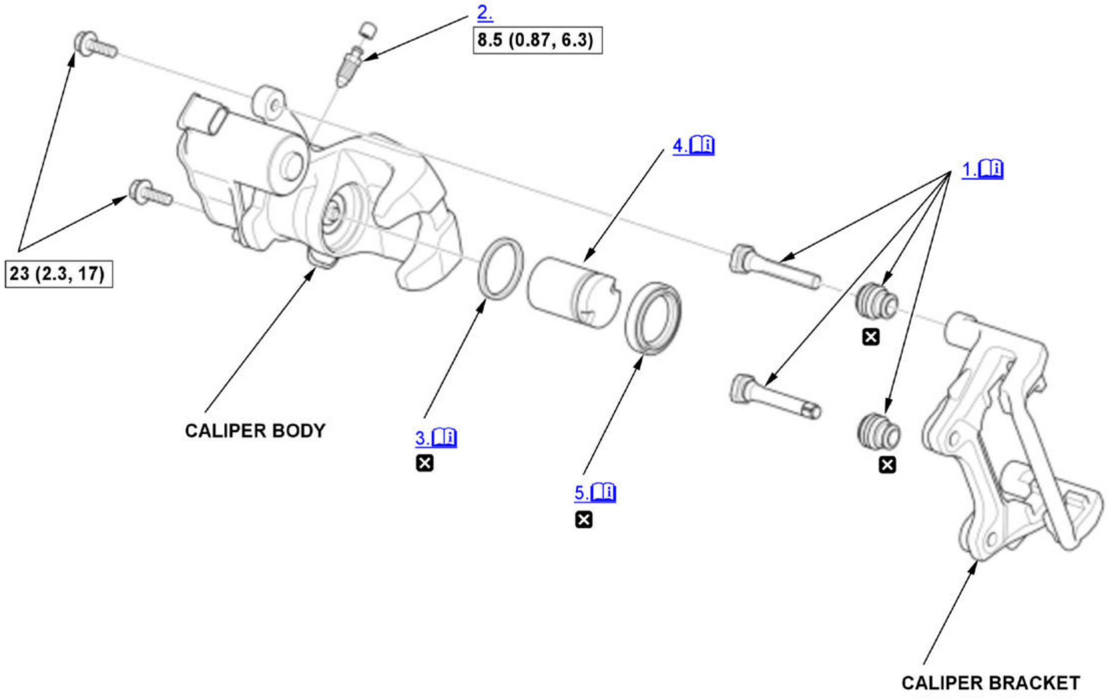

Fig. 6: Exploded View Of Rear Brake Caliper Components With Torque Specifications For Reassembly
Courtesy of HONDA, U.S.A., INC.

ℹ	Detailed information, notes, and precautions
☐	Torque: N.m (kgf.m, lbf.ft)
☒	Replace

1. Caliper Pin and Pin Boot - Install

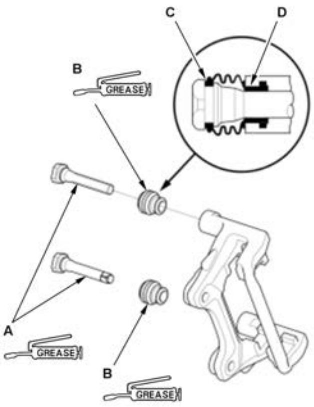	1. Apply a thin coat of Honda silicone grease (P/N 08C30-B0234M) or caliper set grease to the caliper pins (A) and the pin boots (B). **NOTE:** Use the grease (NIGLUBE RM) that is included in the caliper set. 2. Install the pin boots. 3. Install the caliper pins. **NOTE:** - Make sure that the caliper pins are installed correctly. The upper caliper pin and the lower caliper pin are different. If these caliper pins are installed in the wrong location, it will cause vibration, uneven or rapid brake pad wear, and possibly uneven tire wear.

	- Make sure that the pin boots are properly positioned into the grooves (C) of the caliper pin and the grooves (D) of the caliper body. - Remove air from within the pin boots.

2. Bleed Screw - Install
3. Piston Seal - Install

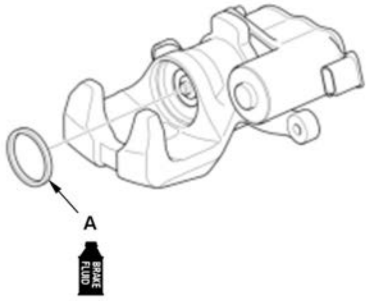	1. Apply brake fluid to the piston seal (A). 2. Install the piston seal. **NOTE:** If necessary, remove the adjuster nut before installing the piston seal. When installing the adjuster nut, turn the adjuster nut until it comes to a lock.

4. Piston - Install

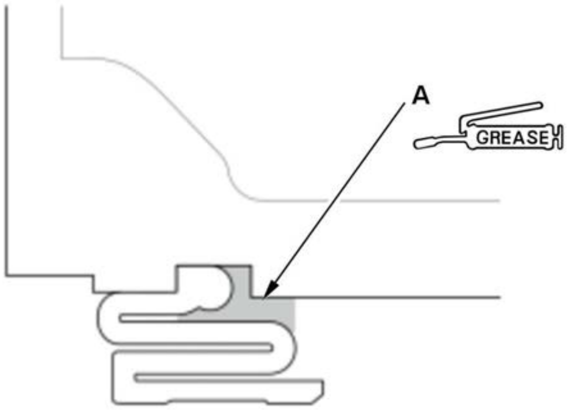	1. Install the piston boot to the piston. 2. Apply caliper set grease (GB3G) (A) to the piston boot as shown. **NOTE:** Use the grease that is included in the caliper set.

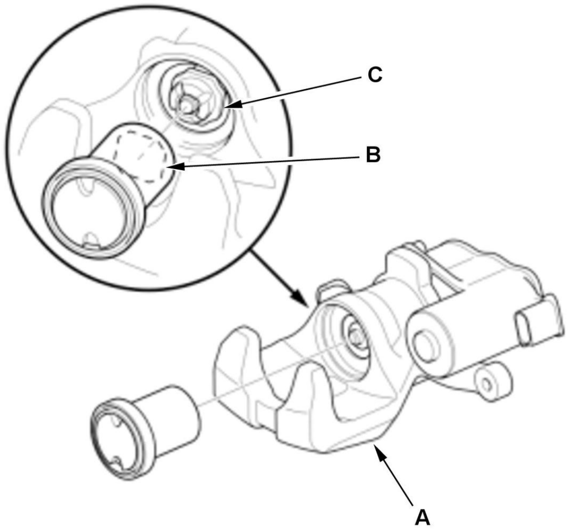	3. Set the piston in place on the caliper body (A) and align the groove (B) of the piston and the adjuster nut (C).

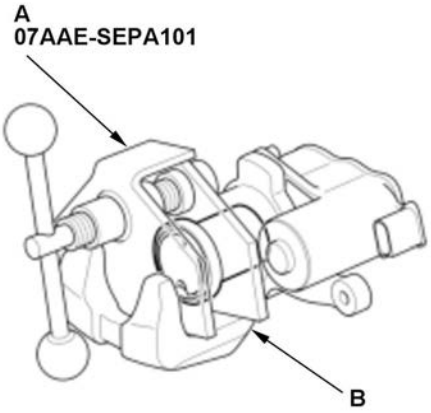	4. Install the brake caliper piston compressor tool (A) on the caliper body (B). 5. Press in the piston with the brake caliper piston compressor tool. **NOTE:** - Do not press the piston diagonally, and do not force it. - Be careful not to damage the piston boot when pressing in the piston.

5. Piston Boot - Install

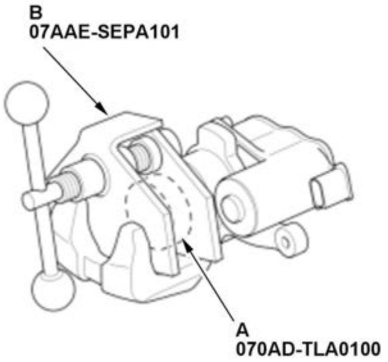	1. Press the piston boot into the caliper body using the rear brake caliper dust boot installer (A) and the brake caliper piston compressor tool (B). **NOTE:** Make sure that the piston boot is properly positioned into the groove of the caliper body.

REMOVAL AND INSTALLATION

BRAKE HOSE REMOVAL AND INSTALLATION

Removal

NOTE: Review the Service Precautions before doing repairs or service .

Front

1. Vehicle - Lift
2. Front Wheel - Remove
3. Brake Hose - Remove

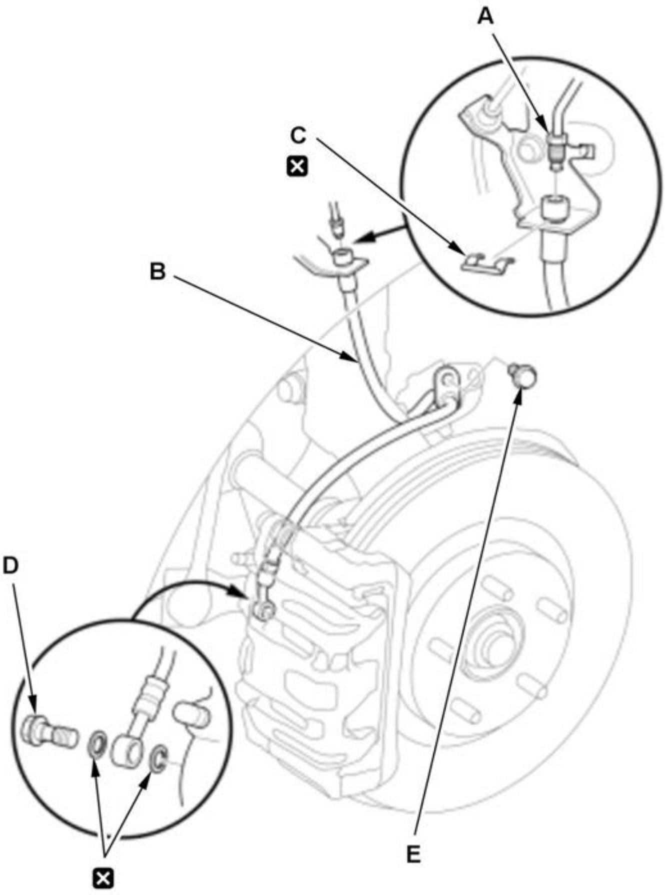	1. Disconnect the brake line (A) from the brake hose (B). 2. Remove the brake hose clip (C). 3. Remove the banjo bolt (D), and disconnect the brake hose from the caliper body. 4. Remove the brake hose mounting bolt (E).

Rear

1. **Vehicle - Lift**
2. **Rear Wheel - Remove**
3. Brake Hose - Remove

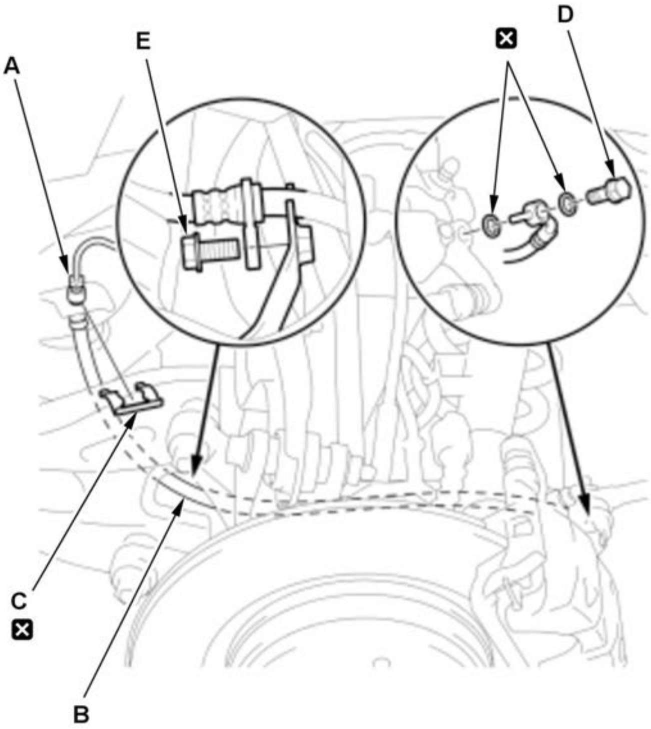	1. Disconnect the brake line (A) from the brake hose (B). 2. Remove the brake hose clip (C). 3. Remove the banjo bolt (D), and disconnect the brake hose from the caliper body. 4. Remove the brake hose mounting bolt (E).

Installation

NOTE:

- **How to read the torque specifications** .
- **Review the Service Precautions before doing repairs or service** .

Front

1. Brake Hose - Install

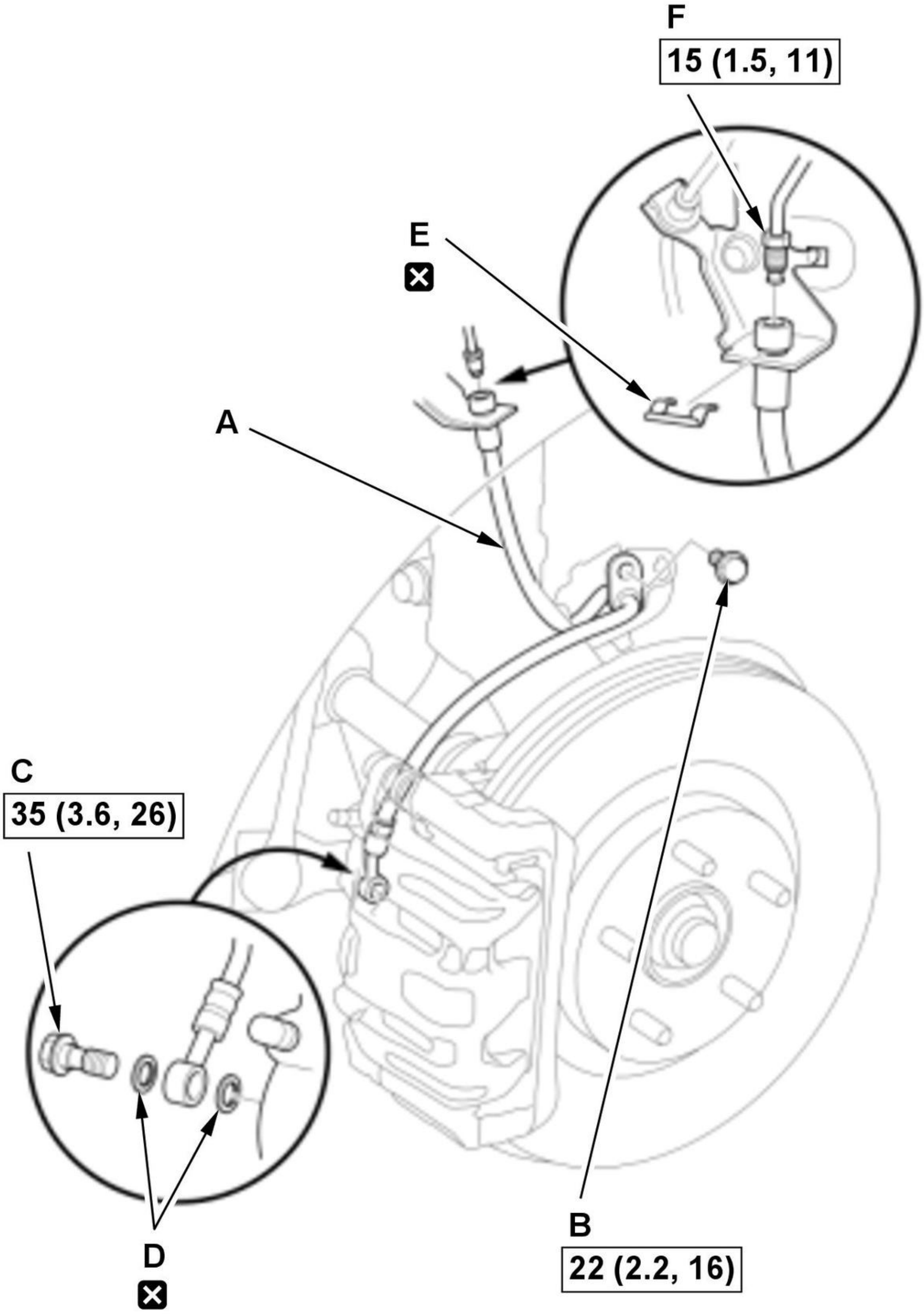

Fig. 7: Front Brake Hose Components With Torque Specifications
Courtesy of HONDA, U.S.A., INC.

1. Install the brake hose (A) with the brake hose mounting bolt (B).

2. Connect the brake hose to the caliper body with the banjo bolt (C) and new sealing washers (D).

3. Install a new brake hose clip (E) to the brake hose.

4. Connect the brake line (F) to the brake hose.

2. Brake System - Bleed
3. Brake Hose and Line - Check
4. Front Wheel - Install

Rear

1. Brake Hose - Install

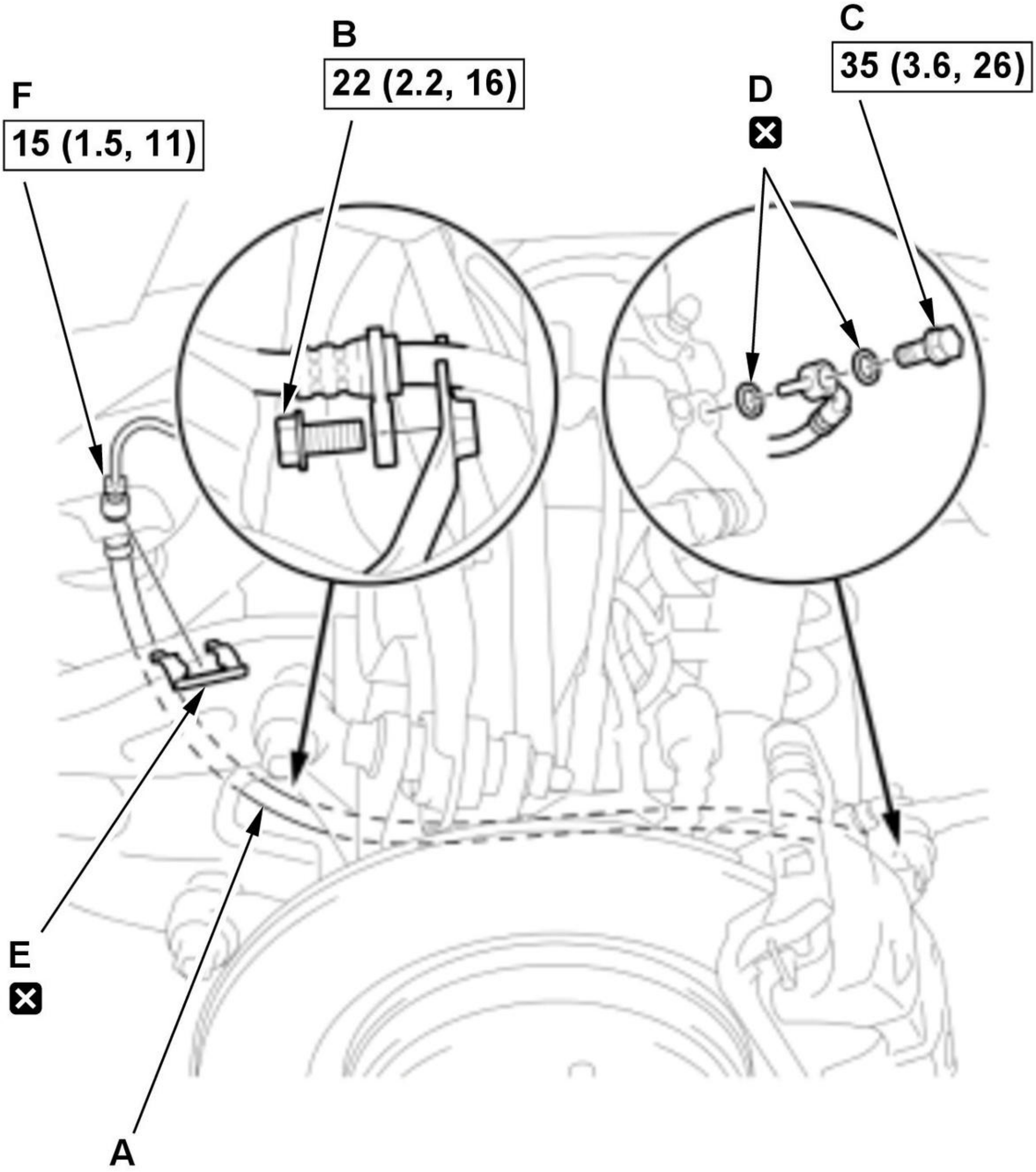

Fig. 8: Rear Brake Hose Components With Torque Specifications
Courtesy of HONDA, U.S.A., INC.

1. Install the brake hose (A) with the brake hose mounting bolt (B).

2. Connect the brake hose to the caliper body with the banjo bolt (C) and new sealing washers (D).

3. Install a new brake hose clip (E) to the brake hose.

4. Connect the brake line (F) to the brake hose.

2. **Brake System - Bleed**
3. **Brake Hose and Line - Check**
4. **Rear Wheel - Install**

BRAKE PEDAL REMOVAL AND INSTALLATION

Removal and Installation

NOTE: **How to read the torque specifications** .

1. **Driver's Dashboard Undercover - Remove**
2. **Driver's Dashboard Lower Cover - Remove**
3. **Brake Pedal Position Switch - Remove**
4. Brake Pedal - Remove

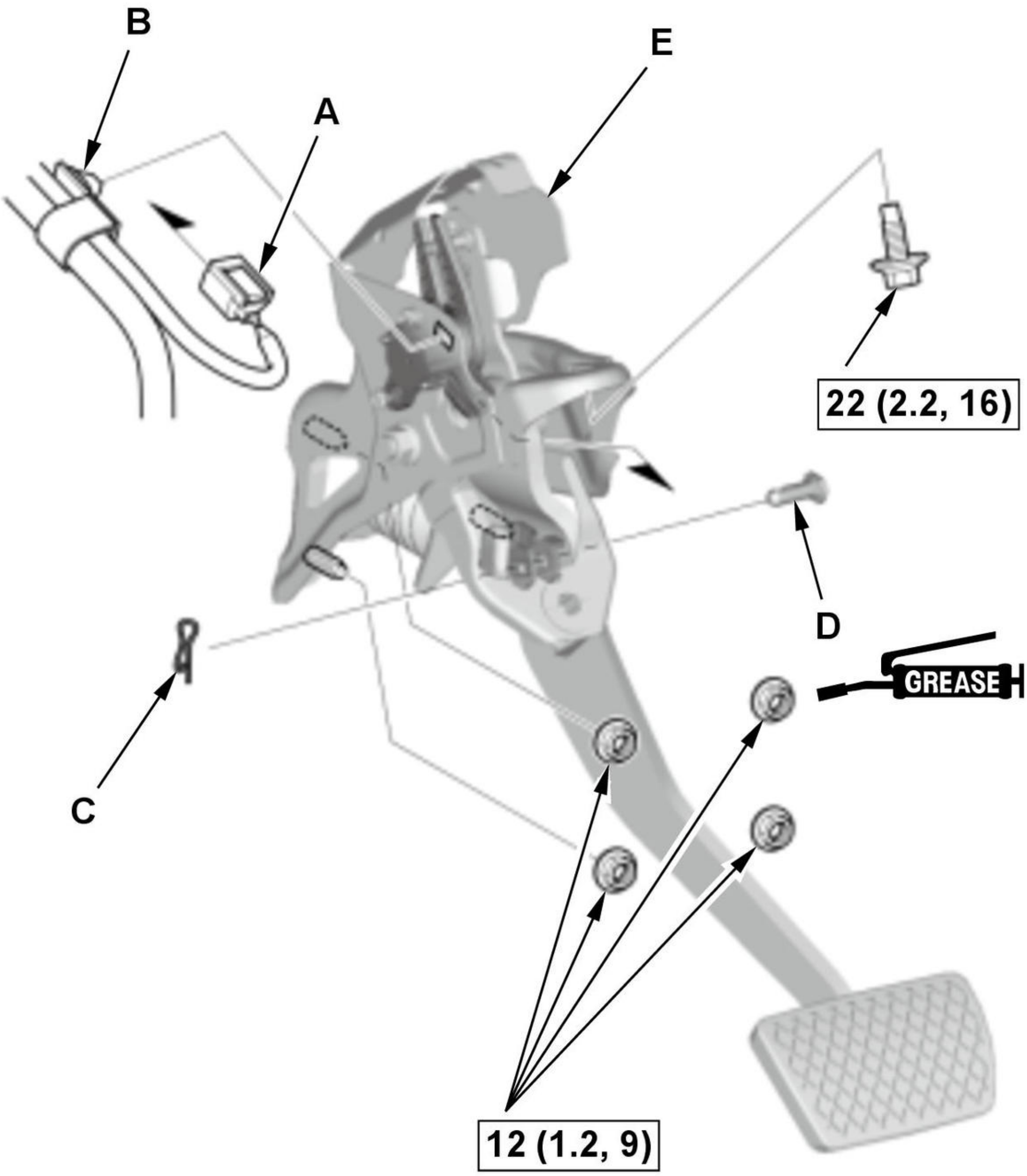

Fig. 9: Brake Pedal Components With Torque Specifications
Courtesy of HONDA, U.S.A., INC.

1. Disconnect the connector (A).

2. Remove the harness clip (B).

3. Remove the lock pin (C).

4. Remove the yoke pin (D).

NOTE: During installation, apply multipurpose grease to the yoke pin.

5. Remove the brake pedal with the bracket (E).

5. All Removed Parts - Install

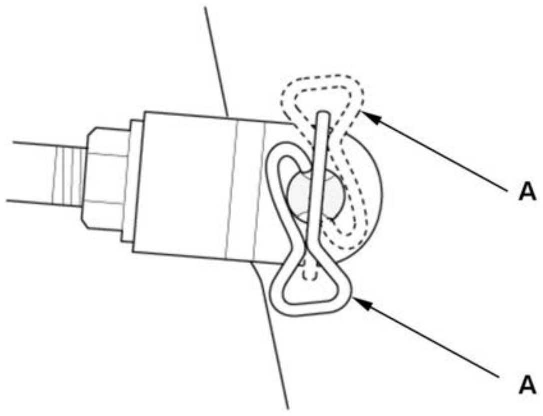	1. Install all removed parts in the reverse order of removal. **NOTE:** The lock pin (A) can be installed from the top or bottom.

6. **Brake Pedal and Brake Pedal Position Switch - Adjust**
7. **Sensor 0 (Zero) Position - Memorize**

BRAKE TANDEM MOTOR CYLINDER REMOVAL AND INSTALLATION

Removal and Installation

NOTE:

- **How to read the torque specifications** .
- **Review the Service Precautions before doing repairs or service** .
- The electric powertrain components are located in this area. The electric powertrain is a high-voltage system. You must be familiar with the electric powertrain system before working on or around it. Make sure you have read the electric powertrain **service precautions** before doing repairs or service.

1. 12 Volt Battery Terminal - Disconnect

1. Open the driver's door, and wait 3 minutes or more. **NOTE:** Do not turn the vehicle to the ON mode. 2. **Do the 12 volt battery terminal disconnection procedure** .

2. Brake Fluid - Remove

1. Remove the brake fluid from the reservoir tank with a syringe.

3. **Intake Air Resonator - Remove**
4. **Air Intake Tube A/B - Remove**
5. A/C Line Bracket Mounting Bolt - Remove

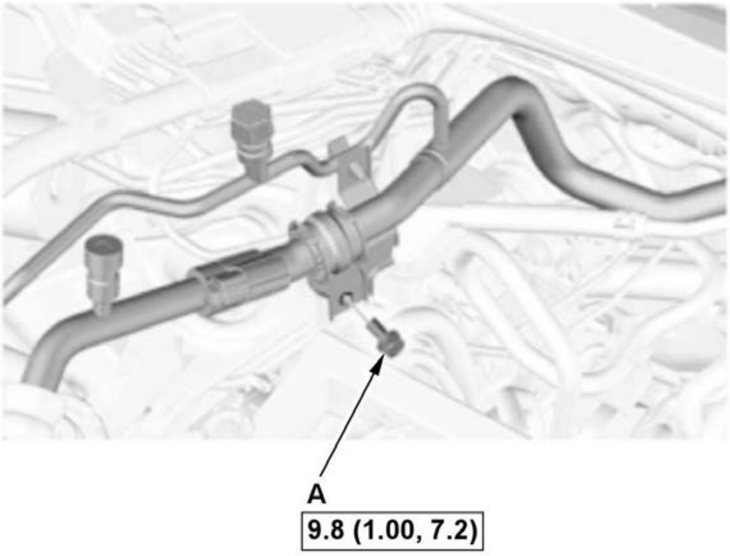	1. Remove the A/C line bracket mounting bolt (A).

6. Tandem Motor Cylinder - Remove

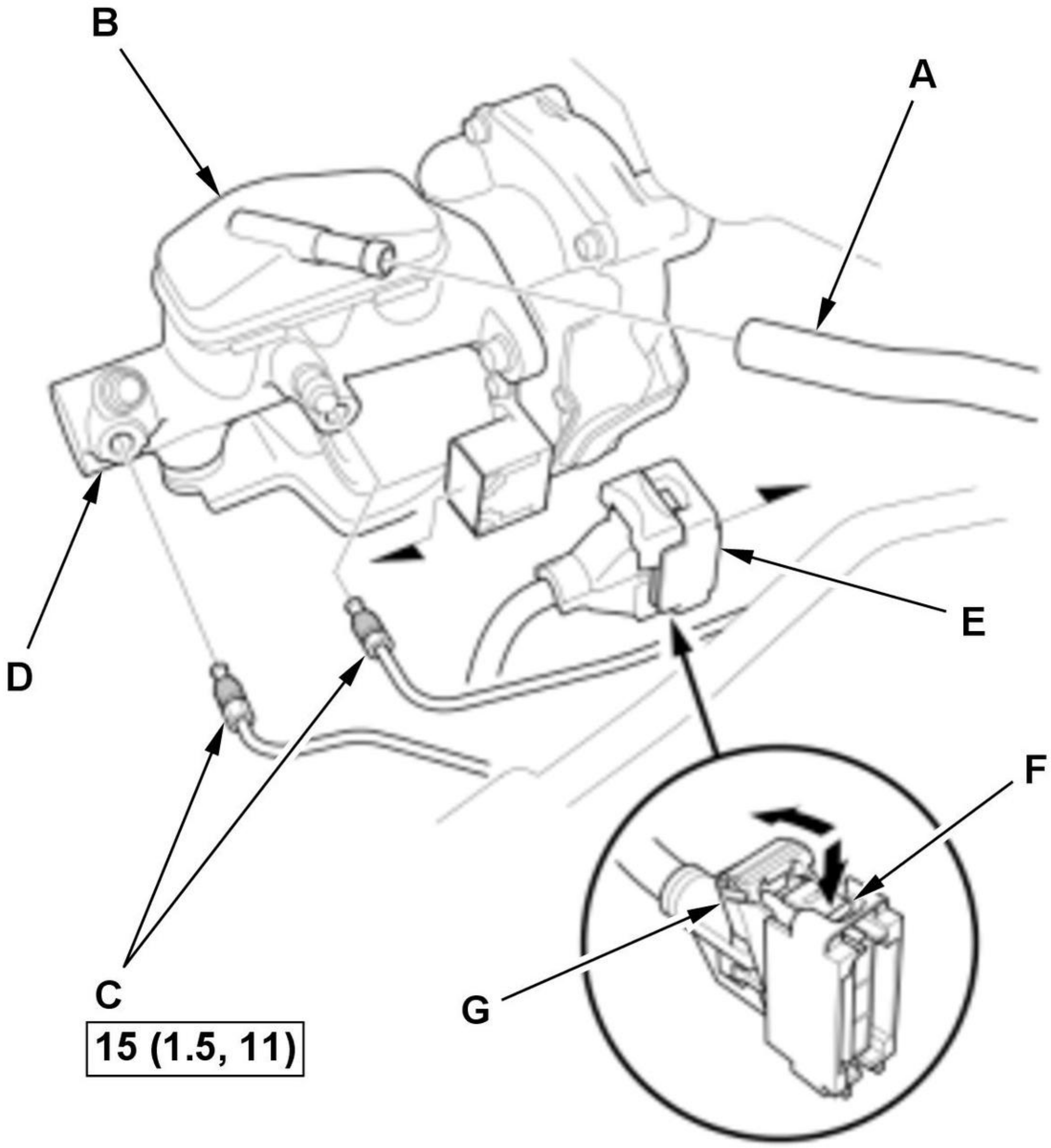

Fig. 10: Tandem Motor Cylinder Components With Torque Specifications
Courtesy of HONDA, U.S.A., INC.

1. Disconnect the suction hose (A) from the reservoir union (B).

2. Disconnect the brake lines (C) from the tandem motor cylinder (D).

3. Disconnect the connector (E) by pushing the lock (F), and pulling down on the lever (G).

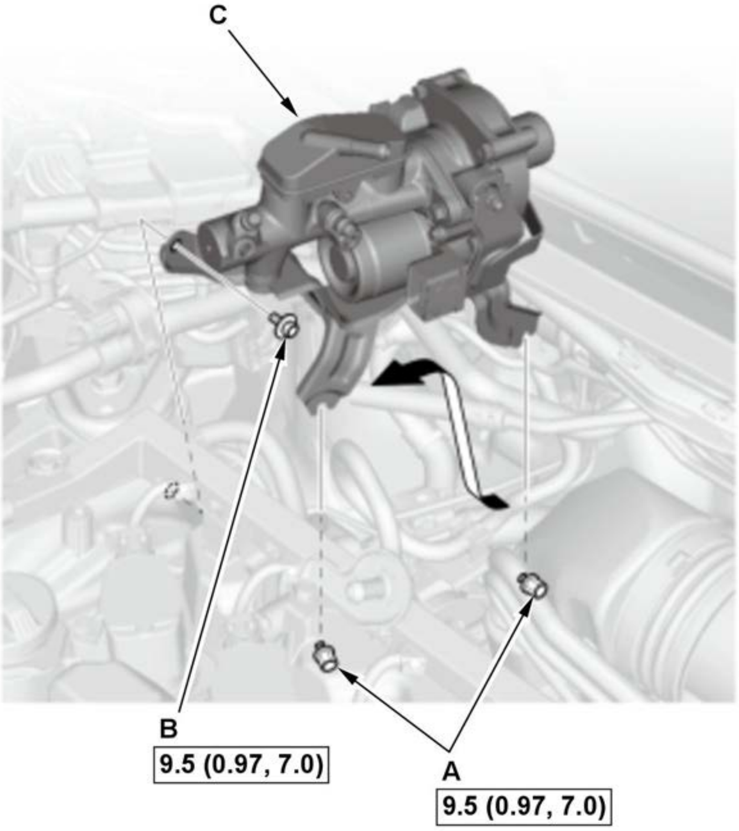	4. Loosen the tandem motor cylinder mounting bolts (A). **NOTE:** Do not remove the bolts. 5. Remove the tandem motor cylinder mounting bolt (B). 6. Remove the tandem motor cylinder (C) with the bracket.

7. Tandem Motor Cylinder Bracket - Remove

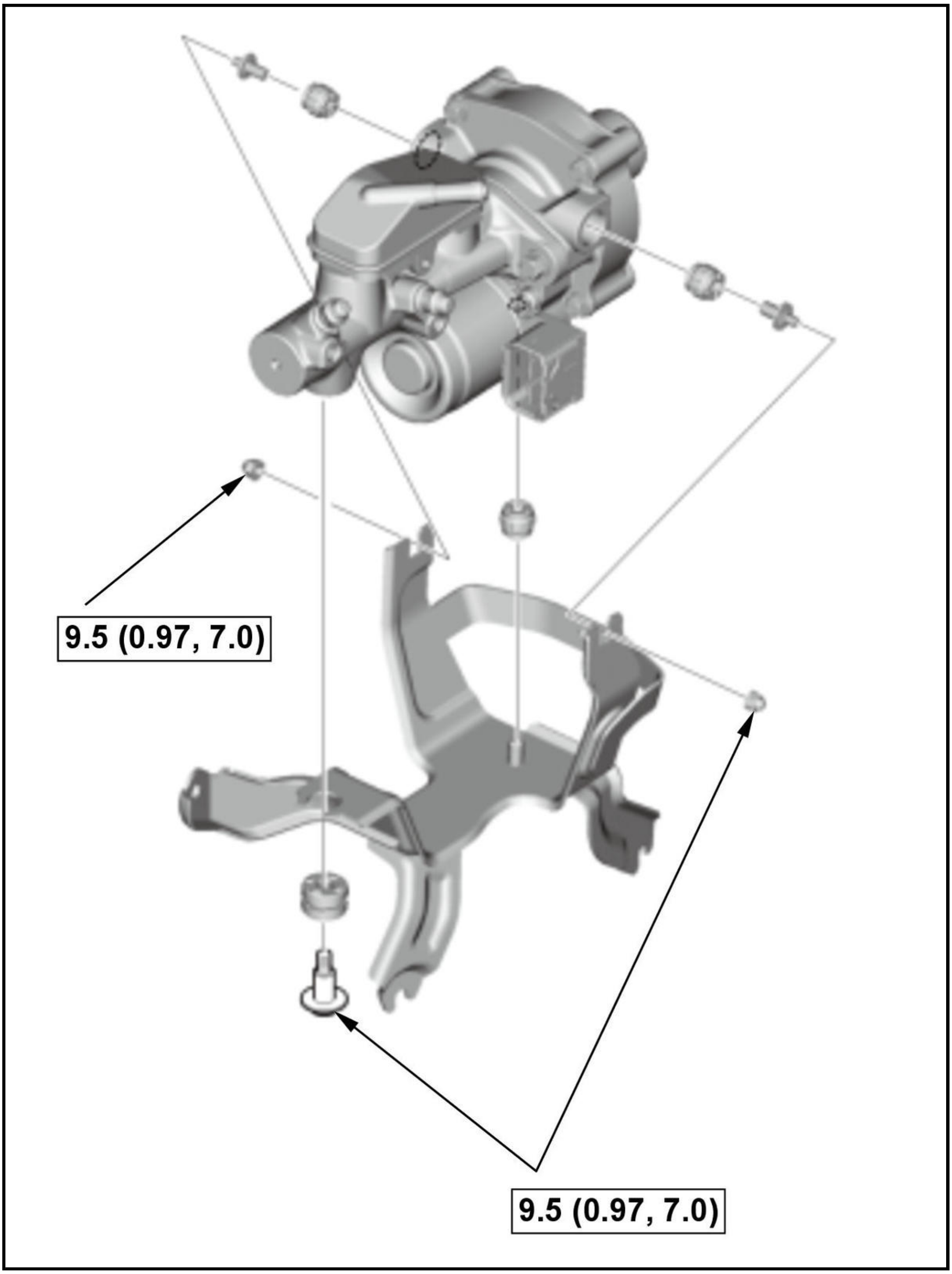

8. All Removed Parts - Install

1. Install all removed parts in the reverse order of removal.

9. **Brake System - Bleed**

ELECTRIC SERVO BRAKE CONTROL UNIT/PEDAL FEEL SIMULATOR REMOVAL AND INSTALLATION

Removal and Installation

NOTE:

- **How to read the torque specifications** .
- **Review the Service Precautions before doing repairs or service** .
- The electric powertrain components are located in this area. The electric powertrain is a high-voltage system. You must be familiar with the electric powertrain system before working on or around it. Make sure you have read the electric powertrain **service precautions** before doing repairs or service.
- Do not disassemble the electric servo brake control unit and the pedal feel simulator.

1. 12 Volt Battery Terminal - Disconnect

1. Open the driver's door, and wait 3 minutes or more. **NOTE:** Do not turn the vehicle to the ON mode. 2. **Do the 12 volt battery terminal disconnection procedure** .

2. Brake Fluid - Remove

1. Remove the brake fluid from the reservoir tank with a syringe.

3. **Driver's Dashboard Undercover - Remove**
4. **PCM - Remove**
5. Reservoir - Remove

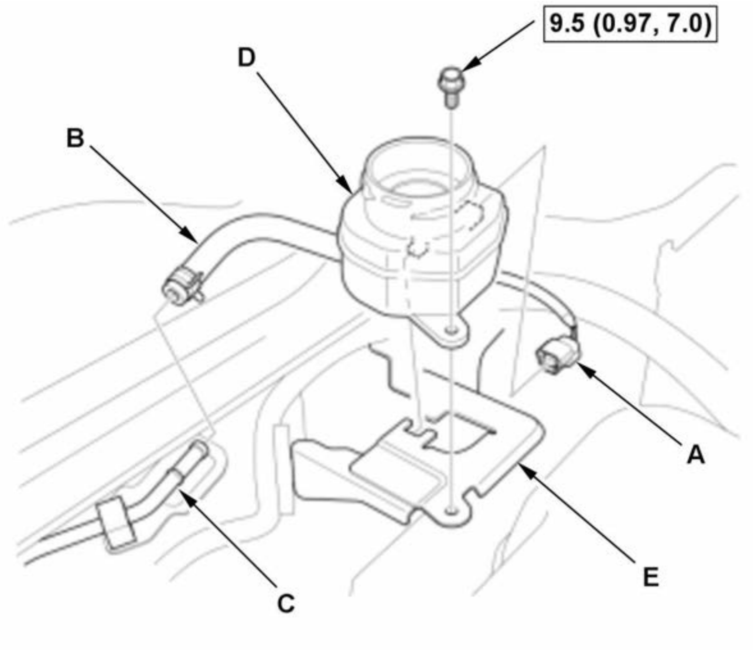	1. Disconnect the connector (A). 2. Disconnect the suction hose (B) from the brake line (C). 3. Remove the reservoir (D) from the reservoir bracket (E).

6. Reservoir Bracket - Remove

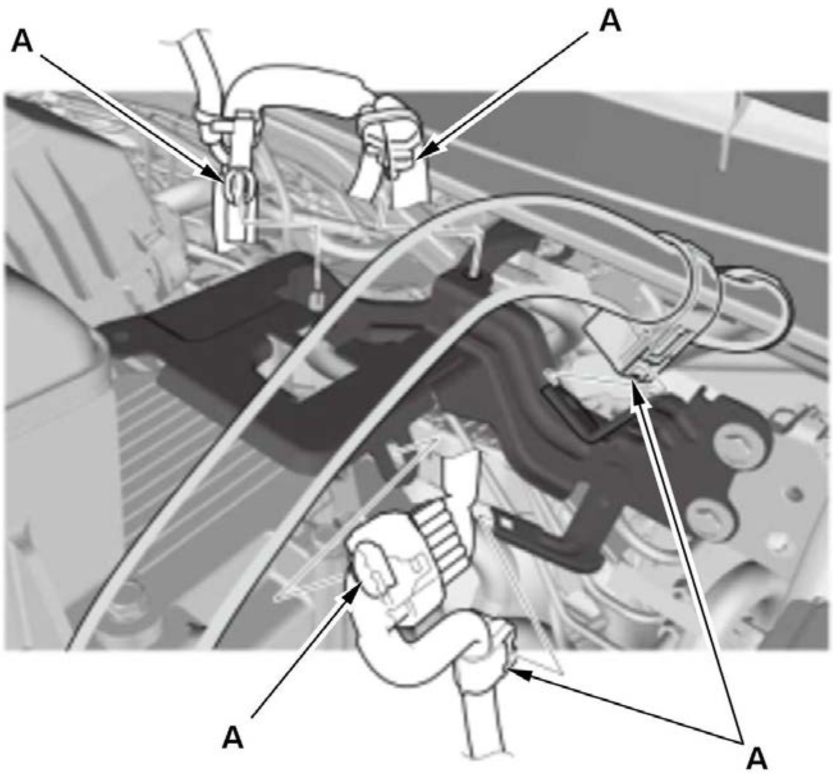

1. Remove the clips (A).

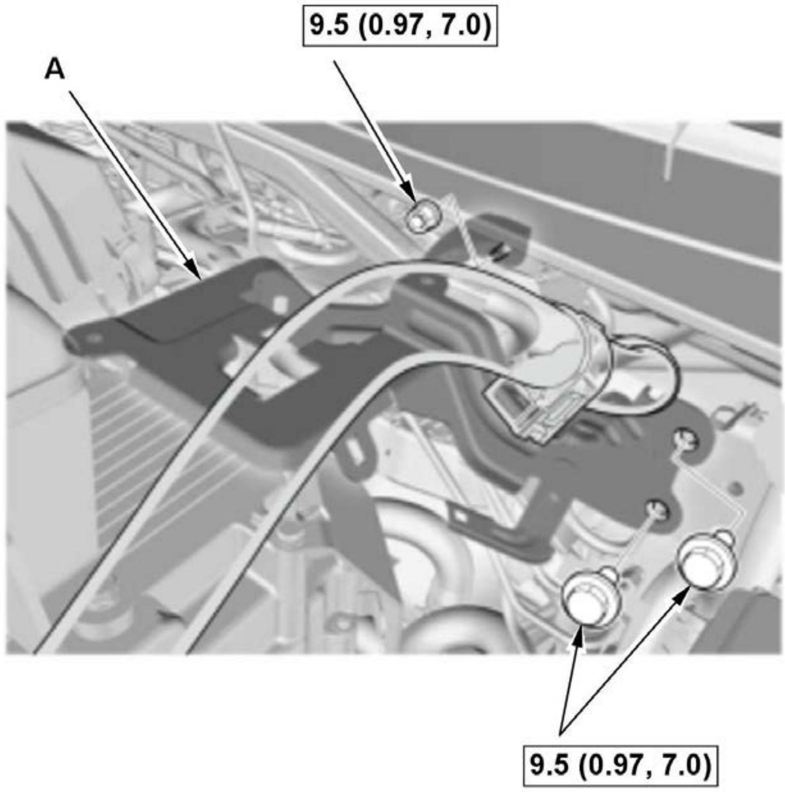
9.5 (0.97, 7.0)
A
9.5 (0.97, 7.0)

2. Remove the reservoir bracket (A).

7. Electric Servo Brake Control Unit/Pedal Feel Simulator - Remove

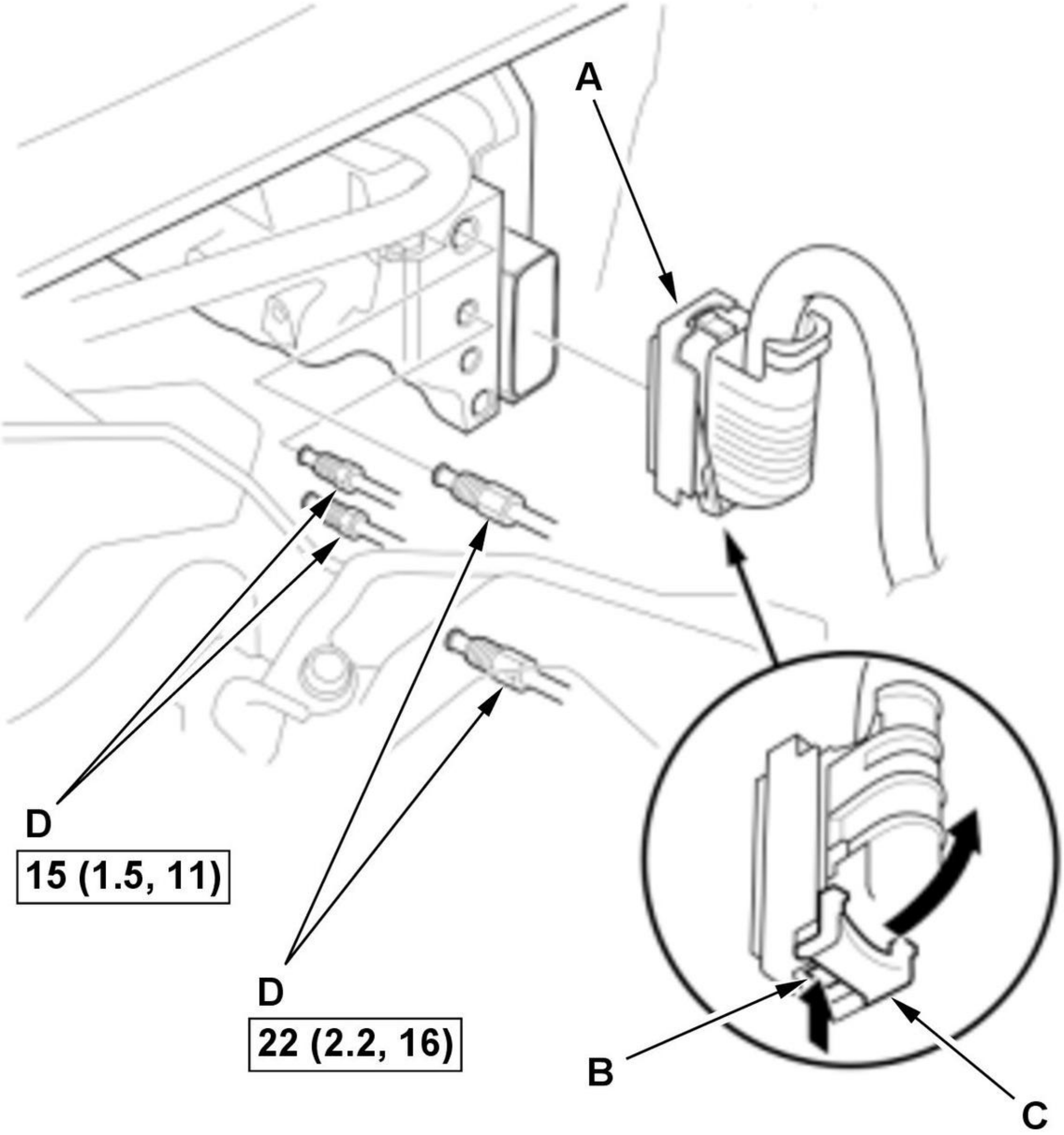

Fig. 11: Electric Servo Brake Control Unit/Pedal Feel Simulator Components And Brake Lines With Torque Specifications
Courtesy of HONDA, U.S.A., INC.

1. Disconnect the connector (A) by pushing the lock (B), and pulling up the lever (C). 2. Disconnect the brake lines (D) from the pedal feel simulator.

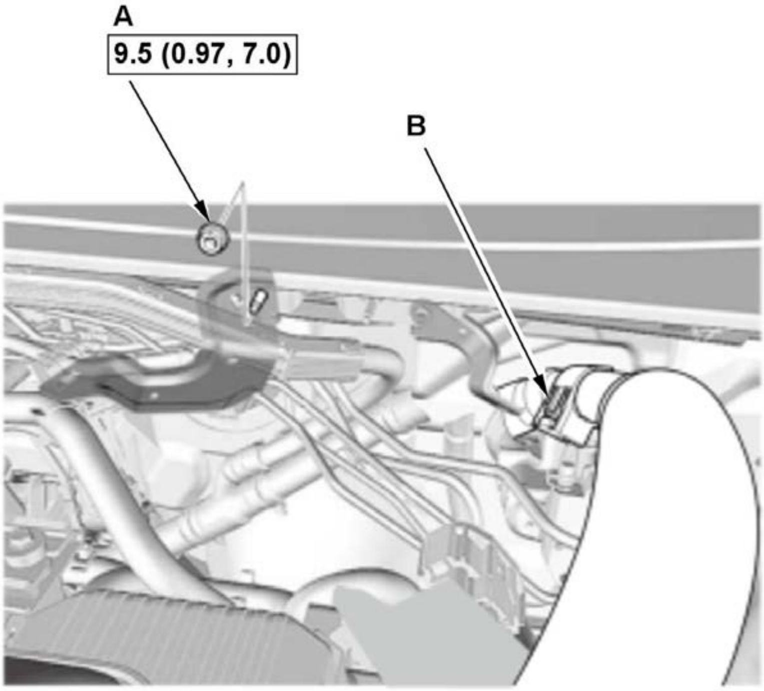	3. Remove the bracket mounting nut (A). 4. Remove the clip (B).

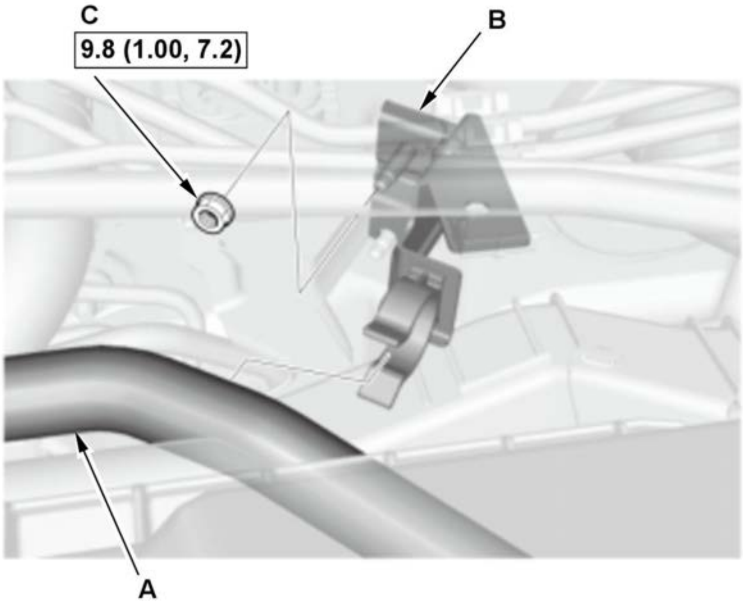 C 9.8 (1.00, 7.2) B A	5. Remove the heater hose (A) from the heater hose clamp (B). 6. Remove the bracket mounting nut (C).

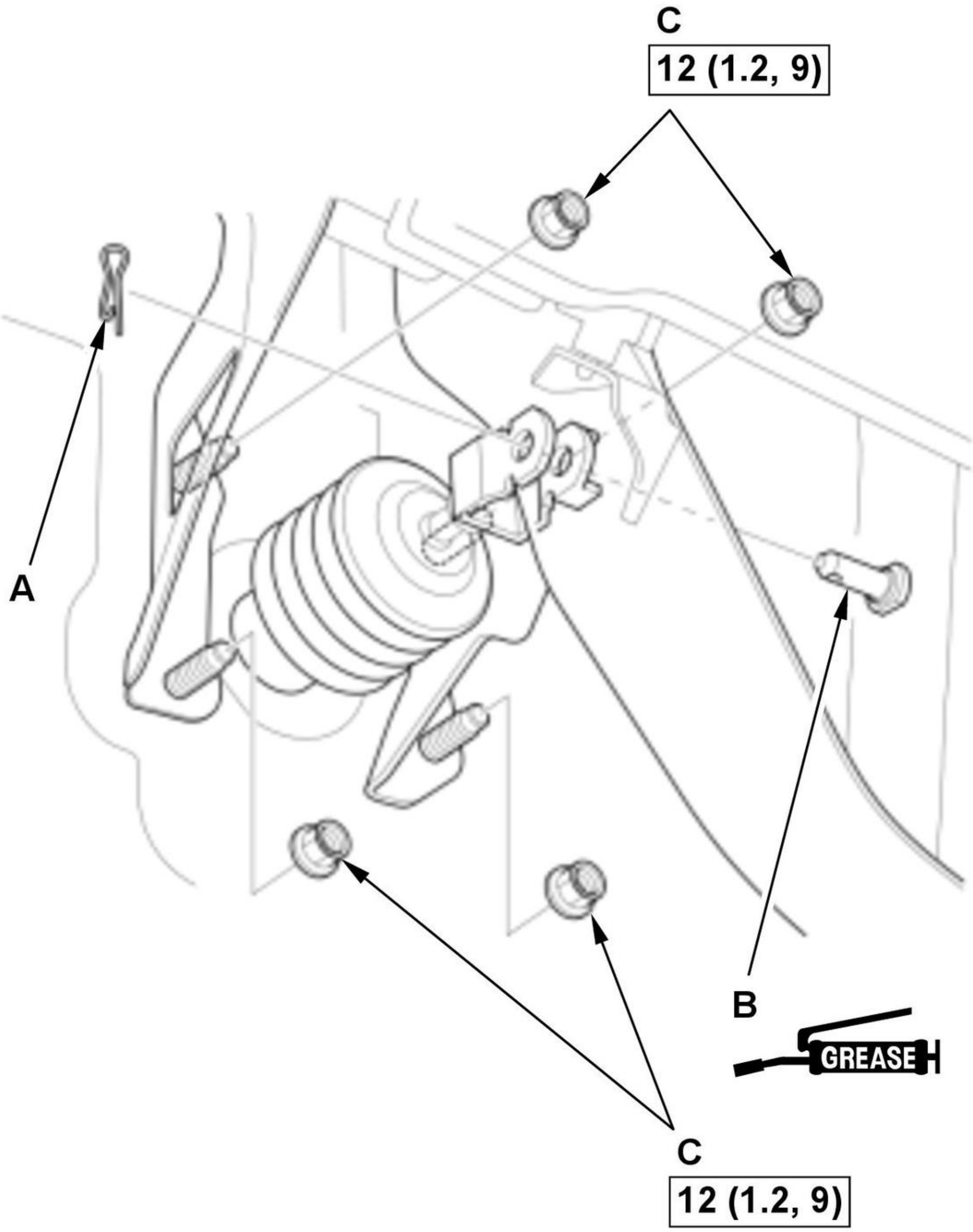

Fig. 12: Pedal Feel Simulator Components With Torque Specifications
Courtesy of HONDA, U.S.A., INC.

7. Remove the lock pin (A).

8. Remove the clevis pin (B).

NOTE: Apply multipurpose grease to the clevis pin during reassembly.

9. Remove the pedal feel simulator mounting nuts (C).

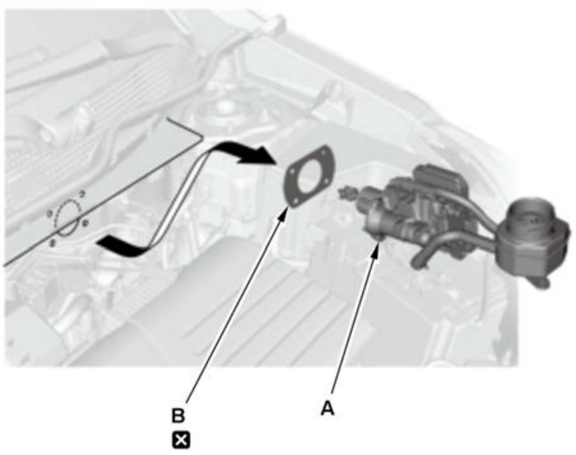 	10. Remove the electric servo brake control unit/pedal feel simulator (A) from the engine compartment. **NOTE:** • Be careful not to damage the pedal feel simulator surfaces and the threads on the pedal feel simulator studs. • Be careful not to bend or damage the brake lines or other components hoses and lines. 11. Remove the pedal feel simulator gasket (B). **NOTE:** Use a new pedal feel simulator gasket during reassembly.

8. All Removed Parts - Install

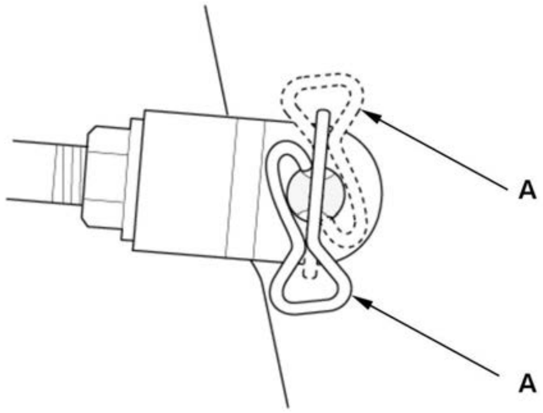 	1. Install all removed parts in the reverse order of removal. **NOTE:** The lock pin (A) can be installed from the top or bottom.

9. **Brake System - Bleed**
10. **Brake Pedal Height and Free Play - Check**
11. **Sensor 0 (Zero) Position - Memorize**
12. Electric Servo Brake Control Unit Software - Check

1. Make sure the electric servo brake control unit has the latest software. If it does not have the latest, **update the software in the electric servo brake control unit** .

FRONT BRAKE CALIPER REMOVAL AND INSTALLATION

Removal and Installation

NOTE:

- **How to read the torque specifications** .
- **Review the Service Precautions before doing repairs or service** .

1. **Vehicle - Lift**
2. **Front Wheel - Remove**
3. Brake Hose - Remove

1. **Disconnect the brake hose from the caliper body**.

4. Brake Caliper Body - Remove (If necessary)

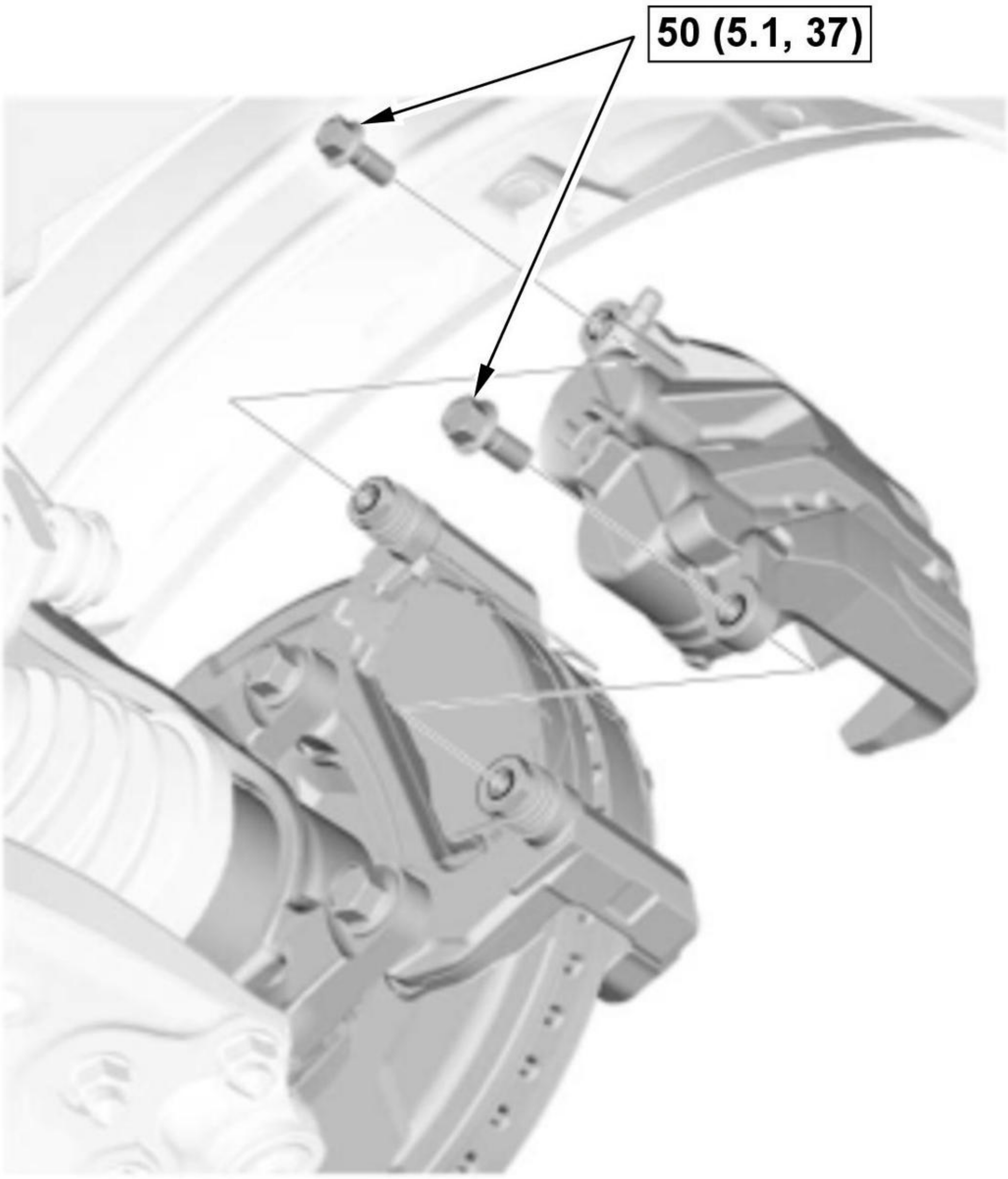

Fig. 13: Front Brake Caliper Body And Bolts With Torque Specifications
Courtesy of HONDA, U.S.A., INC.

5. Brake Caliper - Remove

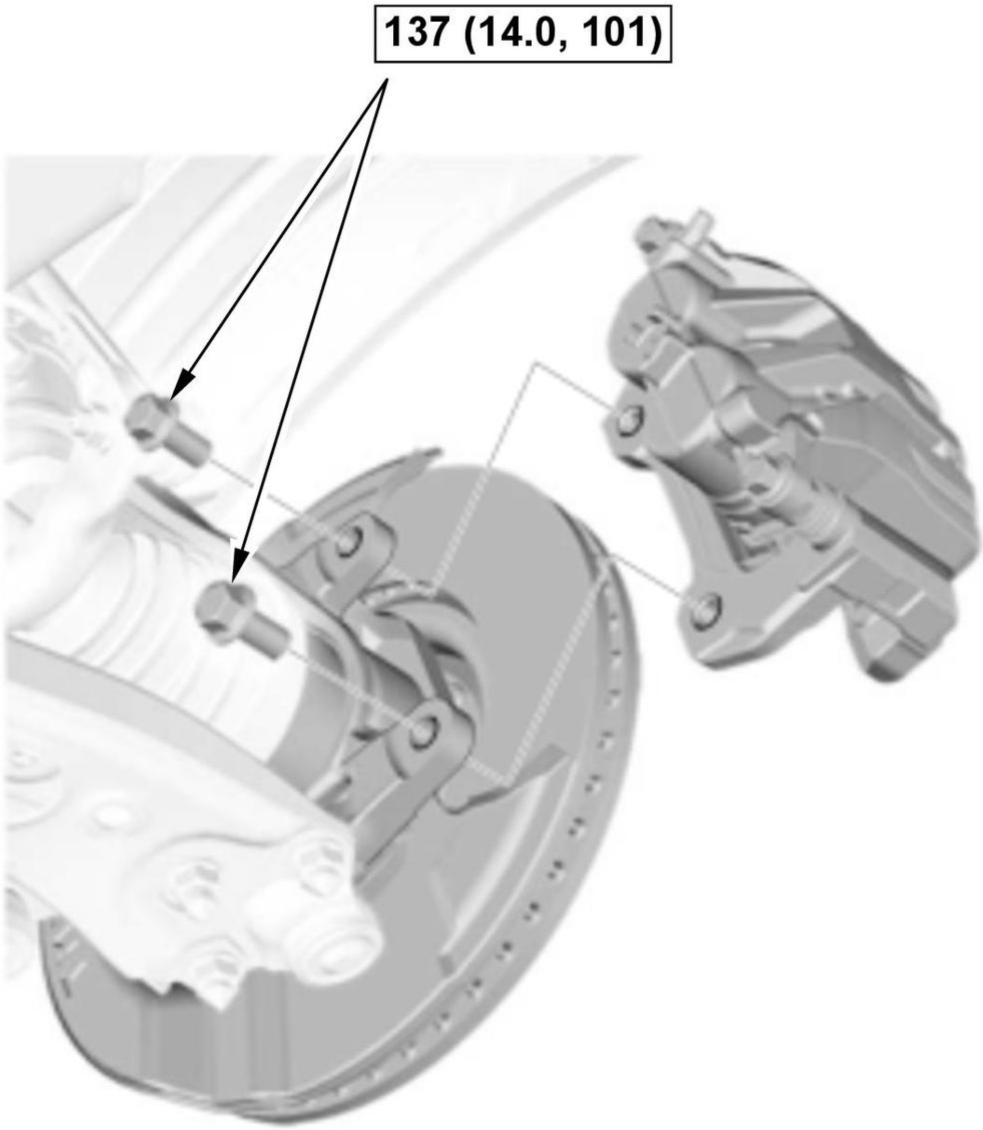

Fig. 14: Front Brake Caliper And Bolts With Torque Specifications
Courtesy of HONDA, U.S.A., INC.

6. All Removed Parts - Install

   1. Install all removed parts in the reverse order of removal.

7. Brake System - Bleed

REAR BRAKE CALIPER REMOVAL AND INSTALLATION

Removal and Installation

NOTE:

- How to read the torque specifications .
- Review the Service Precautions before doing repairs or service .

1. Vehicle - Lift
2. Rear Wheel - Remove
3. Parking Brake - Release

   NOTE: Only necessary if the automatic parking brake function is turned on.

4. Connector (Electric Parking Brake Actuator) - Disconnect
5. Brake Hose - Remove

   1. Disconnect the brake hose from the caliper body.

6. Brake Caliper Body - Remove (If necessary)

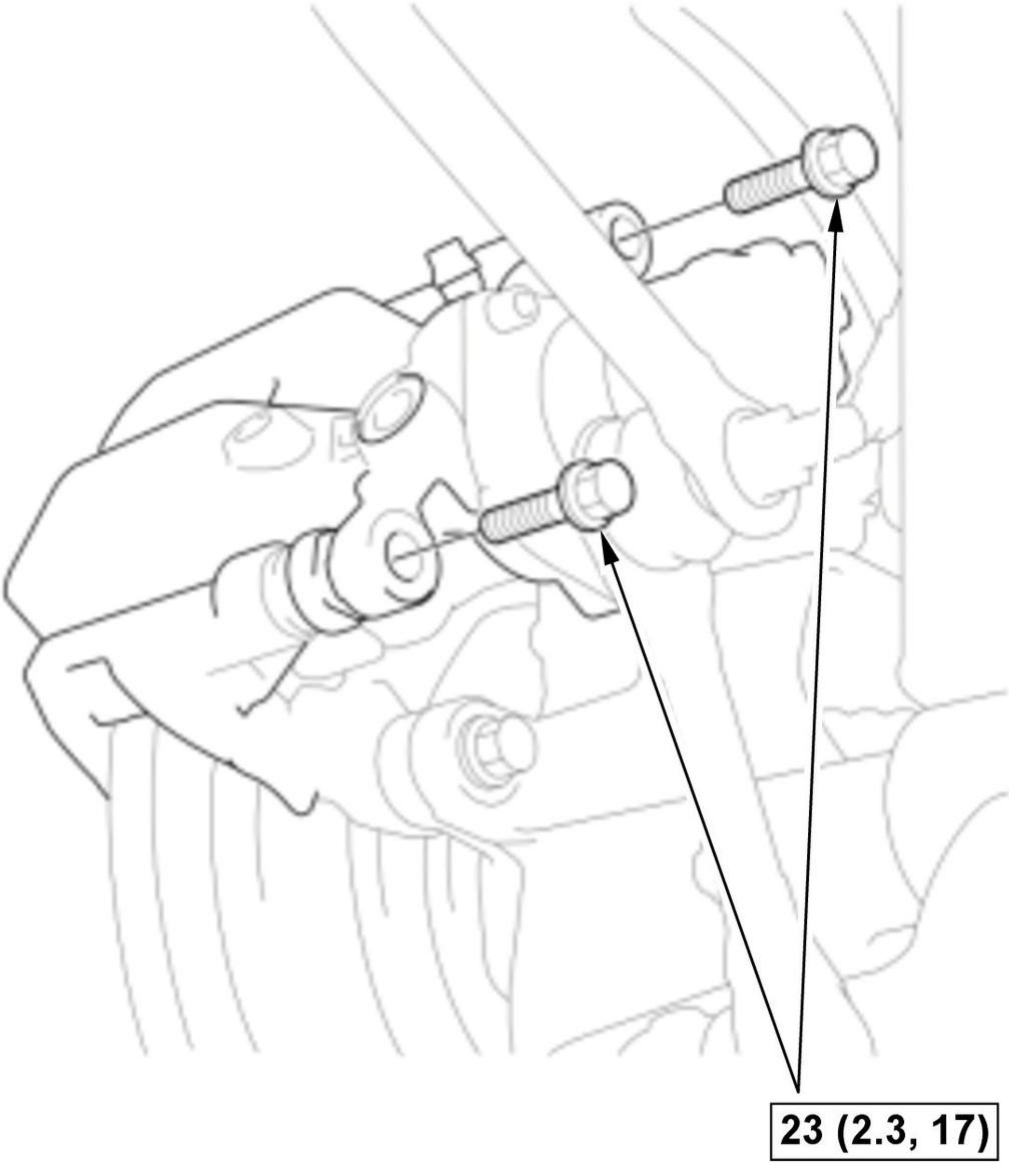

Fig. 15: Rear Brake Caliper Body And Bolts With Torque Specifications
Courtesy of HONDA, U.S.A., INC.

7. Brake Caliper - Remove

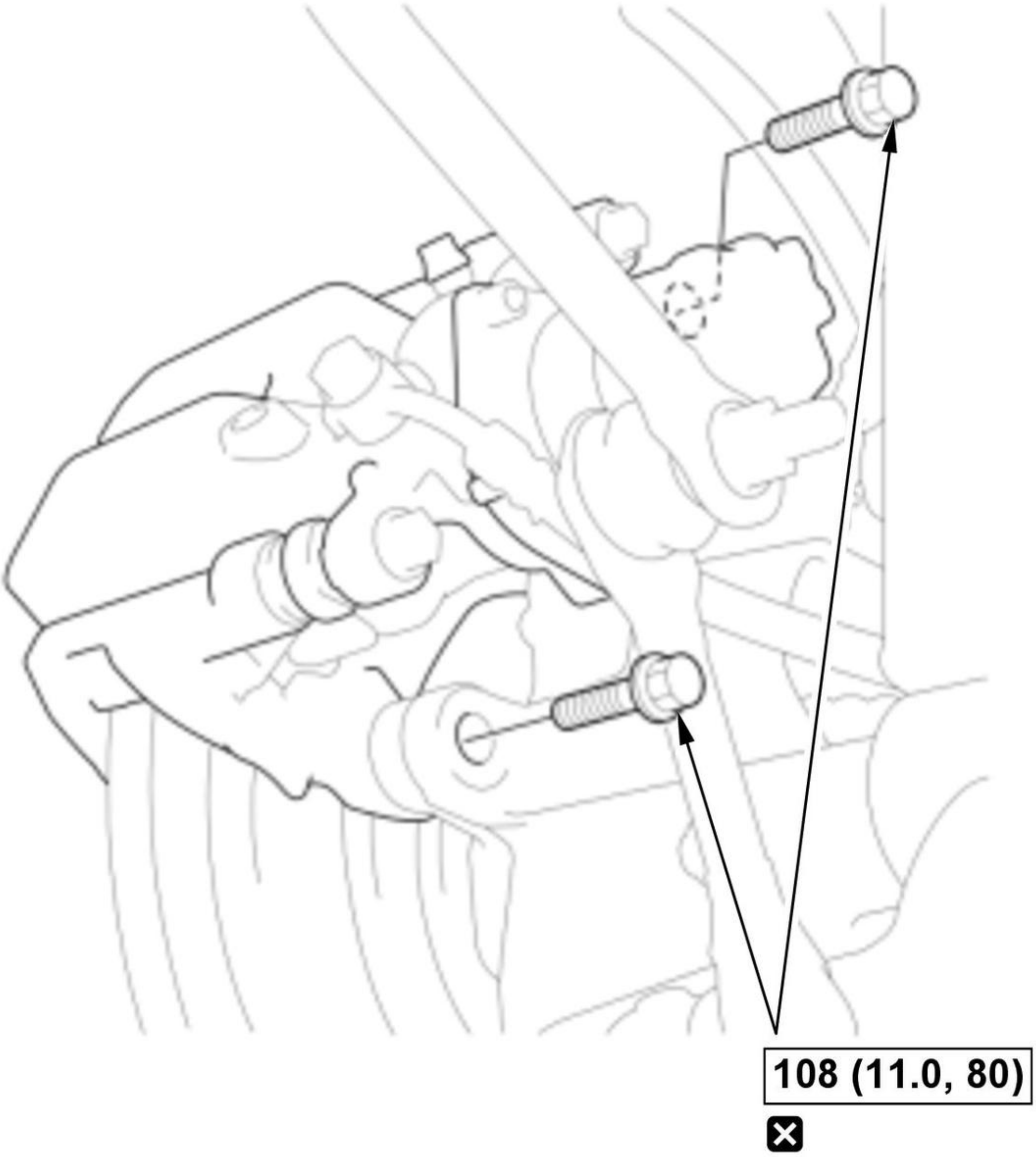

Fig. 16: Rear Brake Caliper And Bolts With Torque Specifications
Courtesy of HONDA, U.S.A., INC.

8. **Electric Parking Brake Actuator - Remove (If necessary)**
9. All Removed Parts - Install

1. Install all removed parts in the reverse order of removal.

10. **Brake System - Bleed**
11. Brake Caliper After Install - Check

1. Turn the vehicle to the ON mode.

2. Apply and release the parking brake 2 times, then make sure that the brake system indicator (red) goes OFF.

NOTE: If the brake system indicator (red) does not go OFF, check for a poor connection at the electric parking brake actuator connector.

3. Turn the vehicle to the OFF (LOCK) mode.

REMOVAL, INSTALLATION & TEST

AUTOMATIC BRAKE HOLD SWITCH REMOVAL, INSTALLATION, AND TEST

Removal and Installation

1. Escutcheon Panel - Remove
2. Automatic Brake Hold Switch - Remove

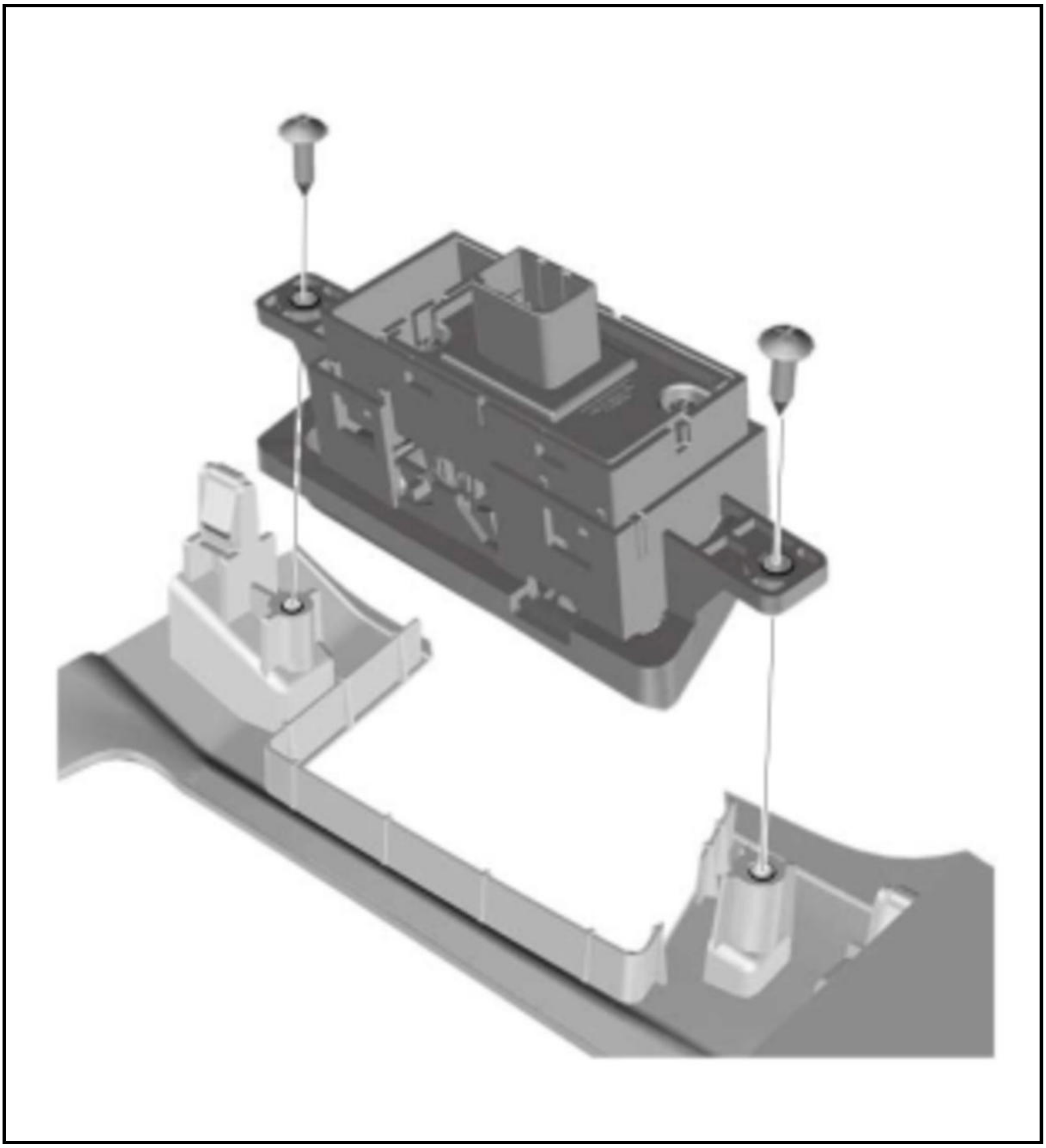

3. All Removed Parts - Install

1. Install all removed parts in the reverse order of removal.

Test

1. Automatic Brake Hold Switch - Test

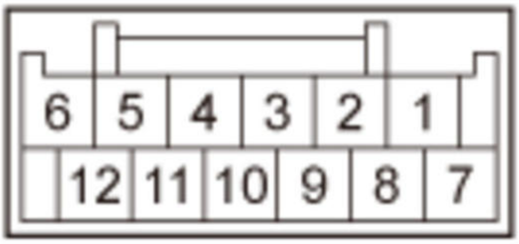
6
5
4
3
2
1
12
11
10
9
8
7

Switch Internal Resistance Check:

1. On the switch side, measure the resistance between the connector terminal (male terminals) in each switch position according to the table.

Terminal	Position	Resistance
No. 7 and No. 8	PRESSED	About 559 Ω
	RELEASED	About 2200 Ω

2. If the switch does not work as described in the table, replace the switch.

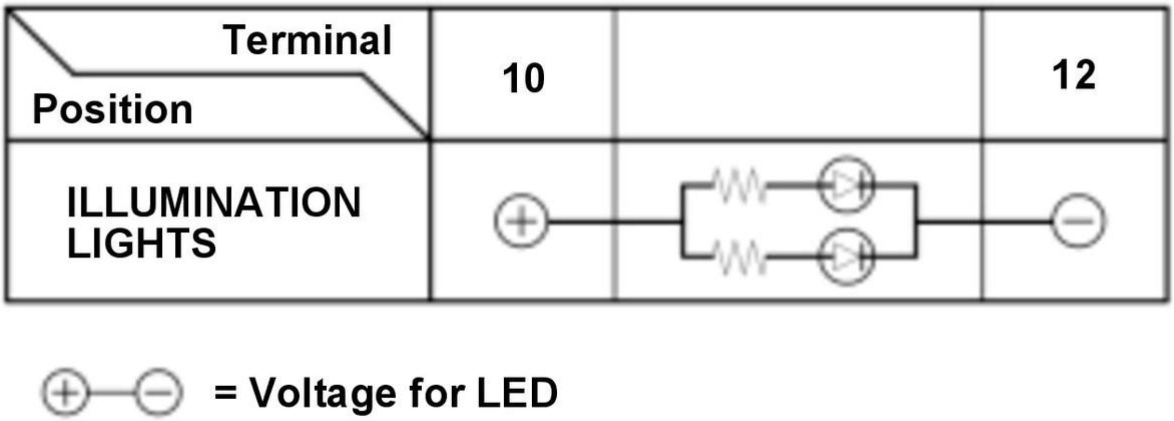
Terminal
Position
10
12
ILLUMINATION LIGHTS
= Voltage for LED

Switch Illumination Circuit Check:

1. On the switch side, check the LED for illumination by applying power and ground to the terminals according to the table.

NOTE: Important operating characteristic; diode bias causes a diode to fully conduct electricity in one direction (forward), while not at all in the opposite direction (reverse).

2. If the result is not as specified, replace the switch.

SYMPTOM TROUBLESHOOTING INDEX FOR VIEWER

BRAKE SYSTEM INDICATOR (AMBER) DOES NOT GO OFF

Diagnostic Procedure

- Check for PGM-FI system DTCs .
- Check for VSA system DTCs .
- Check for VSA system symptom troubleshooting (ABS indicator, brake system indicator (red), VSA indicator, and brake system indicator (amber) do not go off) .
- Check for electric servo brake system DTCs.
- Check for driving support system DTCs .
- Do the gauge control module self-diagnostic function .

RAPID BRAKE PAD WEAR, VEHICLE VIBRATION (AFTER A LONG DRIVE), OR HIGH, HARD BRAKE PEDAL

Diagnostic Procedure

- Symptom Troubleshooting.

DESCRIPTION & OPERATION

ELECTRIC SERVO BRAKE SYSTEM DESCRIPTION

Overview

The electric servo brake system is used to convert as much of the vehicle's kinetic energy as possible into electricity and store it in the battery. The system enables to maximize the regenerative brake force depending on the brake pedal pressure available. The braking force is determined by the amount of regenerative electricity and the brake. When vehicle speed is low, the brake creates most of the braking force.

Electric servo brake system performs the following control:

- Servo control: Reduces the driver's effort for operating the brake pedal.
- Regeneration control: Coordinated control with the regenerative brake by the traction motor.
- Stall management: Protective control of the traction motor.
- Brake assist control: Increases the braking force when emergency braking is detected.
- Hill start assist control: Startup assist on a slope road.
- Automatic brake hold: Reduces the driver's load for operating the brake pedal.

On vehicles equipped with ACC and CMBS, the electric servo brake system performs brake control for the ACC and the CMBS.

Brake Control

If vehicle speed is low, the amount of regeneration by the traction motor decreases, thus causing a decline in braking effort. The electric servo brake control unit drives the motor of the tandem motor cylinder to increase fluid pressure while minimizing the change in braking effort, enabling a smooth transition from regeneration brake to hydraulic brake.

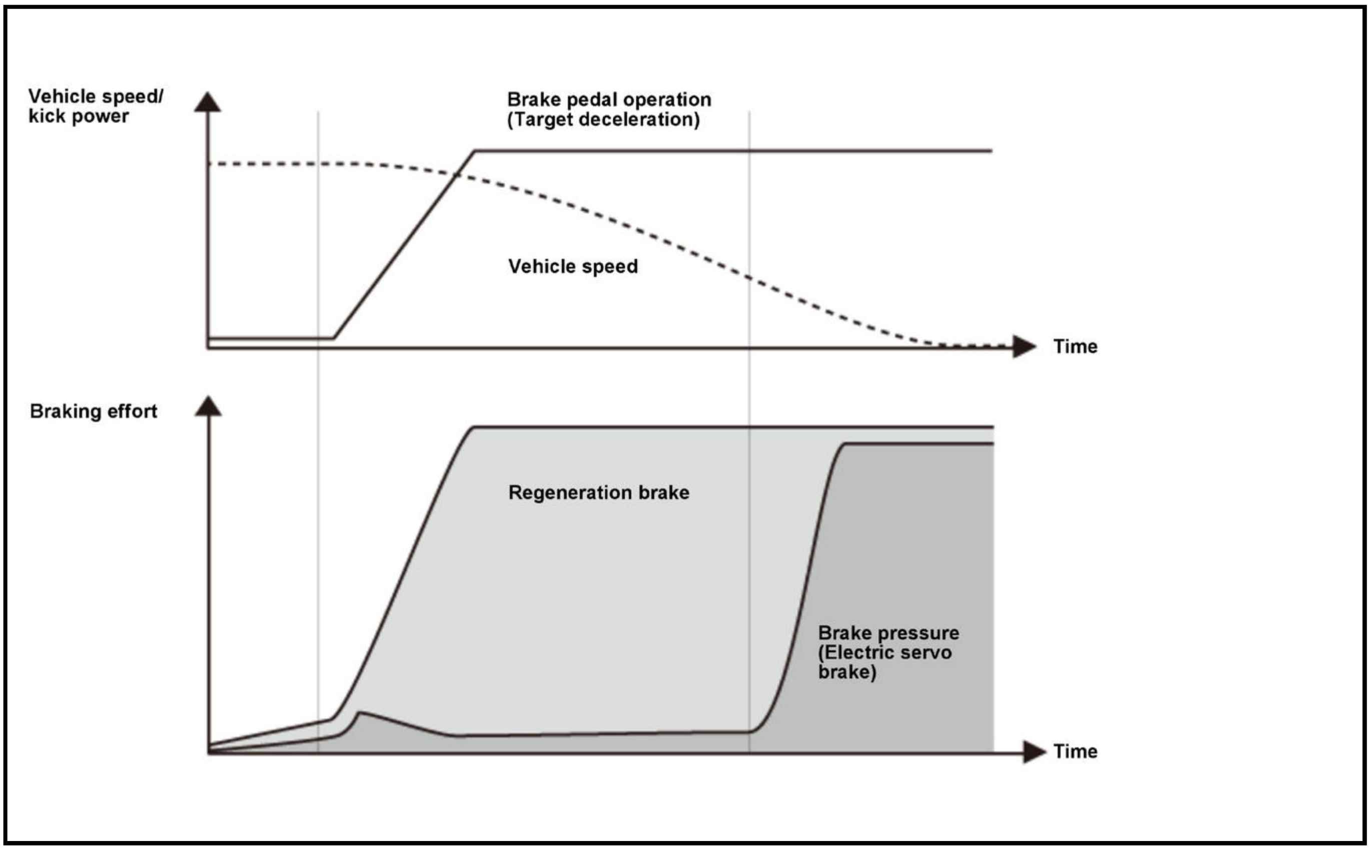

Servo Control

System Shutdown State

When the electric servo brake system is shut down, the master cylinder cut valve (MCV) opens and the pedal feel simulator cut valve (PFSV) is closed while the brake pedal is not in use.

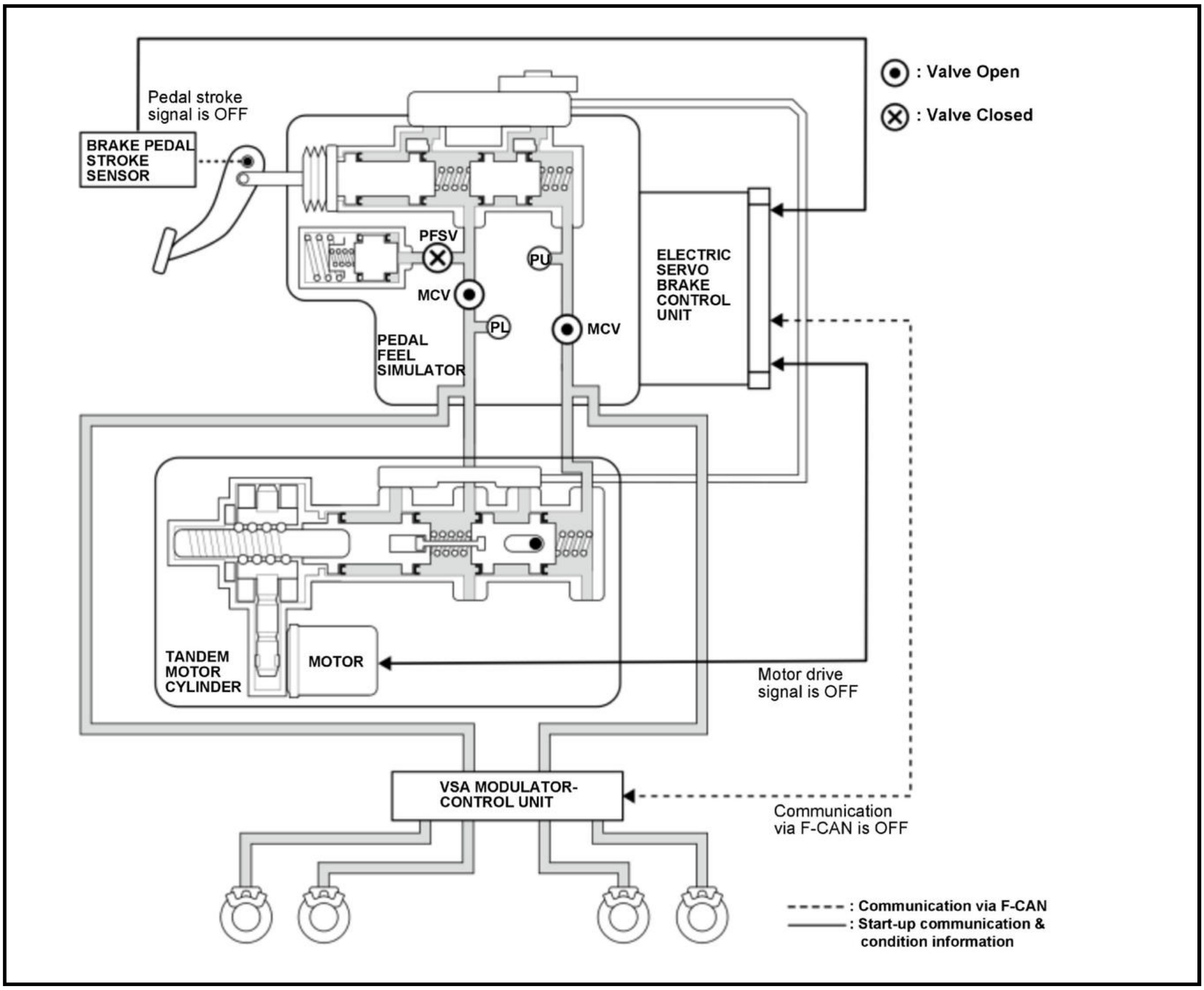
: Valve Open
: Valve Closed
Pedal stroke signal is OFF
BRAKE PEDAL STROKE SENSOR
PFSV
PU
MCV
PL
MCV
PEDAL FEEL SIMULATOR
ELECTRIC SERVO BRAKE CONTROL UNIT
TANDEM MOTOR CYLINDER
MOTOR
Motor drive signal is OFF
VSA MODULATOR-CONTROL UNIT
Communication via F-CAN is OFF
: Communication via F-CAN
: Start-up communication & condition information

System Startup State

The electric servo brake system activates when the driver's door is opened. When the system activates, the motor starts its initial operation. The master cylinder cut valve (MCV) opens and the pedal feel simulator cut valve (PFSV) is open until the brake pedal is pressed.

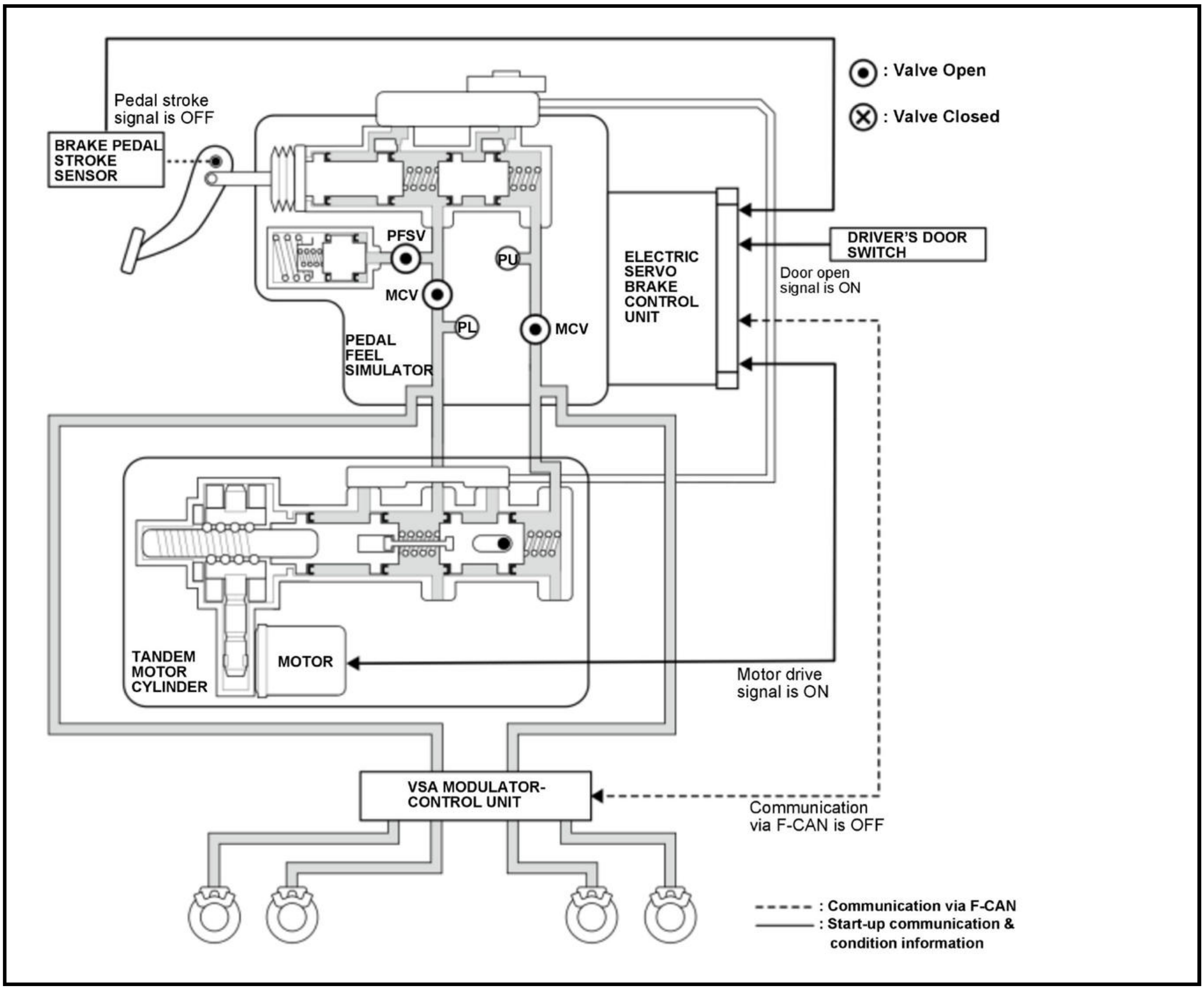
: Valve Open
: Valve Closed
Pedal stroke signal is OFF
BRAKE PEDAL STROKE SENSOR
PFSV
PU
MCV
PL
MCV
PEDAL FEEL SIMULATOR
ELECTRIC SERVO BRAKE CONTROL UNIT
DRIVER'S DOOR SWITCH
Door open signal is ON
TANDEM MOTOR CYLINDER
MOTOR
Motor drive signal is ON
VSA MODULATOR-CONTROL UNIT
Communication via F-CAN is OFF
: Communication via F-CAN
: Start-up communication & condition information

Servo Control Operations

During normal operation, the master cylinder cut valve (MCV) closes and the pedal feel simulator cut valve (PFSV) is open. Under these conditions, the system can prevent the brake hydraulic pressure created by the braking pedal force from transmitting to the VSA modulator-control unit. Pedal feedback is created virtually by the pedal feel simulator. The hydraulic pressure for the VSA modulator-control unit is created when the piston in the slave cylinder gets pushed by a thrust force. The thrust force is transmitted from the rotary torque of the motor in the tandem motor cylinder using a gearbox. The required hydraulic pressure is calculated by the electric servo brake control unit using the stroke sensor signal and controlled by the rotary angle of the motor in the tandem motor cylinder.

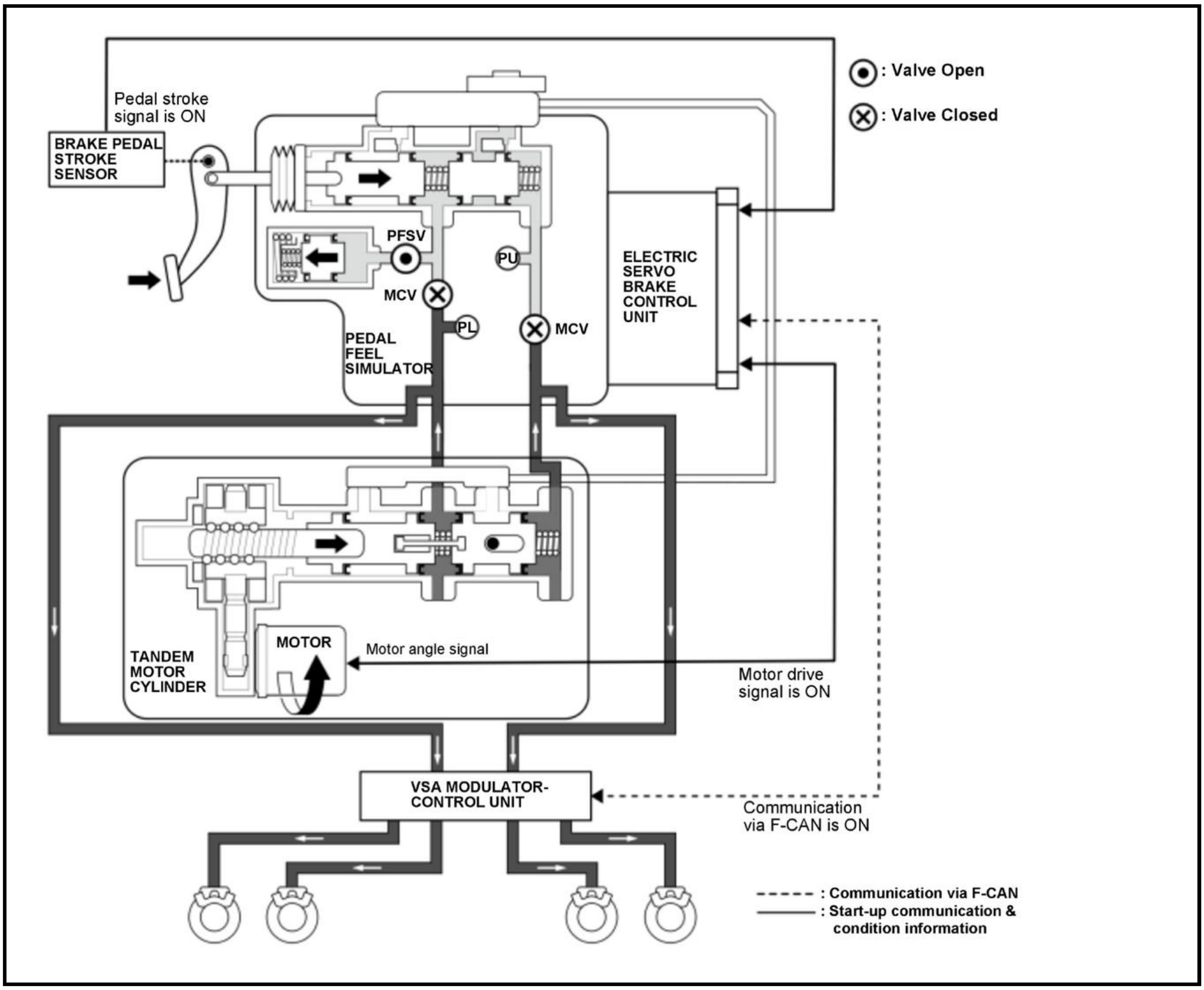

: Valve Open
: Valve Closed
Pedal stroke signal is ON
BRAKE PEDAL STROKE SENSOR
PFSV
PU
MCV
PL
MCV
PEDAL FEEL SIMULATOR
ELECTRIC SERVO BRAKE CONTROL UNIT
TANDEM MOTOR CYLINDER
MOTOR
Motor angle signal
Motor drive signal is ON
VSA MODULATOR-CONTROL UNIT
Communication via F-CAN is ON
: Communication via F-CAN
: Start-up communication & condition information

Regeneration Control Operations

When the brake and regeneration system work together, the master cylinder cut valve (MCV) closes and the pedal feel simulator cut valve (PFSV) is open. The electric servo brake control unit uses the information on the amount of charge in the regenerative electricity system to activate the motor in the tandem motor cylinder and reduce the hydraulic pressure. At the same time, the unit also increases the amount of charge in regenerative electricity system.

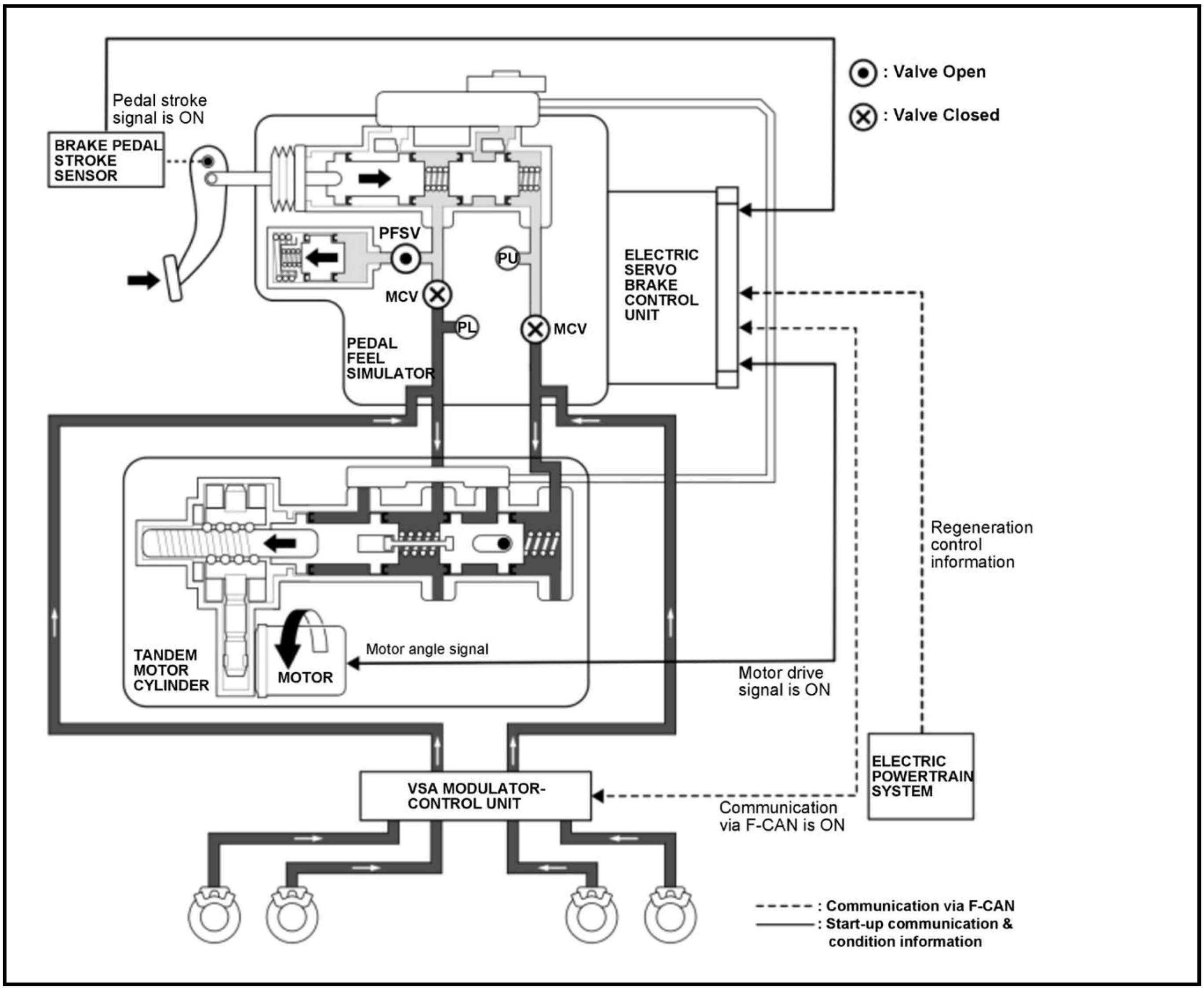
: Valve Open
: Valve Closed
Pedal stroke signal is ON
BRAKE PEDAL STROKE SENSOR
PFSV
PU
MCV
PL
MCV
PEDAL FEEL SIMULATOR
ELECTRIC SERVO BRAKE CONTROL UNIT
Regeneration control information
TANDEM MOTOR CYLINDER
MOTOR
Motor angle signal
Motor drive signal is ON
ELECTRIC POWERTRAIN SYSTEM
VSA MODULATOR-CONTROL UNIT
Communication via F-CAN is ON
: Communication via F-CAN
: Start-up communication & condition information

Fail-Safe

During the fail-safe mode, the master cylinder cut valve (MCV) opens and the pedal feel simulator cut valve (PFSV) is closed. The hydraulic pressure created by the brake pedal force activates the brake caliper.

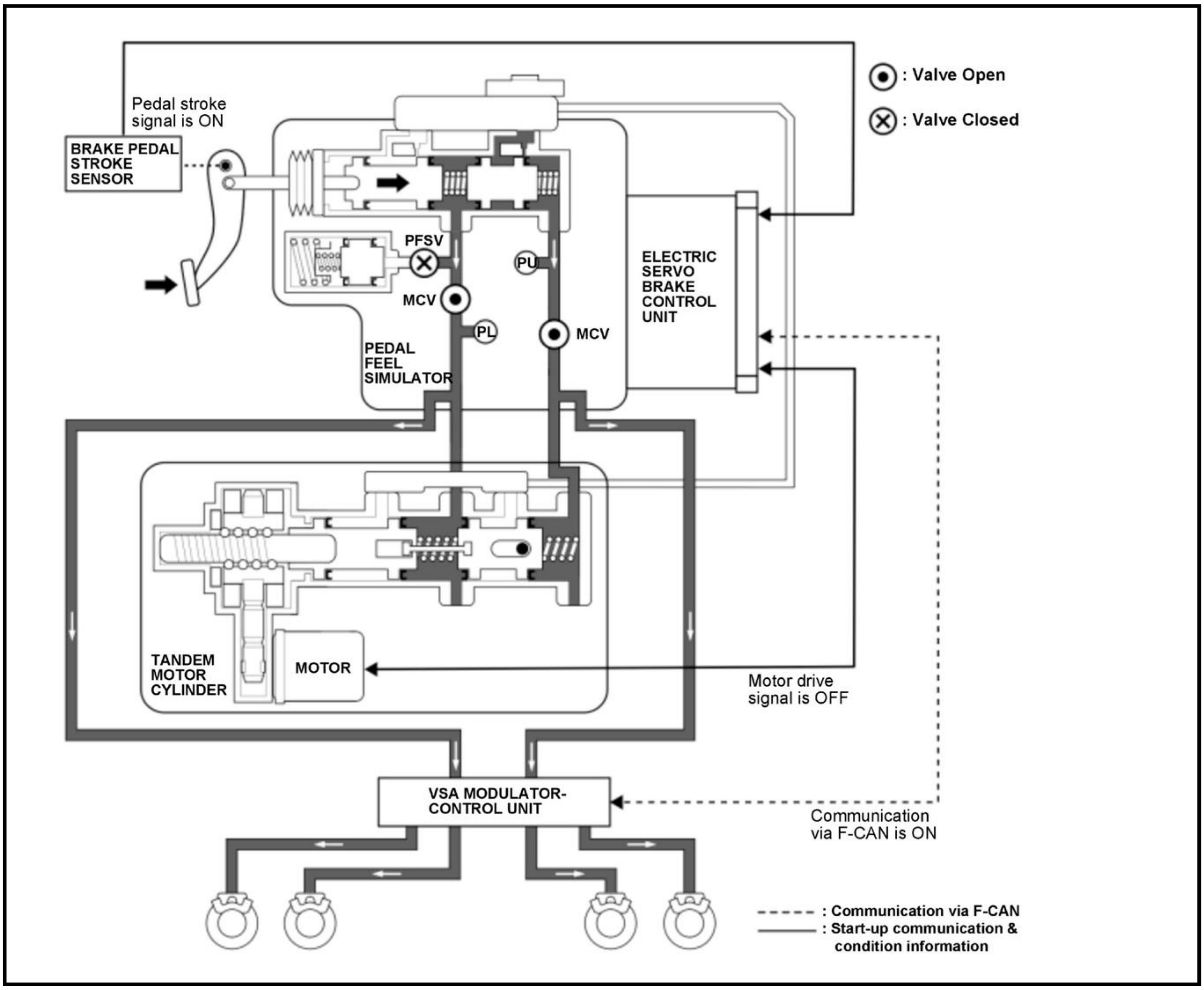
: Valve Open
: Valve Closed
Pedal stroke signal is ON
BRAKE PEDAL STROKE SENSOR
PFSV
PU
MCV
PL
MCV
PEDAL FEEL SIMULATOR
ELECTRIC SERVO BRAKE CONTROL UNIT
TANDEM MOTOR CYLINDER
MOTOR
Motor drive signal is OFF
VSA MODULATOR-CONTROL UNIT
Communication via F-CAN is ON
: Communication via F-CAN
: Start-up communication & condition information

Stall Management

When driving uphill, the driving force of the vehicle's drive motor balances against the gravitational force that pulls the vehicle back. Electric current continues to flow only to specific motor drive circuits, generating heat in them. If driving uphill for an extended period of time, the amount of heat generated could damage the circuit and motor. To prevent overheating, the stall cooperative control activates the electric servo brake, which prevents the vehicle drive circuit from overheating. When the brake or the accelerator pedal are pressed, the stall cooperative control stops.

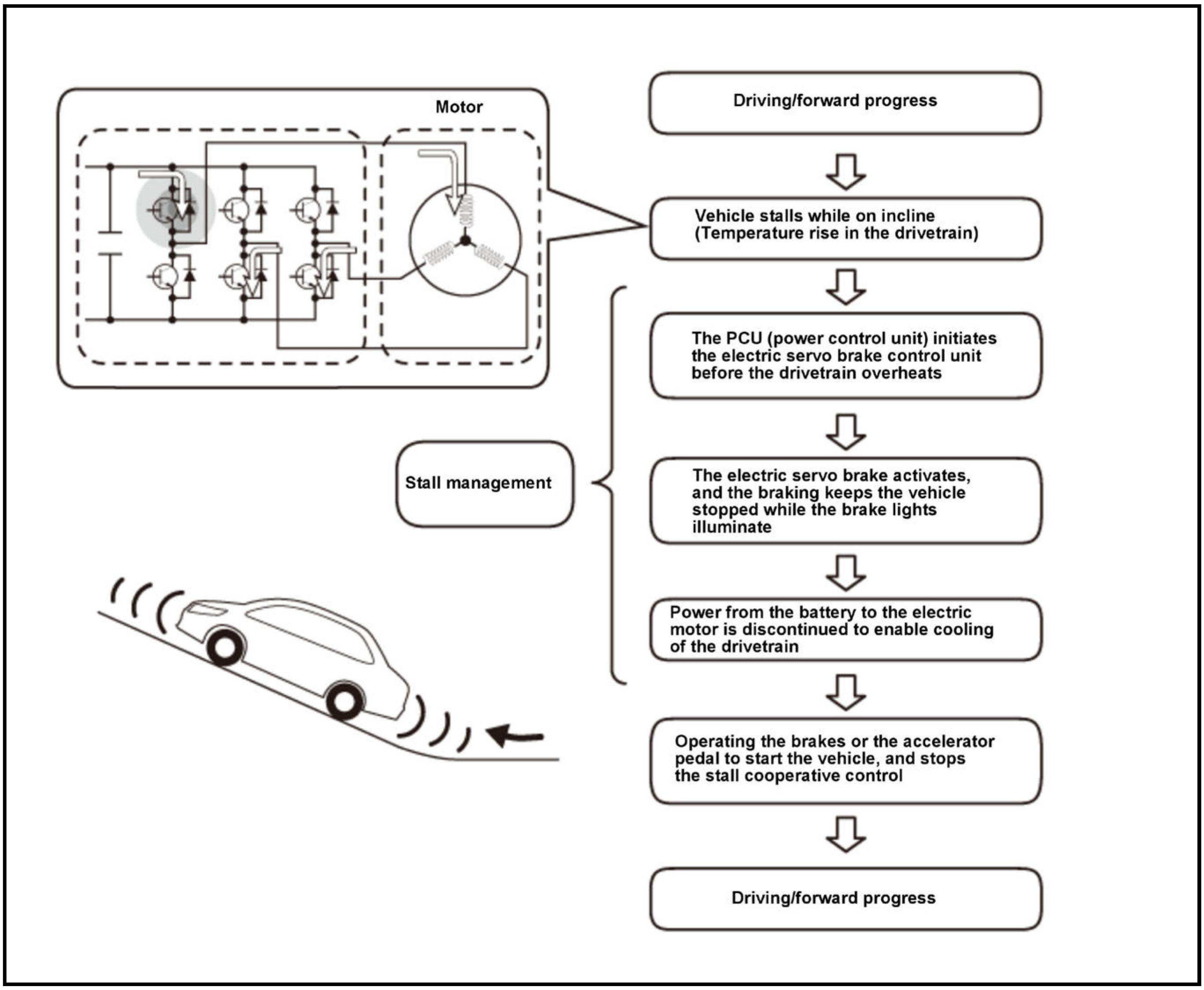
Motor
Driving/forward progress
Vehicle stalls while on incline (Temperature rise in the drivetrain)
The PCU (power control unit) initiates the electric servo brake control unit before the drivetrain overheats
Stall management
The electric servo brake activates, and the braking keeps the vehicle stopped while the brake lights illuminate
Power from the battery to the electric motor is discontinued to enable cooling of the drivetrain
Operating the brakes or the accelerator pedal to start the vehicle, and stops the stall cooperative control
Driving/forward progress

System Wake-Up and Shutdown

The electric servo brake system is activated when the driver's door is opened while the vehicle is in the OFF (LOCK) mode or when the vehicle is turned to the ON mode.

When the electric servo brake system is not activated (the vehicle is turned to the ON mode while pressing the brake pedal) the brake pedal may travel down as the pedal feel simulator cut valve (PFSV) opens. This is normal and not a system fault. To prevent the driver from feeling this condition at system start-up, the electric servo brake system is activated for 3 minutes, triggered by the driver's door switch signal when the driver's door is opened. To prevent excessive battery discharge, the system will automatically shut down after 3 minutes from when the driver's door is opened.

Activating and shutting down the system by the driver's door operation is as follows.

Open the driver's door

The electric servo brake system is activated when the driver's door is opened, and will shut down automatically 3 minutes after the driver's door was opened with the vehicle in the OFF (LOCK) mode.

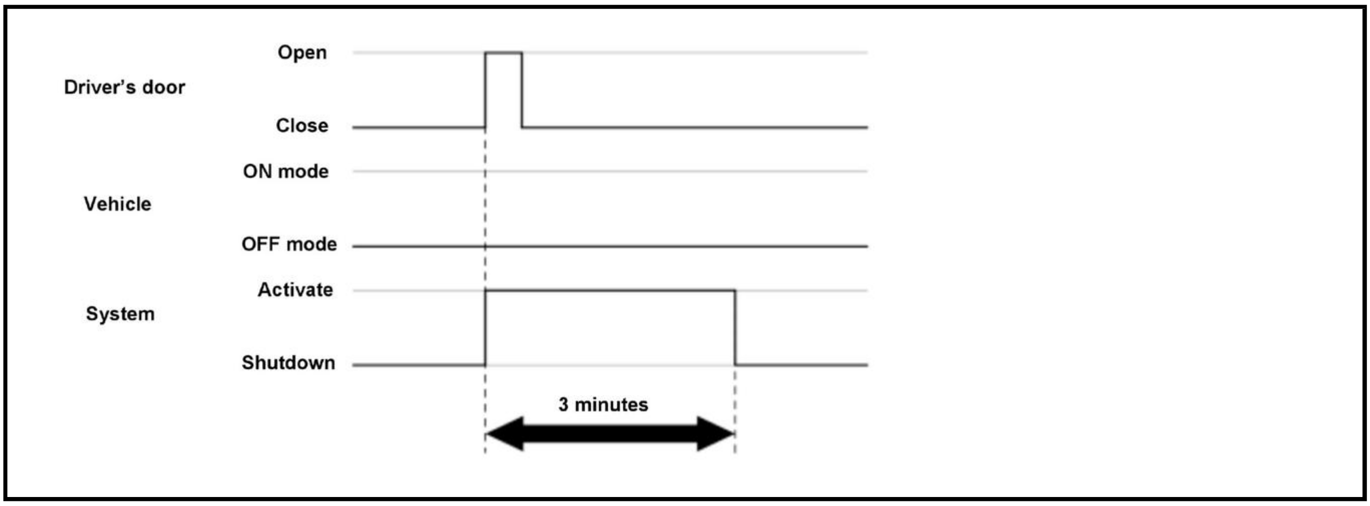
Driver's door
Open
Close
Vehicle
ON mode
OFF mode
System
Activate
Shutdown
3 minutes

Turn the vehicle to the ON mode after opening the driver's door

If the vehicle is turned to the ON mode within 3 minutes after opening the driver's door, the electric servo brake system will continue to operate.

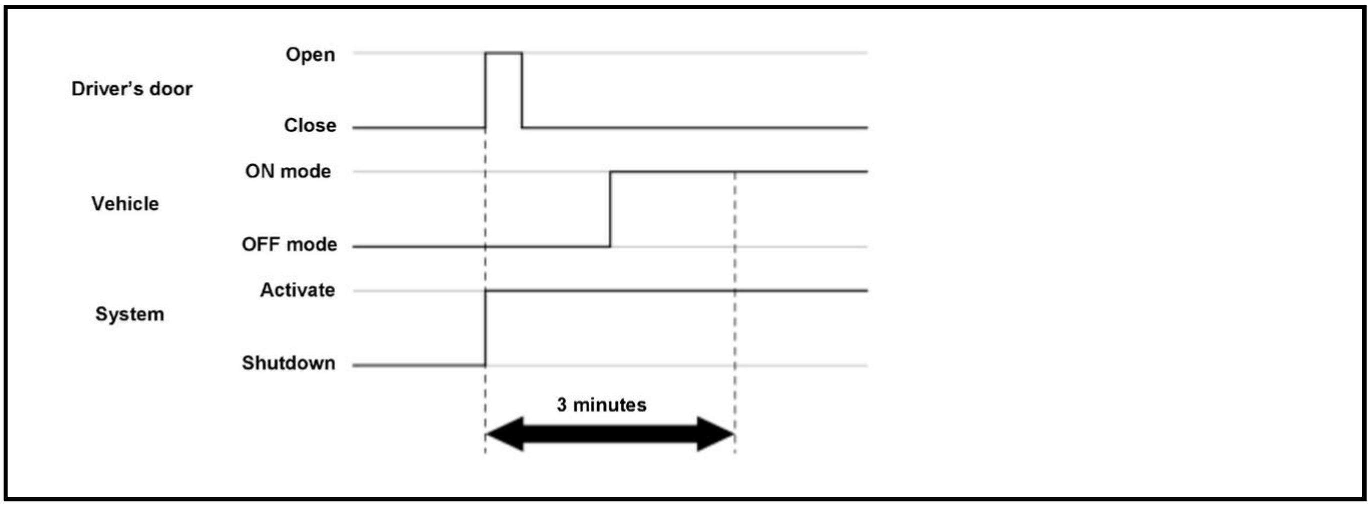
Driver's door
Open
Close
Vehicle
ON mode
OFF mode
System
Activate
Shutdown
3 minutes

Open the driver's door again after the system is activated by opening the door

Once the driver's door is opened and the system is activated, the system's activation time will not be extended even if the door was opened again.

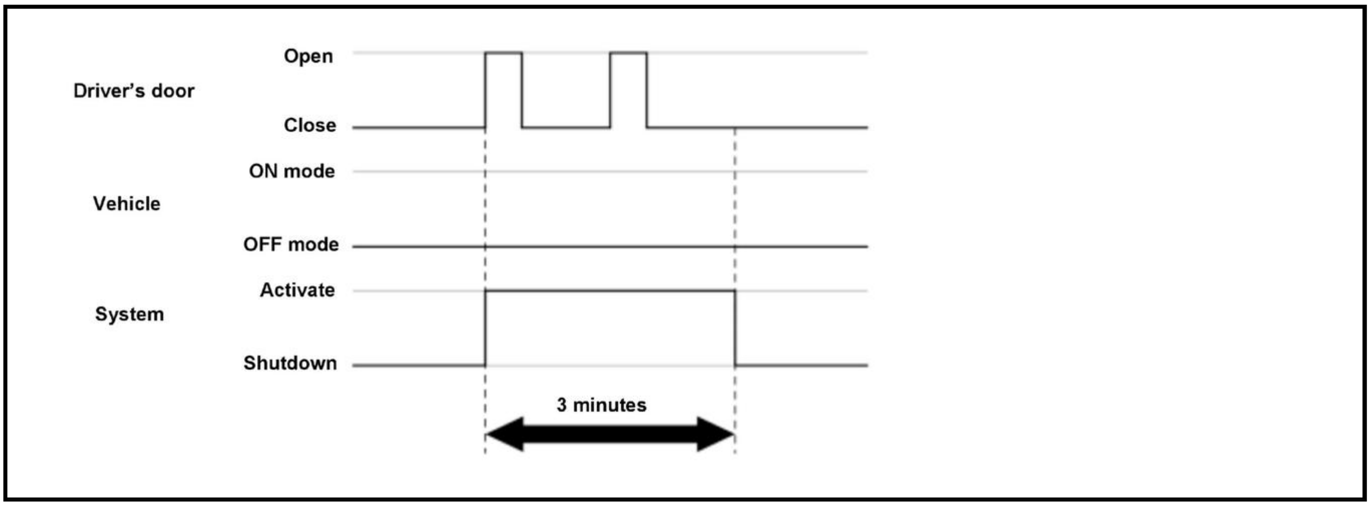
Driver's door
Open
Close
Vehicle
ON mode
OFF mode
System
Activate
Shutdown
3 minutes

Open the driver's door after turning the vehicle to the OFF (LOCK) mode from ON mode

The system will shut down automatically 3 minutes after the vehicle is turned to the OFF (LOCK) mode, and the system's activation time will not be extended even if the door is opened.

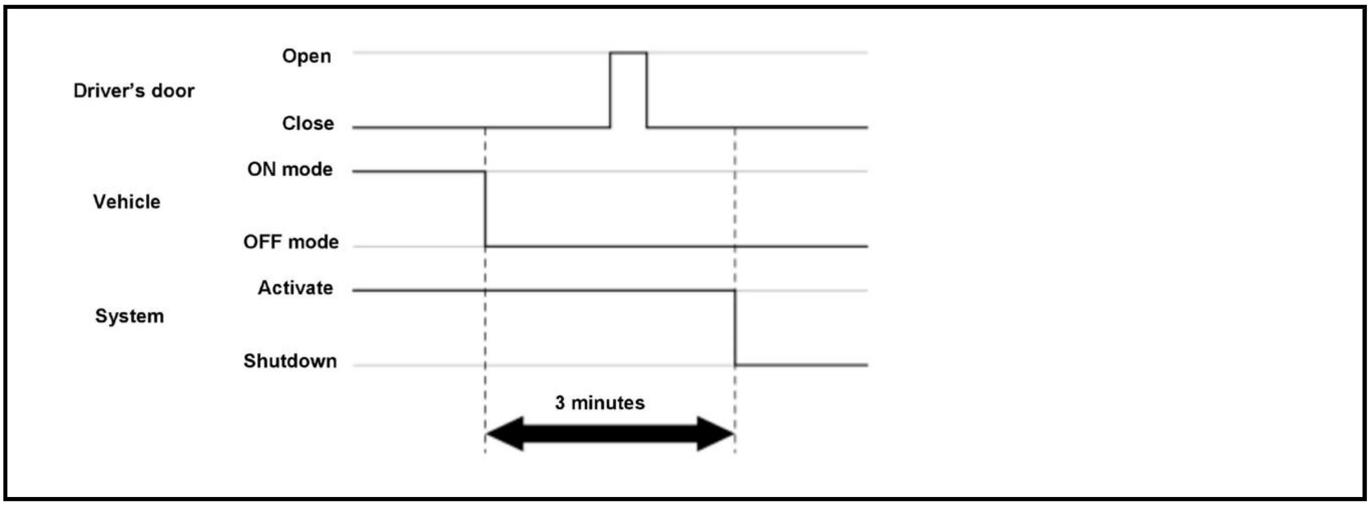
Driver's door
Open
Close
Vehicle
ON mode
OFF mode
System
Activate
Shutdown
3 minutes

ELECTRIC SERVO BRAKE SYSTEM DESCRIPTION - AUTOMATIC BRAKE HOLD

Overview

With automatic brake hold, the vehicle stays in a stopped state by using the main brakes and will remain stopped even when the brake pedal is released. There is no need to keep pressing the brake pedal while stopped in heavy traffic or at traffic lights.

Control

As the accelerator pedal is pressed, the automatic brake hold feature is cancelled and returns to the stand by mode. If the automatic brake hold features is applied for an extended time (approx.10 minutes), the electric parking brake will engage to hold the vehicle.

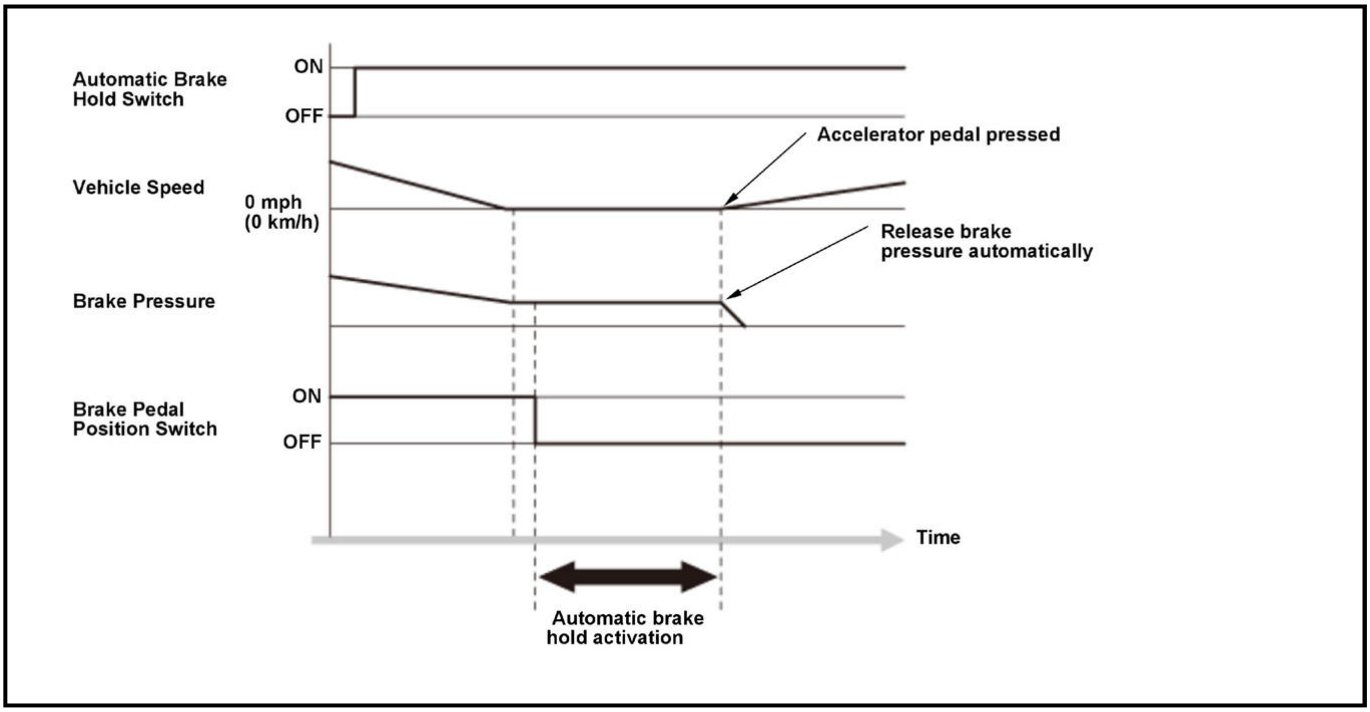
Automatic Brake Hold Switch
ON
OFF
Accelerator pedal pressed
Vehicle Speed
0 mph (0 km/h)
Release brake pressure automatically
Brake Pressure
Brake Pedal Position Switch
ON
OFF
Time
Automatic brake hold activation

ELECTRIC SERVO BRAKE SYSTEM DESCRIPTION - BRAKE ASSIST CONTROL

The brake assist control constantly monitors brake operation through the pressure sensor. If the pedal stroke speed and pedal stroke amount exceed the predetermined values, it is considered to be emergency braking. When emergency braking is determined to be taking place, the electric servo brake control unit increases braking force compared to normal braking and shortens the braking distance.

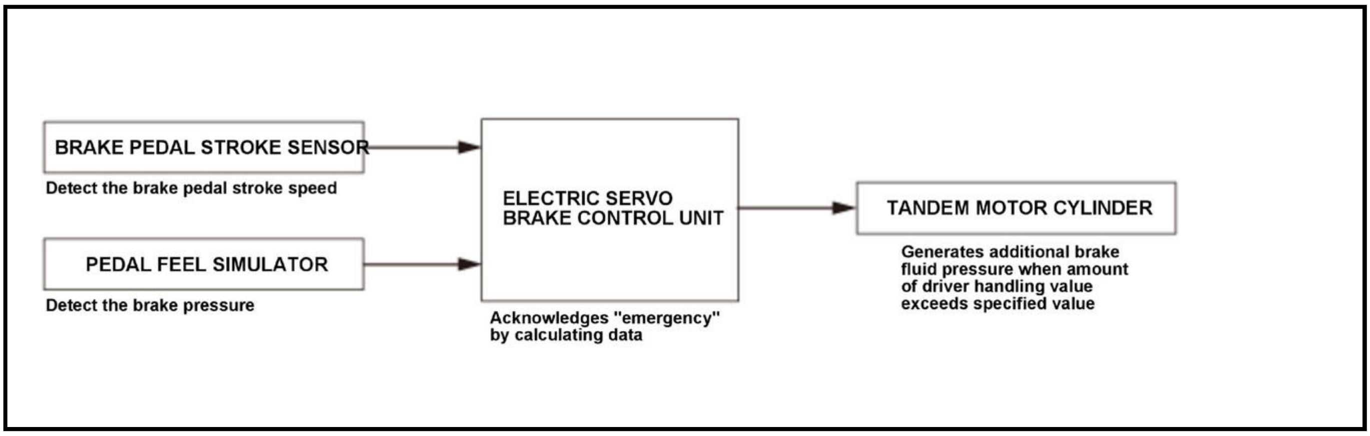
BRAKE PEDAL STROKE SENSOR
Detect the brake pedal stroke speed
PEDAL FEEL SIMULATOR
Detect the brake pressure
ELECTRIC SERVO BRAKE CONTROL UNIT
Acknowledges "emergency" by calculating data
TANDEM MOTOR CYLINDER
Generates additional brake fluid pressure when amount of driver handling value exceeds specified value

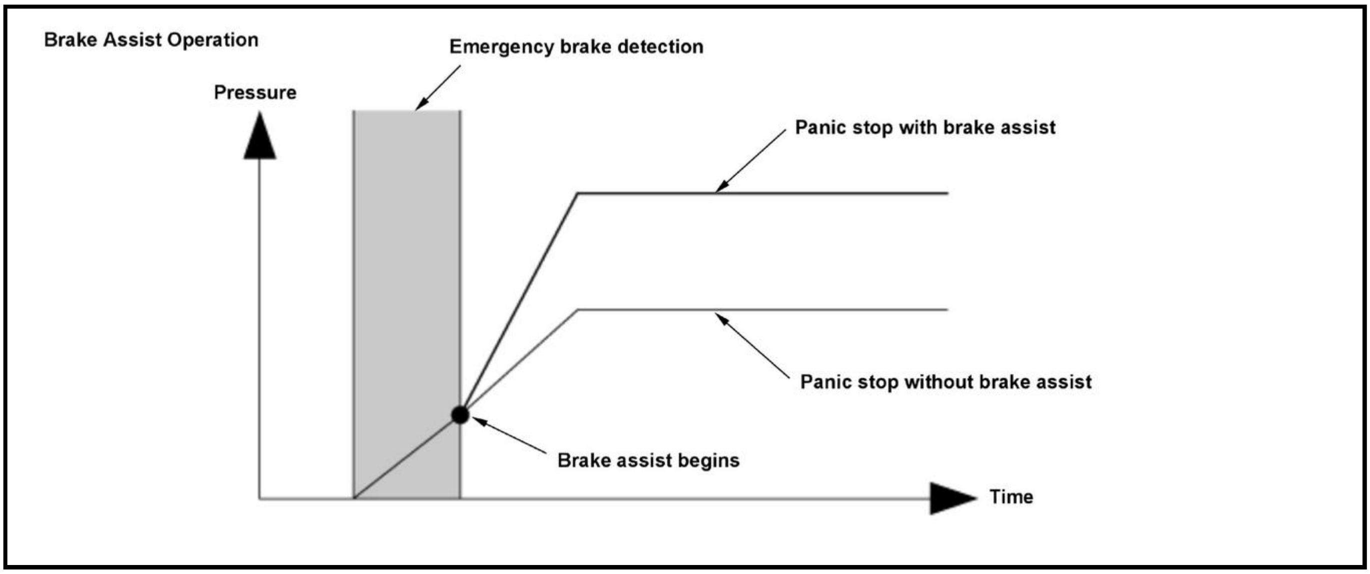

ELECTRIC SERVO BRAKE SYSTEM DESCRIPTION - COMPONENTS

Components

The electric servo brake system consists of the following primary components:

- Electric servo brake control unit/pedal feel simulator
- Tandem motor cylinder
- Brake pedal stroke sensor
- System indicator

For locations of each component on the vehicle, refer to Component Location Index, and for functions of the indicator, refer to How to Troubleshoot the Electric Servo Brake System.

Electric Servo Brake Control Unit/Pedal Feel Simulator

The electric servo brake control unit/pedal feel simulator consists of the electric servo brake control unit, master cylinder, pedal force simulator, pedal feel simulator valve (PFSV), master cylinder cut valves (MCV), and hydraulic pressure sensors. It reproduces the feel when the brake pedal is pressed.

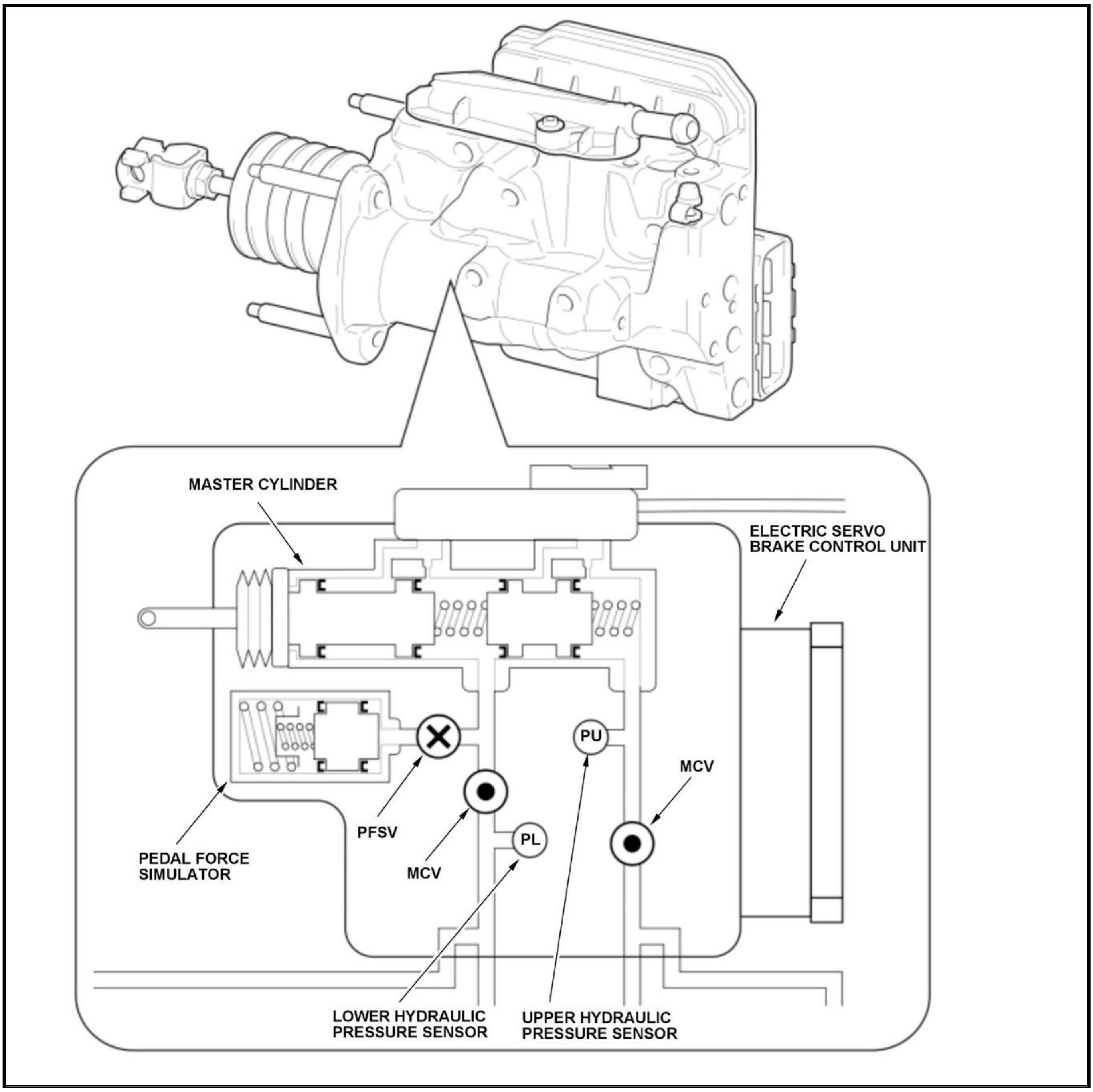
MASTER CYLINDER
ELECTRIC SERVO BRAKE CONTROL UNIT
PU
MCV
PFSV
PL
PEDAL FORCE SIMULATOR
MCV
LOWER HYDRAULIC PRESSURE SENSOR
UPPER HYDRAULIC PRESSURE SENSOR

Tandem Motor Cylinder

The tandem motor cylinder is composed of the motor, the gearbox, and the slave cylinder. The electric servo brake control unit drives the motor, whose movement is transmitted through the gearbox, in order to move the piston in the slave cylinder and generate fluid pressure.

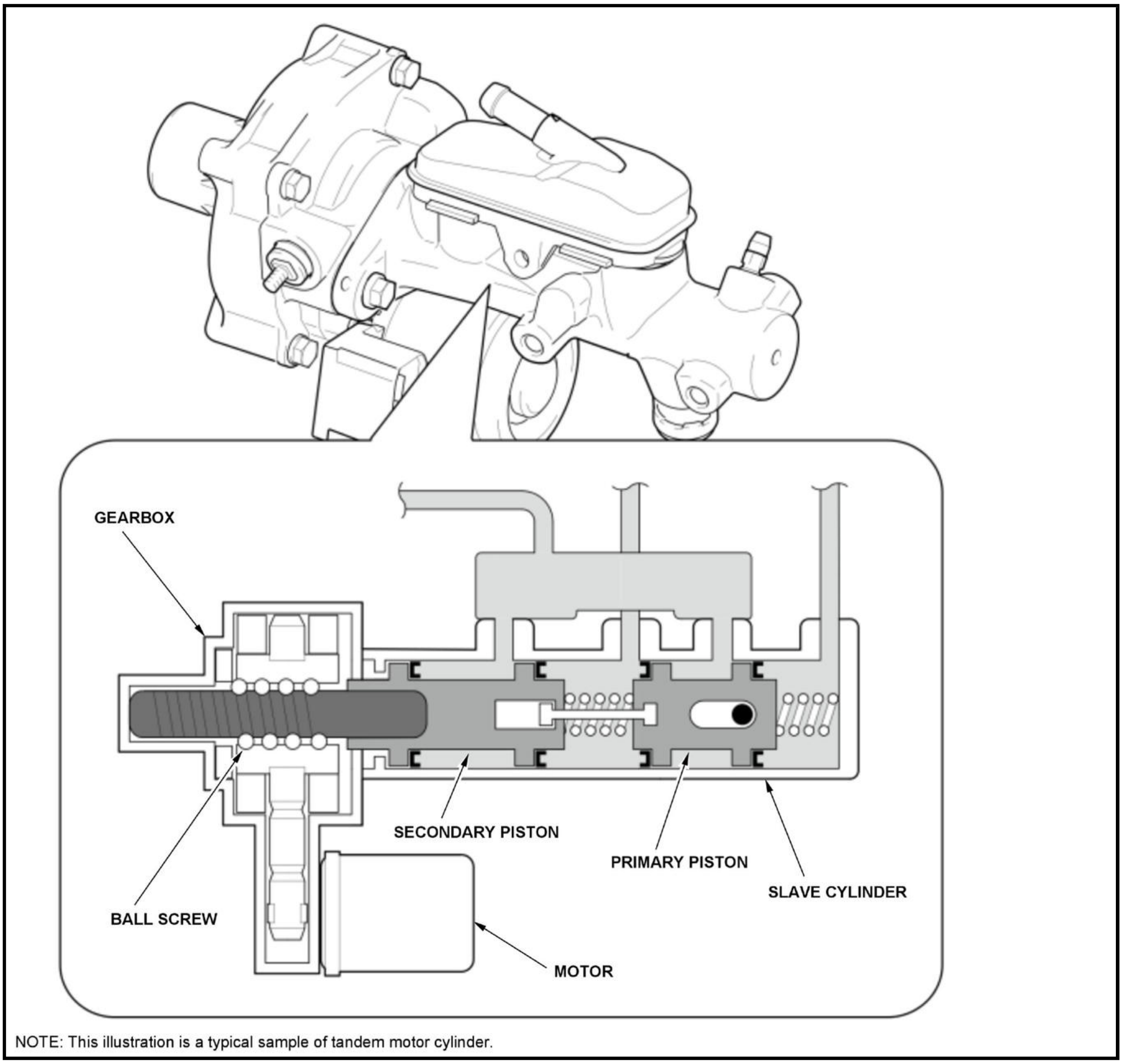
GEARBOX
SECONDARY PISTON
PRIMARY PISTON
SLAVE CYLINDER
BALL SCREW
MOTOR
NOTE: This illustration is a typical sample of tandem motor cylinder.

Brake Pedal Stroke Sensor

The brake pedal stroke sensor is located in the brake pedal bracket. The brake pedal stroke sensor detects the level of brake pedal force and outputs two kinds of voltage values depending on the given angle.

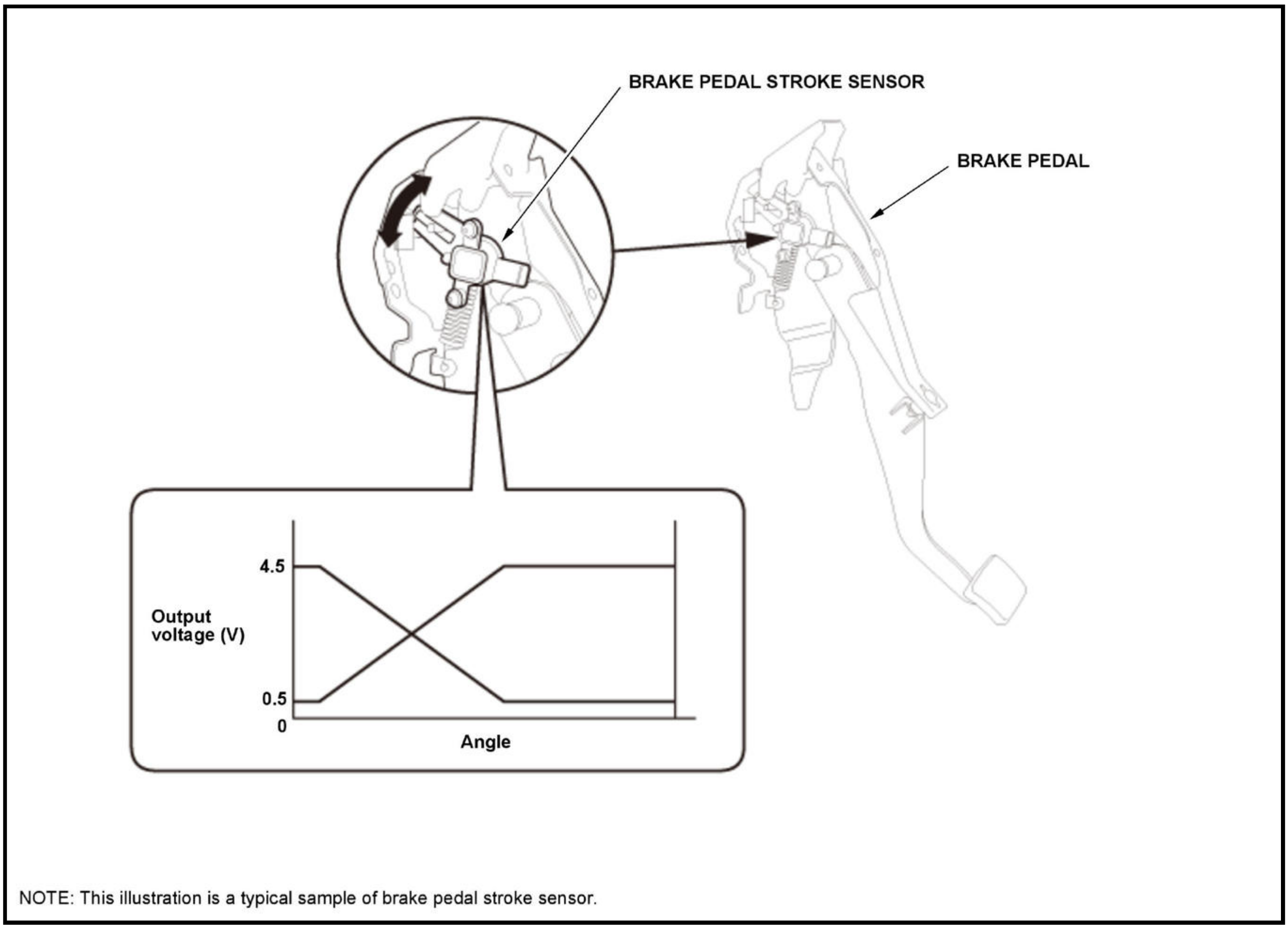

NOTE: This illustration is a typical sample of brake pedal stroke sensor.

ELECTRIC SERVO BRAKE SYSTEM DESCRIPTION - HILL START ASSIST CONTROL

Overview

The hill start assist control assists drivers by automatically controlling brake pressure when starting a vehicle on a steep hill; this assist prevents the vehicle from rolling on a hill for a few seconds while the driver's foot moves from the brake pedal to the accelerator pedal. The hill start assist control may not be activated when the driver does not press the brake pedal strongly enough upon stopping the vehicle or when the driver releases the brake pedal gradually upon starting the vehicle.

Control

The control unit reads the angle of inclination from the longitudinal acceleration signal and that all four wheels are stopped, then it calculates the amount of fluid pressure required to keep the vehicle from rolling backward. This takes place as the control unit sees the brake pressure decrease when the driver lifts their foot off of the brake pedal and moves it onto the accelerator pedal. After the driver transitions to the accelerator pedal and the drive torque is restored to the predetermined level required to start-up the vehicle, the hill start assist control will release the brake fluid pressure. The hill start assist control will release the brake fluid pressure if the accelerator pedal is not pressed for a certain period of time after the brake pedal has been released.

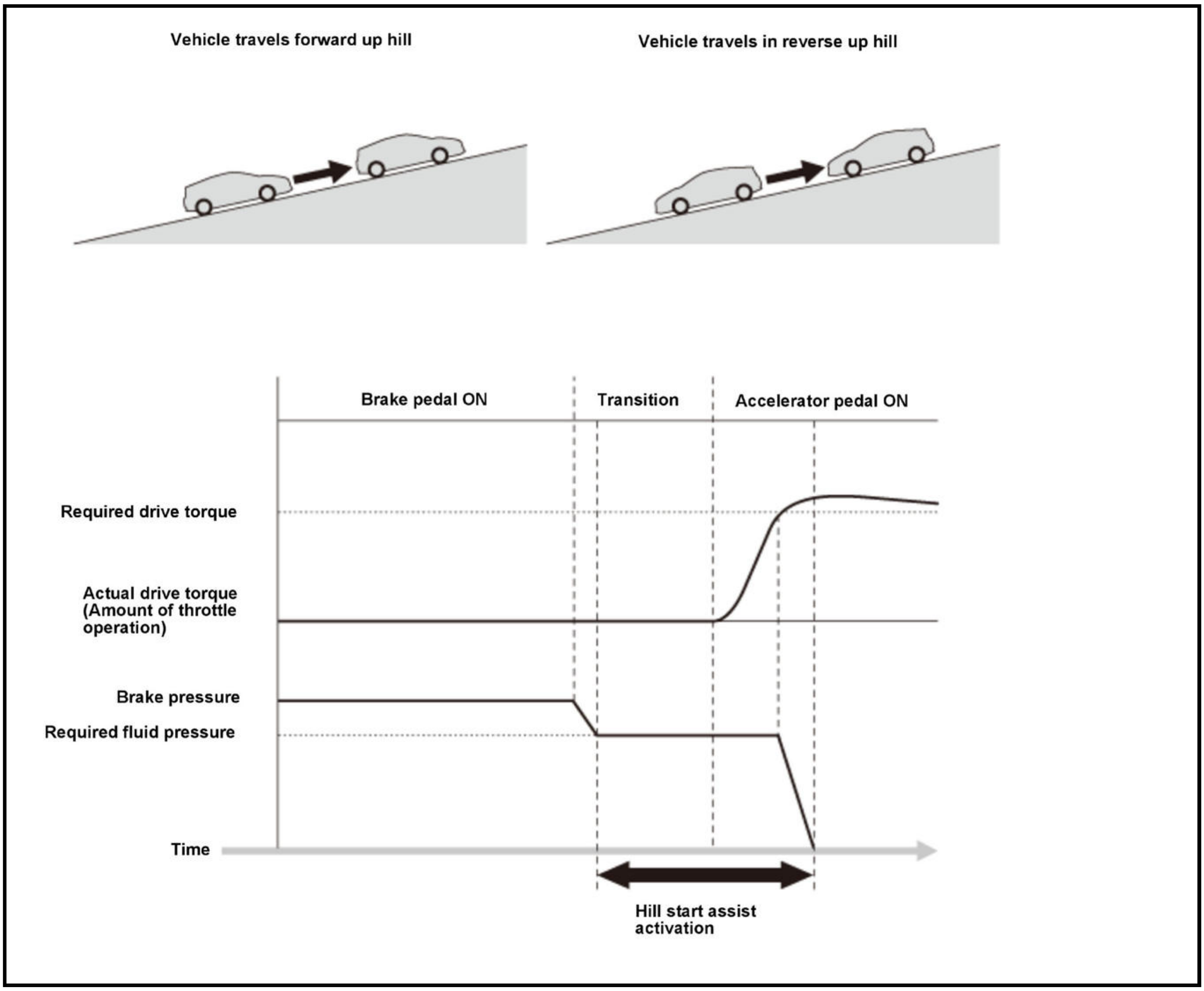

ELECTRIC SERVO BRAKE SYSTEM DESCRIPTION - SYSTEM DIAGRAM

The electric servo brake control unit receives the pedal stroke signal from the brake pedal stroke sensor, regeneration control information from the electric powertrain system, and various other signals. Based on these signals, the electric servo brake unit drives the valve in the pedal feel simulator and the motor of the tandem motor cylinder, while controlling the brake fluid pressure, and therefore the braking force for each wheel. If a problem is detected, the warning indicator in the gauge control module illuminates to inform the driver about the problem.

For locations of each component on the vehicle, refer to Component Location Index:

- Electric servo brake control unit/Pedal feel simulator, Tandem motor cylinder, Brake pedal stroke sensor, Automatic brake hold switch
- Gauge control module
- PCM
- VSA modulator-control unit
- SRS unit
- Battery condition monitor module
- Millimeter wave radar
- Driver's door switch
- Brake light relay circuit (built into the relay circuit board)

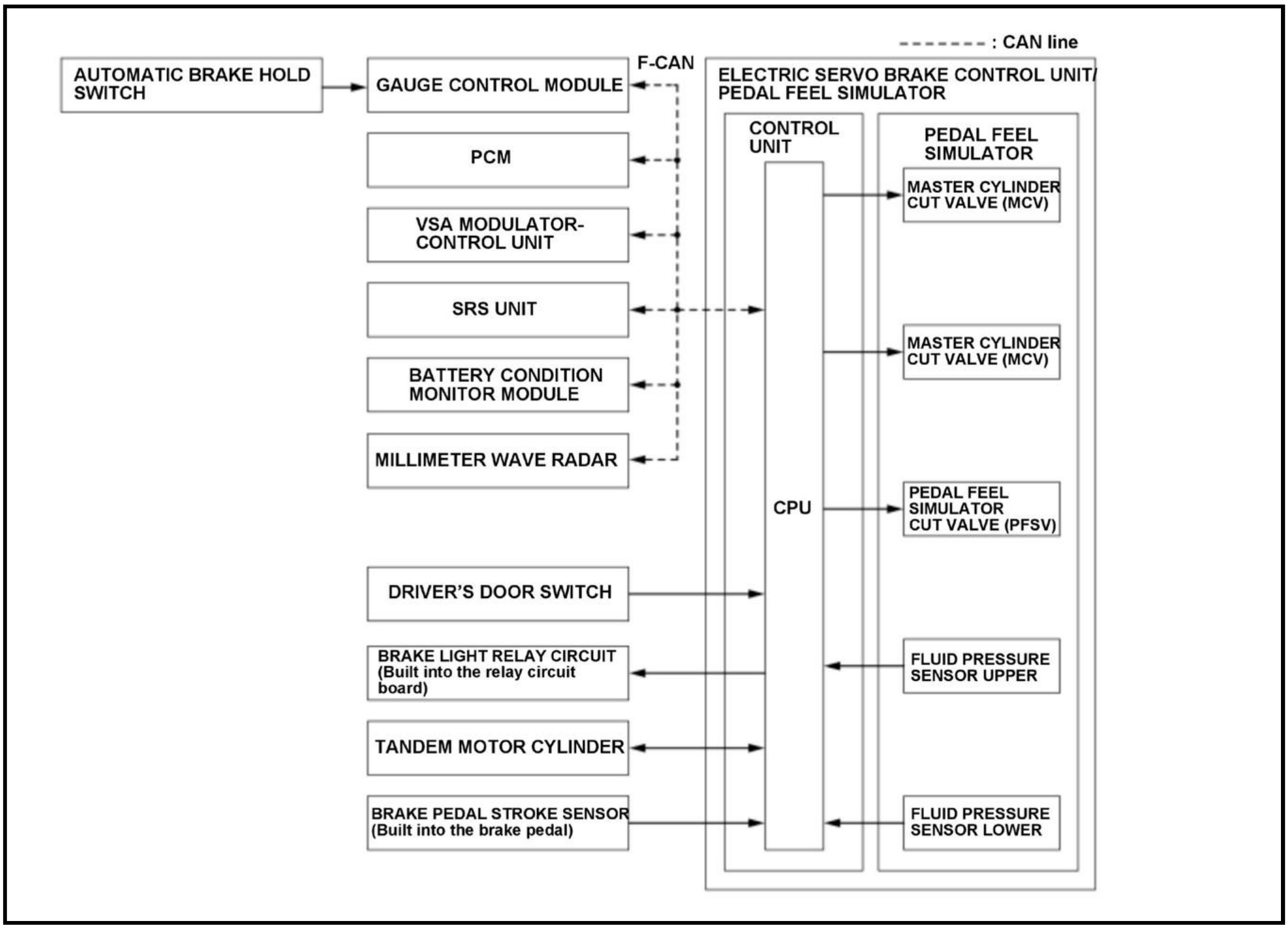
: CAN line
AUTOMATIC BRAKE HOLD SWITCH
GAUGE CONTROL MODULE
F-CAN
ELECTRIC SERVO BRAKE CONTROL UNIT/ PEDAL FEEL SIMULATOR
PCM
VSA MODULATOR-CONTROL UNIT
SRS UNIT
BATTERY CONDITION MONITOR MODULE
MILLIMETER WAVE RADAR
CONTROL UNIT
CPU
PEDAL FEEL SIMULATOR
MASTER CYLINDER CUT VALVE (MCV)
MASTER CYLINDER CUT VALVE (MCV)
PEDAL FEEL SIMULATOR CUT VALVE (PFSV)
DRIVER'S DOOR SWITCH
BRAKE LIGHT RELAY CIRCUIT (Built into the relay circuit board)
TANDEM MOTOR CYLINDER
BRAKE PEDAL STROKE SENSOR (Built into the brake pedal)
FLUID PRESSURE SENSOR UPPER
FLUID PRESSURE SENSOR LOWER

F-CAN Communication Data

Electric Servo Brake System Primary Receiving Signal

Transmitting Unit	Signal Name
Gauge control module	• Automatic brake hold switch status signal

Transmitting Unit	Signal Name
PCM	• Servo control enable/disable signal • Accelerator pedal position signal • Drive torque signal • Vehicle speed signal • Regeneration brake control information signal • Stall management control request signal • Brake pedal position switch signal • Shift position signal • Service check signal • System failure information
VSA modulator-control unit	• Regeneration control stop request signal • Pressurization control activation signal • Wheel speed signal • Longitudinal acceleration signal • Hydraulic pressure control request signal

Transmitting Unit	Signal Name
	- Target deceleration signal - Parking brake activation status - Operating information of each control - System failure information
Battery condition monitor module	- System operating status signal
SRS unit	- Yaw rate signal - Driver's seat belt buckle switch status signal - System failure information
Millimeter wave radar	- Brake control request signal - Target deceleration signal - System failure information

Electric Servo Brake System Primary Transmitting Signal

Transmitting Unit	Signal Name
Electric servo brake control unit	- Pressurization control activation signal - Regeneration brake control request signal - Stall management control information - Hydraulic boost failure compensation control request signal - Driver request brake pressure signal - Brake light relay drive information - Parking brake apply request signal - Indicator drive request signal - System failure information

REMOVAL, INSTALLATION AND INSPECTION

FRONT BRAKE DISC REMOVAL, INSTALLATION, AND INSPECTION

Removal and Installation

NOTE:

- **How to read the torque specifications** .
- **Review the Service Precautions before doing repairs or service**.

1. **Vehicle - Lift**
2. **Front Wheel - Remove**
3. Front Brake Caliper - Remove

    1. **Remove the caliper assembly without disconnecting the brake hose from the caliper body** .

4. Front Brake Disc - Remove

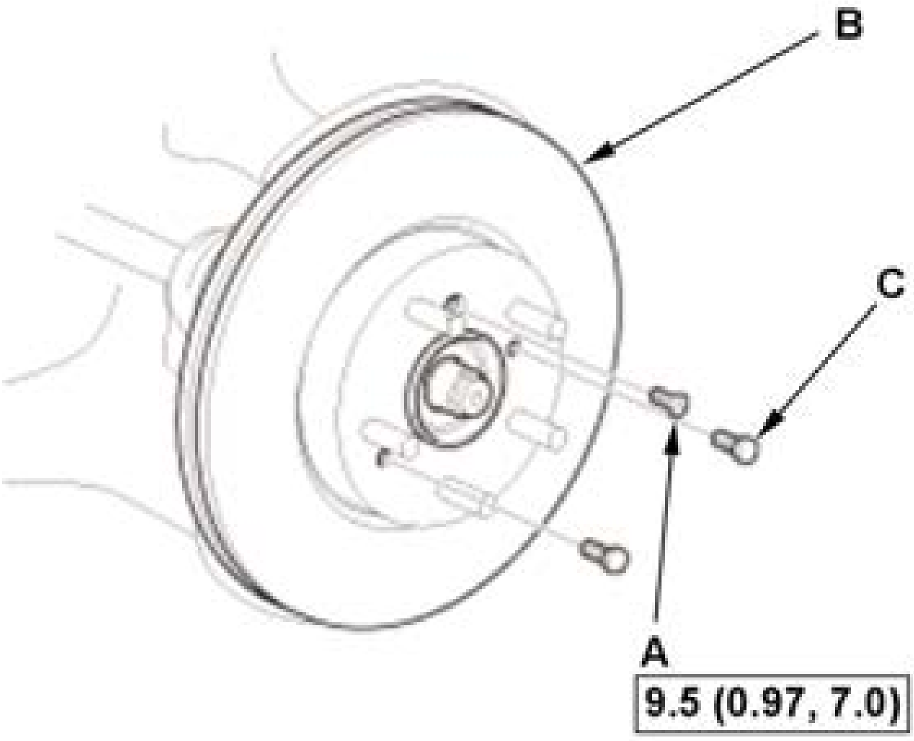

Fig. 1: Brake Disc Flathead Screws With Torque Specifications
Courtesy of HONDA, U.S.A., INC.

1. Remove the brake disc flathead screw (A).

2. Remove the brake disc (B).

NOTE: If the brake disc is stuck to the front hub, thread two 8 x 1.25 mm bolts (C) into the brake disc to push it away from the front hub. Turn each bolt 90 degrees at a time to prevent the brake disc from binding.

5. All Removed Parts - Install

1. Install all removed parts in the reverse order of removal.

6. Front Brake Disc Runout - Inspect

Inspection

NOTE: **How to read the torque specifications** .

1. **Vehicle - Lift**
2. **Front Wheels - Remove**
3. **Brake Pad - Remove**
4. Front Brake Disc Thickness and Parallelism - Inspect

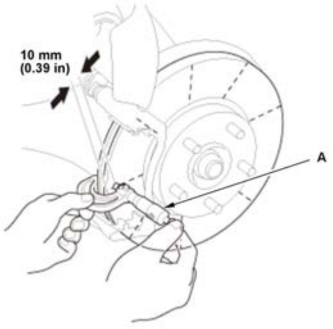

1. Using a micrometer (A), measure the brake disc thickness at eight points, about 45 deg. apart and 10 mm (0.39 in) in from the outer edge of the brake disc. Replace the brake disc if the smallest measurement is less than the maximum refinishing limit.

* This is the maximum allowable difference between the thickness measurements.

2. If the brake disc is beyond the service limit for parallelism, refinish the brake disc with a Honda-approved commercially available on-car brake lathe.

NOTE:

- **If the brake disc is beyond the service limit for refinishing, replace it.**
- **For more information on Honda-approved brake lathes, refer to any authorized service information related brake disc refinishing (if available).**

3. Inspect the brake disc runout.

Brake disc thickness:		
B	**Standard:**	**28.0 mm (1.102 in)**
B	**Maximum refinishing limit:**	**26.0 mm (1.024 in)**
Brake disc parallelism*:		**0.015 mm (0.00059 in) max.**

5. Front Brake Disc Runout - Inspect

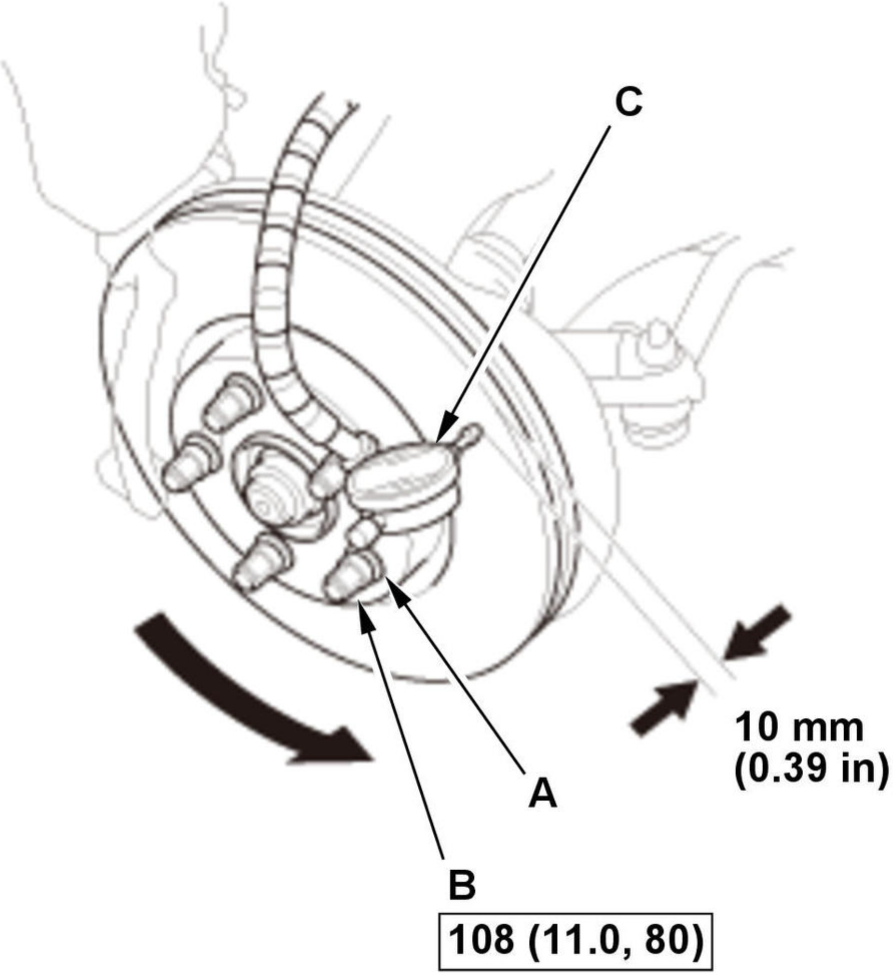

Fig. 2: Front Brake Disc Flat Washers And Wheel Nuts With Torque Specifications
Courtesy of HONDA, U.S.A., INC.

1. Inspect the brake disc to wheel surface for damage and cracks.

2. Clean the brake disc thoroughly, and remove all rust.

3. Install suitable flat washers (A) and the wheel nuts (B).

4. Tighten the wheel nuts to the specified torque to hold the brake disc securely against the hub.

5. Set up the dial gauge (C) against the brake disc as shown.

6. Measure the runout at 10 mm (0.39 in) from the outer edge of the brake disc.

7. If the brake disc is beyond the service limit, refinish the brake disc with a Honda-approved commercially available on-car brake lathe.

NOTE:

- **If the brake disc is beyond the**

service limit for refinishing, replace it.

- If the brake disc is replaced with a new one, check the new disc for runout. If the new disc is out of specification, refinish the disc.
- For more information on Honda-approved brake lathes, refer to any authorized service information related brake disc refinishing (if available).

Maximum refinishing limit:	**26.0 mm (1.024 in)**

Brake disc runout:		
B	**Service limit:**	**0.04 mm (0.0016 in)**

6. Brake Pad - Install
7. Front Wheels - Install

FRONT BRAKE PAD REMOVAL, INSTALLATION, AND INSPECTION

Special Tools Required

Image	Description/Tool Number
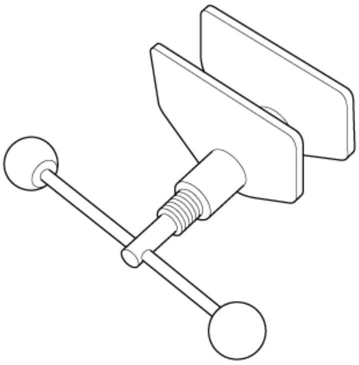	Brake Caliper Piston Compressor 07AAE-SEPA101

Removal

NOTE: Review the Service Precautions before doing repairs or service.

1. Brake Fluid - Remove

   1. Remove some brake fluid from the reservoir.

2. Vehicle - Lift
3. Front Wheels - Remove
4. Brake Pad - Remove

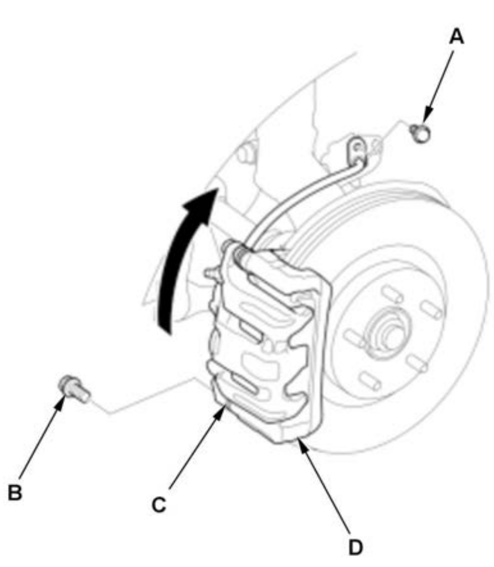	1. Remove the brake hose mounting bolt (A). 2. Remove the flange bolt (B) while holding the caliper pin (C) with a wrench. **NOTE:** Be careful not to damage the pin boot. 3. Pivot the caliper body (D) up out of the way. - Be careful when pivoting the caliper body up or the spring could pop out of position. - Check the hose and the pin boots for damage and deterioration.

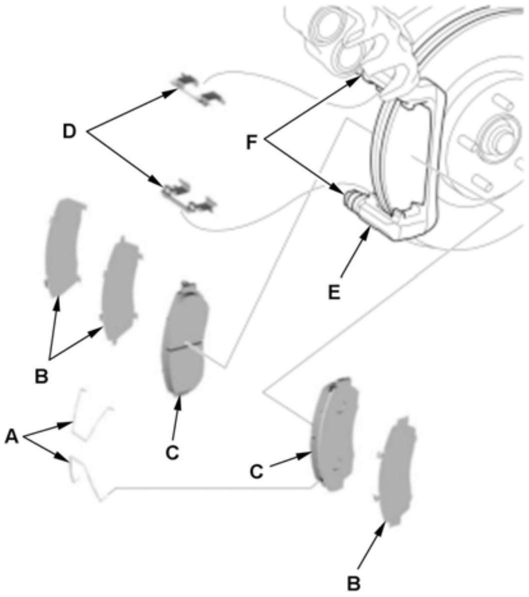	4. Remove the pad return springs (A). 5. Remove the pad shims (B) and the brake pads (C). 6. Remove the pad retainers (D). **NOTE:** The upper and lower pad retainers are different. During installation, make sure the pad retainers are in the proper positions. 7. Clean the caliper bracket (E) thoroughly; remove any rust, and check for grooves and cracks. 8. Verify that the caliper pins (F) move in and out smoothly. Clean and lube if needed.

5. Brake Disc - Inspect

Installation

NOTE:

- **How to read the torque specifications** .
- **Review the Service Precautions before doing repairs or service**.

1. Brake Pad - Install

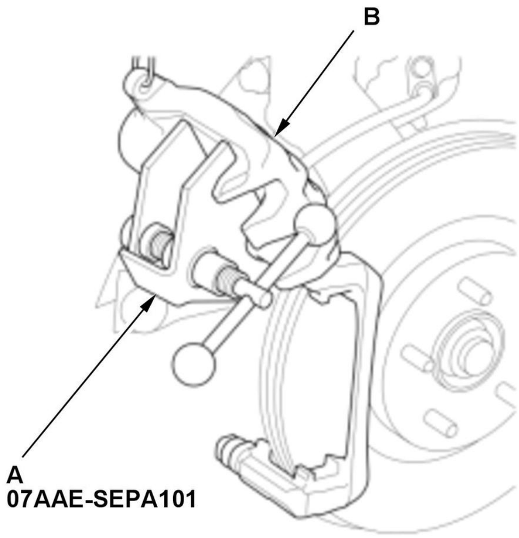 	1. Install the brake caliper piston compressor tool (A) on the caliper body (B). 2. Press in the piston with the brake caliper piston compressor tool. 3. Remove the brake caliper piston compressor tool.

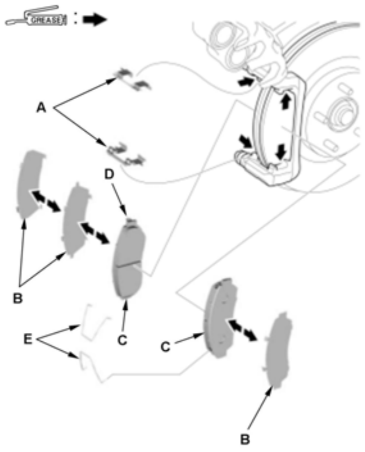 	4. Apply a thin coat of M-77 assembly paste (P/N 08798-9010) to the retainer mating surface of the caliper bracket (indicated by the arrows). 5. Install the pad retainers (A). **NOTE:** - **The upper and lower pad retainers are different. During installation, make sure the pad retainers are in the proper positions.** - **If you are replacing the brake pads with new ones, also replace the pad retainers.** 6. Wipe off the excess assembly paste from the retainers. Keep the assembly paste away from the brake disc and the brake pads.

	7. Apply a thin coat of M-77 assembly paste (P/N 08798-9010) to the pad side of the shims (B), the back of the brake pads (C), and the other areas indicated by the arrows. 8. Wipe off the excess assembly paste from the pad shims and brake pads friction material. Keep grease and assembly paste away from the brake disc and brake pads. Contaminated brake disc or brake pads reduce stopping ability. 9. Install the brake pads and pad shims correctly, with the wear indicator (D) on the upper inside position. **NOTE:** If you are reusing the brake pads, always reinstall the brake pads in their original positions to prevent a temporary loss of braking efficiency. 10. Install the pad return springs (E).

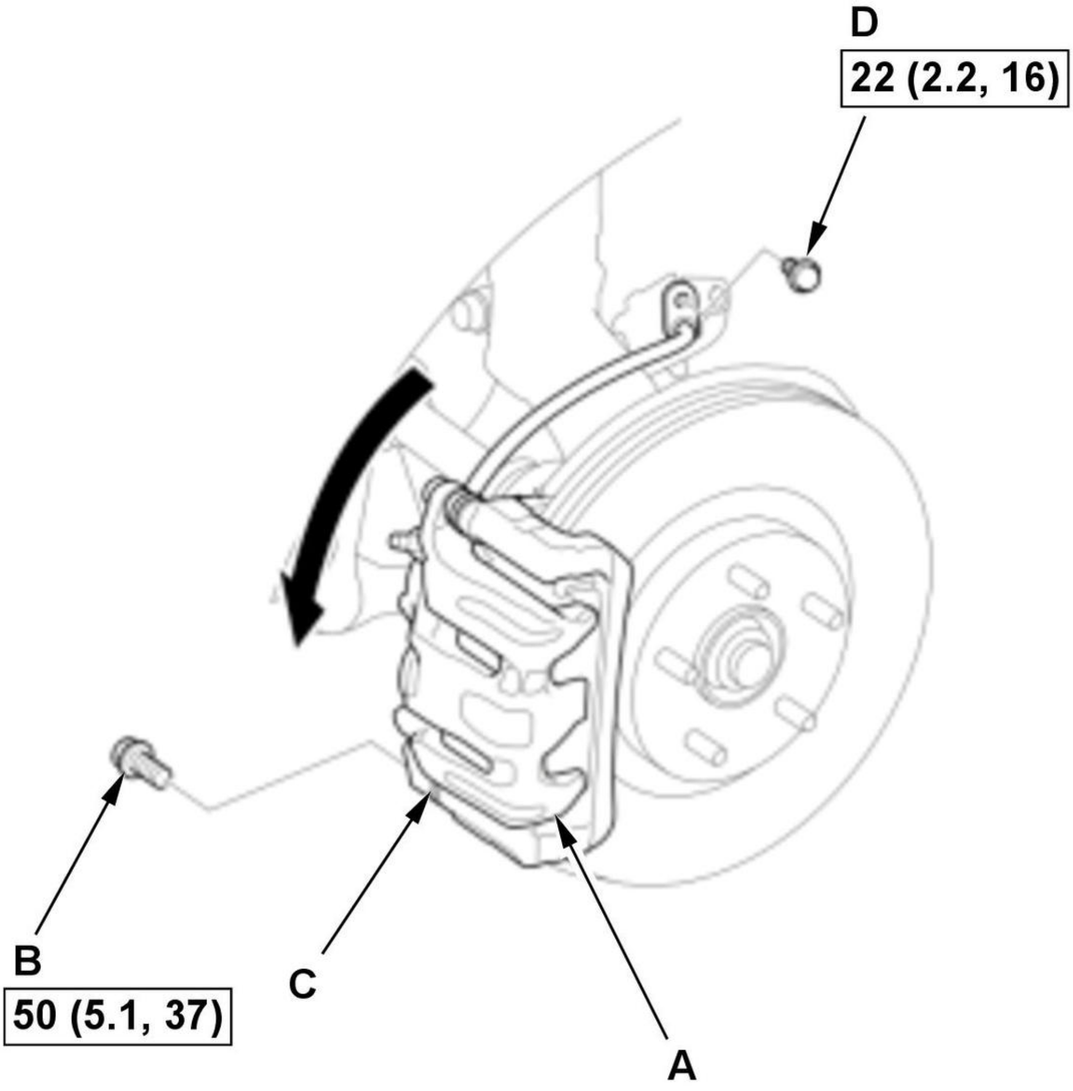

Fig. 3: Flange Bolts With Torque Specifications
Courtesy of HONDA, U.S.A., INC.

11. Pivot the caliper body (A) down into the original position.

12. Install the flange bolt (B) while holding the caliper pin (C) with a wrench.

NOTE: Be careful not to damage the pin boot.

13. Install the brake hose mounting bolt (D).

2. **Front Wheels - Install**
3. Brake Fluid - Refill

1. Press the brake pedal several times to make sure the brakes work.

NOTE: Engagement may require a greater pedal stroke immediately after the brake pads have been replaced as a set. Several applications of the brake pedal will restore the normal pedal stroke.

2. Add brake fluid as needed.

Inspection

NOTE: **Review the Service Precautions before doing repairs or service**.

1. **Vehicle - Lift**
2. **Front Wheels - Remove**
3. Brake Pad - Inspect

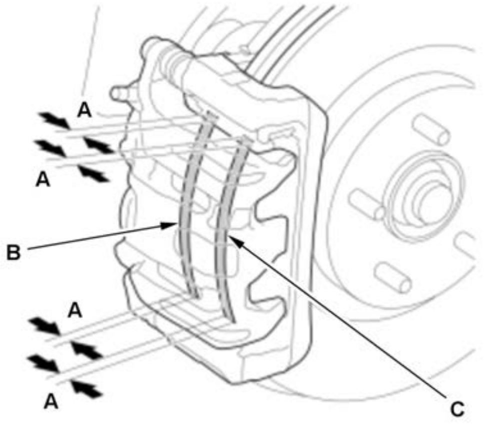

1. Check the thickness (A) of the inner pad (B) and the outer pad (C). Do not include the thickness of the backing plate.

2. If any part of the brake pad thickness is less than the service limit, replace the brake pads as a set.

Brake pad thickness:		
B	**Standard:**	**12.0 mm (0.472 in)**
B	**Service limit:**	**1.6 mm (0.063 in)**

4. **Front Wheels - Install**

REAR BRAKE DISC REMOVAL, INSTALLATION, AND INSPECTION

Removal and Installation

NOTE:

- **How to read the torque specifications** .
- **Review the Service Precautions before doing repairs or service**.

1. Vehicle - Lift
2. Rear Wheel - Remove
3. Parking Brake - Release

   NOTE: Only necessary if the automatic parking brake function is turned on.

4. Rear Brake Caliper - Remove

1. Remove the caliper assembly without disconnecting the brake hose from the caliper body .

5. Brake Disc - Remove

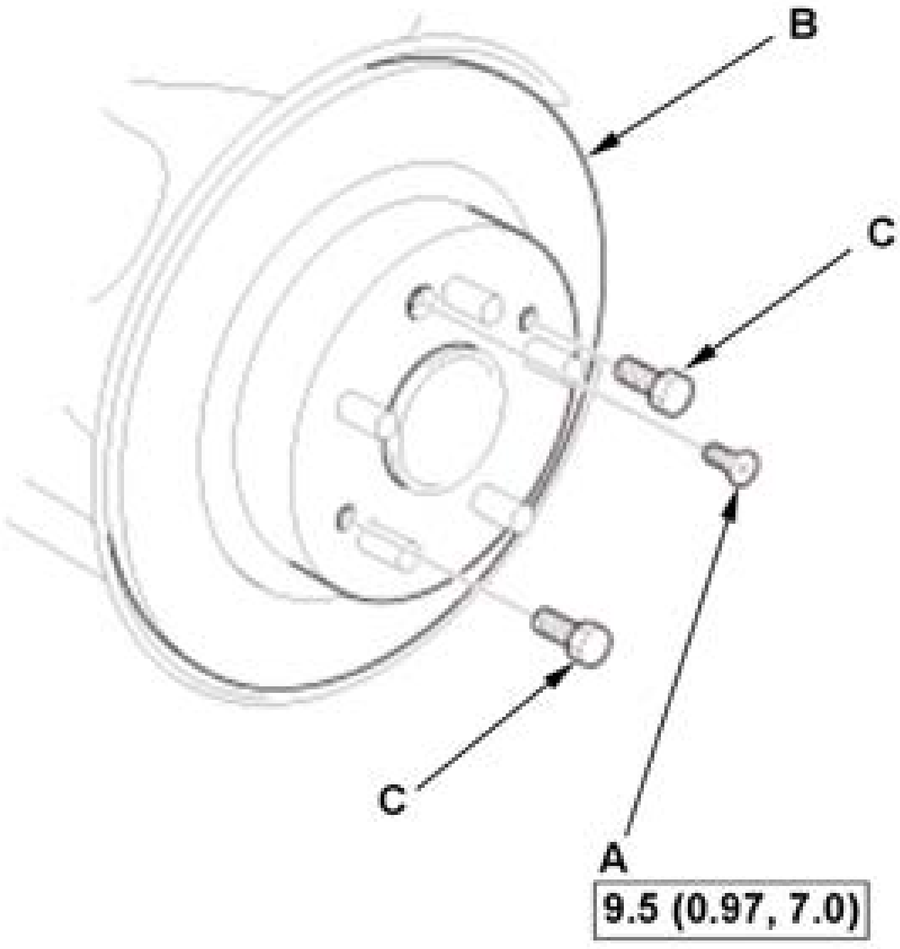

Fig. 4: Brake Disc Flathead Screw With Torque Specifications
Courtesy of HONDA, U.S.A., INC.

1. Remove the brake disc flathead screw (A). 2. Remove the brake disc (B). **NOTE:** If the brake disc is stuck to the hub bearing unit, thread two 8 x 1.25 mm bolts (C) into the brake disc to push it away from the hub bearing unit. Turn each bolt 90 degrees at a time to prevent the brake disc from binding.

6. All Removed Parts - Install

1. Install all removed parts in the reverse order of removal.

7. Rear Brake Disc Runout - Inspect
8. Parking Brake - Adjust

1. Turn the vehicle to the ON mode.

2. Apply the parking brake, then press the brake pedal and release the parking brake.

3. Turn the vehicle to the OFF (LOCK) mode.

Inspection

NOTE: **How to read the torque specifications** .

1. **Vehicle - Lift**
2. **Rear Wheels - Remove**
3. **Brake Pad - Remove**
4. Rear Brake Disc Thickness and Parallelism - Inspect

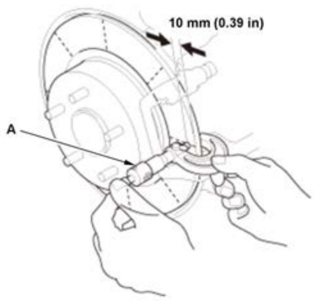 	1. Using a micrometer (A), measure the brake disc thickness at eight points, about 45 deg. apart and 10 mm (0.39 in) in from the outer edge of the brake disc. Replace the brake disc if the smallest measurement is less than the maximum refinishing limit. * This is the maximum allowable difference between the thickness measurements. 2. If the brake disc is beyond the service limit for parallelism, refinish the brake disc with a Honda-approved commercially available on-car brake lathe. **NOTE:** - **If the brake disc is beyond the service limit for refinishing, replace it.** - **For more information on Honda-approved brake lathes, refer to any authorized service information related brake disc refinishing (if available).**

	3. Inspect the brake disc runout.

Brake disc thickness:		
B	**Standard:**	**10.0 mm (0.394 in)**
B	**Maximum refinishing limit:**	**8.0 mm (0.315 in)**
Brake disc parallelism*:		**0.015 mm (0.00059 in) max.**

5. Rear Brake Disc Runout - Inspect

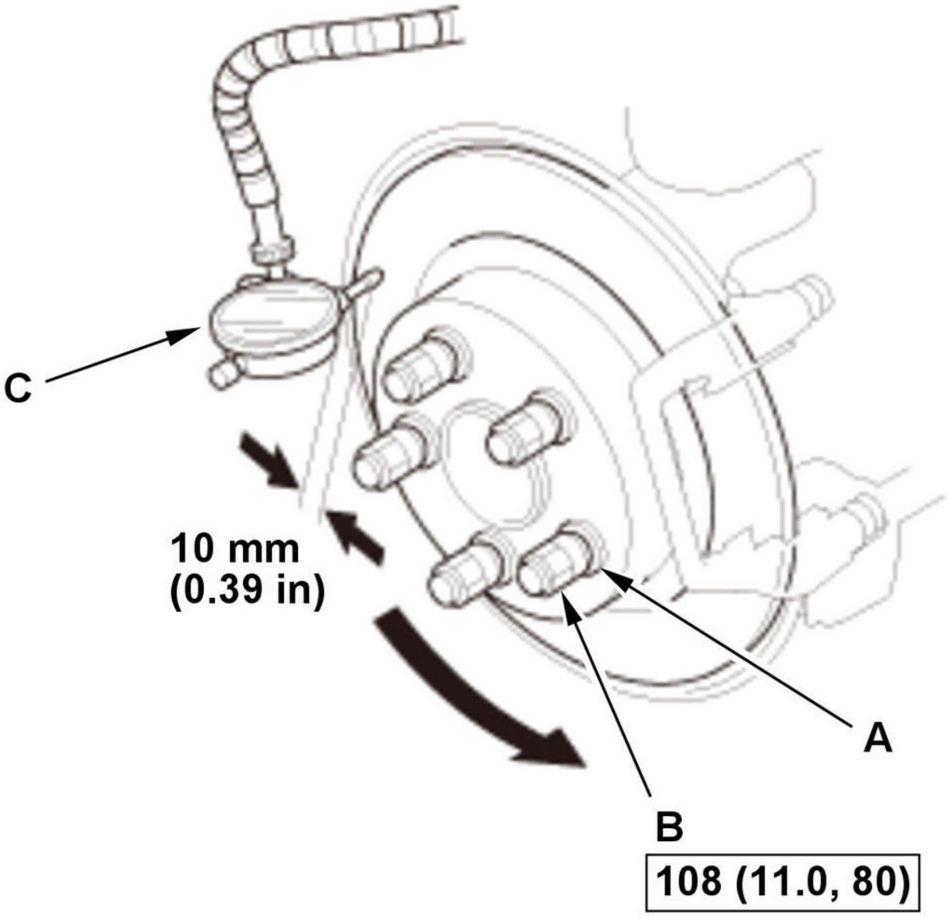

Fig. 5: Rear Brake Disc Washers And Wheel Nuts With Torque Specifications
Courtesy of HONDA, U.S.A., INC.

1. Inspect the brake disc to wheel surface for damage and cracks.

2. Clean the brake disc thoroughly, and remove all rust.

3. Install suitable flat washers (A) and the wheel nuts (B).

4. Tighten the wheel nuts to the specified torque to hold the brake disc securely against the hub.

5. Set up the dial gauge (C) against the brake disc as shown.

6. Measure the runout at 10 mm (0.39 in) from the outer edge of the brake disc.

7. If the brake disc is beyond the service limit, refinish the brake disc with a Honda-approved commercially available

on-car brake lathe.

NOTE:

- If the brake disc is beyond the service limit for refinishing, replace it.
- If the brake disc is replaced with a new one, check the new disc for runout. If the new disc is out of specification, refinish the disc.
- For more information on Honda-approved brake lathes, refer to any authorized service information related brake disc refinishing (if available).

Maximum refinishing limit:	**8.0 mm (0.315 in)**

Brake disc runout:		
B	**Service limit:**	**0.04 mm (0.0016 in)**

6. **Brake Pad - Install**
7. **Rear Wheels - Install**

REAR BRAKE PAD REMOVAL, INSTALLATION, AND INSPECTION

Special Tools Required

Image	Description/Tool Number
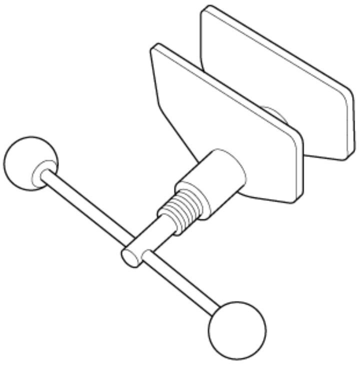	Brake Caliper Piston Compressor 07AAE-SEPA101

Removal

NOTE: **Review the Service Precautions before doing repairs or service**.

1. Brake Fluid - Remove

1. Remove some brake fluid from the reservoir.

2. **Vehicle - Lift**
3. **Rear Wheels - Remove**
4. Brake Caliper Piston - Enter the MAINTENANCE MODE

NOTE: If the HDS was not used, **remove the electric parking brake actuator, and using a TORX driver, turn the spindle clockwise until it comes to a lock** .

1. **Connect the HDS to the data link connector (DLC)**

2. Select ADJUSTMENT from ABS/VSA menu with the HDS, then enter ENTER BRAKE PAD MAINTENANCE MODE from BRAKE PAD MAINTENANCE MODE, and follow the screen prompts. Make sure TRANSITION TO PAD EXCHANGE MODE HAS BEEN COMPLETED on the screen.

3. Turn the vehicle to the OFF (LOCK) mode.

5. Brake Pad - Remove

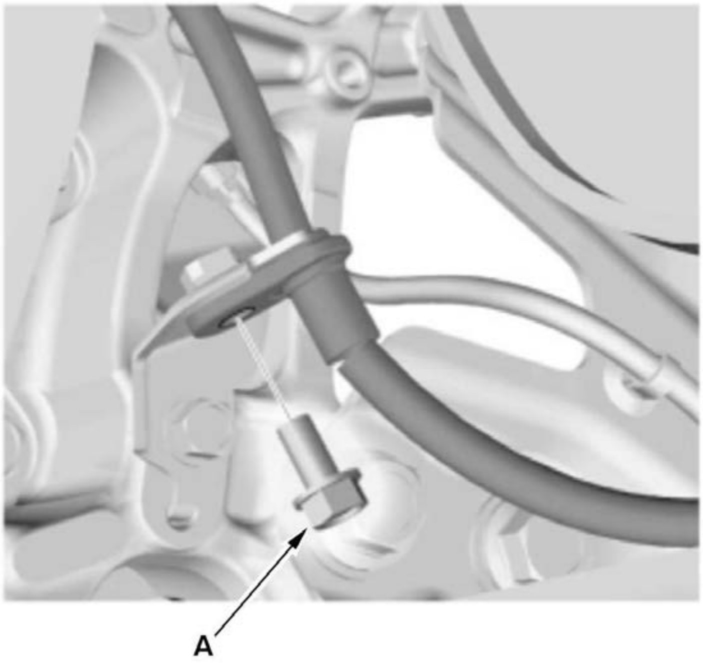	1. Remove the brake hose mounting bolt (A).

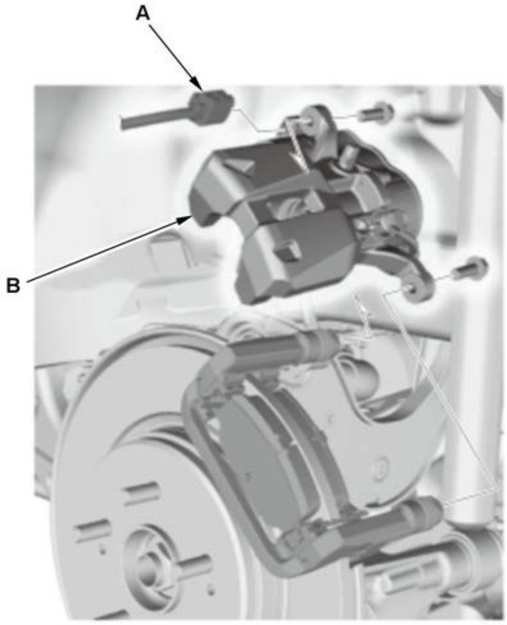	2. Disconnect the connector (A). **NOTE:** If the connector lock tab is difficult to release, push in on the connector body before pushing on the release lock. 3. Remove the caliper body (B). **NOTE:** Check the hose and the pin boots for damage and deterioration.

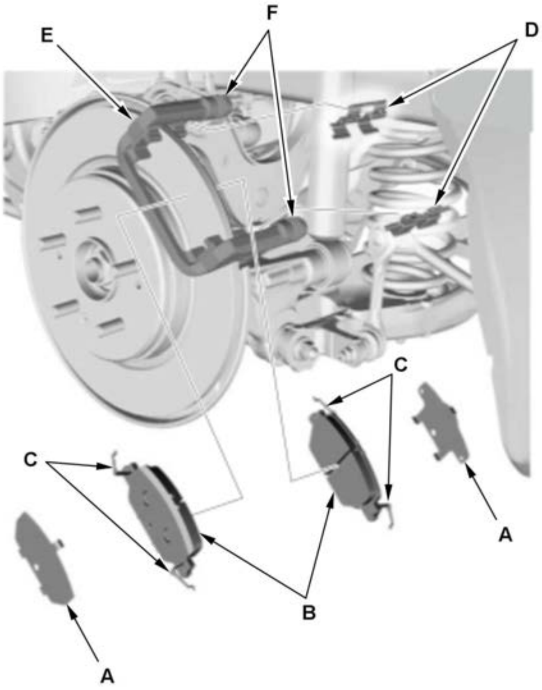	4. Remove the pad shims (A) and the brake pads (B). **NOTE:** Be careful not to damage or deform the pad return springs (C). 5. Remove the pad retainers (D). **NOTE:** The upper and lower pad retainers are different. During installation, make sure the pad retainers are in the proper positions. 6. Clean the caliper bracket (E) thoroughly; remove any rust, and check for grooves and cracks. 7. Verify that the caliper pins (F) move in and out smoothly. Clean and lube if needed.

6. Brake Disc - Inspect

Installation

NOTE:

- How to read the torque specifications .
- Review the Service Precautions before doing repairs or service.

1. Brake Caliper Piston - Return

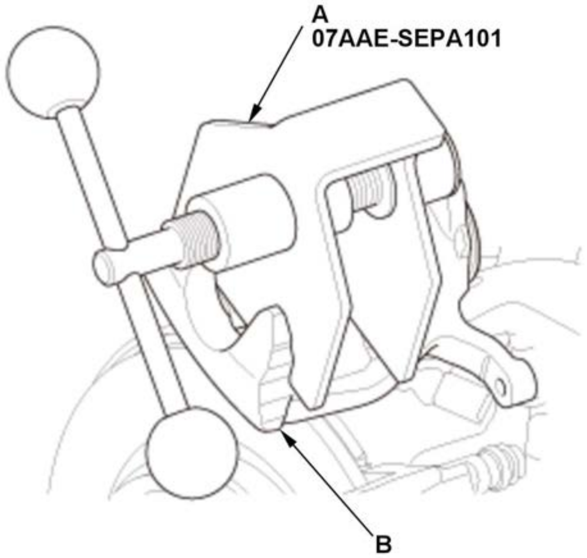	1. Install the brake caliper piston compressor tool (A) on the caliper body (B). 2. Press in the piston with the brake caliper piston compressor tool. 3. Remove the brake caliper piston compressor tool.

2. Brake Pad - Install

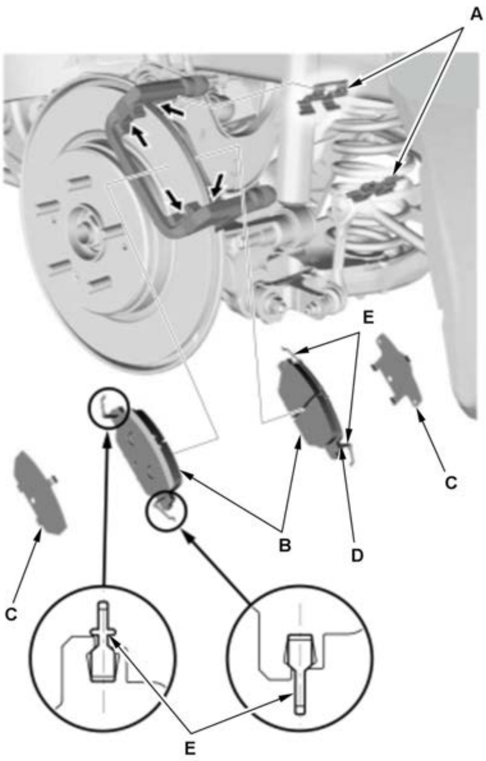	1. Apply a thin coat of M-77 assembly paste (P/N 08798-9010) to the retainer mating surface of the caliper bracket (indicated by the arrows). **NOTE:** Do not apply the assembly paste to area of unless otherwise specified. 2. Install the pad retainers (A). - The upper and lower pad retainers are different. During installation, make sure the pad retainers are in the proper positions. - If you are replacing the brake pads with new ones, also replace the pad retainers. - If the brake pads do not need to be replaced with new ones, check the retainer. If the retainer is not normal, replace it with a new one. 3. Wipe off the excess assembly paste from the retainers. Keep the assembly paste away from the brake disc and the brake pads. 4. Install the brake pads (B) and pad shims (C) correctly with the indicator (D) on the bottom inside position. **NOTE:** - **If you are reusing the brake pads, always reinstall the brake pads in their original positions to prevent a temporary loss of braking efficiency.** - **Be careful not to damage or deform the pad return springs (E). If the pad return springs is damaged or deformed,**

	replace the brake pad as an assembly. • **The upper and lower pad return springs are different. During installation, make sure the pad return springs are in the proper positions.**

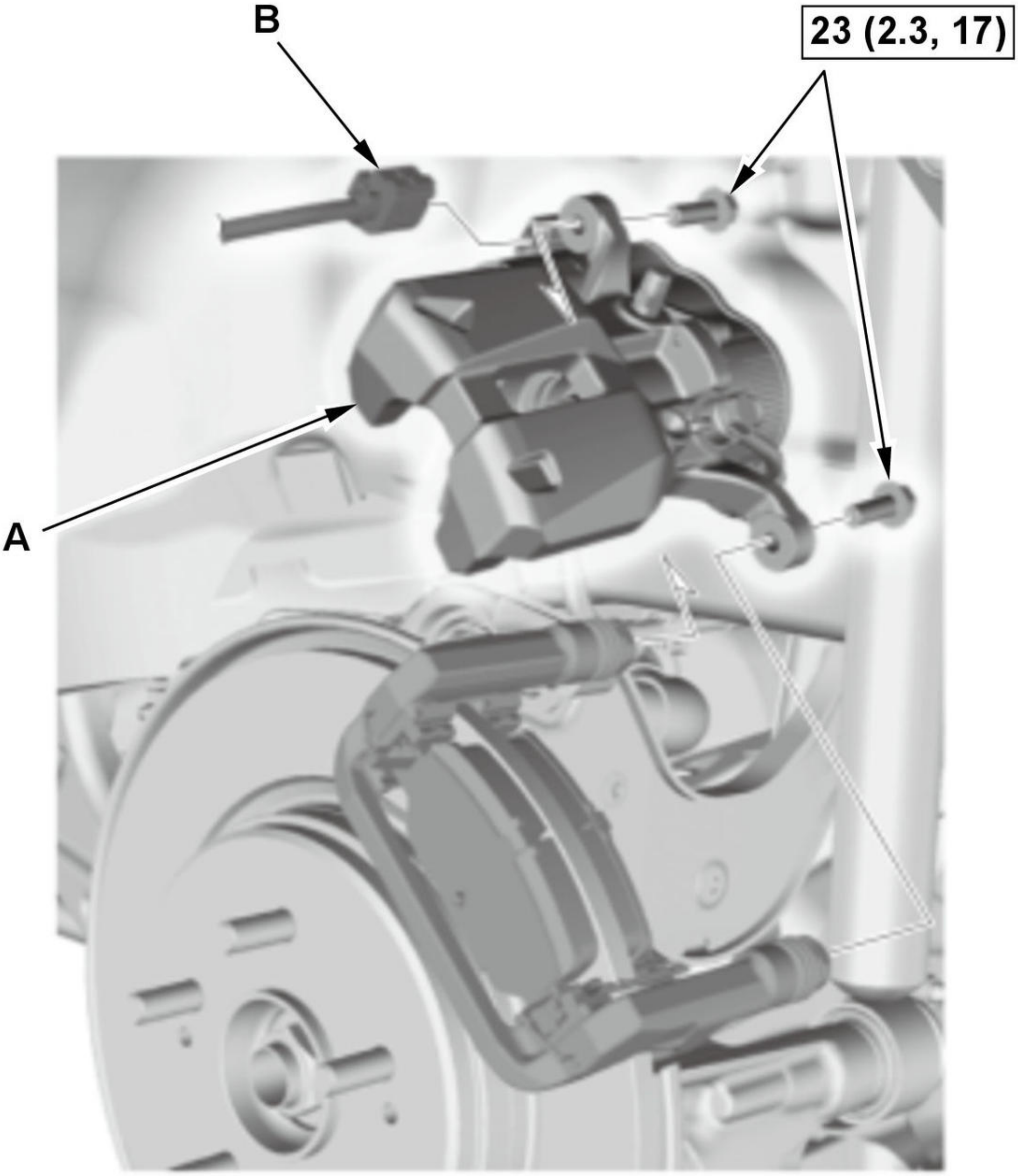

Fig. 6: Caliper Body Bolts With Torque Specifications
Courtesy of HONDA, U.S.A., INC.

5. Install the caliper body (A).

6. Connect the connector (B).

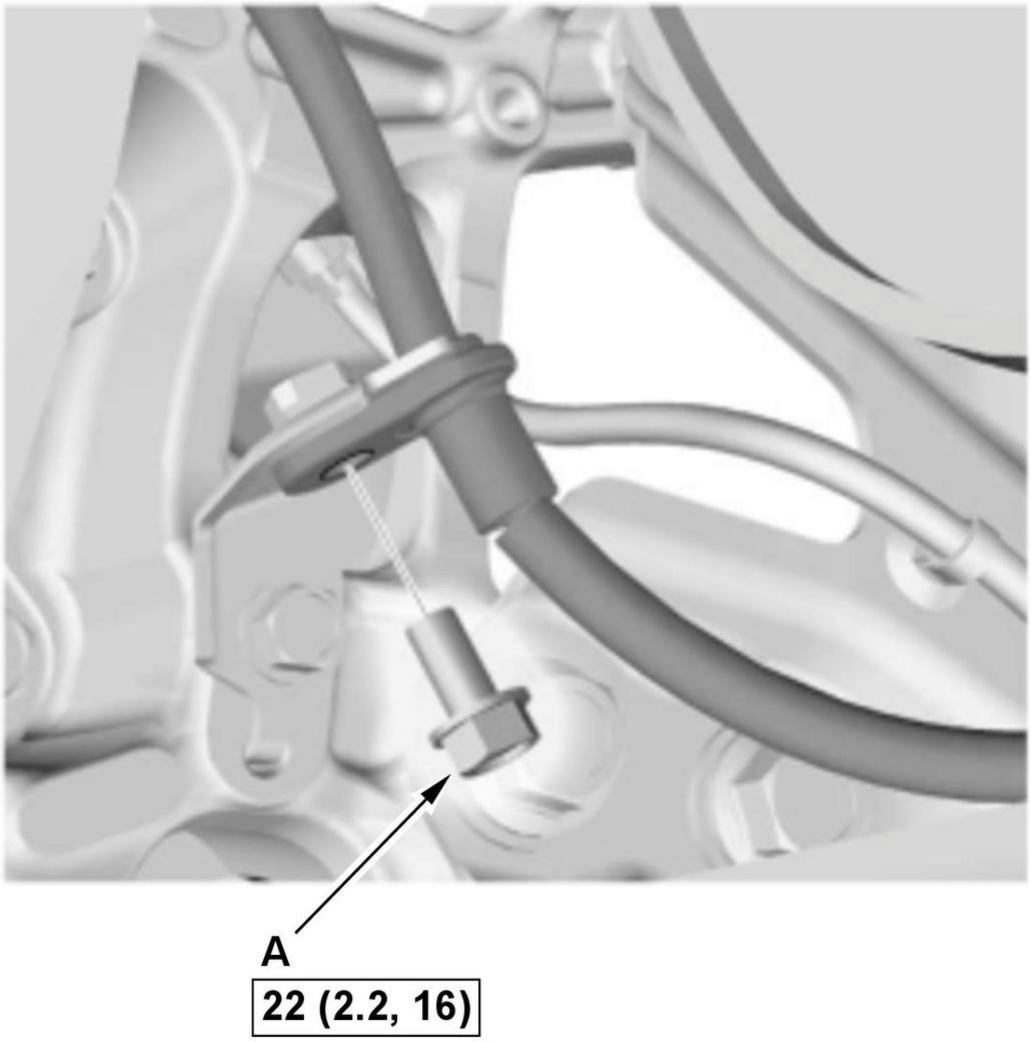

Fig. 7: Brake Hose Mounting Bolt With Torque Specifications
Courtesy of HONDA, U.S.A., INC.

7. Install the brake hose mounting bolt (A).

3. Brake Caliper Piston - Finish the MAINTENANCE MODE

NOTE: If the HDS was not used, **install the electric parking brake actuator** .

1. Turn the vehicle to the ON mode.

2. Select ADJUSTMENT from ABS/VSA menu with the HDS, then enter BACK TO NORMAL MODE from BRAKE PAD MAINTENANCE MODE, and follow the screen prompts. Make sure THIS FUNCTION PROCEDURE IS FINISHED on the screen, then press the enter button.

3. Turn the vehicle to the OFF (LOCK) mode.

4. **Rear Wheels - Install**

5. Brake Fluid - Refill

1. Add brake fluid as needed.

Inspection

NOTE: **Review the Service Precautions before doing repairs or service**.

1. **Vehicle - Lift**
2. **Rear Wheels - Remove**
3. Rear Brake Pad - Inspect

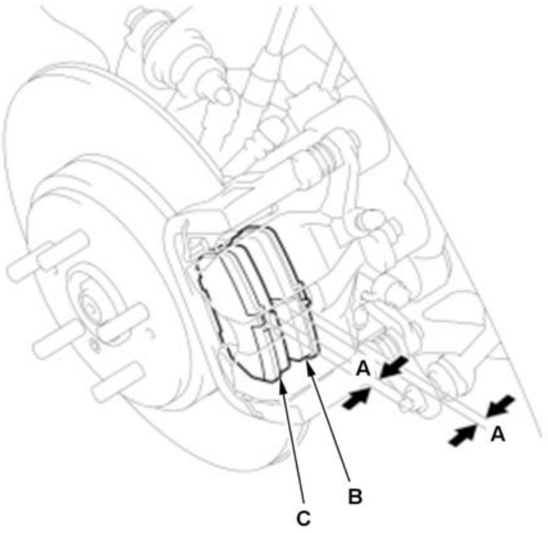	1. Check the thickness (A) of the inner pad (B) and the outer pad (C). Do not include the thickness of the backing plate. 2. If any part of the brake pad thickness is less than the service limit, replace the brake pads as a set.

Brake pad thickness:		
B	**Standard:**	**10.0 mm (0.394 in)**
B	**Service limit:**	**1.6 mm (0.063 in)**

4. **Rear Wheels - Install**

GENERAL INFORMATION

CONVENTIONAL BRAKE SERVICE PRECAUTIONS

Check the following precautions when handling the brake fluid and brake parts.

Handling the Brake Fluid

NOTICE:

Do not spill brake fluid on the vehicle; it may damage the paint. If brake fluid does contact the paint, wash it off immediately with water.

- Brake fluid is poisonous. If ingested, get medical attention immediately.
- Use recommend new genuine Acura or Honda Brake Fluid from an unopened container. Using a non-Acura or non-Honda brake fluid can cause corrosion and shorten the life of the system.
- Do not reuse drained brake fluid.
- Make sure no dirt or other foreign matter gets into the brake fluid.

Handling the Brake Parts

WARNING:

Frequent inhalation of brake pad dust, regardless of material composition, could be hazardous to your health.

- Avoid breathing dust particles.
- Never use a compressed air gun (unless specified) to clean brake assemblies. Use an OSHA-approved vacuum cleaner.

- Clean all parts with brake cleaner and air dry.
- Before reassembling, check that all the parts are free of dirt and other foreign particles.
- Replace parts with new ones whenever specified to do so.
- Make sure no grease or oil gets on the brake discs, the brake drums, the brake pads, or the brake shoes.
- Before installing the brake disc or the brake drum, clean the mating surfaces between the hub or hub bearing unit and the inside of the brake disc or the brake drum.
- After removing the brake hoses and the brake lines, plug the ends of the hoses and the joints to prevent spilling brake fluid.
- Be careful not to bend, damage, or deform the brake lines.
- After installing the brake hoses, check the brake hoses for interference and twisting.
- During brake caliper removal, to prevent damage to the caliper assembly or brake hose, use a short piece of wire to hang the caliper assembly from the undercarriage.
- Be careful when pressing or moving the piston back in the caliper; brake fluid might overflow from the master cylinder's reservoir. If brake fluid gets on any painted surface, wash it off immediately with water.

SYMPTOM TROUBLESHOOTING INDEX

CONVENTIONAL BRAKE SYMPTOM TROUBLESHOOTING INDEX

Symptom	Diagnostic Procedure	Also check for
Brake system indicator (amber) does not go off	• Check for PGM-FI system DTCs . • Check for VSA system DTCs . • Check for VSA system symptom troubleshooting (ABS indicator, brake system indicator (red), VSA indicator, and brake system indicator (amber) do not go off) . • Check for electric servo brake system DTCs. • Check for driving support system DTCs . • Do the gauge control module self-diagnostic function .	B
Rapid brake pad wear, vehicle vibration (after a long drive), or high, hard brake pedal	Symptom Troubleshooting.	B

REWRITE

ELECTRIC SERVO BRAKE CONTROL UNIT UPDATE

Procedure

1. Electric Servo Brake Control Unit - Update
2. Sensor 0 (Zero) Position - Memorize

INSPECTION

BRAKE HOSE AND LINE INSPECTION

Inspection

1. Brake Hose and Line - Inspect
   1. Inspect the brake hoses for damage, deterioration, leaks, interference, and twisting.
   2. Check the brake lines for damage, rusting, and leaks. Also check for bent brake lines.
   3. Check for leaks at hose and line joints and connections, and retighten if necessary.
   4. Check the tandem motor cylinder and the pedal feel simulator for damage and leaks.
   5. Check the VSA modulator-control unit for damage and leaks.

Connection Point	Component	Connected to	Specified Torque Value	Note
A	Front brake caliper	Brake hose	35 N.m (3.6 kgf.m, 26 lbf.ft)	Banjo bolt
		Bleed screw	8.5 N.m (0.87 kgf.m, 6.3 lbf.ft)	B
B	Rear brake caliper	Brake hose	35 N.m (3.6 kgf.m, 26 lbf.ft)	Banjo bolt
		Bleed screw	8.5 N.m (0.87 kgf.m, 6.3 lbf.ft)	B
C	Brake hose	Brake line	15 N.m (1.5 kgf.m, 11 lbf.ft)	Flare nut
D	VSA modulator-control unit	Brake line (10 mm nut)	15 N.m (1.5 kgf.m, 11 lbf.ft)	Flare nut
		Brake line (12 mm nut)	22 N.m (2.2 kgf.m, 16 lbf.ft)	
E	Tandem motor cylinder	Brake line	15 N.m (1.5 kgf.m, 11 lbf.ft)	Flare nut
		Brake hose	---	Hose clamp
F	Pedal feel simulator	Brake line (10 mm nut)	15 N.m (1.5 kgf.m, 11 lbf.ft)	Flare nut
		Brake line (12 mm nut)	22 N.m (2.2 kgf.m, 16 lbf.ft)	
		Brake hose	---	Hose clamp

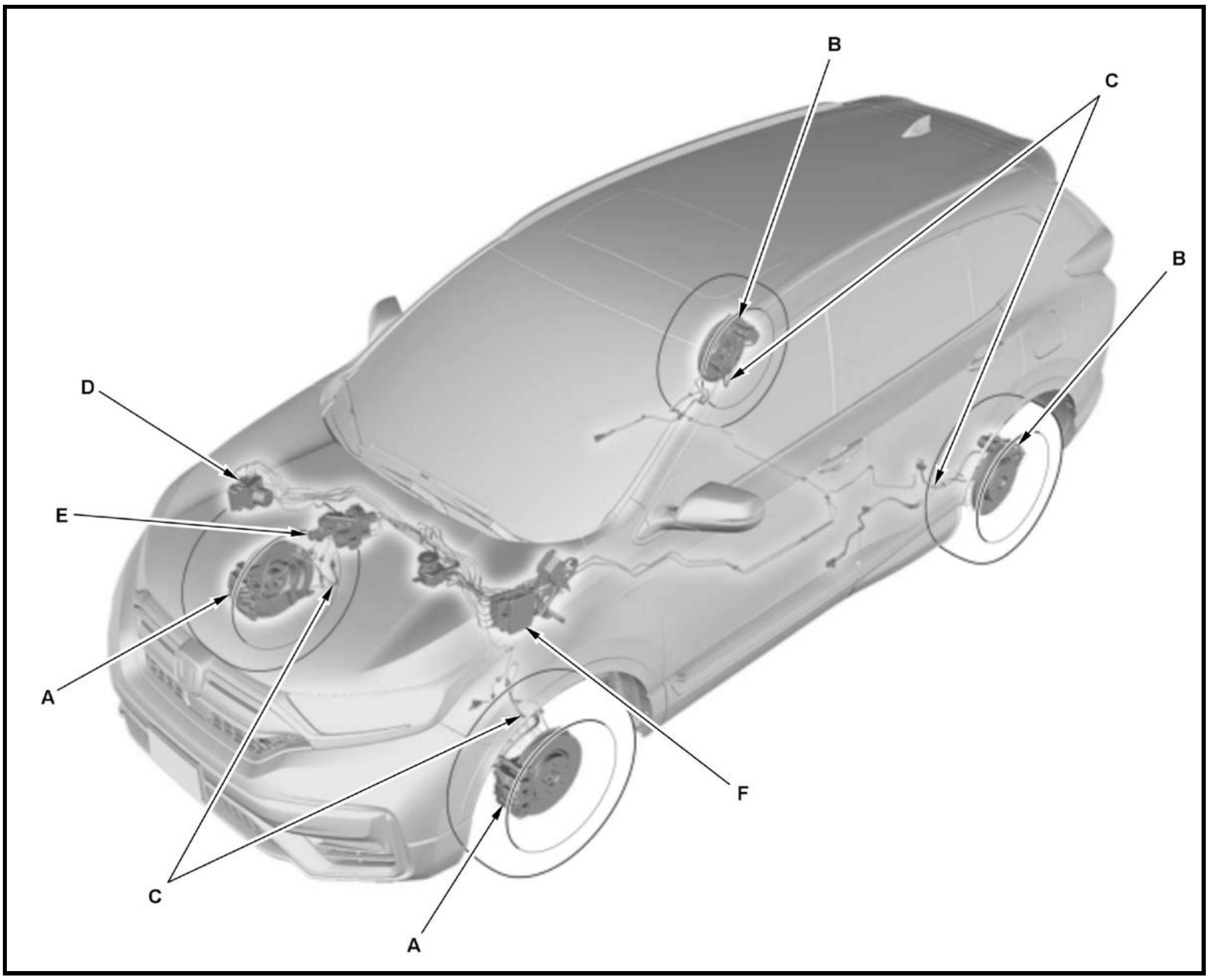

BRAKE PEDAL FEEL SIMULATOR INSPECTION

Inspection

NOTE:

- **How to read the torque specifications** .
- **Review the Service Precautions before doing repairs or service**.
- Do not try to disassemble the pedal feel simulator. Replace the pedal feel simulator with a new part if necessary.
- Align the paint marks (A) on the reservoir hose with the marks (B) on the reservoir or the reservoir union.
- Check for deterioration and damage to each part during removal.

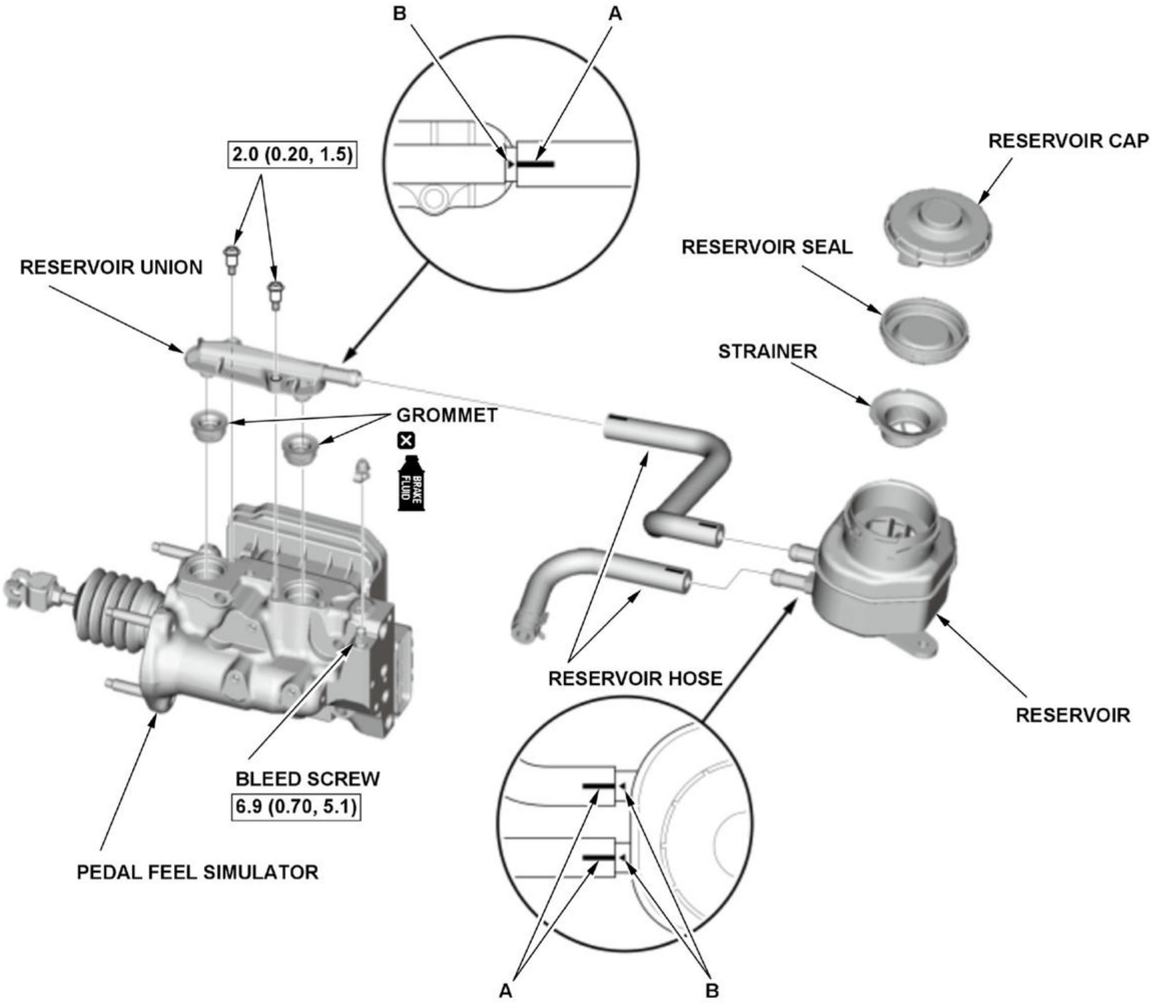
B
A
RESERVOIR CAP
2.0 (0.20, 1.5)
RESERVOIR UNION
RESERVOIR SEAL
STRAINER
GROMMET
BRAKE FLUID
RESERVOIR HOSE
RESERVOIR
BLEED SCREW
6.9 (0.70, 5.1)
PEDAL FEEL SIMULATOR
A
B

ELECTRIC SERVO BRAKE SYSTEM INSPECTION

Inspection

1. **HDS - Connect**
2. Function Test

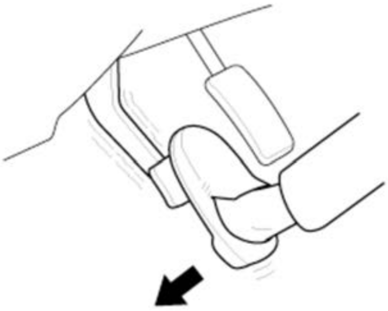	1. Check the BRAKE PEDAL STROKE and BRAKE FLUID PRESSURE SENSOR PL in the ELECTRIC SERVO BRAKE DATA LIST. 2. With the HDS, measure the BRAKE PEDAL STROKE while pressing down on the brake pedal. At the same time, check the BRAKE FLUID PRESSURE SENSOR PL value. **NOTE:** Do not continue to keep down the pedal for a long time, otherwise the fluid pressure is decreased abnormally to protect the motor. 3. When it is less than the specified value, **check for the electric servo brake system DTCs**.

BRAKE PEDAL STROKEmm (in)	BRAKE FLUID PRESSURE SENSOR PLMPa (kgf/cm 2, psi) min.
64.0-68.0(2.520-2.677)	9.0(91.77, 1, 305.4)

DTC TROUBLESHOOTING INDEX

ELECTRIC SERVO BRAKE SYSTEM DTC TROUBLESHOOTING INDEX

DTC		Detection Item
B0050	-F0	(Driver's Seat Belt Buckle Switch Malfunction)
C0023	-12	Brake Diag Circuit ON Failure
	-14	Brake Diag Circuit OFF Failure
C0049	-7A	Brake Fluid Leak or Seal Failure
C0062	-F0	Longitudinal Acceleration Sensor Malfunction
C0063	-F0	Yaw Rate Sensor Malfunction
C1260	-7A	Brake Fluid Leak or Seal Failure in Pedal Feel Simulator
C1270	-11	Automatic Brake Hold Switch Signal Circuit Short
	-15	Automatic Brake Hold Switch Signal Circuit Open
P057B	-00	Brake Pedal Stroke Sensor Circuit Range/Performance Problem
P057C	-00	Brake Pedal Stroke Sensor Circuit Low Voltage
P057D	-00	Brake Pedal Stroke Sensor Circuit High Voltage
P0602	-00	Electric Servo Brake Control Unit Programming Error
P0606	-00	Electric Servo Brake Control Unit Internal Circuit Malfunction
P062F	-00	Electric Servo Brake Control Unit Internal Circuit EEPROM Error
P0642	-00	Sensor Power Source Circuit Low Voltage
P0643	-00	Sensor Power Source Circuit High Voltage
P1E20	-00	Brake Fluid Pressure Sensor PL/PLR Incorrect Correlation
P1E24	-00	Brake Pedal Stroke Redundant Sensor Circuit High Voltage
P1E25	-00	Brake Pedal Stroke Redundant Sensor Circuit Low Voltage
P1E26	-00	Brake Pedal Stroke Sensor/Brake Pedal Stroke Redundant Sensor Incorrect Correlation
P1E27	-00	Brake Fluid Pressure Sensor PU Circuit High Voltage
P1E28	-00	Brake Fluid Pressure Sensor PU Circuit Low Voltage
P1E29	-00	Brake Fluid Pressure Sensor PUR Circuit High Voltage
P1E2A	-00	Brake Fluid Pressure Sensor PUR Circuit Low Voltage
P1E2B	-00	Brake Fluid Pressure Sensor PU/PUR Incorrect Correlation
P1E2C	-00	Brake Fluid Pressure Sensor PL Circuit High Voltage
P1E2D	-00	Brake Fluid Pressure Sensor PL Circuit Low Voltage
P1E2E	-00	Brake Fluid Pressure Sensor PLR Circuit High Voltage
P1E2F	-00	Brake Fluid Pressure Sensor PLR Circuit Low Voltage
P1E32	-00	Master Cylinder Cut Valve Stuck OFF (Stuck Open)
P1E33	-00	Master Cylinder Cut Valve Incorrect Operation
P1E34	-00	Master Cylinder Cut Valve Stuck ON (Stuck Close)
P1E35	-00	Brake Pedal Feel Simulator Cut Valve Incorrect Operation
P1E36	-00	Brake Pedal Feel Simulator Cut Valve No Operation
P1E37	-00	Brake Pedal Feel Simulator Cut Valve Stuck OFF (Stuck Close)
P1E38	-00	Brake Pedal Feel Simulator Cut Valve Stuck ON (Stuck Open)
P1E41	-00	Electric Servo Brake System Fail-Safe Relay Stuck ON
P1E42	-00	Electric Servo Brake System Fail-Safe Relay Stuck OFF

DTC		Detection Item
P1E44	-00	Electric Servo Brake Control Unit Internal Circuit Malfunction (Charge Pump Circuit)
P1E46	-00	Electric Servo Brake Control Unit Internal Circuit Malfunction (FET Stuck ON)
P1E47	-00	Electric Servo Brake Control Unit Internal Circuit Malfunction (FET Stuck OFF)
P1E48	-00	Slave Cylinder Drive Motor Current Malfunction (Offset)
P1E49	-00	Slave Cylinder Drive Motor Current Malfunction (Stuck)
P1E4A	-00	Slave Cylinder Drive Motor Current Malfunction (Over Current)
P1E4B	-00	Slave Cylinder Drive Motor Circuit Open
P1E4C	-00	Slave Cylinder Drive Motor Power Source Circuit High Voltage

DTC		Detection Item
P1E4D	-00	Motor Angle Signal Malfunction
P1E51	-00	Tandem Motor Cylinder Gearbox Mechanical Linkage Failure
P1E52	-00	Tandem Motor Cylinder Gearbox Stuck
P1E63	-00	Brake Pedal Stroke Sensor Signal Stuck
P1E68	-00	Brake Master Cylinder Cut Valve Self Lock
P2531	-00	Electric Servo Brake Control Unit Power Source Circuit (IG1) Low Voltage
P2532	-00	Electric Servo Brake Control Unit Power Source Circuit (IG1) High Voltage
U0029	-00	F-CAN Malfunction (BUS-OFF)
U0047	-00	F-CAN Malfunction (Ch2 Bus-OFF)/Vehicle Communication Bus C Performance
U0100	-00	F-CAN Malfunction (Electric Servo Brake Control Unit Lost Communication With Management ECU)
U0101	-00	F-CAN Malfunction (Electric Servo Brake Control Unit Lost Communication With TCM/PCM (Gear System))
U0104	-00	F-CAN Malfunction (Electric Servo Brake Control Unit Lost Communication With Driving Support System Control Unit)
U0111	-00	Lost communication With Battery Energy Control Module A
U0122	-00	F-CAN Malfunction (Electric Servo Brake Control Unit Lost Communication With VSA Modulator-Control Unit)
U0128	-00	F-CAN Malfunction (Electric Servo Brake Control Unit Lost Communication With Electric Parking Brake Control Unit)
U0151	-00	F-CAN Malfunction (Electric Servo Brake Control Unit Lost Communication With SRS Unit)
U0155	-00	F-CAN Malfunction (Electric Servo Brake Control Unit Lost Communication With Gauge Control Module)
U0401	-68	(PGM-FI/ECM/PCM System Malfunction)
U0415	-68	(ABS System Malfunction)
U0416	-68	(VSA System Malfunction)
U0417	-68	(Electric Parking Brake System Malfunction)
U3000	-49	Driver's Door Switch Signal Stuck On (ECU Internal Malfunction)
U3003	-16	Electric Servo Brake Control Unit Power Source Circuit (+B) Low Voltage
	-17	Electric Servo Brake Control Unit Power Source Circuit (+B) High Voltage
	-92	System Voltage Low (Long Term)

REPLACEMENT

BRAKE FLUID REPLACEMENT

Replacement

NOTICE:

- Review the Service Precautions before doing repairs or service.
- There are three different methods used for bleeding brake systems. The method shown in this procedure is the preferred method for removing the air from the system. For pressure or vacuum bleeding, refer to the tool manufacturer's instructions included with the tool. If you use a commercially available pressure feed bleeder and operate the brake pedal, excessive hydraulic pressure will be applied to the cup inside the master cylinder causing damage. Do not use these methods together.

NOTE:

- The reservoir connected to the pedal feel simulator must be at the MAX (upper) level mark at the start of the bleeding procedure and checked after bleeding each wheel. Add fluid as required.
- Because brake fluid is replaced with the vehicle in the ON mode, the brake system indicator is indicated by brake fluid decrease. The brake system indicator goes off by depressing the brake pedal for about 3 seconds.
- Press the brake pedal slowly while the vehicle is being in ON mode.
- Before beginning the bleeding procedure, remove the reservoir cap and strainer, and remove any dirt and debris then reinstall the strainer only.
- Bleed the brake system in the following order: front-driver's, front-passenger's, rear-passenger's, and rear-driver's.

1. Vehicle - Lift
2. Turn the Vehicle to the ON Mode
3. Brake System - Bleed 1 (Between Tandem Motor Cylinder and Each Brake)

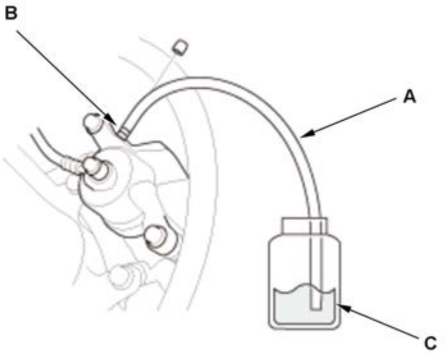	1. Attach a clear tube (A) to the bleed screw (B). 2. Submerge the other end of the clear tube into a clear plastic catch bottle of brake fluid (C). 3. Have an assistant slowly pump the brake pedal several times then apply steady continuous pressure. 4. Loosen the bleed screw slowly to bleed the fluid into the plastic catch bottle. The brake pedal will travel toward the floor as the fluid is bled from the system. 5. When the brake pedal reaches the floor, have the assistant hold the pedal in that position, then tighten the bleed screw. The brake pedal can now be released. 6. Check and refill the reservoir tank to the MAX (upper) level line. Be sure to reinstall the reservoir cap. 7. Repeat steps 3 thru 6 until the brake fluid in the clear drain tube appears to be clean and new. Then tighten the bleed screw to the specified torque 8. Repeat this procedure for each brake in the bleeding sequence.

4. Turn the Vehicle to the OFF (LOCK) Mode

1. Turn the vehicle to the OFF (LOCK) mode, and wait 3 minutes or more.

NOTE: After 3 minutes, do not open or close the door.

5. Brake System - Bleed 2 (Between Pedal Feel Simulator and Each Brake)

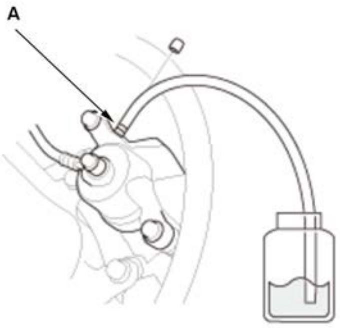

1. Have an assistant slowly pump the brake pedal several times then apply steady continuous pressure.

2. Loosen the bleed screw (A) slowly to bleed the fluid into the plastic catch bottle. The brake pedal will travel toward the floor as the fluid is bled from the system.

3. When the brake pedal reaches the floor, have the assistant hold the pedal in that position, then tighten the bleed screw. The brake pedal can now be released.

4. Check and refill the reservoir tank to the MAX (upper) level line. Be sure to reinstall the reservoir cap.

5. Repeat steps 1 thru 4 until the brake fluid in the clear tube appears to be clean and new. **Then tighten the bleed screw to the specified torque**

6. Repeat this procedure for each bleed screw of the brake caliper in the bleeding sequence.

6. After Bleeding - Check

1. Make sure the brake fluid level in reservoir is at the MAX (upper) level line.

2. Turn the vehicle to the ON mode.

3. Depress the pedal with a normal force, and keep the pedal depressed for about 3 seconds.

4. Release the brake pedal.

5. Check that the brake system indicator does not come on.

SYMPTOM TROUBLESHOOTING

BRAKE SYSTEM SYMPTOM TROUBLESHOOTING - RAPID BRAKE PAD WEAR, VEHICLE VIBRATION (AFTER A LONG DRIVE), OR HIGH, HARD BRAKE PEDAL

NOTE: Make sure that the caliper pins are installed correctly. The upper caliper pin and the lower caliper pin are different. If these caliper pins are installed in the wrong location, it will cause vibration, uneven or rapid brake pad wear, and possibly uneven tire wear. See the proper caliper pin location:

- **Front caliper**
- **Rear caliper**

1. Electric servo brake system check

-1. Turn the vehicle to the ON mode.

-2. Check the brake system indicator (red) and the brake system indicator (amber) for several seconds when the vehicle to the ON mode.

Do the indicators come on then go off?

YES

Go to step 2.

NO

Go to electric servo brake system troubleshooting.

2. Electric parking brake system check

   -1. Turn the vehicle to the OFF (LOCK) mode, then to the ON mode.

   -2. Check the brake system indicator (red) and the brake system indicator (amber) for several seconds when the vehicle to the ON mode.

   Does the indicator come on then go off?

   YES

   Go to step 3.

   NO

   Go to electric parking brake system troubleshooting .

3. Brake system check

   -1. Drive the vehicle to note if the brakes drag or the pedal becomes high and hard. This may take 20 or more brake pedal applications during an extended test-drive.

   -2. With the vehicle in the READY TO DRIVE mode, **raise and support the vehicle** , and spin all four wheels by hand.

   Is there brake drag at any of the wheels?

   YES

   Go to step 4.

   NO

   Look for other causes of pad wear, high pedal, or vehicle vibration.

4. Brake pedal position switch check

   -1. Without removing the brake lines, separate the brake pedal from the pedal feel simulator, then spin the wheels to check for brake drag.

   Is there brake drag at any of the wheels?

   YES

   Go to step 5.

   NO

Check the brake pedal position switch adjustment and pedal free play .

5. Caliper check

   -1. Loosen the bleed screws at each caliper, then spin the wheels to check for brake drag.

   Is there brake drag at any of the wheels?

   YES

   Check the pedal feel simulator reservoir for contamination in the brake fluid. If you find contamination, flush the entire brake system of all contaminated fluid, then replace all rubber parts in the brake system that were exposed to contaminated fluid. If the brake fluid is OK, disassemble and repair the caliper on the wheel(s) with brake drag.

   NO

   Look for and replace any damaged brake lines. If all brake lines are OK, **replace the VSA modulator-control unit** .

SERVICE PROCEDURE

BRAKE SYSTEM INSPECTION AND TEST

Inspection

1. Brake System - Inspect

   Inspect the brake system components listed. Repair or replace any parts that are leaking or damaged.

   Component Inspections:

Component	Procedure	Also check for
Brake hoses	Look for damage or signs of fluid leakage at: • Line joints and banjo bolt connections. • Hoses and lines, also inspect for twisting or damage.	Bulging, twisted, or bent lines.
Caliper	Look for damage or signs of fluid leakage at: • Piston seals. • Banjo bolt connections. • Bleed screw.	Seized or sticking caliper pins.
Tandem Motor Cylinder	Look for damage or signs of fluid leakage at: • Reservoir, reservoir union, or tandem motor cylinder. • Lines, reservoir hose, grommets, and their joints. • Between slave cylinder and gearbox. • Bleed screw.	Bulging seal at reservoir cap. This is a sign of fluid contamination.
Pedal Feel Simulator	Look for damage or signs of fluid leakage at:	Bulging seal at reservoir cap. This is a sign of fluid contamination.

Component	Procedure	Also check for
	• Reservoir, reservoir union, or pedal feel simulator. • Lines, reservoir hose, grommets, and their joints. • Bleed screw.	
VSA modulator-control unit	Look for damage or signs of fluid leakage at: • Line joints. • Modulator-control unit.	B

ELECTRIC SERVO BRAKE SYSTEM BLEEDING

Procedure

NOTICE:

- **Review the Service Precautions before doing repairs or service**.
- There are three different methods used for bleeding brake systems. The method shown in this procedure is the preferred method for removing the air from the system. For pressure or vacuum bleeding, refer to the tool manufacturer's instructions included with the tool. If you use a commercially available pressure feed bleeder and operate the brake pedal, excessive hydraulic pressure will be applied to the cup inside the master cylinder causing damage. Do not use these methods together.

NOTE:

- The procedure of bleeding brake system is different from that of replacing brake fluid. **Refer to the procedure of Brake Fluid Replacement as needed**.
- The reservoir connected to the pedal feel simulator must be at the MAX (upper) level mark at the start of the bleeding procedure and checked after bleeding each wheel. Add fluid as required.
- When a rear brake caliper equipped with an electric parking brake is removed and installed, or overhauled (brake hose was disconnected), the bleeding procedure differs from the normal method. First, bleed the brakes using the normal procedure. Second, follow the procedure listed under rear caliper bleed. Third, bleed the brakes again using the normal procedure. This does not apply when the rear calipers are replaced.
- Before beginning the bleeding procedure, remove the reservoir cap and strainer, and remove any dirt and debris then reinstall the strainer only.
- Bleed the brake system in the following order: front-driver's, front-passenger's, rear-passenger's, and rear-driver's.
- Unless indicated, the illustrations shown are examples only and may not match your vehicle.

1. **Vehicle - Lift**
2. 12 Volt Battery Terminal - Disconnect

    1. Open the driver's door, and wait 3 minutes or more.

    NOTE: Do not turn the vehicle to the ON mode.

    2. **Do the 12 volt battery terminal disconnection procedure**

    .

3. Brake System - Normal Bleed 1 (Between Pedal Feel Simulator and Brake Caliper)

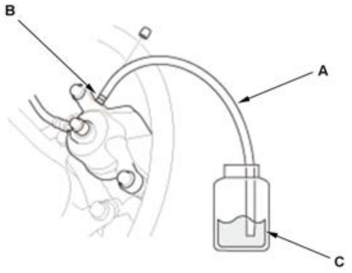 	**NOTE:** If a large amount of air is introduced into the system from a brake system component replacement, first drain the brake fluid into a container from each caliper by pumping the brake pedal slowly before starting the normal brake system bleed. 1. Attach a clear tube (A) to the bleed screw (B). 2. Submerge the other end of the clear tube into a clear plastic catch bottle of brake fluid (C). 3. Have an assistant slowly pump the brake pedal several times then apply steady continuous pressure. 4. Loosen the bleed screw slowly to bleed the fluid into the plastic catch bottle. The brake pedal will travel toward the floor as the fluid is bled from the system. 5. When the brake pedal reaches the floor, have the assistant hold the pedal in that position, then tighten the bleed screw. The brake pedal can now be released. 6. Check and refill the reservoir tank to the MAX (upper) level line. Be sure to reinstall the reservoir cap. 7. Repeat steps 3 thru 6 until the brake fluid in the clear drain tube appears fresh and there are no air bubbles in the fluid. **Then tighten the bleed screw to the specified torque**. 8. Repeat this procedure for each brake in the bleeding sequence.

4. Brake System - Normal Bleed 2 (Between Pedal Feel Simulator and Tandem Motor Cylinder)

Rear bleed screw 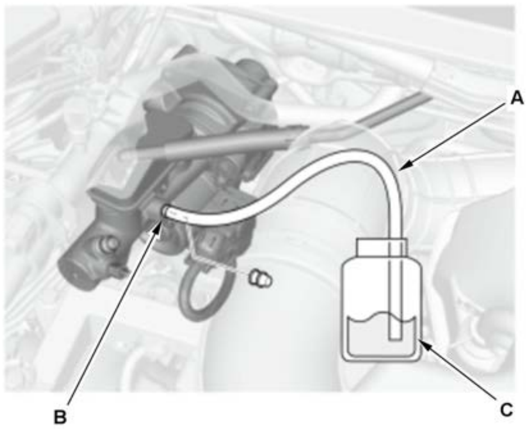 **Front bleed screw**	1. Attach a clear tube (A) to the bleed screw (B). 2. Submerge the other end of the clear tube into a clear plastic catch bottle of brake fluid (C). 3. Have an assistant slowly pump the brake pedal several times then apply steady continuous pressure. 4. Loosen the bleed screw slowly to bleed the fluid into the plastic catch bottle. The brake pedal will travel toward the floor as the fluid is bled from the system. 5. When the brake pedal reaches the floor, have the assistant hold the pedal in that position, then tighten the bleed screw. The brake pedal can now be released. 6. Check and refill the reservoir tank to the MAX (upper) level line. Be sure to reinstall the reservoir cap. 7. Repeat steps 3 thru 6 until the brake fluid in the clear drain tube appears fresh and there are no air

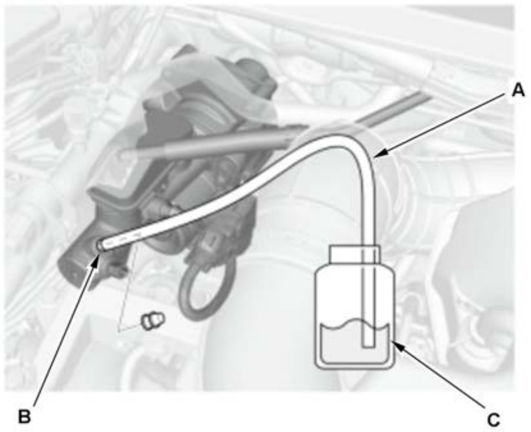

bubbles in the fluid. **Then tighten the bleed screw to the specified torque**

8. Repeat this procedure for each bleed screw of the tandem motor cylinder in the bleeding sequence.

5. Brake System - Normal Bleed 3 (Between Pedal Feel Simulator and Brake Caliper)

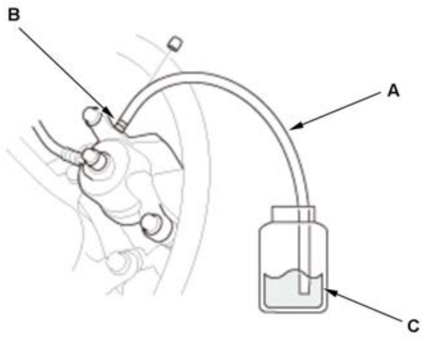

1. Attach a clear tube (A) to the bleed screw (B).

2. Submerge the other end of the clear tube into a clear plastic catch bottle of brake fluid (C).

3. Have an assistant slowly pump the brake pedal several times then apply steady continuous pressure.

4. Loosen the bleed screw slowly to bleed the fluid into the plastic catch bottle. The brake pedal will travel toward the floor as the fluid is bled from the system.

5. When the brake pedal reaches the floor, have the assistant hold the pedal in that position, then tighten the bleed screw. The brake pedal can now be released.

6. Check and refill the reservoir tank to the MAX (upper) level line. Be sure to reinstall the reservoir cap.

7. Repeat steps 3 thru 6 until the brake fluid in the clear drain tube appears fresh and there are no air bubbles in the fluid. **Then tighten the bleed screw to the specified torque**

8. Repeat this procedure for each bleed screw of the brake caliper in the bleeding sequence.

6. Brake System - Rear Caliper Bleed

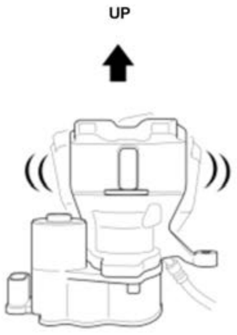

NOTE:

- When shaking the caliper body, be careful not to damage the electric parking brake actuator.
- When bleeding the brake system, air can get trapped inside the rear calipers. This is due to the complex fluid path inside the electric parking brake calipers. Therefore this procedure is necessary.

1. **Remove the caliper assembly without disconnecting the brake hose from the caliper body** .

	2. Tilt up the caliper body as shown and shake it.

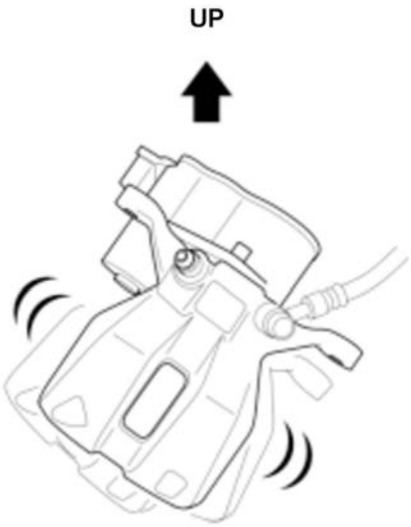	3. Tilt down the caliper body as shown and shake it again. 4. **Install the rear brake caliper body** 5. Bleed the rear brake again using the normal bleeding procedure.

7. **12 Volt Battery Terminal - Reconnect**
8. After Bleeding - Check

1. Turn the vehicle to the ON mode. 2. Check that the brake system indicator does not come on.

ELECTRIC SERVO BRAKE SYSTEM SENSOR 0 (ZERO) POSITION MEMORIZATION

Procedure

The electric servo brake system sensor 0 (zero) position must be memorized whenever you do any of these actions:

- Electric servo brake control unit/pedal feel simulator removal and installation
- Brake pedal removal and installation
- Electric servo brake control unit update
- Brake pedal height adjustment

1. **HDS - Connect**
2. Sensor 0 (Zero) Position - Memorize

NOTE: If brake system indicator (amber) is blinking before this procedure, press the brake pedal hard while brake system indicator goes off. 1. In the BRAKE SYSTEM MENU of the HDS, select ELECTRIC SERVO BRAKE SYSTEM, select ADJUSTMENT MENU, then select SENSOR 0 (ZERO) POSITION MEMORIZATION.

HOW TO INFORMATION

HOW TO TROUBLESHOOT THE ELECTRIC SERVO BRAKE SYSTEM

System Indicator

This system has four indicators:

- Brake system indicator (red)

- Brake system indicator (amber)
- Automatic brake hold system indicator
- Automatic brake hold indicator

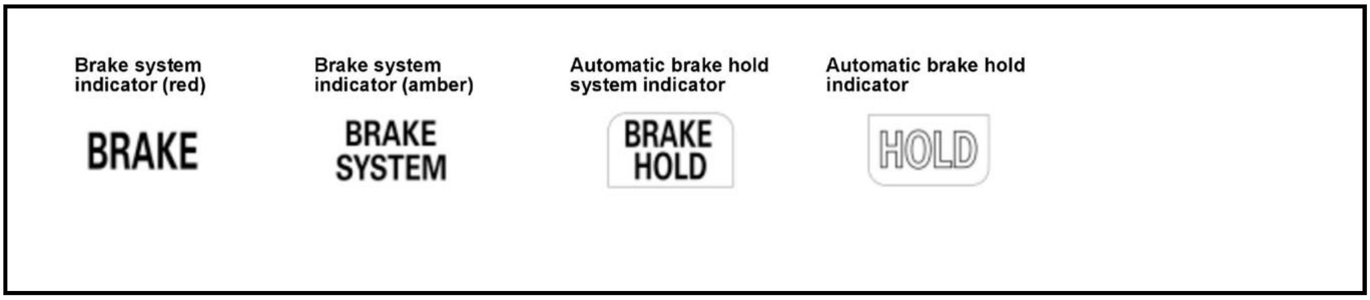
Brake system indicator (red)
BRAKE
Brake system indicator (amber)
BRAKE SYSTEM
Automatic brake hold system indicator
BRAKE HOLD
Automatic brake hold indicator
HOLD

NOTE: For locations of each indicator, refer to gauge control module component location index .

When the system is OK, each indicator comes on for about 2 seconds after turning the vehicle to the ON mode, then goes off.

NOTE: If the parking brake is applied, and/or the brake fluid level is low, the brake system indicator (red) will stay on.

When the system detects a problem, it turns on the brake system indicator (amber), and/or the brake system indicator (red). Depending on the failure, the electric servo brake control unit determines which indicators are turned on.

When the brake system indicator (amber) and the brake system indicator (red) comes on, the brakes get heavier and the pedal strokes get longer. Depressing the brake pedal further will cause kickbacks similar to what is felt during ABS activation, which are actually caused by the assist control from the hydraulic brake booster built inside the ABS/VSA modular.

Brake System Indicator (Red)

The brake system indicator (red) comes on when the electric servo brake is lost, or the EBD function is lost, the parking brake is applied, and/or the brake fluid level is low.

NOTE: If two or more wheel speed sensors fail, the brake system indicator (red) will come on along with the VSA indicator.

Brake System Indicator (Amber)

The brake system indicator (amber) comes on, when the regenerative brake control is lost, or the hydraulic boost failure compensation function is lost.

Automatic Brake Hold System Indicator

The automatic brake hold system indicator comes on when the automatic brake hold system is turned ON by using the automatic brake hold switch.

Automatic Brake Hold Indicator

The automatic brake hold indicator comes on when the automatic brake hold function is activating.

Diagnostic Trouble Code (DTC)

- The memory can hold 29 DTCs. However, when the same DTC is detected more than once, the more recent DTC is written over the earlier one.
- The DTCs are indicated in ascending order, not in the order they occurred.
- The DTCs are memorized in an EEPROM in the electric servo brake control unit. Therefore, the memorized DTCs cannot be erased by disconnecting the 12 volt battery. Do the specified procedures to

clear the DTCs.

Self-Diagnosis

- Self-diagnosis can be classified into two categories:
-
    - -

      Initial diagnosis: Done right after the vehicle to the ON mode and until the brake system indicator (red), and brake system indicator (amber) go off.
-
    - -

      Regular diagnosis: Done right after the initial diagnosis until turning the vehicle to the OFF (LOCK) mode.
- The electric servo brake control unit does the following functions when a problem is detected by self-diagnosis:
-
    - -

      Switches to the non servo mode.
    - -

      Turns on the brake system indicator (amber) and brake system indicator (red) depending on the failure.
    - -

      Stores the DTC.
    - -

      Stops the regenerative control cooperation.

Servo Motor

- The servo motor operates when the electric servo brake control unit is functioning.
- Turning the vehicle to the ON mode enables the servo motor to operate, and with the vehicle in the OFF (LOCK) mode, the servo motor operates for 3 minutes after opening the driver's door.

Hydraulic Boost Failure Compensation

This vehicle is equipped with a hydraulic boost failure compensation. This hydraulic boost failure compensation uses the VSA modulator-control unit's pressurization control to provide additional brake assist. This is necessary when the electric servo brake system is lost. The hydraulic boost failure compensation can be heard when operating and some kickback will be felt on the brake pedal. This is considered normal characteristics of this system.

Brake Fluid Replacement

Brake fluid replacement procedures are identical to the procedures of the electric servo brake.

Brake Fluid Air Bleeding

Brake fluid air bleeding procedures are identical to the procedures of the electric servo brake.

How to Troubleshoot DTCs

The troubleshooting procedures assume that the cause of the problem is still present and the brake system indicator (amber), and/or brake system indicator (red) are still on. Following a troubleshooting procedure for a DTC that has been cleared but does not reset can result in incorrect diagnosis.

1. Question the customer about the conditions when the problem occurred, and try to reproduce the same conditions for troubleshooting. Find out when the brake system indicator (amber), and/or brake system indicator (red) came on, such as during activation, after activation, when the vehicle was traveling at a certain speed, etc. If necessary, have the customer demonstrate the concern.

2. When the brake system indicator (amber), or brake system indicator (red) does not come on during the test-drive, but troubleshooting is done based on the DTC, check for loose connectors, poor contact of the terminals, etc. in the circuit indicated by the DTC.

3. After troubleshooting, or the repairs are done, clear the DTCs, and test-drive the vehicle under the same conditions that originally set the DTCs. Make sure the brake system indicator (amber) and brake system indicator (red) do not come on.

Intermittent Failures

The term "intermittent failure" means a system may have had a failure, but it checks OK now. If you cannot reproduce the condition, check for loose connections and terminals. Also check ground and power connections related to the circuit that you are troubleshooting.

How to Use the HDS (Honda Diagnostic System)

NOTE: Make sure the 12 volt battery is in good condition and fully charged.

1. If the system indicator(s) stay on, **connect the HDS to the data link connector (DLC)**

2. Turn the vehicle to the ON mode.

3. Make sure the HDS communicates with the vehicle and the electric servo brake control unit. If it does not, **go to the DTC troubleshooting index**

4. Check the diagnostic trouble code (DTC) and the freeze data, for all systems, troubleshoot the powertrain DTCs first. Then refer to the indicated DTC's troubleshooting, and do the appropriate troubleshooting procedure.

NOTE:

- Freeze data indicates the electric servo brake conditions when the first system malfunction that activated the indicator was detected.
- The HDS can read the DTC, the freeze data, the current data, and other system data.
- For specific operations, refer to the Help menu that came with the HDS.

How to Retrieve DTCs

1. With the vehicle to the OFF (LOCK) mode, **connect the HDS to the data link connector (DLC)**

2. Turn the vehicle to the ON mode.

3. Make sure the HDS communicates with the vehicle and the electric servo brake control unit. If it does not, **go to the DTC troubleshooting index**

4. Follow the prompts on the HDS to display the DTC(s) on the screen. After determining the DTC, refer to the DTC troubleshooting. Do the all systems DTC check, and troubleshoot any powertrain DTCs first.

5. Turn the vehicle to the OFF (LOCK) mode.

How to Clear DTCs

1. With the vehicle in the OFF (LOCK) mode, connect the HDS to the data link connector (DLC)

2. Turn the vehicle to the ON mode.

3. Make sure the HDS communicates with the vehicle and the electric servo brake control unit. If it does not, go to the DTC troubleshooting index

4. Clear the DTC(s) by following the screen prompts on the HDS.

5. Turn the vehicle to the OFF (LOCK) mode.

CONNECTOR VIEW

ELECTRIC SERVO BRAKE CONTROL UNIT CONNECTOR FOR INPUTS AND OUTPUTS

Electric Servo Brake Control Unit 22P Connector (female terminals) (Connector Disconnected)

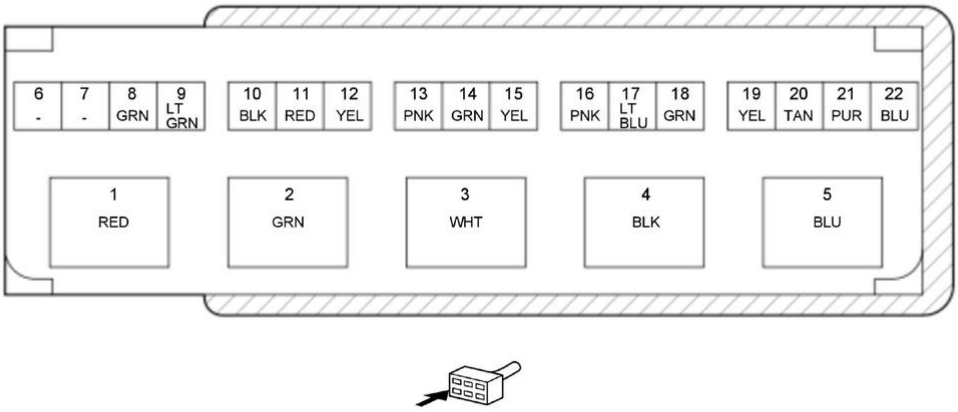

Terminal number	Terminal sign	Description
1	MV	Drive the motor
2	MU	Drive the motor
3	MW	Drive the motor
4	GND	Ground for the electric servo brake control unit
5	+B_ESB	Power source for the electric servo brake control unit
6	Not used	---
7	Not used	---
8	BPS	Detects brake pedal stroke sensor signal
9	ESV_SGND	Ground for the sensors
10	FL_DOOR_SW	Detects driver's door switch signal
11	BPSR	Detects brake pedal stroke sensor redundant signal
12	ESB_SVCC	Power source for the sensors
13	BRK_LAMP	Drive the brake light relay
14	F-CAN B_L	F-CAN communication circuit
15	F-CAN B_H	F-CAN communication circuit
16	BRK_DIAG	Detects brake light relay signal
17	IG1_HAC	Power source for activating the system
18	F-CAN C_L	F-CAN communication circuit

Terminal number	Terminal sign	Description
19	F-CAN C_H	F-CAN communication circuit
20	HALL_U	Detects motor angle sensor signal
21	HALL_V	Detects motor angle sensor signal
22	HALL_W	Detects motor angle sensor signal

CIRCUIT DIAGRAM

ELECTRIC SERVO BRAKE SYSTEM CIRCUIT DIAGRAM

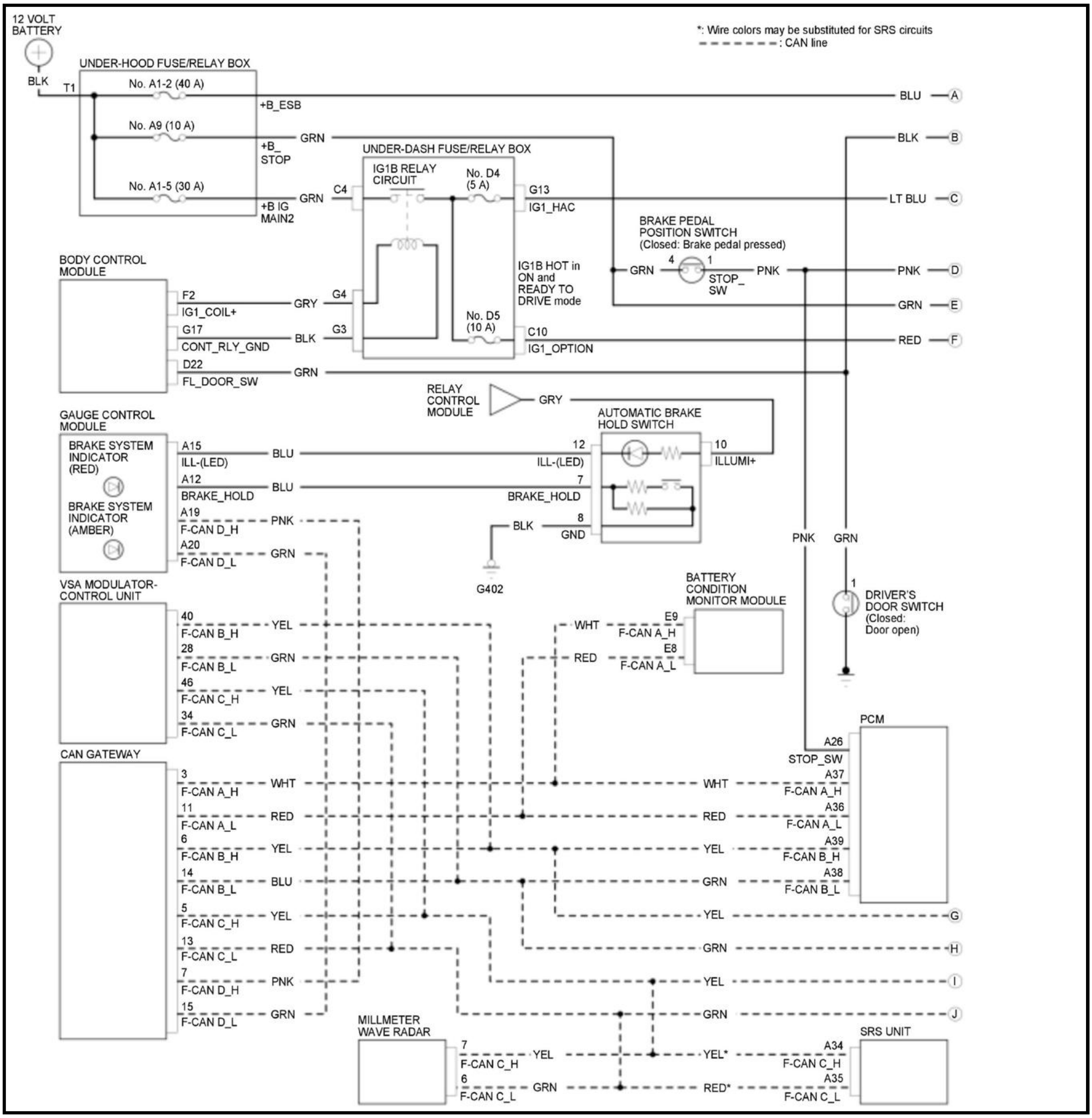

12 VOLT BATTERY
BLK
T1
UNDER-HOOD FUSE/RELAY BOX
No. A1-2 (40 A)
+B_ESB
No. A9 (10 A)
+B_ STOP
No. A1-5 (30 A)
+B IG MAIN2
GRN
GRN
*: Wire colors may be substituted for SRS circuits
: CAN line
BLU
A
BLK
B
LT BLU
C
UNDER-DASH FUSE/RELAY BOX
IG1B RELAY CIRCUIT
No. D4 (5 A)
C4
G13
IG1_HAC
IG1B HOT in ON and READY TO DRIVE mode
No. D5 (10 A)
C10
IG1_OPTION
G4
G3
BRAKE PEDAL POSITION SWITCH (Closed: Brake pedal pressed)
4
1
GRN
PNK
STOP_ SW
PNK
D
GRN
E
RED
F
BODY CONTROL MODULE
F2
IG1_COIL+
GRY
G17
CONT_RLY_GND
BLK
D22
FL_DOOR_SW
GRN
RELAY CONTROL MODULE
GRY
AUTOMATIC BRAKE HOLD SWITCH
12
ILL-(LED)
10
ILLUMI+
7
BRAKE_HOLD
8
GND
BLK
G402
GAUGE CONTROL MODULE
BRAKE SYSTEM INDICATOR (RED)
BRAKE SYSTEM INDICATOR (AMBER)
A15
ILL-(LED)
BLU
A12
BRAKE_HOLD
BLU
A19
F-CAN D_H
PNK
A20
F-CAN D_L
GRN
PNK
GRN
DRIVER'S DOOR SWITCH (Closed: Door open)
1
BATTERY CONDITION MONITOR MODULE
E9
F-CAN A_H
WHT
E8
F-CAN A_L
RED
VSA MODULATOR-CONTROL UNIT
40
F-CAN B_H
YEL
28
F-CAN B_L
GRN
46
F-CAN C_H
YEL
34
F-CAN C_L
GRN
CAN GATEWAY
3
F-CAN A_H
WHT
11
F-CAN A_L
RED
6
F-CAN B_H
YEL
14
F-CAN B_L
BLU
5
F-CAN C_H
YEL
13
F-CAN C_L
RED
7
F-CAN D_H
PNK
15
F-CAN D_L
GRN
PCM
A26
STOP_SW
A37
F-CAN A_H
WHT
A36
F-CAN A_L
RED
A39
F-CAN B_H
YEL
A38
F-CAN B_L
GRN
YEL
G
GRN
H
YEL
I
GRN
J
MILLIMETER WAVE RADAR
7
F-CAN C_H
YEL
6
F-CAN C_L
GRN
SRS UNIT
A34
F-CAN C_H
YEL*
A35
F-CAN C_L
RED*

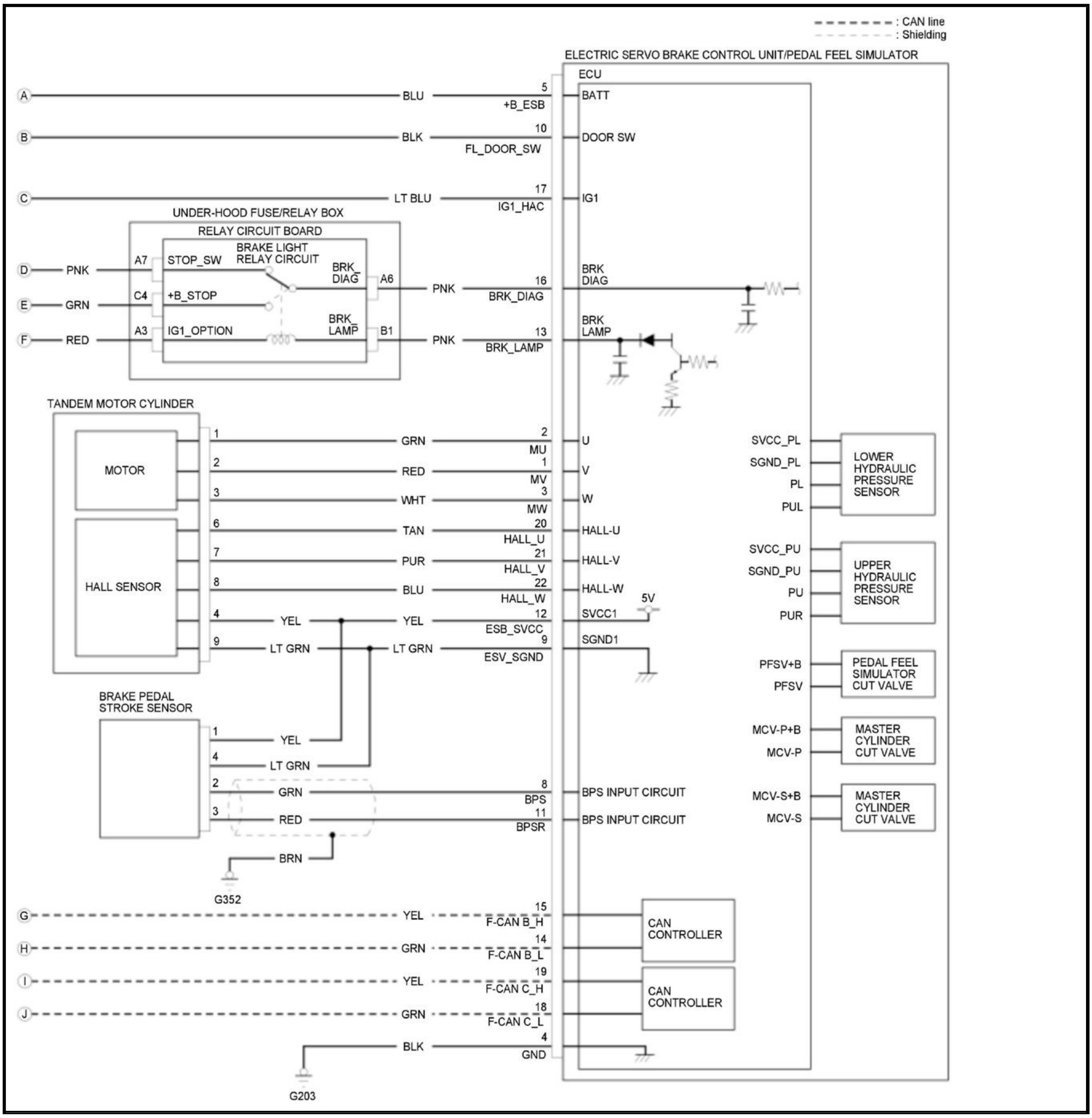
: CAN line
: Shielding
ELECTRIC SERVO BRAKE CONTROL UNIT/PEDAL FEEL SIMULATOR
ECU
A
BLU
5
+B_ESB
BATT
B
BLK
10
FL_DOOR_SW
DOOR SW
C
LT BLU
17
IG1_HAC
IG1
UNDER-HOOD FUSE/RELAY BOX
RELAY CIRCUIT BOARD
BRAKE LIGHT RELAY CIRCUIT
D
PNK
A7
STOP_SW
BRK_DIAG
A6
PNK
16
BRK_DIAG
BRK DIAG
E
GRN
C4
+B_STOP
F
RED
A3
IG1_OPTION
BRK_LAMP
B1
PNK
13
BRK_LAMP
BRK LAMP
TANDEM MOTOR CYLINDER
MOTOR
HALL SENSOR
1
GRN
2
MU
U
2
RED
1
MV
V
3
WHT
3
MW
W
6
TAN
20
HALL_U
HALL-U
7
PUR
21
HALL_V
HALL-V
8
BLU
22
HALL_W
HALL-W
5V
4
YEL
YEL
12
ESB_SVCC
SVCC1
9
LT GRN
LT GRN
9
ESV_SGND
SGND1
SVCC_PL
SGND_PL
PL
PUL
LOWER HYDRAULIC PRESSURE SENSOR
SVCC_PU
SGND_PU
PU
PUR
UPPER HYDRAULIC PRESSURE SENSOR
PFSV+B
PFSV
PEDAL FEEL SIMULATOR CUT VALVE
MCV-P+B
MCV-P
MASTER CYLINDER CUT VALVE
MCV-S+B
MCV-S
MASTER CYLINDER CUT VALVE
BRAKE PEDAL STROKE SENSOR
1
YEL
4
LT GRN
2
GRN
8
BPS
BPS INPUT CIRCUIT
3
RED
11
BPSR
BPS INPUT CIRCUIT
BRN
G352
G
YEL
15
F-CAN B_H
CAN CONTROLLER
H
GRN
14
F-CAN B_L
I
YEL
19
F-CAN C_H
CAN CONTROLLER
J
GRN
18
F-CAN C_L
BLK
4
GND
G203

COMPONENT LOCATION INDEX

CONVENTIONAL BRAKE COMPONENT LOCATION INDEX

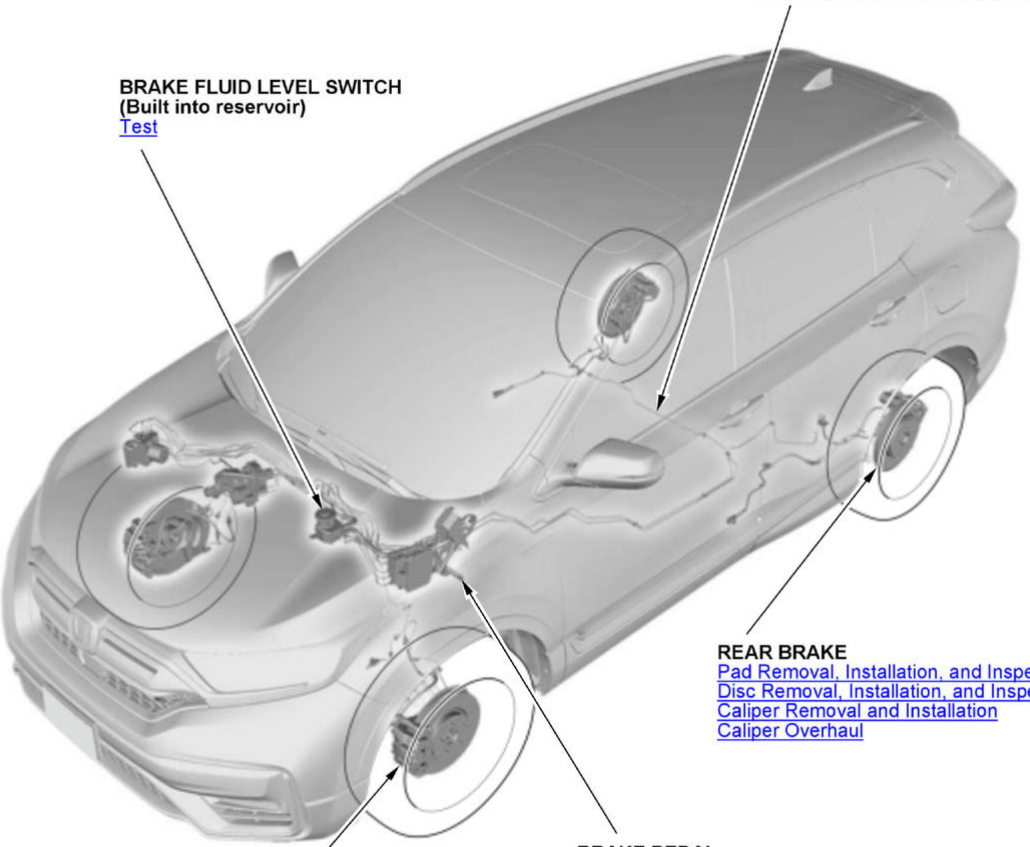

BRAKE HOSE and LINE
Inspection
Brake Hose Removal and Installation

BRAKE FLUID LEVEL SWITCH
(Built into reservoir)
Test

REAR BRAKE
Pad Removal, Installation, and Inspection
Disc Removal, Installation, and Inspection
Caliper Removal and Installation
Caliper Overhaul

BRAKE PEDAL
Brake Pedal and Brake Pedal Position Switch Adjustment
Removal and Installation

FRONT BRAKE
Pad Removal, Installation, and Inspection
Disc Removal, Installation, and Inspection
Caliper Removal and Installation
Caliper Overhaul

ELECTRIC SERVO BRAKE SYSTEM COMPONENT LOCATION INDEX

For relationships between signals in a system, refer to System Diagram.

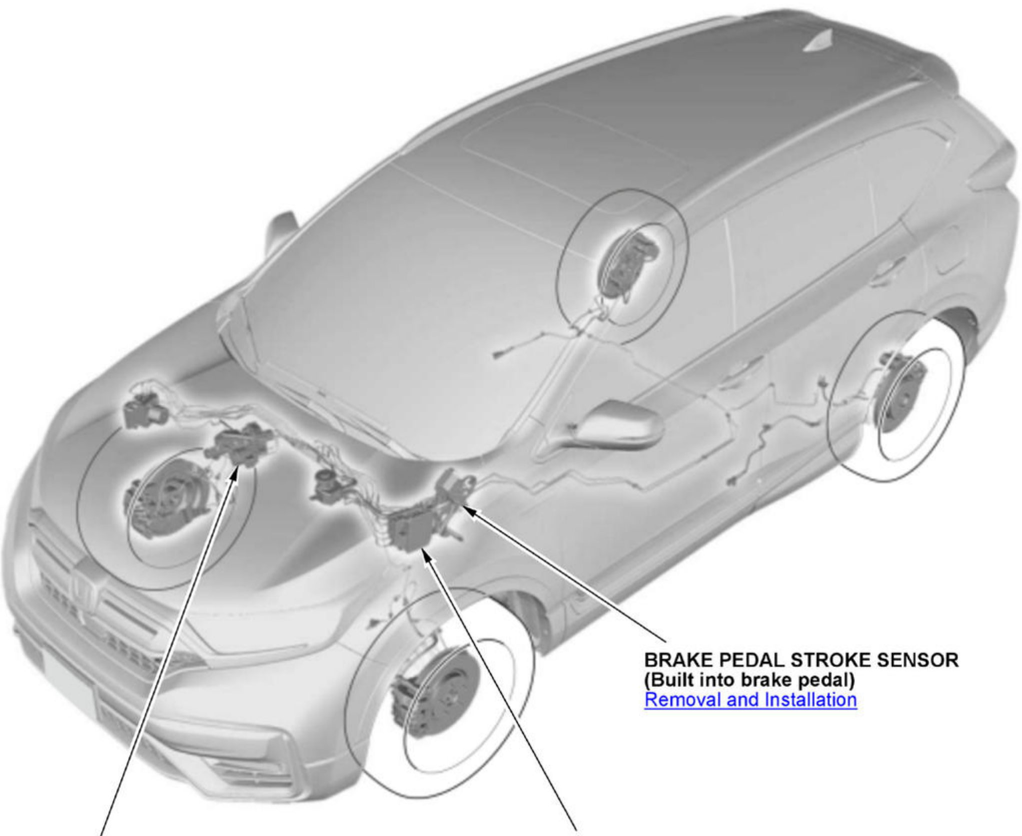

BRAKE PEDAL STROKE SENSOR (Built into brake pedal)
Removal and Installation

ELECTRIC SERVO BRAKE CONTROL UNIT/ PEDAL FEEL SIMULATOR
Removal and Installation
Inspection
Sensor 0 (Zero) Position Memorization
Bleeding
Fluid replacement
Update

TANDEM MOTOR CYLINDER
Removal and Installation
Disassembly and Reassembly

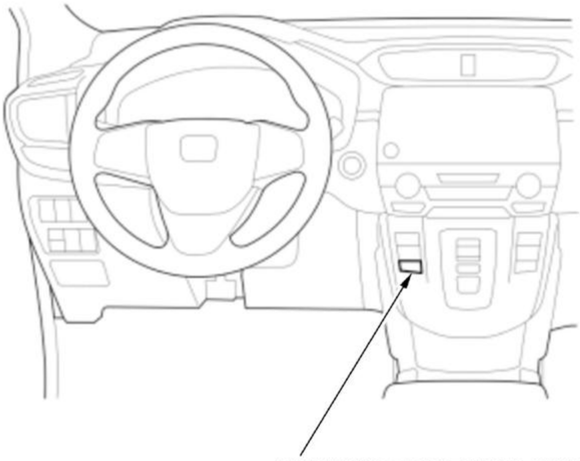

AUTOMATIC BRAKE HOLD SWITCH
Removal, Installation, and Test

DESCRIPTION & OPERATION

ELECTRIC BRAKE BOOSTER SYSTEM DESCRIPTION - COMPONENTS (ELECTRIC BRAKE BOOSTER CONTROL UNIT TYPE A) (2017 2018 2019)

Electric Brake Booster

The electric brake booster consists of the brushless motor, control unit, gear unit, motor angle sensor, brake pedal stroke sensor, and master cylinder.

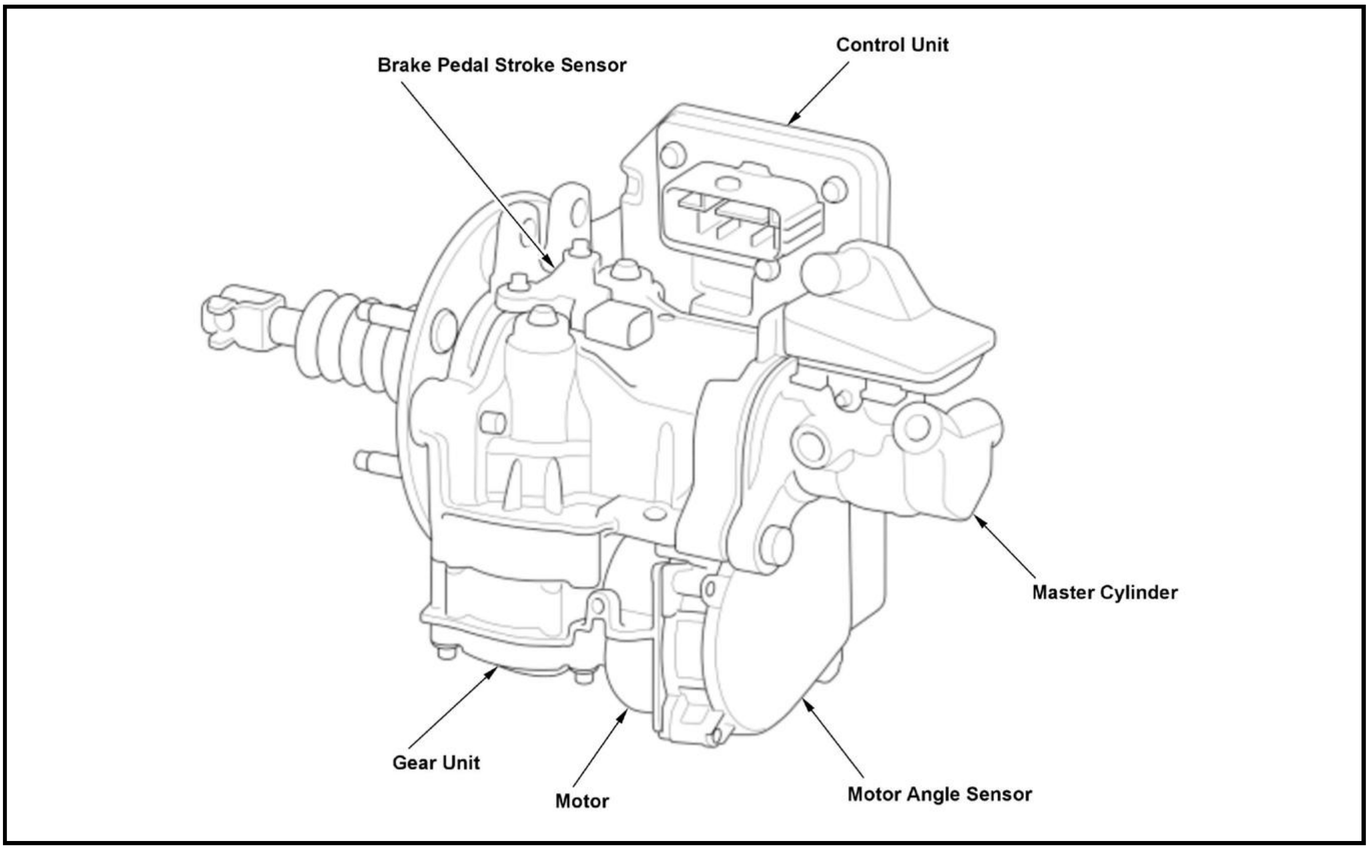
Control Unit
Brake Pedal Stroke Sensor
Master Cylinder
Gear Unit
Motor
Motor Angle Sensor

Brake Pedal Stroke Sensor

The brake pedal stroke sensor is located in the electric brake booster. The brake pedal stroke sensor detects the level of brake pedal force and outputs two kinds of voltage values depending on the given stroke.

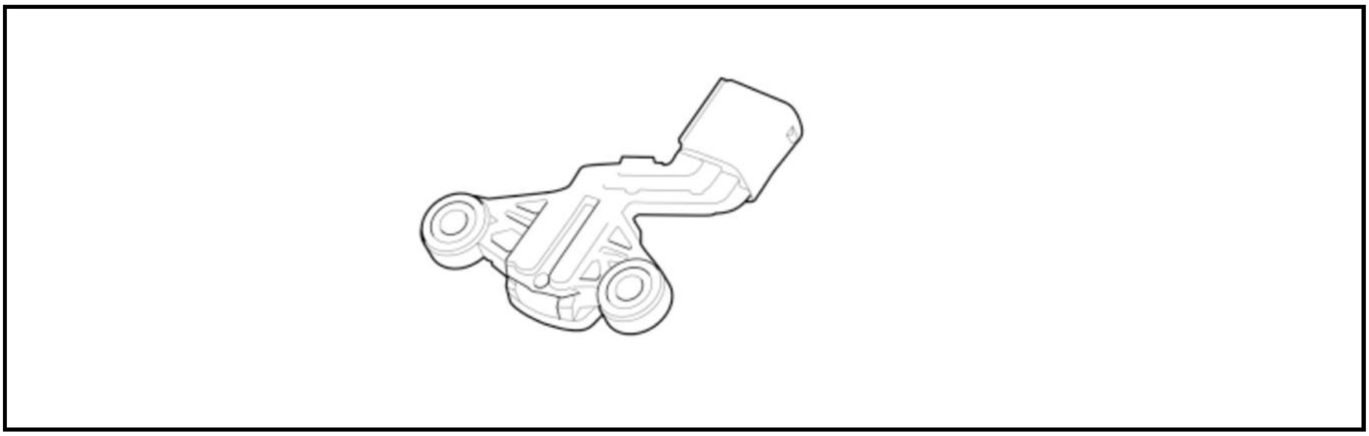

ELECTRIC BRAKE BOOSTER SYSTEM DESCRIPTION - COMPONENTS (ELECTRIC BRAKE BOOSTER CONTROL UNIT TYPE B) (2020 2021)

Components

The electric brake booster system consists of the following primary components:

- Electric brake booster
- Brake pedal stroke sensor
- System indicator

For locations of each component on the vehicle, **refer to Component Location Index**, and for indicator functions, **refer to How to Troubleshoot the Electric Brake Booster System**.

Electric Brake Booster

The electric brake booster consists of the brushless motor, control unit, transmission, rotary position sensor, brake pedal stroke sensor, and master cylinder.

The electric brake booster consists of the servo component, the servo control component, and the master cylinder component. The servo component consists of the motor, the transmission, and the valve body. The assisting force generated with the motor is transmitted to the valve body through the transmission, and an assist is performed because the valve body moves the piston of the master cylinder through the reaction disc.

The servo control component consists of the electric brake booster control unit, the rotary position sensor, and the brake pedal stroke sensor. The electric brake booster control unit measures the target differential stroke by using the brake pedal stroke sensor. The location of the plunger is calculated from the target differential stroke and the motor angle information (measured by the rotary position sensor). The master cylinder component is equivalent to a conventional vacuum brake booster brake system.

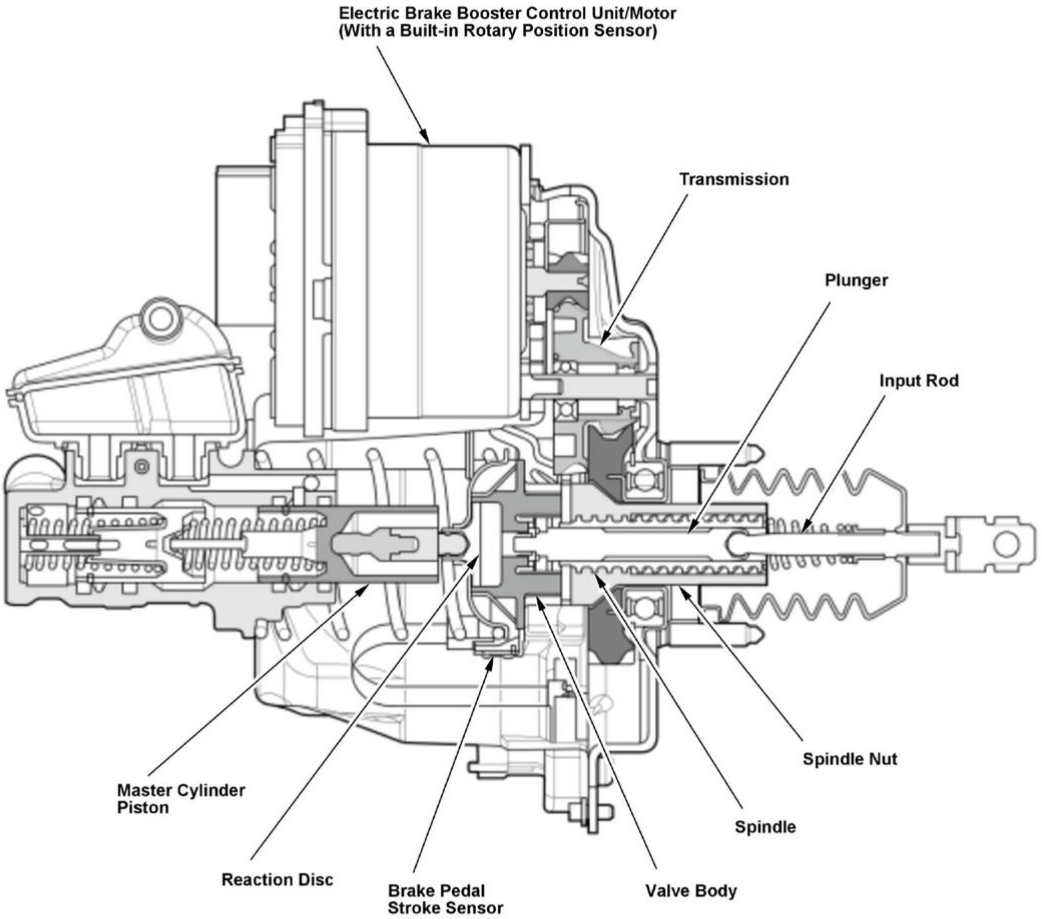
Electric Brake Booster Control Unit/Motor
(With a Built-in Rotary Position Sensor)
Transmission
Plunger
Input Rod
Spindle Nut
Master Cylinder Piston
Spindle
Reaction Disc
Brake Pedal Stroke Sensor
Valve Body

NOTE: This illustration is a typical sample of electric brake booster.

Brake Pedal Stroke Sensor

The brake pedal stroke sensor is located in the electric brake booster. The brake pedal stroke sensor detects the level of brake pedal force and outputs two kinds of voltage values depending on the given stroke.

ELECTRIC BRAKE BOOSTER SYSTEM DESCRIPTION - SYSTEM DIAGRAM (ELECTRIC BRAKE BOOSTER CONTROL UNIT TYPE A) (2017 2018 2019)

This system diagram shows the inputs and outputs of the electric brake booster system.

For locations of each component on the vehicle, refer to Component Location Index:

- Electric brake booster
- Gauge control module
- PCM
- VSA modulator-control unit, Automatic brake hold switch
- Driver's door switch

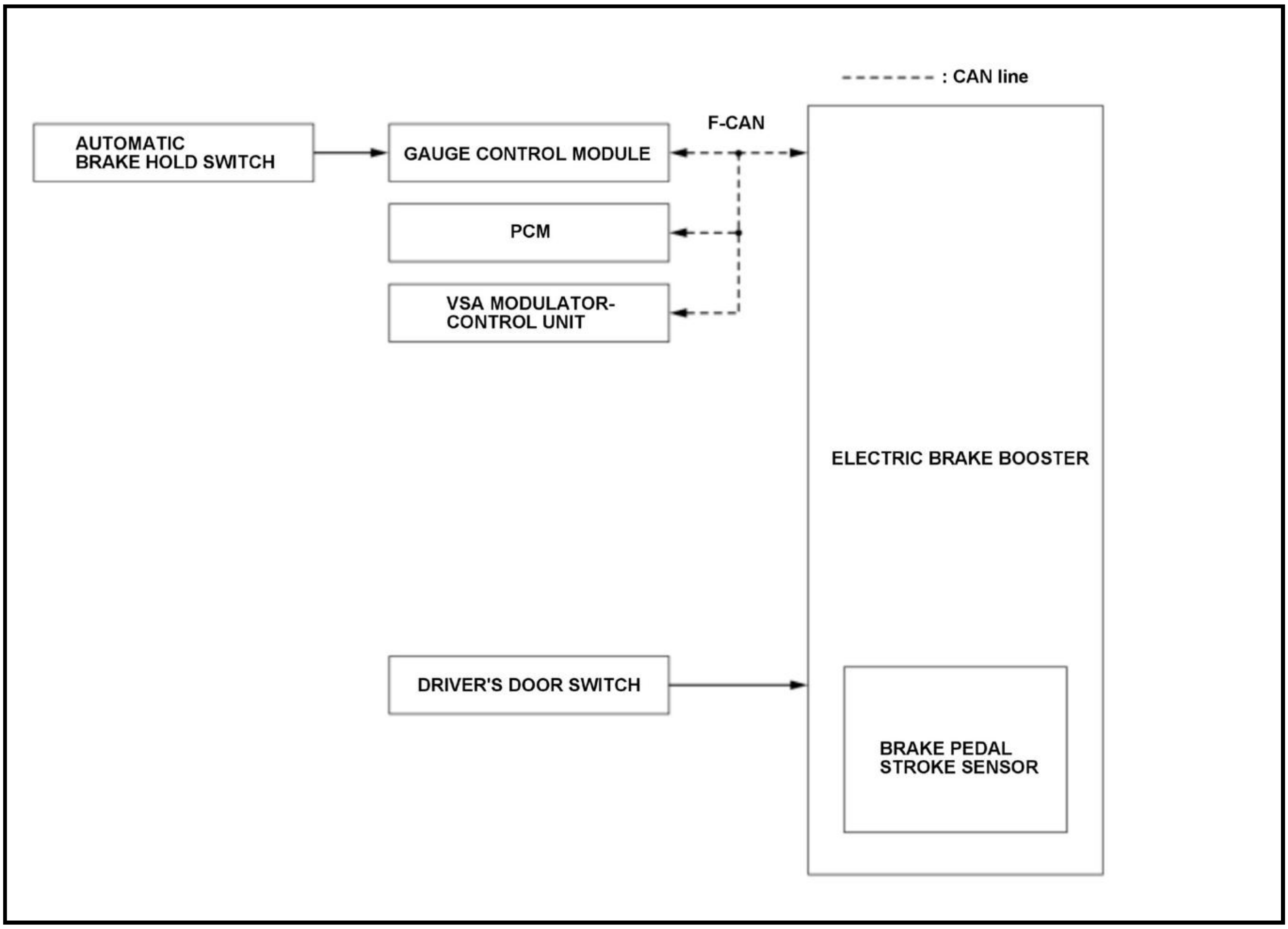
-------- : CAN line
F-CAN
AUTOMATIC BRAKE HOLD SWITCH
GAUGE CONTROL MODULE
PCM
VSA MODULATOR-CONTROL UNIT
ELECTRIC BRAKE BOOSTER
DRIVER'S DOOR SWITCH
BRAKE PEDAL STROKE SENSOR

F-CAN Communication Data

Electric Brake Booster System Receiving Signal

Transmitting Unit	Signal Name
PCM	Engine speed signal System operating status signal

*1: With ACC

Transmitting Unit	Signal Name
VSA modulator-control unit	- Master cylinder fluid pressure signal - Wheel speed signal - Automatic brake hold request signal - Target brake pressure signal *1 - System operating status signal - System failure Information

*1: With ACC

Electric Brake Booster System Transmitting Signal

Transmitting Unit	Signal Name
Electric brake booster	- Hydraulic boost failure compensation control request signal - Indicator drive signal - System operating status signal - System failure Information

ELECTRIC BRAKE BOOSTER SYSTEM DESCRIPTION - SYSTEM DIAGRAM (ELECTRIC BRAKE BOOSTER CONTROL UNIT TYPE B) (2020 2021)

This system diagram shows the inputs and outputs of the electric brake booster system.

For locations of each component on the vehicle, refer to Component Location Index:

- **Electric brake booster**
- **Gauge control module**
- **PCM**
- **VSA modulator-control unit, Automatic brake hold switch**
- **Driver's door switch**

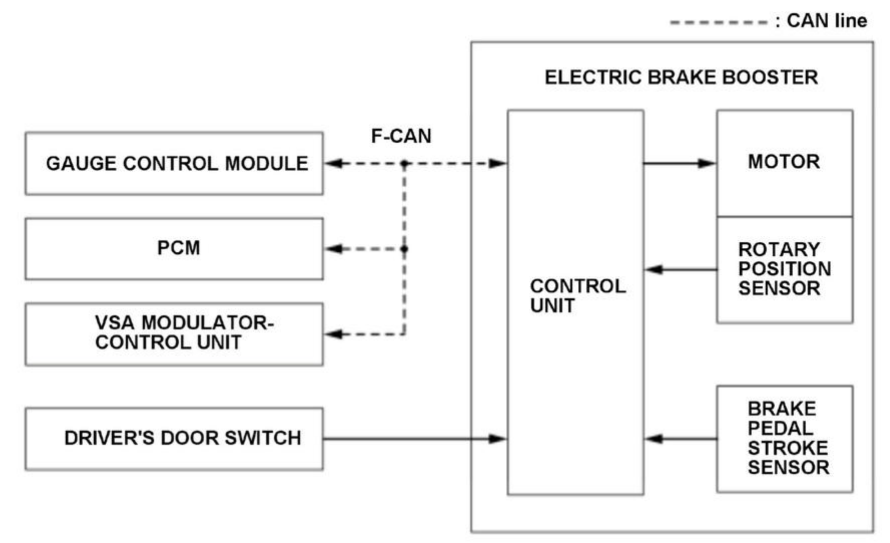
-------- : CAN line
ELECTRIC BRAKE BOOSTER
F-CAN
GAUGE CONTROL MODULE
PCM
VSA MODULATOR-CONTROL UNIT
DRIVER'S DOOR SWITCH
CONTROL UNIT
MOTOR
ROTARY POSITION SENSOR
BRAKE PEDAL STROKE SENSOR

F-CAN Communication Data

Electric Brake Booster System Receiving Signal

Transmitting Unit	Signal Name
PCM	• Engine speed signal • System operating status signal
VSA modulator-control unit	• Master cylinder fluid pressure signal • Vehicle speed signal • External brake control mode signal • System operating status signal • System failure Information

Electric Brake Booster System Transmitting Signal

Transmitting Unit	Signal Name
Electric brake booster	• Hydraulic boost failure compensation control request signal • Indicator drive signal • System operating status signal • System failure Information

ELECTRIC BRAKE BOOSTER SYSTEM DESCRIPTION (ELECTRIC BRAKE BOOSTER CONTROL UNIT TYPE A) (2017 2018 2019)

Overview

The electric brake booster is an electromechanical brake booster that replaces a typical vacuum brake booster. This system provides stable braking performance that does not depend on vacuum supply.

The electric brake booster system consists of the following primary components:

- Electric brake booster
- Brake pedal stroke sensor
- System indicator

For locations of each component on the vehicle, **refer to Component Location Index**, and for functions of the indicator, **refer to How to Troubleshoot the Electric Brake Booster System**.

Construction

The electric brake booster consists of the servo component, the servo control component, and the master cylinder component. The servo component consists of the motor, the gear unit, and the boost body. The assisting force generated with the motor is transmitted to the boost body through the gear unit, and an assist is performed because the boost body moves the piston of the master cylinder through the reaction disc.

The servo control component consists of the electric brake booster control unit, the motor angle sensor, and the brake pedal stroke sensor. The electric brake booster control unit is calculating the location of the boost body from the motor angle information measured by the motor angle sensor. The location of the plunger is measured based on the signal from the brake pedal stroke sensor. The master cylinder component is equivalent to a conventional vacuum brake booster brake system.

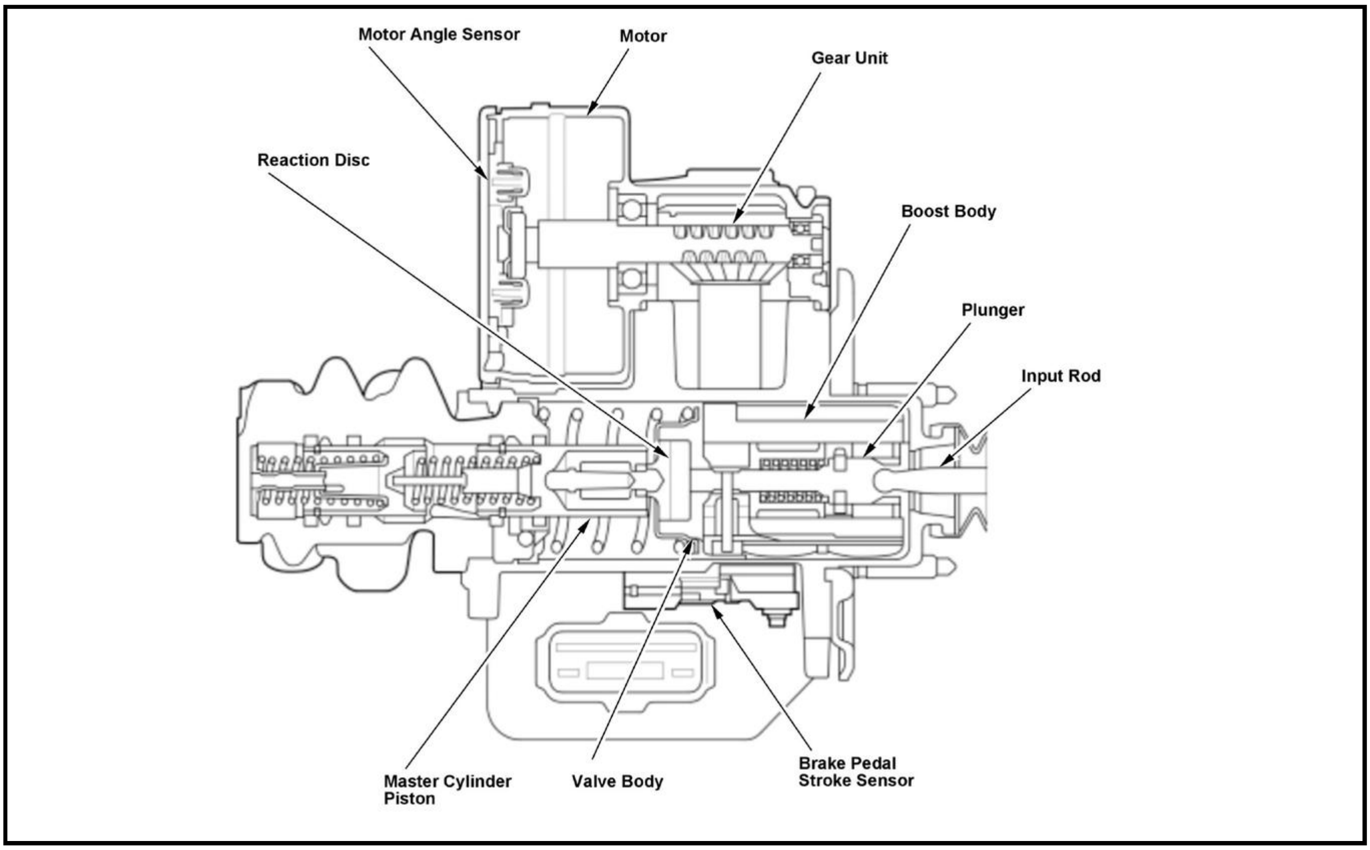
Motor Angle Sensor
Motor
Gear Unit
Reaction Disc
Boost Body
Plunger
Input Rod
Master Cylinder Piston
Valve Body
Brake Pedal Stroke Sensor

Servo Control Operations

When the driver presses down the brake pedal, the master cylinder piston is pushed by the driver's pedal force via the input rod, the plunger, and the reaction disc. The plunger moves at this time, but the boost body connected with the motor through the gear unit does not move because the motor is not active. As a result, there is a difference between the relative position of the plunger and the boost body. The control unit drives the motor to generate the required assisting force which is calculated based on the relative position of the plunger and the boost body. The assisting force created by the movement of the boost body is transmitted via the reaction disc to the master cylinder piston.

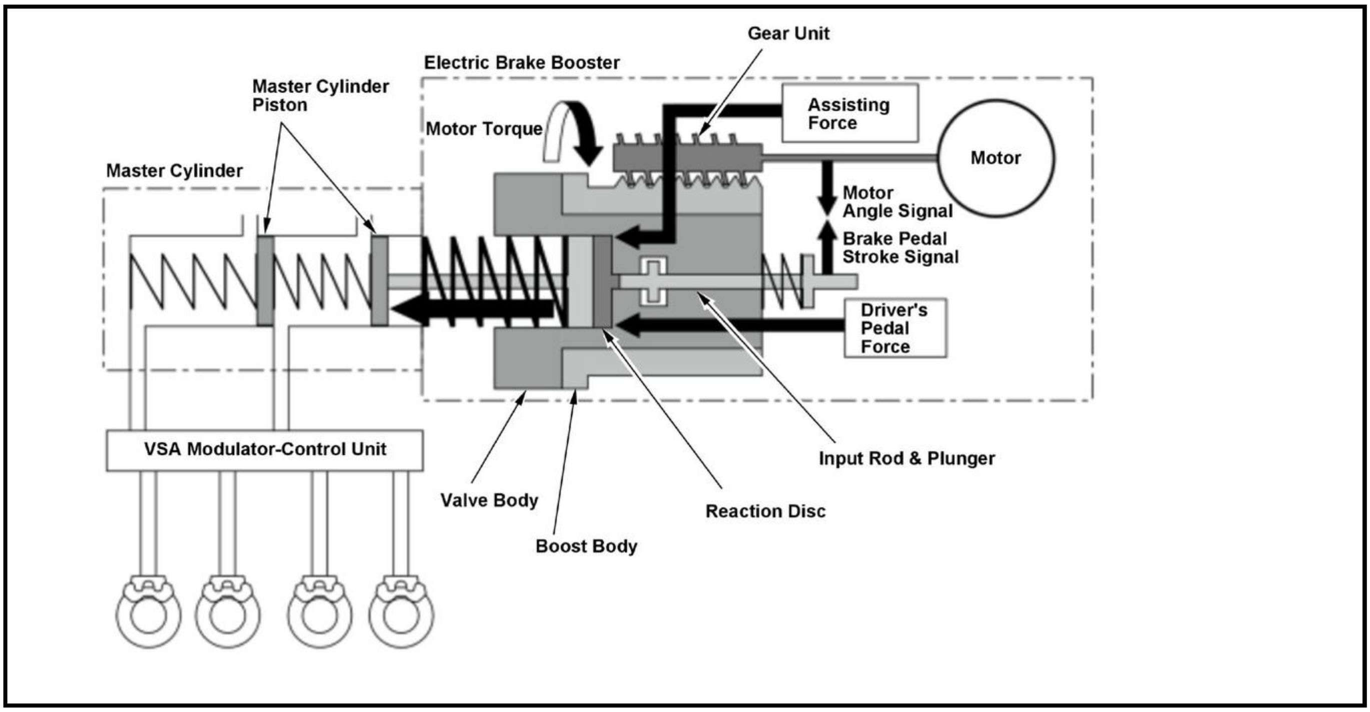
Gear Unit
Electric Brake Booster
Master Cylinder Piston
Motor Torque
Assisting Force
Motor
Master Cylinder
Motor Angle Signal
Brake Pedal Stroke Signal
Driver's Pedal Force
VSA Modulator-Control Unit
Input Rod & Plunger
Valve Body
Reaction Disc
Boost Body

Fail-safe

During the fail-safe mode, the driver's brake pedal operating force is transmitted via the reaction disc to the master cylinder piston directly. The hydraulic pressure created by the brake pedal force activates the brake caliper. In the fail-safe mode, the electric brake booster requests the hydraulic boost failure compensation control to the VSA modulator-control unit.

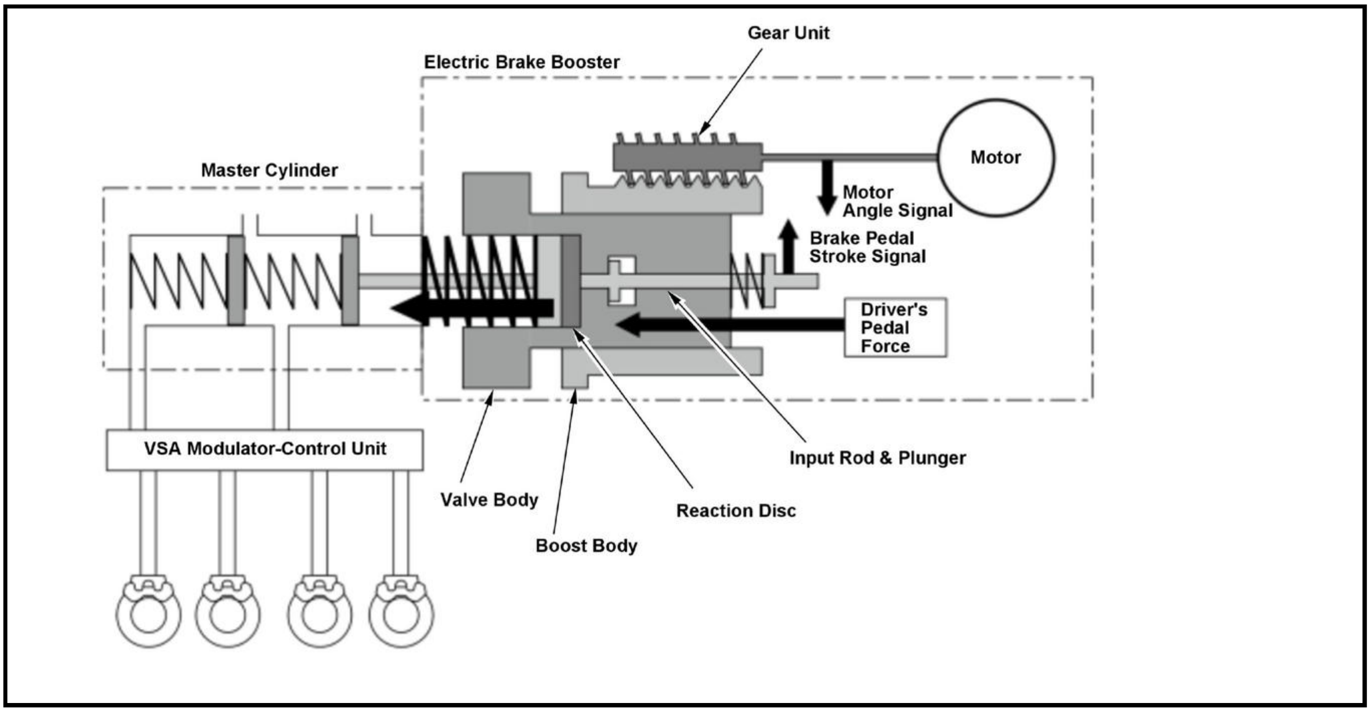
Gear Unit
Electric Brake Booster
Motor
Master Cylinder
Motor Angle Signal
Brake Pedal Stroke Signal
Driver's Pedal Force
VSA Modulator-Control Unit
Input Rod & Plunger
Valve Body
Reaction Disc
Boost Body

Engine Starting Prohibition Condition

Vehicles equipped with the electric brake booster have starting restrictions. The engine may only start under the following conditions:

- Shift position/mode is P.
- Shift position/mode is N and parking brake is applied.

For more information, **refer to the Fuel and Emissions Construction and Function** .

System Wake-Up and Shutdown

The electric brake booster system is activated when the driver's door is opened while the vehicle is in the OFF (LOCK) mode or when the vehicle is turned to the ON mode.

To prevent excessive battery discharge, the system will shut down automatically 3 minutes after the driver's door was opened with the vehicle in the OFF (LOCK) mode. Once the driver's door is opened and the system is activated, the system's activation time will not be extended even if the door was opened again.

Activating and shutting down the system by the driver's door operation is as follows.

Open the driver's door

The electric brake booster system is activated when the driver's door is opened, and will shut down automatically 3 minutes after the driver's door was opened with the vehicle in the OFF (LOCK) mode.

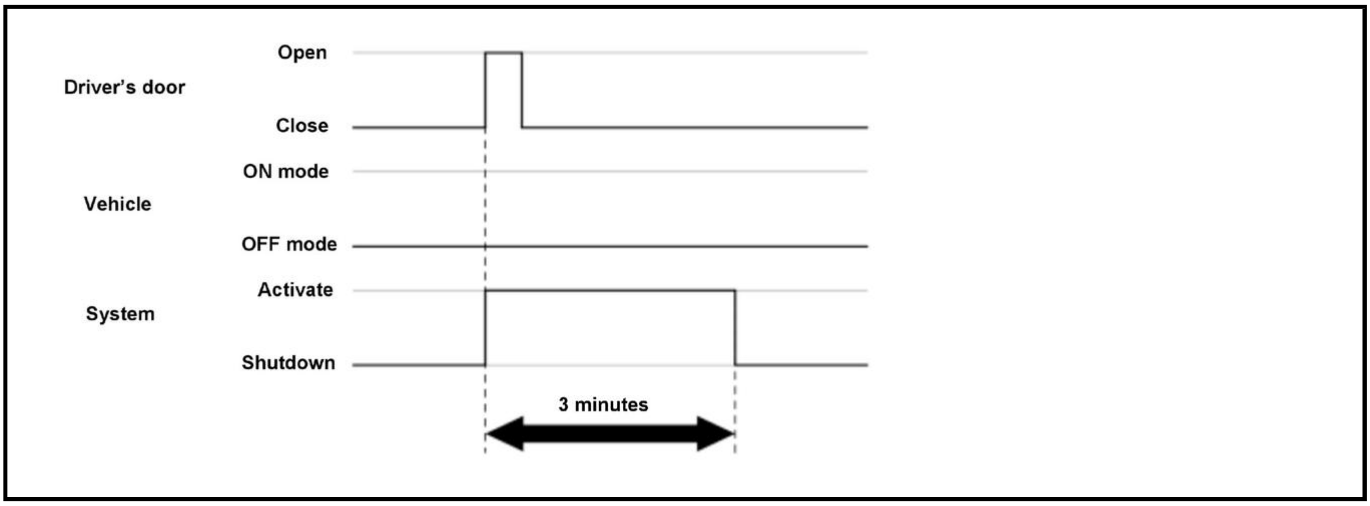
Driver's door
Open
Close
Vehicle
ON mode
OFF mode
System
Activate
Shutdown
3 minutes

Turn the vehicle to the ON mode after opening the driver's door

If the vehicle is turned to the ON mode within 3 minutes after opening the driver's door, the electric brake booster system will continue to operate.

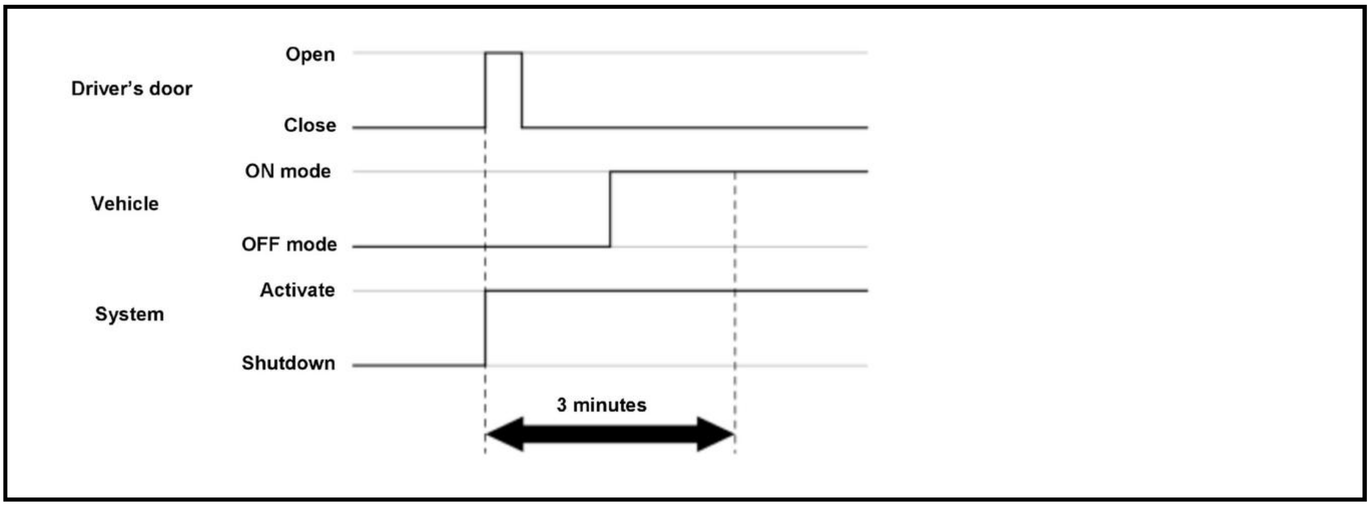
Driver's door
Open
Close
Vehicle
ON mode
OFF mode
System
Activate
Shutdown
3 minutes

Open the driver's door again after the system is activated by opening the door

Once the driver's door is opened and the system is activated, the system's activation time will not be extended even if the door was opened again.

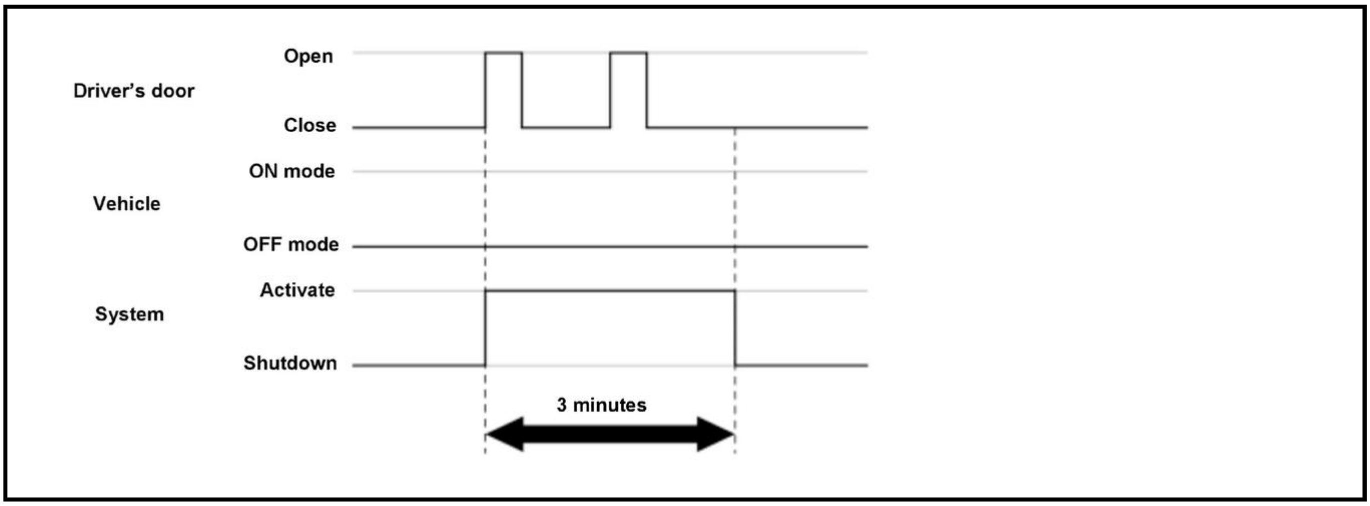
Driver's door
Open
Close
Vehicle
ON mode
OFF mode
System
Activate
Shutdown
3 minutes

Open the driver's door after turning the vehicle to the OFF (LOCK) mode from ON mode

The system will shut down automatically 3 minutes after the vehicle is turned to the OFF (LOCK) mode, and the system's activation time will not be extended even if the door is opened.

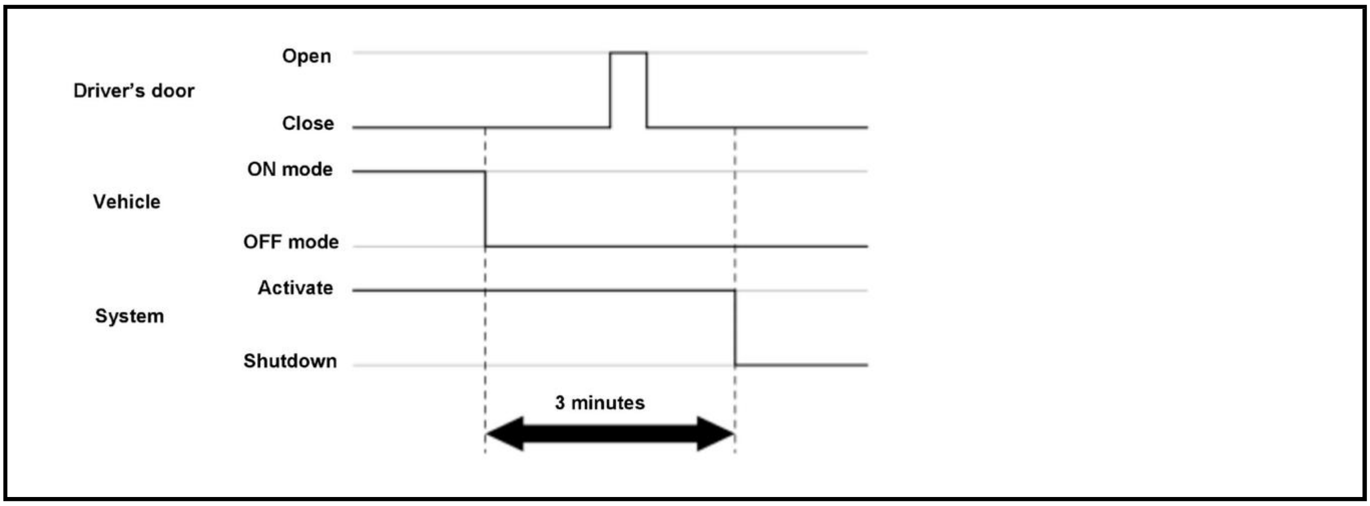

Boost Restriction

When the system is activated by the driver's door operation, and the vehicle is stopped, a boost amount of electric brake booster is restricted. Under this condition, a boost amount is such that the brake pedal position switch can be turned ON. The boost restriction continues even after turning the vehicle to the ON mode, and the normal boost is started when the engine is started. Therefore, the driver may feel that the brake pedal is hard until the engine is started, but it is not a system fault. While the system is activated for 3 minutes after turning the vehicle to the OFF (LOCK) mode, the normal boost is maintained.

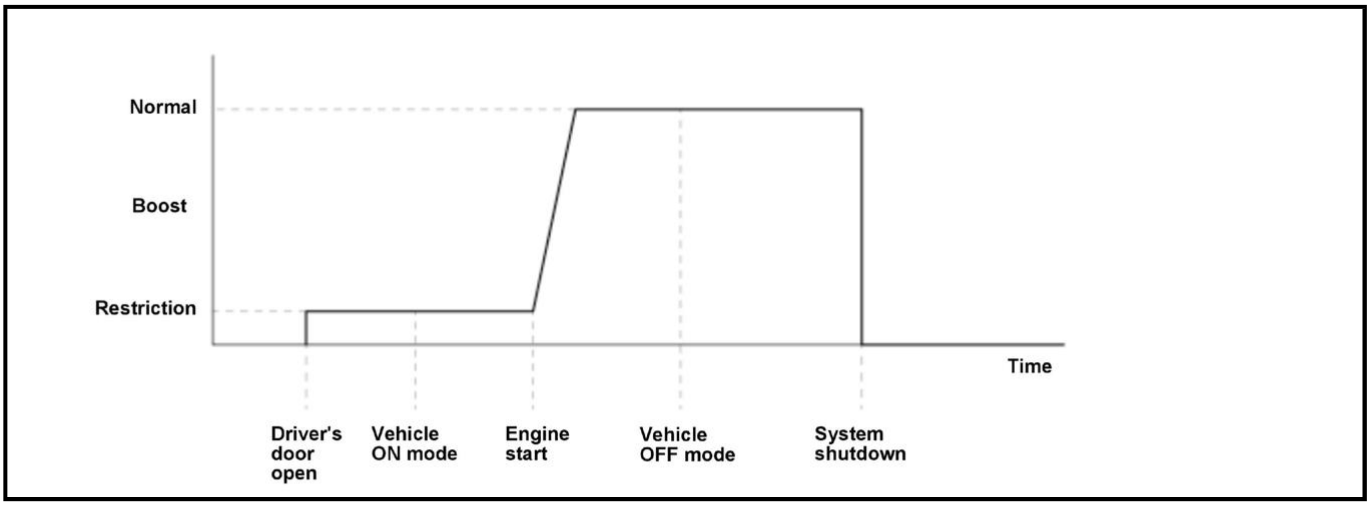

ELECTRIC BRAKE BOOSTER SYSTEM DESCRIPTION (ELECTRIC BRAKE BOOSTER CONTROL UNIT TYPE B) (2020 2021)

Overview

The electric brake booster is an electromechanical brake booster that replaces a typical vacuum brake booster. This system provides stable braking performance that does not depend on vacuum supply.

The driver's brake pedal control is changed to the fluid pressure by the master cylinder and it's transmitted to the VSA modulator-control unit. The electric brake booster provides the assisting force created by the motor to the master cylinder input force. The system generates the braking force based on other control unit request. (Depending on the model)

Servo Control Operations

When the driver presses the brake pedal, the input rod and the plunger moves to the master cylinder piston side. The plunger moves at this time, but the valve body connected with the motor through the transmission, the spindle nut, and the spindle does not move because the motor is not active. As a result, there is a difference between the relative position of the plunger and the valve body. The control unit drives the motor to generate the required assisting force which is calculated based on the relative position of the plunger and the valve body.

The assisting force created by the movement of the valve body is transmitted via the reaction disc to the master cylinder piston.

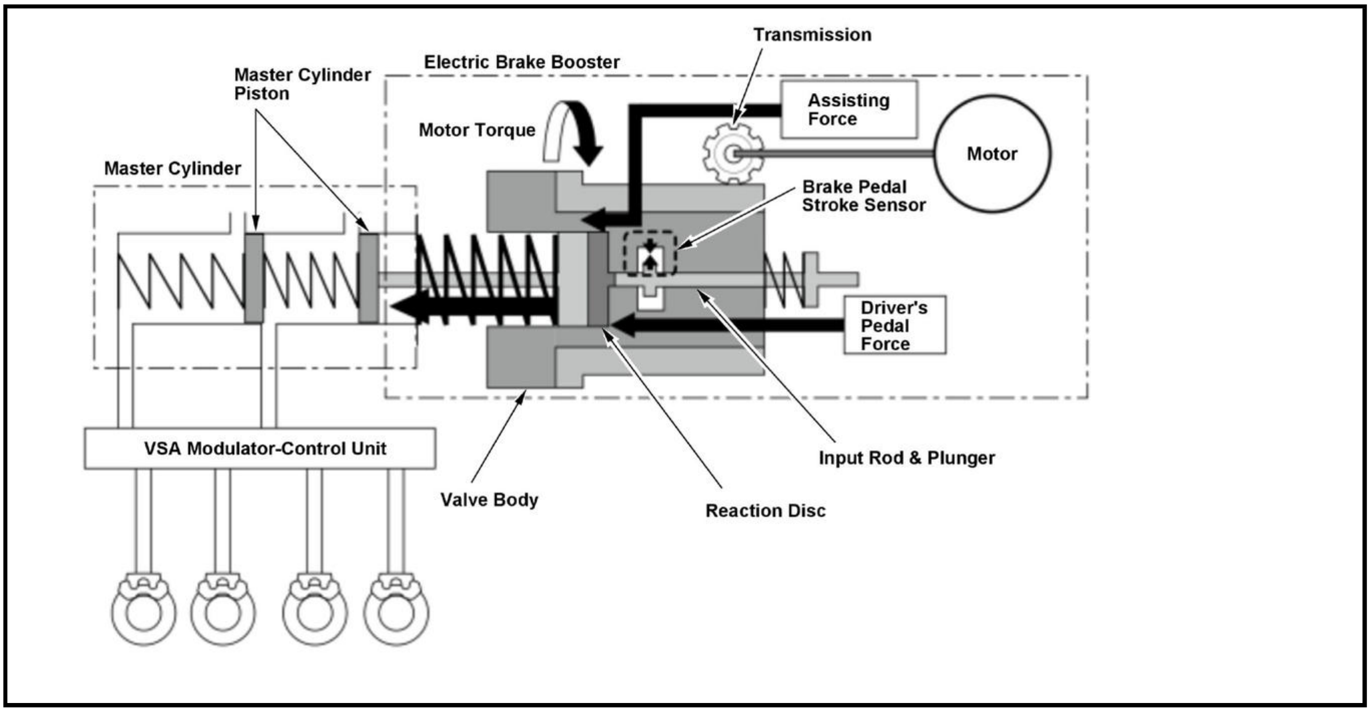
Transmission
Electric Brake Booster
Master Cylinder Piston
Assisting Force
Motor Torque
Motor
Master Cylinder
Brake Pedal Stroke Sensor
Driver's Pedal Force
VSA Modulator-Control Unit
Input Rod & Plunger
Valve Body
Reaction Disc

Fail-safe

During the fail-safe mode, the driver's brake pedal operating force is transmitted via the reaction disc to the master cylinder piston directly. The hydraulic pressure created by the brake pedal force activates the brake caliper. In the fail-safe mode, the operating force of the brake pedal becomes higher than under normal conditions. To reduce the operating force of the brake pedal, the electric brake booster requests **hydraulic boost failure compensation control** to the VSA system.

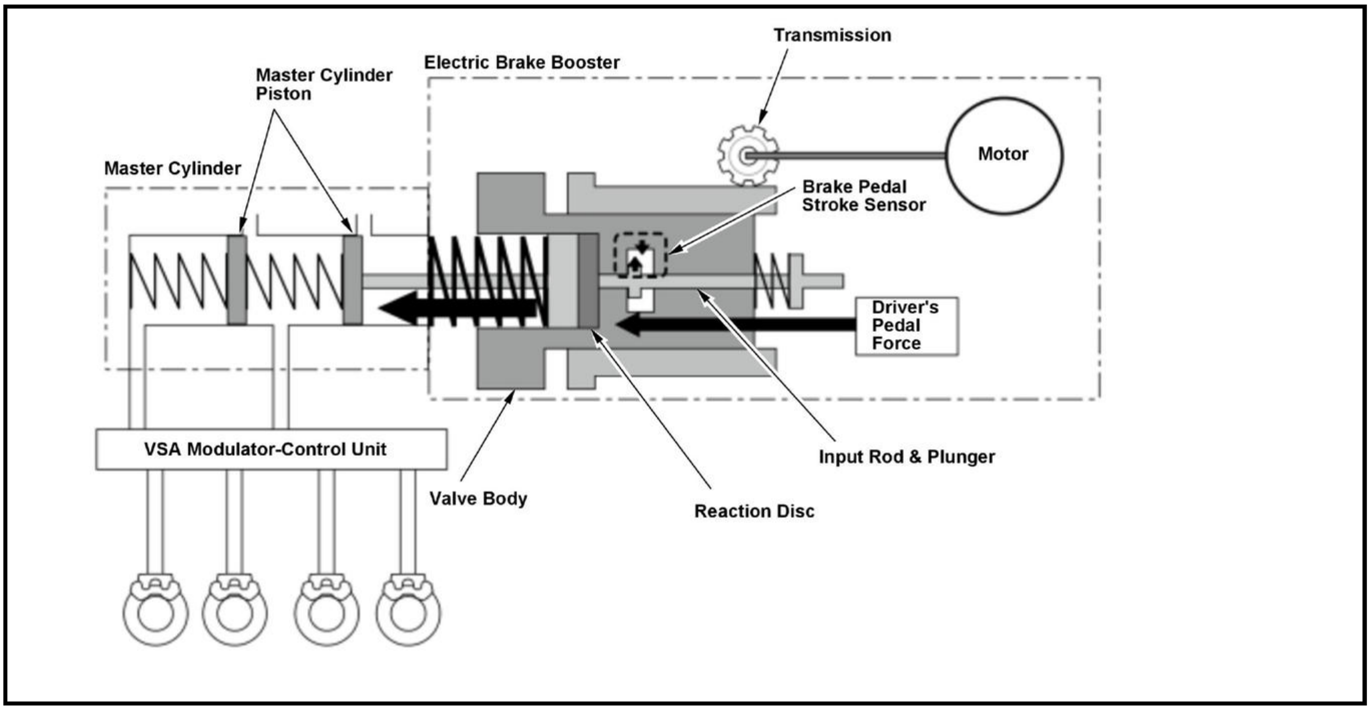
Transmission
Electric Brake Booster
Master Cylinder Piston
Motor
Master Cylinder
Brake Pedal Stroke Sensor
Driver's Pedal Force
VSA Modulator-Control Unit
Input Rod & Plunger
Valve Body
Reaction Disc

System Wake-Up and Shutdown

The electric brake booster system is activated when the driver's door is opened while the vehicle is in the OFF (LOCK) mode or when the vehicle is turned to the ON mode.

To prevent excessive battery discharge, the system will shut down automatically 3 minutes after the driver's door was opened with the vehicle in the OFF (LOCK) mode. Once the driver's door is opened and the system is activated, the system's activation time will not be extended even if the door was opened again.

Activating and shutting down the system by the driver's door operation is as follows.

Open the driver's door

The electric brake booster system is activated when the driver's door is opened, and will shut down automatically 3 minutes after the driver's door was opened with the vehicle in the OFF (LOCK) mode.

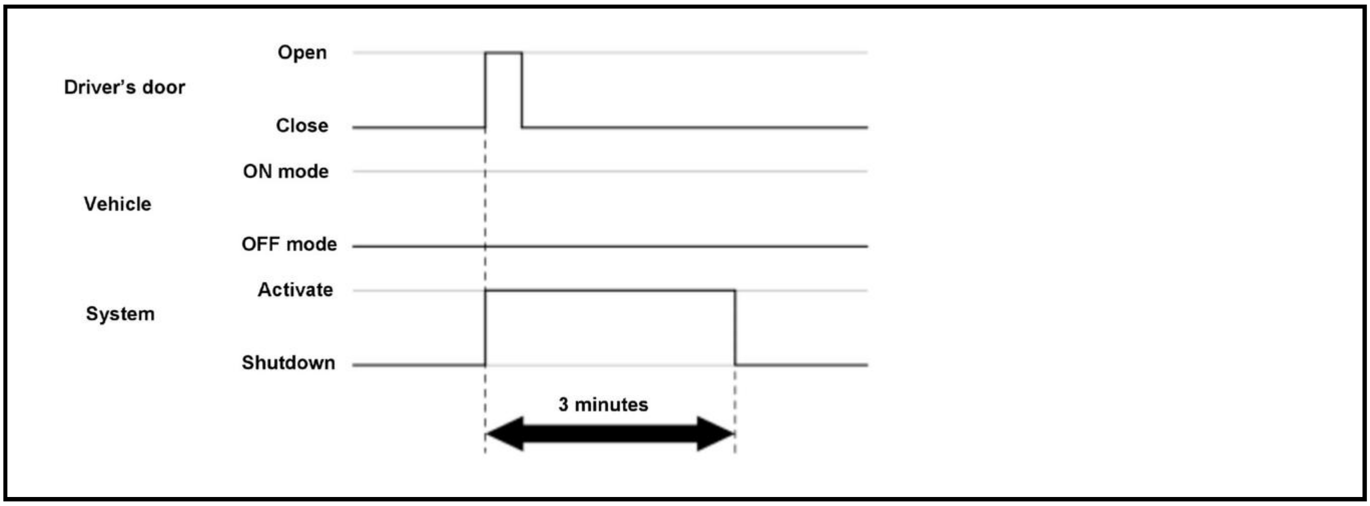
Driver's door
Open
Close
Vehicle
ON mode
OFF mode
System
Activate
Shutdown
3 minutes

Turn the vehicle to the ON mode after opening the driver's door

If the vehicle is turned to the ON mode within 3 minutes after opening the driver's door, the electric brake booster system will continue to operate.

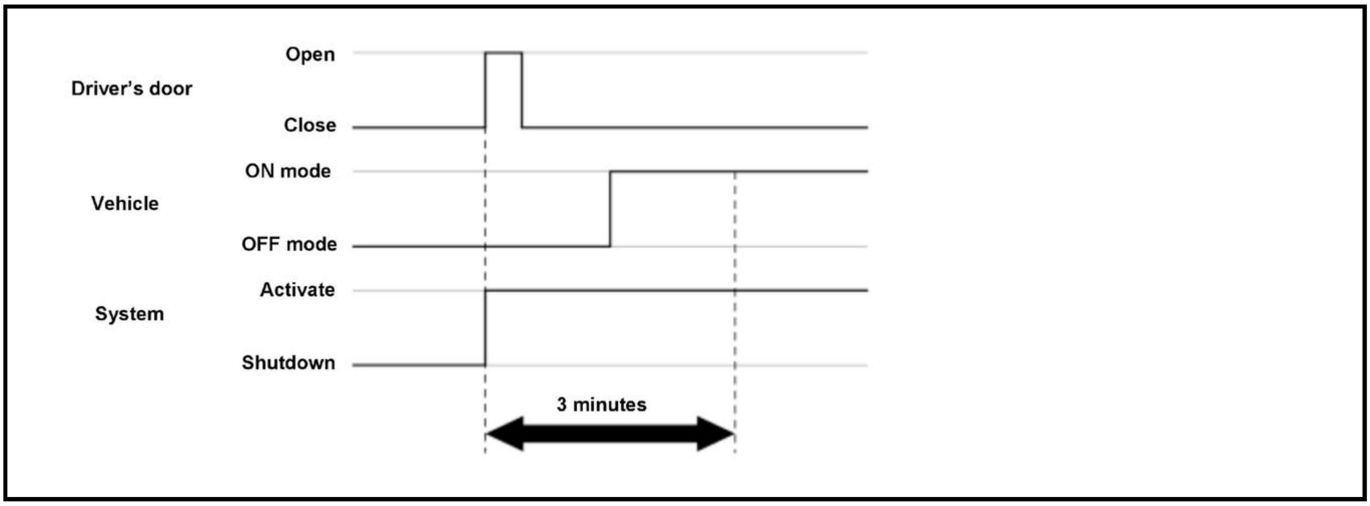
Driver's door
Open
Close
Vehicle
ON mode
OFF mode
System
Activate
Shutdown
3 minutes

Open the driver's door again after the system is activated by opening the door

Once the driver's door is opened and the system is activated, the system's activation time will not be extended even if the door was opened again.

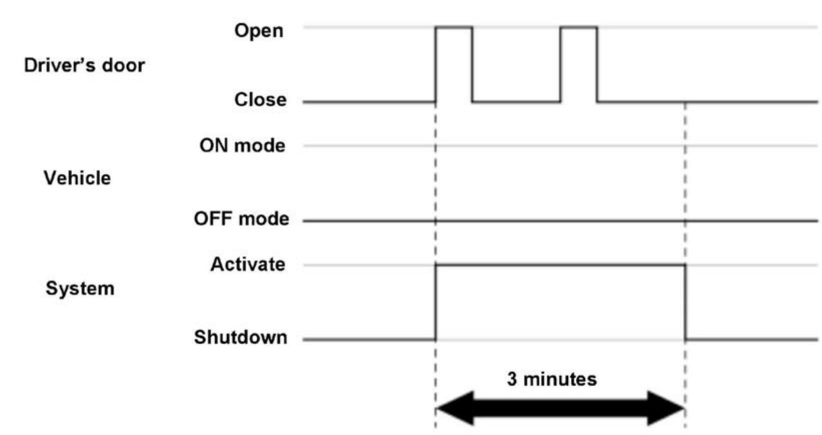

Open the driver's door after turning the vehicle to the OFF (LOCK) mode from ON mode

The system will shut down automatically 3 minutes after the vehicle is turned to the OFF (LOCK) mode, and the system's activation time will not be extended even if the door is opened.

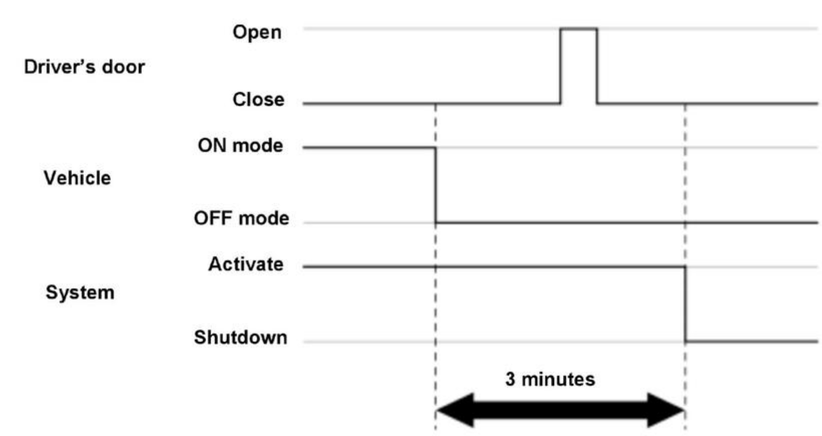

CONNECTOR VIEW

ELECTRIC BRAKE BOOSTER CONNECTOR FOR INPUTS AND OUTPUTS (ELECTRIC BRAKE BOOSTER CONTROL UNIT TYPE A) (2017 2018 2019)

Electric Brake Booster Inputs and Outputs for 26P Connector (female terminals)

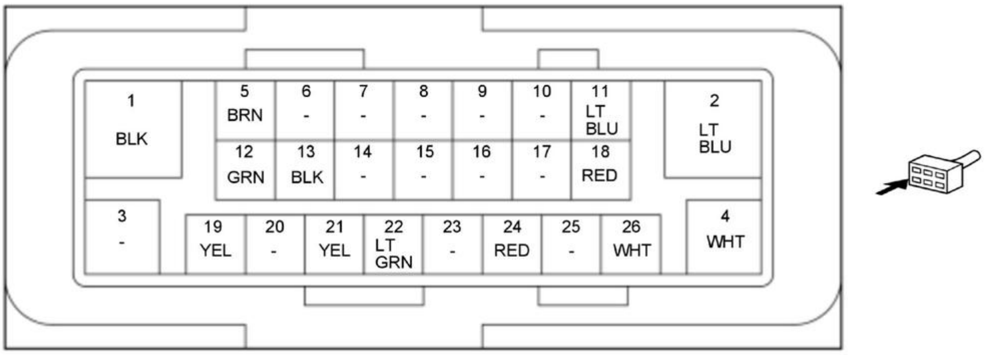
1
BLK
5
BRN
6
-
7
-
8
-
9
-
10
-
11
LT BLU
2
LT BLU
12
GRN
13
BLK
14
-
15
-
16
-
17
-
18
RED
3
-
19
YEL
20
-
21
YEL
22
LT GRN
23
-
24
RED
25
-
26
WHT
4
WHT

Terminal number	Terminal sign	Description
1	GND	Ground for the electric brake booster

Terminal number	Terminal sign	Description
2	+B EBB	Power source for the motor
3	Not used	---
4	+B OPTION	Power source for the ECU
5	PTS GND	Ground for the brake pedal stroke sensor
6	Not used	---
7	Not used	
8	Not used	
9	Not used	
10	Not used	
11	PTS VS	Power source for the brake pedal stroke sensor
12	EBB CAN L *1F-CAN B L *2	F-CAN communication circuit
13	FL DOOR SW	Detects driver's door switch signal
14	Not used	---
15	Not used	
16	Not used	
17	Not used	
18	F-CAN L *1F-CAN A L *2	F-CAN communication circuit
19	EBB CAN H *1F-CAN B H *2	F-CAN communication circuit
20	Not used	---
21	PTS2	Detects brake pedal stroke sensor signal
22	PTS1	Detects brake pedal stroke sensor signal
23	Not used	---
24	IG1 OPTION	Power source for activating the system
25	Not used	---
26	F-CAN H *1F-CAN A H *2	F-CAN communication circuit

*1: Without CAN gateway*2: With CAN gateway

ELECTRIC BRAKE BOOSTER CONNECTOR FOR INPUTS AND OUTPUTS (ELECTRIC BRAKE BOOSTER CONTROL UNIT TYPE B) (2020 2021)

Electric Brake Booster Inputs and Outputs for 26P Connector (female terminals)

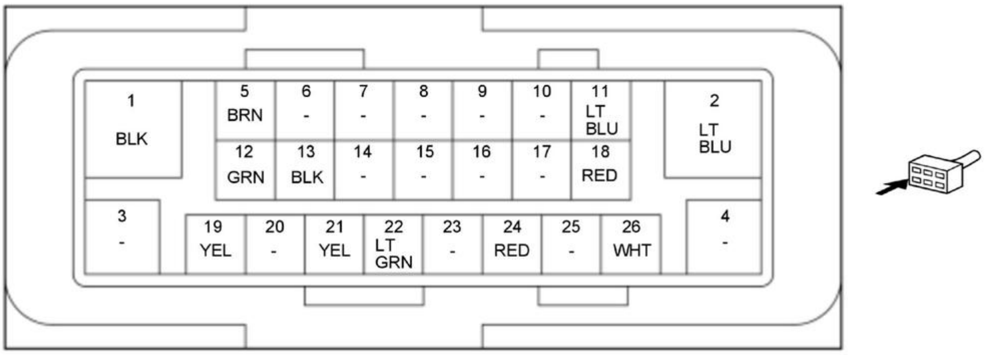

Terminal number	Terminal sign	Description
1	GND	Ground for the electric brake booster

Terminal number	Terminal sign	Description
2	+B EBB	Power source for the motor
3	Not used	---
4	Not used	
5	PTS GND	Ground for the brake pedal stroke sensor
6	Not used	---
7	Not used	
8	Not used	
9	Not used	
10	Not used	
11	PTS VS	Power source for the brake pedal stroke sensor
12	F-CAN B L	F-CAN communication circuit
13	FL DOOR SW	Detects driver's door switch signal
14	Not used	---
15	Not used	
16	Not used	
17	Not used	
18	F-CAN A L	F-CAN communication circuit
19	F-CAN B H	F-CAN communication circuit
20	Not used	---
21	PTS2	Detects brake pedal stroke sensor signal
22	PTS1	Detects brake pedal stroke sensor signal
23	Not used	---
24	IG1 OPTION	Power source for activating the system
25	Not used	---
26	F-CAN A H	F-CAN communication circuit

DTC TROUBLESHOOTING

DTC C0049-7A (ELECTRIC BRAKE BOOSTER CONTROL UNIT TYPE A) (2017 2018 2019)

DTC C0049-7A : Brake Fluid Leak or Seal Failure

NOTE:

- Before you troubleshoot, review the general troubleshooting information.
- The DTCs may be indicated under these conditions:
-
    - -

      Bleed the brake system.
    - -

      Air trapped in the brake system.

DTC Description	DTC	Freeze Frame
C0049-7A Brake Fluid Leak or Seal Failure	B	B

DTC (Electric brake booster)

1. Problem verification

-1. Turn the vehicle to the ON mode.

-2. Clear the DTCs with the HDS.

-3. Turn the vehicle to the OFF (LOCK) mode, then wait 5 seconds or more.

NOTE: Do not open and close the driver's door.

-4. Start the engine.

-5. Press the brake pedal several times.

-6. Check for DTCs with the HDS.

DTC Description	DTC	Freeze Frame
C0049-7A Brake Fluid Leak or Seal Failure	B	B

Is DTC C0049-7A indicated?

YES

The failure is duplicated. Go to step 2.

NO

Intermittent failure, the system is OK at this time. **Refer to intermittent failures troubleshooting**. If the freeze data/on-board snapshot of this DTC is recorded, try to reproduce the failure under the same conditions with the freeze data/on-board snapshot.

2. Brake fluid leakage check

-1. Press the brake pedal hard and hold for several seconds.

-2. **Inspect the brake system**.

Is there a fluid leakΩ

YES

Repair the brake fluid leak.

NO

Go to step 3.

3. Master cylinder check

-1. **Bleed the brake system**.

-2. Clear the DTCs with the HDS.

-3. Turn the vehicle to the OFF (LOCK) mode, then wait 5 seconds or more.

NOTE: Do not open and close the driver's door.

-4. Start the engine.

-5. Press the brake pedal several times.

-6. Check for DTCs with the HDS.

DTC Description	DTC	Freeze Frame
C0049-7A Brake Fluid Leak or Seal Failure	B	B

Is DTC C0049-7A indicated?

YES

Replace the master cylinder .

NO

Troubleshooting is complete.

DTC C1250-98 (ELECTRIC BRAKE BOOSTER CONTROL UNIT TYPE A) (2017 2018 2019)

DTC C1250-98 : ECU Internal Malfunction (Over Temperature)

NOTE: Before you troubleshoot, review the general troubleshooting information.

DTC Description	DTC	Freeze Frame
C1250-98 ECU Internal Malfunction (Over Temperature)	B	B

DTC (Electric brake booster)

1. Problem verification

   -1. Turn the vehicle to the ON mode.

   -2. Clear the DTC with the HDS.

   -3. Turn the vehicle to the OFF (LOCK) mode, then wait 5 seconds or more.

   NOTE: Do not open and close the driver's door.

   -4. Turn the vehicle to the ON mode.

   -5. Check for DTCs with the HDS.

DTC Description	DTC	Freeze Frame
C1250-98 ECU Internal Malfunction (Over Temperature)	B	B

   Is DTC C1250-98 indicated?

   YES

   The failure is duplicated. Go to step 2.

   NO

   Intermittent failure, the system is OK at this time. Refer to intermittent failures troubleshooting. If the freeze data/on-board snapshot of this DTC is recorded, try to reproduce the failure under the same conditions with the freeze data/on-board snapshot.

2. Electric brake booster check

   -1. Turn the vehicle to the OFF (LOCK) mode.

   -2. Open the hood and cool the engine compartment for at least 10 minutes.

-3. Turn the vehicle to the ON mode.

-4. Clear the DTC with the HDS.

-5. Turn the vehicle to the OFF (LOCK) mode, then wait 5 seconds or more.

NOTE: Do not open and close the driver's door.

-6. Turn the vehicle to the ON mode.

-7. Check for DTCs with the HDS.

DTC Description	DTC	Freeze Frame
C1250-98 ECU Internal Malfunction (Over Temperature)	B	B

Is DTC C1250-98 indicated?

YES

Check for loose terminals and poor connections in the electric brake booster 26P connector. Check for any authorized service information related to the DTCs or symptoms you are troubleshooting. If they are OK, **replace the electric brake booster** .

NO

Troubleshooting is complete.

DTC C1250-98 (ELECTRIC BRAKE BOOSTER CONTROL UNIT TYPE B) (2020 2021)

DTC C1250-98 : ECU Internal Malfunction (Over Temperature)

NOTE: **Before you troubleshoot, review the general troubleshooting information**.

DTC Description	DTC	Freeze Frame
C1250-98 ECU Internal Malfunction (Over Temperature)	B	B

DTC (Electric brake booster)

1. Problem verification

-1. Turn the vehicle to the ON mode.

-2. Clear the DTC with the HDS.

-3. Turn the vehicle to the OFF (LOCK) mode, then wait 5 seconds or more.

NOTE: Do not open and close the driver's door.

-4. Turn the vehicle to the ON mode.

-5. Check for DTCs with the HDS.

DTC Description	DTC	Freeze Frame
C1250-98 ECU Internal Malfunction (Over Temperature)	B	B

Is DTC C1250-98 indicated?

YES

The failure is duplicated. Go to step 2.

NO

Intermittent failure, the system is OK at this time. **Refer to intermittent failures troubleshooting**. If the freeze data/on-board snapshot of this DTC is recorded, try to reproduce the failure under the same conditions with the freeze data/on-board snapshot.

2. Electric brake booster check

   -1. Turn the vehicle to the OFF (LOCK) mode.

   -2. Open the hood and cool the engine compartment for at least 10 minutes.

   -3. Turn the vehicle to the ON mode.

   -4. Clear the DTC with the HDS.

   -5. Turn the vehicle to the OFF (LOCK) mode, then wait 5 seconds or more.

   NOTE: Do not open and close the driver's door.

   -6. Turn the vehicle to the ON mode.

   -7. Check for DTCs with the HDS.

DTC Description	DTC	Freeze Frame
C1250-98 ECU Internal Malfunction (Over Temperature)	B	B

Is DTC C1250-98 indicated?

YES

Check for loose terminals and poor connections in the electric brake booster 26P connector. Check for any authorized service information related to the DTCs or symptoms you are troubleshooting. If they are OK, **replace the electric brake booster** .

NO

Troubleshooting is complete.

DTC C1C01-96 (ELECTRIC BRAKE BOOSTER CONTROL UNIT TYPE A) (2017 2018 2019)

DTC C1C01-96 : Brake Pedal Stroke Sensor Component Internal Failure

NOTE: **Before you troubleshoot, review the general troubleshooting information**.

DTC Description	DTC	Freeze Frame
C1C01-96 Brake Pedal Stroke Sensor Component Internal Failure	B	B

DTC (Electric brake booster)

1. Problem verification

   -1. Turn the vehicle to the ON mode.

   -2. Clear the DTC with the HDS.

   -3. Turn the vehicle to the OFF (LOCK) mode, then wait 5 seconds or more.

NOTE: Do not open and close the driver's door.

-4. Turn the vehicle to the ON mode.

-5. Check for DTCs with the HDS.

DTC Description	DTC	Freeze Frame
C1C01-96 Brake Pedal Stroke Sensor Component Internal Failure	B	B

Is DTC C1C01-96 indicated?

YES

The failure is duplicated. Check for loose terminals and poor connections in the electric brake booster 26P connector. Check for any authorized service information related to the DTCs or symptoms you are troubleshooting. If they are OK, **replace the electric brake booster** .

NO

Intermittent failure, the system is OK at this time. **Refer to intermittent failures troubleshooting**. If the freeze data/on-board snapshot of this DTC is recorded, try to reproduce the failure under the same conditions with the freeze data/on-board snapshot.

DTC C1C01-96 (ELECTRIC BRAKE BOOSTER CONTROL UNIT TYPE B) (2020 2021)

DTC C1C01-96 : Brake Pedal Stroke Sensor Component Internal Failure

NOTE: **Before you troubleshoot, review the general troubleshooting information**.

DTC Description	DTC	Freeze Frame
C1C01-96 Brake Pedal Stroke Sensor Component Internal Failure	B	B

DTC (Electric brake booster)

1. Problem verification 1

-1. Turn the vehicle to the ON mode.

-2. Clear the DTC with the HDS.

-3. Turn the vehicle to the OFF (LOCK) mode, then wait 5 seconds or more.

NOTE: Do not open and close the driver's door.

-4. Turn the vehicle to the ON mode.

-5. Check for DTCs with the HDS.

DTC Description	DTC	Freeze Frame
C1C01-96 Brake Pedal Stroke Sensor Component Internal Failure	B	B

Is DTC C1C01-96 indicated?

YES

The failure is duplicated. Check for loose terminals and poor connections in the electric brake booster 26P connector. Check for any authorized service information related to the DTCs or symptoms you are troubleshooting. If they are OK, **replace the electric brake booster** .

NO

Go to step 2.

2. Problem verification 2

-1. Start the engine.

-2. Test-drive the vehicle without pressing the brake pedal for 1 minute or more.

NOTE: Drive the vehicle on the road, not on a lift.

-3. Turn the vehicle to the OFF (LOCK) mode, then wait for 3 minutes or more.

NOTE: Do not open and close the driver's door.

Turn the vehicle to the ON mode, then wait for 1 minute or more.

NOTE:

- Do not open and close the driver's door.
- Do not press the brake pedal during 1 minute elapse.

-5. Check for DTCs with the HDS.

DTC Description	DTC	Freeze Frame
C1C01-96 Brake Pedal Stroke Sensor Component Internal Failure	B	B

Is DTC C1C01-96 indicated?

YES

The failure is duplicated. Check for loose terminals and poor connections in the electric brake booster 26P connector. Check for any authorized service information related to the DTCs or symptoms you are troubleshooting. If they are OK, **replace the electric brake booster** .

NO

Intermittent failure, the system is OK at this time. **Refer to intermittent failures troubleshooting**. If the freeze data/on-board snapshot of this DTC is recorded, try to reproduce the failure under the same conditions with the freeze data/on-board snapshot.

DTC C1C02-11 (ELECTRIC BRAKE BOOSTER CONTROL UNIT TYPE B) (2020 2021)

DTC C1C02-11 : Brake Pedal Stroke Sensor Signal Circuit 1 Short To Ground

NOTE: **Before you troubleshoot, review the general troubleshooting information**.

DTC Description	DTC	Freeze Frame
C1C02-11 Brake Pedal Stroke Sensor Signal Circuit 1 Short To Ground	B	B

DTC (Electric brake booster)

1. DTC check

-1. Turn the vehicle to the ON mode.

-2. Clear the DTC with the HDS.

-3. Turn the vehicle to the OFF (LOCK) mode, then wait 5 seconds or more.

NOTE: Do not open and close the driver's door.

-4. Turn the vehicle to the ON mode.

-5. Check for DTCs with the HDS.

DTC Description	DTC	Freeze Frame
C1C02-11 Brake Pedal Stroke Sensor Signal Circuit 1 Short To Ground	B	B
C1C04-11 Brake Pedal Stroke Sensor Power Circuit Short To Ground or Battery	B	B

Is DTC C1C02-11 indicated?

YES

If only C1C02-11 is indicated, go to step 2.

YES

If DTC C1C04-11 is also indicated, **go to DTC C1C04-11**.

NO

Intermittent failure, the system is OK at this time. **Refer to intermittent failures troubleshooting**. If the freeze data/on-board snapshot of this DTC is recorded, try to reproduce the failure under the same conditions with the freeze data/on-board snapshot.

2. Shorted wire check (PTS1 line to ground)

-1. Turn the vehicle to the OFF (LOCK) mode with driver's door open.

-2. Wait for 3 minutes.

NOTE: Do not close the driver's door.

-3. **Remove the 12 volt battery** .

-4. Disconnect the following connectors.

Electric brake booster 26P connector
Brake pedal stroke sensor 4P connector

-5. Measure the resistance between test points 1 and 2.

Test condition	Vehicle OFF (LOCK) mode
B	Electric brake booster 26P connector
B	Brake pedal stroke sensor 4P connector: disconnected
Test point 1	**Electric brake booster 26P connector No. 22**
Test point 2	Body ground

Is there 1 MΩ or more?

YES

Go to step 3.

NO

Repair a short to ground in the wire between the electric brake booster and the brake pedal stroke sensor.

3. Shorted wire check (PTS1 line to PTS GND line)

-1. Measure the resistance between test points 1 and 2.

Test condition	Vehicle OFF (LOCK) mode
B	Electric brake booster 26P connector
B	Brake pedal stroke sensor 4P connector: disconnected
Test point 1	**Electric brake booster 26P connector No. 22**
Test point 2	**Electric brake booster 26P connector No. 5**

Is there 1 MΩ or more?

YES

Check for loose terminals and poor connections in the electric brake booster 26P connector. Check for any authorized service information related to the DTCs or symptoms you are troubleshooting. If they are OK, **replace the electric brake booster** .

NO

Repair a short in the wire between the electric brake booster and the brake pedal stroke sensor.

DTC C1C02-12 (ELECTRIC BRAKE BOOSTER CONTROL UNIT TYPE A) (2017 2018 2019)

DTC C1C02-12 : Brake Pedal Stroke Sensor Signal Circuit 1 Short To Battery

NOTE: **Before you troubleshoot, review the general troubleshooting information**.

DTC Description	DTC	Freeze Frame
C1C02-12 Brake Pedal Stroke Sensor Signal Circuit 1 Short To Battery	B	B

DTC (Electric brake booster)

1. DTC check

-1. Turn the vehicle to the ON mode.

-2. Clear the DTC with the HDS.

-3. Turn the vehicle to the OFF (LOCK) mode, then wait 5 seconds or more.

NOTE: Do not open and close the driver's door.

-4. Turn the vehicle to the ON mode.

-5. Check for DTCs with the HDS.

DTC Description	DTC	Freeze Frame
C1C02-12 Brake Pedal Stroke Sensor Signal Circuit 1 Short To Battery	B	B

DTC Description	DTC	Freeze Frame
C1C04-11 Brake Pedal Stroke Sensor Power Circuit Short To Ground or Battery	B	B

Is DTC C1C02-12 indicated?

YES

If only C1C02-12 is indicated, go to step 2.

YES

If DTC C1C04-11 is also indicated, **go to DTC C1C04-11**.

NO

Intermittent failure, the system is OK at this time. **Refer to intermittent failures troubleshooting**. If the freeze data/on-board snapshot of this DTC is recorded, try to reproduce the failure under the same conditions with the freeze data/on-board snapshot.

2. Shorted wire check (PTS1 line to +B EBB line)

-1. Turn the vehicle to the OFF (LOCK) mode with driver's door open.

-2. Wait for 3 minutes.

NOTE: Do not close the driver's door.

-3. **Remove the 12 volt battery** .

-4. Disconnect the following connectors.

Electric brake booster 26P connector
Brake pedal stroke sensor 4P connector

-5. Check for continuity between test points 1 and 2.

Test condition	Vehicle OFF (LOCK) mode
B	Electric brake booster 26P connector: disconnected
B	Brake pedal stroke sensor 4P connector: disconnected
Test point 1	**Electric brake booster 26P connector No. 22**
Test point 2	**Electric brake booster 26P connector No. 2**

Is there continuity?

YES

Repair a short to power in the wire between the electric brake booster and the brake pedal stroke sensor.

NO

Go to step 3.

3. Shorted wire check (PTS1 line to +B OPTION line)

-1. Check for continuity between test points 1 and 2.

Test condition	Vehicle OFF (LOCK) mode
B	Electric brake booster 26P connector: disconnected

B	Brake pedal stroke sensor 4P connector: disconnected
Test point 1	**Electric brake booster 26P connector No. 22**
Test point 2	**Electric brake booster 26P connector No. 4**

Is there continuity?

YES

Repair a short to power in the wire between the electric brake booster and the brake pedal stroke sensor.

NO

Go to step 4.

4. Shorted wire check (PTS1 line to IG1 OPTION line)

-1. Check for continuity between test points 1 and 2.

Test condition	Vehicle OFF (LOCK) mode
B	Electric brake booster 26P connector
B	Brake pedal stroke sensor 4P connector: disconnected
Test point 1	**Electric brake booster 26P connector No. 22**
Test point 2	**Electric brake booster 26P connector No. 24**

Is there continuity?

YES

Repair a short to power in the wire between the electric brake booster and the brake pedal stroke sensor.

NO

Go to step 5.

5. Shorted wire check (PTS1 line to PTS VS line)

-1. Check for continuity between test points 1 and 2.

Test condition	Vehicle OFF (LOCK) mode
B	Electric brake booster 26P connector: disconnected
B	Brake pedal stroke sensor 4P connector: disconnected
Test point 1	**Electric brake booster 26P connector No. 22**
Test point 2	**Electric brake booster 26P connector No. 11**

Is there continuity?

YES

Repair a short to power in the wire between the electric brake booster and the brake pedal stroke sensor.

NO

Check for loose terminals and poor connections in the electric brake booster 26P connector. Check for any authorized service information related to the DTCs or symptoms you are troubleshooting. If they are OK, **replace the electric brake booster** .

DTC C1C02-14 (ELECTRIC BRAKE BOOSTER CONTROL UNIT TYPE A) (2017 2018 2019)

DTC C1C02-14 : Brake Pedal Stroke Sensor Signal Circuit 1 Short To Ground or Open

NOTE: **Before you troubleshoot, review the general troubleshooting information**.

DTC Description	DTC	Freeze Frame
C1C02-14 Brake Pedal Stroke Sensor Signal Circuit 1 Short To Ground or Open	B	B

DTC (Electric brake booster)

1. DTC check

   -1. Turn the vehicle to the ON mode.

   -2. Clear the DTC with the HDS.

   -3. Turn the vehicle to the OFF (LOCK) mode, then wait 5 seconds or more.

   NOTE: Do not open and close the driver's door.

   -4. Turn the vehicle to the ON mode.

   -5. Check for DTCs with the HDS.

DTC Description	DTC	Freeze Frame
C1C02-14 Brake Pedal Stroke Sensor Signal Circuit 1 Short To Ground or Open	B	B
C1C04-11 Brake Pedal Stroke Sensor Power Circuit Short To Ground or Battery	B	B

   Is DTC C1C02-14 indicated?

   YES

   If only C1C02-14 is indicated, go to step 2.

   YES

   If DTC C1C04-11 is also indicated, **go to DTC C1C04-11**.

   NO

   Intermittent failure, the system is OK at this time. **Refer to intermittent failures troubleshooting**. If the freeze data/on-board snapshot of this DTC is recorded, try to reproduce the failure under the same conditions with the freeze data/on-board snapshot.

2. Open wire check (PTS VS line)

   -1. Turn the vehicle to the OFF (LOCK) mode with driver's door open.

   -2. Wait for 3 minutes.

   NOTE: Do not close the driver's door.

   -3. **Remove the 12 volt battery** .

   -4. Disconnect the following connectors.

Electric brake booster 26P connector

Brake pedal stroke sensor 4P connector

-5. Check for continuity between test points 1 and 2.

Test condition	Vehicle OFF (LOCK) mode
B	Electric brake booster 26P connector
B	Brake pedal stroke sensor 4P connector: disconnected
Test point 1	**Electric brake booster 26P connector No. 11**
Test point 2	Brake pedal stroke sensor 4P connector (female terminals) No. 1: ①

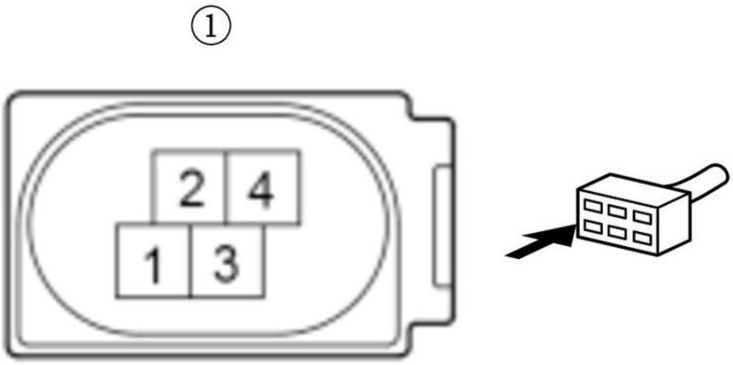

Is there continuity?

YES

Go to step 3.

NO

Repair an open in the wire between the electric brake booster and the brake pedal stroke sensor.

3. Open wire check (PTS GND line)

-1. Check for continuity between test points 1 and 2.

Test condition	Vehicle OFF (LOCK) mode
B	Electric brake booster 26P connector
B	Brake pedal stroke sensor 4P connector: disconnected
Test point 1	**Electric brake booster 26P connector No. 5**
Test point 2	Brake pedal stroke sensor 4P connector (female terminals) No. 3: ①

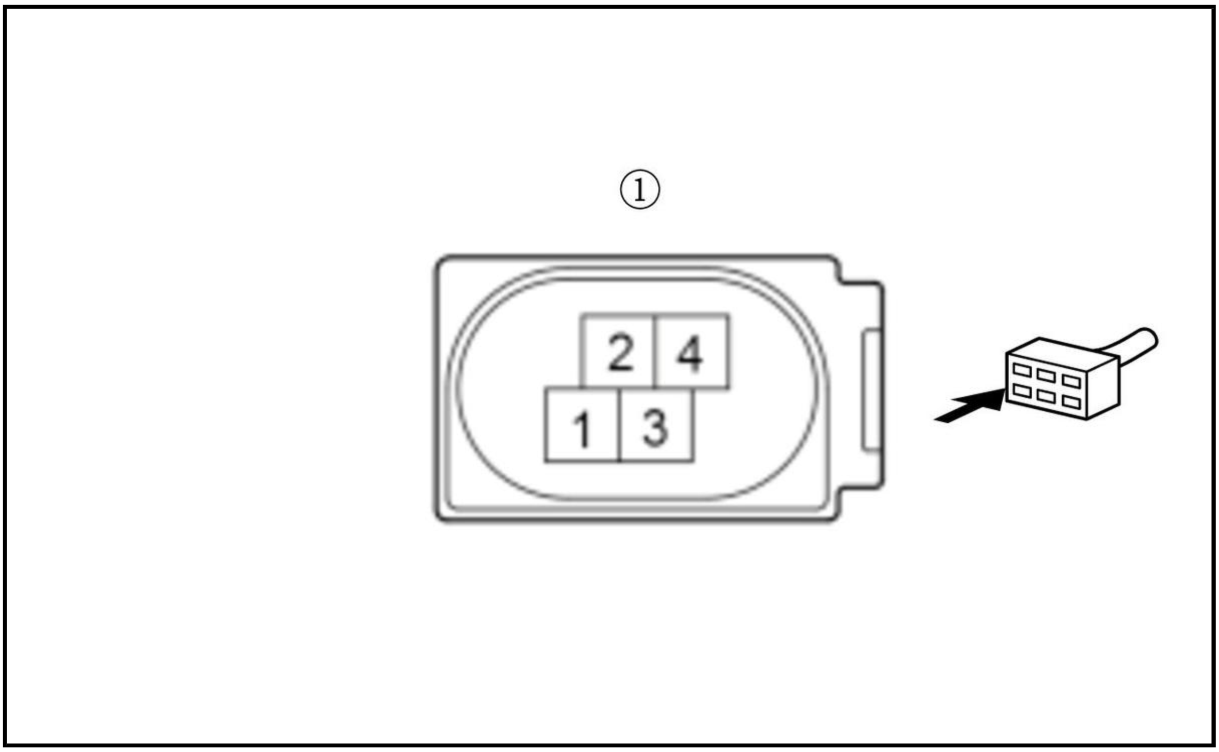

Is there continuity?

YES

Go to step 4.

NO

Repair an open in the wire between the electric brake booster and the brake pedal stroke sensor.

4. Open wire check (PTS1 line)

-1. Check for continuity between test points 1 and 2.

Test condition	Vehicle OFF (LOCK) mode
B	Electric brake booster 26P connector
B	Brake pedal stroke sensor 4P connector: disconnected
Test point 1	**Electric brake booster 26P connector No. 22**
Test point 2	Brake pedal stroke sensor 4P connector (female terminals) No. 2: ①

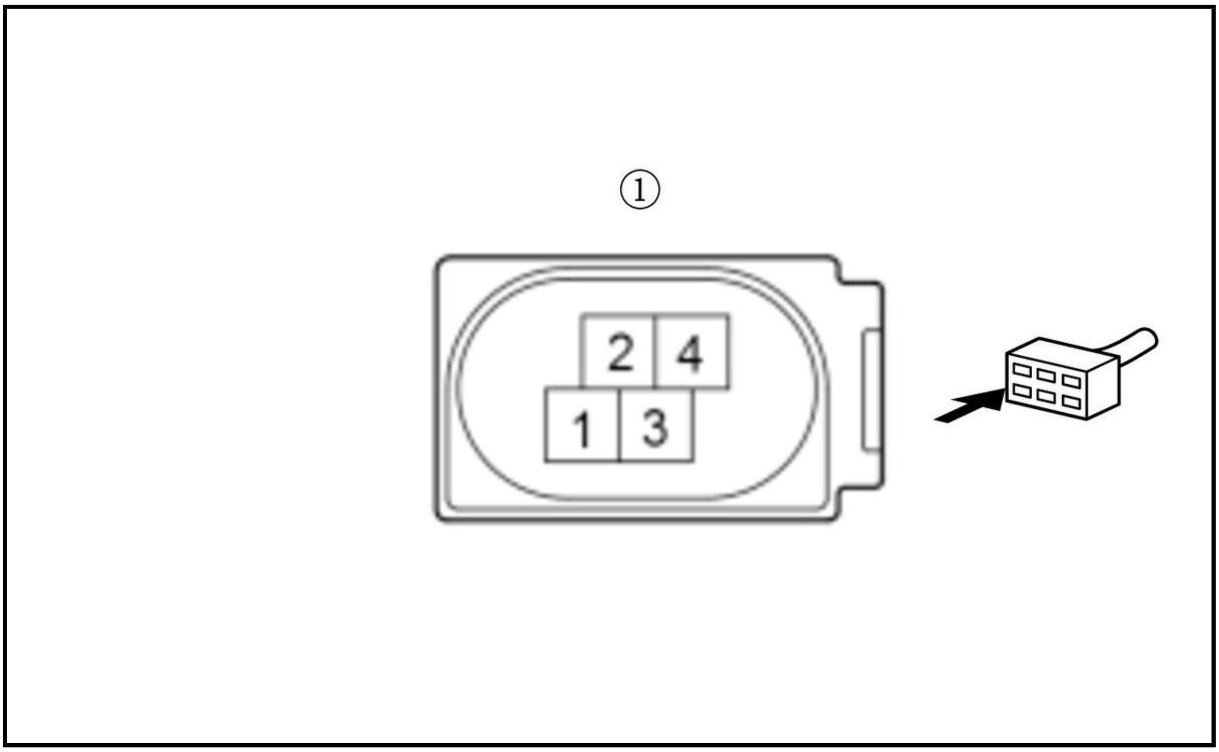

Is there continuity?

YES

Go to step 5.

NO

Repair an open in the wire between the electric brake booster and the brake pedal stroke sensor.

5. Shorted wire check (PTS1 line to ground)

-1. Check for continuity between test points 1 and 2.

Test condition	Vehicle OFF (LOCK) mode

B	Electric brake booster 26P connector
B	Brake pedal stroke sensor 4P connector: disconnected
Test point 1	**Electric brake booster 26P connector No. 22**
Test point 2	Body ground

Is there continuity?

YES

Repair a short to ground in the wire between the electric brake booster and the brake pedal stroke sensor.

NO

Go to step 6.

6. Shorted wire check (PTS1 line to PTS GND line)

-1. Check for continuity between test points 1 and 2.

Test condition	Vehicle OFF (LOCK) mode
B	Electric brake booster 26P connector

B	Brake pedal stroke sensor 4P connector: disconnected
Test point 1	**Electric brake booster 26P connector No. 22**
Test point 2	**Electric brake booster 26P connector No. 5**

Is there continuity?

YES

Repair a short in the wire between the electric brake booster and the brake pedal stroke sensor.

NO

Check for loose terminals and poor connections in the electric brake booster 26P connector. Check for any authorized service information related to the DTCs or symptoms you are troubleshooting. If they are OK, **replace the electric brake booster** .

DTC C1C02-15 (ELECTRIC BRAKE BOOSTER CONTROL UNIT TYPE B) (2020 2021)

DTC C1C02-15 : Brake Pedal Stroke Sensor Signal Circuit 1 Short To Battery or Open

NOTE: **Before you troubleshoot, review the general troubleshooting information**.

DTC Description	DTC	Freeze Frame
C1C02-15 Brake Pedal Stroke Sensor Signal Circuit1 Short To Battery or Open	B	B

DTC (Electric brake booster)

1. DTC check

-1. Turn the vehicle to the ON mode.

-2. Clear the DTC with the HDS.

-3. Turn the vehicle to the OFF (LOCK) mode, then wait 5 seconds or more.

NOTE: Do not open and close the driver's door.

-4. Turn the vehicle to the ON mode.

-5. Check for DTCs with the HDS.

DTC Description	DTC	Freeze Frame
C1C02-15 Brake Pedal Stroke Sensor Signal Circuit1 Short To Battery or Open	B	B
C1C04-11 Brake Pedal Stroke Sensor Power Circuit Short To Ground or Battery	B	B

Is DTC C1C02-15 indicated?

YES

If only C1C02-15 is indicated, go to step 2.

YES

If DTC C1C04-11 is also indicated, **go to DTC C1C04-11**.

NO

Intermittent failure, the system is OK at this time. **Refer to intermittent failures troubleshooting**. If the freeze data/on-board snapshot of this DTC is recorded, try to reproduce the failure under the same conditions with the freeze data/on-board snapshot.

2. Shorted wire check (PTS1 line to +B EBB line)

-1. Turn the vehicle to the OFF (LOCK) mode with driver's door open.

-2. Wait for 3 minutes.

NOTE: Do not close the driver's door.

-3. **Remove the 12 volt battery** .

-4. Disconnect the following connectors.

Electric brake booster 26P connector
Brake pedal stroke sensor 4P connector

-5. Measure the resistance between test points 1 and 2.

Test condition	Vehicle OFF (LOCK) mode
B	Electric brake booster 26P connector
B	Brake pedal stroke sensor 4P connector: disconnected
Test point 1	**Electric brake booster 26P connector No. 22**
Test point 2	**Electric brake booster 26P connector No. 2**

Is there 1 MΩ or more?

YES

Go to step 3.

NO

Repair a short to power in the wire between the electric brake booster and the brake pedal stroke sensor.

3. Shorted wire check (PTS1 line to IG1 OPTION line)

-1. Measure the resistance between test points 1 and 2.

Test condition	Vehicle OFF (LOCK) mode
B	Electric brake booster 26P connector

B	Brake pedal stroke sensor 4P connector: disconnected
Test point 1	**Electric brake booster 26P connector No. 22**
Test point 2	**Electric brake booster 26P connector No. 24**

Is there 1 MΩ or more?

YES

Go to step 4.

NO

Repair a short to power in the wire between the electric brake booster and the brake pedal stroke sensor.

4. Shorted wire check (PTS1 line to PTS VS line)

-1. Measure the resistance between test points 1 and 2.

Test condition	Vehicle OFF (LOCK) mode
B	Electric brake booster 26P connector
B	Brake pedal stroke sensor 4P connector: disconnected
Test point 1	**Electric brake booster 26P connector No. 22**
Test point 2	**Electric brake booster 26P connector No. 11**

Is there 1 MΩ or more?

YES

Go to step 5.

NO

Repair a short to power in the wire between the electric brake booster and the brake pedal stroke sensor.

5. Open wire check (PTS1 line)

-1. Measure the resistance between test points 1 and 2.

Test condition	Vehicle OFF (LOCK) mode
B	Electric brake booster 26P connector
B	Brake pedal stroke sensor 4P connector: disconnected
Test point 1	**Electric brake booster 26P connector No. 22**
Test point 2	Brake pedal stroke sensor 4P connector (female terminals) No. 1: ①

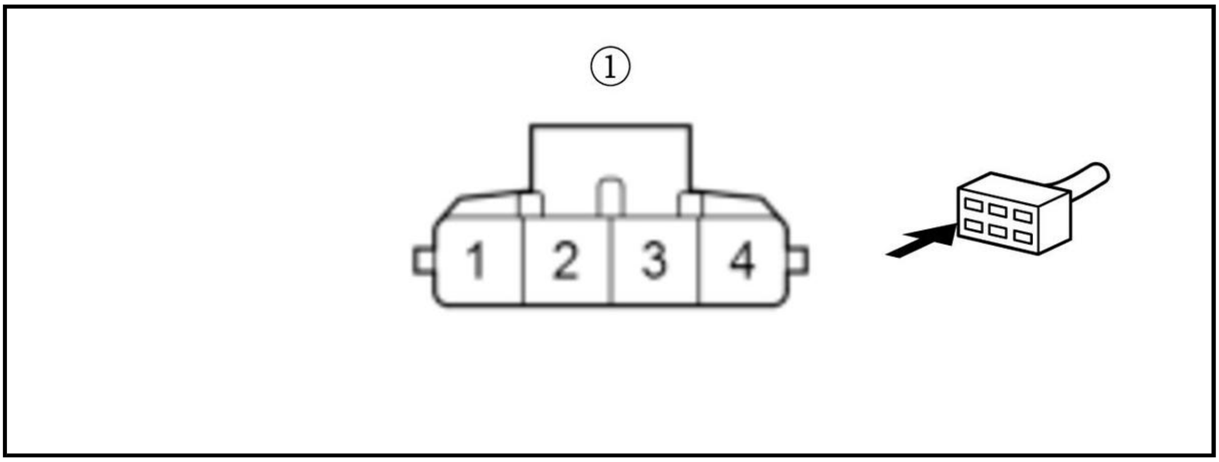

Is there 1.0 Ω or less?

YES

Go to step 6.

NO

Repair an open in the wire between the electric brake booster and the brake pedal stroke sensor.

6. Open wire check (PTS VS line)

-1. Measure the resistance between test points 1 and 2.

Test condition	Vehicle OFF (LOCK) mode
B	Electric brake booster 26P connector
B	Brake pedal stroke sensor 4P connector: disconnected
Test point 1	**Electric brake booster 26P connector No. 11**
Test point 2	Brake pedal stroke sensor 4P connector (female terminals) No. 2: ①

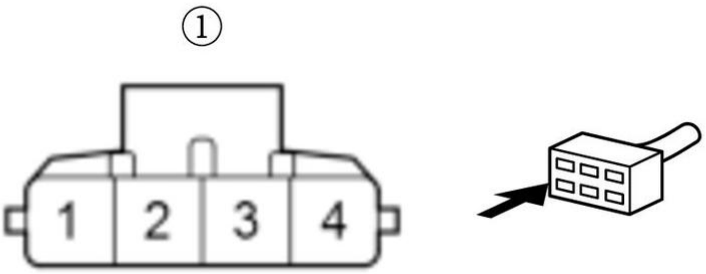

Is there 1.0 Ω or less?

YES

Go to step 7.

NO

Repair an open in the wire between the electric brake booster and the brake pedal stroke sensor.

7. Open wire check (PTS GND line)

-1. Measure the resistance between test points 1 and 2.

Test condition	Vehicle OFF (LOCK) mode
B	Electric brake booster 26P connector
B	Brake pedal stroke sensor 4P connector: disconnected
Test point 1	**Electric brake booster 26P connector No. 5**
Test point 2	Brake pedal stroke sensor 4P connector (female terminals) No. 4: ①

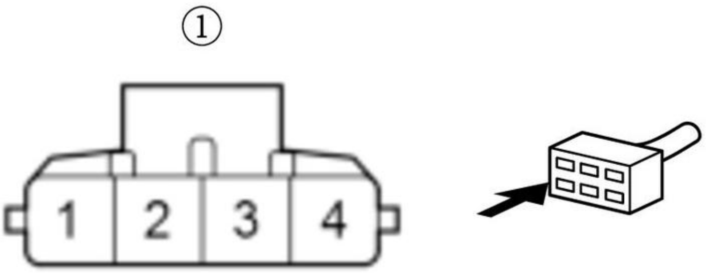

Is there 1.0 Ω or less?

YES

Check for loose terminals and poor connections in the electric brake booster 26P connector. Check for any authorized service information related to the DTCs or symptoms you are troubleshooting. If they are OK, **replace the electric brake booster** .

NO

Repair an open in the wire between the electric brake booster and the brake pedal stroke sensor.

DTC C1C03-11 (ELECTRIC BRAKE BOOSTER CONTROL UNIT TYPE A) (2017 2018 2019)

DTC C1C03-11 : Brake Pedal Stroke Sensor Signal Circuit 2 Short To Ground

NOTE: **Before you troubleshoot, review the general troubleshooting information**.

DTC Description	DTC	Freeze Frame
C1C03-11 Brake Pedal Stroke Sensor Signal Circuit 2 Short To Ground	B	B

DTC (Electric brake booster)

1. DTC check

-1. Turn the vehicle to the ON mode.

-2. Clear the DTC with the HDS.

-3. Turn the vehicle to the OFF (LOCK) mode, then wait 5 seconds or more.

NOTE: Do not open and close the driver's door.

-4. Turn the vehicle to the ON mode.

-5. Check for DTCs with the HDS.

DTC Description	DTC	Freeze Frame
C1C03-11 Brake Pedal Stroke Sensor Signal Circuit 2 Short To Ground	B	B
C1C04-11 Brake Pedal Stroke Sensor Power Circuit Short To Ground or Battery	B	B

Is DTC C1C03-11 indicated?

YES

If only C1C03-11 is indicated, go to step 2.

YES

If DTC C1C04-11 is also indicated, **go to DTC C1C04-11**.

NO

Intermittent failure, the system is OK at this time. **Refer to intermittent failures troubleshooting**. If the freeze data/on-board snapshot of this DTC is recorded, try to reproduce the failure under the same conditions with the freeze data/on-board snapshot.

2. Shorted wire check (PTS2 line to ground)

-1. Turn the vehicle to the OFF (LOCK) mode with driver's door open.

-2. Wait for 3 minutes.

NOTE: Do not close the driver's door.

-3. **Remove the 12 volt battery** .

-4. Disconnect the following connectors.

Electric brake booster 26P connector
Brake pedal stroke sensor 4P connector

-5. Check for continuity between test points 1 and 2.

Test condition	Vehicle OFF (LOCK) mode
B	Electric brake booster 26P connector
B	Brake pedal stroke sensor 4P connector: disconnected
Test point 1	**Electric brake booster 26P connector No. 21**
Test point 2	Body ground

Is there continuity?

YES

Repair a short to ground in the wire between the electric brake booster and the brake pedal stroke sensor.

NO

Go to step 3.

3. Shorted wire check (PTS2 line to PTS GND line)

-1. Check for continuity between test points 1 and 2.

Test condition	Vehicle OFF (LOCK) mode
B	Electric brake booster 26P connector
B	Brake pedal stroke sensor 4P connector: disconnected
Test point 1	**Electric brake booster 26P connector No. 21**
Test point 2	**Electric brake booster 26P connector No. 5**

Is there continuity?

YES

Repair a short in the wire between the electric brake booster and the brake pedal stroke sensor.

NO

Check for loose terminals and poor connections in the electric brake booster 26P connector. Check for any authorized service information related to the DTCs or symptoms you are troubleshooting. If they are OK, **replace the electric brake booster** .

DTC C1C03-11 (ELECTRIC BRAKE BOOSTER CONTROL UNIT TYPE B) (2020 2021)

DTC C1C03-11 : Brake Pedal Stroke Sensor Signal Circuit 2 Short To Ground

NOTE: **Before you troubleshoot, review the general troubleshooting information**.

DTC Description	DTC	Freeze Frame
C1C03-11 Brake Pedal Stroke Sensor Signal Circuit 2 Short To Ground	B	B

DTC (Electric brake booster)

1. DTC check

   -1. Turn the vehicle to the ON mode.

   -2. Clear the DTC with the HDS.

   -3. Turn the vehicle to the OFF (LOCK) mode, then wait 5 seconds or more.

   NOTE: Do not open and close the driver's door.

   -4. Turn the vehicle to the ON mode.

   -5. Check for DTCs with the HDS.

DTC Description	DTC	Freeze Frame
C1C03-11 Brake Pedal Stroke Sensor Signal Circuit 2 Short To Ground	B	B
C1C04-11 Brake Pedal Stroke Sensor Power Circuit Short To Ground or Battery	B	B

   Is DTC C1C03-11 indicated?

   YES

   If only C1C03-11 is indicated, go to step 2.

   YES

   If DTC C1C04-11 is also indicated, go to DTC C1C04-11.

   NO

   Intermittent failure, the system is OK at this time. Refer to intermittent failures troubleshooting. If the freeze data/on-board snapshot of this DTC is recorded, try to reproduce the failure under the same conditions with the freeze data/on-board snapshot.

2. Shorted wire check (PTS2 line to ground)

   -1. Turn the vehicle to the OFF (LOCK) mode with driver's door open.

   -2. Wait for 3 minutes.

   NOTE: Do not close the driver's door.

   -3. Remove the 12 volt battery .

   -4. Disconnect the following connectors.

Electric brake booster 26P connector
Brake pedal stroke sensor 4P connector

   -5. Measure the resistance between test points 1 and 2.

Test condition	Vehicle OFF (LOCK) mode
B	Electric brake booster 26P connector
B	Brake pedal stroke sensor 4P connector: disconnected
Test point 1	**Electric brake booster 26P connector No. 21**
Test point 2	Body ground

Is there 1 MΩ or more?

YES

Go to step 3.

NO

Repair a short to ground in the wire between the electric brake booster and the brake pedal stroke sensor.

3. Shorted wire check (PTS2 line to PTS GND line)

-1. Measure the resistance between test points 1 and 2.

Test condition	Vehicle OFF (LOCK) mode
B	Electric brake booster 26P connector
B	Brake pedal stroke sensor 4P connector: disconnected
Test point 1	**Electric brake booster 26P connector No. 21**
Test point 2	**Electric brake booster 26P connector No. 5**

Is there 1 MΩ or more?

YES

Check for loose terminals and poor connections in the electric brake booster 26P connector. Check for any authorized service information related to the DTCs or symptoms you are troubleshooting. If they are OK, **replace the electric brake booster** .

NO

Repair a short in the wire between the electric brake booster and the brake pedal stroke sensor.

DTC C1C03-15 (ELECTRIC BRAKE BOOSTER CONTROL UNIT TYPE A) (2017 2018 2019)

DTC C1C03-15 : Brake Pedal Stroke Sensor Signal Circuit 2 Short To Battery or Open

NOTE: **Before you troubleshoot, review the general troubleshooting information**.

DTC Description	DTC	Freeze Frame
C1C03-15 Brake Pedal Stroke Sensor Signal Circuit 2 Short To Battery or Open	B	B

DTC (Electric brake booster)

1. DTC check

-1. Turn the vehicle to the ON mode.

-2. Clear the DTC with the HDS.

-3. Turn the vehicle to the OFF (LOCK) mode, then wait 5 seconds or more.

NOTE: Do not open and close the driver's door.

-4. Turn the vehicle to the ON mode.

-5. Check for DTCs with the HDS.

DTC Description	DTC	Freeze Frame
C1C03-15 Brake Pedal Stroke Sensor Signal Circuit 2 Short To Battery or Open	B	B
C1C04-11 Brake Pedal Stroke Sensor Power Circuit Short To Ground or Battery	B	B

Is DTC C1C03-15 indicated?

YES

If only C1C03-15 is indicated, go to step 2.

YES

If DTC C1C04-11 is also indicated, **go to DTC C1C04-11**.

NO

Intermittent failure, the system is OK at this time. **Refer to intermittent failures troubleshooting**. If the freeze data/on-board snapshot of this DTC is recorded, try to reproduce the failure under the same conditions with the freeze data/on-board snapshot.

2. Shorted wire check (PTS2 line to +B EBB line)

-1. Turn the vehicle to the OFF (LOCK) mode with driver's door open.

-2. Wait for 3 minutes.

NOTE: Do not close the driver's door.

-3. **Remove the 12 volt battery** .

-4. Disconnect the following connectors.

Electric brake booster 26P connector
Brake pedal stroke sensor 4P connector

-5. Check for continuity between test points 1 and 2.

Test condition	Vehicle OFF (LOCK) mode
B	Electric brake booster 26P connector
B	Brake pedal stroke sensor 4P connector: disconnected
Test point 1	**Electric brake booster 26P connector No. 21**
Test point 2	**Electric brake booster 26P connector No. 2**

Is there continuity?

YES

Repair a short to power in the wire between the electric brake booster and the brake pedal stroke sensor.

NO

Go to step 3.

3. Shorted wire check (PTS2 line to +B OPTION line)

-1. Check for continuity between test points 1 and 2.

Test condition	Vehicle OFF (LOCK) mode
B	Electric brake booster 26P connector
B	Brake pedal stroke sensor 4P connector: disconnected
Test point 1	**Electric brake booster 26P connector No. 21**
Test point 2	**Electric brake booster 26P connector No. 4**

Is there continuity?

YES

Repair a short to power in the wire between the electric brake booster and the brake pedal stroke sensor.

NO

Go to step 4.

4. Shorted wire check (PTS2 line to IG1 OPTION line)

-1. Check for continuity between test points 1 and 2.

Test condition	Vehicle OFF (LOCK) mode
B	Electric brake booster 26P connector
B	Brake pedal stroke sensor 4P connector: disconnected
Test point 1	**Electric brake booster 26P connector No. 21**
Test point 2	**Electric brake booster 26P connector No. 24**

Is there continuity?

YES

Repair a short to power in the wire between the electric brake booster and the brake pedal stroke sensor.

NO

Go to step 5.

5. Shorted wire check (PTS2 line to PTS VS line)

-1. Check for continuity between test points 1 and 2.

Test condition	Vehicle OFF (LOCK) mode
B	Electric brake booster 26P connector
B	Brake pedal stroke sensor 4P connector: disconnected
Test point 1	**Electric brake booster 26P connector No. 21**
Test point 2	**Electric brake booster 26P connector No. 11**

Is there continuity?

YES

Repair a short to power in the wire between the electric brake booster and the brake pedal stroke sensor.

NO

Go to step 6.

6. Open wire check (PTS2 line)

-1. Check for continuity between test points 1 and 2.

Test condition	Vehicle OFF (LOCK) mode
B	Electric brake booster 26P connector
B	Brake pedal stroke sensor 4P connector: disconnected
Test point 1	**Electric brake booster 26P connector No. 21**

Test point 2	Brake pedal stroke sensor 4P connector (female terminals) No. 4: ①

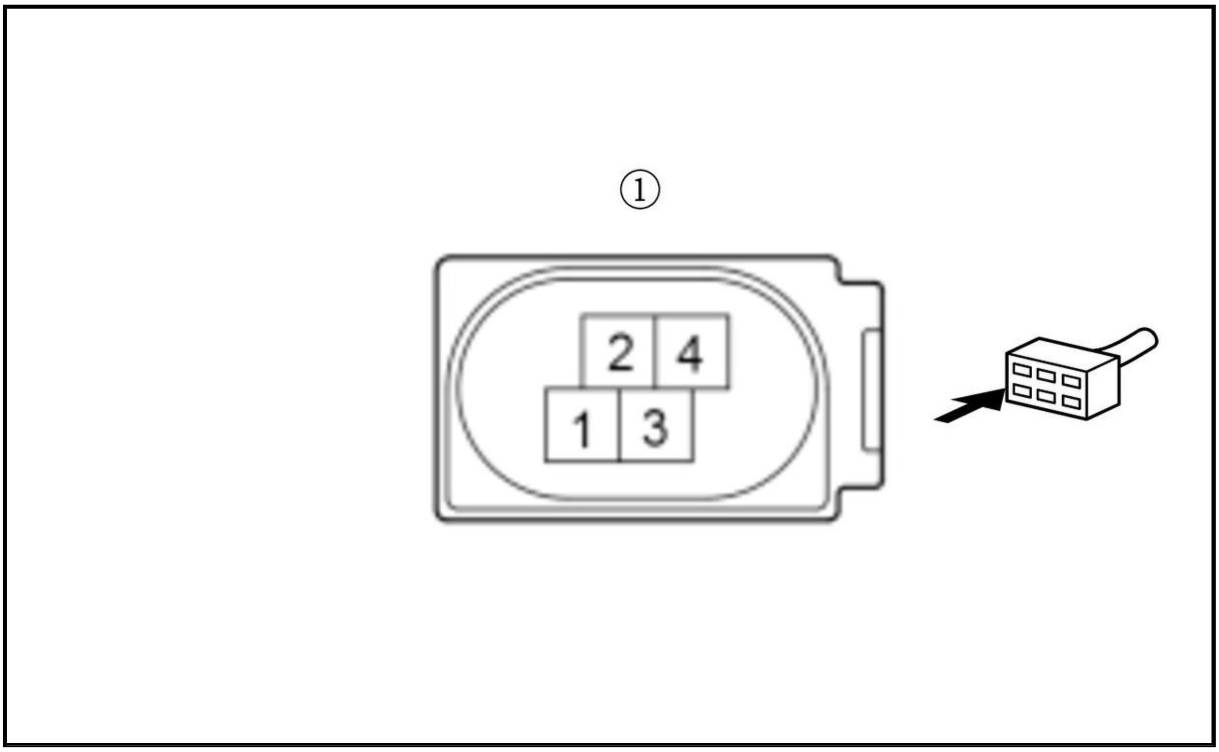

Is there continuity?

YES

Go to step 7.

NO

Repair an open in the wire between the electric brake booster and the brake pedal stroke sensor.

7. Open wire check (PTS VS line)

-1. Check for continuity between test points 1 and 2.

Test condition	Vehicle OFF (LOCK) mode
B	Electric brake booster 26P connector
B	Brake pedal stroke sensor 4P connector: disconnected
Test point 1	**Electric brake booster 26P connector No. 11**
Test point 2	Brake pedal stroke sensor 4P connector (female terminals) No. 1: ①

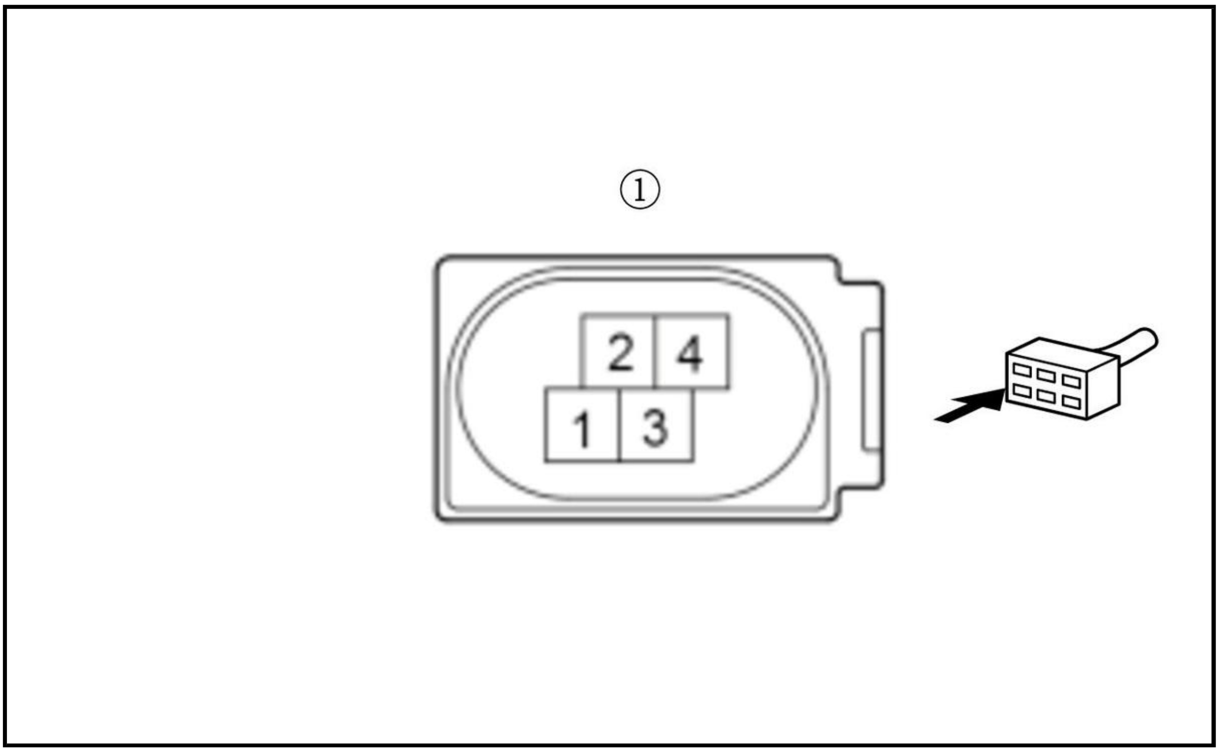

Is there continuity?

YES

Go to step 8.

NO

Repair an open in the wire between the electric brake booster and the brake pedal stroke sensor.

8. Open wire check (PTS GND line)

-1. Check for continuity between test points 1 and 2.

Test condition	Vehicle OFF (LOCK) mode
B	Electric brake booster 26P connector
B	Brake pedal stroke sensor 4P connector: disconnected
Test point 1	**Electric brake booster 26P connector No. 5**
Test point 2	Brake pedal stroke sensor 4P connector (female terminals) No. 3: ①

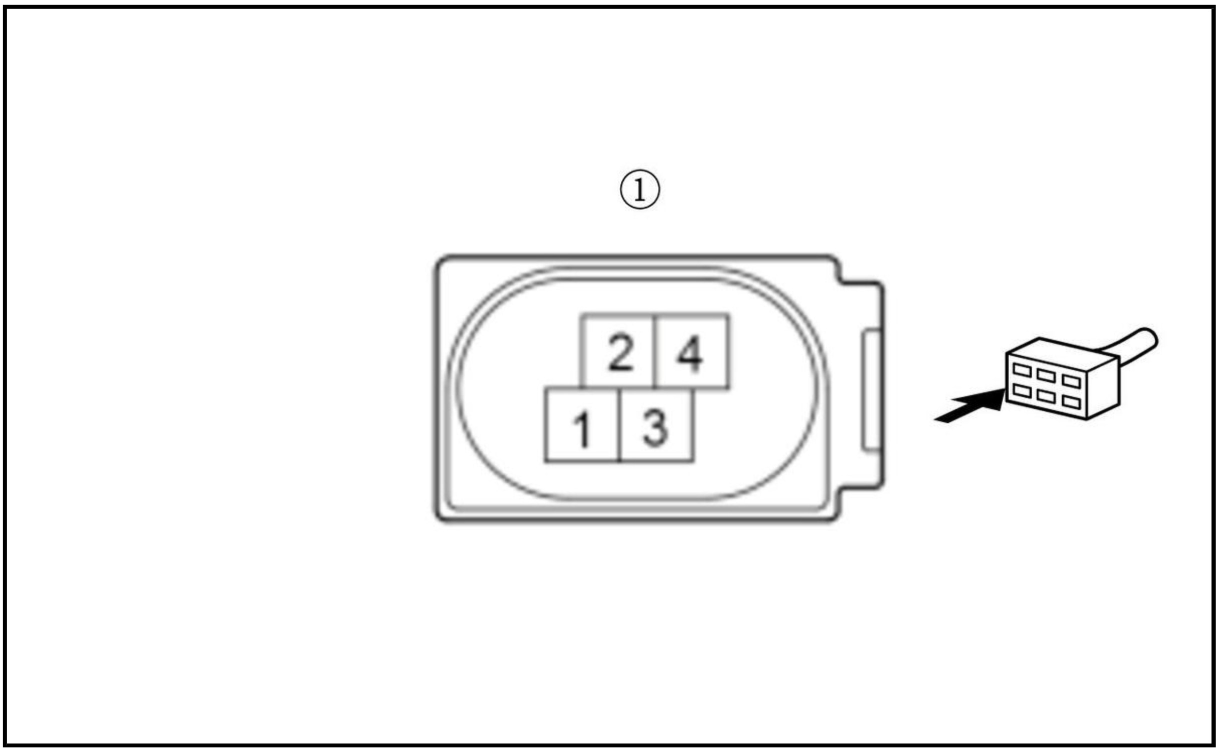

Is there continuity?

YES

Check for loose terminals and poor connections in the electric brake booster 26P connector. Check for any authorized service information related to the DTCs or symptoms you are troubleshooting. If they are OK, replace the electric brake booster .

NO

Repair an open in the wire between the electric brake booster and the brake pedal stroke sensor.

DTC C1C03-15 (ELECTRIC BRAKE BOOSTER CONTROL UNIT TYPE B) (2020 2021)

DTC C1C03-15 : Brake Pedal Stroke Sensor Signal Circuit 2 Short To Battery or Open

NOTE: Before you troubleshoot, review the general troubleshooting information.

DTC Description	DTC	Freeze Frame
C1C03-15 Brake Pedal Stroke Sensor Signal Circuit 2 Short To Battery or Open	B	B

DTC (Electric brake booster)

1. DTC check

-1. Turn the vehicle to the ON mode.

-2. Clear the DTC with the HDS.

-3. Turn the vehicle to the OFF (LOCK) mode, then wait 5 seconds or more.

NOTE: Do not open and close the driver's door.

-4. Turn the vehicle to the ON mode.

-5. Check for DTCs with the HDS.

DTC Description	DTC	Freeze Frame
C1C03-15 Brake Pedal Stroke Sensor Signal Circuit 2 Short To Battery or Open	B	B
C1C04-11 Brake Pedal Stroke Sensor Power Circuit Short To Ground or Battery	B	B

Is DTC C1C03-15 indicated?

YES

If only C1C03-15 is indicated, go to step 2.

YES

If DTC C1C04-11 is also indicated, **go to DTC C1C04-11**.

NO

Intermittent failure, the system is OK at this time. **Refer to intermittent failures troubleshooting**. If the freeze data/on-board snapshot of this DTC is recorded, try to reproduce the failure under the same conditions with the freeze data/on-board snapshot.

2. Shorted wire check (PTS2 line to +B EBB line)

-1. Turn the vehicle to the OFF (LOCK) mode with driver's door open.

-2. Wait for 3 minutes.

NOTE: Do not close the driver's door.

-3. **Remove the 12 volt battery** .

-4. Disconnect the following connectors.

Electric brake booster 26P connector
Brake pedal stroke sensor 4P connector

-5. Measure the resistance between test points 1 and 2.

Test condition	Vehicle OFF (LOCK) mode
B	Electric brake booster 26P connector
B	Brake pedal stroke sensor 4P connector: disconnected
Test point 1	**Electric brake booster 26P connector No. 21**
Test point 2	**Electric brake booster 26P connector No. 2**

Is there 1 MΩ or more?

YES

Go to step 3.

NO

Repair a short to power in the wire between the electric brake booster and the brake pedal stroke sensor.

3. Shorted wire check (PTS2 line to IG1 OPTION line)

-1. Measure the resistance between test points 1 and 2.

Test condition	Vehicle OFF (LOCK) mode
B	Electric brake booster 26P connector
B	Brake pedal stroke sensor 4P connector: disconnected
Test point 1	**Electric brake booster 26P connector No. 21**
Test point 2	**Electric brake booster 26P connector No. 24**

Is there 1 MΩ or more?

YES

Go to step 4.

NO

Repair a short to power in the wire between the electric brake booster and the brake pedal stroke sensor.

4. Shorted wire check (PTS2 line to PTS VS line)

-1. Measure the resistance between test points 1 and 2.

Test condition	Vehicle OFF (LOCK) mode
B	Electric brake booster 26P connector
B	Brake pedal stroke sensor 4P connector: disconnected
Test point 1	**Electric brake booster 26P connector No. 21**
Test point 2	**Electric brake booster 26P connector No. 11**

Is there 1 MΩ or more?

YES

Go to step 5.

NO

Repair a short to power in the wire between the electric brake booster and the brake pedal stroke sensor.

5. Open wire check (PTS2 line)

-1. Measure the resistance between test points 1 and 2.

Test condition	Vehicle OFF (LOCK) mode
B	Electric brake booster 26P connector
B	Brake pedal stroke sensor 4P connector: disconnected
Test point 1	**Electric brake booster 26P connector No. 21**
Test point 2	Brake pedal stroke sensor 4P connector (female terminals) No. 3: ①

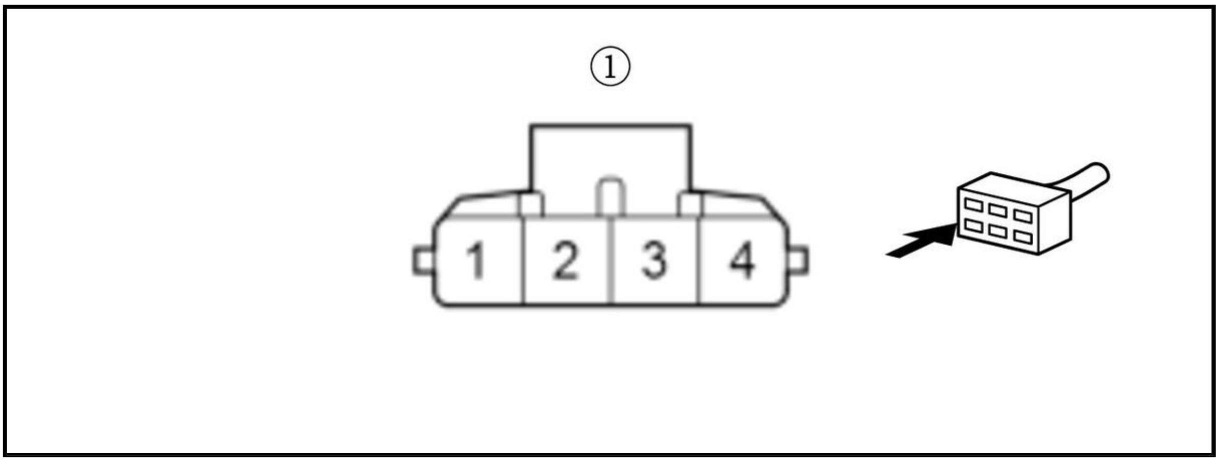

Is there 1.0 Ω or less?

YES

Go to step 6.

NO

Repair an open in the wire between the electric brake booster and the brake pedal stroke sensor.

6. Open wire check (PTS VS line)

-1. Measure the resistance between test points 1 and 2.

Test condition	Vehicle OFF (LOCK) mode
B	Electric brake booster 26P connector
B	Brake pedal stroke sensor 4P connector: disconnected
Test point 1	**Electric brake booster 26P connector No. 11**
Test point 2	Brake pedal stroke sensor 4P connector (female terminals) No. 2: ①

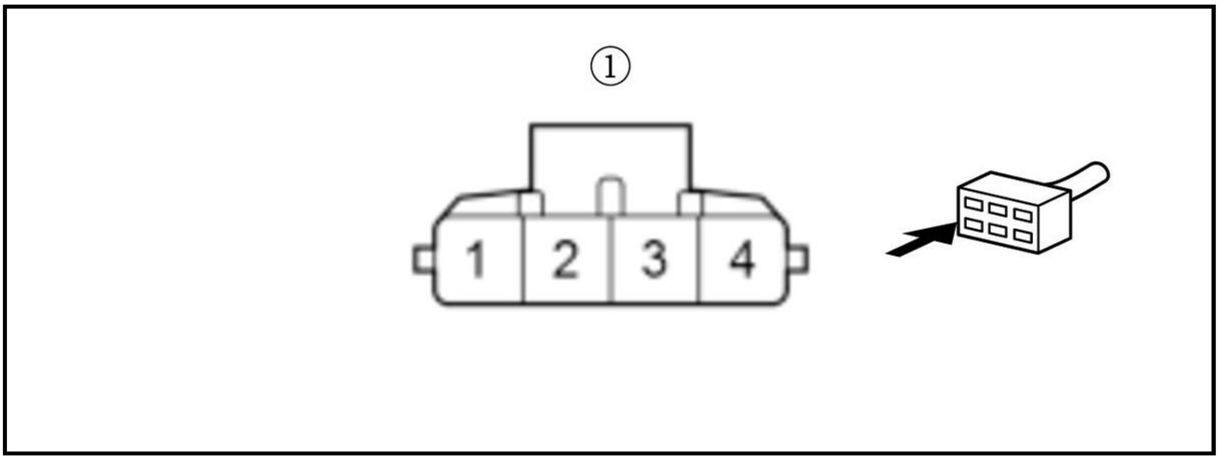

Is there 1.0 Ω or less?

YES

Go to step 7.

NO

Repair an open in the wire between the electric brake booster and the brake pedal stroke sensor.

7. Open wire check (PTS GND line)

-1. Measure the resistance between test points 1 and 2.

Test condition	Vehicle OFF (LOCK) mode
B	Electric brake booster 26P connector
B	Brake pedal stroke sensor 4P connector: disconnected
Test point 1	**Electric brake booster 26P connector No. 5**
Test point 2	Brake pedal stroke sensor 4P connector (female terminals) No. 4: ①

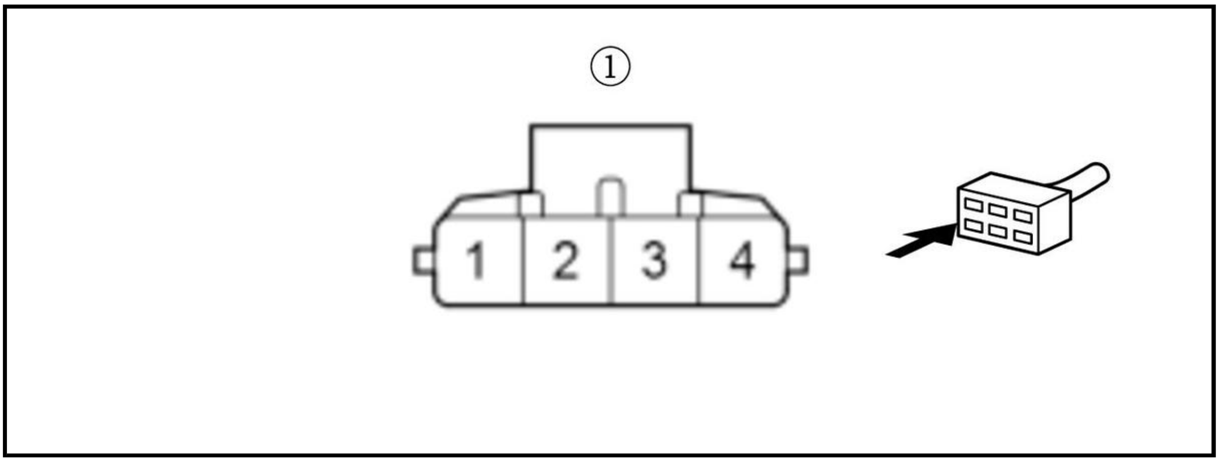

Is there 1.0 Ω or less?

YES

Check for loose terminals and poor connections in the electric brake booster 26P connector. Check for any authorized service information related to the DTCs or symptoms you are troubleshooting. If they are OK, **replace the electric brake booster** .

NO

Repair an open in the wire between the electric brake booster and the brake pedal stroke sensor.

DTC C1C04-11 (ELECTRIC BRAKE BOOSTER CONTROL UNIT TYPE A) (2017 2018 2019)

DTC C1C04-11 : Brake Pedal Stroke Sensor Power Circuit Short To Ground or Battery

NOTE: **Before you troubleshoot, review the general troubleshooting information**.

DTC Description	DTC	Freeze Frame
C1C04-11 Brake Pedal Stroke Sensor Power Circuit Short To Ground or Battery	B	B

DTC (Electric brake booster)

1. Problem verification

-1. Turn the vehicle to the ON mode.

-2. Clear the DTC with the HDS.

-3. Turn the vehicle to the OFF (LOCK) mode, then wait 5 seconds or more.

NOTE: Do not open and close the driver's door.

-4. Turn the vehicle to the ON mode.

-5. Check for DTCs with the HDS.

DTC Description	DTC	Freeze Frame
C1C04-11 Brake Pedal Stroke Sensor Power Circuit Short To Ground or Battery	B	B

Is DTC C1C04-11 indicated?

YES

The failure is duplicated. Go to step 2.

NO

Intermittent failure, the system is OK at this time. **Refer to intermittent failures troubleshooting**. If the freeze data/on-board snapshot of this DTC is recorded, try to reproduce the failure under the same conditions with the freeze data/on-board snapshot.

2. Shorted wire check (PTS VS line to +B EBB line)

-1. Turn the vehicle to the OFF (LOCK) mode with driver's door open.

-2. Wait for 3 minutes.

NOTE: Do not close the driver's door.

-3. **Remove the 12 volt battery** .

-4. Disconnect the following connectors.

Electric brake booster 26P connector
Brake pedal stroke sensor 4P connector

-5. Check for continuity between test points 1 and 2.

Test condition	Vehicle OFF (LOCK) mode
B	Electric brake booster 26P connector
B	Brake pedal stroke sensor 4P connector: disconnected
Test point 1	**Electric brake booster 26P connector No. 11**
Test point 2	**Electric brake booster 26P connector No. 2**

Is there continuity?

YES

Repair a short to power in the wire between the electric brake booster and the brake pedal stroke sensor.

NO

Go to step 3.

3. Shorted wire check (PTS VS line to +B OPTION line)

-1. Check for continuity between test points 1 and 2.

Test condition	Vehicle OFF (LOCK) mode
B	Electric brake booster 26P connector
B	Brake pedal stroke sensor 4P connector: disconnected

Test point 1	**Electric brake booster 26P connector No. 11**
Test point 2	**Electric brake booster 26P connector No. 4**

Is there continuity?

YES

Repair a short to power in the wire between the electric brake booster and the brake pedal stroke sensor.

NO

Go to step 4.

4. Shorted wire check (PTS VS line to IG1 OPTION line)

-1. Check for continuity between test points 1 and 2.

Test condition	Vehicle OFF (LOCK) mode
B	Electric brake booster 26P connector
B	Brake pedal stroke sensor 4P connector: disconnected
Test point 1	**Electric brake booster 26P connector No. 11**
Test point 2	**Electric brake booster 26P connector No. 24**

Is there continuity?

YES

Repair a short to power in the wire between the electric brake booster and the brake pedal stroke sensor.

NO

Go to step 5.

5. Shorted wire check (PTS VS line to ground)

-1. Check for continuity between test points 1 and 2.

Test condition	Vehicle OFF (LOCK) mode
B	Electric brake booster 26P connector
B	Brake pedal stroke sensor 4P connector: disconnected
Test point 1	**Electric brake booster 26P connector No. 11**
Test point 2	Body ground

Is there continuity?

YES

Repair a short to ground in the wire between the electric brake booster and the brake pedal stroke sensor.

NO

Go to step 6.

6. Shorted wire check (PTS VS line to PTS GND line)

-1. Check for continuity between test points 1 and 2.

Test condition	Vehicle OFF (LOCK) mode

B	Electric brake booster 26P connector
B	Brake pedal stroke sensor 4P connector: disconnected
Test point 1	**Electric brake booster 26P connector No. 11**
Test point 2	**Electric brake booster 26P connector No. 5**

Is there continuity?

YES

Repair a short in the wire between the electric brake booster and the brake pedal stroke sensor.

NO

Check for loose terminals and poor connections in the electric brake booster 26P connector. Check for any authorized service information related to the DTCs or symptoms you are troubleshooting. If they are OK, **replace the electric brake booster** .

DTC C1C04-11 (ELECTRIC BRAKE BOOSTER CONTROL UNIT TYPE B) (2020 2021)

DTC C1C04-11 : Brake Pedal Stroke Sensor Power Circuit Short To Ground or Battery

NOTE: **Before you troubleshoot, review the general troubleshooting information**.

DTC Description	DTC	Freeze Frame
C1C04-11 Brake Pedal Stroke Sensor Power Circuit Short To Ground or Battery	B	B

DTC (Electric brake booster)

1. Problem verification

-1. Turn the vehicle to the ON mode.

-2. Clear the DTC with the HDS.

-3. Turn the vehicle to the OFF (LOCK) mode, then wait 5 seconds or more.

NOTE: Do not open and close the driver's door.

-4. Turn the vehicle to the ON mode.

-5. Check for DTCs with the HDS.

DTC Description	DTC	Freeze Frame
C1C04-11 Brake Pedal Stroke Sensor Power Circuit Short To Ground or Battery	B	B

Is DTC C1C04-11 indicated?

YES

The failure is duplicated. Go to step 2.

NO

Intermittent failure, the system is OK at this time. **Refer to intermittent failures troubleshooting**. If the freeze data/on-board snapshot of this DTC is recorded, try to reproduce the failure under the same conditions with the freeze data/on-board snapshot.

2. Shorted wire check (PTS VS line to +B EBB line)

-1. Turn the vehicle to the OFF (LOCK) mode with driver's door open.

-2. Wait for 3 minutes.

NOTE: Do not close the driver's door.

-3. **Remove the 12 volt battery** .

-4. Disconnect the following connectors.

Electric brake booster 26P connector
Brake pedal stroke sensor 4P connector

-5. Measure the resistance between test points 1 and 2.

Test condition	Vehicle OFF (LOCK) mode
B	Electric brake booster 26P connector
B	Brake pedal stroke sensor 4P connector: disconnected
Test point 1	**Electric brake booster 26P connector No. 11**
Test point 2	**Electric brake booster 26P connector No. 2**

Is there 1 MΩ or more?

YES

Go to step 3.

NO

Repair a short to power in the wire between the electric brake booster and the brake pedal stroke sensor.

3. Shorted wire check (PTS VS line to IG1 OPTION line)

-1. Measure the resistance between test points 1 and 2.

Test condition	Vehicle OFF (LOCK) mode
B	Electric brake booster 26P connector
B	Brake pedal stroke sensor 4P connector: disconnected
Test point 1	**Electric brake booster 26P connector No. 11**
Test point 2	**Electric brake booster 26P connector No. 24**

Is there 1 MΩ or more?

YES

Go to step 4.

NO

Repair a short to power in the wire between the electric brake booster and the brake pedal stroke sensor.

4. Shorted wire check (PTS VS line to ground)

-1. Measure the resistance between test points 1 and 2.

Test condition	Vehicle OFF (LOCK) mode

B	Electric brake booster 26P connector
B	Brake pedal stroke sensor 4P connector: disconnected
Test point 1	**Electric brake booster 26P connector No. 11**
Test point 2	Body ground

Is there 1 MΩ or more?

YES

Go to step 5.

NO

Repair a short to ground in the wire between the electric brake booster and the brake pedal stroke sensor.

5. Shorted wire check (PTS VS line to PTS GND line)

-1. Measure the resistance between test points 1 and 2.

Test condition	Vehicle OFF (LOCK) mode
B	Electric brake booster 26P connector
B	Brake pedal stroke sensor 4P connector: disconnected
Test point 1	**Electric brake booster 26P connector No. 11**
Test point 2	**Electric brake booster 26P connector No. 5**

Is there 1 MΩ or more?

YES

Check for loose terminals and poor connections in the electric brake booster 26P connector. Check for any authorized service information related to the DTCs or symptoms you are troubleshooting. If they are OK, **replace the electric brake booster** .

NO

Repair a short in the wire between the electric brake booster and the brake pedal stroke sensor.

DTC U0029-00 (ELECTRIC BRAKE BOOSTER CONTROL UNIT TYPE A (WITHOUT CAN GATEWAY)) (2017 2018 2019)

DTC U0029-00 : CAN Communication Failure (Ch1 Bus OFF)

NOTE:

- **Before you troubleshoot, review the general troubleshooting information**.
- This DTC is stored by communication failure between the F-CAN line and the electric brake booster. When DTC U0029-00 is indicated, the F-CAN line has already returned to normal. Check for loose terminals and poor connections in the connectors. If the connectors are OK, clear the DTC and following this troubleshooting.

DTC Description	DTC	Freeze Frame
U0029-00 CAN Communication Failure (Ch1 Bus OFF)	B	B

DTC (Electric brake booster)

1. Electric brake booster communication check

-1. Turn the vehicle to the ON mode.

-2. Check for communication between the electric brake booster and the HDS.

Is there communication between the electric brake booster and the HDS?

YES

Intermittent failure, the system is OK at this time. **Refer to intermittent failures troubleshooting**. If the freeze data/on-board snapshot of this DTC is recorded, try to reproduce the failure under the same conditions with the freeze data/on-board snapshot.

NO

Go to step 2.

2. Open wire check (F-CAN H, F-CAN L lines)

-1. Turn the vehicle to the OFF (LOCK) mode with driver's door open.

-2. Jump the SCS line with the HDS, and wait more than 1 minute.

-3. Wait for 3 minutes.

NOTE: Do not close the driver's door.

-4. Disconnect the following connectors.

Electric brake booster 26P connector

PCM connector A (51P)

-5. Check for continuity between test points 1 and 2.

Test condition	Vehicle OFF (LOCK) mode
B	Electric brake booster 26P connector: disconnected
B	PCM connector A (51P): disconnected
Test circuit 1	B
Test point 1	**Electric brake booster 26P connector No. 26**
Test point 2	**PCM connector A (51P) No. 2**

Test circuit 2	B
Test point 1	**Electric brake booster 26P connector No. 18**
Test point 2	**PCM connector A (51P) No. 1**

Is there continuity?

YES

The F-CAN H and F-CAN L wires are OK. Check for loose terminals and poor connections in the electric brake booster 26P connector. Check for any authorized service information related to the DTCs or symptoms you are troubleshooting. If they are OK, **replace the electric brake booster** .

NO

Repair an open in the wire between the electric brake booster and the PCM.

DTC U0029-00, U0047-00 (ELECTRIC BRAKE BOOSTER CONTROL UNIT TYPE A (WITH CAN GATEWAY)) (2017 2018 2019)

DTC U0029-00 : CAN Communication Failure (Ch1 Bus OFF)**DTC U0047-00** : CAN Communication Failure (Ch2 Bus OFF)

NOTE: **Before you troubleshoot, review the general troubleshooting information**.

DTC Description	DTC	Freeze Frame
U0029-00 CAN Communication Failure (Ch1 Bus OFF)	B	B
U0047-00 CAN Communication Failure (Ch2 Bus OFF)	B	B

DTC (Electric brake booster)

1. Problem verification

   -1. Turn the vehicle to the ON mode.

   -2. Clear the DTC with the HDS.

   -3. Turn the vehicle to the OFF (LOCK) mode, then wait 5 seconds or more.

   NOTE: Do not open and close the driver's door.

   -4. Turn the vehicle to the ON mode.

   -5. Check for DTCs with the HDS.

DTC Description	DTC	Freeze Frame
U0029-00 CAN Communication Failure (Ch1 Bus OFF)	B	B
U0047-00 CAN Communication Failure (Ch2 Bus OFF)	B	B

   Is DTC U0029-00 or U0047-00 indicated?

   YES

   The failure is duplicated. Go to step 2.

   NO

   Intermittent failure, the system is OK at this time. **Refer to intermittent failures troubleshooting**. If the freeze data/on-board snapshot of this DTC is recorded, try to reproduce the failure under the same conditions with the freeze data/on-board snapshot.

2. DTC check (CAN gateway system)

   -1. Check for CAN gateway system DTCs with the HDS.

DTC Description	DTC
B	B

   Is DTC indicated?

   YES

   Go to indicated DTC's troubleshooting.

   NO

   Go to step 3.

3. F-CAN circuit communication check

-1. Select the FUNCTION TEST in the CAN gateway with the HDS, then select the F-CAN Bus Connected Unit Check.

F-CAN Bus Connected Unit Check

Which result is indicated?

Electric brake booster (Bus A) is Not Available

Go to step 4.

Electric brake booster (Bus B) is Not Available

Go to step 5.

Electric brake booster (Bus A and B) is Available

Check for loose terminals and poor connections in the electric brake booster 26P connector. Check for any authorized service information related to the DTCs or symptoms you are troubleshooting. If they are OK, **replace the electric brake booster** .

4. Open wire check (F-CAN A H, F-CAN A L lines)

-1. Turn the vehicle to the OFF (LOCK) mode with driver's door open.

-2. Wait for 3 minutes.

NOTE: Do not close the driver's door.

-3. Disconnect the following connectors.

Electric brake booster 26P connector
CAN gateway 12P connector

-4. Check for continuity between test points 1 and 2.

Test condition	Vehicle OFF (LOCK) mode
B	Electric brake booster 26P connector: disconnected
B	CAN gateway 12P connector: disconnected
Test circuit 1	B
Test point 1	**Electric brake booster 26P connector No. 26**
Test point 2	CAN gateway 12P connector (female terminals) No. 3: ①

Test circuit 2	B
Test point 1	**Electric brake booster 26P connector No. 18**
Test point 2	CAN gateway 12P connector (female terminals) No. 9: ①

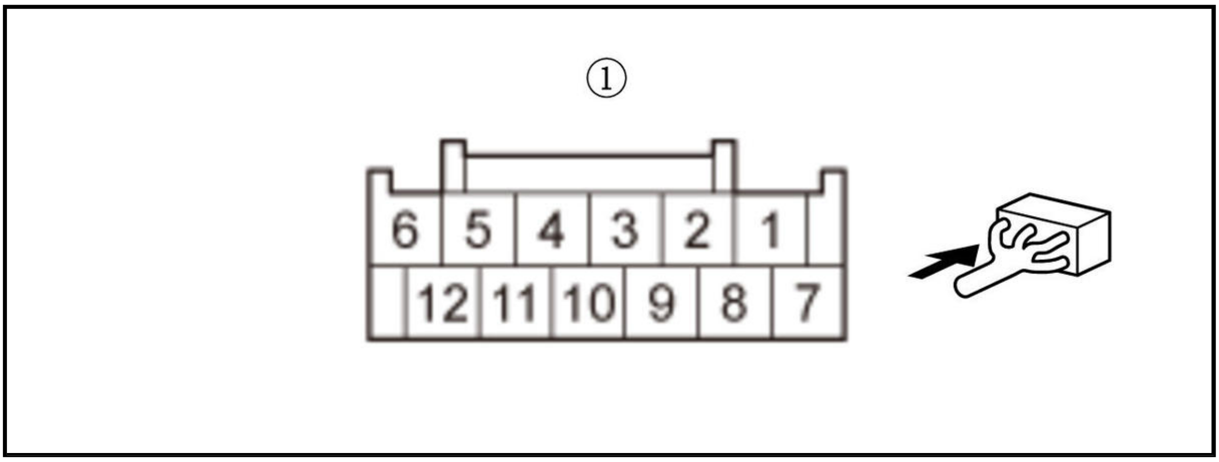

Is there continuity?

YES

The F-CAN A H and F-CAN A L wires are OK. Check for loose terminals and poor connections in the electric brake booster 26P connector. Check for any authorized service information related to the DTCs or symptoms you are troubleshooting. If they are OK, **replace the electric brake booster** .

NO

Repair an open in the wire between the electric brake booster and the CAN gateway.

5. Open wire check (F-CAN B H, F-CAN B L lines)

-1. Turn the vehicle to the OFF (LOCK) mode with driver's door open.

-2. Wait for 3 minutes.

NOTE: Do not close the driver's door.

-3. Disconnect the following connectors.

Electric brake booster 26P connector
CAN gateway 12P connector

-4. Check for continuity between test points 1 and 2.

Test condition	Vehicle OFF (LOCK) mode
B	Electric brake booster 26P connector: disconnected
B	CAN gateway 12P connector: disconnected
Test circuit 1	B
Test point 1	**Electric brake booster 26P connector No. 19**
Test point 2	CAN gateway 12P connector (female terminals) No. 12: ①

Test circuit 2	B
Test point 1	**Electric brake booster 26P connector No. 12**
Test point 2	CAN gateway 12P connector (female terminals) No. 5: ①

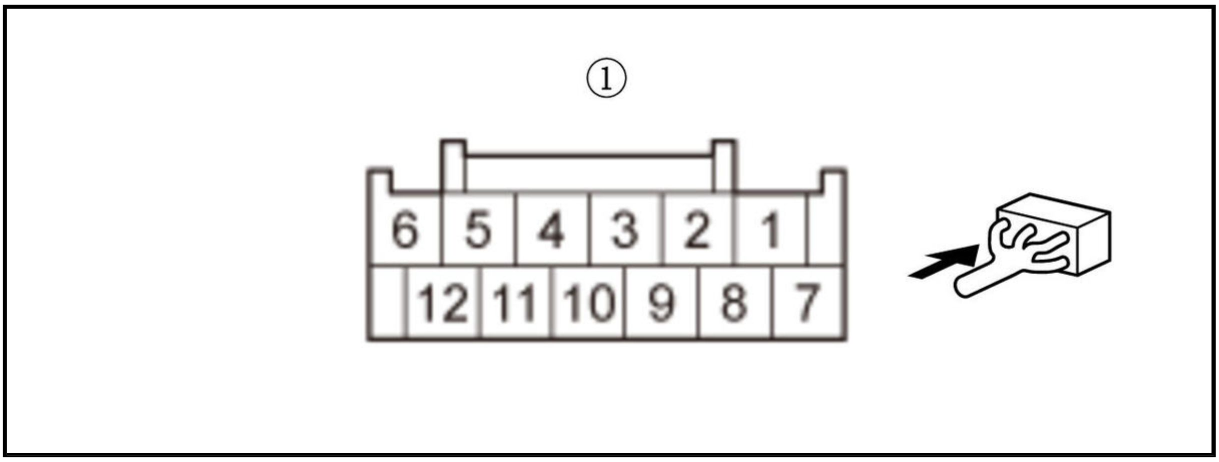

Is there continuity?

YES

The F-CAN B H and F-CAN B L wires are OK. Check for loose terminals and poor connections in the electric brake booster 26P connector. Check for any authorized service information related to the DTCs or symptoms you are troubleshooting. If they are OK, replace the electric brake booster .

NO

Repair an open in the wire between the electric brake booster and the CAN gateway.

DTC U0029-00, U0047-00 (ELECTRIC BRAKE BOOSTER CONTROL UNIT TYPE B) (2020 2021)

DTC U0029-00 : CAN Communication Failure (Ch1 Bus OFF)**DTC U0047-00** : CAN Communication Failure (Ch2 Bus OFF)

NOTE: Before you troubleshoot, review the general troubleshooting information.

*1: CAN gateway 12P connector type*2: CAN gateway 16P connector type

DTC Description	DTC	Freeze Frame
U0029-00 CAN Communication Failure (Ch1 Bus OFF)	B	B
U0047-00 CAN Communication Failure (Ch2 Bus OFF)	B	B

DTC (Electric brake booster)

1. Problem verification

-1. Turn the vehicle to the ON mode.

-2. Clear the DTC with the HDS.

-3. Turn the vehicle to the OFF (LOCK) mode, then wait 5 seconds or more.

NOTE: Do not open and close the driver's door.

-4. Turn the vehicle to the ON mode.

-5. Check for DTCs with the HDS.

DTC Description	DTC	Freeze Frame
U0029-00 CAN Communication Failure (Ch1 Bus OFF)	B	B
U0047-00 CAN Communication Failure (Ch2 Bus OFF)	B	B

Is DTC U0029-00 or U0047-00 indicated?

YES

The failure is duplicated. Go to step 2.

NO

Intermittent failure, the system is OK at this time. **Refer to intermittent failures troubleshooting**. If the freeze data/on-board snapshot of this DTC is recorded, try to reproduce the failure under the same conditions with the freeze data/on-board snapshot.

2. DTC check (CAN gateway system)

-1. Check for CAN gateway system DTCs with the HDS.

DTC Description	DTC
B	B

Are DTC (s) indicated?

YES

Go to indicated DTC's troubleshooting.

NO

Go to step 3.

3. F-CAN circuit communication check

-1. Select the FUNCTION TEST in the CAN gateway with the HDS, then select the F-CAN Bus Connected Unit Check.

F-CAN Bus Connected Unit Check

Which result is indicated?

Electric brake booster (Bus A) is Not Available

Go to step 4.

Electric brake booster (Bus B) is Not Available

Go to step 5.

Electric brake booster (Bus A and B) is Available

Check for loose terminals and poor connections in the electric brake booster 26P connector. Check for any authorized service information related to the DTCs or symptoms you are troubleshooting. If they are OK, **replace the electric brake booster** .

4. Open wire check (F-CAN A H, F-CAN A L lines)

-1. Turn the vehicle to the OFF (LOCK) mode with driver's door open.

-2. Wait for 3 minutes.

NOTE: Do not close the driver's door.

-3. Disconnect the following connectors.

Electric brake booster 26P connector
CAN gateway 12P connector *1
CAN gateway 16P connector *2

-4. Measure the resistance between test points 1 and 2.

Test condition	Vehicle OFF (LOCK) mode
B	Electric brake booster 26P connector: disconnected
B	CAN gateway 12P connector *1: disconnected
B	CAN gateway 16P connector *2: disconnected
Test circuit 1	B
Test point 1	**Electric brake booster 26P connector No. 26**
Test point 2	CAN gateway 12P connector *1 (female terminals) No. 3: ①
B	CAN gateway 16P connector *2 (female terminals) No. 3: ②

Test circuit 2	B
Test point 1	**Electric brake booster 26P connector No. 18**
Test point 2	CAN gateway 12P connector *1 (female terminals) No. 9: ①
B	CAN gateway 16P connector *2 (female terminals) No. 11: ②

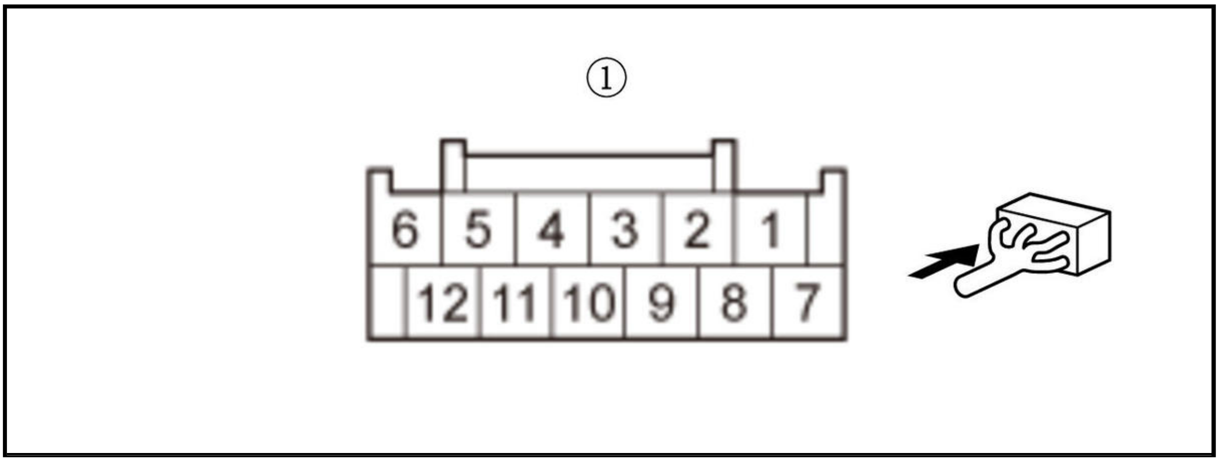

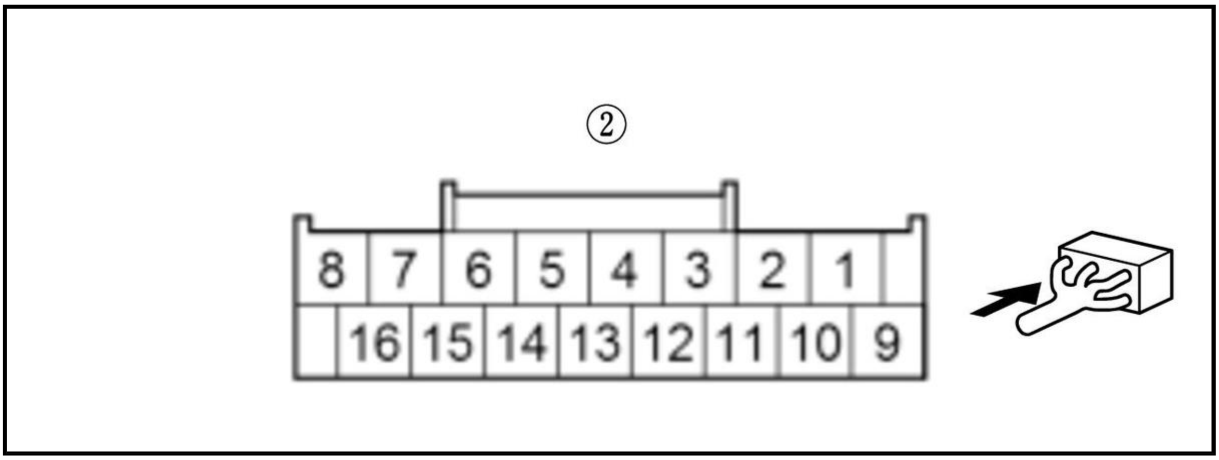

Is there 1.0 Ω or less?

YES

The F-CAN A H and F-CAN A L wires are OK. Check for loose terminals and poor connections in the electric brake booster 26P connector. Check for any authorized service information related to the DTCs or symptoms you are troubleshooting. If they are OK, **replace the electric brake booster** .

NO

Repair an open in the wire between the electric brake booster and the CAN gateway.

5. Open wire check (F-CAN B H, F-CAN B L lines)

-1. Turn the vehicle to the OFF (LOCK) mode with driver's door open.

-2. Wait for 3 minutes.

NOTE: Do not close the driver's door.

-3. Disconnect the following connectors.

Electric brake booster 26P connector
CAN gateway 12P connector *1
CAN gateway 16P connector *2

-4. Measure the resistance between test points 1 and 2.

Test condition	Vehicle OFF (LOCK) mode
B	Electric brake booster 26P connector: disconnected
B	CAN gateway 12P connector *1: disconnected
B	CAN gateway 16P connector *2: disconnected
Test circuit 1	B
Test point 1	**Electric brake booster 26P connector No. 19**
Test point 2	CAN gateway 12P connector *1 (female terminals) No. 12: ①
B	CAN gateway 16P connector *2 (female terminals) No. 6: ②

Test circuit 2	B
Test point 1	**Electric brake booster 26P connector No. 12**
Test point 2	CAN gateway 12P connector *1 (female terminals) No. 5: ①
B	CAN gateway 16P connector *2 (female terminals) No. 14: ②

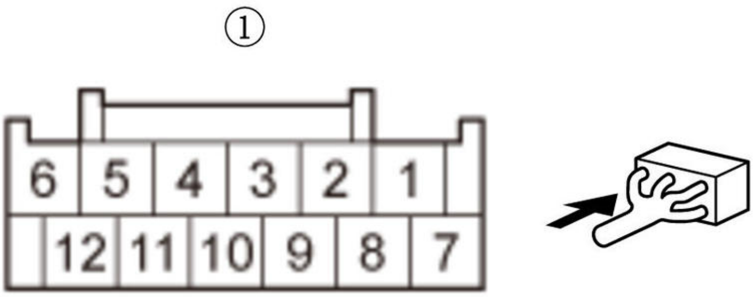

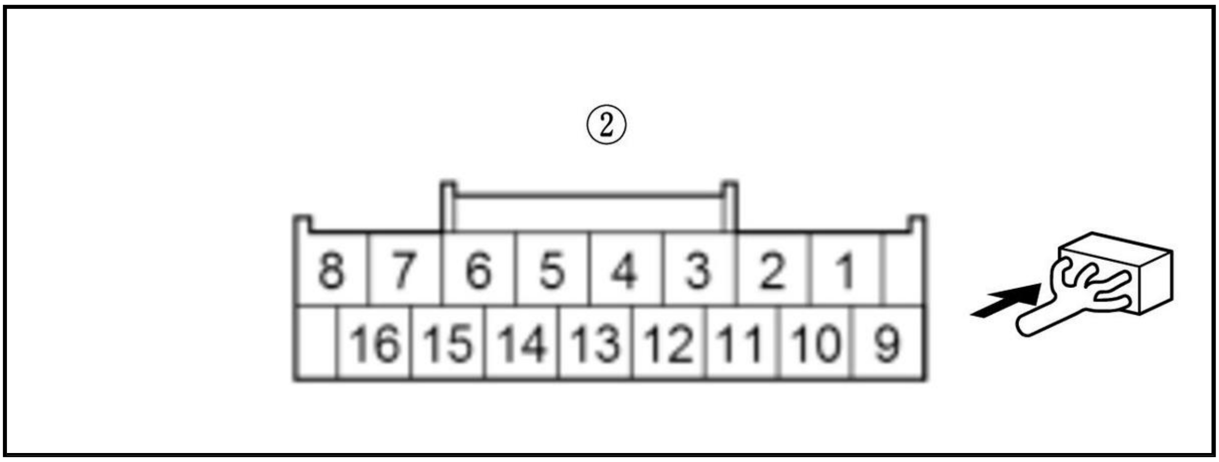

Is there 1.0 Ω or less?

YES

The F-CAN B H and F-CAN B L wires are OK. Check for loose terminals and poor connections in the electric brake booster 26P connector. Check for any authorized service information related to the DTCs or symptoms you are troubleshooting. If they are OK, replace the electric brake booster .

NO

Repair an open in the wire between the electric brake booster and the CAN gateway.

DTC U0047-00 (ELECTRIC BRAKE BOOSTER CONTROL UNIT TYPE A (WITHOUT CAN GATEWAY)) (2017 2018 2019)

DTC U0047-00 : CAN Communication Failure (Ch2 Bus OFF)

NOTE: Before you troubleshoot, review the general troubleshooting information.

DTC Description	DTC	Freeze Frame
U0047-00 CAN Communication Failure (Ch2 Bus OFF)	B	B

DTC (Electric brake booster)

1. Problem verification

-1. Turn the vehicle to the ON mode.

-2. Clear the DTC with the HDS.

-3. Turn the vehicle to the OFF (LOCK) mode, then wait 5 seconds or more.

NOTE: Do not open and close the driver's door.

-4. Turn the vehicle to the ON mode.

-5. Check for DTCs with the HDS.

DTC Description	DTC	Freeze Frame
U0047-00 CAN Communication Failure (Ch2 Bus OFF)	B	B

Is DTC U0047-00 indicated?

YES

The failure is duplicated. Go to step 2.

NO

Intermittent failure, the system is OK at this time. **Refer to intermittent failures troubleshooting**. If the freeze data/on-board snapshot of this DTC is recorded, try to reproduce the failure under the same conditions with the freeze data/on-board snapshot.

2. EBB CAN circuit resistance check

-1. Turn the vehicle to the OFF (LOCK) mode with driver's door open.

-2. Wait for 3 minutes.

NOTE: Do not close the driver's door.

-3. Disconnect the following connector.

Electric brake booster 26P connector

-4. Measure the resistance between test points 1 and 2.

Test condition	Vehicle OFF (LOCK) mode
B	Electric brake booster 26P connector: disconnected
Test point 1	**Electric brake booster 26P connector No. 19**
Test point 2	**Electric brake booster 26P connector No. 12**

Is there about 108-132 Ω ?

YES

Go to step 5.

NO

Go to step 3.

3. Shorted wire check (EBB CAN H line to EBB CAN L line)

-1. Disconnect the following connector.

VSA modulator-control unit 46P connector

-2. Check for continuity between test points 1 and 2.

Test condition	Vehicle OFF (LOCK) mode
	Electric brake booster 26P connector: disconnected
	VSA modulator-control unit 46P connector: disconnected
Test point 1	**Electric brake booster 26P connector No. 19**
Test point 2	**Electric brake booster 26P connector No. 12**

Is there continuity?

YES

Repair a short in the wires between the electric brake booster terminals 19 and 12.

NO

Go to step 4.

4. Open wire check (EBB CAN H, EBB CAN L lines)

   -1. Check for continuity between test points 1 and 2.

Test condition	Vehicle OFF (LOCK) mode

B	Electric brake booster 26P connector: disconnected
B	VSA modulator-control unit 46P connector: disconnected
Test circuit 1	B
Test point 1	**Electric brake booster 26P connector No. 19**
Test point 2	**VSA modulator-control unit 46P connector No. 46**

Test circuit 2	B
Test point 1	**Electric brake booster 26P connector No. 12**
Test point 2	**VSA modulator-control unit 46P connector No. 34**

   Is there continuity?

   YES

   The EBB CAN H, EBB CAN L wires are OK. Check for loose terminals and poor connections in the VSA modulator-control unit 46P connector. Check for any authorized service information related to the DTCs or symptoms you are troubleshooting. If they are OK, **replace the VSA modulator-control unit** .

   NO

   Repair an open in the wire between the electric brake booster and the VSA modulator-control unit.

5. Shorted wire check (EBB CAN H, EBB CAN L lines)

   -1. Disconnect the following connector.

VSA modulator-control unit 46P connector

   -2. Check for continuity between test points 1 and 2.

Test condition	Vehicle OFF (LOCK) mode
B	Electric brake booster 26P connector: disconnected
B	VSA modulator-control unit 46P connector: disconnected
Test circuit 1	B
Test point 1	**Electric brake booster 26P connector No. 19**
Test point 2	Body ground

Test circuit 2	B
Test point 1	**Electric brake booster 26P connector No. 12**
Test point 2	Body ground

   Is there continuity?

   YES

   Repair a short to ground in the wire between the electric brake booster and the VSA modulator-control unit.

NO

The EBB CAN H, EBB CAN L wires are OK. Check for loose terminals and poor connections in the electric brake booster 26P connector. Check for any authorized service information related to the DTCs or symptoms you are troubleshooting. If they are OK, **replace the electric brake booster** .

DTC U0100-00, U0104-00, U0122-00 (ELECTRIC BRAKE BOOSTER CONTROL UNIT TYPE B) (2020 2021)

DTC U0100-00 : CAN Communication Failure With ECM/PCM **DTC U0104-00** : CAN Communication Failure With Driving Support System Control Unit **DTC U0122-00** : CAN Communication Failure With VSA

NOTE:

- **Before you troubleshoot, review the general troubleshooting information**.
- According to the detected DTC (s), check for the power circuit and the ground circuit of the control unit which cannot communicate with the electric brake booster.

*1: CAN gateway 12P connector type*2: CAN gateway 16P connector type

DTC Description	DTC	Freeze Frame
U0100-00 CAN Communication Failure With ECM/PCM	B	B
U0104-00 CAN Communication Failure With Driving Support System Control Unit	B	B
U0122-00 CAN Communication Failure With VSA	B	B

DTC (Electric brake booster)

1. DTC check

   -1. Turn the vehicle to the ON mode.

   -2. Clear the DTC with the HDS.

   -3. Turn the vehicle to the OFF (LOCK) mode, then wait 5 seconds or more.

   NOTE: Do not open and close the driver's door.

   -4. Turn the vehicle to the ON mode.

   -5. Check for DTCs with the HDS.

DTC Description	DTC	Freeze Frame
U0100-00 CAN Communication Failure With ECM/PCM	B	B
U0104-00 CAN Communication Failure With Driving Support System Control Unit	B	B
U0122-00 CAN Communication Failure With VSA	B	B

Is DTC indicated?

YES

Go to step 2.

NO

Intermittent failure, the system is OK at this time. **Refer to intermittent failures troubleshooting**. If the freeze data/on-board snapshot of this DTC is recorded, try to reproduce the failure under the same

conditions with the freeze data/on-board snapshot.

2. DTC check (CAN gateway system)

-1. Check for CAN gateway system DTCs with the HDS.

DTC Description	DTC
B	B

Are DTC (s) indicated?

YES

Go to indicated DTC's troubleshooting.

NO

Go to step 3.

3. F-CAN circuit communication check (Receiving control unit)

-1. Select the FUNCTION TEST in the CAN gateway with the HDS, then select the F-CAN Bus Connected Unit Check.

F-CAN Bus Connected Unit Check

Which result is indicated?

Electric brake booster (Bus A) is Not Available

Go to step 4.

Electric brake booster (Bus B) is Not Available

Go to step 5.

Electric brake booster (Bus A and B) is Available

Go to step 6.

4. Open wire check (F-CAN A H, F-CAN A L lines)

-1. Turn the vehicle to the OFF (LOCK) mode with driver's door open.

-2. Wait for 3 minutes.

NOTE: Do not close the driver's door.

-3. Disconnect the following connectors.

Electric brake booster 26P connector
CAN gateway 12P connector *1
CAN gateway 16P connector *2

-4. Measure the resistance between test points 1 and 2.

Test condition	Vehicle OFF (LOCK) mode
B	Electric brake booster 26P connector: disconnected
B	CAN gateway 12P connector *1: disconnected

B	CAN gateway 16P connector *2: disconnected
Test circuit 1	B
Test point 1	**Electric brake booster 26P connector No. 26**
Test point 2	CAN gateway 12P connector *1 (female terminals) No. 3: ①
B	CAN gateway 16P connector *2 (female terminals) No. 3: ②

Test circuit 2	B
Test point 1	**Electric brake booster 26P connector No. 18**
Test point 2	CAN gateway 12P connector *1 (female terminals) No. 9: ①
B	CAN gateway 16P connector *2 (female terminals) No. 11: ②

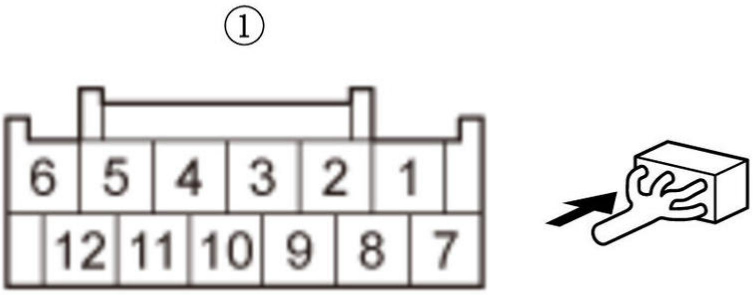

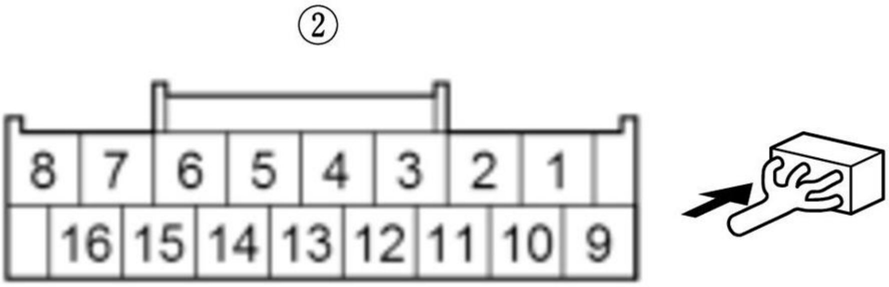

Is there 1.0 Ω or less?

YES

The F-CAN A H and F-CAN A L wires are OK. Check for loose terminals and poor connections in the electric brake booster 26P connector. Check for any authorized service information related to the DTCs or symptoms you are troubleshooting. If they are OK, **replace the electric brake booster** .

NO

Repair an open in the wire between the electric brake booster and the CAN gateway.

5. Open wire check (F-CAN B H, F-CAN B L lines)

-1. Turn the vehicle to the OFF (LOCK) mode with driver's door open.

-2. Wait for 3 minutes.

NOTE: Do not close the driver's door.

-3. Disconnect the following connectors.

Electric brake booster 26P connector
CAN gateway 12P connector *1
CAN gateway 16P connector *2

-4. Measure the resistance between test points 1 and 2.

Test condition	Vehicle OFF (LOCK) mode
B	Electric brake booster 26P connector: disconnected
B	CAN gateway 12P connector *1: disconnected
B	CAN gateway 16P connector *2: disconnected
Test circuit 1	B
Test point 1	**Electric brake booster 26P connector No. 19**
Test point 2	CAN gateway 12P connector *1 (female terminals) No. 12: ①
B	CAN gateway 16P connector *2 (female terminals) No. 6: ②

Test circuit 2	B
Test point 1	**Electric brake booster 26P connector No. 12**
Test point 2	CAN gateway 12P connector *1 (female terminals) No. 5: ①
B	CAN gateway 16P connector *2 (female terminals) No. 14: ②

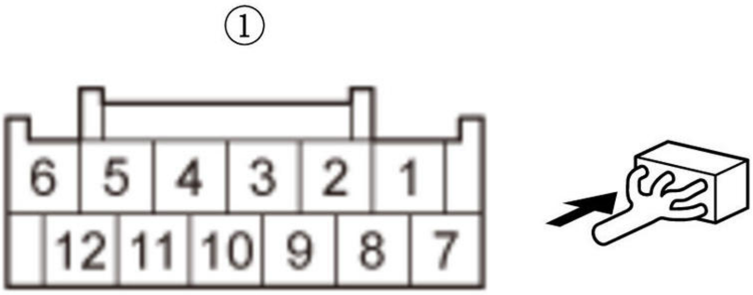

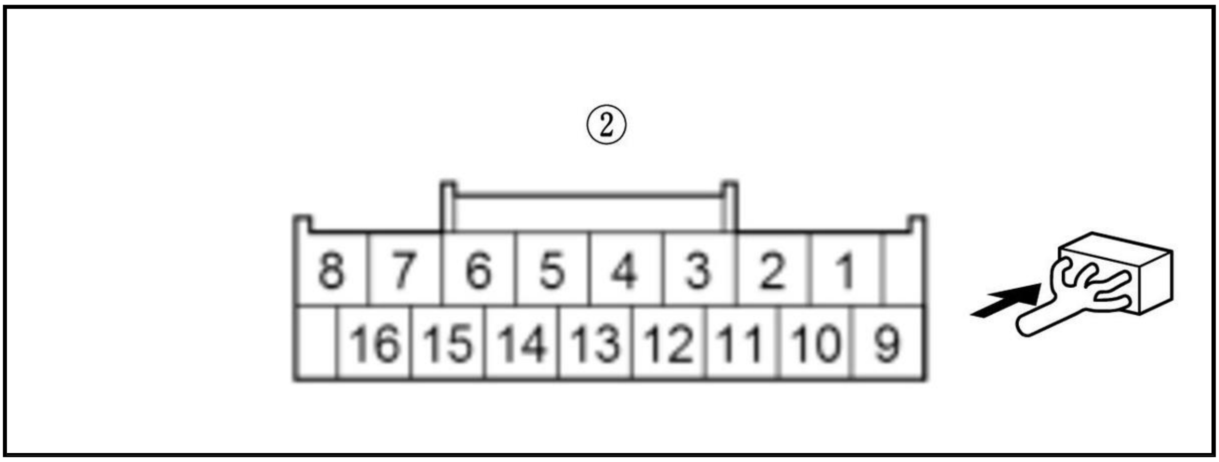

Is there 1.0 Ω or less?

YES

The F-CAN B H and F-CAN B L wires are OK. Check for loose terminals and poor connections in the electric brake booster 26P connector. Check for any authorized service information related to the DTCs or symptoms you are troubleshooting. If they are OK, **replace the electric brake booster** .

NO

Repair an open in the wire between the electric brake booster and the CAN gateway.

6. F-CAN circuit communication check (Transmitting control unit)

-1. Select the FUNCTION TEST in the CAN gateway with the HDS, then select the F-CAN Bus Connected Unit Check.

F-CAN Bus Connected Unit Check

According to the detected DTC on the following table, make sure that the transmitting control unit detects the CAN gateway Bus channel (s) normally.

DTC	Transmitting control unit	Detected CAN gateway Bus channel (s) at normal
U0100-00	PCM	A, B
U0104-00	Millimeter wave radar	B
U0122-00	VSA modulator-control unit	A, B

Is it detected normally?

Detected normal

Intermittent failure, the system is OK at this time. **Refer to intermittent failures troubleshooting**. If the freeze data/on-board snapshot of this DTC is recorded, try to reproduce the failure under the same conditions with the freeze data/on-board snapshot.

U0100-00: PCM (Bus A) is Not Available

Go to step 7.

U0100-00: PCM (Bus B) is Not Available

Go to step 8.

U0104-00: Millimeter wave radar (Bus B) is Not Available

Go to step 8.

U0122-00: VSA modulator-control unit (Bus A) is Not Available

Go to step 7.

U0122-00: VSA modulator-control unit (Bus B) is Not Available

Go to step 8.

7. Open wire check (F-CAN A H, F-CAN A L lines)

-1. Turn the vehicle to the OFF (LOCK) mode with driver's door open.

-2. Wait for 3 minutes.

NOTE: Do not close the driver's door.

-3. Disconnect the following connectors according to the detected DTC.

DTC	Connector
B	CAN gateway 12P connector *1CAN gateway 16P connector *2
U0100-00	PCM connector A (50P)
U0122-00	VSA modulator-control unit 46P connector

NOTE: Jump the SCS line with the HDS, and wait more than 1 minute when disconnecting the PCM connector.

-4. Measure the resistance between test points 1 and 2.

Test condition	Vehicle OFF (LOCK) mode
B	Transmitting control unit connector (s) for indicated DTCs: disconnected
B	CAN gateway 12P connector *1: disconnected
B	CAN gateway 16P connector *2: disconnected

DTC	Circuit name	Test point 1 (Receiving control unit)		Test point 2 (Transmitting control unit)	
		Connector	Terminal	Connector	Terminal
U0100-00	F-CAN A H	CAN gateway 12P connector *1 (female terminals): ①	No. 3	PCM connector A (50P)	No. 37
	F-CAN A L		No. 9		No. 36
	F-CAN A H	CAN gateway 16P connector *2 (female terminals): ②	No. 3		No. 37
	F-CAN A L		No. 11		No. 36

DTC	Circuit name	Test point 1 (Receiving control unit)		Test point 2 (Transmitting control unit)	
		Connector	Terminal	Connector	Terminal
U0122-00	F-CAN A H	CAN gateway 12P connector *1 (female terminals): ①	No. 3	VSA modulator-control unit 46P connector	No. 40
	F-CAN A L		No. 9		No. 28
	F-CAN A H	CAN gateway 16P connector *2 (female	No. 3		No. 40
	F-CAN A L		No. 11		No. 28

DTC	Circuit name	Test point 1 (Receiving control unit)		Test point 2 (Transmitting control unit)	
		Connector	Terminal	Connector	Terminal

terminals): ②

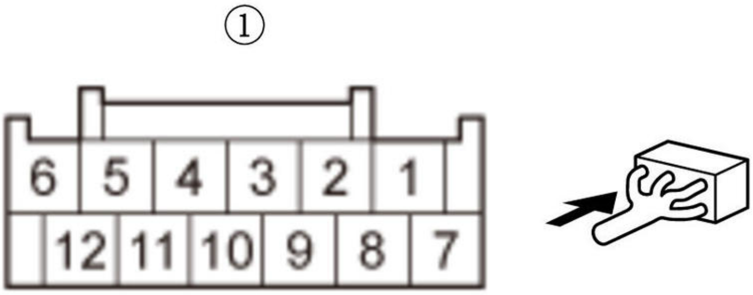

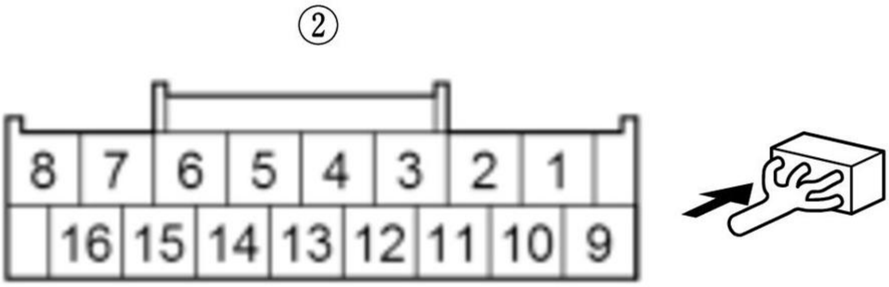

Is there 1.0 Ω or less?

YES

The F-CAN A H and F-CAN A L wires are OK. Check for any authorized service information related to the DTCs or symptoms you are troubleshooting. According to the detected DTC on the following table, substitute or replace the correspond control unit.

DTC	Transmitting Control Unit
U0100-00	**PCM**
U0122-00	**VSA modulator-control unit**

NO

Repair an open in the wire between the receiving control unit and the transmitting control unit.

8. Open wire check (F-CAN B H, F-CAN B L lines)

-1. Turn the vehicle to the OFF (LOCK) mode with driver's door open.

-2. Wait for 3 minutes.

NOTE: Do not close the driver's door.

-3. Disconnect the following connectors according to the detected DTC.

DTC	Connector
B	CAN gateway 12P connector *1CAN gateway 16P connector *2
U0100-00	PCM connector A (50P)
U0104-00	Millimeter wave radar 8P connector
U0122-00	VSA modulator-control unit 46P connector

NOTE: Jump the SCS line with the HDS, and wait more than 1 minute when disconnecting the PCM connector.

-4. Measure the resistance between test points 1 and 2.

Test condition	Vehicle OFF (LOCK) mode

B	Transmitting control unit connector (s) for indicated DTCs: disconnected
B	CAN gateway 12P connector *1: disconnected
B	CAN gateway 16P connector *2: disconnected

DTC	Circuit name	Test point 1 (Receiving control unit)		Test point 2 (Transmitting control unit)	
		Connector	Terminal	Connector	Terminal
U0100-00	F-CAN B H	CAN gateway 12P connector *1 (female terminals): ①	No. 12	**PCM connector A (50P)**	No. 39
	F-CAN B L		No. 5		No. 38
	F-CAN B H	CAN gateway 16P connector *2 (female terminals): ②	No. 6		No. 39
	F-CAN B L		No. 14		No. 38
U0104-00	F-CAN B H	CAN gateway 12P connector *1 (female terminals): ①	No. 12	**Millimeter wave radar 8P connector**	No. 7
	F-CAN B L		No. 5		No. 6
	F-CAN B H	CAN gateway 16P connector *2 (female terminals): ②	No. 6		No. 7
	F-CAN B L		No. 14		No. 6
U0122-00	F-CAN B H	CAN gateway 12P connector *1 (female terminals): ①	No. 12	**VSA modulator-control unit 46P connector**	No. 46
	F-CAN B L		No. 5		No. 34
	F-CAN B H	CAN gateway 16P connector *2 (female terminals): ②	No. 6		No. 46
	F-CAN B L		No. 14		No. 34

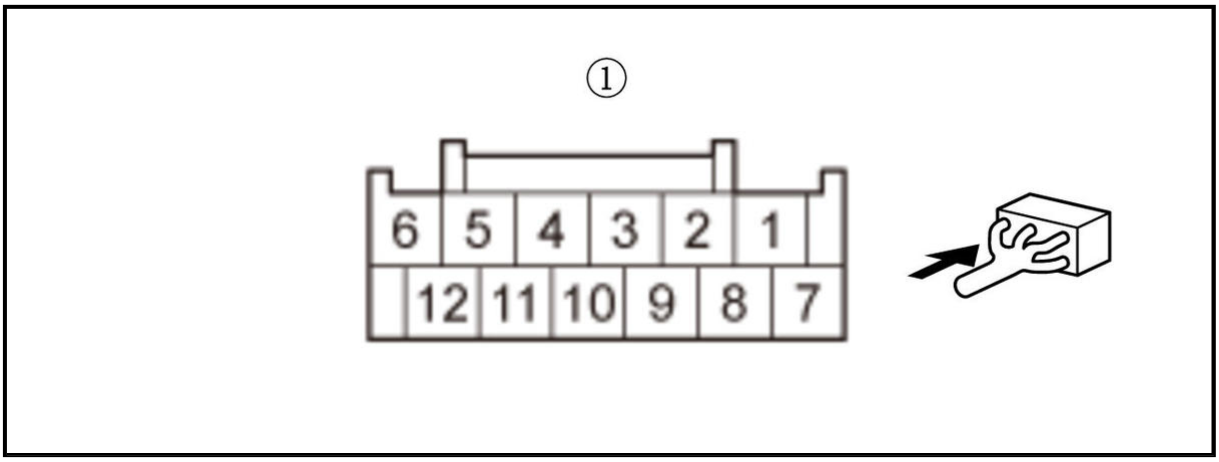

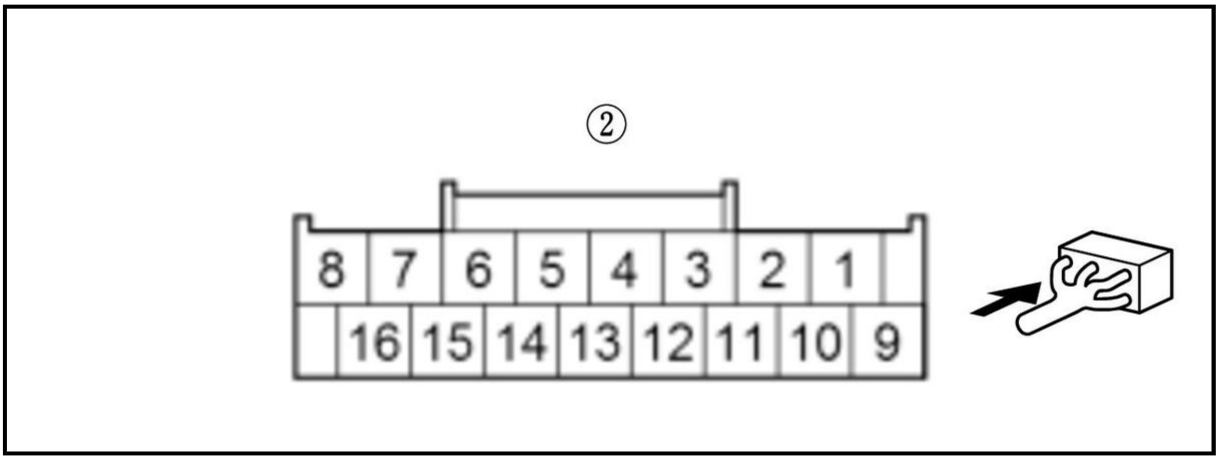

Is there 1.0 Ω or less?

YES

The F-CAN B H and F-CAN B L wires are OK. Check for any authorized service information related to the DTCs or symptoms you are troubleshooting. According to the detected DTC on the following table, substitute or replace the correspond control unit.

DTC	Transmitting Control Unit
U0100-00	PCM
U0104-00	Millimeter wave radar
U0122-00	VSA modulator-control unit

NO

Repair an open in the wire between the receiving control unit and the transmitting control unit.

DTC U0100-00, U0122-00 (ELECTRIC BRAKE BOOSTER CONTROL UNIT TYPE A (WITHOUT CAN GATEWAY)) (2017 2018 2019)

DTC U0100-00 : CAN Communication Failure With ECM/PCM **DTC U0122-00** : CAN Communication Failure With VSA (CAN Ch1)

NOTE:

- **Before you troubleshoot, review the general troubleshooting information**.
- According to the detected DTC (s), check for the power circuit and the ground circuit of the control unit which cannot communicate with the electric brake booster.

DTC Description	DTC	Freeze Frame
U0100-00 CAN Communication Failure With ECM/PCM	B	B
U0122-00 CAN Communication Failure With VSA (CAN Ch1)	B	B

DTC (Electric brake booster)

1. DTC check

   -1. Turn the vehicle to the ON mode.

   -2. Clear the DTC with the HDS.

   -3. Turn the vehicle to the OFF (LOCK) mode, then wait 5 seconds or more.

   NOTE: Do not open and close the driver's door.

   -4. Turn the vehicle to the ON mode.

   -5. Check for DTCs with the HDS.

DTC Description	DTC	Freeze Frame
U0100-00 CAN Communication Failure With ECM/PCM	B	B
U0122-00 CAN Communication Failure With VSA (CAN Ch1)	B	B

   Is DTC indicated?

   YES

   Go to step 2.

   NO

   Intermittent failure, the system is OK at this time. **Refer to intermittent failures troubleshooting**. If the freeze data/on-board snapshot of this DTC is recorded, try to reproduce the failure under the same conditions with the freeze data/on-board snapshot.

2. Open wire check (F-CAN H, F-CAN L lines)

   -1. Turn the vehicle to the OFF (LOCK) mode with driver's door open.

   -2. Wait for 3 minutes.

   NOTE: Do not close the driver's door.

   -3. Disconnect the following connector.

Electric brake booster 26P connector

   -4. Disconnect the following connectors according to the detected DTC.

DTC	Connector
U0100-00	PCM connector A (51P)
U0122-00	VSA modulator-control unit 46P connector

   NOTE: Jump the SCS line with the HDS, and wait more than 1 minute when disconnecting the PCM connector.

-5. Check for continuity between the receiving control unit and the transmitting control unit according to the detected DTC.

Test condition	Vehicle OFF (LOCK) mode
B	Electric brake booster 26P connector: disconnected
B	Transmitting control unit connector (s) for indicated DTCs: disconnected

DTC	Circuit name	Test point 1 (Receiving control unit)		Test point 2 (Transmitting control unit)	
		Connector	Terminal	Connector	Terminal
U0100-00	F-CAN H	Electric brake booster 26P connector	No. 26	PCM connector A (51P)	No. 2
	F-CAN L		No. 18		No. 1
U0122-00	F-CAN H	Electric brake booster 26P connector	No. 26	VSA modulator-control unit 46P connector	No. 40
	F-CAN L		No. 18		No. 28

Is there continuity?

YES

The F-CAN H and F-CAN L wires are OK. Check for any authorized service information related to the DTCs or symptoms you are troubleshooting. According to the detected DTC on the following table, replace the correspond control unit.

DTC	Transmitting Control Unit
U0100-00	PCM
U0122-00	VSA modulator-control unit

NO

Repair an open in the wire between the receiving control unit and the transmitting control unit.

DTC U0100-00, U0122-00, U12B5-00 (ELECTRIC BRAKE BOOSTER CONTROL UNIT TYPE A (WITH CAN GATEWAY)) (2017 2018 2019)

DTC U0100-00 : CAN Communication Failure With ECM/PCM **DTC U0122-00** : CAN Communication Failure With VSA (CAN Ch1)**DTC U12B5-00** : CAN Communication Failure With VSA (CAN Ch2)

NOTE:

- Before you troubleshoot, review the general troubleshooting information.
- According to the detected DTC (s), check for the power circuit and the ground circuit of the control unit which cannot communicate with the electric brake booster.

DTC Description	DTC	Freeze Frame
U0100-00 CAN Communication Failure With ECM/PCM	B	B
U0122-00 CAN Communication Failure With VSA (CAN Ch1)	B	B
U12B5-00 CAN Communication Failure With VSA (CAN Ch2)	B	B

DTC (Electric brake booster)

1. DTC check

-1. Turn the vehicle to the ON mode.

-2. Clear the DTC with the HDS.

-3. Turn the vehicle to the OFF (LOCK) mode, then wait 5 seconds or more.

NOTE: Do not open and close the driver's door.

-4. Turn the vehicle to the ON mode.

-5. Check for DTCs with the HDS.

DTC Description	DTC	Freeze Frame
U0100-00 CAN Communication Failure With ECM/PCM	B	B
U0122-00 CAN Communication Failure With VSA (CAN Ch1)	B	B
U12B5-00 CAN Communication Failure With VSA (CAN Ch2)	B	B

Is DTC indicated?

YES

Go to step 2.

NO

Intermittent failure, the system is OK at this time. **Refer to intermittent failures troubleshooting**. If the freeze data/on-board snapshot of this DTC is recorded, try to reproduce the failure under the same conditions with the freeze data/on-board snapshot.

2. DTC check (CAN gateway system)

-1. Check for CAN gateway system DTCs with the HDS.

DTC Description	DTC
B	B

Is DTC indicated?

YES

Go to indicated DTC's troubleshooting.

NO

Go to step 3.

3. F-CAN circuit communication check (Receiving control unit)

-1. Select the FUNCTION TEST in the CAN gateway with the HDS, then select the F-CAN Bus Connected Unit Check.

F-CAN Bus Connected Unit Check

Which result is indicated?

Electric brake booster (Bus A) is Not Available

Go to step 4.

Electric brake booster (Bus B) is Not Available

Go to step 5.

Electric brake booster (Bus A and B) is Available

Go to step 6.

4. Open wire check (F-CAN A H, F-CAN A L lines)

-1. Turn the vehicle to the OFF (LOCK) mode with driver's door open.

-2. Wait for 3 minutes.

NOTE: Do not close the driver's door.

-3. Disconnect the following connectors.

Electric brake booster 26P connector
CAN gateway 12P connector

-4. Check for continuity between test points 1 and 2.

Test condition	Vehicle OFF (LOCK) mode
B	Electric brake booster 26P connector: disconnected
B	CAN gateway 12P connector: disconnected
Test circuit 1	B
Test point 1	**Electric brake booster 26P connector No. 26**
Test point 2	CAN gateway 12P connector (female terminals) No. 3: ①

Test circuit 2	B
Test point 1	**Electric brake booster 26P connector No. 18**
Test point 2	CAN gateway 12P connector (female terminals) No. 9: ①

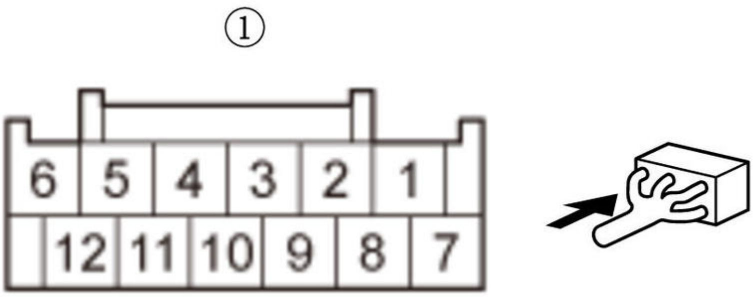

Is there continuity?

YES

The F-CAN A H and F-CAN A L wires are OK. Check for loose terminals and poor connections in the electric brake booster 26P connector. Check for any authorized service information related to the DTCs or symptoms you are troubleshooting. If they are OK, **replace the electric brake booster** .

NO

Repair an open in the wire between the electric brake booster and the CAN gateway.

5. Open wire check (F-CAN B H, F-CAN B L lines)

-1. Turn the vehicle to the OFF (LOCK) mode with driver's door open.

-2. Wait for 3 minutes.

NOTE: Do not close the driver's door.

-3. Disconnect the following connectors.

Electric brake booster 26P connector
CAN gateway 12P connector

-4. Check for continuity between test points 1 and 2.

Test condition	Vehicle OFF (LOCK) mode
B	Electric brake booster 26P connector: disconnected
B	CAN gateway 12P connector: disconnected
Test point 1	**Electric brake booster 26P connector No. 19**
Test point 2	CAN gateway 12P connector (female terminals) No. 12: ①

Test point 1	**Electric brake booster 26P connector No. 12**
Test point 2	CAN gateway 12P connector (female terminals) No. 5: ①

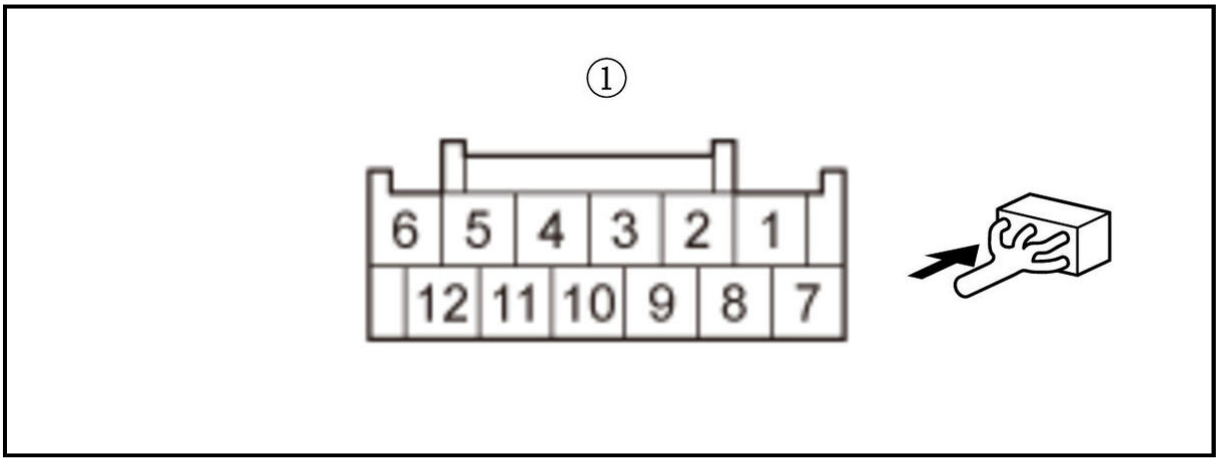

Is there continuity?

YES

The F-CAN B H and F-CAN B L wires are OK. Check for loose terminals and poor connections in the electric brake booster 26P connector. Check for any authorized service information related to the DTCs or symptoms you are troubleshooting. If they are OK, **replace the electric brake booster** .

NO

Repair an open in the wire between the electric brake booster and the CAN gateway.

6. F-CAN circuit communication check (Transmitting control unit)

-1. Select the FUNCTION TEST in the CAN gateway with the HDS, then select the F-CAN Bus Connected Unit Check.

F-CAN Bus Connected Unit Check

According to the detected DTC on the following table, make sure that the transmitting control unit detects the CAN gateway Bus channel (s) normally.

DTC	Transmitting control unit	Detected CAN getaway Bus channel (s) at normal
U0100-00	PCM	A, B
U0122-00	VSA modulator-control unit	A
U12B5-00	VSA modulator-control unit	B

Is it detected normally?

Detected normal

Intermittent failure, the system is OK at this time. Refer to intermittent failures troubleshooting. If the freeze data/on-board snapshot of this DTC is recorded, try to reproduce the failure under the same conditions with the freeze data/on-board snapshot.

U0100-00: PCM (Bus A) is Not Available

Go to step 7.

U0100-00: PCM (Bus B) is Not Available

Go to step 8.

U0122-00: VSA modulator-control unit (Bus A) is Not Available

Go to step 7.

U12B5-00: VSA modulator-control unit (Bus B) is Not Available

Go to step 8.

7. Open wire check (F-CAN A H, F-CAN A L lines)

-1. Turn the vehicle to the OFF (LOCK) mode with driver's door open.

-2. Wait for 3 minutes.

NOTE: Do not close the driver's door.

-3. Disconnect the following connectors according to the detected DTC.

DTC	Connector
B	CAN gateway 12P connector
U0100-00	PCM connector A (50P)
U0122-00	VSA modulator-control unit 46P connector

NOTE: Jump the SCS line with the HDS, and wait more than 1 minute when disconnecting the PCM connector.

-4. Check for continuity between test points 1 and 2.

Test condition	Vehicle OFF (LOCK) mode

B	Transmitting control unit connector (s) for indicated DTCs: disconnected
B	CAN gateway 12P connector: disconnected

DTC	Circuit name	Test point 1 (Receiving control unit)		Test point 2 (Transmitting control unit)	
		Connector	Terminal	Connector	Terminal
U0100-00	F-CAN A H	CAN gateway 12P connector (female terminals): ①	No. 3	PCM connector A (50P)	No. 37
	F-CAN A L		No. 9		No. 36
U0122-00	F-CAN A H	CAN gateway 12P connector (female terminals): ①	No. 3	VSA modulator-control unit 46P connector	No. 40
	F-CAN A L		No. 9		No. 28

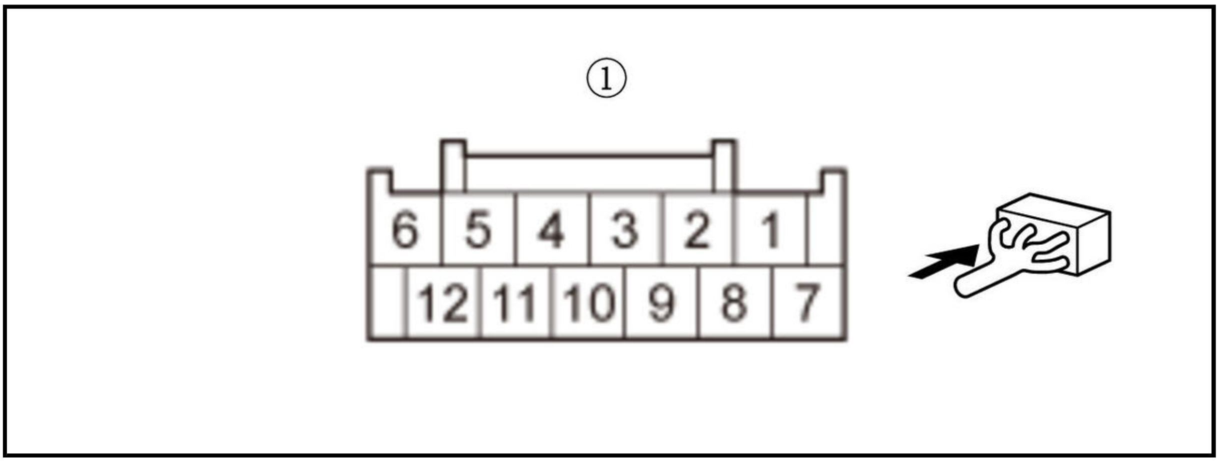

Is there continuity?

YES

The F-CAN A H and F-CAN A L wires are OK. Check for any authorized service information related to the DTCs or symptoms you are troubleshooting. According to the detected DTC on the following table, substitute or replace the correspond control unit.

DTC	Transmitting Control Unit
U0100-00	PCM
U0122-00	VSA modulator-control unit

NO

Repair an open in the wire between the receiving control unit and the transmitting control unit.

8. Open wire check (F-CAN B H, F-CAN B L lines)

-1. Turn the vehicle to the OFF (LOCK) mode with driver's door open.

-2. Wait for 3 minutes.

NOTE: Do not close the driver's door.

-3. Disconnect the following connectors according to the detected DTC.

DTC	Connector
B	CAN gateway 12P connector
U0100-00	PCM connector A (50P)

DTC	Connector
U12B5-00	VSA modulator-control unit 46P connector

NOTE: Jump the SCS line with the HDS, and wait more than 1 minute when disconnecting the PCM connector.

-4. Check for continuity between test points 1 and 2.

Test condition	Vehicle OFF (LOCK) mode
B	Transmitting control unit connector (s) for indicated DTCs: disconnected
B	CAN gateway 12P connector: disconnected

DTC	Circuit name	Test point 1 (Receiving control unit)		Test point 2 (Transmitting control unit)	
		Connector	Terminal	Connector	Terminal
U0100-00	F-CAN B H	CAN gateway 12P connector (female terminals): ①	No. 12	PCM connector A (50P)	No. 39
	F-CAN B L		No. 5		No. 38
U12B5-00	F-CAN B H	CAN gateway 12P connector (female terminals): ①	No. 12	VSA modulator-control unit 46P connector	No. 46
	F-CAN B L		No. 5		No. 34

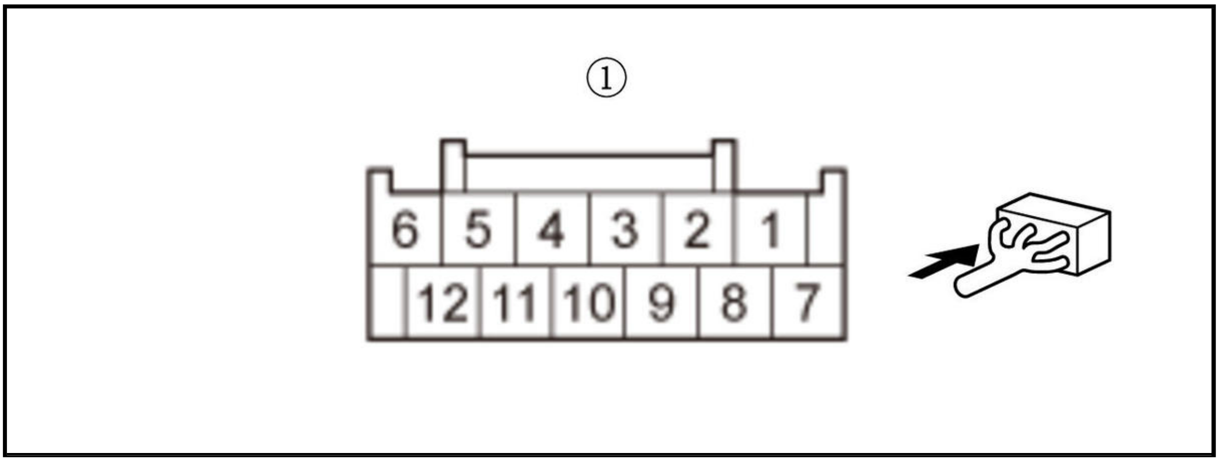

Is there continuity?

YES

The F-CAN B H and F-CAN B L wires are OK. Check for any authorized service information related to the DTCs or symptoms you are troubleshooting. According to the detected DTC on the following table, substitute or replace the correspond control unit.

DTC	Transmitting Control Unit
U0100-00	PCM
U12B5-00	VSA modulator-control unit

NO

Repair an open in the wire between the receiving control unit and the transmitting control unit.

DTC U0416-68 (ELECTRIC BRAKE BOOSTER CONTROL UNIT TYPE A) (2017 2018 2019)

DTC U0416-68 : VSA System Malfunction

NOTE: **Before you troubleshoot, review the general troubleshooting information**.

DTC Description	DTC	Freeze Frame
U0416-68 VSA System Malfunction	B	B

DTC (Electric brake booster)

1. Problem verification

   -1. Turn the vehicle to the ON mode.

   -2. Clear the DTC with the HDS.

   -3. Turn the vehicle to the OFF (LOCK) mode, then wait 5 seconds or more.

   NOTE: Do not open and close the driver's door.

   -4. Turn the vehicle to the ON mode.

   -5. Check for DTCs with the HDS.

DTC Description	DTC	Freeze Frame
U0416-68 VSA System Malfunction	B	B

   Is DTC U0416-68 indicated?

   YES

   The failure is duplicated. **Go to VSA system troubleshooting** .

   NO

   Intermittent failure, the system is OK at this time. **Refer to intermittent failures troubleshooting**. If the freeze data/on-board snapshot of this DTC is recorded, try to reproduce the failure under the same conditions with the freeze data/on-board snapshot.

DTC U0416-68 (ELECTRIC BRAKE BOOSTER CONTROL UNIT TYPE B) (2020 2021)

DTC U0416-68 : (VSA System Malfunction)

NOTE: **Before you troubleshoot, review the general troubleshooting information**.

DTC Description	DTC	Freeze Frame
U0416-68 (VSA System Malfunction)	B	B

DTC (Electric brake booster)

1. Problem verification

   -1. Turn the vehicle to the ON mode.

   -2. Clear the DTC with the HDS.

   -3. Turn the vehicle to the OFF (LOCK) mode, then wait 5 seconds or more.

   NOTE: Do not open and close the driver's door.

   -4. Turn the vehicle to the ON mode.

-5. Check for DTCs with the HDS.

DTC Description	DTC	Freeze Frame
U0416-68 (VSA System Malfunction)	B	B

Is DTC U0416-68 indicated?

YES

The failure is duplicated. **Go to VSA DTC troubleshooting** .

NO

Intermittent failure, the system is OK at this time. **Refer to intermittent failures troubleshooting**. If the freeze data/on-board snapshot of this DTC is recorded, try to reproduce the failure under the same conditions with the freeze data/on-board snapshot.

DTC U12B5-00 (ELECTRIC BRAKE BOOSTER CONTROL UNIT TYPE A (WITHOUT CAN GATEWAY)) (2017 2018 2019)

DTC U12B5-00 : CAN Communication Failure With VSA (CAN Ch2)

NOTE:

- **Before you troubleshoot, review the general troubleshooting information**.
- According to the detected DTC (s), check for the power circuit and the ground circuit of the control unit which cannot communicate with the electric brake booster.

DTC Description	DTC	Freeze Frame
U12B5-00 CAN Communication Failure With VSA (CAN Ch2)	B	B

DTC (Electric brake booster)

1. DTC check (Electric brake booster)

-1. Turn the vehicle to the ON mode.

-2. Clear the DTC with the HDS.

-3. Turn the vehicle to the OFF (LOCK) mode, then wait 5 seconds or more.

NOTE: Do not open and close the driver's door.

-4. Turn the vehicle to the ON mode.

-5. Check for DTCs with the HDS.

DTC Description	DTC	Freeze Frame
U12B5-00 CAN Communication Failure With VSA (CAN Ch2)	B	B

Is DTC indicated?

YES

Go to step 2.

NO

Intermittent failure, the system is OK at this time. Refer to intermittent failures troubleshooting. If the freeze data/on-board snapshot of this DTC is recorded, try to reproduce the failure under the same conditions with the freeze data/on-board snapshot.

2. Open wire check (EBB CAN H, EBB CAN L lines)

-1. Turn the vehicle to the OFF (LOCK) mode with driver's door open.

-2. Wait for 3 minutes.

NOTE: Do not close the driver's door.

-3. Disconnect the following connector.

Electric brake booster 26P connector

-4. Disconnect the following connectors according to the detected DTC.

DTC	Connector
U12B5-00	VSA modulator-control unit 46P connector

-5. Check for continuity between test points 1 and 2.

Test condition	Vehicle OFF (LOCK) mode
B	Electric brake booster 26P connector: disconnected
B	Transmitting control unit connector (s) for indicated DTCs: disconnected

DTC	Circuit name	Test point 1 (Receiving control unit)		Test point 2 (Transmitting control unit)	
		Connector	Terminal	Connector	Terminal
U12B5-00	EBB CAN H	Electric brake booster 26P connector	No. 19	VSA modulator-control unit 46P connector	No. 46
	EBB CAN L		No. 12		No. 34

Is there continuity?

YES

The EBB CAN H and EBB CAN L wires are OK. Check for any authorized service information related to the DTCs or symptoms you are troubleshooting. According to the detected DTC on the following table, substitute or replace the correspond control unit.

DTC	Transmitting Control Unit
U12B5-00	VSA modulator-control unit

NO

Repair an open in the wire between the receiving control unit and the transmitting control unit.

DTC U3000-49 (ELECTRIC BRAKE BOOSTER CONTROL UNIT TYPE A) (2017 2018 2019)

DTC U3000-49 : ECU Internal Malfunction

NOTE: Before you troubleshoot, review the general troubleshooting information.

DTC Description	DTC	Freeze Frame
U3000-49 ECU Internal Malfunction	B	B

DTC (Electric brake booster)

1. Problem verification

   -1. Turn the vehicle to the ON mode.

   -2. Clear the DTC with the HDS.

   -3. Turn the vehicle to the OFF (LOCK) mode, then wait 5 seconds or more.

   NOTE: Do not open and close the driver's door.

   -4. Turn the vehicle to the ON mode.

   -5. Check for DTCs with the HDS.

DTC Description	DTC	Freeze Frame
U3000-49 ECU Internal Malfunction	B	B

Is DTC U3000-49 indicated?

YES

The failure is duplicated. Check for loose terminals and poor connections in the electric brake booster 26P connector. Check for any authorized service information related to the DTCs or symptoms you are troubleshooting. If they are OK, **replace the electric brake booster** .

NO

Intermittent failure, the system is OK at this time. **Refer to intermittent failures troubleshooting**. If the freeze data/on-board snapshot of this DTC is recorded, try to reproduce the failure under the same conditions with the freeze data/on-board snapshot.

DTC U3000-49 (ELECTRIC BRAKE BOOSTER CONTROL UNIT TYPE B) (2020 2021)

DTC U3000-49 : ECU Internal Malfunction

NOTE: **Before you troubleshoot, review the general troubleshooting information**.

DTC Description	DTC	Freeze Frame
U3000-49 ECU Internal Malfunction	B	B

DTC (Electric brake booster)

1. Problem verification

   -1. Turn the vehicle to the ON mode.

   -2. Clear the DTC with the HDS.

   -3. Turn the vehicle to the OFF (LOCK) mode, then wait 5 seconds or more.

   NOTE: Do not open and close the driver's door.

   -4. Turn the vehicle to the ON mode.

   -5. Check for DTCs with the HDS.

DTC Description	DTC	Freeze Frame
U3000-49 ECU Internal Malfunction	B	B

Is DTC U3000-49 indicated?

YES

The failure is duplicated. Check for loose terminals and poor connections in the electric brake booster 26P connector. Check for any authorized service information related to the DTCs or symptoms you are troubleshooting. If they are OK, **replace the electric brake booster** .

NO

Intermittent failure, the system is OK at this time. **Refer to intermittent failures troubleshooting**. If the freeze data/on-board snapshot of this DTC is recorded, try to reproduce the failure under the same conditions with the freeze data/on-board snapshot.

DTC U3000-51 (ELECTRIC BRAKE BOOSTER CONTROL UNIT TYPE A) (2017 2018 2019)

DTC U3000-51 : ECU Software Update Failure

NOTE:

- **Before you troubleshoot, review the general troubleshooting information**.
- Do not turn the vehicle to the OFF (LOCK) mode while updating the electric brake booster. If you turn the vehicle to the OFF (LOCK) mode before completion, the electric brake booster will be damaged.

DTC Description	DTC	Freeze Frame
U3000-51 ECU Software Update Failure	B	B

DTC (Electric brake booster)

1. Problem verification

-1. Turn the vehicle to the ON mode.

-2. Clear the DTC with the HDS.

-3. Turn the vehicle to the OFF (LOCK) mode, then wait 5 seconds or more.

NOTE: Do not open and close the driver's door.

-4. Turn the vehicle to the ON mode.

-5. Check for DTCs with the HDS.

DTC Description	DTC	Freeze Frame
U3000-51 ECU Software Update Failure	B	B

Is DTC U3000-51 indicated?

YES

The failure is duplicated. Go to step 2.

NO

Intermittent failure, the system is OK at this time. **Refer to intermittent failures troubleshooting**. If the freeze data/on-board snapshot of this DTC is recorded, try to reproduce the failure under the same

conditions with the freeze data/on-board snapshot.

2. Electric brake booster check (update)

   -1. **Update the electric brake booster**.

   -2. Turn the vehicle to the OFF (LOCK) mode, then wait 5 seconds or more.

   NOTE: Do not open and close the driver's door.

   -3. Turn the vehicle to the ON mode.

   -4. Check for DTCs with the HDS.

DTC Description	DTC	Freeze Frame
B	B	B

Is DTC U3000-51 indicated?

YES

Check for loose terminals and poor connections in the electric brake booster 26P connector. Check for any authorized service information related to the DTCs or symptoms you are troubleshooting. If they are OK, **replace the electric brake booster** .

NO

Troubleshooting is complete. If any other DTCs are indicated, go to the indicated DTCs troubleshooting.

DTC U3000-51 (ELECTRIC BRAKE BOOSTER CONTROL UNIT TYPE B) (2020 2021)

DTC U3000-51 : ECU Software Update Failure

NOTE:

- **Before you troubleshoot, review the general troubleshooting information**.
- Do not turn the vehicle to the OFF (LOCK) mode while updating the electric brake booster. If you turn the vehicle to the OFF (LOCK) mode before completion, the electric brake booster will be damaged.

DTC Description	DTC	Freeze Frame
U3000-51 ECU Software Update Failure	B	B

DTC (Electric brake booster)

1. Problem verification

   -1. Turn the vehicle to the ON mode.

   -2. Clear the DTC with the HDS.

   -3. Turn the vehicle to the OFF (LOCK) mode, then wait 5 seconds or more.

   NOTE: Do not open and close the driver's door.

   -4. Turn the vehicle to the ON mode.

   -5. Check for DTCs with the HDS.

DTC Description	DTC	Freeze Frame
U3000-51 ECU Software Update Failure	B	B

Is DTC U3000-51 indicated?

YES

The failure is duplicated. Go to step 2.

NO

Intermittent failure, the system is OK at this time. **Refer to intermittent failures troubleshooting**. If the freeze data/on-board snapshot of this DTC is recorded, try to reproduce the failure under the same conditions with the freeze data/on-board snapshot.

2. Electric brake booster check (update)

-1. **Update the electric brake booster**.

-2. Turn the vehicle to the OFF (LOCK) mode, then wait 5 seconds or more.

NOTE: Do not open and close the driver's door.

-3. Turn the vehicle to the ON mode.

-4. Check for DTCs with the HDS.

DTC Description	DTC	Freeze Frame
B	B	B

Is DTC U3000-51 indicated?

YES

Check for loose terminals and poor connections in the electric brake booster 26P connector. Check for any authorized service information related to the DTCs or symptoms you are troubleshooting. If they are OK, **replace the electric brake booster** .

NO

Troubleshooting is complete. If any other DTCs are indicated, go to the indicated DTCs troubleshooting.

DTC U3000-55 (ELECTRIC BRAKE BOOSTER CONTROL UNIT TYPE B) (2020 2021)

DTC U3000-55 : Variant Code Undefined

NOTE: **Before you troubleshoot, review the general troubleshooting information**.

DTC Description	DTC	Freeze Frame
U3000-55 Variant Code Undefined	B	B

DTC (Electric brake booster)

1. Problem verification

-1. Turn the vehicle to the ON mode.

-2. Clear the DTC with the HDS.

-3. Turn the vehicle to the OFF (LOCK) mode, then wait 5 seconds or more.

NOTE: Do not open and close the driver's door.

-4. Turn the vehicle to the ON mode.

-5. Check for DTCs with the HDS.

DTC Description	DTC	Freeze Frame
U3000-55 Variant Code Undefined	B	B

Is DTC U3000-55 indicated?

YES

The failure is duplicated. Check for loose terminals and poor connections in the electric brake booster 26P connector. Check for any authorized service information related to the DTCs or symptoms you are troubleshooting. If they are OK, **replace the electric brake booster** .

NO

Intermittent failure, the system is OK at this time. **Refer to intermittent failures troubleshooting**. If the freeze data/on-board snapshot of this DTC is recorded, try to reproduce the failure under the same conditions with the freeze data/on-board snapshot.

DTC U3003-16 (ELECTRIC BRAKE BOOSTER CONTROL UNIT TYPE A) (2017 2018 2019)

DTC U3003-16 : Brake Booster Control Unit Power Circuit (+B) Low Voltage

NOTE: **Before you troubleshoot, review the general troubleshooting information**.

DTC Description	DTC	Freeze Frame
U3003-16 Brake Booster Control Unit Power Circuit (+B) Low Voltage	B	B

DTC (Electric brake booster)

1. Problem verification

-1. Turn the vehicle to the ON mode.

-2. Clear the DTC with the HDS.

-3. Turn the vehicle to the OFF (LOCK) mode, then wait 5 seconds or more.

NOTE: Do not open and close the driver's door.

-4. Turn the vehicle to the ON mode.

-5. Check for DTCs with the HDS.

DTC Description	DTC	Freeze Frame
U3003-16 Brake Booster Control Unit Power Circuit (+B) Low Voltage	B	B

Is DTC U3003-16 indicated?

YES

The failure is duplicated. Go to step 2.

NO

Intermittent failure, the system is OK at this time. **Refer to intermittent failures troubleshooting**. If the freeze data/on-board snapshot of this DTC is recorded, try to reproduce the failure under the same conditions with the freeze data/on-board snapshot.

2. Fuse check

-1. Turn the vehicle to the OFF (LOCK) mode with driver's door open.

-2. Wait for 3 minutes.

NOTE: Do not close the driver's door.

-3. Check the following fuse.

Fuse	No. A1-2 (40 A)
Location	Under-hood fuse/relay box

Is the fuse OK?

YES

The fuse is OK. Reinstall the fuse, then go to step 3.

NO

Replace the fuse. If the fuse blows again, repair a short to ground in the No. A1-2 (40 A) fuse circuit.

3. Open wire check (+B EBB line)

-1. Disconnect the following connector.

Electric brake booster 26P connector

-2. Measure the voltage between test points 1 and 2.

Test condition	Vehicle OFF (LOCK) mode
B	Electric brake booster 26P connector: disconnected
Test point 1	**Electric brake booster 26P connector No. 2**
Test point 2	Body ground

Is there battery voltage?

YES

Check for loose terminals and poor connections in the electric brake booster 26P connector. Check for any authorized service information related to the DTCs or symptoms you are troubleshooting. If they are OK, **replace the electric brake booster** .

NO

Repair an open in the wire between the electric brake booster and the under-hood fuse/relay box.

DTC U3003-16 (ELECTRIC BRAKE BOOSTER CONTROL UNIT TYPE B) (2020 2021)

DTC U3003-16 : Brake Booster Control Unit Power Circuit (+B) Low Voltage

NOTE: **Before you troubleshoot, review the general troubleshooting information**.

DTC Description	DTC	Freeze Frame
U3003-16 Brake Booster Control Unit Power Circuit (+B) Low Voltage	B	B

DTC (Electric brake booster)

1. Problem verification

   -1. Turn the vehicle to the ON mode.

   -2. Clear the DTC with the HDS.

   -3. Turn the vehicle to the OFF (LOCK) mode, then wait 5 seconds or more.

   NOTE: Do not open and close the driver's door.

   -4. Turn the vehicle to the ON mode.

   -5. Check for DTCs with the HDS.

DTC Description	DTC	Freeze Frame
U3003-16 Brake Booster Control Unit Power Circuit (+B) Low Voltage	B	B

   Is DTC U3003-16 indicated?

   YES

   The failure is duplicated. Go to step 2.

   NO

   Intermittent failure, the system is OK at this time. **Refer to intermittent failures troubleshooting**. If the freeze data/on-board snapshot of this DTC is recorded, try to reproduce the failure under the same conditions with the freeze data/on-board snapshot.

2. Fuse check

   -1. Turn the vehicle to the OFF (LOCK) mode with driver's door open.

   -2. Wait for 3 minutes.

   NOTE: Do not close the driver's door.

   -3. Check the following fuse.

Fuse	**No. A1-2**

   Is the fuse OK?

   YES

   The fuse is OK. Reinstall the fuse, then go to step 3.

   NO

   Replace the fuse. If the fuse blows again, repair a short to ground in the No. A1-2 fuse circuit.

3. Open wire check (+B EBB line)

-1. Disconnect the following connector.

Electric brake booster 26P connector

-2. Measure the voltage between test points 1 and 2.

Test condition	Vehicle OFF (LOCK) mode
B	Electric brake booster 26P connector: disconnected
Test point 1	**Electric brake booster 26P connector No. 2**
Test point 2	Body ground

Is there battery voltage?

YES

Check for loose terminals and poor connections in the electric brake booster 26P connector. Check for any authorized service information related to the DTCs or symptoms you are troubleshooting. If they are OK, **replace the electric brake booster** .

NO

Repair an open in the wire between the electric brake booster and the under-hood fuse/relay box.

DTC U3003-17 (ELECTRIC BRAKE BOOSTER CONTROL UNIT TYPE A) (2017 2018 2019)

DTC U3003-17 : Brake Booster Control Unit Power Circuit (+B) High Voltage

NOTE: **Before you troubleshoot, review the general troubleshooting information**.

DTC Description	DTC	Freeze Frame
U3003-17 Brake Booster Control Unit Power Circuit (+B) High Voltage	B	B

DTC (Electric brake booster)

1. Problem verification

-1. Turn the vehicle to the ON mode.

-2. Clear the DTC with the HDS.

-3. Turn the vehicle to the OFF (LOCK) mode, then wait 5 seconds or more.

NOTE: Do not open and close the driver's door.

-4. Turn the vehicle to the ON mode.

-5. Check for DTCs with the HDS.

DTC Description	DTC	Freeze Frame
U3003-17 Brake Booster Control Unit Power Circuit (+B) High Voltage	B	B

Is DTC U3003-17 indicated?

YES

The failure is duplicated. Go to step 2.

NO

Intermittent failure, the system is OK at this time. **Refer to intermittent failures troubleshooting**. If the freeze data/on-board snapshot of this DTC is recorded, try to reproduce the failure under the same conditions with the freeze data/on-board snapshot.

2. DTC check (PGM-FI system)

   -1. Check for DTCs with the HDS.

DTC Description	Confirmed DTC	Pending DTC
B	B	B

Is DTC indicated?

YES

Go to indicated DTC's troubleshooting.

NO

Check for loose terminals and poor connections in the electric brake booster 26P connector. Check for any authorized service information related to the DTCs or symptoms you are troubleshooting. If they are OK, **replace the electric brake booster** .

DTC U3003-17 (ELECTRIC BRAKE BOOSTER CONTROL UNIT TYPE B) (2020 2021)

DTC U3003-17 : Brake Booster Control Unit Power Circuit (+B) High Voltage

NOTE: **Before you troubleshoot, review the general troubleshooting information**.

DTC Description	DTC	Freeze Frame
U3003-17 Brake Booster Control Unit Power Circuit (+B) High Voltage	B	B

DTC (Electric brake booster)

1. Problem verification

   -1. Turn the vehicle to the ON mode.

   -2. Clear the DTC with the HDS.

   -3. Turn the vehicle to the OFF (LOCK) mode, then wait 5 seconds or more.

   NOTE: Do not open and close the driver's door.

   -4. Turn the vehicle to the ON mode.

   -5. Check for DTCs with the HDS.

DTC Description	DTC	Freeze Frame
U3003-17 Brake Booster Control Unit Power Circuit (+B) High Voltage	B	B

Is DTC U3003-17 indicated?

YES

The failure is duplicated. Go to step 2.

NO

Intermittent failure, the system is OK at this time. **Refer to intermittent failures troubleshooting**. If the freeze data/on-board snapshot of this DTC is recorded, try to reproduce the failure under the same conditions with the freeze data/on-board snapshot.

2. Power source performance check

   -1. Check and note the parameter (s) below with the HDS.

Signal	Threshold		Current conditions	
	Values	Unit	Values	Unit
Battery Voltage	More than 18.0	V	B	B

Do the current condition (s) match the threshold?

YES

Check the 12 volt battery , and **check the PGM-FI system DTCs** .

NO

Check for loose terminals and poor connections in the electric brake booster 26P connector. Check for any authorized service information related to the DTCs or symptoms you are troubleshooting. If they are OK, **replace the electric brake booster** .

DTC U3006-13 (ELECTRIC BRAKE BOOSTER CONTROL UNIT TYPE A) (2017 2018 2019)

DTC U3006-13 : IG1 Circuit Open

NOTE: **Before you troubleshoot, review the general troubleshooting information**.

DTC Description	DTC	Freeze Frame
U3006-13 IG1 Circuit Open	B	B

DTC (Electric brake booster)

1. Problem verification

   -1. Turn the vehicle to the ON mode.

   -2. Clear the DTC with the HDS.

   -3. Turn the vehicle to the OFF (LOCK) mode, then wait 5 seconds or more.

   NOTE: Do not open and close the driver's door.

   -4. Turn the vehicle to the ON mode.

   -5. Check for DTCs with the HDS.

DTC Description	DTC	Freeze Frame
U3006-13 IG1 Circuit Open	B	B

Is DTC U3006-13 indicated?

YES

The failure is duplicated. Go to step 2.

NO

Intermittent failure, the system is OK at this time. Refer to intermittent failures troubleshooting. If the freeze data/on-board snapshot of this DTC is recorded, try to reproduce the failure under the same conditions with the freeze data/on-board snapshot.

2. Fuse check

-1. Turn the vehicle to the OFF (LOCK) mode with driver's door open.

-2. Wait for 3 minutes.

NOTE: Do not close the driver's door.

-3. Check the following fuse.

Fuse	No. D5 (10 A)
Location	Under-dash fuse/relay box

Is the fuse OK?

YES

The fuse is OK. Reinstall the fuse, then go to step 3.

NO

Replace the fuse. If the fuse blows again, repair a short to ground in the No. D5 (10 A) fuse circuit.

3. Open wire check (IG1 OPTION line)

-1. Disconnect the following connector.

Electric brake booster 26P connector

-2. Turn the vehicle to the ON mode.

-3. Measure the voltage between test points 1 and 2.

Test condition	Vehicle ON mode
B	Electric brake booster 26P connector: disconnected
Test point 1	Electric brake booster 26P connector No. 24
Test point 2	Body ground

Is there battery voltage?

YES

Check for loose terminals and poor connections in the electric brake booster 26P connector. Check for any authorized service information related to the DTCs or symptoms you are troubleshooting. If they are OK, replace the electric brake booster .

NO

Repair an open in the wire between the electric brake booster and the under-dash fuse/relay box.

DTC U3006-13 (ELECTRIC BRAKE BOOSTER CONTROL UNIT TYPE B) (2020 2021)

DTC U3006-13 : IG1 Circuit Open

NOTE: **Before you troubleshoot, review the general troubleshooting information**.

DTC Description	DTC	Freeze Frame
U3006-13 IG1 Circuit Open	B	B

DTC (Electric brake booster)

1. Problem verification

   -1. Turn the vehicle to the ON mode.

   -2. Clear the DTC with the HDS.

   -3. Turn the vehicle to the OFF (LOCK) mode, then wait 5 seconds or more.

   NOTE: Do not open and close the driver's door.

   -4. Turn the vehicle to the ON mode.

   -5. Check for DTCs with the HDS.

DTC Description	DTC	Freeze Frame
U3006-13 IG1 Circuit Open	B	B

   Is DTC U3006-13 indicated?

   YES

   The failure is duplicated. Go to step 2.

   NO

   Intermittent failure, the system is OK at this time. **Refer to intermittent failures troubleshooting**. If the freeze data/on-board snapshot of this DTC is recorded, try to reproduce the failure under the same conditions with the freeze data/on-board snapshot.

2. Fuse check

   -1. Turn the vehicle to the OFF (LOCK) mode with driver's door open.

   -2. Wait for 3 minutes.

   NOTE: Do not close the driver's door.

   -3. Check the following fuse.

Fuse	**No. D5**

   Is the fuse OK?

   YES

   The fuse is OK. Reinstall the fuse, then go to step 3.

   NO

   Replace the fuse. If the fuse blows again, repair a short to ground in the No. D5 fuse circuit.

3. Open wire check (IG1 OPTION line)

-1. Disconnect the following connector.

Electric brake booster 26P connector

-2. Turn the vehicle to the ON mode.

-3. Measure the voltage between test points 1 and 2.

Test condition	Vehicle ON mode
B	Electric brake booster 26P connector: disconnected
Test point 1	**Electric brake booster 26P connector No. 24**
Test point 2	Body ground

Is there battery voltage?

YES

Check for loose terminals and poor connections in the electric brake booster 26P connector. Check for any authorized service information related to the DTCs or symptoms you are troubleshooting. If they are OK, **replace the electric brake booster** .

NO

Repair an open in the wire between the electric brake booster and the under-dash fuse/relay box.

SERVICE INFORMATION

BRAKE SYSTEM INSPECTION AND TEST

Inspection

1. Brake System - Inspect

Inspect the brake system components listed. Repair or replace any parts that are leaking or damaged.

Component Inspections:

Component	Procedure	Also check for
Master cylinder	Look for damage or signs of fluid leakage at: • Reservoir or reservoir grommets. • Lines and their joints. • Between master cylinder and brake booster.	Bulging seal at reservoir cap. This is a sign of fluid contamination.
Brake hoses	Look for damage or signs of fluid leakage at: • Line joints and banjo bolt connections. • Hoses and lines, also inspect for twisting or damage.	Bulging, twisted, or bent lines.
Caliper	Look for damage or signs of fluid leakage at: • Piston seal. • Banjo bolt connections. • Bleed screw.	Seized or sticking caliper pins.
VSA modulator-control unit	Look for damage or signs of fluid leakage at: • Line joints. • Modulator-control unit.	B

Test

1. Brake System - Test

Brake pedal sinks/fades when braking

1. Set the parking brake, and start the engine, then turn off the A/C. Allow the engine to warm up to normal operating temperature (radiator fan comes on twice).

2. Make sure the steering column lock lever is in the locked position. Attach a 50 mm (1.97 in) piece of masking tape along the bottom of the steering wheel, and draw a horizontal reference mark across it.

3. With the transmission in P or N, press and hold the brake pedal lightly (about the same pressure needed to keep an A/T-equipped vehicle from creeping), then release the parking brake.

4. While still holding the brake pedal, hook the end of the tape measure behind the brake pedal, then pull the tape up to the steering wheel. Note the measurement between the brake pedal and the reference mark on the steering wheel.

5. Apply steady pressure to the brake pedal for 3 minutes.

6. Watch the tape measure.

- If the measurement increases 10 mm (0.39 in) or less, the master cylinder is OK.
- If the measurement increases more than 10 mm (0.39 in), replace the master cylinder .

CONVENTIONAL BRAKE SYSTEM BLEEDING

Bleeding

NOTE:

- **Review the Service Precautions before doing repairs or service**.
- There are three different methods used for bleeding brake systems. The method shown in this procedure is the preferred method for removing the air from the system. For pressure or vacuum bleeding, refer to the tool manufacturer's instructions included with the tool. If you use a commercially available pressure feed bleeder and operate the brake pedal, excessive hydraulic pressure will be applied to the cup inside the master cylinder causing damage. Do not use these methods together.
- When a rear brake caliper equipped with an electric parking brake is removed and installed, or overhauled (brake hose was disconnected), the bleeding procedure differs from the normal method. First, bleed the brakes using the normal procedure. Second, follow the procedure listed under rear caliper bleed. Third, bleed the brakes again using the normal procedure. This does not apply when the rear calipers are replaced.

NOTE:

- The reservoir connected to the master cylinder must be at the MAX (upper) level mark at the start of the bleeding procedure and checked after bleeding each wheel. Add fluid as required.
- Before beginning the bleeding procedure, remove the reservoir cap and strainer, and remove any dirt and debris then reinstall the strainer only.
- Bleed the brake system in the following order: front-driver's, front-passenger's, rear-passenger's, and rear-driver's.
- Unless indicated, the illustrations shown are examples only and may not match your vehicle.

1. **Vehicle - Lift**
2. Brake System - Normal Bleed

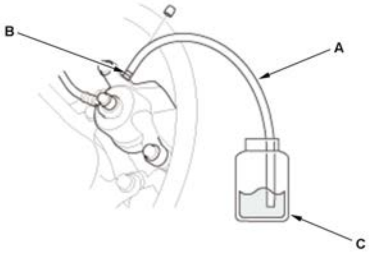	**NOTE:** If a large amount of air is introduced into the system from a brake system component replacement, first drain the brake fluid into a container from each caliper by pumping the brake pedal slowly before starting the normal brake system bleed. 1. Attach a clear tube (A) to the bleed screw (B). 2. Submerge the other end of the clear tube into a clear plastic catch bottle of brake fluid (C). 3. Have an assistant slowly pump the brake pedal several times then apply steady continuous pressure. 4. Loosen the bleed screw slowly to bleed the fluid into the plastic catch bottle. The brake pedal will travel toward the floor as the fluid is bled from the system. 5. When the brake pedal reaches the floor, have the assistant hold the pedal in that position, then tighten the bleed screw. The brake pedal can now be released. 6. Repeat steps 3 thru 5 until the brake fluid in the clear drain tube appears fresh and there are no air bubbles in the fluid. **Then tighten the bleed screw to the specified torque** 7. Repeat this procedure for each caliper in the bleeding sequence.**NOTE:** If you removed and installed (brake hose was disconnected), or overhauled the rear caliper, also do the rear caliper bleed procedure.

3. Brake System - Rear Caliper Bleed

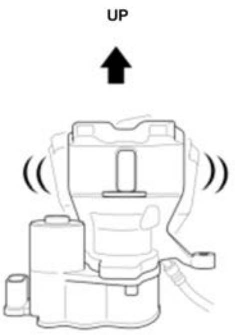	**NOTE:** • When shaking the caliper body, be careful not to damage the electric parking brake actuator. • When bleeding the brake system, air can get trapped inside the rear calipers. This is due to the complex fluid path inside the electric parking brake calipers. Therefore this procedure is necessary. 1. **Remove the caliper assembly without disconnecting the brake hose from the caliper body** . 2. Tilt up the caliper body as shown and shake it.

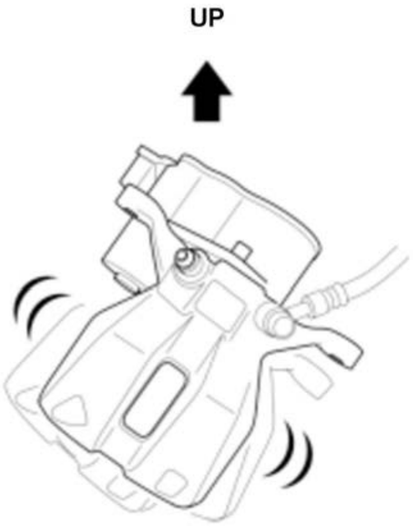	3. Tilt down the caliper body as shown and shake it again. 4. **Install the rear brake caliper body** 5. Bleed the rear brake again using the normal bleeding procedure.

TEST

BRAKE FLUID LEVEL SWITCH TEST

Test

NOTE: If both the ABS/VSA indicator and the brake system indicator (red) come on at the same time, **check the VSA system first** .

1. Brake Fluid Level Switch - Test

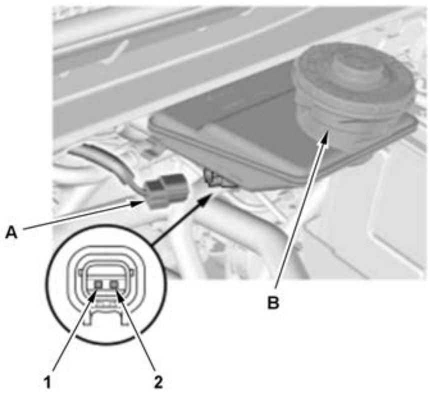	1. Disconnect the connector (A). 2. Check for continuity between the terminals (1) and (2) with the float in the down position and in the up position. • Remove the brake fluid completely from the reservoir. With the float down, there should be continuity. • Fill the reservoir with brake fluid to the MAX (upper) level (B). With the float up, there should be no continuity. **NOTE:** If the brake fluid level switch is OK, but the brake system indicator (red) does not function, **do the**

	gauge control module self-diagnostic function . 3. Connect the connector.

INSPECTION

BRAKE HOSE AND LINE INSPECTION

Inspection

1. Brake Hose and Line - Inspect
    1. Inspect the brake hoses for damage, deterioration, leaks, interference, and twisting.
    2. Check the brake lines for damage, rusting, and leaks. Also check for bent brake lines.
    3. Check for leaks at hose and line joints and connections, and retighten if necessary.
    4. Check the master cylinder and the VSA modulator-control unit for damage and leaks.

Connection Point	Component	Connected to	Specified Torque Value	Note
A	Front brake caliper	Brake hose	35 N.m (3.6 kgf.m, 26 lbf.ft)	Banjo bolt
		Bleed screw	8.5 N.m (0.87 kgf.m, 6.3 lbf.ft)	B
B	Rear brake caliper	Brake hose	35 N.m (3.6 kgf.m, 26 lbf.ft)	Banjo bolt
		Bleed screw	8.5 N.m (0.87 kgf.m, 6.3 lbf.ft)	B
C	Brake hose	Brake line	15 N.m (1.5 kgf.m, 11 lbf.ft)	Flare nut
D	Master cylinder	Brake line	22 N.m (2.2 kgf.m, 16 lbf.ft)	Flare nut
E	VSA modulator-control unit	Brake line (10 mm nut)	15 N.m (1.5 kgf.m, 11 lbf.ft)	Flare nut
		Brake line (12 mm nut)	22 N.m (2.2 kgf.m, 16 lbf.ft)	

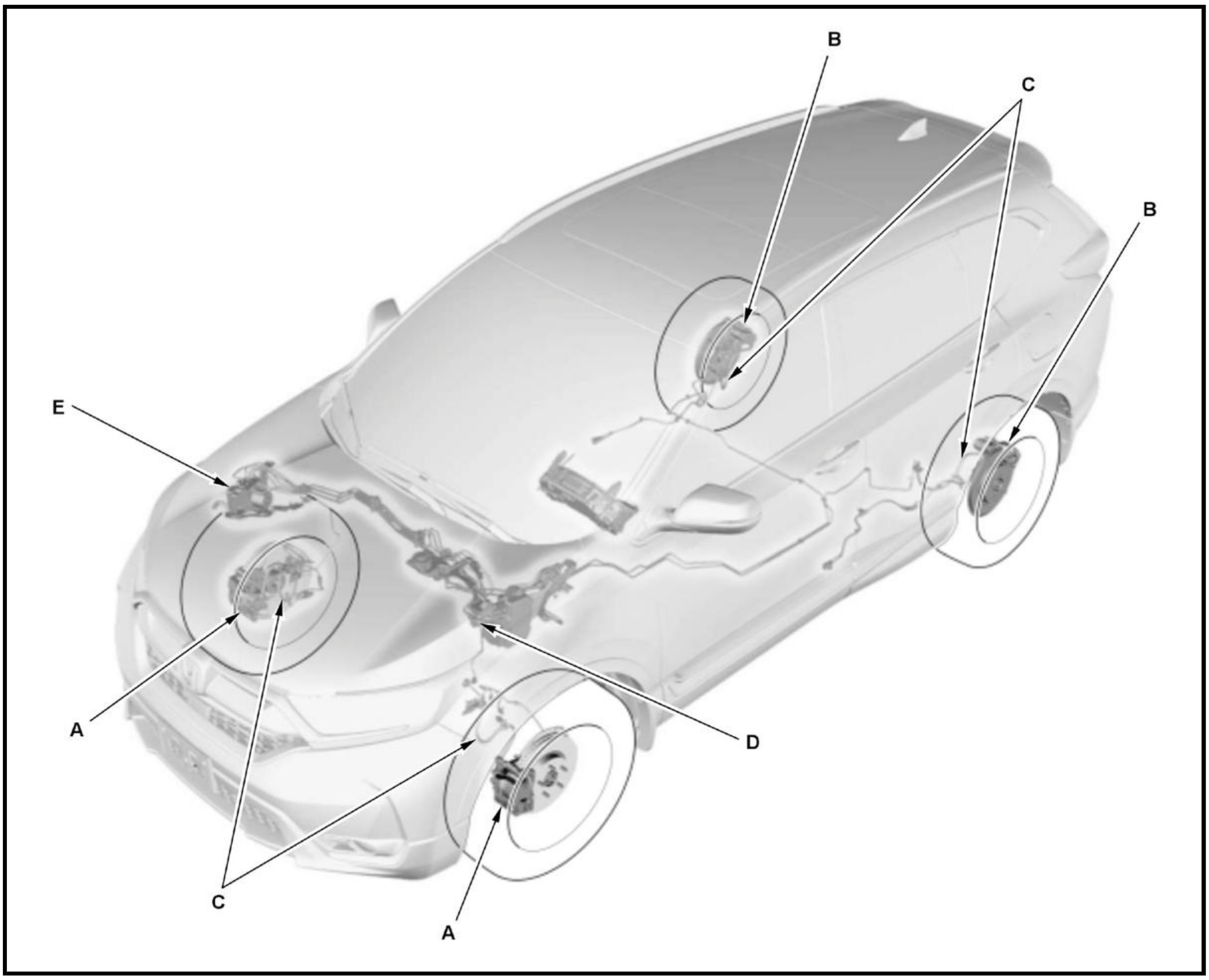

BRAKE MASTER CYLINDER INSPECTION (WITH ELECTRIC BRAKE BOOSTER TYPE A (KA/KC)) (2017 2018 2019)

Inspection

1. Master Cylinder - Inspect

   NOTE:

   - **Review the Service Precautions before doing repairs or service**.
   - There are two types of electric brake boosters (type A or B) that can be differentiated visually. **Make sure which booster type is equipped before doing any repairs or service**.
   - Do not try to disassemble the master cylinder. Replace the master cylinder with a new part if necessary.
   - Check for deterioration and damage to each part during removal.

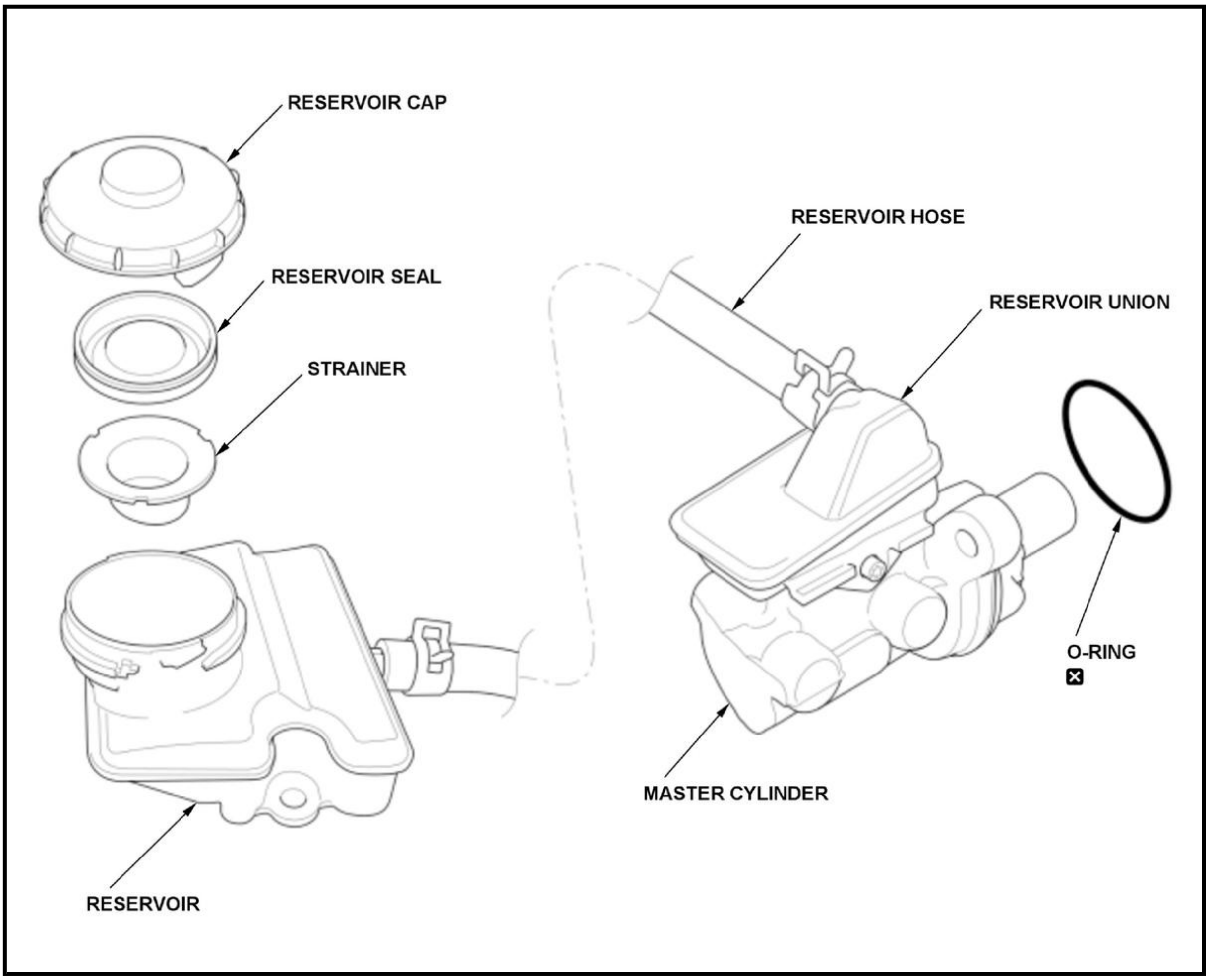
RESERVOIR CAP
RESERVOIR HOSE
RESERVOIR SEAL
RESERVOIR UNION
STRAINER
O-RING
☒
MASTER CYLINDER
RESERVOIR

BRAKE MASTER CYLINDER INSPECTION (WITH ELECTRIC BRAKE BOOSTER TYPE B (KA/KC)) (2020 2021)

Inspection

1. Master Cylinder - Inspect

   NOTE:

   - **Review the Service Precautions before doing repairs or service**.
   - There are two types of electric brake boosters (type A or B) that can be differentiated visually. **Make sure which booster type is equipped before doing any repairs or service**.
   - Do not try to disassemble the master cylinder. Replace the master cylinder with a new part if necessary.
   - Check for deterioration and damage to each part during removal.

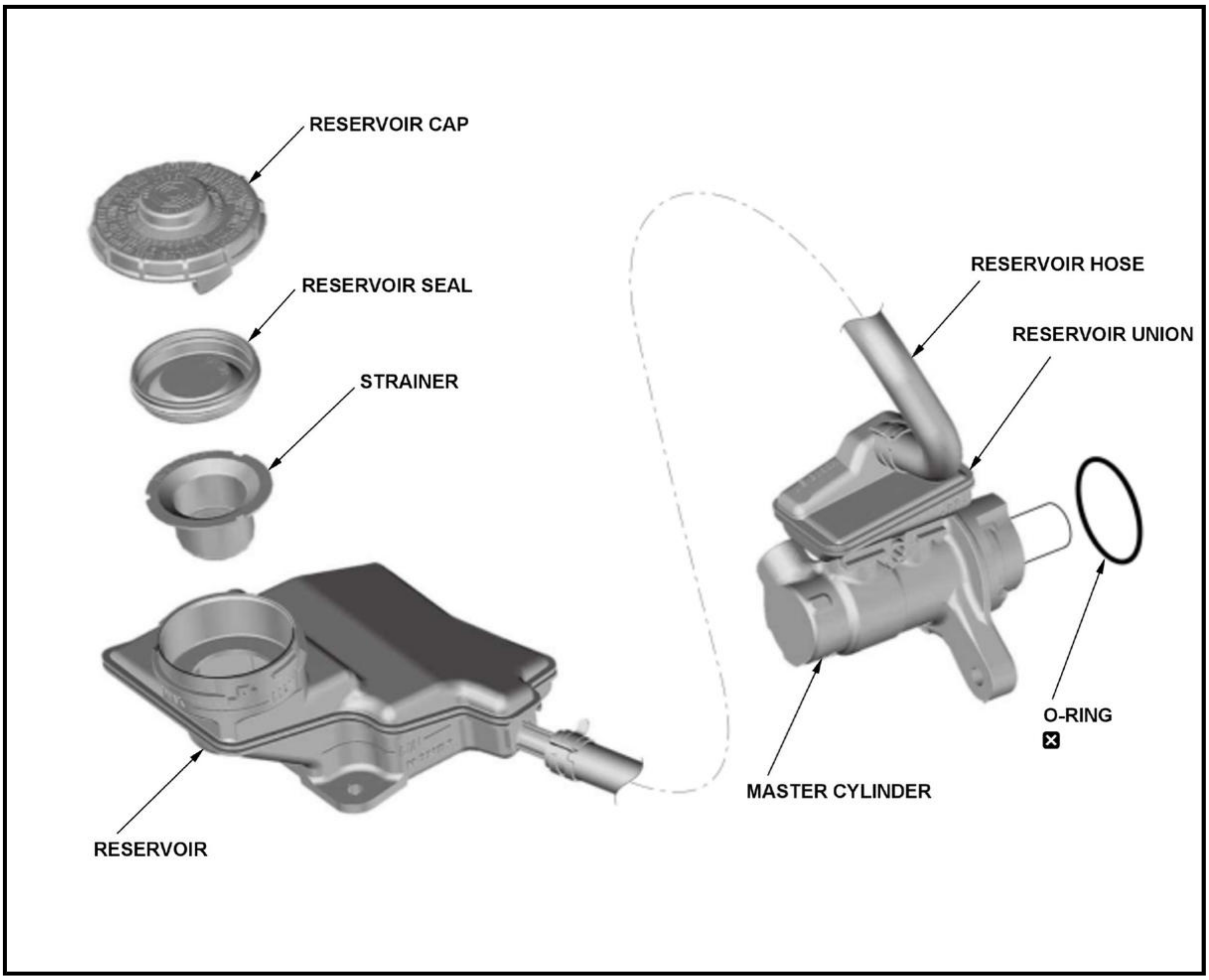

DTC TROUBLESHOOTING INDEX

ELECTRIC BRAKE BOOSTER SYSTEM DTC TROUBLESHOOTING INDEX (ELECTRIC BRAKE BOOSTER CONTROL UNIT TYPE A) (2017 2018 2019)

DTC		Detection Item
C0049	-7A	Brake Fluid Leak or Seal Failure
C1250	-98	ECU Internal Malfunction (Over Temperature)
C1C01	-96	Brake Pedal Stroke Sensor Component Internal Failure
C1C02	-12	Brake Pedal Stroke Sensor Signal Circuit 1 Short To Battery
	-14	Brake Pedal Stroke Sensor Signal Circuit 1 Short To Ground or Open
C1C03	-11	Brake Pedal Stroke Sensor Signal Circuit 2 Short To Ground
	-15	Brake Pedal Stroke Sensor Signal Circuit 2 Short To Battery or Open
C1C04	-11	Brake Pedal Stroke Sensor Power Circuit Short To Ground or Battery
U0029	-00	CAN Communication Failure (Ch1 Bus OFF)
U0047	-00	CAN Communication Failure (Ch2 Bus OFF)
U0100	-00	CAN Communication Failure With ECM/PCM
U0122	-00	CAN Communication Failure With VSA (CAN Ch1)
U0416	-68	VSA System Malfunction
U12B5	-00	CAN Communication Failure With VSA (CAN Ch2)
U3000	-49	ECU Internal Malfunction
	-51	ECU Software Update Failure
U3003	-16	Brake Booster Control Unit Power Circuit (+B) Low Voltage
	-17	Brake Booster Control Unit Power Circuit (+B) High Voltage
U3006	-13	IG1 Circuit Open

ELECTRIC BRAKE BOOSTER SYSTEM DTC TROUBLESHOOTING INDEX (ELECTRIC BRAKE BOOSTER CONTROL UNIT TYPE B) (2020 2021)

DTC		Detection Item
C1250	-98	ECU Internal Malfunction (Over Temperature)
C1C01	-96	Brake Pedal Stroke Sensor Component Internal Failure
C1C02	-11	Brake Pedal Stroke Sensor Signal Circuit 1 Short To Ground
	-15	Brake Pedal Stroke Sensor Signal Circuit 1 Short To Battery or Open
C1C03	-11	Brake Pedal Stroke Sensor Signal Circuit 2 Short To Ground
	-15	Brake Pedal Stroke Sensor Signal Circuit 2 Short To Battery or Open
C1C04	-11	Brake Pedal Stroke Sensor Power Circuit Short To Ground or Battery
U0029	-00	CAN Communication Failure (Ch1 Bus OFF)
U0047	-00	CAN Communication Failure (Ch2 Bus OFF)
U0100	-00	CAN Communication Failure With ECM/PCM
U0104	-00	CAN Communication Failure With Driving Support System Control Unit
U0122	-00	CAN Communication Failure With VSA
U0416	-68	(VSA System Malfunction)
U3000	-49	ECU Internal Malfunction
	-51	ECU Software Update Failure
	-55	Variant Code Undefined
U3003	-16	Brake Booster Control Unit Power Circuit (+B) Low Voltage
	-17	Brake Booster Control Unit Power Circuit (+B) High Voltage
U3006	-13	IG1 Circuit Open

REWRITE

ELECTRIC BRAKE BOOSTER CONTROL UNIT UPDATE

Procedure

1. Electric Brake Booster - Update

   NOTE: When updating control units, use the most current version of the HDS software and interface device. Check any official service information website for more information about updating control units.

CIRCUIT DIAGRAM

ELECTRIC BRAKE BOOSTER SYSTEM CIRCUIT DIAGRAM (ELECTRIC BRAKE BOOSTER CONTROL UNIT TYPE A (WITH CAN GATEWAY)) (2017 2018 2019)

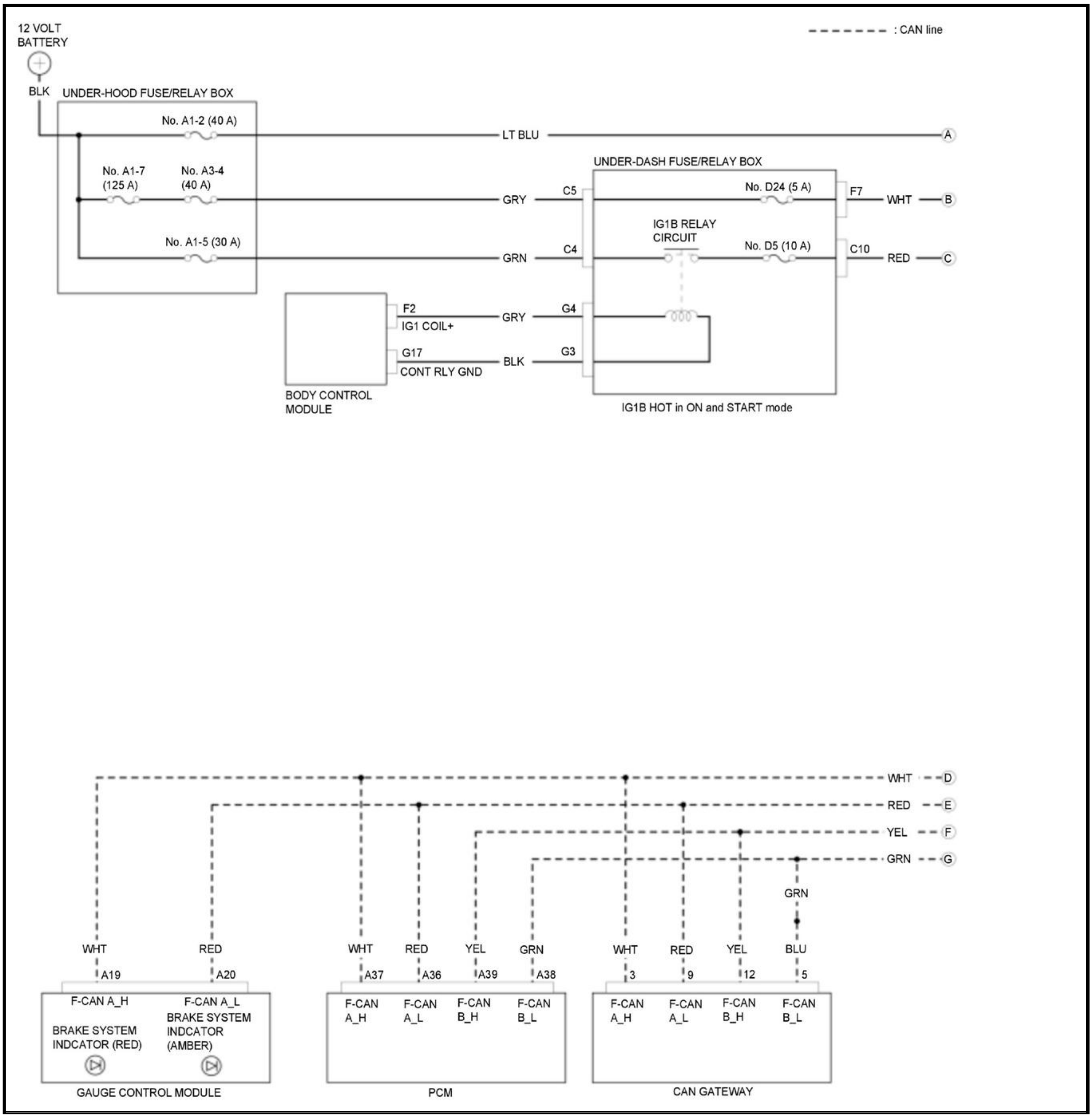
12 VOLT BATTERY
BLK
UNDER-HOOD FUSE/RELAY BOX
No. A1-2 (40 A)
LT BLU
A
No. A1-7 (125 A)
No. A3-4 (40 A)
GRY
No. A1-5 (30 A)
GRN
UNDER-DASH FUSE/RELAY BOX
C5
No. D24 (5 A)
F7
WHT
B
IG1B RELAY CIRCUIT
C4
No. D5 (10 A)
C10
RED
C
F2
IG1 COIL+
GRY
G4
G17
CONT RLY GND
BLK
G3
BODY CONTROL MODULE
IG1B HOT in ON and START mode
: CAN line
WHT
D
RED
E
YEL
F
GRN
G
GRN
WHT
A19
RED
A20
F-CAN A_H
F-CAN A_L
BRAKE SYSTEM INDCATOR (RED)
BRAKE SYSTEM INDCATOR (AMBER)
GAUGE CONTROL MODULE
WHT
A37
RED
A36
YEL
A39
GRN
A38
F-CAN A_H
F-CAN A_L
F-CAN B_H
F-CAN B_L
PCM
WHT
3
RED
9
YEL
12
BLU
5
F-CAN A_H
F-CAN A_L
F-CAN B_H
F-CAN B_L
CAN GATEWAY

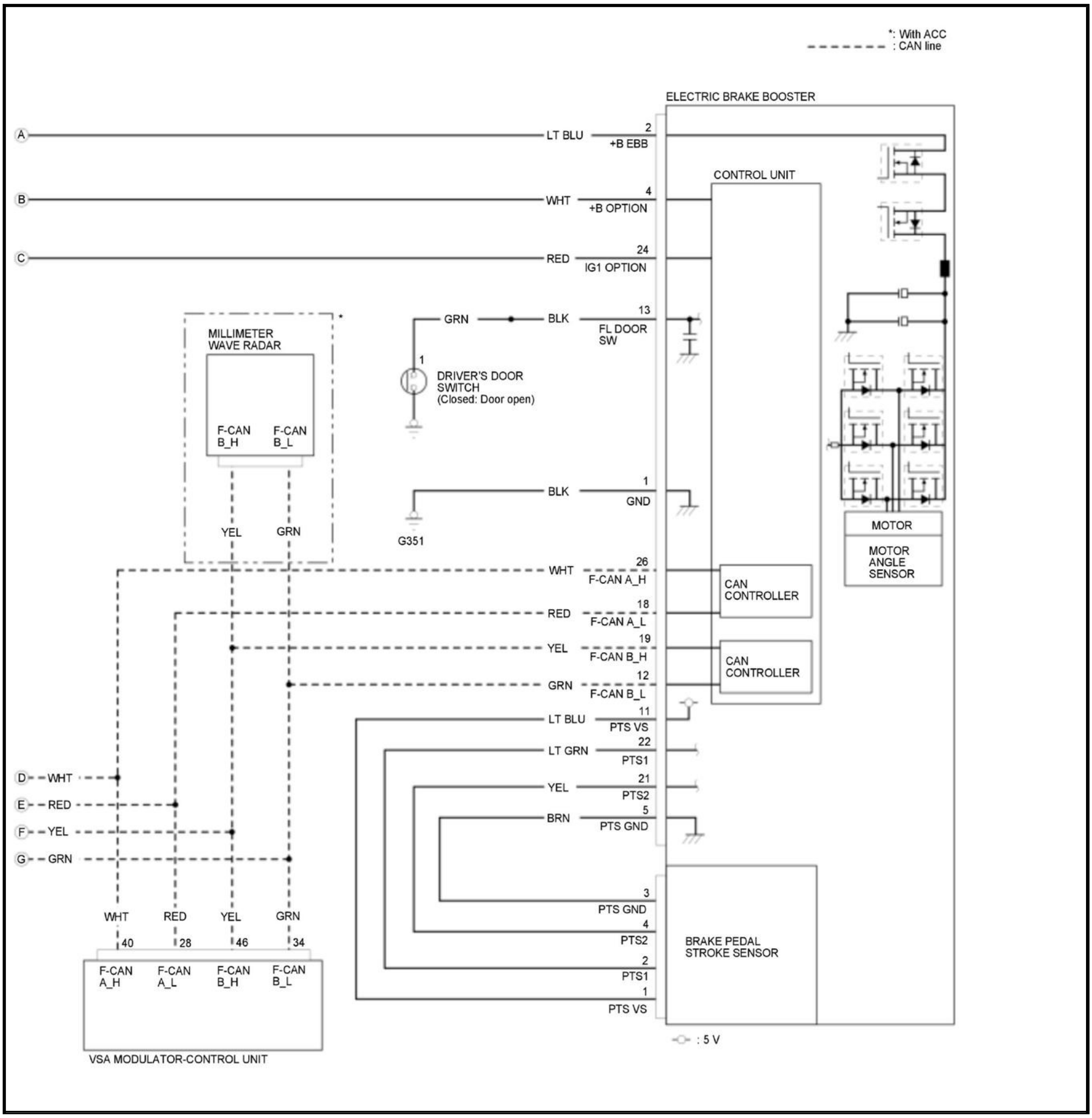
*: With ACC
: CAN line
ELECTRIC BRAKE BOOSTER
A
LT BLU
2
+B EBB
B
WHT
4
+B OPTION
CONTROL UNIT
C
RED
24
IG1 OPTION
MILLIMETER WAVE RADAR
*
GRN
BLK
13
FL DOOR SW
1
DRIVER'S DOOR SWITCH (Closed: Door open)
F-CAN B_H
F-CAN B_L
BLK
1
GND
YEL
GRN
G351
MOTOR
MOTOR ANGLE SENSOR
WHT
26
F-CAN A_H
CAN CONTROLLER
RED
18
F-CAN A_L
YEL
19
F-CAN B_H
CAN CONTROLLER
GRN
12
F-CAN B_L
LT BLU
11
PTS VS
LT GRN
22
PTS1
D
WHT
YEL
21
PTS2
E
RED
F
YEL
BRN
5
PTS GND
G
GRN
3
PTS GND
WHT
RED
YEL
GRN
4
PTS2
BRAKE PEDAL STROKE SENSOR
40
28
46
34
F-CAN A_H
F-CAN A_L
F-CAN B_H
F-CAN B_L
2
PTS1
1
PTS VS
VSA MODULATOR-CONTROL UNIT
: 5 V

ELECTRIC BRAKE BOOSTER SYSTEM CIRCUIT DIAGRAM (ELECTRIC BRAKE BOOSTER CONTROL UNIT TYPE A (WITHOUT CAN GATEWAY)) (2017 2018 2019)

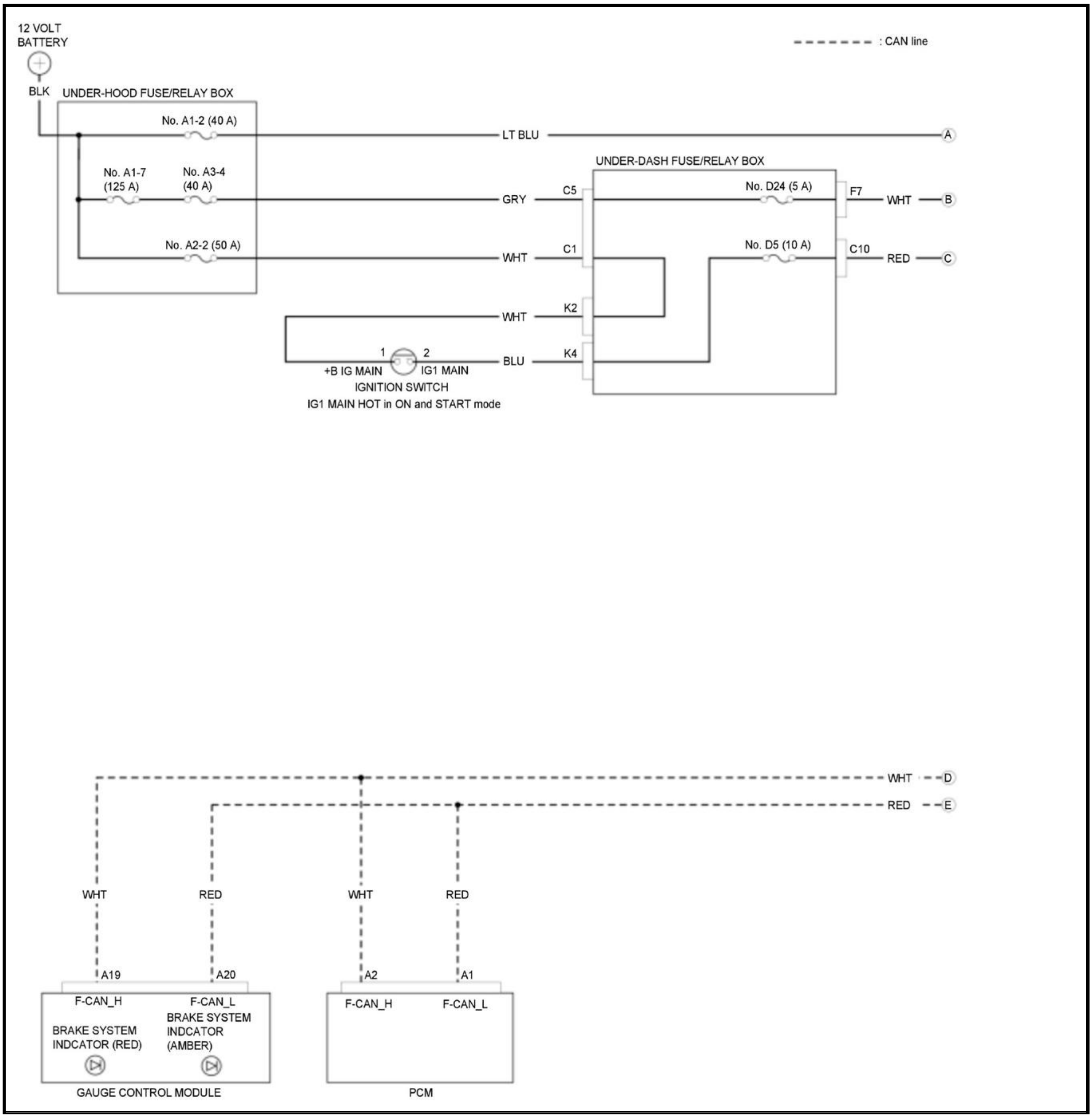
12 VOLT
BATTERY
BLK
: CAN line
UNDER-HOOD FUSE/RELAY BOX
No. A1-2 (40 A)
LT BLU
A
UNDER-DASH FUSE/RELAY BOX
No. A1-7
(125 A)
No. A3-4
(40 A)
GRY
C5
No. D24 (5 A)
F7
WHT
B
No. A2-2 (50 A)
WHT
C1
No. D5 (10 A)
C10
RED
C
WHT
K2
1
2
+B IG MAIN
IG1 MAIN
BLU
K4
IGNITION SWITCH
IG1 MAIN HOT in ON and START mode
WHT
D
RED
E
WHT
RED
WHT
RED
A19
A20
A2
A1
F-CAN_H
F-CAN_L
BRAKE SYSTEM
INDCATOR (RED)
BRAKE SYSTEM
INDCATOR
(AMBER)
F-CAN_H
F-CAN_L
GAUGE CONTROL MODULE
PCM

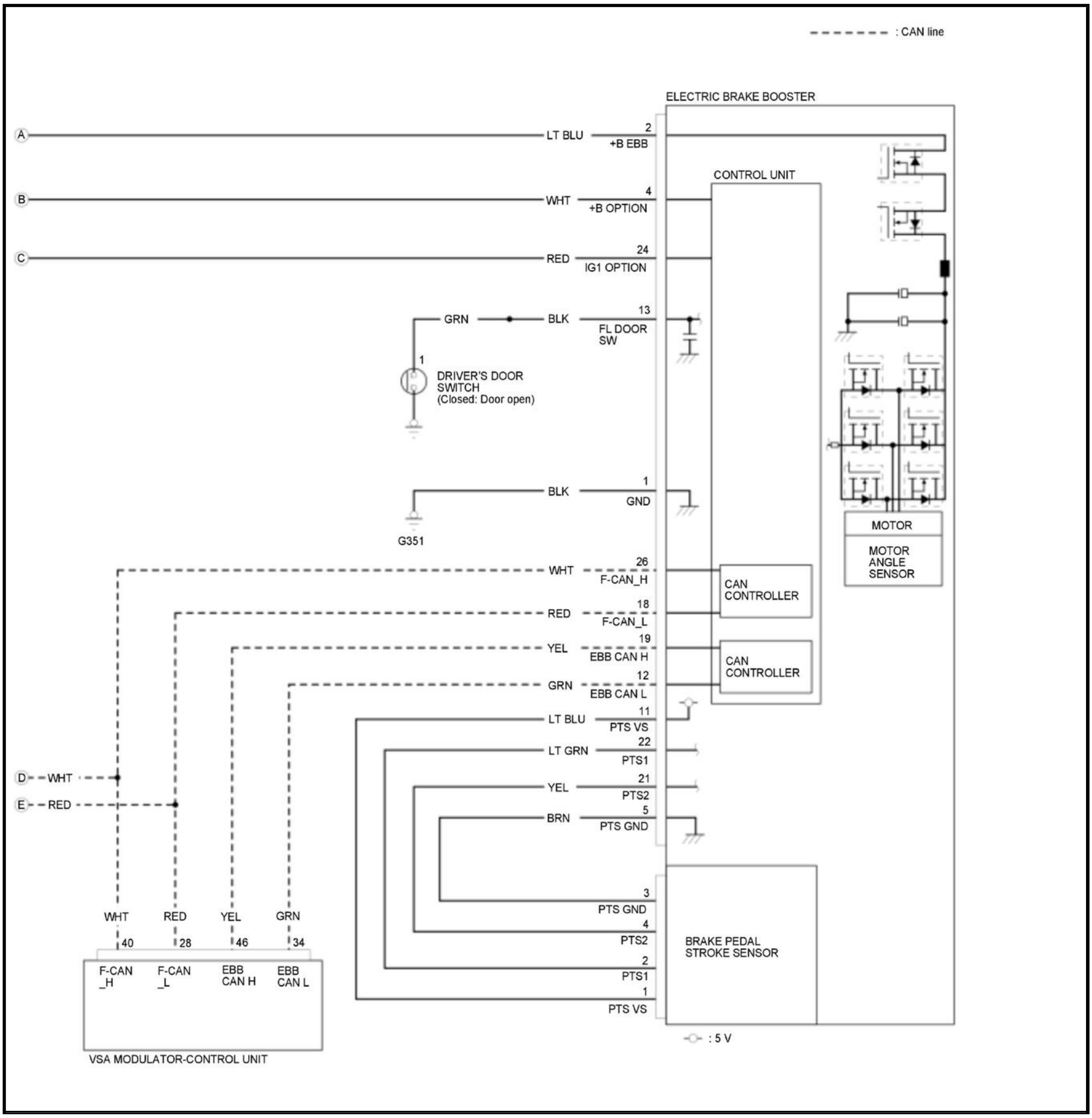
: CAN line
ELECTRIC BRAKE BOOSTER
A
LT BLU
2
+B EBB
CONTROL UNIT
B
WHT
4
+B OPTION
C
RED
24
IG1 OPTION
GRN
BLK
13
FL DOOR SW
1
DRIVER'S DOOR SWITCH (Closed: Door open)
BLK
1
GND
G351
MOTOR
MOTOR ANGLE SENSOR
WHT
26
F-CAN_H
CAN CONTROLLER
RED
18
F-CAN_L
YEL
19
EBB CAN H
CAN CONTROLLER
GRN
12
EBB CAN L
LT BLU
11
PTS VS
LT GRN
22
PTS1
D
WHT
E
RED
YEL
21
PTS2
BRN
5
PTS GND
3
PTS GND
4
PTS2
BRAKE PEDAL STROKE SENSOR
2
PTS1
1
PTS VS
WHT
RED
YEL
GRN
40
28
46
34
F-CAN _H
F-CAN _L
EBB CAN H
EBB CAN L
VSA MODULATOR-CONTROL UNIT
: 5 V

ELECTRIC BRAKE BOOSTER SYSTEM CIRCUIT DIAGRAM (ELECTRIC BRAKE BOOSTER CONTROL UNIT TYPE B) (2020 2021)

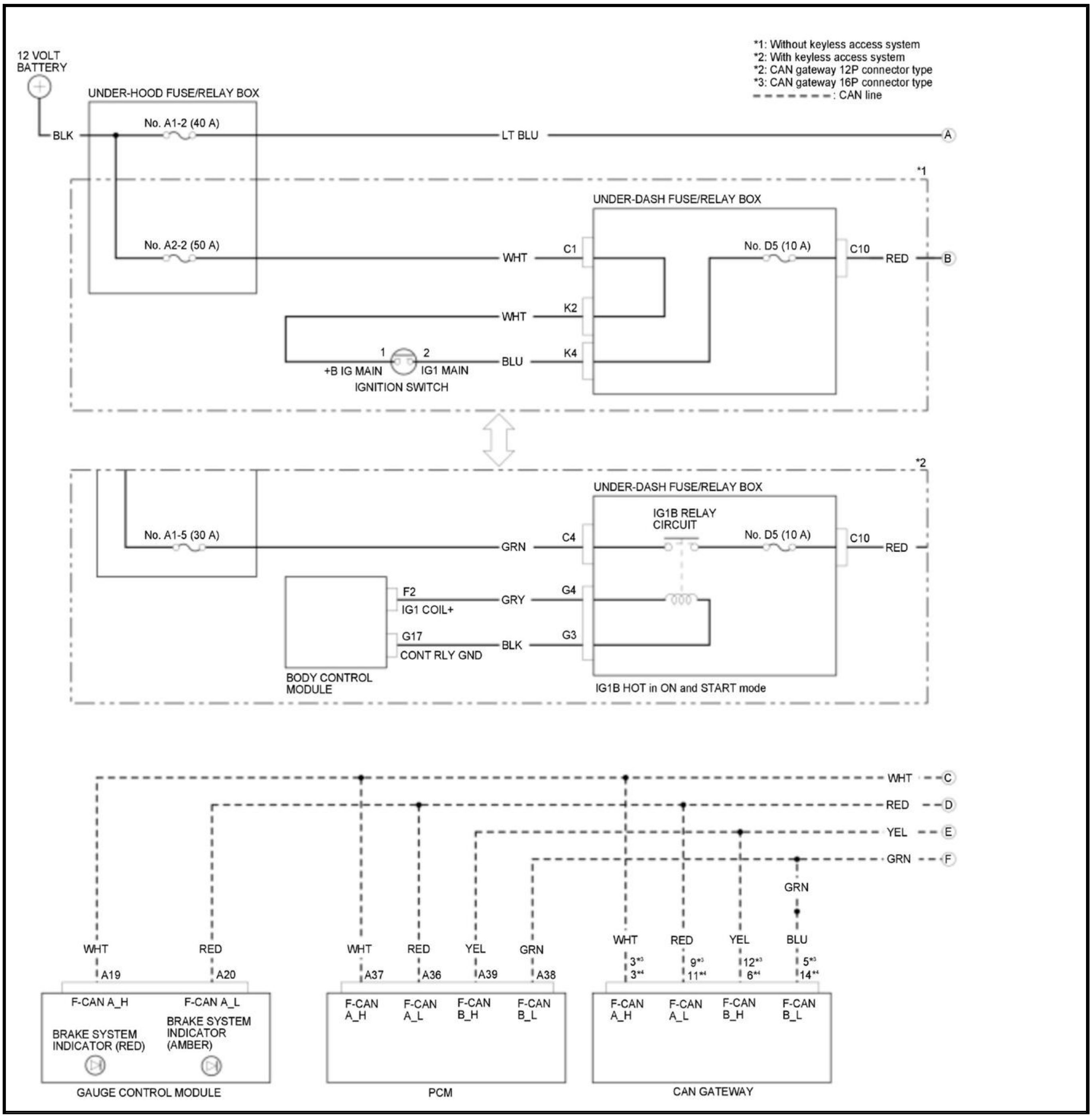
*1: Without keyless access system
*2: With keyless access system
*2: CAN gateway 12P connector type
*3: CAN gateway 16P connector type
: CAN line
12 VOLT BATTERY
BLK
UNDER-HOOD FUSE/RELAY BOX
No. A1-2 (40 A)
LT BLU
A
*1
UNDER-DASH FUSE/RELAY BOX
No. A2-2 (50 A)
WHT
C1
No. D5 (10 A)
C10
RED
B
WHT
K2
1
2
BLU
K4
+B IG MAIN
IG1 MAIN
IGNITION SWITCH
*2
UNDER-DASH FUSE/RELAY BOX
IG1B RELAY CIRCUIT
No. A1-5 (30 A)
GRN
C4
No. D5 (10 A)
C10
RED
F2
IG1 COIL+
GRY
G4
G17
CONT RLY GND
BLK
G3
BODY CONTROL MODULE
IG1B HOT in ON and START mode
WHT
C
RED
D
YEL
E
GRN
F
GRN
WHT
RED
WHT
RED
YEL
GRN
WHT
RED
YEL
BLU
A19
A20
A37
A36
A39
A38
3*3
3*4
9*3
11*4
12*3
6*4
5*3
14*4
F-CAN A_H
F-CAN A_L
BRAKE SYSTEM INDICATOR (RED)
BRAKE SYSTEM INDICATOR (AMBER)
GAUGE CONTROL MODULE
F-CAN A_H
F-CAN A_L
F-CAN B_H
F-CAN B_L
PCM
F-CAN A_H
F-CAN A_L
F-CAN B_H
F-CAN B_L
CAN GATEWAY

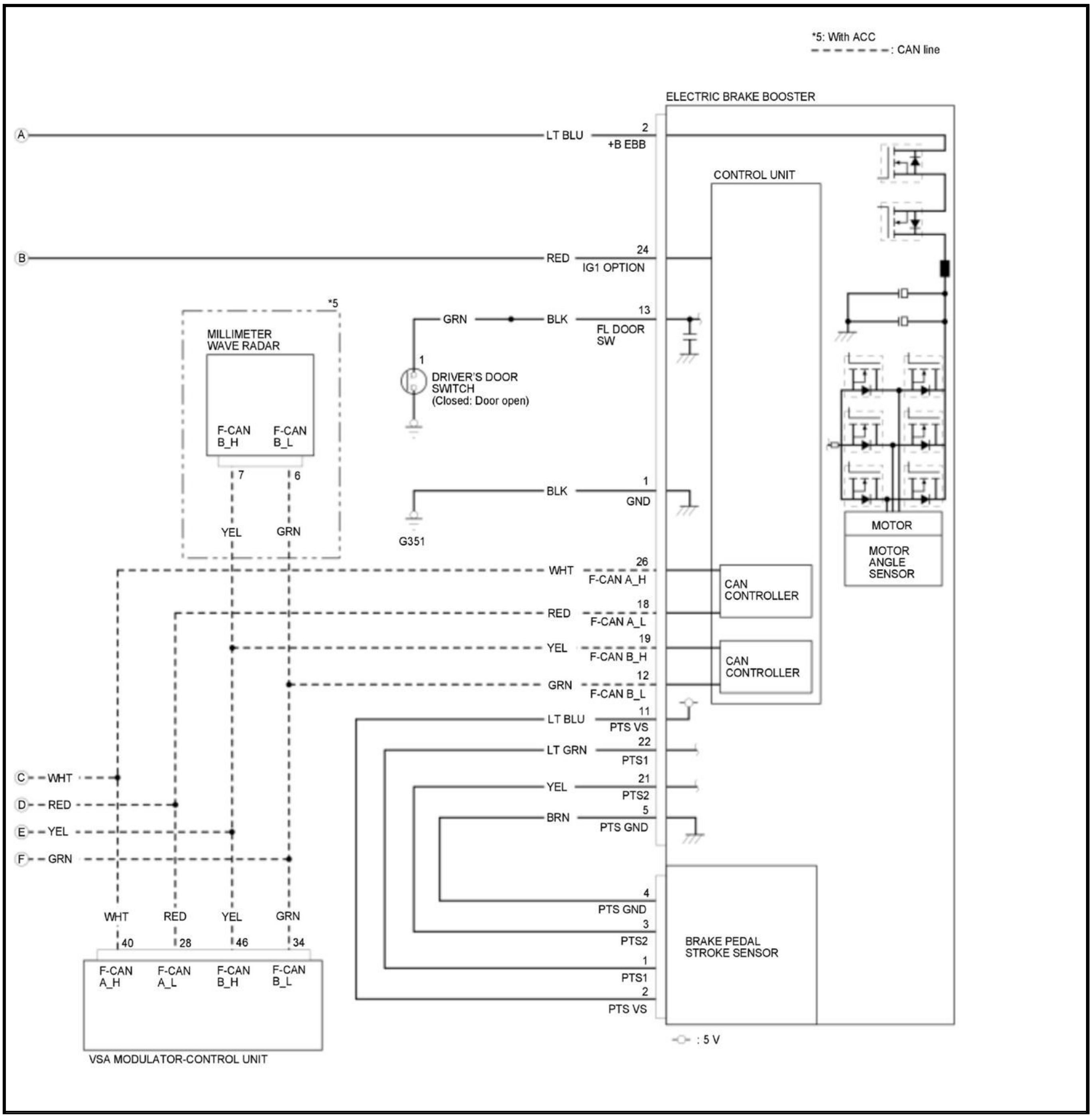
*5: With ACC
CAN line
ELECTRIC BRAKE BOOSTER
A
LT BLU
2
+B EBB
CONTROL UNIT
B
RED
24
IG1 OPTION
*5
MILLIMETER WAVE RADAR
GRN
BLK
13
FL DOOR SW
1
DRIVER'S DOOR SWITCH (Closed: Door open)
F-CAN B_H
F-CAN B_L
7
6
BLK
1
GND
G351
YEL
GRN
WHT
26
F-CAN A_H
CAN CONTROLLER
RED
18
F-CAN A_L
YEL
19
F-CAN B_H
CAN CONTROLLER
GRN
12
F-CAN B_L
MOTOR
MOTOR ANGLE SENSOR
LT BLU
11
PTS VS
LT GRN
22
PTS1
YEL
21
PTS2
BRN
5
PTS GND
C
WHT
D
RED
E
YEL
F
GRN
WHT
RED
YEL
GRN
40
28
46
34
F-CAN A_H
F-CAN A_L
F-CAN B_H
F-CAN B_L
VSA MODULATOR-CONTROL UNIT
4
PTS GND
3
PTS2
1
PTS1
2
PTS VS
BRAKE PEDAL STROKE SENSOR
: 5 V

GENERAL INFORMATION

CONVENTIONAL BRAKE SERVICE PRECAUTIONS

Check the following precautions when handling the brake fluid and brake parts.

Handling the Brake Fluid

NOTE:

Do not spill brake fluid on the vehicle; it may damage the paint. If brake fluid does contact the paint, wash it off immediately with water.

- Brake fluid is poisonous. If ingested, get medical attention immediately.
- Use recommend new genuine Acura or Honda Brake Fluid from an unopened container. Using a non-Acura or non-Honda brake fluid can cause corrosion and shorten the life of the system.
- Do not reuse drained brake fluid.
- Make sure no dirt or other foreign matter gets into the brake fluid.

Handling the Brake Parts

WARNING: **Frequent inhalation of brake pad dust, regardless of material composition, could be hazardous to your health.**

- Avoid breathing dust particles.
- Never use a compressed air gun (unless specified) to clean brake assemblies. Use an OSHA-approved vacuum cleaner.

- Clean all parts with brake cleaner and air dry.
- Before reassembling, check that all the parts are free of dirt and other foreign particles.
- During brake caliper removal, to prevent damage to the caliper assembly or brake hose, use a short piece of wire to hang the caliper assembly from the undercarriage. After installation, check the brake hoses for interference and twisting.
- Be careful when pressing or moving the piston back in the caliper; brake fluid might overflow from the master cylinder's reservoir. If brake fluid gets on any painted surface, wash it off immediately with water.
- Before installing the brake disc or the brake drum clean the mating surfaces between the hub or hub bearing unit and the inside of the brake disc or the brake drum.
- Make sure no grease or oil gets on the brake discs, the brake drums, the brake pads, or the brake shoes.
- Be careful not to bend, damage, or deform the brake lines.
- After removing the brake hoses and the brake lines, plug the ends of the hoses and the joints to prevent spilling brake fluid.
- Replace parts with new ones whenever specified to do so.

Electric brake booster type

There are two types of electric brake boosters (type A or B) depending on the model year that can be differentiated visually.

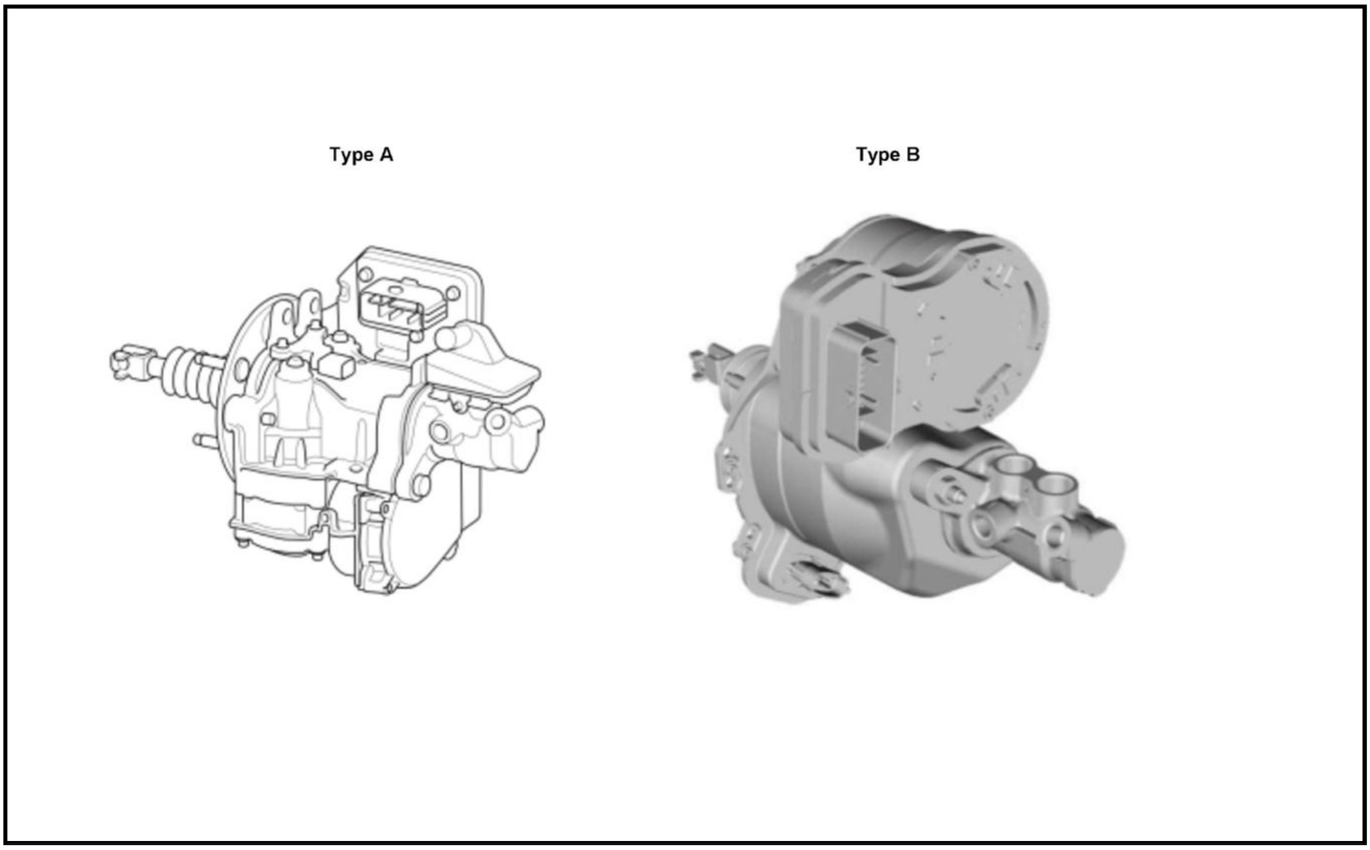

COMPONENT LOCATION INDEX

CONVENTIONAL BRAKE COMPONENT LOCATION INDEX (WITH ELECTRIC BRAKE BOOSTER TYPE B) (2020 2021)

There are two types of electric brake boosters (type A or B) that can be differentiated visually.
Make sure which booster type is equipped before doing any repairs or service.

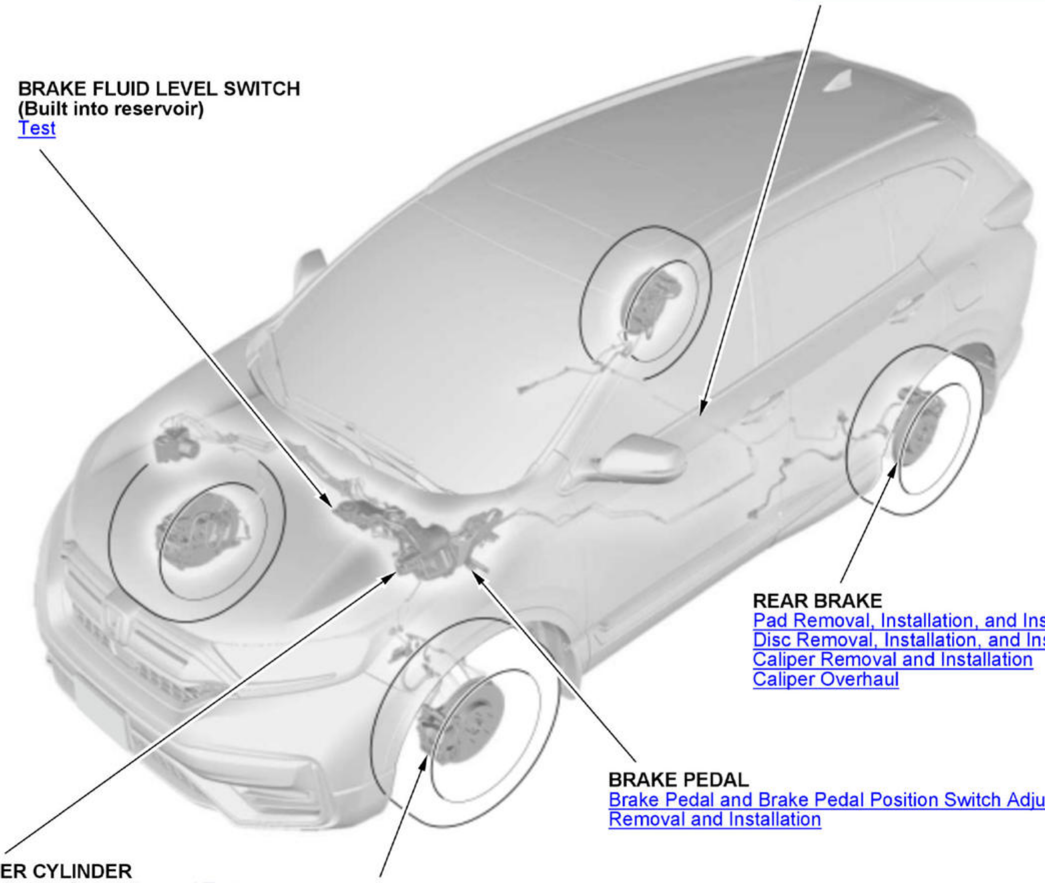

BRAKE HOSE and LINE
Inspection
Brake Hose Removal and Installation

BRAKE FLUID LEVEL SWITCH
(Built into reservoir)
Test

REAR BRAKE
Pad Removal, Installation, and Inspection
Disc Removal, Installation, and Inspection
Caliper Removal and Installation
Caliper Overhaul

BRAKE PEDAL
Brake Pedal and Brake Pedal Position Switch Adjustment
Removal and Installation

MASTER CYLINDER
Brake System Inspection and Test
Brake System Bleeding
Inspection
Removal and Installation

FRONT BRAKE
Pad Removal, Installation, and Inspection
Disc Removal, Installation, and Inspection
Caliper Removal and Installation
Caliper Overhaul

ELECTRIC BRAKE BOOSTER SYSTEM COMPONENT LOCATION INDEX (ELECTRIC BRAKE BOOSTER CONTROL UNIT TYPE A) (2017 2018 2019)

For relationships between signals in a system, refer to System Diagram.

There are two types of electric brake boosters (type A or B) that can be differentiated visually.
Make sure which booster type is equipped before doing any repairs or service.

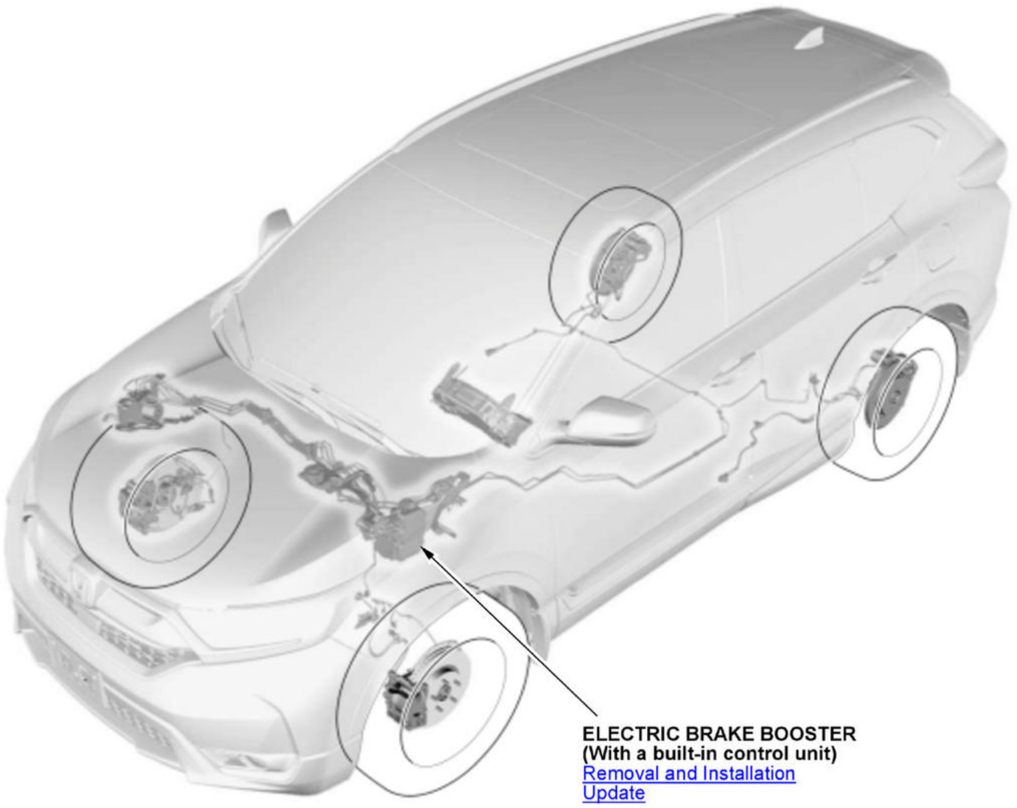

ELECTRIC BRAKE BOOSTER
(With a built-in control unit)
Removal and Installation
Update

ELECTRIC BRAKE BOOSTER SYSTEM COMPONENT LOCATION INDEX (ELECTRIC BRAKE BOOSTER CONTROL UNIT TYPE B) (2020 2021)

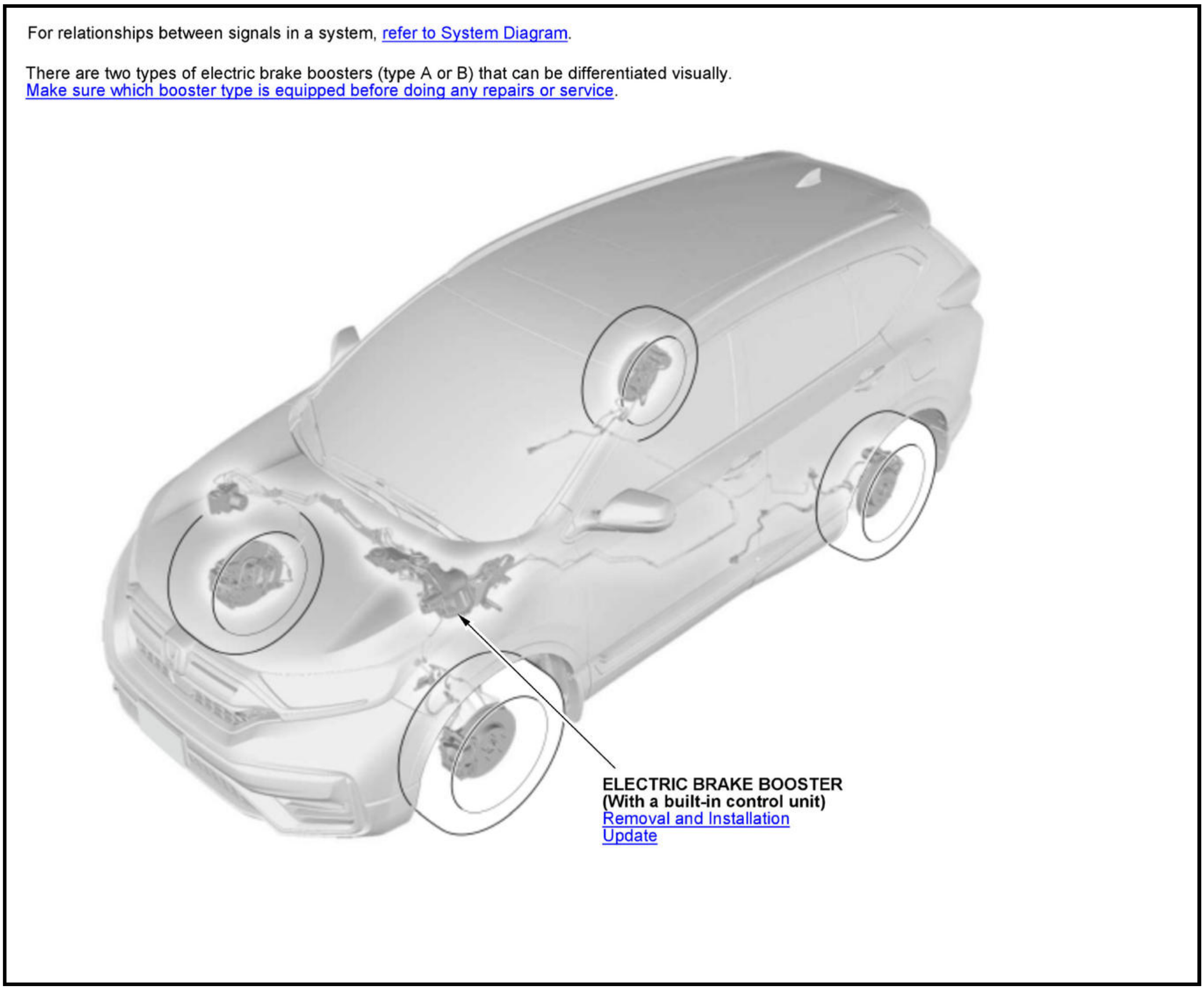

For relationships between signals in a system, refer to System Diagram.

There are two types of electric brake boosters (type A or B) that can be differentiated visually.
Make sure which booster type is equipped before doing any repairs or service.

SYMPTOM TROUBLESHOOTING

BRAKE SYSTEM SYMPTOM TROUBLESHOOTING - RAPID BRAKE PAD WEAR, VEHICLE VIBRATION (AFTER A LONG DRIVE), OR HIGH, HARD BRAKE PEDAL

Rapid brake pad wear, vehicle vibration (after a long drive), or high, hard brake pedal

NOTE: Make sure that the caliper pins are installed correctly. The upper caliper pin and the lower caliper pin are different. If these caliper pins are installed in the wrong location, it will cause vibration, uneven or rapid brake pad wear, and possibly uneven tire wear. See the proper caliper pin location:

- **Front caliper**
- **Rear caliper**

1. Electric brake booster system check

   -1. Turn the vehicle to the ON mode.

   -2. Check the brake system indicator (red) and the brake system indicator (amber) for several seconds when the vehicle to the ON mode.

   Do the indicators come on then go off?

   YES

   Go to step 2.

NO

Go to electric brake booster system troubleshooting.

2. Electric parking brake system check

   -1. Turn the vehicle to the OFF (LOCK) mode, then the ON mode.

   -2. Check the brake system indicator (red) and the brake system indicator (amber) for several seconds when the vehicle to the ON mode.

   Do the indicators come on then go off?

   YES

   Go to step 3.

   NO

   Go to electric parking brake system troubleshooting .

3. Brake system check

   -1. Drive the vehicle to note if the brakes drag or the pedal becomes high and hard. This may take 20 or more brake pedal applications during an extended test-drive.

   -2. With the engine running, **raise and support the vehicle** , and spin all four wheels by hand.

   Is there brake drag at any of the wheels?

   YES

   Go to step 4.

   NO

   Look for other causes of pad wear, high pedal, or vehicle vibration.

4. Brake pedal position switch check

   -1. Without removing the brake lines, unbolt and separate the master cylinder from the brake booster, then spin the wheels to check for brake drag.

   Is there brake drag at any of the wheels?

   YES

   Go to step 5.

   NO

   Check the brake pedal position switch adjustment and pedal free play .

5. Master cylinder check

   -1. Loosen the hydraulic lines at the master cylinder, then spin the wheels to check for brake drag.

   Is there brake drag at any of the wheels?

   YES

Go to step 6.

NO

Check the master cylinder reservoir for contamination in the brake fluid. If you find contamination, flush the entire brake system of all contaminated fluid, then replace all rubber parts in the brake system that were exposed to contaminated fluid. If the brake fluid is OK, **replace the master cylinder** .

6. Caliper check

   -1. Loosen the bleed screws at each caliper, then spin the wheels to check for brake drag.

   Is there brake drag at any of the wheels?

   YES

   Check the master cylinder reservoir for contamination in the brake fluid. If you find contamination, flush the entire brake system of all contaminated fluid, then replace all rubber parts in the brake system that were exposed to contaminated fluid. If the brake fluid is OK, disassemble and repair the caliper or wheel cylinder on the wheel (s) with brake drag.

   NO

   Look for and replace any damaged brake lines. If all brake lines are OK, **replace the VSA modulator-control unit** .

ELECTRIC BRAKE BOOSTER SYSTEM SYMPTOM TROUBLESHOOTING - BRAKE SYSTEM INDICATOR (RED) AND BRAKE SYSTEM INDICATOR (AMBER) DO NOT GO OFF (ELECTRIC BRAKE BOOSTER CONTROL UNIT TYPE A (WITH CAN GATEWAY)) (2017 2018 2019)

Brake system indicator (red) and brake system indicator (amber) do not go off

1. DTC check (Electric brake booster)

   -1. Turn the vehicle to the ON mode.

   -2. Check for DTCs with the HDS.

DTC Description	DTC	Freeze Frame
B	B	B

   Is DTC indicated?

   YES

   Go to indicated DTC's troubleshooting.

   NO

   Go to step 2.

2. DTC check (CAN gateway system)

   -1. Check for CAN gateway system DTCs with the HDS.

DTC Description	DTC
B	B

   Is DTC indicated?

YES

Go to indicated DTC's troubleshooting.

NO

Go to step 3.

3. Gauge control module operation check

-1. Do the gauge control module self-diagnostic function .

Is the gauge control module OK?

YES

Go to step 4.

NO

Replace the gauge control module .

4. Fuse check 1

-1. Turn the vehicle to the OFF (LOCK) mode with driver's door open.

-2. Wait for 3 minutes.

NOTE: Do not close the driver's door.

-3. Check the following fuse.

Fuse	No. A1-2 (40 A)
Location	Under-hood fuse/relay box

Is the fuse OK?

YES

The fuse is OK. Reinstall the fuse, then go to step 5.

NO

Replace the fuse. If the fuse blows again, repair a short to ground in the No. A1-2 (40 A) fuse circuit.

5. Fuse check 2

-1. Check the following fuse.

Fuse	No. D24 (5 A)
Location	Under-dash fuse/relay box

Is the fuse OK?

YES

The fuse is OK. Reinstall the fuse, then go to step 6.

NO

Replace the fuse. If the fuse blows again, repair a short to ground in the No. D24 (5 A) fuse circuit.

6. Fuse check 3

-1. Check the following fuse.

Fuse	No. D5 (10 A)
Location	Under-dash fuse/relay box

Is the fuse OK?

YES

The fuse is OK. Reinstall the fuse, then go to step 7.

NO

Replace the fuse. Turn the vehicle to the ON mode, then to the OFF (LOCK) mode. If the fuse blows again, repair a short to ground in the No. D5 (10 A) fuse circuit.

7. Open wire check (IG1 OPTION line)

-1. Disconnect the following connector.

Electric brake booster 26P connector

-2. Turn the vehicle to the ON mode.

-3. Measure the voltage between test points 1 and 2.

Test condition	Vehicle ON mode
B	Electric brake booster 26P connector: disconnected
Test point 1	**Electric brake booster 26P connector No. 24**
Test point 2	Body ground

Is there battery voltage?

YES

The IG1 OPTION wire is OK. Go to step 8.

NO

Repair an open in the wire between the under-dash fuse/relay box and the electric brake booster.

8. Open wire check (+B EBB line)

-1. Turn the vehicle to the OFF (LOCK) mode.

-2. Measure the voltage between test points 1 and 2.

Test condition	Vehicle OFF (LOCK) mode
B	Electric brake booster 26P connector: disconnected
Test point 1	**Electric brake booster 26P connector No. 2**
Test point 2	Body ground

Is there battery voltage?

YES

The +B EBB wire is OK. Go to step 9.

NO

Repair an open in the wire between the under-hood fuse/relay box and the electric brake booster.

9. Open wire check (+B OPTION line)

-1. Measure the voltage between test points 1 and 2.

Test condition	Vehicle OFF (LOCK) mode
B	Electric brake booster 26P connector: disconnected
Test point 1	**Electric brake booster 26P connector No. 4**
Test point 2	Body ground

Is there battery voltage?

YES

The +B OPTION wire is OK. Go to step 10.

NO

Repair an open in the wire between the under-dash fuse/relay box and the electric brake booster.

10. Open wire check (GND line)

-1. Check for continuity between test points 1 and 2.

Test condition	Vehicle OFF (LOCK) mode
B	Electric brake booster 26P connector: disconnected
Test point 1	**Electric brake booster 26P connector No. 1**
Test point 2	Body ground

Is there continuity?

YES

The GND wire is OK. Go to step 11.

NO

Repair an open in the wire between the electric brake booster and body ground (G351).

11. F-CAN circuit communication check

-1. Reconnect the following connector.

Electric brake booster 26P connector

-2. Select the FUNCTION TEST in the CAN gateway with the HDS, then select the F-CAN Bus Connected Unit Check.

F-CAN Bus Connected Unit Check

Which result is indicated?

Gauge control module (Bus A) is Not Available

Go to step 12.

Electric brake booster (Bus A) is Not Available

Go to step 13.

Electric brake booster (Bus B) is Not Available

Go to step 14.

Electric brake booster and gauge control module are Available

Intermittent failure, the system is OK at this time. **Refer to intermittent failures troubleshooting**.

12. Open wire check (F-CAN A H, F-CAN A L lines)

-1. Turn the vehicle to the OFF (LOCK) mode with driver's door open.

-2. Wait for 3 minutes.

NOTE: Do not close the driver's door.

-3. Disconnect the following connectors.

Gauge control module connector A (32P)
CAN gateway 12P connector

-4. Check for continuity between test points 1 and 2.

Test condition	Vehicle OFF (LOCK) mode
B	Gauge control module connector A (32P): disconnected
B	CAN gateway 12P connector: disconnected
Test circuit 1	B
Test point 1	**Gauge control module connector A (32P) No. 19**
Test point 2	CAN gateway 12P connector (female terminals) No. 3: ①

Test circuit 2	B
Test point 1	**Gauge control module connector A (32P) No. 20**
Test point 2	CAN gateway 12P connector (female terminals) No. 9: ①

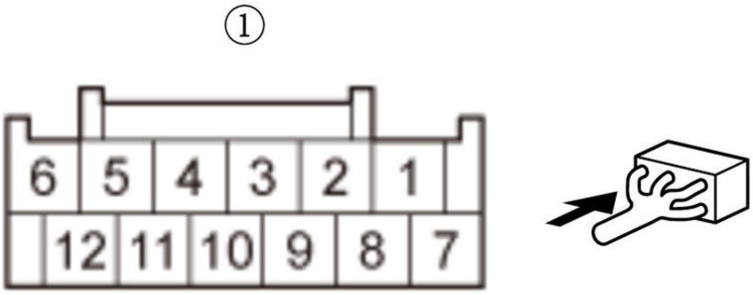

Is there continuity?

YES

The F-CAN A H and F-CAN A L wires are OK. Check for any authorized service information related to the DTCs or symptoms you are troubleshooting or **substitute a known-good gauge control module** , then recheck. If the symptom/indication goes away with a known-good gauge control module, **replace the original gauge control module** .

NO

Repair an open in the wire between the gauge control module and the CAN gateway.

13. Open wire check (F-CAN A H, F-CAN A L lines)

-1. Turn the vehicle to the OFF (LOCK) mode with driver's door open.

-2. Wait for 3 minutes.

NOTE: Do not close the driver's door.

-3. Disconnect the following connectors.

Electric brake booster 26P connector
CAN gateway 12P connector

-4. Check for continuity between test points 1 and 2.

Test condition	Vehicle OFF (LOCK) mode
B	Electric brake booster 26P connector: disconnected
B	CAN gateway 12P connector: disconnected
Test circuit 1	B
Test point 1	**Electric brake booster 26P connector No. 26**
Test point 2	CAN gateway 12P connector (female terminals) No. 3: ①

Test circuit 2	B

Test point 1	**Electric brake booster 26P connector No. 18**
Test point 2	CAN gateway 12P connector (female terminals) No. 9: ①

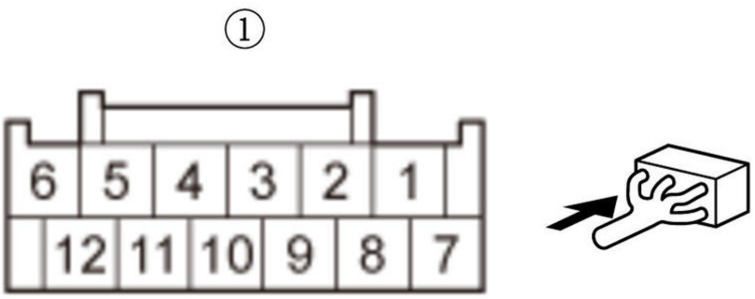

Is there continuity?

YES

The F-CAN A H and F-CAN A L wires are OK. Check for loose terminals and poor connections in the electric brake booster 26P connector. Check for any authorized service information related to the DTCs or symptoms you are troubleshooting. If they are OK, replace the electric brake booster .

NO

Repair an open in the wire between the electric brake booster and the CAN gateway.

14. Open wire check (F-CAN B H, F-CAN B L lines)

-1. Turn the vehicle to the OFF (LOCK) mode with driver's door open.

-2. Wait for 3 minutes.

NOTE: Do not close the driver's door.

-3. Disconnect the following connectors.

Electric brake booster 26P connector
CAN gateway 12P connector

-4. Check for continuity between test points 1 and 2.

Test condition	Vehicle OFF (LOCK) mode
B	Electric brake booster 26P connector: disconnected
B	CAN gateway 12P connector: disconnected
Test circuit 1	B
Test point 1	**Electric brake booster 26P connector No. 19**
Test point 2	CAN gateway 12P connector (female terminals) No. 12: ①

Test circuit 2	B
Test point 1	**Electric brake booster 26P connector No. 12**
Test point 2	CAN gateway 12P connector (female terminals) No. 5: ①

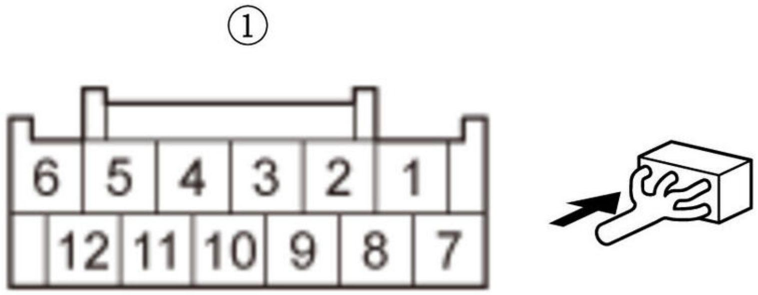

Is there continuity?

YES

The F-CAN B H and F-CAN B L wires are OK. Check for loose terminals and poor connections in the electric brake booster 26P connector. Check for any authorized service information related to the DTCs or symptoms you are troubleshooting. If they are OK, replace the electric brake booster .

NO

Repair an open in the wire between the electric brake booster and the CAN gateway.

ELECTRIC BRAKE BOOSTER SYSTEM SYMPTOM TROUBLESHOOTING - BRAKE SYSTEM INDICATOR (RED) AND BRAKE SYSTEM INDICATOR (AMBER) DO NOT GO OFF (ELECTRIC BRAKE BOOSTER CONTROL UNIT TYPE A (WITHOUT CAN GATEWAY)) (2017 2018 2019)

Brake system indicator (red) and brake system indicator (amber) do not go off

1. DTC check (Electric brake booster)

-1. Turn the vehicle to the ON mode.

-2. Check for DTCs with the HDS.

DTC Description	DTC	Freeze Frame
B	B	B

Is DTC indicated?

YES

Go to indicated DTC's troubleshooting.

NO

Go to step 2.

2. Gauge control module operation check

-1. Do the gauge control module self-diagnostic function .

Is the gauge control module OK?

YES

Go to step 3.

NO

Replace the gauge control module .

3. Fuse check 1

-1. Turn the vehicle to the OFF (LOCK) mode with driver's door open.

-2. Wait for 3 minutes.

NOTE: Do not close the driver's door.

-3. Check the following fuse.

Fuse	No. A1-2 (40 A)
Location	Under-hood fuse/relay box

Is the fuse OK?

YES

The fuse is OK. Reinstall the fuse, then go to step 4.

NO

Replace the fuse. If the fuse blows again, repair a short to ground in the No. A1-2 (40 A) fuse circuit.

4. Fuse check 2

-1. Check the following fuse.

Fuse	No. D24 (5 A)
Location	Under-dash fuse/relay box

Is the fuse OK?

YES

The fuse is OK. Reinstall the fuse, then go to step 5.

NO

Replace the fuse. If the fuse blows again, repair a short to ground in the No. D24 (5 A) fuse circuit.

5. Fuse check 3

-1. Check the following fuse.

Fuse	No. D5 (10 A)
Location	Under-dash fuse/relay box

Is the fuse OK?

YES

The fuse is OK. Reinstall the fuse, then go to step 6.

NO

Replace the fuse. Turn the vehicle to the ON mode, then to the OFF (LOCK) mode. If the fuse blows again, repair a short to ground in the No. D5 (10 A) fuse circuit.

6. Open wire check (IG1 OPTION line)

-1. Disconnect the following connector.

Electric brake booster 26P connector

-2. Turn the vehicle to the ON mode.

-3. Measure the voltage between test points 1 and 2.

Test condition	Vehicle ON mode
B	Electric brake booster 26P connector: disconnected
Test point 1	**Electric brake booster 26P connector No. 24**
Test point 2	Body ground

Is there battery voltage?

YES

The IG1 OPTION wire is OK. Go to step 7.

NO

Repair an open in the wire between the under-dash fuse/relay box and the electric brake booster.

7. Open wire check (+B EBB line)

-1. Turn the vehicle to the OFF (LOCK) mode.

-2. Measure the voltage between test points 1 and 2.

Test condition	Vehicle OFF (LOCK) mode
B	Electric brake booster 26P connector: disconnected
Test point 1	**Electric brake booster 26P connector No. 2**
Test point 2	Body ground

Is there battery voltage?

YES

The +B EBB wire is OK. Go to step 8.

NO

Repair an open in the wire between the under-hood fuse/relay box and the electric brake booster.

8. Open wire check (+B OPTION line)

-1. Measure the voltage between test points 1 and 2.

Test condition	Vehicle OFF (LOCK) mode
B	Electric brake booster 26P connector: disconnected
Test point 1	**Electric brake booster 26P connector No. 4**
Test point 2	Body ground

Is there battery voltage?

YES

The +B OPTION wire is OK. Go to step 9.

NO

Repair an open in the wire between the under-dash fuse/relay box and the electric brake booster.

9. Open wire check (GND line)

-1. Check for continuity between test points 1 and 2.

Test condition	Vehicle OFF (LOCK) mode
B	Electric brake booster 26P connector: disconnected
Test point 1	**Electric brake booster 26P connector No. 1**
Test point 2	Body ground

Is there continuity?

YES

The GND wire is OK. Go to step 10.

NO

Repair an open in the wire between the electric brake booster and body ground (G351).

10. Open wire check (F-CAN H, F-CAN L lines)

-1. Disconnect the following connector.

Gauge control module connector A (32P)

-2. Check for continuity between test points 1 and 2.

Test condition	Vehicle OFF (LOCK) mode
B	Electric brake booster 26P connector: disconnected
B	Gauge control module connector A (32P): disconnected
Test circuit 1	B
Test point 1	**Electric brake booster 26P connector No. 26**
Test point 2	**Gauge control module connector A (32P) No. 19**

Test circuit 2	B
Test point 1	**Electric brake booster 26P connector No. 18**
Test point 2	**Gauge control module connector A (32P) No. 20**

Is there continuity?

YES

The F-CAN H and F-CAN L wires are OK. Check for loose terminals and poor connections in the electric brake booster 26P connector. Check for any authorized service information related to the DTCs or symptoms you are troubleshooting. If they are OK, **replace the electric brake booster** .

NO

Repair an open in the wire between the electric brake booster and the gauge control module.

ELECTRIC BRAKE BOOSTER SYSTEM SYMPTOM TROUBLESHOOTING - BRAKE SYSTEM INDICATOR (RED) AND BRAKE SYSTEM INDICATOR (AMBER) DO NOT GO OFF (ELECTRIC BRAKE BOOSTER CONTROL UNIT TYPE B) (2020 2021)

Brake system indicator (red) and brake system indicator (amber) do not go off

*1: CAN gateway 12P connector type*2: CAN gateway 16P connector type

1. All DTCs check

-1. All DTCs check with the HDS.

All DTCs

Are there DTCs indicated?

YES

Go to indicated DTC's troubleshooting.

NO

Go to step 2.

2. Fuse check 1

-1. Turn the vehicle to the OFF (LOCK) mode with driver's door open.

-2. Wait for 3 minutes.

NOTE: Do not close the driver's door.

-3. Check the following fuse.

Fuse	**No. A1-2**

Is the fuse OK?

YES

The fuse is OK. Reinstall the fuse, then go to step 3.

NO

Replace the fuse. If the fuse blows again, repair a short to ground in the No. A1-2 fuse circuit.

3. Fuse check 2

-1. Check the following fuse.

Fuse	**No. D5**

Is the fuse OK?

YES

The fuse is OK. Reinstall the fuse, then go to step 4.

NO

Replace the fuse. Turn the vehicle to the ON mode, then to the OFF (LOCK) mode. If the fuse blows again, repair a short to ground in the No. D5 fuse circuit.

4. Open wire check (IG1 OPTION line)

-1. Disconnect the following connector.

Electric brake booster 26P connector

-2. Turn the vehicle to the ON mode.

-3. Measure the voltage between test points 1 and 2.

Test condition	Vehicle ON mode
B	Electric brake booster 26P connector: disconnected
Test point 1	**Electric brake booster 26P connector No. 24**
Test point 2	Body ground

Is there battery voltage?

YES

The IG1 OPTION wire is OK. Go to step 5.

NO

Repair an open in the wire between the under-dash fuse/relay box and the electric brake booster.

5. Open wire check (+B EBB line)

-1. Turn the vehicle to the OFF (LOCK) mode.

-2. Measure the voltage between test points 1 and 2.

Test condition	Vehicle OFF (LOCK) mode
B	Electric brake booster 26P connector: disconnected
Test point 1	**Electric brake booster 26P connector No. 2**
Test point 2	Body ground

Is there battery voltage?

YES

The +B EBB wire is OK. Go to step 6.

NO

Repair an open in the wire between the under-hood fuse/relay box and the electric brake booster.

6. Open wire check (GND line)

-1. Measure the resistance between test points 1 and 2.

Test condition	Vehicle OFF (LOCK) mode
B	Electric brake booster 26P connector: disconnected
Test point 1	**Electric brake booster 26P connector No. 1**
Test point 2	Body ground

Is there 1.0 Ω or less?

YES

The GND wire is OK. Go to step 7.

NO

Repair an open in the wire between the electric brake booster and body ground (G351).

7. F-CAN circuit communication check

-1. Reconnect the following connector.

Electric brake booster 26P connector

-2. Select the FUNCTION TEST in the CAN gateway with the HDS, then select the F-CAN Bus Connected Unit Check.

F-CAN Bus Connected Unit Check

Which result is indicated?

Gauge control module (Bus A) is Not Available

Go to step 8.

Electric brake booster (Bus A) is Not Available

Go to step 9.

Electric brake booster (Bus B) is Not Available

Go to step 10.

Electric brake booster and gauge control module are Available

Intermittent failure, the system is OK at this time. **Refer to intermittent failures troubleshooting**.

8. Open wire check (F-CAN A H, F-CAN A L lines)

-1. Turn the vehicle to the OFF (LOCK) mode with driver's door open.

-2. Wait for 3 minutes.

NOTE: Do not close the driver's door.

-3. Disconnect the following connectors.

Gauge control module connector A (32P)
CAN gateway 12P connector *1
CAN gateway 16P connector *2

-4. Measure the resistance between test points 1 and 2.

Test condition	Vehicle OFF (LOCK) mode
B	Gauge control module connector A (32P): disconnected
B	CAN gateway 12P connector *1: disconnected
B	CAN gateway 16P connector *2: disconnected
Test circuit 1	B
Test point 1	**Gauge control module connector A (32P) No. 19**
Test point 2	CAN gateway 12P connector *1 (female terminals) No. 3: ①
B	CAN gateway 16P connector *2 (female terminals) No. 3: ②

Test circuit 2	B
Test point 1	**Gauge control module connector A (32P) No. 20**
Test point 2	CAN gateway 12P connector *1 (female terminals) No. 9: ①
B	CAN gateway 16P connector *2 (female terminals) No. 11: ②

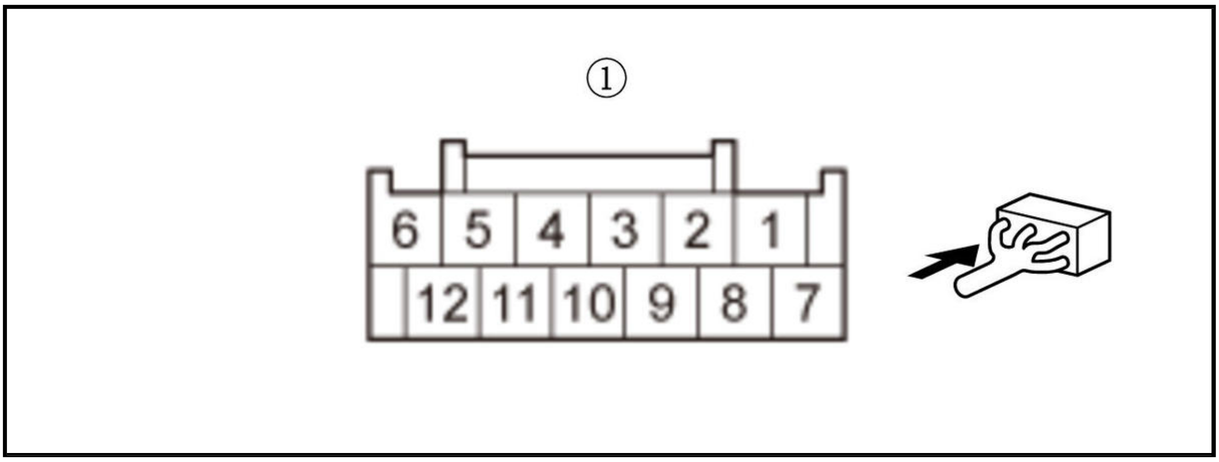

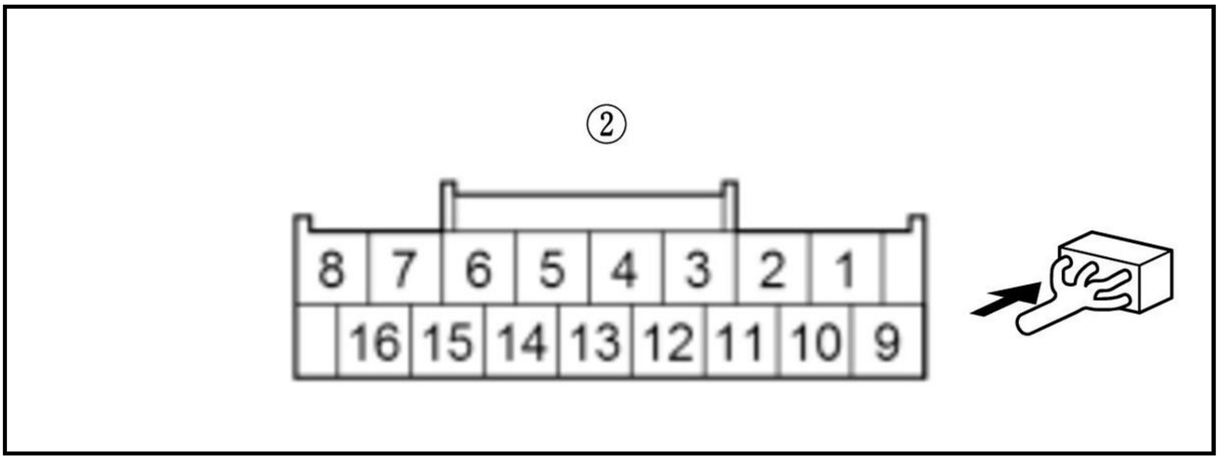

Is there 1.0 Ω or less?

YES

The F-CAN A H and F-CAN A L wires are OK. Check for any authorized service information related to the DTCs or symptoms you are troubleshooting or **substitute a known-good gauge control module** , then recheck. If the symptom/indication goes away with a known-good gauge control module, **replace the original gauge control module** .

NO

Repair an open in the wire between the gauge control module and the CAN gateway.

9. Open wire check (F-CAN A H, F-CAN A L lines)

-1. Turn the vehicle to the OFF (LOCK) mode with driver's door open.

-2. Wait for 3 minutes.

NOTE: Do not close the driver's door.

-3. Disconnect the following connectors.

Electric brake booster 26P connector
CAN gateway 12P connector *1
CAN gateway 16P connector *2

-4. Measure the resistance between test points 1 and 2.

Test condition	Vehicle OFF (LOCK) mode
B	Electric brake booster 26P connector: disconnected

B	CAN gateway 12P connector *1: disconnected
B	CAN gateway 16P connector *2: disconnected
Test circuit 1	B
Test point 1	**Electric brake booster 26P connector No. 26**
Test point 2	CAN gateway 12P connector *1 (female terminals) No. 3: ①
B	CAN gateway 16P connector *2 (female terminals) No. 3: ②

Test circuit 2	B
Test point 1	**Electric brake booster 26P connector No. 18**
Test point 2	CAN gateway 12P connector *1 (female terminals) No. 9: ①
B	CAN gateway 16P connector *2 (female terminals) No. 11: ②

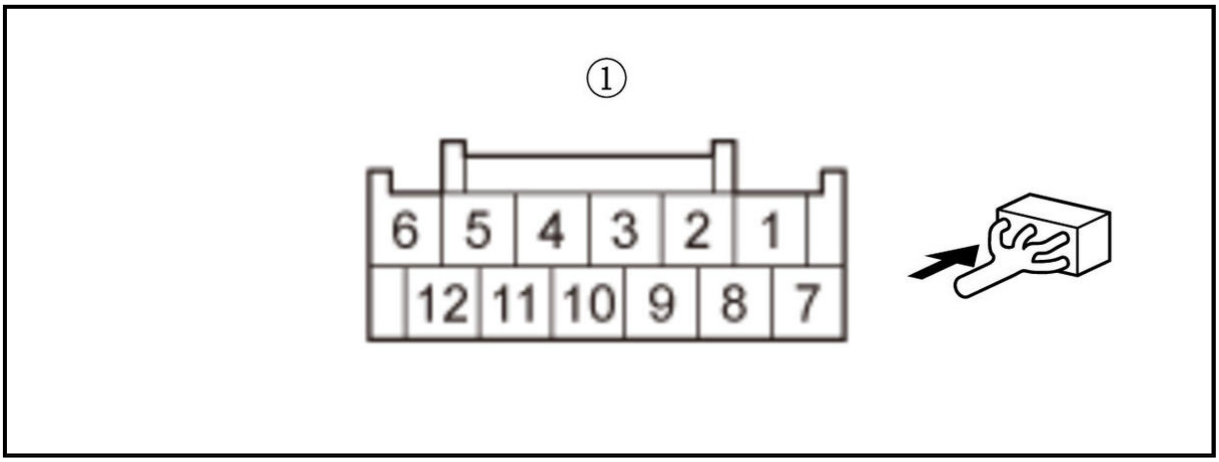

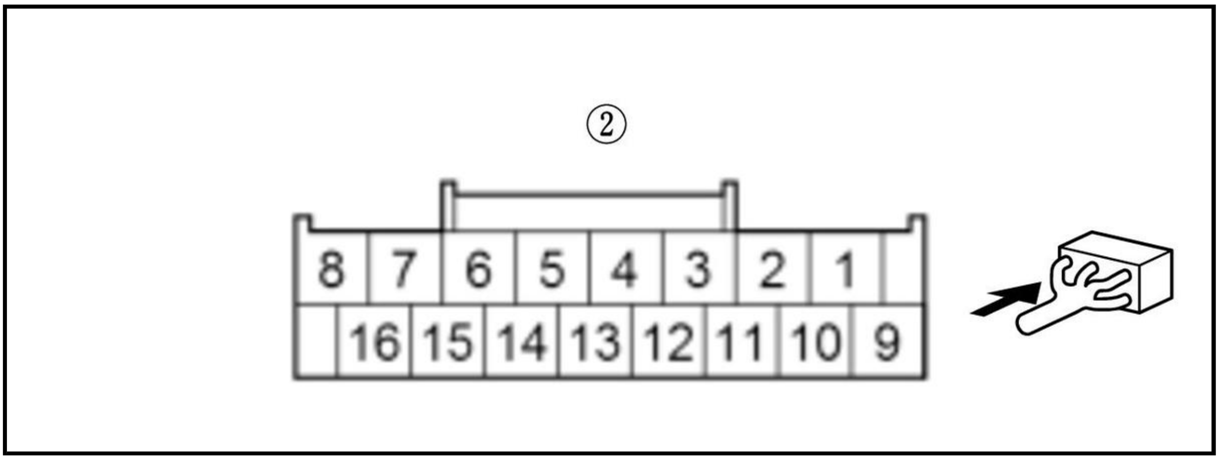

Is there 1.0 Ω or less?

YES

The F-CAN A H and F-CAN A L wires are OK. Check for loose terminals and poor connections in the electric brake booster 26P connector. Check for any authorized service information related to the DTCs or symptoms you are troubleshooting. If they are OK, **replace the electric brake booster** .

NO

Repair an open in the wire between the electric brake booster and the CAN gateway.

10. Open wire check (F-CAN B H, F-CAN B L lines)

-1. Turn the vehicle to the OFF (LOCK) mode with driver's door open.

-2. Wait for 3 minutes.

NOTE: Do not close the driver's door.

-3. Disconnect the following connectors.

Electric brake booster 26P connector
CAN gateway 12P connector *1
CAN gateway 16P connector *2

-4. Measure the resistance between test points 1 and 2.

Test condition	Vehicle OFF (LOCK) mode
B	Electric brake booster 26P connector: disconnected
B	CAN gateway 12P connector *1: disconnected
B	CAN gateway 16P connector *2: disconnected
Test circuit 1	B
Test point 1	**Electric brake booster 26P connector No. 19**
Test point 2	CAN gateway 12P connector *1 (female terminals) No. 12: ①
B	CAN gateway 16P connector *2 (female terminals) No. 6: ②

Test circuit 2	B
Test point 1	**Electric brake booster 26P connector No. 12**
Test point 2	CAN gateway 12P connector *1 (female terminals) No. 5: ①
B	CAN gateway 16P connector *2 (female terminals) No. 14: ②

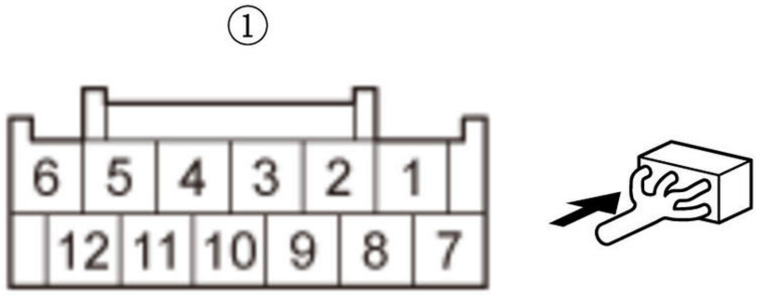

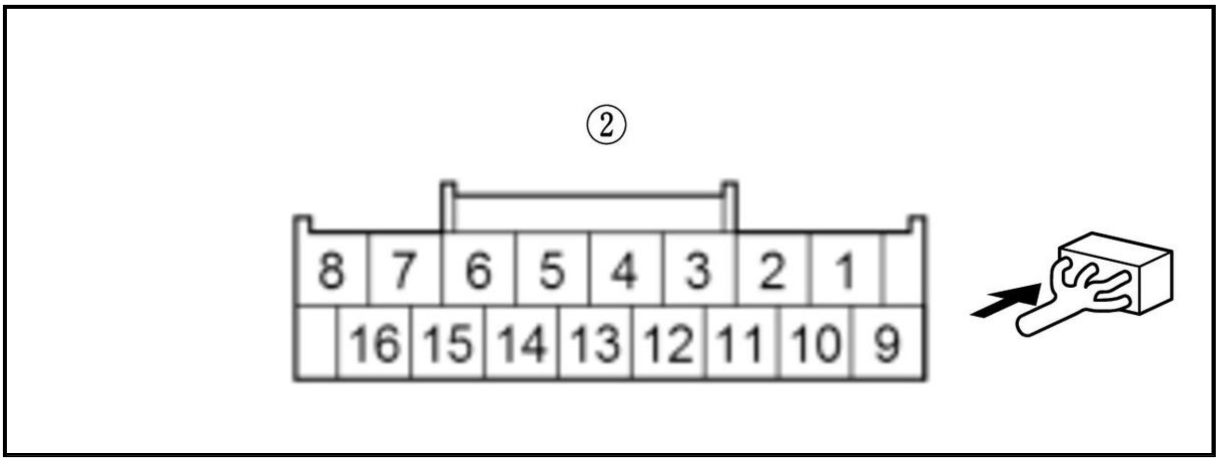

Is there 1.0 Ω or less?

YES

The F-CAN B H and F-CAN B L wires are OK. Check for loose terminals and poor connections in the electric brake booster 26P connector. Check for any authorized service information related to the DTCs or symptoms you are troubleshooting. If they are OK, **replace the electric brake booster** .

NO

Repair an open in the wire between the electric brake booster and the CAN gateway.

SYMPTOM TROUBLESHOOTING INDEX

CONVENTIONAL BRAKE SYMPTOM TROUBLESHOOTING INDEX

Symptom	Diagnostic Procedure	Also check for
Brake system indicator (amber) does not go off	• **Check for PGM-FI DTCs** . • **Check for VSA System DTCs** . • **Check for VSA system symptom troubleshooting (ABS indicator, brake system indicator (red), VSA indicator, and brake system indicator (amber) do not go off)** . • **Check for electric brake booster system DTCs**. • **Check for electric brake booster system symptom troubleshooting (Brake system indicator (red) and brake system indicator (amber) do not go off)**. • With ACC: **Check for driving support system DTCs** . • **Do the gauge control module self-diagnostic function** .	B
Rapid brake pad wear, vehicle vibration (after a long drive), or high, hard brake pedal	**Symptom Troubleshooting**.	B

ELECTRIC BRAKE BOOSTER SYSTEM SYMPTOM TROUBLESHOOTING INDEX

When the vehicle has one of these symptoms, check for electric brake booster diagnostic trouble codes (DTCs) with the HDS. If there are no DTCs, do the diagnostic procedure for the symptom, in the sequence listed, until you find the cause.

Symptom	Diagnostic procedure	Also check for
HDS does not communicate with the electric brake booster or the vehicle	Troubleshoot the F-CAN circuit .	Power and ground at the electric brake booster.
Brake system indicator (red) or brake system indicator (amber) does not come on at start-up (bulb check)	Do the gauge control module self-diagnostic function .	B
Brake system indicator (red) and brake system indicator (amber) do not go off	Symptom troubleshooting.	B

HOW TO INFORMATION

HOW TO TROUBLESHOOT THE ELECTRIC BRAKE BOOSTER SYSTEM

System Indicator

This system has two indicators on the gauge control module.

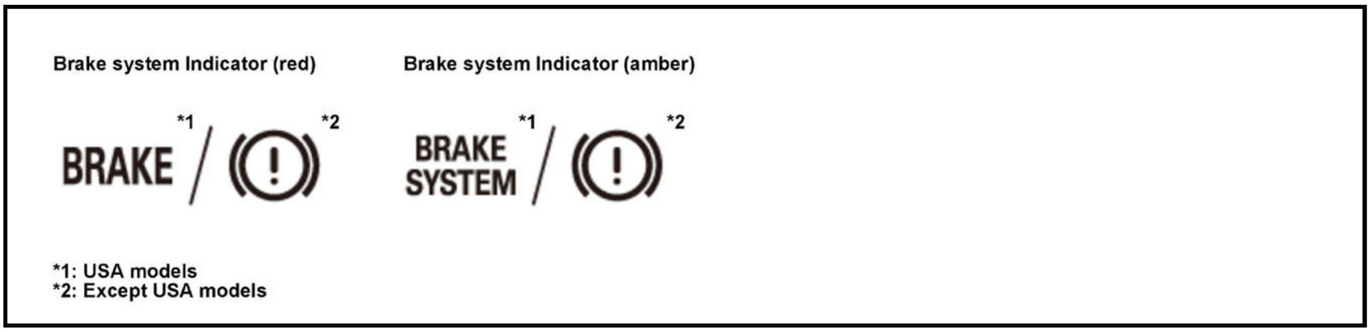

NOTE: For locations of each indicator, refer to gauge control module component location index.

When the system is OK, each indicator comes on for about 2 seconds after turning the vehicle to the ON mode, then it goes off.

When the system detects a problem, a DTC will set and depending upon the failure, the electric brake booster determines which indicator (s) will turn on. If the problem goes away (system returns to normal), the indicator (s) will be controlled in the following way depending upon the DTC that was set:

- The indicator (s) will come on and stay on when turning the vehicle to the ON mode.
- The indicator (s) will automatically go off.
- The indicator (s) will go off after the vehicle is driven.

Brake System Indicator (Red)

The brake system indicator (red) comes on when the electric brake booster servo control is lost, the EBD function is lost, the parking brake is applied, and/or the brake fluid level is low.

NOTE: If two or more wheel speed sensors fail, the brake system indicator (red) will come on along with the VSA indicator.

Brake System Indicator (Amber)

The brake system indicator (amber) comes on, when the brake control system is lost.

Diagnostic Trouble Code (DTC)

- The memory can hold 10 DTCs. However, when the same DTC is detected more than once, the more recent DTC is written over the earlier one. Therefore, when the same problem is detected repeatedly, it is memorized as a single DTC.
- The DTCs are indicated in ascending order, not in the order they occurred.
- The DTCs are memorized in an EEPROM in the electric brake booster. Therefore, the memorized DTCs cannot be erased by disconnecting the 12 volt battery. Do the specified procedures to clear the DTCs.

Self-Diagnosis

- Self-diagnosis can be classified into two categories:
-
    - -

      Initial diagnosis: Done right after the vehicle turned to the ON mode and until the brake system indicator (red) and the brake system indicator (amber) go off.
-
    - -

      Regular diagnosis: Done right after the initial diagnosis until turning the vehicle to the OFF (LOCK) mode.
- When the system detects a problem, the electric brake booster shifts to fail-safe mode.

Hydraulic Boost Failure Compensation

This vehicle is equipped with a hydraulic boost failure compensation. This hydraulic boost failure compensation uses the VSA modulator-control unit's pressurization control to provide additional brake assist. This is necessary when the electric brake booster system is lost. The hydraulic boost failure compensation can be heard when operating and some kickback will be felt on the brake pedal. The hydraulic boost failure compensation may also be activated in some high altitude conditions. These are considered normal characteristics of this system.

How to Discriminate the Type of the Electric Brake Booster

The type of the electric brake booster can be discriminated between type A and type B as shown.

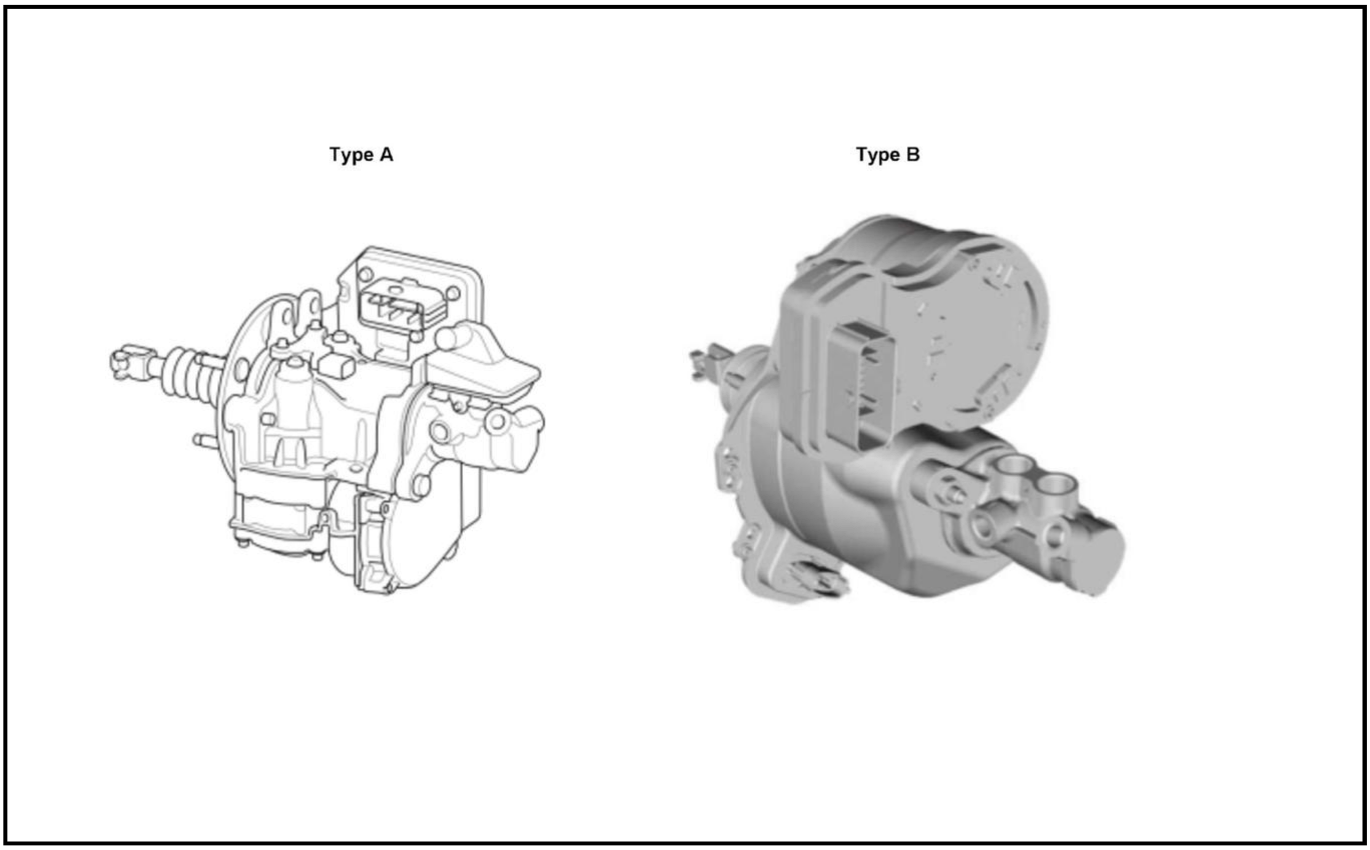

How to Troubleshoot DTCs

The troubleshooting procedures assume that the cause of the problem is still present and the brake system indicator (red), and/or brake system indicator (amber) are still on. Following a troubleshooting procedure for a DTC that has been cleared but does not reset can result in incorrect diagnosis.

1. Question the customer about the conditions when the problem occurred, and try to reproduce the same conditions for troubleshooting. Find out when the brake system indicator (red), and/or brake system indicator (amber) came on, such as during activation, after activation, when the vehicle was traveling at a certain speed, etc. If necessary, have the customer demonstrate the concern.

2. When the brake system indicator (red) or brake system indicator (amber) does not come on during the test-drive, but troubleshooting is done based on the DTC, check for loose connectors, poor contact of the terminals, etc. in the circuit indicated by the DTC.

3. After troubleshooting, or the repairs are done, clear the DTCs, and test-drive the vehicle under the same conditions that originally set the DTCs. Make sure the brake system indicator (red) and brake system indicator (amber) do not come on.

Intermittent Failures

The term "intermittent failure" means a system may have had a failure, but it checks OK now. If you cannot reproduce the condition, check for loose connections and terminals. Also check ground and power connections related to the circuit that you are troubleshooting.

How to Use the HDS (Honda Diagnostic System)

NOTE: Make sure the 12 volt battery is in good condition and fully charged.

1. If the system indicator (s) stay on, **connect the HDS to the data link connector (DLC)**

2. Turn the vehicle to the ON mode.

3. Make sure the HDS communicates with the vehicle and the electric brake booster. If it does not, **go to the F-CAN circuit troubleshooting**

4. Check the diagnostic trouble code (DTC) and the freeze data, for all systems, troubleshoot the powertrain DTCs first. Then refer to the indicated DTC's troubleshooting, and do the appropriate troubleshooting procedure.

NOTE:

- Freeze data indicates the electric servo brake system conditions when the first system malfunction that activated the indicator was detected.
- The HDS can read the DTC, the freeze data, the current data, and other system data.
- For specific operations, refer to the HDS Help menu.

How to Retrieve DTCs

1. With the vehicle in OFF (LOCK) mode, **connect the HDS to the data link connector (DLC)**

2. Turn the vehicle to the ON mode.

3. Make sure the HDS communicates with the vehicle and the electric brake booster. If it does not, **go to the F-CAN circuit troubleshooting**

4. Follow the prompts on the HDS to display the DTC (s) on the screen. After determining the DTC, refer to the DTC troubleshooting. Do the all systems DTC check, and troubleshoot any powertrain DTCs first.

5. Turn the vehicle to the OFF (LOCK) mode.

How to Clear DTCs

1. With the vehicle in OFF (LOCK) mode, **connect the HDS to the data link connector (DLC)**

2. Turn the vehicle to the ON mode.

3. Make sure the HDS communicates with the vehicle and the electric brake booster. If it does not, **go to the F-CAN circuit troubleshooting**

4. Clear the DTC (s) by following the screen prompts on the HDS.

5. Turn the vehicle to the OFF (LOCK) mode.

REMOVAL & INSTALLATION INSPECTION

FRONT BRAKE DISC REMOVAL, INSTALLATION, AND INSPECTION

Removal and Installation

NOTE:

- **How to read the torque specifications** .
- **Review the Service Precautions before doing repairs or service**.

1. **Vehicle - Lift**
2. **Front Wheel - Remove**
3. Front Brake Caliper - Remove

   1. **Remove the caliper assembly without disconnecting the brake hose from the caliper body** .

4. Front Brake Disc - Remove

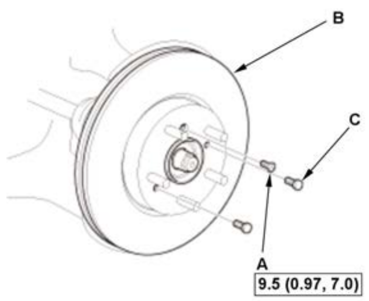 	1. Remove the brake disc flathead screw (A). 2. Remove the brake disc (B). **NOTE:** If the brake disc is stuck to the front hub, thread two 8 x 1.25 mm bolts (C) into the brake disc to push it away from the front hub. Turn each bolt 90 degrees at a time to prevent the brake disc from binding.

5. All Removed Parts - Install

1. Install all removed parts in the reverse order of removal.

6. Front Brake Disc Runout - Inspect

Inspection

NOTE: How to read the torque specifications .

1. **Vehicle - Lift**
2. **Front Wheels - Remove**
3. **Brake Pad - Remove**
4. Front Brake Disc Thickness and Parallelism - Inspect

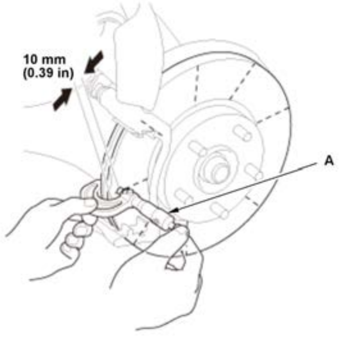 	1. Using a micrometer (A), measure the brake disc thickness at eight points, about 45 deg. apart and 10 mm (0.39 in) in from the outer edge of the brake disc. Replace the brake disc if the smallest measurement is less than the maximum refinishing limit. * This is the maximum allowable difference between the thickness measurements. 2. If the brake disc is beyond the service limit for parallelism, refinish the brake disc with a Honda-approved commercially available on-car brake lathe. **NOTE:** - If the brake disc is beyond the service limit for refinishing, replace it. - For more information on Honda-approved brake lathes, refer to any authorized service information related brake disc refinishing (if available). 3. Inspect the brake disc runout.

Brake disc thickness:		
B	**Standard:**	**25.0 mm (0.984 in)**
B	**Maximum refinishing limit:**	**23.0 mm (0.906 in)**
Brake disc parallelism*:		**0.015 mm (0.00059 in) max.**

5. Front Brake Disc Runout - Inspect

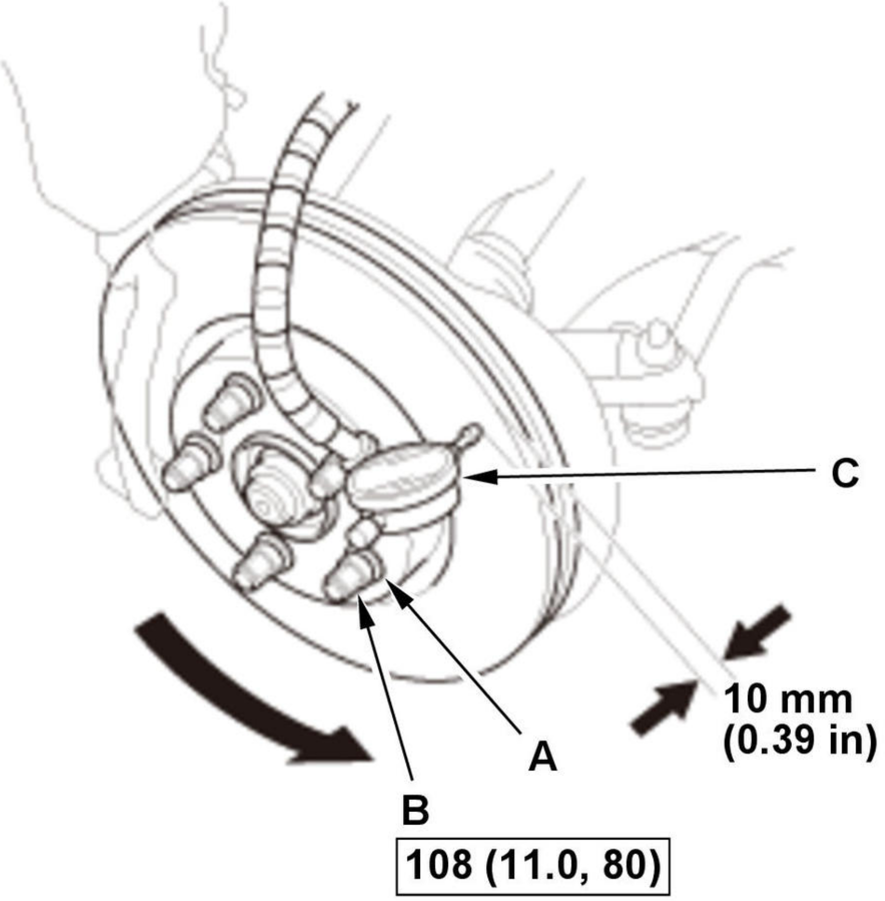

Fig. 1: Front Wheel Nuts Tightening Sequence
Courtesy of HONDA, U.S.A., INC.

B	1. Inspect the brake disc to wheel surface for damage and cracks. 2. Clean the brake disc thoroughly, and remove all rust. 3. Install suitable flat washers (A) and the wheel nuts (B). 4. Tighten the wheel nuts to the specified torque to hold the brake disc securely against the hub. 5. Set up the dial gauge (C) against the brake disc as shown. 6. Measure the runout at 10 mm (0.39 in) from the outer edge of the brake disc. 7. If the brake disc is beyond the service limit, refinish the brake disc with a Honda-approved commercially available on-car brake lathe. **NOTE:** • If the brake disc is beyond the service limit for refinishing, replace it. • If the brake disc is replaced with a new one, check the new disc for runout. If the new disc is out of specification, refinish the disc. • For more information on Honda-approved brake lathes, refer to any authorized service information related brake disc refinishing (if available).

Maximum refinishing limit:	**23.0 mm (0.906 in)**

Brake disc runout:		
B	**Service limit:**	**0.04 mm (0.0016 in)**

6. **Brake Pad - Install**
7. **Front Wheels - Install**

FRONT BRAKE PAD REMOVAL, INSTALLATION, AND INSPECTION

Special Tools Required

Image	Description/Tool Number
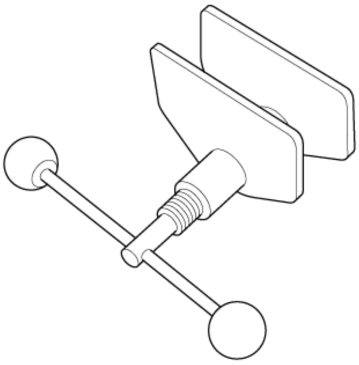	Brake Caliper Piston Compressor 07AAE-SEPA101

Removal

NOTE: **Review the Service Precautions before doing repairs or service**.

1. Brake Fluid - Remove

1. Remove some brake fluid from the reservoir.

2. **Vehicle - Lift**
3. **Front Wheels - Remove**
4. Brake Pad - Remove

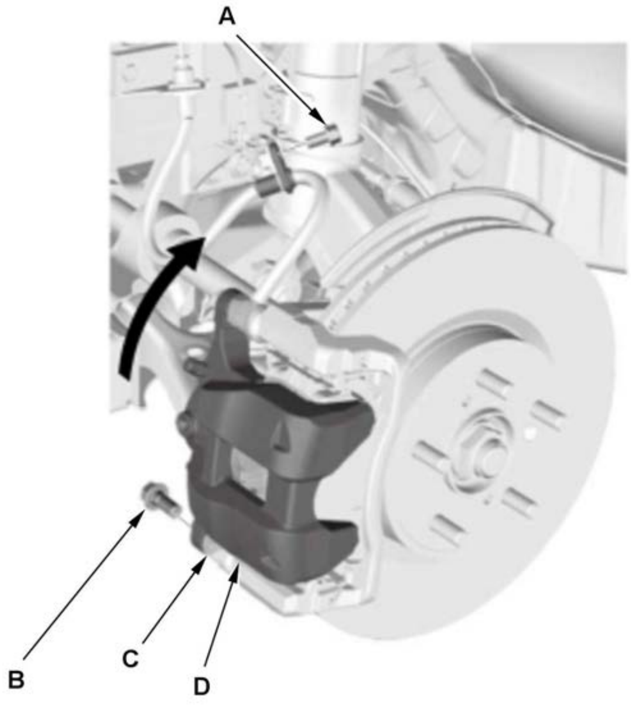	1. Remove the brake hose mounting bolt (A). 2. Remove the flange bolt (B) while holding the caliper pin (C). **NOTE:** Be careful not to damage the pin boot. 3. Pivot the caliper body (D) up out of the way. **NOTE:** Check the hose and the pin boots for damage and deterioration.

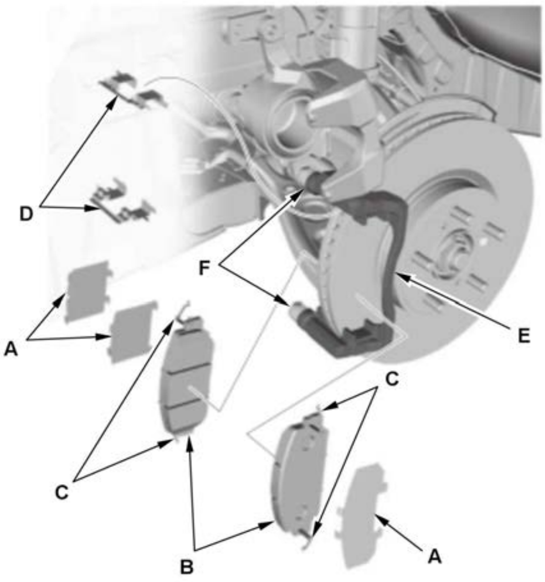	4. Remove the pad shims (A) and the brake pads (B). **NOTE:** Be careful not to damage or deform the pad return springs (C). 5. Remove the pad retainers (D). **NOTE:** The upper and lower pad retainers are different. During installation, make sure the pad retainers are in the proper positions. 6. Clean the caliper bracket (E) thoroughly; remove any rust, and check for grooves and cracks. 7. Verify that the caliper pins (F) move in and out smoothly. Clean and lube if needed.

5. Brake Disc - Inspect

Installation

NOTE:

- How to read the torque specifications .
- Review the Service Precautions before doing repairs or service.

1. Brake Pad - Install

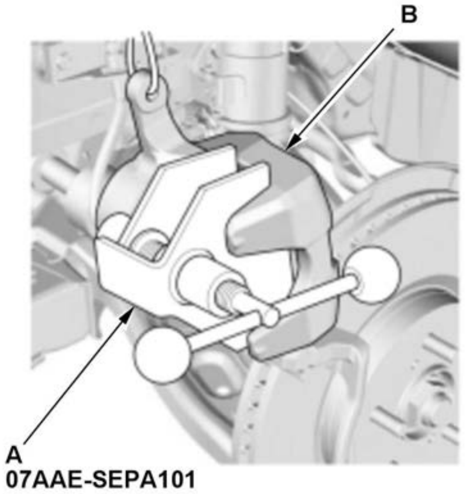

1. Install the brake caliper piston compressor tool (A) on the caliper body (B).

2. Press in the piston with the brake caliper piston compressor tool.

3. Remove the brake caliper piston compressor tool.

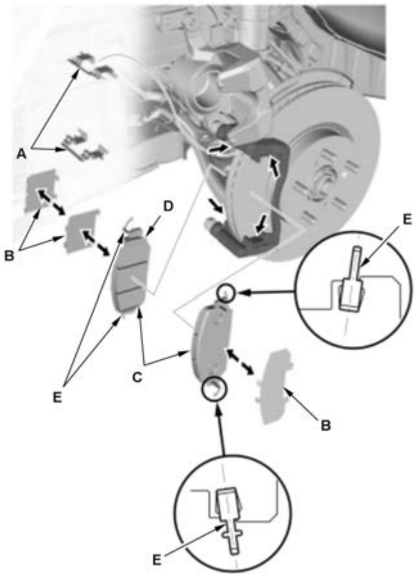

4. Apply a thin coat of M-77 assembly paste (P/N 08798-9010) to the retainer mating surface of the caliper bracket (indicated by the arrows).

5. Install the pad retainers (A).

NOTE:

- The upper and lower pad retainers are different. During installation, make sure the pad retainers are in the proper positions.
- If you are replacing the brake pads with new ones, also replace the pad retainers.

6. Wipe off the excess assembly paste from the retainers. Keep the assembly paste away from the brake disc and the brake pads.

7. Apply a thin coat of M-77 assembly paste (P/N 08798-9010) to the pad side of the shims (B), the back of the brake pads (C), and the other areas indicated by the arrows.

8. Wipe off the excess assembly paste from the pad shims and brake pads friction material. Keep grease and assembly paste away from the brake disc and brake pads. Contaminated brake disc or brake pads reduce stopping ability.

9. Install the brake pads and pad shims correctly with the wear indicator (D) on the upper inside position.

NOTE:

- If you are reusing the brake pads, always reinstall the brake pads in their original positions to prevent a temporary loss of braking efficiency.
- Be careful not to damage or deform the pad return springs (E). If the pad return springs is damaged or deformed, replace the brake pad as an assembly.
- The upper and lower pad return springs are different. During installation, make sure the pad return springs are

	in the proper positions.

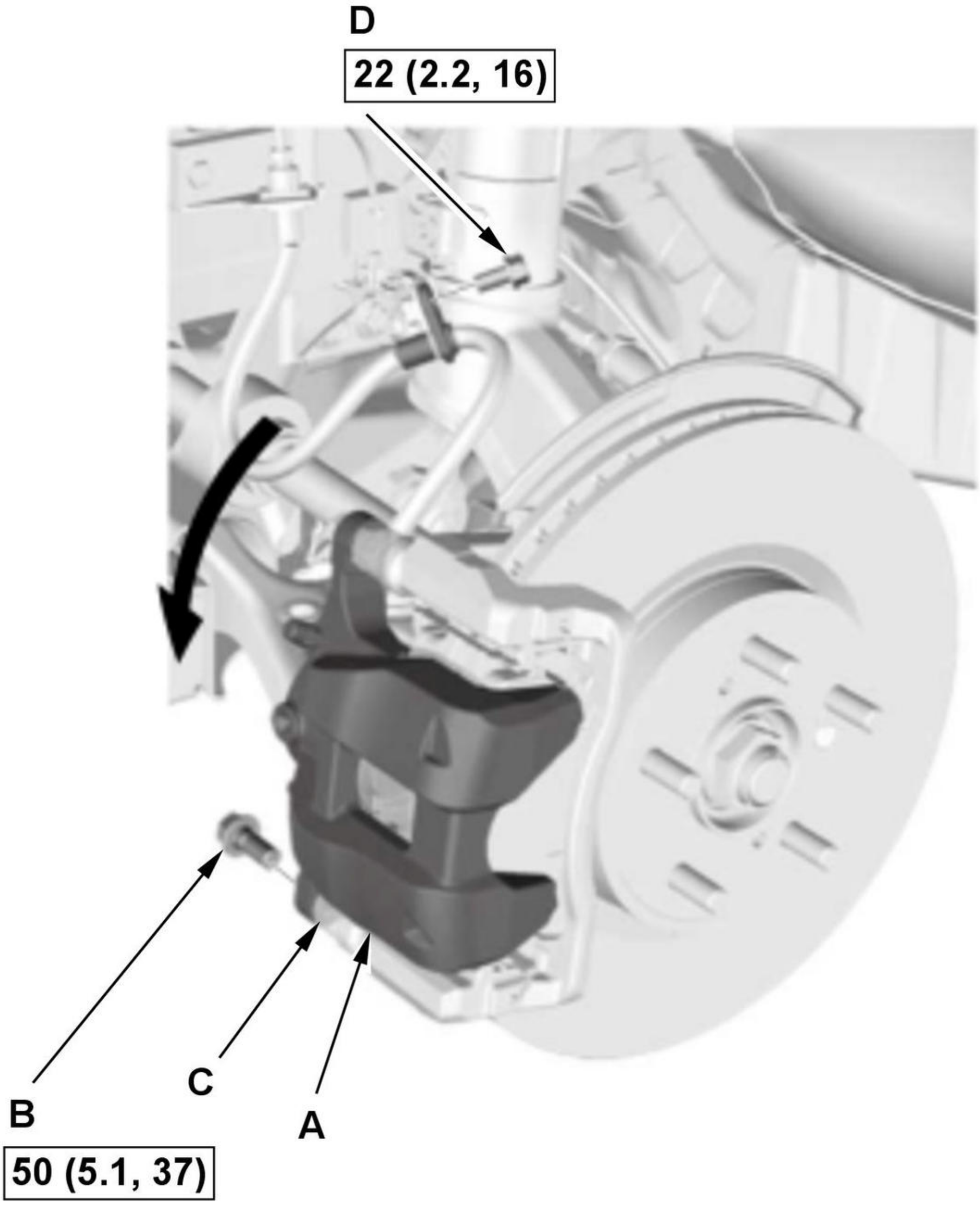

Fig. 2: Flange Bolt And Brake House Mounting Bolt With Torque Specifications
Courtesy of HONDA, U.S.A., INC.

B	10. Pivot the caliper body (A) down into position. 11. Install the flange bolt (B) while holding the caliper pin (C). **NOTE:** Be careful not to damage the pin boot. 12. Install the brake hose mounting bolt (D).

2. Front Wheels - Install
3. Brake Fluid - Refill

1. Press the brake pedal several times to make sure the brakes work. **NOTE:** Engagement may require a greater pedal stroke immediately after the brake pads have been replaced as a set. Several applications of the brake pedal will restore the normal pedal stroke.

2. Add brake fluid as needed.

Inspection

NOTE: **Review the Service Precautions before doing repairs or service**.

1. **Vehicle - Lift**
2. **Front Wheels - Remove**
3. Front Brake Pad - Inspect

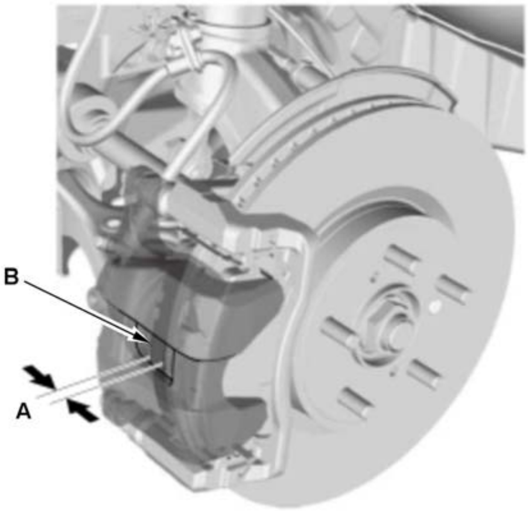 **Inner pad** **Outer pad** 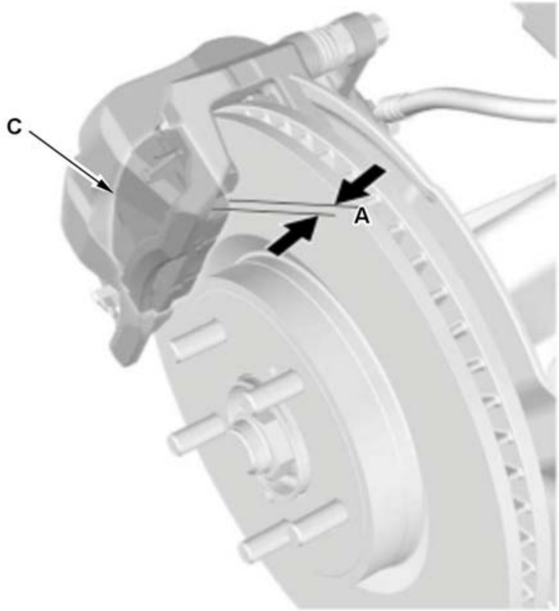	1. Check the thickness (A) of the inner pad (B) and the outer pad (C). Do not include the thickness of the backing plate. 2. If any part of the brake pad thickness is less than the service limit, replace the brake pads as a set.

Brake pad thickness:		
B	**Standard:**	**11.0 mm (0.433 in)**
B	**Service limit:**	**1.6 mm (0.063 in)**

4. **Front Wheels - Install**

REAR BRAKE DISC REMOVAL, INSTALLATION, AND INSPECTION

Removal and Installation

NOTE:

- **How to read the torque specifications** .
- **Review the Service Precautions before doing repairs or service**.

1. **Vehicle - Lift**
2. **Rear Wheel - Remove**
3. **Parking Brake - Release**

   NOTE: Only necessary if the automatic parking brake function is turned on.

4. Rear Brake Caliper - Remove

   1. **Remove the caliper assembly without disconnecting the brake hose from the caliper body** .

5. Brake Disc - Remove

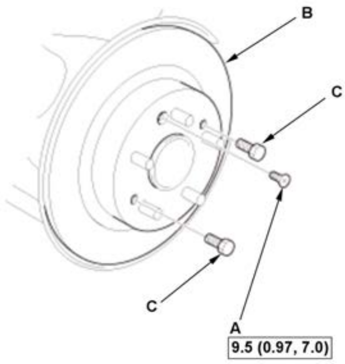	1. Remove the brake disc flathead screw (A). 2. Remove the brake disc (B). **NOTE:** If the brake disc is stuck to the hub bearing unit, thread two 8 x 1.25 mm bolts (C) into the brake disc to push it away from the hub bearing unit. Turn each bolt 90 degrees at a time to prevent the brake disc from binding.

6. All Removed Parts - Install

   1. Install all removed parts in the reverse order of removal.

7. Rear Brake Disc Runout - Inspect
8. Parking Brake - Adjust

   1. Turn the vehicle to the ON mode.

   2. Apply the parking brake, then press the brake pedal and release the parking brake.

   3. Turn the vehicle to the OFF (LOCK) mode.

Inspection

NOTE: **How to read the torque specifications** .

1. **Vehicle - Lift**
2. **Rear Wheels - Remove**
3. **Brake Pad - Remove**
4. Rear Brake Disc Thickness and Parallelism - Inspect

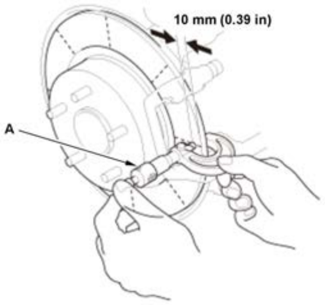

1. Using a micrometer (A), measure the brake disc thickness at eight points, about 45 deg. apart and 10 mm (0.39 in) in from the outer edge of the brake disc. Replace the brake disc if the smallest measurement is less than the maximum refinishing limit.

* This is the maximum allowable difference between the thickness measurements.

2. If the brake disc is beyond the service limit for parallelism, refinish the brake disc with a Honda-approved commercially available on-car brake lathe.

NOTE:

- If the brake disc is beyond the service limit for refinishing, replace it.
- For more information on Honda-approved brake lathes, refer to any authorized service information related brake disc refinishing (if available).

3. Inspect the brake disc runout.

Brake disc thickness:		
B	**Standard:**	**10.0 mm (0.394 in)**
B	**Maximum refinishing limit:**	**8.0 mm (0.315 in)**
Brake disc parallelism*:		**0.015 mm (0.00059 in) max.**

5. Rear Brake Disc Runout - Inspect

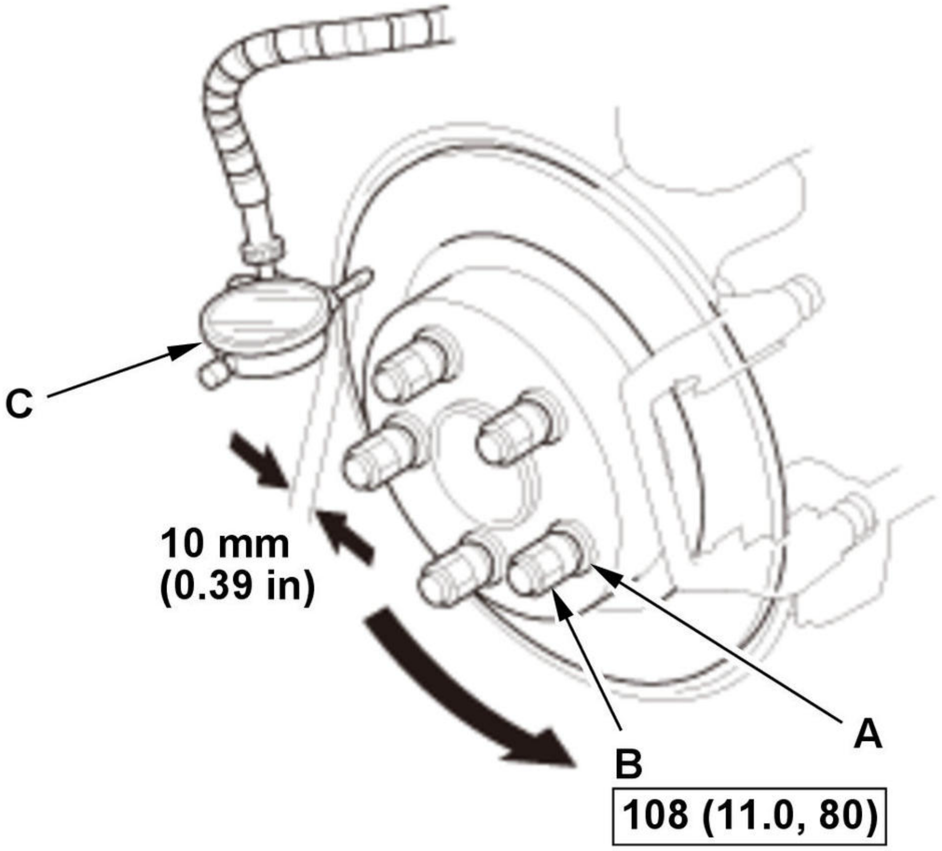

Fig. 3: Rear Wheel Nuts With Torque Specifications
Courtesy of HONDA, U.S.A., INC.

B	1. Inspect the brake disc to wheel surface for damage and cracks. 2. Clean the brake disc thoroughly, and remove all rust. 3. Install suitable flat washers (A) and the wheel nuts (B). 4. Tighten the wheel nuts to the specified torque to hold the brake disc securely against the hub. 5. Set up the dial gauge (C) against the brake disc as shown. 6. Measure the runout at 10 mm (0.39 in) from the outer edge of the brake disc. 7. If the brake disc is beyond the service limit, refinish the brake disc with a Honda-approved commercially available on-car brake lathe. **NOTE:** • If the brake disc is beyond the service limit for refinishing, replace it. • If the brake disc is replaced with a new one, check the new disc for runout. If the new disc is out of specification, refinish the disc. • For more information on Honda-approved brake lathes, refer to any authorized service information related brake disc refinishing (if available).

Maximum refinishing limit:	**8.0 mm (0.315 in)**

Brake disc runout:		
B	**Service limit:**	**0.04 mm (0.0016 in)**

6. Brake Pad - Install
7. Rear Wheels - Install

REAR BRAKE PAD REMOVAL, INSTALLATION, AND INSPECTION

Special Tools Required

Image	Description/Tool Number
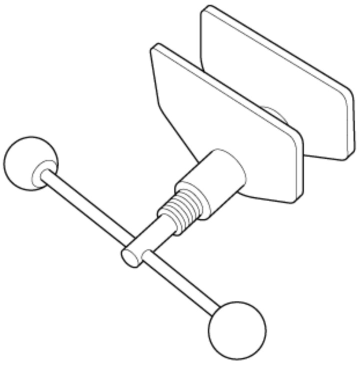	Brake Caliper Piston Compressor 07AAE-SEPA101

Removal

NOTE: Review the Service Precautions before doing repairs or service.

1. Brake Fluid - Remove

1. Remove some brake fluid from the reservoir.
2. Vehicle - Lift
3. Rear Wheels - Remove
4. Brake Caliper Piston - Enter the MAINTENANCE MODE

NOTE: If the HDS is not used, remove the electric parking brake actuator, and using a T45 TORX driver, turn the spindle clockwise until it comes to a lock .

1. Connect the HDS to the data link connector (DLC)

2. Select ADJUSTMENT from ABS/VSA menu with the HDS, then enter ENTER BRAKE PAD MAINTENANCE MODE from BRAKE PAD MAINTENANCE MODE, and follow the screen prompts. Make sure TRANSITION TO PAD EXCHANGE MODE HAS BEEN COMPLETED on the screen.

3. Turn the vehicle to the OFF (LOCK) mode.

5. Brake Pad - Remove

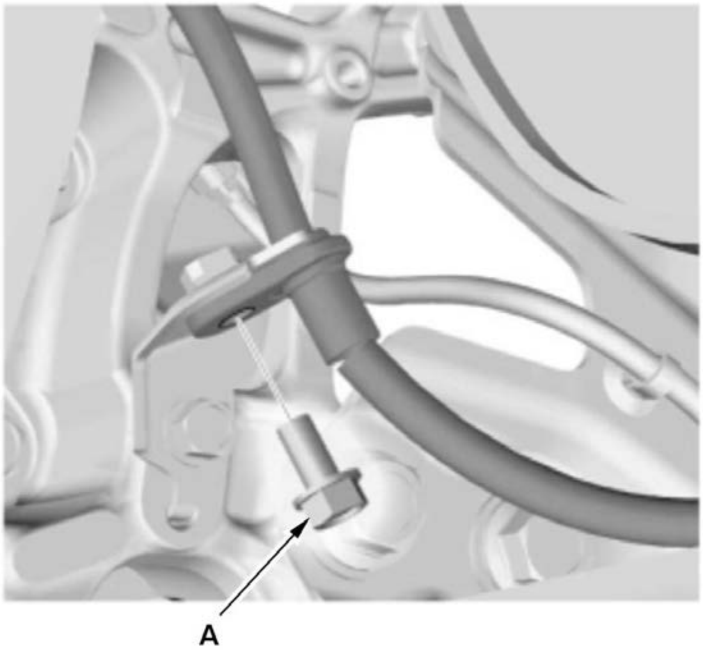	1. Remove the brake hose mounting bolt (A).

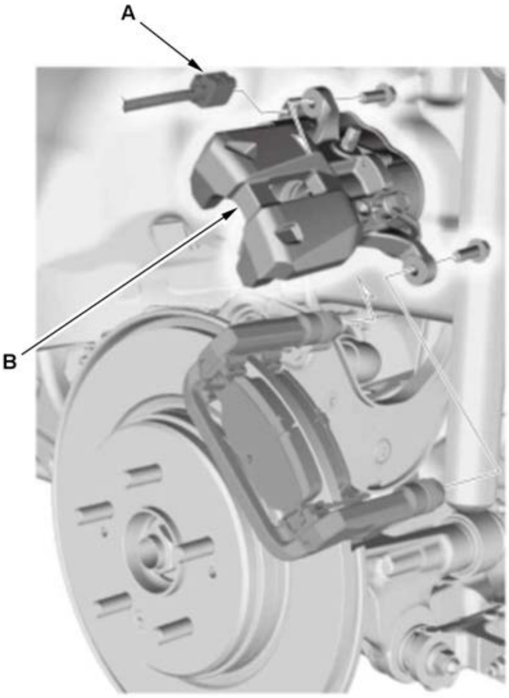	2. Disconnect the connector (A). **NOTE:** If the connector lock tab is difficult to release, push in on the connector body before pushing on the release lock. 3. Remove the caliper body (B). **NOTE:** Check the hose and the pin boots for damage and deterioration.
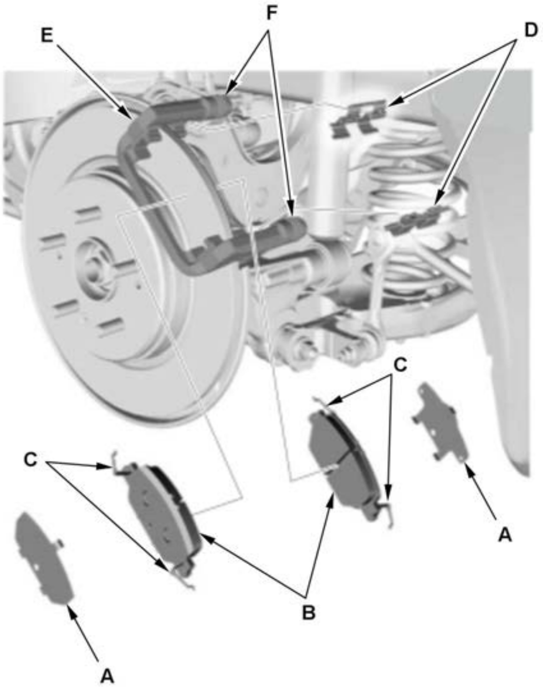	4. Remove the pad shims (A) and the brake pads (B). **NOTE:** Be careful not to damage or deform the pad return springs (C). 5. Remove the pad retainers (D). **NOTE:** The upper and lower pad retainers are different. During installation, make sure the pad retainers are in the proper positions. 6. Clean the caliper bracket (E) thoroughly; remove any rust, and check for grooves and cracks. 7. Verify that the caliper pins (F) move in and out smoothly. Clean and lube if needed.

6. **Brake Disc - Inspect**

Installation

NOTE:

- **How to read the torque specifications** .
- **Review the Service Precautions before doing repairs or service**.

1. Brake Caliper Piston - Return (Without Using the HDS)

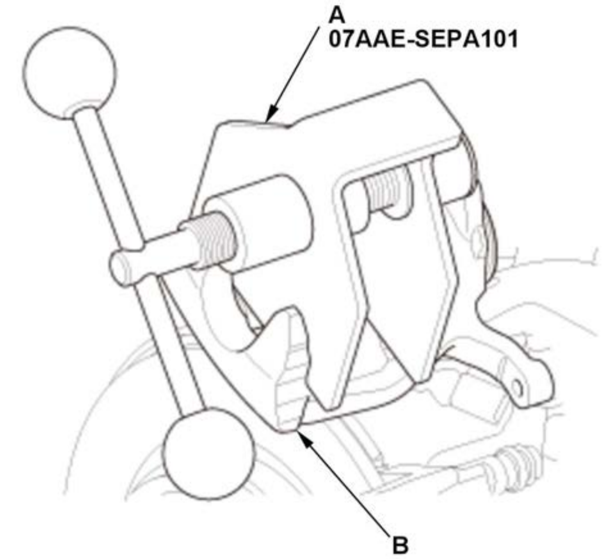	1. Install the brake caliper piston compressor tool (A) on the caliper body (B). 2. Press in the piston with the brake caliper piston compressor tool. 3. Remove the brake caliper piston compressor tool.

2. Brake Pad - Install

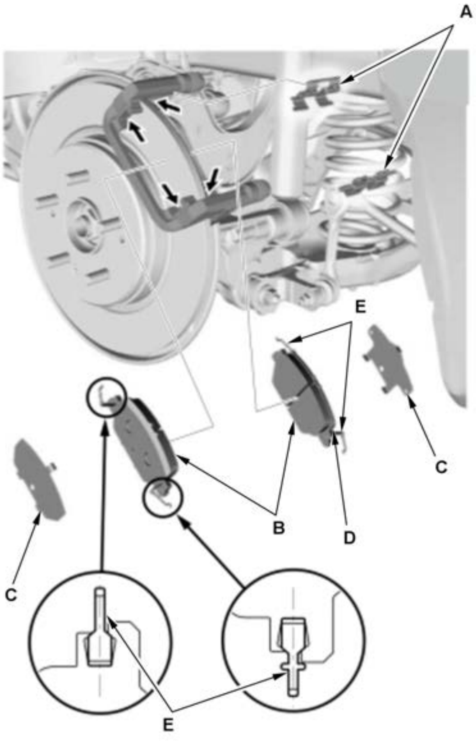	1. Apply a thin coat of M-77 assembly paste (P/N 08798-9010) to the retainer mating surface of the caliper bracket (indicated by the arrows). **NOTE:** Do not apply the assembly paste to area of unless otherwise specified. 2. Install the pad retainers (A). • The upper and lower pad retainers are different. During installation, make sure the pad retainers are in the proper positions. • If you are replacing the brake pads with new ones, also replace the pad retainers. • If the brake pads do not need to be replaced with new ones, check the retainer. If the retainer is not normal, replace it with a new one. 3. Wipe off the excess assembly paste from the retainers. Keep the assembly paste away from the brake disc and the brake pads. 4. Install the brake pads (B) and pad shims (C) correctly with the indicator (D) on the bottom inside position. **NOTE:** • If you are reusing the brake pads, always reinstall the brake pads in their original positions to prevent a temporary loss of braking efficiency. • Be careful not to damage or deform the pad return springs (E). If the pad return springs is damaged or deformed, replace the brake pad as an assembly.

	- The upper and lower pad return springs are different. During installation, make sure the pad return springs are in the proper positions.

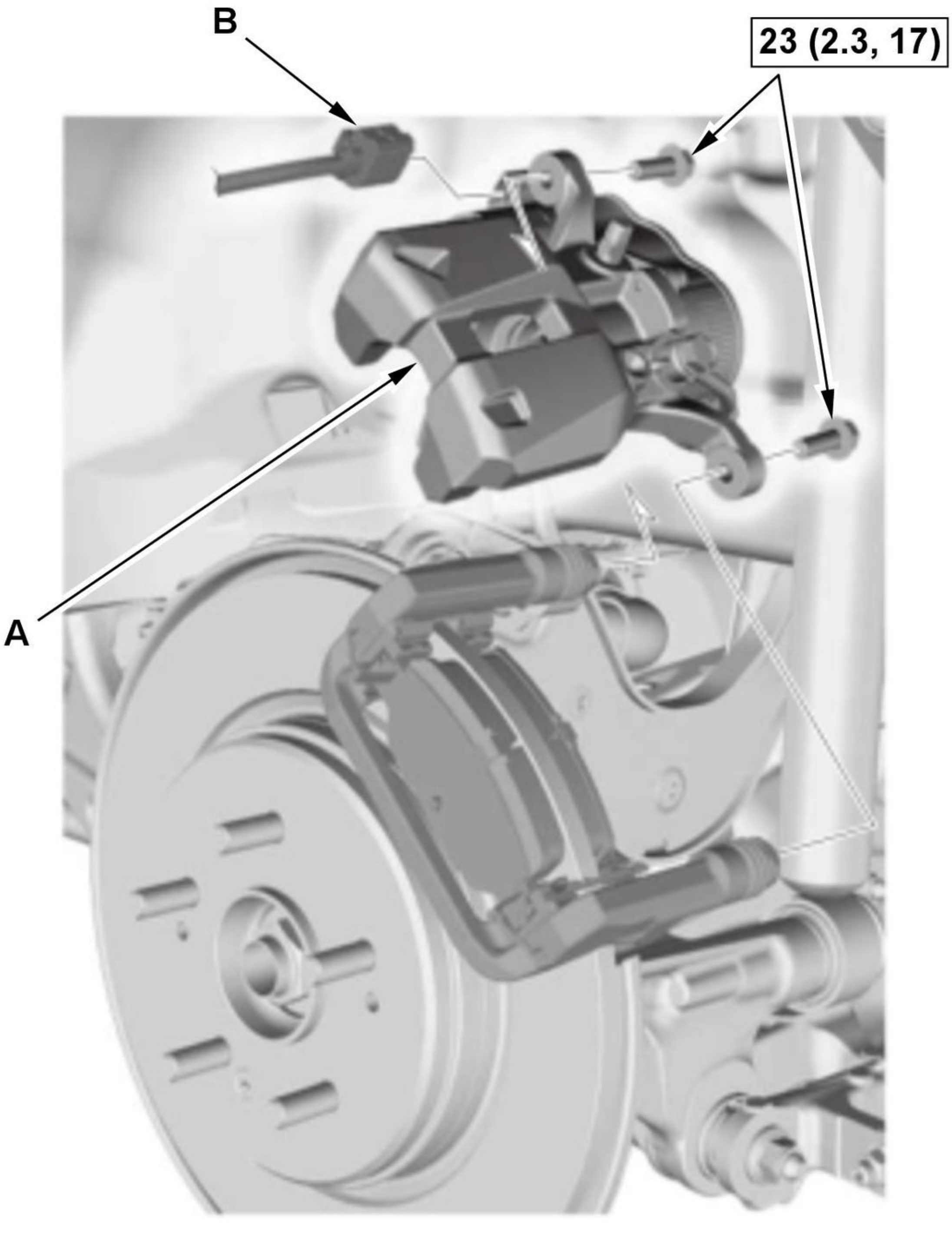

Fig. 4: Caliper Body With Torque Specifications
Courtesy of HONDA, U.S.A., INC.

B	5. Install the caliper body (A). 6. Connect the connector (B).

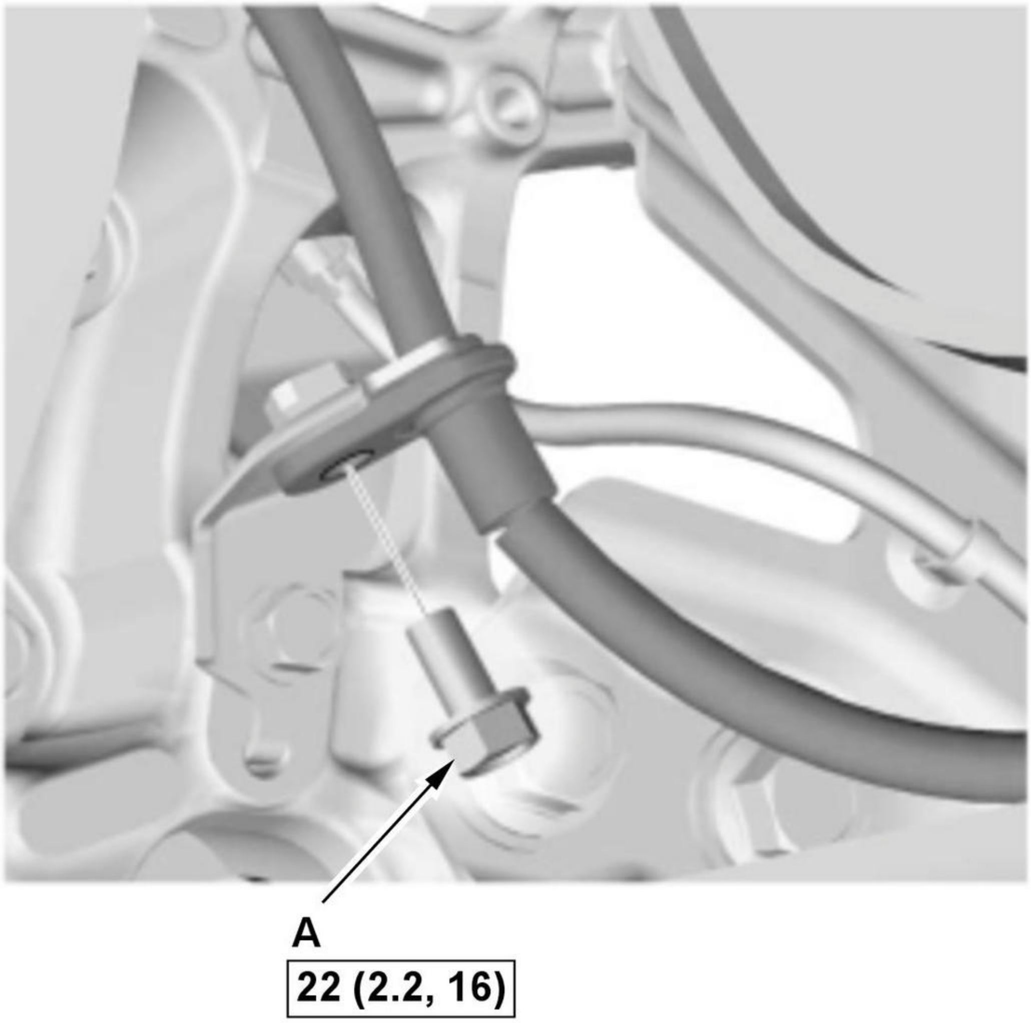

Fig. 5: Brake Hose Mounting Bolt With Torque Specifications
Courtesy of HONDA, U.S.A., INC.

B	7. Install the brake hose mounting bolt (A).

3. Brake Caliper Piston - Finish the MAINTENANCE MODE

NOTE: If the HDS was not used, **install the electric parking brake actuator** .

1. Turn the vehicle to the ON mode.

2. Select ADJUSTMENT from ABS/VSA menu with the HDS, then enter BACK TO NORMAL MODE from BRAKE PAD MAINTENANCE MODE, and follow the screen prompts. Make sure THIS FUNCTION PROCEDURE IS FINISHED on the screen, then press the enter button.

3. Turn the vehicle to the OFF (LOCK) mode.

4. **Rear Wheels - Install**
5. Brake Fluid - Refill

1. Add brake fluid as needed.

Inspection

NOTE: **Review the Service Precautions before doing repairs or service**.

1. Vehicle - Lift
2. Rear Wheels - Remove
3. Rear Brake Pad - Inspect

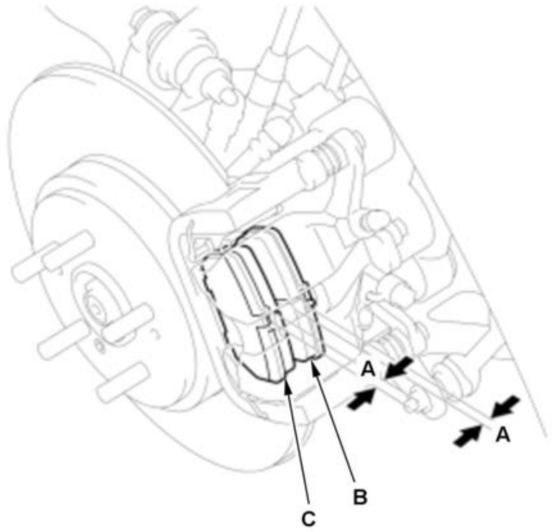	1. Check the thickness (A) of the inner pad (B) and the outer pad (C). Do not include the thickness of the backing plate. 2. If any part of the brake pad thickness is less than the service limit, replace the brake pads as a set.

Brake pad thickness:		
B	**Standard:**	**10.0 mm (0.394 in)**
B	**Service limit:**	**1.6 mm (0.063 in)**

4. Rear Wheels - Install

SYMPTOM TROUBLESHOOTING INDEX FOR VIEWER

BRAKE SYSTEM INDICATOR (AMBER) DOES NOT GO OFF

Diagnostic Procedure

- Check for PGM-FI DTCs .
- Check for VSA System DTCs .
- Check for VSA system symptom troubleshooting (ABS indicator, brake system indicator (red), VSA indicator, and brake system indicator (amber) do not go off) .
- Check for electric brake booster system DTCs.
- Check for electric brake booster system symptom troubleshooting (Brake system indicator (red) and brake system indicator (amber) do not go off).
- With ACC: Check for driving support system DTCs .
- Do the gauge control module self-diagnostic function .

BRAKE SYSTEM INDICATOR (RED) AND BRAKE SYSTEM INDICATOR (AMBER) DO NOT GO OFF

Diagnostic procedure

- Symptom troubleshooting.

BRAKE SYSTEM INDICATOR (RED) OR BRAKE SYSTEM INDICATOR (AMBER) DOES NOT COME ON AT START-UP (BULB CHECK)

Diagnostic procedure

- Do the gauge control module self-diagnostic function .

HDS DOES NOT COMMUNICATE WITH THE ELECTRIC BRAKE BOOSTER OR THE VEHICLE

Diagnostic procedure

- Troubleshoot the F-CAN circuit .

Also check for

Power and ground at the electric brake booster.

RAPID BRAKE PAD WEAR, VEHICLE VIBRATION (AFTER A LONG DRIVE), OR HIGH, HARD BRAKE PEDAL

Diagnostic Procedure

- Symptom Troubleshooting.

2020-21 Brakes

Brake System Service Specifications - CR-V

STANDARDS AND SERVICE LIMITS (2020-21)

BRAKES

Item	Measurement	Qualification	Standard or New	Service Limit
Brake pedal	Height from floor	B	215 +/- 5 mm (8.46 +/- 0.20 in)	
	Free play	B	2.7-8.2 mm (0.106-0.323 in)	-
Brake disc	Thickness	Front	25.0 mm (0.984 in)	23.0 mm (0.906 in)
		Rear	10.0 mm (0.394 in)	8.0 mm (0.315 in)
	Runout	B	-	0.04 mm (0.0016 in)
	Parallelism	B	-	0.015 mm (0.00059 in)
Brake pad	Thickness	Front	11.0 mm (0.433 in)	1.6 mm (0.063 in)
		Rear	10.0 mm (0.394 in)	1.6 mm (0.063 in)
Brake fluid	Fluid type (except Ecuador)	B	Brake Fluid DOT3	
	Fluid type (Ecuador)	B	Brake Fluid DOT3 or DOT4	

2020-22 BRAKES

Brakes Service Specifications - CR-V (Hyrbid)

BRAKES

Item	Measurement	Qualification	Standard or New	Service Limit
Brake pedal	Height from floor	B	215 +/- 5 mm (8.46 +/- 0.20 in)	
	Free play	B	8.1-15.8 mm (0.319-0.622 in)	-
Brake disc	Thickness	Front	28.0 mm (1.102 in)	26.0 mm (1.024 in)
		Rear	10.0 mm (0.394 in)	8.0 mm (0.315 in)
	Runout	B	-	0.04 mm (0.0016 in)
	Parallelism	B	-	0.015 mm (0.00059 in) max.
Brake pad	Thickness	Front	12.0 mm (0.472 in)	1.6 mm (0.063 in)
		Rear	10.0 mm (0.394 in)	1.6 mm (0.063 in)
Brake fluid	Fluid type	B	We recommend genuine Honda DOT 3	

2017-22 BRAKES

Electric Parking Brake - Troubleshooting - Introduction - CR-V

HOW TO INFORMATION

HOW TO TROUBLESHOOT THE ELECTRIC PARKING BRAKE SYSTEM

Control Unit

The vehicle is equipped with the electric parking brake and the system is controlled by the VSA modulator-control unit.

NOTE: For DTCs of the electric parking brake system, please check from the ABS/TCS/VSA menu in the HDS.

System Indicator

This system has two indicators on the gauge control module.

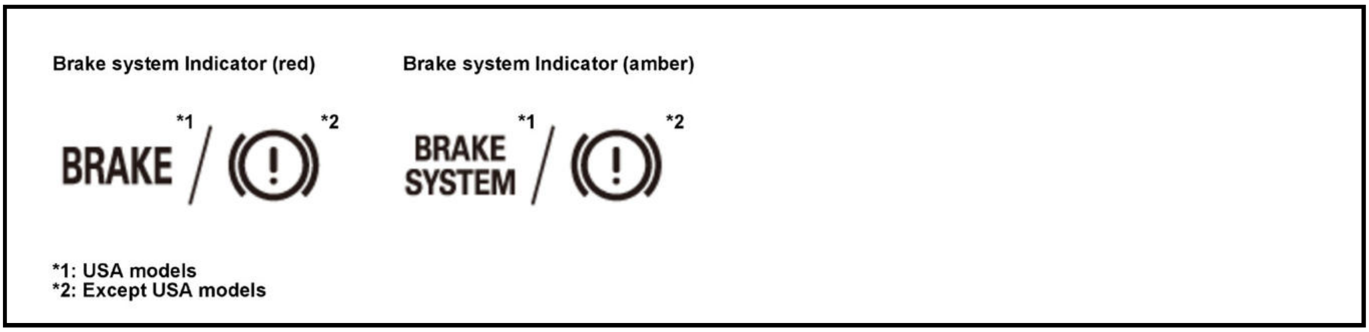

NOTE: For locations of each indicator, refer to gauge control module component location index .

When the system is OK, each indicator comes on for about 2 seconds after turning the vehicle to the ON mode, then it goes off. If the parking brake is applied, the brake system indicator (red) is still ON.

Brake System Indicator (Amber)

- The brake system indicator (amber) comes on when the electric parking brake function is lost.
- The brake system indicator (amber) will also illuminate when the HDS maintenance mode is enabled.

Brake System Indicator (Red)

- The brake system indicator (red) comes on when the electric parking brake is applied.
- The brake system indicator (red) blinks when the electric parking brake function is lost.

Diagnostic Trouble Code (DTC)

- The memory can hold 10 DTCs. However, when the same DTC is detected more than once, the more recent DTC is written over the earlier one. Therefore, when the same problem is detected repeatedly, it is memorized as a single DTC.
- The DTCs are indicated in ascending order, not in the order they occurred.
- The DTCs are memorized in an EEPROM in the VSA modulator-control unit. Therefore, the memorized DTCs cannot be erased by disconnecting the 12 volt battery. Do the specified procedures to clear the DTCs.

Self-Diagnosis

- Self-diagnosis can be classified into two categories:
-

  - -

    Initial diagnosis: Done right after turning the vehicle to the ON mode and until the brake system indicator (amber) goes off.

-
  - -

    Regular diagnosis: Done right after the initial diagnosis until turning the vehicle to the OFF (LOCK) mode.

- When the system detects a problem, the VSA modulator-control unit shifts to fail-safe mode.

Electric Parking Brake Actuator

- The electric parking brake actuator operates when the parking brake applies or releases.
- The parking brake motor can be heard at the rear wheels when the parking brake is applied or released, this is normal.

Electric Parking Brake Forced Cancellation

- When the electric parking brake system has malfunction and parking brake cannot be released, you can release parking brake by doing forced cancellation procedure.
- Before doing electric parking brake forced cancellation, check for electric parking brake system DTCs with the HDS. If any DTCs are indicated, do the indicated DTC's troubleshooting and repair the cause for DTC first.
- If the electric parking brake switch fails, switch operation will be disabled and the manual release is not possible. However, depending on the malfunction, you may be able to release the parking brake by following procedures.
-
  - Buckle the driver's seat belt.
  - Start the engine.
  - Shift the transmission to D or R position/mode.
  - Slowly press the accelerator pedal.

Brake Pad Maintenance Mode

When replacing the rear brake pad, it is necessary to enter the maintenance mode with the HDS.

How to Troubleshoot DTCs

The troubleshooting procedures assume that the cause of the problem is still present and the brake system indicator (amber) is still on. Following a troubleshooting procedure for a DTC that has been cleared but does not reset can result in incorrect diagnosis.

1. Question the customer about the conditions when the problem occurred, and try to reproduce the same conditions for troubleshooting. Find out when the brake system indicator (amber) came on, such as during activation, after activation, when the vehicle was traveling at a certain speed, etc. If necessary, have the customer demonstrate the concern.

2. When the brake system indicator (amber) does not come on during the test-drive, but troubleshooting is done based on the DTC, check for loose connectors, poor contact of the terminals, etc. in the circuit indicated by the DTC.

3. After troubleshooting or the repairs are done, clear the DTCs, and test-drive the vehicle under the same conditions that originally set the DTCs. Make sure the brake system indicator (amber) does not come on.

Intermittent Failures

The term "intermittent failure" means a system may have had a failure, but it checks OK now. If you cannot reproduce the condition, check for loose connections and terminals. Also check ground and power connections related to the circuit that you are troubleshooting.

How to Use the HDS (Honda Diagnostic System)

NOTE: Make sure the 12 volt battery is in good condition and fully charged.

1. If the system indicator(s) stay on, **connect the HDS to the data link connector (DLC)**

2. Turn the vehicle to the ON mode.

3. Make sure the HDS communicates with the vehicle. If it does not, **go to the F-CAN circuit troubleshooting** .

4. Check the diagnostic trouble code (DTC) for all systems, troubleshoot the powertrain DTCs first. Then refer to the indicated DTC's troubleshooting, and do the appropriate troubleshooting procedure.

NOTE:

- The HDS can read the DTC, the freeze data, the current data, and other system data.
- For specific operations, refer to the Help menu that came with the HDS.

How to Retrieve DTCs

1. With the vehicle in the OFF (LOCK) mode, **connect the HDS to the data link connector (DLC)**

2. Turn the vehicle to the ON mode.

3. Make sure the HDS communicates with the vehicle. If it does not, **go to the F-CAN circuit troubleshooting**

4. Follow the prompts on the HDS to display the DTC(s) on the screen. After determining the DTC, refer to the DTC troubleshooting. Do the all systems DTC check, and troubleshoot any powertrain DTCs first.

5. Turn the vehicle to the OFF (LOCK) mode.

How to Clear DTCs

1. With the vehicle in the OFF (LOCK) mode, **connect the HDS to the data link connector (DLC)**

2. Turn the vehicle to the ON mode.

3. Make sure the HDS communicates with the vehicle. If it does not, **go to the F-CAN circuit troubleshooting**

4. Clear the DTC(s) by following the screen prompts on the HDS.

5. Turn the vehicle to the OFF (LOCK) mode.

REMOVAL & INSTALLATION TEST

ELECTRIC PARKING BRAKE SWITCH REMOVAL, INSTALLATION, AND TEST

Removal and Installation

1. Shift Lever Panel - Remove
2. Electric Parking Brake Switch - Remove

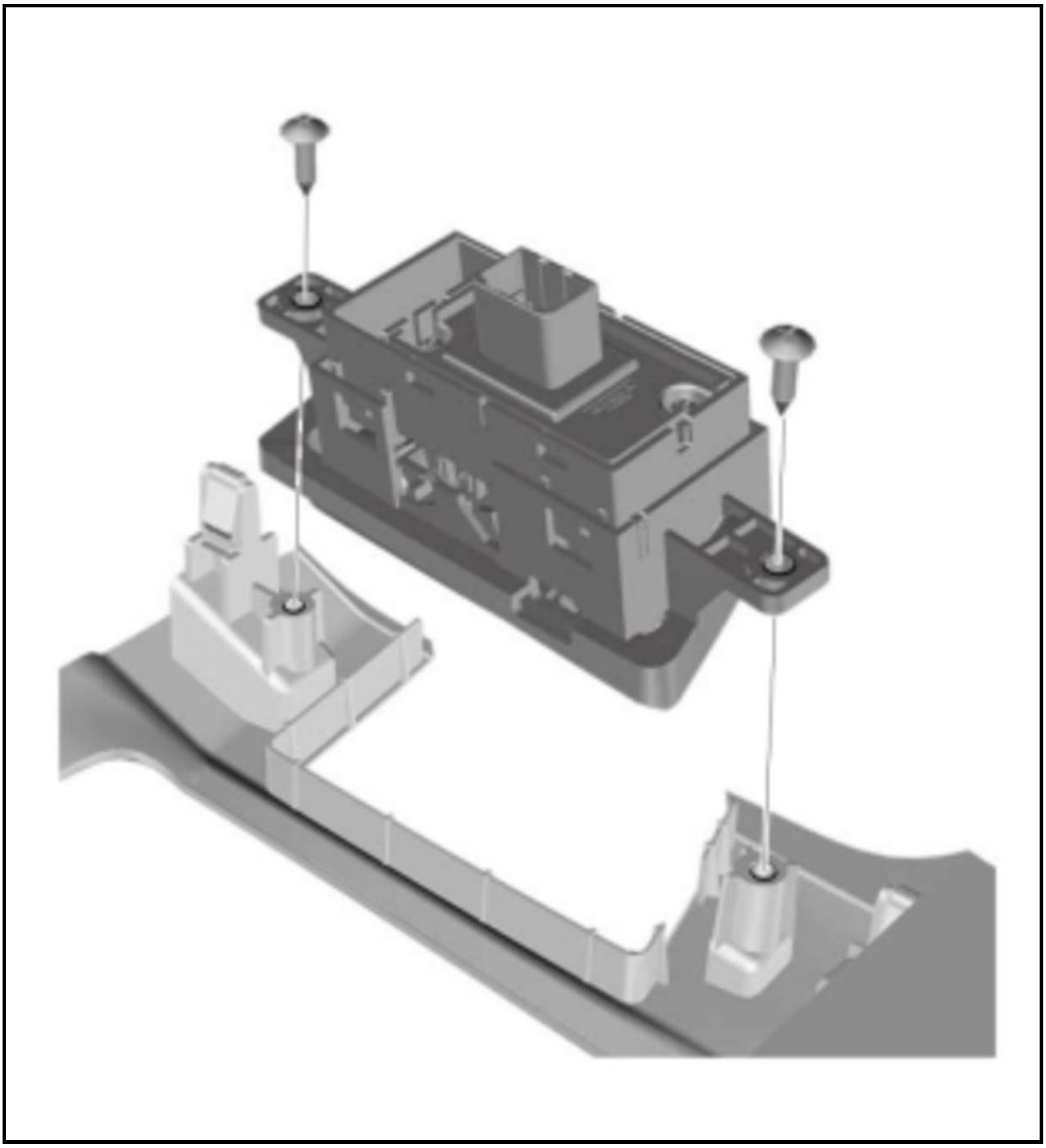

3. All Removed Parts - Install

1. Install all removed parts in the reverse order of removal.

Test

1. Electric Parking Brake Switch - Test

1. On the switch side, check for continuity between the connector terminals in each switch position according to the table.

Electric parking brake/automatic brake hold switch 12P connector (male terminals)

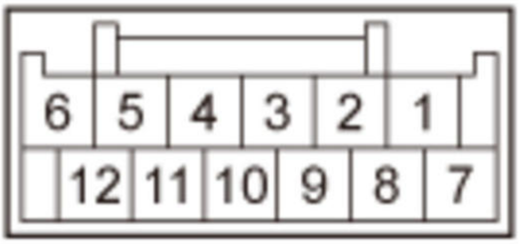

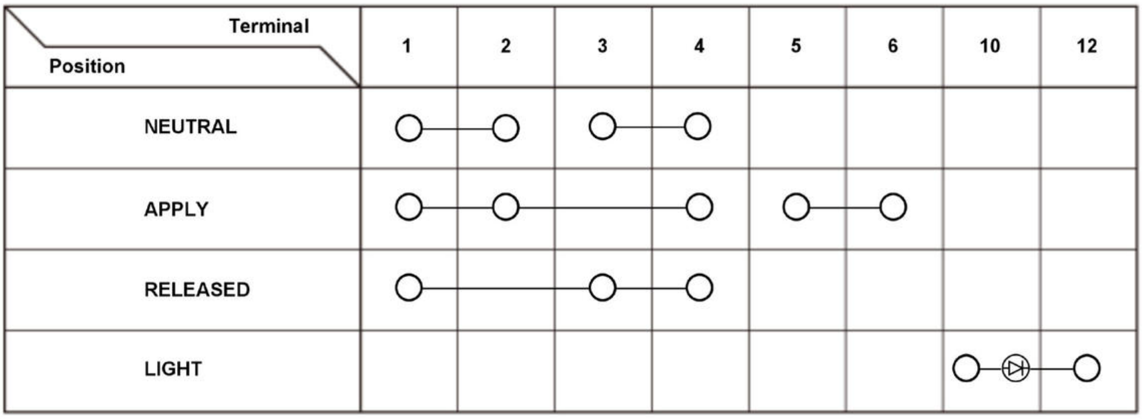

Terminal / Position	1	2	3	4	5	6	10	12
NEUTRAL	○—	○	○—	○				
APPLY	○—	○—	—	○	○—	○		
RELEASED	○—	—	○—	○				
LIGHT							○—⊳|—	○

2. If the switch does not work as described in the table, replace the switch.

REMOVAL AND INSTALLATION

ELECTRIC PARKING BRAKE ACTUATOR REMOVAL AND INSTALLATION

Removal and Installation

NOTE: How to read the torque specifications .

1. Vehicle - Lift
2. Rear Wheel - Remove
3. Electric Parking Brake Actuator - Remove

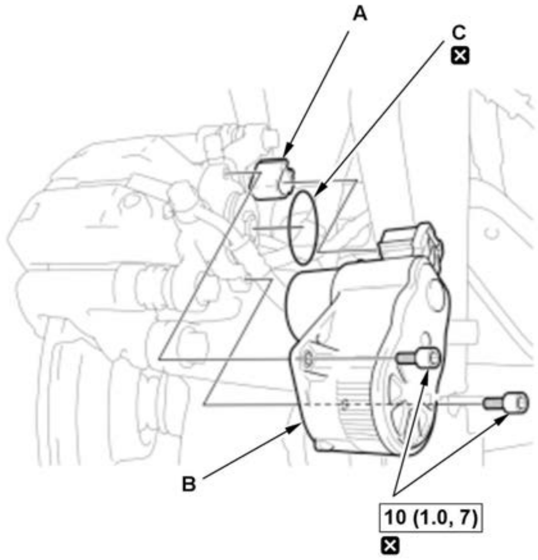	1. Disconnect the connector (A). **NOTE:** **If the connector lock tab is difficult to release, push in on the connector body before pushing on the release lock.** 2. Remove the electric parking brake actuator (B). **NOTE:** **Use new mounting screws during reassembly.** 3. Remove the O-ring (C). - Replace the O-ring whenever the electric parking brake actuator is removed. - When installing the actuator, make sure there is no foreign matter on the mating surfaces and the O-ring.

4. All Removed Parts - Install

1. Install all removed parts in the reverse order of removal.

5. Electric Parking Brake Actuator After Install - Check

1. Turn the vehicle to the ON mode.

2. Apply and release the parking brake 2 times, then make sure that the brake system indicator (red) goes OFF.

NOTE:

If the brake system indicator (red) does not go OFF, check for a poor connection at the electric

parking brake actuator connector. 3. Turn the vehicle to the OFF (LOCK) mode.

DESCRIPTION & OPERATION

ELECTRIC PARKING BRAKE SYSTEM DESCRIPTION

Overview

The electric parking brake system replaces the traditional parking brake pedal or lever and linkage with an electrically controlled parking brake mechanism in the rear calipers. This reduces driver effort and provides additional features such as:

- Simple electric switch operation
- Parking brake release upon acceleration
- Automatic rollaway prevention

The system is controlled by the VSA modulator-control unit.

The electric parking brake system consists of the following primary components:

- VSA modulator-control unit
- Electric parking brake actuators
- Electric parking brake switch
- System indicator

For locations of each component on the vehicle, refer to Component Location Index, and for functions of the indicator, refer to How to Troubleshoot the Electric Parking Brake .

Function

The electric parking brake system has following functions.

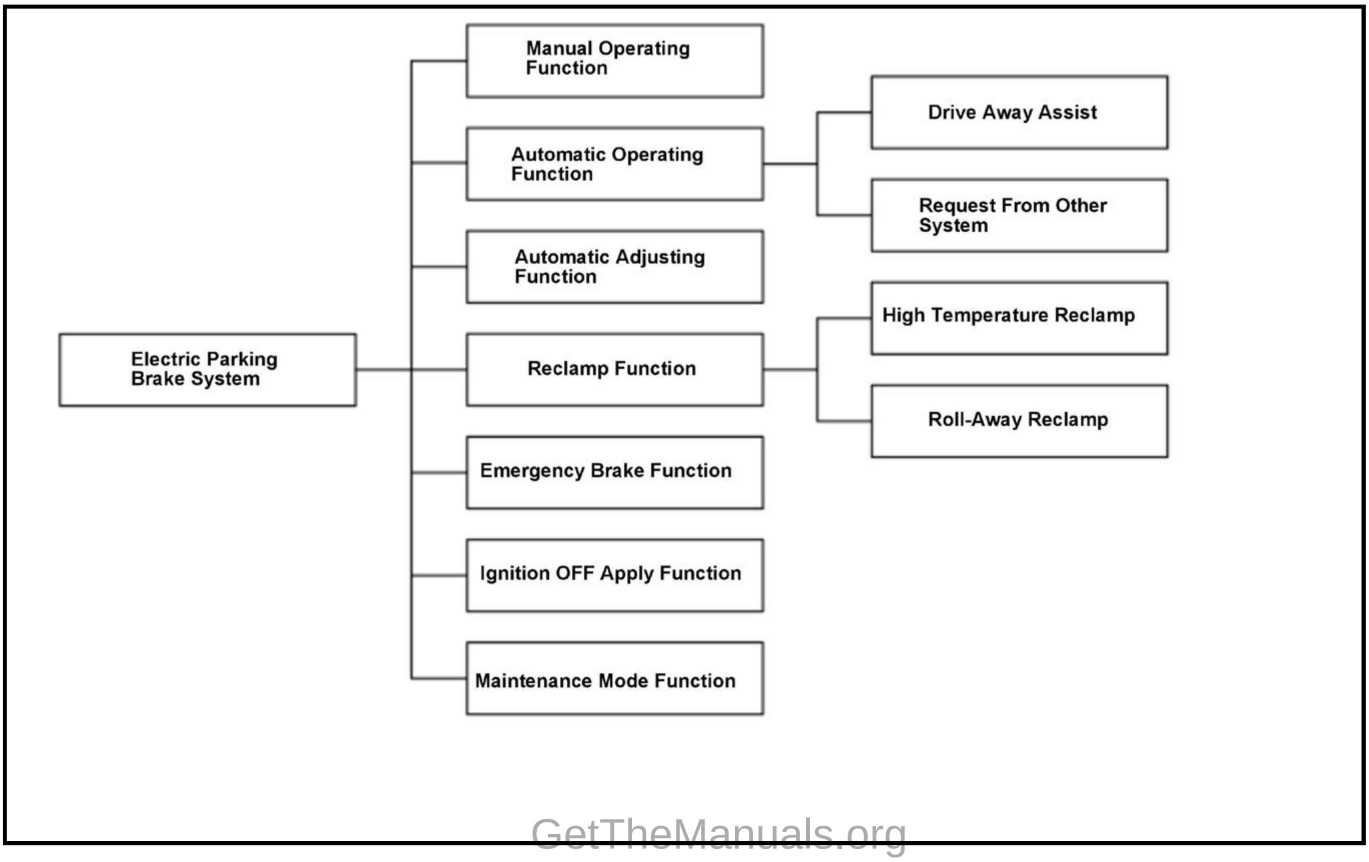
Electric Parking Brake System
Manual Operating Function
Automatic Operating Function
Automatic Adjusting Function
Reclamp Function
Emergency Brake Function
Ignition OFF Apply Function
Maintenance Mode Function
Drive Away Assist
Request From Other System
High Temperature Reclamp
Roll-Away Reclamp

Manual Operating Function

The electric parking brake can be manually applied and released using the switch. Pulling up on the electric parking brake switch applies the parking brake. Firmly applying the brake pedal and pushing down on the electric parking brake switch releases it.

Automatic Operating Function - Drive Away Assist

When using the automatic brake hold function, the electric parking brake is released automatically when the vehicle is driven away from a stop with the driver's seat belt buckled. Problems in the electric parking brake switch circuits do not affect automatic apply and release.

Automatic Operating Function - Request From Other System

While the electric brake booster system is preventing vehicle movement during automatic brake hold control, the electric parking brake system may operate automatically. This will occur after a specific time period has elapsed based on commands sent from the electric brake booster.

Automatic Adjusting Function

Because the parking brake is automatically adjusted whenever applying the parking brake, the electric parking brake needs no adjustment. And, if the vehicle is driven 625 miles (1, 000 km) without applying the parking brake, the parking brake is automatically applied and released while vehicle is at a short stop, and adjusts the remaining brake pads.

Reclamp Function - High Temperature Reclamp

Brake disc temperature is calculated from the vehicle's kinetic energy as it stops, because loss of clamping force can occur when brake system components contract as they cool. If the calculated brake temperature exceeds a predetermined threshold, the high temperature reclamp function reapplies the electric parking brake actuators after a cool-down time has elapsed to compensate for any loss of clamping force. In order to accommodate this function, the VSA modulator-control unit may be kept on for a period of time after the turning the vehicle to the OFF (LOCK) mode. Depending on when high temperature reclamp occurs, the driver may notice the motor noise.

Reclamp Function - Roll-Away Reclamp

The roll-away reclamp function reapplies the parking brake if wheel movement is detected after the electric parking brake is applied.

Emergency Brake Function

In an emergency situation, such as a failure of the conventional brake system, the electric parking brake system performs the emergency brake function by activating the electric parking brake switch continuously. There are two controls depending on the state of the VSA system.

In cases where the VSA system can perform the pressure adding control:

The electric parking brake system sends the brake control request to the VSA system which applies the emergency brake using the pressure adding control.

In cases where the VSA system can not perform the pressure adding control:

The electric parking brake system controls the electric parking brake actuator so that the wheels do not lock, and applies the emergency brake instead of the VSA system. However, if the wheel speed signal is abnormal, the anti-lock control is not perform.

Ignition OFF Apply Function

The electric parking brake system can apply the parking brake automatically when the vehicle is turned to the OFF (LOCK) mode based on customer preferences. It may be necessary to temporarily cancel this function in certain service procedures. **Refer to How To Temporarily Cancel Automatic Electric Parking Brake**. For more information on how to turn on or off the automatic parking brake function, refer to the owner's manual.

Maintenance Mode

The electric parking brake system has a brake pad maintenance mode functional test. This test fully releases the parking brake mechanism so that brake service, such as rear pad replacement, can be done. Maintenance mode can be activated by the HDS.

ELECTRIC PARKING BRAKE SYSTEM DESCRIPTION - COMPONENTS

Electric Parking Brake Actuator

The electric parking brake actuator has a built-in DC motor. When the motor operates, the motor's speed is reduced by the drive screw mechanism, increasing torque. The spindle and the nut inside the caliper piston force it outward to generate brake pad clamping force. The electric parking brake actuators are automatically adjusted to compensate for brake pad wear, so no parking brake adjustment is necessary.

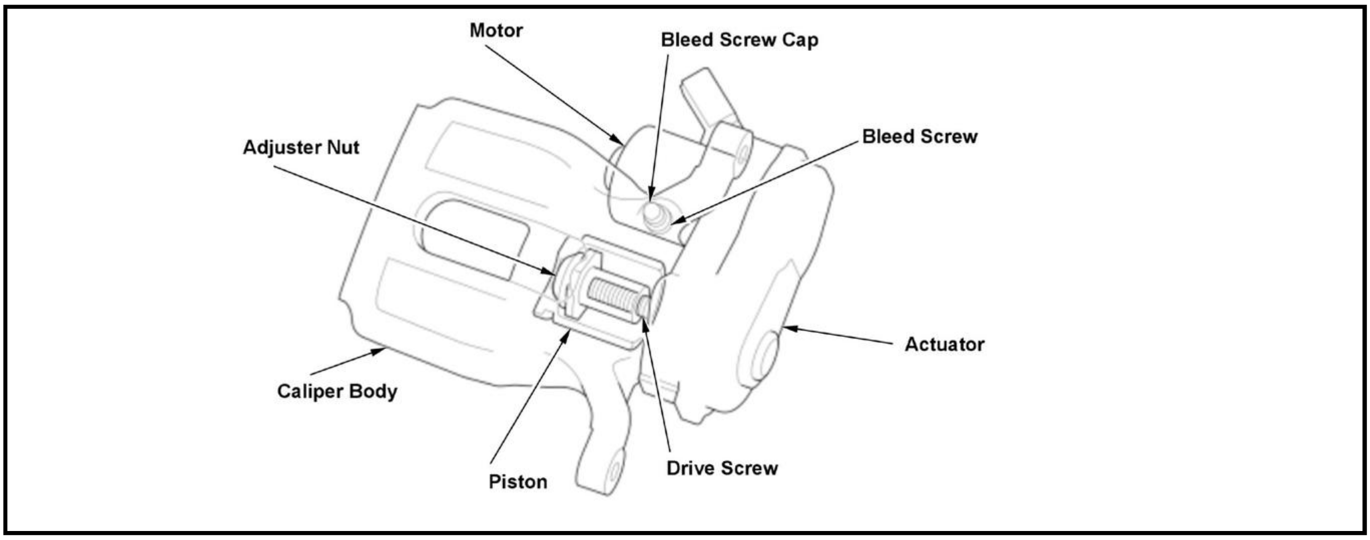

When the electric parking brake system has a malfunction and the parking brake cannot be released, you can release the parking brake by doing the forced cancellation procedure. **Refer to the forced cancellation procedure**.

Electric Parking Brake Switch

The electric parking brake switch is connected to the VSA modulator-control unit using four separate circuits. The control unit must see the correct voltage patterns on all 4 circuits, or the switch will be disabled and a DTC will be set.

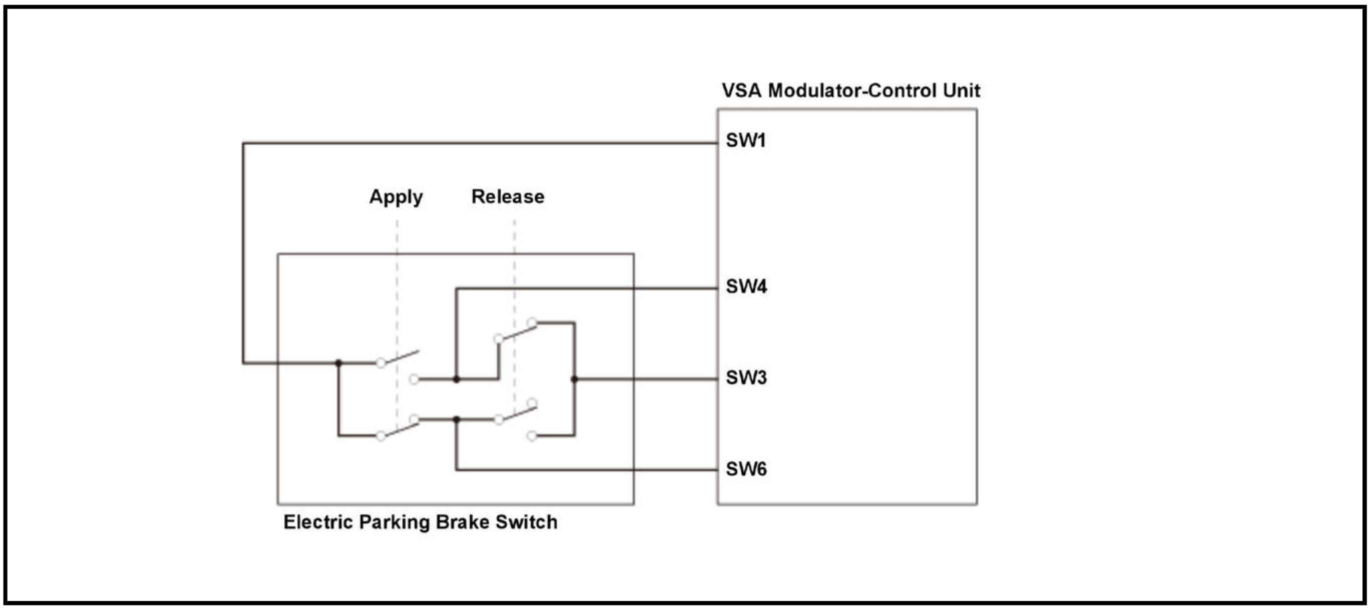
VSA Modulator-Control Unit
SW1
Apply
Release
SW4
SW3
SW6
Electric Parking Brake Switch

ELECTRIC PARKING BRAKE SYSTEM DESCRIPTION - SYSTEM DIAGRAM

This system diagram shows the inputs and outputs of the electric parking brake system.

For locations of each component on vehicle, refer to Component Location Index:

- VSA modulator-control unit, Wheel speed sensor
- Electric parking brake switch, Electric parking brake actuator
- PCM
- TCM (L15BE engine)
- Gauge control module
- SRS unit
- Electric brake booster
- Millimeter wave radar (With ACC)

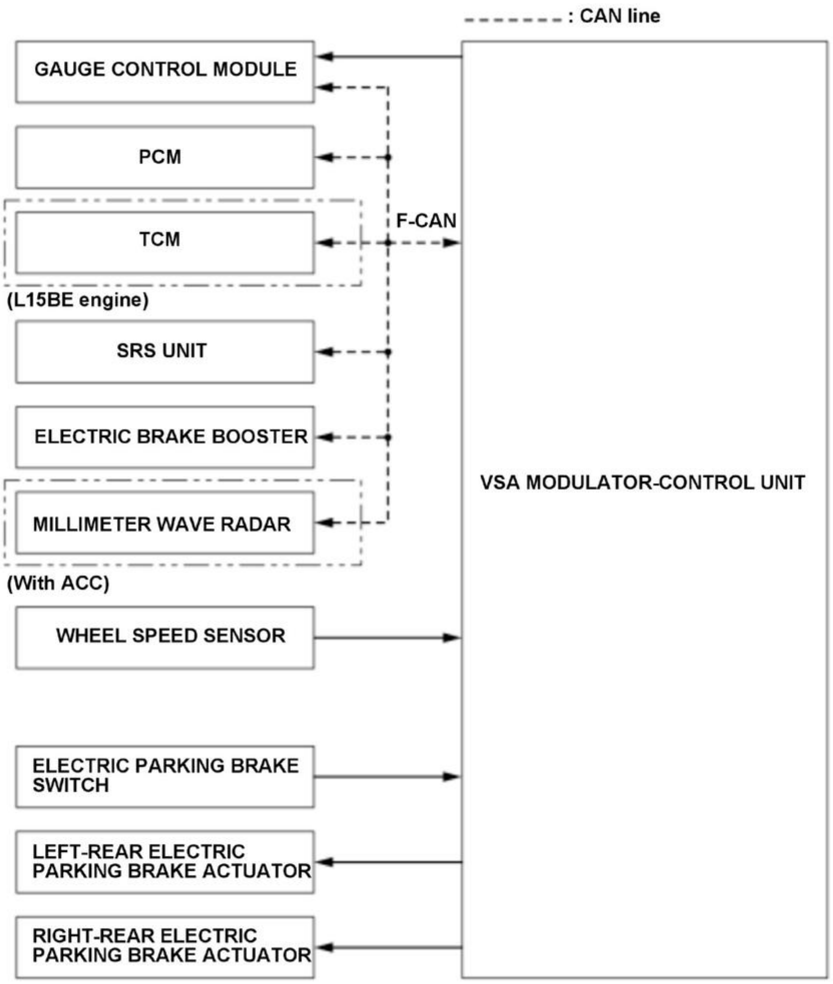
: CAN line
GAUGE CONTROL MODULE
PCM
TCM
(L15BE engine)
F-CAN
SRS UNIT
ELECTRIC BRAKE BOOSTER
MILLIMETER WAVE RADAR
(With ACC)
VSA MODULATOR-CONTROL UNIT
WHEEL SPEED SENSOR
ELECTRIC PARKING BRAKE SWITCH
LEFT-REAR ELECTRIC PARKING BRAKE ACTUATOR
RIGHT-REAR ELECTRIC PARKING BRAKE ACTUATOR

F-CAN Communication Data

Electric Parking Brake System Receiving Signal

Transmitting Unit	Signal Name
PCM	• Accelerator pedal position signal • Engine speed signal • Engine torque signal

*1: L15BE engine

*2: With ACC

Transmitting Unit	Signal Name
TCM* 1	• Shift position signal
Gauge control module	• Odometer data
SRS unit	• Driver's seat belt buckle switch status • Longitudinal acceleration signal
Electric brake booster	• Parking brake apply request signal

Transmitting Unit	Signal Name
Millimeter wave radar *2	- Parking brake apply request signal

*1: L15BE engine

*2: With ACC

Electric Parking Brake System Transmitting Signal

Transmitting Unit	Signal Name
VSA modulator-control unit	- Indicator drive signal - Parking brake status signal - System operating status signal - System failure Information

RESET PROCEDURE

ELECTRIC PARKING BRAKE SYSTEM FORCED CANCELLATION

Procedure

NOTE: Forced cancellation is performed when the system is abnormal and the parking brake cannot be released.

1. Vehicle - Lift
2. Rear Wheel - Remove
3. Electric Parking Brake Actuator - Remove
4. Parking Brake - Forced Cancel

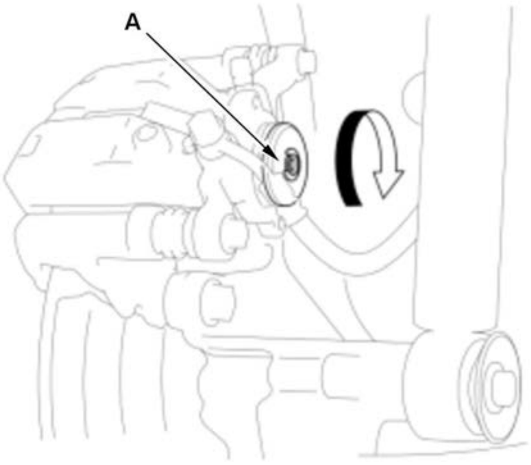	1. Using a TORX driver, turn the spindle shaft (A) clockwise until parking brake is released.

GENERAL INFORMATION

HOW TO TEMPORARILY CANCEL AUTOMATIC ELECTRIC PARKING BRAKE

Procedure

NOTE:

- The electric parking brake on this vehicle has the ability to apply itself once the vehicle is turned to the OFF (LOCK) mode based on the customer's preferences. During certain service procedures, it may be necessary to turn off this function temporarily.
- Refer to the owner's manual for more information on how to turn on or off the automatic parking brake function.

For more information, **refer to the Electric Parking Brake System Description**.

1. Temporary Cancellation

> **NOTE:** Before doing this procedure, turn off the ACC function (if equipped) and the automatic brake hold function.
>
> 1. Park the vehicle with the vehicle in the ON mode.
>
> 2. Turn the vehicle to the OFF (LOCK) mode, then within 2 seconds pull up the electric parking brake switch.

COMPONENT LOCATION INDEX

CONVENTIONAL BRAKE COMPONENT LOCATION INDEX (WITH ELECTRIC BRAKE BOOSTER TYPE A) (2017 2018 2019)

There are two types of electric brake boosters (type A or B) that can be differentiated visually.
Make sure which booster type is equipped before doing any repairs or service.

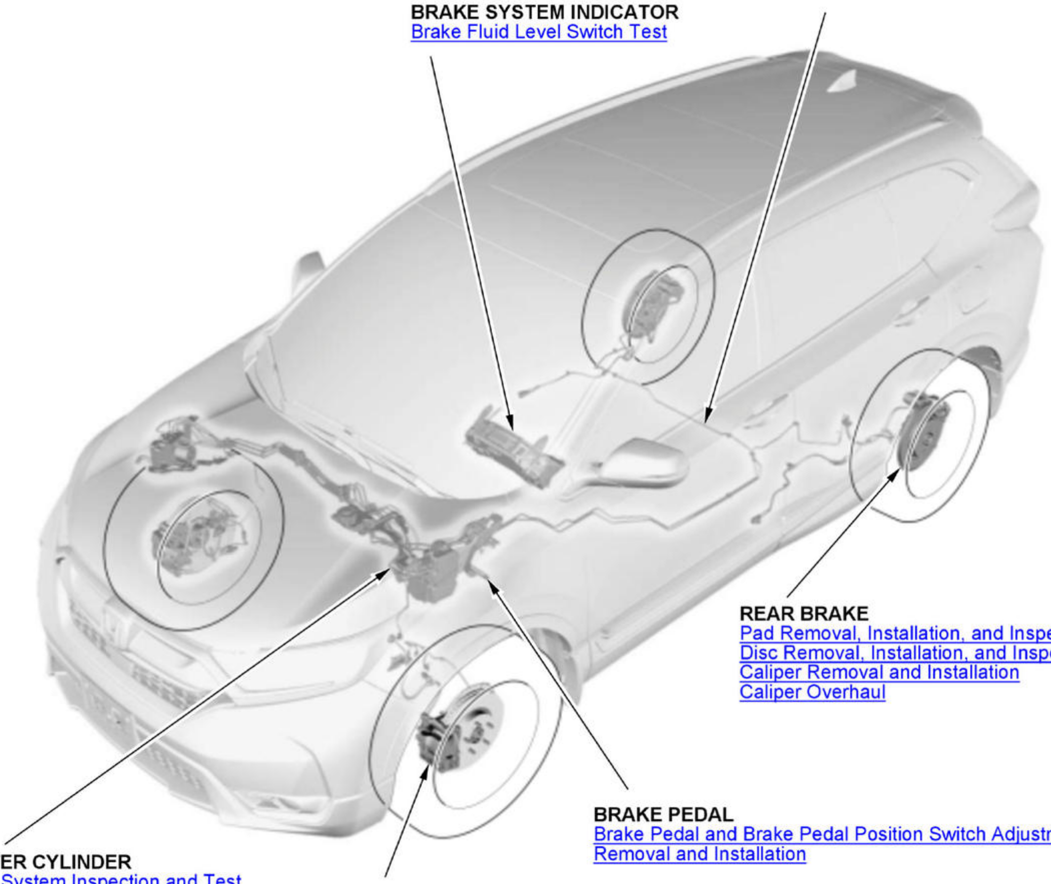

BRAKE HOSE and LINE
Inspection
Brake Hose Removal and Installation

BRAKE SYSTEM INDICATOR
Brake Fluid Level Switch Test

REAR BRAKE
Pad Removal, Installation, and Inspection
Disc Removal, Installation, and Inspection
Caliper Removal and Installation
Caliper Overhaul

BRAKE PEDAL
Brake Pedal and Brake Pedal Position Switch Adjustment
Removal and Installation

MASTER CYLINDER
Brake System Inspection and Test
Brake System Bleeding
Inspection
Removal and Installation

FRONT BRAKE
Pad Removal, Installation, and Inspection
Disc Removal, Installation, and Inspection
Caliper Removal and Installation
Caliper Overhaul

ELECTRIC PARKING BRAKE SYSTEM COMPONENT LOCATION INDEX

For relationships between signals in a system, refer to System Diagram.

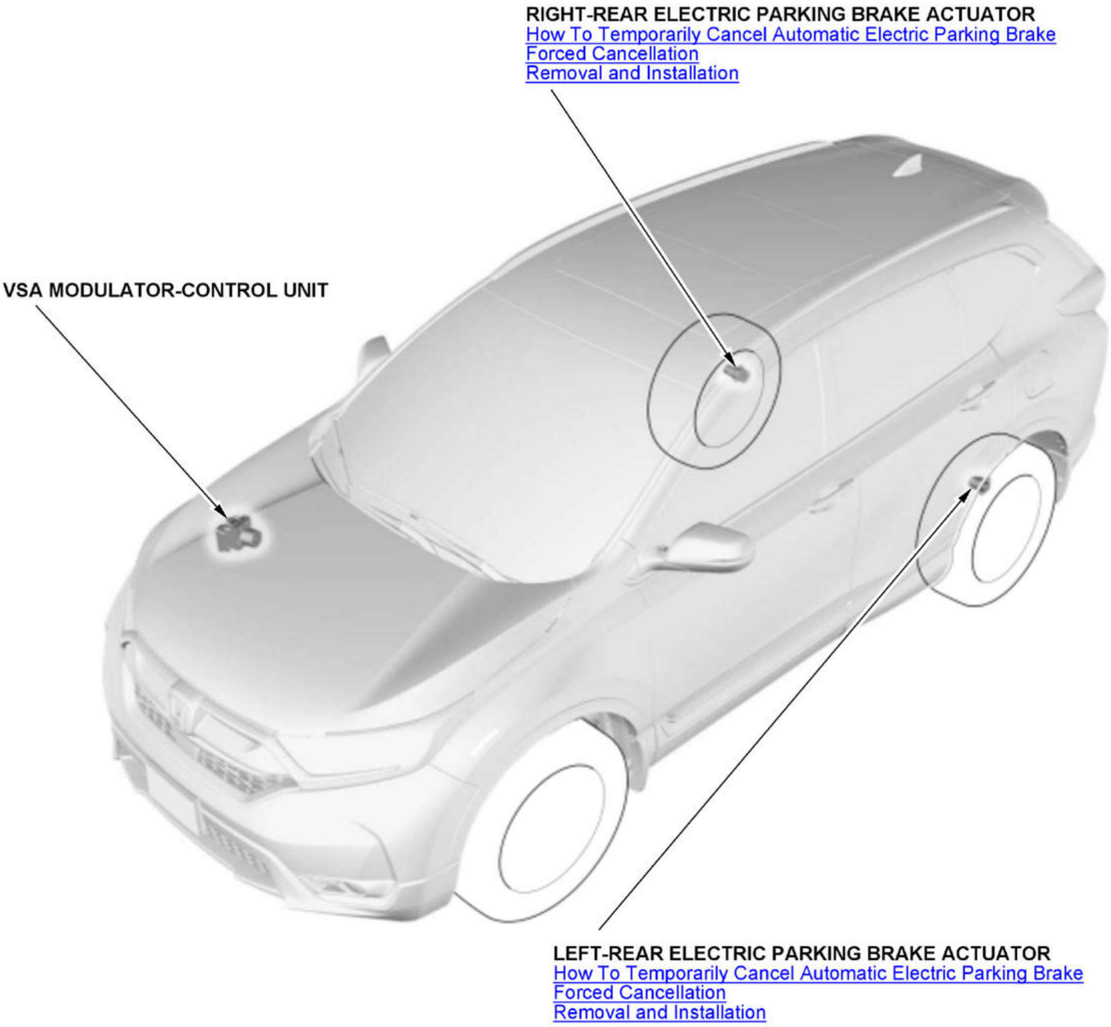
RIGHT-REAR ELECTRIC PARKING BRAKE ACTUATOR
How To Temporarily Cancel Automatic Electric Parking Brake
Forced Cancellation
Removal and Installation
VSA MODULATOR-CONTROL UNIT
LEFT-REAR ELECTRIC PARKING BRAKE ACTUATOR
How To Temporarily Cancel Automatic Electric Parking Brake
Forced Cancellation
Removal and Installation

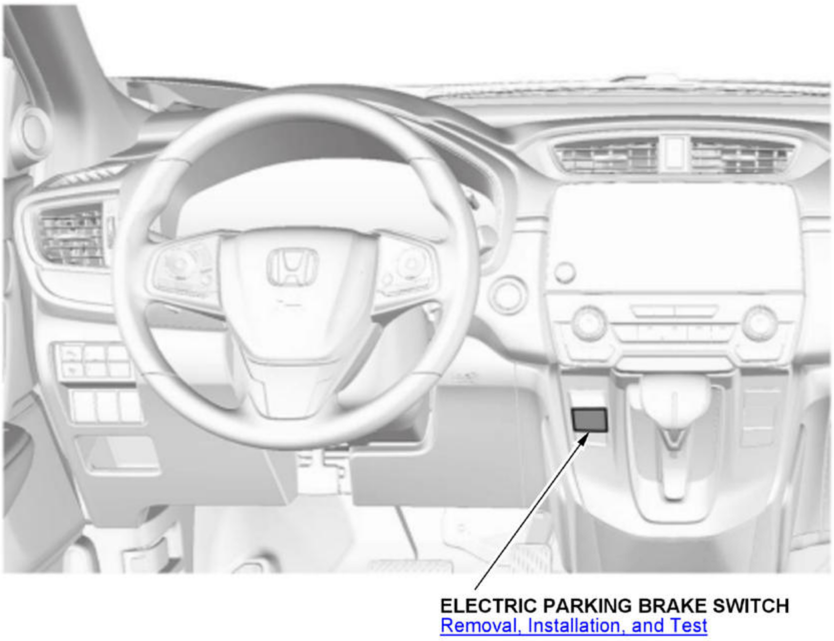
ELECTRIC PARKING BRAKE SWITCH
Removal, Installation, and Test

SYMPTOM TROUBLESHOOTING

ELECTRIC PARKING BRAKE SYSTEM SYMPTOM TROUBLESHOOTING - BRAKE SYSTEM INDICATOR (RED) INDICATOR DOES NOT COME ON

Brake system indicator (red) indicator does not come on

1. Gauge control module operation check

   -1. Do the gauge control module self-diagnostic function .

   Is the gauge control module OK?

   YES

   Go to step 2.

   NO

   Replace the gauge control module .

2. Open wire check (PARK LAMP line)

   -1. Turn the vehicle to the OFF (LOCK) mode.

   -2. Disconnect the following connectors.

VSA modulator-control unit 46P connector
Gauge control module connector A (32P)

   -3. Check for continuity between test points 1 and 2.

Test condition	Vehicle OFF (LOCK) mode
	VSA modulator-control unit 46P connector: disconnected

	Gauge control module connector A (32P): disconnected
Test point 1	**VSA modulator-control unit 46P connector No. 29**
Test point 2	**Gauge control module connector A (32P) No. 10**

Is there continuity?

YES

The PARK LAMP wire is OK. Check for loose terminals and poor connections in the VSA modulator-control unit 46P connector. Check for any authorized service information related to the DTCs or symptoms you are troubleshooting. If they are OK, **replace the VSA modulator-control unit** .

NO

Repair an open in the wire between the VSA modulator-control unit and the gauge control module.

ELECTRIC PARKING BRAKE SYSTEM SYMPTOM TROUBLESHOOTING - BRAKE SYSTEM INDICATOR (RED) INDICATOR DOES NOT GO OFF

Brake system indicator (red) indicator does not go off

1. DTC check

-1. Turn the vehicle to the ON mode.

-2. Check for DTCs with the HDS.

DTC Description	DTC	Freeze Frame
B	B	B

Is DTC indicated?

YES

Go to indicated DTC's troubleshooting.

NO

Go to step 2.

2. Gauge control module operation check

-1. **Do the gauge control module self-diagnostic function** .

Is the gauge control module OK?

YES

Go to step 3.

NO

Replace the gauge control module .

3. Shorted wire check (PARK LAMP line)

-1. Turn the vehicle to the OFF (LOCK) mode.

-2. Disconnect the following connectors.

VSA modulator-control unit 46P connector
Gauge control module connector A (32P)

-3. Check for continuity between test points 1 and 2.

Test condition	Vehicle OFF (LOCK) mode
	VSA modulator-control unit 46P connector: disconnected
	Gauge control module connector A (32P): disconnected
Test point 1	VSA modulator-control unit 46P connector No. 29
Test point 2	Body ground

Is there continuity?

YES

Repair a short to body ground in the wire between the VSA modulator-control unit and the gauge control module.

NO

The PARK LAMP wire is OK. Check for loose terminals and poor connections in the VSA modulator-control unit 46P connector. Check for any authorized service information related to the DTCs or symptoms you are troubleshooting. If they are OK, replace the VSA modulator-control unit .

SYMPTOM TROUBLESHOOTING INDEX

ELECTRIC PARKING BRAKE SYSTEM SYMPTOM TROUBLESHOOTING INDEX (ELECTRIC PARKING BRAKE)

Symptom	Diagnostic procedure	Also check for
HDS does not communicate with the VSA modulator-control unit or the vehicle	Troubleshoot the F-CAN circuit .	Faulty data link cable
Brake system indicator (amber) does not come on	Do the gauge control module self-diagnostic function .	B
Brake system indicator (red) indicator does not come on	Symptom troubleshooting.	B
Brake system indicator (red) indicator does not go off	Symptom troubleshooting.	B

SYMPTOM TROUBLESHOOTING INDEX FOR VIEWER

BRAKE SYSTEM INDICATOR (AMBER) DOES NOT COME ON (ELECTRIC PARKING BRAKE)

Diagnostic procedure

- Do the gauge control module self-diagnostic function .

BRAKE SYSTEM INDICATOR (RED) INDICATOR DOES NOT COME ON (ELECTRIC PARKING BRAKE)

Diagnostic procedure

- Symptom troubleshooting.

BRAKE SYSTEM INDICATOR (RED) INDICATOR DOES NOT GO OFF (ELECTRIC PARKING BRAKE)

Diagnostic procedure

- Symptom troubleshooting.

HDS DOES NOT COMMUNICATE WITH THE VSA MODULATOR-CONTROL UNIT OR THE VEHICLE (ELECTRIC PARKING BRAKE)

Diagnostic procedure

- Troubleshoot the F-CAN circuit .

Also check for

Faulty data link cable

ADVANCED DIAGNOSTICS

DTC B0050-F0 (ELECTRIC SERVO BRAKE CONTROL UNIT)

DTC B0050-F0: (Driver's Seat Belt Buckle Switch Malfunction)

NOTE

- Initial Diagnosis:

  The initial on-board diagnosis occurs right after the vehicle condition is turned to the ON mode, and the brake system indicator (red or amber) comes on, and continues until the indicator goes off.

- Regular Diagnosis:

  The regular on-board diagnosis begins right after the brake system indicator (red or amber) goes off, and it continues until the vehicle condition is turned to the OFF (LOCK) mode.

- Review "How to Troubleshoot the Electric Servo Brake System" before doing the DTC troubleshooting procedure.
- Test-drive the vehicle according to local traffic conditions and regulations. Do not test-drive on a lift unless specified.
- The possible causes shown may not be a complete list of all potential problems, and it is possible that there may be other causes.

Confirmation Procedure	Basic Condition: • 12 volt battery voltage 9.5 - 16.7 V With the Driving Pattern: • Turn the vehicle to the ON mode.
Execution	Regular Diagnosis
Duration	About 1 second
DTC Type	• 1 drive cycle • Brake system indicator (amber) on
Fail Safe Action	• Stop automatic brake hold function (Re-diagnose at the next IG-ON)
Possible Cause	• Driver's seat belt buckle assembly internal failure (Driver's seat belt buckle switch)

DTC C0023-12

DTC C0023-12: Brake Diag Circuit ON Failure

NOTE

- Initial Diagnosis:

The initial on-board diagnosis occurs right after the vehicle condition is turned to the ON mode, and the brake system indicator (red or amber) comes on, and continues until the indicator goes off.

- Regular Diagnosis:

  The regular on-board diagnosis begins right after the brake system indicator (red or amber) goes off, and it continues until the vehicle condition is turned to the OFF (LOCK) mode.

- Review "How to Troubleshoot the Electric Servo Brake System" before doing the DTC troubleshooting procedure.
- Test-drive the vehicle according to local traffic conditions and regulations. Do not test-drive on a lift unless specified.
- The possible causes shown may not be a complete list of all potential problems, and it is possible that there may be other causes.

Confirmation Procedure	Basic Condition: • 12 volt battery voltage above 9.5 V • Brake pedal is released With the Driving Pattern: • Turn the vehicle to the ON mode. • Wait 1 second or more without pressing the brake pedal.
Execution	Regular Diagnosis
Duration	About 1 second
DTC Type	• 1 drive cycle • Brake system indicator (amber) on
Fail Safe Action	• Stop automatic brake hold function (Re-diagnose at the next IG-ON) • Stop deceleration assist brake cooperative control function (Re-diagnose at the next IG-ON) • Stop stall management function (Re-diagnose at the next IG-ON) • Stop driving support system brake control function (Re-diagnose at the next IG-ON)
Possible Cause	• Short to ground between the electric servo brake control unit and the brake light relay circuit (BRK_LAMP line) • Open between the PCM and the brake pedal position switch (STOP_SW line) • Brake light relay circuit failure • PCM internal failure • Electric servo brake control unit internal failure

DTC C0023-14

DTC C0023-14: Brake Diag Circuit OFF Failure

NOTE

- Initial Diagnosis:

  The initial on-board diagnosis occurs right after the vehicle condition is turned to the ON mode, and the brake system indicator (red or amber) comes on, and continues until the indicator goes off.

- Regular Diagnosis:

  The regular on-board diagnosis begins right after the brake system indicator (red or amber) goes off, and it continues until the vehicle condition is turned to the OFF (LOCK) mode.

- Review "How to Troubleshoot the Electric Servo Brake System" before doing the DTC troubleshooting procedure.
- Test-drive the vehicle according to local traffic conditions and regulations. Do not test-drive on a lift unless specified.
- The possible causes shown may not be a complete list of all potential problems, and it is possible that there may be other causes.

Confirmation Procedure	Basic Condition: • 12 volt battery voltage above 9.5 V • Brake pedal is released With the HDS: • Turn the vehicle to the ON mode. • Select the BRAKE LIGHT RELAY TEST in the ELECTRIC SERVO BRAKE FUNCTION TEST with the HDS.
Execution	Regular Diagnosis
Duration	About 1 second
DTC Type	• 1 drive cycle • Brake system indicator (amber) on
Fail Safe Action	• Stop automatic brake hold function (Re-diagnose at the next IG-ON) • Stop deceleration assist brake cooperative control function (Re-diagnose at the next IG-ON) • Stop stall management function (Re-diagnose at the next IG-ON) • Stop driving support system brake control function (Re-diagnose at the next IG-ON)
Possible Cause	• Open between the under-hood fuse/relay box and the brake light relay circuit (+B_STOP line) • Open between the under-dash fuse/relay box and the brake light relay circuit (IG1_OPTION line) • Open between the brake light relay circuit and the electric servo brake control unit (BRK_DIAG, BRK_LAMP lines) • Blown fuse (No. A9) • Blown fuse (No. D5) • Brake light relay circuit failure • Electric servo brake control unit internal failure

DTC C0049-7A

DTC C0049-7A: Brake Fluid Leak or Seal Failure

NOTE

- Initial Diagnosis:

  The initial on-board diagnosis occurs right after the vehicle condition is turned to the ON mode, and the brake system indicator (red or amber) comes on, and continues until the indicator goes off.

- Regular Diagnosis:

  The regular on-board diagnosis begins right after the brake system indicator (red or amber) goes off, and it continues until the vehicle condition is turned to the OFF (LOCK) mode.

- Review "How to Troubleshoot the Electric Servo Brake System" before doing the DTC troubleshooting procedure.
- Test-drive the vehicle according to local traffic conditions and regulations. Do not test-drive on a lift unless specified.
- The possible causes shown may not be a complete list of all potential problems, and it is possible that there may be other causes.

Confirmation Procedure	Basic Condition: • 12 volt battery voltage 9.5 - 16.7 V With the Driving Pattern: • Turn the vehicle to the READY TO DRIVE mode. • Test-drive the vehicle and stop the vehicle by pressing the brake pedal. • Repeat step 2 procedure in the 1 drive cycle at least 5 times.
Execution	Regular Diagnosis
Duration	-
DTC Type	• 1 drive cycle • Brake system indicator (red) on • Brake system indicator (amber) on
Fail Safe Action	• Stop brake assist function (Re-diagnose at the next IG-ON) • Stop automatic brake hold function (Re-diagnose at the next IG-ON) • Stop hill start assist function (Re-diagnose at the next IG-ON) • Stop deceleration assist brake cooperative control function (Re-diagnose at the next IG-ON) • Stop VSA assist cooperative control function (Re-diagnose at the next IG-ON) • Stop stall management function (Re-diagnose at the next IG-ON) • Stop driving support system brake control function (Re-diagnose at the next IG-ON)
Possible Cause	• Tandem motor cylinder internal failure (Piston cup) • Brake fluid leakage

DTC C0062-F0 (ELECTRIC SERVO BRAKE CONTROL UNIT)

DTC C0062-F0: Longitudinal Acceleration Sensor Malfunction

NOTE

- Initial Diagnosis:

The initial on-board diagnosis occurs right after the vehicle condition is turned to the ON mode, and the brake system indicator (red or amber) comes on, and continues until the indicator goes off.

- Regular Diagnosis:

  The regular on-board diagnosis begins right after the brake system indicator (red or amber) goes off, and it continues until the vehicle condition is turned to the OFF (LOCK) mode.

- Review "How to Troubleshoot the Electric Servo Brake System" before doing the DTC troubleshooting procedure.
- Test-drive the vehicle according to local traffic conditions and regulations. Do not test-drive on a lift unless specified.
- The possible causes shown may not be a complete list of all potential problems, and it is possible that there may be other causes.

Confirmation Procedure	Basic Condition: • 12 volt battery voltage 9.5 - 16.7 V With the Driving Pattern: • Turn the vehicle to the ON mode.
Execution	Regular Diagnosis
Duration	About 1 second
DTC Type	• 1 drive cycle • Brake system indicator (amber) on
Fail Safe Action	• Stop automatic brake hold function (Re-diagnose at the next IG-ON) • Stop hill start assist function (Re-diagnose at the next IG-ON) • Stop driving support system brake control function (Re-diagnose at the next IG-ON)
Possible Cause	• SRS unit internal failure (Longitudinal acceleration sensor)

DTC C0063-F0 (ELECTRIC SERVO BRAKE CONTROL UNIT)

DTC C0063-F0: Yaw Rate Sensor Malfunction

NOTE

- Initial Diagnosis:

  The initial on-board diagnosis occurs right after the vehicle condition is turned to the ON mode, and the brake system indicator (red or amber) comes on, and continues until the indicator goes off.

- Regular Diagnosis:

  The regular on-board diagnosis begins right after the brake system indicator (red or amber) goes off, and it continues until the vehicle condition is turned to the OFF (LOCK) mode.

- Review "How to Troubleshoot the Electric Servo Brake System" before doing the DTC troubleshooting procedure.
- Test-drive the vehicle according to local traffic conditions and regulations. Do not test-drive on a lift unless specified.

- The possible causes shown may not be a complete list of all potential problems, and it is possible that there may be other causes.

Confirmation Procedure	Basic Condition: - 12 volt battery voltage 9.5 - 16.7 V With the Driving Pattern: - Turn the vehicle to the ON mode.
Execution	Regular Diagnosis
Duration	About 1 second
DTC Type	- 1 drive cycle - Brake system indicator (amber) on
Fail Safe Action	- Stop automatic brake hold function (Re-diagnose at the next IG-ON)
Possible Cause	- SRS unit internal failure (Yaw rate sensor)

DTC C1260-7A

DTC C1260-7A: Brake Fluid Leak or Seal Failure in Pedal Feel Simulator

NOTE

- Initial Diagnosis:

  The initial on-board diagnosis occurs right after the vehicle condition is turned to the ON mode, and the brake system indicator (red or amber) comes on, and continues until the indicator goes off.

- Regular Diagnosis:

  The regular on-board diagnosis begins right after the brake system indicator (red or amber) goes off, and it continues until the vehicle condition is turned to the OFF (LOCK) mode.

- Review "How to Troubleshoot the Electric Servo Brake System" before doing the DTC troubleshooting procedure.
- Test-drive the vehicle according to local traffic conditions and regulations. Do not test-drive on a lift unless specified.
- The possible causes shown may not be a complete list of all potential problems, and it is possible that there may be other causes.

Confirmation Procedure	Basic Condition: - 12 volt battery voltage 9.5 - 16.7 V With the Driving Pattern: - Turn the vehicle to the READY TO DRIVE mode. - Press the brake pedal hard.
Execution	Regular Diagnosis
Duration	About 1 second
DTC Type	- 1 drive cycle

	- Brake system indicator (amber) on
Fail Safe Action	- None
Possible Cause	- Pedal feel simulator internal failure (Piston cup) - Brake fluid leakage

DTC C1270-11

DTC C1270-11: Automatic Brake Hold Switch Signal Circuit Short

NOTE

- Initial Diagnosis:

  The initial on-board diagnosis occurs right after the vehicle condition is turned to the ON mode, and the brake system indicator (red or amber) comes on, and continues until the indicator goes off.

- Regular Diagnosis:

  The regular on-board diagnosis begins right after the brake system indicator (red or amber) goes off, and it continues until the vehicle condition is turned to the OFF (LOCK) mode.

- Review "How to Troubleshoot the Electric Servo Brake System" before doing the DTC troubleshooting procedure.
- Test-drive the vehicle according to local traffic conditions and regulations. Do not test-drive on a lift unless specified.
- The possible causes shown may not be a complete list of all potential problems, and it is possible that there may be other causes.

Confirmation Procedure	Basic Condition: - 12 volt battery voltage 9.5 - 16.7 V With the Driving Pattern: - Turn the vehicle to the ON mode.
Execution	Regular Diagnosis
Duration	About 1 second
DTC Type	- 1 drive cycle - Brake system indicator (amber) on
Fail Safe Action	- Stop automatic brake hold function (Re-diagnose at the next IG-ON)
Possible Cause	- Short to ground between the automatic brake hold switch and the gauge control module (BRAKE_HOLD line) - Automatic brake hold switch failure - Gauge control module internal failure

DTC C1270-15

DTC C1270-15: Automatic Brake Hold Switch Signal Circuit Open

NOTE

- Initial Diagnosis:

  The initial on-board diagnosis occurs right after the vehicle condition is turned to the ON mode, and the brake system indicator (red or amber) comes on, and continues until the indicator goes off.

- Regular Diagnosis:

  The regular on-board diagnosis begins right after the brake system indicator (red or amber) goes off, and it continues until the vehicle condition is turned to the OFF (LOCK) mode.

- Review "How to Troubleshoot the Electric Servo Brake System" before doing the DTC troubleshooting procedure.
- Test-drive the vehicle according to local traffic conditions and regulations. Do not test-drive on a lift unless specified.
- The possible causes shown may not be a complete list of all potential problems, and it is possible that there may be other causes.

Confirmation Procedure	Basic Condition: • 12 volt battery voltage 9.5 - 16.7 V With the Driving Pattern: • Turn the vehicle to the ON mode.
Execution	Regular Diagnosis
Duration	About 1 second
DTC Type	• 1 drive cycle • Brake system indicator (amber) on
Fail Safe Action	• Stop automatic brake hold function (Re-diagnose at the next IG-ON)
Possible Cause	• Open or short to power between the automatic brake hold switch and the gauge control module (BRAKE_HOLD line) • Open between the automatic brake hold switch and body ground (GND line) • Automatic brake hold switch failure • Gauge control module internal failure

DTC P057B-00

DTC P057B-00: Brake Pedal Stroke Sensor Circuit Range/Performance Problem

NOTE

- Initial Diagnosis:

  The initial on-board diagnosis occurs right after the vehicle condition is turned to the ON mode, and the brake system indicator (red or amber) comes on, and continues until the indicator goes off.

- Regular Diagnosis:

  The regular on-board diagnosis begins right after the brake system indicator (red or amber) goes off, and it continues until the vehicle condition is turned to the OFF (LOCK) mode.

- Review "How to Troubleshoot the Electric Servo Brake System" before doing the DTC troubleshooting procedure.
- Test-drive the vehicle according to local traffic conditions and regulations. Do not test-drive on a lift unless specified.
- The possible causes shown may not be a complete list of all potential problems, and it is possible that there may be other causes.

Confirmation Procedure	Basic Condition: • 12 volt battery voltage 9.5 - 16.7 V With the Driving Pattern: • Turn the vehicle to the ON mode. • Press the brake pedal several times.
Execution	Initial Diagnosis/Regular Diagnosis
Duration	About 1 second
DTC Type	• 1 drive cycle • Brake system indicator (red) on • Brake system indicator (amber) on
Fail Safe Action	• Stop electric servo brake function (Re-diagnose at the next IG-ON) • Stop brake assist function (Re-diagnose at the next IG-ON) • Stop automatic brake hold function (Re-diagnose at the next IG-ON) • Stop hill start assist function (Re-diagnose at the next IG-ON) • Stop deceleration assist brake cooperative control function (Re-diagnose at the next IG-ON) • Stop VSA assist cooperative control function (Re-diagnose at the next IG-ON) • Stop stall management function (Re-diagnose at the next IG-ON) • Stop regenerative brake function (Re-diagnose at the next IG-ON) • Stop driving support system brake control function (Re-diagnose at the next IG-ON)
Possible Cause	• Incorrect brake pedal stroke sensor installed • Brake pedal stroke sensor internal failure

DTC P057C-00

DTC P057C-00: Brake Pedal Stroke Sensor Circuit Low Voltage

NOTE

- Initial Diagnosis:

  The initial on-board diagnosis occurs right after the vehicle condition is turned to the ON mode, and the brake system indicator (red or amber) comes on, and continues until the indicator goes off.

- Regular Diagnosis:

  The regular on-board diagnosis begins right after the brake system indicator (red or amber) goes off, and it continues until the vehicle condition is turned to the OFF (LOCK) mode.

- Review "How to Troubleshoot the Electric Servo Brake System" before doing the DTC troubleshooting procedure.
- Test-drive the vehicle according to local traffic conditions and regulations. Do not test-drive on a lift unless specified.
- The possible causes shown may not be a complete list of all potential problems, and it is possible that there may be other causes.

Confirmation Procedure	Basic Condition: • 12 volt battery voltage 9.5 - 16.7 V With the Driving Pattern: • Turn the vehicle to the ON mode.
Execution	Initial Diagnosis/Regular Diagnosis
Duration	About 1 second
DTC Type	• 1 drive cycle • Brake system indicator (red) on • Brake system indicator (amber) on
Fail Safe Action	• Stop electric servo brake function (Re-diagnose at the next IG-ON) • Stop brake assist function (Re-diagnose at the next IG-ON) • Stop automatic brake hold function (Re-diagnose at the next IG-ON) • Stop hill start assist function (Re-diagnose at the next IG-ON) • Stop deceleration assist brake cooperative control function (Re-diagnose at the next IG-ON) • Stop VSA assist cooperative control function (Re-diagnose at the next IG-ON) • Stop stall management function (Re-diagnose at the next IG-ON) • Stop regenerative brake function (Re-diagnose at the next IG-ON) • Stop driving support system brake control function (Re-diagnose at the next IG-ON)
Possible Cause	• Open, short to ground, or poor connection between the electric servo brake control unit and the brake pedal stroke sensor (BPS line) • Open or poor connection between the electric servo brake control unit and the brake pedal stroke sensor (ESB_SVCC line) • Brake pedal stroke sensor internal failure • Electric servo brake control unit internal failure

DTC P057D-00

DTC P057D-00: Brake Pedal Stroke Sensor Circuit High Voltage

NOTE

- Initial Diagnosis:

  The initial on-board diagnosis occurs right after the vehicle condition is turned to the ON mode, and the brake system indicator (red or amber) comes on, and continues until the indicator goes off.

- Regular Diagnosis:

The regular on-board diagnosis begins right after the brake system indicator (red or amber) goes off, and it continues until the vehicle condition is turned to the OFF (LOCK) mode.

- Review "How to Troubleshoot the Electric Servo Brake System" before doing the DTC troubleshooting procedure.
- Test-drive the vehicle according to local traffic conditions and regulations. Do not test-drive on a lift unless specified.
- The possible causes shown may not be a complete list of all potential problems, and it is possible that there may be other causes.

Confirmation Procedure	Basic Condition: • 12 volt battery voltage 9.5 - 16.7 V With the Driving Pattern: • Turn the vehicle to the ON mode.
Execution	Initial Diagnosis/Regular Diagnosis
Duration	About 1 second
DTC Type	• 1 drive cycle • Brake system indicator (red) on • Brake system indicator (amber) on
Fail Safe Action	• Stop electric servo brake function (Re-diagnose at the next IG-ON) • Stop brake assist function (Re-diagnose at the next IG-ON) • Stop automatic brake hold function (Re-diagnose at the next IG-ON) • Stop hill start assist function (Re-diagnose at the next IG-ON) • Stop deceleration assist brake cooperative control function (Re-diagnose at the next IG-ON) • Stop VSA assist cooperative control function (Re-diagnose at the next IG-ON) • Stop stall management function (Re-diagnose at the next IG-ON) • Stop regenerative brake function (Re-diagnose at the next IG-ON) • Stop driving support system brake control function (Re-diagnose at the next IG-ON)
Possible Cause	• Short to power between the electric servo brake control unit and the brake pedal stroke sensor (BPS line) • Open between the electric servo brake control unit and the brake pedal stroke sensor (ESV_SGND line) • Brake pedal stroke sensor internal failure • Electric servo brake control unit internal failure

DTC P0602-00

DTC P0602-00: Electric Servo Brake Control Unit Programming Error

NOTE

- Initial Diagnosis:

  The initial on-board diagnosis occurs right after the vehicle condition is turned to the ON mode, and the brake system indicator (red or amber) comes on, and continues until the indicator goes off.

- Regular Diagnosis:

  The regular on-board diagnosis begins right after the brake system indicator (red or amber) goes off, and it continues until the vehicle condition is turned to the OFF (LOCK) mode.

- Review "How to Troubleshoot the Electric Servo Brake System" before doing the DTC troubleshooting procedure.
- Test-drive the vehicle according to local traffic conditions and regulations. Do not test-drive on a lift unless specified.
- The possible causes shown may not be a complete list of all potential problems, and it is possible that there may be other causes.

Confirmation Procedure	Basic Condition: • 12 volt battery voltage 9.5 - 16.7 V With the Driving Pattern: • Turn the vehicle to the ON mode.
Execution	Regular Diagnosis
Duration	About 1 second
DTC Type	• 1 drive cycle • Brake system indicator (red) on • Brake system indicator (amber) on
Fail Safe Action	• Stop electric servo brake function (Re-diagnose at the next IG-ON) • Stop brake assist function (Re-diagnose at the next IG-ON) • Stop automatic brake hold function (Re-diagnose at the next IG-ON) • Stop hill start assist function (Re-diagnose at the next IG-ON) • Stop deceleration assist brake cooperative control function (Re-diagnose at the next IG-ON) • Stop VSA assist cooperative control function (Re-diagnose at the next IG-ON) • Stop stall management function (Re-diagnose at the next IG-ON) • Stop regenerative brake function (Re-diagnose at the next IG-ON) • Stop driving support system brake control function (Re-diagnose at the next IG-ON)
Possible Cause	• Electric servo brake control unit program unwritten • Electric servo brake control unit internal failure

DTC P0606-00

DTC P0606-00: Electric Servo Brake Control Unit Internal Circuit Malfunction

NOTE

- Initial Diagnosis:

  The initial on-board diagnosis occurs right after the vehicle condition is turned to the ON mode, and the brake system indicator (red or amber) comes on, and continues until the indicator goes off.

- Regular Diagnosis:

The regular on-board diagnosis begins right after the brake system indicator (red or amber) goes off, and it continues until the vehicle condition is turned to the OFF (LOCK) mode.

- Review "How to Troubleshoot the Electric Servo Brake System" before doing the DTC troubleshooting procedure.
- Test-drive the vehicle according to local traffic conditions and regulations. Do not test-drive on a lift unless specified.
- The possible causes shown may not be a complete list of all potential problems, and it is possible that there may be other causes.

Confirmation Procedure	Basic Condition: • 12 volt battery voltage 9.5 - 16.7 V With the Driving Pattern: • Turn the vehicle to the ON mode, then to the OFF (LOCK) mode. • Wait 10 seconds or more. • Turn the vehicle to the ON mode.
Execution	Initial Diagnosis/Regular Diagnosis
Duration	About 10 seconds
DTC Type	• 1 drive cycle • Brake system indicator (red) on (Dependant upon the conditions) • Brake system indicator (amber) on
Fail Safe Action	• Stop electric servo brake function (Dependant upon the conditions) Re-diagnose at the next IG-ON) • Stop brake assist function (Dependant upon the conditions) Re-diagnose at the next IG-ON) • Stop automatic brake hold function (Dependant upon the conditions) Re-diagnose at the next IG-ON) • Stop hill start assist function (Dependant upon the conditions) Re-diagnose at the next IG-ON) • Stop deceleration assist brake cooperative control function (Dependant upon the conditions) Re-diagnose at the next IG-ON) • Stop VSA assist cooperative control function (Dependant upon the conditions) Re-diagnose at the next IG-ON) • Stop stall management function (Dependant upon the conditions) Re-diagnose at the next IG-ON) • Stop regenerative brake function (Dependant upon the conditions) Re-diagnose at the next IG-ON) • Stop driving support system brake control function (Dependant upon the conditions) Re-diagnose at the next IG-ON)
Possible Cause	• Electric servo brake control unit internal failure

DTC P062F-00

DTC P062F-00: Electric Servo Brake Control Unit Internal Circuit EEPROM Error

NOTE

- Initial Diagnosis:

  The initial on-board diagnosis occurs right after the vehicle condition is turned to the ON mode, and the brake system indicator (red or amber) comes on, and continues until the indicator goes off.

- Regular Diagnosis:

  The regular on-board diagnosis begins right after the brake system indicator (red or amber) goes off, and it continues until the vehicle condition is turned to the OFF (LOCK) mode.

- Review "How to Troubleshoot the Electric Servo Brake System" before doing the DTC troubleshooting procedure.
- Test-drive the vehicle according to local traffic conditions and regulations. Do not test-drive on a lift unless specified.
- The possible causes shown may not be a complete list of all potential problems, and it is possible that there may be other causes.

Confirmation Procedure	Basic Condition: • 12 volt battery voltage 9.5 - 16.7 V With the Driving Pattern: • Turn the vehicle to the ON mode.
Execution	Initial Diagnosis/Regular Diagnosis
Duration	About 1 second
DTC Type	• 1 drive cycle • Brake system indicator (red) on • Brake system indicator (amber) on
Fail Safe Action	• Stop electric servo brake function (Re-diagnose at the next IG-ON) • Stop brake assist function (Re-diagnose at the next IG-ON) • Stop automatic brake hold function (Re-diagnose at the next IG-ON) • Stop hill start assist function (Re-diagnose at the next IG-ON) • Stop deceleration assist brake cooperative control function (Re-diagnose at the next IG-ON) • Stop VSA assist cooperative control function (Re-diagnose at the next IG-ON) • Stop stall management function (Re-diagnose at the next IG-ON) • Stop regenerative brake function (Re-diagnose at the next IG-ON) • Stop driving support system brake control function (Re-diagnose at the next IG-ON)
Possible Cause	• Electric servo brake control unit internal failure

DTC P0642-00

DTC P0642-00: Sensor Power Source Circuit Low Voltage

NOTE

- Initial Diagnosis:

The initial on-board diagnosis occurs right after the vehicle condition is turned to the ON mode, and the brake system indicator (red or amber) comes on, and continues until the indicator goes off.

- Regular Diagnosis:

  The regular on-board diagnosis begins right after the brake system indicator (red or amber) goes off, and it continues until the vehicle condition is turned to the OFF (LOCK) mode.

- Review "How to Troubleshoot the Electric Servo Brake System" before doing the DTC troubleshooting procedure.
- Test-drive the vehicle according to local traffic conditions and regulations. Do not test-drive on a lift unless specified.
- The possible causes shown may not be a complete list of all potential problems, and it is possible that there may be other causes.

Confirmation Procedure	Basic Condition: • 12 volt battery voltage 9.5 - 16.7 V With the Driving Pattern: • Turn the vehicle to the ON mode.
Execution	Initial Diagnosis/Regular Diagnosis
Duration	About 1 second
DTC Type	• 1 drive cycle • Brake system indicator (red) on • Brake system indicator (amber) on
Fail Safe Action	• Stop electric servo brake function (Re-diagnose at the next IG-ON) • Stop brake assist function (Re-diagnose at the next IG-ON) • Stop automatic brake hold function (Re-diagnose at the next IG-ON) • Stop hill start assist function (Re-diagnose at the next IG-ON) • Stop deceleration assist brake cooperative control function (Re-diagnose at the next IG-ON) • Stop VSA assist cooperative control function (Re-diagnose at the next IG-ON) • Stop stall management function (Re-diagnose at the next IG-ON) • Stop regenerative brake function (Re-diagnose at the next IG-ON) • Stop driving support system brake control function (Re-diagnose at the next IG-ON)
Possible Cause	• Short to ground between the electric servo brake control unit and the brake pedal stroke sensor, the tandem motor cylinder (ESB_SVCC line) • Brake pedal stroke sensor internal failure • Tandem motor cylinder internal failure (Hall sensor) • Electric servo brake control unit internal failure

DTC P0643-00

DTC P0643-00: Sensor Power Source Circuit High Voltage

NOTE

- Initial Diagnosis:

  The initial on-board diagnosis occurs right after the vehicle condition is turned to the ON mode, and the brake system indicator (red or amber) comes on, and continues until the indicator goes off.

- Regular Diagnosis:

  The regular on-board diagnosis begins right after the brake system indicator (red or amber) goes off, and it continues until the vehicle condition is turned to the OFF (LOCK) mode.

- Review "How to Troubleshoot the Electric Servo Brake System" before doing the DTC troubleshooting procedure.
- Test-drive the vehicle according to local traffic conditions and regulations. Do not test-drive on a lift unless specified.
- The possible causes shown may not be a complete list of all potential problems, and it is possible that there may be other causes.

Confirmation Procedure	Basic Condition: • 12 volt battery voltage 9.5 - 16.7 V With the Driving Pattern: • Turn the vehicle to the ON mode.
Execution	Initial Diagnosis/Regular Diagnosis
Duration	About 1 second
DTC Type	• 1 drive cycle • Brake system indicator (red) on (Dependant upon the conditions) • Brake system indicator (amber) on
Fail Safe Action	• Stop electric servo brake function (Dependant upon the conditions) Re-diagnose at the next IG-ON) • Stop brake assist function (Dependant upon the conditions) Re-diagnose at the next IG-ON) • Stop automatic brake hold function (Dependant upon the conditions) Re-diagnose at the next IG-ON) • Stop hill start assist function (Dependant upon the conditions) Re-diagnose at the next IG-ON) • Stop deceleration assist brake cooperative control function (Dependant upon the conditions) Re-diagnose at the next IG-ON) • Stop VSA assist cooperative control function (Dependant upon the conditions) Re-diagnose at the next IG-ON) • Stop stall management function (Dependant upon the conditions) Re-diagnose at the next IG-ON) • Stop regenerative brake function (Dependant upon the conditions) Re-diagnose at the next IG-ON) • Stop driving support system brake control function (Dependant upon the conditions) Re-diagnose at the next IG-ON)
Possible Cause	• Short to power between the electric servo brake control unit and the brake pedal stroke sensor, the tandem motor cylinder (ESB_SVCC line) • Electric servo brake control unit internal failure

DTC P1E20-00

DTC P1E20-00: Brake Fluid Pressure Sensor PL/PLR Incorrect Correlation

NOTE

- Initial Diagnosis:

  The initial on-board diagnosis occurs right after the vehicle condition is turned to the ON mode, and the brake system indicator (red or amber) comes on, and continues until the indicator goes off.

- Regular Diagnosis:

  The regular on-board diagnosis begins right after the brake system indicator (red or amber) goes off, and it continues until the vehicle condition is turned to the OFF (LOCK) mode.

- Review "How to Troubleshoot the Electric Servo Brake System" before doing the DTC troubleshooting procedure.
- Test-drive the vehicle according to local traffic conditions and regulations. Do not test-drive on a lift unless specified.
- The possible causes shown may not be a complete list of all potential problems, and it is possible that there may be other causes.

Confirmation Procedure	Basic Condition: • 12 volt battery voltage 9.5 - 16.7 V With the Driving Pattern: • Turn the vehicle to the ON mode. • Press the brake pedal several times.
Execution	Initial Diagnosis/Regular Diagnosis
Duration	About 1 second
DTC Type	• 1 drive cycle • Brake system indicator (red) on • Brake system indicator (amber) on
Fail Safe Action	• Stop electric servo brake function (Re-diagnose at the next IG-ON) • Stop brake assist function (Re-diagnose at the next IG-ON) • Stop automatic brake hold function (Re-diagnose at the next IG-ON) • Stop hill start assist function (Re-diagnose at the next IG-ON) • Stop deceleration assist brake cooperative control function (Re-diagnose at the next IG-ON) • Stop VSA assist cooperative control function (Re-diagnose at the next IG-ON) • Stop stall management function (Re-diagnose at the next IG-ON) • Stop regenerative brake function (Re-diagnose at the next IG-ON) • Stop driving support system brake control function (Re-diagnose at the next IG-ON)
Possible Cause	• Pedal feel simulator internal failure (Lower hydraulic pressure sensor) • Electric servo brake control unit internal failure

DTC P1E24-00

DTC P1E24-00: Brake Pedal Stroke Redundant Sensor Circuit High Voltage

NOTE

- Initial Diagnosis:

  The initial on-board diagnosis occurs right after the vehicle condition is turned to the ON mode, and the brake system indicator (red or amber) comes on, and continues until the indicator goes off.

- Regular Diagnosis:

  The regular on-board diagnosis begins right after the brake system indicator (red or amber) goes off, and it continues until the vehicle condition is turned to the OFF (LOCK) mode.

- Review "How to Troubleshoot the Electric Servo Brake System" before doing the DTC troubleshooting procedure.
- Test-drive the vehicle according to local traffic conditions and regulations. Do not test-drive on a lift unless specified.
- The possible causes shown may not be a complete list of all potential problems, and it is possible that there may be other causes.

Confirmation Procedure	Basic Condition: • 12 volt battery voltage 9.5 - 16.7 V With the Driving Pattern: • Turn the vehicle to the ON mode.
Execution	Initial Diagnosis/Regular Diagnosis
Duration	About 1 second
DTC Type	• 1 drive cycle • Brake system indicator (red) on • Brake system indicator (amber) on
Fail Safe Action	• Stop electric servo brake function (Re-diagnose at the next IG-ON) • Stop brake assist function (Re-diagnose at the next IG-ON) • Stop automatic brake hold function (Re-diagnose at the next IG-ON) • Stop hill start assist function (Re-diagnose at the next IG-ON) • Stop deceleration assist brake cooperative control function (Re-diagnose at the next IG-ON) • Stop VSA assist cooperative control function (Re-diagnose at the next IG-ON) • Stop stall management function (Re-diagnose at the next IG-ON) • Stop regenerative brake function (Re-diagnose at the next IG-ON) • Stop driving support system brake control function (Re-diagnose at the next IG-ON)
Possible Cause	• Short to power between the electric servo brake control unit and the brake pedal stroke sensor (BPSR line) • Open between the electric servo brake control unit and the brake pedal stroke sensor (ESV_SGND line) • Brake pedal stroke sensor internal failure • Electric servo brake control unit internal failure

DTC P1E25-00

DTC P1E25-00: Brake Pedal Stroke Redundant Sensor Circuit Low Voltage

NOTE

- Initial Diagnosis:

  The initial on-board diagnosis occurs right after the vehicle condition is turned to the ON mode, and the brake system indicator (red or amber) comes on, and continues until the indicator goes off.

- Regular Diagnosis:

The regular on-board diagnosis begins right after the brake system indicator (red or amber) goes off, and it continues until the vehicle condition is turned to the OFF (LOCK) mode.

- Review "How to Troubleshoot the Electric Servo Brake System" before doing the DTC troubleshooting procedure.
- Test-drive the vehicle according to local traffic conditions and regulations. Do not test-drive on a lift unless specified.
- The possible causes shown may not be a complete list of all potential problems, and it is possible that there may be other causes.

Confirmation Procedure	Basic Condition: • 12 volt battery voltage 9.5 - 16.7 V With the Driving Pattern: • Turn the vehicle to the ON mode.
Execution	Initial Diagnosis/Regular Diagnosis
Duration	About 1 second
DTC Type	• 1 drive cycle • Brake system indicator (red) on • Brake system indicator (amber) on
Fail Safe Action	• Stop electric servo brake function (Re-diagnose at the next IG-ON) • Stop brake assist function (Re-diagnose at the next IG-ON) • Stop automatic brake hold function (Re-diagnose at the next IG-ON) • Stop hill start assist function (Re-diagnose at the next IG-ON) • Stop deceleration assist brake cooperative control function (Re-diagnose at the next IG-ON) • Stop VSA assist cooperative control function (Re-diagnose at the next IG-ON) • Stop stall management function (Re-diagnose at the next IG-ON) • Stop regenerative brake function (Re-diagnose at the next IG-ON) • Stop driving support system brake control function (Re-diagnose at the next IG-ON)
Possible Cause	• Open, short to ground, or poor connection between the electric servo brake control unit and the brake pedal stroke sensor (BPSR line) • Open or poor connection between the electric servo brake control unit and the brake pedal stroke sensor (ESB_SVCC line) • Brake pedal stroke sensor internal failure • Electric servo brake control unit internal failure

DTC P1E26-00

DTC P1E26-00: Brake Pedal Stroke Sensor/Brake Pedal Stroke Redundant Sensor Incorrect Correlation

NOTE

- Initial Diagnosis:

  The initial on-board diagnosis occurs right after the vehicle condition is turned to the ON mode, and the brake system indicator (red or amber) comes on, and continues until the indicator goes off.

- Regular Diagnosis:

  The regular on-board diagnosis begins right after the brake system indicator (red or amber) goes off, and it continues until the vehicle condition is turned to the OFF (LOCK) mode.

- Review "How to Troubleshoot the Electric Servo Brake System" before doing the DTC troubleshooting procedure.
- Test-drive the vehicle according to local traffic conditions and regulations. Do not test-drive on a lift unless specified.
- The possible causes shown may not be a complete list of all potential problems, and it is possible that there may be other causes.

Confirmation Procedure	Basic Condition: • 12 volt battery voltage 9.5 - 16.7 V With the Driving Pattern: • Turn the vehicle to the ON mode. • Press the brake pedal several times.
Execution	Initial Diagnosis/Regular Diagnosis
Duration	About 1 second
DTC Type	• 1 drive cycle • Brake system indicator (red) on • Brake system indicator (amber) on
Fail Safe Action	• Stop electric servo brake function (Re-diagnose at the next IG-ON) • Stop brake assist function (Re-diagnose at the next IG-ON) • Stop automatic brake hold function (Re-diagnose at the next IG-ON) • Stop hill start assist function (Re-diagnose at the next IG-ON) • Stop deceleration assist brake cooperative control function (Re-diagnose at the next IG-ON) • Stop VSA assist cooperative control function (Re-diagnose at the next IG-ON) • Stop stall management function (Re-diagnose at the next IG-ON) • Stop regenerative brake function (Re-diagnose at the next IG-ON) • Stop driving support system brake control function (Re-diagnose at the next IG-ON)
Possible Cause	• Short to another line between the electric servo brake control unit and the brake pedal stroke sensor (BPS, BPSR lines) • Brake pedal stroke sensor internal failure • Electric servo brake control unit internal failure

DTC P1E27-00

DTC P1E27-00: Brake Fluid Pressure Sensor PU Circuit High Voltage

NOTE

- Initial Diagnosis:

The initial on-board diagnosis occurs right after the vehicle condition is turned to the ON mode, and the brake system indicator (red or amber) comes on, and continues until the indicator goes off.

- Regular Diagnosis:

  The regular on-board diagnosis begins right after the brake system indicator (red or amber) goes off, and it continues until the vehicle condition is turned to the OFF (LOCK) mode.

- Review "How to Troubleshoot the Electric Servo Brake System" before doing the DTC troubleshooting procedure.
- Test-drive the vehicle according to local traffic conditions and regulations. Do not test-drive on a lift unless specified.
- The possible causes shown may not be a complete list of all potential problems, and it is possible that there may be other causes.

Confirmation Procedure	Basic Condition: • 12 volt battery voltage 9.5 - 16.7 V With the Driving Pattern: • Turn the vehicle to the ON mode. • Press the brake pedal several times.
Execution	Initial Diagnosis/Regular Diagnosis
Duration	About 1 second
DTC Type	• 1 drive cycle • Brake system indicator (red) on • Brake system indicator (amber) on
Fail Safe Action	• Stop electric servo brake function (Re-diagnose at the next IG-ON) • Stop brake assist function (Re-diagnose at the next IG-ON) • Stop automatic brake hold function (Re-diagnose at the next IG-ON) • Stop hill start assist function (Re-diagnose at the next IG-ON) • Stop deceleration assist brake cooperative control function (Re-diagnose at the next IG-ON) • Stop VSA assist cooperative control function (Re-diagnose at the next IG-ON) • Stop stall management function (Re-diagnose at the next IG-ON) • Stop regenerative brake function (Re-diagnose at the next IG-ON) • Stop driving support system brake control function (Re-diagnose at the next IG-ON)
Possible Cause	• Pedal feel simulator internal failure (Upper hydraulic pressure sensor) • Electric servo brake control unit internal failure

DTC P1E28-00

DTC P1E28-00: Brake Fluid Pressure Sensor PU Circuit Low Voltage

NOTE

- Initial Diagnosis:

The initial on-board diagnosis occurs right after the vehicle condition is turned to the ON mode, and the brake system indicator (red or amber) comes on, and continues until the indicator goes off.

- Regular Diagnosis:

  The regular on-board diagnosis begins right after the brake system indicator (red or amber) goes off, and it continues until the vehicle condition is turned to the OFF (LOCK) mode.

- Review "How to Troubleshoot the Electric Servo Brake System" before doing the DTC troubleshooting procedure.
- Test-drive the vehicle according to local traffic conditions and regulations. Do not test-drive on a lift unless specified.
- The possible causes shown may not be a complete list of all potential problems, and it is possible that there may be other causes.

Confirmation Procedure	Basic Condition: • 12 volt battery voltage 9.5 - 16.7 V With the Driving Pattern: • Turn the vehicle to the ON mode. • Press the brake pedal several times.
Execution	Initial Diagnosis/Regular Diagnosis
Duration	About 1 second
DTC Type	• 1 drive cycle • Brake system indicator (red) on • Brake system indicator (amber) on
Fail Safe Action	• Stop electric servo brake function (Re-diagnose at the next IG-ON) • Stop brake assist function (Re-diagnose at the next IG-ON) • Stop automatic brake hold function (Re-diagnose at the next IG-ON) • Stop hill start assist function (Re-diagnose at the next IG-ON) • Stop deceleration assist brake cooperative control function (Re-diagnose at the next IG-ON) • Stop VSA assist cooperative control function (Re-diagnose at the next IG-ON) • Stop stall management function (Re-diagnose at the next IG-ON) • Stop regenerative brake function (Re-diagnose at the next IG-ON) • Stop driving support system brake control function (Re-diagnose at the next IG-ON)
Possible Cause	• Pedal feel simulator internal failure (Upper hydraulic pressure sensor) • Electric servo brake control unit internal failure

DTC P1E29-00

DTC P1E29-00: Brake Fluid Pressure Sensor PUR Circuit High Voltage

NOTE

- Initial Diagnosis:

The initial on-board diagnosis occurs right after the vehicle condition is turned to the ON mode, and the brake system indicator (red or amber) comes on, and continues until the indicator goes off.

- Regular Diagnosis:

  The regular on-board diagnosis begins right after the brake system indicator (red or amber) goes off, and it continues until the vehicle condition is turned to the OFF (LOCK) mode.

- Review "How to Troubleshoot the Electric Servo Brake System" before doing the DTC troubleshooting procedure.
- Test-drive the vehicle according to local traffic conditions and regulations. Do not test-drive on a lift unless specified.
- The possible causes shown may not be a complete list of all potential problems, and it is possible that there may be other causes.

Confirmation Procedure	Basic Condition: • 12 volt battery voltage 9.5 - 16.7 V With the Driving Pattern: • Turn the vehicle to the ON mode. • Press the brake pedal several times.
Execution	Initial Diagnosis/Regular Diagnosis
Duration	About 1 second
DTC Type	• 1 drive cycle • Brake system indicator (red) on • Brake system indicator (amber) on
Fail Safe Action	• Stop electric servo brake function (Re-diagnose at the next IG-ON) • Stop brake assist function (Re-diagnose at the next IG-ON) • Stop automatic brake hold function (Re-diagnose at the next IG-ON) • Stop hill start assist function (Re-diagnose at the next IG-ON) • Stop deceleration assist brake cooperative control function (Re-diagnose at the next IG-ON) • Stop VSA assist cooperative control function (Re-diagnose at the next IG-ON) • Stop stall management function (Re-diagnose at the next IG-ON) • Stop regenerative brake function (Re-diagnose at the next IG-ON) • Stop driving support system brake control function (Re-diagnose at the next IG-ON)
Possible Cause	• Pedal feel simulator internal failure (Upper hydraulic pressure sensor) • Electric servo brake control unit internal failure

DTC P1E2A-00

DTC P1E2A-00: Brake Fluid Pressure Sensor PUR Circuit Low Voltage

NOTE

- Initial Diagnosis:

The initial on-board diagnosis occurs right after the vehicle condition is turned to the ON mode, and the brake system indicator (red or amber) comes on, and continues until the indicator goes off.

- Regular Diagnosis:

  The regular on-board diagnosis begins right after the brake system indicator (red or amber) goes off, and it continues until the vehicle condition is turned to the OFF (LOCK) mode.

- Review "How to Troubleshoot the Electric Servo Brake System" before doing the DTC troubleshooting procedure.
- Test-drive the vehicle according to local traffic conditions and regulations. Do not test-drive on a lift unless specified.
- The possible causes shown may not be a complete list of all potential problems, and it is possible that there may be other causes.

Confirmation Procedure	Basic Condition: • 12 volt battery voltage 9.5 - 16.7 V With the Driving Pattern: • Turn the vehicle to the ON mode. • Press the brake pedal several times.
Execution	Initial Diagnosis/Regular Diagnosis
Duration	About 1 second
DTC Type	• 1 drive cycle • Brake system indicator (red) on • Brake system indicator (amber) on
Fail Safe Action	• Stop electric servo brake function (Re-diagnose at the next IG-ON) • Stop brake assist function (Re-diagnose at the next IG-ON) • Stop automatic brake hold function (Re-diagnose at the next IG-ON) • Stop hill start assist function (Re-diagnose at the next IG-ON) • Stop deceleration assist brake cooperative control function (Re-diagnose at the next IG-ON) • Stop VSA assist cooperative control function (Re-diagnose at the next IG-ON) • Stop stall management function (Re-diagnose at the next IG-ON) • Stop regenerative brake function (Re-diagnose at the next IG-ON) • Stop driving support system brake control function (Re-diagnose at the next IG-ON)
Possible Cause	• Pedal feel simulator internal failure (Upper hydraulic pressure sensor) • Electric servo brake control unit internal failure

DTC P1E2B-00

DTC P1E2B-00: Brake Fluid Pressure Sensor PU/PUR Incorrect Correlation

NOTE

- Initial Diagnosis:

The initial on-board diagnosis occurs right after the vehicle condition is turned to the ON mode, and the brake system indicator (red or amber) comes on, and continues until the indicator goes off.

- Regular Diagnosis:

  The regular on-board diagnosis begins right after the brake system indicator (red or amber) goes off, and it continues until the vehicle condition is turned to the OFF (LOCK) mode.

- Review "How to Troubleshoot the Electric Servo Brake System" before doing the DTC troubleshooting procedure.
- Test-drive the vehicle according to local traffic conditions and regulations. Do not test-drive on a lift unless specified.
- The possible causes shown may not be a complete list of all potential problems, and it is possible that there may be other causes.

Confirmation Procedure	Basic Condition: • 12 volt battery voltage 9.5 - 16.7 V With the Driving Pattern: • Turn the vehicle to the ON mode. • Press the brake pedal several times.
Execution	Initial Diagnosis/Regular Diagnosis
Duration	About 1 second
DTC Type	• 1 drive cycle • Brake system indicator (red) on • Brake system indicator (amber) on
Fail Safe Action	• Stop electric servo brake function (Re-diagnose at the next IG-ON) • Stop brake assist function (Re-diagnose at the next IG-ON) • Stop automatic brake hold function (Re-diagnose at the next IG-ON) • Stop hill start assist function (Re-diagnose at the next IG-ON) • Stop deceleration assist brake cooperative control function (Re-diagnose at the next IG-ON) • Stop VSA assist cooperative control function (Re-diagnose at the next IG-ON) • Stop stall management function (Re-diagnose at the next IG-ON) • Stop regenerative brake function (Re-diagnose at the next IG-ON) • Stop driving support system brake control function (Re-diagnose at the next IG-ON)
Possible Cause	• Pedal feel simulator internal failure (Upper hydraulic pressure sensor) • Electric servo brake control unit internal failure

DTC P1E2C-00

DTC P1E2C-00: Brake Fluid Pressure Sensor PL Circuit High Voltage

NOTE

- Initial Diagnosis:

The initial on-board diagnosis occurs right after the vehicle condition is turned to the ON mode, and the brake system indicator (red or amber) comes on, and continues until the indicator goes off.

- Regular Diagnosis:

  The regular on-board diagnosis begins right after the brake system indicator (red or amber) goes off, and it continues until the vehicle condition is turned to the OFF (LOCK) mode.

- Review "How to Troubleshoot the Electric Servo Brake System" before doing the DTC troubleshooting procedure.
- Test-drive the vehicle according to local traffic conditions and regulations. Do not test-drive on a lift unless specified.
- The possible causes shown may not be a complete list of all potential problems, and it is possible that there may be other causes.

Confirmation Procedure	Basic Condition: • 12 volt battery voltage 9.5 - 16.7 V With the Driving Pattern: • Turn the vehicle to the ON mode. • Press the brake pedal several times.
Execution	Initial Diagnosis/Regular Diagnosis
Duration	About 1 second
DTC Type	• 1 drive cycle • Brake system indicator (red) on • Brake system indicator (amber) on
Fail Safe Action	• Stop electric servo brake function (Re-diagnose at the next IG-ON) • Stop brake assist function (Re-diagnose at the next IG-ON) • Stop automatic brake hold function (Re-diagnose at the next IG-ON) • Stop hill start assist function (Re-diagnose at the next IG-ON) • Stop deceleration assist brake cooperative control function (Re-diagnose at the next IG-ON) • Stop VSA assist cooperative control function (Re-diagnose at the next IG-ON) • Stop stall management function (Re-diagnose at the next IG-ON) • Stop regenerative brake function (Re-diagnose at the next IG-ON) • Stop driving support system brake control function (Re-diagnose at the next IG-ON)
Possible Cause	• Pedal feel simulator internal failure (Lower hydraulic pressure sensor) • Electric servo brake control unit internal failure

DTC P1E2D-00

DTC P1E2D-00: Brake Fluid Pressure Sensor PL Circuit Low Voltage

NOTE

- Initial Diagnosis:

The initial on-board diagnosis occurs right after the vehicle condition is turned to the ON mode, and the brake system indicator (red or amber) comes on, and continues until the indicator goes off.

- Regular Diagnosis:

  The regular on-board diagnosis begins right after the brake system indicator (red or amber) goes off, and it continues until the vehicle condition is turned to the OFF (LOCK) mode.

- Review "How to Troubleshoot the Electric Servo Brake System" before doing the DTC troubleshooting procedure.
- Test-drive the vehicle according to local traffic conditions and regulations. Do not test-drive on a lift unless specified.
- The possible causes shown may not be a complete list of all potential problems, and it is possible that there may be other causes.

Confirmation Procedure	Basic Condition: • 12 volt battery voltage 9.5 - 16.7 V With the Driving Pattern: • Turn the vehicle to the ON mode. • Press the brake pedal several times.
Execution	Initial Diagnosis/Regular Diagnosis
Duration	About 1 second
DTC Type	• 1 drive cycle • Brake system indicator (red) on • Brake system indicator (amber) on
Fail Safe Action	• Stop electric servo brake function (Re-diagnose at the next IG-ON) • Stop brake assist function (Re-diagnose at the next IG-ON) • Stop automatic brake hold function (Re-diagnose at the next IG-ON) • Stop hill start assist function (Re-diagnose at the next IG-ON) • Stop deceleration assist brake cooperative control function (Re-diagnose at the next IG-ON) • Stop VSA assist cooperative control function (Re-diagnose at the next IG-ON) • Stop stall management function (Re-diagnose at the next IG-ON) • Stop regenerative brake function (Re-diagnose at the next IG-ON) • Stop driving support system brake control function (Re-diagnose at the next IG-ON)
Possible Cause	• Pedal feel simulator internal failure (Lower hydraulic pressure sensor) • Electric servo brake control unit internal failure

DTC P1E2E-00

DTC P1E2E-00: Brake Fluid Pressure Sensor PLR Circuit High Voltage

NOTE

- Initial Diagnosis:

The initial on-board diagnosis occurs right after the vehicle condition is turned to the ON mode, and the brake system indicator (red or amber) comes on, and continues until the indicator goes off.

- Regular Diagnosis:

  The regular on-board diagnosis begins right after the brake system indicator (red or amber) goes off, and it continues until the vehicle condition is turned to the OFF (LOCK) mode.

- Review "How to Troubleshoot the Electric Servo Brake System" before doing the DTC troubleshooting procedure.
- Test-drive the vehicle according to local traffic conditions and regulations. Do not test-drive on a lift unless specified.
- The possible causes shown may not be a complete list of all potential problems, and it is possible that there may be other causes.

Confirmation Procedure	Basic Condition: • 12 volt battery voltage 9.5 - 16.7 V With the Driving Pattern: • Turn the vehicle to the ON mode. • Press the brake pedal several times.
Execution	Initial Diagnosis/Regular Diagnosis
Duration	About 1 second
DTC Type	• 1 drive cycle • Brake system indicator (red) on • Brake system indicator (amber) on
Fail Safe Action	• Stop electric servo brake function (Re-diagnose at the next IG-ON) • Stop brake assist function (Re-diagnose at the next IG-ON) • Stop automatic brake hold function (Re-diagnose at the next IG-ON) • Stop hill start assist function (Re-diagnose at the next IG-ON) • Stop deceleration assist brake cooperative control function (Re-diagnose at the next IG-ON) • Stop VSA assist cooperative control function (Re-diagnose at the next IG-ON) • Stop stall management function (Re-diagnose at the next IG-ON) • Stop regenerative brake function (Re-diagnose at the next IG-ON) • Stop driving support system brake control function (Re-diagnose at the next IG-ON)
Possible Cause	• Pedal feel simulator internal failure (Lower hydraulic pressure sensor) • Electric servo brake control unit internal failure

DTC P1E2F-00

DTC P1E2F-00: Brake Fluid Pressure Sensor PLR Circuit Low Voltage

NOTE

- Initial Diagnosis:

The initial on-board diagnosis occurs right after the vehicle condition is turned to the ON mode, and the brake system indicator (red or amber) comes on, and continues until the indicator goes off.

- Regular Diagnosis:

  The regular on-board diagnosis begins right after the brake system indicator (red or amber) goes off, and it continues until the vehicle condition is turned to the OFF (LOCK) mode.

- Review "How to Troubleshoot the Electric Servo Brake System" before doing the DTC troubleshooting procedure.
- Test-drive the vehicle according to local traffic conditions and regulations. Do not test-drive on a lift unless specified.
- The possible causes shown may not be a complete list of all potential problems, and it is possible that there may be other causes.

Confirmation Procedure	Basic Condition: • 12 volt battery voltage 9.5 - 16.7 V With the Driving Pattern: • Turn the vehicle to the ON mode. • Press the brake pedal several times.
Execution	Initial Diagnosis/Regular Diagnosis
Duration	About 1 second
DTC Type	• 1 drive cycle • Brake system indicator (red) on • Brake system indicator (amber) on
Fail Safe Action	• Stop electric servo brake function (Re-diagnose at the next IG-ON) • Stop brake assist function (Re-diagnose at the next IG-ON) • Stop automatic brake hold function (Re-diagnose at the next IG-ON) • Stop hill start assist function (Re-diagnose at the next IG-ON) • Stop deceleration assist brake cooperative control function (Re-diagnose at the next IG-ON) • Stop VSA assist cooperative control function (Re-diagnose at the next IG-ON) • Stop stall management function (Re-diagnose at the next IG-ON) • Stop regenerative brake function (Re-diagnose at the next IG-ON) • Stop driving support system brake control function (Re-diagnose at the next IG-ON)
Possible Cause	• Pedal feel simulator internal failure (Lower hydraulic pressure sensor) • Electric servo brake control unit internal failure

DTC P1E32-00

DTC P1E32-00: Master Cylinder Cut Valve Stuck OFF (Stuck Open)

NOTE

- Initial Diagnosis:

The initial on-board diagnosis occurs right after the vehicle condition is turned to the ON mode, and the brake system indicator (red or amber) comes on, and continues until the indicator goes off.

- Regular Diagnosis:

  The regular on-board diagnosis begins right after the brake system indicator (red or amber) goes off, and it continues until the vehicle condition is turned to the OFF (LOCK) mode.

- Review "How to Troubleshoot the Electric Servo Brake System" before doing the DTC troubleshooting procedure.
- Test-drive the vehicle according to local traffic conditions and regulations. Do not test-drive on a lift unless specified.
- The possible causes shown may not be a complete list of all potential problems, and it is possible that there may be other causes.

Confirmation Procedure	Basic Condition: • 12 volt battery voltage 9.5 - 16.7 V • Brake pedal is released With the Driving Pattern: • Turn the vehicle to the ON mode. • Wait 1 second or more without pressing the brake pedal.
Execution	Initial Diagnosis/Regular Diagnosis
Duration	About 1 second
DTC Type	• 1 drive cycle • Brake system indicator (red) on • Brake system indicator (amber) on
Fail Safe Action	• Stop electric servo brake function (Re-diagnose at the next IG-ON) • Stop brake assist function (Re-diagnose at the next IG-ON) • Stop automatic brake hold function (Re-diagnose at the next IG-ON) • Stop hill start assist function (Re-diagnose at the next IG-ON) • Stop deceleration assist brake cooperative control function (Re-diagnose at the next IG-ON) • Stop VSA assist cooperative control function (Re-diagnose at the next IG-ON) • Stop stall management function (Re-diagnose at the next IG-ON) • Stop regenerative brake function (Re-diagnose at the next IG-ON) • Stop driving support system brake control function (Re-diagnose at the next IG-ON)
Possible Cause	• Pedal feel simulator internal failure (Master cylinder cut valve) • Electric servo brake control unit internal failure

DTC P1E33-00

DTC P1E33-00: Master Cylinder Cut Valve Incorrect Operation

NOTE

- Initial Diagnosis:

The initial on-board diagnosis occurs right after the vehicle condition is turned to the ON mode, and the brake system indicator (red or amber) comes on, and continues until the indicator goes off.

- Regular Diagnosis:

  The regular on-board diagnosis begins right after the brake system indicator (red or amber) goes off, and it continues until the vehicle condition is turned to the OFF (LOCK) mode.

- Review "How to Troubleshoot the Electric Servo Brake System" before doing the DTC troubleshooting procedure.
- Test-drive the vehicle according to local traffic conditions and regulations. Do not test-drive on a lift unless specified.
- The possible causes shown may not be a complete list of all potential problems, and it is possible that there may be other causes.

Confirmation Procedure	Basic Condition: • 12 volt battery voltage 9.5 - 16.7 V With the Driving Pattern: • Turn the vehicle to the ON mode. • Press the brake pedal several times.
Execution	Regular Diagnosis
Duration	About 1 second
DTC Type	• 1 drive cycle • Brake system indicator (red) on • Brake system indicator (amber) on
Fail Safe Action	• Stop electric servo brake function (Re-diagnose at the next IG-ON) • Stop brake assist function (Re-diagnose at the next IG-ON) • Stop automatic brake hold function (Re-diagnose at the next IG-ON) • Stop hill start assist function (Re-diagnose at the next IG-ON) • Stop deceleration assist brake cooperative control function (Re-diagnose at the next IG-ON) • Stop VSA assist cooperative control function (Re-diagnose at the next IG-ON) • Stop stall management function (Re-diagnose at the next IG-ON) • Stop regenerative brake function (Re-diagnose at the next IG-ON) • Stop driving support system brake control function (Re-diagnose at the next IG-ON)
Possible Cause	• Pedal feel simulator internal failure (Master cylinder cut valve) • Electric servo brake control unit internal failure

DTC P1E34-00

DTC P1E34-00: Master Cylinder Cut Valve Stuck ON (Stuck Close)

NOTE

- Initial Diagnosis:

The initial on-board diagnosis occurs right after the vehicle condition is turned to the ON mode, and the brake system indicator (red or amber) comes on, and continues until the indicator goes off.

- Regular Diagnosis:

  The regular on-board diagnosis begins right after the brake system indicator (red or amber) goes off, and it continues until the vehicle condition is turned to the OFF (LOCK) mode.

- Review "How to Troubleshoot the Electric Servo Brake System" before doing the DTC troubleshooting procedure.
- Test-drive the vehicle according to local traffic conditions and regulations. Do not test-drive on a lift unless specified.
- The possible causes shown may not be a complete list of all potential problems, and it is possible that there may be other causes.

Confirmation Procedure	Basic Condition: • 12 volt battery voltage 9.5 - 16.7 V • Brake pedal is released With the Driving Pattern: • Turn the vehicle to the ON mode. • Wait 1 second or more without pressing the brake pedal.
Execution	Initial Diagnosis/Regular Diagnosis
Duration	About 1 second
DTC Type	• 1 drive cycle • Brake system indicator (red) on • Brake system indicator (amber) on
Fail Safe Action	• Stop electric servo brake function (Re-diagnose at the next IG-ON) • Stop brake assist function (Re-diagnose at the next IG-ON) • Stop automatic brake hold function (Re-diagnose at the next IG-ON) • Stop hill start assist function (Re-diagnose at the next IG-ON) • Stop deceleration assist brake cooperative control function (Re-diagnose at the next IG-ON) • Stop VSA assist cooperative control function (Re-diagnose at the next IG-ON) • Stop stall management function (Re-diagnose at the next IG-ON) • Stop regenerative brake function (Re-diagnose at the next IG-ON) • Stop driving support system brake control function (Re-diagnose at the next IG-ON)
Possible Cause	• Pedal feel simulator internal failure (Master cylinder cut valve) • Electric servo brake control unit internal failure

DTC P1E35-00

DTC P1E35-00: Brake Pedal Feel Simulator Cut Valve Incorrect Operation

NOTE

- Initial Diagnosis:

The initial on-board diagnosis occurs right after the vehicle condition is turned to the ON mode, and the brake system indicator (red or amber) comes on, and continues until the indicator goes off.

- Regular Diagnosis:

  The regular on-board diagnosis begins right after the brake system indicator (red or amber) goes off, and it continues until the vehicle condition is turned to the OFF (LOCK) mode.

- Review "How to Troubleshoot the Electric Servo Brake System" before doing the DTC troubleshooting procedure.
- Test-drive the vehicle according to local traffic conditions and regulations. Do not test-drive on a lift unless specified.
- The possible causes shown may not be a complete list of all potential problems, and it is possible that there may be other causes.

Confirmation Procedure	Basic Condition: • 12 volt battery voltage 9.5 - 16.7 V With the Driving Pattern: • Turn the vehicle to the ON mode. • Press the brake pedal several times.
Execution	Regular Diagnosis
Duration	About 1 second
DTC Type	• 1 drive cycle • Brake system indicator (red) on • Brake system indicator (amber) on
Fail Safe Action	• Stop electric servo brake function (Re-diagnose at the next IG-ON) • Stop brake assist function (Re-diagnose at the next IG-ON) • Stop automatic brake hold function (Re-diagnose at the next IG-ON) • Stop hill start assist function (Re-diagnose at the next IG-ON) • Stop deceleration assist brake cooperative control function (Re-diagnose at the next IG-ON) • Stop VSA assist cooperative control function (Re-diagnose at the next IG-ON) • Stop stall management function (Re-diagnose at the next IG-ON) • Stop regenerative brake function (Re-diagnose at the next IG-ON) • Stop driving support system brake control function (Re-diagnose at the next IG-ON)
Possible Cause	• Pedal feel simulator internal failure (Pedal feel simulator cut valve) • Electric servo brake control unit internal failure

DTC P1E36-00

DTC P1E36-00: Brake Pedal Feel Simulator Cut Valve No Operation

NOTE

- Initial Diagnosis:

The initial on-board diagnosis occurs right after the vehicle condition is turned to the ON mode, and the brake system indicator (red or amber) comes on, and continues until the indicator goes off.

- Regular Diagnosis:

  The regular on-board diagnosis begins right after the brake system indicator (red or amber) goes off, and it continues until the vehicle condition is turned to the OFF (LOCK) mode.

- Review "How to Troubleshoot the Electric Servo Brake System" before doing the DTC troubleshooting procedure.
- Test-drive the vehicle according to local traffic conditions and regulations. Do not test-drive on a lift unless specified.
- The possible causes shown may not be a complete list of all potential problems, and it is possible that there may be other causes.

Confirmation Procedure	Basic Condition: • 12 volt battery voltage 9.5 - 16.7 V With the Driving Pattern: • Turn the vehicle to the ON mode. • Press the brake pedal several times.
Execution	Regular Diagnosis
Duration	About 1 second
DTC Type	• 1 drive cycle • Brake system indicator (red) on • Brake system indicator (amber) on
Fail Safe Action	• Stop electric servo brake function (Re-diagnose at the next IG-ON) • Stop brake assist function (Re-diagnose at the next IG-ON) • Stop automatic brake hold function (Re-diagnose at the next IG-ON) • Stop hill start assist function (Re-diagnose at the next IG-ON) • Stop deceleration assist brake cooperative control function (Re-diagnose at the next IG-ON) • Stop VSA assist cooperative control function (Re-diagnose at the next IG-ON) • Stop stall management function (Re-diagnose at the next IG-ON) • Stop regenerative brake function (Re-diagnose at the next IG-ON) • Stop driving support system brake control function (Re-diagnose at the next IG-ON)
Possible Cause	• Pedal feel simulator internal failure (Pedal feel simulator cut valve)

DTC P1E37-00

DTC P1E37-00: Brake Pedal Feel Simulator Cut Valve Stuck OFF (Stuck Close)

NOTE

- Initial Diagnosis:

The initial on-board diagnosis occurs right after the vehicle condition is turned to the ON mode, and the brake system indicator (red or amber) comes on, and continues until the indicator goes off.

- Regular Diagnosis:

  The regular on-board diagnosis begins right after the brake system indicator (red or amber) goes off, and it continues until the vehicle condition is turned to the OFF (LOCK) mode.

- Review "How to Troubleshoot the Electric Servo Brake System" before doing the DTC troubleshooting procedure.
- Test-drive the vehicle according to local traffic conditions and regulations. Do not test-drive on a lift unless specified.
- The possible causes shown may not be a complete list of all potential problems, and it is possible that there may be other causes.

Confirmation Procedure	Basic Condition: • 12 volt battery voltage 9.5 - 16.7 V • Brake pedal is released With the Driving Pattern: • Turn the vehicle to the ON mode. • Wait 1 second or more without pressing the brake pedal.
Execution	Initial Diagnosis/Regular Diagnosis
Duration	About 1 second
DTC Type	• 1 drive cycle • Brake system indicator (red) on • Brake system indicator (amber) on
Fail Safe Action	• Stop electric servo brake function (Re-diagnose at the next IG-ON) • Stop brake assist function (Re-diagnose at the next IG-ON) • Stop automatic brake hold function (Re-diagnose at the next IG-ON) • Stop hill start assist function (Re-diagnose at the next IG-ON) • Stop deceleration assist brake cooperative control function (Re-diagnose at the next IG-ON) • Stop VSA assist cooperative control function (Re-diagnose at the next IG-ON) • Stop stall management function (Re-diagnose at the next IG-ON) • Stop regenerative brake function (Re-diagnose at the next IG-ON) • Stop driving support system brake control function (Re-diagnose at the next IG-ON)
Possible Cause	• Pedal feel simulator internal failure (Pedal feel simulator cut valve) • Electric servo brake control unit internal failure

DTC P1E38-00

DTC P1E38-00: Brake Pedal Feel Simulator Cut Valve Stuck ON (Stuck Open)

NOTE

- Initial Diagnosis:

The initial on-board diagnosis occurs right after the vehicle condition is turned to the ON mode, and the brake system indicator (red or amber) comes on, and continues until the indicator goes off.

- Regular Diagnosis:

  The regular on-board diagnosis begins right after the brake system indicator (red or amber) goes off, and it continues until the vehicle condition is turned to the OFF (LOCK) mode.

- Review "How to Troubleshoot the Electric Servo Brake System" before doing the DTC troubleshooting procedure.
- Test-drive the vehicle according to local traffic conditions and regulations. Do not test-drive on a lift unless specified.
- The possible causes shown may not be a complete list of all potential problems, and it is possible that there may be other causes.

Confirmation Procedure	Basic Condition: • 12 volt battery voltage 9.5 - 16.7 V • Brake pedal is released With the Driving Pattern: • Turn the vehicle to the ON mode. • Wait 1 second or more without pressing the brake pedal.
Execution	Initial Diagnosis/Regular Diagnosis
Duration	About 1 second
DTC Type	• 1 drive cycle • Brake system indicator (red) on • Brake system indicator (amber) on
Fail Safe Action	• Stop electric servo brake function (Re-diagnose at the next IG-ON) • Stop brake assist function (Re-diagnose at the next IG-ON) • Stop automatic brake hold function (Re-diagnose at the next IG-ON) • Stop hill start assist function (Re-diagnose at the next IG-ON) • Stop deceleration assist brake cooperative control function (Re-diagnose at the next IG-ON) • Stop VSA assist cooperative control function (Re-diagnose at the next IG-ON) • Stop stall management function (Re-diagnose at the next IG-ON) • Stop regenerative brake function (Re-diagnose at the next IG-ON) • Stop driving support system brake control function (Re-diagnose at the next IG-ON)
Possible Cause	• Pedal feel simulator internal failure (Pedal feel simulator cut valve) • Electric servo brake control unit internal failure

DTC P1E41-00

DTC P1E41-00: Electric Servo Brake System Fail-Safe Relay Stuck ON

NOTE

- Initial Diagnosis:

The initial on-board diagnosis occurs right after the vehicle condition is turned to the ON mode, and the brake system indicator (red or amber) comes on, and continues until the indicator goes off.

- Regular Diagnosis:

  The regular on-board diagnosis begins right after the brake system indicator (red or amber) goes off, and it continues until the vehicle condition is turned to the OFF (LOCK) mode.

- Review "How to Troubleshoot the Electric Servo Brake System" before doing the DTC troubleshooting procedure.
- Test-drive the vehicle according to local traffic conditions and regulations. Do not test-drive on a lift unless specified.
- The possible causes shown may not be a complete list of all potential problems, and it is possible that there may be other causes.

Confirmation Procedure	Basic Condition: • 12 volt battery voltage 9.5 - 16.7 V With the Driving Pattern: • Turn the vehicle to the ON mode. • Wait 5 seconds or more.
Execution	Initial Diagnosis
Duration	About 5 seconds
DTC Type	• 1 drive cycle • Brake system indicator (red) on • Brake system indicator (amber) on
Fail Safe Action	• Stop electric servo brake function (Re-diagnose at the next IG-ON) • Stop brake assist function (Re-diagnose at the next IG-ON) • Stop automatic brake hold function (Re-diagnose at the next IG-ON) • Stop hill start assist function (Re-diagnose at the next IG-ON) • Stop deceleration assist brake cooperative control function (Re-diagnose at the next IG-ON) • Stop VSA assist cooperative control function (Re-diagnose at the next IG-ON) • Stop stall management function (Re-diagnose at the next IG-ON) • Stop regenerative brake function (Re-diagnose at the next IG-ON) • Stop driving support system brake control function (Re-diagnose at the next IG-ON)
Possible Cause	• Electric servo brake control unit internal failure

DTC P1E42-00

DTC P1E42-00: Electric Servo Brake System Fail-Safe Relay Stuck OFF

NOTE

- Initial Diagnosis:

The initial on-board diagnosis occurs right after the vehicle condition is turned to the ON mode, and the brake system indicator (red or amber) comes on, and continues until the indicator goes off.

- Regular Diagnosis:

  The regular on-board diagnosis begins right after the brake system indicator (red or amber) goes off, and it continues until the vehicle condition is turned to the OFF (LOCK) mode.

- Review "How to Troubleshoot the Electric Servo Brake System" before doing the DTC troubleshooting procedure.
- Test-drive the vehicle according to local traffic conditions and regulations. Do not test-drive on a lift unless specified.
- The possible causes shown may not be a complete list of all potential problems, and it is possible that there may be other causes.

Confirmation Procedure	Basic Condition: • 12 volt battery voltage 9.5 - 16.7 V With the Driving Pattern: • Turn the vehicle to the ON mode.
Execution	Initial Diagnosis/Regular Diagnosis
Duration	About 1 second
DTC Type	• 1 drive cycle • Brake system indicator (red) on • Brake system indicator (amber) on
Fail Safe Action	• Stop electric servo brake function (Re-diagnose at the next IG-ON) • Stop brake assist function (Re-diagnose at the next IG-ON) • Stop automatic brake hold function (Re-diagnose at the next IG-ON) • Stop hill start assist function (Re-diagnose at the next IG-ON) • Stop deceleration assist brake cooperative control function (Re-diagnose at the next IG-ON) • Stop VSA assist cooperative control function (Re-diagnose at the next IG-ON) • Stop stall management function (Re-diagnose at the next IG-ON) • Stop regenerative brake function (Re-diagnose at the next IG-ON) • Stop driving support system brake control function (Re-diagnose at the next IG-ON)
Possible Cause	• Electric servo brake control unit internal failure

DTC P1E44-00

DTC P1E44-00: Electric Servo Brake Control Unit Internal Circuit Malfunction (Charge Pump Circuit)

NOTE

- Initial Diagnosis:

  The initial on-board diagnosis occurs right after the vehicle condition is turned to the ON mode, and the brake system indicator (red or amber) comes on, and continues until the indicator goes off.

- Regular Diagnosis:

  The regular on-board diagnosis begins right after the brake system indicator (red or amber) goes off, and it continues until the vehicle condition is turned to the OFF (LOCK) mode.

- Review "How to Troubleshoot the Electric Servo Brake System" before doing the DTC troubleshooting procedure.
- Test-drive the vehicle according to local traffic conditions and regulations. Do not test-drive on a lift unless specified.
- The possible causes shown may not be a complete list of all potential problems, and it is possible that there may be other causes.

Confirmation Procedure	Basic Condition: • 12 volt battery voltage 9.5 - 16.7 V With the Driving Pattern: • Turn the vehicle to the ON mode.
Execution	Initial Diagnosis/Regular Diagnosis
Duration	About 1 second
DTC Type	• 1 drive cycle • Brake system indicator (red) on • Brake system indicator (amber) on
Fail Safe Action	• Stop electric servo brake function (Re-diagnose at the next IG-ON) • Stop brake assist function (Re-diagnose at the next IG-ON) • Stop automatic brake hold function (Re-diagnose at the next IG-ON) • Stop hill start assist function (Re-diagnose at the next IG-ON) • Stop deceleration assist brake cooperative control function (Re-diagnose at the next IG-ON) • Stop VSA assist cooperative control function (Re-diagnose at the next IG-ON) • Stop stall management function (Re-diagnose at the next IG-ON) • Stop regenerative brake function (Re-diagnose at the next IG-ON) • Stop driving support system brake control function (Re-diagnose at the next IG-ON)
Possible Cause	• Electric servo brake control unit internal failure

DTC P1E46-00

DTC P1E46-00: Electric Servo Brake Control Unit Internal Circuit Malfunction (FET Stuck ON)

NOTE

- Initial Diagnosis:

  The initial on-board diagnosis occurs right after the vehicle condition is turned to the ON mode, and the brake system indicator (red or amber) comes on, and continues until the indicator goes off.

- Regular Diagnosis:

The regular on-board diagnosis begins right after the brake system indicator (red or amber) goes off, and it continues until the vehicle condition is turned to the OFF (LOCK) mode.

- Review "How to Troubleshoot the Electric Servo Brake System" before doing the DTC troubleshooting procedure.
- Test-drive the vehicle according to local traffic conditions and regulations. Do not test-drive on a lift unless specified.
- The possible causes shown may not be a complete list of all potential problems, and it is possible that there may be other causes.

Confirmation Procedure	Basic Condition: • 12 volt battery voltage 9.5 - 16.7 V • Brake pedal is released With the Driving Pattern: • Turn the vehicle to the ON mode. • Wait 1 second or more without pressing the brake pedal.
Execution	Initial Diagnosis/Regular Diagnosis
Duration	About 1 second
DTC Type	• 1 drive cycle • Brake system indicator (red) on • Brake system indicator (amber) on
Fail Safe Action	• Stop electric servo brake function (Re-diagnose at the next IG-ON) • Stop brake assist function (Re-diagnose at the next IG-ON) • Stop automatic brake hold function (Re-diagnose at the next IG-ON) • Stop hill start assist function (Re-diagnose at the next IG-ON) • Stop deceleration assist brake cooperative control function (Re-diagnose at the next IG-ON) • Stop VSA assist cooperative control function (Re-diagnose at the next IG-ON) • Stop stall management function (Re-diagnose at the next IG-ON) • Stop regenerative brake function (Re-diagnose at the next IG-ON) • Stop driving support system brake control function (Re-diagnose at the next IG-ON)
Possible Cause	• Short to ground or short to power between the electric servo brake control unit and the tandem motor cylinder (MU, MV, MW lines) • Tandem motor cylinder internal failure (Motor) • Electric servo brake control unit internal failure

DTC P1E47-00

DTC P1E47-00: Electric Servo Brake Control Unit Internal Circuit Malfunction (FET Stuck OFF)

NOTE

- Initial Diagnosis:

The initial on-board diagnosis occurs right after the vehicle condition is turned to the ON mode, and the brake system indicator (red or amber) comes on, and continues until the indicator goes off.

- Regular Diagnosis:

  The regular on-board diagnosis begins right after the brake system indicator (red or amber) goes off, and it continues until the vehicle condition is turned to the OFF (LOCK) mode.

- Review "How to Troubleshoot the Electric Servo Brake System" before doing the DTC troubleshooting procedure.
- Test-drive the vehicle according to local traffic conditions and regulations. Do not test-drive on a lift unless specified.
- The possible causes shown may not be a complete list of all potential problems, and it is possible that there may be other causes.

Confirmation Procedure	Basic Condition: • 12 volt battery voltage 10.0 - 16.0 V With the Driving Pattern: • Turn the vehicle to the ON mode.
Execution	Initial Diagnosis
Duration	About 1 second
DTC Type	• 1 drive cycle • Brake system indicator (red) on • Brake system indicator (amber) on
Fail Safe Action	• Stop electric servo brake function (Re-diagnose at the next IG-ON) • Stop brake assist function (Re-diagnose at the next IG-ON) • Stop automatic brake hold function (Re-diagnose at the next IG-ON) • Stop hill start assist function (Re-diagnose at the next IG-ON) • Stop deceleration assist brake cooperative control function (Re-diagnose at the next IG-ON) • Stop VSA assist cooperative control function (Re-diagnose at the next IG-ON) • Stop stall management function (Re-diagnose at the next IG-ON) • Stop regenerative brake function (Re-diagnose at the next IG-ON) • Stop driving support system brake control function (Re-diagnose at the next IG-ON)
Possible Cause	• Short to ground or short to power between the electric servo brake control unit and the tandem motor cylinder (MU, MV, MW lines) • Tandem motor cylinder internal failure (Motor) • Electric servo brake control unit internal failure

DTC P1E48-00

DTC P1E48-00: Slave Cylinder Drive Motor Current Malfunction (Offset)

NOTE

- Initial Diagnosis:

The initial on-board diagnosis occurs right after the vehicle condition is turned to the ON mode, and the brake system indicator (red or amber) comes on, and continues until the indicator goes off.

- Regular Diagnosis:

  The regular on-board diagnosis begins right after the brake system indicator (red or amber) goes off, and it continues until the vehicle condition is turned to the OFF (LOCK) mode.

- Review "How to Troubleshoot the Electric Servo Brake System" before doing the DTC troubleshooting procedure.
- Test-drive the vehicle according to local traffic conditions and regulations. Do not test-drive on a lift unless specified.
- The possible causes shown may not be a complete list of all potential problems, and it is possible that there may be other causes.

Confirmation Procedure	Basic Condition: • 12 volt battery voltage 9.5 - 16.7 V • Brake pedal is released With the Driving Pattern: • Turn the vehicle to the ON mode. • Wait 1 second or more without pressing the brake pedal.
Execution	Initial Diagnosis/Regular Diagnosis
Duration	About 1 second
DTC Type	• 1 drive cycle • Brake system indicator (red) on • Brake system indicator (amber) on
Fail Safe Action	• Stop electric servo brake function (Re-diagnose at the next IG-ON) • Stop brake assist function (Re-diagnose at the next IG-ON) • Stop automatic brake hold function (Re-diagnose at the next IG-ON) • Stop hill start assist function (Re-diagnose at the next IG-ON) • Stop deceleration assist brake cooperative control function (Re-diagnose at the next IG-ON) • Stop VSA assist cooperative control function (Re-diagnose at the next IG-ON) • Stop stall management function (Re-diagnose at the next IG-ON) • Stop regenerative brake function (Re-diagnose at the next IG-ON) • Stop driving support system brake control function (Re-diagnose at the next IG-ON)
Possible Cause	• Short to ground or short to another line between the electric servo brake control unit and the tandem motor cylinder (MU, MV, MW lines) • Tandem motor cylinder internal failure (Motor) • Electric servo brake control unit internal failure

DTC P1E49-00

DTC P1E49-00: Slave Cylinder Drive Motor Current Malfunction (Stuck)

NOTE

- Initial Diagnosis:

  The initial on-board diagnosis occurs right after the vehicle condition is turned to the ON mode, and the brake system indicator (red or amber) comes on, and continues until the indicator goes off.

- Regular Diagnosis:

  The regular on-board diagnosis begins right after the brake system indicator (red or amber) goes off, and it continues until the vehicle condition is turned to the OFF (LOCK) mode.

- Review "How to Troubleshoot the Electric Servo Brake System" before doing the DTC troubleshooting procedure.
- Test-drive the vehicle according to local traffic conditions and regulations. Do not test-drive on a lift unless specified.
- The possible causes shown may not be a complete list of all potential problems, and it is possible that there may be other causes.

Confirmation Procedure	Basic Condition: • 12 volt battery voltage 9.5 - 16.7 V With the Driving Pattern: • Turn the vehicle to the ON mode. • Press the brake pedal several times.
Execution	Regular Diagnosis
Duration	About 1 second
DTC Type	• 1 drive cycle • Brake system indicator (red) on • Brake system indicator (amber) on
Fail Safe Action	• Stop electric servo brake function (Re-diagnose at the next IG-ON) • Stop brake assist function (Re-diagnose at the next IG-ON) • Stop automatic brake hold function (Re-diagnose at the next IG-ON) • Stop hill start assist function (Re-diagnose at the next IG-ON) • Stop deceleration assist brake cooperative control function (Re-diagnose at the next IG-ON) • Stop VSA assist cooperative control function (Re-diagnose at the next IG-ON) • Stop stall management function (Re-diagnose at the next IG-ON) • Stop regenerative brake function (Re-diagnose at the next IG-ON) • Stop driving support system brake control function (Re-diagnose at the next IG-ON)
Possible Cause	• Open between the electric servo brake control unit and the tandem motor cylinder (MU, MV, MW lines) • Tandem motor cylinder internal failure (Motor) • Electric servo brake control unit internal failure

DTC P1E4A-00

DTC P1E4A-00: Slave Cylinder Drive Motor Current Malfunction (Over Current)

NOTE

- Initial Diagnosis:

  The initial on-board diagnosis occurs right after the vehicle condition is turned to the ON mode, and the brake system indicator (red or amber) comes on, and continues until the indicator goes off.

- Regular Diagnosis:

  The regular on-board diagnosis begins right after the brake system indicator (red or amber) goes off, and it continues until the vehicle condition is turned to the OFF (LOCK) mode.

- Review "How to Troubleshoot the Electric Servo Brake System" before doing the DTC troubleshooting procedure.
- Test-drive the vehicle according to local traffic conditions and regulations. Do not test-drive on a lift unless specified.
- The possible causes shown may not be a complete list of all potential problems, and it is possible that there may be other causes.

Confirmation Procedure	Basic Condition: • 12 volt battery voltage 9.5 - 16.7 V With the Driving Pattern: • Turn the vehicle to the ON mode.
Execution	Regular Diagnosis
Duration	About 1 second
DTC Type	• 1 drive cycle • Brake system indicator (red) on • Brake system indicator (amber) on
Fail Safe Action	• Stop electric servo brake function (Re-diagnose at the next IG-ON) • Stop brake assist function (Re-diagnose at the next IG-ON) • Stop automatic brake hold function (Re-diagnose at the next IG-ON) • Stop hill start assist function (Re-diagnose at the next IG-ON) • Stop deceleration assist brake cooperative control function (Re-diagnose at the next IG-ON) • Stop VSA assist cooperative control function (Re-diagnose at the next IG-ON) • Stop stall management function (Re-diagnose at the next IG-ON) • Stop regenerative brake function (Re-diagnose at the next IG-ON) • Stop driving support system brake control function (Re-diagnose at the next IG-ON)
Possible Cause	• Short to ground between the electric servo brake control unit and the tandem motor cylinder (MU, MV, MW lines) • Tandem motor cylinder internal failure (Motor) • Electric servo brake control unit internal failure

DTC P1E4B-00

DTC P1E4B-00: Slave Cylinder Drive Motor Circuit Open

NOTE

- Initial Diagnosis:

  The initial on-board diagnosis occurs right after the vehicle condition is turned to the ON mode, and the brake system indicator (red or amber) comes on, and continues until the indicator goes off.

- Regular Diagnosis:

  The regular on-board diagnosis begins right after the brake system indicator (red or amber) goes off, and it continues until the vehicle condition is turned to the OFF (LOCK) mode.

- Review "How to Troubleshoot the Electric Servo Brake System" before doing the DTC troubleshooting procedure.
- Test-drive the vehicle according to local traffic conditions and regulations. Do not test-drive on a lift unless specified.
- The possible causes shown may not be a complete list of all potential problems, and it is possible that there may be other causes.

Confirmation Procedure	Basic Condition: • 12 volt battery voltage 9.5 - 16.7 V With the Driving Pattern: • Turn the vehicle to the ON mode. • Press the brake pedal several times.
Execution	Initial Diagnosis/Regular Diagnosis
Duration	About 1 second
DTC Type	• 1 drive cycle • Brake system indicator (red) on • Brake system indicator (amber) on
Fail Safe Action	• Stop electric servo brake function (Re-diagnose at the next IG-ON) • Stop brake assist function (Re-diagnose at the next IG-ON) • Stop automatic brake hold function (Re-diagnose at the next IG-ON) • Stop hill start assist function (Re-diagnose at the next IG-ON) • Stop deceleration assist brake cooperative control function (Re-diagnose at the next IG-ON) • Stop VSA assist cooperative control function (Re-diagnose at the next IG-ON) • Stop stall management function (Re-diagnose at the next IG-ON) • Stop regenerative brake function (Re-diagnose at the next IG-ON) • Stop driving support system brake control function (Re-diagnose at the next IG-ON)
Possible Cause	• Open between the electric servo brake control unit and the tandem motor cylinder (MU, MV, MW lines) • Tandem motor cylinder internal failure (Motor)

	- Electric servo brake control unit internal failure

DTC P1E4C-00

DTC P1E4C-00: Slave Cylinder Drive Motor Power Source Circuit High Voltage

NOTE

- Initial Diagnosis:

  The initial on-board diagnosis occurs right after the vehicle condition is turned to the ON mode, and the brake system indicator (red or amber) comes on, and continues until the indicator goes off.

- Regular Diagnosis:

  The regular on-board diagnosis begins right after the brake system indicator (red or amber) goes off, and it continues until the vehicle condition is turned to the OFF (LOCK) mode.

- Review "How to Troubleshoot the Electric Servo Brake System" before doing the DTC troubleshooting procedure.
- Test-drive the vehicle according to local traffic conditions and regulations. Do not test-drive on a lift unless specified.
- The possible causes shown may not be a complete list of all potential problems, and it is possible that there may be other causes.

Confirmation Procedure	Basic Condition: • 12 volt battery voltage 9.5 - 16.7 V With the Driving Pattern: • Turn the vehicle to the ON mode.
Execution	Initial Diagnosis/Regular Diagnosis
Duration	About 1 second
DTC Type	• 1 drive cycle • Brake system indicator (red) on • Brake system indicator (amber) on
Fail Safe Action	• Stop electric servo brake function (Re-diagnose at the next IG-ON) • Stop brake assist function (Re-diagnose at the next IG-ON) • Stop automatic brake hold function (Re-diagnose at the next IG-ON) • Stop hill start assist function (Re-diagnose at the next IG-ON) • Stop deceleration assist brake cooperative control function (Re-diagnose at the next IG-ON) • Stop VSA assist cooperative control function (Re-diagnose at the next IG-ON) • Stop stall management function (Re-diagnose at the next IG-ON) • Stop regenerative brake function (Re-diagnose at the next IG-ON) • Stop driving support system brake control function (Re-diagnose at the next IG-ON)
Possible Cause	• Short to power between the electric servo brake control unit and the tandem motor cylinder (MU, MV, MW lines)

	- Electric servo brake control unit internal failure

DTC P1E4D-00

DTC P1E4D-00: Motor Angle Signal Malfunction

NOTE

- Initial Diagnosis:

  The initial on-board diagnosis occurs right after the vehicle condition is turned to the ON mode, and the brake system indicator (red or amber) comes on, and continues until the indicator goes off.

- Regular Diagnosis:

  The regular on-board diagnosis begins right after the brake system indicator (red or amber) goes off, and it continues until the vehicle condition is turned to the OFF (LOCK) mode.

- Review "How to Troubleshoot the Electric Servo Brake System" before doing the DTC troubleshooting procedure.
- Test-drive the vehicle according to local traffic conditions and regulations. Do not test-drive on a lift unless specified.
- The possible causes shown may not be a complete list of all potential problems, and it is possible that there may be other causes.

Confirmation Procedure	Basic Condition: - 12 volt battery voltage 9.5 - 16.7 V With the Driving Pattern: - Turn the vehicle to the ON mode. - Press the brake pedal several times.
Execution	Initial Diagnosis/Regular Diagnosis
Duration	About 1 second
DTC Type	- 1 drive cycle - Brake system indicator (red) on - Brake system indicator (amber) on
Fail Safe Action	- Stop electric servo brake function (Re-diagnose at the next IG-ON) - Stop brake assist function (Re-diagnose at the next IG-ON) - Stop automatic brake hold function (Re-diagnose at the next IG-ON) - Stop hill start assist function (Re-diagnose at the next IG-ON) - Stop deceleration assist brake cooperative control function (Re-diagnose at the next IG-ON) - Stop VSA assist cooperative control function (Re-diagnose at the next IG-ON) - Stop stall management function (Re-diagnose at the next IG-ON) - Stop regenerative brake function (Re-diagnose at the next IG-ON) - Stop driving support system brake control function (Re-diagnose at the next IG-ON)

Possible Cause	• Open between the electric servo brake control unit and the tandem motor cylinder (ESB_SVCC, ESV_SGND lines) • Open or short to ground between the electric servo brake control unit and the tandem motor cylinder (HALL_U, HALL_V, HALL_W lines) • Tandem motor cylinder internal failure (Hall sensor) • Electric servo brake control unit internal failure

DTC P1E51-00

DTC P1E51-00: Tandem Motor Cylinder Gearbox Mechanical Linkage Failure

NOTE

- Initial Diagnosis:

  The initial on-board diagnosis occurs right after the vehicle condition is turned to the ON mode, and the brake system indicator (red or amber) comes on, and continues until the indicator goes off.

- Regular Diagnosis:

  The regular on-board diagnosis begins right after the brake system indicator (red or amber) goes off, and it continues until the vehicle condition is turned to the OFF (LOCK) mode.

- Review "How to Troubleshoot the Electric Servo Brake System" before doing the DTC troubleshooting procedure.
- Test-drive the vehicle according to local traffic conditions and regulations. Do not test-drive on a lift unless specified.
- The possible causes shown may not be a complete list of all potential problems, and it is possible that there may be other causes.

Confirmation Procedure	Basic Condition: • 12 volt battery voltage 9.5 - 16.7 V With the Driving Pattern: • Turn the vehicle to the ON mode. • Wait 10 seconds or more without pressing the brake pedal. • Press the brake pedal several times.
Execution	Regular Diagnosis
Duration	About 10 seconds
DTC Type	• 1 drive cycle • Brake system indicator (red) on • Brake system indicator (amber) on
Fail Safe Action	• Stop electric servo brake function (Re-diagnose at the next IG-ON) • Stop brake assist function (Re-diagnose at the next IG-ON) • Stop automatic brake hold function (Re-diagnose at the next IG-ON) • Stop hill start assist function (Re-diagnose at the next IG-ON) • Stop deceleration assist brake cooperative control function (Re-diagnose at the next IG-ON) • Stop VSA assist cooperative control function (Re-diagnose at the next IG-ON)

	• Stop stall management function (Re-diagnose at the next IG-ON) • Stop regenerative brake function (Re-diagnose at the next IG-ON) • Stop driving support system brake control function (Re-diagnose at the next IG-ON)
Possible Cause	• Tandem motor cylinder internal failure

DTC P1E52-00

DTC P1E52-00: Tandem Motor Cylinder Gearbox Stuck

NOTE

- Initial Diagnosis:

  The initial on-board diagnosis occurs right after the vehicle condition is turned to the ON mode, and the brake system indicator (red or amber) comes on, and continues until the indicator goes off.

- Regular Diagnosis:

  The regular on-board diagnosis begins right after the brake system indicator (red or amber) goes off, and it continues until the vehicle condition is turned to the OFF (LOCK) mode.

- Review "How to Troubleshoot the Electric Servo Brake System" before doing the DTC troubleshooting procedure.
- Test-drive the vehicle according to local traffic conditions and regulations. Do not test-drive on a lift unless specified.
- The possible causes shown may not be a complete list of all potential problems, and it is possible that there may be other causes.

Confirmation Procedure	Basic Condition: • 12 volt battery voltage 9.5 - 16.7 V With the Driving Pattern: • Turn the vehicle to the ON mode. • Press the brake pedal several times.
Execution	Regular Diagnosis
Duration	About 1 second
DTC Type	• 1 drive cycle • Brake system indicator (red) on • Brake system indicator (amber) on
Fail Safe Action	• Stop electric servo brake function (Re-diagnose at the next IG-ON) • Stop brake assist function (Re-diagnose at the next IG-ON) • Stop automatic brake hold function (Re-diagnose at the next IG-ON) • Stop hill start assist function (Re-diagnose at the next IG-ON) • Stop deceleration assist brake cooperative control function (Re-diagnose at the next IG-ON) • Stop VSA assist cooperative control function (Re-diagnose at the next IG-ON) • Stop stall management function (Re-diagnose at the next IG-ON)

	• Stop regenerative brake function (Re-diagnose at the next IG-ON) • Stop driving support system brake control function (Re-diagnose at the next IG-ON)
Possible Cause	• Tandem motor cylinder internal failure

DTC P1E63-00

DTC P1E63-00: Brake Pedal Stroke Sensor Signal Stuck

NOTE

- Initial Diagnosis:

  The initial on-board diagnosis occurs right after the vehicle condition is turned to the ON mode, and the brake system indicator (red or amber) comes on, and continues until the indicator goes off.

- Regular Diagnosis:

  The regular on-board diagnosis begins right after the brake system indicator (red or amber) goes off, and it continues until the vehicle condition is turned to the OFF (LOCK) mode.

- Review "How to Troubleshoot the Electric Servo Brake System" before doing the DTC troubleshooting procedure.
- Test-drive the vehicle according to local traffic conditions and regulations. Do not test-drive on a lift unless specified.
- The possible causes shown may not be a complete list of all potential problems, and it is possible that there may be other causes.

Confirmation Procedure	Basic Condition: • 12 volt battery voltage 9.5 - 16.7 V With the Driving Pattern: • Turn the vehicle to the ON mode. • Press the brake pedal hard, then release. • Wait 3 minutes or more.
Execution	Regular Diagnosis
Duration	About 3 minutes
DTC Type	• 1 drive cycle • Brake system indicator (red) on • Brake system indicator (amber) on
Fail Safe Action	• Stop electric servo brake function (Re-diagnose at the next IG-ON) • Stop brake assist function (Re-diagnose at the next IG-ON) • Stop automatic brake hold function (Re-diagnose at the next IG-ON) • Stop hill start assist function (Re-diagnose at the next IG-ON) • Stop deceleration assist brake cooperative control function (Re-diagnose at the next IG-ON) • Stop VSA assist cooperative control function (Re-diagnose at the next IG-ON) • Stop stall management function (Re-diagnose at the next IG-ON)

	- Stop regenerative brake function (Re-diagnose at the next IG-ON) - Stop driving support system brake control function (Re-diagnose at the next IG-ON)
Possible Cause	- Brake pedal stroke sensor internal failure - Electric servo brake control unit internal failure

DTC P1E68-00

DTC P1E68-00: Brake Master Cylinder Cut Valve Self Lock

NOTE

- Initial Diagnosis:

  The initial on-board diagnosis occurs right after the vehicle condition is turned to the ON mode, and the brake system indicator (red or amber) comes on, and continues until the indicator goes off.

- Regular Diagnosis:

  The regular on-board diagnosis begins right after the brake system indicator (red or amber) goes off, and it continues until the vehicle condition is turned to the OFF (LOCK) mode.

- Review "How to Troubleshoot the Electric Servo Brake System" before doing the DTC troubleshooting procedure.
- Test-drive the vehicle according to local traffic conditions and regulations. Do not test-drive on a lift unless specified.
- The possible causes shown may not be a complete list of all potential problems, and it is possible that there may be other causes.

Confirmation Procedure	Basic Condition: - 12 volt battery voltage 9.5 - 16.7 V With the Driving Pattern: - Turn the vehicle to the ON mode. - Wait 10 seconds or more without pressing the brake pedal. - Press the brake pedal hard, then release.
Execution	Regular Diagnosis
Duration	About 1 second
DTC Type	- 1 drive cycle - Brake system indicator (red) on - Brake system indicator (amber) on
Fail Safe Action	- Stop electric servo brake function (Re-diagnose at the next IG-ON) - Stop brake assist function (Re-diagnose at the next IG-ON) - Stop automatic brake hold function (Re-diagnose at the next IG-ON) - Stop hill start assist function (Re-diagnose at the next IG-ON) - Stop deceleration assist brake cooperative control function (Re-diagnose at the next IG-ON) - Stop VSA assist cooperative control function (Re-diagnose at the next IG-ON)

	• Stop stall management function (Re-diagnose at the next IG-ON) • Stop regenerative brake function (Re-diagnose at the next IG-ON) • Stop driving support system brake control function (Re-diagnose at the next IG-ON)
Possible Cause	• Tandem motor cylinder internal failure • Pedal feel simulator internal failure (Master cylinder cut valve)

DTC P2531-00

DTC P2531-00: Electric Servo Brake Control Unit Power Source Circuit (IG1) Low Voltage

NOTE

- Initial Diagnosis:

  The initial on-board diagnosis occurs right after the vehicle condition is turned to the ON mode, and the brake system indicator (red or amber) comes on, and continues until the indicator goes off.

- Regular Diagnosis:

  The regular on-board diagnosis begins right after the brake system indicator (red or amber) goes off, and it continues until the vehicle condition is turned to the OFF (LOCK) mode.

- Review "How to Troubleshoot the Electric Servo Brake System" before doing the DTC troubleshooting procedure.
- Test-drive the vehicle according to local traffic conditions and regulations. Do not test-drive on a lift unless specified.
- The possible causes shown may not be a complete list of all potential problems, and it is possible that there may be other causes.

Confirmation Procedure	Basic Condition: • 12 volt battery voltage 9.5 - 16.7 V With the Driving Pattern: • Turn the vehicle to the ON mode.
Execution	Regular Diagnosis
Duration	About 2 seconds
DTC Type	• 1 drive cycle • Brake system indicator (amber) on
Fail Safe Action	• None
Possible Cause	• Open or short to ground between the under-dash fuse/relay box and the electric servo brake control unit (IG1_HAC line) • Blown fuse (No. B4) • Electric servo brake control unit internal failure

DTC P2532-00

DTC P2532-00: Electric Servo Brake Control Unit Power Source Circuit (IG1) High Voltage

NOTE

- Initial Diagnosis:

  The initial on-board diagnosis occurs right after the vehicle condition is turned to the ON mode, and the brake system indicator (red or amber) comes on, and continues until the indicator goes off.

- Regular Diagnosis:

  The regular on-board diagnosis begins right after the brake system indicator (red or amber) goes off, and it continues until the vehicle condition is turned to the OFF (LOCK) mode.

- Review "How to Troubleshoot the Electric Servo Brake System" before doing the DTC troubleshooting procedure.
- Test-drive the vehicle according to local traffic conditions and regulations. Do not test-drive on a lift unless specified.
- The possible causes shown may not be a complete list of all potential problems, and it is possible that there may be other causes.

Confirmation Procedure	Basic Condition: • 12 volt battery voltage 9.5 - 16.7 V With the Driving Pattern: • Turn the vehicle to the ON mode.
Execution	Regular Diagnosis
Duration	About 5 seconds
DTC Type	• 1 drive cycle • Brake system indicator (amber) on
Fail Safe Action	• None
Possible Cause	• Abnormal 12 volt battery • Electric powertrain system failure • Electric servo brake control unit internal failure

DTC U0029-00 (ELECTRIC SERVO BRAKE CONTROL UNIT)

DTC U0029-00: F-CAN Malfunction (BUS-OFF)

NOTE

- Initial Diagnosis:

  The initial on-board diagnosis occurs right after the vehicle condition is turned to the ON mode, and the brake system indicator (red or amber) comes on, and continues until the indicator goes off.

- Regular Diagnosis:

  The regular on-board diagnosis begins right after the brake system indicator (red or amber) goes off, and it continues until the vehicle condition is turned to the OFF (LOCK) mode.

- Review "How to Troubleshoot the Electric Servo Brake System" before doing the DTC troubleshooting procedure.
- Test-drive the vehicle according to local traffic conditions and regulations. Do not test-drive on a lift unless specified.
- The possible causes shown may not be a complete list of all potential problems, and it is possible that there may be other causes.

Confirmation Procedure	Basic Condition: • 12 volt battery voltage 9.5 - 16.7 V With the Driving Pattern: • Turn the vehicle to the ON mode.
Execution	Initial Diagnosis/Regular Diagnosis
Duration	About 2 seconds
DTC Type	• 1 drive cycle • Brake system indicator (amber) on
Fail Safe Action	• Stop brake assist function (Re-diagnose at the next IG-ON) • Stop automatic brake hold function (Re-diagnose at the next IG-ON) • Stop hill start assist function (Re-diagnose at the next IG-ON) • Stop deceleration assist brake cooperative control function (Re-diagnose at the next IG-ON) • Stop VSA assist cooperative control function (Re-diagnose at the next IG-ON) • Stop stall management function (Re-diagnose at the next IG-ON) • Stop regenerative brake function (Re-diagnose at the next IG-ON) • Stop driving support system brake control function (Re-diagnose at the next IG-ON)
Possible Cause	• Open, short to ground, short to another wire, or poor connection between the electric servo brake control unit and other control units (F-CAN lines) • Internal failure of other unit on F-CAN • Electric servo brake control unit internal failure

DTC U0047-00 (ELECTRIC SERVO BRAKE CONTROL UNIT)

DTC U0047-00: F-CAN Malfunction (Ch2 Bus-OFF) / Vehicle Communication Bus C Performance

NOTE

- Initial Diagnosis:

  The initial on-board diagnosis occurs right after the vehicle condition is turned to the ON mode, and the brake system indicator (red or amber) comes on, and continues until the indicator goes off.

- Regular Diagnosis:

  The regular on-board diagnosis begins right after the brake system indicator (red or amber) goes off, and it continues until the vehicle condition is turned to the OFF (LOCK) mode.

- Review "How to Troubleshoot the Electric Servo Brake System" before doing the DTC troubleshooting procedure.
- Test-drive the vehicle according to local traffic conditions and regulations. Do not test-drive on a lift unless specified.
- The possible causes shown may not be a complete list of all potential problems, and it is possible that there may be other causes.

Confirmation Procedure	Basic Condition: • 12 volt battery voltage 9.5 - 16.7 V With the Driving Pattern: • Turn the vehicle to the ON mode.
Execution	Initial Diagnosis/Regular Diagnosis
Duration	About 2 seconds
DTC Type	• 1 drive cycle • Brake system indicator (amber) on
Fail Safe Action	• Stop brake assist function (Re-diagnose at the next IG-ON) • Stop automatic brake hold function (Re-diagnose at the next IG-ON) • Stop hill start assist function (Re-diagnose at the next IG-ON) • Stop deceleration assist brake cooperative control function (Re-diagnose at the next IG-ON) • Stop VSA assist cooperative control function (Re-diagnose at the next IG-ON) • Stop stall management function (Re-diagnose at the next IG-ON) • Stop regenerative brake function (Re-diagnose at the next IG-ON) • Stop driving support system brake control function (Re-diagnose at the next IG-ON)
Possible Cause	• Open, short to ground, short to another wire, or poor connection between the electric servo brake control unit and other control units (F-CAN lines) • Internal failure of other unit on F-CAN • Electric servo brake control unit internal failure

DTC U0100-00 (ELECTRIC SERVO BRAKE CONTROL UNIT)

DTC U0100-00: F-CAN Malfunction (Electric Servo Brake Control Unit Lost Communication With Management ECU)

NOTE

- Initial Diagnosis:

  The initial on-board diagnosis occurs right after the vehicle condition is turned to the ON mode, and the brake system indicator (red or amber) comes on, and continues until the indicator goes off.

- Regular Diagnosis:

  The regular on-board diagnosis begins right after the brake system indicator (red or amber) goes off, and it continues until the vehicle condition is turned to the OFF (LOCK) mode.

- Review "How to Troubleshoot the Electric Servo Brake System" before doing the DTC troubleshooting procedure.
- Test-drive the vehicle according to local traffic conditions and regulations. Do not test-drive on a lift unless specified.
- The possible causes shown may not be a complete list of all potential problems, and it is possible that there may be other causes.

Confirmation Procedure	Basic Condition: • 12 volt battery voltage 9.5 - 16.7 V With the Driving Pattern: • Turn the vehicle to the ON mode.
Execution	Regular Diagnosis
Duration	About 1 second
DTC Type	• 1 drive cycle • Brake system indicator (amber) on
Fail Safe Action	• Stop automatic brake hold function (Dependant upon the conditions) Re-diagnose at the next IG-ON) • Stop hill start assist function (Dependant upon the conditions) Re-diagnose at the next IG-ON) • Stop stall management function (Dependant upon the conditions) Re-diagnose at the next IG-ON) • Stop regenerative brake function (Dependant upon the conditions) Re-diagnose at the next IG-ON) • Stop driving support system brake control function (Dependant upon the conditions) Re-diagnose at the next IG-ON)
Possible Cause	• Open or poor connection between the electric servo brake control unit and the PCM (F-CAN lines) • PCM internal failure • Electric servo brake control unit internal failure

DTC U0101-00 (ELECTRIC SERVO BRAKE CONTROL UNIT)

DTC U0101-00: F-CAN Malfunction (Electric Servo Brake Control Unit Lost Communication With TCM/PCM (Gear System))

NOTE

- Initial Diagnosis:

  The initial on-board diagnosis occurs right after the vehicle condition is turned to the ON mode, and the brake system indicator (red or amber) comes on, and continues until the indicator goes off.

- Regular Diagnosis:

  The regular on-board diagnosis begins right after the brake system indicator (red or amber) goes off, and it continues until the vehicle condition is turned to the OFF (LOCK) mode.

- Review "How to Troubleshoot the Electric Servo Brake System" before doing the DTC troubleshooting procedure.
- Test-drive the vehicle according to local traffic conditions and regulations. Do not test-drive on a lift unless specified.
- The possible causes shown may not be a complete list of all potential problems, and it is possible that there may be other causes.

Confirmation Procedure	Basic Condition: • 12 volt battery voltage 9.5 - 16.7 V With the Driving Pattern: • Turn the vehicle to the ON mode.
Execution	Regular Diagnosis
Duration	About 1 second
DTC Type	• 1 drive cycle • Brake system indicator (amber) on
Fail Safe Action	• Stop automatic brake hold function (Dependant upon the conditions) Re-diagnose at the next IG-ON) • Stop hill start assist function (Dependant upon the conditions) Re-diagnose at the next IG-ON) • Stop regenerative brake function (Dependant upon the conditions) Re-diagnose at the next IG-ON)
Possible Cause	• Open, short to ground, short to another wire, or poor connection between the electric servo brake control unit and the PCM (F-CAN lines) • PCM internal failure • Electric servo brake control unit internal failure

DTC U0104-00 (ELECTRIC SERVO BRAKE CONTROL UNIT)

DTC U0104-00: F-CAN Malfunction (Electric Servo Brake Control Unit Lost Communication With Driving Support System Control Unit)

NOTE

- Initial Diagnosis:

  The initial on-board diagnosis occurs right after the vehicle condition is turned to the ON mode, and the brake system indicator (red or amber) comes on, and continues until the indicator goes off.

- Regular Diagnosis:

  The regular on-board diagnosis begins right after the brake system indicator (red or amber) goes off, and it continues until the vehicle condition is turned to the OFF (LOCK) mode.

- Review "How to Troubleshoot the Electric Servo Brake System" before doing the DTC troubleshooting procedure.
- Test-drive the vehicle according to local traffic conditions and regulations. Do not test-drive on a lift unless specified.

- The possible causes shown may not be a complete list of all potential problems, and it is possible that there may be other causes.

Confirmation Procedure	Basic Condition: • 12 volt battery voltage 9.5 - 16.7 V With the Driving Pattern: • Turn the vehicle to the ON mode.
Execution	Regular Diagnosis
Duration	About 1 second
DTC Type	• 1 drive cycle
Fail Safe Action	• Stop automatic brake hold function (Dependant upon the conditions) Re-diagnose at the next IG-ON) • Stop driving support system brake control function (Re-diagnose at the next IG-ON)
Possible Cause	• Open, short to ground, short to another wire, or poor connection between the electric servo brake control unit and the millimeter wave radar (F-CAN lines) • Millimeter wave radar internal failure • Electric servo brake control unit internal failure

DTC U0111-00 (ELECTRIC SERVO BRAKE CONTROL UNIT)

DTC U0111-00 : Lost communication With Battery Energy Control Module A

NOTE

- Initial Diagnosis:

  The initial on-board diagnosis occurs right after the vehicle condition is turned to the ON mode, and the brake system indicator (red or amber) comes on, and continues until the indicator goes off.

- Regular Diagnosis:

  The regular on-board diagnosis begins right after the brake system indicator (red or amber) goes off, and it continues until the vehicle condition is turned to the OFF (LOCK) mode.

- Review "How to Troubleshoot the Electric Servo Brake System" before doing the DTC troubleshooting procedure.
- Test-drive the vehicle according to local traffic conditions and regulations. Do not test-drive on a lift unless specified.
- The possible causes shown may not be a complete list of all potential problems, and it is possible that there may be other causes.

Confirmation Procedure	Basic Condition: • 12 volt battery voltage 9.5 - 16.7 V With the Driving Pattern: • Turn the vehicle to the ON mode.
Execution	Regular Diagnosis
Duration	About 1 second
DTC Type	• 1 drive cycle • Brake system indicator (amber) on
Fail Safe Action	• None
Possible Cause	• Open or poor connection between the electric servo brake control unit and the battery condition monitor module (F-CAN lines) • Battery condition monitor module internal failure • Electric servo brake control unit internal failure

DTC U0122-00 (ELECTRIC SERVO BRAKE CONTROL UNIT)

DTC U0122-00: F-CAN Malfunction (Electric Servo Brake Control Unit Lost Communication With VSA Modulator-Control Unit)

NOTE

- Initial Diagnosis:

  The initial on-board diagnosis occurs right after the vehicle condition is turned to the ON mode, and the brake system indicator (red or amber) comes on, and continues until the indicator goes off.

- Regular Diagnosis:

  The regular on-board diagnosis begins right after the brake system indicator (red or amber) goes off, and it continues until the vehicle condition is turned to the OFF (LOCK) mode.

- Review "How to Troubleshoot the Electric Servo Brake System" before doing the DTC troubleshooting procedure.
- Test-drive the vehicle according to local traffic conditions and regulations. Do not test-drive on a lift unless specified.
- The possible causes shown may not be a complete list of all potential problems, and it is possible that there may be other causes.

Confirmation Procedure	Basic Condition: • 12 volt battery voltage 9.5 - 16.7 V With the Driving Pattern: • Turn the vehicle to the ON mode.
Execution	Regular Diagnosis
Duration	About 1 second
DTC Type	• 1 drive cycle

	- Brake system indicator (amber) on
Fail Safe Action	- Stop brake assist function (Dependant upon the conditions) Re-diagnose at the next IG-ON) - Stop automatic brake hold function (Dependant upon the conditions) Re-diagnose at the next IG-ON) - Stop hill start assist function (Dependant upon the conditions) Re-diagnose at the next IG-ON) - Stop VSA assist cooperative control function (Dependant upon the conditions) Re-diagnose at the next IG-ON) - Stop stall management function (Dependant upon the conditions) Re-diagnose at the next IG-ON) - Stop regenerative brake function (Dependant upon the conditions) Re-diagnose at the next IG-ON) - Stop driving support system brake control function (Dependant upon the conditions) Re-diagnose at the next IG-ON)
Possible Cause	- Open, short to ground, short to another wire, or poor connection between the electric servo brake control unit and the VSA modulator-control unit (F-CAN lines) - VSA modulator-control unit internal failure - Electric servo brake control unit internal failure

DTC U0128-00 (ELECTRIC SERVO BRAKE CONTROL UNIT)

DTC U0128-00: F-CAN Malfunction (Electric Servo Brake Control Unit Lost Communication With Electric Parking Brake Control Unit)

NOTE

- Initial Diagnosis:

  The initial on-board diagnosis occurs right after the vehicle condition is turned to the ON mode, and the brake system indicator (red or amber) comes on, and continues until the indicator goes off.

- Regular Diagnosis:

  The regular on-board diagnosis begins right after the brake system indicator (red or amber) goes off, and it continues until the vehicle condition is turned to the OFF (LOCK) mode.

- Review "How to Troubleshoot the Electric Servo Brake System" before doing the DTC troubleshooting procedure.
- Test-drive the vehicle according to local traffic conditions and regulations. Do not test-drive on a lift unless specified.
- The possible causes shown may not be a complete list of all potential problems, and it is possible that there may be other causes.

Confirmation Procedure	Basic Condition: • 12 volt battery voltage 9.5 - 16.7 V With the Driving Pattern: • Turn the vehicle to the ON mode.
Execution	Regular Diagnosis
Duration	About 1 second
DTC Type	• 1 drive cycle • Brake system indicator (amber) on
Fail Safe Action	• Stop automatic brake hold function (Re-diagnose at the next IG-ON) • Stop deceleration assist brake cooperative control function (Re-diagnose at the next IG-ON)
Possible Cause	• Open, short to ground, short to another wire, or poor connection between the electric servo brake control unit and the VSA modulator-control unit (F-CAN lines) • VSA modulator-control unit internal failure • Electric servo brake control unit internal failure

DTC U0151-00 (ELECTRIC SERVO BRAKE CONTROL UNIT)

DTC U0151-00: F-CAN Malfunction (Electric Servo Brake Control Unit Lost Communication With SRS Unit)

NOTE

- Initial Diagnosis:

  The initial on-board diagnosis occurs right after the vehicle condition is turned to the ON mode, and the brake system indicator (red or amber) comes on, and continues until the indicator goes off.

- Regular Diagnosis:

  The regular on-board diagnosis begins right after the brake system indicator (red or amber) goes off, and it continues until the vehicle condition is turned to the OFF (LOCK) mode.

- Review "How to Troubleshoot the Electric Servo Brake System" before doing the DTC troubleshooting procedure.
- Test-drive the vehicle according to local traffic conditions and regulations. Do not test-drive on a lift unless specified.
- The possible causes shown may not be a complete list of all potential problems, and it is possible that there may be other causes.

Confirmation Procedure	Basic Condition: • 12 volt battery voltage 9.5 - 16.7 V With the Driving Pattern: • Turn the vehicle to the ON mode.
Execution	Regular Diagnosis

Duration	About 1 second
DTC Type	- 1 drive cycle - Brake system indicator (amber) on
Fail Safe Action	- Stop automatic brake hold function (Re-diagnose at the next IG-ON)
Possible Cause	- Open, short to ground, short to another wire, or poor connection between the electric servo brake control unit and the SRS unit (F-CAN lines) - SRS unit internal failure - Electric servo brake control unit internal failure

DTC U0155-00 (ELECTRIC SERVO BRAKE CONTROL UNIT)

DTC U0155-00: F-CAN Malfunction (Electric Servo Brake Control Unit Lost Communication With Gauge Control Module)

NOTE

- Initial Diagnosis:

  The initial on-board diagnosis occurs right after the vehicle condition is turned to the ON mode, and the brake system indicator (red or amber) comes on, and continues until the indicator goes off.

- Regular Diagnosis:

  The regular on-board diagnosis begins right after the brake system indicator (red or amber) goes off, and it continues until the vehicle condition is turned to the OFF (LOCK) mode.

- Review "How to Troubleshoot the Electric Servo Brake System" before doing the DTC troubleshooting procedure.
- Test-drive the vehicle according to local traffic conditions and regulations. Do not test-drive on a lift unless specified.
- The possible causes shown may not be a complete list of all potential problems, and it is possible that there may be other causes.

Confirmation Procedure	Basic Condition: - 12 volt battery voltage 9.5 - 16.7 V With the Driving Pattern: - Turn the vehicle to the ON mode.
Execution	Regular Diagnosis
Duration	About 1 second
DTC Type	- 1 drive cycle - Brake system indicator (amber) on
Fail Safe Action	- Stop automatic brake hold function (Re-diagnose at the next IG-ON)
Possible Cause	- Open, short to ground, short to another wire, or poor connection between the electric servo brake control unit and the gauge control module (F-CAN lines) - Gauge control module internal failure

	- Electric servo brake control unit internal failure

DTC U0401-68 (ELECTRIC SERVO BRAKE CONTROL UNIT)

DTC U0401-68: (PGM-FI/ECM/PCM System Malfunction)

NOTE

- Initial Diagnosis:

  The initial on-board diagnosis occurs right after the vehicle condition is turned to the ON mode, and the brake system indicator (red or amber) comes on, and continues until the indicator goes off.

- Regular Diagnosis:

  The regular on-board diagnosis begins right after the brake system indicator (red or amber) goes off, and it continues until the vehicle condition is turned to the OFF (LOCK) mode.

- Review "How to Troubleshoot the Electric Servo Brake System" before doing the DTC troubleshooting procedure.
- Test-drive the vehicle according to local traffic conditions and regulations. Do not test-drive on a lift unless specified.
- The possible causes shown may not be a complete list of all potential problems, and it is possible that there may be other causes.

Confirmation Procedure	Basic Condition: • 12 volt battery voltage 9.5 - 16.7 V With the Driving Pattern: • Turn the vehicle to the ON mode.
Execution	Regular Diagnosis
Duration	About 1 second
DTC Type	• 1 drive cycle • Brake system indicator (amber) on
Fail Safe Action	• Stop automatic brake hold function (Dependant upon the conditions) Re-diagnose at the next IG-ON) • Stop hill start assist function (Dependant upon the conditions) Re-diagnose at the next IG-ON) • Stop stall management function (Dependant upon the conditions) Re-diagnose at the next IG-ON) • Stop regenerative brake function (Dependant upon the conditions) Re-diagnose at the next IG-ON)
Possible Cause	• PGM-FI system failure • PCM internal failure

DTC U0415-68 (ELECTRIC SERVO BRAKE CONTROL UNIT)

DTC U0415-68: (ABS System Malfunction)

NOTE

- Initial Diagnosis:

  The initial on-board diagnosis occurs right after the vehicle condition is turned to the ON mode, and the brake system indicator (red or amber) comes on, and continues until the indicator goes off.

- Regular Diagnosis:

  The regular on-board diagnosis begins right after the brake system indicator (red or amber) goes off, and it continues until the vehicle condition is turned to the OFF (LOCK) mode.

- Review "How to Troubleshoot the Electric Servo Brake System" before doing the DTC troubleshooting procedure.
- Test-drive the vehicle according to local traffic conditions and regulations. Do not test-drive on a lift unless specified.
- The possible causes shown may not be a complete list of all potential problems, and it is possible that there may be other causes.

Confirmation Procedure	Basic Condition: • 12 volt battery voltage 9.5 - 16.7 V With the Driving Pattern: • Turn the vehicle to the ON mode.
Execution	Regular Diagnosis
Duration	About 1 second
DTC Type	• 1 drive cycle • Brake system indicator (amber) on
Fail Safe Action	• Stop brake assist function (Re-diagnose at the next IG-ON) • Stop automatic brake hold function (Re-diagnose at the next IG-ON) • Stop hill start assist function (Re-diagnose at the next IG-ON) • Stop regenerative brake function (Re-diagnose at the next IG-ON) • Stop driving support system brake control function (Re-diagnose at the next IG-ON)
Possible Cause	• VSA system failure • VSA modulator-control unit internal failure

DTC U0416-68 (ELECTRIC SERVO BRAKE CONTROL UNIT)

DTC U0416-68: (VSA System Malfunction)

NOTE

- Initial Diagnosis:

  The initial on-board diagnosis occurs right after the vehicle condition is turned to the ON mode, and the brake system indicator (red or amber) comes on, and continues until the indicator goes off.

- Regular Diagnosis:

The regular on-board diagnosis begins right after the brake system indicator (red or amber) goes off, and it continues until the vehicle condition is turned to the OFF (LOCK) mode.

- Review "How to Troubleshoot the Electric Servo Brake System" before doing the DTC troubleshooting procedure.
- Test-drive the vehicle according to local traffic conditions and regulations. Do not test-drive on a lift unless specified.
- The possible causes shown may not be a complete list of all potential problems, and it is possible that there may be other causes.

Confirmation Procedure	Basic Condition: • 12 volt battery voltage 9.5 - 16.7 V With the Driving Pattern: • Turn the vehicle to the ON mode.
Execution	Regular Diagnosis
Duration	About 1 second
DTC Type	• 1 drive cycle • Brake system indicator (amber) on
Fail Safe Action	• Stop brake assist function (Dependant upon the conditions) Re-diagnose at the next IG-ON) • Stop automatic brake hold function (Dependant upon the conditions) Re-diagnose at the next IG-ON) • Stop hill start assist function (Dependant upon the conditions) Re-diagnose at the next IG-ON) • Stop VSA assist cooperative control function (Dependant upon the conditions) Re-diagnose at the next IG-ON) • Stop stall management function (Dependant upon the conditions) Re-diagnose at the next IG-ON) • Stop regenerative brake function (Dependant upon the conditions) Re-diagnose at the next IG-ON) • Stop driving support system brake control function (Dependant upon the conditions) Re-diagnose at the next IG-ON)
Possible Cause	• VSA system failure • VSA modulator-control unit internal failure

DTC U0417-68 (ELECTRIC SERVO BRAKE CONTROL UNIT)

DTC U0417-68: (Electric Parking Brake System Malfunction)

NOTE

- Initial Diagnosis:

  The initial on-board diagnosis occurs right after the vehicle condition is turned to the ON mode, and the brake system indicator (red or amber) comes on, and continues until the indicator goes off.

- Regular Diagnosis:

The regular on-board diagnosis begins right after the brake system indicator (red or amber) goes off, and it continues until the vehicle condition is turned to the OFF (LOCK) mode.

- Review "How to Troubleshoot the Electric Servo Brake System" before doing the DTC troubleshooting procedure.
- Test-drive the vehicle according to local traffic conditions and regulations. Do not test-drive on a lift unless specified.
- The possible causes shown may not be a complete list of all potential problems, and it is possible that there may be other causes.

Confirmation Procedure	Basic Condition: • 12 volt battery voltage 9.5 - 16.7 V With the Driving Pattern: • Turn the vehicle to the ON mode.
Execution	Regular Diagnosis
Duration	About 1 second
DTC Type	• 1 drive cycle • Brake system indicator (amber) on
Fail Safe Action	• Stop automatic brake hold function (Re-diagnose at the next IG-ON) • Stop deceleration assist brake cooperative control function (Re-diagnose at the next IG-ON)
Possible Cause	• Electric parking brake system failure • VSA modulator-control unit internal failure

DTC U3000-49 (ELECTRIC SERVO BRAKE CONTROL UNIT)

DTC U3000-49: Driver's Door Switch Signal Stuck On (ECU Internal Malfunction)

NOTE

- Initial Diagnosis:

  The initial on-board diagnosis occurs right after the vehicle condition is turned to the ON mode, and the brake system indicator (red or amber) comes on, and continues until the indicator goes off.

- Regular Diagnosis:

  The regular on-board diagnosis begins right after the brake system indicator (red or amber) goes off, and it continues until the vehicle condition is turned to the OFF (LOCK) mode.

- Review "How to Troubleshoot the Electric Servo Brake System" before doing the DTC troubleshooting procedure.
- Test-drive the vehicle according to local traffic conditions and regulations. Do not test-drive on a lift unless specified.
- The possible causes shown may not be a complete list of all potential problems, and it is possible that there may be other causes.

Confirmation Procedure	Basic Condition:

	- 12 volt battery voltage 9.5 - 16.7 V With the Driving Pattern: - Turn the vehicle to the ON mode. - Open and close the driver's door. - Wait 2 minutes or more.
Execution	Regular Diagnosis
Duration	About 2 minutes
DTC Type	- 1 drive cycle - Brake system indicator (amber) on
Fail Safe Action	- None
Possible Cause	- Electric servo brake control unit internal failure

DTC U3003-16 (ELECTRIC SERVO BRAKE CONTROL UNIT)

DTC U3003-16: Electric Servo Brake Control Unit Power Source Circuit (+B) Low Voltage

NOTE

- Initial Diagnosis:

  The initial on-board diagnosis occurs right after the vehicle condition is turned to the ON mode, and the brake system indicator (red or amber) comes on, and continues until the indicator goes off.

- Regular Diagnosis:

  The regular on-board diagnosis begins right after the brake system indicator (red or amber) goes off, and it continues until the vehicle condition is turned to the OFF (LOCK) mode.

- Review "How to Troubleshoot the Electric Servo Brake System" before doing the DTC troubleshooting procedure.
- Test-drive the vehicle according to local traffic conditions and regulations. Do not test-drive on a lift unless specified.
- The possible causes shown may not be a complete list of all potential problems, and it is possible that there may be other causes.

Confirmation Procedure	With the Driving Pattern: - Turn the vehicle to the ON mode. - Wait 10 seconds or more.
Execution	Initial Diagnosis/Regular Diagnosis
Duration	About 10 seconds
DTC Type	- 1 drive cycle - Brake system indicator (red) on - Brake system indicator (amber) on
Fail Safe Action	- Stop electric servo brake function (Re-diagnose at the next IG-ON) - Stop brake assist function (Re-diagnose at the next IG-ON)

	• Stop automatic brake hold function (Re-diagnose at the next IG-ON) • Stop hill start assist function (Re-diagnose at the next IG-ON) • Stop deceleration assist brake cooperative control function (Re-diagnose at the next IG-ON) • Stop VSA assist cooperative control function (Re-diagnose at the next IG-ON) • Stop stall management function (Re-diagnose at the next IG-ON) • Stop regenerative brake function (Re-diagnose at the next IG-ON) • Stop driving support system brake control function (Re-diagnose at the next IG-ON)
Possible Cause	• Open or short to ground between the under-hood fuse/relay box and the electric servo brake control unit (+B_ESB line) • Blown fuse (No. A1-2) • Abnormal 12 volt battery • Electric powertrain system failure • Electric servo brake control unit internal failure

DTC U3003-17 (ELECTRIC SERVO BRAKE CONTROL UNIT)

DTC U3003-17: Electric Servo Brake Control Unit Power Source Circuit (+B) High Voltage

NOTE

- Initial Diagnosis:

  The initial on-board diagnosis occurs right after the vehicle condition is turned to the ON mode, and the brake system indicator (red or amber) comes on, and continues until the indicator goes off.

- Regular Diagnosis:

  The regular on-board diagnosis begins right after the brake system indicator (red or amber) goes off, and it continues until the vehicle condition is turned to the OFF (LOCK) mode.

- Review "How to Troubleshoot the Electric Servo Brake System" before doing the DTC troubleshooting procedure.
- Test-drive the vehicle according to local traffic conditions and regulations. Do not test-drive on a lift unless specified.
- The possible causes shown may not be a complete list of all potential problems, and it is possible that there may be other causes.

Confirmation Procedure	With the Driving Pattern: • Turn the vehicle to the READY TO DRIVE mode. • Wait 10 seconds or more.
Execution	Initial Diagnosis/Regular Diagnosis
Duration	About 10 seconds
DTC Type	• 1 drive cycle • Brake system indicator (red) on • Brake system indicator (amber) on
Fail Safe Action	• Stop electric servo brake function (Re-diagnose at the next IG-ON)

	- Stop brake assist function (Re-diagnose at the next IG-ON) - Stop automatic brake hold function (Re-diagnose at the next IG-ON) - Stop hill start assist function (Re-diagnose at the next IG-ON) - Stop deceleration assist brake cooperative control function (Re-diagnose at the next IG-ON) - Stop VSA assist cooperative control function (Re-diagnose at the next IG-ON) - Stop stall management function (Re-diagnose at the next IG-ON) - Stop regenerative brake function (Re-diagnose at the next IG-ON) - Stop driving support system brake control function (Re-diagnose at the next IG-ON)
Possible Cause	- Abnormal 12 volt battery - Electric powertrain system failure - Electric servo brake control unit internal failure

DTC U3003-92 (ELECTRIC SERVO BRAKE CONTROL UNIT)

DTC U3003-92 : System Voltage Low (Long Term)

NOTE

- Initial Diagnosis:

  The initial on-board diagnosis occurs right after the vehicle condition is turned to the ON mode, and the brake system indicator (red or amber) comes on, and continues until the indicator goes off.

- Regular Diagnosis:

  The regular on-board diagnosis begins right after the brake system indicator (red or amber) goes off, and it continues until the vehicle condition is turned to the OFF (LOCK) mode.

- Review "How to Troubleshoot the Electric Servo Brake System" before doing the DTC troubleshooting procedure.
- Test-drive the vehicle according to local traffic conditions and regulations. Do not test-drive on a lift unless specified.
- The possible causes shown may not be a complete list of all potential problems, and it is possible that there may be other causes.

Confirmation Procedure	Basic Condition: - 12 volt battery voltage 9.5 - 16.7 V With the Driving Pattern: - Turn the vehicle to the ON mode. - Wait 60 seconds or more.
Execution	Regular Diagnosis
Duration	About 60 seconds
DTC Type	- 1 drive cycle - Brake system indicator (red) on - Brake system indicator (amber) on

Fail Safe Action	• None
Possible Cause	• Electric powertrain system failure • Electric servo brake control unit internal failure

DTC TROUBLESHOOTING

DTC B0050-F0 (ELECTRIC SERVO BRAKE CONTROL UNIT)

DTC B0050-F0 : (Driver's Seat Belt Buckle Switch Malfunction)

NOTE: Before you troubleshoot, review the general troubleshooting information .

DTC Description	DTC	Freeze Frame
B0050-F0 (Driver's Seat Belt Buckle Switch Malfunction)	B	B

DTC (Electric servo brake)

1. Problem verification

   -1. Turn the vehicle to the ON mode.

   -2. Clear the DTCs with the HDS.

   -3. Turn the vehicle to the OFF (LOCK) mode, then to the ON mode.

   -4. Check for DTCs with the HDS.

DTC Description	DTC	Freeze Frame
B0050-F0 (Driver's Seat Belt Buckle Switch Malfunction)	B	B

   Is DTC B0050-F0 indicated?

   YES

   The failure is duplicated. Go to SRS troubleshooting .

   NO

   Intermittent failure, the system is OK at this time. Refer to intermittent failures troubleshooting . If the freeze data/on-board snapshot of this DTC is recorded, try to reproduce the failure under the same conditions with the freeze data/on-board snapshot.

DTC C0023-12

DTC C0023-12 : Brake Diag Circuit ON Failure

NOTE: Before you troubleshoot, review the general troubleshooting information .

DTC Description	DTC	Freeze Frame
C0023-12 Brake Diag Circuit ON Failure	B	B

DTC (Electric servo brake)

1. Problem verification

   -1. Turn the vehicle to the ON mode.

   -2. Clear the DTC with the HDS.

-3. Turn the vehicle to the OFF (LOCK) mode, then to the ON mode.

-4. Wait 1 second or more without pressing the brake pedal

-5. Check for DTCs with the HDS.

DTC Description	DTC	Freeze Frame
C0023-12 Brake Diag Circuit ON Failure	B	B

Is DTC C0023-12 indicated?

YES

The failure is duplicated. Go to step 2.

NO

Intermittent failure, the system is OK at this time. **Refer to intermittent failures troubleshooting** . If the freeze data/on-board snapshot of this DTC is recorded, try to reproduce the failure under the same conditions with the freeze data/on-board snapshot.

2. Brake light relay check

-1. Turn the vehicle to the OFF (LOCK) mode.

-2. Wait for 3 minutes.

NOTE: Do not close the driver's door.

-3. Check the brake lights without pressing the brake pedal.

Are the brake lights on?

YES

Replace the relay circuit board .

NO

Go to step 3.

3. Shorted wire check (BRK_LAMP line) 1

-1. Turn the vehicle to the ON mode.

-2. Check the brake lights without pressing the brake pedal.

Are the brake lights on?

YES

Go to step 4.

NO

The BRK_LAMP wire is OK. Go to step 5.

4. Shorted wire check (BRK_LAMP line) 2

-1. Turn the vehicle to the OFF (LOCK) mode.

-2. Disconnect the following connector.

Electric servo brake control unit 22P connector

-3. Turn the vehicle to the ON mode.

-4. Check the brake lights without pressing the brake pedal.

Are the brake lights on?

YES

Repair a short to body ground in the wire between the electric servo brake control unit and the relay circuit board.

NO

The BRK_LAMP wire is OK. Check for loose terminals and poor connections in the electric servo brake control unit 22P connector. Check for any authorized service information related to the DTCs or symptoms you are troubleshooting. If they are OK, **replace the electric servo brake control unit/pedal feel simulator** .

5. Open wire check (STOP_SW line)

-1. Turn the vehicle to the OFF (LOCK) mode.

-2. Jump the SCS line with the HDS, and wait more than 1 minute.

-3. Disconnect the following connectors.

Brake pedal position switch 4P connector
PCM connector A (50P)

-4. Measure the resistance between test points 1 and 2.

Test condition	Vehicle OFF (LOCK) mode
B	Brake pedal position switch 4P connector: disconnected
B	PCM connector A (50P): disconnected
Test point 1	Brake pedal position switch 4P connector (female terminals) No. 1: ①
Test point 2	**PCM connector A (50P) No. 26**

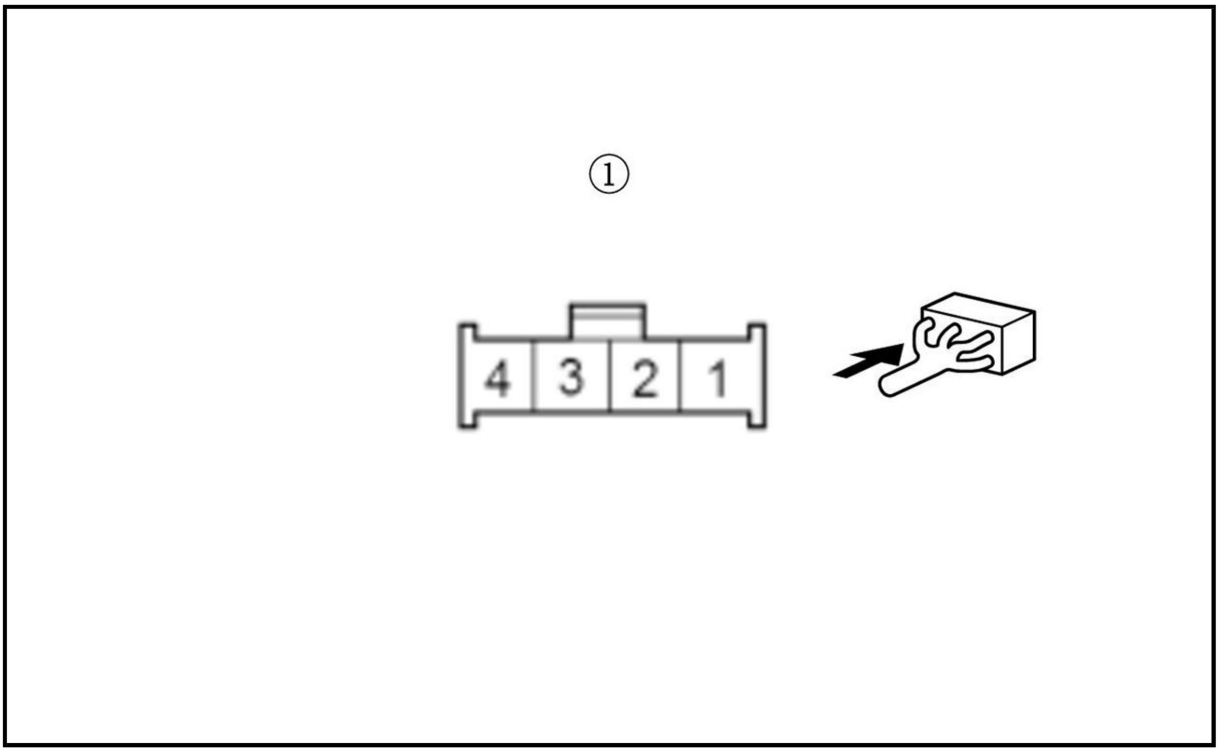

Is there 1.0 Ω or less?

YES

The STOP_SW wire is OK. Go to step 6.

NO

Repair an open in the wire between the PCM and the brake pedal position switch.

6. PCM check

-1. **Substitute a known-good PCM** .

-2. Reconnect the following connectors.

PCM connector A (50P)
Brake pedal position switch 4P connector

-3. Turn the vehicle to the ON mode.

-4. Clear the DTC with the HDS.

-5. Turn the vehicle to the OFF (LOCK) mode, then to the ON mode.

-6. Wait 1 second or more without pressing the brake pedal.

-7. Check for DTCs with the HDS.

DTC Description	DTC	Freeze Frame
C0023-12 Brake Diag Circuit ON Failure	B	B

Is DTC C0023-12 indicated?

YES

Check for loose terminals and poor connections in the electric servo brake control unit 22P connector. Check for any authorized service information related to the DTCs or symptoms you are troubleshooting.

If they are OK, replace the electric servo brake control unit/pedal feel simulator .

NO

Replace the original PCM .

DTC C0023-14

DTC C0023-14 : Brake Diag Circuit OFF Failure

NOTE: Before you troubleshoot, review the general troubleshooting information .

DTC Description	DTC	Freeze Frame
C0023-14 Brake Diag Circuit OFF Failure	B	B

DTC (Electric servo brake)

1. Problem verification

   -1. Turn the vehicle to the ON mode.

   -2. Clear the DTC with the HDS.

   -3. Turn the vehicle to the OFF (LOCK) mode, then to the ON mode.

   -4. Do the BRAKE LIGHT RELAY function test with the HDS.

   BRAKE LIGHT RELAY TEST

   Check for DTCs with the HDS.

DTC Description	DTC	Freeze Frame
C0023-14 Brake Diag Circuit OFF Failure	B	B

   Is DTC C0023-14 indicated?

   YES

   The failure is duplicated. Go to step 2.

   NO

   Intermittent failure, the system is OK at this time. Refer to intermittent failures troubleshooting . If the freeze data/on-board snapshot of this DTC is recorded, try to reproduce the failure under the same conditions with the freeze data/on-board snapshot.

2. Brake light relay check

   -1. Check the relay circuit board .

   Is the relay circuit board OK?

   YES

   Go to step 3.

   NO

   Replace the relay circuit board .

3. Open wire check (BRK_LAMP line) 1

-1. Turn the vehicle to the OFF (LOCK) mode.

-2. Disconnect the following connector.

Electric servo brake control unit 22P connector

-3. Connect terminals 1 and 2 with a jumper wire.

Terminal 1	**Electric servo brake control unit 22P connector No. 13**
Terminal 2	Body ground

-4. Turn the vehicle to the ON mode.

-5. Check the brake lights without pressing the brake pedal.

Are the brake lights on?

YES

The BRK_LAMP wire is OK. Go to step 7.

NO

Go to step 4.

4. Open wire check (BRK_LAMP line) 2

-1. Turn the vehicle to the OFF (LOCK) mode.

-2. Disconnect the jumper wire.

-3. Disconnect the following connector.

Relay circuit board connector B (6P)

-4. Measure the resistance between test points 1 and 2.

Test condition	Vehicle OFF (LOCK) mode

B	Relay circuit board connector B (6P): disconnected
B	Electric servo brake control unit 22P connector: disconnected
Test point 1	**Electric servo brake control unit 22P connector No. 13**
Test point 2	Relay circuit board connector B (6P) (female terminals) No. 1: ①

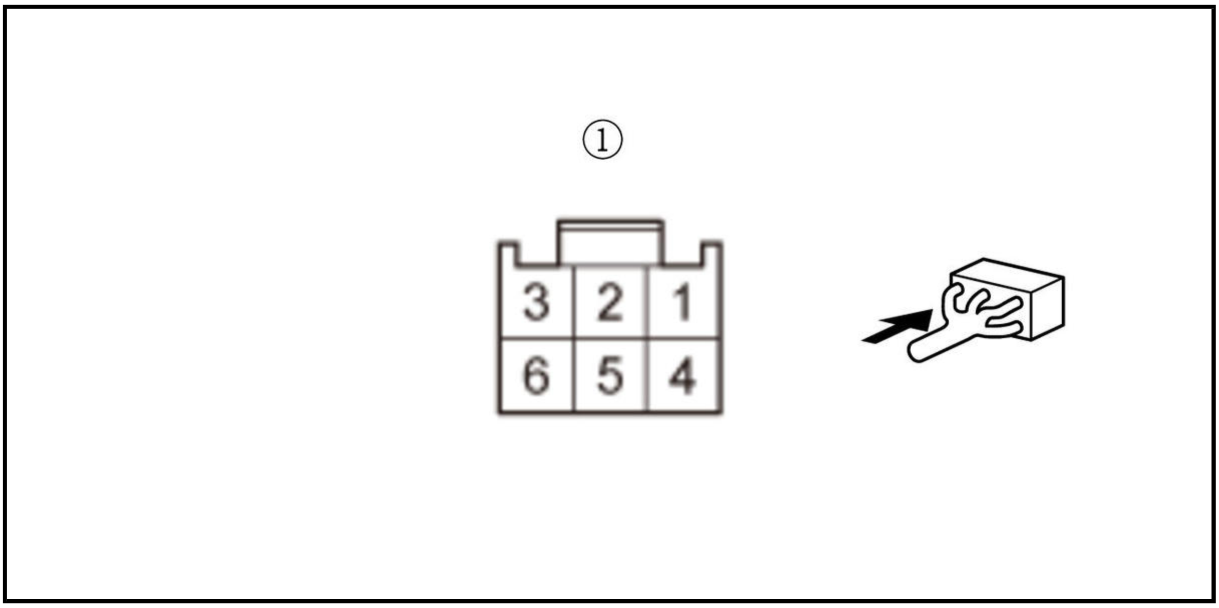

Is there 1.0 Ω or less?

YES

The BRK_LAMP wire is OK. Go to step 5.

NO

Repair an open in the wire between the electric servo brake control unit and the relay circuit board.

5. Open wire check (IG1_OPTION line)

-1. Disconnect the following connector.

Relay circuit board connector A (8P)

-2. Turn the vehicle to the ON mode.

-3. Measure the voltage between test points 1 and 2.

Test condition	Vehicle ON mode
B	Relay circuit board connector A (8P): disconnected
B	Relay circuit board connector B (6P): disconnected
B	Electric servo brake control unit 22P connector: disconnected
Test point 1	Relay circuit board connector A (8P) (female terminals) No. 3: ①
Test point 2	Body ground

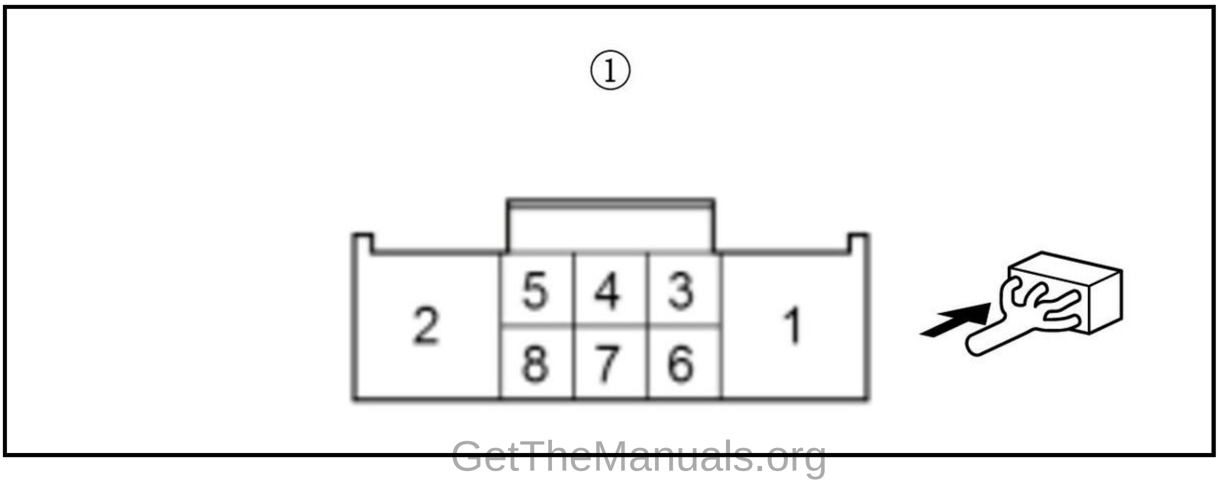

Is there battery voltage?

YES

The IG1_OPTION wire is OK. Go to step 6.

NO

Repair an open in the wire between the relay circuit board and the **No. D5** fuse.

6. Open wire check (+B_STOP line)

-1. Turn the vehicle to the OFF (LOCK) mode.

-2. Disconnect the following connector.

Relay circuit board connector C (18P)

-3. Measure the voltage between test points 1 and 2.

Test condition	Vehicle OFF (LOCK) mode
B	Relay circuit board connector A (8P): disconnected
B	Relay circuit board connector B (6P): disconnected
B	Relay circuit board connector C (18P): disconnected
B	Electric servo brake control unit 22P connector: disconnected
Test point 1	Relay circuit board connector C (18P) (female terminals) No. 4: ①
Test point 2	Body ground

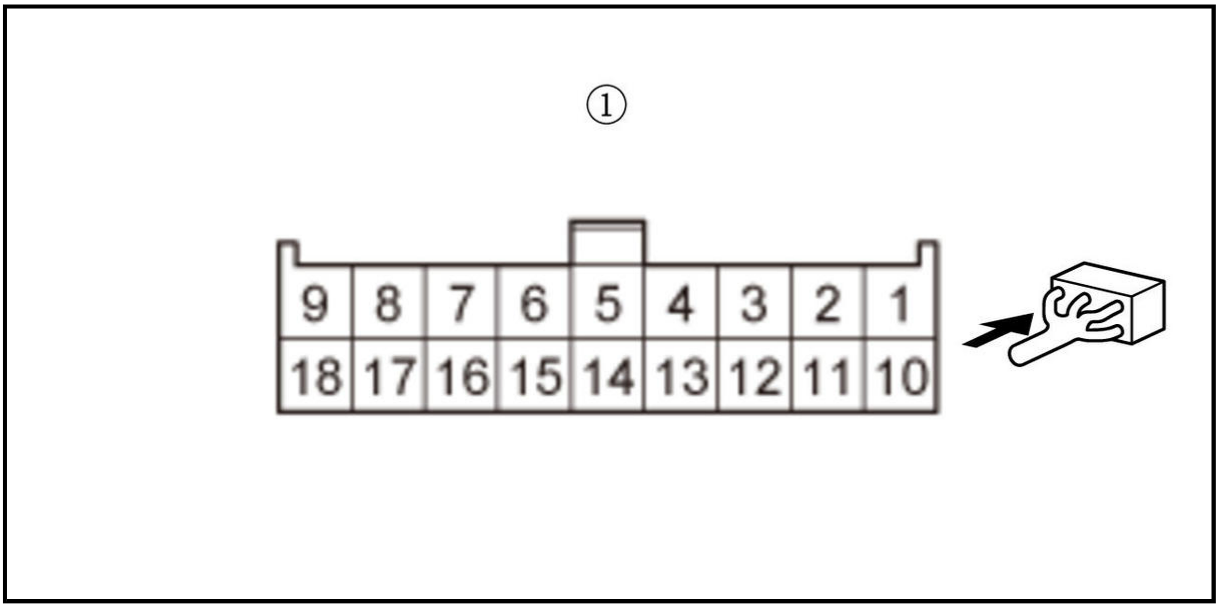

Is there battery voltage?

YES

The +B_STOP wire is OK. Go to step 7.

NO

Repair an open in the wire between the relay circuit board and the **No. A9** fuse.

7. Open wire check (BRK_DIAG line)

-1. Turn the vehicle to the OFF (LOCK) mode.

-2. Disconnect the jumper wire. (if connected)

-3. Disconnect the following connector. (if connected)

Relay circuit board connector A (8P)

-4. Measure the resistance between test points 1 and 2.

Test condition	Vehicle OFF (LOCK) mode
B	Relay circuit board connector A (8P): disconnected
B	Relay circuit board connector B (6P): if disconnected
B	Relay circuit board connector C (18P): if disconnected
B	Electric servo brake control unit 22P connector: disconnected
Test point 1	**Electric servo brake control unit 22P connector No. 16**
Test point 2	Relay circuit board connector A (8P) (female terminals) No. 6: ①

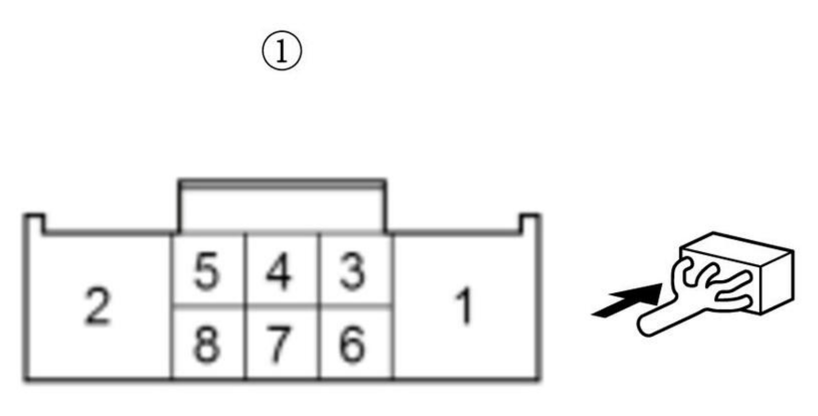

Is there 1.0 Ω or less?

YES

The BRK_DIAG wire is OK. Check for loose terminals and poor connections in the electric servo brake control unit 22P connector. Check for any authorized service information related to the DTCs or symptoms you are troubleshooting. If they are OK, **replace the electric servo brake control unit/pedal feel simulator** .

NO

Repair an open in the wire between the electric servo brake control unit and the relay circuit board.

DTC C0049-7A

DTC C0049-7A : Brake Fluid Leak or Seal Failure

NOTE:

- **Before you troubleshoot, review the general troubleshooting information** .
- The DTCs may be indicated under these conditions:
-
    - -

Bleed the brake system .

- -

  Replace the brake fluid .

- -

  Air trapped in the brake system.

DTC Description	DTC	Freeze Frame
C0049-7A Brake Fluid Leak or Seal Failure	B	B

DTC (Electric servo brake)

1. Problem verification

   -1. Turn the vehicle to the ON mode.

   -2. Clear the DTCs with the HDS.

   -3. Turn the vehicle to the OFF (LOCK) mode, then to the READY TO DRIVE mode.

   -4. Test-drive the vehicle and stop the vehicle by pressing the brake pedal. Repeat this procedure in the 1 drive cycle at least 5 times.

   -5. Check for DTCs with the HDS.

DTC Description	DTC	Freeze Frame
C0049-7A Brake Fluid Leak or Seal Failure	B	B

   Is DTC C0049-7A indicated?

   YES

   The failure is duplicated. Go to step 2.

   NO

   Intermittent failure, the system is OK at this time. **Refer to intermittent failures troubleshooting** . If the freeze data/on-board snapshot of this DTC is recorded, try to reproduce the failure under the same conditions with the freeze data/on-board snapshot.

2. Brake fluid leakage check

   -1. Press the brake pedal hard and hold for several seconds.

   -2. **Inspect the brake system** .

   Is there a fluid leakΩ

   YES

   Repair the brake fluid leak.

   NO

   Go to step 3.

3. Slave cylinder check

-1. Bleed the brake system .

-2. Clear the DTCs with the HDS.

-3. Turn the vehicle to the OFF (LOCK) mode, then to the READY TO DRIVE mode.

-4. Test-drive the vehicle and stop the vehicle by pressing the brake pedal. Repeat this procedure in the 1 drive cycle at least 5 times.

-5. Check for DTCs with the HDS.

DTC Description	DTC	Freeze Frame
C0049-7A Brake Fluid Leak or Seal Failure	B	B

Is DTC C0049-7A indicated?

YES

Replace the slave cylinder .

NO

Troubleshooting is complete.

DTC C0062-F0, C0063-F0 (ELECTRIC SERVO BRAKE CONTROL UNIT)

DTC C0062-F0 : Longitudinal Acceleration Sensor Malfunction

DTC C0063-F0 : Yaw Rate Sensor Malfunction

NOTE: Before you troubleshoot, review the general troubleshooting information .

DTC Description	DTC	Freeze Frame
C0062-F0 Longitudinal Acceleration Sensor Malfunction	B	B
C0063-F0 Yaw Rate Sensor Malfunction	B	B

DTC (Electric servo brake)

1. Problem verification

-1. Turn the vehicle to the ON mode.

-2. Clear the DTCs with the HDS.

-3. Turn the vehicle to the OFF (LOCK) mode, then to the ON mode.

-4. Check for DTCs with the HDS.

DTC Description	DTC	Freeze Frame
C0062-F0 Longitudinal Acceleration Sensor Malfunction	B	B
C0063-F0 Yaw Rate Sensor Malfunction	B	B

Is DTC C0062-F0 or C0063-F0 indicated?

YES

The failure is duplicated. Replace the SRS unit .

NO

Intermittent failure, the system is OK at this time. **Refer to intermittent failures troubleshooting** . If the freeze data/on-board snapshot of this DTC is recorded, try to reproduce the failure under the same conditions with the freeze data/on-board snapshot.

DTC C1260-7A

DTC C1260-7A : Brake Fluid Leak or Seal Failure in Pedal Feel Simulator

NOTE:

- **Before you troubleshoot, review the general troubleshooting information** .
- The DTCs may be indicated under these conditions:
-
  - -

    Bleed the brake system .
  - -

    Replace the brake fluid .
  - -

    Air trapped in the brake system.

DTC Description	DTC	Freeze Frame
C1260-7A Brake Fluid Leak or Seal Failure in Pedal Feel Simulator	B	B

DTC (Electric servo brake)

1. Problem verification 1

   -1. Turn the vehicle to the ON mode.

   -2. Clear the DTC with the HDS.

   -3. Turn the vehicle to the OFF (LOCK) mode, then to the READY TO DRIVE mode.

   -4. Press the brake pedal hard.

   -5. Check for DTCs with the HDS.

DTC Description	DTC	Freeze Frame
C1260-7A Brake Fluid Leak or Seal Failure in Pedal Feel Simulator	B	B

   Is DTC C1260-7A indicated?

   YES

   The failure is duplicated. Go to step 3.

   NO

   Go to step 2.

2. Problem verification 2

-1. Press the brake pedal slowly and fully, then hold it.

-2. Check for DTCs with the HDS.

DTC Description	DTC	Freeze Frame
C1260-7A Brake Fluid Leak or Seal Failure in Pedal Feel Simulator	B	B

Is DTC C1260-7A indicated?

YES

The failure is duplicated. Go to step 3.

NO

Intermittent failure, the system is OK at this time . **Check for brake fluid leakage at the pedal feel simulator and the VSA modulator-control unit, tandem motor cylinder, hose and line joints** . If the freeze data/on-board snapshot of this DTC is recorded, try to reproduce the failure under the same conditions with the freeze data/on-board snapshot.

3. Pedal feel simulator check

-1. **Bleed the brake system** .

-2. Turn the vehicle to the ON mode.

-3. Clear the DTC with the HDS.

-4. Turn the vehicle to the OFF (LOCK) mode, then to the READY TO DRIVE mode.

-5. Press the brake pedal hard.

-6. Check for DTCs with the HDS.

DTC Description	DTC	Freeze Frame
C1260-7A Brake Fluid Leak or Seal Failure in Pedal Feel Simulator	B	B

Is DTC C1260-7A indicated?

YES

Check for loose terminals and poor connections in the electric servo brake control unit 22P connector. Check for any authorized service information related to the DTCs or symptoms you are troubleshooting. If they are OK, **replace the electric servo brake control unit/pedal feel simulator** .

NO

Go to step 4.

4. DTC check

-1. Press the brake pedal slowly and fully, then hold it.

-2. Check for DTCs with the HDS.

DTC Description	DTC	Freeze Frame
C1260-7A Brake Fluid Leak or Seal Failure in Pedal Feel	B	B

DTC Description	DTC	Freeze Frame
Simulator		

Is DTC C1260-7A indicated?

YES

Check for loose terminals and poor connections in the electric servo brake control unit 22P connector. Check for any authorized service information related to the DTCs or symptoms you are troubleshooting. If they are OK, **replace the electric servo brake control unit/pedal feel simulator** .

NO

Troubleshooting is complete.

DTC C1270-11

DTC C1270-11 : Automatic Brake Hold Switch Signal Circuit Short

NOTE: **Before you troubleshoot, review the general troubleshooting information** .

DTC Description	DTC	Freeze Frame
C1270-11 Automatic Brake Hold Switch Signal Circuit Short	B	B

DTC (Electric servo brake)

1. Problem verification

   -1. Turn the vehicle to the ON mode.

   -2. Clear the DTC with the HDS.

   -3. Turn the vehicle to the OFF (LOCK) mode, then to the ON mode.

   -4. Check for DTCs with the HDS.

DTC Description	DTC	Freeze Frame
C1270-11 Automatic Brake Hold Switch Signal Circuit Short	B	B

Is DTC C1270-11 indicated?

YES

The failure is duplicated. Go to step 2.

NO

Intermittent failure, the system is OK at this time. **Refer to intermittent failures troubleshooting** . If the freeze data/on-board snapshot of this DTC is recorded, try to reproduce the failure under the same conditions with the freeze data/on-board snapshot.

2. Automatic brake hold switch check

   -1. Turn the vehicle to the OFF (LOCK) mode.

   -2. **Check the automatic brake hold switch** .

   Is the automatic brake hold switch OK?

YES

Go to step 3.

NO

Replace the electric parking brake/automatic brake hold switch .

3. Shorted wire check (BRAKE_HOLD line)

-1. Disconnect the following connectors.

Electric parking brake/automatic brake hold switch 12P connector
Gauge control module connector A (32P)

-2. Measure the resistance between test points 1 and 2.

Test condition	Vehicle OFF (LOCK) mode
B	Electric parking brake/automatic brake hold switch 12P connector: disconnected
B	Gauge control module connector A (32P): disconnected
Test point 1	Electric parking brake/automatic brake hold switch 12P connector (female terminals) No. 7: ①
Test point 2	Body ground

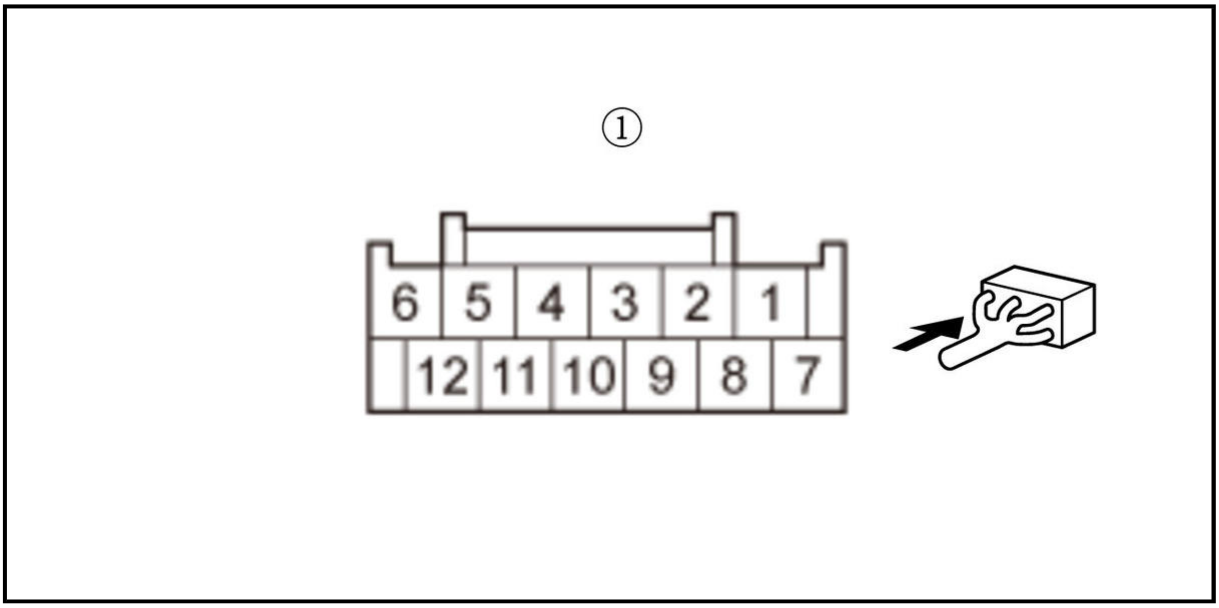

Is there 1 MΩ or more?

YES

Replace the gauge control module .

NO

Repair a short to body ground in the wire between the electric parking brake/automatic brake hold switch and the gauge control module.

DTC C1270-15

DTC C1270-15 : Automatic Brake Hold Switch Signal Circuit Open

NOTE: **Before you troubleshoot, review the general troubleshooting information** .

DTC Description	DTC	Freeze Frame
C1270-15 Automatic Brake Hold Switch Signal Circuit Open	B	B

DTC (Electric servo brake)

1. Problem verification

   -1. Turn the vehicle to the ON mode.

   -2. Clear the DTC with the HDS.

   -3. Turn the vehicle to the OFF (LOCK) mode, then to the ON mode.

   -4. Check for DTCs with the HDS.

DTC Description	DTC	Freeze Frame
C1270-15 Automatic Brake Hold Switch Signal Circuit Open	B	B

   Is DTC C1270-15 indicated?

   YES

   The failure is duplicated. Go to step 2.

   NO

   Intermittent failure, the system is OK at this time. **Refer to intermittent failures troubleshooting** . If the freeze data/on-board snapshot of this DTC is recorded, try to reproduce the failure under the same conditions with the freeze data/on-board snapshot.

2. Automatic brake hold switch check

   -1. Turn the vehicle to the OFF (LOCK) mode.

   -2. **Check the automatic brake hold switch** .

   Is the automatic brake hold switch OK?

   YES

   Go to step 3.

   NO

   Replace the electric parking brake/automatic brake hold switch .

3. Open wire check (BRAKE_HOLD line) 1

   -1. Disconnect the following connector.

Electric parking brake/automatic brake hold switch 12P connector

   -2. Turn the vehicle to the ON mode.

   -3. Measure the voltage between test points 1 and 2.

Test condition	Vehicle ON mode
B	Electric parking brake/automatic brake hold switch 12P connector: disconnected

Test point 1	Electric parking brake/automatic brake hold switch 12P connector (female terminals) No. 7: ①
Test point 2	Body ground

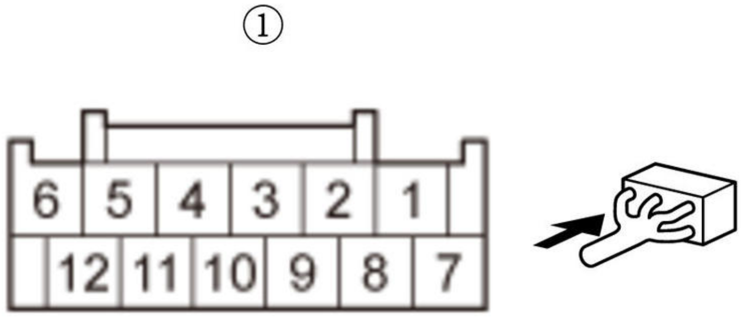

Is there about 5 V?

YES

The BRAKE_HOLD wire is OK. Go to step 4.

NO

Go to step 5.

NO

Go to step 6.

4. Open wire check (GND line)

-1. Turn the vehicle to the OFF (LOCK) mode.

-2. Measure the resistance between test points 1 and 2.

Test condition	Vehicle OFF (LOCK) mode
B	Electric parking brake/automatic brake hold switch 12P connector: disconnected
Test point 1	Electric parking brake/automatic brake hold switch 12P connector No. 8 (female terminals): ①
Test point 2	Body ground

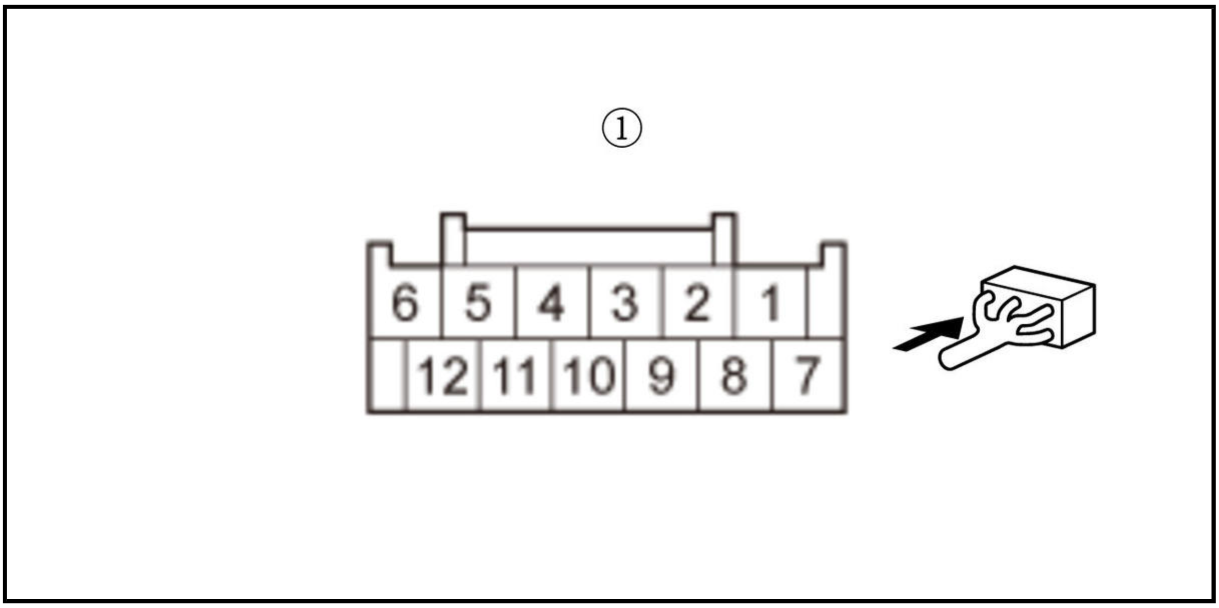

Is there 1.0 Ω or less?

YES

The GND wire is OK. Check for any authorized service information related to the DTCs or symptoms you are troubleshooting or **substitute a known-good gauge control module** , then recheck. If the symptom/indication goes away with a known-good gauge control module, **replace the original gauge control module** .

NO

Repair an open in the wire between the electric parking brake/automatic brake hold switch and body ground (G402).

5. Shorted wire check (BRAKE_HOLD line to power)

-1. Turn the vehicle to the OFF (LOCK) mode.

-2. Disconnect the following connector.

Gauge control module connector A (32P)

-3. Turn the vehicle to the ON mode.

-4. Measure the voltage between test points 1 and 2.

Test condition	Vehicle ON mode
B	Electric parking brake/automatic brake hold switch 12P connector: disconnected
B	Gauge control module connector A (32P): disconnected
Test point 1	Electric parking brake/automatic brake hold switch 12P connector (female terminals) No. 7: ①
Test point 2	Body ground

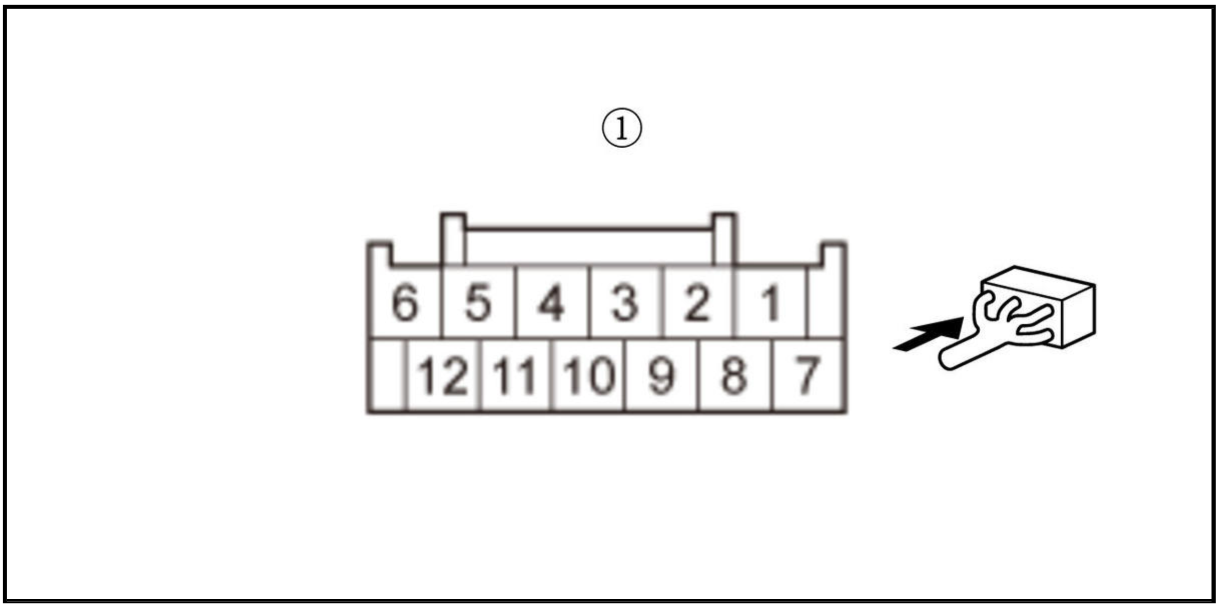

Is there 0.1 V or more?

YES

Repair a short to power in the wire between the automatic brake hold switch and the gauge control module.

NO

The BRAKE_HOLD wire is OK. Check for any authorized service information related to the DTCs or symptoms you are troubleshooting or **substitute a known-good gauge control module** , then recheck. If the symptom/indication goes away with a known-good gauge control module, **replace the original gauge control module** .

6. Open wire check (BRAKE_HOLD line) 2

-1. Turn the vehicle to the OFF (LOCK) mode.

-2. Disconnect the following connector.

Gauge control module connector A (32P)

-3. Measure the resistance between test points 1 and 2.

Test condition	Vehicle OFF (LOCK) mode
B	Electric parking brake/automatic brake hold switch 12P connector: disconnected
B	Gauge control module connector A (32P): disconnected
Test point 1	Electric parking brake/automatic brake hold switch 12P connector (female terminals) No. 7: ①
Test point 2	**Gauge control module connector A (32P) No. 12**

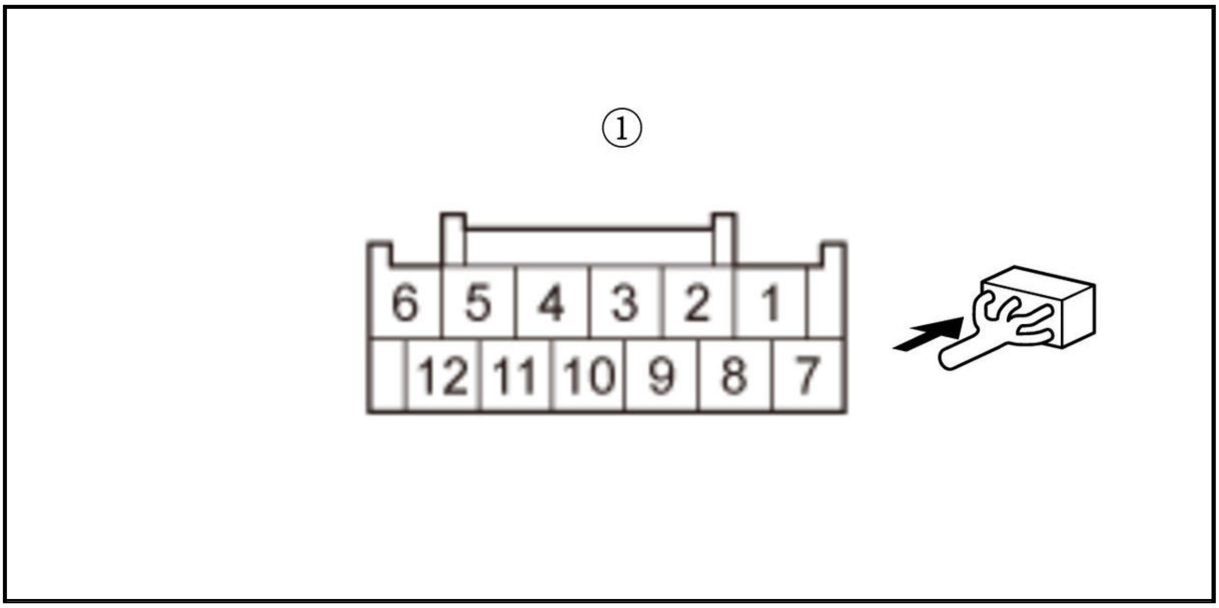

Is there 1.0 Ω or less?

YES

The BRAKE_HOLD wire is OK. Check for any authorized service information related to the DTCs or symptoms you are troubleshooting or **substitute a known-good gauge control module** , then recheck. If the symptom/indication goes away with a known-good gauge control module, **replace the original gauge control module** .

NO

Repair an open in the wire between the electric parking brake/automatic brake hold switch and the gauge control module.

DTC P057B-00

DTC P057B-00 : Brake Pedal Stroke Sensor Circuit Range/Performance Problem

NOTE: **Before you troubleshoot, review the general troubleshooting information** .

DTC Description	DTC	Freeze Frame
P057B-00 Brake Pedal Stroke Sensor Circuit Range/Performance Problem	B	B

DTC (Electric servo brake)

1. Problem verification

   -1. Turn the vehicle to the ON mode.

   -2. Clear the DTC with the HDS.

   -3. Turn the vehicle to the OFF (LOCK) mode, then to the ON mode.

   -4. Press the brake pedal several times.

   -5. Check for DTCs with the HDS.

DTC Description	DTC	Freeze Frame
P057B-00 Brake Pedal Stroke Sensor Circuit Range/Performance Problem	B	B

Is DTC P057B-00 indicated?

YES

The failure is duplicated. Go to step 3.

NO

Go to step 2.

2. Brake pedal stroke sensor check

-1. Check the parameter(s) below with the HDS without pressing the brake pedal.

Signal	Threshold		Current conditions	
	Value	**Unit**	**Value**	**Unit**
Brake Pedal Stroke Sensor Voltage	Less than 0.96	V	B	B
Brake Pedal Stroke Redundant Sensor Voltage	More than 4.04	V	B	B

Do the current conditions match the threshold?

YES

Go to step 3.

NO

Intermittent failure, the system is OK at this time. **Refer to intermittent failures troubleshooting** . If the freeze data/on-board snapshot of this DTC is recorded, try to reproduce the failure under the same conditions with the freeze data/on-board snapshot.

3. Brake pedal stroke sensor installation check

-1. Turn the vehicle to the OFF (LOCK) mode.

-2. Check the brake pedal stroke sensor and its connector for damage and proper installation.

Is the brake pedal stroke sensor installation OK?

YES

Replace the brake pedal .

NO

Reinstall the brake pedal, and check the mounting position .

DTC P057C-00, P1E25-00

DTC P057C-00 : Brake Pedal Stroke Sensor Circuit Low Voltage

DTC P1E25-00 : Brake Pedal Stroke Redundant Sensor Circuit Low Voltage

NOTE: **Before you troubleshoot, review the general troubleshooting information** .

DTC Description	DTC	Freeze Frame
P057C-00 Brake Pedal Stroke Sensor Circuit Low Voltage	B	B
P1E25-00 Brake Pedal Stroke Redundant Sensor Circuit Low Voltage	B	B

DTC (Electric servo brake)

1. Problem verification

-1. Turn the vehicle to the ON mode.

-2. Clear the DTC with the HDS.

-3. Turn the vehicle to the OFF (LOCK) mode, then to the ON mode.

-4. Check for DTCs with the HDS.

DTC Description	DTC	Freeze Frame
P057C-00 Brake Pedal Stroke Sensor Circuit Low Voltage	B	B
P1E25-00 Brake Pedal Stroke Redundant Sensor Circuit Low Voltage	B	B

Is DTC P057C-00 or P1E25-00 indicated?

YES

The failure is duplicated. Go to step 2.

NO

Intermittent failure, the system is OK at this time. **Refer to intermittent failures troubleshooting** . If the freeze data/on-board snapshot of this DTC is recorded, try to reproduce the failure under the same conditions with the freeze data/on-board snapshot.

2. Open wire check (ESB_SVCC line)

-1. Turn the vehicle to the OFF (LOCK) mode with driver's door open.

-2. Wait for 3 minutes.

NOTE: Do not close the driver's door.

-3. Disconnect the following connectors.

Brake pedal stroke sensor 4P connector
Electric servo brake control unit 22P connector

-4. Measure the resistance between test points 1 and 2.

Test condition	Vehicle OFF (LOCK) mode
B	Brake pedal stroke sensor 4P connector: disconnected
B	Electric servo brake control unit 22P connector: disconnected
Test point 1	Brake pedal stroke sensor 4P connector (female terminals) No. 1: ①
Test point 2	**Electric servo brake control unit 22P connector No. 12**

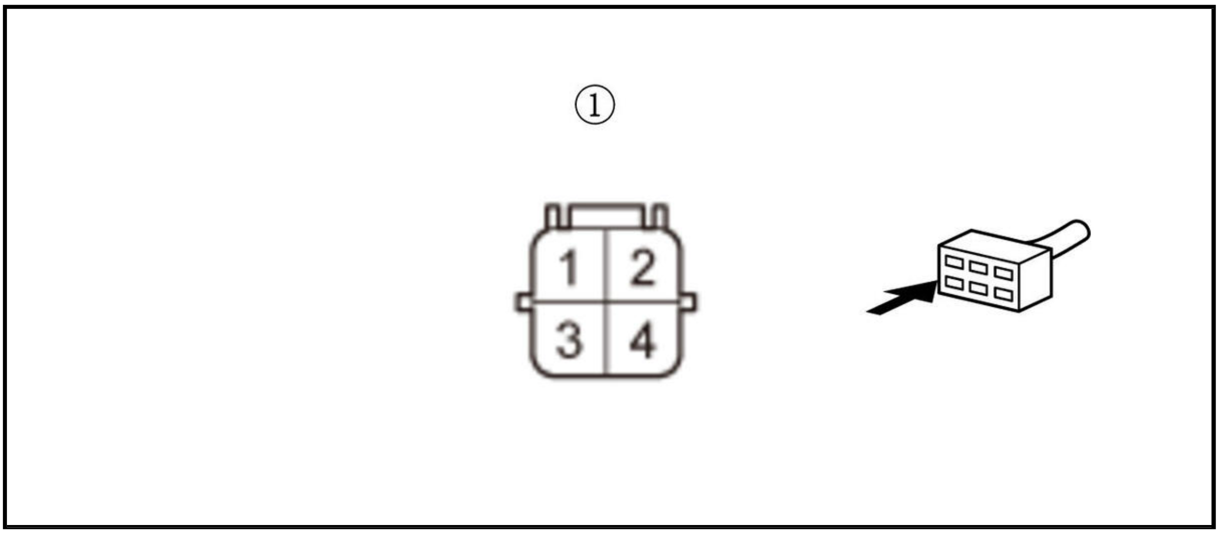

Is there 1.0 Ω or less?

YES

The ESB_SVCC wire is OK. Go to step 3.

NO

Repair an open in the wire between electric servo brake control unit and the brake pedal stroke sensor.

3. Open wire check (ESV_SGND line)

-1. Measure the resistance between test points 1 and 2.

Test condition	Vehicle OFF (LOCK) mode
B	Brake pedal stroke sensor 4P connector: disconnected
B	Electric servo brake control unit 22P connector: disconnected
Test point 1	**Electric servo brake control unit 22P connector No. 9**

Test point 2	Brake pedal stroke sensor 4P connector (female terminals) No. 4: ①

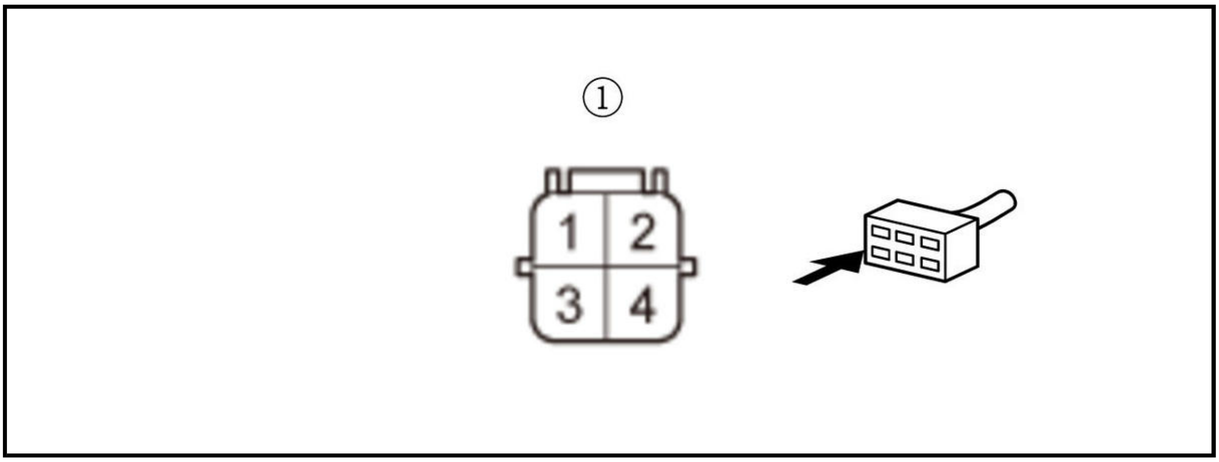

Is there 1.0 Ω or less?

YES

The ESV_SGND wire is OK. Go to step 4.

NO

Repair an open in the wire between the electric servo brake control unit and the brake pedal stroke sensor.

4. Shorted wire check (BPS, BPSR line)

-1. Measure the resistance between test points 1 and 2.

Test condition	Vehicle OFF (LOCK) mode
B	Brake pedal stroke sensor 4P connector: disconnected
B	Electric servo brake control unit 22P connector: disconnected
Test circuit 1	B
Test point 1	Brake pedal stroke sensor 4P connector (female terminals) No. 2: ①
Test point 2	Body ground

Test circuit 2	B
Test point 1	Brake pedal stroke sensor 4P connector (female terminals) No. 3: ①
Test point 2	Body ground

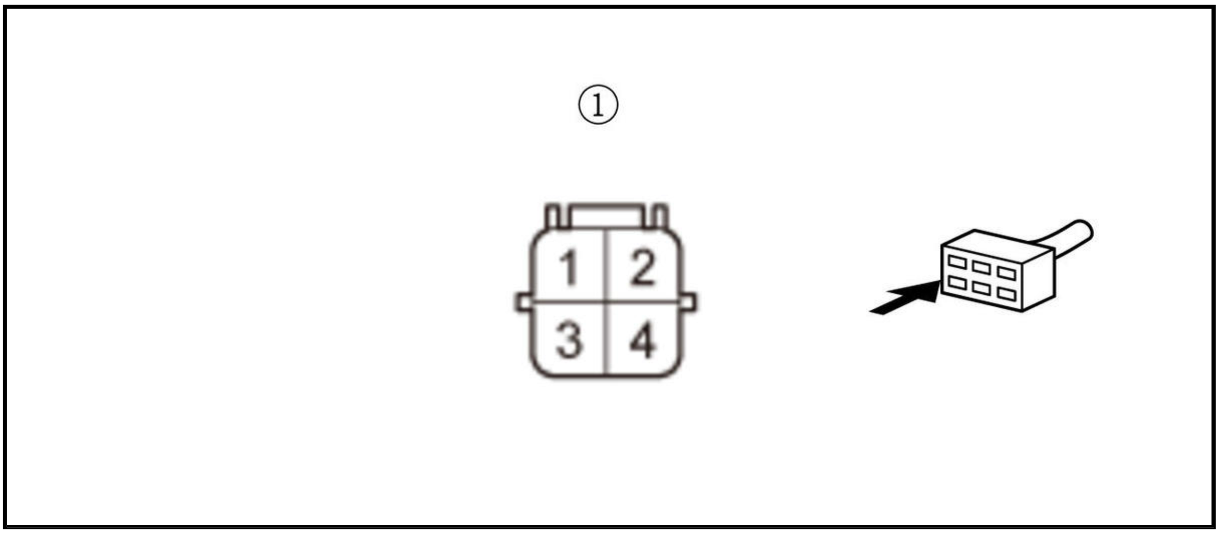

Is there 1 MΩ or more?

YES

The BPS and BPSR wires are not shorted to ground. Go to step 5.

NO

Repair a short to ground in the wire between electric servo brake control unit and the brake pedal stroke sensor.

5. Open wire check (BPS, BPSR line)

-1. Measure the resistance between test points 1 and 2.

Test condition	Vehicle OFF (LOCK) mode
B	Brake pedal stroke sensor 4P connector: disconnected
B	Electric servo brake control unit 22P connector: disconnected
Test circuit 1	B
Test point 1	**Electric servo brake control unit 22P connector No. 8**

Test point 2	Brake pedal stroke sensor 4P connector (female terminals) No. 2: ①

Test circuit 2	B
Test point 1	**Electric servo brake control unit 22P connector No. 11**

Test point 2	Brake pedal stroke sensor 4P connector (female terminals) No. 3: ①

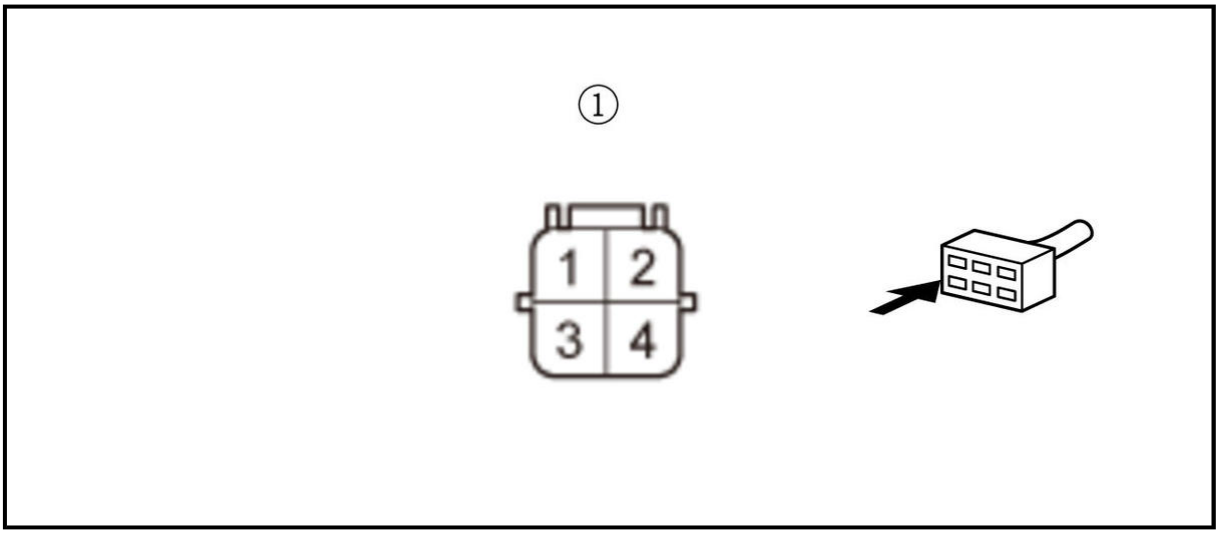

Is there 1.0 Ω or less?

YES

The BPS and BPSR wires are OK. Go to step 6.

NO

Repair an open in the wire between electric servo brake control unit and the brake pedal stroke sensor.

6. Brake pedal stroke sensor check

-1. **Substitute a known-good brake pedal** .

-2. Reconnect the following connectors.

Brake pedal stroke sensor 4P connector
Electric servo brake control unit 22P connector

-3. Turn the vehicle to the ON mode.

-4. Clear the DTCs with the HDS.

-5. Turn the vehicle to the OFF (LOCK) mode, then to the ON mode.

-6. Check for DTCs with the HDS.

DTC Description	DTC	Freeze Frame
B	B	B

Is P057C-00 or P1E25-00 indicated?

YES

Check for loose terminals and poor connections in the electric servo brake control unit 22P connector. Check for any authorized service information related to the DTCs or symptoms you are troubleshooting. If they are OK, replace the electric servo brake control unit/pedal feel simulator .

NO

Replace the original brake pedal .

DTC P057D-00, P1E24-00

DTC P057D-00 : Brake Pedal Stroke Sensor Circuit High Voltage

DTC P1E24-00 : Brake Pedal Stroke Redundant Sensor Circuit High Voltage

NOTE: Before you troubleshoot, review the general troubleshooting information .

DTC Description	DTC	Freeze Frame
P057D-00 Brake Pedal Stroke Sensor Circuit High Voltage	B	B
P1E24-00 Brake Pedal Stroke Redundant Sensor Circuit High Voltage	B	B

DTC (Electric servo brake)

1. Problem verification

   -1. Turn the vehicle to the ON mode.

   -2. Clear the DTCs with the HDS.

   -3. Turn the vehicle to the OFF (LOCK) mode, then to the ON mode.

   -4. Check for DTCs with the HDS.

DTC Description	DTC	Freeze Frame
P057D-00 Brake Pedal Stroke Sensor Circuit High Voltage	B	B
P1E24-00 Brake Pedal Stroke Redundant Sensor Circuit High Voltage	B	B

   Is DTC P057D-00 or P1E24-00 indicated?

   YES

   The failure is duplicated. Go to step 2.

   NO

   Intermittent failure, the system is OK at this time. Refer to intermittent failures troubleshooting . If the freeze data/on-board snapshot of this DTC is recorded, try to reproduce the failure under the same conditions with the freeze data/on-board snapshot.

2. Shorted wire check (ESB_SVCC line to BPS, BPSR lines)

   -1. Turn the vehicle to the OFF (LOCK) mode with driver's door open.

   -2. Wait for 3 minutes.

   NOTE: Do not close the driver's door.

   -3. Disconnect the following connectors.

Brake pedal stroke sensor 4P connector
Electric servo brake control unit 22P connector

-4. Measure the resistance between test points 1 and 2.

Test condition	Vehicle OFF (LOCK) mode
B	Brake pedal stroke sensor 4P connector: disconnected
B	Electric servo brake control unit 22P connector: disconnected
Test circuit 1	B
Test point 1	**Electric servo brake control unit 22P connector No. 12**
Test point 2	**Electric servo brake control unit 22P connector No. 8**

Test circuit 2	B
Test point 1	**Electric servo brake control unit 22P connector No. 12**
Test point 2	**Electric servo brake control unit 22P connector No. 11**

Is there 1 MΩ or more?

YES

The BPS, BPSR, and ESB_SVCC wires is OK. Go to step 3.

NO

Repair a short in the wire between electric servo brake control unit and the brake pedal stroke sensor.

3. Open wire check (ESV_SGND line)

-1. Measure the resistance between test points 1 and 2.

Test condition	Vehicle OFF (LOCK) mode
B	Brake pedal stroke sensor 4P connector: disconnected
B	Electric servo brake control unit 22P connector: disconnected
Test point 1	**Electric servo brake control unit 22P connector No. 9**
Test point 2	Brake pedal stroke sensor 4P connector (female terminals) No. 4: ①

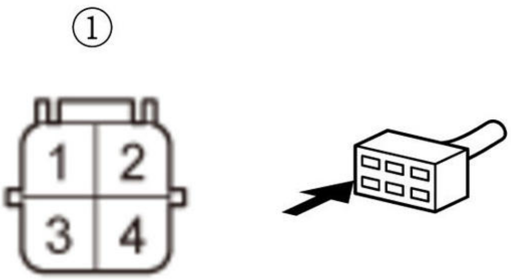

Is there 1.0 Ω or less?

YES

The ESV_SGND wire is OK. Go to step 4.

NO

Repair an open in the wire between the electric servo brake control unit and the brake pedal stroke sensor.

4. Brake pedal stroke sensor check

   -1. **Substitute a known-good brake pedal** .

   -2. Reconnect the following connectors.

Brake pedal stroke sensor 4P connector
Electric servo brake control unit 22P connector

   -3. Turn the vehicle to the ON mode.

   -4. Clear the DTCs with the HDS.

   -5. Turn the vehicle to the OFF (LOCK) mode, then to the ON mode.

   -6. Check for DTCs with the HDS.

DTC Description	DTC	Freeze Frame
P057D-00 Brake Pedal Stroke Sensor Circuit High Voltage	B	B
P1E24-00 Brake Pedal Stroke Redundant Sensor Circuit High Voltage	B	B

Is P057D-00 or P1E24-00 indicated?

YES

Check for loose terminals and poor connections in the electric servo brake control unit 22P connector. Check for any authorized service information related to the DTCs or symptoms you are troubleshooting. If they are OK, **replace the electric servo brake control unit/pedal feel simulator** .

NO

Replace the original brake pedal .

DTC P0602-00

DTC P0602-00 : Electric Servo Brake Control Unit Programming Error

NOTE:

- **Before you troubleshoot, review the general troubleshooting information** .
- Do not turn the vehicle to the OFF (LOCK) mode while updating the electric servo brake control unit. If you turn the vehicle to the OFF (LOCK) mode before completion, the electric servo brake control unit will be damaged.

DTC Description	DTC	Freeze Frame
P0602-00 Electric Servo Brake Control Unit Programming Error	B	B

DTC (Electric servo brake)

1. Problem verification

   -1. Turn the vehicle to the ON mode.

-2. Clear the DTCs with the HDS.

-3. Turn the vehicle to the OFF (LOCK) mode, then to the ON mode.

-4. Check for DTCs with the HDS.

DTC Description	DTC	Freeze Frame
P0602-00 Electric Servo Brake Control Unit Programming Error	B	B

Is DTC P0602-00 indicated?

YES

The failure is duplicated. Go to step 2.

NO

Intermittent failure, the system is OK at this time. **Refer to intermittent failures troubleshooting** . If the freeze data/on-board snapshot of this DTC is recorded, try to reproduce the failure under the same conditions with the freeze data/on-board snapshot.

2. Electric servo brake control unit check (update)

-1. **Update the electric servo brake control unit** .

-2. Turn the vehicle to the OFF (LOCK) mode, then to the ON mode.

-3. Check for DTCs with the HDS.

DTC Description	DTC	Freeze Frame
B	B	B

Is DTC P0602-00 indicated?

YES

Check for loose terminals and poor connections in the electric servo brake control unit 22P connector. Check for any authorized service information related to the DTCs or symptoms you are troubleshooting. If they are OK, **replace the electric servo brake control unit/pedal feel simulator** .

NO

Troubleshooting is complete.

DTC P0606-00

DTC P0606-00 : Electric Servo Brake Control Unit Internal Circuit Malfunction

NOTE: **Before you troubleshoot, review the general troubleshooting information** .

DTC Description	DTC	Freeze Frame
P0606-00 Electric Servo Brake Control Unit Internal Circuit Malfunction	B	B

DTC (Electric servo brake)

1. Problem verification

-1. Turn the vehicle to the ON mode.

-2. Clear the DTCs with the HDS.

-3. Turn the vehicle to the OFF (LOCK) mode.

-4. Wait 10 seconds or more.

-5. Turn the vehicle to the ON mode.

-6. Check for DTCs with the HDS.

DTC Description	DTC	Freeze Frame
P0606-00 Electric Servo Brake Control Unit Internal Circuit Malfunction	B	B

Is DTC P0606-00 indicated?

YES

The failure is duplicated. Check for loose terminals and poor connections in the electric servo brake control unit 22P connector. Check for any authorized service information related to the DTCs or symptoms you are troubleshooting. If they are OK, **replace the electric servo brake control unit/pedal feel simulator** .

NO

Intermittent failure, the system is OK at this time. **Refer to intermittent failures troubleshooting** . If the freeze data/on-board snapshot of this DTC is recorded, try to reproduce the failure under the same conditions with the freeze data/on-board snapshot.

DTC P062F-00, P1E44-00

DTC P062F-00 : Electric Servo Brake Control Unit Internal Circuit EEPROM Error

DTC P1E44-00 : Electric Servo Brake Control Unit Internal Circuit Malfunction (Charge Pump Circuit)

NOTE: **Before you troubleshoot, review the general troubleshooting information** .

DTC Description	DTC	Freeze Frame
P062F-00 Electric Servo Brake Control Unit Internal Circuit EEPROM Error	B	B
P1E44-00 Electric Servo Brake Control Unit Internal Circuit Malfunction (Charge Pump Circuit)	B	B

DTC (Electric servo brake)

1. Problem verification

-1. Turn the vehicle to the ON mode.

-2. Clear the DTCs with the HDS.

-3. Turn the vehicle to the OFF (LOCK) mode, then to the ON mode.

-4. Check for DTCs with the HDS.

DTC Description	DTC	Freeze Frame
P062F-00 Electric Servo Brake Control Unit Internal Circuit EEPROM Error	B	B

DTC Description	DTC	Freeze Frame
P1E44-00 Electric Servo Brake Control Unit Internal Circuit Malfunction (Charge Pump Circuit)	B	B

Is DTC P062F-00 or P1E44-00 indicated?

YES

The failure is duplicated. Check for loose terminals and poor connections in the electric servo brake control unit 22P connector. Check for any authorized service information related to the DTCs or symptoms you are troubleshooting. If they are OK, **replace the electric servo brake control unit/pedal feel simulator** .

NO

Intermittent failure, the system is OK at this time. **Refer to intermittent failures troubleshooting** . If the freeze data/on-board snapshot of this DTC is recorded, try to reproduce the failure under the same conditions with the freeze data/on-board snapshot.

DTC P0642-00

DTC P0642-00 : Sensor Power Source Circuit Low Voltage

NOTE: **Before you troubleshoot, review the general troubleshooting information** .

DTC Description	DTC	Freeze Frame
P0642-00 Sensor Power Source Circuit Low Voltage	B	B

DTC (Electric servo brake)

1. Problem verification

-1. Turn the vehicle to the ON mode.

-2. Clear the DTCs with the HDS.

-3. Turn the vehicle to the OFF (LOCK) mode, then to the ON mode.

-4. Check for DTCs with the HDS.

DTC Description	DTC	Freeze Frame
P0642-00 Sensor Power Source Circuit Low Voltage	B	B

Is DTC P0642-00 or others (Relation of brake pedal stroke sensor failure DTCs or brake fluid pressure sensor failure DTCs) indicated?

YES

The failure is duplicated. Go to step 2.

YES

Go to indicated DTC's troubleshooting.

NO

Intermittent failure, the system is OK at this time. **Refer to intermittent failures troubleshooting** . If the freeze data/on-board snapshot of this DTC is recorded, try to reproduce the failure under the same conditions with the freeze data/on-board snapshot.

2. Shorted wire check (ESB_SVCC line)

-1. Turn the vehicle to the OFF (LOCK) mode with driver's door open.

-2. Wait for 3 minutes.

NOTE: Do not close the driver's door.

-3. Disconnect the following connector.

Electric servo brake control unit 22P connector

-4. Measure the resistance between test points 1 and 2.

Test condition	Vehicle OFF (LOCK) mode
B	Electric servo brake control unit 22P connector: disconnected
Test point 1	**Electric servo brake control unit 22P connector No. 12**
Test point 2	Body ground
B	B

Is there 1 MΩ or more?

YES

Check for loose terminals and poor connections in the electric servo brake control unit 22P connector. Check for any authorized service information related to the DTCs or symptoms you are troubleshooting. If they are OK, **replace the electric servo brake control unit/pedal feel simulator** .

NO

Repair a short to ground in the wire between the electric servo brake control unit and the tandem motor cylinder or the brake pedal stroke sensor.

DTC P0643-00

DTC P0643-00 : Sensor Power Source Circuit High Voltage

NOTE: **Before you troubleshoot, review the general troubleshooting information** .

DTC Description	DTC	Freeze Frame
P0643-00 Sensor Power Source Circuit High Voltage	B	B

DTC (Electric servo brake)

1. Problem verification

-1. Turn the vehicle to the ON mode.

-2. Clear the DTCs with the HDS.

-3. Turn the vehicle to the OFF (LOCK) mode, then to the ON mode.

-4. Check for DTCs with the HDS.

DTC Description	DTC	Freeze Frame
P0643-00 Sensor Power Source Circuit High Voltage	B	B

Is DTC P0643-00 indicated?

YES

The failure is duplicated. Go to step 2.

NO

Intermittent failure, the system is OK at this time. **Refer to intermittent failures troubleshooting** . If the freeze data/on-board snapshot of this DTC is recorded, try to reproduce the failure under the same conditions with the freeze data/on-board snapshot.

2. Shorted wire check (ESB_SVCC line to power)

-1. Turn the vehicle to the OFF (LOCK) mode with driver's door open.

-2. Wait 3 minutes.

NOTE: Do not close the driver's door.

-3. Disconnect the following connectors.

Electric servo brake control unit 22P connector
Tandem motor cylinder 9P connector
Brake pedal stroke sensor 4P connector

-4. Measure the voltage between test points 1 and 2.

Test condition	Vehicle OFF (LOCK) mode
B	Electric servo brake control unit 22P connector: disconnected
B	Tandem motor cylinder 9P connector: disconnected
B	Brake pedal stroke sensor 4P connector: disconnected
Test point 1	**Electric servo brake control unit 22P connector No. 12**
Test point 2	Body ground
B	B

Is there 0.1 V or more?

YES

Repair a short to power in the wire between the electric servo brake control unit and the tandem motor cylinder or the brake pedal stroke sensor.

NO

Check for loose terminals and poor connections in the electric servo brake control unit 22P connector. Check for any authorized service information related to the DTCs or symptoms you are troubleshooting. If they are OK, **replace the electric servo brake control unit/pedal feel simulator** .

DTC P1E20-00

DTC P1E20-00 : Brake Fluid Pressure Sensor PL/PLR Incorrect Correlation

NOTE: **Before you troubleshoot, review the general troubleshooting information** .

DTC Description	DTC	Freeze Frame
P1E20-00 Brake Fluid Pressure Sensor PL/PLR Incorrect Correlation	B	B

DTC (Electric servo brake)

1. Problem verification

   -1. Turn the vehicle to the ON mode.

   -2. Clear the DTCs with the HDS.

   -3. Turn the vehicle to the OFF (LOCK) mode, then to the ON mode.

   -4. Press the brake pedal several times.

   -5. Check for DTCs with the HDS.

DTC Description	DTC	Freeze Frame
P1E20-00 Brake Fluid Pressure Sensor PL/PLR Incorrect Correlation	B	B

Is DTC P1E20-00 indicated?

YES

The failure is duplicated. Check for loose terminals and poor connections in the electric servo brake control unit 22P connector. Check for any authorized service information related to the DTCs or symptoms you are troubleshooting. If they are OK, **replace the electric servo brake control unit/pedal feel simulator** .

NO

Intermittent failure, the system is OK at this time. **Refer to intermittent failures troubleshooting** . If the freeze data/on-board snapshot of this DTC is recorded, try to reproduce the failure under the same conditions with the freeze data/on-board snapshot.

DTC P1E26-00

DTC P1E26-00 : Brake Pedal Stroke Sensor/Brake Pedal Stroke Redundant Sensor Incorrect Correlation

NOTE: **Before you troubleshoot, review the general troubleshooting information** .

DTC Description	DTC	Freeze Frame
P1E26-00 Brake Pedal Stroke Sensor/Brake Pedal Stroke Redundant Sensor Incorrect Correlation	B	B

DTC (Electric servo brake)

1. Problem verification

   -1. Turn the vehicle to the ON mode.

   -2. Clear the DTCs with the HDS.

   -3. Turn the vehicle to the OFF (LOCK) mode, then to the ON mode.

   -4. Press the brake pedal several times.

   -5. Check for DTCs with the HDS.

DTC Description	DTC	Freeze Frame
P1E26-00 Brake Pedal Stroke Sensor/Brake Pedal Stroke Redundant Sensor Incorrect Correlation	B	B

Is DTC P1E26-00 indicated?

YES

The failure is duplicated. Go to step 2.

NO

Intermittent failure, the system is OK at this time. **Refer to intermittent failures troubleshooting** . If the freeze data/on-board snapshot of this DTC is recorded, try to reproduce the failure under the same conditions with the freeze data/on-board snapshot.

2. Shorted wire check (BPS line to BPSR line) 1

-1. Turn the vehicle to the OFF (LOCK) mode with driver's door open.

-2. Wait for 3 minutes.

NOTE: Do not close the driver's door.

-3. Disconnect the following connector.

Electric servo brake control unit 22P connector

-4. Measure the resistance between test points 1 and 2.

Test condition	Vehicle OFF (LOCK) mode
B	Electric servo brake control unit 22P connector: disconnected
Test point 1	**Electric servo brake control unit 22P connector No. 8**
Test point 2	**Electric servo brake control unit 22P connector No. 11**

Is there 1 MΩ or more?

YES

Check for loose terminals and poor connections in the electric servo brake control unit 22P connector. Check for any authorized service information related to the DTCs or symptoms you are troubleshooting. If they are OK, **replace the electric servo brake control unit/pedal feel simulator** .

NO

Go to step 3.

3. Shorted wire check (BPS line to BPSR line) 2

-1. Disconnect the following connector.

Brake pedal stroke sensor 4P connector

-2. Measure the resistance between test points 1 and 2.

Test condition	Vehicle OFF (LOCK) mode
B	Electric servo brake control unit 22P connector: disconnected
B	Brake pedal stroke sensor 4P connector: disconnect
Test point 1	**Electric servo brake control unit 22P connector No. 8**
Test point 2	**Electric servo brake control unit 22P connector No. 11**

Is there 1 MΩ or more?

YES

Replace the brake pedal .

NO

Repair a short in the wire between the electric servo brake control unit and the brake pedal stroke sensor.

DTC P1E27-00, P1E29-00, P1E2C-00, P1E2E-00

DTC P1E27-00 : Brake Fluid Pressure Sensor PU Circuit High Voltage

DTC P1E29-00 : Brake Fluid Pressure Sensor PUR Circuit High Voltage

DTC P1E2C-00 : Brake Fluid Pressure Sensor PL Circuit High Voltage

DTC P1E2E-00 : Brake Fluid Pressure Sensor PLR Circuit High Voltage

NOTE: Before you troubleshoot, review the general troubleshooting information .

DTC Description	DTC	Freeze Frame
P1E27-00 Brake Fluid Pressure Sensor PU Circuit High Voltage	B	B
P1E29-00 Brake Fluid Pressure Sensor PUR Circuit High Voltage	B	B
P1E2C-00 Brake Fluid Pressure Sensor PL Circuit High Voltage	B	B
P1E2E-00 Brake Fluid Pressure Sensor PLR Circuit High Voltage	B	B

DTC (Electric servo brake)

1. Problem verification

-1. Turn the vehicle to the ON mode.

-2. Clear the DTCs with the HDS.

-3. Turn the vehicle to the OFF (LOCK) mode, then to the ON mode.

-4. Press the brake pedal several times.

-5. Check for DTCs with the HDS.

DTC Description	DTC	Freeze Frame
P1E27-00 Brake Fluid Pressure Sensor PU Circuit High Voltage	B	B
P1E29-00 Brake Fluid Pressure Sensor PUR Circuit High Voltage	B	B
P1E2C-00 Brake Fluid Pressure Sensor PL Circuit High Voltage	B	B
P1E2E-00 Brake Fluid Pressure Sensor PLR Circuit High Voltage	B	B

Is DTC P1E27-00, P1E29-00, P1E2C-00, or P1E2E-00 indicated?

YES

The failure is duplicated. Check for loose terminals and poor connections in the electric servo brake control unit 22P connector. Check for any authorized service information related to the DTCs or symptoms you are troubleshooting. If they are OK, **replace the electric servo brake control unit/pedal feel simulator** .

NO

Intermittent failure, the system is OK at this time. **Refer to intermittent failures troubleshooting** . If the freeze data/on-board snapshot of this DTC is recorded, try to reproduce the failure under the same conditions with the freeze data/on-board snapshot.

DTC P1E28-00, P1E2A-00, P1E2D-00, P1E2F-00

DTC P1E28-00 : Brake Fluid Pressure Sensor PU Circuit Low Voltage

DTC P1E2A-00 : Brake Fluid Pressure Sensor PUR Circuit Low Voltage

DTC P1E2D-00 : Brake Fluid Pressure Sensor PL Circuit Low Voltage

DTC P1E2F-00 : Brake Fluid Pressure Sensor PLR Circuit Low Voltage

NOTE: **Before you troubleshoot, review the general troubleshooting information** .

DTC Description	DTC	Freeze Frame
P1E28-00 Brake Fluid Pressure Sensor PU Circuit Low Voltage	B	B
P1E2A-00 Brake Fluid Pressure Sensor PUR Circuit Low Voltage	B	B
P1E2D-00 Brake Fluid Pressure Sensor PL Circuit Low Voltage	B	B
P1E2F-00 Brake Fluid Pressure Sensor PLR Circuit Low Voltage	B	B

DTC (Electric servo brake)

1. Problem verification

    -1. Turn the vehicle to the ON mode.

    -2. Clear the DTCs with the HDS.

    -3. Turn the vehicle to the OFF (LOCK) mode, then to the ON mode.

    -4. Press the brake pedal several times.

    -5. Check for DTCs with the HDS.

DTC Description	DTC	Freeze Frame
P1E28-00 Brake Fluid Pressure Sensor PU Circuit Low Voltage	B	B
P1E2A-00 Brake Fluid Pressure Sensor PUR Circuit Low Voltage	B	B
P1E2D-00 Brake Fluid Pressure Sensor PL Circuit Low Voltage	B	B
P1E2F-00 Brake Fluid Pressure Sensor PLR Circuit Low Voltage	B	B

Is DTC P1E28-00, P1E2A-00, P1E2D-00, or P1E2F-00 indicated?

YES

The failure is duplicated. Check for loose terminals and poor connections in the electric servo brake control unit 22P connector. Check for any authorized service information related to the DTCs or symptoms you are troubleshooting. If they are OK, **replace the electric servo brake control unit/pedal feel simulator** .

NO

Intermittent failure, the system is OK at this time. **Refer to intermittent failures troubleshooting** . If the freeze data/on-board snapshot of this DTC is recorded, try to reproduce the failure under the same conditions with the freeze data/on-board snapshot.

DTC P1E2B-00

DTC P1E2B-00 : Brake Fluid Pressure Sensor PU/PUR Incorrect Correlation

NOTE: **Before you troubleshoot, review the general troubleshooting information** .

DTC Description	DTC	Freeze Frame
P1E2B-00 Brake Fluid Pressure Sensor PU/PUR Incorrect Correlation	B	B

DTC (Electric servo brake)

1. Problem verification

   -1. Turn the vehicle to the ON mode.

   -2. Clear the DTCs with the HDS.

   -3. Turn the vehicle to the OFF (LOCK) mode, then to the ON mode.

   -4. Press the brake pedal several times.

   -5. Check for DTCs with the HDS.

DTC Description	DTC	Freeze Frame
P1E2B-00 Brake Fluid Pressure Sensor PU/PUR Incorrect Correlation	B	B

Is DTC P1E2B-00 indicated?

YES

The failure is duplicated. Check for loose terminals and poor connections in the electric servo brake control unit 22P connector. Check for any authorized service information related to the DTCs or symptoms you are troubleshooting. If they are OK, **replace the electric servo brake control unit/pedal feel simulator** .

NO

Intermittent failure, the system is OK at this time. **Refer to intermittent failures troubleshooting** . If the freeze data/on-board snapshot of this DTC is recorded, try to reproduce the failure under the same conditions with the freeze data/on-board snapshot.

DTC P1E32-00, P1E33-00, P1E34-00

DTC P1E32-00 : Master Cylinder Cut Valve Stuck OFF (Stuck Open)

DTC P1E33-00 : Master Cylinder Cut Valve Incorrect Operation

DTC P1E34-00 : Master Cylinder Cut Valve Stuck ON (Stuck Close)

NOTE: **Before you troubleshoot, review the general troubleshooting information** .

DTC Description	DTC	Freeze Frame
P1E32-00 Master Cylinder Cut Valve Stuck OFF (Stuck Open)	B	B
P1E33-00 Master Cylinder Cut Valve Incorrect Operation	B	B
P1E34-00 Master Cylinder Cut Valve Stuck ON (Stuck Close)	B	B

DTC (Electric servo brake)

1. Problem verification

   -1. Turn the vehicle to the ON mode.

   -2. Clear the DTCs with the HDS.

   -3. Turn the vehicle to the OFF (LOCK) mode, then to the ON mode.

   -4. Wait 1 second or more without pressing the brake pedal.

   -5. Press the brake pedal several times.

   -6. Check for DTCs with the HDS.

DTC Description	DTC	Freeze Frame
P1E32-00 Master Cylinder Cut Valve Stuck OFF (Stuck Open)	B	B
P1E33-00 Master Cylinder Cut Valve Incorrect Operation	B	B
P1E34-00 Master Cylinder Cut Valve Stuck ON (Stuck Close)	B	B

Is DTC P1E32-00, P1E33-00, or P1E34-00 indicated?

YES

The failure is duplicated. Check for loose terminals and poor connections in the electric servo brake control unit 22P connector. Check for any authorized service information related to the DTCs or symptoms you are troubleshooting. If they are OK, **replace the electric servo brake control unit/pedal feel simulator** .

NO

Intermittent failure, the system is OK at this time. **Refer to intermittent failures troubleshooting** . If the freeze data/on-board snapshot of this DTC is recorded, try to reproduce the failure under the same conditions with the freeze data/on-board snapshot.

DTC P1E35-00, P1E37-00, P1E38-00

DTC P1E35-00 : Brake Pedal Feel Simulator Cut Valve Incorrect Operation

DTC P1E37-00 : Brake Pedal Feel Simulator Cut Valve Stuck OFF (Stuck Close)

DTC P1E38-00 : Brake Pedal Feel Simulator Cut Valve Stuck ON (Stuck Open)

NOTE: **Before you troubleshoot, review the general troubleshooting information** .

DTC Description	DTC	Freeze Frame
P1E35-00 Brake Pedal Feel Simulator Cut Valve Incorrect Operation	B	B
P1E37-00 Brake Pedal Feel Simulator Cut Valve Stuck OFF (Stuck Close)	B	B
P1E38-00 Brake Pedal Feel Simulator Cut Valve Stuck ON (Stuck Open)	B	B

DTC (Electric servo brake)

1. Problem verification

-1. Turn the vehicle to the ON mode.

-2. Clear the DTCs with the HDS.

-3. Turn the vehicle to the OFF (LOCK) mode, then to the ON mode.

-4. Wait 1 second or more without pressing the brake pedal.

-5. Press the brake pedal several times.

-6. Check for DTCs with the HDS.

DTC Description	DTC	Freeze Frame
P1E35-00 Brake Pedal Feel Simulator Cut Valve Incorrect Operation	B	B
P1E37-00 Brake Pedal Feel Simulator Cut Valve Stuck OFF (Stuck Close)	B	B
P1E38-00 Brake Pedal Feel Simulator Cut Valve Stuck ON (Stuck Open)	B	B

Is DTC P1E35-00, P1E37-00, or P1E38-00 indicated?

YES

The failure is duplicated. Check for loose terminals and poor connections in the electric servo brake control unit 22P connector. Check for any authorized service information related to the DTCs or symptoms you are troubleshooting. If they are OK, **replace the electric servo brake control unit/pedal feel simulator** .

NO

Intermittent failure, the system is OK at this time. **Refer to intermittent failures troubleshooting** . If the freeze data/on-board snapshot of this DTC is recorded, try to reproduce the failure under the same conditions with the freeze data/on-board snapshot.

DTC P1E36-00

DTC P1E36-00 : Brake Pedal Feel Simulator Cut Valve No Operation

NOTE: **Before you troubleshoot, review the general troubleshooting information** .

DTC Description	DTC	Freeze Frame
P1E36-00 Brake Pedal Feel Simulator Cut Valve No Operation	B	B

DTC (Electric servo brake)

1. Problem verification

 -1. Turn the vehicle to the ON mode.

 -2. Clear the DTCs with the HDS.

 -3. Turn the vehicle to the OFF (LOCK) mode, then to the ON mode.

 -4. Press the brake pedal several times.

 -5. Check for DTCs with the HDS.

DTC Description	DTC	Freeze Frame
P1E36-00 Brake Pedal Feel Simulator Cut Valve No Operation	B	B

Is DTC P1E36-00 indicated?

YES

The failure is duplicated. Check for loose terminals and poor connections in the electric servo brake control unit 22P connector. Check for any authorized service information related to the DTCs or symptoms you are troubleshooting. If they are OK, **replace the electric servo brake control unit/pedal feel simulator** .

NO

Intermittent failure, the system is OK at this time. **Refer to intermittent failures troubleshooting** . If the freeze data/on-board snapshot of this DTC is recorded, try to reproduce the failure under the same conditions with the freeze data/on-board snapshot.

DTC P1E41-00

DTC P1E41-00 : Electric Servo Brake System Fail-Safe Relay Stuck ON

NOTE: **Before you troubleshoot, review the general troubleshooting information** .

DTC Description	DTC	Freeze Frame
P1E41-00 Electric Servo Brake System Fail-Safe Relay Stuck ON	B	B

DTC (Electric servo brake)

1. DTC Check

 -1. Turn the vehicle to the ON mode.

 -2. Clear the DTCs with the HDS.

 -3. Turn the vehicle to the OFF (LOCK) mode, then to the ON mode.

 -4. Wait 5 seconds or more.

 -5. Check for DTCs with the HDS.

DTC Description	DTC	Freeze Frame
P1E34-00 Master Cylinder Cut Valve Stuck ON (Stuck Close)	B	B
P1E38-00 Brake Pedal Feel Simulator Cut Valve Stuck ON (Stuck Open)	B	B
P1E41-00 Electric Servo Brake System Fail-Safe Relay Stuck ON	B	B

Is DTC P1E41-00 indicated?

YES

Check for loose terminals and poor connections in the electric servo brake control unit 22P connector. Check for any authorized service information related to the DTCs or symptoms you are troubleshooting. If they are OK, **replace the electric servo brake control unit/pedal feel simulator** .

YES

Go to indicated DTC's troubleshooting.

NO

Intermittent failure, the system is OK at this time. **Refer to intermittent failures troubleshooting** . If the freeze data/on-board snapshot of this DTC is recorded, try to reproduce the failure under the same conditions with the freeze data/on-board snapshot.

DTC P1E42-00

DTC P1E42-00 : Electric Servo Brake System Fail-Safe Relay Stuck OFF

NOTE: **Before you troubleshoot, review the general troubleshooting information** .

DTC Description	DTC	Freeze Frame
P1E42-00 Electric Servo Brake System Fail-Safe Relay Stuck OFF	B	B

DTC (Electric servo brake)

1. DTC Check

   -1. Turn the vehicle to the ON mode.

   -2. Clear the DTCs with the HDS.

   -3. Turn the vehicle to the OFF (LOCK) mode, then to the ON mode.

   -4. Check for DTCs with the HDS.

DTC Description	DTC	Freeze Frame
P1E32-00 Master Cylinder Cut Valve Stuck OFF (Stuck Open)	B	B
P1E33-00 Master Cylinder Cut Valve Incorrect Operation	B	B
P1E34-00 Master Cylinder Cut Valve Stuck ON (Stuck Close)	B	B
P1E35-00 Brake Pedal Feel Simulator Cut Valve Incorrect Operation	B	B

DTC Description	DTC	Freeze Frame
P1E36-00 Brake Pedal Feel Simulator Cut Valve No Operation	B	B
P1E37-00 Brake Pedal Feel Simulator Cut Valve Stuck OFF (Stuck Close)	B	B
P1E38-00 Brake Pedal Feel Simulator Cut Valve Stuck ON (Stuck Open)	B	B
P1E42-00 Electric Servo Brake System Fail-Safe Relay Stuck OFF	B	B

DTC Description	DTC	Freeze Frame
P1E47-00 Electric Servo Brake Control Unit Internal Circuit Malfunction (FET Stuck OFF)	B	B

Is DTC P1E42-00 indicated?

YES

Check for loose terminals and poor connections in the electric servo brake control unit 22P connector. Check for any authorized service information related to the DTCs or symptoms you are troubleshooting. If they are OK, **replace the electric servo brake control unit/pedal feel simulator** .

YES

Go to indicated DTC's troubleshooting.

NO

Intermittent failure, the system is OK at this time. **Refer to intermittent failures troubleshooting** . If the freeze data/on-board snapshot of this DTC is recorded, try to reproduce the failure under the same conditions with the freeze data/on-board snapshot.

DTC P1E46-00, P1E47-00, P1E48-00, P1E4A-00, P1E4C-00

DTC P1E46-00 : Electric Servo Brake Control Unit Internal Circuit Malfunction (FET Stuck ON)

DTC P1E47-00 : Electric Servo Brake Control Unit Internal Circuit Malfunction (FET Stuck OFF)

DTC P1E48-00 : Slave Cylinder Drive Motor Current Malfunction (Offset)

DTC P1E4A-00 : Slave Cylinder Drive Motor Current Malfunction (Over Current)

DTC P1E4C-00 : Slave Cylinder Drive Motor Power Source Circuit High Voltage

NOTE: **Before you troubleshoot, review the general troubleshooting information** .

DTC Description	DTC	Freeze Frame
P1E46-00 Electric Servo Brake Control Unit Internal Circuit Malfunction (FET Stuck ON)	B	B
P1E47-00 Electric Servo Brake Control Unit Internal Circuit Malfunction (FET Stuck OFF)	B	B
P1E48-00 Slave Cylinder Drive Motor Current Malfunction (Offset)	B	B
P1E4A-00 Slave Cylinder Drive Motor Current Malfunction (Over Current)	B	B
P1E4C-00 Slave Cylinder Drive Motor Power Source Circuit High Voltage	B	B

DTC (Electric servo brake)

1. Problem verification

   -1. Turn the vehicle to the ON mode.

   -2. Clear the DTCs with the HDS.

   -3. Turn the vehicle to the OFF (LOCK) mode, then to the ON mode.

   -4. Wait 1 second or more without pressing the brake pedal.

   -5. Check for DTCs with the HDS.

DTC Description	DTC	Freeze Frame
P1E46-00 Electric Servo Brake Control Unit Internal Circuit Malfunction (FET Stuck ON)	B	B
P1E47-00 Electric Servo Brake Control Unit Internal Circuit Malfunction (FET Stuck OFF)	B	B
P1E48-00 Slave Cylinder Drive Motor Current Malfunction (Offset)	B	B
P1E4A-00 Slave Cylinder Drive Motor Current Malfunction (Over Current)	B	B
P1E4C-00 Slave Cylinder Drive Motor Power Source Circuit High Voltage	B	B

   Is DTC P1E46-00, P1E47-00, P1E48-00, P1E4A-00, or P1E4C-00 indicated?

   YES

   The failure is duplicated. Go to step 2.

   NO

   Intermittent failure, the system is OK at this time. **Refer to intermittent failures troubleshooting** . If the freeze data/on-board snapshot of this DTC is recorded, try to reproduce the failure under the same conditions with the freeze data/on-board snapshot.

2. Shorted wire check (MV, MU, MW lines to power) 1

   -1. Turn the vehicle to the OFF (LOCK) mode with driver's door open.

   -2. Wait for 3 minutes.

   NOTE: Do not close the driver's door.

   -3. Disconnect the following connector.

Electric servo brake control unit 22P connector

   -4. Measure the voltage between the following test points and body ground individually.

Test condition	Vehicle OFF (LOCK) mode
B	Electric servo brake control unit 22P connector: disconnected

Connector	Test point 1	Test point 2
Electric servo brake control unit 22P connector	No. 1	Body ground

Connector	Test point 1	Test point 2
	No. 2	
	No. 3	

Is there 0.1 V or more?

YES

Go to step 3.

NO

Go to step 4.

3. Shorted wire check (MV, MU, MW lines to power) 2

-1. Disconnect the following connector.

Tandem motor cylinder 9P connector

-2. Measure the voltage between the following test points and body ground individually.

Test condition	Vehicle OFF (LOCK) mode
B	Electric servo brake control unit 22P connector: disconnected
B	Tandem motor cylinder 9P connector: disconnected

Connector	Test point 1	Test point 2
Electric servo brake control unit 22P connector	No. 1	Body ground
	No. 2	
	No. 3	

Is there 0.1 V or more?

YES

Repair a short to power in the wire between the electric servo brake control unit and the tandem motor cylinder.

NO

Replace the motor .

4. Shorted wire check (MV, MU, MW lines) 1

-1. Measure the resistance between the following test points and body ground individually.

Test condition	Vehicle OFF (LOCK) mode
B	Electric servo brake control unit 22P connector: disconnected

Connector	Test point 1	Test point 2
Electric servo brake control unit 22P connector	No. 1	Body ground
	No. 2	
	No. 3	

Is there 1 MΩ or more?

YES

Go to step 6.

NO

Go to step 5.

5. Shorted wire check (MV, MU, MW lines) 2

-1. Disconnect the following connector.

Tandem motor cylinder 9P connector

-2. Measure the resistance between the following test points and body ground individually.

Test condition	Vehicle OFF (LOCK) mode
B	Electric servo brake control unit 22P connector: disconnected
B	Tandem motor cylinder 9P connector: disconnected

Connector	Test point 1	Test point 2
Electric servo brake control unit 22P connector	No. 1	Body ground
	No. 2	
	No. 3	

Is there 1 MΩ or more?

YES

Replace the motor .

NO

Repair a short to body ground in the wire between electric servo brake control unit and the tandem motor cylinder.

6. Shorted wire check (MV, MU, MW lines wire to wire)

-1. Disconnect the following connector.

Tandem motor cylinder 9P connector

-2. Measure the resistance between test points 1 and 2 individually.

Test condition	Vehicle OFF (LOCK) mode
B	Electric servo brake control unit 22P connector: disconnected
B	Tandem motor cylinder 9P connector: disconnected

Connector	Test point 1	Test point 2
Electric servo brake control unit 22P connector	No. 1	No. 2
		No. 3
	No. 2	No. 1
		No. 3
	No. 3	No. 1
		No. 2

Is there 1 MΩ or more?

YES

Check for loose terminals and poor connections in the electric servo brake control unit 22P connector. Check for any authorized service information related to the DTCs or symptoms you are troubleshooting. If they are OK, replace the electric servo brake control unit/pedal feel simulator .

NO

Repair a short in the wires between the electric servo brake control unit and the tandem motor cylinder.

DTC P1E49-00, P1E4B-00

DTC P1E49-00 : Slave Cylinder Drive Motor Current Malfunction (Stuck)

DTC P1E4B-00 : Slave Cylinder Drive Motor Circuit Open

NOTE: Before you troubleshoot, review the general troubleshooting information .

DTC Description	DTC	Freeze Frame
P1E49-00 Slave Cylinder Drive Motor Current Malfunction (Stuck)	B	B
P1E4B-00 Slave Cylinder Drive Motor Circuit Open	B	B

DTC (Electric servo brake)

1. Problem verification

   -1. Turn the vehicle to the ON mode.

   -2. Clear the DTCs with the HDS.

   -3. Turn the vehicle to the OFF (LOCK) mode, then to the ON mode.

   -4. Press the brake pedal several times.

   -5. Check for DTCs with the HDS.

DTC Description	DTC	Freeze Frame
P1E49-00 Slave Cylinder Drive Motor Current Malfunction (Stuck)	B	B
P1E4B-00 Slave Cylinder Drive Motor Circuit Open	B	B

   Is DTC P1E49-00 or P1E4B-00 indicated?

   YES

   The failure is duplicated. Go to step 2.

   NO

   Intermittent failure, the system is OK at this time. Refer to intermittent failures troubleshooting . If the freeze data/on-board snapshot of this DTC is recorded, try to reproduce the failure under the same conditions with the freeze data/on-board snapshot.

2. Open wire check (MV, MU, MW lines) 1

   -1. Turn the vehicle to the OFF (LOCK) mode with driver's door open.

   -2. Wait for 3 minutes.

NOTE: Do not close the driver's door.

-3. Disconnect the following connector.

Electric servo brake control unit 22P connector

-4. Check for continuity between test points 1 and 2 individually.

Test condition	Vehicle OFF (LOCK) mode
B	Electric servo brake control unit 22P connector: disconnected

Connector	**Test point 1**	**Test point 2**
Electric servo brake control unit 22P connector	No. 1	No. 2
		No. 3
	No. 2	No. 1
		No. 3
	No. 3	No. 1
		No. 2

Is there continuity?

YES

Check for loose terminals and poor connections in the electric servo brake control unit 22P connector. Check for any authorized service information related to the DTCs or symptoms you are troubleshooting. If they are OK, **replace the electric servo brake control unit/pedal feel simulator** .

NO

Go to step 3.

3. Open wire check (MV, MU, MW lines) 2

-1. Disconnect the following connector.

Tandem motor cylinder 9P connector

-2. Measure the resistance between test points 1 and 2 individually.

Test condition	Vehicle OFF (LOCK) mode
B	Electric servo brake control unit 22P connector: disconnected
B	Tandem motor cylinder 9P connector: disconnected
Test circuit 1	B
Test point 1	**Electric servo brake control unit 22P connector No. 1**
Test point 2	Tandem motor cylinder 9P connector (female terminals) No. 2: ①

Test circuit 2	B
Test point 1	**Electric servo brake control unit 22P connector No. 2**
Test point 2	Tandem motor cylinder 9P connector (female terminals) No. 1: ①

Test circuit 3	B
Test point 1	**Electric servo brake control unit 22P connector No. 3**

Test point 2	Tandem motor cylinder 9P connector (female terminals) No. 3: ①

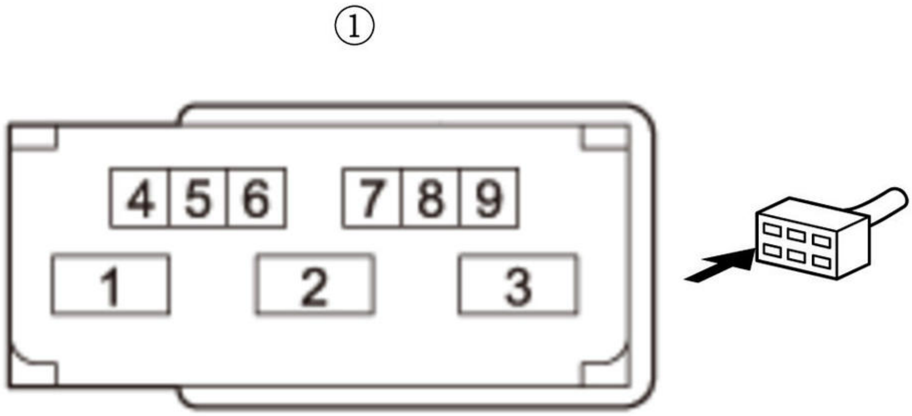

Is there 1.0 Ω or less?

YES

Replace the motor .

NO

Repair an open in the wire between the electric servo brake control unit and the tandem motor cylinder.

DTC P1E4D-00

DTC P1E4D-00 : Motor Angle Signal Malfunction

NOTE: **Before you troubleshoot, review the general troubleshooting information** .

DTC Description	DTC	Freeze Frame
P1E4D-00 Motor Angle Signal Malfunction	B	B

DTC (Electric servo brake)

1. Problem verification

-1. Turn the vehicle to the ON mode.

-2. Clear the DTCs with the HDS.

-3. Turn the vehicle to the OFF (LOCK) mode, then to the ON mode.

-4. Press the brake pedal several times.

-5. Check for DTCs with the HDS.

DTC Description	DTC	Freeze Frame
P1E4D-00 Motor Angle Signal Malfunction	B	B

Is DTC P1E4D-00 indicated?

YES

The failure is duplicated. Go to step 2.

NO

Intermittent failure, the system is OK at this time. **Refer to intermittent failures troubleshooting** . If the freeze data/on-board snapshot of this DTC is recorded, try to reproduce the failure under the same conditions with the freeze data/on-board snapshot.

2. Determine possible failure area (HALL lines, others)

-1. Turn the vehicle to the OFF (LOCK) mode with driver's door open.

-2. Wait for 3 minutes.

NOTE: Do not close the driver's door.

-3. Disconnect the following connector.

Tandem motor cylinder 9P connector

-4. Turn the vehicle to the ON mode.

-5. Measure the voltage between test points 1 and 2.

Test condition	Vehicle ON mode
B	Tandem motor cylinder 9P connector: disconnected
Test point 1	Tandem motor cylinder 9P connector (female terminals) No. 4: ①
Test point 2	Tandem motor cylinder 9P connector (female terminals) No. 9: ①

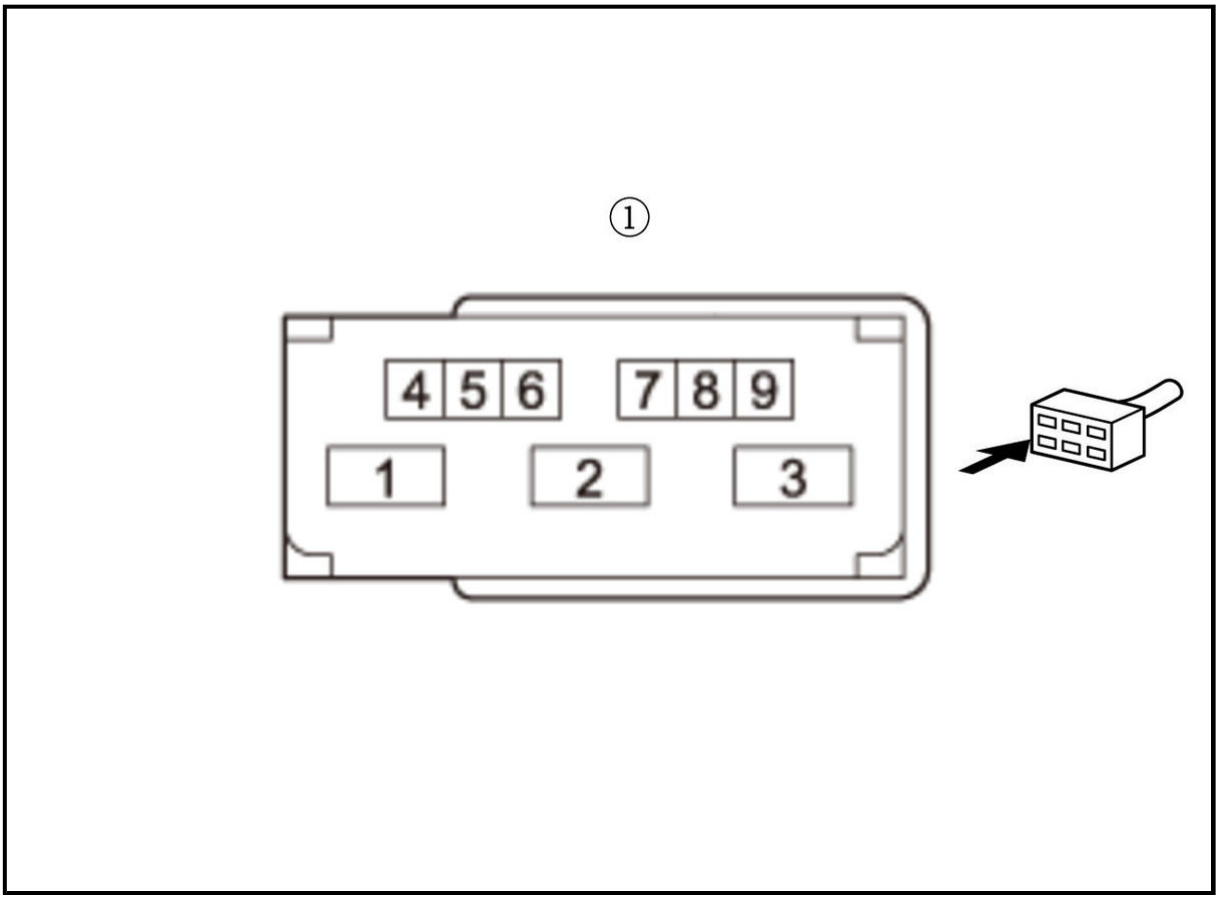

Is there about 5 V?

YES

Go to step 5.

NO

Go to step 3.

3. Open wire check (ESB_SVCC line)

-1. Turn the vehicle to the OFF (LOCK) mode with driver's door open.

-2. Wait for 3 minutes.

NOTE: Do not close the driver's door.

-3. Disconnect the following connector.

Electric servo brake control unit 22P connector

-4. Measure the resistance between test points 1 and 2.

Test condition	Vehicle OFF (LOCK) mode
B	Tandem motor cylinder 9P connector: disconnected
B	Electric servo brake control unit 22P connector: disconnected
Test point 1	Tandem motor cylinder 9P connector (female terminals) No. 4: ①
Test point 2	**Electric servo brake control unit 22P connector No. 12**

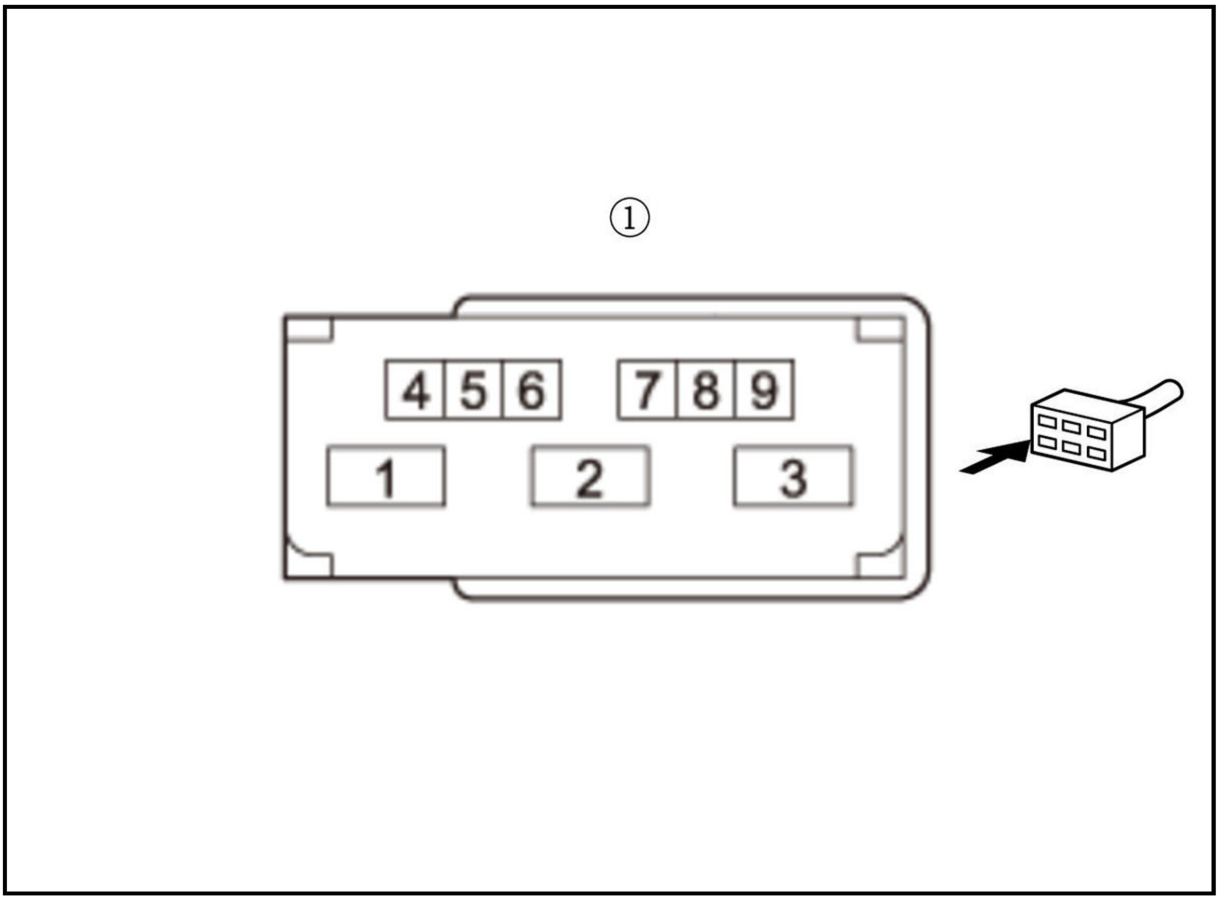

Is there 1.0 Ω or less?

YES

The ESB_SVCC wire is OK. Go to step 4.

NO

Repair an open in the wire between the electric servo brake control unit and the tandem motor cylinder.

4. Open wire check (ESV_SGND line)

-1. Measure the resistance between test points 1 and 2.

Test condition	Vehicle OFF (LOCK) mode
B	Tandem motor cylinder 9P connector: disconnected
B	Electric servo brake control unit 22P connector: disconnected
Test point 1	Tandem motor cylinder 9P connector (female terminals) No. 9: ①
Test point 2	**Electric servo brake control unit 22P connector No. 9**

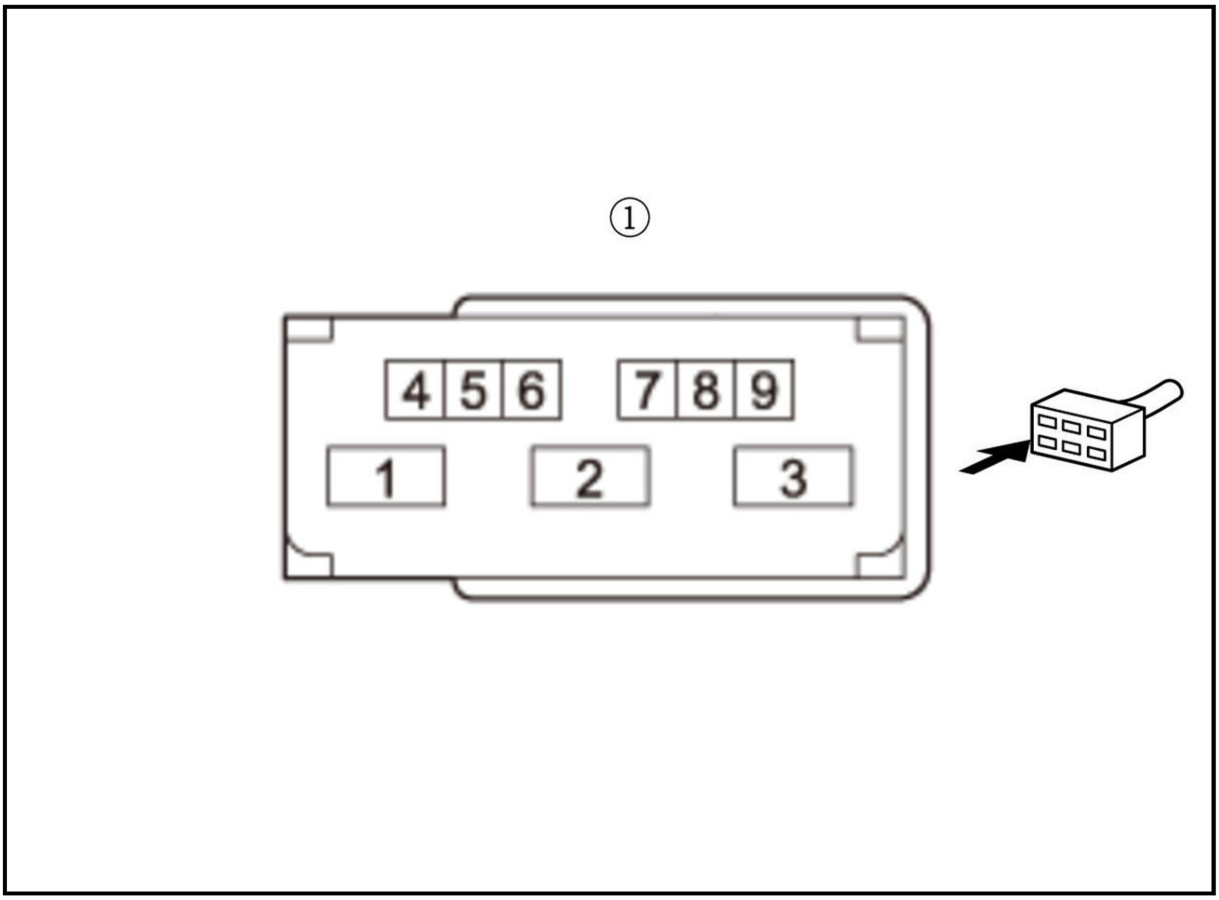

Is there 1.0 Ω or less?

YES

Check for loose terminals and poor connections in the electric servo brake control unit 22P connector. Check for any authorized service information related to the DTCs or symptoms you are troubleshooting. If they are OK, **replace the electric servo brake control unit/pedal feel simulator** .

NO

Repair an open in the wire between the electric servo brake control unit and the tandem motor cylinder.

5. Open wire check (HALL lines)

-1. Turn the vehicle to the OFF (LOCK) mode with driver's door open.

-2. Wait for 3 minutes.

NOTE: Do not close the driver's door.

-3. Disconnect the following connector.

Electric servo brake control unit 22P connector

-4. Measure the resistance between test points 1 and 2 individually.

Test condition	Vehicle OFF (LOCK) mode
B	Tandem motor cylinder 9P connector: disconnected
B	Electric servo brake control unit 22P connector: disconnected
Test circuit 1	B
Test point 1	Tandem motor cylinder 9P connector (female terminals) No. 6: ①

Test point 2	**Electric servo brake control unit 22P connector No. 20**

Test circuit 2	B
Test point 1	Tandem motor cylinder 9P connector (female terminals) No. 7: ①
Test point 2	**Electric servo brake control unit 22P connector No. 21**

Test circuit 3	B
Test point 1	Tandem motor cylinder 9P connector (female terminals) No. 8: ①
Test point 2	**Electric servo brake control unit 22P connector No. 22**

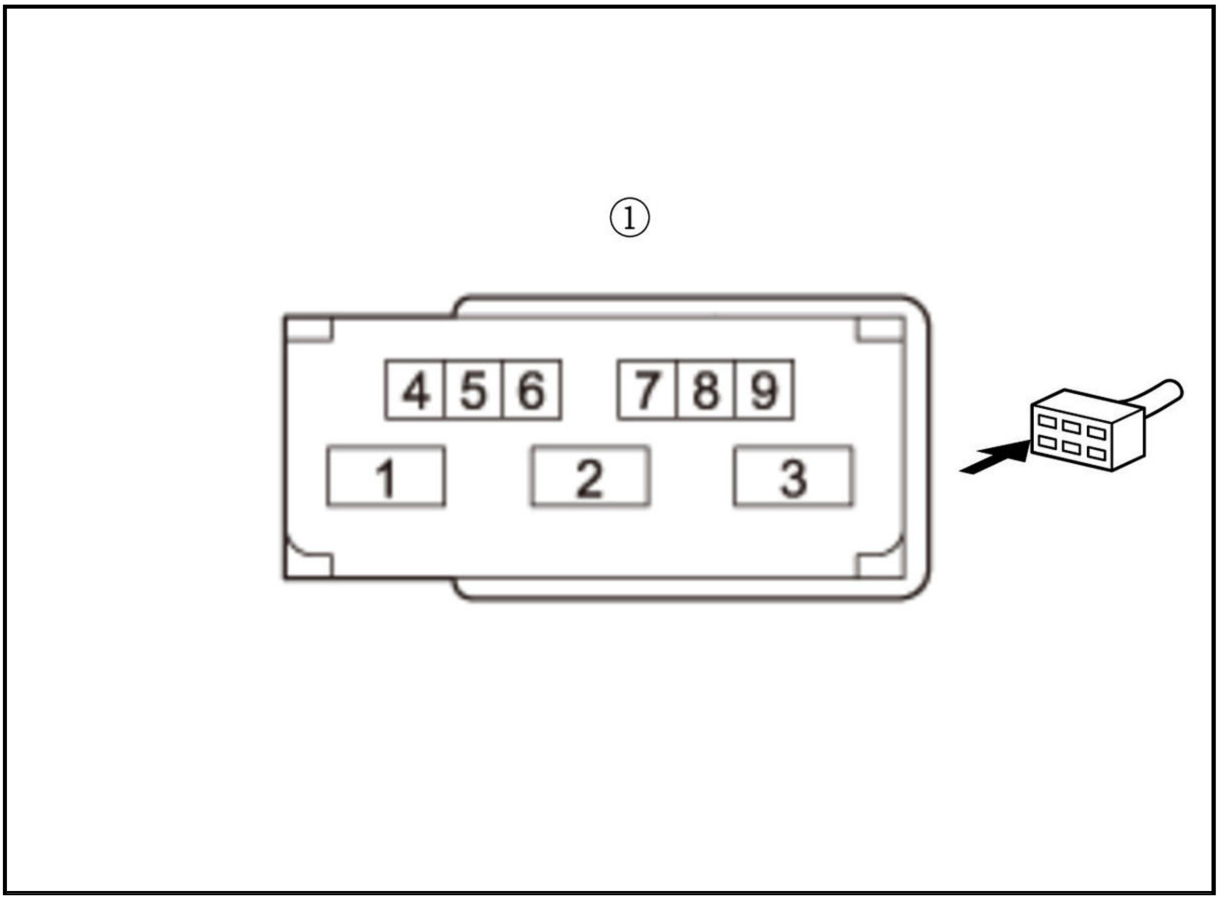

Is there 1.0 Ω or less?

YES

The HALL wires are not open. Go to step 6.

NO

Repair an open in the wire between the electric servo brake control unit and the tandem motor cylinder.

6. Shorted wire check (HALL U, HALL V, HALL W lines)

   -1. Measure the resistance between the appropriate electric servo brake control unit 22P connector terminal and body ground individually (see table).

Test condition	Vehicle OFF (LOCK) mode
B	Tandem motor cylinder 9P connector
B	Electric servo brake control unit 22P connector: disconnected

Connector	Test point 1	Test point 2
Electric servo brake control unit 22P connector	No. 20	Body ground
	No. 21	
	No. 22	

Is there 1 MΩ or more?

YES

Go to step 7.

NO

Repair a short to body ground in the wire between the electric servo brake control unit and the tandem motor cylinder.

7. Motor check

-1. **Substitute a known-good motor** .

-2. Reconnect all connectors.

-3. Turn the vehicle to the ON mode.

-4. Clear the DTCs with the HDS.

-5. Turn the vehicle to the OFF (LOCK) mode, then to the ON mode.

-6. Press the brake pedal several times.

-7. Check for DTCs with the HDS.

DTC Description	DTC	Freeze Frame
P1E4D-00 Motor Angle Signal Malfunction	B	B

Is DTC P1E4D-00 indicated?

YES

Check for loose terminals and poor connections in the electric servo brake control unit 22P connector. Check for any authorized service information related to the DTCs or symptoms you are troubleshooting. If they are OK, **replace the electric servo brake control unit/pedal feel simulator** .

NO

Replace the original motor .

DTC P1E51-00

DTC P1E51-00 : Tandem Motor Cylinder Gearbox Mechanical Linkage Failure

NOTE: **Before you troubleshoot, review the general troubleshooting information** .

DTC Description	DTC	Freeze Frame
P1E51-00 Tandem Motor Cylinder Gearbox Mechanical Linkage Failure	B	B

DTC (Electric servo brake)

1. Problem verification

   -1. Turn the vehicle to the ON mode.

   -2. Clear the DTCs with the HDS.

   -3. Turn the vehicle to the OFF (LOCK) mode, then to the ON mode.

   -4. Wait 10 seconds or more without pressing the brake pedal.

   -5. Check for DTCs with the HDS.

DTC Description	DTC	Freeze Frame
P1E51-00 Tandem Motor Cylinder Gearbox Mechanical Linkage Failure	B	B

   Is DTC P1E51-00 indicated?

   YES

   The failure is duplicated. Go to step 2.

   NO

   Intermittent failure, the system is OK at this time. **Refer to intermittent failures troubleshooting** . If the freeze data/on-board snapshot of this DTC is recorded, try to reproduce the failure under the same conditions with the freeze data/on-board snapshot.

2. Tandem motor cylinder check

   -1. Turn the vehicle to the OFF (LOCK) mode with driver's door open.

   -2. Wait for 3 minutes.

   NOTE: Do not close the driver's door.

   -3. **Inspect the tandem motor cylinder** .

   Is related parts damaged?

   YES

   Replace the gearbox or the motor .

   NO

   Check for loose terminals and poor connections in the electric servo brake control unit 22P connector. Check for any authorized service information related to the DTCs or symptoms you are troubleshooting. If they are OK, **replace the electric servo brake control unit/pedal feel simulator** .

DTC P1E52-00

DTC P1E52-00 : Tandem Motor Cylinder Gearbox Stuck

NOTE: **Before you troubleshoot, review the general troubleshooting information** .

DTC Description	DTC	Freeze Frame
P1E52-00 Tandem Motor Cylinder Gearbox Stuck	B	B

DTC (Electric servo brake)

1. Problem verification

   -1. Turn the vehicle to the ON mode.

   -2. Clear the DTCs with the HDS.

   -3. Turn the vehicle to the OFF (LOCK) mode, then to the ON mode.

   -4. Press the brake pedal several times.

   -5. Check for DTCs with the HDS.

DTC Description	DTC	Freeze Frame
P1E52-00 Tandem Motor Cylinder Gearbox Stuck	B	B

Is DTC P1E52-00 indicated?

YES

The failure is duplicated. Check for loose terminals and poor connections between the electric servo brake control unit and tandem motor cylinder connector(s). Check for any authorized service information related to the DTCs or symptoms you are troubleshooting. If they are OK, **replace the gearbox or the motor** .

NO

Intermittent failure, the system is OK at this time. **Refer to intermittent failures troubleshooting** . If the freeze data/on-board snapshot of this DTC is recorded, try to reproduce the failure under the same conditions with the freeze data/on-board snapshot.

DTC P1E63-00

DTC P1E63-00 : Brake Pedal Stroke Sensor Signal Stuck

NOTE: **Before you troubleshoot, review the general troubleshooting information** .

DTC Description	DTC	Freeze Frame
P1E63-00 Brake Pedal Stroke Sensor Signal Stuck	B	B

DTC (Electric servo brake)

1. Problem verification

   -1. Turn the vehicle to the ON mode.

   -2. Clear the DTCs with the HDS.

   -3. Turn the vehicle to the OFF (LOCK) mode, then to the ON mode.

   -4. Press the brake pedal hard, then release.

   -5. Wait 3 minutes or more.

   -6. Check for DTCs with the HDS.

DTC Description	DTC	Freeze Frame
P1E63-00 Brake Pedal Stroke Sensor Signal Stuck	B	B

Is DTC P1E63-00 indicated?

YES

The failure is duplicated. Go to step 2.

NO

Intermittent failure, the system is OK at this time. **Refer to intermittent failures troubleshooting** . If the freeze data/on-board snapshot of this DTC is recorded, try to reproduce the failure under the same conditions with the freeze data/on-board snapshot.

2. Brake pedal stroke sensor check

-1. Turn the vehicle to the OFF (LOCK) mode with driver's door open.

-2. Wait for 3 minutes.

NOTE: Do not close the driver's door.

-3. **Substitute a known-good brake pedal** .

-4. Turn the vehicle to the ON mode.

-5. Clear the DTCs with the HDS.

-6. Turn the vehicle to the OFF (LOCK) mode, then to the ON mode.

-7. Press the brake pedal hard, then release.

-8. Wait 3 minutes or more.

-9. Check for DTCs with the HDS.

DTC Description	DTC	Freeze Frame
B	B	B

Is DTC P1E63-00 indicated?

YES

Check for loose terminals and poor connections in the electric servo brake control unit 22P connector. Check for any authorized service information related to the DTCs or symptoms you are troubleshooting. If they are OK, **replace the electric servo brake control unit/pedal feel simulator** .

NO

Replace the original brake pedal .

DTC P1E68-00

DTC P1E68-00 : Brake Master Cylinder Cut Valve Self Lock

NOTE: **Before you troubleshoot, review the general troubleshooting information** .

DTC Description	DTC	Freeze Frame
P1E68-00 Brake Master Cylinder Cut Valve Self Lock	B	B

DTC (Electric servo brake)

1. DTC check

   -1. Turn the vehicle to the ON mode.

   -2. Clear the DTCs with the HDS.

   -3. Turn the vehicle to the OFF (LOCK) mode, then to the ON mode.

   -4. Wait 10 seconds or more without pressing the brake pedal.

   -5. Press the brake pedal hard, then release.

   -6. Check for DTCs with the HDS.

DTC Description	DTC	Freeze Frame
P1E51-00 Tandem Motor Cylinder Gearbox Mechanical Linkage Failure	B	B
P1E52-00 Tandem Motor Cylinder Gearbox Stuck	B	B
P1E68-00 Brake Master Cylinder Cut Valve Self Lock	B	B

   Is DTC P1E68-00 indicated?

   YES

   If only DTC P1E68-00 is indicated, go to step 2.

   YES

   If DTC P1E51-00 or P1E52-00 are also indicated, **go to indicated DTC's troubleshooting** .

   NO

   Intermittent failure, the system is OK at this time. **Refer to intermittent failures troubleshooting** . If the freeze data/on-board snapshot of this DTC is recorded, try to reproduce the failure under the same conditions with the freeze data/on-board snapshot.

2. Tandem motor cylinder check

   -1. Turn the vehicle to the OFF (LOCK) mode with driver's door open.

   -2. Wait for 3 minutes.

   NOTE: Do not close the driver's door.

   -3. **Inspect the tandem motor cylinder** .

   Is related parts damaged?

   YES

   Replace the gearbox or the motor .

   NO

   Check for loose terminals and poor connections in the electric servo brake control unit 22P connector. Check for any authorized service information related to the DTCs or symptoms you are troubleshooting. If they are OK, **replace the electric servo brake control unit/pedal feel simulator** .

DTC P2531-00

DTC P2531-00 : Electric Servo Brake Control Unit Power Source Circuit (IG1) Low Voltage

NOTE: **Before you troubleshoot, review the general troubleshooting information** .

DTC Description	DTC	Freeze Frame
P2531-00 Electric Servo Brake Control Unit Power Source Circuit (IG1) Low Voltage	B	B

DTC (Electric servo brake)

1. Problem verification

   -1. Turn the vehicle to the ON mode.

   -2. Clear the DTCs with the HDS.

   -3. Turn the vehicle to the OFF (LOCK) mode, then to the ON mode.

   -4. Wait for 5 seconds.

   -5. Check for DTCs with the HDS.

DTC Description	DTC	Freeze Frame
P2531-00 Electric Servo Brake Control Unit Power Source Circuit (IG1) Low Voltage	B	B

   Is DTC P2531-00 indicated?

   YES

   The failure is duplicated. Go to step 2.

   NO

   Intermittent failure, the system is OK at this time. **Refer to intermittent failures troubleshooting** . If the freeze data/on-board snapshot of this DTC is recorded, try to reproduce the failure under the same conditions with the freeze data/on-board snapshot.

2. Fuse check

   -1. Turn the vehicle to the OFF (LOCK) mode with driver's door open.

   -2. Wait for 3 minutes.

   NOTE: Do not close the driver's door.

   -3. Check the following fuse.

Fuse	**No. D4**

   Is the fuse OK?

   YES

   The fuse is OK. Reinstall the fuse, then go to step 3.

   NO

Replace the fuse. Turn the vehicle to the ON mode, then to the OFF (LOCK) mode. If the fuse blows again, repair the short to ground on the No. D4 fuse circuit.

3. Open wire check (IG1_HAC line)

-1. Turn the vehicle to the OFF (LOCK) mode with driver's door open.

-2. Wait for 3 minutes.

NOTE: Do not close the driver's door.

-3. Disconnect the following connector.

Electric servo brake control unit 22P connector

-4. Turn the vehicle to the ON mode.

-5. Measure the voltage between test points 1 and 2.

Test condition	Vehicle ON mode
B	Electric servo brake control unit 22P connector: disconnected
Test point 1	**Electric servo brake control unit 22P connector No. 17**
Test point 2	Body ground

Is there battery voltage?

YES

The IG1_HAC wire is OK. Check for loose terminals and poor connections in the electric servo brake control unit 22P connector. Check for any authorized service information related to the DTCs or symptoms you are troubleshooting. If they are OK, **replace the electric servo brake control unit/pedal feel simulator** .

NO

Repair an open in the IG1_HAC wire between the **No. D4** fuse and the electric servo brake control unit.

DTC P2532-00

DTC P2532-00 : Electric Servo Brake Control Unit Power Source Circuit (IG1) High Voltage

NOTE: **Before you troubleshoot, review the general troubleshooting information** .

DTC Description	DTC	Freeze Frame
P2532-00 Electric Servo Brake Control Unit Power Source Circuit (IG1) High Voltage	B	B

DTC (Electric servo brake)

1. Problem verification

-1. Turn the vehicle to the ON mode.

-2. Clear the DTCs with the HDS.

-3. Turn the vehicle to the OFF (LOCK) mode, then to the ON mode.

-4. Wait for 5 seconds or more.

-5. Check for DTCs with the HDS.

DTC Description	DTC	Freeze Frame
P2532-00 Electric Servo Brake Control Unit Power Source Circuit (IG1) High Voltage	B	B

Is DTC P2532-00 indicated?

YES

The failure is duplicated. Go to step 2.

NO

Intermittent failure, the system is OK at this time. **Refer to intermittent failures troubleshooting** . If the freeze data/on-board snapshot of this DTC is recorded, try to reproduce the failure under the same conditions with the freeze data/on-board snapshot.

2. Electric servo brake control unit check

-1. Check the parameter(s) below with the HDS.

Signal	Threshold		Current conditions	
	Values	Unit	Values	Unit
Ignition Voltage	More than 17.96	V	B	B

Do the current condition(s) match the threshold?

YES

Check the 12 volt battery , and **check the electric powertrain system DTCs** .

NO

Check for loose terminals and poor connections in the electric servo brake control unit 22P connector. Check for any authorized service information related to the DTCs or symptoms you are troubleshooting. If they are OK, **replace the electric servo brake control unit/pedal feel simulator** .

DTC U0029-00, U0047-00 (ELECTRIC SERVO BRAKE CONTROL UNIT)

DTC U0029-00 : F-CAN Malfunction (BUS-OFF)

DTC U0047-00 : F-CAN Malfunction (Ch2 Bus-OFF)/Vehicle Communication Bus C Performance

NOTE: **Before you troubleshoot, review the general troubleshooting information** .

DTC Description	DTC	Freeze Frame
U0029-00 F-CAN Malfunction (BUS-OFF)	B	B
U0047-00 F-CAN Malfunction (Ch2 Bus-OFF)/Vehicle Communication Bus C Performance	B	B

DTC (Electric servo brake)

1. Problem verification

-1. Turn the vehicle to the ON mode.

-2. Clear the DTCs with the HDS.

-3. Turn the vehicle to the OFF (LOCK) mode, then to the ON mode.

-4. Check for DTCs with the HDS.

DTC Description	DTC	Freeze Frame
U0029-00 F-CAN Malfunction (BUS-OFF)	B	B
U0047-00 F-CAN Malfunction (Ch2 Bus-OFF)/Vehicle Communication Bus C Performance	B	B

Is DTC U0029-00 or U0047-00 indicated?

YES

The failure is duplicated. Go to step 2.

NO

Intermittent failure, the system is OK at this time. **Refer to intermittent failures troubleshooting** . If the freeze data/on-board snapshot of this DTC is recorded, try to reproduce the failure under the same conditions with the freeze data/on-board snapshot.

2. DTC check (CAN gateway system)

-1. Check for CAN gateway system DTCs with the HDS.

DTC Description	DTC
B	B

Are DTC(s) indicated?

YES

Go to indicated DTC's troubleshooting.

NO

Go to step 3.

3. F-CAN circuit communication check

-1. Select the FUNCTION TEST in the CAN gateway with the HDS, then select the F-CAN Bus Connected Unit Check.

F-CAN Bus Connected Unit Check

Which result is indicated?

Electric servo brake control unit (Bus B) is Not Available

Go to step 4.

Electric servo brake control unit (Bus C) is Not Available

Go to step 5.

Electric servo brake control unit (Bus B and C) is Available

Check for loose terminals and poor connections in the electric servo brake control unit 22P connector. Check for any authorized service information related to the DTCs or symptoms you are troubleshooting. If they are OK, **replace the electric servo brake control unit/pedal feel simulator** .

4. Open wire check (F-CAN B_H, F-CAN B_L lines)

-1. Turn the vehicle to the OFF (LOCK) mode.

-2. Disconnect the following connectors.

Electric servo brake control unit 22P connector
CAN gateway 16P connector

-3. Measure the resistance between test points 1 and 2.

Test condition	Vehicle OFF (LOCK) mode
B	Electric servo brake control unit 22P connector: disconnected
B	CAN gateway 16P connector: disconnected
Test circuit 1	B
Test point 1	**Electric servo brake control unit 22P connector No. 15**
Test point 2	CAN gateway 16P connector (female terminals) No. 6: ①

Test circuit 2	B
Test point 1	**Electric servo brake control unit 22P connector No. 14**
Test point 2	CAN gateway 16P connector (female terminals) No. 14: ①

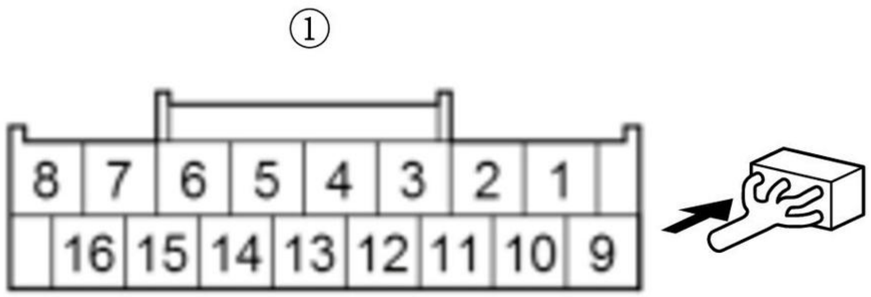

Is there 1.0 Ω or less?

YES

The F-CAN B_H and F-CAN B_L wires are OK. Check for loose terminals and poor connections in the electric servo brake control unit 22P connector. Check for any authorized service information related to the DTCs or symptoms you are troubleshooting. If they are OK, **replace the electric servo brake control unit/pedal feel simulator** .

NO

Repair an open in the wire between the electric servo brake control unit and the CAN gateway.

5. Open wire check (F-CAN C_H, F-CAN C_L lines)

-1. Turn the vehicle to the OFF (LOCK) mode.

-2. Disconnect the following connectors.

Electric servo brake control unit 22P connector

CAN gateway 16P connector

-3. Measure the resistance between test points 1 and 2.

Test condition	Vehicle OFF (LOCK) mode
B	Electric servo brake control unit 22P connector: disconnected
B	CAN gateway 16P connector: disconnected
Test circuit 1	B
Test point 1	**Electric servo brake control unit 22P connector No. 19**
Test point 2	CAN gateway 16P connector (female terminals) No. 5: ①

Test circuit 2	B
Test point 1	**Electric servo brake control unit 22P connector No. 18**
Test point 2	CAN gateway 16P connector (female terminals) No. 13: ①

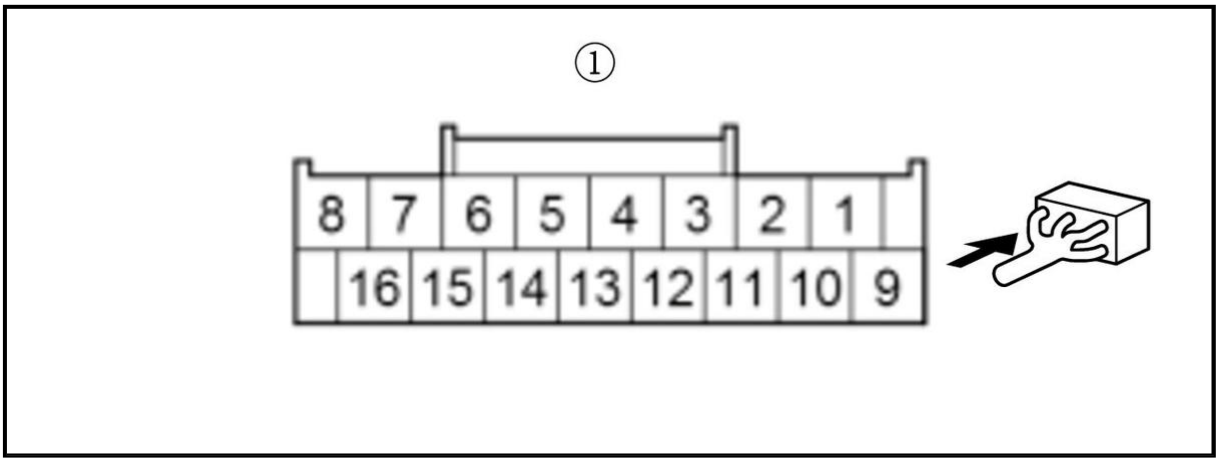

Is there 1.0 Ω or less?

YES

The F-CAN C_H and F-CAN C_L wires are OK. Check for loose terminals and poor connections in the electric servo brake control unit 22P connector. Check for any authorized service information related to the DTCs or symptoms you are troubleshooting. If they are OK, **replace the electric servo brake control unit/pedal feel simulator** .

NO

Repair an open in the wire between the electric servo brake control unit and the CAN gateway.

DTC U0100-00, U0101-00, U0104-00, U0111-00, U0122-00, U0128-00, U0151-00, U0155-00 (ELECTRIC SERVO BRAKE CONTROL UNIT)

DTC U0100-00 : F-CAN Malfunction (Electric Servo Brake Control Unit Lost Communication With Management ECU)

DTC U0101-00 : F-CAN Malfunction (Electric Servo Brake Control Unit Lost Communication With TCM/PCM (Gear System))

DTC U0104-00 : F-CAN Malfunction (Electric Servo Brake Control Unit Lost Communication With Driving Support System Control Unit)

DTC U0111-00 : Lost communication With Battery Energy Control Module A

DTC U0122-00 : F-CAN Malfunction (Electric Servo Brake Control Unit Lost Communication With VSA Modulator-Control Unit)

DTC U0128-00 : F-CAN Malfunction (Electric Servo Brake Control Unit Lost Communication With Electric Parking Brake Control Unit)

DTC U0151-00 : F-CAN Malfunction (Electric Servo Brake Control Unit Lost Communication With SRS Unit)

DTC U0155-00 : F-CAN Malfunction (Electric Servo Brake Control Unit Lost Communication With Gauge Control Module)

NOTE:

- **Before you troubleshoot, review the general troubleshooting information** .
- According to the detected DTC(s), confirm the control unit that the electric servo brake control unit lost communication with has the proper power supply and ground connection. Refer to the input testing for that control unit if necessary.

DTC Description	DTC	Freeze Frame
U0100-00 F-CAN Malfunction (Electric Servo Brake Control Unit Lost Communication With Management ECU)	B	B
U0101-00 F-CAN Malfunction (Electric Servo Brake Control Unit Lost Communication With TCM/PCM(Gear System))	B	B
U0104-00 F-CAN Malfunction (Electric Servo Brake Control Unit Lost Communication With Driving Support System Control Unit)	B	B
U0111-00 Lost communication With Battery Energy Control Module A	B	B
U0122-00 F-CAN Malfunction (Electric Servo Brake Control Unit Lost Communication With VSA Modulator-Control Unit)	B	B
U0128-00 F-CAN Malfunction (Electric Servo Brake Control Unit Lost Communication With Electric Parking Brake Control Unit)	B	B
U0151-00 F-CAN Malfunction (Electric Servo Brake Control Unit Lost Communication With SRS Unit)	B	B
U0155-00 F-CAN Malfunction (Electric Servo Brake Control Unit Lost Communication With Gauge Control Module)	B	B

DTC (Electric servo brake)

1. DTC check

   -1. Turn the vehicle to the ON mode.

   -2. Clear the DTC with the HDS.

   -3. Turn the vehicle to the OFF (LOCK) mode, then to the READY TO DRIVE mode.

   -4. Check for DTCs with the HDS.

DTC Description	DTC	Freeze Frame
U0100-00 F-CAN Malfunction (Electric Servo Brake Control Unit Lost Communication With Management ECU)	B	B

DTC Description	DTC	Freeze Frame
U0101-00 F-CAN Malfunction (Electric Servo Brake Control Unit Lost Communication With TCM/PCM (Gear System))	B	B
U0104-00 F-CAN Malfunction (Electric Servo Brake Control Unit Lost Communication With Driving Support System Control Unit)	B	B
U0111-00 Lost communication With Battery Energy Control Module A	B	B
U0122-00 F-CAN Malfunction (Electric Servo Brake Control Unit Lost Communication With VSA Modulator-Control Unit)	B	B
U0128-00 F-CAN Malfunction (Electric Servo Brake Control Unit Lost Communication With Electric Parking Brake Control Unit)	B	B
U0151-00 F-CAN Malfunction (Electric Servo Brake Control Unit Lost Communication With SRS Unit)	B	B
U0155-00 F-CAN Malfunction (Electric Servo Brake Control Unit Lost Communication With Gauge Control Module)	B	B

Is DTC indicated?

YES

Go to step 2.

NO

Intermittent failure, the system is OK at this time. Refer to intermittent failures troubleshooting . If the freeze data/on-board snapshot of this DTC is recorded, try to reproduce the failure under the same conditions with the freeze data/on-board snapshot.

2. DTC check (CAN gateway system)

-1. Check for CAN gateway system DTCs with the HDS.

DTC Description	DTC
B	B

Are DTC(s) indicated?

YES

Go to indicated DTC's troubleshooting.

NO

Go to step 3.

3. F-CAN circuit communication check (Receiving control unit)

-1. Select the FUNCTION TEST in the CAN gateway with the HDS, then select the F-CAN Bus Connected Unit Check.

F-CAN Bus Connected Unit Check

Which result is indicated?

Electric servo brake control unit (Bus B) is Not Available

Go to step 4.

Electric servo brake control unit (Bus C) is Not Available

Go to step 5.

Electric servo brake control unit (Bus B and C) is Available

Go to step 6.

4. Open wire check (F-CAN B_H, F-CAN B_L lines)

   -1. Turn the vehicle to the OFF (LOCK) mode.

   -2. Disconnect the following connectors.

Electric servo brake control unit 22P connector
CAN gateway 16P connector

   -3. Measure the resistance between test points 1 and 2.

Test condition	Vehicle OFF (LOCK) mode
B	Electric servo brake control unit 22P connector: disconnected
B	CAN gateway 16P connector: disconnected
Test circuit 1	B
Test point 1	Electric servo brake control unit 22P connector No. 15
Test point 2	CAN gateway 16P connector (female terminals) No. 6: ①

Test circuit 2	B
Test point 1	Electric servo brake control unit 22P connector No. 14
Test point 2	CAN gateway 16P connector (female terminals) No. 14: ①

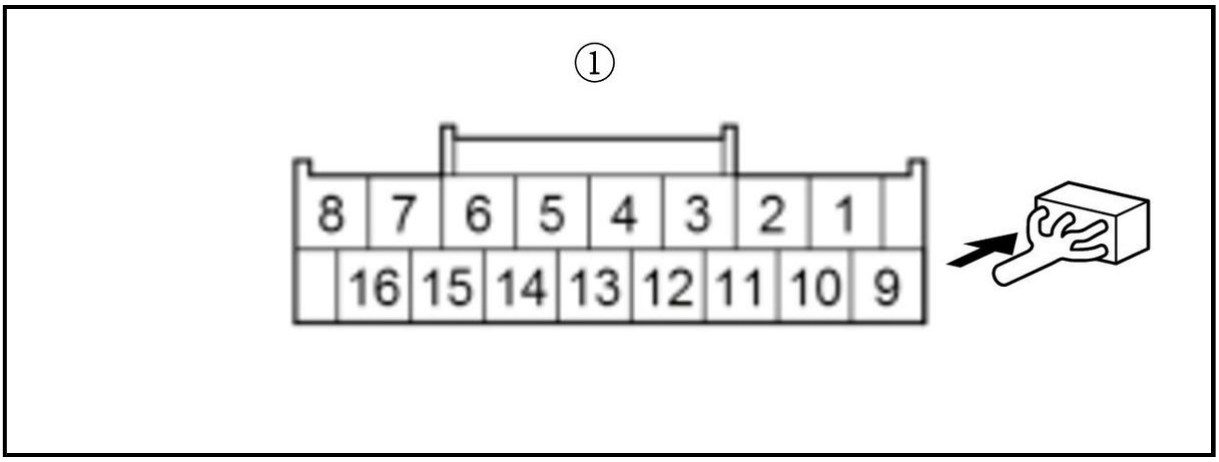

Is there 1.0 Ω or less?

YES

The F-CAN B_H and F-CAN B_L wires are OK. Check for loose terminals and poor connections in the electric servo brake control unit 22P connector. Check for any authorized service information related to the DTCs or symptoms you are troubleshooting. If they are OK, replace the electric servo brake control unit/pedal feel simulator .

NO

Repair an open in the wire between the electric servo brake control unit and the CAN gateway.

5. Open wire check (F-CAN C_H, F-CAN C_L lines)

-1. Turn the vehicle to the OFF (LOCK) mode.

-2. Disconnect the following connectors.

Electric servo brake control unit 22P connector
CAN gateway 16P connector

-3. Measure the resistance between test points 1 and 2.

Test condition	Vehicle OFF (LOCK) mode
B	Electric servo brake control unit 22P connector: disconnected
B	CAN gateway 16P connector: disconnected
Test circuit 1	B
Test point 1	**Electric servo brake control unit 22P connector No. 19**
Test point 2	CAN gateway 16P connector (female terminals) No. 5: ①

Test circuit 2	B
Test point 1	**Electric servo brake control unit 22P connector No. 18**
Test point 2	CAN gateway 16P connector (female terminals) No. 13: ①

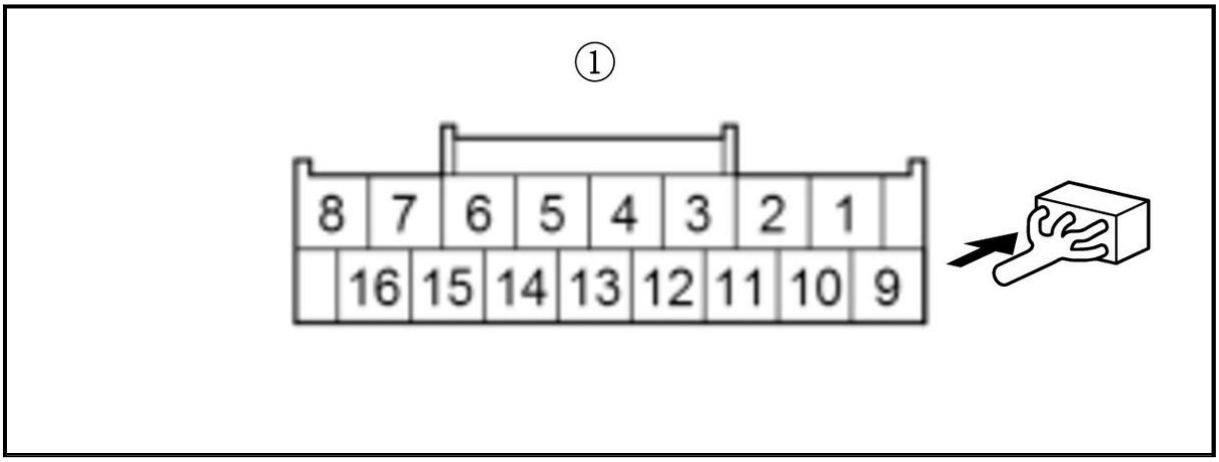

Is there 1.0 Ω or less?

YES

The F-CAN C_H and F-CAN C_L wires are OK. Check for loose terminals and poor connections in the electric servo brake control unit 22P connector. Check for any authorized service information related to the DTCs or symptoms you are troubleshooting. If they are OK, **replace the electric servo brake control unit/pedal feel simulator** .

NO

Repair an open in the wire between the electric servo brake control unit and the CAN gateway.

6. F-CAN circuit communication check (Transmitting control unit)

-1. Select the FUNCTION TEST in the CAN gateway with the HDS, then select the F-CAN Bus Connected Unit Check.

F-CAN Bus Connected Unit Check

According to the detected DTC on the following table, make sure that the transmitting control unit detects the CAN gateway Bus channel(s) normally.

DTC	Transmitting control unit	Detected CAN gateway Bus channel(s) at normal
U0100-00	PCM	A, B
U0101-00	PCM	A, B
U0104-00	Millimeter wave radar	C
U0111-00	Battery condition monitor module	A
U0122-00	VSA modulator-control unit	B, C
U0128-00	VSA modulator-control unit	B, C
U0151-00	SRS unit	C
U0155-00	Gauge control module	D

Is it detected normally?

Detected normal

Intermittent failure, the system is OK at this time. **Refer to intermittent failures troubleshooting** . If the freeze data/on-board snapshot of this DTC is recorded, try to reproduce the failure under the same conditions with the freeze data/on-board snapshot.

U0100-00: PCM (Bus A) is Not Available

Go to step 7.

U0100-00: PCM (Bus B) is Not Available

Go to step 8.

U0101-00: PCM (Bus A) is Not Available

Go to step 7.

U0101-00: PCM (Bus B) is Not Available

Go to step 8.

U0104-00: Millimeter wave radar (Bus C) is Not Available

Go to step 9.

U0111-00: Battery condition monitor module (Bus A) is Not Available

Go to step 7.

U0122-00: VSA modulator-control unit (Bus B) is Not Available

Go to step 8.

U0122-00: VSA modulator-control unit (Bus C) is Not Available

Go to step 9.

U0128-00: VSA modulator-control unit (Bus B) is Not Available

Go to step 8.

U0128-00: VSA modulator-control unit (Bus C) is Not Available

Go to step 9.

U0151-00: SRS unit (Bus C) is Not Available

Go to step 9.

U0155-00: Gauge control module (Bus D) is Not Available

Go to step 10.

7. Open wire check (F-CAN A_H, F-CAN A_L lines)

-1. Turn the vehicle to the OFF (LOCK) mode.

-2. Disconnect the following connectors according to the detected DTC.

DTC	Connector
B	CAN gateway 16P connector
U0100-00	PCM connector A (50P)
U0101-00	PCM connector A (50P)
U0111-00	Battery condition monitor module connector E (32P)

NOTE: Jump the SCS line with the HDS, and wait more than 1 minute when disconnecting the PCM connector.

-3. Measure the resistance between test points 1 and 2.

Test condition	Vehicle OFF (LOCK) mode
B	Transmitting control unit connector(s) for indicated DTCs: disconnected
B	CAN gateway 16P connector: disconnected

DTC	**Circuit name**	**Test point 1 (Receiving control unit)**		**Test point 2 (Transmitting control unit)**	
		Connector	**Terminal**	**Connector**	**Terminal**
U0100-00	F-CAN A_H	CAN gateway 16P connector (female terminals): ①	No. 3	PCM connector A (50P)	No. 37
	F-CAN A_L		No. 11		No. 36
U0101-00	F-CAN A_H	CAN gateway 16P connector (female terminals): ①	No. 3	PCM connector A (50P)	No. 37
	F-CAN A_L		No. 11		No. 36
U0111-00	F-CAN A_H	CAN gateway 16P connector (female terminals): ①	No. 3	Battery condition monitor module connector E (32P)	No. 9
	F-CAN A_L		No. 11		No. 8

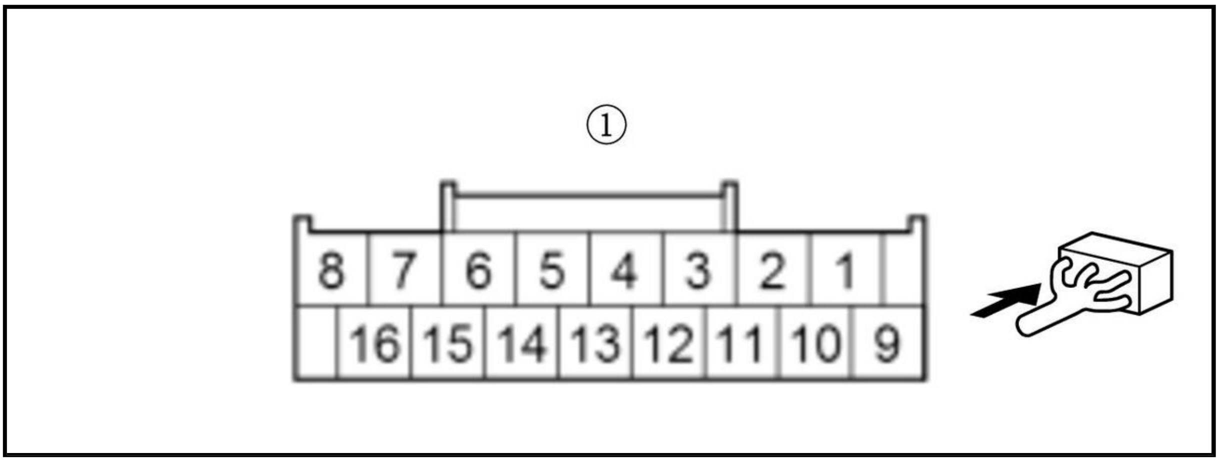

Is there 1.0 Ω or less?

YES

The F-CAN A_H and F-CAN A_L wires are OK. Check for any authorized service information related to the DTCs or symptoms you are troubleshooting. According to the detected DTC on the following table, replace the correspond control unit.

DTC	Transmitting Control Unit
U0100-00	**PCM**
U0101-00	**PCM**
U0111-00	**Battery condition monitor module**

NO

Repair an open in the wire between the receiving control unit and the transmitting control unit.

8. Open wire check (F-CAN B_H, F-CAN B_L lines)

-1. Turn the vehicle to the OFF (LOCK) mode.

-2. Disconnect the following connectors according to the detected DTC.

DTC	Connector
B	CAN gateway 16P connector
U0100-00	PCM connector A (50P)
U0101-00	PCM connector A (50P)
U0122-00	VSA modulator-control unit 46P connector
U0128-00	VSA modulator-control unit 46P connector

NOTE: Jump the SCS line with the HDS, and wait more than 1 minute when disconnecting the PCM connector.

-3. Measure the resistance between test points 1 and 2.

Test condition	Vehicle OFF (LOCK) mode
B	Transmitting control unit connector(s) for indicated DTCs: disconnected
B	CAN gateway 16P connector: disconnected

DTC	Circuit name	Test point 1 (Receiving control unit)		Test point 2 (Transmitting control unit)	
		Connector	Terminal	Connector	Terminal
U0100-00	F-CAN B_H	CAN gateway 16P connector (female terminals): ①	No. 6	PCM connector A (50P)	No. 39
	F-CAN B_L		No. 14		No. 38

DTC	Circuit name	Test point 1 (Receiving control unit)		Test point 2 (Transmitting control unit)	
		Connector	Terminal	Connector	Terminal
U0101-00	F-CAN B_H	CAN gateway 16P connector (female terminals): ①	No. 6	PCM connector A (50P)	No. 39
	F-CAN B_L		No. 14		No. 38
U0122-00	F-CAN B_H	CAN gateway 16P connector (female terminals): ①	No. 6	VSA modulator-control unit 46P connector	No. 40
	F-CAN B_L		No. 14		No. 28
U0128-00	F-CAN B_H	CAN gateway 16P connector (female terminals): ①	No. 6	VSA modulator-control unit 46P connector	No. 40
	F-CAN B_L		No. 14		No. 28

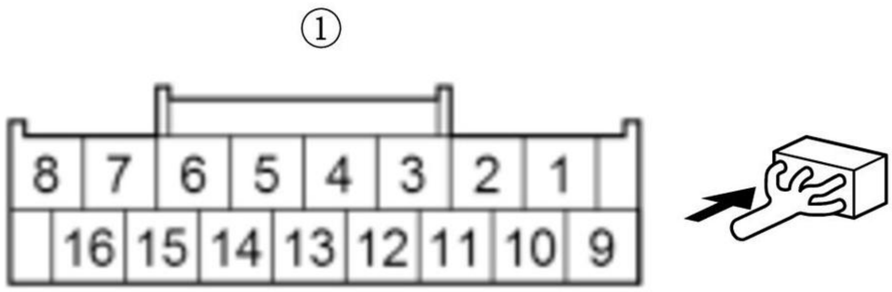

Is there 1.0 Ω or less?

YES

The F-CAN B_H and F-CAN B_L wires are OK. Check for any authorized service information related to the DTCs or symptoms you are troubleshooting. According to the detected DTC on the following table, replace the correspond control unit.

DTC	Transmitting Control Unit
U0100-00	PCM
U0101-00	PCM
U0122-00	VSA modulator-control unit
U0128-00	VSA modulator-control unit

NO

Repair an open in the wire between the receiving control unit and the transmitting control unit.

9. Open wire check (F-CAN C_H, F-CAN C_L lines)

-1. Turn the vehicle to the OFF (LOCK) mode.

-2. Disconnect the following connectors according to the detected DTC.

DTC	Connector
B	CAN gateway 16P connector
U0104-00	Millimeter wave radar 8P connector
U0122-00	VSA modulator-control unit 46P connector
U0128-00	VSA modulator-control unit 46P connector
U0151-00	SRS unit connector A (39P)

NOTE: Before disconnecting the SRS unit connector, **do the 12 volt battery terminal disconnection procedure** and wait for at least 3 minutes.

-3. Measure the resistance between test points 1 and 2.

Test condition	Vehicle OFF (LOCK) mode
B	Transmitting control unit connector(s) for indicated DTCs: disconnected
B	CAN gateway 16P connector: disconnected

DTC	Circuit name	Test point 1 (Receiving control unit)		Test point 2 (Transmitting control unit)	
		Connector	Terminal	Connector	Terminal
U0104-00	F-CAN C_H	CAN gateway 16P connector (female terminals): ①	No. 5	**Millimeter wave radar 8P connector**	No. 7
	F-CAN C_L		No. 13		No. 6

DTC	Circuit name	Test point 1 (Receiving control unit)		Test point 2 (Transmitting control unit)	
		Connector	Terminal	Connector	Terminal
U0122-00	F-CAN C_H	CAN gateway 16P connector (female terminals): ①	No. 5	**VSA modulator-control unit 46P connector**	No. 46
	F-CAN C_L		No. 13		No. 34
U0128-00	F-CAN C_H	CAN gateway 16P connector (female terminals): ①	No. 5	**VSA modulator-control unit 46P connector**	No. 46
	F-CAN C_L		No. 13		No. 34
U0151-00	F-CAN C_H	CAN gateway 16P connector (female terminals): ①	No. 5	**SRS unit connector A (39P)**	No. 34
	F-CAN C_L		No. 13		No. 35

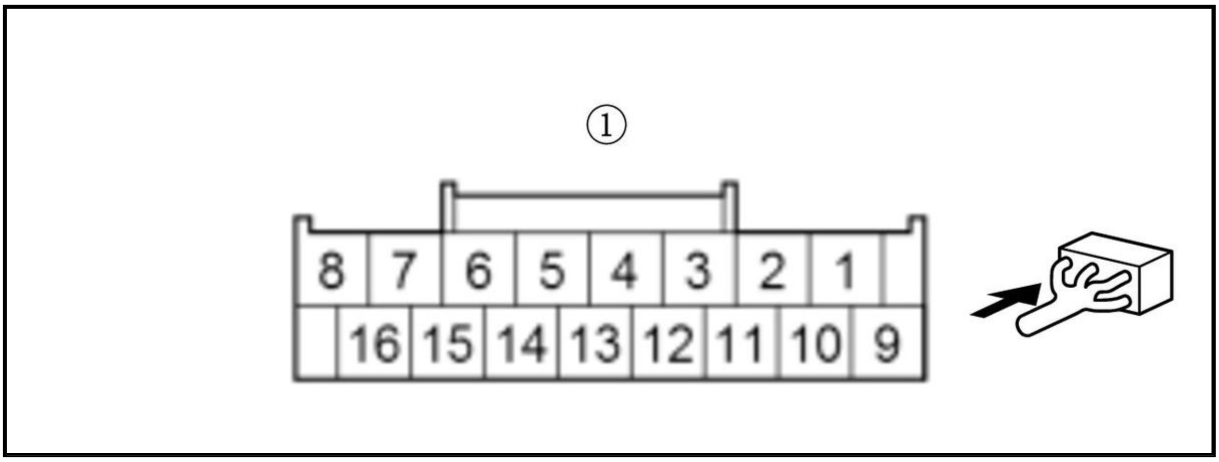

Is there 1.0 Ω or less?

YES

The F-CAN C_H and F-CAN C_L wires are OK. Check for any authorized service information related to the DTCs or symptoms you are troubleshooting. According to the detected DTC on the following table, replace the correspond control unit.

DTC	Transmitting Control Unit
U0104-00	**Millimeter wave radar**
U0122-00	**VSA modulator-control unit**
U0128-00	**VSA modulator-control unit**
U0151-00	**SRS unit**

NO

Repair an open in the wire between the receiving control unit and the transmitting control unit.

10. Open wire check (F-CAN D_H, F-CAN D_L lines)

-1. Turn the vehicle to the OFF (LOCK) mode.

-2. Disconnect the following connectors according to the detected DTC.

DTC	Connector
B	CAN gateway 16P connector
U0155-00	Gauge control module connector A (32P)

-3. Measure the resistance between test points 1 and 2.

Test condition	Vehicle OFF (LOCK) mode
B	Transmitting control unit connector(s) for indicated DTCs: disconnected
B	CAN gateway 16P connector: disconnected

DTC	Circuit name	Test point 1 (Receiving control unit)		Test point 2 (Transmitting control unit)	
		Connector	Terminal	Connector	Terminal
U0155-00	F-CAN D_H	CAN gateway 16P connector (female terminals): ①	No. 7	**Gauge control module connector A (32P)**	No. 19
	F-CAN D_L		No. 15		No. 20

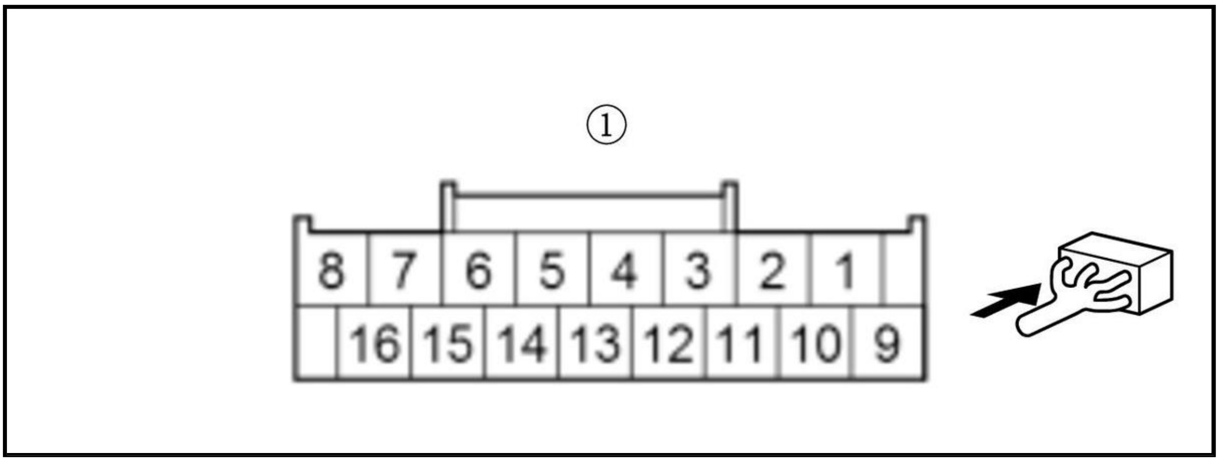

Is there 1.0 Ω or less?

YES

The F-CAN D_H and F-CAN D_L wires are OK. Check for any authorized service information related to the DTCs or symptoms you are troubleshooting. According to the detected DTC on the following table, replace the correspond control unit.

DTC	Transmitting Control Unit
U0155-00	Gauge control module

NO

Repair an open in the wire between the receiving control unit and the transmitting control unit.

DTC U0401-68 (ELECTRIC SERVO BRAKE CONTROL UNIT)

DTC U0401-68 : (PGM-FI/ECM/PCM System Malfunction)

NOTE: Before you troubleshoot, review the general troubleshooting information .

DTC Description	DTC	Freeze Frame
U0401-68 (PGM-FI/ECM/PCM System Malfunction)	B	B

DTC (Electric servo brake)

1. Problem verification

-1. Turn the vehicle to the ON mode.

-2. Clear the DTCs with the HDS.

-3. Turn the vehicle to the OFF (LOCK) mode, then to the READY TO DRIVE mode.

-4. Check for DTCs with the HDS.

DTC Description	DTC	Freeze Frame
U0401-68 (PGM-FI/ECM/PCM System Malfunction)	B	B

Is DTC U0401-68 indicated?

YES

The failure is duplicated. Go to PGM-FI system troubleshooting .

NO

Intermittent failure, the system is OK at this time. **Refer to intermittent failures troubleshooting** . If the freeze data/on-board snapshot of this DTC is recorded, try to reproduce the failure under the same conditions with the freeze data/on-board snapshot.

DTC U0415-68, U0416-68 (ELECTRIC SERVO BRAKE CONTROL UNIT)

DTC U0415-68 : (ABS System Malfunction)

DTC U0416-68 : (VSA System Malfunction)

NOTE: **Before you troubleshoot, review the general troubleshooting information** .

DTC Description	DTC	Freeze Frame
U0415-68 (ABS System Malfunction)	B	B
U0416-68 (VSA System Malfunction)	B	B

DTC (Electric servo brake)

1. Problem verification

   -1. Turn the vehicle to the ON mode.

   -2. Clear the DTCs with the HDS.

   -3. Turn the vehicle to the OFF (LOCK) mode, then to the READY TO DRIVE mode.

   -4. Check for DTCs with the HDS.

DTC Description	DTC	Freeze Frame
U0415-68 (ABS System Malfunction)	B	B
U0416-68 (VSA System Malfunction)	B	B

Is DTC U0415-68 or U0416-68 indicated?

YES

The failure is duplicated. **Go to the VSA system troubleshooting** .

NO

Intermittent failure, the system is OK at this time. **Refer to intermittent failures troubleshooting** . If the freeze data/on-board snapshot of this DTC is recorded, try to reproduce the failure under the same conditions with the freeze data/on-board snapshot.

DTC U0417-68 (ELECTRIC SERVO BRAKE CONTROL UNIT)

DTC U0417-68 : (Electric Parking Brake System Malfunction)

NOTE: **Before you troubleshoot, review the general troubleshooting information** .

DTC Description	DTC	Freeze Frame
U0417-68 (Electric Parking Brake System Malfunction)	B	B

DTC (Electric servo brake)

1. Problem verification

-1. Turn the vehicle to the ON mode.

-2. Clear the DTCs with the HDS.

-3. Turn the vehicle to the OFF (LOCK) mode, then to the READY TO DRIVE mode.

-4. Check for DTCs with the HDS.

DTC Description	DTC	Freeze Frame
U0417-68 (Electric Parking Brake System Malfunction)	B	B

Is DTC U0417-68 indicated?

YES

The failure is duplicated. **Go to electric parking brake system troubleshooting** .

NO

Intermittent failure, the system is OK at this time. **Refer to intermittent failures troubleshooting** . If the freeze data/on-board snapshot of this DTC is recorded, try to reproduce the failure under the same conditions with the freeze data/on-board snapshot.

DTC U3000-49 (ELECTRIC SERVO BRAKE CONTROL UNIT)

DTC U3000-49 : Driver's Door Switch Signal Stuck On (ECU Internal Malfunction)

NOTE: **Before you troubleshoot, review the general troubleshooting information** .

DTC Description	DTC	Freeze Frame
U3000-49 Driver's Door Switch Signal Stuck On (ECU Internal Malfunction)	B	B

DTC (Electric servo brake)

1. Problem verification

-1. Turn the vehicle to the ON mode.

-2. Clear the DTCs with the HDS.

-3. Turn the vehicle to the OFF (LOCK) mode, then to the ON mode.

-4. Open and close the driver's door several times.

-5. Wait for 2 minutes or more.

-6. Check for DTCs with the HDS.

DTC Description	DTC	Freeze Frame
U3000-49 Driver's Door Switch Signal Stuck On (ECU Internal Malfunction)	B	B

Is DTC U3000-49 indicated?

YES

The failure is duplicated. Check for loose terminals and poor connections in the electric servo brake control unit 22P connector. Check for any authorized service information related to the DTCs or symptoms you are troubleshooting. If they are OK, replace the electric servo brake control unit/pedal feel simulator .

NO

Intermittent failure, the system is OK at this time. Refer to intermittent failures troubleshooting . If the freeze data/on-board snapshot of this DTC is recorded, try to reproduce the failure under the same conditions with the freeze data/on-board snapshot.

DTC U3003-16 (ELECTRIC SERVO BRAKE CONTROL UNIT)

DTC U3003-16 : Electric Servo Brake Control Unit Power Source Circuit (+B) Low Voltage

NOTE: Before you troubleshoot, review the general troubleshooting information .

DTC Description	DTC	Freeze Frame
U3003-16 Electric Servo Brake Control Unit Power Source Circuit (+B) Low Voltage	B	B

DTC (Electric servo brake)

1. Problem verification

   -1. Turn the vehicle to the ON mode.

   -2. Clear the DTCs with the HDS.

   -3. Turn the vehicle to the OFF (LOCK) mode, then to the READY TO DRIVE mode.

   -4. Wait 10 seconds or more.

   -5. Check for DTCs with the HDS.

DTC Description	DTC	Freeze Frame
U3003-16 Electric Servo Brake Control Unit Power Source Circuit (+B) Low Voltage	B	B

   Is DTC U3003-16 indicated?

   YES

   The failure is duplicated. Go to step 2.

   NO

   Intermittent failure, the system is OK at this time. Refer to intermittent failures troubleshooting . If the freeze data/on-board snapshot of this DTC is recorded, try to reproduce the failure under the same conditions with the freeze data/on-board snapshot.

2. Fuse check

   -1. Turn the vehicle to the OFF (LOCK) mode with driver's door open.

   -2. Wait for 3 minutes.

   NOTE: Do not close the driver's door.

   -3. Check the following fuse.

Fuse	No. A1-2

Is the fuse OK?

YES

The fuse is OK. Reinstall the fuse, then go to step 3.

NO

Replace the fuse. If the fuse blows again, repair a short to ground in the No. A1-2 fuse circuit.

3. Open wire check (+B_ESB line)

-1. Disconnect the following connector.

Electric servo brake control unit 22P connector

-2. Measure the voltage between test points 1 and 2.

Test condition	Vehicle OFF (LOCK) mode
B	Electric servo brake control unit 22P connector: disconnected
Test point 1	Electric servo brake control unit 22P connector No. 5
Test point 2	Body ground

Is there battery voltage?

YES

Check for loose terminals and poor connections in the electric servo brake control unit 22P connector. Check for any authorized service information related to the DTCs or symptoms you are troubleshooting. If they are OK, replace the electric servo brake control unit/pedal feel simulator .

NO

Repair an open in the wire between the No. A1-2 fuse and the electric servo brake control unit.

DTC U3003-17 (ELECTRIC SERVO BRAKE CONTROL UNIT)

DTC U3003-17 : Electric Servo Brake Control Unit Power Source Circuit (+B) High Voltage

NOTE: Before you troubleshoot, review the general troubleshooting information .

DTC Description	DTC	Freeze Frame
U3003-17 Electric Servo Brake Control Unit Power Source Circuit (+B) High Voltage	B	B

DTC (Electric servo brake)

1. Problem verification

-1. Turn the vehicle to the ON mode.

-2. Clear the DTCs with the HDS.

-3. Turn the vehicle to the OFF (LOCK) mode, then to the READY TO DRIVE mode.

-4. Wait 10 seconds or more.

-5. Check for DTCs with the HDS.

DTC Description	DTC	Freeze Frame
U3003-17 Electric Servo Brake Control Unit Power Source Circuit (+B) High Voltage	B	B

Is DTC U3003-17 indicated?

YES

The failure is duplicated. Go to step 2.

NO

Intermittent failure, the system is OK at this time. **Refer to intermittent failures troubleshooting** . If the freeze data/on-board snapshot of this DTC is recorded, try to reproduce the failure under the same conditions with the freeze data/on-board snapshot.

2. DTC check (electric powertrain system)

-1. Check for DTCs with the HDS.

DTC Description	Confirmed DTC	Pending DTC	Freeze Frame
B	B	B	B

Is DTC indicated?

YES

Go to indicated DTC's troubleshooting.

NO

Check for loose terminals and poor connections in the electric servo brake control unit 22P connector. Check for any authorized service information related to the DTCs or symptoms you are troubleshooting. If they are OK, **replace the electric servo brake control unit/pedal feel simulator** .

DTC U3003-92 (ELECTRIC SERVO BRAKE CONTROL UNIT)

DTC U3003-92 : System Voltage Low (Long Term)

NOTE: **Before you troubleshoot, review the general troubleshooting information** .

DTC Description	DTC	Freeze Frame
U3003-92 System Voltage Low (Long Term)	B	B

DTC (Electric servo brake)

1. Problem verification

-1. Turn the vehicle to the ON mode.

-2. Clear the DTCs with the HDS.

-3. Turn the vehicle to the OFF (LOCK) mode, then to the READY TO DRIVE mode.

-4. Wait 60 seconds or more.

-5. Check for DTCs with the HDS.

DTC Description	DTC	Freeze Frame
U3003-92 System Voltage Low (Long Term)	B	B

Is DTC U3003-92 indicated?

YES

The failure is duplicated. Go to step 2.

NO

Intermittent failure, the system is OK at this time. **Refer to intermittent failures troubleshooting** . If the freeze data/on-board snapshot of this DTC is recorded, try to reproduce the failure under the same conditions with the freeze data/on-board snapshot.

2. DTC check (electric powertrain system)

   -1. Check for DTCs with the HDS.

DTC Description	Confirmed DTC	Pending DTC	Freeze Frame
B	B	B	B

Is DTC indicated?

YES

Go to indicated DTC's troubleshooting.

NO

Check for loose terminals and poor connections in the electric servo brake control unit 22P connector. Check for any authorized service information related to the DTCs or symptoms you are troubleshooting. If they are OK, **replace the electric servo brake control unit/pedal feel simulator** .

REMOVAL AND INSTALLATION

ELECTRIC PARKING BRAKE ACTUATOR REMOVAL AND INSTALLATION

Removal and Installation

NOTE: How to read the torque specifications .

1. Vehicle - Lift
2. Rear Wheel - Remove
3. Electric Parking Brake Actuator - Remove

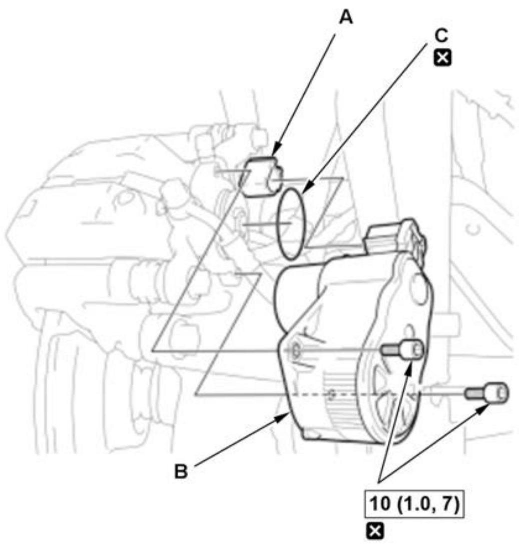

1. Disconnect the connector (A).

NOTE: If the connector lock tab is difficult to release, push in on the connector body before pushing on the release lock.

2. Remove the electric parking brake actuator (B).

NOTE: Use new mounting screws during reassembly.

3. Remove the O-ring (C).

NOTE:

- Replace the O-ring whenever the electric parking brake actuator is removed.
- When installing the actuator, make sure there is no foreign matter on the mating surfaces and the O-ring.

4. All Removed Parts - Install

1. Install all removed parts in the reverse order of removal.

5. Electric Parking Brake Actuator After Install - Check

1. Turn the vehicle to the ON mode.

2. Apply and release the parking brake 2 times, then make sure that the brake system indicator (red) goes OFF.

NOTE: If the brake system indicator (red) does not go OFF, check for a poor connection at the electric parking brake actuator connector.

3. Turn the vehicle to the OFF (LOCK) mode.

REMOVAL, INSTALLATION & TEST

ELECTRIC PARKING BRAKE SWITCH REMOVAL, INSTALLATION, AND TEST

Removal and Installation

1. **Escutcheon Panel - Remove**
2. Electric Parking Brake Switch - Remove

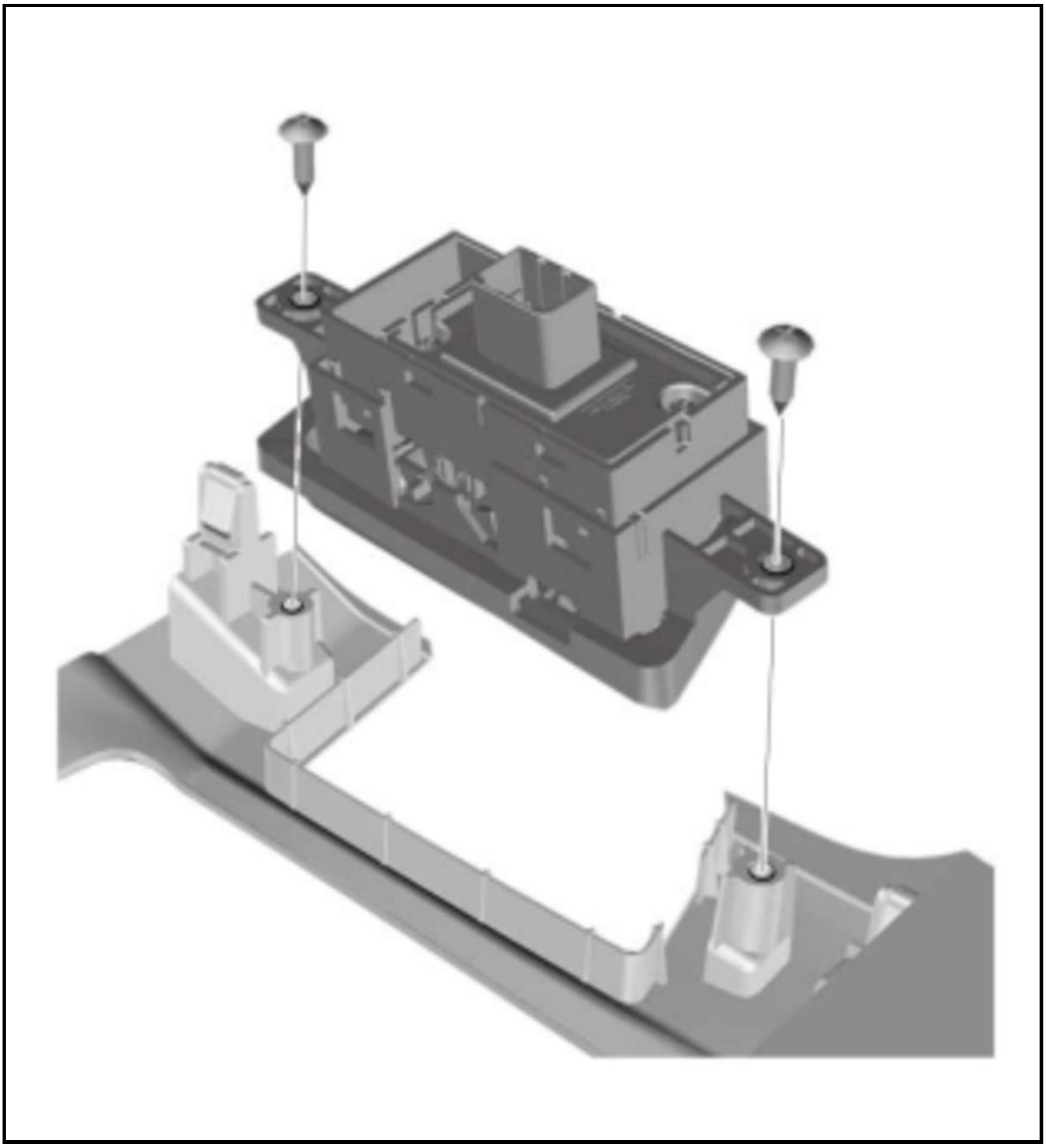

3. All Removed Parts - Install

1. Install all removed parts in the reverse order of removal.

Test

1. Electric Parking Brake Switch - Test

Switch Internal Continuity Check:

1. On the switch side, check for continuity between the connector terminals in each switch position according to the table.

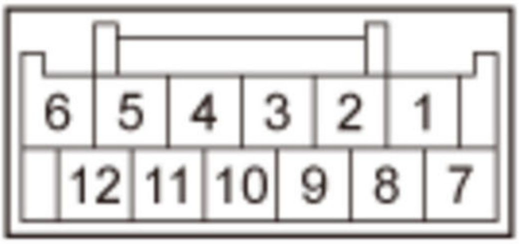
6
5
4
3
2
1
12
11
10
9
8
7

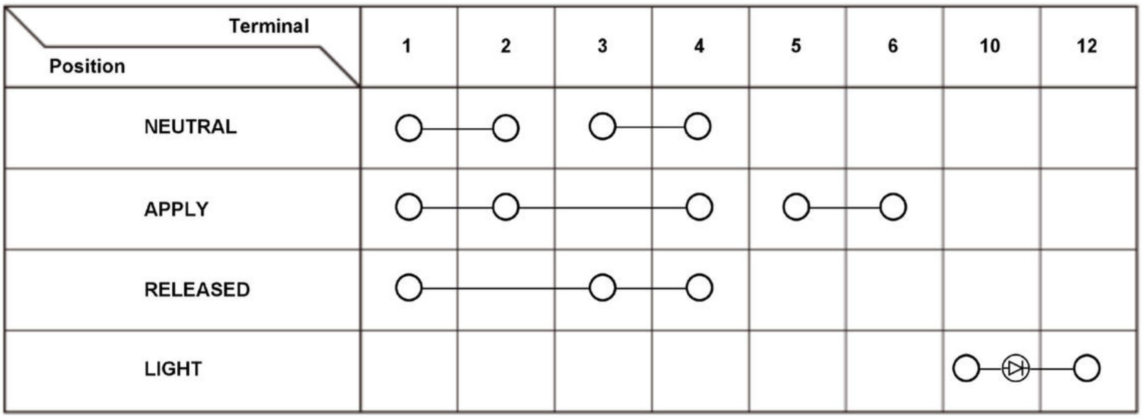

Position \ Terminal	1	2	3	4	5	6	10	12
NEUTRAL	○	○	○	○				
APPLY	○	○		○	○	○		
RELEASED	○		○	○				
LIGHT							○	○

2. If the switch does not work as described in the table, replace the switch.

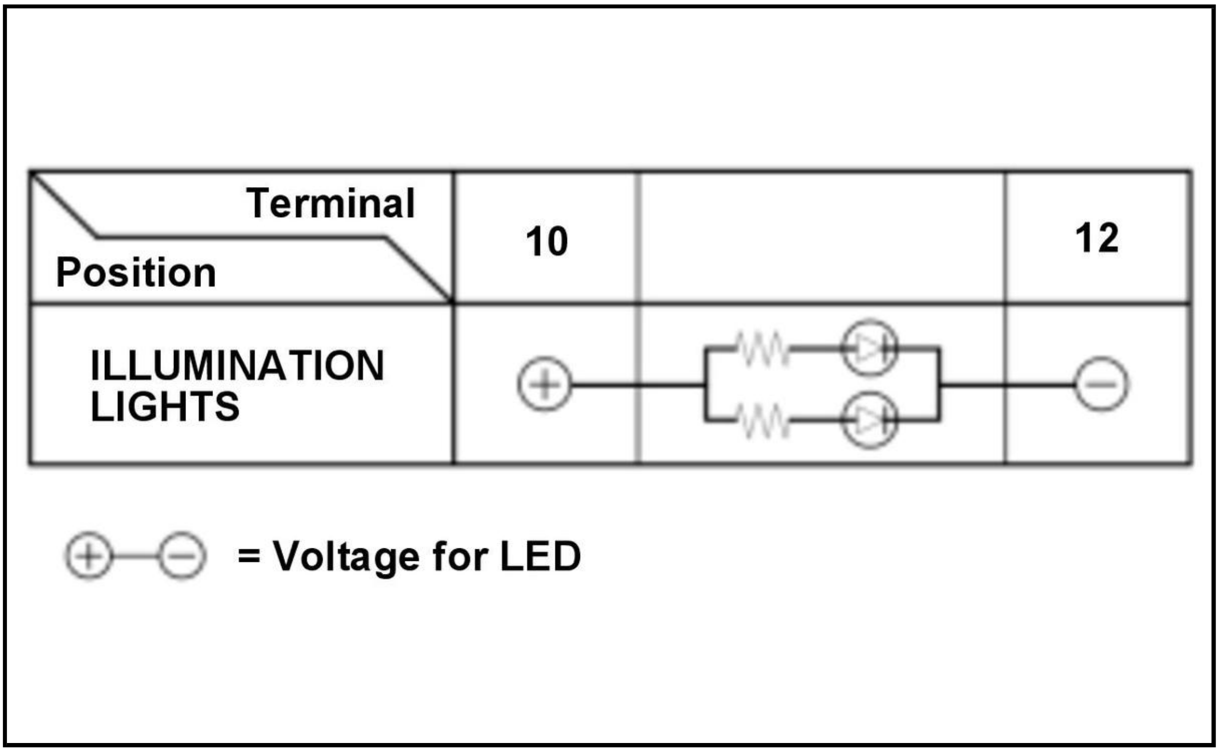

Terminal / Position	10		12
ILLUMINATION LIGHTS	⊕		⊖

⊕—⊖ = Voltage for LED

Switch Illumination Circuit Check:

1. On the switch side, check the LED for illumination by applying power and ground to the terminals according to the table.

NOTE: Important operating characteristic; diode bias causes a diode to fully conduct electricity in one direction (forward), while not at all in the opposite direction (reverse).

2. If the result is not as specified, replace the switch.

SYMPTOM TROUBLESHOOTING INDEX FOR VIEWER

BRAKE SYSTEM INDICATOR (AMBER) DOES NOT COME ON (ELECTRIC PARKING BRAKE SYSTEM)

Diagnostic procedure

- Do the gauge control module self-diagnostic function .

BRAKE SYSTEM INDICATOR (RED) DOES NOT COME ON (ELECTRIC PARKING BRAKE SYSTEM)

Diagnostic procedure

- Symptom troubleshooting.

BRAKE SYSTEM INDICATOR (RED) DOES NOT GO OFF (ELECTRIC PARKING BRAKE SYSTEM)

Diagnostic procedure

- Symptom troubleshooting.

HDS DOES NOT COMMUNICATE WITH THE VSA MODULATOR-CONTROL UNIT OR THE VEHICLE (ELECTRIC PARKING BRAKE SYSTEM)

Diagnostic procedure

- Go to the DTC troubleshooting index .

Also check for

Faulty data link cable

DESCRIPTION & OPERATION

ELECTRIC PARKING BRAKE SYSTEM DESCRIPTION

Overview

The electric parking brake system replaces the traditional parking brake pedal or lever and linkage with an electrically controlled parking brake mechanism in the rear calipers. This reduces driver effort and provides additional features such as:

- Simple electric switch operation
- Parking brake release upon acceleration
- Automatic rollaway prevention

The system is controlled by the VSA modulator-control unit.

Function

The electric parking brake system has following functions.

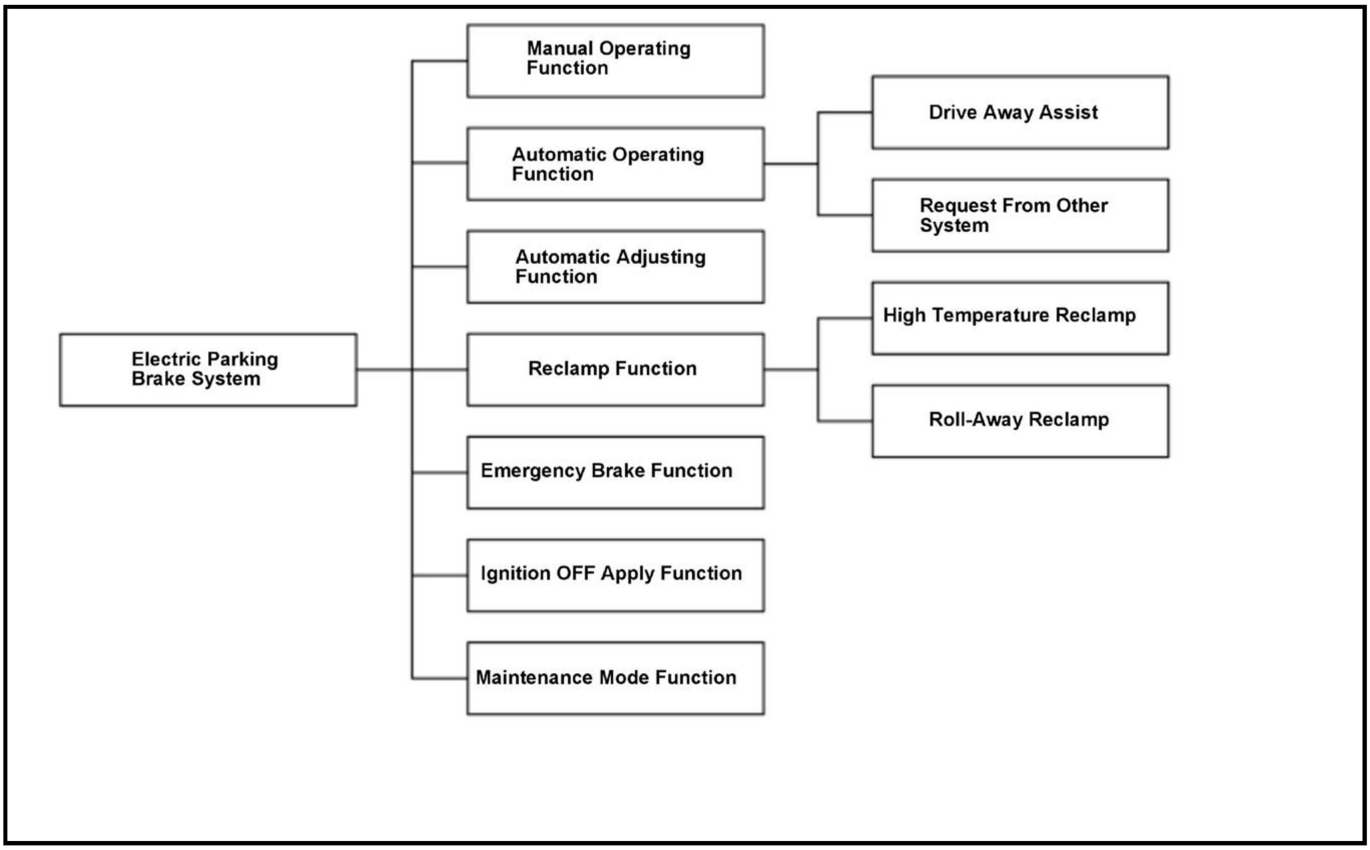
Electric Parking Brake System
Manual Operating Function
Automatic Operating Function
Automatic Adjusting Function
Reclamp Function
Emergency Brake Function
Ignition OFF Apply Function
Maintenance Mode Function
Drive Away Assist
Request From Other System
High Temperature Reclamp
Roll-Away Reclamp

Manual Operating Function

The electric parking brake can be manually applied and released using the switch. Pulling up on the electric parking brake switch applies the parking brake. Firmly applying the brake pedal and pushing down on the electric parking brake switch releases it.

Automatic Operating Function - Drive Away Assist

The electric parking brake is released automatically when the vehicle is driven away from a stop with the driver's seat belt buckled. Problems in the electric parking brake switch circuits do not affect automatic apply and release.

Automatic Operating Function - Request From Other System

While the electric servo brake system is preventing vehicle movement during automatic brake hold control, the electric parking brake system may operate automatically. This will occur after a specific time period has elapsed based on commands sent from the electric servo brake system.

Automatic Adjusting Function

Because the parking brake is automatically adjusted whenever applying the parking brake, the electric parking brake needs no adjustment. And, if the vehicle is driven 625 miles (1, 000 km) without applying the parking brake, the parking brake is automatically applied and released while vehicle is at a short stop, and adjusts the remaining brake pads.

Reclamp Function - High Temperature Reclamp

Brake disc temperature is calculated from the vehicle's kinetic energy as it stops, because loss of clamping force can occur when brake system components contract as they cool. If the calculated brake temperature exceeds a predetermined threshold, the high temperature reclamp function reapplies the electric parking brake actuators after a cool-down time has elapsed to compensate for any loss of clamping force. In order to accommodate this function, the VSA modulator-control unit may be kept on for a period of time after the turning the vehicle to the OFF (LOCK) mode. Depending on when high temperature reclamp occurs, the driver may notice the motor noise.

Reclamp Function - Roll-Away Reclamp

The roll-away reclamp function reapplies the parking brake if wheel movement is detected after the electric parking brake is applied.

Emergency Brake Function

In an emergency situation, such as a failure of the conventional brake system, the electric parking brake system performs the emergency brake function by activating the electric parking brake switch continuously. There are two controls depending on the state of the electric servo brake system.

- **In cases where the electric servo brake system can perform the servo control:**

  The electric parking brake system sends the brake control request to the electric servo brake system which applies the emergency brake using the servo control.

- **In cases where the electric servo brake system can not perform the servo control:**

  The electric parking brake system controls the electric parking brake actuator so that the wheels do not lock, and applies the emergency brake instead of the electric servo brake system. However, if the wheel speed signal is abnormal, the anti-lock control is not performed.

Ignition OFF Apply Function

The electric parking brake system can apply the parking brake automatically when the vehicle is turned to the OFF (LOCK) mode based on customer preferences. It may be necessary to temporarily cancel this function in certain service procedures. **Refer to How To Temporarily Cancel Automatic Electric Parking Brake**. For more information on how to turn on or off the automatic parking brake function, refer to the owner's manual.

Maintenance Mode

The electric parking brake system has a brake pad maintenance mode functional test. This test fully releases the parking brake mechanism so that brake service, such as rear pad replacement, can be done. Maintenance mode can be activated by the HDS.

ELECTRIC PARKING BRAKE SYSTEM DESCRIPTION - COMPONENTS

The electric parking brake system consists of the following primary components:

- VSA modulator-control unit
- Electric parking brake actuators
- Electric parking brake switch
- System indicator

For locations of each component on the vehicle, **refer to Component Location Index** , and for functions of the indicator, **refer to How to Troubleshoot the Electric Parking Brake**.

Electric Parking Brake Actuator

The electric parking brake actuator has a built-in DC motor. When the motor operates, the motor's speed is reduced by the actuator, increasing torque. The actuator turns the spindle and the adjuster nut inside the caliper piston force it outward to generate brake pad clamping force. The electric parking brake actuators are automatically adjusted to compensate for brake pad wear, so no parking brake adjustment is necessary.

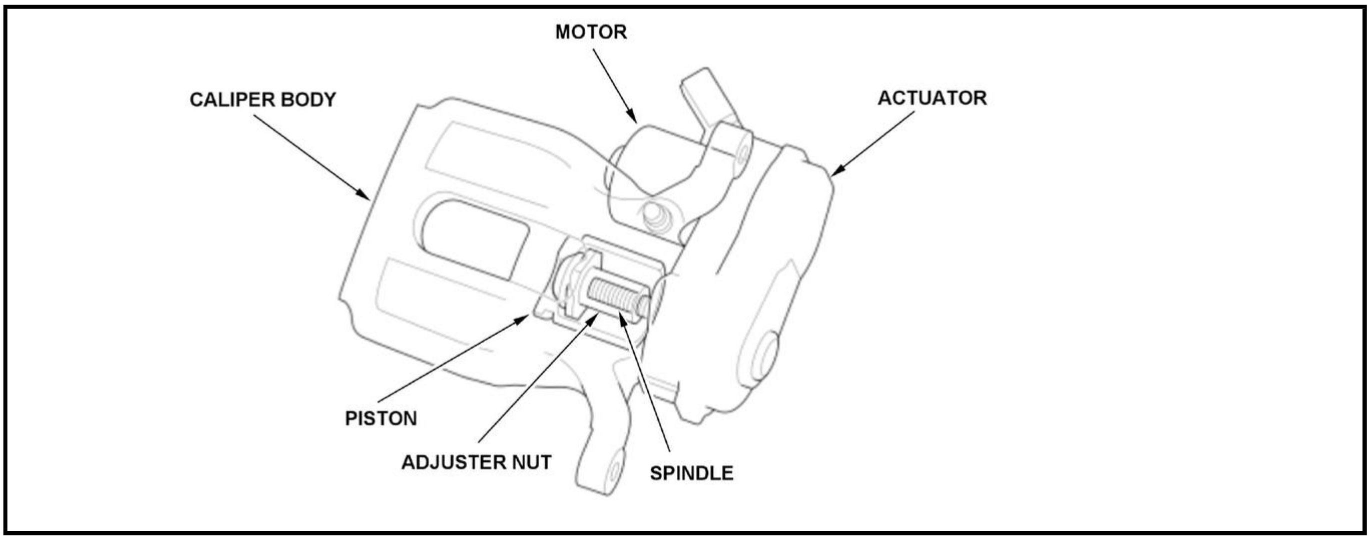
MOTOR
CALIPER BODY
ACTUATOR
PISTON
ADJUSTER NUT
SPINDLE

When the electric parking brake system has a malfunction and the parking brake cannot be released, you can release the parking brake by doing the forced cancellation procedure. **Refer to the forced cancellation procedure**.

Electric Parking Brake Switch

The electric parking brake switch is connected to the VSA modulator-control unit using four separate circuits. The control unit must see the correct voltage patterns on all four circuits, or the switch will be disabled and a DTC will be set.

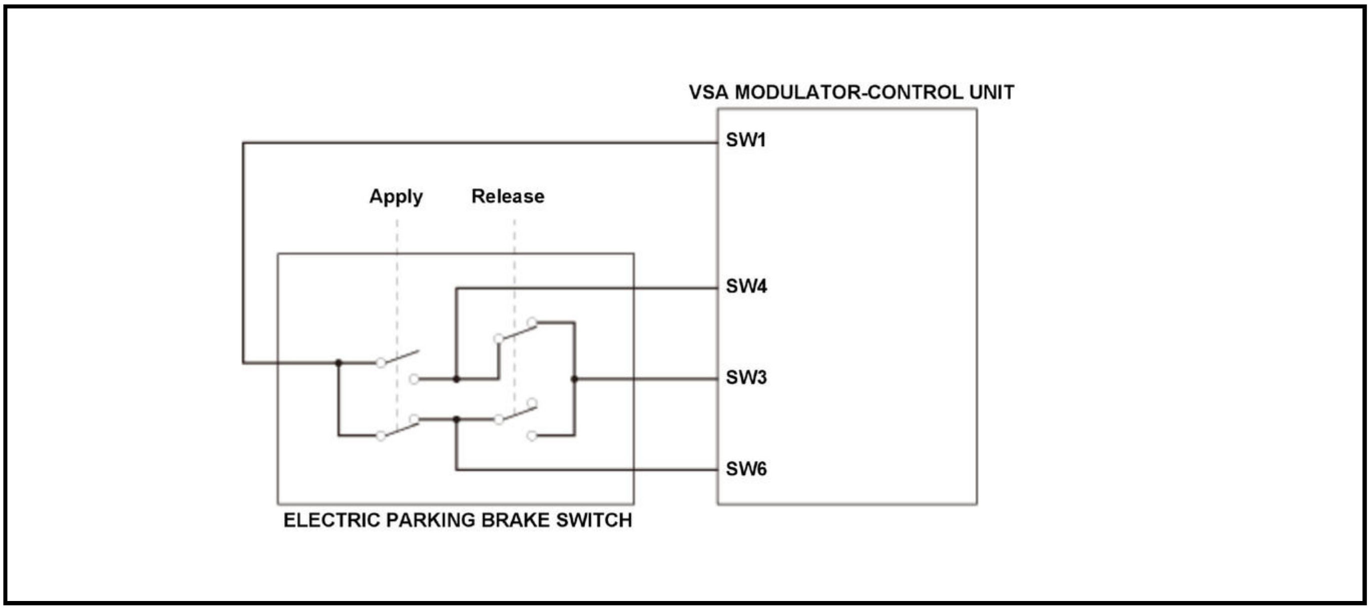
VSA MODULATOR-CONTROL UNIT
SW1
Apply
Release
SW4
SW3
SW6
ELECTRIC PARKING BRAKE SWITCH

ELECTRIC PARKING BRAKE SYSTEM DESCRIPTION - SYSTEM DIAGRAM

This system diagram shows the inputs and outputs of the electric parking brake system.

For locations of each component on vehicle, refer to Component Location Index:

- **VSA modulator-control unit, Wheel speed sensor**
- **Electric parking brake switch, Electric parking brake actuator**
- **Gauge control module**
- **PCM**
- **SRS unit**
- **Electric servo brake control unit**

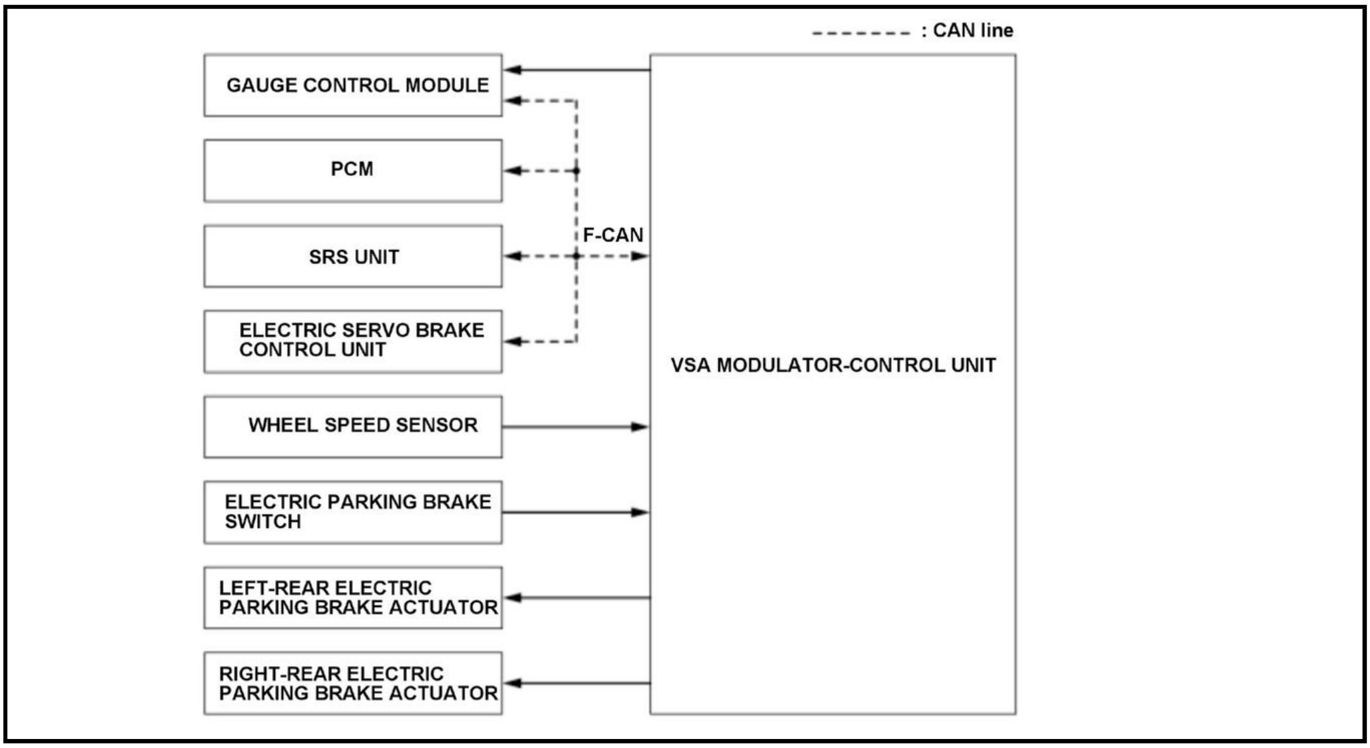
: CAN line
GAUGE CONTROL MODULE
PCM
SRS UNIT
ELECTRIC SERVO BRAKE CONTROL UNIT
WHEEL SPEED SENSOR
ELECTRIC PARKING BRAKE SWITCH
LEFT-REAR ELECTRIC PARKING BRAKE ACTUATOR
RIGHT-REAR ELECTRIC PARKING BRAKE ACTUATOR
F-CAN
VSA MODULATOR-CONTROL UNIT

F-CAN Communication Data

Electric Parking Brake System Receiving Signal

Transmitting Unit	Signal Name
PCM	• Accelerator pedal position signal • Drive torque signal • Shift position signal • System failure information
Gauge control module	• Odometer data
SRS unit	• Driver's seat belt buckle switch status • Longitudinal acceleration signal • System failure information
Electric servo brake control unit	• Parking brake apply request signal • System failure information

Electric Parking Brake System Transmitting Signal

Transmitting Unit	Signal Name
VSA modulator-control unit	• Parking brake activation status • Hydraulic pressure control request signal • Target deceleration signal • Indicator drive request signal • System operating status • System failure information

GENERAL INFORMATION

HOW TO TEMPORARILY CANCEL AUTOMATIC ELECTRIC PARKING BRAKE

Procedure

NOTE:

- The electric parking brake on this vehicle has the ability to apply itself once the vehicle is turned to the OFF (LOCK) mode based on the customer's preferences. During certain service procedures, it may be necessary to turn off this function temporarily.
- Refer to the owner's manual for more information on how to turn on or off the automatic parking brake function.

For more information, **refer to the Electric Parking Brake System Description**.

1. Temporary Cancellation

> **NOTE:** Before doing this procedure, turn off the ACC function (if equipped) and the automatic brake hold function.
>
> 1. Park the vehicle with the vehicle in the ON mode.
>
> 2. Turn the vehicle to the OFF (LOCK) mode, then within 2 seconds release the electric parking brake.

SYMPTOM TROUBLESHOOTING INDEX

ELECTRIC PARKING BRAKE SYSTEM SYMPTOM TROUBLESHOOTING INDEX (ELECTRIC PARKING BRAKE SYSTEM)

Symptom	Diagnostic procedure	Also check for
HDS does not communicate with the VSA modulator-control unit or the vehicle	**Go to the DTC troubleshooting index** .	Faulty data link cable
Brake system indicator (amber) does not come on	**Do the gauge control module self-diagnostic function** .	B
Brake system indicator (red) does not come on	**Symptom troubleshooting**.	B
Brake system indicator (red) does not go off	**Symptom troubleshooting**.	B

SYMPTOM TROUBLESHOOTING

ELECTRIC PARKING BRAKE SYSTEM SYMPTOM TROUBLESHOOTING - BRAKE SYSTEM INDICATOR (RED) DOES NOT COME ON

1. Gauge control module operation check

-1. **Do the gauge control module self-diagnostic function** .

Is the gauge control module OK?

YES

Go to step 2.

NO

Replace the gauge control module .

2. Open wire check (PARK_LAMP line)

   -1. Turn the vehicle to the OFF (LOCK) mode.

   -2. Disconnect the following connectors.

VSA modulator-control unit 46P connector
Gauge control module connector A (32P)

   -3. Measure the resistance between test points 1 and 2.

Test condition	Vehicle OFF (LOCK) mode
	VSA modulator-control unit 46P connector: disconnected
	Gauge control module connector A (32P): disconnected
Test point 1	VSA modulator-control unit 46P connector No. 29
Test point 2	Gauge control module connector A (32P) No. 10

   Is there 1.0 Ω or less?

   YES

   The PARK_LAMP wire is OK. Check for loose terminals and poor connections in the VSA modulator-control unit 46P connector. Check for any authorized service information related to the DTCs or symptoms you are troubleshooting. If they are OK, replace the VSA modulator-control unit .

   NO

   Repair an open in the wire between the VSA modulator-control unit and the gauge control module.

ELECTRIC PARKING BRAKE SYSTEM SYMPTOM TROUBLESHOOTING - BRAKE SYSTEM INDICATOR (RED) DOES NOT GO OFF

1. DTC check

   -1. Turn the vehicle to the ON mode.

   -2. Check for DTCs with the HDS.

DTC Description	DTC
B	B

   Is DTC indicated?

   YES

   Go to indicated DTC's troubleshooting.

   NO

   Go to step 2.

2. Gauge control module operation check

   -1. Do the gauge control module self-diagnostic function .

   Is the gauge control module OK?

YES

Go to step 3.

NO

Replace the gauge control module .

3. Shorted wire check (PARK_LAMP line)

-1. Turn the vehicle to the OFF (LOCK) mode.

-2. Disconnect the following connectors.

VSA modulator-control unit 46P connector
Gauge control module connector A (32P)

-3. Measure the resistance between test points 1 and 2.

Test condition	Vehicle OFF (LOCK) mode
	VSA modulator-control unit 46P connector: disconnected
	Gauge control module connector A (32P): disconnected
Test point 1	**VSA modulator-control unit 46P connector No. 29**
Test point 2	Body ground

Is there 1 MΩ or more?

YES

The PARK_LAMP wire is OK. Check for loose terminals and poor connections in the VSA modulator-control unit 46P connector. Check for any authorized service information related to the DTCs or symptoms you are troubleshooting. If they are OK, **replace the VSA modulator-control unit** .

NO

Repair a short to body ground in the wire between the VSA modulator-control unit and the gauge control module.

SERVICE PROCEDURE

ELECTRIC PARKING BRAKE SYSTEM FORCED CANCELLATION

Procedure

NOTE: Forced cancellation is performed when the system is abnormal and the parking brake cannot be released.

1. **Vehicle - Lift**
2. **Rear Wheel - Remove**
3. **Electric Parking Brake Actuator - Remove**
4. Parking Brake - Forced Cancel

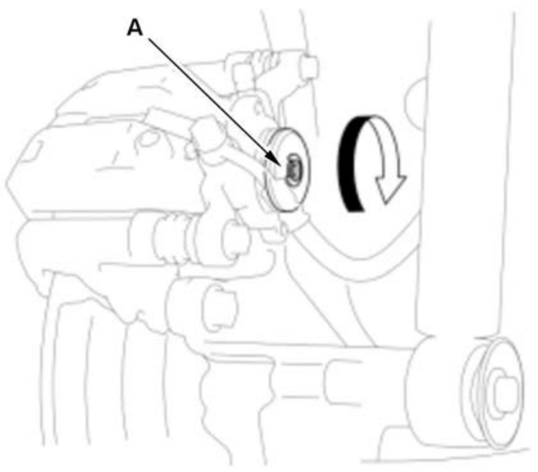	1. Using a TORX driver, turn the spindle shaft (A) clockwise until parking brake is released.

HOW TO INFORMATION

HOW TO TROUBLESHOOT THE ELECTRIC PARKING BRAKE SYSTEM

Control Unit

The vehicle is equipped with the electric parking brake and the system is controlled by the VSA modulator-control unit.

NOTE: For DTCs of the electric parking brake system, please check from the ABS/VSA menu in the HDS.

System Indicator

This system has two indicators on the gauge control module.

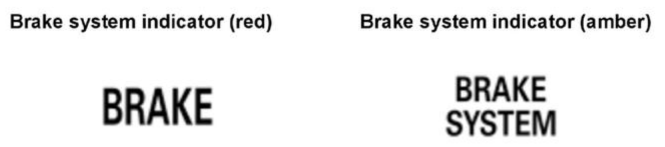

NOTE: For locations of each indicator, refer to gauge control module component location index .

When the system is OK, each indicator comes on for about 2 seconds after turning the vehicle to the ON mode, then it goes off. If the parking brake is applied, the brake system indicator (red) is still ON.

Brake System Indicator (Amber)

- The brake system indicator (amber) comes on when the electric parking brake function is lost.
- The brake system indicator (amber) will also illuminate when the HDS maintenance mode is enabled.

Brake System Indicator (Red)

- The brake system indicator (red) comes on when the electric parking brake is applied.
- The brake system indicator (red) blinks when the electric parking brake function is lost.

Diagnostic Trouble Code (DTC)

- The memory can hold 10 DTCs. However, when the same DTC is detected more than once, the more recent DTC is written over the earlier one. Therefore, when the same problem is detected repeatedly, it is memorized as a single DTC.
- The DTCs are indicated in ascending order, not in the order they occurred.
- The DTCs are memorized in an EEPROM in the VSA modulator-control unit. Therefore, the memorized DTCs cannot be erased by disconnecting the 12 volt battery. Do the specified procedures to clear the DTCs.

Self-Diagnosis

- Self-diagnosis can be classified into two categories:
-
    - -

      Initial diagnosis: Done right after turning the vehicle to the ON mode and until the brake system indicator (amber) goes off.
-
    - -

      Regular diagnosis: Done right after the initial diagnosis until turning the vehicle to the OFF (LOCK) mode.
- When the system detects a problem, the VSA modulator-control unit shifts to fail-safe mode.

Electric Parking Brake Actuator

- The electric parking brake actuator operates when the parking brake applies or releases.
- The parking brake motor can be heard at the rear wheels when the parking brake is applied or released, this is normal.

Electric Parking Brake Forced Cancellation

- When the electric parking brake system has malfunction and parking brake cannot be released, you can release parking brake by doing forced cancellation procedure.
- Before doing electric parking brake forced cancellation, check for electric parking brake system DTCs with the HDS. If any DTCs are indicated, do the indicated DTC's troubleshooting and repair the cause for DTC first.
- If the electric parking brake switch fails, switch operation will be disabled and the manual release is not possible. However, depending on the malfunction, you may be able to release the parking brake by following procedures.
-
    - Buckle the driver's seat belt.
    - Turn the vehicle to the READY TO DRIVE mode.
    - Shift the transmission to D or R position/mode.
    - Slowly press the accelerator pedal.

Brake Pad Maintenance Mode

When replacing the rear brake pad, it is necessary to enter the maintenance mode with the HDS.

How to Troubleshoot DTCs

The troubleshooting procedures assume that the cause of the problem is still present and the brake system indicator (amber) is still on. Following a troubleshooting procedure for a DTC that has been cleared but does not reset can result in incorrect diagnosis.

1. Question the customer about the conditions when the problem occurred, and try to reproduce the same conditions for troubleshooting. Find out when the brake system indicator (amber) came on, such as during activation, after activation, when the vehicle was traveling at a certain speed, etc. If necessary, have the customer demonstrate the concern.

2. When the brake system indicator (amber) does not come on during the test-drive, but troubleshooting is done based on the DTC, check for loose connectors, poor contact of the terminals, etc. in the circuit indicated by the DTC.

3. After troubleshooting or the repairs are done, clear the DTCs, and test-drive the vehicle under the same conditions that originally set the DTCs. Make sure the brake system indicator (amber) does not come on.

Intermittent Failures

The term "intermittent failure" means a system may have had a failure, but it checks OK now. If you cannot reproduce the condition, check for loose connections and terminals. Also check ground and power connections related to the circuit that you are troubleshooting.

How to Use the HDS (Honda Diagnostic System)

NOTE: Make sure the 12 volt battery is in good condition and fully charged.

1. If the system indicator (s) stay on, **connect the HDS to the data link connector (DLC)**

2. Turn the vehicle to the ON mode.

3. Make sure the HDS communicates with the vehicle. If it does not, **go to the DTC troubleshooting index**

4. Check the diagnostic trouble code (DTC) and the freeze data (except ABS/VSA system), for all systems, troubleshoot the powertrain DTCs first. Then refer to the indicated DTC's troubleshooting, and do the appropriate troubleshooting procedure.

NOTE:

- The HDS can read the DTC, the freeze data (except ABS/VSA system), the current data, and other system data.
- For specific operations, refer to the Help menu that came with the HDS.

How to Retrieve DTCs

1. With the vehicle in the OFF (LOCK) mode, **connect the HDS to the data link connector (DLC)**

2. Turn the vehicle to the ON mode.

3. Make sure the HDS communicates with the vehicle. If it does not, **go to the DTC troubleshooting index**

4. Follow the prompts on the HDS to display the DTC (s) on the screen. After determining the DTC, refer to the DTC troubleshooting. Do the all systems DTC check, and troubleshoot any powertrain DTCs first.

5. Turn the vehicle to the OFF (LOCK) mode.

How to Clear DTCs

1. With the vehicle in the OFF (LOCK) mode, **connect the HDS to the data link connector (DLC)**

2. Turn the vehicle to the ON mode.

3. Make sure the HDS communicates with the vehicle. If it does not, **go to the DTC troubleshooting index**

4. Clear the DTC (s) by following the screen prompts on the HDS.

5. Turn the vehicle to the OFF (LOCK) mode.

COMPONENT LOCATION INDEX

ELECTRIC PARKING BRAKE SYSTEM COMPONENT LOCATION INDEX

For relationships between signals in a system, refer to System Diagram.

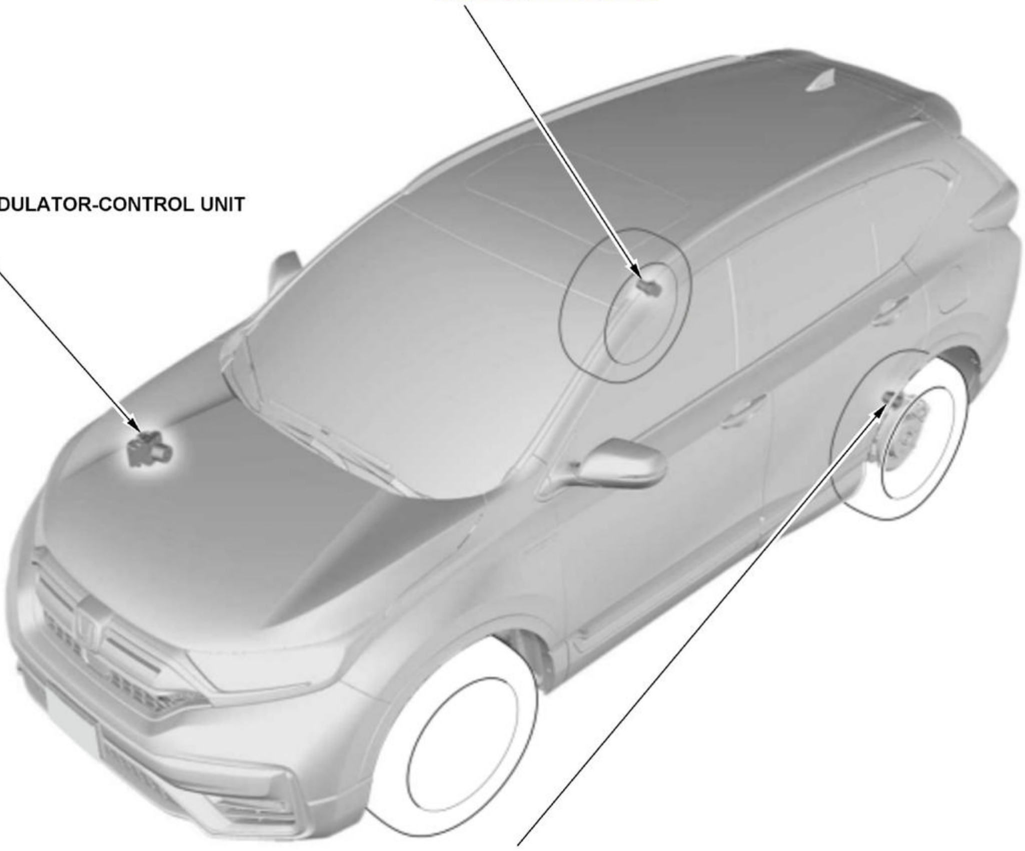

RIGHT-REAR ELECTRIC PARKING BRAKE ACTUATOR
How To Temporarily Cancel Automatic Electric Parking Brake
Forced Cancellation
Removal and Installation

VSA MODULATOR-CONTROL UNIT

LEFT-REAR ELECTRIC PARKING BRAKE ACTUATOR
How To Temporarily Cancel Automatic Electric Parking Brake
Forced Cancellation
Removal and Installation

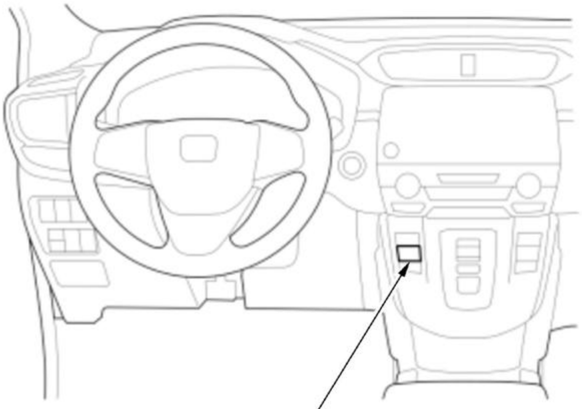

ELECTRIC PARKING BRAKE SWITCH
Removal, Installation, and Test

DTC TROUBLESHOOTING INDEX

TPMS DTC TROUBLESHOOTING INDEX

DTC		Detection Item
C0077	-78	Low Tire Air Pressure
C0078	-4A	Different Diameter Tire Detection

HOW TO INFORMATION

HOW TO TROUBLESHOOT THE TPMS

Control Unit

The vehicle is equipped with TPMS (tire pressure monitoring system) and the system is controlled by the VSA modulator-control unit.

System Indicator

This system has an indicator on the gauge control module.

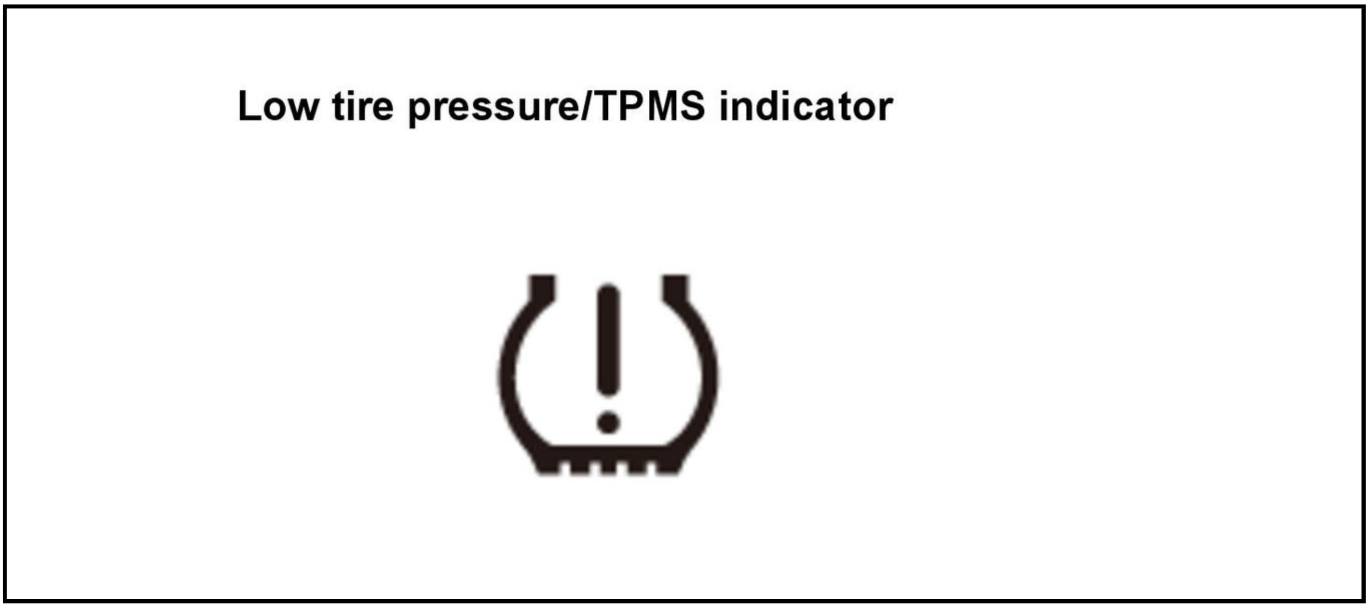

NOTE: For locations of the indicator, refer to gauge control module component location index .

The Low Tire Pressure/TPMS Indicator

If the system detects low tire pressure in any of the four tires, the low tire pressure/TPMS indicator comes on. It will stay on until calibration procedure starts.

CHECK SYSTEM (TPMS)

- If a problem in the system is detected, the VSA indicator comes on, and the low tire pressure/TPMS indicator comes on after blinking for about 75 seconds.
- If VSA falls into error mode, TPMS also falls into error mode and stops all operation. If TPMS is calibrating, the calibration will be suspended.

If the system is OK, the low tire pressure/TPMS indicator should come on when the vehicle is turned to the ON mode, and then go off 2 seconds later. If it does not, there is a problem with the system.

Conditions for Data Rejection

Even if the system is normal, calibration or deflation detection is not performed during the following conditions.

- The brake pedal is pressed.
- The vehicle is stopping.
- While going slower than 28 mph (45 km/h) or cruising over 65 mph (105 km/h).
- Short turn, rapid acceleration, hard braking.
- Conditions where the right and left wheels are rotating at different speeds like when driving on sand, loose gravel, snow, ice or extremely rough roads.
- When the ABS, EBD, TCS, or VSA controls are operating.
- Gentle cornering radius.
- Driving on a steep slope.

Conditions Where TPMS Can Not Operate Normally

In the following cases, false warning might occur or deflation might not be detected.

- Non-recommended tires are used.
- Tires with different wear level, different brand, model, type or different sizes are used.
- All four tires are not replaced to the recommended tires at once.
- Calibrated with non-recommended tire pressure.
- Tire chains are mounted.
- Driving on sand, loose gravel, snow, ice or extremely rough roads.
- With trailer towing.
- With a roof carrier.
- With a very heavy load.
- With an extremely unbalanced load.
- Rapid deflation like a tire burst.

Change of the Tire Pressure Threshold

When changing tire/wheel size, it may be necessary to adjust the tire pressure threshold using the HDS. If it is not adjusted, the system may not operate normally. This operation can be done through ABS/VSA menu in HDS.

DTC TROUBLESHOOTING

DTC C0077-78

DTC C0077-78 : Low Tire Air Pressure

NOTE:

- **Before you troubleshoot, review the general troubleshooting information**.
- Before troubleshooting, **check the outside air temperature sensor** . If outside air temperature sensor is failed, the VSA modulator-control unit may set this code.
- Make sure to avoid lopsided loading on one side (left or right) of the vehicle and excessive loading.

- Make sure to inflate the tires to recommended pressure, not higher than the specified pressure, when TPMS calibration is being performed.

DTC Description	DTC
C0077-78 Low Tire Air Pressure	B

DTC (VSA)

1. Tire pressure check

   -1. Turn the vehicle to the OFF (LOCK) mode.

   -2. Check all four tires for size, inflation, and wear.

   Are all four tires the correct size, specified tire pressure, same speed rating, same brand/model, and are evenly worn?

   YES

   The system is OK at this time. **Do the TPMS calibration** .

   NO

   Install the correct tires, a known-good set of tires, or set the tires to the correct pressure, and **do the TPMS calibration** .

DTC C0078-4A

DTC C0078-4A : Different Diameter Tire Detection

NOTE:

- **Before you troubleshoot, review the general troubleshooting information**.
- The DTC will be indicated when the vehicle has a different diameter tire(s) compared to the other tires.
- Check the record of using tires and wheels of a different size from originally supplied with the vehicle including the use of temporary spare tire.

DTC Description	DTC
C0078-4A Different Diameter Tire Detection	B

DTC (VSA)

1. Tire and wheel check

   -1. Turn the vehicle to the OFF (LOCK) mode.

   -2. Check all four tires for size, inflation, and wear.

   Are all four tires the correct size, specified tire pressure, same speed rating, same brand/model, and are evenly worn?

   YES

   The system is OK at this time. **Do the TPMS calibration** .

   NO

   Install the correct tires, a known-good set of tires, or set the tires to the correct pressure, and **do the TPMS calibration** .

TROUBLESHOOTING

DTC C0077-78

DTC C0077-78 : Low Tire Air Pressure

NOTE:

- **Before you troubleshoot, review the general troubleshooting information**.
- Before troubleshooting, **check the outside air temperature sensor** . If outside air temperature sensor is failed, the VSA modulator-control unit may set this code.
- Make sure to avoid lopsided loading on one side (left or right) of the vehicle and excessive loading.
- Make sure to inflate the tires to recommended pressure, not higher than the specified pressure, when TPMS calibration is being performed.

DTC Description	DTC	Freeze Frame
C0077-78 Low Tire Air Pressure	B	B

DTC (VSA)

1. Tire pressure check

-1. Turn the vehicle to the OFF (LOCK) mode.

-2. Check all four tires for size, inflation, and wear.

Are all four tires the correct size, specified tire pressure, same speed rating, same brand/model, and are evenly worn?

YES

The system is OK at this time. **Do the TPMS calibration** .

NO

Install the correct tires, a known-good set of tires, or set the tires to the correct pressure, and **do the TPMS calibration** .

DTC C0078-4A

DTC C0078-4A : Different Diameter Tire Detection

NOTE:

- **Before you troubleshoot, review the general troubleshooting information**.
- The DTC will be indicated when the vehicle has a different diameter tire(s) compared to the other tires.
- Check the record of using tires and wheels of a different size from originally supplied with the vehicle including the use of temporary spare tire.

DTC Description	DTC	Freeze Frame
C0078-4A Different Diameter Tire Detection	B	B

DTC (VSA)

1. Tire and wheel check

   -1. Turn the vehicle to the OFF (LOCK) mode.

   -2. Check all four tires for size, inflation, and wear.

   Are all four tires the correct size, specified tire pressure, same speed rating, same brand/model, and are evenly worn?

   YES

   The system is OK at this time. Do the TPMS calibration .

   NO

   Install the correct tires, a known-good set of tires, or set the tires to the correct pressure, and do the TPMS calibration .

DTC C1030-11

DTC C1030-11 : TPMS Switch Circuit Short

NOTE:

- Before you troubleshoot, review the general troubleshooting information.
- Pressing and holding the TPMS switch for more than 60 seconds will cause this DTC to set.

DTC Description	DTC	Freeze Frame
C1030-11 TPMS Switch Circuit Short	B	B

DTC (VSA)

1. Problem verification

   -1. Turn the vehicle to the ON mode.

   -2. Clear the DTC with the HDS.

   -3. Turn the vehicle to the OFF (LOCK) mode, then to the ON mode.

   -4. Wait 60 seconds or more.

   -5. Check for DTCs with the HDS.

DTC Description	DTC	Freeze Frame
C1030-11 TPMS Switch Circuit Short	B	B

   Is DTC C1030-11 indicated?

   YES

   The failure is duplicated. Go to step 2.

   NO

   Intermittent failure, the system is OK at this time. If the freeze data/on-board snapshot of this DTC is recorded, try to reproduce the failure under the same conditions with the freeze data/on-board snapshot.

2. TPMS switch check

-1. Turn the vehicle to the OFF (LOCK) mode.

-2. **Check the TPMS switch** .

Is the TPMS switch OK?

YES

Go to step 3.

NO

Replace the TPMS switch .

3. Shorted wire check (TPMS SW line)

-1. Disconnect the following connectors.

Gauge control module connector A (32P)
TPMS switch 5P connector

-2. Check for continuity between test points 1 and 2.

Test condition	Vehicle OFF (LOCK) mode
B	Gauge control module connector A (32P): disconnected
B	TPMS switch 5P connector: disconnected
Test point 1	**Gauge control module connector A (32P) No. 23**
Test point 2	Body ground

Is there continuity?

YES

Repair a short to body ground in the wire between the gauge control module and the TPMS switch.

NO

The TPMS SW wire is OK. Check for any authorized service information related to the DTCs or symptoms you are troubleshooting or **substitute a known-good gauge control module** , then recheck. If the symptom/indication goes away with a known-good gauge control module, **replace the original gauge control module** .

HOW TO INFORMATION

HOW TO TROUBLESHOOT THE TPMS

Control Unit

The vehicle is equipped with TPMS (tire pressure monitoring system) and the system is controlled by the VSA modulator-control unit.

System Indicator

This system has an indicator on the gauge control module.

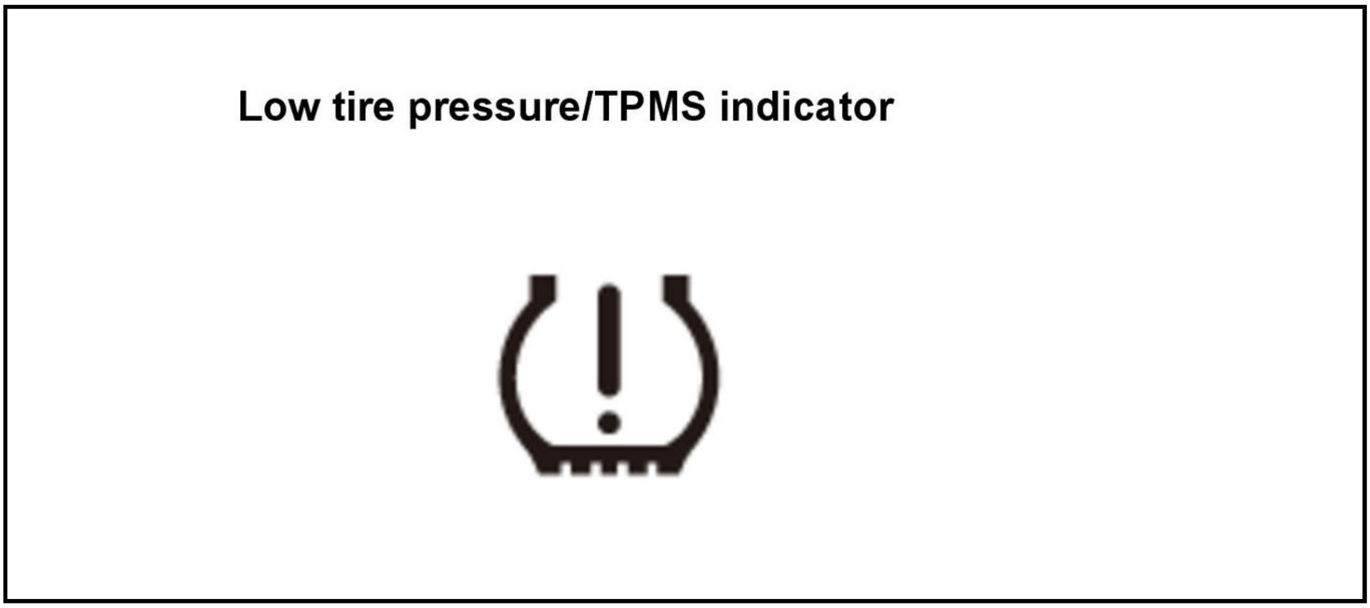

NOTE: For locations of the indicator, refer to gauge control module component location index .

The Low Tire Pressure/TPMS Indicator

If the system detects low tire pressure in any of the four tires, the low tire pressure/TPMS indicator comes on. It will stay on until calibration procedure starts.

CHECK SYSTEM (TPMS)

- If a problem in the system is detected, the VSA indicator comes on, and the low tire pressure/TPMS indicator comes on after blinking for about 75 seconds.
- If VSA falls into error mode, TPMS also falls into error mode and stops all operation. If TPMS is calibrating, the calibration will be suspended.

If the system is OK, the low tire pressure/TPMS indicator should come on when the vehicle is turned to the ON mode, and then go off 2 seconds later. If it does not, there is a problem with the system.

Conditions for Data Rejection

Even if the system is normal, calibration or deflation detection is not performed during the following conditions.

- The brake pedal is pressed.
- The vehicle is stopping.
- While going slower than 28 mph (45 km/h) or cruising over 65 mph (105 km/h).
- Short turn, rapid acceleration, hard braking.
- Conditions where the right and left wheels are rotating at different speeds like when driving on sand, loose gravel, snow, ice or extremely rough roads.
- When the ABS, EBD, TCS, or VSA controls are operating.
- Gentle cornering radius.
- Driving on a steep slope.

Conditions Where TPMS Can Not Operate Normally

In the following cases, false warning might occur or deflation might not be detected.

- Non-recommended tires are used.
- Tires with different wear level, different brand, model, type or different sizes are used.
- All four tires are not replaced to the recommended tires at once.

- Calibrated with non-recommended tire pressure.
- Temporary spare tires or tire chains are mounted.
- Driving on sand, loose gravel, snow, ice or extremely rough roads.
- With trailer towing.
- With a roof carrier.
- With a very heavy load.
- With an extremely unbalanced load.
- Rapid deflation like a tire burst.

Change of the Tire Pressure Threshold

When changing tire/wheel size, it may be necessary to adjust the tire pressure threshold using the HDS. If it is not adjusted, the system may not operate normally. This operation can be done through the ABS/TCS/VSA menu in HDS.

ADVANCED DIAGNOSTICS

DTC B0050-F0 (VSA CONTROL UNIT)

DTC B0050-F0 : (Driver's Seat Belt Buckle Switch Malfunction)

NOTE

- Initial Diagnosis:

  The initial on-board diagnosis occurs right after the vehicle condition is turned to the ON mode, and the ABS/VSA indicator comes on, and continues until the indicator goes off.

- Regular Diagnosis:

  The regular on-board diagnosis begins right after the ABS/VSA indicator goes off, and it continues until the vehicle condition is turned to the OFF (LOCK) mode.

- Review "How to troubleshoot the VSA system" before doing the DTC troubleshooting procedure.
- Test-drive the vehicle according to local traffic conditions and regulations. Do not test-drive on a lift unless specified.
- The possible causes shown may not be a complete list of all potential problems, and it is possible that there may be other causes.

Confirmation Procedure	Basic Condition: • 12 volt battery voltage 9.6 - 16.5 V With the Driving Pattern: • Turn the vehicle to the ON mode.
Execution	Regular Diagnosis
Duration	About 1 second
DTC Type	• 1 drive cycle • Brake system indicator (amber) on
Fail Safe Action	• Stop electric parking brake function (some of function)
Possible Cause	• SRS failure

DTC C0010-49

DTC C0010-49 : Inlet Solenoid (Left Front) Circuit Failure

NOTE

- Initial Diagnosis:

  The initial on-board diagnosis occurs right after the vehicle condition is turned to the ON mode, and the ABS/VSA indicator comes on, and continues until the indicator goes off.

- Regular Diagnosis:

  The regular on-board diagnosis begins right after the ABS/VSA indicator goes off, and it continues until the vehicle condition is turned to the OFF (LOCK) mode.

- Review "How to troubleshoot the VSA system" before doing the DTC troubleshooting procedure.
- Test-drive the vehicle according to local traffic conditions and regulations. Do not test-drive on a lift unless specified.
- The possible causes shown may not be a complete list of all potential problems, and it is possible that there may be other causes.

Confirmation Procedure	Basic Condition: • 12 volt battery voltage 9.6 - 16.5 V • ABS/VSA function not in operation With the Driving Pattern: • Turn the vehicle to the READY TO DRIVE mode. • Wait 20 seconds or more.
Execution	Initial Diagnosis/Regular Diagnosis
Duration	About 20 seconds
DTC Type	• 1 drive cycle • Brake system indicator (red) on • Brake system indicator (amber) on • ABS indicator on • VSA indicator on
Fail Safe Action	• Stop EBD function • Stop ABS function • Stop engine drag torque control function • Stop TCS function • Stop VSA function • Stop agile handling assist function • Stop hydraulic boost failure compensation function • Stop electric parking brake function (some of function)
Possible Cause	• VSA modulator-control unit internal failure

DTC C0011-49

DTC C0011-49 : Outlet Solenoid (Left Front) Circuit Failure

NOTE

- Initial Diagnosis:

  The initial on-board diagnosis occurs right after the vehicle condition is turned to the ON mode, and the ABS/VSA indicator comes on, and continues until the indicator goes off.

- Regular Diagnosis:

The regular on-board diagnosis begins right after the ABS/VSA indicator goes off, and it continues until the vehicle condition is turned to the OFF (LOCK) mode.

- Review "How to troubleshoot the VSA system" before doing the DTC troubleshooting procedure.
- Test-drive the vehicle according to local traffic conditions and regulations. Do not test-drive on a lift unless specified.
- The possible causes shown may not be a complete list of all potential problems, and it is possible that there may be other causes.

Confirmation Procedure	Basic Condition: • 12 volt battery voltage 9.6 - 16.5 V • ABS/VSA function not in operation With the Driving Pattern: • Turn the vehicle to the READY TO DRIVE mode. • Wait 20 seconds or more.
Execution	Initial Diagnosis/Regular Diagnosis
Duration	About 20 seconds
DTC Type	• 1 drive cycle • Brake system indicator (red) on • Brake system indicator (amber) on • ABS indicator on • VSA indicator on
Fail Safe Action	• Stop EBD function • Stop ABS function • Stop engine drag torque control function • Stop TCS function • Stop VSA function • Stop agile handling assist function • Stop hydraulic boost failure compensation function • Stop electric parking brake function (some of function)
Possible Cause	• VSA modulator-control unit internal failure

DTC C0014-49

DTC C0014-49 : Inlet Solenoid (Right Front) Circuit Failure

NOTE

- Initial Diagnosis:

  The initial on-board diagnosis occurs right after the vehicle condition is turned to the ON mode, and the ABS/VSA indicator comes on, and continues until the indicator goes off.

- Regular Diagnosis:

  The regular on-board diagnosis begins right after the ABS/VSA indicator goes off, and it continues until the vehicle condition is turned to the OFF (LOCK) mode.

- Review "How to troubleshoot the VSA system" before doing the DTC troubleshooting procedure.
- Test-drive the vehicle according to local traffic conditions and regulations. Do not test-drive on a lift unless specified.
- The possible causes shown may not be a complete list of all potential problems, and it is possible that there may be other causes.

Confirmation Procedure	Basic Condition: • 12 volt battery voltage 9.6 - 16.5 V • ABS/VSA function not in operation With the Driving Pattern: • Turn the vehicle to the READY TO DRIVE mode. • Wait 20 seconds or more.
Execution	Initial Diagnosis/Regular Diagnosis
Duration	About 20 seconds
DTC Type	• 1 drive cycle • Brake system indicator (red) on • Brake system indicator (amber) on • ABS indicator on • VSA indicator on
Fail Safe Action	• Stop EBD function • Stop ABS function • Stop engine drag torque control function • Stop TCS function • Stop VSA function • Stop agile handling assist function • Stop hydraulic boost failure compensation function • Stop electric parking brake function (some of function)
Possible Cause	• VSA modulator-control unit internal failure

DTC C0015-49

DTC C0015-49 : Outlet Solenoid (Right Front) Circuit Failure

NOTE

- Initial Diagnosis:

  The initial on-board diagnosis occurs right after the vehicle condition is turned to the ON mode, and the ABS/VSA indicator comes on, and continues until the indicator goes off.

- Regular Diagnosis:

  The regular on-board diagnosis begins right after the ABS/VSA indicator goes off, and it continues until the vehicle condition is turned to the OFF (LOCK) mode.

- Review "How to troubleshoot the VSA system" before doing the DTC troubleshooting procedure.

- Test-drive the vehicle according to local traffic conditions and regulations. Do not test-drive on a lift unless specified.
- The possible causes shown may not be a complete list of all potential problems, and it is possible that there may be other causes.

Confirmation Procedure	Basic Condition: • 12 volt battery voltage 9.6 - 16.5 V • ABS/VSA function not in operation With the Driving Pattern: • Turn the vehicle to the READY TO DRIVE mode. • Wait 20 seconds or more.
Execution	Initial Diagnosis/Regular Diagnosis
Duration	About 20 seconds
DTC Type	• 1 drive cycle • Brake system indicator (red) on • Brake system indicator (amber) on • ABS indicator on • VSA indicator on
Fail Safe Action	• Stop EBD function • Stop ABS function • Stop engine drag torque control function • Stop TCS function • Stop VSA function • Stop agile handling assist function • Stop hydraulic boost failure compensation function • Stop electric parking brake function (some of function)
Possible Cause	• VSA modulator-control unit internal failure

DTC C0018-49

DTC C0018-49 : Inlet Solenoid (Left Rear) Circuit Failure

NOTE

- Initial Diagnosis:

  The initial on-board diagnosis occurs right after the vehicle condition is turned to the ON mode, and the ABS/VSA indicator comes on, and continues until the indicator goes off.

- Regular Diagnosis:

  The regular on-board diagnosis begins right after the ABS/VSA indicator goes off, and it continues until the vehicle condition is turned to the OFF (LOCK) mode.

- Review "How to troubleshoot the VSA system" before doing the DTC troubleshooting procedure.

- Test-drive the vehicle according to local traffic conditions and regulations. Do not test-drive on a lift unless specified.
- The possible causes shown may not be a complete list of all potential problems, and it is possible that there may be other causes.

Confirmation Procedure	Basic Condition: • 12 volt battery voltage 9.6 - 16.5 V • ABS/VSA function not in operation With the Driving Pattern: • Turn the vehicle to the READY TO DRIVE mode. • Wait 20 seconds or more.
Execution	Initial Diagnosis/Regular Diagnosis
Duration	About 20 seconds
DTC Type	• 1 drive cycle • Brake system indicator (red) on • Brake system indicator (amber) on • ABS indicator on • VSA indicator on
Fail Safe Action	• Stop EBD function • Stop ABS function • Stop engine drag torque control function • Stop TCS function • Stop VSA function • Stop agile handling assist function • Stop hydraulic boost failure compensation function • Stop electric parking brake function (some of function)
Possible Cause	• VSA modulator-control unit internal failure

DTC C0019-49

DTC C0019-49 : Outlet Solenoid (Left Rear) Circuit Failure

NOTE

- Initial Diagnosis:

  The initial on-board diagnosis occurs right after the vehicle condition is turned to the ON mode, and the ABS/VSA indicator comes on, and continues until the indicator goes off.

- Regular Diagnosis:

  The regular on-board diagnosis begins right after the ABS/VSA indicator goes off, and it continues until the vehicle condition is turned to the OFF (LOCK) mode.

- Review "How to troubleshoot the VSA system" before doing the DTC troubleshooting procedure.

- Test-drive the vehicle according to local traffic conditions and regulations. Do not test-drive on a lift unless specified.
- The possible causes shown may not be a complete list of all potential problems, and it is possible that there may be other causes.

Confirmation Procedure	Basic Condition: • 12 volt battery voltage 9.6 - 16.5 V • ABS/VSA function not in operation With the Driving Pattern: • Turn the vehicle to the READY TO DRIVE mode. • Wait 20 seconds or more.
Execution	Initial Diagnosis/Regular Diagnosis
Duration	About 20 seconds
DTC Type	• 1 drive cycle • Brake system indicator (red) on • Brake system indicator (amber) on • ABS indicator on • VSA indicator on
Fail Safe Action	• Stop EBD function • Stop ABS function • Stop engine drag torque control function • Stop TCS function • Stop VSA function • Stop agile handling assist function • Stop hydraulic boost failure compensation function • Stop electric parking brake function (some of function)
Possible Cause	• VSA modulator-control unit internal failure

DTC C001C-49

DTC C001C-49 : Inlet Solenoid (Right Rear) Circuit Failure

NOTE

- Initial Diagnosis:

  The initial on-board diagnosis occurs right after the vehicle condition is turned to the ON mode, and the ABS/VSA indicator comes on, and continues until the indicator goes off.

- Regular Diagnosis:

  The regular on-board diagnosis begins right after the ABS/VSA indicator goes off, and it continues until the vehicle condition is turned to the OFF (LOCK) mode.

- Review "How to troubleshoot the VSA system" before doing the DTC troubleshooting procedure.

- Test-drive the vehicle according to local traffic conditions and regulations. Do not test-drive on a lift unless specified.
- The possible causes shown may not be a complete list of all potential problems, and it is possible that there may be other causes.

Confirmation Procedure	Basic Condition: • 12 volt battery voltage 9.6 - 16.5 V • ABS/VSA function not in operation With the Driving Pattern: • Turn the vehicle to the READY TO DRIVE mode. • Wait 20 seconds or more.
Execution	Initial Diagnosis/Regular Diagnosis
Duration	About 20 seconds
DTC Type	• 1 drive cycle • Brake system indicator (red) on • Brake system indicator (amber) on • ABS indicator on • VSA indicator on
Fail Safe Action	• Stop EBD function • Stop ABS function • Stop engine drag torque control function • Stop TCS function • Stop VSA function • Stop agile handling assist function • Stop hydraulic boost failure compensation function • Stop electric parking brake function (some of function)
Possible Cause	• VSA modulator-control unit internal failure

DTC C001D-49

DTC C001D-49 : Outlet Solenoid (Right Rear) Circuit Failure

NOTE

- Initial Diagnosis:

  The initial on-board diagnosis occurs right after the vehicle condition is turned to the ON mode, and the ABS/VSA indicator comes on, and continues until the indicator goes off.

- Regular Diagnosis:

  The regular on-board diagnosis begins right after the ABS/VSA indicator goes off, and it continues until the vehicle condition is turned to the OFF (LOCK) mode.

- Review "How to troubleshoot the VSA system" before doing the DTC troubleshooting procedure.

- Test-drive the vehicle according to local traffic conditions and regulations. Do not test-drive on a lift unless specified.
- The possible causes shown may not be a complete list of all potential problems, and it is possible that there may be other causes.

Confirmation Procedure	Basic Condition: • 12 volt battery voltage 9.6 - 16.5 V • ABS/VSA function not in operation With the Driving Pattern: • Turn the vehicle to the READY TO DRIVE mode. • Wait 20 seconds or more.
Execution	Initial Diagnosis/Regular Diagnosis
Duration	About 20 seconds
DTC Type	• 1 drive cycle • Brake system indicator (red) on • Brake system indicator (amber) on • ABS indicator on • VSA indicator on
Fail Safe Action	• Stop EBD function • Stop ABS function • Stop engine drag torque control function • Stop TCS function • Stop VSA function • Stop agile handling assist function • Stop hydraulic boost failure compensation function • Stop electric parking brake function (some of function)
Possible Cause	• VSA modulator-control unit internal failure

DTC C0020-12

DTC C0020-12 : Pump Motor Circuit Failure (Stuck ON)

NOTE

- Initial Diagnosis:

  The initial on-board diagnosis occurs right after the vehicle condition is turned to the ON mode, and the ABS/VSA indicator comes on, and continues until the indicator goes off.

- Regular Diagnosis:

  The regular on-board diagnosis begins right after the ABS/VSA indicator goes off, and it continues until the vehicle condition is turned to the OFF (LOCK) mode.

- Review "How to troubleshoot the VSA system" before doing the DTC troubleshooting procedure.

- Test-drive the vehicle according to local traffic conditions and regulations. Do not test-drive on a lift unless specified.
- The possible causes shown may not be a complete list of all potential problems, and it is possible that there may be other causes.

Confirmation Procedure	With the Driving Pattern: • Turn the vehicle to the ON mode.
Execution	Initial Diagnosis/Regular Diagnosis
Duration	About 1 second
DTC Type	• 1 drive cycle • Brake system indicator (red) on • Brake system indicator (amber) on • ABS indicator on • VSA indicator on
Fail Safe Action	• Degrade EBD performance • Stop ABS function • Stop engine drag torque control function • Stop TCS function • Stop VSA function • Stop agile handling assist function • Stop hydraulic boost failure compensation function • Stop electric parking brake function (some of function)
Possible Cause	• Open or poor connection between the VSA modulator-control unit and body ground (GND line) • VSA modulator-control unit internal failure

DTC C0020-14

DTC C0020-14 : Pump Motor Circuit Failure (Stuck OFF)

NOTE

- Initial Diagnosis:

  The initial on-board diagnosis occurs right after the vehicle condition is turned to the ON mode, and the ABS/VSA indicator comes on, and continues until the indicator goes off.

- Regular Diagnosis:

  The regular on-board diagnosis begins right after the ABS/VSA indicator goes off, and it continues until the vehicle condition is turned to the OFF (LOCK) mode.

- Review "How to troubleshoot the VSA system" before doing the DTC troubleshooting procedure.
- Test-drive the vehicle according to local traffic conditions and regulations. Do not test-drive on a lift unless specified.
- The possible causes shown may not be a complete list of all potential problems, and it is possible that there may be other causes.

Confirmation Procedure	Basic Condition: • 12 volt battery voltage 9.6 - 16.5 V • ABS/VSA function not in operation With the Driving Pattern: • Turn the vehicle to the ON mode. • Wait 20 seconds or more.
Execution	Initial Diagnosis/Regular Diagnosis
Duration	About 20 seconds
DTC Type	• 1 drive cycle • Brake system indicator (red) on • Brake system indicator (amber) on • ABS indicator on • VSA indicator on
Fail Safe Action	• Degrade EBD performance • Stop ABS function • Stop engine drag torque control function • Stop TCS function • Stop VSA function • Stop agile handling assist function • Stop hydraulic boost failure compensation function • Stop electric parking brake function (some of function)
Possible Cause	• Open or short to ground between the VSA modulator-control unit and the under-hood fuse/relay box (+B_ABS/VSA_MTR line) • Fuse failure (Under-hood fuse/relay box No. A3-3) • VSA modulator-control unit internal failure

DTC C0031-14

DTC C0031-14 : Left Front Wheel Speed Sensor Circuit Failure (Circuit Short To Ground or Open)

NOTE

- Initial Diagnosis:

  The initial on-board diagnosis occurs right after the vehicle condition is turned to the ON mode, and the ABS/VSA indicator comes on, and continues until the indicator goes off.

- Regular Diagnosis:

  The regular on-board diagnosis begins right after the ABS/VSA indicator goes off, and it continues until the vehicle condition is turned to the OFF (LOCK) mode.

- Review "How to troubleshoot the VSA system" before doing the DTC troubleshooting procedure.
- Test-drive the vehicle according to local traffic conditions and regulations. Do not test-drive on a lift unless specified.

- The possible causes shown may not be a complete list of all potential problems, and it is possible that there may be other causes.

Confirmation Procedure	With the Driving Pattern: • Turn the vehicle to the ON mode.
Execution	Initial Diagnosis/Regular Diagnosis
Duration	About 1 second
DTC Type	• 1 drive cycle • Brake system indicator (red) on (If multiple wheel failures are detected) • Brake system indicator (amber) on • ABS indicator on • VSA indicator on
Fail Safe Action	• Stop EBD function (If multiple wheel failures are detected) • Stop ABS function • Stop engine drag torque control function • Stop TCS function • Stop VSA function • Stop agile handling assist function • Stop hydraulic boost failure compensation function • Stop electric parking brake function (some of function)
Possible Cause	• Open, short to ground, short to power, or short to another line between the VSA modulator-control unit and the left-front wheel speed sensor (FR_L_ABS_SNSR+, FR_L_ABS_SNSR- lines) • Left- front wheel speed sensor failure • VSA modulator-control unit internal failure

DTC C0031-3A

DTC C0031-3A : Wheel Speed Sensor (Left Front) Signal Failure (Signal Frequency is Too High)

NOTE

- Initial Diagnosis:

  The initial on-board diagnosis occurs right after the vehicle condition is turned to the ON mode, and the ABS/VSA indicator comes on, and continues until the indicator goes off.

- Regular Diagnosis:

  The regular on-board diagnosis begins right after the ABS/VSA indicator goes off, and it continues until the vehicle condition is turned to the OFF (LOCK) mode.

- Review "How to troubleshoot the VSA system" before doing the DTC troubleshooting procedure.
- Test-drive the vehicle according to local traffic conditions and regulations. Do not test-drive on a lift unless specified.
- The possible causes shown may not be a complete list of all potential problems, and it is possible that there may be other causes.

Confirmation Procedure	Basic Condition: • 12 volt battery voltage 9.6 - 16.5 V With the Driving Pattern: • Turn the vehicle to the READY TO DRIVE mode. • Test-drive the vehicle for 80 seconds or more. (Be careful of the surrounding traffic conditions.)
Execution	Regular Diagnosis
Duration	About 80 seconds
DTC Type	• 1 drive cycle • Brake system indicator (red) on (If multiple wheel failures are detected) • Brake system indicator (amber) on • ABS indicator on • VSA indicator on
Fail Safe Action	• Stop EBD function (If multiple wheel failures are detected) • Stop ABS function • Stop engine drag torque control function • Stop TCS function • Stop VSA function • Stop agile handling assist function • Stop hydraulic boost failure compensation function • Stop electric parking brake function (some of function)
Possible Cause	• Electrical noise in the left-front wheel speed sensor signal • Left-front wheel speed sensor incorrect installation • Debris on the left-front encoder surface • Left-front wheel speed sensor failure • VSA modulator-control unit internal failure

DTC C0031-62 (VSA CONTROL UNIT)

DTC C0031-62 : Left Front Wheel Speed Sensor Signal Compare Failure

NOTE

- Initial Diagnosis:

  The initial on-board diagnosis occurs right after the vehicle condition is turned to the ON mode, and the ABS/VSA indicator comes on, and continues until the indicator goes off.

- Regular Diagnosis:

  The regular on-board diagnosis begins right after the ABS/VSA indicator goes off, and it continues until the vehicle condition is turned to the OFF (LOCK) mode.

- Review "How to troubleshoot the VSA system" before doing the DTC troubleshooting procedure.

- Test-drive the vehicle according to local traffic conditions and regulations. Do not test-drive on a lift unless specified.
- The possible causes shown may not be a complete list of all potential problems, and it is possible that there may be other causes.

Confirmation Procedure	Basic Condition: • No other DTCs detected • Brake TCS function not in operation • ABS function not in operation (Not applied under operating only for slowest wheel) With the Driving Pattern: • Turn the vehicle to the READY TO DRIVE mode. • Test-drive the vehicle at 31 mph (50 km/h) or more. (Be careful of the surrounding traffic conditions.)
Execution	Regular Diagnosis
Duration	About 1 second
DTC Type	• 1 drive cycle • Brake system indicator (red) on (If multiple wheel failures are detected) • Brake system indicator (amber) on • ABS indicator on • VSA indicator on
Fail Safe Action	• Stop EBD function (If multiple wheel failures are detected) • Stop ABS function • Stop engine drag torque control function • Stop TCS function • Stop VSA function • Stop agile handling assist function • Stop hydraulic boost failure compensation function • Stop electric parking brake function (some of function)
Possible Cause	• Left-front wheel speed sensor incorrect installation • Debris on the left-front encoder surface • Left-front wheel speed sensor failure • VSA modulator-control unit internal failure

DTC C0034-14

DTC C0034-14 : Right Front Wheel Speed Sensor Circuit Failure (Circuit Short To Ground or Open)

NOTE

- Initial Diagnosis:

The initial on-board diagnosis occurs right after the vehicle condition is turned to the ON mode, and the ABS/VSA indicator comes on, and continues until the indicator goes off.

- Regular Diagnosis:

  The regular on-board diagnosis begins right after the ABS/VSA indicator goes off, and it continues until the vehicle condition is turned to the OFF (LOCK) mode.

- Review "How to troubleshoot the VSA system" before doing the DTC troubleshooting procedure.
- Test-drive the vehicle according to local traffic conditions and regulations. Do not test-drive on a lift unless specified.
- The possible causes shown may not be a complete list of all potential problems, and it is possible that there may be other causes.

Confirmation Procedure	With the Driving Pattern: • Turn the vehicle to the ON mode.
Execution	Initial Diagnosis/Regular Diagnosis
Duration	About 1 second
DTC Type	• 1 drive cycle • Brake system indicator (red) on (If multiple wheel failures are detected) • Brake system indicator (amber) on • ABS indicator on • VSA indicator on
Fail Safe Action	• Stop EBD function (If multiple wheel failures are detected) • Stop ABS function • Stop engine drag torque control function • Stop TCS function • Stop VSA function • Stop agile handling assist function • Stop hydraulic boost failure compensation function • Stop electric parking brake function (some of function)
Possible Cause	• Open, short to ground, short to power, or short to another line between the VSA modulator-control unit and the right-front wheel speed sensor (FR_R_ABS_SNSR+, FR_R_ABS_SNSR-- lines) • Right-front wheel speed sensor failure • VSA modulator-control unit internal failure

DTC C0034-3A

DTC C0034-3A : Wheel Speed Sensor (Right Front) Signal Failure (Signal Frequency is Too High)

NOTE

- Initial Diagnosis:

  The initial on-board diagnosis occurs right after the vehicle condition is turned to the ON mode, and the ABS/VSA indicator comes on, and continues until the indicator goes off.

- Regular Diagnosis:

The regular on-board diagnosis begins right after the ABS/VSA indicator goes off, and it continues until the vehicle condition is turned to the OFF (LOCK) mode.

- Review "How to troubleshoot the VSA system" before doing the DTC troubleshooting procedure.
- Test-drive the vehicle according to local traffic conditions and regulations. Do not test-drive on a lift unless specified.
- The possible causes shown may not be a complete list of all potential problems, and it is possible that there may be other causes.

Confirmation Procedure	Basic Condition: • 12 volt battery voltage 9.6 - 16.5 V With the Driving Pattern: • Turn the vehicle to the READY TO DRIVE mode. • Test-drive the vehicle for 80 seconds or more. (Be careful of the surrounding traffic conditions.)
Execution	Regular Diagnosis
Duration	About 80 seconds
DTC Type	• 1 drive cycle • Brake system indicator (red) on (If multiple wheel failures are detected) • Brake system indicator (amber) on • ABS indicator on • VSA indicator on
Fail Safe Action	• Stop EBD function (If multiple wheel failures are detected) • Stop ABS function • Stop engine drag torque control function • Stop TCS function • Stop VSA function • Stop agile handling assist function • Stop hydraulic boost failure compensation function • Stop electric parking brake function (some of function)
Possible Cause	• Electrical noise in the right- front wheel speed sensor signal • Right-front wheel speed sensor incorrect installation • Debris on the right-front encoder surface • Right-front wheel speed sensor failure • VSA modulator-control unit internal failure

DTC C0034-62 (VSA CONTROL UNIT)

DTC C0034-62 : Right Front Wheel Speed Sensor Signal Compare Failure

NOTE

- Initial Diagnosis:

The initial on-board diagnosis occurs right after the vehicle condition is turned to the ON mode, and the ABS/VSA indicator comes on, and continues until the indicator goes off.

- Regular Diagnosis:

  The regular on-board diagnosis begins right after the ABS/VSA indicator goes off, and it continues until the vehicle condition is turned to the OFF (LOCK) mode.

- Review "How to troubleshoot the VSA system" before doing the DTC troubleshooting procedure.
- Test-drive the vehicle according to local traffic conditions and regulations. Do not test-drive on a lift unless specified.
- The possible causes shown may not be a complete list of all potential problems, and it is possible that there may be other causes.

Confirmation Procedure	Basic Condition: • No other DTCs detected • Brake TCS function not in operation • ABS function not in operation (Not applied under operating only for slowest wheel) With the Driving Pattern: • Turn the vehicle to the READY TO DRIVE mode. • Test-drive the vehicle at 31 mph (50 km/h) or more. (Be careful of the surrounding traffic conditions.)
Execution	Regular Diagnosis
Duration	About 1 second
DTC Type	• 1 drive cycle • Brake system indicator (red) on (If multiple wheel failures are detected) • Brake system indicator (amber) on • ABS indicator on • VSA indicator on
Fail Safe Action	• Stop EBD function (If multiple wheel failures are detected) • Stop ABS function • Stop engine drag torque control function • Stop TCS function • Stop VSA function • Stop agile handling assist function • Stop hydraulic boost failure compensation function • Stop electric parking brake function (some of function)
Possible Cause	• Right-front wheel speed sensor incorrect installation • Debris on the right-front encoder surface • Right-front wheel speed sensor failure • VSA modulator-control unit internal failure

DTC C0037-14 : Left Rear Wheel Speed Sensor Circuit Failure (Circuit Short To Ground or Open)

NOTE

- Initial Diagnosis:

  The initial on-board diagnosis occurs right after the vehicle condition is turned to the ON mode, and the ABS/VSA indicator comes on, and continues until the indicator goes off.

- Regular Diagnosis:

  The regular on-board diagnosis begins right after the ABS/VSA indicator goes off, and it continues until the vehicle condition is turned to the OFF (LOCK) mode.

- Review "How to troubleshoot the VSA system" before doing the DTC troubleshooting procedure.
- Test-drive the vehicle according to local traffic conditions and regulations. Do not test-drive on a lift unless specified.
- The possible causes shown may not be a complete list of all potential problems, and it is possible that there may be other causes.

Confirmation Procedure	With the Driving Pattern: - Turn the vehicle to the ON mode.
Execution	Initial Diagnosis/Regular Diagnosis
Duration	About 1 second
DTC Type	- 1 drive cycle - Brake system indicator (red) on (If multiple wheel failures are detected) - Brake system indicator (amber) on - ABS indicator on - VSA indicator on
Fail Safe Action	- Stop EBD function (If multiple wheel failures are detected) - Stop ABS function - Stop engine drag torque control function - Stop TCS function - Stop VSA function - Stop agile handling assist function - Stop hydraulic boost failure compensation function - Stop electric parking brake function (some of function)
Possible Cause	- Open, short to ground, short to power, or short to another line between the VSA modulator-control unit and the left-rear wheel speed sensor (RR_L_ABS_SNSR+, RR_L_ABS_SNSR- lines) - Left-rear wheel speed sensor failure - VSA modulator-control unit internal failure

DTC C0037-3A

DTC C0037-3A : Wheel Speed Sensor (Left Rear) Signal Failure (Signal Frequency is Too High)

NOTE

- Initial Diagnosis:

  The initial on-board diagnosis occurs right after the vehicle condition is turned to the ON mode, and the ABS/VSA indicator comes on, and continues until the indicator goes off.

- Regular Diagnosis:

  The regular on-board diagnosis begins right after the ABS/VSA indicator goes off, and it continues until the vehicle condition is turned to the OFF (LOCK) mode.

- Review "How to troubleshoot the VSA system" before doing the DTC troubleshooting procedure.
- Test-drive the vehicle according to local traffic conditions and regulations. Do not test-drive on a lift unless specified.
- The possible causes shown may not be a complete list of all potential problems, and it is possible that there may be other causes.

Confirmation Procedure	Basic Condition: • 12 volt battery voltage 9.6 - 16.5 V With the Driving Pattern: • Turn the vehicle to the READY TO DRIVE mode. • Test-drive the vehicle for 80 seconds or more. (Be careful of the surrounding traffic conditions.)
Execution	Regular Diagnosis
Duration	About 80 seconds
DTC Type	• 1 drive cycle • Brake system indicator (red) on (If multiple wheel failures are detected) • Brake system indicator (amber) on • ABS indicator on • VSA indicator on
Fail Safe Action	• Stop EBD function (If multiple wheel failures are detected) • Stop ABS function • Stop engine drag torque control function • Stop TCS function • Stop VSA function • Stop agile handling assist function • Stop hydraulic boost failure compensation function • Stop electric parking brake function (some of function)
Possible Cause	• Electrical noise in the left-rear wheel speed sensor signal • Left-rear wheel speed sensor incorrect installation • Debris on the left-rear encoder surface • Left-rear wheel speed sensor failure • VSA modulator-control unit internal failure

DTC C0037-62 (VSA CONTROL UNIT)

DTC C0037-62 : Left Rear Wheel Speed Sensor Signal Compare Failure

NOTE

- Initial Diagnosis:

  The initial on-board diagnosis occurs right after the vehicle condition is turned to the ON mode, and the ABS/VSA indicator comes on, and continues until the indicator goes off.

- Regular Diagnosis:

  The regular on-board diagnosis begins right after the ABS/VSA indicator goes off, and it continues until the vehicle condition is turned to the OFF (LOCK) mode.

- Review "How to troubleshoot the VSA system" before doing the DTC troubleshooting procedure.
- Test-drive the vehicle according to local traffic conditions and regulations. Do not test-drive on a lift unless specified.
- The possible causes shown may not be a complete list of all potential problems, and it is possible that there may be other causes.

Confirmation Procedure	Basic Condition • No other DTCs detected • Brake TCS function not in operation • ABS function not in operation (Not applied under operating only for slowest wheel) With the Driving Pattern: • Turn the vehicle to the READY TO DRIVE mode. • Test-drive the vehicle at 31 mph (50 km/h) or more. (Be careful of the surrounding traffic conditions.)
Execution	Regular Diagnosis
Duration	About 1 second
DTC Type	• 1 drive cycle • Brake system indicator (red) on (If multiple wheel failures are detected) • Brake system indicator (amber) on • ABS indicator on • VSA indicator on
Fail Safe Action	• Stop EBD function (If multiple wheel failures are detected) • Stop ABS function • Stop engine drag torque control function • Stop TCS function • Stop VSA function • Stop agile handling assist function • Stop hydraulic boost failure compensation function

	- Stop electric parking brake function (some of function)
Possible Cause	- Left-rear wheel speed sensor incorrect installation - Debris on the left-rear encoder surface - Left-rear wheel speed sensor failure - VSA modulator-control unit internal failure

DTC C003A-14

DTC C003A-14 : Right Rear Wheel Speed Sensor Circuit Failure (Circuit Short To Ground or Open)

NOTE

- Initial Diagnosis:

  The initial on-board diagnosis occurs right after the vehicle condition is turned to the ON mode, and the ABS/VSA indicator comes on, and continues until the indicator goes off.

- Regular Diagnosis:

  The regular on-board diagnosis begins right after the ABS/VSA indicator goes off, and it continues until the vehicle condition is turned to the OFF (LOCK) mode.

- Review "How to troubleshoot the VSA system" before doing the DTC troubleshooting procedure.
- Test-drive the vehicle according to local traffic conditions and regulations. Do not test-drive on a lift unless specified.
- The possible causes shown may not be a complete list of all potential problems, and it is possible that there may be other causes.

Confirmation Procedure	With the Driving Pattern: - Turn the vehicle to the ON mode.
Execution	Initial Diagnosis/Regular Diagnosis
Duration	About 1 second
DTC Type	- 1 drive cycle - Brake system indicator (red) on (If multiple wheel failures are detected) - Brake system indicator (amber) on - ABS indicator on - VSA indicator on
Fail Safe Action	- Stop EBD function (If multiple wheel failures are detected) - Stop ABS function - Stop engine drag torque control function - Stop TCS function - Stop VSA function - Stop agile handling assist function - Stop hydraulic boost failure compensation function - Stop electric parking brake function (some of function)

Possible Cause	• Open, short to ground, short to power, or short to another line between the VSA modulator-control unit and the right-rear wheel speed sensor (RR_R_ABS_SNSR+, RR_R_ABS_SNSR- lines) • Right-rear wheel speed sensor failure • VSA modulator-control unit internal failure

DTC C003A-3A

DTC C003A-3A : Wheel Speed Sensor (Right Rear) Signal Failure (Signal Frequency is Too High)

NOTE

- Initial Diagnosis:

  The initial on-board diagnosis occurs right after the vehicle condition is turned to the ON mode, and the ABS/VSA indicator comes on, and continues until the indicator goes off.

- Regular Diagnosis:

  The regular on-board diagnosis begins right after the ABS/VSA indicator goes off, and it continues until the vehicle condition is turned to the OFF (LOCK) mode.

- Review "How to troubleshoot the VSA system" before doing the DTC troubleshooting procedure.
- Test-drive the vehicle according to local traffic conditions and regulations. Do not test-drive on a lift unless specified.
- The possible causes shown may not be a complete list of all potential problems, and it is possible that there may be other causes.

Confirmation Procedure	Basic Condition: • 12 volt battery voltage 9.6 - 16.5 V With the Driving Pattern: • Turn the vehicle to the READY TO DRIVE mode. • Test-drive the vehicle for 80 seconds or more. (Be careful of the surrounding traffic conditions.)
Execution	Regular Diagnosis
Duration	About 80 seconds
DTC Type	• 1 drive cycle • Brake system indicator (red) on (If multiple wheel failures are detected) • Brake system indicator (amber) on • ABS indicator on • VSA indicator on
Fail Safe Action	• Stop EBD function (If multiple wheel failures are detected) • Stop ABS function • Stop engine drag torque control function • Stop TCS function • Stop VSA function • Stop agile handling assist function

	• Stop hydraulic boost failure compensation function • Stop electric parking brake function (some of function)
Possible Cause	• Electrical noise in the right-rear wheel speed sensor signal • Right-rear wheel speed sensor incorrect installation • Debris on the right-rear encoder surface • Right-rear wheel speed sensor failure • VSA modulator-control unit internal failure

DTC C003A-62 (VSA CONTROL UNIT)

DTC C003A-62 : Right Rear Wheel Speed Sensor Signal Compare Failure

NOTE

- Initial Diagnosis:

  The initial on-board diagnosis occurs right after the vehicle condition is turned to the ON mode, and the ABS/VSA indicator comes on, and continues until the indicator goes off.

- Regular Diagnosis:

  The regular on-board diagnosis begins right after the ABS/VSA indicator goes off, and it continues until the vehicle condition is turned to the OFF (LOCK) mode.

- Review "How to troubleshoot the VSA system" before doing the DTC troubleshooting procedure.
- Test-drive the vehicle according to local traffic conditions and regulations. Do not test-drive on a lift unless specified.
- The possible causes shown may not be a complete list of all potential problems, and it is possible that there may be other causes.

Confirmation Procedure	Basic Condition: • No other DTCs detected • Brake TCS function not in operation • ABS function not in operation (Not applied under operating only for slowest wheel) With the Driving Pattern: • Turn the vehicle to the READY TO DRIVE mode. • Test-drive the vehicle at 31 mph (50 km/h) or more. (Be careful of the surrounding traffic conditions.)
Execution	Regular Diagnosis
Duration	About 1 second
DTC Type	• 1 drive cycle • Brake system indicator (red) on (If multiple wheel failures are detected) • Brake system indicator (amber) on • ABS indicator on • VSA indicator on
Fail Safe Action	• Stop EBD function (If multiple wheel failures are detected) • Stop ABS function • Stop engine drag torque control function • Stop TCS function • Stop VSA function • Stop agile handling assist function • Stop hydraulic boost failure compensation function • Stop electric parking brake function (some of function)
Possible Cause	• Right-rear wheel speed sensor incorrect installation • Debris on the right-rear encoder surface • Right-rear wheel speed sensor failure • VSA modulator-control unit internal failure

DTC C0040-12

DTC C0040-12 : Brake Light Switch Failure (Stuck ON)/Brake Pedal Stroke Sensor Stuck (EBB)

NOTE

- Initial Diagnosis:

  The initial on-board diagnosis occurs right after the vehicle condition is turned to the ON mode, and the ABS/VSA indicator comes on, and continues until the indicator goes off.

- Regular Diagnosis:

  The regular on-board diagnosis begins right after the ABS/VSA indicator goes off, and it continues until the vehicle condition is turned to the OFF (LOCK) mode.

- Review "How to troubleshoot the VSA system" before doing the DTC troubleshooting procedure.
- Test-drive the vehicle according to local traffic conditions and regulations. Do not test-drive on a lift unless specified.
- The possible causes shown may not be a complete list of all potential problems, and it is possible that there may be other causes.

Confirmation Procedure	Basic Condition: • 12 volt battery voltage 9.6 - 16.5 V • No other DTCs detected With the Driving Pattern: • Turn the vehicle to the READY TO DRIVE mode. • Test-drive the vehicle under these conditions: (Be careful of the surrounding traffic conditions.) • ◦ Vehicle speed at 9 mph (15 km/h) or more for at least 60 seconds ◦ Accelerator pedal pressed ◦ Brake pedal released
Execution	Regular Diagnosis
Duration	About 60 seconds
DTC Type	• 1 drive cycle • VSA indicator on
Fail Safe Action	• Degrade ABS performance • Stop engine drag torque control function • Stop TCS function • Stop VSA function • Stop agile handling assist function • Degrade hydraulic boost failure compensation function
Possible Cause	• Short to power between the brake pedal position switch and the PCM (STOP_SW line) • Brake pedal height incorrect position • Brake pedal position switch failure • PCM internal failure • VSA modulator-control unit internal failure

DTC C0040-16

DTC C0040-16 : Plausibility BLS vs. Pressure Sensor

NOTE

- Initial Diagnosis:

  The initial on-board diagnosis occurs right after the vehicle condition is turned to the ON mode, and the ABS/VSA indicator comes on, and continues until the indicator goes off.

- Regular Diagnosis:

  The regular on-board diagnosis begins right after the ABS/VSA indicator goes off, and it continues until the vehicle condition is turned to the OFF (LOCK) mode.

- Review "How to troubleshoot the VSA system" before doing the DTC troubleshooting procedure.
- Test-drive the vehicle according to local traffic conditions and regulations. Do not test-drive on a lift unless specified.
- The possible causes shown may not be a complete list of all potential problems, and it is possible that there may be other causes.

Confirmation Procedure	Basic Condition: • 12 volt battery voltage 9.6 - 16.5 V • No other DTCs detected With the Driving Pattern: • Turn the vehicle to the READY TO DRIVE mode. • Wait 1 second or more without pressing the brake pedal. • Press the brake pedal hard for 1 second or more.
Execution	Regular Diagnosis
Duration	About 1 second
DTC Type	• 1 drive cycle • VSA indicator on
Fail Safe Action	• Degrade ABS performance • Stop engine drag torque control function • Stop TCS function • Stop VSA function • Stop agile handling assist function • Degrade hydraulic boost failure compensation function
Possible Cause	• Brake pedal height incorrect position • Open or short to ground between the under-hood fuse/relay box and the brake pedal position switch (+B_STOP line) • Open or short to ground between the brake pedal position switch and the PCM (STOP_SW line) • Fuse failure (Under-hood fuse/relay box No. A9) • Brake pedal position switch failure • PCM internal failure • VSA modulator-control unit internal failure

DTC C0044-49

DTC C0044-49 : Master Cylinder Pressure Sensor Failure (Internal Circuit Failure)

NOTE

- Initial Diagnosis:

The initial on-board diagnosis occurs right after the vehicle condition is turned to the ON mode, and the ABS/VSA indicator comes on, and continues until the indicator goes off.

- Regular Diagnosis:

  The regular on-board diagnosis begins right after the ABS/VSA indicator goes off, and it continues until the vehicle condition is turned to the OFF (LOCK) mode.

- Review "How to troubleshoot the VSA system" before doing the DTC troubleshooting procedure.
- Test-drive the vehicle according to local traffic conditions and regulations. Do not test-drive on a lift unless specified.
- The possible causes shown may not be a complete list of all potential problems, and it is possible that there may be other causes.

Confirmation Procedure	With the Driving Pattern: • Turn the vehicle to the ON mode.
Execution	Initial Diagnosis/Regular Diagnosis
Duration	About 1 second
DTC Type	• 1 drive cycle • Brake system indicator (amber) on • VSA indicator on
Fail Safe Action	• Degrade ABS performance • Stop engine drag torque control function • Stop TCS function • Stop VSA function • Stop agile handling assist function • Stop hydraulic boost failure compensation function • Stop electric parking brake function (some of function)
Possible Cause	• VSA modulator-control unit internal failure

DTC C0044-62

DTC C0044-62 : Master Cylinder Pressure Sensor Failure (Signal Stuck)

NOTE

- Initial Diagnosis:

  The initial on-board diagnosis occurs right after the vehicle condition is turned to the ON mode, and the ABS/VSA indicator comes on, and continues until the indicator goes off.

- Regular Diagnosis:

  The regular on-board diagnosis begins right after the ABS/VSA indicator goes off, and it continues until the vehicle condition is turned to the OFF (LOCK) mode.

- Review "How to troubleshoot the VSA system" before doing the DTC troubleshooting procedure.
- Test-drive the vehicle according to local traffic conditions and regulations. Do not test-drive on a lift unless specified.

- The possible causes shown may not be a complete list of all potential problems, and it is possible that there may be other causes.

Confirmation Procedure	Basic Condition: • ABS/VSA function not in operation • Vehicle is not braking With the Driving Pattern: • Turn the vehicle to the READY TO DRIVE mode. • Test-drive the vehicle under these conditions: (Be careful of the surrounding traffic conditions.) • • Vehicle speed at less than 9 mph (14 km/h) for at least 30 seconds • Brake pedal released
Execution	Regular Diagnosis
Duration	About 30 seconds
DTC Type	• 1 drive cycle • Brake system indicator (amber) on • VSA indicator on
Fail Safe Action	• Degrade ABS performance • Stop engine drag torque control function • Stop TCS function • Stop VSA function • Stop agile handling assist function • Stop hydraulic boost failure compensation function • Stop electric parking brake function (some of function)
Possible Cause	• VSA modulator-control unit internal failure

DTC C0049-7B

DTC C0049-7B : Brake Fluid Level Too Low

NOTE

- Initial Diagnosis:

  The initial on-board diagnosis occurs right after the vehicle condition is turned to the ON mode, and the ABS/VSA indicator comes on, and continues until the indicator goes off.

- Regular Diagnosis:

  The regular on-board diagnosis begins right after the ABS/VSA indicator goes off, and it continues until the vehicle condition is turned to the OFF (LOCK) mode.

- Review "How to troubleshoot the VSA system" before doing the DTC troubleshooting procedure.

- Test-drive the vehicle according to local traffic conditions and regulations. Do not test-drive on a lift unless specified.
- The possible causes shown may not be a complete list of all potential problems, and it is possible that there may be other causes.

Confirmation Procedure	Basic Condition: • 12 volt battery voltage 9.6 - 16.5 V With the Driving Pattern: • Turn the vehicle to the ON mode. • Wait 60 seconds or more.
Execution	Regular Diagnosis
Duration	About 60 seconds
DTC Type	• 1 drive cycle • Brake system indicator (amber) on • VSA indicator on
Fail Safe Action	• Degrade ABS performance • Stop engine drag torque control function • Stop TCS function • Stop VSA function • Stop agile handling assist function • Stop hydraulic boost failure compensation function • Stop electric parking brake function (some of function)
Possible Cause	• Short to ground between the gauge control module and the brake fluid level switch (BRAKE_LEVEL_SW line) • Low brake fluid level • Brake fluid level switch failure • Gauge control module internal failure • VSA modulator-control unit internal failure

DTC C0051-54 (VSA CONTROL UNIT)

DTC C0051-54 : Steering Angle Neutral Position Learning Incomplete

NOTE

- Initial Diagnosis:

  The initial on-board diagnosis occurs right after the vehicle condition is turned to the ON mode, and the ABS/VSA indicator comes on, and continues until the indicator goes off.

- Regular Diagnosis:

  The regular on-board diagnosis begins right after the ABS/VSA indicator goes off, and it continues until the vehicle condition is turned to the OFF (LOCK) mode.

- Review "How to troubleshoot the VSA system" before doing the DTC troubleshooting procedure.

- Test-drive the vehicle according to local traffic conditions and regulations. Do not test-drive on a lift unless specified.
- The possible causes shown may not be a complete list of all potential problems, and it is possible that there may be other causes.

Confirmation Procedure	Basic Condition: • 12 volt battery voltage 9.6 - 16.5 V • No other DTCs detected With the Driving Pattern: • Turn the vehicle to the ON mode.
Execution	Regular Diagnosis
Duration	About 1 second
DTC Type	• 1 drive cycle • VSA indicator on
Fail Safe Action	• Degrade ABS performance • Stop engine drag torque control function • Stop TCS function • Stop VSA function • Stop agile handling assist function
Possible Cause	• Steering angle neutral position not learned • EPS motor/control unit internal failure • VSA modulator-control unit internal failure

DTC C0051-62

DTC C0051-62 : Steering Angle Sensor Failure (Signal Compare Failure)

NOTE

- Initial Diagnosis:

  The initial on-board diagnosis occurs right after the vehicle condition is turned to the ON mode, and the ABS/VSA indicator comes on, and continues until the indicator goes off.

- Regular Diagnosis:

  The regular on-board diagnosis begins right after the ABS/VSA indicator goes off, and it continues until the vehicle condition is turned to the OFF (LOCK) mode.

- Review "How to troubleshoot the VSA system" before doing the DTC troubleshooting procedure.
- Test-drive the vehicle according to local traffic conditions and regulations. Do not test-drive on a lift unless specified.
- The possible causes shown may not be a complete list of all potential problems, and it is possible that there may be other causes.

Confirmation Procedure	Basic Condition:

	• 12 volt battery voltage 9.6 - 16.5 V
	• No other DTCs detected
	With the Driving Pattern:
	• Turn the vehicle to the READY TO DRIVE mode.
	• Test-drive the vehicle under these conditions:
	(Be careful of the surrounding traffic conditions.)
	•
	  • Vehicle speed at 45 mph (72 km/h) or more
	  • Change lanes for a few times

Execution	Regular Diagnosis
Duration	About 5 seconds
DTC Type	• 1 drive cycle • VSA indicator on
Fail Safe Action	• Degrade ABS performance • Stop engine drag torque control function • Stop TCS function • Stop VSA function • Stop agile handling assist function
Possible Cause	• EPS motor/control unit internal failure • VSA modulator-control unit internal failure

DTC C0051-96 (VSA CONTROL UNIT)

DTC C0051-96 : Steering Angle Sensor Failure (Sensor Detects Internal Failure)

NOTE

- Initial Diagnosis:

  The initial on-board diagnosis occurs right after the vehicle condition is turned to the ON mode, and the ABS/VSA indicator comes on, and continues until the indicator goes off.

- Regular Diagnosis:

  The regular on-board diagnosis begins right after the ABS/VSA indicator goes off, and it continues until the vehicle condition is turned to the OFF (LOCK) mode.

- Review "How to troubleshoot the VSA system" before doing the DTC troubleshooting procedure.
- Test-drive the vehicle according to local traffic conditions and regulations. Do not test-drive on a lift unless specified.
- The possible causes shown may not be a complete list of all potential problems, and it is possible that there may be other causes.

Confirmation Procedure	Basic Condition: • 12 volt battery voltage 9.6 - 16.5 V

	- No other DTCs detected With the Driving Pattern: - Turn the vehicle to the READY TO DRIVE mode. - Turn the steering wheel left and right for a few times.
Execution	Regular Diagnosis
Duration	About 1 second
DTC Type	- 1 drive cycle - VSA indicator on
Fail Safe Action	- Degrade ABS performance - Stop engine drag torque control function - Stop TCS function - Stop VSA function - Stop agile handling assist function
Possible Cause	- EPS motor/control unit internal failure - VSA modulator-control unit internal failure

DTC C0061-49

DTC C0061-49 : Acceleration Sensor Malfunction

NOTE

- Initial Diagnosis:

  The initial on-board diagnosis occurs right after the vehicle condition is turned to the ON mode, and the ABS/VSA indicator comes on, and continues until the indicator goes off.

- Regular Diagnosis:

  The regular on-board diagnosis begins right after the ABS/VSA indicator goes off, and it continues until the vehicle condition is turned to the OFF (LOCK) mode.

- Review "How to troubleshoot the VSA system" before doing the DTC troubleshooting procedure.
- Test-drive the vehicle according to local traffic conditions and regulations. Do not test-drive on a lift unless specified.
- The possible causes shown may not be a complete list of all potential problems, and it is possible that there may be other causes.

Confirmation Procedure	With the Driving Pattern: - Turn the vehicle to the READY TO DRIVE mode.
Execution	Initial Diagnosis/Regular Diagnosis
Duration	About 1 second
DTC Type	- 1 drive cycle - VSA indicator on
Fail Safe Action	- Degrade ABS performance

	• Stop engine drag torque control function • Stop TCS function • Stop VSA function • Stop agile handling assist function
Possible Cause	• SRS unit internal failure

DTC C0061-54

DTC C0061-54 : Lateral Acceleration Sensor Calibration Incomplete

NOTE

- Initial Diagnosis:

  The initial on-board diagnosis occurs right after the vehicle condition is turned to the ON mode, and the ABS/VSA indicator comes on, and continues until the indicator goes off.

- Regular Diagnosis:

  The regular on-board diagnosis begins right after the ABS/VSA indicator goes off, and it continues until the vehicle condition is turned to the OFF (LOCK) mode.

- Review "How to troubleshoot the VSA system" before doing the DTC troubleshooting procedure.
- Test-drive the vehicle according to local traffic conditions and regulations. Do not test-drive on a lift unless specified.
- The possible causes shown may not be a complete list of all potential problems, and it is possible that there may be other causes.

Confirmation Procedure	Basic Condition: • 12 volt battery voltage 9.6 - 16.5 V • No other DTCs detected With the Driving Pattern: • Turn the vehicle to the ON mode.
Execution	Regular Diagnosis
Duration	About 1 second
DTC Type	• 1 drive cycle • VSA indicator on
Fail Safe Action	• Degrade ABS performance • Stop engine drag torque control function • Stop TCS function • Stop VSA function • Stop agile handling assist function
Possible Cause	• VSA sensor neutral position memorization not completed • SRS unit internal failure • VSA modulator-control unit internal failure

DTC C0061-62

DTC C0061-62 : Lateral Acceleration Sensor Failure (Signal Compare Failure)

NOTE

- Initial Diagnosis:

  The initial on-board diagnosis occurs right after the vehicle condition is turned to the ON mode, and the ABS/VSA indicator comes on, and continues until the indicator goes off.

- Regular Diagnosis:

  The regular on-board diagnosis begins right after the ABS/VSA indicator goes off, and it continues until the vehicle condition is turned to the OFF (LOCK) mode.

- Review "How to troubleshoot the VSA system" before doing the DTC troubleshooting procedure.
- Test-drive the vehicle according to local traffic conditions and regulations. Do not test-drive on a lift unless specified.
- The possible causes shown may not be a complete list of all potential problems, and it is possible that there may be other causes.

Confirmation Procedure	With the Driving Pattern: • Turn the vehicle to the READY TO DRIVE mode. • Test-drive the vehicle under these conditions: (Be careful of the surrounding traffic conditions.) •

	• Vehicle speed at 31 mph (50 km/h) or more for at least 20 seconds • Change lanes for a few times
Execution	Regular Diagnosis
Duration	About 2 seconds
DTC Type	• 1 drive cycle • VSA indicator on
Fail Safe Action	• Degrade ABS performance • Stop engine drag torque control function • Stop TCS function • Stop VSA function • Stop agile handling assist function
Possible Cause	• SRS unit internal failure

DTC C0062-49

DTC C0062-49 : Longitudinal Acceleration Sensor Malfunction

NOTE

- Initial Diagnosis:

  The initial on-board diagnosis occurs right after the vehicle condition is turned to the ON mode, and the ABS/VSA indicator comes on, and continues until the indicator goes off.

- Regular Diagnosis:

  The regular on-board diagnosis begins right after the ABS/VSA indicator goes off, and it continues until the vehicle condition is turned to the OFF (LOCK) mode.

- Review "How to troubleshoot the VSA system" before doing the DTC troubleshooting procedure.
- Test-drive the vehicle according to local traffic conditions and regulations. Do not test-drive on a lift unless specified.
- The possible causes shown may not be a complete list of all potential problems, and it is possible that there may be other causes.

Confirmation Procedure	With the Driving Pattern: • Turn the vehicle to the READY TO DRIVE mode.
Execution	Regular Diagnosis
Duration	About 1 second
DTC Type	• 1 drive cycle • Brake system indicator (amber) on • ABS indicator on • VSA indicator on
Fail Safe Action	• Stop ABS function • Stop engine drag torque control function

	• Stop TCS function • Stop VSA function • Stop agile handling assist function • Stop hydraulic boost failure compensation function • Stop electric parking brake function (some of function)
Possible Cause	• SRS unit internal failure

DTC C0062-54

DTC C0062-54 : Longitudinal Acceleration Sensor Neutral Position Not Learned/Calibration Incomplete

NOTE

- Initial Diagnosis:

  The initial on-board diagnosis occurs right after the vehicle condition is turned to the ON mode, and the ABS/VSA indicator comes on, and continues until the indicator goes off.

- Regular Diagnosis:

  The regular on-board diagnosis begins right after the ABS/VSA indicator goes off, and it continues until the vehicle condition is turned to the OFF (LOCK) mode.

- Review "How to troubleshoot the VSA system" before doing the DTC troubleshooting procedure.
- Test-drive the vehicle according to local traffic conditions and regulations. Do not test-drive on a lift unless specified.
- The possible causes shown may not be a complete list of all potential problems, and it is possible that there may be other causes.

Confirmation Procedure	Basic Condition: • 12 volt battery voltage 9.6 - 16.5 V • No other DTCs detected With the Driving Pattern: • Turn the vehicle to the ON mode.
Execution	Regular Diagnosis
Duration	About 1 second
DTC Type	• 1 drive cycle • Brake system indicator (amber) on • ABS indicator on • VSA indicator on
Fail Safe Action	• Stop ABS function • Stop engine drag torque control function • Stop TCS function • Stop VSA function • Stop agile handling assist function • Stop hydraulic boost failure compensation function

	- Stop electric parking brake function (some of function)
Possible Cause	- VSA sensor neutral position memorization not completed - SRS unit internal failure - VSA modulator-control unit internal failure

DTC C0062-62

DTC C0062-62 : Longitudinal Acceleration Sensor Failure (Signal Compare Failure)

NOTE

- Initial Diagnosis:

  The initial on-board diagnosis occurs right after the vehicle condition is turned to the ON mode, and the ABS/VSA indicator comes on, and continues until the indicator goes off.

- Regular Diagnosis:

  The regular on-board diagnosis begins right after the ABS/VSA indicator goes off, and it continues until the vehicle condition is turned to the OFF (LOCK) mode.

- Review "How to troubleshoot the VSA system" before doing the DTC troubleshooting procedure.
- Test-drive the vehicle according to local traffic conditions and regulations. Do not test-drive on a lift unless specified.
- The possible causes shown may not be a complete list of all potential problems, and it is possible that there may be other causes.

Confirmation Procedure	Basic Condition:
	- No other DTCs detected
	- ABS/VSA function not in operation
	With the Driving Pattern:
	- Turn the vehicle to the READY TO DRIVE mode.
	- Test-drive the vehicle under these conditions:
	(Be careful of the surrounding traffic conditions.)
	-
	  - Vehicle speed at 31 mph (50 km/h) or more for at least 20 seconds
	  - Brake pedal released
	  - Change lanes for a few times

Execution	Regular Diagnosis
Duration	About 20 seconds
DTC Type	- 1 drive cycle - Brake system indicator (amber) on - ABS indicator on - VSA indicator on
Fail Safe Action	- Stop ABS function

	- Stop engine drag torque control function - Stop TCS function - Stop VSA function - Stop agile handling assist function - Stop hydraulic boost failure compensation function - Stop electric parking brake function (some of function)
Possible Cause	- SRS unit internal failure

DTC C0063-49

DTC C0063-49 : Yaw Rate Sensor Malfunction

NOTE

- Initial Diagnosis:

  The initial on-board diagnosis occurs right after the vehicle condition is turned to the ON mode, and the ABS/VSA indicator comes on, and continues until the indicator goes off.

- Regular Diagnosis:

  The regular on-board diagnosis begins right after the ABS/VSA indicator goes off, and it continues until the vehicle condition is turned to the OFF (LOCK) mode.

- Review "How to troubleshoot the VSA system" before doing the DTC troubleshooting procedure.
- Test-drive the vehicle according to local traffic conditions and regulations. Do not test-drive on a lift unless specified.
- The possible causes shown may not be a complete list of all potential problems, and it is possible that there may be other causes.

Confirmation Procedure	With the Driving Pattern: - Turn the vehicle to the READY TO DRIVE mode.
Execution	Regular Diagnosis
Duration	About 1 second
DTC Type	- 1 drive cycle - Brake system indicator (amber) on (Dependant upon the conditions) - ABS indicator on (Dependant upon the conditions) - VSA indicator on
Fail Safe Action	- Stop ABS function or degrade ABS performance (Dependant upon the conditions) - Stop engine drag torque control function - Stop TCS function - Stop VSA function - Stop agile handling assist function - Stop hydraulic boost failure compensation function (Dependant upon the conditions) - Stop electric parking brake function (some of function) (Dependant upon the conditions)
Possible Cause	- SRS unit internal failure

DTC C0063-54

DTC C0063-54 : Yaw Rate Sensor Calibration Incomplete

NOTE

- Initial Diagnosis:

  The initial on-board diagnosis occurs right after the vehicle condition is turned to the ON mode, and the ABS/VSA indicator comes on, and continues until the indicator goes off.

- Regular Diagnosis:

  The regular on-board diagnosis begins right after the ABS/VSA indicator goes off, and it continues until the vehicle condition is turned to the OFF (LOCK) mode.

- Review "How to troubleshoot the VSA system" before doing the DTC troubleshooting procedure.
- Test-drive the vehicle according to local traffic conditions and regulations. Do not test-drive on a lift unless specified.
- The possible causes shown may not be a complete list of all potential problems, and it is possible that there may be other causes.

Confirmation Procedure	Basic Condition: - 12 volt battery voltage 9.6 - 16.5 V - No other DTCs detected With the Driving Pattern:

	• Turn the vehicle to the ON mode.
Execution	Regular Diagnosis
Duration	About 1 second
DTC Type	• 1 drive cycle • VSA indicator on
Fail Safe Action	• Degrade ABS performance • Stop engine drag torque control function • Stop TCS function • Stop VSA function • Stop agile handling assist function
Possible Cause	• VSA sensor neutral position memorization not completed • SRS unit internal failure • VSA modulator-control unit internal failure

DTC C0063-62

DTC C0063-62 : Yaw Rate Sensor Failure (Signal Compare Failure)

NOTE

- Initial Diagnosis:

  The initial on-board diagnosis occurs right after the vehicle condition is turned to the ON mode, and the ABS/VSA indicator comes on, and continues until the indicator goes off.

- Regular Diagnosis:

  The regular on-board diagnosis begins right after the ABS/VSA indicator goes off, and it continues until the vehicle condition is turned to the OFF (LOCK) mode.

- Review "How to troubleshoot the VSA system" before doing the DTC troubleshooting procedure.
- Test-drive the vehicle according to local traffic conditions and regulations. Do not test-drive on a lift unless specified.
- The possible causes shown may not be a complete list of all potential problems, and it is possible that there may be other causes.

Confirmation Procedure	Basic Condition: • No other DTCs detected • ABS/VSA function not in operation With the Driving Pattern: • Turn the vehicle to the READY TO DRIVE mode. • Test-drive the vehicle under these conditions: (Be careful of the surrounding traffic conditions.) • • Vehicle speed at 31 mph (50 km/h) or more for at least 20 seconds

	• Brake pedal released • Change lanes for a few times
Execution	Regular Diagnosis
Duration	About 5 seconds
DTC Type	• 1 drive cycle • VSA indicator on
Fail Safe Action	• Degrade ABS performance • Stop engine drag torque control function • Stop TCS function • Stop VSA function • Stop agile handling assist function
Possible Cause	• SRS unit internal failure

DTC C1000-94

DTC C1000-94 : ABS/VSA Activation Time Too Long

NOTE

- Initial Diagnosis:

  The initial on-board diagnosis occurs right after the vehicle condition is turned to the ON mode, and the ABS/VSA indicator comes on, and continues until the indicator goes off.

- Regular Diagnosis:

  The regular on-board diagnosis begins right after the ABS/VSA indicator goes off, and it continues until the vehicle condition is turned to the OFF (LOCK) mode.

- Review "How to troubleshoot the VSA system" before doing the DTC troubleshooting procedure.
- Test-drive the vehicle according to local traffic conditions and regulations. Do not test-drive on a lift unless specified.
- The possible causes shown may not be a complete list of all potential problems, and it is possible that there may be other causes.

Confirmation Procedure	Basic Condition: • 12 volt battery voltage 6.9 V or more With the Driving Pattern: • Turn the vehicle to the READY TO DRIVE mode. • Test-drive the vehicle under these conditions: (Be careful of the surrounding traffic conditions.) • • Vehicle speed at 31 mph (50 km/h) or more for at least 60 seconds • Brake pedal released

Execution	Regular Diagnosis
Duration	About 60 seconds
DTC Type	• 1 drive cycle • Brake system indicator (red) on (Dependant upon the conditions) • Brake system indicator (amber) on • ABS indicator on • VSA indicator on
Fail Safe Action	• Stop EBD function (Dependant upon the conditions) • Stop ABS function • Stop engine drag torque control function • Stop TCS function • Stop VSA function • Stop agile handling assist function • Stop hydraulic boost failure compensation function • Stop electric parking brake function (some of function)
Possible Cause	• Low air pressure in tires • Different diameter tires • Wheel speed sensor failure • Debris on the encoder surface • VSA modulator-control unit internal failure

DTC C1020-49

DTC C1020-49 : VSA Master Cut Valve Failure (Unexpected Operation)

NOTE

- Initial Diagnosis:

  The initial on-board diagnosis occurs right after the vehicle condition is turned to the ON mode, and the ABS/VSA indicator comes on, and continues until the indicator goes off.

- Regular Diagnosis:

  The regular on-board diagnosis begins right after the ABS/VSA indicator goes off, and it continues until the vehicle condition is turned to the OFF (LOCK) mode.

- Review "How to troubleshoot the VSA system" before doing the DTC troubleshooting procedure.
- Test-drive the vehicle according to local traffic conditions and regulations. Do not test-drive on a lift unless specified.
- The possible causes shown may not be a complete list of all potential problems, and it is possible that there may be other causes.

Confirmation Procedure	Basic Condition: • 12 volt battery voltage 9.6 - 16.5 V With the Driving Pattern: • Turn the vehicle to the READY TO DRIVE mode.

	• Wait 20 seconds or more. • Test-drive the vehicle at 9 mph (15 km/h) or more. (Be careful of the surrounding traffic conditions.)
Execution	Regular Diagnosis
Duration	About 20 seconds
DTC Type	• 1 drive cycle • Brake system indicator (red) on • Brake system indicator (amber) on • ABS indicator on • VSA indicator on
Fail Safe Action	• Stop EBD function • Stop ABS function • Stop engine drag torque control function • Stop TCS function • Stop VSA function • Stop agile handling assist function • Stop hydraulic boost failure compensation function • Stop electric parking brake function (some of function)
Possible Cause	• VSA modulator-control unit internal failure

DTC C1021-49

DTC C1021-49 : VSA Suction Valve Failure (Unexpected Operation)

NOTE

- Initial Diagnosis:

  The initial on-board diagnosis occurs right after the vehicle condition is turned to the ON mode, and the ABS/VSA indicator comes on, and continues until the indicator goes off.

- Regular Diagnosis:

  The regular on-board diagnosis begins right after the ABS/VSA indicator goes off, and it continues until the vehicle condition is turned to the OFF (LOCK) mode.

- Review "How to troubleshoot the VSA system" before doing the DTC troubleshooting procedure.
- Test-drive the vehicle according to local traffic conditions and regulations. Do not test-drive on a lift unless specified.
- The possible causes shown may not be a complete list of all potential problems, and it is possible that there may be other causes.

Confirmation Procedure	Basic Condition: • 12 volt battery voltage 9.6 - 16.5 V With the Driving Pattern: • Turn the vehicle to the READY TO DRIVE mode.

	Wait 20 seconds or more. Test-drive the vehicle at 9 mph (15 km/h) or more. (Be careful of the surrounding traffic conditions.)
Execution	Regular Diagnosis
Duration	About 20 seconds
DTC Type	1 drive cycle Brake system indicator (red) on Brake system indicator (amber) on ABS indicator on VSA indicator on
Fail Safe Action	Stop EBD function Stop ABS function Stop engine drag torque control function Stop TCS function Stop VSA function Stop agile handling assist function Stop hydraulic boost failure compensation function Stop electric parking brake function (some of function)
Possible Cause	VSA modulator-control unit internal failure

DTC C1022-14

DTC C1022-14 : Power Source Failure for Pump Motor

NOTE

- Initial Diagnosis:

  The initial on-board diagnosis occurs right after the vehicle condition is turned to the ON mode, and the ABS/VSA indicator comes on, and continues until the indicator goes off.

- Regular Diagnosis:

  The regular on-board diagnosis begins right after the ABS/VSA indicator goes off, and it continues until the vehicle condition is turned to the OFF (LOCK) mode.

- Review "How to troubleshoot the VSA system" before doing the DTC troubleshooting procedure.
- Test-drive the vehicle according to local traffic conditions and regulations. Do not test-drive on a lift unless specified.
- The possible causes shown may not be a complete list of all potential problems, and it is possible that there may be other causes.

Confirmation Procedure	With the Driving Pattern: • Turn the vehicle to the READY TO DRIVE mode. • Test-drive the vehicle at 6 mph (10 km/h) or more. (Be careful of the surrounding traffic conditions.)
Execution	Initial Diagnosis/Regular Diagnosis
Duration	About 1 second
DTC Type	• 1 drive cycle • Brake system indicator (red) on • Brake system indicator (amber) on • ABS indicator on • VSA indicator on
Fail Safe Action	• Degrade EBD performance • Stop ABS function • Stop engine drag torque control function • Stop TCS function • Stop VSA function • Stop agile handling assist function • Stop hydraulic boost failure compensation function • Stop electric parking brake function (some of function)
Possible Cause	• Open or short to ground between the VSA modulator-control unit and the under-hood fuse/relay box (+B_ABS/VSA_MTR line) • Fuse failure (Under-hood fuse/relay box No. A3-3) • VSA modulator-control unit internal failure

DTC C1040-00 (VSA CONTROL UNIT)

DTC C1040-00 : Different Diameter Tire is Detected

NOTE

- Initial Diagnosis:

  The initial on-board diagnosis occurs right after the vehicle condition is turned to the ON mode, and the ABS/VSA indicator comes on, and continues until the indicator goes off.

- Regular Diagnosis:

  The regular on-board diagnosis begins right after the ABS/VSA indicator goes off, and it continues until the vehicle condition is turned to the OFF (LOCK) mode.

- Review "How to troubleshoot the VSA system" before doing the DTC troubleshooting procedure.
- Test-drive the vehicle according to local traffic conditions and regulations. Do not test-drive on a lift unless specified.
- The possible causes shown may not be a complete list of all potential problems, and it is possible that there may be other causes.

Confirmation Procedure	Basic Condition: • No other DTCs detected With the Driving Pattern: • Turn the vehicle to the READY TO DRIVE mode. • Test-drive the vehicle at 12 mph (20 km/h) or more for at least 72 seconds. (Be careful of the surrounding traffic conditions.)
Execution	Regular Diagnosis
Duration	About 72 seconds
DTC Type	• 1 drive cycle • Brake system indicator (red) on (Dependant upon the conditions) • Brake system indicator (amber) on • ABS indicator on • VSA indicator on
Fail Safe Action	• Stop EBD function (Dependant upon the conditions) • Stop ABS function • Stop engine drag torque control function • Stop TCS function • Stop VSA function • Stop agile handling assist control function • Stop hydraulic boost failure compensation function • Stop electric parking brake function (some of function)
Possible Cause	• Low air pressure in tires • Different diameter tires • Wheel speed sensor failure • Debris on the encoder surface • VSA modulator-control unit internal failure

DTC C1041-00

DTC C1041-00 : Right Front Wheel Abnormal Slip Detection

NOTE

- Initial Diagnosis:

  The initial on-board diagnosis occurs right after the vehicle condition is turned to the ON mode, and the ABS/VSA indicator comes on, and continues until the indicator goes off.

- Regular Diagnosis:

  The regular on-board diagnosis begins right after the ABS/VSA indicator goes off, and it continues until the vehicle condition is turned to the OFF (LOCK) mode.

- Review "How to troubleshoot the VSA system" before doing the DTC troubleshooting procedure.

- Test-drive the vehicle according to local traffic conditions and regulations. Do not test-drive on a lift unless specified.
- The possible causes shown may not be a complete list of all potential problems, and it is possible that there may be other causes.

Confirmation Procedure	Basic Condition: • No other DTCs detected With the Driving Pattern: • Turn the vehicle to the READY TO DRIVE mode. • Test-drive the vehicle at 12 mph (20 km/h) or more for at least 72 seconds. (Be careful of the surrounding traffic conditions.)
Execution	Regular Diagnosis
Duration	About 72 seconds
DTC Type	• 1 drive cycle • Brake system indicator (red) on (If multiple wheel failures are detected) • Brake system indicator (amber) on • ABS indicator on • VSA indicator on
Fail Safe Action	• Stop EBD function (If multiple wheel failures are detected) • Stop ABS function • Stop engine drag torque control function • Stop TCS function • Stop VSA function • Stop agile handling assist function • Stop hydraulic boost failure compensation function • Stop electric parking brake function (some of function)
Possible Cause	• Low air pressure in right-front tire • Different diameter right-front tire • Right-front wheel speed sensor failure • Debris on the right-front encoder surface • VSA modulator-control unit internal failure

DTC C1042-00

DTC C1042-00 : Left Front Wheel Abnormal Slip Detection

NOTE

- Initial Diagnosis:

  The initial on-board diagnosis occurs right after the vehicle condition is turned to the ON mode, and the ABS/VSA indicator comes on, and continues until the indicator goes off.

- Regular Diagnosis:

The regular on-board diagnosis begins right after the ABS/VSA indicator goes off, and it continues until the vehicle condition is turned to the OFF (LOCK) mode.

- Review "How to troubleshoot the VSA system" before doing the DTC troubleshooting procedure.
- Test-drive the vehicle according to local traffic conditions and regulations. Do not test-drive on a lift unless specified.
- The possible causes shown may not be a complete list of all potential problems, and it is possible that there may be other causes.

Confirmation Procedure	Basic Condition: • No other DTCs detected With the Driving Pattern: • Turn the vehicle to the READY TO DRIVE mode. • Test-drive the vehicle at 12 mph (20 km/h) or more for at least 72 seconds. (Be careful of the surrounding traffic conditions.)
Execution	Regular Diagnosis
Duration	About 72 seconds
DTC Type	• 1 drive cycle • Brake system indicator (red) on (If multiple wheel failures are detected) • Brake system indicator (amber) on • ABS indicator on • VSA indicator on
Fail Safe Action	• Stop EBD function (If multiple wheel failures are detected) • Stop ABS function • Stop engine drag torque control function • Stop TCS function • Stop VSA function • Stop agile handling assist function • Stop hydraulic boost failure compensation function • Stop electric parking brake function (some of function)
Possible Cause	• Low air pressure in left-front tire • Different diameter left-front tire • Left-front wheel speed sensor failure • Debris on the left-front encoder surface • VSA modulator-control unit internal failure

DTC C1043-00

DTC C1043-00 : Right Rear Wheel Abnormal Slip Detection

NOTE

- Initial Diagnosis:

The initial on-board diagnosis occurs right after the vehicle condition is turned to the ON mode, and the ABS/VSA indicator comes on, and continues until the indicator goes off.

- Regular Diagnosis:

  The regular on-board diagnosis begins right after the ABS/VSA indicator goes off, and it continues until the vehicle condition is turned to the OFF (LOCK) mode.

- Review "How to troubleshoot the VSA system" before doing the DTC troubleshooting procedure.
- Test-drive the vehicle according to local traffic conditions and regulations. Do not test-drive on a lift unless specified.
- The possible causes shown may not be a complete list of all potential problems, and it is possible that there may be other causes.

Confirmation Procedure	Basic Condition: • No other DTCs detected With the Driving Pattern: • Turn the vehicle to the READY TO DRIVE mode. • Test-drive the vehicle at 12 mph (20 km/h) or more for at least 72 seconds. (Be careful of the surrounding traffic conditions.)
Execution	Regular Diagnosis
Duration	About 72 seconds
DTC Type	• 1 drive cycle • Brake system indicator (red) on (If multiple wheel failures are detected) • Brake system indicator (amber) on • ABS indicator on • VSA indicator on
Fail Safe Action	• Stop EBD function (If multiple wheel failures are detected) • Stop ABS function • Stop engine drag torque control function • Stop TCS function • Stop VSA function • Stop agile handling assist function • Stop hydraulic boost failure compensation function • Stop electric parking brake function (some of function)
Possible Cause	• Low air pressure in right-rear tire • Different diameter right-rear tire • Right-rear wheel speed sensor failure • Debris on the right-rear encoder surface • VSA modulator-control unit internal failure

DTC C1044-00

DTC C1044-00 : Left Rear Wheel Abnormal Slip Detection

NOTE

- Initial Diagnosis:

  The initial on-board diagnosis occurs right after the vehicle condition is turned to the ON mode, and the ABS/VSA indicator comes on, and continues until the indicator goes off.

- Regular Diagnosis:

  The regular on-board diagnosis begins right after the ABS/VSA indicator goes off, and it continues until the vehicle condition is turned to the OFF (LOCK) mode.

- Review "How to troubleshoot the VSA system" before doing the DTC troubleshooting procedure.
- Test-drive the vehicle according to local traffic conditions and regulations. Do not test-drive on a lift unless specified.
- The possible causes shown may not be a complete list of all potential problems, and it is possible that there may be other causes.

Confirmation Procedure	Basic Condition: • No other DTCs detected With the Driving Pattern: • Turn the vehicle to the READY TO DRIVE mode. • Test-drive the vehicle at 12 mph (20 km/h) or more for at least 72 seconds. (Be careful of the surrounding traffic conditions.)
Execution	Regular Diagnosis
Duration	About 72 seconds
DTC Type	• 1 drive cycle • Brake system indicator (red) on (If multiple wheel failures are detected) • Brake system indicator (amber) on • ABS indicator on • VSA indicator on
Fail Safe Action	• Stop EBD function (If multiple wheel failures are detected) • Stop ABS function • Stop engine drag torque control function • Stop TCS function • Stop VSA function • Stop agile handling assist function • Stop hydraulic boost failure compensation function • Stop electric parking brake function (some of function)
Possible Cause	• Low air pressure in left-rear tire • Different diameter left-rear tire • Left-rear wheel speed sensor failure • Debris on the left-rear encoder surface • VSA modulator-control unit internal failure

DTC C1100-48

DTC C1100-48 : Electric Parking Brake Abnormal Operation Monitoring

NOTE

- Initial Diagnosis:

  The initial on-board diagnosis occurs right after the vehicle condition is turned to the ON mode, and the ABS/VSA indicator comes on, and continues until the indicator goes off.

- Regular Diagnosis:

  The regular on-board diagnosis begins right after the ABS/VSA indicator goes off, and it continues until the vehicle condition is turned to the OFF (LOCK) mode.

- Review "How to troubleshoot the VSA system" before doing the DTC troubleshooting procedure.
- Test-drive the vehicle according to local traffic conditions and regulations. Do not test-drive on a lift unless specified.
- The possible causes shown may not be a complete list of all potential problems, and it is possible that there may be other causes.

Confirmation Procedure	Basic Condition: • Wheel speed is less than 2 mph (3 km/h) With the Driving Pattern: • Turn the vehicle to the ON mode. • Apply and release the parking brake several times. • Wait 30 seconds or more.
Execution	Regular Diagnosis
Duration	About 30 seconds
DTC Type	• 1 drive cycle • Brake system indicator (red) blink • Brake system indicator (amber) on
Fail Safe Action	• Stop electric parking brake function (some of function)
Possible Cause	• VSA modulator-control unit internal failure

DTC C1100-54

DTC C1100-54 : Piston Position Not Learned

NOTE

- Initial Diagnosis:

  The initial on-board diagnosis occurs right after the vehicle condition is turned to the ON mode, and the ABS/VSA indicator comes on, and continues until the indicator goes off.

- Regular Diagnosis:

The regular on-board diagnosis begins right after the ABS/VSA indicator goes off, and it continues until the vehicle condition is turned to the OFF (LOCK) mode.

- Review "How to troubleshoot the VSA system" before doing the DTC troubleshooting procedure.
- Test-drive the vehicle according to local traffic conditions and regulations. Do not test-drive on a lift unless specified.
- The possible causes shown may not be a complete list of all potential problems, and it is possible that there may be other causes.

Confirmation Procedure	With the Driving Pattern: • Turn the vehicle to the ON mode.
Execution	Regular Diagnosis
Duration	-
DTC Type	• 1 drive cycle • Brake system indicator (red) on
Fail Safe Action	• None
Possible Cause	• Piston position not learned • VSA modulator-control unit internal failure

DTC C1100-94

DTC C1100-94 : Electric Parking Brake Actuator Malfunction

NOTE

- Initial Diagnosis:

  The initial on-board diagnosis occurs right after the vehicle condition is turned to the ON mode, and the ABS/VSA indicator comes on, and continues until the indicator goes off.

- Regular Diagnosis:

  The regular on-board diagnosis begins right after the ABS/VSA indicator goes off, and it continues until the vehicle condition is turned to the OFF (LOCK) mode.

- Review "How to troubleshoot the VSA system" before doing the DTC troubleshooting procedure.
- Test-drive the vehicle according to local traffic conditions and regulations. Do not test-drive on a lift unless specified.
- The possible causes shown may not be a complete list of all potential problems, and it is possible that there may be other causes.

Confirmation Procedure	With the Driving Pattern: • Turn the vehicle to the ON mode. • Apply and release the parking brake several times.
Execution	Initial Diagnosis/Regular Diagnosis
Duration	About 1 second
DTC Type	• 1 drive cycle • Brake system indicator (red) blink

	- Brake system indicator (amber) on
Fail Safe Action	- Stop electric parking brake function (some of function)
Possible Cause	- Electric parking brake actuator internal failure - VSA modulator-control unit internal failure

DTC C1100-98

DTC C1100-98 : Electric Parking Brake Continuous Operations Detected

NOTE

- Initial Diagnosis:

  The initial on-board diagnosis occurs right after the vehicle condition is turned to the ON mode, and the ABS/VSA indicator comes on, and continues until the indicator goes off.

- Regular Diagnosis:

  The regular on-board diagnosis begins right after the ABS/VSA indicator goes off, and it continues until the vehicle condition is turned to the OFF (LOCK) mode.

- Review "How to troubleshoot the VSA system" before doing the DTC troubleshooting procedure.
- Test-drive the vehicle according to local traffic conditions and regulations. Do not test-drive on a lift unless specified.
- The possible causes shown may not be a complete list of all potential problems, and it is possible that there may be other causes.

Confirmation Procedure	With the Driving Pattern: - Turn the vehicle to the ON mode. - Apply and release the parking brake several times. (This DTC is set when repeated use of the electric parking brake function causes electric parking brake actuator overheating.)
Execution	Regular Diagnosis
Duration	-
DTC Type	- 1 drive cycle - Brake system indicator (amber) on
Fail Safe Action	- Stop electric parking brake function (some of function)
Possible Cause	- Electric parking actuator overheating - VSA modulator-control unit internal failure

DTC C1110-11

DTC C1110-11 : Left Rear Electric Parking Brake Actuator Circuit Short to Ground

NOTE

- Initial Diagnosis:

The initial on-board diagnosis occurs right after the vehicle condition is turned to the ON mode, and the ABS/VSA indicator comes on, and continues until the indicator goes off.

- Regular Diagnosis:

  The regular on-board diagnosis begins right after the ABS/VSA indicator goes off, and it continues until the vehicle condition is turned to the OFF (LOCK) mode.

- Review "How to troubleshoot the VSA system" before doing the DTC troubleshooting procedure.
- Test-drive the vehicle according to local traffic conditions and regulations. Do not test-drive on a lift unless specified.
- The possible causes shown may not be a complete list of all potential problems, and it is possible that there may be other causes.

Confirmation Procedure	With the Driving Pattern: • Turn the vehicle to the ON mode. • Apply and release the parking brake several times.
Execution	Regular Diagnosis
Duration	About 1 second
DTC Type	• 1 drive cycle • Brake system indicator (amber) on
Fail Safe Action	• Stop electric parking brake function (some of function)
Possible Cause	• Short to ground between the VSA modulator-control unit and the left-rear electric parking brake actuator (EPB_L_ACT+, EPB_L_ACT- lines) • Left-rear electric parking brake actuator • VSA modulator-control unit internal failure

DTC C1110-13

DTC C1110-13 : Left Rear Electric Parking Brake Actuator Circuit Open

NOTE

- Initial Diagnosis:

  The initial on-board diagnosis occurs right after the vehicle condition is turned to the ON mode, and the ABS/VSA indicator comes on, and continues until the indicator goes off.

- Regular Diagnosis:

  The regular on-board diagnosis begins right after the ABS/VSA indicator goes off, and it continues until the vehicle condition is turned to the OFF (LOCK) mode.

- Review "How to troubleshoot the VSA system" before doing the DTC troubleshooting procedure.
- Test-drive the vehicle according to local traffic conditions and regulations. Do not test-drive on a lift unless specified.
- The possible causes shown may not be a complete list of all potential problems, and it is possible that there may be other causes.

Confirmation Procedure	With the Driving Pattern:

	- Turn the vehicle to the ON mode. - Apply and release the parking brake several times.
Execution	Regular Diagnosis
Duration	About 1 second
DTC Type	- 1 drive cycle - Brake system indicator (amber) on
Fail Safe Action	- Stop electric parking brake function (some of function)
Possible Cause	- Open or poor connection between the VSA modulator-control unit and the left-rear electric parking brake actuator (EPB_L_ACT+, EPB_L_ACT- lines) - Open, short to ground, or poor connection between the VSA modulator-control unit and the under-hood fuse/relay box (+B_ABS/VSA_FSR line) - Fuse failure (Under-hood fuse/relay box No. A1-3) - Left-rear electric parking brake actuator - VSA modulator-control unit internal failure

DTC C1110-79

DTC C1110-79 : Left Side Electric Parking Brake Doesn't Work Correctly

NOTE

- Initial Diagnosis:

  The initial on-board diagnosis occurs right after the vehicle condition is turned to the ON mode, and the ABS/VSA indicator comes on, and continues until the indicator goes off.

- Regular Diagnosis:

  The regular on-board diagnosis begins right after the ABS/VSA indicator goes off, and it continues until the vehicle condition is turned to the OFF (LOCK) mode.

- Review "How to troubleshoot the VSA system" before doing the DTC troubleshooting procedure.
- Test-drive the vehicle according to local traffic conditions and regulations. Do not test-drive on a lift unless specified.
- The possible causes shown may not be a complete list of all potential problems, and it is possible that there may be other causes.

Confirmation Procedure	With the Driving Pattern: - Turn the vehicle to the ON mode. - Apply and release the parking brake several times. - Wait 35 seconds or more.
Execution	Regular Diagnosis
Duration	About 35 seconds
DTC Type	- 1 drive cycle - Brake system indicator (red) blink - Brake system indicator (amber) on

Fail Safe Action	- Stop electric parking brake function (some of function)
Possible Cause	- Rear brake component parts installation incorrect - Left-rear electric parking brake actuator - VSA modulator-control unit internal failure

DTC C1110-94

DTC C1110-94 : Left Side Electric Parking Brake Actuator Unexpected Operation

NOTE

- Initial Diagnosis:

  The initial on-board diagnosis occurs right after the vehicle condition is turned to the ON mode, and the ABS/VSA indicator comes on, and continues until the indicator goes off.

- Regular Diagnosis:

  The regular on-board diagnosis begins right after the ABS/VSA indicator goes off, and it continues until the vehicle condition is turned to the OFF (LOCK) mode.

- Review "How to troubleshoot the VSA system" before doing the DTC troubleshooting procedure.
- Test-drive the vehicle according to local traffic conditions and regulations. Do not test-drive on a lift unless specified.
- The possible causes shown may not be a complete list of all potential problems, and it is possible that there may be other causes.

Confirmation Procedure	With the Driving Pattern: - Turn the vehicle to the ON mode. - Apply and release the parking brake several times.
Execution	Regular Diagnosis
Duration	About 1 second
DTC Type	- 1 drive cycle - Brake system indicator (red) blink - Brake system indicator (amber) on
Fail Safe Action	- Stop electric parking brake function (some of function)
Possible Cause	- Left-rear electric parking brake actuator - VSA modulator-control unit internal failure

DTC C1110-96

DTC C1110-96 : Left Side Electric Parking Brake Actuator Malfunction

NOTE

- Initial Diagnosis:

The initial on-board diagnosis occurs right after the vehicle condition is turned to the ON mode, and the ABS/VSA indicator comes on, and continues until the indicator goes off.

- Regular Diagnosis:

  The regular on-board diagnosis begins right after the ABS/VSA indicator goes off, and it continues until the vehicle condition is turned to the OFF (LOCK) mode.

- Review "How to troubleshoot the VSA system" before doing the DTC troubleshooting procedure.
- Test-drive the vehicle according to local traffic conditions and regulations. Do not test-drive on a lift unless specified.
- The possible causes shown may not be a complete list of all potential problems, and it is possible that there may be other causes.

Confirmation Procedure	With the Driving Pattern: • Turn the vehicle to the ON mode. • Apply and release the parking brake several times.
Execution	Initial Diagnosis/Regular Diagnosis
Duration	About 1 second
DTC Type	• 1 drive cycle • Brake system indicator (red) blink (Dependant upon the conditions) • Brake system indicator (amber) on
Fail Safe Action	• Stop electric parking brake function (some of function)
Possible Cause	• Rear brake component parts installation incorrect • Left-rear electric parking brake actuator • VSA modulator-control unit internal failure

DTC C1111-11

DTC C1111-11 : Right Rear Electric Parking Brake Actuator Circuit Short to Ground

NOTE

- Initial Diagnosis:

  The initial on-board diagnosis occurs right after the vehicle condition is turned to the ON mode, and the ABS/VSA indicator comes on, and continues until the indicator goes off.

- Regular Diagnosis:

  The regular on-board diagnosis begins right after the ABS/VSA indicator goes off, and it continues until the vehicle condition is turned to the OFF (LOCK) mode.

- Review "How to troubleshoot the VSA system" before doing the DTC troubleshooting procedure.
- Test-drive the vehicle according to local traffic conditions and regulations. Do not test-drive on a lift unless specified.
- The possible causes shown may not be a complete list of all potential problems, and it is possible that there may be other causes.

Confirmation Procedure	With the Driving Pattern: • Turn the vehicle to the ON mode. • Apply and release the parking brake several times.
Execution	Regular Diagnosis
Duration	About 1 second
DTC Type	• 1 drive cycle • Brake system indicator (amber) on
Fail Safe Action	• Stop electric parking brake function (some of function)
Possible Cause	• Short to ground between the VSA modulator-control unit and the right-rear electric parking brake actuator (EPB_R_ACT+, EPB_L_ACT- lines) • Right-rear electric parking brake actuator • VSA modulator-control unit internal failure

DTC C1111-13

DTC C1111-13 : Right Rear Electric Parking Brake Actuator Circuit Open

NOTE

- Initial Diagnosis:

  The initial on-board diagnosis occurs right after the vehicle condition is turned to the ON mode, and the ABS/VSA indicator comes on, and continues until the indicator goes off.

- Regular Diagnosis:

  The regular on-board diagnosis begins right after the ABS/VSA indicator goes off, and it continues until the vehicle condition is turned to the OFF (LOCK) mode.

- Review "How to troubleshoot the VSA system" before doing the DTC troubleshooting procedure.
- Test-drive the vehicle according to local traffic conditions and regulations. Do not test-drive on a lift unless specified.
- The possible causes shown may not be a complete list of all potential problems, and it is possible that there may be other causes.

Confirmation Procedure	With the Driving Pattern: • Turn the vehicle to the ON mode. • Apply and release the parking brake several times.
Execution	Regular Diagnosis
Duration	About 1 second
DTC Type	• 1 drive cycle • Brake system indicator (amber) on
Fail Safe Action	• Stop electric parking brake function (some of function)
Possible Cause	• Open or poor connection between the VSA modulator-control unit and the right-rear electric parking brake actuator (EPB_R_ACT+, EPB_R_ACT- lines)

	• Open, short to ground, or poor connection between the VSA modulator-control unit and the under-hood fuse/relay box (+B_ABS/VSA_FSR line) • Fuse failure (Under-hood fuse/relay box No. A1-3) • Right-rear electric parking brake actuator • VSA modulator-control unit internal failure

DTC C1111-79

DTC C1111-79 : Right Side Electric Parking Brake Doesn't Work Correctly

NOTE

- Initial Diagnosis:

  The initial on-board diagnosis occurs right after the vehicle condition is turned to the ON mode, and the ABS/VSA indicator comes on, and continues until the indicator goes off.

- Regular Diagnosis:

  The regular on-board diagnosis begins right after the ABS/VSA indicator goes off, and it continues until the vehicle condition is turned to the OFF (LOCK) mode.

- Review "How to troubleshoot the VSA system" before doing the DTC troubleshooting procedure.
- Test-drive the vehicle according to local traffic conditions and regulations. Do not test-drive on a lift unless specified.
- The possible causes shown may not be a complete list of all potential problems, and it is possible that there may be other causes.

Confirmation Procedure	With the Driving Pattern: • Turn the vehicle to the ON mode. • Apply and release the parking brake several times. • Wait 35 seconds or more.
Execution	Regular Diagnosis
Duration	About 35 seconds
DTC Type	• 1 drive cycle • Brake system indicator (red) blink • Brake system indicator (amber) on
Fail Safe Action	• Stop electric parking brake function (some of function)
Possible Cause	• Rear brake component parts installation incorrect • Right-rear electric parking brake actuator • VSA modulator-control unit internal failure

DTC C1111-94

DTC C1111-94 : Right Side Electric Parking Brake Actuator Unexpected Operation

NOTE

- Initial Diagnosis:

  The initial on-board diagnosis occurs right after the vehicle condition is turned to the ON mode, and the ABS/VSA indicator comes on, and continues until the indicator goes off.

- Regular Diagnosis:

  The regular on-board diagnosis begins right after the ABS/VSA indicator goes off, and it continues until the vehicle condition is turned to the OFF (LOCK) mode.

- Review "How to troubleshoot the VSA system" before doing the DTC troubleshooting procedure.
- Test-drive the vehicle according to local traffic conditions and regulations. Do not test-drive on a lift unless specified.
- The possible causes shown may not be a complete list of all potential problems, and it is possible that there may be other causes.

Confirmation Procedure	With the Driving Pattern: • Turn the vehicle to the ON mode. • Apply and release the parking brake several times.
Execution	Regular Diagnosis
Duration	About 1 second
DTC Type	• 1 drive cycle • Brake system indicator (red) blink • Brake system indicator (amber) on
Fail Safe Action	• Stop electric parking brake function (some of function)
Possible Cause	• Right-rear electric parking brake actuator • VSA modulator-control unit internal failure

DTC C1111-96

DTC C1111-96 : Right Side Electric Parking Brake Actuator Malfunction

NOTE

- Initial Diagnosis:

  The initial on-board diagnosis occurs right after the vehicle condition is turned to the ON mode, and the ABS/VSA indicator comes on, and continues until the indicator goes off.

- Regular Diagnosis:

  The regular on-board diagnosis begins right after the ABS/VSA indicator goes off, and it continues until the vehicle condition is turned to the OFF (LOCK) mode.

- Review "How to troubleshoot the VSA system" before doing the DTC troubleshooting procedure.
- Test-drive the vehicle according to local traffic conditions and regulations. Do not test-drive on a lift unless specified.
- The possible causes shown may not be a complete list of all potential problems, and it is possible that there may be other causes.

Confirmation Procedure	With the Driving Pattern: • Turn the vehicle to the ON mode. • Apply and release the parking brake several times.
Execution	Initial Diagnosis/Regular Diagnosis
Duration	About 1 second
DTC Type	• 1 drive cycle • Brake system indicator (red) blink (Dependant upon the conditions) • Brake system indicator (amber) on
Fail Safe Action	• Stop electric parking brake function (some of function)
Possible Cause	• Rear brake component parts installation incorrect • Right-rear electric parking brake actuator • VSA modulator-control unit internal failure

DTC C1120-14

DTC C1120-14 : Electric Parking Brake Switch Circuit Malfunction

NOTE

- Initial Diagnosis:

  The initial on-board diagnosis occurs right after the vehicle condition is turned to the ON mode, and the ABS/VSA indicator comes on, and continues until the indicator goes off.

- Regular Diagnosis:

  The regular on-board diagnosis begins right after the ABS/VSA indicator goes off, and it continues until the vehicle condition is turned to the OFF (LOCK) mode.

- Review "How to troubleshoot the VSA system" before doing the DTC troubleshooting procedure.
- Test-drive the vehicle according to local traffic conditions and regulations. Do not test-drive on a lift unless specified.
- The possible causes shown may not be a complete list of all potential problems, and it is possible that there may be other causes.

Confirmation Procedure	Basic Condition: • 12 volt battery voltage 9.6 - 16.5 V With the Driving Pattern: • Turn the vehicle to the ON mode.
Execution	Regular Diagnosis
Duration	-
DTC Type	• 1 drive cycle • Brake system indicator (red) blink • Brake system indicator (amber) on

Fail Safe Action	• Stop electric parking brake function (some of function)
Possible Cause	• Open, short to ground, or poor connection between the electric parking brake/automatic brake hold switch and the VSA modulator-control unit (SW1, SW3, SW4, SW6 lines) • Electric parking brake/automatic brake hold switch failure • VSA modulator-control unit internal failure

DTC C1120-96

DTC C1120-96 : Electric Parking Brake Switch Malfunction

NOTE

- Initial Diagnosis:

  The initial on-board diagnosis occurs right after the vehicle condition is turned to the ON mode, and the ABS/VSA indicator comes on, and continues until the indicator goes off.

- Regular Diagnosis:

  The regular on-board diagnosis begins right after the ABS/VSA indicator goes off, and it continues until the vehicle condition is turned to the OFF (LOCK) mode.

- Review "How to troubleshoot the VSA system" before doing the DTC troubleshooting procedure.
- Test-drive the vehicle according to local traffic conditions and regulations. Do not test-drive on a lift unless specified.
- The possible causes shown may not be a complete list of all potential problems, and it is possible that there may be other causes.

Confirmation Procedure	Basic Condition: • 12 volt battery voltage 9.6 - 16.5 V With the Driving Pattern: • Turn the vehicle to the ON mode. • Wait 5 minutes or more.
Execution	Regular Diagnosis
Duration	About 5 minutes
DTC Type	• 1 drive cycle • Brake system indicator (red) blink • Brake system indicator (amber) on
Fail Safe Action	• Stop electric parking brake function (some of function)
Possible Cause	• Electric parking brake/automatic brake hold switch failure • VSA modulator-control unit internal failure

DTC P0562 (MOTOR CONTROL MODULE)

DTC P0562: Traction Motor Control Module System Voltage Low

General Description

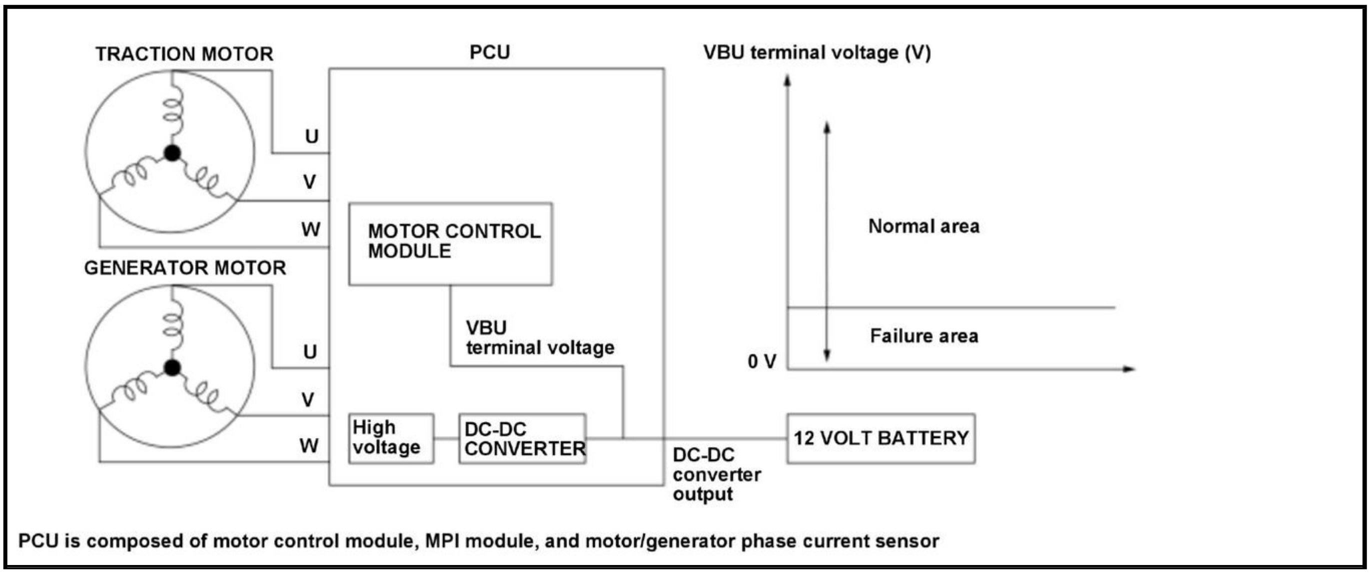
TRACTION MOTOR
PCU
VBU terminal voltage (V)
U
V
W
MOTOR CONTROL MODULE
Normal area
GENERATOR MOTOR
VBU terminal voltage
Failure area
0 V
U
V
W
High voltage
DC-DC CONVERTER
12 VOLT BATTERY
DC-DC converter output

PCU is composed of motor control module, MPI module, and motor/generator phase current sensor

The power control unit (PCU) controls the voltage at which to charge a 12 volt battery according to the input from the VBU terminal voltage. If the VBU terminal voltage is out of a specified value for a specified time, the motor control module in the PCU detects a malfunction and stores a DTC.

Monitor Execution, Sequence, Duration, DTC Type

Execution	Continuous
Sequence	None
Duration	5.5 seconds or more
DTC Type	One drive cycle, MIL on, POWER SYSTEM indicator on

Enable Conditions

Condition	Minimum	Maximum
IGA voltage	10 V	-
Vehicle	ON mode	

Malfunction Threshold

The VBU terminal voltage of the motor control module is less than 3.0 V for at least 5.5 seconds.

Possible Cause

NOTE: The causes shown may not be a complete list of all potential problems, and it is possible that there may be other causes.

- This DTC is stored at the same time when DTC P0AE1, P0DA8 or P1D65 is detected.
- DC-DC converter internal circuit failure
- PCU internal failure

Diagnosis Details

Conditions for setting the DTC

When a malfunction is detected, the MIL comes on and a Pending DTC, a Confirmed DTC, and the freeze data are stored in the motor control module memory.

Conditions for clearing the DTC

The MIL is cleared if the malfunction does not return in three consecutive trips in which the diagnostic runs. The MIL, the Pending DTC, the Confirmed DTC, and the freeze data can be cleared with the scan tool Clear command.

DTC P0602 (GENERATOR MOTOR CONTROL MODULE)

DTC P0602: Generator Motor Control Module Programming Error

General Description

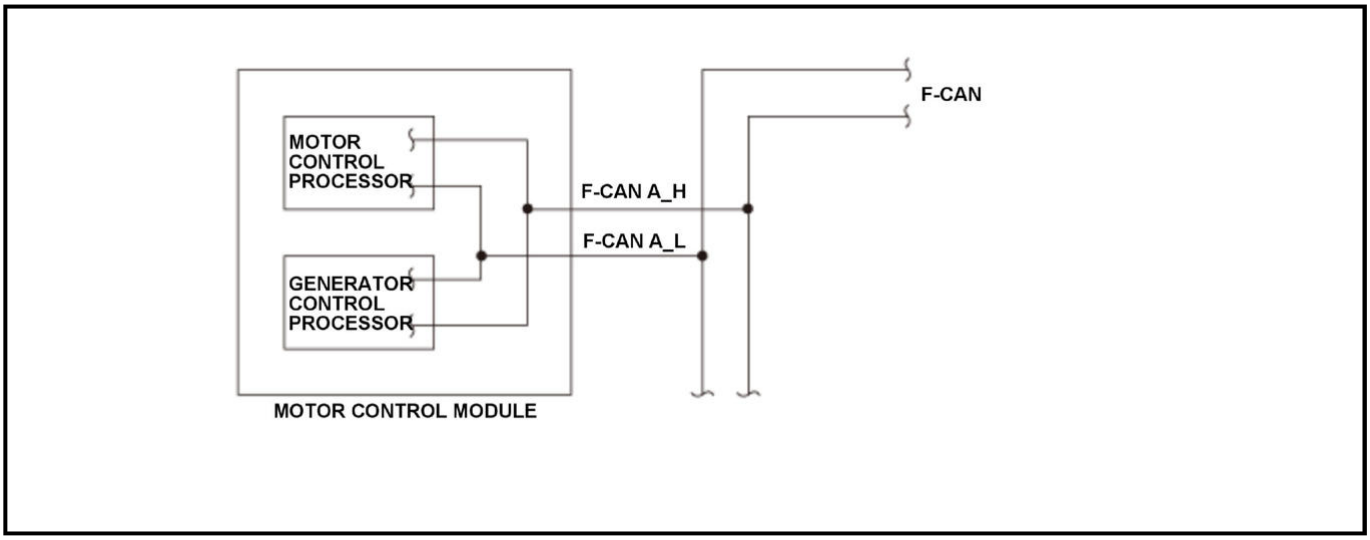

The generator control processor in the motor control module can be reprogrammed with updated software. The generator control processor confirms if the control program update is completed normally. When the power is interrupted during reprogramming, the generator control processor detects a malfunction and stores a DTC.

Monitor Execution, Sequence, Duration, DTC Type

Execution	When the power is turned on after updating is executed and it failed
Sequence	None
Duration	-
DTC Type	One drive cycle, MIL on, POWER SYSTEM indicator on

Enable Conditions

Condition	Â
Vehicle	ON mode

Malfunction Threshold

The power is interrupted during reprogramming, and the generator control processor is not updated and programmed normally.

Possible Cause

NOTE: The causes shown may not be a complete list of all potential problems, and it is possible that there may be other causes.

- Generator control processor program unwritten

Diagnosis Details

Conditions for setting the DTC

When a malfunction is detected, the MIL comes on and a Pending DTC, a Confirmed DTC, and the freeze data are stored in the motor control module memory.

Conditions for clearing the DTC

The MIL is cleared if the malfunction does not return in three consecutive trips in which the diagnostic runs. The MIL, the Pending DTC, the Confirmed DTC, and the freeze data can be cleared with the scan tool Clear command.

DTC P0602 (TRACTION MOTOR CONTROL MODULE)

DTC P0602: Traction Motor Control Module Programming Error

General Description

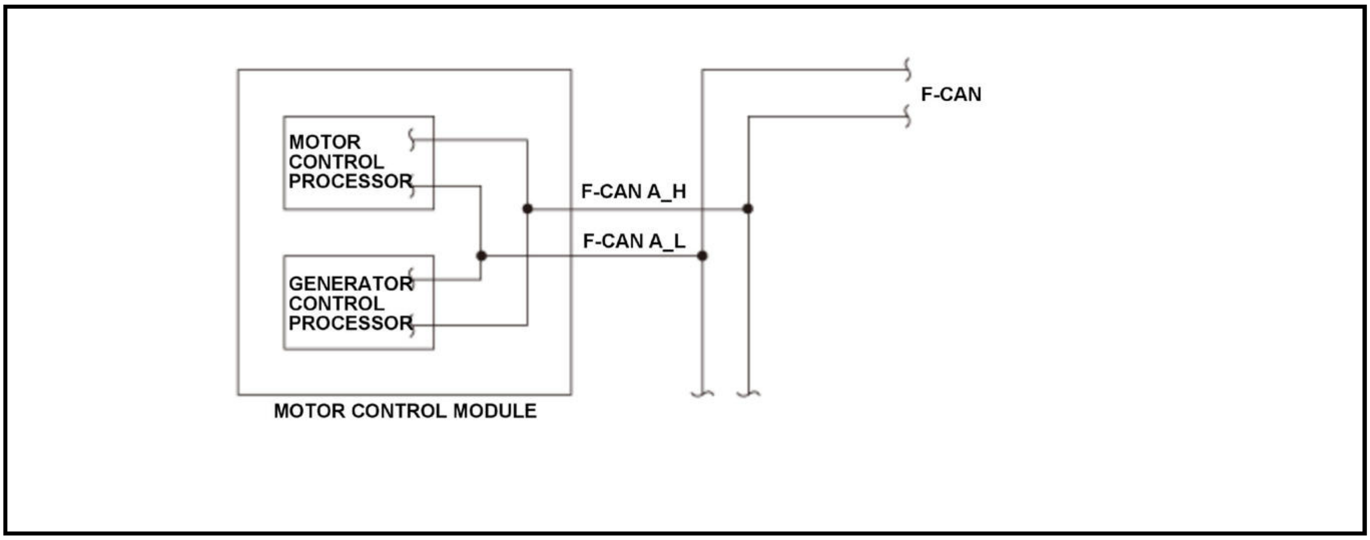

The motor control processor in the motor control module can be reprogrammed with updated software. The motor control processor confirms if the control program update is completed normally. When the power is interrupted during reprogramming, the motor control processor detects a malfunction and stores a DTC.

Monitor Execution, Sequence, Duration, DTC Type

Execution	When the power is turned on after updating is executed and it failed
Sequence	None
Duration	-
DTC Type	One drive cycle, MIL on, POWER SYSTEM indicator on

Enable Conditions

Condition	Â
Vehicle	ON mode

Malfunction Threshold

The power is interrupted during reprogramming, and the motor control processor is not updated and programmed normally.

Possible Cause

NOTE: The causes shown may not be a complete list of all potential problems, and it is possible that there may be other causes.

- Motor control processor program unwritten

Diagnosis Details

Conditions for setting the DTC

When a malfunction is detected, the MIL comes on and a Pending DTC, a Confirmed DTC, and the freeze data are stored in the motor control module memory.

Conditions for clearing the DTC

The MIL is cleared if the malfunction does not return in three consecutive trips in which the diagnostic runs. The MIL, the Pending DTC, the Confirmed DTC, and the freeze data can be cleared with the scan tool Clear command.

DTC P061B (MOTOR CONTROL MODULE)

DTC P061B: Traction Motor Control Module Torque Calculation Performance

General Description

This fault code is a general (specified by SAE) DTC that is stored at the time the following DTC codes (P1A54, P1A55) are detected.

DTC P062F (GENERATOR MOTOR CONTROL MODULE)

DTC P062F: Generator Motor Control Module EEPROM Error

General Description

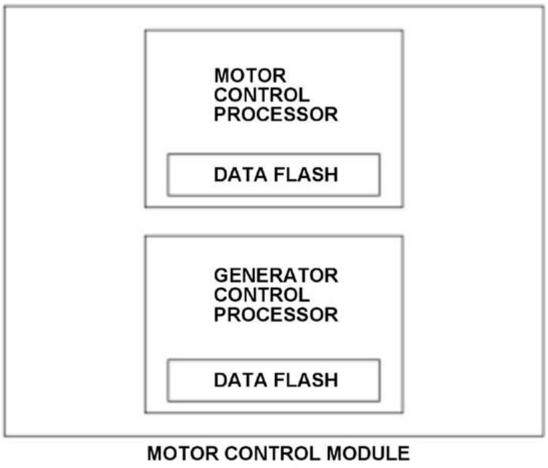

The generator control processor in the motor control module store control data to the data flash in the generator control processor. The generator control processor compares the input data and read data of the data flash. When the data does not match, a malfunction is detected and stores a DTC.

Monitor Execution, Sequence, Duration, DTC Type

Execution	Continuous
Sequence	None
Duration	-
DTC Type	One drive cycle, MIL on, POWER SYSTEM indicator on

Enable Conditions

Condition	Â
Vehicle	ON mode

Malfunction Threshold

The motor control module fails to input to or read out from the data flash 3 times or more.

Possible Cause

NOTE: The causes shown may not be a complete list of all potential problems, and it is possible that there may be other causes.

- Motor control module internal circuit failure

Diagnosis Details

Conditions for setting the DTC

When a malfunction is detected, the MIL comes on and a Pending DTC, a Confirmed DTC, and the freeze data are stored in the motor control module memory.

Conditions for clearing the DTC

The MIL is cleared if the malfunction does not return in three consecutive trips in which the diagnostic runs. The MIL, the Pending DTC, the Confirmed DTC, and the freeze data can be cleared with the scan tool Clear command.

DTC P062F (TRACTION MOTOR CONTROL MODULE)

DTC P062F: Traction Motor Control Module EEPROM Error

General Description

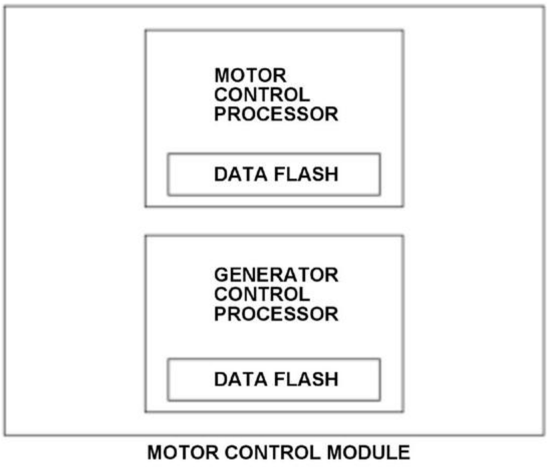

The motor control processor in the motor control module store control data to the data flash in the motor control processor. The motor control processor compares the input data and read data of the data flash. When the data does not match, a malfunction is detected and stores a DTC.

Monitor Execution, Sequence, Duration, DTC Type

Execution	Continuous
Sequence	None
Duration	-

DTC Type	One drive cycle, MIL on, POWER SYSTEM indicator on

Enable Conditions

Condition	Â
Vehicle	ON mode

Malfunction Threshold

The motor control module fails to input to or read out from the data flash 3 times or more.

Possible Cause

NOTE: The causes shown may not be a complete list of all potential problems, and it is possible that there may be other causes.

- Motor control module internal circuit failure

Diagnosis Details

Conditions for setting the DTC

When a malfunction is detected, the MIL comes on and a Pending DTC, a Confirmed DTC, and the freeze data are stored in the motor control module memory.

Conditions for clearing the DTC

The MIL is cleared if the malfunction does not return in three consecutive trips in which the diagnostic runs. The MIL, the Pending DTC, the Confirmed DTC, and the freeze data can be cleared with the scan tool Clear command.

DTC P0634

DTC P0634: PCU Internal Temperature Too High

General Description

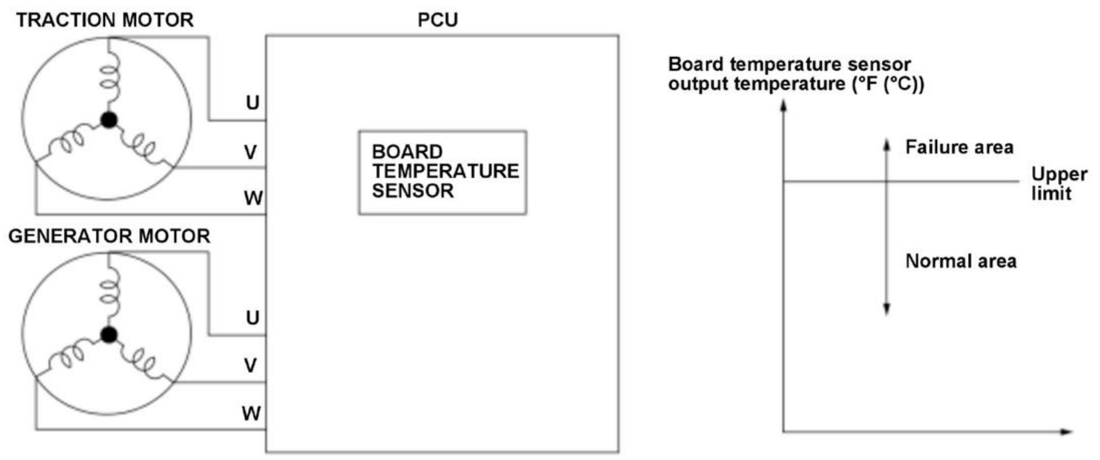
TRACTION MOTOR
PCU
U
V
W
BOARD TEMPERATURE SENSOR
GENERATOR MOTOR
U
V
W
Board temperature sensor output temperature (°F (°C))
Failure area
Upper limit
Normal area

PCU is composed of motor control module, MPI module, and motor/generator phase current sensor

The power control unit (PCU) monitors the board temperature sensor value to prevent malfunction of internal parts due to heat generation. If the board temperature sensor output temperature is out of a specified value for a specified time, the motor control module in the PCU detects a malfunction and stores a DTC.

Monitor Execution, Sequence, Duration, DTC Type

Execution	Continuous
Sequence	None
Duration	500 milliseconds or more
DTC Type	One drive cycle, MIL on, POWER SYSTEM indicator on

Enable Conditions

Condition	Minimum	Maximum
High voltage side power supply voltage (6 V)	5 V	-

Malfunction Threshold

The output temperature from the board temperature sensor is more than 238 deg.F (114 deg.C) for at least 500 milliseconds.

Possible Cause

NOTE: The causes shown may not be a complete list of all potential problems, and it is possible that there may be other causes.

- Water pipe leak
- PCU electric coolant pump failure
- PCU internal failure

Diagnosis Details

Conditions for setting the DTC

When a malfunction is detected, the MIL comes on and a Pending DTC, a Confirmed DTC, and the freeze data are stored in the motor control module memory.

Conditions for clearing the DTC

The MIL is cleared if the malfunction does not return in three consecutive trips in which the diagnostic runs. The MIL, the Pending DTC, the Confirmed DTC, and the freeze data can be cleared with the scan tool Clear command.

DTC P06B1 (GENERATOR MOTOR CONTROL MODULE)

DTC P06B1: Generator Motor Phase Current Sensor Power Supply Circuit Low (Phase U)

General Description

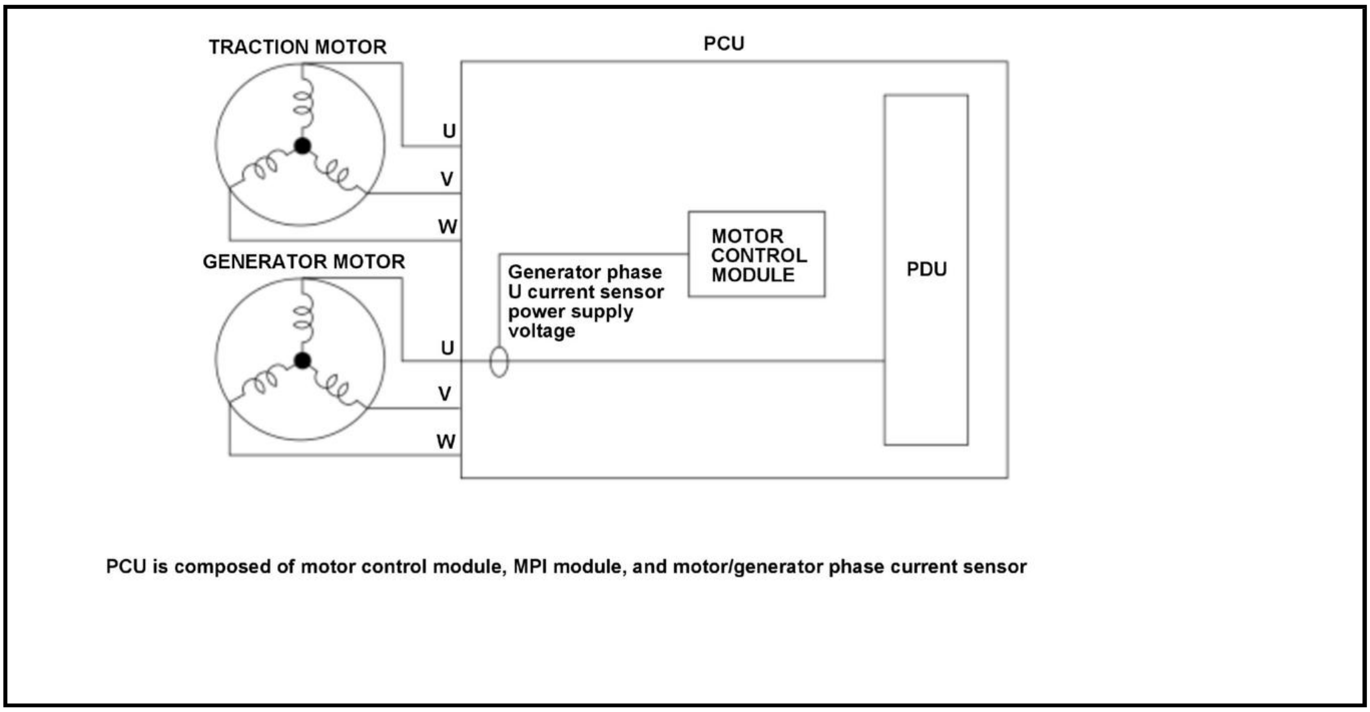
TRACTION MOTOR
PCU
U
V
W
GENERATOR MOTOR
MOTOR CONTROL MODULE
Generator phase U current sensor power supply voltage
PDU
U
V
W
PCU is composed of motor control module, MPI module, and motor/generator phase current sensor

The power control unit (PCU) controls the motor output based on the generator phase U current sensor signals. When the power supply voltage is out of a specified range for a set time, the motor control module in the PCU detects a malfunction and stores a DTC.

Monitor Execution, Sequence, Duration, DTC Type

Execution	Continuous
Sequence	None
Duration	200 milliseconds or more
DTC Type	One drive cycle, MIL on, POWER SYSTEM indicator on

Enable Conditions

Condition	Minimum	Maximum
12 volt battery voltage	8 V	-

Malfunction Threshold

The generator phase U current sensor power supply voltage is 4.65 V or less or 5.35 V or more for at least 200 milliseconds.

Possible Cause

NOTE: The causes shown may not be a complete list of all potential problems, and it is possible that there may be other causes.

- PCU internal failure

Diagnosis Details

Conditions for setting the DTC

When a malfunction is detected, the MIL comes on and a Pending DTC, a Confirmed DTC, and the freeze data are stored in the motor control module memory.

Conditions for clearing the DTC

The MIL is cleared if the malfunction does not return in three consecutive trips in which the diagnostic runs. The MIL, the Pending DTC, the Confirmed DTC, and the freeze data can be cleared with the scan tool Clear command.

DTC P06B1(TRACTION MOTOR CONTROL MODULE)

DTC P06B1: Traction Motor Phase Current Sensor Power Supply Circuit Low (Phase U)

General Description

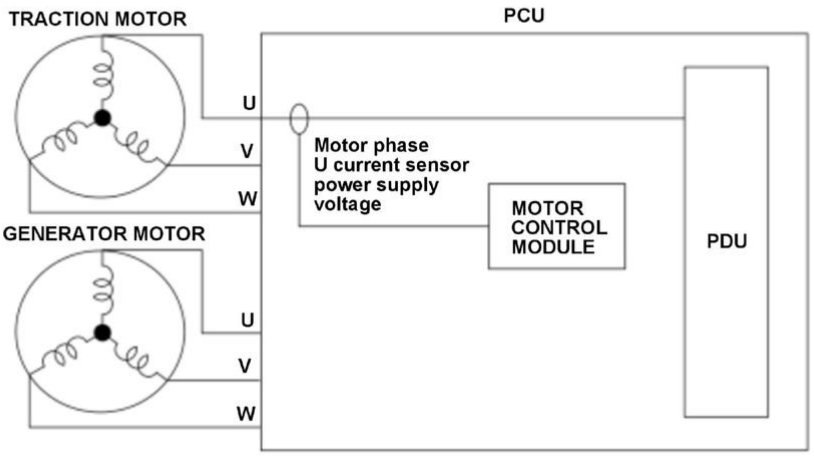

PCU is composed of motor control module, MPI module, and motor/generator phase current sensor

The power control unit (PCU) controls the motor output based on the motor phase U current sensor signals. When the power supply voltage is out of a specified range for a set time, the motor control module in the PCU detects a malfunction and stores a DTC.

Monitor Execution, Sequence, Duration, DTC Type

Execution	Continuous
Sequence	None
Duration	200 milliseconds or more
DTC Type	One drive cycle, MIL on, POWER SYSTEM indicator on

Enable Conditions

Condition	Minimum	Maximum
12 volt battery voltage	8 V	-

Malfunction Threshold

The motor phase U current sensor power supply voltage is 4.65 V or less or 5.35 V or more for at least 200 milliseconds.

Possible Cause

NOTE: The causes shown may not be a complete list of all potential problems, and it is possible that there may be other causes.

- PCU internal failure

Diagnosis Details

Conditions for setting the DTC

When a malfunction is detected, the MIL comes on and a Pending DTC, a Confirmed DTC, and the freeze data are stored in the motor control module memory.

Conditions for clearing the DTC

The MIL is cleared if the malfunction does not return in three consecutive trips in which the diagnostic runs. The MIL, the Pending DTC, the Confirmed DTC, and the freeze data can be cleared with the scan tool Clear command.

DTC P06B4 (GENERATOR MOTOR CONTROL MODULE)

DTC P06B4: Generator Motor Phase Current Sensor Power Supply Circuit Low (Phase V)

General Description

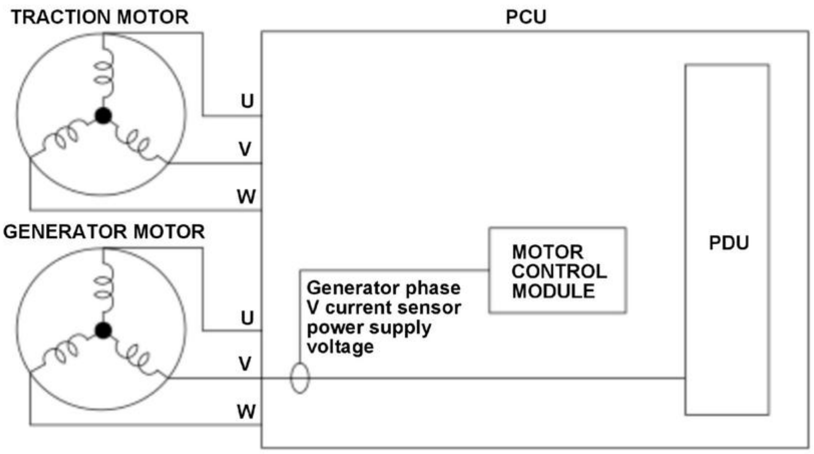

PCU is composed of motor control module, MPI module, and motor/generator phase current sensor

The power control unit (PCU) controls the motor output based on the generator phase V current sensor signals. When the power supply voltage is out of a specified range for a set time, the motor control module in the PCU detects a malfunction and stores a DTC.

Monitor Execution, Sequence, Duration, DTC Type

Execution	Continuous
Sequence	None
Duration	200 milliseconds or more
DTC Type	Two drive cycles, MIL on, POWER SYSTEM indicator on

Enable Conditions

Condition	Minimum	Maximum
12 volt battery voltage	8 V	-

Malfunction Threshold

The generator phase V current sensor power supply voltage is 4.65 V or less or 5.35 V or more for at least 200 milliseconds.

Possible Cause

NOTE: The causes shown may not be a complete list of all potential problems, and it is possible that there may be other causes.

- PCU internal failure

Diagnosis Details

Conditions for setting the DTC

When a malfunction is detected during the first drive cycle, a Pending DTC is stored in the motor control module memory. If the malfunction returns in the next (second) drive cycle, the MIL comes on and a Confirmed DTC and the freeze data are stored.

Conditions for clearing the DTC

The MIL is cleared if the malfunction does not return in three consecutive trips in which the diagnostic runs. The MIL, the Pending DTC, the Confirmed DTC, and the freeze data can be cleared with the scan tool Clear command.

DTC P06B4 (TRACTION MOTOR CONTROL MODULE)

DTC P06B4: Traction Motor Phase Current Sensor Power Supply Circuit Low (Phase V)

General Description

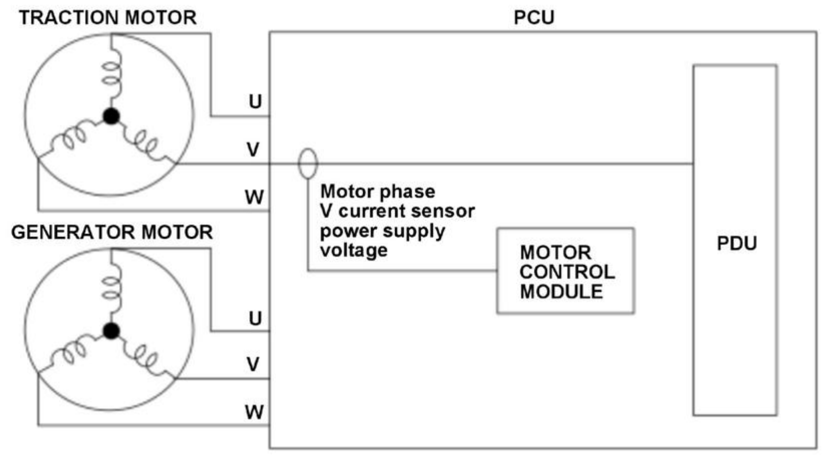

PCU is composed of motor control module, MPI module, and motor/generator phase current sensor

The power control unit (PCU) controls the motor output based on the motor phase V current sensor signals. When the power supply voltage is out of a specified range for a set time, the motor control module in the PCU detects a malfunction and stores a DTC.

Monitor Execution, Sequence, Duration, DTC Type

Execution	Continuous
Sequence	None

Duration	200 milliseconds or more
DTC Type	Two drive cycles, MIL on, POWER SYSTEM indicator on

Enable Conditions

Condition	Minimum	Maximum
12 volt battery voltage	8 V	-

Malfunction Threshold

The motor phase V current sensor power supply voltage is 4.65 V or less or 5.35 V or more for at least 200 milliseconds.

Possible Cause

NOTE: The causes shown may not be a complete list of all potential problems, and it is possible that there may be other causes.

- PCU internal failure

Diagnosis Details

Conditions for setting the DTC

When a malfunction is detected during the first drive cycle, a Pending DTC is stored in the motor control module memory. If the malfunction returns in the next (second) drive cycle, the MIL comes on and a Confirmed DTC and the freeze data are stored.

Conditions for clearing the DTC

The MIL is cleared if the malfunction does not return in three consecutive trips in which the diagnostic runs. The MIL, the Pending DTC, the Confirmed DTC, and the freeze data can be cleared with the scan tool Clear command.

DTC P06E7 (GENERATOR MOTOR CONTROL MODULE)

DTC P06E7: Generator Motor Phase Current Sensor Power Supply Circuit Low (Phase W)

General Description

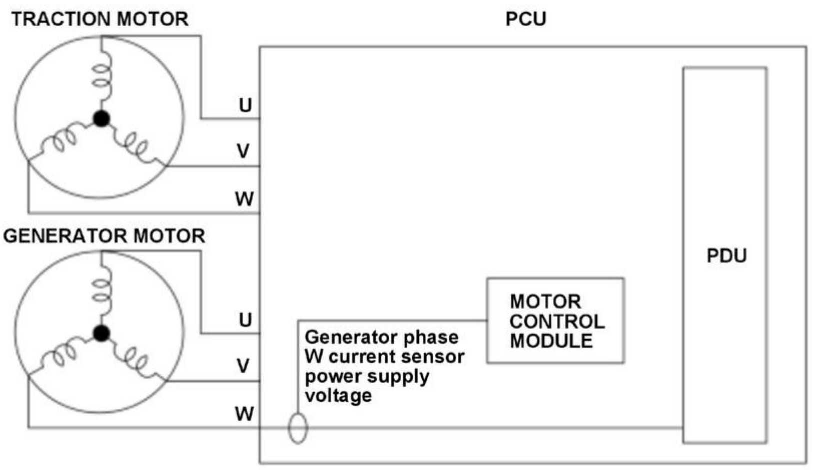

PCU is composed of motor control module, MPI module, and motor/generator phase current sensor

The power control unit (PCU) controls the motor output based on the generator phase W current sensor signals. When the power supply voltage is out of a specified range for a set time, the motor control module in the PCU detects a malfunction and stores a DTC.

Monitor Execution, Sequence, Duration, DTC Type

Execution	Continuous
Sequence	None
Duration	200 milliseconds or more
DTC Type	Two drive cycles, MIL on, POWER SYSTEM indicator on

Enable Conditions

Condition	Minimum	Maximum
12 volt battery voltage	8 V	-

Malfunction Threshold

The generator phase W current sensor power supply voltage is 4.65 V or less or 5.35 V or more for at least 200 milliseconds.

Possible Cause

NOTE: The causes shown may not be a complete list of all potential problems, and it is possible that there may be other causes.

- PCU internal failure

Diagnosis Details

Conditions for setting the DTC

When a malfunction is detected during the first drive cycle, a Pending DTC is stored in the motor control module memory. If the malfunction returns in the next (second) drive cycle, the MIL comes on and a Confirmed DTC and the freeze data are stored.

Conditions for clearing the DTC

The MIL is cleared if the malfunction does not return in three consecutive trips in which the diagnostic runs. The MIL, the Pending DTC, the Confirmed DTC, and the freeze data can be cleared with the scan tool Clear command.

DTC P06E7 (TRACTION MOTOR CONTROL MODULE)

DTC P06E7: Traction Motor Phase Current Sensor Power Supply Circuit Low (Phase W)

General Description

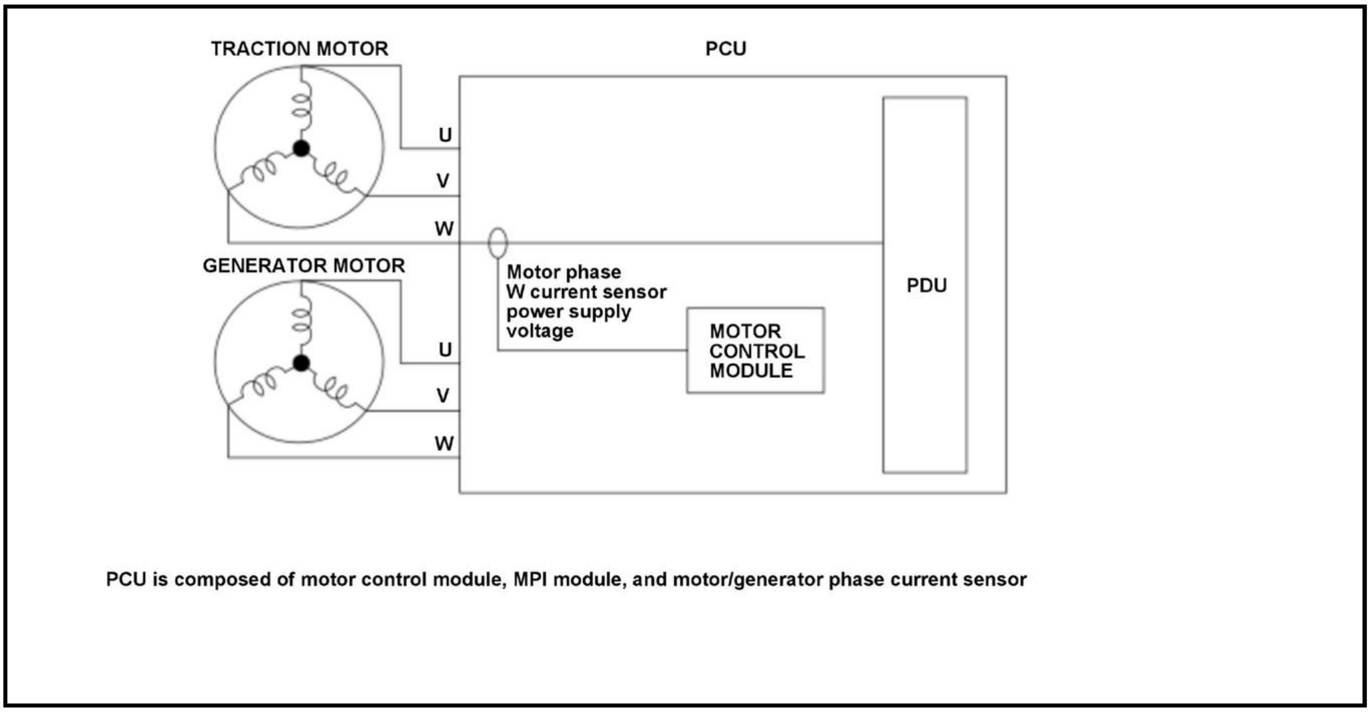
TRACTION MOTOR
PCU
U
V
W
GENERATOR MOTOR
Motor phase W current sensor power supply voltage
PDU
MOTOR CONTROL MODULE
U
V
W
PCU is composed of motor control module, MPI module, and motor/generator phase current sensor

The power control unit (PCU) controls the motor output based on the motor phase W current sensor signals. When the power supply voltage is out of a specified range for a set time, the motor control module in the PCU detects a malfunction and stores a DTC.

Monitor Execution, Sequence, Duration, DTC Type

Execution	Continuous
Sequence	None
Duration	200 milliseconds or more
DTC Type	Two drive cycles, MIL on, POWER SYSTEM indicator on

Enable Conditions

Condition	Minimum	Maximum
12 volt battery voltage	8 V	-

Malfunction Threshold

The motor phase W current sensor power supply voltage is 4.65 V or less or 5.35 V or more for at least 200 milliseconds.

Possible Cause

NOTE: The causes shown may not be a complete list of all potential problems, and it is possible that there may be other causes.

- PCU internal failure

Diagnosis Details

Conditions for setting the DTC

When a malfunction is detected during the first drive cycle, a Pending DTC is stored in the motor control module memory. If the malfunction returns in the next (second) drive cycle, the MIL comes on and a Confirmed DTC and the freeze data are stored.

Conditions for clearing the DTC

The MIL is cleared if the malfunction does not return in three consecutive trips in which the diagnostic runs. The MIL, the Pending DTC, the Confirmed DTC, and the freeze data can be cleared with the scan tool Clear command.

DTC P0710

DTC P0710: Transmission Fluid Temperature Sensor Circuit Range/Performance

General Description

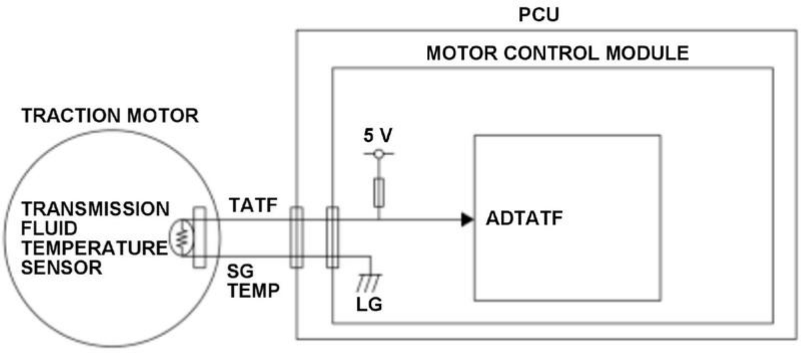

PCU is composed of motor control module, MPI module, and motor/generator phase current sensor

The traction motor is cooled by an automatic transmission fluid (ATF)-based oil cooling system and the power control unit (PCU) obtains the ATF temperature and traction motor temperature signals. Normally, the traction motor temperature and the ATF temperature become nearly the same value immediately after the traction motor is started when it is sufficiently cooled down. The motor control module in the PCU detects a malfunction and stores a DTC when the difference between the ATF temperature and the traction motor temperature immediately after the motor is started is equal to or more than the prescribed value continuously for the prescribed time or more.

Monitor Execution, Sequence, Duration, DTC Type

Execution	Continuous
Sequence	None
Duration	3 seconds or more
DTC Type	One drive cycle, MIL on, POWER SYSTEM indicator on

Enable Conditions

Condition	Minimum	Maximum
Elapsed time after the vehicle condition is turned to the OFF (LOCK) mode	5 hours 50 minutes	-

Condition	Minimum	Maximum
Traction motor absolute torque value	-	10 N*m (1 kgf*m, 7.3 Ibf*ft)

Malfunction Threshold

The difference between the ATF temperature [ATF Temperature (TRC)] and the traction motor temperature is more than 90 deg.F (50 deg.C) for at least 3 seconds.

[ ]: HDS Parameter

Possible Cause

NOTE: The causes shown may not be a complete list of all potential problems, and it is possible that there may be other causes.

- Traction motor temperature sensor failure
- Transmission fluid temperature sensor failure
- PCU internal failure

Diagnosis Details

Conditions for setting the DTC

When a malfunction is detected, the MIL comes on and a Pending DTC, a Confirmed DTC, and the freeze data are stored in the motor control module memory.

Conditions for clearing the DTC

The MIL is cleared if the malfunction does not return in three consecutive trips in which the diagnostic runs. The MIL, the Pending DTC, the Confirmed DTC, and the freeze data can be cleared with the scan tool Clear command.

DTC P0711

DTC P0711: Transmission Fluid Temperature Sensor Circuit

General Description

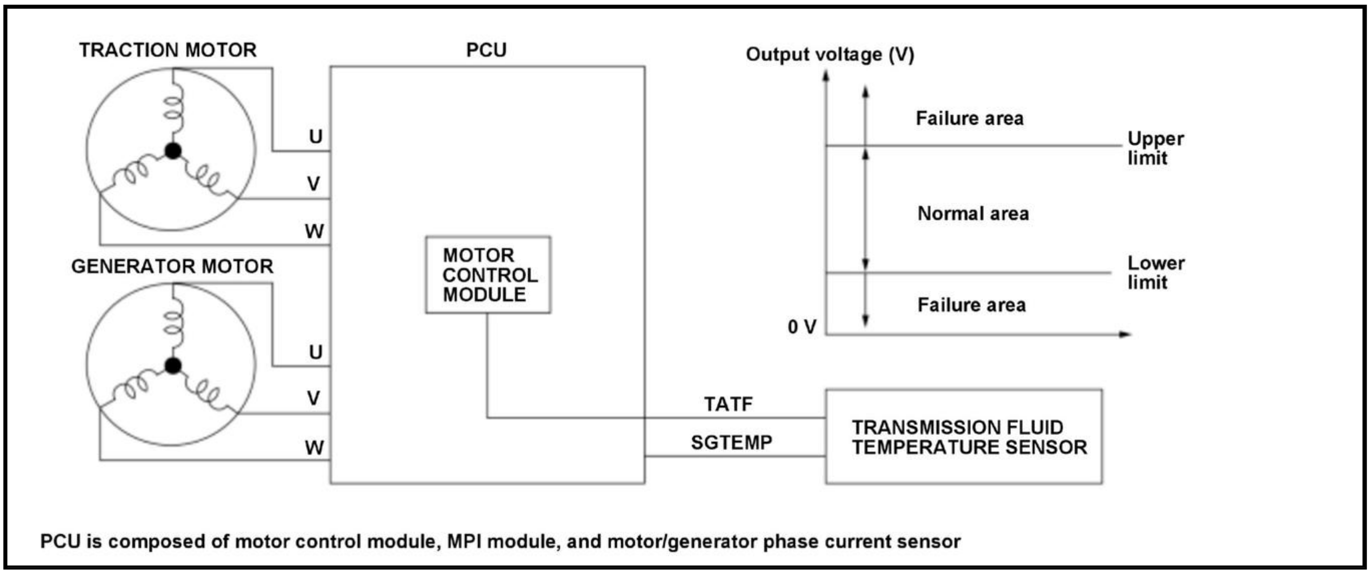
TRACTION MOTOR
PCU
Output voltage (V)
Failure area
Upper limit
U
V
W
Normal area
GENERATOR MOTOR
MOTOR CONTROL MODULE
Lower limit
Failure area
0 V
U
V
TATF
W
SGTEMP
TRANSMISSION FLUID TEMPERATURE SENSOR
PCU is composed of motor control module, MPI module, and motor/generator phase current sensor

The power control unit (PCU) monitors the transmission fluid temperature sensor value to prevent malfunction of traction motor and generator motor due to heat generation. If the signal voltage from the transmission fluid temperature sensor falls below or exceeds a set value for a specified time, the motor control module in the PCU detects a malfunction and stores a DTC.

Monitor Execution, Sequence, Duration, DTC Type

Execution	Continuous
Sequence	None
Duration	2.5 seconds or more
DTC Type	Two drive cycles, MIL on, POWER SYSTEM indicator on

Enable Conditions

Condition	Minimum	Maximum
12 volt battery voltage	8 V	-

Malfunction Threshold

The transmission fluid temperature sensor output voltage [ATF Temperature Sensor Voltage (TRC)] is more than 4.83 V or less than 0.15 V for at least 2.5 seconds.

[ ]: HDS Parameter

Possible Cause

NOTE: The causes shown may not be a complete list of all potential problems, and it is possible that there may be other causes.

- Transmission fluid temperature sensor failure
- PCU internal failure

Diagnosis Details

Conditions for setting the DTC

When a malfunction is detected during the first drive cycle, a Pending DTC is stored in the motor control module memory. If the malfunction returns in the next (second) drive cycle, the MIL comes on and a Confirmed DTC and the freeze data are stored.

Conditions for clearing the DTC

The MIL is cleared if the malfunction does not return in three consecutive trips in which the diagnostic runs. The MIL, the Pending DTC, the Confirmed DTC, and the freeze data can be cleared with the scan tool Clear command.

DTC P0712

DTC P0712: Transmission Fluid Temperature Sensor Circuit Low

General Description

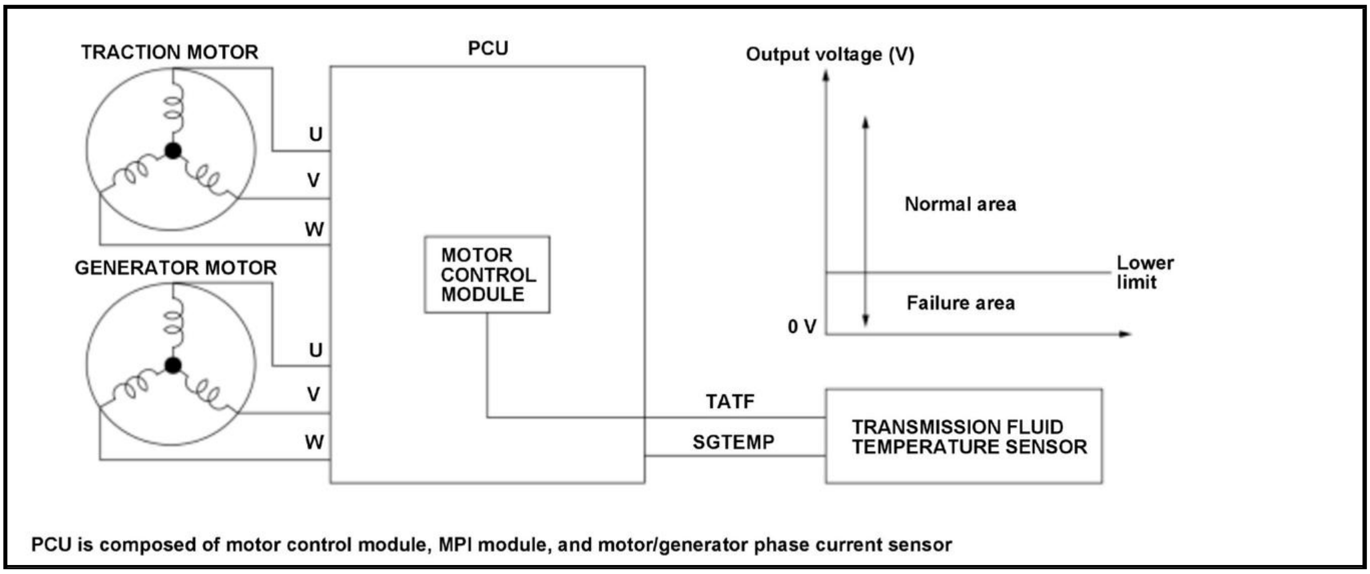
TRACTION MOTOR
PCU
Output voltage (V)
U
V
W
Normal area
GENERATOR MOTOR
MOTOR CONTROL MODULE
Lower limit
Failure area
0 V
U
V
W
TATF
SGTEMP
TRANSMISSION FLUID TEMPERATURE SENSOR
PCU is composed of motor control module, MPI module, and motor/generator phase current sensor

The power control unit (PCU) monitors the transmission fluid temperature sensor value to prevent malfunction of traction motor and generator motor due to heat generation. If the transmission fluid temperature sensor voltage is excessively low for a set time, the motor control module in the PCU detects a malfunction and stores a DTC.

Monitor Execution, Sequence, Duration, DTC Type

Execution	Continuous
Sequence	None
Duration	2.0 seconds or more
DTC Type	One drive cycle, MIL on, POWER SYSTEM indicator on

Enable Conditions

Condition	Minimum	Maximum
12 volt battery voltage	8 V	-

Malfunction Threshold

The transmission fluid temperature sensor output voltage [ATF Temperature Sensor Voltage (TRC)] is less than 0.1 V for at least 2.0 seconds.

[ ]: HDS Parameter

Possible Cause

NOTE: The causes shown may not be a complete list of all potential problems, and it is possible that there may be other causes.

- Transmission fluid temperature sensor TATF line short to ground
- Transmission fluid temperature sensor failure
- PCU internal failure

Diagnosis Details

Conditions for setting the DTC

When a malfunction is detected, the MIL comes on and a Pending DTC, a Confirmed DTC, and the freeze data are stored in the motor control module memory.

Conditions for clearing the DTC

The MIL is cleared if the malfunction does not return in three consecutive trips in which the diagnostic runs. The MIL, the Pending DTC, the Confirmed DTC, and the freeze data can be cleared with the scan tool Clear command.

DTC P0713

DTC P0713: Transmission Fluid Temperature Sensor Circuit High

General Description

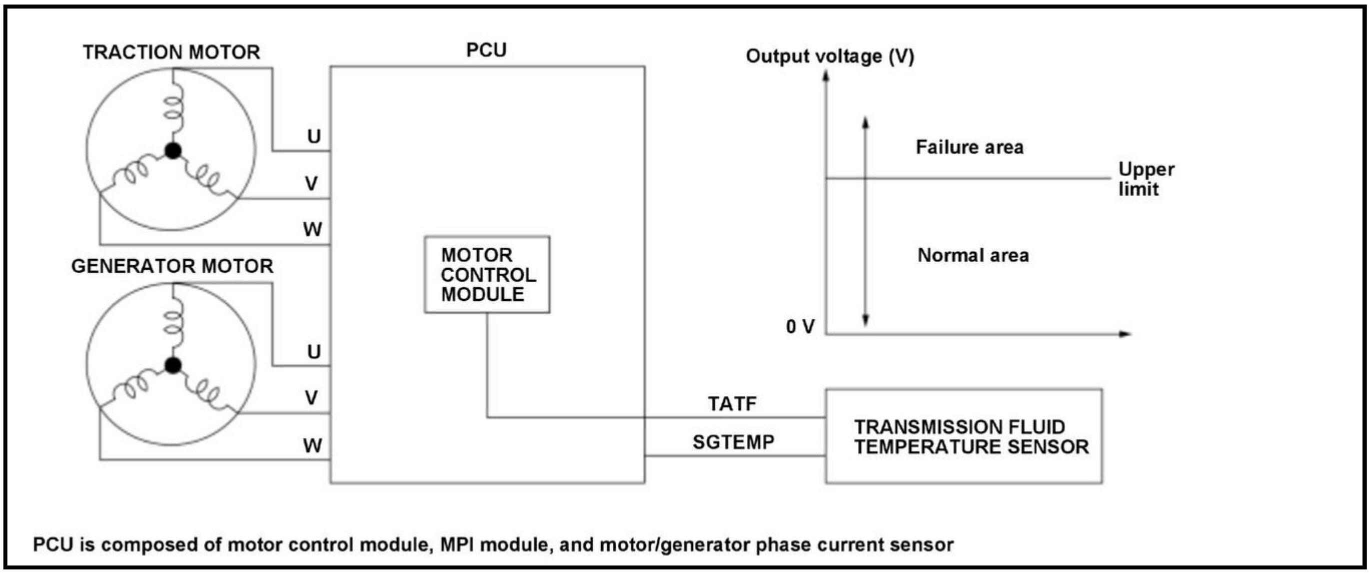
TRACTION MOTOR
PCU
U
V
W
GENERATOR MOTOR
U
V
W
MOTOR CONTROL MODULE
Output voltage (V)
Failure area
Upper limit
Normal area
0 V
TATF
SGTEMP
TRANSMISSION FLUID TEMPERATURE SENSOR
PCU is composed of motor control module, MPI module, and motor/generator phase current sensor

The power control unit (PCU) monitors the transmission fluid temperature sensor value to prevent malfunction of traction motor and generator motor due to heat generation. If the transmission fluid temperature sensor voltage is excessively high for a set time, the motor control module in the PCU detects a malfunction and stores a DTC.

Monitor Execution, Sequence, Duration, DTC Type

Execution	Continuous
Sequence	None
Duration	2.0 seconds or more
DTC Type	One drive cycle, MIL on, POWER SYSTEM indicator on

Enable Conditions

Condition	Minimum	Maximum
12 volt battery voltage	8 V	-

Malfunction Threshold

The transmission fluid temperature sensor output voltage [ATF Temperature Sensor Voltage (TRC)] is more than 4.9 V for at least 2.0 seconds.

[ ]: HDS Parameter

Possible Cause

NOTE: The causes shown may not be a complete list of all potential problems, and it is possible that there may be other causes.

- Transmission fluid temperature sensor TATF line open
- Transmission fluid temperature sensor SGTEMP line open

- Transmission fluid temperature sensor failure
- PCU internal failure

Diagnosis Details

Conditions for setting the DTC

When a malfunction is detected, the MIL comes on and a Pending DTC, a Confirmed DTC, and the freeze data are stored in the motor control module memory.

Conditions for clearing the DTC

The MIL is cleared if the malfunction does not return in three consecutive trips in which the diagnostic runs. The MIL, the Pending DTC, the Confirmed DTC, and the freeze data can be cleared with the scan tool Clear command.

DTC P0A1A (GENERATOR MOTOR CONTROL MODULE)

DTC P0A1A: Generator Motor Control Module

General Description

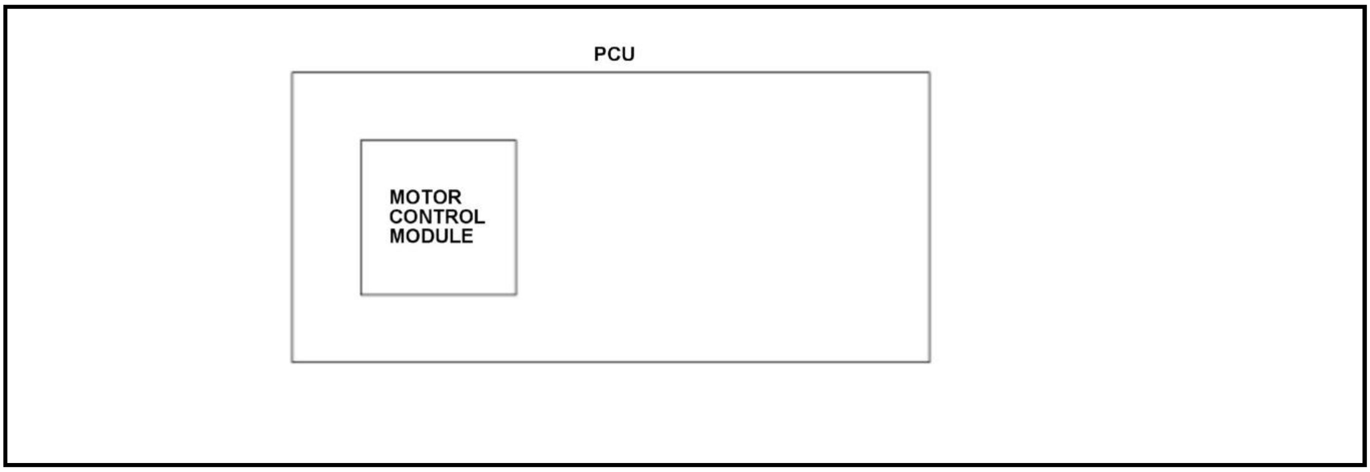

The microcomputer is built into the motor control module. If the motor control module detects an abnormal in the microcomputer, a malfunction is detected and stores a DTC.

Monitor Execution, Sequence, Duration, DTC Type

Execution	Continuous
Sequence	None
Duration	-
DTC Type	One drive cycle, MIL on, POWER SYSTEM indicator on

Enable Conditions

Condition	Â
Vehicle	ON mode

Malfunction Threshold

The motor control module detects an abnormal in the microcomputer 3 times or more.

Possible Cause

NOTE: The causes shown may not be a complete list of all potential problems, and it is possible that there may be other causes.

- PCU internal failure

Diagnosis Details

Conditions for setting the DTC

When a malfunction is detected, the MIL comes on and a Pending DTC, a Confirmed DTC, and the freeze data are stored in the motor control module memory.

Conditions for clearing the DTC

The MIL is cleared if the malfunction does not return in three consecutive trips in which the diagnostic runs. The MIL, the Pending DTC, the Confirmed DTC, and the freeze data can be cleared with the scan tool Clear command.

DTC P0A1A (TRACTION MOTOR CONTROL MODULE)

DTC P0A1A: Generator Motor Control Module (Traction Motor Control Module Detected)

General Description

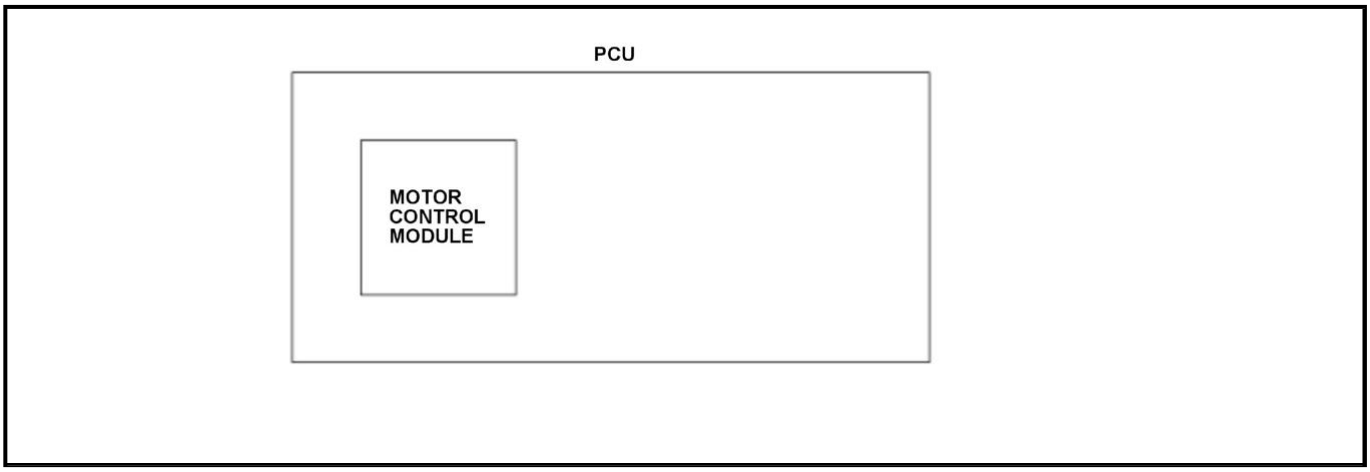

The microcomputer is built into the motor control module. If the motor control module detects an abnormal in the microcomputer, a malfunction is detected and stores a DTC.

Monitor Execution, Sequence, Duration, DTC Type

Execution	Continuous
Sequence	None
Duration	-
DTC Type	One drive cycle, MIL on, POWER SYSTEM indicator on

Enable Conditions

Condition	Â
Vehicle	ON mode

Malfunction Threshold

The motor control module detects an abnormal in the microcomputer 3 times or more.

Possible Cause

NOTE: The causes shown may not be a complete list of all potential problems, and it is possible that there may be other causes.

- PCU internal failure

Diagnosis Details

Conditions for setting the DTC

When a malfunction is detected, the MIL comes on and a Pending DTC, a Confirmed DTC, and the freeze data are stored in the motor control module memory.

Conditions for clearing the DTC

The MIL is cleared if the malfunction does not return in three consecutive trips in which the diagnostic runs. The MIL, the Pending DTC, the Confirmed DTC, and the freeze data can be cleared with the scan tool Clear command.

DTC P0A1B

DTC P0A1B: Traction Motor Control Module

General Description

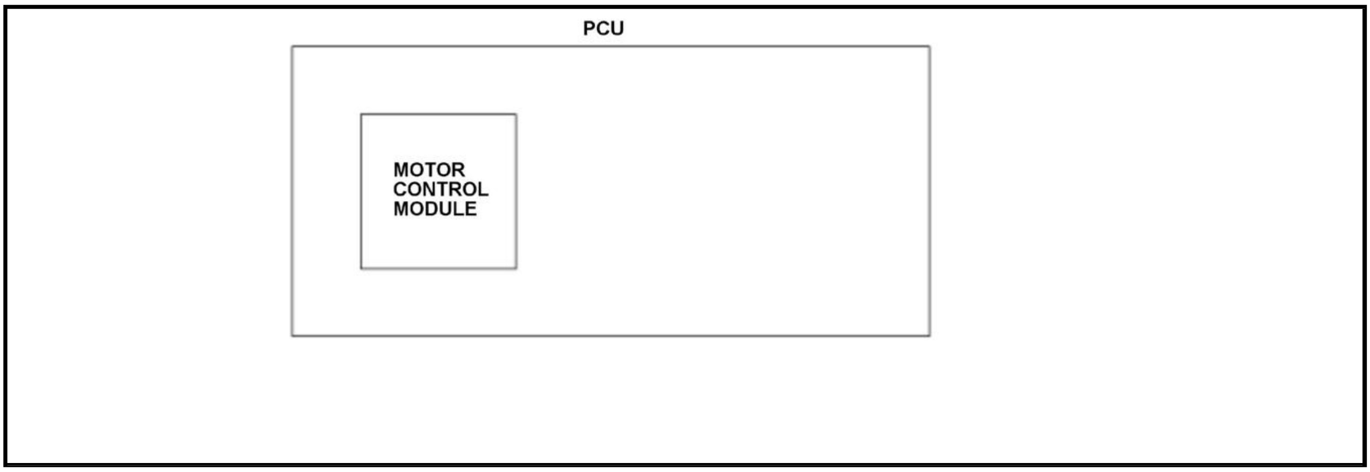

The microcomputer is built into the motor control module. If the motor control module detects an abnormal in the microcomputer, a malfunction is detected and stores a DTC.

Monitor Execution, Sequence, Duration, DTC Type

Execution	Continuous
Sequence	None
Duration	-
DTC Type	One drive cycle, MIL on, POWER SYSTEM indicator on

Enable Conditions

Condition	Â
Vehicle	ON mode

Malfunction Threshold

The motor control module detects an abnormal in the microcomputer 3 times or more.

Possible Cause

NOTE: The causes shown may not be a complete list of all potential problems, and it is possible that there may be other causes.

- PCU internal failure

Diagnosis Details

Conditions for setting the DTC

When a malfunction is detected, the MIL comes on and a Pending DTC, a Confirmed DTC, and the freeze data are stored in the motor control module memory.

Conditions for clearing the DTC

The MIL is cleared if the malfunction does not return in three consecutive trips in which the diagnostic runs. The MIL, the Pending DTC, the Confirmed DTC, and the freeze data can be cleared with the scan tool Clear command.

DTC P0A2A

DTC P0A2A: Traction Motor Temperature Sensor Circuit

General Description

This fault code is a general (specified by SAE) DTC that is stored at the time the following DTC codes (P1D6E, P1D72) are detected.

DTC P0A2B

DTC P0A2B: Traction Motor Temperature Sensor Circuit Range/Performance

General Description

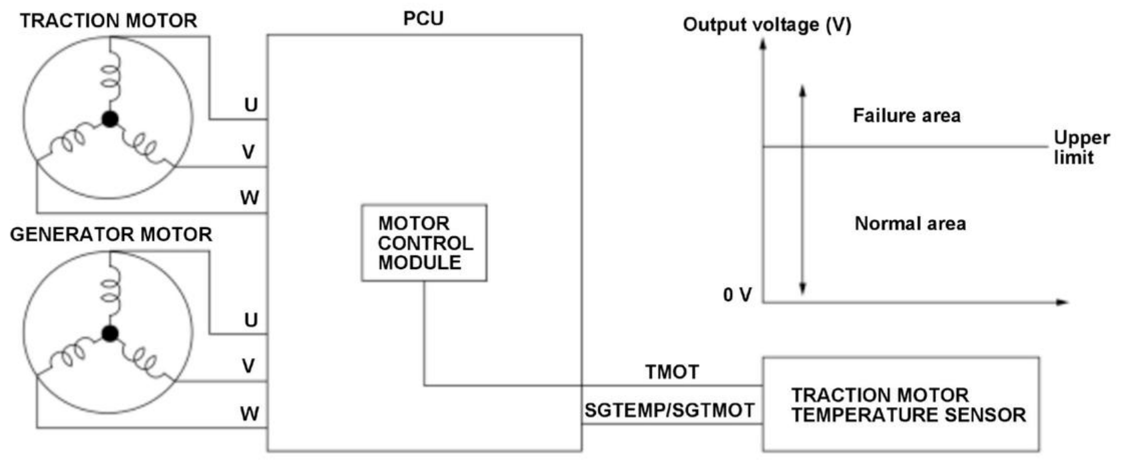
TRACTION MOTOR
PCU
Output voltage (V)
U
V
W
Failure area
Upper limit
Normal area
GENERATOR MOTOR
MOTOR CONTROL MODULE
0 V
U
V
W
TMOT
SGTEMP/SGTMOT
TRACTION MOTOR TEMPERATURE SENSOR

PCU is composed of motor control module, MPI module, and motor/generator phase current sensor

The power control unit (PCU) monitors the traction motor temperature sensor value to prevent malfunction of traction motor due to heat generation. If the traction motor temperature sensor voltage is excessively high for a set time, the motor control module in the PCU detects a malfunction and stores a DTC.

Monitor Execution, Sequence, Duration, DTC Type

Execution	Continuous
Sequence	None
Duration	2.5 seconds or more

DTC Type	Two drive cycles, MIL on, POWER SYSTEM indicator on

Enable Conditions

Condition	Minimum	Maximum
12 volt battery voltage	8 V	-

Malfunction Threshold

The traction motor temperature sensor output voltage [Motor Temperature Sensor Voltage (TRC)] is more than 4.83 V for at least 2.5 seconds.

[ ]: HDS Parameter

Possible Cause

NOTE: The causes shown may not be a complete list of all potential problems, and it is possible that there may be other causes.

- Traction motor temperature sensor failure
- PCU internal failure

Diagnosis Details

Conditions for setting the DTC

When a malfunction is detected during the first drive cycle, a Pending DTC is stored in the motor control module memory. If the malfunction returns in the next (second) drive cycle, the MIL comes on and a Confirmed DTC and the freeze data are stored.

Conditions for clearing the DTC

The MIL is cleared if the malfunction does not return in three consecutive trips in which the diagnostic runs. The MIL, the Pending DTC, the Confirmed DTC, and the freeze data can be cleared with the scan tool Clear command.

DTC P0A2C

DTC P0A2C: Traction Motor Temperature Sensor Circuit Low

General Description

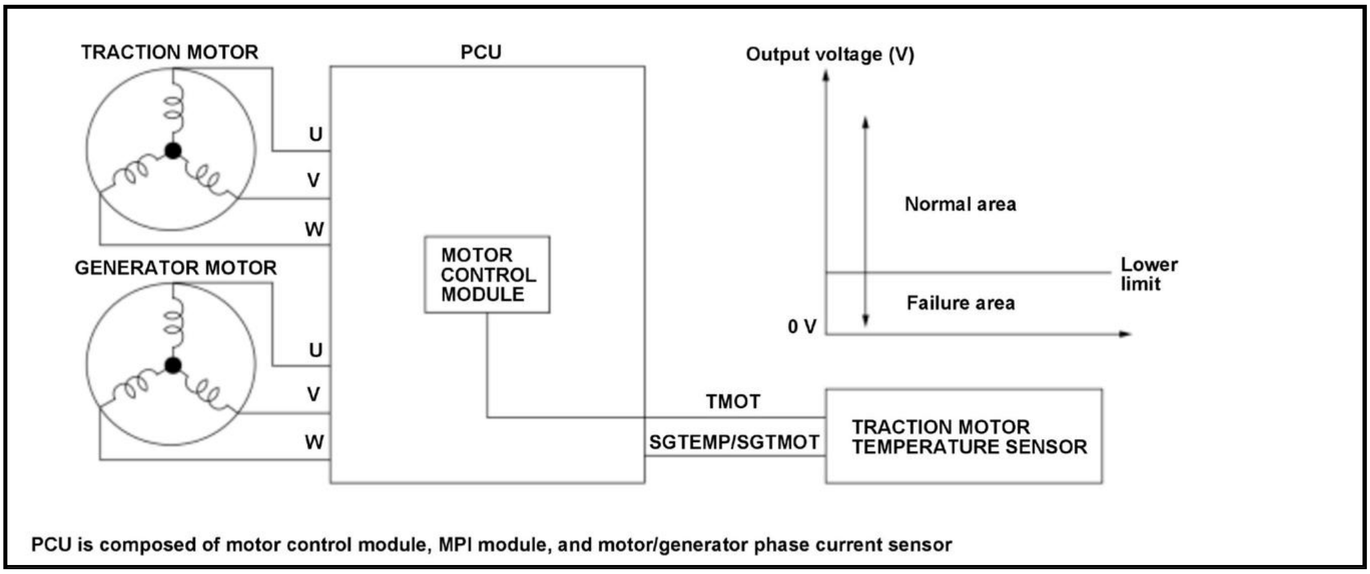
TRACTION MOTOR
PCU
Output voltage (V)
U
V
W
Normal area
GENERATOR MOTOR
MOTOR CONTROL MODULE
Lower limit
Failure area
0 V
U
V
W
TMOT
SGTEMP/SGTMOT
TRACTION MOTOR TEMPERATURE SENSOR
PCU is composed of motor control module, MPI module, and motor/generator phase current sensor

The power control unit (PCU) monitors the traction motor temperature sensor value to prevent malfunction of traction motor due to heat generation. If the traction motor temperature sensor voltage is excessively low for a set time, the motor control module in the PCU detects a malfunction and stores a DTC.

Monitor Execution, Sequence, Duration, DTC Type

Execution	Continuous
Sequence	None
Duration	2.0 seconds or more
DTC Type	One drive cycle, MIL on, POWER SYSTEM indicator on

Enable Conditions

Condition	Minimum	Maximum
12 volt battery voltage	8 V	-

Malfunction Threshold

The traction motor temperature sensor output voltage [Motor Temperature Sensor Voltage (TRC)] is less than 0.3 V for at least 2.0 seconds.

[ ]: HDS Parameter

Possible Cause

NOTE: The causes shown may not be a complete list of all potential problems, and it is possible that there may be other causes.

- Traction motor temperature sensor TMOT line short to ground
- Traction motor temperature sensor failure
- PCU internal failure

Diagnosis Details

Conditions for setting the DTC

When a malfunction is detected, the MIL comes on and a Pending DTC, a Confirmed DTC, and the freeze data are stored in the motor control module memory.

Conditions for clearing the DTC

The MIL is cleared if the malfunction does not return in three consecutive trips in which the diagnostic runs. The MIL, the Pending DTC, the Confirmed DTC, and the freeze data can be cleared with the scan tool Clear command.

DTC P0A2D

DTC P0A2D: Traction Motor Temperature Sensor Circuit High

General Description

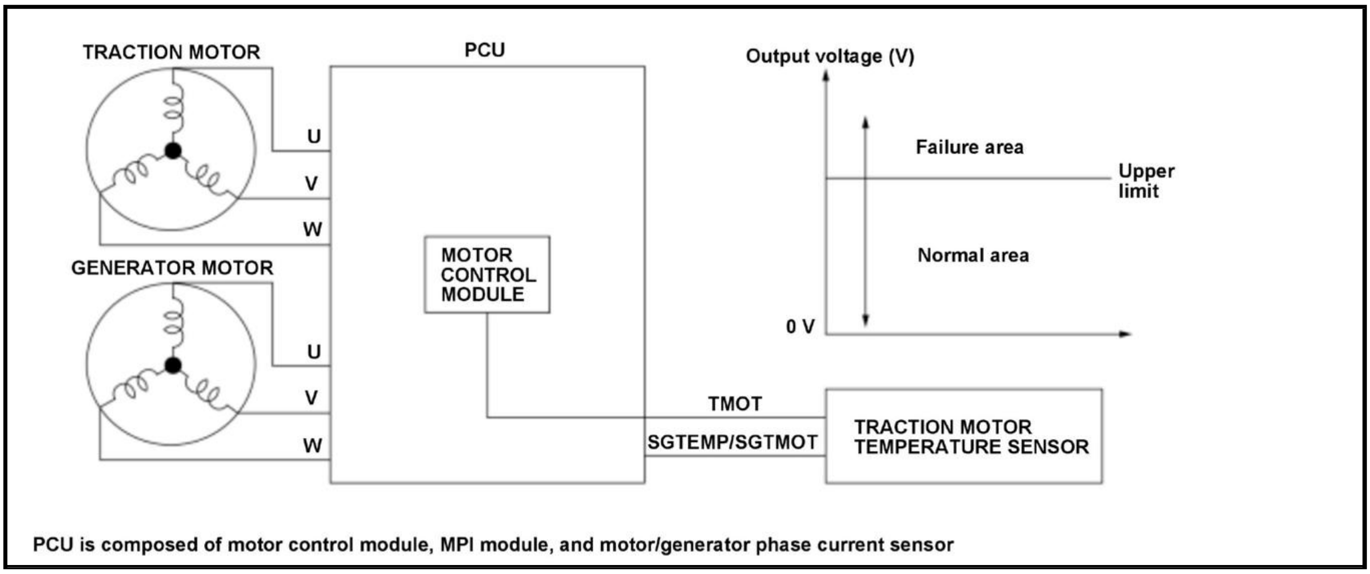
TRACTION MOTOR
PCU
Output voltage (V)
U
V
W
Failure area
Upper limit
Normal area
GENERATOR MOTOR
MOTOR CONTROL MODULE
0 V
U
V
W
TMOT
SGTEMP/SGTMOT
TRACTION MOTOR TEMPERATURE SENSOR
PCU is composed of motor control module, MPI module, and motor/generator phase current sensor

The power control unit (PCU) monitors the traction motor temperature sensor value to prevent malfunction of traction motor due to heat generation. If the traction motor temperature sensor voltage is excessively high for a set time, the motor control module in the PCU detects a malfunction and stores a DTC.

Monitor Execution, Sequence, Duration, DTC Type

Execution	Continuous
Sequence	None
Duration	2.0 seconds or more
DTC Type	One drive cycle, MIL on, POWER SYSTEM indicator on

Enable Conditions

Condition	Minimum	Maximum
12 volt battery voltage	8 V	-

Malfunction Threshold

The traction motor temperature sensor output voltage [Motor Temperature Sensor Voltage (TRC)] is more than 4.9 V for at least 2.0 seconds.

[ ]: HDS Parameter

Possible Cause

NOTE: The causes shown may not be a complete list of all potential problems, and it is possible that there may be other causes.

- Traction motor temperature sensor TMOT line open
- Traction motor temperature sensor SGTEMP/SGTMOT line open
- Traction motor temperature sensor failure
- PCU internal failure

Diagnosis Details

Conditions for setting the DTC

When a malfunction is detected, the MIL comes on and a Pending DTC, a Confirmed DTC, and the freeze data are stored in the motor control module memory.

Conditions for clearing the DTC

The MIL is cleared if the malfunction does not return in three consecutive trips in which the diagnostic runs. The MIL, the Pending DTC, the Confirmed DTC, and the freeze data can be cleared with the scan tool Clear command.

DTC P0A2F

DTC P0A2F: Traction Motor Over Temperature

General Description

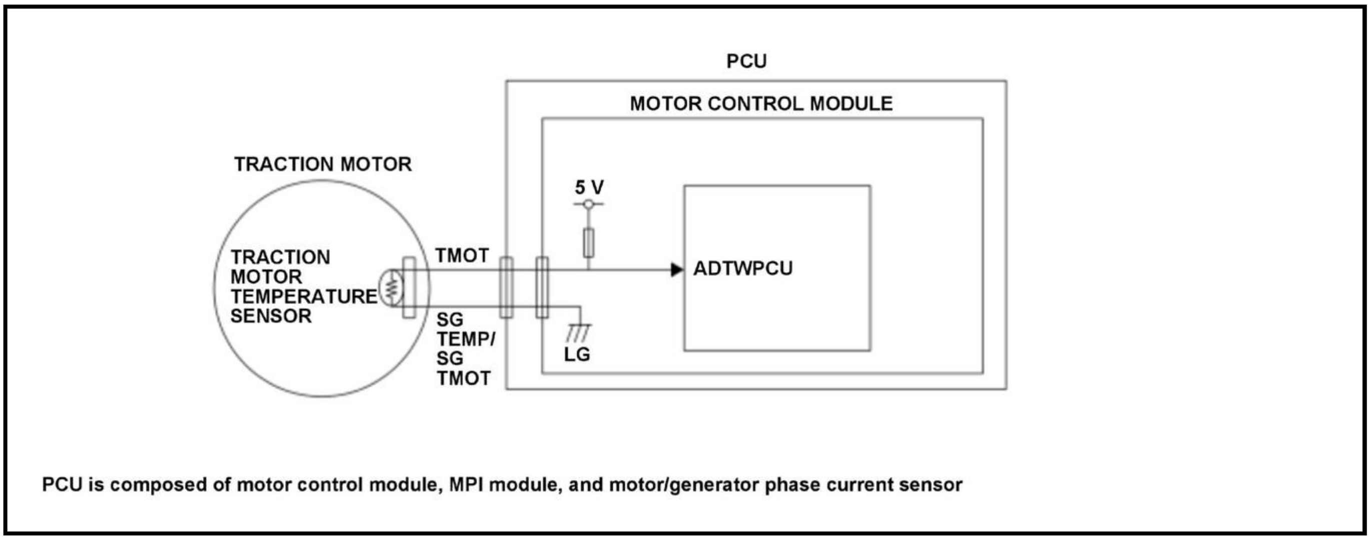

PCU is composed of motor control module, MPI module, and motor/generator phase current sensor

The traction motor is cooled by an automatic transmission fluid (ATF)-based oil cooling system and the motor control module obtains traction motor temperature signal to monitor whether the temperature is normal. The motor control module detects a malfunction and stores a DTC when the traction motor temperature is abnormally high for the prescribed time or more.

Monitor Execution, Sequence, Duration, DTC Type

Execution	Continuous
Sequence	None
Duration	3 seconds or more
DTC Type	One drive cycle, MIL on, POWER SYSTEM indicator on

Enable Conditions

Condition	Â
Vehicle	ON mode

Malfunction Threshold

The traction motor temperature is more than 364 deg.F (184 deg.C) for at least 3 seconds.

Possible Cause

NOTE: The causes shown may not be a complete list of all potential problems, and it is possible that there may be other causes.

- ATF cooler pipe clogged
- ATF cooler pipe leak
- ATF cooler failure

- ATF pump failure
- Traction motor temperature sensor failure
- PCU internal failure

Diagnosis Details

Conditions for setting the DTC

When a malfunction is detected, the MIL comes on and a Pending DTC, a Confirmed DTC, and the freeze data are stored in the motor control module memory.

Conditions for clearing the DTC

The MIL is cleared if the malfunction does not return in three consecutive trips in which the diagnostic runs. The MIL, the Pending DTC, the Confirmed DTC, and the freeze data can be cleared with the scan tool Clear command.

DTC P0A3C

DTC P0A3C: Traction Motor Inverter Over Temperature

General Description

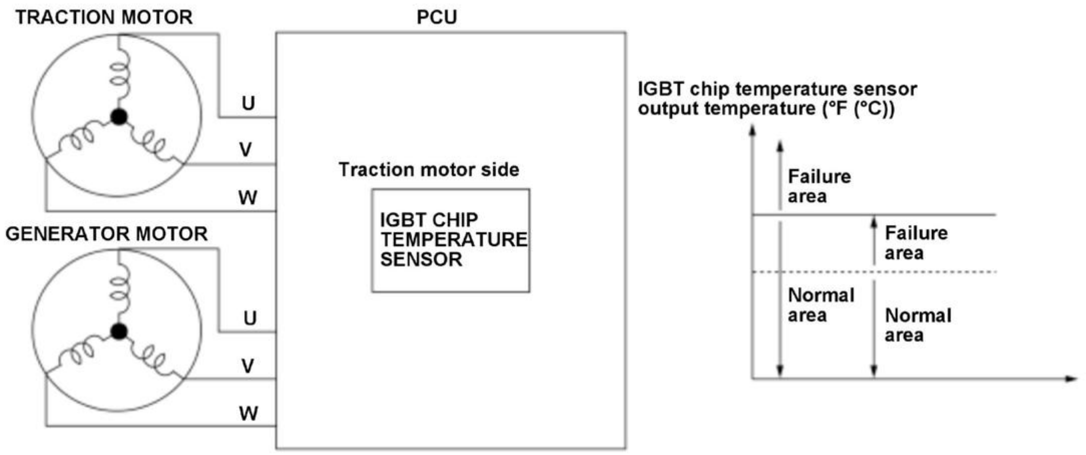
TRACTION MOTOR
PCU
U
V
W
GENERATOR MOTOR
U
V
W
Traction motor side
IGBT CHIP TEMPERATURE SENSOR
IGBT chip temperature sensor output temperature (°F (°C))
Failure area
Failure area
Normal area
Normal area

PCU is composed of motor control module, MPI module, and motor/generator phase current sensor

The power control unit (PCU) monitors the IGBT chip temperature sensor value to prevent malfunction of the chip due to heat generation. If the IGBT chip temperature sensor output temperature is out of a specified value for a specified time, the motor control module in the PCU detects a malfunction and stores a DTC.

Monitor Execution, Sequence, Duration, DTC Type

Execution	Continuous
Sequence	None
Duration	100 milliseconds or more*11 seconds or more**
DTC Type	One drive cycle, MIL on, POWER SYSTEM indicator on

*: Symptom 1

**: Symptom 2

Enable Conditions

Condition	Minimum	Maximum
12 volt battery voltage	8 V	-

Malfunction Threshold

One of these symptoms occurs:

- Symptom 1

  The output temperature from the IGBT chip temperature sensor is more than 328 deg.F (164 deg.C) for at least 100 milliseconds.

- Symptom 2

  The output temperature from the IGBT chip temperature sensor is more than 317 deg.F (158 deg.C) for at least 11 seconds.

Possible Cause

NOTE: The causes shown may not be a complete list of all potential problems, and it is possible that there may be other causes.

- Traction motor motor rotor position sensor line failure
- Traction motor power cable line failure
- Traction motor gate drive-wire line failure
- Radiator fan control (RFC) unit line failure
- PCU electric coolant pump line failure
- Water pipe leak
- Water pipe clogged
- RFC unit failure
- PCU coolant temperature sensor failure
- Traction motor motor rotor position sensor failure
- Motor phase current sensor failure
- PCU electric coolant pump failure
- Traction motor failure
- PCU internal failure

Diagnosis Details

Conditions for setting the DTC

When a malfunction is detected, the MIL comes on and a Pending DTC, a Confirmed DTC, and the freeze data are stored in the motor control module memory.

Conditions for clearing the DTC

The MIL is cleared if the malfunction does not return in three consecutive trips in which the diagnostic runs. The MIL, the Pending DTC, the Confirmed DTC, and the freeze data can be cleared with the scan tool Clear command.

DTC P0A3E

DTC P0A3E: Generator Motor Inverter Over Temperature

General Description

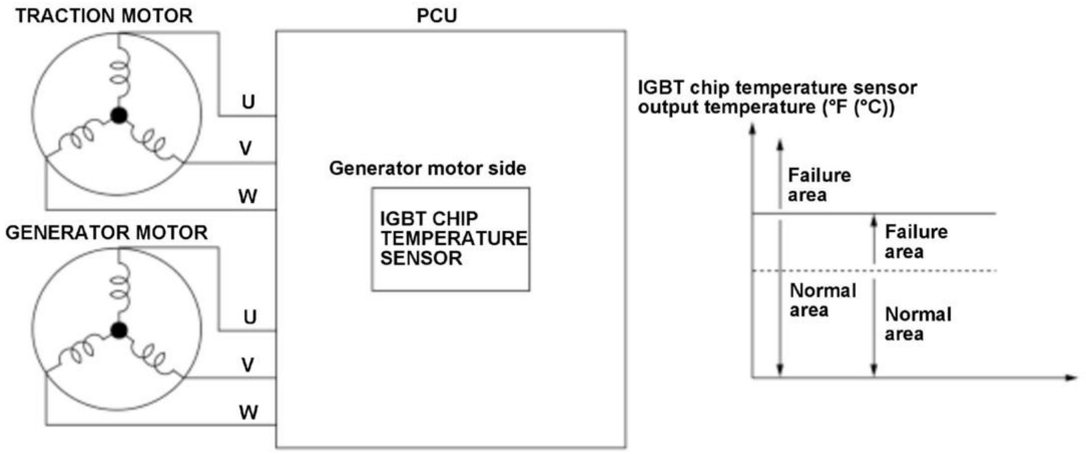
TRACTION MOTOR
PCU
U
V
W
GENERATOR MOTOR
U
V
W
Generator motor side
IGBT CHIP TEMPERATURE SENSOR
IGBT chip temperature sensor output temperature (°F (°C))
Failure area
Failure area
Normal area
Normal area

PCU is composed of motor control module, MPI module, and motor/generator phase current sensor

The power control unit (PCU) monitors the IGBT chip temperature sensor value to prevent malfunction of the chip due to heat generation. If the IGBT chip temperature sensor output temperature is out of a specified value for a specified time, the motor control module in the PCU detects a malfunction and stores a DTC.

Monitor Execution, Sequence, Duration, DTC Type

Execution	Continuous
Sequence	None
Duration	100 milliseconds or more*11 seconds or more**
DTC Type	One drive cycle, MIL on, POWER SYSTEM indicator on

*: Symptom 1

**: Symptom 2

Enable Conditions

Condition	Minimum	Maximum
12 volt battery voltage	8 V	-
High voltage side power supply voltage (6 V)*	5 V	-

Malfunction Threshold

One of these symptoms occurs:

- Symptom 1

  The output temperature from the IGBT chip temperature sensor is more than 322 deg.F (161 deg.C) for at least 100 milliseconds.

- Symptom 2

  The output temperature from the IGBT chip temperature sensor is more than 302 deg.F (150 deg.C) for at least 11 seconds.

Possible Cause

NOTE: The causes shown may not be a complete list of all potential problems, and it is possible that there may be other causes.

- Generator motor motor rotor position sensor line failure
- Generator motor power cable line failure
- Radiator fan control (RFC) unit line failure
- PCU electric coolant pump line failure
- Water pipe leak
- RFC unit failure
- PCU coolant temperature sensor failure
- Generator motor motor rotor position sensor failure
- PCU electric coolant pump failure
- PCU internal failure

Diagnosis Details

Conditions for setting the DTC

When a malfunction is detected, the MIL comes on and a Pending DTC, a Confirmed DTC, and the freeze data are stored in the motor control module memory.

Conditions for clearing the DTC

The MIL is cleared if the malfunction does not return in three consecutive trips in which the diagnostic runs. The MIL, the Pending DTC, the Confirmed DTC, and the freeze data can be cleared with the scan tool Clear command.

DTC P0A3F

DTC P0A3F: Traction Motor Rotor Position Sensor Circuit

General Description

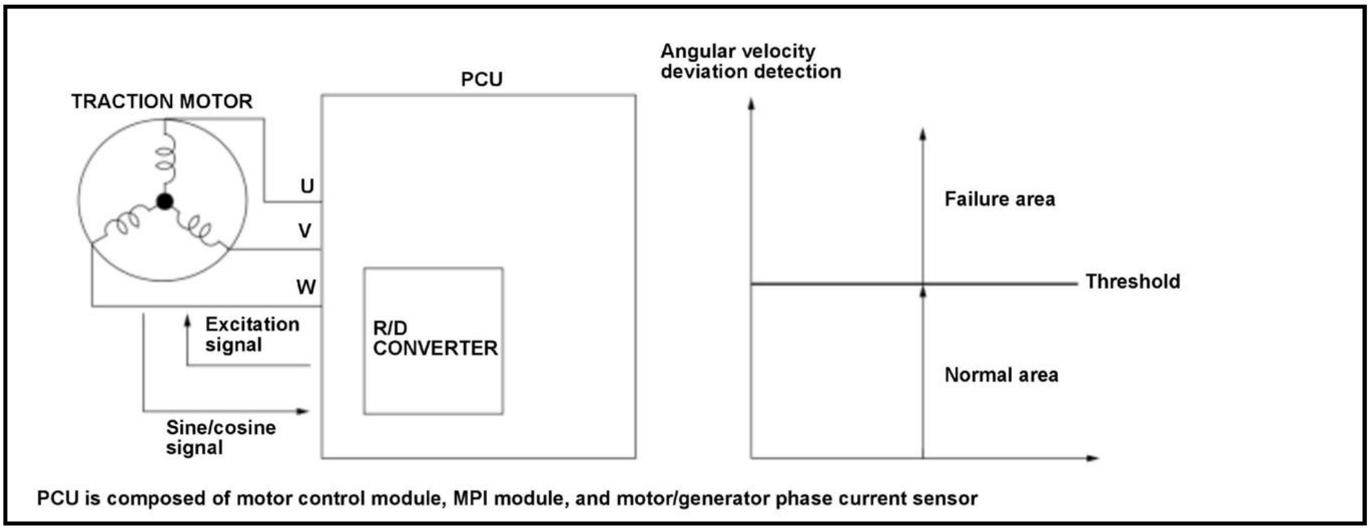
TRACTION MOTOR
PCU
Angular velocity deviation detection
U
V
W
Excitation signal
Sine/cosine signal
R/D CONVERTER
Failure area
Threshold
Normal area
PCU is composed of motor control module, MPI module, and motor/generator phase current sensor

The power control unit (PCU) detects the traction motor rotor position by the R/D converter based on the traction motor motor rotor position sensor signals. If either of following conditions occurs, the motor control module in the PCU detects a malfunction and stores a DTC.

- Tracking loop abnormal bit detection counter exceeds a specified time.

- Deviation between the R/D converter angular velocity and the angular velocity calculated from electrical angle exceeds a specified value.

Monitor Execution, Sequence, Duration, DTC Type

Execution	Continuous
Sequence	None
Duration	310 milliseconds or more*400 milliseconds or more**
DTC Type	One drive cycle, MIL on, POWER SYSTEM indicator on

*: R/D converter tracking loop abnormal bit detection

**: Angular velocity deviation detection

Enable Conditions

Condition	Minimum	Maximum
12 volt battery voltage	8 V	-

Malfunction Threshold

Either of the conditions occurs:

- R/D converter tracking loop abnormal bit is as 1 for at least 310 milliseconds.
- Deviation between the R/D converter angular velocity and the angular velocity calculated from electrical angle is 2, 000 rad/s or more for at least 400 milliseconds.

Possible Cause

NOTE: The causes shown may not be a complete list of all potential problems, and it is possible that there may be other causes.

- Traction motor motor rotor position sensor line failure
- Traction motor motor rotor position sensor failure
- PCU internal failure

Diagnosis Details

Conditions for setting the DTC

When a malfunction is detected, the MIL comes on and a Pending DTC, a Confirmed DTC, and the freeze data are stored in the motor control module memory.

Conditions for clearing the DTC

The MIL is cleared if the malfunction does not return in three consecutive trips in which the diagnostic runs. The MIL, the Pending DTC, the Confirmed DTC, and the freeze data can be cleared with the scan tool Clear command.

DTC P0A40

DTC P0A40: Traction Motor Rotor Position Sensor Circuit Range/Performance

General Description

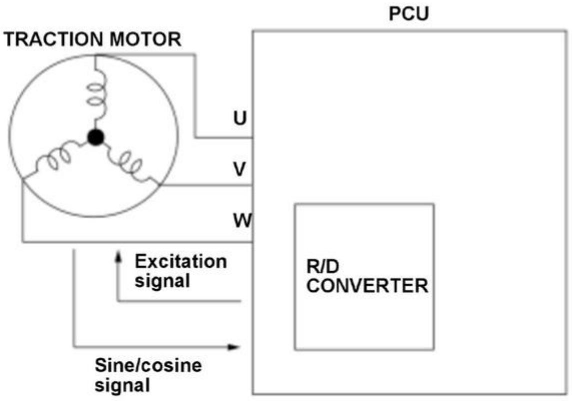

PCU is composed of motor control module, MPI module, and motor/generator phase current sensor

The power control unit (PCU) detects the traction motor position by the R/D converter based on the traction motor motor rotor position sensor signals. If any of following conditions continues for a specified time, the motor control module in the PCU detects a malfunction and stores a DTC.

- R/D converter excitation abnormal bit is detected.
- Excitation output circuit short detection voltage is detected.
- Sine/cosine signal offset voltage abnormal is detected.
- Sine/cosine signal offset voltage upper limit abnormal is detected.

Monitor Execution, Sequence, Duration, DTC Type

Execution	Continuous
Sequence	None
Duration	280 milliseconds or more*, ***230 milliseconds or more**210 milliseconds or more****
DTC Type	One drive cycle, MIL on, POWER SYSTEM indicator on

*: R/D converter excitation abnormal bit detection

**: Excitation output circuit short detection voltage detection

***: Sine/cosine signal offset voltage abnormal detection

****: Sine/cosine signal offset voltage upper limit abnormal detection

Enable Conditions

Condition	Minimum	Maximum
12 volt battery voltage	8 V	-

Malfunction Threshold

Any of following conditions occurs:

- R/D converter excitation abnormal bit is as 1 for at least 280 milliseconds.
- Excitation output circuit short detection voltage is 1 V or less for at least 230 milliseconds.
- Sine/cosine signal offset voltage is out of range from 2.10 - 2.90 V for at least 280 milliseconds.
- Sine/cosine signal offset voltage is 4.90 V or more for at least 210 milliseconds.

Possible Cause

NOTE: The causes shown may not be a complete list of all potential problems, and it is possible that there may be other causes.

- Traction motor motor rotor position sensor R1M/R2M line open
- Traction motor motor rotor position sensor R1M/R2M line short to ground
- Traction motor motor rotor position sensor R1M/R2M line short to traction motor motor rotor position sensor S1M/S2M/S3M/S4M line
- Traction motor motor rotor position sensor S1M/S2M/S3M/S4M line short to other line
- Traction motor motor rotor position sensor miss installed
- Traction motor motor rotor position sensor failure
- PCU internal failure

Diagnosis Details

Conditions for setting the DTC

When a malfunction is detected, the MIL comes on and a Pending DTC, a Confirmed DTC, and the freeze data are stored in the motor control module memory.

Conditions for clearing the DTC

The MIL is cleared if the malfunction does not return in three consecutive trips in which the diagnostic runs. The MIL, the Pending DTC, the Confirmed DTC, and the freeze data can be cleared with the scan tool Clear command.

DTC P0A41

DTC P0A41: Traction Motor Rotor Position Sensor Circuit Low

General Description

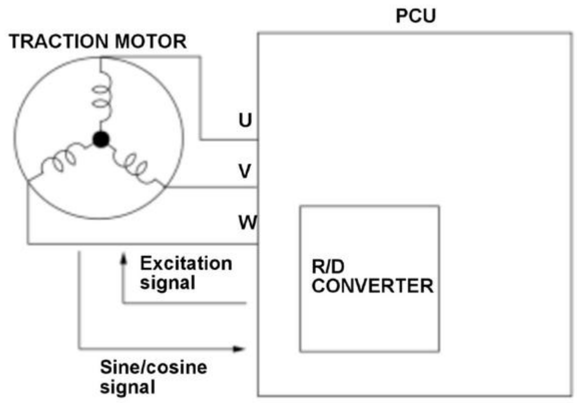

PCU is composed of motor control module, MPI module, and motor/generator phase current sensor

The power control unit (PCU) detects the traction motor position by the R/D converter based on the traction motor motor rotor position sensor signals. If the sine/cosine signal offset voltage is a specified voltage for a specified time, the motor control module in the PCU detects a malfunction and stores a DTC.

Monitor Execution, Sequence, Duration, DTC Type

Execution	Continuous
Sequence	None
Duration	210 milliseconds or more
DTC Type	One drive cycle, MIL on, POWER SYSTEM indicator on

Enable Conditions

Condition	Minimum	Maximum
12 volt battery voltage	8 V	-

Malfunction Threshold

Sine/cosine signal offset voltage is 2.00 V or less for at least 210 milliseconds.

Possible Cause

NOTE: The causes shown may not be a complete list of all potential problems, and it is possible that there may be other causes.

- Traction motor motor rotor position sensor S1M/S2M/S3M/S4M line open
- Traction motor motor rotor position sensor S1M/S2M/S3M/S4M line short to ground
- Traction motor motor rotor position sensor miss installed
- Traction motor motor rotor position sensor failure
- PCU internal failure

Diagnosis Details

Conditions for setting the DTC

When a malfunction is detected, the MIL comes on and a Pending DTC, a Confirmed DTC, and the freeze data are stored in the motor control module memory.

Conditions for clearing the DTC

The MIL is cleared if the malfunction does not return in three consecutive trips in which the diagnostic runs. The MIL, the Pending DTC, the Confirmed DTC, and the freeze data can be cleared with the scan tool Clear command.

DTC P0A4B

DTC P0A4B: Generator Motor Rotor Position Sensor Circuit

General Description

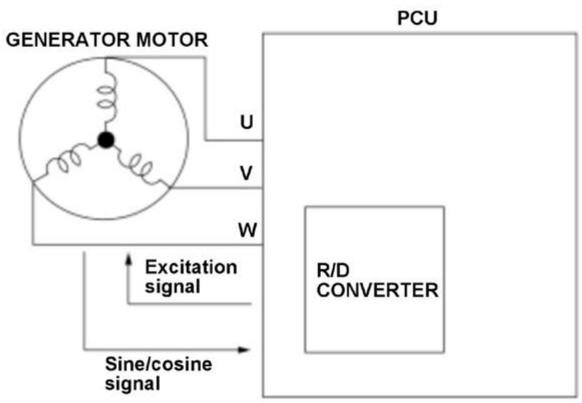

PCU is composed of motor control module, MPI module, and motor/generator phase current sensor

The power control unit (PCU) detects the generator motor rotor position by the R/D converter based on the generator motor motor rotor position sensor signals. If the tracking loop abnormal bit detection counter exceeds a specified time, the motor control module in the PCU detects a malfunction and stores a DTC.

Monitor Execution, Sequence, Duration, DTC Type

Execution	Continuous
Sequence	None
Duration	310 milliseconds or more
DTC Type	One drive cycle, MIL on, POWER SYSTEM indicator on

Enable Conditions

Condition	Minimum	Maximum
12 volt battery voltage	8 V	-

Malfunction Threshold

R/D converter tracking loop abnormal bit is as 1 for at least 310 milliseconds.

Possible Cause

NOTE: The causes shown may not be a complete list of all potential problems, and it is possible that there may be other causes.

- Generator motor motor rotor position sensor line failure
- Generator motor motor rotor position sensor failure
- PCU internal failure

Diagnosis Details

Conditions for setting the DTC

When a malfunction is detected, the MIL comes on and a Pending DTC, a Confirmed DTC, and the freeze data are stored in the motor control module memory.

Conditions for clearing the DTC

The MIL is cleared if the malfunction does not return in three consecutive trips in which the diagnostic runs. The MIL, the Pending DTC, the Confirmed DTC, and the freeze data can be cleared with the scan tool Clear command.

DTC P0A4C

DTC P0A4C: Generator Motor Rotor Position Sensor Circuit Range/Performance

General Description

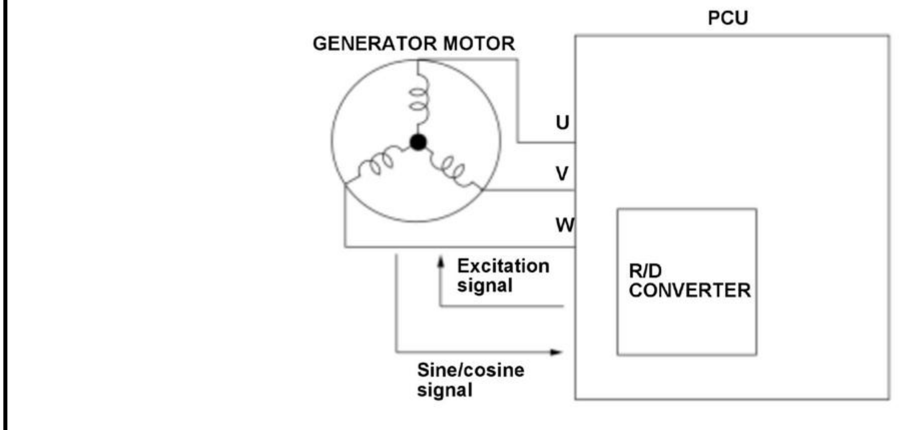

PCU is composed of motor control module, MPI module, and motor/generator phase current sensor

The power control unit (PCU) detects the generator motor position by the R/D converter based on the generator motor motor rotor position sensor signals. If any of following conditions continues for a specified time, the motor control module in the PCU detects a malfunction and stores a DTC.

- R/D converter excitation abnormal bit is detected.
- Excitation output circuit short detection bit is detected.
- Sine/cosine signal offset voltage abnormal is detected.
- Sine/cosine signal offset voltage upper limit abnormal is detected.

Monitor Execution, Sequence, Duration, DTC Type

Execution	Continuous
Sequence	None
Duration	280 milliseconds or more*, ***230 milliseconds or more**210 milliseconds or more****
DTC Type	One drive cycle, MIL on, POWER SYSTEM indicator on

*: R/D converter excitation abnormal bit detection

**: Excitation output circuit short detection bit detection

***: Sine/cosine signal offset voltage abnormal detection

****: Sine/cosine signal offset voltage upper limit abnormal detection

Enable Conditions

Condition	Minimum	Maximum
12 volt battery voltage	8 V	-

Malfunction Threshold

Any of following conditions occurs:

- R/D converter excitation abnormal bit is as 1 for at least 280 milliseconds.
- Excitation output circuit short detection bit is as 1 for at least 230 milliseconds.
- Sine/cosine signal offset voltage is out of range from 2.10 - 2.90 V for at least 280 milliseconds.
- Sine/cosine signal offset voltage is 4.90 V or more for at least 210 milliseconds.

Possible Cause

NOTE: The causes shown may not be a complete list of all potential problems, and it is possible that there may be other causes.

- Generator motor motor rotor position sensor R1G/R2G line open
- Generator motor motor rotor position sensor R1G/R2G line short to ground
- Generator motor motor rotor position sensor R1G/R2G line short to generator motor motor rotor position sensor S1G/S2G/S3G/S4G line
- Generator motor motor rotor position sensor S1G/S2G/S3G/S4G line short to other line
- Generator motor motor rotor position sensor miss installed
- Generator motor motor rotor position sensor failure
- PCU internal failure

Diagnosis Details

Conditions for setting the DTC

When a malfunction is detected, the MIL comes on and a Pending DTC, a Confirmed DTC, and the freeze data are stored in the motor control module memory.

Conditions for clearing the DTC

The MIL is cleared if the malfunction does not return in three consecutive trips in which the diagnostic runs. The MIL, the Pending DTC, the Confirmed DTC, and the freeze data can be cleared with the scan tool Clear command.

DTC P0A4D

DTC P0A4D: Generator Motor Rotor Position Sensor Circuit Low

General Description

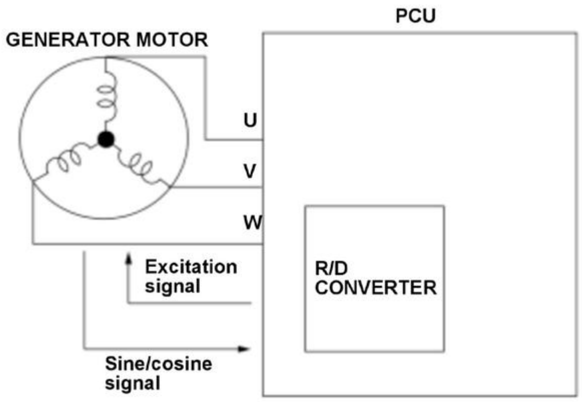

PCU is composed of motor control module, MPI module, and motor/generator phase current sensor

The power control unit (PCU) detects the generator motor position by the R/D converter based on the generator motor motor rotor position sensor signals. If the sine/cosine signal offset voltage is a specified voltage for a specified time, the motor control module in the PCU detects a malfunction and stores a DTC.

Monitor Execution, Sequence, Duration, DTC Type

Execution	Continuous
Sequence	None
Duration	210 milliseconds or more
DTC Type	One drive cycle, MIL on, POWER SYSTEM indicator on

Enable Conditions

Condition	Minimum	Maximum
12 volt battery voltage	8 V	-

Malfunction Threshold

Sine/cosine signal offset voltage is 2.00 V or less for at least 210 milliseconds.

Possible Cause

NOTE: The causes shown may not be a complete list of all potential problems, and it is possible that there may be other causes.

- Generator motor motor rotor position sensor S1G/S2G/S3G/S4G line open
- Generator motor motor rotor position sensor S1G/S2G/S3G/S4G line short to ground
- Generator motor motor rotor position sensor miss installed
- Generator motor motor rotor position sensor failure
- PCU internal failure

Diagnosis Details

Conditions for setting the DTC

When a malfunction is detected, the MIL comes on and a Pending DTC, a Confirmed DTC, and the freeze data are stored in the motor control module memory.

Conditions for clearing the DTC

The MIL is cleared if the malfunction does not return in three consecutive trips in which the diagnostic runs. The MIL, the Pending DTC, the Confirmed DTC, and the freeze data can be cleared with the scan tool Clear command.

DTC P0A5E

DTC P0A5E: Traction Motor Phase U Current Low

General Description

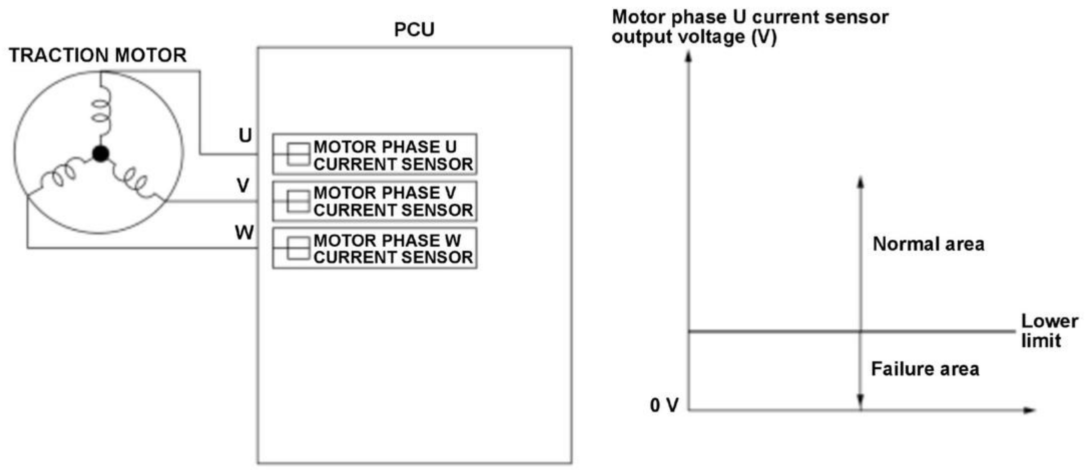
TRACTION MOTOR
PCU
U
V
W
MOTOR PHASE U CURRENT SENSOR
MOTOR PHASE V CURRENT SENSOR
MOTOR PHASE W CURRENT SENSOR
Motor phase U current sensor output voltage (V)
Normal area
Lower limit
Failure area
0 V

PCU is composed of motor control module, MPI module, and motor/generator phase current sensor

The power control unit (PCU) controls the traction motor output based on the motor phase current sensor signals. When the motor phase U current sensor output voltage is a specified voltage for a set time, the motor control module in the PCU detects a malfunction and stores a DTC.

Monitor Execution, Sequence, Duration, DTC Type

Execution	Continuous
Sequence	None
Duration	290 milliseconds or more
DTC Type	Two drive cycles, MIL on, POWER SYSTEM indicator on

Enable Conditions

Condition	Minimum	Maximum
12 volt battery voltage	8 V	-

Malfunction Threshold

The motor phase U current sensor output voltage is less than 0.14 V for at least 290 milliseconds.

Possible Cause

NOTE: The causes shown may not be a complete list of all potential problems, and it is possible that there may be other causes.

- PCU internal failure

Diagnosis Details

Conditions for setting the DTC

When a malfunction is detected during the first drive cycle, a Pending DTC is stored in the motor control module memory. If the malfunction returns in the next (second) drive cycle, the MIL comes on and a Confirmed DTC and the freeze data are stored.

Conditions for clearing the DTC

The MIL is cleared if the malfunction does not return in three consecutive trips in which the diagnostic runs. The MIL, the Pending DTC, the Confirmed DTC, and the freeze data can be cleared with the scan tool Clear command.

DTC P0A5F

DTC P0A5F: Traction Motor Phase U Current High

General Description

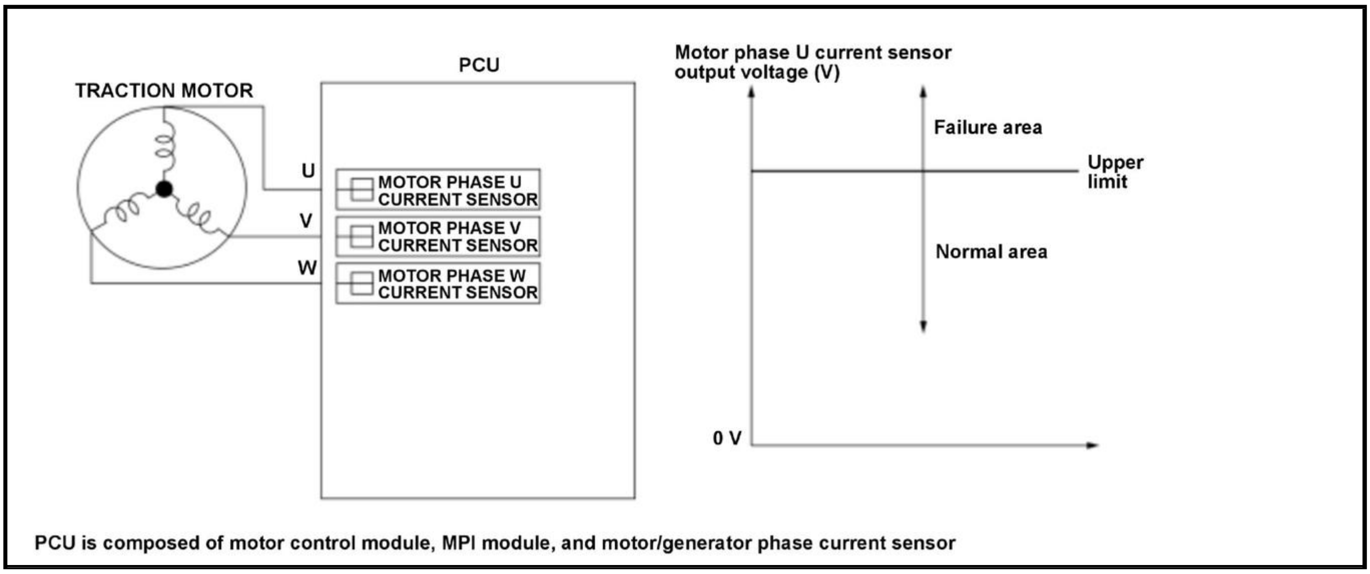
TRACTION MOTOR
PCU
U
V
W
MOTOR PHASE U CURRENT SENSOR
MOTOR PHASE V CURRENT SENSOR
MOTOR PHASE W CURRENT SENSOR
Motor phase U current sensor output voltage (V)
Failure area
Upper limit
Normal area
0 V
PCU is composed of motor control module, MPI module, and motor/generator phase current sensor

The power control unit (PCU) controls the traction motor output based on the motor phase current sensor signals. When the motor phase U current sensor output voltage is a specified voltage for a set time, the motor control module in the PCU detects a malfunction and stores a DTC.

Monitor Execution, Sequence, Duration, DTC Type

Execution	Continuous
Sequence	None
Duration	290 milliseconds or more
DTC Type	Two drive cycles, MIL on, POWER SYSTEM indicator on

Enable Conditions

Condition	Minimum	Maximum
12 volt battery voltage	8 V	-

Malfunction Threshold

The motor phase U current sensor output voltage is more than 4.84 V for at least 290 milliseconds.

Possible Cause

NOTE: The causes shown may not be a complete list of all potential problems, and it is possible that there may be other causes.

- PCU internal failure

Diagnosis Details

Conditions for setting the DTC

When a malfunction is detected during the first drive cycle, a Pending DTC is stored in the motor control module memory. If the malfunction returns in the next (second) drive cycle, the MIL comes on and a Confirmed DTC and the freeze data are stored.

Conditions for clearing the DTC

The MIL is cleared if the malfunction does not return in three consecutive trips in which the diagnostic runs. The MIL, the Pending DTC, the Confirmed DTC, and the freeze data can be cleared with the scan tool Clear command.

DTC P0A61

DTC P0A61: Traction Motor Phase V Current Low

General Description

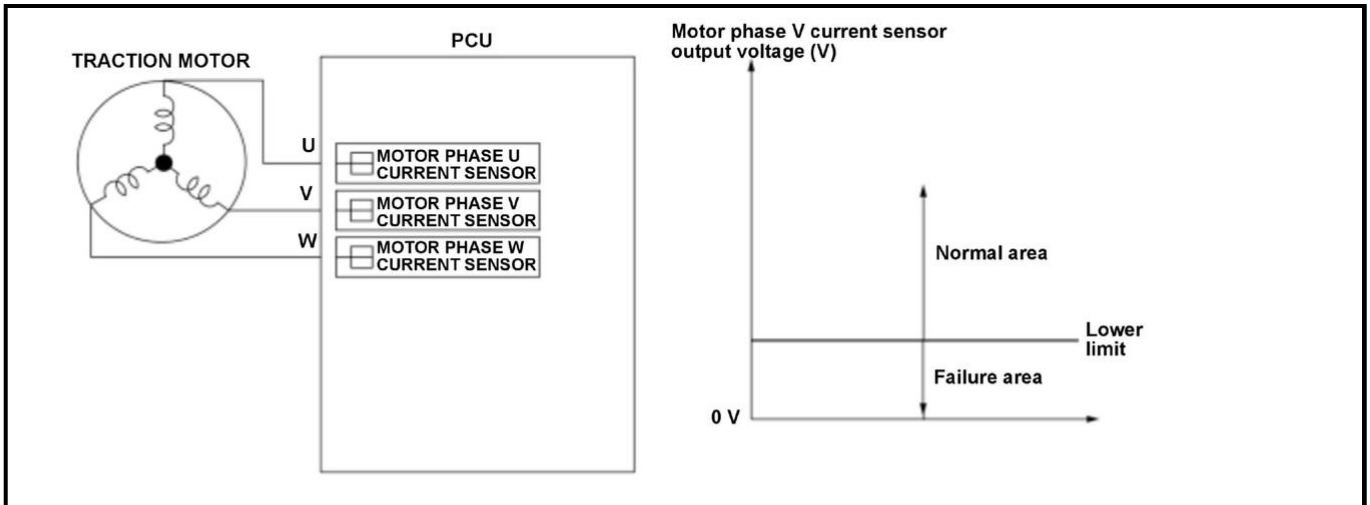
TRACTION MOTOR
PCU
U
V
W
MOTOR PHASE U CURRENT SENSOR
MOTOR PHASE V CURRENT SENSOR
MOTOR PHASE W CURRENT SENSOR
Motor phase V current sensor output voltage (V)
Normal area
Lower limit
Failure area
0 V

PCU is composed of motor control module, MPI module, and motor/generator phase current sensor

The power control unit (PCU) controls the traction motor output based on the motor phase current sensor signals. When the motor phase V current sensor output voltage is a specified voltage for a set time, the motor control module in the PCU detects a malfunction and stores a DTC.

Monitor Execution, Sequence, Duration, DTC Type

Execution	Continuous
Sequence	None
Duration	290 milliseconds or more
DTC Type	Two drive cycles, MIL on, POWER SYSTEM indicator on

Enable Conditions

Condition	Minimum	Maximum
12 volt battery voltage	8 V	-

Malfunction Threshold

The motor phase V current sensor output voltage is less than 0.14 V for at least 290 milliseconds.

Possible Cause

NOTE: The causes shown may not be a complete list of all potential problems, and it is possible that there may be other causes.

- PCU internal failure

Diagnosis Details

Conditions for setting the DTC

When a malfunction is detected during the first drive cycle, a Pending DTC is stored in the motor control module memory. If the malfunction returns in the next (second) drive cycle, the MIL comes on and a Confirmed DTC and the freeze data are stored.

Conditions for clearing the DTC

The MIL is cleared if the malfunction does not return in three consecutive trips in which the diagnostic runs. The MIL, the Pending DTC, the Confirmed DTC, and the freeze data can be cleared with the scan tool Clear command.

DTC P0A62

DTC P0A62: Traction Motor Phase V Current High

General Description

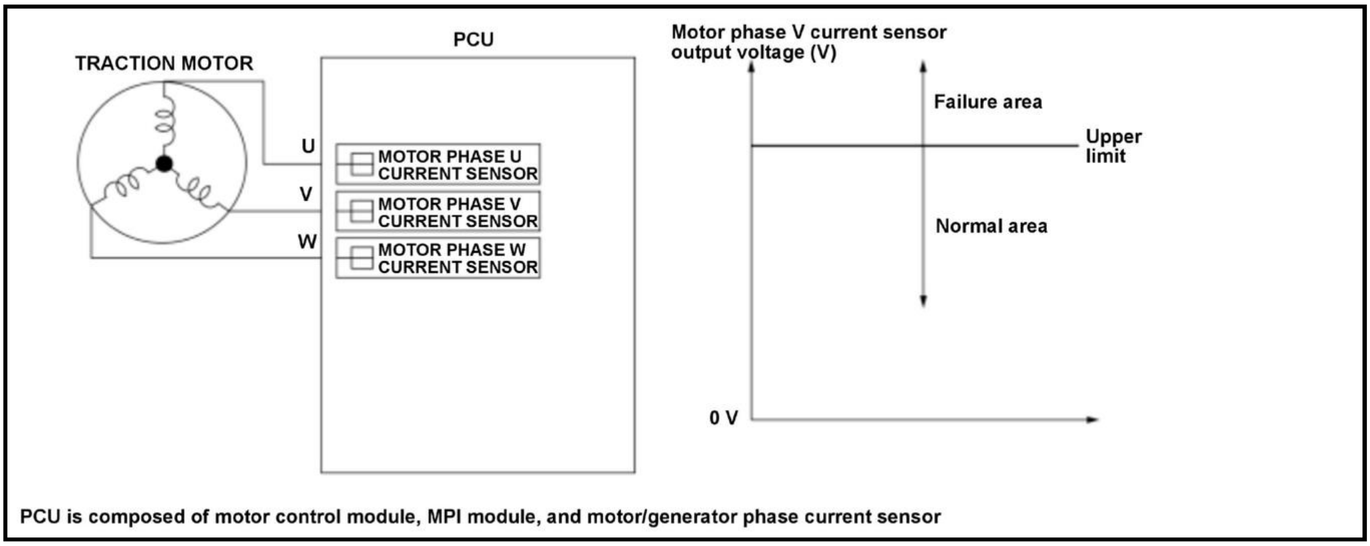
TRACTION MOTOR
PCU
U
V
W
MOTOR PHASE U CURRENT SENSOR
MOTOR PHASE V CURRENT SENSOR
MOTOR PHASE W CURRENT SENSOR
Motor phase V current sensor output voltage (V)
Failure area
Upper limit
Normal area
0 V

PCU is composed of motor control module, MPI module, and motor/generator phase current sensor

The power control unit (PCU) controls the traction motor output based on the motor phase current sensor signals. When the motor phase V current sensor output voltage is a specified voltage for a set time, the motor control module in the PCU detects a malfunction and stores a DTC.

Monitor Execution, Sequence, Duration, DTC Type

Execution	Continuous
Sequence	None
Duration	290 milliseconds or more
DTC Type	Two drive cycles, MIL on, POWER SYSTEM indicator on

Enable Conditions

Condition	Minimum	Maximum
12 volt battery voltage	8 V	-

Malfunction Threshold

The motor phase V current sensor output voltage is more than 4.84 V for at least 290 milliseconds.

Possible Cause

NOTE: The causes shown may not be a complete list of all potential problems, and it is possible that there may be other causes.

- PCU internal failure

Diagnosis Details

Conditions for setting the DTC

When a malfunction is detected during the first drive cycle, a Pending DTC is stored in the motor control module memory. If the malfunction returns in the next (second) drive cycle, the MIL comes on and a Confirmed DTC and the freeze data are stored.

Conditions for clearing the DTC

The MIL is cleared if the malfunction does not return in three consecutive trips in which the diagnostic runs. The MIL, the Pending DTC, the Confirmed DTC, and the freeze data can be cleared with the scan tool Clear command.

DTC P0A64

DTC P0A64: Traction Motor Phase W Current Low

General Description

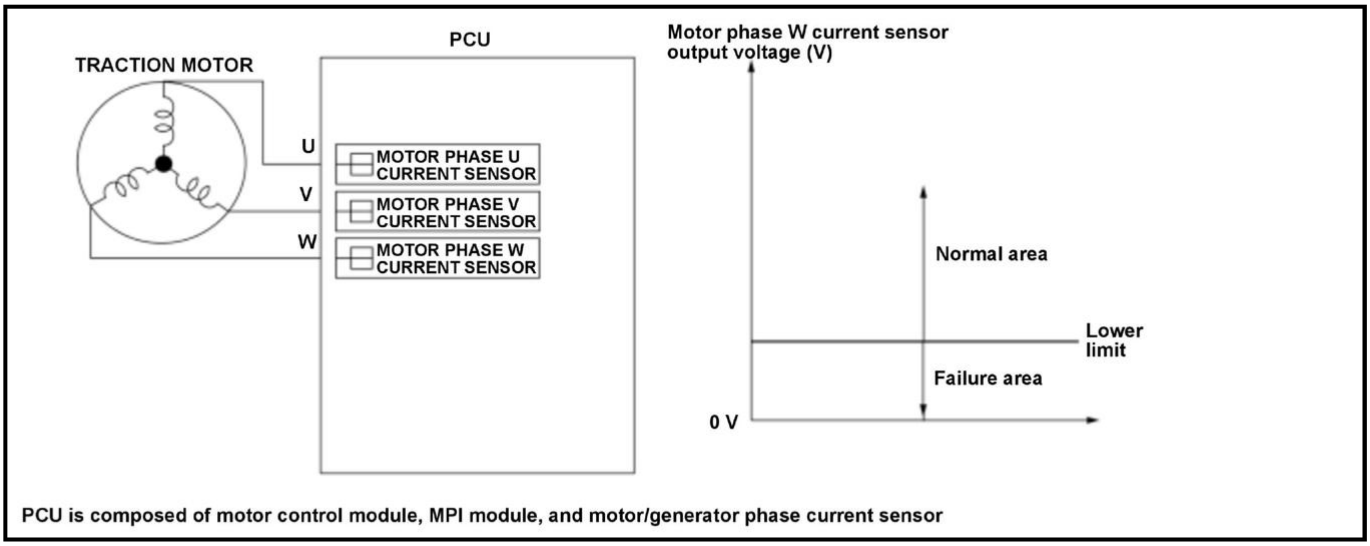
TRACTION MOTOR
PCU
U
V
W
MOTOR PHASE U CURRENT SENSOR
MOTOR PHASE V CURRENT SENSOR
MOTOR PHASE W CURRENT SENSOR
Motor phase W current sensor output voltage (V)
Normal area
Lower limit
Failure area
0 V
PCU is composed of motor control module, MPI module, and motor/generator phase current sensor

The power control unit (PCU) controls the traction motor output based on the motor phase current sensor signals. When the motor phase W current sensor output voltage is a specified voltage for a set time, the motor control module in the PCU detects a malfunction and stores a DTC.

Monitor Execution, Sequence, Duration, DTC Type

Execution	Continuous
Sequence	None
Duration	290 milliseconds or more
DTC Type	Two drive cycles, MIL on, POWER SYSTEM indicator on

Enable Conditions

Condition	Minimum	Maximum
12 volt battery voltage	8 V	-

Malfunction Threshold

The motor phase W current sensor output voltage is less than 0.14 V for at least 290 milliseconds.

Possible Cause

NOTE: The causes shown may not be a complete list of all potential problems, and it is possible that there may be other causes.

- PCU internal failure

Diagnosis Details

Conditions for setting the DTC

When a malfunction is detected during the first drive cycle, a Pending DTC is stored in the motor control module memory. If the malfunction returns in the next (second) drive cycle, the MIL comes on and a Confirmed DTC and the freeze data are stored.

Conditions for clearing the DTC

The MIL is cleared if the malfunction does not return in three consecutive trips in which the diagnostic runs. The MIL, the Pending DTC, the Confirmed DTC, and the freeze data can be cleared with the scan tool Clear command.

DTC P0A65

DTC P0A65: Traction Motor Phase W Current High

General Description

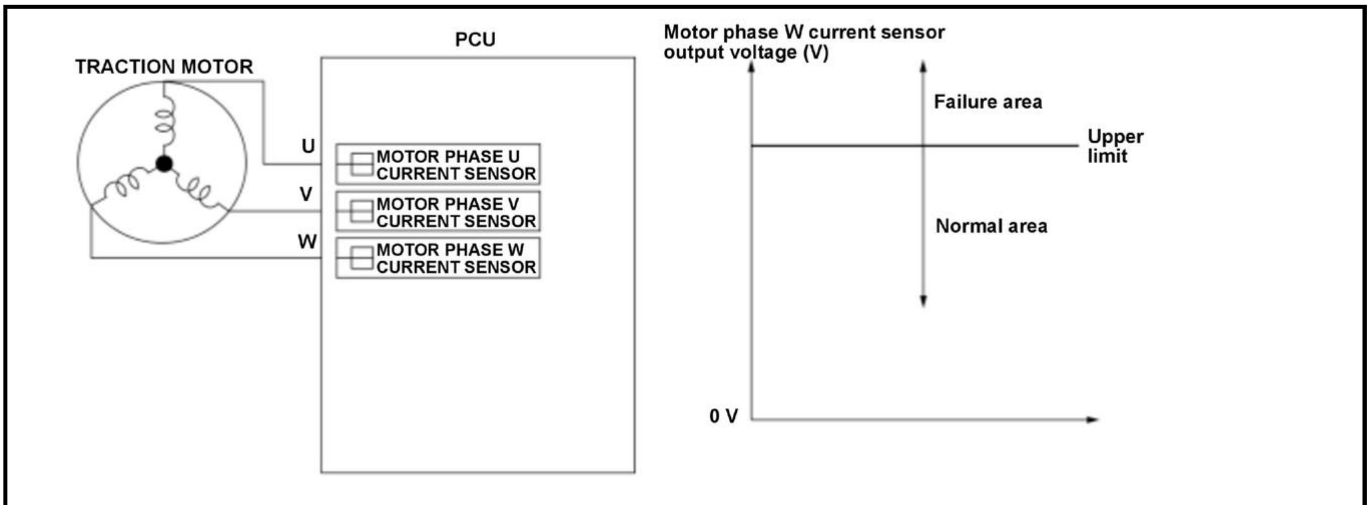
TRACTION MOTOR
PCU
U
V
W
MOTOR PHASE U CURRENT SENSOR
MOTOR PHASE V CURRENT SENSOR
MOTOR PHASE W CURRENT SENSOR
Motor phase W current sensor output voltage (V)
Failure area
Upper limit
Normal area
0 V

PCU is composed of motor control module, MPI module, and motor/generator phase current sensor

The power control unit (PCU) controls the traction motor output based on the motor phase current sensor signals. When the motor phase W current sensor output voltage is a specified voltage for a set time, the motor control module in the PCU detects a malfunction and stores a DTC.

Monitor Execution, Sequence, Duration, DTC Type

Execution	Continuous
Sequence	None
Duration	290 milliseconds or more
DTC Type	Two drive cycles, MIL on, POWER SYSTEM indicator on

Enable Conditions

Condition	Minimum	Maximum
12 volt battery voltage	8 V	-

Malfunction Threshold

The motor phase W current sensor output voltage is more than 4.84 V for at least 290 milliseconds.

Possible Cause

NOTE: The causes shown may not be a complete list of all potential problems, and it is possible that there may be other causes.

- PCU internal failure

Diagnosis Details

Conditions for setting the DTC

When a malfunction is detected during the first drive cycle, a Pending DTC is stored in the motor control module memory. If the malfunction returns in the next (second) drive cycle, the MIL comes on and a Confirmed DTC and the freeze data are stored.

Conditions for clearing the DTC

The MIL is cleared if the malfunction does not return in three consecutive trips in which the diagnostic runs. The MIL, the Pending DTC, the Confirmed DTC, and the freeze data can be cleared with the scan tool Clear command.

DTC P0A70

DTC P0A70: Generator Motor Phase U Current Low

General Description

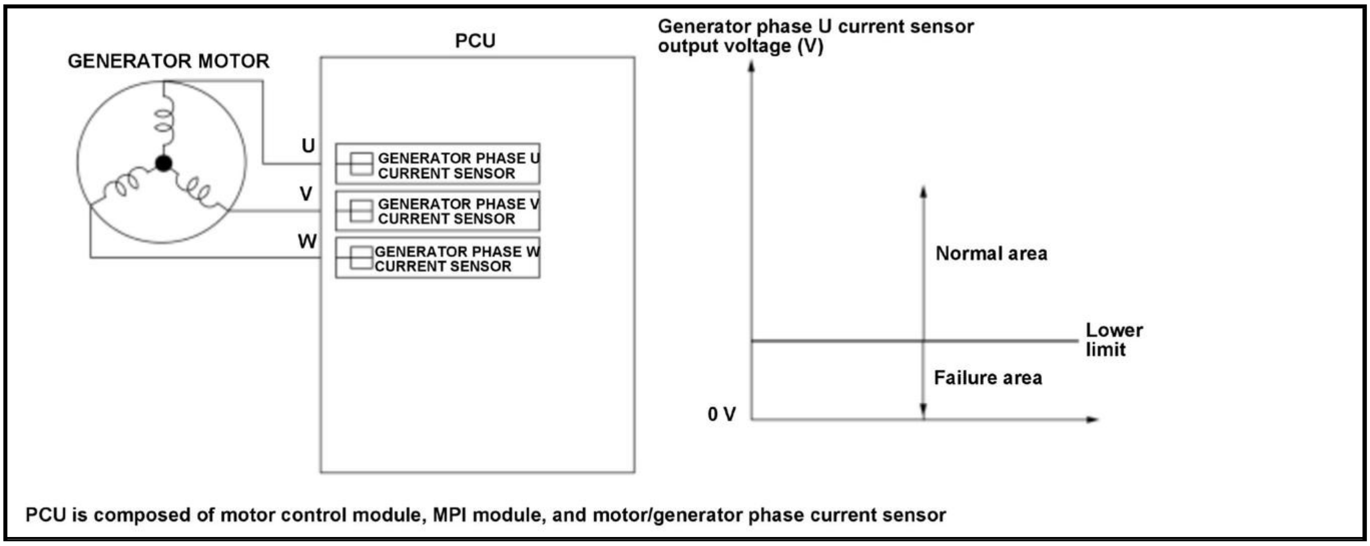
GENERATOR MOTOR
PCU
U
V
W
GENERATOR PHASE U CURRENT SENSOR
GENERATOR PHASE V CURRENT SENSOR
GENERATOR PHASE W CURRENT SENSOR
Generator phase U current sensor output voltage (V)
Normal area
Lower limit
Failure area
0 V

PCU is composed of motor control module, MPI module, and motor/generator phase current sensor

The power control unit (PCU) controls the generator motor output based on the generator phase current sensor signals. When the generator phase U current sensor output voltage is a specified voltage for a set time, the motor control module in the PCU detects a malfunction and stores a DTC.

Monitor Execution, Sequence, Duration, DTC Type

Execution	Continuous
Sequence	None
Duration	290 milliseconds or more
DTC Type	Two drive cycles, MIL on, POWER SYSTEM indicator on

Enable Conditions

Condition	Minimum	Maximum
12 volt battery voltage	8 V	-

Malfunction Threshold

The generator phase U current sensor output voltage is less than 0.14 V for at least 290 milliseconds.

Possible Cause

NOTE: The causes shown may not be a complete list of all potential problems, and it is possible that there may be other causes.

- PCU internal failure

Diagnosis Details

Conditions for setting the DTC

When a malfunction is detected during the first drive cycle, a Pending DTC is stored in the motor control module memory. If the malfunction returns in the next (second) drive cycle, the MIL comes on and a Confirmed DTC and the freeze data are stored.

Conditions for clearing the DTC

The MIL is cleared if the malfunction does not return in three consecutive trips in which the diagnostic runs. The MIL, the Pending DTC, the Confirmed DTC, and the freeze data can be cleared with the scan tool Clear command.

DTC P0A71

DTC P0A71: Generator Motor Phase U Current High

General Description

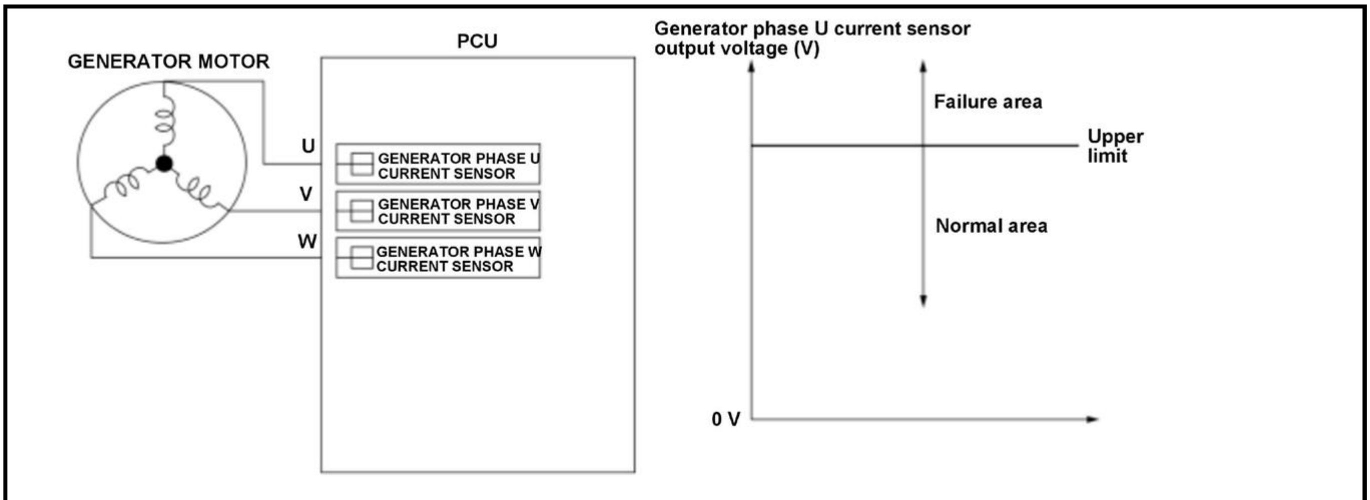
GENERATOR MOTOR
PCU
U
V
W
GENERATOR PHASE U CURRENT SENSOR
GENERATOR PHASE V CURRENT SENSOR
GENERATOR PHASE W CURRENT SENSOR
Generator phase U current sensor output voltage (V)
Failure area
Upper limit
Normal area
0 V

PCU is composed of motor control module, MPI module, and motor/generator phase current sensor

The power control unit (PCU) controls the generator motor output based on the generator phase current sensor signals. When the generator phase U current sensor output voltage is a specified voltage for a set time, the motor control module in the PCU detects a malfunction and stores a DTC.

Monitor Execution, Sequence, Duration, DTC Type

Execution	Continuous
Sequence	None
Duration	290 milliseconds or more
DTC Type	Two drive cycles, MIL on, POWER SYSTEM indicator on

Enable Conditions

Condition	Minimum	Maximum
12 volt battery voltage	8 V	-

Malfunction Threshold

The generator phase U current sensor output voltage is more than 4.84 V for at least 290 milliseconds.

Possible Cause

NOTE: The causes shown may not be a complete list of all potential problems, and it is possible that there may be other causes.

- PCU internal failure

Diagnosis Details

Conditions for setting the DTC

When a malfunction is detected during the first drive cycle, a Pending DTC is stored in the motor control module memory. If the malfunction returns in the next (second) drive cycle, the MIL comes on and a Confirmed DTC and the freeze data are stored.

Conditions for clearing the DTC

The MIL is cleared if the malfunction does not return in three consecutive trips in which the diagnostic runs. The MIL, the Pending DTC, the Confirmed DTC, and the freeze data can be cleared with the scan tool Clear command.

DTC P0A73

DTC P0A73: Generator Motor Phase V Current Low

General Description

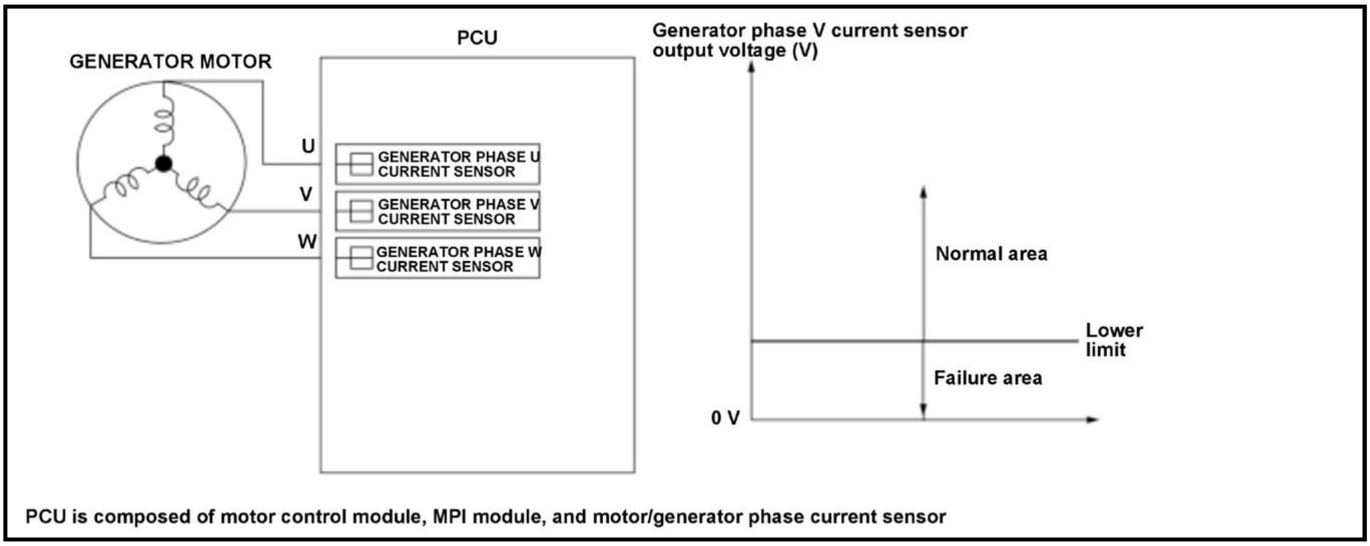
GENERATOR MOTOR
PCU
U
V
W
GENERATOR PHASE U CURRENT SENSOR
GENERATOR PHASE V CURRENT SENSOR
GENERATOR PHASE W CURRENT SENSOR
Generator phase V current sensor output voltage (V)
Normal area
Lower limit
Failure area
0 V

PCU is composed of motor control module, MPI module, and motor/generator phase current sensor

The power control unit (PCU) controls the generator motor output based on the generator phase current sensor signals. When the generator phase V current sensor output voltage is a specified voltage for a set time, the motor control module in the PCU detects a malfunction and stores a DTC.

Monitor Execution, Sequence, Duration, DTC Type

Execution	Continuous
Sequence	None
Duration	290 milliseconds or more

DTC Type	Two drive cycles, MIL on, POWER SYSTEM indicator on

Enable Conditions

Condition	Minimum	Maximum
12 volt battery voltage	8 V	-

Malfunction Threshold

The generator phase V current sensor output voltage is less than 0.14 V for at least 290 milliseconds.

Possible Cause

NOTE: The causes shown may not be a complete list of all potential problems, and it is possible that there may be other causes.

- PCU internal failure

Diagnosis Details

Conditions for setting the DTC

When a malfunction is detected during the first drive cycle, a Pending DTC is stored in the motor control module memory. If the malfunction returns in the next (second) drive cycle, the MIL comes on and a Confirmed DTC and the freeze data are stored.

Conditions for clearing the DTC

The MIL is cleared if the malfunction does not return in three consecutive trips in which the diagnostic runs. The MIL, the Pending DTC, the Confirmed DTC, and the freeze data can be cleared with the scan tool Clear command.

DTC P0A74

DTC P0A74: Generator Motor Phase V Current High

General Description

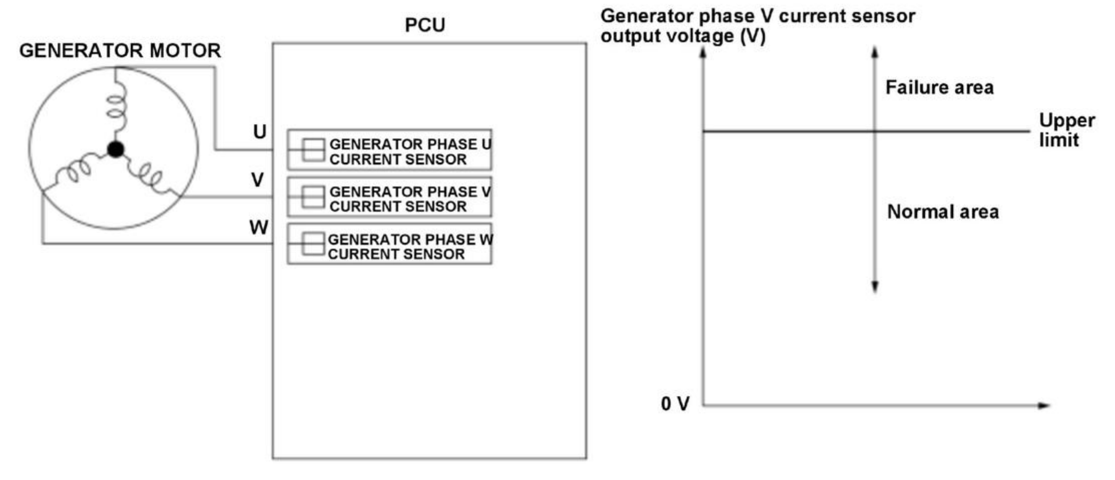
GENERATOR MOTOR
PCU
U
V
W
GENERATOR PHASE U CURRENT SENSOR
GENERATOR PHASE V CURRENT SENSOR
GENERATOR PHASE W CURRENT SENSOR
Generator phase V current sensor output voltage (V)
Failure area
Upper limit
Normal area
0 V

PCU is composed of motor control module, MPI module, and motor/generator phase current sensor

The power control unit (PCU) controls the generator motor output based on the generator phase current sensor signals. When the generator phase V current sensor output voltage is a specified voltage for a set time, the motor control module in the PCU detects a malfunction and stores a DTC.

Monitor Execution, Sequence, Duration, DTC Type

Execution	Continuous
Sequence	None
Duration	290 milliseconds or more
DTC Type	Two drive cycles, MIL on, POWER SYSTEM indicator on

Enable Conditions

Condition	Minimum	Maximum
12 volt battery voltage	8 V	-

Malfunction Threshold

The generator phase V current sensor output voltage is more than 4.84 V for at least 290 milliseconds.

Possible Cause

NOTE: The causes shown may not be a complete list of all potential problems, and it is possible that there may be other causes.

- PCU internal failure

Diagnosis Details

Conditions for setting the DTC

When a malfunction is detected during the first drive cycle, a Pending DTC is stored in the motor control module memory. If the malfunction returns in the next (second) drive cycle, the MIL comes on and a Confirmed DTC and the freeze data are stored.

Conditions for clearing the DTC

The MIL is cleared if the malfunction does not return in three consecutive trips in which the diagnostic runs. The MIL, the Pending DTC, the Confirmed DTC, and the freeze data can be cleared with the scan tool Clear command.

DTC P0A76

DTC P0A76: Generator Motor Phase W Current Low

General Description

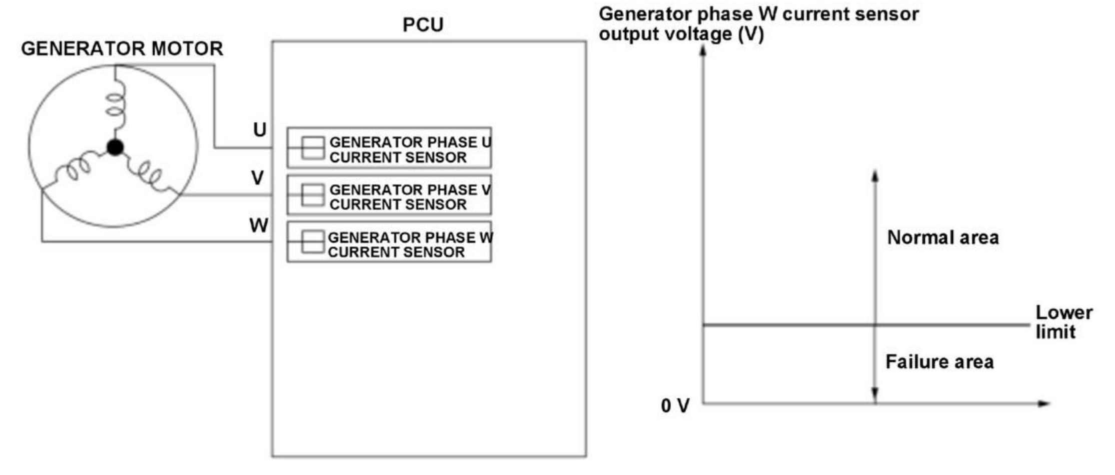
GENERATOR MOTOR
PCU
U
V
W
GENERATOR PHASE U CURRENT SENSOR
GENERATOR PHASE V CURRENT SENSOR
GENERATOR PHASE W CURRENT SENSOR
Generator phase W current sensor output voltage (V)
Normal area
Lower limit
Failure area
0 V

PCU is composed of motor control module, MPI module, and motor/generator phase current sensor

The power control unit (PCU) controls the generator motor output based on the generator phase current sensor signals. When the generator phase W current sensor output voltage is a specified voltage for a set time, the motor control module in the PCU detects a malfunction and stores a DTC.

Monitor Execution, Sequence, Duration, DTC Type

Execution	Continuous
Sequence	None
Duration	290 milliseconds or more
DTC Type	Two drive cycles, MIL on, POWER SYSTEM indicator on

Enable Conditions

Condition	Minimum	Maximum
12 volt battery voltage	8 V	-

Malfunction Threshold

The generator phase W current sensor output voltage is less than 0.14 V for at least 290 milliseconds.

Possible Cause

NOTE: The causes shown may not be a complete list of all potential problems, and it is possible that there may be other causes.

- PCU internal failure

Diagnosis Details

Conditions for setting the DTC

When a malfunction is detected during the first drive cycle, a Pending DTC is stored in the motor control module memory. If the malfunction returns in the next (second) drive cycle, the MIL comes on and a Confirmed DTC and the freeze data are stored.

Conditions for clearing the DTC

The MIL is cleared if the malfunction does not return in three consecutive trips in which the diagnostic runs. The MIL, the Pending DTC, the Confirmed DTC, and the freeze data can be cleared with the scan tool Clear command.

DTC P0A77

DTC P0A77: Generator Motor Phase W Current High

General Description

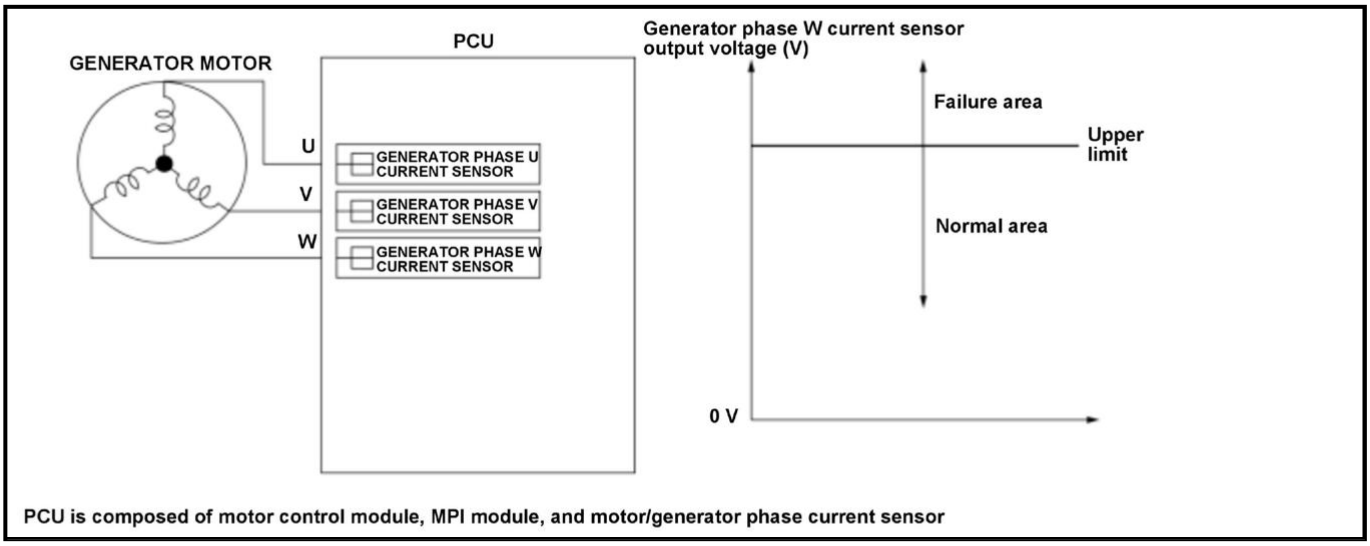
GENERATOR MOTOR
PCU
U
V
W
GENERATOR PHASE U CURRENT SENSOR
GENERATOR PHASE V CURRENT SENSOR
GENERATOR PHASE W CURRENT SENSOR
Generator phase W current sensor output voltage (V)
Failure area
Upper limit
Normal area
0 V
PCU is composed of motor control module, MPI module, and motor/generator phase current sensor

The power control unit (PCU) controls the generator motor output based on the generator phase current sensor signals. When the generator phase W current sensor output voltage is a specified voltage for a set time, the motor control module in the PCU detects a malfunction and stores a DTC.

Monitor Execution, Sequence, Duration, DTC Type

Execution	Continuous
Sequence	None
Duration	290 milliseconds or more
DTC Type	Two drive cycles, MIL on, POWER SYSTEM indicator on

Enable Conditions

Condition	Minimum	Maximum
12 volt battery voltage	8 V	-

Malfunction Threshold

The generator phase W current sensor output voltage is more than 4.84 V for at least 290 milliseconds.

Possible Cause

NOTE: The causes shown may not be a complete list of all potential problems, and it is possible that there may be other causes.

- PCU internal failure

Diagnosis Details

Conditions for setting the DTC

When a malfunction is detected during the first drive cycle, a Pending DTC is stored in the motor control module memory. If the malfunction returns in the next (second) drive cycle, the MIL comes on and a Confirmed DTC and the freeze data are stored.

Conditions for clearing the DTC

The MIL is cleared if the malfunction does not return in three consecutive trips in which the diagnostic runs. The MIL, the Pending DTC, the Confirmed DTC, and the freeze data can be cleared with the scan tool Clear command.

DTC P0A78

DTC P0A78: Traction Motor Inverter Performance

General Description

This fault code is a general (specified by SAE) DTC that is stored at the time the following DTC codes (P1437, P1440, P15A5, P1A56, P1A57, P1A64, P1A65, P1D05, P1D18, P1D70, P1D7A, P1D7B, P1D7D, P1D7E, P1D85, P1DDB) are detected.

DTC P0A7A (GENERATOR MOTOR CONTROL MODULE)

DTC P0A7A: Generator Motor Inverter Performance

General Description

This fault code is a general (specified by SAE) DTC that is stored at the time the following DTC codes (P1D7F, P1D8A, P1D8C, P1D8D, P1D97) are detected.

DTC P0A7A (TRACTION MOTOR CONTROL MODULE)

DTC P0A7A: Generator Motor Inverter Performance (Traction Motor Control Module Detected)

General Description

This fault code is a general (specified by SAE) DTC that is stored at the time the following DTC codes (P1A63, P1A87, P1A88, P1A89, P1D1B, P1D1C, P1D1D, P1D77, P1D78, P1D79, P1D81, P1D9D, P1DA0, P1DA1, P1DA4, P1DA6, P1DA8, P1DAA, P1DD8, P1DD9, P1DE3, P1DE4, P1DE5, P1DE6, P1DE7, P1DE8, P1DE9, P1DEA, P1F3C) are detected.

DTC P0A90

DTC P0A90: Traction Motor Performance

General Description

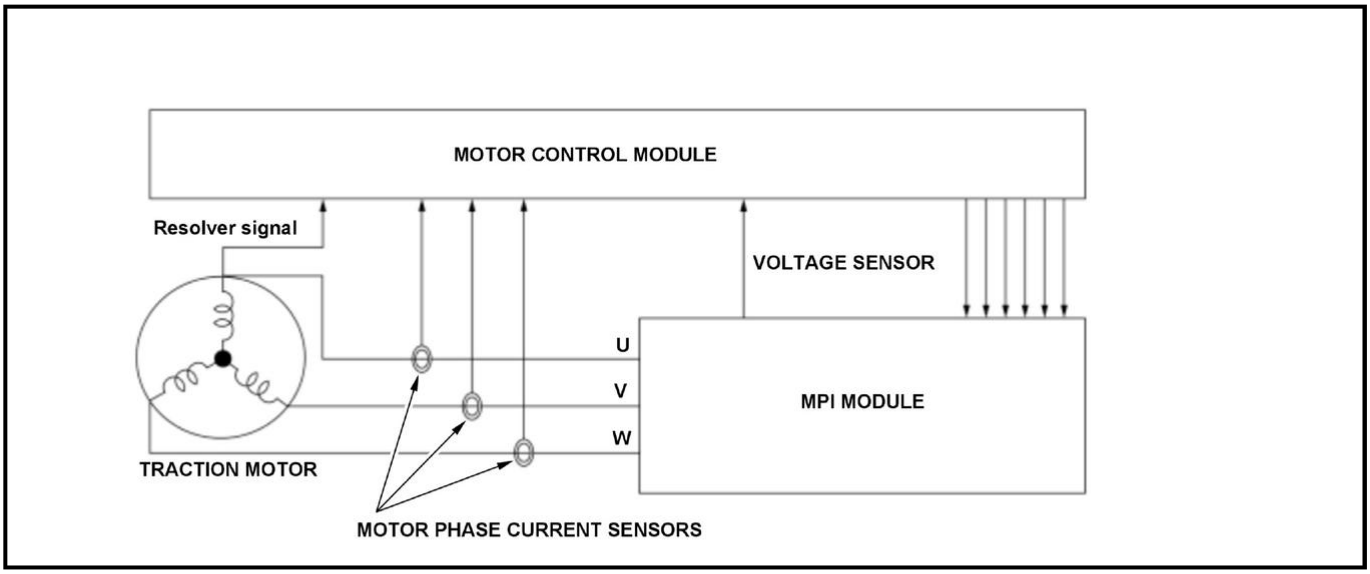

If the performance of the traction motor drops, the output torque may be difficult to control as specified. To monitor the performance of the traction motor torque, the motor control module monitors the estimated torque. If the estimated torque cannot follow the specified torque for a specified time, the motor control module in the power control unit (PCU) detects a malfunction and stores a DTC.

Monitor Execution, Sequence, Duration, DTC Type

Execution	Continuous

Sequence	None
Duration	3 seconds or more
DTC Type	One drive cycle, MIL on, POWER SYSTEM indicator on

Enable Conditions

Condition	Minimum	Maximum
Traction motor speed (absolute value)	2, 000 rpm	-
Traction motor torque command	88 N.m (9.0 kgf.m, 65.0 lbf.ft)	-

Malfunction Threshold

If the estimated torque falls below the torque reduction threshold provided by the specified torque for at least 3 seconds. A torque reduction threshold is the following value.

Traction motor torque command	Torque reduction threshold
88 N.m (9.0 kgf.m, 65.0 lbf.ft)	42 N.m (4.3 kgf.m, 31.5 lbf.ft)
151 N.m (15.4 kgf.m, 111.0 lbf.ft)	105 N.m (10.7 kgf.m, 77.5 lbf.ft)
320 N.m (32.7 kgf.m, 236.1 lbf.ft)	105 N.m (10.7 kgf.m, 77.5 lbf.ft)

Possible Cause

NOTE: The causes shown may not be a complete list of all potential problems, and it is possible that there may be other causes.

- Traction motor motor rotor position sensor line failure
- ATF cooler pipe leak
- ATF cooler pipe clogged
- ATF cooler failure
- ATF pump failure
- Traction motor motor rotor position sensor miss installed
- Traction motor motor rotor position sensor failure
- Traction motor temperature sensor failure
- Traction motor failure
- PCU internal failure

Diagnosis Details

Conditions for setting the DTC

When a malfunction is detected, the MIL comes on and a Pending DTC, a Confirmed DTC, and the freeze data are stored in the motor control module memory.

Conditions for clearing the DTC

The MIL is cleared if the malfunction does not return in three consecutive trips in which the diagnostic runs. The MIL, the Pending DTC, the Confirmed DTC, and the freeze data can be cleared with the scan tool Clear command.

DTC P0A92

DTC P0A92: Generator Motor Performance

General Description

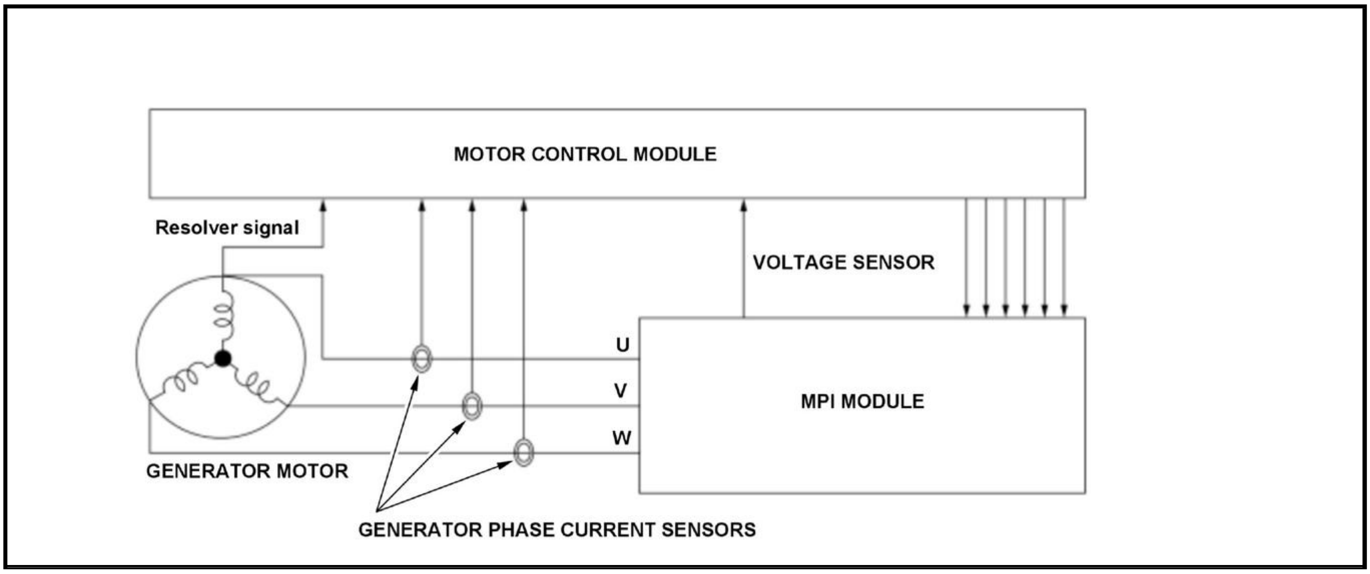

If the performance of the generator motor drops, the output torque may be difficult to control as specified. To monitor the performance of the generator motor torque, the motor control module monitors the estimated torque. If the estimated torque cannot follow the specified torque for a specified time, the motor control module in the power control unit (PCU) detects a malfunction and stores a DTC.

Monitor Execution, Sequence, Duration, DTC Type

Execution	Continuous
Sequence	None
Duration	3 seconds or more
DTC Type	One drive cycle, MIL on, POWER SYSTEM indicator on

Enable Conditions

Condition	Minimum	Maximum
Generator motor speed (absolute value) [Motor Speed (GEN)]	2, 200 rpm	-
Generator motor torque command	50 N.m (5.1 kgf.m, 36.9 lbf.ft)	-

[ ]: HDS Parameter

Malfunction Threshold

If the estimated torque falls below the torque reduction threshold provided by the specified torque for at least 3 seconds. A torque reduction threshold is the following value.

Generator motor torque command	Torque reduction threshold
-85 N.m (-8.6 kgf.m, -62.6 lbf.ft)	-59 N.m (-6.0 kgf.m, -43.9 lbf.ft)
-50 N.m (-5.1 kgf.m, -36.9 lbf.ft)	-28 N.m (-2.8 kgf.m, -20.6 lbf.ft)
50 N.m (5.1 kgf.m, 36.9 lbf.ft)	28 N.m (2.8 kgf.m, 20.6 lbf.ft)
85 N.m (8.6 kgf.m, 62.6 lbf.ft)	59 N.m (6.0 kgf.m, 43.9 lbf.ft)

Possible Cause

NOTE: The causes shown may not be a complete list of all potential problems, and it is possible that there may be other causes.

- Generator motor motor rotor position sensor line failure
- ATF cooler pipe leak
- ATF cooler pipe clogged
- ATF cooler failure
- ATF pump failure
- Generator motor motor rotor position sensor miss installed
- Generator motor motor rotor position sensor failure
- Generator motor failure
- PCU internal failure

Diagnosis Details

Conditions for setting the DTC

When a malfunction is detected, the MIL comes on and a Pending DTC, a Confirmed DTC, and the freeze data are stored in the motor control module memory.

Conditions for clearing the DTC

The MIL is cleared if the malfunction does not return in three consecutive trips in which the diagnostic runs. The MIL, the Pending DTC, the Confirmed DTC, and the freeze data can be cleared with the scan tool Clear command.

DTC P0AED

DTC P0AED: Traction Motor Inverter Temperature Sensor 1 Circuit

General Description

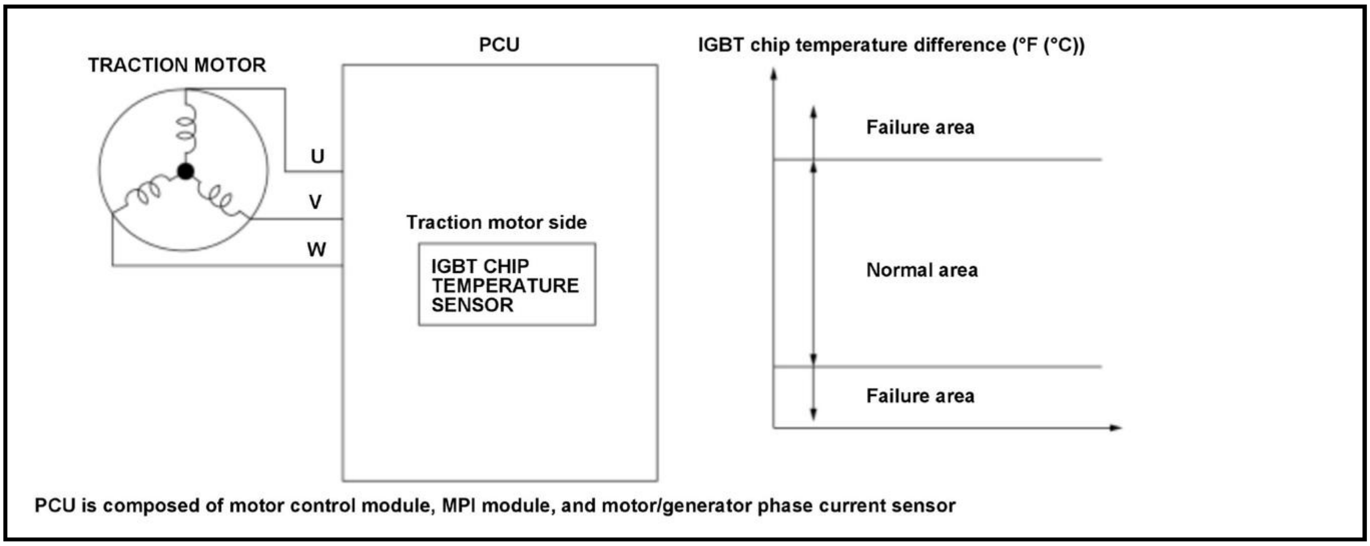

PCU is composed of motor control module, MPI module, and motor/generator phase current sensor

The power control unit (PCU) monitors the IGBT chip temperature sensor values to prevent malfunctions of the chip and other parts due to heat generation. The PCU calculates the difference in output temperature between the parallel phases of the IGBT chip temperature sensor at the traction motor side. If the difference is out of a specified value for a specified time, the motor control module in the PCU detects a malfunction and stores a DTC.

Monitor Execution, Sequence, Duration, DTC Type

Execution	Continuous
Sequence	None
Duration	10 seconds or more

DTC Type	One drive cycle, MIL on, POWER SYSTEM indicator on

Enable Conditions

Condition	Minimum	Maximum
12 volt battery voltage	8 V	-

Malfunction Threshold

If the difference in output temperature between the parallel phases of the IGBT chip temperature sensor at the traction motor side more than 108 deg.F (60 deg.C) or less than -108 deg.F (-60 deg.C) for at least 10 seconds.

Possible Cause

NOTE: The causes shown may not be a complete list of all potential problems, and it is possible that there may be other causes.

- PCU internal failure

Diagnosis Details

Conditions for setting the DTC

When a malfunction is detected, the MIL comes on and a Pending DTC, a Confirmed DTC, and the freeze data are stored in the motor control module memory.

Conditions for clearing the DTC

The MIL is cleared if the malfunction does not return in three consecutive trips in which the diagnostic runs. The MIL, the Pending DTC, the Confirmed DTC, and the freeze data can be cleared with the scan tool Clear command.

DTC P0AEE

DTC P0AEE: Traction Motor Inverter Temperature Sensor 1 Circuit Range/Performance

General Description

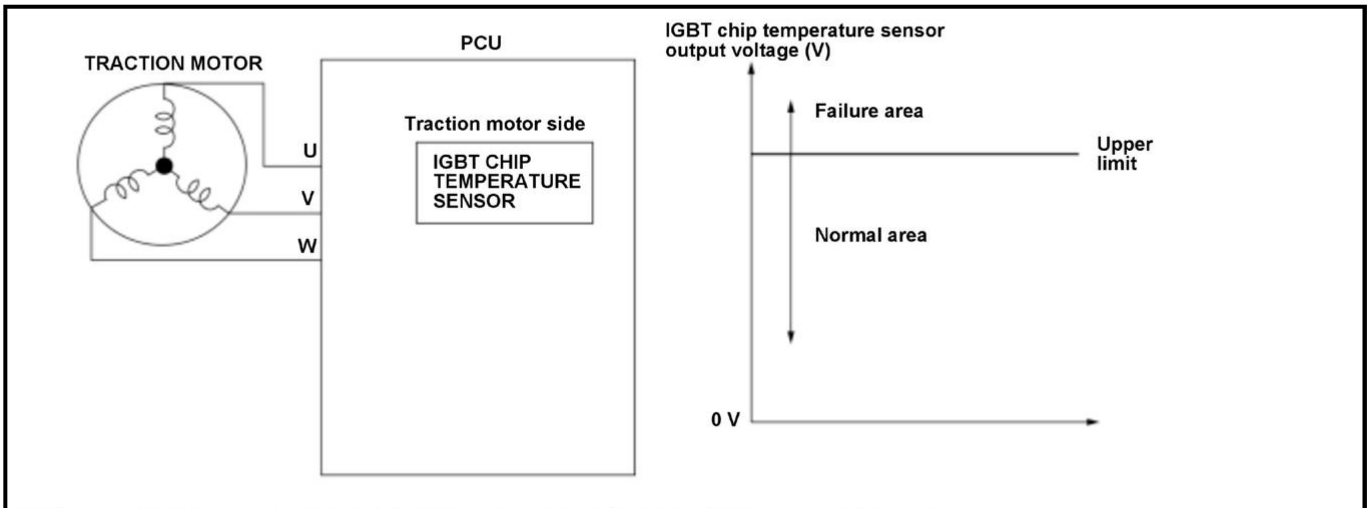

PCU is composed of motor control module, MPI module, and motor/generator phase current sensor

The power control unit (PCU) monitors the IGBT chip temperature sensor value to prevent malfunction of the chip due to heat generation. If the IGBT chip temperature sensor output voltage is a specified voltage for a specified time, the motor control module in the PCU detects a malfunction and stores a DTC.

Monitor Execution, Sequence, Duration, DTC Type

Execution	Continuous
Sequence	None
Duration	2.0 seconds or more
DTC Type	Two drive cycles, MIL on, POWER SYSTEM indicator on

Enable Conditions

Condition	Minimum	Maximum
12 volt battery voltage	8 V	-

Malfunction Threshold

The IGBT chip temperature sensor output voltage is more than 3.57 V for at least 2.0 seconds.

Possible Cause

NOTE: The causes shown may not be a complete list of all potential problems, and it is possible that there may be other causes.

- PCU internal failure

Diagnosis Details

Conditions for setting the DTC

When a malfunction is detected during the first drive cycle, a Pending DTC is stored in the motor control module memory. If the malfunction returns in the next (second) drive cycle, the MIL comes on and a Confirmed DTC and the freeze data are stored.

Conditions for clearing the DTC

The MIL is cleared if the malfunction does not return in three consecutive trips in which the diagnostic runs. The MIL, the Pending DTC, the Confirmed DTC, and the freeze data can be cleared with the scan tool Clear command.

DTC P0AEF

DTC P0AEF: Traction Motor Inverter Temperature Sensor 1 Circuit Low

General Description

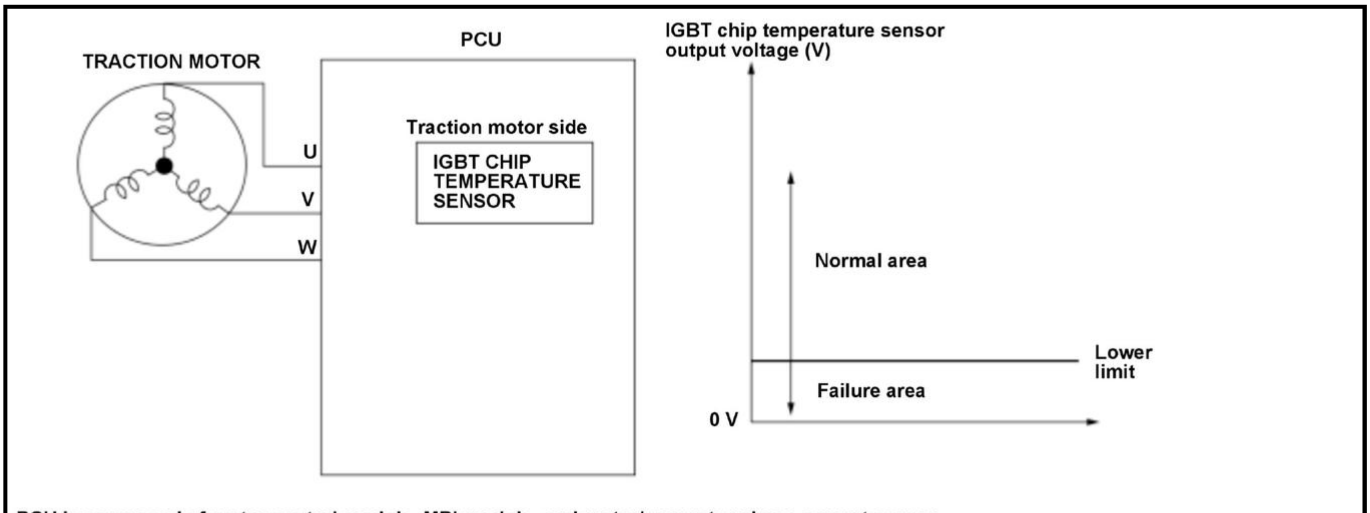
TRACTION MOTOR
PCU
U
V
W
Traction motor side
IGBT CHIP TEMPERATURE SENSOR
IGBT chip temperature sensor output voltage (V)
Normal area
Lower limit
Failure area
0 V

PCU is composed of motor control module, MPI module, and motor/generator phase current sensor

The power control unit (PCU) monitors the IGBT chip temperature sensor value to prevent malfunction of the chip due to heat generation. If the IGBT chip temperature sensor output voltage is a specified voltage for a specified time, the motor control module in the PCU detects a malfunction and stores a DTC.

Monitor Execution, Sequence, Duration, DTC Type

Execution	Continuous
Sequence	None
Duration	80 milliseconds or more
DTC Type	One drive cycle, MIL on, POWER SYSTEM indicator on

Enable Conditions

Condition	Minimum	Maximum
12 volt battery voltage	8 V	-

Malfunction Threshold

The IGBT chip temperature sensor output voltage is less than 1.46 V for at least 80 milliseconds.

Possible Cause

NOTE: The causes shown may not be a complete list of all potential problems, and it is possible that there may be other causes.

- PCU internal failure

Diagnosis Details

Conditions for setting the DTC

When a malfunction is detected, the MIL comes on and a Pending DTC, a Confirmed DTC, and the freeze data are stored in the motor control module memory.

Conditions for clearing the DTC

The MIL is cleared if the malfunction does not return in three consecutive trips in which the diagnostic runs. The MIL, the Pending DTC, the Confirmed DTC, and the freeze data can be cleared with the scan tool Clear command.

DTC P0AF0

DTC P0AF0: Traction Motor Inverter Temperature Sensor 1 Circuit High

General Description

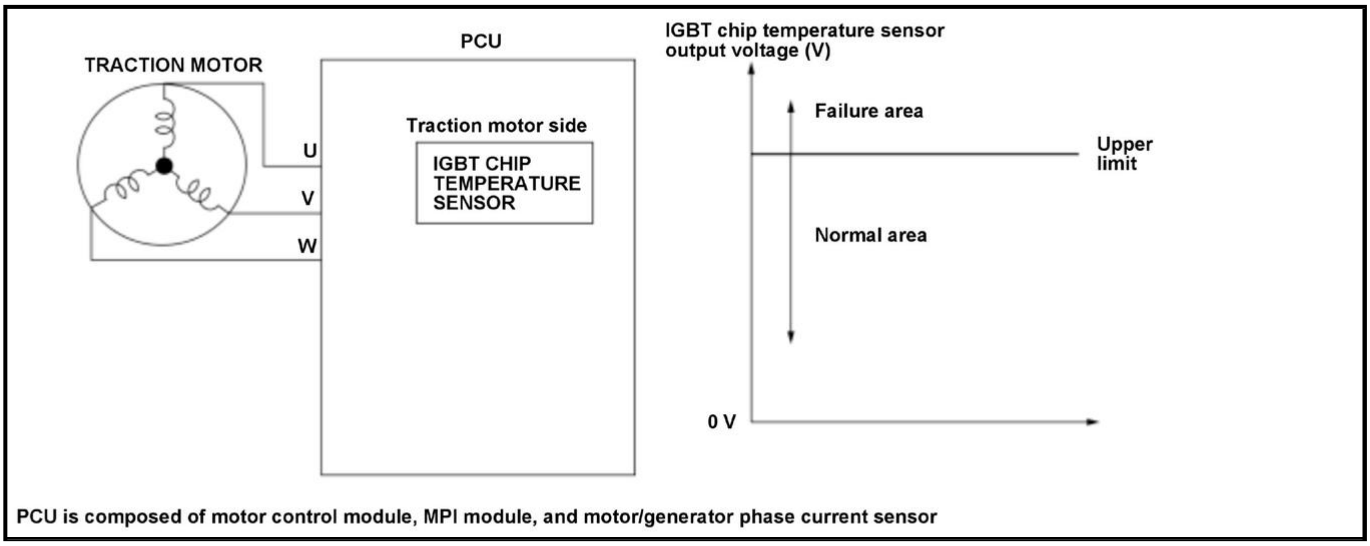
TRACTION MOTOR
PCU
U
V
W
Traction motor side
IGBT CHIP TEMPERATURE SENSOR
IGBT chip temperature sensor output voltage (V)
Failure area
Upper limit
Normal area
0 V
PCU is composed of motor control module, MPI module, and motor/generator phase current sensor

The power control unit (PCU) monitors the IGBT chip temperature sensor value to prevent malfunction of the chip due to heat generation. If the IGBT chip temperature sensor output voltage is a specified voltage for a specified time, the motor control module in the PCU detects a malfunction and stores a DTC.

Monitor Execution, Sequence, Duration, DTC Type

Execution	Continuous
Sequence	None
Duration	80 milliseconds or more
DTC Type	One drive cycle, MIL on, POWER SYSTEM indicator on

Enable Conditions

Condition	Minimum	Maximum
12 volt battery voltage	8 V	-

Malfunction Threshold

The IGBT chip temperature sensor output voltage is more than 4.8 V for at least 80 milliseconds.

Possible Cause

NOTE: The causes shown may not be a complete list of all potential problems, and it is possible that there may be other causes.

- PCU internal failure

Diagnosis Details

Conditions for setting the DTC

When a malfunction is detected, the MIL comes on and a Pending DTC, a Confirmed DTC, and the freeze data are stored in the motor control module memory.

Conditions for clearing the DTC

The MIL is cleared if the malfunction does not return in three consecutive trips in which the diagnostic runs. The MIL, the Pending DTC, the Confirmed DTC, and the freeze data can be cleared with the scan tool Clear command.

DTC P0AF2

DTC P0AF2: Traction Motor Inverter Temperature Sensor 2 Circuit

General Description

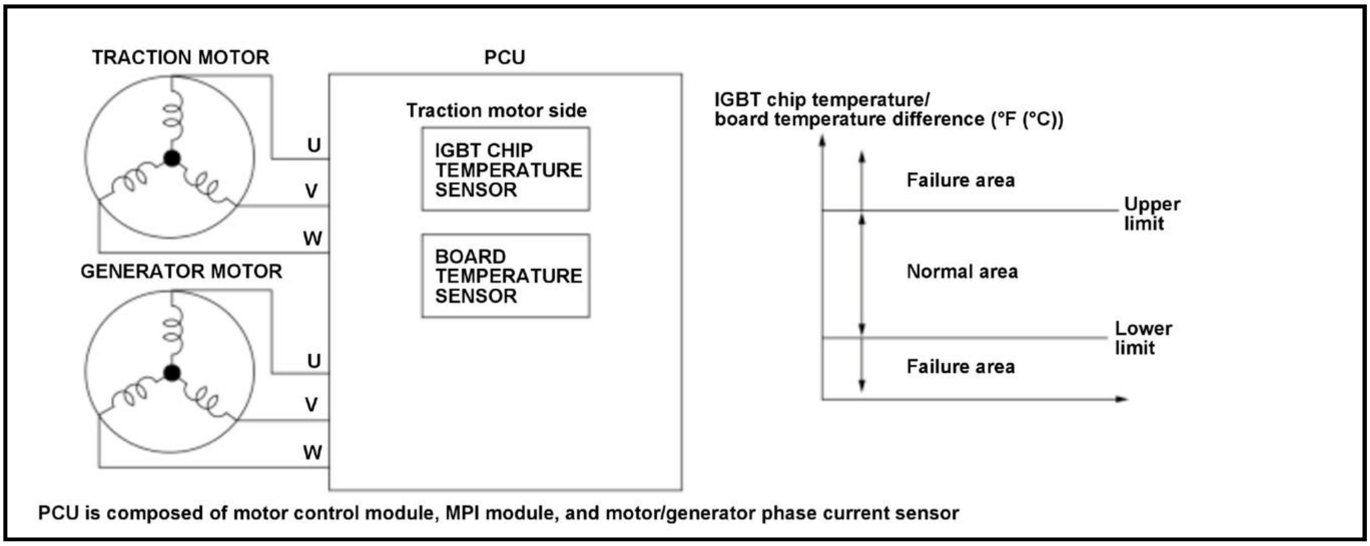
TRACTION MOTOR
PCU
Traction motor side
IGBT CHIP TEMPERATURE SENSOR
BOARD TEMPERATURE SENSOR
U
V
W
GENERATOR MOTOR
U
V
W
IGBT chip temperature/ board temperature difference (°F (°C))
Failure area
Upper limit
Normal area
Lower limit
Failure area
PCU is composed of motor control module, MPI module, and motor/generator phase current sensor

The power control unit (PCU) monitors the IGBT chip and board temperature sensor values to prevent malfunctions of the chip and other parts due to heat generation. The motor control module in the PCU compares the output temperature difference between the IGBT chip temperature sensor and the board temperature sensor at system activation timing, and if the difference exceeds a malfunction threshold for a specified time, the motor control module detects a malfunction and stores a DTC.

Monitor Execution, Sequence, Duration, DTC Type

Execution	Continuous
Sequence	None
Duration	100 milliseconds or more
DTC Type	Two drive cycles, MIL on, POWER SYSTEM indicator on

Enable Conditions

Condition	Minimum	Maximum
Elapsed time after the vehicle is turned to the OFF (LOCK) mode	6 hours	-
Traction motor speed	-	20 rpm
Generator motor speed [Motor Speed (GEN)]	-	20 rpm
12 volt battery voltage	8 V	-
High voltage side power supply voltage (6 V)	5 V	-

[ ]: HDS Parameter

Malfunction Threshold

The output temperature difference between the IGBT chip temperature sensor and the board temperature sensor at system activation timing is more than 84 deg.F (47 deg.C) or less than -83 deg.F (-46 deg.C) for at least 100 milliseconds.

Possible Cause

NOTE: The causes shown may not be a complete list of all potential problems, and it is possible that there may be other causes.

- PCU internal failure

Diagnosis Details

Conditions for setting the DTC

When a malfunction is detected during the first drive cycle, a Pending DTC is stored in the motor control module memory. If the malfunction returns in the next (second) drive cycle, the MIL comes on and a Confirmed DTC and the freeze data are stored.

Conditions for clearing the DTC

The MIL is cleared if the malfunction does not return in three consecutive trips in which the diagnostic runs. The MIL, the Pending DTC, the Confirmed DTC, and the freeze data can be cleared with the scan tool Clear command.

DTC P0AF3

DTC P0AF3: Traction Motor Inverter Temperature Sensor 2 Circuit Range/Performance

General Description

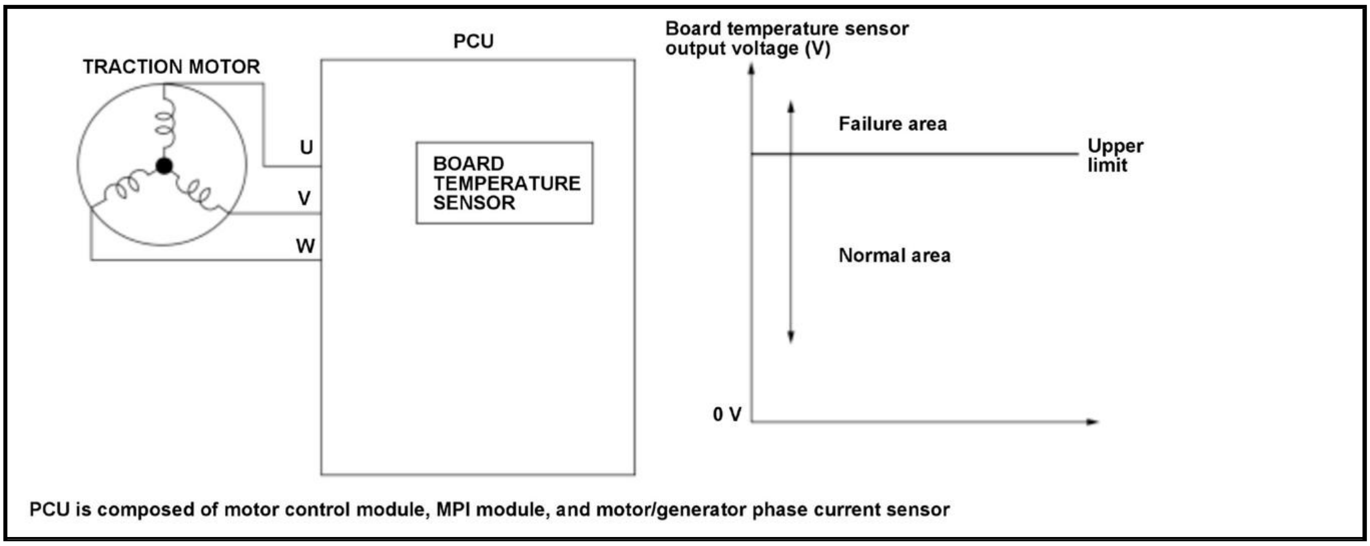
TRACTION MOTOR
PCU
U
V
W
BOARD TEMPERATURE SENSOR
Board temperature sensor output voltage (V)
Failure area
Upper limit
Normal area
0 V
PCU is composed of motor control module, MPI module, and motor/generator phase current sensor

The power control unit (PCU) monitors the board temperature sensor value to prevent malfunction of internal parts due to heat generation. If the board temperature sensor output voltage is a specified voltage for a specified time, the motor control module in the PCU detects a malfunction and stores a DTC.

Monitor Execution, Sequence, Duration, DTC Type

Execution	Continuous
Sequence	None
Duration	2.0 seconds or more
DTC Type	Two drive cycles, MIL on, POWER SYSTEM indicator on

Enable Conditions

Condition	Minimum	Maximum
12 volt battery voltage	8 V	-

Malfunction Threshold

The board temperature sensor output voltage is more than 4.72 V for at least 2.0 seconds.

Possible Cause

NOTE: The causes shown may not be a complete list of all potential problems, and it is possible that there may be other causes.

- PCU internal failure

Diagnosis Details

Conditions for setting the DTC

When a malfunction is detected during the first drive cycle, a Pending DTC is stored in the motor control module memory. If the malfunction returns in the next (second) drive cycle, the MIL comes on and a Confirmed DTC and the freeze data are stored.

Conditions for clearing the DTC

The MIL is cleared if the malfunction does not return in three consecutive trips in which the diagnostic runs. The MIL, the Pending DTC, the Confirmed DTC, and the freeze data can be cleared with the scan tool Clear command.

DTC P0AF4

DTC P0AF4: Traction Motor Inverter Temperature Sensor 2 Circuit Low

General Description

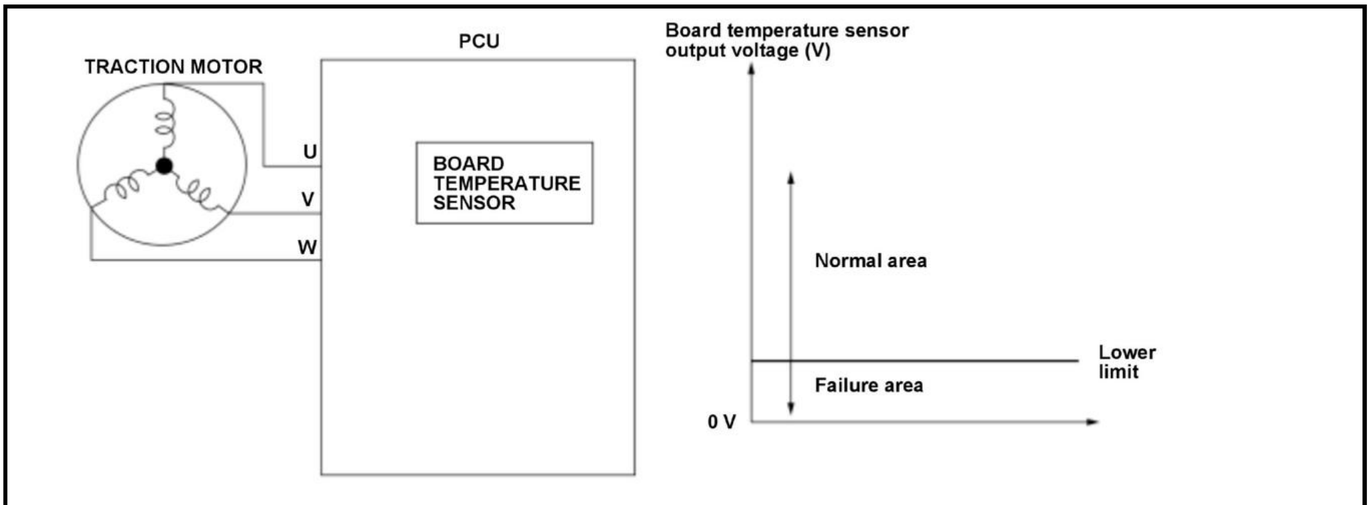

PCU is composed of motor control module, MPI module, and motor/generator phase current sensor

The power control unit (PCU) monitors the board temperature sensor value to prevent malfunction of internal parts due to heat generation. If the board temperature sensor output voltage is a specified voltage for a specified time, the motor control module in the PCU detects a malfunction and stores a DTC.

Monitor Execution, Sequence, Duration, DTC Type

Execution	Continuous
Sequence	None
Duration	250 milliseconds or more
DTC Type	One drive cycle, MIL on, POWER SYSTEM indicator on

Enable Conditions

Condition	Minimum	Maximum
12 volt battery voltage	8 V	-

Malfunction Threshold

The board temperature sensor output voltage is less than 0.1 V for at least 250 milliseconds.

Possible Cause

NOTE: The causes shown may not be a complete list of all potential problems, and it is possible that there may be other causes.

- PCU internal failure

Diagnosis Details

Conditions for setting the DTC

When a malfunction is detected, the MIL comes on and a Pending DTC, a Confirmed DTC, and the freeze data are stored in the motor control module memory.

Conditions for clearing the DTC

The MIL is cleared if the malfunction does not return in three consecutive trips in which the diagnostic runs. The MIL, the Pending DTC, the Confirmed DTC, and the freeze data can be cleared with the scan tool Clear command.

DTC P0AF5

DTC P0AF5: Traction Motor Inverter Temperature Sensor 2 Circuit High

General Description

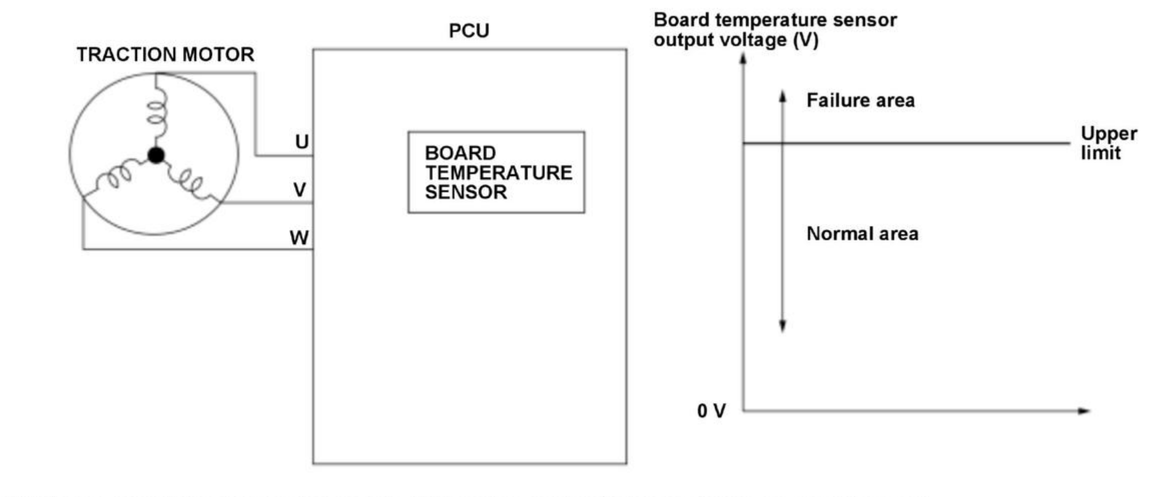

PCU is composed of motor control module, MPI module, and motor/generator phase current sensor

The power control unit (PCU) monitors the board temperature sensor value to prevent malfunction of internal parts due to heat generation. If the board temperature sensor output voltage is a specified voltage for a specified time, the motor control module in the PCU detects a malfunction and stores a DTC.

Monitor Execution, Sequence, Duration, DTC Type

Execution	Continuous
Sequence	None
Duration	250 milliseconds or more

DTC Type	One drive cycle, MIL on, POWER SYSTEM indicator on

Enable Conditions

Condition	Minimum	Maximum
12 volt battery voltage	8 V	-

Malfunction Threshold

The board temperature sensor output voltage is more than 4.8 V for at least 250 milliseconds.

Possible Cause

NOTE: The causes shown may not be a complete list of all potential problems, and it is possible that there may be other causes.

- PCU internal failure

Diagnosis Details

Conditions for setting the DTC

When a malfunction is detected, the MIL comes on and a Pending DTC, a Confirmed DTC, and the freeze data are stored in the motor control module memory.

Conditions for clearing the DTC

The MIL is cleared if the malfunction does not return in three consecutive trips in which the diagnostic runs. The MIL, the Pending DTC, the Confirmed DTC, and the freeze data can be cleared with the scan tool Clear command.

DTC P0BCC

DTC P0BCC: Generator Motor Inverter Temperature Sensor Circuit

General Description

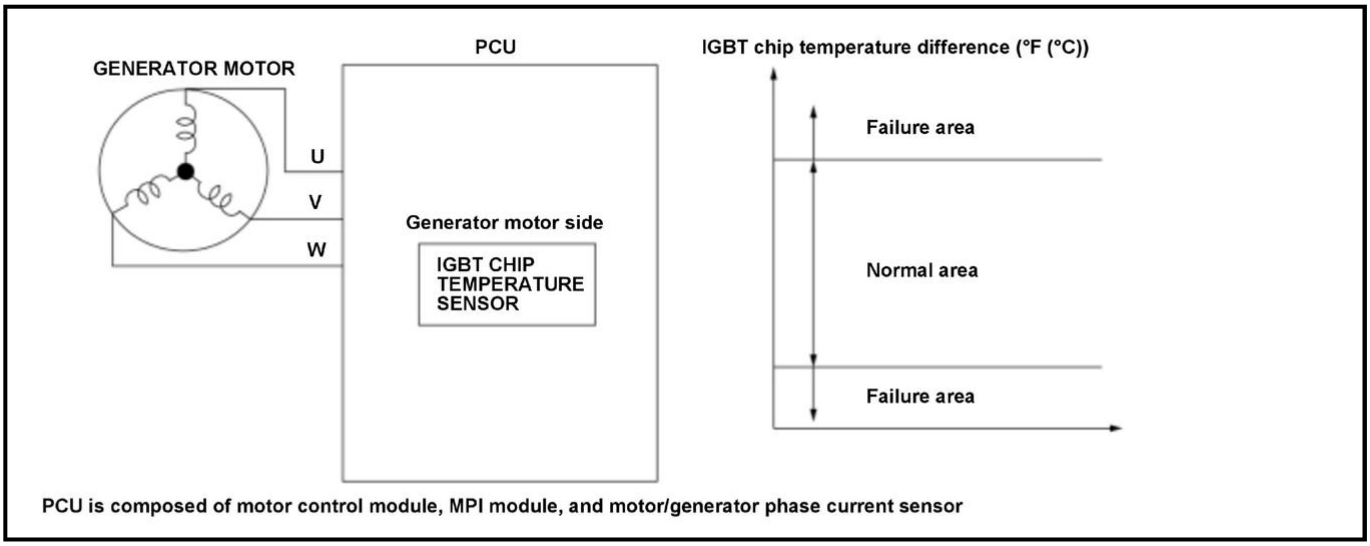
GENERATOR MOTOR
PCU
U
V
W
Generator motor side
IGBT CHIP TEMPERATURE SENSOR
IGBT chip temperature difference (°F (°C))
Failure area
Normal area
Failure area
PCU is composed of motor control module, MPI module, and motor/generator phase current sensor

The power control unit (PCU) monitors the IGBT chip temperature sensor values to prevent malfunctions of the chip and other parts due to heat generation. The PCU calculates the difference in output temperature among the phases (U, V, W) of the IGBT chip temperature sensor at the generator motor side. If the difference is out of a specified value for a specified time, the motor control module in the PCU detects a malfunction and stores a DTC.

Monitor Execution, Sequence, Duration, DTC Type

Execution	Continuous
Sequence	None
Duration	10 seconds or more
DTC Type	One drive cycle, MIL on, POWER SYSTEM indicator on

Enable Conditions

Condition	Minimum	Maximum
12 volt battery voltage	8 V	-
High voltage side power supply voltage (6 V)	5 V	-
Other	Generator motor rotation speed [Motor Speed (GEN)] is 1, 000 rpm continues for 8.2 seconds	

[ ]: HDS Parameter

Malfunction Threshold

If the difference in output temperature among the phases of the IGBT chip temperature sensor at the generator motor side more than 108 deg.F (60 deg.C) or less than -108 deg.F (-60 deg.C) for at least 10 seconds.

Possible Cause

NOTE: The causes shown may not be a complete list of all potential problems, and it is possible that there may be other causes.

- PCU internal failure

Diagnosis Details

Conditions for setting the DTC

When a malfunction is detected, the MIL comes on and a Pending DTC, a Confirmed DTC, and the freeze data are stored in the motor control module memory.

Conditions for clearing the DTC

The MIL is cleared if the malfunction does not return in three consecutive trips in which the diagnostic runs. The MIL, the Pending DTC, the Confirmed DTC, and the freeze data can be cleared with the scan tool Clear command.

DTC P0BCD

DTC P0BCD: Generator Motor Inverter Temperature Sensor Circuit Range/Performance

General Description

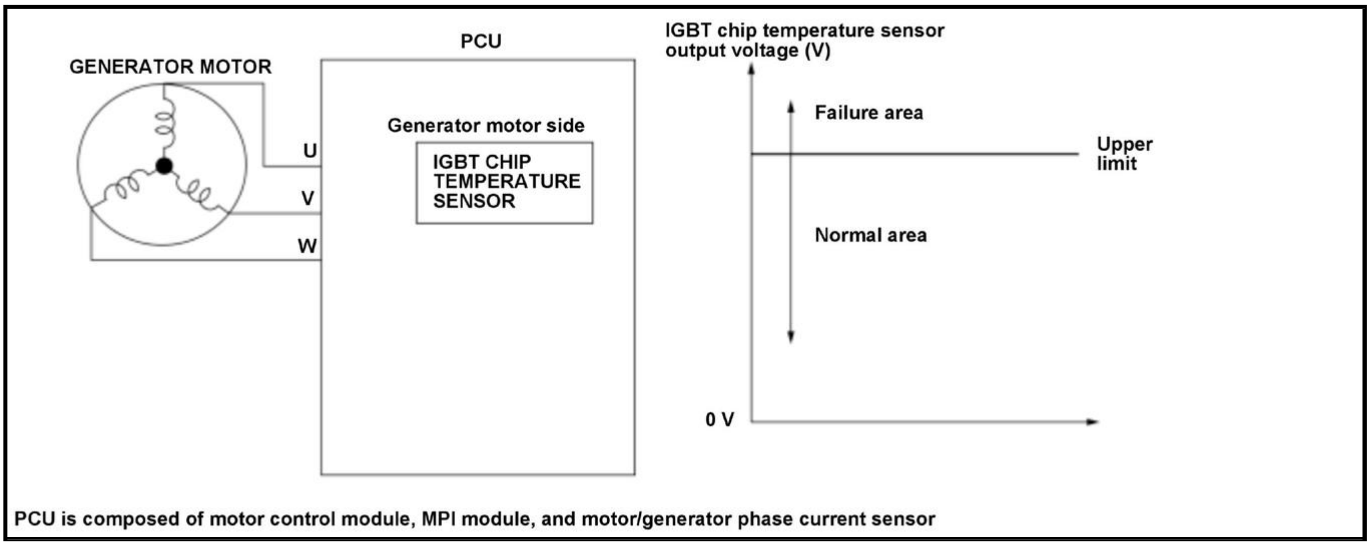
GENERATOR MOTOR
PCU
Generator motor side
IGBT CHIP TEMPERATURE SENSOR
U
V
W
IGBT chip temperature sensor output voltage (V)
Failure area
Upper limit
Normal area
0 V
PCU is composed of motor control module, MPI module, and motor/generator phase current sensor

The power control unit (PCU) monitors the IGBT chip temperature sensor value to prevent malfunction of the chip due to heat generation. If the IGBT chip temperature sensor output voltage is a specified voltage for a specified time, the motor control module in the PCU detects a malfunction and stores a DTC.

Monitor Execution, Sequence, Duration, DTC Type

Execution	Continuous
Sequence	None
Duration	2.0 seconds or more
DTC Type	One drive cycle, MIL on, POWER SYSTEM indicator on

Enable Conditions

Condition	Minimum	Maximum
12 volt battery voltage	8 V	-

Malfunction Threshold

The IGBT chip temperature sensor output voltage is more than 3.59 V for at least 2.0 seconds.

Possible Cause

NOTE: The causes shown may not be a complete list of all potential problems, and it is possible that there may be other causes.

- PCU internal failure

Diagnosis Details

Conditions for setting the DTC

When a malfunction is detected, the MIL comes on and a Pending DTC, a Confirmed DTC, and the freeze data are stored in the motor control module memory.

Conditions for clearing the DTC

The MIL is cleared if the malfunction does not return in three consecutive trips in which the diagnostic runs. The MIL, the Pending DTC, the Confirmed DTC, and the freeze data can be cleared with the scan tool Clear command.

DTC P0BCE

DTC P0BCE: Generator Motor Inverter Temperature Sensor Circuit Low

General Description

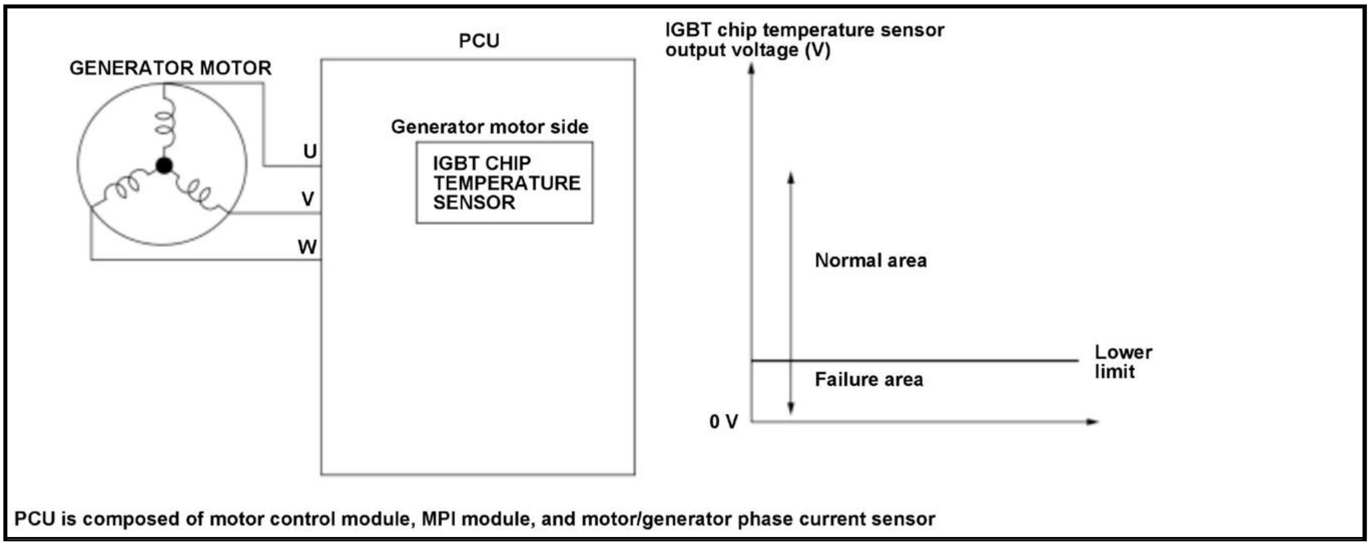
GENERATOR MOTOR
PCU
U
V
W
Generator motor side
IGBT CHIP TEMPERATURE SENSOR
IGBT chip temperature sensor output voltage (V)
Normal area
Lower limit
Failure area
0 V
PCU is composed of motor control module, MPI module, and motor/generator phase current sensor

The power control unit (PCU) monitors the IGBT chip temperature sensor value to prevent malfunction of the chip due to heat generation. If the IGBT chip temperature sensor output voltage is a specified voltage for a specified time, the motor control module in the PCU detects a malfunction and stores a DTC.

Monitor Execution, Sequence, Duration, DTC Type

Execution	Continuous
Sequence	None
Duration	90 milliseconds or more
DTC Type	One drive cycle, MIL on, POWER SYSTEM indicator on

Enable Conditions

Condition	Minimum	Maximum
12 volt battery voltage	8 V	-

Malfunction Threshold

The IGBT chip temperature sensor output voltage is less than 0.2 V for at least 90 milliseconds.

Possible Cause

NOTE: The causes shown may not be a complete list of all potential problems, and it is possible that there may be other causes.

- PCU internal failure

Diagnosis Details

Conditions for setting the DTC

When a malfunction is detected, the MIL comes on and a Pending DTC, a Confirmed DTC, and the freeze data are stored in the motor control module memory.

Conditions for clearing the DTC

The MIL is cleared if the malfunction does not return in three consecutive trips in which the diagnostic runs. The MIL, the Pending DTC, the Confirmed DTC, and the freeze data can be cleared with the scan tool Clear

command.

DTC P0BCF

DTC P0BCF: Generator Motor Inverter Temperature Sensor Circuit High

General Description

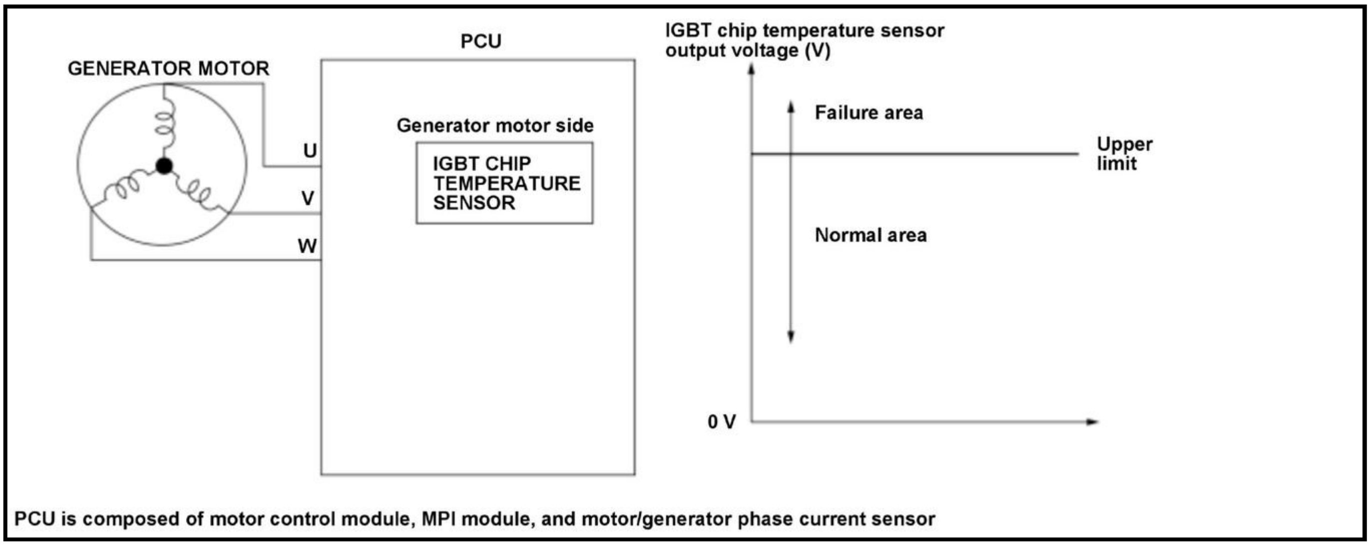
GENERATOR MOTOR
PCU
Generator motor side
IGBT CHIP TEMPERATURE SENSOR
U
V
W
IGBT chip temperature sensor output voltage (V)
Failure area
Upper limit
Normal area
0 V
PCU is composed of motor control module, MPI module, and motor/generator phase current sensor

The power control unit (PCU) monitors the IGBT chip temperature sensor value to prevent malfunction of the chip due to heat generation. If the IGBT chip temperature sensor output voltage is a specified voltage for a specified time, the motor control module in the PCU detects a malfunction and stores a DTC.

Monitor Execution, Sequence, Duration, DTC Type

Execution	Continuous
Sequence	None
Duration	90 milliseconds or more
DTC Type	One drive cycle, MIL on, POWER SYSTEM indicator on

Enable Conditions

Condition	Minimum	Maximum
12 volt battery voltage	8 V	-

Malfunction Threshold

The IGBT chip temperature sensor output voltage is more than 3.84 V for at least 90 milliseconds.

Possible Cause

NOTE: The causes shown may not be a complete list of all potential problems, and it is possible that there may be other causes.

- PCU internal failure

Diagnosis Details

Conditions for setting the DTC

When a malfunction is detected, the MIL comes on and a Pending DTC, a Confirmed DTC, and the freeze data are stored in the motor control module memory.

Conditions for clearing the DTC

The MIL is cleared if the malfunction does not return in three consecutive trips in which the diagnostic runs. The MIL, the Pending DTC, the Confirmed DTC, and the freeze data can be cleared with the scan tool Clear command.

DTC P0BE6

DTC P0BE6: Traction Motor Phase U Current Sensor Circuit Range/Performance

General Description

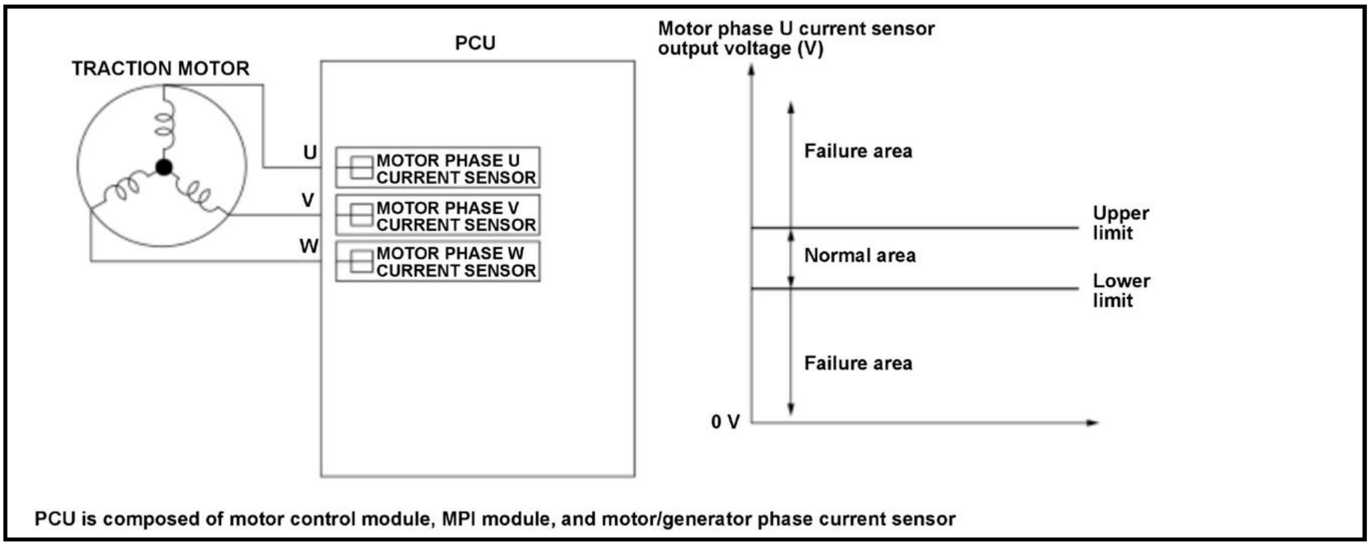
TRACTION MOTOR
PCU
U
V
W
MOTOR PHASE U CURRENT SENSOR
MOTOR PHASE V CURRENT SENSOR
MOTOR PHASE W CURRENT SENSOR
Motor phase U current sensor output voltage (V)
Failure area
Upper limit
Normal area
Lower limit
Failure area
0 V
PCU is composed of motor control module, MPI module, and motor/generator phase current sensor

The power control unit (PCU) controls the motor output based on the motor phase current sensor signals. If the motor phase U current sensor offset voltage is out of a specified range when the sensor input current is 0 A, the motor control module in the PCU detects a malfunction of the motor phase current sensor and stores a DTC.

Monitor Execution, Sequence, Duration, DTC Type

Execution	Continuous
Sequence	None
Duration	320 milliseconds or more
DTC Type	Two drive cycles, MIL on, POWER SYSTEM indicator on

Enable Conditions

Condition	Minimum	Maximum
Traction motor speed	-	20 rpm
12 volt battery voltage	8 V	-
Gate drive circuit	Not operated	

Malfunction Threshold

The motor phase U current sensor offset voltage is more than 2.7 V or less than 2.3 V for at least 320 milliseconds.

Possible Cause

NOTE: The causes shown may not be a complete list of all potential problems, and it is possible that there may be other causes.

- PCU internal failure

Diagnosis Details

Conditions for setting the DTC

When a malfunction is detected during the first drive cycle, a Pending DTC is stored in the motor control module memory. If the malfunction returns in the next (second) drive cycle, the MIL comes on and a Confirmed DTC and the freeze data are stored.

Conditions for clearing the DTC

The MIL is cleared if the malfunction does not return in three consecutive trips in which the diagnostic runs. The MIL, the Pending DTC, the Confirmed DTC, and the freeze data can be cleared with the scan tool Clear command.

DTC P0BEA

DTC P0BEA: Traction Motor Phase V Current Sensor Circuit Range/Performance

General Description

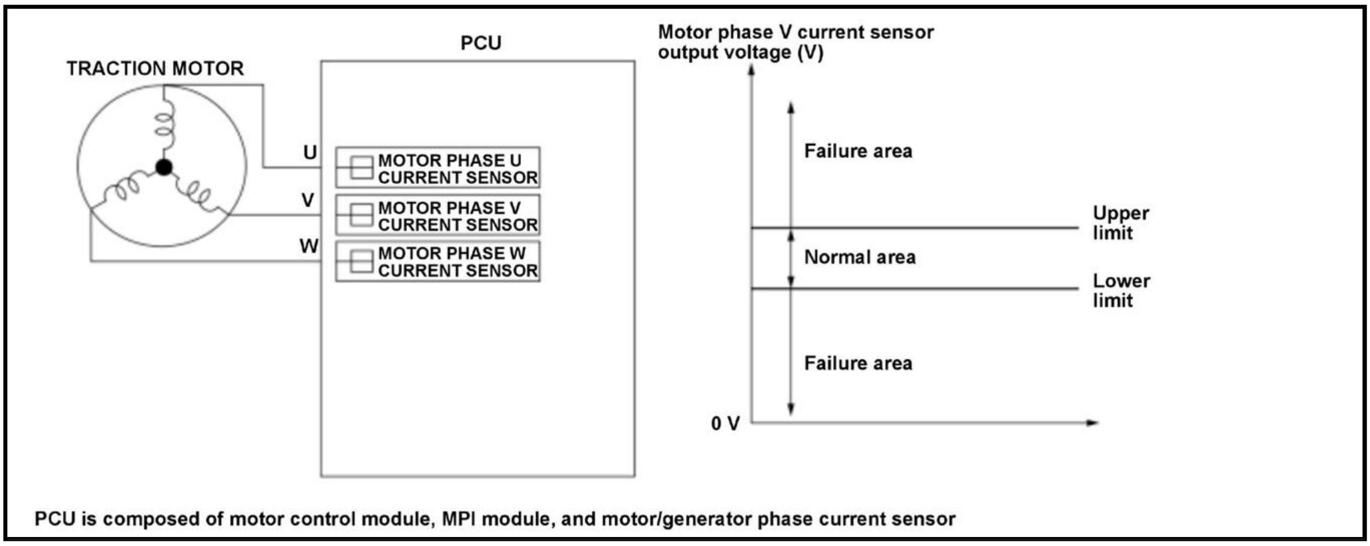
TRACTION MOTOR
PCU
U
V
W
MOTOR PHASE U CURRENT SENSOR
MOTOR PHASE V CURRENT SENSOR
MOTOR PHASE W CURRENT SENSOR
Motor phase V current sensor output voltage (V)
Failure area
Upper limit
Normal area
Lower limit
Failure area
0 V
PCU is composed of motor control module, MPI module, and motor/generator phase current sensor

The power control unit (PCU) controls the motor output based on the motor phase current sensor signals. If the motor phase V current sensor offset voltage is out of a specified range when the sensor input current is 0 A, the motor control module in the PCU detects a malfunction of the motor phase current sensor and stores a DTC.

Monitor Execution, Sequence, Duration, DTC Type

Execution	Continuous
Sequence	None
Duration	320 milliseconds or more
DTC Type	Two drive cycles, MIL on, POWER SYSTEM indicator on

Enable Conditions

Condition	Minimum	Maximum
Traction motor speed	-	20 rpm
12 volt battery voltage	8 V	-
Gate drive circuit	Not operated	

Malfunction Threshold

The motor phase V current sensor offset voltage is more than 2.7 V or less than 2.3 V for at least 320 milliseconds.

Possible Cause

NOTE: The causes shown may not be a complete list of all potential problems, and it is possible that there may be other causes.

- PCU internal failure

Diagnosis Details

Conditions for setting the DTC

When a malfunction is detected during the first drive cycle, a Pending DTC is stored in the motor control module memory. If the malfunction returns in the next (second) drive cycle, the MIL comes on and a Confirmed DTC and the freeze data are stored.

Conditions for clearing the DTC

The MIL is cleared if the malfunction does not return in three consecutive trips in which the diagnostic runs. The MIL, the Pending DTC, the Confirmed DTC, and the freeze data can be cleared with the scan tool Clear command.

DTC P0BEE

DTC P0BEE: Traction Motor Phase W Current Sensor Circuit Range/Performance

General Description

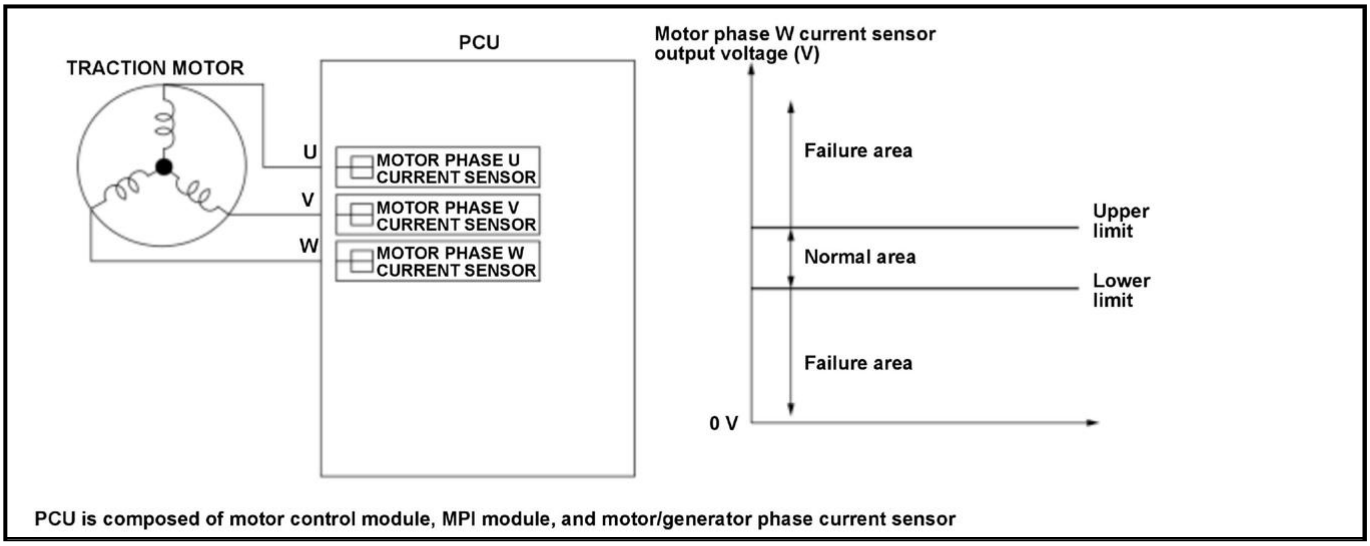
TRACTION MOTOR
PCU
U
V
W
MOTOR PHASE U CURRENT SENSOR
MOTOR PHASE V CURRENT SENSOR
MOTOR PHASE W CURRENT SENSOR
Motor phase W current sensor output voltage (V)
Failure area
Upper limit
Normal area
Lower limit
Failure area
0 V
PCU is composed of motor control module, MPI module, and motor/generator phase current sensor

The power control unit (PCU) controls the motor output based on the motor phase current sensor signals. If the motor phase W current sensor offset voltage is out of a specified range when the sensor input current is 0 A, the motor control module in the PCU detects a malfunction of the motor phase current sensor and stores a DTC.

Monitor Execution, Sequence, Duration, DTC Type

Execution	Continuous
Sequence	None
Duration	320 milliseconds or more
DTC Type	Two drive cycles, MIL on, POWER SYSTEM indicator on

Enable Conditions

Condition	Minimum	Maximum
Traction motor speed	-	20 rpm

Condition	Minimum	Maximum
12 volt battery voltage	8 V	-
Gate drive circuit	Not operated	

Malfunction Threshold

The motor phase W current sensor offset voltage is more than 2.7 V or less than 2.3 V for at least 320 milliseconds.

Possible Cause

NOTE: The causes shown may not be a complete list of all potential problems, and it is possible that there may be other causes.

- PCU internal failure

Diagnosis Details

Conditions for setting the DTC

When a malfunction is detected during the first drive cycle, a Pending DTC is stored in the motor control module memory. If the malfunction returns in the next (second) drive cycle, the MIL comes on and a Confirmed DTC and the freeze data are stored.

Conditions for clearing the DTC

The MIL is cleared if the malfunction does not return in three consecutive trips in which the diagnostic runs. The MIL, the Pending DTC, the Confirmed DTC, and the freeze data can be cleared with the scan tool Clear command.

DTC P0BFD

DTC P0BFD: Traction Motor Phase U-V-W Current Sensor Correlation

General Description

This fault code is a general (specified by SAE) DTC that is stored at the time the DTC code P1D11 is detected.

DTC P0C0C

DTC P0C0C: Traction Motor Inverter Power Supply Circuit Low

General Description

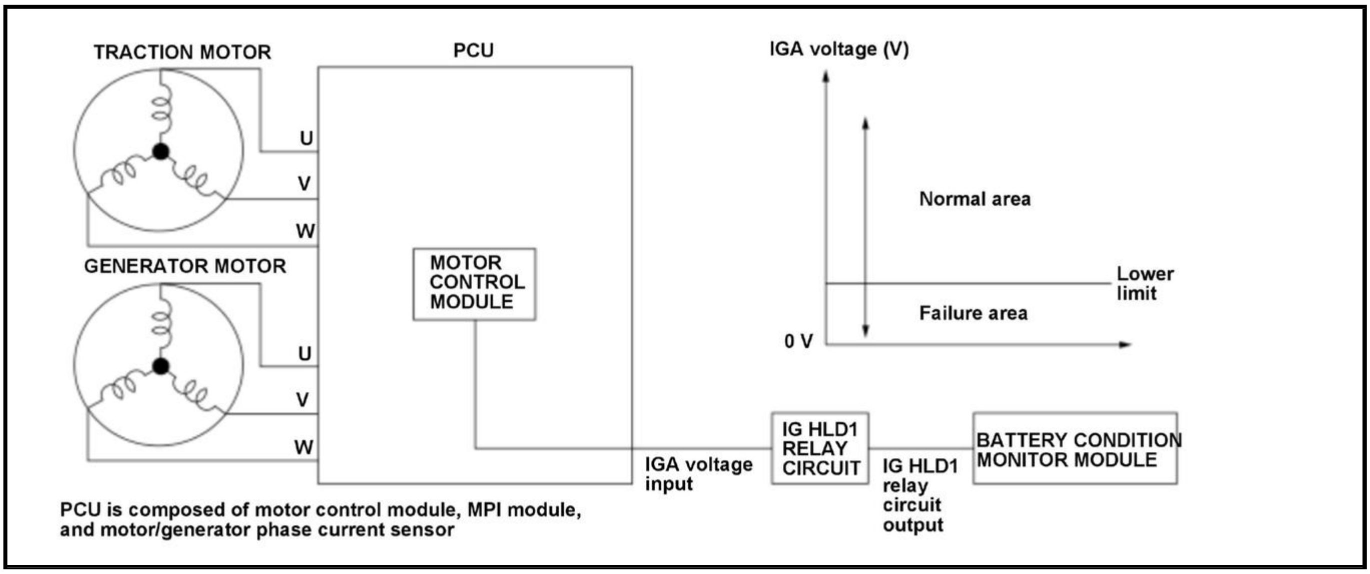
TRACTION MOTOR
PCU
IGA voltage (V)
U
V
W
Normal area
GENERATOR MOTOR
MOTOR CONTROL MODULE
Lower limit
Failure area
0 V
U
V
W
IG HLD1 RELAY CIRCUIT
BATTERY CONDITION MONITOR MODULE
IGA voltage input
IG HLD1 relay circuit output
PCU is composed of motor control module, MPI module, and motor/generator phase current sensor

The power control unit (PCU) monitors the IGA voltage supplied to the PCU according to the voltage detected at the IGA voltage input part. If the IGA voltage is out of a specified value for a specified time, the motor control module in the PCU detects a malfunction and stores a DTC.

Monitor Execution, Sequence, Duration, DTC Type

Execution	Continuous
Sequence	None
Duration	2.0 seconds or more
DTC Type	One drive cycle, MIL on, POWER SYSTEM indicator on

Enable Conditions

Condition	Minimum	Maximum
12 volt battery voltage	10 V	-
Vehicle	ON mode	

Malfunction Threshold

The IGA voltage is less than 0.65 V for at least 2.0 seconds.

Possible Cause

NOTE: The causes shown may not be a complete list of all potential problems, and it is possible that there may be other causes.

- IG HLD1 relay circuit IGA line open
- IG HLD1 relay circuit IGHLD line open
- IG HLD1 relay circuit IGAMONI line open
- IG HLD1 relay circuit IGA line short to ground
- IG HLD1 relay circuit failure
- Battery condition monitor module failure
- PCU internal failure

Diagnosis Details

Conditions for setting the DTC

When a malfunction is detected, the MIL comes on and a Pending DTC, a Confirmed DTC, and the freeze data are stored in the motor control module memory.

Conditions for clearing the DTC

The MIL is cleared if the malfunction does not return in three consecutive trips in which the diagnostic runs. The MIL, the Pending DTC, the Confirmed DTC, and the freeze data can be cleared with the scan tool Clear command.

DTC P0C39

DTC P0C39: DC-DC Converter Temperature Sensor Range/Performance

General Description

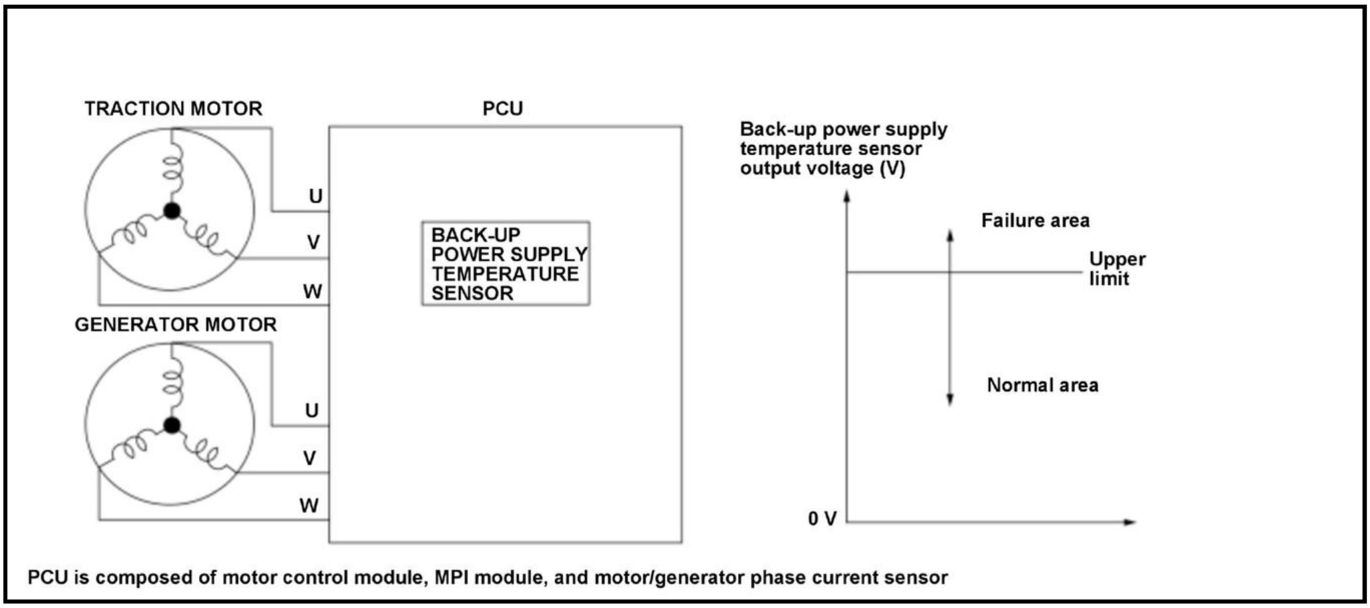
TRACTION MOTOR
PCU
U
V
W
BACK-UP POWER SUPPLY TEMPERATURE SENSOR
GENERATOR MOTOR
U
V
W
Back-up power supply temperature sensor output voltage (V)
Failure area
Upper limit
Normal area
0 V
PCU is composed of motor control module, MPI module, and motor/generator phase current sensor

The power control unit (PCU) monitors the back-up power supply temperature sensor value to prevent malfunction of internal parts due to heat generation. If the back-up power supply temperature sensor output voltage is a specified voltage for a specified time, the motor control module in the PCU detects a malfunction and stores a DTC.

Monitor Execution, Sequence, Duration, DTC Type

Execution	Continuous
Sequence	None
Duration	500 milliseconds or more
DTC Type	Two drive cycles, MIL off, POWER SYSTEM indicator on

Enable Conditions

Condition	Minimum	Maximum
12 volt battery voltage	8 V	-
Step down converter (SDC) voltage	7.74 V	-
Active discharge system (ADS) voltage	7.74 V	-

Malfunction Threshold

The back-up power supply temperature sensor output voltage is more than 4.79 V for at least 500 milliseconds.

Possible Cause

NOTE: The causes shown may not be a complete list of all potential problems, and it is possible that there may be other causes.

- PCU internal failure

Diagnosis Details

Conditions for setting the DTC

When a malfunction is detected during the first drive cycle, a Pending DTC is stored in the motor control module memory. If the malfunction returns in the next (second) drive cycle, the POWER SYSTEM indicator comes on and a Confirmed DTC and the freeze data are stored. The MIL does not come on.

Conditions for clearing the DTC

The POWER SYSTEM indicator is cleared if the malfunction does not return in the next trip in which the diagnostic runs. The POWER SYSTEM indicator, the Pending DTC, the Confirmed DTC, and the freeze data can be cleared with the scan tool Clear command.

DTC P0C3A

DTC P0C3A: DC-DC Converter Temperature Sensor Low

General Description

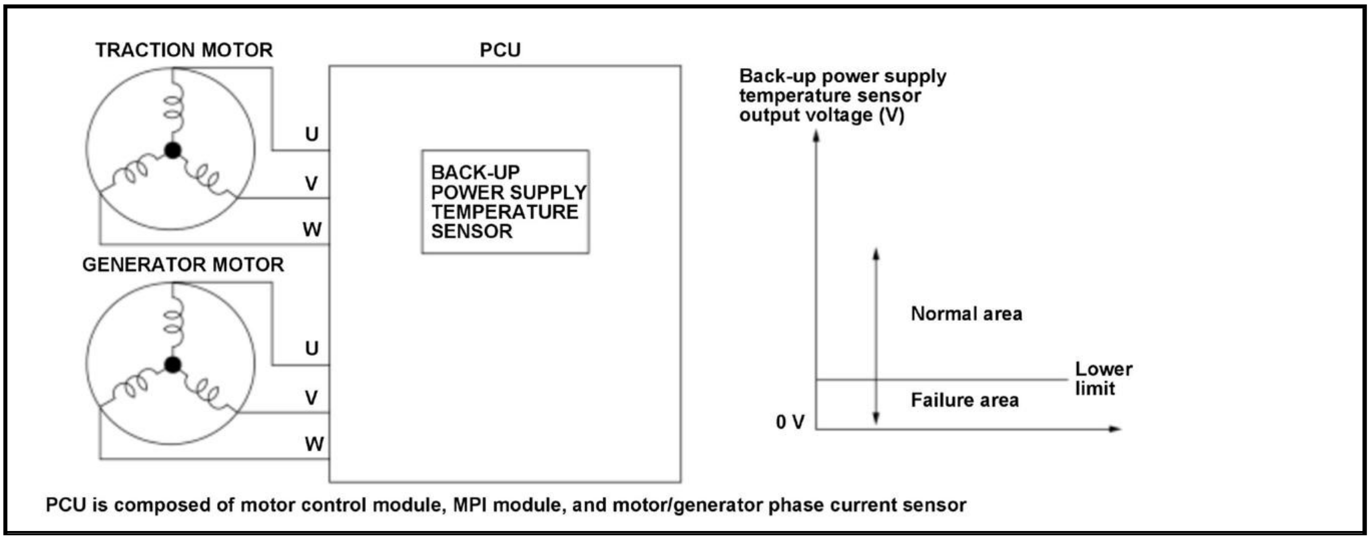
TRACTION MOTOR
PCU
U
V
W
BACK-UP POWER SUPPLY TEMPERATURE SENSOR
GENERATOR MOTOR
U
V
W
Back-up power supply temperature sensor output voltage (V)
Normal area
Lower limit
Failure area
0 V
PCU is composed of motor control module, MPI module, and motor/generator phase current sensor

The power control unit (PCU) monitors the back-up power supply temperature sensor value to prevent malfunction of internal parts due to heat generation. If the back-up power supply temperature sensor output voltage is a specified voltage for a specified time, the motor control module in the PCU detects a malfunction and stores a DTC.

Monitor Execution, Sequence, Duration, DTC Type

Execution	Continuous
Sequence	None
Duration	300 milliseconds or more
DTC Type	Two drive cycles, MIL off, POWER SYSTEM indicator on

Enable Conditions

Condition	Minimum	Maximum
12 volt battery voltage	8 V	-
Step down converter (SDC) voltage	7.74 V	-
Active discharge system (ADS) voltage	7.74 V	-

Malfunction Threshold

The back-up power supply temperature sensor output voltage is less than 0.1 V for at least 300 milliseconds.

Possible Cause

NOTE: The causes shown may not be a complete list of all potential problems, and it is possible that there may be other causes.

- PCU internal failure

Diagnosis Details

Conditions for setting the DTC

When a malfunction is detected during the first drive cycle, a Pending DTC is stored in the motor control module memory. If the malfunction returns in the next (second) drive cycle, the POWER SYSTEM indicator comes on and a Confirmed DTC and the freeze data are stored. The MIL does not come on.

Conditions for clearing the DTC

The POWER SYSTEM indicator is cleared if the malfunction does not return in the next trip in which the diagnostic runs. The POWER SYSTEM indicator, the Pending DTC, the Confirmed DTC, and the freeze data can be cleared with the scan tool Clear command.

DTC P0C3B

DTC P0C3B: DC-DC Converter Temperature Sensor High

General Description

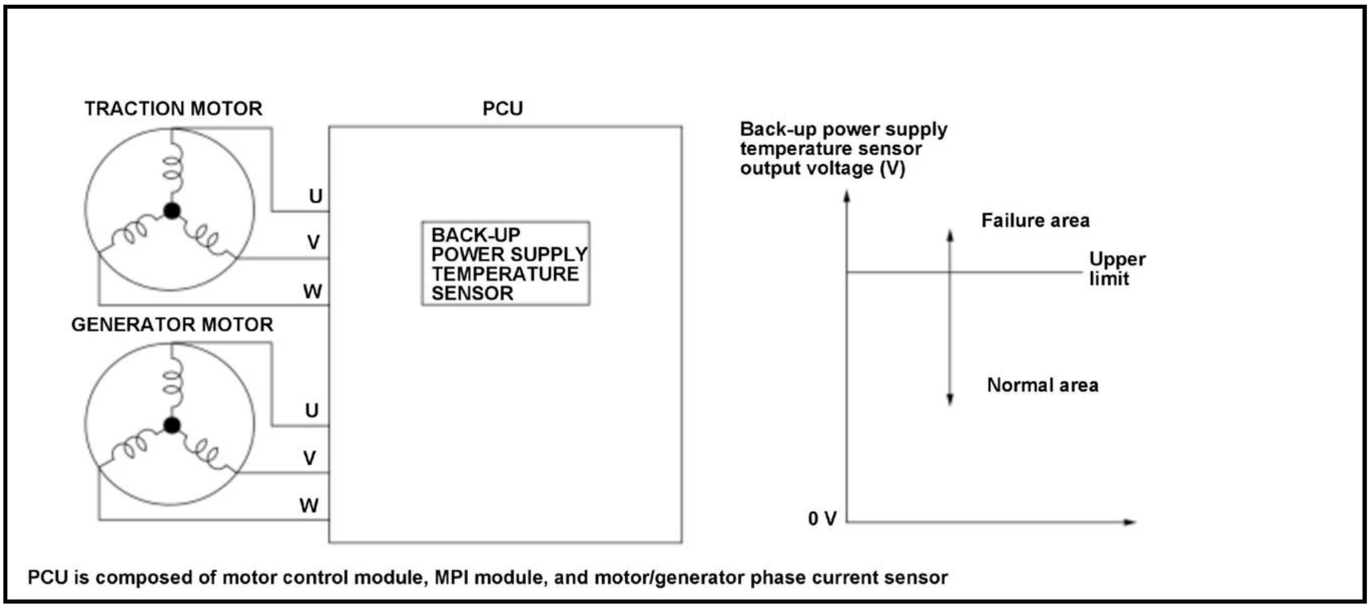
TRACTION MOTOR
PCU
U
V
W
BACK-UP POWER SUPPLY TEMPERATURE SENSOR
GENERATOR MOTOR
U
V
W
Back-up power supply temperature sensor output voltage (V)
Failure area
Upper limit
Normal area
0 V
PCU is composed of motor control module, MPI module, and motor/generator phase current sensor

The power control unit (PCU) monitors the back-up power supply temperature sensor value to prevent malfunction of internal parts due to heat generation. If the back-up power supply temperature sensor output voltage is a specified voltage for a specified time, the motor control module in the PCU detects a malfunction and stores a DTC.

Monitor Execution, Sequence, Duration, DTC Type

Execution	Continuous
Sequence	None
Duration	300 milliseconds or more
DTC Type	Two drive cycles, MIL off, POWER SYSTEM indicator on

Enable Conditions

Condition	Minimum	Maximum
12 volt battery voltage	8 V	-
Step down converter (SDC) voltage	7.74 V	-
Active discharge system (ADS) voltage	7.74 V	-

Malfunction Threshold

The back-up power supply temperature sensor output voltage is more than 4.84 V for at least 300 milliseconds.

Possible Cause

NOTE: The causes shown may not be a complete list of all potential problems, and it is possible that there may be other causes.

- PCU internal failure

Diagnosis Details

Conditions for setting the DTC

When a malfunction is detected during the first drive cycle, a Pending DTC is stored in the motor control module memory. If the malfunction returns in the next (second) drive cycle, the POWER SYSTEM indicator comes on and a Confirmed DTC and the freeze data are stored. The MIL does not come on.

Conditions for clearing the DTC

The POWER SYSTEM indicator is cleared if the malfunction does not return in the next trip in which the diagnostic runs. The POWER SYSTEM indicator, the Pending DTC, the Confirmed DTC, and the freeze data can be cleared with the scan tool Clear command.

DTC P0C4E

DTC P0C4E: Traction Motor Rotor Position Exceeded Learning Limit

General Description

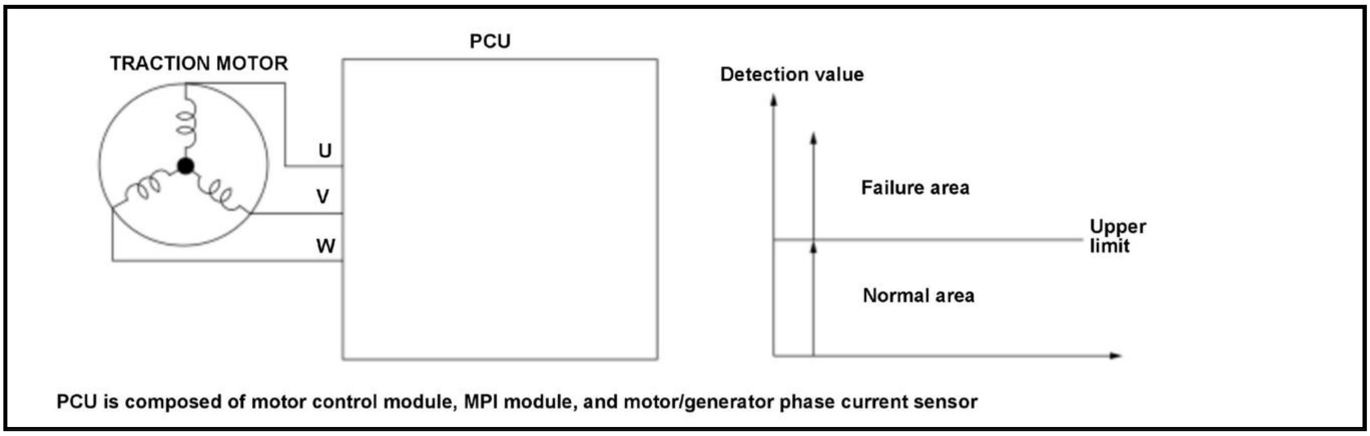
TRACTION MOTOR
PCU
U
V
W
Detection value
Failure area
Upper limit
Normal area
PCU is composed of motor control module, MPI module, and motor/generator phase current sensor

The motor control module controls the traction motor by detecting the rotor position angle using the traction motor motor rotor position sensor. The motor control module detects zero point offset to improve torque accuracy and traction motor efficiency. When the zero point offset detection value is out of a permissible range, the motor control module in the power control unit (PCU) detects a malfunction and stores a DTC.

Monitor Execution, Sequence, Duration, DTC Type

Execution	Once when the motor control module is reset
Sequence	None
Duration	15 seconds or more
DTC Type	One drive cycle, MIL off, POWER SYSTEM indicator on

Enable Conditions

Condition	Minimum	Maximum
Traction motor speed	4, 000 rpm	8, 500 rpm

Malfunction Threshold

The traction motor motor rotor position sensor angle detection value is 30 deg. or more.

Possible Cause

NOTE: The causes shown may not be a complete list of all potential problems, and it is possible that there may be other causes.

- Traction motor power cable line open
- Traction motor power cable miss installed
- Traction motor motor rotor position sensor failure
- Traction motor failure
- PCU internal failure

Diagnosis Details

Conditions for setting the DTC

When a malfunction is detected, the POWER SYSTEM indicator comes on and a Pending DTC, a Confirmed DTC, and the freeze data are stored in the motor control module memory. The MIL does not come on.

Conditions for clearing the DTC

The POWER SYSTEM indicator is cleared if the malfunction does not return in the next trip in which the diagnostic runs. The POWER SYSTEM indicator, the Pending DTC, the Confirmed DTC, and the freeze data can be cleared with the scan tool Clear command.

DTC P0CE9

DTC P0CE9: PCU Electric Coolant Pump Control Circuit Open

General Description

This fault code is a general (specified by SAE) DTC that is stored at the time the following DTC codes (P1D92, P1D99) are detected.

DTC P0CEA

DTC P0CEA: PCU Electric Coolant Pump Performance

General Description

This fault code is a general (specified by SAE) DTC that is stored at the time the following DTC codes (P1D93, P1D9A) are detected.

DTC P0CED

DTC P0CED: PCU Electric Coolant Pump Enable Circuit

General Description

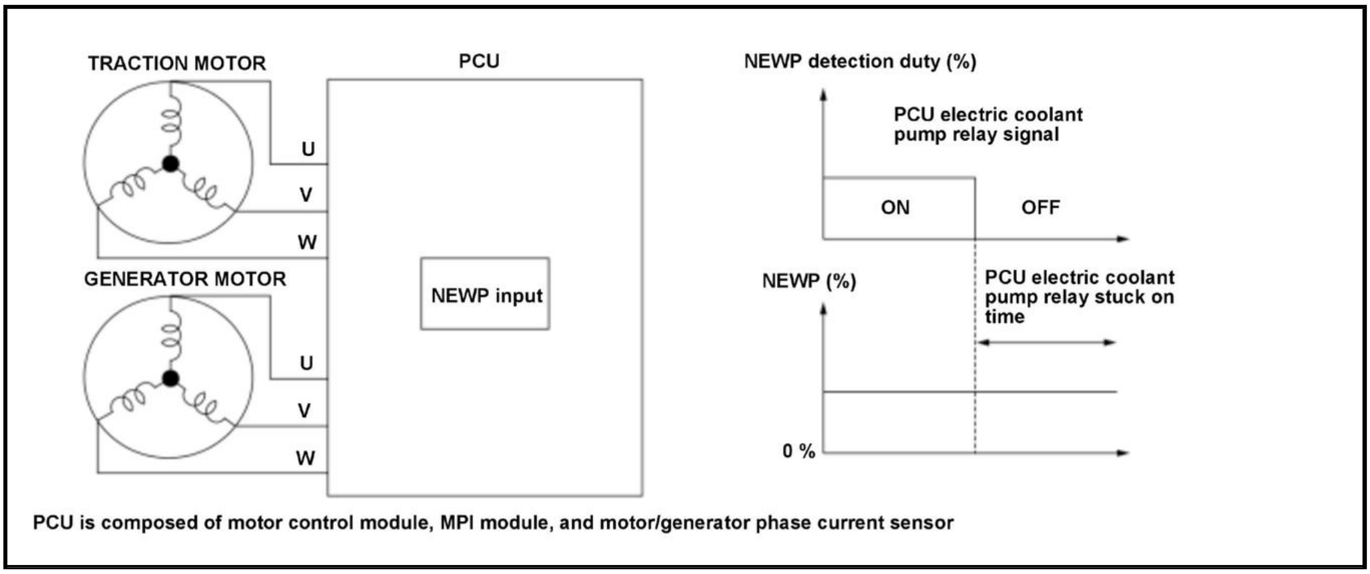
TRACTION MOTOR
U
V
W
GENERATOR MOTOR
U
V
W
PCU
NEWP input
NEWP detection duty (%)
PCU electric coolant pump relay signal
ON
OFF
NEWP (%)
PCU electric coolant pump relay stuck on time
0 %
PCU is composed of motor control module, MPI module, and motor/generator phase current sensor

The power control unit (PCU) controls the PCU electric coolant pump according to the rotational speed of the PCU electric coolant pump calculated from the frequency (duty fixed to 50 %) detected from the NEWP terminal. If, an OFF signal is output from the PCU electric coolant pump relay, a frequency (duty) is detected from the NEWP terminal for a specified time, the motor control module in the PCU detects a malfunction and stores a DTC.

Monitor Execution, Sequence, Duration, DTC Type

Execution	PCU electric coolant pump relay is OFF condition
Sequence	None
Duration	1.6 seconds or more
DTC Type	Two drive cycles, MIL off, POWER SYSTEM indicator on

Enable Conditions

Condition	Minimum	Maximum
Elapsed time after the PCU electric coolant pump relay	2 seconds	-

Condition	Minimum	Maximum
OFF commanded		
12 volt battery voltage	10 V	-

Malfunction Threshold

If the NEWP frequency is more than 2.5 Hz for at least 1.6 seconds when the PCU electric coolant pump relay is turned off.

Possible Cause

NOTE: The causes shown may not be a complete list of all potential problems, and it is possible that there may be other causes.

- PCU electric coolant pump relay failure
- PCU electric coolant pump failure
- PCU internal failure

Diagnosis Details

Conditions for setting the DTC

When a malfunction is detected during the first drive cycle, a Pending DTC is stored in the motor control module memory. If the malfunction returns in the next (second) drive cycle, the POWER SYSTEM indicator comes on and a Confirmed DTC and the freeze data are stored. The MIL does not come on.

Conditions for clearing the DTC

The POWER SYSTEM indicator is cleared if the malfunction does not return in the next trip in which the diagnostic runs. The POWER SYSTEM indicator, the Pending DTC, the Confirmed DTC, and the freeze data can be cleared with the scan tool Clear command.

DTC P0CEE

DTC P0CEE: PCU Coolant Temperature Sensor Circuit

General Description

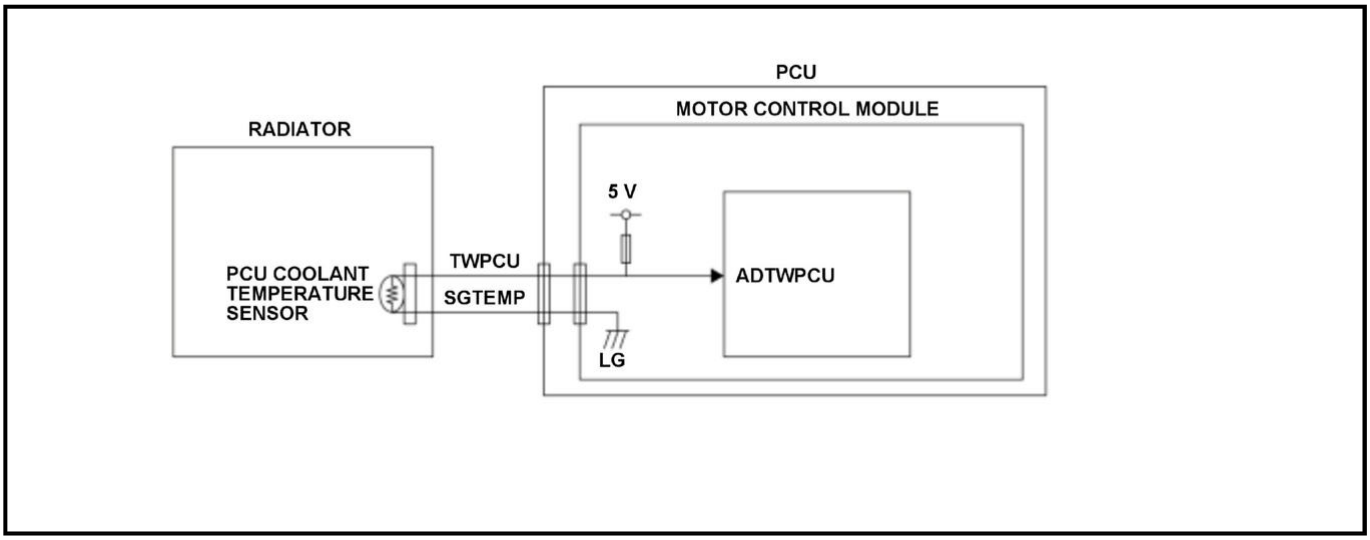

To control the temperature of power control unit (PCU) coolant, while monitoring the coolant temperature and the temperature of each part, the PCU drives the PCU electric coolant pump and sends a drive request to the radiator fan. Since the coolant temperature and the reactor temperature become nearly identical immediately after the engine is started when it is sufficiently cooled down, the motor control module in the PCU detects a malfunction and stores a DTC when the difference between the coolant temperature and the reactor temperature is equal to or more than the prescribed value continuously for the prescribed time or more.

Monitor Execution, Sequence, Duration, DTC Type

Execution	Continuous
Sequence	None
Duration	-
DTC Type	Two drive cycles, MIL off, POWER SYSTEM indicator on

Enable Conditions

Condition	Minimum	Maximum
Elapsed time after the vehicle condition is turned to the OFF (LOCK) mode	5 hours 50 minutes	-
Traction motor absolute torque value	-	0.2 N*m (0.02 kgf*m, 0.14 Ibf*ft)
Generator motor absolute torque value	-	0.2 N*m (0.02 kgf*m, 0.14 Ibf*ft)

Malfunction Threshold

The difference between the reactor temperature and the coolant temperature is more than 81 deg.F (45 deg.C).

Possible Cause

NOTE: The causes shown may not be a complete list of all potential problems, and it is possible that there may be other causes.

- PCU coolant temperature sensor failure
- PCU internal failure

Diagnosis Details

Conditions for setting the DTC

When a malfunction is detected during the first drive cycle, a Pending DTC is stored in the motor control module memory. If the malfunction returns in the next (second) drive cycle, the POWER SYSTEM indicator comes on and a Confirmed DTC and the freeze data are stored. The MIL does not come on.

Conditions for clearing the DTC

The POWER SYSTEM indicator is cleared if the malfunction does not return in the next trip in which the diagnostic runs. The POWER SYSTEM indicator, the Pending DTC, the Confirmed DTC, and the freeze data can be cleared with the scan tool Clear command.

DTC P0CEF

DTC P0CEF: PCU Coolant Temperature Sensor Circuit Range/Performance

General Description

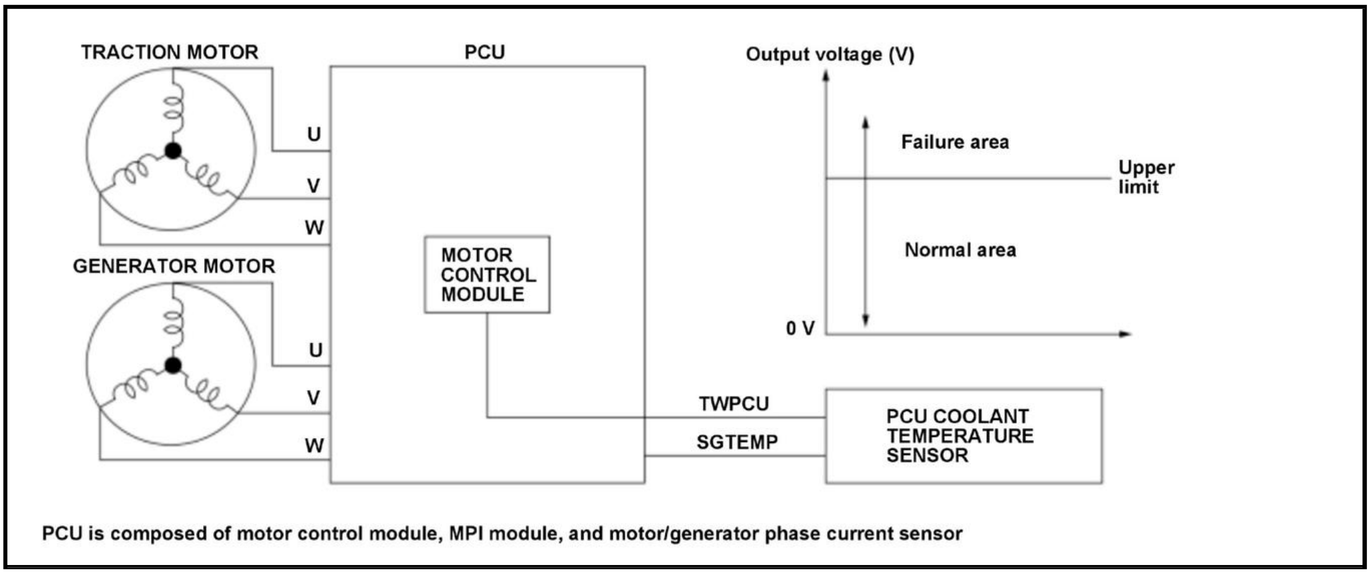
TRACTION MOTOR
PCU
Output voltage (V)
U
V
W
Failure area
Upper limit
Normal area
GENERATOR MOTOR
MOTOR CONTROL MODULE
0 V
U
V
W
TWPCU
SGTEMP
PCU COOLANT TEMPERATURE SENSOR
PCU is composed of motor control module, MPI module, and motor/generator phase current sensor

The power control unit (PCU) monitors the PCU coolant temperature sensor value to prevent malfunction of internal parts due to heat generation. If the PCU coolant temperature sensor output temperature is out of a specified value for a specified time, the motor control module in the PCU detects a malfunction and stores a DTC.

Monitor Execution, Sequence, Duration, DTC Type

Execution	Continuous
Sequence	None
Duration	2.5 seconds or more
DTC Type	Two drive cycles, MIL off, POWER SYSTEM indicator on

Enable Conditions

Condition	Minimum	Maximum
12 volt battery voltage	8 V	-

Malfunction Threshold

The output voltage from the PCU coolant temperature sensor [Radiator Water Temperature Sensor Voltage (TRC)] is more than 4.87 V for at least 2.5 seconds.

[ ]: HDS Parameter

Possible Cause

NOTE: The causes shown may not be a complete list of all potential problems, and it is possible that there may be other causes.

- PCU coolant temperature sensor failure
- PCU internal failure

Diagnosis Details

Conditions for setting the DTC

When a malfunction is detected during the first drive cycle, a Pending DTC is stored in the motor control module memory. If the malfunction returns in the next (second) drive cycle, the POWER SYSTEM indicator comes on and a Confirmed DTC and the freeze data are stored. The MIL does not come on.

Conditions for clearing the DTC

The POWER SYSTEM indicator is cleared if the malfunction does not return in the next trip in which the diagnostic runs. The POWER SYSTEM indicator, the Pending DTC, the Confirmed DTC, and the freeze data can be cleared with the scan tool Clear command.

DTC P0CF0

DTC P0CF0: PCU Coolant Temperature Sensor Circuit Low

General Description

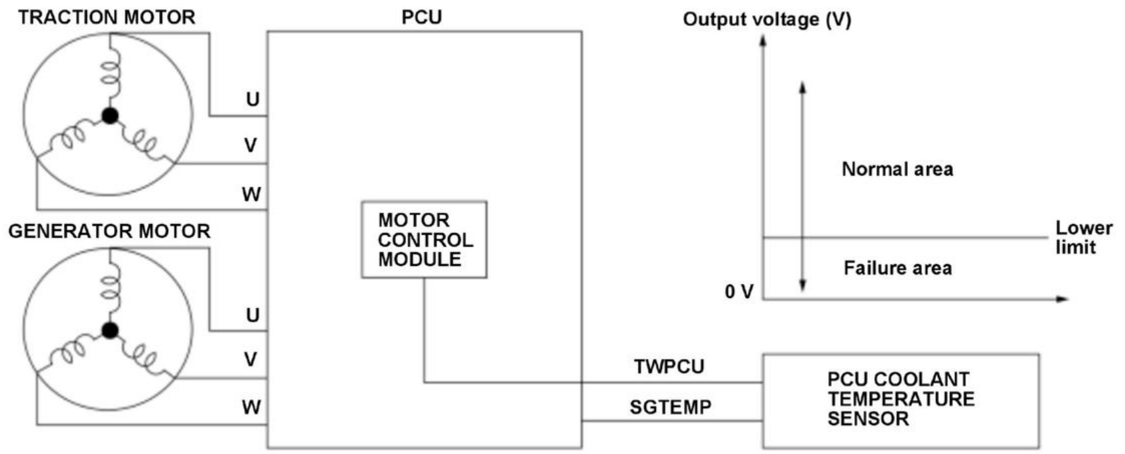
TRACTION MOTOR
PCU
Output voltage (V)
U
V
W
Normal area
Lower limit
GENERATOR MOTOR
MOTOR CONTROL MODULE
Failure area
0 V
U
V
W
TWPCU
SGTEMP
PCU COOLANT TEMPERATURE SENSOR

PCU is composed of motor control module, MPI module, and motor/generator phase current sensor

The power control unit (PCU) monitors the PCU coolant temperature sensor value to prevent malfunction of internal parts due to heat generation. If the PCU coolant temperature sensor output temperature is out of a specified value for a specified time, the motor control module in the PCU detects a malfunction and stores a DTC.

Monitor Execution, Sequence, Duration, DTC Type

Execution	Continuous
Sequence	None
Duration	2.0 seconds or more
DTC Type	Two drive cycles, MIL off, POWER SYSTEM indicator on

Enable Conditions

Condition	Minimum	Maximum
12 volt battery voltage	8 V	-

Malfunction Threshold

The output voltage from the PCU coolant temperature sensor [Radiator Water Temperature Sensor Voltage (TRC)] is less than 0.08 V for at least 2.0 seconds.

[ ]: HDS Parameter

Possible Cause

NOTE: The causes shown may not be a complete list of all potential problems, and it is possible that there may be other causes.

- PCU coolant temperature sensor TWPCU line short to ground
- PCU coolant temperature sensor failure

- PCU internal failure

Diagnosis Details

Conditions for setting the DTC

When a malfunction is detected during the first drive cycle, a Pending DTC is stored in the motor control module memory. If the malfunction returns in the next (second) drive cycle, the POWER SYSTEM indicator comes on and a Confirmed DTC and the freeze data are stored. The MIL does not come on.

Conditions for clearing the DTC

The POWER SYSTEM indicator is cleared if the malfunction does not return in the next trip in which the diagnostic runs. The POWER SYSTEM indicator, the Pending DTC, the Confirmed DTC, and the freeze data can be cleared with the scan tool Clear command.

DTC P0CF1

DTC P0CF1: PCU Coolant Temperature Sensor Circuit High

General Description

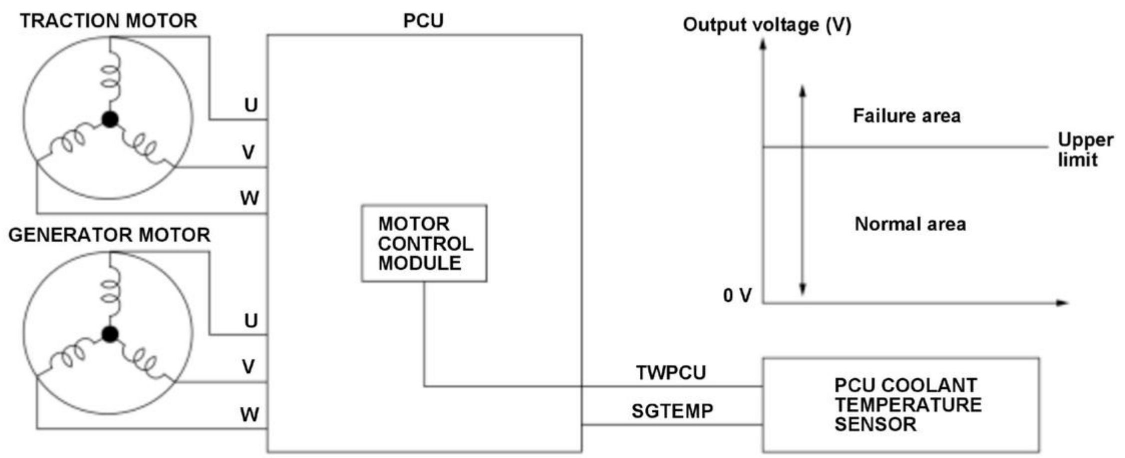
TRACTION MOTOR
PCU
Output voltage (V)
U
V
W
Failure area
Upper limit
Normal area
GENERATOR MOTOR
MOTOR CONTROL MODULE
0 V
U
V
W
TWPCU
SGTEMP
PCU COOLANT TEMPERATURE SENSOR

PCU is composed of motor control module, MPI module, and motor/generator phase current sensor

The power control unit (PCU) monitors the PCU coolant temperature sensor value to prevent malfunction of internal parts due to heat generation. If the PCU coolant temperature sensor output temperature is out of a specified value for a specified time, the motor control module in the PCU detects a malfunction and stores a DTC.

Monitor Execution, Sequence, Duration, DTC Type

Execution	Continuous
Sequence	None
Duration	2.0 seconds or more
DTC Type	Two drive cycles, MIL off, POWER SYSTEM indicator on

Enable Conditions

Condition	Minimum	Maximum
12 volt battery voltage	8 V	-

Malfunction Threshold

The output voltage from the PCU coolant temperature sensor [Radiator Water Temperature Sensor Voltage (TRC)] is more than 4.9 V for at least 2.0 seconds.

[ ]: HDS Parameter

Possible Cause

NOTE: The causes shown may not be a complete list of all potential problems, and it is possible that there may be other causes.

- PCU coolant temperature sensor TWPCU line open
- PCU coolant temperature sensor SGTEMP line open
- PCU coolant temperature sensor failure
- PCU internal failure

Diagnosis Details

Conditions for setting the DTC

When a malfunction is detected during the first drive cycle, a Pending DTC is stored in the motor control module memory. If the malfunction returns in the next (second) drive cycle, the POWER SYSTEM indicator comes on and a Confirmed DTC and the freeze data are stored. The MIL does not come on.

Conditions for clearing the DTC

The POWER SYSTEM indicator is cleared if the malfunction does not return in the next trip in which the diagnostic runs. The POWER SYSTEM indicator, the Pending DTC, the Confirmed DTC, and the freeze data can be cleared with the scan tool Clear command.

DTC P0D32 (MOTOR CONTROL MODULE)

DTC P0D32: DC-DC Converter Over Temperature (Traction Motor Control Module Detected)

General Description

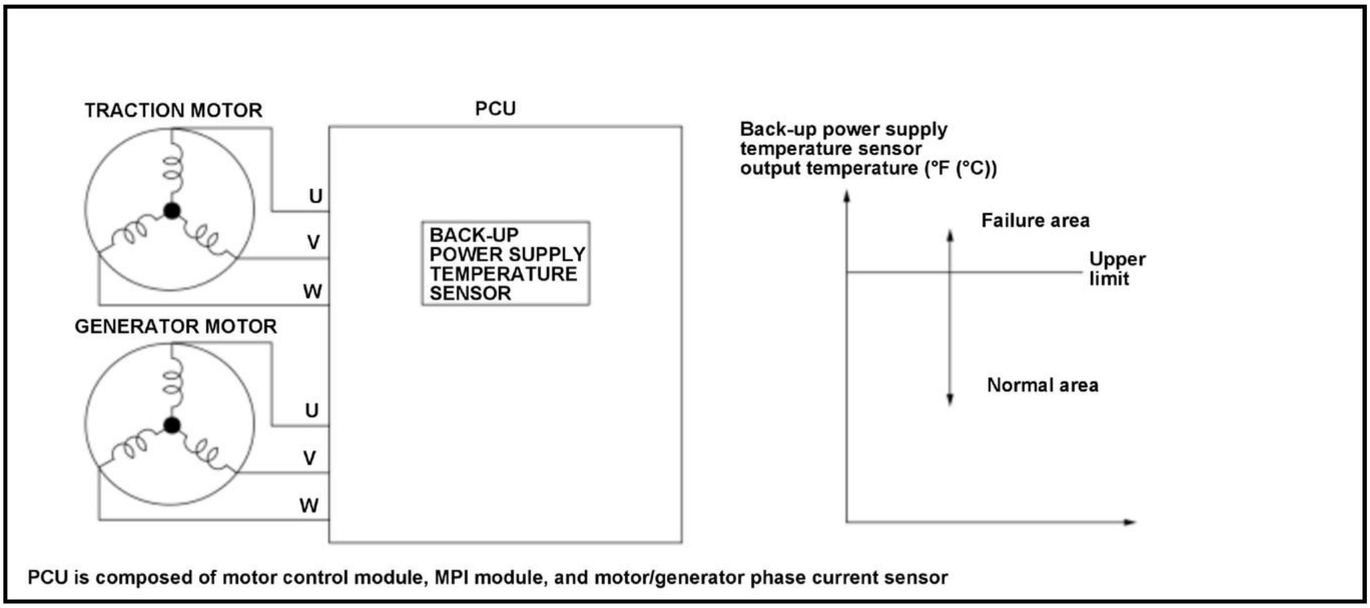
TRACTION MOTOR
PCU
U
V
W
BACK-UP POWER SUPPLY TEMPERATURE SENSOR
GENERATOR MOTOR
U
V
W
Back-up power supply temperature sensor output temperature (°F (°C))
Failure area
Upper limit
Normal area

PCU is composed of motor control module, MPI module, and motor/generator phase current sensor

The power control unit (PCU) monitors the back-up power supply temperature sensor value to prevent malfunction of internal parts due to heat generation. If the back-up power supply temperature sensor output temperature is a specified voltage for a specified time, the motor control module in the PCU detects a malfunction and stores a DTC.

Monitor Execution, Sequence, Duration, DTC Type

Execution	Continuous
Sequence	None
Duration	500 milliseconds or more
DTC Type	Two drive cycles, MIL off, POWER SYSTEM indicator on

Enable Conditions

Condition	Minimum	Maximum
12 volt battery voltage	8 V	-
Step down converter (SDC) voltage	7.74 V	-
Active discharge system (ADS) voltage	7.74 V	-

Malfunction Threshold

The back-up power supply temperature sensor output temperature is more than 260 deg.F (127 deg.C) for at least 500 milliseconds.

Possible Cause

NOTE: The causes shown may not be a complete list of all potential problems, and it is possible that there may be other causes.

- PCU internal failure

Diagnosis Details

Conditions for setting the DTC

When a malfunction is detected during the first drive cycle, a Pending DTC is stored in the motor control module memory. If the malfunction returns in the next (second) drive cycle, the POWER SYSTEM indicator comes on and a Confirmed DTC and the freeze data are stored. The MIL does not come on.

Conditions for clearing the DTC

The POWER SYSTEM indicator is cleared if the malfunction does not return in the next trip in which the diagnostic runs. The POWER SYSTEM indicator, the Pending DTC, the Confirmed DTC, and the freeze data can be cleared with the scan tool Clear command.

DTC P0DFA

DTC P0DFA: Generator Motor Phase U-V-W Current Sensor Correlation

General Description

This fault code is a general (specified by SAE) DTC that is stored at the time the DTC code P1D13 is detected.

DTC P0DFB

DTC P0DFB: Generator Motor Rotor Position Sensor Exceeding Learn Limit

General Description

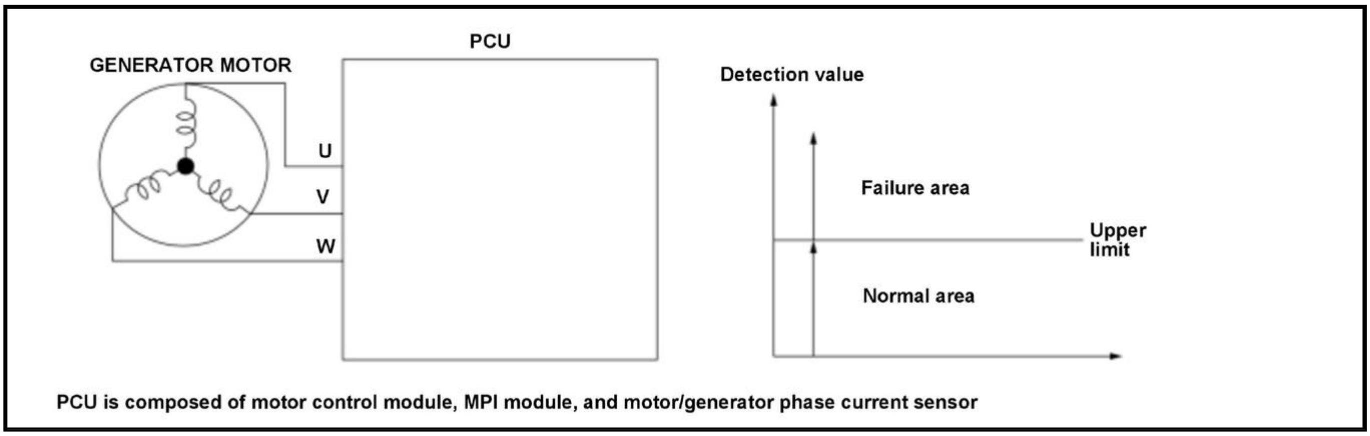
PCU
GENERATOR MOTOR
U
V
W
Detection value
Failure area
Upper limit
Normal area
PCU is composed of motor control module, MPI module, and motor/generator phase current sensor

The motor control module controls the generator motor by detecting the rotor position angle using the generator motor motor rotor position sensor. The motor control module detects zero point offset to improve torque accuracy and generator motor efficiency. When the zero point offset detection value is out of a permissible range, the motor control module in the power control unit (PCU) detects a malfunction and stores a DTC.

Monitor Execution, Sequence, Duration, DTC Type

Execution	Once when the motor control module is reset
Sequence	None
Duration	15 seconds or more
DTC Type	One drive cycle, MIL off, POWER SYSTEM indicator on

Enable Conditions

Condition	Minimum	Maximum
Generator motor speed[Motor Speed (GEN)]	2, 500 rpm	6, 000 rpm

[ ]: HDS Parameter

Malfunction Threshold

The generator motor motor rotor position sensor angle detection value is 30 deg. or more for at least 15 seconds.

Possible Cause

NOTE: The causes shown may not be a complete list of all potential problems, and it is possible that there may be other causes.

- Generator motor power cable line open
- Generator motor power cable miss installed
- Generator motor motor rotor position sensor failure
- Generator motor failure
- PCU internal failure

Diagnosis Details

Conditions for setting the DTC

When a malfunction is detected, the POWER SYSTEM indicator comes on and a Pending DTC, a Confirmed DTC, and the freeze data are stored in the motor control module memory. The MIL does not come on.

Conditions for clearing the DTC

The POWER SYSTEM indicator is cleared if the malfunction does not return in the next trip in which the diagnostic runs. The POWER SYSTEM indicator, the Pending DTC, the Confirmed DTC, and the freeze data can be cleared with the scan tool Clear command.

DTC P0E01

DTC P0E01: Generator Motor Phase U Current Sensor Circuit Range/Performance

General Description

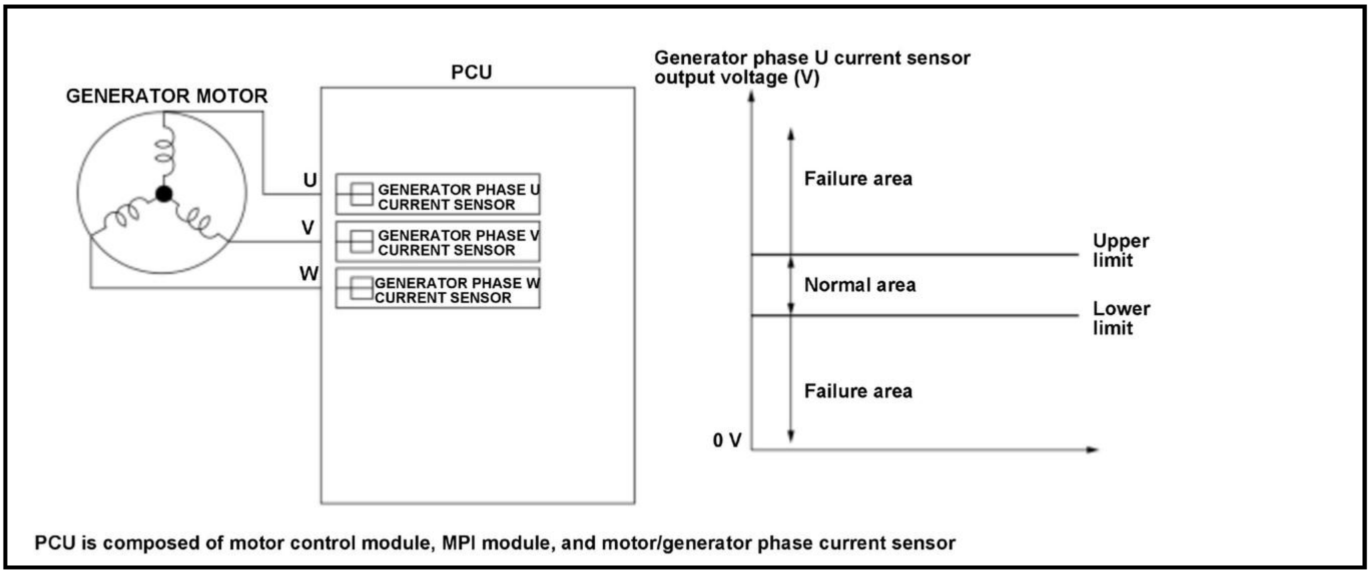
GENERATOR MOTOR
PCU
U
V
W
GENERATOR PHASE U CURRENT SENSOR
GENERATOR PHASE V CURRENT SENSOR
GENERATOR PHASE W CURRENT SENSOR
Generator phase U current sensor output voltage (V)
Failure area
Upper limit
Normal area
Lower limit
Failure area
0 V

PCU is composed of motor control module, MPI module, and motor/generator phase current sensor

The power control unit (PCU) controls the motor output based on the generator phase current sensor signals. If the generator phase U current sensor offset voltage is out of a specified range when the sensor input current is 0 A, the motor control module in the PCU detects a malfunction of the generator phase current sensor and stores a DTC.

Monitor Execution, Sequence, Duration, DTC Type

Execution	Continuous
Sequence	None
Duration	320 milliseconds or more
DTC Type	Two drive cycles, MIL on, POWER SYSTEM indicator on

Enable Conditions

Condition	Minimum	Maximum
Generator motor speed[Motor Speed (GEN)]	-	20 rpm
12 volt battery voltage	8 V	-
Gate generator circuit	Not operated	

[ ]: HDS Parameter

Malfunction Threshold

The generator phase U current sensor offset voltage is more than 2.7 V or less than 2.3 V for at least 320 milliseconds.

Possible Cause

NOTE: The causes shown may not be a complete list of all potential problems, and it is possible that there may be other causes.

- PCU internal failure

Diagnosis Details

Conditions for setting the DTC

When a malfunction is detected during the first drive cycle, a Pending DTC is stored in the motor control module memory. If the malfunction returns in the next (second) drive cycle, the MIL comes on and a Confirmed DTC and the freeze data are stored.

Conditions for clearing the DTC

The MIL is cleared if the malfunction does not return in three consecutive trips in which the diagnostic runs. The MIL, the Pending DTC, the Confirmed DTC, and the freeze data can be cleared with the scan tool Clear command.

DTC P0E05

DTC P0E05: Generator Motor Phase V Current Sensor Circuit Range/Performance

General Description

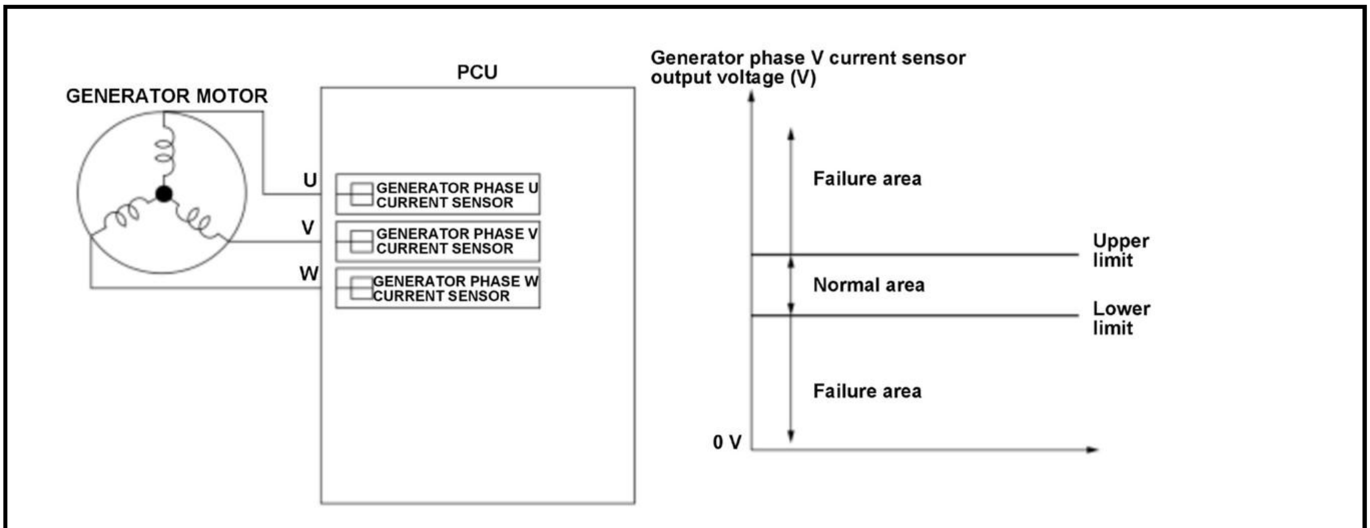
GENERATOR MOTOR
PCU
U
V
W
GENERATOR PHASE U CURRENT SENSOR
GENERATOR PHASE V CURRENT SENSOR
GENERATOR PHASE W CURRENT SENSOR
Generator phase V current sensor output voltage (V)
Failure area
Upper limit
Normal area
Lower limit
Failure area
0 V

PCU is composed of motor control module, MPI module, and motor/generator phase current sensor

The power control unit (PCU) controls the motor output based on the generator phase current sensor signals. If the generator phase V current sensor offset voltage is out of a specified range when the sensor input current is 0 A, the motor control module in the PCU detects a malfunction of the generator phase current sensor and stores a DTC.

Monitor Execution, Sequence, Duration, DTC Type

Execution	Continuous
Sequence	None
Duration	320 milliseconds or more
DTC Type	Two drive cycles, MIL on, POWER SYSTEM indicator on

Enable Conditions

Condition	Minimum	Maximum
Generator motor speed[Motor Speed (GEN)]	-	20 rpm
12 volt battery voltage	8 V	-
Gate generator circuit	Not operated	

[ ]: HDS Parameter

Malfunction Threshold

The generator phase V current sensor offset voltage is more than 2.7 V or less than 2.3 V for at least 320 milliseconds.

Possible Cause

NOTE: The causes shown may not be a complete list of all potential problems, and it is possible that there may be other causes.

- PCU internal failure

Diagnosis Details

Conditions for setting the DTC

When a malfunction is detected during the first drive cycle, a Pending DTC is stored in the motor control module memory. If the malfunction returns in the next (second) drive cycle, the MIL comes on and a Confirmed DTC and the freeze data are stored.

Conditions for clearing the DTC

The MIL is cleared if the malfunction does not return in three consecutive trips in which the diagnostic runs. The MIL, the Pending DTC, the Confirmed DTC, and the freeze data can be cleared with the scan tool Clear command.

DTC P0E09

DTC P0E09: Generator Motor Phase W Current Sensor Circuit Range/Performance

General Description

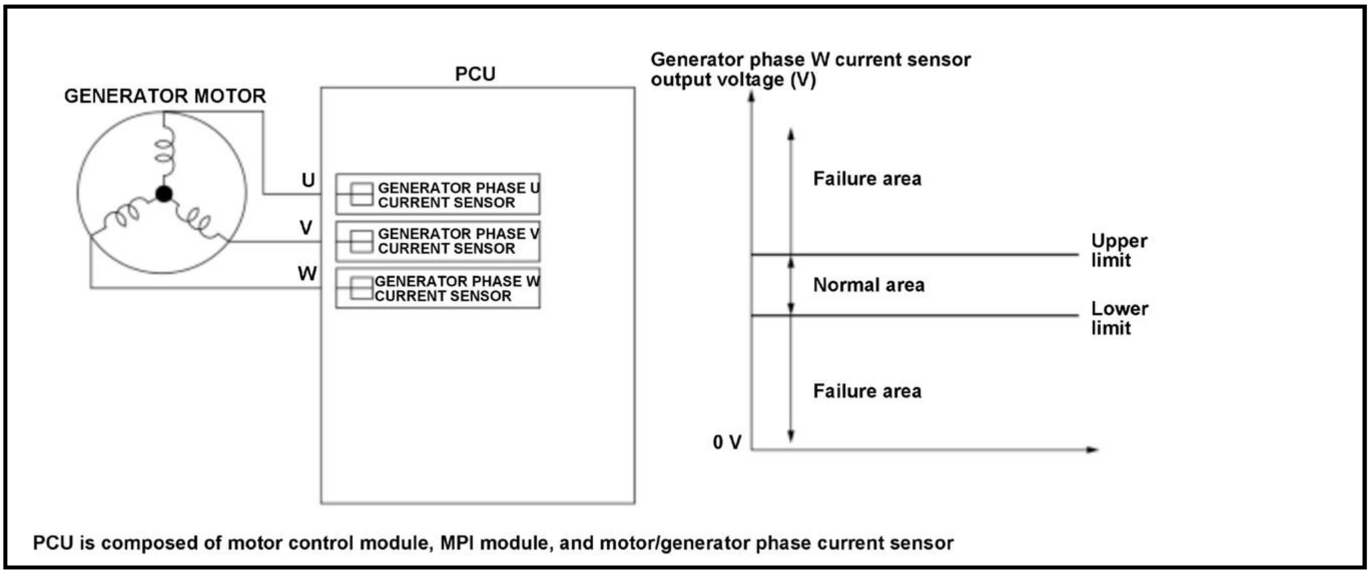
GENERATOR MOTOR
PCU
U
V
W
GENERATOR PHASE U CURRENT SENSOR
GENERATOR PHASE V CURRENT SENSOR
GENERATOR PHASE W CURRENT SENSOR
Generator phase W current sensor output voltage (V)
Failure area
Upper limit
Normal area
Lower limit
Failure area
0 V

PCU is composed of motor control module, MPI module, and motor/generator phase current sensor

The power control unit (PCU) controls the motor output based on the generator phase current sensor signals. If the generator phase W current sensor offset voltage is out of a specified range when the sensor input current is 0 A, the motor control module in the PCU detects a malfunction of the generator phase current sensor and stores a DTC.

Monitor Execution, Sequence, Duration, DTC Type

Execution	Continuous

Sequence	None
Duration	320 milliseconds or more
DTC Type	Two drive cycles, MIL on, POWER SYSTEM indicator on

Enable Conditions

Condition	Minimum	Maximum
Generator motor speed[Motor Speed (GEN)]	-	20 rpm
12 volt battery voltage	8 V	-
Gate generator circuit	Not operated	

[ ]: HDS Parameter

Malfunction Threshold

The generator phase W current sensor offset voltage is more than 2.7 V or less than 2.3 V for at least 320 milliseconds.

Possible Cause

NOTE: The causes shown may not be a complete list of all potential problems, and it is possible that there may be other causes.

- PCU internal failure

Diagnosis Details

Conditions for setting the DTC

When a malfunction is detected during the first drive cycle, a Pending DTC is stored in the motor control module memory. If the malfunction returns in the next (second) drive cycle, the MIL comes on and a Confirmed DTC and the freeze data are stored.

Conditions for clearing the DTC

The MIL is cleared if the malfunction does not return in three consecutive trips in which the diagnostic runs. The MIL, the Pending DTC, the Confirmed DTC, and the freeze data can be cleared with the scan tool Clear command.

DTC P0E56

DTC P0E56: DC-DC Converter Voltage Sensor Circuit Low

General Description

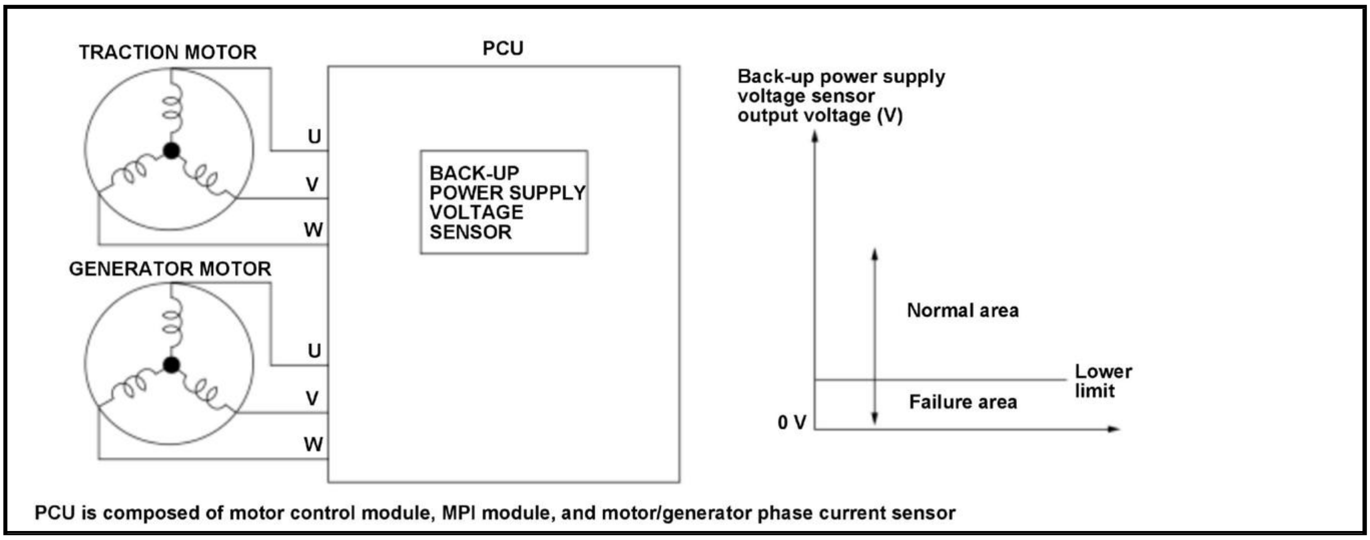
TRACTION MOTOR
PCU
U
V
W
BACK-UP POWER SUPPLY VOLTAGE SENSOR
GENERATOR MOTOR
U
V
W
Back-up power supply voltage sensor output voltage (V)
Normal area
Lower limit
Failure area
0 V
PCU is composed of motor control module, MPI module, and motor/generator phase current sensor

The power control unit (PCU) monitors the back-up power supply voltage sensor output voltage. If the back-up power supply voltage sensor output voltage is a specified voltage for a specified time, the motor control module in the PCU detects a malfunction and stores a DTC.

Monitor Execution, Sequence, Duration, DTC Type

Execution	Continuous
Sequence	None
Duration	2.0 seconds or more
DTC Type	Two drive cycles, MIL off, POWER SYSTEM indicator on

Enable Conditions

Condition	Minimum	Maximum
12 volt battery voltage	8 V	-
V2 voltage	55 V	-
Active discharge system (ADS)/Step down converter (SDC) power supply voltage command	ON condition	
Other	V2M voltage sensor is normal	
	V2S voltage sensor is normal	
	Internal CAN communication is normal	

Malfunction Threshold

The back-up power supply voltage sensor output voltage is less than 1.58 V for at least 2.0 seconds.

Possible Cause

NOTE: The causes shown may not be a complete list of all potential problems, and it is possible that there may be other causes.

- PCU internal failure

Diagnosis Details

Conditions for setting the DTC

When a malfunction is detected during the first drive cycle, a Pending DTC is stored in the motor control module memory. If the malfunction returns in the next (second) drive cycle, the POWER SYSTEM indicator comes on and a Confirmed DTC and the freeze data are stored. The MIL does not come on.

Conditions for clearing the DTC

The POWER SYSTEM indicator is cleared if the malfunction does not return in the next trip in which the diagnostic runs. The POWER SYSTEM indicator, the Pending DTC, the Confirmed DTC, and the freeze data can be cleared with the scan tool Clear command.

DTC P0E57

DTC P0E57: DC-DC Converter Voltage Sensor Circuit High

General Description

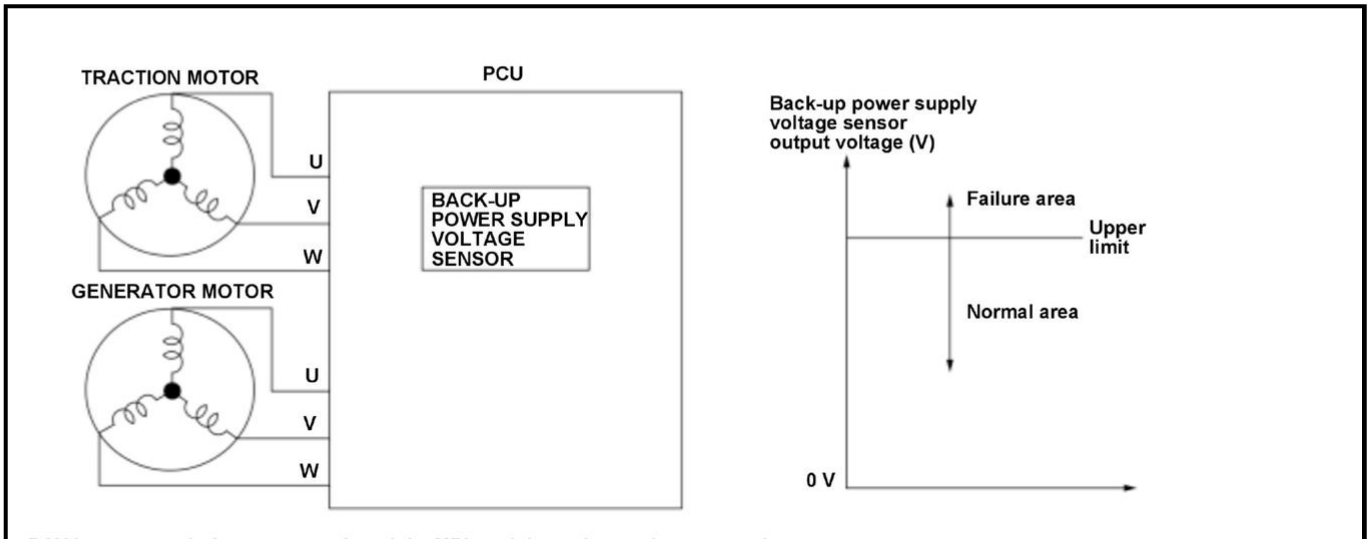
TRACTION MOTOR
PCU
U
V
W
BACK-UP POWER SUPPLY VOLTAGE SENSOR
GENERATOR MOTOR
U
V
W
Back-up power supply voltage sensor output voltage (V)
Failure area
Upper limit
Normal area
0 V

PCU is composed of motor control module, MPI module, and motor/generator phase current sensor

The power control unit (PCU) monitors the back-up power supply voltage sensor output voltage. If the back-up power supply voltage sensor output voltage is a specified voltage for a specified time, the motor control module in the PCU detects a malfunction and stores a DTC.

Monitor Execution, Sequence, Duration, DTC Type

Execution	Continuous
Sequence	None
Duration	2.0 seconds or more
DTC Type	Two drive cycles, MIL off, POWER SYSTEM indicator on

Enable Conditions

Condition	Minimum	Maximum
12 volt battery voltage	8 V	-
Active discharge system (ADS)/Step down converter (SDC) power supply voltage command	ON condition	

Malfunction Threshold

The back-up power supply voltage sensor output voltage is more than 2.05 V for at least 2.0 seconds.

Possible Cause

NOTE: The causes shown may not be a complete list of all potential problems, and it is possible that there may be other causes.

- PCU internal failure

Diagnosis Details

Conditions for setting the DTC

When a malfunction is detected during the first drive cycle, a Pending DTC is stored in the motor control module memory. If the malfunction returns in the next (second) drive cycle, the POWER SYSTEM indicator comes on and a Confirmed DTC and the freeze data are stored. The MIL does not come on.

Conditions for clearing the DTC

The POWER SYSTEM indicator is cleared if the malfunction does not return in the next trip in which the diagnostic runs. The POWER SYSTEM indicator, the Pending DTC, the Confirmed DTC, and the freeze data can be cleared with the scan tool Clear command.

DTC P1437

DTC P1437: Traction Motor Inverter Short

General Description

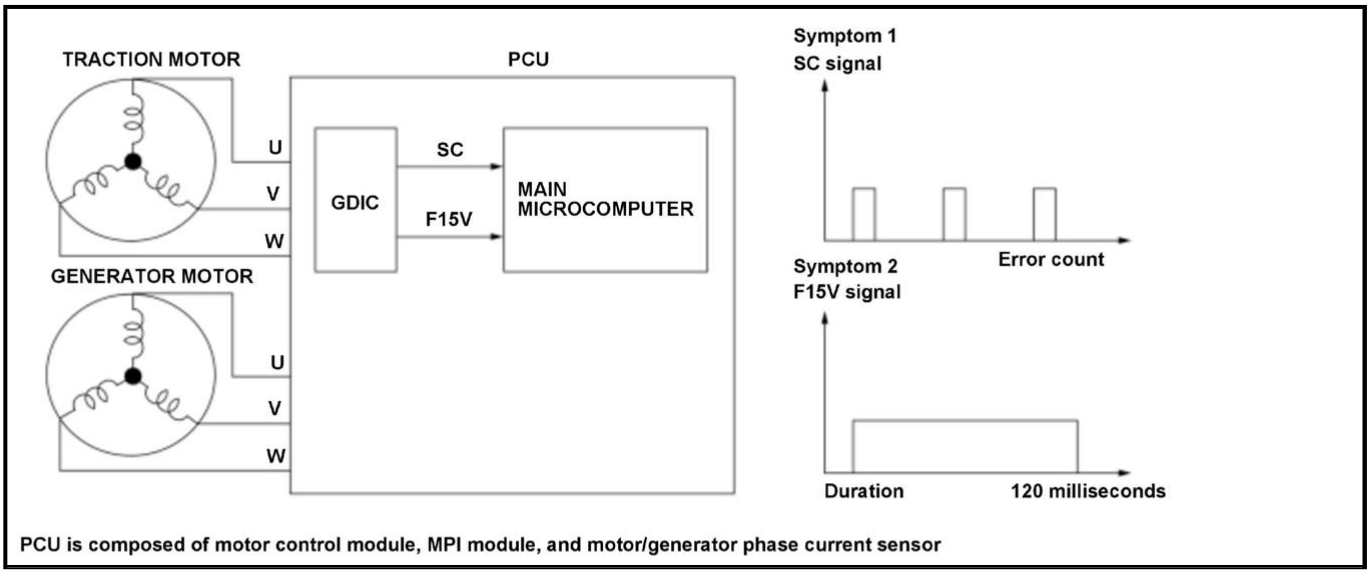
TRACTION MOTOR
PCU
Symptom 1
SC signal
U
V
W
GDIC
SC
F15V
MAIN MICROCOMPUTER
Error count
GENERATOR MOTOR
Symptom 2
F15V signal
U
V
W
Duration
120 milliseconds
PCU is composed of motor control module, MPI module, and motor/generator phase current sensor

Symptom 1

When an overcurrent (short circuit current) passes through the IGBT at the traction motor side, the power control unit (PCU) detects a trouble (SC) with the GDIC function and, at the same time when outputting a failure information (SC) to the main microcomputer, blocks a gate signal. The failure information (SC) from the GDIC is released after a specified time has elapsed if the failure is restored to normal. If a specified number of SC signals are issued, the motor control module in the PCU detects a malfunction and stores a DTC.

Symptom 2

When a trouble with the power supply which drives the IGBT at the traction motor side occurs, the PCU detects a trouble (F15V) with the GDIC function and, at the same time when outputting a failure information (F15V) to the main microcomputer, blocks a gate signal. If an F15V signal and CAN information (TRC FO) from the high-voltage microcomputer are detected for a specified time, the motor control module in the PCU detects a malfunction and stores a DTC.

Monitor Execution, Sequence, Duration, DTC Type

Execution	Continuous
Sequence	None
Duration	200 milliseconds or more*120 milliseconds or more**
DTC Type	One drive cycle, MIL on, POWER SYSTEM indicator on

*: Symptom 1

**: Symptom 2

Enable Conditions

Condition	Minimum	Maximum
12 volt battery voltage	8 V	-
High voltage side power supply voltage (6 V)**	5 V	-

Malfunction Threshold

One of these symptoms occurs:

Symptom 1

- If an SC detection arising from IGBT overcurrent (short circuit current) occurs 3 times consecutively.

Symptom 2

- If an F15V detection (F15V detection and CAN information (TRC FO) from the high-voltage microcomputer) arising from a trouble with the power supply which drives the IGBT occurs continuously for at least 120 milliseconds.

Possible Cause

NOTE: The causes shown may not be a complete list of all potential problems, and it is possible that there may be other causes.

- PCU internal failure

Diagnosis Details

Conditions for setting the DTC

When a malfunction is detected, the MIL comes on and a Pending DTC, a Confirmed DTC, and the freeze data are stored in the motor control module memory.

Conditions for clearing the DTC

The MIL is cleared if the malfunction does not return in three consecutive trips in which the diagnostic runs. The MIL, the Pending DTC, the Confirmed DTC, and the freeze data can be cleared with the scan tool Clear command.

DTC P1440

DTC P1440: Traction Motor Inverter Gate Line Open

General Description

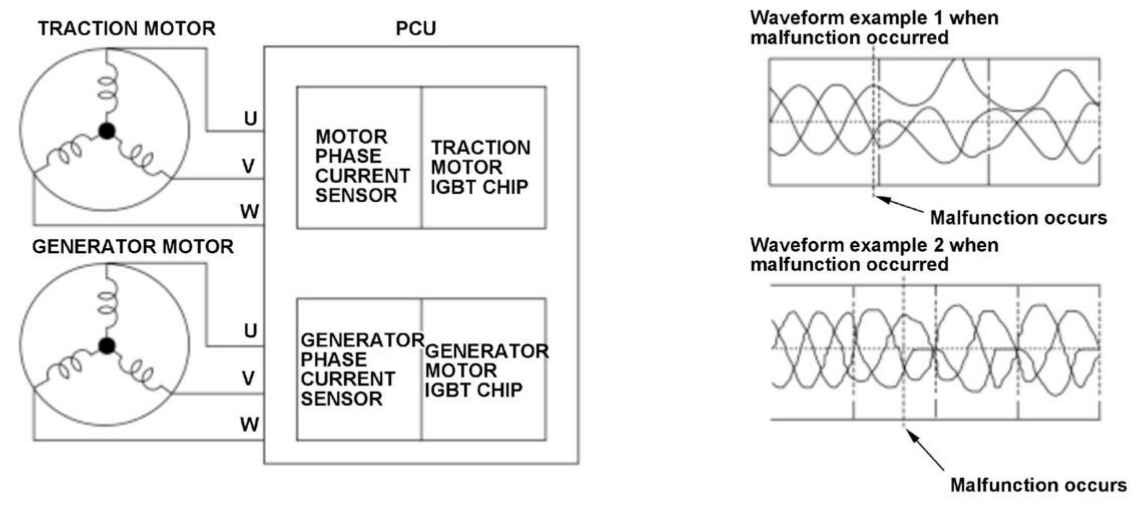
TRACTION MOTOR
PCU
U
V
W
MOTOR PHASE CURRENT SENSOR
TRACTION MOTOR IGBT CHIP
GENERATOR MOTOR
U
V
W
GENERATOR PHASE CURRENT SENSOR
GENERATOR MOTOR IGBT CHIP
Waveform example 1 when malfunction occurred
Malfunction occurs
Waveform example 2 when malfunction occurred
Malfunction occurs

PCU is composed of motor control module, MPI module, and motor/generator phase current sensor

The power control unit (PCU) cannot be able to output malfunction information (SC) signal which outputs by an occurrence of IGBT overcurrent if the SC detection circuit malfunctions. Three motor phase current typically generate sine waves centered around 0 A. But if it malfunctions, a part of the waveform chips or one phase fixes to 0 A resulting an occurrence of difference between the commanded current and the actual current. If either of the following conditions occurs, the motor control module in the PCU detects a malfunction and stores a DTC.

Symptom 1

If the 3-phase current sensor output value is out of a specified value for a specified time, the motor control module in the PCU detects a malfunction and stores a DTC.

Symptom 2

If the deviation between the current sensor output (A) and command value is out of a specified value in specified times, the motor control module in the PCU detects a malfunction and stores a DTC.

Monitor Execution, Sequence, Duration, DTC Type

Execution	Continuous
Sequence	None
Duration	400 milliseconds or more
DTC Type	One drive cycle, MIL on, POWER SYSTEM indicator on

Enable Conditions

Condition	Minimum	Maximum
Traction motor speed*	400 rpm	-
Traction motor speed**	-	3, 000 rpm
12 volt battery voltage	8 V	-
Current width	50 A	-

*: Symptom 1

**: Symptom 2

Malfunction Threshold

One of these symptoms occurs:

Symptom 1

- If a circumstance where the current sensor output value (A) is less than 29.2 A or more than -29.2 A at 95 % or more of 100 milliseconds continues for at least 400 milliseconds.

Symptom 2

- The following conditions occurs 4 times within 1 second:

  The condition when the phase current deviation is more than commanded current x (multiplied by) 0.22 + (plus) 32.5 A, or less than commanded current x (multiplied by) -0.22 - (minus) -32.5 A accounts for 10 % or more during 100 milliseconds.

Possible Cause

NOTE: The causes shown may not be a complete list of all potential problems, and it is possible that there may be other causes.

- Traction motor power cable line failure
- Traction motor motor rotor position sensor line failure
- Traction motor motor rotor position sensor failure
- Traction motor failure
- PCU internal failure

Diagnosis Details

Conditions for setting the DTC

When a malfunction is detected, the MIL comes on and a Pending DTC, a Confirmed DTC, and the freeze data are stored in the motor control module memory.

Conditions for clearing the DTC

The MIL is cleared if the malfunction does not return in three consecutive trips in which the diagnostic runs. The MIL, the Pending DTC, the Confirmed DTC, and the freeze data can be cleared with the scan tool Clear command.

DTC P15A5

DTC P15A5: Traction Motor Inverter Current Too High

General Description

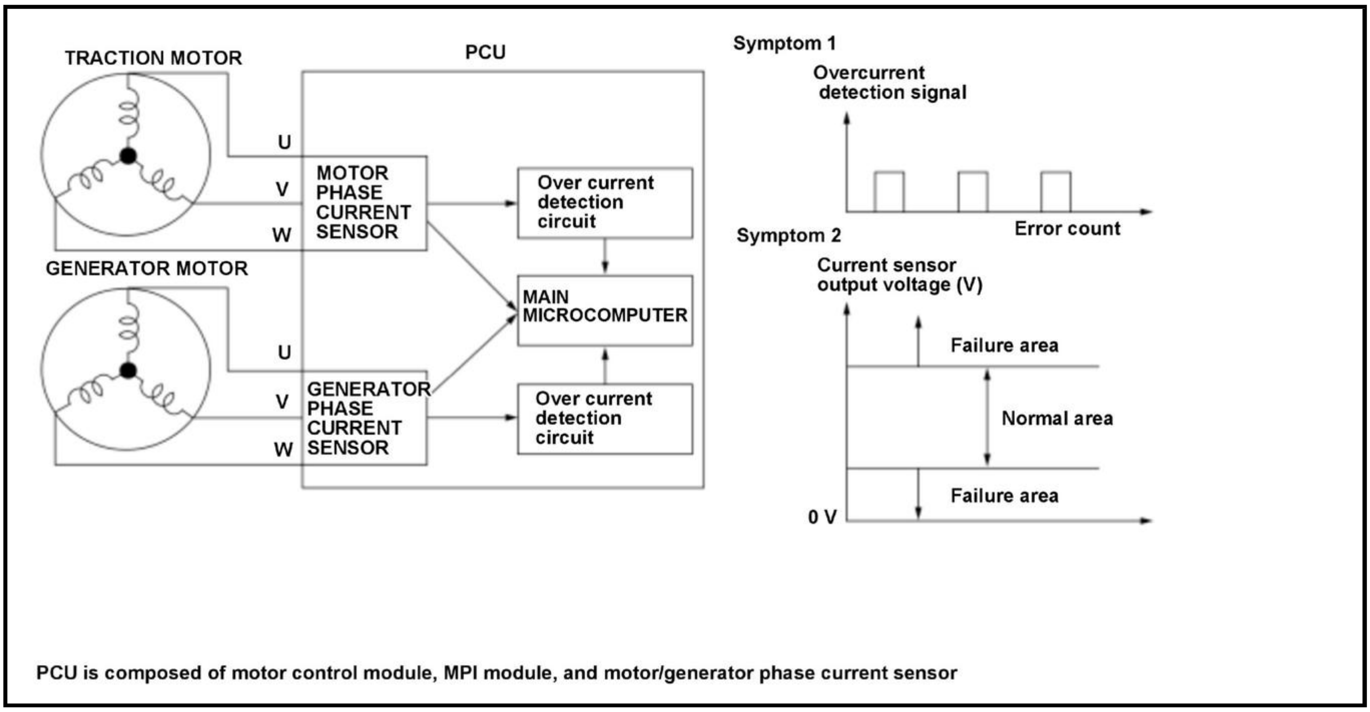
TRACTION MOTOR
PCU
U
V
W
MOTOR PHASE CURRENT SENSOR
Over current detection circuit
MAIN MICROCOMPUTER
GENERATOR MOTOR
U
V
W
GENERATOR PHASE CURRENT SENSOR
Over current detection circuit
Symptom 1
Overcurrent detection signal
Error count
Symptom 2
Current sensor output voltage (V)
Failure area
Normal area
Failure area
0 V
PCU is composed of motor control module, MPI module, and motor/generator phase current sensor

The power control unit (PCU) controls the traction motor output and detects overcurrent based on the motor phase current sensor signals. If either of the following conditions occurs, the motor control module in the PCU detects a malfunction and stores a DTC.

Symptom 1

If an overcurrent is detected in motor phase current, a failure information is output to the main microcomputer. If an overcurrent occurs in specified times, the motor control module in the PCU detects a malfunction and stores a DTC.

Symptom 2

If an overcurrent detection circuit is malfunctioning, a failure information is not output to the main microcomputer. If a current sensor signal reaches an over current state in specified times, the motor control module in the PCU detects a malfunction and stores a DTC.

Monitor Execution, Sequence, Duration, DTC Type

Execution	Continuous
Sequence	None
Duration	Within 1.2 seconds
DTC Type	One drive cycle, MIL on, POWER SYSTEM indicator on

Enable Conditions

Condition	Minimum	Maximum
12 volt battery voltage	8 V	-

Malfunction Threshold

One of these symptoms occurs:

Symptom 1

- If the output voltage from the current sensor exceeds the specified value and an overcurrent is detected 3 times within 1.2 seconds.

Symptom 2

- If the output voltage from the current sensor transfers from the normal range to the failure range 3 times within 1.2 seconds.

Possible Cause

NOTE: The causes shown may not be a complete list of all potential problems, and it is possible that there may be other causes.

- Traction motor power cable line failure
- Traction motor motor rotor position sensor line failure
- Traction motor failure
- Traction motor motor rotor position sensor failure
- PCU internal failure

Diagnosis Details

Conditions for setting the DTC

When a malfunction is detected, the MIL comes on and a Pending DTC, a Confirmed DTC, and the freeze data are stored in the motor control module memory.

Conditions for clearing the DTC

The MIL is cleared if the malfunction does not return in three consecutive trips in which the diagnostic runs. The MIL, the Pending DTC, the Confirmed DTC, and the freeze data can be cleared with the scan tool Clear command.

DTC P1A54

DTC P1A54: Traction Motor Control Module Torque Control Performance

General Description

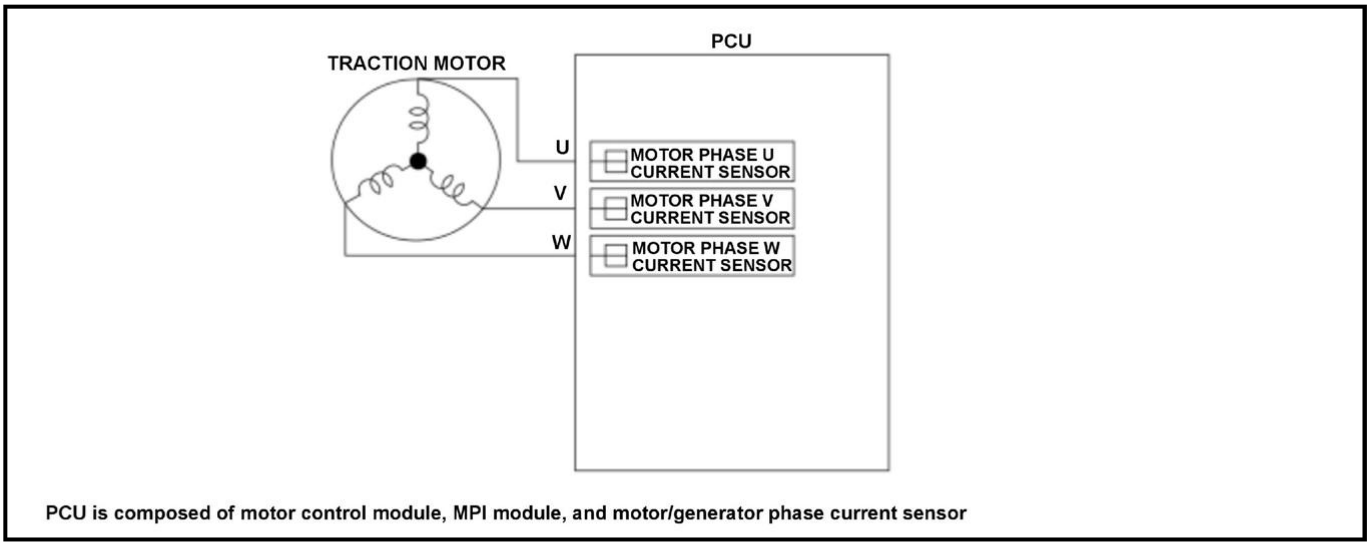
PCU
TRACTION MOTOR
U
V
W
MOTOR PHASE U CURRENT SENSOR
MOTOR PHASE V CURRENT SENSOR
MOTOR PHASE W CURRENT SENSOR
PCU is composed of motor control module, MPI module, and motor/generator phase current sensor

The power control unit (PCU) controls the motor output based on the motor phase current sensor signals. When the motor control module in the PCU malfunctions, there is a possibility that the motor torque cannot be controlled properly. If the difference between the target motor torque and the estimated motor torque is out of a specified value, the motor control module detects a malfunction and stores a DTC.

Monitor Execution, Sequence, Duration, DTC Type

Execution	Continuous
Sequence	None
Duration	Depending on the driving conditions
DTC Type	One drive cycle, MIL on, POWER SYSTEM indicator on

Enable Conditions

Condition	Â
Vehicle	ON mode

Malfunction Threshold

The difference between the target motor torque and the estimated motor torque which is presumed by the angle and the current is equal to or more than the value listed in following table. The judgment duration depends on the threshold.

Difference between target and estimated motor torque	Judgment duration
292.0 N.m (29.8 kgf.m, 216 lbf.ft)	433 milliseconds
269.0 N.m (27.5 kgf.m, 199 lbf.ft)	476 milliseconds
246.0 N.m (25.1 kgf.m, 182 lbf.ft)	526 milliseconds
223.0 N.m (22.8 kgf.m, 165 lbf.ft)	586 milliseconds
200.0 N.m (20.4 kgf.m, 148 lbf.ft)	661 milliseconds
177.0 N.m (18.1 kgf.m, 131 lbf.ft)	754 milliseconds
154.0 N.m (15.8 kgf.m, 114 lbf.ft)	876 milliseconds
131.0 N.m (13.4 kgf.m, 97 lbf.ft)	1.1 seconds
108.0 N.m (11.1 kgf.m, 80 lbf.ft)	1.3 seconds
82.0 N.m (8.4 kgf.m, 61 lbf.ft)	1.7 seconds

Possible Cause

NOTE: The causes shown may not be a complete list of all potential problems, and it is possible that there may be other causes.

- PCU internal failure

Diagnosis Details

Conditions for setting the DTC

When a malfunction is detected, the MIL comes on and a Pending DTC, a Confirmed DTC, and the freeze data are stored in the motor control module memory.

Conditions for clearing the DTC

The MIL is cleared if the malfunction does not return in three consecutive trips in which the diagnostic runs. The MIL, the Pending DTC, the Confirmed DTC, and the freeze data can be cleared with the scan tool Clear command.

DTC P1A55

DTC P1A55: Traction Motor Control Module Torque Adjustment Performance

General Description

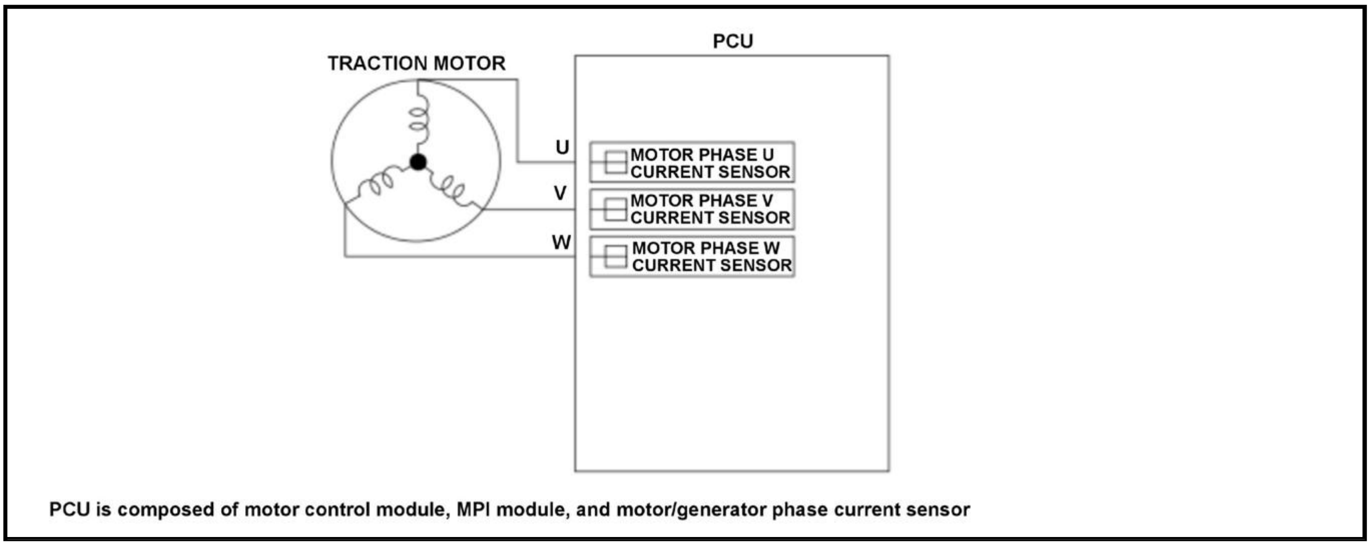
PCU
TRACTION MOTOR
U
V
W
MOTOR PHASE U CURRENT SENSOR
MOTOR PHASE V CURRENT SENSOR
MOTOR PHASE W CURRENT SENSOR
PCU is composed of motor control module, MPI module, and motor/generator phase current sensor

The power control unit (PCU) controls the motor output based on the motor phase current sensor signals. When the motor control module in the PCU malfunctions, there is a possibility that the motor torque cannot be controlled properly. If the difference between the commanded motor torque and the target motor torque is out of a specified value, the motor control module detects a malfunction and stores a DTC.

Monitor Execution, Sequence, Duration, DTC Type

Execution	Continuous
Sequence	None
Duration	Depending on the driving conditions
DTC Type	One drive cycle, MIL on, POWER SYSTEM indicator on

Enable Conditions

Condition	Â
Vehicle	ON mode

Malfunction Threshold

The difference between the commanded motor torque and the target motor torque is equal to or more than the value listed in following table. The judgment duration depends on the threshold.

Difference between target and estimated motor torque	Judgment duration
292.0 N.m (29.8 kgf.m, 216 lbf.ft)	433 milliseconds
269.0 N.m (27.5 kgf.m, 199 lbf.ft)	476 milliseconds
246.0 N.m (25.1 kgf.m, 182 lbf.ft)	526 milliseconds
223.0 N.m (22.8 kgf.m, 165 lbf.ft)	586 milliseconds
200.0 N.m (20.4 kgf.m, 148 lbf.ft)	661 milliseconds
177.0 N.m (18.1 kgf.m, 131 lbf.ft)	754 milliseconds
154.0 N.m (15.8 kgf.m, 114 lbf.ft)	876 milliseconds
131.0 N.m (13.4 kgf.m, 97 lbf.ft)	1.1 seconds
108.0 N.m (11.1 kgf.m, 80 lbf.ft)	1.3 seconds
82.0 N.m (8.4 kgf.m, 61 lbf.ft)	1.7 seconds

Possible Cause

NOTE: The causes shown may not be a complete list of all potential problems, and it is possible that there may be other causes.

- I1 current sensor failure
- PCU internal failure

Diagnosis Details

Conditions for setting the DTC

When a malfunction is detected, the MIL comes on and a Pending DTC, a Confirmed DTC, and the freeze data are stored in the motor control module memory.

Conditions for clearing the DTC

The MIL is cleared if the malfunction does not return in three consecutive trips in which the diagnostic runs. The MIL, the Pending DTC, the Confirmed DTC, and the freeze data can be cleared with the scan tool Clear command.

DTC P1A56

DTC P1A56: Traction Motor Current Too High

General Description

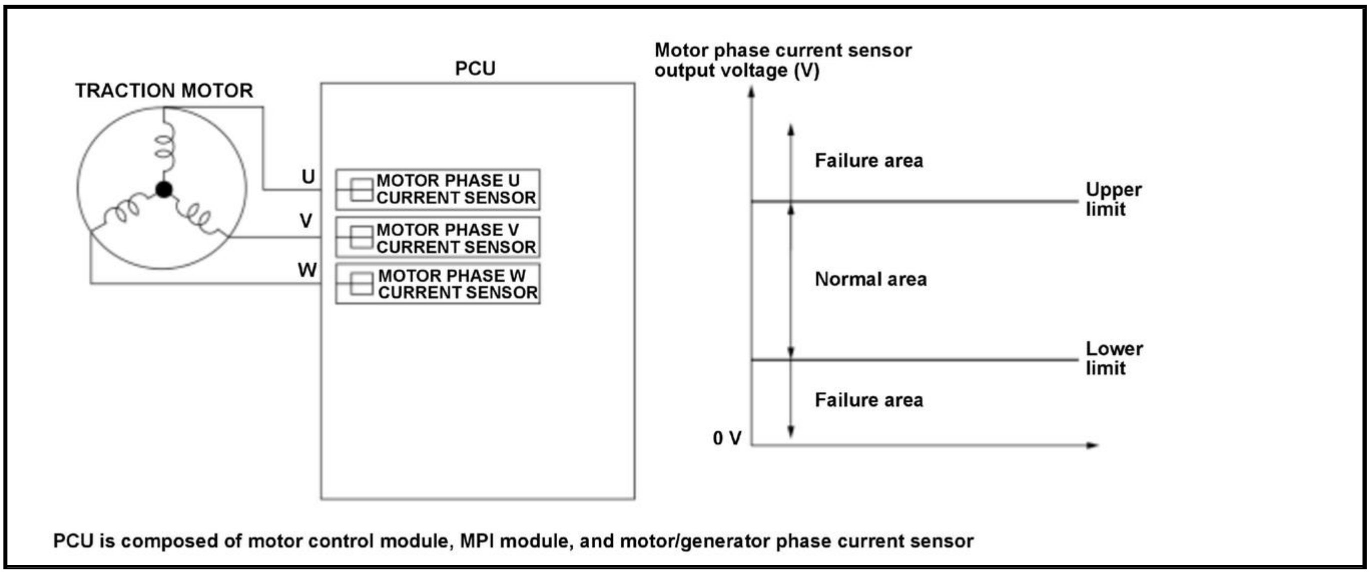
TRACTION MOTOR
PCU
U
V
W
MOTOR PHASE U CURRENT SENSOR
MOTOR PHASE V CURRENT SENSOR
MOTOR PHASE W CURRENT SENSOR
Motor phase current sensor output voltage (V)
Failure area
Upper limit
Normal area
Lower limit
Failure area
0 V
PCU is composed of motor control module, MPI module, and motor/generator phase current sensor

The power control unit (PCU) controls the motor output based on the motor phase current sensor signals. If the motor phase current sensor output voltage is out of a specified range, the motor control module in the PCU detects a malfunction and stores a DTC.

Monitor Execution, Sequence, Duration, DTC Type

Execution	Continuous
Sequence	None
Duration	190 milliseconds or more
DTC Type	One drive cycle, MIL on, POWER SYSTEM indicator on

Enable Conditions

Condition	Minimum	Maximum
12 volt battery voltage	8 V	-
Gate drive circuit	Operated	

Malfunction Threshold

The motor phase current sensor output voltage is more than 4.53 V, or less than 0.47 V for at least 190 milliseconds.

Possible Cause

NOTE: The causes shown may not be a complete list of all potential problems, and it is possible that there may be other causes.

- Traction motor power cable line failure
- Traction motor motor rotor position sensor line failure
- Traction motor motor rotor position sensor failure
- Traction motor failure
- PCU internal failure

Diagnosis Details

Conditions for setting the DTC

When a malfunction is detected, the MIL comes on and a Pending DTC, a Confirmed DTC, and the freeze data are stored in the motor control module memory.

Conditions for clearing the DTC

The MIL is cleared if the malfunction does not return in three consecutive trips in which the diagnostic runs. The MIL, the Pending DTC, the Confirmed DTC, and the freeze data can be cleared with the scan tool Clear command.

DTC P1A57

DTC P1A57: Traction Motor Phase Current Sensor

General Description

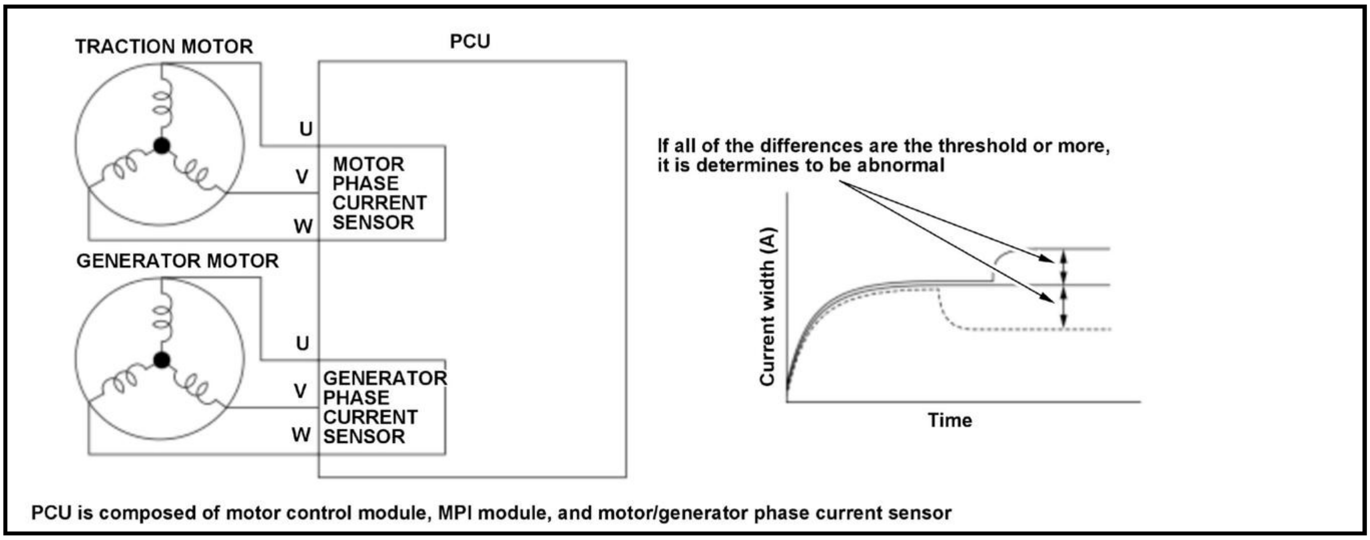
TRACTION MOTOR
PCU
U
V
W
MOTOR PHASE CURRENT SENSOR
GENERATOR MOTOR
U
V
W
GENERATOR PHASE CURRENT SENSOR
If all of the differences are the threshold or more, it is determines to be abnormal
Current width (A)
Time

PCU is composed of motor control module, MPI module, and motor/generator phase current sensor

The power control unit (PCU) controls the motor output based on the motor phase current sensor signals. If the difference in amplitude of the 3-phase current sensor output is the threshold or more for a specified time, the motor control module in the PCU detects a malfunction and stores a DTC.

Monitor Execution, Sequence, Duration, DTC Type

Execution	Continuous
Sequence	None
Duration	340 milliseconds or more

DTC Type	One drive cycle, MIL on, POWER SYSTEM indicator on

Enable Conditions

Condition	Minimum	Maximum
Traction motor speed	500 rpm	-
12 volt battery voltage	8 V	-

Malfunction Threshold

If all of the differences in amplitude of phase current from the current sensor is more than 141.6 A for at least 340 milliseconds.

Possible Cause

NOTE: The causes shown may not be a complete list of all potential problems, and it is possible that there may be other causes.

- PCU internal failure

Diagnosis Details

Conditions for setting the DTC

When a malfunction is detected, the MIL comes on and a Pending DTC, a Confirmed DTC, and the freeze data are stored in the motor control module memory.

Conditions for clearing the DTC

The MIL is cleared if the malfunction does not return in three consecutive trips in which the diagnostic runs. The MIL, the Pending DTC, the Confirmed DTC, and the freeze data can be cleared with the scan tool Clear command.

DTC P1A63

DTC P1A63: VCU V2 Voltage Sensor Circuit Range/Performance

General Description

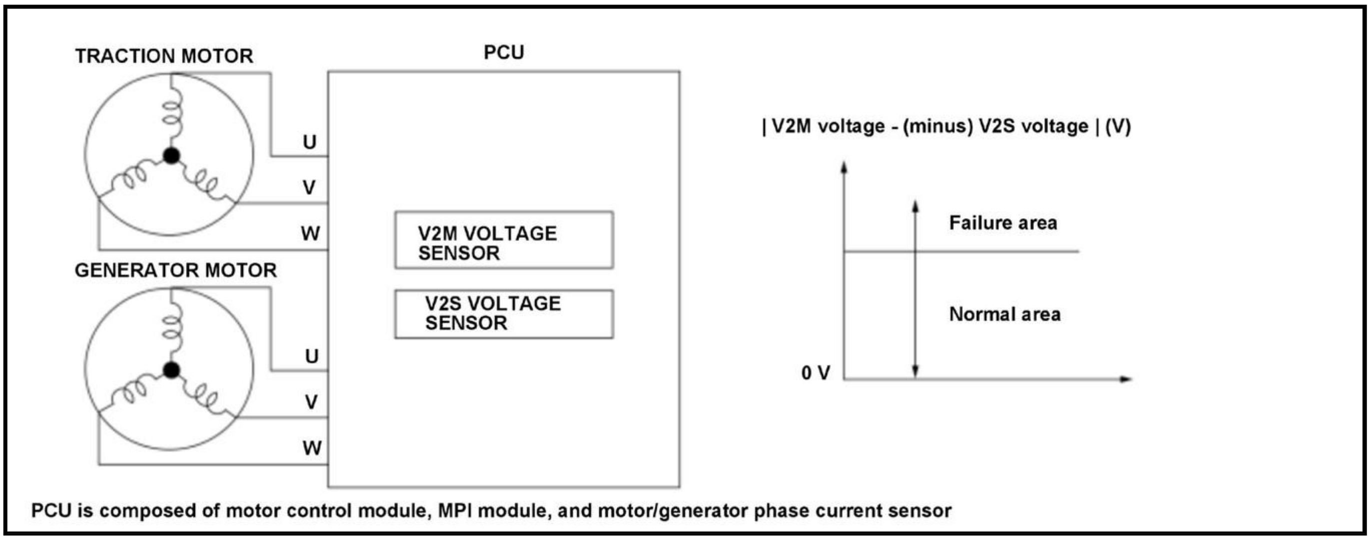

PCU is composed of motor control module, MPI module, and motor/generator phase current sensor

The power control unit (PCU) controls an output of the voltage control unit module according to a signal of the V2M voltage sensor and controls each output of the traction motor and generator motor according to a signal of the V2S voltage sensor. When the difference in voltages compared is a specified value or more and continues for a specified duration or more, the motor control module in the PCU detects a malfunction and stores a DTC.

Monitor Execution, Sequence, Duration, DTC Type

Execution	Continuous
Sequence	None
Duration	1.2 seconds or more
DTC Type	One drive cycle, MIL on, POWER SYSTEM indicator on

Enable Conditions

Condition	Minimum	Maximum
12 volt battery voltage	8 V	-
High voltage side power supply voltage (6 V)	5 V	-

Malfunction Threshold

The difference between the V2M voltage sensor detection value and the V2S voltage sensor detection value is more than 50 V and continues for 1.2 seconds or more.

Possible Cause

NOTE: The causes shown may not be a complete list of all potential problems, and it is possible that there may be other causes.

- PCU internal failure

Diagnosis Details

Conditions for setting the DTC

When a malfunction is detected, the MIL comes on and a Pending DTC, a Confirmed DTC, and the freeze data are stored in the motor control module memory.

Conditions for clearing the DTC

The MIL is cleared if the malfunction does not return in three consecutive trips in which the diagnostic runs. The MIL, the Pending DTC, the Confirmed DTC, and the freeze data can be cleared with the scan tool Clear command.

DTC P1A64

DTC P1A64: PCU Internal Failure (Communication Error)

General Description

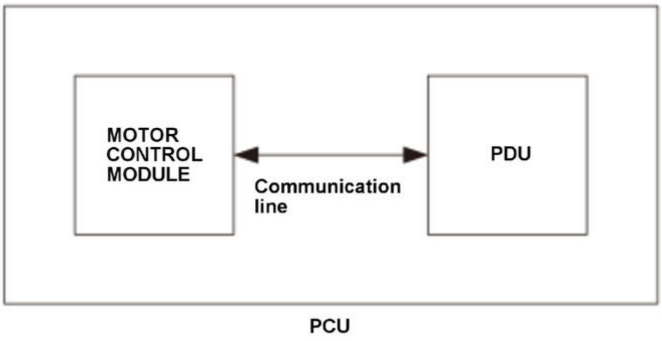

The power control unit (PCU) incorporates a motor control module which controls an output of the traction motor and a power drive unit (PDU) which serves for high voltage control. If the motor control module receives a trouble with microcomputer (A/D converter failure) detected by the PDU, the PCU detects a malfunction and stores a DTC.

Monitor Execution, Sequence, Duration, DTC Type

Execution	Continuous
Sequence	None
Duration	80 milliseconds or more
DTC Type	One drive cycle, MIL on, POWER SYSTEM indicator on

Enable Conditions

Condition	Â
Vehicle	ON mode

Malfunction Threshold

If the PDU receives a trouble with microcomputer (A/D converter failure) for at least 80 milliseconds.

Possible Cause

NOTE: The causes shown may not be a complete list of all potential problems, and it is possible that there may be other causes.

- PCU internal failure

Diagnosis Details

Conditions for setting the DTC

When a malfunction is detected, the MIL comes on and a Pending DTC, a Confirmed DTC, and the freeze data are stored in the motor control module memory.

Conditions for clearing the DTC

The MIL is cleared if the malfunction does not return in three consecutive trips in which the diagnostic runs. The MIL, the Pending DTC, the Confirmed DTC, and the freeze data can be cleared with the scan tool Clear command.

DTC P1A65

DTC P1A65: Motor Inverter Internal Failure

General Description

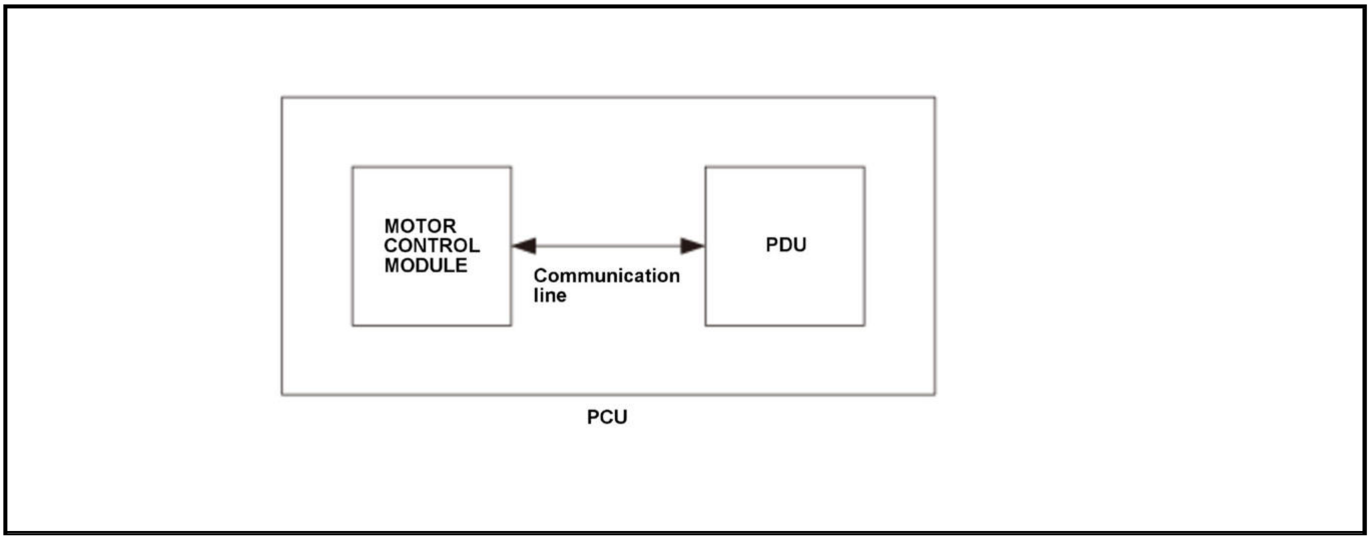

The power control unit (PCU) incorporates a motor control module which controls an output of the traction motor and a power drive unit (PDU) which serves for high voltage control. If the motor control module receives a trouble with microcomputer (data flash failure) detected by the PDU, the PCU detects a malfunction and stores a DTC.

Monitor Execution, Sequence, Duration, DTC Type

Execution	Continuous
Sequence	None
Duration	-
DTC Type	One drive cycle, MIL on, POWER SYSTEM indicator on

Enable Conditions

Condition	Â
Vehicle	ON mode

Malfunction Threshold

If the PDU receives a trouble with microcomputer (data flash failure) at least 3 times.

Possible Cause

NOTE: The causes shown may not be a complete list of all potential problems, and it is possible that there may be other causes.

- PCU internal failure

Diagnosis Details

Conditions for setting the DTC

When a malfunction is detected, the MIL comes on and a Pending DTC, a Confirmed DTC, and the freeze data are stored in the motor control module memory.

Conditions for clearing the DTC

The MIL is cleared if the malfunction does not return in three consecutive trips in which the diagnostic runs. The MIL, the Pending DTC, the Confirmed DTC, and the freeze data can be cleared with the scan tool Clear command.

DTC P1A87

DTC P1A87: VCU V0 Voltage Sensor Circuit Range/Performance (Over Voltage Range)

General Description

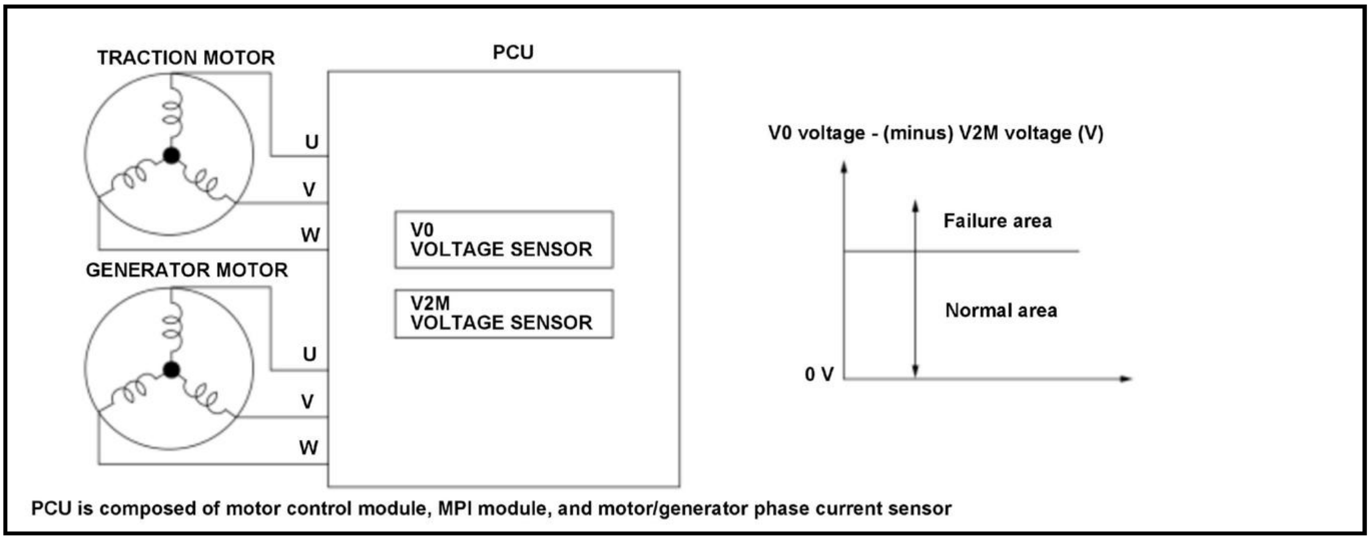

PCU is composed of motor control module, MPI module, and motor/generator phase current sensor

The power control unit (PCU) controls the voltage control unit (VCU) output based on the V0 voltage sensor signals. When the difference in voltages compared is a specified value or more and continues for a specified duration or more, the motor control module in the PCU detects a malfunction and stores a DTC.

Monitor Execution, Sequence, Duration, DTC Type

Execution	Continuous
Sequence	None
Duration	1.5 seconds or more
DTC Type	One drive cycle, MIL on, POWER SYSTEM indicator on

Enable Conditions

Condition	Minimum	Maximum
12 volt battery voltage	8 V	-

Malfunction Threshold

The difference between the V0 voltage sensor detection value and the V2M voltage sensor detection value is more than 60 V and continues for 1.5 seconds or more.

Possible Cause

NOTE: The causes shown may not be a complete list of all potential problems, and it is possible that there may be other causes.

- PCU internal failure

Diagnosis Details

Conditions for setting the DTC

When a malfunction is detected, the MIL comes on and a Pending DTC, a Confirmed DTC, and the freeze data are stored in the motor control module memory.

Conditions for clearing the DTC

The MIL is cleared if the malfunction does not return in three consecutive trips in which the diagnostic runs. The MIL, the Pending DTC, the Confirmed DTC, and the freeze data can be cleared with the scan tool Clear command.

DTC P1A88

DTC P1A88: VCU V1 Voltage Sensor Circuit Range/Performance (Under Voltage Range)

General Description

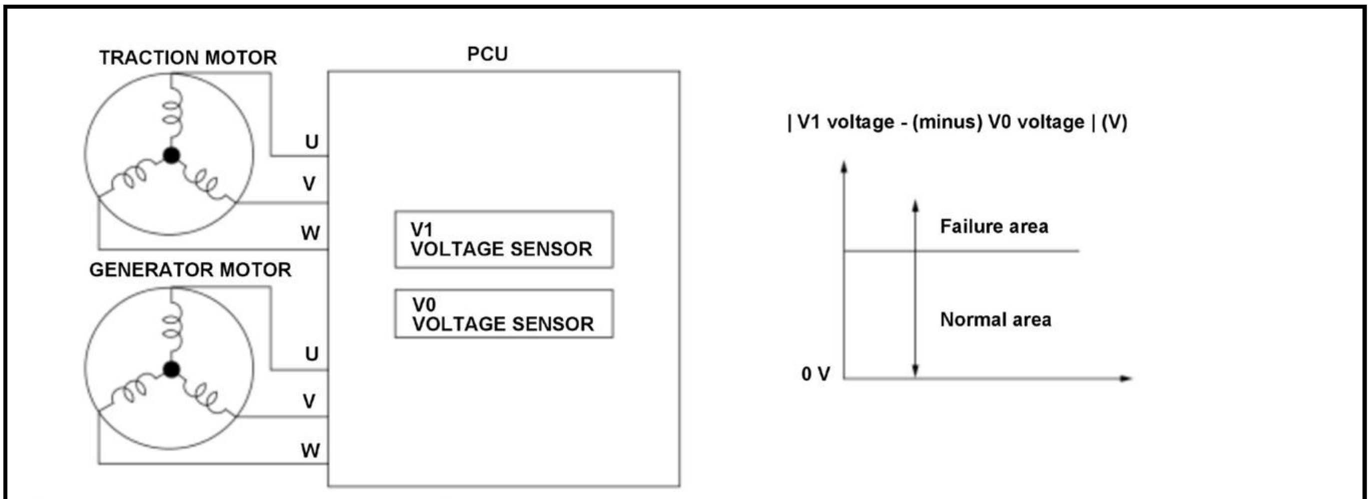

PCU is composed of motor control module, MPI module, and motor/generator phase current sensor

The power control unit (PCU) controls the voltage control unit (VCU) output based on the V1 voltage sensor signals. When the difference in voltages compared during self-diagnosis (with the C1C0 directly connected) is a specified value or more and continues for a specified duration or more, the motor control module in the PCU detects a malfunction and stores a DTC.

Monitor Execution, Sequence, Duration, DTC Type

Execution	Continuous
Sequence	None
Duration	1.0 second or more
DTC Type	One drive cycle, MIL on, POWER SYSTEM indicator on

Enable Conditions

Condition	Minimum	Maximum
High voltage side power supply voltage (6 V)	5 V	-

Malfunction Threshold

The difference between the V1 voltage sensor detection value and the V0 voltage sensor detection value is more than 30 V and continues for 1.0 second or more.

Possible Cause

NOTE: The causes shown may not be a complete list of all potential problems, and it is possible that there may be other causes.

- PCU internal failure

Diagnosis Details

Conditions for setting the DTC

When a malfunction is detected, the MIL comes on and a Pending DTC, a Confirmed DTC, and the freeze data are stored in the motor control module memory.

Conditions for clearing the DTC

The MIL is cleared if the malfunction does not return in three consecutive trips in which the diagnostic runs. The MIL, the Pending DTC, the Confirmed DTC, and the freeze data can be cleared with the scan tool Clear command.

DTC P1A89

DTC P1A89: VCU V1 Voltage Sensor Circuit Range/Performance (Over Voltage Range)

General Description

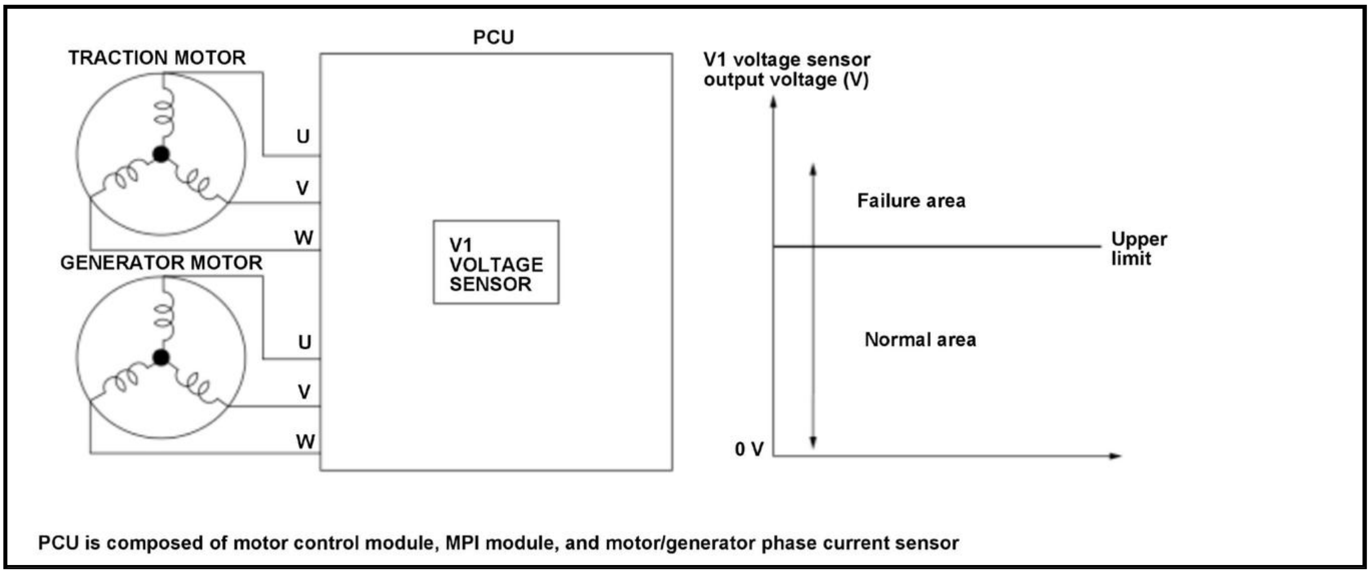

PCU is composed of motor control module, MPI module, and motor/generator phase current sensor

The power control unit (PCU) controls the voltage control unit (VCU) output based on the V1 voltage sensor signals. If the signal voltage from the V1 voltage sensor exceeds a set value for a specified time, the motor control module in the PCU detects a malfunction and stores a DTC.

Monitor Execution, Sequence, Duration, DTC Type

Execution	Continuous
Sequence	None
Duration	1.0 second or more
DTC Type	One drive cycle, MIL on, POWER SYSTEM indicator on

Enable Conditions

Condition	Minimum	Maximum
High voltage side power supply voltage (6 V)	5 V	-

Malfunction Threshold

The V1 voltage sensor output voltage is more than 340 V for at least 1.0 second.

Possible Cause

NOTE: The causes shown may not be a complete list of all potential problems, and it is possible that there may be other causes.

- PCU internal failure

Diagnosis Details

Conditions for setting the DTC

When a malfunction is detected, the MIL comes on and a Pending DTC, a Confirmed DTC, and the freeze data are stored in the motor control module memory.

Conditions for clearing the DTC

The MIL is cleared if the malfunction does not return in three consecutive trips in which the diagnostic runs. The MIL, the Pending DTC, the Confirmed DTC, and the freeze data can be cleared with the scan tool Clear command.

DTC P1D05

DTC P1D05: Traction Motor Control Module Internal Communication Failure

General Description

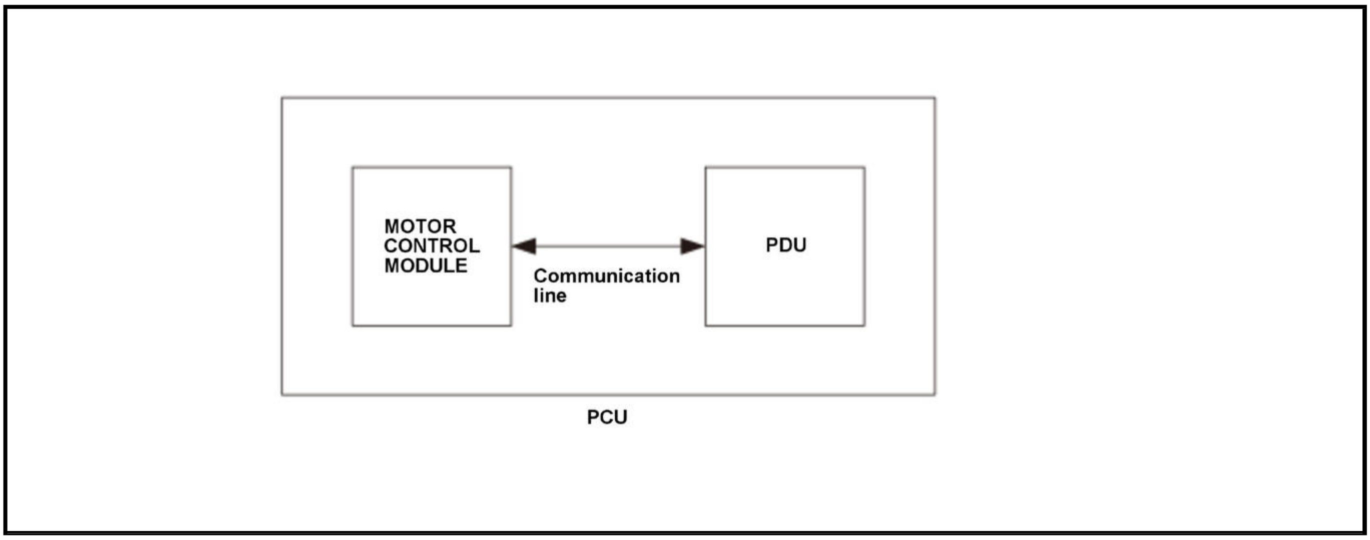

The power control unit (PCU) incorporates a motor control module which controls an output of the traction motor and a power drive unit (PDU) which serves for high-voltage control. If data communication loss or data trouble (ALIVE/SUM CHECK) in CAN communications with the PDU continues for the specified time or if the CAN Bus-off state continues for a specified time, the motor control module in the PCU detects a malfunction and stores a DTC.

Monitor Execution, Sequence, Duration, DTC Type

Execution	Continuous
Sequence	None
Duration	500 milliseconds or more
DTC Type	One drive cycle, MIL on, POWER SYSTEM indicator on

Enable Conditions

Condition	Minimum	Maximum
Elapsed time after the vehicle condition is turned to the ON mode	1 second	-
12 volt battery voltage	8 V	-

Malfunction Threshold

If loss of data communications with the PDU, data trouble (ALIVE / SUM CHECK), or the CAN Bus-off state continues for at least 500 milliseconds.

Possible Cause

NOTE: The causes shown may not be a complete list of all potential problems, and it is possible that there may be other causes.

- PCU internal failure

Diagnosis Details

Conditions for setting the DTC

When a malfunction is detected, the MIL comes on and a Pending DTC, a Confirmed DTC, and the freeze data are stored in the motor control module memory.

Conditions for clearing the DTC

The MIL is cleared if the malfunction does not return in three consecutive trips in which the diagnostic runs. The MIL, the Pending DTC, the Confirmed DTC, and the freeze data can be cleared with the scan tool Clear command.

DTC P1D11

DTC P1D11: Traction Motor Phase Current Sensor Circuit Range/Performance

General Description

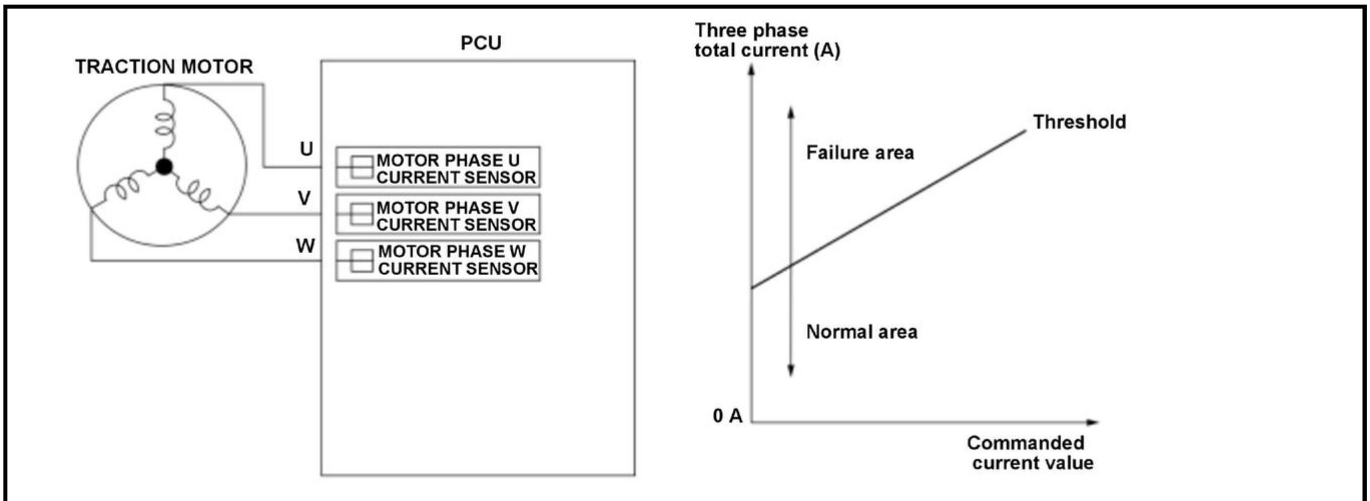
TRACTION MOTOR
PCU
U
V
W
MOTOR PHASE U CURRENT SENSOR
MOTOR PHASE V CURRENT SENSOR
MOTOR PHASE W CURRENT SENSOR
Three phase total current (A)
Threshold
Failure area
Normal area
0 A
Commanded current value

PCU is composed of motor control module, MPI module, and motor/generator phase current sensor

The power control unit (PCU) controls the motor output based on the motor phase current sensor signals. If the sum of three motor phase current sensor current is out of a specified range for a specified time, the motor control module in the PCU detects a malfunction and stores a DTC.

Monitor Execution, Sequence, Duration, DTC Type

Execution	Continuous
Sequence	None
Duration	350 milliseconds or more
DTC Type	Two drive cycles, MIL on, POWER SYSTEM indicator on

Enable Conditions

Condition	Minimum	Maximum
12 volt battery voltage	8 V	-

Malfunction Threshold

IGBT gate active condition:

The sum of the three motor phase current sensor current is more than |commanded current value x 0.138 + 48.6 A| for at least 350 milliseconds.

IGBT gate not active condition:

The sum of the three motor phase current sensor current is more than 157.8 A for at least 350 milliseconds.

Possible Cause

NOTE: The causes shown may not be a complete list of all potential problems, and it is possible that there may be other causes.

- PCU internal failure

Diagnosis Details

Conditions for setting the DTC

When a malfunction is detected during the first drive cycle, a Pending DTC is stored in the motor control module memory. If the malfunction returns in the next (second) drive cycle, the MIL comes on and a Confirmed DTC and the freeze data are stored.

Conditions for clearing the DTC

The MIL is cleared if the malfunction does not return in three consecutive trips in which the diagnostic runs. The MIL, the Pending DTC, the Confirmed DTC, and the freeze data can be cleared with the scan tool Clear command.

DTC P1D13

DTC P1D13: Generator Motor Phase Current Sensor Range/Performance

General Description

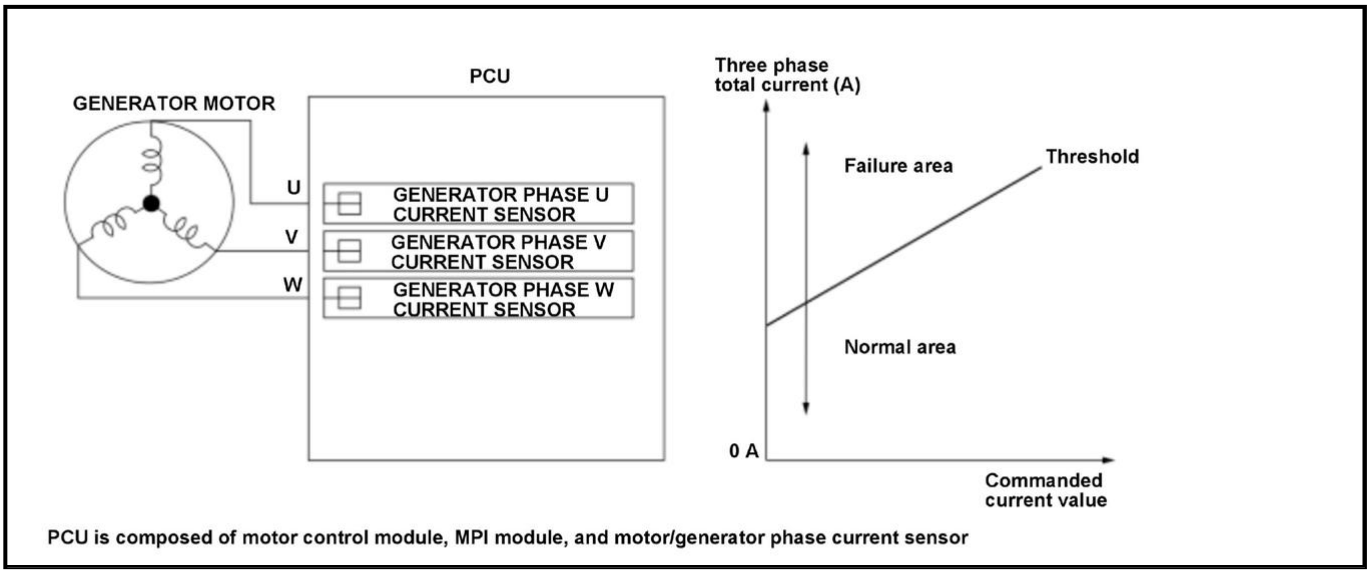
GENERATOR MOTOR
PCU
U
V
W
GENERATOR PHASE U CURRENT SENSOR
GENERATOR PHASE V CURRENT SENSOR
GENERATOR PHASE W CURRENT SENSOR
Three phase total current (A)
Failure area
Threshold
Normal area
0 A
Commanded current value
PCU is composed of motor control module, MPI module, and motor/generator phase current sensor

The power control unit (PCU) controls the motor output based on the generator phase current sensor signals. If the sum of three generator phase current sensor current is out of a specified range for a specified time, the motor control module in the PCU detects a malfunction and stores a DTC.

Monitor Execution, Sequence, Duration, DTC Type

Execution	Continuous
Sequence	None
Duration	350 milliseconds or more
DTC Type	Two drive cycles, MIL on, POWER SYSTEM indicator on

Enable Conditions

Condition	Minimum	Maximum
12 volt battery voltage	8 V	-

Malfunction Threshold

IGBT gate active condition:

The sum of the three generator phase current sensor current is more than |commanded current value x 0.138 + 34.6 A| for at least 350 milliseconds.

IGBT gate not active condition:

The sum of the three generator phase current sensor current is more than 111.9 A for at least 350 milliseconds.

Possible Cause

NOTE: The causes shown may not be a complete list of all potential problems, and it is possible that there may be other causes.

- PCU internal failure

Diagnosis Details

Conditions for setting the DTC

When a malfunction is detected during the first drive cycle, a Pending DTC is stored in the motor control module memory. If the malfunction returns in the next (second) drive cycle, the MIL comes on and a Confirmed DTC and the freeze data are stored.

Conditions for clearing the DTC

The MIL is cleared if the malfunction does not return in three consecutive trips in which the diagnostic runs. The MIL, the Pending DTC, the Confirmed DTC, and the freeze data can be cleared with the scan tool Clear command.

DTC P1D18

DTC P1D18: Traction Motor Temperature Sense Failure

General Description

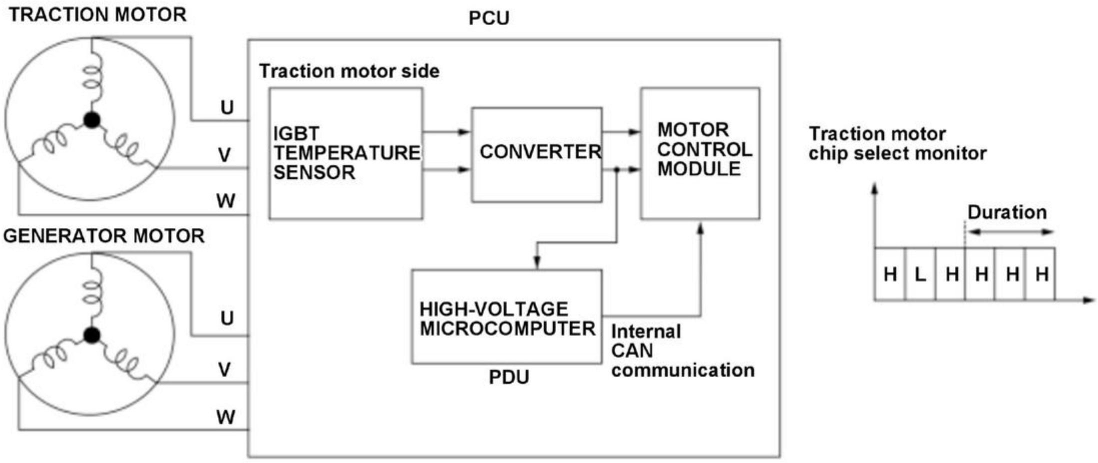
TRACTION MOTOR
PCU
Traction motor side
U
V
W
IGBT TEMPERATURE SENSOR
CONVERTER
MOTOR CONTROL MODULE
Traction motor chip select monitor
Duration
H
L
H
H
H
H
GENERATOR MOTOR
U
V
W
HIGH-VOLTAGE MICROCOMPUTER
PDU
Internal CAN communication

PCU is composed of motor control module, MPI module, and motor/generator phase current sensor

The power control unit (PCU) monitors the IGBT chip temperature sensor value to prevent malfunction of the chip due to heat generation. The PCU detects the IGBT chip temperature sensor at the traction motor side by selecting a parallel phase temperature using the selector. If a selection signal is not switched for the specified time, the motor control module in the PCU detects a malfunction and stores a DTC.

Monitor Execution, Sequence, Duration, DTC Type

Execution	Continuous
Sequence	None
Duration	2.0 seconds or more
DTC Type	One drive cycle, MIL on, POWER SYSTEM indicator on

Enable Conditions

Condition	Minimum	Maximum
12 volt battery voltage	8 V	-

Malfunction Threshold

If the traction motor chip select monitor for internal CAN communication is not switched to "H" or "L" for at least 2.0 seconds.

Possible Cause

NOTE: The causes shown may not be a complete list of all potential problems, and it is possible that there may be other causes.

- PCU internal failure

Diagnosis Details

Conditions for setting the DTC

When a malfunction is detected, the MIL comes on and a Pending DTC, a Confirmed DTC, and the freeze data are stored in the motor control module memory.

Conditions for clearing the DTC

The MIL is cleared if the malfunction does not return in three consecutive trips in which the diagnostic runs. The MIL, the Pending DTC, the Confirmed DTC, and the freeze data can be cleared with the scan tool Clear command.

DTC P1D1B

DTC P1D1B: VCU V2S Voltage Sensor Circuit High

General Description

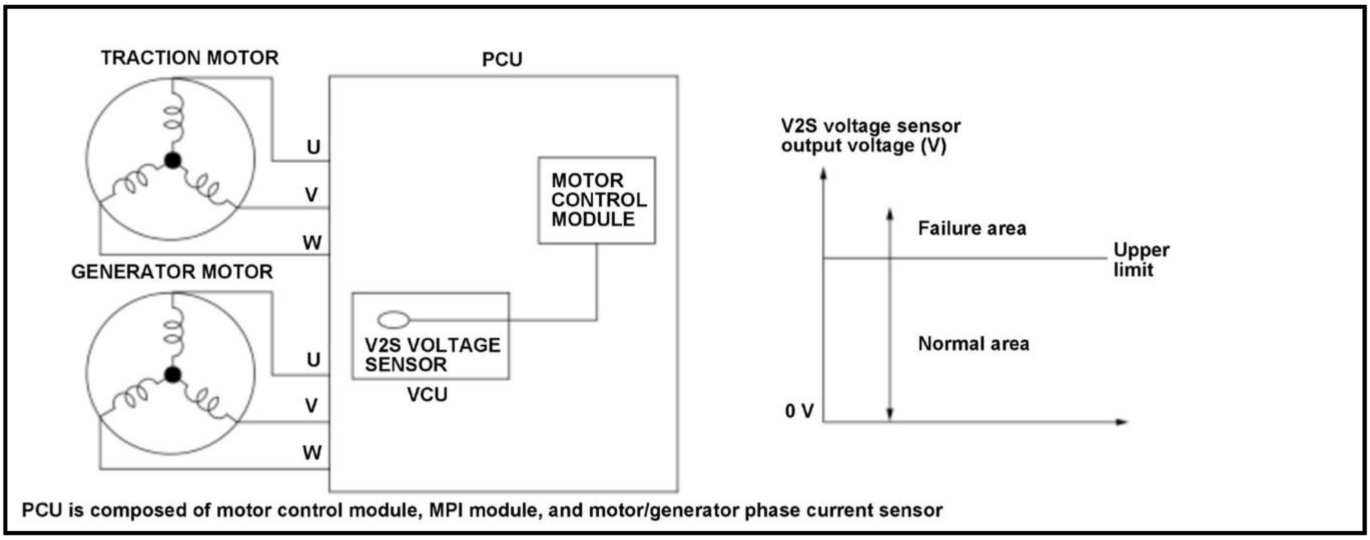
TRACTION MOTOR
PCU
U
V
W
MOTOR CONTROL MODULE
GENERATOR MOTOR
U
V
W
V2S VOLTAGE SENSOR
VCU
V2S voltage sensor output voltage (V)
Failure area
Upper limit
Normal area
0 V
PCU is composed of motor control module, MPI module, and motor/generator phase current sensor

The power control unit (PCU) controls the traction motor and generator motor output based on the V2S voltage sensor signals. If the signal voltage from the V2S voltage sensor exceeds a set value for a specified time, the motor control module in the PCU detects a malfunction and stores a DTC.

Monitor Execution, Sequence, Duration, DTC Type

Execution	Continuous
Sequence	None
Duration	500 milliseconds or more
DTC Type	One drive cycle, MIL on, POWER SYSTEM indicator on

Enable Conditions

Condition	Minimum	Maximum
12 volt battery voltage	8 V	-

Malfunction Threshold

The V2S voltage sensor output voltage is more than 4.88 V for at least 500 milliseconds.

Possible Cause

NOTE: The causes shown may not be a complete list of all potential problems, and it is possible that there may be other causes.

- PCU internal failure

Diagnosis Details

Conditions for setting the DTC

When a malfunction is detected, the MIL comes on and a Pending DTC, a Confirmed DTC, and the freeze data are stored in the motor control module memory.

Conditions for clearing the DTC

The MIL is cleared if the malfunction does not return in three consecutive trips in which the diagnostic runs. The MIL, the Pending DTC, the Confirmed DTC, and the freeze data can be cleared with the scan tool Clear command.

DTC P1D1C

DTC P1D1C: VCU V2S Voltage Sensor Circuit

General Description

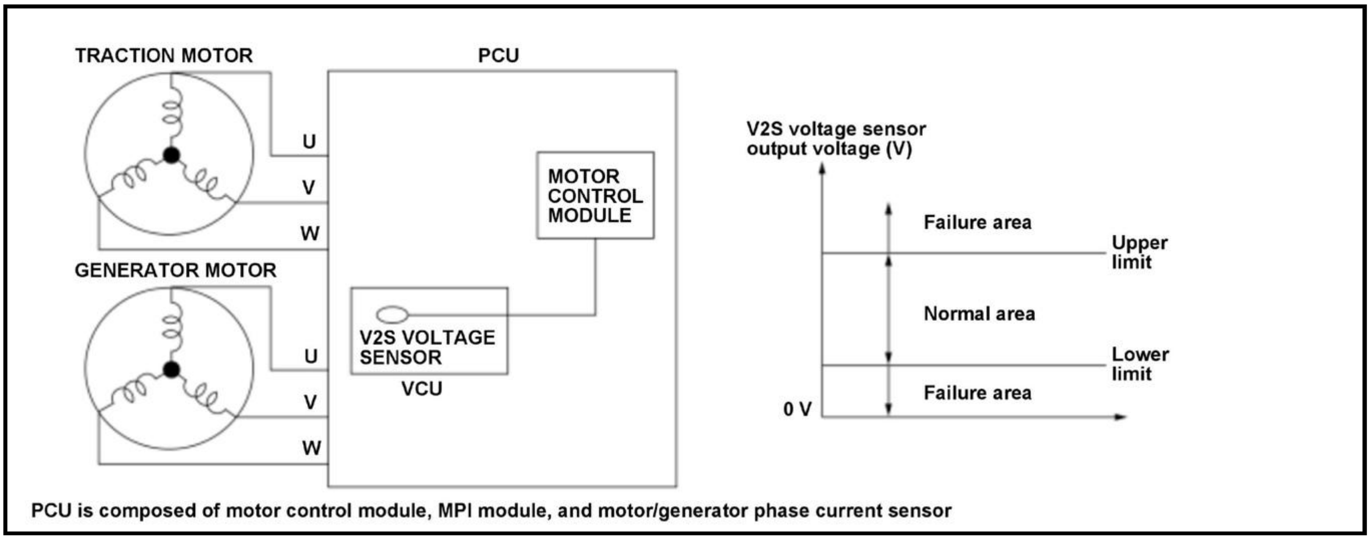
TRACTION MOTOR
PCU
U
V
W
GENERATOR MOTOR
U
V
W
MOTOR CONTROL MODULE
V2S VOLTAGE SENSOR
VCU
V2S voltage sensor output voltage (V)
Failure area
Upper limit
Normal area
Lower limit
Failure area
0 V
PCU is composed of motor control module, MPI module, and motor/generator phase current sensor

The power control unit (PCU) controls the traction motor and generator motor output based on the V2S voltage sensor signals. If the signal voltage from the V2S voltage sensor exceeds a set value for a specified time, the motor control module in the PCU detects a malfunction and stores a DTC.

Monitor Execution, Sequence, Duration, DTC Type

Execution	Continuous
Sequence	None
Duration	2.0 seconds or more
DTC Type	Two drive cycles, MIL on, POWER SYSTEM indicator on

Enable Conditions

Condition	Minimum	Maximum
12 volt battery voltage	8 V	-

Malfunction Threshold

The V2S voltage sensor output voltage is more than 4.83 V or less than 0.05 V for at least 2.0 seconds.

Possible Cause

NOTE: The causes shown may not be a complete list of all potential problems, and it is possible that there may be other causes.

- PCU internal failure

Diagnosis Details

Conditions for setting the DTC

When a malfunction is detected during the first drive cycle, a Pending DTC is stored in the motor control module memory. If the malfunction returns in the next (second) drive cycle, the MIL comes on and a Confirmed DTC and the freeze data are stored.

Conditions for clearing the DTC

The MIL is cleared if the malfunction does not return in three consecutive trips in which the diagnostic runs. The MIL, the Pending DTC, the Confirmed DTC, and the freeze data can be cleared with the scan tool Clear command.

DTC P1D1D

DTC P1D1D: VCU V0 Voltage Sensor Circuit Low

General Description

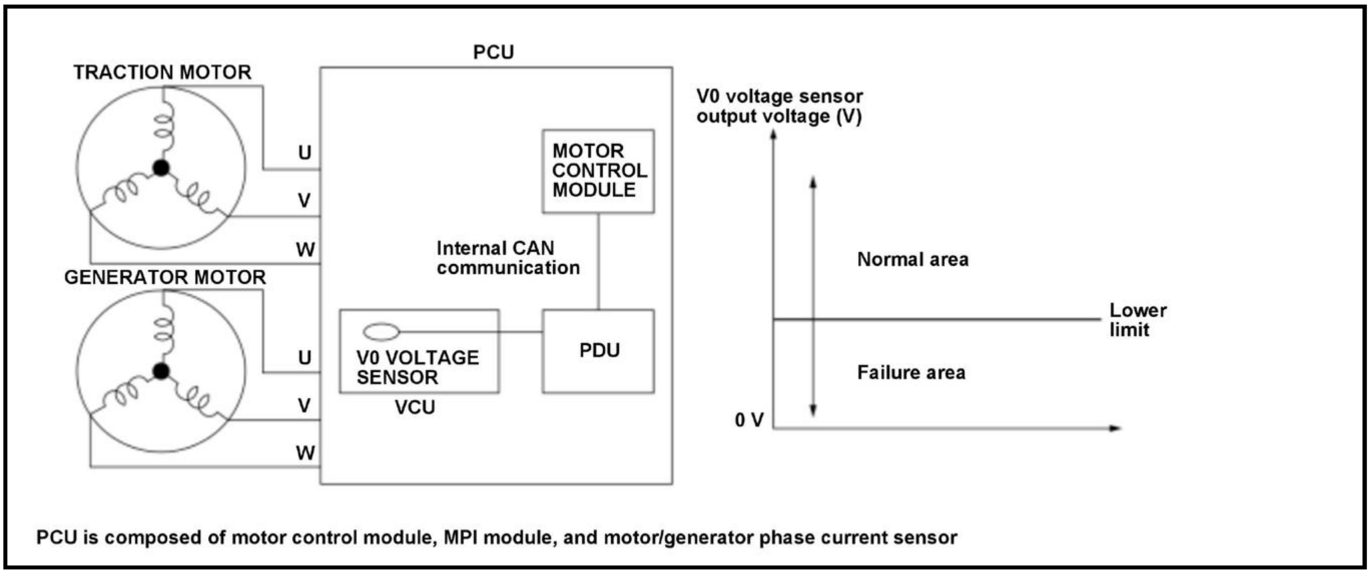
TRACTION MOTOR
PCU
U
V
W
MOTOR CONTROL MODULE
Internal CAN communication
GENERATOR MOTOR
U
V
W
V0 VOLTAGE SENSOR
VCU
PDU
V0 voltage sensor output voltage (V)
Normal area
Lower limit
Failure area
0 V
PCU is composed of motor control module, MPI module, and motor/generator phase current sensor

The power control unit (PCU) controls the voltage control unit (VCU) output based on the V0 voltage sensor signals. If the signal voltage from the V0 voltage sensor exceeds a set value for a specified time, the motor control module in the PCU detects a malfunction and stores a DTC.

Monitor Execution, Sequence, Duration, DTC Type

Execution	Continuous
Sequence	None

Duration	500 milliseconds or more
DTC Type	One drive cycle, MIL on, POWER SYSTEM indicator on

Enable Conditions

Condition	Minimum	Maximum
12 volt battery voltage	8 V	-

Malfunction Threshold

The V0 voltage sensor output voltage is less than 0.10 V for at least 500 milliseconds.

Possible Cause

NOTE: The causes shown may not be a complete list of all potential problems, and it is possible that there may be other causes.

- PCU internal failure

Diagnosis Details

Conditions for setting the DTC

When a malfunction is detected, the MIL comes on and a Pending DTC, a Confirmed DTC, and the freeze data are stored in the motor control module memory.

Conditions for clearing the DTC

The MIL is cleared if the malfunction does not return in three consecutive trips in which the diagnostic runs. The MIL, the Pending DTC, the Confirmed DTC, and the freeze data can be cleared with the scan tool Clear command.

DTC P1D6E

DTC P1D6E: Traction Motor Temperature Sensor Circuit Performance

General Description

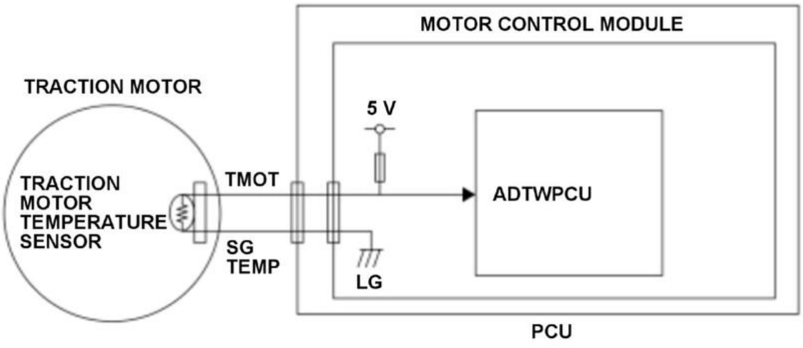

PCU is composed of motor control module, MPI module, and motor/generator phase current sensor

The traction motor is cooled by an automatic transmission fluid (ATF)-based oil cooling system and the motor control module obtains the ATF temperature and traction motor temperature signals. Normally, the traction motor temperature and the ATF temperature become nearly the same value immediately after the traction motor is started when it is sufficiently cooled down. The motor control module in the power control unit (PCU) detects a malfunction and stores a DTC when the difference between the ATF temperature and the traction motor temperature immediately after the motor is started is equal to or more than the prescribed value for the prescribed time or more.

Monitor Execution, Sequence, Duration, DTC Type

Execution	Continuous
Sequence	None
Duration	3 seconds or more
DTC Type	One drive cycle, MIL on, POWER SYSTEM indicator on

Enable Conditions

Condition	Minimum	Maximum
Elapsed time after the vehicle condition is turned to the OFF (LOCK) mode	5 hours 50 minutes	-
Traction motor absolute torque value	-	10 N.m (1 kgf.m, 7.3 lbf.ft)

Malfunction Threshold

The difference between the ATF temperature [ATF Temperature (TRC)] and the traction motor temperature is more than 90 deg.F (50 deg.C) for at least 3 seconds.

[ ]: HDS Parameter

Possible Cause

NOTE: The causes shown may not be a complete list of all potential problems, and it is possible that there may be other causes.

- Traction motor temperature sensor failure
- Transmission fluid temperature sensor failure
- PCU internal failure

Diagnosis Details

Conditions for setting the DTC

When a malfunction is detected, the MIL comes on and a Pending DTC, a Confirmed DTC, and the freeze data are stored in the motor control module memory.

Conditions for clearing the DTC

The MIL is cleared if the malfunction does not return in three consecutive trips in which the diagnostic runs. The MIL, the Pending DTC, the Confirmed DTC, and the freeze data can be cleared with the scan tool Clear command.

DTC P1D70

DTC P1D70: Traction Motor Phase Current Sensor Multiple Performance

General Description

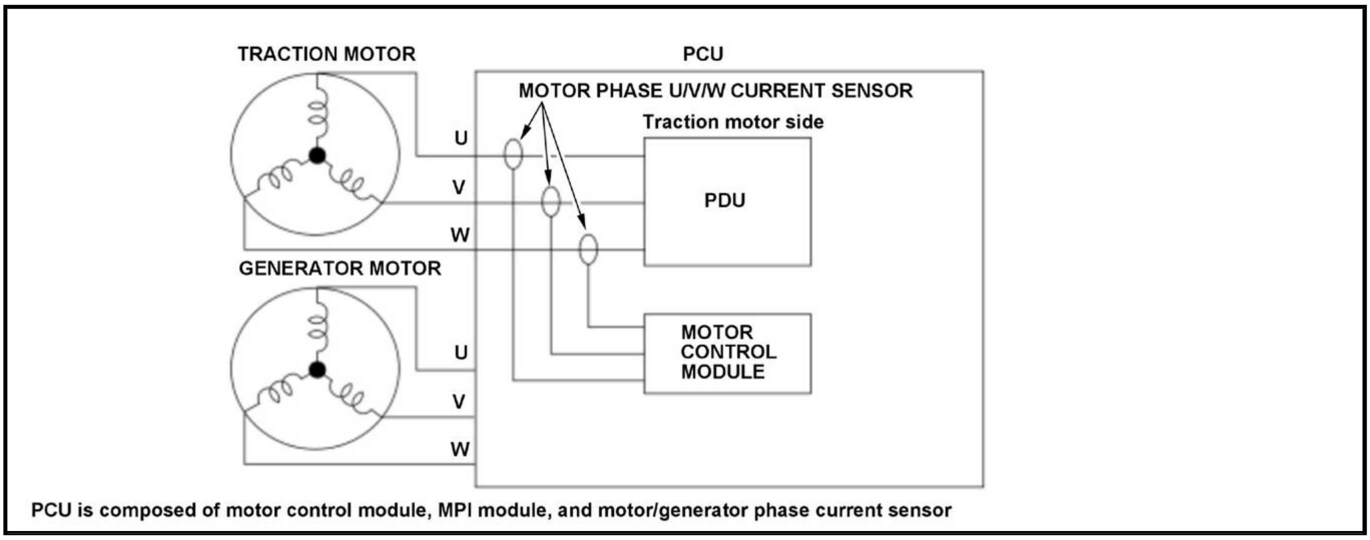
TRACTION MOTOR
PCU
MOTOR PHASE U/V/W CURRENT SENSOR
Traction motor side
U
V
W
PDU
GENERATOR MOTOR
MOTOR CONTROL MODULE
U
V
W
PCU is composed of motor control module, MPI module, and motor/generator phase current sensor

The power control unit (PCU) controls the traction motor output based on the motor phase current sensor signals. If a failure in the current sensor or sensor power supply is detected in two phases or more, it is determined more than one failure occurs and the PCU detects a malfunction and stores a DTC.

Monitor Execution, Sequence, Duration, DTC Type

Execution	Continuous
Sequence	None
Duration	200 milliseconds or more
DTC Type	One drive cycle, MIL on, POWER SYSTEM indicator on

Enable Conditions

Condition	Minimum	Maximum
12 volt battery voltage	8 V	-

Malfunction Threshold

If a failure in the following current sensor is detected in two phases or more or in three-phase sum failure +1 phase or more.

- The motor control module detects a U phase malfunction.
- The motor control module detects a V phase malfunction.
- The motor control module detects a W phase malfunction.
- The motor control module detects a U, V and W phases malfunction.

Possible Cause

NOTE: The causes shown may not be a complete list of all potential problems, and it is possible that there may be other causes.

- PCU internal failure

Diagnosis Details

Conditions for setting the DTC

When a malfunction is detected, the MIL comes on and a Pending DTC, a Confirmed DTC, and the freeze data are stored in the motor control module memory.

Conditions for clearing the DTC

The MIL is cleared if the malfunction does not return in three consecutive trips in which the diagnostic runs. The MIL, the Pending DTC, the Confirmed DTC, and the freeze data can be cleared with the scan tool Clear command.

DTC P1D72

DTC P1D72: Traction Motor Temperature Sensor Circuit Range/Performance (Lo Side)

General Description

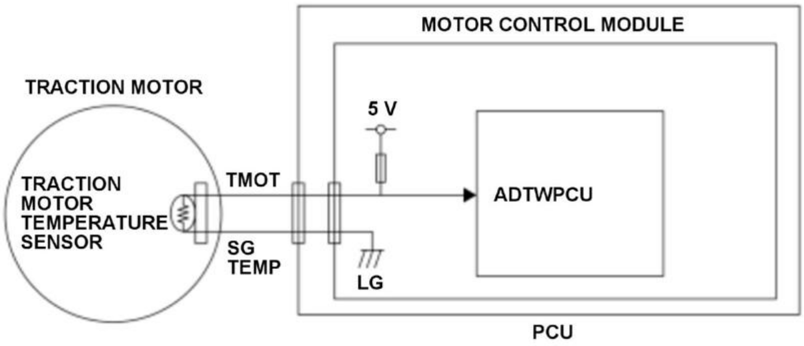

PCU is composed of motor control module, MPI module, and motor/generator phase current sensor

The power control unit (PCU) detects the traction motor temperature with a traction motor temperature sensor installed in the traction motor. The motor control module in the PCU detects a malfunction and stores a DTC when the traction motor temperature sensor value does not change from the initial value continuously for the prescribed time though the traction motor is under load.

Monitor Execution, Sequence, Duration, DTC Type

Execution	Continuous
Sequence	None
Duration	8 seconds or more
DTC Type	One drive cycle, MIL on, POWER SYSTEM indicator on

Enable Conditions

Condition	Minimum	Maximum
Traction motor absolute torque value	260 N.m (26.6 kgf.m, 191.8 lbf.ft)	-

Malfunction Threshold

When the deviation between the temperature sensor value while the traction motor is operating under high duty and the initial temperature sensor value at the start is 1 deg.F (1 deg.C) or less continuously for 8 seconds or more.

Possible Cause

NOTE: The causes shown may not be a complete list of all potential problems, and it is possible that there may be other causes.

- Traction motor temperature sensor failure
- PCU internal failure

Diagnosis Details

Conditions for setting the DTC

When a malfunction is detected, the MIL comes on and a Pending DTC, a Confirmed DTC, and the freeze data are stored in the motor control module memory.

Conditions for clearing the DTC

The MIL is cleared if the malfunction does not return in three consecutive trips in which the diagnostic runs. The MIL, the Pending DTC, the Confirmed DTC, and the freeze data can be cleared with the scan tool Clear command.

DTC P1D77

DTC P1D77: VCU I1 Current Sensor Circuit Range/Performance

General Description

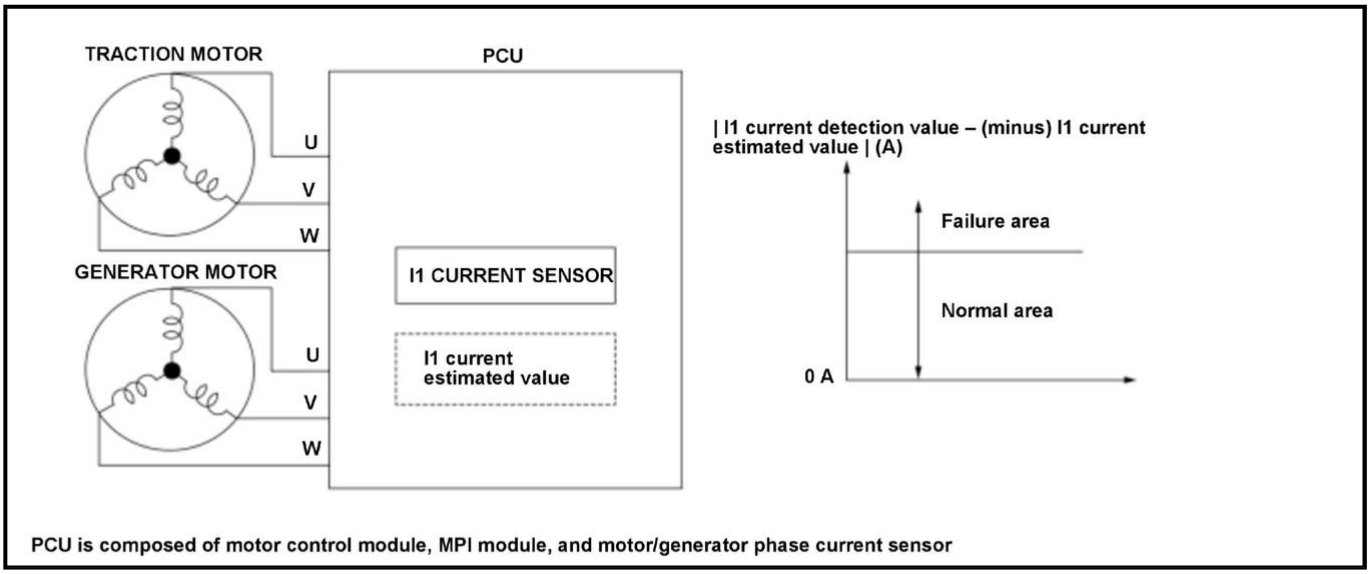
TRACTION MOTOR
PCU
U
V
W
GENERATOR MOTOR
U
V
W
I1 CURRENT SENSOR
I1 current estimated value
| I1 current detection value – (minus) I1 current estimated value | (A)
Failure area
Normal area
0 A

PCU is composed of motor control module, MPI module, and motor/generator phase current sensor

The power control unit (PCU) controls the voltage control unit (VCU) output based on the I1 current sensor signals. If the signal current from the I1 current sensor exceeds a set value for a specified time, the motor control module in the PCU detects a malfunction and stores a DTC.

Monitor Execution, Sequence, Duration, DTC Type

Execution	Gate drive circuit is ON condition
Sequence	None
Duration	2 seconds or more
DTC Type	One drive cycle, MIL on, POWER SYSTEM indicator on

Enable Conditions

Condition	Minimum	Maximum
12 volt battery voltage	8 V	-
High voltage side power supply voltage (6 V)	5 V	-
VCU control mode	Direct connection	
Power drive unit (PDU) 1 control mode	PWM mode	
Power drive unit (PDU) 2	PWM mode	

Condition	Minimum	Maximum
control mode		

Malfunction Threshold

The difference between the I1 current detection value and the I1 current estimated value is more than 50 A and continues for 2 seconds or more.

Possible Cause

NOTE: The causes shown may not be a complete list of all potential problems, and it is possible that there may be other causes.

- PCU internal failure

Diagnosis Details

Conditions for setting the DTC

When a malfunction is detected, the MIL comes on and a Pending DTC, a Confirmed DTC, and the freeze data are stored in the motor control module memory.

Conditions for clearing the DTC

The MIL is cleared if the malfunction does not return in three consecutive trips in which the diagnostic runs. The MIL, the Pending DTC, the Confirmed DTC, and the freeze data can be cleared with the scan tool Clear command.

DTC P1D78

DTC P1D78: VCU I1 Current Sensor Circuit Low

General Description

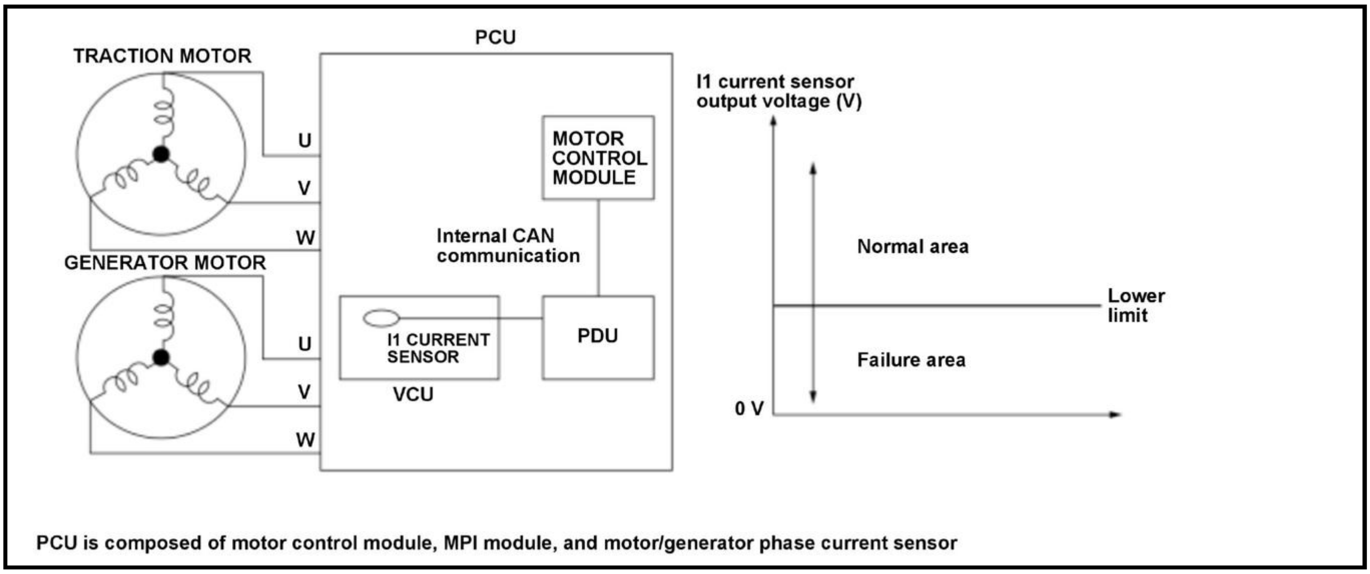
TRACTION MOTOR
PCU
U
V
W
GENERATOR MOTOR
U
V
W
MOTOR CONTROL MODULE
Internal CAN communication
I1 CURRENT SENSOR
VCU
PDU
I1 current sensor output voltage (V)
Normal area
Lower limit
Failure area
0 V
PCU is composed of motor control module, MPI module, and motor/generator phase current sensor

The power control unit (PCU) controls the voltage control unit (VCU) output based on the I1 current sensor signals. If the signal voltage from the I1 current sensor exceeds a set value for a specified time, the motor control module in the PCU detects a malfunction and stores a DTC.

Monitor Execution, Sequence, Duration, DTC Type

Execution	Continuous
Sequence	None

Duration	500 milliseconds or more
DTC Type	One drive cycle, MIL on, POWER SYSTEM indicator on

Enable Conditions

Condition	Minimum	Maximum
12 volt battery voltage	8 V	-

Malfunction Threshold

The I1 current sensor output voltage is less than 0.13 V for at least 500 milliseconds.

Possible Cause

NOTE: The causes shown may not be a complete list of all potential problems, and it is possible that there may be other causes.

- PCU internal failure

Diagnosis Details

Conditions for setting the DTC

When a malfunction is detected, the MIL comes on and a Pending DTC, a Confirmed DTC, and the freeze data are stored in the motor control module memory.

Conditions for clearing the DTC

The MIL is cleared if the malfunction does not return in three consecutive trips in which the diagnostic runs. The MIL, the Pending DTC, the Confirmed DTC, and the freeze data can be cleared with the scan tool Clear command.

DTC P1D79

DTC P1D79: VCU I1 Current Sensor Circuit High

General Description

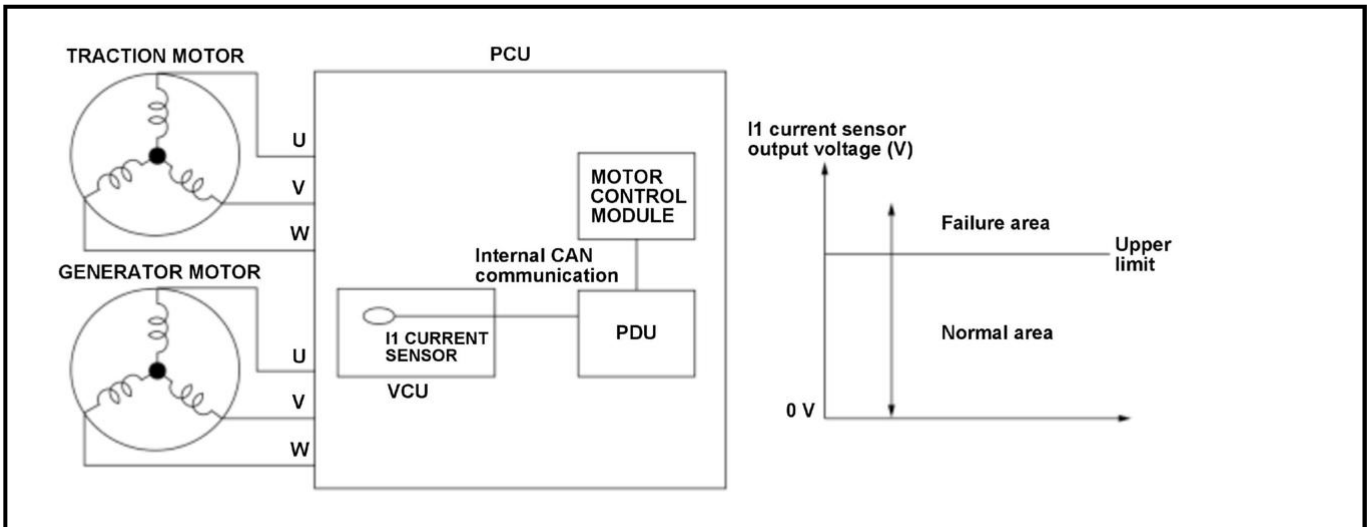
TRACTION MOTOR
PCU
U
V
W
GENERATOR MOTOR
U
V
W
MOTOR CONTROL MODULE
Internal CAN communication
I1 CURRENT SENSOR
VCU
PDU
I1 current sensor output voltage (V)
Failure area
Upper limit
Normal area
0 V

PCU is composed of motor control module, MPI module, and motor/generator phase current sensor

The power control unit (PCU) controls the voltage control unit (VCU) output based on the I1 current sensor signals. If the signal voltage from the I1 current sensor exceeds a set value for a specified time, the motor control module in the PCU detects a malfunction and stores a DTC.

Monitor Execution, Sequence, Duration, DTC Type

Execution	Continuous
Sequence	None
Duration	500 milliseconds or more
DTC Type	One drive cycle, MIL on, POWER SYSTEM indicator on

Enable Conditions

Condition	Minimum	Maximum
12 volt battery voltage	8 V	-

Malfunction Threshold

The I1 current sensor output voltage is more than 4.87 V for at least 500 milliseconds.

Possible Cause

NOTE: The causes shown may not be a complete list of all potential problems, and it is possible that there may be other causes.

- PCU internal failure

Diagnosis Details

Conditions for setting the DTC

When a malfunction is detected, the MIL comes on and a Pending DTC, a Confirmed DTC, and the freeze data are stored in the motor control module memory.

Conditions for clearing the DTC

The MIL is cleared if the malfunction does not return in three consecutive trips in which the diagnostic runs. The MIL, the Pending DTC, the Confirmed DTC, and the freeze data can be cleared with the scan tool Clear command.

DTC P1D7A

DTC P1D7A: Reactor Temperature Sensor Circuit Range/Performance Problem

General Description

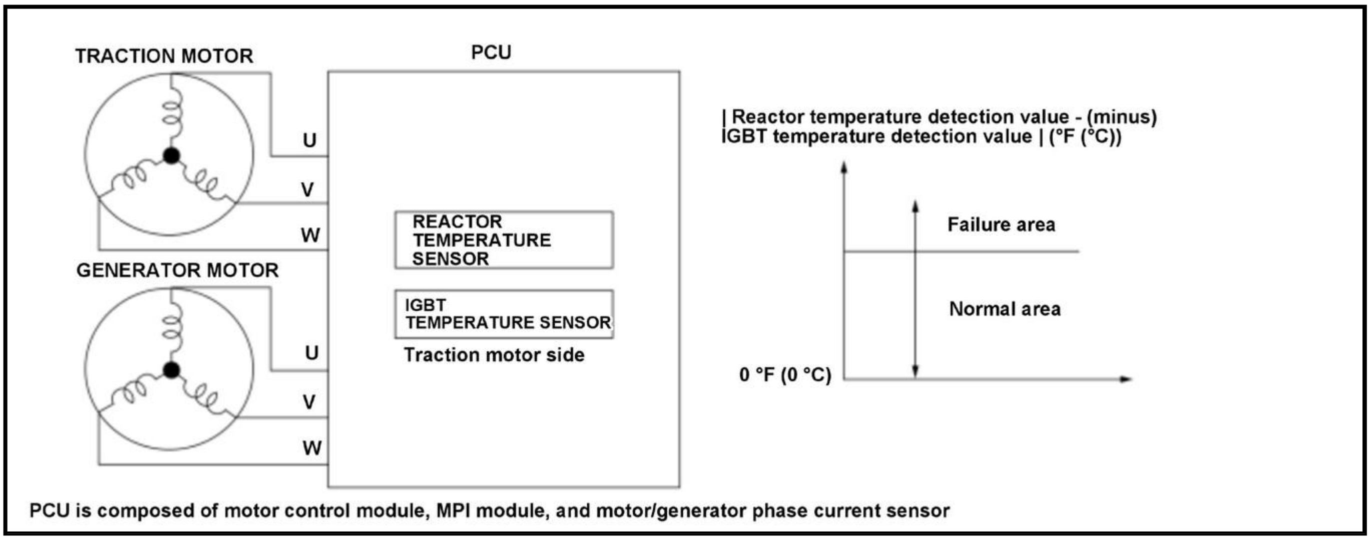
TRACTION MOTOR
PCU
U
V
W
GENERATOR MOTOR
U
V
W
REACTOR TEMPERATURE SENSOR
IGBT TEMPERATURE SENSOR
Traction motor side
| Reactor temperature detection value - (minus) IGBT temperature detection value | (°F (°C))
Failure area
Normal area
0 °F (0 °C)
PCU is composed of motor control module, MPI module, and motor/generator phase current sensor

The power control unit (PCU) monitors the reactor temperature sensor value to prevent malfunction of the reactor due to heat generation. If the reactor temperature sensor detection value is a specified value for a specified time, the motor control module in the PCU detects a malfunction and stores a DTC.

Monitor Execution, Sequence, Duration, DTC Type

Execution	Immediately after the vehicle is turned to ON mode
Sequence	None
Duration	100 milliseconds or more
DTC Type	One drive cycle, MIL on, POWER SYSTEM indicator on

Enable Conditions

Condition	Minimum	Maximum
Elapsed time after the vehicle condition is turned to the OFF (LOCK) mode	6 hours	-
Traction motor speed	-	20 rpm
Generator motor speed [Motor Speed (GEN)]	-	20 rpm
12 volt battery voltage	8 V	-

[ ]: HDS Parameter

Malfunction Threshold

The difference between the reactor temperature detection value and the IGBT temperature detection value is more than 72 deg.F (40 deg.C) and continues for 100 milliseconds or more.

Possible Cause

NOTE: The causes shown may not be a complete list of all potential problems, and it is possible that there may be other causes.

- PCU internal failure

Diagnosis Details

Conditions for setting the DTC

When a malfunction is detected, the MIL comes on and a Pending DTC, a Confirmed DTC, and the freeze data are stored in the motor control module memory.

Conditions for clearing the DTC

The MIL is cleared if the malfunction does not return in three consecutive trips in which the diagnostic runs. The MIL, the Pending DTC, the Confirmed DTC, and the freeze data can be cleared with the scan tool Clear command.

DTC P1D7B

DTC P1D7B: Reactor Over Temperature (Traction Motor Control Module Detected)

General Description

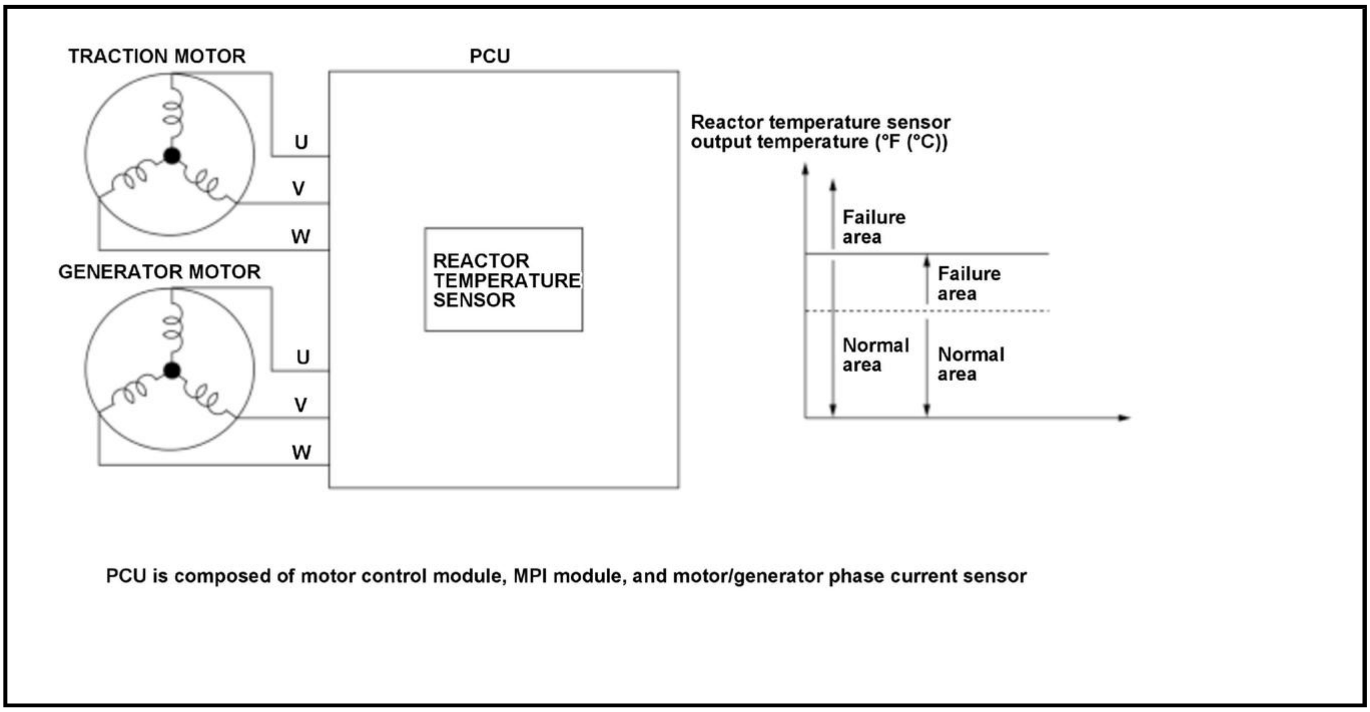
TRACTION MOTOR
PCU
U
V
W
GENERATOR MOTOR
U
V
W
REACTOR TEMPERATURE SENSOR
Reactor temperature sensor output temperature (°F (°C))
Failure area
Failure area
Normal area
Normal area
PCU is composed of motor control module, MPI module, and motor/generator phase current sensor

The power control unit (PCU) monitors the reactor temperature sensor value to prevent malfunction of the reactor due to heat generation. If the reactor temperature sensor output temperature is a specified temperature for a specified time, the motor control module in the PCU detects a malfunction and stores a DTC.

Monitor Execution, Sequence, Duration, DTC Type

Execution	Continuous
Sequence	None
Duration	500 milliseconds or more*11 seconds or more**
DTC Type	One drive cycle, MIL on, POWER SYSTEM indicator on

*: Symptom 1

**: Symptom 2

Enable Conditions

Condition	Minimum	Maximum
12 volt battery voltage	8 V	-

Malfunction Threshold

One of these symptoms occurs:

Symptom 1

- The reactor temperature sensor output temperature is more than 328 deg.F (164 deg.C) for at least 500 milliseconds.

Symptom 2

- The reactor temperature sensor output temperature is more than 326 deg.F (163 deg.C) for at least 11 seconds.

Possible Cause

NOTE: The causes shown may not be a complete list of all potential problems, and it is possible that there may be other causes.

- Water pipe leak
- Radiator fan control (RFC) unit failure
- PCU electric coolant pump failure
- PCU internal failure

Diagnosis Details

Conditions for setting the DTC

When a malfunction is detected, the MIL comes on and a Pending DTC, a Confirmed DTC, and the freeze data are stored in the motor control module memory.

Conditions for clearing the DTC

The MIL is cleared if the malfunction does not return in three consecutive trips in which the diagnostic runs. The MIL, the Pending DTC, the Confirmed DTC, and the freeze data can be cleared with the scan tool Clear command.

DTC P1D7D

DTC P1D7D: Reactor Temperature Sensor 1 Circuit Low

General Description

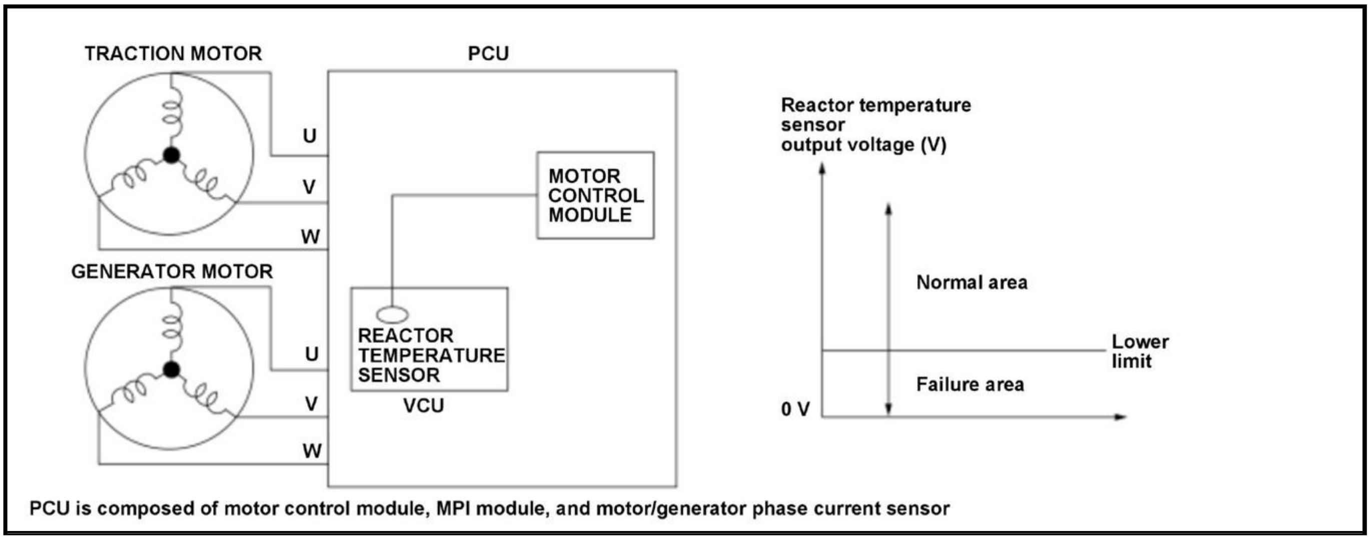
TRACTION MOTOR
PCU
U
V
W
MOTOR CONTROL MODULE
GENERATOR MOTOR
U
V
W
REACTOR TEMPERATURE SENSOR
VCU
Reactor temperature sensor output voltage (V)
Normal area
Lower limit
Failure area
0 V
PCU is composed of motor control module, MPI module, and motor/generator phase current sensor

The power control unit (PCU) monitors the reactor temperature sensor value to prevent malfunction of the reactor due to heat generation. If the reactor temperature sensor output voltage is a specified voltage for a specified time, the motor control module in the PCU detects a malfunction and stores a DTC.

Monitor Execution, Sequence, Duration, DTC Type

Execution	Continuous
Sequence	None
Duration	400 milliseconds or more
DTC Type	One drive cycle, MIL on, POWER SYSTEM indicator on

Enable Conditions

Condition	Minimum	Maximum
12 volt battery voltage	8 V	-

Malfunction Threshold

The reactor temperature sensor output voltage is less than 0.21 V for at least 400 milliseconds.

Possible Cause

NOTE: The causes shown may not be a complete list of all potential problems, and it is possible that there may be other causes.

- PCU internal failure

Diagnosis Details

Conditions for setting the DTC

When a malfunction is detected, the MIL comes on and a Pending DTC, a Confirmed DTC, and the freeze data are stored in the motor control module memory.

Conditions for clearing the DTC

The MIL is cleared if the malfunction does not return in three consecutive trips in which the diagnostic runs. The MIL, the Pending DTC, the Confirmed DTC, and the freeze data can be cleared with the scan tool Clear command.

DTC P1D7E

DTC P1D7E: Reactor Temperature Sensor 1 Circuit High

General Description

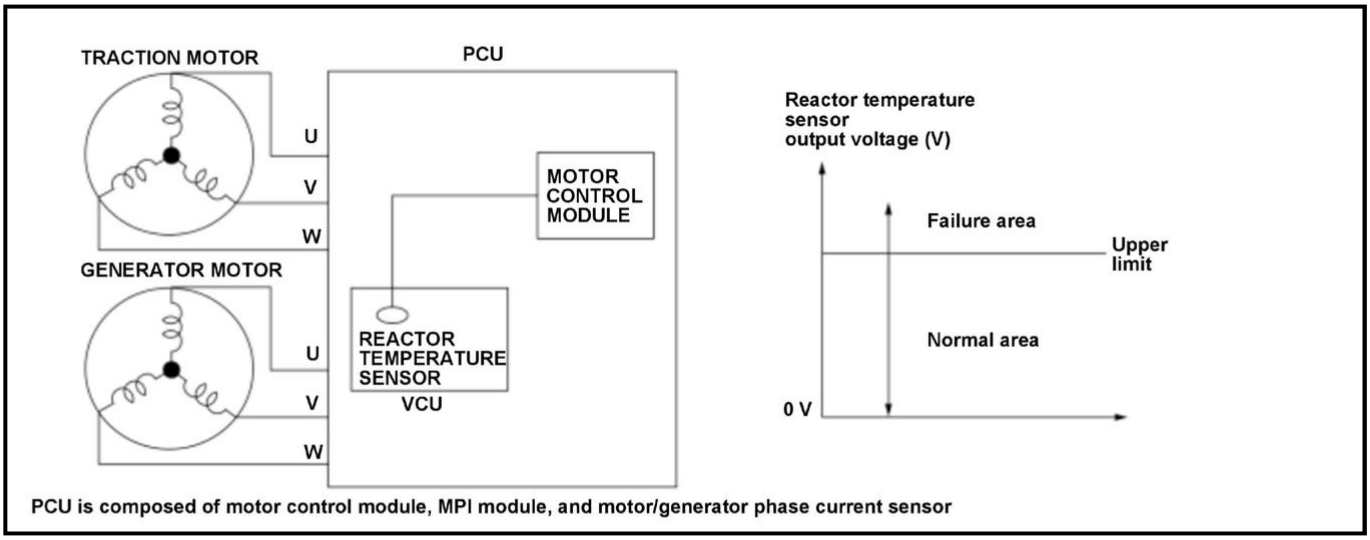
TRACTION MOTOR
PCU
U
V
W
GENERATOR MOTOR
U
V
W
MOTOR CONTROL MODULE
REACTOR TEMPERATURE SENSOR
VCU
Reactor temperature sensor output voltage (V)
Failure area
Upper limit
Normal area
0 V
PCU is composed of motor control module, MPI module, and motor/generator phase current sensor

The power control unit (PCU) monitors the reactor temperature sensor value to prevent malfunction of the reactor due to heat generation. If the reactor temperature sensor output voltage is a specified voltage for a specified time, the motor control module in the PCU detects a malfunction and stores a DTC.

Monitor Execution, Sequence, Duration, DTC Type

Execution	Continuous
Sequence	None
Duration	400 milliseconds or more

DTC Type	One drive cycle, MIL on, POWER SYSTEM indicator on

Enable Conditions

Condition	Minimum	Maximum
12 volt battery voltage	8 V	-

Malfunction Threshold

The reactor temperature sensor output voltage is more than 4.83 V for at least 400 milliseconds.

Possible Cause

NOTE: The causes shown may not be a complete list of all potential problems, and it is possible that there may be other causes.

- PCU internal failure

Diagnosis Details

Conditions for setting the DTC

When a malfunction is detected, the MIL comes on and a Pending DTC, a Confirmed DTC, and the freeze data are stored in the motor control module memory.

Conditions for clearing the DTC

The MIL is cleared if the malfunction does not return in three consecutive trips in which the diagnostic runs. The MIL, the Pending DTC, the Confirmed DTC, and the freeze data can be cleared with the scan tool Clear command.

DTC P1D7F

DTC P1D7F: Generator Motor Inverter Malfunction Signal Low (Generator Motor Control Module Detected)

General Description

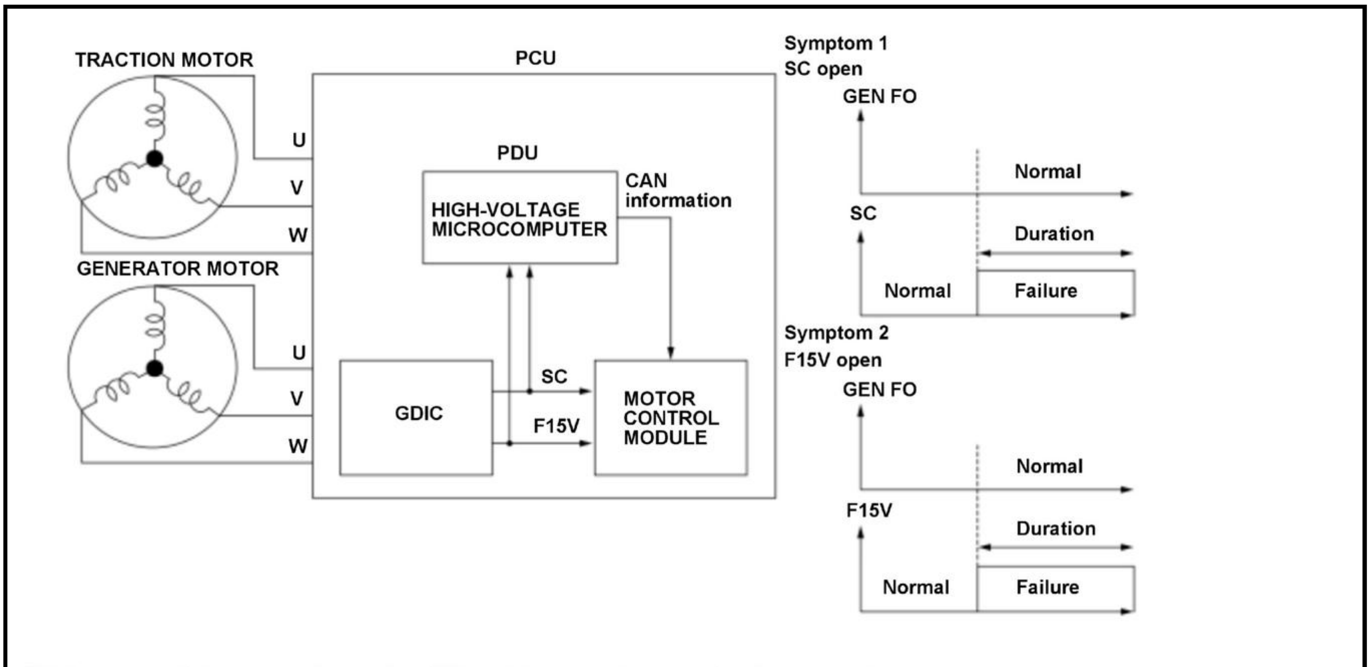
TRACTION MOTOR
PCU
U
V
W
GENERATOR MOTOR
U
V
W
PDU
HIGH-VOLTAGE MICROCOMPUTER
CAN information
GDIC
SC
F15V
MOTOR CONTROL MODULE
Symptom 1
SC open
GEN FO
Normal
SC
Duration
Normal
Failure
Symptom 2
F15V open
GEN FO
Normal
F15V
Duration
Normal
Failure

PCU is composed of motor control module, MPI module, and motor/generator phase current sensor

Symptom 1

When an overcurrent (short circuit current) passes through the IGBT at the generator motor side, the power control unit (PCU) detects a trouble (SC) with the GDIC function and, at the same time when outputting a failure information (SC) to the motor control module, blocks a gate signal. If it is detected for the specified time that the SC signal is unmatched with the CAN information (GEN FO) from the power drive unit (PDU) (SC side: Abnormal, GEN FO side: Normal), the motor control module in the PCU detects a malfunction and stores a DTC.

Symptom 2

When a trouble with the power supply which drives the IGBT at the generator motor side occurs, the PCU detects a trouble (F15V) with the GDIC function and, at the same time when outputting a failure information (F15V) to the motor control module, blocks a gate signal. If it is detected for the specified time that the F15V signal is unmatched with the CAN information (GEN FO) from the PDU (F15V side: Abnormal, GEN FO side: Normal), the motor control module in the PCU detects a malfunction and stores a DTC.

Monitor Execution, Sequence, Duration, DTC Type

Execution	Continuous
Sequence	None
Duration	90 milliseconds or more
DTC Type	One drive cycle, MIL on, POWER SYSTEM indicator on

Enable Conditions

Condition	Minimum	Maximum
12 volt battery voltage	8 V	-

Malfunction Threshold

One of these symptoms occurs:

Symptom 1

- If a wiring trouble inside the SC (where an SC signal is detected and the CAN information from the PDU (GEN FO) is normal) continues for at least 90 milliseconds.

Symptom 2

- If a wiring trouble inside the F15V (where an F15V signal is detected and the CAN information from the PDU (GEN FO) is normal) continues for at least 90 milliseconds.

Possible Cause

NOTE: The causes shown may not be a complete list of all potential problems, and it is possible that there may be other causes.

- PCU internal failure

Diagnosis Details

Conditions for setting the DTC

When a malfunction is detected, the MIL comes on and a Pending DTC, a Confirmed DTC, and the freeze data are stored in the motor control module memory.

Conditions for clearing the DTC

The MIL is cleared if the malfunction does not return in three consecutive trips in which the diagnostic runs. The MIL, the Pending DTC, the Confirmed DTC, and the freeze data can be cleared with the scan tool Clear

command.

DTC P1D81

DTC P1D81: VCU Malfunction Signal Low (Traction Motor Control Module Detected)

General Description

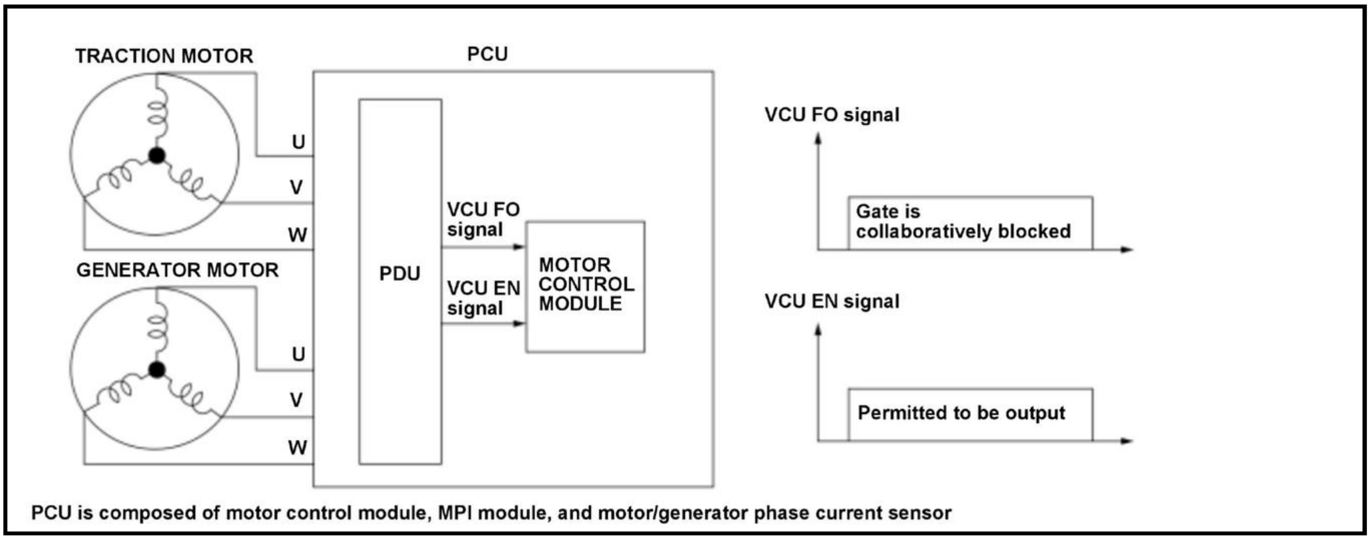
TRACTION MOTOR
PCU
U
V
W
GENERATOR MOTOR
U
V
W
PDU
VCU FO signal
VCU EN signal
MOTOR CONTROL MODULE
VCU FO signal
Gate is collaboratively blocked
VCU EN signal
Permitted to be output

PCU is composed of motor control module, MPI module, and motor/generator phase current sensor

When fail safe occurs in the power drive unit (PDU), a VCU FO signal is transmitted to the motor control module and the gate is collaboratively blocked. If the harness for VCU FO signal is disconnected, a gate signal for the traction motor / generator motor is blocked while a VCU FO signal is blocked even if any fail safe does not occur. If a VCU FO signal is continuously blocked although a VCU output permission signal (VCU EN signal) is "permitted to be output," the motor control module in the PCU detects a malfunction and stores a DTC.

Monitor Execution, Sequence, Duration, DTC Type

Execution	Continuous
Sequence	None
Duration	2.5 seconds or more
DTC Type	One drive cycle, MIL on, POWER SYSTEM indicator on

Enable Conditions

Condition	Minimum	Maximum
12 volt battery voltage	8 V	-

Malfunction Threshold

If a VCU FO signal is blocked although a VCU output permission signal (VCU EN signal) is "permitted to be output" for at least 2.5 seconds.

Possible Cause

NOTE: The causes shown may not be a complete list of all potential problems, and it is possible that there may be other causes.

- PCU internal failure

Diagnosis Details

Conditions for setting the DTC

When a malfunction is detected, the MIL comes on and a Pending DTC, a Confirmed DTC, and the freeze data are stored in the motor control module memory.

Conditions for clearing the DTC

The MIL is cleared if the malfunction does not return in three consecutive trips in which the diagnostic runs. The MIL, the Pending DTC, the Confirmed DTC, and the freeze data can be cleared with the scan tool Clear command.

DTC P1D85

DTC P1D85: Traction Motor Inverter Malfunction Signal Low (Traction Motor Control Module Detected)

General Description

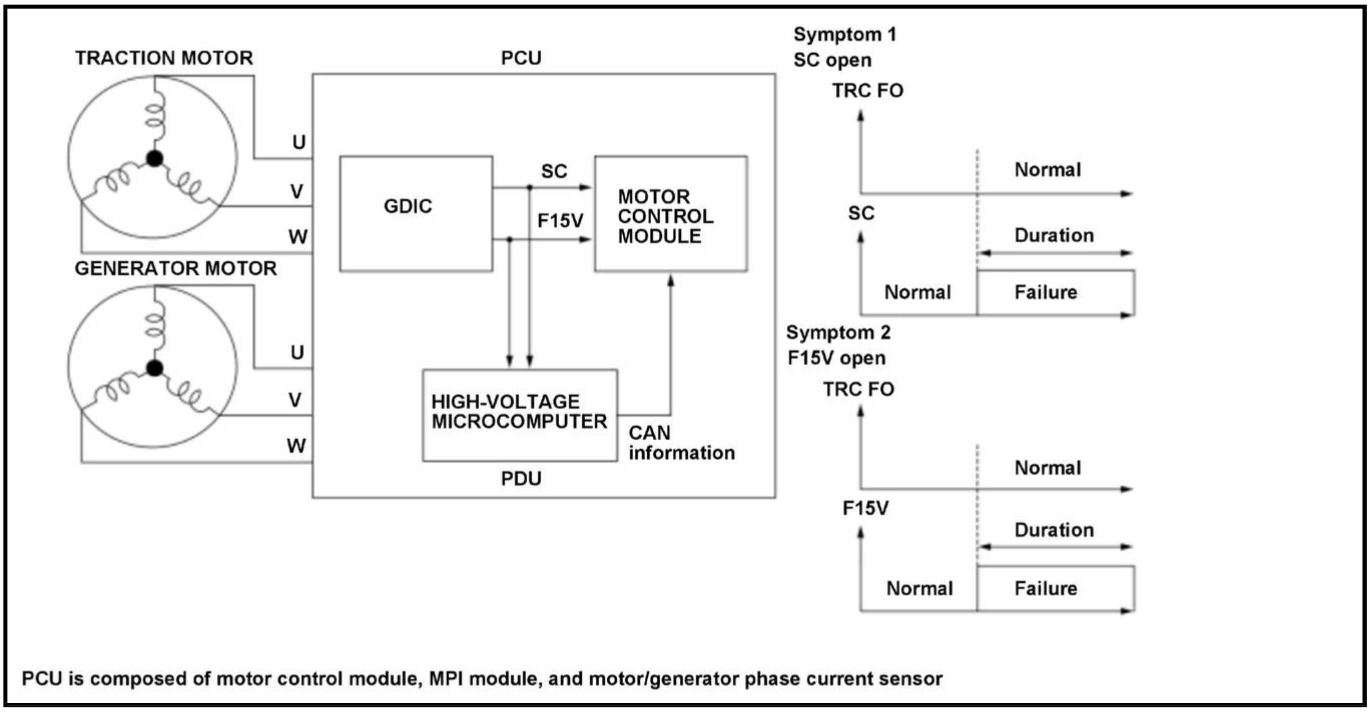
TRACTION MOTOR
PCU
U
V
W
GENERATOR MOTOR
U
V
W
GDIC
SC
F15V
MOTOR CONTROL MODULE
HIGH-VOLTAGE MICROCOMPUTER
CAN information
PDU
Symptom 1
SC open
TRC FO
Normal
SC
Duration
Normal
Failure
Symptom 2
F15V open
TRC FO
Normal
F15V
Duration
Normal
Failure

PCU is composed of motor control module, MPI module, and motor/generator phase current sensor

Symptom 1

When an overcurrent (short circuit current) passes through the IGBT at the traction motor side, the power control unit (PCU) detects a trouble (SC) with the GDIC function and, at the same time when outputting a failure information (SC) to the motor control module, blocks a gate signal. If it is detected for the specified time that the SC signal is unmatched with the CAN information (TRC FO) from the power drive unit (PDU) (SC side: Abnormal, TRC FO side: Normal), the motor control module in the PCU detects a malfunction and stores a DTC.

Symptom 2

When a trouble with the power supply which drives the IGBT at the traction motor side occurs, the PCU detects a trouble (F15V) with the GDIC function and, at the same time when outputting a failure information (F15V) to the motor control module, blocks a gate signal. If it is detected for the specified time that the F15V signal is unmatched with the CAN information (TRC FO) from the PDU (F15V side: Abnormal, TRC FO side: Normal), the motor control module in the PCU detects a malfunction and stores a DTC.

Monitor Execution, Sequence, Duration, DTC Type

Execution	Continuous
Sequence	None
Duration	90 milliseconds or more
DTC Type	One drive cycle, MIL on, POWER SYSTEM indicator on

Enable Conditions

Condition	Minimum	Maximum
12 volt battery voltage	8 V	-

Malfunction Threshold

One of these symptoms occurs:

Symptom 1

- If a wiring trouble inside the SC (where an SC signal is detected and the CAN information from the PDU (TRC FO) is normal) continues for at least 90 milliseconds.

Symptom 2

- If a wiring trouble inside the F15V (where an F15V signal is detected and the CAN information from the PDU (TRC FO) is normal) continues for at least 90 milliseconds.

Possible Cause

NOTE: The causes shown may not be a complete list of all potential problems, and it is possible that there may be other causes.

- PCU internal failure

Diagnosis Details

Conditions for setting the DTC

When a malfunction is detected, the MIL comes on and a Pending DTC, a Confirmed DTC, and the freeze data are stored in the motor control module memory.

Conditions for clearing the DTC

The MIL is cleared if the malfunction does not return in three consecutive trips in which the diagnostic runs. The MIL, the Pending DTC, the Confirmed DTC, and the freeze data can be cleared with the scan tool Clear command.

DTC P1D8A

DTC P1D8A: Generator Motor Inverter Gate Line Open

General Description

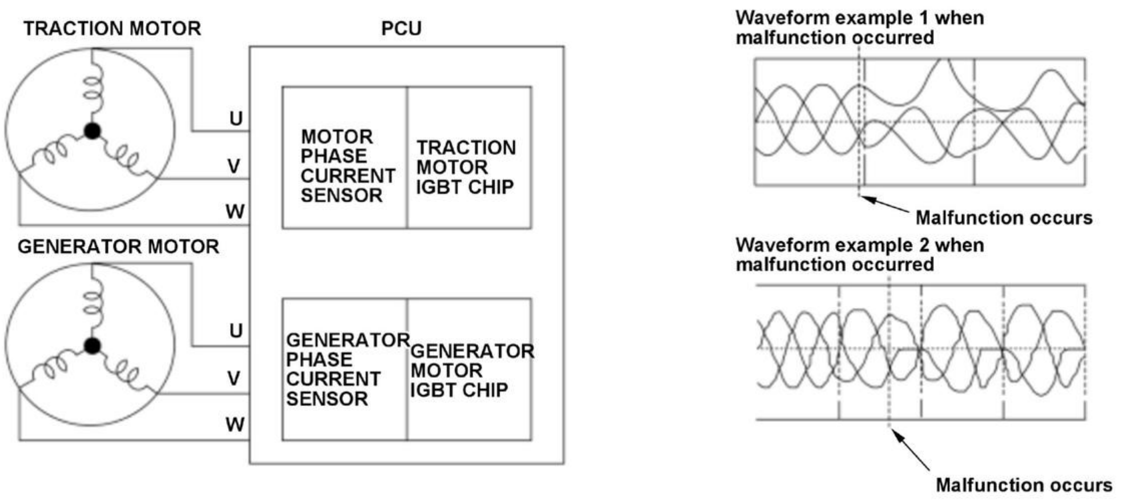
TRACTION MOTOR
PCU
U
V
W
MOTOR PHASE CURRENT SENSOR
TRACTION MOTOR IGBT CHIP
GENERATOR MOTOR
U
V
W
GENERATOR PHASE CURRENT SENSOR
GENERATOR MOTOR IGBT CHIP
Waveform example 1 when malfunction occurred
Malfunction occurs
Waveform example 2 when malfunction occurred
Malfunction occurs

PCU is composed of motor control module, MPI module, and motor/generator phase current sensor

The power control unit (PCU) cannot be able to output malfunction information (SC) signal which outputs by an occurrence of IGBT overcurrent if the SC detection circuit malfunctions. Three motor phase current typically generate sine waves centered around 0 A. But if it malfunctions, a part of the waveform chips or one phase fixes to 0 A resulting an occurrence of difference between the commanded current and the actual current. If either of the following conditions occurs, the motor control module in the PCU detects a malfunction and stores a DTC.

Symptom 1

If the 3-phase current sensor output value is out of a specified value for a specified time, the motor control module in the PCU detects a malfunction and stores a DTC.

Symptom 2

If the deviation between the current sensor output (A) and command value is out of a specified value in specified times, the motor control module in the PCU detects a malfunction and stores a DTC.

Monitor Execution, Sequence, Duration, DTC Type

Execution	Continuous
Sequence	None
Duration	400 milliseconds or more
DTC Type	One drive cycle, MIL on, POWER SYSTEM indicator on

Enable Conditions

Condition	Minimum	Maximum
Generator motor speed [Motor speed (GEN)]*	400 rpm	-
Generator motor speed [Motor speed (GEN)]**	-	3, 000 rpm
12 volt battery voltage	8 V	-

[ ]: HDS Parameter

*: Symptom 1

**: Symptom 2

Condition	Minimum	Maximum
Current width	50 A	-

[ ]: HDS Parameter

*: Symptom 1

**: Symptom 2

Malfunction Threshold

One of these symptoms occurs:

Symptom 1

- If a circumstance where the current sensor output value (A) is less than 21.6 A or more than -21.6 A at 95 % or more of 100 milliseconds continues for at least 400 milliseconds.

Symptom 2

- The following conditions occurs 4 times within 1 second:

  The condition when the phase current deviation is more than commanded current x (multiplied by) 0.22 + (plus) 31.5 A, or less than commanded current x (multiplied by) -0.22 - (minus) -31.5 A accounts for 10 % or more during 100 milliseconds.

Possible Cause

NOTE: The causes shown may not be a complete list of all potential problems, and it is possible that there may be other causes.

- Generator motor power cable line failure
- Generator motor motor rotor position sensor line failure
- Generator motor motor rotor position sensor failure
- Generator motor failure
- PCU internal failure

Diagnosis Details

Conditions for setting the DTC

When a malfunction is detected, the MIL comes on and a Pending DTC, a Confirmed DTC, and the freeze data are stored in the motor control module memory.

Conditions for clearing the DTC

The MIL is cleared if the malfunction does not return in three consecutive trips in which the diagnostic runs. The MIL, the Pending DTC, the Confirmed DTC, and the freeze data can be cleared with the scan tool Clear command.

DTC P1D8C

DTC P1D8C: Generator Motor Inverter Over Current

General Description

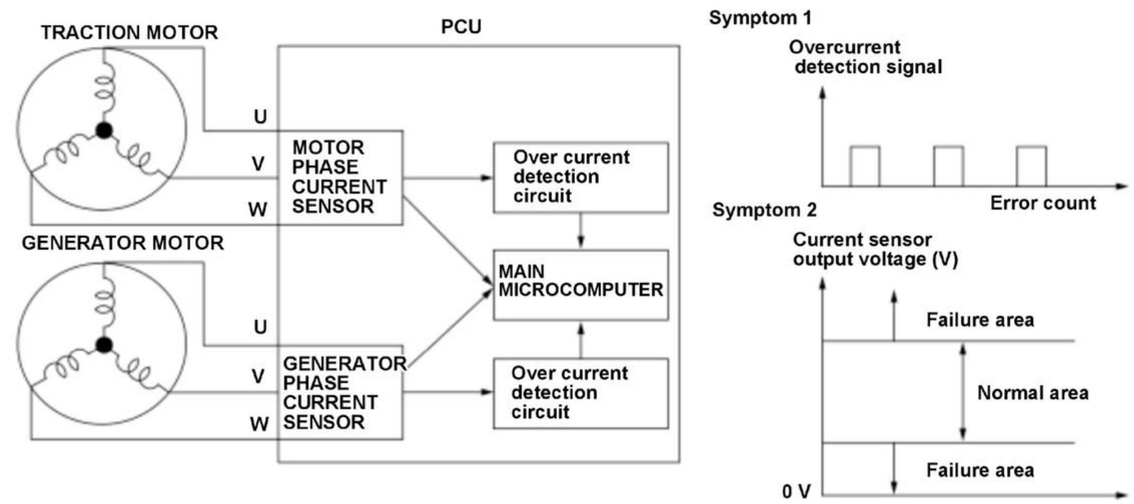
TRACTION MOTOR
PCU
U
V
W
MOTOR PHASE CURRENT SENSOR
Over current detection circuit
MAIN MICROCOMPUTER
GENERATOR MOTOR
U
V
W
GENERATOR PHASE CURRENT SENSOR
Over current detection circuit
Symptom 1
Overcurrent detection signal
Error count
Symptom 2
Current sensor output voltage (V)
Failure area
Normal area
Failure area
0 V

PCU is composed of motor control module, MPI module, and motor/generator phase current sensor

The power control unit (PCU) controls the generator motor output and detects overcurrent based on the generator phase current sensor signals. If either of the following conditions occurs, the motor control module in the PCU detects a malfunction and stores a DTC.

Symptom 1

If an overcurrent is detected in generator phase current, a failure information is output to the main microcomputer. If an overcurrent occurs in specified times, the motor control module in the PCU detects a malfunction and stores a DTC.

Symptom 2

If an overcurrent detection circuit is malfunctioning, a failure information is not output to the main microcomputer. If a current sensor signal reaches an over current state in specified times, the motor control module in the PCU detects a malfunction and stores a DTC.

Monitor Execution, Sequence, Duration, DTC Type

Execution	Continuous
Sequence	None
Duration	Within 1.2 seconds
DTC Type	One drive cycle, MIL on, POWER SYSTEM indicator on

Enable Conditions

Condition	Minimum	Maximum
12 volt battery voltage	8 V	-

Malfunction Threshold

One of these symptoms occurs:

Symptom 1

- If the output voltage from the current sensor exceeds the specified value and an overcurrent is detected three times within 1.2 seconds.

Symptom 2

- If the output voltage from the current sensor transfers from the normal range to the failure range three times within 1.2 seconds.

Possible Cause

NOTE: The causes shown may not be a complete list of all potential problems, and it is possible that there may be other causes.

- Generator motor power cable line failure
- Generator motor motor rotor position sensor line failure
- Generator motor failure
- Generator motor motor rotor position sensor failure
- PCU internal failure

Diagnosis Details

Conditions for setting the DTC

When a malfunction is detected, the MIL comes on and a Pending DTC, a Confirmed DTC, and the freeze data are stored in the motor control module memory.

Conditions for clearing the DTC

The MIL is cleared if the malfunction does not return in three consecutive trips in which the diagnostic runs. The MIL, the Pending DTC, the Confirmed DTC, and the freeze data can be cleared with the scan tool Clear command.

DTC P1D8D

DTC P1D8D: Generator Motor Inverter Short

General Description

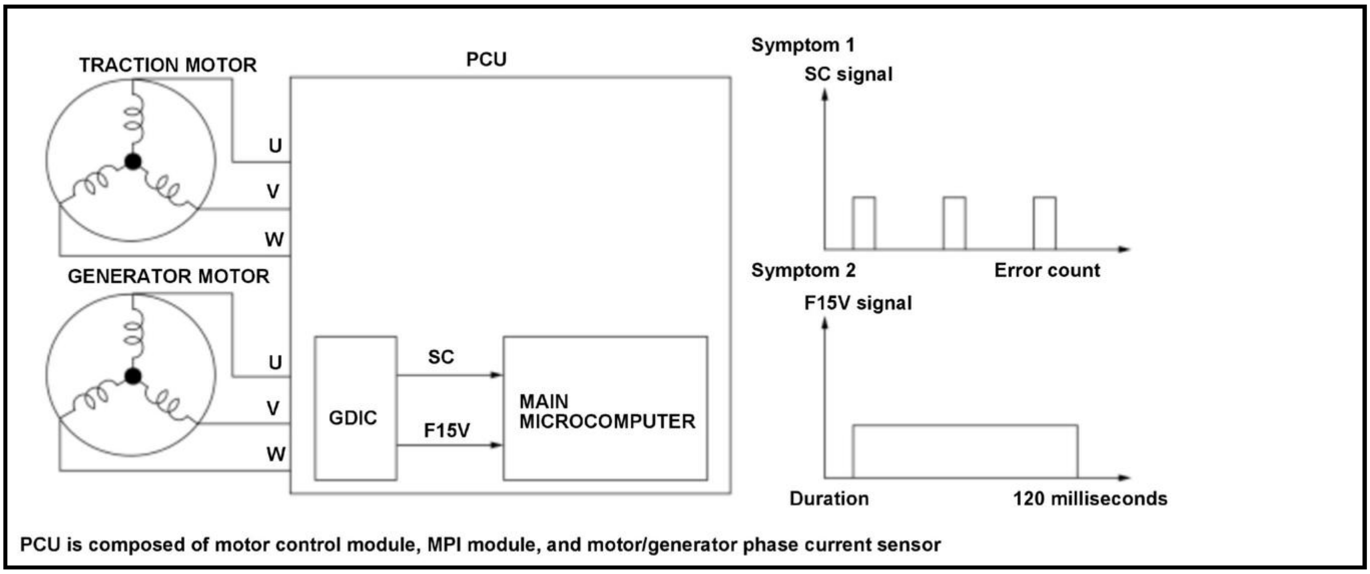
TRACTION MOTOR
PCU
U
V
W
GENERATOR MOTOR
U
V
W
GDIC
SC
F15V
MAIN MICROCOMPUTER
Symptom 1
SC signal
Error count
Symptom 2
F15V signal
Duration
120 milliseconds
PCU is composed of motor control module, MPI module, and motor/generator phase current sensor

Symptom 1

When an overcurrent (short circuit current) passes through the IGBT at the generator motor side, the power control unit (PCU) detects a trouble (SC) with the GDIC function and, at the same time when outputting a failure information (SC) to the main microcomputer, blocks a gate signal. The failure information (SC) from the GDIC is released after a specified time has elapsed if the failure is restored to normal. If a specified number of SC signals are issued, the motor control module in the PCU detects a malfunction and stores a DTC.

Symptom 2

When a trouble with the power supply which drives the IGBT at the generator motor side occurs, the PCU detects a trouble (F15V) with the GDIC function and, at the same time when outputting a failure information (F15V) to the main microcomputer, blocks a gate signal. If an F15V signal and CAN information (TRC FO) from the high-voltage microcomputer are detected for a specified time, the motor control module in the PCU detects a malfunction and stores a DTC.

Monitor Execution, Sequence, Duration, DTC Type

Execution	Continuous
Sequence	None
Duration	200 milliseconds or more*120 milliseconds or more**
DTC Type	One drive cycle, MIL on, POWER SYSTEM indicator on

*: Symptom 1

**: Symptom 2

Enable Conditions

Condition	Minimum	Maximum
12 volt battery voltage	8 V	-
High voltage side power supply voltage (6 V)**	5 V	-

Malfunction Threshold

One of these symptoms occurs:

Symptom 1

- If an SC detection arising from IGBT overcurrent (short circuit current) occurs three times consecutively.

Symptom 2

- If an F15V detection (F15V detection and CAN information (TRC FO) from the high-voltage microcomputer) arising from a trouble with the power supply which drives the IGBT occurs continuously for at least 120 milliseconds.

Possible Cause

NOTE: The causes shown may not be a complete list of all potential problems, and it is possible that there may be other causes.

- PCU internal failure

Diagnosis Details

Conditions for setting the DTC

When a malfunction is detected, the MIL comes on and a Pending DTC, a Confirmed DTC, and the freeze data are stored in the motor control module memory.

Conditions for clearing the DTC

The MIL is cleared if the malfunction does not return in three consecutive trips in which the diagnostic runs. The MIL, the Pending DTC, the Confirmed DTC, and the freeze data can be cleared with the scan tool Clear

command.

DTC P1D92

DTC P1D92: PCU Electric Coolant Pump Control Circuit

General Description

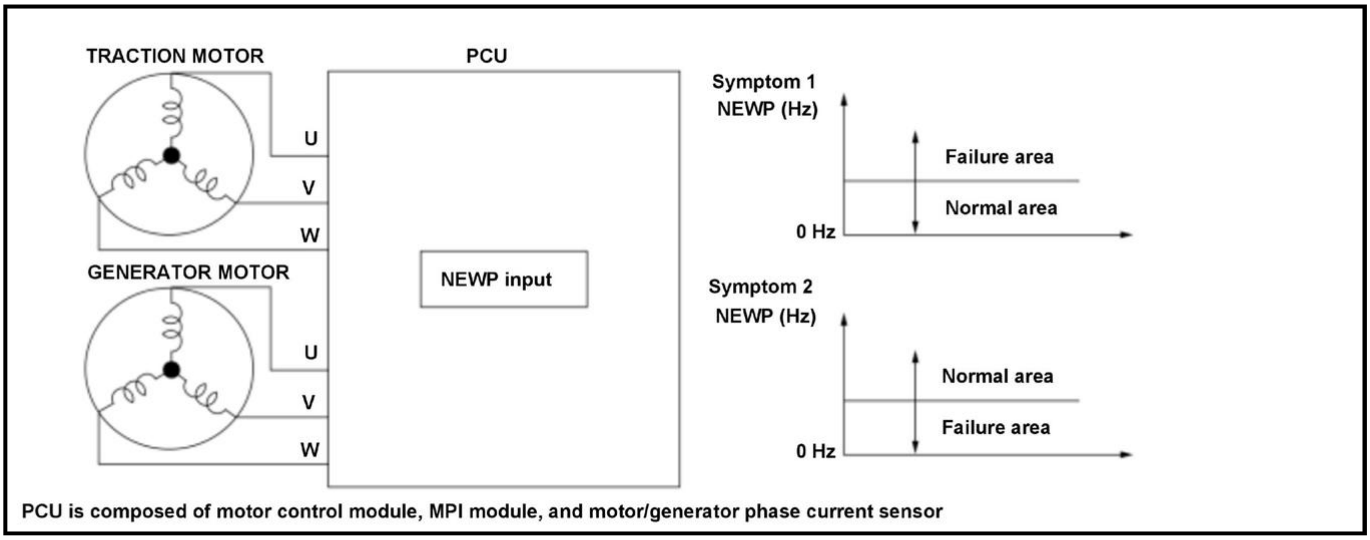

PCU is composed of motor control module, MPI module, and motor/generator phase current sensor

The power control unit (PCU) controls the PCU electric coolant pump according to the rotational speed of the PCU electric coolant pump calculated from the frequency (duty fixed to 50 %) detected from the NEWP terminal. If either of the following conditions occurs, the motor control module in the PCU detects a malfunction and stores a DTC.

Symptom 1

If the NEWP output equivalent to "85 % duty" output when the EWP detects an open / short to power of the EWP wire or a trouble with EWP input duty waveform (continuous Hi signal) is out of a specified value for a specified time, the motor control module in the PCU detects a malfunction and stores a DTC.

Symptom 2

If the NEWP output which is output when a short circuit of the EWP wire or a trouble with EWP input duty waveform (abnormal interval) is out of a specified value for a specified time, the motor control module in the PCU detects a malfunction and stores a DTC.

Monitor Execution, Sequence, Duration, DTC Type

Execution	Continuous
Sequence	None
Duration	6.5 seconds or more*10 seconds or more**
DTC Type	Two drive cycles, MIL on, POWER SYSTEM indicator on

*: Symptom 1

**: Symptom 2

Enable Conditions

Symptom 1

Condition	Minimum	Maximum
PCU electric coolant pump	2 seconds	-

Condition	Minimum	Maximum
output duty change instructions		
12 volt battery voltage	10 V	-
PCU electric coolant pump output duty	-	42.6 %

Symptom 2

Condition	Minimum	Maximum
PCU electric coolant pump output duty change instructions	2 seconds	-

Condition	Minimum	Maximum
12 volt battery voltage	10 V	18.6 V
PCU electric coolant pump output duty	35 %	-

Malfunction Threshold

One of these symptoms occurs:

Symptom 1

- The PCU electric coolant pump output value is more than 77.8 Hz for at least 6.5 seconds.

Symptom 2

- The PCU electric coolant pump output value is less than 8 Hz for at least 10 seconds.

Possible Cause

NOTE: The causes shown may not be a complete list of all potential problems, and it is possible that there may be other causes.

- PCU electric coolant pump failure
- PCU internal failure

Confirmation Procedure

Operating Condition

Turn the vehicle to the ON mode.

With the HDS

- Turn the vehicle to the ON mode.
- Select the ELECTRIC WATER PUMP TEST in the Electric Powertrain FUNCTION TEST with the HDS, then select START.
- Wait 10 seconds.
- Select the ELECTRIC WATER PUMP TEST in the Electric Powertrain FUNCTION TEST with the HDS, then select STOP.

Diagnosis Details

Conditions for setting the DTC

When a malfunction is detected during the first drive cycle, a Pending DTC is stored in the motor control module memory. If the malfunction returns in the next (second) drive cycle, the MIL comes on and a Confirmed DTC and the freeze data are stored.

Conditions for clearing the DTC

The MIL is cleared if the malfunction does not return in three consecutive trips in which the diagnostic runs. The MIL, the Pending DTC, the Confirmed DTC, and the freeze data can be cleared with the scan tool Clear command.

DTC P1D93

DTC P1D93: PCU Coolant Over Temperature

General Description

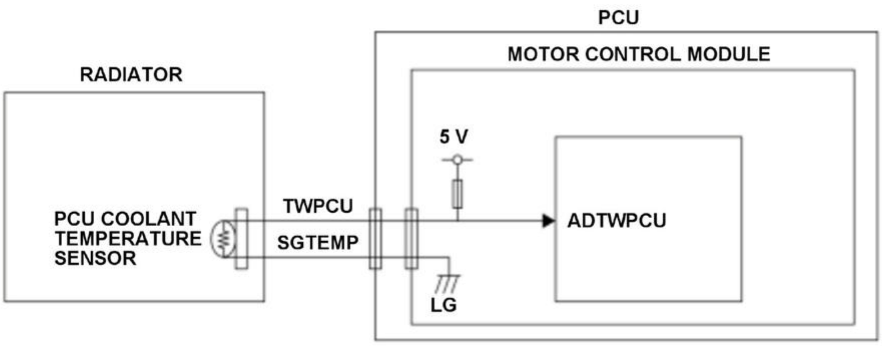

PCU is composed of motor control module, MPI module, and motor/generator phase current sensor

To control the temperature of power control unit (PCU) coolant, while monitoring the coolant temperature and the temperature of each part, the PCU drives the PCU electric coolant pump and sends a drive request to the radiator fan control (RFC) unit. If the coolant temperature is extraordinarily high although the PCU provides the PCU electric coolant pump and RFC unit with an adequate command, the PCU detects a malfunction and stores a DTC.

Monitor Execution, Sequence, Duration, DTC Type

Execution	Continuous
Sequence	None
Duration	3 seconds or more
DTC Type	Two drive cycles, MIL off, POWER SYSTEM indicator on

Enable Conditions

Condition	Minimum	Maximum
PCU electric coolant pump speed[Electric Water Pump Speed (TRC)]	1, 100 rpm	-

[ ]: HDS Parameter

Malfunction Threshold

When the coolant temperature is 180 deg.F (82 deg.C) or more continuously for 3 seconds or more while the RFC unit operation request is High.

Possible Cause

NOTE: The causes shown may not be a complete list of all potential problems, and it is possible that there may be other causes.

- Water pipe leak
- Water pipe clogged
- RFC unit failure
- PCU coolant temperature sensor failure
- PCU electric coolant pump failure
- PCU internal failure

Diagnosis Details

Conditions for setting the DTC

When a malfunction is detected during the first drive cycle, a Pending DTC is stored in the motor control module memory. If the malfunction returns in the next (second) drive cycle, the POWER SYSTEM indicator comes on and a Confirmed DTC and the freeze data are stored. The MIL does not come on.

Conditions for clearing the DTC

The POWER SYSTEM indicator is cleared if the malfunction does not return in the next trip in which the diagnostic runs. The POWER SYSTEM indicator, the Pending DTC, the Confirmed DTC, and the freeze data can be cleared with the scan tool Clear command.

DTC P1D97

DTC P1D97: Generator Motor Phase Current Sensors Multiple Failure

General Description

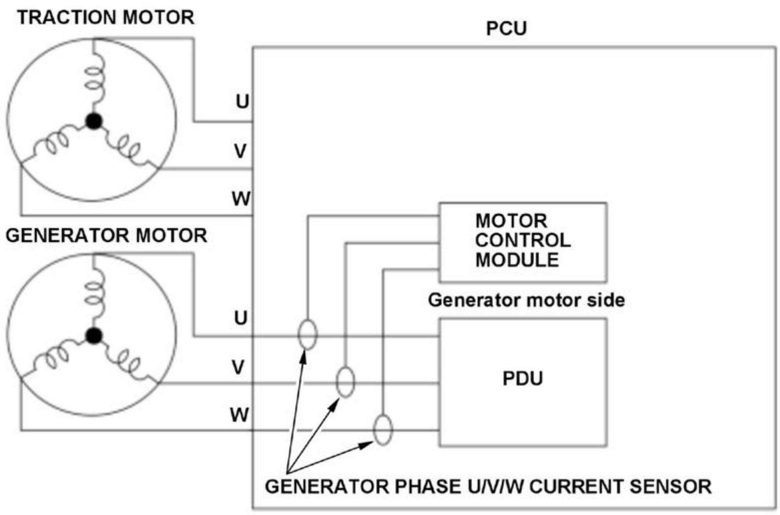

PCU is composed of motor control module, MPI module, and motor/generator phase current sensor

The power control unit (PCU) controls the generator motor output based on the generator phase current sensor signals. If a failure in the current sensor or sensor power supply is detected in two phases or more, it is determined more than one failure occurs and the PCU detects a malfunction and stores a DTC.

Monitor Execution, Sequence, Duration, DTC Type

Execution	Continuous
Sequence	None
Duration	200 milliseconds or more
DTC Type	One drive cycle, MIL on, POWER SYSTEM indicator on

Enable Conditions

Condition	Minimum	Maximum
12 volt battery voltage	8 V	-

Malfunction Threshold

If a failure in the following current sensor is detected in two phases or more or in three-phase sum failure +1 phase or more.

- The motor control module detects a U phase malfunction.
- The motor control module detects a V phase malfunction.
- The motor control module detects a W phase malfunction.
- The motor control module detects a U, V and W phases malfunction.

Possible Cause

NOTE: The causes shown may not be a complete list of all potential problems, and it is possible that there may be other causes.

- PCU internal failure

Diagnosis Details

Conditions for setting the DTC

When a malfunction is detected, the MIL comes on and a Pending DTC, a Confirmed DTC, and the freeze data are stored in the motor control module memory.

Conditions for clearing the DTC

The MIL is cleared if the malfunction does not return in three consecutive trips in which the diagnostic runs. The MIL, the Pending DTC, the Confirmed DTC, and the freeze data can be cleared with the scan tool Clear command.

DTC P1D99

DTC P1D99: PCU Electric Coolant Pump

General Description

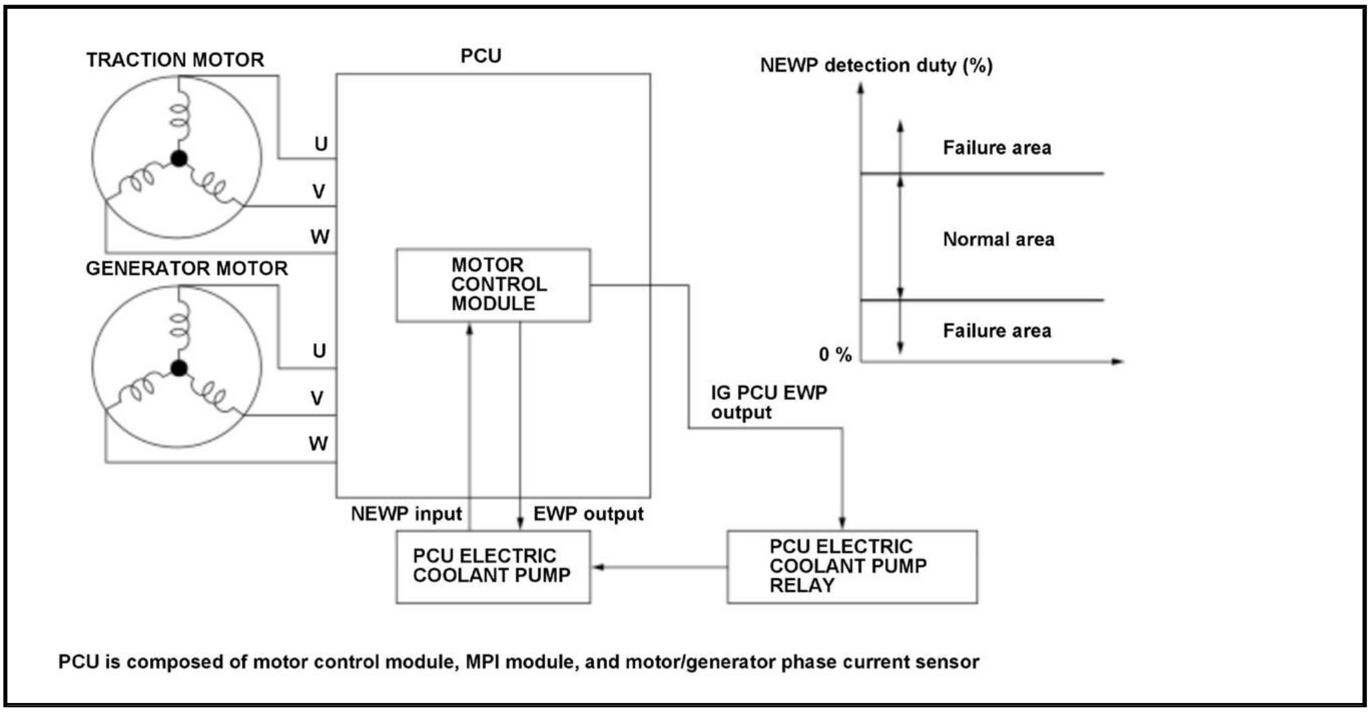
TRACTION MOTOR
PCU
NEWP detection duty (%)
U
V
W
Failure area
Normal area
Failure area
0 %
GENERATOR MOTOR
MOTOR CONTROL MODULE
U
V
W
IG PCU EWP output
NEWP input
EWP output
PCU ELECTRIC COOLANT PUMP
PCU ELECTRIC COOLANT PUMP RELAY
PCU is composed of motor control module, MPI module, and motor/generator phase current sensor

The power control unit (PCU) controls the PCU electric coolant pump according to the rotational speed of the PCU electric coolant pump calculated from the frequency (duty fixed to 50 %) detected from the NEWP terminal. If the detection duty of the NEWP terminal (NEWPDUTY) is out of a specified value for a specified time, the motor control module in the PCU detects a malfunction and stores a DTC.

Monitor Execution, Sequence, Duration, DTC Type

Execution	Continuous
Sequence	None
Duration	5.0 seconds or more
DTC Type	Two drive cycles, MIL on, POWER SYSTEM indicator on

Enable Conditions

Condition	Minimum	Maximum
12 volt battery voltage	10 V	-
Vehicle	ON mode	

Malfunction Threshold

If the detection duty of the NEWP terminal is 100 % or more or 0 % for at least 5.0 seconds.

Possible Cause

NOTE: The causes shown may not be a complete list of all potential problems, and it is possible that there may be other causes.

- PCU electric coolant pump NEWP line open
- PCU electric coolant pump NEWP line short to ground
- PCU electric coolant pump relay IG PCU EWP line open
- PCU electric coolant pump relay failure
- PCU electric coolant pump failure
- PCU internal failure

Confirmation Procedure

Operating Condition

Turn the vehicle to the ON mode.

With the HDS

Select the ELECTRIC WATER PUMP TEST in the Electric Powertrain FUNCTION TEST with the HDS. Then do the START.

Diagnosis Details

Conditions for setting the DTC

When a malfunction is detected during the first drive cycle, a Pending DTC is stored in the motor control module memory. If the malfunction returns in the next (second) drive cycle, the MIL comes on and a Confirmed DTC and the freeze data are stored.

Conditions for clearing the DTC

The MIL is cleared if the malfunction does not return in three consecutive trips in which the diagnostic runs. The MIL, the Pending DTC, the Confirmed DTC, and the freeze data can be cleared with the scan tool Clear command.

DTC P1D9A

DTC P1D9A: PCU Electric Coolant Pump Circuit

General Description

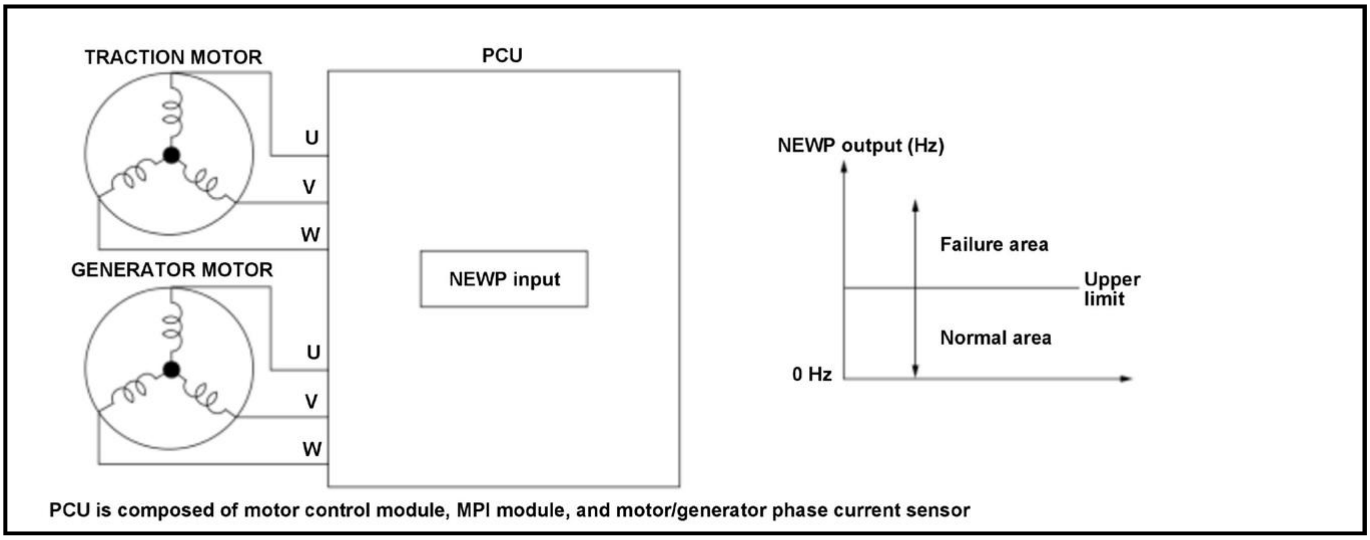
TRACTION MOTOR
PCU
U
V
W
GENERATOR MOTOR
U
V
W
NEWP input
NEWP output (Hz)
Failure area
Upper limit
Normal area
0 Hz
PCU is composed of motor control module, MPI module, and motor/generator phase current sensor

The power control unit (PCU) controls the PCU electric coolant pump according to the rotational speed of the PCU electric coolant pump calculated from the frequency (duty fixed to 50 %) detected from the NEWP terminal. If, when a trouble with EWP input duty signal, leak of coolant, or another event leads to unexpected small load and then over rotation, the NEWP output of "intermittent operation" output by the EWP out of a specified value for a specified time, the motor control module in the PCU detects a malfunction and stores a DTC.

Monitor Execution, Sequence, Duration, DTC Type

Execution	Continuous
Sequence	None
Duration	1.5 seconds or more
DTC Type	Two drive cycles, MIL on, POWER SYSTEM indicator on

Enable Conditions

Condition	Minimum	Maximum
PCU electric coolant pump output duty change instructions	2 seconds	-
12 volt battery voltage	10 V	-
PCU electric coolant pump output duty	35 %	-

Malfunction Threshold

The NEWP output value is more than 164.8 Hz for at least 1.5 seconds.

Possible Cause

NOTE: The causes shown may not be a complete list of all potential problems, and it is possible that there may be other causes.

- Water pipe leak
- Water pipe clogged
- PCU electric coolant pump failure
- PCU internal failure

Confirmation Procedure

Operating Condition

Turn the vehicle to the ON mode.

With the HDS

Select the ELECTRIC WATER PUMP TEST in the Electric Powertrain FUNCTION TEST with the HDS. Then do the START.

Diagnosis Details

Conditions for setting the DTC

When a malfunction is detected during the first drive cycle, a Pending DTC is stored in the motor control module memory. If the malfunction returns in the next (second) drive cycle, the MIL comes on and a Confirmed DTC and the freeze data are stored.

Conditions for clearing the DTC

The MIL is cleared if the malfunction does not return in three consecutive trips in which the diagnostic runs. The MIL, the Pending DTC, the Confirmed DTC, and the freeze data can be cleared with the scan tool Clear command.

DTC P1D9D

DTC P1D9D: VCU Temperature Sensor Circuit Range/Performance

General Description

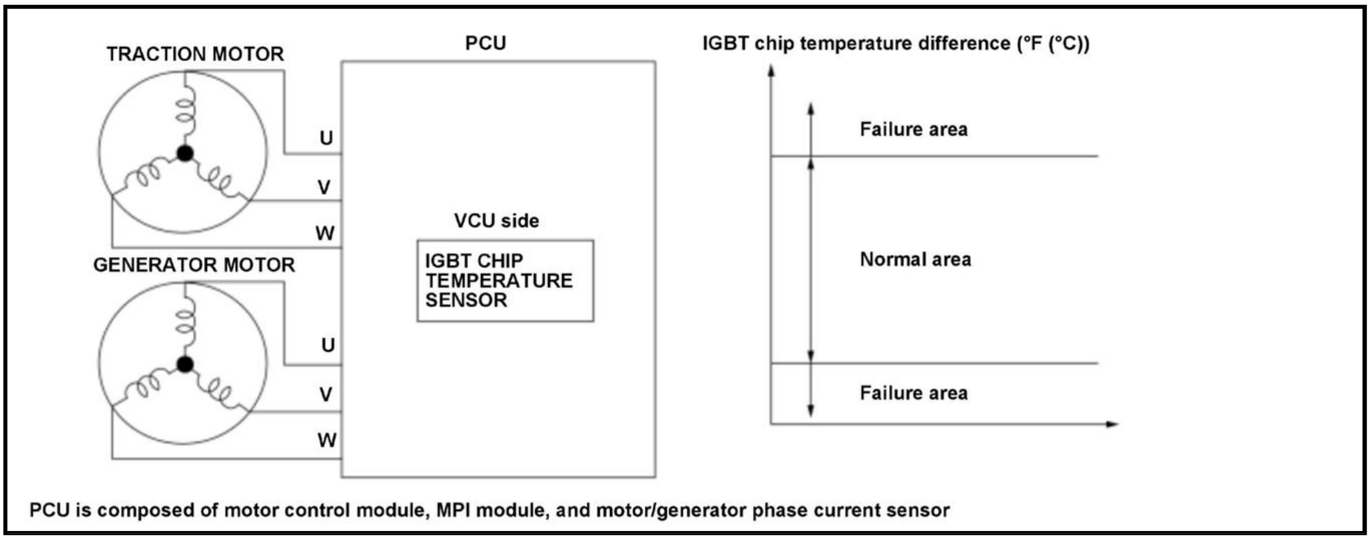
TRACTION MOTOR
PCU
IGBT chip temperature difference (°F (°C))
U
V
W
Failure area
VCU side
GENERATOR MOTOR
IGBT CHIP TEMPERATURE SENSOR
Normal area
U
V
W
Failure area
PCU is composed of motor control module, MPI module, and motor/generator phase current sensor

The power control unit (PCU) monitors the IGBT chip temperature sensor value to prevent malfunction of the chip due to heat generation. The PCU calculates the difference in output temperature between the parallel phases of the IGBT chip temperature sensor at the voltage control unit (VCU) side. If the difference is out of a specified value for a specified time, the motor control module in the PCU detects a malfunction and stores a DTC.

Monitor Execution, Sequence, Duration, DTC Type

Execution	Continuous
Sequence	None
Duration	10 seconds or more
DTC Type	One drive cycle, MIL on, POWER SYSTEM indicator on

Enable Conditions

Condition	Minimum	Maximum
High voltage side power supply voltage (6 V)	5 V	-

Malfunction Threshold

If the difference in output temperature between the parallel phases of the IGBT chip temperature sensor at the VCU side more than 90 deg.F (50 deg.C) or less than -90 deg.F (-50 deg.C) for at least 10 seconds.

Possible Cause

NOTE: The causes shown may not be a complete list of all potential problems, and it is possible that there may be other causes.

- PCU internal failure

Diagnosis Details

Conditions for setting the DTC

When a malfunction is detected, the MIL comes on and a Pending DTC, a Confirmed DTC, and the freeze data are stored in the motor control module memory.

Conditions for clearing the DTC

The MIL is cleared if the malfunction does not return in three consecutive trips in which the diagnostic runs. The MIL, the Pending DTC, the Confirmed DTC, and the freeze data can be cleared with the scan tool Clear

command.

DTC P1DA0

DTC P1DA0: VCU Inverter Temperature Sensor Circuit Low

General Description

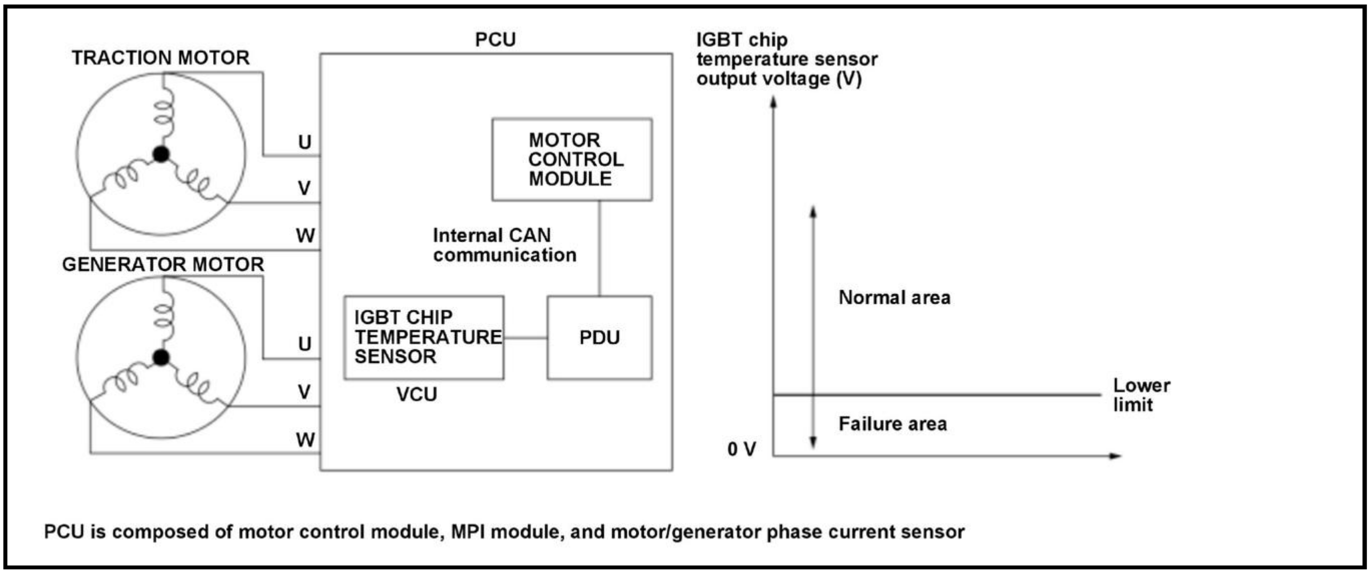
TRACTION MOTOR
PCU
IGBT chip temperature sensor output voltage (V)
U
V
W
MOTOR CONTROL MODULE
Internal CAN communication
GENERATOR MOTOR
IGBT CHIP TEMPERATURE SENSOR
PDU
VCU
U
V
W
Normal area
Lower limit
Failure area
0 V
PCU is composed of motor control module, MPI module, and motor/generator phase current sensor

The power control unit (PCU) monitors the IGBT chip temperature sensor value to prevent malfunction of the chip due to heat generation. If the IGBT chip temperature sensor output voltage is a specified voltage for a specified time, the motor control module in the PCU detects a malfunction and stores a DTC.

Monitor Execution, Sequence, Duration, DTC Type

Execution	Continuous
Sequence	None
Duration	90 milliseconds or more
DTC Type	One drive cycle, MIL on, POWER SYSTEM indicator on

Enable Conditions

Condition	Minimum	Maximum
12 volt battery voltage	8 V	-

Malfunction Threshold

The IGBT chip temperature sensor output voltage is less than 1.46 V for at least 90 milliseconds.

Possible Cause

NOTE: The causes shown may not be a complete list of all potential problems, and it is possible that there may be other causes.

- PCU internal failure

Diagnosis Details

Conditions for setting the DTC

When a malfunction is detected, the MIL comes on and a Pending DTC, a Confirmed DTC, and the freeze data are stored in the motor control module memory.

Conditions for clearing the DTC

The MIL is cleared if the malfunction does not return in three consecutive trips in which the diagnostic runs. The MIL, the Pending DTC, the Confirmed DTC, and the freeze data can be cleared with the scan tool Clear command.

DTC P1DA1

DTC P1DA1: VCU Inverter Temperature Sensor Circuit High

General Description

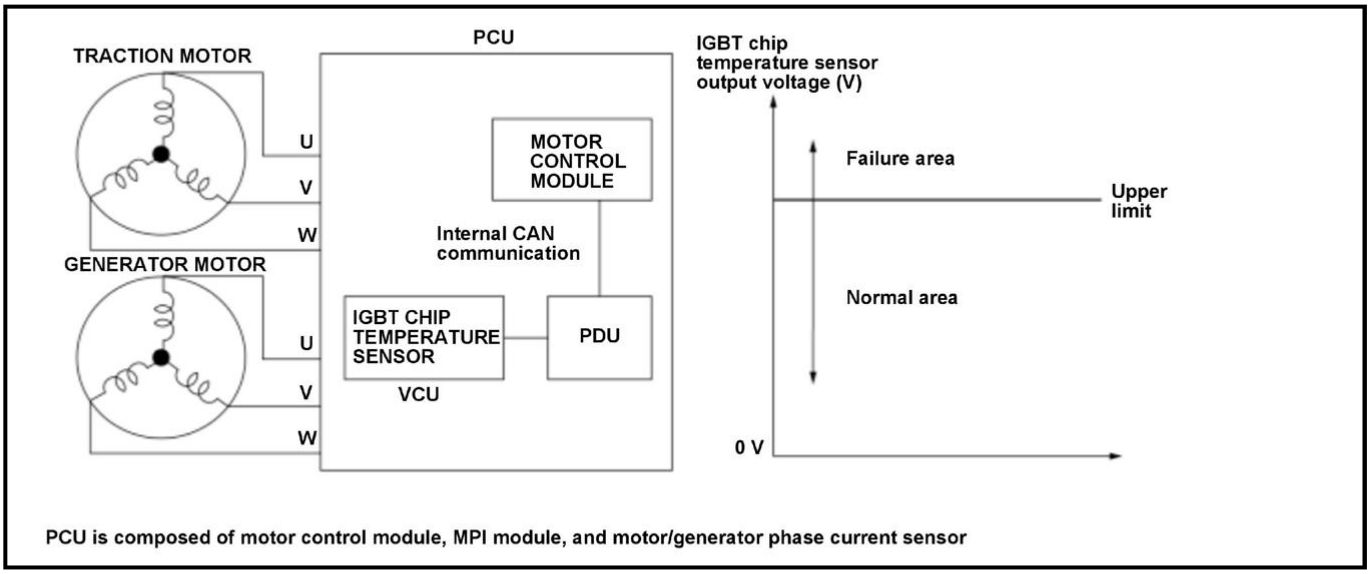

PCU
TRACTION MOTOR
U
V
W
GENERATOR MOTOR
U
V
W
MOTOR CONTROL MODULE
Internal CAN communication
IGBT CHIP TEMPERATURE SENSOR
VCU
PDU
IGBT chip temperature sensor output voltage (V)
Failure area
Upper limit
Normal area
0 V
PCU is composed of motor control module, MPI module, and motor/generator phase current sensor

The power control unit (PCU) monitors the IGBT chip temperature sensor value to prevent malfunction of the chip due to heat generation. If the IGBT chip temperature sensor output voltage is a specified voltage for a specified time, the motor control module in the PCU detects a malfunction and stores a DTC.

Monitor Execution, Sequence, Duration, DTC Type

Execution	Continuous
Sequence	None
Duration	90 milliseconds or more
DTC Type	One drive cycle, MIL on, POWER SYSTEM indicator on

Enable Conditions

Condition	Minimum	Maximum
12 volt battery voltage	8 V	-

Malfunction Threshold

The IGBT chip temperature sensor output voltage is more than 4.8 V for at least 90 milliseconds.

Possible Cause

NOTE: The causes shown may not be a complete list of all potential problems, and it is possible that there may be other causes.

- PCU internal failure

Diagnosis Details

Conditions for setting the DTC

When a malfunction is detected, the MIL comes on and a Pending DTC, a Confirmed DTC, and the freeze data are stored in the motor control module memory.

Conditions for clearing the DTC

The MIL is cleared if the malfunction does not return in three consecutive trips in which the diagnostic runs. The MIL, the Pending DTC, the Confirmed DTC, and the freeze data can be cleared with the scan tool Clear command.

DTC P1DA4

DTC P1DA4: VCU Inverter Short

General Description

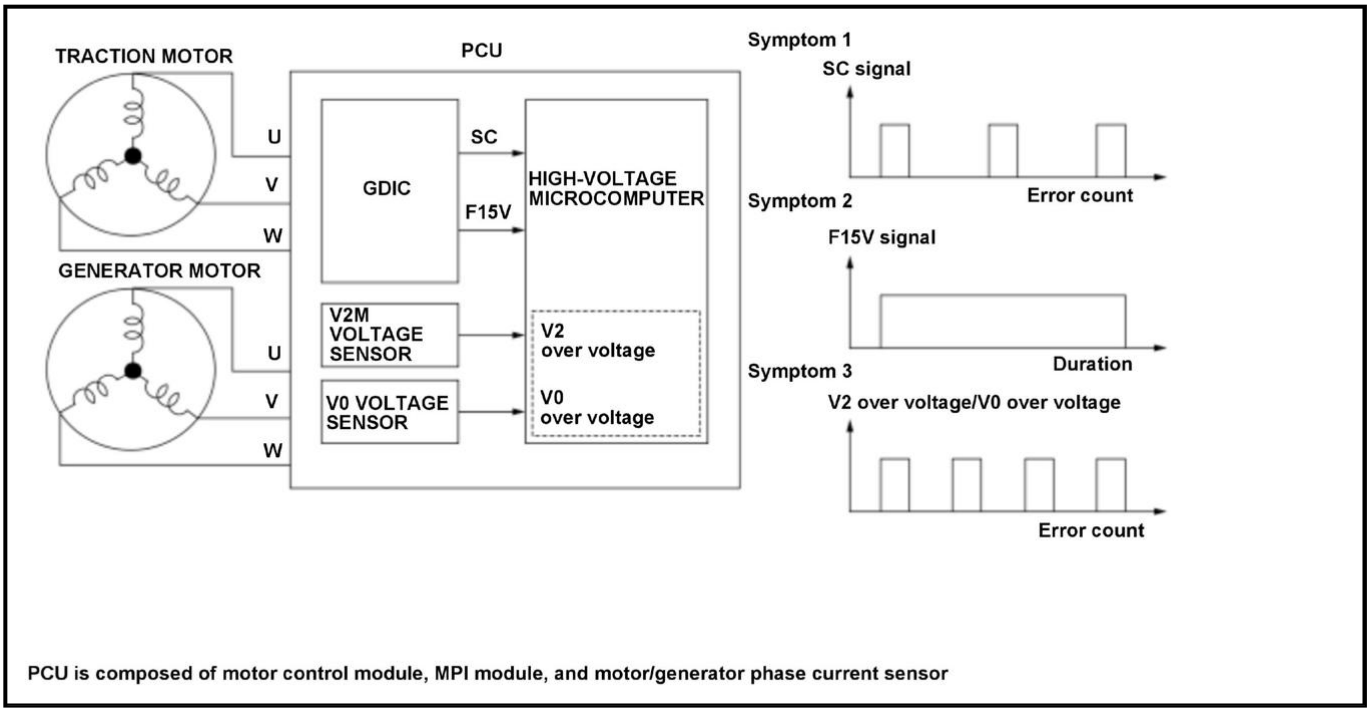
TRACTION MOTOR
PCU
Symptom 1
SC signal
U
SC
V
GDIC
HIGH-VOLTAGE MICROCOMPUTER
F15V
Error count
Symptom 2
W
F15V signal
GENERATOR MOTOR
V2M VOLTAGE SENSOR
V2 over voltage
U
V0 VOLTAGE SENSOR
V0 over voltage
V
W
Duration
Symptom 3
V2 over voltage/V0 over voltage
Error count

PCU is composed of motor control module, MPI module, and motor/generator phase current sensor

Symptom 1

When an overcurrent (short circuit current) passes through the IGBT at the voltage control unit (VCU) side, the power control unit (PCU) detects a trouble (SC) with the GDIC function and, at the same time when outputting a failure information (SC) to the high-voltage microcomputer, blocks a gate signal. The failure information (SC) from the GDIC is released after a specified time has elapsed if the failure is restored to normal. If a specified number of SC signals are issued, the motor control module in the PCU detects a malfunction and stores a DTC.

Symptom 2

When a trouble with the power supply which drives the IGBT at the VCU side occurs, the PCU detects a trouble (F15V) with the GDIC function and, at the same time when outputting a failure information (F15V) to the high-voltage microcomputer, blocks a gate signal. If an F15V signal detects a trouble for the specified time, the motor control module in the PCU detects a malfunction and stores a DTC.

Symptom 3

If the high-side IGBT of the VCU fails (is turned off), a V2 overvoltage or V0 overvoltage occurs at regeneration operation. If a V2 overvoltage or V0 overvoltage occurs in specified times, the motor control module in the PCU detects a malfunction and stores a DTC.

Monitor Execution, Sequence, Duration, DTC Type

Execution	Continuous
Sequence	None
Duration	180 milliseconds or more*120 milliseconds or more**870 milliseconds or more***
DTC Type	One drive cycle, MIL on, POWER SYSTEM indicator on

*: Symptom 1

**: Symptom 2

***: Symptom 3

Enable Conditions

Condition	Minimum	Maximum
12 volt battery voltage**	8 V	-

Condition	Minimum	Maximum
High voltage side power supply voltage (6 V)	5 V	-

Malfunction Threshold

One of these symptoms occurs:

Symptom 1

- If an SC detection arising from IGBT overcurrent (short circuit current) occurs three times consecutively.

Symptom 2

- If an F15V detection arising from a trouble with the power supply which drives the IGBT occurs continuously for at least 120 milliseconds.

Symptom 3

- If a V2 overvoltage or V0 overvoltage occurs four times consecutively while the VCU operates.

Possible Cause

NOTE: The causes shown may not be a complete list of all potential problems, and it is possible that there may be other causes.

- PCU internal failure

Diagnosis Details

Conditions for setting the DTC

When a malfunction is detected, the MIL comes on and a Pending DTC, a Confirmed DTC, and the freeze data are stored in the motor control module memory.

Conditions for clearing the DTC

The MIL is cleared if the malfunction does not return in three consecutive trips in which the diagnostic runs. The MIL, the Pending DTC, the Confirmed DTC, and the freeze data can be cleared with the scan tool Clear command.

DTC P1DA6

DTC P1DA6: VCU V1 Voltage Sensor Circuit Range/Performance

General Description

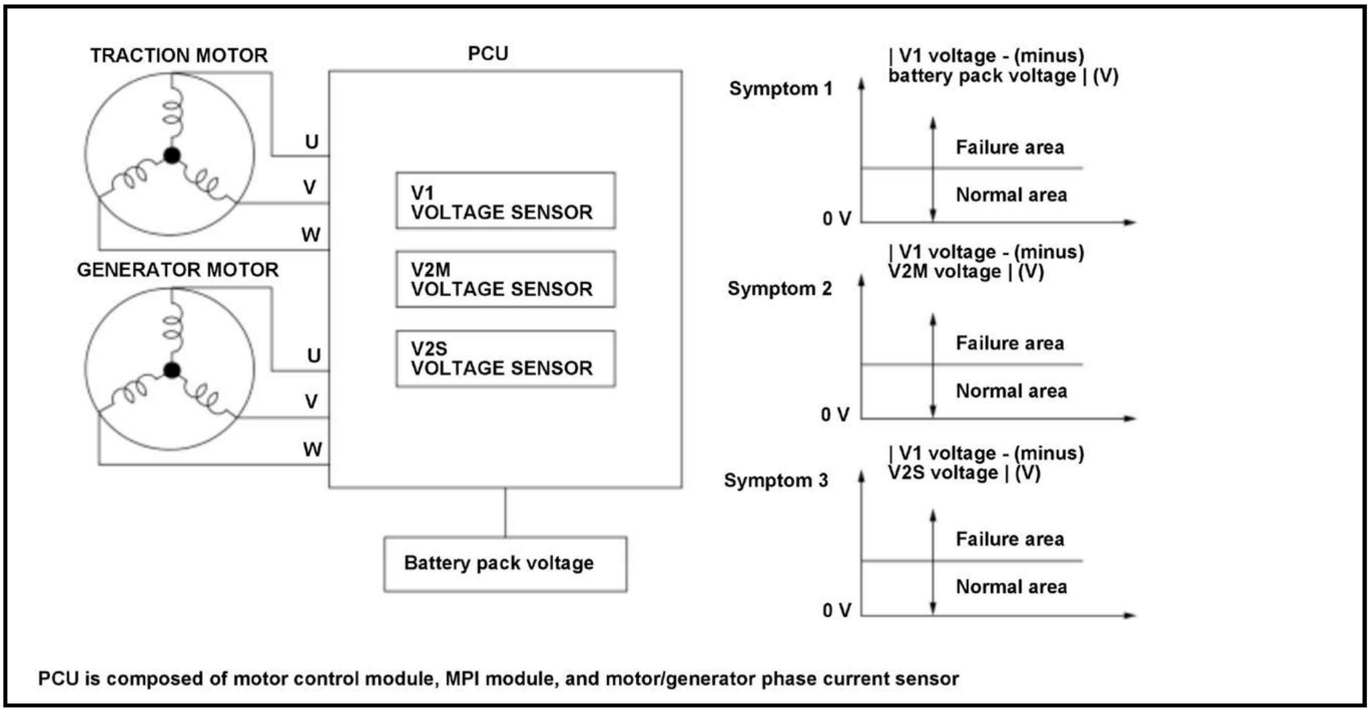
TRACTION MOTOR
PCU
U
V
W
V1 VOLTAGE SENSOR
GENERATOR MOTOR
V2M VOLTAGE SENSOR
V2S VOLTAGE SENSOR
U
V
W
Battery pack voltage
Symptom 1
| V1 voltage - (minus) battery pack voltage | (V)
Failure area
Normal area
0 V
Symptom 2
| V1 voltage - (minus) V2M voltage | (V)
Failure area
Normal area
0 V
Symptom 3
| V1 voltage - (minus) V2S voltage | (V)
Failure area
Normal area
0 V
PCU is composed of motor control module, MPI module, and motor/generator phase current sensor

The power control unit (PCU) controls the voltage control unit (VCU) output based on the V1 voltage sensor signals. If a calculated output voltage of the V1 voltage sensor (V V1 S) is out of a specified value for a specified time, the motor control module in the PCU detects a malfunction and stores a DTC.

Monitor Execution, Sequence, Duration, DTC Type

Execution	Gate drive circuit is ON condition
Sequence	None
Duration	1.0 second or more
DTC Type	One drive cycle, MIL on, POWER SYSTEM indicator on

Enable Conditions

Condition	Minimum	Maximum
12 volt battery voltage	8 V	-
High voltage side power supply voltage (6 V)	5 V	-
VCU control mode	Direct connection	

Malfunction Threshold

If both Symptom 1 and (Symptom 2 or Symptom 3) continue for at least 1.0 second.

Symptom 1

- The difference between the V1 voltage sensor detection value and the battery pack voltage is 30 V or more.

Symptom 2

- The difference between the V1 voltage sensor detection value and the V2M voltage sensor detection value is 30 V or more.

Symptom 3

- The difference between the V1 voltage sensor detection value and the V2S voltage sensor detection value is 40 V or more.

Possible Cause

NOTE: The causes shown may not be a complete list of all potential problems, and it is possible that there may be other causes.

- PCU internal failure

Diagnosis Details

Conditions for setting the DTC

When a malfunction is detected, the MIL comes on and a Pending DTC, a Confirmed DTC, and the freeze data are stored in the motor control module memory.

Conditions for clearing the DTC

The MIL is cleared if the malfunction does not return in three consecutive trips in which the diagnostic runs. The MIL, the Pending DTC, the Confirmed DTC, and the freeze data can be cleared with the scan tool Clear command.

DTC P1DA8

DTC P1DA8: VCU V2M Voltage Sensor Circuit Range/Performance

General Description

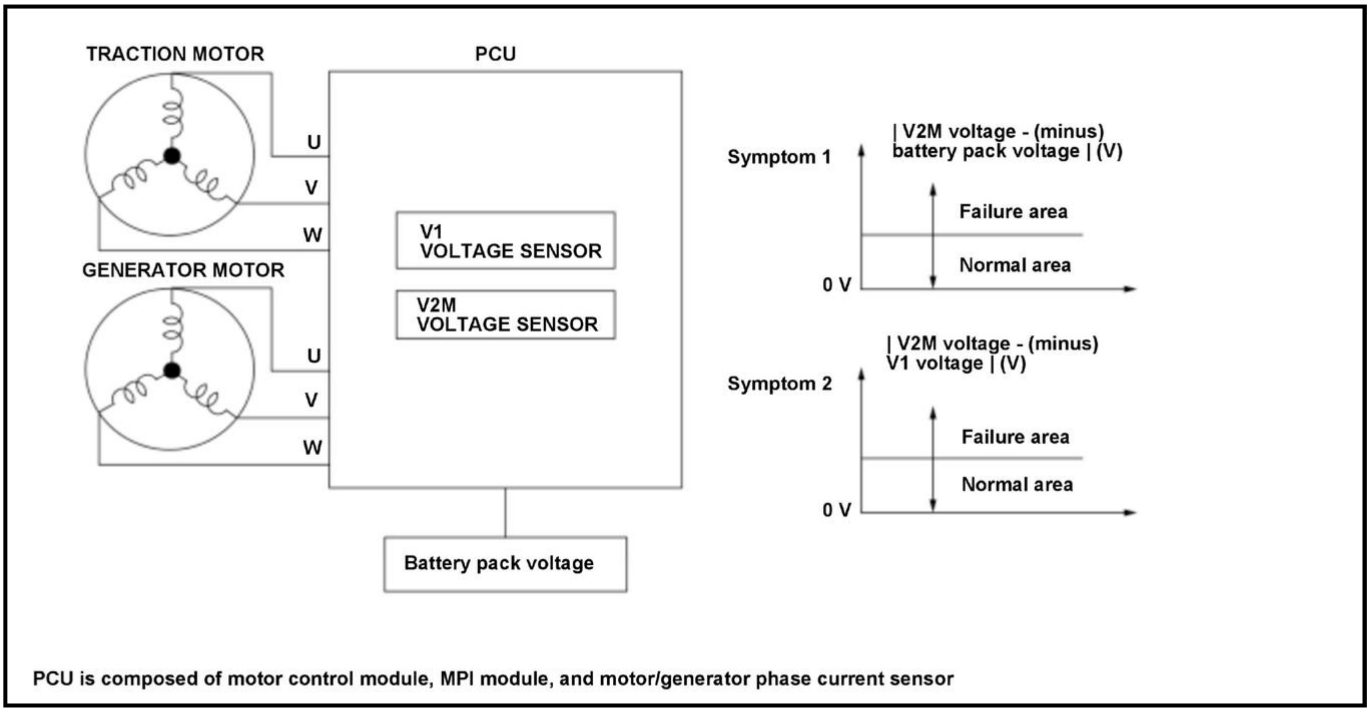
TRACTION MOTOR
PCU
U
V
W
GENERATOR MOTOR
U
V
W
V1
VOLTAGE SENSOR
V2M
VOLTAGE SENSOR
Battery pack voltage
Symptom 1
| V2M voltage - (minus) battery pack voltage | (V)
Failure area
Normal area
0 V
Symptom 2
| V2M voltage - (minus) V1 voltage | (V)
Failure area
Normal area
0 V

PCU is composed of motor control module, MPI module, and motor/generator phase current sensor

The power control unit (PCU) controls the voltage control unit (VCU) output based on the V2M voltage sensor signals. If a calculated output voltage of the V2M voltage sensor (V V2MOS) is out of a specified value for a specified time, the motor control module in the PCU detects a malfunction and stores a DTC.

Monitor Execution, Sequence, Duration, DTC Type

Execution	Gate drive circuit is ON condition
Sequence	None
Duration	1.0 second or more
DTC Type	One drive cycle, MIL on, POWER SYSTEM indicator on

Enable Conditions

Condition	Minimum	Maximum
12 volt battery voltage	8 V	-
High voltage side power supply voltage (6 V)	5 V	-
VCU control mode	Direct connection	

Malfunction Threshold

If both Symptom 1 and Symptom 2 continue for at least 1.0 second.

Symptom 1

- The difference between the V2M voltage sensor detection value and the battery pack voltage is 30 V or more.

Symptom 2

- The difference between the V2M voltage sensor detection value and the V1 voltage sensor detection value is 30 V or more.

Possible Cause

NOTE: The causes shown may not be a complete list of all potential problems, and it is possible that there may be other causes.

- PCU internal failure

Diagnosis Details

Conditions for setting the DTC

When a malfunction is detected, the MIL comes on and a Pending DTC, a Confirmed DTC, and the freeze data are stored in the motor control module memory.

Conditions for clearing the DTC

The MIL is cleared if the malfunction does not return in three consecutive trips in which the diagnostic runs. The MIL, the Pending DTC, the Confirmed DTC, and the freeze data can be cleared with the scan tool Clear command.

DTC P1DAA

DTC P1DAA: VCU V2S Voltage Sensor Circuit Range/Performance

General Description

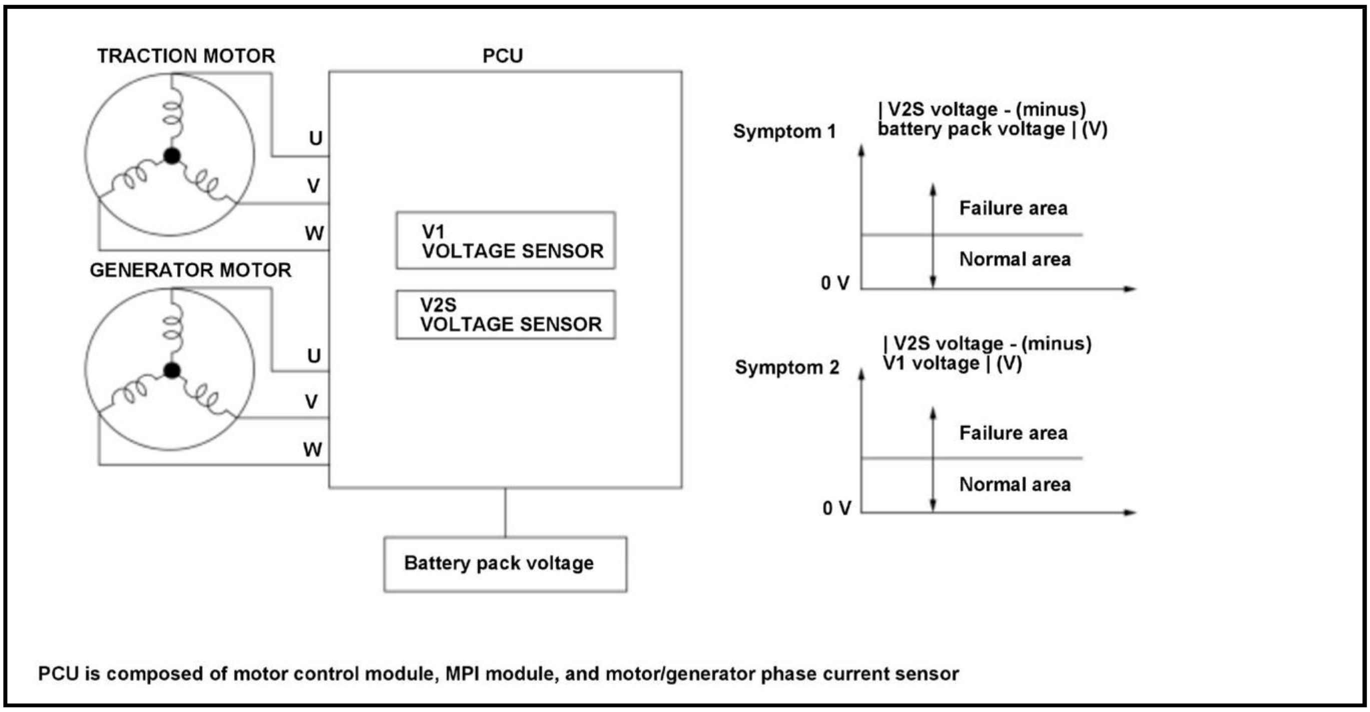
TRACTION MOTOR
PCU
U
V
W
GENERATOR MOTOR
U
V
W
V1 VOLTAGE SENSOR
V2S VOLTAGE SENSOR
Battery pack voltage
Symptom 1
| V2S voltage - (minus) battery pack voltage | (V)
Failure area
Normal area
0 V
Symptom 2
| V2S voltage - (minus) V1 voltage | (V)
Failure area
Normal area
0 V
PCU is composed of motor control module, MPI module, and motor/generator phase current sensor

The power control unit (PCU) controls the traction motor and generator motor output based on the V2S voltage sensor signals. If a calculated output voltage of the V2S voltage sensor (V V2SOS) is out of a specified value for a specified time, the motor control module in the PCU detects a malfunction and stores a DTC.

Monitor Execution, Sequence, Duration, DTC Type

Execution	Gate drive circuit is ON condition
Sequence	None
Duration	1.0 second or more
DTC Type	One drive cycle, MIL on, POWER SYSTEM indicator on

Enable Conditions

Condition	Minimum	Maximum
12 volt battery voltage	8 V	-
High voltage side power supply voltage (6 V)	5 V	-
VCU control mode	Direct connection	

Malfunction Threshold

If both Symptom 1 and Symptom 2 continue for at least 1.0 second.

Symptom 1

- The difference between the V2S voltage sensor detection value and the battery pack voltage is 40 V or more.

Symptom 2

- The difference between the V2S voltage sensor detection value and the V1 voltage sensor detection value is 50 V or more.

Possible Cause

NOTE: The causes shown may not be a complete list of all potential problems, and it is possible that there may be other causes.

- PCU internal failure

Diagnosis Details

Conditions for setting the DTC

When a malfunction is detected, the MIL comes on and a Pending DTC, a Confirmed DTC, and the freeze data are stored in the motor control module memory.

Conditions for clearing the DTC

The MIL is cleared if the malfunction does not return in three consecutive trips in which the diagnostic runs. The MIL, the Pending DTC, the Confirmed DTC, and the freeze data can be cleared with the scan tool Clear command.

DTC P1DD8

DTC P1DD8: VCU Inverter Temperature Sensor Circuit

General Description

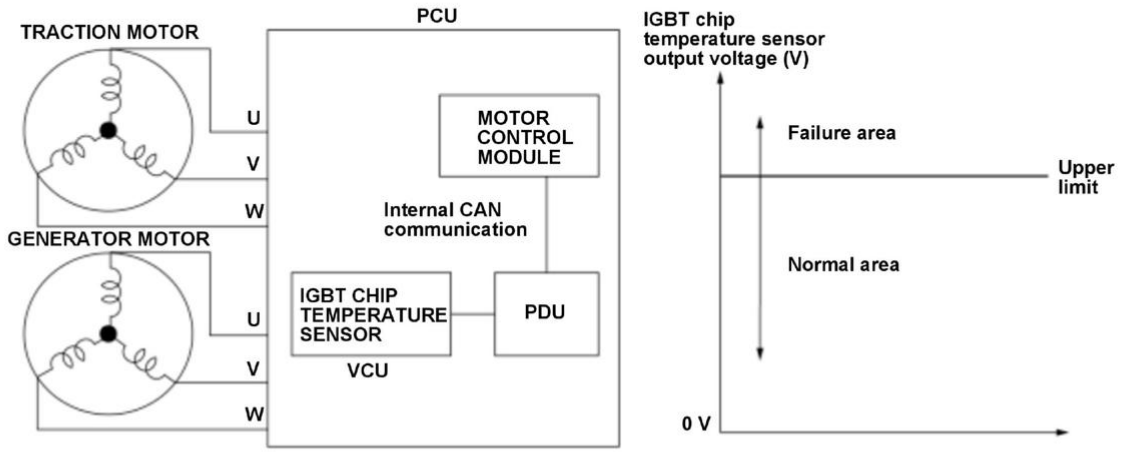
TRACTION MOTOR
PCU
U
V
W
MOTOR CONTROL MODULE
Internal CAN communication
GENERATOR MOTOR
IGBT CHIP TEMPERATURE SENSOR
PDU
U
V
W
VCU
IGBT chip temperature sensor output voltage (V)
Failure area
Upper limit
Normal area
0 V

PCU is composed of motor control module, MPI module, and motor/generator phase current sensor

The power control unit (PCU) monitors the IGBT chip temperature sensor value to prevent malfunction of the chip due to heat generation. If the IGBT chip temperature sensor output voltage is a specified voltage for a specified time, the motor control module in the PCU detects a malfunction and stores a DTC.

Monitor Execution, Sequence, Duration, DTC Type

Execution	Continuous
Sequence	None
Duration	2.0 seconds or more
DTC Type	Two drive cycles, MIL on, POWER SYSTEM indicator on

Enable Conditions

Condition	Minimum	Maximum
12 volt battery voltage	8 V	-

Malfunction Threshold

The IGBT chip temperature sensor output voltage is more than 3.57 V for at least 2.0 seconds.

Possible Cause

NOTE: The causes shown may not be a complete list of all potential problems, and it is possible that there may be other causes.

- PCU internal failure

Diagnosis Details

Conditions for setting the DTC

When a malfunction is detected during the first drive cycle, a Pending DTC is stored in the motor control module memory. If the malfunction returns in the next (second) drive cycle, the MIL comes on and a Confirmed DTC and the freeze data are stored.

Conditions for clearing the DTC

The MIL is cleared if the malfunction does not return in three consecutive trips in which the diagnostic runs. The MIL, the Pending DTC, the Confirmed DTC, and the freeze data can be cleared with the scan tool Clear command.

DTC P1DD9

DTC P1DD9: VCU I1 Current Sensor Circuit

General Description

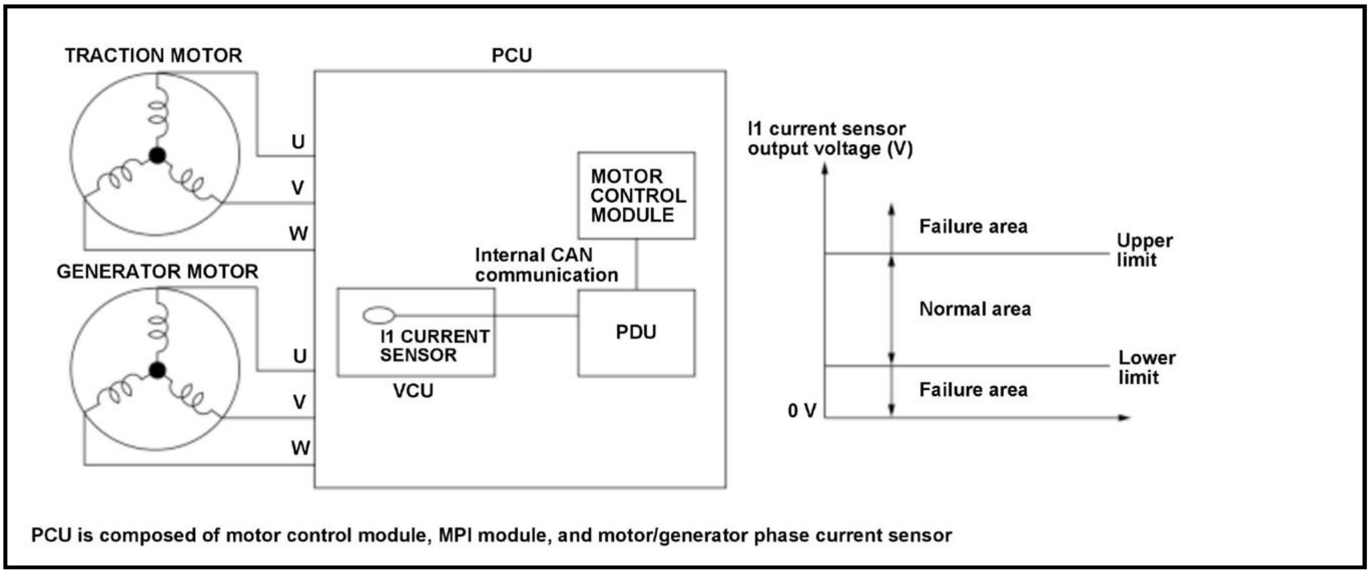
TRACTION MOTOR
PCU
U
V
W
GENERATOR MOTOR
U
V
W
MOTOR CONTROL MODULE
Internal CAN communication
I1 CURRENT SENSOR
VCU
PDU
I1 current sensor output voltage (V)
Failure area
Upper limit
Normal area
Lower limit
Failure area
0 V
PCU is composed of motor control module, MPI module, and motor/generator phase current sensor

The power control unit (PCU) controls the voltage control unit (VCU) output based on the I1 current sensor signals. If the signal voltage from the I1 current sensor exceeds a set value for a specified time, the motor control module in the PCU detects a malfunction and stores a DTC.

Monitor Execution, Sequence, Duration, DTC Type

Execution	Continuous
Sequence	None
Duration	2.0 seconds or more
DTC Type	One drive cycle, MIL on, POWER SYSTEM indicator on

Enable Conditions

Condition	Minimum	Maximum
12 volt battery voltage	8 V	-

Malfunction Threshold

The I1 current sensor output voltage is more than 4.53 V or less than 0.47 V for at least 2.0 seconds.

Possible Cause

NOTE: The causes shown may not be a complete list of all potential problems, and it is possible that there may be other causes.

- PCU internal failure

Diagnosis Details

Conditions for setting the DTC

When a malfunction is detected, the MIL comes on and a Pending DTC, a Confirmed DTC, and the freeze data are stored in the motor control module memory.

Conditions for clearing the DTC

The MIL is cleared if the malfunction does not return in three consecutive trips in which the diagnostic runs. The MIL, the Pending DTC, the Confirmed DTC, and the freeze data can be cleared with the scan tool Clear command.

DTC P1DDB

DTC P1DDB: Reactor Temperature Sensor Circuit

General Description

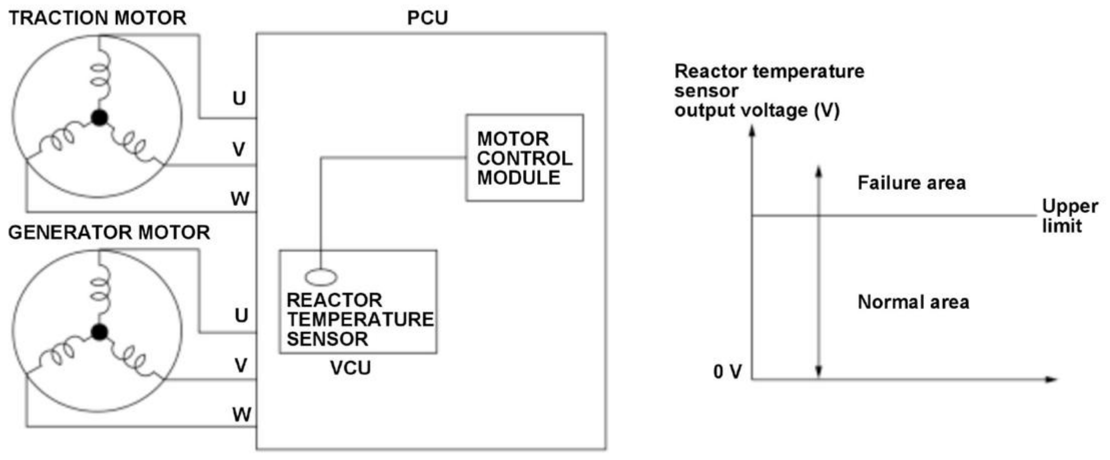
TRACTION MOTOR
PCU
U
V
W
MOTOR CONTROL MODULE
GENERATOR MOTOR
U
V
W
REACTOR TEMPERATURE SENSOR
VCU
Reactor temperature sensor output voltage (V)
Failure area
Upper limit
Normal area
0 V

PCU is composed of motor control module, MPI module, and motor/generator phase current sensor

The power control unit (PCU) monitors the reactor temperature sensor value to prevent malfunction of the reactor due to heat generation. If the reactor temperature sensor output voltage is a specified voltage for a specified time, the motor control module in the PCU detects a malfunction and stores a DTC.

Monitor Execution, Sequence, Duration, DTC Type

Execution	Continuous
Sequence	None
Duration	2.0 seconds or more

DTC Type	One drive cycle, MIL on, POWER SYSTEM indicator on

Enable Conditions

Condition	Minimum	Maximum
12 volt battery voltage	8 V	-

Malfunction Threshold

The reactor temperature sensor output voltage is more than 4.82 V for at least 2.0 seconds.

Possible Cause

NOTE: The causes shown may not be a complete list of all potential problems, and it is possible that there may be other causes.

- PCU internal failure

Diagnosis Details

Conditions for setting the DTC

When a malfunction is detected, the MIL comes on and a Pending DTC, a Confirmed DTC, and the freeze data are stored in the motor control module memory.

Conditions for clearing the DTC

The MIL is cleared if the malfunction does not return in three consecutive trips in which the diagnostic runs. The MIL, the Pending DTC, the Confirmed DTC, and the freeze data can be cleared with the scan tool Clear command.

DTC P1DE3

DTC P1DE3: VCU V1 Voltage Sensor Circuit High

General Description

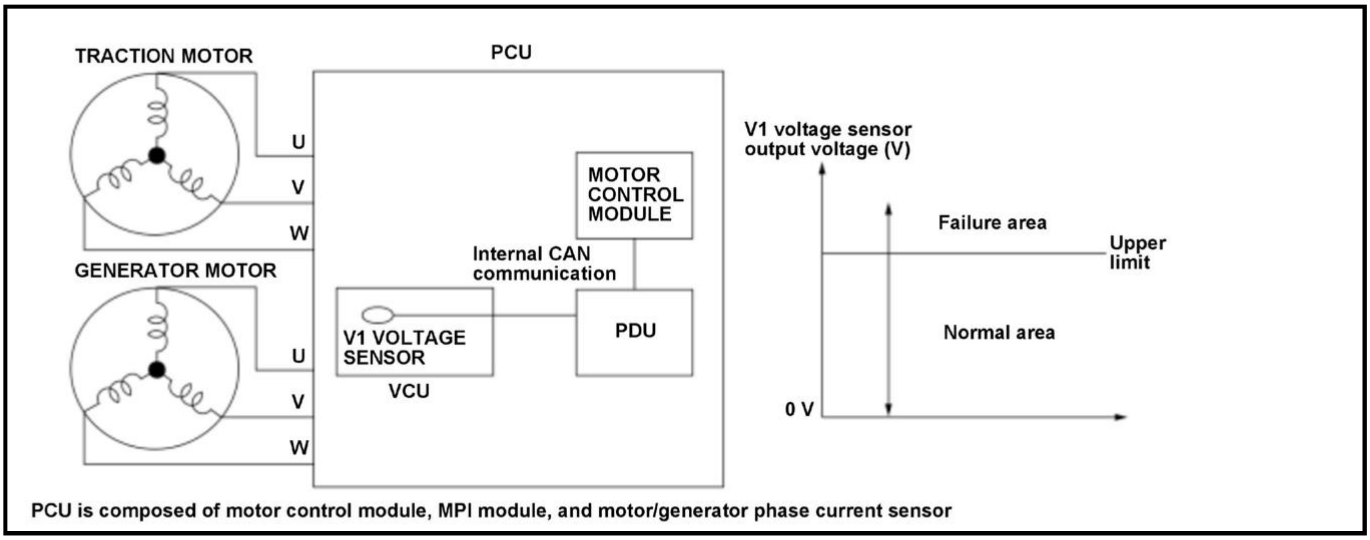
TRACTION MOTOR
PCU
U
V
W
GENERATOR MOTOR
U
V
W
MOTOR CONTROL MODULE
Internal CAN communication
V1 VOLTAGE SENSOR
VCU
PDU
V1 voltage sensor output voltage (V)
Failure area
Upper limit
Normal area
0 V
PCU is composed of motor control module, MPI module, and motor/generator phase current sensor

The power control unit (PCU) controls the voltage control unit (VCU) output based on the V1 voltage sensor signals. If the signal voltage from the V1 voltage sensor exceeds a set value for a specified time, the motor control module in the PCU detects a malfunction and stores a DTC.

Monitor Execution, Sequence, Duration, DTC Type

Execution	Continuous
Sequence	None
Duration	500 milliseconds or more
DTC Type	One drive cycle, MIL on, POWER SYSTEM indicator on

Enable Conditions

Condition	Minimum	Maximum
12 volt battery voltage	8 V	-

Malfunction Threshold

The V1 voltage sensor output voltage is more than 4.9 V for at least 500 milliseconds.

Possible Cause

NOTE: The causes shown may not be a complete list of all potential problems, and it is possible that there may be other causes.

- PCU internal failure

Diagnosis Details

Conditions for setting the DTC

When a malfunction is detected, the MIL comes on and a Pending DTC, a Confirmed DTC, and the freeze data are stored in the motor control module memory.

Conditions for clearing the DTC

The MIL is cleared if the malfunction does not return in three consecutive trips in which the diagnostic runs. The MIL, the Pending DTC, the Confirmed DTC, and the freeze data can be cleared with the scan tool Clear command.

DTC P1DE4

DTC P1DE4: VCU V1 Voltage Sensor Circuit

General Description

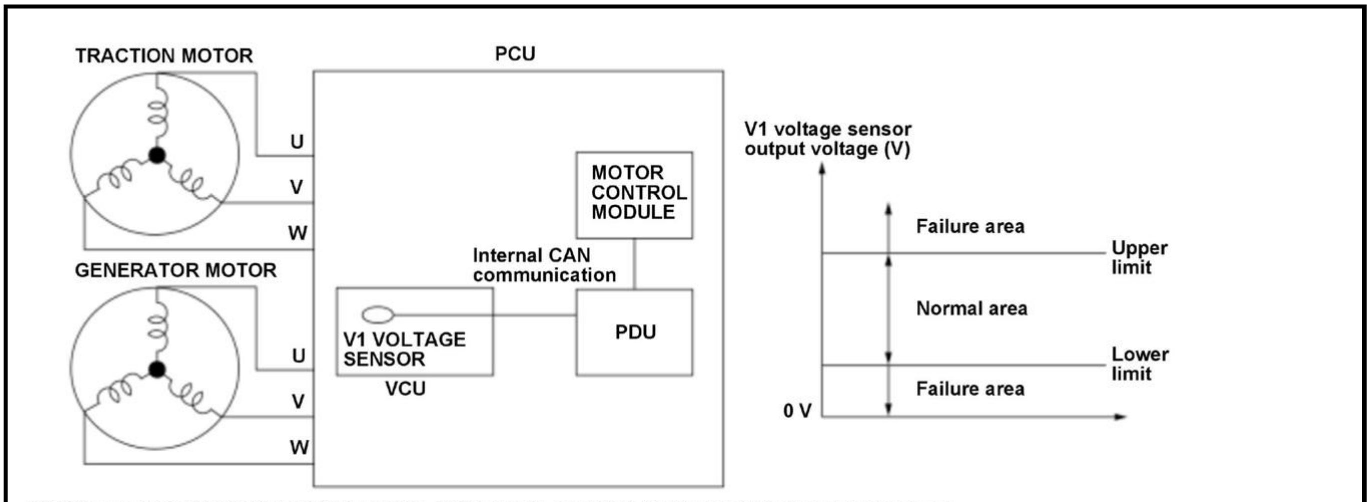
TRACTION MOTOR
PCU
U
V
W
GENERATOR MOTOR
U
V
W
MOTOR CONTROL MODULE
Internal CAN communication
V1 VOLTAGE SENSOR
VCU
PDU
V1 voltage sensor output voltage (V)
Failure area
Upper limit
Normal area
Lower limit
Failure area
0 V

PCU is composed of motor control module, MPI module, and motor/generator phase current sensor

The power control unit (PCU) controls the voltage control unit (VCU) output based on the V1 voltage sensor signals. If the signal voltage from the V1 voltage sensor exceeds a set value for a specified time, the motor control module in the PCU detects a malfunction and stores a DTC.

Monitor Execution, Sequence, Duration, DTC Type

Execution	Continuous
Sequence	None
Duration	2.0 seconds or more*5.0 seconds or more**
DTC Type	Two drive cycles, MIL on, POWER SYSTEM indicator on

*: Symptom 1

**: Symptom 2

Enable Conditions

Condition	Minimum	Maximum
12 volt battery voltage	10 V	-
Vehicle	ON mode	

Malfunction Threshold

One of these symptoms occurs:

Symptom 1

- The V1 voltage sensor output voltage is more than 4.22 V for at least 2.0 seconds.

Symptom 2

- The V1 voltage sensor output voltage is less than 0.10 V for at least 5.0 seconds.

Possible Cause

NOTE: The causes shown may not be a complete list of all potential problems, and it is possible that there may be other causes.

- This DTC is stored at the same time when DTC P0AE1, P0DA8 or P1D65 is detected.
- PCU internal failure

Diagnosis Details

Conditions for setting the DTC

When a malfunction is detected during the first drive cycle, a Pending DTC is stored in the motor control module memory. If the malfunction returns in the next (second) drive cycle, the MIL comes on and a Confirmed DTC and the freeze data are stored.

Conditions for clearing the DTC

The MIL is cleared if the malfunction does not return in three consecutive trips in which the diagnostic runs. The MIL, the Pending DTC, the Confirmed DTC, and the freeze data can be cleared with the scan tool Clear command.

DTC P1DE5

DTC P1DE5: VCU V2M Voltage Sensor Circuit High

General Description

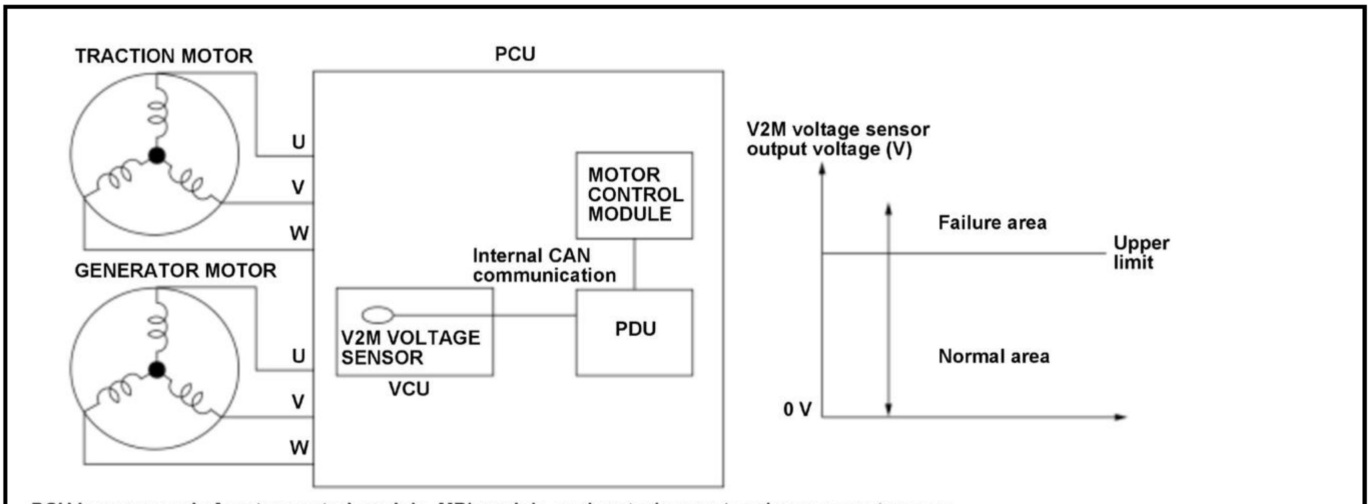
TRACTION MOTOR
PCU
U
V
W
MOTOR CONTROL MODULE
V2M voltage sensor output voltage (V)
Failure area
Upper limit
GENERATOR MOTOR
Internal CAN communication
V2M VOLTAGE SENSOR
PDU
VCU
U
V
W
Normal area
0 V

PCU is composed of motor control module, MPI module, and motor/generator phase current sensor

The power control unit (PCU) controls the voltage control unit (VCU) output based on the V2M voltage sensor signals. If the signal voltage from the V2M voltage sensor exceeds a set value for a specified time, the motor control module in the PCU detects a malfunction and stores a DTC.

Monitor Execution, Sequence, Duration, DTC Type

Execution	Continuous
Sequence	None
Duration	500 milliseconds or more
DTC Type	One drive cycle, MIL on, POWER SYSTEM indicator on

Enable Conditions

Condition	Minimum	Maximum
12 volt battery voltage	8 V	-

Malfunction Threshold

The V2M voltage sensor output voltage is more than 4.9 V for at least 500 milliseconds.

Possible Cause

NOTE: The causes shown may not be a complete list of all potential problems, and it is possible that there may be other causes.

- PCU internal failure

Diagnosis Details

Conditions for setting the DTC

When a malfunction is detected, the MIL comes on and a Pending DTC, a Confirmed DTC, and the freeze data are stored in the motor control module memory.

Conditions for clearing the DTC

The MIL is cleared if the malfunction does not return in three consecutive trips in which the diagnostic runs. The MIL, the Pending DTC, the Confirmed DTC, and the freeze data can be cleared with the scan tool Clear command.

DTC P1DE6

DTC P1DE6: VCU V2M Voltage Sensor Circuit

General Description

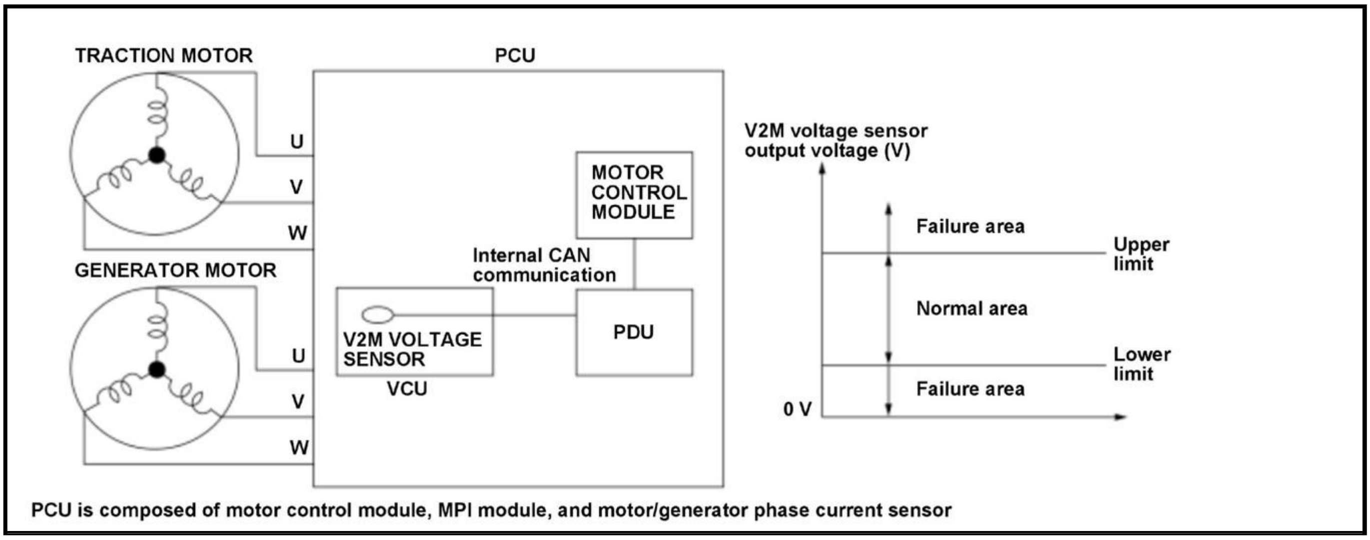
TRACTION MOTOR
PCU
U
V
W
MOTOR CONTROL MODULE
GENERATOR MOTOR
Internal CAN communication
V2M VOLTAGE SENSOR
VCU
PDU
U
V
W
V2M voltage sensor output voltage (V)
Failure area
Upper limit
Normal area
Lower limit
Failure area
0 V
PCU is composed of motor control module, MPI module, and motor/generator phase current sensor

The power control unit (PCU) controls the voltage control unit (VCU) output based on the V2M voltage sensor signals. If the signal voltage from the V2M voltage sensor exceeds a set value for a specified time, the motor control module in the PCU detects a malfunction and stores a DTC.

Monitor Execution, Sequence, Duration, DTC Type

Execution	Continuous
Sequence	None
Duration	2.0 seconds or more*5.0 seconds or more**
DTC Type	Two drive cycles, MIL on, POWER SYSTEM indicator on

*: Symptom 1

**: Symptom 2

Enable Conditions

Condition	Minimum	Maximum
12 volt battery voltage	10 V	-
Vehicle	ON mode	

Malfunction Threshold

One of these symptoms occurs:

Symptom 1

- The V2M voltage sensor output voltage is more than 4.18 V for at least 2.0 seconds.

Symptom 2

- The V2M voltage sensor output voltage is less than 0.10 V for at least 5.0 seconds.

Possible Cause

NOTE: The causes shown may not be a complete list of all potential problems, and it is possible that there may be other causes.

- This DTC is stored at the same time when DTC P0AE1, P0DA8 or P1D65 is detected.
- PCU internal failure

Diagnosis Details

Conditions for setting the DTC

When a malfunction is detected during the first drive cycle, a Pending DTC is stored in the motor control module memory. If the malfunction returns in the next (second) drive cycle, the MIL comes on and a Confirmed DTC and the freeze data are stored.

Conditions for clearing the DTC

The MIL is cleared if the malfunction does not return in three consecutive trips in which the diagnostic runs. The MIL, the Pending DTC, the Confirmed DTC, and the freeze data can be cleared with the scan tool Clear command.

DTC P1DE7

DTC P1DE7: VCU V0 Voltage Sensor Circuit High

General Description

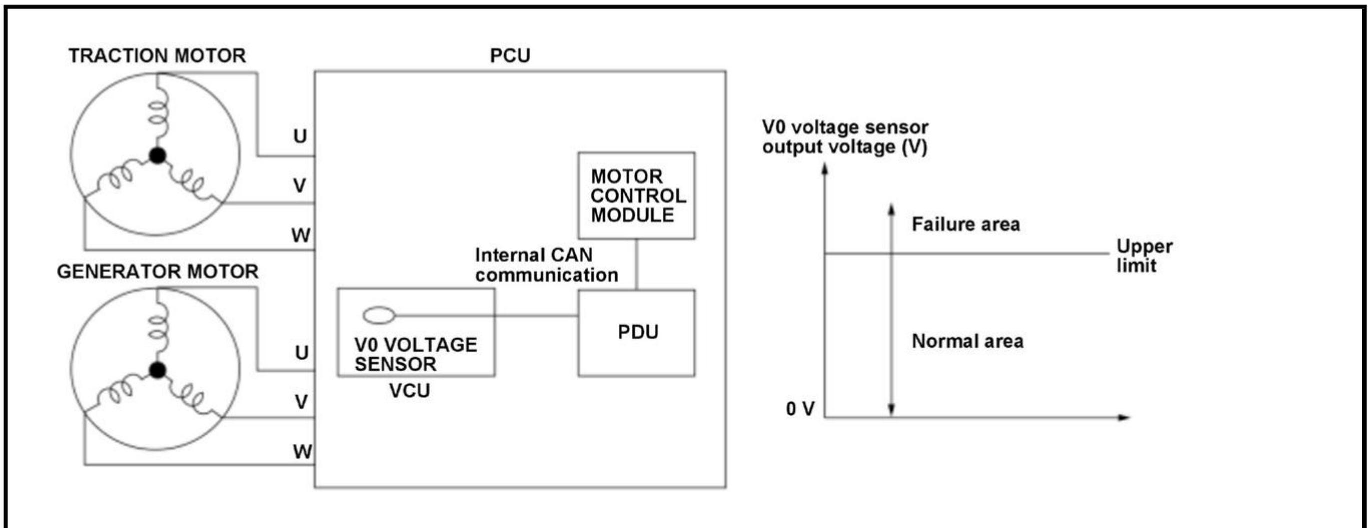
TRACTION MOTOR
PCU
U
V
W
GENERATOR MOTOR
U
V
W
MOTOR CONTROL MODULE
Internal CAN communication
V0 VOLTAGE SENSOR
VCU
PDU
V0 voltage sensor output voltage (V)
Failure area
Upper limit
Normal area
0 V

PCU is composed of motor control module, MPI module, and motor/generator phase current sensor

The power control unit (PCU) controls the voltage control unit (VCU) output based on the V0 voltage sensor signals. If the signal voltage from the V0 voltage sensor exceeds a set value for a specified time, the motor control module in the PCU detects a malfunction and stores a DTC.

Monitor Execution, Sequence, Duration, DTC Type

Execution	Continuous
Sequence	None
Duration	500 milliseconds or more
DTC Type	One drive cycle, MIL on, POWER SYSTEM indicator on

Enable Conditions

Condition	Minimum	Maximum
12 volt battery voltage	8 V	-

Malfunction Threshold

The V0 voltage sensor output voltage is more than 4.90 V for at least 500 milliseconds.

Possible Cause

NOTE: The causes shown may not be a complete list of all potential problems, and it is possible that there may be other causes.

- PCU internal failure

Diagnosis Details

Conditions for setting the DTC

When a malfunction is detected, the MIL comes on and a Pending DTC, a Confirmed DTC, and the freeze data are stored in the motor control module memory.

Conditions for clearing the DTC

The MIL is cleared if the malfunction does not return in three consecutive trips in which the diagnostic runs. The MIL, the Pending DTC, the Confirmed DTC, and the freeze data can be cleared with the scan tool Clear command.

DTC P1DE8

DTC P1DE8: VCU V0 Voltage Sensor Circuit

General Description

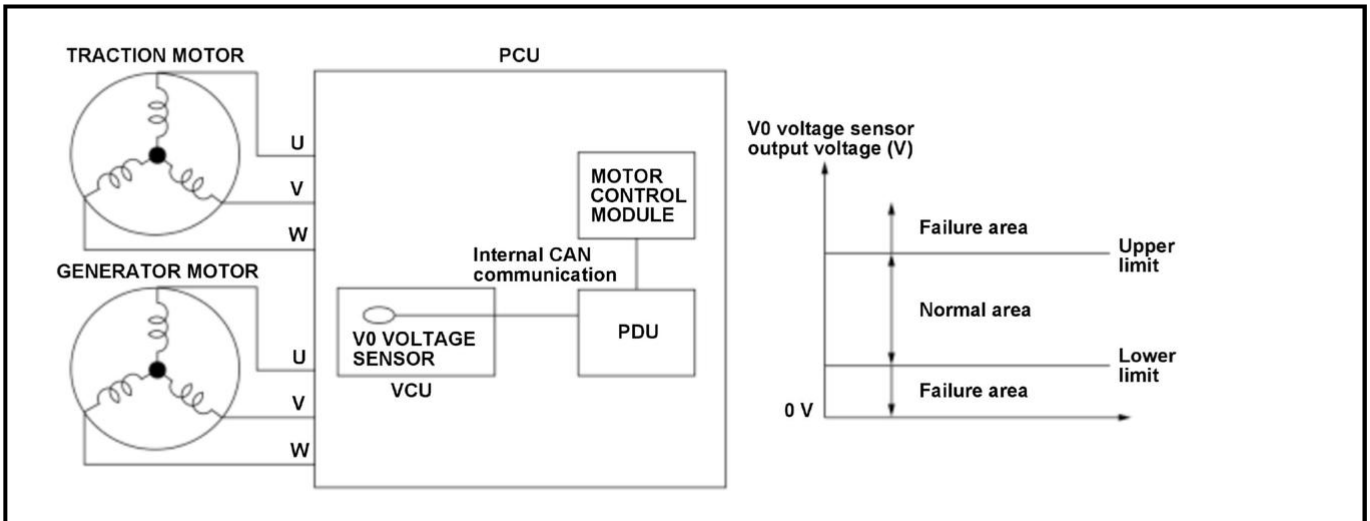
TRACTION MOTOR
PCU
U
V
W
GENERATOR MOTOR
U
V
W
MOTOR CONTROL MODULE
Internal CAN communication
V0 VOLTAGE SENSOR
VCU
PDU
V0 voltage sensor output voltage (V)
Failure area
Upper limit
Normal area
Lower limit
Failure area
0 V

PCU is composed of motor control module, MPI module, and motor/generator phase current sensor

The power control unit (PCU) controls the voltage control unit (VCU) output based on the V0 voltage sensor signals. If the signal voltage from the V0 voltage sensor exceeds a set value for a specified time, the motor control module in the PCU detects a malfunction and stores a DTC.

Monitor Execution, Sequence, Duration, DTC Type

Execution	Continuous
Sequence	None
Duration	2.0 seconds or more
DTC Type	Two drive cycles, MIL on, POWER SYSTEM indicator on

Enable Conditions

Condition	Minimum	Maximum
12 volt battery voltage	8 V	-

Malfunction Threshold

The V0 voltage sensor output voltage is more than 2.40 V or less than 0.37 V for at least 2.0 seconds.

Possible Cause

NOTE: The causes shown may not be a complete list of all potential problems, and it is possible that there may be other causes.

- PCU internal failure

Diagnosis Details

Conditions for setting the DTC

When a malfunction is detected during the first drive cycle, a Pending DTC is stored in the motor control module memory. If the malfunction returns in the next (second) drive cycle, the MIL comes on and a Confirmed DTC and the freeze data are stored.

Conditions for clearing the DTC

The MIL is cleared if the malfunction does not return in three consecutive trips in which the diagnostic runs. The MIL, the Pending DTC, the Confirmed DTC, and the freeze data can be cleared with the scan tool Clear command.

DTC P1DE9

DTC P1DE9: VCU V0 Voltage Sensor Circuit Range/Performance

General Description

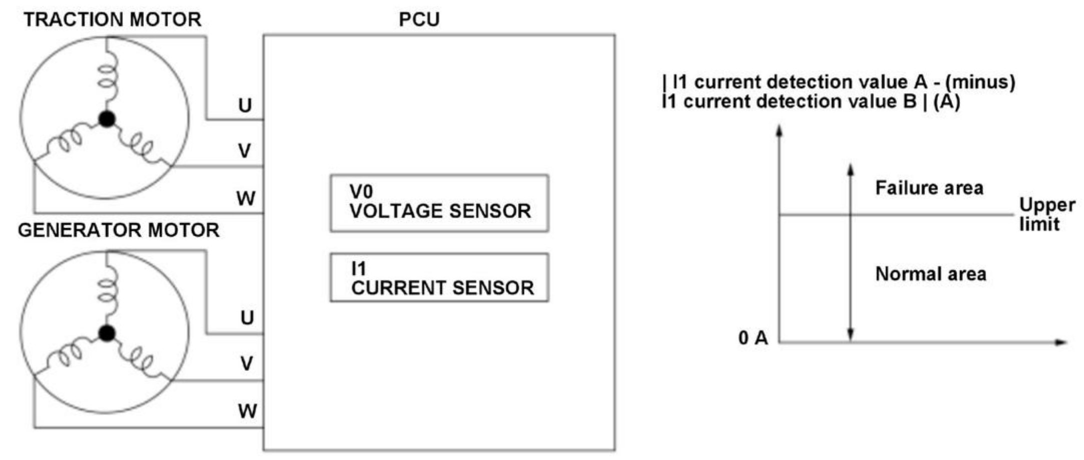
TRACTION MOTOR
PCU
U
V
W
GENERATOR MOTOR
U
V
W
V0
VOLTAGE SENSOR
I1
CURRENT SENSOR
| I1 current detection value A - (minus)
I1 current detection value B | (A)
Failure area
Upper
limit
Normal area
0 A

PCU is composed of motor control module, MPI module, and motor/generator phase current sensor

The power control unit (PCU) controls the voltage control unit (VCU) output based on the V0 voltage sensor signals. If the V0 voltage sensor (V0OS) fails, when the difference in current compared is a specified value or more and continues for a specified duration or more, the motor control module in the PCU detects a malfunction and stores a DTC.

Monitor Execution, Sequence, Duration, DTC Type

Execution	Gate drive circuit is ON condition
Sequence	None

Duration	5.0 seconds or more
DTC Type	One drive cycle, MIL on, POWER SYSTEM indicator on

Enable Conditions

Condition	Minimum	Maximum
High voltage side power supply voltage (6 V)	5 V	-
V2 voltage control duty	20 %	-
VCU control mode	Voltage boost mode	

Malfunction Threshold

The difference between the I1 current detection value A and the I1 current detection value B is more than 45 A and continues for 5.0 seconds or more.

Possible Cause

NOTE: The causes shown may not be a complete list of all potential problems, and it is possible that there may be other causes.

- PCU internal failure

Diagnosis Details

Conditions for setting the DTC

When a malfunction is detected, the MIL comes on and a Pending DTC, a Confirmed DTC, and the freeze data are stored in the motor control module memory.

Conditions for clearing the DTC

The MIL is cleared if the malfunction does not return in three consecutive trips in which the diagnostic runs. The MIL, the Pending DTC, the Confirmed DTC, and the freeze data can be cleared with the scan tool Clear command.

DTC P1DEA

DTC P1DEA: VCU V0 Voltage Control Failure

General Description

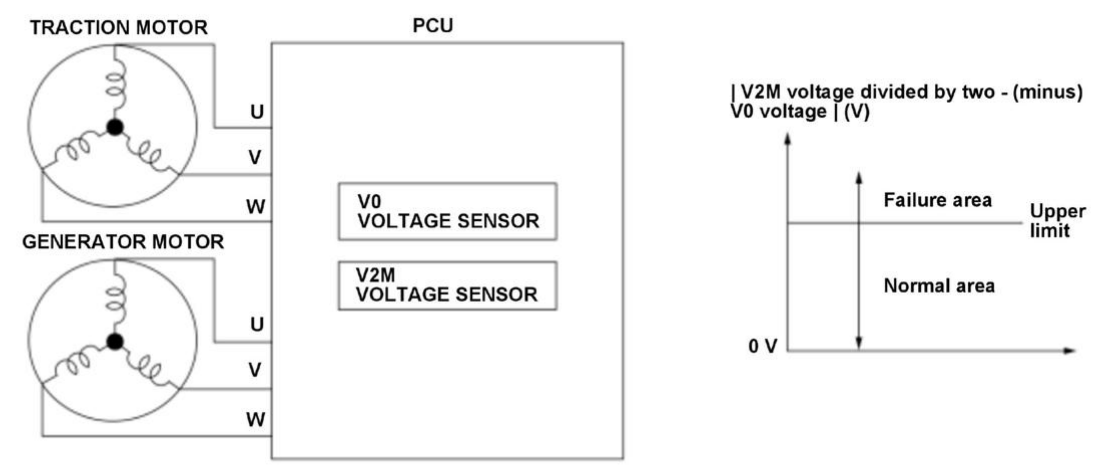
TRACTION MOTOR
PCU
U
V
W
GENERATOR MOTOR
U
V
W
V0 VOLTAGE SENSOR
V2M VOLTAGE SENSOR
| V2M voltage divided by two - (minus) V0 voltage | (V)
Failure area
Upper limit
Normal area
0 V

PCU is composed of motor control module, MPI module, and motor/generator phase current sensor

The power control unit (PCU) controls the voltage control unit (VCU) output based on the V0 voltage sensor signals. When the difference in voltages compared is a specified value or more and continues for a specified duration or more, the motor control module in the PCU detects a malfunction and stores a DTC.

Monitor Execution, Sequence, Duration, DTC Type

Execution	Gate drive circuit is ON condition
Sequence	None
Duration	2.0 seconds or more
DTC Type	One drive cycle, MIL on, POWER SYSTEM indicator on

Enable Conditions

Condition	Minimum	Maximum
High voltage side power supply voltage (6 V)	5 V	-
V2 voltage control duty	20 %	-
VCU control mode	Voltage boost mode	

Malfunction Threshold

The difference between the V2M voltage sensor detection value divided by two and the V0 voltage sensor detection value is more than 20 V and continues for 2.0 seconds or more.

Possible Cause

NOTE: The causes shown may not be a complete list of all potential problems, and it is possible that there may be other causes.

- PCU internal failure

Diagnosis Details

Conditions for setting the DTC

When a malfunction is detected, the MIL comes on and a Pending DTC, a Confirmed DTC, and the freeze data are stored in the motor control module memory.

Conditions for clearing the DTC

The MIL is cleared if the malfunction does not return in three consecutive trips in which the diagnostic runs. The MIL, the Pending DTC, the Confirmed DTC, and the freeze data can be cleared with the scan tool Clear command.

DTC P1F3C

DTC P1F3C: VCU Over Temperature

General Description

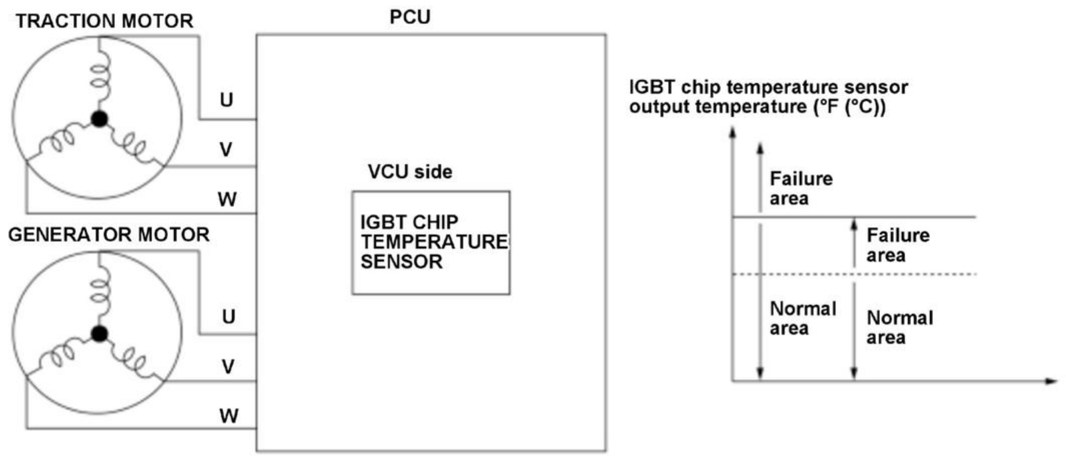
TRACTION MOTOR
PCU
U
V
W
GENERATOR MOTOR
U
V
W
VCU side
IGBT CHIP TEMPERATURE SENSOR
IGBT chip temperature sensor output temperature (°F (°C))
Failure area
Failure area
Normal area
Normal area

PCU is composed of motor control module, MPI module, and motor/generator phase current sensor

The power control unit (PCU) monitors the IGBT chip temperature sensor value to prevent malfunction of the chip due to heat generation. If the IGBT chip temperature sensor output temperature is a specified voltage for a specified time, the motor control module in the PCU detects a malfunction and stores a DTC.

Monitor Execution, Sequence, Duration, DTC Type

Execution	Continuous
Sequence	None
Duration	100 milliseconds or more*11 seconds or more**
DTC Type	One drive cycle, MIL on, POWER SYSTEM indicator on

*: Symptom 1

**: Symptom 2

Enable Conditions

Condition	Minimum	Maximum
High voltage side power supply voltage (6 V)	5 V	-

Malfunction Threshold

One of these symptoms occurs:

Symptom 1

- If the detection temperature of the IGBT chip temperature sensor at the voltage control unit (VCU) side is more than 311 deg.F (155 deg.C) at the High side (S3, S4) and more than 331 deg.F (166 deg.C) at the Low side (S1, S2) for at least 100 milliseconds.

Symptom 2

- If the detection temperature of the IGBT chip temperature sensor at the VCU side is more than 281 deg.F (138 deg.C) at the High side (S3, S4) and more than 306 deg.F (152 deg.C) at the Low side (S1, S2) for at least 11 seconds.

Possible Cause

NOTE: The causes shown may not be a complete list of all potential problems, and it is possible that there may be other causes.

- Radiator fan control (RFC) unit line failure
- PCU electric coolant pump line failure
- Water pipe leak
- Water pipe clogged
- PCU coolant temperature sensor failure
- RFC unit failure
- PCU electric coolant pump failure
- PCU internal failure

Diagnosis Details

Conditions for setting the DTC

When a malfunction is detected, the MIL comes on and a Pending DTC, a Confirmed DTC, and the freeze data are stored in the motor control module memory.

Conditions for clearing the DTC

The MIL is cleared if the malfunction does not return in three consecutive trips in which the diagnostic runs. The MIL, the Pending DTC, the Confirmed DTC, and the freeze data can be cleared with the scan tool Clear command.

DTC U0029 (MOTOR CONTROL MODULE)

DTC U0029: F-CAN Malfunction (Traction Motor Control Module Bus-Off)

General Description

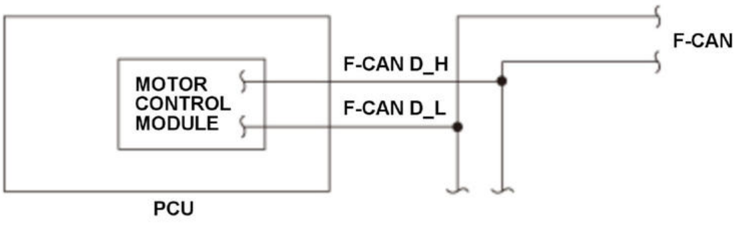

PCU is composed of motor control module, MPI module, and motor/generator phase current sensor

The controller area network (CAN) transmits/receives pulsing signals to/from the control modules simultaneously by using two signal lines (H line and L line). If the bus-off condition continues for a prescribed time, the motor control module in the power control unit (PCU) detects a malfunction and stores a DTC.

Monitor Execution, Sequence, Duration, DTC Type

Execution	Continuous
Sequence	None
Duration	500 milliseconds or more
DTC Type	Two drive cycles, MIL on, POWER SYSTEM indicator on

Enable Conditions

Condition	Minimum	Maximum
Elapsed time after the vehicle condition is turned to the ON mode	5 seconds	-
12 volt battery voltage	10 V	-

Malfunction Threshold

The F-CAN line bus-off continues for at least 500 milliseconds.

Possible Cause

NOTE: The causes shown may not be a complete list of all potential problems, and it is possible that there may be other causes.

- F-CAN circuit F-CAN D_H line open
- F-CAN circuit F-CAN D_L line open
- F-CAN circuit F-CAN D_H line short to ground
- F-CAN circuit F-CAN D_L line short to ground
- Unit communicating on F-CAN internal circuit failure
- PCU internal failure

Diagnosis Details

Conditions for setting the DTC

When a malfunction is detected during the first drive cycle, a Pending DTC is stored in the motor control module memory. If the malfunction returns in the next (second) drive cycle, the MIL comes on and a Confirmed DTC and the freeze data are stored.

Conditions for clearing the DTC

The MIL is cleared if the malfunction does not return in three consecutive trips in which the diagnostic runs. The MIL, the Pending DTC, the Confirmed DTC, and the freeze data can be cleared with the scan tool Clear command.

DTC U0029-00 (VSA CONTROL UNIT)

DTC U0029-00 : CAN Communication Failure (Bus OFF Ch 1)

NOTE

- Initial Diagnosis:

  The initial on-board diagnosis occurs right after the vehicle condition is turned to the ON mode, and the ABS/VSA indicator comes on, and continues until the indicator goes off.

- Regular Diagnosis:

  The regular on-board diagnosis begins right after the ABS/VSA indicator goes off, and it continues until the vehicle condition is turned to the OFF (LOCK) mode.

- Review "How to troubleshoot the VSA system" before doing the DTC troubleshooting procedure.
- Test-drive the vehicle according to local traffic conditions and regulations. Do not test-drive on a lift unless specified.

- The possible causes shown may not be a complete list of all potential problems, and it is possible that there may be other causes.

Confirmation Procedure	Basic Condition: • 12 volt battery voltage 9.6 - 16.5 V With the Driving Pattern: • Turn the vehicle to the READY TO DRIVE mode.
Execution	Initial Diagnosis/Regular Diagnosis
Duration	About 2 seconds
DTC Type	• 1 drive cycle • Brake system indicator (red) blink • Brake system indicator (amber) on • VSA indicator on
Fail Safe Action	• Stop CAN function (Dependant upon the conditions) • Degrade ABS performance • Stop engine drag torque control function • Stop TCS function • Stop VSA function • Stop agile handling assist function • Degrade hydraulic boost failure compensation function • Stop electric parking brake function (some of function)
Possible Cause	• Open, short to ground, short to power, or short to another line between the VSA modulator-control unit and other control units (F-CAN lines) • Internal failure of other unit on F-CAN • VSA modulator-control unit internal failure

DTC U0038 (MOTOR CONTROL MODULE)

DTC U0038: EP-CAN Malfunction (Traction Motor Control Module Bus-Off)

General Description

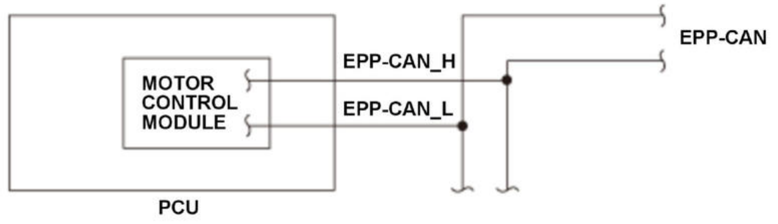

PCU is composed of motor control module, MPI module, and motor/generator phase current sensor

The controller area network (CAN) transmits/receives pulsing signals to/from the control modules simultaneously by using two signal lines (H line and L line). If the bus-off occurs due to an open or a short circuit in the EPP-CAN line is detected for a prescribed time, the motor control module in the power control unit (PCU) detects a malfunction and stores a DTC.

Monitor Execution, Sequence, Duration, DTC Type

Execution	Continuous
Sequence	None
Duration	500 milliseconds or more
DTC Type	One drive cycle, MIL on, POWER SYSTEM indicator on

Enable Conditions

Condition	Minimum	Maximum
Elapsed time after the vehicle condition is turned to the ON mode	5 seconds	-
12 volt battery voltage	10 V	-

Malfunction Threshold

The EPP-CAN line bus-off continues for at least 500 milliseconds.

Possible Cause

NOTE: The causes shown may not be a complete list of all potential problems, and it is possible that there may be other causes.

- EPP-CAN circuit EPP-CAN_H line open
- EPP-CAN circuit EPP-CAN_L line open
- EPP-CAN circuit EPP-CAN_H line short to ground
- EPP-CAN circuit EPP-CAN_L line short to ground
- Unit communicating on EPP-CAN internal circuit failure
- PCU internal failure

Diagnosis Details

Conditions for setting the DTC

When a malfunction is detected, the MIL comes on and a Pending DTC, a Confirmed DTC, and the freeze data are stored in the motor control module memory.

Conditions for clearing the DTC

The MIL is cleared if the malfunction does not return in three consecutive trips in which the diagnostic runs. The MIL, the Pending DTC, the Confirmed DTC, and the freeze data can be cleared with the scan tool Clear command.

DTC U0047-00 (VSA CONTROL UNIT)

DTC U0047-00 : CAN Communication Failure (Bus OFF Ch 2)

NOTE

- Initial Diagnosis:

  The initial on-board diagnosis occurs right after the vehicle condition is turned to the ON mode, and the ABS/VSA indicator comes on, and continues until the indicator goes off.

- Regular Diagnosis:

  The regular on-board diagnosis begins right after the ABS/VSA indicator goes off, and it continues until the vehicle condition is turned to the OFF (LOCK) mode.

- Review "How to troubleshoot the VSA system" before doing the DTC troubleshooting procedure.
- Test-drive the vehicle according to local traffic conditions and regulations. Do not test-drive on a lift unless specified.
- The possible causes shown may not be a complete list of all potential problems, and it is possible that there may be other causes.

Confirmation Procedure	Basic Condition: • 12 volt battery voltage 9.6 - 16.5 V With the Driving Pattern: • Turn the vehicle to the READY TO DRIVE mode.
Execution	Initial Diagnosis/Regular Diagnosis
Duration	About 2 seconds
DTC Type	• 1 drive cycle • Brake system indicator (red) blink • Brake system indicator (amber) on • ABS indicator on • VSA indicator on
Fail Safe Action	• Stop CAN function (Dependant upon the conditions) • Stop ABS function • Stop engine drag torque control function • Stop TCS function • Stop VSA function • Stop agile handling assist function • Stop hydraulic boost failure compensation function • Stop electric parking brake function (some of function)
Possible Cause	• Open, short to ground, short to power, or short to another line between the VSA modulator-control unit and other control units (F-CAN lines) • Internal failure of other unit on F-CAN • VSA modulator-control unit internal failure

DTC U0100 (MOTOR CONTROL MODULE)

DTC U0100: CAN Malfunction (Traction Motor Control Module - PCM)

General Description

This fault code is a general (specified by SAE) DTC that is stored at the time the following DTC codes (U1204, U1600) are detected.

DTC U0100-00 (VSA CONTROL UNIT)

DTC U0100-00 : CAN Communication Failure with ECM/ISU

NOTE

- Initial Diagnosis:

  The initial on-board diagnosis occurs right after the vehicle condition is turned to the ON mode, and the ABS/VSA indicator comes on, and continues until the indicator goes off.

- Regular Diagnosis:

  The regular on-board diagnosis begins right after the ABS/VSA indicator goes off, and it continues until the vehicle condition is turned to the OFF (LOCK) mode.

- Review "How to troubleshoot the VSA system" before doing the DTC troubleshooting procedure.
- Test-drive the vehicle according to local traffic conditions and regulations. Do not test-drive on a lift unless specified.
- The possible causes shown may not be a complete list of all potential problems, and it is possible that there may be other causes.

Confirmation Procedure	Basic Condition: • 12 volt battery voltage 9.6 - 16.5 V With the Driving Pattern: • Turn the vehicle to the READY TO DRIVE mode. • Test-drive the vehicle at 6 mph (10 km/h) or more.
Execution	Regular Diagnosis
Duration	About 1 second
DTC Type	• 1 drive cycle • Brake system indicator (red) blink (Dependant upon the conditions) • Brake system indicator (amber) on • VSA indicator on
Fail Safe Action	• Degrade ABS performance • Stop engine drag torque control function • Stop TCS function • Stop VSA function • Stop agile handling assist function • Degrade hydraulic boost failure compensation function (Dependant upon the conditions) • Stop electric parking brake function (some of function)
Possible Cause	• Open or poor connection between the VSA modulator-control unit and the PCM (F-CAN lines) • PCM internal failure • VSA modulator-control unit internal failure

DTC U0101-00 (VSA CONTROL UNIT)

DTC U0101-00 : CAN Communication Failure with PCM/TCM

NOTE

- Initial Diagnosis:

  The initial on-board diagnosis occurs right after the vehicle condition is turned to the ON mode, and the ABS/VSA indicator comes on, and continues until the indicator goes off.

- Regular Diagnosis:

  The regular on-board diagnosis begins right after the ABS/VSA indicator goes off, and it continues until the vehicle condition is turned to the OFF (LOCK) mode.

- Review "How to troubleshoot the VSA system" before doing the DTC troubleshooting procedure.
- Test-drive the vehicle according to local traffic conditions and regulations. Do not test-drive on a lift unless specified.
- The possible causes shown may not be a complete list of all potential problems, and it is possible that there may be other causes.

Confirmation Procedure	Basic Condition: • 12 volt battery voltage 9.6 - 16.5 V With the Driving Pattern: • Turn the vehicle to the READY TO DRIVE mode. • Test-drive the vehicle at 6 mph (10 km/h) or more.
Execution	Regular Diagnosis
Duration	About 1 second
DTC Type	• 1 drive cycle • Brake system indicator (amber) on
Fail Safe Action	• Stop electric parking brake function (some of function)
Possible Cause	• Open or poor connection between the VSA modulator-control unit and the PCM (F-CAN lines) • PCM internal failure • VSA modulator-control unit internal failure

DTC U0111 (MOTOR CONTROL MODULE)

DTC U0111: CAN Malfunction (Traction Motor Control Module - Battery Condition Monitor Module)

General Description

This fault code is a general (specified by SAE) DTC that is stored at the time the following DTC codes (U1206, U1603) are detected.

DTC U0126-00 (VSA CONTROL UNIT)

DTC U0126-00 : CAN Communication Failure with Absolute Steering Wheel Angle Sensor

NOTE

- Initial Diagnosis:

The initial on-board diagnosis occurs right after the vehicle condition is turned to the ON mode, and the ABS/VSA indicator comes on, and continues until the indicator goes off.

- Regular Diagnosis:

  The regular on-board diagnosis begins right after the ABS/VSA indicator goes off, and it continues until the vehicle condition is turned to the OFF (LOCK) mode.

- Review "How to troubleshoot the VSA system" before doing the DTC troubleshooting procedure.
- Test-drive the vehicle according to local traffic conditions and regulations. Do not test-drive on a lift unless specified.
- The possible causes shown may not be a complete list of all potential problems, and it is possible that there may be other causes.

Confirmation Procedure	Basic Condition: • 12 volt battery voltage 9.6 - 16.5 V With the Driving Pattern: • Turn the vehicle to the READY TO DRIVE mode.
Execution	Regular Diagnosis
Duration	About 1 second
DTC Type	• 1 drive cycle • VSA indicator on
Fail Safe Action	• Degrade ABS performance • Stop engine drag torque control function • Stop TCS function • Stop VSA function • Stop agile handling assist function
Possible Cause	• Open or poor connection between the VSA modulator-control unit and the EPS motor/control unit (F-CAN lines) • EPS motor/control unit internal failure • VSA modulator-control unit internal failure

DTC U0129-00 (VSA CONTROL UNIT)

DTC U0129-00 : CAN Communication Failure with AHB/ESB/EBB

NOTE

- Initial Diagnosis:

  The initial on-board diagnosis occurs right after the vehicle condition is turned to the ON mode, and the ABS/VSA indicator comes on, and continues until the indicator goes off.

- Regular Diagnosis:

  The regular on-board diagnosis begins right after the ABS/VSA indicator goes off, and it continues until the vehicle condition is turned to the OFF (LOCK) mode.

- Review "How to troubleshoot the VSA system" before doing the DTC troubleshooting procedure.

- Test-drive the vehicle according to local traffic conditions and regulations. Do not test-drive on a lift unless specified.
- The possible causes shown may not be a complete list of all potential problems, and it is possible that there may be other causes.

Confirmation Procedure	Basic Condition: • 12 volt battery voltage 9.6 - 16.5 V With the Driving Pattern: • Turn the vehicle to the READY TO DRIVE mode.
Execution	Regular Diagnosis
Duration	About 1 second
DTC Type	• 1 drive cycle • Brake system indicator (amber) on • VSA indicator on
Fail Safe Action	• Degrade ABS performance • Stop engine drag torque control function • Stop TCS function • Stop VSA function • Stop agile handling assist function • Degrade hydraulic boost failure compensation function (Dependant upon the conditions) • Stop electric parking brake function (some of function)
Possible Cause	• Open or poor connection between the VSA modulator-control unit and the electric servo brake control unit (F-CAN lines) • Electric servo brake control unit internal failure • VSA modulator-control unit internal failure

DTC U0146 (MOTOR CONTROL MODULE)

DTC U0146: F-CAN Malfunction (Traction Motor Control Module - CAN Gateway)

General Description

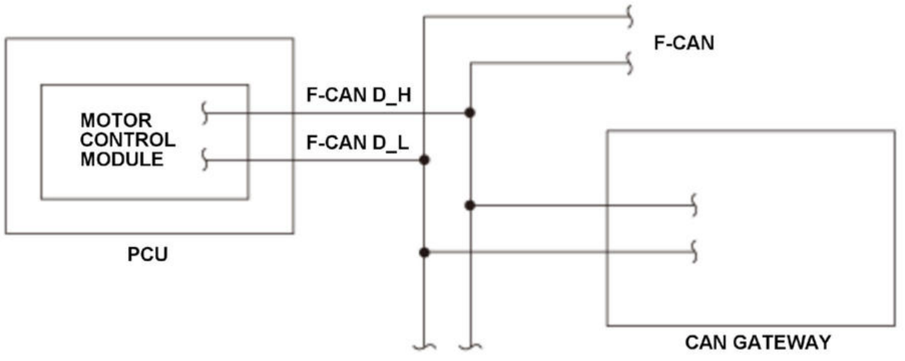

PCU is composed of motor control module, MPI module, and motor/generator phase current sensor

The controller area network (CAN) transmits/receives pulsing signals to/from the control modules simultaneously by using two signal lines (H line and L line). When the motor control module in the power control unit (PCU) does not receive the signals from the CAN gateway via the F-CAN lines or the received data is abnormal for a specified time, a malfunction is detected and a DTC is stored.

Monitor Execution, Sequence, Duration, DTC Type

Execution	Continuous
Sequence	None
Duration	2 seconds or more
DTC Type	Two drive cycles, MIL on, POWER SYSTEM indicator on

Enable Conditions

Condition	Minimum	Maximum
Elapsed time after the vehicle condition is turned to the ON mode	5 seconds	-
12 volt battery voltage	10 V	-

Malfunction Threshold

One of these conditions is met for at least 2 seconds:

- The motor control module does not receive any signals via the F-CAN lines.
- The information sent from the CAN gateway is abnormal.

Possible Cause

NOTE: The causes shown may not be a complete list of all potential problems, and it is possible that there may be other causes.

- F-CAN circuit F-CAN D_H line open
- F-CAN circuit F-CAN D_L line open
- F-CAN circuit F-CAN D_H line short to ground
- F-CAN circuit F-CAN D_L line short to ground
- Unit communicating on F-CAN internal circuit failure
- CAN gateway failure
- PCU internal failure

Diagnosis Details

Conditions for setting the DTC

When a malfunction is detected during the first drive cycle, a Pending DTC is stored in the motor control module memory. If the malfunction returns in the next (second) drive cycle, the MIL comes on and a Confirmed DTC and the freeze data are stored.

Conditions for clearing the DTC

The MIL is cleared if the malfunction does not return in three consecutive trips in which the diagnostic runs. The MIL, the Pending DTC, the Confirmed DTC, and the freeze data can be cleared with the scan tool Clear command.

DTC U0151-00 (VSA CONTROL UNIT)

DTC U0151-00 : CAN Communication Failure with SRS

NOTE

- Initial Diagnosis:

  The initial on-board diagnosis occurs right after the vehicle condition is turned to the ON mode, and the ABS/VSA indicator comes on, and continues until the indicator goes off.

- Regular Diagnosis:

  The regular on-board diagnosis begins right after the ABS/VSA indicator goes off, and it continues until the vehicle condition is turned to the OFF (LOCK) mode.

- Review "How to troubleshoot the VSA system" before doing the DTC troubleshooting procedure.
- Test-drive the vehicle according to local traffic conditions and regulations. Do not test-drive on a lift unless specified.
- The possible causes shown may not be a complete list of all potential problems, and it is possible that there may be other causes.

Confirmation Procedure	Basic Condition: • 12 volt battery voltage 9.6 - 16.5 V With the Driving Pattern: • Turn the vehicle to the READY TO DRIVE mode.
Execution	Regular Diagnosis
Duration	About 2 seconds
DTC Type	• 1 drive cycle • Brake system indicator (amber) on • ABS indicator on (Dependant upon the conditions) • VSA indicator on (Dependant upon the conditions)
Fail Safe Action	• Stop ABS function (Dependant upon the conditions) • Stop engine drag torque control function (Dependant upon the conditions) • Stop TCS function (Dependant upon the conditions) • Stop VSA function (Dependant upon the conditions) • Stop agile handling assist function (Dependant upon the conditions)

	• Stop hydraulic boost failure compensation function (Dependant upon the conditions) • Stop electric parking brake function (some of function)
Possible Cause	• Open or poor connection between the VSA modulator-control unit and the SRS unit (F-CAN lines) • SRS unit internal failure • VSA modulator-control unit internal failure

DTC U0155-00 (VSA CONTROL UNIT)

DTC U0155-00 : CAN Communication Failure with Meter

NOTE

- Initial Diagnosis:

  The initial on-board diagnosis occurs right after the vehicle condition is turned to the ON mode, and the ABS/VSA indicator comes on, and continues until the indicator goes off.

- Regular Diagnosis:

  The regular on-board diagnosis begins right after the ABS/VSA indicator goes off, and it continues until the vehicle condition is turned to the OFF (LOCK) mode.

- Review "How to troubleshoot the VSA system" before doing the DTC troubleshooting procedure.
- Test-drive the vehicle according to local traffic conditions and regulations. Do not test-drive on a lift unless specified.
- The possible causes shown may not be a complete list of all potential problems, and it is possible that there may be other causes.

Confirmation Procedure	Basic Condition: • 12 volt battery voltage 9.6 - 16.5 V With the Driving Pattern: • Turn the vehicle to the READY TO DRIVE mode.
Execution	Regular Diagnosis
Duration	About 5 seconds
DTC Type	• 1 drive cycle • Brake system indicator (amber) on (Dependant upon the conditions) • VSA indicator on (Dependant upon the conditions)
Fail Safe Action	• Degrade ABS performance (Dependant upon the conditions) • Stop engine drag torque control function (Dependant upon the conditions) • Stop TCS function (Dependant upon the conditions) • Stop VSA function (Dependant upon the conditions) • Stop agile handling assist function (Dependant upon the conditions) • Stop hydraulic boost failure compensation function (Dependant upon the conditions)

	- Stop electric parking brake function (some of function) (Dependant upon the conditions)
Possible Cause	- Open or poor connection between the VSA modulator-control unit and the gauge control module (F-CAN lines) - Gauge control module internal failure - VSA modulator-control unit internal failure

DTC U0311 (MOTOR CONTROL MODULE)

DTC U0311: Traction Motor Control Module Programming Error (Version Mismatch)

General Description

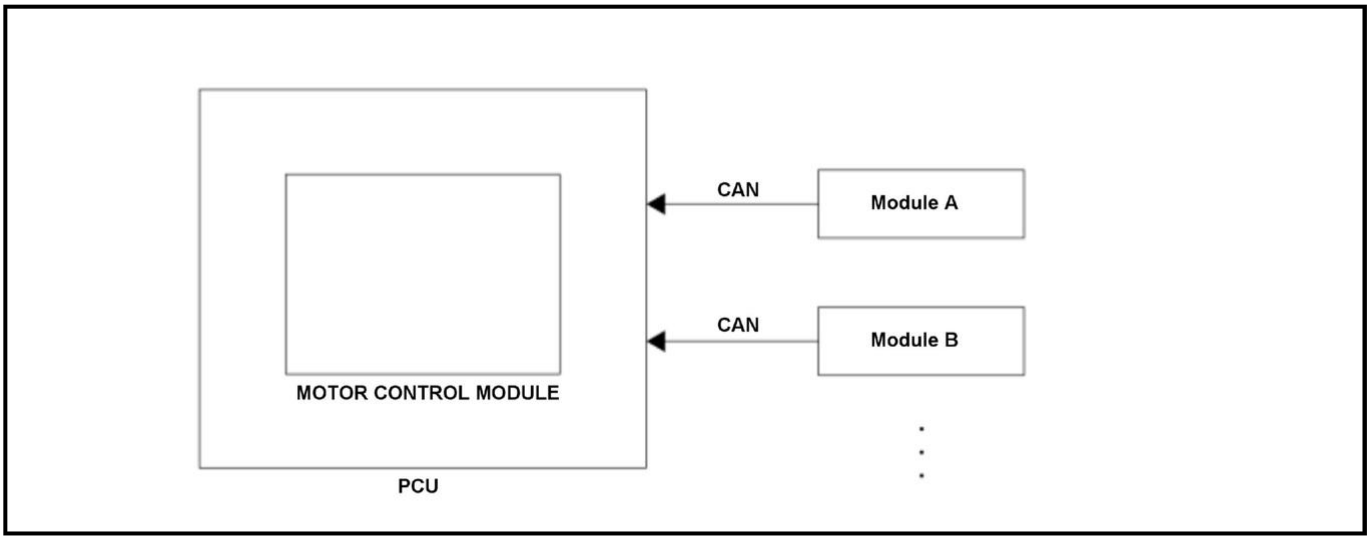

The motor control module in the power control unit (PCU) can be updated by a software rewriting device connected via CAN lines. Each control module has program version information as ROM values and compares its own with the others by transmitting/receiving the values via CAN lines. The PCU needs to be updated with the other modules. If the PCU detects that its own software is not the latest version, the warning indicator comes on and the motor control module stores a DTC.

Monitor Execution, Sequence, Duration, DTC Type

Execution	Continuous
Sequence	None
Duration	1.0 second or more
DTC Type	One drive cycle, MIL on, POWER SYSTEM indicator on

Enable Conditions

Condition	Â
Vehicle	ON mode

Malfunction Threshold

The motor control module detects that its own software is not the latest version for at least 1.0 second after comparing program version information.

Possible Cause

NOTE: The causes shown may not be a complete list of all potential problems, and it is possible that there may be other causes.

- Program version mismatch between the motor control module and other control modules

Diagnosis Details

Conditions for setting the DTC

When a malfunction is detected, the MIL comes on and a Pending DTC, a Confirmed DTC, and the freeze data are stored in the motor control module memory.

Conditions for clearing the DTC

The MIL is cleared if the malfunction does not return in three consecutive trips in which the diagnostic runs. The MIL, the Pending DTC, the Confirmed DTC, and the freeze data can be cleared with the scan tool Clear command.

DTC U0401-68 (VSA CONTROL UNIT)

DTC U0401-68 : (ECM Failure)

NOTE

- Initial Diagnosis:

  The initial on-board diagnosis occurs right after the vehicle condition is turned to the ON mode, and the ABS/VSA indicator comes on, and continues until the indicator goes off.

- Regular Diagnosis:

  The regular on-board diagnosis begins right after the ABS/VSA indicator goes off, and it continues until the vehicle condition is turned to the OFF (LOCK) mode.

- Review "How to troubleshoot the VSA system" before doing the DTC troubleshooting procedure.
- Test-drive the vehicle according to local traffic conditions and regulations. Do not test-drive on a lift unless specified.
- The possible causes shown may not be a complete list of all potential problems, and it is possible that there may be other causes.

Confirmation Procedure	Basic Condition: • 12 volt battery voltage 9.6 - 16.5 V With the Driving Pattern: • Turn the vehicle to the READY TO DRIVE mode.
Execution	Regular Diagnosis
Duration	About 1 second
DTC Type	• 1 drive cycle • Brake system indicator (red) blink • Brake system indicator (amber) on • VSA indicator on (Dependant upon the conditions)
Fail Safe Action	• Degrade ABS performance (Dependant upon the conditions) • Stop engine drag torque control function (Dependant upon the conditions)

	- Stop TCS function (Dependant upon the conditions) - Stop VSA function (Dependant upon the conditions) - Stop agile handling assist function (Dependant upon the conditions) - Stop electric parking brake function (some of function)
Possible Cause	- PGM-FI system failure - PCM internal failure

DTC U0402-68 (VSA CONTROL UNIT)

DTC U0402-68 : (TCM Failure)

NOTE

- Initial Diagnosis:

  The initial on-board diagnosis occurs right after the vehicle condition is turned to the ON mode, and the ABS/VSA indicator comes on, and continues until the indicator goes off.

- Regular Diagnosis:

  The regular on-board diagnosis begins right after the ABS/VSA indicator goes off, and it continues until the vehicle condition is turned to the OFF (LOCK) mode.

- Review "How to troubleshoot the VSA system" before doing the DTC troubleshooting procedure.
- Test-drive the vehicle according to local traffic conditions and regulations. Do not test-drive on a lift unless specified.
- The possible causes shown may not be a complete list of all potential problems, and it is possible that there may be other causes.

Confirmation Procedure	Basic Condition: - 12 volt battery voltage 9.6 - 16.5 V With the Driving Pattern: - Turn the vehicle to the READY TO DRIVE mode.
Execution	Regular Diagnosis
Duration	About 1 second
DTC Type	- 1 drive cycle - Brake system indicator (amber) on
Fail Safe Action	- Stop electric parking brake function (some of function)
Possible Cause	- Gear system failure - PCM internal failure

DTC U0418-68 (VSA CONTROL UNIT)

DTC U0418-68 : (ESB/EBB Failure)

NOTE

- Initial Diagnosis:

  The initial on-board diagnosis occurs right after the vehicle condition is turned to the ON mode, and the ABS/VSA indicator comes on, and continues until the indicator goes off.

- Regular Diagnosis:

  The regular on-board diagnosis begins right after the ABS/VSA indicator goes off, and it continues until the vehicle condition is turned to the OFF (LOCK) mode.

- Review "How to troubleshoot the VSA system" before doing the DTC troubleshooting procedure.
- Test-drive the vehicle according to local traffic conditions and regulations. Do not test-drive on a lift unless specified.
- The possible causes shown may not be a complete list of all potential problems, and it is possible that there may be other causes.

Confirmation Procedure	Basic Condition: • 12 volt battery voltage 9.6 - 16.5 V With the Driving Pattern: • Turn the vehicle to the READY TO DRIVE mode.
Execution	Regular Diagnosis
Duration	About 1 second
DTC Type	• 1 drive cycle • Brake system indicator (amber) on • VSA indicator on (Dependant upon the conditions)
Fail Safe Action	• Degrade ABS performance (Dependant upon the conditions) • Stop engine drag torque control function (Dependant upon the conditions) • Stop TCS function (Dependant upon the conditions) • Stop VSA function (Dependant upon the conditions) • Stop agile handling assist function (Dependant upon the conditions) • Stop electric parking brake function (some of function)
Possible Cause	• Electric servo brake system failure • Electric servo brake control unit internal failure

DTC U1204 (MOTOR CONTROL MODULE)

DTC U1204: EP-CAN Malfunction (Traction Motor Control Module - PCM)

General Description

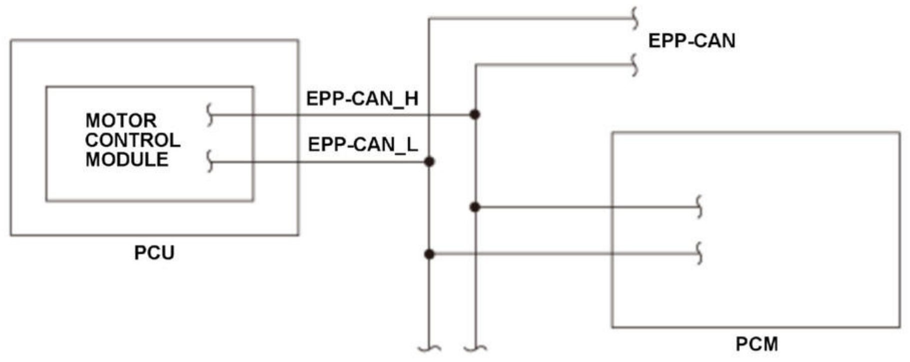

PCU is composed of motor control module, MPI module, and motor/generator phase current sensor

The controller area network (CAN) transmits/receives pulsing signals to/from the control modules simultaneously by using two signal lines (H line and L line). When the motor control module in the power control unit (PCU) does not receive the signals from the powertrain control module (PCM) via the EPP-CAN lines or the received data is abnormal for a specified time, a malfunction is detected and a DTC is stored.

Monitor Execution, Sequence, Duration, DTC Type

Execution	Continuous
Sequence	None
Duration	2 seconds or more
DTC Type	One drive cycle, MIL on, POWER SYSTEM indicator on

Enable Conditions

Condition	Minimum	Maximum
Elapsed time after the vehicle condition is turned to the ON mode	5 seconds	-
12 volt battery voltage	10 V	-

Malfunction Threshold

One of these conditions is met for at least 2 seconds:

- The motor control module does not receive any signals via the EPP-CAN lines.
- The information sent from the PCM is abnormal.

Possible Cause

NOTE: The causes shown may not be a complete list of all potential problems, and it is possible that there may be other causes.

- EPP-CAN circuit EPP-CAN_H line open
- EPP-CAN circuit EPP-CAN_L line open
- EPP-CAN circuit EPP-CAN_H line short to ground
- EPP-CAN circuit EPP-CAN_L line short to ground
- Unit communicating on EPP-CAN internal circuit failure
- PCM failure
- PCU internal failure

Diagnosis Details

Conditions for setting the DTC

When a malfunction is detected, the MIL comes on and a Pending DTC, a Confirmed DTC, and the freeze data are stored in the motor control module memory.

Conditions for clearing the DTC

The MIL is cleared if the malfunction does not return in three consecutive trips in which the diagnostic runs. The MIL, the Pending DTC, the Confirmed DTC, and the freeze data can be cleared with the scan tool Clear command.

DTC U1206 (MOTOR CONTROL MODULE)

DTC U1206: EP-CAN Malfunction (Traction Motor Control Module - Battery Condition Monitor Module)

General Description

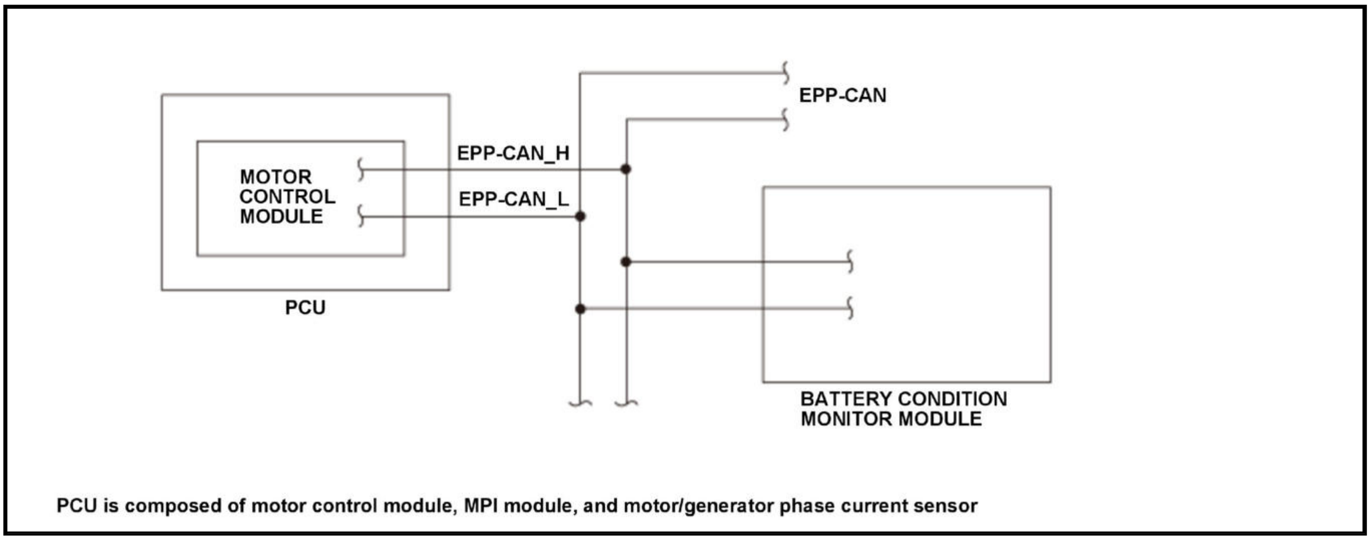

PCU is composed of motor control module, MPI module, and motor/generator phase current sensor

The controller area network (CAN) transmits/receives pulsing signals to/from the control modules simultaneously by using two signal lines (H line and L line). When the motor control module in the power control unit (PCU) does not receive the signals from the battery condition monitor module via the EPP-CAN lines or the received data is abnormal for a specified time, a malfunction is detected and a DTC is stored.

Monitor Execution, Sequence, Duration, DTC Type

Execution	Continuous
Sequence	None
Duration	2 seconds or more
DTC Type	One drive cycle, MIL on, POWER SYSTEM indicator on

Enable Conditions

Condition	Minimum	Maximum
Elapsed time after the vehicle condition is turned to the ON mode	5 seconds	-
12 volt battery voltage	10 V	-

Malfunction Threshold

One of these conditions is met for at least 2 seconds:

- The motor control module does not receive any signals via the EPP-CAN lines.
- The information sent from the battery condition monitor module is abnormal.

Possible Cause

NOTE: The causes shown may not be a complete list of all potential problems, and it is possible that there may be other causes.

- EPP-CAN circuit EPP-CAN_H line open
- EPP-CAN circuit EPP-CAN_L line open
- EPP-CAN circuit EPP-CAN_H line short to ground
- EPP-CAN circuit EPP-CAN_L line short to ground
- Unit communicating on EPP-CAN internal circuit failure
- Battery condition monitor module failure
- PCU internal failure

Diagnosis Details

Conditions for setting the DTC

When a malfunction is detected, the MIL comes on and a Pending DTC, a Confirmed DTC, and the freeze data are stored in the motor control module memory.

Conditions for clearing the DTC

The MIL is cleared if the malfunction does not return in three consecutive trips in which the diagnostic runs. The MIL, the Pending DTC, the Confirmed DTC, and the freeze data can be cleared with the scan tool Clear command.

DTC U1600 (MOTOR CONTROL MODULE)

DTC U1600: F-CAN Malfunction (Traction Motor Control Module - PCM)

General Description

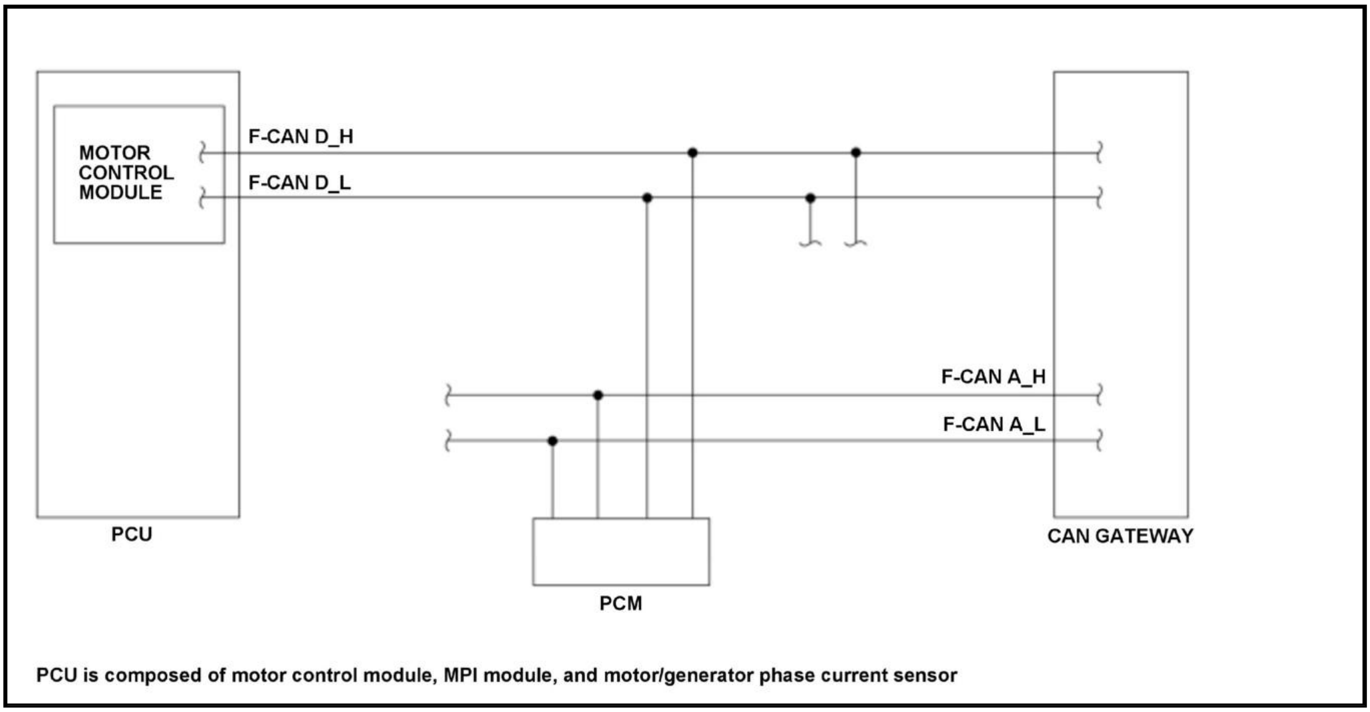

PCU is composed of motor control module, MPI module, and motor/generator phase current sensor

The controller area network (CAN) transmits/receives pulsing signals to/from the control modules simultaneously by using two signal lines (H line and L line). When the motor control module does not receive the signals from the powertrain control module (PCM) via the F-CAN lines or the received data is abnormal for a specified time, a malfunction is detected and a DTC is stored.

Monitor Execution, Sequence, Duration, DTC Type

Execution	Continuous
Sequence	None
Duration	2 seconds or more
DTC Type	Two drive cycles, MIL on, POWER SYSTEM indicator on

Enable Conditions

Condition	Minimum	Maximum
Elapsed time after the vehicle condition is turned to the ON mode	5 seconds	-
12 volt battery voltage	10 V	-

Malfunction Threshold

One of these conditions is met for at least 2 seconds:

- The motor control module does not receive any signals via the F-CAN lines.
- The information sent from the PCM is abnormal.

Possible Cause

NOTE: The causes shown may not be a complete list of all potential problems, and it is possible that there may be other causes.

- F-CAN circuit F-CAN A_H line open
- F-CAN circuit F-CAN A_L line open
- F-CAN circuit F-CAN A_H line short to ground
- F-CAN circuit F-CAN A_L line short to ground
- F-CAN circuit F-CAN D_H line open
- F-CAN circuit F-CAN D_L line open
- F-CAN circuit F-CAN D_H line short to ground
- F-CAN circuit F-CAN D_L line short to ground
- Unit communicating on F-CAN internal circuit failure
- PCM failure
- PCU internal failure

Diagnosis Details

Conditions for setting the DTC

When a malfunction is detected during the first drive cycle, a Pending DTC is stored in the motor control module memory. If the malfunction returns in the next (second) drive cycle, the MIL comes on and a Confirmed DTC and the freeze data are stored.

Conditions for clearing the DTC

The MIL is cleared if the malfunction does not return in three consecutive trips in which the diagnostic runs. The MIL, the Pending DTC, the Confirmed DTC, and the freeze data can be cleared with the scan tool Clear command.

DTC U1603 (MOTOR CONTROL MODULE)

DTC U1603: F-CAN Malfunction (Traction Motor Control Module - Battery Condition Monitor Module)

General Description

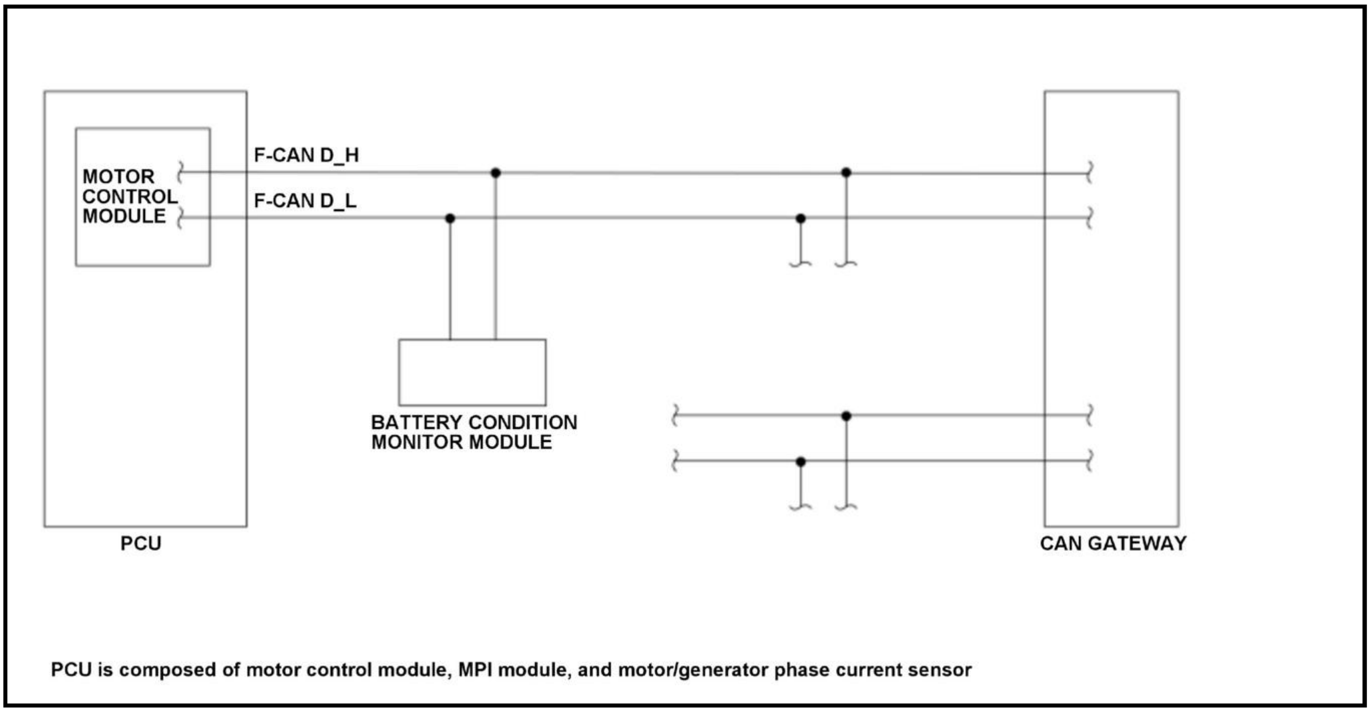
MOTOR CONTROL MODULE
F-CAN D_H
F-CAN D_L
BATTERY CONDITION MONITOR MODULE
PCU
CAN GATEWAY
PCU is composed of motor control module, MPI module, and motor/generator phase current sensor

The controller area network (CAN) transmits/receives pulsing signals to/from the control modules simultaneously by using two signal lines (H line and L line). When the motor control module does not receive the signals from the battery condition monitor module via the F-CAN lines or the received data is abnormal for a specified time, a malfunction is detected and a DTC is stored.

Monitor Execution, Sequence, Duration, DTC Type

Execution	Continuous
Sequence	None
Duration	2 seconds or more
DTC Type	Two drive cycles, MIL on, POWER SYSTEM indicator on

Enable Conditions

Condition	Minimum	Maximum
Elapsed time after the vehicle condition is turned to the ON mode	5 seconds	-
12 volt battery voltage	10 V	-

Malfunction Threshold

One of these conditions is met for at least 2 seconds:

- The motor control module does not receive any signals via the F-CAN lines.
- The information sent from the battery condition monitor module is abnormal.

Possible Cause

NOTE: The causes shown may not be a complete list of all potential problems, and it is possible that there may be other causes.

- F-CAN circuit F-CAN D_H line open
- F-CAN circuit F-CAN D_L line open
- F-CAN circuit F-CAN D_H line short to ground
- F-CAN circuit F-CAN D_L line short to ground
- Unit communicating on F-CAN internal circuit failure
- Battery condition monitor module failure
- PCU internal failure

Diagnosis Details

Conditions for setting the DTC

When a malfunction is detected during the first drive cycle, a Pending DTC is stored in the motor control module memory. If the malfunction returns in the next (second) drive cycle, the MIL comes on and a Confirmed DTC and the freeze data are stored.

Conditions for clearing the DTC

The MIL is cleared if the malfunction does not return in three consecutive trips in which the diagnostic runs. The MIL, the Pending DTC, the Confirmed DTC, and the freeze data can be cleared with the scan tool Clear command.

DTC U3000-49 (VSA CONTROL UNIT)

DTC U3000-49 : ECU Internal Circuit Failure

NOTE

- Initial Diagnosis:

  The initial on-board diagnosis occurs right after the vehicle condition is turned to the ON mode, and the ABS/VSA indicator comes on, and continues until the indicator goes off.

- Regular Diagnosis:

  The regular on-board diagnosis begins right after the ABS/VSA indicator goes off, and it continues until the vehicle condition is turned to the OFF (LOCK) mode.

- Review "How to troubleshoot the VSA system" before doing the DTC troubleshooting procedure.
- Test-drive the vehicle according to local traffic conditions and regulations. Do not test-drive on a lift unless specified.
- The possible causes shown may not be a complete list of all potential problems, and it is possible that there may be other causes.

Confirmation Procedure	Basic Condition: • 12 volt battery voltage 9.6 - 16.5 V • ABS/VSA function not in operation With the Driving Pattern: • Turn the vehicle to the READY TO DRIVE mode.

	- Test-drive the vehicle at 25 mph (40 km/h) or more. (Be careful of the surrounding traffic conditions.)
Execution	Initial Diagnosis/Regular Diagnosis
Duration	About 1 second
DTC Type	- 1 drive cycle - Brake system indicator (red) on or blink (Dependant upon the conditions) - Brake system indicator (amber) on (Dependant upon the conditions) - ABS indicator on (Dependant upon the conditions) - VSA indicator on (Dependant upon the conditions)
Fail Safe Action	- Stop CAN function (Dependant upon the conditions) - Stop EBD function or Degrade EBD performance (Dependant upon the conditions) - Stop ABS function (Dependant upon the conditions) - Stop engine drag torque control function (Dependant upon the conditions) - Stop TCS function (Dependant upon the conditions) - Stop VSA function (Dependant upon the conditions) - Stop agile handling assist control function (Dependant upon the conditions) - Stop hydraulic boost failure compensation function (Dependant upon the conditions) - Stop electric parking brake function (some of function) (Dependant upon the conditions)
Possible Cause	- VSA modulator-control unit internal failure

DTC U3000-51 (VSA CONTROL UNIT)

DTC U3000-51 : ECU Software Update Failure

NOTE

- Initial Diagnosis:

  The initial on-board diagnosis occurs right after the vehicle condition is turned to the ON mode, and the ABS/VSA indicator comes on, and continues until the indicator goes off.

- Regular Diagnosis:

  The regular on-board diagnosis begins right after the ABS/VSA indicator goes off, and it continues until the vehicle condition is turned to the OFF (LOCK) mode.

- Review "How to troubleshoot the VSA system" before doing the DTC troubleshooting procedure.
- Test-drive the vehicle according to local traffic conditions and regulations. Do not test-drive on a lift unless specified.
- The possible causes shown may not be a complete list of all potential problems, and it is possible that there may be other causes.

Confirmation Procedure	With the Driving Pattern:

	- Turn the vehicle to the ON mode.
Execution	Initial Diagnosis/Regular Diagnosis
Duration	About 1 second
DTC Type	- 1 drive cycle - Brake system indicator (red) on (Dependant upon the conditions) - Brake system indicator (amber) on (Dependant upon the conditions) - ABS indicator on (Dependant upon the conditions) - VSA indicator on (Dependant upon the conditions)
Fail Safe Action	- Stop CAN function - Stop EBD function - Stop ABS function - Stop engine drag torque control function - Stop TCS function - Stop VSA function - Stop agile handling assist function - Stop hydraulic boost failure compensation function - Stop electric parking brake function
Possible Cause	- VSA modulator-control unit program not the latest - VSA modulator-control unit internal failure

DTC U3003-16 (VSA CONTROL UNIT)

DTC U3003-16 : Electric Parking Brake Control Unit Power Source Circuit (+B) Low Voltage

NOTE

- Initial Diagnosis:

  The initial on-board diagnosis occurs right after the vehicle condition is turned to the ON mode, and the ABS/VSA indicator comes on, and continues until the indicator goes off.

- Regular Diagnosis:

  The regular on-board diagnosis begins right after the ABS/VSA indicator goes off, and it continues until the vehicle condition is turned to the OFF (LOCK) mode.

- Review "How to troubleshoot the VSA system" before doing the DTC troubleshooting procedure.
- Test-drive the vehicle according to local traffic conditions and regulations. Do not test-drive on a lift unless specified.
- The possible causes shown may not be a complete list of all potential problems, and it is possible that there may be other causes.

Confirmation Procedure	With the Driving Pattern: - Turn the vehicle to the READY TO DRIVE mode. - Wait 15 seconds or more.
Execution	Regular Diagnosis

Duration	About 15 seconds
DTC Type	- 1 drive cycle - Brake system indicator (red) blink (Dependant upon the conditions) - Brake system indicator (amber) on
Fail Safe Action	- Stop electric parking brake function (some of function)
Possible Cause	- Poor connection between the VSA modulator-control unit and the under-hood fuse/relay box (+B_ABS/VSA_FSR line) - Electric powertrain system failure - Abnormal 12 volt battery - VSA modulator-control unit internal failure

DTC U3003-17 (VSA CONTROL UNIT)

DTC U3003-17 : Electric Parking Brake Control Unit Power Source Circuit (+B) High Voltage

NOTE

- Initial Diagnosis:

  The initial on-board diagnosis occurs right after the vehicle condition is turned to the ON mode, and the ABS/VSA indicator comes on, and continues until the indicator goes off.

- Regular Diagnosis:

  The regular on-board diagnosis begins right after the ABS/VSA indicator goes off, and it continues until the vehicle condition is turned to the OFF (LOCK) mode.

- Review "How to troubleshoot the VSA system" before doing the DTC troubleshooting procedure.
- Test-drive the vehicle according to local traffic conditions and regulations. Do not test-drive on a lift unless specified.
- The possible causes shown may not be a complete list of all potential problems, and it is possible that there may be other causes.

Confirmation Procedure	With the Driving Pattern: - Turn the vehicle to the READY TO DRIVE mode.
Execution	Regular Diagnosis
Duration	About 1 second
DTC Type	- 1 drive cycle - Brake system indicator (amber) on
Fail Safe Action	- Stop electric parking brake function (some of function)
Possible Cause	- Electric powertrain system failure - Abnormal 12 volt battery - VSA modulator-control unit internal failure

DTC U3006-16 (VSA CONTROL UNIT)

DTC U3006-16 : Power Source Failure for ECU (Low Voltage)

NOTE

- Initial Diagnosis:

  The initial on-board diagnosis occurs right after the vehicle condition is turned to the ON mode, and the ABS/VSA indicator comes on, and continues until the indicator goes off.

- Regular Diagnosis:

  The regular on-board diagnosis begins right after the ABS/VSA indicator goes off, and it continues until the vehicle condition is turned to the OFF (LOCK) mode.

- Review "How to troubleshoot the VSA system" before doing the DTC troubleshooting procedure.
- Test-drive the vehicle according to local traffic conditions and regulations. Do not test-drive on a lift unless specified.
- The possible causes shown may not be a complete list of all potential problems, and it is possible that there may be other causes.

Confirmation Procedure	With the Driving Pattern: • Turn the vehicle to the READY TO DRIVE mode. • Test-drive the vehicle at 6 mph (10 km/h) or more. (Be careful of the surrounding traffic conditions.)
Execution	Initial Diagnosis/Regular Diagnosis
Duration	About 1 second
DTC Type	• 1 drive cycle • Brake system indicator (red) on or blink (Dependant upon the conditions) • Brake system indicator (amber) on • ABS indicator on • VSA indicator on
Fail Safe Action	• Stop CAN function (Dependant upon the conditions) • Stop EBD function or Degrade EBD performance (Dependant upon the conditions) • Stop ABS function • Stop engine drag torque control function • Stop TCS function • Stop VSA function • Stop agile handling assist control function • Stop hydraulic boost failure compensation function • Stop electric parking brake function (some of function)
Possible Cause	• Poor connection between the VSA modulator-control unit and the under-hood fuse/relay box (+B_ABS/VSA_FSR line) • Electric powertrain system failure • Abnormal 12 volt battery • VSA modulator-control unit internal failure

DTC U3006-17 (VSA CONTROL UNIT)

DTC U3006-17 : Power Source Failure for ECU (High Voltage)

NOTE

- Initial Diagnosis:

  The initial on-board diagnosis occurs right after the vehicle condition is turned to the ON mode, and the ABS/VSA indicator comes on, and continues until the indicator goes off.

- Regular Diagnosis:

  The regular on-board diagnosis begins right after the ABS/VSA indicator goes off, and it continues until the vehicle condition is turned to the OFF (LOCK) mode.

- Review "How to troubleshoot the VSA system" before doing the DTC troubleshooting procedure.
- Test-drive the vehicle according to local traffic conditions and regulations. Do not test-drive on a lift unless specified.
- The possible causes shown may not be a complete list of all potential problems, and it is possible that there may be other causes.

Confirmation Procedure	With the Driving Pattern: • Turn the vehicle to the READY TO DRIVE mode.
Execution	Initial Diagnosis/Regular Diagnosis
Duration	About 1 second
DTC Type	• 1 drive cycle • Brake system indicator (red) on or blink (Dependant upon the conditions) • Brake system indicator (amber) on • ABS indicator on • VSA indicator on
Fail Safe Action	• Stop CAN function (Dependant upon the conditions) • Degrade EBD performance (Dependant upon the conditions) • Stop ABS function • Stop engine drag torque control function • Stop TCS function • Stop VSA function • Stop agile handling assist control function • Stop hydraulic boost failure compensation function • Stop electric parking brake function (some of function)
Possible Cause	• Electric powertrain system failure • Abnormal 12 volt battery • VSA modulator-control unit internal failure

ADVANCED DIAGNOSTICS

DTC B0050-F0 (VSA CONTROL UNIT)

DTC B0050-F0 : Driver's Seat Belt Buckle Switch Malfunction

NOTE:

- Initial Diagnosis:

  The initial on-board diagnosis occurs right after the vehicle condition is turned to the ON mode, and the ABS/VSA indicator comes on, and continues until the indicator goes off.

- Regular Diagnosis:

  The regular on-board diagnosis begins right after the ABS/VSA indicator goes off, and it continues until the vehicle condition is turned to the OFF (LOCK) mode.

- Review "How to troubleshoot the VSA system" before doing the DTC troubleshooting procedure.
- Test-drive the vehicle according to local traffic conditions and regulations. Do not test-drive on a lift unless specified.
- The possible causes shown may not be a complete list of all potential problems, and it is possible that there may be other causes.

Confirmation Procedure	Basic Condition: • 12 volt battery voltage 9.6 - 16.5 V With the Driving Pattern: • Turn the vehicle to the ON mode.
Execution	Regular Diagnosis
Duration	About 1 second
DTC Type	• 1 drive cycle • Brake system indicator (amber) on
Fail Safe Action	• Stop automatic brake hold function • Stop automatic operating function (Drive away assist) • Stop ignition OFF apply function
Possible Cause	• SRS failure

DTC C0010-49

DTC C0010-49 : Inlet Solenoid (Left Front) Circuit Failure

NOTE

- Initial Diagnosis:

The initial on-board diagnosis occurs right after the vehicle condition is turned to the ON mode, and the ABS/VSA indicator comes on, and continues until the indicator goes off.

- Regular Diagnosis:

  The regular on-board diagnosis begins right after the ABS/VSA indicator goes off, and it continues until the vehicle condition is turned to the OFF (LOCK) mode.

- Review "How to troubleshoot the VSA system" before doing the DTC troubleshooting procedure.
- Test-drive the vehicle according to local traffic conditions and regulations. Do not test-drive on a lift unless specified.
- The possible causes shown may not be a complete list of all potential problems, and it is possible that there may be other causes.

Confirmation Procedure	Basic Condition: • 12 volt battery voltage 9.6 - 16.5 V • ABS/VSA function not in operation With the Driving Pattern: • Start the engine. • Wait 20 seconds or more.
Execution	Initial Diagnosis/Regular Diagnosis
Duration	About 20 seconds
DTC Type	• 1 drive cycle • Brake system indicator (red) on • Brake system indicator (amber) on • ABS indicator on • VSA indicator on
Fail Safe Action	• Stop EBD function • Stop ABS function • Stop engine drag torque control function • Stop TCS function • Stop VSA function • Stop agile handling assist function • Stop brake assist function • Stop hydraulic boost failure compensation function • Stop hill start assist function • Stop automatic brake hold function • Stop automatic operating function (Drive away assist) • Stop ignition OFF apply function • Stop ACC function* • Stop CMBS function*
Possible Cause	• VSA modulator-control unit internal failure

*: With ACC

DTC C0011-49

DTC C0011-49 : Outlet Solenoid (Left Front) Circuit Failure

NOTE

- Initial Diagnosis:

  The initial on-board diagnosis occurs right after the vehicle condition is turned to the ON mode, and the ABS/VSA indicator comes on, and continues until the indicator goes off.

- Regular Diagnosis:

  The regular on-board diagnosis begins right after the ABS/VSA indicator goes off, and it continues until the vehicle condition is turned to the OFF (LOCK) mode.

- Review "How to troubleshoot the VSA system" before doing the DTC troubleshooting procedure.
- Test-drive the vehicle according to local traffic conditions and regulations. Do not test-drive on a lift unless specified.
- The possible causes shown may not be a complete list of all potential problems, and it is possible that there may be other causes.

Confirmation Procedure	Basic Condition: • 12 volt battery voltage 9.6 - 16.5 V • ABS/VSA function not in operation With the Driving Pattern: • Start the engine. • Wait 20 seconds or more.
Execution	Initial Diagnosis/Regular Diagnosis
Duration	About 20 seconds
DTC Type	• 1 drive cycle • Brake system indicator (red) on • Brake system indicator (amber) on • ABS indicator on • VSA indicator on
Fail Safe Action	• Stop EBD function • Stop ABS function • Stop engine drag torque control function • Stop TCS function • Stop VSA function • Stop agile handling assist function • Stop brake assist function • Stop hydraulic boost failure compensation function • Stop hill start assist function • Stop automatic brake hold function • Stop automatic operating function (Drive away assist) • Stop ignition OFF apply function

	- Stop ACC function* - Stop CMBS function*
Possible Cause	- VSA modulator-control unit internal failure

*: With ACC

DTC C0014-49

DTC C0014-49 : Inlet Solenoid (Right Front) Circuit Failure

NOTE

- Initial Diagnosis:

  The initial on-board diagnosis occurs right after the vehicle condition is turned to the ON mode, and the ABS/VSA indicator comes on, and continues until the indicator goes off.

- Regular Diagnosis:

  The regular on-board diagnosis begins right after the ABS/VSA indicator goes off, and it continues until the vehicle condition is turned to the OFF (LOCK) mode.

- Review "How to troubleshoot the VSA system" before doing the DTC troubleshooting procedure.
- Test-drive the vehicle according to local traffic conditions and regulations. Do not test-drive on a lift unless specified.
- The possible causes shown may not be a complete list of all potential problems, and it is possible that there may be other causes.

Confirmation Procedure	Basic Condition: - 12 volt battery voltage 9.6 - 16.5 V - ABS/VSA function not in operation With the Driving Pattern: - Start the engine. - Wait 20 seconds or more.
Execution	Initial Diagnosis/Regular Diagnosis
Duration	About 20 seconds
DTC Type	- 1 drive cycle - Brake system indicator (red) on - Brake system indicator (amber) on - ABS indicator on - VSA indicator on
Fail Safe Action	- Stop EBD function - Stop ABS function - Stop engine drag torque control function - Stop TCS function - Stop VSA function - Stop agile handling assist function

	• Stop brake assist function • Stop hydraulic boost failure compensation function • Stop hill start assist function • Stop automatic brake hold function • Stop automatic operating function (Drive away assist) • Stop ignition OFF apply function • Stop ACC function* • Stop CMBS function*
Possible Cause	• VSA modulator-control unit internal failure

*: With ACC

DTC C0015-49

DTC C0015-49 : Outlet Solenoid (Right Front) Circuit Failure

NOTE

- Initial Diagnosis:

  The initial on-board diagnosis occurs right after the vehicle condition is turned to the ON mode, and the ABS/VSA indicator comes on, and continues until the indicator goes off.

- Regular Diagnosis:

  The regular on-board diagnosis begins right after the ABS/VSA indicator goes off, and it continues until the vehicle condition is turned to the OFF (LOCK) mode.

- Review "How to troubleshoot the VSA system" before doing the DTC troubleshooting procedure.
- Test-drive the vehicle according to local traffic conditions and regulations. Do not test-drive on a lift unless specified.
- The possible causes shown may not be a complete list of all potential problems, and it is possible that there may be other causes.

Confirmation Procedure	Basic Condition: • 12 volt battery voltage 9.6 - 16.5 V • ABS/VSA function not in operation With the Driving Pattern: • Start the engine. • Wait 20 seconds or more.
Execution	Initial Diagnosis/Regular Diagnosis
Duration	About 20 seconds
DTC Type	• 1 drive cycle • Brake system indicator (red) on • Brake system indicator (amber) on • ABS indicator on • VSA indicator on

Fail Safe Action	- Stop EBD function - Stop ABS function - Stop engine drag torque control function - Stop TCS function - Stop VSA function - Stop agile handling assist function - Stop brake assist function - Stop hydraulic boost failure compensation function - Stop hill start assist function - Stop automatic brake hold function - Stop automatic operating function (Drive away assist) - Stop ignition OFF apply function - Stop ACC function* - Stop CMBS function*
Possible Cause	- VSA modulator-control unit internal failure

*: With ACC

DTC C0018-49

DTC C0018-49 : Inlet Solenoid (Left Rear) Circuit Failure

NOTE

- Initial Diagnosis:

  The initial on-board diagnosis occurs right after the vehicle condition is turned to the ON mode, and the ABS/VSA indicator comes on, and continues until the indicator goes off.

- Regular Diagnosis:

  The regular on-board diagnosis begins right after the ABS/VSA indicator goes off, and it continues until the vehicle condition is turned to the OFF (LOCK) mode.

- Review "How to troubleshoot the VSA system" before doing the DTC troubleshooting procedure.
- Test-drive the vehicle according to local traffic conditions and regulations. Do not test-drive on a lift unless specified.
- The possible causes shown may not be a complete list of all potential problems, and it is possible that there may be other causes.

Confirmation Procedure	Basic Condition: - 12 volt battery voltage 9.6 - 16.5 V - ABS/VSA function not in operation With the Driving Pattern: - Start the engine. - Wait 20 seconds or more.
Execution	Initial Diagnosis/Regular Diagnosis

Duration	About 20 seconds
DTC Type	• 1 drive cycle • Brake system indicator (red) on • Brake system indicator (amber) on • ABS indicator on • VSA indicator on
Fail Safe Action	• Stop EBD function • Stop ABS function • Stop engine drag torque control function • Stop TCS function • Stop VSA function • Stop agile handling assist function • Stop brake assist function • Stop hydraulic boost failure compensation function • Stop hill start assist function • Stop automatic brake hold function • Stop automatic operating function (Drive away assist) • Stop ignition OFF apply function • Stop ACC function* • Stop CMBS function*
Possible Cause	• VSA modulator-control unit internal failure

*: With ACC

DTC C0019-49

DTC C0019-49 : Outlet Solenoid (Left Rear) Circuit Failure

NOTE

- Initial Diagnosis:

  The initial on-board diagnosis occurs right after the vehicle condition is turned to the ON mode, and the ABS/VSA indicator comes on, and continues until the indicator goes off.

- Regular Diagnosis:

  The regular on-board diagnosis begins right after the ABS/VSA indicator goes off, and it continues until the vehicle condition is turned to the OFF (LOCK) mode.

- Review "How to troubleshoot the VSA system" before doing the DTC troubleshooting procedure.
- Test-drive the vehicle according to local traffic conditions and regulations. Do not test-drive on a lift unless specified.
- The possible causes shown may not be a complete list of all potential problems, and it is possible that there may be other causes.

Confirmation Procedure	Basic Condition: • 12 volt battery voltage 9.6 - 16.5 V

	- ABS/VSA function not in operation With the Driving Pattern: - Start the engine. - Wait 20 seconds or more.
Execution	Initial Diagnosis/Regular Diagnosis
Duration	About 20 seconds
DTC Type	- 1 drive cycle - Brake system indicator (red) on - Brake system indicator (amber) on - ABS indicator on - VSA indicator on
Fail Safe Action	- Stop EBD function - Stop ABS function - Stop engine drag torque control function - Stop TCS function - Stop VSA function - Stop agile handling assist function - Stop brake assist function - Stop hydraulic boost failure compensation function - Stop hill start assist function - Stop automatic brake hold function - Stop automatic operating function (Drive away assist) - Stop ignition OFF apply function - Stop ACC function* - Stop CMBS function*
Possible Cause	- VSA modulator-control unit internal failure

*: With ACC

DTC C001C-49

DTC C001C-49 : Inlet Solenoid (Right Rear) Circuit Failure

NOTE

- Initial Diagnosis:

  The initial on-board diagnosis occurs right after the vehicle condition is turned to the ON mode, and the ABS/VSA indicator comes on, and continues until the indicator goes off.

- Regular Diagnosis:

  The regular on-board diagnosis begins right after the ABS/VSA indicator goes off, and it continues until the vehicle condition is turned to the OFF (LOCK) mode.

- Review "How to troubleshoot the VSA system" before doing the DTC troubleshooting procedure.

- Test-drive the vehicle according to local traffic conditions and regulations. Do not test-drive on a lift unless specified.
- The possible causes shown may not be a complete list of all potential problems, and it is possible that there may be other causes.

Confirmation Procedure	Basic Condition: • 12 volt battery voltage 9.6 - 16.5 V • ABS/VSA function not in operation With the Driving Pattern: • Start the engine. • Wait 20 seconds or more.
Execution	Initial Diagnosis/Regular Diagnosis
Duration	About 20 seconds
DTC Type	• 1 drive cycle • Brake system indicator (red) on • Brake system indicator (amber) on • ABS indicator on • VSA indicator on
Fail Safe Action	• Stop EBD function • Stop ABS function • Stop engine drag torque control function • Stop TCS function • Stop VSA function • Stop agile handling assist function • Stop brake assist function • Stop hydraulic boost failure compensation function • Stop hill start assist function • Stop automatic brake hold function • Stop automatic operating function (Drive away assist) • Stop ignition OFF apply function • Stop ACC function* • Stop CMBS function*
Possible Cause	• VSA modulator-control unit internal failure

*: With ACC

DTC C001D-49

DTC C001D-49 : Outlet Solenoid (Right Rear) Circuit Failure

NOTE

- Initial Diagnosis:

The initial on-board diagnosis occurs right after the vehicle condition is turned to the ON mode, and the ABS/VSA indicator comes on, and continues until the indicator goes off.

- Regular Diagnosis:

  The regular on-board diagnosis begins right after the ABS/VSA indicator goes off, and it continues until the vehicle condition is turned to the OFF (LOCK) mode.

- Review "How to troubleshoot the VSA system" before doing the DTC troubleshooting procedure.
- Test-drive the vehicle according to local traffic conditions and regulations. Do not test-drive on a lift unless specified.
- The possible causes shown may not be a complete list of all potential problems, and it is possible that there may be other causes.

Confirmation Procedure	Basic Condition: • 12 volt battery voltage 9.6 - 16.5 V • ABS/VSA function not in operation With the Driving Pattern: • Start the engine. • Wait 20 seconds or more.
Execution	Initial Diagnosis/Regular Diagnosis
Duration	About 20 seconds
DTC Type	• 1 drive cycle • Brake system indicator (red) on • Brake system indicator (amber) on • ABS indicator on • VSA indicator on
Fail Safe Action	• Stop EBD function • Stop ABS function • Stop engine drag torque control function • Stop TCS function • Stop VSA function • Stop agile handling assist function • Stop brake assist function • Stop hydraulic boost failure compensation function • Stop hill start assist function • Stop automatic brake hold function • Stop automatic operating function (Drive away assist) • Stop ignition OFF apply function • Stop ACC function* • Stop CMBS function*
Possible Cause	• VSA modulator-control unit internal failure

*: With ACC

DTC C0020-12

DTC C0020-12 : Pump Motor Circuit Failure (Stuck ON)

NOTE

- Initial Diagnosis:

  The initial on-board diagnosis occurs right after the vehicle condition is turned to the ON mode, and the ABS/VSA indicator comes on, and continues until the indicator goes off.

- Regular Diagnosis:

  The regular on-board diagnosis begins right after the ABS/VSA indicator goes off, and it continues until the vehicle condition is turned to the OFF (LOCK) mode.

- Review "How to troubleshoot the VSA system" before doing the DTC troubleshooting procedure.
- Test-drive the vehicle according to local traffic conditions and regulations. Do not test-drive on a lift unless specified.
- The possible causes shown may not be a complete list of all potential problems, and it is possible that there may be other causes.

Confirmation Procedure	With the Driving Pattern: • Turn the vehicle to the ON mode.
Execution	Initial Diagnosis/Regular Diagnosis
Duration	About 1 second
DTC Type	• 1 drive cycle • Brake system indicator (red) on • Brake system indicator (amber) on • ABS indicator on • VSA indicator on
Fail Safe Action	• Degrade EBD performance • Stop ABS function • Stop engine drag torque control function • Stop TCS function • Stop VSA function • Stop agile handling assist function • Stop brake assist function • Stop hydraulic boost failure compensation function • Stop hill start assist function • Stop automatic brake hold function • Stop automatic operating function (Drive away assist) • Stop ignition OFF apply function • Stop ACC function* • Stop CMBS function*
Possible Cause	• Open or Poor connection between the VSA modulator-control unit and the body ground (GND line) • VSA modulator-control unit internal failure

*: With ACC

DTC C0020-14

DTC C0020-14 : Pump Motor Circuit Failure (Stuck OFF)

NOTE

- Initial Diagnosis:

  The initial on-board diagnosis occurs right after the vehicle condition is turned to the ON mode, and the ABS/VSA indicator comes on, and continues until the indicator goes off.

- Regular Diagnosis:

  The regular on-board diagnosis begins right after the ABS/VSA indicator goes off, and it continues until the vehicle condition is turned to the OFF (LOCK) mode.

- Review "How to troubleshoot the VSA system" before doing the DTC troubleshooting procedure.

- Test-drive the vehicle according to local traffic conditions and regulations. Do not test-drive on a lift unless specified.
- The possible causes shown may not be a complete list of all potential problems, and it is possible that there may be other causes.

Confirmation Procedure	Basic Condition: • 12 volt battery voltage 9.6 - 16.5 V • ABS/VSA function not in operation With the Driving Pattern: • Turn the vehicle to the ON mode. • Wait 20 seconds or more.
Execution	Initial Diagnosis/Regular Diagnosis
Duration	About 20 seconds
DTC Type	• 1 drive cycle • Brake system indicator (red) on • Brake system indicator (amber) on • ABS indicator on • VSA indicator on
Fail Safe Action	• Degrade EBD performance • Stop ABS function • Stop engine drag torque control function • Stop TCS function • Stop VSA function • Stop agile handling assist function • Stop brake assist function • Stop hydraulic boost failure compensation function • Stop hill start assist function • Stop automatic brake hold function • Stop automatic operating function (Drive away assist) • Stop ignition OFF apply function • Stop ACC function* • Stop CMBS function*
Possible Cause	• Open or Short to ground between the VSA modulator-control unit and the under-hood fuse/relay box (+B ABS/VSA MTR line) • Fuse failure (Under-hood fuse/relay box No. A3-3 (40 A)) • VSA modulator-control unit internal failure

*: With ACC

DTC C0023-12

DTC C0023-12 : Brake Diag Circuit ON Failure

NOTE

- Initial Diagnosis:

  The initial on-board diagnosis occurs right after the vehicle condition is turned to the ON mode, and the ABS/VSA indicator comes on, and continues until the indicator goes off.

- Regular Diagnosis:

  The regular on-board diagnosis begins right after the ABS/VSA indicator goes off, and it continues until the vehicle condition is turned to the OFF (LOCK) mode.

- Review "How to troubleshoot the VSA system" before doing the DTC troubleshooting procedure.
- Test-drive the vehicle according to local traffic conditions and regulations. Do not test-drive on a lift unless specified.
- The possible causes shown may not be a complete list of all potential problems, and it is possible that there may be other causes.

Confirmation Procedure	Basic Condition: • 12 volt battery voltage 9.6 - 16.5 V • No other DTCs detected • Brake pedal is released With the Driving Pattern: • Turn the vehicle to the ON mode, and release the brake pedal. • Wait 2 seconds or more without pressing the brake pedal.
Execution	Regular Diagnosis
Duration	About 2 seconds
DTC Type	• 1 drive cycle • Brake system indicator (amber) on
Fail Safe Action	• Stop automatic brake hold function • Stop ACC function* • Stop CMBS function*
Possible Cause	• Relay circuit board failure • Short to ground between the VSA modulator-control unit and the relay circuit board (BRK LAMP line) • Open between the PCM and the brake pedal position switch (STOP SW line) • PCM internal failure • VSA modulator-control unit internal failure

*: With ACC

DTC C0023-14

DTC C0023-14 : Brake Diag Circuit OFF Failure

NOTE

- Initial Diagnosis:

The initial on-board diagnosis occurs right after the vehicle condition is turned to the ON mode, and the ABS/VSA indicator comes on, and continues until the indicator goes off.

- Regular Diagnosis:

  The regular on-board diagnosis begins right after the ABS/VSA indicator goes off, and it continues until the vehicle condition is turned to the OFF (LOCK) mode.

- Review "How to troubleshoot the VSA system" before doing the DTC troubleshooting procedure.
- Test-drive the vehicle according to local traffic conditions and regulations. Do not test-drive on a lift unless specified.
- The possible causes shown may not be a complete list of all potential problems, and it is possible that there may be other causes.

Confirmation Procedure	Basic Condition: • 12 volt battery voltage 9.6 - 16.5 V With the HDS: • Turn the vehicle to the ON mode. • Select the BRAKE LIGHT RELAY TEST in the VSA FUNCTION TEST with the HDS.
Execution	Regular Diagnosis
Duration	About 1 second
DTC Type	• 1 drive cycle • Brake system indicator (amber) on
Fail Safe Action	• Stop automatic brake hold function • Stop ACC function* • Stop CMBS function*
Possible Cause	• Relay circuit board failure • Open between the under-hood fuse/relay box and the relay circuit board (+B STOP line) • Open between the brake pedal position switch and the relay circuit board (STOP SW line) • Open between the under-dash fuse/relay box and the relay circuit board (IG1 OPTION line) • Open between the relay circuit board and the VSA modulator-control unit (BRK DIAG, BRK LAMP lines) • VSA modulator-control unit internal failure

*: With ACC

DTC C0031-14

DTC C0031-14 : Left Front Wheel Speed Sensor Circuit Failure (Circuit Short To Ground or Open)

NOTE

- Initial Diagnosis:

The initial on-board diagnosis occurs right after the vehicle condition is turned to the ON mode, and the ABS/VSA indicator comes on, and continues until the indicator goes off.

- Regular Diagnosis:

  The regular on-board diagnosis begins right after the ABS/VSA indicator goes off, and it continues until the vehicle condition is turned to the OFF (LOCK) mode.

- Review "How to troubleshoot the VSA system" before doing the DTC troubleshooting procedure.
- Test-drive the vehicle according to local traffic conditions and regulations. Do not test-drive on a lift unless specified.
- The possible causes shown may not be a complete list of all potential problems, and it is possible that there may be other causes.

Confirmation Procedure	With the Driving Pattern: • Turn the vehicle to the ON mode.
Execution	Initial Diagnosis/Regular Diagnosis
Duration	About 1 second
DTC Type	• 1 drive cycle • Brake system indicator (red) on (If multiple wheel failures are detected) • Brake system indicator (amber) on • ABS indicator on • VSA indicator on
Fail Safe Action	• Stop EBD function (If multiple wheel failures are detected) • Stop ABS function • Stop engine drag torque control function • Stop TCS function • Stop VSA function • Stop agile handling assist function • Stop brake assist function • Stop hydraulic boost failure compensation function • Stop hill start assist function • Stop automatic brake hold function • Stop automatic operating function (Drive away assist) • Stop automatic operating function (Request from other system) (Dependant upon the conditions) • Stop ignition OFF apply function • Stop ACC function* • Stop CMBS function*
Possible Cause	• Open, Short to ground, Short to power, or Short to another line between the VSA modulator-control unit and the left-front wheel speed sensor (FR L ABS SNSR+, FR L ABS SNSR- lines) • Left- front wheel speed sensor failure • VSA modulator-control unit internal failure

*: With ACC

DTC C0031-3A

DTC C0031-3A : Wheel Speed Sensor (Left Front) Signal Failure (Signal Frequency is Too High)

NOTE

- Initial Diagnosis:

  The initial on-board diagnosis occurs right after the vehicle condition is turned to the ON mode, and the ABS/VSA indicator comes on, and continues until the indicator goes off.

- Regular Diagnosis:

  The regular on-board diagnosis begins right after the ABS/VSA indicator goes off, and it continues until the vehicle condition is turned to the OFF (LOCK) mode.

- Review "How to troubleshoot the VSA system" before doing the DTC troubleshooting procedure.
- Test-drive the vehicle according to local traffic conditions and regulations. Do not test-drive on a lift unless specified.
- The possible causes shown may not be a complete list of all potential problems, and it is possible that there may be other causes.

Confirmation Procedure	Basic Condition: • 12 volt battery voltage 9.6 - 16.5 V With the Driving Pattern: • Start the engine. • Test-drive the vehicle for 80 seconds or more. (Be careful of the surrounding traffic conditions.)
Execution	Regular Diagnosis
Duration	About 80 seconds
DTC Type	• 1 drive cycle • Brake system indicator (red) on (If multiple wheel failures are detected) • Brake system indicator (amber) on • ABS indicator on • VSA indicator on
Fail Safe Action	• Stop EBD function (If multiple wheel failures are detected) • Stop ABS function • Stop engine drag torque control function • Stop TCS function • Stop VSA function • Stop agile handling assist function • Stop brake assist function • Stop hydraulic boost failure compensation function • Stop hill start assist function • Stop automatic brake hold function • Stop automatic operating function (Drive away assist)

	• Stop automatic operating function (Request from other system) (Dependant upon the conditions) • Stop ignition OFF apply function • Stop ACC function* • Stop CMBS function*
Possible Cause	• Electrical noise in the left-front wheel speed sensor signal • Left-front wheel speed sensor incorrect installation • Debris on the left-front encoder surface • Left-front wheel speed sensor failure • VSA modulator-control unit internal failure

*: With ACC

DTC C0031-62 (VSA CONTROL UNIT)

DTC C0031-62 : Left Front Wheel Speed Sensor Signal Compare Failure

NOTE

- Initial Diagnosis:

  The initial on-board diagnosis occurs right after the vehicle condition is turned to the ON mode, and the ABS/VSA indicator comes on, and continues until the indicator goes off.

- Regular Diagnosis:

  The regular on-board diagnosis begins right after the ABS/VSA indicator goes off, and it continues until the vehicle condition is turned to the OFF (LOCK) mode.

- Review "How to troubleshoot the VSA system" before doing the DTC troubleshooting procedure.
- Test-drive the vehicle according to local traffic conditions and regulations. Do not test-drive on a lift unless specified.
- The possible causes shown may not be a complete list of all potential problems, and it is possible that there may be other causes.

Confirmation Procedure	Basic Condition: • No other DTCs detected • Brake TCS function not in operation • ABS function not in operation (Not applied under operating only for slowest wheel) With the Driving Pattern: • Start the engine. • Test-drive the vehicle at 31 mph (50 km/h) or more. (Be careful of the surrounding traffic conditions.)
Execution	Regular Diagnosis
Duration	About 1 second
DTC Type	• 1 drive cycle

	• Brake system indicator (red) on (If multiple wheel failures are detected) • Brake system indicator (amber) on • ABS indicator on • VSA indicator on
Fail Safe Action	• Stop EBD function (If multiple wheel failures are detected) • Stop ABS function • Stop engine drag torque control function • Stop TCS function • Stop VSA function • Stop agile handling assist function • Stop brake assist function • Stop hydraulic boost failure compensation function • Stop hill start assist function • Stop automatic brake hold function • Stop automatic operating function (Drive away assist) • Stop automatic operating function (Request from other system) (Dependant upon the conditions) • Stop ignition OFF apply function • Stop ACC function* • Stop CMBS function*

*: With ACC

Possible Cause	• Left-front wheel speed sensor incorrect installation • Debris on the left-front encoder surface • Left-front wheel speed sensor failure • VSA modulator-control unit internal failure

*: With ACC

DTC C0034-14

DTC C0034-14 : Right-Front Wheel Speed Sensor Circuit Failure (Circuit Short To Ground or Open)

NOTE

- Initial Diagnosis:

  The initial on-board diagnosis occurs right after the vehicle condition is turned to the ON mode, and the ABS/VSA indicator comes on, and continues until the indicator goes off.

- Regular Diagnosis:

  The regular on-board diagnosis begins right after the ABS/VSA indicator goes off, and it continues until the vehicle condition is turned to the OFF (LOCK) mode.

- Review "How to troubleshoot the VSA system" before doing the DTC troubleshooting procedure.
- Test-drive the vehicle according to local traffic conditions and regulations. Do not test-drive on a lift unless specified.

- The possible causes shown may not be a complete list of all potential problems, and it is possible that there may be other causes.

Confirmation Procedure	With the Driving Pattern: • Turn the vehicle to the ON mode.
Execution	Initial Diagnosis/Regular Diagnosis
Duration	About 1 second
DTC Type	• 1 drive cycle • Brake system indicator (red) on (If multiple wheel failures are detected) • Brake system indicator (amber) on • ABS indicator on • VSA indicator on
Fail Safe Action	• Stop EBD function (If multiple wheel failures are detected) • Stop ABS function • Stop engine drag torque control function • Stop TCS function • Stop VSA function • Stop agile handling assist function • Stop brake assist function • Stop hydraulic boost failure compensation function • Stop hill start assist function • Stop automatic brake hold function • Stop automatic operating function (Drive away assist) • Stop automatic operating function (Request from other system) (Dependant upon the conditions) • Stop ignition OFF apply function • Stop ACC function* • Stop CMBS function*
Possible Cause	• Open, Short to ground, Short to power, or Short to another line between the VSA modulator-control unit and the right-front wheel speed sensor (FR R ABS SNSR+, FR R ABS SNSR-- lines) • Right-front wheel speed sensor failure • VSA modulator-control unit internal failure

*: With ACC

DTC C0034-3A

DTC C0034-3A : Wheel Speed Sensor (Right Front) Signal Failure (Signal Frequency is Too High)

NOTE

- Initial Diagnosis:

  The initial on-board diagnosis occurs right after the vehicle condition is turned to the ON mode, and the ABS/VSA indicator comes on, and continues until the indicator goes off.

- Regular Diagnosis:

  The regular on-board diagnosis begins right after the ABS/VSA indicator goes off, and it continues until the vehicle condition is turned to the OFF (LOCK) mode.

- Review "How to troubleshoot the VSA system" before doing the DTC troubleshooting procedure.
- Test-drive the vehicle according to local traffic conditions and regulations. Do not test-drive on a lift unless specified.
- The possible causes shown may not be a complete list of all potential problems, and it is possible that there may be other causes.

Confirmation Procedure	Basic Condition: • 12 volt battery voltage 9.6 - 16.5 V With the Driving Pattern: • Start the engine. • Test-drive the vehicle for 80 seconds or more. (Be careful of the surrounding traffic conditions.)
Execution	Regular Diagnosis
Duration	About 80 seconds
DTC Type	• 1 drive cycle • Brake system indicator (red) on (If multiple wheel failures are detected) • Brake system indicator (amber) on • ABS indicator on • VSA indicator on
Fail Safe Action	• Stop EBD function (If multiple wheel failures are detected) • Stop ABS function • Stop engine drag torque control function • Stop TCS function • Stop VSA function • Stop agile handling assist function • Stop brake assist function • Stop hydraulic boost failure compensation function • Stop hill start assist function • Stop automatic brake hold function • Stop automatic operating function (Drive away assist) • Stop automatic operating function (Request from other system) (Dependant upon the conditions) • Stop ignition OFF apply function • Stop ACC function* • Stop CMBS function*
Possible Cause	• Electrical noise in the right- front wheel speed sensor signal • Right-front wheel speed sensor incorrect installation • Debris on the right-front encoder surface

	- Right-front wheel speed sensor failure - VSA modulator-control unit internal failure

*: With ACC

DTC C0034-62 (VSA CONTROL UNIT)

DTC C0034-62 : Right Front Wheel Speed Sensor Signal Compare Failure

NOTE

- Initial Diagnosis:

  The initial on-board diagnosis occurs right after the vehicle condition is turned to the ON mode, and the ABS/VSA indicator comes on, and continues until the indicator goes off.

- Regular Diagnosis:

  The regular on-board diagnosis begins right after the ABS/VSA indicator goes off, and it continues until the vehicle condition is turned to the OFF (LOCK) mode.

- Review "How to troubleshoot the VSA system" before doing the DTC troubleshooting procedure.
- Test-drive the vehicle according to local traffic conditions and regulations. Do not test-drive on a lift unless specified.
- The possible causes shown may not be a complete list of all potential problems, and it is possible that there may be other causes.

Confirmation Procedure	Basic Condition: - No other DTCs detected - Brake TCS function not in operation - ABS function not in operation (Not applied under operating only for slowest wheel) With the Driving Pattern: - Start the engine. - Test-drive the vehicle at 31 mph (50 km/h) or more. (Be careful of the surrounding traffic conditions.)
Execution	Regular Diagnosis
Duration	About 1 second
DTC Type	- 1 drive cycle - Brake system indicator (red) on (If multiple wheel failures are detected) - Brake system indicator (amber) on - ABS indicator on - VSA indicator on
Fail Safe Action	- Stop EBD function (If multiple wheel failures are detected) - Stop ABS function - Stop engine drag torque control function

	• Stop TCS function • Stop VSA function • Stop agile handling assist function • Stop brake assist function • Stop hydraulic boost failure compensation function • Stop hill start assist function • Stop automatic brake hold function • Stop automatic operating function (Drive away assist) • Stop automatic operating function (Request from other system) (Dependant upon the conditions) • Stop ignition OFF apply function • Stop ACC function* • Stop CMBS function*

*: With ACC

Possible Cause	• Right-front wheel speed sensor incorrect installation • Debris on the right-front encoder surface • Right-front wheel speed sensor failure • VSA modulator-control unit internal failure

*: With ACC

DTC C0037-14

DTC C0037-14 : Left Rear Wheel Speed Sensor Circuit Failure (Circuit Short To Ground or Open)

NOTE

- Initial Diagnosis:

  The initial on-board diagnosis occurs right after the vehicle condition is turned to the ON mode, and the ABS/VSA indicator comes on, and continues until the indicator goes off.

- Regular Diagnosis:

  The regular on-board diagnosis begins right after the ABS/VSA indicator goes off, and it continues until the vehicle condition is turned to the OFF (LOCK) mode.

- Review "How to troubleshoot the VSA system" before doing the DTC troubleshooting procedure.
- Test-drive the vehicle according to local traffic conditions and regulations. Do not test-drive on a lift unless specified.
- The possible causes shown may not be a complete list of all potential problems, and it is possible that there may be other causes.

Confirmation Procedure	With the Driving Pattern: • Turn the vehicle to the ON mode.
Execution	Initial Diagnosis/Regular Diagnosis
Duration	About 1 second

DTC Type	1 drive cycle Brake system indicator (red) on (If multiple wheel failures are detected) Brake system indicator (amber) on ABS indicator on VSA indicator on
Fail Safe Action	Stop EBD function (If multiple wheel failures are detected) Stop ABS function Stop engine drag torque control function Stop TCS function Stop VSA function Stop agile handling assist function Stop brake assist function Stop hydraulic boost failure compensation function Stop hill start assist function Stop automatic brake hold function Stop automatic operating function (Drive away assist) Stop automatic operating function (Request from other system) (Dependant upon the conditions) Stop ignition OFF apply function Stop ACC function* Stop CMBS function*
Possible Cause	Open, Short to ground, Short to power, or Short to another line between the VSA modulator-control unit and the left-rear wheel speed sensor (RR L ABS SNSR+, RR L ABS SNSR- lines) Left-rear wheel speed sensor failure VSA modulator-control unit internal failure

*: With ACC

DTC C0037-3A

DTC C0037-3A : Wheel Speed Sensor (Left Rear) Signal Failure (Signal Frequency is Too High)

NOTE

- Initial Diagnosis:

  The initial on-board diagnosis occurs right after the vehicle condition is turned to the ON mode, and the ABS/VSA indicator comes on, and continues until the indicator goes off.

- Regular Diagnosis:

  The regular on-board diagnosis begins right after the ABS/VSA indicator goes off, and it continues until the vehicle condition is turned to the OFF (LOCK) mode.

- Review "How to troubleshoot the VSA system" before doing the DTC troubleshooting procedure.
- Test-drive the vehicle according to local traffic conditions and regulations. Do not test-drive on a lift unless specified.

- The possible causes shown may not be a complete list of all potential problems, and it is possible that there may be other causes.

Confirmation Procedure	Basic Condition: - 12 volt battery voltage 9.6 - 16.5 V With the Driving Pattern: - Start the engine. - Test-drive the vehicle for 80 seconds or more. (Be careful of the surrounding traffic conditions.)
Execution	Regular Diagnosis
Duration	About 80 seconds
DTC Type	- 1 drive cycle - Brake system indicator (red) on (If multiple wheel failures are detected) - Brake system indicator (amber) on - ABS indicator on - VSA indicator on
Fail Safe Action	- Stop EBD function (If multiple wheel failures are detected) - Stop ABS function - Stop engine drag torque control function - Stop TCS function - Stop VSA function - Stop agile handling assist function - Stop brake assist function - Stop hydraulic boost failure compensation function - Stop hill start assist function - Stop automatic brake hold function - Stop automatic operating function (Drive away assist) - Stop automatic operating function (Request from other system) (Dependant upon the conditions) - Stop ignition OFF apply function - Stop ACC function* - Stop CMBS function*
Possible Cause	- Electrical noise in the left-rear wheel speed sensor signal - Left-rear wheel speed sensor incorrect installation - Debris on the left-rear encoder surface - Left-rear wheel speed sensor failure - VSA modulator-control unit internal failure

*: With ACC

DTC C0037-62 (VSA CONTROL UNIT)

DTC C0037-62 : Left Rear Wheel Speed Sensor Signal Compare Failure

NOTE

- Initial Diagnosis:

  The initial on-board diagnosis occurs right after the vehicle condition is turned to the ON mode, and the ABS/VSA indicator comes on, and continues until the indicator goes off.

- Regular Diagnosis:

  The regular on-board diagnosis begins right after the ABS/VSA indicator goes off, and it continues until the vehicle condition is turned to the OFF (LOCK) mode.

- Review "How to troubleshoot the VSA system" before doing the DTC troubleshooting procedure.
- Test-drive the vehicle according to local traffic conditions and regulations. Do not test-drive on a lift unless specified.
- The possible causes shown may not be a complete list of all potential problems, and it is possible that there may be other causes.

Confirmation Procedure	Basic Condition • No other DTCs detected • Brake TCS function not in operation • ABS function not in operation (Not applied under operating only for slowest wheel) With the Driving Pattern: • Start the engine. • Test-drive the vehicle at 31 mph (50 km/h) or more. (Be careful of the surrounding traffic conditions.)
Execution	Regular Diagnosis
Duration	About 1 second
DTC Type	• 1 drive cycle • Brake system indicator (red) on (If multiple wheel failures are detected) • Brake system indicator (amber) on • ABS indicator on • VSA indicator on
Fail Safe Action	• Stop EBD function (If multiple wheel failures are detected) • Stop ABS function • Stop engine drag torque control function • Stop TCS function • Stop VSA function • Stop agile handling assist function • Stop brake assist function • Stop hydraulic boost failure compensation function • Stop hill start assist function • Stop automatic brake hold function • Stop automatic operating function (Drive away assist)

	- Stop automatic operating function (Request from other system) (Dependant upon the conditions) - Stop ignition OFF apply function - Stop ACC function* - Stop CMBS function*

*: With ACC

Possible Cause	- Left-rear wheel speed sensor incorrect installation - Debris on the left-rear encoder surface - Left-rear wheel speed sensor failure - VSA modulator-control unit internal failure

*: With ACC

DTC C003A-14

DTC C003A-14 : Right Rear Wheel Speed Sensor Circuit Failure (Circuit Short To Ground or Open)

NOTE

- Initial Diagnosis:

  The initial on-board diagnosis occurs right after the vehicle condition is turned to the ON mode, and the ABS/VSA indicator comes on, and continues until the indicator goes off.

- Regular Diagnosis:

  The regular on-board diagnosis begins right after the ABS/VSA indicator goes off, and it continues until the vehicle condition is turned to the OFF (LOCK) mode.

- Review "How to troubleshoot the VSA system" before doing the DTC troubleshooting procedure.
- Test-drive the vehicle according to local traffic conditions and regulations. Do not test-drive on a lift unless specified.
- The possible causes shown may not be a complete list of all potential problems, and it is possible that there may be other causes.

Confirmation Procedure	With the Driving Pattern: - Turn the vehicle to the ON mode.
Execution	Initial Diagnosis/Regular Diagnosis
Duration	About 1 second
DTC Type	- 1 drive cycle - Brake system indicator (red) on (If multiple wheel failures are detected) - Brake system indicator (amber) on - ABS indicator on - VSA indicator on
Fail Safe Action	- Stop EBD function (If multiple wheel failures are detected) - Stop ABS function

	• Stop engine drag torque control function • Stop TCS function • Stop VSA function • Stop agile handling assist function • Stop brake assist function • Stop hydraulic boost failure compensation function • Stop hill start assist function • Stop automatic brake hold function • Stop automatic operating function (Drive away assist) • Stop automatic operating function (Request from other system) (Dependant upon the conditions) • Stop ignition OFF apply function • Stop ACC function* • Stop CMBS function*
Possible Cause	• Open, Short to ground, Short to power, or Short to another line between the VSA modulator-control unit and the right-rear wheel speed sensor (RR R ABS SNSR+, RR R ABS SNSR- lines) • Right-rear wheel speed sensor failure • VSA modulator-control unit internal failure

*: With ACC

DTC C003A-3A

DTC C003A-3A : Wheel Speed Sensor (Right Rear) Signal Failure (Signal Frequency is Too High)

NOTE

- Initial Diagnosis:

  The initial on-board diagnosis occurs right after the vehicle condition is turned to the ON mode, and the ABS/VSA indicator comes on, and continues until the indicator goes off.

- Regular Diagnosis:

  The regular on-board diagnosis begins right after the ABS/VSA indicator goes off, and it continues until the vehicle condition is turned to the OFF (LOCK) mode.

- Review "How to troubleshoot the VSA system" before doing the DTC troubleshooting procedure.
- Test-drive the vehicle according to local traffic conditions and regulations. Do not test-drive on a lift unless specified.
- The possible causes shown may not be a complete list of all potential problems, and it is possible that there may be other causes.

Confirmation Procedure	Basic Condition: • 12 volt battery voltage 9.6 - 16.5 V With the Driving Pattern: • Start the engine. • Test-drive the vehicle for 80 seconds or more.

	(Be careful of the surrounding traffic conditions.)
Execution	Regular Diagnosis
Duration	About 80 seconds
DTC Type	• 1 drive cycle • Brake system indicator (red) on (If multiple wheel failures are detected) • Brake system indicator (amber) on • ABS indicator on • VSA indicator on
Fail Safe Action	• Stop EBD function (If multiple wheel failures are detected) • Stop ABS function • Stop engine drag torque control function • Stop TCS function • Stop VSA function • Stop agile handling assist function • Stop brake assist function • Stop hydraulic boost failure compensation function • Stop hill start assist function • Stop automatic brake hold function • Stop automatic operating function (Drive away assist) • Stop automatic operating function (Request from other system) (Dependant upon the conditions) • Stop ignition OFF apply function • Stop ACC function* • Stop CMBS function*
Possible Cause	• Electrical noise in the right-rear wheel speed sensor signal • Right-rear wheel speed sensor incorrect installation • Debris on the right-rear encoder surface • Right-rear wheel speed sensor failure • VSA modulator-control unit internal failure

*: With ACC

DTC C003A-62 (VSA CONTROL UNIT)

DTC C003A-62 : Right Rear Wheel Speed Sensor Signal Compare Failure

NOTE

- Initial Diagnosis:

  The initial on-board diagnosis occurs right after the vehicle condition is turned to the ON mode, and the ABS/VSA indicator comes on, and continues until the indicator goes off.

- Regular Diagnosis:

The regular on-board diagnosis begins right after the ABS/VSA indicator goes off, and it continues until the vehicle condition is turned to the OFF (LOCK) mode.

- Review "How to troubleshoot the VSA system" before doing the DTC troubleshooting procedure.
- Test-drive the vehicle according to local traffic conditions and regulations. Do not test-drive on a lift unless specified.
- The possible causes shown may not be a complete list of all potential problems, and it is possible that there may be other causes.

Confirmation Procedure	Basic Condition: • No other DTCs detected • Brake TCS function not in operation • ABS function not in operation (Not applied under operating only for slowest wheel) With the Driving Pattern: • Start the engine. • Test-drive the vehicle at 31 mph (50 km/h) or more. (Be careful of the surrounding traffic conditions.)
Execution	Regular Diagnosis
Duration	About 1 second
DTC Type	• 1 drive cycle • Brake system indicator (red) on (If multiple wheel failures are detected) • Brake system indicator (amber) on • ABS indicator on • VSA indicator on
Fail Safe Action	• Stop EBD function (If multiple wheel failures are detected) • Stop ABS function • Stop engine drag torque control function • Stop TCS function • Stop VSA function • Stop agile handling assist function • Stop brake assist function • Stop hydraulic boost failure compensation function • Stop hill start assist function • Stop automatic brake hold function • Stop automatic operating function (Drive away assist) • Stop automatic operating function (Request from other system) (Dependant upon the conditions) • Stop ignition OFF apply function • Stop ACC function* • Stop CMBS function*

*: With ACC

Possible Cause	• Right-rear wheel speed sensor incorrect installation • Debris on the right-rear encoder surface • Right-rear wheel speed sensor failure • VSA modulator-control unit internal failure

*: With ACC

DTC C0040-12 (2017 2018 2019)

DTC C0040-12 : Brake Light Switch Failure (Stuck ON)/Brake Pedal Stroke Sensor Stuck (EBB)

NOTE

- Initial Diagnosis:

  The initial on-board diagnosis occurs right after the vehicle condition is turned to the ON mode, and the ABS/VSA indicator comes on, and continues until the indicator goes off.

- Regular Diagnosis:

  The regular on-board diagnosis begins right after the ABS/VSA indicator goes off, and it continues until the vehicle condition is turned to the OFF (LOCK) mode.

- Review "How to troubleshoot the VSA system" before doing the DTC troubleshooting procedure.
- Test-drive the vehicle according to local traffic conditions and regulations. Do not test-drive on a lift unless specified.
- The possible causes shown may not be a complete list of all potential problems, and it is possible that there may be other causes.

Confirmation Procedure	Basic Condition:
	• 12 volt battery voltage 9.6 - 16.5 V
	• No other DTCs detected
	With the Driving Pattern:
	• Start the engine.
	• Test-drive the vehicle under these conditions:
	(Be careful of the surrounding traffic conditions.)
	•
	  • Vehicle speed at 9 mph (15 km/h) or more for at least 60 seconds
	  • Accelerator pedal pressed
	  • Brake pedal released

Execution	Regular Diagnosis
Duration	About 60 seconds
DTC Type	• 1 drive cycle • Brake system indicator (amber) on • VSA indicator on
Fail Safe Action	• Degrade ABS performance

	• Stop engine drag torque control function • Stop TCS function • Stop VSA function • Stop agile handling assist function • Stop brake assist function • Stop hill start assist function • Stop automatic brake hold function • Stop ACC function* • Stop CMBS function*
Possible Cause	• Electric brake booster system failure • Electric brake booster internal failure • Brake pedal installation failure • Brake pedal position switch installation failure

*: With ACC

DTC C0040-16 (2017 2018 2019)

DTC C0040-16 : Plausibility BLS vs. Pressure Sensor

NOTE

- Initial Diagnosis:

  The initial on-board diagnosis occurs right after the vehicle condition is turned to the ON mode, and the ABS/VSA indicator comes on, and continues until the indicator goes off.

- Regular Diagnosis:

  The regular on-board diagnosis begins right after the ABS/VSA indicator goes off, and it continues until the vehicle condition is turned to the OFF (LOCK) mode.

- Review "How to troubleshoot the VSA system" before doing the DTC troubleshooting procedure.
- Test-drive the vehicle according to local traffic conditions and regulations. Do not test-drive on a lift unless specified.
- The possible causes shown may not be a complete list of all potential problems, and it is possible that there may be other causes.

Confirmation Procedure	Basic Condition: • 12 volt battery voltage 9.6 - 16.5 V • No other DTCs detected With the Driving Pattern: • Start the engine. • Wait 1 second or more without pressing the brake pedal. • Press the brake pedal hard for 1 second or more.
Execution	Regular Diagnosis
Duration	About 1 second

DTC Type	• 1 drive cycle • Brake system indicator (amber) on • VSA indicator on
Fail Safe Action	• Degrade ABS performance • Stop engine drag torque control function • Stop TCS function • Stop VSA function • Stop agile handling assist function • Stop brake assist function • Stop hill start assist function • Stop automatic brake hold function • Stop ACC function* • Stop CMBS function*
Possible Cause	• Electric brake booster system failure • Electric brake booster internal failure

*: With ACC

DTC C0044-49

DTC C0044-49 : Master Cylinder Pressure Sensor Failure (Internal Circuit Failure)

NOTE

- Initial Diagnosis:

  The initial on-board diagnosis occurs right after the vehicle condition is turned to the ON mode, and the ABS/VSA indicator comes on, and continues until the indicator goes off.

- Regular Diagnosis:

  The regular on-board diagnosis begins right after the ABS/VSA indicator goes off, and it continues until the vehicle condition is turned to the OFF (LOCK) mode.

- Review "How to troubleshoot the VSA system" before doing the DTC troubleshooting procedure.
- Test-drive the vehicle according to local traffic conditions and regulations. Do not test-drive on a lift unless specified.
- The possible causes shown may not be a complete list of all potential problems, and it is possible that there may be other causes.

Confirmation Procedure	With the Driving Pattern: • Turn the vehicle to the ON mode.
Execution	Initial Diagnosis/Regular Diagnosis
Duration	About 1 second
DTC Type	• 1 drive cycle • Brake system indicator (amber) on • VSA indicator on

Fail Safe Action	- Degrade ABS performance - Stop engine drag torque control function - Stop TCS function - Stop VSA function - Stop agile handling assist function - Stop brake assist function - Stop hydraulic boost failure compensation function - Stop hill start assist function - Stop automatic brake hold function - Stop automatic operating function (Drive away assist) - Stop ignition OFF apply function - Stop ACC function* - Stop CMBS function*
Possible Cause	- VSA modulator-control unit internal failure

*: With ACC

DTC C0044-62

DTC C0044-62 : Master Cylinder Pressure Sensor Failure (Signal Stuck)

NOTE

- Initial Diagnosis:

  The initial on-board diagnosis occurs right after the vehicle condition is turned to the ON mode, and the ABS/VSA indicator comes on, and continues until the indicator goes off.

- Regular Diagnosis:

  The regular on-board diagnosis begins right after the ABS/VSA indicator goes off, and it continues until the vehicle condition is turned to the OFF (LOCK) mode.

- Review "How to troubleshoot the VSA system" before doing the DTC troubleshooting procedure.
- Test-drive the vehicle according to local traffic conditions and regulations. Do not test-drive on a lift unless specified.
- The possible causes shown may not be a complete list of all potential problems, and it is possible that there may be other causes.

Confirmation Procedure	Basic Condition: - ABS/VSA function not in operation - Vehicle is not braking With the Driving Pattern: - Start the engine. - Test-drive the vehicle under these conditions: (Be careful of the surrounding traffic conditions.) -

	- Vehicle speed at less than 9 mph (14 km/h) for at least 30 seconds - Brake pedal released
Execution	Regular Diagnosis
Duration	About 30 seconds
DTC Type	- 1 drive cycle - Brake system indicator (amber) on - VSA indicator on
Fail Safe Action	- Degrade ABS performance - Stop engine drag torque control function - Stop TCS function - Stop VSA function - Stop agile handling assist function - Stop brake assist function - Stop hydraulic boost failure compensation function - Stop hill start assist function - Stop automatic brake hold function - Stop automatic operating function (Drive away assist) - Stop ignition OFF apply function - Stop ACC function* - Stop CMBS function*
Possible Cause	- VSA modulator-control unit internal failure

*: With ACC

DTC C0049-7B

DTC C0049-7B : Brake Fluid Level Too Low

NOTE

- Initial Diagnosis:

  The initial on-board diagnosis occurs right after the vehicle condition is turned to the ON mode, and the ABS/VSA indicator comes on, and continues until the indicator goes off.

- Regular Diagnosis:

  The regular on-board diagnosis begins right after the ABS/VSA indicator goes off, and it continues until the vehicle condition is turned to the OFF (LOCK) mode.

- Review "How to troubleshoot the VSA system" before doing the DTC troubleshooting procedure.
- Test-drive the vehicle according to local traffic conditions and regulations. Do not test-drive on a lift unless specified.
- The possible causes shown may not be a complete list of all potential problems, and it is possible that there may be other causes.

Confirmation Procedure	Basic Condition:

	• 12 volt battery voltage 9.6 - 16.5 V With the Driving Pattern: • Turn the vehicle to the ON mode. • Wait 60 seconds or more.
Execution	Regular Diagnosis
Duration	About 60 seconds
DTC Type	• 1 drive cycle • Brake system indicator (amber) on • VSA indicator on
Fail Safe Action	• Degrade ABS performance • Stop engine drag torque control function • Stop TCS function • Stop VSA function • Stop agile handling assist function • Stop brake assist function • Stop hydraulic boost failure compensation function • Stop hill start assist function • Stop automatic brake hold function • Stop ACC function* • Stop CMBS function*
Possible Cause	• Short to ground between the gauge control module and the brake fluid level switch (BRAKE LEVEL SW line) • Low brake fluid level • Brake fluid level switch failure • Gauge control module internal failure • VSA modulator-control unit internal failure

*: With ACC

DTC C0051-54 (VSA CONTROL UNIT)

DTC C0051-54 : Steering Angle Neutral Position Learning Incomplete

NOTE

- Initial Diagnosis:

  The initial on-board diagnosis occurs right after the vehicle condition is turned to the ON mode, and the ABS/VSA indicator comes on, and continues until the indicator goes off.

- Regular Diagnosis:

  The regular on-board diagnosis begins right after the ABS/VSA indicator goes off, and it continues until the vehicle condition is turned to the OFF (LOCK) mode.

- Review "How to troubleshoot the VSA system" before doing the DTC troubleshooting procedure.

- Test-drive the vehicle according to local traffic conditions and regulations. Do not test-drive on a lift unless specified.
- The possible causes shown may not be a complete list of all potential problems, and it is possible that there may be other causes.

Confirmation Procedure	Basic Condition: • 12 volt battery voltage 9.6 - 16.5 V • No other DTCs detected With the Driving Pattern: • Turn the vehicle to the ON mode.
Execution	Regular Diagnosis
Duration	About 1 second
DTC Type	• 1 drive cycle • Brake system indicator (amber) on • VSA indicator on
Fail Safe Action	• Degrade ABS performance • Stop engine drag torque control function • Stop TCS function • Stop VSA function • Stop agile handling assist function • Stop hill start assist function • Stop automatic brake hold function • Stop ACC function* • Stop CMBS function*
Possible Cause	• Steering angle neutral position not learned • EPS motor/control unit internal failure • VSA modulator-control unit internal failure

*: With ACC

DTC C0051-62

DTC C0051-62 : Steering Angle Sensor Failure (Signal Compare Failure)

NOTE

- Initial Diagnosis:

  The initial on-board diagnosis occurs right after the vehicle condition is turned to the ON mode, and the ABS/VSA indicator comes on, and continues until the indicator goes off.

- Regular Diagnosis:

  The regular on-board diagnosis begins right after the ABS/VSA indicator goes off, and it continues until the vehicle condition is turned to the OFF (LOCK) mode.

- Review "How to troubleshoot the VSA system" before doing the DTC troubleshooting procedure.

- Test-drive the vehicle according to local traffic conditions and regulations. Do not test-drive on a lift unless specified.
- The possible causes shown may not be a complete list of all potential problems, and it is possible that there may be other causes.

Confirmation Procedure	Basic Condition: • 12 volt battery voltage 9.6 - 16.5 V • No other DTCs detected With the Driving Pattern: • Start the engine. • Test-drive the vehicle under these conditions: (Be careful of the surrounding traffic conditions.) • • Vehicle speed at 45 mph (72 km/h) or more • Change lanes for a few times
Execution	Regular Diagnosis
Duration	About 5 seconds
DTC Type	• 1 drive cycle • Brake system indicator (amber) on • VSA indicator on
Fail Safe Action	• Degrade ABS performance • Stop engine drag torque control function • Stop TCS function • Stop VSA function • Stop agile handling assist function • Stop hill start assist function • Stop automatic brake hold function • Stop ACC function* • Stop CMBS function*
Possible Cause	• EPS motor/control unit internal failure • VSA modulator-control unit internal failure

*: With ACC

DTC C0051-96 (VSA CONTROL UNIT)

DTC C0051-96 : Steering Angle Sensor Failure (Sensor Detects Internal Failure)

NOTE

- Initial Diagnosis:

  The initial on-board diagnosis occurs right after the vehicle condition is turned to the ON mode, and the ABS/VSA indicator comes on, and continues until the indicator goes off.

- Regular Diagnosis:

  The regular on-board diagnosis begins right after the ABS/VSA indicator goes off, and it continues until the vehicle condition is turned to the OFF (LOCK) mode.

- Review "How to troubleshoot the VSA system" before doing the DTC troubleshooting procedure.
- Test-drive the vehicle according to local traffic conditions and regulations. Do not test-drive on a lift unless specified.
- The possible causes shown may not be a complete list of all potential problems, and it is possible that there may be other causes.

Confirmation Procedure	Basic Condition: • 12 volt battery voltage 9.6 - 16.5 V • No other DTCs detected With the Driving Pattern: • Start the engine. • Turn the steering wheel left and right for a few times.
Execution	Regular Diagnosis
Duration	About 1 second
DTC Type	• 1 drive cycle • Brake system indicator (amber) on • VSA indicator on
Fail Safe Action	• Degrade ABS performance • Stop engine drag torque control function • Stop TCS function • Stop VSA function • Stop agile handling assist function • Stop hill start assist function • Stop automatic brake hold function • Stop ACC function* • Stop CMBS function*
Possible Cause	• EPS motor/control unit internal failure • VSA modulator-control unit internal failure

*: With ACC

DTC C0061-49

DTC C0061-49 : Acceleration Sensor Malfunction

NOTE

- Initial Diagnosis:

  The initial on-board diagnosis occurs right after the vehicle condition is turned to the ON mode, and the ABS/VSA indicator comes on, and continues until the indicator goes off.

- Regular Diagnosis:

  The regular on-board diagnosis begins right after the ABS/VSA indicator goes off, and it continues until the vehicle condition is turned to the OFF (LOCK) mode.

- Review "How to troubleshoot the VSA system" before doing the DTC troubleshooting procedure.
- Test-drive the vehicle according to local traffic conditions and regulations. Do not test-drive on a lift unless specified.
- The possible causes shown may not be a complete list of all potential problems, and it is possible that there may be other causes.

Confirmation Procedure	With the Driving Pattern: • Start the engine.
Execution	Initial Diagnosis/Regular Diagnosis
Duration	About 1 second
DTC Type	• 1 drive cycle • Brake system indicator (amber) on • VSA indicator on
Fail Safe Action	• Degrade ABS performance • Stop engine drag torque control function • Stop TCS function • Stop VSA function • Stop agile handling assist function • Stop hill start assist function • Stop automatic brake hold function • Stop ACC function* • Stop CMBS function*
Possible Cause	• SRS unit internal failure • VSA modulator-control unit internal failure

*: With ACC

DTC C0061-54

DTC C0061-54 : Lateral Acceleration Sensor Calibration Incomplete

NOTE

- Initial Diagnosis:

  The initial on-board diagnosis occurs right after the vehicle condition is turned to the ON mode, and the ABS/VSA indicator comes on, and continues until the indicator goes off.

- Regular Diagnosis:

  The regular on-board diagnosis begins right after the ABS/VSA indicator goes off, and it continues until the vehicle condition is turned to the OFF (LOCK) mode.

- Review "How to troubleshoot the VSA system" before doing the DTC troubleshooting procedure.

- Test-drive the vehicle according to local traffic conditions and regulations. Do not test-drive on a lift unless specified.
- The possible causes shown may not be a complete list of all potential problems, and it is possible that there may be other causes.

Confirmation Procedure	Basic Condition: • 12 volt battery voltage 9.6 - 16.5 V • No other DTCs detected With the Driving Pattern: • Turn the vehicle to the ON mode.
Execution	Regular Diagnosis
Duration	About 1 second
DTC Type	• 1 drive cycle • Brake system indicator (amber) on • VSA indicator on
Fail Safe Action	• Degrade ABS performance • Stop engine drag torque control function • Stop TCS function • Stop VSA function • Stop agile handling assist function • Stop hill start assist function • Stop automatic brake hold function • Stop ACC function* • Stop CMBS function*
Possible Cause	• VSA sensor neutral position memorization not completed • SRS unit internal failure • VSA modulator-control unit internal failure

*: With ACC

DTC C0061-62

DTC C0061-62 : Lateral Acceleration Sensor Failure (Signal Compare Failure)

NOTE

- Initial Diagnosis:

  The initial on-board diagnosis occurs right after the vehicle condition is turned to the ON mode, and the ABS/VSA indicator comes on, and continues until the indicator goes off.

- Regular Diagnosis:

  The regular on-board diagnosis begins right after the ABS/VSA indicator goes off, and it continues until the vehicle condition is turned to the OFF (LOCK) mode.

- Review "How to troubleshoot the VSA system" before doing the DTC troubleshooting procedure.

- Test-drive the vehicle according to local traffic conditions and regulations. Do not test-drive on a lift unless specified.
- The possible causes shown may not be a complete list of all potential problems, and it is possible that there may be other causes.

Confirmation Procedure	With the Driving Pattern: • Start the engine. • Test-drive the vehicle under these conditions: (Be careful of the surrounding traffic conditions.) • • Vehicle speed at 31 mph (50 km/h) or more for at least 20 seconds • Change lanes for a few times
Execution	Regular Diagnosis
Duration	About 2 seconds
DTC Type	• 1 drive cycle • Brake system indicator (amber) on • VSA indicator on
Fail Safe Action	• Degrade ABS performance • Stop engine drag torque control function • Stop TCS function • Stop VSA function • Stop agile handling assist function • Stop hill start assist function • Stop automatic brake hold function • Stop ACC function* • Stop CMBS function*
Possible Cause	• SRS unit internal failure

*: With ACC

DTC C0062-49

DTC C0062-49 : Longitudinal Acceleration Sensor Malfunction

NOTE

- Initial Diagnosis:

  The initial on-board diagnosis occurs right after the vehicle condition is turned to the ON mode, and the ABS/VSA indicator comes on, and continues until the indicator goes off.

- Regular Diagnosis:

  The regular on-board diagnosis begins right after the ABS/VSA indicator goes off, and it continues until the vehicle condition is turned to the OFF (LOCK) mode.

- Review "How to troubleshoot the VSA system" before doing the DTC troubleshooting procedure.

- Test-drive the vehicle according to local traffic conditions and regulations. Do not test-drive on a lift unless specified.
- The possible causes shown may not be a complete list of all potential problems, and it is possible that there may be other causes.

Confirmation Procedure	With the Driving Pattern: • Start the engine.
Execution	Regular Diagnosis
Duration	About 1 second
DTC Type	• 1 drive cycle • Brake system indicator (amber) on • ABS indicator on *1 • VSA indicator on
Fail Safe Action	• Stop ABS function *1 • Stop engine drag torque control function *1 • Stop TCS function *1 • Stop VSA function *1 • Stop agile handling assist function *1 • Stop brake assist function *1 • Stop hydraulic boost failure compensation function *1 • Stop hill start assist function • Stop automatic brake hold function • Stop automatic operating function (Drive away assist) • Stop ignition OFF apply function • Stop ACC function *2 • Stop CMBS function *2
Possible Cause	• SRS unit internal failure • VSA modulator-control unit internal failure

*1: AWD

*2: With ACC

DTC C0062-54

DTC C0062-54 : Longitudinal Acceleration Sensor Calibration Incomplete

NOTE

- Initial Diagnosis:

  The initial on-board diagnosis occurs right after the vehicle condition is turned to the ON mode, and the ABS/VSA indicator comes on, and continues until the indicator goes off.

- Regular Diagnosis:

  The regular on-board diagnosis begins right after the ABS/VSA indicator goes off, and it continues until the vehicle condition is turned to the OFF (LOCK) mode.

- Review "How to troubleshoot the VSA system" before doing the DTC troubleshooting procedure.
- Test-drive the vehicle according to local traffic conditions and regulations. Do not test-drive on a lift unless specified.
- The possible causes shown may not be a complete list of all potential problems, and it is possible that there may be other causes.

Confirmation Procedure	Basic Condition: • 12 volt battery voltage 9.6 - 16.5 V • No other DTCs detected With the Driving Pattern: • Turn the vehicle to the ON mode.
Execution	Regular Diagnosis
Duration	About 1 second
DTC Type	• 1 drive cycle • Brake system indicator (amber) on • ABS indicator on *1 • VSA indicator on
Fail Safe Action	• Stop ABS function *1 • Stop engine drag torque control function *1 • Stop TCS function *1 • Stop VSA function *1 • Stop agile handling assist function *1 • Stop brake assist function *1 • Stop hydraulic boost failure compensation function *1 • Stop hill start assist function • Stop automatic brake hold function • Stop automatic operating function (Drive away assist) • Stop ignition OFF apply function • Stop ACC function *2 • Stop CMBS function *2
Possible Cause	• VSA sensor neutral position memorization not completed • SRS unit internal failure • VSA modulator-control unit internal failure

*1: AWD

*2: With ACC

DTC C0062-62

DTC C0062-62 : Longitudinal Acceleration Sensor Failure (Signal Compare Failure)

NOTE

- Initial Diagnosis:

The initial on-board diagnosis occurs right after the vehicle condition is turned to the ON mode, and the ABS/VSA indicator comes on, and continues until the indicator goes off.

- Regular Diagnosis:

  The regular on-board diagnosis begins right after the ABS/VSA indicator goes off, and it continues until the vehicle condition is turned to the OFF (LOCK) mode.

- Review "How to troubleshoot the VSA system" before doing the DTC troubleshooting procedure.
- Test-drive the vehicle according to local traffic conditions and regulations. Do not test-drive on a lift unless specified.
- The possible causes shown may not be a complete list of all potential problems, and it is possible that there may be other causes.

Confirmation Procedure	Basic Condition: • No other DTCs detected • ABS/VSA function not in operation With the Driving Pattern: • Start the engine. • Test-drive the vehicle under these conditions: (Be careful of the surrounding traffic conditions.) • • Vehicle speed at 31 mph (50 km/h) or more for at least 20 seconds • Brake pedal released • Change lanes for a few times
Execution	Regular Diagnosis
Duration	About 20 seconds
DTC Type	• 1 drive cycle • Brake system indicator (amber) on • ABS indicator on *1 • VSA indicator on
Fail Safe Action	• Stop ABS function *1 • Stop engine drag torque control function • Stop TCS function *1 • Stop VSA function *1 • Stop agile handling assist function *1 • Stop brake assist function *1 • Stop hydraulic boost failure compensation function *1 • Stop hill start assist function • Stop automatic brake hold function • Stop automatic operating function (Drive away assist) • Stop ignition OFF apply function • Stop ACC function *2 • Stop CMBS function *2

Possible Cause	- SRS unit internal failure

*1: AWD

*2: With ACC

DTC C0063-49

DTC C0063-49 : Yaw Rate Sensor Malfunction

NOTE

- Initial Diagnosis:

  The initial on-board diagnosis occurs right after the vehicle condition is turned to the ON mode, and the ABS/VSA indicator comes on, and continues until the indicator goes off.

- Regular Diagnosis:

  The regular on-board diagnosis begins right after the ABS/VSA indicator goes off, and it continues until the vehicle condition is turned to the OFF (LOCK) mode.

- Review "How to troubleshoot the VSA system" before doing the DTC troubleshooting procedure.
- Test-drive the vehicle according to local traffic conditions and regulations. Do not test-drive on a lift unless specified.
- The possible causes shown may not be a complete list of all potential problems, and it is possible that there may be other causes.

Confirmation Procedure	With the Driving Pattern: - Start the engine.
Execution	Regular Diagnosis
Duration	About 1 second
DTC Type	- 1 drive cycle - Brake system indicator (amber) on - ABS indicator on (Dependant upon the conditions) *1 - VSA indicator on
Fail Safe Action	- Degrade ABS performance *2 - Stop ABS function or degrade ABS performance (Dependant upon the conditions) *1 - Stop engine drag torque control function - Stop TCS function - Stop VSA function - Stop agile handling assist function - Stop brake assist function (Dependant upon the conditions) *1 - Stop hydraulic boost failure compensation function (Dependant upon the conditions) *1 - Stop hill start assist function - Stop automatic brake hold function

	• Stop automatic operating function (Drive away assist) (Dependant upon the conditions) • Stop ignition OFF apply function (Dependant upon the conditions) • Stop ACC function *3 • Stop CMBS function *3
Possible Cause	• SRS unit internal failure • VSA modulator-control unit internal failure

*1: AWD

*2: 2WD

*3: With ACC

DTC C0063-54

DTC C0063-54 : Yaw Rate Sensor Calibration Incomplete

NOTE

- Initial Diagnosis:

  The initial on-board diagnosis occurs right after the vehicle condition is turned to the ON mode, and the ABS/VSA indicator comes on, and continues until the indicator goes off.

- Regular Diagnosis:

  The regular on-board diagnosis begins right after the ABS/VSA indicator goes off, and it continues until the vehicle condition is turned to the OFF (LOCK) mode.

- Review "How to troubleshoot the VSA system" before doing the DTC troubleshooting procedure.
- Test-drive the vehicle according to local traffic conditions and regulations. Do not test-drive on a lift unless specified.
- The possible causes shown may not be a complete list of all potential problems, and it is possible that there may be other causes.

Confirmation Procedure	Basic Condition: • 12 volt battery voltage 9.6 - 16.5 V • No other DTCs detected With the Driving Pattern: • Turn the vehicle to the ON mode.
Execution	Regular Diagnosis
Duration	About 1 second
DTC Type	• 1 drive cycle • Brake system indicator (amber) on • VSA indicator on
Fail Safe Action	• Degrade ABS performance • Stop engine drag torque control function

	• Stop TCS function • Stop VSA function • Stop agile handling assist function • Stop hill start assist function • Stop automatic brake hold function • Stop ACC function* • Stop CMBS function*
Possible Cause	• VSA sensor neutral position memorization not completed • SRS unit internal failure • VSA modulator-control unit internal failure

*: With ACC

DTC C0063-62

DTC C0063-62 : Yaw Rate Sensor Failure (Signal Compare Failure)

NOTE

- Initial Diagnosis:

  The initial on-board diagnosis occurs right after the vehicle condition is turned to the ON mode, and the ABS/VSA indicator comes on, and continues until the indicator goes off.

- Regular Diagnosis:

  The regular on-board diagnosis begins right after the ABS/VSA indicator goes off, and it continues until the vehicle condition is turned to the OFF (LOCK) mode.

- Review "How to troubleshoot the VSA system" before doing the DTC troubleshooting procedure.
- Test-drive the vehicle according to local traffic conditions and regulations. Do not test-drive on a lift unless specified.
- The possible causes shown may not be a complete list of all potential problems, and it is possible that there may be other causes.

Confirmation Procedure	Basic Condition:
	• No other DTCs detected
	• ABS/VSA function not in operation
	With the Driving Pattern:
	• Start the engine.
	• Test-drive the vehicle under these conditions:
	(Be careful of the surrounding traffic conditions.)
	•
	  • Vehicle speed at 31 mph (50 km/h) or more for at least 20 seconds
	  • Brake pedal released
	  • Change lanes for a few times

Execution	Regular Diagnosis
Duration	About 5 seconds
DTC Type	1 drive cycle Brake system indicator (amber) on VSA indicator on
Fail Safe Action	Degrade ABS performance Stop engine drag torque control function Stop TCS function Stop VSA function Stop agile handling assist function Stop hill start assist function Stop automatic brake hold function Stop ACC function* Stop CMBS function*
Possible Cause	SRS unit internal failure

*: With ACC

DTC C1000-94

DTC C1000-94 : ABS/VSA Activation Time Too Long

NOTE

- Initial Diagnosis:

  The initial on-board diagnosis occurs right after the vehicle condition is turned to the ON mode, and the ABS/VSA indicator comes on, and continues until the indicator goes off.

- Regular Diagnosis:

  The regular on-board diagnosis begins right after the ABS/VSA indicator goes off, and it continues until the vehicle condition is turned to the OFF (LOCK) mode.

- Review "How to troubleshoot the VSA system" before doing the DTC troubleshooting procedure.
- Test-drive the vehicle according to local traffic conditions and regulations. Do not test-drive on a lift unless specified.
- The possible causes shown may not be a complete list of all potential problems, and it is possible that there may be other causes.

Confirmation Procedure	Basic Condition: • 12 volt battery voltage 6.9 V or more With the Driving Pattern: • Start the engine. • Test-drive the vehicle under these conditions: (Be careful of the surrounding traffic conditions.)

	• • Vehicle speed at 31 mph (50 km/h) or more for at least 60 seconds • Brake pedal released
Execution	Regular Diagnosis
Duration	About 60 seconds
DTC Type	• 1 drive cycle • Brake system indicator (red) on (Dependant upon the conditions) • Brake system indicator (amber) on • ABS indicator on • VSA indicator on
Fail Safe Action	• Stop EBD function (Dependant upon the conditions) • Stop ABS function • Stop engine drag torque control function • Stop TCS function • Stop VSA function • Stop agile handling assist function • Stop brake assist function • Stop hydraulic boost failure compensation function • Stop hill start assist function • Stop automatic brake hold function • Stop automatic operating function (Drive away assist) • Stop ignition OFF apply function • Stop ACC function* • Stop CMBS function*
Possible Cause	• Low air pressure in tires • Different diameter tires • Wheel speed sensor failure • Debris on the encoder surface • VSA modulator-control unit internal failure

*: With ACC

DTC C1020-49

DTC C1020-49 : VSA Master Cut Valve Failure (Unexpected Operation)

NOTE

- Initial Diagnosis:

  The initial on-board diagnosis occurs right after the vehicle condition is turned to the ON mode, and the ABS/VSA indicator comes on, and continues until the indicator goes off.

- Regular Diagnosis:

  The regular on-board diagnosis begins right after the ABS/VSA indicator goes off, and it continues until the vehicle condition is turned to the OFF (LOCK) mode.

- Review "How to troubleshoot the VSA system" before doing the DTC troubleshooting procedure.
- Test-drive the vehicle according to local traffic conditions and regulations. Do not test-drive on a lift unless specified.
- The possible causes shown may not be a complete list of all potential problems, and it is possible that there may be other causes.

Confirmation Procedure	Basic Condition: • 12 volt battery voltage 9.6 - 16.5 V With the Driving Pattern: • Start the engine. • Wait 20 seconds or more. • Test-drive the vehicle at 9 mph (15 km/h) or more. (Be careful of the surrounding traffic conditions.)
Execution	Regular Diagnosis
Duration	About 20 seconds
DTC Type	• 1 drive cycle • Brake system indicator (red) on • Brake system indicator (amber) on • ABS indicator on • VSA indicator on
Fail Safe Action	• Stop EBD function • Stop ABS function • Stop engine drag torque control function • Stop TCS function • Stop VSA function • Stop agile handling assist function • Stop brake assist function • Stop hydraulic boost failure compensation function • Stop hill start assist function • Stop automatic brake hold function • Stop automatic operating function (Drive away assist) • Stop ignition OFF apply function • Stop ACC function* • Stop CMBS function*
Possible Cause	• VSA modulator-control unit internal failure

*: With ACC

DTC C1021-49

DTC C1021-49 : VSA Suction Valve Failure (Unexpected Operation)

NOTE

- Initial Diagnosis:

  The initial on-board diagnosis occurs right after the vehicle condition is turned to the ON mode, and the ABS/VSA indicator comes on, and continues until the indicator goes off.

- Regular Diagnosis:

  The regular on-board diagnosis begins right after the ABS/VSA indicator goes off, and it continues until the vehicle condition is turned to the OFF (LOCK) mode.

- Review "How to troubleshoot the VSA system" before doing the DTC troubleshooting procedure.
- Test-drive the vehicle according to local traffic conditions and regulations. Do not test-drive on a lift unless specified.
- The possible causes shown may not be a complete list of all potential problems, and it is possible that there may be other causes.

Confirmation Procedure	Basic Condition: • 12 volt battery voltage 9.6 - 16.5 V With the Driving Pattern: • Start the engine. • Wait 20 seconds or more. • Test-drive the vehicle at 9 mph (15 km/h) or more. (Be careful of the surrounding traffic conditions.)
Execution	Regular Diagnosis
Duration	About 20 seconds
DTC Type	• 1 drive cycle • Brake system indicator (red) on • Brake system indicator (amber) on • ABS indicator on • VSA indicator on
Fail Safe Action	• Stop EBD function • Stop ABS function • Stop engine drag torque control function • Stop TCS function • Stop VSA function • Stop agile handling assist function • Stop brake assist function • Stop hydraulic boost failure compensation function • Stop hill start assist function • Stop automatic brake hold function • Stop automatic operating function (Drive away assist) • Stop ignition OFF apply function • Stop ACC function* • Stop CMBS function*

Possible Cause	- VSA modulator-control unit internal failure

*: With ACC

DTC C1022-14

DTC C1022-14 : Power Source Failure for Pump Motor

NOTE

- Initial Diagnosis:

  The initial on-board diagnosis occurs right after the vehicle condition is turned to the ON mode, and the ABS/VSA indicator comes on, and continues until the indicator goes off.

- Regular Diagnosis:

  The regular on-board diagnosis begins right after the ABS/VSA indicator goes off, and it continues until the vehicle condition is turned to the OFF (LOCK) mode.

- Review "How to troubleshoot the VSA system" before doing the DTC troubleshooting procedure.
- Test-drive the vehicle according to local traffic conditions and regulations. Do not test-drive on a lift unless specified.
- The possible causes shown may not be a complete list of all potential problems, and it is possible that there may be other causes.

Confirmation Procedure	With the Driving Pattern: • Start the engine. • Test-drive the vehicle at 6 mph (10 km/h) or more. (Be careful of the surrounding traffic conditions.)
Execution	Initial Diagnosis/Regular Diagnosis
Duration	About 1 second
DTC Type	• 1 drive cycle • Brake system indicator (red) on • Brake system indicator (amber) on • ABS indicator on • VSA indicator on
Fail Safe Action	• Degrade EBD performance • Stop ABS function • Stop engine drag torque control function • Stop TCS function • Stop VSA function • Stop agile handling assist function • Stop brake assist function • Stop hydraulic boost failure compensation function • Stop hill start assist function • Stop automatic brake hold function • Stop automatic operating function (Drive away assist)

	- Stop ignition OFF apply function - Stop ACC function* - Stop CMBS function*
Possible Cause	- Open or Short to ground between the VSA modulator-control unit and the under-hood fuse/relay box (+B ABS/VSA MTR line) - Fuse failure (Under-hood fuse/relay box No. A3-3 (40 A)) - VSA modulator-control unit internal failure

*: With ACC

DTC C1040-00 (VSA CONTROL UNIT)

DTC C1040-00 : Different Diameter Tire is Detected

NOTE

- Initial Diagnosis:

  The initial on-board diagnosis occurs right after the vehicle condition is turned to the ON mode, and the ABS/VSA indicator comes on, and continues until the indicator goes off.

- Regular Diagnosis:

  The regular on-board diagnosis begins right after the ABS/VSA indicator goes off, and it continues until the vehicle condition is turned to the OFF (LOCK) mode.

- Review "How to troubleshoot the VSA system" before doing the DTC troubleshooting procedure.
- Test-drive the vehicle according to local traffic conditions and regulations. Do not test-drive on a lift unless specified.
- The possible causes shown may not be a complete list of all potential problems, and it is possible that there may be other causes.

Confirmation Procedure	Basic Condition: - No other DTCs detected With the Driving Pattern: - Start the engine. - Test-drive the vehicle at 12 mph (20 km/h) or more for at least 72 seconds. (Be careful of the surrounding traffic conditions.)
Execution	Regular Diagnosis
Duration	About 72 seconds
DTC Type	- 1 drive cycle - Brake system indicator (red) on (Dependant upon the conditions) - Brake system indicator (amber) on - ABS indicator on - VSA indicator on
Fail Safe Action	- Stop EBD function (Dependant upon the conditions)

	• Stop ABS function • Stop engine drag torque control function • Stop TCS function • Stop VSA function • Stop agile handling assist control function • Stop brake assist function • Stop hydraulic boost failure compensation function • Stop hill start assist function • Stop automatic brake hold function • Stop automatic operating function (Drive away assist) • Stop automatic operating function (Request from other system) (Dependant upon the conditions) • Stop ignition OFF apply function • Stop ACC function* • Stop CMBS function*
Possible Cause	• Low air pressure in tires • Different diameter tires • Wheel speed sensor failure • Debris on the encoder surface • VSA modulator-control unit internal failure

*: With ACC

DTC C1041-00

DTC C1041-00 : Right Front Wheel Abnormal Slip Detection

NOTE

- Initial Diagnosis:

  The initial on-board diagnosis occurs right after the vehicle condition is turned to the ON mode, and the ABS/VSA indicator comes on, and continues until the indicator goes off.

- Regular Diagnosis:

  The regular on-board diagnosis begins right after the ABS/VSA indicator goes off, and it continues until the vehicle condition is turned to the OFF (LOCK) mode.

- Review "How to troubleshoot the VSA system" before doing the DTC troubleshooting procedure.
- Test-drive the vehicle according to local traffic conditions and regulations. Do not test-drive on a lift unless specified.
- The possible causes shown may not be a complete list of all potential problems, and it is possible that there may be other causes.

Confirmation Procedure	Basic Condition: • No other DTCs detected With the Driving Pattern:

	• Start the engine. • Test-drive the vehicle at 12 mph (20 km/h) or more for at least 72 seconds. (Be careful of the surrounding traffic conditions.)
Execution	Regular Diagnosis
Duration	About 72 seconds
DTC Type	• 1 drive cycle • Brake system indicator (red) on (If multiple wheel failures are detected) • Brake system indicator (amber) on • ABS indicator on • VSA indicator on
Fail Safe Action	• Stop EBD function (If multiple wheel failures are detected) • Stop ABS function • Stop engine drag torque control function • Stop TCS function • Stop VSA function • Stop agile handling assist control function • Stop brake assist function • Stop hydraulic boost failure compensation function • Stop hill start assist function • Stop automatic brake hold function • Stop automatic operating function (Drive away assist) • Stop automatic operating function (Request from other system) (Dependant upon the conditions) • Stop ignition OFF apply function • Stop ACC function* • Stop CMBS function*
Possible Cause	• Low air pressure in right-front tire • Different diameter right-front tire • Right-front wheel speed sensor failure • Debris on the right-front encoder surface • VSA modulator-control unit internal failure

*: With ACC

DTC C1042-00

DTC C1042-00 : Left Front Wheel Abnormal Slip Detection

NOTE

- Initial Diagnosis:

  The initial on-board diagnosis occurs right after the vehicle condition is turned to the ON mode, and the ABS/VSA indicator comes on, and continues until the indicator goes off.

- Regular Diagnosis:

  The regular on-board diagnosis begins right after the ABS/VSA indicator goes off, and it continues until the vehicle condition is turned to the OFF (LOCK) mode.

- Review "How to troubleshoot the VSA system" before doing the DTC troubleshooting procedure.
- Test-drive the vehicle according to local traffic conditions and regulations. Do not test-drive on a lift unless specified.
- The possible causes shown may not be a complete list of all potential problems, and it is possible that there may be other causes.

Confirmation Procedure	Basic Condition: • No other DTCs detected With the Driving Pattern: • Start the engine. • Test-drive the vehicle at 12 mph (20 km/h) or more for at least 72 seconds. (Be careful of the surrounding traffic conditions.)
Execution	Regular Diagnosis
Duration	About 72 seconds
DTC Type	• 1 drive cycle • Brake system indicator (red) on (If multiple wheel failures are detected) • Brake system indicator (amber) on • ABS indicator on • VSA indicator on
Fail Safe Action	• Stop EBD function (If multiple wheel failures are detected) • Stop ABS function • Stop engine drag torque control function • Stop TCS function • Stop VSA function • Stop agile handling assist control function • Stop brake assist function • Stop hydraulic boost failure compensation function • Stop hill start assist function • Stop automatic brake hold function • Stop automatic operating function (Drive away assist) • Stop automatic operating function (Request from other system) (Dependant upon the conditions) • Stop ignition OFF apply function • Stop ACC function* • Stop CMBS function*
Possible Cause	• Low air pressure in left-front tire • Different diameter left-front tire • Left-front wheel speed sensor failure

	• Debris on the left-front encoder surface • VSA modulator-control unit internal failure

*: With ACC

DTC C1043-00

DTC C1043-00 : Right Rear Wheel Abnormal Slip Detection

NOTE

- Initial Diagnosis:

  The initial on-board diagnosis occurs right after the vehicle condition is turned to the ON mode, and the ABS/VSA indicator comes on, and continues until the indicator goes off.

- Regular Diagnosis:

  The regular on-board diagnosis begins right after the ABS/VSA indicator goes off, and it continues until the vehicle condition is turned to the OFF (LOCK) mode.

- Review "How to troubleshoot the VSA system" before doing the DTC troubleshooting procedure.
- Test-drive the vehicle according to local traffic conditions and regulations. Do not test-drive on a lift unless specified.
- The possible causes shown may not be a complete list of all potential problems, and it is possible that there may be other causes.

Confirmation Procedure	Basic Condition: • No other DTCs detected With the Driving Pattern: • Start the engine. • Test-drive the vehicle at 12 mph (20 km/h) or more for at least 72 seconds. (Be careful of the surrounding traffic conditions.)
Execution	Regular Diagnosis
Duration	About 72 seconds
DTC Type	• 1 drive cycle • Brake system indicator (red) on (If multiple wheel failures are detected) • Brake system indicator (amber) on • ABS indicator on • VSA indicator on
Fail Safe Action	• Stop EBD function (If multiple wheel failures are detected) • Stop ABS function • Stop engine drag torque control function • Stop TCS function • Stop VSA function • Stop agile handling assist control function • Stop brake assist function

	- Stop hydraulic boost failure compensation function - Stop hill start assist function - Stop automatic brake hold function - Stop automatic operating function (Drive away assist) - Stop automatic operating function (Request from other system) (Dependant upon the conditions) - Stop ignition OFF apply function - Stop ACC function* - Stop CMBS function*
Possible Cause	- Low air pressure in right-rear tire - Different diameter right-rear tire - Right-rear wheel speed sensor failure - Debris on the right-rear encoder surface - VSA modulator-control unit internal failure

*: With ACC

DTC C1044-00

DTC C1044-00 : Left Rear Wheel Abnormal Slip Detection

NOTE

- Initial Diagnosis:

  The initial on-board diagnosis occurs right after the vehicle condition is turned to the ON mode, and the ABS/VSA indicator comes on, and continues until the indicator goes off.

- Regular Diagnosis:

  The regular on-board diagnosis begins right after the ABS/VSA indicator goes off, and it continues until the vehicle condition is turned to the OFF (LOCK) mode.

- Review "How to troubleshoot the VSA system" before doing the DTC troubleshooting procedure.
- Test-drive the vehicle according to local traffic conditions and regulations. Do not test-drive on a lift unless specified.
- The possible causes shown may not be a complete list of all potential problems, and it is possible that there may be other causes.

Confirmation Procedure	Basic Condition: - No other DTCs detected With the Driving Pattern: - Start the engine. - Test-drive the vehicle at 12 mph (20 km/h) or more for at least 72 seconds. (Be careful of the surrounding traffic conditions.)
Execution	Regular Diagnosis
Duration	About 72 seconds

DTC Type	• 1 drive cycle • Brake system indicator (red) on (If multiple wheel failures are detected) • Brake system indicator (amber) on • ABS indicator on • VSA indicator on
Fail Safe Action	• Stop EBD function (If multiple wheel failures are detected) • Stop ABS function • Stop engine drag torque control function • Stop TCS function • Stop VSA function • Stop agile handling assist control function • Stop brake assist function • Stop hydraulic boost failure compensation function • Stop hill start assist function • Stop automatic brake hold function • Stop automatic operating function (Drive away assist) • Stop automatic operating function (Request from other system) (Dependant upon the conditions) • Stop ignition OFF apply function • Stop ACC function* • Stop CMBS function*
Possible Cause	• Low air pressure in left-rear tire • Different diameter left-rear tire • Left-rear wheel speed sensor failure • Debris on the left-rear encoder surface • VSA modulator-control unit internal failure

*: With ACC

DTC C1100-48

DTC C1100-48 : Electric Parking Brake Abnormal Operation Monitoring

NOTE

- Initial Diagnosis:

  The initial on-board diagnosis occurs right after the vehicle condition is turned to the ON mode, and the ABS/VSA indicator comes on, and continues until the indicator goes off.

- Regular Diagnosis:

  The regular on-board diagnosis begins right after the ABS/VSA indicator goes off, and it continues until the vehicle condition is turned to the OFF (LOCK) mode.

- Review "How to troubleshoot the VSA system" before doing the DTC troubleshooting procedure.
- Test-drive the vehicle according to local traffic conditions and regulations. Do not test-drive on a lift unless specified.

- The possible causes shown may not be a complete list of all potential problems, and it is possible that there may be other causes.

Confirmation Procedure	Basic Condition: • Wheel speed is less than 2 mph (3 km/h) With the Driving Pattern: • Turn the vehicle to the ON mode. • Apply and release the parking brake several times. • Wait 30 seconds or more.
Execution	Regular Diagnosis
Duration	About 30 seconds
DTC Type	• 1 drive cycle • Brake system indicator (red) blink • Brake system indicator (amber) on
Fail Safe Action	• Stop automatic brake hold function • Stop manual operating function • Stop automatic operating function (Drive away assist) • Stop automatic operating function (Request from other system) • Stop ignition OFF apply function • Stop ACC function* • Stop CMBS function*
Possible Cause	• VSA modulator-control unit internal failure

*: With ACC

DTC C1100-54

DTC C1100-54 : Piston Position Not Learned

NOTE

- Initial Diagnosis:

  The initial on-board diagnosis occurs right after the vehicle condition is turned to the ON mode, and the ABS/VSA indicator comes on, and continues until the indicator goes off.

- Regular Diagnosis:

  The regular on-board diagnosis begins right after the ABS/VSA indicator goes off, and it continues until the vehicle condition is turned to the OFF (LOCK) mode.

- Review "How to troubleshoot the VSA system" before doing the DTC troubleshooting procedure.
- Test-drive the vehicle according to local traffic conditions and regulations. Do not test-drive on a lift unless specified.
- The possible causes shown may not be a complete list of all potential problems, and it is possible that there may be other causes.

Confirmation Procedure	With the Driving Pattern: - Turn the vehicle to the ON mode.
Execution	Regular Diagnosis
Duration	-
DTC Type	- 1 drive cycle - Brake system indicator (red) on
Fail Safe Action	- None
Possible Cause	- Piston position not learned - VSA modulator-control unit internal failure

DTC C1100-94

DTC C1100-94 : Electric Parking Brake Actuator Malfunction

NOTE

- Initial Diagnosis:

  The initial on-board diagnosis occurs right after the vehicle condition is turned to the ON mode, and the ABS/VSA indicator comes on, and continues until the indicator goes off.

- Regular Diagnosis:

  The regular on-board diagnosis begins right after the ABS/VSA indicator goes off, and it continues until the vehicle condition is turned to the OFF (LOCK) mode.

- Review "How to troubleshoot the VSA system" before doing the DTC troubleshooting procedure.
- Test-drive the vehicle according to local traffic conditions and regulations. Do not test-drive on a lift unless specified.
- The possible causes shown may not be a complete list of all potential problems, and it is possible that there may be other causes.

Confirmation Procedure	With the Driving Pattern: - Turn the vehicle to the ON mode. - Apply and release the parking brake several times.
Execution	Initial Diagnosis/Regular Diagnosis
Duration	About 1 second
DTC Type	- 1 drive cycle - Brake system indicator (red) blink - Brake system indicator (amber) on
Fail Safe Action	- Stop automatic brake hold function - Stop automatic operating function (Drive away assist) - Stop automatic operating function (Request from other system) - Stop ignition OFF apply function - Stop ACC function*

	- Stop CMBS function*
Possible Cause	- Electric parking brake actuator internal failure - VSA modulator-control unit internal failure

*: With ACC

DTC C1100-98

DTC C1100-98 : Electric Parking Brake Continuous Operations Detected

NOTE

- Initial Diagnosis:

  The initial on-board diagnosis occurs right after the vehicle condition is turned to the ON mode, and the ABS/VSA indicator comes on, and continues until the indicator goes off.

- Regular Diagnosis:

  The regular on-board diagnosis begins right after the ABS/VSA indicator goes off, and it continues until the vehicle condition is turned to the OFF (LOCK) mode.

- Review "How to troubleshoot the VSA system" before doing the DTC troubleshooting procedure.
- Test-drive the vehicle according to local traffic conditions and regulations. Do not test-drive on a lift unless specified.
- The possible causes shown may not be a complete list of all potential problems, and it is possible that there may be other causes.

Confirmation Procedure	With the Driving Pattern: - Turn the vehicle to the ON mode. - Apply and release the parking brake several times. (This DTC is set when repeated use of the electric parking brake function causes electric parking brake actuator overheating.)
Execution	Regular Diagnosis
Duration	-
DTC Type	- 1 drive cycle - Brake system indicator (amber) on
Fail Safe Action	- Stop automatic brake hold function - Stop manual operating function (Dependant upon the conditions) - Stop automatic operating function (Drive away assist) (Dependant upon the conditions) - Stop automatic operating function (Request from other system) - Stop ignition OFF apply function - Stop ACC function* - Stop CMBS function*
Possible Cause	- Electric parking actuator overheating - VSA modulator-control unit internal failure

*: With ACC

DTC C1110-11

DTC C1110-11 : Left Rear Electric Parking Brake Actuator Circuit Short to Ground

NOTE

- Initial Diagnosis:

  The initial on-board diagnosis occurs right after the vehicle condition is turned to the ON mode, and the ABS/VSA indicator comes on, and continues until the indicator goes off.

- Regular Diagnosis:

  The regular on-board diagnosis begins right after the ABS/VSA indicator goes off, and it continues until the vehicle condition is turned to the OFF (LOCK) mode.

- Review "How to troubleshoot the VSA system" before doing the DTC troubleshooting procedure.
- Test-drive the vehicle according to local traffic conditions and regulations. Do not test-drive on a lift unless specified.
- The possible causes shown may not be a complete list of all potential problems, and it is possible that there may be other causes.

Confirmation Procedure	With the Driving Pattern: • Turn the vehicle to the ON mode. • Apply and release the parking brake several times.
Execution	Regular Diagnosis
Duration	About 1 second
DTC Type	• 1 drive cycle • Brake system indicator (amber) on
Fail Safe Action	• Stop automatic brake hold function • Stop manual operating function • Stop automatic operating function (Drive away assist) • Stop automatic operating function (Request from other system) • Stop ignition OFF apply function • Stop ACC function* • Stop CMBS function*
Possible Cause	• Short to ground between the VSA modulator-control unit and the left-rear electric parking brake actuator (EPB L ACT+, EPB L ACT- lines) • Left electric parking brake actuator • VSA modulator-control unit internal failure

*: With ACC

DTC C1110-13

DTC C1110-13 : Left Rear Electric Parking Brake Actuator Circuit Open

NOTE

- Initial Diagnosis:

  The initial on-board diagnosis occurs right after the vehicle condition is turned to the ON mode, and the ABS/VSA indicator comes on, and continues until the indicator goes off.

- Regular Diagnosis:

  The regular on-board diagnosis begins right after the ABS/VSA indicator goes off, and it continues until the vehicle condition is turned to the OFF (LOCK) mode.

- Review "How to troubleshoot the VSA system" before doing the DTC troubleshooting procedure.
- Test-drive the vehicle according to local traffic conditions and regulations. Do not test-drive on a lift unless specified.
- The possible causes shown may not be a complete list of all potential problems, and it is possible that there may be other causes.

Confirmation Procedure	With the Driving Pattern: • Turn the vehicle to the ON mode. • Apply and release the parking brake several times.
Execution	Regular Diagnosis
Duration	About 1 second
DTC Type	• 1 drive cycle • Brake system indicator (amber) on
Fail Safe Action	• Stop automatic brake hold function • Stop manual operating function • Stop automatic operating function (Drive away assist) • Stop automatic operating function (Request from other system) • Stop ignition OFF apply function • Stop ACC function* • Stop CMBS function*
Possible Cause	• Open or Poor connection between the VSA modulator-control unit and the left-rear electric parking brake actuator (EPB L ACT+, EPB L ACT- lines) • Open, Short to ground, or Poor connection between the VSA modulator-control unit and the under-hood fuse/relay box (+B ABS/VSA FSR line) • Fuse failure (Under-hood fuse/relay box No. A3-2 (40 A)) • Left electric parking brake actuator • VSA modulator-control unit internal failure

*: With ACC

DTC C1110-79

DTC C1110-79 : Left Side Electric Parking Brake Doesn't Work Correctly

NOTE

- Initial Diagnosis:

The initial on-board diagnosis occurs right after the vehicle condition is turned to the ON mode, and the ABS/VSA indicator comes on, and continues until the indicator goes off.

- Regular Diagnosis:

  The regular on-board diagnosis begins right after the ABS/VSA indicator goes off, and it continues until the vehicle condition is turned to the OFF (LOCK) mode.

- Review "How to troubleshoot the VSA system" before doing the DTC troubleshooting procedure.
- Test-drive the vehicle according to local traffic conditions and regulations. Do not test-drive on a lift unless specified.
- The possible causes shown may not be a complete list of all potential problems, and it is possible that there may be other causes.

Confirmation Procedure	With the Driving Pattern: • Turn the vehicle to the ON mode. • Apply and release the parking brake several times. • Wait 35 seconds or more.
Execution	Regular Diagnosis
Duration	About 35 seconds
DTC Type	• 1 drive cycle • Brake system indicator (red) blink • Brake system indicator (amber) on
Fail Safe Action	• Stop automatic brake hold function • Stop manual operating function (Dependant upon the conditions) • Stop automatic operating function (Drive away assist) • Stop automatic operating function (Request from other system) • Stop ignition OFF apply function • Stop ACC function* • Stop CMBS function*
Possible Cause	• Rear brake component parts installation incorrect • Left electric parking brake actuator • VSA modulator-control unit internal failure

*: With ACC

DTC C1110-94

DTC C1110-94 : Left Side Electric Parking Brake Actuator Unexpected Operation

NOTE

- Initial Diagnosis:

  The initial on-board diagnosis occurs right after the vehicle condition is turned to the ON mode, and the ABS/VSA indicator comes on, and continues until the indicator goes off.

- Regular Diagnosis:

The regular on-board diagnosis begins right after the ABS/VSA indicator goes off, and it continues until the vehicle condition is turned to the OFF (LOCK) mode.

- Review "How to troubleshoot the VSA system" before doing the DTC troubleshooting procedure.
- Test-drive the vehicle according to local traffic conditions and regulations. Do not test-drive on a lift unless specified.
- The possible causes shown may not be a complete list of all potential problems, and it is possible that there may be other causes.

Confirmation Procedure	With the Driving Pattern: • Turn the vehicle to the ON mode. • Apply and release the parking brake several times.
Execution	Regular Diagnosis
Duration	About 1 second
DTC Type	• 1 drive cycle • Brake system indicator (red) blink • Brake system indicator (amber) on
Fail Safe Action	• Stop automatic brake hold function • Stop automatic operating function (Drive away assist) • Stop automatic operating function (Request from other system) • Stop ignition OFF apply function • Stop ACC function* • Stop CMBS function*
Possible Cause	• Left electric parking brake actuator • VSA modulator-control unit internal failure

*: With ACC

DTC C1110-96

DTC C1110-96 : Left Side Electric Parking Brake Actuator Malfunction

NOTE

- Initial Diagnosis:

  The initial on-board diagnosis occurs right after the vehicle condition is turned to the ON mode, and the ABS/VSA indicator comes on, and continues until the indicator goes off.

- Regular Diagnosis:

  The regular on-board diagnosis begins right after the ABS/VSA indicator goes off, and it continues until the vehicle condition is turned to the OFF (LOCK) mode.

- Review "How to troubleshoot the VSA system" before doing the DTC troubleshooting procedure.
- Test-drive the vehicle according to local traffic conditions and regulations. Do not test-drive on a lift unless specified.
- The possible causes shown may not be a complete list of all potential problems, and it is possible that there may be other causes.

Confirmation Procedure	With the Driving Pattern: • Turn the vehicle to the ON mode. • Apply and release the parking brake several times.
Execution	Initial Diagnosis/Regular Diagnosis
Duration	About 1 second
DTC Type	• 1 drive cycle • Brake system indicator (red) blink (Dependant upon the conditions) • Brake system indicator (amber) on
Fail Safe Action	• Stop automatic brake hold function • Stop manual operating function (Dependant upon the conditions) • Stop automatic operating function (Drive away assist) (Dependant upon the conditions) • Stop automatic operating function (Request from other system) • Stop ignition OFF apply function • Stop ACC function* • Stop CMBS function*
Possible Cause	• Rear brake component parts installation incorrect • Left electric parking brake actuator • VSA modulator-control unit internal failure

*: With ACC

DTC C1111-11

DTC C1111-11 : Right Rear Electric Parking Brake Actuator Circuit Short to Ground

NOTE

- Initial Diagnosis:

  The initial on-board diagnosis occurs right after the vehicle condition is turned to the ON mode, and the ABS/VSA indicator comes on, and continues until the indicator goes off.

- Regular Diagnosis:

  The regular on-board diagnosis begins right after the ABS/VSA indicator goes off, and it continues until the vehicle condition is turned to the OFF (LOCK) mode.

- Review "How to troubleshoot the VSA system" before doing the DTC troubleshooting procedure.
- Test-drive the vehicle according to local traffic conditions and regulations. Do not test-drive on a lift unless specified.
- The possible causes shown may not be a complete list of all potential problems, and it is possible that there may be other causes.

Confirmation Procedure	With the Driving Pattern: • Turn the vehicle to the ON mode. • Apply and release the parking brake several times.
Execution	Regular Diagnosis
Duration	About 1 second
DTC Type	• 1 drive cycle • Brake system indicator (amber) on
Fail Safe Action	• Stop automatic brake hold function • Stop manual operating function • Stop automatic operating function (Drive away assist) • Stop automatic operating function (Request from other system) • Stop ignition OFF apply function • Stop ACC function* • Stop CMBS function*
Possible Cause	• Short to ground between the VSA modulator-control unit and the right-rear electric parking brake actuator (EPB R ACT+, EPB L ACT- lines) • Right electric parking brake actuator • VSA modulator-control unit internal failure

*: With ACC

DTC C1111-13

DTC C1111-13 : Right Rear Electric Parking Brake Actuator Circuit Open

NOTE

- Initial Diagnosis:

  The initial on-board diagnosis occurs right after the vehicle condition is turned to the ON mode, and the ABS/VSA indicator comes on, and continues until the indicator goes off.

- Regular Diagnosis:

  The regular on-board diagnosis begins right after the ABS/VSA indicator goes off, and it continues until the vehicle condition is turned to the OFF (LOCK) mode.

- Review "How to troubleshoot the VSA system" before doing the DTC troubleshooting procedure.
- Test-drive the vehicle according to local traffic conditions and regulations. Do not test-drive on a lift unless specified.
- The possible causes shown may not be a complete list of all potential problems, and it is possible that there may be other causes.

Confirmation Procedure	With the Driving Pattern: • Turn the vehicle to the ON mode. • Apply and release the parking brake several times.

Execution	Regular Diagnosis
Duration	About 1 second
DTC Type	- 1 drive cycle - Brake system indicator (amber) on
Fail Safe Action	- Stop automatic brake hold function - Stop manual operating function - Stop automatic operating function (Drive away assist) - Stop automatic operating function (Request from other system) - Stop ignition OFF apply function - Stop ACC function* - Stop CMBS function*
Possible Cause	- Open or Poor connection between the VSA modulator-control unit and the right-rear electric parking brake actuator (EPB R ACT+, EPB R ACT- lines) - Open, Short to ground, or Poor connection between the VSA modulator-control unit and the under-hood fuse/relay box (+B ABS/VSA FSR line) - Fuse failure (Under-hood fuse/relay box No. A3-2 (40 A)) - Right electric parking brake actuator - VSA modulator-control unit internal failure

*: With ACC

DTC C1111-79

DTC C1111-79 : Right Side Electric Parking Brake Doesn't Work Correctly

NOTE

- Initial Diagnosis:

  The initial on-board diagnosis occurs right after the vehicle condition is turned to the ON mode, and the ABS/VSA indicator comes on, and continues until the indicator goes off.

- Regular Diagnosis:

  The regular on-board diagnosis begins right after the ABS/VSA indicator goes off, and it continues until the vehicle condition is turned to the OFF (LOCK) mode.

- Review "How to troubleshoot the VSA system" before doing the DTC troubleshooting procedure.
- Test-drive the vehicle according to local traffic conditions and regulations. Do not test-drive on a lift unless specified.
- The possible causes shown may not be a complete list of all potential problems, and it is possible that there may be other causes.

Confirmation Procedure	With the Driving Pattern: - Turn the vehicle to the ON mode. - Apply and release the parking brake several times. - Wait 35 seconds or more.
Execution	Regular Diagnosis

Duration	About 35 seconds
DTC Type	• 1 drive cycle • Brake system indicator (red) blink • Brake system indicator (amber) on
Fail Safe Action	• Stop automatic brake hold function • Stop manual operating function (Dependant upon the conditions) • Stop automatic operating function (Drive away assist) • Stop automatic operating function (Request from other system) • Stop ignition OFF apply function • Stop ACC function* • Stop CMBS function*
Possible Cause	• Rear brake component parts installation incorrect • Right electric parking brake actuator • VSA modulator-control unit internal failure

*: With ACC

DTC C1111-94

DTC C1111-94 : Right Side Electric Parking Brake Actuator Unexpected Operation

NOTE

- Initial Diagnosis:

  The initial on-board diagnosis occurs right after the vehicle condition is turned to the ON mode, and the ABS/VSA indicator comes on, and continues until the indicator goes off.

- Regular Diagnosis:

  The regular on-board diagnosis begins right after the ABS/VSA indicator goes off, and it continues until the vehicle condition is turned to the OFF (LOCK) mode.

- Review "How to troubleshoot the VSA system" before doing the DTC troubleshooting procedure.
- Test-drive the vehicle according to local traffic conditions and regulations. Do not test-drive on a lift unless specified.
- The possible causes shown may not be a complete list of all potential problems, and it is possible that there may be other causes.

Confirmation Procedure	With the Driving Pattern: • Turn the vehicle to the ON mode. • Apply and release the parking brake several times.
Execution	Regular Diagnosis
Duration	About 1 second
DTC Type	• 1 drive cycle • Brake system indicator (red) blink • Brake system indicator (amber) on

Fail Safe Action	- Stop automatic brake hold function - Stop automatic operating function (Drive away assist) - Stop automatic operating function (Request from other system) - Stop ignition OFF apply function - Stop ACC function* - Stop CMBS function*
Possible Cause	- Right electric parking brake actuator - VSA modulator-control unit internal failure

*: With ACC

DTC C1111-96

DTC C1111-96 : Right Side Electric Parking Brake Actuator Malfunction

NOTE

- Initial Diagnosis:

  The initial on-board diagnosis occurs right after the vehicle condition is turned to the ON mode, and the ABS/VSA indicator comes on, and continues until the indicator goes off.

- Regular Diagnosis:

  The regular on-board diagnosis begins right after the ABS/VSA indicator goes off, and it continues until the vehicle condition is turned to the OFF (LOCK) mode.

- Review "How to troubleshoot the VSA system" before doing the DTC troubleshooting procedure.
- Test-drive the vehicle according to local traffic conditions and regulations. Do not test-drive on a lift unless specified.
- The possible causes shown may not be a complete list of all potential problems, and it is possible that there may be other causes.

Confirmation Procedure	With the Driving Pattern: - Turn the vehicle to the ON mode. - Apply and release the parking brake several times.
Execution	Initial Diagnosis/Regular Diagnosis
Duration	About 1 second
DTC Type	- 1 drive cycle - Brake system indicator (red) blink (Dependant upon the conditions) - Brake system indicator (amber) on
Fail Safe Action	- Stop automatic brake hold function - Stop manual operating function (Dependant upon the conditions) - Stop automatic operating function (Drive away assist) (Dependant upon the conditions) - Stop automatic operating function (Request from other system) - Stop ignition OFF apply function - Stop ACC function*

	- Stop CMBS function*
Possible Cause	- Rear brake component parts installation incorrect - Right electric parking brake actuator - VSA modulator-control unit internal failure

*: With ACC

DTC C1120-14

DTC C1120-14 : Electric Parking Brake Switch Circuit Malfunction

NOTE

- Initial Diagnosis:

  The initial on-board diagnosis occurs right after the vehicle condition is turned to the ON mode, and the ABS/VSA indicator comes on, and continues until the indicator goes off.

- Regular Diagnosis:

  The regular on-board diagnosis begins right after the ABS/VSA indicator goes off, and it continues until the vehicle condition is turned to the OFF (LOCK) mode.

- Review "How to troubleshoot the VSA system" before doing the DTC troubleshooting procedure.
- Test-drive the vehicle according to local traffic conditions and regulations. Do not test-drive on a lift unless specified.
- The possible causes shown may not be a complete list of all potential problems, and it is possible that there may be other causes.

Confirmation Procedure	Basic Condition: - 12 volt battery voltage 9.6 - 16.5 V With the Driving Pattern: - Turn the vehicle to the ON mode.
Execution	Regular Diagnosis
Duration	-
DTC Type	- 1 drive cycle - Brake system indicator (red) blink - Brake system indicator (amber) on
Fail Safe Action	- Stop manual operating function - Stop emergency brake function
Possible Cause	- Open, Short to ground, or Poor connection between the electric parking brake/automatic brake hold switch and the VSA modulator-control unit (SW1, SW3, SW4, SW6 lines) - Electric parking brake/automatic brake hold switch failure - VSA modulator-control unit internal failure

DTC C1120-96

DTC C1120-96 : Electric Parking Brake Switch Malfunction

NOTE

- Initial Diagnosis:

  The initial on-board diagnosis occurs right after the vehicle condition is turned to the ON mode, and the ABS/VSA indicator comes on, and continues until the indicator goes off.

- Regular Diagnosis:

  The regular on-board diagnosis begins right after the ABS/VSA indicator goes off, and it continues until the vehicle condition is turned to the OFF (LOCK) mode.

- Review "How to troubleshoot the VSA system" before doing the DTC troubleshooting procedure.
- Test-drive the vehicle according to local traffic conditions and regulations. Do not test-drive on a lift unless specified.
- The possible causes shown may not be a complete list of all potential problems, and it is possible that there may be other causes.

Confirmation Procedure	Basic Condition: • 12 volt battery voltage 9.6 - 16.5 V With the Driving Pattern: • Turn the vehicle to the ON mode. • Wait 5 minutes or more.
Execution	Regular Diagnosis
Duration	About 5 minutes
DTC Type	• 1 drive cycle • Brake system indicator (red) blink • Brake system indicator (amber) on
Fail Safe Action	• Stop manual operating function • Stop emergency brake function
Possible Cause	• Electric parking brake/automatic brake hold switch failure • VSA modulator-control unit internal failure

DTC C1270-11

DTC C1270-11 : Automatic Brake Hold Switch Signal Circuit Short

NOTE

- Initial Diagnosis:

  The initial on-board diagnosis occurs right after the vehicle condition is turned to the ON mode, and the ABS/VSA indicator comes on, and continues until the indicator goes off.

- Regular Diagnosis:

The regular on-board diagnosis begins right after the ABS/VSA indicator goes off, and it continues until the vehicle condition is turned to the OFF (LOCK) mode.

- Review "How to troubleshoot the VSA system" before doing the DTC troubleshooting procedure.
- Test-drive the vehicle according to local traffic conditions and regulations. Do not test-drive on a lift unless specified.
- The possible causes shown may not be a complete list of all potential problems, and it is possible that there may be other causes.

Confirmation Procedure	Basic Condition: • 12 volt battery voltage 9.6 - 16.5 V With the Driving Pattern: • Turn the vehicle to the ON mode.
Execution	Regular Diagnosis
Duration	About 1 second
DTC Type	• 1 drive cycle • Brake system indicator (amber) on
Fail Safe Action	• Stop automatic brake hold function
Possible Cause	• Short to ground between the electric parking brake/automatic brake hold switch and the gauge control module (BRAKE HOLD line) • Electric parking brake/automatic brake hold switch failure • Gauge control module internal failure

DTC C1270-15

DTC C1270-15 : Automatic Brake Hold Switch Signal Circuit Open

NOTE

- Initial Diagnosis:

  The initial on-board diagnosis occurs right after the vehicle condition is turned to the ON mode, and the ABS/VSA indicator comes on, and continues until the indicator goes off.

- Regular Diagnosis:

  The regular on-board diagnosis begins right after the ABS/VSA indicator goes off, and it continues until the vehicle condition is turned to the OFF (LOCK) mode.

- Review "How to troubleshoot the VSA system" before doing the DTC troubleshooting procedure.
- Test-drive the vehicle according to local traffic conditions and regulations. Do not test-drive on a lift unless specified.
- The possible causes shown may not be a complete list of all potential problems, and it is possible that there may be other causes.

Confirmation Procedure	Basic Condition: • 12 volt battery voltage 9.6 - 16.5 V

	With the Driving Pattern: - Turn the vehicle to the ON mode.
Execution	Regular Diagnosis
Duration	About 1 second
DTC Type	- 1 drive cycle - Brake system indicator (amber) on
Fail Safe Action	- Stop automatic brake hold function
Possible Cause	- Open or Short to power between the electric parking brake/automatic brake hold switch and the gauge control module (BRAKE HOLD line) - Open between the electric parking brake/automatic brake hold switch and body ground (GND line) - Electric parking brake/automatic brake hold switch failure - Gauge control module internal failure

DTC U0029-00 (VSA CONTROL UNIT)

DTC U0029-00 : CAN Communication Failure (Bus OFF Ch 1)

NOTE

- Initial Diagnosis:

  The initial on-board diagnosis occurs right after the vehicle condition is turned to the ON mode, and the ABS/VSA indicator comes on, and continues until the indicator goes off.

- Regular Diagnosis:

  The regular on-board diagnosis begins right after the ABS/VSA indicator goes off, and it continues until the vehicle condition is turned to the OFF (LOCK) mode.

- Review "How to troubleshoot the VSA system" before doing the DTC troubleshooting procedure.
- Test-drive the vehicle according to local traffic conditions and regulations. Do not test-drive on a lift unless specified.
- The possible causes shown may not be a complete list of all potential problems, and it is possible that there may be other causes.

Confirmation Procedure	Basic Condition: - 12 volt battery voltage 9.6 - 16.5 V With the Driving Pattern: - Start the engine.
Execution	Initial Diagnosis/Regular Diagnosis
Duration	About 2 seconds
DTC Type	- 1 drive cycle - Brake system indicator (red) blink - Brake system indicator (amber) on

	- VSA indicator on
Fail Safe Action	- Stop CAN function (Dependant upon the conditions) - Degrade ABS performance - Stop engine drag torque control function - Stop TCS function - Stop VSA function - Stop agile handling assist function - Stop brake assist function - Stop hydraulic boost failure compensation function - Stop hill start assist function - Stop automatic brake hold function - Stop automatic operating function (Drive away assist) - Stop ignition OFF apply function - Stop ACC function *1 - Stop CMBS function *1
Possible Cause	- Open, Short to ground, Short to power, or Short to another line between the VSA modulator-control unit and other control units (F-CAN lines) *2 - Open, Short to ground, Short to power, or Short to another line between the VSA modulator-control unit and other control units (F-CAN A lines) *3 - Internal failure of other unit on F-CAN - VSA modulator-control unit internal failure

*1: With ACC

*2: Without CAN gateway

*3: With CAN gateway

DTC U0047-00 (VSA CONTROL UNIT)

DTC U0047-00 : CAN Communication Failure (Bus OFF Ch 2)

NOTE

- Initial Diagnosis:

  The initial on-board diagnosis occurs right after the vehicle condition is turned to the ON mode, and the ABS/VSA indicator comes on, and continues until the indicator goes off.

- Regular Diagnosis:

  The regular on-board diagnosis begins right after the ABS/VSA indicator goes off, and it continues until the vehicle condition is turned to the OFF (LOCK) mode.

- Review "How to troubleshoot the VSA system" before doing the DTC troubleshooting procedure.
- Test-drive the vehicle according to local traffic conditions and regulations. Do not test-drive on a lift unless specified.
- The possible causes shown may not be a complete list of all potential problems, and it is possible that there may be other causes.

Confirmation Procedure	Basic Condition: • 12 volt battery voltage 9.6 - 16.5 V With the Driving Pattern: • Start the engine.
Execution	Initial Diagnosis/Regular Diagnosis
Duration	About 2 seconds
DTC Type	• 1 drive cycle • Brake system indicator (red) blink (Dependant upon the conditions) • Brake system indicator (amber) on (Dependant upon the conditions) • ABS indicator on (Dependant upon the conditions) *1 • VSA indicator on (Dependant upon the conditions)
Fail Safe Action	• Stop CAN function (Dependant upon the conditions) • Degrade ABS performance (Dependant upon the conditions) *2 • Stop ABS function (Dependant upon the conditions) *1 • Stop engine drag torque control function (Dependant upon the conditions) • Stop TCS function (Dependant upon the conditions) • Stop VSA function (Dependant upon the conditions) • Stop agile handling assist function (Dependant upon the conditions) • Stop brake assist function (Dependant upon the conditions) *1 • Stop hydraulic boost failure compensation function (Dependant upon the conditions) *1 • Stop hill start assist function (Dependant upon the conditions) • Stop automatic brake hold function (Dependant upon the conditions) • Stop automatic operating function (Drive away assist) (Dependant upon the conditions) • Stop ignition OFF apply function (Dependant upon the conditions) • Stop ACC function (Dependant upon the conditions) *3 • Stop CMBS function (Dependant upon the conditions) *3

*1: AWD

*2: 2WD

*3: With ACC

*4: Without CAN gateway

*5: With CAN gateway

Possible Cause	• Open, Short to ground, Short to power, or Short to another line between the VSA modulator-control unit and other control units (EBB CAN lines) *4 • Open, Short to ground, Short to power, or Short to another line between the VSA modulator-control unit and other control units (F-CAN B lines) *5 • Internal failure of other unit on EBB CAN *4 • Internal failure of other unit on F-CAN *5

	- VSA modulator-control unit internal failure

*1: AWD

*2: 2WD

*3: With ACC

*4: Without CAN gateway

*5: With CAN gateway

DTC U0100-00 (VSA CONTROL UNIT)

DTC U0100-00 : CAN Communication Failure with ECM/ISU

NOTE

- Initial Diagnosis:

  The initial on-board diagnosis occurs right after the vehicle condition is turned to the ON mode, and the ABS/VSA indicator comes on, and continues until the indicator goes off.

- Regular Diagnosis:

  The regular on-board diagnosis begins right after the ABS/VSA indicator goes off, and it continues until the vehicle condition is turned to the OFF (LOCK) mode.

- Review "How to troubleshoot the VSA system" before doing the DTC troubleshooting procedure.
- Test-drive the vehicle according to local traffic conditions and regulations. Do not test-drive on a lift unless specified.
- The possible causes shown may not be a complete list of all potential problems, and it is possible that there may be other causes.

Confirmation Procedure	Basic Condition: • 12 volt battery voltage 9.6 - 16.5 V With the Driving Pattern: • Start the engine. • Test-drive the vehicle at 6 mph (10 km/h) or more.
Execution	Regular Diagnosis
Duration	About 1 second
DTC Type	• 1 drive cycle • Brake system indicator (red) blink • Brake system indicator (amber) on • VSA indicator on
Fail Safe Action	• Degrade ABS performance • Stop engine drag torque control function • Stop TCS function • Stop VSA function • Stop agile handling assist function

	- Stop brake assist function (Dependant upon the conditions) - Stop hill start assist function - Stop automatic brake hold function - Stop automatic operating function (Drive away assist) - Stop ignition OFF apply function - Stop ACC function* - Stop CMBS function*
Possible Cause	- Open or Poor connection between the VSA modulator-control unit and the PCM (F-CAN lines) - PCM internal failure - VSA modulator-control unit internal failure

*: With ACC

DTC U0101-00 (VSA CONTROL UNIT)

DTC U0101-00 : CAN Communication Failure with TCM

NOTE

- Initial Diagnosis:

  The initial on-board diagnosis occurs right after the vehicle condition is turned to the ON mode, and the ABS/VSA indicator comes on, and continues until the indicator goes off.

- Regular Diagnosis:

  The regular on-board diagnosis begins right after the ABS/VSA indicator goes off, and it continues until the vehicle condition is turned to the OFF (LOCK) mode.

- Review "How to troubleshoot the VSA system" before doing the DTC troubleshooting procedure.
- Test-drive the vehicle according to local traffic conditions and regulations. Do not test-drive on a lift unless specified.
- The possible causes shown may not be a complete list of all potential problems, and it is possible that there may be other causes.

Confirmation Procedure	Basic Condition: - 12 volt battery voltage 9.6 - 16.5 V With the Driving Pattern: - Start the engine. - Test-drive the vehicle at 6 mph (10 km/h) or more.
Execution	Regular Diagnosis
Duration	About 1 second
DTC Type	- 1 drive cycle - Brake system indicator (amber) on - VSA indicator on (Dependant upon the conditions)
Fail Safe Action	- Stop hill start assist function (Dependant upon the conditions)

	• Stop automatic brake hold function (Dependant upon the conditions) • Stop automatic operating function (Drive away assist) • Stop ignition OFF apply function
Possible Cause	• Open or Poor connection between the VSA modulator-control unit and the PCM (F-CAN lines) *1 • Open or Poor connection between the VSA modulator-control unit and the TCM (F-CAN lines) *2 • PCM internal failure • TCM internal failure *2 • VSA modulator-control unit internal failure

*1: K24W9/K24V9 engine

*2: L15BE engine

DTC U0104-00 (VSA CONTROL UNIT)

DTC U0104-00 : CAN Communication Failure with Driving Support System Control Unit

NOTE

- Initial Diagnosis:

  The initial on-board diagnosis occurs right after the vehicle condition is turned to the ON mode, and the ABS/VSA indicator comes on, and continues until the indicator goes off.

- Regular Diagnosis:

  The regular on-board diagnosis begins right after the ABS/VSA indicator goes off, and it continues until the vehicle condition is turned to the OFF (LOCK) mode.

- Review "How to troubleshoot the VSA system" before doing the DTC troubleshooting procedure.
- Test-drive the vehicle according to local traffic conditions and regulations. Do not test-drive on a lift unless specified.
- The possible causes shown may not be a complete list of all potential problems, and it is possible that there may be other causes.

Confirmation Procedure	Basic Condition: • 12 volt battery voltage 9.6 - 16.5 V With the Driving Pattern: • Start the engine.
Execution	Regular Diagnosis
Duration	About 1 second
DTC Type	• 1 drive cycle
Fail Safe Action	• Stop ACC function • Stop CMBS function

Possible Cause	• Open or Poor connection between the VSA modulator-control unit and the millimeter wave radar (F-CAN lines) • Millimeter wave radar internal failure • VSA modulator-control unit internal failure

DTC U0126-00 (VSA CONTROL UNIT)

DTC U0126-00 : CAN Communication Failure with Absolute Steering Wheel Angle Sensor

NOTE

- Initial Diagnosis:

  The initial on-board diagnosis occurs right after the vehicle condition is turned to the ON mode, and the ABS/VSA indicator comes on, and continues until the indicator goes off.

- Regular Diagnosis:

  The regular on-board diagnosis begins right after the ABS/VSA indicator goes off, and it continues until the vehicle condition is turned to the OFF (LOCK) mode.

- Review "How to troubleshoot the VSA system" before doing the DTC troubleshooting procedure.
- Test-drive the vehicle according to local traffic conditions and regulations. Do not test-drive on a lift unless specified.
- The possible causes shown may not be a complete list of all potential problems, and it is possible that there may be other causes.

Confirmation Procedure	Basic Condition: • 12 volt battery voltage 9.6 - 16.5 V With the Driving Pattern: • Start the engine.
Execution	Regular Diagnosis
Duration	About 1 second
DTC Type	• 1 drive cycle • Brake system indicator (amber) on • VSA indicator on
Fail Safe Action	• Degrade ABS performance • Stop engine drag torque control function • Stop TCS function • Stop VSA function • Stop agile handling assist function • Stop hill start assist function • Stop automatic brake hold function • Stop ACC function* • Stop CMBS function*

Possible Cause	- Open or Poor connection between the VSA modulator-control unit and the EPS motor/control unit (F-CAN lines) - EPS motor/control unit internal failure - VSA modulator-control unit internal failure

*: With ACC

DTC U0129-00 (VSA CONTROL UNIT)

DTC U0129-00 : CAN Communication Failure with AHB/ESB/EBB

NOTE

- Initial Diagnosis:

  The initial on-board diagnosis occurs right after the vehicle condition is turned to the ON mode, and the ABS/VSA indicator comes on, and continues until the indicator goes off.

- Regular Diagnosis:

  The regular on-board diagnosis begins right after the ABS/VSA indicator goes off, and it continues until the vehicle condition is turned to the OFF (LOCK) mode.

- Review "How to troubleshoot the VSA system" before doing the DTC troubleshooting procedure.
- Test-drive the vehicle according to local traffic conditions and regulations. Do not test-drive on a lift unless specified.
- The possible causes shown may not be a complete list of all potential problems, and it is possible that there may be other causes.

Confirmation Procedure	Basic Condition: - 12 volt battery voltage 9.6 - 16.5 V With the Driving Pattern: - Start the engine.
Execution	Regular Diagnosis
Duration	About 1 second
DTC Type	- 1 drive cycle - Brake system indicator (amber) on (Dependant upon the conditions) - VSA indicator on (Dependant upon the conditions)
Fail Safe Action	- Degrade ABS performance (Dependant upon the conditions) - Stop engine drag torque control function (Dependant upon the conditions) - Stop TCS function (Dependant upon the conditions) - Stop VSA function (Dependant upon the conditions) - Stop agile handling assist function (Dependant upon the conditions) - Stop brake assist function (Dependant upon the conditions) - Stop hill start assist function (Dependant upon the conditions) - Stop automatic brake hold function (Dependant upon the conditions) - Stop ACC function (Dependant upon the conditions) *1

	• Stop CMBS function (Dependant upon the conditions) *1
Possible Cause	• Open or Poor connection between the VSA modulator-control unit and the electric brake booster (F-CAN lines) • Open or Poor connection between the VSA modulator-control unit and the electric brake booster (EBB CAN lines) *2 • Open or Poor connection between the VSA modulator-control unit and the electric brake booster (F-CAN B lines) *3 • Electric brake booster internal failure • VSA modulator-control unit internal failure

*1: With ACC

*2: Without CAN gateway

*3: With CAN gateway

DTC U0151-00 (VSA CONTROL UNIT)

DTC U0151-00 : CAN Communication Failure with SRS

NOTE

- Initial Diagnosis:

  The initial on-board diagnosis occurs right after the vehicle condition is turned to the ON mode, and the ABS/VSA indicator comes on, and continues until the indicator goes off.

- Regular Diagnosis:

  The regular on-board diagnosis begins right after the ABS/VSA indicator goes off, and it continues until the vehicle condition is turned to the OFF (LOCK) mode.

- Review "How to troubleshoot the VSA system" before doing the DTC troubleshooting procedure.
- Test-drive the vehicle according to local traffic conditions and regulations. Do not test-drive on a lift unless specified.
- The possible causes shown may not be a complete list of all potential problems, and it is possible that there may be other causes.

Confirmation Procedure	Basic Condition: • 12 volt battery voltage 9.6 - 16.5 V With the Driving Pattern: • Start the engine.
Execution	Regular Diagnosis
Duration	About 2 seconds
DTC Type	• 1 drive cycle • Brake system indicator (amber) on • ABS indicator on (Dependant upon the conditions) *1 • VSA indicator on (Dependant upon the conditions)

Fail Safe Action	- Degrade ABS performance (Dependant upon the conditions) *2 - Stop ABS function (Dependant upon the conditions) *1 - Stop engine drag torque control function (Dependant upon the conditions) - Stop TCS function (Dependant upon the conditions) - Stop VSA function (Dependant upon the conditions) - Stop agile handling assist function (Dependant upon the conditions) - Stop brake assist function (Dependant upon the conditions) *1 - Stop hydraulic boost failure compensation function (Dependant upon the conditions) *1 - Stop hill start assist function (Dependant upon the conditions) - Stop automatic brake hold function - Stop automatic operating function (Drive away assist) - Stop ignition OFF apply function - Stop ACC function (Dependant upon the conditions) *3 - Stop CMBS function (Dependant upon the conditions) *3
Possible Cause	- Open or Poor connection between the VSA modulator-control unit and the SRS unit (F-CAN lines) - SRS unit internal failure - VSA modulator-control unit internal failure

*1: AWD

*2: 2WD

*3: With ACC

DTC U0155-00 (VSA CONTROL UNIT)

DTC U0155-00 : CAN Communication Failure with Meter

NOTE

- Initial Diagnosis:

  The initial on-board diagnosis occurs right after the vehicle condition is turned to the ON mode, and the ABS/VSA indicator comes on, and continues until the indicator goes off.

- Regular Diagnosis:

  The regular on-board diagnosis begins right after the ABS/VSA indicator goes off, and it continues until the vehicle condition is turned to the OFF (LOCK) mode.

- Review "How to troubleshoot the VSA system" before doing the DTC troubleshooting procedure.
- Test-drive the vehicle according to local traffic conditions and regulations. Do not test-drive on a lift unless specified.
- The possible causes shown may not be a complete list of all potential problems, and it is possible that there may be other causes.

Confirmation Procedure	Basic Condition: - 12 volt battery voltage 9.6 - 16.5 V

	With the Driving Pattern: • Start the engine.
Execution	Regular Diagnosis
Duration	About 5 seconds
DTC Type	• 1 drive cycle • Brake system indicator (amber) on (Dependant upon the conditions) • VSA indicator on (Dependant upon the conditions)
Fail Safe Action	• Degrade ABS performance (Dependant upon the conditions) • Stop engine drag torque control function (Dependant upon the conditions) • Stop TCS function (Dependant upon the conditions) • Stop VSA function (Dependant upon the conditions) • Stop agile handling assist function (Dependant upon the conditions) • Stop brake assist function (Dependant upon the conditions) • Stop hydraulic boost failure compensation function (Dependant upon the conditions) • Stop hill start assist function (Dependant upon the conditions) • Stop automatic brake hold function (Dependant upon the conditions) • Stop ACC function (Dependant upon the conditions)* • Stop CMBS function (Dependant upon the conditions)*
Possible Cause	• Open or Poor connection between the VSA modulator-control unit and the gauge control module (F-CAN lines) • Gauge control module internal failure • VSA modulator-control unit internal failure

*: With ACC

DTC U0401-68 (VSA CONTROL UNIT)

DTC U0401-68 : ECM Failure

NOTE

- Initial Diagnosis:

  The initial on-board diagnosis occurs right after the vehicle condition is turned to the ON mode, and the ABS/VSA indicator comes on, and continues until the indicator goes off.

- Regular Diagnosis:

  The regular on-board diagnosis begins right after the ABS/VSA indicator goes off, and it continues until the vehicle condition is turned to the OFF (LOCK) mode.

- Review "How to troubleshoot the VSA system" before doing the DTC troubleshooting procedure.
- Test-drive the vehicle according to local traffic conditions and regulations. Do not test-drive on a lift unless specified.
- The possible causes shown may not be a complete list of all potential problems, and it is possible that there may be other causes.

Confirmation Procedure	Basic Condition: • 12 volt battery voltage 9.6 - 16.5 V With the Driving Pattern: • Start the engine.
Execution	Regular Diagnosis
Duration	About 1 second
DTC Type	• 1 drive cycle • Brake system indicator (red) blink • Brake system indicator (amber) on • VSA indicator on
Fail Safe Action	• Degrade ABS performance (Dependant upon the conditions) • Stop engine drag torque control function (Dependant upon the conditions) • Stop TCS function (Dependant upon the conditions) • Stop VSA function (Dependant upon the conditions) • Stop agile handling assist function (Dependant upon the conditions) • Stop hill start assist function • Stop automatic brake hold function • Stop automatic operating function (Drive away assist) • Stop ignition OFF apply function • Stop ACC function (Dependant upon the conditions)* • Stop CMBS function (Dependant upon the conditions)*
Possible Cause	• PGM-FI system failure • PCM internal failure

*: With ACC

DTC U0402-68 (VSA CONTROL UNIT)

DTC U0402-68 : TCM Failure

NOTE

- Initial Diagnosis:

  The initial on-board diagnosis occurs right after the vehicle condition is turned to the ON mode, and the ABS/VSA indicator comes on, and continues until the indicator goes off.

- Regular Diagnosis:

  The regular on-board diagnosis begins right after the ABS/VSA indicator goes off, and it continues until the vehicle condition is turned to the OFF (LOCK) mode.

- Review "How to troubleshoot the VSA system" before doing the DTC troubleshooting procedure.
- Test-drive the vehicle according to local traffic conditions and regulations. Do not test-drive on a lift unless specified.

- The possible causes shown may not be a complete list of all potential problems, and it is possible that there may be other causes.

Confirmation Procedure	Basic Condition: • 12 volt battery voltage 9.6 - 16.5 V With the Driving Pattern: • Start the engine.
Execution	Regular Diagnosis
Duration	About 1 second
DTC Type	• 1 drive cycle • Brake system indicator (amber) on • VSA indicator on (Dependant upon the conditions)
Fail Safe Action	• Stop hill start assist function (Dependant upon the conditions) • Stop automatic brake hold function • Stop automatic operating function (Drive away assist) • Stop ignition OFF apply function
Possible Cause	• CVT system failure • PCM internal failure *1 • TCM internal failure *2

*1: K24W9/K24V9 engine

*2: L15BE engine

DTC U0418-68 (VSA CONTROL UNIT)

DTC U0418-68 : ESB/EBB Failure

NOTE

- Initial Diagnosis:

  The initial on-board diagnosis occurs right after the vehicle condition is turned to the ON mode, and the ABS/VSA indicator comes on, and continues until the indicator goes off.

- Regular Diagnosis:

  The regular on-board diagnosis begins right after the ABS/VSA indicator goes off, and it continues until the vehicle condition is turned to the OFF (LOCK) mode.

- Review "How to troubleshoot the VSA system" before doing the DTC troubleshooting procedure.
- Test-drive the vehicle according to local traffic conditions and regulations. Do not test-drive on a lift unless specified.
- The possible causes shown may not be a complete list of all potential problems, and it is possible that there may be other causes.

Confirmation Procedure	Basic Condition:

	• 12 volt battery voltage 9.6 - 16.5 V With the Driving Pattern: • Start the engine.
Execution	Regular Diagnosis
Duration	About 1 second
DTC Type	• 1 drive cycle • Brake system indicator (amber) on • VSA indicator on (Dependant upon the conditions)
Fail Safe Action	• Degrade ABS performance (Dependant upon the conditions) • Stop engine drag torque control function (Dependant upon the conditions) • Stop TCS function (Dependant upon the conditions) • Stop VSA function (Dependant upon the conditions) • Stop agile handling assist function (Dependant upon the conditions) • Stop brake assist function (Dependant upon the conditions) • Stop hill start assist function (Dependant upon the conditions) • Stop automatic brake hold function • Stop ACC function* • Stop CMBS function*
Possible Cause	• Electric brake booster system failure • Electric brake booster internal failure

*: With ACC

DTC U0418-F8 (VSA CONTROL UNIT) (2020 2021)

DTC U0418-F8 : Plausibility Brake Pedal Signal (EBB) vs. Pressure Sensor

NOTE

- Initial Diagnosis:

  The initial on-board diagnosis occurs right after the vehicle condition is turned to the ON mode, and the ABS/VSA indicator comes on, and continues until the indicator goes off.

- Regular Diagnosis:

  The regular on-board diagnosis begins right after the ABS/VSA indicator goes off, and it continues until the vehicle condition is turned to the OFF (LOCK) mode.

- Review "How to troubleshoot the VSA system" before doing the DTC troubleshooting procedure.
- Test-drive the vehicle according to local traffic conditions and regulations. Do not test-drive on a lift unless specified.
- The possible causes shown may not be a complete list of all potential problems, and it is possible that there may be other causes.

Confirmation Procedure	Basic Condition:

	- 12 volt battery voltage 9.6 - 16.5 V - No other DTCs detected With the Driving Pattern: - Start the engine. - Wait 1 second or more without pressing the brake pedal. - Press the brake pedal hard for 1 second or more.
Execution	Regular Diagnosis
Duration	About 1 second
DTC Type	- 1 drive cycle - Brake system indicator (amber) on - VSA indicator on
Fail Safe Action	- Degrade ABS performance - Stop engine drag torque control function - Stop TCS function - Stop VSA function - Stop agile handling assist function - Stop brake assist function - Stop hill start assist function - Stop starting assist brake function* 1 - Stop automatic brake hold function - Stop ACC function* 2 - Stop CMBS function* 2
Possible Cause	- Electric brake booster system failure - Electric brake booster internal failure

*1: With auto idle stop system

*2: With ACC

DTC U3000-49 (VSA CONTROL UNIT)

DTC U3000-49 : ECU Internal Circuit Failure

NOTE

- Initial Diagnosis:

  The initial on-board diagnosis occurs right after the vehicle condition is turned to the ON mode, and the ABS/VSA indicator comes on, and continues until the indicator goes off.

- Regular Diagnosis:

  The regular on-board diagnosis begins right after the ABS/VSA indicator goes off, and it continues until the vehicle condition is turned to the OFF (LOCK) mode.

- Review "How to troubleshoot the VSA system" before doing the DTC troubleshooting procedure.

- Test-drive the vehicle according to local traffic conditions and regulations. Do not test-drive on a lift unless specified.
- The possible causes shown may not be a complete list of all potential problems, and it is possible that there may be other causes.

Confirmation Procedure	Basic Condition: • 12 volt battery voltage 9.6 - 16.5 V • ABS/VSA function not in operation With the Driving Pattern: • Start the engine. • Test-drive the vehicle at 25 mph (40 km/h) or more. (Be careful of the surrounding traffic conditions.)
Execution	Initial Diagnosis/Regular Diagnosis
Duration	About 1 second
DTC Type	• 1 drive cycle • Brake system indicator (red) on or blink (Dependant upon the conditions) • Brake system indicator (amber) on (Dependant upon the conditions) • ABS indicator on (Dependant upon the conditions) • VSA indicator on (Dependant upon the conditions)

*1: 2WD

*2: AWD

*3: With ACC

Fail Safe Action	• Stop CAN function (Dependant upon the conditions) • Stop EBD function or Degrade EBD performance (Dependant upon the conditions) • Stop ABS function or Degrade ABS performance (Dependant upon the conditions) *1 • Stop ABS function (Dependant upon the conditions) *2 • Stop engine drag torque control function (Dependant upon the conditions) • Stop TCS function (Dependant upon the conditions) • Stop VSA function (Dependant upon the conditions) • Stop agile handling assist control function (Dependant upon the conditions) • Stop brake assist function (Dependant upon the conditions) • Stop hydraulic boost failure compensation function (Dependant upon the conditions) • Stop hill start assist function (Dependant upon the conditions) • Stop automatic brake hold function (Dependant upon the conditions) • Stop manual operating function (Dependant upon the conditions) • Stop automatic operating function (Drive away assist) (Dependant upon the conditions)

	• Stop automatic operating function (Request from other system) (Dependant upon the conditions) • Stop ignition OFF apply function (Dependant upon the conditions) • Stop emergency brake function (Dependant upon the conditions) • Stop ACC function (Dependant upon the conditions) *3 • Stop CMBS function (Dependant upon the conditions) *3
Possible Cause	• VSA modulator-control unit internal failure

*1: 2WD

*2: AWD

*3: With ACC

DTC U3000-51 (VSA CONTROL UNIT)

DTC U3000-51 : ECU Software Update Failure

NOTE

- Initial Diagnosis:

  The initial on-board diagnosis occurs right after the vehicle condition is turned to the ON mode, and the ABS/VSA indicator comes on, and continues until the indicator goes off.

- Regular Diagnosis:

  The regular on-board diagnosis begins right after the ABS/VSA indicator goes off, and it continues until the vehicle condition is turned to the OFF (LOCK) mode.

- Review "How to troubleshoot the VSA system" before doing the DTC troubleshooting procedure.
- Test-drive the vehicle according to local traffic conditions and regulations. Do not test-drive on a lift unless specified.
- The possible causes shown may not be a complete list of all potential problems, and it is possible that there may be other causes.

Confirmation Procedure	With the Driving Pattern: • Turn the vehicle to the ON mode.
Execution	Initial Diagnosis/Regular Diagnosis
Duration	About 1 second
DTC Type	• 1 drive cycle • Brake system indicator (red) on (Dependant upon the conditions) • Brake system indicator (amber) on (Dependant upon the conditions) • ABS indicator on (Dependant upon the conditions) • VSA indicator on (Dependant upon the conditions)
Fail Safe Action	• Stop CAN function • Stop EBD function • Stop ABS function • Stop engine drag torque control function

	• Stop TCS function • Stop VSA function • Stop agile handling assist function • Stop brake assist function • Stop hydraulic boost failure compensation function • Stop hill start assist function • Stop automatic brake hold function • Stop manual operating function • Stop automatic operating function (Drive away assist) • Stop automatic operating function (Request from other system) • Stop ignition OFF apply function • Stop emergency brake function • Stop ACC function* • Stop CMBS function*
Possible Cause	• VSA modulator-control unit program not the latest • VSA modulator-control unit internal failure

*: With ACC

DTC U3003-16 (VSA CONTROL UNIT)

DTC U3003-16 : Electric Parking Brake Control Unit Power Source Circuit (+B) Low Voltage

NOTE

- Initial Diagnosis:

  The initial on-board diagnosis occurs right after the vehicle condition is turned to the ON mode, and the ABS/VSA indicator comes on, and continues until the indicator goes off.

- Regular Diagnosis:

  The regular on-board diagnosis begins right after the ABS/VSA indicator goes off, and it continues until the vehicle condition is turned to the OFF (LOCK) mode.

- Review "How to troubleshoot the VSA system" before doing the DTC troubleshooting procedure.
- Test-drive the vehicle according to local traffic conditions and regulations. Do not test-drive on a lift unless specified.
- The possible causes shown may not be a complete list of all potential problems, and it is possible that there may be other causes.

Confirmation Procedure	With the Driving Pattern: • Start the engine. • Wait 15 seconds or more.
Execution	Regular Diagnosis
Duration	About 15 seconds
DTC Type	• 1 drive cycle • Brake system indicator (red) blink (Dependant upon the conditions)

	- Brake system indicator (amber) on
Fail Safe Action	- Stop automatic brake hold function (Dependant upon the conditions) - Stop manual operating function - Stop automatic operating function (Drive away assist) (Dependant upon the conditions) - Stop automatic operating function (Request from other system) (Dependant upon the conditions) - Stop ignition OFF apply function (Dependant upon the conditions) - Stop emergency brake function (Dependant upon the conditions) - Stop ACC function (Dependant upon the conditions)* - Stop CMBS function (Dependant upon the conditions)*
Possible Cause	- Poor connection between the VSA modulator-control unit and the under-hood fuse/relay box (+B ABS/VSA FSR line) - PGM-FI system failure - Abnormal 12 volt battery - VSA modulator-control unit internal failure

*: With ACC

DTC U3003-17 (VSA CONTROL UNIT)

DTC U3003-17 : Electric Parking Brake Control Unit Power Source Circuit (+B) High Voltage

NOTE

- Initial Diagnosis:

  The initial on-board diagnosis occurs right after the vehicle condition is turned to the ON mode, and the ABS/VSA indicator comes on, and continues until the indicator goes off.

- Regular Diagnosis:

  The regular on-board diagnosis begins right after the ABS/VSA indicator goes off, and it continues until the vehicle condition is turned to the OFF (LOCK) mode.

- Review "How to troubleshoot the VSA system" before doing the DTC troubleshooting procedure.
- Test-drive the vehicle according to local traffic conditions and regulations. Do not test-drive on a lift unless specified.
- The possible causes shown may not be a complete list of all potential problems, and it is possible that there may be other causes.

Confirmation Procedure	With the Driving Pattern: - Start the engine.
Execution	Regular Diagnosis
Duration	About 1 second
DTC Type	- 1 drive cycle - Brake system indicator (amber) on

Fail Safe Action	- Stop automatic brake hold function - Stop manual operating function - Stop automatic operating function (Drive away assist) - Stop automatic operating function (Request from other system) - Stop ignition OFF apply function - Stop ACC function* - Stop CMBS function*
Possible Cause	- PGM-FI system failure - Abnormal 12 volt battery - VSA modulator-control unit internal failure

*: With ACC

DTC U3006-16 (VSA CONTROL UNIT)

DTC U3006-16 : Power Source Failure for ECU (Low Voltage)

NOTE

- Initial Diagnosis:

  The initial on-board diagnosis occurs right after the vehicle condition is turned to the ON mode, and the ABS/VSA indicator comes on, and continues until the indicator goes off.

- Regular Diagnosis:

  The regular on-board diagnosis begins right after the ABS/VSA indicator goes off, and it continues until the vehicle condition is turned to the OFF (LOCK) mode.

- Review "How to troubleshoot the VSA system" before doing the DTC troubleshooting procedure.
- Test-drive the vehicle according to local traffic conditions and regulations. Do not test-drive on a lift unless specified.
- The possible causes shown may not be a complete list of all potential problems, and it is possible that there may be other causes.

Confirmation Procedure	With the Driving Pattern: - Start the engine. - Test-drive the vehicle at 6 mph (10 km/h) or more. (Be careful of the surrounding traffic conditions.)
Execution	Initial Diagnosis/Regular Diagnosis
Duration	About 1 second
DTC Type	- 1 drive cycle - Brake system indicator (red) on or blink (Dependant upon the conditions) - Brake system indicator (amber) on - ABS indicator on (Dependant upon the conditions) - VSA indicator on
Fail Safe Action	- Stop CAN function (Dependant upon the conditions)

	- Stop EBD function or Degrade EBD performance (Dependant upon the conditions) - Stop ABS function or Degrade ABS performance (Dependant upon the conditions) *1 - Stop ABS function *2 - Stop engine drag torque control function - Stop TCS function - Stop VSA function - Stop agile handling assist control function - Stop brake assist function - Stop hydraulic boost failure compensation function - Stop hill start assist function - Stop automatic brake hold function - Stop automatic operating function (Drive away assist) - Stop ignition OFF apply function - Stop ACC function *3 - Stop CMBS function *3
Possible Cause	- Poor connection between the VSA modulator-control unit and the under-hood fuse/relay box (+B ABS/VSA FSR line) - PGM-FI system failure - Abnormal 12 volt battery - VSA modulator-control unit internal failure

*1: 2WD

*2: AWD

*3: With ACC

DTC U3006-17 (VSA CONTROL UNIT)

DTC U3006-17 : Power Source Failure for ECU (High Voltage)

NOTE

- Initial Diagnosis:

  The initial on-board diagnosis occurs right after the vehicle condition is turned to the ON mode, and the ABS/VSA indicator comes on, and continues until the indicator goes off.

- Regular Diagnosis:

  The regular on-board diagnosis begins right after the ABS/VSA indicator goes off, and it continues until the vehicle condition is turned to the OFF (LOCK) mode.

- Review "How to troubleshoot the VSA system" before doing the DTC troubleshooting procedure.
- Test-drive the vehicle according to local traffic conditions and regulations. Do not test-drive on a lift unless specified.
- The possible causes shown may not be a complete list of all potential problems, and it is possible that there may be other causes.

Confirmation Procedure	With the Driving Pattern: • Start the engine.
Execution	Initial Diagnosis/Regular Diagnosis
Duration	About 1 second
DTC Type	• 1 drive cycle • Brake system indicator (red) on or blink (Dependant upon the conditions) • Brake system indicator (amber) on • ABS indicator on (Dependant upon the conditions) • VSA indicator on
Fail Safe Action	• Stop CAN function (Dependant upon the conditions) • Degrade EBD performance (Dependant upon the conditions) • Stop ABS function or Degrade ABS performance (Dependant upon the conditions) • Stop engine drag torque control function • Stop TCS function • Stop VSA function • Stop agile handling assist control function • Stop brake assist function • Stop hydraulic boost failure compensation function • Stop hill start assist function • Stop automatic brake hold function • Stop automatic operating function (Drive away assist) • Stop ignition OFF apply function • Stop ACC function* • Stop CMBS function*
Possible Cause	• PGM-FI system failure • Abnormal 12 volt battery • VSA modulator-control unit internal failure

*: With ACC

DTC TROUBLESHOOTING

DTC B0050-F0 (VSA CONTROL UNIT)

DTC B0050-F0 : Driver's Seat Belt Buckle Switch Malfunction

NOTE: Before you troubleshoot, review the general troubleshooting information .

DTC Description	DTC	Freeze Frame
B0050-F0 Driver's Seat Belt Buckle Switch Malfunction	B	B

DTC (VSA)

1. Problem verification

   -1. Turn the vehicle to the ON mode.

   -2. Clear the DTC with the HDS.

   -3. Turn the vehicle to the OFF (LOCK) mode.

   -4. Turn the vehicle to the ON mode, then wait for a few seconds or more.

   -5. Check for DTCs with the HDS.

DTC Description	DTC	Freeze Frame
B0050-F0 Driver's Seat Belt Buckle Switch Malfunction	B	B

   Is DTC B0050-F0 indicated?

   YES

   The failure is duplicated. Go to SRS troubleshooting .

   NO

   Intermittent failure, the system is OK at this time. Refer to intermittent failures troubleshooting . If the freeze data/on-board snapshot of this DTC is recorded, try to reproduce the failure under the same conditions with the freeze data/on-board snapshot.

DTC C0010-49, C0011-49, C0014-49, C0015-49, C0018-49, C0019-49, C001C-49, C001D-49

DTC C0010-49 : Inlet Solenoid (Left Front) Circuit Failure **DTC C0011-49** : Outlet Solenoid (Left Front) Circuit Failure **DTC C0014-49** : Inlet Solenoid (Right Front) Circuit Failure **DTC C0015-49** : Outlet Solenoid (Right Front) Circuit Failure **DTC C0018-49** : Inlet Solenoid (Left Rear) Circuit Failure **DTC C0019-49** : Outlet Solenoid (Left Rear) Circuit Failure **DTC C001C-49** : Inlet Solenoid (Right Rear) Circuit Failure **DTC C001D-49** : Outlet Solenoid (Right Rear) Circuit Failure

NOTE: Before you troubleshoot, review the general troubleshooting information .

DTC Description	DTC	Freeze Frame
C0010-49 Inlet Solenoid (Left Front) Circuit Failure	B	B
C0011-49 Outlet Solenoid (Left Front) Circuit Failure	B	B
C0014-49 Inlet Solenoid (Right Front) Circuit Failure	B	B

DTC Description	DTC	Freeze Frame
C0015-49 Outlet Solenoid (Right Front) Circuit Failure	B	B
C0018-49 Inlet Solenoid (Left Rear) Circuit Failure	B	B
C0019-49 Outlet Solenoid (Left Rear) Circuit Failure	B	B
C001C-49 Inlet Solenoid (Right Rear) Circuit Failure	B	B
C001D-49 Outlet Solenoid (Right Rear) Circuit Failure	B	B

DTC (VSA)

1. Problem verification

 -1. Turn the vehicle to the ON mode.

 -2. Clear the DTC with the HDS.

 -3. Turn the vehicle to the OFF (LOCK) mode, then start the engine.

 -4. Wait 20 seconds or more.

 -5. Check for DTCs with the HDS.

DTC Description	DTC	Freeze Frame
C0010-49 Inlet Solenoid (Left Front) Circuit Failure	B	B
C0011-49 Outlet Solenoid (Left Front) Circuit Failure	B	B
C0014-49 Inlet Solenoid (Right Front) Circuit Failure	B	B
C0015-49 Outlet Solenoid (Right Front) Circuit Failure	B	B
C0018-49 Inlet Solenoid (Left Rear) Circuit Failure	B	B
C0019-49 Outlet Solenoid (Left Rear) Circuit Failure	B	B
C001C-49 Inlet Solenoid (Right Rear) Circuit Failure	B	B
C001D-49 Outlet Solenoid (Right Rear) Circuit Failure	B	B

Is DTC C0010-49, C0011-49, C0014-49, C0015-49, C0018-49, C0019-49, C001C-49, or C001D-49 indicated?

YES

The failure is duplicated. Check for loose terminals and poor connections in the VSA modulator-control unit 46P connector. Check for any authorized service information related to the DTCs or symptoms you are troubleshooting. If they are OK, **replace the VSA modulator-control unit** .

NO

Intermittent failure, the system is OK at this time. **Refer to intermittent failures troubleshooting** . If the freeze data/on-board snapshot of this DTC is recorded, try to reproduce the failure under the same conditions with the freeze data/on-board snapshot.

DTC C0020-12

DTC C0020-12 : Pump Motor Circuit Failure (Stuck ON)

NOTE: **Before you troubleshoot, review the general troubleshooting information** .

DTC Description	DTC	Freeze Frame
C0020-12 Pump Motor Circuit Failure (Stuck ON)	B	B

DTC (VSA)

1. Problem verification

   -1. Turn the vehicle to the ON mode.

   -2. Clear the DTC with the HDS.

   -3. Turn the vehicle to the OFF (LOCK) mode, then to the ON mode.

   -4. Check for DTCs with the HDS.

DTC Description	DTC	Freeze Frame
C0020-12 Pump Motor Circuit Failure (Stuck ON)	B	B

Is DTC C0020-12 indicated?

YES

The failure is duplicated. Go to step 2.

NO

Intermittent failure, the system is OK at this time. **Refer to intermittent failures troubleshooting** . If the freeze data/on-board snapshot of this DTC is recorded, try to reproduce the failure under the same conditions with the freeze data/on-board snapshot.

2. Open wire check (GND line)

   -1. Turn the vehicle to the OFF (LOCK) mode.

   -2. Disconnect the following connector.

VSA modulator-control unit 46P connector

-3. Check for continuity between test points 1 and 2.

Test condition	Vehicle OFF (LOCK) mode

B	VSA modulator-control unit 46P connector: disconnected
Test point 1	**VSA modulator-control unit 46P connector No. 4**
Test point 2	Body ground

Is there continuity?

YES

The GND wire is OK. Check for loose terminals and poor connections in the VSA modulator-control unit 46P connector. Check for any authorized service information related to the DTCs or symptoms you are troubleshooting. If they are OK, **replace the VSA modulator-control unit** .

NO

Repair an open or poor connection in the wire between the VSA modulator-control unit and body ground (G201).

DTC C0020-14, C1022-14

DTC C0020-14 : Pump Motor Circuit Failure (Stuck OFF)**DTC C1022-14** : Power Source Failure for Pump Motor

NOTE: **Before you troubleshoot, review the general troubleshooting information** .

DTC Description	DTC	Freeze Frame
C0020-14 Pump Motor Circuit Failure (Stuck OFF)	B	B
C1022-14 Power Source Failure for Pump Motor	B	B

DTC (VSA)

1. DTC check

   -1. Turn the vehicle to the ON mode.

   -2. Clear the DTC with the HDS.

   -3. Turn the vehicle to the OFF (LOCK) mode, then start the engine.

   -4. Wait 20 seconds or more.

   -5. Test-drive the vehicle at 6 mph (10 km/h) or more.

   -6. Check for DTCs with the HDS.

DTC Description	DTC	Freeze Frame
C0020-12 Pump Motor Circuit Failure (Stuck ON)	B	B
C0020-14 Pump Motor Circuit Failure (Stuck OFF)	B	B

DTC Description	DTC	Freeze Frame
C1022-14 Power Source Failure for Pump Motor	B	B

Is DTC C0020-14 or C1022-14 indicated?

YES

If only DTC C0020-14 or C1022-14 are indicated, go to step 2.

YES

If DTC C0020-12 is also indicated, **go to DTC C0020-12**.

NO

Intermittent failure, the system is OK at this time. **Refer to intermittent failures troubleshooting** . If the freeze data/on-board snapshot of this DTC is recorded, try to reproduce the failure under the same conditions with the freeze data/on-board snapshot.

2. Fuse check

   -1. Turn the vehicle to the OFF (LOCK) mode.

   -2. Check the following fuse.

Fuse	No. A3-3 (40 A)
Location	Under-hood fuse/relay box

Is the fuse OK?

YES

The fuse is OK. Reinstall the fuse, then go to step 3.

NO

Replace the fuse. If the fuse blows again, repair a short to ground in the No. A3-3 (40 A) fuse circuit.

3. Open wire check (+B ABS/VSA MTR line)

-1. Disconnect the following connector.

VSA modulator-control unit 46P connector

-2. Measure the voltage between test points 1 and 2.

Test condition	Vehicle OFF (LOCK) mode
B	VSA modulator-control unit 46P connector: disconnected
Test point 1	**VSA modulator-control unit 46P connector No. 3**
Test point 2	Body ground

Is there battery voltage?

YES

The +B ABS/VSA MTR wire is OK. Check for loose terminals and poor connections in the VSA modulator-control unit 46P connector. Check for any authorized service information related to the DTCs or symptoms you are troubleshooting. If they are OK, **replace the VSA modulator-control unit** .

NO

Repair an open in the wire between the No. A3-3 (40 A) fuse in the under-hood fuse/relay box and the VSA modulator-control unit.

DTC C0023-12

DTC C0023-12 : Brake Diag Circuit ON Failure

NOTE: **Before you troubleshoot, review the general troubleshooting information** .

DTC Description	DTC	Freeze Frame
C0023-12 Brake Diag Circuit ON Failure	B	B

DTC (VSA)

1. Problem verification

-1. Turn the vehicle to the ON mode.

-2. Clear the DTC with the HDS.

-3. Turn the vehicle to the OFF (LOCK) mode, then to the ON mode.

-4. Wait 2 seconds or more without pressing the brake pedal.

-5. Check for DTCs with the HDS.

DTC Description	DTC	Freeze Frame
C0023-12 Brake Diag Circuit ON Failure	B	B

Is DTC C0023-12 indicated?

YES

The failure is duplicated. Go to step 2.

NO

Intermittent failure, the system is OK at this time. **Refer to intermittent failures troubleshooting** . If the freeze data/on-board snapshot of this DTC is recorded, try to reproduce the failure under the same conditions with the freeze data/on-board snapshot.

2. Relay circuit board check

-1. Turn the vehicle to the OFF (LOCK) mode.

-2. Check the brake lights without pressing the brake pedal.

Are the brake lights on?

YES

Replace the relay circuit board .

NO

Go to step 3.

3. Shorted wire check (BRK LAMP line) 1

-1. Turn the vehicle to the ON mode.

-2. Check the brake lights without pressing the brake pedal.

Are the brake lights on?

YES

Go to step 4.

NO

Go to step 5.

4. Shorted wire check (BRK LAMP line) 2

-1. Turn the vehicle to the OFF (LOCK) mode.

-2. Disconnect the following connector.

VSA modulator-control unit 46P connector

-3. Turn the vehicle to the ON mode.

-4. Check the brake lights without pressing the brake pedal.

Are the brake lights on?

YES

Repair a short to ground in the wire between the relay circuit board and the VSA modulator-control unit.

NO

The BRK LAMP wire is OK. Check for loose terminals and poor connections in the VSA modulator-control unit 46P connector. Check for any authorized service information related to the DTCs or symptoms you are troubleshooting. If they are OK, **replace the VSA modulator-control unit** .

5. Open wire check (STOP SW line)

-1. Turn the vehicle to the OFF (LOCK) mode.

-2. Jump the SCS line with the HDS, and wait more than 1 minute.

-3. Disconnect the following connectors.

PCM connector A (50P) (L15BE engine)
PCM connector A (51P) (K24W9/K24V9 engine)
Brake pedal position switch 4P connector

-4. Check for continuity between test points 1 and 2.

Test condition	Vehicle OFF (LOCK) mode
B	PCM connector A (50P) (L15BE engine): disconnected
B	PCM connector A (51P) (K24W9/K24V9 engine): disconnected
B	Brake pedal position switch 4P connector: disconnected
Test point 1	**PCM connector A (50P) (L15BE engine) No. 26**
B	**PCM connector A (51P) (K24W9/K24V9 engine) No. 37**
Test point 2	Brake pedal position switch 4P connector (female terminals) No. 1: ①

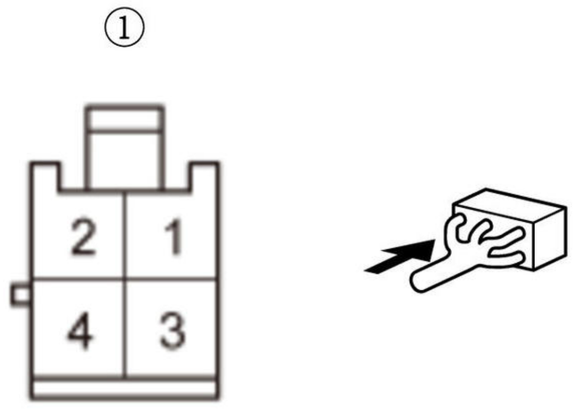

Is there continuity?

YES

The STOP SW wire is OK. Go to step 6.

NO

Repair an open in the wire between the PCM and the brake pedal position switch.

6. PCM check

   -1. Reconnect the following connectors.

PCM connector A (50P) (L15BE engine)
PCM connector A (51P) (K24W9/K24V9 engine)
Brake pedal position switch 4P connector

   -2. **Substitute a known-good PCM** .

   -3. Clear the DTC with the HDS.

   -4. Turn the vehicle to the OFF (LOCK) mode, then to the ON mode.

   -5. Wait 2 seconds or more without pressing the brake pedal.

   -6. Check for DTCs with the HDS.

DTC Description	DTC	Freeze Frame
C0023-12 Brake Diag Circuit ON Failure	B	B

   Is DTC C0023-12 indicated?

   YES

   Check for loose terminals and poor connections in the VSA modulator-control unit 46P connector. Check for any authorized service information related to the DTCs or symptoms you are troubleshooting. If they are OK, **replace the VSA modulator-control unit** .

   NO

   Replace the original PCM .

DTC C0023-14

DTC C0023-14 : Brake Diag Circuit OFF Failure

NOTE: **Before you troubleshoot, review the general troubleshooting information** .

DTC Description	DTC	Freeze Frame
C0023-14 Brake Diag Circuit OFF Failure	B	B

DTC (VSA)

1. Problem verification

   -1. Turn the vehicle to the ON mode.

   -2. Clear the DTC with the HDS.

   -3. Turn the vehicle to the OFF (LOCK) mode, then to the ON mode.

   -4. Select the BRAKE LIGHT RELAY TEST in the VSA FUNCTION TEST with the HDS.

   BRAKE LIGHT RELAY TEST

   Check for DTCs with the HDS.

DTC Description	DTC	Freeze Frame
C0023-14 Brake Diag Circuit OFF Failure	B	B

Is DTC C0023-14 indicated?

YES

The failure is duplicated. Go to step 2.

NO

Intermittent failure, the system is OK at this time. **Refer to intermittent failures troubleshooting** . If the freeze data/on-board snapshot of this DTC is recorded, try to reproduce the failure under the same conditions with the freeze data/on-board snapshot.

2. Relay circuit board check

-1. Turn the vehicle to the OFF (LOCK) mode.

-2. **Substitute a known-good relay circuit board** .

-3. Turn the vehicle to the ON mode.

-4. Clear the DTC with the HDS.

-5. Turn the vehicle to the OFF (LOCK) mode, then to the ON mode.

-6. Select the BRAKE LIGHT RELAY TEST in the VSA FUNCTION TEST with the HDS.

BRAKE LIGHT RELAY TEST

Check for DTCs with the HDS.

DTC Description	DTC	Freeze Frame
C0023-14 Brake Diag Circuit OFF Failure	B	B

Is DTC C0023-14 indicated?

YES

Go to step 3.

NO

Replace the original relay circuit board .

3. Open wire check (BRK LAMP line) 1

-1. Turn the vehicle to the OFF (LOCK) mode.

-2. Disconnect the following connector.

VSA modulator-control unit 46P connector

-3. Connect terminals 1 and 2 with a jumper wire.

Terminal 1	**VSA modulator-control unit 46P connector No. 11**
Terminal 2	Body ground

-4. Turn the vehicle to the ON mode.

-5. Check the brake lights without pressing the brake pedal.

Are the brake lights on?

YES

Go to step 7.

NO

Go to step 4.

4. Open wire check (BRK LAMP line) 2

-1. Turn the vehicle to the OFF (LOCK) mode.

-2. Disconnect the jumper wire.

-3. Disconnect the following connector.

Relay circuit board connector B (6P)

-4. Check for continuity between test points 1 and 2.

Test condition	Vehicle OFF (LOCK) mode
B	VSA modulator-control unit 46P connector: disconnected
B	Relay circuit board connector B (6P): disconnected
Test point 1	**VSA modulator-control unit 46P connector No. 11**
Test point 2	Relay circuit board connector B (6P) (female terminals) No. 1: ①

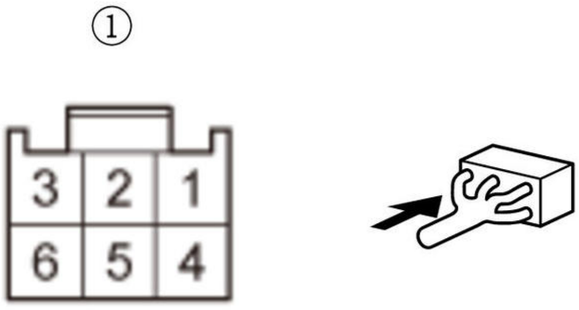

Is there continuity?

YES

The BRK LAMP wire is OK. Go to step 5.

NO

Repair an open in the wire between the VSA modulator-control unit and the relay circuit board.

5. Open wire check (IG1 OPTION line)

-1. Turn the vehicle to the ON mode.

-2. Measure the voltage between test points 1 and 2.

Test condition	Vehicle ON mode
B	VSA modulator-control unit 46P connector: disconnected
B	Relay circuit board connector B (6P): disconnected
Test point 1	Relay circuit board connector B (6P) (female terminals) No. 2: ①
Test point 2	Body ground

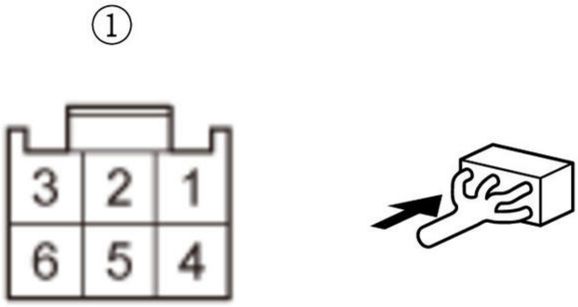

Is there battery voltage?

YES

The IG1 OPTION wire is OK. Go to step 6.

NO

Repair an open in the wire between the under-dash fuse/relay box and the relay circuit board.

6. Open wire check (+B STOP line)

-1. Turn the vehicle to the OFF (LOCK) mode.

-2. Disconnect the following connector.

Relay circuit board connector C (18P)

-3. Measure the voltage between test points 1 and 2.

Test condition	Vehicle OFF (LOCK) mode
B	VSA modulator-control unit 46P connector: disconnected
B	Relay circuit board connector B (6P): disconnected
B	Relay circuit board connector C (18P): disconnected

Test point 1	Relay circuit board connector C (18P) (female terminals) No. 4: ①
Test point 2	Body ground

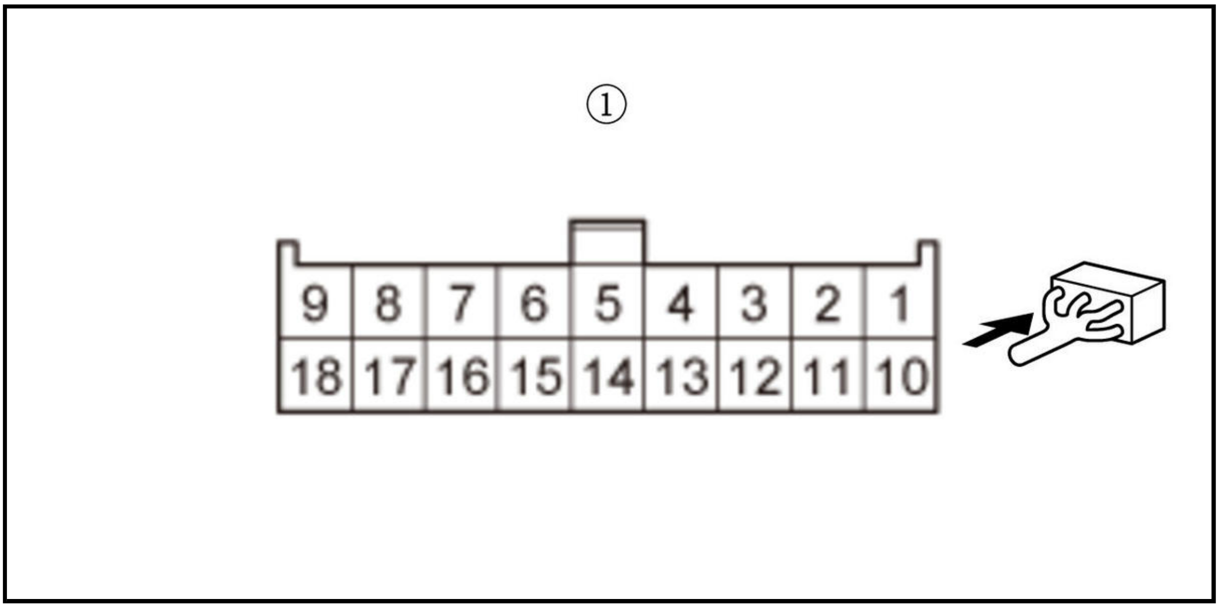

Is there battery voltage?

YES

The +B STOP wire is OK. Go to step 7.

NO

Repair an open in the wire between the under-hood fuse/relay box and the relay circuit board.

7. Open wire check (BRK DIAG line)

-1. Turn the vehicle to the OFF (LOCK) mode.

-2. Disconnect the jumper wire. (if connected)

-3. Disconnect the following connector.

Relay circuit board connector A (8P)

-4. Check for continuity between test points 1 and 2.

Test condition	Vehicle OFF (LOCK) mode
B	Relay circuit board connector A (8P): disconnected
B	Relay circuit board connector B (6P): disconnected (if disconnected)
B	Relay circuit board connector C (18P): disconnected (if disconnected)
B	VSA modulator-control unit 46P connector: disconnected
Test point 1	VSA modulator-control unit 46P connector No. 44
Test point 2	Relay circuit board connector A (8P) (female terminals) No. 6: ①

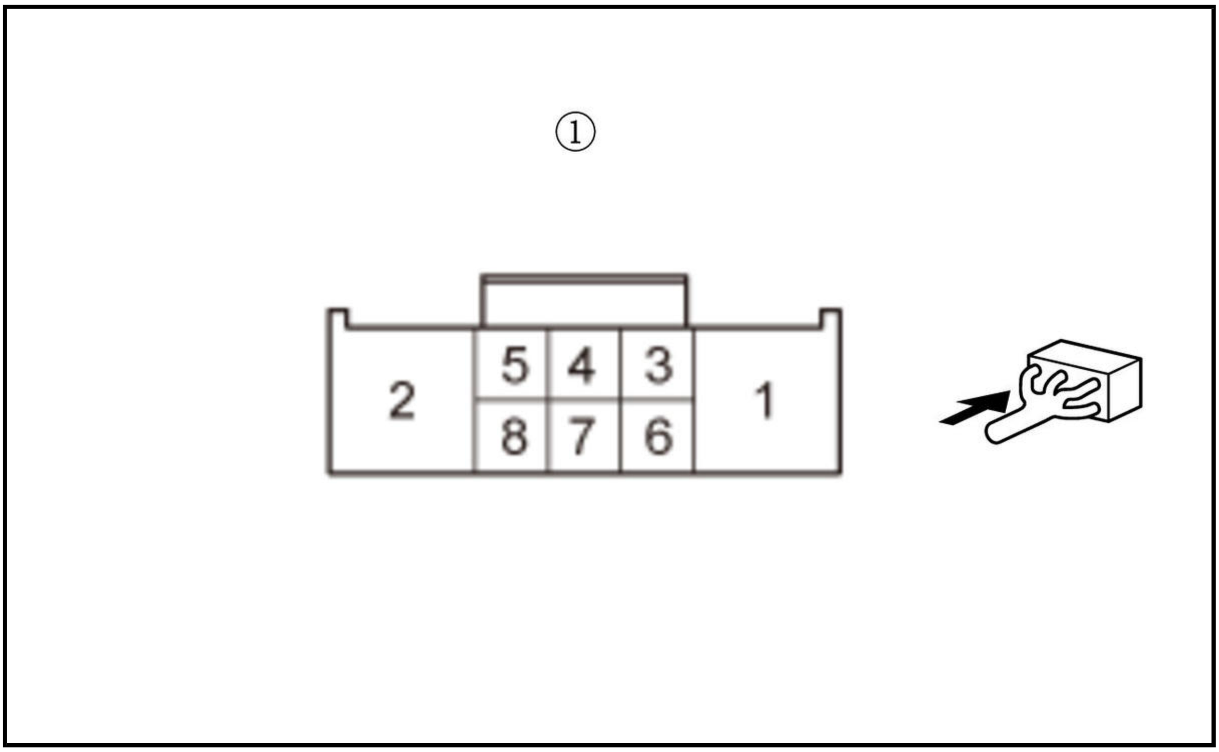

Is there continuity?

YES

The BRK DIAG wire is OK. Check for loose terminals and poor connections in the VSA modulator-control unit 46P connector. Check for any authorized service information related to the DTCs or symptoms you are troubleshooting. If they are OK, replace the VSA modulator-control unit .

NO

Repair an open in the wire between the relay circuit board and the VSA modulator-control unit.

DTC C0031-14, C0034-14, C0037-14, C003A-14

DTC C0031-14 : Left Front Wheel Speed Sensor Circuit Failure (Circuit Short To Ground or Open)**DTC C0034-14** : Right-Front Wheel Speed Sensor Circuit Failure (Circuit Short To Ground or Open)**DTC C0037-14** : Left Rear Wheel Speed Sensor Circuit Failure (Circuit Short To Ground or Open)**DTC C003A-14** : Right Rear Wheel Speed Sensor Circuit Failure (Circuit Short To Ground or Open)

NOTE: Before you troubleshoot, review the general troubleshooting information .

DTC Description	DTC	Freeze Frame
C0031-14 Left Front Wheel Speed Sensor Circuit Failure (Circuit Short To Ground or Open)	B	B
C0034-14 Right-Front Wheel Speed Sensor Circuit Failure (Circuit Short To Ground or Open)	B	B
C0037-14 Left Rear Wheel Speed Sensor Circuit Failure (Circuit Short To Ground or Open)	B	B
C003A-14 Right Rear Wheel Speed Sensor Circuit Failure (Circuit Short To Ground or Open)	B	B

DTC (VSA)

1. Problem verification

-1. Turn the vehicle to the ON mode.

-2. Clear the DTC with the HDS.

-3. Turn the vehicle to the OFF (LOCK) mode, then to the ON mode.

-4. Check for DTCs with the HDS.

DTC Description	DTC	Freeze Frame
C0031-14 Left Front Wheel Speed Sensor Circuit Failure (Circuit Short To Ground or Open)	B	B
C0034-14 Right-Front Wheel Speed Sensor Circuit Failure (Circuit Short To Ground or Open)	B	B
C0037-14 Left Rear Wheel Speed Sensor Circuit Failure (Circuit Short To Ground or Open)	B	B
C003A-14 Right Rear Wheel Speed Sensor Circuit Failure (Circuit Short To Ground or Open)	B	B

Is DTC C0031-14, C0034-14, C0037-14, or C003A-14 indicated?

YES

The failure is duplicated. Go to step 2.

NO

Intermittent failure, the system is OK at this time. **Refer to intermittent failures troubleshooting** . If the freeze data/on-board snapshot of this DTC is recorded, try to reproduce the failure under the same conditions with the freeze data/on-board snapshot.

2. Shorted wire check (Wheel speed sensor lines to ground)

-1. Turn the vehicle to the OFF (LOCK) mode.

-2. Disconnect the following connector.

VSA modulator-control unit 46P connector

-3. Check for continuity between body ground and the appropriate wheel speed sensor +B and GND terminals of the VSA modulator-control unit 46P connector individually (see table).

Test condition	Vehicle OFF (LOCK) mode
B	VSA modulator-control unit 46P connector: disconnected

Connector	DTC	Test point 1	Test point 2
VSA modulator-control unit 46P connector	C0031-14Left-front	No. 33	Body ground
		No. 42	
	C0034-14Right-front	No. 30	
		No. 35	
	C0037-14Left-rear	No. 17	
		No. 32	
	C003A-14Right-rear	No. 31	
		No. 15	

Is there continuity?

YES

Wheel speed sensor wires are shorted to ground. Go to step 3.

NO

Wheel speed sensor wires are not shorted to ground. Go to step 4.

3. Wheel speed sensor (s) check 1

-1. Disconnect the following connectors.

Appropriate wheel speed sensor 2P connector (front)
Appropriate wheel speed sensor 4P connector (rear)

-2. On the sensor side, check for continuity between test points 1 and 2.

Test condition	Vehicle OFF (LOCK) mode
B	VSA modulator-control unit 46P connector: disconnected
B	Appropriate wheel speed sensor 2P connector (front): disconnected
B	Appropriate wheel speed sensor 4P connector (rear): disconnected
Test circuit 1	B
Test point 1	Appropriate wheel speed sensor 2P connector (male terminals) No. 1: ①
B	Appropriate wheel speed sensor 4P connector (male terminals) No. 3: ②
Test point 2	Body ground

Test circuit 2	B
Test point 1	Appropriate wheel speed sensor 2P connector (male terminals) No. 2: ①
B	Appropriate wheel speed sensor 4P connector (male terminals) No. 4: ②
Test point 2	Body ground

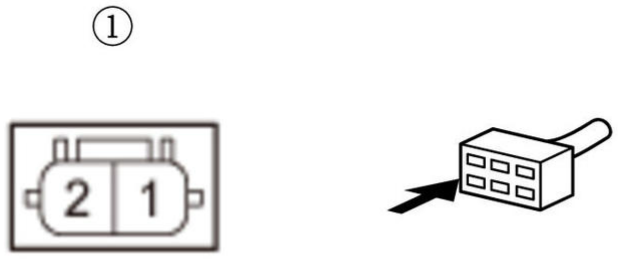

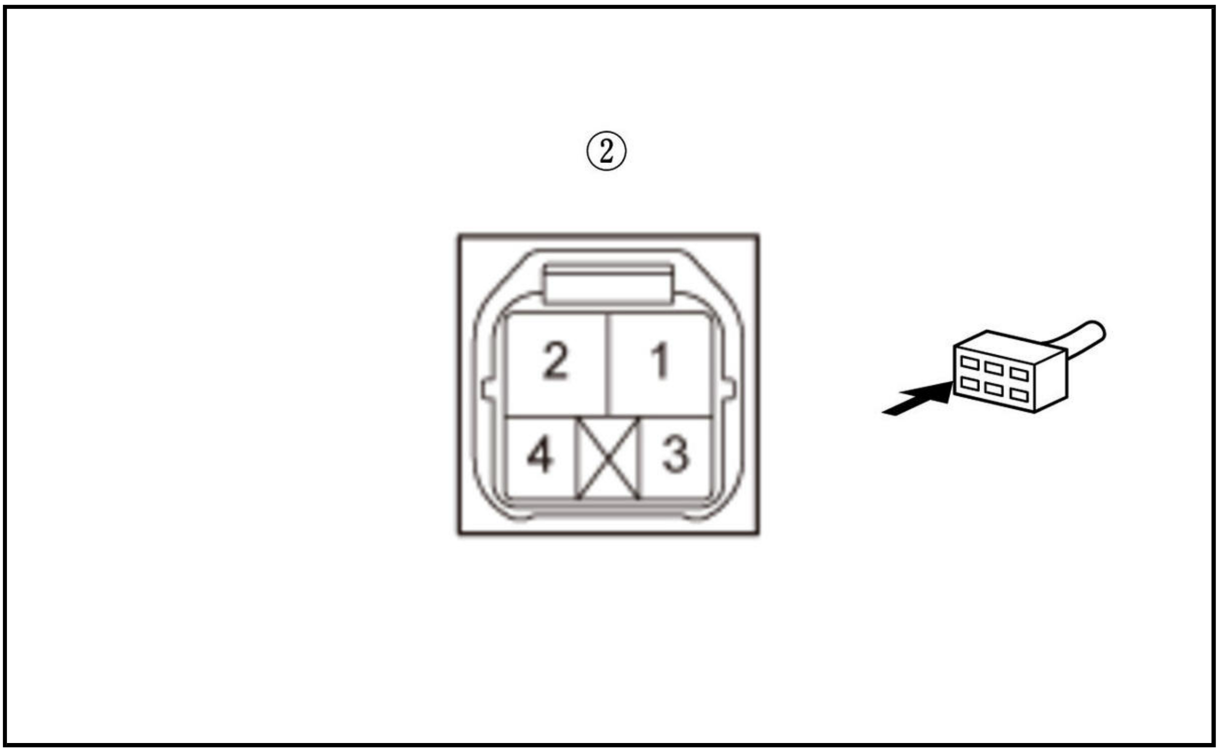

Is there continuity?

YES

Replace the appropriate wheel speed sensor .

NO

Repair a short to ground in the wire between the VSA modulator-control unit and the wheel speed sensor.

4. Shorted wire check (Wheel speed sensor lines to power)

-1. Turn the vehicle to the ON mode.

-2. Measure the voltage between body ground and the appropriate wheel speed sensor +B and GND terminals of the VSA modulator-control unit 46P connector individually (see table).

Test condition	Vehicle ON mode
B	VSA modulator-control unit 46P connector: disconnected

Connector	DTC	Test point 1	Test point 2
VSA modulator-control unit 46P connector	C0031-14Left-front	No. 33	Body ground
		No. 42	
	C0034-14Right-front	No. 30	
		No. 35	
	C0037-14Left-rear	No. 17	
		No. 32	
	C003A-14Right-rear	No. 31	
		No. 15	

Is there 1 V or more?

YES

The wheel speed sensor wires are shorted to power. Go to step 5.

NO

The wheel speed sensor wires are not shorted to power. Go to step 6.

5. Wheel speed sensor (s) check 2

-1. Turn the vehicle to the OFF (LOCK) mode.

-2. Disconnect the following connectors.

Appropriate wheel speed sensor 2P connector (front)
Appropriate wheel speed sensor 4P connector (rear)

-3. Turn the vehicle to the ON mode.

-4. On the sensor side, measure the voltage between test points 1 and 2.

Test condition	Vehicle ON mode
B	VSA modulator-control unit 46P connector: disconnected
B	Appropriate wheel speed sensor 2P connector (front): disconnected
B	Appropriate wheel speed sensor 4P connector (rear): disconnected
Test circuit 1	B
Test point 1	Appropriate wheel speed sensor 2P connector (male terminals) No. 1: ①
B	Appropriate wheel speed sensor 4P connector (male terminals) No. 3: ②
Test point 2	Body ground

Test circuit 2	B
Test point 1	Appropriate wheel speed sensor 2P connector (male terminals) No. 2: ①
B	Appropriate wheel speed sensor 4P connector (male terminals) No. 4: ②
Test point 2	Body ground

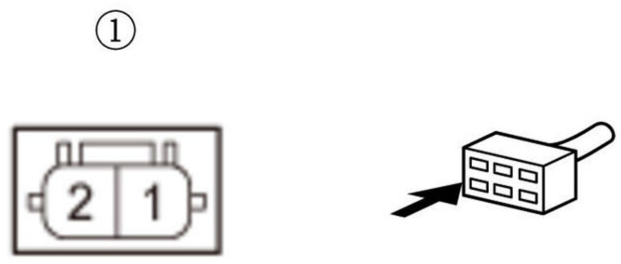

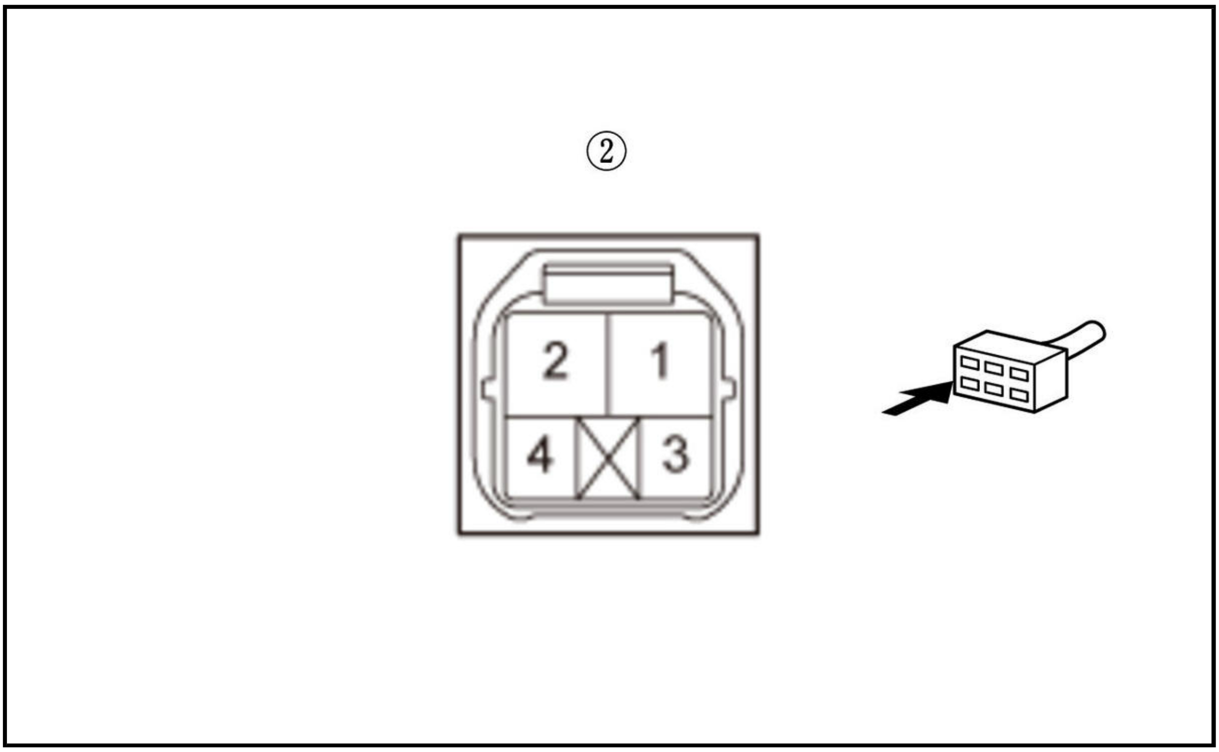

Is there 1 V or more?

YES

Replace the appropriate wheel speed sensor .

NO

Repair a short to power in the wire between the VSA modulator-control unit and the appropriate wheel speed sensor.

6. Shorted wire check (Wheel speed sensor lines wire to wire)

-1. Turn the vehicle to the OFF (LOCK) mode.

-2. Disconnect the following connectors.

Appropriate wheel speed sensor 2P connector (front)
Appropriate wheel speed sensor 4P connector (rear)

-3. Check for continuity between the appropriate VSA modulator-control unit 46P connector wheel speed sensor +B and GND terminals (see table).

Test condition	Vehicle OFF (LOCK) mode
B	VSA modulator-control unit 46P connector: disconnected
B	Appropriate wheel speed sensor 2P connector (front): disconnected
B	Appropriate wheel speed sensor 4P connector (rear): disconnected

Connector	DTC	Test point 1	Test point 2
VSA modulator-control unit 46P connector	C0031-14Left-front	No. 33	No. 42
	C0034-14Right-front	No. 30	No. 35
	C0037-14Left-rear	No. 17	No. 32
	C003A-14Right-rear	No. 31	No. 15

Is there continuity?

YES

Repair a short in the wires between the VSA modulator-control unit and the appropriate wheel speed sensor.

NO

The wheel speed sensor wires are not shorted in the wires. Go to step 7.

7. Open wire check (Wheel speed sensor lines) 1

-1. Check for continuity between the appropriate VSA modulator-control unit 46P connector terminal and the appropriate wheel speed sensor connector terminal (see table).

Test condition	Vehicle OFF (LOCK) mode
B	VSA modulator-control unit 46P connector: disconnected
B	Appropriate wheel speed sensor 2P connector (front): disconnected
B	Appropriate wheel speed sensor 4P connector (rear): disconnected

DTC	**VSA modulator-control unit 46P connector**	**Appropriate Wheel Speed Sensor Connector Terminal**
C0031-14Left-front	No. 33	Left-front wheel speed sensor 2P connector (female terminals) No. 1: ①
C0034-14Right-front	No. 30	Right-front wheel speed sensor 2P connector (female terminals) No. 1: ①
C0037-14Left-rear	No. 17	Left-rear wheel speed sensor 4P connector (female terminals) No. 3: ②
C003A-14Right-rear	No. 31	Right-rear wheel speed sensor 4P connector (female terminals) No. 3: ②

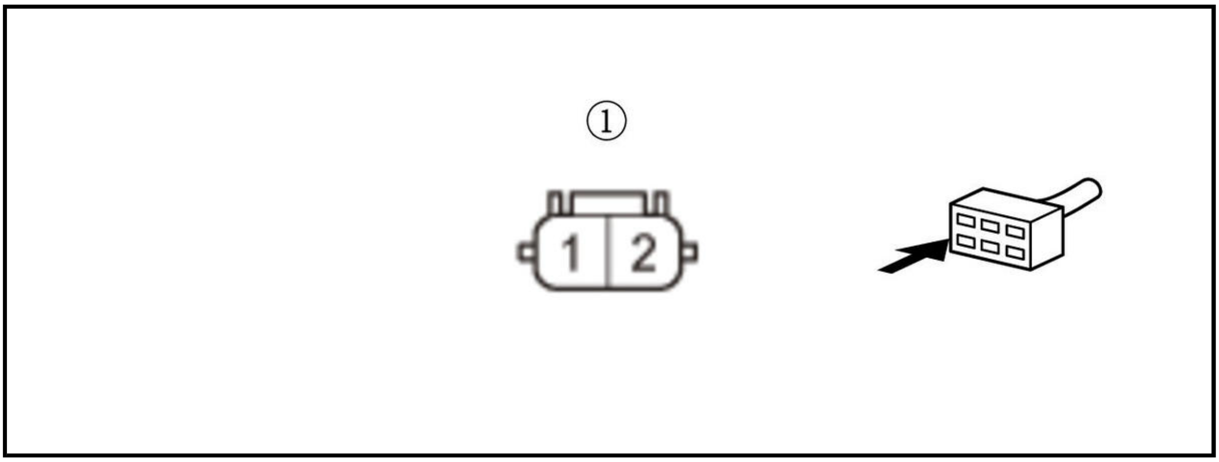

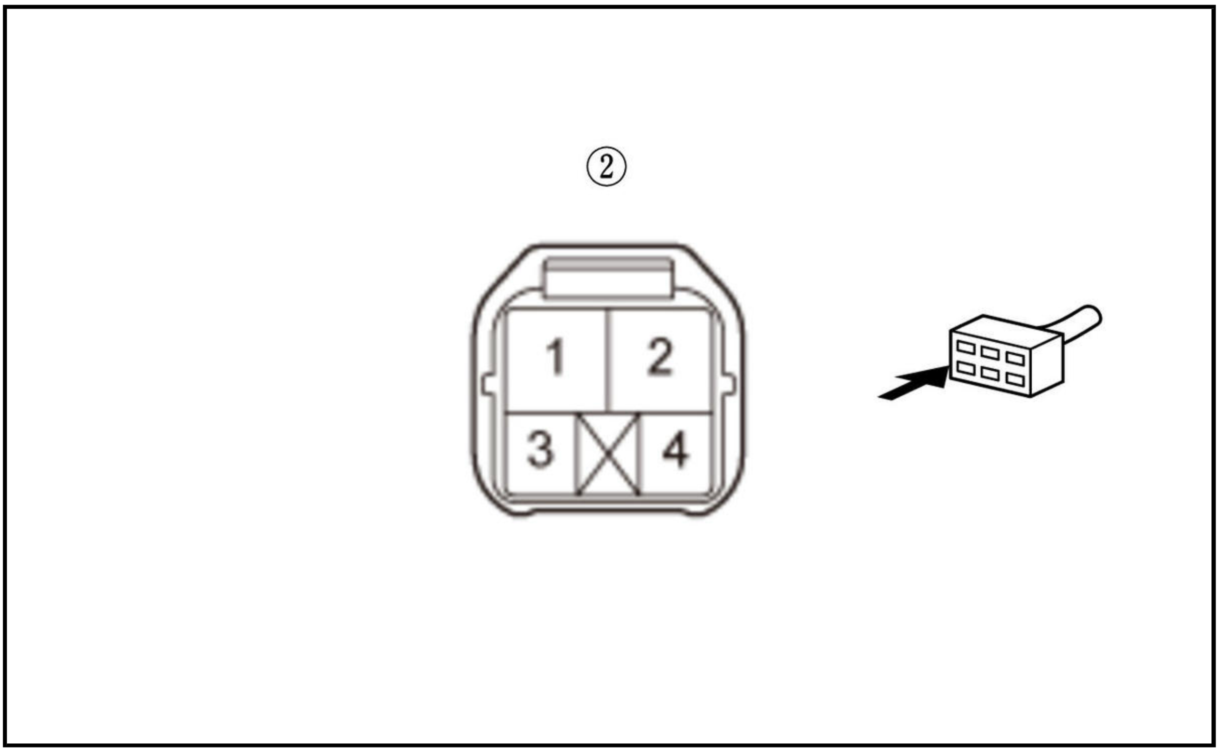

Is there continuity?

YES

Go to step 8.

NO

Repair an open in the wire between the VSA modulator-control unit and the appropriate wheel speed sensor.

8. Open wire check (Wheel speed sensor lines) 2

-1. Check for continuity between the appropriate VSA modulator-control unit 46P connector terminal and the appropriate wheel speed sensor connector terminal (see table).

Test condition	Vehicle OFF (LOCK) mode
B	VSA modulator-control unit 46P connector: disconnected
B	Appropriate wheel speed sensor 2P connector (front): disconnected
B	Appropriate wheel speed sensor 4P connector (rear): disconnected

DTC	**VSA modulator-control unit 46P connector**	**Appropriate Wheel Speed Sensor Connector Terminal**
C0031-14Left-front	No. 42	Left-front wheel speed sensor 2P connector (female terminals) No. 2: ①
C0034-14Right-front	No. 35	Right-front wheel speed sensor 2P connector (female terminals) No. 2: ①
C0037-14Left-rear	No. 32	Left-rear wheel speed sensor 4P connector (female terminals) No. 4: ②
C003A-14Right-rear	No. 15	Right-rear wheel speed sensor 4P connector (female terminals) No. 4: ②

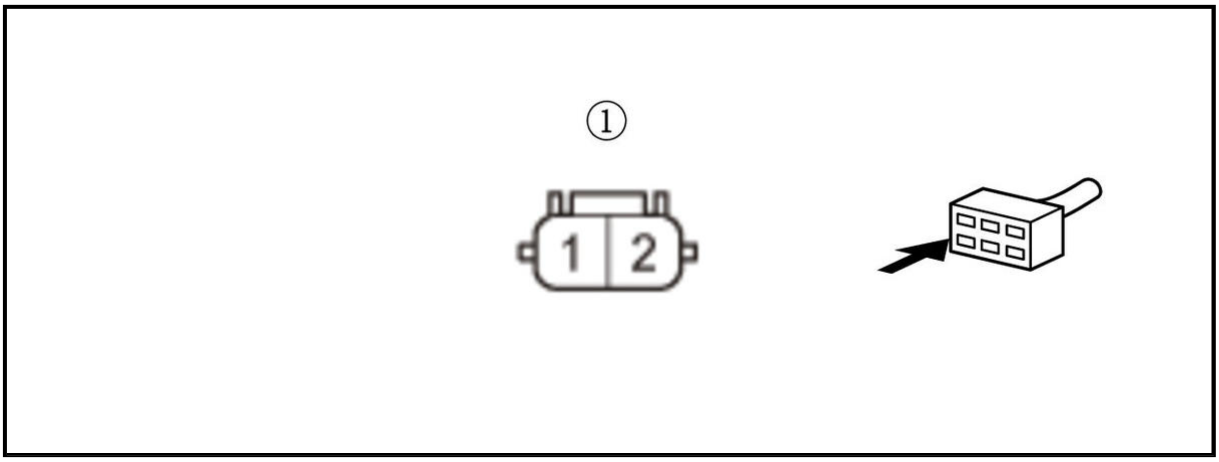

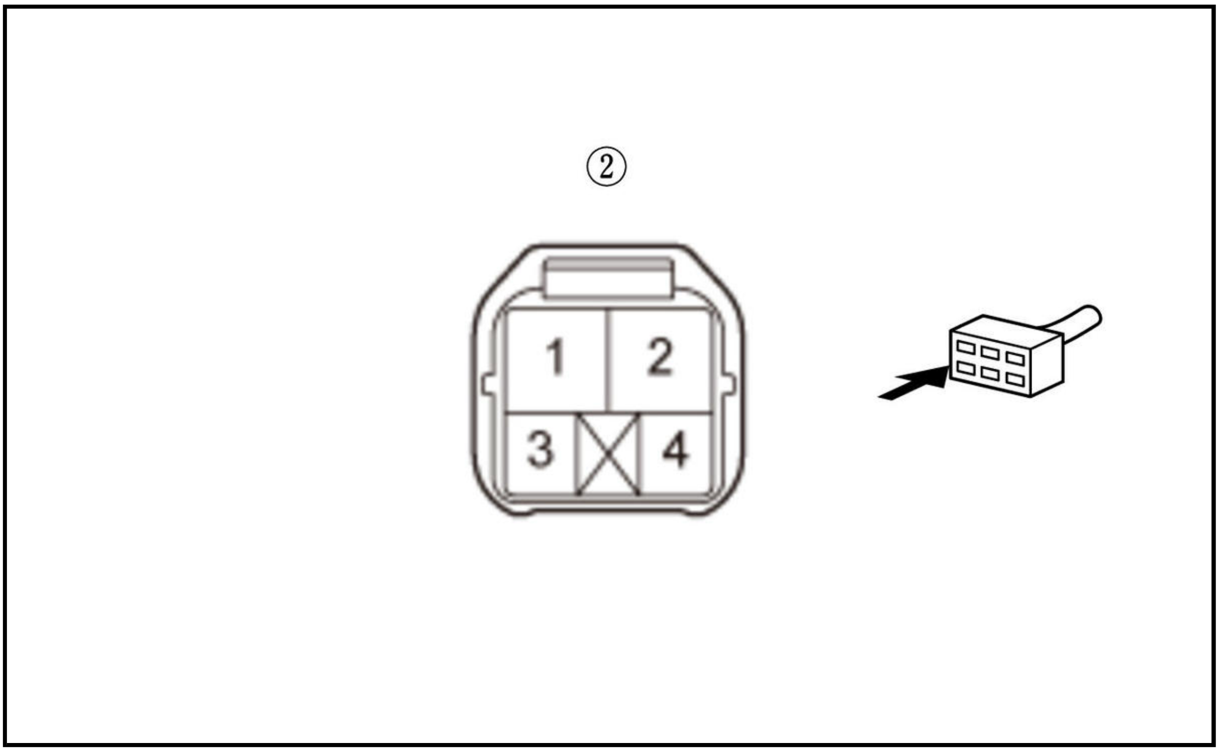

Is there continuity?

YES

The wheel speed sensor wires are OK. Go to step 9.

NO

Repair an open in the wire between the VSA modulator-control unit and the appropriate wheel speed sensor.

9. Wheel speed sensor (s) check

-1. **Substitute a known-good wheel speed sensor** .

DTC	Appropriate Wheel Speed Sensor
C0031-14	Left-front
C0034-14	Right-front
C0037-14	Left-rear
C003A-14	Right-rear

-2. Reconnect the following connectors.

VSA modulator-control unit 46P connector
Appropriate wheel speed sensor 2P connector (front)
Appropriate wheel speed sensor 4P connector (rear)

-3. Turn the vehicle to the ON mode.

-4. Clear the DTC with the HDS.

-5. Turn the vehicle to the OFF (LOCK) mode, then to the ON mode.

-6. Check for DTCs with the HDS.

DTC Description	DTC	Freeze Frame
B	B	B

Is DTC C0031-14, C0034-14, C0037-14, or C003A-14 indicated?

YES

Check for loose terminals and poor connections in the VSA modulator-control unit 46P connector. Check for any authorized service information related to the DTCs or symptoms you are troubleshooting. If they are OK, **replace the VSA modulator-control unit** .

NO

Replace the original wheel speed sensor .

DTC C0031-3A, C0034-3A, C0037-3A, C003A-3A

DTC C0031-3A : Wheel Speed Sensor (Left Front) Signal Failure (Signal Frequency is Too High)**DTC C0034-3A** : Wheel Speed Sensor (Right Front) Signal Failure (Signal Frequency is Too High)**DTC C0037-3A** : Wheel Speed Sensor (Left Rear) Signal Failure (Signal Frequency is Too High)**DTC C003A-3A** : Wheel Speed Sensor (Right Rear) Signal Failure (Signal Frequency is Too High)

NOTE:

- **Before you troubleshoot, review the general troubleshooting information** .
- If the ABS and other indicators come on because of electrical noise, the indicators will go off when you test-drive the vehicle speed at 9 mph (15 km/h) or more and the noise is gone.

DTC Description	DTC	Freeze Frame
C0031-3A Wheel Speed Sensor (Left Front) Signal Failure (Signal Frequency is Too High)	B	B
C0034-3A Wheel Speed Sensor (Right Front) Signal Failure (Signal Frequency is Too High)	B	B
C0037-3A Wheel Speed Sensor (Left Rear) Signal Failure (Signal Frequency is Too High)	B	B
C003A-3A Wheel Speed Sensor (Right Rear) Signal Failure (Signal Frequency is Too High)	B	B

DTC (VSA)

1. Problem verification

-1. Turn the vehicle to the ON mode.

-2. Clear the DTC with the HDS.

-3. Turn the vehicle to the OFF (LOCK) mode, then start the engine.

-4. Test-drive the vehicle for 80 seconds or more.

NOTE: Drive the vehicle on the road, not on a lift.

-5. Check for DTCs with the HDS.

DTC Description	DTC	Freeze Frame
C0031-3A Wheel Speed Sensor (Left Front) Signal Failure (Signal Frequency is Too High)	B	B
C0034-3A Wheel Speed Sensor (Right Front) Signal Failure (Signal Frequency is Too High)	B	B
C0037-3A Wheel Speed Sensor (Left Rear) Signal Failure (Signal Frequency is Too High)	B	B
C003A-3A Wheel Speed Sensor (Right Rear) Signal Failure (Signal Frequency is Too High)	B	B

Is DTC C0031-3A, C0034-3A, C0037-3A, or C003A-3A indicated?

YES

The failure is duplicated. Go to step 2.

NO

Intermittent failure, the system is OK at this time. **Refer to intermittent failures troubleshooting** . If the freeze data/on-board snapshot of this DTC is recorded, try to reproduce the failure under the same conditions with the freeze data/on-board snapshot.

2. Wheel speed sensor installation check

-1. Turn the vehicle to the OFF (LOCK) mode.

-2. **Check that the appropriate wheel speed sensor is properly mounted** .

DTC	Appropriate Wheel Speed Sensor
C0031-3A	Left-front
C0034-3A	Right-front
C0037-3A	Left-rear
C003A-3A	Right-rear

Is the wheel speed sensor installation OK?

YES

Go to step 3.

NO

Reinstall the wheel speed sensor , and recheck its mounting position, then go to step 1.

3. Wheel speed sensor check

-1. **Substitute a known-good wheel speed sensor** .

DTC	Appropriate Wheel Speed Sensor
C0031-3A	Left-front

DTC	Appropriate Wheel Speed Sensor
C0034-3A	Right-front
C0037-3A	Left-rear
C003A-3A	Right-rear

-2. Turn the vehicle to the ON mode.

-3. Clear the DTC with the HDS.

-4. Turn the vehicle to the OFF (LOCK) mode, then start the engine.

-5. Test-drive the vehicle for 80 seconds or more.

NOTE: Drive the vehicle on the road, not on a lift.

-6. Check for DTCs with the HDS.

DTC Description	DTC	Freeze Frame
C0031-3A Wheel Speed Sensor (Left Front) Signal Failure (Signal Frequency is Too High)	B	B
C0034-3A Wheel Speed Sensor (Right Front) Signal Failure (Signal Frequency is Too High)	B	B
C0037-3A Wheel Speed Sensor (Left Rear) Signal Failure (Signal Frequency is Too High)	B	B
C003A-3A Wheel Speed Sensor (Right Rear) Signal Failure (Signal Frequency is Too High)	B	B

Is DTC C0031-3A, C0034-3A, C0037-3A, or C003A-3A indicated?

YES

Go to step 4.

NO

Replace the original wheel speed sensor .

4. Magnetic encoder check

-1. Turn the vehicle to the OFF (LOCK) mode.

-2. Inspect the appropriate magnetic encoder for damage, debris, and correct installation.

DTC	Appropriate Magnetic Encoder	Note
C0031-3A	Left-front	**Remove the driveshaft outboard joint from the appropriate wheel hub** .
C0034-3A	Right-front	
C0037-3A	Left-rear	**Remove the hub bearing unit** .
C003A-3A	Right-rear	

Is the magnetic encoder surface OK?

YES

Check for loose terminals and poor connections in the VSA modulator-control unit 46P connector. Check for any authorized service information related to the DTCs or symptoms you are troubleshooting. If they are OK, **replace the VSA modulator-control unit** .

NO

Clean the debris from the appropriate magnetic encoder surface on the wheel bearing or the hub bearing unit. If the debris cannot be removed or the encoder is damaged, replace the appropriate wheel bearing or the hub bearing unit .

DTC C0031-62, C0034-62, C0037-62, C003A-62 (VSA CONTROL UNIT)

DTC C0031-62 : Left Front Wheel Speed Sensor Signal Compare Failure **DTC C0034-62** : Right Front Wheel Speed Sensor Signal Compare Failure **DTC C0037-62** : Left Rear Wheel Speed Sensor Signal Compare Failure **DTC C003A-62** : Right Rear Wheel Speed Sensor Signal Compare Failure

NOTE: Before you troubleshoot, review the general troubleshooting information .

DTC Description	DTC	Freeze Frame
C0031-62 Left Front Wheel Speed Sensor Signal Compare Failure	B	B
C0034-62 Right Front Wheel Speed Sensor Signal Compare Failure	B	B
C0037-62 Left Rear Wheel Speed Sensor Signal Compare Failure	B	B
C003A-62 Right Rear Wheel Speed Sensor Signal Compare Failure	B	B

DTC (VSA)

1. Problem verification

-1. Turn the vehicle to the ON mode.

-2. Clear the DTC with the HDS.

-3. Turn the vehicle to the OFF (LOCK) mode, then start the engine.

-4. Test-drive the vehicle at 31 mph (50 km/h) or more.

NOTE: Drive the vehicle on the road, not on a lift.

-5. Check for DTCs with the HDS.

DTC Description	DTC	Freeze Frame
C0031-62 Left Front Wheel Speed Sensor Signal Compare Failure	B	B
C0034-62 Right Front Wheel Speed Sensor Signal Compare Failure	B	B
C0037-62 Left Rear Wheel Speed Sensor Signal Compare Failure	B	B
C003A-62 Right Rear Wheel Speed Sensor Signal Compare Failure	B	B

Is DTC C0031-62, C0034-62, C0037-62, or C003A-62 indicated?

YES

The failure is duplicated. Go to step 2.

NO

Intermittent failure, the system is OK at this time. Refer to intermittent failures troubleshooting . If the freeze data/on-board snapshot of this DTC is recorded, try to reproduce the failure under the same

conditions with the freeze data/on-board snapshot.

2. Wheel speed sensor installation check

-1. Turn the vehicle to the OFF (LOCK) mode.

-2. **Check that the appropriate wheel speed sensor is properly mounted** .

DTC	Appropriate Wheel Speed Sensor
C0031-62	Left-front
C0034-62	Right-front
C0037-62	Left-rear
C003A-62	Right-rear

Is the wheel speed sensor installation OK?

YES

Go to step 3.

NO

Reinstall the wheel speed sensor , and recheck the mounting position, then go to step 1.

3. Wheel speed sensor check

-1. **Substitute a known-good wheel speed sensor** .

DTC	Appropriate Wheel Speed Sensor
C0031-62	Left-front
C0034-62	Right-front
C0037-62	Left-rear
C003A-62	Right-rear

-2. Turn the vehicle to the ON mode.

-3. Clear the DTC with the HDS.

-4. Turn the vehicle to the OFF (LOCK) mode, then start the engine.

-5. Test-drive the vehicle at 31 mph (50 km/h) or more.

NOTE: Drive the vehicle on the road, not on a lift.

-6. Check for DTCs with the HDS.

DTC Description	DTC	Freeze Frame
C0031-62 Left Front Wheel Speed Sensor Signal Compare Failure	B	B
C0034-62 Right Front Wheel Speed Sensor Signal Compare Failure	B	B
C0037-62 Left Rear Wheel Speed Sensor Signal Compare Failure	B	B
C003A-62 Right Rear Wheel Speed Sensor Signal Compare Failure	B	B

Is DTC C0031-62, C0034-62, C0037-62, or C003A-62 indicated?

YES

Go to step 4.

NO

Replace the original wheel speed sensor .

4. Magnetic encoder check

-1. Turn the vehicle to the OFF (LOCK) mode.

-2. Inspect the appropriate magnetic encoder for damage, debris, and correct installation.

DTC	Appropriate Magnetic Encoder	Note
C0031-62	Left-front	**Remove the driveshaft outboard joint from the appropriate wheel hub** .
C0034-62	Right-front	
C0037-62	Left-rear	**Remove the hub bearing unit** .
C003A-62	Right-rear	

Is the magnetic encoder surface OK?

YES

Check for loose terminals and poor connections in the VSA modulator-control unit 46P connector. Check for any authorized service information related to the DTCs or symptoms you are troubleshooting. If they are OK, **replace the VSA modulator-control unit** .

NO

Clean the debris from the appropriate magnetic encoder surface on the wheel bearing or the hub bearing unit. If the debris cannot be removed or the encoder is damaged, replace the appropriate **wheel bearing** or the **hub bearing unit** .

DTC C0040-12 (2017 2018 2019)

DTC C0040-12 : Brake Light Switch Failure (Stuck ON)/Brake Pedal Stroke Sensor Stuck (EBB)

NOTE: **Before you troubleshoot, review the general troubleshooting information** .

DTC Description	DTC
C0040-12 Brake Light Switch Failure (Stuck ON)/Brake Pedal Stroke Sensor Stuck (EBB)	B

DTC (VSA)

1. Problem verification

-1. Turn the vehicle to the ON mode.

-2. Clear the DTC with the HDS.

-3. Turn the vehicle to the OFF (LOCK) mode, then start the engine.

-4. Test-drive the vehicle under these conditions:

- Vehicle speed at 9 mph (15 km/h) or more for at least 60 seconds
- Accelerator pedal pressed
- Brake pedal released

NOTE: Drive the vehicle on the road, not on a lift.

-5. Check for DTCs with the HDS.

DTC Description	DTC
C0040-12 Brake Light Switch Failure (Stuck ON)/Brake Pedal Stroke Sensor Stuck (EBB)	B

Is DTC C0040-12 indicated?

YES

The failure is duplicated. Go to step 2.

NO

Intermittent failure, the system is OK at this time. **Refer to intermittent failures troubleshooting** . If the freeze data/on-board snapshot of this DTC is recorded, try to reproduce the failure under the same conditions with the freeze data/on-board snapshot.

2. Electric brake booster system DTC check

-1. Check for electric brake booster system DTCs with the HDS.

DTC Description	DTC	Freeze Frame
C1C01-96 Brake Pedal Stroke Sensor Component Internal Failure	B	B
C1C02-12 Brake Pedal Stroke Sensor Signal Circuit 1 Short To Battery	B	B
C1C02-14 Brake Pedal Stroke Sensor Signal Circuit 1 Short To Ground or Open	B	B
C1C03-11 Brake Pedal Stroke Sensor Signal Circuit 2 Short To Ground	B	B
C1C03-15 Brake Pedal Stroke Sensor Signal Circuit 2 Short To Battery or Open	B	B
C1C04-11 Brake Pedal Stroke Sensor Power Circuit Short To Ground or Battery	B	B

Is DTC indicated?

YES

Go to indicated DTCs troubleshooting.

NO

Go to step 3.

3. Brake pedal/brake pedal position switch and electric brake booster check

-1. Turn the vehicle to the OFF (LOCK) mode.

-2. **Inspect the brake pedal and brake pedal position switch** .

-3. Turn the vehicle to the ON mode.

-4. Clear the DTC with the HDS.

-5. Turn the vehicle to the OFF (LOCK) mode, then start the engine.

-6. Test-drive the vehicle under these conditions:

- Vehicle speed at 9 mph (15 km/h) or more for at least 60 seconds
- Accelerator pedal pressed
- Brake pedal released

NOTE: Drive the vehicle on the road, not on a lift.

-7. Check for DTCs with the HDS.

DTC Description	DTC
C0040-12 Brake Light Switch Failure (Stuck ON)/Brake Pedal Stroke Sensor Stuck (EBB)	B

Is DTC C0040-12 indicated?

YES

Check for loose terminals and poor connections in the electric brake booster 26P connector. Check for any authorized service information related to the DTCs or symptoms you are troubleshooting. If they are OK, **replace the electric brake booster** .

NO

Troubleshooting is complete.

DTC C0040-16 (2017 2018 2019)

DTC C0040-16 : Plausibility BLS vs. Pressure Sensor

NOTE: **Before you troubleshoot, review the general troubleshooting information** .

DTC Description	DTC	Freeze Frame
C0040-16 Plausibility BLS vs. Pressure Sensor	B	B

DTC (VSA)

1. Problem verification

-1. Turn the vehicle to the ON mode.

-2. Clear the DTC with the HDS.

-3. Turn the vehicle to the OFF (LOCK) mode, then start the engine.

-4. Wait 1 second or more without pressing the brake pedal.

-5. Press the brake pedal hard for 1 second or more.

-6. Check for DTCs with the HDS.

DTC Description	DTC	Freeze Frame
C0040-16 Plausibility BLS vs. Pressure Sensor	B	B

Is DTC C0040-16 indicated?

YES

The failure is duplicated. Go to step 2.

NO

Intermittent failure, the system is OK at this time. **Refer to intermittent failures troubleshooting** . If the freeze data/on-board snapshot of this DTC is recorded, try to reproduce the failure under the same conditions with the freeze data/on-board snapshot.

2. Electric brake booster system DTC check

-1. Check for electric brake booster system DTCs with the HDS.

DTC Description	DTC	Freeze Frame
C1C01-96 Brake Pedal Stroke Sensor Component Internal Failure	B	B
C1C02-12 Brake Pedal Stroke Sensor Signal Circuit 1 Short To Battery	B	B
C1C02-14 Brake Pedal Stroke Sensor Signal Circuit 1 Short To Ground or Open	B	B
C1C03-11 Brake Pedal Stroke Sensor Signal Circuit 2 Short To Ground	B	B
C1C03-15 Brake Pedal Stroke Sensor Signal Circuit 2 Short To Battery or Open	B	B
C1C04-11 Brake Pedal Stroke Sensor Power Circuit Short To Ground or Battery	B	B

Is DTC indicated?

YES

Go to indicated DTCs troubleshooting.

NO

Intermittent failure, the system is OK at this time. **Refer to intermittent failures troubleshooting** . If the freeze data/on-board snapshot of this DTC is recorded, try to reproduce the failure under the same conditions with the freeze data/on-board snapshot.

DTC C0044-49

DTC C0044-49 : Master Cylinder Pressure Sensor Failure (Internal Circuit Failure)

NOTE: **Before you troubleshoot, review the general troubleshooting information** .

DTC Description	DTC	Freeze Frame
C0044-49 Master Cylinder Pressure Sensor Failure (Internal Circuit Failure)	B	B

DTC (VSA)

1. Problem verification

-1. Turn the vehicle to the ON mode.

-2. Clear the DTC with the HDS.

-3. Turn the vehicle to the OFF (LOCK) mode, then to the ON mode.

-4. Check for DTCs with the HDS.

DTC Description	DTC	Freeze Frame
C0044-49 Master Cylinder Pressure Sensor Failure (Internal Circuit Failure)	B	B

Is DTC C0044-49 indicated?

YES

The failure is duplicated. Check for loose terminals and poor connections in the VSA modulator-control unit 46P connector. Check for any authorized service information related to the DTCs or symptoms you are troubleshooting. If they are OK, **replace the VSA modulator-control unit** .

NO

Intermittent failure, the system is OK at this time. **Refer to intermittent failures troubleshooting** . If the freeze data/on-board snapshot of this DTC is recorded, try to reproduce the failure under the same conditions with the freeze data/on-board snapshot.

DTC C0044-62

DTC C0044-62 : Master Cylinder Pressure Sensor Failure (Signal Stuck)

NOTE: **Before you troubleshoot, review the general troubleshooting information** .

DTC Description	DTC	Freeze Frame
C0044-62 Master Cylinder Pressure Sensor Failure (Signal Stuck)	B	B

DTC (VSA)

1. Problem verification

-1. Turn the vehicle to the ON mode.

-2. Clear the DTC with the HDS.

-3. Turn the vehicle to the OFF (LOCK) mode, then start the engine.

Test-drive the vehicle under these conditions:

- Vehicle speed at less than 9 mph (14 km/h) for at least 30 seconds
- Brake pedal released

NOTE: Drive the vehicle on the road, not on a lift.

-5. Check for DTCs with the HDS.

DTC Description	DTC	Freeze Frame
C0044-62 Master Cylinder Pressure Sensor Failure (Signal Stuck)	B	B

Is DTC C0044-62 indicated?

YES

The failure is duplicated. Check for loose terminals and poor connections in the VSA modulator-control unit 46P connector. Check for any authorized service information related to the DTCs or symptoms you are troubleshooting. If they are OK, **replace the VSA modulator-control unit** .

NO

Intermittent failure, the system is OK at this time. **Refer to intermittent failures troubleshooting** . If the freeze data/on-board snapshot of this DTC is recorded, try to reproduce the failure under the same conditions with the freeze data/on-board snapshot.

DTC C0049-7B

DTC C0049-7B : Brake Fluid Level Too Low

NOTE:

- **Before you troubleshoot, review the general troubleshooting information** .
- Bleeding the brake system while turn the vehicle to the ON mode can cause this DTC.

DTC Description	DTC	Freeze Frame
C0049-7B Brake Fluid Level Too Low	B	B

DTC (VSA)

1. Problem verification

   -1. Turn the vehicle to the ON mode.

   -2. Clear the DTC with the HDS.

   -3. Turn the vehicle to the OFF (LOCK) mode, then to the ON mode.

   -4. Wait 60 seconds or more.

   -5. Check for DTCs with the HDS.

DTC Description	DTC	Freeze Frame
C0049-7B Brake Fluid Level Too Low	B	B

   Is DTC C0049-7B indicated?

   YES

   The failure is duplicated. Go to step 2.

   NO

   Intermittent failure, the system is OK at this time. **Refer to intermittent failures troubleshooting** . If the freeze data/on-board snapshot of this DTC is recorded, try to reproduce the failure under the same conditions with the freeze data/on-board snapshot.

2. Brake fluid level check

   -1. Check the brake fluid level in the master cylinder reservoir.

   Is the brake fluid level OK?

   YES

   Go to step 3.

   NO

Check for worn brake pads or brake fluid leaks.

- **Inspect the brake lines and hoses for leaks** , and repair as needed.
- **Inspect the front brake pads** and replace worn out brake pads.
- **Inspect the rear brake pads** and replace worn out brake pads.
- Add brake fluid and recheck.

3. Gauge control module check 1

-1. Release the parking brake.

-2. Turn the vehicle to the OFF (LOCK) mode, then to the ON mode.

-3. Check the brake system indicator (red) in the gauge control module.

Does the indicator come on, then go off?

YES

Check for loose terminals and poor connections in the VSA modulator-control unit 46P connector. Check for any authorized service information related to the DTCs or symptoms you are troubleshooting. If they are OK, **replace the VSA modulator-control unit** .

NO

Go to step 4.

4. Gauge control module check 2

-1. Check the parameter (s) below with the HDS.

Signal	Current conditions	
	Values	Unit
BRAKE FLUID LEVEL	B	B

Does the HDS indicate ENOUGH?

YES

Replace the gauge control module .

NO

Go to step 5.

5. Brake fluid level switch check

-1. Turn the vehicle to the OFF (LOCK) mode.

-2. Disconnect the following connector.

Brake fluid level switch 2P connector

-3. Turn the vehicle to the ON mode.

-4. Check the parameter (s) below with the HDS.

Signal	Current conditions	
	Values	Unit
BRAKE FLUID LEVEL	B	B

Does the HDS indicate ENOUGH?

YES

Replace the brake fluid reservoir (brake fluid level switch is included) .

NO

Go to step 6.

6. Shorted wire check (BRAKE LEVEL SW line)

-1. Turn the vehicle to the OFF (LOCK) mode.

-2. Disconnect the following connector.

Gauge control module connector A (32P)

-3. Check for continuity between test points 1 and 2.

Test condition	Vehicle OFF (LOCK) mode
B	Brake fluid level switch 2P connector: disconnected
B	Gauge control module connector A (32P): disconnected
Test point 1	Brake fluid level switch 2P connector (female terminals) No. 2: ①
Test point 2	Body ground

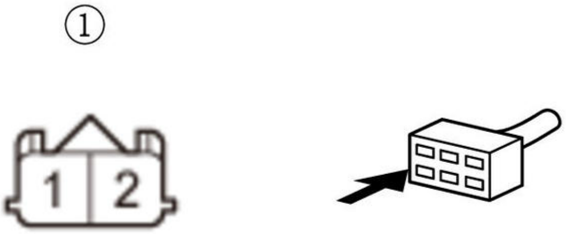

Is there continuity?

YES

Repair a short to body ground in the wire between the gauge control module and the brake fluid level switch.

NO

The BRAKE LEVEL SW wire is OK. **Replace the gauge control module** .

DTC C0051-54 (VSA CONTROL UNIT)

DTC C0051-54 : Steering Angle Neutral Position Learning Incomplete

NOTE: **Before you troubleshoot, review the general troubleshooting information** .

DTC Description	DTC	Freeze Frame
C0051-54 Steering Angle Neutral Position Learning Incomplete	B	B

DTC (VSA)

1. Problem verification

   -1. Turn the vehicle to the ON mode.

   -2. Clear the DTC with the HDS.

   -3. Turn the vehicle to the OFF (LOCK) mode, then to the ON mode.

   -4. Check for DTCs with the HDS.

DTC Description	DTC	Freeze Frame
C0051-54 Steering Angle Neutral Position Learning Incomplete	B	B

   Is DTC C0051-54 indicated?

   YES

   The failure is duplicated. Go to step 2.

   NO

   Intermittent failure, the system is OK at this time. **Refer to intermittent failures troubleshooting** . If the freeze data/on-board snapshot of this DTC is recorded, try to reproduce the failure under the same conditions with the freeze data/on-board snapshot.

2. DTC check (EPS control unit)

   -1. Check for DTCs with the HDS.

DTC Description	DTC	Freeze Frame
B	B	B

   Is DTC indicated?

   YES

   Go to indicated DTC's troubleshooting.

   NO

   Go to step 3.

3. VSA modulator-control unit check (VSA sensor neutral position memorization)

-1. **Do the VSA sensor neutral position memorization** .

-2. Clear the DTC with the HDS.

-3. Turn the vehicle to the OFF (LOCK) mode, then to the ON mode.

-4. Check for DTCs with the HDS.

DTC Description	DTC	Freeze Frame
C0051-54 Steering Angle Neutral Position Learning Incomplete	B	B

Is DTC C0051-54 indicated?

YES

Check for loose terminals and poor connections in the VSA modulator-control unit 46P connector. Check for any authorized service information related to the DTCs or symptoms you are troubleshooting. If they are OK, **replace the VSA modulator-control unit** .

NO

Troubleshooting is complete.

DTC C0051-62, C0051-96

DTC C0051-62 : Steering Angle Sensor Failure (Signal Compare Failure)**DTC C0051-96** : Steering Angle Sensor Failure (Sensor Detects Internal Failure)

NOTE: **Before you troubleshoot, review the general troubleshooting information** .

DTC Description	DTC	Freeze Frame
C0051-62 Steering Angle Sensor Failure (Signal Compare Failure)	B	B
C0051-96 Steering Angle Sensor Failure (Sensor Detects Internal Failure)	B	B

DTC (VSA)

1. Problem verification

-1. Turn the vehicle to the ON mode.

-2. Clear the DTC with the HDS.

-3. Turn the vehicle to the OFF (LOCK) mode, then start the engine.

-4. Test-drive the vehicle under these conditions:

- Vehicle speed at 45 mph (72 km/h) or more
- Change lanes for a few times

NOTE:

- Drive the vehicle on the road, not on a lift.
- Be careful of the surrounding traffic conditions.

-5. Check for DTCs with the HDS.

DTC Description	DTC	Freeze Frame
C0051-62 Steering Angle Sensor Failure (Signal Compare Failure)	B	B
C0051-96 Steering Angle Sensor Failure (Sensor Detects Internal Failure)	B	B

Is DTC C0051-62 or C0051-96 indicated?

YES

The failure is duplicated. Go to step 2.

NO

Intermittent failure, the system is OK at this time. **Refer to intermittent failures troubleshooting** . If the freeze data/on-board snapshot of this DTC is recorded, try to reproduce the failure under the same conditions with the freeze data/on-board snapshot.

2. DTC check (EPS control unit)

-1. Check for DTCs with the HDS.

DTC Description	DTC	Freeze Frame
B	B	B

Is DTC indicated?

YES

Go to indicated DTC's troubleshooting.

NO

Check for loose terminals and poor connections in the VSA modulator-control unit 46P connector. Check for any authorized service information related to the DTCs or symptoms you are troubleshooting. If they are OK, **replace the VSA modulator-control unit** .

DTC C0061-49, C0062-49, C0063-49

DTC C0061-49 : Acceleration Sensor Malfunction **DTC C0062-49** : Longitudinal Acceleration Sensor Malfunction **DTC C0063-49** : Yaw Rate Sensor Malfunction

NOTE:

- **Before you troubleshoot, review the general troubleshooting information** .
- The yaw rate-acceleration sensor is built into the SRS unit.
- Before troubleshooting, check the SRS unit for proper mounting. If not properly installed the VSA modulator-control unit may set these codes.

DTC Description	DTC	Freeze Frame
C0061-49 Acceleration Sensor Malfunction	B	B
C0062-49 Longitudinal Acceleration Sensor Malfunction	B	B
C0063-49 Yaw Rate Sensor Malfunction	B	B

DTC (VSA)

1. Problem verification

   -1. Turn the vehicle to the ON mode.

   -2. Clear the DTC with the HDS.

   -3. Turn the vehicle to the OFF (LOCK) mode, then start the engine.

   -4. Check for DTCs with the HDS.

DTC Description	DTC	Freeze Frame
C0061-49 Acceleration Sensor Malfunction	B	B
C0062-49 Longitudinal Acceleration Sensor Malfunction	B	B
C0063-49 Yaw Rate Sensor Malfunction	B	B

Is DTC C0061-49, C0062-49, or C0063-49 indicated?

YES

The failure is duplicated. **Replace the SRS unit** .

NO

Intermittent failure, the system is OK at this time. **Refer to intermittent failures troubleshooting** . If the freeze data/on-board snapshot of this DTC is recorded, try to reproduce the failure under the same conditions with the freeze data/on-board snapshot.

DTC C0061-54, C0062-54, C0063-54

DTC C0061-54 : Lateral Acceleration Sensor Calibration Incomplete **DTC C0062-54** : Longitudinal Acceleration Sensor Calibration Incomplete **DTC C0063-54** : Yaw Rate Sensor Calibration Incomplete

NOTE: **Before you troubleshoot, review the general troubleshooting information** .

DTC Description	DTC	Freeze Frame
C0061-54 Lateral Acceleration Sensor Calibration Incomplete	B	B
C0062-54 Longitudinal Acceleration Sensor Calibration Incomplete	B	B
C0063-54 Yaw Rate Sensor Calibration Incomplete	B	B

DTC (VSA)

1. Problem verification

   -1. Turn the vehicle to the ON mode.

   -2. Clear the DTC with the HDS.

   -3. Turn the vehicle to the OFF (LOCK) mode, then to the ON mode.

   -4. Check for DTCs with the HDS.

DTC Description	DTC	Freeze Frame
C0061-54 Lateral Acceleration Sensor Calibration Incomplete	B	B
C0062-54 Longitudinal Acceleration Sensor Calibration	B	B

DTC Description	DTC	Freeze Frame
Incomplete		

DTC Description	DTC	Freeze Frame
C0063-54 Yaw Rate Sensor Calibration Incomplete	B	B

Is DTC C0061-54, C0062-54, or C0063-54 indicated?

YES

The failure is duplicated. Go to step 2.

NO

Intermittent failure, the system is OK at this time. **Refer to intermittent failures troubleshooting** . If the freeze data/on-board snapshot of this DTC is recorded, try to reproduce the failure under the same conditions with the freeze data/on-board snapshot.

2. DTC check (SRS unit)

-1. Check for DTCs with the HDS.

DTC Description	DTC
B	B

Is DTC indicated?

YES

Go to indicated DTC's troubleshooting.

NO

Go to step 3.

3. VSA modulator-control unit check (VSA sensor neutral position memorization)

-1. **Do the VSA sensor neutral position memorization** .

-2. Clear the DTC with the HDS.

-3. Turn the vehicle to the OFF (LOCK) mode, then to the ON mode.

-4. Check for DTCs with the HDS.

DTC Description	DTC	Freeze Frame
C0061-54 Lateral Acceleration Sensor Calibration Incomplete	B	B
C0062-54 Longitudinal Acceleration Sensor Calibration Incomplete	B	B
C0063-54 Yaw Rate Sensor Calibration Incomplete	B	B

Is DTC C0061-54, C0062-54, or C0063-54 indicated?

YES

Check for loose terminals and poor connections in the VSA modulator-control unit 46P connector. Check for any authorized service information related to the DTCs or symptoms you are troubleshooting. If they are OK, **replace the VSA modulator-control unit** .

NO

Troubleshooting is complete.

DTC C0061-62, C0062-62, C0063-62

DTC C0061-62 : Lateral Acceleration Sensor Failure (Signal Compare Failure)**DTC C0062-62** : Longitudinal Acceleration Sensor Failure (Signal Compare Failure)**DTC C0063-62** : Yaw Rate Sensor Failure (Signal Compare Failure)

NOTE:

- **Before you troubleshoot, review the general troubleshooting information** .
- The yaw rate-acceleration sensor is built into the SRS unit.
- Before troubleshooting, check the SRS unit for proper mounting. If not properly installed the VSA modulator-control unit may set these codes.

DTC Description	DTC	Freeze Frame
C0061-62 Lateral Acceleration Sensor Failure (Signal Compare Failure)	B	B
C0062-62 Longitudinal Acceleration Sensor Failure (Signal Compare Failure)	B	B
C0063-62 Yaw Rate Sensor Failure (Signal Compare Failure)	B	B

DTC (VSA)

1. Problem verification

-1. Turn the vehicle to the ON mode.

-2. Clear the DTC with the HDS.

-3. Turn the vehicle to the OFF (LOCK) mode, then start the engine.

-4. Test-drive the vehicle under these conditions:

- Vehicle speed at 31 mph (50 km/h) or more for at least 20 seconds
- Brake pedal released
- Change lanes for a few times

NOTE:

- Drive the vehicle on the road, not on a lift.
- Be careful of the surrounding traffic conditions.

-5. Check for DTCs with the HDS.

DTC Description	DTC	Freeze Frame
C0061-62 Lateral Acceleration Sensor Failure (Signal Compare Failure)	B	B
C0062-62 Longitudinal Acceleration Sensor Failure (Signal Compare Failure)	B	B
C0063-62 Yaw Rate Sensor Failure (Signal Compare Failure)	B	B

Is DTC C0061-62, C0062-62, or C0063-62 indicated?

YES

The failure is duplicated. Replace the SRS unit .

NO

Intermittent failure, the system is OK at this time. Refer to intermittent failures troubleshooting . If the freeze data/on-board snapshot of this DTC is recorded, try to reproduce the failure under the same conditions with the freeze data/on-board snapshot.

DTC C1000-94

DTC C1000-94 : ABS/VSA Activation Time Too Long

NOTE:

- Before you troubleshoot, review the general troubleshooting information .
- A wheel bearing that is installed backwards can cause this DTC.

DTC Description	DTC	Freeze Frame
C1000-94 ABS/VSA Activation Time Too Long	B	B

DTC (VSA)

1. Problem verification

   -1. Turn the vehicle to the ON mode.

   -2. Clear the DTC with the HDS.

   -3. Turn the vehicle to the OFF (LOCK) mode, then start the engine.

   -4. Test-drive the vehicle under these conditions:

   - Vehicle speed at 31 mph (50 km/h) or more for at least 60 seconds
   - Brake pedal released

   NOTE: Drive the vehicle on the road, not on a lift.

   -5. Check for DTCs with the HDS.

DTC Description	DTC	Freeze Frame
C1000-94 ABS/VSA Activation Time Too Long	B	B

   Is DTC C1000-94 indicated?

   YES

   The failure is duplicated. Go to step 2.

   NO

   Intermittent failure, the system is OK at this time. Refer to intermittent failures troubleshooting . If the freeze data/on-board snapshot of this DTC is recorded, try to reproduce the failure under the same conditions with the freeze data/on-board snapshot.

2. Tire check

   -1. Turn the vehicle to the OFF (LOCK) mode.

   -2. Check all four tires for size, inflation, and wear .

Are all four tires the correct size, properly inflated, and worn evenly?

YES

Go to step 3.

NO

Swap the wheels and tires with a known-good set (the correct size, type, and properly inflated), then retest-drive the vehicle.

3. Wheel speed sensor performance check

-1. Test-drive the vehicle at 31 mph (50 km/h) or more in a straight line.

NOTE: Drive the vehicle on the road, not on a lift.

-2. Check the parameter (s) below with the HDS.

Signal	Current conditions	
	Values	**Unit**
RIGHT FRONT WHEEL SPEED	B	B
LEFT FRONT WHEEL SPEED	B	B
RIGHT REAR WHEEL SPEED	B	B
LEFT REAR WHEEL SPEED	B	B

Is any one of the four values different?

YES

Go to step 4.

NO

Check for loose terminals and poor connections in the VSA modulator-control unit 46P connector. Check for any authorized service information related to the DTCs or symptoms you are troubleshooting. If they are OK, **replace the VSA modulator-control unit** .

4. Wheel speed sensor check

-1. Turn the vehicle to the OFF (LOCK) mode.

-2. **Substitute a known-good wheel speed sensor** .

-3. Turn the vehicle to the ON mode.

-4. Clear the DTC with the HDS.

-5. Turn the vehicle to the OFF (LOCK) mode, then start the engine.

-6. Test-drive the vehicle under these conditions:

- Vehicle speed at 31 mph (50 km/h) or more for at least 60 seconds
- Brake pedal released

NOTE: Drive the vehicle on the road, not on a lift.

-7. Check for DTCs with the HDS.

DTC Description	DTC	Freeze Frame
C1000-94 ABS/VSA Activation Time Too Long	B	B

Is DTC C1000-94 indicated?

YES

Go to step 5.

NO

Replace the original wheel speed sensor .

5. Magnetic encoder check

-1. Turn the vehicle to the OFF (LOCK) mode.

-2. Inspect the magnetic encoder for damage, debris, and correct installation.

Appropriate Magnetic Encoder	Note
Left-front	**Remove the driveshaft outboard joint from the appropriate wheel hub** .
Right-front	
Left-rear	**Remove the hub bearing unit** .
Right-rear	

Is the magnetic encoder surface OK?

YES

Check for loose terminals and poor connections in the VSA modulator-control unit 46P connector. Check for any authorized service information related to the DTCs or symptoms you are troubleshooting. If they are OK, **replace the VSA modulator-control unit** .

NO

Clean the debris from the appropriate magnetic encoder surface on the wheel bearing or the hub bearing unit. If the debris cannot be removed or the encoder is damaged, replace the appropriate **wheel bearing** or the **hub bearing unit** .

DTC C1020-49, C1021-49

DTC C1020-49 : VSA Master Cut Valve Failure (Unexpected Operation)**DTC C1021-49** : VSA Suction Valve Failure (Unexpected Operation)

NOTE: **Before you troubleshoot, review the general troubleshooting information** .

DTC Description	DTC	Freeze Frame
C1020-49 VSA Master Cut Valve Failure (Unexpected Operation)	B	B
C1021-49 VSA Suction Valve Failure (Unexpected Operation)	B	B

DTC (VSA)

1. Problem verification

-1. Turn the vehicle to the ON mode.

-2. Clear the DTC with the HDS.

-3. Turn the vehicle to the OFF (LOCK) mode, then start the engine.

-4. Wait 20 seconds or more.

-5. Test-drive the vehicle at 9 mph (15 km/h) or more.

NOTE: Drive the vehicle on the road, not on a lift.

-6. Check for DTCs with the HDS.

DTC Description	DTC	Freeze Frame
C1020-49 VSA Master Cut Valve Failure (Unexpected Operation)	B	B
C1021-49 VSA Suction Valve Failure (Unexpected Operation)	B	B

Is DTC C1020-49 or C1021-49 indicated?

YES

The failure is duplicated. Check for loose terminals and poor connections in the VSA modulator-control unit 46P connector. Check for any authorized service information related to the DTCs or symptoms you are troubleshooting. If they are OK, **replace the VSA modulator-control unit** .

NO

Intermittent failure, the system is OK at this time. **Refer to intermittent failures troubleshooting** . If the freeze data/on-board snapshot of this DTC is recorded, try to reproduce the failure under the same conditions with the freeze data/on-board snapshot.

DTC C1040-00 (VSA CONTROL UNIT)

DTC C1040-00 : Different Diameter Tire is Detected

NOTE: **Before you troubleshoot, review the general troubleshooting information** .

DTC Description	DTC	Freeze Frame
C1040-00 Different Diameter Tire is Detected	B	B

DTC (VSA)

1. Problem verification

-1. Turn the vehicle to the ON mode.

-2. Clear the DTC with the HDS.

-3. Turn the vehicle to the OFF (LOCK) mode, then start the engine.

-4. Test-drive the vehicle at 12 mph (20 km/h) or more for at least 72 seconds.

NOTE: Drive the vehicle on the road, not on a lift.

-5. Check for DTCs with the HDS.

DTC Description	DTC	Freeze Frame
C1040-00 Different Diameter Tire is Detected	B	B

Is DTC C1040-00 indicated?

YES

The failure is duplicated. Go to step 2.

NO

Intermittent failure, the system is OK at this time. **Refer to intermittent failures troubleshooting** . If the freeze data/on-board snapshot of this DTC is recorded, try to reproduce the failure under the same conditions with the freeze data/on-board snapshot.

2. Tire check

-1. Turn the vehicle to the OFF (LOCK) mode.

-2. **Check all four tires for size, inflation, and wear** .

Are all four tires the correct size, properly inflated, and worn evenly?

YES

Go to step 3.

NO

Swap the wheels and tires with a known-good set (the correct size, type, and properly inflated), then retest-drive the vehicle.

3. Wheel speed sensor performance check

-1. Test-drive the vehicle at 12 mph (20 km/h) or more in a straight line.

NOTE: Drive the vehicle on the road, not on a lift.

-2. Check the parameter (s) below with the HDS.

Signal	Current conditions	
	Values	Unit
RIGHT FRONT WHEEL SPEED	B	B
LEFT FRONT WHEEL SPEED	B	B
RIGHT REAR WHEEL SPEED	B	B
LEFT REAR WHEEL SPEED	B	B

Is any one of the four values different?

YES

Go to step 4.

NO

Check for loose terminals and poor connections in the VSA modulator-control unit 46P connector. Check for any authorized service information related to the DTCs or symptoms you are troubleshooting. If they are OK, **replace the VSA modulator-control unit** .

4. Wheel speed sensor check

-1. Turn the vehicle to the OFF (LOCK) mode.

-2. **Substitute a known-good wheel speed sensor** .

-3. Turn the vehicle to the ON mode.

-4. Clear the DTC with the HDS.

-5. Turn the vehicle to the OFF (LOCK) mode, then start the engine.

-6. Test-drive the vehicle at 12 mph (20 km/h) or more for at least 72 seconds.

NOTE: Drive the vehicle on the road, not on a lift.

-7. Check for DTCs with the HDS.

DTC Description	DTC	Freeze Frame
C1040-00 Different Diameter Tire is Detected	B	B

Is DTC C1040-00 indicated?

YES

Go to step 5.

NO

Replace the original wheel speed sensor .

5. Magnetic encoder check

-1. Turn the vehicle to the OFF (LOCK) mode.

-2. Inspect the magnetic encoder for damage, debris, and correct installation.

Appropriate Magnetic Encoder	Note
Left-front	**Remove the driveshaft outboard joint from the appropriate wheel hub** .
Right-front	
Left-rear	**Remove the hub bearing unit** .
Right-rear	

Is the magnetic encoder surface OK?

YES

Check for loose terminals and poor connections in the VSA modulator-control unit 46P connector. Check for any authorized service information related to the DTCs or symptoms you are troubleshooting. If they are OK, **replace the VSA modulator-control unit** .

NO

Clean the debris from the appropriate magnetic encoder surface on the wheel bearing or the hub bearing unit. If the debris cannot be removed or the encoder is damaged, replace the appropriate **wheel bearing** or the **hub bearing unit** .

DTC C1041-00, C1042-00, C1043-00, C1044-00

DTC C1041-00 : Right Front Wheel Abnormal Slip Detection **DTC C1042-00** : Left Front Wheel Abnormal Slip Detection **DTC C1043-00** : Right Rear Wheel Abnormal Slip Detection **DTC C1044-00** : Left Rear Wheel Abnormal Slip Detection

NOTE: **Before you troubleshoot, review the general troubleshooting information** .

DTC Description	DTC	Freeze Frame
C1041-00 Right Front Wheel Abnormal Slip Detection	B	B
C1042-00 Left Front Wheel Abnormal Slip Detection	B	B
C1043-00 Right Rear Wheel Abnormal Slip Detection	B	B
C1044-00 Left Rear Wheel Abnormal Slip Detection	B	B

DTC (VSA)

1. Problem verification

   -1. Turn the vehicle to the ON mode.

   -2. Clear the DTC with the HDS.

   -3. Turn the vehicle to the OFF (LOCK) mode, then start the engine.

   -4. Test-drive the vehicle at 12 mph (20 km/h) or more for at least 72 seconds.

   NOTE: Drive the vehicle on the road, not on a lift.

   -5. Check for DTCs with the HDS.

DTC Description	DTC	Freeze Frame
C1041-00 Right Front Wheel Abnormal Slip Detection	B	B
C1042-00 Left Front Wheel Abnormal Slip Detection	B	B
C1043-00 Right Rear Wheel Abnormal Slip Detection	B	B
C1044-00 Left Rear Wheel Abnormal Slip Detection	B	B

   Is DTC C1041-00, C1042-00, C1043-00, or C1044-00 indicated?

   YES

   The failure is duplicated. Go to step 2.

   NO

   Intermittent failure, the system is OK at this time. **Refer to intermittent failures troubleshooting** . If the freeze data/on-board snapshot of this DTC is recorded, try to reproduce the failure under the same conditions with the freeze data/on-board snapshot.

2. Tire check

   -1. Turn the vehicle to the OFF (LOCK) mode.

   -2. **Check all four tires for size, inflation, and wear** .

   Are all four tires the correct size, properly inflated, and worn evenly?

   YES

   Go to step 3.

   NO

   Swap the wheels and tires with a known-good set (the correct size, type, and properly inflated), then retest-drive the vehicle.

3. Wheel speed sensor performance check

-1. Test-drive the vehicle at 12 mph (20 km/h) or more in a straight line.

NOTE: Drive the vehicle on the road, not on a lift.

-2. Check the parameter (s) below with the HDS.

Signal	Current conditions	
	Values	**Unit**
RIGHT FRONT WHEEL SPEED	B	B
LEFT FRONT WHEEL SPEED	B	B
RIGHT REAR WHEEL SPEED	B	B
LEFT REAR WHEEL SPEED	B	B

Is any one of the four values different?

YES

Go to step 4.

NO

Check for loose terminals and poor connections in the VSA modulator-control unit 46P connector. Check for any authorized service information related to the DTCs or symptoms you are troubleshooting. If they are OK, **replace the VSA modulator-control unit** .

4. Wheel speed sensor check

-1. Turn the vehicle to the OFF (LOCK) mode.

-2. **Substitute a known-good wheel speed sensor** .

-3. Turn the vehicle to the ON mode.

-4. Clear the DTC with the HDS.

-5. Turn the vehicle to the OFF (LOCK) mode, then start the engine.

-6. Test-drive the vehicle at 12 mph (20 km/h) or more for at least 72 seconds.

NOTE: Drive the vehicle on the road, not on a lift.

-7. Check for DTCs with the HDS.

DTC Description	DTC	Freeze Frame
C1041-00 Right Front Wheel Abnormal Slip Detection	B	B
C1042-00 Left Front Wheel Abnormal Slip Detection	B	B
C1043-00 Right Rear Wheel Abnormal Slip Detection	B	B
C1044-00 Left Rear Wheel Abnormal Slip Detection	B	B

Is DTC C1041-00, C1042-00, C1043-00, or C1044-00 indicated?

YES

Go to step 5.

NO

Replace the original wheel speed sensor .

5. Magnetic encoder check

   -1. Turn the vehicle to the OFF (LOCK) mode.

   -2. Inspect the magnetic encoder for damage, debris, and correct installation.

Appropriate Magnetic Encoder	Note
Left-front	**Remove the driveshaft outboard joint from the appropriate wheel hub** .
Right-front	
Left-rear	**Remove the hub bearing unit** .
Right-rear	

Is the magnetic encoder surface OK?

YES

Check for loose terminals and poor connections in the VSA modulator-control unit 46P connector. Check for any authorized service information related to the DTCs or symptoms you are troubleshooting. If they are OK, **replace the VSA modulator-control unit** .

NO

Clean the debris from the appropriate magnetic encoder surface on the wheel bearing or the hub bearing unit. If the debris cannot be removed or the encoder is damaged, replace the appropriate **wheel bearing** or the **hub bearing unit** .

DTC C1100-48

DTC C1100-48 : Electric Parking Brake Abnormal Operation Monitoring

NOTE: **Before you troubleshoot, review the general troubleshooting information** .

DTC Description	DTC	Freeze Frame
C1100-48 Electric Parking Brake Abnormal Operation Monitoring	B	B

DTC (VSA)

1. DTC check

   -1. Turn the vehicle to the ON mode.

   -2. Clear the DTC with the HDS.

   -3. Turn the vehicle to the OFF (LOCK) mode, then to the ON mode.

   -4. Wait 30 seconds or more.

   -5. Check for DTCs with the HDS.

DTC Description	DTC	Freeze Frame
B	B	B

Is DTC C1100-48 indicated?

YES

The failure is duplicated. Check for loose terminals and poor connections in the VSA modulator-control unit 46P connector. Check for any authorized service information related to the DTCs or symptoms you are troubleshooting. If they are OK, replace the VSA modulator-control unit .

NO

Go to indicated DTC's troubleshooting.

NO

Intermittent failure, the system is OK at this time. Refer to intermittent failures troubleshooting . If the freeze data/on-board snapshot of this DTC is recorded, try to reproduce the failure under the same conditions with the freeze data/on-board snapshot.

DTC C1100-54

DTC C1100-54 : Piston Position Not Learned

NOTE: Before you troubleshoot, review the general troubleshooting information .

DTC Description	DTC	Freeze Frame
C1100-54 Piston Position Not Learned	B	B

DTC (VSA)

1. Problem verification

   -1. Turn the vehicle to the ON mode.

   -2. Clear the DTC with the HDS.

   -3. Turn the vehicle to the OFF (LOCK) mode, then to the ON mode.

   -4. Check for DTCs with the HDS.

DTC Description	DTC	Freeze Frame
C1100-54 Piston Position Not Learned	B	B

   Is DTC C1100-54 indicated?

   YES

   The failure is duplicated. Go to step 2.

   NO

   Intermittent failure, the system is OK at this time. Refer to intermittent failures troubleshooting . If the freeze data/on-board snapshot of this DTC is recorded, try to reproduce the failure under the same conditions with the freeze data/on-board snapshot.

2. Piston position learn operation check

   -1. Clear the DTC with the HDS.

   -2. Turn the vehicle to the OFF (LOCK) mode, then to the ON mode.

   -3. Apply and release the parking brake several times.

   -4. Check for DTCs with the HDS.

DTC Description	DTC	Freeze Frame
C1100-54 Piston Position Not Learned	B	B

Is DTC C1100-54 indicated?

YES

Check for loose terminals and poor connections in the VSA modulator-control unit 46P connector. Check for any authorized service information related to the DTCs or symptoms you are troubleshooting. If they are OK, replace the VSA modulator-control unit .

NO

Troubleshooting is complete.

DTC C1100-94

DTC C1100-94 : Electric Parking Brake Actuator Malfunction

NOTE: Before you troubleshoot, review the general troubleshooting information .

DTC Description	DTC	Freeze Frame
C1100-94 Electric Parking Brake Actuator Malfunction	B	B

DTC (VSA)

1. DTC check

   -1. Turn the vehicle to the ON mode.

   -2. Clear the DTC with the HDS.

   -3. Turn the vehicle to the OFF (LOCK) mode, then to the ON mode.

   -4. Apply and release the parking brake several times.

   -5. Check for DTCs with the HDS.

DTC Description	DTC	Freeze Frame
B	B	B

   Is DTC C1100-94 indicated?

   YES

   The failure is duplicated. Go to step 2.

   YES

   If DTC C1110-11, C1110-13, C1110-79, C1110-94, C1110-96, C1111-11, C1111-13, C1111-79, C1111-94, or C1111-96 is also indicated, go to indicated DTCs troubleshooting .

   NO

   Intermittent failure, the system is OK at this time. Refer to intermittent failures troubleshooting . If the freeze data/on-board snapshot of this DTC is recorded, try to reproduce the failure under the same conditions with the freeze data/on-board snapshot.

2. Electric parking brake actuator check (Left side)

-1. Turn the vehicle to the OFF (LOCK) mode.

-2. **Substitute a known-good left electric parking brake actuator** .

-3. Turn the vehicle to the ON mode.

-4. Clear the DTC with the HDS.

-5. Turn the vehicle to the OFF (LOCK) mode, then to the ON mode.

-6. Apply and release the parking brake several times.

-7. Check for DTCs with the HDS.

DTC Description	DTC	Freeze Frame
C1100-94 Electric Parking Brake Actuator Malfunction	B	B

Is DTC C1100-94 indicated?

YES

Go to step 3.

NO

Replace the original left electric parking brake actuator .

3. Electric parking brake actuator check (Right side)

-1. Turn the vehicle to the OFF (LOCK) mode.

-2. **Reinstall the original left electric parking brake actuator** .

-3. **Substitute a known-good right electric parking brake actuator** .

-4. Turn the vehicle to the ON mode.

-5. Clear the DTC with the HDS.

-6. Turn the vehicle to the OFF (LOCK) mode, then to the ON mode.

-7. Apply and release the parking brake several times.

-8. Check for DTCs with the HDS.

DTC Description	DTC	Freeze Frame
C1100-94 Electric Parking Brake Actuator Malfunction	B	B

Is DTC C1100-94 indicated?

YES

Check for loose terminals and poor connections in the VSA modulator-control unit 46P connector. Check for any authorized service information related to the DTCs or symptoms you are troubleshooting. If they are OK, **replace the VSA modulator-control unit** .

NO

Replace the original right electric parking brake actuator .

DTC C1100-98

DTC C1100-98 : Electric Parking Brake Continuous Operations Detected

NOTE:

- **Before you troubleshoot, review the general troubleshooting information** .
- This DTC is set when repeated use of the electric parking brake function causes electric parking brake actuator overheating. The code can be cleared with the HDS once the electric parking brake actuator has cooled.

DTC Description	DTC	Freeze Frame
C1100-98 Electric Parking Brake Continuous Operations Detected	B	B

DTC (VSA)

1. Problem verification

   -1. Turn the vehicle to the ON mode.

   -2. Clear the DTC with the HDS.

   -3. Turn the vehicle to the OFF (LOCK) mode, then wait for 5 minutes or more.

   -4. Turn the vehicle to the ON mode.

   -5. Apply and release the parking brake several times.

   -6. Check for DTCs with the HDS.

DTC Description	DTC	Freeze Frame
C1100-98 Electric Parking Brake Continuous Operations Detected	B	B

   Is DTC C1100-98 indicated?

   YES

   The failure is duplicated. Go to step 2.

   NO

   Intermittent failure, the system is OK at this time. **Refer to intermittent failures troubleshooting** . If the freeze data/on-board snapshot of this DTC is recorded, try to reproduce the failure under the same conditions with the freeze data/on-board snapshot.

2. Electric parking brake actuator check (Left side)

   -1. Turn the vehicle to the OFF (LOCK) mode.

   -2. **Substitute a known-good left electric parking brake actuator** .

   -3. Turn the vehicle to the ON mode.

   -4. Clear the DTC with the HDS.

   -5. Turn the vehicle to the OFF (LOCK) mode, then wait for 5 minutes or more.

-6. Turn the vehicle to the ON mode.

-7. Apply and release the parking brake several times.

-8. Check for DTCs with the HDS.

DTC Description	DTC	Freeze Frame
C1100-98 Electric Parking Brake Continuous Operations Detected	B	B

Is DTC C1100-98 indicated?

YES

Go to step 3.

NO

Replace the original left electric parking brake actuator .

3. Electric parking brake actuator check (Right side)

-1. Turn the vehicle to the OFF (LOCK) mode.

-2. **Reinstall the original left electric parking brake actuator** .

-3. **Substitute a known-good right electric parking brake actuator** .

-4. Turn the vehicle to the ON mode.

-5. Clear the DTC with the HDS.

-6. Turn the vehicle to the OFF (LOCK) mode, then wait for 5 minutes or more.

-7. Turn the vehicle to the ON mode.

-8. Apply and release the parking brake several times.

-9. Check for DTCs with the HDS.

DTC Description	DTC	Freeze Frame
C1100-98 Electric Parking Brake Continuous Operations Detected	B	B

Is DTC C1100-98 indicated?

YES

Check for loose terminals and poor connections in the VSA modulator-control unit 46P connector. Check for any authorized service information related to the DTCs or symptoms you are troubleshooting. If they are OK, **replace the VSA modulator-control unit** .

NO

Replace the original right electric parking brake actuator .

DTC C1110-11, C1111-11

DTC C1110-11 : Left Rear Electric Parking Brake Actuator Circuit Short to Ground **DTC C1111-11** : Right Rear Electric Parking Brake Actuator Circuit Short to Ground

NOTE: **Before you troubleshoot, review the general troubleshooting information** .

DTC Description	DTC	Freeze Frame
C1110-11 Left Rear Electric Parking Brake Actuator Circuit Short to Ground	B	B
C1111-11 Right Rear Electric Parking Brake Actuator Circuit Short to Ground	B	B

DTC (VSA)

1. Problem verification

   -1. Turn the vehicle to the ON mode.

   -2. Clear the DTC with the HDS.

   -3. Turn the vehicle to the OFF (LOCK) mode, then to the ON mode.

   -4. Apply and release the parking brake several times.

   -5. Check for DTCs with the HDS.

DTC Description	DTC	Freeze Frame
C1110-11 Left Rear Electric Parking Brake Actuator Circuit Short to Ground	B	B
C1111-11 Right Rear Electric Parking Brake Actuator Circuit Short to Ground	B	B

   Is DTC C1110-11 or C1111-11 indicated?

   YES

   The failure is duplicated. Go to step 2.

   NO

   Intermittent failure, the system is OK at this time. **Refer to intermittent failures troubleshooting** . If the freeze data/on-board snapshot of this DTC is recorded, try to reproduce the failure under the same conditions with the freeze data/on-board snapshot.

2. Shorted wire check (EPB L ACT+, EPB R ACT+ lines)

   -1. Turn the vehicle to the OFF (LOCK) mode.

   -2. Disconnect the following connectors.

VSA modulator-control unit 46P connector
Appropriate electric parking brake actuator 4P connector

   -3. Check for continuity between test points 1 and 2.

Test condition	Vehicle OFF (LOCK) mode
B	VSA modulator-control unit 46P connector: disconnected
B	Appropriate electric parking brake actuator 4P connector: disconnected

DTC	Test point 1	Test point 2
C1110-11	**VSA modulator-control unit 46P connector No. 8**	Body ground

DTC	Test point 1	Test point 2
C1111-11	**VSA modulator-control unit 46P connector No. 5**	Body ground

Is there continuity?

YES

Repair a short to body ground in the wires between the VSA modulator-control unit and the appropriate electric parking brake actuator.

NO

The EPB L ACT+ and EPB R ACT+ wires are OK. Go to step 3.

3. Shorted wire check (EPB L ACT-, EPB R ACT- lines)

-1. Check for continuity between test points 1 and 2.

Test condition	Vehicle OFF (LOCK) mode
B	VSA modulator-control unit 46P connector: disconnected
B	Appropriate electric parking brake actuator 4P connector: disconnected

DTC	Test point 1	Test point 2
C1110-11	**VSA modulator-control unit 46P connector No. 7**	Body ground
C1111-11	**VSA modulator-control unit 46P connector No. 6**	Body ground

Is there continuity?

YES

Repair a short to body ground in the wires between the VSA modulator-control unit and the appropriate electric parking brake actuator.

NO

Go to step 4.

4. Electric parking brake actuator check

-1. **Substitute a known-good electric parking brake actuator** .

-2. Reconnect the following connectors.

VSA modulator-control unit 46P connector
Appropriate electric parking brake actuator 4P connector

-3. Turn the vehicle to the ON mode.

-4. Clear the DTC with the HDS.

-5. Turn the vehicle to the OFF (LOCK) mode, then to the ON mode.

-6. Apply and release the parking brake several times.

-7. Check for DTCs with the HDS.

DTC Description	DTC	Freeze Frame
C1110-11 Left Rear Electric Parking Brake Actuator Circuit Short to Ground	B	B
C1111-11 Right Rear Electric Parking Brake Actuator Circuit Short to Ground	B	B

Is DTC C1110-11 or C1111-11 indicated?

YES

Check for loose terminals and poor connections in the VSA modulator-control unit 46P connector. Check for any authorized service information related to the DTCs or symptoms you are troubleshooting. If they are OK, **replace the VSA modulator-control unit** .

NO

Replace the appropriate electric parking brake actuator .

DTC C1110-13, C1111-13

DTC C1110-13 : Left Rear Electric Parking Brake Actuator Circuit Open **DTC C1111-13** : Right Rear Electric Parking Brake Actuator Circuit Open

NOTE: **Before you troubleshoot, review the general troubleshooting information** .

DTC Description	DTC	Freeze Frame
C1110-13 Left Rear Electric Parking Brake Actuator Circuit Open	B	B
C1111-13 Right Rear Electric Parking Brake Actuator Circuit Open	B	B

DTC (VSA)

1. Problem verification

-1. Turn the vehicle to the ON mode.

-2. Clear the DTC with the HDS.

-3. Turn the vehicle to the OFF (LOCK) mode, then to the ON mode.

-4. Apply and release the parking brake several times.

-5. Check for DTCs with the HDS.

DTC Description	DTC	Freeze Frame
C1110-13 Left Rear Electric Parking Brake Actuator Circuit Open	B	B
C1111-13 Right Rear Electric Parking Brake Actuator Circuit Open	B	B

Is DTC C1110-13 or C1111-13 indicated?

YES

The failure is duplicated. Go to step 2.

NO

Intermittent failure, the system is OK at this time. **Refer to intermittent failures troubleshooting** . If the freeze data/on-board snapshot of this DTC is recorded, try to reproduce the failure under the same conditions with the freeze data/on-board snapshot.

2. Open wire check (EPB L ACT+, EPB L ACT-, EPB R ACT+, EPB R ACT- lines)

-1. Turn the vehicle to the OFF (LOCK) mode.

-2. Disconnect the following connectors.

VSA modulator-control unit 46P connector
Appropriate electric parking brake actuator 4P connector

-3. Check for continuity between test points 1 and 2.

Test condition	Vehicle OFF (LOCK) mode
B	VSA modulator-control unit 46P connector: disconnected
B	Appropriate electric parking brake actuator 4P connector: disconnected

DTC	Test point 1	Test point 2
C1110-13	**VSA modulator-control unit 46P connector No. 8**	Left electric parking brake actuator 4P connector (female terminals) No. 1: ①
	VSA modulator-control unit 46P connector No. 7	Left electric parking brake actuator 4P connector (female terminals) No. 2: ①
C1111-13	**VSA modulator-control unit 46P connector No. 5**	Right electric parking brake actuator 4P connector (female terminals) No. 1: ①
	VSA modulator-control unit 46P connector No. 6	Right electric parking brake actuator 4P connector (female terminals) No. 2: ①

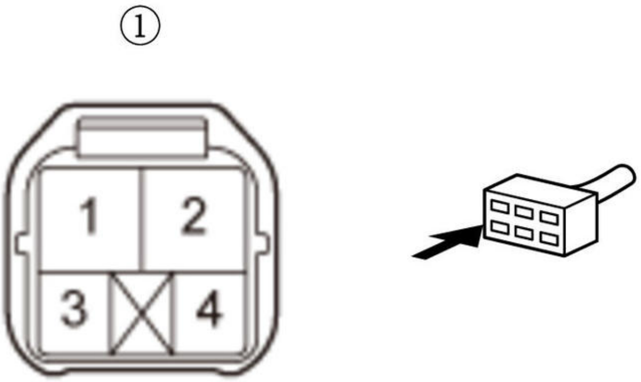

Is there continuity?

YES

Go to step 3.

NO

Repair an open in the wire between the VSA modulator-control unit and the appropriate electric parking brake actuator.

3. Electric parking brake actuator check

-1. **Substitute a known-good electric parking brake actuator** .

-2. Reconnect the following connectors.

VSA modulator-control unit 46P connector
Appropriate electric parking brake actuator 4P connector

-3. Turn the vehicle to the ON mode.

-4. Clear the DTC with the HDS.

-5. Turn the vehicle to the OFF (LOCK) mode, then to the ON mode.

-6. Apply and release the parking brake several times.

-7. Check for DTCs with the HDS.

DTC Description	DTC	Freeze Frame
C1110-13 Left Rear Electric Parking Brake Actuator Circuit Open	B	B
C1111-13 Right Rear Electric Parking Brake Actuator Circuit Open	B	B

Is DTC C1110-13 or C1111-13 indicated?

YES

Check for loose terminals and poor connections in the VSA modulator-control unit 46P connector. Check for any authorized service information related to the DTCs or symptoms you are troubleshooting. If they are OK, **replace the VSA modulator-control unit** .

NO

Replace the original electric parking brake actuator .

DTC C1110-79, C1111-79

DTC C1110-79 : Left Side Electric Parking Brake Doesn't Work Correctly **DTC C1111-79** : Right Side Electric Parking Brake Doesn't Work Correctly

NOTE: **Before you troubleshoot, review the general troubleshooting information** .

DTC Description	DTC	Freeze Frame
C1110-79 Left Side Electric Parking Brake Doesn't Work Correctly	B	B
C1111-79 Right Side Electric Parking Brake Doesn't Work Correctly	B	B

DTC (VSA)

1. Problem verification

   -1. Turn the vehicle to the ON mode.

   -2. Clear the DTC with the HDS.

   -3. Turn the vehicle to the OFF (LOCK) mode, then to the ON mode.

   -4. Apply and release the parking brake several times.

   -5. Wait 35 seconds or more.

   -6. Check for DTCs with the HDS.

DTC Description	DTC	Freeze Frame
C1110-79 Left Side Electric Parking Brake Doesn't Work Correctly	B	B

DTC Description	DTC	Freeze Frame
C1111-79 Right Side Electric Parking Brake Doesn't Work Correctly	B	B

   Is DTC C1110-79 or C1111-79 indicated?

   YES

   The failure is duplicated. Go to step 2.

   NO

   Intermittent failure, the system is OK at this time. **Refer to intermittent failures troubleshooting** . If the freeze data/on-board snapshot of this DTC is recorded, try to reproduce the failure under the same conditions with the freeze data/on-board snapshot.

2. Rear brake component parts check (brake caliper, brake pad, brake disc, and electric parking brake actuator)

   -1. Turn the vehicle to the OFF (LOCK) mode.

   -2. Check that the appropriate rear brake component parts are properly mounted.

   Is the rear brake component parts installation OK?

   YES

   Go to step 3.

   NO

   Reinstall the rear brake component parts, then recheck.

3. Electric parking brake actuator check

   -1. **Substitute a known-good electric parking brake actuator** .

   -2. Turn the vehicle to the ON mode.

   -3. Clear the DTC with the HDS.

-4. Turn the vehicle to the OFF (LOCK) mode, then to the ON mode.

-5. Apply and release the parking brake several times.

-6. Wait 35 seconds or more.

-7. Check for DTCs with the HDS.

DTC Description	DTC	Freeze Frame
C1110-79 Left Side Electric Parking Brake Doesn't Work Correctly	B	B
C1111-79 Right Side Electric Parking Brake Doesn't Work Correctly	B	B

Is DTC C1110-79 or C1111-79 indicated?

YES

Check for loose terminals and poor connections in the VSA modulator-control unit 46P connector. Check for any authorized service information related to the DTCs or symptoms you are troubleshooting. If they are OK, **replace the VSA modulator-control unit** .

NO

Replace the original electric parking brake actuator .

DTC C1110-94

DTC C1110-94 : Left Side Electric Parking Brake Actuator Unexpected Operation

NOTE: **Before you troubleshoot, review the general troubleshooting information** .

DTC Description	DTC	Freeze Frame
C1110-94 Left Side Electric Parking Brake Actuator Unexpected Operation	B	B

DTC (VSA)

1. Problem verification

-1. Turn the vehicle to the ON mode.

-2. Clear the DTC with the HDS.

-3. Turn the vehicle to the OFF (LOCK) mode, then to the ON mode.

-4. Apply and release the parking brake several times.

-5. Check for DTCs with the HDS.

DTC Description	DTC	Freeze Frame
C1110-94 Left Side Electric Parking Brake Actuator Unexpected Operation	B	B

Is DTC C1110-94 indicated?

YES

The failure is duplicated. Go to step 2.

NO

Intermittent failure, the system is OK at this time. Refer to intermittent failures troubleshooting . If the freeze data/on-board snapshot of this DTC is recorded, try to reproduce the failure under the same conditions with the freeze data/on-board snapshot.

2. Electric parking brake actuator check

-1. Turn the vehicle to the OFF (LOCK) mode.

-2. Substitute a known-good left electric parking brake actuator .

-3. Turn the vehicle to the ON mode.

-4. Clear the DTC with the HDS.

-5. Turn the vehicle to the OFF (LOCK) mode, then to the ON mode.

-6. Apply and release the parking brake several times.

-7. Check for DTCs with the HDS.

DTC Description	DTC	Freeze Frame
C1110-94 Left Side Electric Parking Brake Actuator Unexpected Operation	B	B

Is DTC C1110-94 indicated?

YES

Check for loose terminals and poor connections in the VSA modulator-control unit 46P connector. Check for any authorized service information related to the DTCs or symptoms you are troubleshooting. If they are OK, replace the VSA modulator-control unit .

NO

Replace the original left electric parking brake actuator .

DTC C1110-96, C1111-96

DTC C1110-96 : Left Side Electric Parking Brake Actuator Malfunction **DTC C1111-96** : Right Side Electric Parking Brake Actuator Malfunction

NOTE: Before you troubleshoot, review the general troubleshooting information .

DTC Description	DTC	Freeze Frame
C1110-96 Left Side Electric Parking Brake Actuator Malfunction	B	B
C1111-96 Right Side Electric Parking Brake Actuator Malfunction	B	B

DTC (VSA)

1. Problem verification

-1. Turn the vehicle to the ON mode.

-2. Clear the DTC with the HDS.

-3. Turn the vehicle to the OFF (LOCK) mode, then to the ON mode.

-4. Apply and release the parking brake several times.

-5. Check for DTCs with the HDS.

DTC Description	DTC	Freeze Frame
C1110-96 Left Side Electric Parking Brake Actuator Malfunction	B	B
C1111-96 Right Side Electric Parking Brake Actuator Malfunction	B	B

Is DTC C1110-96 or C1111-96 indicated?

YES

The failure is duplicated. Go to step 2.

NO

Intermittent failure, the system is OK at this time. **Refer to intermittent failures troubleshooting** . If the freeze data/on-board snapshot of this DTC is recorded, try to reproduce the failure under the same conditions with the freeze data/on-board snapshot.

2. Rear brake component parts installation check (brake caliper, brake pad, brake disc, and electric parking brake actuator)

   -1. Turn the vehicle to the OFF (LOCK) mode.

   -2. Check that the appropriate rear brake component parts are properly mounted.

   Is the rear brake component parts installation OK?

   YES

   Go to step 3.

   NO

   Reinstall the rear brake component parts, then recheck.

3. Electric parking brake actuator check

   -1. **Substitute a known-good electric parking brake actuator** .

   -2. Turn the vehicle to the ON mode.

   -3. Clear the DTC with the HDS.

   -4. Turn the vehicle to the OFF (LOCK) mode, then to the ON mode.

   -5. Apply and release the parking brake several times.

   -6. Check for DTCs with the HDS.

DTC Description	DTC	Freeze Frame
C1110-96 Left Side Electric Parking Brake Actuator Malfunction	B	B
C1111-96 Right Side Electric Parking Brake Actuator Malfunction	B	B

Is DTC C1110-96 or C1111-96 indicated?

YES

Check for loose terminals and poor connections in the VSA modulator-control unit 46P connector. Check for any authorized service information related to the DTCs or symptoms you are troubleshooting. If they are OK, **replace the VSA modulator-control unit** .

NO

Replace the appropriate electric parking brake actuator .

DTC C1111-94

DTC C1111-94 : Right Side Electric Parking Brake Actuator Unexpected Operation

NOTE: **Before you troubleshoot, review the general troubleshooting information** .

DTC Description	DTC	Freeze Frame
C1111-94 Right Side Electric Parking Brake Actuator Unexpected Operation	B	B

DTC (VSA)

1. Problem verification

   -1. Turn the vehicle to the ON mode.

   -2. Clear the DTC with the HDS.

   -3. Turn the vehicle to the OFF (LOCK) mode, then to the ON mode.

   -4. Apply and release the parking brake several times.

   -5. Check for DTCs with the HDS.

DTC Description	DTC	Freeze Frame
C1111-94 Right Side Electric Parking Brake Actuator Unexpected Operation	B	B

   Is DTC C1111-94 indicated?

   YES

   The failure is duplicated. Go to step 2.

   NO

   Intermittent failure, the system is OK at this time. **Refer to intermittent failures troubleshooting** . If the freeze data/on-board snapshot of this DTC is recorded, try to reproduce the failure under the same conditions with the freeze data/on-board snapshot.

2. Electric parking brake actuator check

   -1. Turn the vehicle to the OFF (LOCK) mode.

   -2. **Substitute a known-good right electric parking brake actuator** .

   -3. Turn the vehicle to the ON mode.

   -4. Clear the DTC with the HDS.

-5. Turn the vehicle to the OFF (LOCK) mode, then to the ON mode.

-6. Apply and release the parking brake several times.

-7. Check for DTCs with the HDS.

DTC Description	DTC	Freeze Frame
C1111-94 Right Side Electric Parking Brake Actuator Unexpected Operation	B	B

Is DTC C1111-94 indicated?

YES

Check for loose terminals and poor connections in the VSA modulator-control unit 46P connector. Check for any authorized service information related to the DTCs or symptoms you are troubleshooting. If they are OK, **replace the VSA modulator-control unit** .

NO

Replace the original right electric parking brake actuator .

DTC C1120-14

DTC C1120-14 : Electric Parking Brake Switch Circuit Malfunction

NOTE: **Before you troubleshoot, review the general troubleshooting information** .

DTC Description	DTC	Freeze Frame
C1120-14 Electric Parking Brake Switch Circuit Malfunction	B	B

DTC (VSA)

1. Problem verification

-1. Turn the vehicle to the ON mode.

-2. Clear the DTC with the HDS.

-3. Turn the vehicle to the OFF (LOCK) mode, then to the ON mode.

-4. Check for DTCs with the HDS.

DTC Description	DTC	Freeze Frame
C1120-14 Electric Parking Brake Switch Circuit Malfunction	B	B

Is DTC C1120-14 indicated?

YES

The failure is duplicated. Go to step 2.

NO

Intermittent failure, the system is OK at this time. **Refer to intermittent failures troubleshooting** . If the freeze data/on-board snapshot of this DTC is recorded, try to reproduce the failure under the same conditions with the freeze data/on-board snapshot.

2. Electric parking brake switch check

-1. Turn the vehicle to the OFF (LOCK) mode.

-2. **Check the electric parking brake switch** .

Is the electric parking brake switch OK?

YES

Go to step 3.

NO

Replace the electric parking brake/automatic brake hold switch .

3. Shorted wire check (SW lines)

-1. Disconnect the following connectors.

VSA modulator-control unit 46P connector
Electric parking brake/automatic brake hold switch 12P connector

-2. Check for continuity between the following test points and body ground individually.

Test condition	Vehicle OFF (LOCK) mode
B	VSA modulator-control unit 46P connector: disconnected
B	Electric parking brake/automatic brake hold switch 12P connector: disconnected

Connector	Test circuit	Test point 1	Test point 2
VSA modulator-control unit 46P connector	SW1	No. 9	Body ground
	SW3	No. 24	
	SW4	No. 10	
	SW6	No. 25	

Is there continuity?

YES

Repair a short to body ground in the wires between the VSA modulator-control unit and the electric parking brake/automatic brake hold switch.

NO

The SW wires are not shorted. Go to step 4.

4. Open wire check (SW lines)

-1. Check for continuity between test points 1 and 2.

Test condition	Vehicle OFF (LOCK) mode
B	VSA modulator-control unit 46P connector: disconnected
B	Electric parking brake/automatic brake hold switch 12P connector: disconnected
Test circuit 1	B
Test point 1	**VSA modulator-control unit 46P connector No. 9**
Test point 2	Electric parking brake/automatic brake hold switch 12P connector (female terminals) No. 4: ①

Test circuit 2	B
Test point 1	**VSA modulator-control unit 46P connector No. 24**
Test point 2	Electric parking brake/automatic brake hold switch 12P connector (female terminals) No. 1: ①

Test circuit 3	B
Test point 1	**VSA modulator-control unit 46P connector No. 10**
Test point 2	Electric parking brake/automatic brake hold switch 12P connector (female terminals) No. 2: ①

Test circuit 4	B
Test point 1	**VSA modulator-control unit 46P connector No. 25**
Test point 2	Electric parking brake/automatic brake hold switch 12P connector (female terminals) No. 3: ①

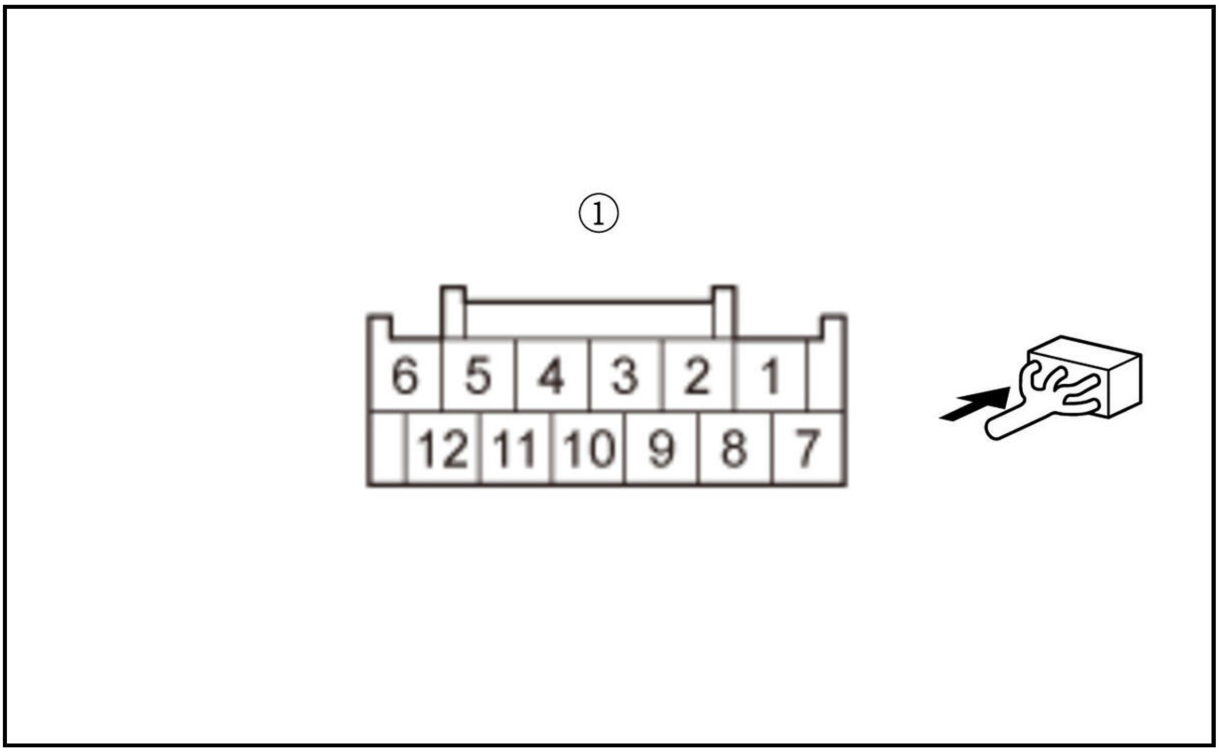

Is there continuity?

YES

The SW wires are OK. Check for loose terminals and poor connections in the VSA modulator-control unit 46P connector. Check for any authorized service information related to the DTCs or symptoms you are troubleshooting. If they are OK, **replace the VSA modulator-control unit** .

NO

Repair an open in the wires between the VSA modulator-control unit and the electric parking brake/automatic brake hold switch.

DTC C1120-96

DTC C1120-96 : Electric Parking Brake Switch Malfunction

NOTE:

- Before you troubleshoot, review the general troubleshooting information .
- This DTC is detected when operating the electric parking brake switch continuously for more than 20 seconds.
- Check that electric parking brake/automatic brake hold switch is free of dirt and other foreign particles.

DTC Description	DTC	Freeze Frame
C1120-96 Electric Parking Brake Switch Malfunction	B	B

DTC (VSA)

1. Problem verification

   -1. Turn the vehicle to the ON mode.

   -2. Clear the DTC with the HDS.

   -3. Turn the vehicle to the OFF (LOCK) mode, then to the ON mode.

   -4. Wait 5 minutes or more.

   -5. Check for DTCs with the HDS.

DTC Description	DTC	Freeze Frame
C1120-96 Electric Parking Brake Switch Malfunction	B	B

   Is DTC C1120-96 indicated?

   YES

   The failure is duplicated. Go to step 2.

   NO

   Intermittent failure, the system is OK at this time. Refer to intermittent failures troubleshooting . If the freeze data/on-board snapshot of this DTC is recorded, try to reproduce the failure under the same conditions with the freeze data/on-board snapshot.

2. Electric parking brake switch check

   -1. Turn the vehicle to the OFF (LOCK) mode.

   -2. Check the electric parking brake switch .

   Is the electric parking brake switch OK?

   YES

   Check for loose terminals and poor connections in the VSA modulator-control unit 46P connector. Check for any authorized service information related to the DTCs or symptoms you are troubleshooting. If they are OK, replace the VSA modulator-control unit .

   NO

   Replace the electric parking brake/automatic brake hold switch.

DTC C1270-11

DTC C1270-11 : Automatic Brake Hold Switch Signal Circuit Short

NOTE: **Before you troubleshoot, review the general troubleshooting information** .

DTC Description	DTC	Freeze Frame
C1270-11 Automatic Brake Hold Switch Signal Circuit Short	B	B

DTC (VSA)

1. Problem verification

   -1. Turn the vehicle to the ON mode.

   -2. Clear the DTC with the HDS.

   -3. Turn the vehicle to the OFF (LOCK) mode, then to the ON mode.

   -4. Check for DTCs with the HDS.

DTC Description	DTC	Freeze Frame
C1270-11 Automatic Brake Hold Switch Signal Circuit Short	B	B

   Is DTC C1270-11 indicated?

   YES

   The failure is duplicated. Go to step 2.

   NO

   Intermittent failure, the system is OK at this time. **Refer to intermittent failures troubleshooting** . If the freeze data/on-board snapshot of this DTC is recorded, try to reproduce the failure under the same conditions with the freeze data/on-board snapshot.

2. Automatic brake hold switch check

   -1. Turn the vehicle to the OFF (LOCK) mode.

   -2. **Check the automatic brake hold switch** .

   Is the automatic brake hold switch OK?

   YES

   Go to step 3.

   NO

   Replace the electric parking brake/automatic brake hold switch .

3. Shorted wire check (BRAKE HOLD line)

   -1. Disconnect the following connectors.

Electric parking brake/automatic brake hold switch 12P connector
Gauge control module connector A (32P)

   -2. Check for continuity between test points 1 and 2.

Test condition	Vehicle OFF (LOCK) mode
B	Electric parking brake/automatic brake hold switch 12P connector: disconnected
B	Gauge control module connector A (32P): disconnected
Test point 1	Electric parking brake/automatic brake hold switch 12P connector (female terminals) No. 7: ①
Test point 2	Body ground

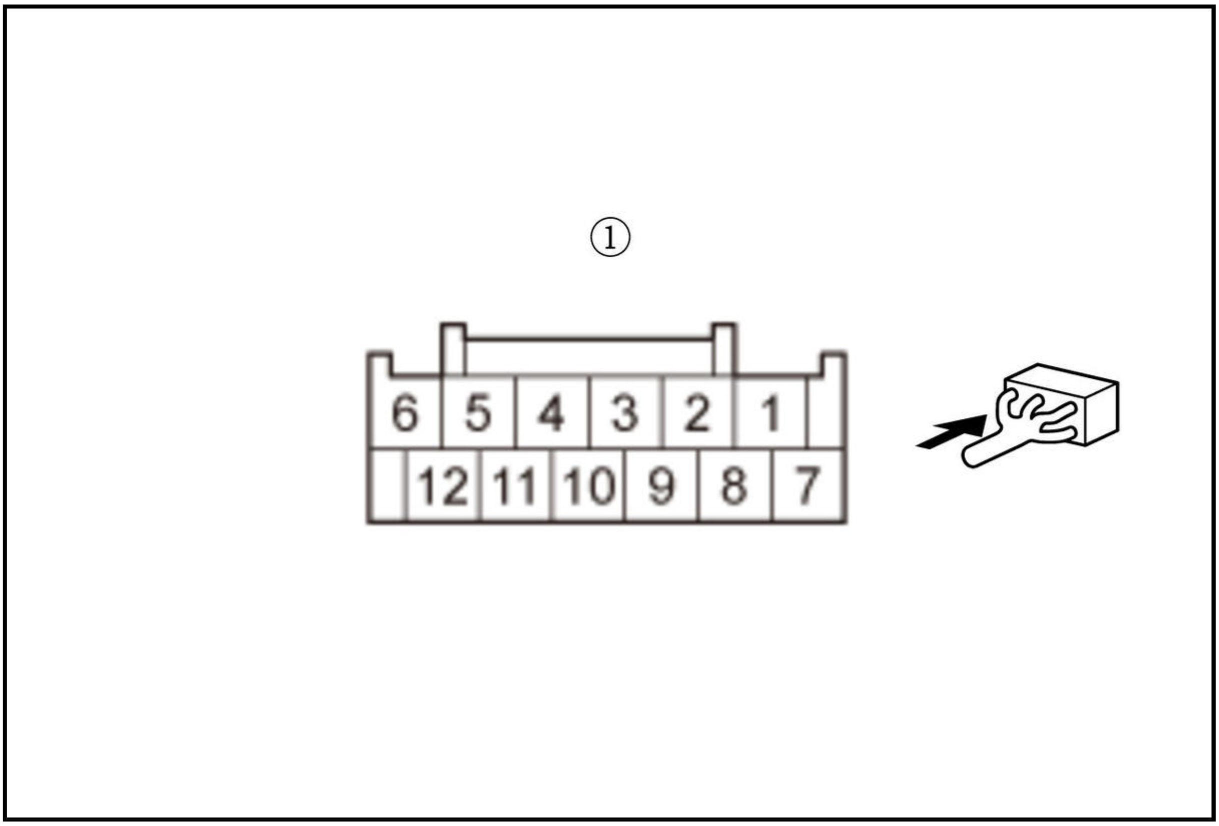

Is there continuity?

YES

Repair a short to body ground in the wire between the electric parking brake/automatic brake hold switch and the gauge control module.

NO

The BRAKE HOLD wire is OK. Check for any authorized service information related to the DTCs or symptoms you are troubleshooting or **substitute a known-good gauge control module** , then recheck. If the symptom/indication goes away with a known-good gauge control module, **replace the original gauge control module** .

DTC C1270-15

DTC C1270-15 : Automatic Brake Hold Switch Signal Circuit Open

NOTE: **Before you troubleshoot, review the general troubleshooting information** .

DTC Description	DTC	Freeze Frame
C1270-15 Automatic Brake Hold Switch Signal Circuit Open	B	B

DTC (VSA)

1. Problem verification

-1. Turn the vehicle to the ON mode.

-2. Clear the DTC with the HDS.

-3. Turn the vehicle to the OFF (LOCK) mode, then to the ON mode.

-4. Check for DTCs with the HDS.

DTC Description	DTC	Freeze Frame
C1270-15 Automatic Brake Hold Switch Signal Circuit Open	B	B

Is DTC C1270-15 indicated?

YES

The failure is duplicated. Go to step 2.

NO

Intermittent failure, the system is OK at this time. **Refer to intermittent failures troubleshooting** . If the freeze data/on-board snapshot of this DTC is recorded, try to reproduce the failure under the same conditions with the freeze data/on-board snapshot.

2. Automatic brake hold switch check

-1. Turn the vehicle to the OFF (LOCK) mode.

-2. **Check the automatic brake hold switch** .

Is the automatic brake hold switch OK?

YES

Go to step 3.

NO

Replace the electric parking brake/automatic brake hold switch .

3. Open wire check (BRAKE HOLD line) 1

-1. Disconnect the following connector.

Electric parking brake/automatic brake hold switch 12P connector

-2. Turn the vehicle to the ON mode.

-3. Measure the voltage between test points 1 and 2.

Test condition	Vehicle ON mode
B	Electric parking brake/automatic brake hold switch 12P connector: disconnected
Test point 1	Electric parking brake/automatic brake hold switch 12P connector (female terminals) No. 7: ①
Test point 2	Body ground

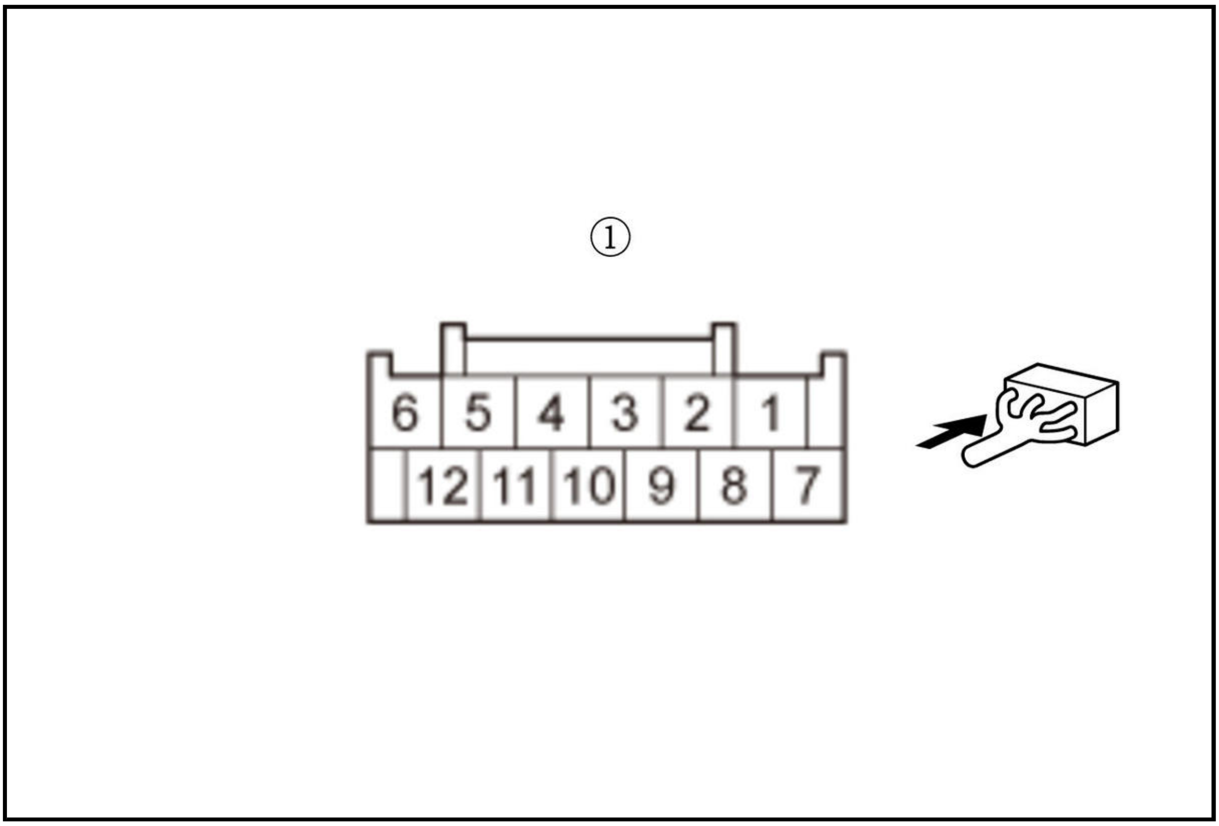

Is there about 5 V?

YES

The BRAKE HOLD wire is OK. Go to step 4.

NO

Go to step 5.

NO

Go to step 6.

4. Open wire check (GND line)

-1. Turn the vehicle to the OFF (LOCK) mode.

-2. Check for continuity between test points 1 and 2.

Test condition	Vehicle OFF (LOCK) mode
B	Electric parking brake/automatic brake hold switch 12P connector: disconnected
Test point 1	Electric parking brake/automatic brake hold switch 12P connector (female terminals) No. 8: ①
Test point 2	Body ground

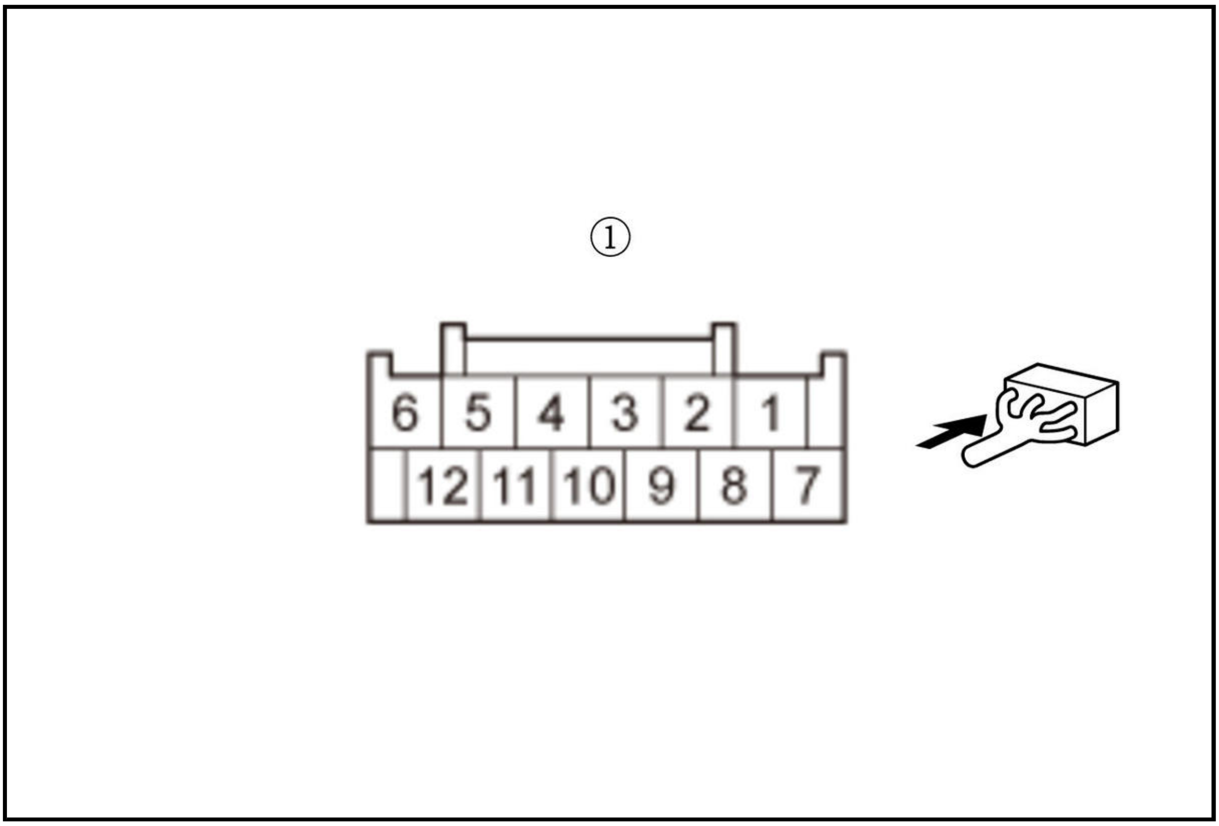

Is there continuity?

YES

The GND wire is OK. Check for any authorized service information related to the DTCs or symptoms you are troubleshooting or **substitute a known-good gauge control module** , then recheck. If the symptom/indication goes away with a known-good gauge control module, **replace the original gauge control module** .

NO

Repair an open in the wire between the electric parking brake/automatic brake hold switch and body ground (G402).

5. Shorted wire check (BRAKE HOLD line to power)

-1. Turn the vehicle to the OFF (LOCK) mode.

-2. Disconnect the following connector.

Gauge control module connector A (32P)

-3. Turn the vehicle to the ON mode.

-4. Measure the voltage between test points 1 and 2.

Test condition	Vehicle ON mode
B	Electric parking brake/automatic brake hold switch 12P connector: disconnected
B	Gauge control module connector A (32P): disconnected
Test point 1	Electric parking brake/automatic brake hold switch 12P connector (female terminals) No. 7: ①

Test point 2	Body ground

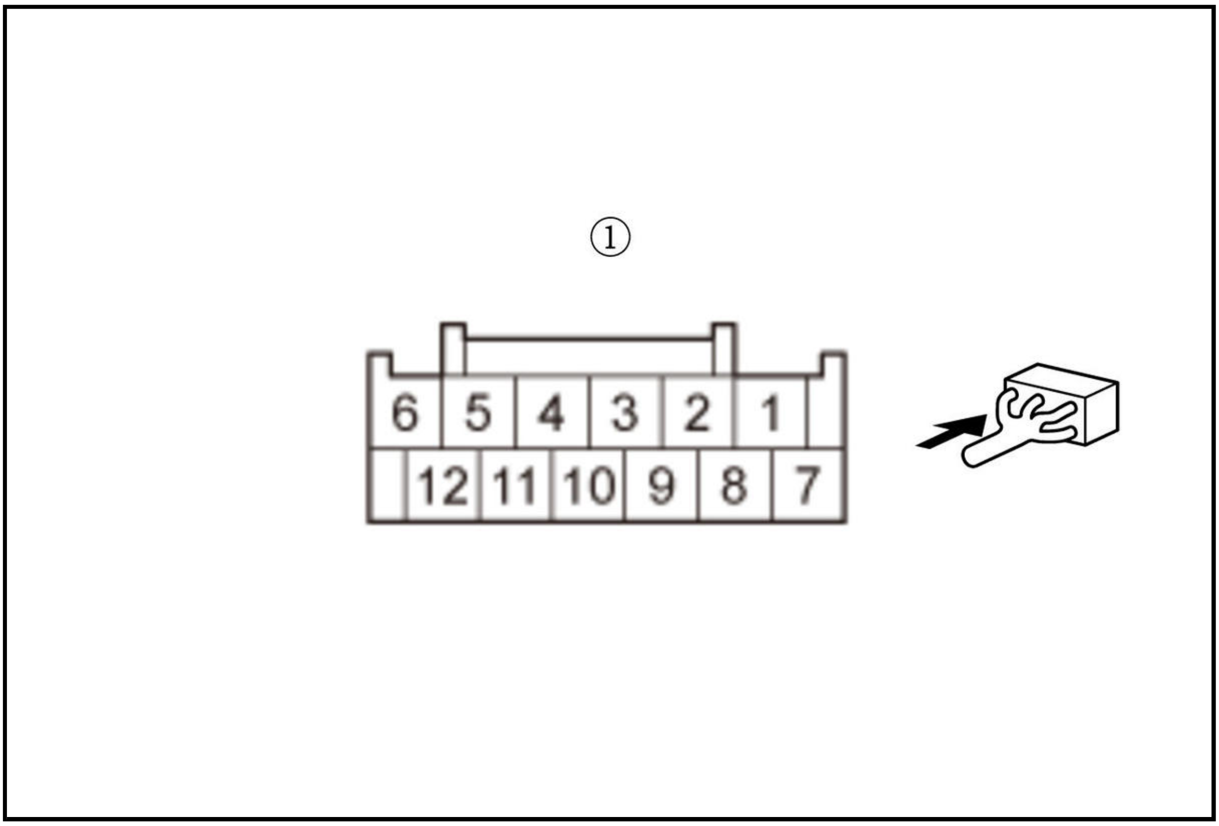

Is there 0.1 V or more?

YES

Repair a short to power in the wire between the electric parking brake/automatic brake hold switch and the gauge control module.

NO

The BRAKE HOLD wire is OK. Check for any authorized service information related to the DTCs or symptoms you are troubleshooting or **substitute a known-good gauge control module** , then recheck. If the symptom/indication goes away with a known-good gauge control module, **replace the original gauge control module** .

6. Open wire check (BRAKE HOLD line) 2

-1. Turn the vehicle to the OFF (LOCK) mode.

-2. Disconnect the following connector.

Gauge control module connector A (32P)

-3. Check for continuity between test points 1 and 2.

Test condition	Vehicle OFF (LOCK) mode
B	Electric parking brake/automatic brake hold switch 12P connector: disconnected
B	Gauge control module connector A (32P): disconnected
Test point 1	Electric parking brake/automatic brake hold switch 12P connector (female terminals) No. 7: ①
Test point 2	**Gauge control module connector A (32P) No. 12**

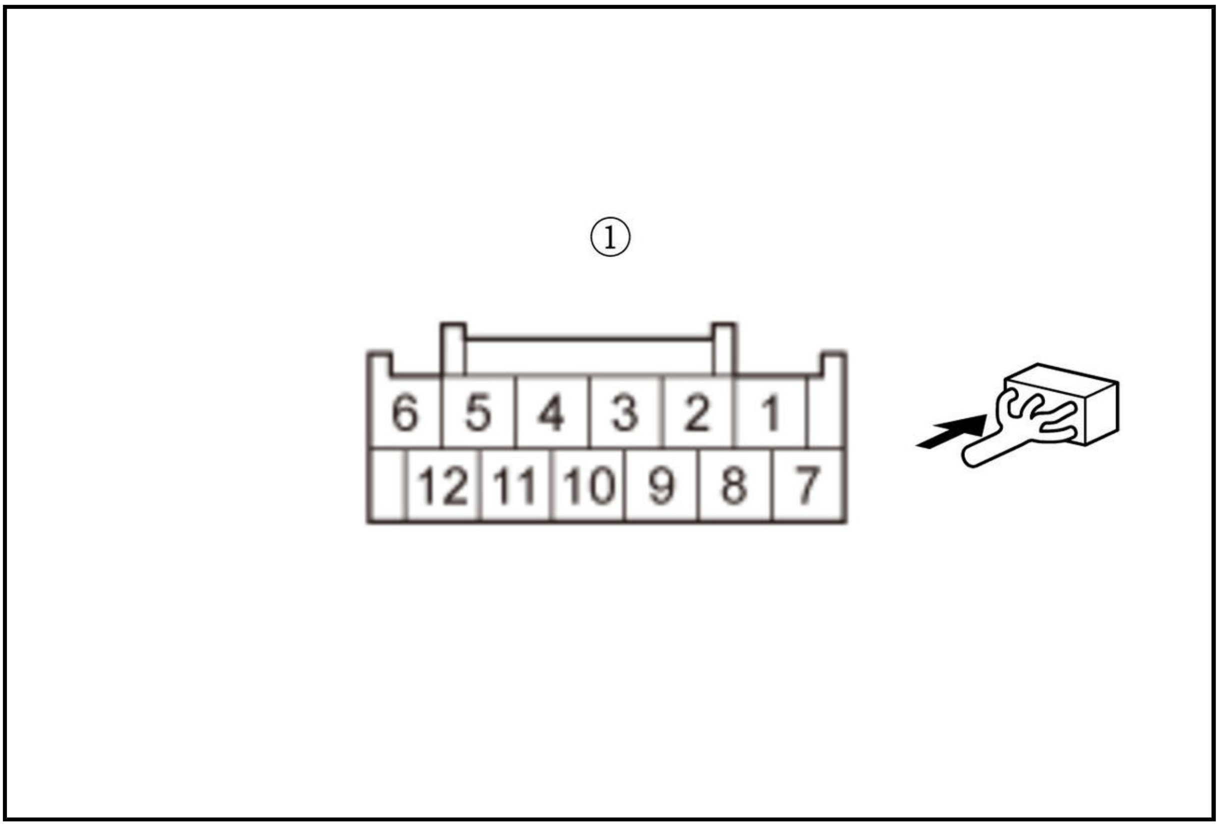

Is there continuity?

YES

The BRAKE HOLD wire is OK. Check for any authorized service information related to the DTCs or symptoms you are troubleshooting or **substitute a known-good gauge control module** , then recheck. If the symptom/indication goes away with a known-good gauge control module, **replace the original gauge control module** .

NO

Repair an open in the wire between the electric parking brake/automatic brake hold switch and the gauge control module.

DTC U0029-00 (VSA CONTROL UNIT (WITHOUT CAN GATEWAY)) (2017 2018 2019)

DTC U0029-00 : CAN Communication Failure (Bus OFF Ch 1)

NOTE:

- **Before you troubleshoot, review the general troubleshooting information** .
- This DTC is stored by communication failure between the F-CAN line and the VSA modulator-control unit. When DTC U0029-00 is indicated, the F-CAN line has already returned to normal. Check for loose terminals and poor connections in the connectors. If the connectors are OK, clear the DTC and following this troubleshooting.

DTC Description	DTC	Freeze Frame
U0029-00 CAN Communication Failure (Bus OFF Ch 1)	B	B

DTC (VSA)

1. VSA modulator-control unit communication check

   -1. Start the engine.

-2. Check for communication between the VSA modulator-control unit and the HDS.

Is there communication between the VSA modulator-control unit and the HDS?

YES

Intermittent failure, the system is OK at this time. **Refer to intermittent failures troubleshooting** . If the freeze data/on-board snapshot of this DTC is recorded, try to reproduce the failure under the same conditions with the freeze data/on-board snapshot.

NO

Go to step 2.

2. Open wire check (F-CAN H, F-CAN L lines)

-1. Turn the vehicle to the OFF (LOCK) mode.

-2. Jump the SCS line with the HDS, and wait more than 1 minute.

-3. Disconnect the following connectors.

VSA modulator-control unit 46P connector
PCM connector A (51P)

-4. Check for continuity between test points 1 and 2.

Test condition	Vehicle OFF (LOCK) mode
B	VSA modulator-control unit 46P connector: disconnected
B	PCM connector A (51P): disconnected
Test circuit 1	B
Test point 1	**VSA modulator-control unit 46P connector No. 40**
Test point 2	**PCM connector A (51P) No. 2**

Test circuit 2	B
Test point 1	**VSA modulator-control unit 46P connector No. 28**
Test point 2	**PCM connector A (51P) No. 1**

Is there continuity?

YES

The F-CAN H and F-CAN L wires are OK. Check for loose terminals and poor connections in the VSA modulator-control unit 46P connector. Check for any authorized service information related to the DTCs or symptoms you are troubleshooting. If they are OK, **replace the VSA modulator-control unit** .

NO

Repair an open in the wire between the VSA modulator-control unit and the PCM.

DTC U0029-00, U0047-00 (VSA CONTROL UNIT (WITH CAN GATEWAY))

DTC U0029-00 : CAN Communication Failure (Bus OFF Ch 1)**DTC U0047-00** : CAN Communication Failure (Bus OFF Ch 2)

NOTE: **Before you troubleshoot, review the general troubleshooting information** .

*1: CAN gateway 12P connector type

*2: CAN gateway 16P connector type

DTC Description	DTC
U0029-00 CAN Communication Failure (Bus OFF Ch 1)	B
U0047-00 CAN Communication Failure (Bus OFF Ch 2)	B

DTC (VSA)

1. Problem verification

   -1. Turn the vehicle to the ON mode.

   -2. Clear the DTC with the HDS.

   -3. Turn the vehicle to the OFF (LOCK) mode, then start the engine.

   -4. Check for DTCs with the HDS.

DTC Description	DTC
U0029-00 CAN Communication Failure (Bus OFF Ch 1)	B
U0047-00 CAN Communication Failure (Bus OFF Ch 2)	B

   Is DTC U0029-00 or U0047-00 indicated?

   YES

   The failure is duplicated. Go to step 2.

   NO

   Intermittent failure, the system is OK at this time. **Refer to intermittent failures troubleshooting** .

2. DTC check (CAN gateway system)

   -1. Check for CAN gateway system DTCs with the HDS.

DTC Description	DTC
B	B

   Are DTC (s) indicated?

   YES

   Go to indicated DTC's troubleshooting.

   NO

   Go to step 3.

3. F-CAN circuit communication check

   -1. Select the FUNCTION TEST in the CAN gateway with the HDS, then select the F-CAN Bus Connected Unit Check.

   F-CAN Bus Connected Unit Check

   Which result is indicated?

   VSA modulator-control unit (Bus A) is Not Available

Go to step 4.

VSA modulator-control unit (Bus B) is Not Available

Go to step 5.

VSA modulator-control unit (Bus A and B) is Available

Check for loose terminals and poor connections in the VSA modulator-control unit 46P connector. Check for any authorized service information related to the DTCs or symptoms you are troubleshooting. If they are OK, **replace the VSA modulator-control unit** .

4. Open wire check (F-CAN A H, F-CAN A L lines)

-1. Turn the vehicle to the OFF (LOCK) mode.

-2. Disconnect the following connectors.

VSA modulator-control unit 46P connector
CAN gateway 12P connector *1
CAN gateway 16P connector *2

-3. Measure the resistance between test points 1 and 2.

Test condition	Vehicle OFF (LOCK) mode
B	VSA modulator-control unit 46P connector: disconnected
B	CAN gateway 12P connector *1: disconnected
B	CAN gateway 16P connector *2: disconnected
Test circuit 1	B
Test point 1	**VSA modulator-control unit 46P connector No. 40**
Test point 2	CAN gateway 12P connector *1 (female terminals) No. 3: ①
B	CAN gateway 16P connector *2 (female terminals) No. 3: ②

Test circuit 2	B
Test point 1	**VSA modulator-control unit 46P connector No. 28**
Test point 2	CAN gateway 12P connector *1 (female terminals) No. 9: ①
B	CAN gateway 16P connector *2 (female terminals) No. 11: ②

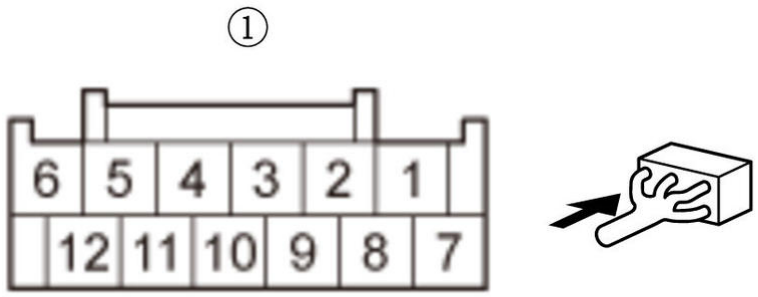

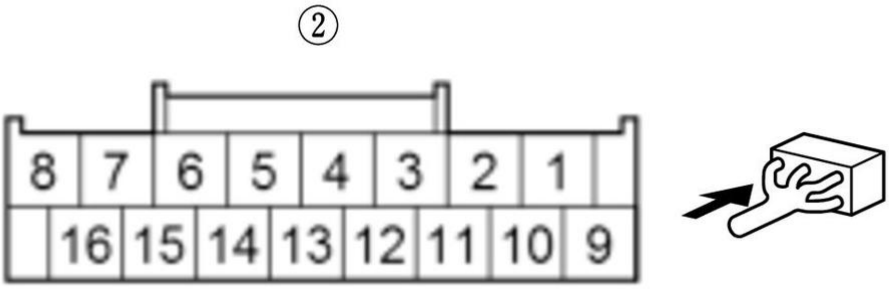

Is there 1.0 Ω or less?

YES

The F-CAN A H and F-CAN A L wires are OK. Check for loose terminals and poor connections in the VSA modulator-control unit 46P connector. Check for any authorized service information related to the DTCs or symptoms you are troubleshooting. If they are OK, **replace the VSA modulator-control unit** .

NO

Repair an open in the wire between the VSA modulator-control unit and the CAN gateway.

5. Open wire check (F-CAN B H, F-CAN B L lines)

-1. Turn the vehicle to the OFF (LOCK) mode.

-2. Disconnect the following connectors.

VSA modulator-control unit 46P connector
CAN gateway 12P connector *1
CAN gateway 16P connector *2

-3. Measure the resistance between test points 1 and 2.

Test condition	Vehicle OFF (LOCK) mode
B	VSA modulator-control unit 46P connector: disconnected
B	CAN gateway 12P connector *1: disconnected
B	CAN gateway 16P connector *2: disconnected
Test circuit 1	B
Test point 1	**VSA modulator-control unit 46P connector No. 46**
Test point 2	CAN gateway 12P connector *1 (female terminals) No. 12: ①
B	CAN gateway 16P connector *2 (female terminals) No. 6: ②

Test circuit 2	B
Test point 1	**VSA modulator-control unit 46P connector No. 34**
Test point 2	CAN gateway 12P connector *1 (female terminals) No. 5: ①
B	CAN gateway 16P connector *2 (female terminals) No. 14: ②

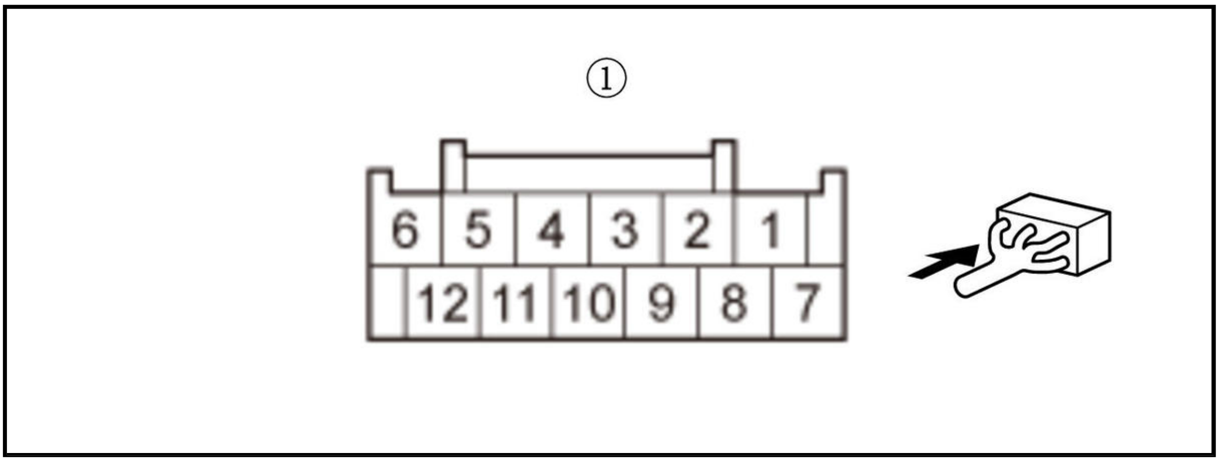

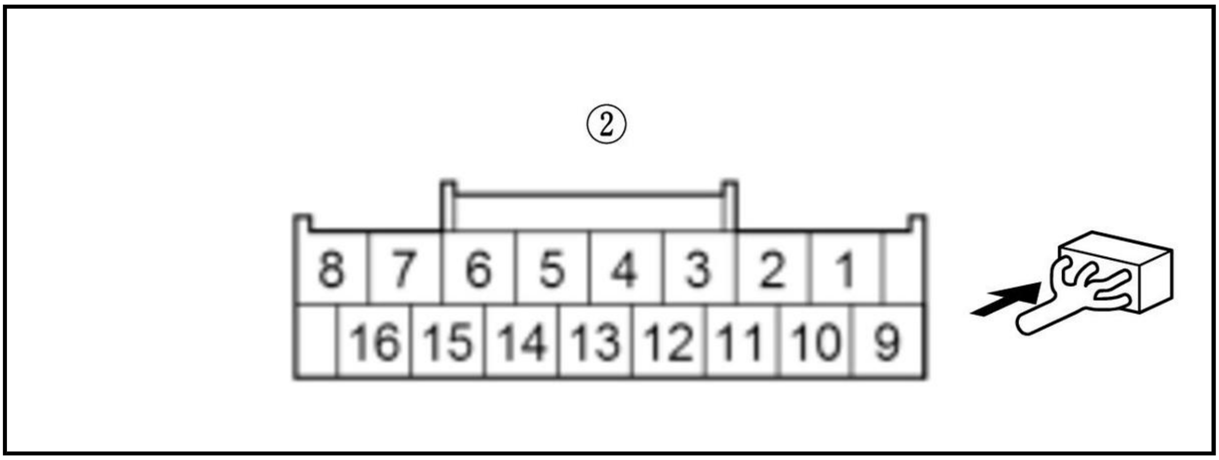

Is there 1.0 Ω or less?

YES

The F-CAN B H and F-CAN B L wires are OK. Check for loose terminals and poor connections in the VSA modulator-control unit 46P connector. Check for any authorized service information related to the DTCs or symptoms you are troubleshooting. If they are OK, replace the VSA modulator-control unit .

NO

Repair an open in the wire between the VSA modulator-control unit and the CAN gateway.

DTC U0047-00 (VSA CONTROL UNIT (WITHOUT CAN GATEWAY)) (2017 2018 2019)

DTC U0047-00 : CAN Communication Failure (Bus OFF Ch 2)

NOTE: Before you troubleshoot, review the general troubleshooting information .

DTC Description	DTC	Freeze Frame
U0047-00 CAN Communication Failure (Bus OFF Ch 2)	B	B

DTC (VSA)

1. Problem verification

-1. Turn the vehicle to the ON mode.

-2. Clear the DTC with the HDS.

-3. Turn the vehicle to the OFF (LOCK) mode, then start the engine.

-4. Check for DTCs with the HDS.

DTC Description	DTC	Freeze Frame
U0047-00 CAN Communication Failure (Bus OFF Ch 2)	B	B

Is DTC U0047-00 indicated?

YES

The failure is duplicated. Go to step 2.

NO

Intermittent failure, the system is OK at this time. **Refer to intermittent failures troubleshooting** . If the freeze data/on-board snapshot of this DTC is recorded, try to reproduce the failure under the same conditions with the freeze data/on-board snapshot.

2. EBB CAN circuit resistance check

-1. Turn the vehicle to the OFF (LOCK) mode with driver's door open.

-2. Wait for 3 minutes.

NOTE: Do not close the driver's door.

-3. Disconnect the following connector.

VSA modulator-control unit 46P connector

-4. Measure the resistance between test points 1 and 2.

Test condition	Vehicle OFF (LOCK) mode
B	VSA modulator-control unit 46P connector: disconnected
Test point 1	**VSA modulator-control unit 46P connector No. 46**
Test point 2	**VSA modulator-control unit 46P connector No. 34**

Is there about 108-132 Ω ?

YES

Go to step 5.

NO

Go to step 3.

3. Shorted wire check (EBB CAN H line to EBB CAN L line)

-1. Disconnect the following connector.

Electric brake booster 26P connector

-2. Check for continuity between test points 1 and 2.

Test condition	Vehicle OFF (LOCK) mode
	VSA modulator-control unit 46P connector: disconnected
	Electric brake booster 26P connector: disconnected
Test point 1	**VSA modulator-control unit 46P connector No. 46**
Test point 2	**VSA modulator-control unit 46P connector No. 34**

Is there continuity?

YES

Repair a short in the wires between the VSA modulator-control unit terminals 46 and 34.

NO

Go to step 4.

4. Open wire check (EBB CAN H, EBB CAN L lines)

-1. Check for continuity between test points 1 and 2.

Test condition	Vehicle OFF (LOCK) mode

B	VSA modulator-control unit 46P connector: disconnected
B	Electric brake booster 26P connector: disconnected
Test circuit 1	B
Test point 1	**VSA modulator-control unit 46P connector No. 46**
Test point 2	**Electric brake booster 26P connector No. 19**

Test circuit 2	B
Test point 1	**VSA modulator-control unit 46P connector No. 34**
Test point 2	**Electric brake booster 26P connector No. 12**

Is there continuity?

YES

The EBB CAN H, EBB CAN L wires are OK. Check for loose terminals and poor connections in the electric brake booster 26P connector. If they are OK, **replace the electric brake booster** .

NO

Repair an open in the wire between the VSA modulator-control unit and the electric brake booster.

5. Shorted wire check (EBB CAN H, EBB CAN L lines)

-1. Disconnect the following connector.

Electric brake booster 26P connector

-2. Check for continuity between test points 1 and 2.

Test condition	Vehicle OFF (LOCK) mode
B	VSA modulator-control unit 46P connector: disconnected
B	Electric brake booster 26P connector: disconnected
Test circuit 1	B
Test point 1	**VSA modulator-control unit 46P connector No. 46**
Test point 2	Body ground

Test circuit 2	B
Test point 1	**VSA modulator-control unit 46P connector No. 34**
Test point 2	Body ground

Is there continuity?

YES

Repair a short to ground in the wire between the VSA modulator-control unit and the electric brake booster.

NO

The EBB CAN H, EBB CAN L wires are OK. Check for loose terminals and poor connections in the VSA modulator-control unit 46P connector. Check for any authorized service information related to the DTCs or symptoms you are troubleshooting. If they are OK, **replace the VSA modulator-control unit** .

DTC U0100-00, U0101-00, U0104-00, U0126-00, U0129-00, U0151-00, U0155-00 (VSA CONTROL UNIT (WITH CAN GATEWAY))

DTC U0100-00 : CAN Communication Failure with ECM/ISU **DTC U0101-00** : CAN Communication Failure with PCM/TCM **DTC U0104-00** : CAN Communication Failure with Driving Support System Control Unit **DTC U0126-00** : CAN Communication Failure with Absolute Steering Wheel Angle Sensor **DTC U0129-00** : CAN Communication Failure with AHB/ESB/EBB **DTC U0151-00** : CAN Communication Failure with SRS **DTC U0155-00** : CAN Communication Failure with Meter

NOTE:

- **Before you troubleshoot, review the general troubleshooting information** .
- According to the detected DTC (s), check for the power circuit and the ground circuit of the control unit which cannot communicate with the VSA modulator-control unit.

*1: CAN gateway 12P connector type

*2: CAN gateway 16P connector type

DTC Description	DTC
U0100-00 CAN Communication Failure with ECM/ISU	B
U0101-00 CAN Communication Failure with PCM/TCM	B
U0104-00 CAN Communication Failure with Driving Support System Control Unit	B
U0126-00 CAN Communication Failure with Absolute Steering Wheel Angle Sensor	B
U0129-00 CAN Communication Failure with AHB/ESB/EBB	B
U0151-00 CAN Communication Failure with SRS	B
U0155-00 CAN Communication Failure with Meter	B

DTC (VSA)

1. DTC check (VSA modulator-control unit)

   -1. Turn the vehicle to the ON mode.

   -2. Clear the DTC with the HDS.

   -3. Turn the vehicle to the OFF (LOCK) mode, then start the engine.

   -4. Test-drive the vehicle at 6 mph (10 km/h) or more.

   NOTE: Drive the vehicle on the road, not on a lift.

   -5. Check for DTCs with the HDS.

DTC Description	DTC
U0100-00 CAN Communication Failure with ECM/ISU	B
U0101-00 CAN Communication Failure with PCM/TCM	B
U0104-00 CAN Communication Failure with Driving Support System Control Unit	B

DTC Description	DTC
U0126-00 CAN Communication Failure with Absolute Steering Wheel Angle Sensor	B
U0129-00 CAN Communication Failure with AHB/ESB/EBB	B
U0151-00 CAN Communication Failure with SRS	B
U0155-00 CAN Communication Failure with Meter	B

Is DTC indicated?

YES

Go to step 2.

NO

Intermittent failure, the system is OK at this time. **Refer to intermittent failures troubleshooting** .

2. DTC check (CAN gateway system)

-1. Check for CAN gateway system DTCs with the HDS.

DTC Description	DTC
B	B

Are DTC (s) indicated?

YES

Go to indicated DTC's troubleshooting.

NO

Go to step 3.

3. F-CAN circuit communication check (Receiving control unit)

-1. Select the FUNCTION TEST in the CAN gateway with the HDS, then select the F-CAN Bus Connected Unit Check.

F-CAN Bus Connected Unit Check

Which result is indicated?

VSA modulator-control unit (Bus A) is Not Available

Go to step 4.

VSA modulator-control unit (Bus B) is Not Available

Go to step 5.

VSA modulator-control unit (Bus A and B) is Available

Go to step 6.

4. Open wire check (F-CAN A H, F-CAN A L lines)

-1. Turn the vehicle to the OFF (LOCK) mode.

-2. Disconnect the following connectors.

VSA modulator-control unit 46P connector
CAN gateway 12P connector *1
CAN gateway 16P connector *2

-3. Measure the resistance between test points 1 and 2.

Test condition	Vehicle OFF (LOCK) mode
B	VSA modulator-control unit 46P connector: disconnected
B	CAN gateway 12P connector *1: disconnected
B	CAN gateway 16P connector *2: disconnected

Test circuit 1	B
Test point 1	**VSA modulator-control unit 46P connector No. 40**
Test point 2	CAN gateway 12P connector *1 (female terminals) No. 3: ①
B	CAN gateway 16P connector *2 (female terminals) No. 3: ②

Test circuit 2	B
Test point 1	**VSA modulator-control unit 46P connector No. 28**
Test point 2	CAN gateway 12P connector *1 (female terminals) No. 9: ①
B	CAN gateway 16P connector *2 (female terminals) No. 11: ②

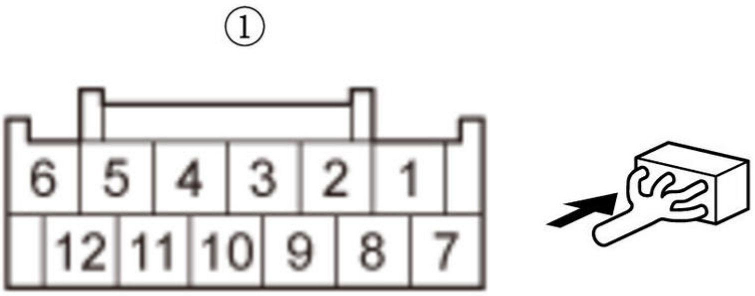

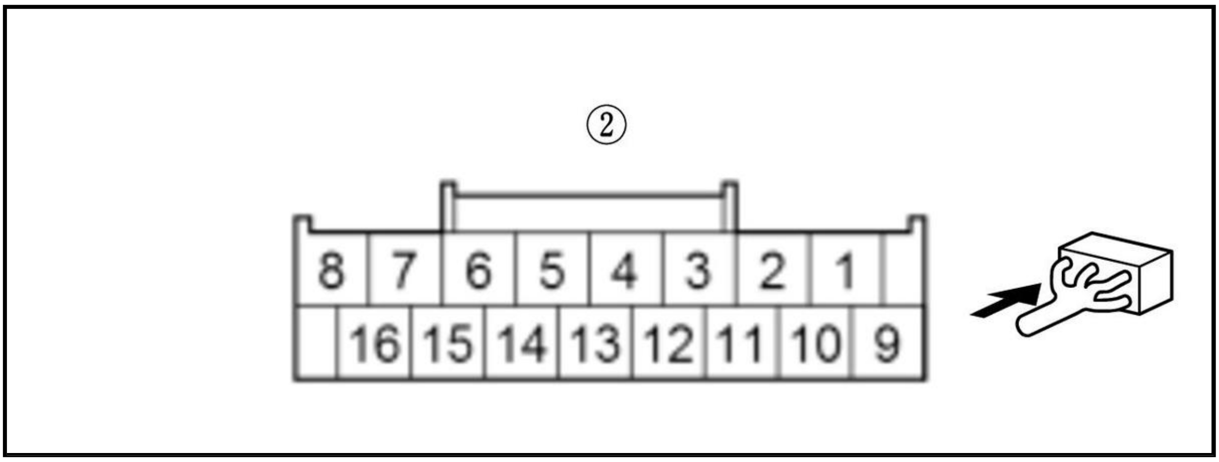

Is there 1.0 Ω or less?

YES

The F-CAN A H and F-CAN A L wires are OK. Check for loose terminals and poor connections in the VSA modulator-control unit 46P connector. Check for any authorized service information related to the DTCs or symptoms you are troubleshooting. If they are OK, **replace the VSA modulator-control unit** .

NO

Repair an open in the wire between the VSA modulator-control unit and the CAN gateway.

5. Open wire check (F-CAN B H, F-CAN B L lines)

-1. Turn the vehicle to the OFF (LOCK) mode.

-2. Disconnect the following connectors.

VSA modulator-control unit 46P connector
CAN gateway 12P connector *1
CAN gateway 16P connector *2

-3. Measure the resistance between test points 1 and 2.

Test condition	Vehicle OFF (LOCK) mode
B	VSA modulator-control unit 46P connector: disconnected
B	CAN gateway 12P connector *1: disconnected
B	CAN gateway 16P connector *2: disconnected
Test circuit 1	B
Test point 1	**VSA modulator-control unit 46P connector No. 46**
Test point 2	CAN gateway 12P connector *1 (female terminals) No. 12: ①
B	CAN gateway 16P connector *2 (female terminals) No. 6: ②

Test circuit 2	B

Test point 1	**VSA modulator-control unit 46P connector No. 34**
Test point 2	CAN gateway 12P connector *1 (female terminals) No. 5: ①
B	CAN gateway 16P connector *2 (female terminals) No. 14: ②

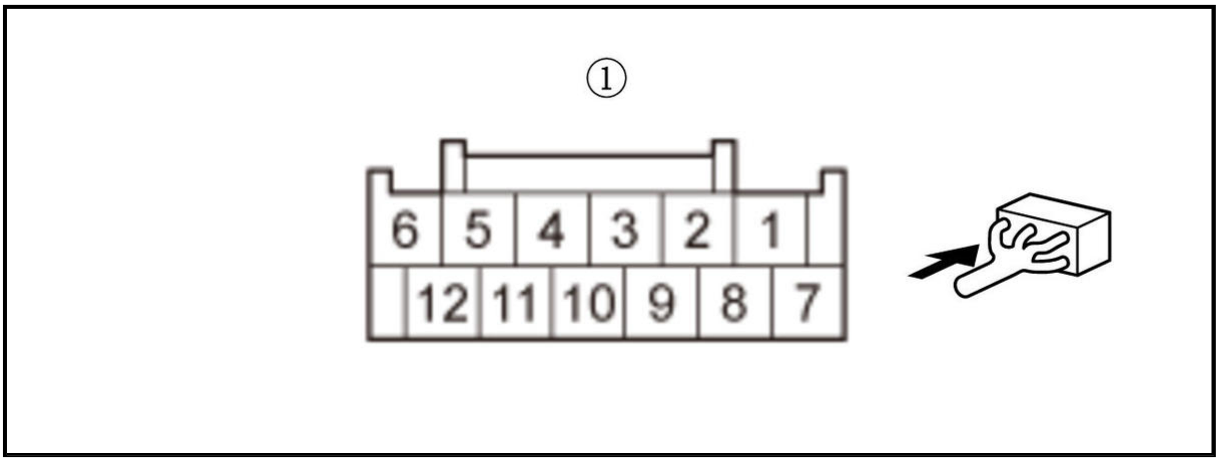

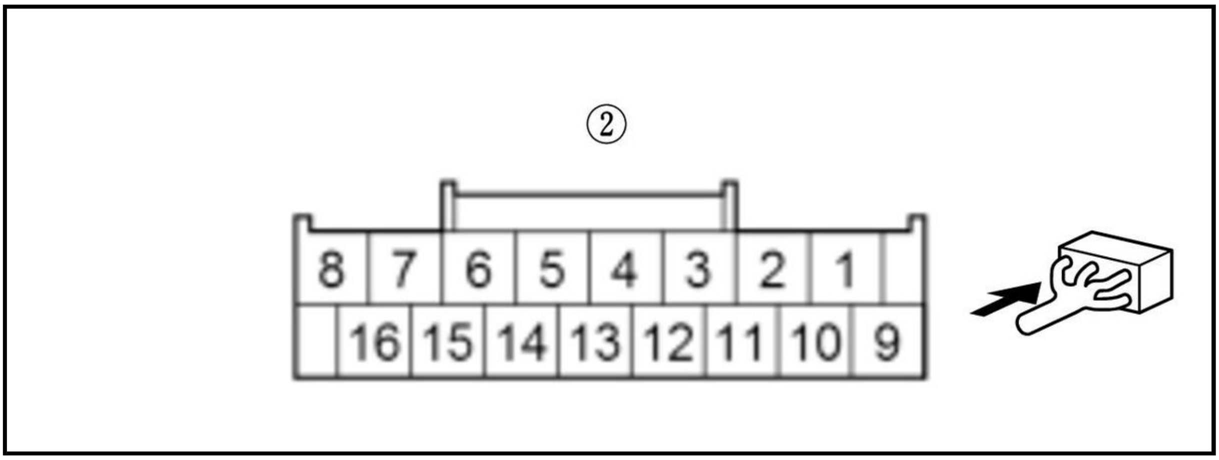

Is there 1.0 Ω or less?

YES

The F-CAN B H and F-CAN B L wires are OK. Check for loose terminals and poor connections in the VSA modulator-control unit 46P connector. Check for any authorized service information related to the DTCs or symptoms you are troubleshooting. If they are OK, **replace the VSA modulator-control unit** .

NO

Repair an open in the wire between the VSA modulator-control unit and the CAN gateway.

6. F-CAN circuit communication check (Transmitting control unit)

-1. Select the FUNCTION TEST in the CAN gateway with the HDS, then select the F-CAN Bus Connected Unit Check.

F-CAN Bus Connected Unit Check

According to the detected DTC on the following table, make sure that the transmitting control unit detects the CAN gateway Bus channel (s) normally.

DTC	Transmitting control unit	Detected CAN gateway Bus channel (s) at normal
U0100-00	PCM	A, B
U0101-00	TCM	A
U0104-00	Millimeter wave radar	B
U0126-00	EPS control unit	B
U0129-00	Electric brake booster	A, B
U0151-00	SRS unit	B
U0155-00	Gauge control module	A

Is it detected normally?

Detected normal

Intermittent failure, the system is OK at this time. **Refer to intermittent failures troubleshooting** .

U0100-00: PCM (Bus A) is Not Available

Go to step 7.

U0100-00: PCM (Bus B) is Not Available

Go to step 8.

U0101-00: TCM (Bus A) is Not Available

Go to step 7.

U0104-00: Millimeter wave radar (Bus B) is Not Available

Go to step 8.

U0126-00: EPS control unit (Bus B) is Not Available

Go to step 8.

U0129-00: Electric brake booster (Bus A) is Not Available

Go to step 7.

U0129-00: Electric brake booster (Bus B) is Not Available

Go to step 8.

U0151-00: SRS unit (Bus B) is Not Available

Go to step 8.

U0155-00: Gauge control module (Bus A) is Not Available

Go to step 7.

7. Open wire check (F-CAN A H, F-CAN A L lines)

-1. Turn the vehicle to the OFF (LOCK) mode.

-2. Disconnect the following connectors according to the detected DTC.

DTC	Connector
B	CAN gateway 12P connector *1 CAN gateway 16P connector *2
U0100-00	PCM connector A (50P)
U0101-00	TCM 50P connector
U0129-00	Electric brake booster 26P connector
U0155-00	Gauge control module connector A (32P)

NOTE: Jump the SCS line with the HDS, and wait more than 1 minute when disconnecting the PCM connector.

-3. Measure the resistance between test points 1 and 2.

Test condition	Vehicle OFF (LOCK) mode
B	Transmitting control unit connector (s) for indicated DTCs: disconnected
B	CAN gateway 12P connector *1: disconnected
B	CAN gateway 16P connector *2: disconnected

DTC	Circuit name	Test point 1 (Receiving control unit)		Test point 2 (Transmitting control unit)	
		Connector	Terminal	Connector	Terminal
U0100-00	F-CAN A H	CAN gateway 12P connector *1 (female terminals): ①	No. 3	PCM connector A (50P)	No. 37
	F-CAN A L		No. 9		No. 36
	F-CAN A H	CAN gateway 16P connector *2 (female terminals): ②	No. 3		No. 37
	F-CAN A L		No. 11		No. 36

DTC	Circuit name	Test point 1 (Receiving control unit)		Test point 2 (Transmitting control unit)	
		Connector	Terminal	Connector	Terminal
U0101-00	F-CAN A H	CAN gateway 12P connector *1 (female terminals): ①	No. 3	TCM 50P connector	No. 3
	F-CAN A L		No. 9		No. 11
	F-CAN A H	CAN gateway 16P connector *2 (female terminals): ②	No. 3		No. 3
	F-CAN A L		No. 11		No. 11
U0129-00	F-CAN A H	CAN gateway 12P connector *1 (female terminals): ①	No. 3	Electric brake booster 26P connector	No. 26
	F-CAN A L		No. 9		No. 18
	F-CAN A H	CAN gateway 16P connector *2 (female terminals): ②	No. 3		No. 26
	F-CAN A L		No. 11		No. 18
U0155-00	F-CAN A H	CAN gateway 12P connector *1 (female terminals): ①	No. 3	Gauge control module connector A (32P)	No. 19
	F-CAN A L		No. 9		No. 20
	F-CAN A H	CAN gateway 16P connector *2 (female terminals): ②	No. 3		No. 19
	F-CAN A L		No. 11		No. 20

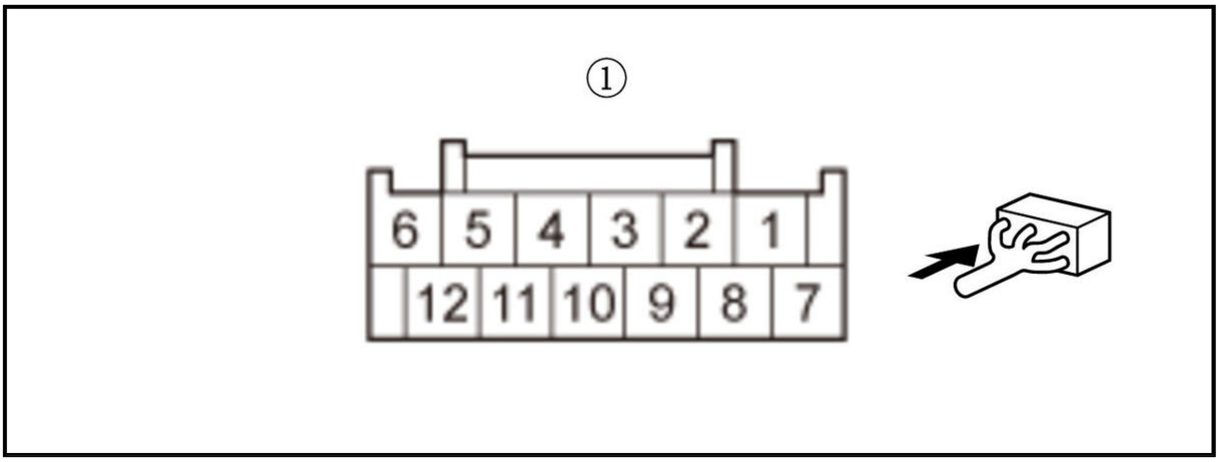

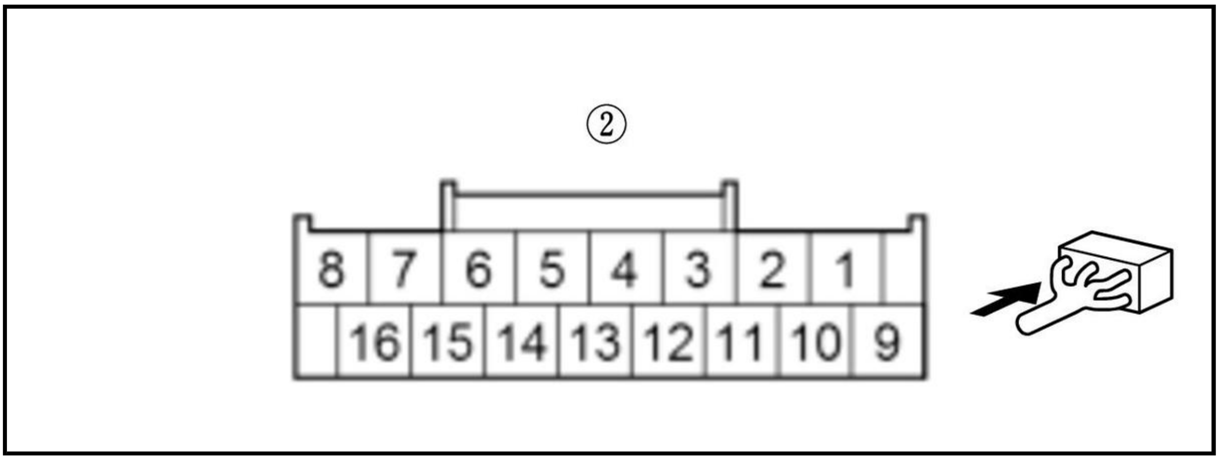

Is there 1.0 Ω or less?

YES

The F-CAN A H and F-CAN A L wires are OK. Check for any authorized service information related to the DTCs or symptoms you are troubleshooting. According to the detected DTC on the following table, replace the correspond control unit.

DTC	Transmitting Control Unit
U0100-00	PCM
U0101-00	TCM
U0129-00	Electric brake booster
U0155-00	Gauge control module

NO

Repair an open in the wire between the receiving control unit and the transmitting control unit.

8. Open wire check (F-CAN B H, F-CAN B L lines)

   -1. Turn the vehicle to the OFF (LOCK) mode.

   -2. Disconnect the following connectors according to the detected DTC.

DTC	Connector
B	CAN gateway 12P connector *1 CAN gateway 16P connector *2
U0100-00	PCM connector A (50P)
U0104-00	Millimeter wave radar 8P connector
U0126-00	EPS control unit connector B (6P)

DTC	Connector
U0129-00	Electric brake booster 26P connector
U0151-00	SRS unit connector A (39P)

NOTE: Jump the SCS line with the HDS, and wait more than 1 minute when disconnecting the PCM connector.

-3. Measure the resistance between test points 1 and 2.

Test condition	Vehicle OFF (LOCK) mode
B	Transmitting control unit connector (s) for indicated DTCs: disconnected
B	CAN gateway 12P connector *1: disconnected
B	CAN gateway 16P connector *2: disconnected

DTC	**Circuit name**	**Test point 1 (Receiving control unit)**		**Test point 2 (Transmitting control unit)**	
		Connector	**Terminal**	**Connector**	**Terminal**
U0100-00	F-CAN B H	CAN gateway 12P connector *1 (female terminals): ①	No. 12	**PCM connector A (50P)**	No. 39
	F-CAN B L		No. 5		No. 38
	F-CAN B H	CAN gateway 16P connector *2 (female terminals): ②	No. 6		No. 39
	F-CAN B L		No. 14		No. 38
U0104-00	F-CAN B H	CAN gateway 12P connector *1 (female terminals): ①	No. 12	**Millimeter wave radar 8P connector**	No. 7
	F-CAN B L		No. 5		No. 6
	F-CAN B H	CAN gateway 16P connector *2 (female terminals): ②	No. 6		No. 7
	F-CAN B L		No. 14		No. 6
U0126-00	F-CAN B H	CAN gateway 12P connector *1 (female terminals): ①	No. 12	**EPS control unit connector B (6P)**	No. 3
	F-CAN B L		No. 5		No. 1
	F-CAN B H	CAN gateway 16P connector *2 (female terminals): ②	No. 6		No. 3
	F-CAN B L		No. 14		No. 1
U0129-00	F-CAN B H	CAN gateway 12P connector *1 (female terminals): ①	No. 12	**Electric brake booster 26P connector**	No. 19
	F-CAN B L		No. 5		No. 12
	F-CAN B H	CAN gateway 16P connector *2 (female terminals): ②	No. 6		No. 19
	F-CAN B L		No. 14		No. 12
U0151-00	F-CAN B H	CAN gateway 12P connector *1 (female terminals): ①	No. 12	**SRS unit connector A (39P)**	No. 34
	F-CAN B L		No. 5		No. 35
	F-CAN B H	CAN gateway 16P connector *2 (female	No. 6		No. 34

DTC	Circuit name	Test point 1 (Receiving control unit)		Test point 2 (Transmitting control unit)	
		Connector	Terminal	Connector	Terminal
	F-CAN B L	terminals): ②	No. 14		No. 35

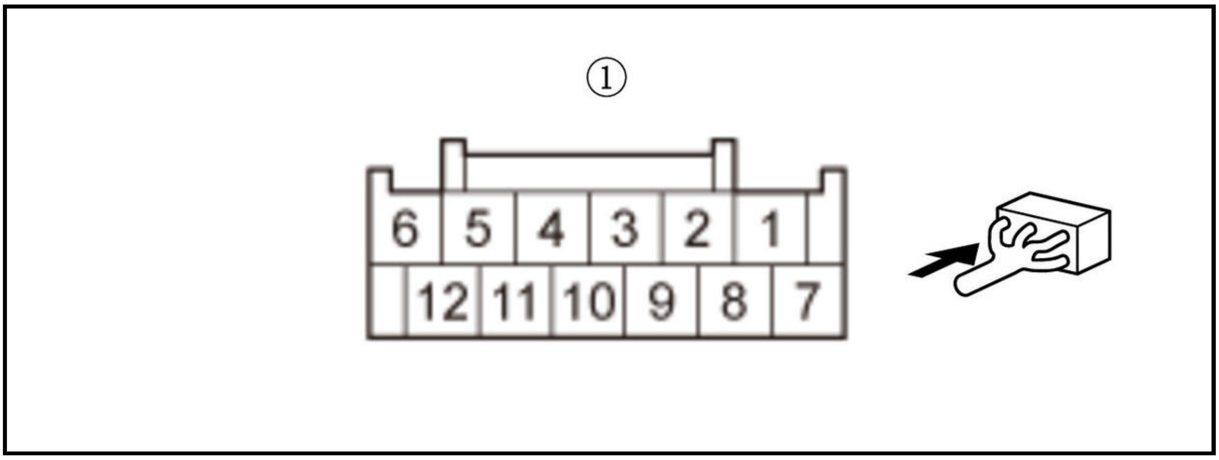

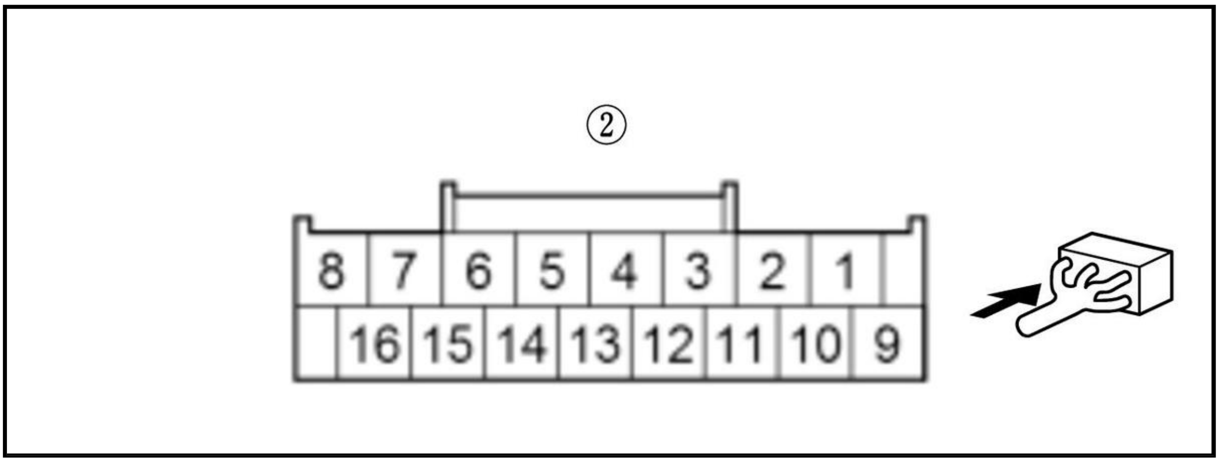

Is there 1.0 Ω or less?

YES

The F-CAN B H and F-CAN B L wires are OK. Check for any authorized service information related to the DTCs or symptoms you are troubleshooting. According to the detected DTC on the following table, replace the correspond control unit.

DTC	Transmitting Control Unit
U0100-00	PCM
U0104-00	Millimeter wave radar
U0126-00	EPS motor/control unit
U0129-00	Electric brake booster
U0151-00	SRS unit

NO

Repair an open in the wire between the receiving control unit and the transmitting control unit.

DTC U0100-00, U0101-00, U0126-00, U0129-00, U0151-00, U0155-00 (VSA CONTROL UNIT (WITHOUT CAN GATEWAY)) (2017 2018 2019)

DTC U0100-00 : CAN Communication Failure with ECM/ISU **DTC U0101-00** : CAN Communication Failure with PCM/TCM **DTC U0126-00** : CAN Communication Failure with Absolute Steering Wheel Angle Sensor

DTC U0129-00 : CAN Communication Failure with AHB/ESB/EBB **DTC U0151-00** : CAN Communication Failure with SRS **DTC U0155-00** : CAN Communication Failure with Meter

NOTE:

- **Before you troubleshoot, review the general troubleshooting information** .
- According to the detected DTC (s), check the voltage supply and ground circuit of the control unit which cannot communicate with the VSA modulator-control unit.

DTC Description	DTC	Freeze Frame
U0100-00 CAN Communication Failure with ECM/ISU	B	B
U0101-00 CAN Communication Failure with PCM/TCM	B	B
U0126-00 CAN Communication Failure with Absolute Steering Wheel Angle Sensor	B	B
U0129-00 CAN Communication Failure with AHB/ESB/EBB	B	B
U0151-00 CAN Communication Failure with SRS	B	B
U0155-00 CAN Communication Failure with Meter	B	B

DTC (VSA)

1. DTC check

   -1. Turn the vehicle to the ON mode.

   -2. Clear the DTC with the HDS.

   -3. Turn the vehicle to the OFF (LOCK) mode, then start the engine.

   -4. Test-drive the vehicle at 6 mph (10 km/h) or more.

   NOTE: Drive the vehicle on the road, not on a lift.

   -5. Check for DTCs with the HDS.

DTC Description	DTC	Freeze Frame
U0100-00 CAN Communication Failure with ECM/ISU	B	B
U0101-00 CAN Communication Failure with PCM/TCM	B	B
U0126-00 CAN Communication Failure with Absolute Steering Wheel Angle Sensor	B	B
U0129-00 CAN Communication Failure with AHB/ESB/EBB	B	B
U0151-00 CAN Communication Failure with SRS	B	B
U0155-00 CAN Communication Failure with Meter	B	B

   Is DTC indicated?

   YES

   Go to step 2.

   NO

   Intermittent failure, the system is OK at this time. **Refer to intermittent failures troubleshooting** . If the freeze data/on-board snapshot of this DTC is recorded, try to reproduce the failure under the same conditions with the freeze data/on-board snapshot.

2. Open wire check (F-CAN H, F-CAN L lines)

-1. Turn the vehicle to the OFF (LOCK) mode with driver's door open.

-2. Wait for 3 minutes.

NOTE: Do not close the driver's door.

-3. Disconnect the following connector.

VSA modulator-control unit 46P connector

-4. Disconnect the following connectors according to the detected DTC.

DTC	Connector
U0100-00	PCM connector A (51P)
U0101-00	PCM connector A (51P)
U0126-00	EPS control unit connector B (6P)
U0129-00	Electric brake booster 26P connector
U0151-00	SRS unit connector A (39P)
U0155-00	Gauge control module connector A (32P)

NOTE: Jump the SCS line with the HDS, and wait more than 1 minute when disconnecting the PCM connector.

-5. Check for continuity between the receiving control unit and the transmitting control unit according to the detected DTC.

Test condition	Vehicle OFF (LOCK) mode

B	VSA modulator-control unit 46P connector: disconnected
B	Transmitting control unit connector (s) for indicated DTCs: disconnected

DTC	Circuit name	Test point 1 (Receiving control unit)		Test point 2 (Transmitting control unit)	
		Connector	**Terminal**	**Connector**	**Terminal**
U0100-00	F-CAN H	VSA modulator-control unit 46P connector	No. 40	PCM connector A (51P)	No. 2
	F-CAN L		No. 28		No. 1
U0101-00	F-CAN H	VSA modulator-control unit 46P connector	No. 40	PCM connector A (51P)	No. 2
	F-CAN L		No. 28		No. 1
U0126-00	F-CAN H	VSA modulator-control unit 46P connector	No. 40	EPS control unit connector B (6P)	No. 3
	F-CAN L		No. 28		No. 1
U0129-00	F-CAN H	VSA modulator-control unit 46P connector	No. 40	Electric brake booster 26P connector	No. 26
	F-CAN L		No. 28		No. 18
U0151-00	F-CAN H	VSA modulator-control unit 46P connector	No. 40	SRS unit connector A (39P)	No. 34
	F-CAN L		No. 28		No. 35
U0155-00	F-CAN H	VSA modulator-control unit 46P connector	No. 40	Gauge control module connector A (32P)	No. 19
	F-CAN L		No. 28		No. 20

Is there continuity?

YES

The F-CAN H and F-CAN L wires are OK. Check for any authorized service information related to the DTCs or symptoms you are troubleshooting. According to the detected DTC on the following table, replace the correspond control unit.

DTC	Transmitting Control Unit
U0100-00	PCM
U0101-00	PCM
U0126-00	EPS motor/control unit
U0129-00	Electric brake booster
U0151-00	SRS unit
U0155-00	Gauge control module

NO

Repair an open in the wire between the receiving control unit and the transmitting control unit.

DTC U0401-68 (VSA CONTROL UNIT)

DTC U0401-68 : ECM Failure

NOTE: Before you troubleshoot, review the general troubleshooting information .

DTC Description	DTC	Freeze Frame
U0401-68 ECM Failure	B	B

DTC (VSA)

1. Problem verification

-1. Turn the vehicle to the ON mode.

-2. Clear the DTC with the HDS.

-3. Turn the vehicle to the OFF (LOCK) mode, then start the engine.

-4. Check for DTCs with the HDS.

DTC Description	DTC	Freeze Frame
U0401-68 ECM Failure	B	B

Is DTC U0401-68 indicated?

YES

The failure is duplicated. Go to PGM-FI system troubleshooting .

NO

Intermittent failure, the system is OK at this time. Refer to intermittent failures troubleshooting . If the freeze data/on-board snapshot of this DTC is recorded, try to reproduce the failure under the same conditions with the freeze data/on-board snapshot.

DTC U0402-68 (VSA CONTROL UNIT)

DTC U0402-68 : TCM Failure

NOTE: Before you troubleshoot, review the general troubleshooting information .

DTC Description	DTC	Freeze Frame
U0402-68 TCM Failure	B	B

DTC (VSA)

1. Problem verification

   -1. Turn the vehicle to the ON mode.

   -2. Clear the DTC with the HDS.

   -3. Turn the vehicle to the OFF (LOCK) mode, then start the engine.

   -4. Check for DTCs with the HDS.

DTC Description	DTC	Freeze Frame
U0402-68 TCM Failure	B	B

   Is DTC U0402-68 indicated?

   YES

   The failure is duplicated. Go to CVT system troubleshooting .

   NO

   Intermittent failure, the system is OK at this time. Refer to intermittent failures troubleshooting . If the freeze data/on-board snapshot of this DTC is recorded, try to reproduce the failure under the same conditions with the freeze data/on-board snapshot.

DTC U0418-68 (VSA CONTROL UNIT)

DTC U0418-68 : ESB/EBB Failure

NOTE: Before you troubleshoot, review the general troubleshooting information .

DTC Description	DTC	Freeze Frame
U0418-68 ESB/EBB Failure	B	B

DTC (VSA)

1. Problem verification

   -1. Turn the vehicle to the ON mode.

   -2. Clear the DTC with the HDS.

   -3. Turn the vehicle to the OFF (LOCK) mode, then start the engine.

   -4. Check for DTCs with the HDS.

DTC Description	DTC	Freeze Frame
U0418-68 ESB/EBB Failure	B	B

   Is DTC U0418-68 indicated?

   YES

The failure is duplicated. Go to electric brake booster system troubleshooting .

NO

Intermittent failure, the system is OK at this time. Refer to intermittent failures troubleshooting . If the freeze data/on-board snapshot of this DTC is recorded, try to reproduce the failure under the same conditions with the freeze data/on-board snapshot.

DTC U0418-F8 (VSA CONTROL UNIT) (2020 2021)

DTC U0418-F8 : Plausibility Brake Pedal Signal (EBB) vs. Pressure Sensor

NOTE: Before you troubleshoot, review the general troubleshooting information .

DTC Description	DTC
U0418-F8 Plausibility Brake Pedal Signal (EBB) vs. Pressure Sensor	B

DTC (VSA)

1. Problem verification

-1. Turn the vehicle to the ON mode.

-2. Clear the DTC with the HDS.

-3. Turn the vehicle to the OFF (LOCK) mode, then start the engine.

-4. Wait 1 second or more without pressing the brake pedal.

-5. Press the brake pedal hard for 1 second or more.

-6. Check for DTCs with the HDS.

DTC Description	DTC
U0418-F8 Plausibility Brake Pedal Signal (EBB) vs. Pressure Sensor	B

Is DTC U0418-F8 indicated?

YES

The failure is duplicated. Go to step 2.

NO

Intermittent failure, the system is OK at this time. Refer to intermittent failures troubleshooting .

2. Electric brake booster system DTC check

-1. Check for electric brake booster system DTCs with the HDS.

DTC Description	DTC
C1C01-96 Brake Pedal Stroke Sensor Component Internal Failure	B
C1C02-11 Brake Pedal Stroke Sensor Signal Circuit1 Short To Ground	B

DTC Description	DTC
C1C02-15 Brake Pedal Stroke Sensor Signal Circuit1 Short To Battery or Open	B
C1C03-11 Brake Pedal Stroke Sensor Signal Circuit 2 Short To Ground	B

DTC Description	DTC
C1C03-15 Brake Pedal Stroke Sensor Signal Circuit 2 Short To Battery or Open	B
C1C04-11 Brake Pedal Stroke Sensor Power Circuit Short To Ground or Battery	B

Is DTC indicated?

YES

Go to indicated DTCs troubleshooting.

NO

Intermittent failure, the system is OK at this time. **Refer to intermittent failures troubleshooting** .

DTC U3000-49 (VSA CONTROL UNIT)

DTC U3000-49 : ECU Internal Circuit Failure

NOTE: **Before you troubleshoot, review the general troubleshooting information** .

DTC Description	DTC	Freeze Frame
U3000-49 ECU Internal Circuit Failure	B	B

DTC (VSA)

1. Problem verification

-1. Turn the vehicle to the ON mode.

-2. Clear the DTC with the HDS.

-3. Turn the vehicle to the OFF (LOCK) mode, then start the engine.

-4. Test-drive the vehicle at 25 mph (40 km/h) or more.

NOTE: Drive the vehicle on the road, not on a lift.

-5. Check for DTCs with the HDS.

DTC Description	DTC	Freeze Frame
U3000-49 ECU Internal Circuit Failure	B	B

Is DTC U3000-49 indicated?

YES

The failure is duplicated. Check for loose terminals and poor connections in the VSA modulator-control unit 46P connector. Check for any authorized service information related to the DTCs or symptoms you are troubleshooting. If they are OK, **replace the VSA modulator-control unit** .

NO

Intermittent failure, the system is OK at this time. **Refer to intermittent failures troubleshooting** . If the freeze data/on-board snapshot of this DTC is recorded, try to reproduce the failure under the same conditions with the freeze data/on-board snapshot.

DTC U3000-51 (VSA CONTROL UNIT)

DTC U3000-51 : ECU Software Update Failure

NOTE:

- **Before you troubleshoot, review the general troubleshooting information** .
- Do not turn the vehicle to the OFF (LOCK) mode while updating the VSA modulator-control unit. If you turn the vehicle to the OFF (LOCK) mode before completion, the VSA modulator-control unit will be damaged.

DTC Description	DTC	Freeze Frame
U3000-51 ECU Software Update Failure	B	B

DTC (VSA)

1. Problem verification

   -1. Turn the vehicle to the ON mode.

   -2. Clear the DTC with the HDS.

   -3. Turn the vehicle to the OFF (LOCK) mode, then to the ON mode.

   -4. Check for DTCs with the HDS.

DTC Description	DTC	Freeze Frame
U3000-51 ECU Software Update Failure	B	B

   Is DTC U3000-51 indicated?

   YES

   The failure is duplicated. Go to step 2.

   NO

   Intermittent failure, the system is OK at this time. **Refer to intermittent failures troubleshooting** . If the freeze data/on-board snapshot of this DTC is recorded, try to reproduce the failure under the same conditions with the freeze data/on-board snapshot.

2. VSA modulator-control unit check (update)

   -1. **Update the VSA modulator-control unit** .

   -2. Turn the vehicle to the OFF (LOCK) mode, then to the ON mode.

   -3. Check for DTCs with the HDS.

DTC Description	DTC	Freeze Frame
B	B	B

   Is DTC U3000-51 indicated?

   YES

   The failure is duplicated. Check for loose terminals and poor connections in the VSA modulator-control unit 46P connector. Check for any authorized service information related to the DTCs or symptoms you are troubleshooting. If they are OK, **replace the VSA modulator-control unit** .

NO

Troubleshooting is complete. If any other DTCs are indicated, go to the indicated DTCs troubleshooting.

DTC U3003-16 (VSA CONTROL UNIT)

DTC U3003-16 : Electric Parking Brake Control Unit Power Source Circuit (+B) Low Voltage

NOTE: Before you troubleshoot, review the general troubleshooting information.

DTC Description	DTC	Freeze Frame
U3003-16 Electric Parking Brake Control Unit Power Source Circuit (+B) Low Voltage	B	B

DTC (VSA)

1. Problem verification

   -1. Turn the vehicle to the ON mode.

   -2. Clear the DTC with the HDS.

   -3. Turn the vehicle to the OFF (LOCK) mode, then start the engine.

   -4. Wait 15 seconds or more.

   -5. Check for DTCs with the HDS.

DTC Description	DTC	Freeze Frame
U3003-16 Electric Parking Brake Control Unit Power Source Circuit (+B) Low Voltage	B	B

   Is DTC U3003-16 indicated?

   YES

   The failure is duplicated. Go to step 2.

   NO

   Intermittent failure, the system is OK at this time. **Refer to intermittent failures troubleshooting** . If the freeze data/on-board snapshot of this DTC is recorded, try to reproduce the failure under the same conditions with the freeze data/on-board snapshot.

2. DTC check (PGM-FI system)

   -1. Check for PGM-FI system DTCs with the HDS.

DTC Description	Confirmed DTC	Pending DTC
B	B	B

   Is DTC indicated?

   YES

   Go to indicated DTCs troubleshooting.

   NO

Check for loose terminals and poor connections in the VSA modulator-control unit 46P connector. Check for any authorized service information related to the DTCs or symptoms you are troubleshooting. If they are OK, replace the VSA modulator-control unit .

DTC U3003-17 (VSA CONTROL UNIT)

DTC U3003-17 : Electric Parking Brake Control Unit Power Source Circuit (+B) High Voltage

NOTE: Before you troubleshoot, review the general troubleshooting information.

DTC Description	DTC	Freeze Frame
U3003-17 Electric Parking Brake Control Unit Power Source Circuit (+B) High Voltage	B	B

DTC (VSA)

1. Problem verification

   -1. Turn the vehicle to the ON mode.

   -2. Clear the DTC with the HDS.

   -3. Turn the vehicle to the OFF (LOCK) mode, then start the engine.

   -4. Check for DTCs with the HDS.

DTC Description	DTC	Freeze Frame
U3003-17 Electric Parking Brake Control Unit Power Source Circuit (+B) High Voltage	B	B

   Is DTC U3003-17 indicated?

   YES

   The failure is duplicated. Go to step 2.

   NO

   Intermittent failure, the system is OK at this time. Refer to intermittent failures troubleshooting . If the freeze data/on-board snapshot of this DTC is recorded, try to reproduce the failure under the same conditions with the freeze data/on-board snapshot.

2. VSA modulator-control unit check

   -1. Check the parameter (s) below with the HDS.

Signal	Threshold		Current conditions	
	Values	Unit	Values	Unit
BATTERY VOLTAGE	More than 16.5	V	B	B

   Do the current condition (s) match the threshold?

   YES

   Check the 12 volt battery , and check the PGM-FI system DTCs .

   NO

Check for loose terminals and poor connections in the VSA modulator-control unit 46P connector. Check for any authorized service information related to the DTCs or symptoms you are troubleshooting. If they are OK, replace the VSA modulator-control unit .

DTC U3006-16 (VSA CONTROL UNIT)

DTC U3006-16 : Power Source Failure for ECU (Low Voltage)

NOTE: Before you troubleshoot, review the general troubleshooting information .

DTC Description	DTC	Freeze Frame
U3006-16 Power Source Failure for ECU (Low Voltage)	B	B

DTC (VSA)

1. Problem verification

-1. Turn the vehicle to the ON mode.

-2. Clear the DTC with the HDS.

-3. Turn the vehicle to the OFF (LOCK) mode, then start the engine.

-4. Test-drive the vehicle at 6 mph (10 km/h) or more.

-5. Check for DTCs with the HDS.

DTC Description	DTC	Freeze Frame
U3006-16 Power Source Failure for ECU (Low Voltage)	B	B

Is DTC U3006-16 indicated?

YES

The failure is duplicated. Go to step 2.

NO

Intermittent failure, the system is OK at this time. Refer to intermittent failures troubleshooting . If the freeze data/on-board snapshot of this DTC is recorded, try to reproduce the failure under the same conditions with the freeze data/on-board snapshot.

2. DTC check (PGM-FI system)

-1. Check for PGM-FI system DTCs with the HDS.

DTC Description	Confirmed DTC	Pending DTC
B	B	B

Is DTC indicated?

YES

Go to indicated DTCs troubleshooting.

NO

Check for loose terminals and poor connections in the VSA modulator-control unit 46P connector. Check for any authorized service information related to the DTCs or symptoms you are troubleshooting. If they are OK, replace the VSA modulator-control unit .

DTC U3006-17 (VSA CONTROL UNIT)

DTC U3006-17 : Power Source Failure for ECU (High Voltage)

NOTE: Before you troubleshoot, review the general troubleshooting information .

DTC Description	DTC	Freeze Frame
U3006-17 Power Source Failure for ECU (High Voltage)	B	B

DTC (VSA)

1. Problem verification

   -1. Turn the vehicle to the ON mode.

   -2. Clear the DTC with the HDS.

   -3. Turn the vehicle to the OFF (LOCK) mode, then start the engine.

   -4. Check for DTCs with the HDS.

DTC Description	DTC	Freeze Frame
U3006-17 Power Source Failure for ECU (High Voltage)	B	B

   Is DTC U3006-17 indicated?

   YES

   The failure is duplicated. Go to step 2.

   NO

   Intermittent failure, the system is OK at this time. Refer to intermittent failures troubleshooting . If the freeze data/on-board snapshot of this DTC is recorded, try to reproduce the failure under the same conditions with the freeze data/on-board snapshot.

2. VSA modulator-control unit check

   -1. Check the parameter (s) below with the HDS.

Signal	Threshold		Current conditions	
	Values	Unit	Values	Unit
BATTERY VOLTAGE	More than 16.5	V	B	B

   Do the current condition (s) match the threshold?

   YES

   Check the 12 volt battery , and check the PGM-FI system DTCs .

   NO

   Check for loose terminals and poor connections in the VSA modulator-control unit 46P connector. Check for any authorized service information related to the DTCs or symptoms you are troubleshooting. If they are OK, replace the VSA modulator-control unit .

DTC TROUBLESHOOTING INDEX

VSA SYSTEM DTC TROUBLESHOOTING INDEX

DTC		Detection Item
B0050	-F0	(Driver's Seat Belt Buckle Switch Malfunction)
C0010	-49	Inlet Solenoid (Left Front) Circuit Failure
C0011	-49	Outlet Solenoid (Left Front) Circuit Failure
C0014	-49	Inlet Solenoid (Right Front) Circuit Failure
C0015	-49	Outlet Solenoid (Right Front) Circuit Failure
C0018	-49	Inlet Solenoid (Left Rear) Circuit Failure
C0019	-49	Outlet Solenoid (Left Rear) Circuit Failure
C001C	-49	Inlet Solenoid (Right Rear) Circuit Failure
C001D	-49	Outlet Solenoid (Right Rear) Circuit Failure
C0020	-12	Pump Motor Circuit Failure (Stuck ON)
	-14	Pump Motor Circuit Failure (Stuck OFF)
C0023	-12	Brake Diag Circuit ON Failure
	-14	Brake Diag Circuit OFF Failure
C0031	-14	Left Front Wheel Speed Sensor Circuit Failure (Circuit Short To Ground or Open)
	-3A	Wheel Speed Sensor (Left Front) Signal Failure (Signal Frequency is Too High)
	-62	Left Front Wheel Speed Sensor Signal Compare Failure
C0034	-14	Right Front Wheel Speed Sensor Circuit Failure (Circuit Short To Ground or Open)
	-3A	Wheel Speed Sensor (Right Front) Signal Failure (Signal Frequency is Too High)
	-62	Right Front Wheel Speed Sensor Signal Compare Failure
C0037	-14	Left Rear Wheel Speed Sensor Circuit Failure (Circuit Short To Ground or Open)
	-3A	Wheel Speed Sensor (Left Rear) Signal Failure (Signal Frequency is Too High)
	-62	Left Rear Wheel Speed Sensor Signal Compare Failure
C003A	-14	Right Rear Wheel Speed Sensor Circuit Failure (Circuit Short To Ground or Open)
	-3A	Wheel Speed Sensor (Right Rear) Signal Failure (Signal Frequency is Too High)
	-62	Right Rear Wheel Speed Sensor Signal Compare Failure
C0040	-12	Brake Light Switch Failure (Stuck ON)/Brake Pedal Stroke Sensor Stuck (EBB)
	-16	Plausibility BLS vs. Pressure Sensor
C0044	-49	Master Cylinder Pressure Sensor Failure (Internal Circuit Failure)
	-62	Master Cylinder Pressure Sensor Failure (Signal Stuck)
C0049	-7B	Brake Fluid Level Too Low
C0051	-54	Steering Angle Neutral Position Learning Incomplete
	-62	Steering Angle Sensor Failure (Signal Compare Failure)
	-96	Steering Angle Sensor Failure (Sensor Detects Internal Failure)
C0061	-49	Acceleration Sensor Malfunction
	-54	Lateral Acceleration Sensor Calibration Incomplete
	-62	Lateral Acceleration Sensor Failure (Signal Compare Failure)
C0062	-49	Longitudinal Acceleration Sensor Malfunction
	-54	Longitudinal Acceleration Sensor Neutral Position Not Learned/Calibration Incomplete
	-62	Longitudinal Acceleration Sensor Failure (Signal Compare Failure)
C0063	-49	Yaw Rate Sensor Malfunction
	-54	Yaw Rate Sensor Calibration Incomplete
	-62	Yaw Rate Sensor Failure (Signal Compare Failure)
C1000	-94	ABS/VSA Activation Time Too Long
C1020	-49	VSA Master Cut Valve Failure (Unexpected Operation)

DTC		Detection Item
C1021	-49	VSA Suction Valve Failure (Unexpected Operation)
C1022	-14	Power Source Failure for Pump Motor
C1040	-00	Different Diameter Tire is Detected

DTC		Detection Item
C1041	-00	Right Front Wheel Abnormal Slip Detection
C1042	-00	Left Front Wheel Abnormal Slip Detection
C1043	-00	Right Rear Wheel Abnormal Slip Detection
C1044	-00	Left Rear Wheel Abnormal Slip Detection
C1100	-48	Electric Parking Brake Abnormal Operation Monitoring
	-54	Piston Position Not Learned
	-94	Electric Parking Brake Actuator Malfunction
	-98	Electric Parking Brake Continuous Operations Detected
C1110	-11	Left Rear Electric Parking Brake Actuator Circuit Short to Ground
	-13	Left Rear Electric Parking Brake Actuator Circuit Open
	-79	Left Side Electric Parking Brake Doesn't Work Correctly
	-94	Left Side Electric Parking Brake Actuator Unexpected Operation
	-96	Left Side Electric Parking Brake Actuator Malfunction
C1111	-11	Right Rear Electric Parking Brake Actuator Circuit Short to Ground
	-13	Right Rear Electric Parking Brake Actuator Circuit Open
	-79	Right Side Electric Parking Brake Doesn't Work Correctly
	-94	Right Side Electric Parking Brake Actuator Unexpected Operation
	-96	Right Side Electric Parking Brake Actuator Malfunction
C1120	-14	Electric Parking Brake Switch Circuit Malfunction
	-96	Electric Parking Brake Switch Malfunction
C1270	-11	Automatic Brake Hold Switch Signal Circuit Short
	-15	Automatic Brake Hold Switch Signal Circuit Open
U0029	-00	CAN Communication Failure (Bus OFF Ch 1)
U0047	-00	CAN Communication Failure (Bus OFF Ch 2)
U0100	-00	CAN Communication Failure with ECM/ISU
U0101	-00	CAN Communication Failure with PCM/TCM
U0104	-00	CAN Communication Failure with Driving Support System Control Unit
U0126	-00	CAN Communication Failure with Absolute Steering Wheel Angle Sensor
U0129	-00	CAN Communication Failure with AHB/ESB/EBB
U0151	-00	CAN Communication Failure with SRS
U0155	-00	CAN Communication Failure with Meter
U0401	-68	(ECM Failure)
U0402	-68	(TCM Failure)
U0418	-68	(ESB/EBB Failure)
	-F8	Plausibility Brake Pedal Signal (EBB) vs. Pressure Sensor
U3000	-49	ECU Internal Circuit Failure
	-51	ECU Software Update Failure
U3003	-16	Electric Parking Brake Control Unit Power Source Circuit (+B) Low Voltage
	-17	Electric Parking Brake Control Unit Power Source Circuit (+B) High Voltage
U3006	-16	Power Source Failure for ECU (Low Voltage)
	-17	Power Source Failure for ECU (High Voltage)

DTC TROUBLESHOOTING

DTC B0050-F0 (VSA CONTROL UNIT)

DTC B0050-F0 : (Driver's Seat Belt Buckle Switch Malfunction)

NOTE: **Before you troubleshoot, review the general troubleshooting information** .

DTC Description	DTC
B0050-F0 (Driver's Seat Belt Buckle Switch Malfunction)	B

DTC (VSA)

1. Problem verification

   -1. Turn the vehicle to the ON mode.

   -2. Clear the DTC with the HDS.

   -3. Turn the vehicle to the OFF (LOCK) mode.

   -4. Turn the vehicle to the ON mode, then wait for a few seconds or more.

   -5. Check for DTCs with the HDS.

DTC Description	DTC
B0050-F0 (Driver's Seat Belt Buckle Switch Malfunction)	B

   Is DTC B0050-F0 indicated?

   YES

   The failure is duplicated. **Go to SRS troubleshooting** .

   NO

   Intermittent failure, the system is OK at this time. **Refer to intermittent failures troubleshooting** .

DTC C0010-49, C0011-49, C0014-49, C0015-49, C0018-49, C0019-49, C001C-49, C001D-49

DTC C0010-49 : Inlet Solenoid (Left Front) Circuit Failure

DTC C0011-49 : Outlet Solenoid (Left Front) Circuit Failure

DTC C0014-49 : Inlet Solenoid (Right Front) Circuit Failure

DTC C0015-49 : Outlet Solenoid (Right Front) Circuit Failure

DTC C0018-49 : Inlet Solenoid (Left Rear) Circuit Failure

DTC C0019-49 : Outlet Solenoid (Left Rear) Circuit Failure

DTC C001C-49 : Inlet Solenoid (Right Rear) Circuit Failure

DTC C001D-49 : Outlet Solenoid (Right Rear) Circuit Failure

NOTE: **Before you troubleshoot, review the general troubleshooting information** .

DTC Description	DTC
C0010-49 Inlet Solenoid (Left Front) Circuit Failure	B
C0011-49 Outlet Solenoid (Left Front) Circuit Failure	B
C0014-49 Inlet Solenoid (Right Front) Circuit Failure	B
C0015-49 Outlet Solenoid (Right Front) Circuit Failure	B
C0018-49 Inlet Solenoid (Left Rear) Circuit Failure	B
C0019-49 Outlet Solenoid (Left Rear) Circuit Failure	B
C001C-49 Inlet Solenoid (Right Rear) Circuit Failure	B
C001D-49 Outlet Solenoid (Right Rear) Circuit Failure	B

DTC (VSA)

1. Problem verification

   -1. Turn the vehicle to the ON mode.

   -2. Clear the DTC with the HDS.

   -3. Turn the vehicle to the OFF (LOCK) mode, then to the READY TO DRIVE mode.

   -4. Wait 20 seconds or more.

   -5. Check for DTCs with the HDS.

DTC Description	DTC
C0010-49 Inlet Solenoid (Left Front) Circuit Failure	B
C0011-49 Outlet Solenoid (Left Front) Circuit Failure	B
C0014-49 Inlet Solenoid (Right Front) Circuit Failure	B
C0015-49 Outlet Solenoid (Right Front) Circuit Failure	B
C0018-49 Inlet Solenoid (Left Rear) Circuit Failure	B
C0019-49 Outlet Solenoid (Left Rear) Circuit Failure	B
C001C-49 Inlet Solenoid (Right Rear) Circuit Failure	B
C001D-49 Outlet Solenoid (Right Rear) Circuit Failure	B

Is DTC C0010-49, C0011-49, C0014-49, C0015-49, C0018-49, C0019-49, C001C-49, or C001D-49 indicated?

YES

The failure is duplicated. Check for loose terminals and poor connections in the VSA modulator-control unit 46P connector. Check for any authorized service information related to the DTCs or symptoms you are troubleshooting. If they are OK, **replace the VSA modulator-control unit** .

NO

Intermittent failure, the system is OK at this time. **Refer to intermittent failures troubleshooting** .

DTC C0020-12

DTC C0020-12 : Pump Motor Circuit Failure (Stuck ON)

NOTE: **Before you troubleshoot, review the general troubleshooting information** .

DTC Description	DTC
C0020-12 Pump Motor Circuit Failure (Stuck ON)	B

DTC (VSA)

1. Problem verification

   -1. Turn the vehicle to the ON mode.

   -2. Clear the DTC with the HDS.

   -3. Turn the vehicle to the OFF (LOCK) mode, then to the ON mode.

   -4. Check for DTCs with the HDS.

DTC Description	DTC
C0020-12 Pump Motor Circuit Failure (Stuck ON)	B

   Is DTC C0020-12 indicated?

   YES

   The failure is duplicated. Go to step 2.

   NO

   Intermittent failure, the system is OK at this time. **Refer to intermittent failures troubleshooting** .

2. Open wire check (GND line)

   -1. Turn the vehicle to the OFF (LOCK) mode.

   -2. Disconnect the following connector.

VSA modulator-control unit 46P connector

   -3. Measure the resistance between test points 1 and 2.

Test condition	Vehicle OFF (LOCK) mode
B	VSA modulator-control unit 46P connector: disconnected
Test point 1	**VSA modulator-control unit 46P connector No. 4**

Test point 2	Body ground

   Is there 1.0 Ω or less?

   YES

   The GND wire is OK. Check for loose terminals and poor connections in the VSA modulator-control unit 46P connector. Check for any authorized service information related to the DTCs or symptoms you are troubleshooting. If they are OK, **replace the VSA modulator-control unit** .

   NO

   Repair an open or poor connection in the wire between the VSA modulator-control unit and body ground (G202).

DTC C0020-14, C1022-14

DTC C0020-14 : Pump Motor Circuit Failure (Stuck OFF)

DTC C1022-14 : Power Source Failure for Pump Motor

NOTE: **Before you troubleshoot, review the general troubleshooting information** .

DTC Description	DTC
C0020-14 Pump Motor Circuit Failure (Stuck OFF)	B
C1022-14 Power Source Failure for Pump Motor	B

DTC (VSA)

1. DTC check

   -1. Turn the vehicle to the ON mode.

   -2. Clear the DTC with the HDS.

   -3. Turn the vehicle to the OFF (LOCK) mode, then to the READY TO DRIVE mode.

   -4. Wait 20 seconds or more.

   -5. Test-drive the vehicle at 6 mph (10 km/h) or more.

   -6. Check for DTCs with the HDS.

DTC Description	DTC
C0020-12 Pump Motor Circuit Failure (Stuck ON)	B
C0020-14 Pump Motor Circuit Failure (Stuck OFF)	B

DTC Description	DTC
C1022-14 Power Source Failure for Pump Motor	B

   Is DTC C0020-14 or C1022-14 indicated?

   YES

   If only DTC C0020-14 or C1022-14 are indicated, go to step 2.

   YES

   If DTC C0020-12 is also indicated, **go to DTC C0020-12**.

   NO

   Intermittent failure, the system is OK at this time. **Refer to intermittent failures troubleshooting** .

2. Fuse check

   -1. Turn the vehicle to the OFF (LOCK) mode.

   -2. Check the following fuse.

Fuse	**No. A3-3**

   Is the fuse OK?

YES

The fuse is OK. Reinstall the fuse, then go to step 3.

NO

Replace the fuse. If the fuse blows again, repair a short to ground in the No. A3-3 fuse circuit.

3. Open wire check (+B_ABS/VSA_MTR line)

-1. Disconnect the following connector.

VSA modulator-control unit 46P connector

-2. Measure the voltage between test points 1 and 2.

Test condition	Vehicle OFF (LOCK) mode
B	VSA modulator-control unit 46P connector: disconnected
Test point 1	**VSA modulator-control unit 46P connector No. 3**
Test point 2	Body ground

Is there battery voltage?

YES

The +B_ABS/VSA_MTR wire is OK. Check for loose terminals and poor connections in the VSA modulator-control unit 46P connector. Check for any authorized service information related to the DTCs or symptoms you are troubleshooting. If they are OK, **replace the VSA modulator-control unit** .

NO

Repair an open in the wire between the **No. A3-3** fuse and the VSA modulator-control unit.

DTC C0031-14, C0034-14, C0037-14, C003A-14

DTC C0031-14 : Left Front Wheel Speed Sensor Circuit Failure (Circuit Short To Ground or Open)

DTC C0034-14 : Right Front Wheel Speed Sensor Circuit Failure (Circuit Short To Ground or Open)

DTC C0037-14 : Left Rear Wheel Speed Sensor Circuit Failure (Circuit Short To Ground or Open)

DTC C003A-14 : Right Rear Wheel Speed Sensor Circuit Failure (Circuit Short To Ground or Open)

NOTE: **Before you troubleshoot, review the general troubleshooting information** .

DTC Description	DTC
C0031-14 Left Front Wheel Speed Sensor Circuit Failure (Circuit Short To Ground or Open)	B
C0034-14 Right Front Wheel Speed Sensor Circuit Failure (Circuit Short To Ground or Open)	B
C0037-14 Left Rear Wheel Speed Sensor Circuit Failure (Circuit Short To Ground or Open)	B
C003A-14 Right Rear Wheel Speed Sensor Circuit Failure (Circuit Short To Ground or Open)	B

DTC (VSA)

1. Problem verification

-1. Turn the vehicle to the ON mode.

-2. Clear the DTC with the HDS.

-3. Turn the vehicle to the OFF (LOCK) mode, then to the ON mode.

-4. Check for DTCs with the HDS.

DTC Description	DTC
C0031-14 Left Front Wheel Speed Sensor Circuit Failure (Circuit Short To Ground or Open)	B
C0034-14 Right Front Wheel Speed Sensor Circuit Failure (Circuit Short To Ground or Open)	B
C0037-14 Left Rear Wheel Speed Sensor Circuit Failure (Circuit Short To Ground or Open)	B
C003A-14 Right Rear Wheel Speed Sensor Circuit Failure (Circuit Short To Ground or Open)	B

Is DTC C0031-14, C0034-14, C0037-14, or C003A-14 indicated?

YES

The failure is duplicated. Go to step 2.

NO

Intermittent failure, the system is OK at this time. **Refer to intermittent failures troubleshooting** .

2. Shorted wire check (Wheel speed sensor lines to ground)

-1. Turn the vehicle to the OFF (LOCK) mode.

-2. Disconnect the following connector.

VSA modulator-control unit 46P connector

-3. Measure the resistance between body ground and the appropriate wheel speed sensor +B and GND terminals of the VSA modulator-control unit 46P connector individually (see table).

Test condition	Vehicle OFF (LOCK) mode
B	VSA modulator-control unit 46P connector: disconnected

Connector	DTC	Test point 1	Test point 2
VSA modulator-control unit 46P connector	C0031-14 Left-front	No. 33	Body ground
		No. 42	
	C0034-14 Right-front	No. 30	
		No. 35	
	C0037-14 Left-rear	No. 17	
		No. 32	
	C003A-14 Right-rear	No. 31	
		No. 15	

Is there 1 MΩ or more?

YES

Wheel speed sensor wires are not shorted to ground. Go to step 4.

NO

Wheel speed sensor wires are shorted to ground. Go to step 3.

3. Wheel speed sensor(s) check 1

-1. Disconnect the following connectors.

Appropriate wheel speed sensor 2P connector (front)
Appropriate wheel speed sensor 4P connector (rear)

-2. On the sensor side, measure the resistance between test points 1 and 2.

Test condition	Vehicle OFF (LOCK) mode
B	VSA modulator-control unit 46P connector: disconnected
B	Appropriate wheel speed sensor 2P connector (front): disconnected
B	Appropriate wheel speed sensor 4P connector (rear): disconnected
Test circuit 1	B
Test point 1	Appropriate wheel speed sensor 2P connector (male terminals) No. 1: ①
B	Appropriate wheel speed sensor 4P connector (male terminals) No. 3: ②
Test point 2	Body ground

Test circuit 2	B
Test point 1	Appropriate wheel speed sensor 2P connector (male terminals) No. 2: ①
B	Appropriate wheel speed sensor 4P connector (male terminals) No. 4: ②
Test point 2	Body ground

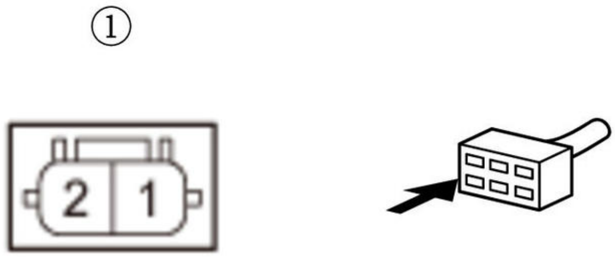

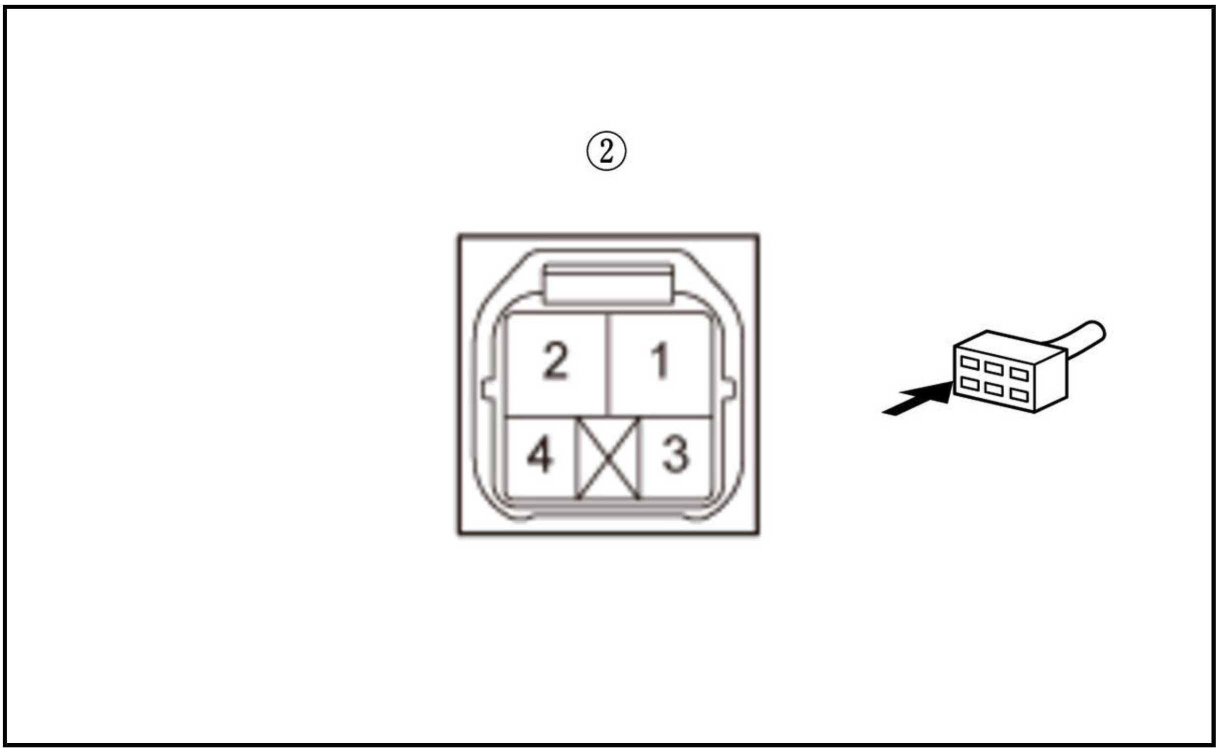

Is there 1 MΩ or more?

YES

Repair a short to ground in the wire between the VSA modulator-control unit and the wheel speed sensor.

NO

Replace the appropriate wheel speed sensor .

4. Shorted wire check (Wheel speed sensor lines to power)

-1. Turn the vehicle to the ON mode.

-2. Measure the voltage between body ground and the appropriate wheel speed sensor +B and GND terminals of the VSA modulator-control unit 46P connector individually (see table).

Test condition	Vehicle ON mode
B	VSA modulator-control unit 46P connector: disconnected

Connector	DTC	Test point 1	Test point 2
VSA modulator-control unit 46P connector	C0031-14 Left-front	No. 33	Body ground
		No. 42	
	C0034-14 Right-front	No. 30	
		No. 35	
	C0037-14 Left-rear	No. 17	
		No. 32	
	C003A-14 Right-rear	No. 31	
		No. 15	

Is there 1 V or more?

YES

The wheel speed sensor wires are shorted to power. Go to step 5.

NO

The wheel speed sensor wires are not shorted to power. Go to step 6.

5. Wheel speed sensor(s) check 2

-1. Turn the vehicle to the OFF (LOCK) mode.

-2. Disconnect the following connectors.

Appropriate wheel speed sensor 2P connector (front)
Appropriate wheel speed sensor 4P connector (rear)

-3. Turn the vehicle to the ON mode.

-4. On the sensor side, measure the voltage between test points 1 and 2.

Test condition	Vehicle ON mode
B	VSA modulator-control unit 46P connector: disconnected
B	Appropriate wheel speed sensor 2P connector (front): disconnected
B	Appropriate wheel speed sensor 4P connector (rear): disconnected
Test circuit 1	B
Test point 1	Appropriate wheel speed sensor 2P connector (male terminals) No. 1: ①
B	Appropriate wheel speed sensor 4P connector (male terminals) No. 3: ②
Test point 2	Body ground

Test circuit 2	B
Test point 1	Appropriate wheel speed sensor 2P connector (male terminals) No. 2: ①
B	Appropriate wheel speed sensor 4P connector (male terminals) No. 4: ②
Test point 2	Body ground

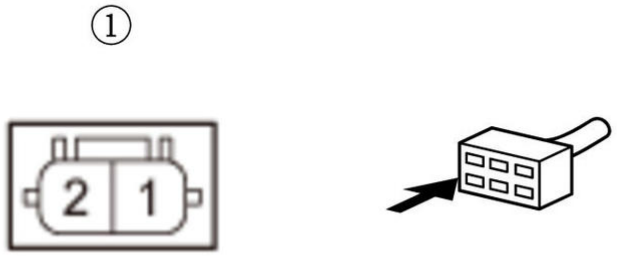

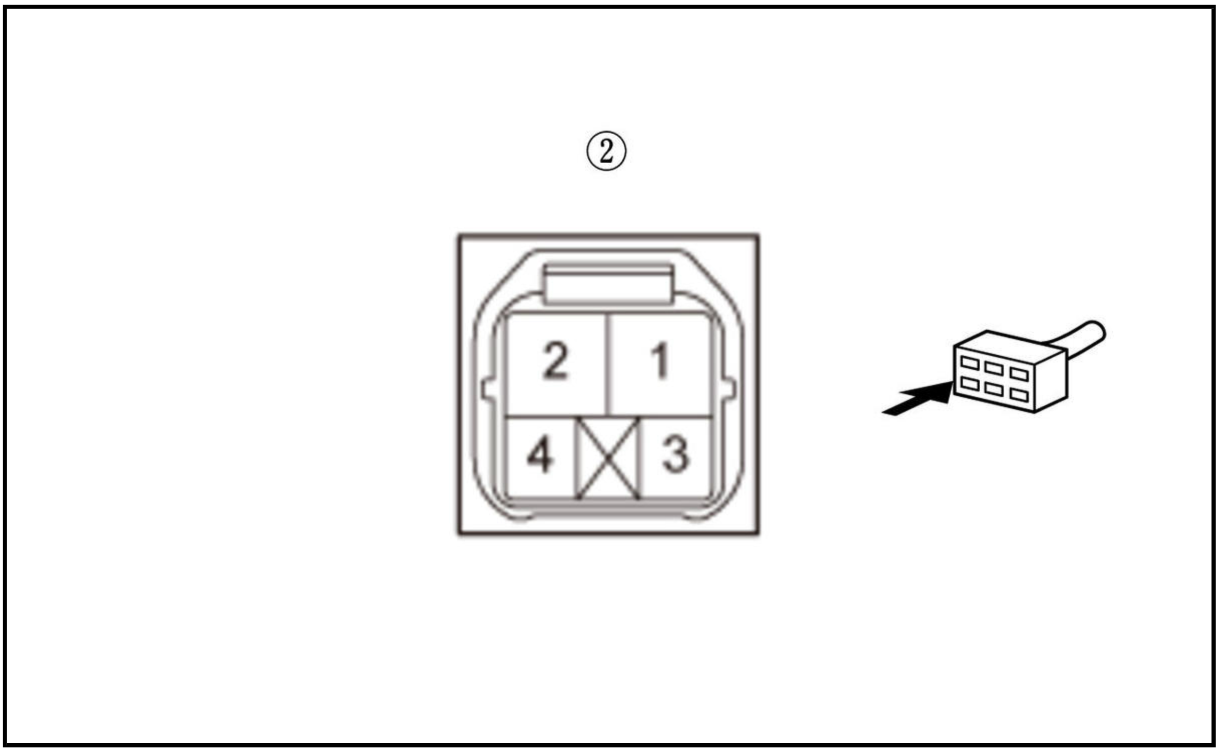

Is there 1 V or more?

YES

Replace the appropriate wheel speed sensor .

NO

Repair a short to power in the wire between the VSA modulator-control unit and the appropriate wheel speed sensor.

6. Shorted wire check (Wheel speed sensor lines wire to wire)

   -1. Turn the vehicle to the OFF (LOCK) mode.

   -2. Disconnect the following connectors.

Appropriate wheel speed sensor 2P connector (front)
Appropriate wheel speed sensor 4P connector (rear)

   -3. Measure the resistance between the appropriate VSA modulator-control unit 46P connector wheel speed sensor +B and GND terminals (see table).

Test condition	Vehicle OFF (LOCK) mode
B	VSA modulator-control unit 46P connector: disconnected
B	Appropriate wheel speed sensor 2P connector (front): disconnected
B	Appropriate wheel speed sensor 4P connector (rear): disconnected

Connector	DTC	Test point 1	Test point 2
VSA modulator-control unit 46P connector	C0031-14 Left-front	No. 33	No. 42
	C0034-14 Right-front	No. 30	No. 35
	C0037-14 Left-rear	No. 17	No. 32
	C003A-14 Right-rear	No. 31	No. 15

Is there 1 MΩ or more?

YES

The wheel speed sensor wires are not shorted in the wires. Go to step 7.

NO

Repair a short in the wires between the VSA modulator-control unit and the appropriate wheel speed sensor.

7. Open wire check (Wheel speed sensor lines) 1

-1. Measure the resistance between the appropriate VSA modulator-control unit 46P connector terminal and the appropriate wheel speed sensor connector terminal (see table).

Test condition	Vehicle OFF (LOCK) mode
B	VSA modulator-control unit 46P connector: disconnected
B	Appropriate wheel speed sensor 2P connector (front): disconnected
B	Appropriate wheel speed sensor 4P connector (rear): disconnected

DTC	**VSA modulator-control unit 46P connector**	**Appropriate Wheel Speed Sensor Connector Terminal**
C0031-14 Left-front	No. 33	Left-front wheel speed sensor 2P connector (female terminals) No. 1: ①
C0034-14 Right-front	No. 30	Right-front wheel speed sensor 2P connector (female terminals) No. 1: ①
C0037-14 Left-rear	No. 17	Left-rear wheel speed sensor 4P connector (female terminals) No. 3: ②
C003A-14 Right-rear	No. 31	Right-rear wheel speed sensor 4P connector (female terminals) No. 3: ②

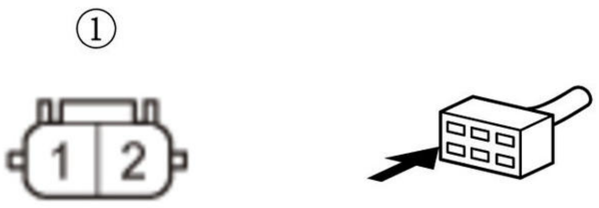

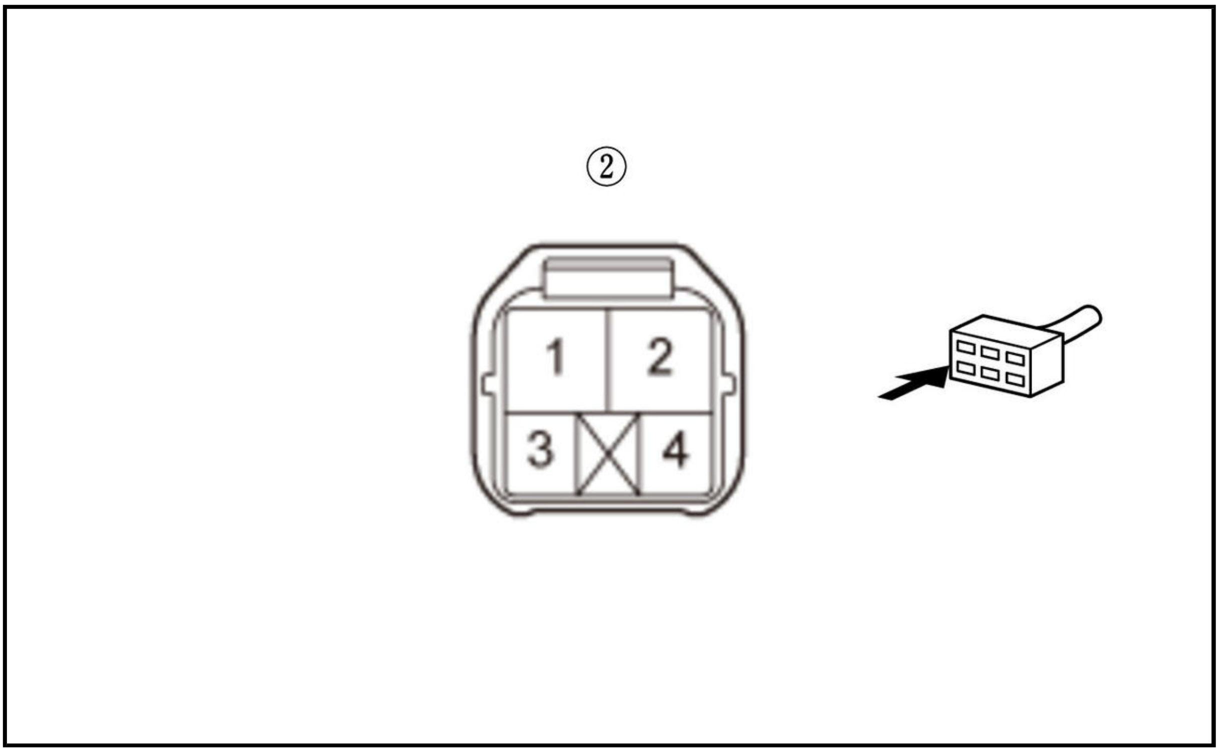

Is there 1.0 Ω or less?

YES

Go to step 8.

NO

Repair an open in the wire between the VSA modulator-control unit and the appropriate wheel speed sensor.

8. Open wire check (Wheel speed sensor lines) 2

-1. Measure the resistance between the appropriate VSA modulator-control unit 46P connector terminal and the appropriate wheel speed sensor connector terminal (see table).

Test condition	Vehicle OFF (LOCK) mode
B	VSA modulator-control unit 46P connector: disconnected
B	Appropriate wheel speed sensor 2P connector (front): disconnected
B	Appropriate wheel speed sensor 4P connector (rear): disconnected

DTC	**VSA modulator-control unit 46P connector**	**Appropriate Wheel Speed Sensor Connector Terminal**
C0031-14 Left-front	No. 42	Left-front wheel speed sensor 2P connector (female terminals) No. 2: ①
C0034-14 Right-front	No. 35	Right-front wheel speed sensor 2P connector (female terminals) No. 2: ①
C0037-14 Left-rear	No. 32	Left-rear wheel speed sensor 4P connector (female terminals) No. 4: ②
C003A-14 Right-rear	No. 15	Right-rear wheel speed sensor 4P connector (female terminals) No. 4: ②

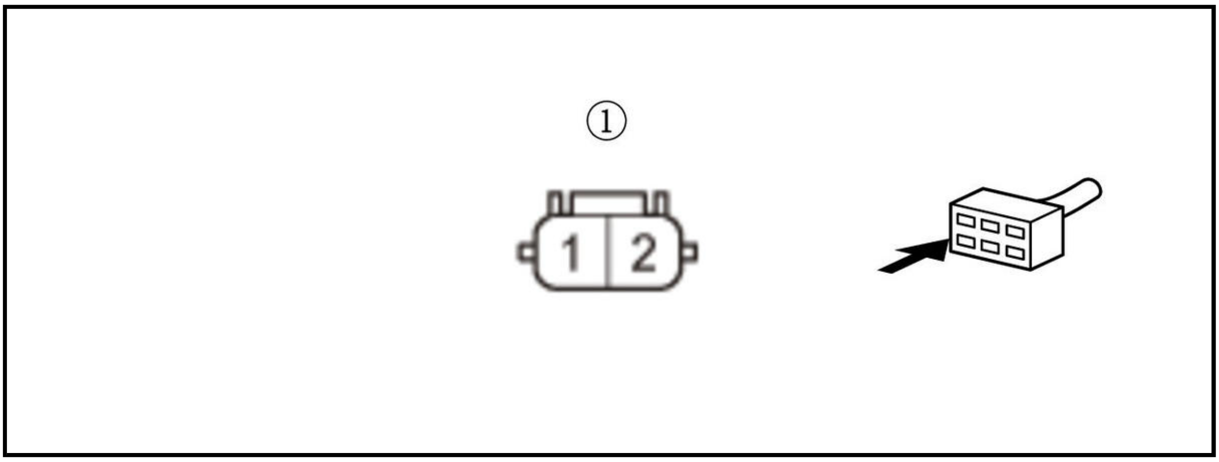

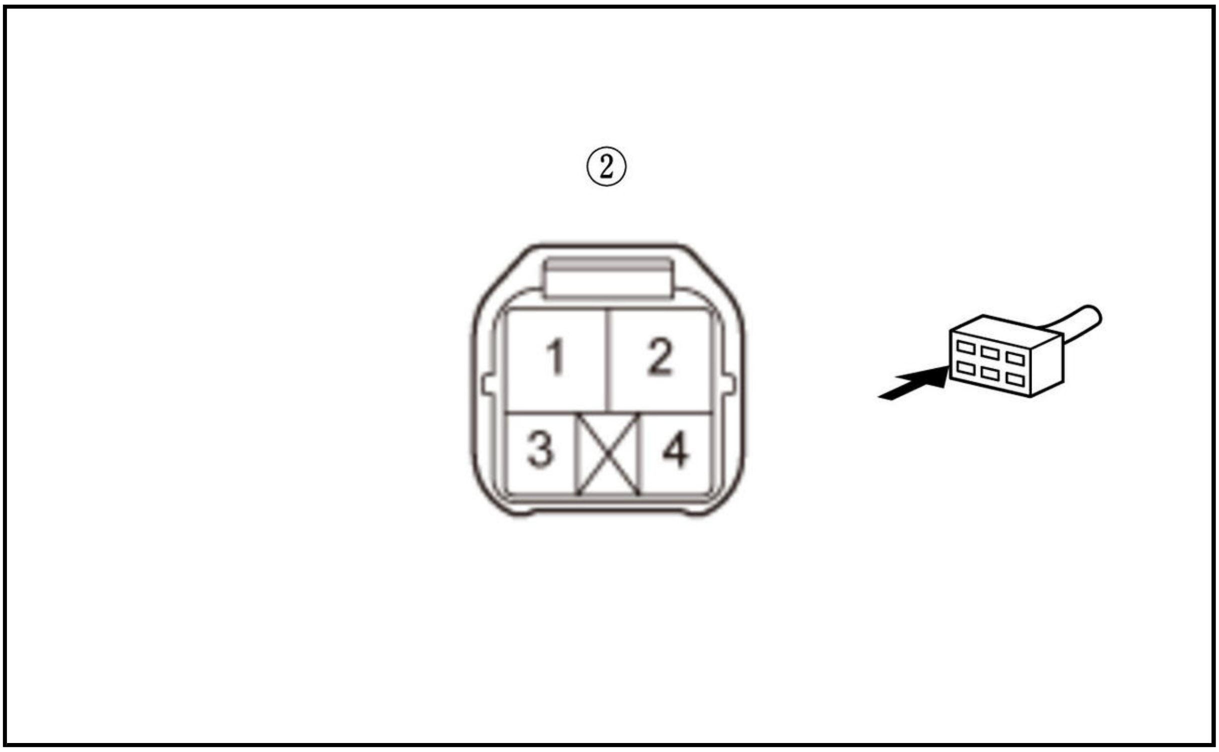

Is there 1.0 Ω or less?

YES

The wheel speed sensor wires are OK. Go to step 9.

NO

Repair an open in the wire between the VSA modulator-control unit and the appropriate wheel speed sensor.

9. Wheel speed sensor(s) check

-1. **Substitute a known-good wheel speed sensor** .

DTC	Appropriate Wheel Speed Sensor
C0031-14	Left-front
C0034-14	Right-front
C0037-14	Left-rear
C003A-14	Right-rear

-2. Reconnect the following connectors.

VSA modulator-control unit 46P connector
Appropriate wheel speed sensor 2P connector (front)
Appropriate wheel speed sensor 4P connector (rear)

-3. Turn the vehicle to the ON mode.

-4. Clear the DTC with the HDS.

-5. Turn the vehicle to the OFF (LOCK) mode, then to the ON mode.

-6. Check for DTCs with the HDS.

DTC Description	DTC
B	B

Is DTC C0031-14, C0034-14, C0037-14, or C003A-14 indicated?

YES

Check for loose terminals and poor connections in the VSA modulator-control unit 46P connector. Check for any authorized service information related to the DTCs or symptoms you are troubleshooting. If they are OK, replace the VSA modulator-control unit .

NO

Replace the original wheel speed sensor .

DTC C0031-3A, C0034-3A, C0037-3A, C003A-3A

DTC C0031-3A : Wheel Speed Sensor (Left Front) Signal Failure (Signal Frequency is Too High)

DTC C0034-3A : Wheel Speed Sensor (Right Front) Signal Failure (Signal Frequency is Too High)

DTC C0037-3A : Wheel Speed Sensor (Left Rear) Signal Failure (Signal Frequency is Too High)

DTC C003A-3A : Wheel Speed Sensor (Right Rear) Signal Failure (Signal Frequency is Too High)

NOTE:

- Before you troubleshoot, review the general troubleshooting information .
- If the ABS and other indicators come on because of electrical noise, the indicators will go off when you test-drive the vehicle speed at 9 mph (15 km/h) or more and the noise is gone.

DTC Description	DTC
C0031-3A Wheel Speed Sensor (Left Front) Signal Failure (Signal Frequency is Too High)	B
C0034-3A Wheel Speed Sensor (Right Front) Signal Failure (Signal Frequency is Too High)	B
C0037-3A Wheel Speed Sensor (Left Rear) Signal Failure (Signal Frequency is Too High)	B
C003A-3A Wheel Speed Sensor (Right Rear) Signal Failure (Signal Frequency is Too High)	B

DTC (VSA)

1. Problem verification

-1. Turn the vehicle to the ON mode.

-2. Clear the DTC with the HDS.

-3. Turn the vehicle to the OFF (LOCK) mode, then to the READY TO DRIVE mode.

-4. Test-drive the vehicle for 80 seconds or more.

NOTE: Drive the vehicle on the road, not on a lift.

-5. Check for DTCs with the HDS.

DTC Description	DTC
C0031-3A Wheel Speed Sensor (Left Front) Signal Failure (Signal Frequency is Too High)	B
C0034-3A Wheel Speed Sensor (Right Front) Signal Failure (Signal Frequency is Too High)	B
C0037-3A Wheel Speed Sensor (Left Rear) Signal Failure (Signal Frequency is Too High)	B
C003A-3A Wheel Speed Sensor (Right Rear) Signal Failure (Signal Frequency is Too High)	B

Is DTC C0031-3A, C0034-3A, C0037-3A, or C003A-3A indicated?

YES

The failure is duplicated. Go to step 2.

NO

Intermittent failure, the system is OK at this time. **Refer to intermittent failures troubleshooting** .

2. Wheel speed sensor installation check

-1. Turn the vehicle to the OFF (LOCK) mode.

-2. **Check that the appropriate wheel speed sensor is properly mounted** .

DTC	Appropriate Wheel Speed Sensor
C0031-3A	Left-front
C0034-3A	Right-front
C0037-3A	Left-rear
C003A-3A	Right-rear

Is the wheel speed sensor installation OK?

YES

Go to step 3.

NO

Reinstall the wheel speed sensor , and recheck its mounting position, then go to step 1.

3. Wheel speed sensor check

-1. **Substitute a known-good wheel speed sensor** .

DTC	Appropriate Wheel Speed Sensor
C0031-3A	Left-front

DTC	Appropriate Wheel Speed Sensor
C0034-3A	Right-front
C0037-3A	Left-rear
C003A-3A	Right-rear

-2. Turn the vehicle to the ON mode.

-3. Clear the DTC with the HDS.

-4. Turn the vehicle to the OFF (LOCK) mode, then to the READY TO DRIVE mode.

-5. Test-drive the vehicle for 80 seconds or more.

NOTE: Drive the vehicle on the road, not on a lift.

-6. Check for DTCs with the HDS.

DTC Description	DTC
C0031-3A Wheel Speed Sensor (Left Front) Signal Failure (Signal Frequency is Too High)	B
C0034-3A Wheel Speed Sensor (Right Front) Signal Failure (Signal Frequency is Too High)	B
C0037-3A Wheel Speed Sensor (Left Rear) Signal Failure (Signal Frequency is Too High)	B
C003A-3A Wheel Speed Sensor (Right Rear) Signal Failure (Signal Frequency is Too High)	B

Is DTC C0031-3A, C0034-3A, C0037-3A, or C003A-3A indicated?

YES

Go to step 4.

NO

Replace the original wheel speed sensor .

4. Magnetic encoder check

-1. Turn the vehicle to the OFF (LOCK) mode.

-2. Inspect the appropriate magnetic encoder for damage, debris, and correct installation.

DTC	Appropriate Magnetic Encoder	Note
C0031-3A	Left-front	**Remove the driveshaft outboard joint from the appropriate wheel hub** .
C0034-3A	Right-front	
C0037-3A	Left-rear	**Remove the hub bearing unit** .
C003A-3A	Right-rear	

Is the magnetic encoder surface OK?

YES

Check for loose terminals and poor connections in the VSA modulator-control unit 46P connector. Check for any authorized service information related to the DTCs or symptoms you are troubleshooting. If they are OK, **replace the VSA modulator-control unit** .

NO

Clean the debris from the appropriate magnetic encoder surface on the wheel bearing or the hub bearing unit. If the debris cannot be removed or the encoder is damaged, replace the appropriate **wheel bearing** or the **hub bearing unit** .

DTC C0031-62, C0034-62, C0037-62, C003A-62 (VSA CONTROL UNIT)

DTC C0031-62 : Left Front Wheel Speed Sensor Signal Compare Failure

DTC C0034-62 : Right Front Wheel Speed Sensor Signal Compare Failure

DTC C0037-62 : Left Rear Wheel Speed Sensor Signal Compare Failure

DTC C003A-62 : Right Rear Wheel Speed Sensor Signal Compare Failure

NOTE: **Before you troubleshoot, review the general troubleshooting information** .

DTC Description	DTC
C0031-62 Left Front Wheel Speed Sensor Signal Compare Failure	B
C0034-62 Right Front Wheel Speed Sensor Signal Compare Failure	B
C0037-62 Left Rear Wheel Speed Sensor Signal Compare Failure	B
C003A-62 Right Rear Wheel Speed Sensor Signal Compare Failure	B

DTC (VSA)

1. Problem verification

-1. Turn the vehicle to the ON mode.

-2. Clear the DTC with the HDS.

-3. Turn the vehicle to the OFF (LOCK) mode, then to the READY TO DRIVE mode.

-4. Test-drive the vehicle at 31 mph (50 km/h) or more.

NOTE: Drive the vehicle on the road, not on a lift.

-5. Check for DTCs with the HDS.

DTC Description	DTC
C0031-62 Left Front Wheel Speed Sensor Signal Compare Failure	B
C0034-62 Right Front Wheel Speed Sensor Signal Compare Failure	B
C0037-62 Left Rear Wheel Speed Sensor Signal Compare Failure	B
C003A-62 Right Rear Wheel Speed Sensor Signal Compare Failure	B

Is DTC C0031-62, C0034-62, C0037-62, or C003A-62 indicated?

YES

The failure is duplicated. Go to step 2.

NO

Intermittent failure, the system is OK at this time. **Refer to intermittent failures troubleshooting** .

2. Wheel speed sensor installation check

-1. Turn the vehicle to the OFF (LOCK) mode.

-2. Check that the appropriate wheel speed sensor is properly mounted .

DTC	Appropriate Wheel Speed Sensor
C0031-62	Left-front
C0034-62	Right-front
C0037-62	Left-rear
C003A-62	Right-rear

Is the wheel speed sensor installation OK?

YES

Go to step 3.

NO

Reinstall the wheel speed sensor , and recheck the mounting position, then go to step 1.

3. Wheel speed sensor check

-1. Substitute a known-good wheel speed sensor .

DTC	Appropriate Wheel Speed Sensor
C0031-62	Left-front
C0034-62	Right-front
C0037-62	Left-rear
C003A-62	Right-rear

-2. Turn the vehicle to the ON mode.

-3. Clear the DTC with the HDS.

-4. Turn the vehicle to the OFF (LOCK) mode, then to the READY TO DRIVE mode.

-5. Test-drive the vehicle at 31 mph (50 km/h) or more.

NOTE: Drive the vehicle on the road, not on a lift.

-6. Check for DTCs with the HDS.

DTC Description	DTC
C0031-62 Left Front Wheel Speed Sensor Signal Compare Failure	B
C0034-62 Right Front Wheel Speed Sensor Signal Compare Failure	B
C0037-62 Left Rear Wheel Speed Sensor Signal Compare Failure	B
C003A-62 Right Rear Wheel Speed Sensor Signal Compare Failure	B

Is DTC C0031-62, C0034-62, C0037-62, or C003A-62 indicated?

YES

Go to step 4.

NO

Replace the original wheel speed sensor .

4. Magnetic encoder check

-1. Turn the vehicle to the OFF (LOCK) mode.

-2. Inspect the appropriate magnetic encoder for damage, debris, and correct installation.

DTC	Appropriate Magnetic Encoder	Note
C0031-62	Left-front	Remove the driveshaft outboard joint from the appropriate wheel hub .
C0034-62	Right-front	
C0037-62	Left-rear	Remove the hub bearing unit .
C003A-62	Right-rear	

Is the magnetic encoder surface OK?

YES

Check for loose terminals and poor connections in the VSA modulator-control unit 46P connector. Check for any authorized service information related to the DTCs or symptoms you are troubleshooting. If they are OK, replace the VSA modulator-control unit .

NO

Clean the debris from the appropriate magnetic encoder surface on the wheel bearing or the hub bearing unit. If the debris cannot be removed or the encoder is damaged, replace the appropriate wheel bearing or the hub bearing unit .

DTC C0040-12

DTC C0040-12 : Brake Light Switch Failure (Stuck ON)/Brake Pedal Stroke Sensor Stuck (EBB)

NOTE: Before you troubleshoot, review the general troubleshooting information .

DTC Description	DTC
C0040-12 Brake Light Switch Failure (Stuck ON)/Brake Pedal Stroke Sensor Stuck (EBB)	B

DTC (VSA)

1. Problem verification

-1. Turn the vehicle to the ON mode.

-2. Clear the DTC with the HDS.

-3. Turn the vehicle to the OFF (LOCK) mode, then to the READY TO DRIVE mode.

-4. Test-drive the vehicle under these conditions:

- Vehicle speed at 9 mph (15 km/h) or more for at least 60 seconds
- Accelerator pedal pressed
- Brake pedal released

NOTE: Drive the vehicle on the road, not on a lift.

-5. Check for DTCs with the HDS.

DTC Description	DTC
C0040-12 Brake Light Switch Failure (Stuck ON)/Brake Pedal Stroke Sensor Stuck (EBB)	B

Is DTC C0040-12 indicated?

YES

The failure is duplicated. Go to step 2.

NO

Intermittent failure, the system is OK at this time. Refer to intermittent failures troubleshooting .

2. Brake pedal height check

-1. Check the brake pedal height .

Is the brake pedal height OK?

YES

Go to step 3.

NO

Adjust brake pedal height .

3. Brake pedal position switch performance check 1

-1. Check the parameter(s) below with the HDS.

Signal	Current conditions	
	Values	Unit
BRAKE SWITCH	B	B

Does the signal change ON and OFF when the brake pedal is pressed and released?

YES

Check for loose terminals and poor connections in the VSA modulator-control unit 46P connector. Check for any authorized service information related to the DTCs or symptoms you are troubleshooting. If they are OK, replace the VSA modulator-control unit .

NO

Go to step 4.

4. Brake pedal position switch performance check 2

-1. Turn the vehicle to the OFF (LOCK) mode.

-2. Disconnect the following connector.

Brake pedal position switch 4P connector

-3. Check the parameter(s) below with the HDS.

Signal	Current conditions	
	Values	Unit
BRAKE SWITCH	B	B

Does the indicator change from ON to OFF?

YES

Replace the brake pedal position switch .

NO

Go to step 5.

5. Shorted wire check (STOP_SW line to power)

-1. Turn the vehicle to the OFF (LOCK) mode.

-2. Jump the SCS line with the HDS, and wait more than 1 minute.

-3. Disconnect the following connector.

PCM connector A (50P)

-4. Turn the vehicle to the ON mode.

-5. Measure the voltage between test points 1 and 2.

Test condition	Vehicle ON mode
B	Brake pedal position switch 4P connector: disconnected
B	PCM connector A (50P): disconnected
Test point 1	**PCM connector A (50P) No. 26**
Test point 2	Body ground

Is there 0.1 V or more?

YES

Repair a short to power in the wire between the brake pedal position switch and the PCM.

NO

The STOP_SW wire is OK. Go to step 6.

6. PCM check

-1. Turn the vehicle to the OFF (LOCK) mode.

-2. **Substitute a known-good PCM** .

-3. Reconnect the following connectors.

Brake pedal position switch 4P connector
PCM connector A (50P)

-4. Turn the vehicle to the ON mode.

-5. Clear the DTC with the HDS.

-6. Turn the vehicle to the OFF (LOCK) mode, then to the READY TO DRIVE mode.

-7. Test-drive the vehicle under these conditions:

- Vehicle speed at 9 mph (15 km/h) or more for at least 60 seconds
- Accelerator pedal pressed

- Brake pedal released

NOTE: Drive the vehicle on the road, not on a lift.

-8. Check for DTCs with the HDS.

DTC Description	DTC
C0040-12 Brake Light Switch Failure (Stuck ON)/Brake Pedal Stroke Sensor Stuck (EBB)	B

Is DTC C0040-12 indicated?

YES

Check for loose terminals and poor connections in the VSA modulator-control unit 46P connector. Check for any authorized service information related to the DTCs or symptoms you are troubleshooting. If they are OK, **replace the VSA modulator-control unit** .

NO

Replace the original PCM .

DTC C0040-16

DTC C0040-16 : Plausibility BLS vs. Pressure Sensor

NOTE:

- **Before you troubleshoot, review the general troubleshooting information** .
- **Troubleshoot any PGM-FI DTCs first** .

DTC Description	DTC
C0040-16 Plausibility BLS vs. Pressure Sensor	B

DTC (VSA)

1. Problem verification

-1. Turn the vehicle to the ON mode.

-2. Clear the DTC with the HDS.

-3. Turn the vehicle to the OFF (LOCK) mode, then to the READY TO DRIVE mode.

-4. Wait for 1 second or more without pressing the brake pedal.

-5. Press the brake pedal hard for 1 second or more.

-6. Check for DTCs with the HDS.

DTC Description	DTC
C0040-16 Plausibility BLS vs. Pressure Sensor	B

Is DTC C0040-16 indicated?

YES

The failure is duplicated. Go to step 2.

NO

Intermittent failure, the system is OK at this time. **Refer to intermittent failures troubleshooting** .

2. VSA modulator-control unit performance check

-1. Check the parameter(s) below with the HDS.

NOTE: Do not press the brake pedal.

Signal	Current conditions	
	Values	Unit
BRAKE PRESSURE	B	B

Is there 10 MPa or less?

YES

Go to step 5.

NO

Go to step 3.

3. Brake pedal height check

-1. **Check the brake pedal height** .

Is the brake pedal height OK?

YES

Go to step 4.

NO

Adjust brake pedal height .

4. Brake drag check

-1. **Check for brake drag** .

Is the brake drag OK?

YES

Check for loose terminals and poor connections in the VSA modulator-control unit 46P connector. Check for any authorized service information related to the DTCs or symptoms you are troubleshooting. If they are OK, **replace the VSA modulator-control unit** .

NO

Repair a brake drag .

5. Brake pedal position switch performance check 1

-1. Check the parameter(s) below with the HDS.

Signal	Current conditions	
	Values	**Unit**
BRAKE SWITCH	B	B

Does the signal change ON and OFF when the brake pedal is pressed and released?

YES

Check for loose terminals and poor connections in the VSA modulator-control unit 46P connector. Check for any authorized service information related to the DTCs or symptoms you are troubleshooting. If they are OK, **replace the VSA modulator-control unit** .

NO

Go to step 6.

6. Brake pedal position switch performance check 2

-1. Turn the vehicle to the OFF (LOCK) mode.

-2. Disconnect the following connector.

Brake pedal position switch 4P connector

-3. Connect terminals 1 and 2 with a jumper wire.

Terminal 1	Brake pedal position switch 4P connector (female terminals) No. 1: ①
Terminal 2	Brake pedal position switch 4P connector (female terminals) No. 4: ①

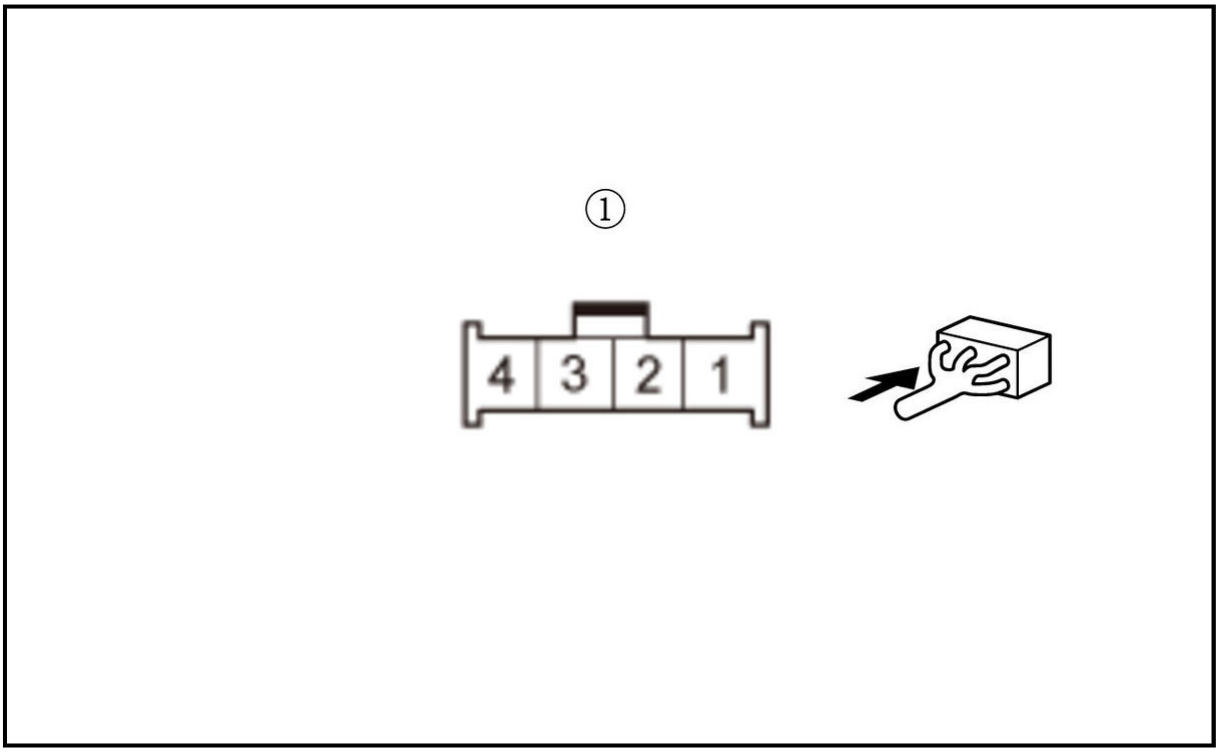

-4. Turn the vehicle to the ON mode.

-5. Check the parameter(s) below with the HDS.

Signal	**Current conditions**	
	Values	**Unit**
BRAKE SWITCH	B	B

Does it indicate ON?

YES

Replace the brake pedal position switch .

NO

Go to step 7.

7. Fuse check

-1. Turn the vehicle to the OFF (LOCK) mode.

-2. Disconnect the jumper wire.

-3. Check the following fuse.

Fuse	**No. A9**

Is the fuse OK?

YES

The fuse is OK. Reinstall the fuse, then go to step 8.

NO

Replace the fuse. If the fuse blows again, repair a short to ground in the No. A9 fuse circuit.

8. Open wire check (+B_STOP line)

-1. Measure the voltage between test points 1 and 2.

Test condition	Vehicle OFF (LOCK) mode
B	Brake pedal position switch 4P connector: disconnected
Test point 1	Brake pedal position switch 4P connector (female terminals) No. 4: ①
Test point 2	Body ground

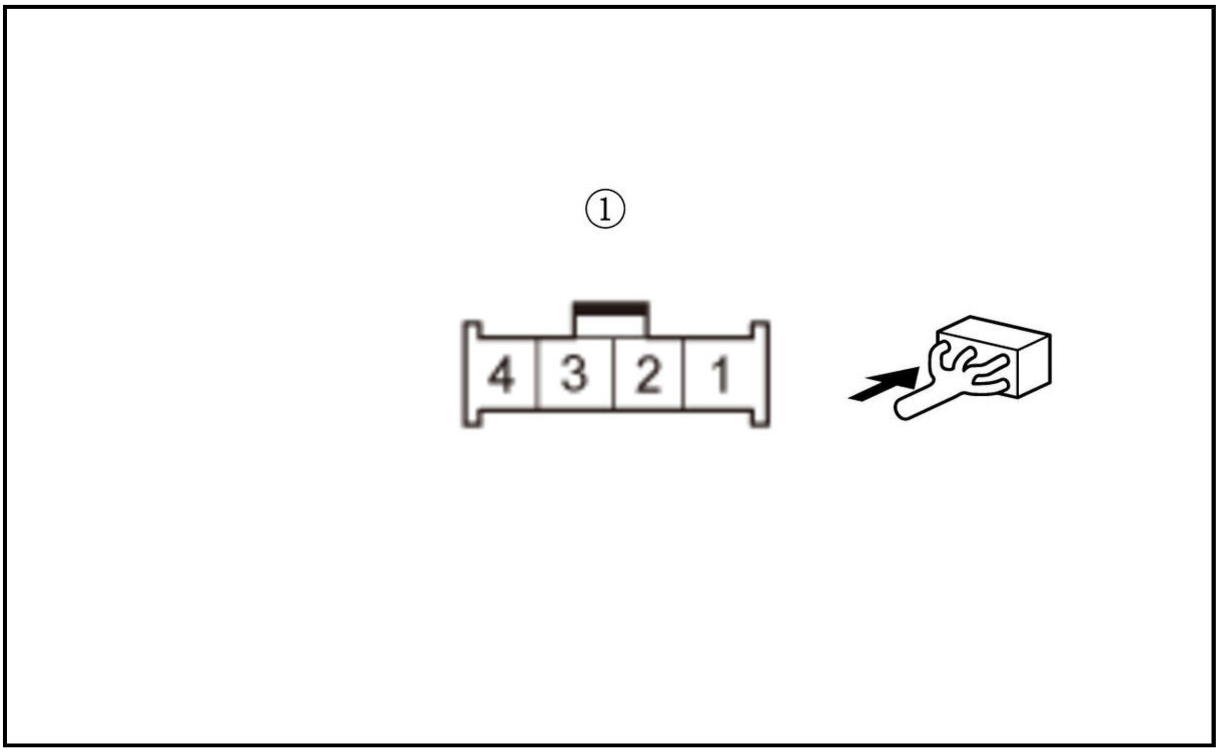

Is there battery voltage?

YES

The +B_STOP wire is OK. Go to step 9.

NO

Repair an open in the wire between the under-hood fuse/relay box and the brake pedal position switch.

9. Open wire check (STOP_SW line)

-1. Jump the SCS line with the HDS, and wait more than 1 minute.

-2. Disconnect the following connector.

PCM connector A (50P)

-3. Measure the resistance between test points 1 and 2.

Test condition	Vehicle OFF (LOCK) mode
B	Brake pedal position switch 4P connector: disconnected
B	PCM connector A (50P): disconnected

Test point 1	**PCM connector A (50P) No. 26**
Test point 2	Brake pedal position switch 4P connector (female terminals) No. 1: ①

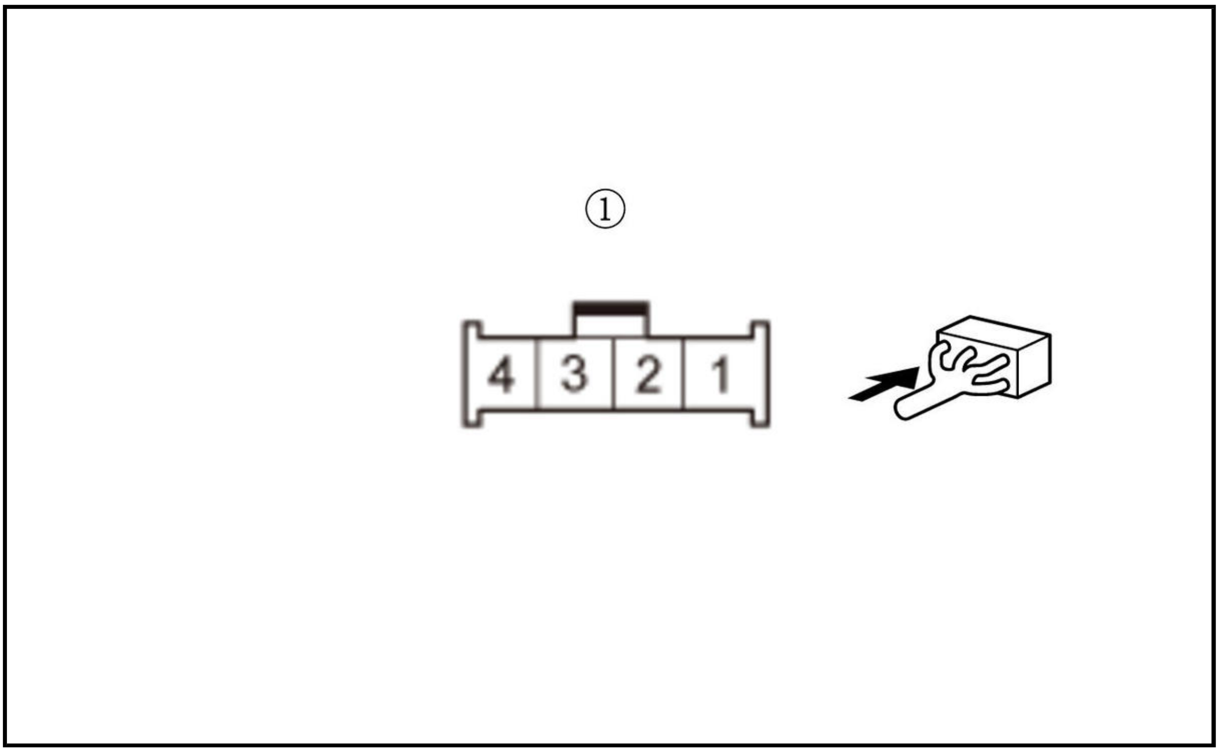

Is there 1.0 Ω or less?

YES

The STOP_SW wire is OK. Go to step 10.

NO

Repair an open in the wire between the brake pedal position switch and the PCM.

10. PCM check

-1. **Substitute a known-good PCM** .

-2. Reconnect the following connectors.

Brake pedal position switch 4P connector
PCM connector A (50P)

-3. Turn the vehicle to the ON mode.

-4. Clear the DTC with the HDS.

-5. Turn the vehicle to the OFF (LOCK) mode, then to the READY TO DRIVE mode.

-6. Wait for 1 second or more without pressing the brake pedal.

-7. Press the brake pedal hard for 1 second or more.

-8. Check for DTCs with the HDS.

DTC Description	DTC
C0040-16 Plausibility BLS vs. Pressure Sensor	B

Is DTC C0040-16 indicated?

YES

Check for loose terminals and poor connections in the VSA modulator-control unit 46P connector. Check for any authorized service information related to the DTCs or symptoms you are troubleshooting. If they are OK, replace the VSA modulator-control unit .

NO

Replace the original PCM .

DTC C0044-49

DTC C0044-49 : Master Cylinder Pressure Sensor Failure (Internal Circuit Failure)

NOTE: Before you troubleshoot, review the general troubleshooting information .

DTC Description	DTC
C0044-49 Master Cylinder Pressure Sensor Failure (Internal Circuit Failure)	B

DTC (VSA)

1. Problem verification

-1. Turn the vehicle to the ON mode.

-2. Clear the DTC with the HDS.

-3. Turn the vehicle to the OFF (LOCK) mode, then to the ON mode.

-4. Check for DTCs with the HDS.

DTC Description	DTC
C0044-49 Master Cylinder Pressure Sensor Failure (Internal Circuit Failure)	B

Is DTC C0044-49 indicated?

YES

The failure is duplicated. Check for loose terminals and poor connections in the VSA modulator-control unit 46P connector. Check for any authorized service information related to the DTCs or symptoms you are troubleshooting. If they are OK, replace the VSA modulator-control unit .

NO

Intermittent failure, the system is OK at this time. Refer to intermittent failures troubleshooting .

DTC C0044-62

DTC C0044-62 : Master Cylinder Pressure Sensor Failure (Signal Stuck)

NOTE: Before you troubleshoot, review the general troubleshooting information .

DTC Description	DTC
C0044-62 Master Cylinder Pressure Sensor Failure (Signal Stuck)	B

DTC (VSA)

1. Problem verification

-1. Turn the vehicle to the ON mode.

-2. Clear the DTC with the HDS.

-3. Turn the vehicle to the OFF (LOCK) mode, then to the READY TO DRIVE mode.

-4. Test-drive the vehicle under these conditions:

- Vehicle speed at less than 9 mph (14 km/h) for at least 30 seconds
- Brake pedal released

NOTE: Drive the vehicle on the road, not on a lift.

-5. Check for DTCs with the HDS.

DTC Description	DTC
C0044-62 Master Cylinder Pressure Sensor Failure (Signal Stuck)	B

Is DTC C0044-62 indicated?

YES

The failure is duplicated. Check for loose terminals and poor connections in the VSA modulator-control unit 46P connector. Check for any authorized service information related to the DTCs or symptoms you are troubleshooting. If they are OK, **replace the VSA modulator-control unit** .

NO

Intermittent failure, the system is OK at this time. **Refer to intermittent failures troubleshooting** .

DTC C0049-7B

DTC C0049-7B : Brake Fluid Level Too Low

NOTE:

- **Before you troubleshoot, review the general troubleshooting information** .
- Bleeding the brake system while turn the vehicle to the ON mode can cause this DTC.

DTC Description	DTC
C0049-7B Brake Fluid Level Too Low	B

DTC (VSA)

1. Problem verification

-1. Turn the vehicle to the ON mode.

-2. Clear the DTC with the HDS.

-3. Turn the vehicle to the OFF (LOCK) mode, then to the ON mode.

-4. Wait 60 seconds or more.

-5. Check for DTCs with the HDS.

DTC Description	DTC
C0049-7B Brake Fluid Level Too Low	B

Is DTC C0049-7B indicated?

YES

The failure is duplicated. Go to step 2.

NO

Intermittent failure, the system is OK at this time. **Refer to intermittent failures troubleshooting** .

2. Brake fluid level check

-1. Check the brake fluid level in the master cylinder reservoir.

Is the brake fluid level OK?

YES

Go to step 3.

NO

Check for worn brake pads or brake fluid leaks.

- **Inspect the brake lines and hoses for leaks** , and repair as needed.
- **Inspect the front brake pads** and replace worn out brake pads.
- **Inspect the rear brake pads** and replace worn out brake pads.
- Add brake fluid and recheck.

3. Gauge control module check 1

-1. Release the parking brake.

-2. Turn the vehicle to the OFF (LOCK) mode, then to the ON mode.

-3. Check the brake system indicator (red) in the gauge control module.

Does the indicator come on, then go off?

YES

Check for loose terminals and poor connections in the VSA modulator-control unit 46P connector. Check for any authorized service information related to the DTCs or symptoms you are troubleshooting. If they are OK, **replace the VSA modulator-control unit** .

NO

Go to step 4.

4. Gauge control module check 2

-1. Check the parameter(s) below with the HDS.

Signal	Current conditions	
	Values	Unit
BRAKE FLUID LEVEL	B	B

Does the HDS indicate ENOUGH?

YES

Replace the gauge control module .

NO

Go to step 5.

5. Brake fluid level switch check

-1. Turn the vehicle to the OFF (LOCK) mode.

-2. Disconnect the following connector.

Brake fluid level switch 2P connector

-3. Turn the vehicle to the ON mode.

-4. Check the parameter(s) below with the HDS.

Signal	Current conditions	
	Values	Unit
BRAKE FLUID LEVEL	B	B

Does the HDS indicate ENOUGH?

YES

Replace the brake fluid reservoir (brake fluid level switch is included) .

NO

Go to step 6.

6. Shorted wire check (BRAKE_LEVEL_SW line)

-1. Turn the vehicle to the OFF (LOCK) mode.

-2. Disconnect the following connector.

Gauge control module connector A (32P)

-3. Measure the resistance between test points 1 and 2.

Test condition	Vehicle OFF (LOCK) mode
B	Brake fluid level switch 2P connector: disconnected
B	Gauge control module connector A (32P): disconnected
Test point 1	Brake fluid level switch 2P connector (female terminals) No. 2: ①
Test point 2	Body ground

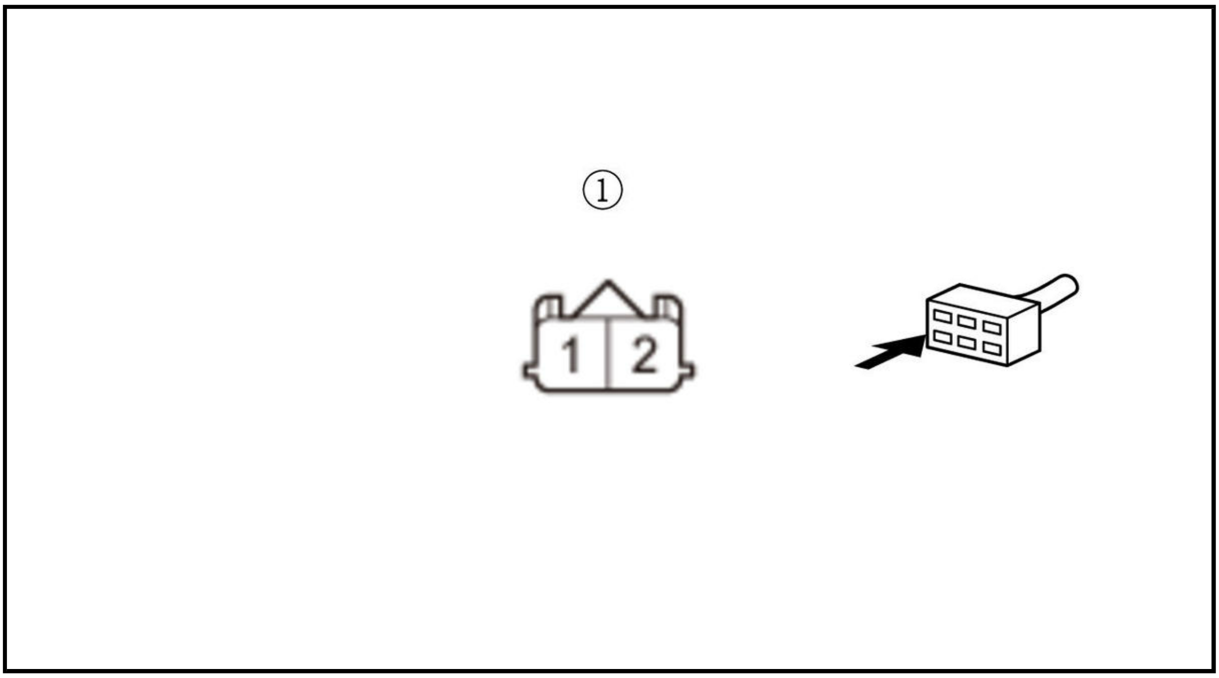

Is there 1 MΩ or more?

YES

The BRAKE_LEVEL_SW wire is OK. **Replace the gauge control module** .

NO

Repair a short to body ground in the wire between the gauge control module and the brake fluid level switch.

DTC C0051-54 (VSA CONTROL UNIT)

DTC C0051-54 : Steering Angle Neutral Position Learning Incomplete

NOTE: **Before you troubleshoot, review the general troubleshooting information** .

DTC Description	DTC
C0051-54 Steering Angle Neutral Position Learning Incomplete	B

DTC (VSA)

1. Problem verification

   -1. Turn the vehicle to the ON mode.

   -2. Clear the DTC with the HDS.

   -3. Turn the vehicle to the OFF (LOCK) mode, then to the ON mode.

   -4. Check for DTCs with the HDS.

DTC Description	DTC
C0051-54 Steering Angle Neutral Position Learning Incomplete	B

Is DTC C0051-54 indicated?

YES

The failure is duplicated. Go to step 2.

NO

Intermittent failure, the system is OK at this time. **Refer to intermittent failures troubleshooting** .

2. DTC check (EPS control unit)

-1. Check for DTCs with the HDS.

DTC Description	DTC	Freeze Frame
B	B	B

Is DTC indicated?

YES

Go to indicated DTC's troubleshooting.

NO

Go to step 3.

3. VSA modulator-control unit check (VSA sensor neutral position memorization)

-1. **Do the VSA sensor neutral position memorization** .

-2. Clear the DTC with the HDS.

-3. Turn the vehicle to the OFF (LOCK) mode, then to the ON mode.

-4. Check for DTCs with the HDS.

DTC Description	DTC
C0051-54 Steering Angle Neutral Position Learning Incomplete	B

Is DTC C0051-54 indicated?

YES

Check for loose terminals and poor connections in the VSA modulator-control unit 46P connector. Check for any authorized service information related to the DTCs or symptoms you are troubleshooting. If they are OK, **replace the VSA modulator-control unit** .

NO

Troubleshooting is complete.

DTC C0051-62, C0051-96

DTC C0051-62 : Steering Angle Sensor Failure (Signal Compare Failure)

DTC C0051-96 : Steering Angle Sensor Failure (Sensor Detects Internal Failure)

NOTE: **Before you troubleshoot, review the general troubleshooting information** .

DTC Description	DTC
C0051-62 Steering Angle Sensor Failure (Signal Compare Failure)	B
C0051-96 Steering Angle Sensor Failure (Sensor Detects Internal Failure)	B

DTC (VSA)

1. Problem verification

   -1. Turn the vehicle to the ON mode.

   -2. Clear the DTC with the HDS.

   -3. Turn the vehicle to the OFF (LOCK) mode, then to the READY TO DRIVE mode.

   -4. Test-drive the vehicle under these conditions:

   - Vehicle speed at 45 mph (72 km/h) or more
   - Change lanes for a few times

   NOTE:

   - Drive the vehicle on the road, not on a lift.
   - Be careful of the surrounding traffic conditions.

   -5. Check for DTCs with the HDS.

DTC Description	DTC
C0051-62 Steering Angle Sensor Failure (Signal Compare Failure)	B
C0051-96 Steering Angle Sensor Failure (Sensor Detects Internal Failure)	B

   Is DTC C0051-62 or C0051-96 indicated?

   YES

   The failure is duplicated. Go to step 2.

   NO

   Intermittent failure, the system is OK at this time. **Refer to intermittent failures troubleshooting** .

2. DTC check (EPS control unit)

   -1. Check for DTCs with the HDS.

DTC Description	DTC	Freeze Frame
B	B	B

   Is DTC indicated?

   YES

   Go to indicated DTC's troubleshooting.

   NO

   Check for loose terminals and poor connections in the VSA modulator-control unit 46P connector. Check for any authorized service information related to the DTCs or symptoms you are troubleshooting. If they are OK, **replace the VSA modulator-control unit** .

DTC C0061-49, C0062-49, C0063-49

DTC C0061-49 : Acceleration Sensor Malfunction

DTC C0062-49 : Longitudinal Acceleration Sensor Malfunction

DTC C0063-49 : Yaw Rate Sensor Malfunction

NOTE:

- **Before you troubleshoot, review the general troubleshooting information** .
- The yaw rate-acceleration sensor is built into the SRS unit.
- Before troubleshooting, check the SRS unit for proper mounting. If not properly installed the VSA modulator-control unit may set these codes.

DTC Description	DTC
C0061-49 Acceleration Sensor Malfunction	B
C0062-49 Longitudinal Acceleration Sensor Malfunction	B
C0063-49 Yaw Rate Sensor Malfunction	B

DTC (VSA)

1. Problem verification

   -1. Turn the vehicle to the ON mode.

   -2. Clear the DTC with the HDS.

   -3. Turn the vehicle to the OFF (LOCK) mode, then to the READY TO DRIVE mode.

   -4. Check for DTCs with the HDS.

DTC Description	DTC
C0061-49 Acceleration Sensor Malfunction	B
C0062-49 Longitudinal Acceleration Sensor Malfunction	B
C0063-49 Yaw Rate Sensor Malfunction	B

   Is DTC C0061-49, C0062-49, or C0063-49 indicated?

   YES

   The failure is duplicated. **Replace the SRS unit** .

   NO

   Intermittent failure, the system is OK at this time. **Refer to intermittent failures troubleshooting** .

DTC C0061-54, C0062-54, C0063-54

DTC C0061-54 : Lateral Acceleration Sensor Calibration Incomplete

DTC C0062-54 : Longitudinal Acceleration Sensor Neutral Position Not Learned/Calibration Incomplete

DTC C0063-54 : Yaw Rate Sensor Calibration Incomplete

NOTE: **Before you troubleshoot, review the general troubleshooting information** .

DTC Description	DTC
C0061-54 Lateral Acceleration Sensor Calibration Incomplete	B
C0062-54 Longitudinal Acceleration Sensor Neutral Position Not Learned/Calibration Incomplete	B

DTC Description	DTC
C0063-54 Yaw Rate Sensor Calibration Incomplete	B

DTC (VSA)

1. Problem verification

   -1. Turn the vehicle to the ON mode.

   -2. Clear the DTC with the HDS.

   -3. Turn the vehicle to the OFF (LOCK) mode, then to the ON mode.

   -4. Check for DTCs with the HDS.

DTC Description	DTC
C0061-54 Lateral Acceleration Sensor Calibration Incomplete	B
C0062-54 Longitudinal Acceleration Sensor Neutral Position Not Learned/Calibration Incomplete	B
C0063-54 Yaw Rate Sensor Calibration Incomplete	B

   Is DTC C0061-54, C0062-54, or C0063-54 indicated?

   YES

   The failure is duplicated. Go to step 2.

   NO

   Intermittent failure, the system is OK at this time. **Refer to intermittent failures troubleshooting** .

2. SRS unit check

   -1. Turn the vehicle to the OFF (LOCK) mode.

   -2. **Substitute a known-good SRS unit** .

   -3. Turn the vehicle to the ON mode.

   -4. Clear the DTC with the HDS.

   -5. Turn the vehicle to the OFF (LOCK) mode, then to the ON mode.

   -6. Check for DTCs with the HDS.

DTC Description	DTC
C0061-54 Lateral Acceleration Sensor Calibration Incomplete	B
C0062-54 Longitudinal Acceleration Sensor Neutral Position Not Learned/Calibration Incomplete	B
C0063-54 Yaw Rate Sensor Calibration Incomplete	B

   Is DTC C0061-54, C0062-54, or C0063-54 indicated?

   YES

   Check for loose terminals and poor connections in the VSA modulator-control unit 46P connector. Check for any authorized service information related to the DTCs or symptoms you are troubleshooting. If they are OK, **replace the VSA modulator-control unit** .

NO

Replace the original SRS unit .

DTC C0061-62, C0062-62, C0063-62

DTC C0061-62 : Lateral Acceleration Sensor Failure (Signal Compare Failure)

DTC C0062-62 : Longitudinal Acceleration Sensor Failure (Signal Compare Failure)

DTC C0063-62 : Yaw Rate Sensor Failure (Signal Compare Failure)

NOTE:

- Before you troubleshoot, review the general troubleshooting information .
- The yaw rate-acceleration sensor is built into the SRS unit.
- Before troubleshooting, check the SRS unit for proper mounting. If not properly installed the VSA modulator-control unit may set these codes.

DTC Description	DTC
C0061-62 Lateral Acceleration Sensor Failure (Signal Compare Failure)	B
C0062-62 Longitudinal Acceleration Sensor Failure (Signal Compare Failure)	B
C0063-62 Yaw Rate Sensor Failure (Signal Compare Failure)	B

DTC (VSA)

1. Problem verification

-1. Turn the vehicle to the ON mode.

-2. Clear the DTC with the HDS.

-3. Turn the vehicle to the OFF (LOCK) mode, then to the READY TO DRIVE mode.

-4. Test-drive the vehicle under these conditions:

- Vehicle speed at 31 mph (50 km/h) or more for at least 20 seconds
- Brake pedal released
- Change lanes for a few times

NOTE:

- Drive the vehicle on the road, not on a lift.
- Be careful of the surrounding traffic conditions.

-5. Check for DTCs with the HDS.

DTC Description	DTC
C0061-62 Lateral Acceleration Sensor Failure (Signal Compare Failure)	B

DTC Description	DTC
C0062-62 Longitudinal Acceleration Sensor Failure (Signal Compare Failure)	B
C0063-62 Yaw Rate Sensor Failure (Signal Compare Failure)	B

Is DTC C0061-62, C0062-62, or C0063-62 indicated?

YES

The failure is duplicated. Replace the SRS unit .

NO

Intermittent failure, the system is OK at this time. Refer to intermittent failures troubleshooting .

DTC C1000-94

DTC C1000-94 : ABS/VSA Activation Time Too Long

NOTE:

- Before you troubleshoot, review the general troubleshooting information .
- A wheel bearing that is installed backwards can cause this DTC.

DTC Description	DTC
C1000-94 ABS/VSA Activation Time Too Long	B

DTC (VSA)

1. Problem verification

-1. Turn the vehicle to the ON mode.

-2. Clear the DTC with the HDS.

-3. Turn the vehicle to the OFF (LOCK) mode, then to the READY TO DRIVE mode.

-4. Test-drive the vehicle under these conditions:

- Vehicle speed at 31 mph (50 km/h) or more for at least 60 seconds
- Brake pedal released

NOTE: Drive the vehicle on the road, not on a lift.

-5. Check for DTCs with the HDS.

DTC Description	DTC
C1000-94 ABS/VSA Activation Time Too Long	B

Is DTC C1000-94 indicated?

YES

The failure is duplicated. Go to step 2.

NO

Intermittent failure, the system is OK at this time. Refer to intermittent failures troubleshooting .

2. Tire check

-1. Turn the vehicle to the OFF (LOCK) mode.

-2. Check all four tires for size, inflation, and wear .

Are all four tires the correct size, properly inflated, and worn evenly?

YES

Go to step 3.

NO

Swap the wheels and tires with a known-good set (the correct size, type, and properly inflated), then retest-drive the vehicle.

3. Wheel speed sensor performance check

-1. Test-drive the vehicle at 31 mph (50 km/h) or more in a straight line.

NOTE: Drive the vehicle on the road, not on a lift.

-2. Check the parameter(s) below with the HDS.

Signal	Current conditions	
	Values	**Unit**
RIGHT FRONT WHEEL SPEED	B	B
LEFT FRONT WHEEL SPEED	B	B
RIGHT REAR WHEEL SPEED	B	B
LEFT REAR WHEEL SPEED	B	B

Is any one of the four values different?

YES

Go to step 4.

NO

Check for loose terminals and poor connections in the VSA modulator-control unit 46P connector. Check for any authorized service information related to the DTCs or symptoms you are troubleshooting. If they are OK, **replace the VSA modulator-control unit** .

4. Wheel speed sensor check

-1. Turn the vehicle to the OFF (LOCK) mode.

-2. **Substitute a known-good wheel speed sensor** .

-3. Turn the vehicle to the ON mode.

-4. Clear the DTC with the HDS.

-5. Turn the vehicle to the OFF (LOCK) mode, then to the READY TO DRIVE mode.

-6. Test-drive the vehicle under these conditions:

- Vehicle speed at 31 mph (50 km/h) or more for at least 60 seconds
- Brake pedal released

NOTE: Drive the vehicle on the road, not on a lift.

-7. Check for DTCs with the HDS.

DTC Description	DTC
C1000-94 ABS/VSA Activation Time Too Long	B

Is DTC C1000-94 indicated?

YES

Go to step 5.

NO

Replace the original wheel speed sensor .

5. Magnetic encoder check

-1. Turn the vehicle to the OFF (LOCK) mode.

-2. Inspect the magnetic encoder for damage, debris, and correct installation.

Appropriate Magnetic Encoder	Note
Left-front	**Remove the driveshaft outboard joint from the appropriate wheel hub** .
Right-front	
Left-rear	**Remove the hub bearing unit** .
Right-rear	

Is the magnetic encoder surface OK?

YES

Check for loose terminals and poor connections in the VSA modulator-control unit 46P connector. Check for any authorized service information related to the DTCs or symptoms you are troubleshooting. If they are OK, **replace the VSA modulator-control unit** .

NO

Clean the debris from the appropriate magnetic encoder surface on the wheel bearing or the hub bearing unit. If the debris cannot be removed or the encoder is damaged, replace the appropriate **wheel bearing** or the **hub bearing unit** .

DTC C1020-49, C1021-49

DTC C1020-49 : VSA Master Cut Valve Failure (Unexpected Operation)

DTC C1021-49 : VSA Suction Valve Failure (Unexpected Operation)

NOTE: **Before you troubleshoot, review the general troubleshooting information** .

DTC Description	DTC
C1020-49 VSA Master Cut Valve Failure (Unexpected Operation)	B
C1021-49 VSA Suction Valve Failure (Unexpected Operation)	B

DTC (VSA)

1. Problem verification

-1. Turn the vehicle to the ON mode.

-2. Clear the DTC with the HDS.

-3. Turn the vehicle to the OFF (LOCK) mode, then to the READY TO DRIVE mode.

-4. Wait 20 seconds or more.

-5. Test-drive the vehicle at 9 mph (15 km/h) or more.

NOTE: Drive the vehicle on the road, not on a lift.

-6. Check for DTCs with the HDS.

DTC Description	DTC
C1020-49 VSA Master Cut Valve Failure (Unexpected Operation)	B
C1021-49 VSA Suction Valve Failure (Unexpected Operation)	B

Is DTC C1020-49 or C1021-49 indicated?

YES

The failure is duplicated. Check for loose terminals and poor connections in the VSA modulator-control unit 46P connector. Check for any authorized service information related to the DTCs or symptoms you are troubleshooting. If they are OK, **replace the VSA modulator-control unit** .

NO

Intermittent failure, the system is OK at this time. **Refer to intermittent failures troubleshooting** .

DTC C1040-00 (VSA CONTROL UNIT)

DTC C1040-00 : Different Diameter Tire is Detected

NOTE: **Before you troubleshoot, review the general troubleshooting information** .

DTC Description	DTC
C1040-00 Different Diameter Tire is Detected	B

DTC (VSA)

1. Problem verification

-1. Turn the vehicle to the ON mode.

-2. Clear the DTC with the HDS.

-3. Turn the vehicle to the OFF (LOCK) mode, then to the READY TO DRIVE mode.

-4. Test-drive the vehicle at 12 mph (20 km/h) or more for at least 72 seconds.

NOTE: Drive the vehicle on the road, not on a lift.

-5. Check for DTCs with the HDS.

DTC Description	DTC
C1040-00 Different Diameter Tire is Detected	B

Is DTC C1040-00 indicated?

YES

The failure is duplicated. Go to step 2.

NO

Intermittent failure, the system is OK at this time. **Refer to intermittent failures troubleshooting** .

2. Tire check

-1. Turn the vehicle to the OFF (LOCK) mode.

-2. Check all four tires for size, inflation, and wear .

Are all four tires the correct size, properly inflated, and worn evenly?

YES

Go to step 3.

NO

Swap the wheels and tires with a known-good set (the correct size, type, and properly inflated), then retest-drive the vehicle.

3. Wheel speed sensor performance check

-1. Test-drive the vehicle at 12 mph (20 km/h) or more in a straight line.

NOTE: Drive the vehicle on the road, not on a lift.

-2. Check the parameter(s) below with the HDS.

Signal	Current conditions	
	Values	Unit
RIGHT FRONT WHEEL SPEED	B	B
LEFT FRONT WHEEL SPEED	B	B
RIGHT REAR WHEEL SPEED	B	B
LEFT REAR WHEEL SPEED	B	B

Is any one of the four values different?

YES

Go to step 4.

NO

Check for loose terminals and poor connections in the VSA modulator-control unit 46P connector. Check for any authorized service information related to the DTCs or symptoms you are troubleshooting. If they are OK, replace the VSA modulator-control unit .

4. Wheel speed sensor check

-1. Turn the vehicle to the OFF (LOCK) mode.

-2. Substitute a known-good wheel speed sensor .

-3. Turn the vehicle to the ON mode.

-4. Clear the DTC with the HDS.

-5. Turn the vehicle to the OFF (LOCK) mode, then to the READY TO DRIVE mode.

-6. Test-drive the vehicle at 12 mph (20 km/h) or more for at least 72 seconds.

NOTE: Drive the vehicle on the road, not on a lift.

-7. Check for DTCs with the HDS.

DTC Description	DTC
C1040-00 Different Diameter Tire is Detected	B

Is DTC C1040-00 indicated?

YES

Go to step 5.

NO

Replace the original wheel speed sensor .

5. Magnetic encoder check

-1. Turn the vehicle to the OFF (LOCK) mode.

-2. Inspect the magnetic encoder for damage, debris, and correct installation.

Appropriate Magnetic Encoder	Note
Left-front	**Remove the driveshaft outboard joint from the appropriate wheel hub** .
Right-front	
Left-rear	**Remove the hub bearing unit** .
Right-rear	

Is the magnetic encoder surface OK?

YES

Check for loose terminals and poor connections in the VSA modulator-control unit 46P connector. Check for any authorized service information related to the DTCs or symptoms you are troubleshooting. If they are OK, **replace the VSA modulator-control unit** .

NO

Clean the debris from the appropriate magnetic encoder surface on the wheel bearing or the hub bearing unit. If the debris cannot be removed or the encoder is damaged, replace the appropriate **wheel bearing** or the **hub bearing unit** .

DTC C1041-00, C1042-00, C1043-00, C1044-00

DTC C1041-00 : Right Front Wheel Abnormal Slip Detection

DTC C1042-00 : Left Front Wheel Abnormal Slip Detection

DTC C1043-00 : Right Rear Wheel Abnormal Slip Detection

DTC C1044-00 : Left Rear Wheel Abnormal Slip Detection

NOTE: **Before you troubleshoot, review the general troubleshooting information** .

DTC Description	DTC
C1041-00 Right Front Wheel Abnormal Slip Detection	B
C1042-00 Left Front Wheel Abnormal Slip Detection	B
C1043-00 Right Rear Wheel Abnormal Slip Detection	B
C1044-00 Left Rear Wheel Abnormal Slip Detection	B

1. Problem verification

-1. Turn the vehicle to the ON mode.

-2. Clear the DTC with the HDS.

-3. Turn the vehicle to the OFF (LOCK) mode, then to the READY TO DRIVE mode.

-4. Test-drive the vehicle at 12 mph (20 km/h) or more for at least 72 seconds.

NOTE: Drive the vehicle on the road, not on a lift.

-5. Check for DTCs with the HDS.

DTC Description	DTC
C1041-00 Right Front Wheel Abnormal Slip Detection	B
C1042-00 Left Front Wheel Abnormal Slip Detection	B
C1043-00 Right Rear Wheel Abnormal Slip Detection	B
C1044-00 Left Rear Wheel Abnormal Slip Detection	B

Is DTC C1041-00, C1042-00, C1043-00, or C1044-00 indicated?

YES

The failure is duplicated. Go to step 2.

NO

Intermittent failure, the system is OK at this time. **Refer to intermittent failures troubleshooting** .

2. Tire check

-1. Turn the vehicle to the OFF (LOCK) mode.

-2. **Check all four tires for size, inflation, and wear** .

Are all four tires the correct size, properly inflated, and worn evenly?

YES

Go to step 3.

NO

Swap the wheels and tires with a known-good set (the correct size, type, and properly inflated), then retest-drive the vehicle.

3. Wheel speed sensor performance check

-1. Test-drive the vehicle at 12 mph (20 km/h) or more in a straight line.

NOTE: Drive the vehicle on the road, not on a lift.

-2. Check the parameter(s) below with the HDS.

Signal	Current conditions	
	Values	Unit
RIGHT FRONT WHEEL SPEED	B	B

Signal	Current conditions	
	Values	Unit
LEFT FRONT WHEEL SPEED	B	B
RIGHT REAR WHEEL SPEED	B	B
LEFT REAR WHEEL SPEED	B	B

Is any one of the four values different?

YES

Go to step 4.

NO

Check for loose terminals and poor connections in the VSA modulator-control unit 46P connector. Check for any authorized service information related to the DTCs or symptoms you are troubleshooting. If they are OK, **replace the VSA modulator-control unit** .

4. Wheel speed sensor check

-1. Turn the vehicle to the OFF (LOCK) mode.

-2. **Substitute a known-good wheel speed sensor** .

-3. Turn the vehicle to the ON mode.

-4. Clear the DTC with the HDS.

-5. Turn the vehicle to the OFF (LOCK) mode, then to the READY TO DRIVE mode.

-6. Test-drive the vehicle at 12 mph (20 km/h) or more for at least 72 seconds.

NOTE: Drive the vehicle on the road, not on a lift.

-7. Check for DTCs with the HDS.

DTC Description	DTC
C1041-00 Right Front Wheel Abnormal Slip Detection	B
C1042-00 Left Front Wheel Abnormal Slip Detection	B
C1043-00 Right Rear Wheel Abnormal Slip Detection	B
C1044-00 Left Rear Wheel Abnormal Slip Detection	B

Is DTC C1041-00, C1042-00, C1043-00, or C1044-00 indicated?

YES

Go to step 5.

NO

Replace the original wheel speed sensor .

5. Magnetic encoder check

-1. Turn the vehicle to the OFF (LOCK) mode.

-2. Inspect the magnetic encoder for damage, debris, and correct installation.

Appropriate Magnetic Encoder	Note
Left-front	**Remove the driveshaft outboard joint from the appropriate wheel hub** .
Right-front	
Left-rear	**Remove the hub bearing unit** .
Right-rear	

Is the magnetic encoder surface OK?

YES

Check for loose terminals and poor connections in the VSA modulator-control unit 46P connector. Check for any authorized service information related to the DTCs or symptoms you are troubleshooting. If they are OK, **replace the VSA modulator-control unit** .

NO

Clean the debris from the appropriate magnetic encoder surface on the wheel bearing or the hub bearing unit. If the debris cannot be removed or the encoder is damaged, replace the appropriate **wheel bearing** or the **hub bearing unit** .

DTC C1100-48

DTC C1100-48 : Electric Parking Brake Abnormal Operation Monitoring

NOTE: **Before you troubleshoot, review the general troubleshooting information** .

DTC Description	DTC
C1100-48 Electric Parking Brake Abnormal Operation Monitoring	B

DTC (VSA)

1. DTC check

-1. Turn the vehicle to the ON mode.

-2. Clear the DTC with the HDS.

-3. Turn the vehicle to the OFF (LOCK) mode, then to the ON mode.

-4. Wait 30 seconds or more.

-5. Check for DTCs with the HDS.

DTC Description	DTC
B	B

Is DTC C1100-48 indicated?

YES

The failure is duplicated. Check for loose terminals and poor connections in the VSA modulator-control unit 46P connector. Check for any authorized service information related to the DTCs or symptoms you are troubleshooting. If they are OK, **replace the VSA modulator-control unit** .

NO

Go to indicated DTC's troubleshooting.

NO

Intermittent failure, the system is OK at this time. **Refer to intermittent failures troubleshooting** .

DTC C1100-54

DTC C1100-54 : Piston Position Not Learned

NOTE: **Before you troubleshoot, review the general troubleshooting information** .

DTC Description	DTC
C1100-54 Piston Position Not Learned	B

DTC (VSA)

1. Problem verification

-1. Turn the vehicle to the ON mode.

-2. Clear the DTC with the HDS.

-3. Turn the vehicle to the OFF (LOCK) mode, then to the ON mode.

-4. Check for DTCs with the HDS.

DTC Description	DTC
C1100-54 Piston Position Not Learned	B

Is DTC C1100-54 indicated?

YES

The failure is duplicated. Go to step 2.

NO

Intermittent failure, the system is OK at this time. **Refer to intermittent failures troubleshooting** .

2. Piston position learn operation check

-1. Clear the DTC with the HDS.

-2. Turn the vehicle to the OFF (LOCK) mode, then to the ON mode.

-3. Apply and release the parking brake several times.

-4. Check for DTCs with the HDS.

DTC Description	DTC
C1100-54 Piston Position Not Learned	B

Is DTC C1100-54 indicated?

YES

Check for loose terminals and poor connections in the VSA modulator-control unit 46P connector. Check for any authorized service information related to the DTCs or symptoms you are troubleshooting. If they are OK, **replace the VSA modulator-control unit** .

NO

Troubleshooting is complete.

DTC C1100-94

DTC C1100-94 : Electric Parking Brake Actuator Malfunction

NOTE: **Before you troubleshoot, review the general troubleshooting information** .

DTC Description	DTC
C1100-94 Electric Parking Brake Actuator Malfunction	B

DTC (VSA)

1. DTC check

   -1. Turn the vehicle to the ON mode.

   -2. Clear the DTC with the HDS.

   -3. Turn the vehicle to the OFF (LOCK) mode, then to the ON mode.

   -4. Apply and release the parking brake several times.

   -5. Check for DTCs with the HDS.

DTC Description	DTC
B	B

   Is DTC C1100-94 indicated?

   YES

   The failure is duplicated. Go to step 2.

   YES

   If DTC C1110-11, C1110-13, C1110-79, C1110-94, C1110-96, C1111-11, C1111-13, C1111-79, C1111-94, or C1111-96 is also indicated, **go to indicated DTCs troubleshooting** .

   NO

   Intermittent failure, the system is OK at this time. **Refer to intermittent failures troubleshooting** .

2. Electric parking brake actuator check

   -1. Turn the vehicle to the OFF (LOCK) mode.

   -2. **Substitute a known-good electric parking brake actuator** .

   -3. Turn the vehicle to the ON mode.

   -4. Clear the DTC with the HDS.

   -5. Turn the vehicle to the OFF (LOCK) mode, then to the ON mode.

   -6. Apply and release the parking brake several times.

   -7. Check for DTCs with the HDS.

DTC Description	DTC
C1100-94 Electric Parking Brake Actuator Malfunction	B

Is DTC C1100-94 indicated?

YES

Check for loose terminals and poor connections in the VSA modulator-control unit 46P connector. Check for any authorized service information related to the DTCs or symptoms you are troubleshooting. If they are OK, **replace the VSA modulator-control unit** .

NO

Replace the appropriate electric parking brake actuator .

DTC C1100-98

DTC C1100-98 : Electric Parking Brake Continuous Operations Detected

NOTE:

- **Before you troubleshoot, review the general troubleshooting information** .
- This DTC is set when repeated use of the electric parking brake function causes electric parking brake actuator overheating. The code can be cleared with the HDS once the electric parking brake actuator has cooled.

DTC Description	DTC
C1100-98 Electric Parking Brake Continuous Operations Detected	B

DTC (VSA)

1. Problem verification

   -1. Turn the vehicle to the ON mode.

   -2. Clear the DTC with the HDS.

   -3. Turn the vehicle to the OFF (LOCK) mode, then wait for 5 minutes or more.

   -4. Turn the vehicle to the ON mode.

   -5. Apply and release the parking brake several times.

   -6. Check for DTCs with the HDS.

DTC Description	DTC
C1100-98 Electric Parking Brake Continuous Operations Detected	B

Is DTC C1100-98 indicated?

YES

The failure is duplicated. Go to step 2.

NO

Intermittent failure, the system is OK at this time. **Refer to intermittent failures troubleshooting** .

2. Electric parking brake actuator check (Left side)

-1. Turn the vehicle to the OFF (LOCK) mode.

-2. **Substitute a known-good left-rear electric parking brake actuator** .

-3. Turn the vehicle to the ON mode.

-4. Clear the DTC with the HDS.

-5. Turn the vehicle to the OFF (LOCK) mode, then wait for 5 minutes or more.

-6. Turn the vehicle to the ON mode.

-7. Apply and release the parking brake several times.

-8. Check for DTCs with the HDS.

DTC Description	DTC
C1100-98 Electric Parking Brake Continuous Operations Detected	B

Is DTC C1100-98 indicated?

YES

Go to step 3.

NO

Replace the original left-rear electric parking brake actuator .

3. Electric parking brake actuator check (Right side)

-1. Turn the vehicle to the OFF (LOCK) mode.

-2. **Reinstall the original left-rear electric parking brake actuator** .

-3. **Substitute a known-good right-rear electric parking brake actuator** .

-4. Turn the vehicle to the ON mode.

-5. Clear the DTC with the HDS.

-6. Turn the vehicle to the OFF (LOCK) mode, then wait for 5 minutes or more.

-7. Turn the vehicle to the ON mode.

-8. Apply and release the parking brake several times.

-9. Check for DTCs with the HDS.

DTC Description	DTC
C1100-98 Electric Parking Brake Continuous Operations Detected	B

Is DTC C1100-98 indicated?

YES

Check for loose terminals and poor connections in the VSA modulator-control unit 46P connector. Check for any authorized service information related to the DTCs or symptoms you are troubleshooting. If they are OK, **replace the VSA modulator-control unit** .

NO

Replace the original right-rear electric parking brake actuator .

DTC C1110-11, C1111-11

DTC C1110-11 : Left Rear Electric Parking Brake Actuator Circuit Short to Ground

DTC C1111-11 : Right Rear Electric Parking Brake Actuator Circuit Short to Ground

NOTE: Before you troubleshoot, review the general troubleshooting information .

DTC Description	DTC
C1110-11 Left Rear Electric Parking Brake Actuator Circuit Short to Ground	B
C1111-11 Right Rear Electric Parking Brake Actuator Circuit Short to Ground	B

DTC (VSA)

1. Problem verification

-1. Turn the vehicle to the ON mode.

-2. Clear the DTC with the HDS.

-3. Turn the vehicle to the OFF (LOCK) mode, then to the ON mode.

-4. Apply and release the parking brake several times.

-5. Check for DTCs with the HDS.

DTC Description	DTC
C1110-11 Left Rear Electric Parking Brake Actuator Circuit Short to Ground	B

DTC Description	DTC
C1111-11 Right Rear Electric Parking Brake Actuator Circuit Short to Ground	B

Is DTC C1110-11 or C1111-11 indicated?

YES

The failure is duplicated. Go to step 2.

NO

Intermittent failure, the system is OK at this time. Refer to intermittent failures troubleshooting .

2. Shorted wire check (EPB_L_ACT+, EPB_R_ACT+ lines)

-1. Turn the vehicle to the OFF (LOCK) mode.

-2. Disconnect the following connectors.

VSA modulator-control unit 46P connector
Appropriate electric parking brake actuator 4P connector

-3. Measure the resistance between test points 1 and 2.

Test condition	Vehicle OFF (LOCK) mode

B	VSA modulator-control unit 46P connector: disconnected
B	Appropriate electric parking brake actuator 4P connector: disconnected

DTC	Test point 1	Test point 2
C1110-11	**VSA modulator-control unit 46P connector No. 8**	Body ground
C1111-11	**VSA modulator-control unit 46P connector No. 5**	Body ground

Is there 1 MΩ or more?

YES

The EPB_L_ACT+ and EPB_R_ACT+ wires are OK. Go to step 3.

NO

Repair a short to body ground in the wires between the VSA modulator-control unit and the appropriate electric parking brake actuator.

3. Shorted wire check (EPB_L_ACT-, EPB_R_ACT- lines)

-1. Measure the resistance between test points 1 and 2.

Test condition	Vehicle OFF (LOCK) mode
B	VSA modulator-control unit 46P connector: disconnected
B	Appropriate electric parking brake actuator 4P connector: disconnected

DTC	Test point 1	Test point 2
C1110-11	**VSA modulator-control unit 46P connector No. 7**	Body ground
C1111-11	**VSA modulator-control unit 46P connector No. 6**	Body ground

Is there 1 MΩ or more?

YES

Go to step 4.

NO

Repair a short to body ground in the wires between the VSA modulator-control unit and the appropriate electric parking brake actuator.

4. Electric parking brake actuator check

-1. **Substitute a known-good electric parking brake actuator** .

-2. Reconnect the following connectors.

VSA modulator-control unit 46P connector
Appropriate electric parking brake actuator 4P connector

-3. Turn the vehicle to the ON mode.

-4. Clear the DTC with the HDS.

-5. Turn the vehicle to the OFF (LOCK) mode, then to the ON mode.

-6. Apply and release the parking brake several times.

-7. Check for DTCs with the HDS.

DTC Description	DTC
C1110-11 Left Rear Electric Parking Brake Actuator Circuit Short to Ground	B
C1111-11 Right Rear Electric Parking Brake Actuator Circuit Short to Ground	B

Is DTC C1110-11 or C1111-11 indicated?

YES

Check for loose terminals and poor connections in the VSA modulator-control unit 46P connector. Check for any authorized service information related to the DTCs or symptoms you are troubleshooting. If they are OK, **replace the VSA modulator-control unit** .

NO

Replace the appropriate electric parking brake actuator .

DTC C1110-13, C1111-13

DTC C1110-13 : Left Rear Electric Parking Brake Actuator Circuit Open

DTC C1111-13 : Right Rear Electric Parking Brake Actuator Circuit Open

NOTE: **Before you troubleshoot, review the general troubleshooting information** .

DTC Description	DTC
C1110-13 Left Rear Electric Parking Brake Actuator Circuit Open	B
C1111-13 Right Rear Electric Parking Brake Actuator Circuit Open	B

DTC (VSA)

1. Problem verification

-1. Turn the vehicle to the ON mode.

-2. Clear the DTC with the HDS.

-3. Turn the vehicle to the OFF (LOCK) mode, then to the ON mode.

-4. Apply and release the parking brake several times.

-5. Check for DTCs with the HDS.

DTC Description	DTC
C1110-13 Left Rear Electric Parking Brake Actuator Circuit Open	B
C1111-13 Right Rear Electric Parking Brake Actuator Circuit Open	B

Is DTC C1110-13 or C1111-13 indicated?

YES

The failure is duplicated. Go to step 2.

NO

Intermittent failure, the system is OK at this time. **Refer to intermittent failures troubleshooting** .

2. Open wire check (EPB_L_ACT+, EPB_L_ACT-, EPB_R_ACT+, EPB_R_ACT- lines)

-1. Turn the vehicle to the OFF (LOCK) mode.

-2. Disconnect the following connectors.

VSA modulator-control unit 46P connector
Appropriate electric parking brake actuator 4P connector

-3. Measure the resistance between test points 1 and 2.

Test condition	Vehicle OFF (LOCK) mode
B	VSA modulator-control unit 46P connector: disconnected
B	Appropriate electric parking brake actuator 4P connector: disconnected

DTC	Test point 1	Test point 2
C1110-13	**VSA modulator-control unit 46P connector No. 8**	Left-rear electric parking brake actuator 4P connector (female terminals) No. 1: ①
	VSA modulator-control unit 46P connector No. 7	Left-rear electric parking brake actuator 4P connector (female terminals) No. 2: ①
C1111-13	**VSA modulator-control unit 46P connector No. 5**	Right-rear electric parking brake actuator 4P connector (female terminals) No. 1: ①
	VSA modulator-control unit 46P connector No. 6	Right-rear electric parking brake actuator 4P connector (female terminals) No. 2: ①

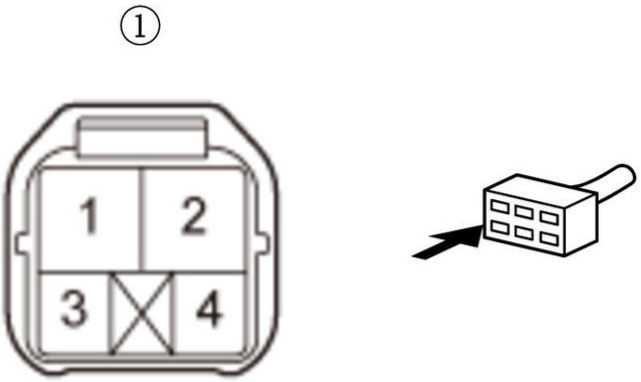

Is there 1.0 Ω or less?

YES

Go to step 3.

NO

Repair an open in the wire between the VSA modulator-control unit and the appropriate electric parking brake actuator.

3. Electric parking brake actuator check

-1. **Substitute a known-good electric parking brake actuator** .

-2. Reconnect the following connectors.

VSA modulator-control unit 46P connector
Appropriate electric parking brake actuator 4P connector

-3. Turn the vehicle to the ON mode.

-4. Clear the DTC with the HDS.

-5. Turn the vehicle to the OFF (LOCK) mode, then to the ON mode.

-6. Apply and release the parking brake several times.

-7. Check for DTCs with the HDS.

DTC Description	DTC
C1110-13 Left Rear Electric Parking Brake Actuator Circuit Open	B
C1111-13 Right Rear Electric Parking Brake Actuator Circuit Open	B

Is DTC C1110-13 or C1111-13 indicated?

YES

Check for loose terminals and poor connections in the VSA modulator-control unit 46P connector. Check for any authorized service information related to the DTCs or symptoms you are troubleshooting. If they are OK, **replace the VSA modulator-control unit** .

NO

Replace the appropriate electric parking brake actuator .

DTC C1110-79, C1111-79

DTC C1110-79 : Left Side Electric Parking Brake Doesn't Work Correctly

DTC C1111-79 : Right Side Electric Parking Brake Doesn't Work Correctly

NOTE: **Before you troubleshoot, review the general troubleshooting information** .

DTC Description	DTC
C1110-79 Left Side Electric Parking Brake Doesn't Work Correctly	B
C1111-79 Right Side Electric Parking Brake Doesn't Work Correctly	B

DTC (VSA)

1. Problem verification

-1. Turn the vehicle to the ON mode.

-2. Clear the DTC with the HDS.

-3. Turn the vehicle to the OFF (LOCK) mode, then to the ON mode.

-4. Apply and release the parking brake several times.

-5. Wait 35 seconds or more.

-6. Check for DTCs with the HDS.

DTC Description	DTC
C1110-79 Left Side Electric Parking Brake Doesn't Work Correctly	B
C1111-79 Right Side Electric Parking Brake Doesn't Work Correctly	B

Is DTC C1110-79 or C1111-79 indicated?

YES

The failure is duplicated. Go to step 2.

NO

Intermittent failure, the system is OK at this time. **Refer to intermittent failures troubleshooting** .

2. Rear brake component parts check (brake caliper, brake pad, brake disc, and electric parking brake actuator)

-1. Turn the vehicle to the OFF (LOCK) mode.

-2. Check that the appropriate rear brake component parts are properly mounted.

Is the rear brake component parts installation OK?

YES

Go to step 3.

NO

Reinstall the rear brake component parts, then recheck.

3. Electric parking brake actuator check

-1. **Substitute a known-good electric parking brake actuator** .

-2. Turn the vehicle to the ON mode.

-3. Clear the DTC with the HDS.

-4. Turn the vehicle to the OFF (LOCK) mode, then to the ON mode.

-5. Apply and release the parking brake several times.

-6. Wait 35 seconds or more.

-7. Check for DTCs with the HDS.

DTC Description	DTC
C1110-79 Left Side Electric Parking Brake Doesn't Work Correctly	B
C1111-79 Right Side Electric Parking Brake Doesn't Work Correctly	B

Is DTC C1110-79 or C1111-79 indicated?

YES

Check for loose terminals and poor connections in the VSA modulator-control unit 46P connector. Check for any authorized service information related to the DTCs or symptoms you are troubleshooting. If they are OK, **replace the VSA modulator-control unit** .

NO

Replace the original electric parking brake actuator .

DTC C1110-94

DTC C1110-94 : Left Side Electric Parking Brake Actuator Unexpected Operation

NOTE: **Before you troubleshoot, review the general troubleshooting information** .

DTC Description	DTC
C1110-94 Left Side Electric Parking Brake Actuator Unexpected Operation	B

DTC (VSA)

1. Problem verification

   -1. Turn the vehicle to the ON mode.

   -2. Clear the DTC with the HDS.

   -3. Turn the vehicle to the OFF (LOCK) mode, then to the ON mode.

   -4. Apply and release the parking brake several times.

   -5. Check for DTCs with the HDS.

DTC Description	DTC
C1110-94 Left Side Electric Parking Brake Actuator Unexpected Operation	B

   Is DTC C1110-94 indicated?

   YES

   The failure is duplicated. Go to step 2.

   NO

   Intermittent failure, the system is OK at this time. **Refer to intermittent failures troubleshooting** .

2. Electric parking brake actuator check

   -1. Turn the vehicle to the OFF (LOCK) mode.

   -2. **Substitute a known-good left-rear electric parking brake actuator** .

   -3. Turn the vehicle to the ON mode.

   -4. Clear the DTC with the HDS.

   -5. Turn the vehicle to the OFF (LOCK) mode, then to the ON mode.

-6. Apply and release the parking brake several times.

-7. Check for DTCs with the HDS.

DTC Description	DTC
C1110-94 Left Side Electric Parking Brake Actuator Unexpected Operation	B

Is DTC C1110-94 indicated?

YES

Check for loose terminals and poor connections in the VSA modulator-control unit 46P connector. Check for any authorized service information related to the DTCs or symptoms you are troubleshooting. If they are OK, **replace the VSA modulator-control unit** .

NO

Replace the original left-rear electric parking brake actuator .

DTC C1110-96, C1111-96

DTC C1110-96 : Left Side Electric Parking Brake Actuator Malfunction

DTC C1111-96 : Right Side Electric Parking Brake Actuator Malfunction

NOTE: **Before you troubleshoot, review the general troubleshooting information** .

DTC Description	DTC
C1110-96 Left Side Electric Parking Brake Actuator Malfunction	B
C1111-96 Right Side Electric Parking Brake Actuator Malfunction	B

DTC (VSA)

1. Problem verification

-1. Turn the vehicle to the ON mode.

-2. Clear the DTC with the HDS.

-3. Turn the vehicle to the OFF (LOCK) mode, then to the ON mode.

-4. Apply and release the parking brake several times.

-5. Check for DTCs with the HDS.

DTC Description	DTC
C1110-96 Left Side Electric Parking Brake Actuator Malfunction	B
C1111-96 Right Side Electric Parking Brake Actuator Malfunction	B

Is DTC C1110-96 or C1111-96 indicated?

YES

The failure is duplicated. Go to step 2.

NO

Intermittent failure, the system is OK at this time. **Refer to intermittent failures troubleshooting** .

2. Rear brake component parts installation check (brake caliper, brake pad, brake disc, and electric parking brake actuator)

   -1. Turn the vehicle to the OFF (LOCK) mode.

   -2. Check that the appropriate rear brake component parts are properly mounted.

   Is the rear brake component parts installation OK?

   YES

   Go to step 3.

   NO

   Reinstall the rear brake component parts, then recheck.

3. Electric parking brake actuator check

   -1. **Substitute a known-good electric parking brake actuator** .

   -2. Turn the vehicle to the ON mode.

   -3. Clear the DTC with the HDS.

   -4. Turn the vehicle to the OFF (LOCK) mode, then to the ON mode.

   -5. Apply and release the parking brake several times.

   -6. Check for DTCs with the HDS.

DTC Description	DTC
C1110-96 Left Side Electric Parking Brake Actuator Malfunction	B
C1111-96 Right Side Electric Parking Brake Actuator Malfunction	B

   Is DTC C1110-96 or C1111-96 indicated?

   YES

   Check for loose terminals and poor connections in the VSA modulator-control unit 46P connector. Check for any authorized service information related to the DTCs or symptoms you are troubleshooting. If they are OK, **replace the VSA modulator-control unit** .

   NO

   Replace the appropriate electric parking brake actuator .

DTC C1111-94

DTC C1111-94 : Right Side Electric Parking Brake Actuator Unexpected Operation

NOTE: **Before you troubleshoot, review the general troubleshooting information** .

DTC Description	DTC
C1111-94 Right Side Electric Parking Brake Actuator Unexpected Operation	B

DTC (VSA)

1. Problem verification

-1. Turn the vehicle to the ON mode.

-2. Clear the DTC with the HDS.

-3. Turn the vehicle to the OFF (LOCK) mode, then to the ON mode.

-4. Apply and release the parking brake several times.

-5. Check for DTCs with the HDS.

DTC Description	DTC
C1111-94 Right Side Electric Parking Brake Actuator Unexpected Operation	B

Is DTC C1111-94 indicated?

YES

The failure is duplicated. Go to step 2.

NO

Intermittent failure, the system is OK at this time. **Refer to intermittent failures troubleshooting** .

2. Electric parking brake actuator check

-1. Turn the vehicle to the OFF (LOCK) mode.

-2. **Substitute a known-good right-rear electric parking brake actuator** .

-3. Turn the vehicle to the ON mode.

-4. Clear the DTC with the HDS.

-5. Turn the vehicle to the OFF (LOCK) mode, then to the ON mode.

-6. Apply and release the parking brake several times.

-7. Check for DTCs with the HDS.

DTC Description	DTC
C1111-94 Right Side Electric Parking Brake Actuator Unexpected Operation	B

Is DTC C1111-94 indicated?

YES

Check for loose terminals and poor connections in the VSA modulator-control unit 46P connector. Check for any authorized service information related to the DTCs or symptoms you are troubleshooting. If they are OK, **replace the VSA modulator-control unit** .

NO

Replace the original right-rear electric parking brake actuator .

DTC C1120-14

DTC C1120-14 : Electric Parking Brake Switch Circuit Malfunction

NOTE: **Before you troubleshoot, review the general troubleshooting information** .

DTC Description	DTC
C1120-14 Electric Parking Brake Switch Circuit Malfunction	B

DTC (VSA)

1. Problem verification

-1. Turn the vehicle to the ON mode.

-2. Clear the DTC with the HDS.

-3. Turn the vehicle to the OFF (LOCK) mode, then to the ON mode.

-4. Check for DTCs with the HDS.

DTC Description	DTC
C1120-14 Electric Parking Brake Switch Circuit Malfunction	B

Is DTC C1120-14 indicated?

YES

The failure is duplicated. Go to step 2.

NO

Intermittent failure, the system is OK at this time. **Refer to intermittent failures troubleshooting** .

2. Electric parking brake switch check

-1. Turn the vehicle to the OFF (LOCK) mode.

-2. **Check the electric parking brake switch** .

Is the electric parking brake switch OK?

YES

Go to step 3.

NO

Replace the electric parking brake/automatic brake hold switch .

3. Shorted wire check (SW lines)

-1. Disconnect the following connectors.

VSA modulator-control unit 46P connector
Electric parking brake/automatic brake hold switch 12P connector

-2. Measure the resistance between the following test points and body ground individually.

Test condition	Vehicle OFF (LOCK) mode
B	VSA modulator-control unit 46P connector: disconnected
B	Electric parking brake/automatic brake hold switch 12P connector: disconnected

Connector	Test circuit	Test point 1	Test point 2
VSA modulator-control unit 46P connector	SW1	No. 9	Body ground
	SW3	No. 24	
	SW4	No. 10	
	SW6	No. 25	

Is there 1 MΩ or more?

YES

The SW wires are not shorted. Go to step 4.

NO

Repair a short to body ground in the wires between the VSA modulator-control unit and the electric parking brake/automatic brake hold switch.

4. Open wire check (SW lines)

-1. Measure the resistance between test points 1 and 2.

Test condition	Vehicle OFF (LOCK) mode
B	VSA modulator-control unit 46P connector: disconnected
B	Electric parking brake/automatic brake hold switch 12P connector: disconnected
Test circuit 1	B
Test point 1	**VSA modulator-control unit 46P connector No. 9**
Test point 2	Electric parking brake/automatic brake hold switch 12P connector (female terminals) No. 4: ①

Test circuit 2	B
Test point 1	**VSA modulator-control unit 46P connector No. 24**
Test point 2	Electric parking brake/automatic brake hold switch 12P connector (female terminals) No. 1: ①

Test circuit 3	B
Test point 1	**VSA modulator-control unit 46P connector No. 10**
Test point 2	Electric parking brake/automatic brake hold switch 12P connector (female terminals) No. 2: ①

Test circuit 4	B
Test point 1	**VSA modulator-control unit 46P connector No. 25**
Test point 2	Electric parking brake/automatic brake hold switch 12P connector (female terminals) No. 3: ①

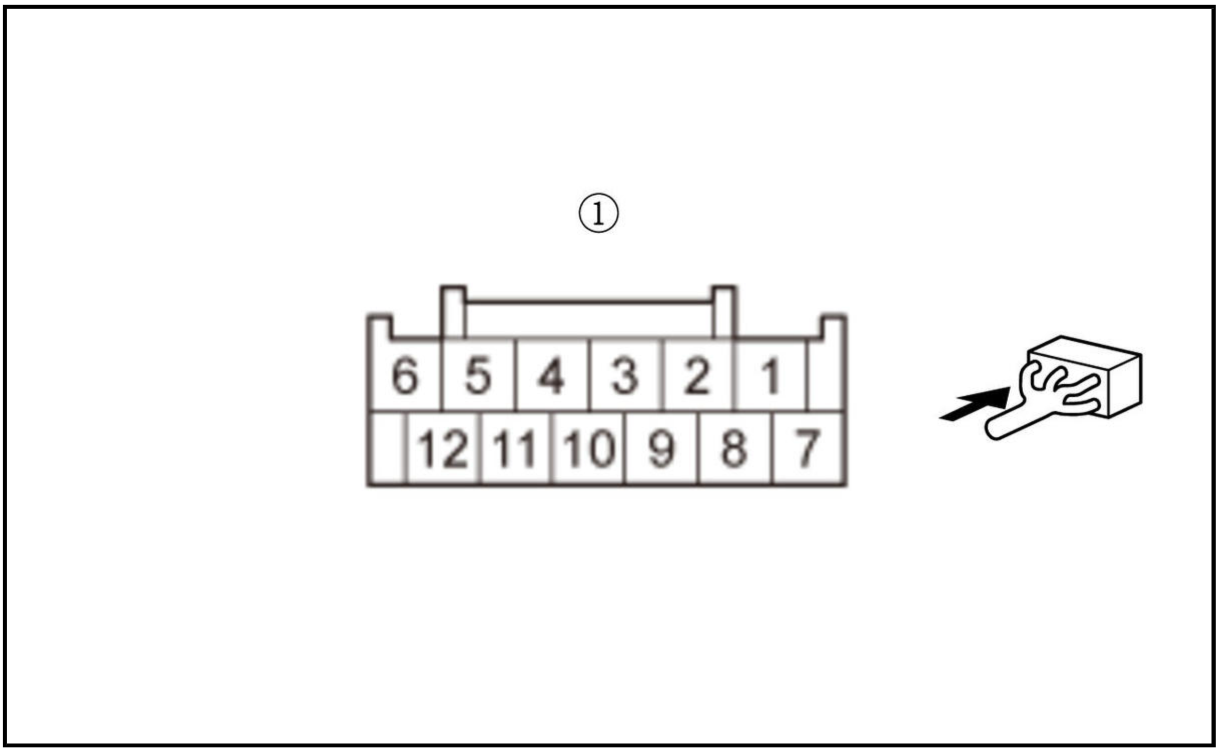

Is there 1.0 Ω or less?

YES

The SW wires are OK. Check for loose terminals and poor connections in the VSA modulator-control unit 46P connector. Check for any authorized service information related to the DTCs or symptoms you are troubleshooting. If they are OK, **replace the VSA modulator-control unit** .

NO

Repair an open in the wires between the VSA modulator-control unit and the electric parking brake/automatic brake hold switch.

DTC C1120-96

DTC C1120-96 : Electric Parking Brake Switch Malfunction

NOTE:

- **Before you troubleshoot, review the general troubleshooting information** .
- This DTC is detected when operating the electric parking brake switch continuously for more than 20 seconds.
- Check that electric parking brake/automatic brake hold switch is free of dirt and other foreign particles.

DTC Description	DTC
C1120-96 Electric Parking Brake Switch Malfunction	B

DTC (VSA)

1. Problem verification

-1. Turn the vehicle to the ON mode.

-2. Clear the DTC with the HDS.

-3. Turn the vehicle to the OFF (LOCK) mode, then to the ON mode.

-4. Wait 5 minutes or more.

-5. Check for DTCs with the HDS.

DTC Description	DTC
C1120-96 Electric Parking Brake Switch Malfunction	B

Is DTC C1120-96 indicated?

YES

The failure is duplicated. Go to step 2.

NO

Intermittent failure, the system is OK at this time. **Refer to intermittent failures troubleshooting** .

2. Electric parking brake switch check

-1. Turn the vehicle to the OFF (LOCK) mode.

-2. **Check the electric parking brake switch** .

Is the electric parking brake switch OK?

YES

Check for loose terminals and poor connections in the VSA modulator-control unit 46P connector. Check for any authorized service information related to the DTCs or symptoms you are troubleshooting. If they are OK, **replace the VSA modulator-control unit** .

NO

Replace the electric parking brake/automatic brake hold switch .

DTC P0562 (94) (TRACTION MOTOR CONTROL MODULE)

DTC P0562 : Traction Motor Control Module System Voltage Low

NOTE:

- Before you troubleshoot, **review the general troubleshooting information** .
- If any of the DTCs listed below are indicated at the same time as DTC P0562 troubleshoot those DTCs first, then recheck for P0562
-
    - P0AE1, P0DA8, P1D65

DTC Description	Confirmed DTC	Pending DTC	Freeze Frame
P0562 Traction Motor Control Module System Voltage Low	B	B	B

DTC (Electric Powertrain)

1. Battery power cable check

-1. Turn the vehicle to the OFF (LOCK) mode.

-2. Check the +B terminal (A) at the PCU.

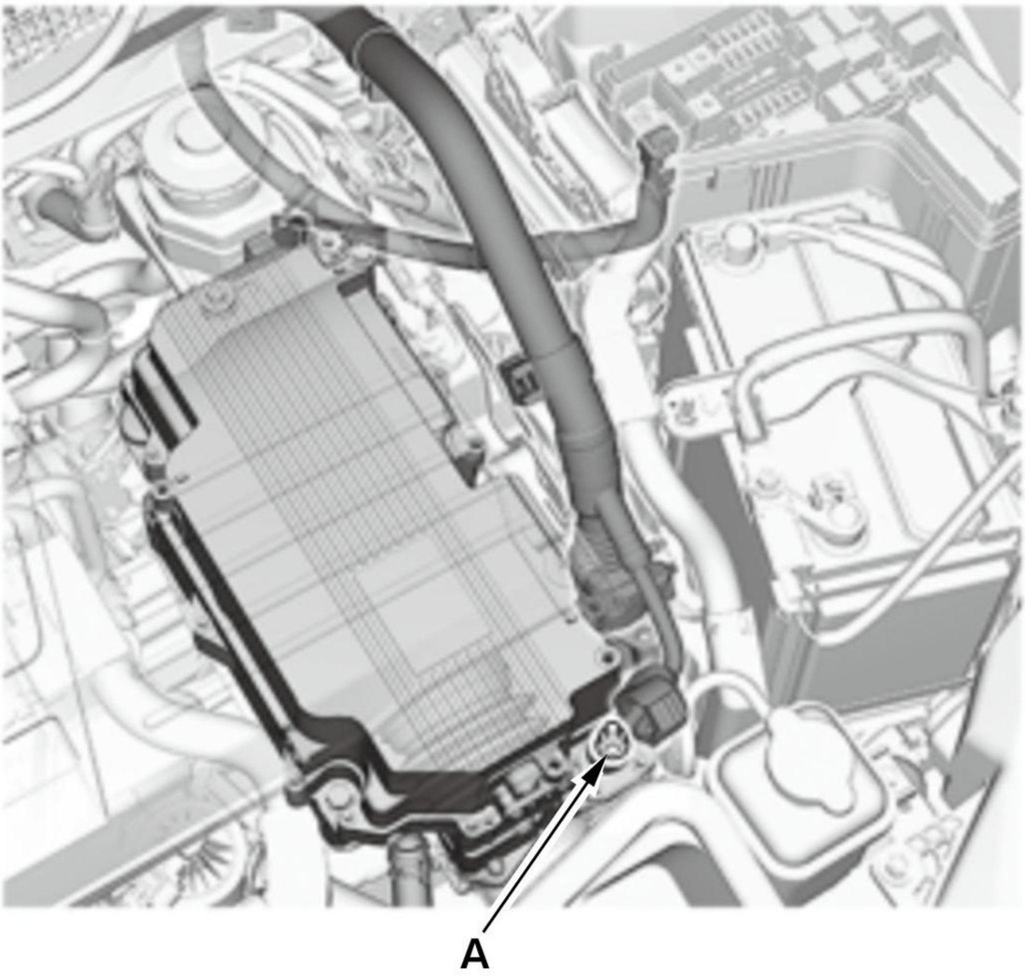

Is there battery voltage?

YES

Go to step 2.

NO

Replace the battery power cable .

2. Problem verification

-1. Turn the vehicle to the ON mode.

-2. Clear the DTC with the HDS.

-3. Turn the vehicle to the OFF (LOCK) mode.

-4. Turn the vehicle to the ON mode.

-5. Check for Pending or Confirmed DTCs with the HDS.

DTC Description	Confirmed DTC	Pending DTC	Freeze Frame
P0562 Traction Motor Control Module System Voltage Low	B	B	B

Is DTC P0562 indicated?

YES

Replace the PCU .

NO

Intermittent failure. The system is OK at this time. If the freeze data/on-board snapshot of this DTC is recorded, try to reproduce the failure under the same conditions with the freeze data/on-board snapshot.

DTC P0602 (310) (GENERATOR MOTOR CONTROL MODULE)

DTC P0602 : Generator Motor Control Module Programming Error

NOTE: Before you troubleshoot, review the general troubleshooting information .

DTC Description	Confirmed DTC	Pending DTC	Freeze Frame
P0602 Generator Motor Control Module Programming Error	B	B	B

DTC (Electric Powertrain)

1. Problem verification

-1. Turn the vehicle to the ON mode.

-2. Clear the DTC with the HDS.

-3. Turn the vehicle to the OFF (LOCK) mode.

-4. Turn the vehicle to the ON mode.

-5. Do the motor control module update procedure .

-6. Check for Pending or Confirmed DTCs with the HDS.

DTC Description	Confirmed DTC	Pending DTC	Freeze Frame
P0602 Generator Motor Control Module Programming Error	B	B	B

Is DTC P0602 indicated?

YES

Replace the PCU .

NO

The update is complete. If any other Pending or Confirmed DTCs are indicated, go to the indicated DTC's troubleshooting.

DTC P0602 (91) (TRACTION MOTOR CONTROL MODULE)

DTC P0602 : Traction Motor Control Module Programming Error

NOTE: Before you troubleshoot, review the general troubleshooting information .

DTC Description	Confirmed DTC	Pending DTC	Freeze Frame
P0602 Traction Motor Control Module Programming Error	B	B	B

DTC (Electric Powertrain)

1. Problem verification

   -1. Turn the vehicle to the ON mode.

   -2. Clear the DTC with the HDS.

   -3. Turn the vehicle to the OFF (LOCK) mode.

   -4. Turn the vehicle to the ON mode.

   -5. **Do the motor control module update procedure** .

   -6. Check for Pending or Confirmed DTCs with the HDS.

DTC Description	Confirmed DTC	Pending DTC	Freeze Frame
P0602 Traction Motor Control Module Programming Error	B	B	B

   Is DTC P0602 indicated?

   YES

   Replace the PCU .

   NO

   The update is complete. If any other Pending or Confirmed DTCs are indicated, go to the indicated DTC's troubleshooting.

DTC P061B (MOTOR CONTROL MODULE)

DTC P061B : Traction Motor Control Module Torque Calculation Performance

NOTE:

- Before you troubleshoot, **review the general troubleshooting information** .
- If any of the DTCs listed below are indicated at the same time as DTC P061B, troubleshoot those DTCs first, then recheck for P061B.
-
  - P1A54, P1A55

DTC Description	Confirmed DTC	Pending DTC	Freeze Frame
P061B Traction Motor Control Module Torque Calculation Performance	B	B	B

DTC (Electric Powertrain)

1. DTC check

   -1. Turn the vehicle to the ON mode.

   -2. Check for Pending or Confirmed DTCs with the HDS.

DTC Description	Confirmed DTC	Pending DTC	Freeze Frame
B	B	B	B

DTC (Electric Powertrain)

Are DTC P061B and any other DTCs indicated at the same time?

YES

Go to the indicated DTC's troubleshooting.

NO

Update the motor control module if it does not have the latest software .

DTC P062F (308) (GENERATOR MOTOR CONTROL MODULE)

DTC P062F : Generator Motor Control Module EEPROM Error

NOTE: Before you troubleshoot, **review the general troubleshooting information** .

DTC Description	Confirmed DTC	Pending DTC	Freeze Frame
P062F Generator Motor Control Module EEPROM Error	B	B	B

DTC (Electric Powertrain)

1. Problem verification

   -1. Turn the vehicle to the ON mode.

   -2. Clear the DTC with the HDS.

   -3. Turn the vehicle to the OFF (LOCK) mode.

   -4. Turn the vehicle to the ON mode.

   -5. Check for Pending or Confirmed DTCs with the HDS.

DTC Description	Confirmed DTC	Pending DTC	Freeze Frame
P062F Generator Motor Control Module EEPROM Error	B	B	B

Is DTC P062F indicated?

YES

Replace the PCU .

NO

Intermittent failure. The system is OK at this time. If the freeze data/on-board snapshot of this DTC is recorded, try to reproduce the failure under the same conditions with the freeze data/on-board snapshot.

DTC P062F (60) (TRACTION MOTOR CONTROL MODULE)

DTC P062F : Traction Motor Control Module EEPROM Error

NOTE: Before you troubleshoot, **review the general troubleshooting information** .

DTC Description	Confirmed DTC	Pending DTC	Freeze Frame
P062F Traction Motor Control Module EEPROM Error	B	B	B

DTC (Electric Powertrain)

1. Problem verification

   -1. Turn the vehicle to the ON mode.

   -2. Clear the DTC with the HDS.

   -3. Turn the vehicle to the OFF (LOCK) mode.

   -4. Turn the vehicle to the ON mode.

   -5. Check for Pending or Confirmed DTCs with the HDS.

DTC Description	Confirmed DTC	Pending DTC	Freeze Frame
P062F Traction Motor Control Module EEPROM Error	B	B	B

   Is DTC P062F indicated?

   YES

   Replace the PCU .

   NO

   Intermittent failure. The system is OK at this time. If the freeze data/on-board snapshot of this DTC is recorded, try to reproduce the failure under the same conditions with the freeze data/on-board snapshot.

DTC P0634 (425)

DTC P0634 : PCU Internal Temperature Too High

NOTE: Before you troubleshoot, **review the general troubleshooting information** .

DTC Description	Confirmed DTC	Pending DTC	Freeze Frame
P0634 PCU Internal Temperature Too High	B	B	B

DTC (Electric Powertrain)

1. Cooling system check

   -1. **Do the PCU coolant circuit inspection** .

   Is it OK?

   YES

   Go to step 2.

   NO

   Repair or replace parts as needed.

2. Problem verification

-1. Test-drive the vehicle in the range of the recorded freeze data parameters.

Freeze Data

-2. Monitor the OBD STATUS for DTC P0634 in the DTCs MENU with the HDS.

DTC Description	OBD STATUS
P0634 PCU Internal Temperature Too High	B

Does the HDS indicate FAILED?

YES

Replace the PCU .

NO

If the HDS indicates PASSED, the system is OK at this time but has an intermittent failure. If the HDS indicates NOT COMPLETED, keep test-driving until the status changes. If the freeze data/on-board snapshot of this DTC is recorded, try to reproduce the failure under the same conditions with the freeze data/on-board snapshot.

DTC P06B1 (353), P06B1 (356), P06B4 (354), P06B4 (357), P06E7 (355), P06E7 (358) (GENERATOR MOTOR CONTROL MODULE)

DTC P06B1 : Traction Motor Phase Current Sensor Power Supply Circuit Low (Phase U)

DTC P06B1 : Generator Motor Phase Current Sensor Power Supply Circuit Low (Phase U)

DTC P06B4 : Traction Motor Phase Current Sensor Power Supply Circuit Low (Phase V)

DTC P06B4 : Generator Motor Phase Current Sensor Power Supply Circuit Low (Phase V)

DTC P06E7 : Traction Motor Phase Current Sensor Power Supply Circuit Low (Phase W)

DTC P06E7 : Generator Motor Phase Current Sensor Power Supply Circuit Low (Phase W)

NOTE: Before you troubleshoot, **review the general troubleshooting information** .

DTC Description	Confirmed DTC	Pending DTC	Freeze Frame
P06B1 Traction Motor Phase Current Sensor Power Supply Circuit Low (Phase U)	B	B	B
P06B1 Generator Motor Phase Current Sensor Power Supply Circuit Low (Phase U)	B	B	B
P06B4 Traction Motor Phase Current Sensor Power Supply Circuit Low (Phase V)	B	B	B
P06B4 Generator Motor Phase Current Sensor Power Supply Circuit Low (Phase V)	B	B	B
P06E7 Traction Motor Phase Current Sensor Power Supply Circuit Low (Phase W)	B	B	B
P06E7 Generator Motor Phase Current Sensor Power Supply Circuit Low (Phase W)	B	B	B

DTC (Electric Powertrain)

1. Problem verification

-1. Turn the vehicle to the ON mode.

-2. Clear the DTC with the HDS.

-3. Turn the vehicle to the OFF (LOCK) mode.

-4. Turn the vehicle to the ON mode.

-5. Check for Pending or Confirmed DTCs with the HDS.

DTC Description	Confirmed DTC	Pending DTC	Freeze Frame
P06B1 Traction Motor Phase Current Sensor Power Supply Circuit Low (Phase U)	B	B	B
P06B1 Generator Motor Phase Current Sensor Power Supply Circuit Low (Phase U)	B	B	B
P06B4 Traction Motor Phase Current Sensor Power Supply Circuit Low (Phase V)	B	B	B
P06B4 Generator Motor Phase Current Sensor Power Supply Circuit Low (Phase V)	B	B	B
P06E7 Traction Motor Phase Current Sensor Power Supply Circuit Low (Phase W)	B	B	B
P06E7 Generator Motor Phase Current Sensor Power Supply Circuit Low (Phase W)	B	B	B

Is DTC P06B1, P06B4, and/or P06E7 indicated?

YES

Replace the PCU .

NO

Intermittent failure. The system is OK at this time. If the freeze data/on-board snapshot of this DTC is recorded, try to reproduce the failure under the same conditions with the freeze data/on-board snapshot.

DTC P0710 (327)

DTC P0710 : Transmission Fluid Temperature Sensor Circuit Range/Performance

NOTE: Before you troubleshoot, **review the general troubleshooting information** .

DTC Description	Confirmed DTC	Pending DTC	Freeze Frame
P0710 Transmission Fluid Temperature Sensor Circuit Range/Performance	B	B	B

DTC (Electric Powertrain)

1. Problem verification

-1. Turn the vehicle to the ON mode.

-2. Clear the DTC with the HDS.

-3. Turn the vehicle to the OFF (LOCK) mode, and wait for about 6 hours.

-4. Turn the vehicle to the ON mode.

-5. Check for Pending or Confirmed DTCs with the HDS.

DTC Description	Confirmed DTC	Pending DTC	Freeze Frame
P0710 Transmission Fluid Temperature Sensor Circuit Range/Performance	B	B	B

Is DTC P0710 indicated?

YES

The failure is duplicated. Go to step 2.

NO

Intermittent failure. The system is OK at this time. If the freeze data/on-board snapshot of this DTC is recorded, try to reproduce the failure under the same conditions with the freeze data/on-board snapshot.

2. Transmission fluid temperature sensor check

-1. Turn the vehicle to the OFF (LOCK) mode.

-2. **Remove the transmission fluid temperature sensor** , but leave it connected.

-3. Submerge the sensor and a thermometer in a container of water.

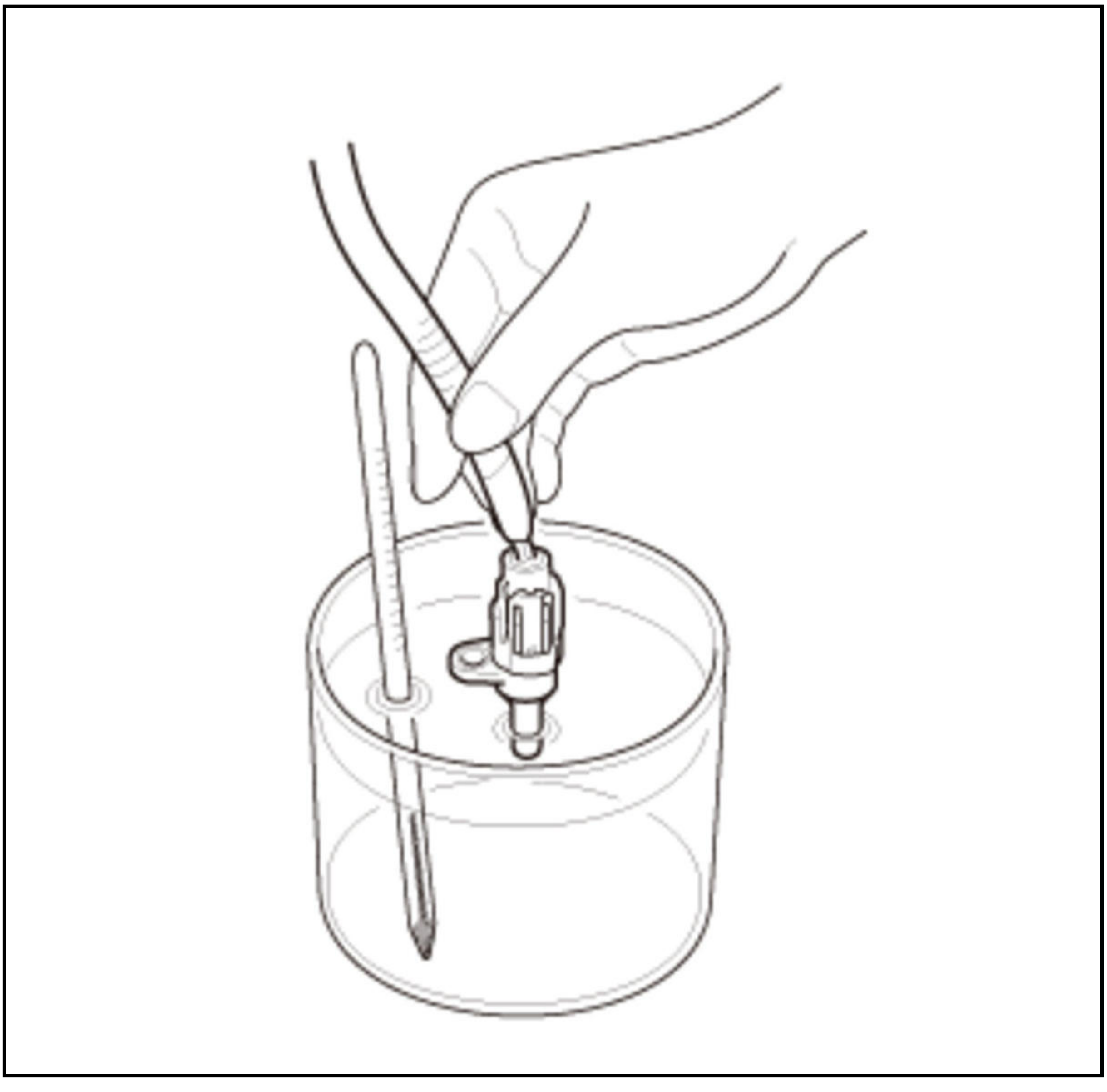

-4. Turn the vehicle to the ON mode.

-5. Check the parameter(s) below with the HDS.

Signal	Current conditions	
	Values	Unit
ATF Temperature (TRC)	B	B

Does the live data for the transmission fluid temperature sensor match the temperature reading from the thermometer?

YES

Replace the transmission (e-CVT) assembly .

NO

Replace the transmission fluid temperature sensor .

DTC P0711 (363)

DTC P0711 : Transmission Fluid Temperature Sensor Circuit

NOTE: Before you troubleshoot, **review the general troubleshooting information** .

DTC Description	Confirmed DTC	Pending DTC	Freeze Frame
P0711 Transmission Fluid Temperature Sensor Circuit	B	B	B

DTC (Electric Powertrain)

1. Problem verification

-1. Turn the vehicle to the ON mode.

-2. Clear the DTC with the HDS.

-3. Turn the vehicle to the OFF (LOCK) mode.

-4. Turn the vehicle to the ON mode.

-5. Check for Pending or Confirmed DTCs with the HDS.

DTC Description	Confirmed DTC	Pending DTC	Freeze Frame
P0711 Transmission Fluid Temperature Sensor Circuit	B	B	B

Is DTC P0711 indicated?

YES

The failure is duplicated. Go to step 2.

NO

Intermittent failure. The system is OK at this time. If the freeze data/on-board snapshot of this DTC is recorded, try to reproduce the failure under the same conditions with the freeze data/on-board snapshot.

2. Transmission fluid temperature sensor check

-1. Turn the vehicle to the OFF (LOCK) mode.

-2. Remove the transmission fluid temperature sensor , but leave it connected.

-3. Submerge the sensor and a thermometer in a container of water.

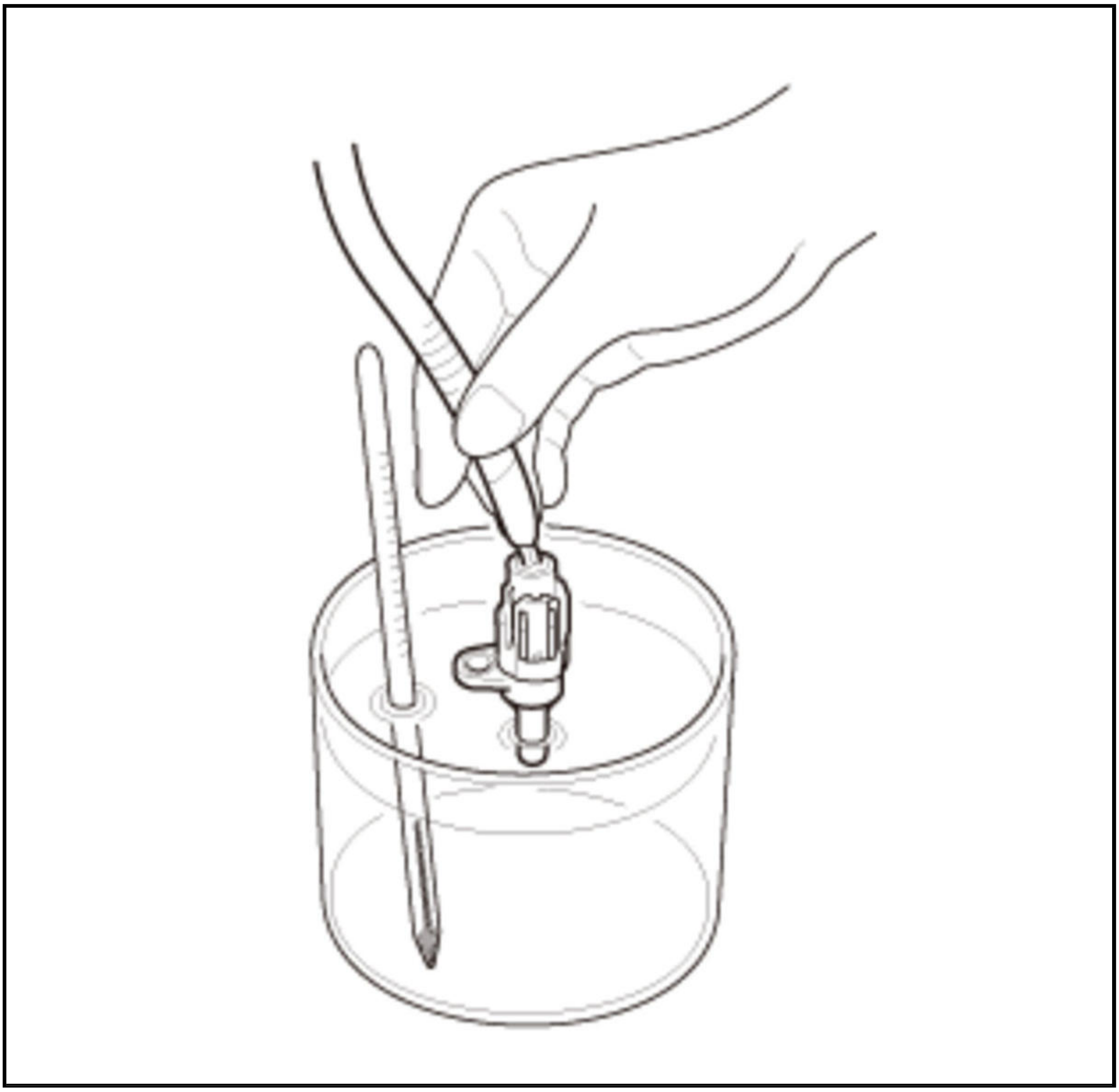

-4. Turn the vehicle to the ON mode.

-5. Check the parameter(s) below with the HDS.

Signal	Current conditions	
	Values	Unit
ATF Temperature (TRC)	B	B

Does the live data for the transmission fluid temperature sensor match the temperature reading from the thermometer?

YES

Replace the transmission (e-CVT) assembly .

NO

Replace the transmission fluid temperature sensor .

DTC P0712 (326)

DTC P0712 : Transmission Fluid Temperature Sensor Circuit Low

NOTE: Before you troubleshoot, **review the general troubleshooting information** .

DTC Description	Confirmed DTC	Pending DTC	Freeze Frame
P0712 Transmission Fluid Temperature Sensor Circuit Low	B	B	B

DTC (Electric Powertrain)

1. Problem verification

   -1. Turn the vehicle to the ON mode.

   -2. Clear the DTC with the HDS.

   -3. Turn the vehicle to the OFF (LOCK) mode.

   -4. Turn the vehicle to the ON mode.

   -5. Check the parameter(s) below with the HDS.

Signal	Threshold		Current conditions	
	Values	Unit	Values	Unit
ATF Temperature Sensor Voltage (TRC)	Less than 0.1	V	B	B

   Does the current condition(s) match the threshold?

   YES

   The failure is duplicated. Go to step 2.

   NO

   Intermittent failure. The system is OK at this time. If the freeze data/on-board snapshot of this DTC is recorded, try to reproduce the failure under the same conditions with the freeze data/on-board snapshot.

2. Determine possible failure area (TATF line, transmission fluid temperature sensor)

   -1. Turn the vehicle to the OFF (LOCK) mode.

   -2. Disconnect the following connector.

Transmission fluid temperature sensor 2P connector

   -3. Turn the vehicle to the ON mode.

   -4. Check the parameter(s) below with the HDS.

Signal	Threshold		Current conditions	
	Values	Unit	Values	Unit
ATF Temperature Sensor Voltage (TRC)	Less than 0.1	V	B	B

   Does the current condition(s) match the threshold?

   YES

Go to step 3.

NO

Replace the transmission fluid temperature sensor .

3. Shorted wire check (TATF line)

-1. Turn the vehicle to the OFF (LOCK) mode.

-2. Do the 12 volt battery terminal disconnection procedure .

-3. Disconnect the following connector.

PCU 33P connector

-4. Measure the resistance between test points 1 and 2.

Test condition	Vehicle OFF (LOCK) mode
B	PCU 33P connector: disconnected
B	Transmission fluid temperature sensor 2P connector: disconnected
Test point 1	PCU 33P connector No. 23
Test point 2	Body ground

Is there 1 MΩ or more?

YES

Replace the PCU .

NO

Repair a short in the TATF wire between the transmission fluid temperature sensor and the PCU.

DTC P0713 (325)

DTC P0713 : Transmission Fluid Temperature Sensor Circuit High

NOTE: Before you troubleshoot, review the general troubleshooting information .

DTC Description	Confirmed DTC	Pending DTC	Freeze Frame
P0713 Transmission Fluid Temperature Sensor Circuit High	B	B	B

DTC (Electric Powertrain)

1. Problem verification

-1. Turn the vehicle to the ON mode.

-2. Clear the DTC with the HDS.

-3. Turn the vehicle to the OFF (LOCK) mode.

-4. Turn the vehicle to the ON mode.

-5. Check the parameter(s) below with the HDS.

Signal	Threshold		Current conditions	
	Values	Unit	Values	Unit
ATF Temperature Sensor Voltage (TRC)	More than 4.9	V	B	B

Does the current condition(s) match the threshold?

YES

The failure is duplicated. Go to step 2.

NO

Intermittent failure. The system is OK at this time. If the freeze data/on-board snapshot of this DTC is recorded, try to reproduce the failure under the same conditions with the freeze data/on-board snapshot.

2. Determine possible failure area (TATF line, SGTEMP/SGTATF line)

-1. Check for Pending or Confirmed DTCs with the HDS.

DTC Description	Confirmed DTC	Pending DTC	Freeze Frame
P0713 Transmission Fluid Temperature Sensor Circuit High	B	B	B
P0A2D Traction Motor Temperature Sensor Circuit High	B	B	B
P0CF1 PCU Coolant Temperature Sensor Circuit High	B	B	B

Are DTC P0713, P0A2D, and P0CF1 indicated at the same time?

YES

Go to step 5.

NO

Go to step 3.

3. Open wire check (TATF line)

-1. Turn the vehicle to the OFF (LOCK) mode.

-2. **Do the 12 volt battery terminal disconnection procedure** .

-3. Disconnect the following connectors.

PCU 33P connector
Transmission fluid temperature sensor 2P connector

-4. Measure the resistance between test points 1 and 2.

Test condition	Vehicle OFF (LOCK) mode
B	PCU 33P connector: disconnected
B	Transmission fluid temperature sensor 2P connector: disconnected
Test point 1	**PCU 33P connector No. 23**
Test point 2	Transmission fluid temperature sensor 2P connector (female terminals) No. 2: ①

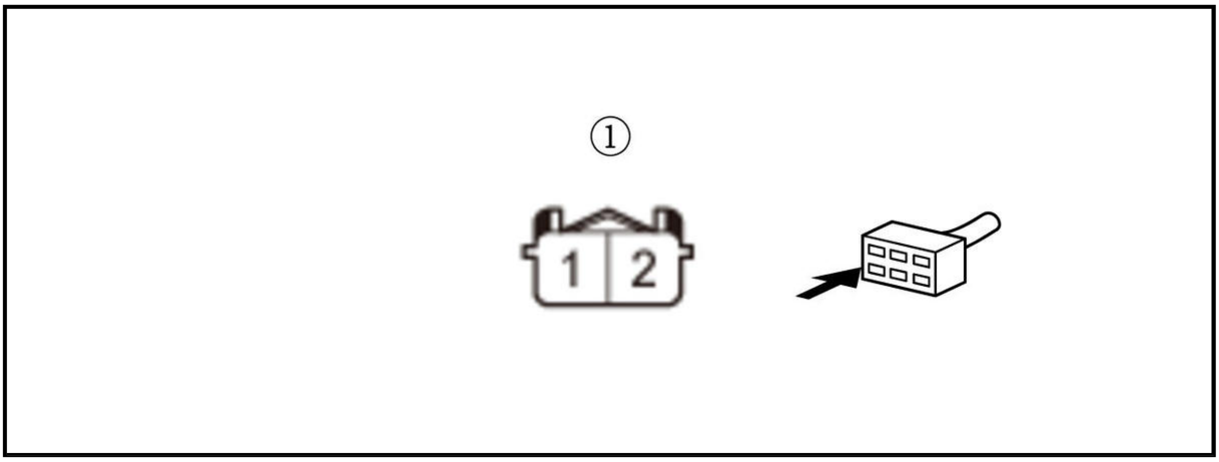

Is there 1.0 Ω or less?

YES

Go to step 4.

NO

Repair an open in the TATF wire between the transmission fluid temperature sensor and the PCU.

4. Transmission fluid temperature sensor check

-1. At the sensor side, check for continuity between test points 1 and 2.

Test condition	Vehicle OFF (LOCK) mode
B	PCU 33P connector: disconnected
B	Transmission fluid temperature sensor 2P connector: disconnected
Test point 1	Transmission fluid temperature sensor 2P connector (male terminals) No. 1: ①
Test point 2	Transmission fluid temperature sensor 2P connector (male terminals) No. 2: ①

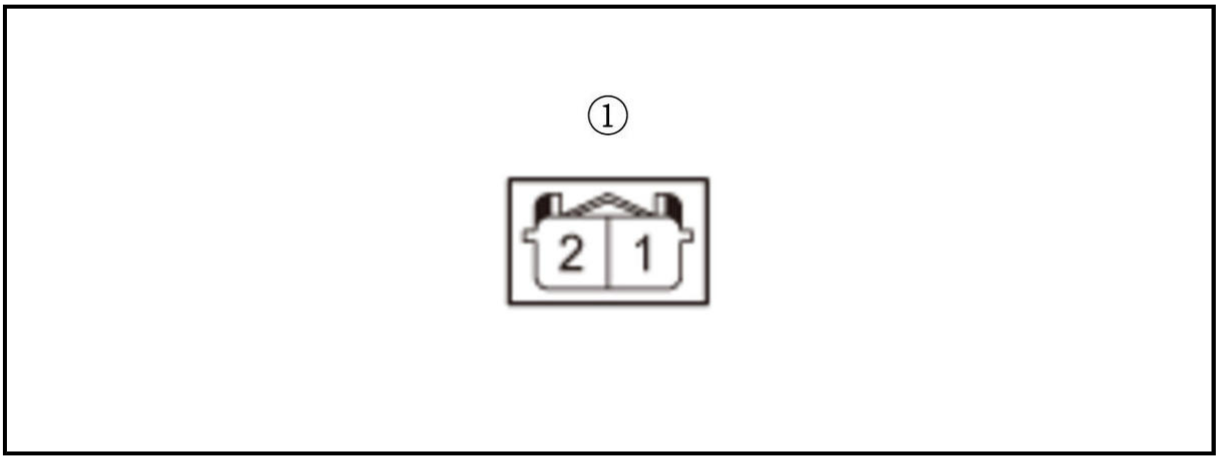

Is there continuity?

YES

Replace the PCU .

NO

Replace the transmission fluid temperature sensor .

5. Open wire check (SGTEMP/SGTATF line)

-1. Turn the vehicle to the OFF (LOCK) mode.

-2. **Do the 12 volt battery terminal disconnection procedure** .

-3. Disconnect the following connectors.

PCU 33P connector
Transmission fluid temperature sensor 2P connector

-4. Measure the resistance between test points 1 and 2.

Test condition	Vehicle OFF (LOCK) mode
B	PCU 33P connector: disconnected
B	Transmission fluid temperature sensor 2P connector: disconnected
Test point 1	**PCU 33P connector No. 17**
Test point 2	Transmission fluid temperature sensor 2P connector (female terminals) No. 1: ①

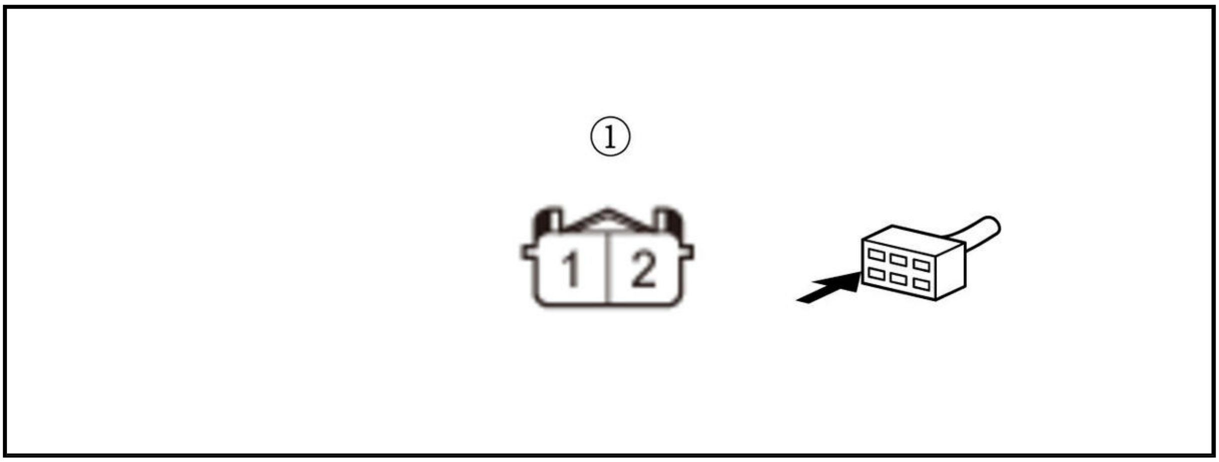

Is there 1.0 Ω or less?

YES

Replace the PCU .

NO

Repair an open in the SGTEMP/SGTATF wire between the transmission fluid temperature sensor and the PCU.

DTC P0A1A (296)

DTC P0A1A : Generator Motor Control Module (Traction Motor Control Module Detected)

DTC P0A1A : Generator Motor Control Module

NOTE: Before you troubleshoot, **review the general troubleshooting information** .

DTC Description	Confirmed DTC	Pending DTC	Freeze Frame
P0A1A Generator Motor Control Module (Traction Motor Control Module Detected)	B	B	B
P0A1A Generator Motor Control Module	B	B	B

DTC (Electric Powertrain)

1. Problem verification

   -1. Turn the vehicle to the ON mode.

   -2. Clear the DTC with the HDS.

   -3. Turn the vehicle to the OFF (LOCK) mode.

   -4. Turn the vehicle to the ON mode.

   -5. Check for Pending or Confirmed DTCs with the HDS.

DTC Description	Confirmed DTC	Pending DTC	Freeze Frame
P0A1A Generator Motor Control Module (Traction Motor Control Module Detected)	B	B	B
P0A1A Generator Motor Control Module	B	B	B

Is DTC P0A1A indicated?

YES

Replace the PCU .

NO

Intermittent failure. The system is OK at this time. If the freeze data/on-board snapshot of this DTC is recorded, try to reproduce the failure under the same conditions with the freeze data/on-board snapshot.

DTC P0A1B (256)

DTC P0A1B : Traction Motor Control Module

NOTE: Before you troubleshoot, review the general troubleshooting information .

DTC Description	Confirmed DTC	Pending DTC	Freeze Frame
P0A1B Traction Motor Control Module	B	B	B

DTC (Electric Powertrain)

1. Problem verification

   -1. Turn the vehicle to the ON mode.

   -2. Clear the DTC with the HDS.

   -3. Turn the vehicle to the OFF (LOCK) mode.

   -4. Turn the vehicle to the ON mode.

   -5. Check for Pending or Confirmed DTCs with the HDS.

DTC Description	Confirmed DTC	Pending DTC	Freeze Frame
P0A1B Traction Motor Control Module	B	B	B

Is DTC P0A1B indicated?

YES

Replace the PCU .

NO

Intermittent failure. The system is OK at this time. If the freeze data/on-board snapshot of this DTC is recorded, try to reproduce the failure under the same conditions with the freeze data/on-board snapshot.

DTC P0A2A

DTC P0A2A : Traction Motor Temperature Sensor Circuit

NOTE:

- Before you troubleshoot, **review the general troubleshooting information** .
- If any of the DTCs listed below are indicated at the same time as DTC P0A2A, troubleshoot those DTCs first, then recheck for P0A2A.
-
    - P1D6E, P1D72

DTC Description	Confirmed DTC	Pending DTC	Freeze Frame
P0A2A Traction Motor Temperature Sensor Circuit	B	B	B

DTC (Electric Powertrain)

1. DTC check

-1. Turn the vehicle to the ON mode.

-2. Check for Pending or Confirmed DTCs with the HDS.

DTC Description	Confirmed DTC	Pending DTC	Freeze Frame
B	B	B	B

DTC (Electric Powertrain)

Are DTC P0A2A and any other DTCs indicated at the same time?

YES

Go to the indicated DTC's troubleshooting.

NO

Update the motor control module if it does not have the latest software .

DTC P0A2B (359)

DTC P0A2B : Traction Motor Temperature Sensor Circuit Range/Performance

NOTE: Before you troubleshoot, **review the general troubleshooting information** .

DTC Description	Confirmed DTC	Pending DTC	Freeze Frame
P0A2B Traction Motor Temperature Sensor Circuit Range/Performance	B	B	B

DTC (Electric Powertrain)

1. Problem verification

   -1. Turn the vehicle to the ON mode.

   -2. Clear the DTC with the HDS.

   -3. Turn the vehicle to the OFF (LOCK) mode.

   -4. Turn the vehicle to the ON mode.

   -5. Check for Pending or Confirmed DTCs with the HDS.

DTC Description	Confirmed DTC	Pending DTC	Freeze Frame
P0A2B Traction Motor Temperature Sensor Circuit Range/Performance	B	B	B

   Is DTC P0A2B indicated?

   YES

   The failure is duplicated. Go to step 2.

   NO

   Intermittent failure. The system is OK at this time. If the freeze data/on-board snapshot of this DTC is recorded, try to reproduce the failure under the same conditions with the freeze data/on-board snapshot.

2. Determine possible failure area (traction motor temperature sensor, others)

   -1. Turn the vehicle to the OFF (LOCK) mode.

   -2. Disconnect the following connector.

Motor temperature sensor 6P connector

   -3. Turn the vehicle to the ON mode.

   -4. Check the parameter(s) below with the HDS.

Signal	Threshold		Current conditions	
	Values	Unit	Values	Unit
Motor Temperature Sensor Voltage (TRC)	More than 4.83	V	B	B

   Does the current condition(s) match the threshold?

   YES

   Faulty traction motor temperature sensor. **Replace the transmission (e-CVT) assembly** .

   NO

   Replace the PCU .

DTC P0A2C (238)

DTC P0A2C : Traction Motor Temperature Sensor Circuit Low

NOTE: Before you troubleshoot, **review the general troubleshooting information** .

DTC Description	Confirmed DTC	Pending DTC	Freeze Frame
P0A2C Traction Motor Temperature Sensor Circuit Low	B	B	B

DTC (Electric Powertrain)

1. Problem verification

   -1. Turn the vehicle to the ON mode.

   -2. Clear the DTC with the HDS.

   -3. Turn the vehicle to the OFF (LOCK) mode.

   -4. Turn the vehicle to the ON mode.

   -5. Check the parameter(s) below with the HDS.

Signal	Threshold		Current conditions	
	Values	Unit	Values	Unit
Motor Temperature Sensor Voltage (TRC)	Less than 0.3	V	B	B

Does the current condition(s) match the threshold?

YES

The failure is duplicated. Go to step 2.

NO

Intermittent failure. The system is OK at this time. If the freeze data/on-board snapshot of this DTC is recorded, try to reproduce the failure under the same conditions with the freeze data/on-board snapshot.

2. Determine possible failure area (TMOT line, traction motor temperature sensor)

   -1. Turn the vehicle to the OFF (LOCK) mode.

   -2. Disconnect the following connector.

Motor temperature sensor 6P connector

   -3. Turn the vehicle to the ON mode.

   -4. Check the parameter(s) below with the HDS.

Signal	Threshold		Current conditions	
	Values	Unit	Values	Unit
Motor Temperature Sensor Voltage (TRC)	Less than 0.3	V	B	B

Does the current condition(s) match the threshold?

YES

Traction motor temperature sensor is OK. Go to step 3.

NO

Faulty traction motor temperature sensor. **Replace the transmission (e-CVT) assembly** .

3. Shorted wire check (TMOT line)

   -1. Turn the vehicle to the OFF (LOCK) mode.

   -2. **Do the 12 volt battery terminal disconnection procedure** .

   -3. Disconnect the following connector.

PCU 33P connector

   -4. Measure the resistance between test points 1 and 2.

Test condition	Vehicle OFF (LOCK) mode
B	PCU 33P connector: disconnected
B	Motor temperature sensor 6P connector: disconnected
Test point 1	**PCU 33P connector No. 10**
Test point 2	Body ground

   Is there 1 MΩ or more?

   YES

   Replace the PCU .

   NO

   Repair a short in the TMOT wire between the traction motor temperature sensor and the PCU.

DTC P0A2D (237)

DTC P0A2D : Traction Motor Temperature Sensor Circuit High

NOTE: Before you troubleshoot, **review the general troubleshooting information** .

DTC Description	Confirmed DTC	Pending DTC	Freeze Frame
P0A2D Traction Motor Temperature Sensor Circuit High	B	B	B

DTC (Electric Powertrain)

1. Problem verification

   -1. Turn the vehicle to the ON mode.

   -2. Clear the DTC with the HDS.

   -3. Turn the vehicle to the OFF (LOCK) mode.

   -4. Turn the vehicle to the ON mode.

   -5. Check for Pending or Confirmed DTCs with the HDS.

DTC Description	Confirmed DTC	Pending DTC	Freeze Frame
P0A2D Traction Motor Temperature Sensor Circuit High	B	B	B

   Is DTC P0A2D indicated?

YES

The failure is duplicated. Go to step 2.

NO

Intermittent failure. The system is OK at this time. If the freeze data/on-board snapshot of this DTC is recorded, try to reproduce the failure under the same conditions with the freeze data/on-board snapshot.

2. Determine possible failure area (TMOT line, SGTEMP/SGTMOT line)

-1. Check for Pending or Confirmed DTCs with the HDS.

DTC Description	Confirmed DTC	Pending DTC	Freeze Frame
P0713 Transmission Fluid Temperature Sensor Circuit High	B	B	B
P0A2D Traction Motor Temperature Sensor Circuit High	B	B	B
P0CF1 PCU Coolant Temperature Sensor Circuit High	B	B	B

Are DTC P0713, P0A2D, and P0CF1 indicated at the same time?

YES

Go to step 5.

NO

Go to step 3.

3. Open wire check (TMOT line)

-1. Turn the vehicle to the OFF (LOCK) mode.

-2. **Do the 12 volt battery terminal disconnection procedure** .

-3. Disconnect the following connectors.

PCU 33P connector
Motor temperature sensor 6P connector

-4. Measure the resistance between test points 1 and 2.

Test condition	Vehicle OFF (LOCK) mode
B	PCU 33P connector: disconnected
B	Motor temperature sensor 6P connector: disconnected
Test point 1	**PCU 33P connector No. 10**
Test point 2	Motor temperature sensor 6P connector (female terminals) No. 3: ①

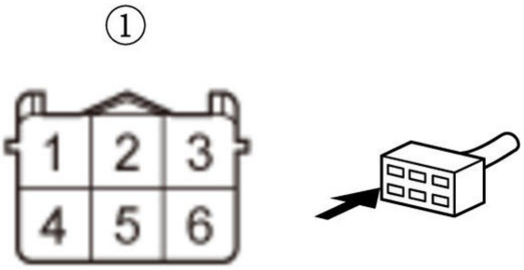

Is there 1.0 Ω or less?

YES

Go to step 4.

NO

Repair an open in the TMOT wire between the traction motor temperature sensor and the PCU.

4. Traction motor temperature sensor check

-1. At the sensor side, check for continuity between test points 1 and 2.

Test condition	Vehicle OFF (LOCK) mode
B	PCU 33P connector: disconnected
B	Motor temperature sensor 6P connector: disconnected
Test point 1	Motor temperature sensor 6P connector (male terminals) No. 2: ①
Test point 2	Motor temperature sensor 6P connector (male terminals) No. 3: ①

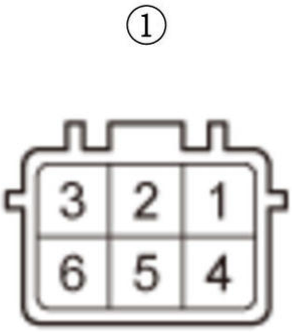

Is there continuity?

YES

Replace the PCU .

NO

Faulty traction motor temperature sensor. Replace the transmission (e-CVT) assembly .

5. Open wire check (SGTEMP/SGTMOT line)

   -1. Turn the vehicle to the OFF (LOCK) mode.

   -2. Do the 12 volt battery terminal disconnection procedure .

   -3. Disconnect the following connectors.

PCU 33P connector
Motor temperature sensor 6P connector

   -4. Measure the resistance between test points 1 and 2.

Test condition	Vehicle OFF (LOCK) mode
B	PCU 33P connector: disconnected
B	Motor temperature sensor 6P connector: disconnected
Test point 1	PCU 33P connector No. 17
Test point 2	Motor temperature sensor 6P connector (female terminals) No. 2: ①

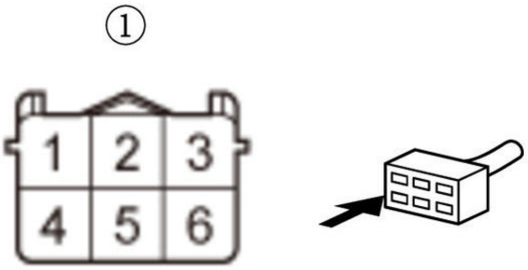

Is there 1.0 Ω or less?

YES

Go to step 6.

NO

Repair an open in the SGTEMP/SGTMOT wire between the traction motor temperature sensor and the PCU.

6. Traction motor temperature sensor check

   -1. At the sensor side, check for continuity between test points 1 and 2.

Test condition	Vehicle OFF (LOCK) mode
B	PCU 33P connector: disconnected

B	Motor temperature sensor 6P connector: disconnected
Test point 1	Motor temperature sensor 6P connector (male terminals) No. 2: ①
Test point 2	Motor temperature sensor 6P connector (male terminals) No. 3: ①

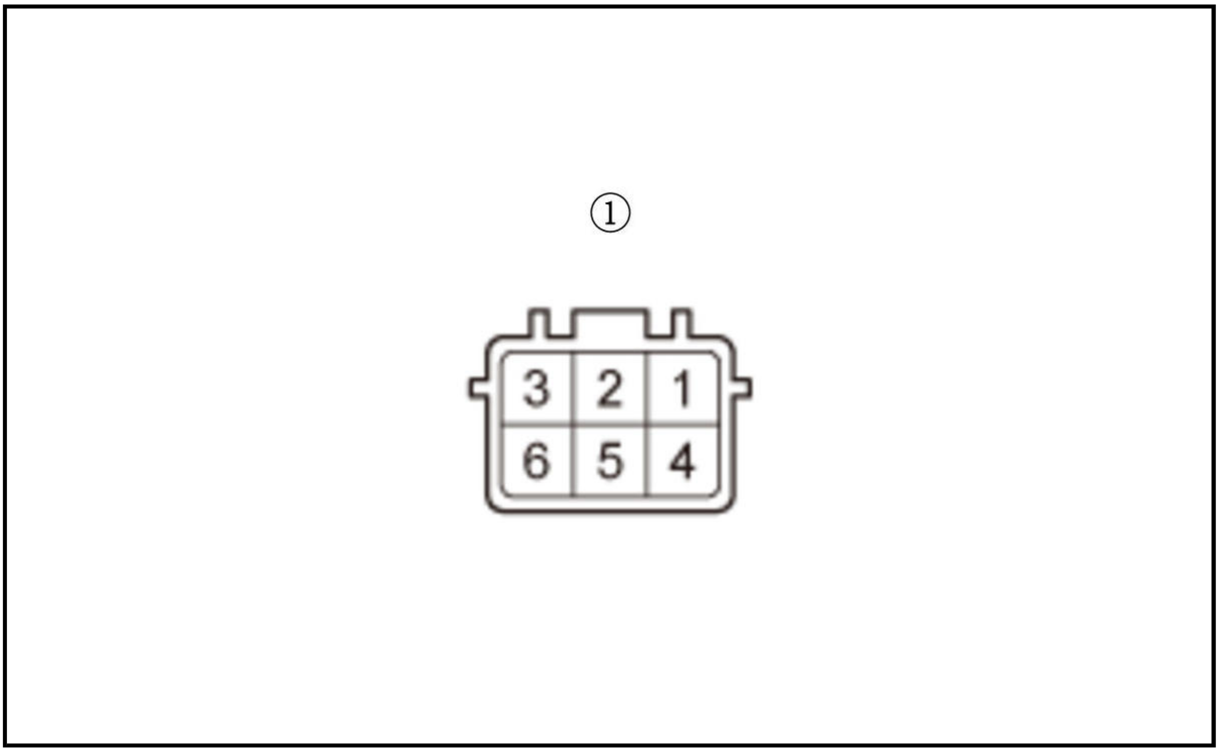

Is there continuity?

YES

Replace the PCU .

NO

Faulty traction motor temperature sensor. **Replace the transmission (e-CVT) assembly** .

DTC P0A2F (313)

DTC P0A2F : Traction Motor Over Temperature

NOTE: Before you troubleshoot, **review the general troubleshooting information** .

DTC Description	Confirmed DTC	Pending DTC	Freeze Frame
P0A2F Traction Motor Over Temperature	B	B	B

DTC (Electric Powertrain)

1. Problem verification

-1. Test-drive the vehicle in the range of the recorded freeze data parameters.

Freeze Data

-2. Monitor the OBD STATUS for DTC P0A2F in the DTCs MENU with the HDS.

DTC Description	OBD STATUS
P0A2F Traction Motor Over Temperature	B

Does the HDS indicate FAILED?

YES

Go to step 2.

NO

If the HDS indicates PASSED, the system is OK at this time but has an intermittent failure. If the HDS indicates NOT COMPLETED, keep test-driving until an indication comes on. If the freeze data/on-board snapshot of this DTC is recorded, try to reproduce the failure under the same conditions with the freeze data/on-board snapshot.

2. ATF check

-1. Turn the vehicle to the OFF (LOCK) mode.

Check these items:

- **Check the ATF level** .
- Check for deteriorated ATF.
- Check for any ATF leakage (from gaskets, hoses, O-rings, etc.).
- Check for dirt, leaves, or insects on ATF cooler.

Is it OK?

YES

Replace the transmission (e-CVT) assembly .

NO

Repair or replace parts as needed.

DTC P0A3C (39)

DTC P0A3C : Traction Motor Inverter Over Temperature

NOTE: Before you troubleshoot, **review the general troubleshooting information** .

DTC Description	Confirmed DTC	Pending DTC	Freeze Frame
P0A3C Traction Motor Inverter Over Temperature	B	B	B

DTC (Electric Powertrain)

1. DTC check

-1. Turn the vehicle to the ON mode.

-2. Check for Pending or Confirmed DTCs with the HDS.

DTC Description	Confirmed DTC	Pending DTC	Freeze Frame
P1D92 PCU Coolant Electric Water Pump Control Circuit	B	B	B

DTC Description	Confirmed DTC	Pending DTC	Freeze Frame
P1D9A PCU Coolant Electric Water Pump Circuit	B	B	B

Is DTC P1D92 or P1D9A indicated?

YES

Go to the indicated DTC's troubleshooting.

NO

Go to step 2.

2. Problem verification

-1. Test-drive the vehicle in the range of the recorded freeze data parameters.

Freeze Data

-2. Monitor the OBD STATUS for DTC P0A3C in the DTCs MENU with the HDS.

DTC Description	OBD STATUS
P0A3C Traction Motor Inverter Over Temperature	B

Does the HDS indicate FAILED?

YES

Go to step 4.

NO

Go to step 3.

3. DTC check

-1. Check for Pending or Confirmed DTCs with the HDS.

DTC Description	Confirmed DTC	Pending DTC	Freeze Frame
P1440 Traction Motor Inverter Gate Line Open	B	B	B

Is DTC P1440 indicated?

YES

Go to the DTC P1440 troubleshooting .

NO

Intermittent failure. The system is OK at this time. If the freeze data/on-board snapshot of this DTC is recorded, try to reproduce the failure under the same conditions with the freeze data/on-board snapshot.

4. Cooling system check

-1. **Do the PCU coolant circuit inspection** .

Is it OK?

YES

Replace the PCU .

NO

Repair or replace parts as needed.

DTC P0A3E (286)

DTC P0A3E : Generator Motor Inverter Over Temperature

NOTE: Before you troubleshoot, review the general troubleshooting information .

DTC Description	Confirmed DTC	Pending DTC	Freeze Frame
P0A3E Generator Motor Inverter Over Temperature	B	B	B

DTC (Electric Powertrain)

1. DTC check 1

   -1. Turn the vehicle to the ON mode.

   -2. Check for Pending or Confirmed DTCs with the HDS.

DTC Description	Confirmed DTC	Pending DTC	Freeze Frame
P1D92 PCU Coolant Electric Water Pump Control Circuit	B	B	B
P1D9A PCU Coolant Electric Water Pump Circuit	B	B	B

   Is DTC P1D92 or P1D9A indicated?

   YES

   Go to the indicated DTC's troubleshooting.

   NO

   Go to step 2.

2. Problem verification

   -1. Test-drive the vehicle in the range of the recorded freeze data parameters.

   Freeze Data

   -2. Monitor the OBD STATUS for DTC P0A3E in the DTCs MENU with the HDS.

DTC Description	OBD STATUS
P0A3E Generator Motor Inverter Over Temperature	B

   Does the HDS indicate FAILED?

   YES

   Go to step 4.

   NO

Go to step 3.

3. DTC check 2

   -1. Turn the vehicle to the ON mode.

   -2. Check for Pending or Confirmed DTCs with the HDS.

DTC Description	Confirmed DTC	Pending DTC	Freeze Frame
P1D8A Generator Motor Inverter Gate Line Open	B	B	B

Is DTC P1D8A indicated?

YES

Go to the DTC P1D8A troubleshooting .

NO

Intermittent failure. The system is OK at this time. If the freeze data/on-board snapshot of this DTC is recorded, try to reproduce the failure under the same conditions with the freeze data/on-board snapshot.

4. Cooling system check

   -1. **Do the PCU coolant circuit inspection** .

Is it OK?

YES

Replace the PCU .

NO

Repair or replace parts as needed.

DTC P0A3F (89), P0A40 (197), P0A41 (198)

DTC P0A3F : Traction Motor Rotor Position Sensor Circuit

DTC P0A40 : Traction Motor Rotor Position Sensor Circuit Range/Performance

DTC P0A41 : Traction Motor Rotor Position Sensor Circuit Low

NOTE: Before you troubleshoot, **review the general troubleshooting information** .

DTC Description	Confirmed DTC	Pending DTC	Freeze Frame
P0A3F Traction Motor Rotor Position Sensor Circuit	B	B	B
P0A40 Traction Motor Rotor Position Sensor Circuit Range/Performance	B	B	B
P0A41 Traction Motor Rotor Position Sensor Circuit Low	B	B	B

DTC (Electric Powertrain)

1. Problem verification

   -1. Turn the vehicle to the ON mode.

-2. Clear the DTC with the HDS.

-3. Turn the vehicle to the OFF (LOCK) mode.

-4. Turn the vehicle to the ON mode.

-5. Monitor the OBD STATUS for DTC P0A3F, P0A40, and P0A41 in the DTCs MENU with the HDS.

DTC Description	OBD STATUS
P0A3F Traction Motor Rotor Position Sensor Circuit	B
P0A40 Traction Motor Rotor Position Sensor Circuit Range/Performance	B

DTC Description	OBD STATUS
P0A41 Traction Motor Rotor Position Sensor Circuit Low	B

Does the HDS indicate FAILED?

YES

The failure is duplicated. Go to step 2.

NO

If the HDS indicates PASSED, the system is OK at this time but has an intermittent failure. If the HDS indicates NOT COMPLETED, keep the vehicle in the ON mode until the status changes. If the freeze data/on-board snapshot of this DTC is recorded, try to reproduce the failure under the same conditions with the freeze data/on-board snapshot.

2. Traction motor motor rotor position sensor circuit check

-1. **Do the traction motor motor rotor position sensor circuit inspection** .

Is it OK?

YES

The traction motor motor rotor position sensor circuit is OK. Faulty traction motor motor rotor position sensor. **Replace the transmission (e-CVT) assembly** .

NO

Repair an open or short in the traction motor motor rotor position sensor circuit between the PCU and the traction motor motor rotor position sensor.

DTC P0A4B (293), P0A4C (473), P0A4D (474)

DTC P0A4B : Generator Motor Rotor Position Sensor Circuit

DTC P0A4C : Generator Motor Rotor Position Sensor Circuit Range/Performance

DTC P0A4D : Generator Motor Rotor Position Sensor Circuit Low

NOTE: Before you troubleshoot, **review the general troubleshooting information** .

DTC Description	Confirmed DTC	Pending DTC	Freeze Frame
P0A4B Generator Motor Rotor Position Sensor Circuit	B	B	B
P0A4C Generator Motor Rotor Position Sensor Circuit Range/Performance	B	B	B

DTC Description	Confirmed DTC	Pending DTC	Freeze Frame
P0A4D Generator Motor Rotor Position Sensor Circuit Low	B	B	B

DTC (Electric Powertrain)

1. Problem verification

   -1. Turn the vehicle to the ON mode.

   -2. Clear the DTC with the HDS.

   -3. Turn the vehicle to the OFF (LOCK) mode.

   -4. Turn the vehicle to the ON mode.

   -5. Monitor the OBD STATUS for DTC P0A4B, P0A4C, and P0A4D in the DTCs MENU with the HDS.

DTC Description	Confirmed DTC	Pending DTC	Freeze Frame
P0A4B Generator Motor Rotor Position Sensor Circuit	B	B	B
P0A4C Generator Motor Rotor Position Sensor Circuit Range/Performance	B	B	B

DTC Description	Confirmed DTC	Pending DTC	Freeze Frame
P0A4D Generator Motor Rotor Position Sensor Circuit Low	B	B	B

   Does the HDS indicate FAILED?

   YES

   The failure is duplicated. Go to step 2.

   NO

   If the HDS indicates PASSED, the system is OK at this time but has an intermittent failure. If the HDS indicates NOT COMPLETED, keep the vehicle in the ON mode until an indication comes on. If the freeze data/on-board snapshot of this DTC is recorded, try to reproduce the failure under the same conditions with the freeze data/on-board snapshot.

2. Generator motor motor rotor position sensor circuit check

   -1. Do the generator motor motor rotor position sensor circuit inspection .

   Is it OK?

   YES

   The generator motor motor rotor position sensor circuit is OK. Faulty generator motor motor rotor position sensor. Replace the transmission (e-CVT) assembly .

   NO

   Repair an open or short in the generator motor motor rotor position sensor circuit between the PCU and the generator motor motor rotor position sensor.

DTC P0A5E (24), P0A5F (25), P0A61 (26), P0A62 (27), P0A64 (28), P0A65 (29)

DTC P0A5E : Traction Motor Phase U Current Low

DTC P0A5F : Traction Motor Phase U Current High

DTC P0A61 : Traction Motor Phase V Current Low

DTC P0A62 : Traction Motor Phase V Current High

DTC P0A64 : Traction Motor Phase W Current Low

DTC P0A65 : Traction Motor Phase W Current High

NOTE: Before you troubleshoot, **review the general troubleshooting information** .

DTC Description	Confirmed DTC	Pending DTC	Freeze Frame
P0A5E Traction Motor Phase U Current Low	B	B	B
P0A5F Traction Motor Phase U Current High	B	B	B
P0A61 Traction Motor Phase V Current Low	B	B	B
P0A62 Traction Motor Phase V Current High	B	B	B
P0A64 Traction Motor Phase W Current Low	B	B	B
P0A65 Traction Motor Phase W Current High	B	B	B

DTC (Electric Powertrain)

1. Problem verification

   -1. Turn the vehicle to the ON mode.

   -2. Clear the DTC with the HDS.

   -3. Turn the vehicle to the OFF (LOCK) mode.

   -4. Turn the vehicle to the ON mode.

   -5. Check for Pending or Confirmed DTCs with the HDS.

DTC Description	Confirmed DTC	Pending DTC	Freeze Frame
P0A5E Traction Motor Phase U Current Low	B	B	B

DTC Description	Confirmed DTC	Pending DTC	Freeze Frame
P0A5F Traction Motor Phase U Current High	B	B	B
P0A61 Traction Motor Phase V Current Low	B	B	B
P0A62 Traction Motor Phase V Current High	B	B	B
P0A64 Traction Motor Phase W Current Low	B	B	B
P0A65 Traction Motor Phase W Current High	B	B	B

Is DTC P0A5E, P0A5F, P0A61, P0A62, P0A64, and/or P0A65 indicated?

YES

Replace the PCU .

NO

Intermittent failure. The system is OK at this time. If the freeze data/on-board snapshot of this DTC is recorded, try to reproduce the failure under the same conditions with the freeze data/on-board snapshot.

DTC P0A70 (276), P0A71 (275), P0A73 (279), P0A74 (278), P0A76 (282), P0A77 (281)

DTC P0A70 : Generator Motor Phase U Current Low

DTC P0A71 : Generator Motor Phase U Current High

DTC P0A73 : Generator Motor Phase V Current Low

DTC P0A74 : Generator Motor Phase V Current High

DTC P0A76 : Generator Motor Phase W Current Low

DTC P0A77 : Generator Motor Phase W Current High

NOTE: Before you troubleshoot, **review the general troubleshooting information** .

DTC Description	Confirmed DTC	Pending DTC	Freeze Frame
P0A70 Generator Motor Phase U Current Low	B	B	B
P0A71 Generator Motor Phase U Current High	B	B	B
P0A73 Generator Motor Phase V Current Low	B	B	B
P0A74 Generator Motor Phase V Current High	B	B	B
P0A76 Generator Motor Phase W Current Low	B	B	B
P0A77 Generator Motor Phase W Current High	B	B	B

DTC (Electric Powertrain)

1. Problem verification

-1. Turn the vehicle to the ON mode.

-2. Clear the DTC with the HDS.

-3. Turn the vehicle to the OFF (LOCK) mode.

-4. Turn the vehicle to the ON mode.

-5. Check for Pending or Confirmed DTCs with the HDS.

DTC Description	Confirmed DTC	Pending DTC	Freeze Frame
P0A70 Generator Motor Phase U Current Low	B	B	B

DTC Description	Confirmed DTC	Pending DTC	Freeze Frame
P0A71 Generator Motor Phase U Current High	B	B	B
P0A73 Generator Motor Phase V Current Low	B	B	B
P0A74 Generator Motor Phase V Current High	B	B	B
P0A76 Generator Motor Phase W Current Low	B	B	B
P0A77 Generator Motor Phase W Current High	B	B	B

Is DTC P0A70, P0A71, P0A73, P0A74, P0A76, and/or P0A77 indicated?

YES

Replace the PCU .

NO

Intermittent failure. The system is OK at this time. If the freeze data/on-board snapshot of this DTC is recorded, try to reproduce the failure under the same conditions with the freeze data/on-board snapshot.

DTC P0A78

DTC P0A78 : Traction Motor Inverter Performance

NOTE:

- Before you troubleshoot, **review the general troubleshooting information** .
- If any of the DTCs listed below are indicated at the same time as DTC P0A78, troubleshoot those DTCs first, then recheck for P0A78.
-
    - P1437, P1440, P15A5, P1A56, P1A57, P1A64, P1A65, P1D05, P1D18, P1D70, P1D7A, P1D7B, P1D7D, P1D7E, P1D85, P1DDB

DTC Description	Confirmed DTC	Pending DTC	Freeze Frame
P0A78 Traction Motor Inverter Performance	B	B	B

DTC (Electric Powertrain)

1. DTC check

   -1. Turn the vehicle to the ON mode.

   -2. Check for Pending or Confirmed DTCs with the HDS.

DTC Description	Confirmed DTC	Pending DTC	Freeze Frame
B	B	B	B

   DTC (Electric Powertrain)

   Are DTC P0A78 and any other DTCs indicated at the same time?

   YES

   Go to the indicated DTC's troubleshooting.

   NO

   Update the motor control module if it does not have the latest software .

DTC P0A7A (GENERATOR MOTOR CONTROL MODULE)

DTC P0A7A : Generator Motor Inverter Performance

NOTE:

- Before you troubleshoot, **review the general troubleshooting information** .
- If any of the DTCs listed below are indicated at the same time as DTC P0A7A, troubleshoot those DTCs first, then recheck for P0A7A.
-
    - Traction motor control module: P1A63, P1A87, P1A88, P1A89, P1D1B, P1D1C, P1D1D, P1D77, P1D78, P1D79, P1D81, P1D9D, P1DA0, P1DA1, P1DA4, P1DA6, P1DA8, P1DAA, P1DD8, P1DD9, P1DE3, P1DE4, P1DE5, P1DE6, P1DE7, P1DE8, P1DE9, P1DEA, P1F3C
    - Generator motor control module: P1D7F, P1D8A, P1D8C, P1D8D, P1D97

DTC Description	Confirmed DTC	Pending DTC	Freeze Frame
P0A7A Generator Motor Inverter Performance	B	B	B

DTC (Electric Powertrain)

1. DTC check

-1. Turn the vehicle to the ON mode.

-2. Check for Pending or Confirmed DTCs with the HDS.

DTC Description	Confirmed DTC	Pending DTC	Freeze Frame
B	B	B	B

DTC (Electric Powertrain)

Are DTC P0A7A and any other DTCs indicated at the same time?

YES

Go to the indicated DTC's troubleshooting.

NO

Update the motor control module if it does not have the latest software .

DTC P0A7A (TRACTION MOTOR CONTROL MODULE)

DTC P0A7A : Generator Motor Inverter Performance (Traction Motor Control Module Detected)

NOTE:

- Before you troubleshoot, **review the general troubleshooting information** .
- If any of the DTCs listed below are indicated at the same time as DTC P0A7A, troubleshoot those DTCs first, then recheck for P0A7A.
-
    - Traction motor control module: P1A63, P1A87, P1A88, P1A89, P1D1B, P1D1C, P1D1D, P1D77, P1D78, P1D79, P1D81, P1D9D, P1DA0, P1DA1, P1DA4, P1DA6, P1DA8, P1DAA, P1DD8, P1DD9, P1DE3, P1DE4, P1DE5, P1DE6, P1DE7, P1DE8, P1DE9, P1DEA, P1F3C
    - Generator motor control module: P1D7F, P1D8A, P1D8C, P1D8D, P1D97

DTC Description	Confirmed DTC	Pending DTC	Freeze Frame
P0A7A Generator Motor Inverter Performance (Traction Motor Control Module Detected)	B	B	B

DTC (Electric Powertrain)

1. DTC check

-1. Turn the vehicle to the ON mode.

-2. Check for Pending or Confirmed DTCs with the HDS.

DTC Description	Confirmed DTC	Pending DTC	Freeze Frame
B	B	B	B

DTC (Electric Powertrain)

Are DTC P0A7A and any other DTCs indicated at the same time?

YES

Go to the indicated DTC's troubleshooting.

NO

Update the motor control module if it does not have the latest software .

DTC P0A90 (1040)

DTC P0A90 : Traction Motor Performance

NOTE: Before you troubleshoot, **review the general troubleshooting information** .

DTC Description	Confirmed DTC	Pending DTC	Freeze Frame
P0A90 Traction Motor Performance	B	B	B

DTC (Electric Powertrain)

1. DTC check

   -1. Turn the vehicle to the ON mode.

   -2. Check for Pending or Confirmed DTCs with the HDS.

DTC Description	Confirmed DTC	Pending DTC	Freeze Frame
B	B	B	B

   DTC (Electric Powertrain)

   Are DTC P0A90 and any other DTCs indicated at the same time?

   YES

   Go to the indicated DTC's troubleshooting.

   NO

   Go to step 2.

2. Problem verification

   -1. Clear the DTC with the HDS.

   -2. Turn the vehicle to the OFF (LOCK) mode.

   -3. Turn the vehicle to the ON mode.

   -4. Turn the EV switch OFF.

   -5. Turn the vehicle to the READY TO DRIVE mode.

   -6. Position to D, and test-drive at 34 mph (55 km/h) for 5 seconds.

   -7. Monitor the OBD STATUS for DTC P0A90 in the DTCs MENU with the HDS.

DTC Description	OBD STATUS
P0A90 Traction Motor Performance	B

Does the HDS indicate FAILED?

YES

Faulty traction motor. Replace the transmission (e-CVT) assembly .

NO

If the HDS indicates PASSED, the system is OK at this time but has an intermittent failure. If the HDS indicates NOT COMPLETED, keep the vehicle in the ON mode until an indication comes on. If the freeze data/on-board snapshot of this DTC is recorded, try to reproduce the failure under the same conditions with the freeze data/on-board snapshot.

DTC P0A92 (1041)

DTC P0A92 : Generator Motor Performance

NOTE: Before you troubleshoot, review the general troubleshooting information .

DTC Description	Confirmed DTC	Pending DTC	Freeze Frame
P0A92 Generator Motor Performance	B	B	B

DTC (Electric Powertrain)

1. DTC check

   -1. Turn the vehicle to the ON mode.

   -2. Check for Pending or Confirmed DTCs with the HDS.

DTC Description	Confirmed DTC	Pending DTC	Freeze Frame
B	B	B	B

   DTC (Electric Powertrain)

   Are DTC P0A92 and any other DTCs indicated at the same time?

   YES

   Go to the indicated DTC's troubleshooting.

   NO

   Go to step 2.

2. Problem verification

   -1. Clear the DTC with the HDS.

   -2. Turn the vehicle to the OFF (LOCK) mode.

   -3. Turn the vehicle to the ON mode.

   -4. Turn the EV switch OFF.

   -5. Turn the vehicle to the READY TO DRIVE mode.

-6. Position to D, and test-drive at 34 mph (55 km/h) for 5 seconds.

-7. Monitor the OBD STATUS for DTC P0A92 in the DTCs MENU with the HDS.

DTC Description	OBD STATUS
P0A92 Generator Motor Performance	B

Does the HDS indicate FAILED?

YES

Faulty generator motor. **Replace the transmission (e-CVT) assembly** .

NO

If the HDS indicates PASSED, the system is OK at this time but has an intermittent failure. If the HDS indicates NOT COMPLETED, keep test-driving until an indication comes on. If the freeze data/on-board snapshot of this DTC is recorded, try to reproduce the failure under the same conditions with the freeze data/on-board snapshot.

DTC P0AED (109)

DTC P0AED : Traction Motor Inverter Temperature Sensor 1 Circuit

NOTE: Before you troubleshoot, **review the general troubleshooting information** .

DTC Description	Confirmed DTC	Pending DTC	Freeze Frame
P0AED Traction Motor Inverter Temperature Sensor 1 Circuit	B	B	B

DTC (Electric Powertrain)

1. Problem verification

-1. Turn the vehicle to the ON mode.

-2. Clear the DTC with the HDS.

-3. Turn the vehicle to the OFF (LOCK) mode.

-4. Turn the vehicle to the ON mode.

-5. Check for Pending or Confirmed DTCs with the HDS.

DTC Description	Confirmed DTC	Pending DTC	Freeze Frame
P0AED Traction Motor Inverter Temperature Sensor 1 Circuit	B	B	B

Is DTC P0AED indicated?

YES

Replace the PCU .

NO

Intermittent failure. The system is OK at this time. If the freeze data/on-board snapshot of this DTC is recorded, try to reproduce the failure under the same conditions with the freeze data/on-board snapshot.

DTC P0AEE (435)

DTC P0AEE : Traction Motor Inverter Temperature Sensor 1 Circuit Range/Performance

NOTE: Before you troubleshoot, **review the general troubleshooting information** .

DTC Description	Confirmed DTC	Pending DTC	Freeze Frame
P0AEE Traction Motor Inverter Temperature Sensor 1 Circuit Range/Performance	B	B	B

DTC (Electric Powertrain)

1. Problem verification

    -1. Turn the vehicle to the ON mode.

    -2. Clear the DTC with the HDS.

    -3. Turn the vehicle to the OFF (LOCK) mode.

    -4. Turn the vehicle to the ON mode.

    -5. Check for Pending or Confirmed DTCs with the HDS.

DTC Description	Confirmed DTC	Pending DTC	Freeze Frame
P0AEE Traction Motor Inverter Temperature Sensor 1 Circuit Range/Performance	B	B	B

Is DTC P0AEE indicated?

YES

Replace the PCU .

NO

Intermittent failure. The system is OK at this time. If the freeze data/on-board snapshot of this DTC is recorded, try to reproduce the failure under the same conditions with the freeze data/on-board snapshot.

DTC P0AEF (110)

DTC P0AEF : Traction Motor Inverter Temperature Sensor 1 Circuit Low

NOTE: Before you troubleshoot, **review the general troubleshooting information** .

DTC Description	Confirmed DTC	Pending DTC	Freeze Frame
P0AEF Traction Motor Inverter Temperature Sensor 1 Circuit Low	B	B	B

DTC (Electric Powertrain)

1. Problem verification

    -1. Turn the vehicle to the ON mode.

    -2. Clear the DTC with the HDS.

    -3. Turn the vehicle to the OFF (LOCK) mode.

-4. Turn the vehicle to the ON mode.

-5. Check for Pending or Confirmed DTCs with the HDS.

DTC Description	Confirmed DTC	Pending DTC	Freeze Frame
P0AEF Traction Motor Inverter Temperature Sensor 1 Circuit Low	B	B	B

Is DTC P0AEF indicated?

YES

Replace the PCU .

NO

Intermittent failure. The system is OK at this time. If the freeze data/on-board snapshot of this DTC is recorded, try to reproduce the failure under the same conditions with the freeze data/on-board snapshot.

DTC P0AF0 (111)

DTC P0AF0 : Traction Motor Inverter Temperature Sensor 1 Circuit High

NOTE: Before you troubleshoot, review the general troubleshooting information .

DTC Description	Confirmed DTC	Pending DTC	Freeze Frame
P0AF0 Traction Motor Inverter Temperature Sensor 1 Circuit High	B	B	B

DTC (Electric Powertrain)

1. Problem verification

-1. Turn the vehicle to the ON mode.

-2. Clear the DTC with the HDS.

-3. Turn the vehicle to the OFF (LOCK) mode.

-4. Turn the vehicle to the ON mode.

-5. Check for Pending or Confirmed DTCs with the HDS.

DTC Description	Confirmed DTC	Pending DTC	Freeze Frame
P0AF0 Traction Motor Inverter Temperature Sensor 1 Circuit High	B	B	B

Is DTC P0AF0 indicated?

YES

Replace the PCU .

NO

Intermittent failure. The system is OK at this time. If the freeze data/on-board snapshot of this DTC is recorded, try to reproduce the failure under the same conditions with the freeze data/on-board snapshot.

DTC P0AF2 (1020)

DTC P0AF2 : Traction Motor Inverter Temperature Sensor 2 Circuit

NOTE: Before you troubleshoot, **review the general troubleshooting information** .

DTC Description	Confirmed DTC	Pending DTC	Freeze Frame
P0AF2 Traction Motor Inverter Temperature Sensor 2 Circuit	B	B	B

DTC (Electric Powertrain)

1. Problem verification

    -1. Turn the vehicle to the ON mode.

    -2. Clear the DTC with the HDS.

    -3. Turn the vehicle to the OFF (LOCK) mode, and wait for about 6 hours.

    -4. Turn the vehicle to the ON mode.

    -5. Check for Pending or Confirmed DTCs with the HDS.

DTC Description	Confirmed DTC	Pending DTC	Freeze Frame
P0AF2 Traction Motor Inverter Temperature Sensor 2 Circuit	B	B	B

    Is DTC P0AF2 indicated?

    YES

    Replace the PCU .

    NO

    Intermittent failure. The system is OK at this time. If the freeze data/on-board snapshot of this DTC is recorded, try to reproduce the failure under the same conditions with the freeze data/on-board snapshot.

DTC P0AF3 (1019)

DTC P0AF3 : Traction Motor Inverter Temperature Sensor 2 Circuit Range/Performance

NOTE: Before you troubleshoot, **review the general troubleshooting information** .

DTC Description	Confirmed DTC	Pending DTC	Freeze Frame
P0AF3 Traction Motor Inverter Temperature Sensor 2 Circuit Range/Performance	B	B	B

DTC (Electric Powertrain)

1. Problem verification

    -1. Turn the vehicle to the ON mode.

    -2. Clear the DTC with the HDS.

    -3. Turn the vehicle to the OFF (LOCK) mode.

    -4. Turn the vehicle to the ON mode.

-5. Check for Pending or Confirmed DTCs with the HDS.

DTC Description	Confirmed DTC	Pending DTC	Freeze Frame
P0AF3 Traction Motor Inverter Temperature Sensor 2 Circuit Range/Performance	B	B	B

Is DTC P0AF3 indicated?

YES

Replace the PCU .

NO

Intermittent failure. The system is OK at this time. If the freeze data/on-board snapshot of this DTC is recorded, try to reproduce the failure under the same conditions with the freeze data/on-board snapshot.

DTC P0AF4 (459)

DTC P0AF4 : Traction Motor Inverter Temperature Sensor 2 Circuit Low

NOTE: Before you troubleshoot, review the general troubleshooting information .

DTC Description	Confirmed DTC	Pending DTC	Freeze Frame
P0AF4 Traction Motor Inverter Temperature Sensor 2 Circuit Low	B	B	B

DTC (Electric Powertrain)

1. Problem verification

-1. Turn the vehicle to the ON mode.

-2. Clear the DTC with the HDS.

-3. Turn the vehicle to the OFF (LOCK) mode.

-4. Turn the vehicle to the ON mode.

-5. Check for Pending or Confirmed DTCs with the HDS.

DTC Description	Confirmed DTC	Pending DTC	Freeze Frame
P0AF4 Traction Motor Inverter Temperature Sensor 2 Circuit Low	B	B	B

Is DTC P0AF4 indicated?

YES

Replace the PCU .

NO

Intermittent failure. The system is OK at this time. If the freeze data/on-board snapshot of this DTC is recorded, try to reproduce the failure under the same conditions with the freeze data/on-board snapshot.

DTC P0AF5 (458)

DTC P0AF5 : Traction Motor Inverter Temperature Sensor 2 Circuit High

NOTE: Before you troubleshoot, **review the general troubleshooting information** .

DTC Description	Confirmed DTC	Pending DTC	Freeze Frame
P0AF5 Traction Motor Inverter Temperature Sensor 2 Circuit High	B	B	B

DTC (Electric Powertrain)

1. Problem verification

   -1. Turn the vehicle to the ON mode.

   -2. Clear the DTC with the HDS.

   -3. Turn the vehicle to the OFF (LOCK) mode.

   -4. Turn the vehicle to the ON mode.

   -5. Check for Pending or Confirmed DTCs with the HDS.

DTC Description	Confirmed DTC	Pending DTC	Freeze Frame
P0AF5 Traction Motor Inverter Temperature Sensor 2 Circuit High	B	B	B

   Is DTC P0AF5 indicated?

   YES

   Replace the PCU .

   NO

   Intermittent failure. The system is OK at this time. If the freeze data/on-board snapshot of this DTC is recorded, try to reproduce the failure under the same conditions with the freeze data/on-board snapshot.

DTC P0BCC (287)

DTC P0BCC : Generator Motor Inverter Temperature Sensor Circuit

NOTE: Before you troubleshoot, **review the general troubleshooting information** .

DTC Description	Confirmed DTC	Pending DTC	Freeze Frame
P0BCC Generator Motor Inverter Temperature Sensor Circuit	B	B	B

DTC (Electric Powertrain)

1. Problem verification

   -1. Turn the vehicle to the ON mode.

   -2. Clear the DTC with the HDS.

   -3. Turn the vehicle to the OFF (LOCK) mode.

   -4. **Raise the vehicle on a lift** .

   -5. Turn the vehicle to READY TO DRIVE mode.

-6. Test-drive the vehicle under these conditions for 1 minute:

- Position to D, but do not operate the accelerator pedal.

  NOTE: Do not apply the brake hard when working on a running vehicle on a lift. It may cause some damage to the drive-line.

- Motor Speed (GEN) is more than 1000 RPM for 10 seconds.

Signal	Current conditions	
	Values	Unit
Motor Speed (GEN)	B	B

-7. Check for Pending or Confirmed DTCs with the HDS.

DTC Description	Confirmed DTC	Pending DTC	Freeze Frame
P0BCC Generator Motor Inverter Temperature Sensor Circuit	B	B	B

Is DTC P0BCC indicated?

YES

Replace the PCU .

NO

Intermittent failure. The system is OK at this time. If the freeze data/on-board snapshot of this DTC is recorded, try to reproduce the failure under the same conditions with the freeze data/on-board snapshot.

DTC P0BCD (436)

DTC P0BCD : Generator Motor Inverter Temperature Sensor Circuit Range/Performance

NOTE: Before you troubleshoot, review the general troubleshooting information .

DTC Description	Confirmed DTC	Pending DTC	Freeze Frame
P0BCD Generator Motor Inverter Temperature Sensor Circuit Range/Performance	B	B	B

DTC (Electric Powertrain)

1. Problem verification

-1. Turn the vehicle to the ON mode.

-2. Clear the DTC with the HDS.

-3. Turn the vehicle to the OFF (LOCK) mode.

-4. Turn the vehicle to the ON mode.

-5. Check for Pending or Confirmed DTCs with the HDS.

DTC Description	Confirmed DTC	Pending DTC	Freeze Frame
P0BCD Generator Motor Inverter Temperature Sensor Circuit Range/Performance	B	B	B

Is DTC P0BCD indicated?

YES

Replace the PCU .

NO

Intermittent failure. The system is OK at this time. If the freeze data/on-board snapshot of this DTC is recorded, try to reproduce the failure under the same conditions with the freeze data/on-board snapshot.

DTC P0BCE (288)

DTC P0BCE : Generator Motor Inverter Temperature Sensor Circuit Low

NOTE: Before you troubleshoot, **review the general troubleshooting information** .

DTC Description	Confirmed DTC	Pending DTC	Freeze Frame
P0BCE Generator Motor Inverter Temperature Sensor Circuit Low	B	B	B

DTC (Electric Powertrain)

1. Problem verification

   -1. Turn the vehicle to the ON mode.

   -2. Clear the DTC with the HDS.

   -3. Turn the vehicle to the OFF (LOCK) mode.

   -4. Turn the vehicle to the ON mode.

   -5. Check for Pending or Confirmed DTCs with the HDS.

DTC Description	Confirmed DTC	Pending DTC	Freeze Frame
P0BCE Generator Motor Inverter Temperature Sensor Circuit Low	B	B	B

Is DTC P0BCE indicated?

YES

Replace the PCU .

NO

Intermittent failure. The system is OK at this time. If the freeze data/on-board snapshot of this DTC is recorded, try to reproduce the failure under the same conditions with the freeze data/on-board snapshot.

DTC P0BCF (289)

DTC P0BCF : Generator Motor Inverter Temperature Sensor Circuit High

NOTE: Before you troubleshoot, **review the general troubleshooting information** .

DTC Description	Confirmed DTC	Pending DTC	Freeze Frame
P0BCF Generator Motor Inverter Temperature Sensor Circuit High	B	B	B

DTC (Electric Powertrain)

1. Problem verification

   -1. Turn the vehicle to the ON mode.

   -2. Clear the DTC with the HDS.

   -3. Turn the vehicle to the OFF (LOCK) mode.

   -4. Turn the vehicle to the ON mode.

   -5. Check for Pending or Confirmed DTCs with the HDS.

DTC Description	Confirmed DTC	Pending DTC	Freeze Frame
P0BCF Generator Motor Inverter Temperature Sensor Circuit High	B	B	B

Is DTC P0BCF indicated?

YES

Replace the PCU .

NO

Intermittent failure. The system is OK at this time. If the freeze data/on-board snapshot of this DTC is recorded, try to reproduce the failure under the same conditions with the freeze data/on-board snapshot.

DTC P0BE6 (86)

DTC P0BE6 : Traction Motor Phase U Current Sensor Circuit Range/Performance

NOTE: Before you troubleshoot, **review the general troubleshooting information** .

DTC Description	Confirmed DTC	Pending DTC	Freeze Frame
P0BE6 Traction Motor Phase U Current Sensor Circuit Range/Performance	B	B	B

DTC (Electric Powertrain)

1. Problem verification

   -1. Turn the vehicle to the ON mode.

   -2. Clear the DTC with the HDS.

   -3. Turn the vehicle to the OFF (LOCK) mode.

   -4. Turn the vehicle to the ON mode.

   -5. Monitor the OBD STATUS for DTC P0BE6 in the DTCs MENU with the HDS.

DTC Description	OBD STATUS
P0BE6 Traction Motor Phase U Current Sensor Circuit Range/Performance	B

Does the HDS indicate FAILED?

YES

Replace the PCU .

NO

If the HDS indicates PASSED, the system is OK at this time but has an intermittent failure. If the HDS indicates NOT COMPLETED, keep the vehicle in the ON mode until an indication comes on. If the freeze data/on-board snapshot of this DTC is recorded, try to reproduce the failure under the same conditions with the freeze data/on-board snapshot.

DTC P0BEA (87)

DTC P0BEA : Traction Motor Phase V Current Sensor Circuit Range/Performance

NOTE: Before you troubleshoot, review the general troubleshooting information .

DTC Description	Confirmed DTC	Pending DTC	Freeze Frame
P0BEA Traction Motor Phase V Current Sensor Circuit Range/Performance	B	B	B

DTC (Electric Powertrain)

1. Problem verification

   -1. Turn the vehicle to the ON mode.

   -2. Clear the DTC with the HDS.

   -3. Turn the vehicle to the OFF (LOCK) mode.

   -4. Turn the vehicle to the ON mode.

   -5. Monitor the OBD STATUS for DTC P0BEA in the DTCs MENU with the HDS.

DTC Description	OBD STATUS
P0BEA Traction Motor Phase V Current Sensor Circuit Range/Performance	B

Does the HDS indicate FAILED?

YES

Replace the PCU .

NO

If the HDS indicates PASSED, the system is OK at this time but has an intermittent failure. If the HDS indicates NOT COMPLETED, keep the vehicle in the ON mode until an indication comes on. If the freeze data/on-board snapshot of this DTC is recorded, try to reproduce the failure under the same conditions with the freeze data/on-board snapshot.

DTC P0BEE (88)

DTC P0BEE : Traction Motor Phase W Current Sensor Circuit Range/Performance

NOTE: Before you troubleshoot, review the general troubleshooting information .

DTC Description	Confirmed DTC	Pending DTC	Freeze Frame
P0BEE Traction Motor Phase W Current Sensor Circuit Range/Performance	B	B	B

DTC (Electric Powertrain)

1. Problem verification

   -1. Turn the vehicle to the ON mode.

   -2. Clear the DTC with the HDS.

   -3. Turn the vehicle to the OFF (LOCK) mode.

   -4. Turn the vehicle to the ON mode.

   -5. Monitor the OBD STATUS for DTC P0BEE in the DTCs MENU with the HDS.

DTC Description	OBD STATUS
P0BEE Traction Motor Phase W Current Sensor Circuit Range/Performance	B

Does the HDS indicate FAILED?

YES

Replace the PCU .

NO

If the HDS indicates PASSED, the system is OK at this time but has an intermittent failure. If the HDS indicates NOT COMPLETED, keep the vehicle in the ON mode until an indication comes on. If the freeze data/on-board snapshot of this DTC is recorded, try to reproduce the failure under the same conditions with the freeze data/on-board snapshot.

DTC P0BFD

DTC P0BFD : Traction Motor Phase U-V-W Current Sensor Correlation

NOTE:

- Before you troubleshoot, **review the general troubleshooting information** .
- If any of the DTCs listed below are indicated at the same time as DTC P0BFD, troubleshoot those DTCs first, then recheck for P0BFD.
-
  - P1D11

DTC Description	Confirmed DTC	Pending DTC	Freeze Frame
P0BFD Traction Motor Phase U-V-W Current Sensor Correlation	B	B	B

DTC (Electric Powertrain)

1. Problem verification

   -1. Turn the vehicle to the ON mode.

   -2. Check for Pending or Confirmed DTCs with the HDS.

DTC Description	Confirmed DTC	Pending DTC	Freeze Frame
B	B	B	B

DTC (Electric Powertrain)

Are DTC P0BFD and any other DTCs indicated at the same time?

YES

Go to the indicated DTC's troubleshooting.

NO

Update the motor control module if it does not have the latest software .

DTC P0C0C (1110)

DTC P0C0C : Traction Motor Inverter Power Supply Circuit Low

NOTE: Before you troubleshoot, review the general troubleshooting information .

DTC Description	Confirmed DTC	Pending DTC	Freeze Frame
P0C0C Traction Motor Inverter Power Supply Circuit Low	B	B	B

DTC (Electric Powertrain)

1. Problem verification

   -1. Turn the vehicle to the ON mode.

   -2. Clear the DTC with the HDS.

   -3. Turn the vehicle to the OFF (LOCK) mode.

   -4. Turn the vehicle to the ON mode.

   -5. Check for Pending or Confirmed DTCs with the HDS.

DTC Description	Confirmed DTC	Pending DTC	Freeze Frame
P0C0C Traction Motor Inverter Power Supply Circuit Low	B	B	B

   Is DTC P0C0C indicated?

   YES

   Go to step 2.

   NO

   Intermittent failure. The system is OK at this time. If the freeze data/on-board snapshot of this DTC is recorded, try to reproduce the failure under the same conditions with the freeze data/on-board snapshot.

2. DTC check

   -1. Check for Pending or Confirmed DTCs with the HDS.

DTC Description	Confirmed DTC	Pending DTC	Freeze Frame
P1673 IGHLD Relay Circuit	B	B	B

   Is DTC P1673 indicated?

   YES

Go to the DTC P1673 troubleshooting .

NO

Go to step 3.

3. Open wire check (IGA line)

-1. Turn the vehicle to the OFF (LOCK) mode.

-2. **Do the 12 volt battery terminal disconnection procedure** .

-3. **Remove the IGHLD1 relay** .

-4. Disconnect the following connector.

PCU 33P connector

-5. Measure the resistance between test points 1 and 2.

Test condition	Vehicle OFF (LOCK) mode
B	IGHLD1 relay: disconnected
B	PCU 33P connector: disconnected
Test point 1	**PCU 33P connector No. 11**
Test point 2	IGHLD1 relay 4P socket (female terminals) No. 2: ①

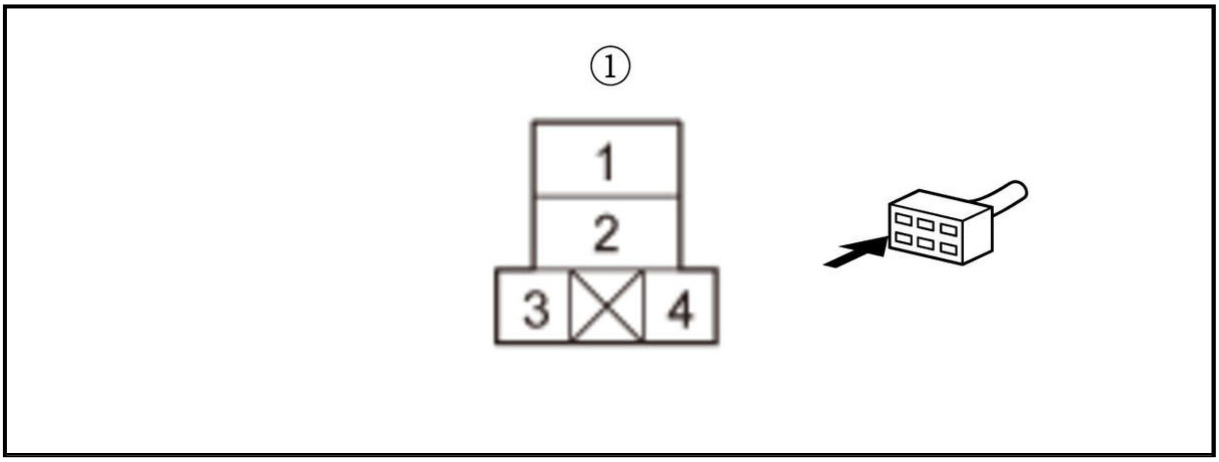

Is there 1.0 Ω or less?

YES

Go to step 4.

NO

Repair an open in the IGA wire between the PCU and the IGHLD1 relay.

4. Shorted wire check (IGA line)

-1. Measure the resistance between test points 1 and 2.

Test condition	Vehicle OFF (LOCK) mode
B	IGHLD1 relay: disconnected
B	PCU 33P connector: disconnected
Test point 1	**PCU 33P connector No. 11**

Test point 2	Body ground

Is there 1 MΩ or more?

YES

Replace the PCU .

NO

Repair a short in the IGA wire between the PCU and the IGHLD1 relay.

DTC P0C39 (1023)

DTC P0C39 : DC-DC Converter Temperature Sensor Range/Performance

NOTE: Before you troubleshoot, review the general troubleshooting information .

DTC Description	Confirmed DTC	Pending DTC	Freeze Frame
P0C39 DC-DC Converter Temperature Sensor Range/Performance	B	B	B

DTC (Electric Powertrain)

1. Problem verification

   -1. Turn the vehicle to the ON mode.

   -2. Clear the DTC with the HDS.

   -3. Turn the vehicle to the OFF (LOCK) mode.

   -4. Turn the vehicle to the ON mode.

   -5. Check for Pending or Confirmed DTCs with the HDS.

DTC Description	Confirmed DTC	Pending DTC	Freeze Frame
P0C39 DC-DC Converter Temperature Sensor Range/Performance	B	B	B

Is DTC P0C39 indicated?

YES

Replace the PCU .

NO

Intermittent failure. The system is OK at this time. If the freeze data/on-board snapshot of this DTC is recorded, try to reproduce the failure under the same conditions with the freeze data/on-board snapshot.

DTC P0C3A (1022)

DTC P0C3A : DC-DC Converter Temperature Sensor Low

NOTE: Before you troubleshoot, review the general troubleshooting information .

DTC Description	Confirmed DTC	Pending DTC	Freeze Frame
P0C3A DC-DC Converter Temperature Sensor Low	B	B	B

DTC (Electric Powertrain)

1. Problem verification

   -1. Turn the vehicle to the ON mode.

   -2. Clear the DTC with the HDS.

   -3. Turn the vehicle to the OFF (LOCK) mode.

   -4. Turn the vehicle to the ON mode.

   -5. Check for Pending or Confirmed DTCs with the HDS.

DTC Description	Confirmed DTC	Pending DTC	Freeze Frame
P0C3A DC-DC Converter Temperature Sensor Low	B	B	B

   Is DTC P0C3A indicated?

   YES

   Replace the PCU .

   NO

   Intermittent failure. The system is OK at this time. If the freeze data/on-board snapshot of this DTC is recorded, try to reproduce the failure under the same conditions with the freeze data/on-board snapshot.

DTC P0C3B (1021)

DTC P0C3B : DC-DC Converter Temperature Sensor High

NOTE: Before you troubleshoot, **review the general troubleshooting information** .

DTC Description	Confirmed DTC	Pending DTC	Freeze Frame
P0C3B DC-DC Converter Temperature Sensor High	B	B	B

DTC (Electric Powertrain)

1. Problem verification

   -1. Turn the vehicle to the ON mode.

   -2. Clear the DTC with the HDS.

   -3. Turn the vehicle to the OFF (LOCK) mode.

   -4. Turn the vehicle to the ON mode.

   -5. Check for Pending or Confirmed DTCs with the HDS.

DTC Description	Confirmed DTC	Pending DTC	Freeze Frame
P0C3B DC-DC Converter Temperature Sensor High	B	B	B

Is DTC P0C3B indicated?

YES

Replace the PCU .

NO

Intermittent failure. The system is OK at this time. If the freeze data/on-board snapshot of this DTC is recorded, try to reproduce the failure under the same conditions with the freeze data/on-board snapshot.

DTC P0C4E (93)

DTC P0C4E : Traction Motor Rotor Position Exceeded Learning Limit

NOTE: Before you troubleshoot, **review the general troubleshooting information** .

DTC Description	Confirmed DTC	Pending DTC	Freeze Frame
P0C4E Traction Motor Rotor Position Exceeded Learning Limit	B	B	B

DTC (Electric Powertrain)

1. Problem verification

-1. Turn the vehicle to the ON mode.

-2. Clear the DTC with the HDS.

-3. Turn the vehicle to the OFF (LOCK) mode.

-4. Turn the vehicle to the ON mode.

-5. **Do the traction motor motor rotor position calibration** .

Is calibration completed?

YES

Intermittent failure. The system is OK at this time. If the freeze data/on-board snapshot of this DTC is recorded, try to reproduce the failure under the same conditions with the freeze data/on-board snapshot.

NO

Faulty traction motor motor rotor position sensor. **Replace the transmission (e-CVT) assembly** .

DTC TROUBLESHOOTING

DTC P0CE9

DTC P0CE9 : PCU Electric Coolant Pump Control Circuit Open

NOTE:

- Before you troubleshoot, **review the general troubleshooting information** .
- If any of the DTCs listed below are indicated at the same time as DTC P0CE9, troubleshoot those DTCs first, then recheck for P0CE9.
-
    - P1D92, P1D99

DTC Description	Confirmed DTC	Pending DTC	Freeze Frame
P0CE9 PCU Electric Coolant Pump Control Circuit Open	B	B	B

DTC (Electric Powertrain)

1. DTC check

   -1. Turn the vehicle to the ON mode.

   -2. Check for Pending or Confirmed DTCs with the HDS.

DTC Description	Confirmed DTC	Pending DTC	Freeze Frame
B	B	B	B

   DTC (Electric Powertrain)

   Are DTC P0CE9 and any other DTCs indicated at the same time?

   YES

   Go to the indicated DTC's troubleshooting.

   NO

   Update the motor control module if it does not have the latest software .

DTC P0CEA

DTC P0CEA : PCU Electric Coolant Pump Performance

NOTE:

- Before you troubleshoot, **review the general troubleshooting information** .
- If any of the DTCs listed below are indicated at the same time as DTC P0CEA, troubleshoot those DTCs first, then recheck for P0CEA.
-
    - P1D93, P1D9A

DTC Description	Confirmed DTC	Pending DTC	Freeze Frame
P0CEA PCU Electric Coolant Pump Performance	B	B	B

DTC (Electric Powertrain)

1. DTC check

   -1. Turn the vehicle to the ON mode.

   -2. Check for Pending or Confirmed DTCs with the HDS.

DTC Description	Confirmed DTC	Pending DTC	Freeze Frame
B	B	B	B

   DTC (Electric Powertrain)

   Are DTC P0CEA and any other DTCs indicated at the same time?

   YES

   Go to the indicated DTC's troubleshooting.

   NO

   Update the motor control module if it does not have the latest software .

DTC P0CED (454)

DTC P0CED : PCU Electric Coolant Pump Enable Circuit

NOTE: Before you troubleshoot, **review the general troubleshooting information** .

DTC Description	Confirmed DTC	Pending DTC	Freeze Frame
P0CED PCU Electric Coolant Pump Enable Circuit	B	B	B

DTC (Electric Powertrain)

1. Problem verification

   -1. Turn the vehicle to the ON mode.

   -2. Clear the DTC with the HDS.

   -3. Turn the vehicle to the OFF (LOCK) mode, then wait at least 1 minute.

   -4. Turn the vehicle to the ON mode.

   -5. Check for Pending or Confirmed DTCs with the HDS.

DTC Description	Confirmed DTC	Pending DTC	Freeze Frame
P0CED PCU Electric Coolant Pump Enable Circuit	B	B	B

   Is DTC P0CED indicated?

   YES

Replace the PCU electric coolant pump relay .

NO

Intermittent failure. The system is OK at this time. If the freeze data/on-board snapshot of this DTC is recorded, try to reproduce the failure under the same conditions with the freeze data/on-board snapshot.

DTC P0CEE (1064)

DTC P0CEE : PCU Coolant Temperature Sensor Circuit

NOTE: Before you troubleshoot, **review the general troubleshooting information** .

DTC Description	Confirmed DTC	Pending DTC	Freeze Frame
P0CEE PCU Coolant Temperature Sensor Circuit	B	B	B

DTC (Electric Powertrain)

1. Problem verification

   -1. Turn the vehicle to the ON mode.

   -2. Clear the DTC with the HDS.

   -3. Turn the vehicle to the OFF (LOCK) mode, and wait 6 hours.

   -4. Turn the vehicle to the ON mode.

   -5. Check for Pending or Confirmed DTCs with the HDS.

DTC Description	Confirmed DTC	Pending DTC	Freeze Frame
P0CEE PCU Coolant Temperature Sensor Circuit	B	B	B

Is DTC P0CEE indicated?

YES

Replace the PCU coolant temperature sensor .

NO

Intermittent failure. The system is OK at this time. If the freeze data/on-board snapshot of this DTC is recorded, try to reproduce the failure under the same conditions with the freeze data/on-board snapshot.

DTC P0CEF (1065)

DTC P0CEF : PCU Coolant Temperature Sensor Circuit Range/Performance

NOTE: Before you troubleshoot, **review the general troubleshooting information** .

DTC Description	Confirmed DTC	Pending DTC	Freeze Frame
P0CEF PCU Coolant Temperature Sensor Circuit Range/Performance	B	B	B

DTC (Electric Powertrain)

1. Problem verification

-1. Turn the vehicle to the ON mode.

-2. Clear the DTC with the HDS.

-3. Turn the vehicle to the OFF (LOCK) mode.

-4. Turn the vehicle to the ON mode.

-5. Check for Pending or Confirmed DTCs with the HDS.

DTC Description	Confirmed DTC	Pending DTC	Freeze Frame
P0CEF PCU Coolant Temperature Sensor Circuit Range/Performance	B	B	B

Is DTC P0CEF indicated?

YES

Replace the PCU .

NO

Intermittent failure. The system is OK at this time. If the freeze data/on-board snapshot of this DTC is recorded, try to reproduce the failure under the same conditions with the freeze data/on-board snapshot.

DTC P0CF0 (1063)

DTC P0CF0 : PCU Coolant Temperature Sensor Circuit Low

NOTE: Before you troubleshoot, **review the general troubleshooting information** .

DTC Description	Confirmed DTC	Pending DTC	Freeze Frame
P0CF0 PCU Coolant Temperature Sensor Circuit Low	B	B	B

DTC (Electric Powertrain)

1. Problem verification

-1. Turn the vehicle to the ON mode.

-2. Clear the DTC with the HDS.

-3. Turn the vehicle to the OFF (LOCK) mode.

-4. Turn the vehicle to the ON mode.

-5. Check the parameter(s) below with the HDS.

Signal	Threshold		Current conditions	
	Values	Unit	Values	Unit
PCU Coolant Temperature Sensor Voltage (TRC)	Less than 0.08	V	B	B

Does the current condition(s) match the threshold?

YES

The failure is duplicated. Go to step 2.

NO

Intermittent failure. The system is OK at this time. If the freeze data/on-board snapshot of this DTC is recorded, try to reproduce the failure under the same conditions with the freeze data/on-board snapshot.

2. Determine possible failure area ((TWPCU/PCU_TW_SNSR line, PCU coolant temperature sensor)

-1. Turn the vehicle to the OFF (LOCK) mode.

-2. Disconnect the following connector.

PCU coolant temperature sensor 2P connector

-3. Turn the vehicle to the ON mode.

-4. Check the parameter(s) below with the HDS.

Signal	Threshold		Current conditions	
	Values	Unit	Values	Unit
PCU Coolant Temperature Sensor Voltage (TRC)	About 5.0 V	V	B	B

Does the current condition(s) match the threshold?

YES

Replace the PCU coolant temperature sensor .

NO

The PCU coolant temperature sensor is OK. Go to step 3.

3. Shorted wire check (TWPCU/PCU_TW_SNSR line)

-1. Turn the vehicle to the OFF (LOCK) mode.

-2. **Do the 12 volt battery terminal disconnection procedure** .

-3. Disconnect the following connector.

PCU 33P connector

-4. Measure the resistance between test points 1 and 2.

Test condition	Vehicle OFF (LOCK) mode
B	PCU 33P connector: disconnected
B	PCU coolant temperature sensor 2P connector: disconnected
Test point 1	**PCU 33P connector No. 16**
Test point 2	Body ground

Is there 1 MΩ or more?

YES

Replace the PCU .

NO

Repair a short in the TWPCU/PCU_TW_SNSR wire between the PCU coolant temperature sensor and the PCU.

DTC P0CF1 (1062)

DTC P0CF1 : PCU Coolant Temperature Sensor Circuit High

NOTE: Before you troubleshoot, **review the general troubleshooting information** .

DTC Description	Confirmed DTC	Pending DTC	Freeze Frame
P0CF1 PCU Coolant Temperature Sensor Circuit High	B	B	B

DTC (Electric Powertrain)

1. Problem verification

   -1. Turn the vehicle to the ON mode.

   -2. Clear the DTC with the HDS.

   -3. Turn the vehicle to the OFF (LOCK) mode.

   -4. Turn the vehicle to the ON mode.

   -5. Check the parameter(s) below with the HDS.

Signal	Threshold		Current conditions	
	Values	Unit	Values	Unit
PCU Coolant Temperature Sensor Voltage (TRC)	More than 4.9	V	B	B

   Does the current condition(s) match the threshold?

   YES

   The failure is duplicated. Go to step 2.

   NO

   Intermittent failure. The system is OK at this time. If the freeze data/on-board snapshot of this DTC is recorded, try to reproduce the failure under the same conditions with the freeze data/on-board snapshot.

2. Determine possible failure area (PCU coolant temperature sensor, others)

   -1. Turn the vehicle to the OFF (LOCK) mode.

   -2. Disconnect the following connector.

PCU coolant temperature sensor 2P connector

   -3. Connect terminals A and B with a jumper wire.

Terminal A	PCU coolant temperature sensor 2P connector (female terminals) No. 1: ①
Terminal B	PCU coolant temperature sensor 2P connector (female terminals) No. 2: ①

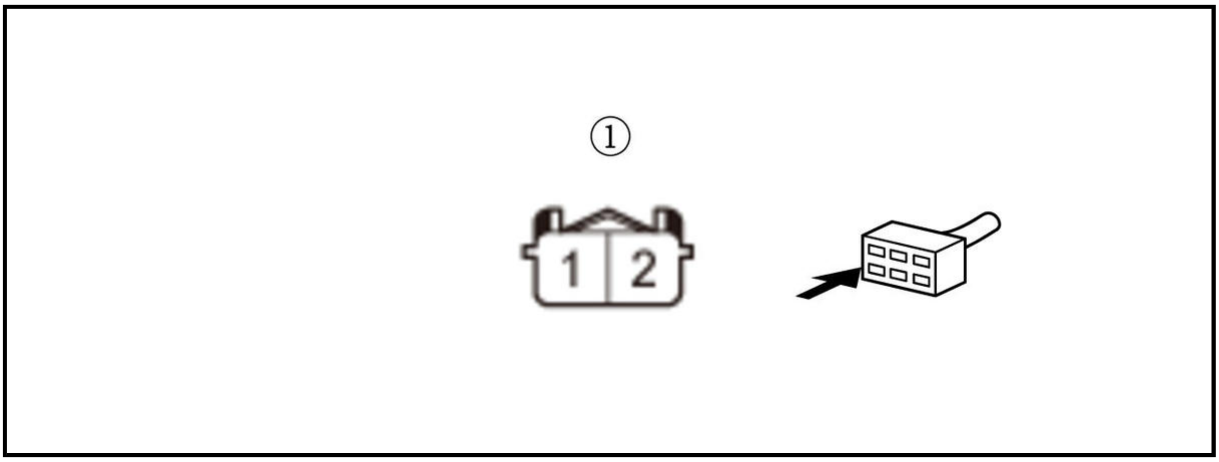

-4. Turn the vehicle to the ON mode.

-5. Check the parameter(s) below with the HDS.

Signal	Threshold		Current conditions	
	Values	**Unit**	**Values**	**Unit**
PCU Coolant Temperature Sensor Voltage (TRC)	More than 4.9	V	B	B

Does the current condition(s) match the threshold?

YES

The PCU coolant temperature sensor is OK. Go to step 3.

NO

Replace the PCU coolant temperature sensor .

3. Determine possible failure area (TWPCU/PCU_TW_SNSR line, others)

-1. Turn the vehicle to the OFF (LOCK) mode.

-2. Remove the jumper wire from the PCU coolant temperature sensor 2P connector.

-3. Turn the vehicle to the ON mode.

-4. Measure the voltage between test points 1 and 2.

Test condition	Vehicle ON mode
B	PCU coolant temperature sensor 2P connector: disconnected
Test point 1	PCU coolant temperature sensor 2P connector (female terminals) No. 1: ①
Test point 2	Body ground

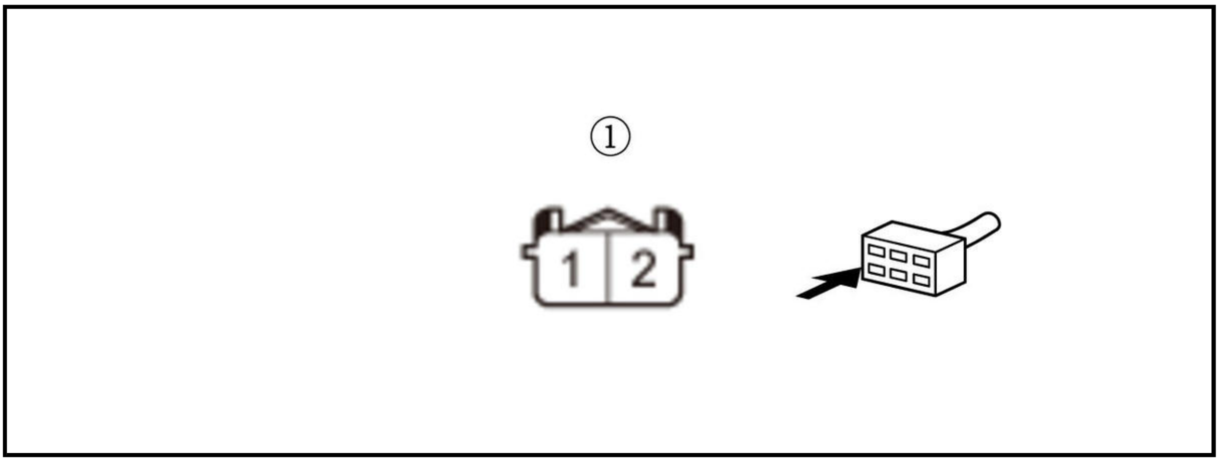

Is there about 5.0 V?

YES

Go to step 4.

NO

Go to step 5.

4. Open wire check (SGTEMP/SGTMP/PCU_TW_SNSR_GND line)

-1. Turn the vehicle to the OFF (LOCK) mode.

-2. **Do the 12 volt battery terminal disconnection procedure** .

-3. Disconnect the following connector.

PCU 33P connector

-4. Measure the resistance between test points 1 and 2.

Test condition	Vehicle OFF (LOCK) mode
B	PCU 33P connector: disconnected
B	PCU coolant temperature sensor 2P connector: disconnected
Test point 1	**PCU 33P connector No. 17**
Test point 2	PCU coolant temperature sensor 2P connector (female terminals) No. 2: ①

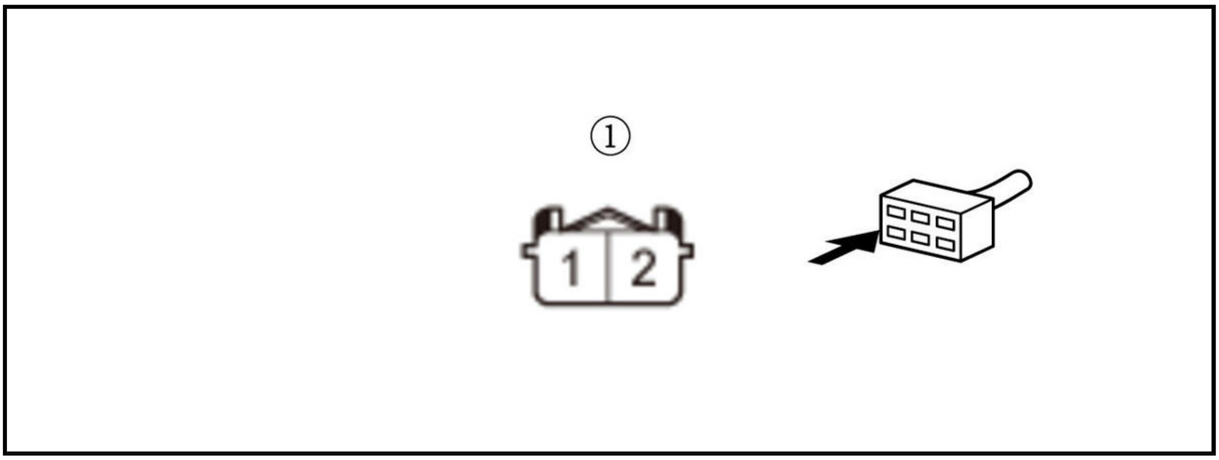

Is there 1.0 Ω or less?

YES

Replace the PCU .

NO

Repair an open in the SGTEMP/SGTMP/PCU_TW_SNSR_GND wire between the PCU coolant temperature sensor and the PCU.

5. Open wire check (TWPCU/PCU_TW_SNSR line)

-1. Turn the vehicle to the OFF (LOCK) mode.

-2. Do the 12 volt battery terminal disconnection procedure .

-3. Disconnect the following connector.

PCU 33P connector

-4. Measure the resistance between test points 1 and 2.

Test condition	Vehicle OFF (LOCK) mode
B	PCU 33P connector: disconnected
B	PCU coolant temperature sensor 2P connector: disconnected
Test point 1	PCU 33P connector No. 16
Test point 2	PCU coolant temperature sensor 2P connector (female terminals) No. 1: ①

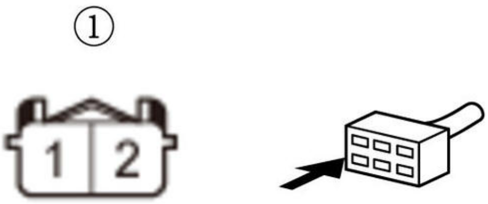

Is there 1.0 Ω or less?

YES

Replace the PCU .

NO

Repair an open in the TWPCU/PCU_TW_SNSR wire between the PCU coolant temperature sensor and the PCU.

DTC P0D32 (1025) (MOTOR CONTROL MODULE)

DTC P0D32 : DC-DC Converter Over Temperature (Traction Motor Control Module Detected)

NOTE: Before you troubleshoot, review the general troubleshooting information .

DTC Description	Confirmed DTC	Pending DTC	Freeze Frame
P0D32 DC-DC Converter Over Temperature (Traction Motor Control Module Detected)	B	B	B

DTC (Electric Powertrain)

1. Problem verification

-1. Turn the vehicle to the ON mode.

-2. Clear the DTC with the HDS.

-3. Turn the vehicle to the OFF (LOCK) mode.

-4. Turn the vehicle to the ON mode.

-5. Check for Pending or Confirmed DTCs with the HDS.

DTC Description	Confirmed DTC	Pending DTC	Freeze Frame
P0D32 DC-DC Converter Over Temperature (Traction Motor Control Module Detected)	B	B	B

Is DTC P0D32 indicated?

YES

Replace the PCU .

NO

Intermittent failure. The system is OK at this time. If the freeze data/on-board snapshot of this DTC is recorded, try to reproduce the failure under the same conditions with the freeze data/on-board snapshot.

DTC P0DFA

DTC P0DFA : Generator Motor Phase U-V-W Current Sensor Correlation

NOTE:

- Before you troubleshoot, **review the general troubleshooting information** .
- If any of the DTCs listed below are indicated at the same time as DTC P0DFA, troubleshoot those DTCs first, then recheck for P0DFA.
-
    - P1D13

DTC Description	Confirmed DTC	Pending DTC	Freeze Frame
P0DFA Generator Motor Phase U-V-W Current Sensor Correlation	B	B	B

DTC (Electric Powertrain)

1. DTC check

-1. Turn the vehicle to the ON mode.

-2. Check for Pending or Confirmed DTCs with the HDS.

DTC Description	Confirmed DTC	Pending DTC	Freeze Frame
B	B	B	B

DTC (Electric Powertrain)

Are DTC P0DFA and any other DTCs indicated at the same time?

YES

Go to the indicated DTC's troubleshooting.

NO

Update the motor control module if it does not have the latest software .

DTC P0DFB (294)

DTC P0DFB : Generator Motor Rotor Position Sensor Exceeding Learn Limit

NOTE:

- Before you troubleshoot, **review the general troubleshooting information** .
- This DTC will be stored when the generator motor motor rotor position sensor is poor installation.

DTC Description	Confirmed DTC	Pending DTC	Freeze Frame
P0DFB Generator Motor Rotor Position Sensor Exceeding Learn Limit	B	B	B

DTC (Electric Powertrain)

1. Problem verification

-1. Turn the vehicle to the ON mode.

-2. Clear the DTC with the HDS.

-3. Turn the vehicle to the OFF (LOCK) mode.

-4. Turn the vehicle to the ON mode.

-5. **Do the generator motor motor rotor position sensor calibration** .

Is calibration completed?

YES

Intermittent failure. The system is OK at this time. If the freeze data/on-board snapshot of this DTC is recorded, try to reproduce the failure under the same conditions with the freeze data/on-board snapshot.

NO

Faulty generator motor motor rotor position sensor. **Replace the transmission (e-CVT) assembly** .

DTC P0E01 (274)

DTC P0E01 : Generator Motor Phase U Current Sensor Circuit Range/Performance

NOTE: Before you troubleshoot, **review the general troubleshooting information** .

DTC Description	Confirmed DTC	Pending DTC	Freeze Frame
P0E01 Generator Motor Phase U Current Sensor Circuit Range/Performance	B	B	B

DTC (Electric Powertrain)

1. Problem verification

   -1. Turn the vehicle to the ON mode.

   -2. Clear the DTC with the HDS.

   -3. Turn the vehicle to the OFF (LOCK) mode.

   -4. Turn the vehicle to the ON mode.

   -5. Monitor the OBD STATUS for DTC P0E01 in the DTCs MENU with the HDS.

DTC Description	OBD STATUS
P0E01 Generator Motor Phase U Current Sensor Circuit Range/Performance	B

   Does the HDS indicate FAILED?

   YES

   Replace the PCU .

   NO

   If the HDS indicates PASSED, the system is OK at this time but has an intermittent failure. If the HDS indicates NOT COMPLETED, keep the vehicle in the ON mode until an indication comes on. If the freeze data/on-board snapshot of this DTC is recorded, try to reproduce the failure under the same conditions with the freeze data/on-board snapshot.

DTC P0E05 (277)

DTC P0E05 : Generator Motor Phase V Current Sensor Circuit Range/Performance

NOTE: Before you troubleshoot, **review the general troubleshooting information** .

DTC Description	Confirmed DTC	Pending DTC	Freeze Frame
P0E05 Generator Motor Phase V Current Sensor Circuit Range/Performance	B	B	B

DTC (Electric Powertrain)

1. Problem verification

   -1. Turn the vehicle to the ON mode.

   -2. Clear the DTC with the HDS.

   -3. Turn the vehicle to the OFF (LOCK) mode.

   -4. Turn the vehicle to the ON mode.

   -5. Monitor the OBD STATUS for DTC P0E05 in the DTCs MENU with the HDS.

DTC Description	OBD STATUS
P0E05 Generator Motor Phase V Current Sensor Circuit Range/Performance	B

Does the HDS indicate FAILED?

YES

Replace the PCU .

NO

If the HDS indicates PASSED, the system is OK at this time but has an intermittent failure. If the HDS indicates NOT COMPLETED, keep the vehicle in the ON mode until an indication comes on. If the freeze data/on-board snapshot of this DTC is recorded, try to reproduce the failure under the same conditions with the freeze data/on-board snapshot.

DTC P0E09 (280)

DTC P0E09 : Generator Motor Phase W Current Sensor Circuit Range/Performance

NOTE: Before you troubleshoot, **review the general troubleshooting information** .

DTC Description	Confirmed DTC	Pending DTC	Freeze Frame
P0E09 Generator Motor Phase W Current Sensor Circuit Range/Performance	B	B	B

DTC (Electric Powertrain)

1. Problem verification

   -1. Turn the vehicle to the ON mode.

   -2. Clear the DTC with the HDS.

   -3. Turn the vehicle to the OFF (LOCK) mode.

   -4. Turn the vehicle to the ON mode.

   -5. Monitor the OBD STATUS for DTC P0E09 in the DTCs MENU with the HDS.

DTC Description	OBD STATUS
P0E09 Generator Motor Phase W Current Sensor Circuit Range/Performance	B

Does the HDS indicate FAILED?

YES

Replace the PCU .

NO

If the HDS indicates PASSED, the system is OK at this time but has an intermittent failure. If the HDS indicates NOT COMPLETED, keep the vehicle in the ON mode until an indication comes on. If the freeze data/on-board snapshot of this DTC is recorded, try to reproduce the failure under the same conditions with the freeze data/on-board snapshot.

DTC P0E56 (1032)

DTC P0E56 : DC-DC Converter Voltage Sensor Circuit Low

NOTE: Before you troubleshoot, review the general troubleshooting information .

DTC Description	Confirmed DTC	Pending DTC	Freeze Frame
P0E56 DC-DC Converter Voltage Sensor Circuit Low	B	B	B

DTC (Electric Powertrain)

1. Problem verification

   -1. Turn the vehicle to the ON mode.

   -2. Clear the DTC with the HDS.

   -3. Turn the vehicle to the OFF (LOCK) mode.

   -4. Turn the vehicle to the ON mode.

   -5. Check for Pending or Confirmed DTCs with the HDS.

DTC Description	Confirmed DTC	Pending DTC	Freeze Frame
P0E56 DC-DC Converter Voltage Sensor Circuit Low	B	B	B

   Is DTC P0E56 indicated?

   YES

   Replace the PCU .

   NO

   Intermittent failure. The system is OK at this time. If the freeze data/on-board snapshot of this DTC is recorded, try to reproduce the failure under the same conditions with the freeze data/on-board snapshot.

DTC P0E57 (1031)

DTC P0E57 : DC-DC Converter Voltage Sensor Circuit High

NOTE: Before you troubleshoot, review the general troubleshooting information .

DTC Description	Confirmed DTC	Pending DTC	Freeze Frame
P0E57 DC-DC Converter Voltage Sensor Circuit High	B	B	B

DTC (Electric Powertrain)

1. Problem verification

   -1. Turn the vehicle to the ON mode.

   -2. Clear the DTC with the HDS.

   -3. Turn the vehicle to the OFF (LOCK) mode.

   -4. Turn the vehicle to the ON mode.

   -5. Check for Pending or Confirmed DTCs with the HDS.

DTC Description	Confirmed DTC	Pending DTC	Freeze Frame
P0E57 DC-DC Converter Voltage Sensor Circuit High	B	B	B

Is DTC P0E57 indicated?

YES

Replace the PCU .

NO

Intermittent failure. The system is OK at this time. If the freeze data/on-board snapshot of this DTC is recorded, try to reproduce the failure under the same conditions with the freeze data/on-board snapshot.

DTC P1437 (41)

DTC P1437 : Traction Motor Inverter Short

WARNING:

This procedure includes high voltage measurements with the electric powertrain system turned on. To avoid serious injury from electrical shocks while testing the high voltage cable, use insulated gloves, select a DC range of 500 V or more on your digital multimeter, and be careful not to contact each tester probes and not to contact any metal parts while you measure the high voltage cable.

NOTE: Before you troubleshoot, **review the general troubleshooting information** .

DTC Description	Confirmed DTC	Pending DTC	Freeze Frame
P1437 Traction Motor Inverter Short	B	B	B

DTC (Electric Powertrain)

1. Problem verification

   -1. Turn the vehicle to the ON mode.

   -2. Clear the DTC with the HDS.

   -3. Turn the vehicle to the OFF (LOCK) mode.

   -4. Turn the vehicle to the READY TO DRIVE mode.

   -5. Position to D, and release the brake pedal.

   -6. Check for Pending or Confirmed DTCs with the HDS.

DTC Description	Confirmed DTC	Pending DTC	Freeze Frame
P1437 Traction Motor Inverter Short	B	B	B

Is DTC P1437 indicated?

YES

Go to step 3

NO

Go to step 2

2. DTC check

-1. Check for Pending or Confirmed DTCs with the HDS.

DTC Description	Confirmed DTC	Pending DTC	Freeze Frame
P1440 Traction Motor Inverter Gate Line Open	B	B	B

Is DTC P1440 indicated?

YES

Go to the DTC P1440 troubleshooting.

NO

Intermittent failure. The system is OK at this time. If the freeze data/on-board snapshot of this DTC is recorded, try to reproduce the failure under the same conditions with the freeze data/on-board snapshot.

3. Traction motor check

-1. Turn the vehicle to the OFF (LOCK) mode.

-2. **Remove the service plug** .

-3. **Remove the PCU** .

-4. At the traction motor 3-phase terminals side, measure the resistance between the following test points individually.

Test condition	Vehicle OFF (LOCK) mode
B	PCU: removed

NOTICE:

When measuring terminals, make sure to use an ohmmeter that is capable of measuring milli-ohm range. Make sure to take the measurement when the transmission temperature is about 68B°F (20B°C) (rated resistance value is at 68B°F (20B°C)) as the resistance figures may vary.

Connector	Terminals	Value (mΩ)
Traction motor high voltage terminals	U - V	About 38.4-40.4
	U - W	About 38.4-40.4

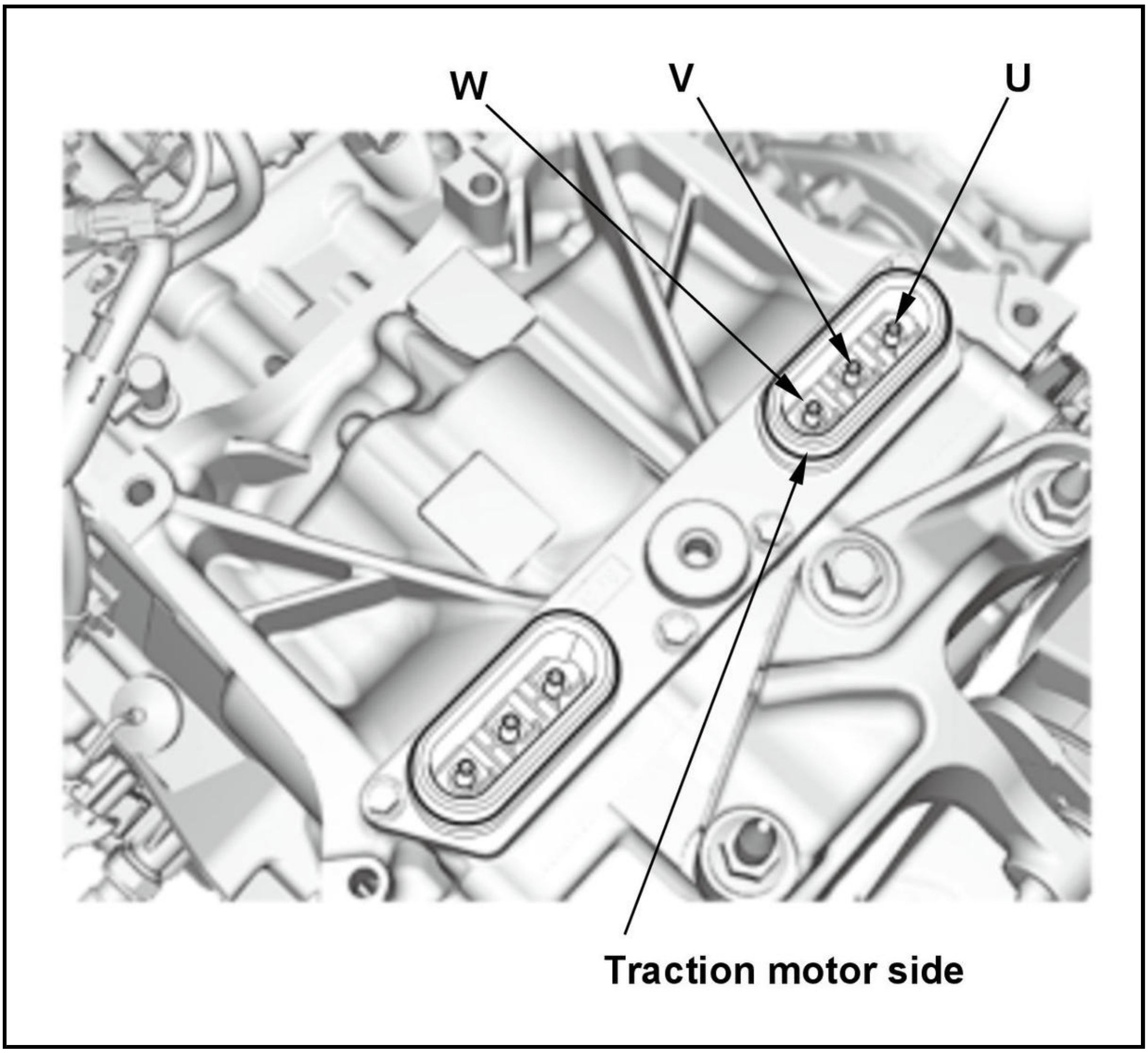

Is resistance value OK?

YES

Go to step 4.

NO

Faulty traction motor. Replace the transmission (e-CVT) assembly .

4. Traction motor motor rotor position sensor circuit check

-1. Do the traction motor motor rotor position sensor circuit check .

Is it OK?

YES

Replace the PCU and the transmission (e-CVT) assembly .

NO

Repair an open or short in the traction motor motor rotor position sensor circuit between the PCU and the traction motor motor rotor position sensor.

DTC P1440 (57)

DTC P1440 : Traction Motor Inverter Gate Line Open

WARNING:

This procedure includes high voltage measurements with the electric powertrain system turned on. To avoid serious injury from electrical shocks while testing the high voltage cable, use insulated gloves, select a DC range of 500 V or more on your digital multimeter, and be careful not to contact each tester probes and not to contact any metal parts while you measure the high voltage cable.

NOTE: Before you troubleshoot, **review the general troubleshooting information** .

DTC Description	Confirmed DTC	Pending DTC	Freeze Frame
P1440 Traction Motor Inverter Gate Line Open	B	B	B

DTC (Electric Powertrain)

1. Problem verification

   -1. Test-drive the vehicle in the range of the recorded freeze data parameters.

   Freeze Data

   -2. Monitor the OBD STATUS for DTC P1440 in the DTCs MENU with the HDS.

DTC Description	OBD STATUS
P1440 Traction Motor Inverter Gate Line Open	B

   Does the HDS indicate FAILED?

   YES

   Go to step 2.

   NO

   If the HDS indicates PASSED, the system is OK at this time but has an intermittent failure. If the HDS indicates NOT COMPLETED, keep test-driving until an indication comes on. If the freeze data/on-board snapshot of this DTC is recorded, try to reproduce the failure under the same conditions with the freeze data/on-board snapshot.

2. Traction motor motor rotor position sensor circuit check

   -1. **Do the traction motor motor rotor position sensor circuit check** .

   Is it OK?

   YES

   Go to step 3.

   NO

   Repair an open or short in the traction motor motor rotor position sensor circuit between the PCU and the traction motor motor rotor position sensor.

3. Traction motor check

   -1. Turn the vehicle to the OFF (LOCK) mode.

   -2. **Remove the service plug** .

-3. Remove the PCU .

-4. At the traction motor 3-phase terminals side, measure the resistance between the following test points individually.

Test condition	Vehicle OFF (LOCK) mode
B	PCU: removed

NOTICE:

When measuring terminals, make sure to use an ohmmeter that is capable of measuring milli-ohm range. Make sure to take the measurement when the transmission temperature is about 68B°F (20B°C) (rated resistance value is at 68B°F (20B°C)) as the resistance figures may vary.

Connector	Terminals	Value (mΩ)
Traction motor high voltage terminals	U - V	About 38.4-40.4
	U - W	About 38.4-40.4

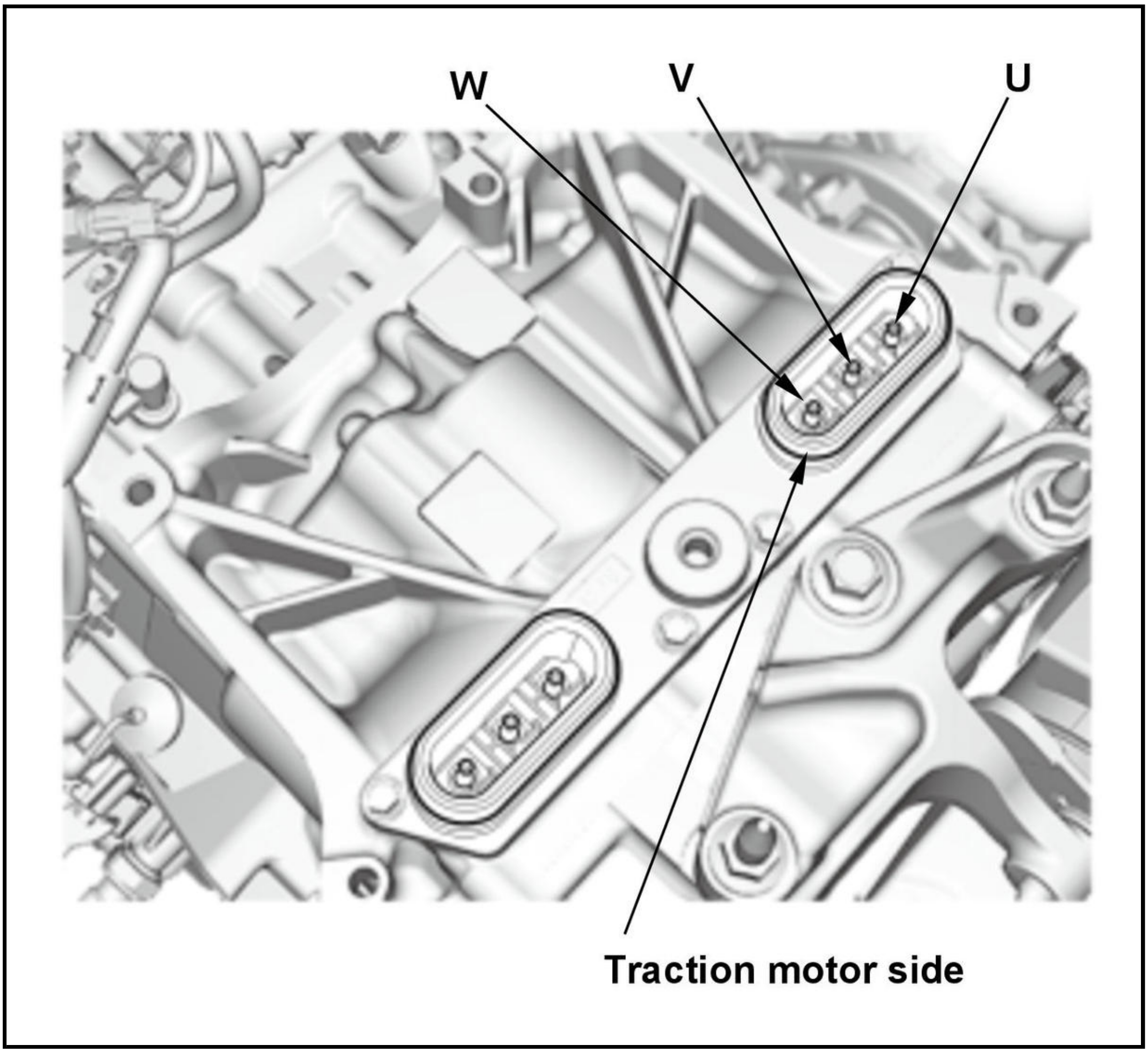

Is resistance value OK?

YES

Replace the PCU .

NO

Faulty traction motor. **Replace the transmission (e-CVT) assembly** .

DTC P15A5 (85)

DTC P15A5 : Traction Motor Inverter Current Too High

WARNING:

This procedure includes high voltage measurements with the electric powertrain system turned on. To avoid serious injury from electrical shocks while testing the high voltage cable, use insulated gloves, select a DC range of 500 V or more on your digital multimeter, and be careful not to contact each tester probes and not to contact any metal parts while you measure the high voltage cable.

NOTE: Before you troubleshoot, **review the general troubleshooting information** .

DTC Description	Confirmed DTC	Pending DTC	Freeze Frame
P15A5 Traction Motor Inverter Current Too High	B	B	B

DTC (Electric Powertrain)

1. Problem verification

   -1. Test-drive the vehicle in the range of the recorded freeze data parameters.

   Freeze Data

   -2. Monitor the OBD STATUS for DTC P15A5 in the DTCs MENU with the HDS.

DTC Description	OBD STATUS
P15A5 Traction Motor Inverter Current Too High	B

   Does the HDS indicate FAILED?

   YES

   Go to step 3.

   NO

   Go to step 2.

2. DTC check

   -1. Check for Pending or Confirmed DTCs with the HDS.

DTC Description	Confirmed DTC	Pending DTC	Freeze Frame
P1440 Traction Motor Inverter Gate Line Open	B	B	B

   Is DTC P1440 indicated?

   YES

   Go to the DTC 1440 troubleshooting.

   NO

   Intermittent failure. The system is OK at this time. If the freeze data/on-board snapshot of this DTC is recorded, try to reproduce the failure under the same conditions with the freeze data/on-board snapshot.

3. Traction motor check

-1. Turn the vehicle to the OFF (LOCK) mode.

-2. **Remove the service plug** .

-3. **Remove the PCU** .

-4. At the traction motor 3-phase terminals side, measure the resistance between the following test points individually.

Test condition	Vehicle OFF (LOCK) mode
B	PCU: removed

NOTICE:

When measuring terminals, make sure to use an ohmmeter that is capable of measuring milli-ohm range. Make sure to take the measurement when the transmission temperature is about 68B°F (20B°C) (rated resistance value is at 68B°F (20B°C)) as the resistance figures may vary.

Connector	Terminals	Value (mΩ)
Traction motor high voltage terminals	U - V	About 38.4-40.4
	U - W	About 38.4-40.4

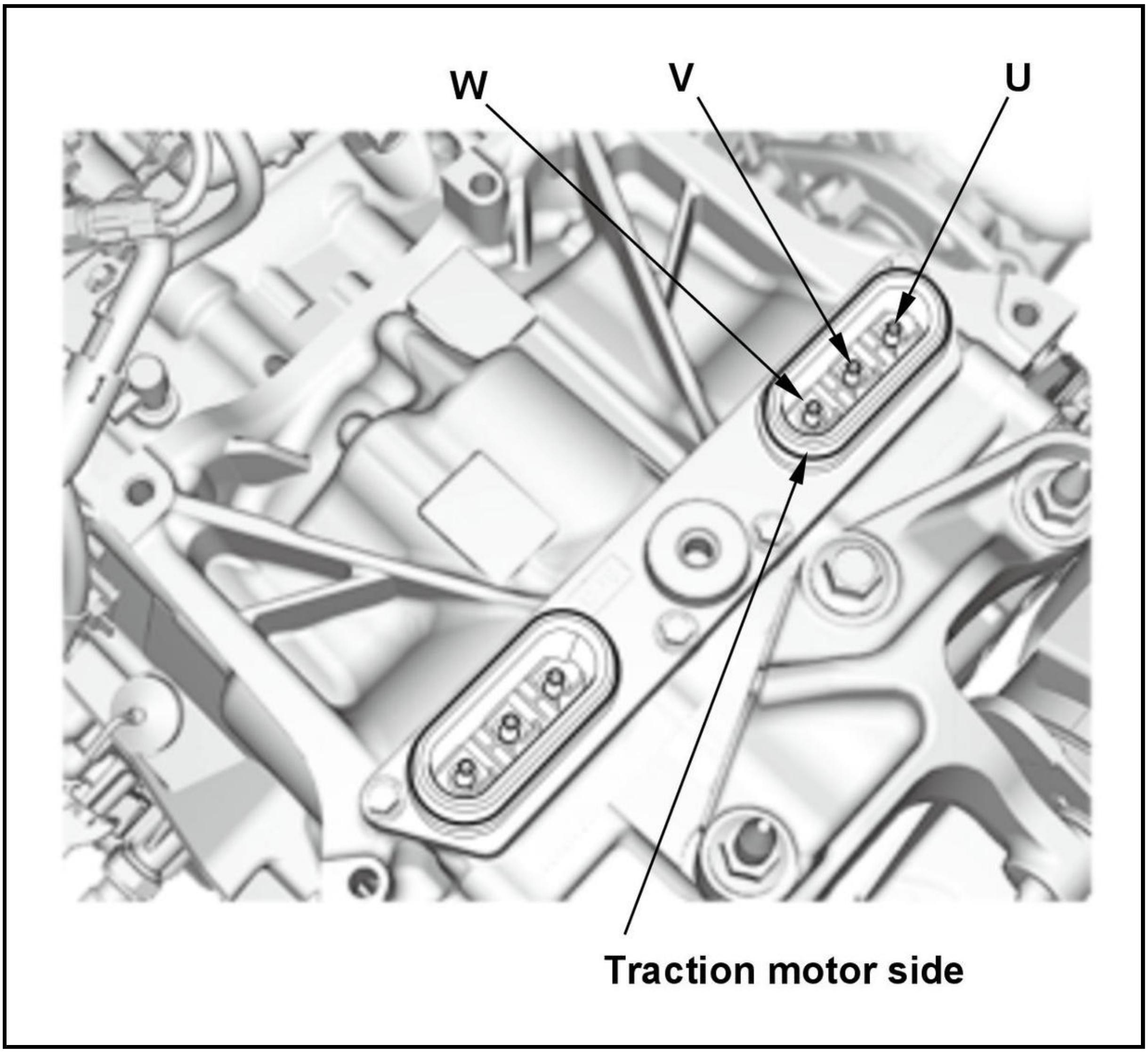

Is resistance value OK?

YES

Replace the PCU .

NO

Faulty traction motor. Replace the transmission (e-CVT) assembly .

DTC P1A54 (461), P1A55 (462)

DTC P1A54 : Traction Motor Control Module Torque Control Performance

DTC P1A55 : Traction Motor Control Module Torque Adjustment Performance

NOTE: Before you troubleshoot, review the general troubleshooting information .

DTC Description	Confirmed DTC	Pending DTC	Freeze Frame
P1A54 Traction Motor Control Module Torque Control Performance	B	B	B
P1A55 Traction Motor Control Module Torque Adjustment Performance	B	B	B

DTC (Electric Powertrain)

1. Problem verification

   -1. Test-drive the vehicle in the range of the recorded freeze data parameters.

   Freeze Data

   -2. Monitor the OBD STATUS for DTC P1A54 or P1A55 in the DTCs MENU with the HDS.

DTC Description	OBD STATUS
P1A54 Traction Motor Control Module Torque Control Performance	B
P1A55 Traction Motor Control Module Torque Adjustment Performance	B

   Does the HDS indicate FAILED?

   YES

   Replace the PCU .

   NO

   If the HDS indicates PASSED, the system is OK at this time but has an intermittent failure. If the HDS indicates NOT COMPLETED, keep test-driving until an indication comes on. If the freeze data/on-board snapshot of this DTC is recorded, try to reproduce the failure under the same conditions with the freeze data/on-board snapshot.

DTC P1A56 (463)

DTC P1A56 : Traction Motor Current Too High

WARNING:

This procedure includes high voltage measurements with the electric powertrain system turned on. To avoid serious injury from electrical shocks while testing the high voltage cable, use insulated gloves, select a DC range of 500 V or more on your digital multimeter, and be careful not to contact each tester probes and not to contact any metal parts while you measure the high voltage cable.

NOTE: Before you troubleshoot, **review the general troubleshooting information** .

DTC Description	Confirmed DTC	Pending DTC	Freeze Frame
P1A56 Traction Motor Current Too High	B	B	B

DTC (Electric Powertrain)

1. Problem verification

   -1. Test-drive the vehicle in the range of the recorded freeze data parameters.

   Freeze Data

   -2. Monitor the OBD STATUS for DTC P1A56 in the DTCs MENU with the HDS.

DTC Description	OBD STATUS
P1A56 Traction Motor Current Too High	B

   Does the HDS indicate FAILED?

   YES

   Go to step 2.

   NO

   If the HDS indicates PASSED, the system is OK at this time but has an intermittent failure. If the HDS indicates NOT COMPLETED, keep test-driving until an indication comes on. If the freeze data/on-board snapshot of this DTC is recorded, try to reproduce the failure under the same conditions with the freeze data/on-board snapshot.

2. Traction motor motor rotor position sensor circuit check

   -1. **Do the traction motor motor rotor position sensor circuit check** .

   Is it OK?

   YES

   Go to step 3.

   NO

   Repair an open or short in the traction motor motor rotor position sensor circuit between the PCU and the traction motor motor rotor position sensor.

3. Traction motor visual check

   -1. **Remove the service plug** .

   -2. **Remove the PCU** .

   -3. At the traction motor 3-phase terminals side, check the terminals damage, or obstructions.

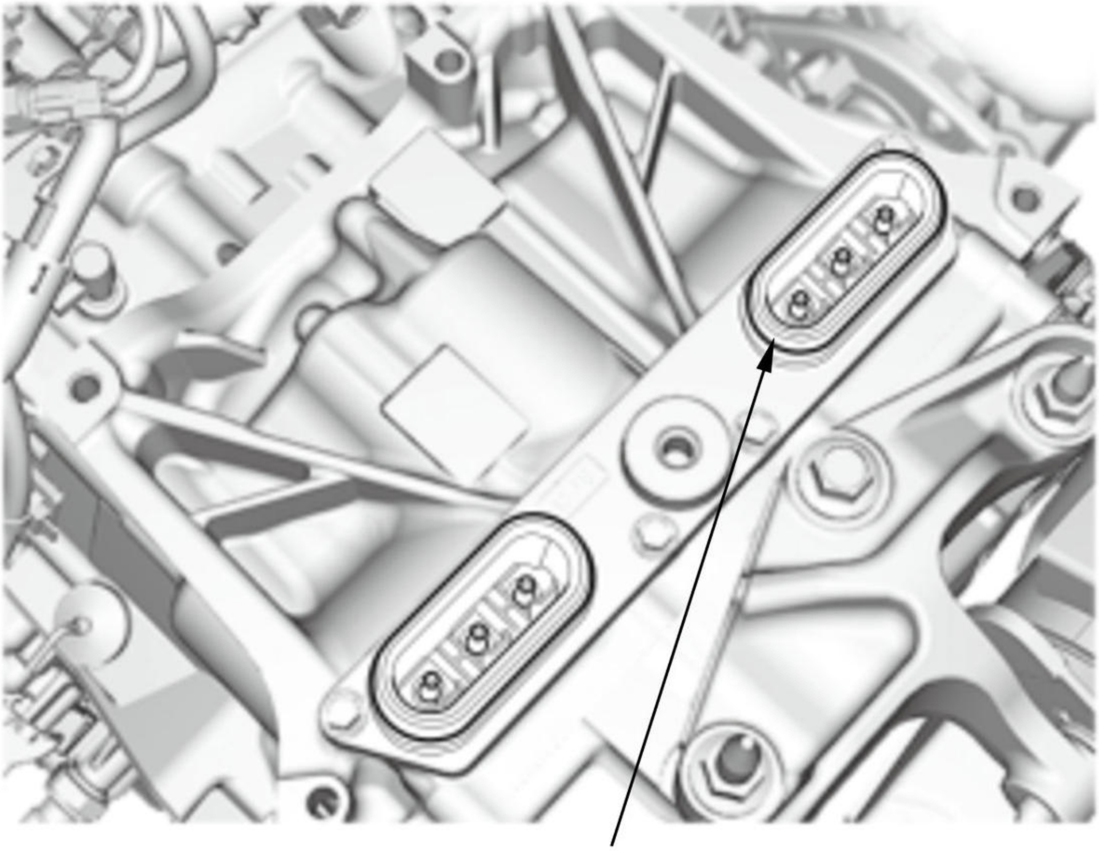

Are the terminals OK?

YES

Replace the PCU .

NO

Faulty traction motor. Replace the transmission (e-CVT) assembly .

DTC P1A57 (464)

DTC P1A57 : Traction Motor Phase Current Sensor

NOTE: Before you troubleshoot, review the general troubleshooting information .

DTC Description	Confirmed DTC	Pending DTC	Freeze Frame
P1A57 Traction Motor Phase Current Sensor	B	B	B

DTC (Electric Powertrain)

1. Problem verification

   -1. Test-drive the vehicle in the range of the recorded freeze data parameters.

   Freeze Data

-2. Monitor the OBD STATUS for DTC P1A57 in the DTCs MENU with the HDS.

DTC Description	OBD STATUS
P1A57 Traction Motor Phase Current Sensor	B

Does the HDS indicate FAILED?

YES

Replace the PCU .

NO

If the HDS indicates PASSED, the system is OK at this time but has an intermittent failure. If the HDS indicates NOT COMPLETED, keep test-driving until an indication comes on. If the freeze data/on-board snapshot of this DTC is recorded, try to reproduce the failure under the same conditions with the freeze data/on-board snapshot.

DTC P1A63 (1089)

DTC P1A63 : VCU V2 Voltage Sensor Circuit Range/Performance

NOTE: Before you troubleshoot, **review the general troubleshooting information** .

DTC Description	Confirmed DTC	Pending DTC	Freeze Frame
P1A63 VCU V2 Voltage Sensor Circuit Range/Performance	B	B	B

DTC (Electric Powertrain)

1. Problem verification

-1. Turn the vehicle to the ON mode.

-2. Clear the DTC with the HDS.

-3. Turn the vehicle to the OFF (LOCK) mode.

-4. Turn the vehicle to the ON mode.

-5. Check for Pending or Confirmed DTCs with the HDS.

DTC Description	Confirmed DTC	Pending DTC	Freeze Frame
P1A63 VCU V2 Voltage Sensor Circuit Range/Performance	B	B	B

Is DTC P1A63 indicated?

YES

Replace the PCU .

NO

Intermittent failure. The system is OK at this time. If the freeze data/on-board snapshot of this DTC is recorded, try to reproduce the failure under the same conditions with the freeze data/on-board snapshot.

DTC P1A64 (460)

DTC P1A64 : PCU Internal Failure (Communication Error)

NOTE: Before you troubleshoot, **review the general troubleshooting information** .

DTC Description	Confirmed DTC	Pending DTC	Freeze Frame
P1A64 PCU Internal Failure (Communication Error)	B	B	B

DTC (Electric Powertrain)

1. Problem verification

   -1. Turn the vehicle to the ON mode.

   -2. Clear the DTC with the HDS.

   -3. Turn the vehicle to the OFF (LOCK) mode.

   -4. Turn the vehicle to the ON mode.

   -5. Check for Pending or Confirmed DTCs with the HDS.

DTC Description	Confirmed DTC	Pending DTC	Freeze Frame
P1A64 PCU Internal Failure (Communication Error)	B	B	B

Is DTC P1A64 indicated?

YES

Replace the PCU .

NO

Intermittent failure. The system is OK at this time. If the freeze data/on-board snapshot of this DTC is recorded, try to reproduce the failure under the same conditions with the freeze data/on-board snapshot.

DTC P1A65 (1090)

DTC P1A65 : Motor Inverter Internal Failure

NOTE: Before you troubleshoot, **review the general troubleshooting information** .

DTC Description	Confirmed DTC	Pending DTC	Freeze Frame
P1A65 Motor Inverter Internal Failure	B	B	B

DTC (Electric Powertrain)

1. Problem verification

   -1. Turn the vehicle to the ON mode.

   -2. Clear the DTC with the HDS.

   -3. Turn the vehicle to the OFF (LOCK) mode.

   -4. Turn the vehicle to the ON mode.

   -5. Check for Pending or Confirmed DTCs with the HDS.

DTC Description	Confirmed DTC	Pending DTC	Freeze Frame
P1A65 Motor Inverter Internal Failure	B	B	B

Is DTC P1A65 indicated?

YES

Replace the PCU .

NO

Intermittent failure. The system is OK at this time. If the freeze data/on-board snapshot of this DTC is recorded, try to reproduce the failure under the same conditions with the freeze data/on-board snapshot.

DTC P1A87 (1111)

DTC P1A87 : VCU V0 Voltage Sensor Circuit Range/Performance (Over Voltage Range)

NOTE: Before you troubleshoot, review the general troubleshooting information .

DTC Description	Confirmed DTC	Pending DTC	Freeze Frame
P1A87 VCU V0 Voltage Sensor Circuit Range/Performance (Over Voltage Range)	B	B	B

DTC (Electric Powertrain)

1. Problem verification

   -1. Turn the vehicle to the ON mode.

   -2. Clear the DTC with the HDS.

   -3. Turn the vehicle to the OFF (LOCK) mode.

   -4. Turn the vehicle to the ON mode.

   -5. Check for Pending or Confirmed DTCs with the HDS.

DTC Description	Confirmed DTC	Pending DTC	Freeze Frame
P1A87 VCU V0 Voltage Sensor Circuit Range/Performance (Over Voltage Range)	B	B	B

Is DTC P1A87 indicated?

YES

Replace the PCU .

NO

Intermittent failure. The system is OK at this time. If the freeze data/on-board snapshot of this DTC is recorded, try to reproduce the failure under the same conditions with the freeze data/on-board snapshot.

DTC P1A88 (1113)

DTC P1A88 : VCU V1 Voltage Sensor Circuit Range/Performance (Under Voltage Range)

NOTE: Before you troubleshoot, review the general troubleshooting information .

DTC Description	Confirmed DTC	Pending DTC	Freeze Frame
P1A88 VCU V1 Voltage Sensor Circuit Range/Performance (Under Voltage Range)	B	B	B

DTC (Electric Powertrain)

1. Problem verification

   -1. Turn the vehicle to the ON mode.

   -2. Clear the DTC with the HDS.

   -3. Turn the vehicle to the OFF (LOCK) mode.

   -4. Turn the vehicle to the ON mode.

   -5. Check for Pending or Confirmed DTCs with the HDS.

DTC Description	Confirmed DTC	Pending DTC	Freeze Frame
P1A88 VCU V1 Voltage Sensor Circuit Range/Performance (Under Voltage Range)	B	B	B

   Is DTC P1A88 indicated?

   YES

   Replace the PCU .

   NO

   Intermittent failure. The system is OK at this time. If the freeze data/on-board snapshot of this DTC is recorded, try to reproduce the failure under the same conditions with the freeze data/on-board snapshot.

DTC P1A89 (1112)

DTC P1A89 : VCU V1 Voltage Sensor Circuit Range/Performance (Over Voltage Range)

NOTE: Before you troubleshoot, **review the general troubleshooting information** .

DTC Description	Confirmed DTC	Pending DTC	Freeze Frame
P1A89 VCU V1 Voltage Sensor Circuit Range/Performance (Over Voltage Range)	B	B	B

DTC (Electric Powertrain)

1. Problem verification

   -1. Turn the vehicle to the ON mode.

   -2. Clear the DTC with the HDS.

   -3. Turn the vehicle to the OFF (LOCK) mode.

   -4. Turn the vehicle to the ON mode.

   -5. Check for Pending or Confirmed DTCs with the HDS.

DTC Description	Confirmed DTC	Pending DTC	Freeze Frame
P1A89 VCU V1 Voltage Sensor Circuit Range/Performance (Over Voltage Range)	B	B	B

Is DTC P1A89 indicated?

YES

Replace the PCU .

NO

Intermittent failure. The system is OK at this time. If the freeze data/on-board snapshot of this DTC is recorded, try to reproduce the failure under the same conditions with the freeze data/on-board snapshot.

DTC P1D05 (457)

DTC P1D05 : Traction Motor Control Module Internal Communication Failure

NOTE: Before you troubleshoot, review the general troubleshooting information .

DTC Description	Confirmed DTC	Pending DTC	Freeze Frame
P1D05 Traction Motor Control Module Internal Communication Failure	B	B	B

DTC (Electric Powertrain)

1. Problem verification

   -1. Turn the vehicle to the ON mode.

   -2. Clear the DTC with the HDS.

   -3. Turn the vehicle to the OFF (LOCK) mode.

   -4. Turn the vehicle to the ON mode.

   -5. Check for Pending or Confirmed DTCs with the HDS.

DTC Description	Confirmed DTC	Pending DTC	Freeze Frame
P1D05 Traction Motor Control Module Internal Communication Failure	B	B	B

Is DTC P1D05 indicated?

YES

Replace the PCU .

NO

Intermittent failure. The system is OK at this time. If the freeze data/on-board snapshot of this DTC is recorded, try to reproduce the failure under the same conditions with the freeze data/on-board snapshot.

DTC P1D11 (30)

DTC P1D11 : Traction Motor Phase Current Sensor Circuit Range/Performance

NOTE: Before you troubleshoot, review the general troubleshooting information .

DTC Description	Confirmed DTC	Pending DTC	Freeze Frame
P1D11 Traction Motor Phase Current Sensor Circuit Range/Performance	B	B	B

DTC (Electric Powertrain)

1. Problem verification

-1. Test-drive the vehicle in the range of the recorded freeze data parameters.

Freeze Data

-2. Monitor the OBD STATUS for DTC P1D11 in the DTCs MENU with the HDS.

DTC Description	OBD STATUS
P1D11 Traction Motor Phase Current Sensor Circuit Range/Performance	B

Does the HDS indicate FAILED?

YES

Replace the PCU .

NO

If the HDS indicates PASSED, the system is OK at this time but has an intermittent failure. If the HDS indicates NOT COMPLETED, keep test-driving until an indication comes on. If the freeze data/on-board snapshot of this DTC is recorded, try to reproduce the failure under the same conditions with the freeze data/on-board snapshot.

DTC P1D13 (283)

DTC P1D13 : Generator Motor Phase Current Sensor Range/Performance

NOTE: Before you troubleshoot, review the general troubleshooting information .

DTC Description	Confirmed DTC	Pending DTC	Freeze Frame
P1D13 Generator Motor Phase Current Sensor Range/Performance	B	B	B

DTC (Electric Powertrain)

1. Problem verification

-1. Test-drive the vehicle in the range of the recorded freeze data parameters.

Freeze Data

-2. Monitor the OBD STATUS for DTC P1D13 in the DTCs MENU with the HDS.

DTC Description	OBD STATUS
P1D13 Generator Motor Phase Current Sensor Range/Performance	B

Does the HDS indicate FAILED?

YES

Replace the PCU .

NO

If the HDS indicates PASSED, the system is OK at this time but has an intermittent failure. If the HDS indicates NOT COMPLETED, keep test-driving until an indication comes on. If the freeze data/on-board snapshot of this DTC is recorded, try to reproduce the failure under the same conditions with the freeze data/on-board snapshot.

DTC P1D18 (1026)

DTC P1D18 : Traction Motor Temperature Sense Failure

NOTE: Before you troubleshoot, **review the general troubleshooting information** .

DTC Description	Confirmed DTC	Pending DTC	Freeze Frame
P1D18 Traction Motor Temperature Sense Failure	B	B	B

DTC (Electric Powertrain)

1. Problem verification

   -1. Turn the vehicle to the ON mode.

   -2. Clear the DTC with the HDS.

   -3. Turn the vehicle to the OFF (LOCK) mode.

   -4. Turn the vehicle to the ON mode.

   -5. Check for Pending or Confirmed DTCs with the HDS.

DTC Description	Confirmed DTC	Pending DTC	Freeze Frame
P1D18 Traction Motor Temperature Sense Failure	B	B	B

   Is DTC P1D18 indicated?

   YES

   Replace the PCU .

   NO

   Intermittent failure. The system is OK at this time. If the freeze data/on-board snapshot of this DTC is recorded, try to reproduce the failure under the same conditions with the freeze data/on-board snapshot.

DTC P1D1B (448)

DTC P1D1B : VCU V2S Voltage Sensor Circuit High

NOTE: Before you troubleshoot, **review the general troubleshooting information** .

DTC Description	Confirmed DTC	Pending DTC	Freeze Frame
P1D1B VCU V2S Voltage Sensor Circuit High	B	B	B

DTC (Electric Powertrain)

1. Problem verification

-1. Turn the vehicle to the ON mode.

-2. Clear the DTC with the HDS.

-3. Turn the vehicle to the OFF (LOCK) mode.

-4. Turn the vehicle to the ON mode.

-5. Check for Pending or Confirmed DTCs with the HDS.

DTC Description	Confirmed DTC	Pending DTC	Freeze Frame
P1D1B VCU V2S Voltage Sensor Circuit High	B	B	B

Is DTC P1D1B indicated?

YES

Replace the PCU .

NO

Intermittent failure. The system is OK at this time. If the freeze data/on-board snapshot of this DTC is recorded, try to reproduce the failure under the same conditions with the freeze data/on-board snapshot.

DTC P1D1C (450)

DTC P1D1C : VCU V2S Voltage Sensor Circuit

NOTE: Before you troubleshoot, review the general troubleshooting information .

DTC Description	Confirmed DTC	Pending DTC	Freeze Frame
P1D1C VCU V2S Voltage Sensor Circuit	B	B	B

DTC (Electric Powertrain)

1. Problem verification

-1. Turn the vehicle to the ON mode.

-2. Clear the DTC with the HDS.

-3. Turn the vehicle to the OFF (LOCK) mode.

-4. Turn the vehicle to the ON mode.

-5. Check for Pending or Confirmed DTCs with the HDS.

DTC Description	Confirmed DTC	Pending DTC	Freeze Frame
P1D1C VCU V2S Voltage Sensor Circuit	B	B	B

Is DTC P1D1C indicated?

YES

Replace the PCU .

NO

Intermittent failure. The system is OK at this time. If the freeze data/on-board snapshot of this DTC is recorded, try to reproduce the failure under the same conditions with the freeze data/on-board snapshot.

DTC P1D1D (1015)

DTC P1D1D : VCU V0 Voltage Sensor Circuit Low

NOTE: Before you troubleshoot, review the general troubleshooting information .

DTC Description	Confirmed DTC	Pending DTC	Freeze Frame
P1D1D VCU V0 Voltage Sensor Circuit Low	B	B	B

DTC (Electric Powertrain)

1. Problem verification

   -1. Turn the vehicle to the ON mode.

   -2. Clear the DTC with the HDS.

   -3. Turn the vehicle to the OFF (LOCK) mode.

   -4. Turn the vehicle to the ON mode.

   -5. Check for Pending or Confirmed DTCs with the HDS.

DTC Description	Confirmed DTC	Pending DTC	Freeze Frame
P1D1D VCU V0 Voltage Sensor Circuit Low	B	B	B

Is DTC P1D1D indicated?

YES

Replace the PCU .

NO

Intermittent failure. The system is OK at this time. If the freeze data/on-board snapshot of this DTC is recorded, try to reproduce the failure under the same conditions with the freeze data/on-board snapshot.

DTC P1D6E (236)

DTC P1D6E : Traction Motor Temperature Sensor Circuit Performance

NOTE: Before you troubleshoot, review the general troubleshooting information .

DTC Description	Confirmed DTC	Pending DTC	Freeze Frame
P1D6E Traction Motor Temperature Sensor Circuit Performance	B	B	B

DTC (Electric Powertrain)

1. Problem verification

   -1. Turn the vehicle to the ON mode.

   -2. Clear the DTC with the HDS.

   -3. Turn the vehicle to the OFF (LOCK) mode, and wait 6 hours.

-4. Turn the vehicle to the ON mode.

-5. Check for Pending or Confirmed DTCs with the HDS.

DTC Description	Confirmed DTC	Pending DTC	Freeze Frame
P1D6E Traction Motor Temperature Sensor Circuit Performance	B	B	B

Is DTC P1D6E indicated?

YES

Go to step 2.

NO

Intermittent failure. The system is OK at this time. If the freeze data/on-board snapshot of this DTC is recorded, try to reproduce the failure under the same conditions with the freeze data/on-board snapshot.

2. Transmission fluid temperature sensor check

-1. Turn the vehicle to the OFF (LOCK) mode.

-2. **Remove the transmission fluid temperature sensor** , but leave it connected.

-3. Submerge the sensor and a thermometer in a container of water.

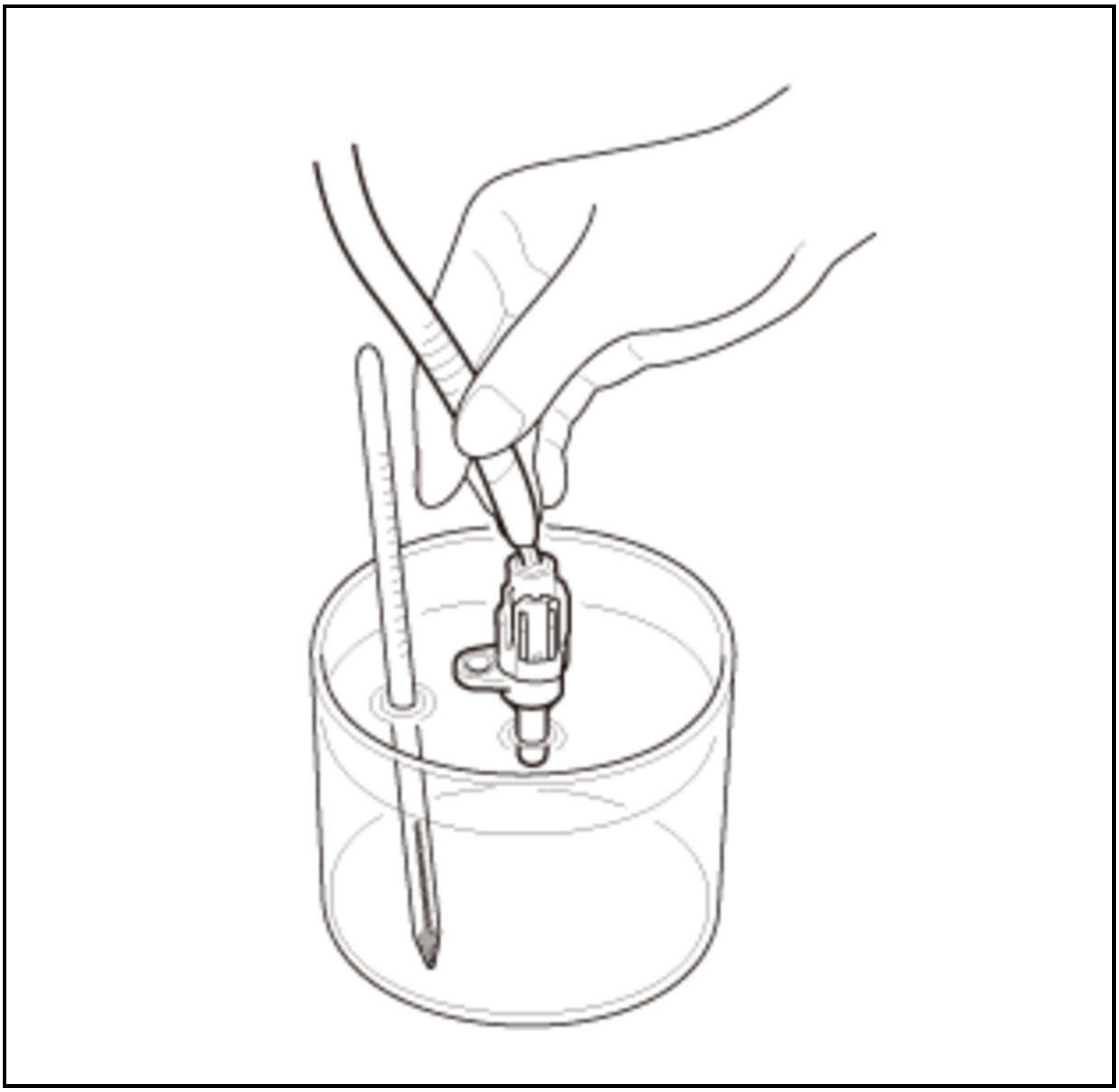

-4. Turn the vehicle to the ON mode.

-5. Check the parameter(s) below with the HDS.

Signal	Current conditions	
	Values	**Unit**
ATF Temperature (TRC)	B	B

Does the live data for the transmission fluid temperature sensor match the temperature reading from the thermometer?

YES

Replace the transmission (e-CVT) assembly .

NO

Replace the transmission fluid temperature sensor .

DTC P1D70 (246)

DTC P1D70 : Traction Motor Phase Current Sensor Multiple Performance

NOTE: Before you troubleshoot, review the general troubleshooting information .

DTC Description	Confirmed DTC	Pending DTC	Freeze Frame
P1D70 Traction Motor Phase Current Sensor Multiple Performance	B	B	B

DTC (Electric Powertrain)

1. Problem verification

   -1. Turn the vehicle to the ON mode.

   -2. Clear the DTC with the HDS.

   -3. Turn the vehicle to the OFF (LOCK) mode.

   -4. Turn the vehicle to the ON mode.

   -5. Check for Pending or Confirmed DTCs with the HDS.

DTC Description	Confirmed DTC	Pending DTC	Freeze Frame
P1D70 Traction Motor Phase Current Sensor Multiple Performance	B	B	B

   Is DTC P1D70 indicated?

   YES

   Replace the PCU .

   NO

   Intermittent failure. The system is OK at this time. If the freeze data/on-board snapshot of this DTC is recorded, try to reproduce the failure under the same conditions with the freeze data/on-board snapshot.

DTC P1D72 (321)

DTC P1D72 : Traction Motor Temperature Sensor Circuit Range/Performance (Lo Side)

NOTE: Before you troubleshoot, review the general troubleshooting information .

DTC Description	Confirmed DTC	Pending DTC	Freeze Frame
P1D72 Traction Motor Temperature Sensor Circuit Range/Performance (Lo Side)	B	B	B

DTC (Electric Powertrain)

1. Problem verification

   -1. Test-drive the vehicle in the range of the recorded freeze data parameters.

   Freeze Data

   -2. Monitor the OBD STATUS for DTC P1D72 in the DTCs MENU with the HDS.

DTC Description	OBD STATUS
P1D72 Traction Motor Temperature Sensor Circuit Range/Performance (Lo Side)	B

   Does the HDS indicate FAILED?

YES

Faulty traction motor temperature sensor. **Replace the transmission (e-CVT) assembly** .

NO

If the HDS indicates PASSED, the system is OK at this time but has an intermittent failure. If the HDS indicates NOT COMPLETED, keep test-driving until an indication comes on. If the freeze data/on-board snapshot of this DTC is recorded, try to reproduce the failure under the same conditions with the freeze data/on-board snapshot.

DTC P1D77 (332)

DTC P1D77 : VCU I1 Current Sensor Circuit Range/Performance

NOTE: Before you troubleshoot, **review the general troubleshooting information** .

DTC Description	Confirmed DTC	Pending DTC	Freeze Frame
P1D77 VCU I1 Current Sensor Circuit Range/Performance	B	B	B

DTC (Electric Powertrain)

1. Problem verification

-1. Test-drive the vehicle in the range of the recorded freeze data parameters.

Freeze Data

-2. Monitor the OBD STATUS for DTC P1D77 in the DTCs MENU with the HDS.

DTC Description	OBD STATUS
P1D77 VCU I1 Current Sensor Circuit Range/Performance	B

Does the HDS indicate FAILED?

YES

Replace the PCU .

NO

If the HDS indicates PASSED, the system is OK at this time but has an intermittent failure. If the HDS indicates NOT COMPLETED, keep test-driving until an indication comes on. If the freeze data/on-board snapshot of this DTC is recorded, try to reproduce the failure under the same conditions with the freeze data/on-board snapshot.

DTC P1D78 (331)

DTC P1D78 : VCU I1 Current Sensor Circuit Low

NOTE: Before you troubleshoot, **review the general troubleshooting information** .

DTC Description	Confirmed DTC	Pending DTC	Freeze Frame
P1D78 VCU I1 Current Sensor Circuit Low	B	B	B

DTC (Electric Powertrain)

1. Problem verification

-1. Turn the vehicle to the ON mode.

-2. Clear the DTC with the HDS.

-3. Turn the vehicle to the OFF (LOCK) mode.

-4. Turn the vehicle to the ON mode.

-5. Check for Pending or Confirmed DTCs with the HDS.

DTC Description	Confirmed DTC	Pending DTC	Freeze Frame
P1D78 VCU I1 Current Sensor Circuit Low	B	B	B

Is DTC P1D78 indicated?

YES

Replace the PCU .

NO

Intermittent failure. The system is OK at this time. If the freeze data/on-board snapshot of this DTC is recorded, try to reproduce the failure under the same conditions with the freeze data/on-board snapshot.

DTC P1D79 (330)

DTC P1D79 : VCU I1 Current Sensor Circuit High

NOTE: Before you troubleshoot, **review the general troubleshooting information** .

DTC Description	Confirmed DTC	Pending DTC	Freeze Frame
P1D79 VCU I1 Current Sensor Circuit High	B	B	B

DTC (Electric Powertrain)

1. Problem verification

-1. Turn the vehicle to the ON mode.

-2. Clear the DTC with the HDS.

-3. Turn the vehicle to the OFF (LOCK) mode.

-4. Turn the vehicle to the ON mode.

-5. Check for Pending or Confirmed DTCs with the HDS.

DTC Description	Confirmed DTC	Pending DTC	Freeze Frame
P1D79 VCU I1 Current Sensor Circuit High	B	B	B

Is DTC P1D79 indicated?

YES

Replace the PCU .

NO

Intermittent failure. The system is OK at this time. If the freeze data/on-board snapshot of this DTC is recorded, try to reproduce the failure under the same conditions with the freeze data/on-board snapshot.

DTC P1D7A (341)

DTC P1D7A : Reactor Temperature Sensor Circuit Range/Performance Problem

NOTE: Before you troubleshoot, **review the general troubleshooting information** .

DTC Description	Confirmed DTC	Pending DTC	Freeze Frame
P1D7A Reactor Temperature Sensor Circuit Range/Performance Problem	B	B	B

DTC (Electric Powertrain)

1. Problem verification

   -1. Turn the vehicle to the ON mode.

   -2. Clear the DTC with the HDS.

   -3. Turn the vehicle to the OFF (LOCK) mode, and wait 6 hours.

   -4. Turn the vehicle to the ON mode.

   -5. Check for Pending or Confirmed DTCs with the HDS.

DTC Description	Confirmed DTC	Pending DTC	Freeze Frame
P1D7A Reactor Temperature Sensor Circuit Range/Performance Problem	B	B	B

   Is DTC P1D7A indicated?

   YES

   Replace the PCU .

   NO

   Intermittent failure. The system is OK at this time. If the freeze data/on-board snapshot of this DTC is recorded, try to reproduce the failure under the same conditions with the freeze data/on-board snapshot.

DTC P1D7B (343)

DTC P1D7B : Reactor Over Temperature (Traction Motor Control Module Detected)

NOTE: Before you troubleshoot, **review the general troubleshooting information** .

DTC Description	Confirmed DTC	Pending DTC	Freeze Frame
P1D7B Reactor Over Temperature (Traction Motor Control Module Detected)	B	B	B

DTC (Electric Powertrain)

1. DTC check

   -1. Turn the vehicle to the ON mode.

   -2. Check for Pending or Confirmed DTCs with the HDS.

DTC Description	Confirmed DTC	Pending DTC	Freeze Frame
P1D92 PCU Electric Coolant Pump Control Circuit	B	B	B
P1D9A PCU Electric Coolant Pump Circuit	B	B	B

Is DTC P1D92 or P1D9A indicated?

YES

Go to the indicated DTC's troubleshooting.

NO

Go to step 2.

2. Problem verification

-1. Test-drive the vehicle in the range of the recorded freeze data parameters.

Freeze Data

-2. Monitor the OBD STATUS for DTC P1D7B in the DTCs MENU with the HDS.

DTC Description	OBD STATUS
P1D7B Reactor Over Temperature (Traction Motor Control Module Detected)	B

Does the HDS indicate FAILED?

YES

Go to step 3.

NO

If the HDS indicates PASSED, the system is OK at this time but has an intermittent failure. If the HDS indicates NOT COMPLETED, keep test-driving until an indication comes on. If the freeze data/on-board snapshot of this DTC is recorded, try to reproduce the failure under the same conditions with the freeze data/on-board snapshot.

3. PCU coolant circuit check

-1. **Do the PCU coolant circuit inspection** .

Is it OK?

YES

Check the cooling fan operation. If it is OK, **replace the PCU** .

NO

Repair or replace parts as needed.

DTC P1D7D (340)

DTC P1D7D : Reactor Temperature Sensor 1 Circuit Low

NOTE: Before you troubleshoot, **review the general troubleshooting information** .

DTC Description	Confirmed DTC	Pending DTC	Freeze Frame
P1D7D Reactor Temperature Sensor 1 Circuit Low	B	B	B

DTC (Electric Powertrain)

1. Problem verification

   -1. Turn the vehicle to the ON mode.

   -2. Clear the DTC with the HDS.

   -3. Turn the vehicle to the OFF (LOCK) mode.

   -4. Turn the vehicle to the ON mode.

   -5. Check for Pending or Confirmed DTCs with the HDS.

DTC Description	Confirmed DTC	Pending DTC	Freeze Frame
P1D7D Reactor Temperature Sensor 1 Circuit Low	B	B	B

   Is DTC P1D7D indicated?

   YES

   Replace the PCU .

   NO

   Intermittent failure. The system is OK at this time. If the freeze data/on-board snapshot of this DTC is recorded, try to reproduce the failure under the same conditions with the freeze data/on-board snapshot.

DTC P1D7E (339)

DTC P1D7E : Reactor Temperature Sensor 1 Circuit High

NOTE: Before you troubleshoot, **review the general troubleshooting information** .

DTC Description	Confirmed DTC	Pending DTC	Freeze Frame
P1D7E Reactor Temperature Sensor 1 Circuit High	B	B	B

DTC (Electric Powertrain)

1. Problem verification

   -1. Turn the vehicle to the ON mode.

   -2. Clear the DTC with the HDS.

   -3. Turn the vehicle to the OFF (LOCK) mode.

   -4. Turn the vehicle to the ON mode.

   -5. Check for Pending or Confirmed DTCs with the HDS.

DTC Description	Confirmed DTC	Pending DTC	Freeze Frame
P1D7E Reactor Temperature Sensor 1 Circuit High	B	B	B

Is DTC P1D7E indicated?

YES

Replace the PCU .

NO

Intermittent failure. The system is OK at this time. If the freeze data/on-board snapshot of this DTC is recorded, try to reproduce the failure under the same conditions with the freeze data/on-board snapshot.

DTC P1D7F (481)

DTC P1D7F : Generator Motor Inverter Malfunction Signal Low (Generator Motor Control Module Detected)

NOTE: Before you troubleshoot, review the general troubleshooting information .

DTC Description	Confirmed DTC	Pending DTC	Freeze Frame
P1D7F Generator Motor Inverter Malfunction Signal Low (Generator Motor Control Module Detected)	B	B	B

DTC (Electric Powertrain)

1. Problem verification

   -1. Turn the vehicle to the ON mode.

   -2. Clear the DTC with the HDS.

   -3. Turn the vehicle to the OFF (LOCK) mode.

   -4. Turn the vehicle to the ON mode.

   -5. Check for Pending or Confirmed DTCs with the HDS.

DTC Description	Confirmed DTC	Pending DTC	Freeze Frame
P1D7F Generator Motor Inverter Malfunction Signal Low (Generator Motor Control Module Detected)	B	B	B

Is DTC P1D7F indicated?

YES

Replace the PCU .

NO

Intermittent failure. The system is OK at this time. If the freeze data/on-board snapshot of this DTC is recorded, try to reproduce the failure under the same conditions with the freeze data/on-board snapshot.

DTC P1D81 (483)

DTC P1D81 : VCU Malfunction Signal Low (Traction Motor Control Module Detected)

NOTE: Before you troubleshoot, review the general troubleshooting information .

DTC Description	Confirmed DTC	Pending DTC	Freeze Frame
P1D81 VCU Malfunction Signal Low (Traction Motor Control Module Detected)	B	B	B

DTC (Electric Powertrain)

1. Problem verification

    -1. Turn the vehicle to the ON mode.

    -2. Clear the DTC with the HDS.

    -3. Turn the vehicle to the OFF (LOCK) mode.

    -4. Turn the vehicle to the ON mode.

    -5. Check for Pending or Confirmed DTCs with the HDS.

DTC Description	Confirmed DTC	Pending DTC	Freeze Frame
P1D81 VCU Malfunction Signal Low (Traction Motor Control Module Detected)	B	B	B

    Is DTC P1D81 indicated?

    YES

    Replace the PCU .

    NO

    Intermittent failure. The system is OK at this time. If the freeze data/on-board snapshot of this DTC is recorded, try to reproduce the failure under the same conditions with the freeze data/on-board snapshot.

DTC P1D85 (479)

DTC P1D85 : Traction Motor Inverter Malfunction Signal Low (Traction Motor Control Module Detected)

NOTE: Before you troubleshoot, review the general troubleshooting information .

DTC Description	Confirmed DTC	Pending DTC	Freeze Frame
P1D85 Traction Motor Inverter Malfunction Signal Low (Traction Motor Control Module Detected)	B	B	B

DTC (Electric Powertrain)

1. Problem verification

    -1. Turn the vehicle to the ON mode.

    -2. Clear the DTC with the HDS.

    -3. Turn the vehicle to the OFF (LOCK) mode.

    -4. Turn the vehicle to the ON mode.

    -5. Check for Pending or Confirmed DTCs with the HDS.

DTC Description	Confirmed DTC	Pending DTC	Freeze Frame
P1D85 Traction Motor Inverter Malfunction Signal Low (Traction Motor Control Module Detected)	B	B	B

Is DTC P1D85 indicated?

YES

Replace the PCU .

NO

Intermittent failure. The system is OK at this time. If the freeze data/on-board snapshot of this DTC is recorded, try to reproduce the failure under the same conditions with the freeze data/on-board snapshot.

DTC P1D8A (295)

DTC P1D8A : Generator Motor Inverter Gate Line Open

WARNING:

This procedure includes high voltage measurements with the electric powertrain system turned on. To avoid serious injury from electrical shocks while testing the high voltage cable, use insulated gloves, select a DC range of 500 V or more on your digital multimeter, and be careful not to contact each tester probes and not to contact any metal parts while you measure the high voltage cable.

NOTE: Before you troubleshoot, **review the general troubleshooting information** .

DTC Description	Confirmed DTC	Pending DTC	Freeze Frame
P1D8A Generator Motor Inverter Gate Line Open	B	B	B

DTC (Electric Powertrain)

1. Problem verification

-1. Test-drive the vehicle in the range of the recorded freeze data parameters.

Freeze Data

-2. Monitor the OBD STATUS for DTC P1D8A in the DTCs MENU with the HDS.

DTC Description	OBD STATUS
P1D8A Generator Motor Inverter Gate Line Open	B

Does the HDS indicate FAILED?

YES

Go to step 2.

NO

If the HDS indicates PASSED, the system is OK at this time but has an intermittent failure. If the HDS indicates NOT COMPLETED, keep test-driving until an indication comes on. If the freeze data/on-board snapshot of this DTC is recorded, try to reproduce the failure under the same conditions with the freeze data/on-board snapshot.

2. Generator motor motor rotor position sensor circuit check

-1. **Do the generator motor motor rotor position sensor circuit check** .

Is it OK?

YES

Go to step 3.

NO

Repair an open or short in the generator motor motor rotor position sensor circuit between the PCU and the generator motor motor rotor position sensor.

3. Generator motor check

-1. Turn the vehicle to the OFF (LOCK) mode.

-2. **Remove the service plug** .

-3. **Remove the PCU** .

-4. At the generator motor 3-phase terminals side, measure the resistance between the following test points individually.

Test condition	Vehicle OFF (LOCK) mode
B	PCU: removed

NOTICE:

When measuring terminals, make sure to use an ohmmeter that is capable of measuring milli-ohm range. Make sure to take the measurement when the transmission temperature is about 68B°F (20B°C) (rated resistance value is at 68B°F (20B°C)) as the resistance figures may vary.

Connector	Terminals	Value (mΩ)
Generator motor high voltage terminals	U - V	About 31.7-33.7
	U - W	About 31.7-33.7

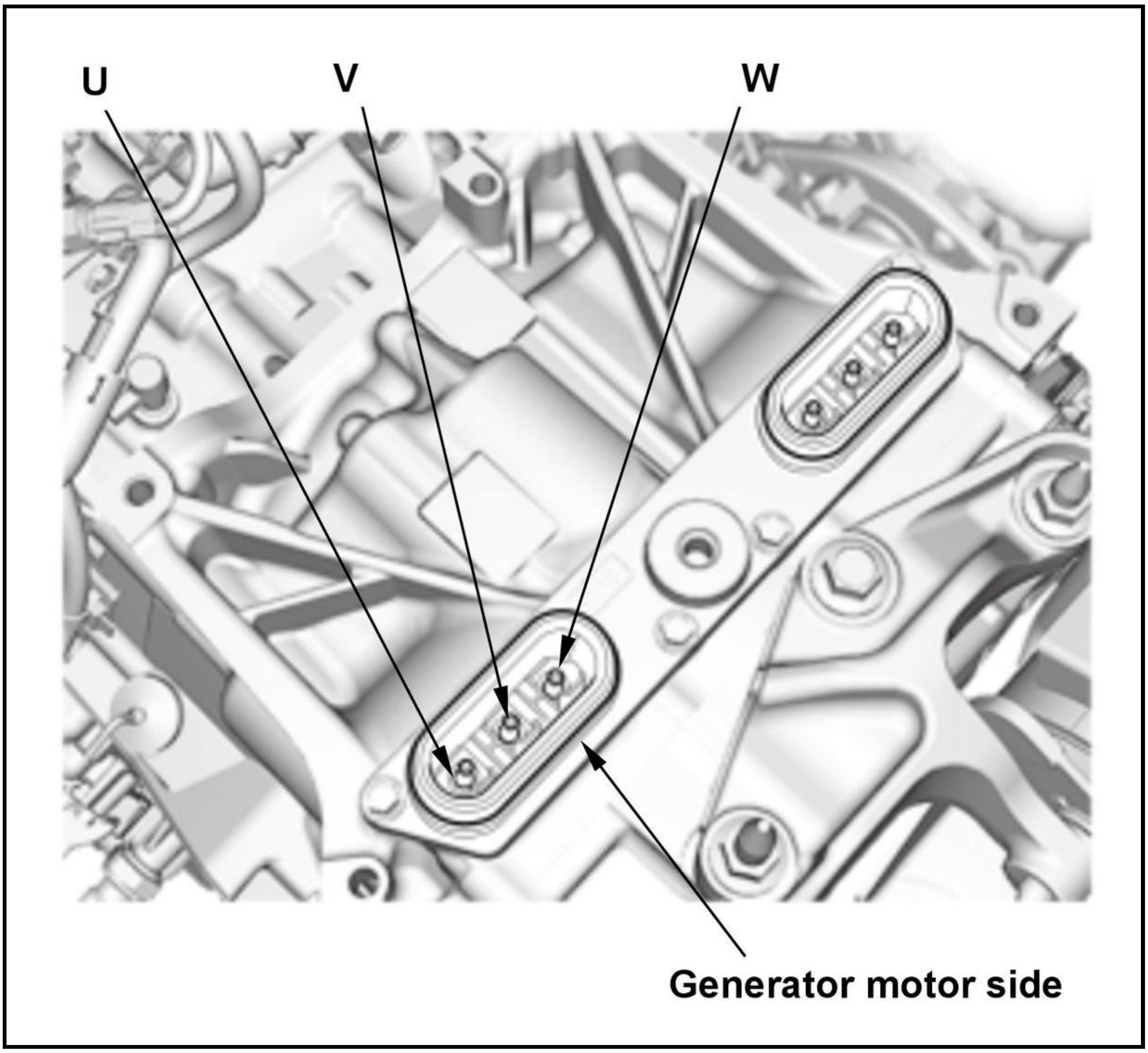

Is resistance value OK?

YES

Replace the PCU .

NO

Faulty generator motor. Replace the transmission (e-CVT) assembly .

DTC P1D8C (284)

DTC P1D8C : Generator Motor Inverter Over Current

WARNING:

This procedure includes high voltage measurements with the electric powertrain system turned on. To avoid serious injury from electrical shocks while testing the high voltage cable, use insulated gloves, select a DC range of 500 V or more on your digital multimeter, and be careful not to contact each tester probes and not to contact any metal parts while you measure the high voltage cable.

NOTE: Before you troubleshoot, review the general troubleshooting information .

DTC Description	Confirmed DTC	Pending DTC	Freeze Frame
P1D8C Generator Motor Inverter Over Current	B	B	B

1. Problem verification

   -1. Test-drive the vehicle in the range of the recorded freeze data parameters.

   Freeze Data

   -2. Monitor the OBD STATUS for DTC P1D8C in the DTCs MENU with the HDS.

DTC Description	OBD STATUS
P1D8C Generator Motor Inverter Over Current	B

   Does the HDS indicate FAILED?

   YES

   Go to step 3.

   NO

   Go to step 2.

2. DTC check

   -1. Check for Pending or Confirmed DTCs with the HDS.

DTC Description	Confirmed DTC	Pending DTC	Freeze Frame
P1D8A Generator Motor Inverter Gate Line Open	B	B	B

   Is DTC P1D8A indicated?

   YES

   Go to the DTC P1D8A troubleshooting.

   NO

   Intermittent failure. The system is OK at this time. If the freeze data/on-board snapshot of this DTC is recorded, try to reproduce the failure under the same conditions with the freeze data/on-board snapshot.

3. Generator motor check

   -1. Turn the vehicle to the OFF (LOCK) mode.

   -2. **Remove the service plug** .

   -3. **Remove the PCU** .

   -4. At the generator motor 3-phase terminals side, measure the resistance between the following test points individually.

Test condition	Vehicle OFF (LOCK) mode
B	PCU: removed

   NOTICE:

   When measuring terminals, make sure to use an ohmmeter that is capable of measuring milli-ohm range. Make sure to take the measurement when the transmission temperature is about 68B°F (20B°C) (rated resistance value is at 68B°F (20B°C)) as the resistance figures may vary.

Connector	Terminals	Value (mΩ)
Generator motor high voltage terminals	U - V	About 31.7-33.7
	U - W	About 31.7-33.7

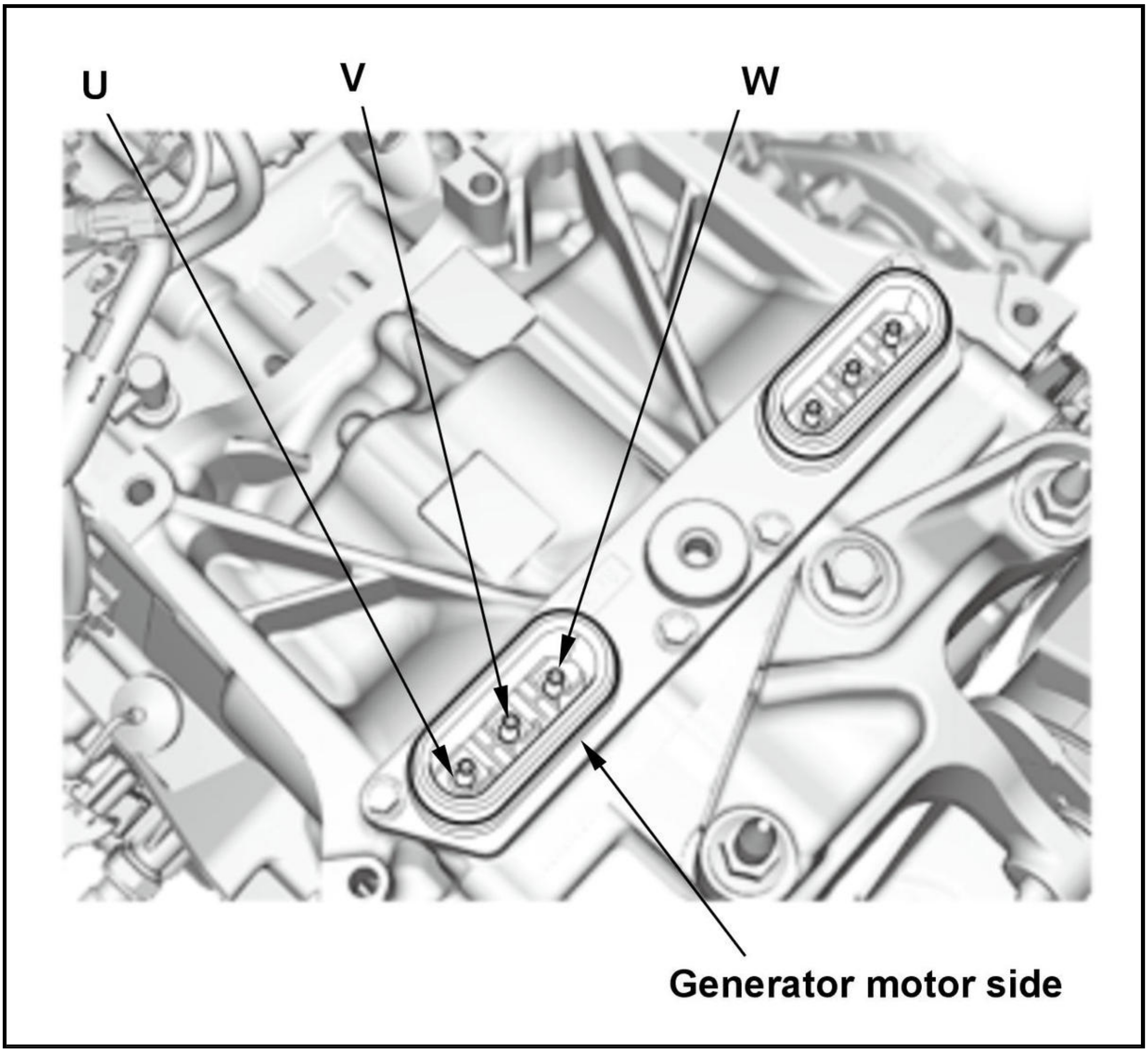

Is resistance value OK?

YES

Replace the PCU .

NO

Faulty generator motor. Replace the transmission (e-CVT) assembly .

DTC P1D8D (285)

DTC P1D8D : Generator Motor Inverter Short

WARNING:

This procedure includes high voltage measurements with the electric powertrain system turned on. To avoid serious injury from electrical shocks while testing the high voltage cable, use insulated gloves, select a DC range of 500 V or more on your digital multimeter, and be careful not to contact each tester probes and not to contact any metal parts while you measure the high voltage cable.

NOTE: Before you troubleshoot, review the general troubleshooting information .

DTC Description	Confirmed DTC	Pending DTC	Freeze Frame
P1D8D Generator Motor Inverter Short	B	B	B

DTC (Electric Powertrain)

1. Problem verification

   -1. Turn the vehicle to the ON mode.

   -2. Clear the DTC with the HDS.

   -3. Turn the vehicle to the OFF (LOCK) mode.

   -4. Turn the vehicle to the ON mode.

   -5. **Enter the maintenance mode** , then start the engine.

   -6. Check for Pending or Confirmed DTCs with the HDS.

DTC Description	Confirmed DTC	Pending DTC	Freeze Frame
P1D8D Generator Motor Inverter Short	B	B	B

   Is DTC P1D8D indicated?

   YES

   Go to step 4.

   NO

   Go to step 2.

2. DTC check

   -1. Check for Pending or Confirmed DTCs with the HDS.

DTC Description	Confirmed DTC	Pending DTC	Freeze Frame
P1D8A Generator Motor Inverter Gate Line Open	B	B	B

   Is DTC P1D8A indicated?

   YES

   Go to the DTC P1D8A troubleshooting.

   NO

   Intermittent failure. The system is OK at this time. If the freeze data/on-board snapshot of this DTC is recorded, try to reproduce the failure under the same conditions with the freeze data/on-board snapshot.

3. Generator motor motor rotor position sensor circuit check

   -1. **Do the generator motor motor rotor position sensor circuit check** .

   Is it OK?

   YES

Go to step 4.

NO

Repair an open or a short in the generator motor motor rotor position sensor circuit between the PCU and the generator motor motor rotor position sensor.

4. Generator motor check

-1. Turn the vehicle to the OFF (LOCK) mode.

-2. **Remove the service plug** .

-3. **Remove the PCU** .

-4. At the generator motor 3-phase terminals side, measure the resistance between the following test points individually.

Test condition	Vehicle OFF (LOCK) mode
B	PCU: removed

NOTICE:

When measuring terminals, make sure to use an ohmmeter that is capable of measuring milli-ohm range. Make sure to take the measurement when the transmission temperature is about 68B°F (20B°C) (rated resistance value is at 68B°F (20B°C)) as the resistance figures may vary.

Connector	Terminals	Value (mΩ)
Generator motor high voltage terminals	U - V	About 31.7-33.7
	U - W	About 31.7-33.7

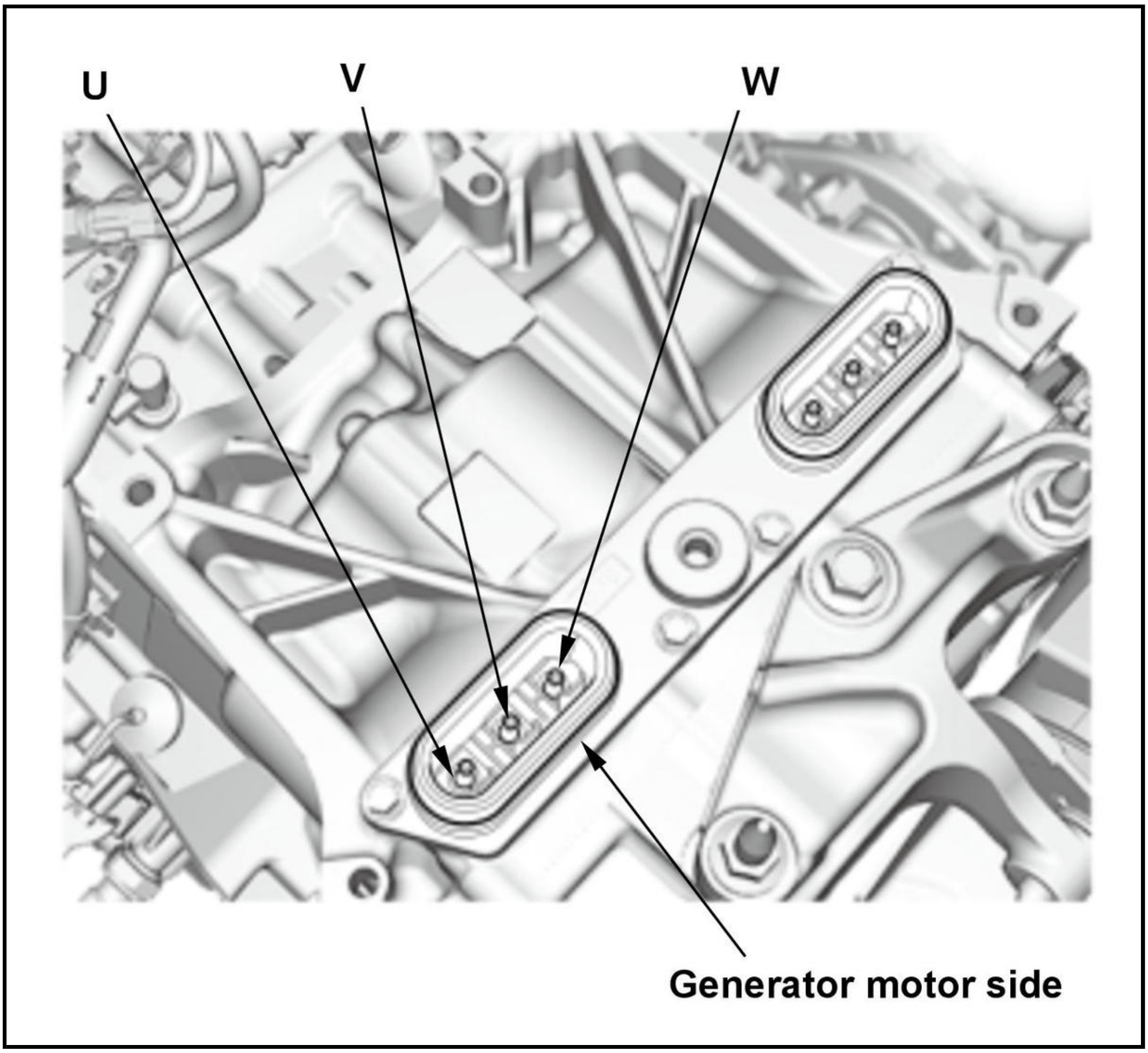

Is resistance value OK?

YES

Replace the PCU .

NO

Faulty generator motor. Replace the transmission (e-CVT) assembly .

DTC P1D92 (230)

DTC P1D92 : PCU Electric Coolant Pump Control Circuit

NOTE: Before you troubleshoot, review the general troubleshooting information .

DTC Description	Confirmed DTC	Pending DTC	Freeze Frame
P1D92 PCU Electric Coolant Pump Control Circuit	B	B	B

DTC (Electric Powertrain)

1. DTC check

   -1. Turn the vehicle to the ON mode.

   -2. Check for Pending or Confirmed DTCs with the HDS.

DTC Description	Confirmed DTC	Pending DTC	Freeze Frame
P1673 IGHLD Relay Circuit	B	B	B

Is DTC P1673 indicated?

YES

Go to the DTC P1673 troubleshooting .

NO

Go to step 2

2. Problem verification 1

   -1. Clear the DTC with the HDS.

   -2. Turn the vehicle to the OFF (LOCK) mode.

   -3. Turn the vehicle to the ON mode.

   -4. Select the ELECTRIC WATER PUMP TEST in the FUNCTION TEST with the HDS, then select START.

   Electric Water Pump Test

   -5. Wait 10 seconds.

   -6. Check for Pending or Confirmed DTCs with the HDS.

DTC Description	Confirmed DTC	Pending DTC	Freeze Frame
P1D92 PCU Electric Coolant Pump Control Circuit	B	B	B

Is DTC P1D92 indicated?

YES

Go to step 4.

NO

Go to step 3.

3. Problem verification 2

   -1. Turn the vehicle to the OFF (LOCK) mode.

   -2. Turn the vehicle to the ON mode.

   -3. Select the ELECTRIC WATER PUMP TEST in the FUNCTION TEST with the HDS, then select STOP.

   Electric Water Pump Test

   -4. Check for Pending or Confirmed DTCs with the HDS.

DTC Description	Confirmed DTC	Pending DTC	Freeze Frame
P1D92 PCU Electric Coolant Pump Control Circuit	B	B	B

Is DTC P1D92 indicated?

YES

Go to step 4.

NO

Intermittent failure. The system is OK at this time. If the freeze data/on-board snapshot of this DTC is recorded, try to reproduce the failure under the same conditions with the freeze data/on-board snapshot.

4. Fuse check

-1. Turn the vehicle to the OFF (LOCK) mode.

-2. Check the following fuse.

Fuse	**No. A13**

Is the fuse OK?

YES

Go to step 5.

NO

Replace the No. A13 fuse. Also check for a short to ground on the No. A13 fuse circuit if needed.

5. Determine possible failure area (PCU electric coolant pump relay circuit, others)

-1. Disconnect the following connector.

PCU electric coolant pump 4P connector

-2. Turn the vehicle to the ON mode.

-3. Measure the voltage between test points 1 and 2.

Test condition	Vehicle ON mode
B	PCU electric coolant pump 4P connector: disconnected
Test point 1	PCU electric coolant pump 4P connector (female terminals) No. 4: ①
Test point 2	Body ground

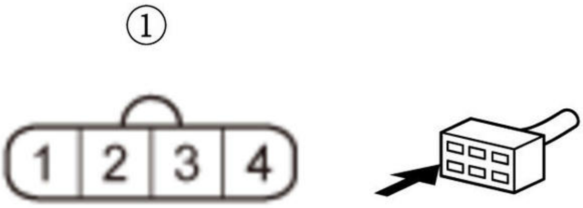

Is there battery voltage?

YES

Go to step 6.

NO

Go to step 11.

6. Open wire check (GND line)

-1. Turn the vehicle to the OFF (LOCK) mode.

-2. Measure the resistance between test points 1 and 2.

Test condition	Vehicle OFF (LOCK) mode
B	PCU electric coolant pump 4P connector: disconnected
Test point 1	PCU electric coolant pump 4P connector (female terminals) No. 1: ①
Test point 2	Body ground

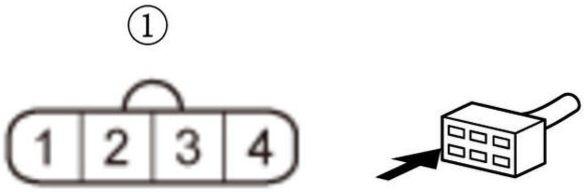

Is there 1.0 Ω or less?

YES

Go to step 7.

NO

Repair an open in the GND wire between the PCU electric coolant pump and G352.

7. Shorted wire check (NEWP/PCU_W/P_NEWP line)

-1. **Do the 12 volt battery terminal disconnection procedure** .

-2. Disconnect the following connector.

PCU 33P connector

-3. Measure the resistance between test points 1 and 2.

Test condition	Vehicle OFF (LOCK) mode
B	PCU electric coolant pump 4P connector: disconnected
B	PCU 33P connector: disconnected
Test point 1	**PCU 33P connector No. 7**
Test point 2	Body ground

Is there 1 MΩ or more?

YES

Go to step 8.

NO

Repair a short in the NEWP/PCU_W/P_NEWP wire between the PCU electric coolant pump and the PCU.

8. Open wire check (NEWP/PCU_W/P_NEWP line)

-1. Measure the resistance between test points 1 and 2.

Test condition	Vehicle OFF (LOCK) mode
B	PCU electric coolant pump 4P connector: disconnected
B	PCU 33P connector: disconnected
Test point 1	PCU electric coolant pump 4P connector (female terminals) No. 2: ①
Test point 2	**PCU 33P connector No. 7**

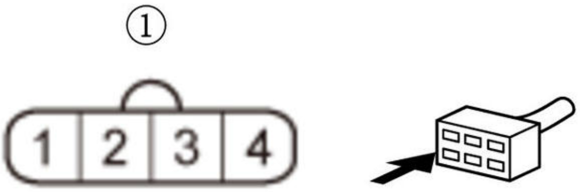

Is there 1.0 Ω or less?

YES

Go to step 9.

NO

Repair an open in the NEWP/PCU_W/P_NEWP wire between the PCU electric coolant pump and the PCU.

9. Shorted wire check (EWP/PCU_W/P_EWP line)

-1. Measure the resistance between test points 1 and 2.

Test condition	Vehicle OFF (LOCK) mode
B	PCU electric coolant pump 4P connector: disconnected
B	PCU 33P connector: disconnected
Test point 1	**PCU 33P connector No. 18**
Test point 1	Body ground

Is there 1 MΩ or more?

YES

Go to step 10.

NO

Repair a short in the EWP/PCU_W/P_EWP wire between the PCU electric coolant pump and the PCU.

10. Open wire check (EWP/PCU_W/P_EWP line)

-1. Measure the resistance between test points 1 and 2.

Test condition	Vehicle OFF (LOCK) mode
B	PCU electric coolant pump 4P connector: disconnected
B	PCU 33P connector: disconnected
Test point 1	PCU electric coolant pump 4P connector (female terminals) No. 3: ①
Test point 2	**PCU 33P connector No. 18**

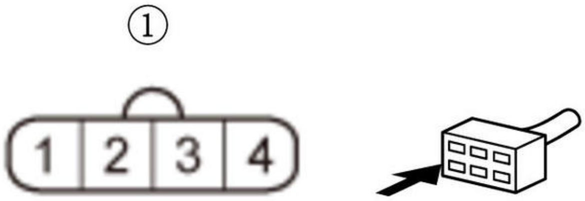

Is there 1.0 Ω or less?

YES

Replace the PCU electric coolant pump , then recheck. If DTC P1D92 is still indicated, **replace the PCU** .

NO

Repair an open in the EWP/PCU_W/P_EWP wire between the PCU electric coolant pump and the PCU.

11. Relay check

-1. Turn the vehicle to the OFF (LOCK) mode.

-2. **Remove the PCU electric coolant pump relay** .

-3. **Test the PCU electric coolant pump relay** .

Is the relay OK?

YES

Go to step 12.

NO

Replace the PCU electric coolant pump relay.

12. Open wire check (PCU_EWP_RLY_OUT line)

-1. Measure the resistance between test points 1 and 2.

Test condition	Vehicle OFF (LOCK) mode
	PCU electric coolant pump 4P connector: disconnected
B	PCU electric coolant pump relay: disconnected
Test point 1	PCU electric coolant pump relay 4P socket (female terminals) No. 2: ①
Test point 2	PCU electric coolant pump 4P connector (female terminals) No. 4: ②

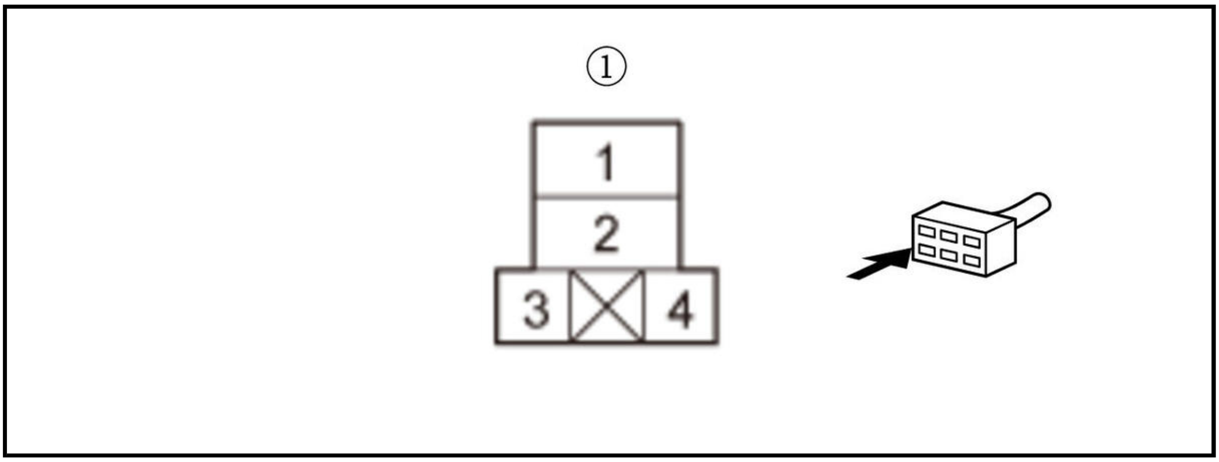

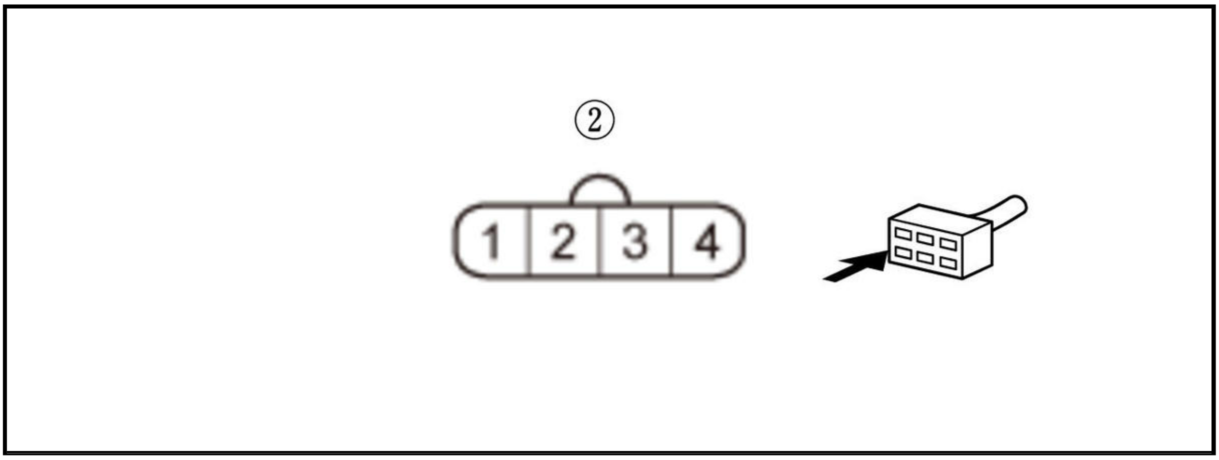

Is there 1.0 Ω or less?

YES

Go to step 13.

NO

Repair an open in the PCU_EWP_RLY_OUT wire between the PCU electric coolant pump relay and the PCU electric coolant pump.

13. Open wire check (IG_PCU_EWP/PCU_EWP_RLY_CL- line)

-1. **Do the 12 volt battery terminal disconnection procedure** .

-2. **Reinstall the PCU electric coolant pump relay** .

-3. Disconnect the following connector.

PCU 33P connector

-4. **Do the 12 volt battery terminal reconnection procedure** .

-5. Turn the vehicle to the ON mode.

-6. Measure the voltage between test points 1 and 2.

Test condition	Vehicle ON mode
B	PCU electric coolant pump 4P connector: disconnected

B	PCU 33P connector: disconnected
Test point 1	**PCU 33P connector No. 33**
Test point 2	Body ground

Is there battery voltage?

YES

Replace the PCU .

NO

Repair an open in the IG_PCU_EWP/PCU_EWP_RLY_CL- wire between the PCU electric coolant pump relay and the PCU.

DTC P1D93 (232)

DTC P1D93 : PCU Coolant Over Temperature

NOTE: Before you troubleshoot, **review the general troubleshooting information** .

DTC Description	Confirmed DTC	Pending DTC	Freeze Frame
P1D93 PCU Coolant Over Temperature	B	B	B

DTC (Electric Powertrain)

1. DTC check

-1. Turn the vehicle to the ON mode.

-2. Check for Pending or Confirmed DTCs with the HDS.

DTC Description	Confirmed DTC	Pending DTC	Freeze Frame
P0634 PCU Internal Temperature Too High	B	B	B
P0A3C Traction Motor Inverter Over Temperature	B	B	B
P0A3E Generator Motor Inverter Over Temperature	B	B	B
P0D32 DC-DC Converter Over Temperature (Traction Motor Control Module Detected)	B	B	B
P1D7B Reactor Over Temperature (Traction Motor Control Module Detected)	B	B	B
P1F3C VCU Over Temperature	B	B	B

Is DTC P0634, P0A3C, P0A3E, P0D32, P1D7B or P1F3C indicated?

YES

Go to the indicated DTC's troubleshooting.

NO

Go to step 2.

2. Problem verification

-1. Test-drive the vehicle in the range of the recorded freeze data parameters.

Freeze Data

-2. Monitor the OBD STATUS for DTC P1D93 in the DTCs MENU with the HDS.

DTC Description	OBD STATUS
P1D93 PCU Coolant Over Temperature	B

Does the HDS indicate FAILED?

YES

Go to step 3.

NO

If the HDS indicates PASSED, the system is OK at this time but has an intermittent failure. If the HDS indicates NOT COMPLETED, keep test-driving until an indication comes on. If the freeze data/on-board snapshot of this DTC is recorded, try to reproduce the failure under the same conditions with the freeze data/on-board snapshot.

3. PCU coolant circuit check

-1. **Do the PCU coolant circuit inspection** .

Is it OK?

YES

Check the cooling fan operation. If it is OK, **replace the PCU coolant temperature sensor** .

NO

Repair or replace parts as needed.

DTC P1D97 (366)

DTC P1D97 : Generator Motor Phase Current Sensors Multiple Failure

NOTE: Before you troubleshoot, **review the general troubleshooting information** .

DTC Description	Confirmed DTC	Pending DTC	Freeze Frame
P1D97 Generator Motor Phase Current Sensors Multiple Failure	B	B	B

DTC (Electric Powertrain)

1. Problem verification

-1. Turn the vehicle to the ON mode.

-2. Clear the DTC with the HDS.

-3. Turn the vehicle to the OFF (LOCK) mode.

-4. Turn the vehicle to the ON mode.

-5. Check for Pending or Confirmed DTCs with the HDS.

DTC Description	Confirmed DTC	Pending DTC	Freeze Frame
P1D97 Generator Motor Phase Current Sensors Multiple Failure	B	B	B

Is DTC P1D97 indicated?

YES

Replace the PCU .

NO

Intermittent failure. The system is OK at this time. If the freeze data/on-board snapshot of this DTC is recorded, try to reproduce the failure under the same conditions with the freeze data/on-board snapshot.

DTC P1D99 (228)

DTC P1D99 : PCU Electric Coolant Pump

NOTE: Before you troubleshoot, **review the general troubleshooting information** .

DTC Description	Confirmed DTC	Pending DTC	Freeze Frame
P1D99 PCU Electric Coolant Pump	B	B	B

DTC (Electric Powertrain)

1. Problem verification

-1. Turn the vehicle to the ON mode.

-2. Clear the DTC with the HDS.

-3. Turn the vehicle to the OFF (LOCK) mode.

-4. Turn the vehicle to the ON mode.

-5. Select the ELECTRIC WATER PUMP TEST in the Electric Powertrain FUNCTION TEST with the HDS. Then do the START.

Electric Water Pump Test

-6. Check for Pending or Confirmed DTCs with the HDS.

DTC Description	Confirmed DTC	Pending DTC	Freeze Frame
P1D99 PCU Electric Coolant Pump	B	B	B

Is DTC P1D99 indicated?

YES

Go to step 2.

NO

Intermittent failure. The system is OK at this time. If the freeze data/on-board snapshot of this DTC is recorded, try to reproduce the failure under the same conditions with the freeze data/on-board snapshot.

2. Fuse check

-1. Turn the vehicle to the OFF (LOCK) mode.

-2. Check the following fuse.

Fuse	**No. A13**

Is the fuse OK?

YES

Go to step 3.

NO

Replace the No. A13 fuse. Also check for a short to ground on the No. A13 fuse circuit if needed.

3. Relay check

-1. **Remove the PCU electric coolant pump relay** .

-2. **Test the PCU electric coolant pump relay** .

Is the relay OK?

YES

Go to step 4.

NO

Replace the PCU electric coolant pump relay.

4. Open wire check (IGA line)

-1. Turn the vehicle to the ON mode.

-2. Measure the voltage between test points 1 and 2.

Test condition	Vehicle ON mode PCU electric coolant pump relay: disconnected
Test point 1	PCU electric coolant pump relay 4P socket (female terminals) No. 3: ①

Test point 2	Body ground

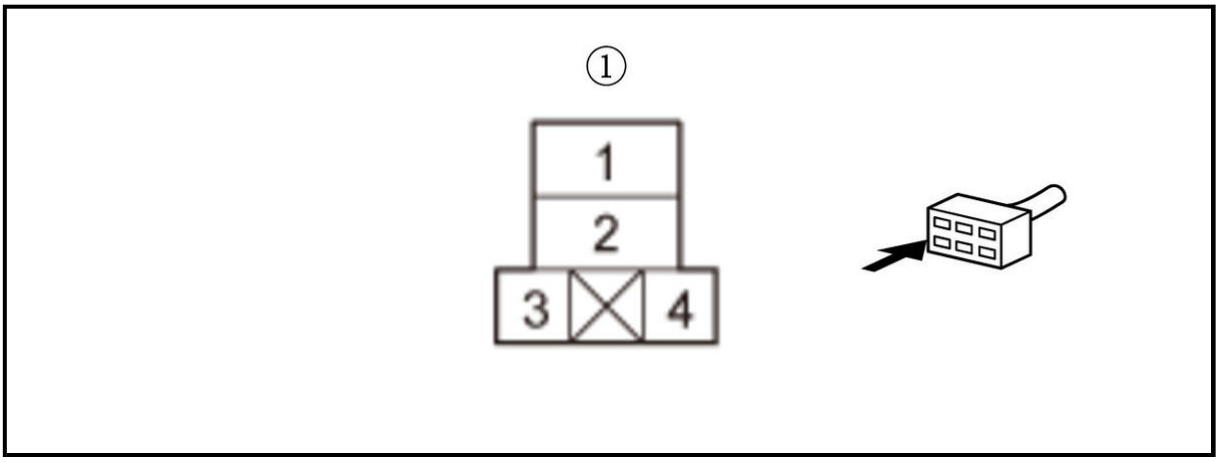

Is there battery voltage?

YES

Go to step 5.

NO

Repair an open in the IGA wire between the PCU electric coolant pump relay and the IGHLD1 relay.

5. Open wire check (PCU_EWP_RLY_OUT line)

-1. Turn the vehicle to the OFF (LOCK) mode.

-2. Measure the resistance between test points 1 and 2.

Test condition	Vehicle OFF (LOCK) mode
	PCU electric coolant pump relay: disconnected
B	PCU electric coolant pump 4P connector: disconnected
Test point 1	PCU electric coolant pump relay 4P socket (female terminals) No. 2: ①
Test point 2	PCU electric coolant pump 4P connector (female terminals) No. 4: ②

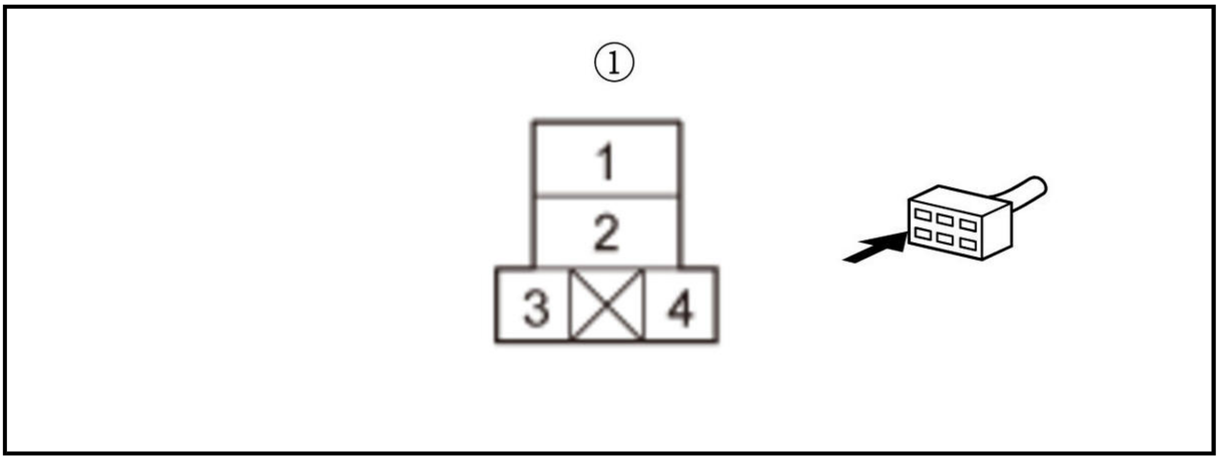

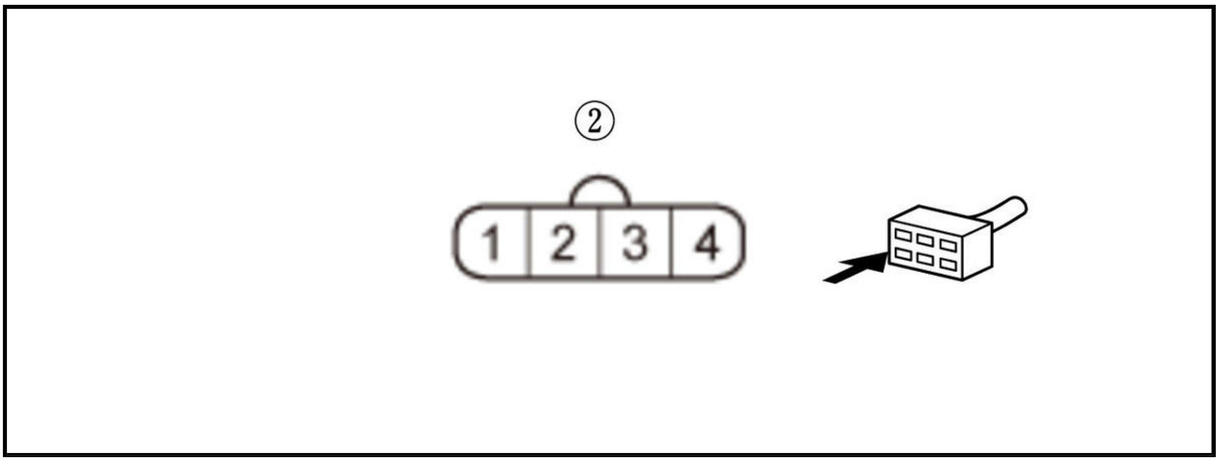

Is there 1.0 Ω or less?

YES

Go to step 6.

NO

Repair an open in the PCU_EWP_RLY_OUT wire between the PCU electric coolant pump relay and the PCU electric coolant pump.

6. Open wire check (PCU_EWP_RLY_CL-/IG_PCU_EWP line)

-1. **Do the 12 volt battery terminal disconnection procedure** .

-2. Disconnect the following connector.

PCU 33P connector

-3. Measure the resistance between test points 1 and 2.

Test condition	Vehicle OFF (LOCK) mode
	PCU electric coolant pump relay: disconnected
	PCU electric coolant pump 4P connector: disconnected
B	PCU 33P connector: disconnected
Test point 1	PCU electric coolant pump relay 4P socket (female terminals) No. 4: ①
Test point 2	**PCU 33P connector (female terminals) No. 33**

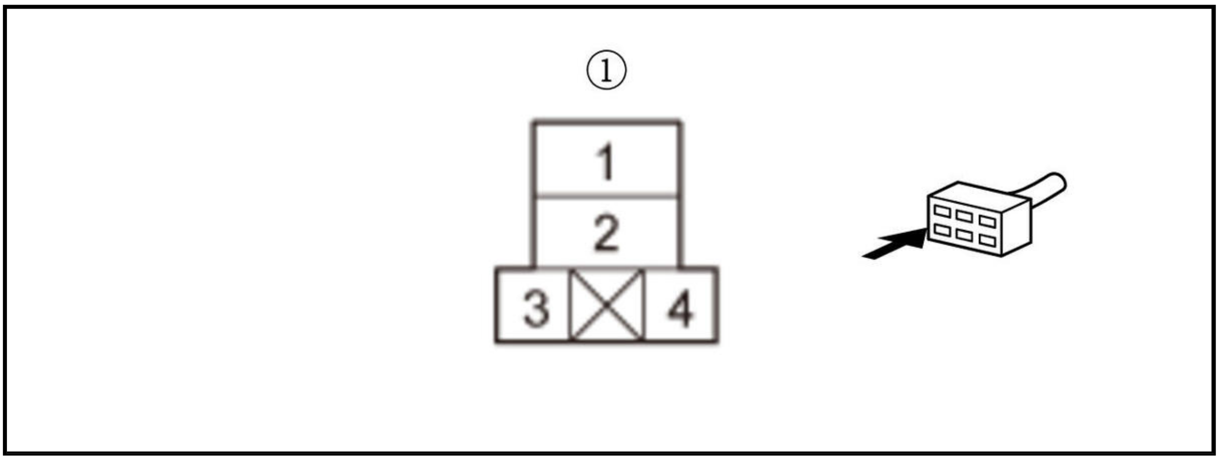

Is there 1.0 Ω or less?

YES

Go to step 7.

NO

Repair an open in the PCU_EWP_RLY_CL-/IG_PCU_EWP wire between the PCU electric coolant pump relay and the PCU.

7. Open wire check (PCU_W/P_NEWP/NEWP line)

-1. Turn the vehicle to the OFF (LOCK) mode.

-2. Measure the resistance between test points 1 and 2.

Test condition	Vehicle OFF (LOCK) mode
B	PCU electric coolant pump relay: disconnected
B	PCU electric coolant pump 4P connector: disconnected
B	PCU 33P connector: disconnected
Test point 1	PCU electric coolant pump 4P connector (female terminals) No. 2: ①
Test point 2	PCU 33P connector (female terminals) No. 7

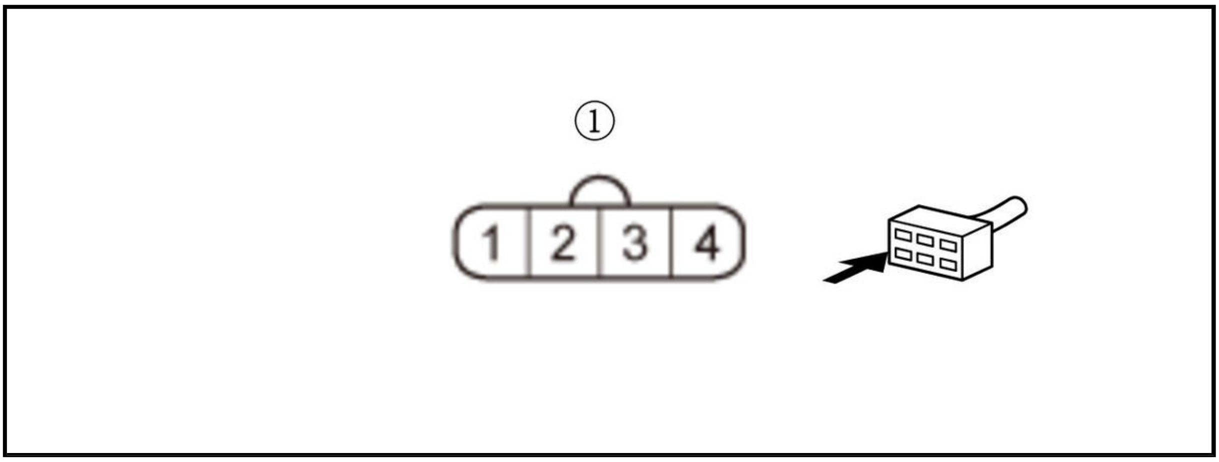

Is there 1.0 Ω or less?

YES

Go to step 8.

NO

Repair an open in the PCU_W/P_NEWP/NEWP wire between the PCU electric coolant pump and the PCU.

8. Shorted wire check (PCU_W/P_NEWP/NEWP line)

-1. Measure the resistance between test points 1 and 2.

Test condition	Vehicle OFF (LOCK) mode
B	PCU electric coolant pump relay: disconnected
B	PCU electric coolant pump 4P connector: disconnected
B	PCU 33P connector: disconnected
Test point 1	PCU electric coolant pump 4P connector (female terminals) No. 2: ①

Test point 2	Body ground

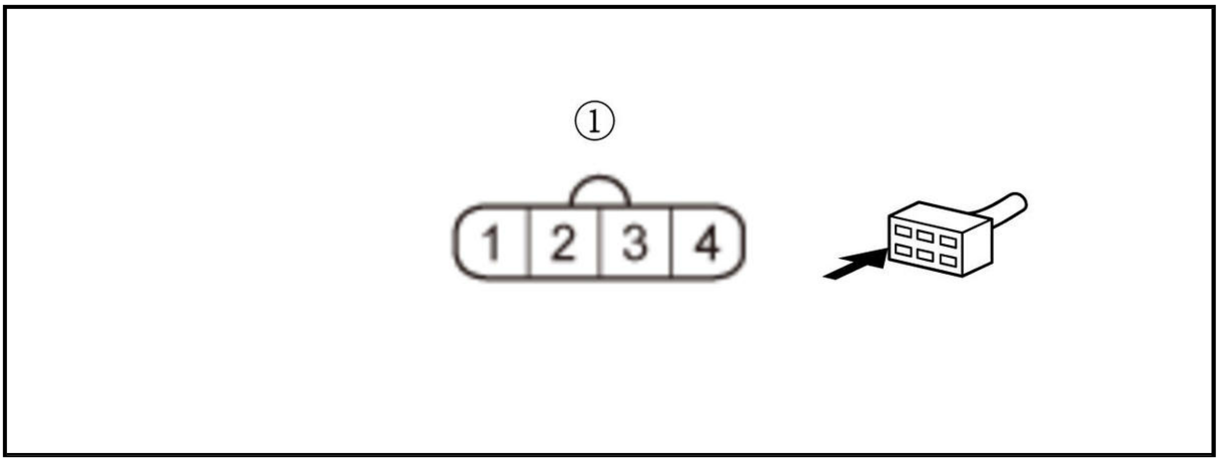

Is there 1 MΩ or more?

YES

Replace the PCU electric coolant pump , then recheck. If DTC P1D99 is still indicated, **replace the PCU** .

NO

Repair a short to ground in the PCU_W/P_NEWP/NEWP wire between the PCU electric coolant pump and the PCU.

DTC P1D9A (229)

DTC P1D9A : PCU Electric Coolant Pump Circuit

NOTE:

- Before you troubleshoot, **review the general troubleshooting information** .
- At a cold district, low concentration coolant can cause this DTC.
- After troubleshooting, **do the PCU coolant air bleeding procedure** .

DTC Description	Confirmed DTC	Pending DTC	Freeze Frame
P1D9A PCU Electric Coolant Pump Circuit	B	B	B

DTC (Electric Powertrain)

1. Problem verification

   -1. Turn the vehicle to the ON mode.

   -2. Clear the DTC with the HDS.

   -3. **Check the coolant level and the coolant concentration** .

   -4. Select the ELECTRIC WATER PUMP TEST in the Electric Powertrain FUNCTION TEST with the HDS. Then do the START.

   Electric Water Pump Test

   -5. Check for Pending or Confirmed DTCs with the HDS.

DTC Description	Confirmed DTC	Pending DTC	Freeze Frame
P1D9A PCU Electric Coolant Pump Circuit	B	B	B

Is DTC P1D9A indicated?

YES

The failure is duplicated. Go to step 2.

NO

Go to step 3.

2. Shorted wire check (PCU_W/P_EWP/EWP line)

-1. Turn the vehicle to the OFF (LOCK) mode.

-2. **Do the 12 volt battery terminal disconnection procedure** .

-3. Disconnect the following connectors.

PCU electric coolant pump 4P connector	
PCU 33P connector	

-4. Measure the resistance between test points 1 and 2.

Test condition	Vehicle OFF (LOCK) mode
B	PCU electric coolant pump 4P connector: disconnected
B	PCU 33P connector: disconnected
Test point 1	PCU electric coolant pump 4P connector (female terminals) No. 3: ①
Test point 2	Body ground

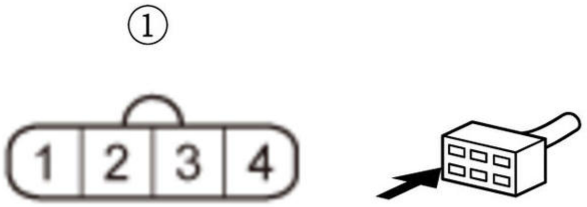

Is there 1 MΩ or more?

YES

Replace the PCU electric coolant pump , then recheck. If DTC P1D9A is still indicated, **replace the PCU** .

NO

Repair a short in the PCU_W/P_EWP/EWP wire between the PCU electric coolant pump and the PCU.

3. Cooling system check

-1. **Do the PCU coolant circuit inspection** .

Is it OK?

YES

Go to step 4.

NO

Repair or replace parts as needed.

4. PCU electric coolant pump operation check

-1. **Do the PCU coolant air bleeding procedure** .

-2. Turn the vehicle to the ON mode.

-3. Select the ELECTRIC WATER PUMP TEST in the Electric Powertrain FUNCTION TEST with the HDS. Then do the START.

Electric Water Pump Test

-4. Check the parameter(s) below with the HDS.

Signal	Threshold		Current conditions	
	Value	Unit	Value	Unit
PCU Electric Coolant Pump Speed (TRC)	1171 - 2894	RPM	B	B

Do the current condition(s) match the threshold?

YES

Intermittent failure, the system is OK at this time. If the freeze data/on-board snapshot of this DTC is recorded, try to reproduce the failure under the same conditions with the freeze data/on-board snapshot.

NO

Replace the PCU electric coolant pump , then recheck. If DTC P1D9A is still indicated, **replace the PCU** .

DTC P1D9D (335)

DTC P1D9D : VCU Temperature Sensor Circuit Range/Performance

NOTE: Before you troubleshoot, **review the general troubleshooting information** .

DTC Description	Confirmed DTC	Pending DTC	Freeze Frame
P1D9D VCU Temperature Sensor Circuit Range/Performance	B	B	B

DTC (Electric Powertrain)

1. Problem verification

-1. Turn the vehicle to the ON mode.

-2. Clear the DTC with the HDS.

-3. Turn the vehicle to the OFF (LOCK) mode.

-4. Turn the vehicle to the ON mode.

-5. Wait 1 minute.

NOTE: Make sure the engine is not running.

-6. Check for Pending or Confirmed DTCs with the HDS.

DTC Description	Confirmed DTC	Pending DTC	Freeze Frame
P1D9D VCU Temperature Sensor Circuit Range/Performance	B	B	B

Is DTC P1D9D indicated?

YES

Replace the PCU .

NO

Intermittent failure. The system is OK at this time. If the freeze data/on-board snapshot of this DTC is recorded, try to reproduce the failure under the same conditions with the freeze data/on-board snapshot.

DTC P1DA0 (437)

DTC P1DA0 : VCU Inverter Temperature Sensor Circuit Low

NOTE: Before you troubleshoot, **review the general troubleshooting information** .

DTC Description	Confirmed DTC	Pending DTC	Freeze Frame
P1DA0 VCU Inverter Temperature Sensor Circuit Low	B	B	B

DTC (Electric Powertrain)

1. Problem verification

-1. Turn the vehicle to the ON mode.

-2. Clear the DTC with the HDS.

-3. Turn the vehicle to the OFF (LOCK) mode.

-4. Turn the vehicle to the ON mode.

-5. Check for Pending or Confirmed DTCs with the HDS.

DTC Description	Confirmed DTC	Pending DTC	Freeze Frame
P1DA0 VCU Inverter Temperature Sensor Circuit Low	B	B	B

Is DTC P1DA0 indicated?

YES

Replace the PCU .

NO

Intermittent failure. The system is OK at this time. If the freeze data/on-board snapshot of this DTC is recorded, try to reproduce the failure under the same conditions with the freeze data/on-board snapshot.

DTC P1DA1 (438)

DTC P1DA1 : VCU Inverter Temperature Sensor Circuit High

NOTE: Before you troubleshoot, review the general troubleshooting information .

DTC Description	Confirmed DTC	Pending DTC	Freeze Frame
P1DA1 VCU Inverter Temperature Sensor Circuit High	B	B	B

DTC (Electric Powertrain)

1. Problem verification

    -1. Turn the vehicle to the ON mode.

    -2. Clear the DTC with the HDS.

    -3. Turn the vehicle to the OFF (LOCK) mode.

    -4. Turn the vehicle to the ON mode.

    -5. Check for Pending or Confirmed DTCs with the HDS.

DTC Description	Confirmed DTC	Pending DTC	Freeze Frame
P1DA1 VCU Inverter Temperature Sensor Circuit High	B	B	B

    Is DTC P1DA1 indicated?

    YES

    Replace the PCU .

    NO

    Intermittent failure. The system is OK at this time. If the freeze data/on-board snapshot of this DTC is recorded, try to reproduce the failure under the same conditions with the freeze data/on-board snapshot.

DTC P1DA4 (486)

DTC P1DA4 : VCU Inverter Short

NOTE: Before you troubleshoot, review the general troubleshooting information .

DTC Description	Confirmed DTC	Pending DTC	Freeze Frame
P1DA4 VCU Inverter Short	B	B	B

DTC (Electric Powertrain)

1. Problem verification

    -1. Turn the vehicle to the ON mode.

-2. Clear the DTC with the HDS.

-3. Turn the vehicle to the OFF (LOCK) mode.

-4. Raise the vehicle on a lift .

-5. Turn the vehicle to the READY TO DRIVE mode.

-6. Position to D, and test-drive at 50 mph (80 km/h) or more for 1 minute.

NOTE: Do not apply the brake hard when working on a running vehicle on a lift. It may cause some damage to the drive-line.

-7. Monitor the OBD STATUS for DTC P1DA4 in the DTCs MENU with the HDS.

DTC Description	OBD STATUS
P1DA4 VCU Inverter Short	B

Does the HDS indicate FAILED?

YES

Replace the PCU .

NO

If the HDS indicates PASSED, the system is OK at this time but has an intermittent failure. If the HDS indicates NOT COMPLETED, keep test-driving until an indication comes on. If the freeze data/on-board snapshot of this DTC is recorded, try to reproduce the failure under the same conditions with the freeze data/on-board snapshot.

DTC P1DA6 (443), P1DA8 (447), P1DAA (451)

DTC P1DA6 : VCU V1 Voltage Sensor Circuit Range/Performance

DTC P1DA8 : VCU V2M Voltage Sensor Circuit Range/Performance

DTC P1DAA : VCU V2S Voltage Sensor Circuit Range/Performance

NOTE: Before you troubleshoot, review the general troubleshooting information .

DTC Description	Confirmed DTC	Pending DTC	Freeze Frame
P1DA6 VCU V1 Voltage Sensor Circuit Range/Performance	B	B	B
P1DA8 VCU V2M Voltage Sensor Circuit Range/Performance	B	B	B
P1DAA VCU V2S Voltage Sensor Circuit Range/Performance	B	B	B

DTC (Electric Powertrain)

1. Problem verification

-1. Turn the vehicle to the ON mode.

-2. Clear the DTC with the HDS.

-3. Turn the vehicle to the OFF (LOCK) mode.

-4. Turn the vehicle to the READY TO DRIVE mode.

-5. Position to D, and release the brake pedal.

-6. Check for Pending or Confirmed DTCs with the HDS.

DTC Description	Confirmed DTC	Pending DTC	Freeze Frame
P1DA6 VCU V1 Voltage Sensor Circuit Range/Performance	B	B	B
P1DA8 VCU V2M Voltage Sensor Circuit Range/Performance	B	B	B
P1DAA VCU V2S Voltage Sensor Circuit Range/Performance	B	B	B

Is DTC P1DA6, P1DA8 and/or P1DAA indicated?

YES

Replace the PCU .

NO

Intermittent failure. The system is OK at this time. If the freeze data/on-board snapshot of this DTC is recorded, try to reproduce the failure under the same conditions with the freeze data/on-board snapshot.

DTC P1DD8 (439)

DTC P1DD8 : VCU Inverter Temperature Sensor Circuit

NOTE: Before you troubleshoot, **review the general troubleshooting information** .

DTC Description	Confirmed DTC	Pending DTC	Freeze Frame
P1DD8 VCU Inverter Temperature Sensor Circuit	B	B	B

DTC (Electric Powertrain)

1. Problem verification

-1. Turn the vehicle to the ON mode.

-2. Clear the DTC with the HDS.

-3. Turn the vehicle to the OFF (LOCK) mode.

-4. Turn the vehicle to the ON mode.

-5. Check for Pending or Confirmed DTCs with the HDS.

DTC Description	Confirmed DTC	Pending DTC	Freeze Frame
P1DD8 VCU Inverter Temperature Sensor Circuit	B	B	B

Is DTC P1DD8 indicated?

YES

Replace the PCU .

NO

Intermittent failure. The system is OK at this time. If the freeze data/on-board snapshot of this DTC is recorded, try to reproduce the failure under the same conditions with the freeze data/on-board snapshot.

DTC P1DD9 (1012)

DTC P1DD9 : VCU I1 Current Sensor Circuit

NOTE: Before you troubleshoot, **review the general troubleshooting information** .

DTC Description	Confirmed DTC	Pending DTC	Freeze Frame
P1DD9 VCU I1 Current Sensor Circuit	B	B	B

DTC (Electric Powertrain)

1. Problem verification

   -1. Turn the vehicle to the ON mode.

   -2. Clear the DTC with the HDS.

   -3. Turn the vehicle to the OFF (LOCK) mode.

   -4. Turn the vehicle to the ON mode.

   -5. Check for Pending or Confirmed DTCs with the HDS.

DTC Description	Confirmed DTC	Pending DTC	Freeze Frame
P1DD9 VCU I1 Current Sensor Circuit	B	B	B

Is DTC P1DD9 indicated?

YES

Replace the PCU .

NO

Intermittent failure. The system is OK at this time. If the freeze data/on-board snapshot of this DTC is recorded, try to reproduce the failure under the same conditions with the freeze data/on-board snapshot.

DTC P1DDB (361)

DTC P1DDB : Reactor Temperature Sensor Circuit

NOTE: Before you troubleshoot, **review the general troubleshooting information** .

DTC Description	Confirmed DTC	Pending DTC	Freeze Frame
P1DDB Reactor Temperature Sensor Circuit	B	B	B

DTC (Electric Powertrain)

1. Problem verification

   -1. Turn the vehicle to the ON mode.

   -2. Clear the DTC with the HDS.

-3. Turn the vehicle to the OFF (LOCK) mode.

-4. Turn the vehicle to the ON mode.

-5. Check for Pending or Confirmed DTCs with the HDS.

DTC Description	Confirmed DTC	Pending DTC	Freeze Frame
P1DDB Reactor Temperature Sensor Circuit	B	B	B

Is DTC P1DDB indicated?

YES

Replace the PCU .

NO

Intermittent failure. The system is OK at this time. If the freeze data/on-board snapshot of this DTC is recorded, try to reproduce the failure under the same conditions with the freeze data/on-board snapshot.

DTC P1DE3 (440)

DTC P1DE3 : VCU V1 Voltage Sensor Circuit High

NOTE: Before you troubleshoot, review the general troubleshooting information .

DTC Description	Confirmed DTC	Pending DTC	Freeze Frame
P1DE3 VCU V1 Voltage Sensor Circuit High	B	B	B

DTC (Electric Powertrain)

1. Problem verification

-1. Turn the vehicle to the ON mode.

-2. Clear the DTC with the HDS.

-3. Turn the vehicle to the OFF (LOCK) mode.

-4. Turn the vehicle to the ON mode.

-5. Check for Pending or Confirmed DTCs with the HDS.

DTC Description	Confirmed DTC	Pending DTC	Freeze Frame
P1DE3 VCU V1 Voltage Sensor Circuit High	B	B	B

Is DTC P1DE3 indicated?

YES

Replace the PCU .

NO

Intermittent failure. The system is OK at this time. If the freeze data/on-board snapshot of this DTC is recorded, try to reproduce the failure under the same conditions with the freeze data/on-board snapshot.

DTC P1DE4 (442)

DTC P1DE4 : VCU V1 Voltage Sensor Circuit

NOTE: Before you troubleshoot, **review the general troubleshooting information** .

DTC Description	Confirmed DTC	Pending DTC	Freeze Frame
P1DE4 VCU V1 Voltage Sensor Circuit	B	B	B

DTC (Electric Powertrain)

1. Problem verification

   -1. Turn the vehicle to the ON mode.

   -2. Clear the DTC with the HDS.

   -3. Turn the vehicle to the OFF (LOCK) mode.

   -4. Turn the vehicle to the ON mode.

   -5. Check for Pending or Confirmed DTCs with the HDS.

DTC Description	Confirmed DTC	Pending DTC	Freeze Frame
P1DE4 VCU V1 Voltage Sensor Circuit	B	B	B

   Is DTC P1DE4 indicated?

   YES

   Go to step 2.

   NO

   Intermittent failure. The system is OK at this time. If the freeze data/on-board snapshot of this DTC is recorded, try to reproduce the failure under the same conditions with the freeze data/on-board snapshot.

2. DTC check

   -1. Check for Pending or Confirmed DTCs with the HDS.

DTC Description	Confirmed DTC	Pending DTC	Freeze Frame
P0AE1 HV Battery Precharge Contactor Circuit	B	B	B
P0DA8 HV Battery Voltage/Motor Inverter Voltage Correlation	B	B	B

DTC Description	Confirmed DTC	Pending DTC	Freeze Frame
P1D65 HV System Shutdown (Collision Detection Signal Detected)	B	B	B

   Is DTC P0AE1, P0DA8, and/or P1D65 indicated?

   YES

   Go to the indicated DTC's troubleshooting.

   NO

   Replace the PCU .

DTC P1DE5 (444)

DTC P1DE5 : VCU V2M Voltage Sensor Circuit High

NOTE: Before you troubleshoot, **review the general troubleshooting information** .

DTC Description	Confirmed DTC	Pending DTC	Freeze Frame
P1DE5 VCU V2M Voltage Sensor Circuit High	B	B	B

DTC (Electric Powertrain)

1. Problem verification

   -1. Turn the vehicle to the ON mode.

   -2. Clear the DTC with the HDS.

   -3. Turn the vehicle to the OFF (LOCK) mode.

   -4. Turn the vehicle to the ON mode.

   -5. Check for Pending or Confirmed DTCs with the HDS.

DTC Description	Confirmed DTC	Pending DTC	Freeze Frame
P1DE5 VCU V2M Voltage Sensor Circuit High	B	B	B

   Is DTC P1DE5 indicated?

   YES

   Replace the PCU .

   NO

   Intermittent failure. The system is OK at this time. If the freeze data/on-board snapshot of this DTC is recorded, try to reproduce the failure under the same conditions with the freeze data/on-board snapshot.

DTC P1DE6 (446)

DTC P1DE6 : VCU V2M Voltage Sensor Circuit

NOTE: Before you troubleshoot, **review the general troubleshooting information** .

DTC Description	Confirmed DTC	Pending DTC	Freeze Frame
P1DE6 VCU V2M Voltage Sensor Circuit	B	B	B

DTC (Electric Powertrain)

1. Problem verification

   -1. Turn the vehicle to the ON mode.

   -2. Clear the DTC with the HDS.

   -3. Turn the vehicle to the OFF (LOCK) mode.

   -4. Turn the vehicle to the ON mode.

-5. Check for Pending or Confirmed DTCs with the HDS.

DTC Description	Confirmed DTC	Pending DTC	Freeze Frame
P1DE6 VCU V2M Voltage Sensor Circuit	B	B	B

Is DTC P1DE6 indicated?

YES

Go to step 2.

NO

Intermittent failure. The system is OK at this time. If the freeze data/on-board snapshot of this DTC is recorded, try to reproduce the failure under the same conditions with the freeze data/on-board snapshot.

2. DTC check

-1. Check for Pending or Confirmed DTCs with the HDS.

DTC Description	Confirmed DTC	Pending DTC	Freeze Frame
P0AE1 HV Battery Precharge Contactor Circuit	B	B	B
P0DA8 HV Battery Voltage/Motor Inverter Voltage Correlation	B	B	B

DTC Description	Confirmed DTC	Pending DTC	Freeze Frame
P1D65 HV System Shutdown (Collision Detection Signal Detected)	B	B	B

Is DTC P0AE1, P0DA8, and/or P1D65 indicated?

YES

Go to the indicated DTC's troubleshooting.

NO

Replace the PCU .

DTC P1DE7 (1014)

DTC P1DE7 : VCU V0 Voltage Sensor Circuit High

NOTE: Before you troubleshoot, **review the general troubleshooting information** .

DTC Description	Confirmed DTC	Pending DTC	Freeze Frame
P1DE7 VCU V0 Voltage Sensor Circuit High	B	B	B

DTC (Electric Powertrain)

1. Problem verification

-1. Turn the vehicle to the ON mode.

-2. Clear the DTC with the HDS.

-3. Turn the vehicle to the OFF (LOCK) mode.

-4. Turn the vehicle to the ON mode.

-5. Check for Pending or Confirmed DTCs with the HDS.

DTC Description	Confirmed DTC	Pending DTC	Freeze Frame
P1DE7 VCU V0 Voltage Sensor Circuit High	B	B	B

Is DTC P1DE7 indicated?

YES

Replace the PCU .

NO

Intermittent failure. The system is OK at this time. If the freeze data/on-board snapshot of this DTC is recorded, try to reproduce the failure under the same conditions with the freeze data/on-board snapshot.

DTC P1DE8 (1016)

DTC P1DE8 : VCU V0 Voltage Sensor Circuit

NOTE: Before you troubleshoot, review the general troubleshooting information .

DTC Description	Confirmed DTC	Pending DTC	Freeze Frame
P1DE8 VCU V0 Voltage Sensor Circuit	B	B	B

DTC (Electric Powertrain)

1. Problem verification

-1. Turn the vehicle to the ON mode.

-2. Clear the DTC with the HDS.

-3. Turn the vehicle to the OFF (LOCK) mode.

-4. Turn the vehicle to the ON mode.

-5. Check for Pending or Confirmed DTCs with the HDS.

DTC Description	Confirmed DTC	Pending DTC	Freeze Frame
P1DE8 VCU V0 Voltage Sensor Circuit	B	B	B

Is DTC P1DE8 indicated?

YES

Replace the PCU .

NO

Intermittent failure. The system is OK at this time. If the freeze data/on-board snapshot of this DTC is recorded, try to reproduce the failure under the same conditions with the freeze data/on-board snapshot.

DTC P1DE9 (1017)

DTC P1DE9 : VCU V0 Voltage Sensor Circuit Range/Performance

NOTE: Before you troubleshoot, review the general troubleshooting information .

DTC Description	Confirmed DTC	Pending DTC	Freeze Frame
P1DE9 VCU V0 Voltage Sensor Circuit Range/Performance	B	B	B

DTC (Electric Powertrain)

1. Problem verification

   -1. Turn the vehicle to the ON mode.

   -2. Clear the DTC with the HDS.

   -3. Turn the vehicle to the OFF (LOCK) mode.

   -4. **Raise the vehicle on a lift** .

   -5. Turn the vehicle to the READY TO DRIVE mode.

   -6. Position to D, and test-drive at 50 mph (80 km/h) or more for 1 minute.

   NOTE: Do not apply the brake hard when working on a running vehicle on a lift. It may cause some damage to the drive-line.

   -7. Monitor the OBD STATUS for DTC P1DE9 in the DTCs MENU with the HDS.

DTC Description	OBD STATUS
P1DE9 VCU V0 Voltage Sensor Circuit Range/Performance	B

   Does the HDS indicate FAILED?

   YES

   Replace the PCU .

   NO

   If the HDS indicates PASSED, the system is OK at this time but has an intermittent failure. If the HDS indicates NOT COMPLETED, keep test-driving until an indication comes on. If the freeze data/on-board snapshot of this DTC is recorded, try to reproduce the failure under the same conditions with the freeze data/on-board snapshot.

DTC P1DEA (1018)

DTC P1DEA : VCU V0 Voltage Control Failure

NOTE: Before you troubleshoot, **review the general troubleshooting information** .

DTC Description	Confirmed DTC	Pending DTC	Freeze Frame
P1DEA VCU V0 Voltage Control Failure	B	B	B

DTC (Electric Powertrain)

1. Problem verification

   -1. Turn the vehicle to the ON mode.

   -2. Clear the DTC with the HDS.

   -3. Turn the vehicle to the OFF (LOCK) mode.

-4. Raise the vehicle on a lift .

-5. Turn the vehicle to the READY TO DRIVE mode.

-6. Position to D, and test-drive at 50 mph (80 km/h) or more for 1 minute.

NOTE: Do not apply the brake hard when working on a running vehicle on a lift. It may cause some damage to the drive-line.

-7. Monitor the OBD STATUS for DTC P1DEA in the DTCs MENU with the HDS.

DTC Description	OBD STATUS
P1DEA VCU V0 Voltage Control Failure	B

Does the HDS indicate FAILED?

YES

Replace the PCU .

NO

If the HDS indicates PASSED, the system is OK at this time but has an intermittent failure. If the HDS indicates NOT COMPLETED, keep test-driving until an indication comes on. If the freeze data/on-board snapshot of this DTC is recorded, try to reproduce the failure under the same conditions with the freeze data/on-board snapshot.

DTC P1F3C (336)

DTC P1F3C : VCU Over Temperature

NOTE: Before you troubleshoot, review the general troubleshooting information .

DTC Description	Confirmed DTC	Pending DTC	Freeze Frame
P1F3C VCU Over Temperature	B	B	B

DTC (Electric Powertrain)

1. DTC check

-1. Turn the vehicle to the ON mode.

-2. Check for Pending or Confirmed DTCs with the HDS.

DTC Description	Confirmed DTC	Pending DTC	Freeze Frame
P1D92 PCU Coolant Electric Water Pump Control Circuit	B	B	B
P1D9A PCU Coolant Electric Water Pump Circuit	B	B	B

Is DTC P1D92 or P1D9A indicated?

YES

Go to the indicated DTC's troubleshooting.

NO

Go to step 2.

2. Problem verification

   -1. Test-drive the vehicle in the range of the recorded freeze data parameters.

   Freeze Data

   -2. Monitor the OBD STATUS for DTC P1F3C in the DTCs MENU with the HDS.

DTC Description	OBD STATUS
P1F3C VCU Over Temperature	B

   Does the HDS indicate FAILED?

   YES

   Go to step 3.

   NO

   If the HDS indicates PASSED, the system is OK at this time but has an intermittent failure. If the HDS indicates NOT COMPLETED, keep test-driving until an indication comes on. If the freeze data/on-board snapshot of this DTC is recorded, try to reproduce the failure under the same conditions with the freeze data/on-board snapshot.

3. PCU coolant circuit check

   -1. **Do the PCU coolant circuit inspection** .

   Is it OK?

   YES

   Check the cooling fan operation. If it is OK, **replace the PCU** .

   NO

   Repair or replace parts as needed.

DTC U0029 (107) (MOTOR CONTROL MODULE)

DTC U0029 : F-CAN Malfunction (Traction Motor Control Module Bus-Off)

NOTE: Before you troubleshoot, **review the general troubleshooting information** .

DTC Description	Confirmed DTC	Pending DTC	Freeze Frame
U0029 F-CAN Malfunction (Traction Motor Control Module Bus-Off)	B	B	B

DTC (Electric Powertrain)

1. Problem verification

   -1. Turn the vehicle to the ON mode.

   -2. Clear the DTC with the HDS.

   -3. Turn the vehicle to the OFF (LOCK) mode.

   -4. Turn the vehicle to the ON mode.

-5. Check for CAN gateway system DTCs with the HDS.

DTC Description	Confirmed DTC
B	B

DTC (CAN GATEWAY)

Are any DTCs indicated?

YES

The failure is duplicated. Go to the troubleshooting for CAN gateway system DTC(s) .

NO

Intermittent failure. The system is OK at this time. If the freeze data/on-board snapshot of this DTC is recorded, try to reproduce the failure under the same conditions with the freeze data/on-board snapshot.

DTC U0029-00, U0047-00 (VSA CONTROL UNIT)

DTC U0029-00 : CAN Communication Failure (Bus OFF Ch 1)

DTC U0047-00 : CAN Communication Failure (Bus OFF Ch 2)

NOTE: Before you troubleshoot, review the general troubleshooting information .

DTC Description	DTC
U0029-00 CAN Communication Failure (Bus OFF Ch 1)	B
U0047-00 CAN Communication Failure (Bus OFF Ch 2)	B

DTC (VSA)

1. Problem verification

-1. Turn the vehicle to the ON mode.

-2. Clear the DTC with the HDS.

-3. Turn the vehicle to the OFF (LOCK) mode, then to the READY TO DRIVE mode.

-4. Check for DTCs with the HDS.

DTC Description	DTC
U0029-00 CAN Communication Failure (Bus OFF Ch 1)	B
U0047-00 CAN Communication Failure (Bus OFF Ch 2)	B

Is DTC U0029-00 or U0047-00 indicated?

YES

The failure is duplicated. Go to step 2.

NO

Intermittent failure, the system is OK at this time. Refer to intermittent failures troubleshooting .

2. DTC check (CAN gateway system)

-1. Check for CAN gateway system DTCs with the HDS.

DTC Description	DTC
B	B

Are DTC(s) indicated?

YES

Go to indicated DTC's troubleshooting.

NO

Go to step 3.

3. F-CAN circuit communication check

-1. Select the FUNCTION TEST in the CAN gateway with the HDS, then select the F-CAN Bus Connected Unit Check.

F-CAN Bus Connected Unit Check

Which result is indicated?

VSA modulator-control unit (Bus B) is Not Available

Go to step 4.

VSA modulator-control unit (Bus C) is Not Available

Go to step 5.

VSA modulator-control unit (Bus B and C) is Available

Check for loose terminals and poor connections in the VSA modulator-control unit 46P connector. Check for any authorized service information related to the DTCs or symptoms you are troubleshooting. If they are OK, **replace the VSA modulator-control unit** .

4. Open wire check (F-CAN B_H, F-CAN B_L lines)

-1. Turn the vehicle to the OFF (LOCK) mode.

-2. Disconnect the following connectors.

VSA modulator-control unit 46P connector

CAN gateway 16P connector

-3. Measure the resistance between test points 1 and 2.

Test condition	Vehicle OFF (LOCK) mode
B	VSA modulator-control unit 46P connector: disconnected
B	CAN gateway 16P connector: disconnected
Test circuit 1	B
Test point 1	**VSA modulator-control unit 46P connector No. 40**
Test point 2	CAN gateway 16P connector (female terminals) No. 6: ①

Test circuit 2	B
Test point 1	**VSA modulator-control unit 46P connector No. 28**

Test point 2	CAN gateway 16P connector (female terminals) No. 14: ①

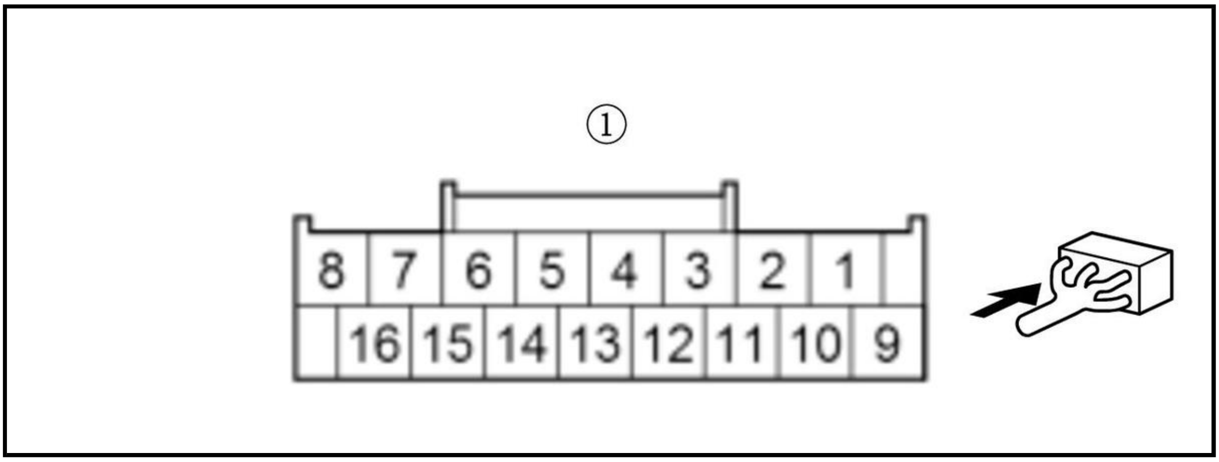

Is there 1.0 Ω or less?

YES

The F-CAN B_H and F-CAN B_L wires are OK. Check for loose terminals and poor connections in the VSA modulator-control unit 46P connector. Check for any authorized service information related to the DTCs or symptoms you are troubleshooting. If they are OK, **replace the VSA modulator-control unit** .

NO

Repair an open in the wire between the VSA modulator-control unit and the CAN gateway.

5. Open wire check (F-CAN C_H, F-CAN C_L lines)

-1. Turn the vehicle to the OFF (LOCK) mode.

-2. Disconnect the following connectors.

VSA modulator-control unit 46P connector
CAN gateway 16P connector

-3. Measure the resistance between test points 1 and 2.

Test condition	Vehicle OFF (LOCK) mode
B	VSA modulator-control unit 46P connector: disconnected
B	CAN gateway 16P connector: disconnected
Test circuit 1	B
Test point 1	**VSA modulator-control unit 46P connector No. 46**
Test point 2	CAN gateway 16P connector (female terminals) No. 5: ①

Test circuit 2	B
Test point 1	**VSA modulator-control unit 46P connector No. 34**
Test point 2	CAN gateway 16P connector (female terminals) No. 13: ①

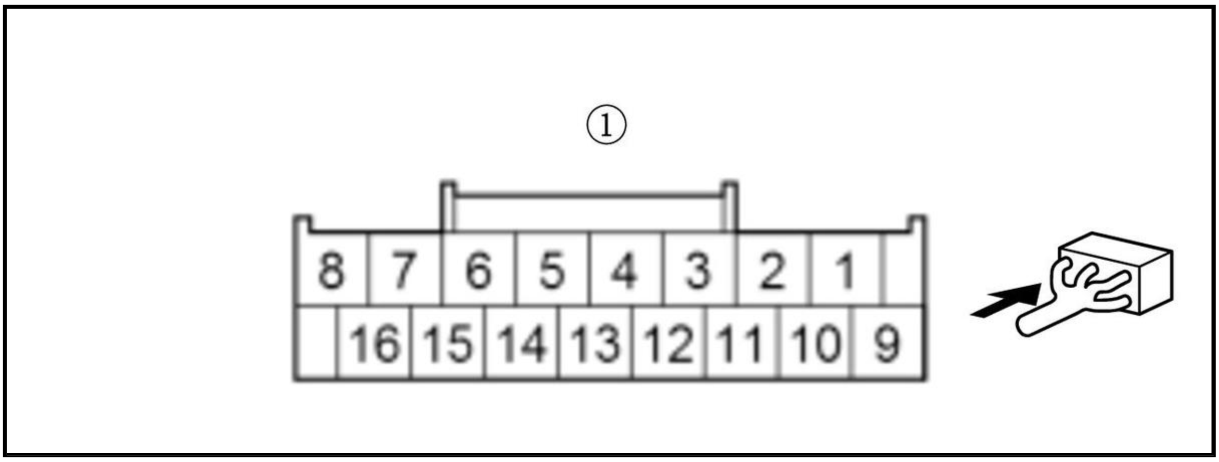

Is there 1.0 Ω or less?

YES

The F-CAN C_H and F-CAN C_L wires are OK. Check for loose terminals and poor connections in the VSA modulator-control unit 46P connector. Check for any authorized service information related to the DTCs or symptoms you are troubleshooting. If they are OK, **replace the VSA modulator-control unit** .

NO

Repair an open in the wire between the VSA modulator-control unit and the CAN gateway.

DTC U0038 (98) (MOTOR CONTROL MODULE)

DTC U0038 : EP-CAN Malfunction (Traction Motor Control Module Bus-Off)

NOTE: Before you troubleshoot, **review the general troubleshooting information** .

DTC Description	Confirmed DTC	Pending DTC	Freeze Frame
U0038 EP-CAN Malfunction (Traction Motor Control Module Bus-Off)	B	B	B

DTC (Electric Powertrain)

1. Problem verification

-1. Turn the vehicle to the ON mode.

-2. Clear the DTC with the HDS.

-3. Turn the vehicle to the OFF (LOCK) mode.

-4. Turn the vehicle to the ON mode, and wait 6 seconds.

-5. Check for Pending or Confirmed DTCs with the HDS.

DTC Description	Confirmed DTC	Pending DTC	Freeze Frame
U0038 EP-CAN Malfunction (Traction Motor Control Module Bus-Off)	B	B	B

Is DTC U0038 indicated?

YES

The failure is duplicated. Go to step 2.

NO

Intermittent failure. The system is OK at this time. If the freeze data/on-board snapshot of this DTC is recorded, try to reproduce the failure under the same conditions with the freeze data/on-board snapshot.

2. Shorted unit check (PCM)

-1. Turn the vehicle to the OFF (LOCK) mode.

-2. Jump the SCS line with the HDS, and wait more than 1 minute.

-3. Disconnect the following connector.

PCM connector A (50P)

-4. Turn the vehicle to the ON mode.

-5. Clear the DTC with the HDS.

-6. Turn the vehicle to the OFF (LOCK) mode.

-7. Turn the vehicle to the ON mode, and wait 6 seconds.

-8. Check for Pending or Confirmed DTCs with the HDS.

DTC Description	Confirmed DTC	Pending DTC	Freeze Frame
U0038 EP-CAN Malfunction (Traction Motor Control Module Bus-Off)	B	B	B

Is DTC U0038 indicated?

YES

Go to step 3.

NO

Check for any authorized service information related to the DTCs or symptoms you are troubleshooting, or **substitute a known-good PCM** .

3. Shorted unit check (battery condition monitor module)

-1. Turn the vehicle to the OFF (LOCK) mode.

-2. Remove the **service plug** and the **IPU cover** .

-3. Disconnect the following connector.

Battery condition monitor module connector E (32P)

-4. **Do the 12 volt battery terminal reconnection procedure** .

-5. Turn the vehicle to the ON mode.

-6. Clear the DTC with the HDS.

-7. Turn the vehicle to the OFF (LOCK) mode.

-8. Turn the vehicle to the ON mode, and wait 6 seconds.

-9. Check for Pending or Confirmed DTCs with the HDS.

DTC Description	Confirmed DTC	Pending DTC	Freeze Frame
U0038 EP-CAN Malfunction (Traction Motor Control Module Bus-Off)	B	B	B

Is DTC U0038 indicated?

YES

Go to step 4.

NO

Replace the battery condition monitor module .

4. Shorted unit check (SBW shifter control module)

-1. Turn the vehicle to the OFF (LOCK) mode.

-2. Disconnect the following connector.

SBW shifter control module 20P connector

-3. Turn the vehicle to the ON mode.

-4. Clear the DTC with the HDS.

-5. Turn the vehicle to the OFF (LOCK) mode.

-6. Turn the vehicle to the ON mode, and wait 6 seconds.

-7. Check for Pending or Confirmed DTCs with the HDS.

DTC Description	Confirmed DTC	Pending DTC	Freeze Frame
U0038 EP-CAN Malfunction (Traction Motor Control Module Bus-Off)	B	B	B

Is DTC U0038 indicated?

YES

Go to step 5.

NO

Check for any authorized service information related to the DTCs or symptoms you are troubleshooting, or **substitute a known-good SBW shifter assembly** .

5. Shorted unit check (park pawl actuator driver unit)

-1. Turn the vehicle to the OFF (LOCK) mode.

-2. Disconnect the following connector.

Park pawl actuator driver unit 26P connector

-3. Turn the vehicle to the ON mode.

-4. Clear the DTC with the HDS.

-5. Turn the vehicle to the OFF (LOCK) mode.

-6. Turn the vehicle to the ON mode, and wait 6 seconds.

-7. Check for Pending or Confirmed DTCs with the HDS.

DTC Description	Confirmed DTC	Pending DTC	Freeze Frame
U0038 EP-CAN Malfunction (Traction Motor Control Module Bus-Off)	B	B	B

Is DTC U0038 indicated?

YES

Go to step 6.

NO

Check for any authorized service information related to the DTCs or symptoms you are troubleshooting, or **substitute a known-good park pawl actuator driver unit** .

6. Shorted wire check (EP-CAN A_H line)

-1. Turn the vehicle to the OFF (LOCK) mode.

-2. **Do the 12 volt battery terminal disconnection procedure** .

-3. Disconnect the following connector.

PCU 33P connector

-4. Check for continuity between test points 1 and 2.

Test condition	Vehicle OFF (LOCK) mode
B	PCM connector A (50P): disconnected
B	Battery condition monitor module connector E (32P): disconnected
B	PCU 33P connector: disconnected
B	SBW shifter control module 20P connector: disconnected
B	Park pawl actuator driver unit 26P connector: disconnected
Test point 1	**PCU 33P connector No. 27**
Test point 2	Body ground

Is there 1 MΩ or more?

YES

Go to step 7.

NO

Repair a short in the EP-CAN A_H wire between the PCM, the battery condition monitor module, the SBW shifter control module, the park pawl actuator driver unit, and the PCU.

7. Shorted wire check (EP-CAN A_L line)

-1. Check for continuity between test points 1 and 2.

Test condition	Vehicle OFF (LOCK) mode

B	PCM connector A (50P): disconnected
B	Battery condition monitor module connector E (32P): disconnected
B	PCU 33P connector: disconnected
B	SBW shifter control module 20P connector: disconnected
B	Park pawl actuator driver unit 26P connector: disconnected
Test point 1	**PCU 33P connector No. 28**
Test point 2	Body ground

Is there 1 MΩ or more?

YES

Go to step 8.

NO

Repair a short in the EP-CAN A_L wire between the PCM, the battery condition monitor module, the SBW shifter control module 20P connector, the Park pawl actuator driver unit 26P connector, and the PCU.

8. Shorted wire check (EP-CAN A_H wire to EP-CAN A_L wire)

-1. Check for continuity between test points 1 and 2.

Test condition	Vehicle OFF (LOCK) mode
B	PCM connector A (50P): disconnected
B	Battery condition monitor module connector E (32P): disconnected
B	PCU 33P connector: disconnected
B	SBW shifter control module 20P connector: disconnected
B	Park pawl actuator driver unit 26P connector: disconnected
Test point 1	**PCU 33P connector No. 27**
Test point 2	**PCU 33P connector No. 28**

Is there 1 MΩ or more?

YES

The EP-CAN A_H wire and the EP-CAN A_L wire are OK. **Replace the PCU** .

NO

Repair a short in the EP-CAN A_H wire to the EP-CAN A_L wire between the PCM, the battery condition monitor module, the SBW shifter control module, the park pawl actuator driver unit, and the PCU.

DTC U0100 (MOTOR CONTROL MODULE)

DTC U0100 : CAN Malfunction (Traction Motor Control Module - PCM)

NOTE:

- Before you troubleshoot, **review the general troubleshooting information** .
- If any of the DTCs listed below are indicated at the same time as DTC U0100, troubleshoot those DTCs first, then recheck for U0100.
-
    - U1204, U1600

DTC Description	Confirmed DTC	Pending DTC	Freeze Frame
U0100 CAN Malfunction (Traction Motor Control Module - PCM)	B	B	B

DTC (Electric Powertrain)

1. DTC check

   -1. Turn the vehicle to the ON mode.

   -2. Check for Pending or Confirmed DTCs with the HDS.

DTC Description	Confirmed DTC	Pending DTC	Freeze Frame
B	B	B	B

   DTC (Electric Powertrain)

   Are DTC U0100 and any other DTCs indicated at the same time?

   YES

   Go to the indicated DTC's troubleshooting.

   NO

   Update the motor control module if it does not have the latest software .

DTC U0100-00, U0101-00, U0126-00, U0129-00, U0151-00, U0155-00 (VSA CONTROL UNIT)

DTC U0100-00 : CAN Communication Failure with ECM/ISU

DTC U0101-00 : CAN Communication Failure with PCM/TCM

DTC U0126-00 : CAN Communication Failure with Absolute Steering Wheel Angle Sensor

DTC U0129-00 : CAN Communication Failure with AHB/ESB/EBB

DTC U0151-00 : CAN Communication Failure with SRS

DTC U0155-00 : CAN Communication Failure with Meter

NOTE:

- **Before you troubleshoot, review the general troubleshooting information** .
- According to the detected DTC(s), confirm the control unit that the VSA modulator-control unit lost communication with has the proper power supply and ground connection. Refer to the input testing for that control unit if necessary.

DTC Description	DTC
U0100-00 CAN Communication Failure with ECM/ISU	B
U0101-00 CAN Communication Failure with PCM/TCM	B
U0126-00 CAN Communication Failure with Absolute Steering Wheel Angle Sensor	B
U0129-00 CAN Communication Failure with AHB/ESB/EBB	B
U0151-00 CAN Communication Failure with SRS	B
U0155-00 CAN Communication Failure with Meter	B

DTC (VSA)

1. DTC check (VSA modulator-control unit)

-1. Turn the vehicle to the ON mode.

-2. Clear the DTC with the HDS.

-3. Turn the vehicle to the OFF (LOCK) mode, then to the READY TO DRIVE mode.

-4. Test-drive the vehicle at 6 mph (10 km/h) or more.

NOTE: Drive the vehicle on the road, not on a lift.

-5. Check for DTCs with the HDS.

DTC Description	DTC
U0100-00 CAN Communication Failure with ECM/ISU	B
U0101-00 CAN Communication Failure with PCM/TCM	B
U0126-00 CAN Communication Failure with Absolute Steering Wheel Angle Sensor	B
U0129-00 CAN Communication Failure with AHB/ESB/EBB	B
U0151-00 CAN Communication Failure with SRS	B

DTC Description	DTC
U0155-00 CAN Communication Failure with Meter	B

Is DTC indicated?

YES

Go to step 2.

NO

Intermittent failure, the system is OK at this time. **Refer to intermittent failures troubleshooting** .

2. DTC check (CAN gateway system)

-1. Check for CAN gateway system DTCs with the HDS.

DTC Description	DTC
B	B

Are DTC(s) indicated?

YES

Go to indicated DTC's troubleshooting.

NO

Go to step 3.

3. F-CAN circuit communication check (Receiving control unit)

-1. Select the FUNCTION TEST in the CAN gateway with the HDS, then select the F-CAN Bus Connected Unit Check.

F-CAN Bus Connected Unit Check

Which result is indicated?

VSA modulator-control unit (Bus B) is Not Available

Go to step 4.

VSA modulator-control unit (Bus C) is Not Available

Go to step 5.

VSA modulator-control unit (Bus B and C) is Available

Go to step 6.

4. Open wire check (F-CAN B_H, F-CAN B_L lines)

-1. Turn the vehicle to the OFF (LOCK) mode.

-2. Disconnect the following connectors.

VSA modulator-control unit 46P connector
CAN gateway 16P connector

-3. Measure the resistance between test points 1 and 2.

Test condition	Vehicle OFF (LOCK) mode
B	VSA modulator-control unit 46P connector: disconnected
B	CAN gateway 16P connector: disconnected
Test circuit 1	B
Test point 1	**VSA modulator-control unit 46P connector No. 40**
Test point 2	CAN gateway 16P connector (female terminals) No. 6: ①

Test circuit 2	B
Test point 1	**VSA modulator-control unit 46P connector No. 28**
Test point 2	CAN gateway 16P connector (female terminals) No. 14: ①

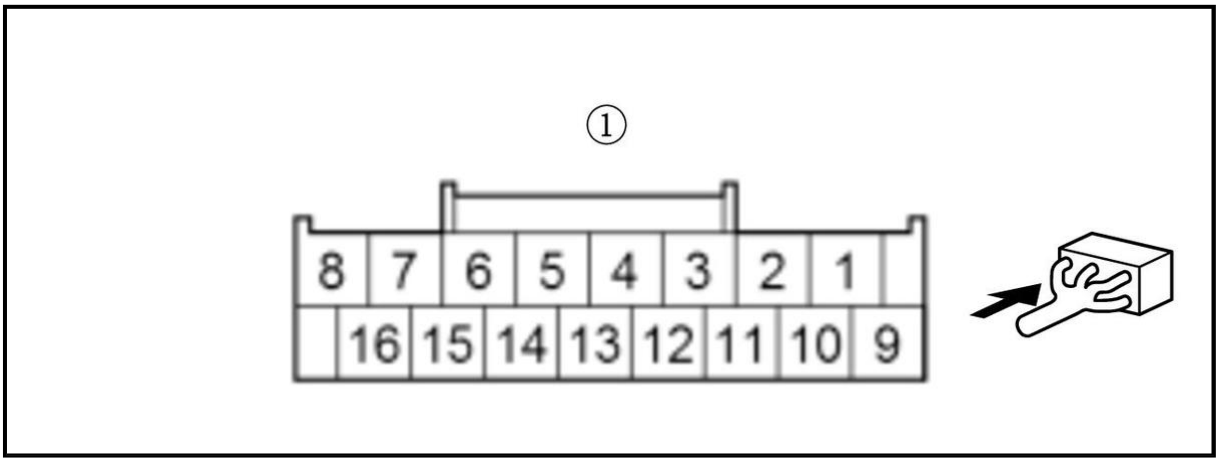

Is there 1.0 Ω or less?

YES

The F-CAN B_H and F-CAN B_L wires are OK. Check for loose terminals and poor connections in the VSA modulator-control unit 46P connector. Check for any authorized service information related to the DTCs or symptoms you are troubleshooting. If they are OK, **replace the VSA modulator-control unit** .

NO

Repair an open in the wire between the VSA modulator-control unit and the CAN gateway.

5. Open wire check (F-CAN C_H, F-CAN C_L lines)

-1. Turn the vehicle to the OFF (LOCK) mode.

-2. Disconnect the following connectors.

VSA modulator-control unit 46P connector
CAN gateway 16P connector

-3. Measure the resistance between test points 1 and 2.

Test condition	Vehicle OFF (LOCK) mode
B	VSA modulator-control unit 46P connector: disconnected
B	CAN gateway 16P connector: disconnected
Test circuit 1	B
Test point 1	**VSA modulator-control unit 46P connector No. 46**
Test point 2	CAN gateway 16P connector (female terminals) No. 5: ①

Test circuit 2	B
Test point 1	**VSA modulator-control unit 46P connector No. 34**
Test point 2	CAN gateway 16P connector (female terminals) No. 13: ①

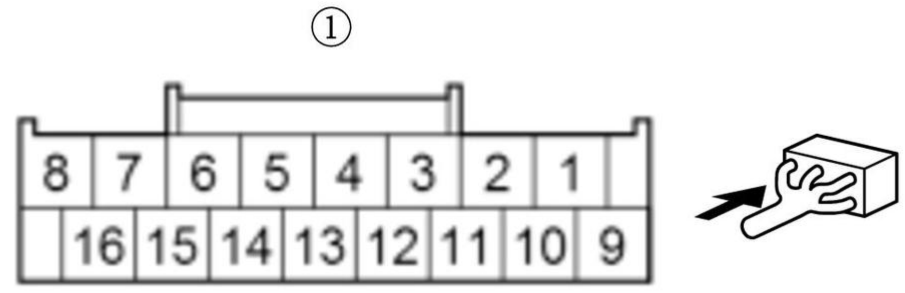

Is there 1.0 Ω or less?

YES

The F-CAN C_H and F-CAN C_L wires are OK. Check for loose terminals and poor connections in the VSA modulator-control unit 46P connector. Check for any authorized service information related to the DTCs or symptoms you are troubleshooting. If they are OK, **replace the VSA modulator-control unit** .

NO

Repair an open in the wire between the VSA modulator-control unit and the CAN gateway.

6. F-CAN circuit communication check (Transmitting control unit)

-1. Select the FUNCTION TEST in the CAN gateway with the HDS, then select the F-CAN Bus Connected Unit Check.

F-CAN Bus Connected Unit Check

-2. According to the detected DTC on the following table, make sure that the transmitting control unit detects the CAN gateway Bus channel(s) normally.

DTC	Transmitting control unit	Detected CAN gateway Bus channel(s) at normal
U0100-00	PCM	A, B
U0101-00	PCM	A, B
U0126-00	EPS control unit	C
U0129-00	Electric servo brake control unit	B, C
U0151-00	SRS unit	C
U0155-00	Gauge control module	D

Is it detected normally?

Detected normal

Intermittent failure, the system is OK at this time. **Refer to intermittent failures troubleshooting** .

U0100-00: PCM (Bus A) is Not Available

Go to step 7.

U0100-00: PCM (Bus B) is Not Available

Go to step 8.

U0101-00: PCM (Bus A) is Not Available

Go to step 7.

U0101-00: PCM (Bus B) is Not Available

Go to step 8.

U0126-00: EPS control unit (Bus C) is Not Available

Go to step 9.

U0129-00: Electric servo brake control unit (Bus B) is Not Available

Go to step 8.

U0129-00: Electric servo brake control unit (Bus C) is Not Available

Go to step 9.

U0151-00: SRS unit (Bus C) is Not Available

Go to step 9.

U0155-00: Gauge control module (Bus D) is Not Available

Go to step 10.

7. Open wire check (F-CAN A_H, F-CAN A_L lines)

-1. Turn the vehicle to the OFF (LOCK) mode.

-2. Disconnect the following connectors according to the detected DTC.

DTC	Connector
B	CAN gateway 16P connector
U0100-00	PCM connector A (50P)
U0101-00	PCM connector A (50P)

NOTE: Jump the SCS line with the HDS, and wait more than 1 minute when disconnecting the PCM connector.

SCS Short

-3. Measure the resistance between test points 1 and 2.

Test condition	Vehicle OFF (LOCK) mode
B	Transmitting control unit connector(s) for indicated DTCs: disconnected
B	CAN gateway 16P connector: disconnected

DTC	Circuit name	Test point 1 (Receiving control unit)		Test point 2 (Transmitting control unit)	
		Connector	Terminal	Connector	Terminal
U0100-00	F-CAN A_H	CAN gateway 16P connector (female terminals): ①	No. 3	**PCM connector A (50P)**	No. 37
	F-CAN A_L		No. 11		No. 36
U0101-00	F-CAN A_H	CAN gateway 16P connector (female terminals): ①	No. 3	**PCM connector A (50P)**	No. 37
	F-CAN A_L		No. 11		No. 36

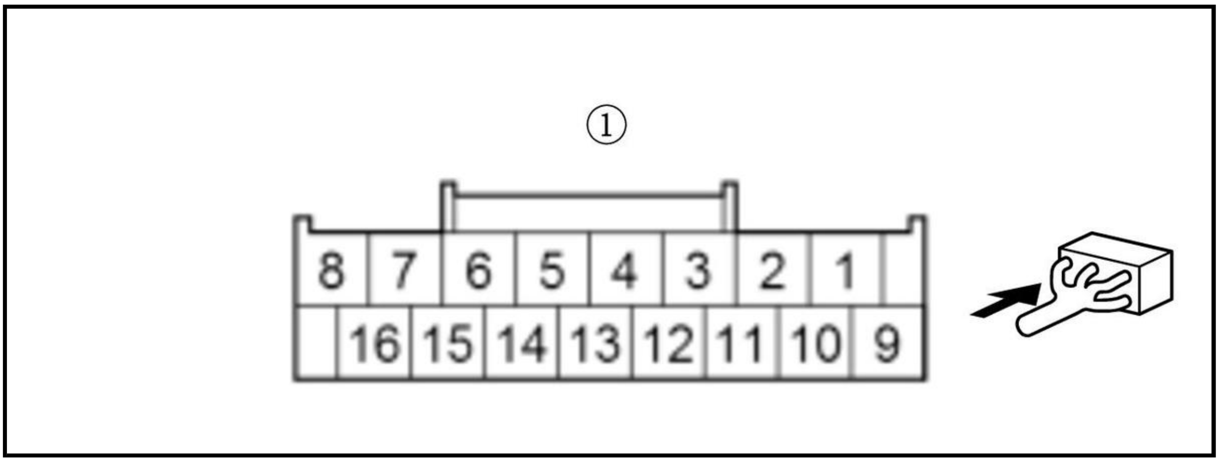

Is there 1.0 Ω or less?

YES

The F-CAN A_H and F-CAN A_L wires are OK. Check for any authorized service information related to the DTCs or symptoms you are troubleshooting. According to the detected DTC on the following table, replace the correspond control unit.

DTC	Transmitting Control Unit
U0100-00	**PCM**
U0101-00	**PCM**

NO

Repair an open in the wire between the receiving control unit and the transmitting control unit.

8. Open wire check (F-CAN B_H, F-CAN B_L lines)

-1. Turn the vehicle to the OFF (LOCK) mode.

-2. Disconnect the following connectors according to the detected DTC.

DTC	Connector
B	CAN gateway 16P connector
U0100-00	PCM connector A (50P)
U0101-00	PCM connector A (50P)
U0129-00	Electric servo brake control unit 22P connector

NOTE: Jump the SCS line with the HDS, and wait more than 1 minute when disconnecting the PCM connector.

SCS Short

-3. Measure the resistance between test points 1 and 2.

Test condition	Vehicle OFF (LOCK) mode
B	Transmitting control unit connector(s) for indicated DTCs: disconnected
B	CAN gateway 16P connector: disconnected

DTC	Circuit name	Test point 1 (Receiving control unit)		Test point 2 (Transmitting control unit)	
		Connector	Terminal	Connector	Terminal
U0100-00	F-CAN B_H	CAN gateway 16P connector (female terminals): ①	No. 6	**PCM connector A (50P)**	No. 39
	F-CAN B_L		No. 14		No. 38
U0101-00	F-CAN B_H	CAN gateway 16P connector (female terminals): ①	No. 6	**PCM connector A (50P)**	No. 39
	F-CAN B_L		No. 14		No. 38
U0129-00	F-CAN B_H	CAN gateway 16P connector (female terminals): ①	No. 6	**Electric servo brake control unit 22P connector**	No. 15
	F-CAN B_L		No. 14		No. 14

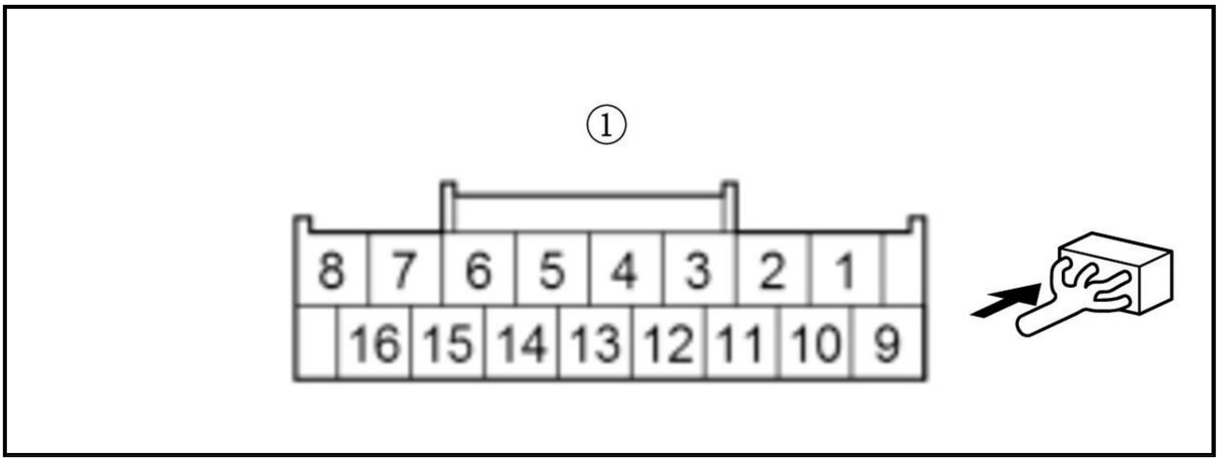

Is there 1.0 Ω or less?

YES

The F-CAN B_H and F-CAN B_L wires are OK. Check for any authorized service information related to the DTCs or symptoms you are troubleshooting. According to the detected DTC on the following table, replace the correspond control unit.

DTC	Transmitting Control Unit
U0100-00	**PCM**
U0101-00	**PCM**
U0129-00	**Electric servo brake control unit/pedal feel simulator**

NO

Repair an open in the wire between the receiving control unit and the transmitting control unit.

9. Open wire check (F-CAN C_H, F-CAN C_L lines)

-1. Turn the vehicle to the OFF (LOCK) mode.

-2. Disconnect the following connectors according to the detected DTC.

DTC	Connector
B	CAN gateway 16P connector
U0126-00	EPS control unit connector B (6P)
U0129-00	Electric servo brake control unit 22P connector
U0151-00	SRS unit connector A (39P)

NOTE: Before disconnecting the SRS unit connector, **do the 12 volt battery terminal disconnection procedure** and wait for at least 3 minutes.

-3. Measure the resistance between test points 1 and 2.

Test condition	Vehicle OFF (LOCK) mode
B	Transmitting control unit connector(s) for indicated DTCs: disconnected
B	CAN gateway 16P connector: disconnected

DTC	Circuit name	Test point 1 (Receiving control unit)		Test point 2 (Transmitting control unit)	
		Connector	Terminal	Connector	Terminal
U0126-00	F-CAN C_H	CAN gateway 16P connector (female	No. 5	**EPS control unit connector B (6P)**	No. 1

DTC	Circuit name	Test point 1 (Receiving control unit)		Test point 2 (Transmitting control unit)	
		Connector	Terminal	Connector	Terminal
	F-CAN C_L	terminals): ①	No. 13		No. 3
U0129-00	F-CAN C_H	CAN gateway 16P connector (female terminals): ①	No. 5	**Electric servo brake control unit 22P connector**	No. 19
	F-CAN C_L		No. 13		No. 18
U0151-00	F-CAN C_H	CAN gateway 16P connector (female terminals): ①	No. 5	**SRS unit connector A (39P)**	No. 34
	F-CAN C_L		No. 13		No. 35

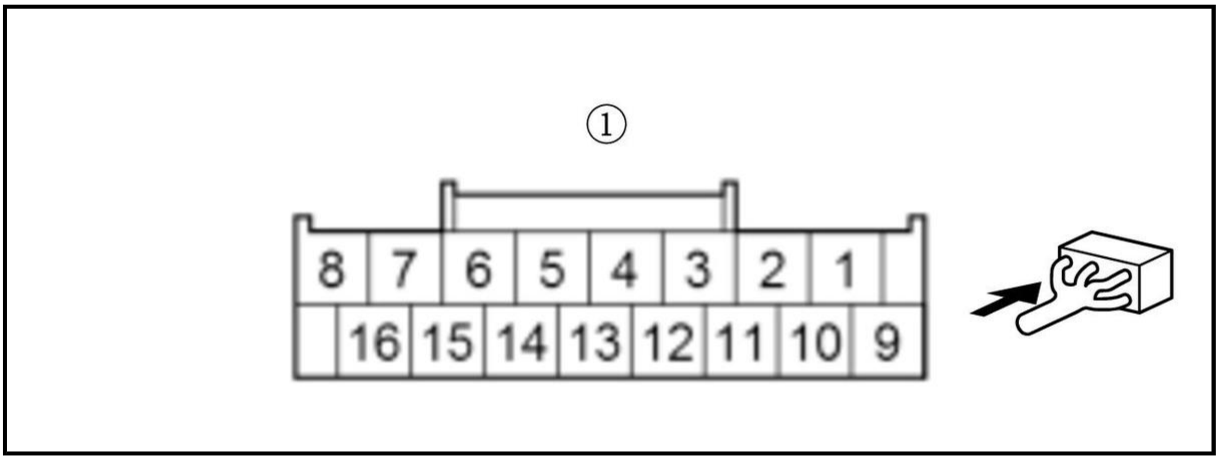

Is there 1.0 Ω or less?

YES

The F-CAN C_H and F-CAN C_L wires are OK. Check for any authorized service information related to the DTCs or symptoms you are troubleshooting. According to the detected DTC on the following table, replace the correspond control unit.

DTC	Transmitting Control Unit
U0126-00	**EPS motor/control unit**
U0129-00	**Electric servo brake control unit/pedal feel simulator**
U0151-00	**SRS unit**

NO

Repair an open in the wire between the receiving control unit and the transmitting control unit.

10. Open wire check (F-CAN D_H, F-CAN D_L lines)

-1. Turn the vehicle to the OFF (LOCK) mode.

-2. Disconnect the following connectors according to the detected DTC.

DTC	Connector
B	CAN gateway 16P connector
U0155-00	Gauge control module connector A (32P)

-3. Measure the resistance between test points 1 and 2.

Test condition	Vehicle OFF (LOCK) mode

B	Transmitting control unit connector(s) for indicated DTCs: disconnected
B	CAN gateway 16P connector: disconnected

DTC	Circuit name	Test point 1 (Receiving control unit)		Test point 2 (Transmitting control unit)	
		Connector	Terminal	Connector	Terminal
U0155-00	F-CAN D_H	CAN gateway 16P connector (female terminals): ①	No. 7	Gauge control module connector A (32P)	No. 19
	F-CAN D_L		No. 15		No. 20

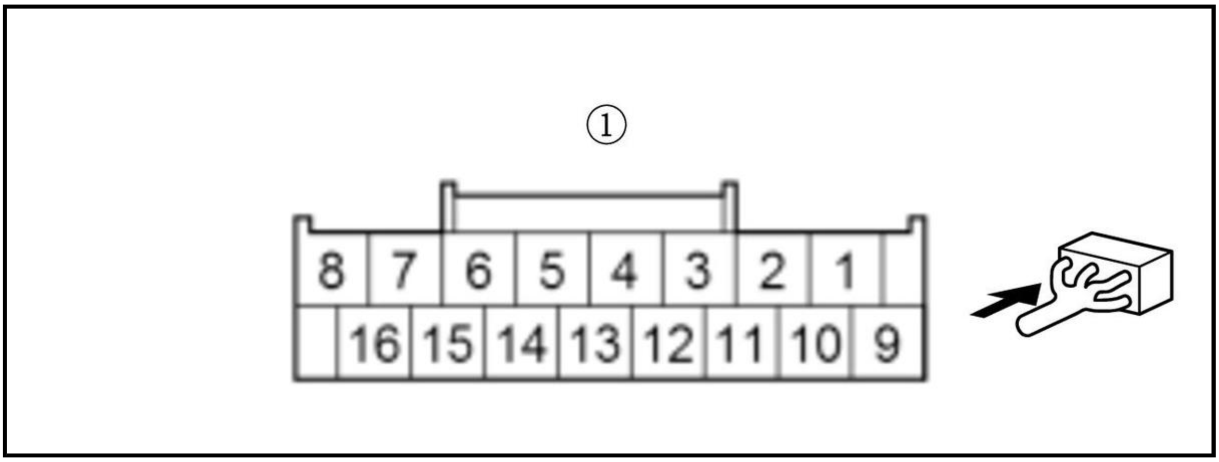

Is there 1.0 Ω or less?

YES

The F-CAN D_H and F-CAN D_L wires are OK. Check for any authorized service information related to the DTCs or symptoms you are troubleshooting. According to the detected DTC on the following table, replace the correspond control unit.

DTC	Transmitting Control Unit
U0155-00	Gauge control module

NO

Repair an open in the wire between the receiving control unit and the transmitting control unit.

DTC U0111 (MOTOR CONTROL MODULE)

DTC U0111 : CAN Malfunction (Traction Motor Control Module - Battery Condition Monitor Module)

NOTE:

- Before you troubleshoot, review the general troubleshooting information .
- If any of the DTCs listed below are indicated at the same time as DTC U0111, troubleshoot those DTCs first, then recheck for U0111.
-
    - U1206, U1603

DTC Description	Confirmed DTC	Pending DTC	Freeze Frame
U0111 CAN Malfunction (Traction Motor Control Module - Battery Condition Monitor Module)	B	B	B

DTC (Electric Powertrain)

1. DTC check

-1. Turn the vehicle to the ON mode.

-2. Check for Pending or Confirmed DTCs with the HDS.

DTC Description	Confirmed DTC	Pending DTC	Freeze Frame
B	B	B	B

DTC (Electric Powertrain)

Are DTC U0111 and any other DTCs indicated at the same time?

YES

Go to the indicated DTC's troubleshooting.

NO

Update the motor control module if it does not have the latest software .

DTC U0146 (305) (MOTOR CONTROL MODULE)

DTC U0146 : F-CAN Malfunction (Traction Motor Control Module - CAN Gateway)

NOTE: Before you troubleshoot, **review the general troubleshooting information** .

DTC Description	Confirmed DTC	Pending DTC	Freeze Frame
U0146 F-CAN Malfunction (Traction Motor Control Module - CAN Gateway)	B	B	B

DTC (Electric Powertrain)

1. Problem verification

-1. Turn the vehicle to the ON mode.

-2. Clear the DTC with the HDS.

-3. Turn the vehicle to the OFF (LOCK) mode.

-4. Turn the vehicle to the ON mode.

-5. Check for Pending or Confirmed DTCs with the HDS.

DTC Description	Confirmed DTC	Pending DTC	Freeze Frame
U0146 F-CAN Malfunction (Traction Motor Control Module - CAN Gateway)	B	B	B

Is DTC U0146 indicated?

YES

Go to step 2.

NO

Intermittent failure. The system is OK at this time. If the freeze data/on-board snapshot of this DTC is recorded, try to reproduce the failure under the same conditions with the freeze data/on-board snapshot.

2. CAN gateway system DTCs check

-1. Check for CAN gateway system DTCs with the HDS.

DTC Description	Confirmed DTC
B	B

DTC (CAN GATEWAY)

Are any DTCs indicated?

YES

Go to the troubleshooting for CAN gateway system DTC(s) .

NO

Go to step 3.

3. Open wire check (F-CAN A_H line, F-CAN A_L line)

-1. Turn the vehicle to the OFF (LOCK) mode.

-2. **Do the 12 volt battery terminal disconnection procedure** .

-3. Disconnect the following connectors.

CAN gateway 16P connector
PCU 33P connector

-4. Measure the resistance between test points 1 and 2.

Test condition	Vehicle OFF (LOCK) mode
B	CAN gateway 16P connector: disconnected
B	PCU 33P connector: disconnected
Test point 1	CAN gateway 16P connector (female terminals) No. 3: ①
Test point 2	**PCU 33P connector No. 5**

Test point 1	CAN gateway 16P connector (female terminals) No. 11: ①
Test point 2	**PCU 33P connector No. 6**

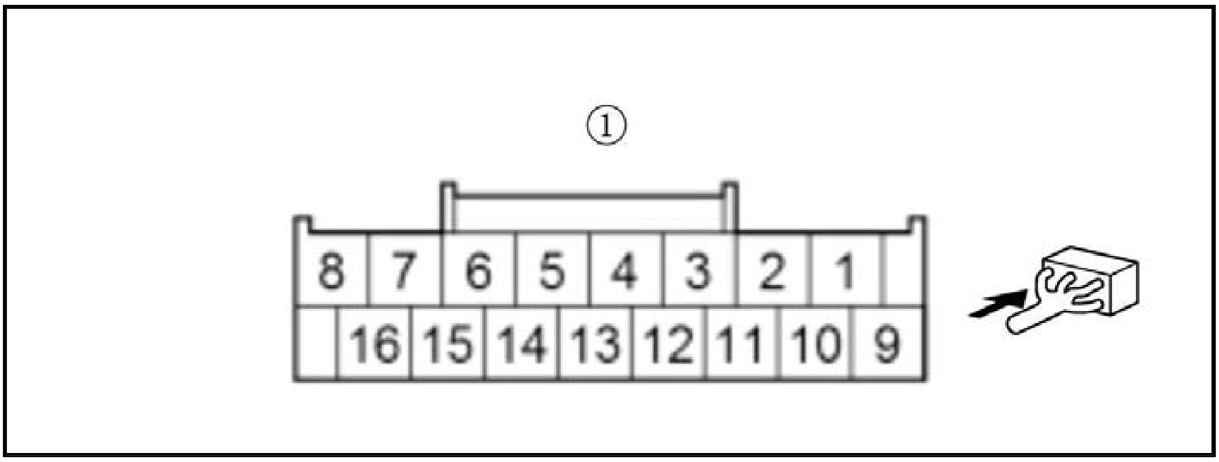

Is there 1.0 Ω or less?

YES

The F-CAN A_H wire and the F-CAN A_L wire are OK. **Replace the PCU** .

NO

Repair an open in the F-CAN A_H wire or the F-CAN A_L wire between the CAN gateway and the PCU.

DTC U0311 (123) (MOTOR CONTROL MODULE)

DTC U0311 : Traction Motor Control Module Programming Error (Version Mismatch)

NOTE: Before you troubleshoot, **review the general troubleshooting information** .

DTC Description	Confirmed DTC	Pending DTC	Freeze Frame
U0311 Traction Motor Control Module Programming Error (Version Mismatch)	B	B	B

DTC (Electric Powertrain)

1. Problem verification

-1. Turn the vehicle to the ON mode.

-2. Clear the DTC with the HDS.

-3. Turn the vehicle to the OFF (LOCK) mode.

-4. Turn the vehicle to the ON mode.

-5. **Do the motor control module update procedure** .

-6. Check for Pending or Confirmed DTCs with the HDS.

DTC Description	Confirmed DTC	Pending DTC	Freeze Frame
U0311 Traction Motor Control Module Programming Error (Version Mismatch)	B	B	B

Is DTC U0311 indicated?

YES

Replace the PCU .

NO

The update is complete. If any other Pending or Confirmed DTCs are indicated, go to the indicated DTC's troubleshooting.

DTC U0401-68 (VSA CONTROL UNIT)

DTC U0401-68 : (ECM Failure)

NOTE: Before you troubleshoot, review the general troubleshooting information .

DTC Description	DTC
U0401-68 (ECM Failure)	B

DTC (VSA)

1. Problem verification

   -1. Turn the vehicle to the ON mode.

   -2. Clear the DTC with the HDS.

   -3. Turn the vehicle to the OFF (LOCK) mode, then to the READY TO DRIVE mode.

   -4. Check for DTCs with the HDS.

DTC Description	DTC
U0401-68 (ECM Failure)	B

   Is DTC U0401-68 indicated?

   YES

   The failure is duplicated. Go to PGM-FI system troubleshooting .

   NO

   Intermittent failure, the system is OK at this time. Refer to intermittent failures troubleshooting .

DTC U0402-68 (VSA CONTROL UNIT)

DTC U0402-68 : (TCM Failure)

NOTE: Before you troubleshoot, review the general troubleshooting information .

DTC Description	DTC
U0402-68 (TCM Failure)	B

DTC (VSA)

1. Problem verification

   -1. Turn the vehicle to the ON mode.

   -2. Clear the DTC with the HDS.

   -3. Turn the vehicle to the OFF (LOCK) mode, then to the READY TO DRIVE mode.

-4. Check for DTCs with the HDS.

DTC Description	DTC
U0402-68 (TCM Failure)	B

Is DTC U0402-68 indicated?

YES

The failure is duplicated. Go to PGM-FI system troubleshooting .

NO

Intermittent failure, the system is OK at this time. Refer to intermittent failures troubleshooting .

DTC U0418-68 (VSA CONTROL UNIT)

DTC U0418-68 : (ESB/EBB Failure)

NOTE: Before you troubleshoot, review the general troubleshooting information .

DTC Description	DTC
U0418-68 (ESB/EBB Failure)	B

DTC (VSA)

1. Problem verification

-1. Turn the vehicle to the ON mode.

-2. Clear the DTC with the HDS.

-3. Turn the vehicle to the OFF (LOCK) mode, then to the READY TO DRIVE mode.

-4. Check for DTCs with the HDS.

DTC Description	DTC
U0418-68 (ESB/EBB Failure)	B

Is DTC U0418-68 indicated?

YES

The failure is duplicated. Go to electric servo brake system troubleshooting .

NO

Intermittent failure, the system is OK at this time. Refer to intermittent failures troubleshooting .

DTC U1204 (95), U1206 (64) (MOTOR CONTROL MODULE)

DTC U1204 : EP-CAN Malfunction (Traction Motor Control Module - PCM)

DTC U1206 : EP-CAN Malfunction (Traction Motor Control Module - Battery Condition Monitor Module)

NOTE:

- Before you troubleshoot, review the general troubleshooting information .

- According to the detected DTC(s), check for the power circuit and the ground circuit of the control unit which cannot communicate with the motor control module.

DTC Description	Confirmed DTC	Pending DTC	Freeze Frame
U1204 EP-CAN Malfunction (Traction Motor Control Module - PCM)	B	B	B
U1206 EP-CAN Malfunction (Traction Motor Control Module - Battery Condition Monitor Module)	B	B	B

DTC (Electric Powertrain)

1. Problem verification

   -1. Turn the vehicle to the ON mode.

   -2. Clear the DTC with the HDS.

   -3. Turn the vehicle to the OFF (LOCK) mode.

   -4. Turn the vehicle to the ON mode.

   -5. Check for Pending or Confirmed DTCs with the HDS.

DTC Description	Confirmed DTC	Pending DTC	Freeze Frame
U1204 EP-CAN Malfunction (Traction Motor Control Module - PCM)	B	B	B
U1206 EP-CAN Malfunction (Traction Motor Control Module - Battery Condition Monitor Module)	B	B	B

   Is DTC U1204 or DTC U1206 indicated?

   YES

   Go to step 2.

   NO

   Intermittent failure. The system is OK at this time. If the freeze data/on-board snapshot of this DTC is recorded, try to reproduce the failure under the same conditions with the freeze data/on-board snapshot.

2. Open wire check (EP-CAN A_H line, EP-CAN A_L line)

   -1. Turn the vehicle to the OFF (LOCK) mode.

   -2. DTC U1204: Jump the SCS line with the HDS, and wait more than 1 minute.

   -3. **Do the 12 volt battery terminal disconnection procedure** .

   -4. DTC U1206: Remove the **service plug** and the **IPU cover** .

   -5. Disconnect the following connectors.

PCU 33P connector
DTC U1204: PCM connector A (50P)
DTC U1206: Battery condition monitor module connector E (32P)

-6. Measure the resistance between test points 1 and 2.

Test condition	Vehicle OFF (LOCK) mode
B	PCU 33P connector: disconnected
B	Transmitting control unit connector(s) for indicated DTCs: disconnected

DTC	Circuit name	Test point 1 (Receiving control unit)		Test point 2 (Transmitting control unit)	
		Connector	Terminal	Connector	Terminal
U1204	EP-CAN A_H	PCU 33P connector	No. 27	PCM connector A (50P)	No. 21
	EP-CAN A_L		No. 28		No. 20
U1206	EP-CAN A_H	PCU 33P connector	No. 27	Battery condition monitor module connector E (32P)	No. 11
	EP-CAN A_L		No. 28		No. 10

Is there 1.0 Ω or less?

YES

The EP-CAN A_H wire and the EP-CAN A_L wire are OK.

According to the detected DTC on the following table, substitute, or replace the corresponding unit.

DTC	Operation for transmitting control unit
U1204	Replace the PCM .
U1206	Replace the battery condition monitor module .

NO

Repair an open in the EP-CAN A_H wire or the EP-CAN A_L wire between the transmitting control unit and the PCU.

DTC U1600 (102), U1603 (100) (MOTOR CONTROL MODULE)

DTC U1600 : F-CAN Malfunction (Traction Motor Control Module - PCM)

DTC U1603 : F-CAN Malfunction (Traction Motor Control Module - Battery Condition Monitor Module)

NOTE:

- Before you troubleshoot, review the general troubleshooting information .
- According to the detected DTC(s), check for the power circuit and the ground circuit of the control unit which cannot communicate with the motor control module.

DTC Description	Confirmed DTC	Pending DTC	Freeze Frame
U1600 F-CAN Malfunction (Traction Motor Control Module - PCM)	B	B	B
U1603 F-CAN Malfunction (Traction Motor Control Module - Battery Condition Monitor Module)	B	B	B

DTC (Electric Powertrain)

1. CAN gateway system DTCs check

-1. Turn the vehicle to the ON mode.

-2. Clear the DTC with the HDS.

-3. Turn the vehicle to the OFF (LOCK) mode.

-4. Turn the vehicle to the ON mode.

-5. Check for CAN gateway system DTCs with the HDS.

DTC Description	Confirmed DTC
B	B

DTC (CAN GATEWAY)

Are any DTCs indicated?

YES

Go to the troubleshooting for CAN gateway system DTC(s) .

NO

Go to step 2.

2. F-CAN circuit communication check (receiving control unit)

-1. Select the FUNCTION TEST in the CAN gateway with the HDS, then select the F-CAN Bus Connected Unit Check.

F-CAN Bus Connected Unit Check

Does the PCU detect the CAN gateway Bus channel A?

Bus A is Not Available

Go to step 3.

Bus A is Detected

Go to step 4.

3. Open wire check (F-CAN A_H line, F-CAN A_L line)

-1. Turn the vehicle to the OFF (LOCK) mode.

-2. **Do the 12 volt battery terminal disconnection procedure** .

-3. Disconnect the following connectors.

PCU 33P connector
CAN gateway 16P connector

-4. Measure the resistance between test points 1 and 2.

Test condition	Vehicle OFF (LOCK) mode
	PCU 33P connector: disconnected
	CAN gateway 16P connector: disconnected
Test point 1	**PCU 33P connector No. 5**
Test point 2	CAN gateway 16P connector (female terminals) No. 3: ①

Test point 1	**PCU 33P connector No. 6**
Test point 2	CAN gateway 16P connector (female terminals) No. 11: ①

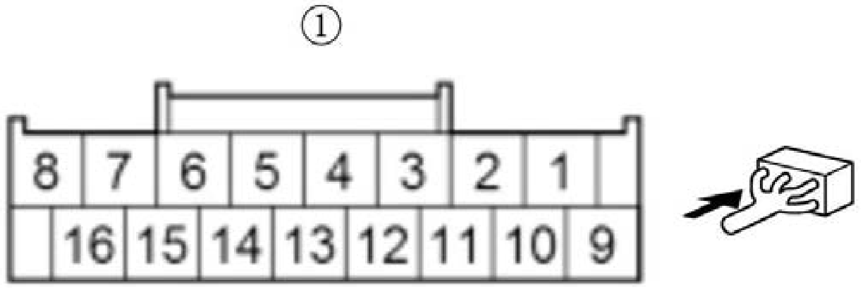

Is there 1.0 Ω or less?

YES

Replace the PCU .

NO

Repair an open in the F-CAN A_H wire or the F-CAN A_L wire between the CAN gateway and the PCU.

4. F-CAN circuit communication check (transmitting control unit)

-1. Select the FUNCTION TEST in the CAN gateway with the HDS, then select the F-CAN Bus Connected Unit Check.

F-CAN Bus Connected Unit Check

-2. According to the detected DTC on the following table, make sure that the transmitting control unit detects the CAN gateway Bus channel(s) normally.

DTC	Transmitting control unit	Detected CAN gateway Bus channel(s) at normal
U1600	PCM	A, B
U1603	Battery condition monitor module	A

Is it detected normally?

Detected normal

Intermittent failure. The system is OK at this time. Check for poor connections or loose terminals at the transmitting control unit and the CAN gateway.

U1600: PCM is Not Available for Bus A

Go to step 5.

U1600: PCM is Not Available for Bus B

Go to step 6.

U1603: Battery condition monitor module is Not Available for Bus A

Go to step 5.

5. Open wire check (F-CAN A_H line, F-CAN A_L line)

-1. Turn the vehicle to the OFF (LOCK) mode.

-2. DTC U1600: Jump the SCS line with the HDS, and wait more than 1 minute.

-3. DTC U1603: Remove the **service plug** and the **IPU cover** .

-4. According to the detected DTC on the following table, disconnect the transmitting control unit connector(s).

DTC	Connector
-	CAN gateway 16P connector
U1600	PCM connector A (50P)
U1603	Battery condition monitor module connector E (32P)

-5. Measure the resistance between test points 1 and 2.

Test condition	Vehicle OFF (LOCK) mode
B	CAN gateway 16P connector: disconnected
B	Transmitting control unit connector(s) for indicated DTCs: disconnected

DTC	Circuit name	Test point 1 (Receiving control unit)		Test point 2 (Transmitting control unit)	
		Connector	Terminal	Connector	Terminal
U1600	F-CAN A_H	CAN gateway 16P connector (female terminals): ①	No. 3	**PCM connector A (50P)**	No. 37
	F-CAN A_L		No. 11		No. 36
U1603	F-CAN A_H	CAN gateway 16P connector (female terminals): ①	No. 3	**Battery condition monitor module connector E (32P)**	No. 9
	F-CAN A_L		No. 11		No. 8

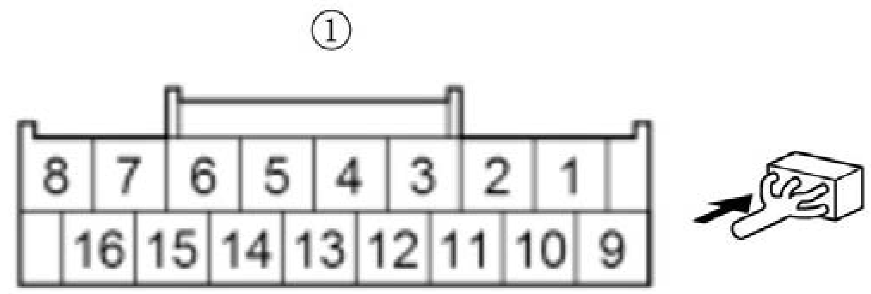

Is there 1.0 Ω or less?

YES

The F-CAN A_H wire and the F-CAN A_L wire are OK.

According to the detected DTC on the following table, substitute, or replace the corresponding unit.

DTC	Operation for transmitting control unit
U1600	**Replace the PCM** .

DTC	Operation for transmitting control unit
U1603	**Replace the battery condition monitor module** .

NO

Repair an open in the F-CAN A_H wire or the F-CAN A_L wire between the transmitting control unit and the CAN gateway.

6. Open wire check (F-CAN B_H line, F-CAN B_L line)

-1. Turn the vehicle to the OFF (LOCK) mode.

-2. Jump the SCS line with the HDS, and wait more than 1 minute.

SCS Short

-3. According to the detected DTC on the following table, disconnect the transmitting control unit connector(s).

DTC	Connector
-	CAN gateway 16P connector
U1600	PCM connector A (50P)

-4. Measure the resistance between test points 1 and 2.

Test condition	Vehicle OFF (LOCK) mode
B	CAN gateway 16P connector: disconnected
B	Transmitting control unit connector(s) for indicated DTCs: disconnected

DTC	Circuit name	Test point 1 (Receiving control unit)		Test point 2 (Transmitting control unit)	
		Connector	Terminal	Connector	Terminal
U1600	F-CAN B_H	CAN gateway 16P connector (female terminals): ①	No. 6	**PCM connector A (50P)**	No. 39
	F-CAN B_L		No. 14		No. 38

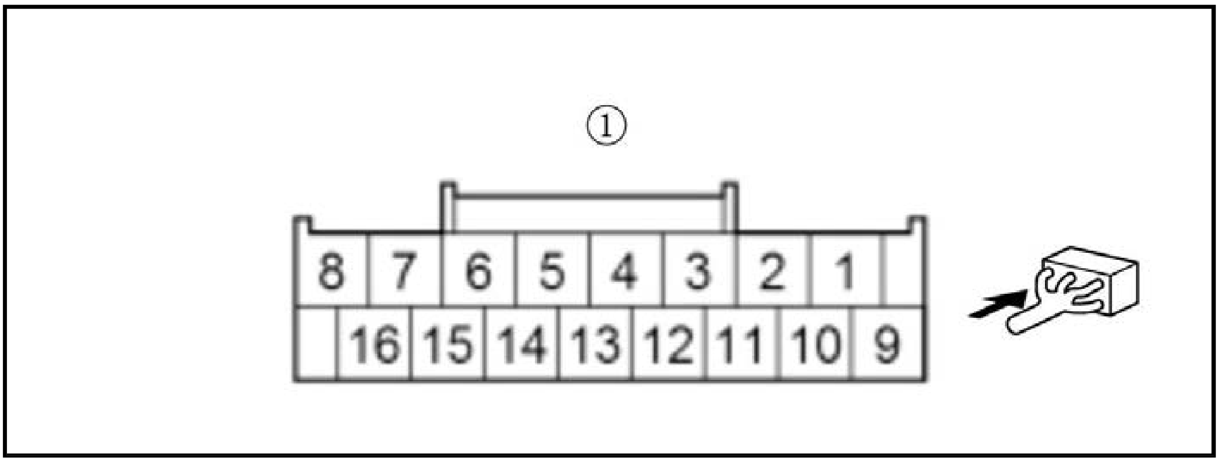

Is there 1.0 Ω or less?

YES

The F-CAN B_H wire and the F-CAN B_L wire are OK.

According to the detected DTC on the following table, substitute, or replace the corresponding unit.

DTC	Operation for transmitting control unit
U1600	Replace the PCM .

NO

Repair an open in the F-CAN B_H wire or the F-CAN B_L wire between the transmitting control unit and the CAN gateway.

DTC U3000-49 (VSA CONTROL UNIT)

DTC U3000-49 : ECU Internal Circuit Failure

NOTE: Before you troubleshoot, review the general troubleshooting information .

DTC Description	DTC
U3000-49 ECU Internal Circuit Failure	B

DTC (VSA)

1. Problem verification

   -1. Turn the vehicle to the ON mode.

   -2. Clear the DTC with the HDS.

   -3. Turn the vehicle to the OFF (LOCK) mode, then to the READY TO DRIVE mode.

   -4. Test-drive the vehicle at 25 mph (40 km/h) or more.

   NOTE: Drive the vehicle on the road, not on a lift.

   -5. Check for DTCs with the HDS.

DTC Description	DTC
U3000-49 ECU Internal Circuit Failure	B

Is DTC U3000-49 indicated?

YES

The failure is duplicated. Check for loose terminals and poor connections in the VSA modulator-control unit 46P connector. Check for any authorized service information related to the DTCs or symptoms you are troubleshooting. If they are OK, replace the VSA modulator-control unit .

NO

Intermittent failure, the system is OK at this time. Refer to intermittent failures troubleshooting .

DTC U3000-51 (VSA CONTROL UNIT)

DTC U3000-51 : ECU Software Update Failure

NOTE:

- Before you troubleshoot, review the general troubleshooting information .

- Do not turn the vehicle to the OFF (LOCK) mode while updating the VSA modulator-control unit. If you turn the vehicle to the OFF (LOCK) mode before completion, the VSA modulator-control unit will be damaged.

DTC Description	DTC
U3000-51 ECU Software Update Failure	B

DTC (VSA)

1. Problem verification

   -1. Turn the vehicle to the ON mode.

   -2. Clear the DTC with the HDS.

   -3. Turn the vehicle to the OFF (LOCK) mode, then to the ON mode.

   -4. Check for DTCs with the HDS.

DTC Description	DTC
U3000-51 ECU Software Update Failure	B

   Is DTC U3000-51 indicated?

   YES

   The failure is duplicated. Go to step 2.

   NO

   Intermittent failure, the system is OK at this time. **Refer to intermittent failures troubleshooting** .

2. VSA modulator-control unit check (update)

   -1. **Update the VSA modulator-control unit** .

   -2. Turn the vehicle to the OFF (LOCK) mode, then to the ON mode.

   -3. Check for DTCs with the HDS.

DTC Description	DTC
B	B

   Is DTC U3000-51 indicated?

   YES

   The failure is duplicated. Check for loose terminals and poor connections in the VSA modulator-control unit 46P connector. Check for any authorized service information related to the DTCs or symptoms you are troubleshooting. If they are OK, **replace the VSA modulator-control unit** .

   NO

   Troubleshooting is complete. If any other DTCs are indicated, go to the indicated DTCs troubleshooting.

DTC U3003-16 (VSA CONTROL UNIT)

DTC U3003-16 : Electric Parking Brake Control Unit Power Source Circuit (+B) Low Voltage

NOTE: **Before you troubleshoot, review the general troubleshooting information.**

DTC Description	**DTC**
U3003-16 Electric Parking Brake Control Unit Power Source Circuit (+B) Low Voltage	B

DTC (VSA)

1. Problem verification

   -1. Turn the vehicle to the ON mode.

   -2. Clear the DTC with the HDS.

   -3. Turn the vehicle to the OFF (LOCK) mode, then to the READY TO DRIVE mode.

   -4. Wait 15 seconds or more.

   -5. Check for DTCs with the HDS.

DTC Description	**DTC**
U3003-16 Electric Parking Brake Control Unit Power Source Circuit (+B) Low Voltage	B

   Is DTC U3003-16 indicated?

   YES

   The failure is duplicated. Go to step 2.

   NO

   Intermittent failure, the system is OK at this time. **Refer to intermittent failures troubleshooting** .

2. DTC check (electric powertrain system)

   -1. Check for electric powertrain system DTCs with the HDS.

DTC Description	**Confirmed DTC**	**Pending DTC**	**Freeze Frame**
B	B	B	B

   Is DTC indicated?

   YES

   Go to indicated DTCs troubleshooting.

   NO

   Check for loose terminals and poor connections in the VSA modulator-control unit 46P connector. Check for any authorized service information related to the DTCs or symptoms you are troubleshooting. If they are OK, **replace the VSA modulator-control unit** .

DTC U3003-17 (VSA CONTROL UNIT)

DTC U3003-17 : Electric Parking Brake Control Unit Power Source Circuit (+B) High Voltage

NOTE: **Before you troubleshoot, review the general troubleshooting information.**

DTC Description	DTC
U3003-17 Electric Parking Brake Control Unit Power Source Circuit (+B) High Voltage	B

DTC (VSA)

1. Problem verification

   -1. Turn the vehicle to the ON mode.

   -2. Clear the DTC with the HDS.

   -3. Turn the vehicle to the OFF (LOCK) mode, then to the READY TO DRIVE mode.

   -4. Check for DTCs with the HDS.

DTC Description	DTC
U3003-17 Electric Parking Brake Control Unit Power Source Circuit (+B) High Voltage	B

   Is DTC U3003-17 indicated?

   YES

   The failure is duplicated. Go to step 2.

   NO

   Intermittent failure, the system is OK at this time. **Refer to intermittent failures troubleshooting** .

2. VSA modulator-control unit check

   -1. Check the parameter(s) below with the HDS.

Signal	Threshold		Current conditions	
	Values	Unit	Values	Unit
BATTERY VOLTAGE	More than 16.5	V	B	B

   Do the current condition(s) match the threshold?

   YES

   Check the 12 volt battery , and **check the electric powertrain system DTCs** .

   NO

   Check for loose terminals and poor connections in the VSA modulator-control unit 46P connector. Check for any authorized service information related to the DTCs or symptoms you are troubleshooting. If they are OK, **replace the VSA modulator-control unit** .

DTC U3006-16 (VSA CONTROL UNIT)

DTC U3006-16 : Power Source Failure for ECU (Low Voltage)

NOTE: **Before you troubleshoot, review the general troubleshooting information** .

DTC Description	DTC
U3006-16 Power Source Failure for ECU (Low Voltage)	B

DTC (VSA)

1. Problem verification

   -1. Turn the vehicle to the ON mode.

   -2. Clear the DTC with the HDS.

   -3. Turn the vehicle to the OFF (LOCK) mode, then to the READY TO DRIVE mode.

   -4. Test-drive the vehicle at 6 mph (10 km/h) or more.

   -5. Check for DTCs with the HDS.

DTC Description	DTC
U3006-16 Power Source Failure for ECU (Low Voltage)	B

   Is DTC U3006-16 indicated?

   YES

   The failure is duplicated. Go to step 2.

   NO

   Intermittent failure, the system is OK at this time. **Refer to intermittent failures troubleshooting** .

2. DTC check (electric powertrain system)

   -1. Check for electric powertrain system DTCs with the HDS.

DTC Description	Confirmed DTC	Pending DTC	Freeze Frame
B	B	B	B

   Is DTC indicated?

   YES

   Go to indicated DTCs troubleshooting.

   NO

   Check for loose terminals and poor connections in the VSA modulator-control unit 46P connector. Check for any authorized service information related to the DTCs or symptoms you are troubleshooting. If they are OK, **replace the VSA modulator-control unit** .

DTC U3006-17 (VSA CONTROL UNIT)

DTC U3006-17 : Power Source Failure for ECU (High Voltage)

NOTE: **Before you troubleshoot, review the general troubleshooting information** .

DTC Description	DTC
U3006-17 Power Source Failure for ECU (High Voltage)	B

DTC (VSA)

1. Problem verification

-1. Turn the vehicle to the ON mode.

-2. Clear the DTC with the HDS.

-3. Turn the vehicle to the OFF (LOCK) mode, then to the READY TO DRIVE mode.

-4. Check for DTCs with the HDS.

DTC Description	DTC
U3006-17 Power Source Failure for ECU (High Voltage)	B

Is DTC U3006-17 indicated?

YES

The failure is duplicated. Go to step 2.

NO

Intermittent failure, the system is OK at this time. **Refer to intermittent failures troubleshooting** .

2. VSA modulator-control unit check

   -1. Check the parameter(s) below with the HDS.

Signal	Threshold		Current conditions	
	Values	Unit	Values	Unit
BATTERY VOLTAGE	More than 16.5	V	B	B

Do the current condition(s) match the threshold?

YES

Check the 12 volt battery , and **check the electric powertrain system DTCs** .

NO

Check for loose terminals and poor connections in the VSA modulator-control unit 46P connector. Check for any authorized service information related to the DTCs or symptoms you are troubleshooting. If they are OK, **replace the VSA modulator-control unit** .

REMOVAL & INSTALLATION TEST

VSA OFF SWITCH REMOVAL, INSTALLATION, AND TEST

Removal and Installation

1. Driver's Dashboard Undercover - Remove
2. Driver's Dashboard Lower Cover - Remove
3. VSA Off Switch - Remove

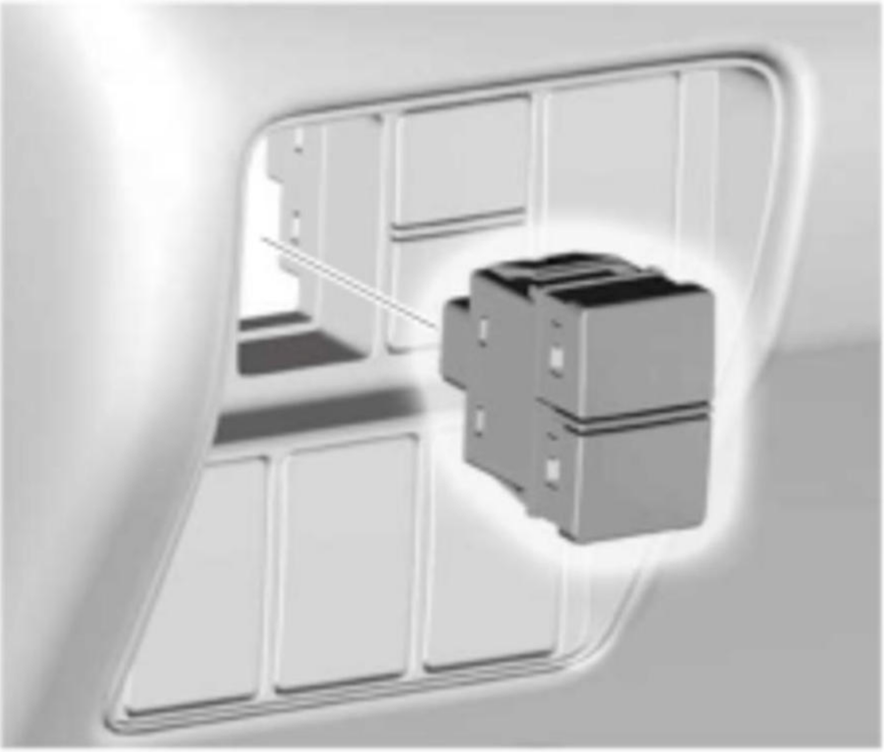

NOTE: Position of the switch is different depending on the model.

4. All Removed Parts - Install

1. Install all removed parts in the reverse order of removal.

Test

1. VSA Off Switch - Test

VSA OFF/lid switch 4P connector

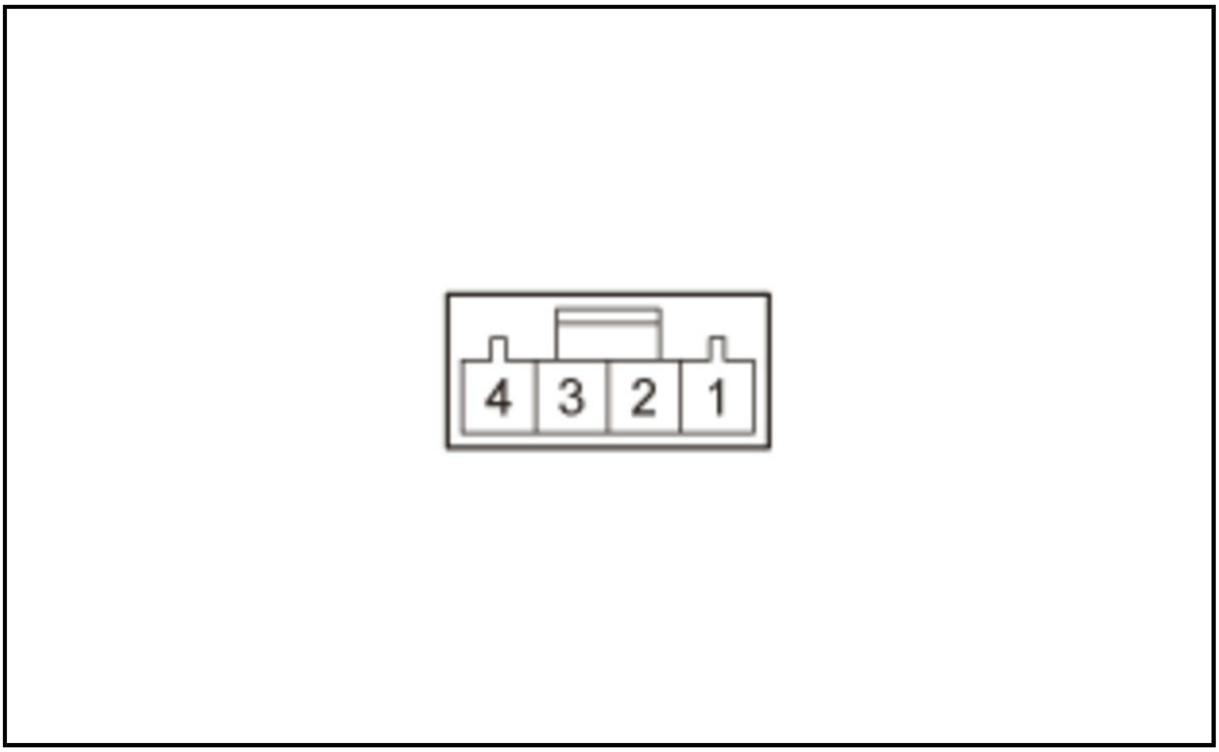

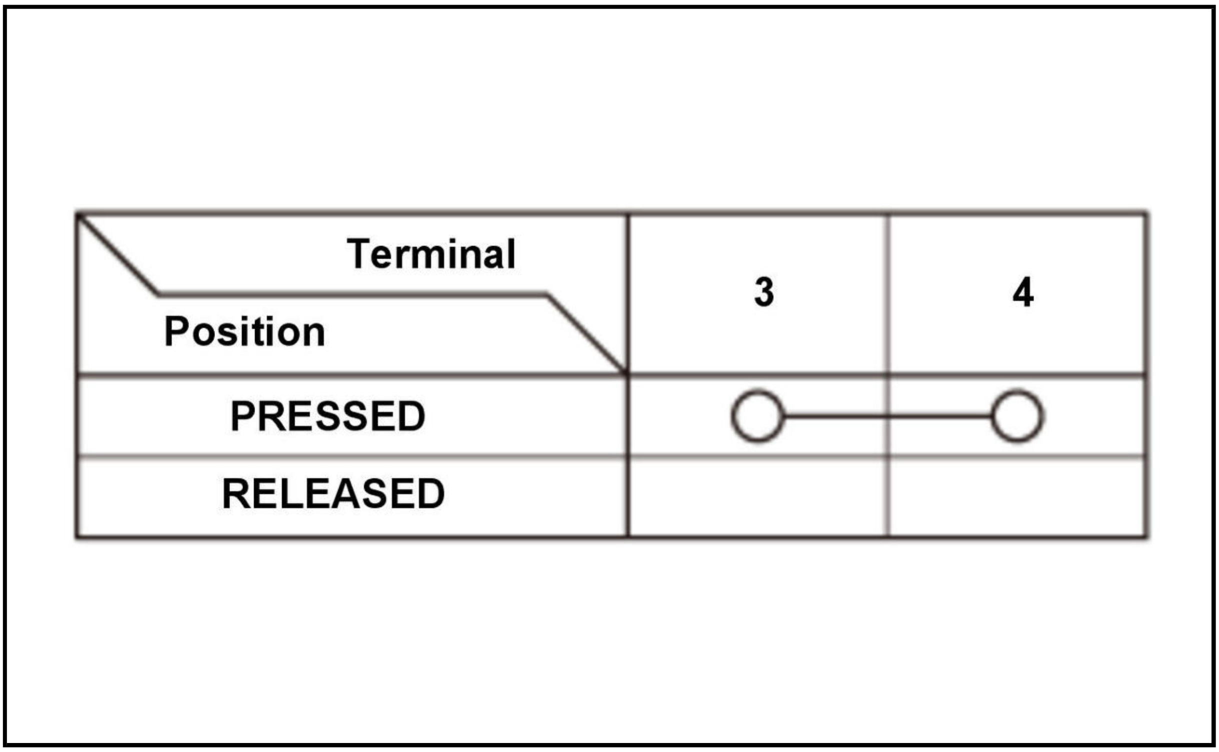

Terminal / Position	3	4
PRESSED	○	○
RELEASED		

VSA OFF/TPMS switch 5P connector

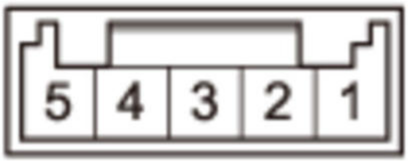

Position \ Terminal	1	3
RELEASED	○	○
PRESSED		

VSA OFF/parking and back-up sensor switch 8P connector

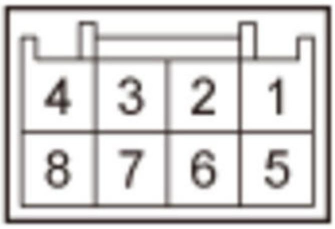

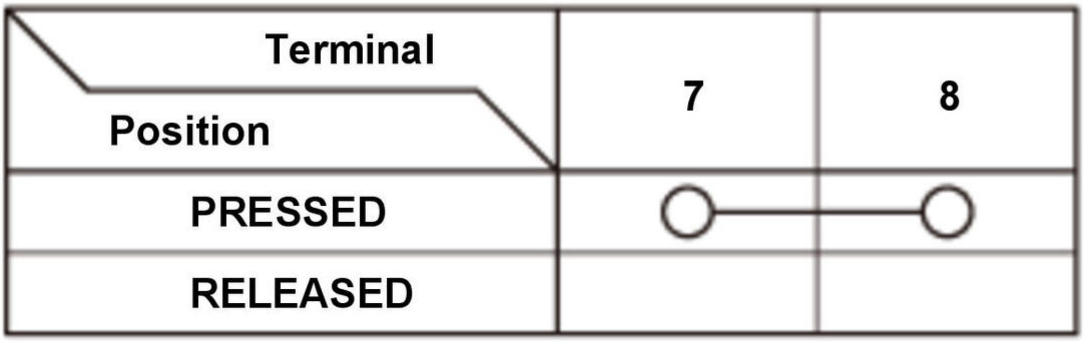

Terminal / Position	7	8
PRESSED	○	○
RELEASED		

VSA OFF/driver's power tailgate switch 12P connector

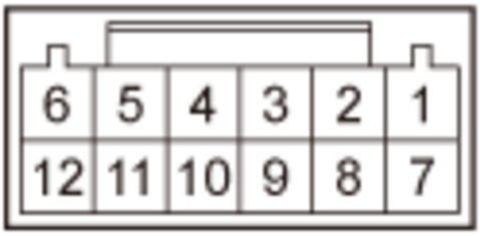
6
5
4
3
2
1
12
11
10
9
8
7

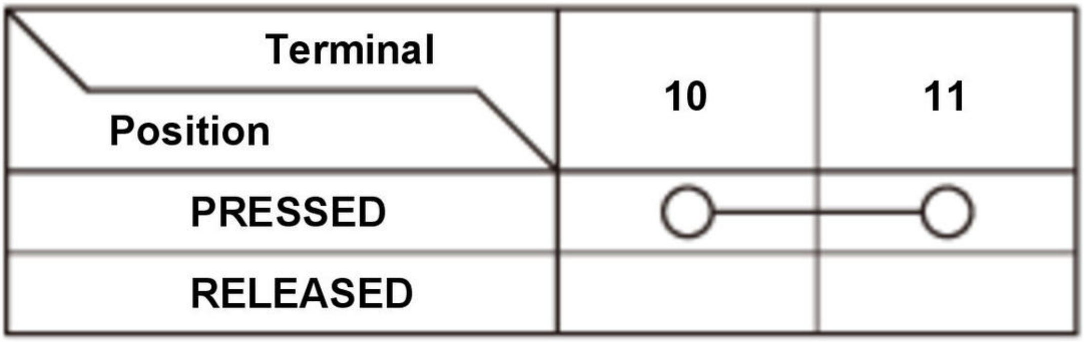

Terminal / Position	10	11
PRESSED	○	○
RELEASED		

VSA OFF/heated windshield wiper area switch 12P connector

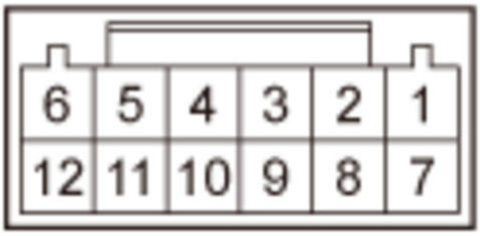
6
5
4
3
2
1
12
11
10
9
8
7

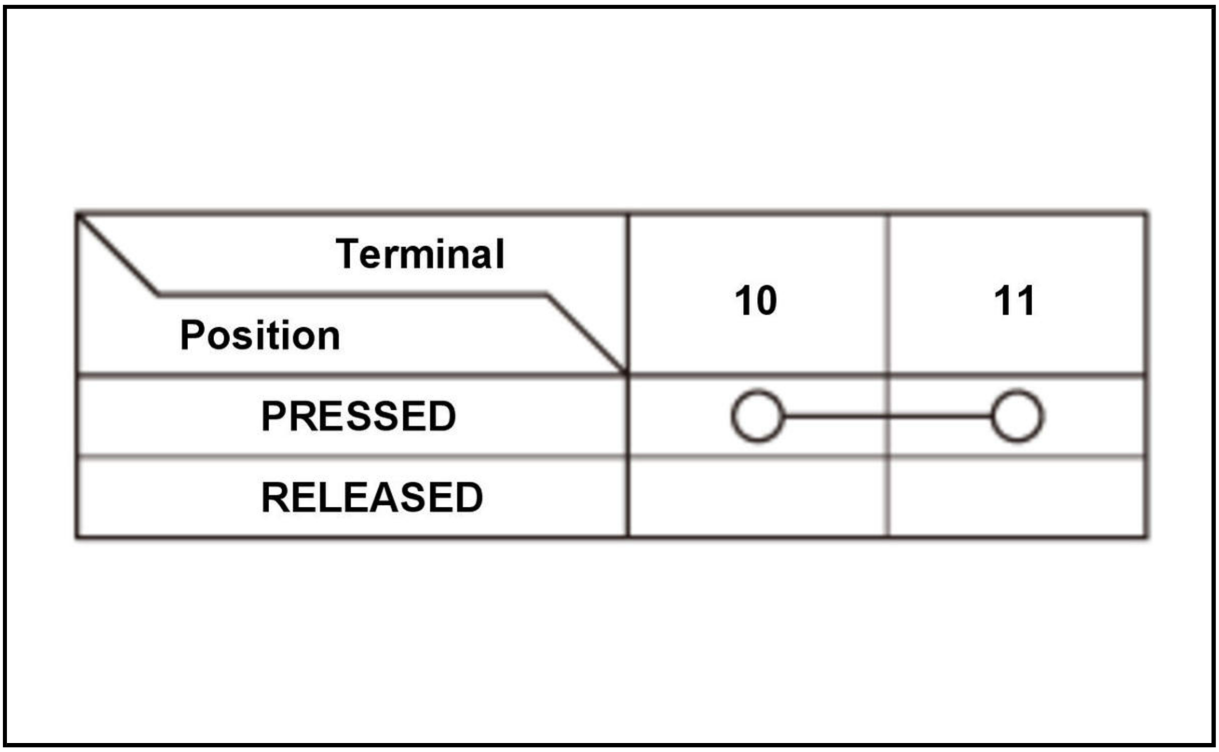

Terminal / Position	10	11
PRESSED	○—	—○
RELEASED		

Switch Internal Continuity Check:

1. On the switch side, check for continuity between the connector terminal in each switch position according to the table.

2. If the switch does not works as described in the table, replace the switch.

VSA OFF/lid switch 4P connector

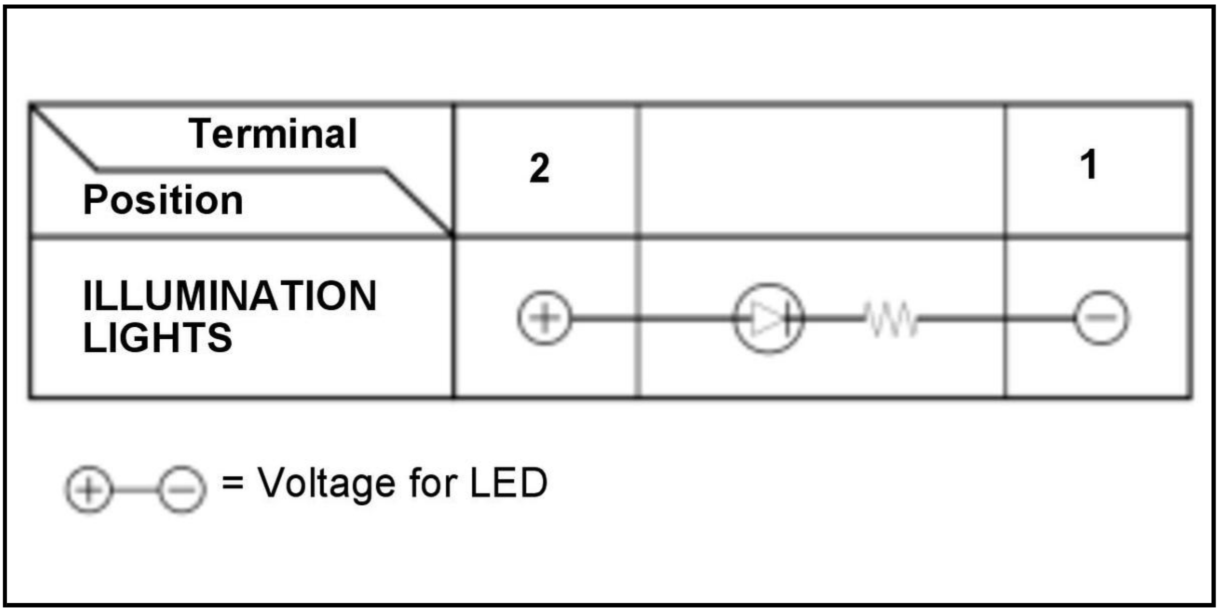

Terminal / Position	2		1
ILLUMINATION LIGHTS	⊕—	—▷|—⩘—	—⊖

⊕—⊖ = Voltage for LED

VSA OFF/TPMS switch 5P connector

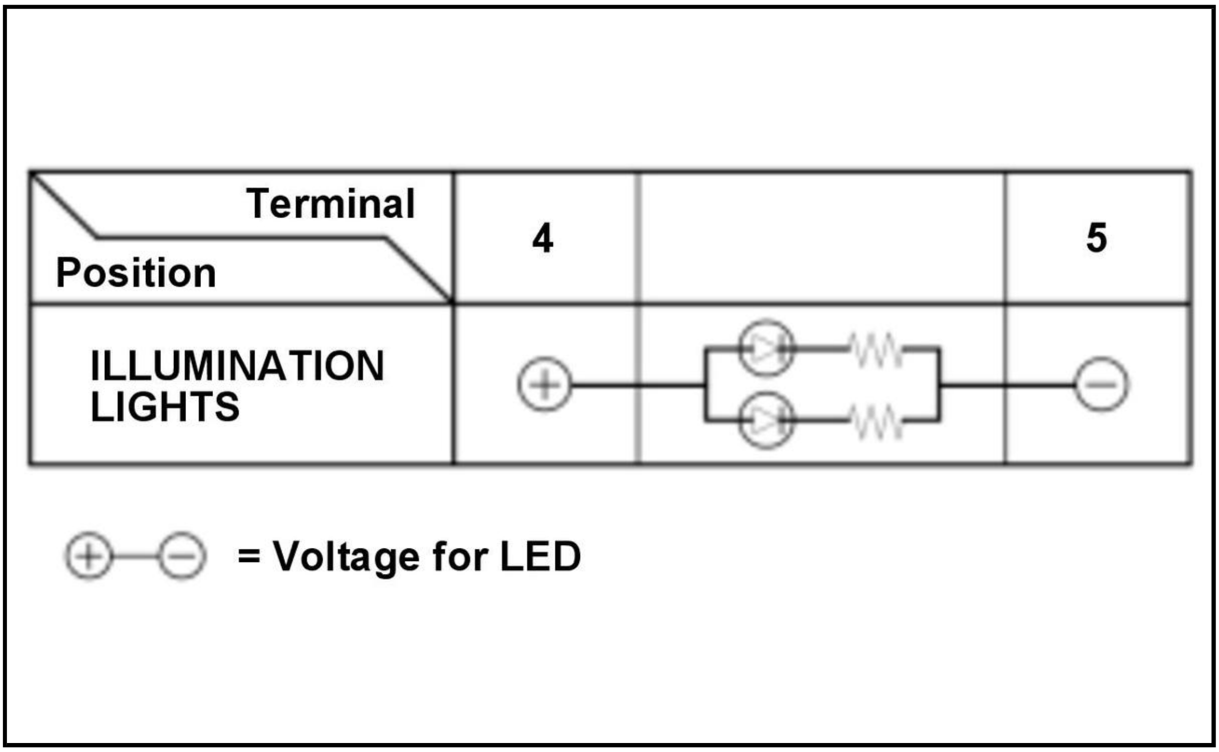
Terminal
Position
4
5
ILLUMINATION LIGHTS
= Voltage for LED

VSA OFF/parking and back-up sensor switch 8P connector

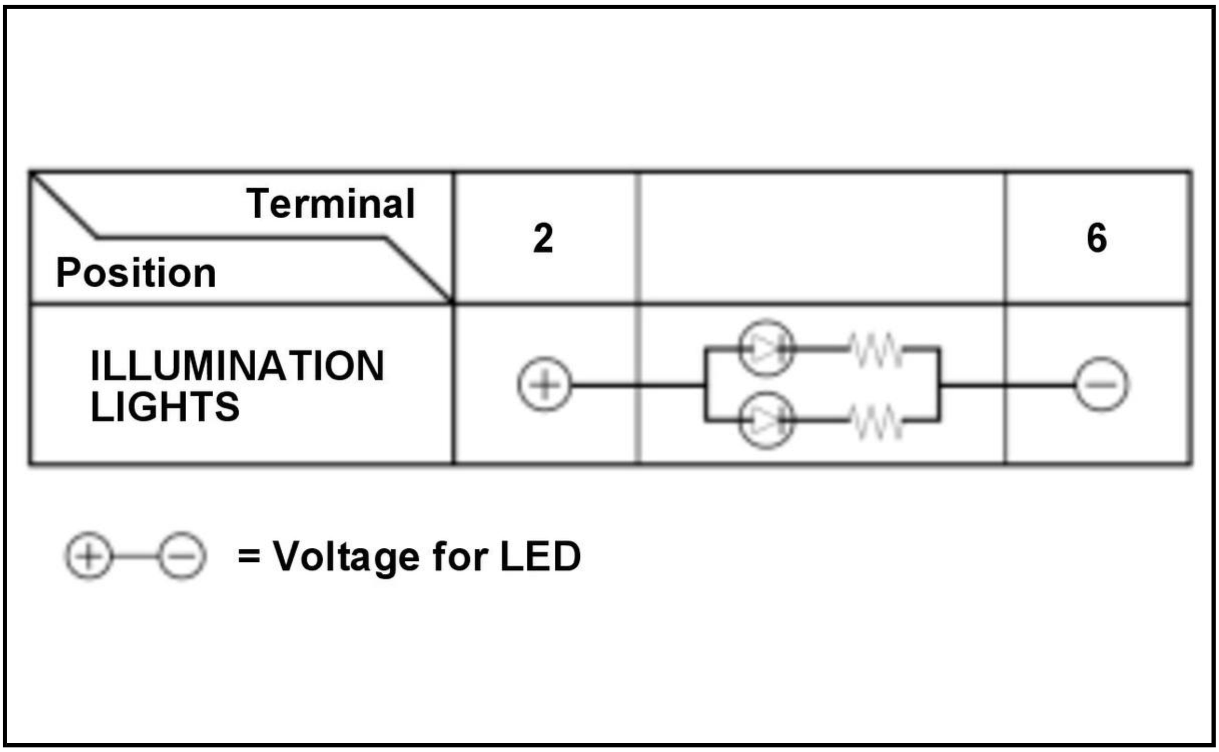
Terminal
Position
2
6
ILLUMINATION LIGHTS
= Voltage for LED

VSA OFF/driver's power tailgate switch 12P connector

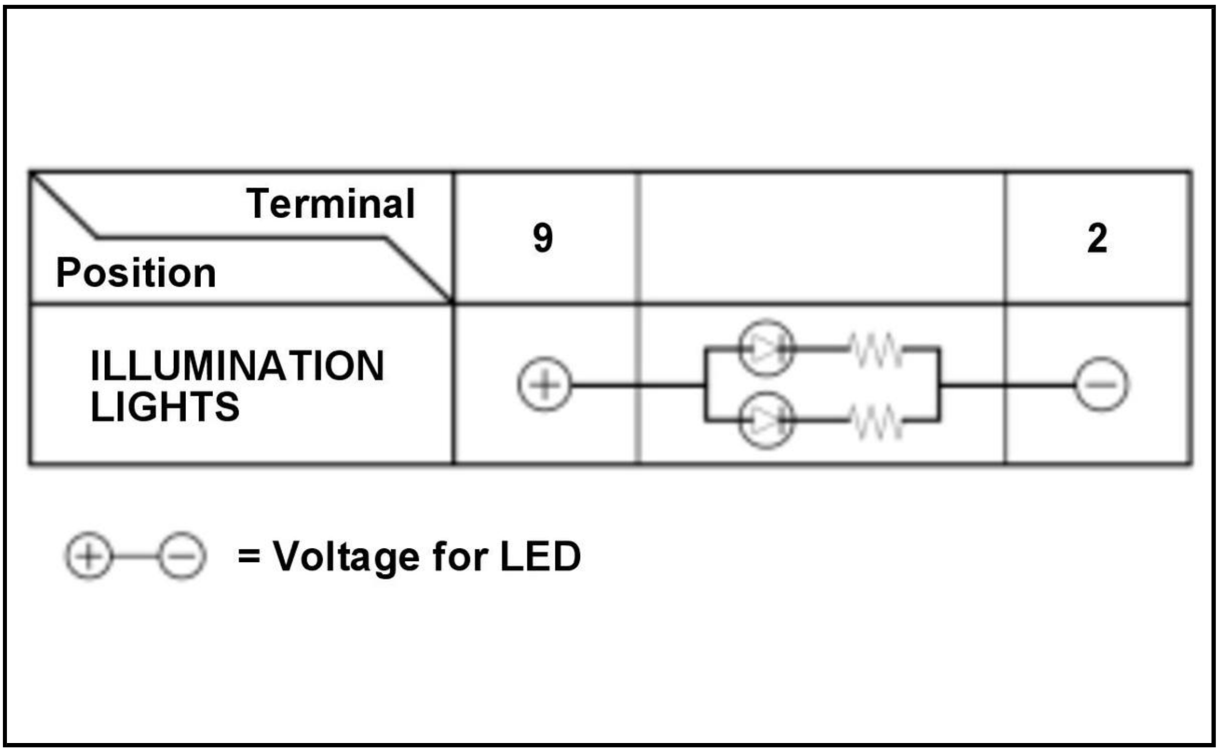
Terminal
Position
9
2
ILLUMINATION LIGHTS
= Voltage for LED

VSA OFF/heated windshield wiper area switch 12P connector

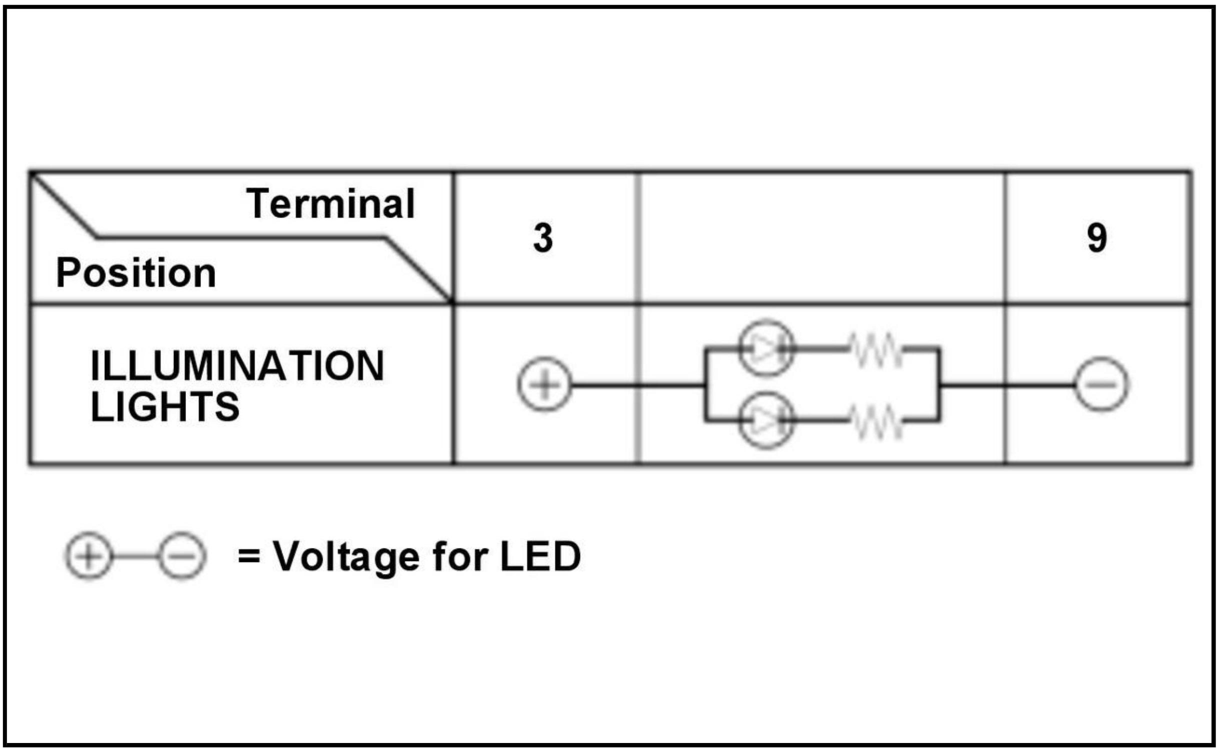
Terminal
Position
3
9
ILLUMINATION LIGHTS
= Voltage for LED

Switch Illumination Circuit Check:

1. On the switch side, check the LED for illumination by applying power and ground to the terminals according to the table.**NOTE:**

Important operating characteristic; diode bias causes a diode to fully conduct electricity in one direction (forward), while not at all in the opposite direction (reverse).

2. If the result is not as specified, replace the switch.

REMOVAL AND INSTALLATION

VSA MODULATOR-CONTROL UNIT REMOVAL AND INSTALLATION

Removal

NOTE:

- **Review the Service Precautions before doing repairs or service** .
- Do not damage or drop the VSA modulator-control unit as it is sensitive.
- Do not use power tools when removing the VSA modulator-control unit.
- When replacing the VSA modulator-control unit, do the immobilizer system registration.

1. 12 Volt Battery Terminal - Disconnect

1. Open the driver's door, and wait 3 minutes or more.

NOTE:

Do not turn the vehicle to the ON mode.

2. **Do the 12 volt battery terminal disconnection procedure**

.

2. VSA Modulator-Control Unit - Remove

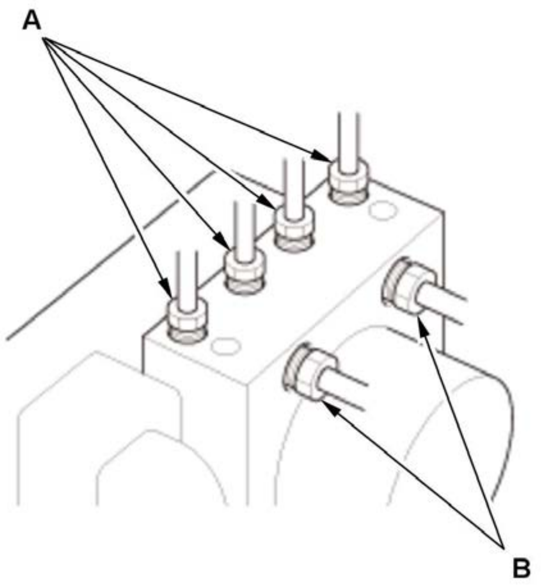

1. Disconnect the 10 mm brake lines (A).

NOTE:

Before disconnecting the brake lines from the VSA modulator, mark them or make note of their original location.

2. Disconnect the 12 mm brake lines (B).

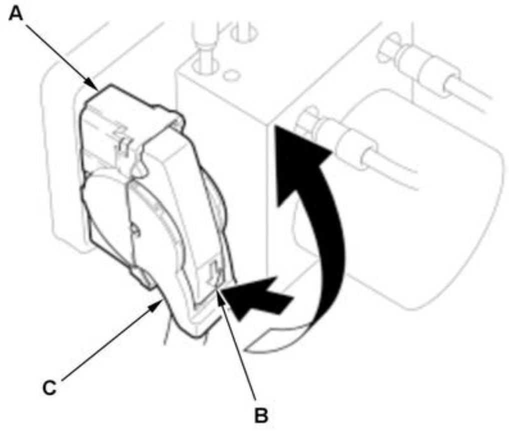	3. Disconnect the connector (A) by pushing the lock (B) and pulling up the lever (C); the connector disconnects itself.

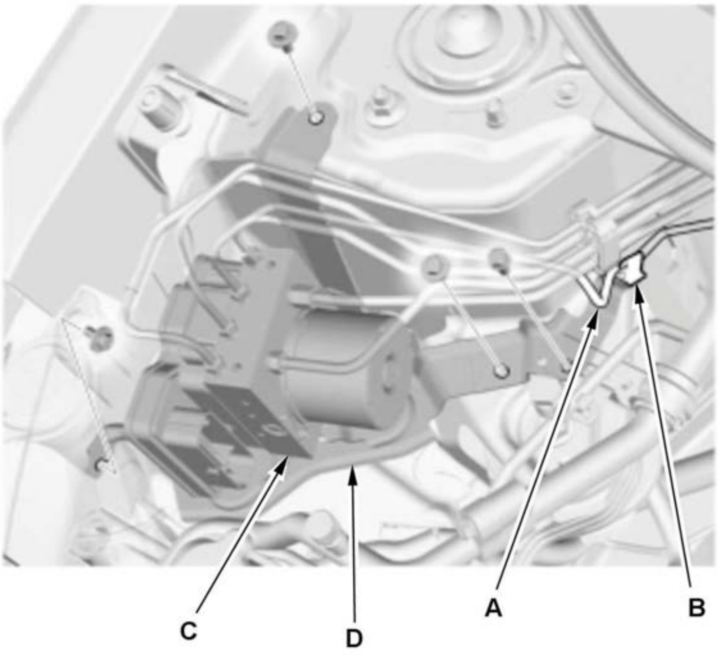	4. Remove the brake line (A) from the brake line clamp (B). 5. Remove the VSA modulator-control unit (C) with the bracket (D).

3. VSA Modulator-Control Unit Bracket - Remove

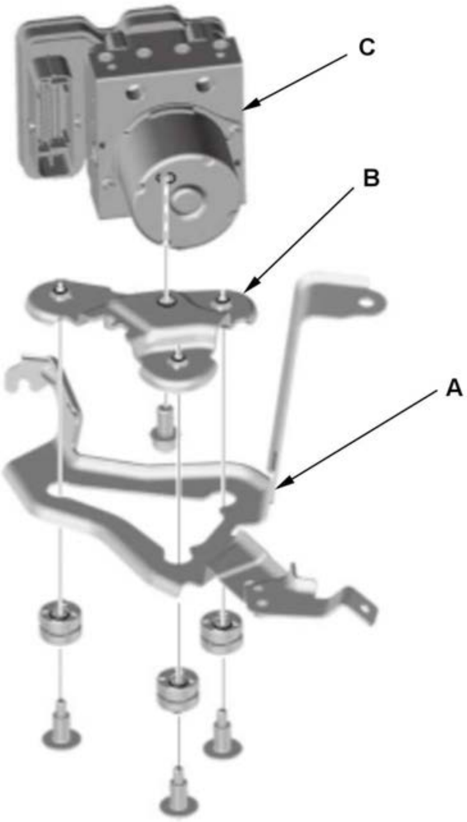	1. Remove the modulator bracket (A) from the modulator sub bracket (B). 2. Remove the VSA modulator-control unit (C) from the modulator sub bracket.

Installation

NOTE:

- **How to read the torque specifications** .
- **Review the Service Precautions before doing repairs or service** .
- Do not damage or drop the VSA modulator-control unit as it is sensitive.
- Do not use power tools when installing the VSA modulator-control unit.
- When replacing the VSA modulator-control unit, do the immobilizer system registration.

1. VSA Modulator-Control Unit Bracket - Install

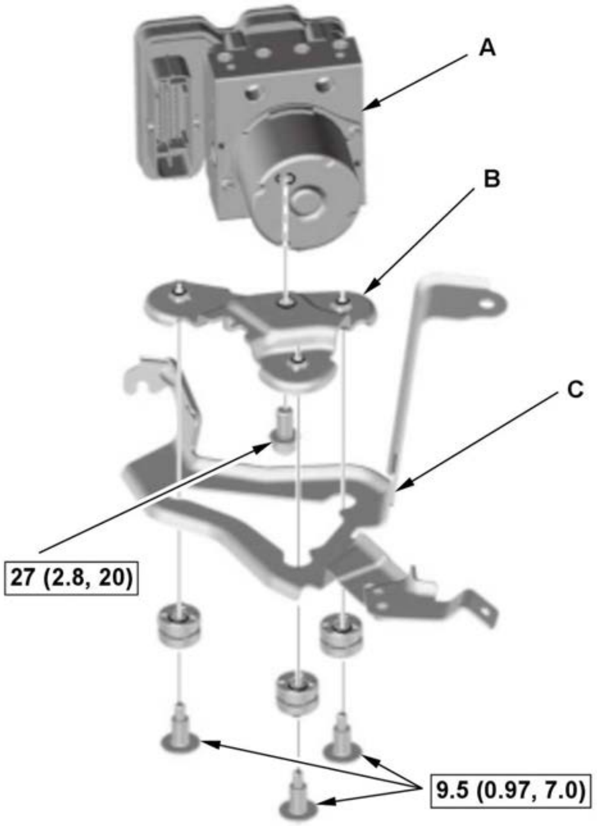 A B C 27 (2.8, 20) 9.5 (0.97, 7.0)	1. Install the VSA modulator-control unit (A) to the modulator sub bracket (B). 2. Install the modulator bracket (C) to the modulator sub bracket.

2. VSA Modulator-Control Unit - Install

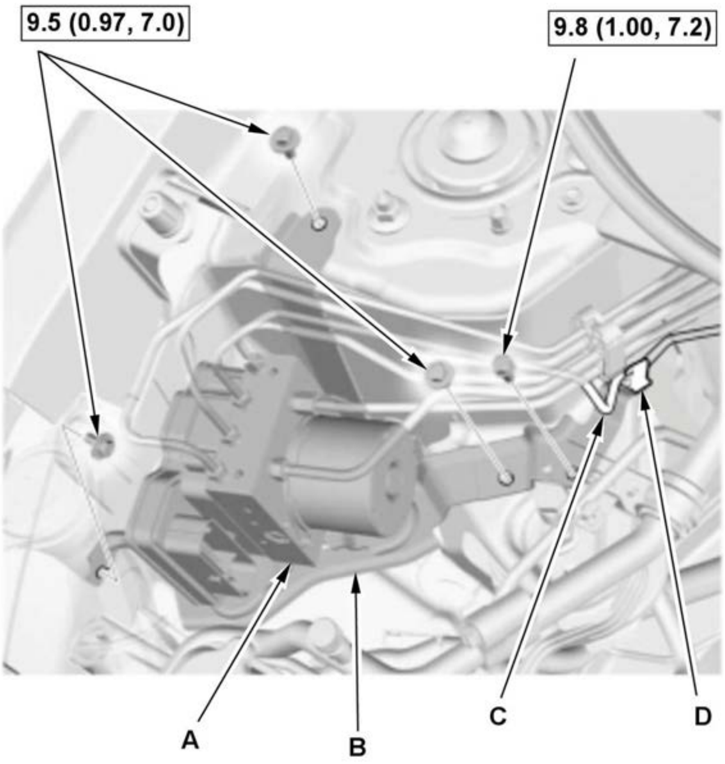 9.5 (0.97, 7.0) 9.8 (1.00, 7.2) A B C D	1. Install the VSA modulator-control unit (A) with the bracket (B). 2. Install the brake line (C) to the brake line clamp (D).

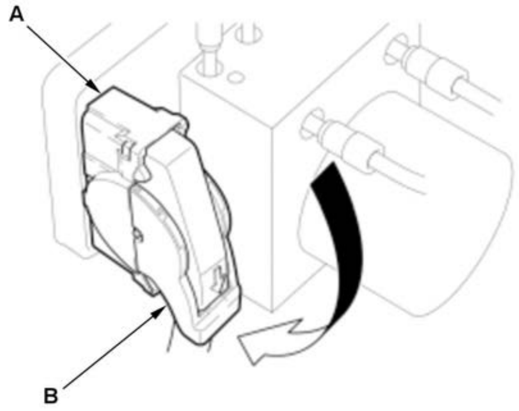	3. Align the connecting surface of the VSA modulator-control unit connector (A). 4. Pull down the lever (B) of the VSA modulator-control unit connector, then confirm the connector is fully seated.

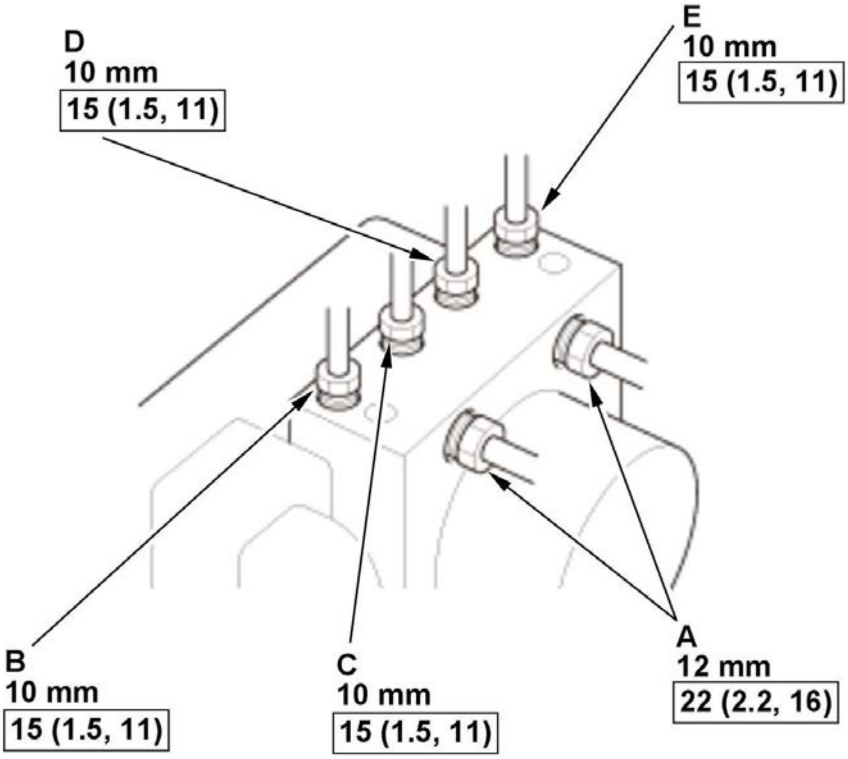 D 10 mm 15 (1.5, 11) E 10 mm 15 (1.5, 11) B 10 mm 15 (1.5, 11) C 10 mm 15 (1.5, 11) A 12 mm 22 (2.2, 16)	5. Connect the brake lines. **NOTE:** **Brake lines are connected to the master cylinder (A), the right-rear (B), the left-front (C), the right-front (D), and the left-rear (E) brake systems.**

3. 12 Volt Battery Terminal - Connect
4. Brake System- Bleed
5. Immobilizer System - Register

NOTE:

- When replacing the VSA modulator-control unit, do the immobilizer system registration.
- Failure to complete the immobilizer system registration will lead to a no-start condition the next time the 12 volt battery is disconnected.

Without keyless access system

1. Do the immobilizer system registration procedure .

With keyless access system

1. Do the keyless access system registration procedure .

6. VSA Modulator-Control Unit Software - Check

1. Make sure the VSA modulator-control unit has the latest software. If it does not have the latest, update the software in the VSA modulator-control unit .

7. VSA Modulator-Control Unit After Install - Check

1. Turn the vehicle to the ON mode.

2. Apply and release the parking brake 2 times, then make sure that the brake system indicator (red) goes OFF.

NOTE:

If the brake system indicator (red) does not go OFF, check for poor connection at the VSA modulator-control unit connector.

3. Turn the vehicle to the OFF (LOCK) mode.

8. VSA Sensor Neutral Position - Memorize
9. TPMS - Calibrate

WHEEL SPEED SENSOR REMOVAL AND INSTALLATION

Removal and Installation

NOTE: How to read the torque specifications .

Front

1. Vehicle - Lift
2. Front Wheel - Remove
3. Front Wheel Speed Sensor - Remove

    1. Disconnect the connector (A).

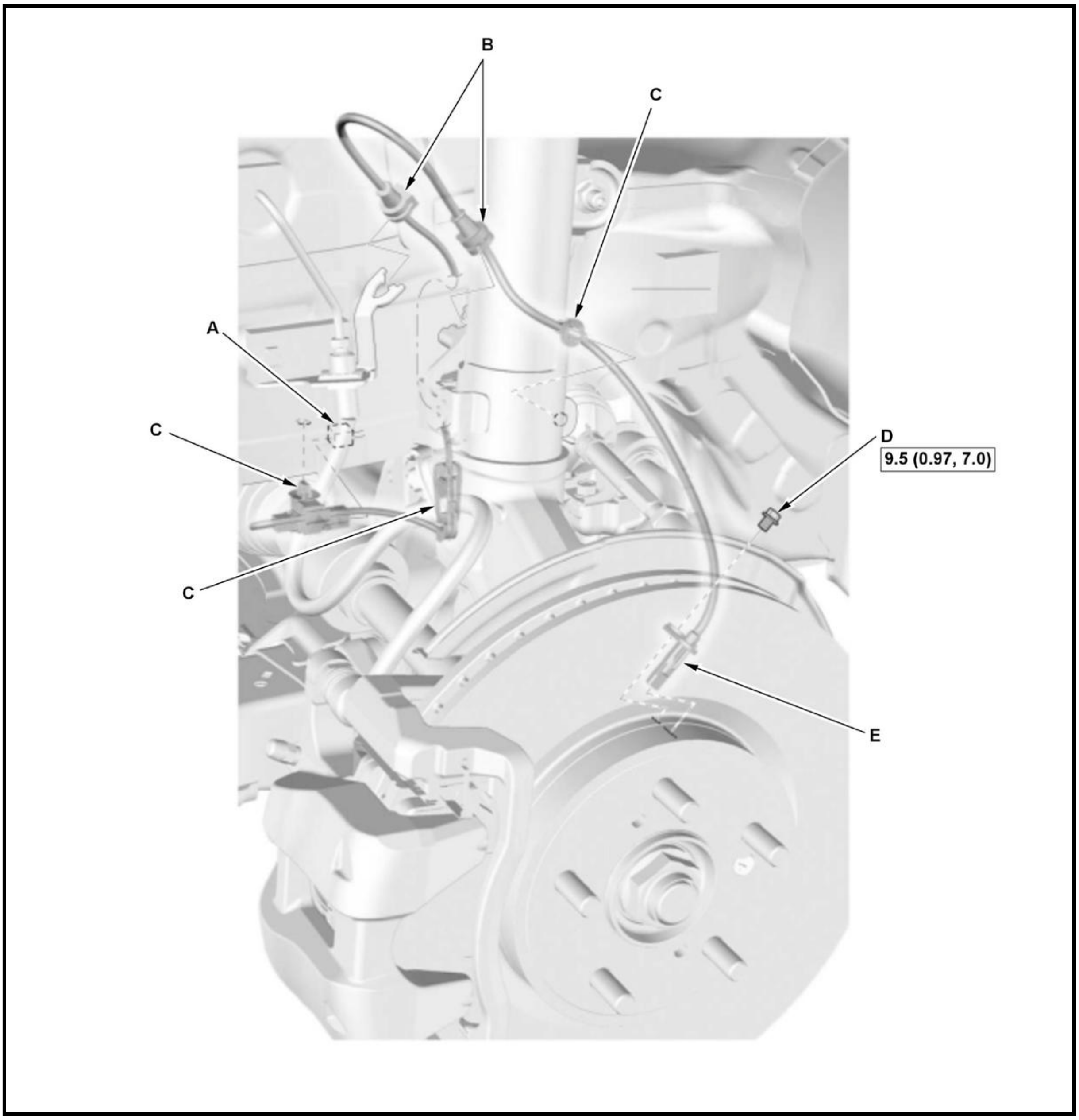

2. Remove the wire guide rubbers (B), the clips (C), and the bolt (D).

3. Remove the wheel speed sensor (E).

4. All Removed Parts - Install

1. Install all removed parts in the reverse order of removal.

NOTE:

- **Install the sensor carefully to avoid twisting the wires.**
- **If the wheel speed sensor comes in**

contact with the wheel bearing, it will become faulty.

- **Make sure there is no debris in the sensor mounting hole.**

Rear

5. Vehicle - Lift
6. Rear Wheel - Remove
7. Rear Wheel Speed Sensor - Remove

1. Disconnect the connector (A).

NOTE: **If the connector lock tab is difficult to release, push in on the connector body before pushing on the release lock.**

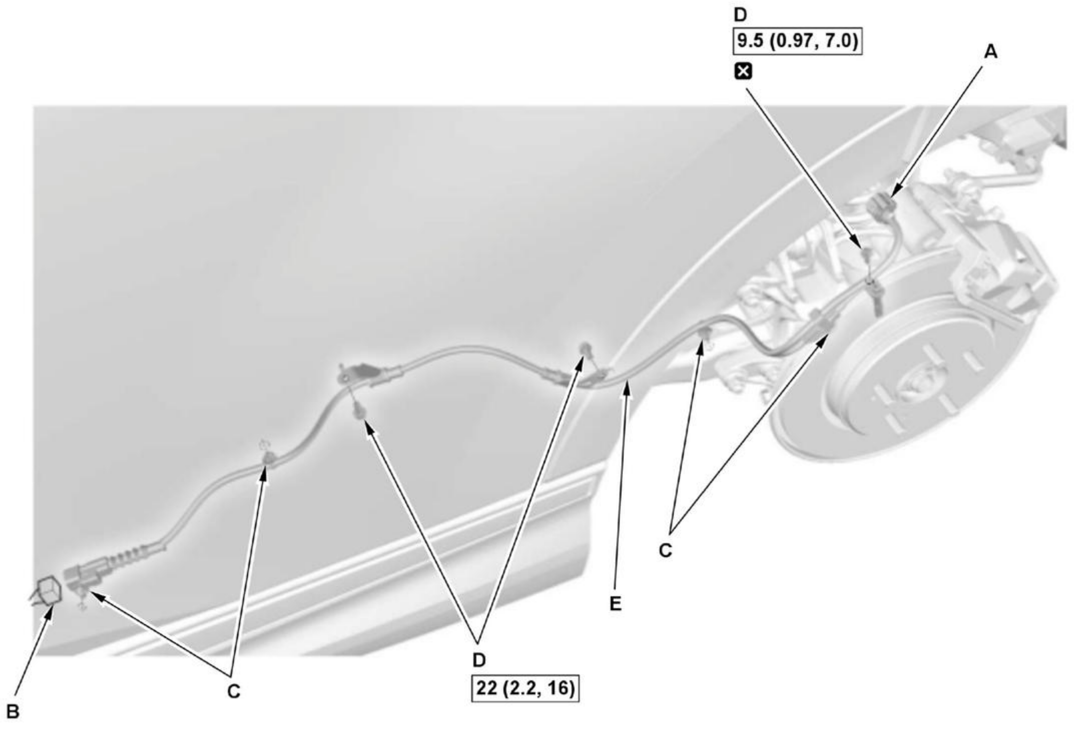

2. Disconnect the connector (B).

3. Remove the clips (C).

4. Remove the bolts (D).

5. Remove the wheel speed sensor (E).

8. All Removed Parts - Install

1. Install all removed parts in the reverse order of removal.

NOTE:

- **Install the sensor carefully to avoid twisting the wires.**
- **If the wheel speed sensor comes in contact with the hub bearing unit, it will become faulty.**
- **Make sure there is no debris in the sensor mounting hole.**

REMOVAL AND INSTALLATION

VSA MODULATOR-CONTROL UNIT REMOVAL AND INSTALLATION

Removal

NOTE:

- Review the Service Precautions before doing repairs or service .
- Do not damage or drop the VSA modulator-control unit as it is sensitive.
- Do not use power tools when removing the VSA modulator-control unit.
- When replacing the VSA modulator-control unit, do the immobilizer system registration.

1. 12 Volt Battery Terminal - Disconnect
2. VSA Modulator-Control Unit - Remove

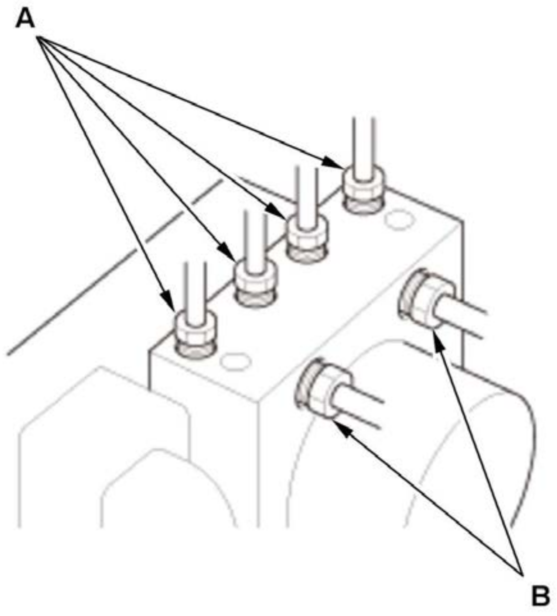	1. Disconnect the 10 mm brake lines (A). 2. Disconnect the 12 mm brake lines (B).

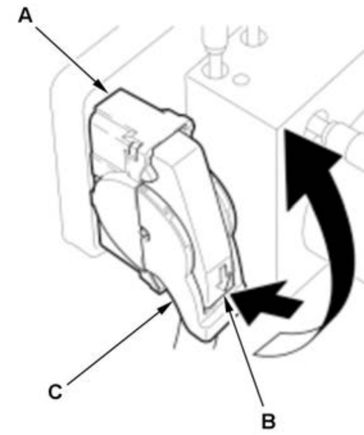

3. Disconnect the connector (A) by pushing the lock (B) and pulling up the lever (C); the connector disconnects itself.

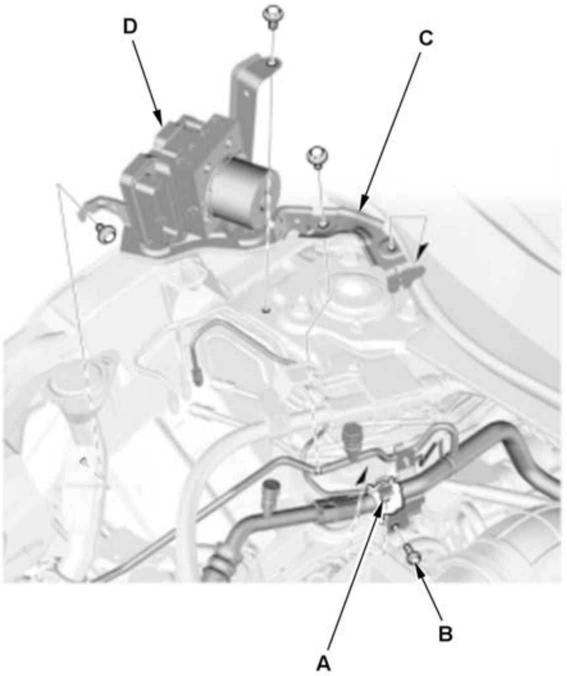

4. Remove the clip (A) and the A/C line bracket mounting bolt (B) from the VSA modulator-control unit bracket (C).

5. Remove the VSA modulator-control unit (D) with the bracket.

3. VSA Modulator-Control Unit Bracket - Remove

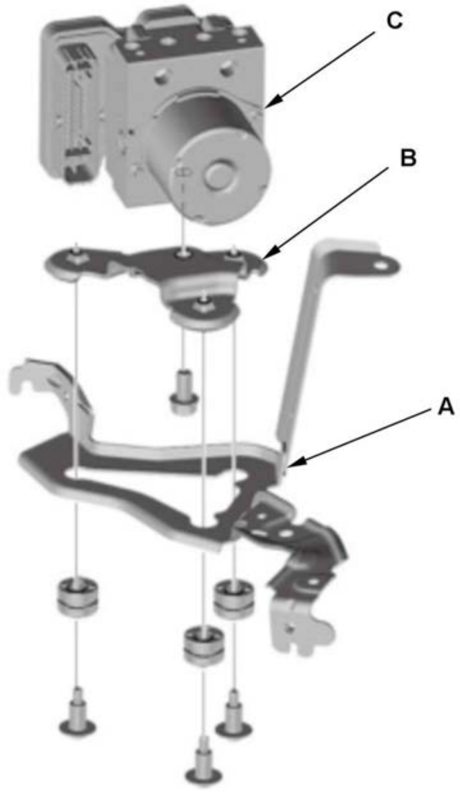	1. Remove the modulator bracket (A) from the modulator sub bracket (B). 2. Remove the VSA modulator-control unit (C) from the modulator sub bracket.

Installation

NOTE:

- **How to read the torque specifications** .
- **Review the Service Precautions before doing repairs or service** .
- Do not damage or drop the VSA modulator-control unit as it is sensitive.
- Do not use power tools when installing the VSA modulator-control unit.
- When replacing the VSA modulator-control unit, do the immobilizer system registration.

1. VSA Modulator-Control Unit Bracket - Install

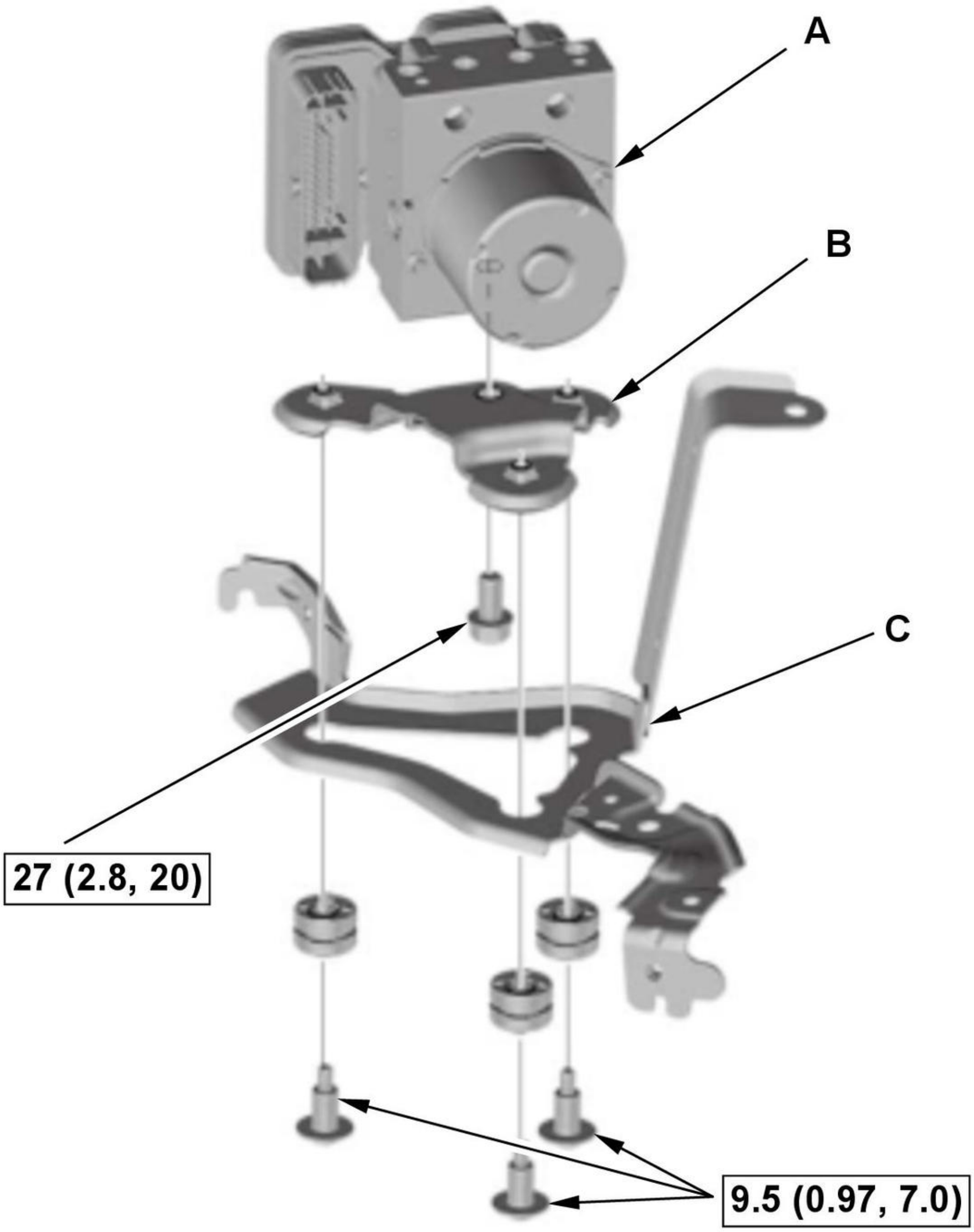

Fig. 1: VSA Modulator-Control Unit Bracket Components With Torque Specifications
Courtesy of HONDA, U.S.A., INC.

1. Install the VSA modulator-control unit (A) to the modulator sub bracket (B). 2. Install the modulator bracket (C) to the modulator sub bracket.

2. VSA Modulator-Control Unit - Install

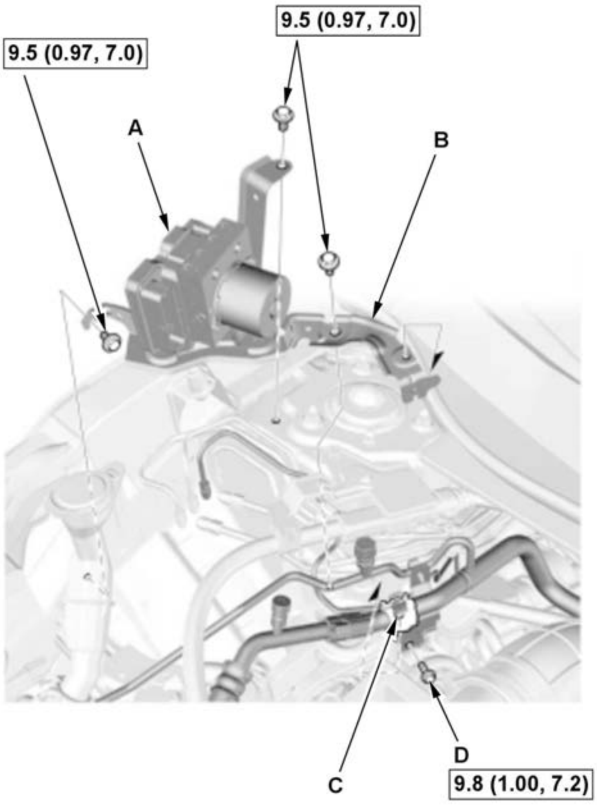 9.5 (0.97, 7.0) 9.5 (0.97, 7.0) A B C D 9.8 (1.00, 7.2)	1. Install the VSA modulator-control unit (A) with the bracket (B). 2. Install the clip (C) and the A/C line bracket mounting bolt (D) to the VSA modulator-control unit bracket.

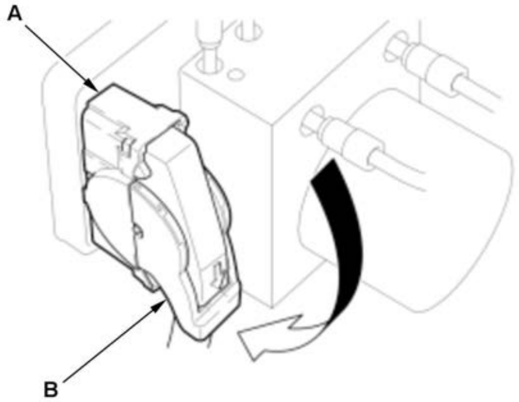	3. Align the connecting surface of the VSA modulator-control unit connector (A). 4. Pull down the lever (B) of the VSA modulator-control unit connector, then confirm the connector is fully seated.

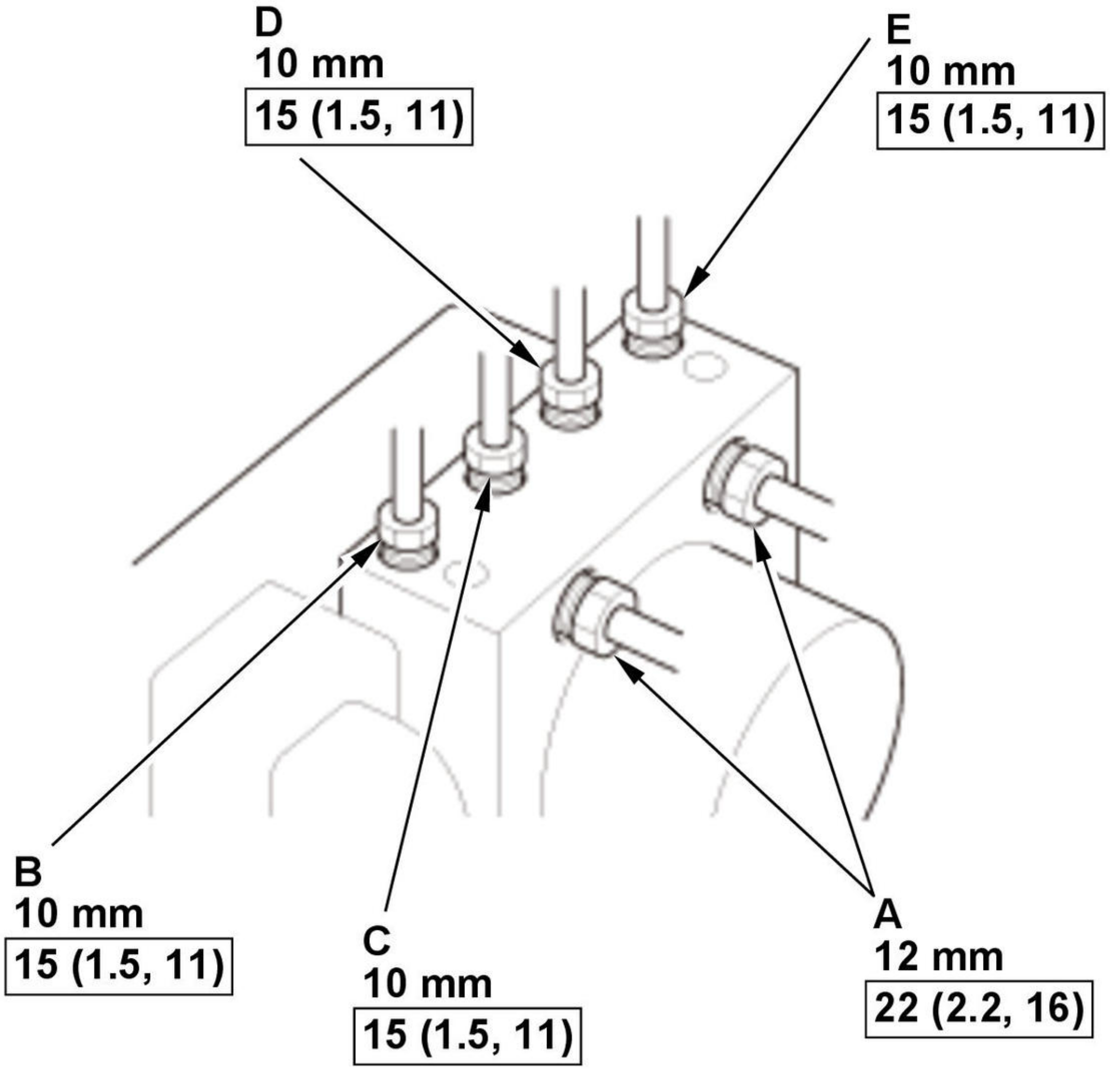

Fig. 2: VSA Modulator-Control Unit And Brake Lines With Torque Specifications
Courtesy of HONDA, U.S.A., INC.

5. Connect the brake lines.
NOTE: Brake lines are connected to the pedal feel simulator (A), the right-rear (B), the left-front (C), the right-front (D), and the left-rear (E) brake systems.

3. 12 Volt Battery Terminal - Connect
4. Brake System - Bleed
5. Keyless Access System - Register

NOTE:

- When replacing the VSA modulator-control unit, do the keyless access system registration.
- Failure to complete the keyless access system registration will lead to a no-start condition the next time the 12 volt battery is disconnected.

1. Do the keyless access system registration procedure .

6. VSA Modulator-Control Unit Software - Check

1. Make sure the VSA modulator-control unit has the latest software. If it does not have the latest, update the software in the VSA modulator-control unit .

7. VSA Modulator-Control Unit After Install - Check

1. Turn the vehicle to the ON mode.

2. Apply and release the parking brake 2 times, then make sure that the brake system indicator (red) goes OFF.

NOTE: If the brake system indicator (red) does not go OFF, check for a poor connection at the VSA modulator-control unit connector.

3. Turn the vehicle to the OFF (LOCK) mode.

8. VSA Sensor Neutral Position - Memorize
9. TPMS - Calibrate

WHEEL SPEED SENSOR REMOVAL AND INSTALLATION

Removal and Installation

NOTE: How to read the torque specifications .

Front

1. Vehicle - Lift
2. Front Wheel - Remove
3. Front Wheel Speed Sensor - Remove

   1. Disconnect the connector (A).

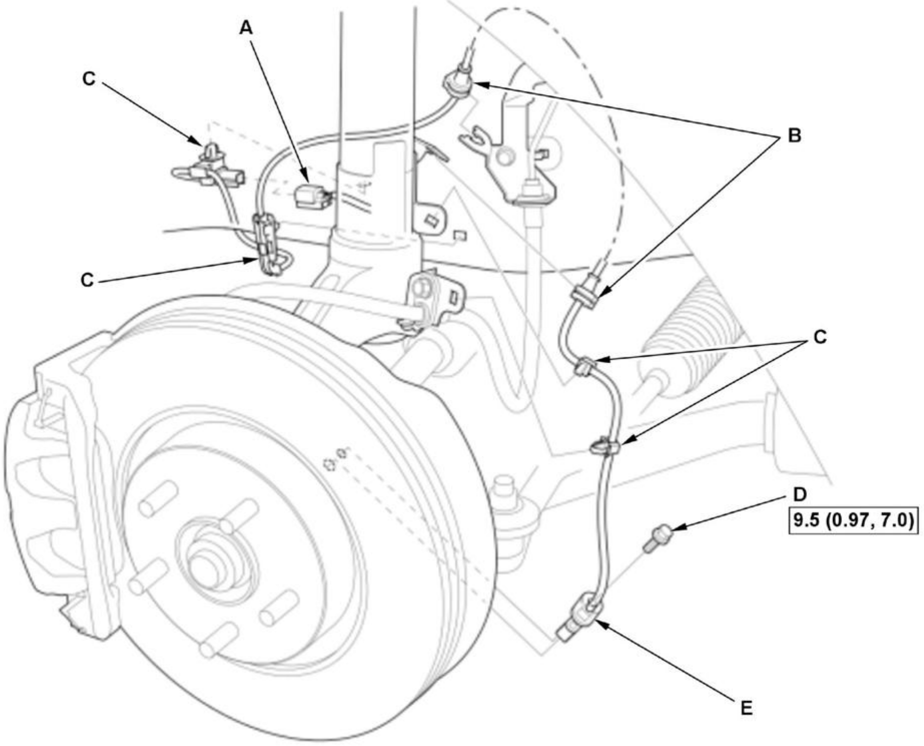

   2. Remove the wire guide rubbers (B), the clips (C), and the bolt (D).

   3. Remove the wheel speed sensor (E).

4. All Removed Parts - Install

> 1. Install all removed parts in the reverse order of removal.
>
> **NOTE:**
>
> - Install the sensor carefully to avoid twisting the wires.
> - If the wheel speed sensor comes in contact with the wheel bearing, it will become faulty.
> - Make sure there is no debris in the sensor mounting hole.

Rear

1. Vehicle - Lift
2. Rear Wheel - Remove
3. Middle Floor Undercover - Remove

> 1. Remove the middle floor undercover as needed .

4. Rear Wheel Speed Sensor - Remove

   1. Disconnect the connector (A).

   NOTE: If the connector lock tab is difficult to release, push in on the connector body before pushing on the release lock.

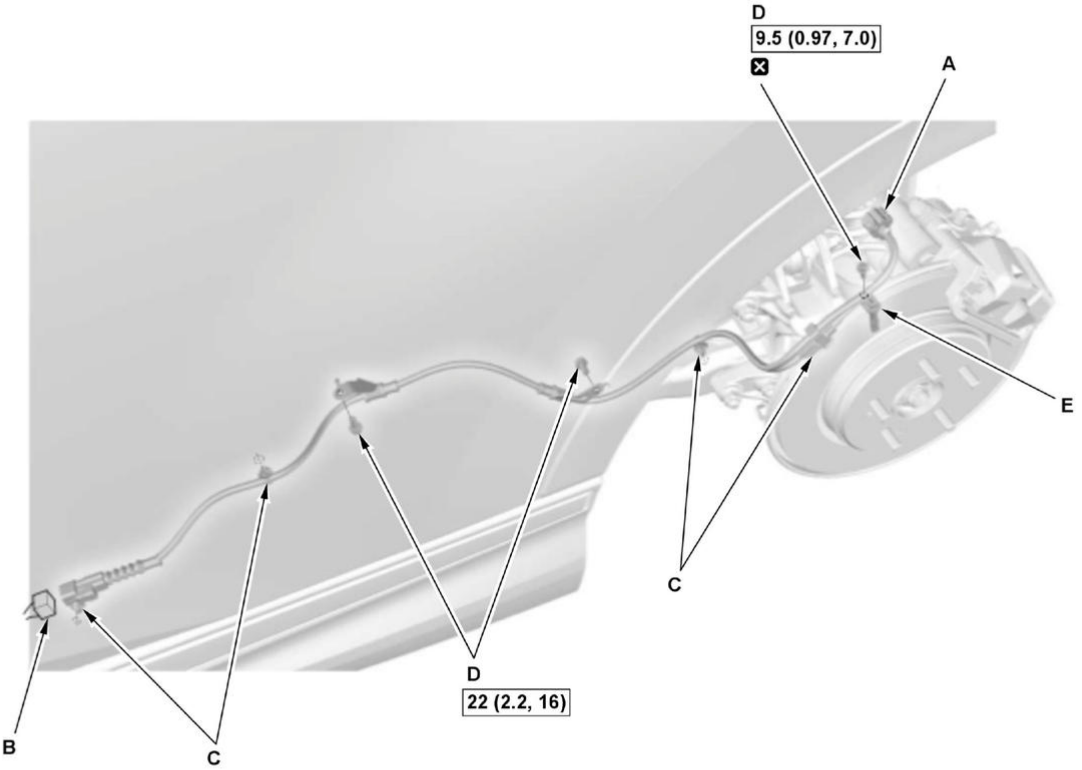

Fig. 3: Rear Wheel Speed Sensor Components With Torque Specifications
Courtesy of HONDA, U.S.A., INC.

   2. Disconnect the connector (B).

   3. Remove the clips (C) and bolts (D).

   4. Remove the wheel speed sensor (E).

5. All Removed Parts - Install

1. Install all removed parts in the reverse order of removal.

NOTE:

- Install the sensor carefully to avoid twisting the wires.
- If the wheel speed sensor comes in contact with the hub bearing unit, it will become faulty.
- Make sure there is no debris in the sensor mounting hole.

REMOVAL, INSTALLATION & TEST

VSA OFF SWITCH REMOVAL, INSTALLATION, AND TEST

Removal and Installation

1. Driver's Dashboard Undercover - Remove
2. Driver's Dashboard Lower Cover - Remove
3. VSA Off Switch - Remove

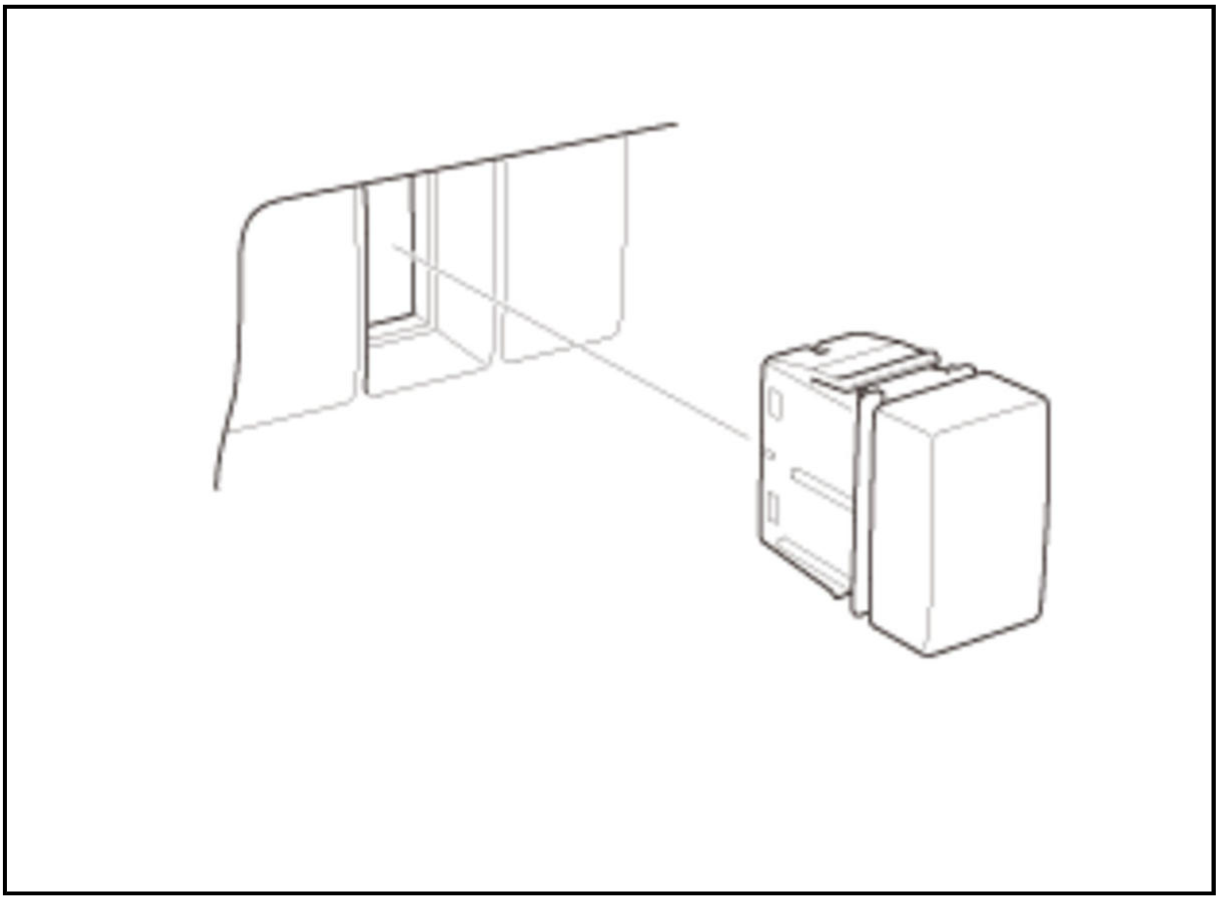

NOTE: Position of the switch is different depending on the model.

4. All Removed Parts - Install

1. Install all removed parts in the reverse order of removal.

Test

1. VSA Off Switch - Test

VSA OFF/lid switch 4P connector

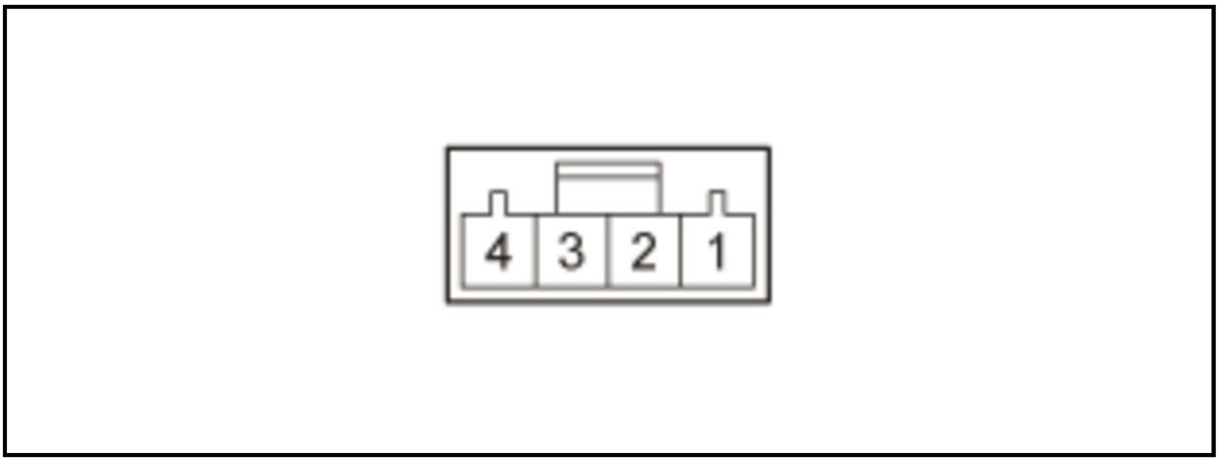

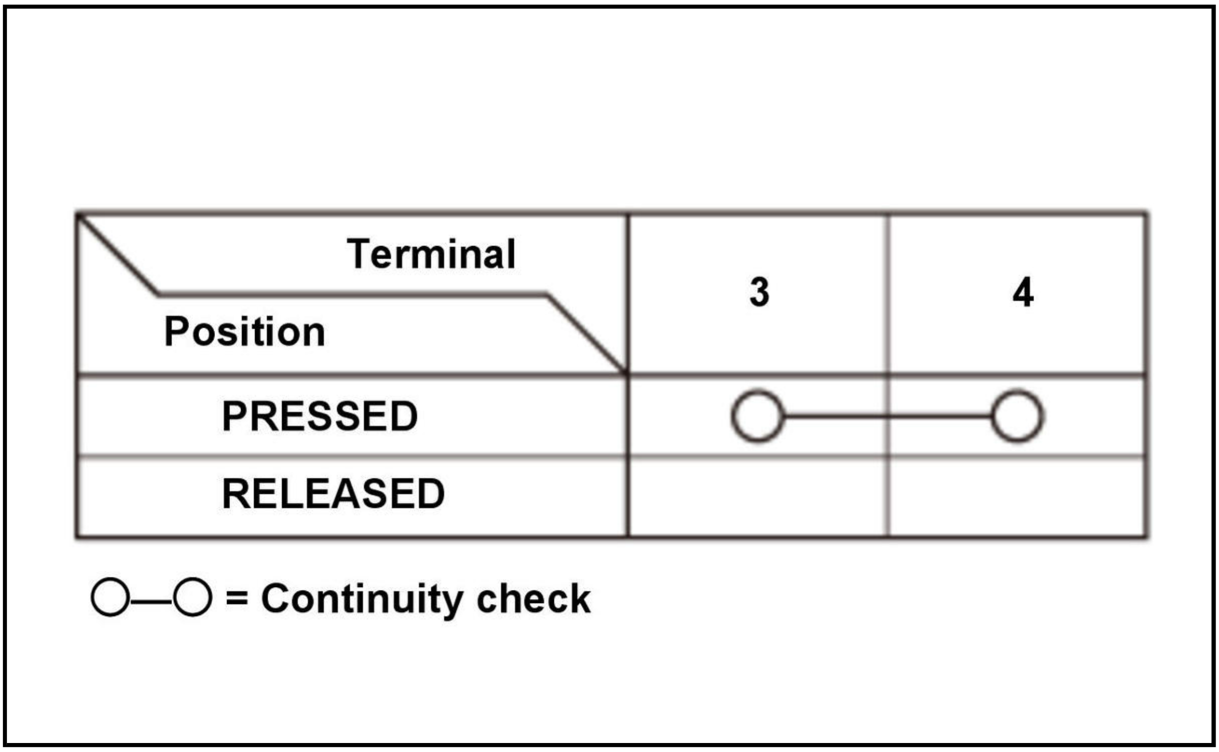

Terminal / Position	3	4
PRESSED	○	○
RELEASED		

○—○ = Continuity check

VSA OFF/parking and back-up sensor switch 8P connector

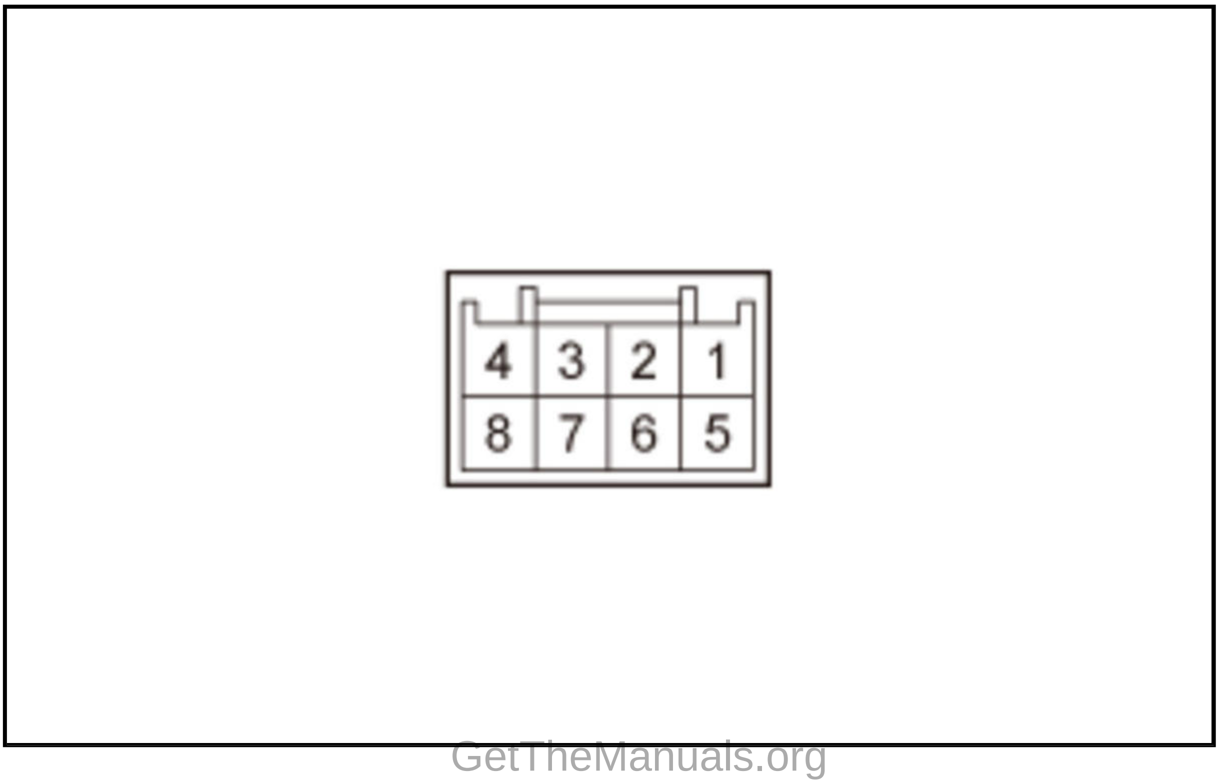

Position \ Terminal	7	8
PRESSED	○—	—○
RELEASED		

VSA OFF/driver's power tailgate switch 12P connector

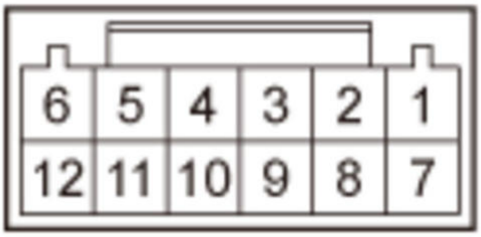
6
5
4
3
2
1
12
11
10
9
8
7

Position \ Terminal	10	11
PRESSED	○—	—○
RELEASED		

○—○ = Continuity check

Switch Internal Circuit Check:

1. On the switch side, check for continuity between the connector terminal in each switch position according to the table.

2. If the switch does not works as described in the table, replace the switch.

VSA OFF/lid switch 4P connector

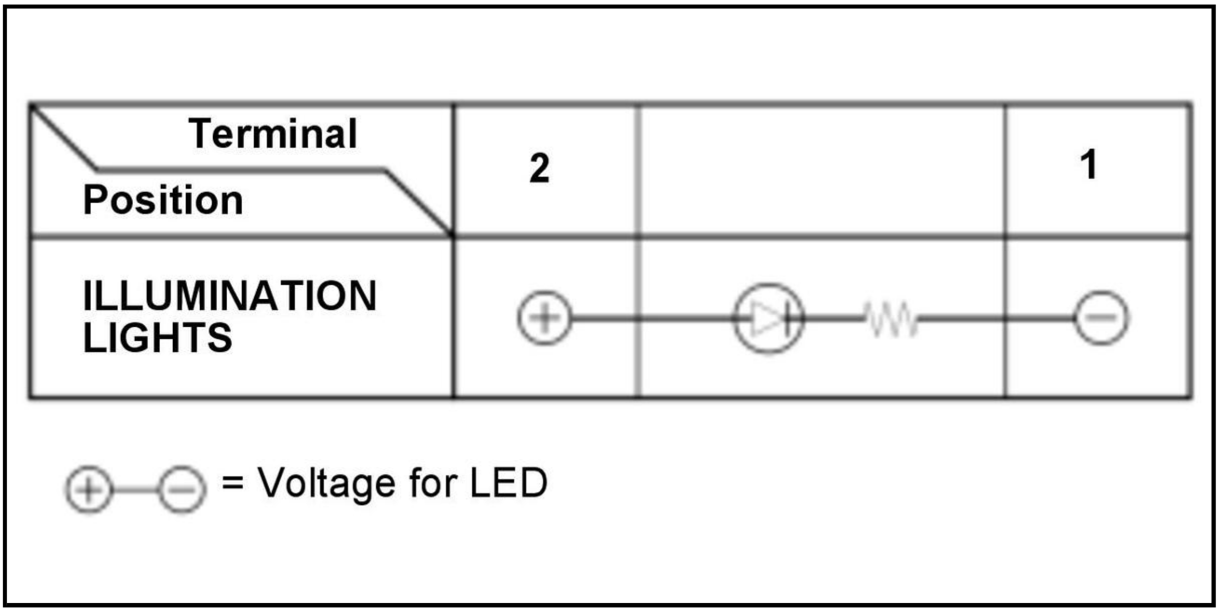
Terminal
Position
2
1
ILLUMINATION LIGHTS
= Voltage for LED

VSA OFF/parking and back-up sensor switch 8P connector

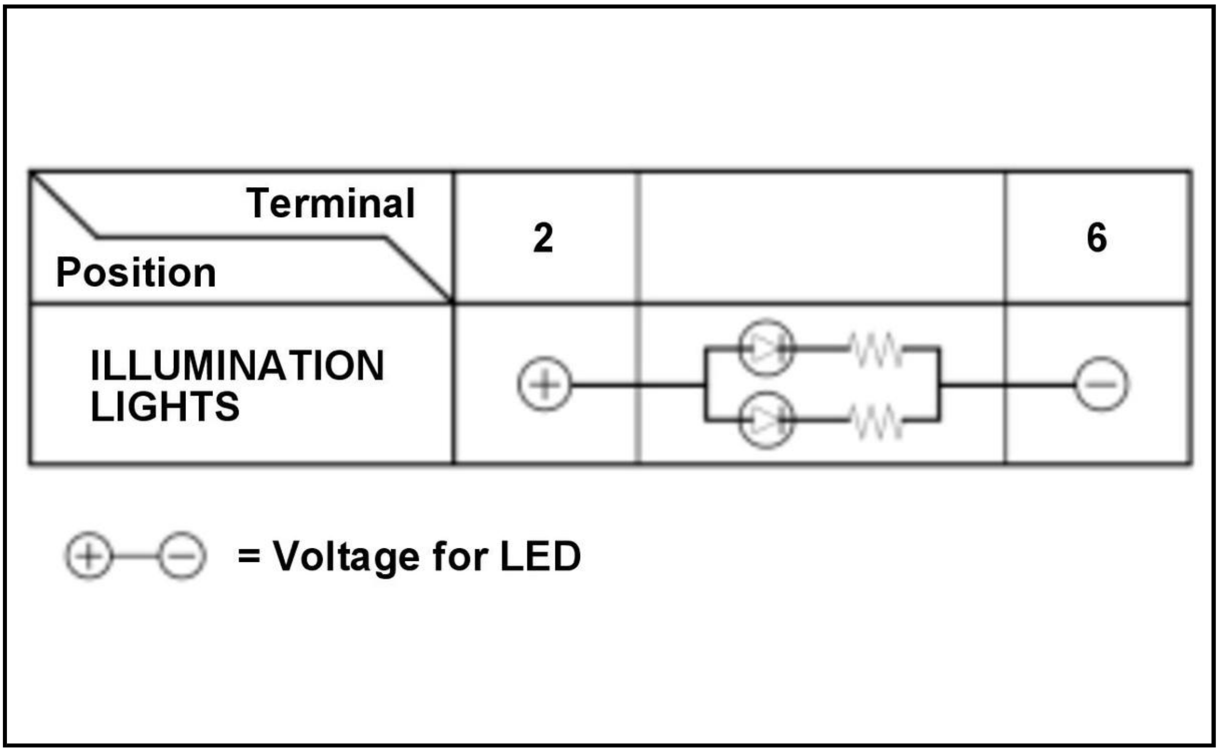
Terminal
Position
2
6
ILLUMINATION LIGHTS
= Voltage for LED

VSA OFF/driver's power tailgate switch 12P connector

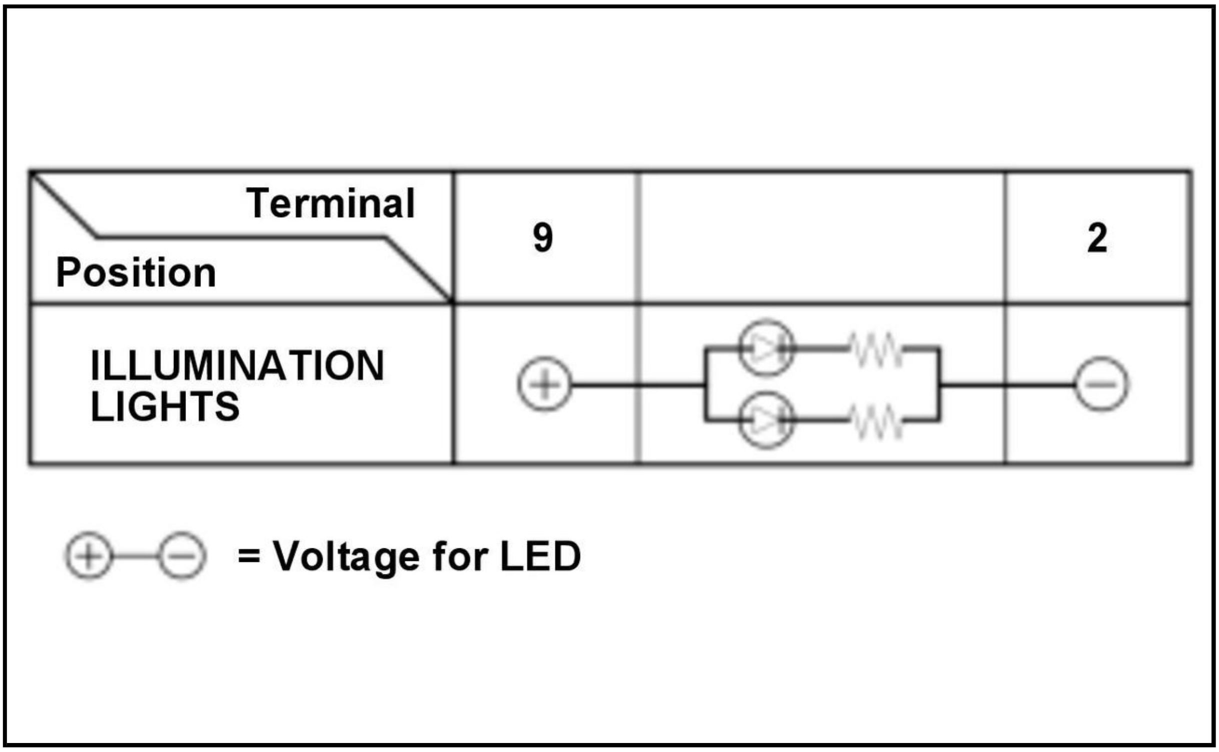
Terminal
Position
9
2
ILLUMINATION LIGHTS
= Voltage for LED

Switch Illumination Circuit Check:

1. On the switch side, check the LED for illumination by applying power and ground to the terminals according to the table.

NOTE: Important operating characteristic; diode bias causes a diode to fully conduct electricity in one direction (forward), while not at all in the opposite direction (reverse).

2. If the result is not as specified, replace the switch.

DESCRIPTION & OPERATION

VSA SYSTEM DESCRIPTION

Overview

The VSA system stabilizes the vehicle behavior by controlling the braking force and engine torque.

The VSA system consists of the following primary components:

- VSA modulator-control unit
- Wheel speed sensors
- Magnetic encoders
- VSA OFF switch
- System indicator

For locations of each component on vehicle, **refer to Component Location Index**, and for functions of indicator, **refer to How to Troubleshoot the VSA system**.

Control Unit Operation

The VSA system performs the following controls.

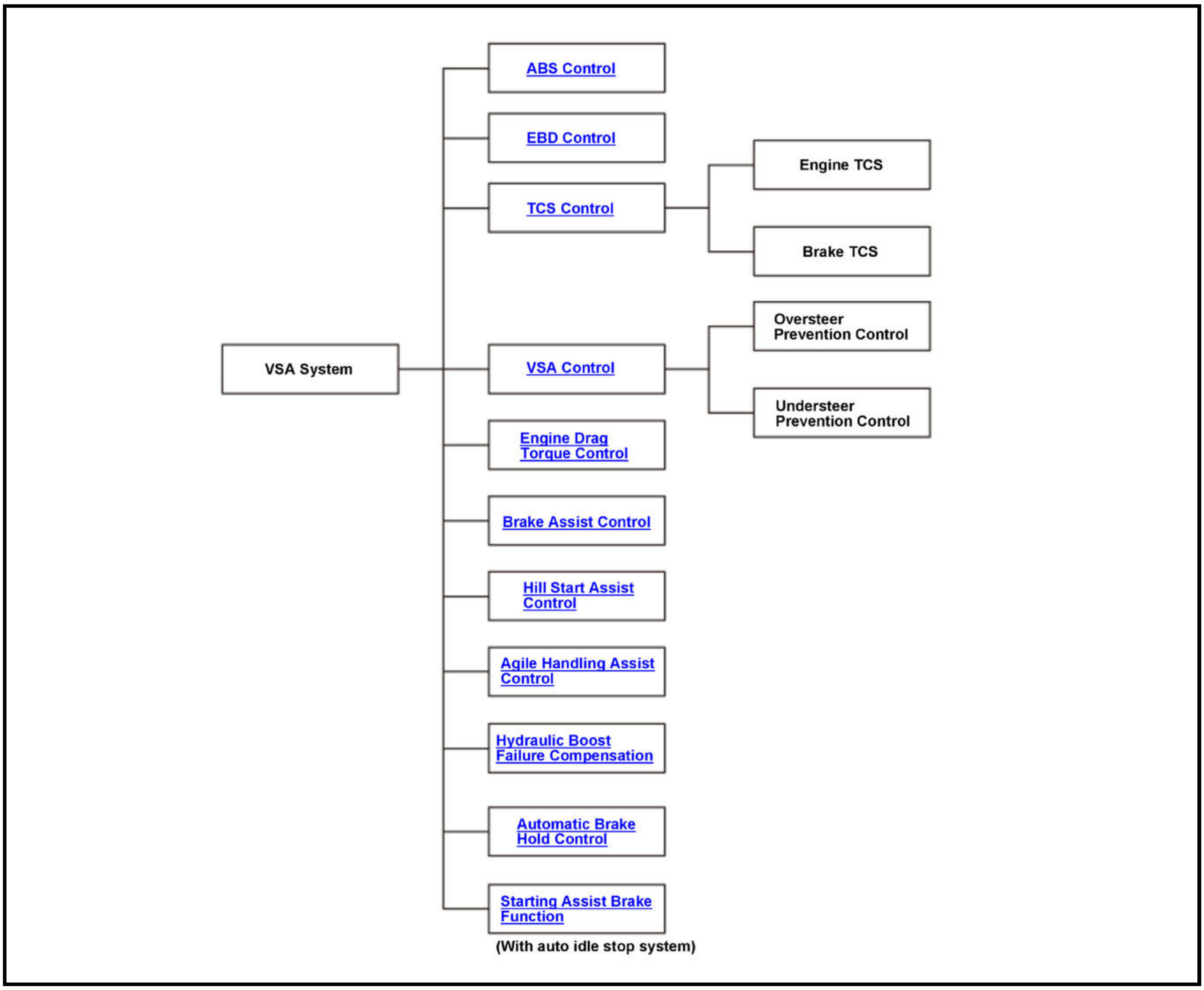
VSA System
ABS Control
EBD Control
TCS Control
Engine TCS
Brake TCS
VSA Control
Oversteer Prevention Control
Understeer Prevention Control
Engine Drag Torque Control
Brake Assist Control
Hill Start Assist Control
Agile Handling Assist Control
Hydraulic Boost Failure Compensation
Automatic Brake Hold Control
Starting Assist Brake Function
(With auto idle stop system)

VSA SYSTEM DESCRIPTION - ABS CONTROL

Overview

The ABS control maintains stability by preventing wheel lock during hard braking or braking on a slippery road surface and helps the driver retain steering control.

Control

When wheel speed is significantly reduced from estimated vehicle speed, the VSA modulator-control unit closes the inlet valve and opens the outlet valve momentarily to reduce brake fluid pressure and the pump motor starts to run. As wheel speed increases, the VSA modulator-control unit maintains brake fluid pressure by keeping the inlet valve closed. Brake fluid pressure is increased when wheel speed matches the estimated speed of the vehicle. The VSA modulator-control unit repeats this valve control operation to control the ABS function.

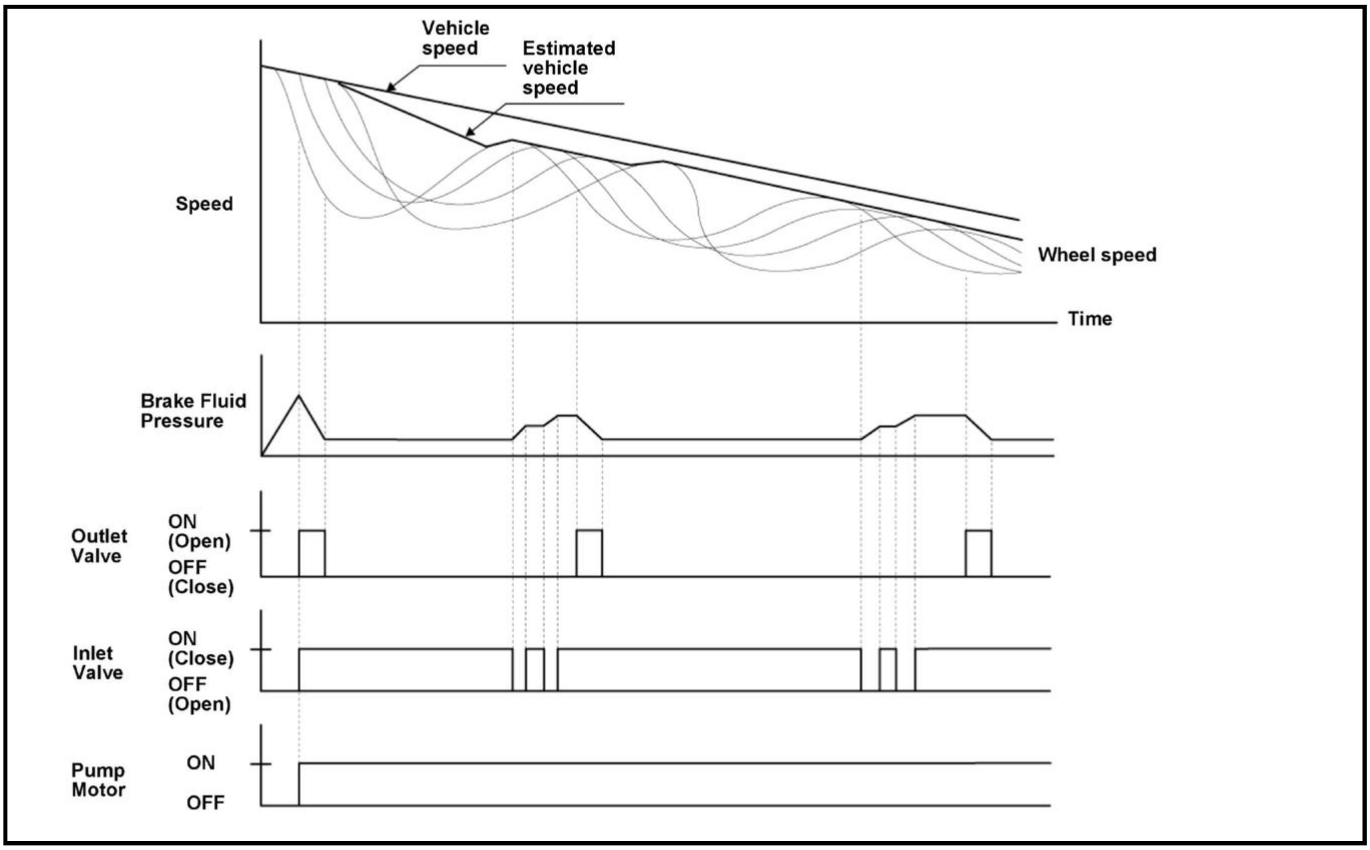

VSA SYSTEM DESCRIPTION - AGILE HANDLING ASSIST CONTROL

Overview

Where previous VSA systems activated at the limit of a turn, the agile handling assist control activates across everyday driving situations providing a safer and more enjoyable driving experience.Agile handling assist responds to the increase/decrease in steering input and vehicle action is made smooth at the same time as it improves response to steering operation and reduced steering effort. The action of steering is accomplished with a smaller amount of steering operation.

Control

Agile Handling Assist Control Overview

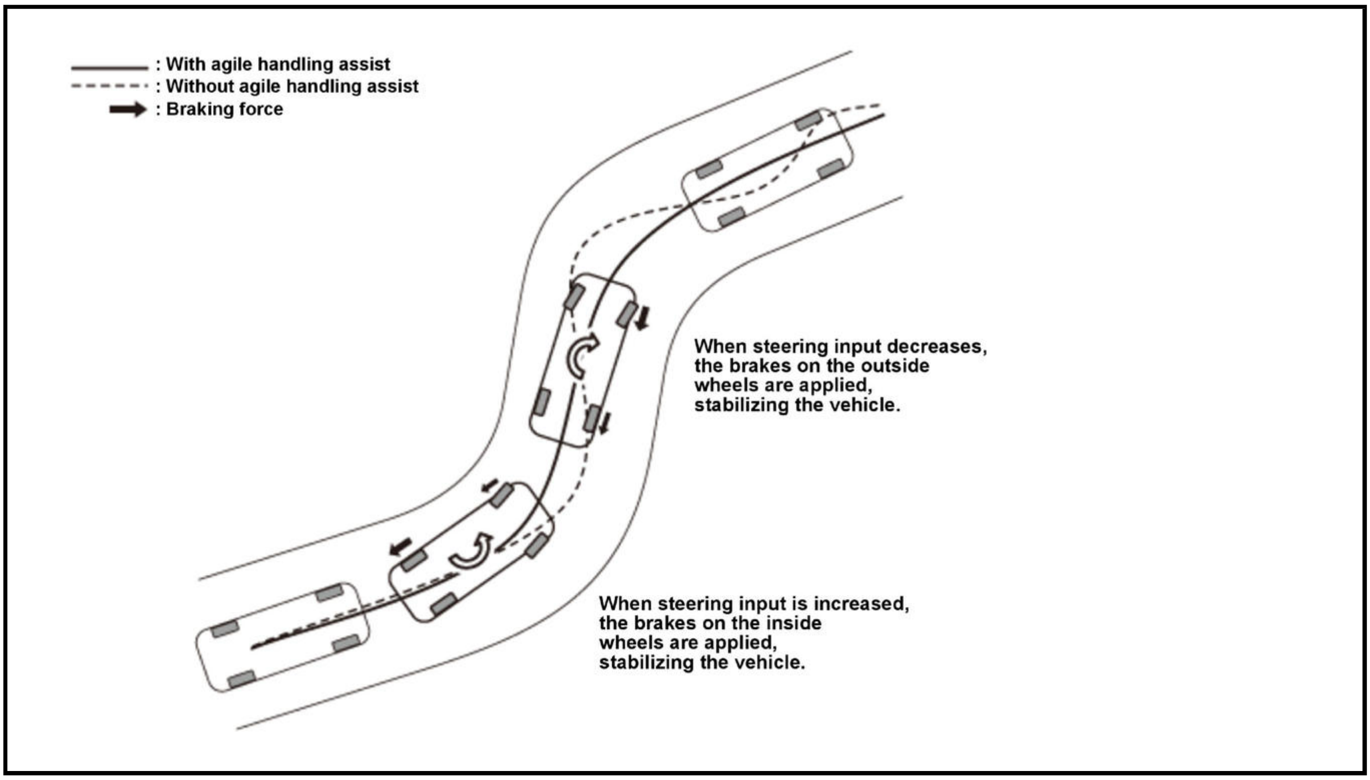
: With agile handling assist
: Without agile handling assist
: Braking force
When steering input decreases, the brakes on the outside wheels are applied, stabilizing the vehicle.
When steering input is increased, the brakes on the inside wheels are applied, stabilizing the vehicle.

Control Block

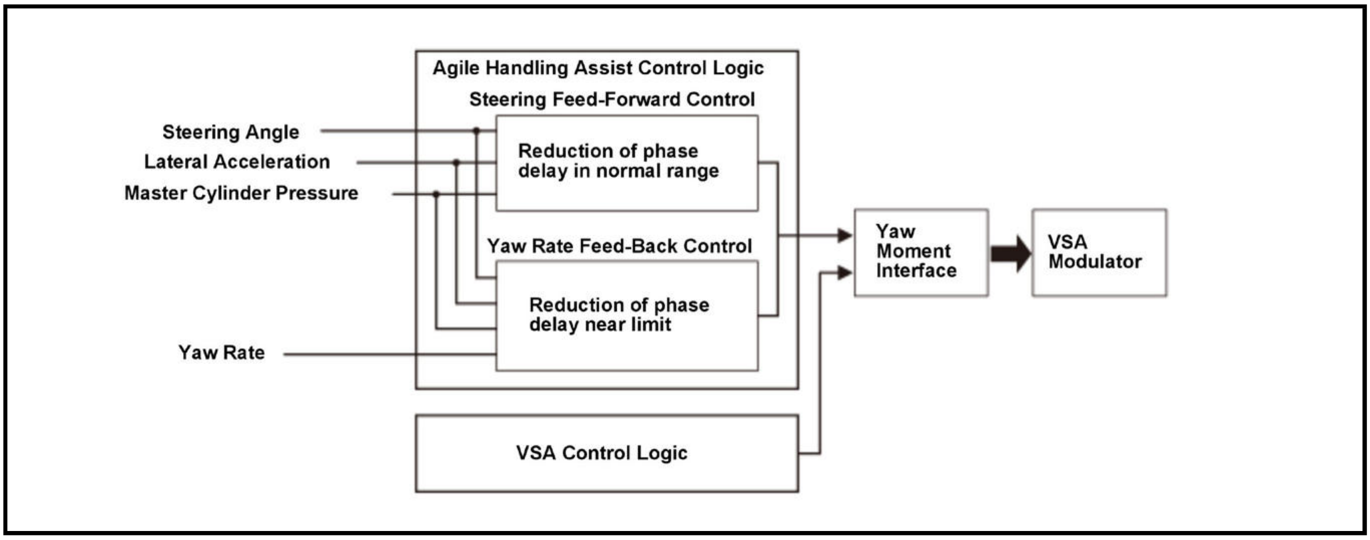
Agile Handling Assist Control Logic
Steering Feed-Forward Control
Steering Angle
Lateral Acceleration
Master Cylinder Pressure
Reduction of phase delay in normal range
Yaw Rate Feed-Back Control
Reduction of phase delay near limit
Yaw Rate
Yaw Moment Interface
VSA Modulator
VSA Control Logic

Brake Pressure Control Image

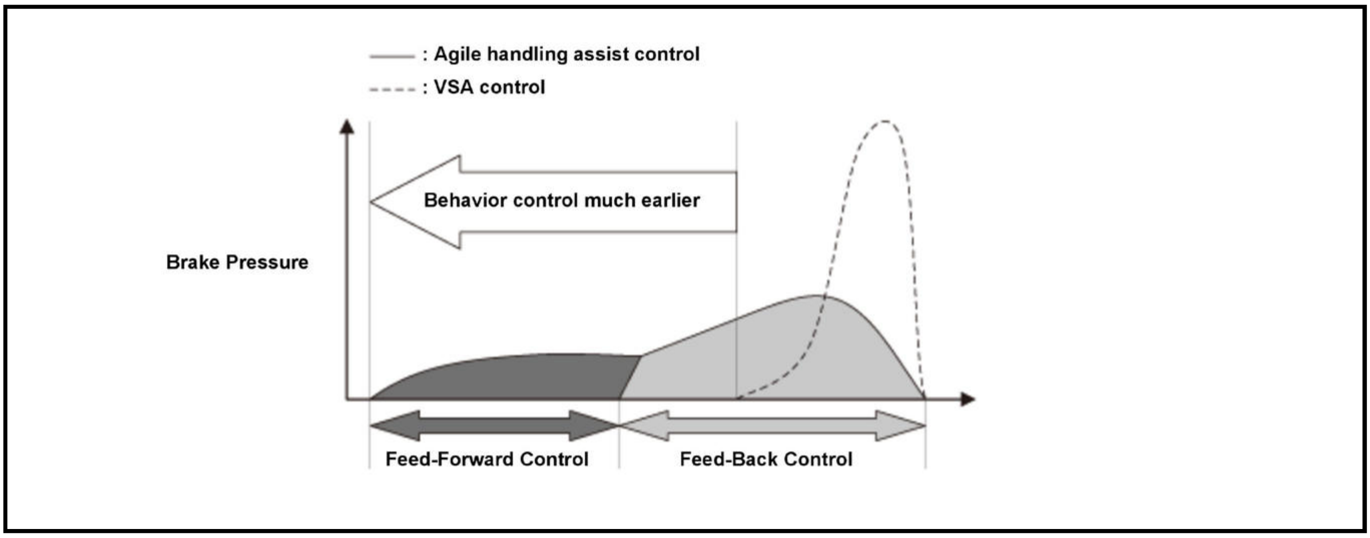

VSA SYSTEM DESCRIPTION - AUTOMATIC BRAKE HOLD

Overview

With automatic brake hold, the vehicle's brakes are applied when the vehicle is stopped, such as being stopped in traffic, even if the brake pedal is released. There is no need to keep pressing the brake pedal while stopped in heavy traffic or at traffic lights.

Control

As the accelerator pedal is pressed, the automatic brake hold feature is cancelled and returns to the stand by mode. If the automatic brake hold features is applied for an extended time (approx.10 minutes), the electric parking brake will engage to hold the vehicle.

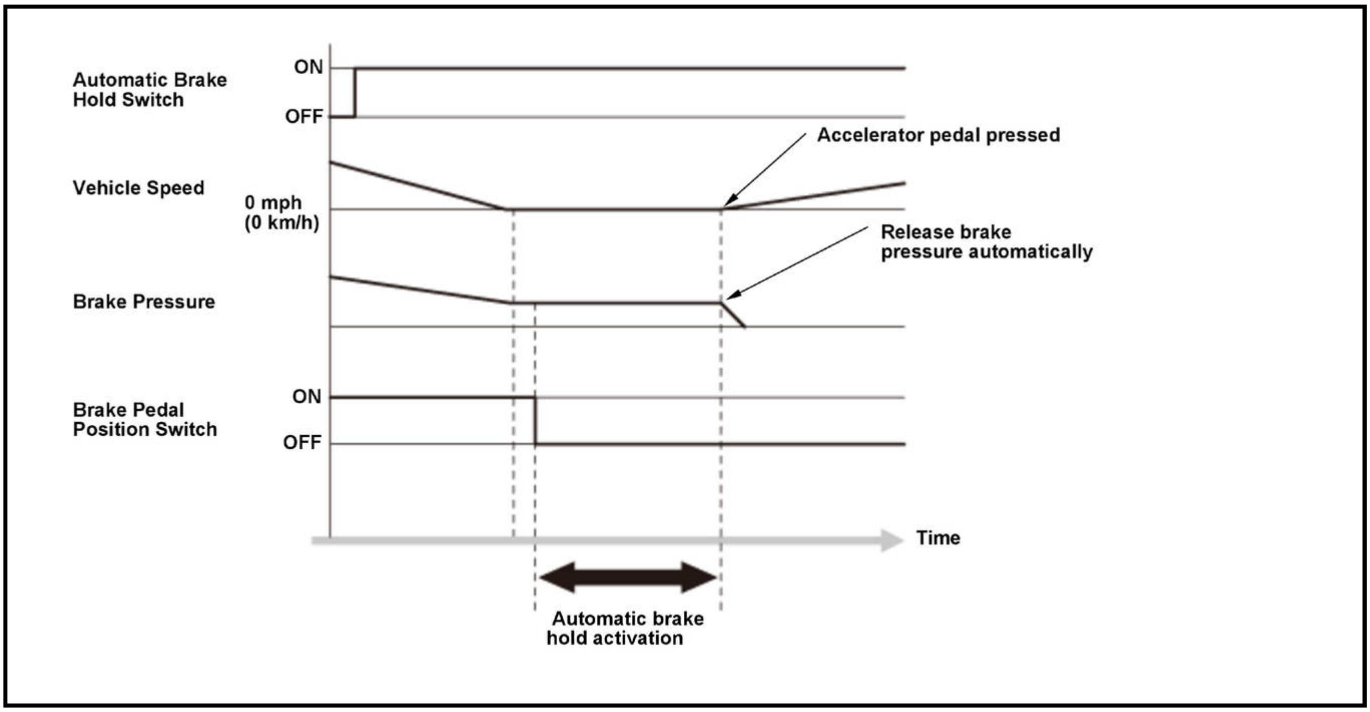

VSA SYSTEM DESCRIPTION - BRAKE ASSIST CONTROL

Overview

The brake assist control shortens the braking distance by increasing the driver's applied brake force during emergency braking.

Control

The VSA modulator-control unit constantly monitors brake operation through the pressure sensor. If the pedal stroke speed and pedal stroke amount exceed the threshold, it is considered to be emergency braking. When emergency braking is determined to be taking place, the VSA modulator-control unit increases braking force compared to normal braking and shortens the braking distance.

Brake Assist Operation Image

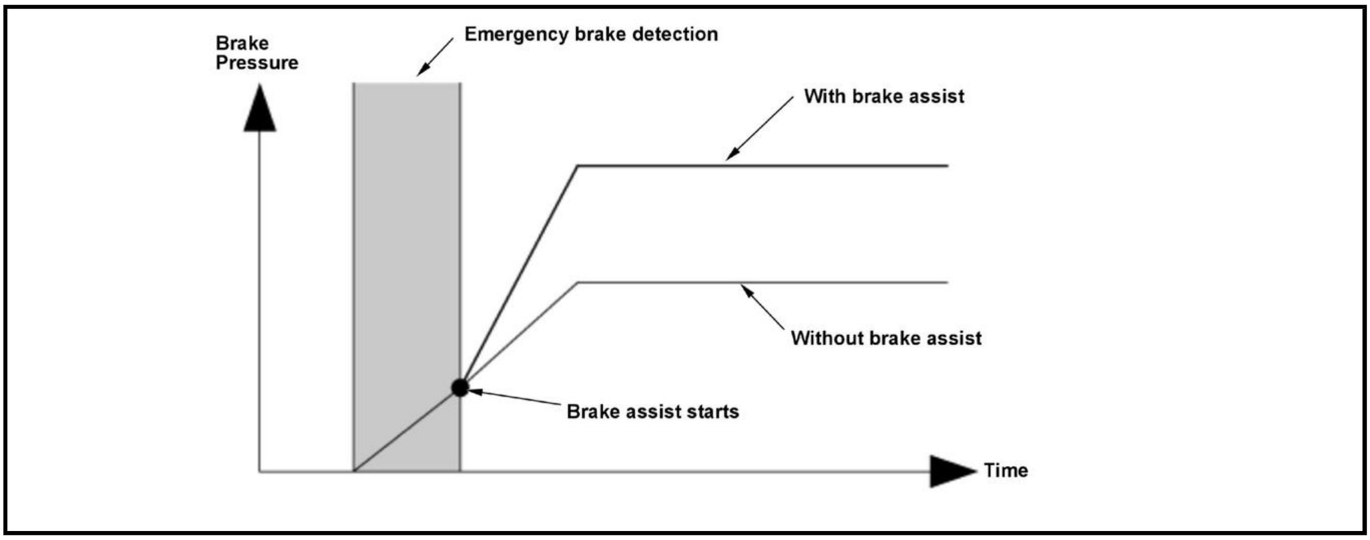

VSA SYSTEM DESCRIPTION - COMPONENTS

VSA Modulator

The VSA modulator unit consists of the inlet solenoid valve, the outlet solenoid valve, the VSA NO (normally open) solenoid valve, the VSA NC (normally closed) solenoid valve, the reservoir, the pump, the pressure sensor, and the pump motor. The hydraulic control has four modes; pressure intensifying, pressure retaining, pressure reducing, and pressure intensifying mode.

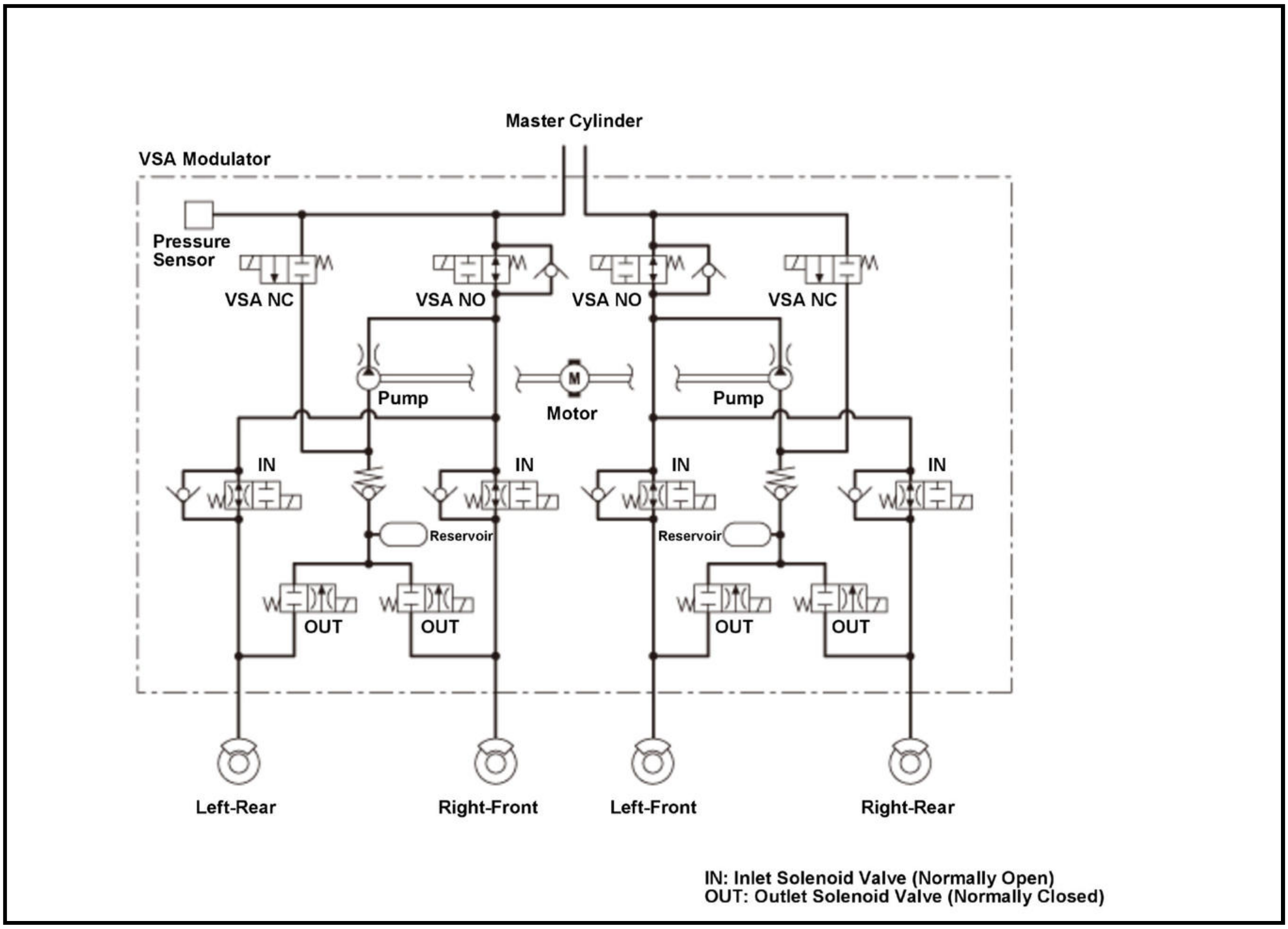
Master Cylinder
VSA Modulator
Pressure Sensor
VSA NC
VSA NO
VSA NO
VSA NC
Pump
M
Motor
Pump
IN
IN
IN
IN
Reservoir
Reservoir
OUT
OUT
OUT
OUT
Left-Rear
Right-Front
Left-Front
Right-Rear
IN: Inlet Solenoid Valve (Normally Open)
OUT: Outlet Solenoid Valve (Normally Closed)

Mode	VSA NOSolenoidValve	VSA NCSolenoidValve	InletSolenoidValve	OutletSolenoidValve	Brake Fluid
Pressure intensifying mode	open	closed	open	closed	Master cylinder fluid is

Mode	VSA NOSolenoidValve	VSA NCSolenoidValve	InletSolenoidValve	OutletSolenoidValve	Brake Fluid
					pumped out to the caliper.
Pressure retaining mode	open	closed	closed	closed	Caliper fluid is retained by the inlet and outlet solenoid valves.
Pressure reducing mode	open	closed	closed	open	Caliper fluid flows through the outlet solenoid valve to the reservoir.

Mode	VSA NOSolenoidValve	VSA NCSolenoidValve	InletSolenoidValve	OutletSolenoidValve	Brake Fluid
Pressure intensifying mode (VSA)	closed (current control)	open	open	closed	• Master cylinder fluid is pumped out by the pump through the VSA NC solenoid valve to the caliper. • Caliper fluid pressure exceeds master cylinder pressure. • The VSA modulator unit controls amount of intensified fluid pressure to respond to each mode

Mode	VSA NOSolenoidValve	VSA NCSolenoidValve	InletSolenoidValve	OutletSolenoidValve	Brake Fluid
					through current control of VSA NO solenoid valve.

Wheel Speed Sensor

The VSA system uses 4 wheel speed sensors to monitor individual wheel speed. The wheel speed sensor is a semiconductor, Hall effect sensor, and detects the magnetic field of a magnetic encoder installed on the inner sealing surface of each hub and wheel bearing assembly. The frequency of the sensor output signal is proportional to the speed of the wheel and this signal information is sent to the VSA control unit.

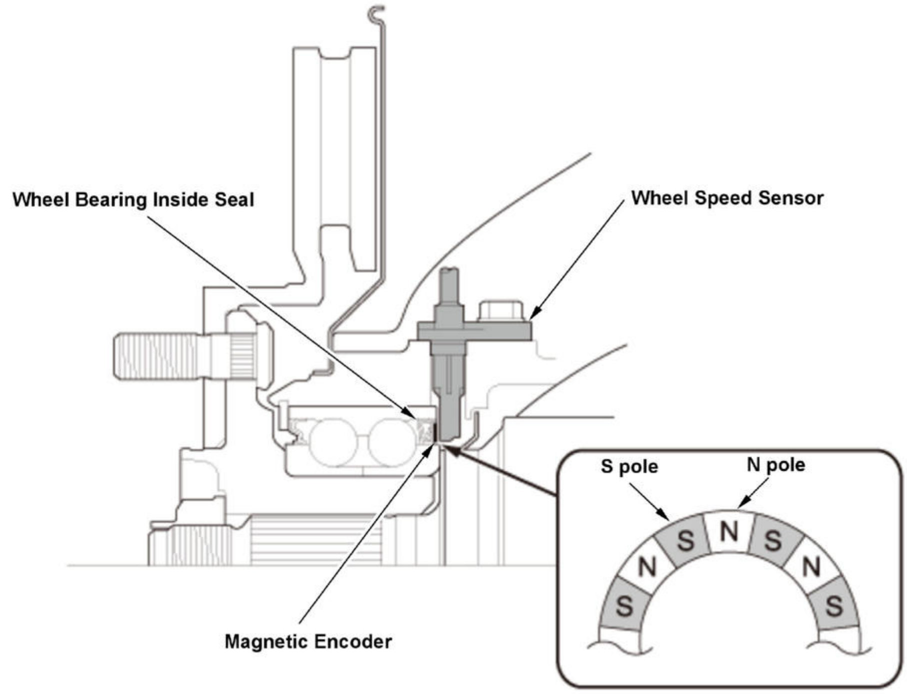
Wheel Bearing Inside Seal
Wheel Speed Sensor
S pole
N pole
S
N
S
N
S
N
S
Magnetic Encoder

NOTE: This illustration is a typical sample of front side wheel speed sensor.

VSA SYSTEM DESCRIPTION - EBD CONTROL

Overview

The EBD system actively controls the distribution of the front and rear braking forces to correspond with changes in the load condition and displacement of the load due to deceleration.

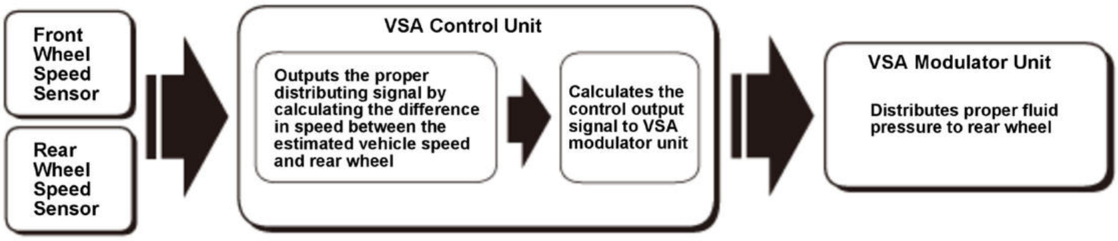
Front Wheel Speed Sensor
Rear Wheel Speed Sensor
VSA Control Unit
Outputs the proper distributing signal by calculating the difference in speed between the estimated vehicle speed and rear wheel
Calculates the control output signal to VSA modulator unit
VSA Modulator Unit
Distributes proper fluid pressure to rear wheel

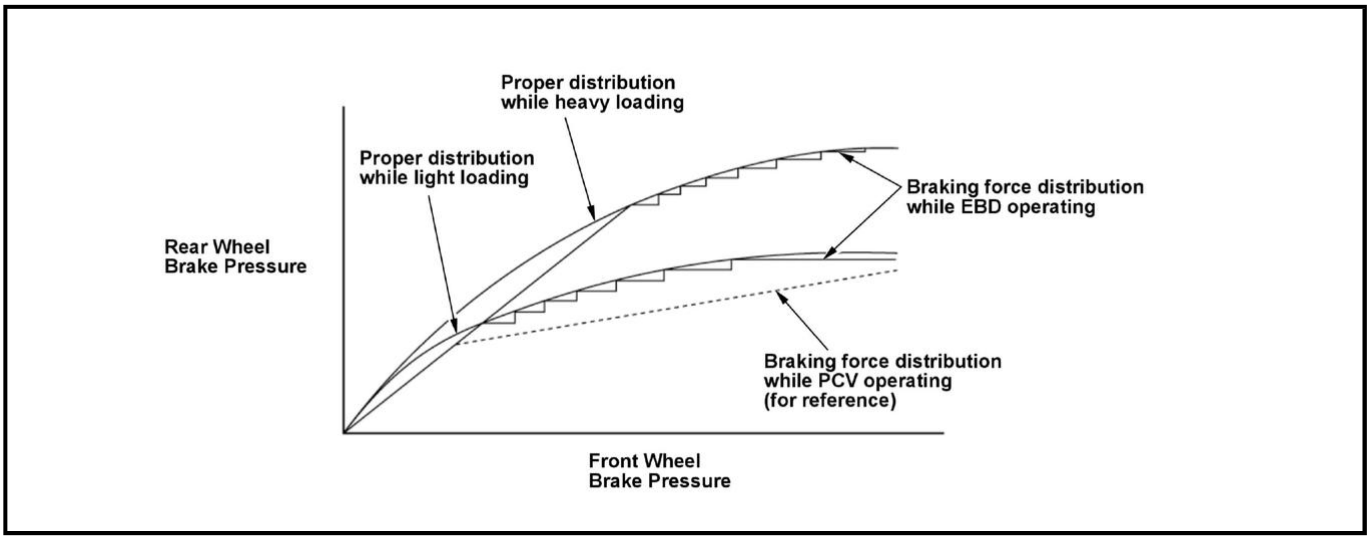

Control

When rear wheel speed is less than the estimated vehicle speed, the VSA modulator-control unit closes the inlet valve to maintain brake fluid pressure. As wheel speed increases, the VSA modulator-control unit opens the inlet valve momentarily to increase the brake fluid pressure. When lower pressure is required, the modulator unit opens the outlet valve momentarily decreasing fluid pressure. The VSA modulator-control unit repeats this valve control operation to control the EBD function.

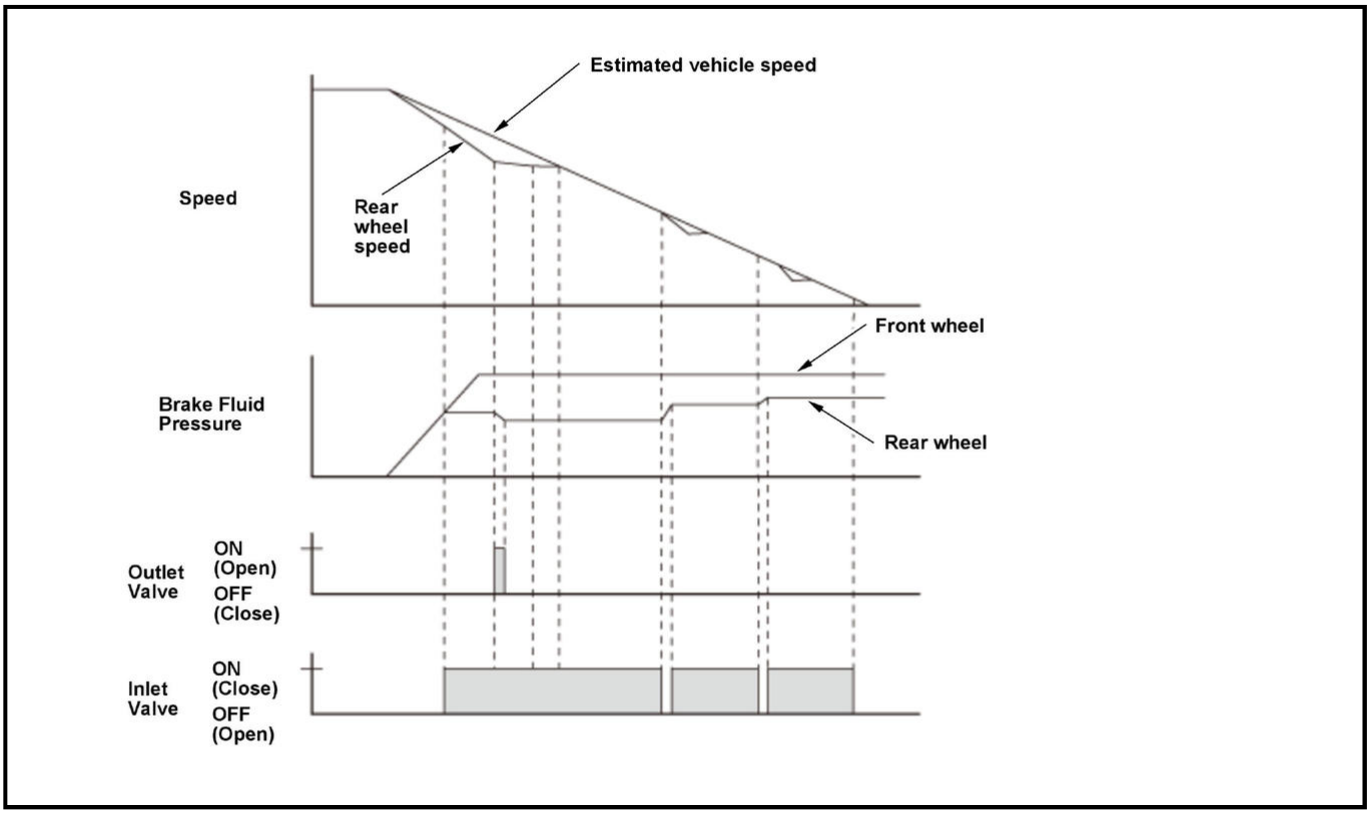

VSA SYSTEM DESCRIPTION - ENGINE DRAG TORQUE CONTROL

Overview

Downshifting on a slippery road may cause vehicle instability because engine braking may lock up the wheels. When engine braking begins to cause the wheels to lock up, the engine drag torque control commands the PCM to increase the torque, helping to prevent tire slip.

Control

The VSA modulator-control unit calculates the vehicle speed and acceleration of each wheel from each wheel speed sensor signal and makes a judgment on the slip condition of the wheel. The VSA modulator-control unit adjusts the engine torque based on the slip condition.

VSA SYSTEM DESCRIPTION - HILL START ASSIST CONTROL

Overview

The hill start assist control assists drivers by automatically controlling brake pressure when starting a vehicle on a steep hill; this assist prevents the vehicle from rolling on a hill for a few seconds while the driver moves their foot from the brake pedal to the accelerator pedal. The hill start assist control may not be activated when the driver does not press the brake strongly enough upon stopping the vehicle or when the driver releases the brake pedal gradually upon starting the vehicle.

Control

The control unit reads the angle of inclination from the longitudinal acceleration signal and that all four wheels are stopped, then it calculates the amount of fluid pressure required to keep the vehicle from rolling backward.This takes place as the control unit sees the brake pressure decrease when the driver lifts their foot off of the brake pedal and moves it onto the accelerator pedal. After the driver transitions to the accelerator pedal and the engine torque is restored to the predetermined level required to start-up the engine, the hill start assist control will release the brake fluid pressure. The hill start assist control will release the brake fluid pressure if the accelerator pedal is not pressed for a certain period of time after the brake pedal has been released.

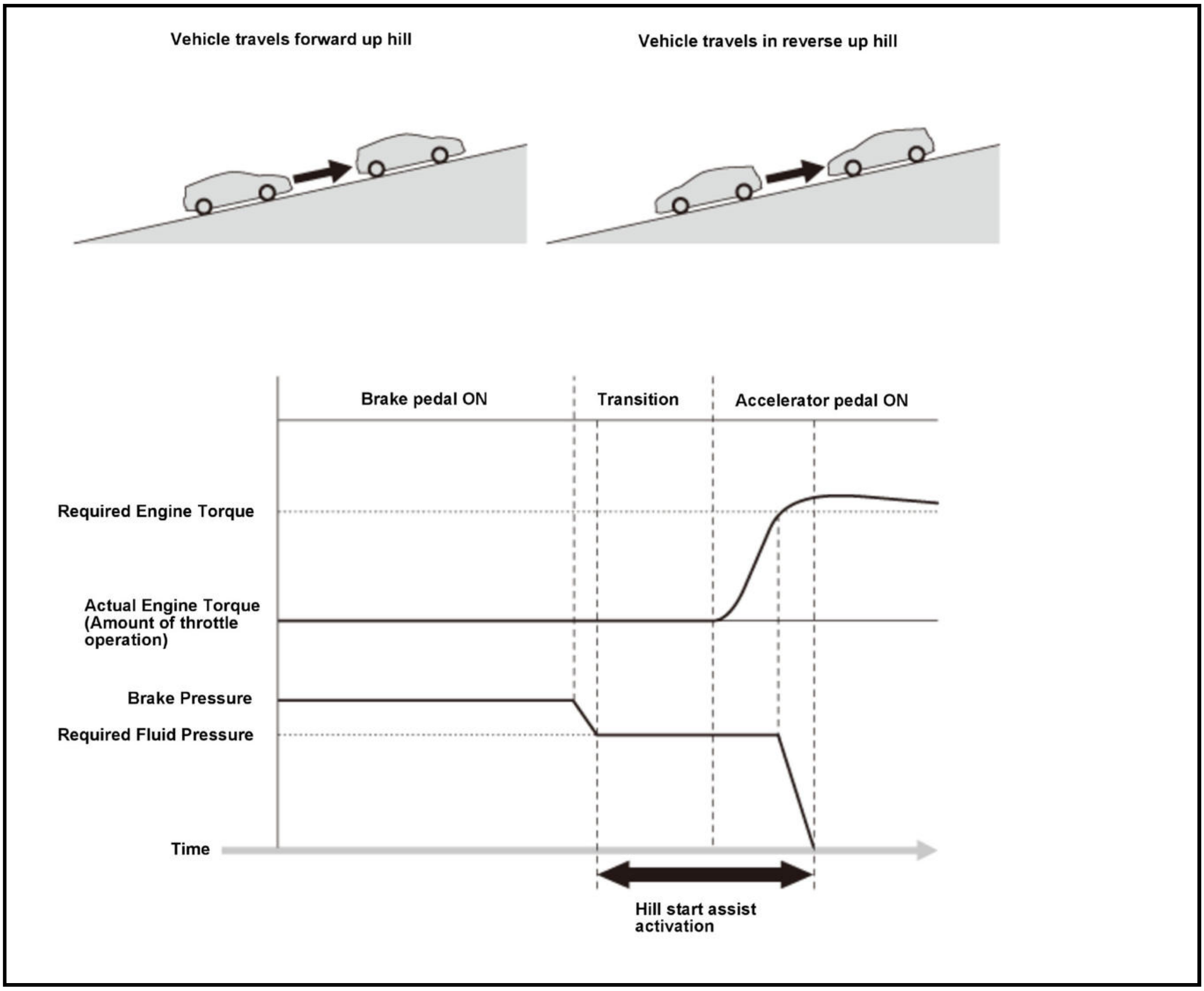
Vehicle travels forward up hill
Vehicle travels in reverse up hill
Brake pedal ON
Transition
Accelerator pedal ON
Required Engine Torque
Actual Engine Torque (Amount of throttle operation)
Brake Pressure
Required Fluid Pressure
Time
Hill start assist activation

VSA SYSTEM DESCRIPTION - HYDRAULIC BOOST FAILURE COMPENSATION

Overview

If the electric brake booster system malfunctions, the operating force of the brake pedal becomes larger than under normal conditions. In this case, the hydraulic boost failure compensation uses the pressurization control of the VSA system to reduce the operating force of the brake pedal.

Control

The VSA modulator-control unit calculates control quantity based on the signals of the brake pedal position switch, the wheel speed sensors, and the pressure sensor, then increases the caliper pressure by driving the pump motor and solenoid valves.

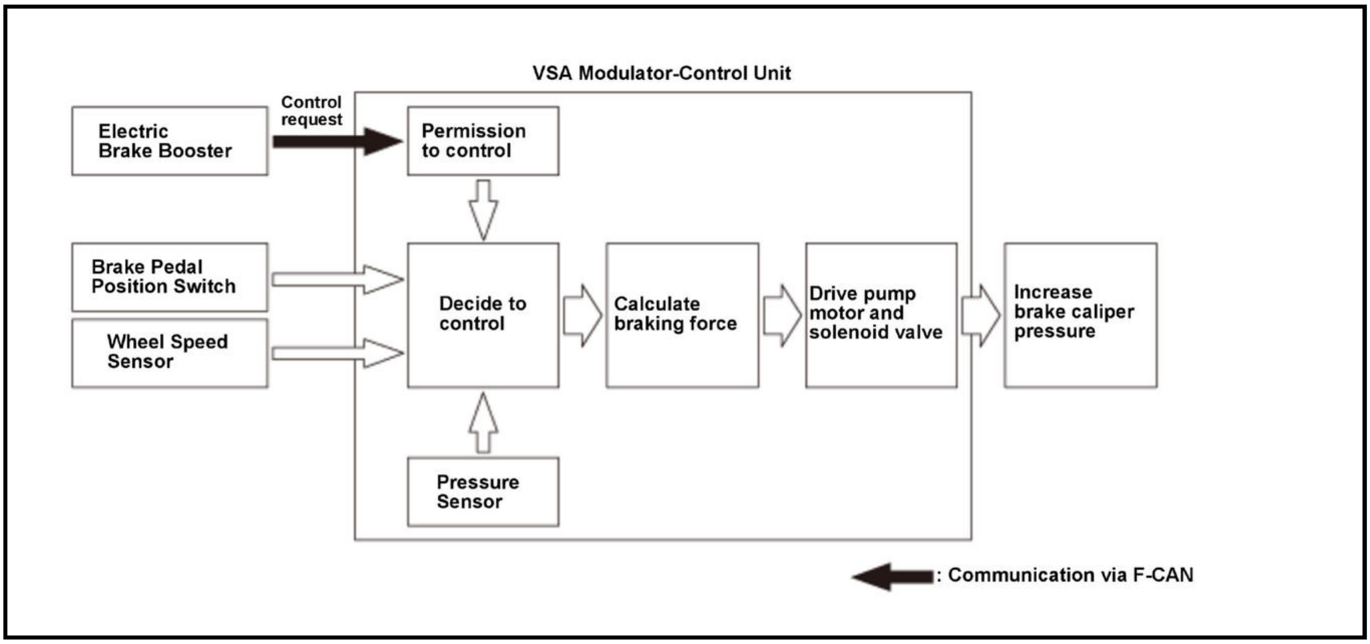
VSA Modulator-Control Unit
Electric Brake Booster
Control request
Permission to control
Brake Pedal Position Switch
Wheel Speed Sensor
Decide to control
Calculate braking force
Drive pump motor and solenoid valve
Increase brake caliper pressure
Pressure Sensor
: Communication via F-CAN

VSA SYSTEM DESCRIPTION - STARTING ASSIST BRAKE FUNCTION (WITH AUTO IDLE STOP SYSTEM) (2020 2021)

Overview

The starting assist brake function holds the brake pressure for a few seconds when there is no creep forces while auto idling stop is activating. This function prevents slight moving of the vehicle when restarts the engine, and also prevents the vehicle from moving backwards on a hill while the driver transitions from the brake pedal to the accelerator pedal.

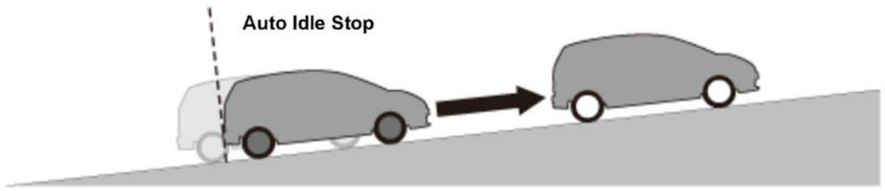
Auto Idle Stop

Control

When the PCM is ready to output an operation request signal for starting assist brake function and the brake pedal is released by the driver, the starting assist brake function holds the brake pressure according to the gradient of the slope.After the driver transitions to the accelerator pedal, the engine is restarted, and the creep force is restored to the programmed level, the starting assist brake function will release the brake pressure.The starting assist brake function may not be activated when the driver does not press the brake strongly enough upon stopping the vehicle or when the driver releases the brake pedal gradually upon starting the vehicle.

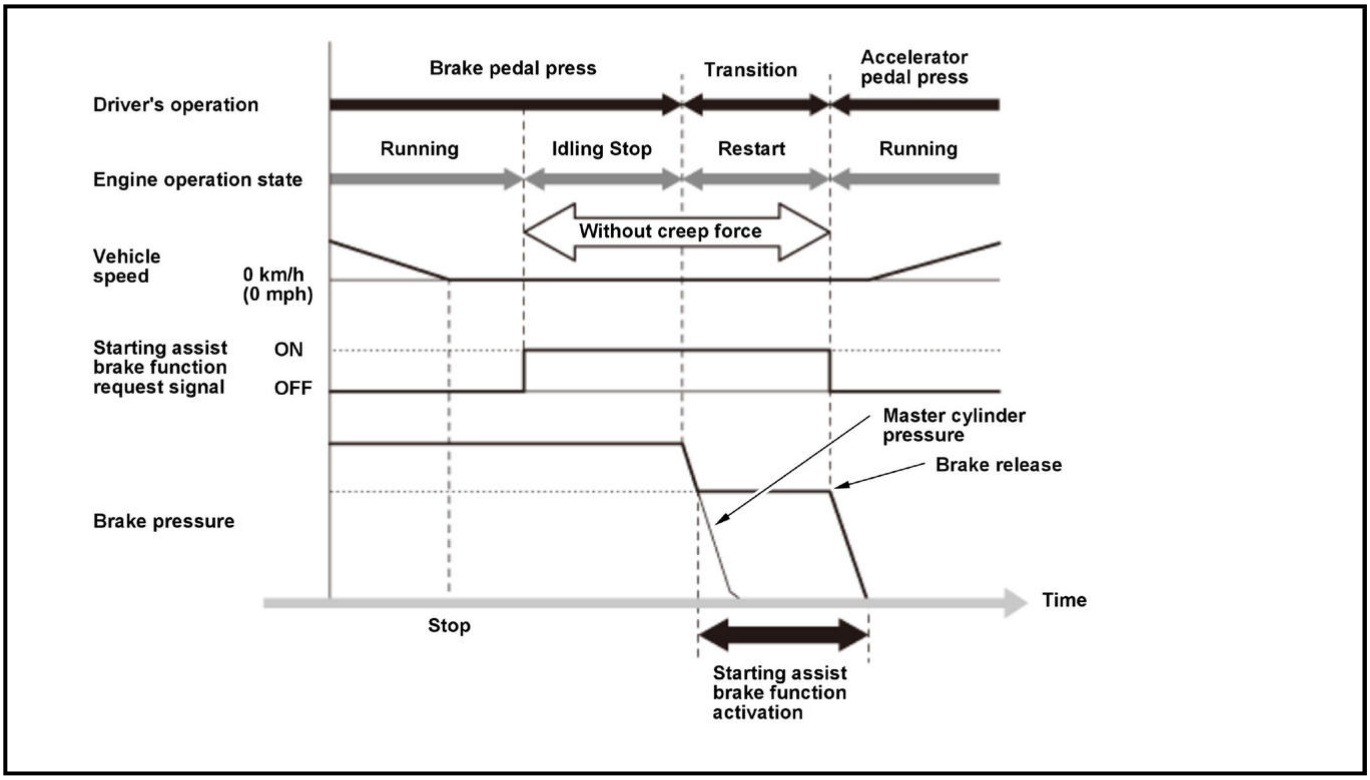

VSA SYSTEM DESCRIPTION - SYSTEM DIAGRAM

The system diagram of the VSA system is shown below.

For locations of each component on vehicle, refer to Component Location Index:

- VSA modulator-control unit, Wheel speed sensor, VSA OFF switch, Automatic brake hold switch
- PCM
- TCM (L15BE engine)
- Gauge control module, Brake fluid level switch
- SRS unit
- EPS control unit
- Electric brake booster
- Brake pedal position switch, Brake light relay
- Millimeter wave radar (With ACC)

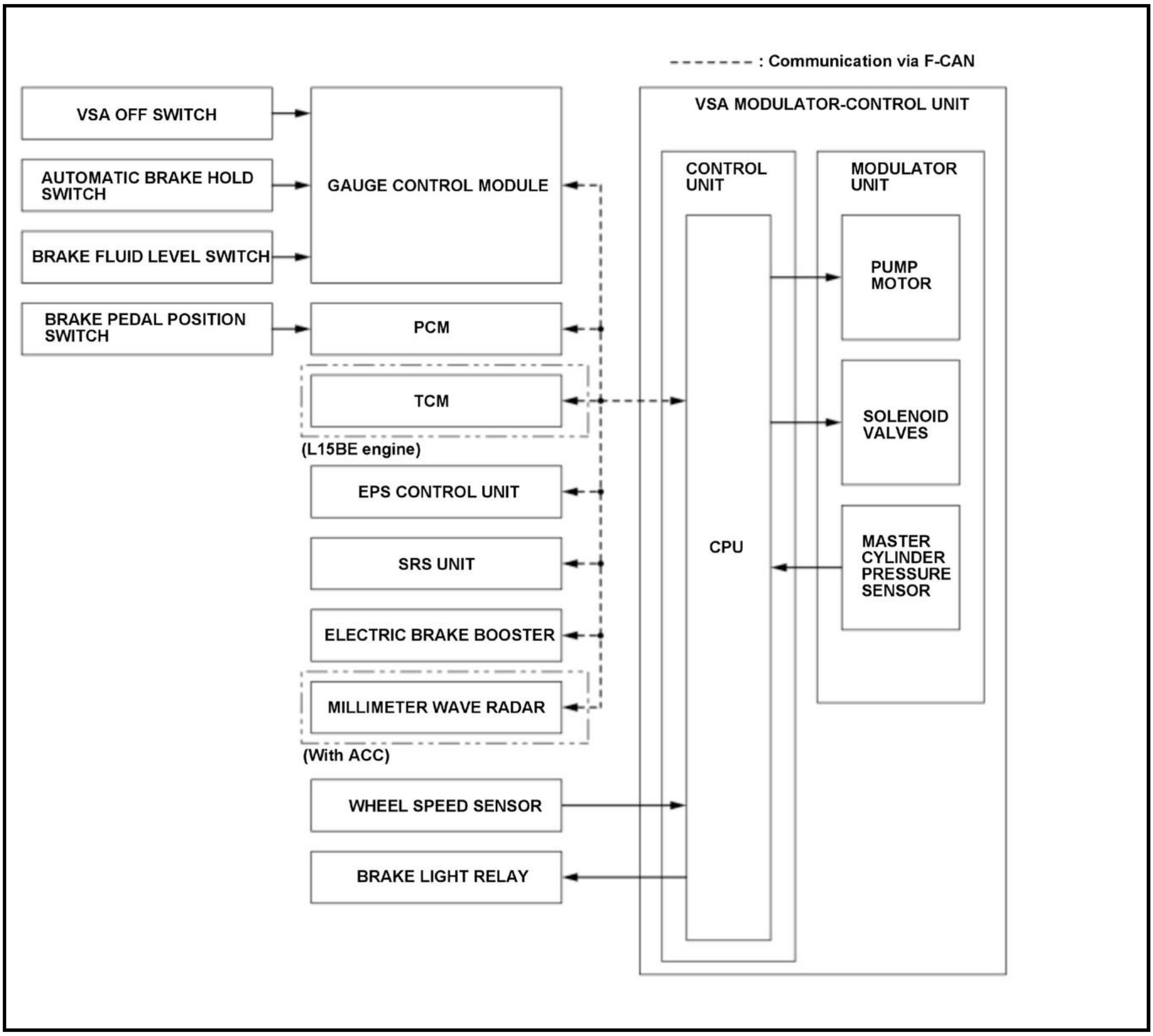

: Communication via F-CAN
VSA OFF SWITCH
AUTOMATIC BRAKE HOLD SWITCH
BRAKE FLUID LEVEL SWITCH
BRAKE PEDAL POSITION SWITCH
GAUGE CONTROL MODULE
PCM
TCM
(L15BE engine)
EPS CONTROL UNIT
SRS UNIT
ELECTRIC BRAKE BOOSTER
MILLIMETER WAVE RADAR
(With ACC)
WHEEL SPEED SENSOR
BRAKE LIGHT RELAY
VSA MODULATOR-CONTROL UNIT
CONTROL UNIT
MODULATOR UNIT
CPU
PUMP MOTOR
SOLENOID VALVES
MASTER CYLINDER PRESSURE SENSOR

F-CAN Communication Data

VSA System Receiving Signal

Transmitting Unit	Signal Name
PCM	• VSA control enable/disable signal • Accelerator pedal position signal • Engine speed signal • Engine torque signal • Vehicle speed signal • Brake pedal position switch signal • Starting assist brake function activation request *1 • Service check signal • System failure Information
TCM *2	• Vehicle speed signal • Shift position signal
Gauge control module	• VSA OFF switch signal

Transmitting Unit	Signal Name
	Brake fluid level switch signal Automatic brake hold switch signal
SRS unit	Yaw rate signal Lateral acceleration signal Longitudinal acceleration signal Driver's seat belt buckle switch status
EPS control unit	Steering angle signal
Electric brake booster	System operating state signal System failure Information Brake pedal stroke sensor state signal
Millimeter wave radar *3	Deceleration request signal System operating state signal System failure Information

*1: With auto idle stop system

*2: L15BE engine

*3: With ACC

VSA System Transmitting Signal

Transmitting Unit	Signal Name
VSA modulator-control unit	Engine torque control request signal Shift control request signal Wheel speed signals Master cylinder pressure signal Indicator drive signal Buzzer request signal Automatic brake hold request signal Target brake pressure signal *1 System operating state signal System failure Information

*1: With ACC

VSA SYSTEM DESCRIPTION - TCS CONTROL

Overview

The TCS control makes a judgment on the speed and slip condition (spinning) of each wheel from each wheel speed sensor signal. If both driving wheels are spinning, the engine TCS control is performed. If one wheel alone is slipping, the brake TCS control is performed.

Engine TCS Control

If the VSA control unit detects a drive wheel slipping during starting, accelerating or cornering, a torque down signal is sent to the PCM. The torque of the driving wheel is reduced by the PCM to maintain tire grip on the road surface.

Brake TCS Control

During brake TCS control, the VSA control unit sends a signal to the modulator unit when wheel slipping is detected.

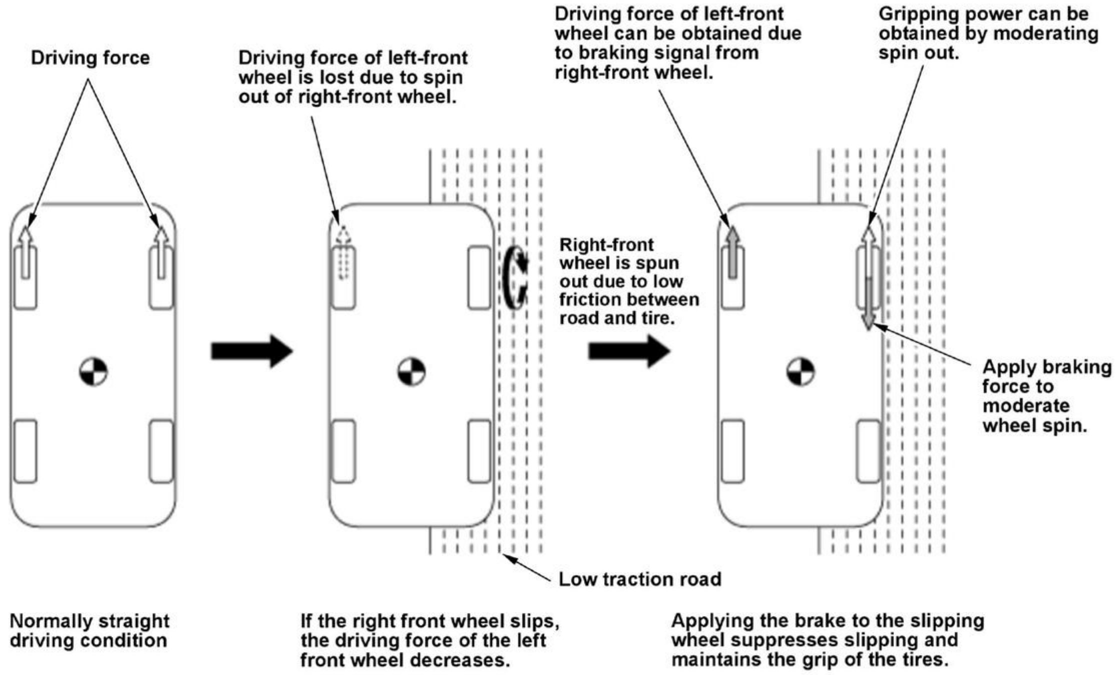
Driving force
Driving force of left-front wheel is lost due to spin out of right-front wheel.
Driving force of left-front wheel can be obtained due to braking signal from right-front wheel.
Gripping power can be obtained by moderating spin out.
Right-front wheel is spun out due to low friction between road and tire.
Apply braking force to moderate wheel spin.
Low traction road
Normally straight driving condition
If the right front wheel slips, the driving force of the left front wheel decreases.
Applying the brake to the slipping wheel suppresses slipping and maintains the grip of the tires.

This illustration is a typical sample of shows front-wheel drive model.

VSA SYSTEM DESCRIPTION - VSA CONTROL

Overview

The VSA modulator-control unit calculates the target yaw rate from the wheel speed signal, lateral acceleration signal and steering angle signal and compares the calculated target yaw rate against the actual yaw rate to make a judgment on the slip condition of the vehicle. The VSA modulator-control unit calculates the target fluid pressure based on this condition, determines one of three fluid pressure control modes (increase, decrease or hold), and adjusts the fluid pressure of the applicable wheel accordingly.

Oversteer Suppression Control

The oversteer suppression control outputs a brake pressure signal that is optimally distributed between the outside front and rear wheels through the VSA modulator-control unit when the vehicle goes into oversteer. This generates a moment that suppresses oversteer and stabilizes the vehicle.

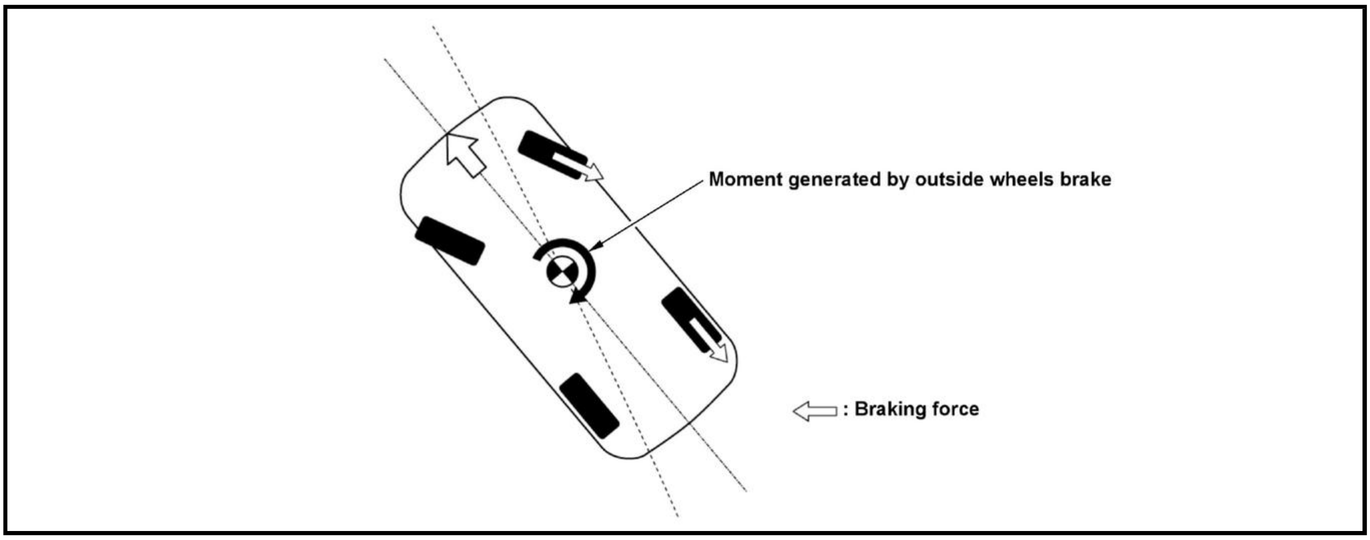
Moment generated by outside wheels brake
⇦ : Braking force

Understeer Suppression Control

The understeer suppression control outputs a brake pressure signal that is optimally distributed between the inside front and rear wheels. This generates a moment that suppresses understeer through the VSA modulator-control unit when the vehicle goes into understeer. During acceleration, an engine torque down signal is also output to the PCM, which increases the cornering force of the driving wheels in order to maintain steerability and improve line traceability.

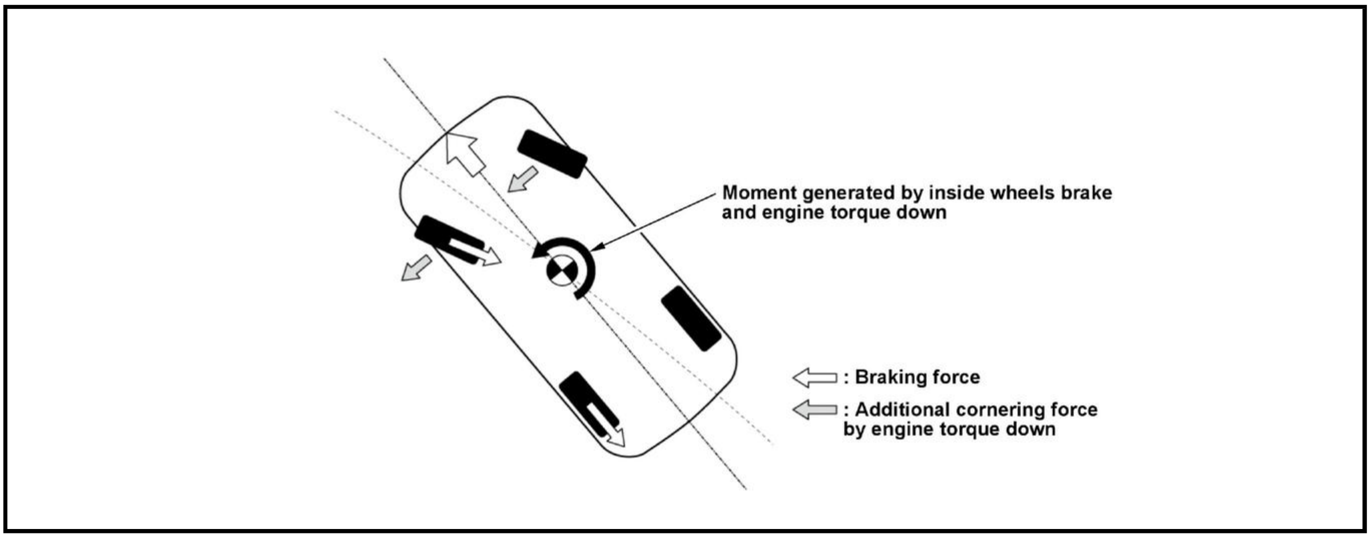
Moment generated by inside wheels brake and engine torque down
⇦ : Braking force
⇦ : Additional cornering force by engine torque down

VSA SYSTEM DESCRIPTION - VSA OFF MODE

Overview

When the VSA OFF switch is pressed, the VSA OFF indicator will illuminate and the VSA will go into the OFF mode. In the VSA OFF mode, the TCS control is changed, but the other controls will not turn off.

TCS Control During VSA OFF mode

- If the TCS activates, the VSA indicator blinks while the VSA OFF indicator is still on.
- By terminating the TCS function at low speeds, the driver can gain traction on loose sand or deep snow.
- During a standing start from varying road surfaces under the left and right side of the vehicle, the TCS function helps gain traction.
- When the vehicle is on a lift while being serviced and its tires are not in contact with any surface, the wheel speed will not exceed 31 mph (50 km/h).
- The TCS function is fully disabled when the VSA maintenance mode is activated.

TCS Operation Image

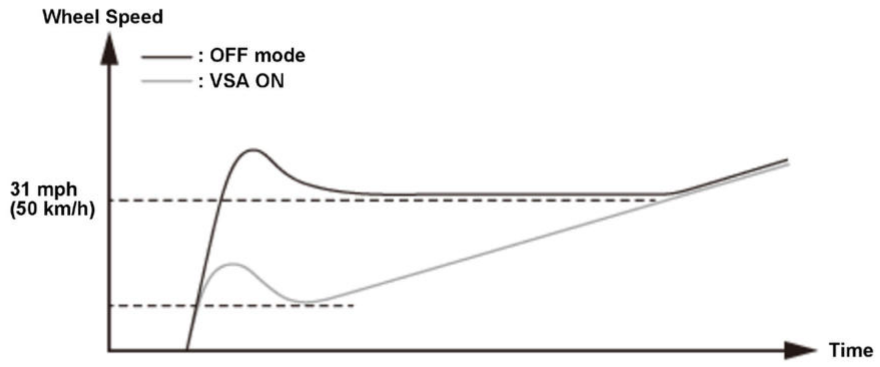

VSA Maintenance Mode

Enter the VSA maintenance mode when the vehicle is on a lift or two-wheel dynamometer, where you need the wheel spin speed to exceed 31 mph (50 km/h).For information on how to enter and exit the VSA maintenance mode, refer to **"How to enter VSA maintenance mode"** in the Removal and Installation section of the shop manual.

CONNECTOR VIEW

VSA MODULATOR-CONTROL UNIT CONNECTOR FOR INPUTS AND OUTPUTS

VSA Modulator-Control Unit Inputs and Outputs for 46P Connector (female terminals)

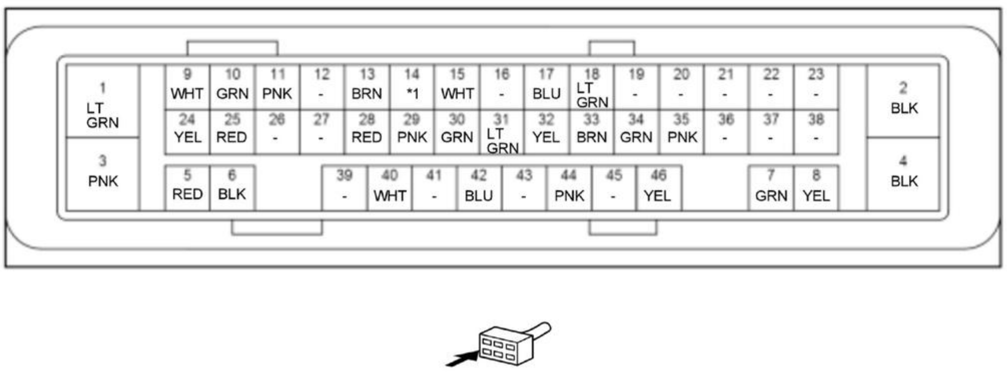
1 LT GRN
3 PNK
9 WHT
10 GRN
11 PNK
12 -
13 BRN
14 *1
15 WHT
16 -
17 BLU
18 LT GRN
19 -
20 -
21 -
22 -
23 -
24 YEL
25 RED
26 -
27 -
28 RED
29 PNK
30 GRN
31 LT GRN
32 YEL
33 BRN
34 GRN
35 PNK
36 -
37 -
38 -
5 RED
6 BLK
39 -
40 WHT
41 -
42 BLU
43 -
44 PNK
45 -
46 YEL
7 GRN
8 YEL
2 BLK
4 BLK

*1: GRY (Without auto idle stop system)
PUR (With auto idle stop system)

Terminal number	Terminal sign	Description
1	+B ABS/VSA FSR	Power source for the fail-safe relay
2	GND	Ground for the VSA modulator-control unit
3	+B ABS/VSA MTR	Power source for the motor relay
4	GND	Ground for the pump motor
5	EPB R ACT+	Drive the right electric parking brake actuator motor
6	EPB R ACT-	Drive the right electric parking brake actuator motor
7	EPB L ACT-	Drive the left electric parking brake actuator motor
8	EPB L ACT+	Drive the left electric parking brake actuator motor
9	SW1	Detects electric parking brake switch signal
10	SW4	Detects electric parking brake switch signal

Terminal number	Terminal sign	Description
11	BRK LAMP	Drives the brake light relay
12	Not used	---
13	PARK BUSY	Sends parking brake signal
14	IG1 VSA/ABS *1IG1 RELAY1 *2	Power source for activating the system
15	RR R ABS SNSR-	Detects right-rear wheel speed sensor signal
16	Not used	---
17	RR L ABS SNSR+	Detects left-rear wheel speed sensor signal
18 *2	+B VSA	Power source for the ECU backup
19	Not used	---
20	Not used	
21	Not used	
22	Not used	
23	Not used	
24	SW3	Detects electric parking brake switch signal
25	SW6	Detects electric parking brake switch signal
26	Not used	---
27	Not used	

*1: Without auto idle stop system

*2: With auto idle stop system

*3: Without CAN gateway

*4: With CAN gateway

Terminal number	Terminal sign	Description
28	F-CAN_L *3F-CAN A_L *4	F-CAN communication circuit
29	PARK LAMP	Sends electric parking brake indicator signal
30	FR R ABS SNSR+	Detects right-front wheel speed sensor signal
31	RR R ABS SNSR+	Detects right-rear wheel speed sensor signal
32	RR L ABS SNSR-	Detects left-rear wheel speed sensor signal
33	FR L ABS SNSR+	Detects left-front wheel speed sensor signal
34	EBB CAN L *3F-CAN B_L *4	F-CAN communication circuit
35	FR R ABS SNSR-	Detects right-front wheel speed sensor signal
36	Not used	---
37	Not used	
38	Not used	
39	Not used	
40	F-CAN_H *3F-CAN A_H *4	F-CAN communication circuit
41	Not used	---
42	FR L ABS SNSR-	Detects left-front wheel speed sensor signal
43	Not used	---
44	BRK DIAG	Detects brake light relay signal
45	Not used	---
46	EBB CAN H *3F-CAN B_H *4	F-CAN communication circuit

*1: Without auto idle stop system

*2: With auto idle stop system

*3: Without CAN gateway

*4: With CAN gateway

SERVICE

VSA SENSOR NEUTRAL POSITION MEMORIZATION

Procedure

NOTE:

- The VSA sensor neutral position must be learned whenever you do any of these actions:
-
  - -

    Update or replace the VSA modulator-control unit.
-
  - -

    Update or replace the SRS unit.
-
  - -

    Remove the steering wheel.
-
  - -

    Disconnect the steering joint.
-
  - -

    Wheel alignment adjustment.
- Before doing the memorization procedure, park the vehicle on a flat and level surface.
- After doing the VSA sensor neutral position memorization, do the related procedure (s).

1. **HDS - Connect**
2. VSA Sensor Neutral Position - Memorize

> **NOTE:** Do not press the brake pedal during this procedure.
>
> 1. Set the steering wheel in the straight ahead position.
>
> 2. Select the ADJUSTMENT from the ABS/TCS/VSA menu with the HDS, then select ALL SENSOR, and follow the screen prompts.

REWRITE

VSA MODULATOR-CONTROL UNIT UPDATE

Procedure

NOTE:

- To ensure the latest program is installed, do a VSA modulator-control unit update whenever the VSA modulator-control unit is replaced.
- High temperature in the engine compartment might cause the VSA modulator-control unit to become too hot to run the update. If the engine has been running before this procedure, open the hood and cool the engine compartment.

1. VSA Modulator-Control Unit - Update
2. **VSA Sensor Neutral Position - Memorize**

CIRCUIT DIAGRAM

VSA SYSTEM CIRCUIT DIAGRAM (WITH CAN GATEWAY (WITH AUTO IDLE STOP SYSTEM)) (2020 2021)

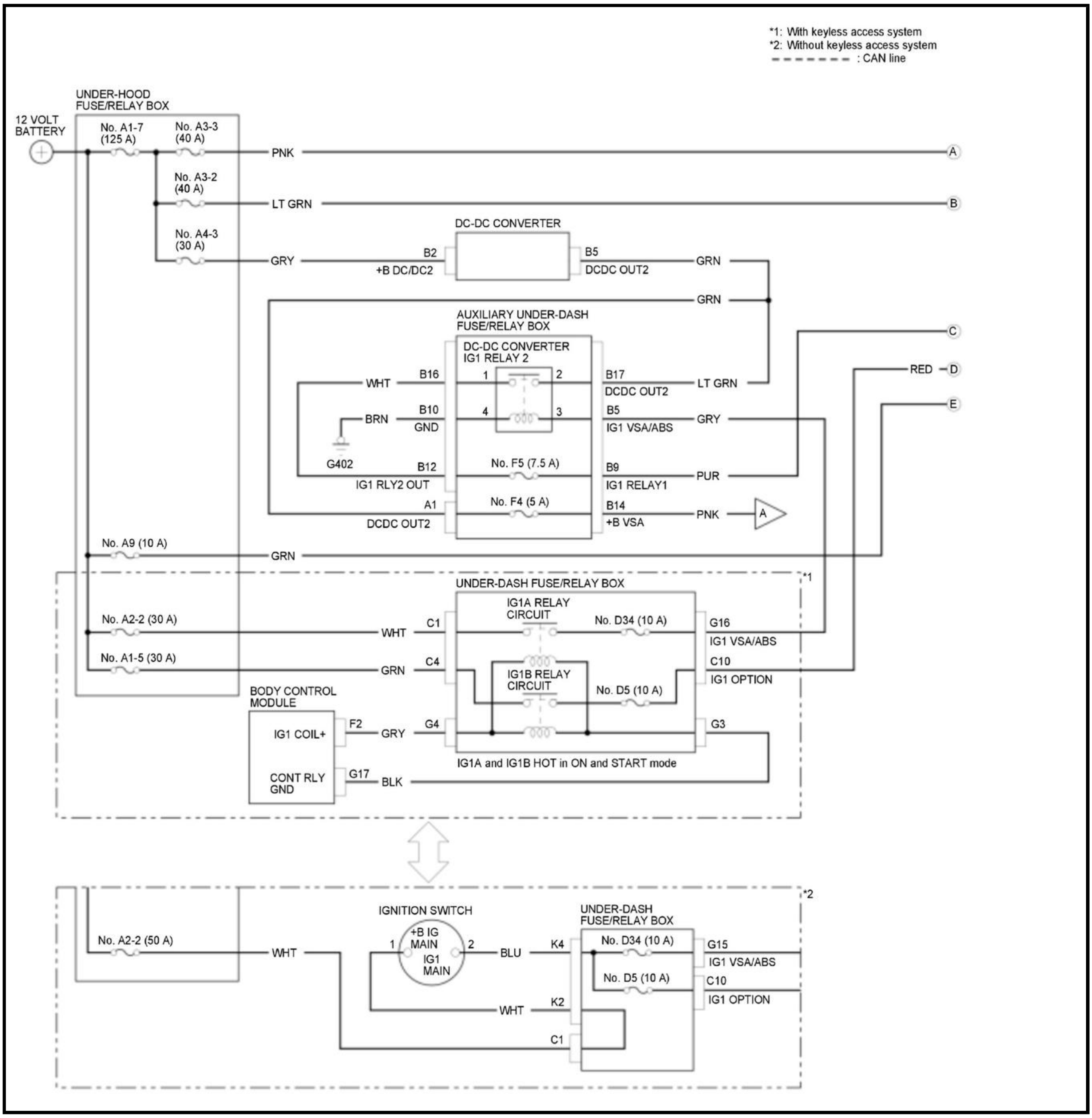
*1: With keyless access system
*2: Without keyless access system
: CAN line
UNDER-HOOD FUSE/RELAY BOX
12 VOLT BATTERY
No. A1-7 (125 A)
No. A3-3 (40 A)
PNK
A
No. A3-2 (40 A)
LT GRN
B
No. A4-3 (30 A)
GRY
DC-DC CONVERTER
B2
+B DC/DC2
B5
DCDC OUT2
GRN
GRN
AUXILIARY UNDER-DASH FUSE/RELAY BOX
DC-DC CONVERTER IG1 RELAY 2
WHT
B16
1
2
B17
DCDC OUT2
LT GRN
C
RED
D
BRN
B10
GND
4
3
B5
IG1 VSA/ABS
GRY
E
G402
B12
IG1 RLY2 OUT
No. F5 (7.5 A)
B9
IG1 RELAY1
PUR
A1
DCDC OUT2
No. F4 (5 A)
B14
+B VSA
PNK
A
No. A9 (10 A)
GRN
*1
UNDER-DASH FUSE/RELAY BOX
IG1A RELAY CIRCUIT
No. A2-2 (30 A)
WHT
C1
No. D34 (10 A)
G16
IG1 VSA/ABS
No. A1-5 (30 A)
GRN
C4
C10
IG1 OPTION
IG1B RELAY CIRCUIT
No. D5 (10 A)
BODY CONTROL MODULE
IG1 COIL+
F2
GRY
G4
G3
IG1A and IG1B HOT in ON and START mode
CONT RLY GND
G17
BLK
*2
IGNITION SWITCH
No. A2-2 (50 A)
WHT
1
+B IG MAIN
IG1 MAIN
2
BLU
UNDER-DASH FUSE/RELAY BOX
K4
No. D34 (10 A)
G15
IG1 VSA/ABS
No. D5 (10 A)
C10
IG1 OPTION
WHT
K2
C1

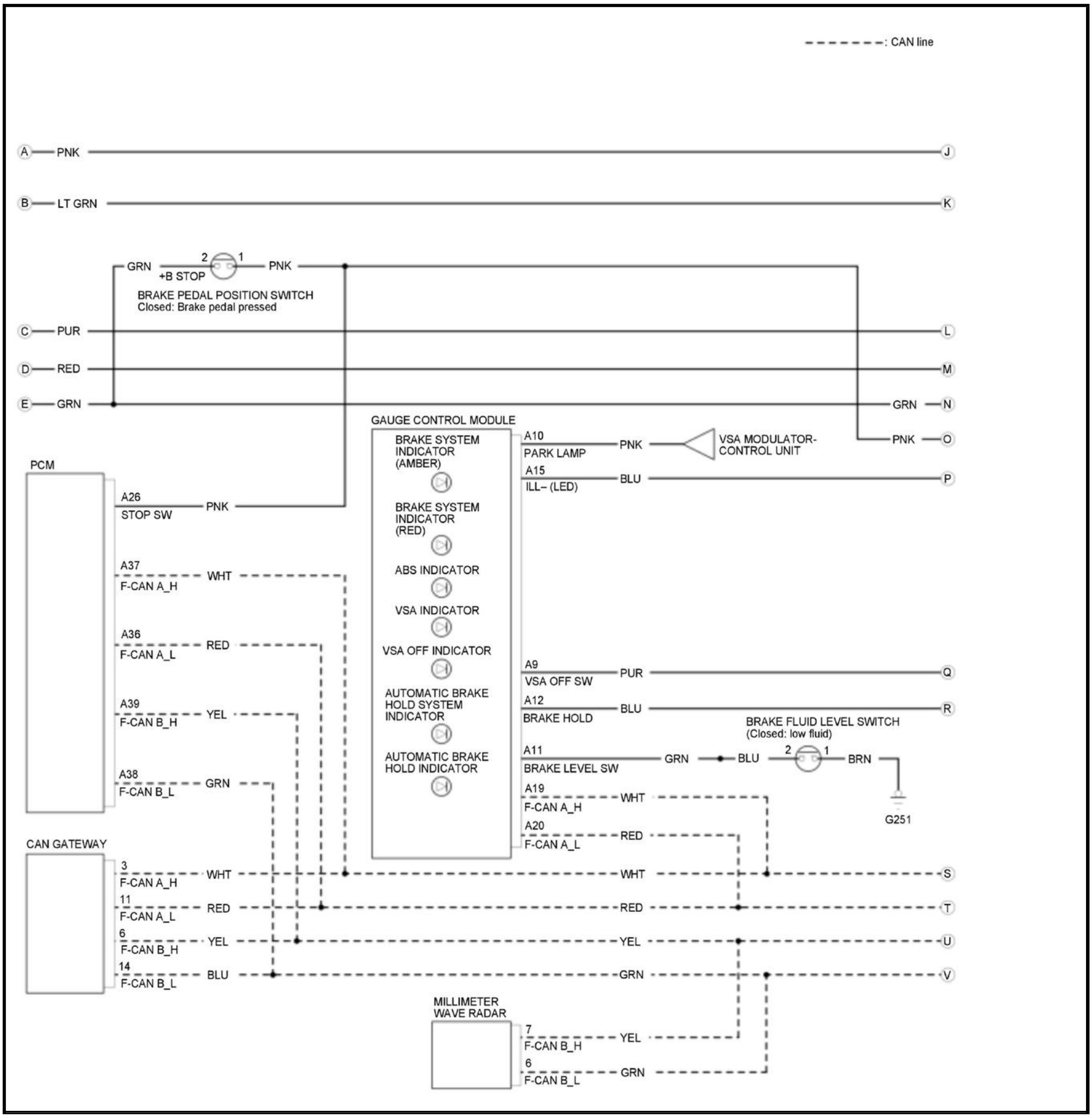
: CAN line
A
PNK
J
B
LT GRN
K
GRN
2
1
PNK
+B STOP
BRAKE PEDAL POSITION SWITCH
Closed: Brake pedal pressed
C
PUR
L
D
RED
M
E
GRN
GRN
N
GAUGE CONTROL MODULE
BRAKE SYSTEM INDICATOR (AMBER)
A10
PARK LAMP
PNK
VSA MODULATOR-CONTROL UNIT
PNK
O
A15
ILL– (LED)
BLU
P
PCM
A26
STOP SW
PNK
BRAKE SYSTEM INDICATOR (RED)
A37
F-CAN A_H
WHT
ABS INDICATOR
VSA INDICATOR
A36
F-CAN A_L
RED
VSA OFF INDICATOR
A9
VSA OFF SW
PUR
Q
AUTOMATIC BRAKE HOLD SYSTEM INDICATOR
A39
F-CAN B_H
YEL
A12
BRAKE HOLD
BLU
R
BRAKE FLUID LEVEL SWITCH
(Closed: low fluid)
AUTOMATIC BRAKE HOLD INDICATOR
A11
BRAKE LEVEL SW
GRN
BLU
2
1
BRN
A38
F-CAN B_L
GRN
A19
F-CAN A_H
WHT
G251
A20
F-CAN A_L
RED
CAN GATEWAY
3
F-CAN A_H
WHT
WHT
S
11
F-CAN A_L
RED
RED
T
6
F-CAN B_H
YEL
YEL
U
14
F-CAN B_L
BLU
GRN
V
MILLIMETER WAVE RADAR
7
F-CAN B_H
YEL
6
F-CAN B_L
GRN

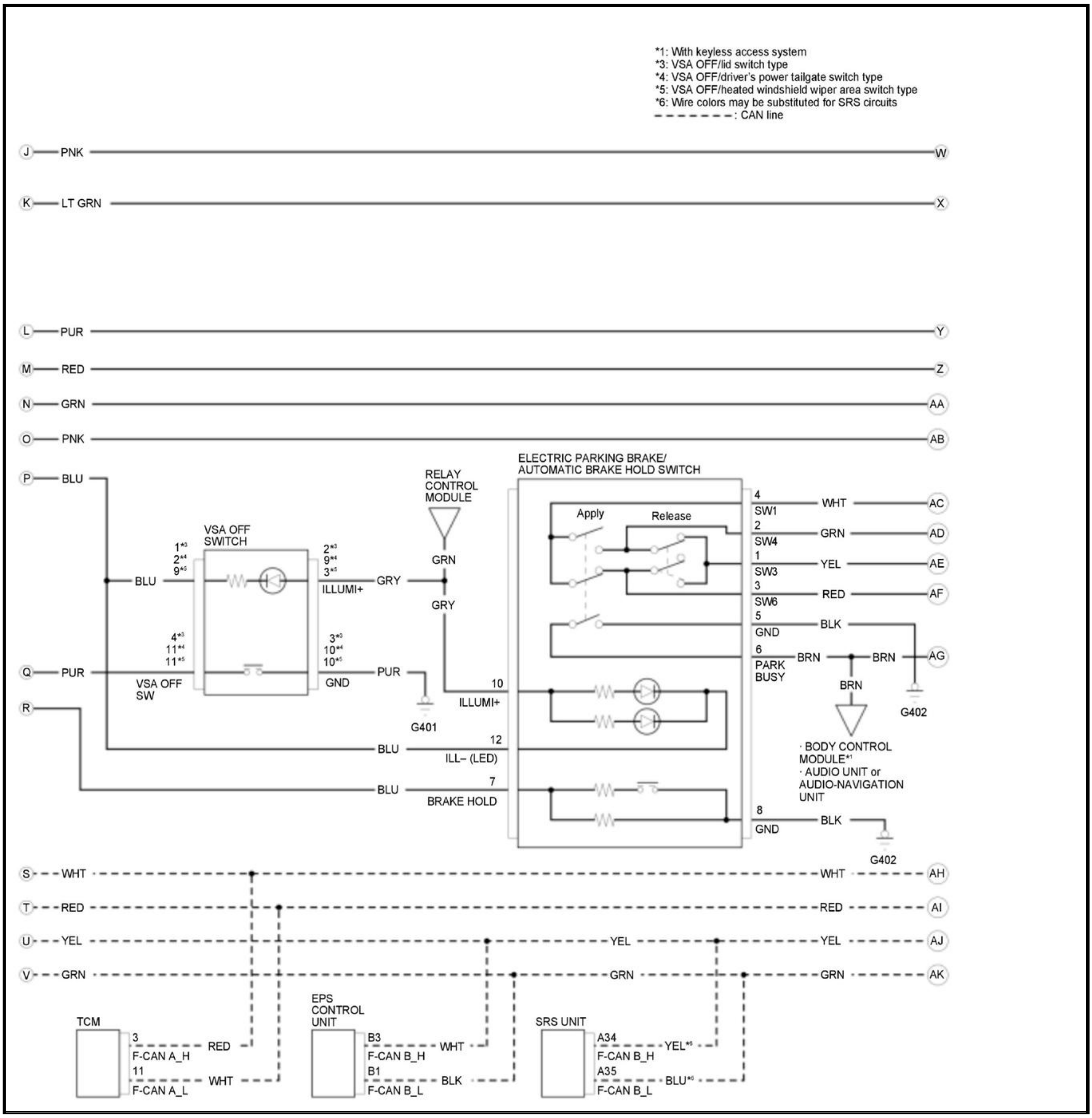
*1: With keyless access system
*3: VSA OFF/lid switch type
*4: VSA OFF/driver's power tailgate switch type
*5: VSA OFF/heated windshield wiper area switch type
*6: Wire colors may be substituted for SRS circuits
- - - - - - - : CAN line

J
PNK
W
K
LT GRN
X
L
PUR
Y
M
RED
Z
N
GRN
AA
O
PNK
AB
P
BLU
RELAY CONTROL MODULE
ELECTRIC PARKING BRAKE/ AUTOMATIC BRAKE HOLD SWITCH
4
SW1
WHT
AC
Apply
Release
2
SW4
GRN
AD
1
SW3
YEL
AE
3
SW6
RED
AF
5
GND
BLK
6
PARK BUSY
BRN
BRN
AG
BRN
G402
VSA OFF SWITCH
1*3
2*4
9*5
2*3
9*4
3*5
BLU
ILLUMI+
GRY
GRN
GRY
4*3
11*4
11*5
3*3
10*4
10*5
Q
PUR
VSA OFF SW
GND
PUR
G401
10
ILLUMI+
R
12
BLU
ILL– (LED)
· BODY CONTROL MODULE*1
· AUDIO UNIT or AUDIO-NAVIGATION UNIT
7
BLU
BRAKE HOLD
8
GND
BLK
G402
S
WHT
WHT
AH
T
RED
RED
AI
U
YEL
YEL
YEL
AJ
V
GRN
GRN
GRN
AK
TCM
3
F-CAN A_H
RED
11
F-CAN A_L
WHT
EPS CONTROL UNIT
B3
F-CAN B_H
WHT
B1
F-CAN B_L
BLK
SRS UNIT
A34
F-CAN B_H
YEL*6
A35
F-CAN B_L
BLU*6

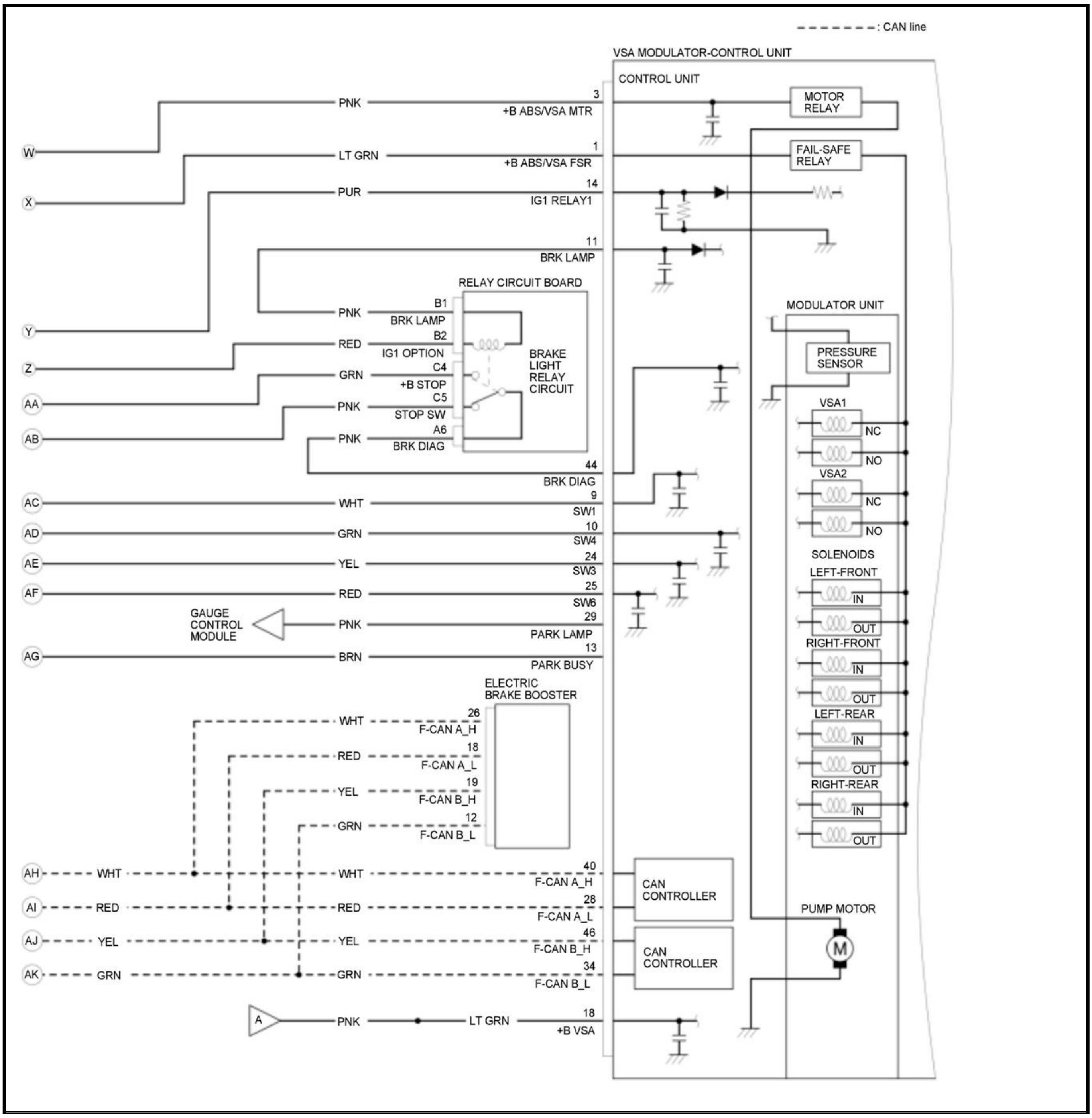

- - - - - - - : CAN line
VSA MODULATOR-CONTROL UNIT
CONTROL UNIT
MOTOR RELAY
FAIL-SAFE RELAY
W
X
Y
Z
AA
AB
AC
AD
AE
AF
AG
AH
AI
AJ
AK
PNK
3
+B ABS/VSA MTR
LT GRN
1
+B ABS/VSA FSR
PUR
14
IG1 RELAY1
11
BRK LAMP
RELAY CIRCUIT BOARD
PNK
B1
BRK LAMP
RED
B2
IG1 OPTION
GRN
C4
+B STOP
PNK
C5
STOP SW
PNK
A6
BRK DIAG
BRAKE LIGHT RELAY CIRCUIT
44
BRK DIAG
WHT
9
SW1
GRN
10
SW4
YEL
24
SW3
RED
25
SW6
GAUGE CONTROL MODULE
PNK
29
PARK LAMP
BRN
13
PARK BUSY
ELECTRIC BRAKE BOOSTER
WHT
26
F-CAN A_H
RED
18
F-CAN A_L
YEL
19
F-CAN B_H
GRN
12
F-CAN B_L
WHT
WHT
40
F-CAN A_H
RED
RED
28
F-CAN A_L
YEL
YEL
46
F-CAN B_H
GRN
GRN
34
F-CAN B_L
CAN CONTROLLER
CAN CONTROLLER
A
PNK
LT GRN
18
+B VSA
MODULATOR UNIT
PRESSURE SENSOR
VSA1
NC
NO
VSA2
NC
NO
SOLENOIDS
LEFT-FRONT
IN
OUT
RIGHT-FRONT
IN
OUT
LEFT-REAR
IN
OUT
RIGHT-REAR
IN
OUT
PUMP MOTOR
M

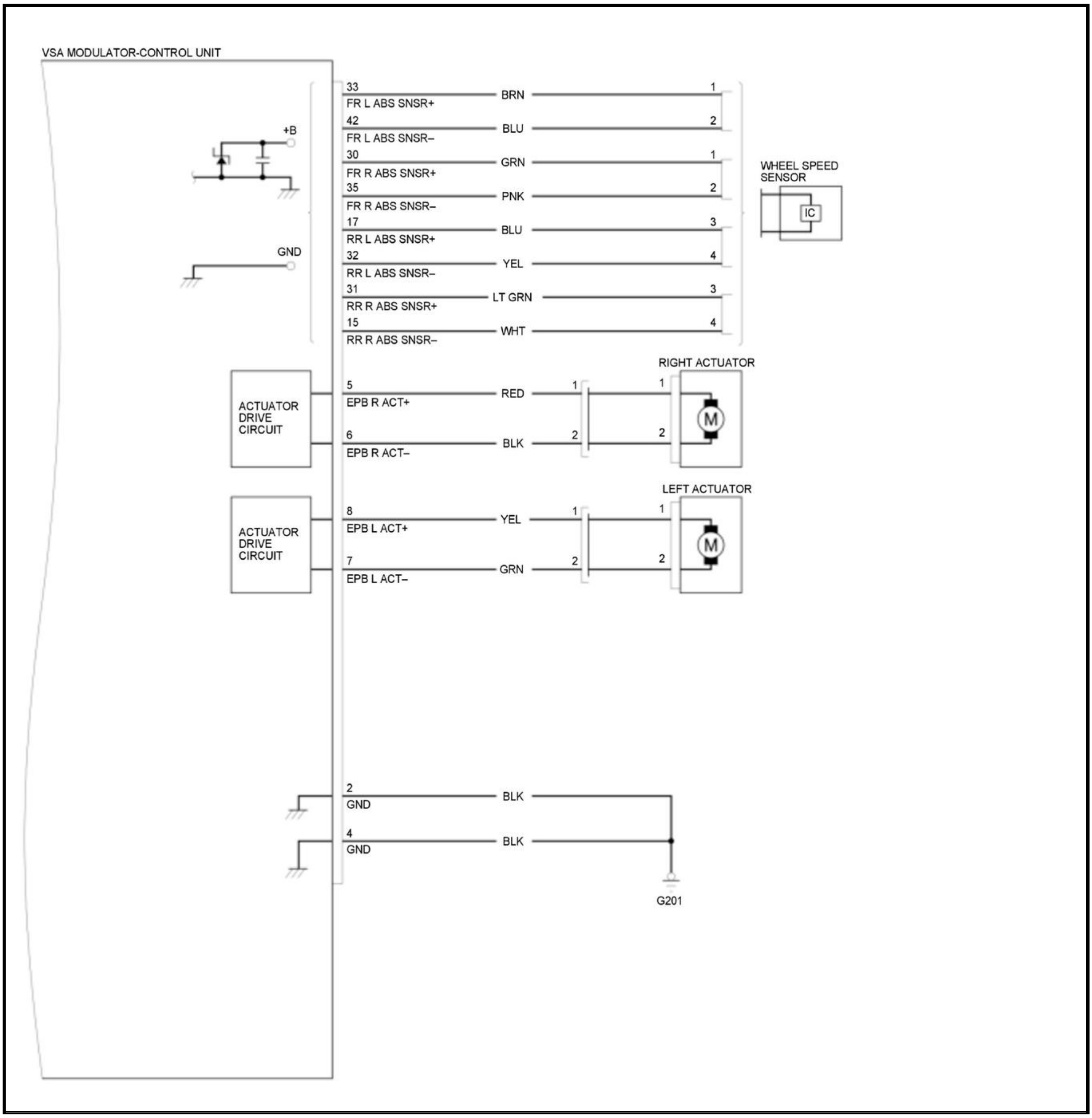
VSA MODULATOR-CONTROL UNIT
+B
GND
33
FR L ABS SNSR+
BRN
42
FR L ABS SNSR–
BLU
30
FR R ABS SNSR+
GRN
35
FR R ABS SNSR–
PNK
17
RR L ABS SNSR+
BLU
32
RR L ABS SNSR–
YEL
31
RR R ABS SNSR+
LT GRN
15
RR R ABS SNSR–
WHT
1
2
1
2
3
4
3
4
WHEEL SPEED SENSOR
IC
ACTUATOR DRIVE CIRCUIT
5
EPB R ACT+
RED
6
EPB R ACT–
BLK
RIGHT ACTUATOR
1
2
1
2
M
ACTUATOR DRIVE CIRCUIT
8
EPB L ACT+
YEL
7
EPB L ACT–
GRN
LEFT ACTUATOR
1
2
1
2
M
2
GND
BLK
4
GND
BLK
G201

VSA SYSTEM CIRCUIT DIAGRAM (WITH CAN GATEWAY (WITHOUT AUTO IDLE STOP SYSTEM)) (2017 2018 2019)

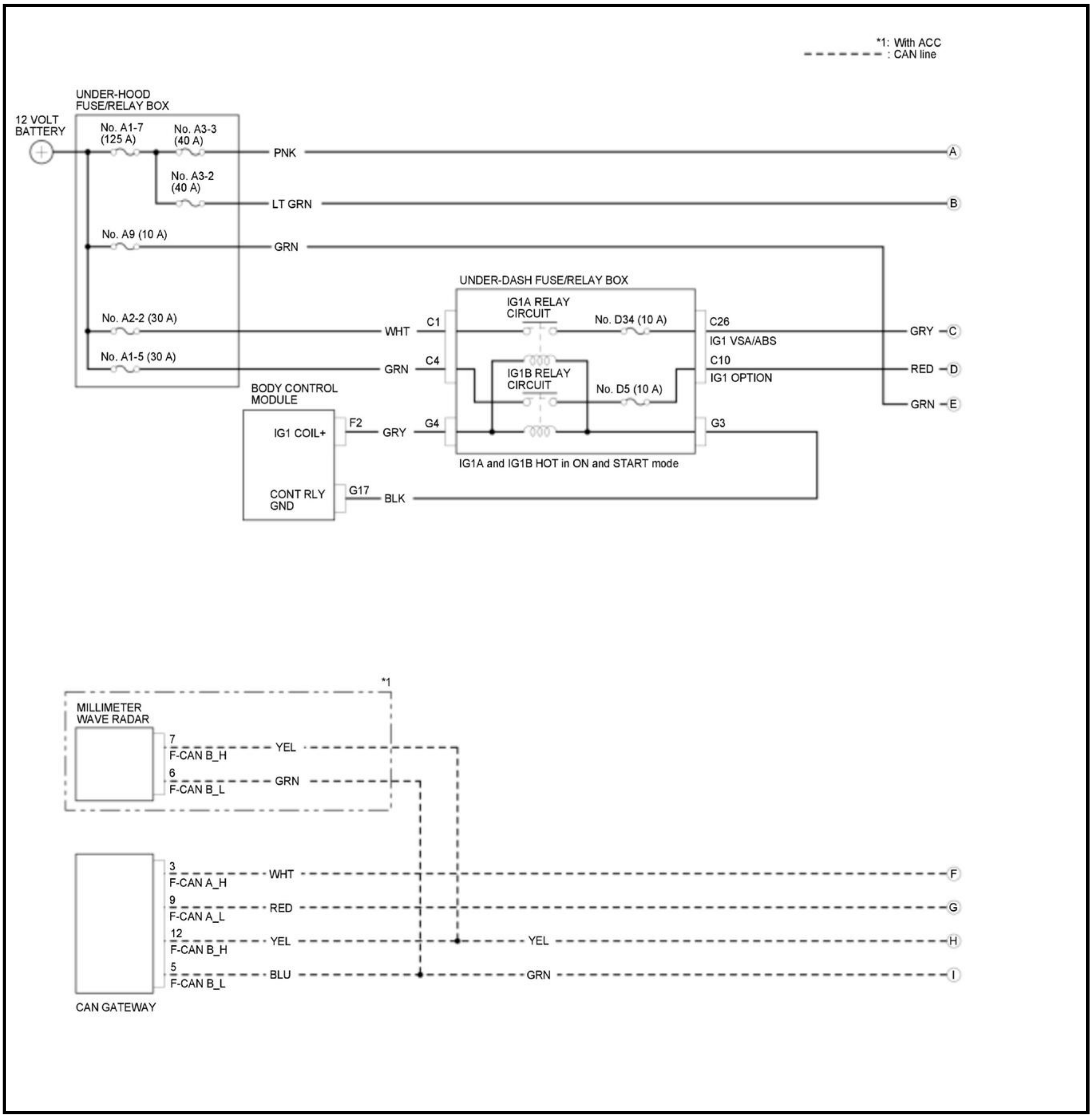
*1: With ACC
: CAN line
UNDER-HOOD FUSE/RELAY BOX
12 VOLT BATTERY
No. A1-7 (125 A)
No. A3-3 (40 A)
PNK
A
No. A3-2 (40 A)
LT GRN
B
No. A9 (10 A)
GRN
UNDER-DASH FUSE/RELAY BOX
IG1A RELAY CIRCUIT
No. D34 (10 A)
No. A2-2 (30 A)
WHT
C1
C26
IG1 VSA/ABS
GRY
C
No. A1-5 (30 A)
GRN
C4
IG1B RELAY CIRCUIT
C10
IG1 OPTION
RED
D
No. D5 (10 A)
GRN
E
BODY CONTROL MODULE
IG1 COIL+
F2
GRY
G4
G3
IG1A and IG1B HOT in ON and START mode
CONT RLY GND
G17
BLK
*1
MILLIMETER WAVE RADAR
7
F-CAN B_H
YEL
6
F-CAN B_L
GRN
3
F-CAN A_H
WHT
F
9
F-CAN A_L
RED
G
12
F-CAN B_H
YEL
YEL
H
5
F-CAN B_L
BLU
GRN
I
CAN GATEWAY

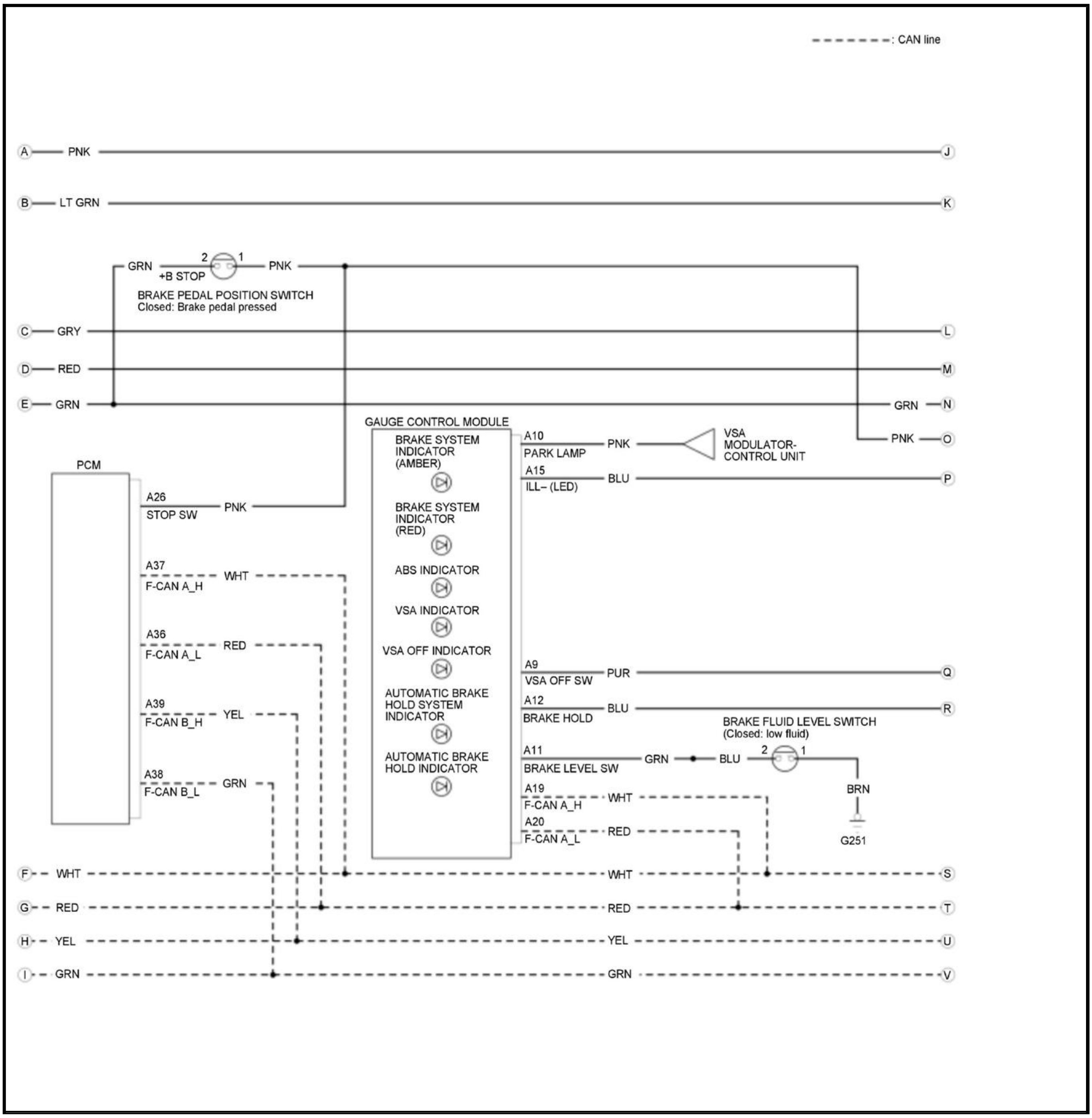
: CAN line
A PNK J
B LT GRN K
GRN
2
1
+B STOP
PNK
BRAKE PEDAL POSITION SWITCH
Closed: Brake pedal pressed
C GRY L
D RED M
E GRN
GRN N
GAUGE CONTROL MODULE
BRAKE SYSTEM INDICATOR (AMBER)
BRAKE SYSTEM INDICATOR (RED)
ABS INDICATOR
VSA INDICATOR
VSA OFF INDICATOR
AUTOMATIC BRAKE HOLD SYSTEM INDICATOR
AUTOMATIC BRAKE HOLD INDICATOR
A10
PARK LAMP
PNK
VSA MODULATOR-CONTROL UNIT
PNK O
A15
ILL– (LED)
BLU P
PCM
A26
STOP SW
PNK
A37
F-CAN A_H
WHT
A36
F-CAN A_L
RED
A39
F-CAN B_H
YEL
A38
F-CAN B_L
GRN
A9
VSA OFF SW
PUR Q
A12
BRAKE HOLD
BLU R
BRAKE FLUID LEVEL SWITCH
(Closed: low fluid)
A11
BRAKE LEVEL SW
GRN
BLU
2
1
BRN
G251
A19
F-CAN A_H
WHT
A20
F-CAN A_L
RED
F WHT
WHT S
G RED
RED T
H YEL
YEL U
I GRN
GRN V

*2: VSA OFF switch 4P connector type
*3: VSA OFF switch 12P connector type (VSA OFF/driver's power tailgate switch)
*4: VSA OFF switch 12P connector type (VSA OFF/heated windshield wiper area switch)
*5: Wire colors may be substituted for SRS circuits
- - - - - - : CAN line

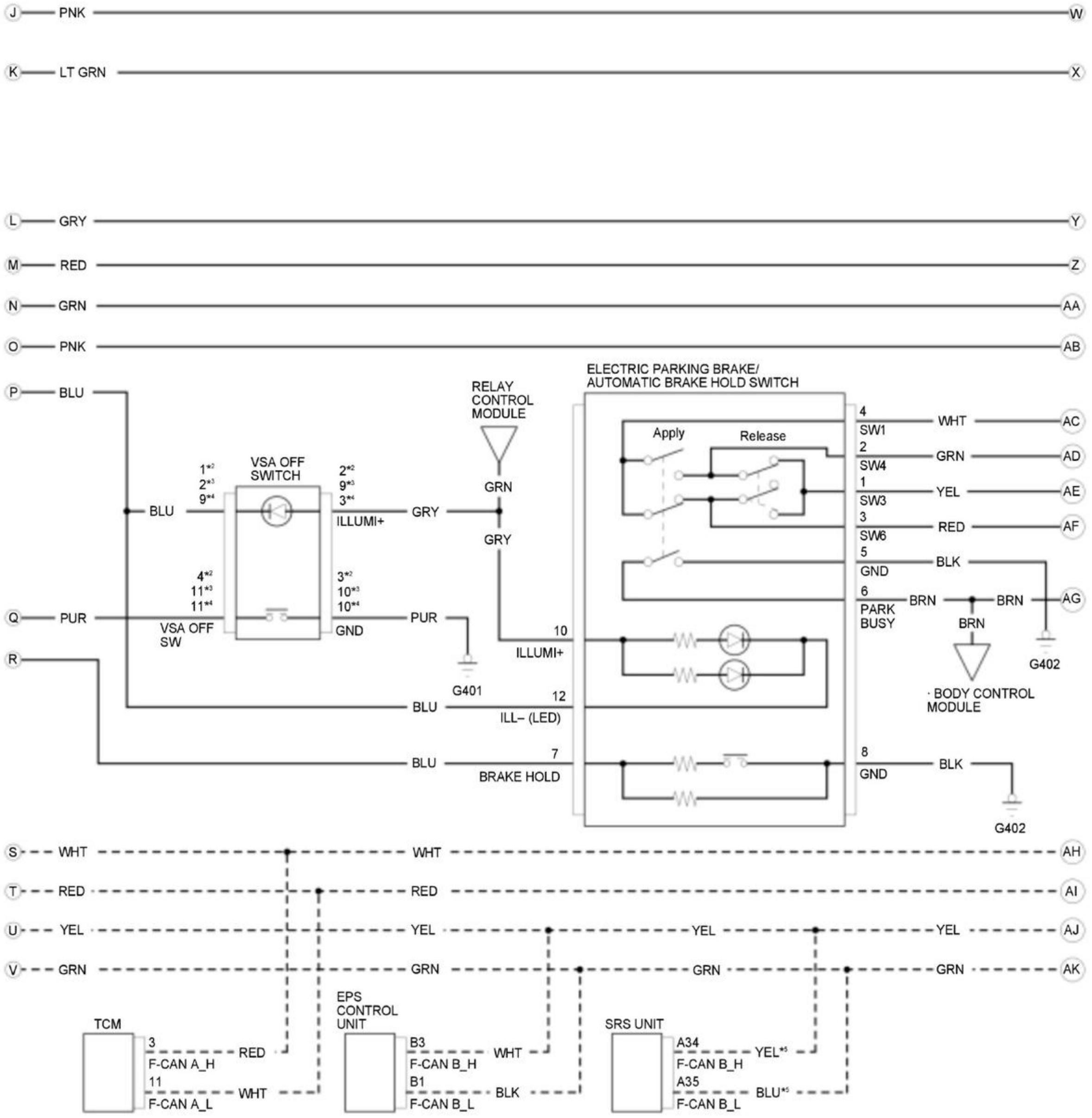
J PNK W
K LT GRN X
L GRY Y
M RED Z
N GRN AA
O PNK AB
P BLU
BLU
VSA OFF SWITCH
1*2 2*3 9*4
2*2 9*3 3*4
ILLUMI+
GRY
RELAY CONTROL MODULE
GRN
GRY
4*2 11*3 11*4
3*2 10*3 10*4
Q PUR
VSA OFF SW
PUR
GND
G401
R
ELECTRIC PARKING BRAKE/ AUTOMATIC BRAKE HOLD SWITCH
Apply
Release
4 SW1 WHT AC
2 SW4 GRN AD
1 SW3 YEL AE
3 SW6 RED AF
5 GND BLK
6 PARK BUSY BRN BRN AG
BRN
BODY CONTROL MODULE
G402
10 ILLUMI+
BLU 12 ILL– (LED)
BLU 7 BRAKE HOLD
8 GND BLK
G402
S WHT WHT AH
T RED RED AI
U YEL YEL YEL YEL AJ
V GRN GRN GRN GRN AK
TCM
3 F-CAN A_H RED
11 F-CAN A_L WHT
EPS CONTROL UNIT
B3 F-CAN B_H WHT
B1 F-CAN B_L BLK
SRS UNIT
A34 F-CAN B_H YEL*5
A35 F-CAN B_L BLU*5

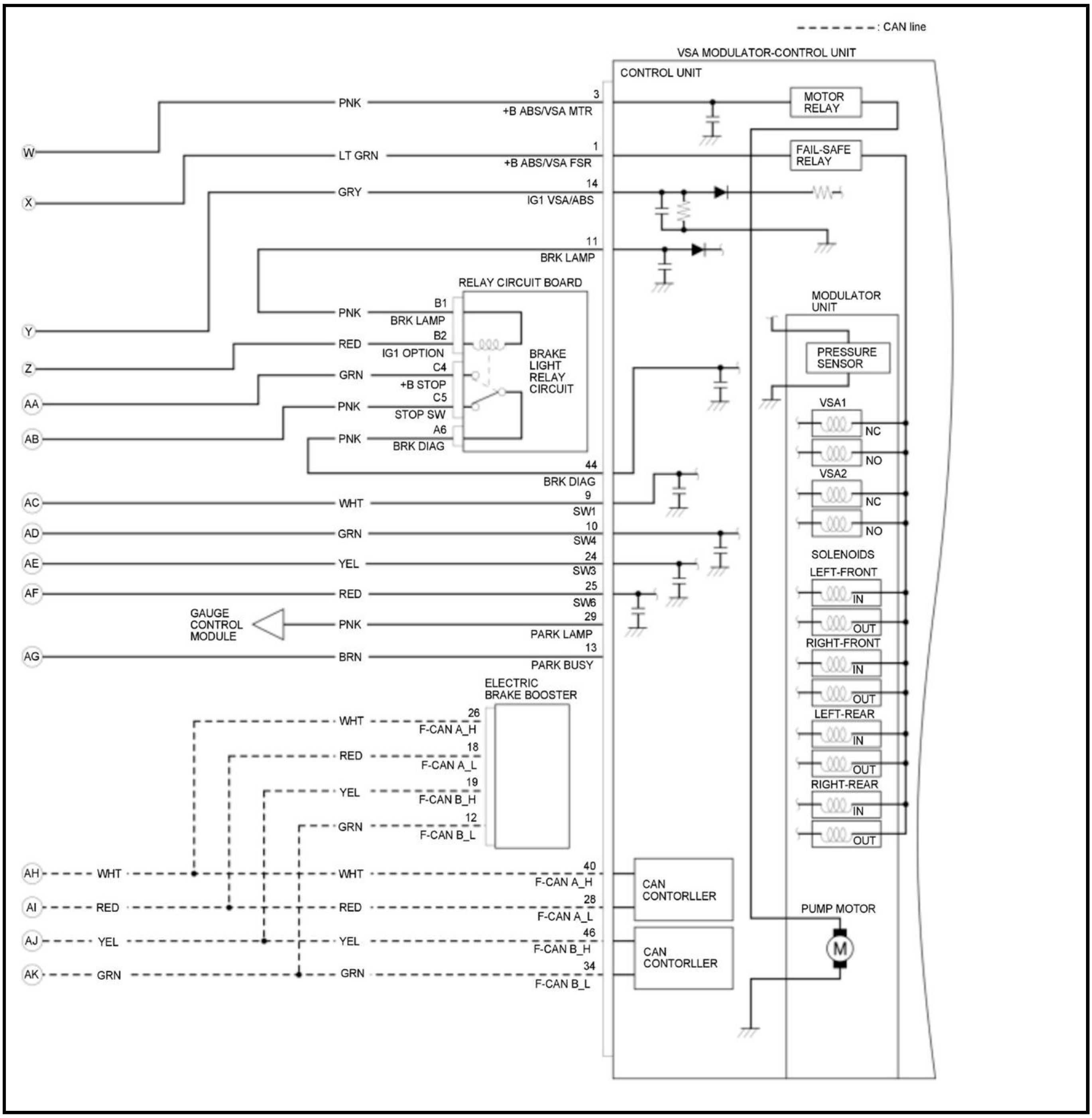

CAN line
VSA MODULATOR-CONTROL UNIT
CONTROL UNIT
MOTOR RELAY
FAIL-SAFE RELAY
W
X
Y
Z
AA
AB
AC
AD
AE
AF
AG
AH
AI
AJ
AK
PNK
3
+B ABS/VSA MTR
LT GRN
1
+B ABS/VSA FSR
GRY
14
IG1 VSA/ABS
11
BRK LAMP
RELAY CIRCUIT BOARD
B1
BRK LAMP
B2
IG1 OPTION
C4
+B STOP
C5
STOP SW
A6
BRK DIAG
BRAKE LIGHT RELAY CIRCUIT
RED
GRN
44
BRK DIAG
WHT
9
SW1
10
SW4
YEL
24
SW3
25
SW6
GAUGE CONTROL MODULE
29
PARK LAMP
BRN
13
PARK BUSY
ELECTRIC BRAKE BOOSTER
26
F-CAN A_H
18
F-CAN A_L
19
F-CAN B_H
12
F-CAN B_L
40
F-CAN A_H
28
F-CAN A_L
46
F-CAN B_H
34
F-CAN B_L
CAN CONTORLLER
CAN CONTORLLER
MODULATOR UNIT
PRESSURE SENSOR
VSA1
NC
NO
VSA2
NC
NO
SOLENOIDS
LEFT-FRONT
IN
OUT
RIGHT-FRONT
IN
OUT
LEFT-REAR
IN
OUT
RIGHT-REAR
IN
OUT
PUMP MOTOR
M

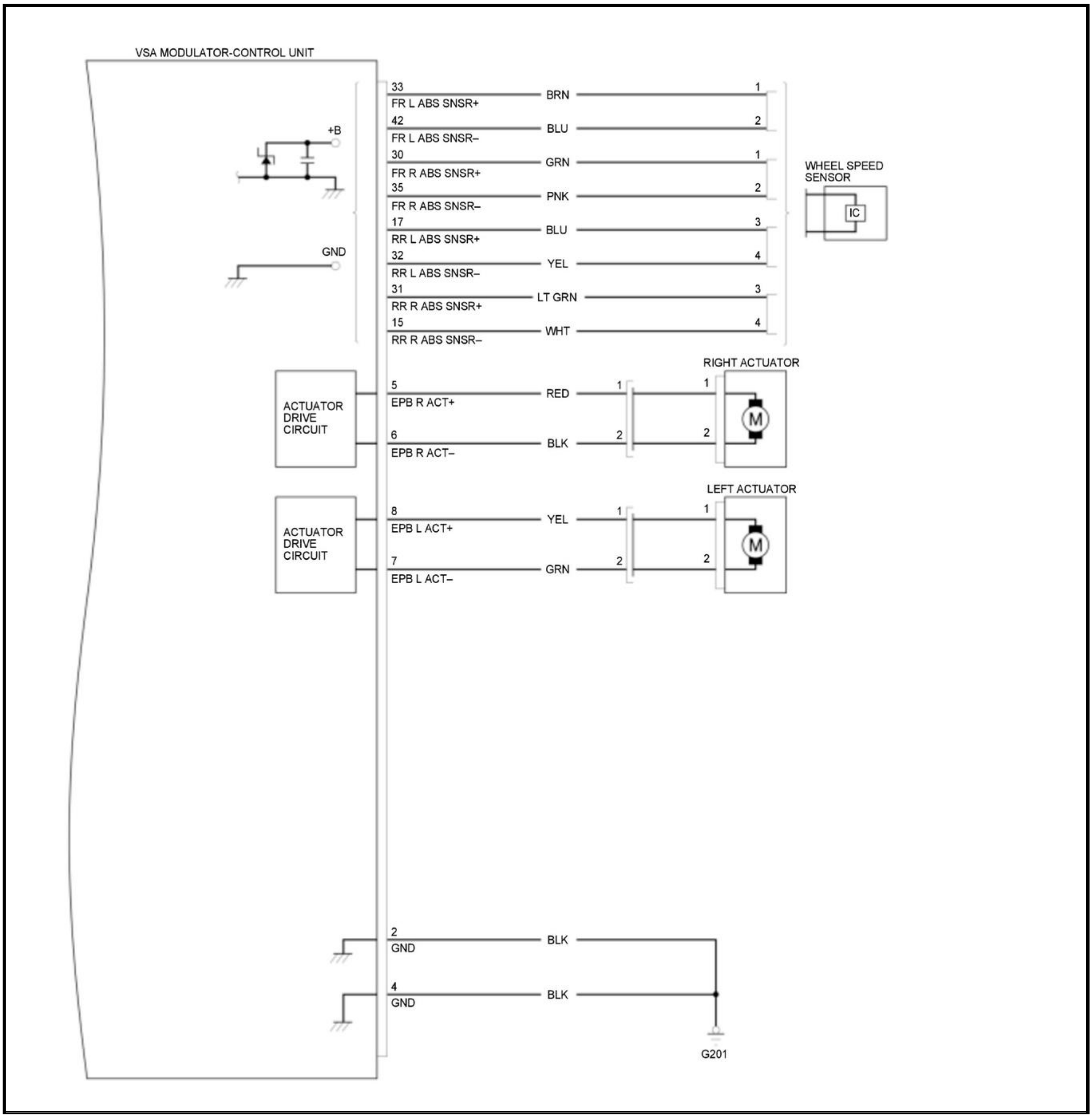
VSA MODULATOR-CONTROL UNIT
+B
GND
33
FR L ABS SNSR+
BRN
1
42
FR L ABS SNSR–
BLU
2
30
FR R ABS SNSR+
GRN
1
35
FR R ABS SNSR–
PNK
2
17
RR L ABS SNSR+
BLU
3
32
RR L ABS SNSR–
YEL
4
31
RR R ABS SNSR+
LT GRN
3
15
RR R ABS SNSR–
WHT
4
WHEEL SPEED SENSOR
IC
RIGHT ACTUATOR
ACTUATOR DRIVE CIRCUIT
5
EPB R ACT+
RED
1
1
6
EPB R ACT–
BLK
2
2
M
LEFT ACTUATOR
ACTUATOR DRIVE CIRCUIT
8
EPB L ACT+
YEL
1
1
7
EPB L ACT–
GRN
2
2
M
2
GND
BLK
4
GND
BLK
G201

VSA SYSTEM CIRCUIT DIAGRAM (WITH CAN GATEWAY (WITHOUT AUTO IDLE STOP SYSTEM)) (2020 2021)

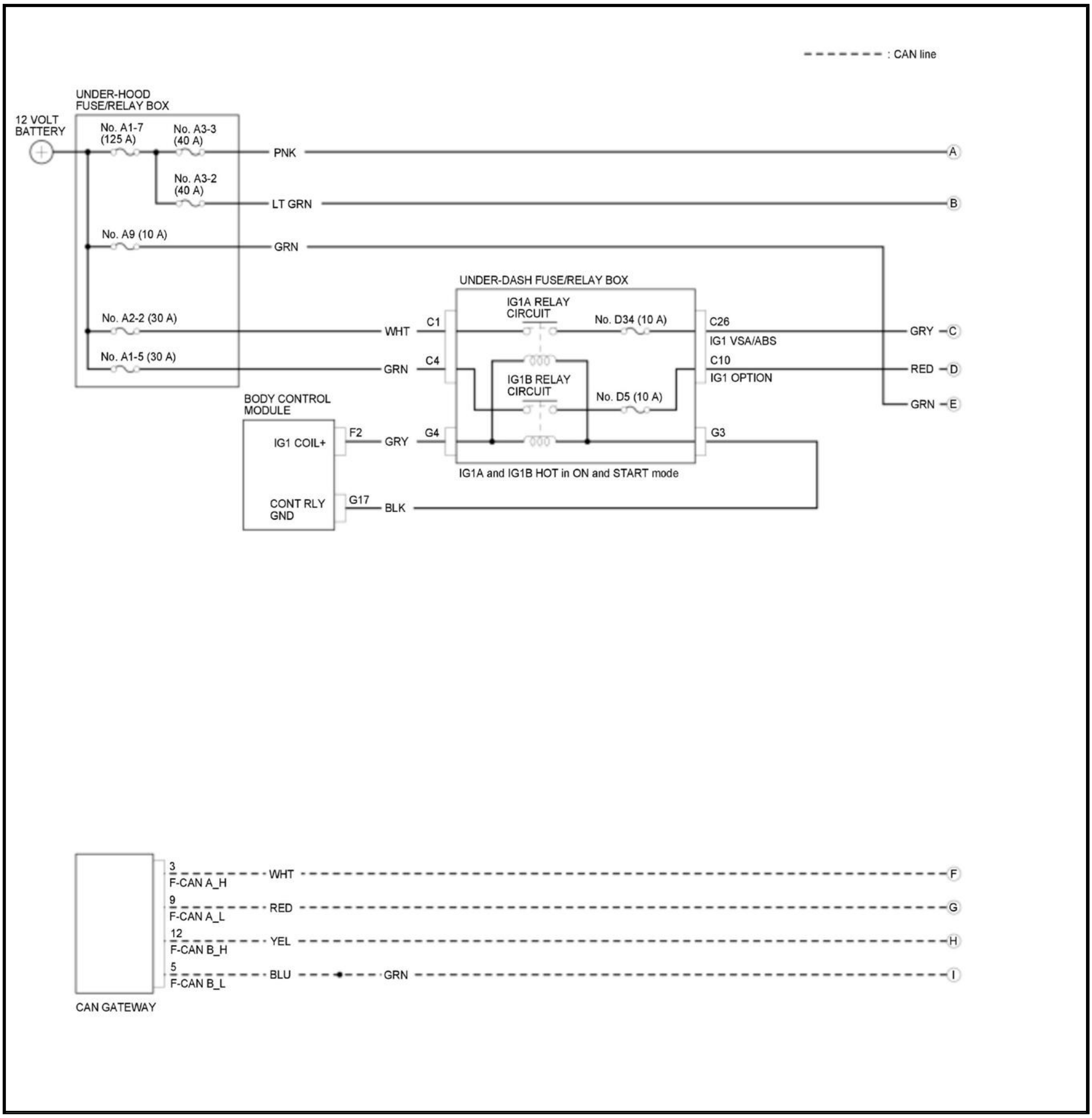
: CAN line
UNDER-HOOD FUSE/RELAY BOX
12 VOLT BATTERY
No. A1-7 (125 A)
No. A3-3 (40 A)
PNK
A
No. A3-2 (40 A)
LT GRN
B
No. A9 (10 A)
GRN
UNDER-DASH FUSE/RELAY BOX
IG1A RELAY CIRCUIT
No. D34 (10 A)
No. A2-2 (30 A)
WHT
C1
C26
IG1 VSA/ABS
GRY
C
No. A1-5 (30 A)
GRN
C4
C10
IG1 OPTION
RED
D
IG1B RELAY CIRCUIT
No. D5 (10 A)
GRN
E
BODY CONTROL MODULE
IG1 COIL+
F2
GRY
G4
G3
IG1A and IG1B HOT in ON and START mode
CONT RLY GND
G17
BLK
3
F-CAN A_H
WHT
F
9
F-CAN A_L
RED
G
12
F-CAN B_H
YEL
H
5
F-CAN B_L
BLU
GRN
I
CAN GATEWAY

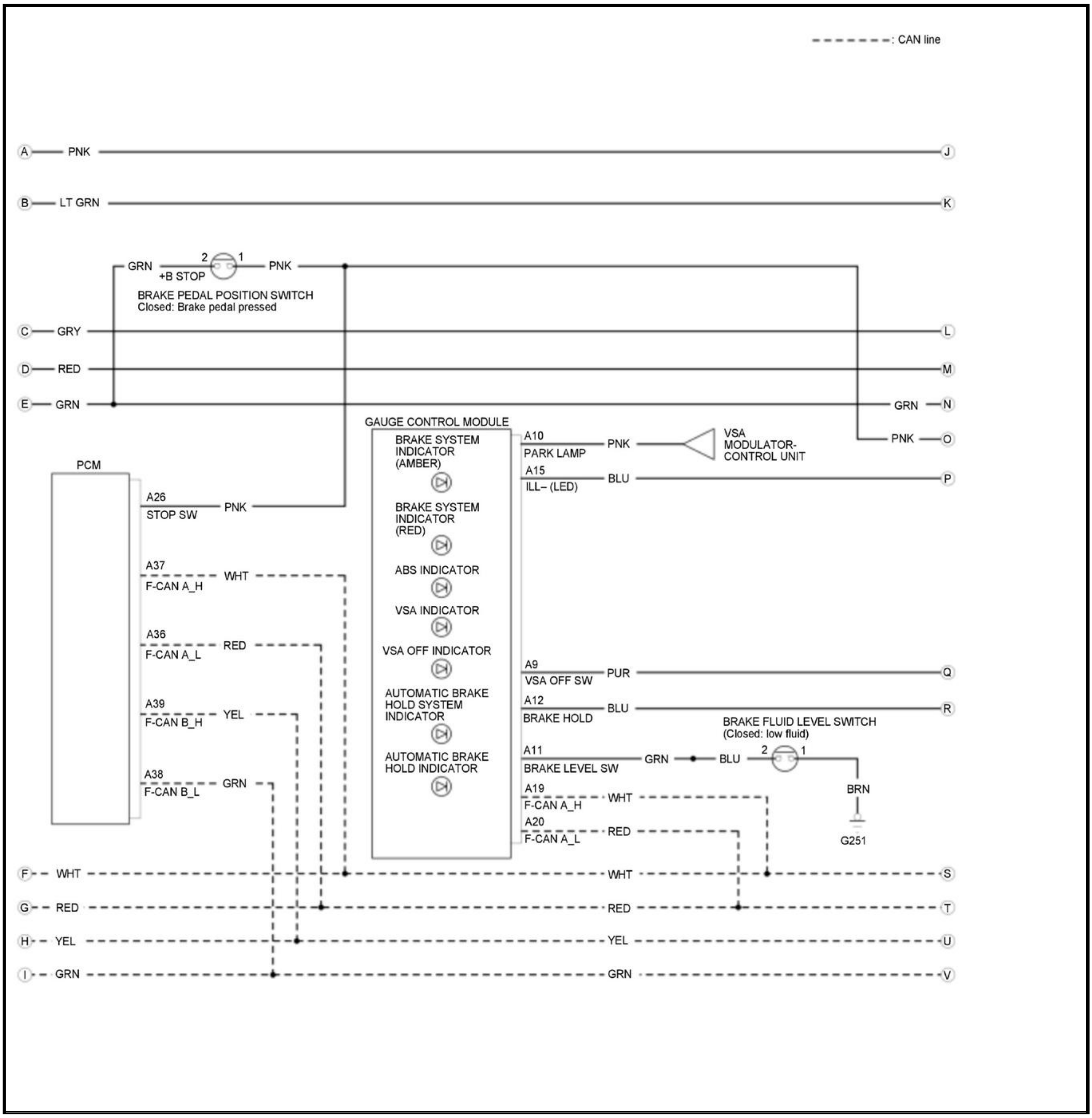
: CAN line
A
PNK
J
B
LT GRN
K
GRN
2
1
+B STOP
PNK
BRAKE PEDAL POSITION SWITCH
Closed: Brake pedal pressed
C
GRY
L
D
RED
M
E
GRN
GRN
N
GAUGE CONTROL MODULE
BRAKE SYSTEM INDICATOR (AMBER)
A10
PARK LAMP
PNK
VSA MODULATOR-CONTROL UNIT
PNK
O
PCM
A15
ILL– (LED)
BLU
P
A26
STOP SW
PNK
BRAKE SYSTEM INDICATOR (RED)
A37
F-CAN A_H
WHT
ABS INDICATOR
VSA INDICATOR
A36
F-CAN A_L
RED
VSA OFF INDICATOR
A9
VSA OFF SW
PUR
Q
A39
F-CAN B_H
YEL
AUTOMATIC BRAKE HOLD SYSTEM INDICATOR
A12
BRAKE HOLD
BLU
R
BRAKE FLUID LEVEL SWITCH
(Closed: low fluid)
AUTOMATIC BRAKE HOLD INDICATOR
A11
BRAKE LEVEL SW
GRN
BLU
2
1
A38
F-CAN B_L
GRN
BRN
A19
F-CAN A_H
WHT
A20
F-CAN A_L
RED
G251
F
WHT
WHT
S
G
RED
RED
T
H
YEL
YEL
U
I
GRN
GRN
V

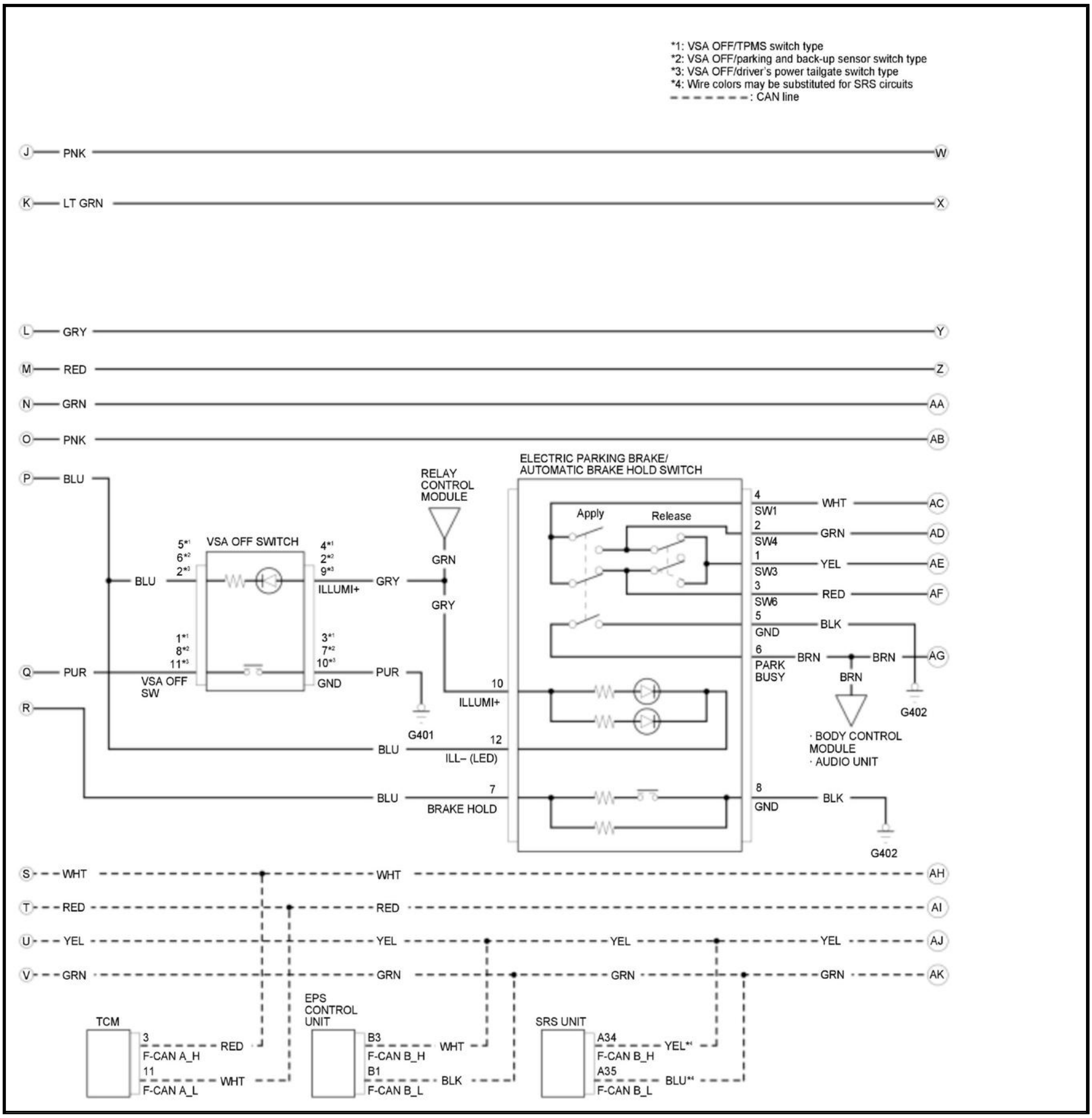

*1: VSA OFF/TPMS switch type
*2: VSA OFF/parking and back-up sensor switch type
*3: VSA OFF/driver's power tailgate switch type
*4: Wire colors may be substituted for SRS circuits
- - - - - - - : CAN line

J PNK W
K LT GRN X
L GRY Y
M RED Z
N GRN AA
O PNK AB
P BLU
Q PUR
R
ELECTRIC PARKING BRAKE/
AUTOMATIC BRAKE HOLD SWITCH
RELAY CONTROL MODULE
GRN
GRY
VSA OFF SWITCH
BLU
5*1 6*2 2*3
4*1 2*2 9*3
ILLUMI+
GRY
1*1 8*2 11*3
3*1 7*2 10*3
VSA OFF SW
GND
PUR
G401
Apply
Release
4 SW1 WHT AC
2 SW4 GRN AD
1 SW3 YEL AE
3 SW6 RED AF
5 GND BLK
6 PARK BUSY BRN BRN AG
BRN
G402
· BODY CONTROL MODULE
· AUDIO UNIT
10 ILLUMI+
12 ILL– (LED)
BLU
7 BRAKE HOLD
BLU
8 GND BLK
G402
S WHT WHT AH
T RED RED AI
U YEL YEL YEL YEL AJ
V GRN GRN GRN GRN AK
TCM
3 F-CAN A_H RED
11 F-CAN A_L WHT
EPS CONTROL UNIT
B3 F-CAN B_H WHT
B1 F-CAN B_L BLK
SRS UNIT
A34 F-CAN B_H YEL*4
A35 F-CAN B_L BLU*4

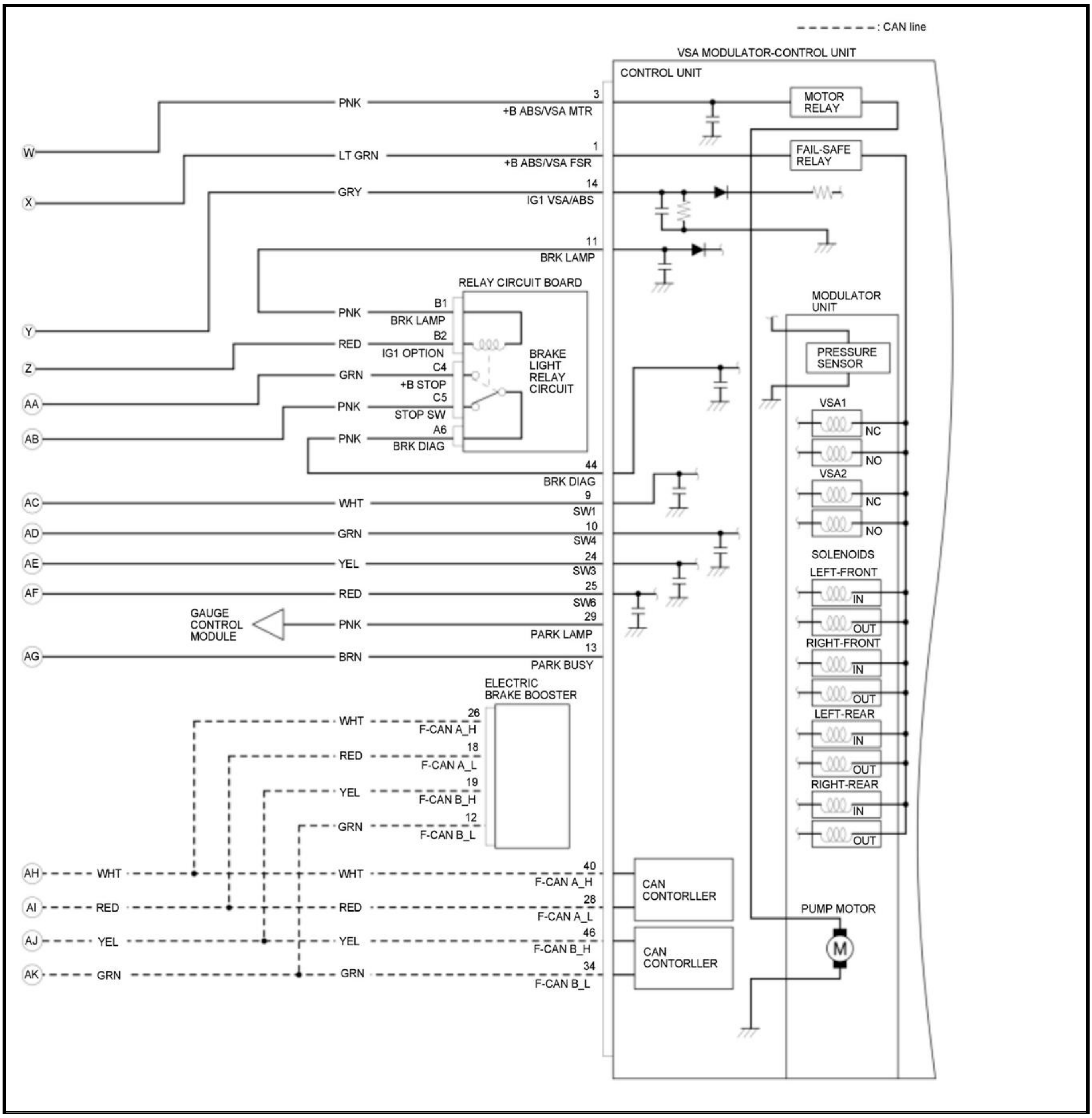
- - - - - - - : CAN line
VSA MODULATOR-CONTROL UNIT
CONTROL UNIT
MOTOR RELAY
FAIL-SAFE RELAY
W
PNK
3
+B ABS/VSA MTR
X
LT GRN
1
+B ABS/VSA FSR
GRY
14
IG1 VSA/ABS
11
BRK LAMP
RELAY CIRCUIT BOARD
Y
PNK
B1
BRK LAMP
Z
RED
B2
IG1 OPTION
AA
GRN
C4
+B STOP
AB
PNK
C5
STOP SW
PNK
A6
BRK DIAG
BRAKE LIGHT RELAY CIRCUIT
44
BRK DIAG
AC
WHT
9
SW1
AD
GRN
10
SW4
AE
YEL
24
SW3
AF
RED
25
SW6
GAUGE CONTROL MODULE
PNK
29
PARK LAMP
AG
BRN
13
PARK BUSY
ELECTRIC BRAKE BOOSTER
WHT
26
F-CAN A_H
RED
18
F-CAN A_L
YEL
19
F-CAN B_H
GRN
12
F-CAN B_L
AH
WHT
WHT
40
F-CAN A_H
AI
RED
RED
28
F-CAN A_L
AJ
YEL
YEL
46
F-CAN B_H
AK
GRN
GRN
34
F-CAN B_L
CAN CONTORLLER
CAN CONTORLLER
MODULATOR UNIT
PRESSURE SENSOR
VSA1
NC
NO
VSA2
NC
NO
SOLENOIDS
LEFT-FRONT
IN
OUT
RIGHT-FRONT
IN
OUT
LEFT-REAR
IN
OUT
RIGHT-REAR
IN
OUT
PUMP MOTOR
M

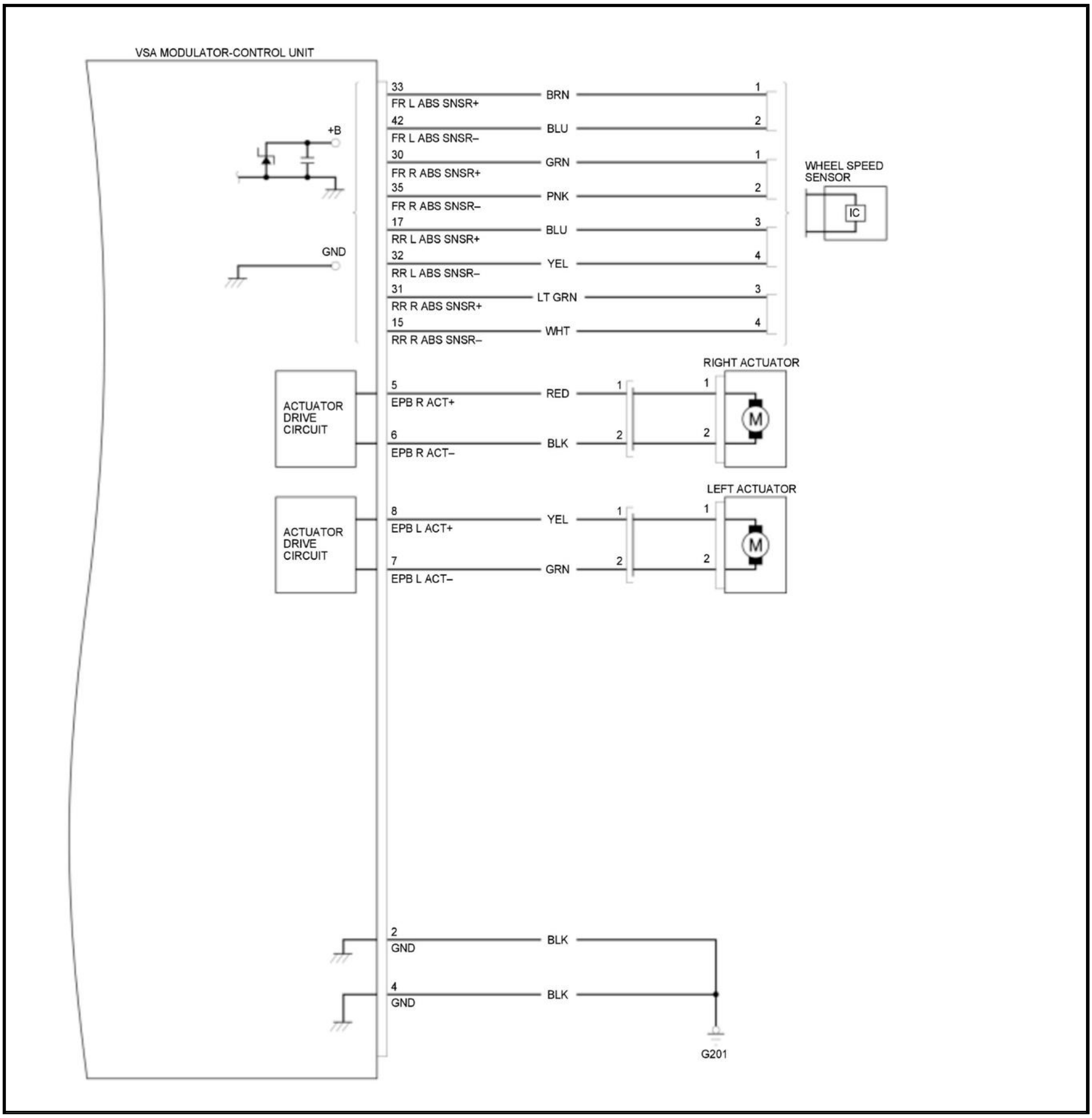
VSA MODULATOR-CONTROL UNIT
+B
GND
33
FR L ABS SNSR+
BRN
42
FR L ABS SNSR–
BLU
30
FR R ABS SNSR+
GRN
35
FR R ABS SNSR–
PNK
17
RR L ABS SNSR+
BLU
32
RR L ABS SNSR–
YEL
31
RR R ABS SNSR+
LT GRN
15
RR R ABS SNSR–
WHT
1
2
1
2
3
4
3
4
WHEEL SPEED SENSOR
IC
ACTUATOR DRIVE CIRCUIT
5
EPB R ACT+
RED
6
EPB R ACT–
BLK
RIGHT ACTUATOR
M
ACTUATOR DRIVE CIRCUIT
8
EPB L ACT+
YEL
7
EPB L ACT–
GRN
LEFT ACTUATOR
M
2
GND
BLK
4
GND
BLK
G201

VSA SYSTEM CIRCUIT DIAGRAM (WITHOUT CAN GATEWAY) (2017 2018 2019)

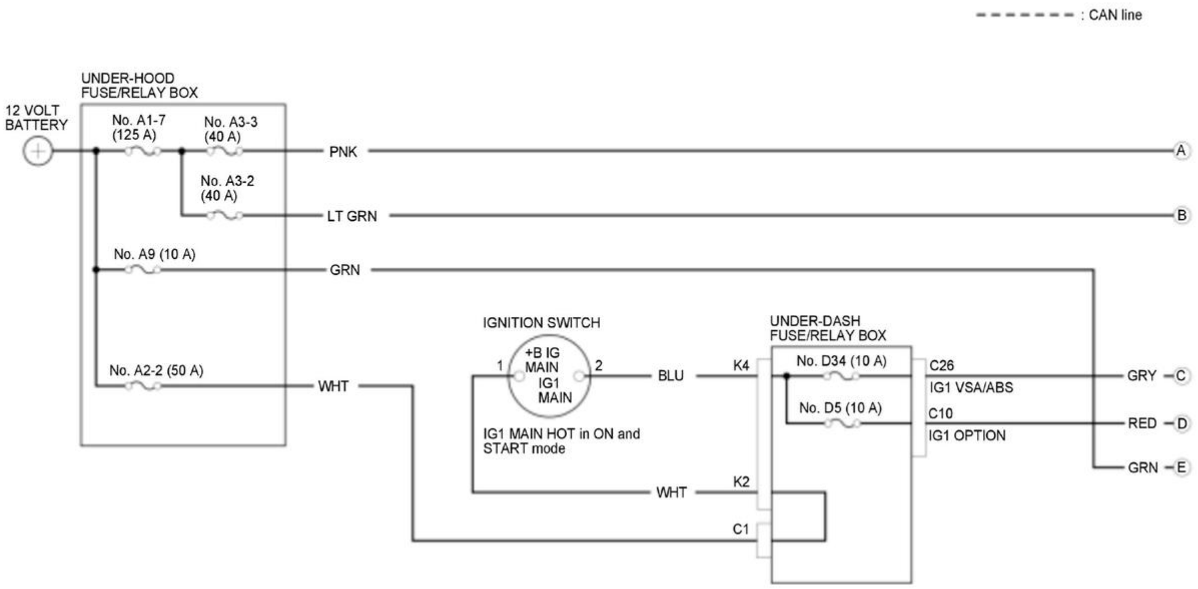

: CAN line
UNDER-HOOD FUSE/RELAY BOX
12 VOLT BATTERY
No. A1-7 (125 A)
No. A3-3 (40 A)
PNK
A
No. A3-2 (40 A)
LT GRN
B
No. A9 (10 A)
GRN
IGNITION SWITCH
+B IG MAIN
IG1 MAIN
1
2
BLU
IG1 MAIN HOT in ON and START mode
UNDER-DASH FUSE/RELAY BOX
K4
No. D34 (10 A)
C26
IG1 VSA/ABS
GRY
C
No. D5 (10 A)
C10
IG1 OPTION
RED
D
GRN
E
No. A2-2 (50 A)
WHT
WHT
K2
C1

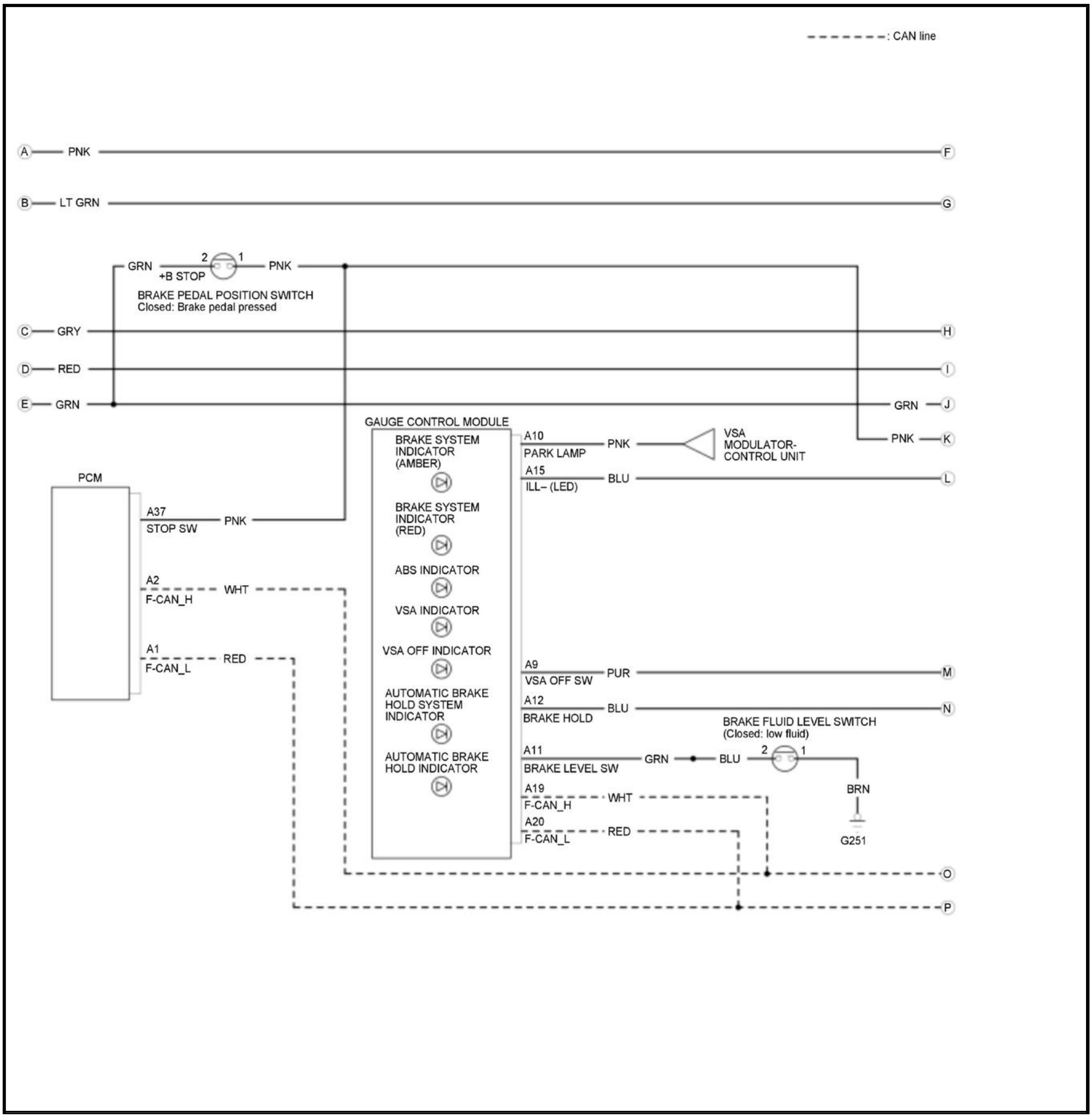
: CAN line
A
PNK
F
B
LT GRN
G
GRN
2
1
+B STOP
PNK
BRAKE PEDAL POSITION SWITCH
Closed: Brake pedal pressed
C
GRY
H
D
RED
I
E
GRN
GRN
J
GAUGE CONTROL MODULE
BRAKE SYSTEM INDICATOR (AMBER)
A10
PARK LAMP
PNK
VSA MODULATOR-CONTROL UNIT
PNK
K
A15
ILL– (LED)
BLU
L
PCM
A37
STOP SW
PNK
BRAKE SYSTEM INDICATOR (RED)
ABS INDICATOR
A2
F-CAN_H
WHT
VSA INDICATOR
A1
F-CAN_L
RED
VSA OFF INDICATOR
A9
VSA OFF SW
PUR
M
AUTOMATIC BRAKE HOLD SYSTEM INDICATOR
A12
BRAKE HOLD
BLU
N
BRAKE FLUID LEVEL SWITCH
(Closed: low fluid)
AUTOMATIC BRAKE HOLD INDICATOR
A11
BRAKE LEVEL SW
GRN
BLU
2
1
BRN
A19
F-CAN_H
WHT
A20
F-CAN_L
RED
G251
O
P

]

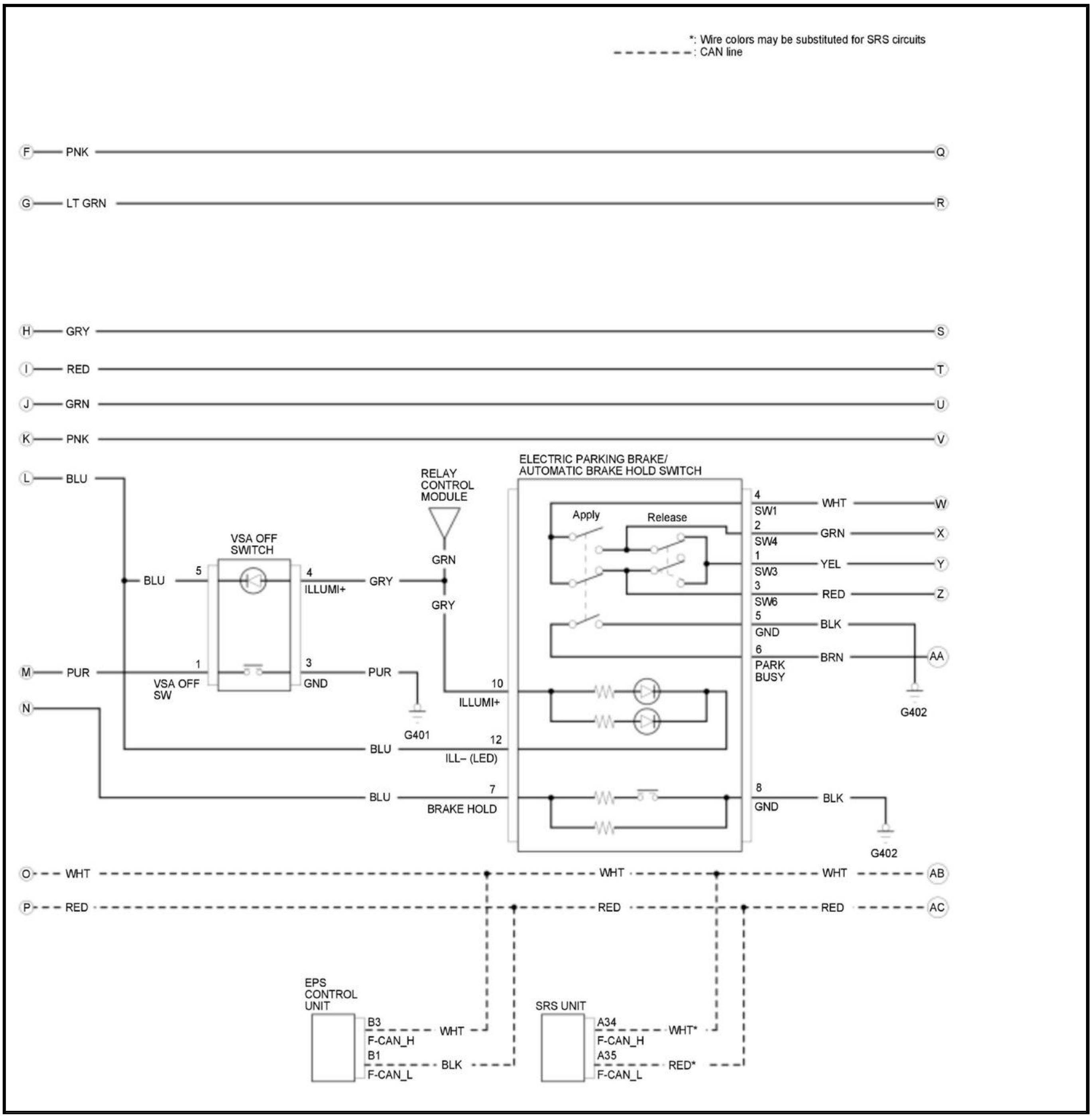
*: Wire colors may be substituted for SRS circuits
: CAN line
F PNK Q
G LT GRN R
H GRY S
I RED T
J GRN U
K PNK V
L BLU
M PUR
N
O WHT
P RED
VSA OFF SWITCH
BLU 5
4 ILLUMI+ GRY
1 VSA OFF SW
3 GND PUR
G401
RELAY CONTROL MODULE
GRN
GRY
ELECTRIC PARKING BRAKE/ AUTOMATIC BRAKE HOLD SWITCH
Apply
Release
10 ILLUMI+
12 ILL– (LED)
BLU
7 BRAKE HOLD
BLU
4 SW1 WHT W
2 SW4 GRN X
1 SW3 YEL Y
3 SW6 RED Z
5 GND BLK
6 PARK BUSY BRN AA
G402
8 GND BLK
G402
WHT AB
RED AC
EPS CONTROL UNIT
B3 F-CAN_H WHT
B1 F-CAN_L BLK
SRS UNIT
A34 F-CAN_H WHT*
A35 F-CAN_L RED*

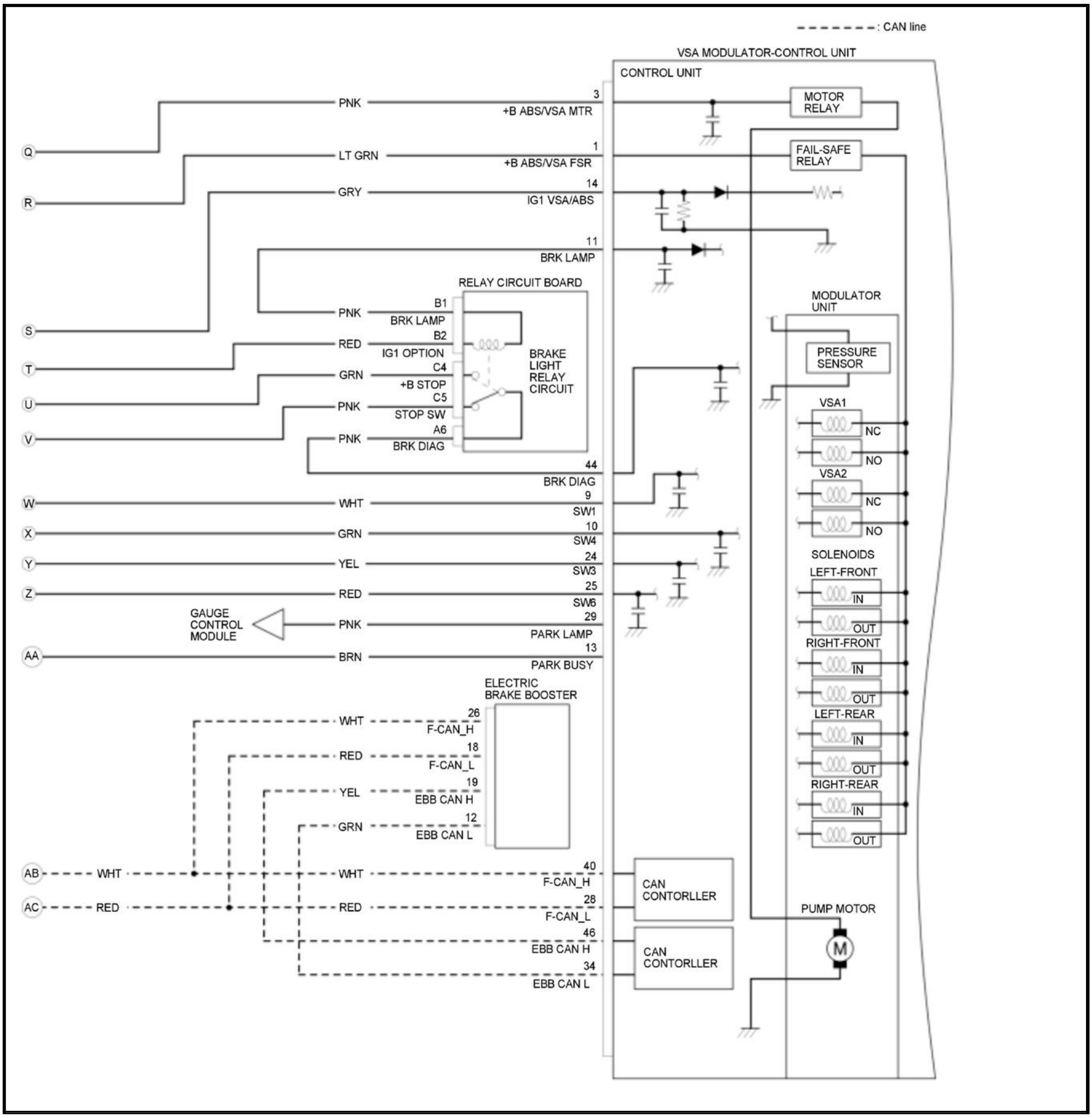
CAN line
VSA MODULATOR-CONTROL UNIT
CONTROL UNIT
MOTOR RELAY
FAIL-SAFE RELAY
Q
R
S
T
U
V
W
X
Y
Z
AA
AB
AC
PNK
3
+B ABS/VSA MTR
LT GRN
1
+B ABS/VSA FSR
GRY
14
IG1 VSA/ABS
11
BRK LAMP
RELAY CIRCUIT BOARD
B1
BRK LAMP
B2
IG1 OPTION
C4
+B STOP
C5
STOP SW
A6
BRK DIAG
BRAKE LIGHT RELAY CIRCUIT
RED
GRN
44
BRK DIAG
WHT
9
SW1
10
SW4
YEL
24
SW3
25
SW6
GAUGE CONTROL MODULE
29
PARK LAMP
BRN
13
PARK BUSY
ELECTRIC BRAKE BOOSTER
26
F-CAN_H
18
F-CAN_L
19
EBB CAN H
12
EBB CAN L
40
F-CAN_H
28
F-CAN_L
46
EBB CAN H
34
EBB CAN L
CAN CONTORLLER
CAN CONTORLLER
MODULATOR UNIT
PRESSURE SENSOR
VSA1
NC
NO
VSA2
NC
NO
SOLENOIDS
LEFT-FRONT
IN
OUT
RIGHT-FRONT
IN
OUT
LEFT-REAR
IN
OUT
RIGHT-REAR
IN
OUT
PUMP MOTOR
M

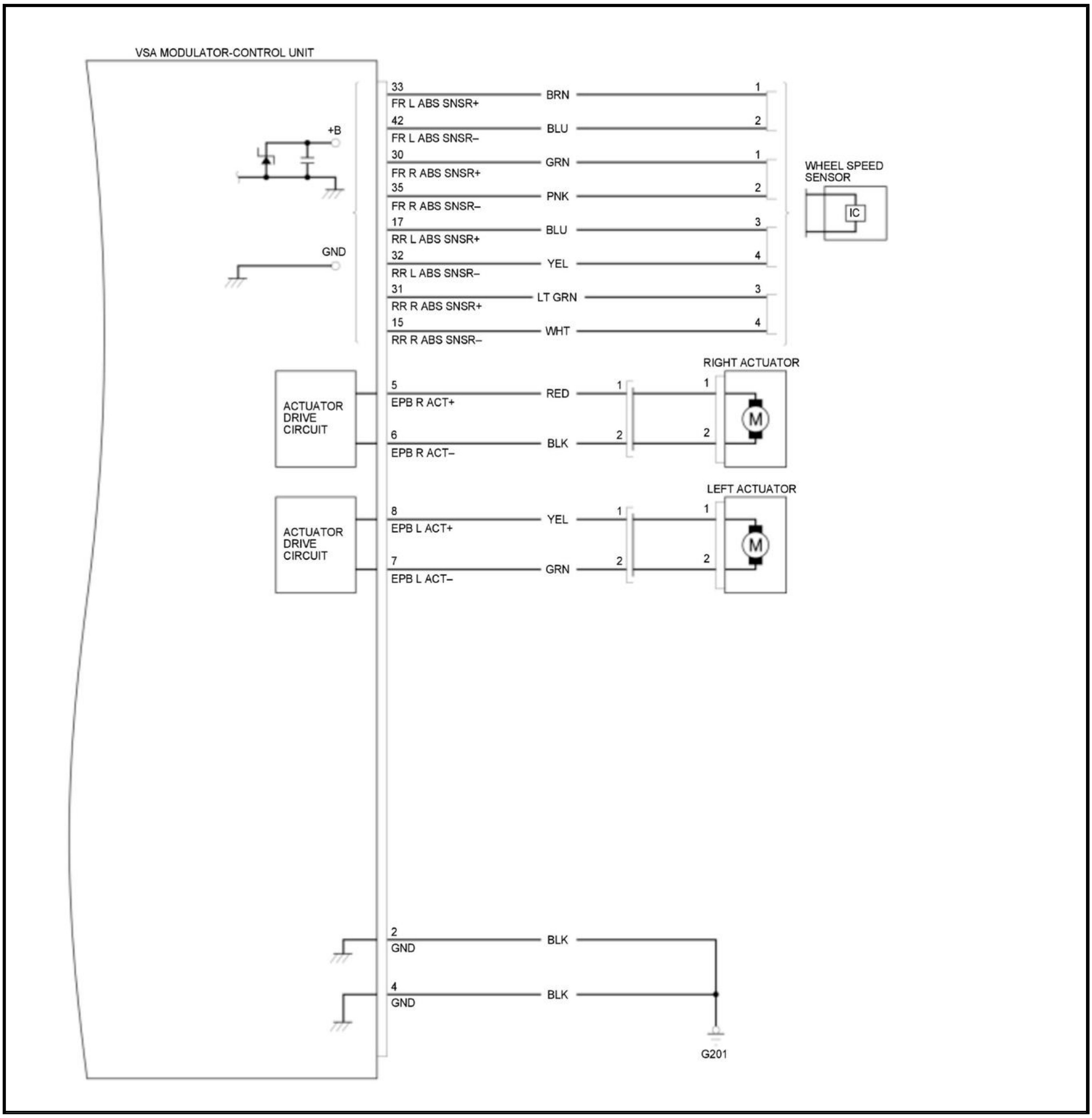
VSA MODULATOR-CONTROL UNIT
+B
GND
33
FR L ABS SNSR+
BRN
1
42
FR L ABS SNSR–
BLU
2
30
FR R ABS SNSR+
GRN
1
35
FR R ABS SNSR–
PNK
2
17
RR L ABS SNSR+
BLU
3
32
RR L ABS SNSR–
YEL
4
31
RR R ABS SNSR+
LT GRN
3
15
RR R ABS SNSR–
WHT
4
WHEEL SPEED SENSOR
IC
RIGHT ACTUATOR
ACTUATOR DRIVE CIRCUIT
5
EPB R ACT+
RED
1
1
6
EPB R ACT–
BLK
2
2
M
LEFT ACTUATOR
ACTUATOR DRIVE CIRCUIT
8
EPB L ACT+
YEL
1
1
7
EPB L ACT–
GRN
2
2
M
2
GND
BLK
4
GND
BLK
G201

GENERAL INFORMATION

HOW TO ENTER VSA SYSTEM MAINTENANCE MODE

Procedure

1. Maintenance Mode - Enter

> **NOTE:**
>
> - Entering condition of VSA Maintenance Mode.
> - When the VSA Maintenance Mode is activated, the VSA and TCS functions are disabled.
> - During the Maintenance Mode, the VSA OFF indicator flashes and the VSA indicator is on. When the vehicle is turned to the OFF (LOCK) mode or the VSA OFF switch is pressed again, the Maintenance Mode is cancelled and both indicators go off.
> - If you do not properly follow the steps to enter the VSA maintenance mode, or you do not complete the procedure within 30 seconds, turn the vehicle to the OFF (LOCK) mode, wait for 10 seconds, and try again.

- To terminate the maintenance mode, do the either one of the following procedures.
-
    - -

      Turn the vehicle to the OFF (LOCK) mode.
    - -

      Press VSA OFF switch for 0.5 sec. (make sure VSA indicator and VSA OFF indicator go off).
- When the VSA detects a malfunction, the Maintenance Mode is cancelled.

1. Turn the vehicle to the ON mode and do the following procedure within 30 seconds.

2. Release the parking brake and hold down the brake pedal.

3. While holding down the brake pedal, press and hold the VSA OFF switch. When the VSA OFF indicator turns on, press and hold the VSA OFF switch again until the VSA OFF indicator goes off.

4. Release the brake pedal and apply the parking brake.

5. While the brake pedal is released, press and hold the VSA OFF switch. When the VSA OFF indicator turns on, press and hold the VSA OFF switch again until the VSA OFF indicator goes off.

6. Hold down the brake pedal while apply the parking brake.

7. Press and hold the VSA OFF switch while both brakes are applied. When the VSA OFF indicator turns on, press and hold the VSA OFF switch again until the VSA OFF indicator flashes and the VSA indicator turns on.

COMPONENT LOCATION INDEX

VSA SYSTEM COMPONENT LOCATION INDEX

For relationships between signals in a system, refer to System Diagram.

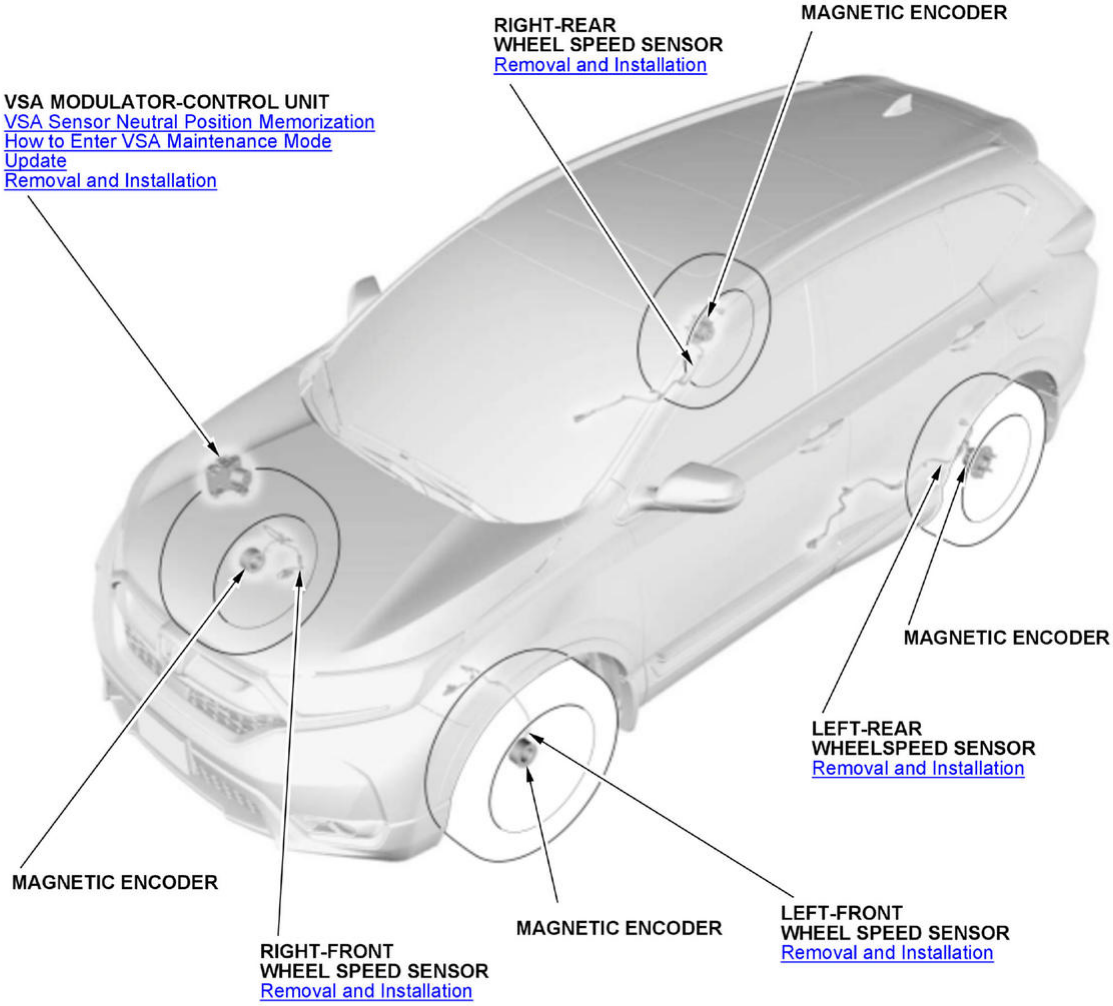
RIGHT-REAR
WHEEL SPEED SENSOR
Removal and Installation
MAGNETIC ENCODER
VSA MODULATOR-CONTROL UNIT
VSA Sensor Neutral Position Memorization
How to Enter VSA Maintenance Mode
Update
Removal and Installation
MAGNETIC ENCODER
LEFT-REAR
WHEELSPEED SENSOR
Removal and Installation
MAGNETIC ENCODER
MAGNETIC ENCODER
LEFT-FRONT
WHEEL SPEED SENSOR
Removal and Installation
RIGHT-FRONT
WHEEL SPEED SENSOR
Removal and Installation

Fig. 1: VSA System Component Locations (1 Of 2)
Courtesy of HONDA, U.S.A., INC.

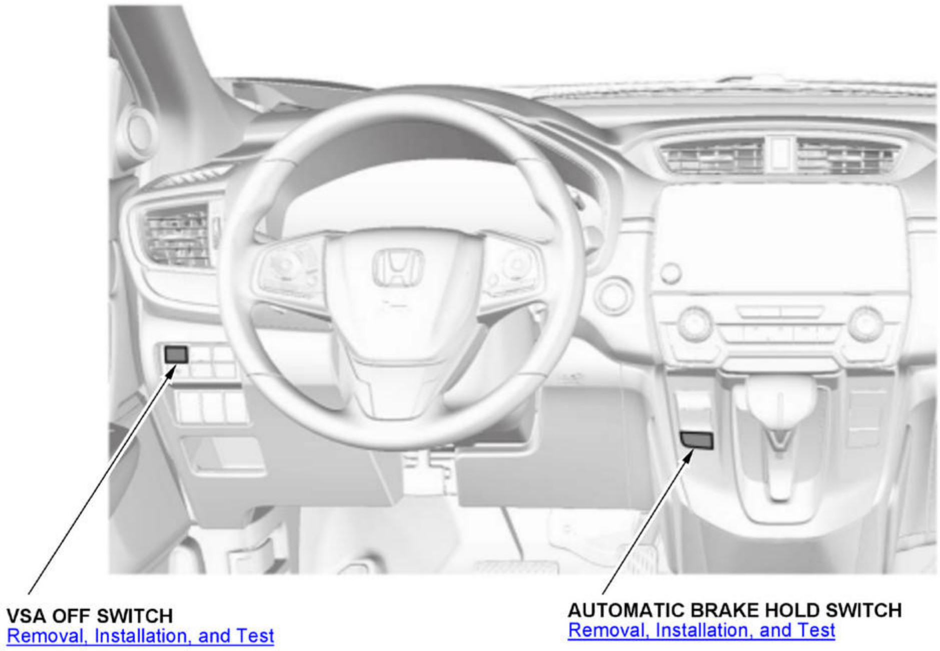
VSA OFF SWITCH
Removal, Installation, and Test
AUTOMATIC BRAKE HOLD SWITCH
Removal, Installation, and Test

Fig. 2: VSA System Component Locations (2 Of 2)
Courtesy of HONDA, U.S.A., INC.

SYMPTOM TROUBLESHOOTING

VSA SYSTEM SYMPTOM TROUBLESHOOTING - ABS INDICATOR, BRAKE SYSTEM INDICATOR (RED), VSA INDICATOR, AND BRAKE SYSTEM INDICATOR (AMBER) DO NOT GO OFF (WITH CAN GATEWAY (WITH AUTO IDLE STOP SYSTEM)) (2020 2021)

ABS indicator, brake system indicator (red), VSA indicator, and brake system indicator (amber) do not go off

1. All DTCs check

   -1. All DTCs check with the HDS.

   All DTCs

   Are there DTCs indicated?

   YES

   Go to indicated DTC's troubleshooting.

   NO

   Go to step 2.

2. Fuse check 1

   -1. Turn the vehicle to the OFF (LOCK) mode.

   -2. Check the following fuse.

Fuse	No. A3-2

Is the fuse OK?

YES

The fuse is OK. Reinstall the fuse, then go to step 3.

NO

Replace the fuse. If the fuse blows again, repair a short to ground in the No. A3-2 fuse circuit.

3. Fuse check 2

-1. Check the following fuse.

Fuse	**No. F4**

Is the fuse OK?

YES

The fuse is OK. Reinstall the fuse, then go to step 4.

NO

Replace the fuse. If the fuse blows again, repair a short to ground in the No. F4 fuse circuit.

4. Fuse check 3

-1. Check the following fuse.

Fuse	**No. D34**

Is the fuse OK?

YES

The fuse is OK. Reinstall the fuse, then go to step 5.

NO

Replace the fuse. Turn the vehicle to the ON mode, then to the OFF (LOCK) mode. If the fuse blows again, repair a short to ground in the No. D34 fuse circuit.

5. Fuse check 4

-1. Check the following fuse.

Fuse	**No. F5**

Is the fuse OK?

YES

The fuse is OK. Reinstall the fuse, then go to step 6.

NO

Replace the fuse. Turn the vehicle to the ON mode, then to the OFF (LOCK) mode. If the fuse blows again, repair a short to ground in the No. F5 fuse circuit.

6. DC-DC converter IG1 relay 2 check

-1. **Remove the DC-DC converter IG1 relay 2** , and **test it** .

Is the relay OK?

YES

The relay is OK. Reinstall the relay, then go to step 7.

NO

Replace the DC-DC converter IG1 relay 2 .

7. Open wire check (IG1 RELAY1 line)

-1. Disconnect the following connector.

VSA modulator-control unit 46P connector

-2. Turn the vehicle to the ON mode.

-3. Measure the voltage between test points 1 and 2.

Test condition	Vehicle ON mode
Â	VSA modulator-control unit 46P connector: disconnected
Test point 1	**VSA modulator-control unit 46P connector No. 14**
Test point 2	Body ground

Is there battery voltage?

YES

The IG1 RELAY1 wire is OK. Go to step 12.

NO

Go to step 8.

8. Open wire check (IG1 RELAY1, IG1 RLY2 OUT lines)

-1. Turn the vehicle to the OFF (LOCK) mode.

-2. **Remove the DC-DC converter IG1 relay 2** .

-3. Measure the resistance between test points 1 and 2.

Test condition	Vehicle OFF (LOCK) mode
Â	VSA modulator-control unit 46P connector: disconnected
Â	DC-DC converter IG1 relay 2: removed
Test point 1	**VSA modulator-control unit 46P connector No. 14**
Test point 2	DC-DC converter IG1 relay 2 4P socket (female terminals) No. 1: ①

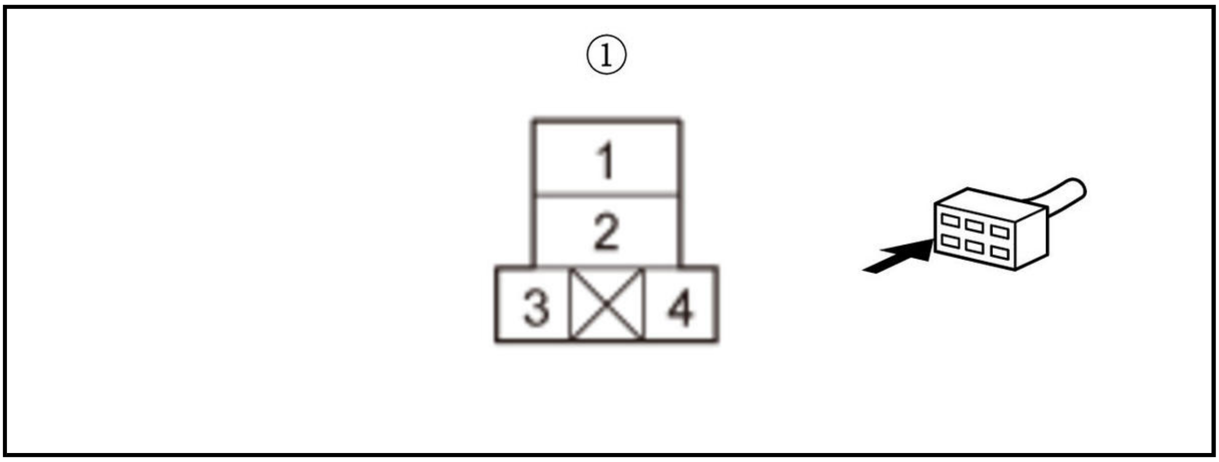

Is there 1.0 Ω or less?

YES

The IG1 RELAY1 and the IG1 RLY2 OUT wires are OK. Go to step 9.

NO

Repair an open in the wire between the VSA modulator-control unit and the DC-DC converter IG1 relay 2.

9. Open wire check (DCDC OUT2 line)

   -1. Disconnect the following connector.

DC-DC converter connector B (5P)

   -2. Measure the resistance between test points 1 and 2.

Test condition	Vehicle OFF (LOCK) mode
Â	VSA modulator-control unit 46P connector: disconnected
Â	DC-DC converter IG1 relay 2: removed
Â	DC-DC converter connector B (5P): disconnected
Test point 1	DC-DC converter IG1 relay 2 4P socket (female terminals) No. 2: ①
Test point 2	DC-DC converter connector B (5P) (female terminals) No. 5: ②

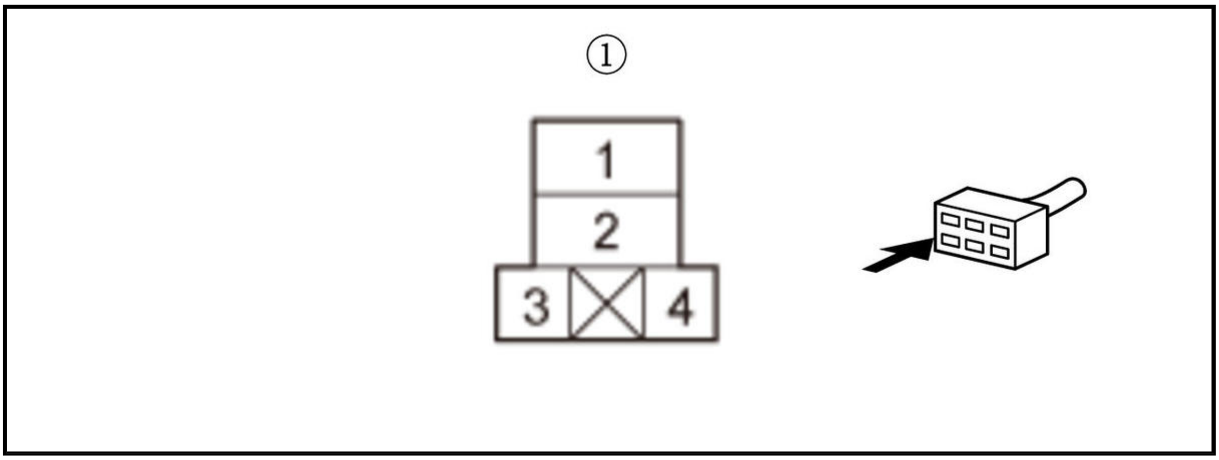

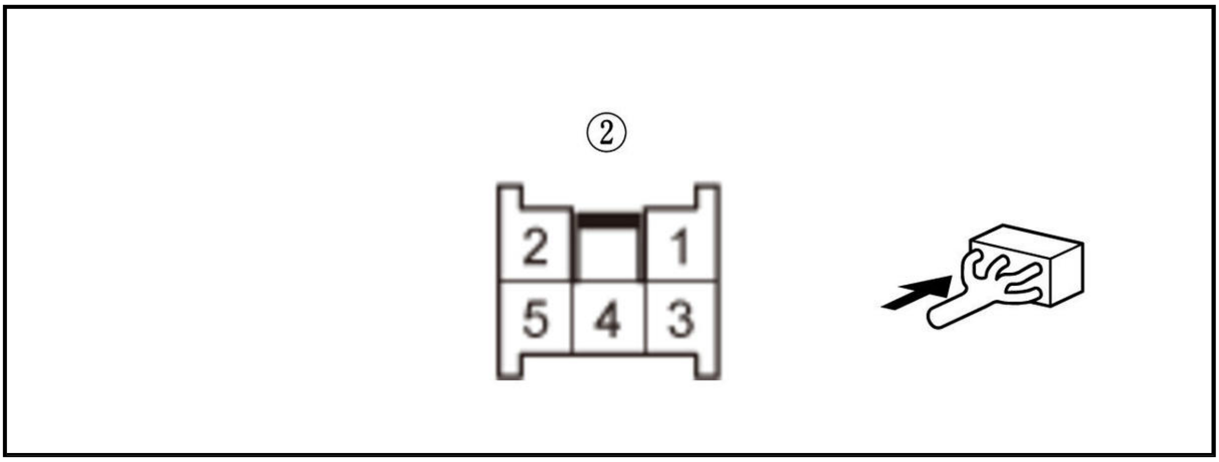

Is there 1.0 Ω or less?

YES

The DCDC OUT2 wire is OK. Go to step 10.

NO

Repair an open in the wire between the DC-DC converter and the DC-DC converter IG1 relay 2.

10. Open wire check (IG1 VSA/ABS line)

-1. Turn the vehicle to the ON mode.

-2. Measure the voltage between test points 1 and 2.

Test condition	Vehicle ON mode
Â	VSA modulator-control unit 46P connector: disconnected
Â	DC-DC converter IG1 relay 2: removed
Â	DC-DC converter connector B (5P): disconnected
Test point 1	DC-DC converter IG1 relay 2 4P socket (female terminals) No. 3: ①
Test point 2	Body ground

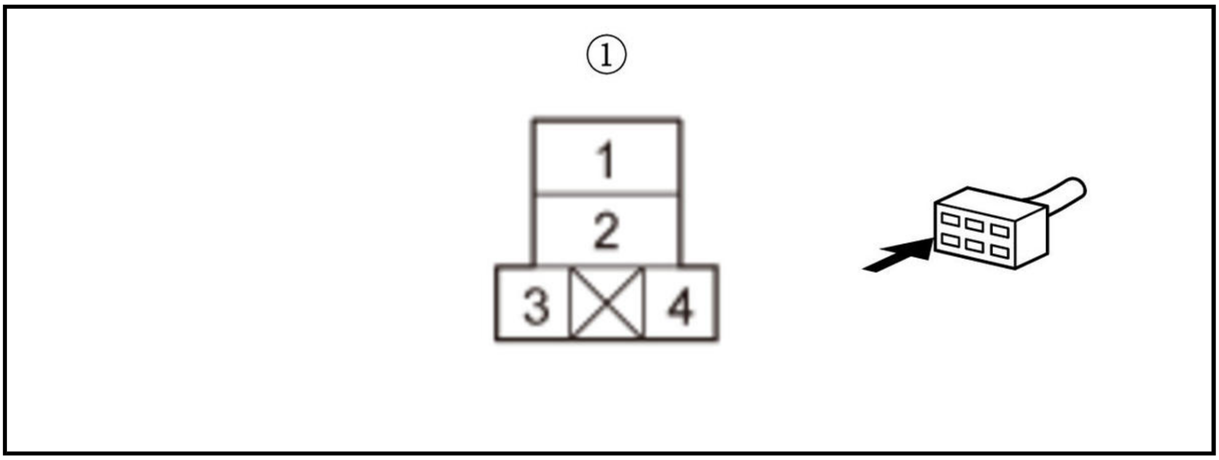

Is there battery voltage?

YES

The IG1 VSA/ABS wire is OK. Go to step 11.

NO

Repair an open in the wire between the under-dash fuse/relay box and the DC-DC converter IG1 relay 2.

11. Open wire check (GND line)

-1. Turn the vehicle to the OFF (LOCK) mode.

-2. Measure the resistance between test points 1 and 2.

Test condition	Vehicle OFF (LOCK) mode
Â	VSA modulator-control unit 46P connector: disconnected
Â	DC-DC converter IG1 relay 2: removed
Â	DC-DC converter connector B (5P): disconnected
Test point 1	DC-DC converter IG1 relay 2 4P socket (female terminals) No. 4: ①
Test point 2	Body ground

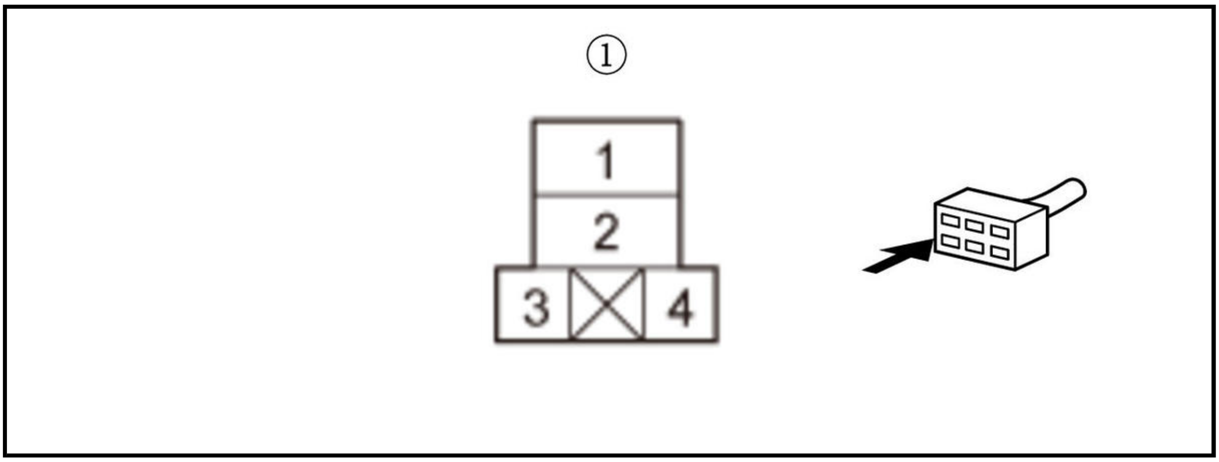

Is there 1.0 Ω or less?

YES

The GND wire is OK. **Replace the DC-DC converter** .

NO

Repair an open in the wire between the DC-DC converter IG1 relay 2 and body ground (G402).

12. Open wire check (+B ABS/VSA FSR line)

-1. Turn the vehicle to the OFF (LOCK) mode.

-2. Disconnect the following connector.

VSA modulator-control unit 46P connector

-3. Measure the voltage between test points 1 and 2.

Test condition	Vehicle OFF (LOCK) mode
Â	VSA modulator-control unit 46P connector: disconnected
Test point 1	**VSA modulator-control unit 46P connector No. 1**
Test point 2	Body ground

Is there battery voltage?

YES

The +B ABS/VSA FSR wire is OK. Go to step 13.

NO

Repair an open in the wire between the under-hood fuse/relay box and the VSA modulator-control unit.

13. Open wire check (+B VSA line)

-1. Measure the voltage between test points 1 and 2.

Test condition	Vehicle OFF (LOCK) mode
Â	VSA modulator-control unit 46P connector: disconnected

Test point 1	**VSA modulator-control unit 46P connector No. 18**
Test point 2	Body ground

Is there battery voltage?

YES

The +B VSA wire is OK. Go to step 14.

NO

Repair an open in the wire between the auxiliary under-dash fuse/relay box and the VSA modulator-control unit.

14. Open wire check (GND line)

-1. Measure the resistance between test points 1 and 2.

Test condition	Vehicle OFF (LOCK) mode
Â	VSA modulator-control unit 46P connector: disconnected
Test point 1	**VSA modulator-control unit 46P connector No. 2**
Test point 2	Body ground

Is there 1.0 Ω or less?

YES

The GND wire is OK. Go to step 15.

NO

Repair an open in the wire between the VSA modulator-control unit and body ground (G201).

15. F-CAN circuit communication check

-1. Reconnect the following connector.

VSA modulator-control unit 46P connector

-2. Select the FUNCTION TEST in the CAN gateway with the HDS, then select the F-CAN Bus Connected Unit Check.

F-CAN Bus Connected Unit Check

Which result is indicated?

Gauge control module (Bus A) is Not Available

Go to step 16.

VSA modulator-control unit (Bus A) is Not Available

Go to step 17.

VSA modulator-control unit (Bus B) is Not Available

Go to step 18.

VSA modulator-control unit and gauge control module are Available

Intermittent failure, the system is OK at this time. **Refer to intermittent failures troubleshooting**.

16. Open wire check (F-CAN A_H, F-CAN A_L lines)

-1. Turn the vehicle to the OFF (LOCK) mode.

-2. Disconnect the following connectors.

Gauge control module connector A (32P)
CAN gateway 16P connector

-3. Measure the resistance between test points 1 and 2.

Test condition	Vehicle OFF (LOCK) mode
Â	Gauge control module connector A (32P): disconnected
Â	CAN gateway 16P connector: disconnected

Test circuit 1	Â
Test point 1	**Gauge control module connector A (32P) No. 19**
Test point 2	CAN gateway 16P connector (female terminals) No. 3: ①

Test circuit 2	Â
Test point 1	**Gauge control module connector A (32P) No. 20**
Test point 2	CAN gateway 16P connector (female terminals) No. 11: ①

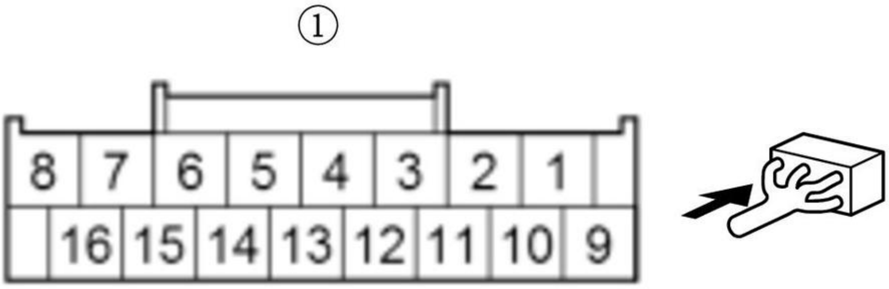

Is there 1.0 Ω or less?

YES

The F-CAN A_H and F-CAN A_L wires are OK. Check for any authorized service information related to the DTCs or symptoms you are troubleshooting or **substitute a known-good gauge control module** , then recheck. If the symptom/indication goes away with a known-good gauge control module, **replace the original gauge control module** .

NO

Repair an open in the wire between the gauge control module and the CAN gateway.

17. Open wire check (F-CAN A_H, F-CAN A_L lines)

-1. Turn the vehicle to the OFF (LOCK) mode.

-2. Disconnect the following connectors.

VSA modulator-control unit 46P connector
CAN gateway 16P connector

-3. Measure the resistance between test points 1 and 2.

Test condition	Vehicle OFF (LOCK) mode
Â	VSA modulator-control unit 46P connector: disconnected
Â	CAN gateway 16P connector: disconnected
Test circuit 1	Â
Test point 1	**VSA modulator-control unit 46P connector No. 40**
Test point 2	CAN gateway 16P connector (female terminals) No. 3: ①

Test circuit 2	Â
Test point 1	**VSA modulator-control unit 46P connector No. 28**
Test point 2	CAN gateway 16P connector (female terminals) No. 11: ①

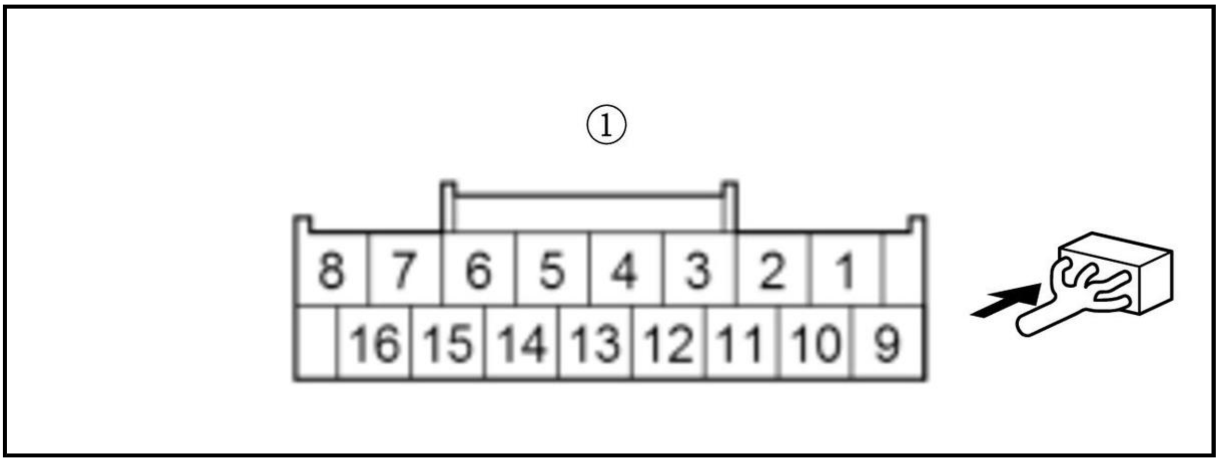

Is there 1.0 Ω or less?

YES

The F-CAN A_H and F-CAN A_L wires are OK. Check for loose terminals and poor connections in the VSA modulator-control unit 46P connector. Check for any authorized service information related to the DTCs or symptoms you are troubleshooting. If they are OK, **replace the VSA modulator-control unit** .

NO

Repair an open in the wire between the VSA modulator-control unit and the CAN gateway.

18. Open wire check (F-CAN B_H, F-CAN B_L lines)

-1. Turn the vehicle to the OFF (LOCK) mode.

-2. Disconnect the following connectors.

VSA modulator-control unit 46P connector
CAN gateway 16P connector

-3. Measure the resistance between test points 1 and 2.

Test condition	Vehicle OFF (LOCK) mode
Â	VSA modulator-control unit 46P connector: disconnected
Â	CAN gateway 16P connector: disconnected
Test circuit 1	Â
Test point 1	**VSA modulator-control unit 46P connector No. 46**
Test point 2	CAN gateway 16P connector (female terminals) No. 6: ①

Test circuit 2	Â
Test point 1	**VSA modulator-control unit 46P connector No. 34**
Test point 2	CAN gateway 16P connector (female terminals) No. 14: ①

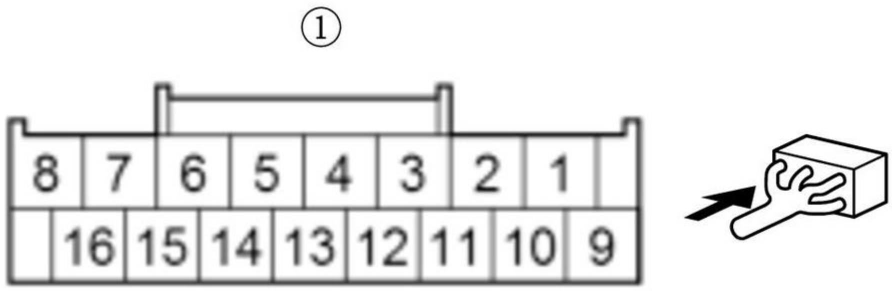

Is there 1.0 Ω or less?

YES

The F-CAN B_H and F-CAN B_L wires are OK. Check for loose terminals and poor connections in the VSA modulator-control unit 46P connector. Check for any authorized service information related to the DTCs or symptoms you are troubleshooting. If they are OK, **replace the VSA modulator-control unit** .

NO

Repair an open in the wire between the VSA modulator-control unit and the CAN gateway.

VSA SYSTEM SYMPTOM TROUBLESHOOTING - ABS INDICATOR, BRAKE SYSTEM INDICATOR (RED), VSA INDICATOR, AND BRAKE SYSTEM INDICATOR (AMBER) DO NOT GO OFF (WITH CAN GATEWAY (WITHOUT AUTO IDLE STOP SYSTEM))

ABS indicator, brake system indicator (red), VSA indicator, and brake system indicator (amber) do not go off

1. DTC check (VSA modulator-control unit)

   -1. Turn the vehicle to the ON mode.

   -2. Check for DTCs with the HDS.

DTC Description	DTC	Freeze Frame
Â	Â	Â

   Is DTC indicated?

   YES

   Go to indicated DTC's troubleshooting.

   NO

   Go to step 2.

2. DTC check (CAN gateway system)

   -1. Check for CAN gateway system DTCs with the HDS.

DTC Description	DTC
Â	Â

   Is DTC indicated?

   YES

   Go to indicated DTC's troubleshooting.

   NO

   Go to step 3.

3. Gauge control module operation check

   -1. Do the gauge control module self-diagnostic function .

   Is the gauge control module OK?

   YES

   Go to step 4.

   NO

   Replace the gauge control module .

4. Fuse check 1

   -1. Turn the vehicle to the OFF (LOCK) mode.

   -2. Check the following fuse.

Fuse	No. A3-2 (40 A)
Location	Under-hood fuse/relay box

Is the fuse OK?

YES

The fuse is OK. Reinstall the fuse, then go to step 5.

NO

Replace the fuse. If the fuse blows again, repair a short to ground in the No. A3-2 (40 A) fuse circuit.

5. Fuse check 2

-1. Check the following fuse.

Fuse	No. D34 (10 A)
Location	Under-dash fuse/relay box

Is the fuse OK?

YES

The fuse is OK. Reinstall the fuse, then go to step 6.

NO

Replace the fuse. Turn the vehicle to the ON mode, then to the OFF (LOCK) mode. If the fuse blows again, repair a short to ground in the No. D34 (10 A) fuse circuit.

6. Open wire check (IG1 VSA/ABS line)

-1. Disconnect the following connector.

VSA modulator-control unit 46P connector

-2. Turn the vehicle to the ON mode.

-3. Measure the voltage between test points 1 and 2.

Test condition	Vehicle ON mode
Â	VSA modulator-control unit 46P connector: disconnected
Test point 1	**VSA modulator-control unit 46P connector No. 14**
Test point 2	Body ground

Is there battery voltage?

YES

The IG1 VSA/ABS wire is OK. Go to step 7.

NO

Repair an open in the wire between the No. D34 (10 A) fuse in the under-dash fuse/relay box and the VSA modulator-control unit.

7. Open wire check (+B ABS/VSA FSR line)

-1. Turn the vehicle to the OFF (LOCK) mode.

-2. Measure the voltage between test points 1 and 2.

Test condition	Vehicle OFF (LOCK) mode
Â	VSA modulator-control unit 46P connector: disconnected
Test point 1	VSA modulator-control unit 46P connector No. 1
Test point 2	Body ground

Is there battery voltage?

YES

The +B ABS/VSA FSR wire is OK. Go to step 8.

NO

Repair an open in the wire between the under-hood fuse/relay box and the VSA modulator-control unit.

8. Open wire check (GND line)

-1. Check for continuity between test points 1 and 2.

Test condition	Vehicle OFF (LOCK) mode
Â	VSA modulator-control unit 46P connector: disconnected
Test point 1	VSA modulator-control unit 46P connector No. 2
Test point 2	Body ground

Is there continuity?

YES

The GND wire is OK. Go to step 9.

NO

Repair an open in the wire between the VSA modulator-control unit and body ground (G201).

9. F-CAN circuit communication check

-1. Reconnect the following connector.

VSA modulator-control unit 46P connector

-2. Select the FUNCTION TEST in the CAN gateway with the HDS, then select the F-CAN Bus Connected Unit Check.

F-CAN Bus Connected Unit Check

Which result is indicated?

Gauge control module (Bus A) is Not Available

Go to step 10.

VSA modulator-control unit (Bus A) is Not Available

Go to step 11.

VSA modulator-control unit (Bus B) is Not Available

Go to step 12.

VSA modulator-control unit and gauge control module are Available

Intermittent failure, the system is OK at this time. **Refer to intermittent failures troubleshooting**.

10. Open wire check (F-CAN A_H, F-CAN A_L lines)

-1. Turn the vehicle to the OFF (LOCK) mode.

-2. Disconnect the following connectors.

Gauge control module connector A (32P)
CAN gateway 12P connector

-3. Check for continuity between test points 1 and 2.

Test condition	Vehicle OFF (LOCK) mode
Â	Gauge control module connector A (32P): disconnected
Â	CAN gateway 12P connector: disconnected
Test circuit 1	Â
Test point 1	**Gauge control module connector A (32P) No. 19**
Test point 2	CAN gateway 12P connector (female terminals) No. 3: ①

Test circuit 2	Â
Test point 1	**Gauge control module connector A (32P) No. 20**
Test point 2	CAN gateway 12P connector (female terminals) No. 9: ①

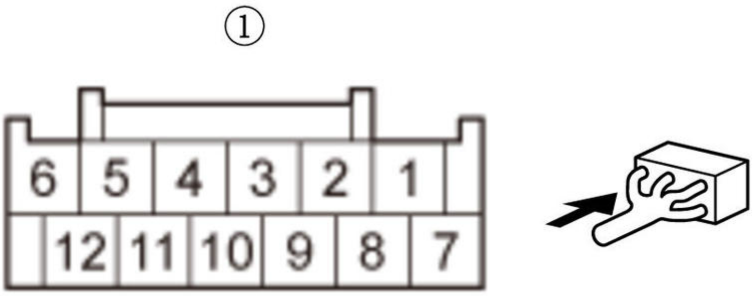

Is there continuity?

YES

The F-CAN A_H and F-CAN A_L wires are OK. Check for any authorized service information related to the DTCs or symptoms you are troubleshooting or **substitute a known-good gauge control module** , then recheck. If the symptom/indication goes away with a known-good gauge control module, **replace the original gauge control module** .

NO

Repair an open in the wire between the gauge control module and the CAN gateway.

11. Open wire check (F-CAN A_H, F-CAN A_L lines)

-1. Turn the vehicle to the OFF (LOCK) mode.

-2. Disconnect the following connectors.

VSA modulator-control unit 46P connector
CAN gateway 12P connector

-3. Check for continuity between test points 1 and 2.

Test condition	Vehicle OFF (LOCK) mode
Â	VSA modulator-control unit 46P connector: disconnected
Â	CAN gateway 12P connector: disconnected
Test circuit 1	Â
Test point 1	**VSA modulator-control unit 46P connector No. 40**
Test point 2	CAN gateway 12P connector (female terminals) No. 3: ①

Test circuit 2	Â
Test point 1	**VSA modulator-control unit 46P connector No. 28**
Test point 2	CAN gateway 12P connector (female terminals) No. 9: ①

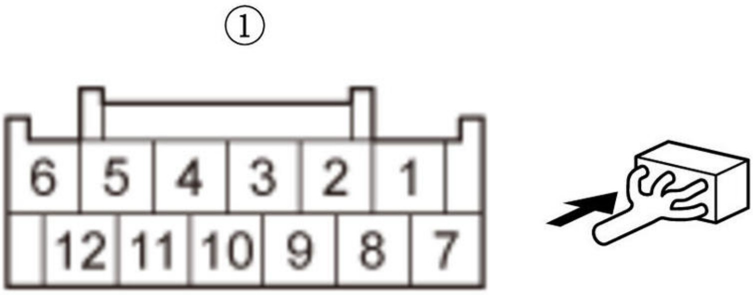

Is there continuity?

YES

The F-CAN A_H and F-CAN A_L wires are OK. Check for loose terminals and poor connections in the VSA modulator-control unit 46P connector. Check for any authorized service information related to the DTCs or symptoms you are troubleshooting. If they are OK, **replace the VSA modulator-control unit** .

NO

Repair an open in the wire between the VSA modulator-control unit and the CAN gateway.

12. Open wire check (F-CAN B_H, F-CAN B_L lines)

-1. Turn the vehicle to the OFF (LOCK) mode.

-2. Disconnect the following connectors.

VSA modulator-control unit 46P connector
CAN gateway 12P connector

-3. Check for continuity between test points 1 and 2.

Test condition	Vehicle OFF (LOCK) mode
Â	VSA modulator-control unit 46P connector: disconnected
Â	CAN gateway 12P connector: disconnected
Test circuit 1	Â
Test point 1	**VSA modulator-control unit 46P connector No. 46**
Test point 2	CAN gateway 12P connector (female terminals) No. 12: ①

Test circuit 2	Â
Test point 1	**VSA modulator-control unit 46P connector No. 34**
Test point 2	CAN gateway 12P connector (female terminals) No. 5: ①

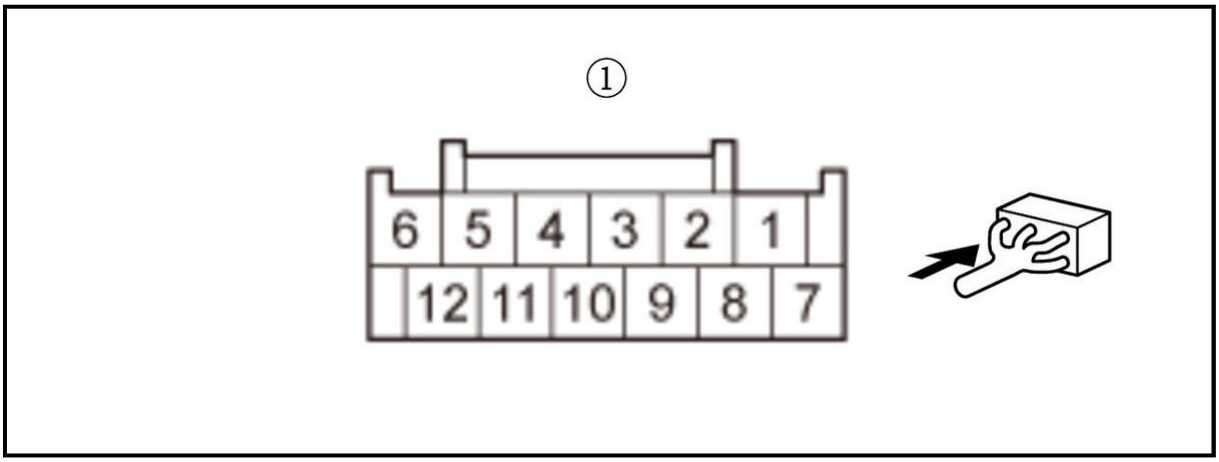

Is there continuity?

YES

The F-CAN B_H and F-CAN B_L wires are OK. Check for loose terminals and poor connections in the VSA modulator-control unit 46P connector. Check for any authorized service information related to the DTCs or symptoms you are troubleshooting. If they are OK, **replace the VSA modulator-control unit** .

NO

Repair an open in the wire between the VSA modulator-control unit and the CAN gateway.

VSA SYSTEM SYMPTOM TROUBLESHOOTING - ABS INDICATOR, BRAKE SYSTEM INDICATOR (RED), VSA INDICATOR, AND BRAKE SYSTEM INDICATOR (AMBER) DO NOT GO OFF (WITHOUT CAN GATEWAY) (2017 2018 2019)

ABS indicator, brake system indicator (red), VSA indicator, and brake system indicator (amber) do not go off

NOTE: Make sure the HDS communicates with the vehicle and the VSA modulator-control unit. If it does not, **go to the F-CAN circuit troubleshooting** .

1. DTC check (VSA modulator-control unit)

-1. Turn the vehicle to the ON mode.

-2. Check for DTCs with the HDS.

DTC Description	DTC	Freeze Frame
Â	Â	Â

Is DTC indicated?

YES

Go to indicated DTC's troubleshooting.

NO

Go to step 2.

2. Gauge control module operation check

-1. **Do the gauge control module self-diagnostic function** .

Is the gauge control module OK?

YES

Go to step 3.

NO

Replace the gauge control module .

3. Fuse check 1

-1. Turn the vehicle to the OFF (LOCK) mode.

-2. Check the following fuse.

Fuse	No. A3-2 (40 A)
Location	Under-hood fuse/relay box

Is the fuse OK?

YES

The fuse is OK. Reinstall the fuse, then go to step 4.

NO

Replace the fuse. If the fuse blows again, repair a short to ground in the No. A3-2 (40 A) fuse circuit.

4. Fuse check 2

-1. Check the following fuse.

Fuse	No. D34 (10 A)
Location	Under-dash fuse/relay box

Is the fuse OK?

YES

The fuse is OK. Reinstall the fuse, then go to step 5.

NO

Replace the fuse. Turn the vehicle to the ON mode, then to the OFF (LOCK) mode. If the fuse blows again, repair a short to ground in the No. D34 (10 A) fuse circuit.

5. Open wire check (IG1 VSA/ABS line)

-1. Disconnect the following connector.

VSA modulator-control unit 46P connector

-2. Turn the vehicle to the ON mode.

-3. Measure the voltage between test points 1 and 2.

Test condition	Vehicle ON mode
Â	VSA modulator-control unit 46P connector: disconnected

Test point 1	**VSA modulator-control unit 46P connector No. 14**
Test point 2	Body ground

Is there battery voltage?

YES

The IG1 VSA/ABS wire is OK. Go to step 6.

NO

Repair an open in the wire between the No. D34 (10 A) fuse in the under-dash fuse/relay box and the VSA modulator-control unit.

6. Open wire check (+B ABS/VSA FSR line)

-1. Turn the vehicle to the OFF (LOCK) mode.

-2. Measure the voltage between test points 1 and 2.

Test condition	Vehicle OFF (LOCK) mode
Â	VSA modulator-control unit 46P connector: disconnected
Test point 1	**VSA modulator-control unit 46P connector No. 1**
Test point 2	Body ground

Is there battery voltage?

YES

The +B ABS/VSA FSR wire is OK. Go to step 7.

NO

Repair an open in the wire between the No. A3-2 (40 A) fuse in the under-hood fuse/relay box and the VSA modulator-control unit.

7. Open wire check (GND line)

-1. Check for continuity between test points 1 and 2.

Test condition	Vehicle OFF (LOCK) mode
Â	VSA modulator-control unit 46P connector: disconnected
Test point 1	**VSA modulator-control unit 46P connector No. 2**
Test point 2	Body ground

Is there continuity?

YES

The GND wire is OK. Go to step 8.

NO

Repair an open in the wire between the VSA modulator-control unit and body ground (G201).

8. Open wire check (F-CAN_H, F-CAN_L lines)

-1. Disconnect the following connector.

Gauge control module connector A (32P)

-2. Check for continuity between test points 1 and 2.

Test condition	Vehicle OFF (LOCK) mode
Â	VSA modulator-control unit 46P connector: disconnected
Â	Gauge control module connector A (32P): disconnected
Test circuit 1	Â
Test point 1	**VSA modulator-control unit 46P connector No. 40**
Test point 2	**Gauge control module connector A (32P) No. 19**

Test circuit 2	Â
Test point 1	**VSA modulator-control unit 46P connector No. 28**
Test point 2	**Gauge control module connector A (32P) No. 20**

Is there continuity?

YES

The F-CAN_H and F-CAN_L wires are OK. Check for loose terminals and poor connections in the VSA modulator-control unit 46P connector. Check for any authorized service information related to the DTCs or symptoms you are troubleshooting. If they are OK, **replace the VSA modulator-control unit** .

NO

Repair an open in the wire between the gauge control module and the VSA modulator-control unit.

VSA SYSTEM SYMPTOM TROUBLESHOOTING - VSA CANNOT BE TURNED OFF

VSA cannot be turned OFF

1. VSA OFF switch check

-1. Turn the vehicle to the OFF (LOCK) mode.

-2. **Check the VSA OFF switch** .

Is the VSA OFF switch OK?

YES

Go to step 2.

NO

Replace the VSA OFF switch .

2. Determine possible failure area (VSA OFF SW line, GND line)

-1. Disconnect the following connector.

VSA OFF/lid switch 4P connector
VSA OFF/TPMS switch 5P connector
VSA OFF/parking and back-up sensor switch 8P connector
VSA OFF/driver's power tailgate switch 12P connector
VSA OFF/heated windshield wiper area switch 12P connector

-2. Turn the vehicle to the ON mode.

-3. Measure the voltage between test points 1 and 2.

Test condition	Vehicle ON mode
Â	VSA OFF/lid switch 4P connector: disconnected
Â	VSA OFF/TPMS switch 5P connector: disconnected
Â	VSA OFF/parking and back-up sensor switch 8P connector: disconnected
Â	VSA OFF/driver's power tailgate switch 12P connector: disconnected
Â	VSA OFF/heated windshield wiper area switch 12P connector: disconnected

Test point 1	VSA OFF/lid switch 4P connector (female terminals) No. 4: ①
Â	VSA OFF/TPMS switch 5P connector (female terminals) No. 1: ②
Â	VSA OFF/parking and back-up sensor switch 8P connector (female terminals) No. 8: ③
Â	VSA OFF/driver's power tailgate switch 12P connector (female terminals) No. 11: ④
Â	VSA OFF/heated windshield wiper area switch 12P connector (female terminals) No. 11: ⑤
Test point 2	Body ground

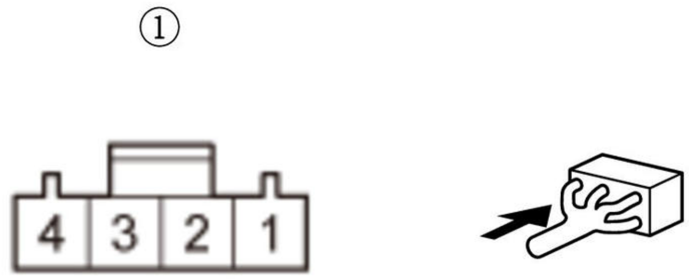

②

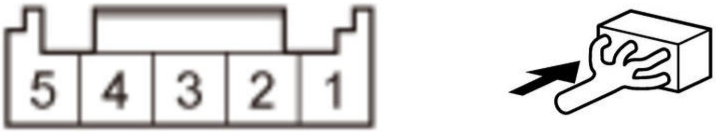

③

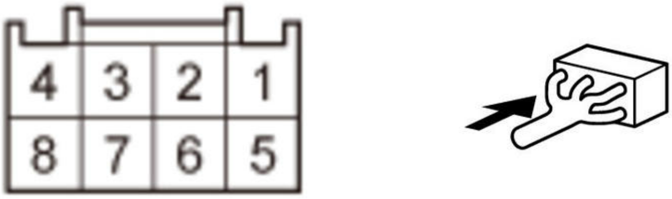

④

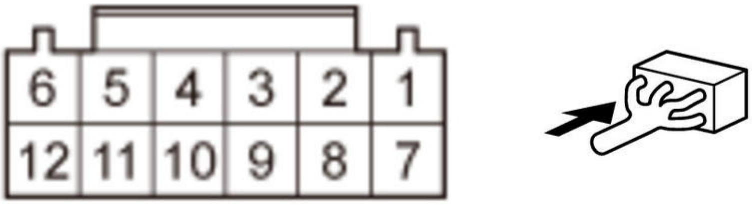
6
5
4
3
2
1
12
11
10
9
8
7

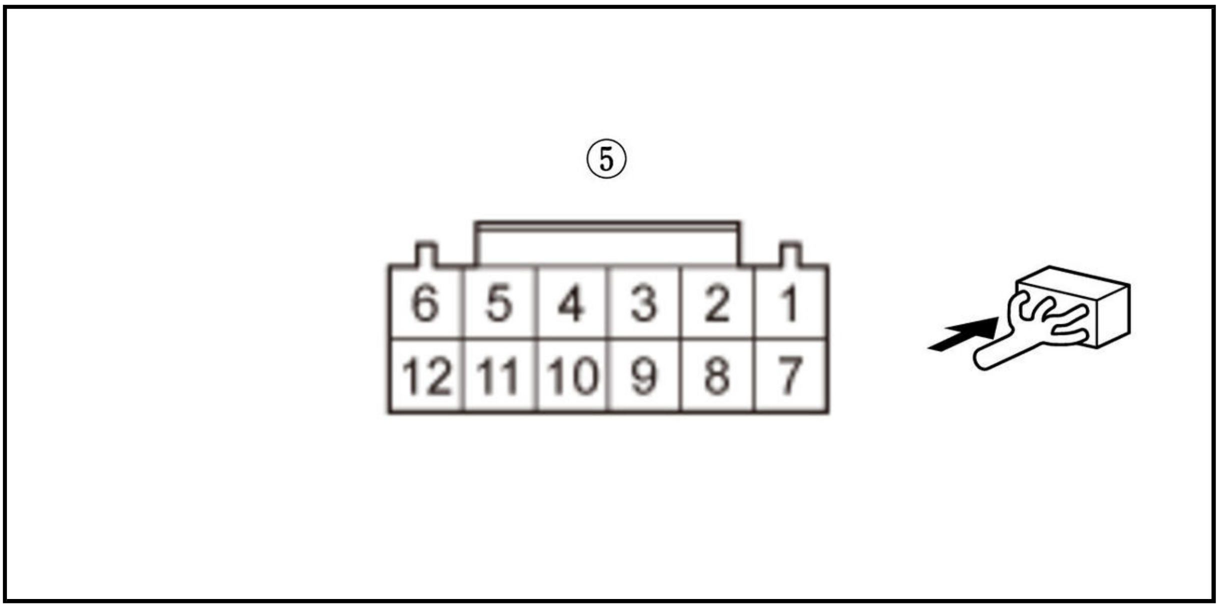

Is there battery voltage?

YES

Repair an open in the wire between the VSA OFF switch and body ground (G401).

NO

Go to step 3.

3. Shorted wire check (VSA OFF SW line)

-1. Turn the vehicle to the OFF (LOCK) mode.

-2. Disconnect the following connector.

Gauge control module connector A (32P)

-3. Measure the resistance between test points 1 and 2.

Test condition	Vehicle OFF (LOCK) mode
Â	VSA OFF/lid switch 4P connector: disconnected
Â	VSA OFF/TPMS switch 5P connector: disconnected
Â	VSA OFF/parking and back-up sensor switch 8P connector: disconnected
Â	VSA OFF/driver's power tailgate switch 12P connector: disconnected
Â	VSA OFF/heated windshield wiper area switch 12P connector: disconnected
Â	Gauge control module connector A (32P): disconnected
Test point 1	VSA OFF/lid switch 4P connector (female terminals) No. 4: ①
Â	VSA OFF/TPMS switch 5P connector (female terminals) No. 1: ②
Â	VSA OFF/parking and back-up sensor switch 8P connector (female terminals) No. 8: ③
Â	VSA OFF/driver's power tailgate switch 12P connector (female terminals) No. 11: ④
Â	VSA OFF/heated windshield wiper area switch 12P connector (female terminals) No. 11: ⑤

Test point 2	Body ground

①

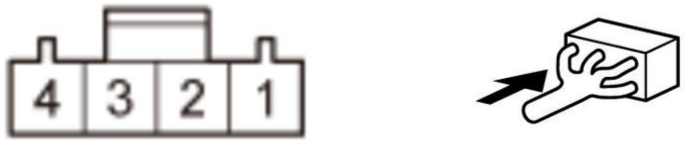

②

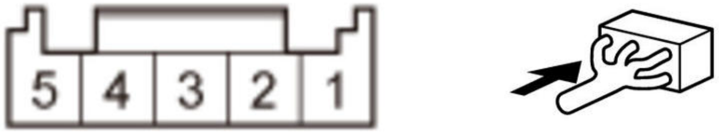

③

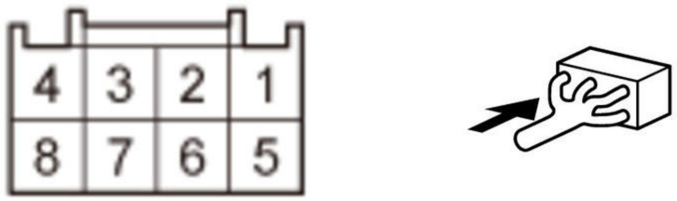

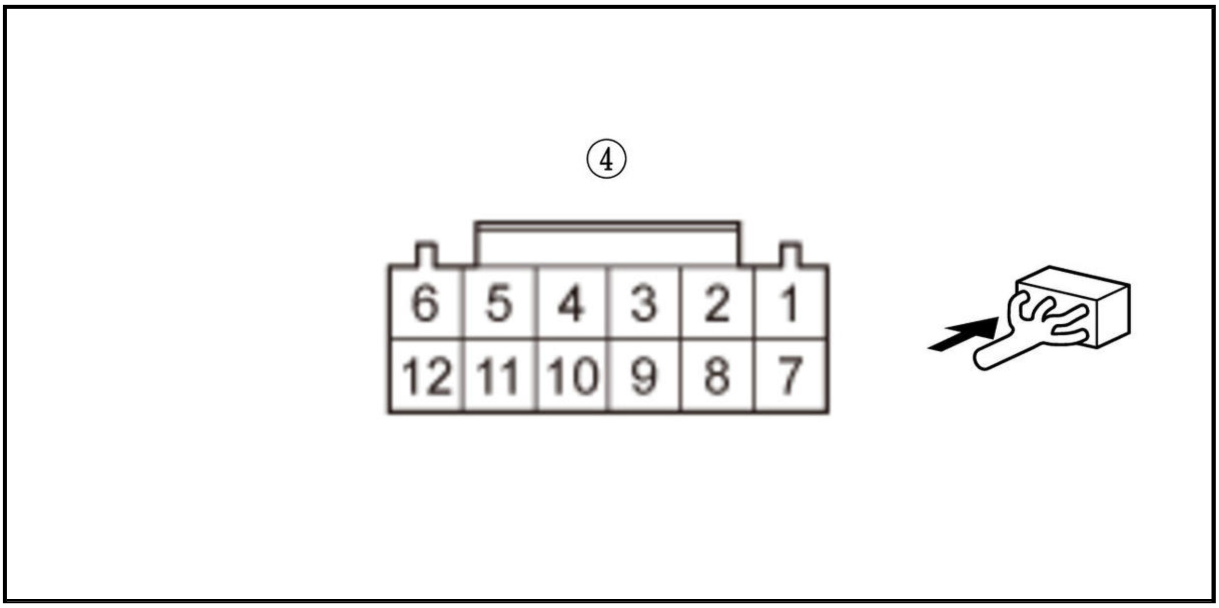

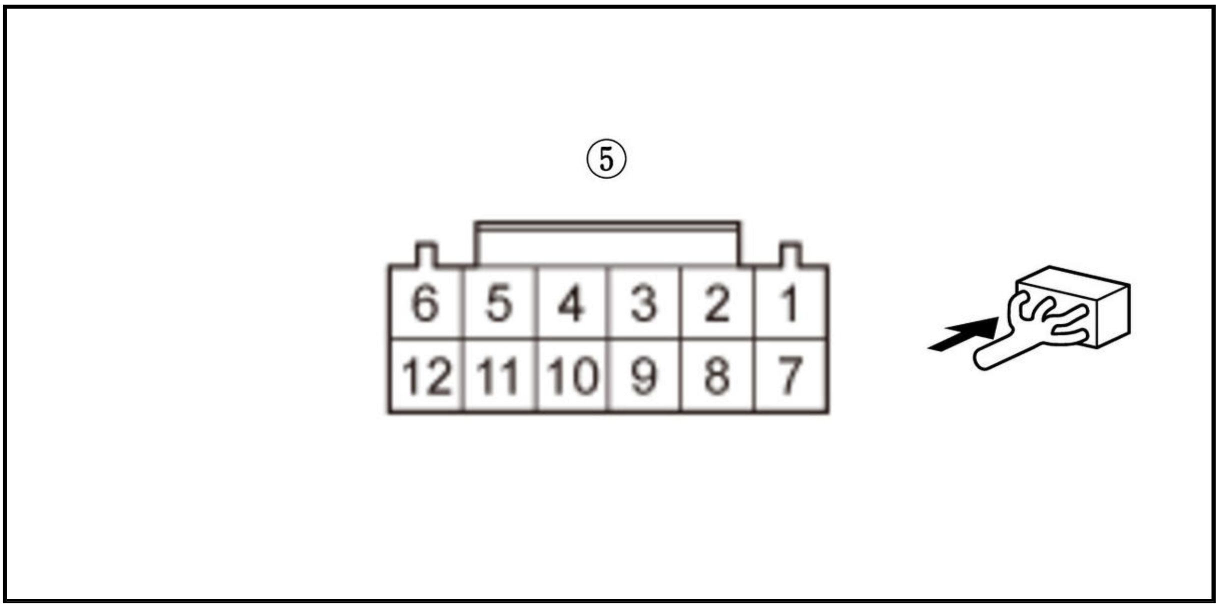

Is there 1 MΩ or more?

YES

Go to step 4.

NO

Repair a short to body ground in the wire between the gauge control module and the VSA OFF switch.

4. Open wire check (VSA OFF SW line)

-1. Measure the resistance between test points 1 and 2.

Test condition	Vehicle OFF (LOCK) mode
Â	VSA OFF/lid switch 4P connector: disconnected
Â	VSA OFF/TPMS switch 5P connector: disconnected
Â	VSA OFF/parking and back-up sensor switch 8P connector: disconnected
Â	VSA OFF/driver's power tailgate switch 12P connector: disconnected
Â	VSA OFF/heated windshield wiper area switch 12P connector: disconnected
Â	Gauge control module connector A (32P): disconnected
Test point 1	VSA OFF/lid switch 4P connector (female terminals) No. 4: ①

Â	VSA OFF/TPMS switch 5P connector (female terminals) No. 1: ②
Â	VSA OFF/parking and back-up sensor switch 8P connector (female terminals) No. 8: ③
Â	VSA OFF/driver's power tailgate switch 12P connector (female terminals) No. 11: ④
Â	VSA OFF/heated windshield wiper area switch 12P connector (female terminals) No. 11: ⑤
Test point 2	**Gauge control module connector A (32P) No. 9**

①

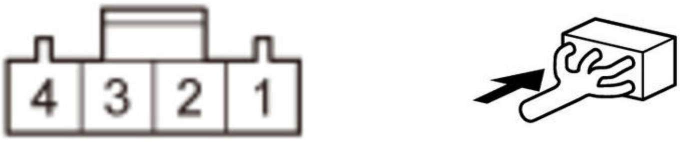

②

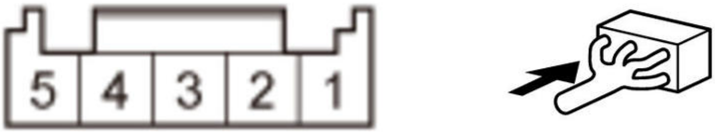

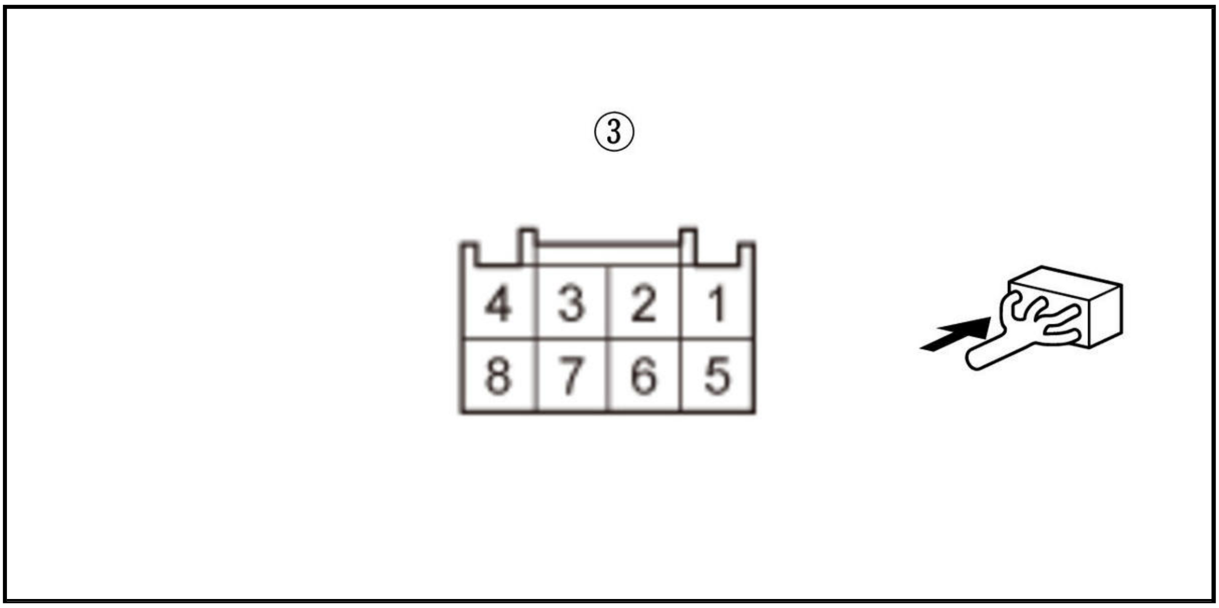

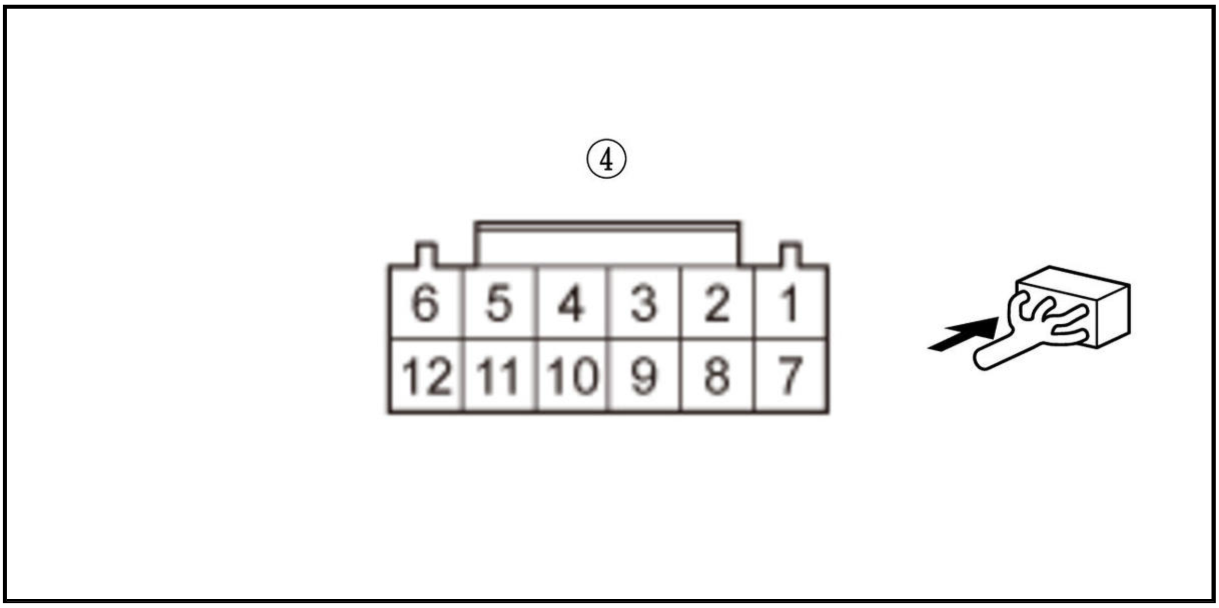
④
6
5
4
3
2
1
12
11
10
9
8
7

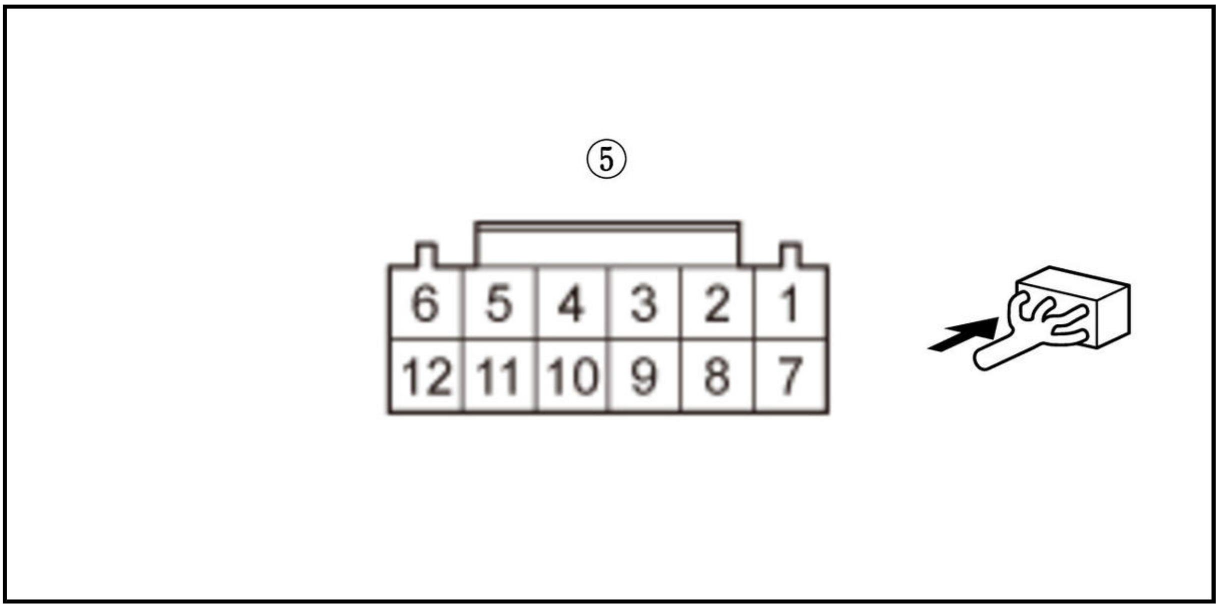
⑤
6
5
4
3
2
1
12
11
10
9
8
7

Is there 1.0 Ω or less?

YES

The VSA OFF SW wire is OK. **Replace the gauge control module** .

NO

Repair an open in the wire between the gauge control module and the VSA OFF switch.

SYMPTOM TROUBLESHOOTING INDEX

VSA SYSTEM SYMPTOM TROUBLESHOOTING INDEX (VSA SYSTEM)

When the vehicle has one of these symptoms, check for VSA diagnostic trouble codes (DTCs) with the HDS. If there are no DTCs, do the diagnostic procedure for the symptom, in the sequence listed, until you find the cause.

Symptom	Diagnostic procedure	Also check for
HDS does not communicate with the VSA modulator-control unit or the vehicle	**Troubleshoot the F-CAN circuit** .	Power and ground at the VSA modulator-control unit.
ABS indicator, brake system indicator (red), VSA indicator, or VSA OFF indicator does not come on at start-up (bulb check)	**Do the gauge control module self-diagnostic function** .	Â
VSA OFF indicator does not go off	• **Do the VSA sensor neutral position memorization**. • **Do the gauge control module self-diagnostic function** . • **Replace the VSA modulator-control unit** .	Â
ABS indicator, brake system indicator (red), VSA indicator, and brake system indicator (amber) do not go off	**Symptom troubleshooting**.	Â
VSA cannot be turned OFF	• **Symptom troubleshooting**. • **Replace the VSA modulator-control unit** .	Â

HOW TO INFORMATION

HOW TO TROUBLESHOOT THE VSA SYSTEM

System Indicator

This system has seven indicators on the gauge control module.

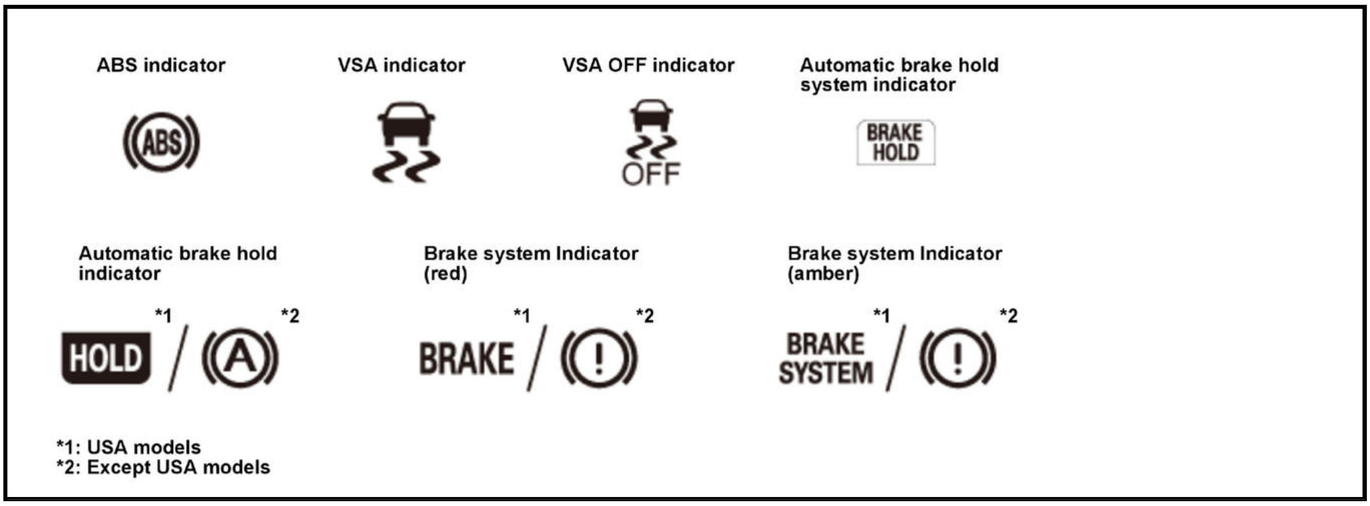
ABS indicator
VSA indicator
VSA OFF indicator
Automatic brake hold system indicator
BRAKE HOLD
Automatic brake hold indicator
*1
*2
HOLD
Brake system Indicator (red)
*1
*2
BRAKE
Brake system Indicator (amber)
*1
*2
BRAKE SYSTEM
*1: USA models
*2: Except USA models

NOTE: For locations of each indicator, **refer to gauge control module component location index** .

When the system is OK, each indicator comes on for about 2 seconds after turning the vehicle to the ON mode, then it goes off.

When the system detects a problem, a DTC will set and depending upon the failure, the VSA modulator-control unit determines which indicator (s) will turn on. If the problem goes away (system returns to normal), the indicator (s) will be controlled in the following way depending upon the DTC that was set:

- The indicator (s) will come on and stay on when turning the vehicle to the ON mode.
- The indicator (s) will automatically go off.
- The indicator (s) will go off after the vehicle is driven.

ABS Indicator

The ABS indicator comes on when the ABS function is lost. The brakes will still work like a conventional system.

Brake System Indicator (Red)

The brake system indicator (red) will come on when:

- The EBD function is lost.
- The parking brake is applied.
- The brake fluid is low.
- Two or more wheel speed sensors fail.

Brake System Indicator (Amber)

The brake system indicator (amber) comes on, when the brake control system is lost.

VSA Indicator

The VSA indicator comes on when the VSA function is lost. The VSA indicator blinks when the VSA function is activating.

VSA OFF Indicator

The VSA OFF indicator comes on when the VSA is turned OFF by using the VSA OFF switch.

Automatic Brake Hold System Indicator

The automatic brake hold system indicator comes on when the automatic brake hold system is turned ON by using the automatic brake hold switch.

Automatic Brake Hold Indicator

The automatic brake hold indicator comes on when the automatic brake hold function is activating.

Diagnostic Trouble Code (DTC)

- The memory can hold 10 DTCs. However, when the same DTC is detected more than once, the more recent DTC is written over the earlier one. Therefore, when the same problem is detected repeatedly, it is memorized as a single DTC.
- The DTCs are memorized in an EEPROM in the VSA modulator-control unit. Therefore, the memorized DTCs cannot be erased by disconnecting the 12 volt battery. Do the specified procedures to clear the DTCs.

Self-Diagnosis

- Self-diagnosis can be classified into two categories:
-
  - -

    Initial diagnosis: Done right after turning the vehicle to the ON mode and until the ABS, VSA, and brake system indicator (red) go off.
-
  - -

    Regular diagnosis: Done right after the initial diagnosis until turning the vehicle to the OFF (LOCK) mode.
- When the system detects a problem, the VSA modulator-control unit shifts to fail-safe mode.

Kickback

The pump motor operates when the VSA modulator-control unit is functioning, and the fluid in the modulator is forced out to the master cylinder, causing kickback at the brake pedal.

Pump Motor

- The pump motor operates when the VSA modulator-control unit is functioning.
- The VSA modulator-control unit checks the pump motor operation when the vehicle is started and does it's first initial acceleration.

Hydraulic Boost Failure Compensation

This vehicle is equipped with an electric brake booster system. This electric brake booster system uses the VSA modulator-control unit's pressurization control to provide additional brake assist. This is necessary when the electric brake booster system is lost. The hydraulic boost failure compensation can be heard when operating and some kickback will be felt on the brake pedal. The hydraulic boost failure compensation may also be activated in some high altitude conditions. These are considered normal characteristics of this system.

Brake Fluid Replacement/Air Bleeding

Brake fluid replacement and air bleeding procedures are identical to the procedures used on vehicles without the VSA system .

How to Troubleshoot DTCs

The troubleshooting procedures assume that the cause of the problem is still present and the ABS, VSA, brake system indicator (red), and/or brake system indicator (amber) are still on. Following a troubleshooting procedure for a DTC that has been cleared but does not reset can result in incorrect diagnosis.

1. Question the customer about the conditions when the problem occurred, and try to reproduce the same conditions for troubleshooting. Find out when the ABS, VSA, brake system indicator (red), and/or brake system indicator (amber) came on, such as during activation, after activation, when the vehicle was traveling at a certain speed, etc. If necessary, have the customer demonstrate the concern.

2. When the ABS, VSA, brake system indicator (red), and/or brake system indicator (amber) does not come on during the test-drive, but troubleshooting is done based on the DTC, check for loose connectors, poor contact of the terminals, etc. in the circuit indicated by the DTC.

3. After troubleshooting, or the repairs are done, clear the DTCs, and test-drive the vehicle under the same conditions that originally set the DTCs. Make sure the ABS, VSA, brake system indicator (red), and brake system indicator (amber) do not come on.

Intermittent Failures

The term "intermittent failure" means a system may have had a failure, but it checks OK now. If you cannot reproduce the condition, check for loose connections and terminals. Also check ground and power connections related to the circuit that you are troubleshooting.

How to Use the HDS (Honda Diagnostic System)

NOTE: Make sure the 12 volt battery is in good condition and fully charged.

1. If the system indicators stay on, **connect the HDS to the data link connector (DLC)**

2. Turn the vehicle to the ON mode.

3. Make sure the HDS communicates with the vehicle and the VSA modulator-control unit. If it does not, **go to the F-CAN circuit troubleshooting**

4. Check the diagnostic trouble code (DTC) and the freeze data, for all systems, troubleshoot the powertrain DTCs first. Then refer to the indicated DTC's troubleshooting, and do the appropriate troubleshooting procedure.

NOTE:

- Freeze data indicates the VSA conditions when the first system malfunction that activated the indicator was detected.
- The HDS can read the DTC, the freeze data, the current data, and other system data.
- For specific operations, refer to the HDS Help menu.

How to Retrieve DTCs

1. With the vehicle in OFF (LOCK) mode, **connect the HDS to the data link connector (DLC)**

2. Turn the vehicle to the ON mode.

3. Make sure the HDS communicates with the vehicle and the VSA modulator-control unit. If it does not, **go to the F-CAN circuit troubleshooting**

4. Follow the prompts on the HDS to display the DTC (s) on the screen. After determining the DTC, refer to the DTC troubleshooting. Do the all systems DTC check, and troubleshoot any powertrain DTCs first.

5. Turn the vehicle to the OFF (LOCK) mode.

How to Clear DTCs

1. With the vehicle in OFF (LOCK) mode, **connect the HDS to the data link connector (DLC)**

2. Turn the vehicle to the ON mode.

3. Make sure the HDS communicates with the vehicle and the VSA modulator-control unit. If it does not, go to the F-CAN circuit troubleshooting

4. Clear the DTC (s) by following the screen prompts on the HDS.

5. Turn the vehicle to the OFF (LOCK) mode.

SYMPTOM TROUBLESHOOTING INDEX FOR VIEWER

ABS INDICATOR, BRAKE SYSTEM INDICATOR (RED), VSA INDICATOR, AND BRAKE SYSTEM INDICATOR (AMBER) DO NOT GO OFF (VSA SYSTEM)

Diagnostic procedure

- Symptom troubleshooting.

ABS INDICATOR, BRAKE SYSTEM INDICATOR (RED), VSA INDICATOR, OR VSA OFF INDICATOR DOES NOT COME ON AT START-UP (BULB CHECK) (VSA SYSTEM)

Diagnostic procedure

- Do the gauge control module self-diagnostic function .

HDS DOES NOT COMMUNICATE WITH THE VSA MODULATOR-CONTROL UNIT OR THE VEHICLE (VSA SYSTEM)

Diagnostic procedure

- Troubleshoot the F-CAN circuit .

Also check for

Power and ground at the VSA modulator-control unit.

VSA OFF INDICATOR DOES NOT GO OFF (VSA SYSTEM)

Diagnostic procedure

- Do the VSA sensor neutral position memorization.
- Do the gauge control module self-diagnostic function .
- Replace the VSA modulator-control unit .

VSA CANNOT BE TURNED OFF (VSA SYSTEM)

Diagnostic procedure

- Symptom troubleshooting.
- Replace the VSA modulator-control unit .

SYMPTOM TROUBLESHOOTING INDEX FOR VIEWER

ABS INDICATOR, BRAKE SYSTEM INDICATOR (RED), VSA INDICATOR, AND BRAKE SYSTEM INDICATOR (AMBER) DO NOT GO OFF

Diagnostic procedure

NOTE: If any of the CAN communication failure DTC is indicated in other system, troubleshoot the DTC first.

- Check for open wire or short wire in the F-CAN circuit;
-
    - -

      Between the gauge control module and the CAN gateway (F-CAN D_H, F-CAN D_L).
    - -

      Between the VSA modulator-control unit and the CAN gateway (F-CAN B_H, F-CAN B_L, F-CAN C_H, F-CAN C_L).
- Check the VSA modulator-control unit power circuit.
-
    - -

      +B_ABS/VSA_FSR, IG1_VSA/ABS
- Check the VSA modulator-control unit ground circuit (GND).
- Do the gauge control module self-diagnostic function .

Also check for

Refer to the followings about the indicator operating condition;

- How to Troubleshoot the VSA System

Refer to the followings about the circuit troubleshooting;

- Gauge control module connector for inputs and outputs
- VSA modulator-control unit connector for inputs and outputs
- VSA system circuit diagram
- Fuse to components index
- Ground to components index

ABS INDICATOR, BRAKE SYSTEM INDICATOR (RED), VSA INDICATOR, OR VSA OFF INDICATOR DOES NOT COME ON AT START-UP (BULB CHECK)

Diagnostic procedure

- Do the gauge control module self-diagnostic function .

HDS DOES NOT COMMUNICATE WITH THE VSA MODULATOR-CONTROL UNIT OR THE VEHICLE

Diagnostic procedure

- Go to the DTC troubleshooting index .

Also check for

Power and ground at the VSA modulator-control unit.

VSA OFF INDICATOR DOES NOT GO OFF

Diagnostic procedure

- Do the VSA sensor neutral position memorization.
- Do the gauge control module self-diagnostic function .
- Replace the VSA modulator-control unit .

VSA CANNOT BE TURNED OFF

Diagnostic procedure

- Symptom troubleshooting.
- Replace the VSA modulator-control unit .

DESCRIPTION & OPERATION

VSA SYSTEM DESCRIPTION

Overview

The VSA system stabilizes the vehicle behavior by controlling the braking force and drive torque.

Control Unit Operation

The VSA system performs the following controls.

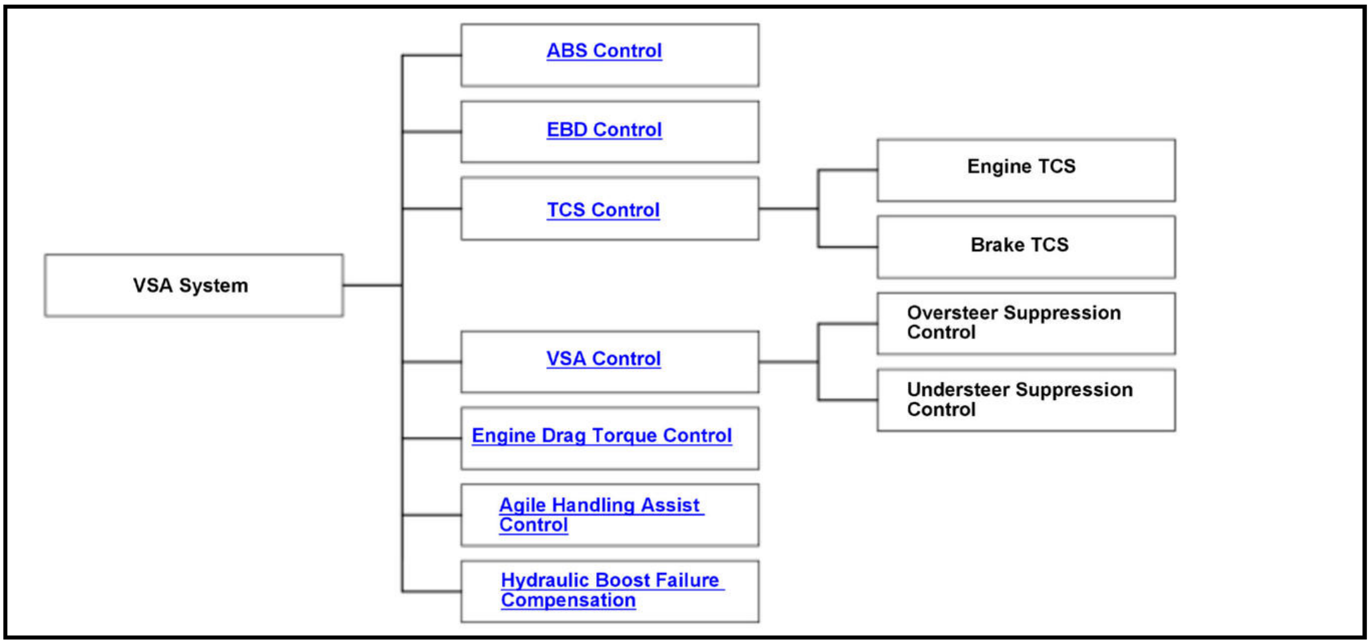
VSA System
ABS Control
EBD Control
TCS Control
Engine TCS
Brake TCS
VSA Control
Oversteer Suppression Control
Understeer Suppression Control
Engine Drag Torque Control
Agile Handling Assist Control
Hydraulic Boost Failure Compensation

VSA SYSTEM DESCRIPTION - ABS CONTROL

Overview

The ABS control maintains vehicle stability by preventing wheel lock during hard braking or braking on a slippery road surface and helps the driver retain steering control.

Control

When wheel speed is significantly reduced from estimated vehicle speed, the VSA modulator-control unit closes the inlet valve and opens the outlet valve momentarily to reduce brake fluid pressure and the pump motor starts to run. As wheel speed increases, the VSA modulator-control unit maintains brake fluid pressure by keeping the inlet valve closed. Brake fluid pressure is increased when wheel speed matches the estimated speed of the vehicle. The VSA modulator-control unit repeats this valve control operation to control the ABS function.

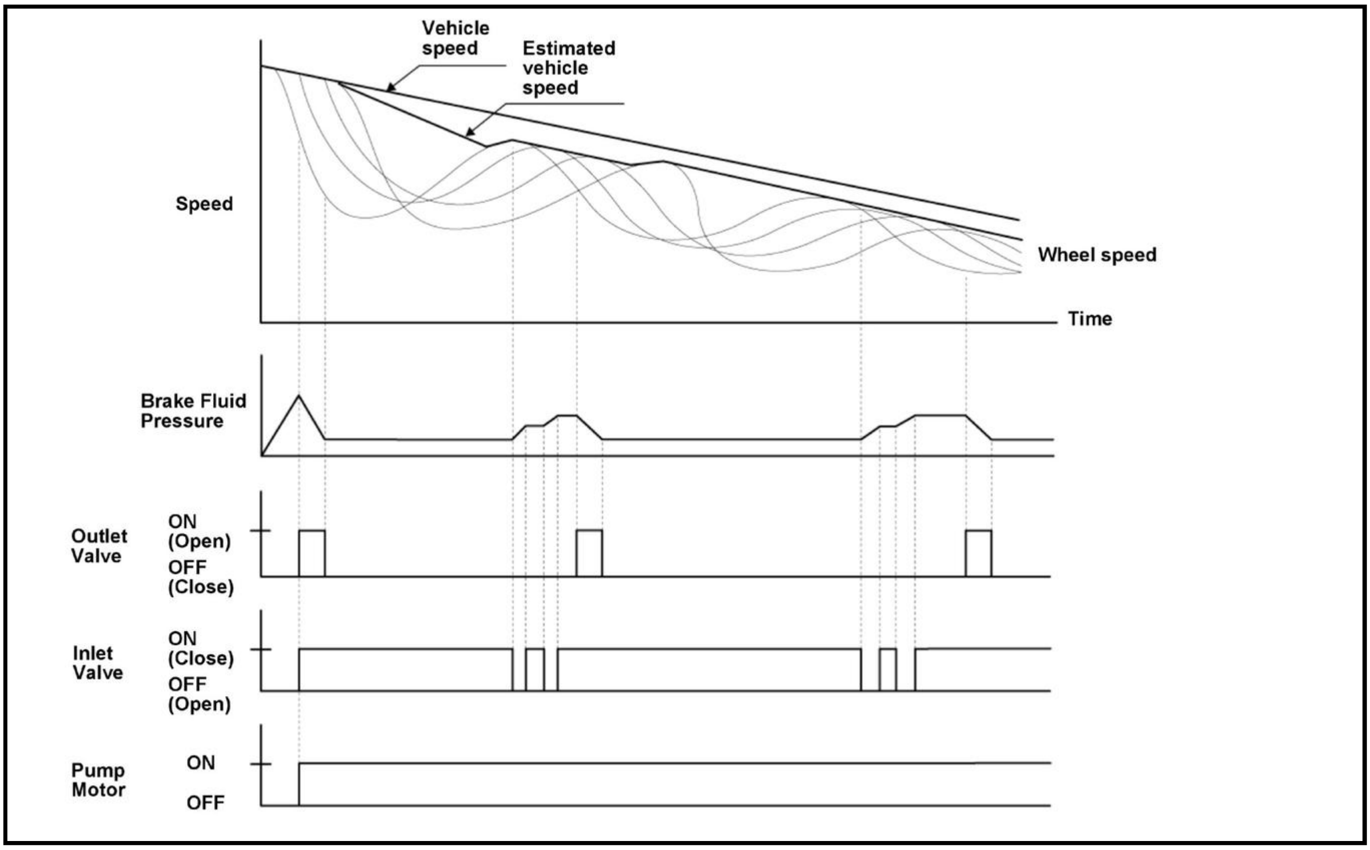

VSA SYSTEM DESCRIPTION - AGILE HANDLING ASSIST CONTROL

Overview

Where previous VSA systems activated at the limit of a turn, the agile handling assist control activates across everyday driving situations providing a safer and more enjoyable driving experience.Agile handling assist responds to the increase/decrease in steering input and vehicle action is made smooth at the same time as it improves response to steering operation and reduced steering effort. The action of steering is accomplished with a smaller amount of steering operation.

Control

Agile Handling Assist Control Overview

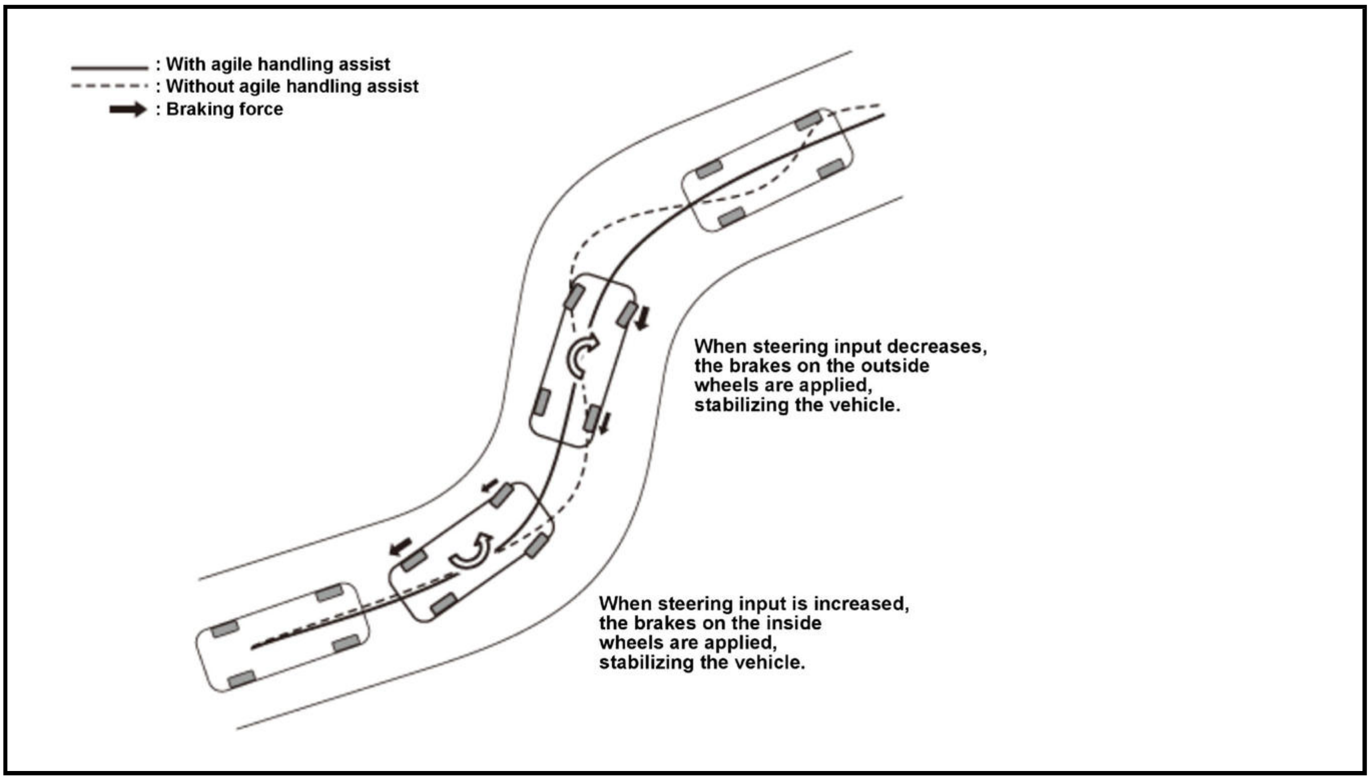
: With agile handling assist
: Without agile handling assist
: Braking force
When steering input decreases, the brakes on the outside wheels are applied, stabilizing the vehicle.
When steering input is increased, the brakes on the inside wheels are applied, stabilizing the vehicle.

Control Block

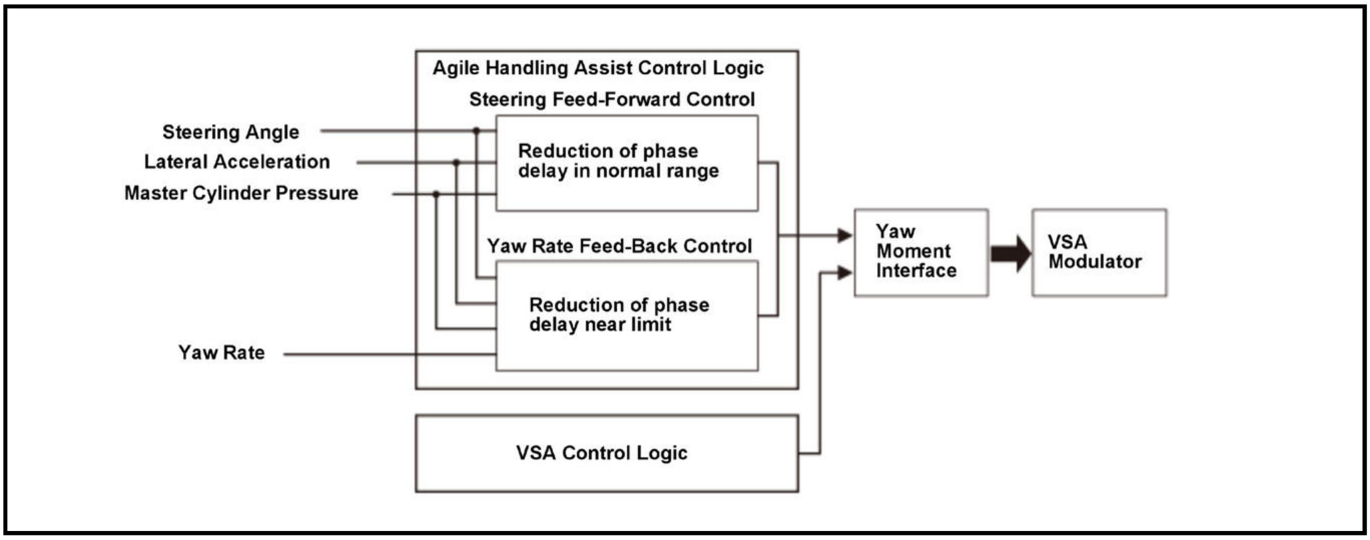
Agile Handling Assist Control Logic
Steering Feed-Forward Control
Steering Angle
Lateral Acceleration
Master Cylinder Pressure
Reduction of phase delay in normal range
Yaw Rate Feed-Back Control
Reduction of phase delay near limit
Yaw Rate
Yaw Moment Interface
VSA Modulator
VSA Control Logic

Brake Pressure Control Image

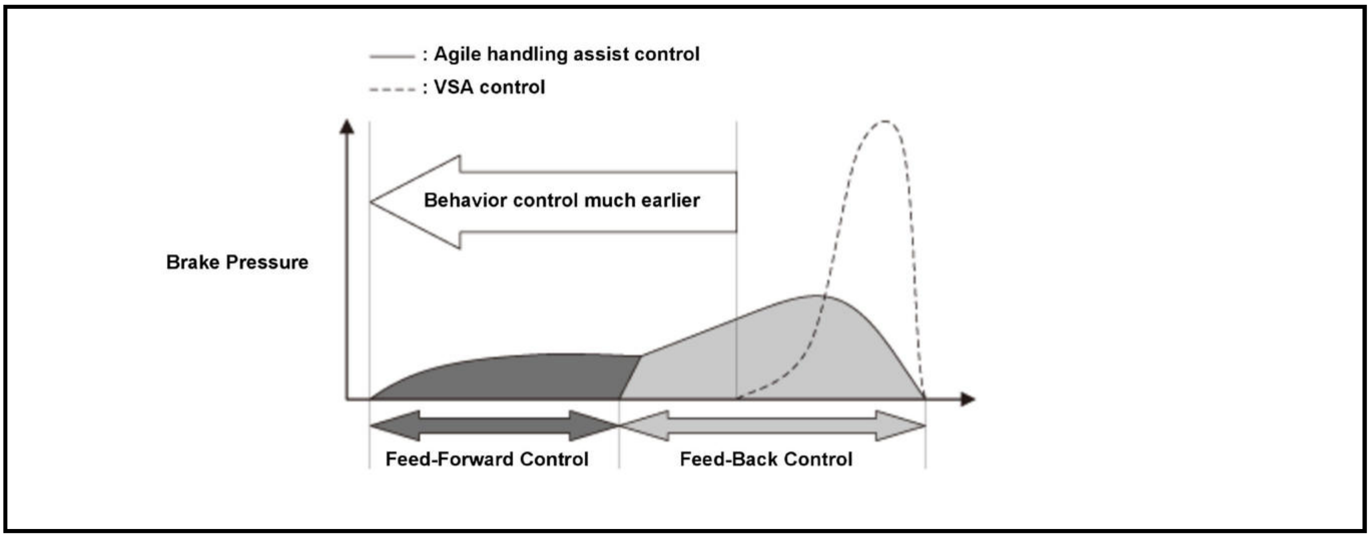

VSA SYSTEM DESCRIPTION - COMPONENTS

The VSA system consists of the following primary components:

- VSA modulator-control unit
- Wheel speed sensors
- VSA OFF switch
- System indicator

For locations of each component on vehicle, refer to Component Location Index, and for functions of indicator, refer to How to Troubleshoot the VSA system.

VSA Modulator

The VSA modulator unit consists of the inlet solenoid valve, the outlet solenoid valve, the VSA NO (normally open) solenoid valve, the VSA NC (normally closed) solenoid valve, the reservoir, the pump, the pressure sensor, and the pump motor. The hydraulic control has four modes; pressure intensifying, pressure retaining, pressure reducing, and pressure intensifying mode.

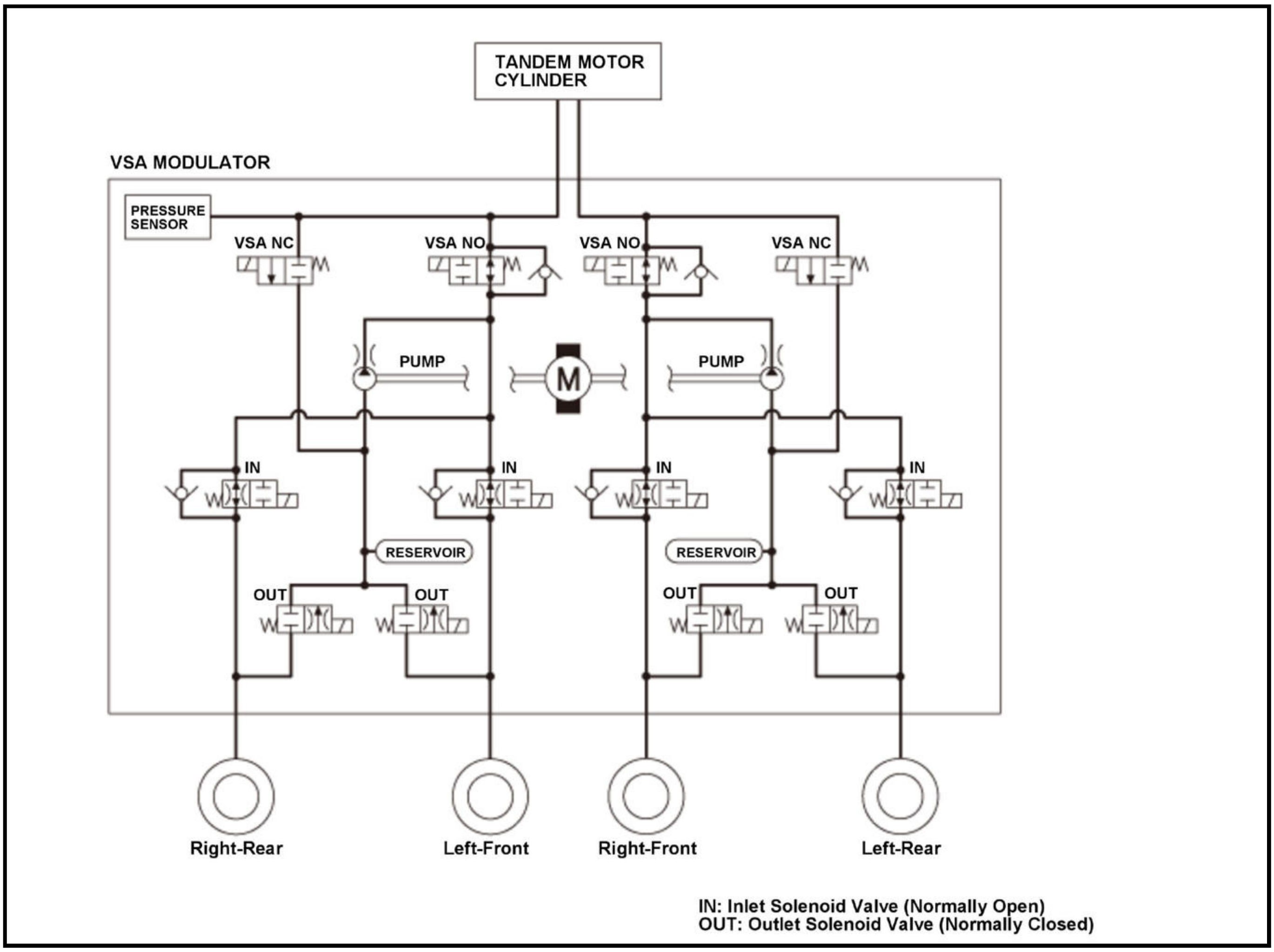
TANDEM MOTOR CYLINDER
VSA MODULATOR
PRESSURE SENSOR
VSA NC
VSA NO
VSA NO
VSA NC
PUMP
M
PUMP
IN
IN
IN
IN
RESERVOIR
RESERVOIR
OUT
OUT
OUT
OUT
Right-Rear
Left-Front
Right-Front
Left-Rear
IN: Inlet Solenoid Valve (Normally Open)
OUT: Outlet Solenoid Valve (Normally Closed)

Mode	VSA NO Solenoid Valve	VSA NC Solenoid Valve	Inlet Solenoid Valve	Outlet Solenoid Valve	Brake Fluid
Pressure intensifying mode	open	closed	open	closed	Master cylinder fluid is pumped out to the caliper.

Mode	VSA NO Solenoid Valve	VSA NC Solenoid Valve	Inlet Solenoid Valve	Outlet Solenoid Valve	Brake Fluid
Pressure retaining mode	open	closed	closed	closed	Caliper fluid is retained by the inlet and outlet solenoid valves.
Pressure reducing mode	open	closed	closed	open	Caliper fluid flows through the outlet solenoid valve to the reservoir.
Pressure intensifying mode (VSA)	closed (current control)	open	open	closed	• Master cylinder fluid is pumped out by the pump through the VSA NC solenoid valve to the caliper. • Caliper fluid pressure exceeds master cylinder pressure. • The VSA modulator unit controls amount of intensified fluid pressure to respond to each mode through current control of VSA NO solenoid valve.

Wheel Speed Sensor

The VSA system uses 4 wheel speed sensors to monitor individual wheel speed. The wheel speed sensor is a semiconductor, Hall effect sensor, and detects the magnetic field of a magnetic encoder installed on the inner sealing surface of each hub and wheel bearing assembly. The frequency of the sensor output signal is proportional to the speed of the wheel and this signal information is sent to the VSA control unit.

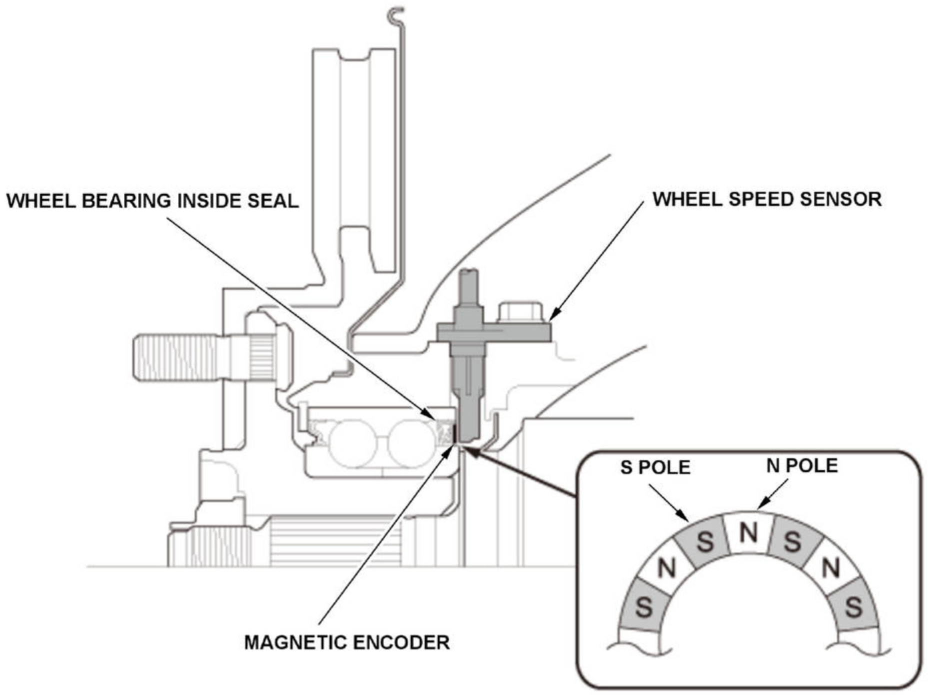

NOTE: This illustration is a typical sample of front side wheel speed sensor.

VSA SYSTEM DESCRIPTION - EBD CONTROL

Overview

The EBD system actively controls the distribution of the front and rear braking forces to correspond with changes in the load condition and displacement of the load due to deceleration.

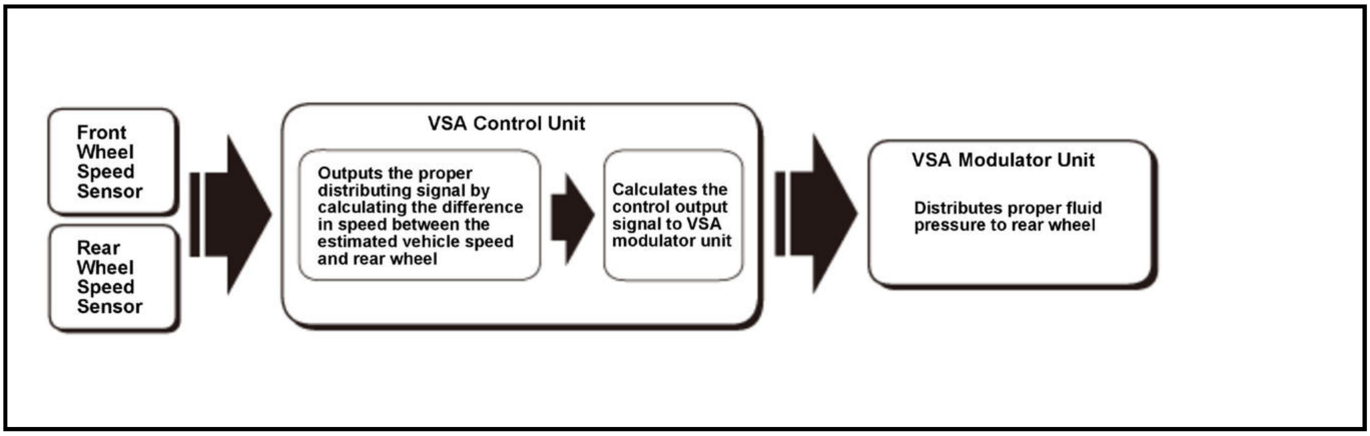
Front Wheel Speed Sensor
Rear Wheel Speed Sensor
VSA Control Unit
Outputs the proper distributing signal by calculating the difference in speed between the estimated vehicle speed and rear wheel
Calculates the control output signal to VSA modulator unit
VSA Modulator Unit
Distributes proper fluid pressure to rear wheel

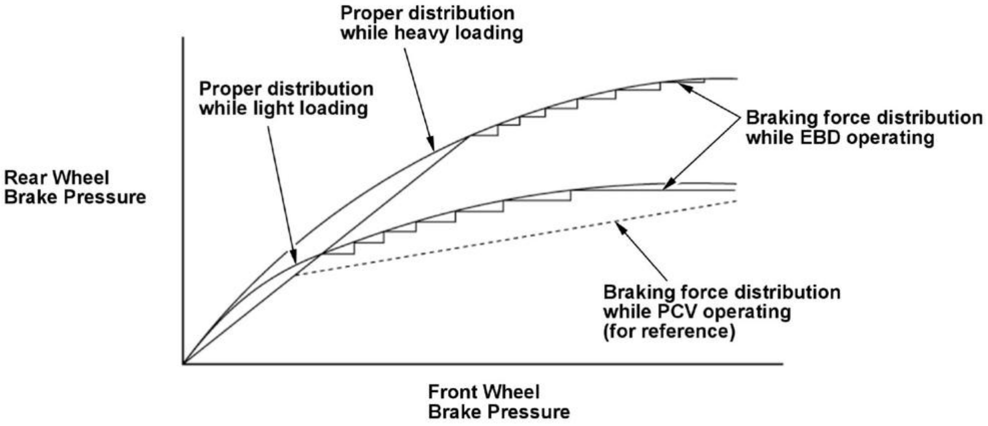

Control

When rear wheel speed is less than the estimated vehicle speed, the VSA modulator-control unit closes the inlet valve to maintain brake fluid pressure. As wheel speed increases, the VSA modulator-control unit opens the inlet valve momentarily to increase the brake fluid pressure. When lower pressure is required, the modulator unit opens the outlet valve momentarily decreasing fluid pressure. The VSA modulator-control unit repeats this valve control operation to control the EBD function.

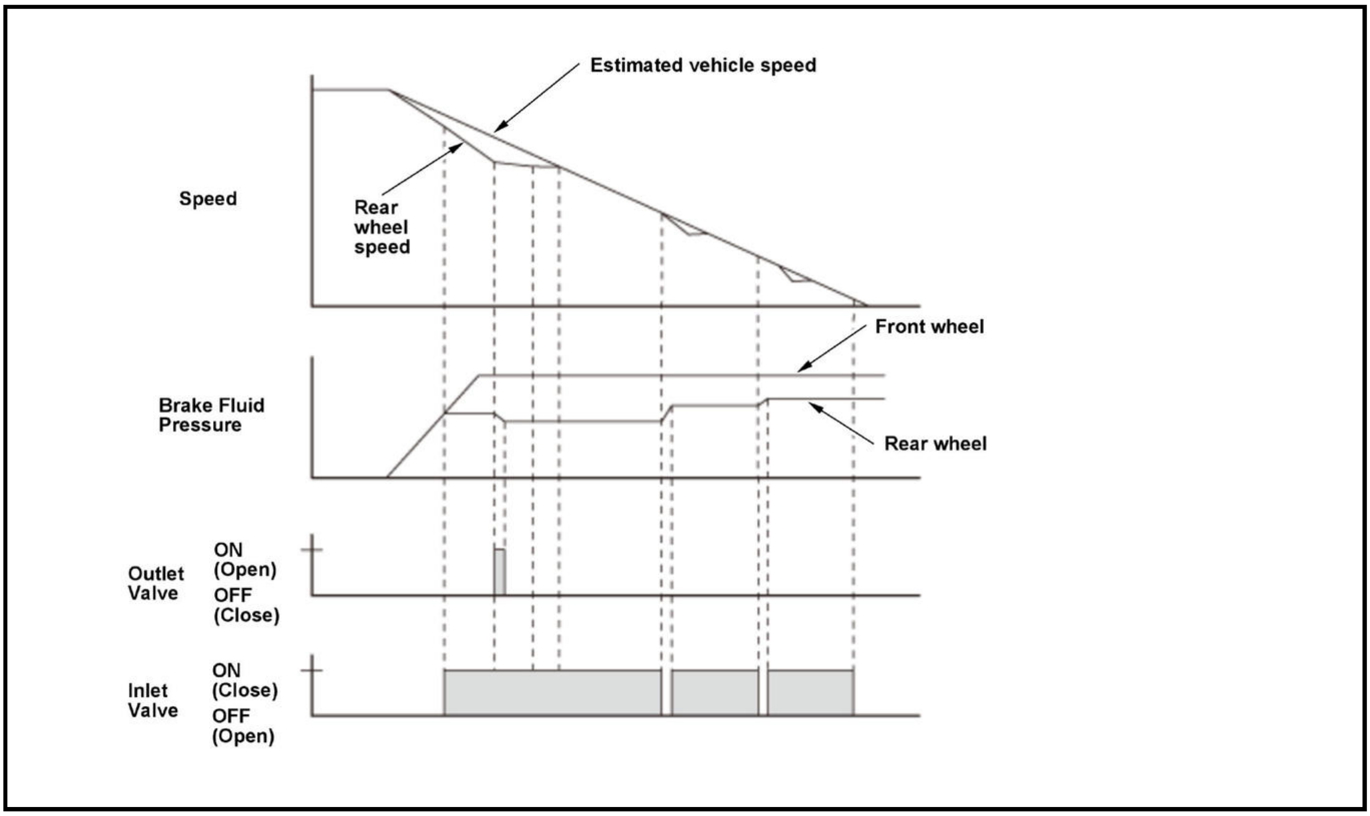

VSA SYSTEM DESCRIPTION - ENGINE DRAG TORQUE CONTROL

Overview

Downshifting on a slippery road may cause vehicle instability because the engine braking may lock up the wheels. When engine braking begins to cause the wheels to lock up, the engine drag torque control commands the PCM to increase the torque, helping to prevent tire slip.

Control

The VSA modulator-control unit calculates the vehicle speed and acceleration of each wheel from each wheel speed sensor signal and makes judgment on the slip condition of the wheel. The VSA modulator-control unit adjusts the engine torque based on the slip condition.

VSA SYSTEM DESCRIPTION - HYDRAULIC BOOST FAILURE COMPENSATION

Overview

If the electric servo brake system has malfunction, the operating force of brake pedal becomes larger than under a normal condition. In this case, the hydraulic boost failure compensation uses the pressurization control of the VSA system to reduce the operating force of brake pedal.

Control

The VSA modulator-control unit calculates control quantity from the signals of the brake pedal position switch, the wheel speed sensors, and the pressure sensor, then increases the caliper pressure by driving the pump motor and solenoid valves.

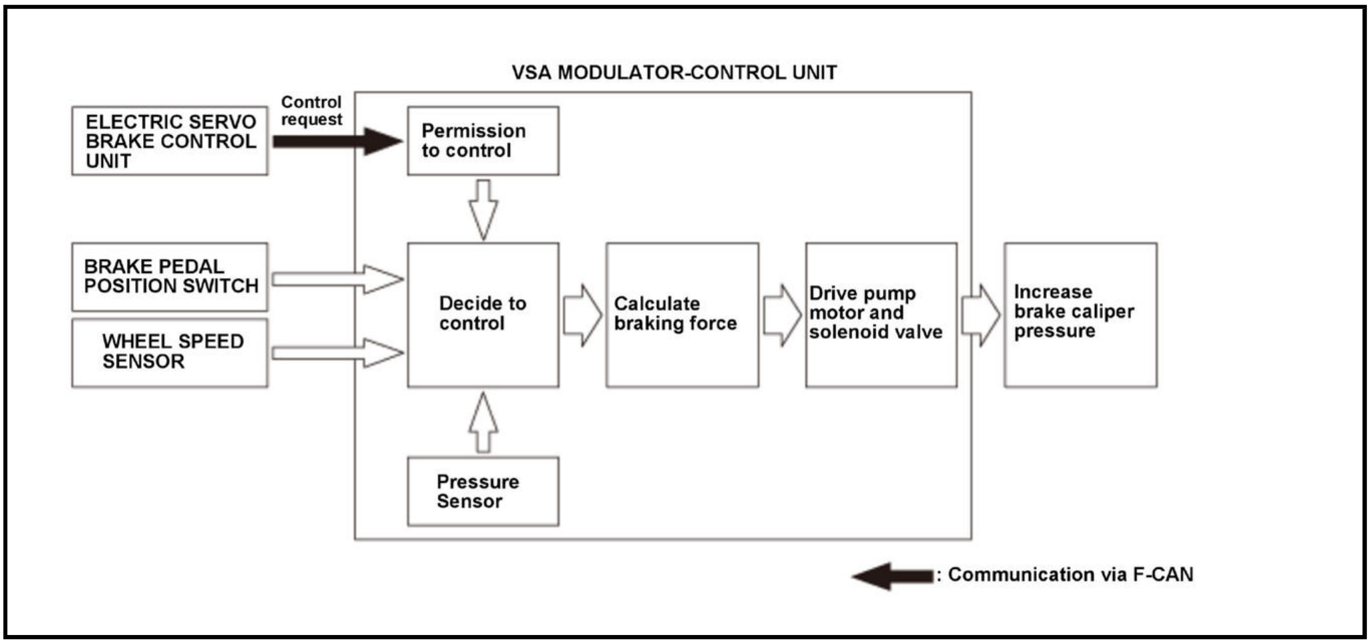
VSA MODULATOR-CONTROL UNIT
ELECTRIC SERVO BRAKE CONTROL UNIT
Control request
Permission to control
BRAKE PEDAL POSITION SWITCH
WHEEL SPEED SENSOR
Decide to control
Calculate braking force
Drive pump motor and solenoid valve
Increase brake caliper pressure
Pressure Sensor
: Communication via F-CAN

VSA SYSTEM DESCRIPTION - SYSTEM DIAGRAM

The system diagram of the VSA system is shown below.

For locations of each component on vehicle, refer to Component Location Index:

- VSA modulator-control unit, Wheel speed sensor, VSA OFF switch
- Gauge control module, Brake fluid level switch
- PCM
- EPS control unit
- SRS unit
- Electric servo brake control unit
- Brake pedal position switch

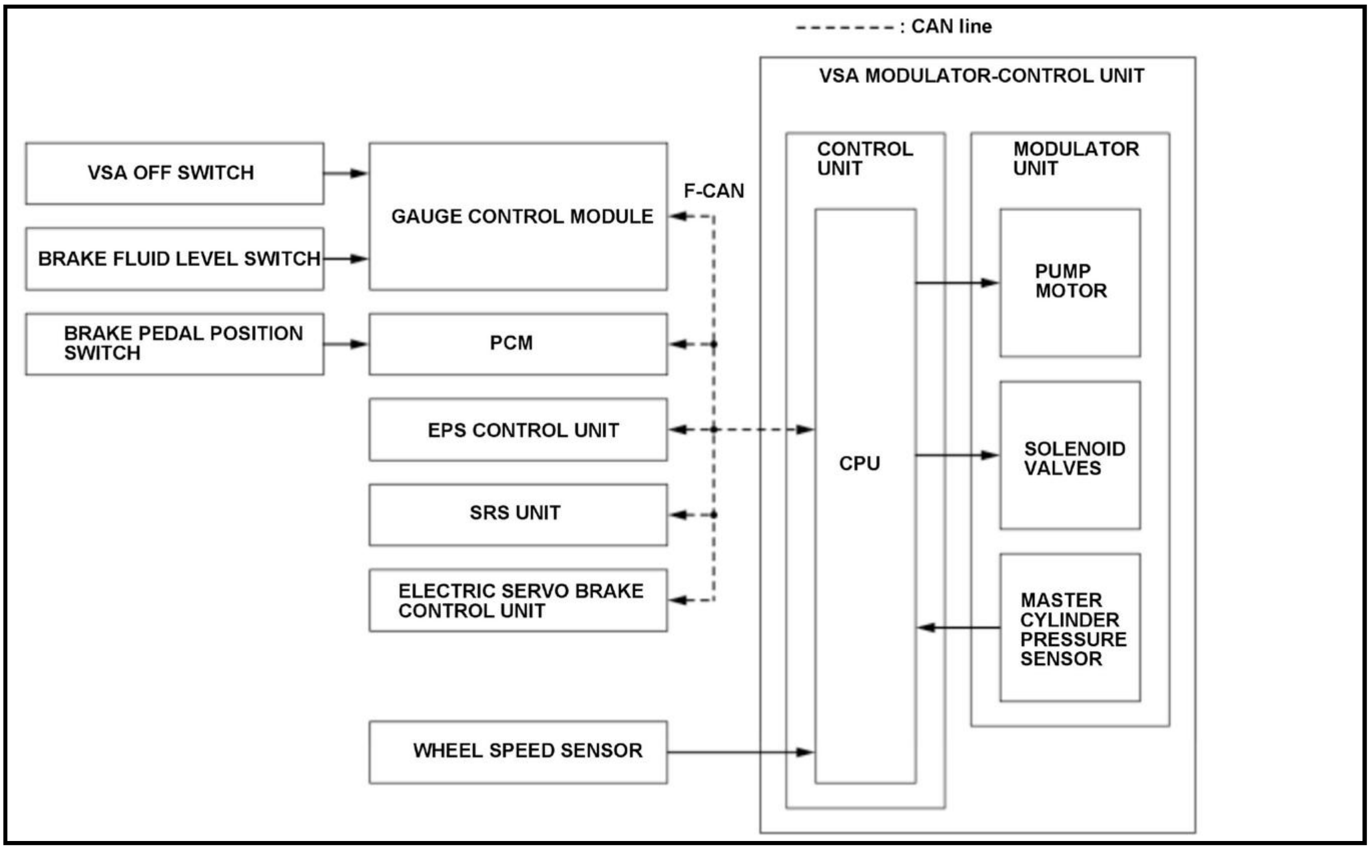
: CAN line
VSA MODULATOR-CONTROL UNIT
VSA OFF SWITCH
BRAKE FLUID LEVEL SWITCH
BRAKE PEDAL POSITION SWITCH
GAUGE CONTROL MODULE
F-CAN
PCM
EPS CONTROL UNIT
SRS UNIT
ELECTRIC SERVO BRAKE CONTROL UNIT
WHEEL SPEED SENSOR
CONTROL UNIT
CPU
MODULATOR UNIT
PUMP MOTOR
SOLENOID VALVES
MASTER CYLINDER PRESSURE SENSOR

F-CAN Communication Data

VSA System Receiving Signal

Transmitting Unit	Signal Name
Gauge control module	• VSA OFF switch signal • Brake fluid level switch signal

Transmitting Unit	Signal Name
PCM	• VSA control enable/disable signal • Accelerator pedal position signal • Drive torque signal • Power plant speed signal • Shift position signal • Brake pedal position switch signal • Service check signal • System failure information
EPS control unit	• Steering angle signal
SRS unit	• Yaw rate signal • Lateral acceleration signal • Longitudinal acceleration signal • System failure information
Electric servo brake control unit	• Hydraulic boost failure compensation control request signal • Driver's input brake pressure signal • Pressurization control activation signal • System failure information

VSA System Primary Transmitting Signal

Transmitting Unit	Signal Name
VSA modulator-control unit	• Drive torque control request signal • Shift control request signal • Wheel speed signal • Master cylinder pressure signal • Vehicle understeering state • Estimated longitudinal acceleration signal • Estimated L/R ' differential signal • Buzzer request signal • Indicator drive signal • System operating information • System failure information

VSA SYSTEM DESCRIPTION - TCS CONTROL

Overview

The TCS control makes a judgment on the speed and slip condition (spinning) of each wheel from each wheel speed sensor signal. If both driving wheels are spinning, the engine TCS control is performed. If one wheel alone is slipping, the brake TCS control is performed.

Engine TCS Control

If the VSA control unit detects a drive wheel slipping during starting, accelerating or cornering, a torque down signal is sent to the PCM. The torque of the driving wheel is reduced by the PCM to maintain tire grip on the road surface.

Brake TCS Control

During brake TCS control, the VSA control unit sends a signal to the modulator unit when wheel slipping is detected.

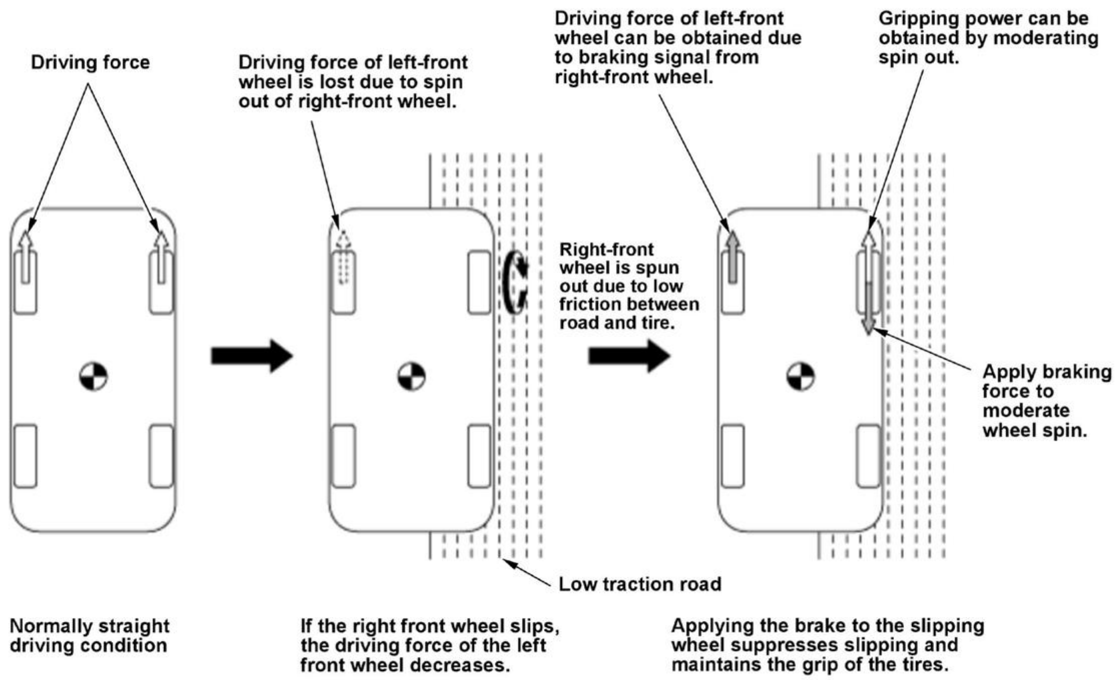
Driving force
Driving force of left-front wheel is lost due to spin out of right-front wheel.
Driving force of left-front wheel can be obtained due to braking signal from right-front wheel.
Gripping power can be obtained by moderating spin out.
Right-front wheel is spun out due to low friction between road and tire.
Apply braking force to moderate wheel spin.
Low traction road
Normally straight driving condition
If the right front wheel slips, the driving force of the left front wheel decreases.
Applying the brake to the slipping wheel suppresses slipping and maintains the grip of the tires.

This illustration is a typical sample of shows front-wheel drive model.

VSA SYSTEM DESCRIPTION - VSA CONTROL

Overview

The VSA modulator-control unit calculates the target yaw rate from the wheel speed signal, lateral acceleration signal and steering angle signal and compares the calculated target yaw rate against the actual yaw rate to make a judgment on the slip condition of the vehicle. The VSA modulator-control unit calculates the target fluid pressure based on this condition, determines one of three fluid pressure control modes (increase, decrease or hold), and adjusts the fluid pressure of the applicable wheel accordingly.

Oversteer Suppression Control

The oversteer suppression control outputs a brake pressure signal that is optimally distributed between the outside front and rear wheels through the VSA modulator-control unit when the vehicle goes into oversteer. This generates a moment that suppresses oversteer and stabilizes the vehicle.

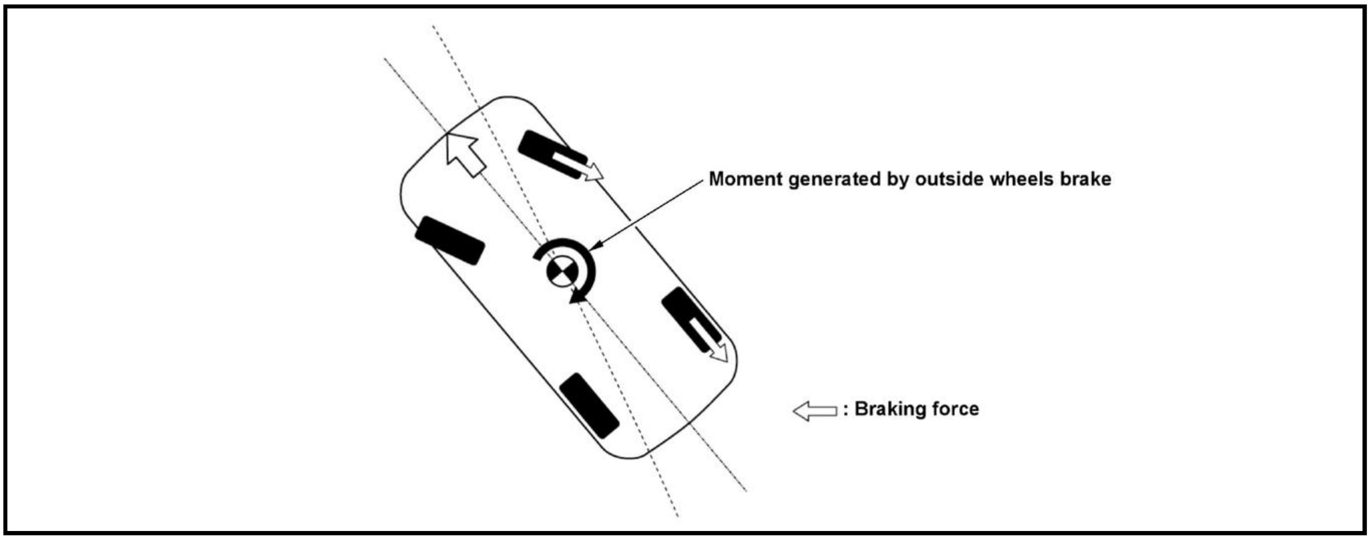
Moment generated by outside wheels brake
⇦ : Braking force

Understeer Suppression Control

The understeer suppression control outputs a brake pressure signal that is optimally distributed between the inside front and rear wheels. This generates a moment that suppresses understeer through the VSA modulator-control unit when the vehicle goes into understeer. During acceleration, a drive torque down signal is also output to the PCM, which increases the cornering force of the driving wheels in order to maintain steerability and improve line traceability.

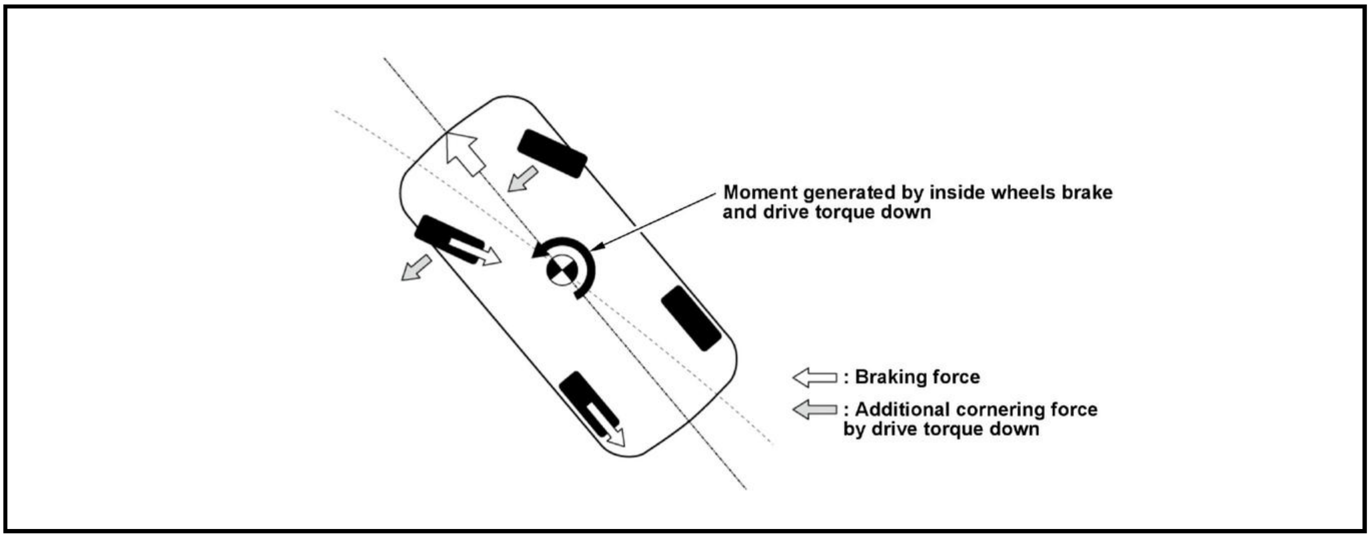
Moment generated by inside wheels brake and drive torque down
⇦ : Braking force
⇦ : Additional cornering force by drive torque down

VSA SYSTEM DESCRIPTION - VSA OFF MODE

Overview

When the VSA OFF switch is pressed, the VSA OFF indicator will illuminate and the VSA will go into the OFF mode. In the VSA OFF mode, the TCS control is changed, but the other controls will not turn off.

TCS Control During VSA OFF mode

- If the TCS activates, the VSA indicator blinks while the VSA OFF indicator is still on.
- By terminating the TCS function at low speeds, the driver can gain traction on loose sand or deep snow.
- During a standing start from varying road surfaces under the left and right side of the vehicle, the TCS function helps gain traction.

- When the vehicle is on a lift while being serviced and its tires are not in contact with any surface, the wheel speed will not exceed 31 mph (50 km/h).
- The TCS function is fully disabled when the VSA maintenance mode is activated.

TCS Operation Image

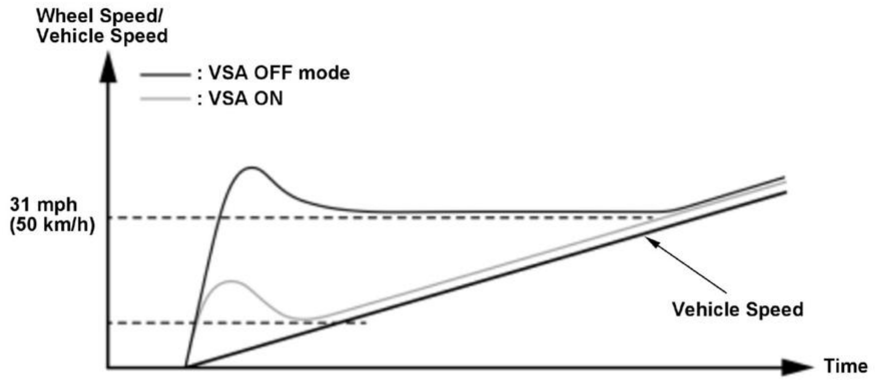

VSA Maintenance Mode

Enter the VSA maintenance mode when the vehicle is on a lift or two-wheel dynamometer, where you need the wheel spin speed to exceed 31 mph (50 km/h). For information on how to enter and exit the VSA maintenance mode, refer to **"How to enter VSA maintenance mode"** in the Removal and Installation section of the shop service information.

GENERAL INFORMATION

HOW TO ENTER VSA SYSTEM MAINTENANCE MODE

Procedure

1. Maintenance Mode - Enter

NOTE:

- For information about entering condition of VSA Maintenance Mode, refer to **"VSA System Description - VSA OFF MODE"**.
- When the VSA Maintenance Mode is activated, the VSA and TCS functions are disabled.
- During the Maintenance Mode, the VSA OFF indicator flashes and the VSA indicator is on. When the vehicle is turned to the OFF (LOCK) mode or the VSA OFF switch is pressed again, the Maintenance Mode is cancelled and both indicators go off.
- If you do not properly follow the steps to enter the VSA maintenance mode, or you do not complete the procedure within 30 seconds, turn the vehicle to the OFF (LOCK) mode, wait for 10 seconds, and try again.
- To terminate the maintenance mode, do the either one of the following procedures:
-
    - -

      Turn the vehicle to the OFF (LOCK) mode.
    - -

      Press VSA OFF switch for 0.5 sec. (make sure VSA indicator and VSA OFF indicator go off).

- When the VSA detects a malfunction, the Maintenance Mode is cancelled.

1. Turn the vehicle to the ON mode and do the following procedure within 30 seconds.

2. Release the parking brake and hold down the brake pedal.

3. While holding down the brake pedal, press and hold the VSA OFF switch. When the VSA OFF indicator turns on, press and hold the VSA OFF switch again until the VSA OFF indicator goes off.

4. Release the brake pedal and apply the parking brake.

5. While the brake pedal is released, press and hold the VSA OFF switch. When the VSA OFF indicator turns on, press and hold the VSA OFF switch again until the VSA OFF indicator goes off.

6. Hold down the brake pedal while apply the parking brake.

7. Press and hold the VSA OFF switch while both brakes are applied. When the VSA OFF indicator turns on, press and hold the VSA OFF switch again until the VSA OFF indicator flashes and the VSA indicator turns on.

SYMPTOM TROUBLESHOOTING INDEX

VSA SYSTEM SYMPTOM TROUBLESHOOTING INDEX

When the vehicle has one of these symptoms, check for VSA diagnostic trouble codes (DTCs) with the HDS. If there are no DTCs, do the diagnostic procedure for the symptom, in the sequence listed, until you find the cause.

Symptom	Diagnostic procedure	Also check for
HDS does not communicate with the VSA modulator-control unit or the vehicle	**Go to the DTC troubleshooting index** .	Power and ground at the VSA modulator-control unit.
ABS indicator, brake system indicator (red), VSA indicator, or VSA OFF indicator does not come on at start-up (bulb check)	**Do the gauge control module self-diagnostic function** .	B
VSA OFF indicator does not go off	• **Do the VSA sensor neutral position memorization**. • **Do the gauge control module self-diagnostic function** . • **Replace the VSA modulator-control unit** .	B
ABS indicator, brake system indicator (red), VSA indicator, and brake system indicator (amber) do not go off	**NOTE:** If any of the CAN communication failure DTC is indicated in other system, troubleshoot the DTC first. • Check for open wire or short wire in the F-CAN circuit; • • - Between the gauge control module and the CAN gateway (F-CAN D_H, F-CAN D_L).	Refer to the followings about the indicator operating condition; • **How to Troubleshoot the VSA System** Refer to the followings about the circuit troubleshooting;

Symptom	Diagnostic procedure	Also check for
	- - Between the VSA modulator-control unit and the CAN gateway (F-CAN B_H, F-CAN B_L, F-CAN C_H, F-CAN C_L). - Check the VSA modulator-control unit power circuit. - - - +B_ABS/VSA_FSR, IG1_VSA/ABS - Check the VSA modulator-control unit ground circuit (GND). - **Do the gauge control module self-diagnostic function** .	- **Gauge control module connector for inputs and outputs** - **VSA modulator-control unit connector for inputs and outputs** - **VSA system circuit diagram** - **Fuse to components index** - **Ground to components index**
VSA cannot be turned OFF	- **Symptom troubleshooting**. - **Replace the VSA modulator-control unit** .	B

REWRITE

VSA MODULATOR-CONTROL UNIT UPDATE

Procedure

NOTE:

- To ensure the latest program is installed, do a VSA modulator-control unit update whenever the VSA modulator-control unit is replaced.
- High temperature in the engine compartment might cause the VSA modulator-control unit to become too hot to run the update. If the engine has been running before this procedure, open the hood and cool the engine compartment.

1. VSA Modulator-Control Unit - Update
2. **VSA Sensor Neutral Position - Memorize**
3. **TPMS - Calibrate**

DTC TROUBLESHOOTING INDEX

VSA SYSTEM DTC TROUBLESHOOTING INDEX

DTC		Detection Item
B0050	**-F0**	(Driver's Seat Belt Buckle Switch Malfunction)
C0010	**-49**	Inlet Solenoid (Left Front) Circuit Failure
C0011	**-49**	Outlet Solenoid (Left Front) Circuit Failure
C0014	**-49**	Inlet Solenoid (Right Front) Circuit Failure
C0015	**-49**	Outlet Solenoid (Right Front) Circuit Failure

DTC		Detection Item
C0018	-49	Inlet Solenoid (Left Rear) Circuit Failure
C0019	-49	Outlet Solenoid (Left Rear) Circuit Failure
C001C	-49	Inlet Solenoid (Right Rear) Circuit Failure
C001D	-49	Outlet Solenoid (Right Rear) Circuit Failure
C0020	-12	Pump Motor Circuit Failure (Stuck ON)
	-14	Pump Motor Circuit Failure (Stuck OFF)
C0031	-14	Left Front Wheel Speed Sensor Circuit Failure (Circuit Short To Ground or Open)
	-3A	Wheel Speed Sensor (Left Front) Signal Failure (Signal Frequency is Too High)
	-62	Left Front Wheel Speed Sensor Signal Compare Failure
C0034	-14	Right Front Wheel Speed Sensor Circuit Failure (Circuit Short To Ground or Open)
	-3A	Wheel Speed Sensor (Right Front) Signal Failure (Signal Frequency is Too High)
	-62	Right Front Wheel Speed Sensor Signal Compare Failure
C0037	-14	Left Rear Wheel Speed Sensor Circuit Failure (Circuit Short To Ground or Open)
	-3A	Wheel Speed Sensor (Left Rear) Signal Failure (Signal Frequency is Too High)
	-62	Left Rear Wheel Speed Sensor Signal Compare Failure
C003A	-14	Right Rear Wheel Speed Sensor Circuit Failure (Circuit Short To Ground or Open)
	-3A	Wheel Speed Sensor (Right Rear) Signal Failure (Signal Frequency is Too High)
	-62	Right Rear Wheel Speed Sensor Signal Compare Failure
C0040	-12	Brake Light Switch Failure (Stuck ON)/Brake Pedal Stroke Sensor Stuck (EBB)
	-16	Plausibility BLS vs. Pressure Sensor
C0044	-49	Master Cylinder Pressure Sensor Failure (Internal Circuit Failure)
	-62	Master Cylinder Pressure Sensor Failure (Signal Stuck)
C0049	-7B	Brake Fluid Level Too Low
C0051	-54	Steering Angle Neutral Position Learning Incomplete
	-62	Steering Angle Sensor Failure (Signal Compare Failure)
	-96	Steering Angle Sensor Failure (Sensor Detects Internal Failure)
C0061	-49	Acceleration Sensor Malfunction
	-54	Lateral Acceleration Sensor Calibration Incomplete
	-62	Lateral Acceleration Sensor Failure (Signal Compare Failure)
C0062	-49	Longitudinal Acceleration Sensor Malfunction
	-54	Longitudinal Acceleration Sensor Neutral Position Not Learned/Calibration Incomplete
	-62	Longitudinal Acceleration Sensor Failure (Signal Compare Failure)
C0063	-49	Yaw Rate Sensor Malfunction
	-54	Yaw Rate Sensor Calibration Incomplete
	-62	Yaw Rate Sensor Failure (Signal Compare Failure)
C1000	-94	ABS/VSA Activation Time Too Long
C1020	-49	VSA Master Cut Valve Failure (Unexpected Operation)
C1021	-49	VSA Suction Valve Failure (Unexpected Operation)
C1022	-14	Power Source Failure for Pump Motor
C1040	-00	Different Diameter Tire is Detected
C1041	-00	Right Front Wheel Abnormal Slip Detection
C1042	-00	Left Front Wheel Abnormal Slip Detection
C1043	-00	Right Rear Wheel Abnormal Slip Detection
C1044	-00	Left Rear Wheel Abnormal Slip Detection
C1100	-48	Electric Parking Brake Abnormal Operation Monitoring
	-54	Piston Position Not Learned

DTC		Detection Item
	-94	Electric Parking Brake Actuator Malfunction
	-98	Electric Parking Brake Continuous Operations Detected
C1110	-11	Left Rear Electric Parking Brake Actuator Circuit Short to Ground
	-13	Left Rear Electric Parking Brake Actuator Circuit Open
	-79	Left Side Electric Parking Brake Doesn't Work Correctly
	-94	Left Side Electric Parking Brake Actuator Unexpected Operation
	-96	Left Side Electric Parking Brake Actuator Malfunction
C1111	-11	Right Rear Electric Parking Brake Actuator Circuit Short to Ground
	-13	Right Rear Electric Parking Brake Actuator Circuit Open
	-79	Right Side Electric Parking Brake Doesn't Work Correctly
	-94	Right Side Electric Parking Brake Actuator Unexpected Operation
	-96	Right Side Electric Parking Brake Actuator Malfunction
C1120	-14	Electric Parking Brake Switch Circuit Malfunction
	-96	Electric Parking Brake Switch Malfunction
U0029	-00	CAN Communication Failure (Bus OFF Ch 1)
U0047	-00	CAN Communication Failure (Bus OFF Ch 2)
U0100	-00	CAN Communication Failure with ECM/ISU
U0101	-00	CAN Communication Failure with PCM/TCM
U0126	-00	CAN Communication Failure with Absolute Steering Wheel Angle Sensor
U0129	-00	CAN Communication Failure with AHB/ESB/EBB
U0151	-00	CAN Communication Failure with SRS
U0155	-00	CAN Communication Failure with Meter
U0401	-68	(ECM Failure)
U0402	-68	(TCM Failure)
U0418	-68	(ESB/EBB Failure)
U3000	-49	ECU Internal Circuit Failure
	-51	ECU Software Update Failure
U3003	-16	Electric Parking Brake Control Unit Power Source Circuit (+B) Low Voltage
	-17	Electric Parking Brake Control Unit Power Source Circuit (+B) High Voltage
U3006	-16	Power Source Failure for ECU (Low Voltage)
	-17	Power Source Failure for ECU (High Voltage)

SYMPTOM TROUBLESHOOTING

VSA SYSTEM SYMPTOM TROUBLESHOOTING - VSA CANNOT BE TURNED OFF

1. VSA OFF switch check

-1. Turn the vehicle to the OFF (LOCK) mode.

-2. Check the VSA OFF switch .

Is the VSA OFF switch OK?

YES

Go to step 2.

NO

Replace the VSA OFF switch .

2. Determine possible failure area (VSA_OFF_SW line, GND line)

-1. Disconnect the following connector.

VSA OFF/lid switch 4P connector
VSA OFF/parking and back-up sensor switch 8P connector
VSA OFF/driver's power tailgate switch 12P connector

-2. Turn the vehicle to the ON mode.

-3. Measure the voltage between test points 1 and 2.

Test condition	Vehicle ON mode
B	VSA OFF/lid switch 4P connector: disconnected
B	VSA OFF/parking and back-up sensor switch 8P connector: disconnected
B	VSA OFF/driver's power tailgate switch 12P connector: disconnected
Test point 1	VSA OFF/lid switch 4P connector (female terminals) No. 4: ①
B	VSA OFF/parking and back-up sensor switch 8P connector (female terminals) No. 8: ②
B	VSA OFF/driver's power tailgate switch 12P connector (female terminals) No. 11: ③
Test point 2	Body ground

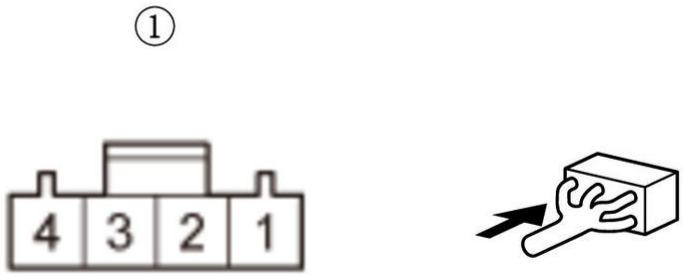

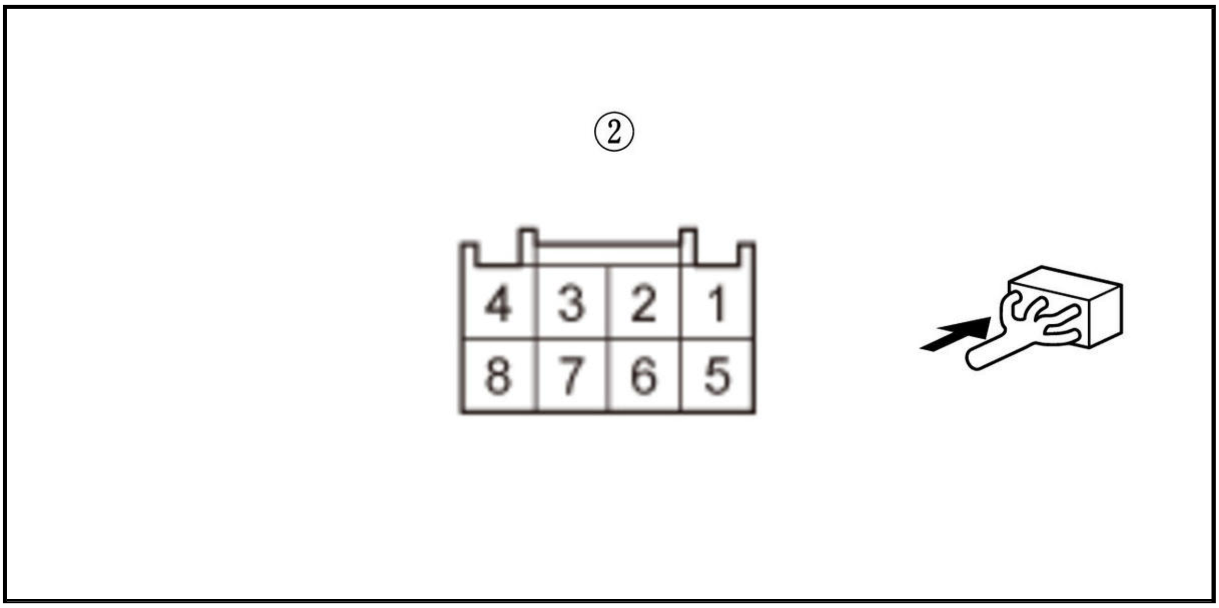

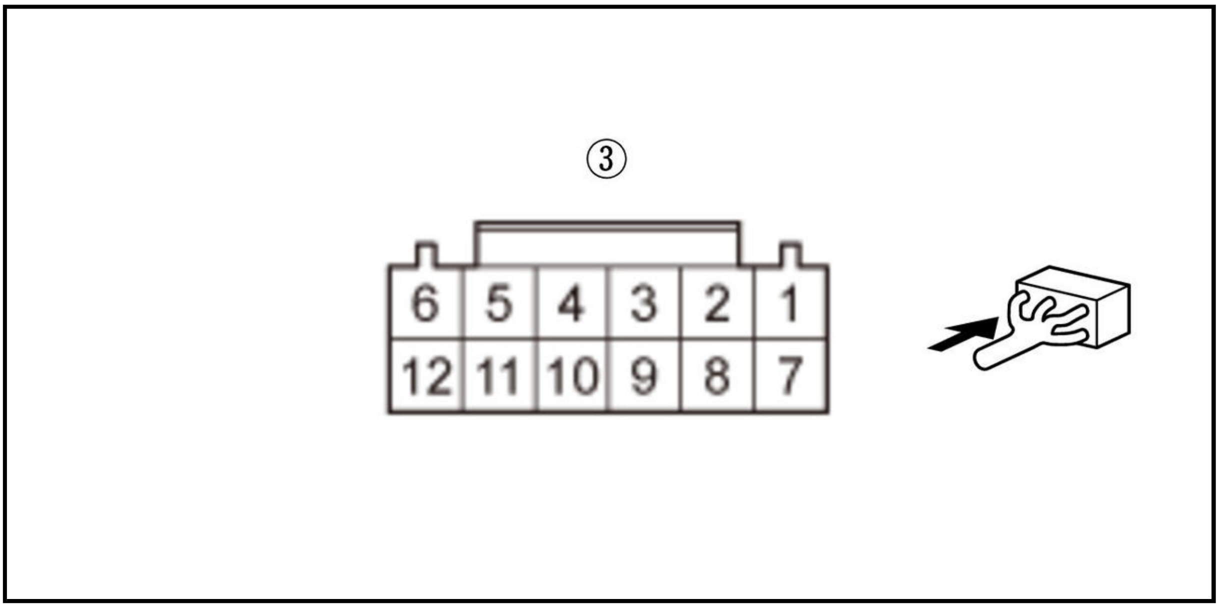

Is there battery voltage?

YES

Repair an open in the wire between the VSA OFF switch and body ground (G401).

NO

Go to step 3.

3. Shorted wire check (VSA_OFF_SW line)

-1. Turn the vehicle to the OFF (LOCK) mode.

-2. Disconnect the following connector.

Gauge control module connector A (32P)

-3. Measure the resistance between test points 1 and 2.

Test condition	Vehicle OFF (LOCK) mode
B	VSA OFF/lid switch 4P connector: disconnected
B	VSA OFF/parking and back-up sensor switch 8P connector: disconnected

B	VSA OFF/driver's power tailgate switch 12P connector: disconnected
B	Gauge control module connector A (32P): disconnected
Test point 1	VSA OFF/lid switch 4P connector (female terminals) No. 4: ①
B	VSA OFF/parking and back-up sensor switch 8P connector (female terminals) No. 8: ②

B	VSA OFF/driver's power tailgate switch 12P connector (female terminals) No. 11: ③
Test point 2	Body ground

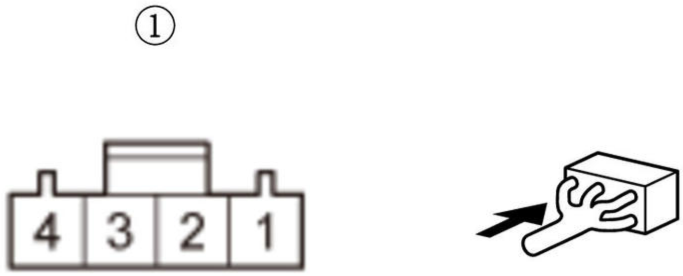

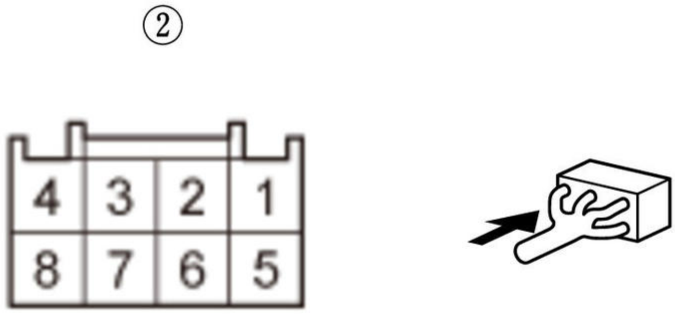

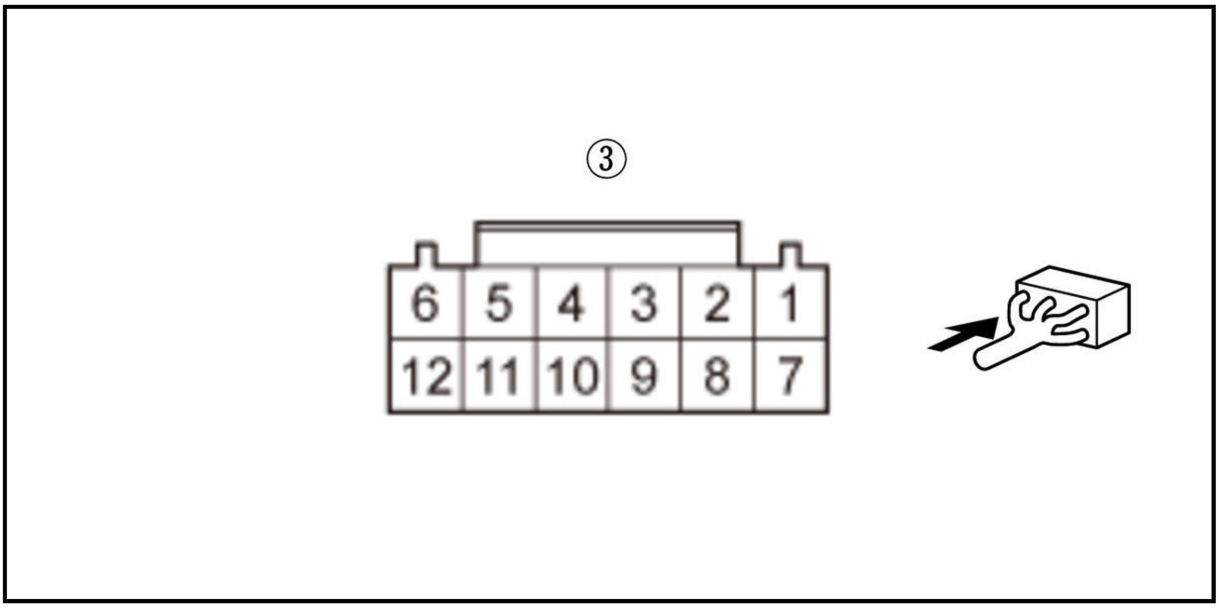

Is there 1 MΩ or more?

YES

Go to step 4.

NO

Repair a short to body ground in the wire between the gauge control module and the VSA OFF switch.

4. Open wire check (VSA_OFF_SW line)

-1. Measure the resistance between test points 1 and 2.

Test condition	Vehicle OFF (LOCK) mode
B	VSA OFF/lid switch 4P connector: disconnected
B	VSA OFF/parking and back-up sensor switch 8P connector: disconnected
B	VSA OFF/driver's power tailgate switch 12P connector: disconnected
B	Gauge control module connector A (32P): disconnected
Test point 1	VSA OFF/lid switch 4P connector (female terminals) No. 4: ①
B	VSA OFF/parking and back-up sensor switch 8P connector (female terminals) No. 8: ②
B	VSA OFF/driver's power tailgate switch 12P connector (female terminals) No. 11: ③
Test point 2	**Gauge control module connector A (32P) No. 9**

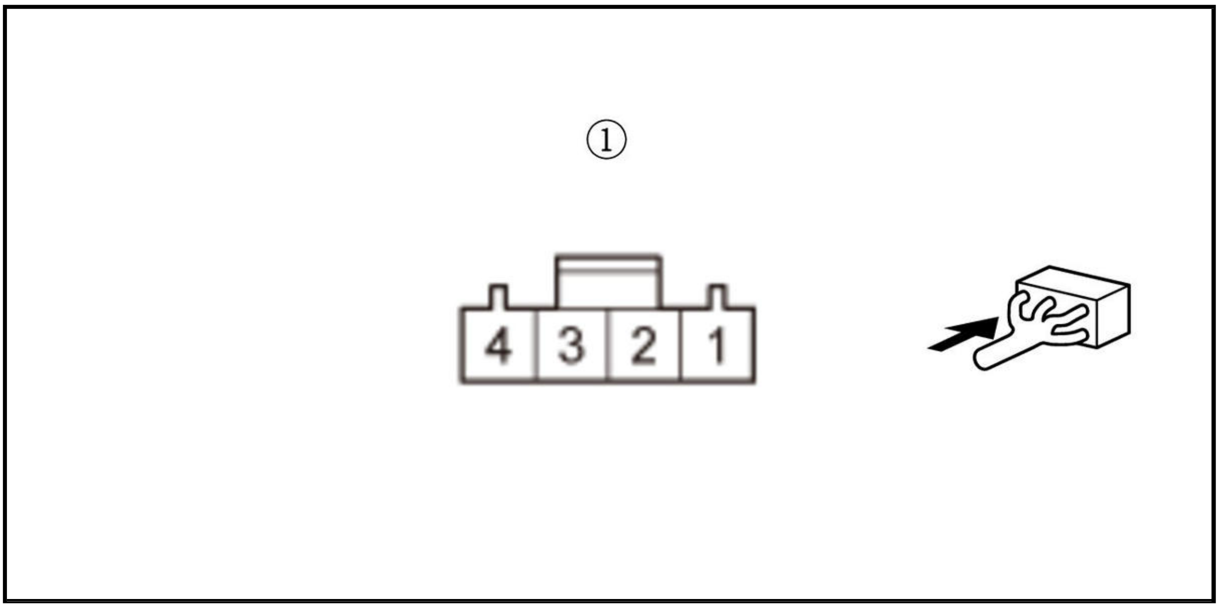

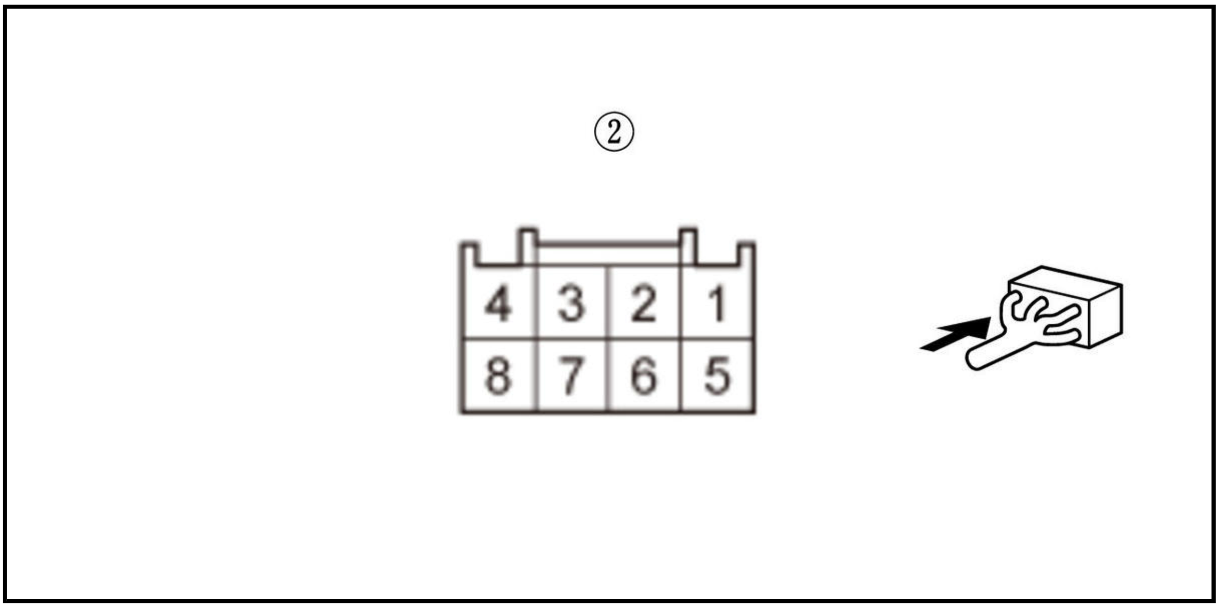

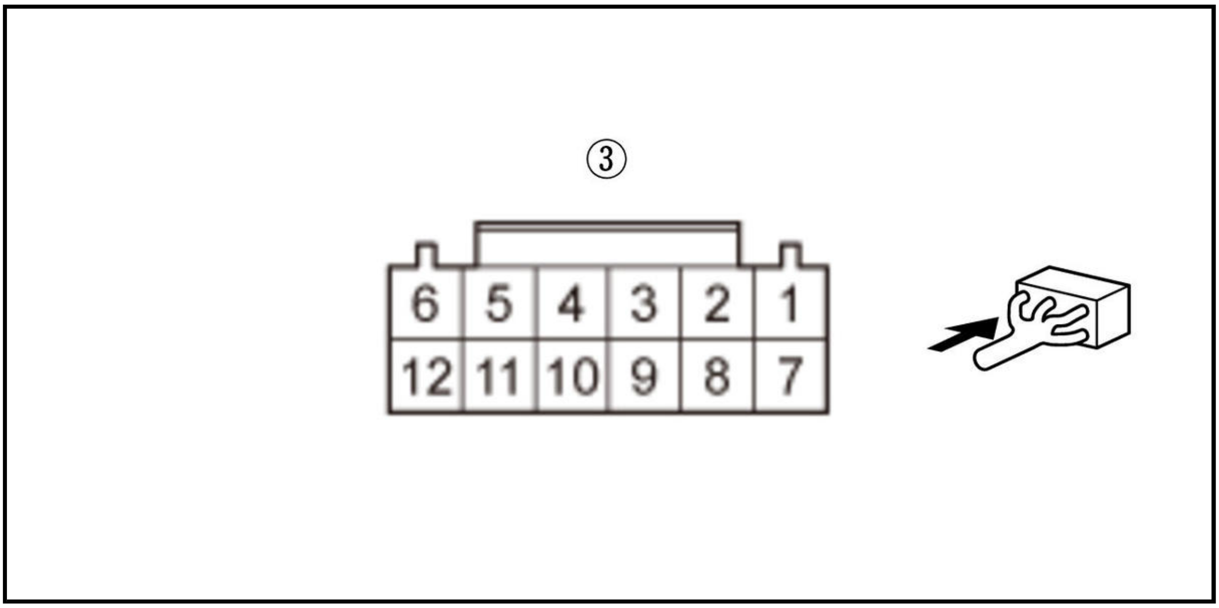
③
6
5
4
3
2
1
12
11
10
9
8
7

Is there 1.0 Ω or less?

YES

The VSA_OFF_SW wire is OK. **Replace the gauge control module** .

NO

Repair an open in the wire between the gauge control module and the VSA OFF switch.

SERVICE PROCEDURE

VSA SENSOR NEUTRAL POSITION MEMORIZATION

Procedure

NOTE:

- The VSA sensor neutral position must be learned whenever you do any of these actions:
-
    - -

      Updating or replacing the VSA modulator-control unit.
-
    - -

      Updating or replacing the SRS unit.
-
    - -

      Removing and installing the steering wheel.
-
    - -

      Disconnecting and reconnecting the steering joint.
-
    - -

      Wheel alignment adjustment.
- Before doing the memorization procedure, park the vehicle on a flat and level surface.

1. HDS - Connect
2. VSA Sensor Neutral Position - Memorize

NOTE: Do not press the brake pedal during this procedure.

1. Set the steering wheel in the straight ahead position.

2. Select ADJUSTMENT from ABS/VSA menu with the HDS, then select ALL SENSOR, and follow the screen prompts.

HOW TO INFORMATION

HOW TO TROUBLESHOOT THE VSA SYSTEM

System Indicator

This system has five indicators on the gauge control module.

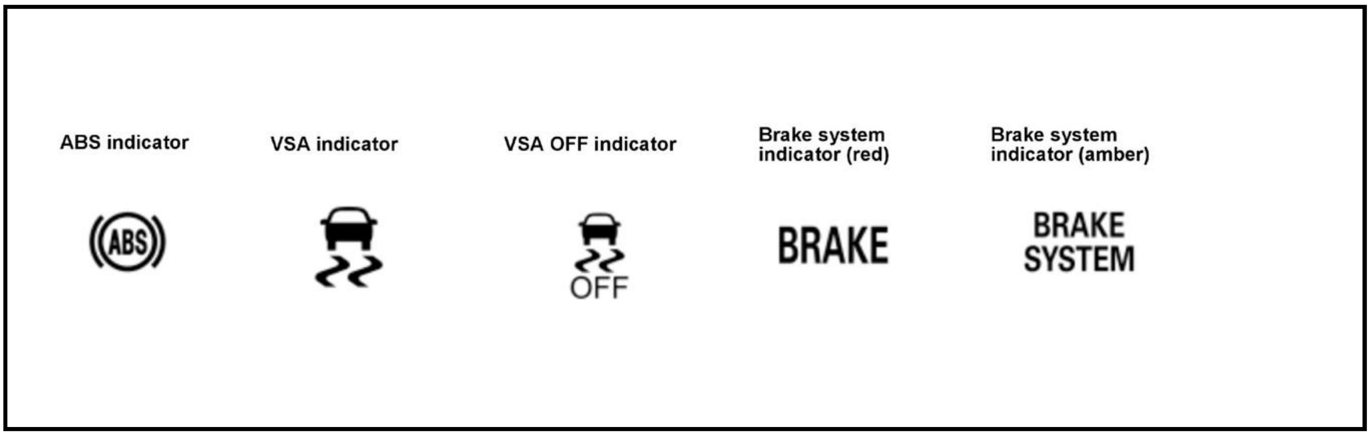

NOTE: For locations of each indicator, refer to gauge control module component location index .

When the system is OK, each indicator comes on for about 2 seconds after turning the vehicle to the ON mode, then it goes off.

When the system detects a problem, a DTC will set and depending upon the failure, the VSA modulator-control unit determines which indicator(s) will turn on. If the problem goes away (system returns to normal), the indicator(s) will be controlled in the following way depending upon the DTC that was set:

- The indicator(s) will come on and stay on when turning the vehicle to the ON mode.
- The indicator(s) will automatically go off.
- The indicator(s) will go off after the vehicle is driven.

ABS Indicator

The ABS indicator comes on when the ABS function is lost. The brakes will still work like a conventional system.

Brake System Indicator (Red)

The brake system indicator (red) will come on when:

- The EBD function is lost.
- The parking brake is applied.
- The brake fluid is low.
- Two or more wheel speed sensors fail.

Brake System Indicator (Amber)

The brake system indicator (amber) comes on, when the brake control system is lost.

VSA Indicator

- The VSA indicator comes on when the VSA function is lost.
- The VSA indicator blinks when the VSA function is activating.

VSA OFF Indicator

The VSA OFF indicator comes on when the VSA is turned OFF by using the VSA OFF switch.

Diagnostic Trouble Code (DTC)

- The memory can hold 10 DTCs. However, when the same DTC is detected more than once, the more recent DTC is written over the earlier one. Therefore, when the same problem is detected repeatedly, it is memorized as a single DTC.

- The DTCs are memorized in an EEPROM in the VSA modulator-control unit. Therefore, the memorized DTCs cannot be erased by disconnecting the 12 volt battery. Do the specified procedures to clear the DTCs.

Self-Diagnosis

- Self-diagnosis can be classified into two categories:
-
    - -

      Initial diagnosis: Done right after turning the vehicle to the ON mode and until the ABS, VSA, brake system indicator (red), and brake system indicator (amber) go off.
-
    - -

      Regular diagnosis: Done right after the initial diagnosis until turning the vehicle to the OFF (LOCK) mode.
- When the system detects a problem, the VSA modulator-control unit shifts to fail-safe mode.

Kickback

The pump motor operates when the VSA modulator-control unit is functioning. When the vehicle is equipped with the electric servo brake, the tandem motor cylinder uses the brake fluid internally, and that will not cause kickback at the brake pedal.

Pump Motor

- The pump motor operates when the VSA modulator-control unit is functioning.
- The VSA modulator-control unit checks the pump motor operation when the vehicle is started and does its first initial acceleration.

Hydraulic Boost Failure Compensation

This vehicle is equipped with an electric servo brake. If the electric servo brake system has malfunctions, the operating force of the brake pedal becomes larger than under normal conditions. In this case, the hydraulic boost failure compensation uses the pressurization control of the VSA system to reduce the operating force of the brake pedal.

Brake Fluid Replacement

Brake fluid replacement procedures are identical to the procedures of electric servo brake .

Brake Fluid Air Bleeding

Brake fluid air bleeding procedures are identical to the procedures of electric servo brake .

How to Troubleshoot DTCs

The troubleshooting procedures assume that the cause of the problem is still present and the ABS, VSA, brake system indicator (red), and/or brake system indicator (amber) are still on. Following a troubleshooting procedure for a DTC that has been cleared but does not reset can result in incorrect diagnosis.

1. Question the customer about the conditions when the problem occurred, and try to reproduce the same conditions for troubleshooting. Find out when the ABS, VSA, brake system indicator (red), and/or brake system indicator (amber) came on, such as during activation, after activation, when the vehicle was traveling at a certain speed, etc. If necessary, have the customer demonstrate the concern.

2. When the ABS, VSA, brake system indicator (red), and/or brake system indicator (amber) does not come on during the test-drive, but troubleshooting is done based on the DTC, check for loose connectors, poor contact of the terminals, etc. in the circuit indicated by the DTC.

3. After troubleshooting, or the repairs are done, clear the DTCs, and test-drive the vehicle under the same conditions that originally set the DTCs. Make sure the ABS, VSA, brake system indicator (red), and brake system indicator (amber) do not come on.

Intermittent Failures

The term "intermittent failure" means a system may have had a failure, but it checks OK now. If you cannot reproduce the condition, check for loose connections and terminals. Also check ground and power connections related to the circuit that you are troubleshooting.

How to Use the HDS (Honda Diagnostic System)

NOTE: Make sure the 12 volt battery is in good condition and fully charged.

1. If the system indicators stay on, **connect the HDS to the data link connector (DLC)**

2. Turn the vehicle to the ON mode.

3. Make sure the HDS communicates with the vehicle and the VSA modulator-control unit. If it does not, **go to the DTC troubleshooting index**

4. Check the diagnostic trouble code (DTC) and the freeze data (except ABS/VSA system), for all systems, troubleshoot the powertrain DTCs first. Then refer to the indicated DTC's troubleshooting, and do the appropriate troubleshooting procedure.

NOTE:

- The HDS can read the DTC, the freeze data (except ABS/VSA system), the current data, and other system data.
- For specific operations, refer to the HDS Help menu.

How to Retrieve DTCs

1. With the vehicle in OFF (LOCK) mode, **connect the HDS to the data link connector (DLC)**

2. Turn the vehicle to the ON mode.

3. Make sure the HDS communicates with the vehicle and the VSA modulator-control unit. If it does not, **go to the DTC troubleshooting index**

4. Follow the prompts on the HDS to display the DTC(s) on the screen. After determining the DTC, refer to the DTC troubleshooting. Do the all systems DTC check, and troubleshoot any powertrain DTCs first.

5. Turn the vehicle to the OFF (LOCK) mode.

How to Clear DTCs

1. With the vehicle in OFF (LOCK) mode, **connect the HDS to the data link connector (DLC)**

2. Turn the vehicle to the ON mode.

3. Make sure the HDS communicates with the vehicle and the VSA modulator-control unit. If it does not, **go to the DTC troubleshooting index**

4. Clear the DTC(s) by following the screen prompts on the HDS.

5. Turn the vehicle to the OFF (LOCK) mode.

CONNECTOR VIEW

VSA MODULATOR-CONTROL UNIT CONNECTOR FOR INPUTS AND OUTPUTS

VSA Modulator-Control Unit Inputs and Outputs for 46P Connector (female terminals)

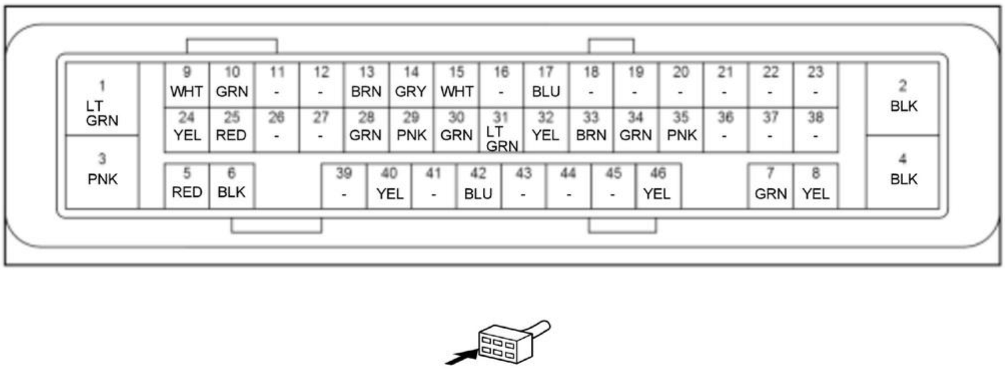
1 LT GRN
9 WHT
10 GRN
11 -
12 -
13 BRN
14 GRY
15 WHT
16 -
17 BLU
18 -
19 -
20 -
21 -
22 -
23 -
2 BLK
24 YEL
25 RED
26 -
27 -
28 GRN
29 PNK
30 GRN
31 LT GRN
32 YEL
33 BRN
34 GRN
35 PNK
36 -
37 -
38 -
3 PNK
5 RED
6 BLK
39 -
40 YEL
41 -
42 BLU
43 -
44 -
45 -
46 YEL
7 GRN
8 YEL
4 BLK

Terminal number	Terminal sign	Description
1	+B_ABS/VSA_FSR	Power source for the fail-safe relay
2	GND	Ground for the VSA modulator-control unit
3	+B_ABS/VSA_MTR	Power source for the motor relay
4	GND	Ground for the pump motor
5	EPB_R_ACT+	Drive the right-rear electric parking brake actuator motor
6	EPB_R_ACT-	Drive the right-rear electric parking brake actuator motor
7	EPB_L_ACT-	Drive the left-rear electric parking brake actuator motor
8	EPB_L_ACT+	Drive the left-rear electric parking brake actuator motor
9	SW1	Detects electric parking brake switch signal
10	SW4	Detects electric parking brake switch signal
11	Not used	---
12	Not used	
13	PARK_BUSY	Sends parking brake signal
14	IG1_VSA/ABS	Power source for activating the system
15	RR_R_ABS_SNSR-	Detects right-rear wheel speed sensor signal
16	Not used	---
17	RR_L_ABS_SNSR+	Detects left-rear wheel speed sensor signal
18	Not used	---
19	Not used	
20	Not used	
21	Not used	
22	Not used	
23	Not used	
24	SW3	Detects electric parking brake switch signal
25	SW6	Detects electric parking brake switch signal
26	Not used	---

Terminal number	Terminal sign	Description
27	Not used	
28	F-CAN B_L	F-CAN communication circuit
29	PARK_LAMP	Sends electric parking brake indicator signal
30	FR_R_ABS_SNSR+	Detects right-front wheel speed sensor signal
31	RR_R_ABS_SNSR+	Detects right-rear wheel speed sensor signal
32	RR_L_ABS_SNSR-	Detects left-rear wheel speed sensor signal
33	FR_L_ABS_SNSR+	Detects left-front wheel speed sensor signal
34	F-CAN C_L	F-CAN communication circuit
35	FR_R_ABS_SNSR-	Detects right-front wheel speed sensor signal
36	Not used	---
37	Not used	
38	Not used	
39	Not used	
40	F-CAN B_H	F-CAN communication circuit
41	Not used	---
42	FR_L_ABS_SNSR-	Detects left-front wheel speed sensor signal
43	Not used	---
44	Not used	
45	Not used	
46	F-CAN C_H	F-CAN communication circuit

CIRCUIT DIAGRAM

VSA SYSTEM CIRCUIT DIAGRAM

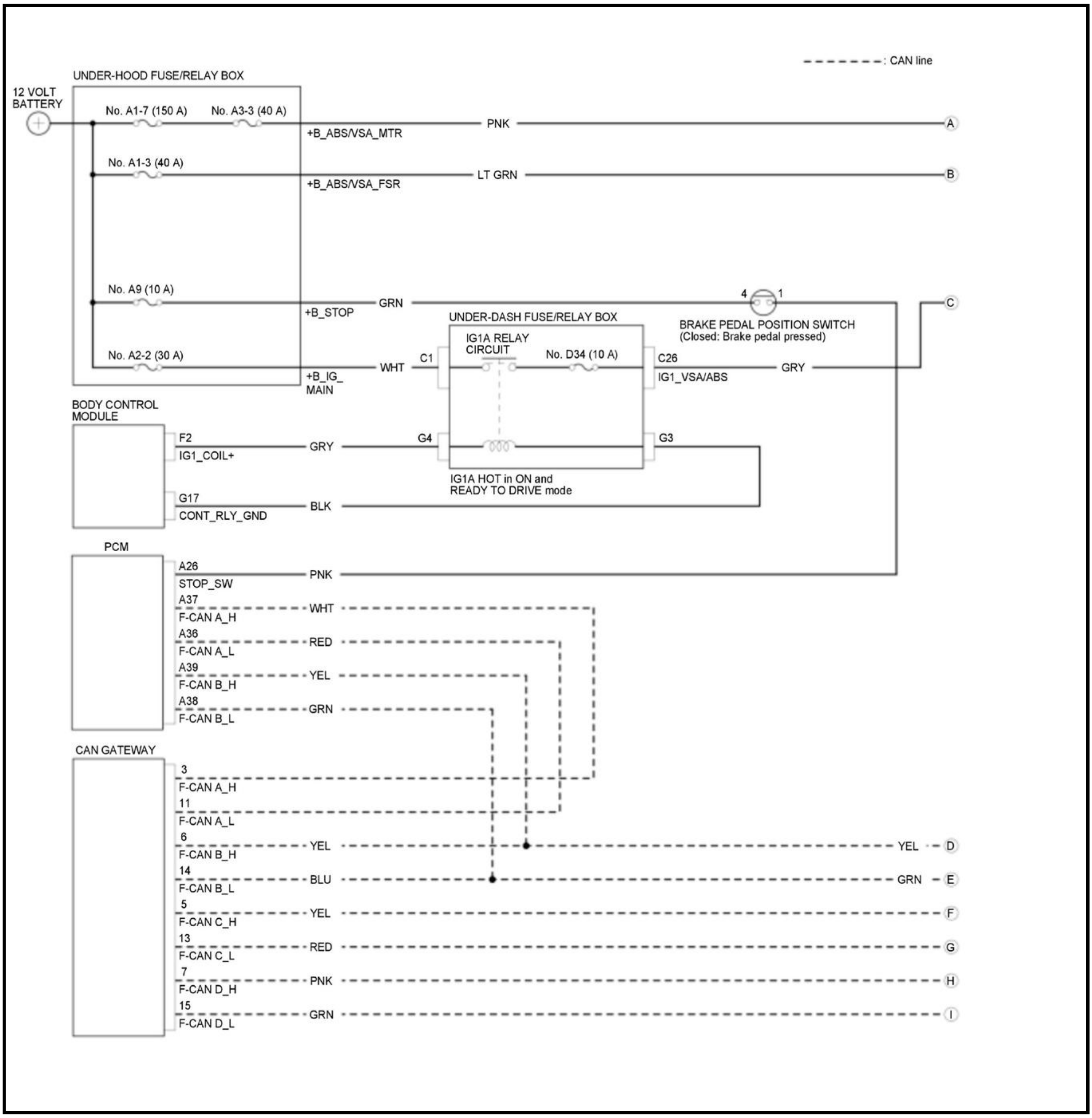
- - - - - - - : CAN line
UNDER-HOOD FUSE/RELAY BOX
12 VOLT BATTERY
No. A1-7 (150 A)
No. A3-3 (40 A)
+B_ABS/VSA_MTR
PNK
A
No. A1-3 (40 A)
+B_ABS/VSA_FSR
LT GRN
B
No. A9 (10 A)
+B_STOP
GRN
4
1
BRAKE PEDAL POSITION SWITCH
(Closed: Brake pedal pressed)
C
UNDER-DASH FUSE/RELAY BOX
IG1A RELAY CIRCUIT
No. D34 (10 A)
No. A2-2 (30 A)
+B_IG_ MAIN
WHT
C1
C26
IG1_VSA/ABS
GRY
BODY CONTROL MODULE
F2
IG1_COIL+
GRY
G4
G3
IG1A HOT in ON and READY TO DRIVE mode
G17
CONT_RLY_GND
BLK
PCM
A26
STOP_SW
PNK
A37
F-CAN A_H
WHT
A36
F-CAN A_L
RED
A39
F-CAN B_H
YEL
A38
F-CAN B_L
GRN
CAN GATEWAY
3
F-CAN A_H
11
F-CAN A_L
6
F-CAN B_H
YEL
YEL
D
14
F-CAN B_L
BLU
GRN
E
5
F-CAN C_H
YEL
F
13
F-CAN C_L
RED
G
7
F-CAN D_H
PNK
H
15
F-CAN D_L
GRN
I

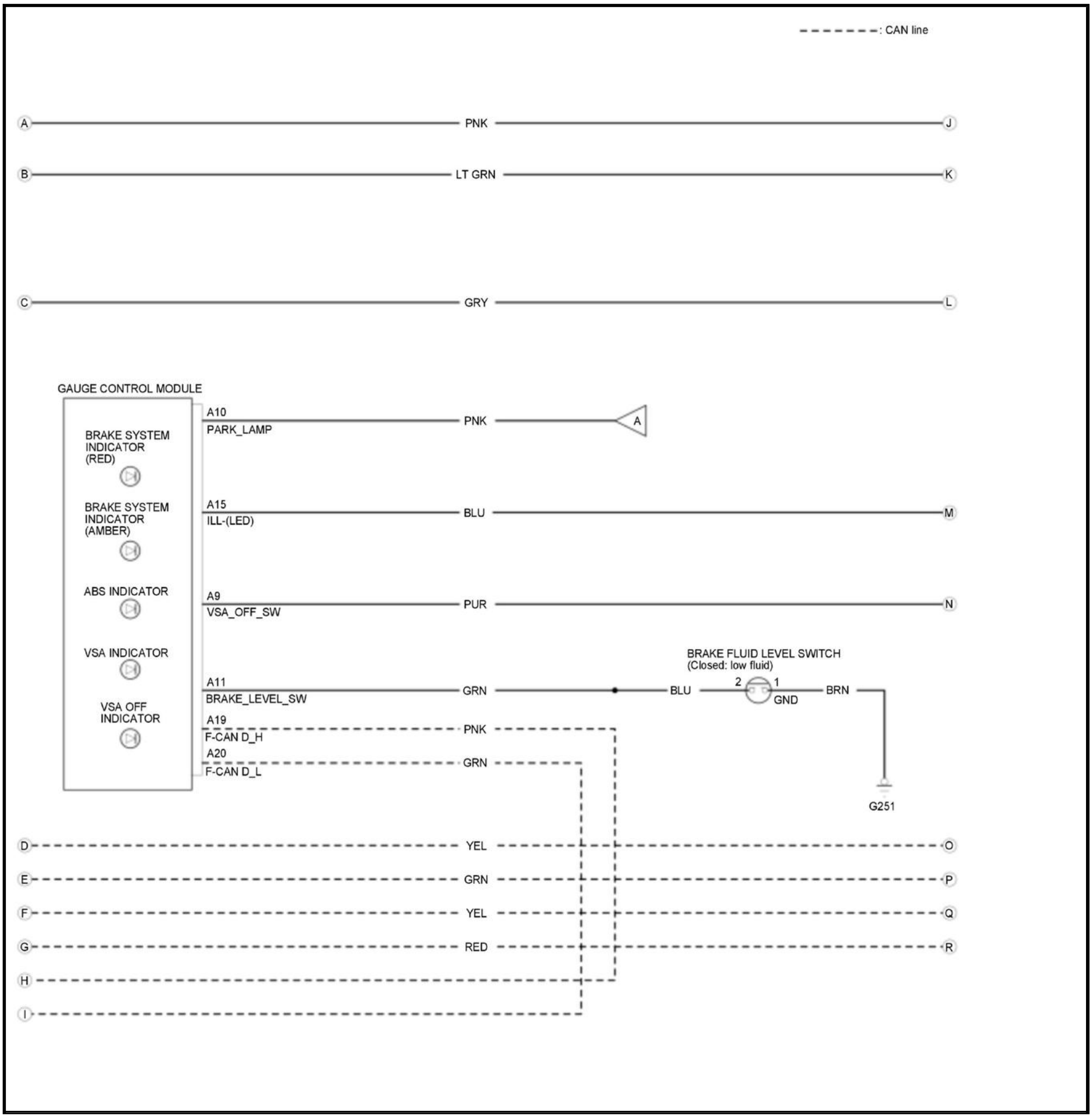
: CAN line
A
PNK
J
B
LT GRN
K
C
GRY
L
GAUGE CONTROL MODULE
BRAKE SYSTEM INDICATOR (RED)
BRAKE SYSTEM INDICATOR (AMBER)
ABS INDICATOR
VSA INDICATOR
VSA OFF INDICATOR
A10
PARK_LAMP
PNK
A
A15
ILL-(LED)
BLU
M
A9
VSA_OFF_SW
PUR
N
BRAKE FLUID LEVEL SWITCH
(Closed: low fluid)
A11
BRAKE_LEVEL_SW
GRN
BLU
2
1
GND
BRN
G251
A19
F-CAN D_H
PNK
A20
F-CAN D_L
GRN
D
YEL
O
E
GRN
P
F
YEL
Q
G
RED
R
H
I

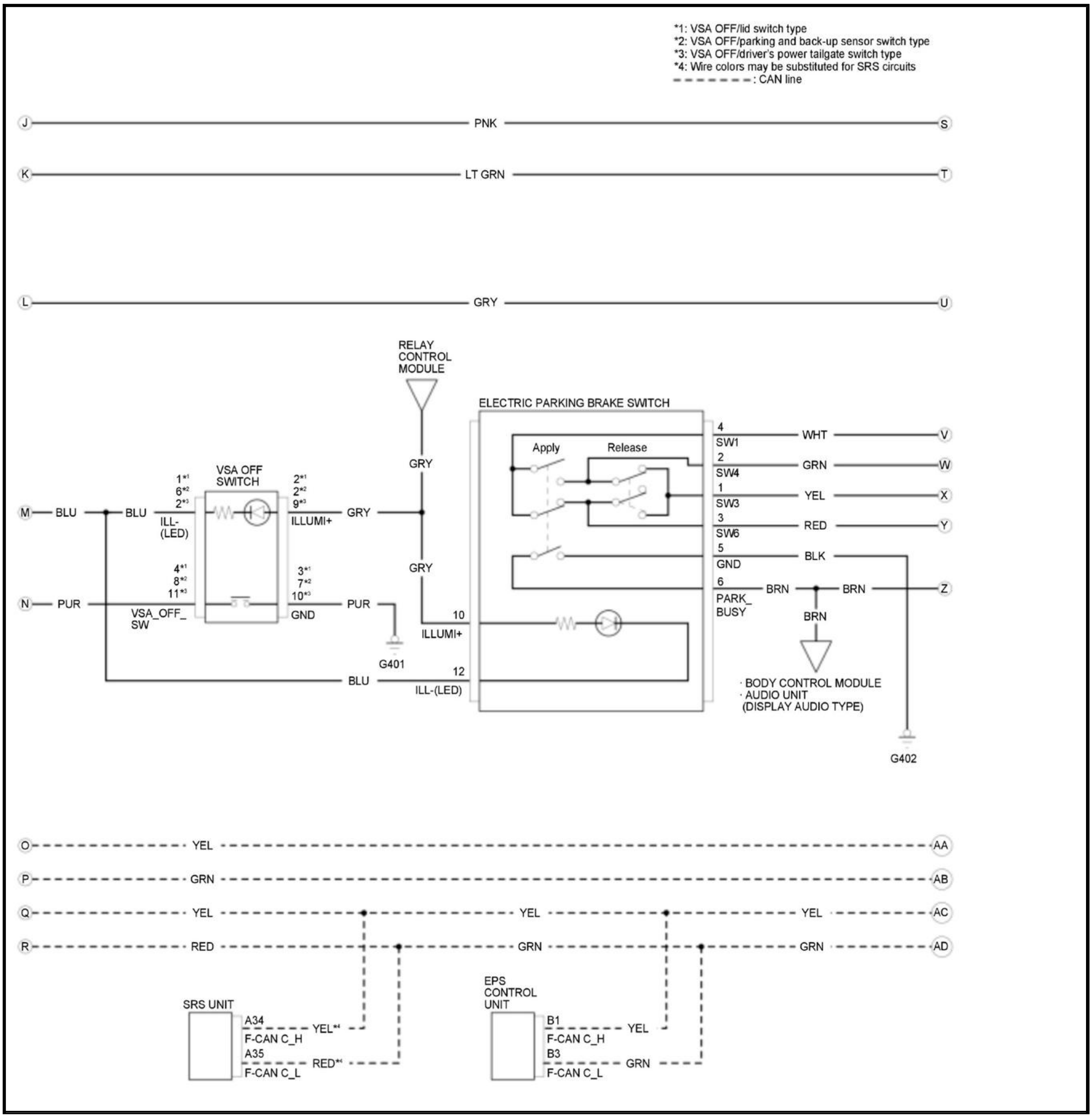

*1: VSA OFF/lid switch type
*2: VSA OFF/parking and back-up sensor switch type
*3: VSA OFF/driver's power tailgate switch type
*4: Wire colors may be substituted for SRS circuits
: CAN line
J
PNK
S
K
LT GRN
T
L
GRY
U
RELAY CONTROL MODULE
ELECTRIC PARKING BRAKE SWITCH
Apply
Release
4
SW1
WHT
V
2
SW4
GRN
W
1
SW3
YEL
X
3
SW6
RED
Y
5
GND
BLK
6
PARK_ BUSY
BRN
BRN
Z
BRN
· BODY CONTROL MODULE
· AUDIO UNIT (DISPLAY AUDIO TYPE)
G402
VSA OFF SWITCH
M
BLU
BLU
1*1
6*2
2*3
ILL- (LED)
2*1
2*2
9*3
ILLUMI+
GRY
GRY
GRY
4*1
8*2
11*3
VSA_OFF_ SW
3*1
7*2
10*3
GND
N
PUR
PUR
G401
10
ILLUMI+
BLU
12
ILL-(LED)
O
YEL
AA
P
GRN
AB
Q
YEL
YEL
YEL
AC
R
RED
GRN
GRN
AD
SRS UNIT
A34
F-CAN C_H
YEL*4
A35
F-CAN C_L
RED*4
EPS CONTROL UNIT
B1
F-CAN C_H
YEL
B3
F-CAN C_L
GRN

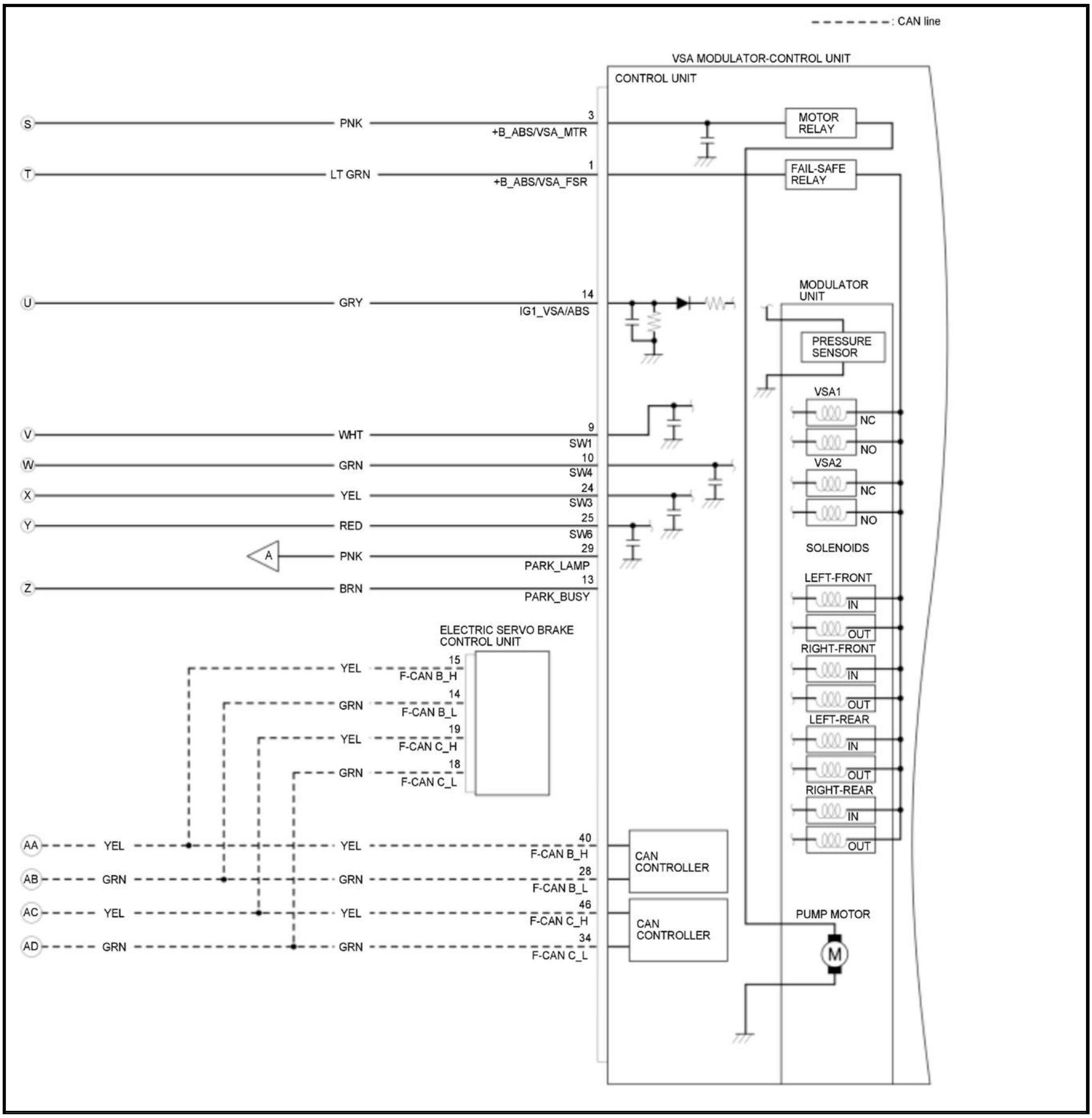

: CAN line
VSA MODULATOR-CONTROL UNIT
CONTROL UNIT
S
PNK
3
+B_ABS/VSA_MTR
MOTOR RELAY
T
LT GRN
1
+B_ABS/VSA_FSR
FAIL-SAFE RELAY
U
GRY
14
IG1_VSA/ABS
MODULATOR UNIT
PRESSURE SENSOR
VSA1
NC
NO
VSA2
NC
NO
V
WHT
9
SW1
W
GRN
10
SW4
X
YEL
24
SW3
Y
RED
25
SW6
A
PNK
29
PARK_LAMP
Z
BRN
13
PARK_BUSY
SOLENOIDS
LEFT-FRONT
IN
OUT
RIGHT-FRONT
IN
OUT
LEFT-REAR
IN
OUT
RIGHT-REAR
IN
OUT
ELECTRIC SERVO BRAKE CONTROL UNIT
YEL
15
F-CAN B_H
GRN
14
F-CAN B_L
YEL
19
F-CAN C_H
GRN
18
F-CAN C_L
AA
YEL
YEL
40
F-CAN B_H
AB
GRN
GRN
28
F-CAN B_L
AC
YEL
YEL
46
F-CAN C_H
AD
GRN
GRN
34
F-CAN C_L
CAN CONTROLLER
CAN CONTROLLER
PUMP MOTOR
M

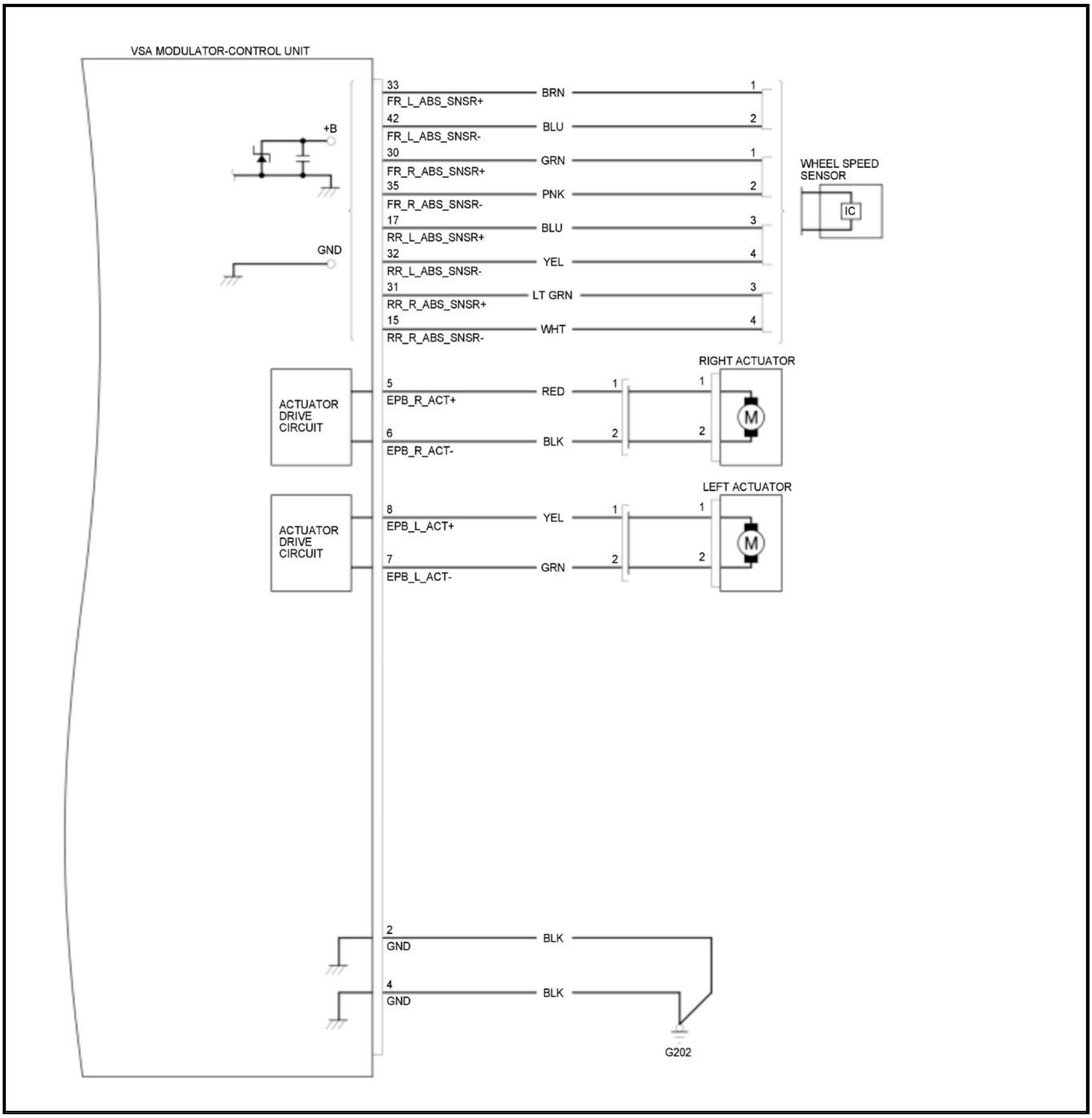
VSA MODULATOR-CONTROL UNIT
+B
GND
33
FR_L_ABS_SNSR+
BRN
1
42
FR_L_ABS_SNSR-
BLU
2
30
FR_R_ABS_SNSR+
GRN
1
35
FR_R_ABS_SNSR-
PNK
2
17
RR_L_ABS_SNSR+
BLU
3
32
RR_L_ABS_SNSR-
YEL
4
31
RR_R_ABS_SNSR+
LT GRN
3
15
RR_R_ABS_SNSR-
WHT
4
WHEEL SPEED SENSOR
IC
ACTUATOR DRIVE CIRCUIT
5
EPB_R_ACT+
RED
6
EPB_R_ACT-
BLK
RIGHT ACTUATOR
M
ACTUATOR DRIVE CIRCUIT
8
EPB_L_ACT+
YEL
7
EPB_L_ACT-
GRN
LEFT ACTUATOR
M
2
GND
BLK
4
GND
BLK
G202

COMPONENT LOCATION INDEX

VSA SYSTEM COMPONENT LOCATION INDEX

For relationships between signals in a system, refer to System Diagram.

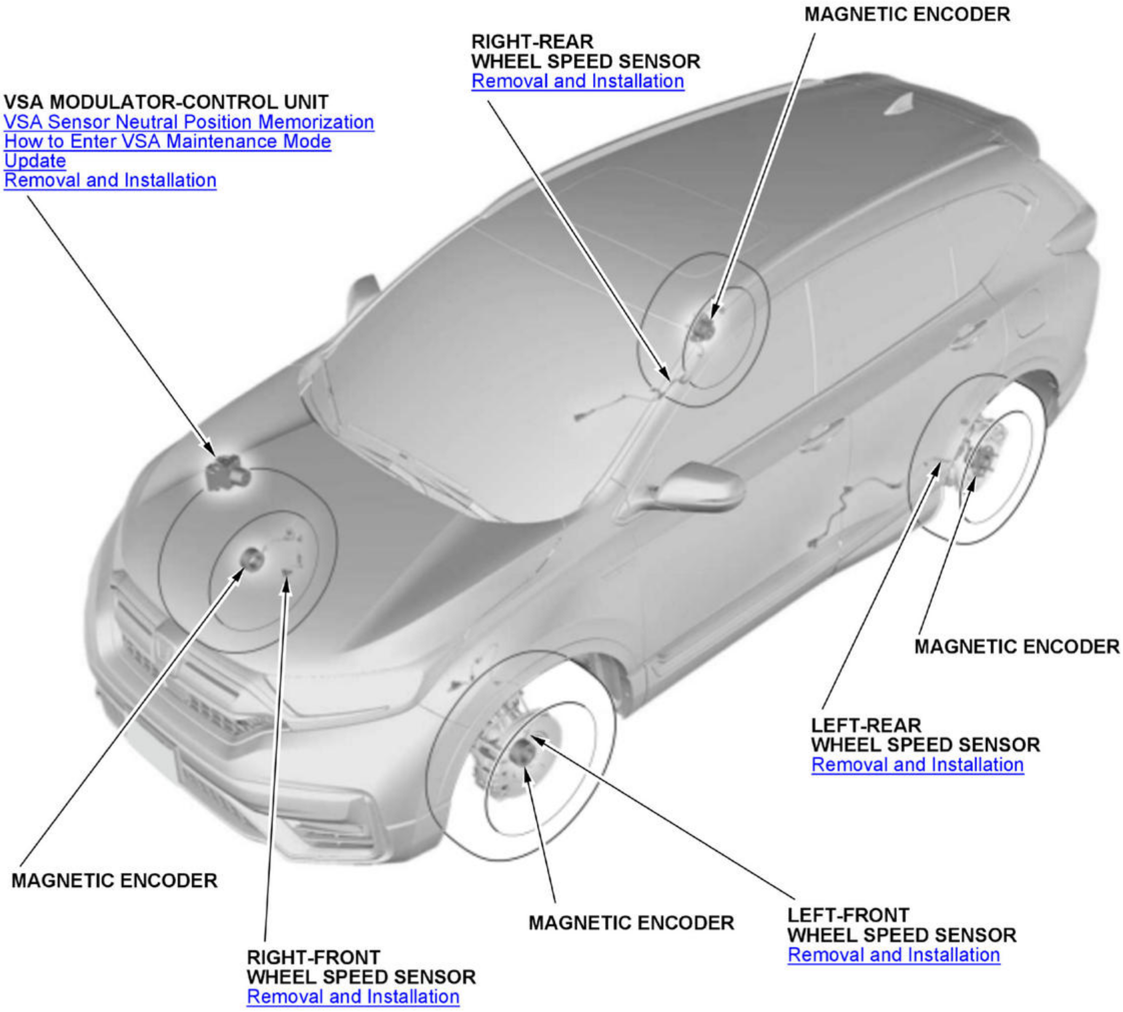
MAGNETIC ENCODER
RIGHT-REAR
WHEEL SPEED SENSOR
Removal and Installation
VSA MODULATOR-CONTROL UNIT
VSA Sensor Neutral Position Memorization
How to Enter VSA Maintenance Mode
Update
Removal and Installation
MAGNETIC ENCODER
LEFT-REAR
WHEEL SPEED SENSOR
Removal and Installation
MAGNETIC ENCODER
MAGNETIC ENCODER
LEFT-FRONT
WHEEL SPEED SENSOR
Removal and Installation
RIGHT-FRONT
WHEEL SPEED SENSOR
Removal and Installation

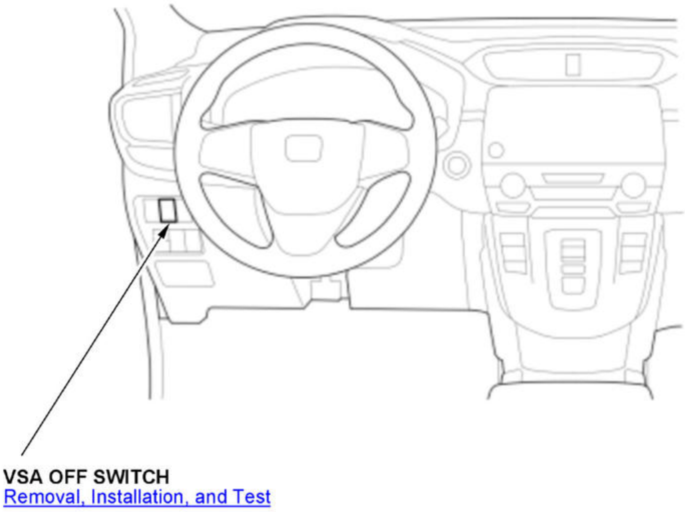
VSA OFF SWITCH
Removal, Installation, and Test

CANADIAN MODEL REFERENCE

Canadian-To-U.S. Model Reference Tables

* PLEASE READ THIS FIRST *

NOTE: **This GENERAL INFORMATION article is displayed for all vehicles. Data contained in this article may not apply to the specific vehicle selected.**

ACURA

NOTE: **All information in this product, unless otherwise noted, is written specifically for vehicles built for the United States market and may or may not apply to vehicles built for the Canadian market. The purpose of this article is to show the relationships between Canadian and U.S. vehicles and should not be used to determine which repair information applies to vehicles built for the Canadian market.**

ACURA MODEL CROSS-REFERENCE

Canadian Model	US Model
1996-2000 1.6EL	Canadian Only (Based on 1996-2000 Japanese Market Honda Domani)
2001-2005 1.7EL	2001-2005 Honda Civic
2004-2005 EL	2004-2005 Honda Civic
2006-2011 CSX	2006-2011 Honda Civic

ASUNA

NOTE: **All information in this product, unless otherwise noted, is written specifically for vehicles built for the United States market and may or may not apply to vehicles built for the Canadian market. The purpose of this article is to show the relationships between Canadian and U.S. vehicles and should not be used to determine which repair information applies to vehicles built for the Canadian market.**

ASUNA MODEL CROSS-REFERENCE

Canadian Model	US Model
1992-93 Sunfire	1990-92 Isuzu Impulse & 1990-93 Geo Storm ("R" Body)
1993 GT/ SE	1988-93 Pontiac LeMans ("T Body)
1992-93 Sunrunner	1989-99 Geo Tracker ("J" Body)

AUDI

NOTE: **All information in this product, unless otherwise noted, is written specifically for vehicles built for the United States market and may or may not apply to vehicles built for the Canadian market. The purpose of this article is to show the relationships between Canadian and U.S. vehicles and should not be used to determine which repair information applies to vehicles built for the Canadian market.**

AUDI MODEL CROSS-REFERENCE

Canadian Model	US Model
1985-86 Quattro	Nearest Match: 1984 Quattro Similar To: 1985-86 Coupe

Canadian Model	US Model
1996-97 S6	Nearest Match: 1996-97 A6

CHRYSLER CORP.

CHRYSLER

NOTE: **All information in this product, unless otherwise noted, is written specifically for vehicles built for the United States market and may or may not apply to vehicles built for the Canadian market. The purpose of this article is to show the relationships between Canadian and U.S. vehicles and should not be used to determine which repair information applies to vehicles built for the Canadian market.**

CHRYSLER MODEL CROSS-REFERENCE

Canadian Model	US Model
1984-93 Daytona	1984-93 Dodge Daytona
1988-93 Dynasty	1988-93 Dodge Dynasty
1993-04 Intrepid	1993-04 Dodge Intrepid
2000-02 Neon	2000-02 Dodge Neon

DODGE

NOTE: **All information in this product, unless otherwise noted, is written specifically for vehicles built for the United States market and may or may not apply to vehicles built for the Canadian market. The purpose of this article is to show the relationships between Canadian and U.S. vehicles and should not be used to determine which repair information applies to vehicles built for the Canadian market.**

DODGE MODEL CROSS-REFERENCE

Canadian Model	US Model
1989-90 2000	1989-90 Mitsubishi Galant
1992-93 Colt Wagon	1992-93 Plymouth Colt Vista
1994 Colt Wagon	1994 Mitsubishi Expo (LRV)
1987-88 Expo	1987-88 Colt Vista
1995-96 Colt	1995-96 Eagle Summit 1995-96 Mitsubishi Mirage
2003-05 SX	2003-05 Neon

EAGLE

NOTE: **All information in this product, unless otherwise noted, is written specifically for vehicles built for the United States market and may or may not apply to vehicles built for the Canadian market. The purpose of this article is to show the relationships between Canadian and U.S. vehicles and should not be used to determine which repair information applies to vehicles built for the Canadian market.**

EAGLE MODEL CROSS-REFERENCE

Canadian Model	US Model
1991-93 2000 GTX	1989-93 Mitsubishi Galant
1989-91 Vista (Sedan/Notchback)	1989-91 Dodge Colt
1992 Vista	1992 Plymouth Colt

Canadian Model	US Model
1989-91 Vista Wagon	1989-91 Dodge Colt Vista

PLYMOUTH

NOTE: **All information in this product, unless otherwise noted, is written specifically for vehicles built for the United States market and may or may not apply to vehicles built for the Canadian market. The purpose of this article is to show the relationships between Canadian and U.S. vehicles and should not be used to determine which repair information applies to vehicles built for the Canadian market.**

PLYMOUTH MODEL CROSS-REFERENCE

Canadian Model	US Model
1978-81 Caravelle	1978-87 Dodge Diplomat
1982-84 Caravelle	1982-84 Gran Fury Also: Dodge 600
1990-92 Colt 100/200	1990-92 Colt
1995-96 Colt	1995-96 Eagle Summit 1995-96 Mitsubishi Mirage
1992-94 Colt Wagon	1992-94 Mitsubishi Expo (LRV)
1987-89 Expo	1987-89 Colt Vista

GENERAL MOTORS

BUICK

NOTE: **All information in this product, unless otherwise noted, is written specifically for vehicles built for the United States market and may or may not apply to vehicles built for the Canadian market. The purpose of this article is to show the relationships between Canadian and U.S. vehicles and should not be used to determine which repair information applies to vehicles built for the Canadian market.**

BUICK MODEL CROSS-REFERENCE

Canadian Model	US Model
2005-09 Allure	2005-09 Buick LaCrosse
1986-87 Somerset Regal	1986-87 Regal (Somerset is a Regal trim level)

CHEVROLET

NOTE: **All information in this product, unless otherwise noted, is written specifically for vehicles built for the United States market and may or may not apply to vehicles built for the Canadian market. The purpose of this article is to show the relationships between Canadian and U.S. vehicles and should not be used to determine which repair information applies to vehicles built for the Canadian market.**

CHEVROLET MODEL CROSS-REFERENCE

Canadian Model	US Model
1989-92 Sprint	1989-92 Geo Metro 1989-92 Suzuki Swift

Canadian Model	US Model
1989-92 Tracker	1989-92 Geo Tracker 1989-92 Suzuki Sidekick
2004-08 Optra (Sedan/Wagon)	2004-08 Suzuki Forenza
2004-08 Optra5	2004-08 Suzuki Reno
2004-06 Epica	2004-06 Suzuki Verona
2012 Orlando	Canadian Only
2009 Uplander	Canadian Only Best Match: 2008 Uplander
2013-4 Chevrolet Trax	2015 Chevrolet Trax

GMC

NOTE: **All information in this product, unless otherwise noted, is written specifically for vehicles built for the United States market and may or may not apply to vehicles built for the Canadian market. The purpose of this article is to show the relationships between Canadian and U.S. vehicles and should not be used to determine which repair information applies to vehicles built for the Canadian market.**

GMC MODEL CROSS-REFERENCE

Canadian Model	US Model
1989-92 Tracker	1989-94 Geo Tracker
2002-05 Jimmy	2002-05 Chevrolet Blazer (Not TrailBlazer)

OLDSMOBILE

NOTE: **All information in this product, unless otherwise noted, is written specifically for vehicles built for the United States market and may or may not apply to vehicles built for the Canadian market. The purpose of this article is to show the relationships between Canadian and U.S. vehicles and should not be used to determine which repair information applies to vehicles built for the Canadian market.**

OPTIMA/PASSPORT MODEL CROSS-REFERENCE

Canadian Model	US Model
1989-90 Delta 88	1989-90 Eighty-Eight

OPTIMA

NOTE: **All information in this product, unless otherwise noted, is written specifically for vehicles built for the United States market and may or may not apply to vehicles built for the Canadian market. The purpose of this article is to show the relationships between Canadian and U.S. vehicles and should not be used to determine which repair information applies to vehicles built for the Canadian market.**

OPTIMA/PASSPORT MODEL CROSS-REFERENCE

Canadian Model	US Model
1988-91 Optima (Passport)	1988-91 Pontiac LeMans ("T" Body)

PONTIAC

NOTE: **All information in this product, unless otherwise noted, is written specifically for vehicles built for the United States market and may or may not apply to vehicles built for the Canadian market. The purpose of this article is to show the relationships between Canadian and U.S. vehicles and should not be used to determine which repair information applies to vehicles built for the Canadian market.**

PONTIAC MODEL CROSS-REFERENCE

Canadian Model	US Model
1982 Parisienne	Best Match: 1983 Parisienne
1985-89 Firefly	1985-89 Chevrolet Sprint
1990-00 Firefly	1990-00 Suzuki Swift 1998-00 Chevrolet Metro
1987-91 Tempest	1987-91 Chevrolet Corsica
2007 Montana SV6	2007 Buick Terraza 2007 Saturn Relay 2007 Chevrolet Uplander
2008-09 Montana SV6	2008 Chevrolet Uplander
1982-83 Grand LeMans	1982-82 Bonneville 1981 Oldsmobile Cutlass
1985-87 Sunburst	1985-87 Chevrolet Spectrum
1994-97 Sunrunner	1994-97 Geo Tracker
2005-09 Wave & G3 Wave	2005-09 Chevrolet Aveo
2010 G3	2010 Chevrolet Aveo
2005-08 G5 Pursuit, G5, & Pursuit	2005-08 Chevrolet Cobalt
1982-87 Acadian	1982-87 Chevrolet Chevette

HYUNDAI

NOTE: **All information in this product, unless otherwise noted, is written specifically for vehicles built for the United States market and may or may not apply to vehicles built for the Canadian market. The purpose of this article is to show the relationships between Canadian and U.S. vehicles and should not be used to determine which repair information applies to vehicles built for the Canadian market.**

HYUNDAI MODEL CROSS-REFERENCE

Canadian Model	US Model
1984-87 Pony	Canadian Only
1985-88 Stellar	Canadian Only

JAGUAR

NOTE: **All information in this product, unless otherwise noted, is written specifically for vehicles built for the United States market and may or may not apply to vehicles built for the Canadian market. The purpose of this article is to show the relationships between Canadian and U.S. vehicles and should not be used to determine which repair information applies to vehicles built for the Canadian market.**

JAGUAR MODEL CROSS-REFERENCE

Canadian Model	US Model
1983-92 XJ12	Canadian Only

KIA

NOTE: All information in this product, unless otherwise noted, is written specifically for vehicles built for the United States market and may or may not apply to vehicles built for the Canadian market. The purpose of this article is to show the relationships between Canadian and U.S. vehicles and should not be used to determine which repair information applies to vehicles built for the Canadian market.

KIA MODEL CROSS-REFERENCE

Canadian Model	US Model
2010-11 Borrego	Canadian Only Best Match: 2009 Borrego
2001-10 Magentis	2001-10 Optima
2011-12 Rondo	Canadian Only Best Match: 2010 Rondo

MAZDA

NOTE: All information in this product, unless otherwise noted, is written specifically for vehicles built for the United States market and may or may not apply to vehicles built for the Canadian market. The purpose of this article is to show the relationships between Canadian and U.S. vehicles and should not be used to determine which repair information applies to vehicles built for the Canadian market.

MAZDA MODEL CROSS-REFERENCE

Canadian Model	US Model
1992-96 MX3 Precidia	1992-95 MX3
1995 323	1995 Protege
1997 B3000	1997 B4000 1997 Ford Ranger
2010 B-Series Trucks	Canadian Only Best Match: 2009 B-Series Trucks
1993-97 MX6 Mystere	1993-97 MX6 193-97 Ford Probe
1992-95 929 Serenia	1988-95 929
1993-97 626 Cronos	1988-97 626

MERCEDES-BENZ

NOTE: All information in this product, unless otherwise noted, is written specifically for vehicles built for the United States market and may or may not apply to vehicles built for the Canadian market. The purpose of this article is to show the relationships between Canadian and U.S. vehicles and should not be used to determine which repair information applies to vehicles built for the Canadian market.

MERCEDES-BENZ MODEL CROSS-REFERENCE

Canadian Model	US Model
1992 350SD / 350SDL	1992 300SD
2006-11 B200	Canadian Only
2008-09 C230	2008-09 C300

Canadian Model	US Model
2010-11 C250	2010-11 C300
2009 CLK63	Canadian Only Best Match: 2008 CLK63
2007 E280	2007 E320
2008-09 E300	2008-09 E350
2009-11 S450	2010-11 S400

MERCURY

NOTE: **All information in this product, unless otherwise noted, is written specifically for vehicles built for the United States market and may or may not apply to vehicles built for the Canadian market. The purpose of this article is to show the relationships between Canadian and U.S. vehicles and should not be used to determine which repair information applies to vehicles built for the Canadian market.**

MERCURY MODEL CROSS-REFERENCE

Canadian Model	US Model
1987 Tracer	1987 Mazda 323

MERKUR

NOTE: **All information in this product, unless otherwise noted, is written specifically for vehicles built for the United States market and may or may not apply to vehicles built for the Canadian market. The purpose of this article is to show the relationships between Canadian and U.S. vehicles and should not be used to determine which repair information applies to vehicles built for the Canadian market.**

MERKUR MODEL CROSS-REFERENCE

Canadian Model	US Model
1987 Scorpio	Canadian Only Best Match: 1988 Scorpio

MITSUBISHI

NOTE: **All information in this product, unless otherwise noted, is written specifically for vehicles built for the United States market and may or may not apply to vehicles built for the Canadian market. The purpose of this article is to show the relationships between Canadian and U.S. vehicles and should not be used to determine which repair information applies to vehicles built for the Canadian market.**

MITSUBISHI MODEL CROSS-REFERENCE

Canadian Model	US Model
2009 Endeavor	Canadian Only Best Match: 2008 Endeavor
2011-22 RVR	2011-22 Outlander Sport

NISSAN

NOTE: **All information in this product, unless otherwise noted, is written specifically for vehicles built for the United States market and may or may not apply to**

vehicles built for the Canadian market. The purpose of this article is to show the relationships between Canadian and U.S. vehicles and should not be used to determine which repair information applies to vehicles built for the Canadian market.

NISSAN MODEL CROSS-REFERENCE

Canadian Model	US Model
1991-95 Axxess Wagon	Canadian Only Best Match: 1990 Axxess Wagon
1986-88 Multi Wagon	1986-88 Stanza Wagon
1984 Micra	Canadian Only
2017-22 Qashqai	2017-2022 Rogue Sport
2005-06 X-Trail	Canadian Only

RENAULT

NOTE: All information in this product, unless otherwise noted, is written specifically for vehicles built for the United States market and may or may not apply to vehicles built for the Canadian market. The purpose of this article is to show the relationships between Canadian and U.S. vehicles and should not be used to determine which repair information applies to vehicles built for the Canadian market.

RENAULT MODEL CROSS-REFERENCE

Canadian Model	US Model
1984-86 LeCar	Canadian Only Best Match: 1983 LeCar

SATURN

NOTE: All information in this product, unless otherwise noted, is written specifically for vehicles built for the United States market and may or may not apply to vehicles built for the Canadian market. The purpose of this article is to show the relationships between Canadian and U.S. vehicles and should not be used to determine which repair information applies to vehicles built for the Canadian market.

SATURN MODEL CROSS-REFERENCE

Canadian Model	US Model
2009 Astra	Canadian Only Same As: 2008 Astra

SMART

NOTE: All information in this product, unless otherwise noted, is written specifically for vehicles built for the United States market and may or may not apply to vehicles built for the Canadian market. The purpose of this article is to show the relationships between Canadian and U.S. vehicles and should not be used to determine which repair information applies to vehicles built for the Canadian market.

SMART MODEL CROSS-REFERENCE

Canadian Model	US Model
2005-07 Fortwo	Canadian Only Best Match: 2008 Fortwo

SUBARU

NOTE: **All information in this product, unless otherwise noted, is written specifically for vehicles built for the United States market and may or may not apply to vehicles built for the Canadian market. The purpose of this article is to show the relationships between Canadian and U.S. vehicles and should not be used to determine which repair information applies to vehicles built for the Canadian market.**

SUBARU MODEL CROSS-REFERENCE

Canadian Model	US Model
1988-89 Chaser	1988-89 GL (Chaser is a hatchback version of the GL)

SUZUKI

NOTE: **All information in this product, unless otherwise noted, is written specifically for vehicles built for the United States market and may or may not apply to vehicles built for the Canadian market. The purpose of this article is to show the relationships between Canadian and U.S. vehicles and should not be used to determine which repair information applies to vehicles built for the Canadian market.**

SUZUKI MODEL CROSS-REFERENCE

Canadian Model	US Model
1986-88 Forsa	1986-88 Chevrolet Sprint
1982-85 Samurai (SJ410)	Canadian Only
2004-08 Swift+	2004-08 Chevrolet Aveo
2009 Swift+	2009 Chevrolet Aveo

TOYOTA

NOTE: **All information in this product, unless otherwise noted, is written specifically for vehicles built for the United States market and may or may not apply to vehicles built for the Canadian market. The purpose of this article is to show the relationships between Canadian and U.S. vehicles and should not be used to determine which repair information applies to vehicles built for the Canadian market.**

TOYOTA MODEL CROSS-REFERENCE

Canadian Model	US Model
1998-99 Paseo	Canadian Only Best Match: 1997 Paseo
1999 Tercel	Canadian Only Best Match: 1998 Tercel
2006 Yaris	Canadian Only Best Match: 2007 Yaris
2016 Venza	Canadian Only Best Match: 2015 Venza

VOLKSWAGEN

NOTE: **All information in this product, unless otherwise noted, is written specifically for vehicles built for the United States market and may or may not apply to vehicles built for the Canadian market. The purpose of this article is to show the relationships between Canadian and U.S. vehicles and should not be used to determine which repair information applies to vehicles built for the Canadian market.**

VOLKSWAGEN MODEL CROSS-REFERENCE

Canadian Model	US Model
1995 Corrado	Canadian Only
1992 & 1994 EuroVan (Gas)	Canadian Only Best Match: 1993 Eurovan
1993-97 EuroVan (Diesel)	Canadian Only (No Diesel Eurovans Sold in U.S.)
2007-08 Golf (A5)	Canadian Only Best Match: 2006 Golf
2008-09 Golf (A6)	Canadian Only Best Match: 2010 Golf
1993 GTI	Canadian Only Best Match: 1993 Cabriolet
1994 GTI	Canadian Only Best Match: 1994 Jetta III
1989 Scirocco	Same As: 1988 Scirocco
1985-92 Transporter Van/Pickup	Canadian Only
1993-03 Transporter Van	1993-03 EuroVan

VOLVO

NOTE: **All information in this product, unless otherwise noted, is written specifically for vehicles built for the United States market and may or may not apply to vehicles built for the Canadian market. The purpose of this article is to show the relationships between Canadian and U.S. vehicles and should not be used to determine which repair information applies to vehicles built for the Canadian market.**

VOLVO MODEL CROSS-REFERENCE

Canadian Model	US Model
1987-88 244 & 245	Canadian Only Best Match: 1987-88 240
2007 C30	Canadian Only Best Match: 2007 S40, V50, C70 Are Similar

ALL OTHERS

NOTE: **This GENERAL INFORMATION article is displayed for all vehicles. Data contained in this article may not apply to the specific vehicle selected.**

NOTE: **All information in this product, unless otherwise noted, is written specifically for vehicles built for the United States market and may or may not apply to vehicles built for the Canadian market. The purpose of this article is to show the relationships between Canadian and U.S. vehicles and should not be used**

to determine which repair information applies to vehicles built for the Canadian market.

Information for other vehicles is not available or known.

BODY CONSTRUCTION

EXTERIOR PARTS CONSTRUCTION

NOTE:

- To confirm which parts are sold as replacement parts, refer to the appropriate Parts Catalog.
- The parts marked with numbers are sold as replacement parts.
- The parts marked with letters are not sold separately and are shown only for reference.
- The numbers in brackets after the part names show thickness; unit: mm (in), and the next numbers of thickness show tensile strength; unit: MPa.
- Zn: Zinc-plating
- MPa is steel tensile strength (grade) in megapascals. Honda defines 340-780 MPa tensile as high-strength steel (HSS). 980 MPa and higher tensile is ultra high-strength steel (UHSS).

Exterior Parts Construction - Exploded View

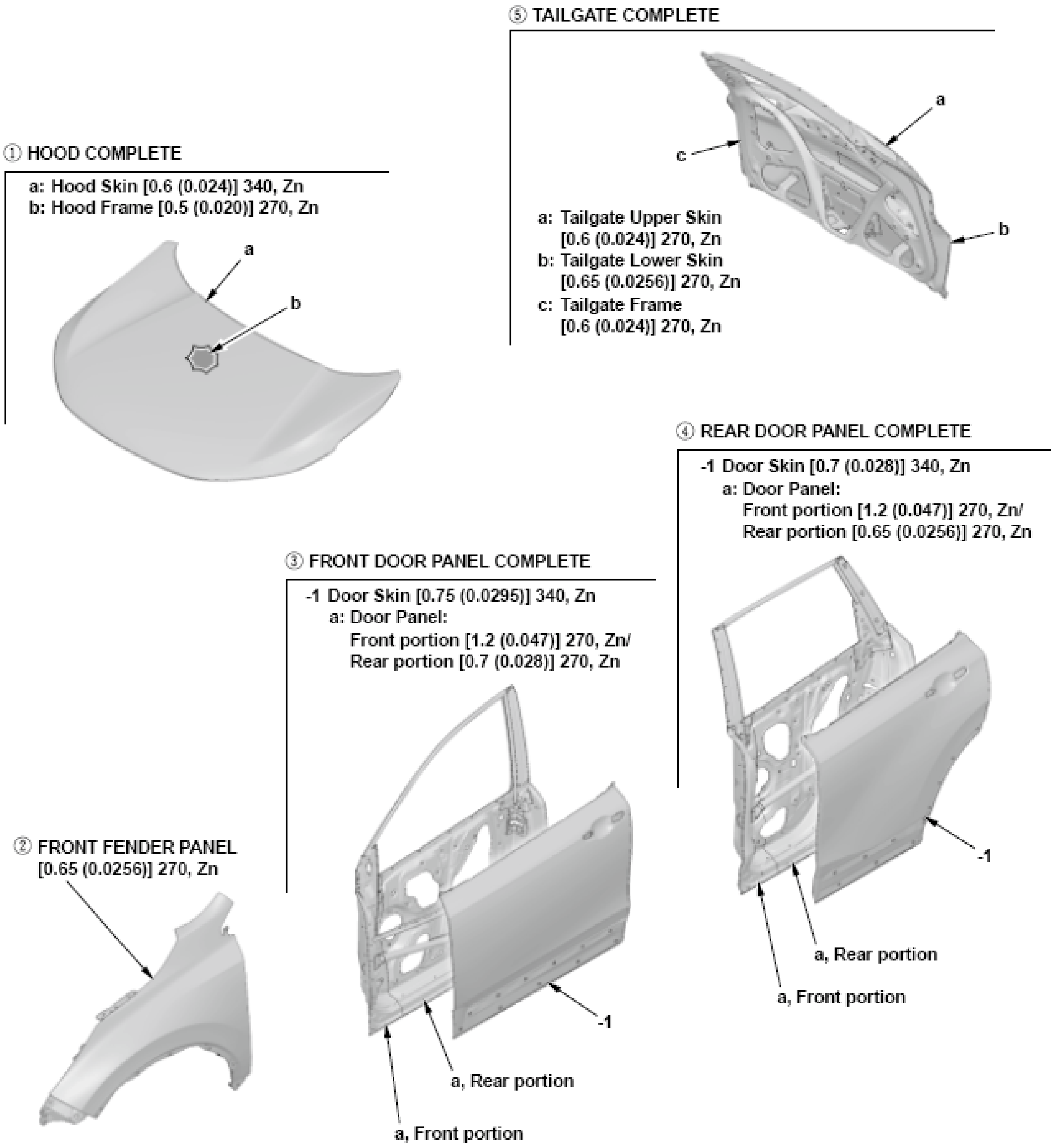
⑤ TAILGATE COMPLETE
a
c
b
a: Tailgate Upper Skin
[0.6 (0.024)] 270, Zn
b: Tailgate Lower Skin
[0.65 (0.0256)] 270, Zn
c: Tailgate Frame
[0.6 (0.024)] 270, Zn
① HOOD COMPLETE
a: Hood Skin [0.6 (0.024)] 340, Zn
b: Hood Frame [0.5 (0.020)] 270, Zn
a
b
④ REAR DOOR PANEL COMPLETE
-1 Door Skin [0.7 (0.028)] 340, Zn
a: Door Panel:
Front portion [1.2 (0.047)] 270, Zn/
Rear portion [0.65 (0.0256)] 270, Zn
-1
a, Rear portion
a, Front portion
③ FRONT DOOR PANEL COMPLETE
-1 Door Skin [0.75 (0.0295)] 340, Zn
a: Door Panel:
Front portion [1.2 (0.047)] 270, Zn/
Rear portion [0.7 (0.028)] 270, Zn
-1
a, Rear portion
a, Front portion
② FRONT FENDER PANEL
[0.65 (0.0256)] 270, Zn

Fig. 1: Exterior Parts Structure Identification Materials
Courtesy of AMERICAN HONDA MOTOR CO., INC.

FRONT BODY CONSTRUCTION

NOTE:

- To confirm which parts are sold as replacement parts, refer to the appropriate Parts Catalog.
- The parts marked with numbers are sold as replacement parts.
- The parts marked with letters are not sold separately and are shown only for reference.
- The numbers in brackets after the part names show thickness; unit: mm (in), and the next numbers of thickness show tensile strength; unit: MPa.
- Zn: Zinc-plating
- MPa is steel tensile strength (grade) in megapascals. Honda defines 340-780 MPa tensile as high-strength steel (HSS). 980 MPa and higher tensile is ultra high-strength steel (UHSS).
- The front bulkhead assembly is made of a composite resin.

Front Body Construction - Exploded View

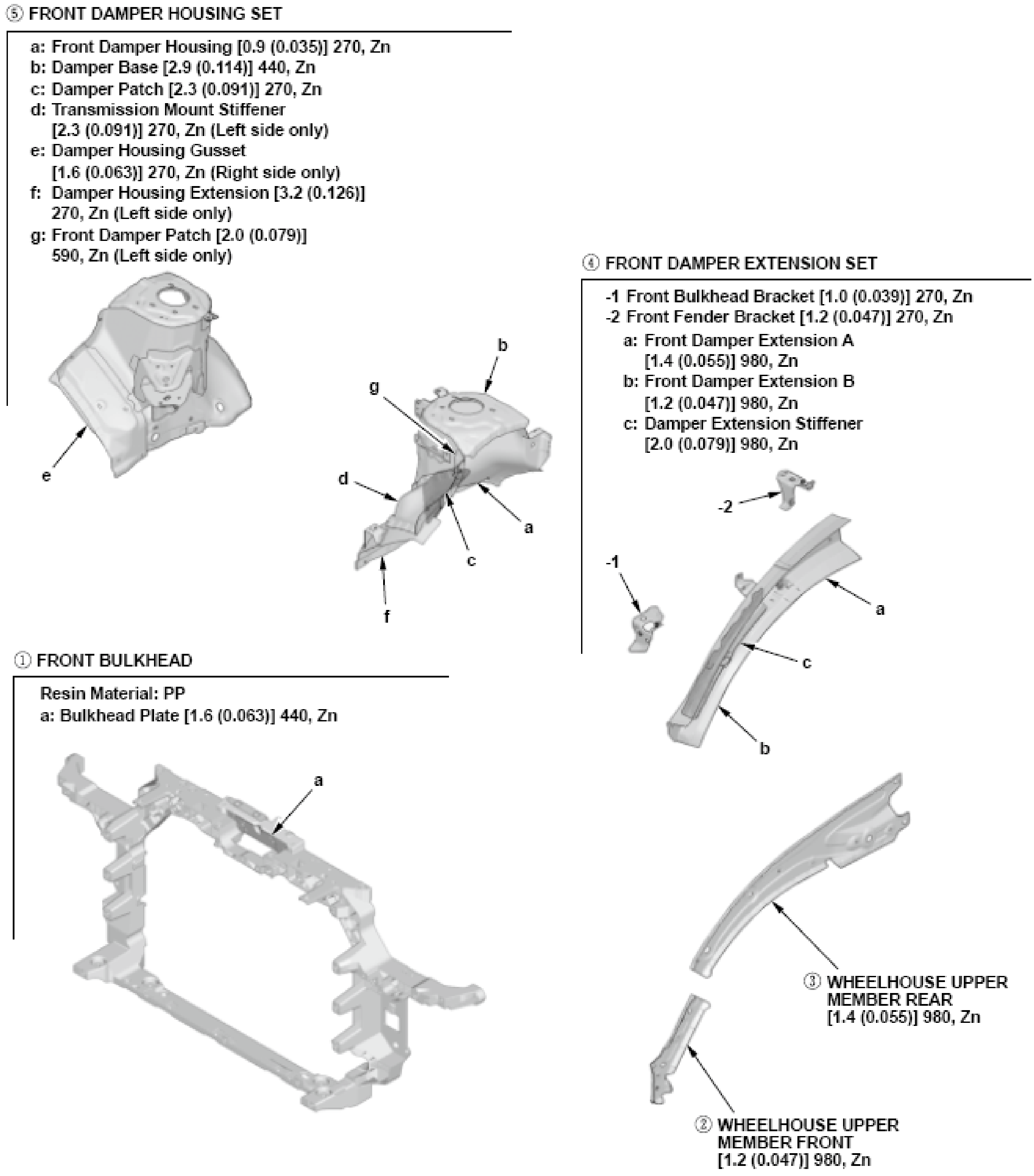
⑤ FRONT DAMPER HOUSING SET
a: Front Damper Housing [0.9 (0.035)] 270, Zn
b: Damper Base [2.9 (0.114)] 440, Zn
c: Damper Patch [2.3 (0.091)] 270, Zn
d: Transmission Mount Stiffener [2.3 (0.091)] 270, Zn (Left side only)
e: Damper Housing Gusset [1.6 (0.063)] 270, Zn (Right side only)
f: Damper Housing Extension [3.2 (0.126)] 270, Zn (Left side only)
g: Front Damper Patch [2.0 (0.079)] 590, Zn (Left side only)
e
g
b
d
a
c
f
④ FRONT DAMPER EXTENSION SET
-1 Front Bulkhead Bracket [1.0 (0.039)] 270, Zn
-2 Front Fender Bracket [1.2 (0.047)] 270, Zn
a: Front Damper Extension A [1.4 (0.055)] 980, Zn
b: Front Damper Extension B [1.2 (0.047)] 980, Zn
c: Damper Extension Stiffener [2.0 (0.079)] 980, Zn
-2
-1
a
c
b
① FRONT BULKHEAD
Resin Material: PP
a: Bulkhead Plate [1.6 (0.063)] 440, Zn
a
③ WHEELHOUSE UPPER MEMBER REAR [1.4 (0.055)] 980, Zn
② WHEELHOUSE UPPER MEMBER FRONT [1.2 (0.047)] 980, Zn

Fig. 2: Front Body Structure Identification Materials (1 Of 3)

Courtesy of AMERICAN HONDA MOTOR CO., INC.

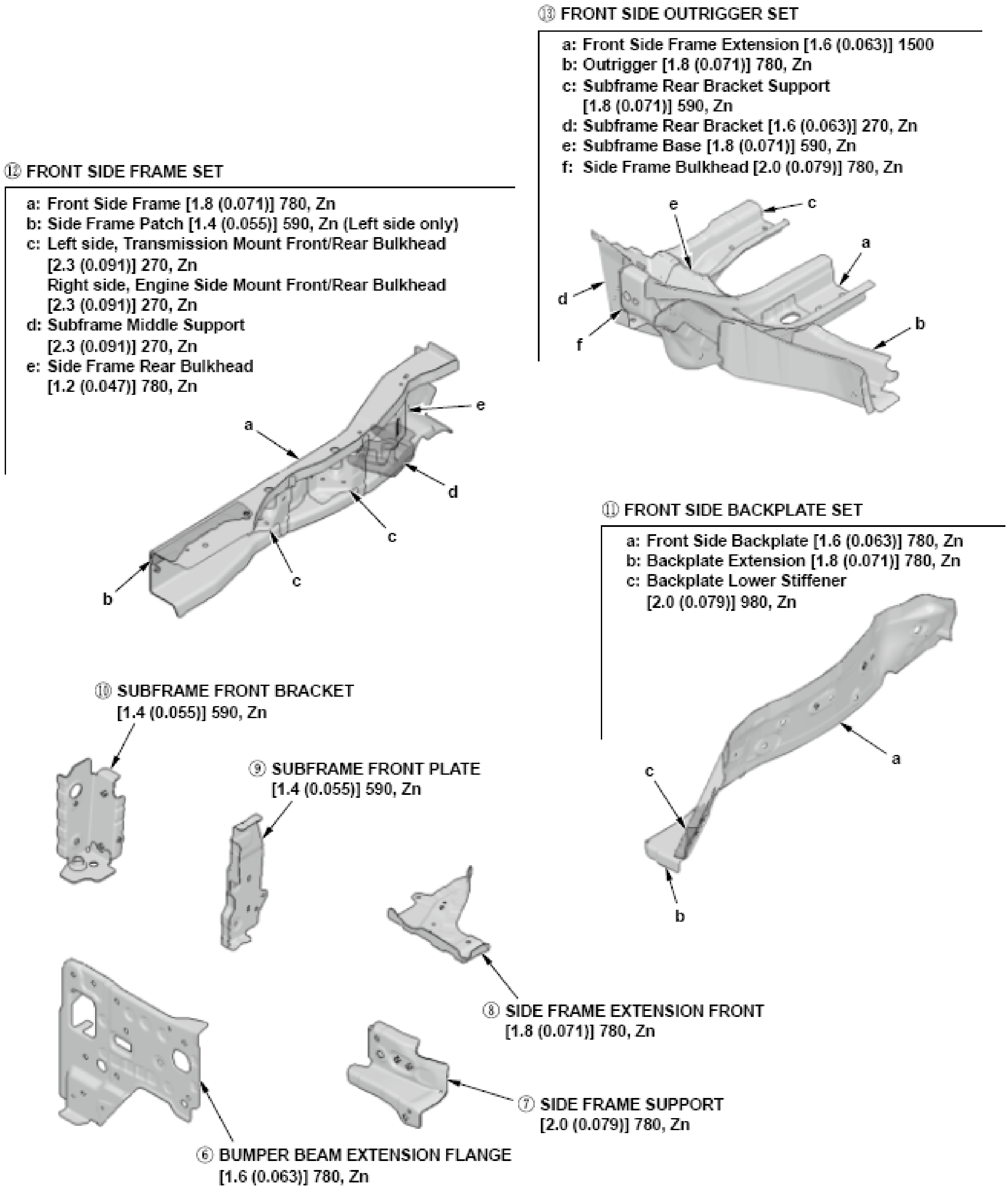
⑬ FRONT SIDE OUTRIGGER SET
a: Front Side Frame Extension [1.6 (0.063)] 1500
b: Outrigger [1.8 (0.071)] 780, Zn
c: Subframe Rear Bracket Support [1.8 (0.071)] 590, Zn
d: Subframe Rear Bracket [1.6 (0.063)] 270, Zn
e: Subframe Base [1.8 (0.071)] 590, Zn
f: Side Frame Bulkhead [2.0 (0.079)] 780, Zn
e
c
a
d
b
f
⑫ FRONT SIDE FRAME SET
a: Front Side Frame [1.8 (0.071)] 780, Zn
b: Side Frame Patch [1.4 (0.055)] 590, Zn (Left side only)
c: Left side, Transmission Mount Front/Rear Bulkhead [2.3 (0.091)] 270, Zn
Right side, Engine Side Mount Front/Rear Bulkhead [2.3 (0.091)] 270, Zn
d: Subframe Middle Support [2.3 (0.091)] 270, Zn
e: Side Frame Rear Bulkhead [1.2 (0.047)] 780, Zn
e
a
d
c
b
c
⑪ FRONT SIDE BACKPLATE SET
a: Front Side Backplate [1.6 (0.063)] 780, Zn
b: Backplate Extension [1.8 (0.071)] 780, Zn
c: Backplate Lower Stiffener [2.0 (0.079)] 980, Zn
a
c
b
⑩ SUBFRAME FRONT BRACKET [1.4 (0.055)] 590, Zn
⑨ SUBFRAME FRONT PLATE [1.4 (0.055)] 590, Zn
⑧ SIDE FRAME EXTENSION FRONT [1.8 (0.071)] 780, Zn
⑦ SIDE FRAME SUPPORT [2.0 (0.079)] 780, Zn
⑥ BUMPER BEAM EXTENSION FLANGE [1.6 (0.063)] 780, Zn

Fig. 3: Front Body Structure Identification Materials (2 Of 3)

Courtesy of AMERICAN HONDA MOTOR CO., INC.

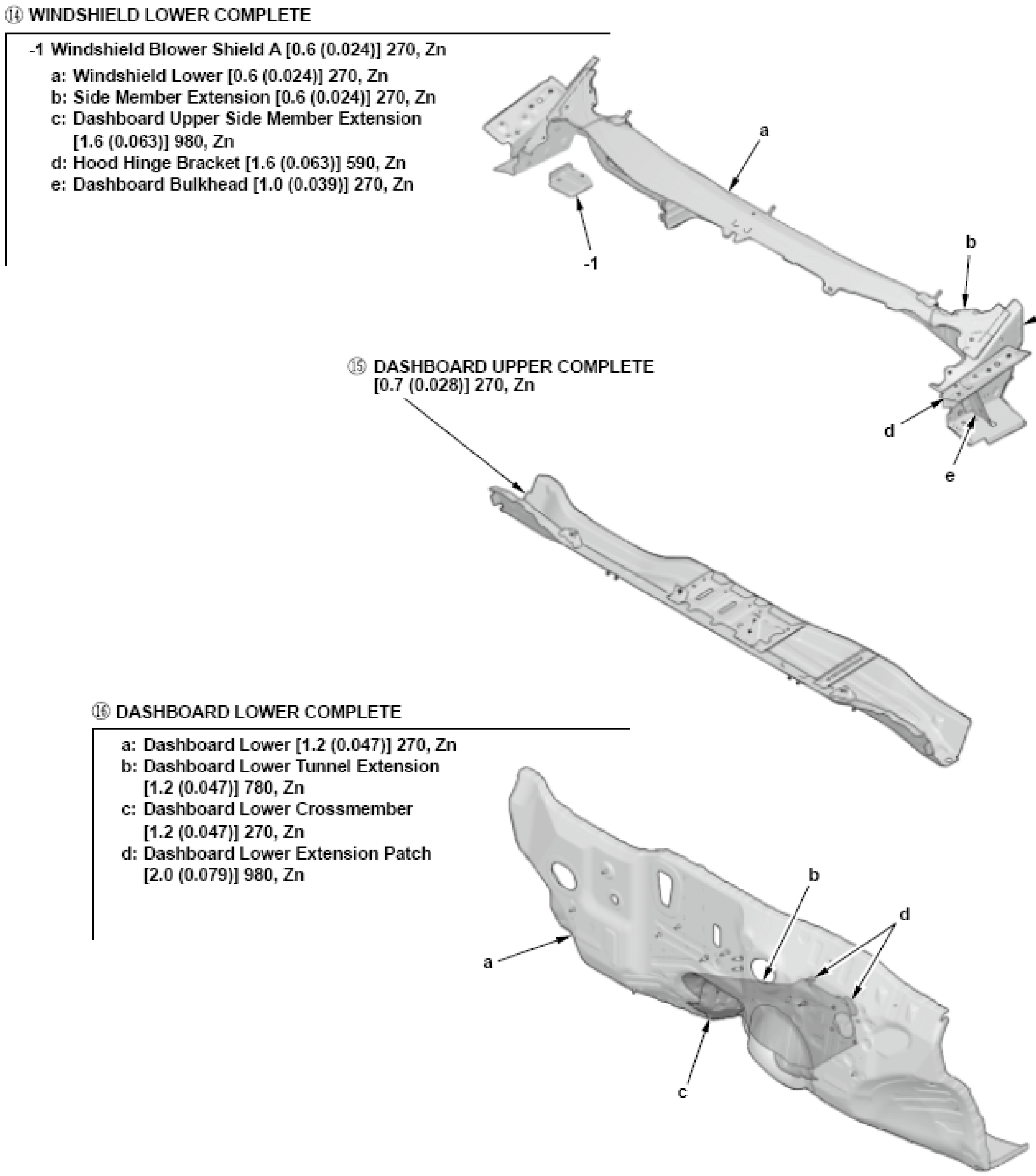
⑭ WINDSHIELD LOWER COMPLETE
-1 Windshield Blower Shield A [0.6 (0.024)] 270, Zn
a: Windshield Lower [0.6 (0.024)] 270, Zn
b: Side Member Extension [0.6 (0.024)] 270, Zn
c: Dashboard Upper Side Member Extension [1.6 (0.063)] 980, Zn
d: Hood Hinge Bracket [1.6 (0.063)] 590, Zn
e: Dashboard Bulkhead [1.0 (0.039)] 270, Zn
a
-1
b
c
d
e
⑮ DASHBOARD UPPER COMPLETE [0.7 (0.028)] 270, Zn
⑯ DASHBOARD LOWER COMPLETE
a: Dashboard Lower [1.2 (0.047)] 270, Zn
b: Dashboard Lower Tunnel Extension [1.2 (0.047)] 780, Zn
c: Dashboard Lower Crossmember [1.2 (0.047)] 270, Zn
d: Dashboard Lower Extension Patch [2.0 (0.079)] 980, Zn
b
d
a
c

Fig. 4: Front Body Structure Identification Materials (3 Of 3)
Courtesy of AMERICAN HONDA MOTOR CO., INC.

ROOF AND SIDE PANEL CONSTRUCTION

NOTE:

- **To confirm which parts are sold as replacement parts, refer to the appropriate Parts Catalog.**
- **The parts marked with numbers are sold as replacement parts.**
- **The parts marked with letters are not sold separately and are shown only for reference.**
- **The numbers in brackets after the part names show thickness; unit: mm (in), and the next numbers of thickness show tensile strength; unit: MPa.**
- **Zn: Zinc-plating**
- **MPa is steel tensile strength (grade) in megapascals. Honda defines 340-780 MPa tensile as high-strength steel (HSS). 980 MPa and higher tensile is ultra high-strength steel (UHSS).**

Roof And Side Panel Construction - Exploded View

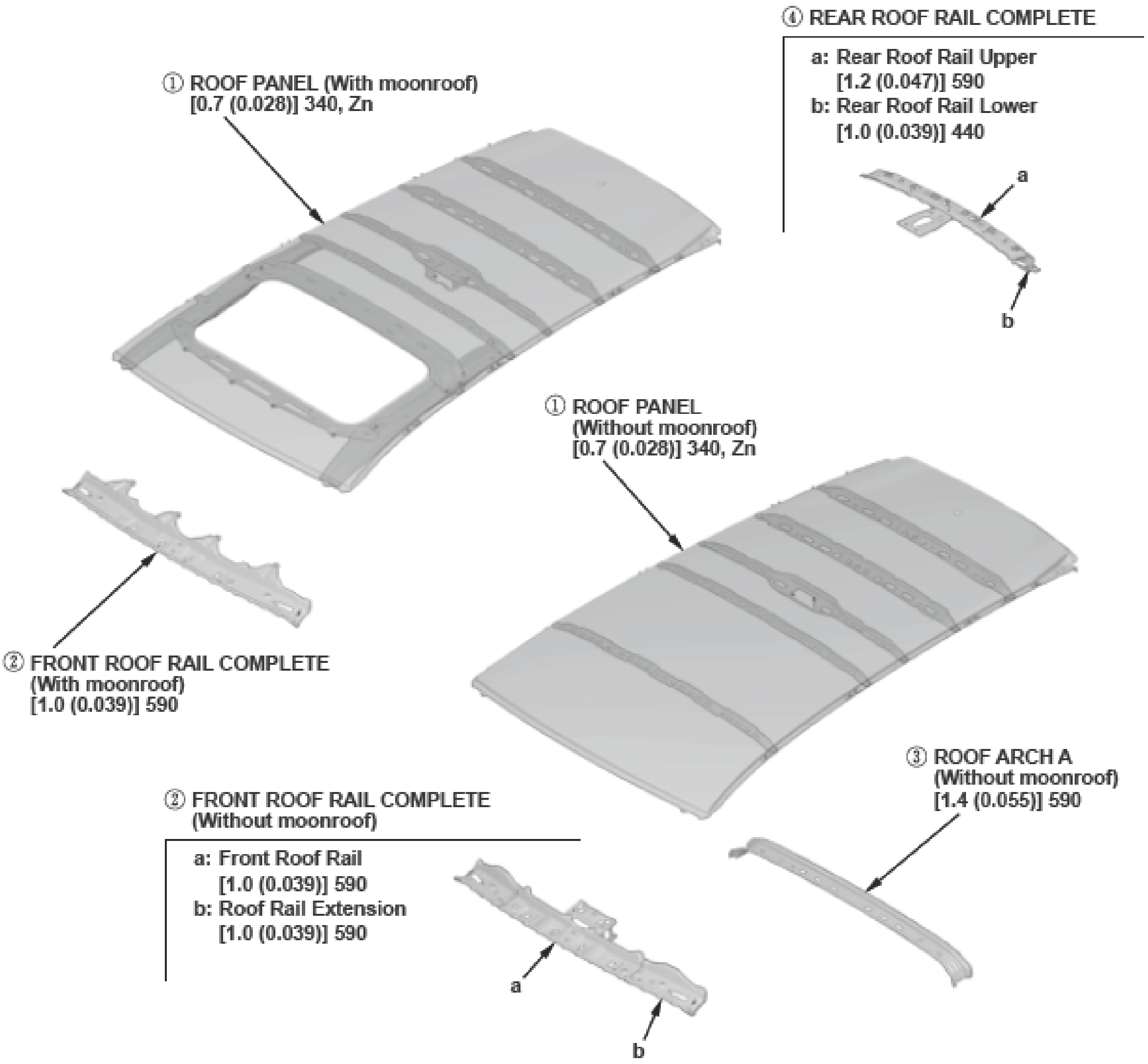
④ REAR ROOF RAIL COMPLETE
a: Rear Roof Rail Upper
[1.2 (0.047)] 590
b: Rear Roof Rail Lower
[1.0 (0.039)] 440
a
b
① ROOF PANEL (With moonroof)
[0.7 (0.028)] 340, Zn
① ROOF PANEL
(Without moonroof)
[0.7 (0.028)] 340, Zn
② FRONT ROOF RAIL COMPLETE
(With moonroof)
[1.0 (0.039)] 590
③ ROOF ARCH A
(Without moonroof)
[1.4 (0.055)] 590
② FRONT ROOF RAIL COMPLETE
(Without moonroof)
a: Front Roof Rail
[1.0 (0.039)] 590
b: Roof Rail Extension
[1.0 (0.039)] 590
a
b

Fig. 5: Roof And Side Panel Structure Identification Materials (1 Of 4)

Courtesy of AMERICAN HONDA MOTOR CO., INC.

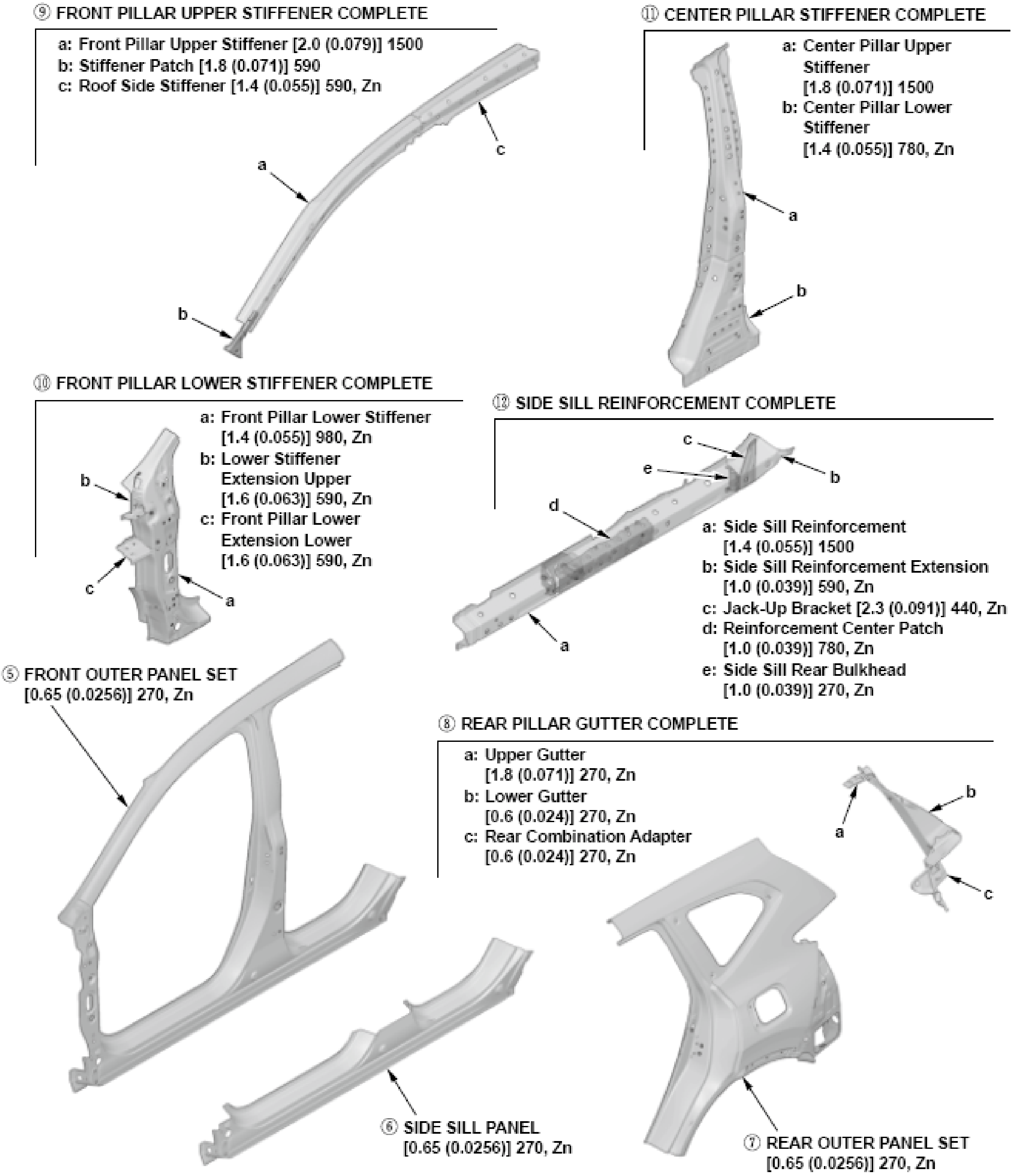
⑨ FRONT PILLAR UPPER STIFFENER COMPLETE
a: Front Pillar Upper Stiffener [2.0 (0.079)] 1500
b: Stiffener Patch [1.8 (0.071)] 590
c: Roof Side Stiffener [1.4 (0.055)] 590, Zn
a
b
c
⑪ CENTER PILLAR STIFFENER COMPLETE
a: Center Pillar Upper Stiffener [1.8 (0.071)] 1500
b: Center Pillar Lower Stiffener [1.4 (0.055)] 780, Zn
a
b
⑩ FRONT PILLAR LOWER STIFFENER COMPLETE
a: Front Pillar Lower Stiffener [1.4 (0.055)] 980, Zn
b: Lower Stiffener Extension Upper [1.6 (0.063)] 590, Zn
c: Front Pillar Lower Extension Lower [1.6 (0.063)] 590, Zn
b
c
a
⑬ SIDE SILL REINFORCEMENT COMPLETE
c
e
b
d
a
a: Side Sill Reinforcement [1.4 (0.055)] 1500
b: Side Sill Reinforcement Extension [1.0 (0.039)] 590, Zn
c: Jack-Up Bracket [2.3 (0.091)] 440, Zn
d: Reinforcement Center Patch [1.0 (0.039)] 780, Zn
e: Side Sill Rear Bulkhead [1.0 (0.039)] 270, Zn
⑤ FRONT OUTER PANEL SET [0.65 (0.0256)] 270, Zn
⑧ REAR PILLAR GUTTER COMPLETE
a: Upper Gutter [1.8 (0.071)] 270, Zn
b: Lower Gutter [0.6 (0.024)] 270, Zn
c: Rear Combination Adapter [0.6 (0.024)] 270, Zn
a
b
c
⑥ SIDE SILL PANEL [0.65 (0.0256)] 270, Zn
⑦ REAR OUTER PANEL SET [0.65 (0.0256)] 270, Zn

Fig. 6: Roof And Side Panel Structure Identification Materials (2 Of 4)
Courtesy of AMERICAN HONDA MOTOR CO., INC.

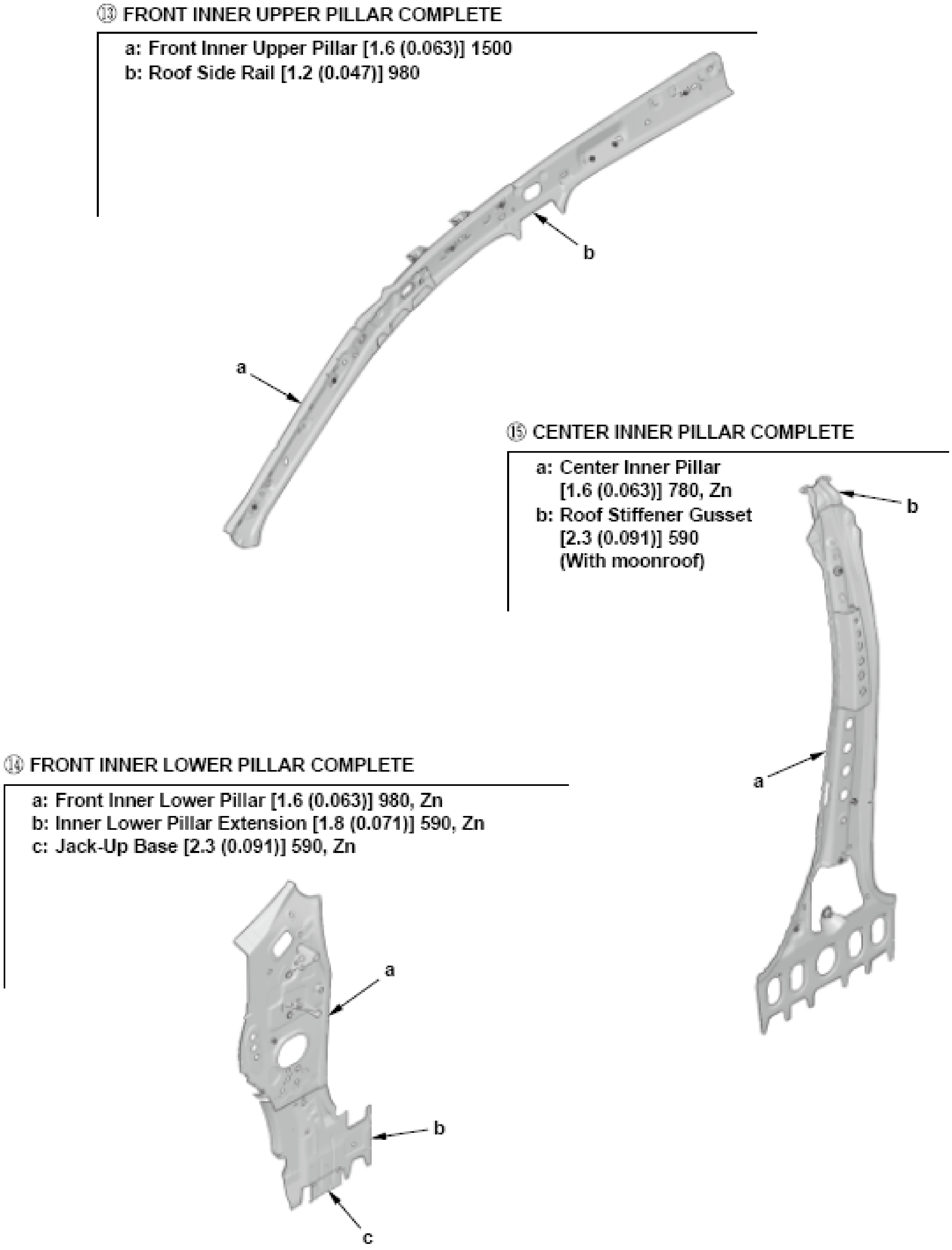
⑬ FRONT INNER UPPER PILLAR COMPLETE
a: Front Inner Upper Pillar [1.6 (0.063)] 1500
b: Roof Side Rail [1.2 (0.047)] 980
b
a
⑮ CENTER INNER PILLAR COMPLETE
a: Center Inner Pillar
[1.6 (0.063)] 780, Zn
b: Roof Stiffener Gusset
[2.3 (0.091)] 590
(With moonroof)
b
a
⑭ FRONT INNER LOWER PILLAR COMPLETE
a: Front Inner Lower Pillar [1.6 (0.063)] 980, Zn
b: Inner Lower Pillar Extension [1.8 (0.071)] 590, Zn
c: Jack-Up Base [2.3 (0.091)] 590, Zn
a
b
c

Fig. 7: Roof And Side Panel Structure Identification Materials (3 Of 4)
Courtesy of AMERICAN HONDA MOTOR CO., INC.

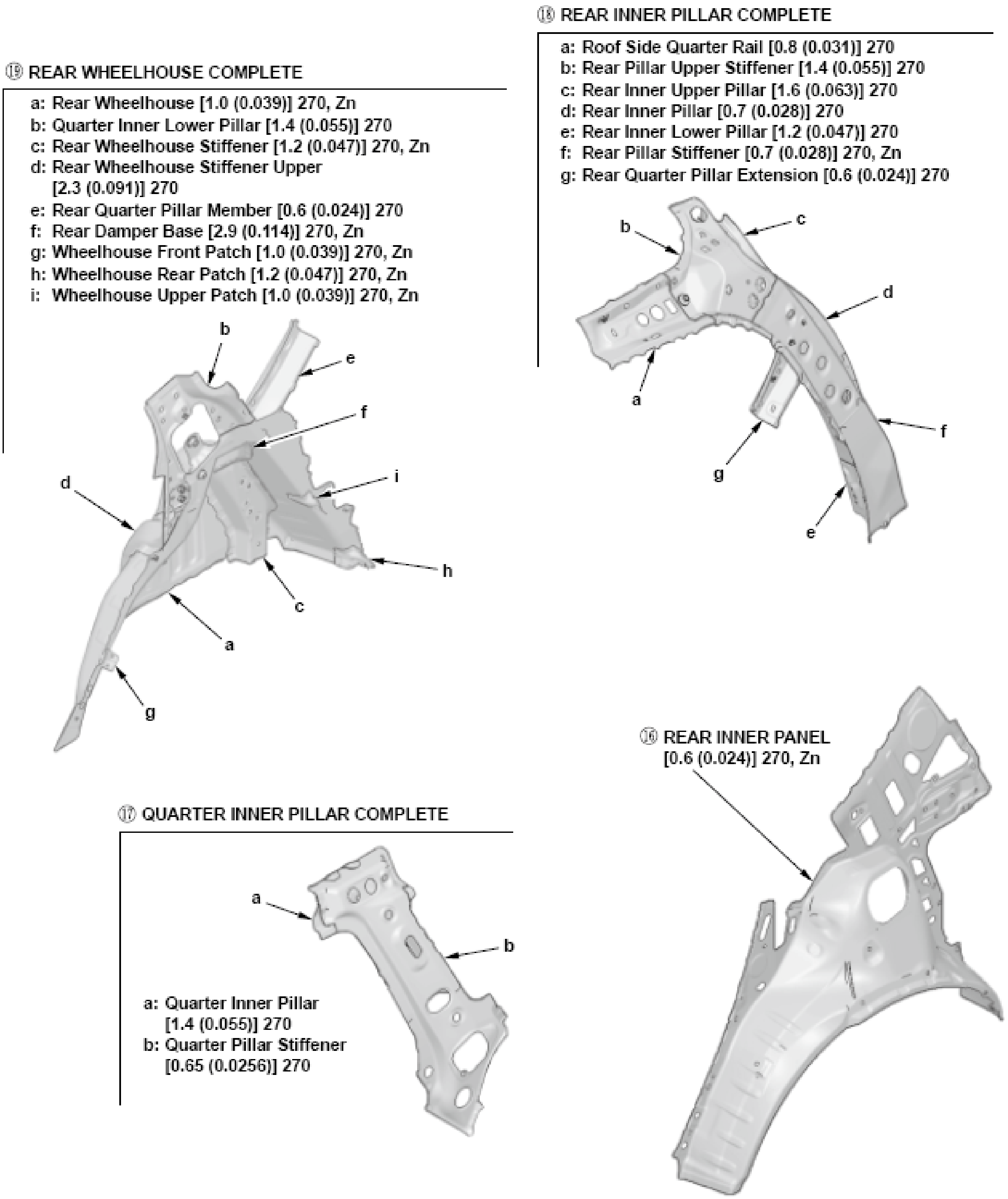

⑲ REAR WHEELHOUSE COMPLETE

a: Rear Wheelhouse [1.0 (0.039)] 270, Zn
b: Quarter Inner Lower Pillar [1.4 (0.055)] 270
c: Rear Wheelhouse Stiffener [1.2 (0.047)] 270, Zn
d: Rear Wheelhouse Stiffener Upper [2.3 (0.091)] 270
e: Rear Quarter Pillar Member [0.6 (0.024)] 270
f: Rear Damper Base [2.9 (0.114)] 270, Zn
g: Wheelhouse Front Patch [1.0 (0.039)] 270, Zn
h: Wheelhouse Rear Patch [1.2 (0.047)] 270, Zn
i: Wheelhouse Upper Patch [1.0 (0.039)] 270, Zn

⑱ REAR INNER PILLAR COMPLETE

a: Roof Side Quarter Rail [0.8 (0.031)] 270
b: Rear Pillar Upper Stiffener [1.4 (0.055)] 270
c: Rear Inner Upper Pillar [1.6 (0.063)] 270
d: Rear Inner Pillar [0.7 (0.028)] 270
e: Rear Inner Lower Pillar [1.2 (0.047)] 270
f: Rear Pillar Stiffener [0.7 (0.028)] 270, Zn
g: Rear Quarter Pillar Extension [0.6 (0.024)] 270

⑰ QUARTER INNER PILLAR COMPLETE

a: Quarter Inner Pillar [1.4 (0.055)] 270
b: Quarter Pillar Stiffener [0.65 (0.0256)] 270

⑯ REAR INNER PANEL [0.6 (0.024)] 270, Zn

Fig. 8: Roof And Side Panel Structure Identification Materials (4 Of 4)
Courtesy of AMERICAN HONDA MOTOR CO., INC.

FLOOR AND REAR BODY CONSTRUCTION

NOTE:

- To confirm which parts are sold as replacement parts, refer to the appropriate Parts Catalog.
- The parts marked with numbers are sold as replacement parts.
- The parts marked with letters are not sold separately and are shown only for reference.
- The numbers in brackets after the part names show thickness; unit: mm (in), and the next numbers of thickness show tensile strength; unit: MPa.
- Zn: Zinc-plating
- MPa is steel tensile strength (grade) in megapascals. Honda defines 340-780 MPa tensile as high-strength steel (HSS). 980 MPa and higher tensile is ultra high-strength steel (UHSS).

Floor And Rear Body Construction - Exploded View

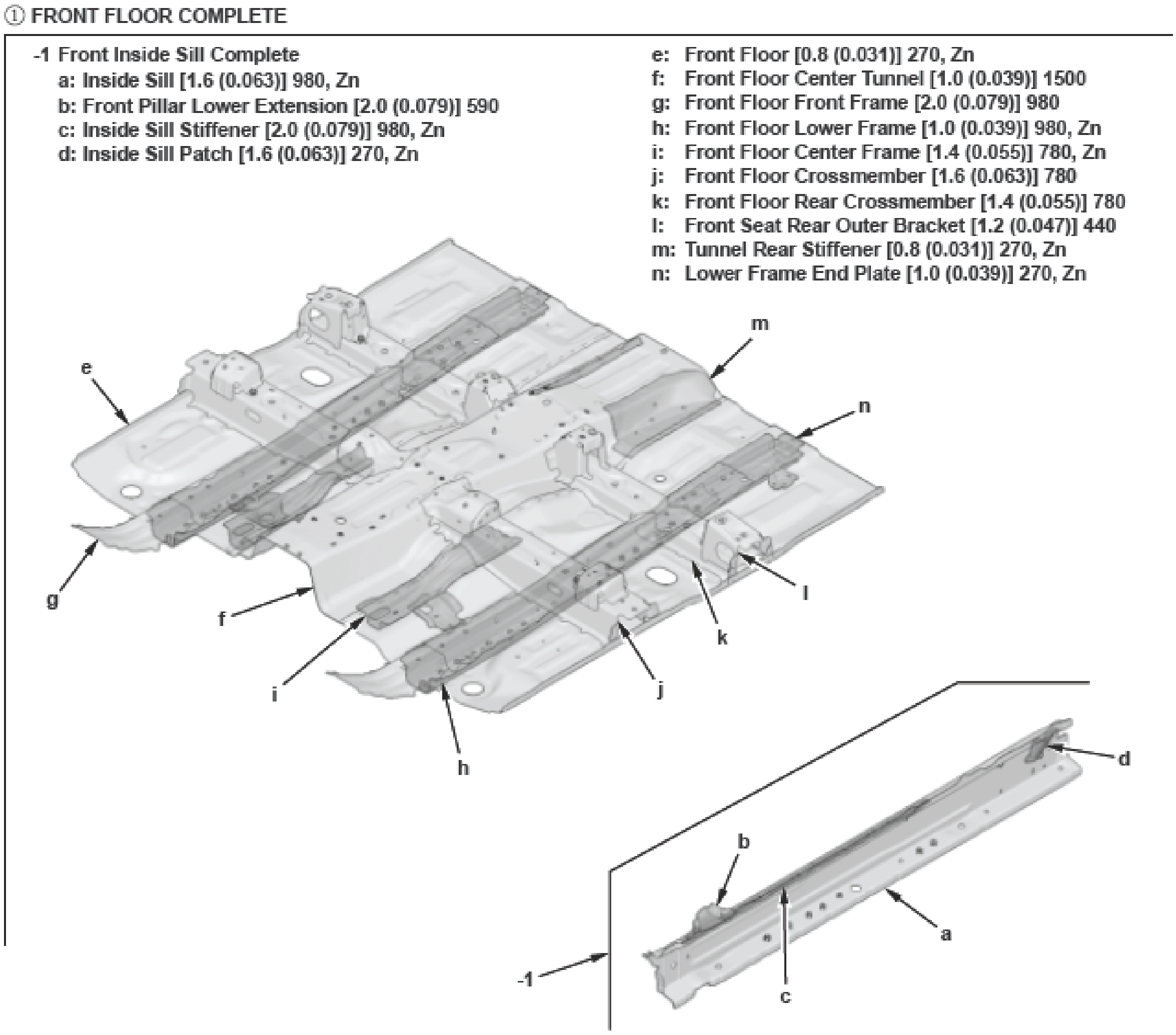
① FRONT FLOOR COMPLETE
-1 Front Inside Sill Complete
a: Inside Sill [1.6 (0.063)] 980, Zn
b: Front Pillar Lower Extension [2.0 (0.079)] 590
c: Inside Sill Stiffener [2.0 (0.079)] 980, Zn
d: Inside Sill Patch [1.6 (0.063)] 270, Zn
e: Front Floor [0.8 (0.031)] 270, Zn
f: Front Floor Center Tunnel [1.0 (0.039)] 1500
g: Front Floor Front Frame [2.0 (0.079)] 980
h: Front Floor Lower Frame [1.0 (0.039)] 980, Zn
i: Front Floor Center Frame [1.4 (0.055)] 780, Zn
j: Front Floor Crossmember [1.6 (0.063)] 780
k: Front Floor Rear Crossmember [1.4 (0.055)] 780
l: Front Seat Rear Outer Bracket [1.2 (0.047)] 440
m: Tunnel Rear Stiffener [0.8 (0.031)] 270, Zn
n: Lower Frame End Plate [1.0 (0.039)] 270, Zn
m
e
n
g
f
l
k
i
j
h
d
b
a
-1
c

Fig. 9: Floor And Rear Body Structure Identification Materials (1 Of 3)
Courtesy of AMERICAN HONDA MOTOR CO., INC.

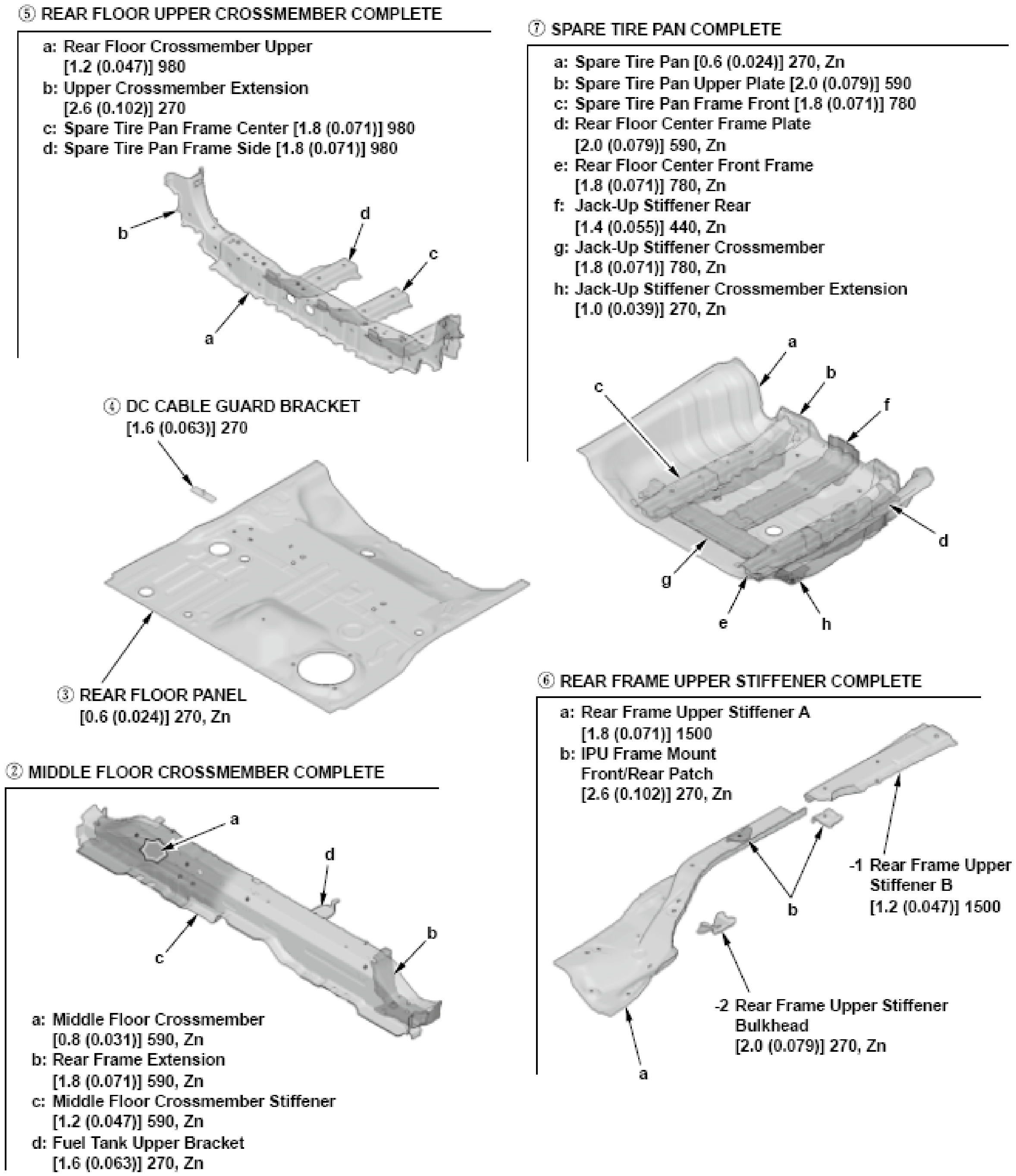
⑤ REAR FLOOR UPPER CROSSMEMBER COMPLETE
a: Rear Floor Crossmember Upper [1.2 (0.047)] 980
b: Upper Crossmember Extension [2.6 (0.102)] 270
c: Spare Tire Pan Frame Center [1.8 (0.071)] 980
d: Spare Tire Pan Frame Side [1.8 (0.071)] 980
b
d
c
a
⑦ SPARE TIRE PAN COMPLETE
a: Spare Tire Pan [0.6 (0.024)] 270, Zn
b: Spare Tire Pan Upper Plate [2.0 (0.079)] 590
c: Spare Tire Pan Frame Front [1.8 (0.071)] 780
d: Rear Floor Center Frame Plate [2.0 (0.079)] 590, Zn
e: Rear Floor Center Front Frame [1.8 (0.071)] 780, Zn
f: Jack-Up Stiffener Rear [1.4 (0.055)] 440, Zn
g: Jack-Up Stiffener Crossmember [1.8 (0.071)] 780, Zn
h: Jack-Up Stiffener Crossmember Extension [1.0 (0.039)] 270, Zn
a
b
c
f
d
g
e
h
④ DC CABLE GUARD BRACKET [1.6 (0.063)] 270
③ REAR FLOOR PANEL [0.6 (0.024)] 270, Zn
⑥ REAR FRAME UPPER STIFFENER COMPLETE
a: Rear Frame Upper Stiffener A [1.8 (0.071)] 1500
b: IPU Frame Mount Front/Rear Patch [2.6 (0.102)] 270, Zn
-1 Rear Frame Upper Stiffener B [1.2 (0.047)] 1500
b
-2 Rear Frame Upper Stiffener Bulkhead [2.0 (0.079)] 270, Zn
a
② MIDDLE FLOOR CROSSMEMBER COMPLETE
a
d
b
c
a: Middle Floor Crossmember [0.8 (0.031)] 590, Zn
b: Rear Frame Extension [1.8 (0.071)] 590, Zn
c: Middle Floor Crossmember Stiffener [1.2 (0.047)] 590, Zn
d: Fuel Tank Upper Bracket [1.6 (0.063)] 270, Zn

Fig. 10: Floor And Rear Body Structure Identification Materials (2 Of 3)

Courtesy of AMERICAN HONDA MOTOR CO., INC.

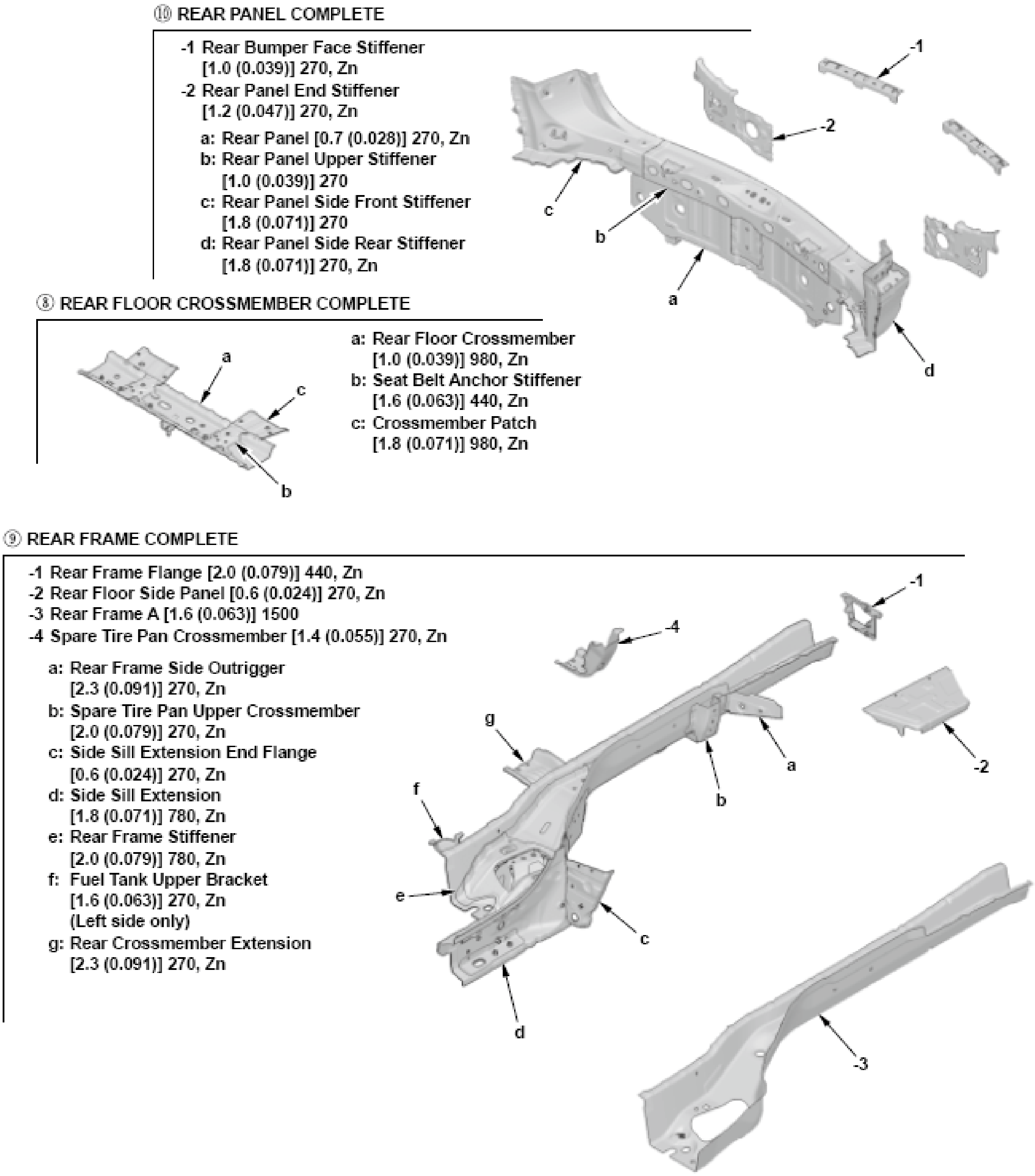
⑩ REAR PANEL COMPLETE
-1 Rear Bumper Face Stiffener [1.0 (0.039)] 270, Zn
-2 Rear Panel End Stiffener [1.2 (0.047)] 270, Zn
a: Rear Panel [0.7 (0.028)] 270, Zn
b: Rear Panel Upper Stiffener [1.0 (0.039)] 270
c: Rear Panel Side Front Stiffener [1.8 (0.071)] 270
d: Rear Panel Side Rear Stiffener [1.8 (0.071)] 270, Zn
-1
-2
a
b
c
d
⑧ REAR FLOOR CROSSMEMBER COMPLETE
a: Rear Floor Crossmember [1.0 (0.039)] 980, Zn
b: Seat Belt Anchor Stiffener [1.6 (0.063)] 440, Zn
c: Crossmember Patch [1.8 (0.071)] 980, Zn
a
b
c
⑨ REAR FRAME COMPLETE
-1 Rear Frame Flange [2.0 (0.079)] 440, Zn
-2 Rear Floor Side Panel [0.6 (0.024)] 270, Zn
-3 Rear Frame A [1.6 (0.063)] 1500
-4 Spare Tire Pan Crossmember [1.4 (0.055)] 270, Zn
a: Rear Frame Side Outrigger [2.3 (0.091)] 270, Zn
b: Spare Tire Pan Upper Crossmember [2.0 (0.079)] 270, Zn
c: Side Sill Extension End Flange [0.6 (0.024)] 270, Zn
d: Side Sill Extension [1.8 (0.071)] 780, Zn
e: Rear Frame Stiffener [2.0 (0.079)] 780, Zn
f: Fuel Tank Upper Bracket [1.6 (0.063)] 270, Zn (Left side only)
g: Rear Crossmember Extension [2.3 (0.091)] 270, Zn
-1
-4
g
f
e
a
b
c
d
-2
-3

Fig. 11: Floor And Rear Body Structure Identification Materials (3 Of 3)

Courtesy of AMERICAN HONDA MOTOR CO., INC.

WELDING AREAS WITH ULTRA HIGH-STRENGTH STEEL (UHSS) (1500 MPA) PARTS

For repair and part replacement in the following areas, adhere to the **spot welding conditions for ultra high-strength steel (UHSS). (1500 MPa)** and the **MIG brazing conditions for ultra high-strength steel (UHSS) (1500 MPa)** .

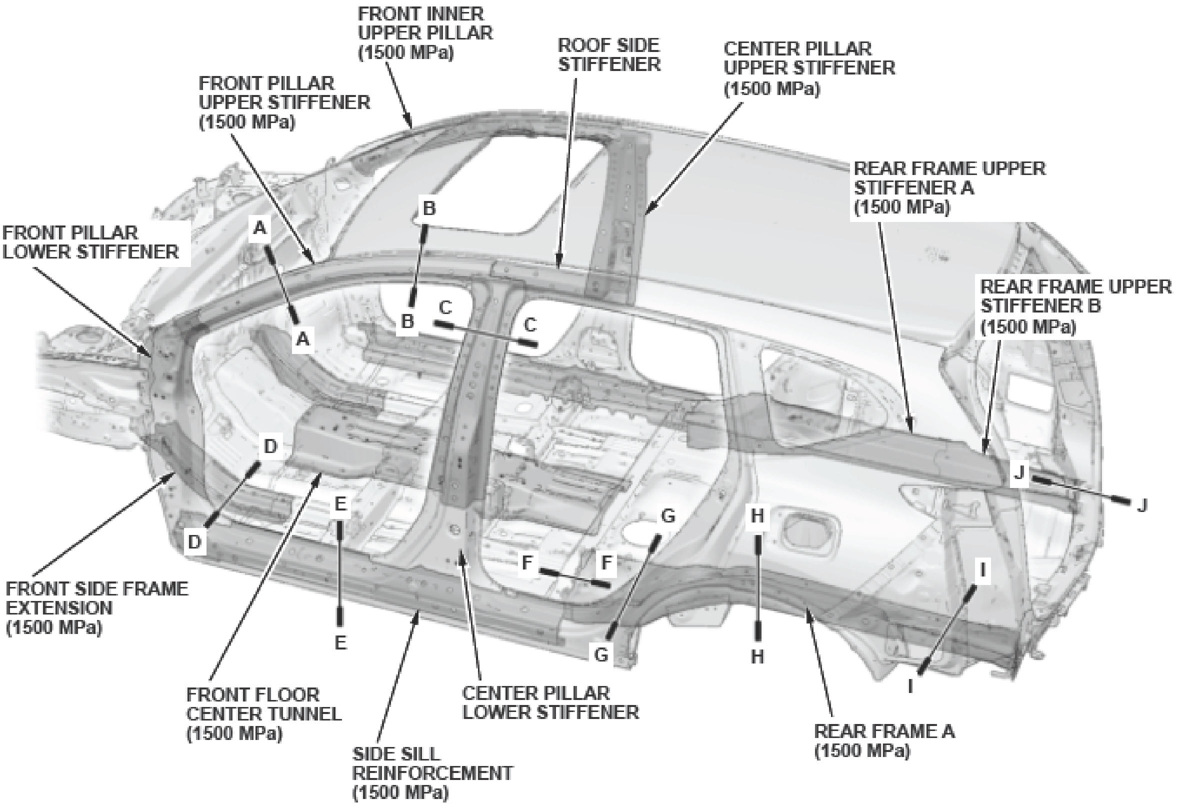
FRONT INNER UPPER PILLAR (1500 MPa)
ROOF SIDE STIFFENER
CENTER PILLAR UPPER STIFFENER (1500 MPa)
FRONT PILLAR UPPER STIFFENER (1500 MPa)
REAR FRAME UPPER STIFFENER A (1500 MPa)
FRONT PILLAR LOWER STIFFENER
REAR FRAME UPPER STIFFENER B (1500 MPa)
A
B
C
D
E
F
G
H
I
J
FRONT SIDE FRAME EXTENSION (1500 MPa)
FRONT FLOOR CENTER TUNNEL (1500 MPa)
CENTER PILLAR LOWER STIFFENER
SIDE SILL REINFORCEMENT (1500 MPa)
REAR FRAME A (1500 MPa)

Fig. 12: Welding Areas With Ultra High-Strength Steel Structure Identification Materials (1 Of 3)

Courtesy of AMERICAN HONDA MOTOR CO., INC.

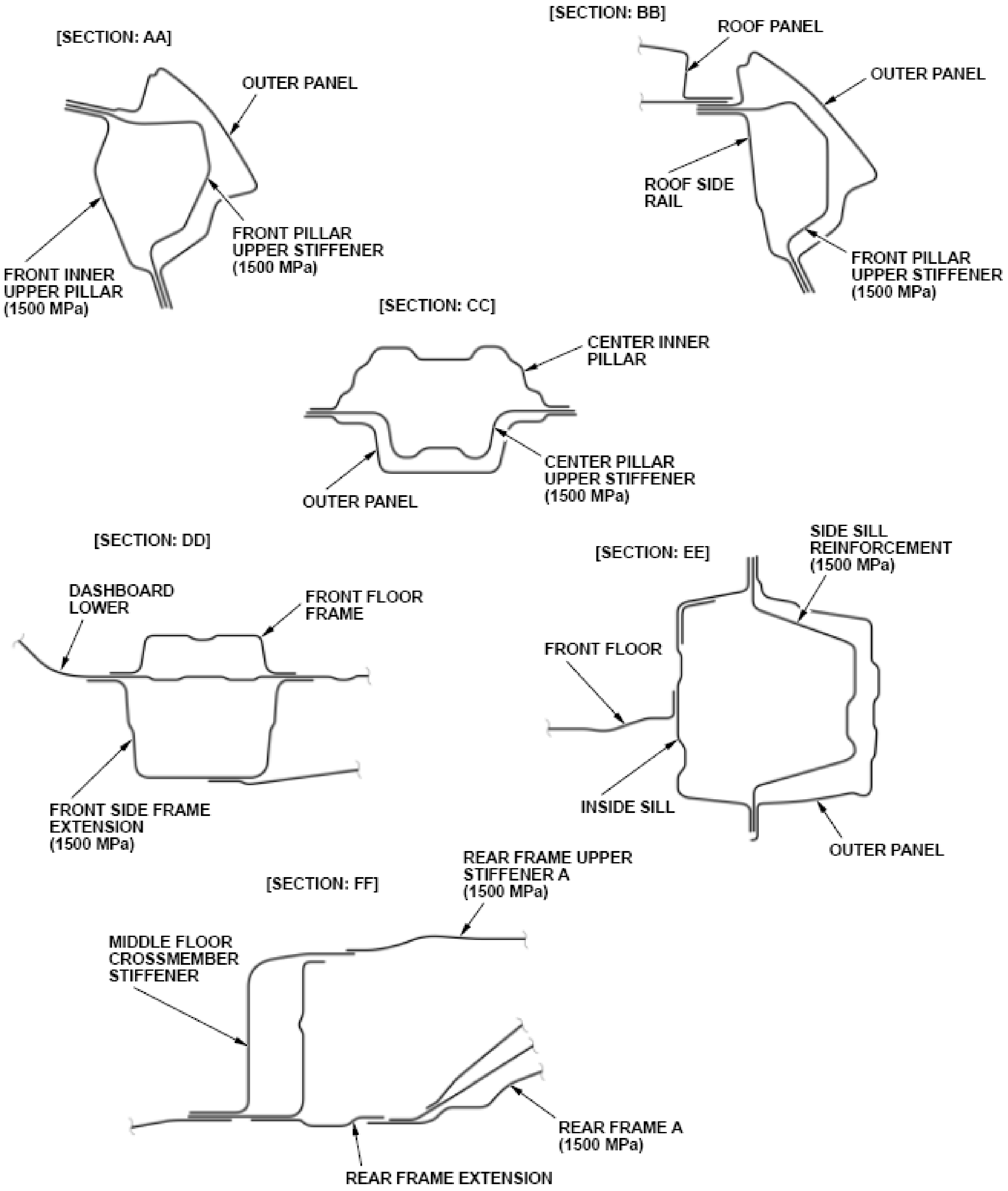
[SECTION: AA]
OUTER PANEL
FRONT PILLAR UPPER STIFFENER (1500 MPa)
FRONT INNER UPPER PILLAR (1500 MPa)
[SECTION: BB]
ROOF PANEL
OUTER PANEL
ROOF SIDE RAIL
FRONT PILLAR UPPER STIFFENER (1500 MPa)
[SECTION: CC]
CENTER INNER PILLAR
CENTER PILLAR UPPER STIFFENER (1500 MPa)
OUTER PANEL
[SECTION: DD]
DASHBOARD LOWER
FRONT FLOOR FRAME
FRONT SIDE FRAME EXTENSION (1500 MPa)
[SECTION: EE]
SIDE SILL REINFORCEMENT (1500 MPa)
FRONT FLOOR
INSIDE SILL
OUTER PANEL
[SECTION: FF]
REAR FRAME UPPER STIFFENER A (1500 MPa)
MIDDLE FLOOR CROSSMEMBER STIFFENER
REAR FRAME A (1500 MPa)
REAR FRAME EXTENSION

Fig. 13: Welding Areas With Ultra High-Strength Steel Structure Identification Materials (2 Of 3)
Courtesy of AMERICAN HONDA MOTOR CO., INC.

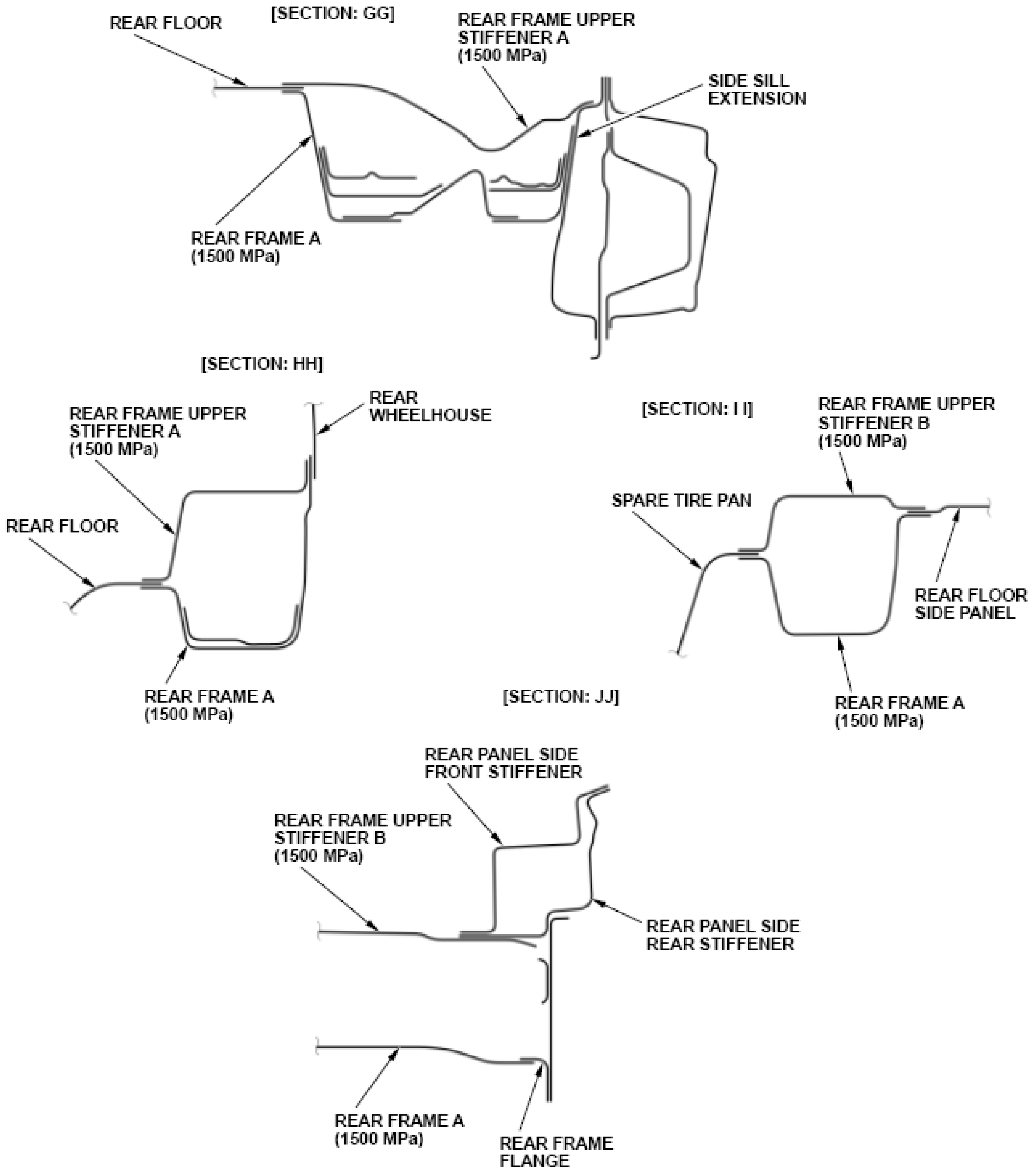
[SECTION: GG]
REAR FLOOR
REAR FRAME UPPER STIFFENER A (1500 MPa)
SIDE SILL EXTENSION
REAR FRAME A (1500 MPa)
[SECTION: HH]
REAR FRAME UPPER STIFFENER A (1500 MPa)
REAR WHEELHOUSE
REAR FLOOR
REAR FRAME A (1500 MPa)
[SECTION: I I]
REAR FRAME UPPER STIFFENER B (1500 MPa)
SPARE TIRE PAN
REAR FLOOR SIDE PANEL
REAR FRAME A (1500 MPa)
[SECTION: JJ]
REAR PANEL SIDE FRONT STIFFENER
REAR FRAME UPPER STIFFENER B (1500 MPa)
REAR PANEL SIDE REAR STIFFENER
REAR FRAME A (1500 MPa)
REAR FRAME FLANGE

Fig. 14: Welding Areas With Ultra High-Strength Steel Structure Identification Materials (3 Of 3)
Courtesy of AMERICAN HONDA MOTOR CO., INC.

DOOR AND BUMPER REINFORCEMENT BEAMS, AND ULTRA HIGH-STRENGTH STEEL PARTS (UHSS) (1500 MPA)

The door reinforcement beams are made from ultra high-strength steel (UHSS).

The front bumper reinforcement beam and the rear bumper reinforcement beam are made from aluminum alloy.

The front pillar upper stiffener, the front inner upper pillar, the center pillar upper stiffener, the front side frame extension, the side sill reinforcement, the front floor center tunnel, rear frame upper stiffener A, rear frame upper stiffener B, and rear frame A are made from ultra high-strength steel (UHSS) (1500 MPa).

Ultra high-strength steel (UHSS) (1500 MPa) sheet: This is an ultra high-strength material manufacturing procedure. A heated steel sheet is press-formed in the metal mold and then quenched to create ultra high-strength steel.

If the ultra high-strength steel is heated, the strength of the steel is reduced. If the ultra high-strength steel is damaged, for example, in a collision, and the reinforcement beams or the ultra high-strength steel (UHSS) (1500 MPa) sheet are bent, the beams of the ultra high-strength steel (UHSS) (1500 MPa) sheet may crack when attempting to straighten them. If a door beam is damaged, the whole door assembly must be replaced.

For this reason, the door, bumper reinforcement beams, and the ultra high-strength steel (UHSS) (1500 MPa) sheet should NEVER be repaired if they are damaged; they must be replaced if they are damaged.

NOTE: **At the range indicated to "Rear Floor/Rear Frame Replacement", the sectioning is possible for rear frame A and rear frame upper stiffener B ; refer to Rear Floor/Rear Frame Replacement .**

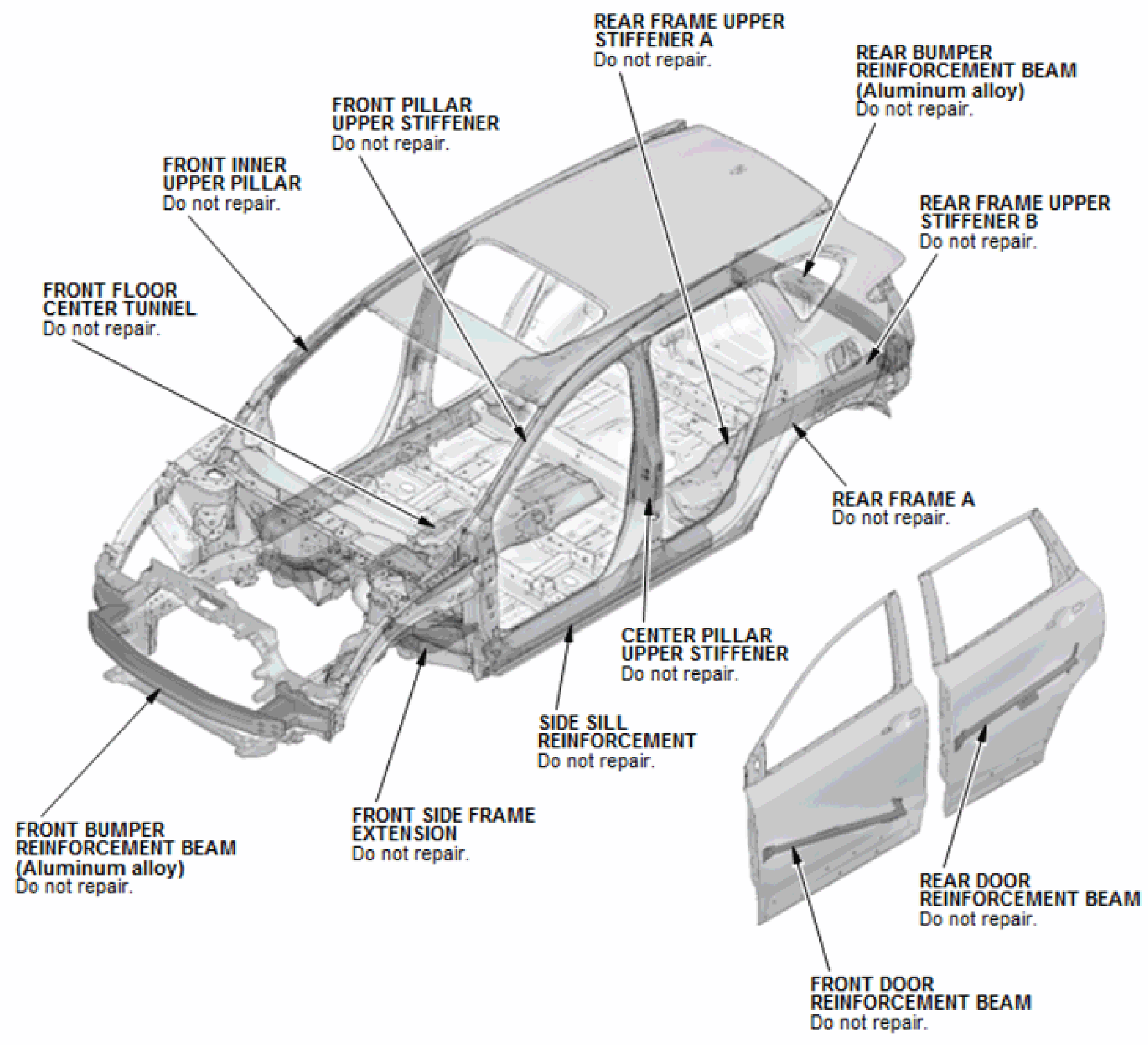
REAR FRAME UPPER STIFFENER A
Do not repair.
REAR BUMPER REINFORCEMENT BEAM (Aluminum alloy)
Do not repair.
FRONT PILLAR UPPER STIFFENER
Do not repair.
FRONT INNER UPPER PILLAR
Do not repair.
REAR FRAME UPPER STIFFENER B
Do not repair.
FRONT FLOOR CENTER TUNNEL
Do not repair.
REAR FRAME A
Do not repair.
CENTER PILLAR UPPER STIFFENER
Do not repair.
SIDE SILL REINFORCEMENT
Do not repair.
FRONT SIDE FRAME EXTENSION
Do not repair.
FRONT BUMPER REINFORCEMENT BEAM (Aluminum alloy)
Do not repair.
REAR DOOR REINFORCEMENT BEAM
Do not repair.
FRONT DOOR REINFORCEMENT BEAM
Do not repair.

Fig. 1: Vehicle Non Repairable Panels And Locations
Courtesy of AMERICAN HONDA MOTOR CO., INC.

EXTERIOR PARTS CONSTRUCTION

NOTE:

- **To confirm which parts are sold as repair parts, refer to the appropriate parts information.**
- **The parts marked with numbers are sold as repair parts.**
- **The parts marked with letters are not sold separately and are shown only for reference.**
- **The numbers in brackets after the part names show thickness; unit: mm (in), and the next numbers of thickness show tensile strength; unit: MPa.**
- **Zn: Zinc-plating**
- **MPa is steel tensile strength (grade) in megapascals. Honda defines 340-780 MPa tensile as high-strength steel (HSS). 980 MPa and higher tensile is ultra high-strength steel (UHSS).**

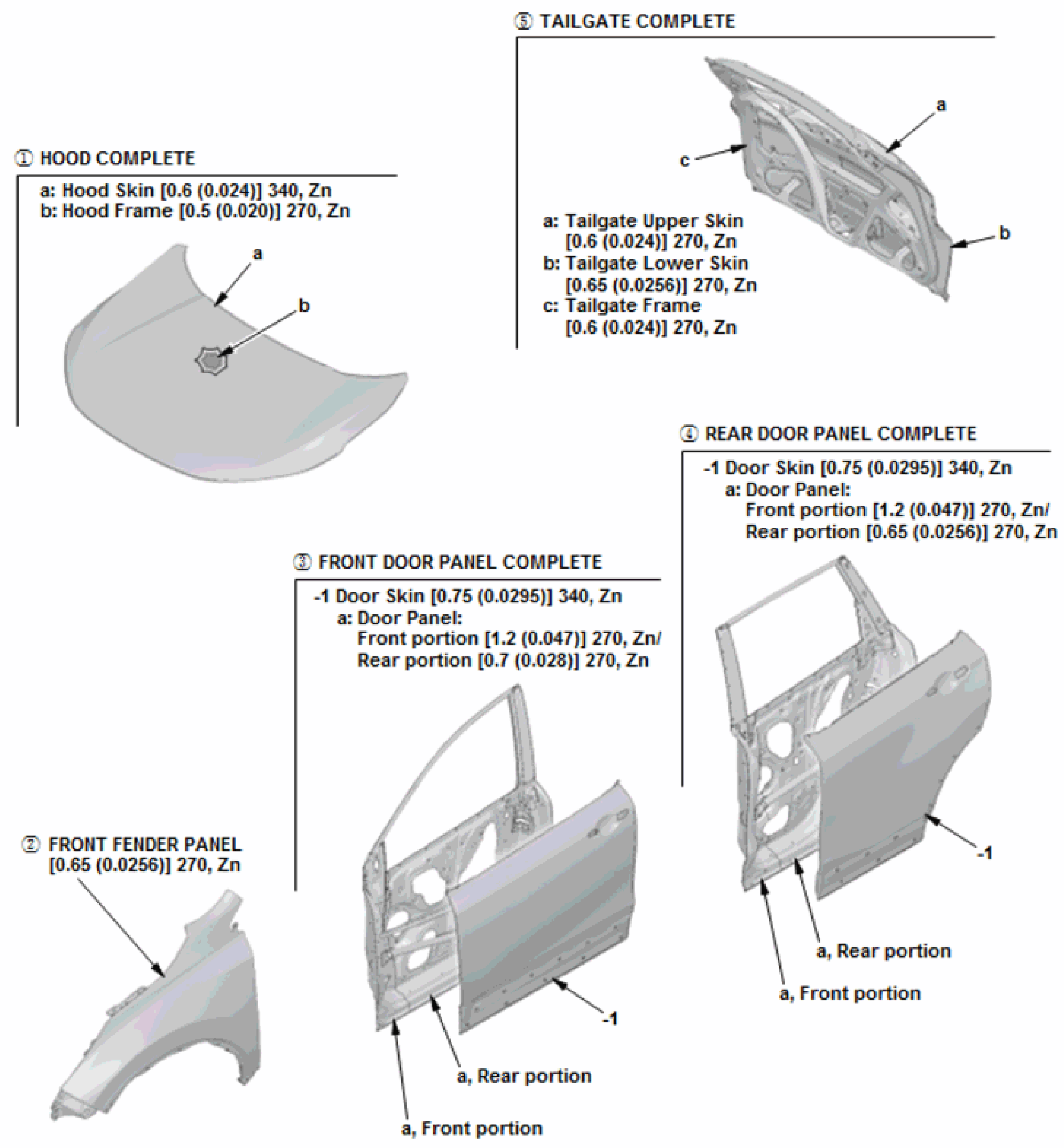
⑤ TAILGATE COMPLETE
a
c
b
a: Tailgate Upper Skin [0.6 (0.024)] 270, Zn
b: Tailgate Lower Skin [0.65 (0.0256)] 270, Zn
c: Tailgate Frame [0.6 (0.024)] 270, Zn
① HOOD COMPLETE
a: Hood Skin [0.6 (0.024)] 340, Zn
b: Hood Frame [0.5 (0.020)] 270, Zn
a
b
④ REAR DOOR PANEL COMPLETE
-1 Door Skin [0.75 (0.0295)] 340, Zn
a: Door Panel:
Front portion [1.2 (0.047)] 270, Zn/
Rear portion [0.65 (0.0256)] 270, Zn
③ FRONT DOOR PANEL COMPLETE
-1 Door Skin [0.75 (0.0295)] 340, Zn
a: Door Panel:
Front portion [1.2 (0.047)] 270, Zn/
Rear portion [0.7 (0.028)] 270, Zn
② FRONT FENDER PANEL
[0.65 (0.0256)] 270, Zn
-1
a, Rear portion
a, Front portion
-1
a, Rear portion
a, Front portion

Fig. 2: Exterior PanelsStructure Identification Materials
Courtesy of AMERICAN HONDA MOTOR CO., INC.

FLOOR AND REAR BODY CONSTRUCTION

NOTE:

- To confirm which parts are sold as repair parts, refer to the appropriate parts information.
- The parts marked with numbers are sold as repair parts.
- The parts marked with letters are not sold separately and are shown only for reference.
- The numbers in brackets after the part names show thickness; unit: mm (in), and the next numbers of thickness show tensile strength; unit: MPa.
- Zn: Zinc-plating
- MPa is steel tensile strength (grade) in megapascals. Honda defines 340-780 MPa tensile as high-strength steel (HSS). 980 MPa and higher tensile is ultra high-strength steel (UHSS).

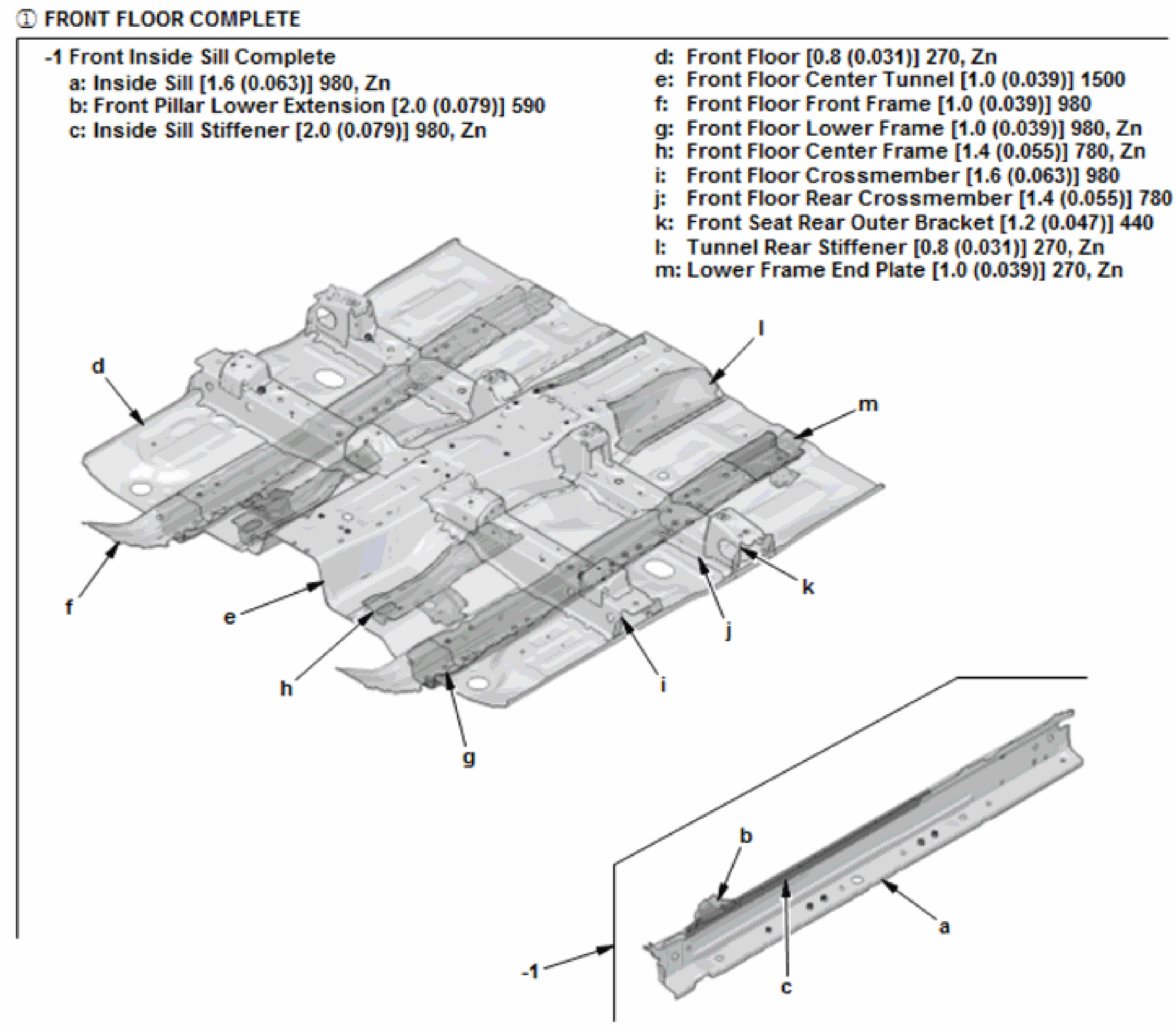

① FRONT FLOOR COMPLETE

-1 Front Inside Sill Complete
  a: Inside Sill [1.6 (0.063)] 980, Zn
  b: Front Pillar Lower Extension [2.0 (0.079)] 590
  c: Inside Sill Stiffener [2.0 (0.079)] 980, Zn

d: Front Floor [0.8 (0.031)] 270, Zn
e: Front Floor Center Tunnel [1.0 (0.039)] 1500
f: Front Floor Front Frame [1.0 (0.039)] 980
g: Front Floor Lower Frame [1.0 (0.039)] 980, Zn
h: Front Floor Center Frame [1.4 (0.055)] 780, Zn
i: Front Floor Crossmember [1.6 (0.063)] 980
j: Front Floor Rear Crossmember [1.4 (0.055)] 780
k: Front Seat Rear Outer Bracket [1.2 (0.047)] 440
l: Tunnel Rear Stiffener [0.8 (0.031)] 270, Zn
m: Lower Frame End Plate [1.0 (0.039)] 270, Zn

Fig. 3: Vehicle Floor And Rear Body Structure Identification Materials (1 Of 3)
Courtesy of AMERICAN HONDA MOTOR CO., INC.

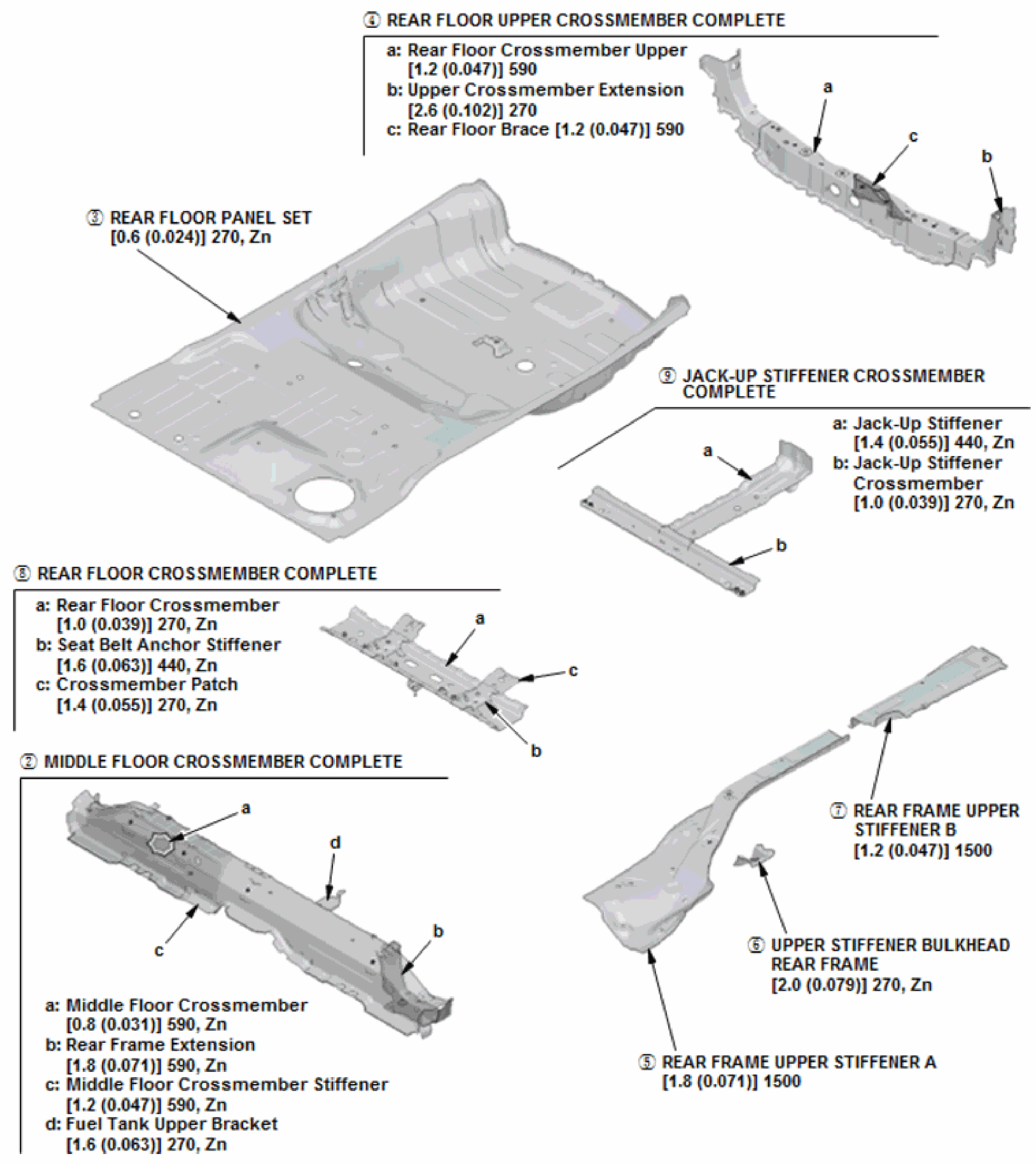
④ REAR FLOOR UPPER CROSSMEMBER COMPLETE
a: Rear Floor Crossmember Upper [1.2 (0.047)] 590
b: Upper Crossmember Extension [2.6 (0.102)] 270
c: Rear Floor Brace [1.2 (0.047)] 590
a
c
b
③ REAR FLOOR PANEL SET [0.6 (0.024)] 270, Zn
⑨ JACK-UP STIFFENER CROSSMEMBER COMPLETE
a: Jack-Up Stiffener [1.4 (0.055)] 440, Zn
b: Jack-Up Stiffener Crossmember [1.0 (0.039)] 270, Zn
a
b
⑧ REAR FLOOR CROSSMEMBER COMPLETE
a: Rear Floor Crossmember [1.0 (0.039)] 270, Zn
b: Seat Belt Anchor Stiffener [1.6 (0.063)] 440, Zn
c: Crossmember Patch [1.4 (0.055)] 270, Zn
a
c
b
② MIDDLE FLOOR CROSSMEMBER COMPLETE
a
d
c
b
a: Middle Floor Crossmember [0.8 (0.031)] 590, Zn
b: Rear Frame Extension [1.8 (0.071)] 590, Zn
c: Middle Floor Crossmember Stiffener [1.2 (0.047)] 590, Zn
d: Fuel Tank Upper Bracket [1.6 (0.063)] 270, Zn
⑦ REAR FRAME UPPER STIFFENER B [1.2 (0.047)] 1500
⑥ UPPER STIFFENER BULKHEAD REAR FRAME [2.0 (0.079)] 270, Zn
⑤ REAR FRAME UPPER STIFFENER A [1.8 (0.071)] 1500

Fig. 4: Vehicle Floor And Rear Body Structure Identification Materials (2 Of 3)

Courtesy of AMERICAN HONDA MOTOR CO., INC.

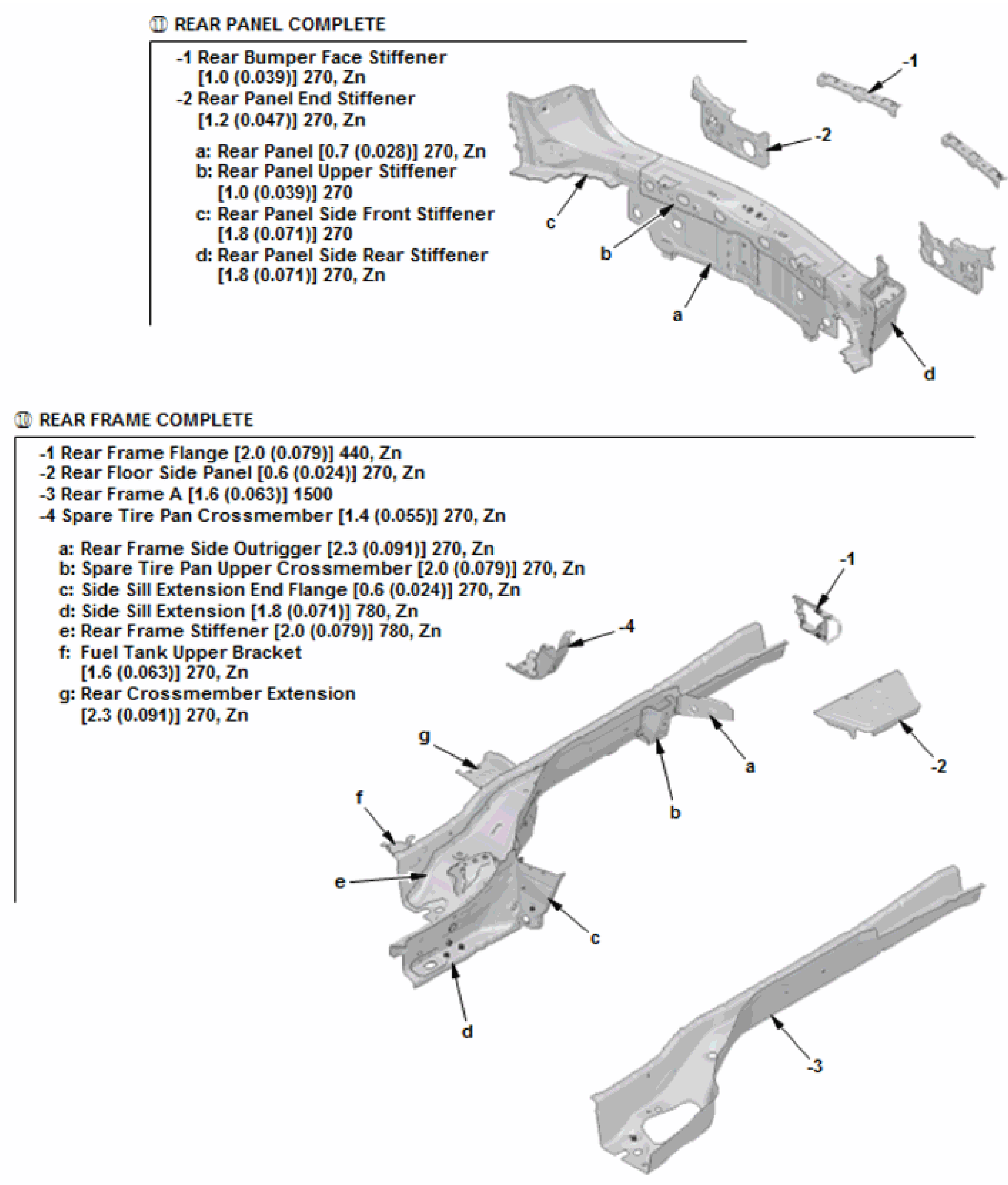
⑪ REAR PANEL COMPLETE
-1 Rear Bumper Face Stiffener [1.0 (0.039)] 270, Zn
-2 Rear Panel End Stiffener [1.2 (0.047)] 270, Zn
a: Rear Panel [0.7 (0.028)] 270, Zn
b: Rear Panel Upper Stiffener [1.0 (0.039)] 270
c: Rear Panel Side Front Stiffener [1.8 (0.071)] 270
d: Rear Panel Side Rear Stiffener [1.8 (0.071)] 270, Zn
-1
-2
c
b
a
d
⑩ REAR FRAME COMPLETE
-1 Rear Frame Flange [2.0 (0.079)] 440, Zn
-2 Rear Floor Side Panel [0.6 (0.024)] 270, Zn
-3 Rear Frame A [1.6 (0.063)] 1500
-4 Spare Tire Pan Crossmember [1.4 (0.055)] 270, Zn
a: Rear Frame Side Outrigger [2.3 (0.091)] 270, Zn
b: Spare Tire Pan Upper Crossmember [2.0 (0.079)] 270, Zn
c: Side Sill Extension End Flange [0.6 (0.024)] 270, Zn
d: Side Sill Extension [1.8 (0.071)] 780, Zn
e: Rear Frame Stiffener [2.0 (0.079)] 780, Zn
f: Fuel Tank Upper Bracket [1.6 (0.063)] 270, Zn
g: Rear Crossmember Extension [2.3 (0.091)] 270, Zn
-1
-4
g
a
-2
b
f
e
c
d
-3

Fig. 5: Vehicle Floor And Rear Body Structure Identification Materials (3 Of 3)

Courtesy of AMERICAN HONDA MOTOR CO., INC.

FRONT BODY CONSTRUCTION

NOTE:

- To confirm which parts are sold as repair parts, refer to the appropriate parts information.
- The parts marked with numbers are sold as repair parts.
- The parts marked with letters are not sold separately and are shown only for reference.
- The numbers in brackets after the part names show thickness; unit: mm (in), and the next numbers of thickness show tensile strength; unit: MPa.
- Zn: Zinc-plating
- MPa is steel tensile strength (grade) in megapascals. Honda defines 340-780 MPa tensile as high-strength steel (HSS). 980 MPa and higher tensile is ultra high-strength steel (UHSS).

- **The front bulkhead assembly is made of a composite resin.**

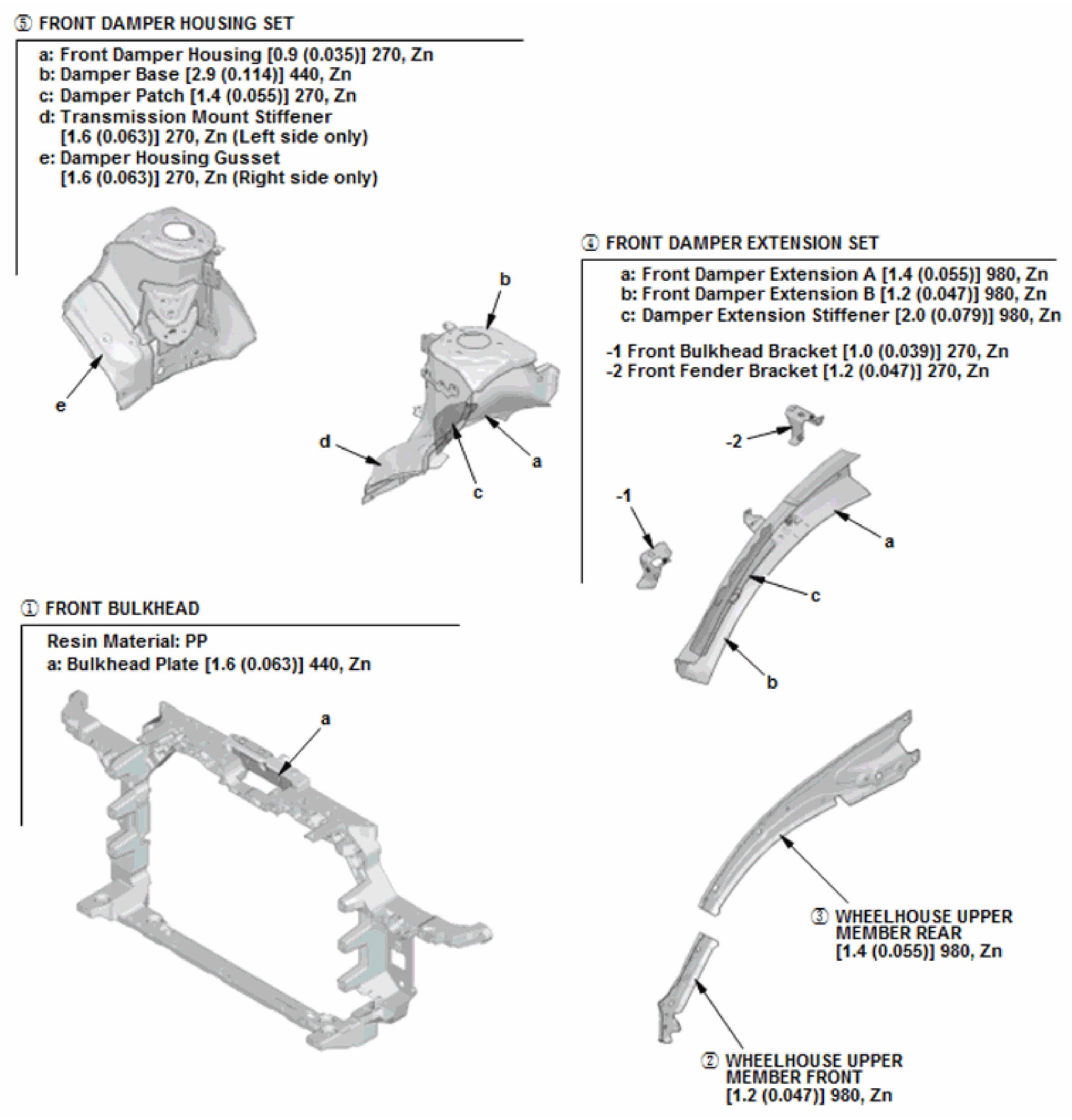
⑤ FRONT DAMPER HOUSING SET
a: Front Damper Housing [0.9 (0.035)] 270, Zn
b: Damper Base [2.9 (0.114)] 440, Zn
c: Damper Patch [1.4 (0.055)] 270, Zn
d: Transmission Mount Stiffener [1.6 (0.063)] 270, Zn (Left side only)
e: Damper Housing Gusset [1.6 (0.063)] 270, Zn (Right side only)
e
b
d
a
c
④ FRONT DAMPER EXTENSION SET
a: Front Damper Extension A [1.4 (0.055)] 980, Zn
b: Front Damper Extension B [1.2 (0.047)] 980, Zn
c: Damper Extension Stiffener [2.0 (0.079)] 980, Zn
-1 Front Bulkhead Bracket [1.0 (0.039)] 270, Zn
-2 Front Fender Bracket [1.2 (0.047)] 270, Zn
-2
-1
a
c
b
① FRONT BULKHEAD
Resin Material: PP
a: Bulkhead Plate [1.6 (0.063)] 440, Zn
a
③ WHEELHOUSE UPPER MEMBER REAR [1.4 (0.055)] 980, Zn
② WHEELHOUSE UPPER MEMBER FRONT [1.2 (0.047)] 980, Zn

Fig. 6: Front Body Structure Identification Materials (1 Of 3)
Courtesy of AMERICAN HONDA MOTOR CO., INC.

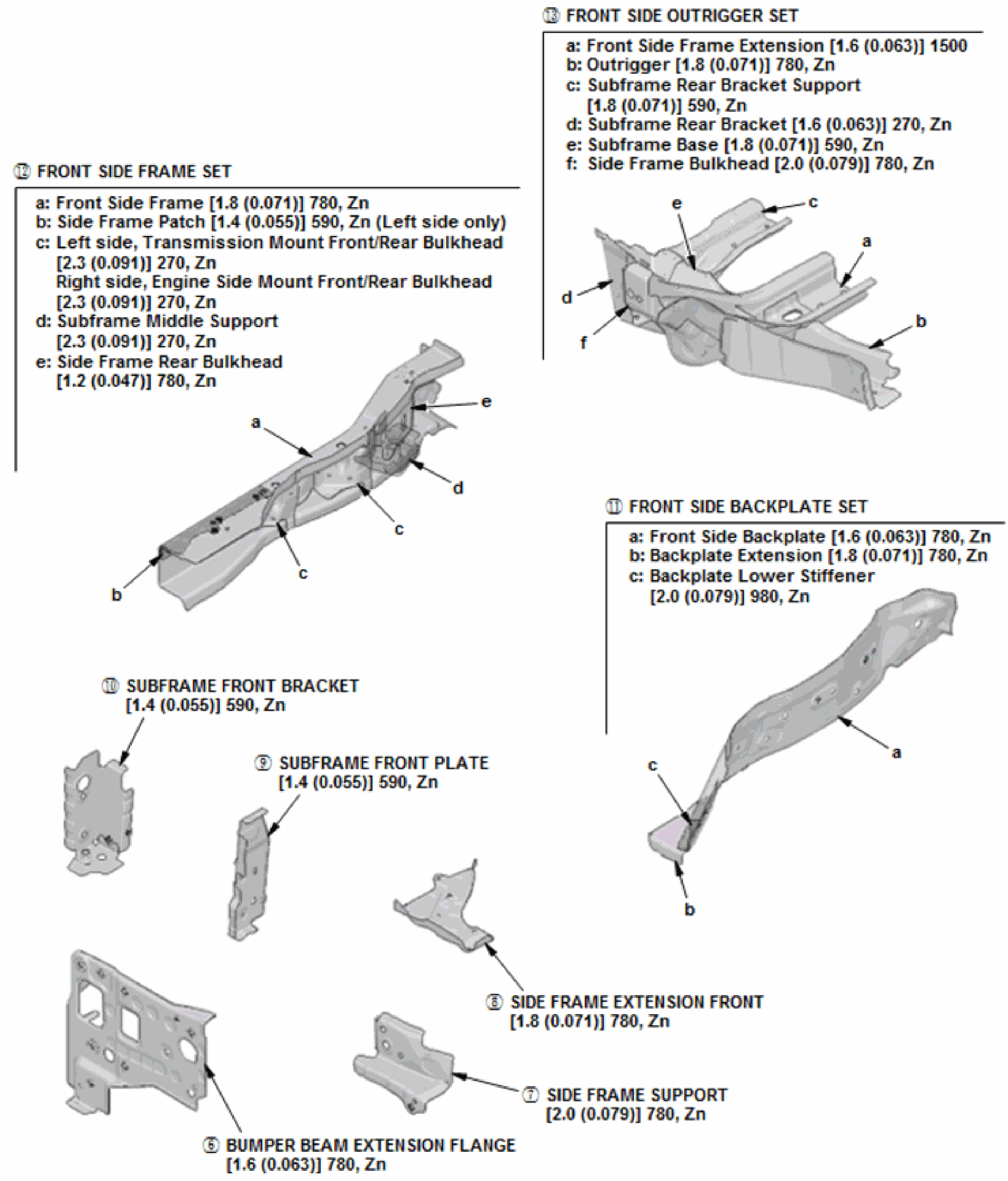
⑬ FRONT SIDE OUTRIGGER SET
a: Front Side Frame Extension [1.6 (0.063)] 1500
b: Outrigger [1.8 (0.071)] 780, Zn
c: Subframe Rear Bracket Support
[1.8 (0.071)] 590, Zn
d: Subframe Rear Bracket [1.6 (0.063)] 270, Zn
e: Subframe Base [1.8 (0.071)] 590, Zn
f: Side Frame Bulkhead [2.0 (0.079)] 780, Zn
e
c
a
d
b
f
⑫ FRONT SIDE FRAME SET
a: Front Side Frame [1.8 (0.071)] 780, Zn
b: Side Frame Patch [1.4 (0.055)] 590, Zn (Left side only)
c: Left side, Transmission Mount Front/Rear Bulkhead
[2.3 (0.091)] 270, Zn
Right side, Engine Side Mount Front/Rear Bulkhead
[2.3 (0.091)] 270, Zn
d: Subframe Middle Support
[2.3 (0.091)] 270, Zn
e: Side Frame Rear Bulkhead
[1.2 (0.047)] 780, Zn
e
a
d
c
c
b
⑪ FRONT SIDE BACKPLATE SET
a: Front Side Backplate [1.6 (0.063)] 780, Zn
b: Backplate Extension [1.8 (0.071)] 780, Zn
c: Backplate Lower Stiffener
[2.0 (0.079)] 980, Zn
c
a
b
⑩ SUBFRAME FRONT BRACKET
[1.4 (0.055)] 590, Zn
⑨ SUBFRAME FRONT PLATE
[1.4 (0.055)] 590, Zn
⑧ SIDE FRAME EXTENSION FRONT
[1.8 (0.071)] 780, Zn
⑦ SIDE FRAME SUPPORT
[2.0 (0.079)] 780, Zn
⑥ BUMPER BEAM EXTENSION FLANGE
[1.6 (0.063)] 780, Zn

Fig. 7: Front Body Structure Identification Materials (2 Of 3)

Courtesy of AMERICAN HONDA MOTOR CO., INC.

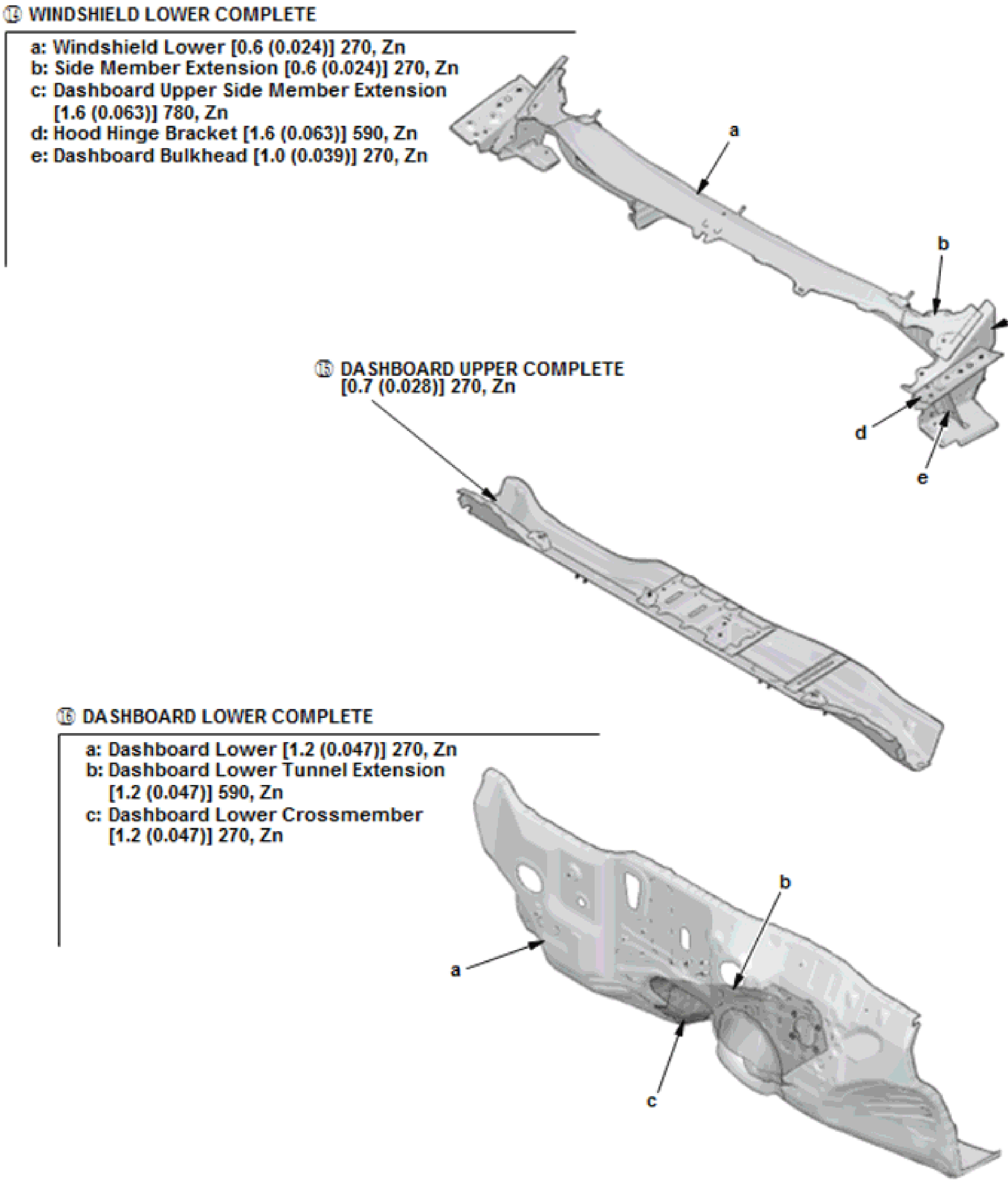
⑭ WINDSHIELD LOWER COMPLETE
a: Windshield Lower [0.6 (0.024)] 270, Zn
b: Side Member Extension [0.6 (0.024)] 270, Zn
c: Dashboard Upper Side Member Extension [1.6 (0.063)] 780, Zn
d: Hood Hinge Bracket [1.6 (0.063)] 590, Zn
e: Dashboard Bulkhead [1.0 (0.039)] 270, Zn
a
b
c
d
e
⑮ DASHBOARD UPPER COMPLETE
[0.7 (0.028)] 270, Zn
⑯ DASHBOARD LOWER COMPLETE
a: Dashboard Lower [1.2 (0.047)] 270, Zn
b: Dashboard Lower Tunnel Extension [1.2 (0.047)] 590, Zn
c: Dashboard Lower Crossmember [1.2 (0.047)] 270, Zn
b
a
c

Fig. 8: Front Body Structure Identification Materials (3 Of 3)
Courtesy of AMERICAN HONDA MOTOR CO., INC.

ROOF AND SIDE PANEL CONSTRUCTION

NOTE:

- To confirm which parts are sold as repair parts, refer to the appropriate parts information.
- The parts marked with numbers are sold as repair parts.
- The parts marked with letters are not sold separately and are shown only for reference.
- The numbers in brackets after the part names show thickness; unit: mm (in), and the next numbers of thickness show tensile strength; unit: MPa.
- Zn: Zinc-plating
- MPa is steel tensile strength (grade) in megapascals. Honda defines 340-780 MPa tensile as high-strength steel (HSS). 980 MPa and higher tensile is ultra high-strength steel (UHSS).

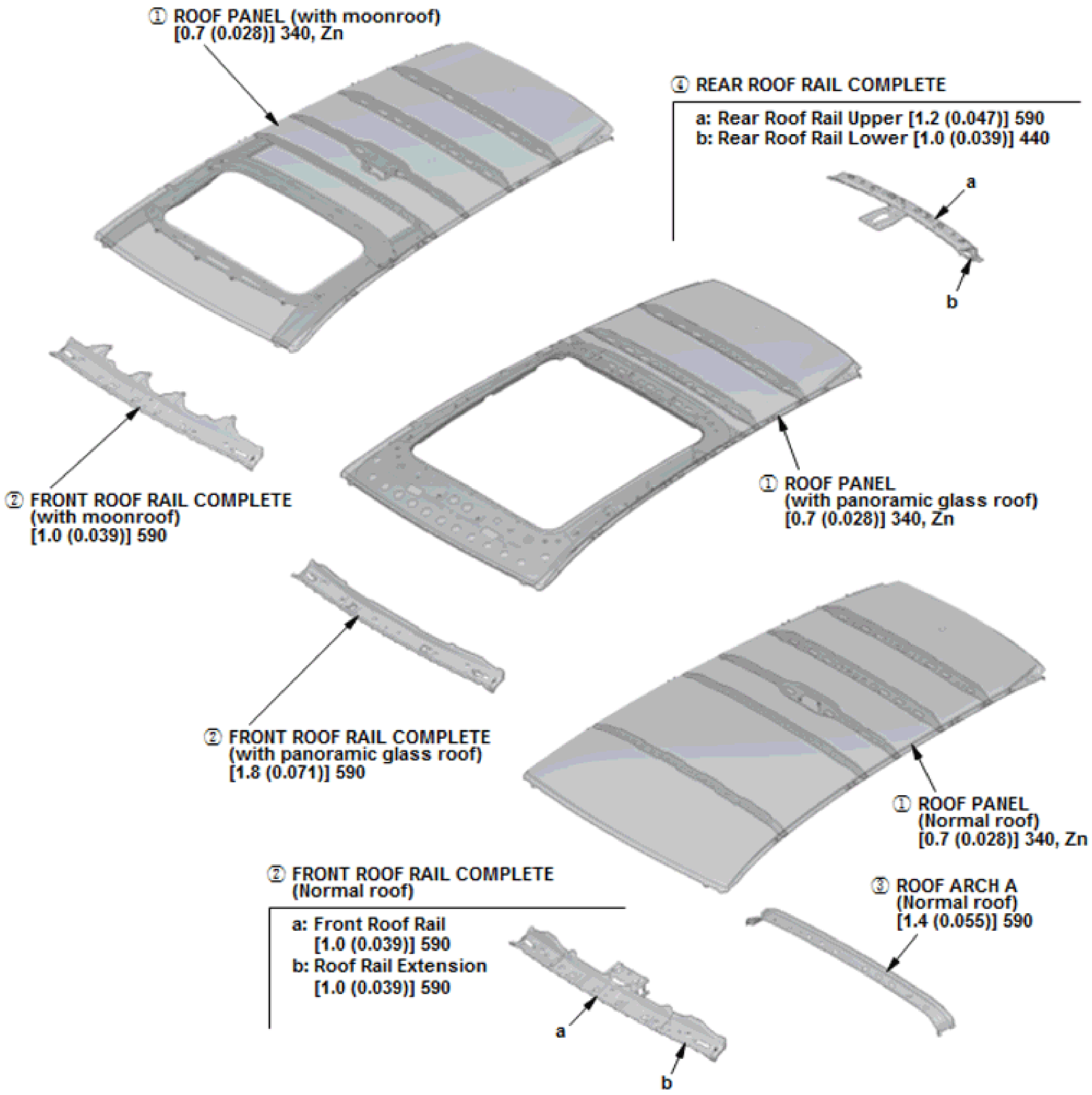
① ROOF PANEL (with moonroof)
[0.7 (0.028)] 340, Zn
④ REAR ROOF RAIL COMPLETE
a: Rear Roof Rail Upper [1.2 (0.047)] 590
b: Rear Roof Rail Lower [1.0 (0.039)] 440
a
b
② FRONT ROOF RAIL COMPLETE
(with moonroof)
[1.0 (0.039)] 590
① ROOF PANEL
(with panoramic glass roof)
[0.7 (0.028)] 340, Zn
② FRONT ROOF RAIL COMPLETE
(with panoramic glass roof)
[1.8 (0.071)] 590
① ROOF PANEL
(Normal roof)
[0.7 (0.028)] 340, Zn
② FRONT ROOF RAIL COMPLETE
(Normal roof)
a: Front Roof Rail
[1.0 (0.039)] 590
b: Roof Rail Extension
[1.0 (0.039)] 590
③ ROOF ARCH A
(Normal roof)
[1.4 (0.055)] 590
a
b

Fig. 9: Vehicle Roof Structure Identification Materials

Courtesy of AMERICAN HONDA MOTOR CO., INC.

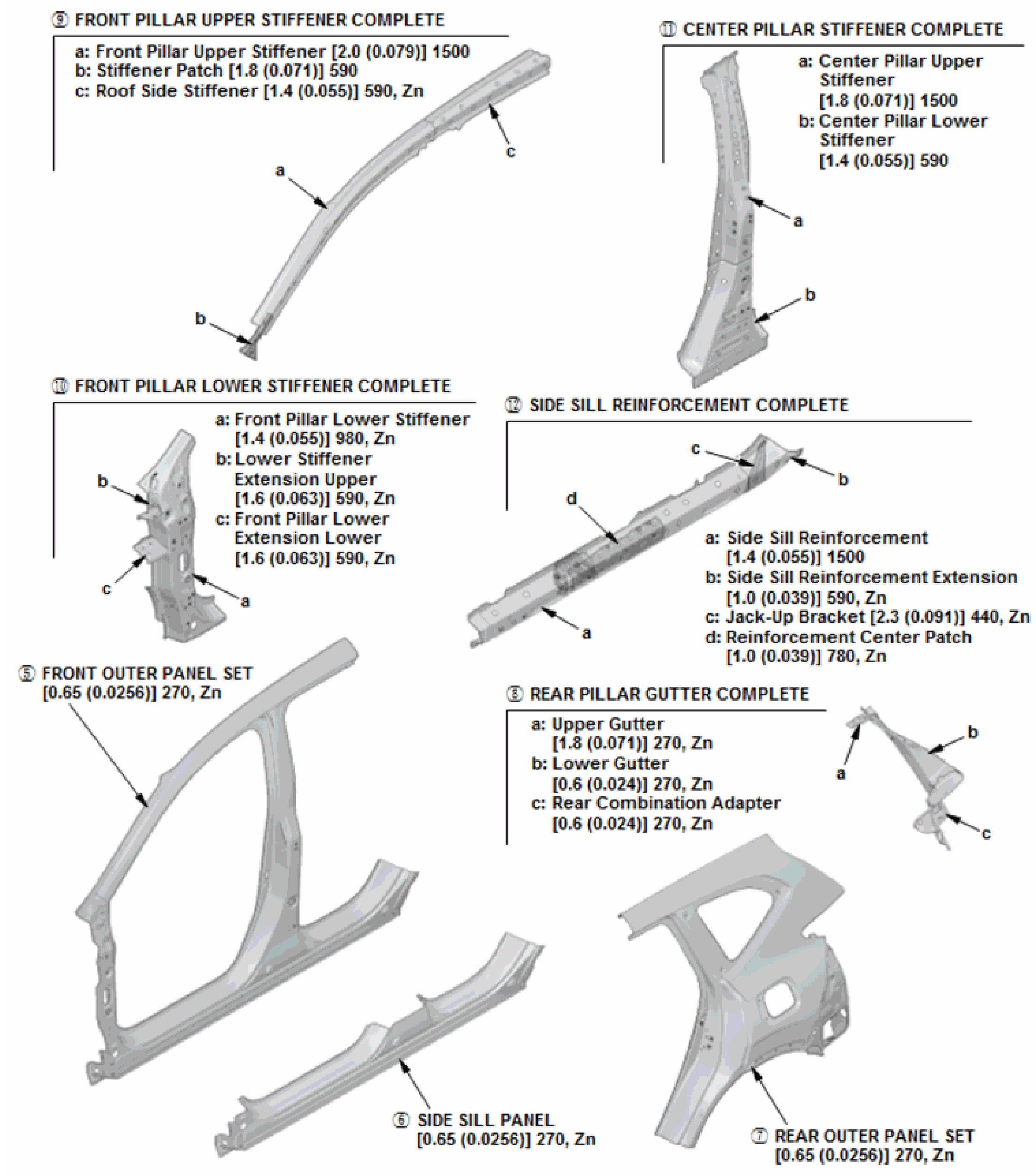
⑨ FRONT PILLAR UPPER STIFFENER COMPLETE
a: Front Pillar Upper Stiffener [2.0 (0.079)] 1500
b: Stiffener Patch [1.8 (0.071)] 590
c: Roof Side Stiffener [1.4 (0.055)] 590, Zn
c
a
b
⑪ CENTER PILLAR STIFFENER COMPLETE
a: Center Pillar Upper Stiffener [1.8 (0.071)] 1500
b: Center Pillar Lower Stiffener [1.4 (0.055)] 590
a
b
⑩ FRONT PILLAR LOWER STIFFENER COMPLETE
a: Front Pillar Lower Stiffener [1.4 (0.055)] 980, Zn
b: Lower Stiffener Extension Upper [1.6 (0.063)] 590, Zn
c: Front Pillar Lower Extension Lower [1.6 (0.063)] 590, Zn
b
c
a
⑫ SIDE SILL REINFORCEMENT COMPLETE
c
b
d
a: Side Sill Reinforcement [1.4 (0.055)] 1500
b: Side Sill Reinforcement Extension [1.0 (0.039)] 590, Zn
c: Jack-Up Bracket [2.3 (0.091)] 440, Zn
d: Reinforcement Center Patch [1.0 (0.039)] 780, Zn
a
⑤ FRONT OUTER PANEL SET [0.65 (0.0256)] 270, Zn
⑧ REAR PILLAR GUTTER COMPLETE
a: Upper Gutter [1.8 (0.071)] 270, Zn
b: Lower Gutter [0.6 (0.024)] 270, Zn
c: Rear Combination Adapter [0.6 (0.024)] 270, Zn
b
a
c
⑥ SIDE SILL PANEL [0.65 (0.0256)] 270, Zn
⑦ REAR OUTER PANEL SET [0.65 (0.0256)] 270, Zn

Fig. 10: Side Body Structure Identification Materials (1 Of 3)

Courtesy of AMERICAN HONDA MOTOR CO., INC.

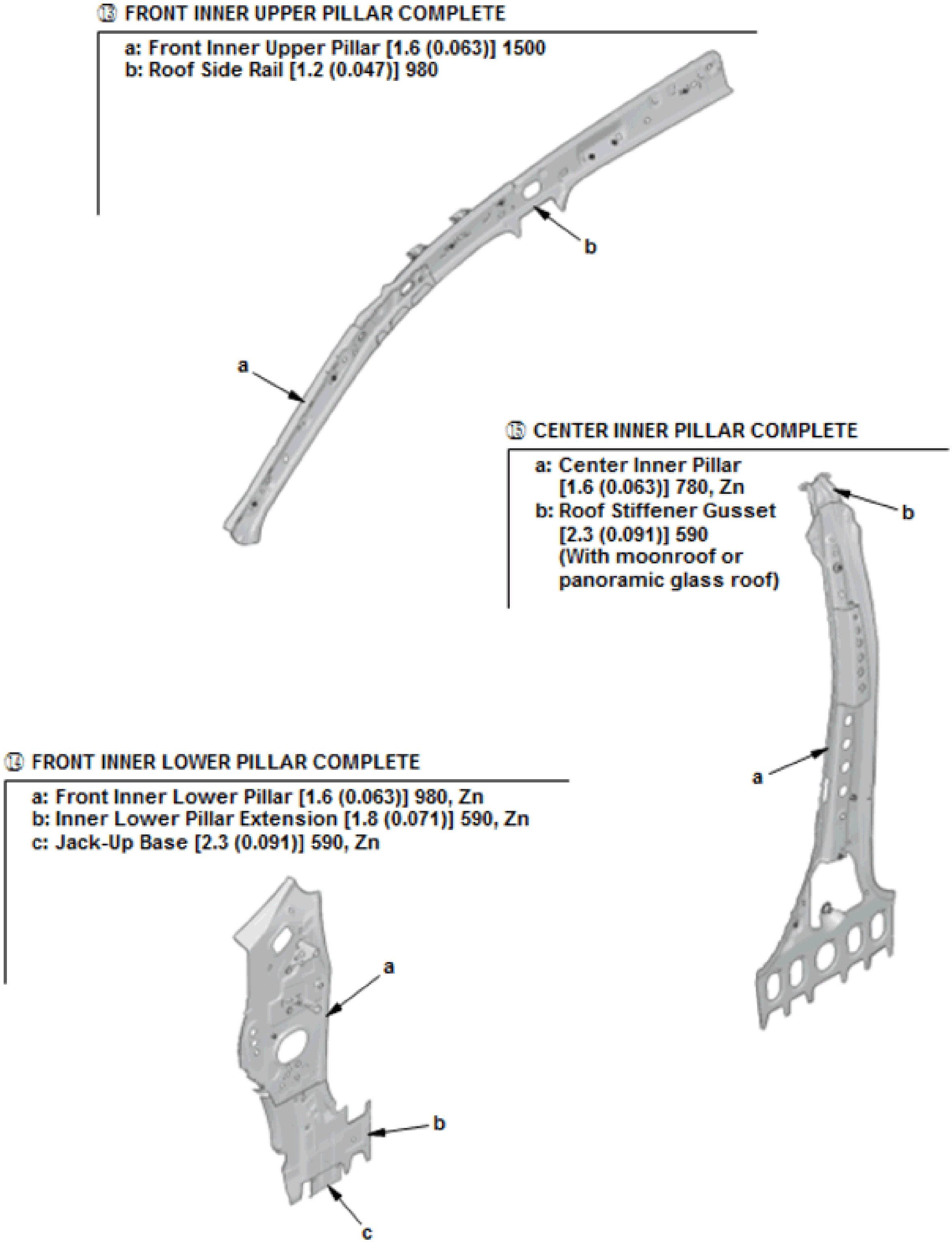
⑬ FRONT INNER UPPER PILLAR COMPLETE
a: Front Inner Upper Pillar [1.6 (0.063)] 1500
b: Roof Side Rail [1.2 (0.047)] 980
b
a
⑮ CENTER INNER PILLAR COMPLETE
a: Center Inner Pillar [1.6 (0.063)] 780, Zn
b: Roof Stiffener Gusset [2.3 (0.091)] 590 (With moonroof or panoramic glass roof)
b
a
⑭ FRONT INNER LOWER PILLAR COMPLETE
a: Front Inner Lower Pillar [1.6 (0.063)] 980, Zn
b: Inner Lower Pillar Extension [1.8 (0.071)] 590, Zn
c: Jack-Up Base [2.3 (0.091)] 590, Zn
a
b
c

Fig. 11: Side Body Structure Identification Materials (2 Of 3)
Courtesy of AMERICAN HONDA MOTOR CO., INC.

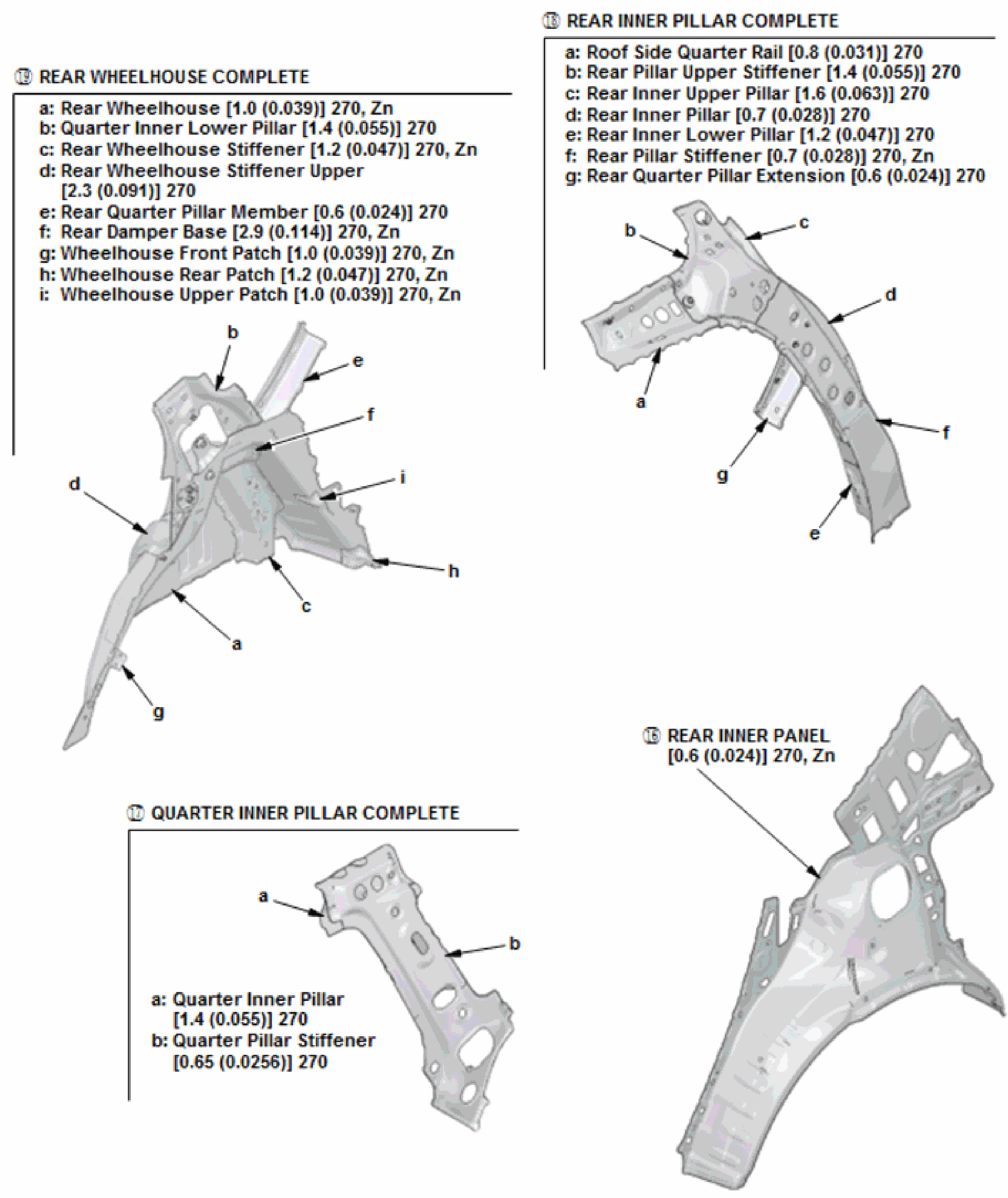

⑱ REAR INNER PILLAR COMPLETE
a: Roof Side Quarter Rail [0.8 (0.031)] 270
b: Rear Pillar Upper Stiffener [1.4 (0.055)] 270
c: Rear Inner Upper Pillar [1.6 (0.063)] 270
d: Rear Inner Pillar [0.7 (0.028)] 270
e: Rear Inner Lower Pillar [1.2 (0.047)] 270
f: Rear Pillar Stiffener [0.7 (0.028)] 270, Zn
g: Rear Quarter Pillar Extension [0.6 (0.024)] 270
b
c
d
a
f
g
e
⑲ REAR WHEELHOUSE COMPLETE
a: Rear Wheelhouse [1.0 (0.039)] 270, Zn
b: Quarter Inner Lower Pillar [1.4 (0.055)] 270
c: Rear Wheelhouse Stiffener [1.2 (0.047)] 270, Zn
d: Rear Wheelhouse Stiffener Upper [2.3 (0.091)] 270
e: Rear Quarter Pillar Member [0.6 (0.024)] 270
f: Rear Damper Base [2.9 (0.114)] 270, Zn
g: Wheelhouse Front Patch [1.0 (0.039)] 270, Zn
h: Wheelhouse Rear Patch [1.2 (0.047)] 270, Zn
i: Wheelhouse Upper Patch [1.0 (0.039)] 270, Zn
b
e
f
i
d
h
c
a
g
⑯ REAR INNER PANEL
[0.6 (0.024)] 270, Zn
⑰ QUARTER INNER PILLAR COMPLETE
a
b
a: Quarter Inner Pillar [1.4 (0.055)] 270
b: Quarter Pillar Stiffener [0.65 (0.0256)] 270

Fig. 12: Side Body Structure Identification Materials (3 Of 3)
Courtesy of AMERICAN HONDA MOTOR CO., INC.

WELDING AREAS WITH ULTRA HIGH-STRENGTH STEEL PARTS (UHSS) (1500 MPA)

For repair and part replacement in the following areas, adhere to the Spot Welding Conditions For Ultra High-Strength Steel Parts (1180 And 1500 MPa) and the MIG Brazing Conditions For Ultra High-Strength Steel Parts (1180 And 1500 MPa) .

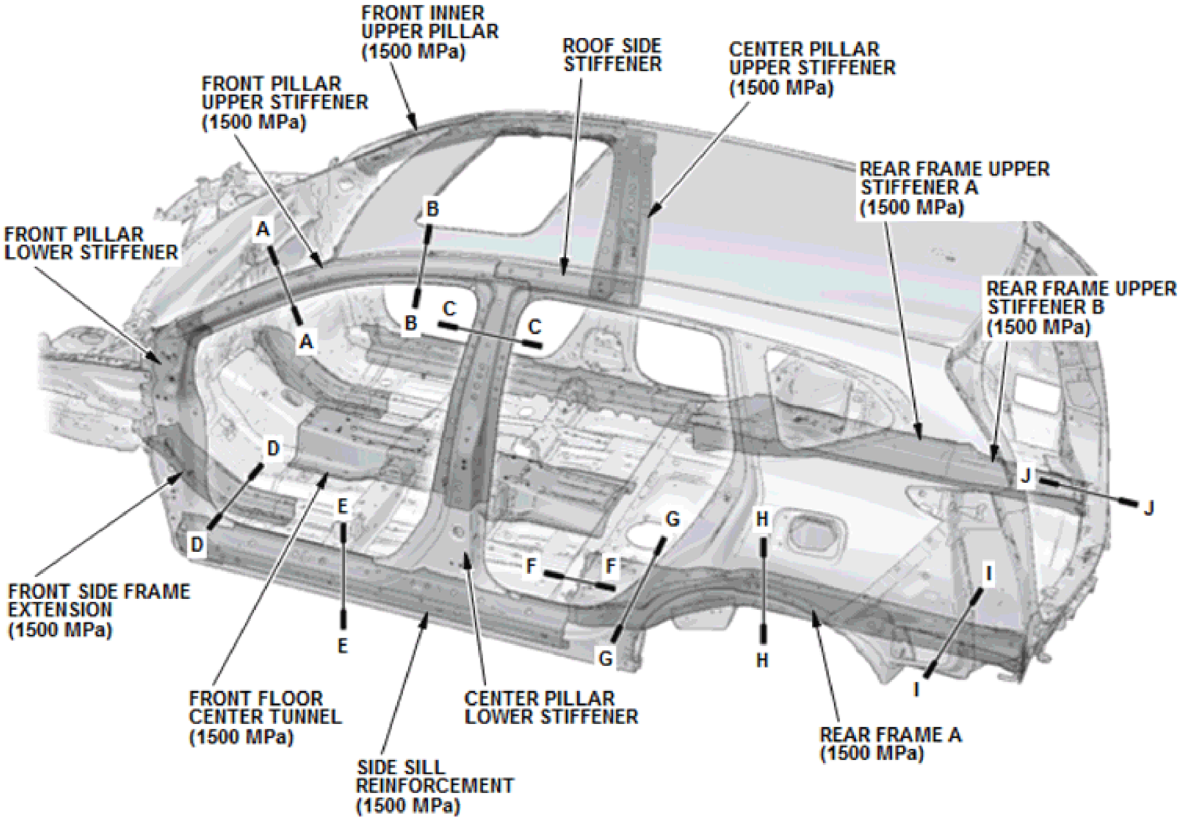
FRONT INNER UPPER PILLAR (1500 MPa)
ROOF SIDE STIFFENER
CENTER PILLAR UPPER STIFFENER (1500 MPa)
FRONT PILLAR UPPER STIFFENER (1500 MPa)
REAR FRAME UPPER STIFFENER A (1500 MPa)
FRONT PILLAR LOWER STIFFENER
REAR FRAME UPPER STIFFENER B (1500 MPa)
A
A
B
B
C
C
D
D
E
E
F
F
G
G
H
H
I
I
J
J
FRONT SIDE FRAME EXTENSION (1500 MPa)
FRONT FLOOR CENTER TUNNEL (1500 MPa)
CENTER PILLAR LOWER STIFFENER
REAR FRAME A (1500 MPa)
SIDE SILL REINFORCEMENT (1500 MPa)

Fig. 13: Ultra High Strength Steel Panel Locations And Structure Identification Materials (1 Of 3)
Courtesy of AMERICAN HONDA MOTOR CO., INC.

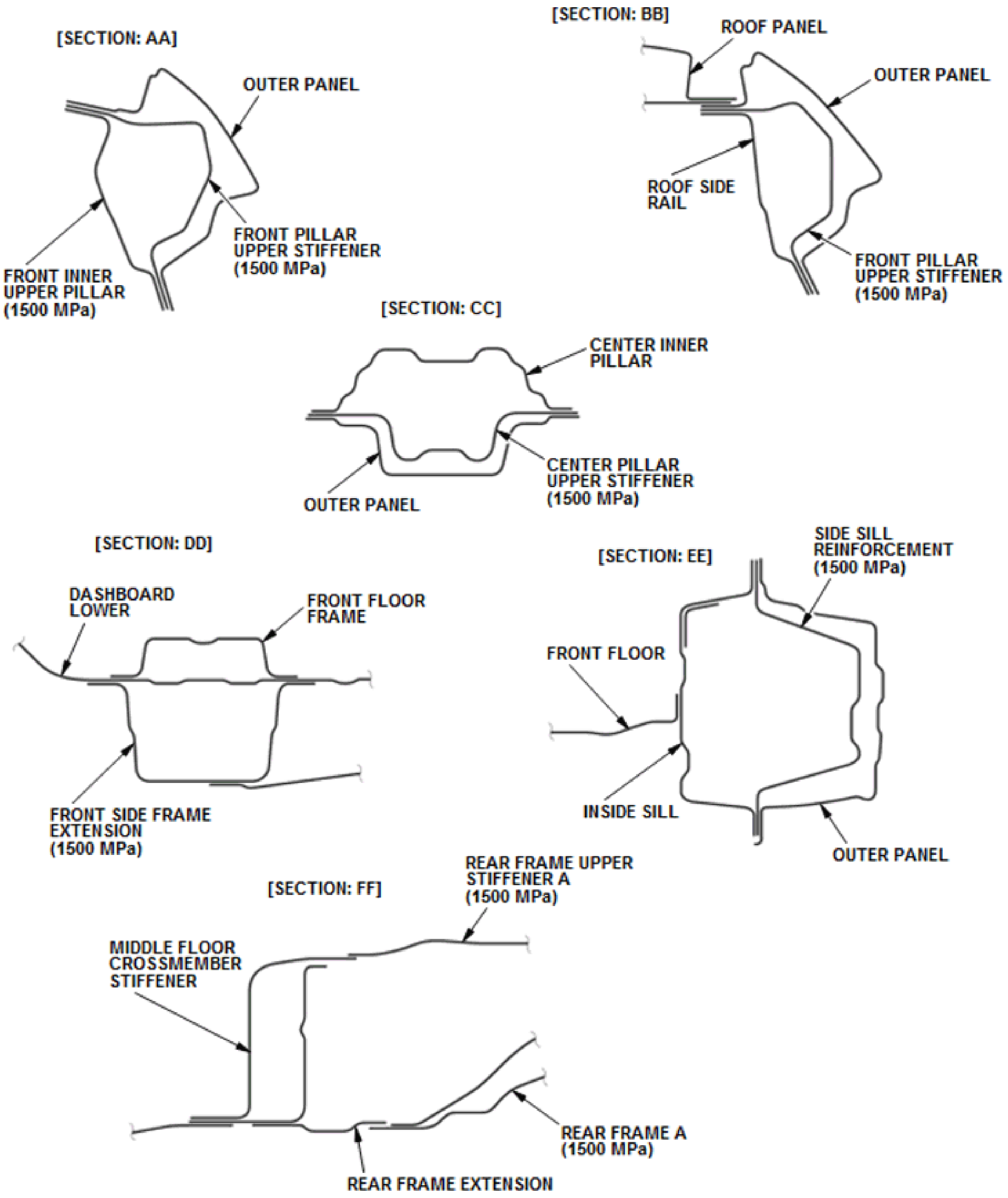
[SECTION: AA]
OUTER PANEL
FRONT PILLAR UPPER STIFFENER (1500 MPa)
FRONT INNER UPPER PILLAR (1500 MPa)
[SECTION: BB]
ROOF PANEL
OUTER PANEL
ROOF SIDE RAIL
FRONT PILLAR UPPER STIFFENER (1500 MPa)
[SECTION: CC]
CENTER INNER PILLAR
CENTER PILLAR UPPER STIFFENER (1500 MPa)
OUTER PANEL
[SECTION: DD]
DASHBOARD LOWER
FRONT FLOOR FRAME
FRONT SIDE FRAME EXTENSION (1500 MPa)
[SECTION: EE]
SIDE SILL REINFORCEMENT (1500 MPa)
FRONT FLOOR
INSIDE SILL
OUTER PANEL
[SECTION: FF]
REAR FRAME UPPER STIFFENER A (1500 MPa)
MIDDLE FLOOR CROSSMEMBER STIFFENER
REAR FRAME A (1500 MPa)
REAR FRAME EXTENSION

Fig. 14: Ultra High Strength Steel Panel Locations And Structure Identification Materials (2 Of 3)

Courtesy of AMERICAN HONDA MOTOR CO., INC.

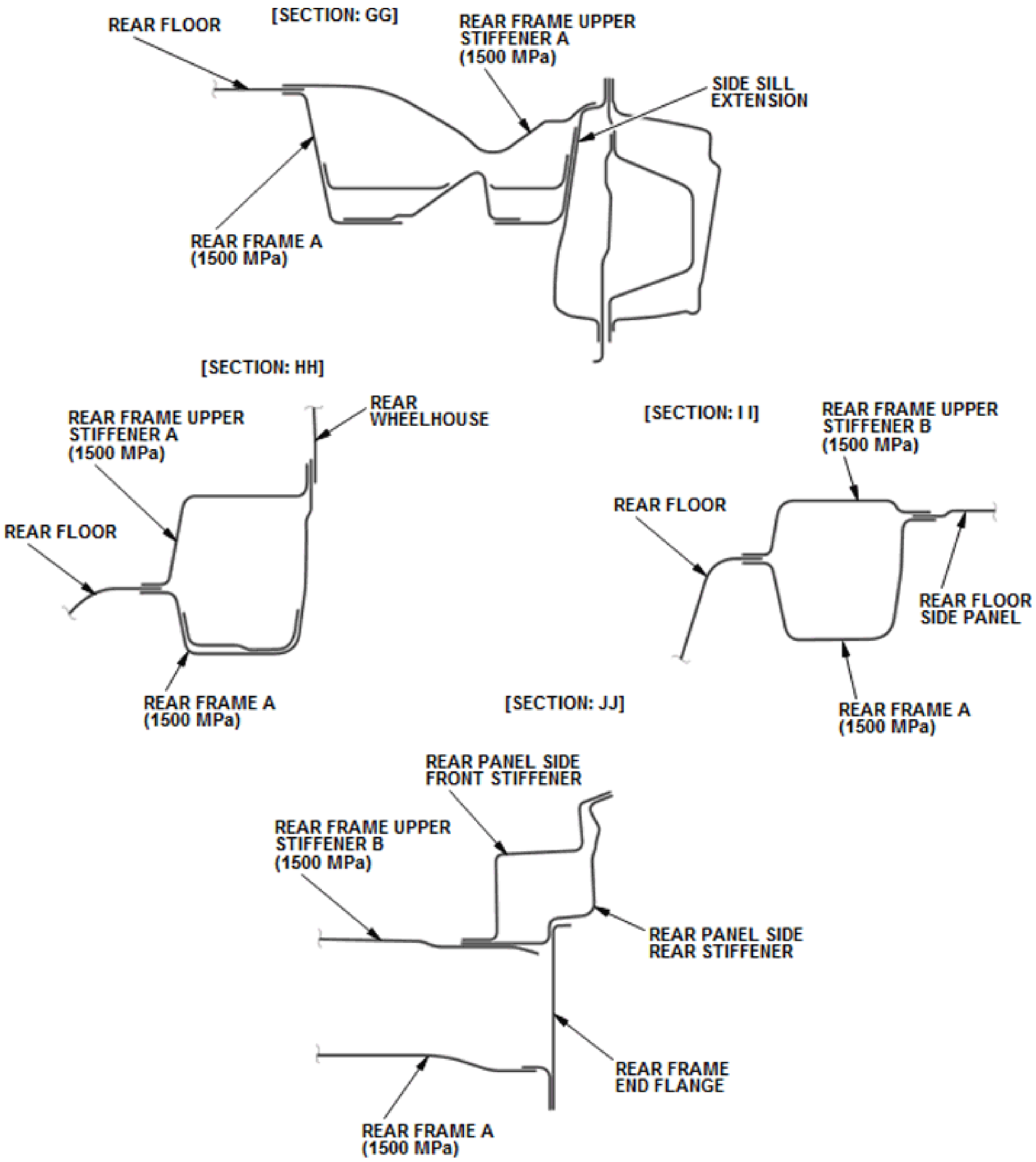
[SECTION: GG]
REAR FLOOR
REAR FRAME UPPER STIFFENER A (1500 MPa)
SIDE SILL EXTENSION
REAR FRAME A (1500 MPa)
[SECTION: HH]
REAR FRAME UPPER STIFFENER A (1500 MPa)
REAR WHEELHOUSE
REAR FLOOR
REAR FRAME A (1500 MPa)
[SECTION: I I]
REAR FRAME UPPER STIFFENER B (1500 MPa)
REAR FLOOR
REAR FLOOR SIDE PANEL
REAR FRAME A (1500 MPa)
[SECTION: JJ]
REAR PANEL SIDE FRONT STIFFENER
REAR FRAME UPPER STIFFENER B (1500 MPa)
REAR PANEL SIDE REAR STIFFENER
REAR FRAME END FLANGE
REAR FRAME A (1500 MPa)

Fig. 15: Ultra High Strength Steel Panel Locations And Structure Identification Materials (3 Of 3)

Courtesy of AMERICAN HONDA MOTOR CO., INC.

BODY DIMENSIONAL DRAWINGS

UPPER BODY MEASURING DIMENSIONS

Front Compartment Area

NOTE: To measure the body dimensions, refer to the BODY DIMENSIONAL DRAWINGS information.

Reference Front Fender Positions Dimension - Measure

NOTE: The hood, both front fender trim, and both front cowl covers are removed in the illustrations.

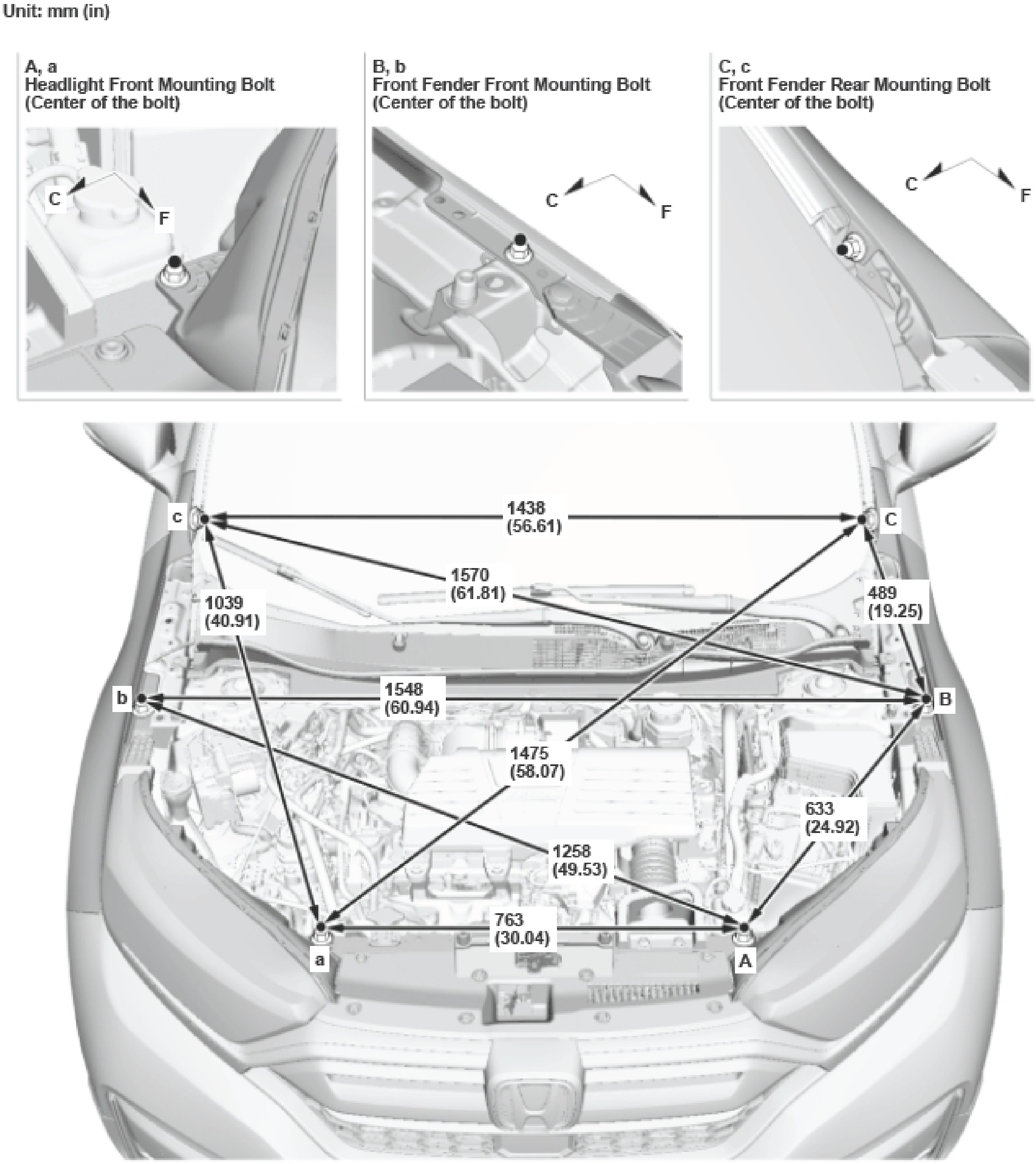
Unit: mm (in)
A, a
Headlight Front Mounting Bolt
(Center of the bolt)
C
F
B, b
Front Fender Front Mounting Bolt
(Center of the bolt)
C
F
C, c
Front Fender Rear Mounting Bolt
(Center of the bolt)
C
F
c
1438
(56.61)
C
1570
(61.81)
1039
(40.91)
489
(19.25)
b
1548
(60.94)
B
1475
(58.07)
633
(24.92)
1258
(49.53)
763
(30.04)
a
A

Fig. 1: Front Fender Dimensions And Measurement Points (Reference)
Courtesy of AMERICAN HONDA MOTOR CO., INC.

Front Bulkhead Position Dimension - Measure

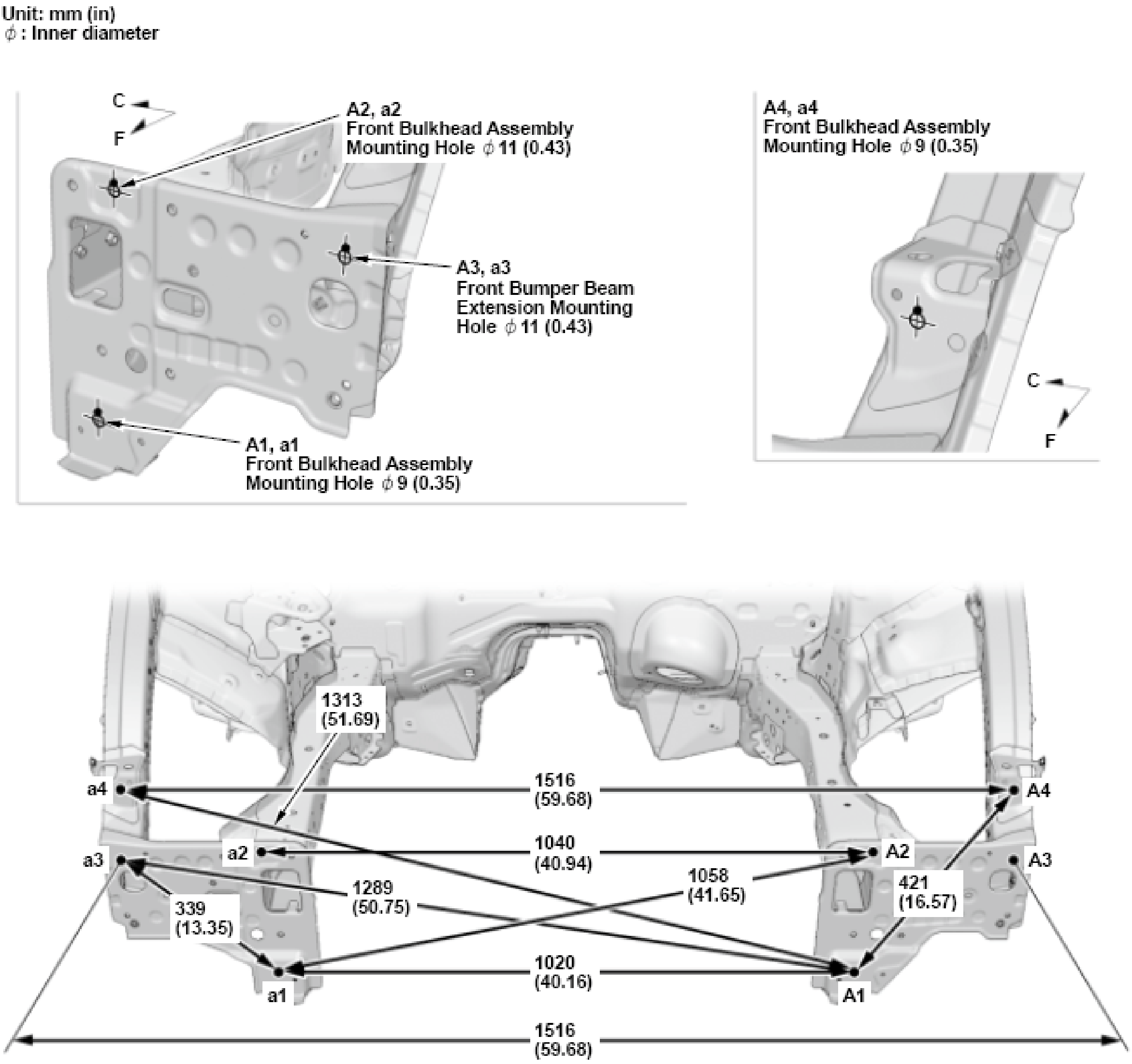
Unit: mm (in)
ϕ : Inner diameter
C
F
A2, a2
Front Bulkhead Assembly
Mounting Hole ϕ 11 (0.43)
A3, a3
Front Bumper Beam
Extension Mounting
Hole ϕ 11 (0.43)
A1, a1
Front Bulkhead Assembly
Mounting Hole ϕ 9 (0.35)
A4, a4
Front Bulkhead Assembly
Mounting Hole ϕ 9 (0.35)
C
F
1313
(51.69)
a4
1516
(59.68)
A4
a3
a2
1040
(40.94)
A2
A3
1058
(41.65)
1289
(50.75)
421
(16.57)
339
(13.35)
1020
(40.16)
a1
A1
1516
(59.68)

Fig. 2: Front Bulkhead Dimensions And Measurement Points
Courtesy of AMERICAN HONDA MOTOR CO., INC.

Engine Compartment Dimension - Measure

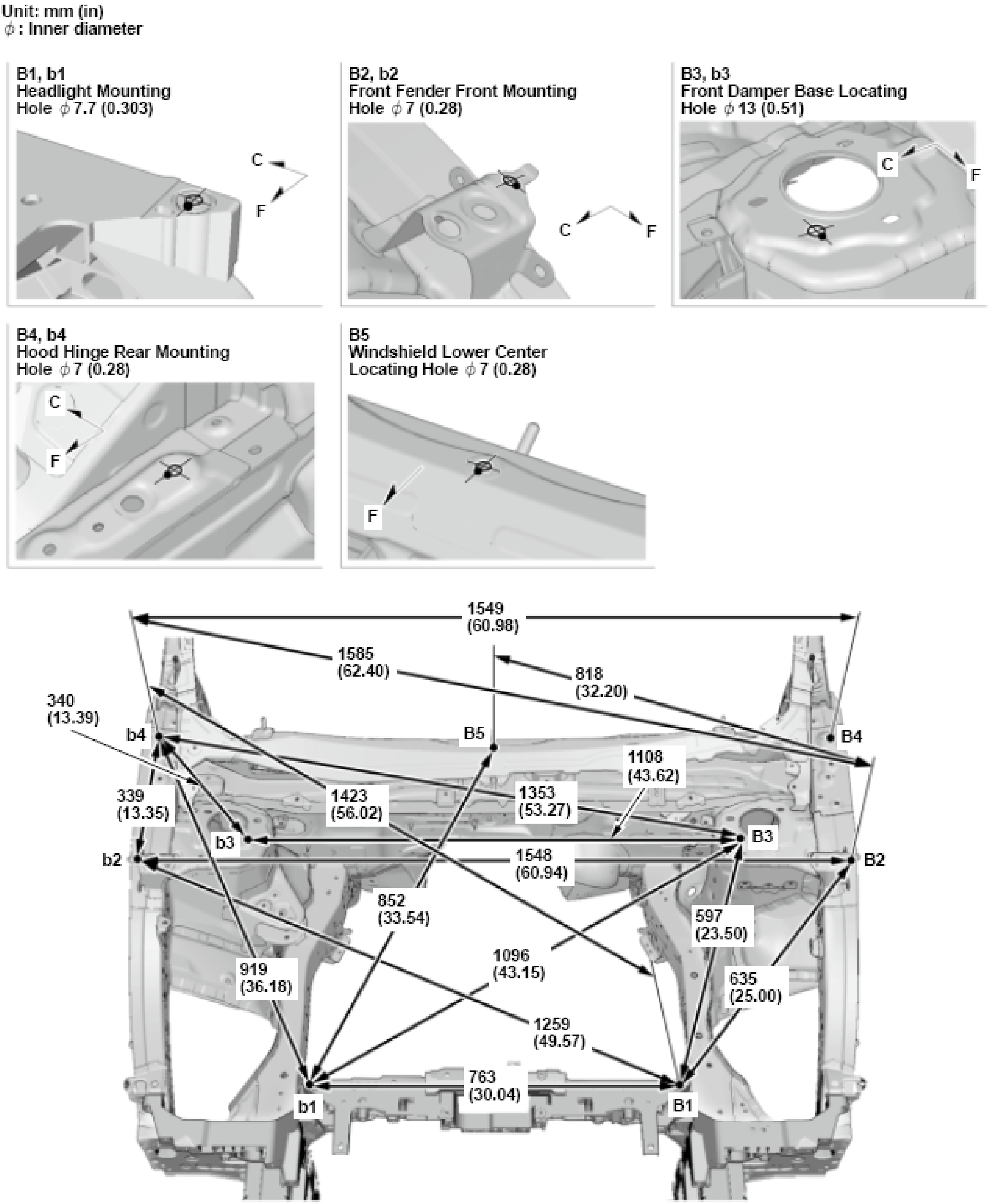
Unit: mm (in)
ϕ : Inner diameter
B1, b1
Headlight Mounting
Hole ϕ 7.7 (0.303)
C
F
B2, b2
Front Fender Front Mounting
Hole ϕ 7 (0.28)
C
F
B3, b3
Front Damper Base Locating
Hole ϕ 13 (0.51)
C
F
B4, b4
Hood Hinge Rear Mounting
Hole ϕ 7 (0.28)
C
F
B5
Windshield Lower Center
Locating Hole ϕ 7 (0.28)
F
1549
(60.98)
1585
(62.40)
818
(32.20)
340
(13.39)
b4
B5
B4
1108
(43.62)
339
(13.35)
1423
(56.02)
1353
(53.27)
b3
B3
b2
1548
(60.94)
B2
852
(33.54)
597
(23.50)
919
(36.18)
1096
(43.15)
635
(25.00)
1259
(49.57)
763
(30.04)
b1
B1

Fig. 3: Engine Compartment Dimensions And Measurement Points

Courtesy of AMERICAN HONDA MOTOR CO., INC.

Engine And Transmission Mount Positions Dimension - Measure

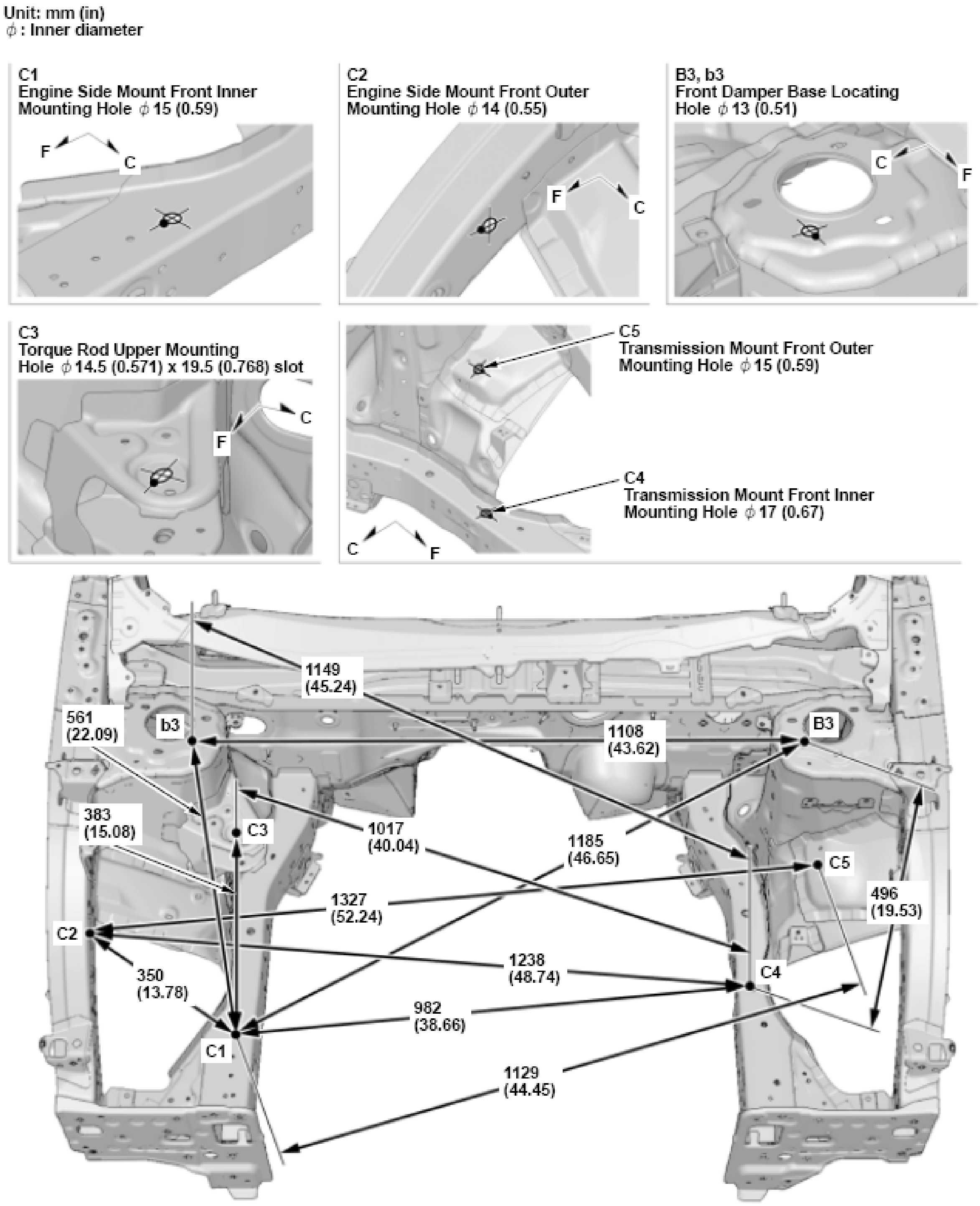
Unit: mm (in)
ϕ : Inner diameter
C1
Engine Side Mount Front Inner Mounting Hole ϕ 15 (0.59)
F
C
C2
Engine Side Mount Front Outer Mounting Hole ϕ 14 (0.55)
F
C
B3, b3
Front Damper Base Locating Hole ϕ 13 (0.51)
C
F
C3
Torque Rod Upper Mounting Hole ϕ 14.5 (0.571) x 19.5 (0.768) slot
F
C
C5
Transmission Mount Front Outer Mounting Hole ϕ 15 (0.59)
C4
Transmission Mount Front Inner Mounting Hole ϕ 17 (0.67)
C
F
1149
(45.24)
561
(22.09)
b3
B3
1108
(43.62)
383
(15.08)
C3
1017
(40.04)
1185
(46.65)
C5
1327
(52.24)
496
(19.53)
C2
1238
(48.74)
C4
350
(13.78)
982
(38.66)
C1
1129
(44.45)

Fig. 4: Engine And Transmission Mount Dimensions And Measurement Points
Courtesy of AMERICAN HONDA MOTOR CO., INC.

Front Wheelhouse Upper Member Position Dimension - Measure

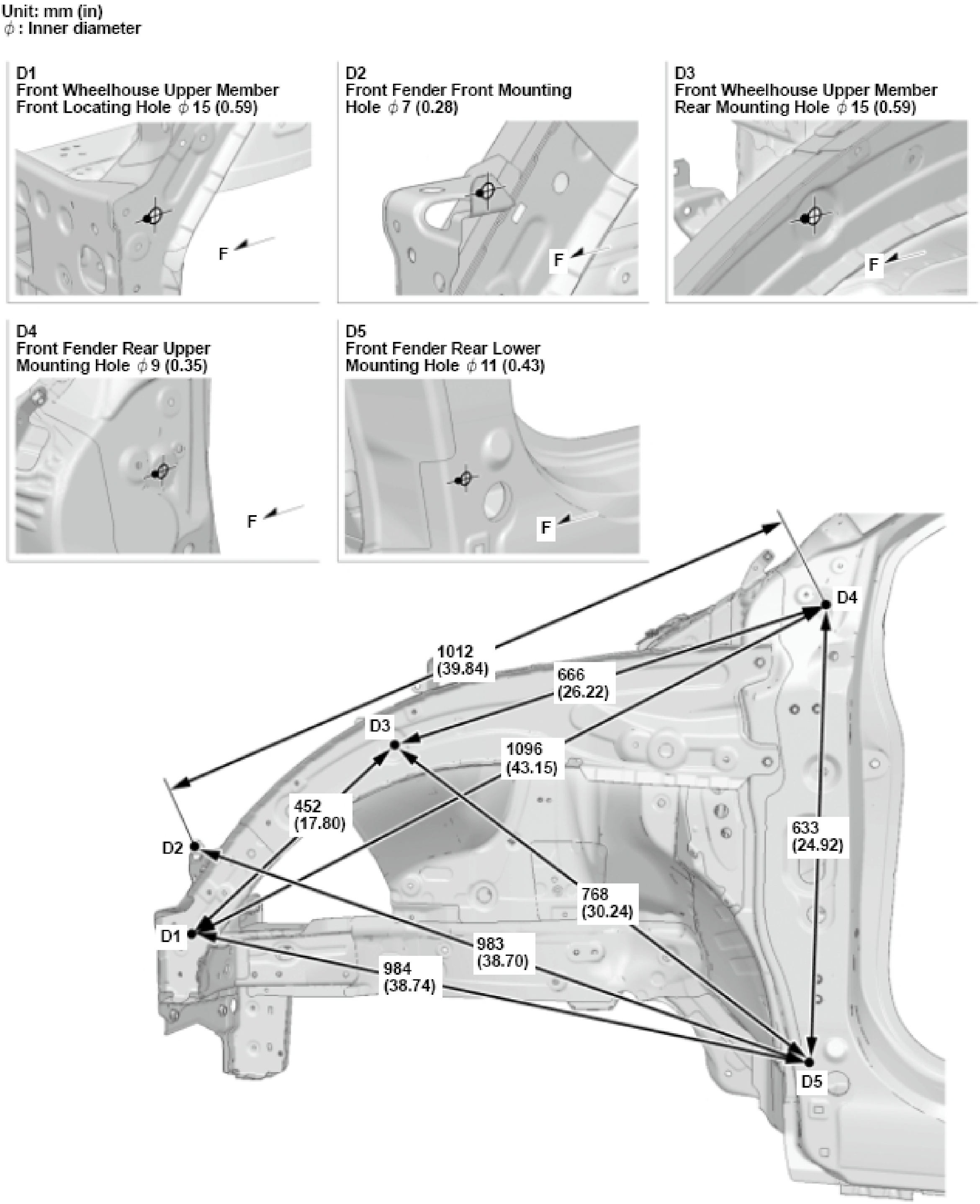
Unit: mm (in)
ϕ : Inner diameter
D1
Front Wheelhouse Upper Member Front Locating Hole ϕ 15 (0.59)
F
D2
Front Fender Front Mounting Hole ϕ 7 (0.28)
F
D3
Front Wheelhouse Upper Member Rear Mounting Hole ϕ 15 (0.59)
F
D4
Front Fender Rear Upper Mounting Hole ϕ 9 (0.35)
F
D5
Front Fender Rear Lower Mounting Hole ϕ 11 (0.43)
F
1012 (39.84)
666 (26.22)
D4
D3
1096 (43.15)
452 (17.80)
D2
633 (24.92)
768 (30.24)
D1
983 (38.70)
984 (38.74)
D5

Fig. 5: Front Wheelhouse Upper Member Dimensions And Measurement Points
Courtesy of AMERICAN HONDA MOTOR CO., INC.

Passengers Compartment Area

NOTE: To measure the body dimensions, refer to the BODY DIMENSIONAL DRAWINGS.

Door Hinge Positions Dimension - Measure

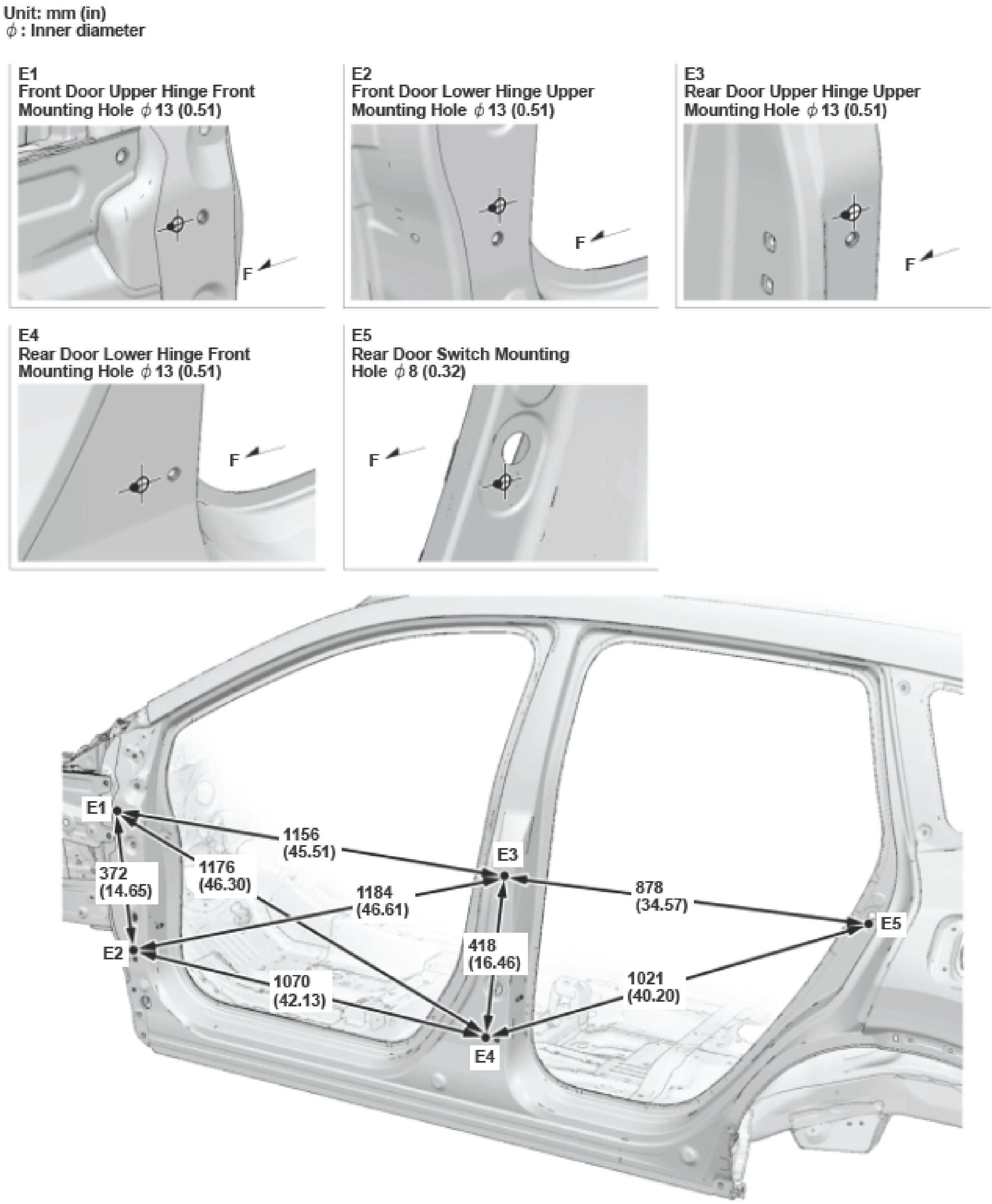
Unit: mm (in)
ϕ : Inner diameter
E1
Front Door Upper Hinge Front Mounting Hole ϕ 13 (0.51)
F
E2
Front Door Lower Hinge Upper Mounting Hole ϕ 13 (0.51)
F
E3
Rear Door Upper Hinge Upper Mounting Hole ϕ 13 (0.51)
F
E4
Rear Door Lower Hinge Front Mounting Hole ϕ 13 (0.51)
F
E5
Rear Door Switch Mounting Hole ϕ 8 (0.32)
F
E1
1156 (45.51)
E3
372 (14.65)
1176 (46.30)
1184 (46.61)
878 (34.57)
E5
E2
418 (16.46)
1070 (42.13)
1021 (40.20)
E4

Fig. 6: Door Hinge Dimensions And Measurement Points
Courtesy of AMERICAN HONDA MOTOR CO., INC.

Passenger's Compartment Dimension - Measure

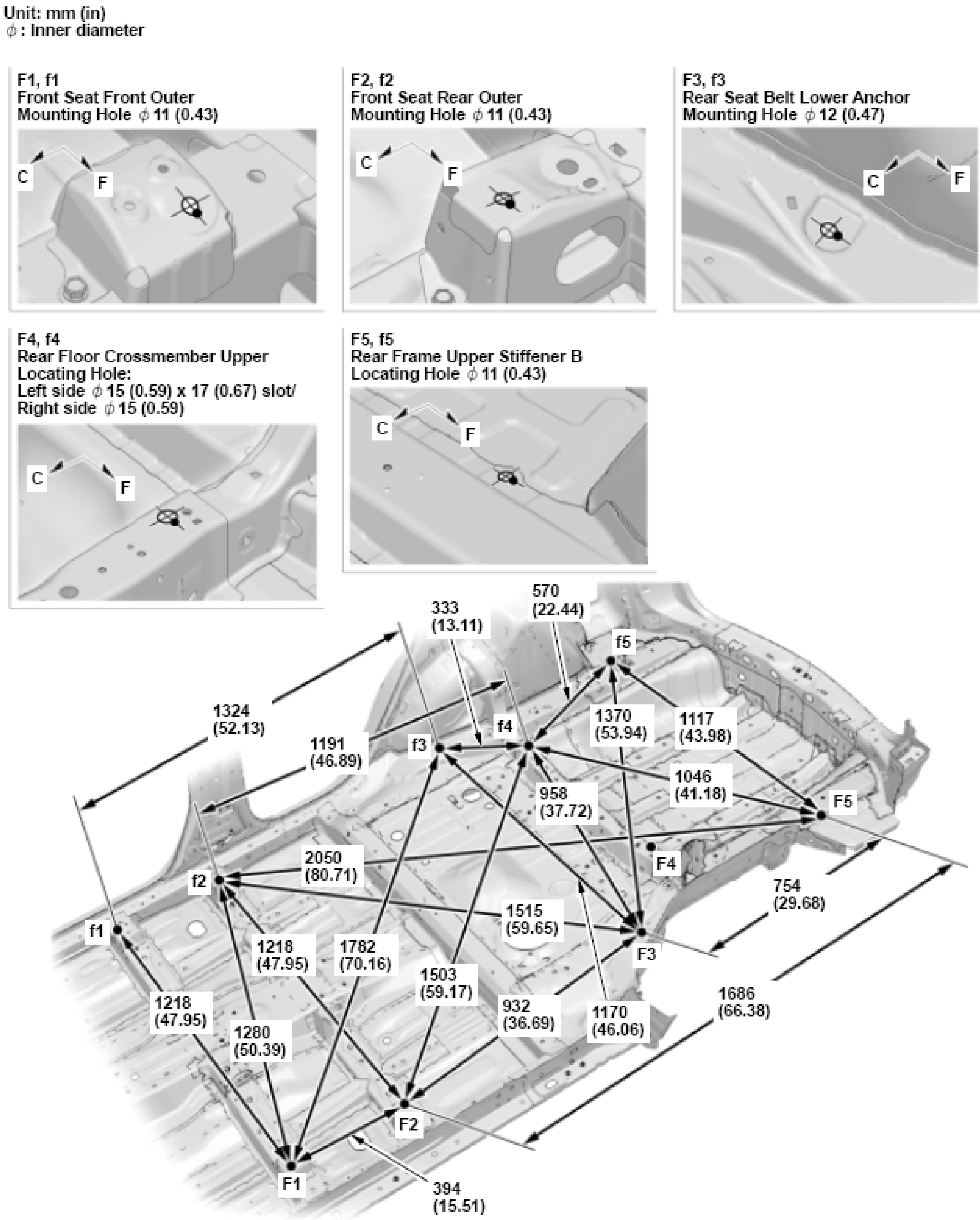
Unit: mm (in)
φ : Inner diameter
F1, f1
Front Seat Front Outer
Mounting Hole φ 11 (0.43)
C
F
F2, f2
Front Seat Rear Outer
Mounting Hole φ 11 (0.43)
C
F
F3, f3
Rear Seat Belt Lower Anchor
Mounting Hole φ 12 (0.47)
C
F
F4, f4
Rear Floor Crossmember Upper
Locating Hole:
Left side φ 15 (0.59) x 17 (0.67) slot/
Right side φ 15 (0.59)
C
F
F5, f5
Rear Frame Upper Stiffener B
Locating Hole φ 11 (0.43)
C
F
570
(22.44)
333
(13.11)
f5
1324
(52.13)
1370
(53.94)
1117
(43.98)
1191
(46.89)
f4
f3
1046
(41.18)
958
(37.72)
F5
F4
2050
(80.71)
f2
754
(29.68)
1515
(59.65)
f1
F3
1218
(47.95)
1782
(70.16)
1503
(59.17)
1686
(66.38)
1218
(47.95)
932
(36.69)
1170
(46.06)
1280
(50.39)
F2
F1
394
(15.51)

Fig. 7: Passengers Compartment Dimensions And Measurement Points

Courtesy of AMERICAN HONDA MOTOR CO., INC.

Inner Panel Positions Dimension - Measure

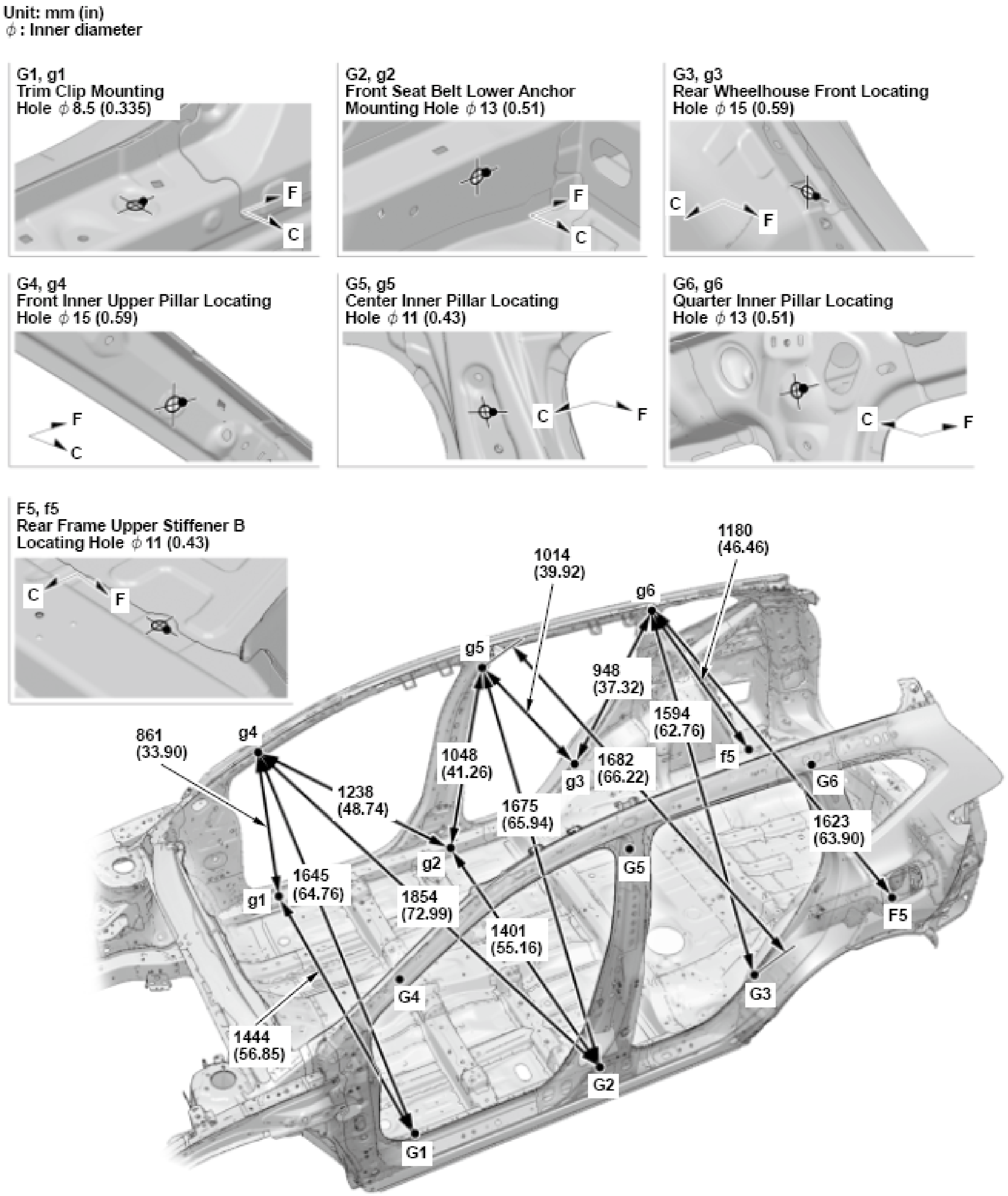
Unit: mm (in)
ϕ : Inner diameter
G1, g1
Trim Clip Mounting
Hole ϕ 8.5 (0.335)
F
C
G2, g2
Front Seat Belt Lower Anchor
Mounting Hole ϕ 13 (0.51)
F
C
G3, g3
Rear Wheelhouse Front Locating
Hole ϕ 15 (0.59)
C
F
G4, g4
Front Inner Upper Pillar Locating
Hole ϕ 15 (0.59)
F
C
G5, g5
Center Inner Pillar Locating
Hole ϕ 11 (0.43)
C
F
G6, g6
Quarter Inner Pillar Locating
Hole ϕ 13 (0.51)
C
F
F5, f5
Rear Frame Upper Stiffener B
Locating Hole ϕ 11 (0.43)
C
F
1180
(46.46)
1014
(39.92)
g6
g5
948
(37.32)
1594
(62.76)
861
(33.90)
g4
1048
(41.26)
1682
(66.22)
f5
g3
G6
1238
(48.74)
1675
(65.94)
1623
(63.90)
g2
G5
g1
1645
(64.76)
1854
(72.99)
F5
1401
(55.16)
G4
G3
1444
(56.85)
G2
G1

Fig. 8: Inner Panel Dimensions And Measurement Points (1 Of 2)

Courtesy of AMERICAN HONDA MOTOR CO., INC.

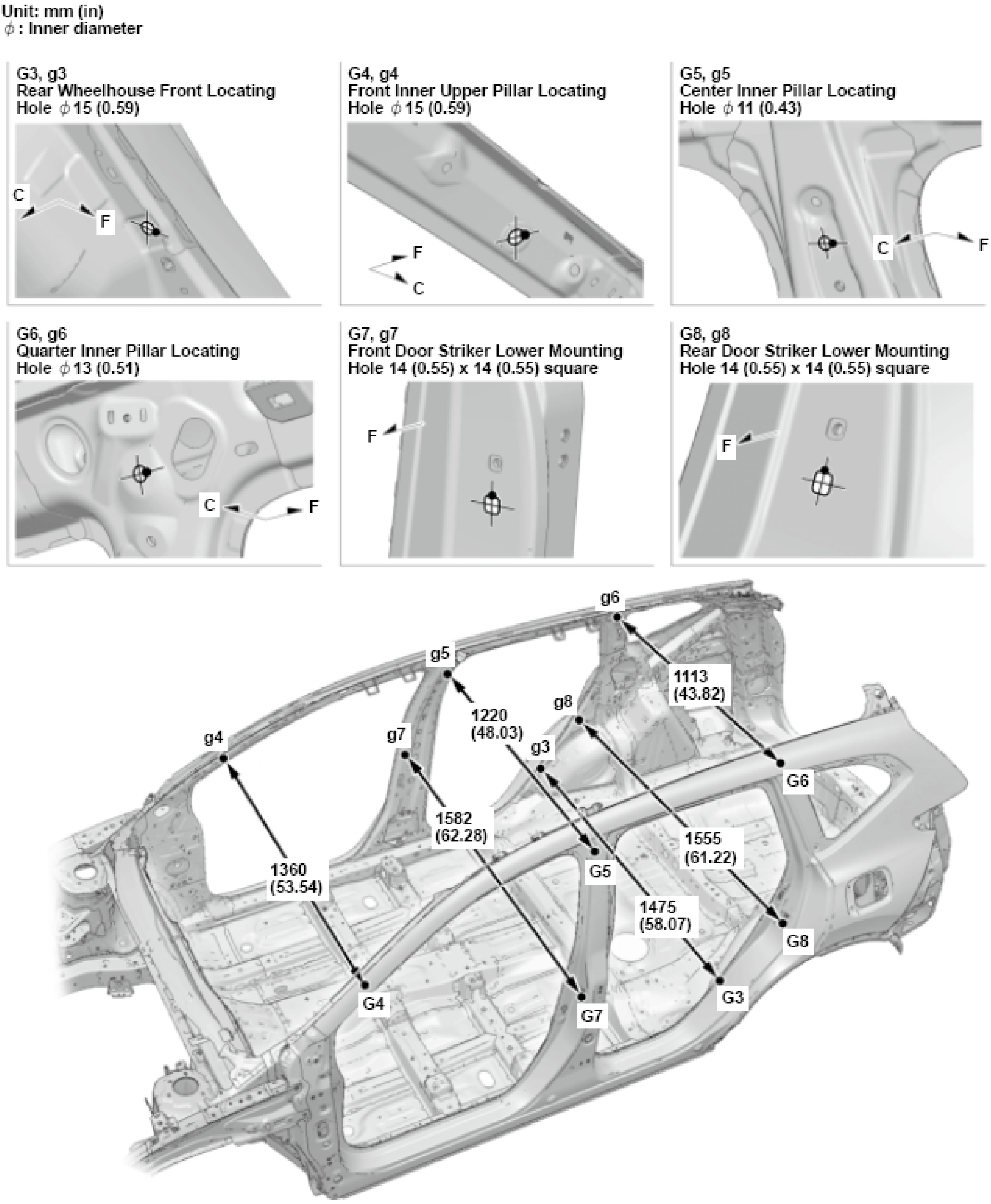
Unit: mm (in)
ϕ : Inner diameter
G3, g3
Rear Wheelhouse Front Locating Hole ϕ 15 (0.59)
C
F
G4, g4
Front Inner Upper Pillar Locating Hole ϕ 15 (0.59)
F
C
G5, g5
Center Inner Pillar Locating Hole ϕ 11 (0.43)
C
F
G6, g6
Quarter Inner Pillar Locating Hole ϕ 13 (0.51)
C
F
G7, g7
Front Door Striker Lower Mounting Hole 14 (0.55) x 14 (0.55) square
F
G8, g8
Rear Door Striker Lower Mounting Hole 14 (0.55) x 14 (0.55) square
F
g6
g5
1113
(43.82)
1220
(48.03)
g8
g4
g7
g3
G6
1360
(53.54)
1582
(62.28)
1555
(61.22)
G5
1475
(58.07)
G8
G4
G7
G3

[Fig. 9: Inner Panel Dimensions And Measurement Points (2 Of 2)](#)

Courtesy of AMERICAN HONDA MOTOR CO., INC.

Roof Rail Positions Dimension - Measure

Without moonroof

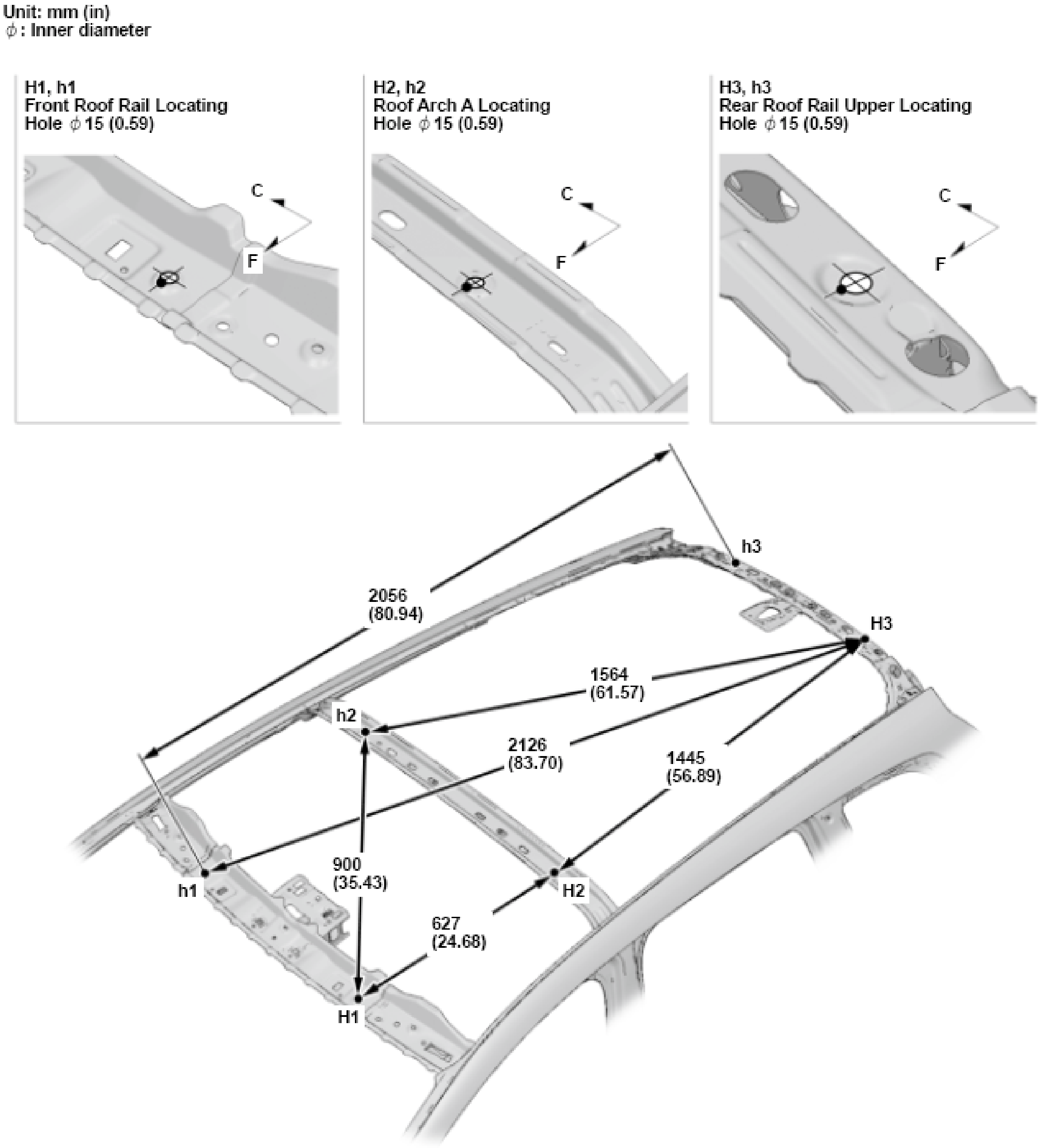
Unit: mm (in)
ϕ: Inner diameter
H1, h1
Front Roof Rail Locating
Hole ϕ 15 (0.59)
C
F
H2, h2
Roof Arch A Locating
Hole ϕ 15 (0.59)
C
F
H3, h3
Rear Roof Rail Upper Locating
Hole ϕ 15 (0.59)
C
F
h3
2056
(80.94)
H3
1564
(61.57)
h2
2126
(83.70)
1445
(56.89)
h1
900
(35.43)
H2
627
(24.68)
H1

Fig. 10: Roof Rail Dimensions And Measurement Points (Without Moonroof)
Courtesy of AMERICAN HONDA MOTOR CO., INC.

With moonroof

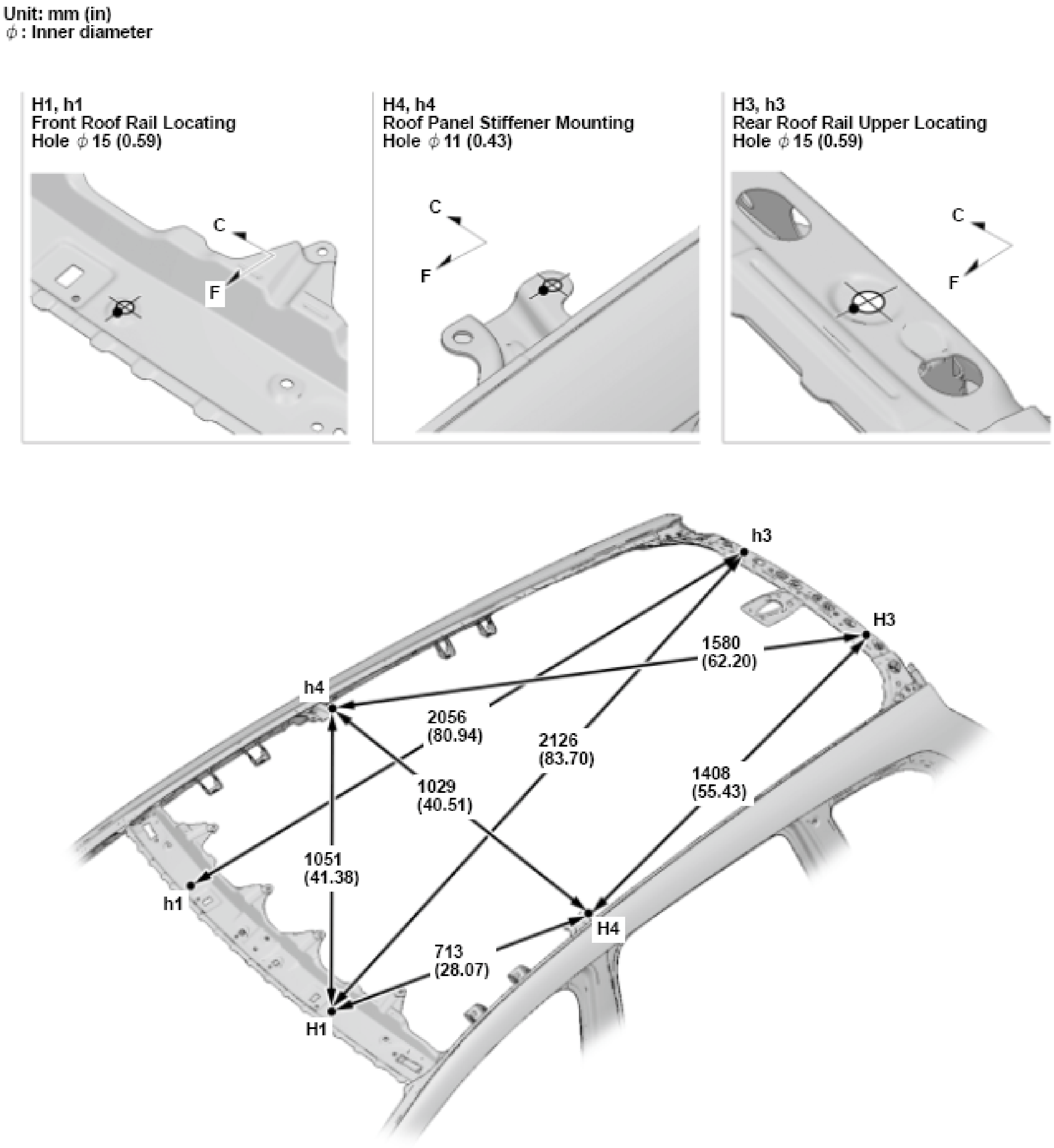
Unit: mm (in)
ϕ : Inner diameter
H1, h1
Front Roof Rail Locating Hole ϕ 15 (0.59)
C
F
H4, h4
Roof Panel Stiffener Mounting Hole ϕ 11 (0.43)
C
F
H3, h3
Rear Roof Rail Upper Locating Hole ϕ 15 (0.59)
C
F
h3
H3
1580 (62.20)
h4
2056 (80.94)
2126 (83.70)
1029 (40.51)
1408 (55.43)
1051 (41.38)
h1
H4
713 (28.07)
H1

Fig. 11: Roof Rail Dimensions And Measurement Points (With Moonroof)

Courtesy of AMERICAN HONDA MOTOR CO., INC.

Rear Trunk And Tailgate Area

NOTE: To measure the body dimensions, refer to the BODY DIMENSIONAL DRAWINGS information.

Rear Pillar Gutter And Rear Panel Positions Dimension - Measure

Unit: mm (in)
ϕ : Inner diameter

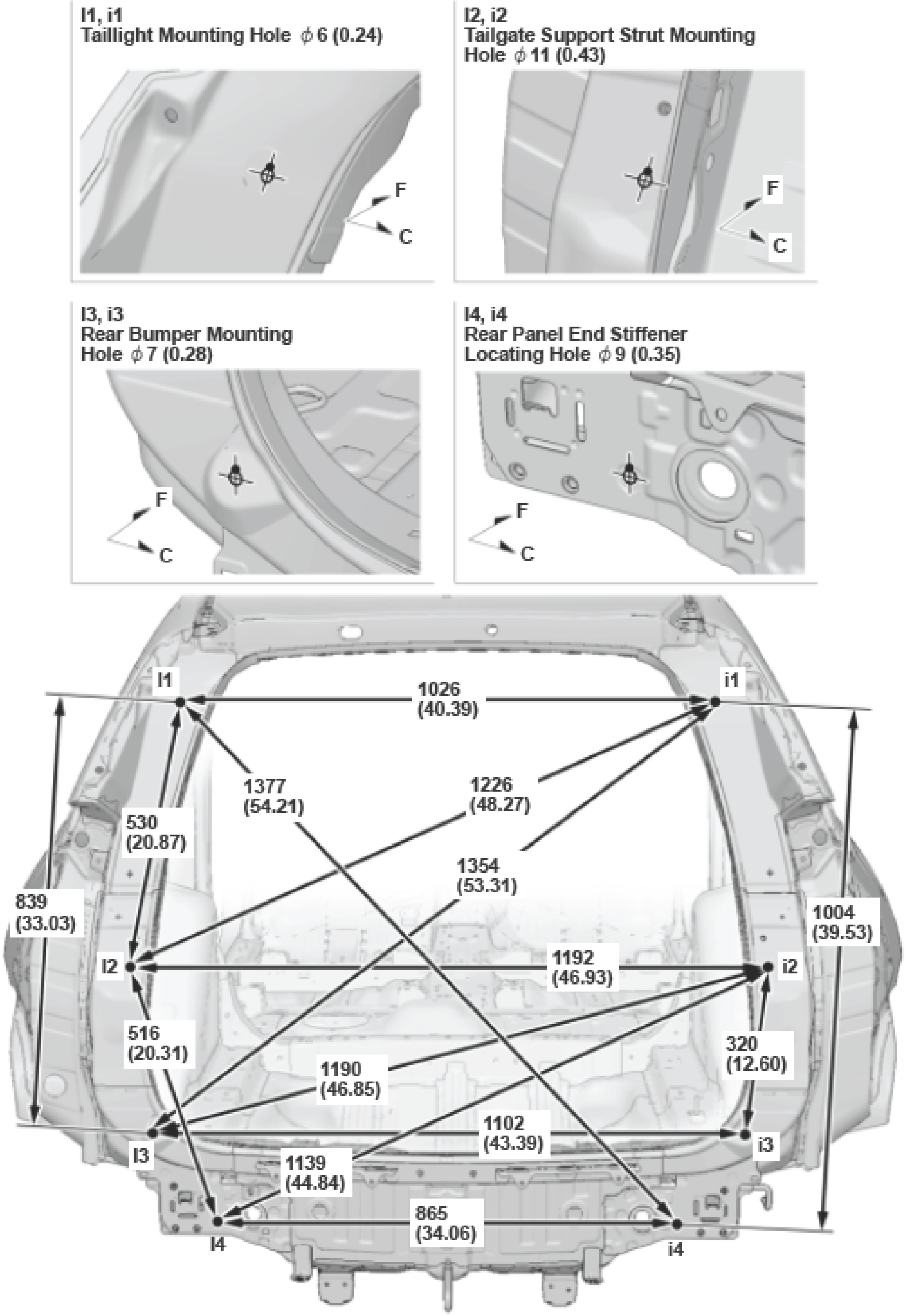

I1, i1
Taillight Mounting Hole ϕ 6 (0.24)

I2, i2
Tailgate Support Strut Mounting Hole ϕ 11 (0.43)

I3, i3
Rear Bumper Mounting Hole ϕ 7 (0.28)

I4, i4
Rear Panel End Stiffener Locating Hole ϕ 9 (0.35)

F
C
I1
i1
1026 (40.39)
1377 (54.21)
1226 (48.27)
530 (20.87)
1354 (53.31)
839 (33.03)
1004 (39.53)
I2
i2
1192 (46.93)
516 (20.31)
320 (12.60)
1190 (46.85)
1102 (43.39)
I3
i3
1139 (44.84)
865 (34.06)
I4
i4

[Fig. 12: Rear Pillar Gutter And Rear Panel Dimensions And Measurement Points (1 Of 2)]

Courtesy of AMERICAN HONDA MOTOR CO., INC.

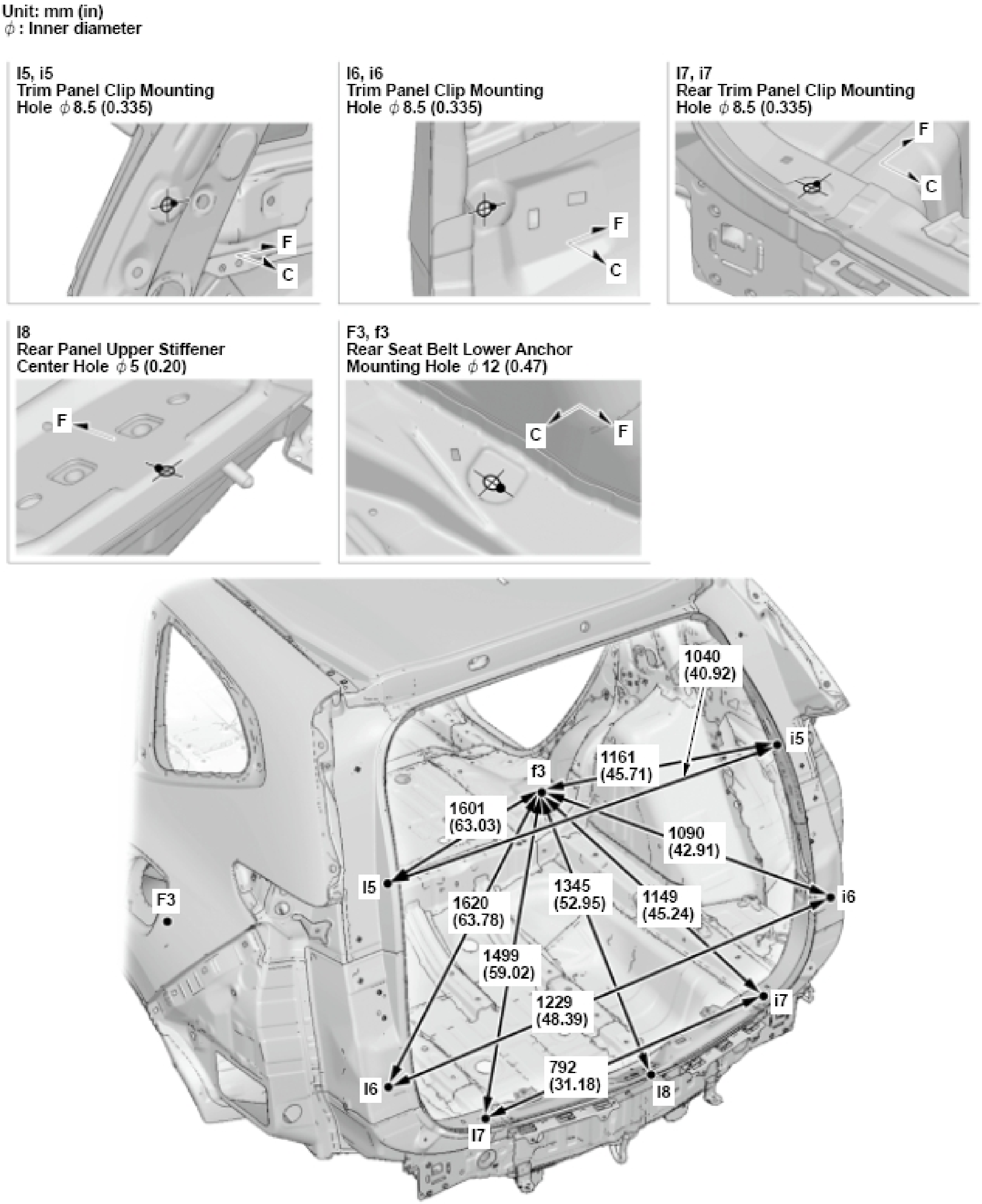
Unit: mm (in)
ϕ : Inner diameter
I5, i5
Trim Panel Clip Mounting
Hole ϕ 8.5 (0.335)
F
C
I6, i6
Trim Panel Clip Mounting
Hole ϕ 8.5 (0.335)
F
C
I7, i7
Rear Trim Panel Clip Mounting
Hole ϕ 8.5 (0.335)
F
C
I8
Rear Panel Upper Stiffener
Center Hole ϕ 5 (0.20)
F
F3, f3
Rear Seat Belt Lower Anchor
Mounting Hole ϕ 12 (0.47)
C
F
1040
(40.92)
i5
1161
(45.71)
f3
1601
(63.03)
1090
(42.91)
I5
F3
1345
(52.95)
1149
(45.24)
i6
1620
(63.78)
1499
(59.02)
1229
(48.39)
i7
792
(31.18)
I6
I8
I7

[Fig. 13: Rear Pillar Gutter And Rear Panel Dimensions And Measurement Points (2 Of 2)]

Courtesy of AMERICAN HONDA MOTOR CO., INC.

Windshield And Door Openings

Windshield And Door Openings Dimension - Measure

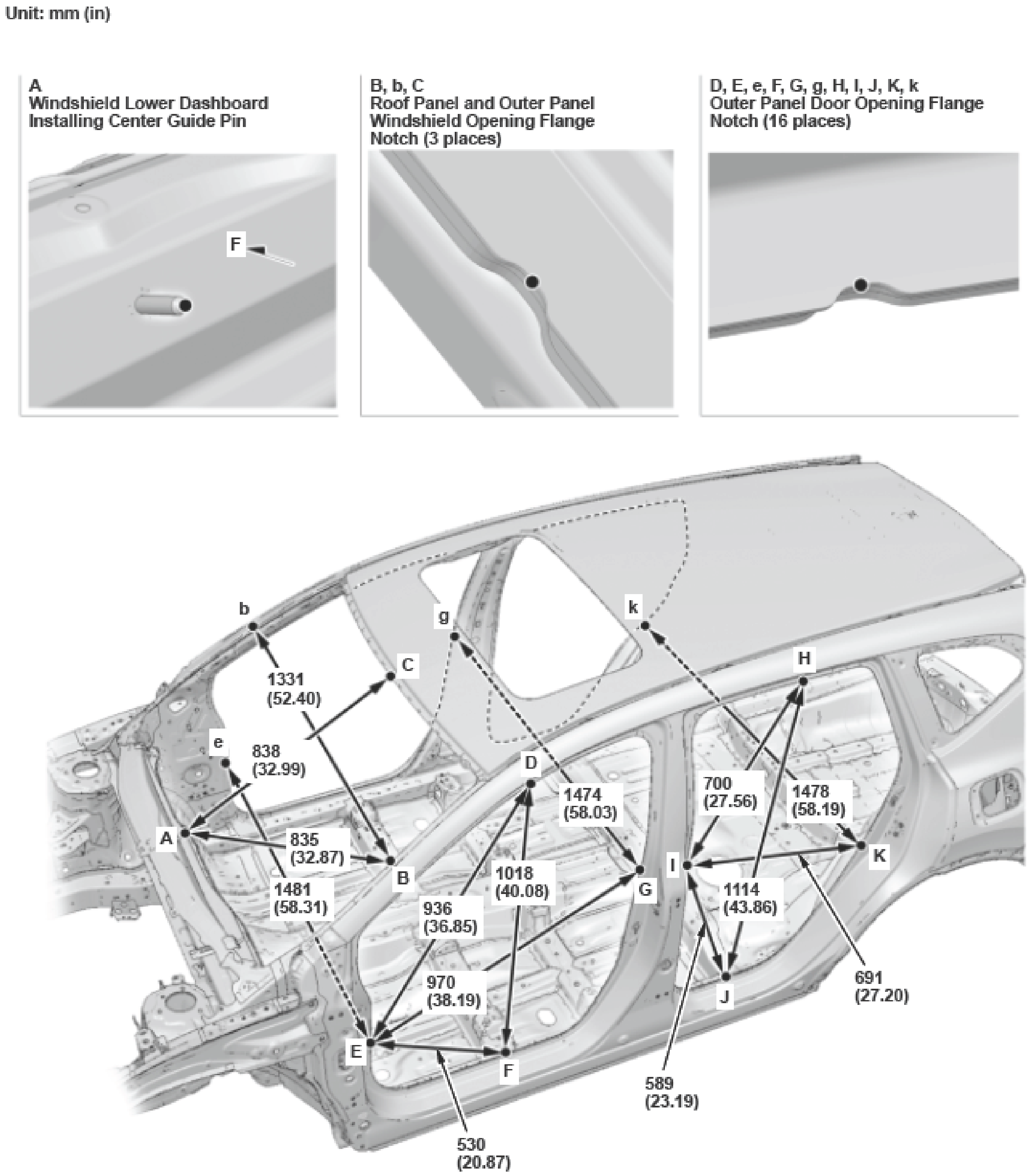
Unit: mm (in)
A
Windshield Lower Dashboard Installing Center Guide Pin
F
B, b, C
Roof Panel and Outer Panel Windshield Opening Flange Notch (3 places)
D, E, e, F, G, g, H, I, J, K, k
Outer Panel Door Opening Flange Notch (16 places)
b
g
k
C
H
1331
(52.40)
e
838
(32.99)
D
1474
(58.03)
700
(27.56)
1478
(58.19)
A
835
(32.87)
B
1018
(40.08)
G
I
K
1481
(58.31)
936
(36.85)
1114
(43.86)
970
(38.19)
J
691
(27.20)
E
F
589
(23.19)
530
(20.87)

Fig. 14: Windshield And Door Opening Dimensions And Measurement Points
Courtesy of AMERICAN HONDA MOTOR CO., INC.

Upper Body Measuring Dimensions - Tailgate Opening

Tailgate Opening Dimension - Measure

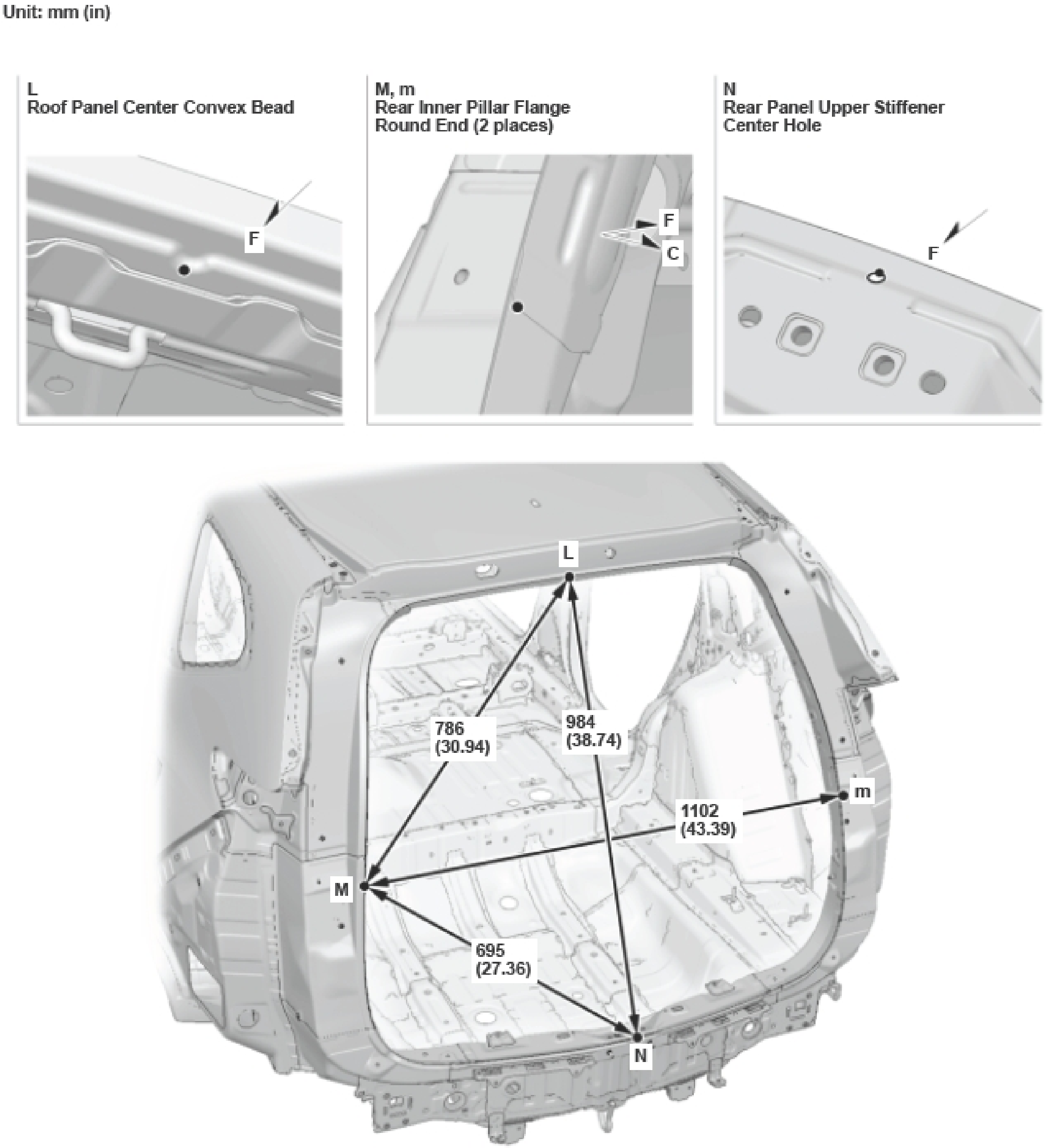
Unit: mm (in)
L
Roof Panel Center Convex Bead
F
M, m
Rear Inner Pillar Flange
Round End (2 places)
F
C
N
Rear Panel Upper Stiffener
Center Hole
F
L
786
(30.94)
984
(38.74)
m
1102
(43.39)
M
695
(27.36)
N

Fig. 15: Tailgate Opening Dimensions And Measurement Points
Courtesy of AMERICAN HONDA MOTOR CO., INC.

External Parts Fitting Positions

Reference External Parts Fitting Positions Dimension - Measure

Unit: mm (in)

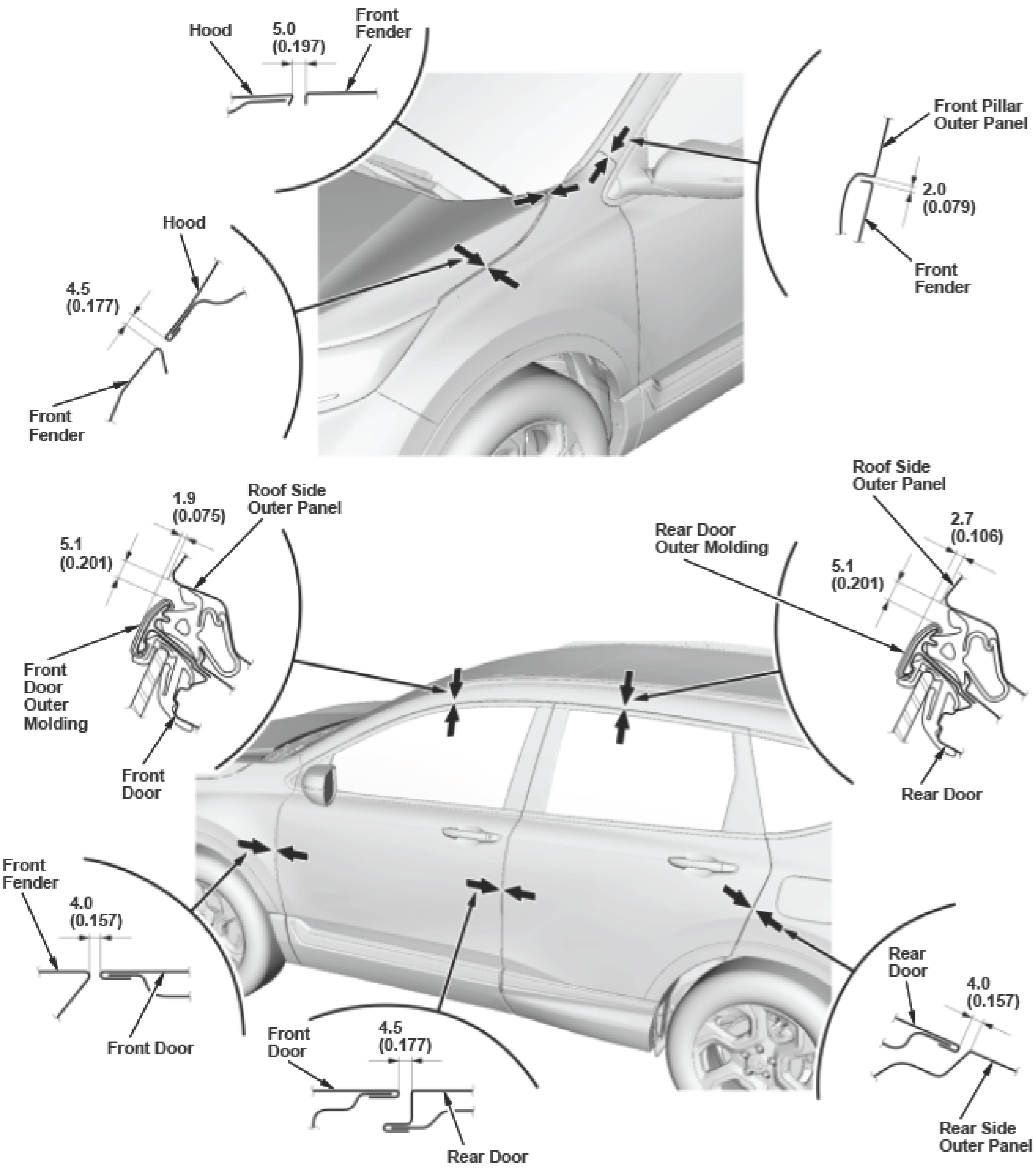
Hood
5.0
(0.197)
Front
Fender
Front Pillar
Outer Panel
2.0
(0.079)
Front
Fender
Hood
4.5
(0.177)
Front
Fender
1.9
(0.075)
Roof Side
Outer Panel
5.1
(0.201)
Front
Door
Outer
Molding
Front
Door
Roof Side
Outer Panel
Rear Door
Outer Molding
2.7
(0.106)
5.1
(0.201)
Rear Door
Front
Fender
4.0
(0.157)
Front Door
Front
Door
4.5
(0.177)
Rear Door
Rear
Door
4.0
(0.157)
Rear Side
Outer Panel

Fig. 16: External Parts Fitting Dimensions And Measurement Points (1 Of 2)
Courtesy of AMERICAN HONDA MOTOR CO., INC.

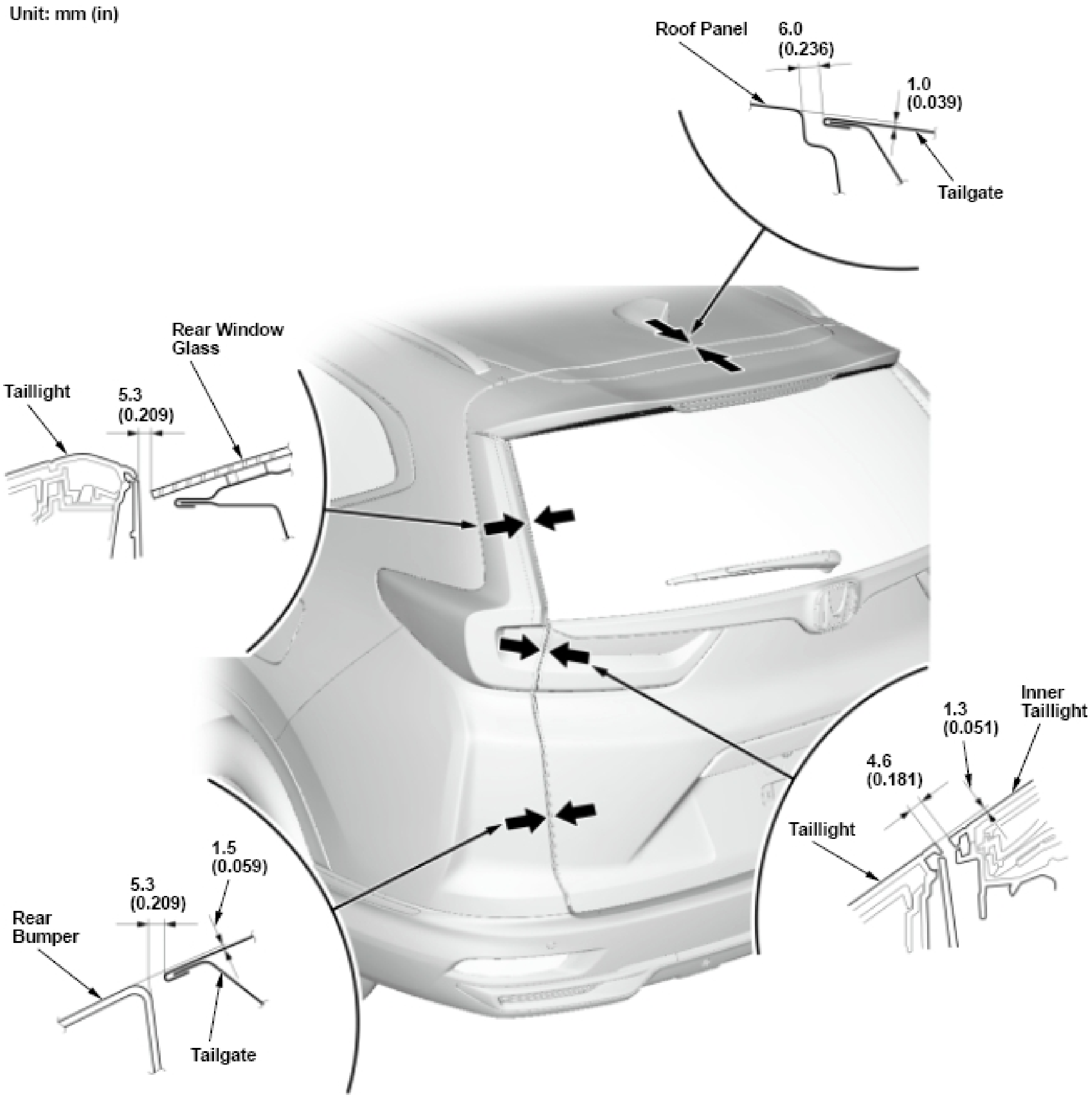
Unit: mm (in)
Roof Panel
6.0
(0.236)
1.0
(0.039)
Tailgate
Rear Window
Glass
Taillight
5.3
(0.209)
Inner
Taillight
1.3
(0.051)
4.6
(0.181)
Taillight
1.5
(0.059)
5.3
(0.209)
Rear
Bumper
Tailgate

Fig. 17: External Parts Fitting Dimensions And Measurement Points (2 Of 2)
Courtesy of AMERICAN HONDA MOTOR CO., INC.

UNDER BODY MEASURING DIMENSIONS

Front Area

NOTE: To measure the body dimensions, refer to the BODY DIMENSIONAL DRAWINGS information.

Reference Front Subframe Position Dimension - Measure

Unit: mm (in)

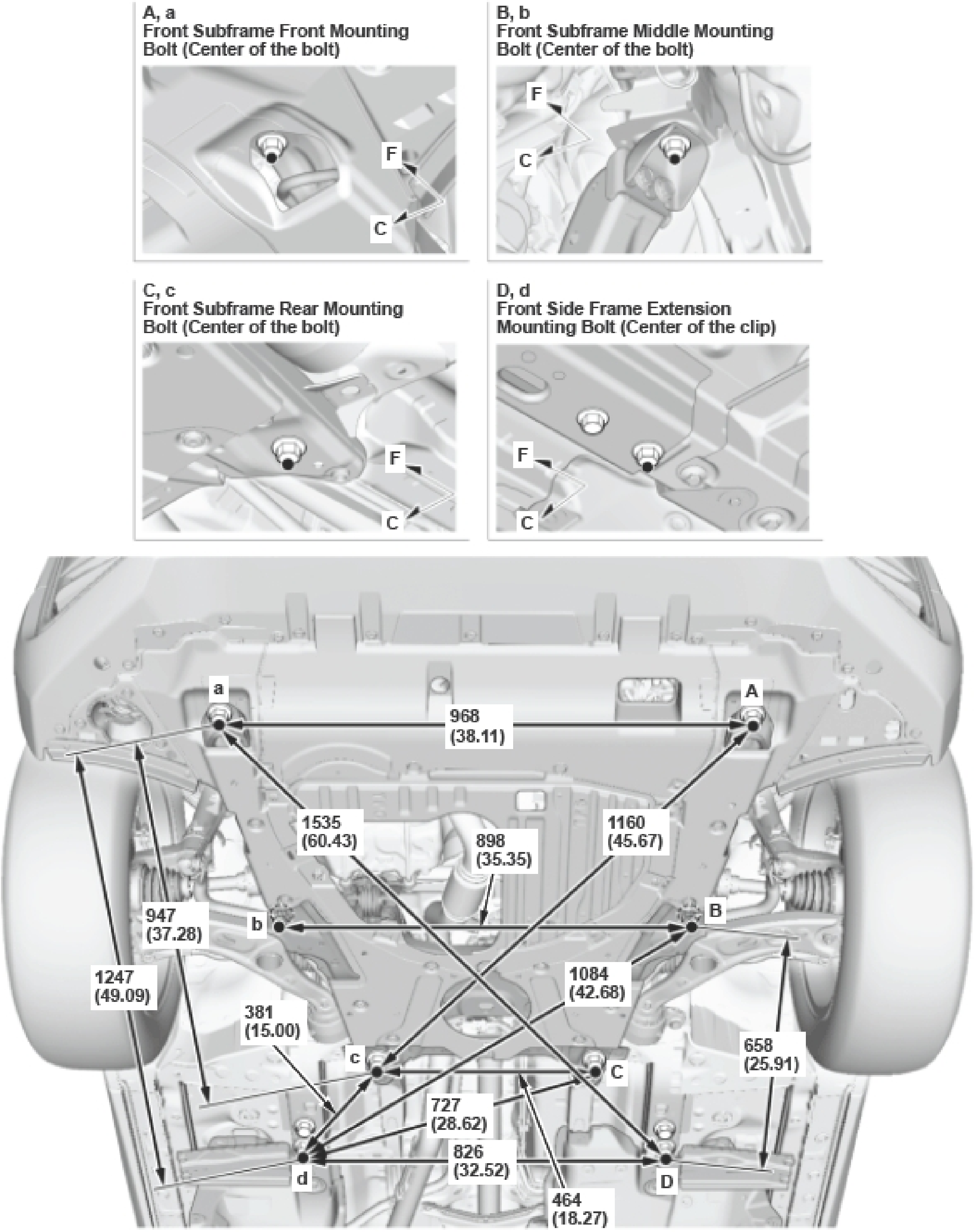
A, a
Front Subframe Front Mounting Bolt (Center of the bolt)
F
C
B, b
Front Subframe Middle Mounting Bolt (Center of the bolt)
F
C
C, c
Front Subframe Rear Mounting Bolt (Center of the bolt)
F
C
D, d
Front Side Frame Extension Mounting Bolt (Center of the clip)
F
C
a
A
968 (38.11)
1535 (60.43)
1160 (45.67)
898 (35.35)
947 (37.28)
b
B
1247 (49.09)
1084 (42.68)
381 (15.00)
658 (25.91)
c
C
727 (28.62)
826 (32.52)
d
D
464 (18.27)

Fig. 18: Front Subframe Dimensions And Measurement Points (Reference)
Courtesy of AMERICAN HONDA MOTOR CO., INC.

Engine Compartment And Front Floor, Under View Dimension - Measure

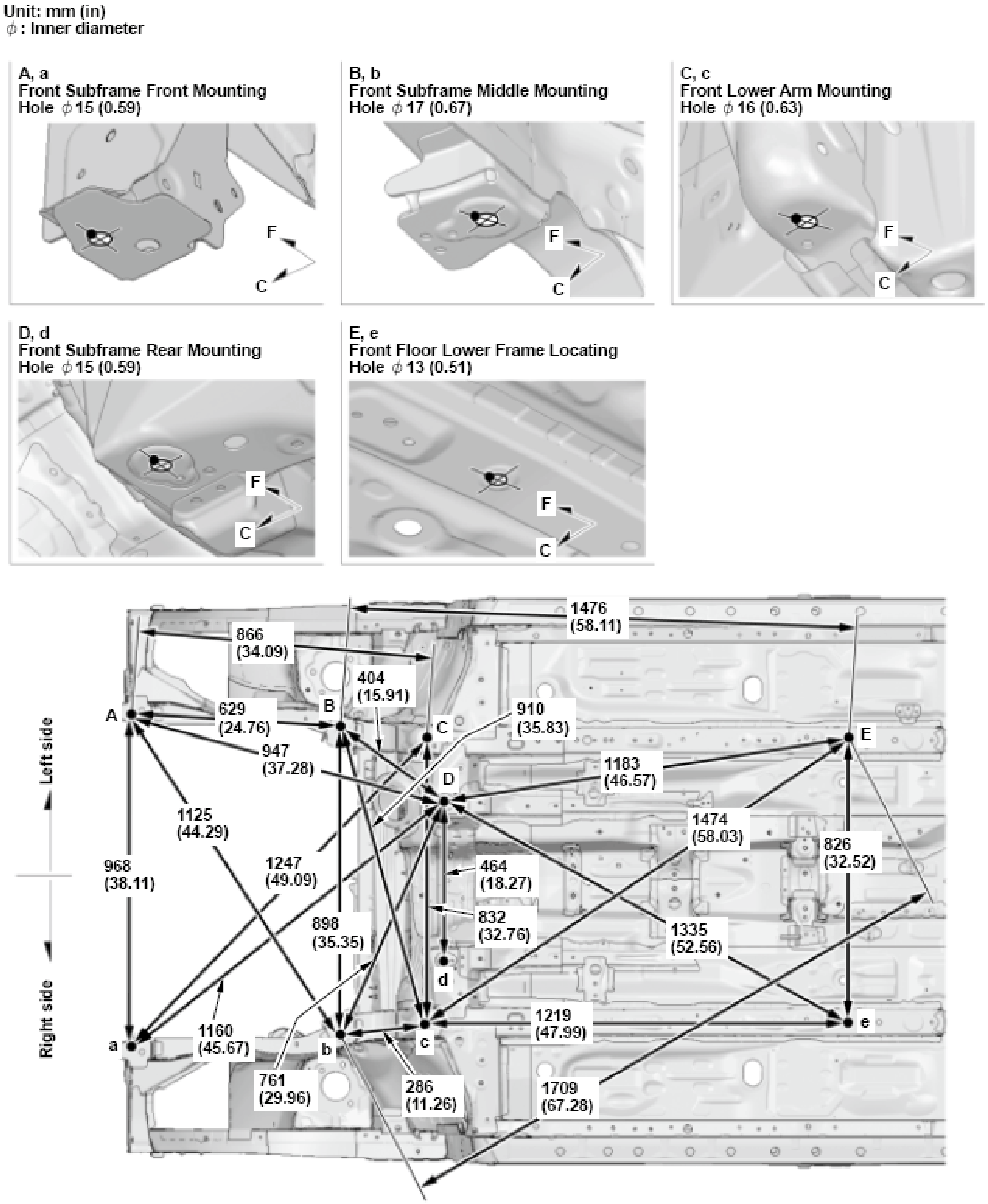
Unit: mm (in)
ϕ : Inner diameter
A, a
Front Subframe Front Mounting
Hole ϕ 15 (0.59)
B, b
Front Subframe Middle Mounting
Hole ϕ 17 (0.67)
C, c
Front Lower Arm Mounting
Hole ϕ 16 (0.63)
D, d
Front Subframe Rear Mounting
Hole ϕ 15 (0.59)
E, e
Front Floor Lower Frame Locating
Hole ϕ 13 (0.51)
F
C
Left side
Right side
A
B
C
D
E
a
b
c
d
e
1476
(58.11)
866
(34.09)
404
(15.91)
629
(24.76)
910
(35.83)
947
(37.28)
1183
(46.57)
1125
(44.29)
1474
(58.03)
968
(38.11)
1247
(49.09)
464
(18.27)
826
(32.52)
832
(32.76)
898
(35.35)
1335
(52.56)
1160
(45.67)
1219
(47.99)
761
(29.96)
286
(11.26)
1709
(67.28)

Fig. 19: Engine Compartment And Front Floor Dimensions And Measurement Points (Under View)
Courtesy of AMERICAN HONDA MOTOR CO., INC.

Under Body Measuring Dimensions - Rear Area

NOTE: To measure the body dimensions, refer to the BODY DIMENSIONAL DRAWINGS information.

Front Floor and Rear Floor, Under View Dimension - Measure

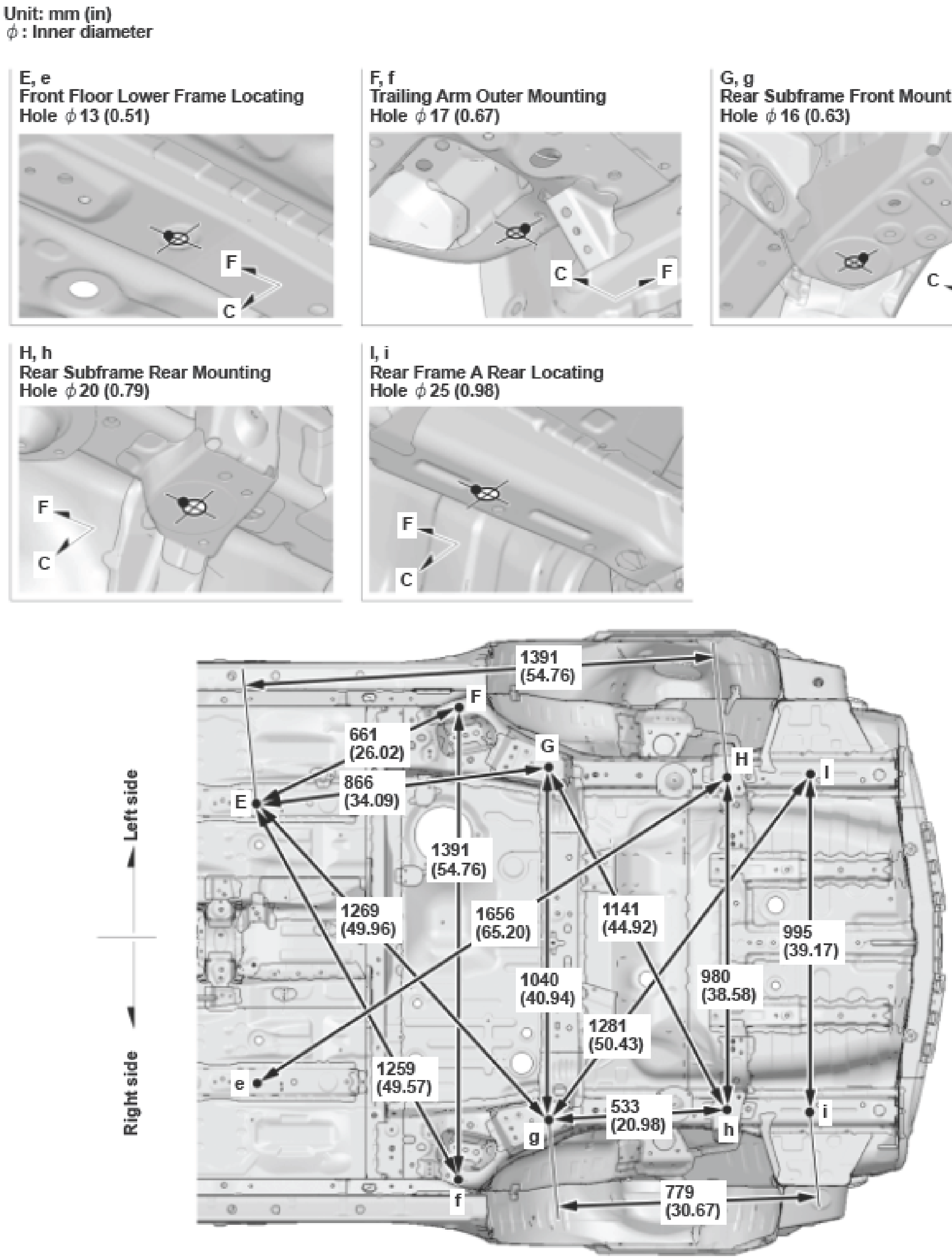
Unit: mm (in)
ϕ : Inner diameter
E, e
Front Floor Lower Frame Locating
Hole ϕ 13 (0.51)
F
C
F, f
Trailing Arm Outer Mounting
Hole ϕ 17 (0.67)
C
F
G, g
Rear Subframe Front Mounting
Hole ϕ 16 (0.63)
C
F
H, h
Rear Subframe Rear Mounting
Hole ϕ 20 (0.79)
F
C
I, i
Rear Frame A Rear Locating
Hole ϕ 25 (0.98)
F
C
Left side
Right side
1391
(54.76)
F
661
(26.02)
G
866
(34.09)
H
I
E
1391
(54.76)
1269
(49.96)
1656
(65.20)
1141
(44.92)
995
(39.17)
1040
(40.94)
980
(38.58)
1281
(50.43)
e
1259
(49.57)
533
(20.98)
g
h
i
f
779
(30.67)

Fig. 20: Front Floor And Rear Floor Dimensions And Measurement Points (Under View) (1 Of 2)

Courtesy of AMERICAN HONDA MOTOR CO., INC.

Unit: mm (in)
ϕ : Inner diameter

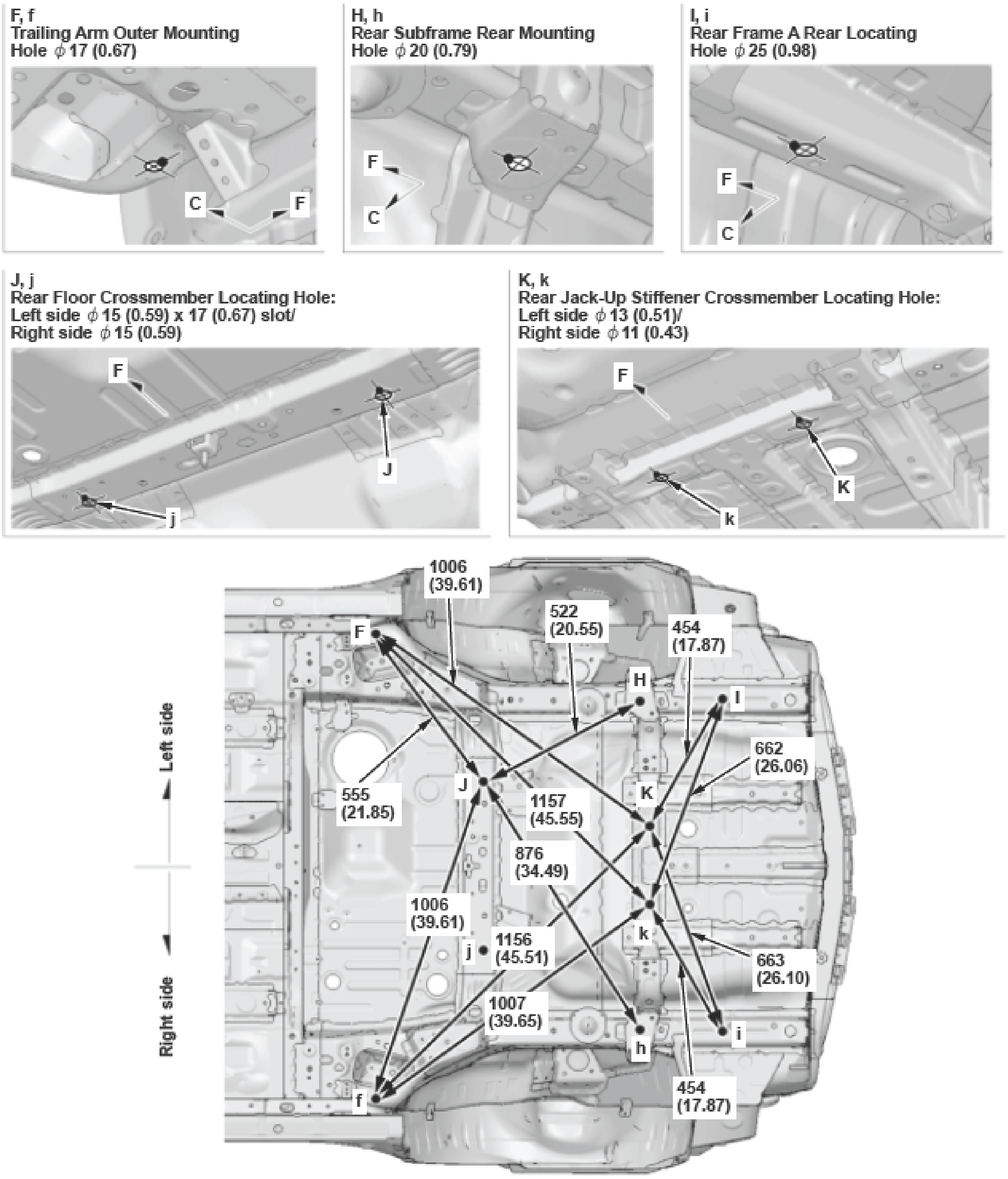
F, f
Trailing Arm Outer Mounting
Hole ϕ 17 (0.67)

H, h
Rear Subframe Rear Mounting
Hole ϕ 20 (0.79)

I, i
Rear Frame A Rear Locating
Hole ϕ 25 (0.98)

J, j
Rear Floor Crossmember Locating Hole:
Left side ϕ 15 (0.59) x 17 (0.67) slot/
Right side ϕ 15 (0.59)

K, k
Rear Jack-Up Stiffener Crossmember Locating Hole:
Left side ϕ 13 (0.51)/
Right side ϕ 11 (0.43)

C
F
F
C
F
C
F
J
j
F
K
k
1006
(39.61)
522
(20.55)
454
(17.87)
F
H
I
662
(26.06)
Left side
555
(21.85)
J
1157
(45.55)
K
876
(34.49)
1006
(39.61)
1156
(45.51)
j
k
663
(26.10)
Right side
1007
(39.65)
h
i
f
454
(17.87)

Fig. 21: Front Floor And Rear Floor Dimensions And Measurement Points (Under View) (2 Of 2)
Courtesy of AMERICAN HONDA MOTOR CO., INC.

Inside Sill Positions Dimension - Measure

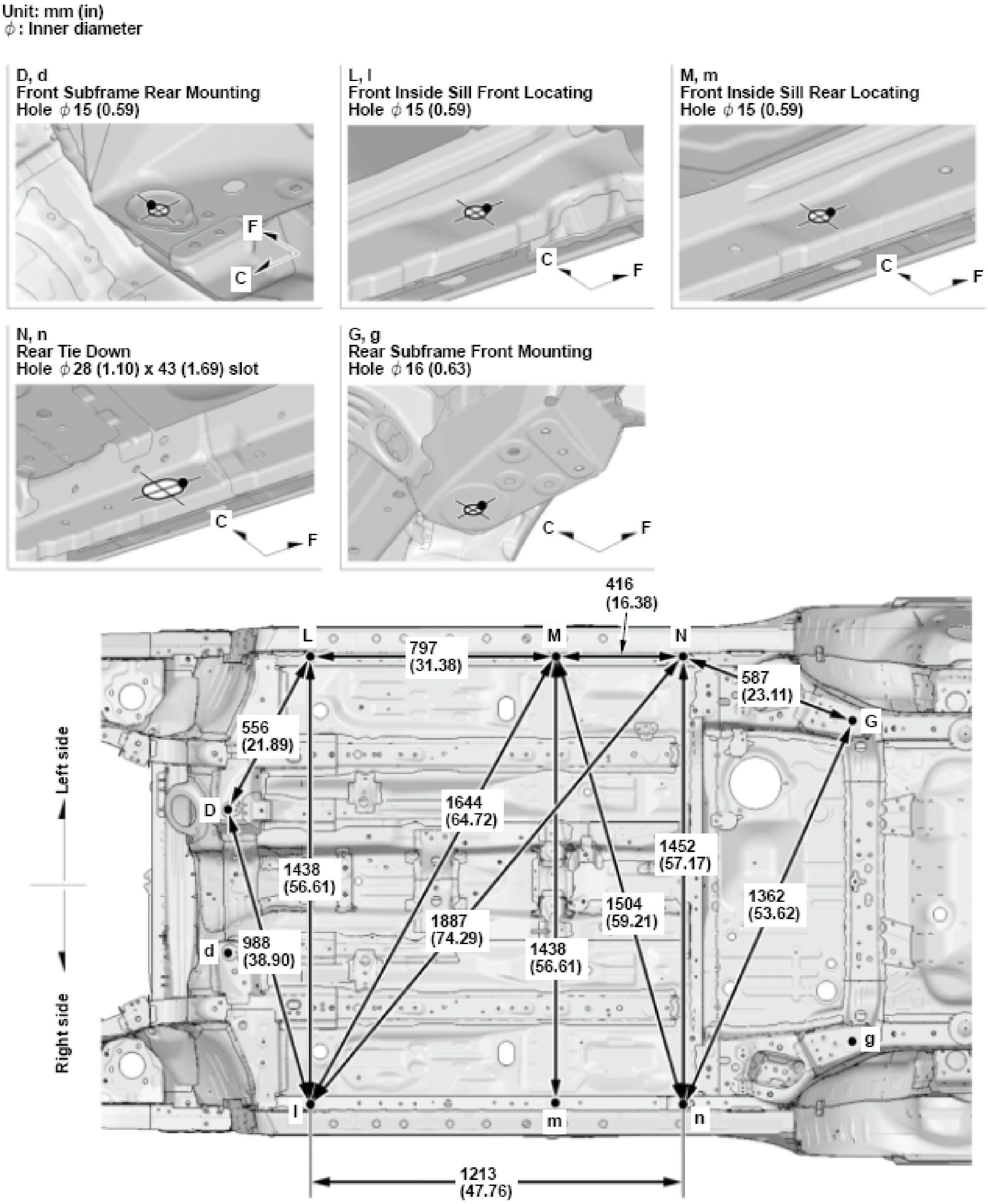
Unit: mm (in)
ϕ : Inner diameter
D, d
Front Subframe Rear Mounting
Hole ϕ 15 (0.59)
L, l
Front Inside Sill Front Locating
Hole ϕ 15 (0.59)
M, m
Front Inside Sill Rear Locating
Hole ϕ 15 (0.59)
N, n
Rear Tie Down
Hole ϕ 28 (1.10) x 43 (1.69) slot
G, g
Rear Subframe Front Mounting
Hole ϕ 16 (0.63)
C
F
416
(16.38)
L
M
N
797
(31.38)
587
(23.11)
G
556
(21.89)
D
1644
(64.72)
1452
(57.17)
1438
(56.61)
1504
(59.21)
1362
(53.62)
1887
(74.29)
d
988
(38.90)
1438
(56.61)
g
l
m
n
1213
(47.76)
Left side
Right side

Fig. 22: Inside Sill Dimensions And Measurement Points
Courtesy of AMERICAN HONDA MOTOR CO., INC.

FRAME REPAIR CHART

NOTE: To measure the body dimensions, refer to the BODY DIMENSIONAL DRAWINGS information.

Top View

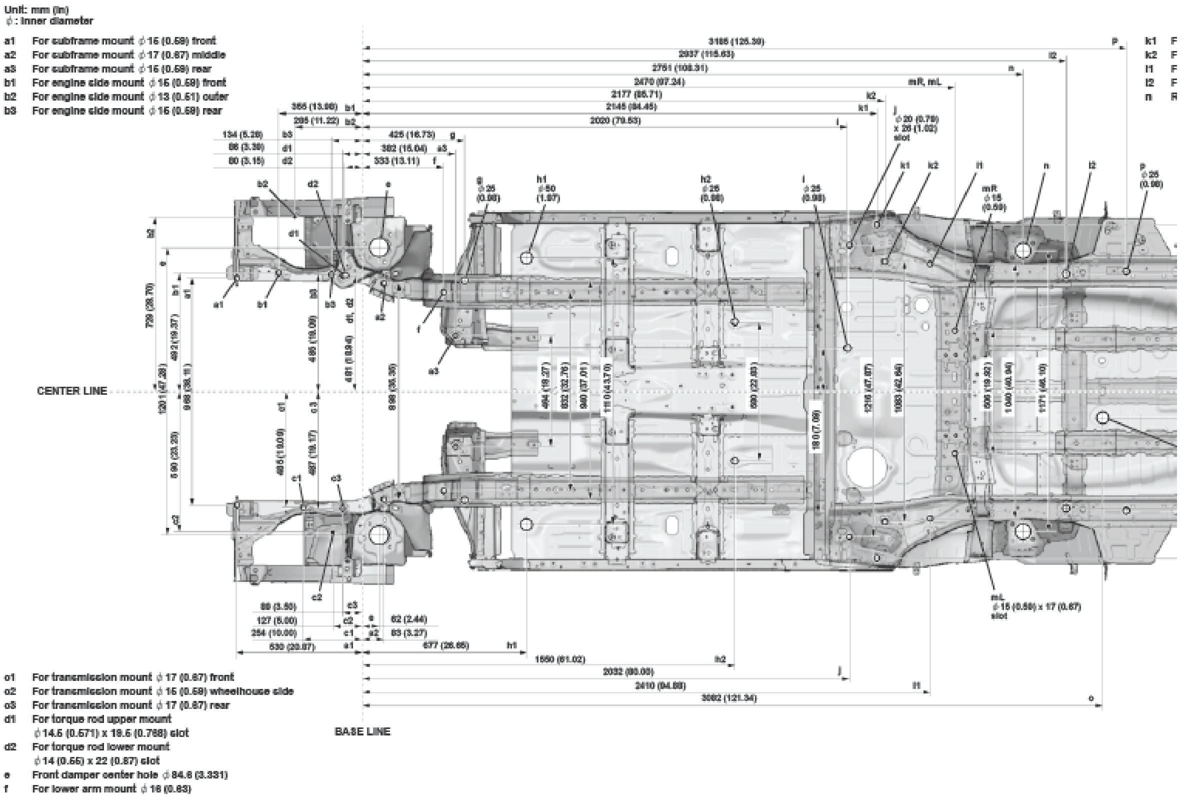
Unit: mm (in)
ϕ : Inner diameter
a1 For subframe mount ϕ 15 (0.59) front
a2 For subframe mount ϕ 17 (0.67) middle
a3 For subframe mount ϕ 15 (0.59) rear
b1 For engine side mount ϕ 15 (0.59) front
b2 For engine side mount ϕ 13 (0.51) outer
b3 For engine side mount ϕ 15 (0.59) rear
3185 (125.39)
p
2937 (115.63)
l2
2751 (108.31)
n
2470 (97.24)
mR, mL
2177 (85.71)
k2
2145 (84.45)
k1
2020 (79.53)
i
355 (13.98)
295 (11.22)
134 (5.28)
88 (3.39)
80 (3.15)
425 (16.73)
g
382 (15.04)
a3
333 (13.11)
f
j
ϕ 20 (0.79)
x 26 (1.02)
slot
g
ϕ 25
(0.98)
h1
ϕ 50
(1.97)
h2
ϕ 25
(0.98)
i
ϕ 25
(0.98)
mR
ϕ 15
(0.59)
p
ϕ 25
(0.98)
k1 F
k2 F
l1 F
l2 F
n R
CENTER LINE
729 (28.70)
1201 (47.28)
492 (19.37)
968 (38.11)
590 (23.23)
485 (19.09)
481 (18.94)
898 (35.35)
487 (19.17)
464 (18.27)
832 (32.76)
940 (37.01)
1110 (43.70)
580 (22.83)
180 (7.09)
1216 (47.87)
1083 (42.64)
506 (19.92)
1040 (40.94)
1171 (46.10)
mL
ϕ 15 (0.59) x 17 (0.67)
slot
89 (3.50)
127 (5.00)
254 (10.00)
530 (20.87)
62 (2.44)
83 (3.27)
677 (26.65)
h1
1550 (61.02)
h2
2032 (80.00)
j
2410 (94.88)
l1
3082 (121.34)
o
c1 For transmission mount ϕ 17 (0.67) front
c2 For transmission mount ϕ 15 (0.59) wheelhouse side
c3 For transmission mount ϕ 17 (0.67) rear
d1 For torque rod upper mount
ϕ 14.5 (0.571) x 19.5 (0.768) slot
d2 For torque rod lower mount
ϕ 14 (0.55) x 22 (0.87) slot
e Front damper center hole ϕ 84.6 (3.331)
f For lower arm mount ϕ 16 (0.63)
BASE LINE

Fig. 23: Frame Repair Dimensions And Measurement Points (Top View)

Courtesy of AMERICAN HONDA MOTOR CO., INC.

Side View

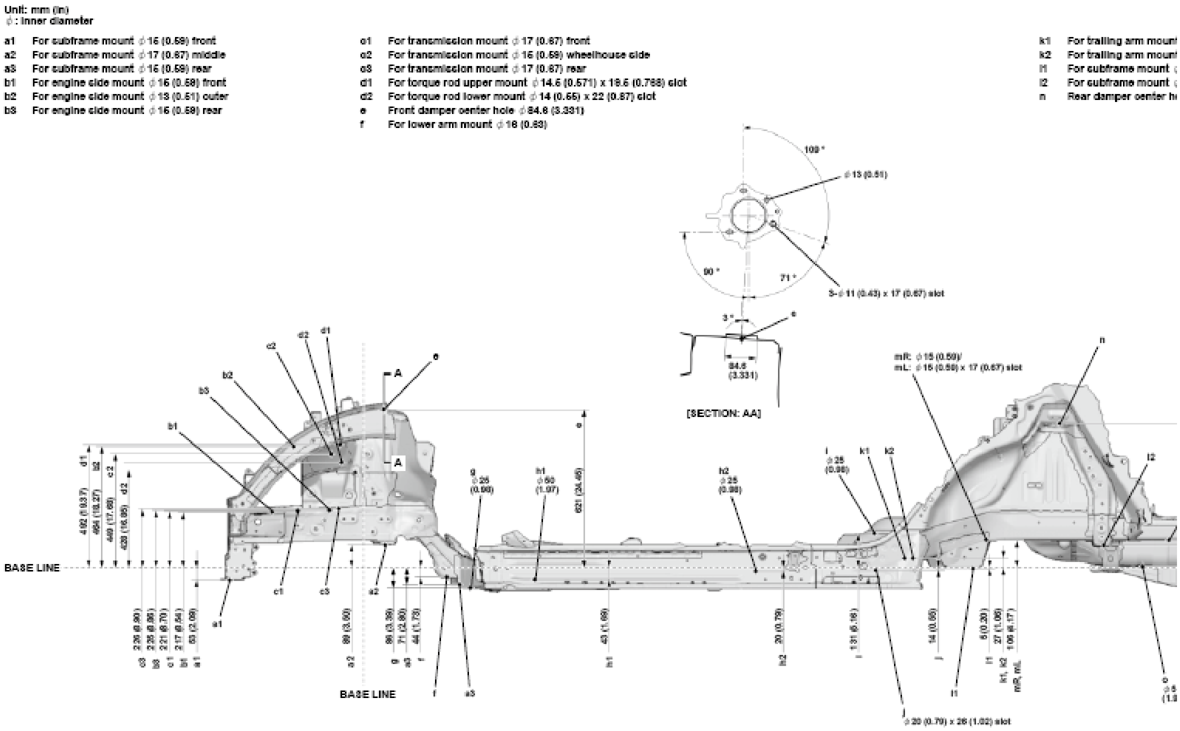
Unit: mm (in)
ϕ : Inner diameter
a1 For subframe mount ϕ 15 (0.59) front
a2 For subframe mount ϕ 17 (0.67) middle
a3 For subframe mount ϕ 15 (0.59) rear
b1 For engine side mount ϕ 15 (0.59) front
b2 For engine side mount ϕ 13 (0.51) outer
b3 For engine side mount ϕ 15 (0.59) rear
c1 For transmission mount ϕ 17 (0.67) front
c2 For transmission mount ϕ 15 (0.59) wheelhouse side
c3 For transmission mount ϕ 17 (0.67) rear
d1 For torque rod upper mount ϕ 14.5 (0.571) x 19.5 (0.768) slot
d2 For torque rod lower mount ϕ 14 (0.55) x 22 (0.87) slot
e Front damper center hole ϕ 84.6 (3.331)
f For lower arm mount ϕ 16 (0.63)
k1 For trailing arm mount
k2 For trailing arm mount
l1 For subframe mount
l2 For subframe mount
n Rear damper center h
109 °
ϕ 13 (0.51)
90 °
71 °
3- ϕ 11 (0.43) x 17 (0.67) slot
3 °
84.6
(3.331)
[SECTION: AA]
A
A
BASE LINE
492 (19.37)
464 (18.27)
449 (17.68)
428 (16.85)
236 (9.29)
226 (8.90)
221 (8.70)
217 (8.54)
53 (2.09)
89 (3.50)
86 (3.39)
71 (2.80)
44 (1.73)
621 (24.45)
43 (1.69)
20 (0.79)
131 (5.16)
14 (0.55)
8 (0.30)
27 (1.06)
106 (4.17)
g
ϕ 25
(0.98)
h1
ϕ 50
(1.97)
h2
ϕ 25
(0.98)
i
ϕ 25
(0.98)
k1
k2
mR: ϕ 15 (0.59)/
mL: ϕ 15 (0.59) x 17 (0.67) slot
n
l2
j
ϕ 20 (0.79) x 26 (1.02) slot
l1
k1, k2
mR, mL

Fig. 24: Frame Repair Dimensions And Measurement Points (Side View)

Courtesy of AMERICAN HONDA MOTOR CO., INC.

FRAME REPAIR CHART

NOTE: To measure the body dimensions, refer to SYMBOLS DEFINITION .

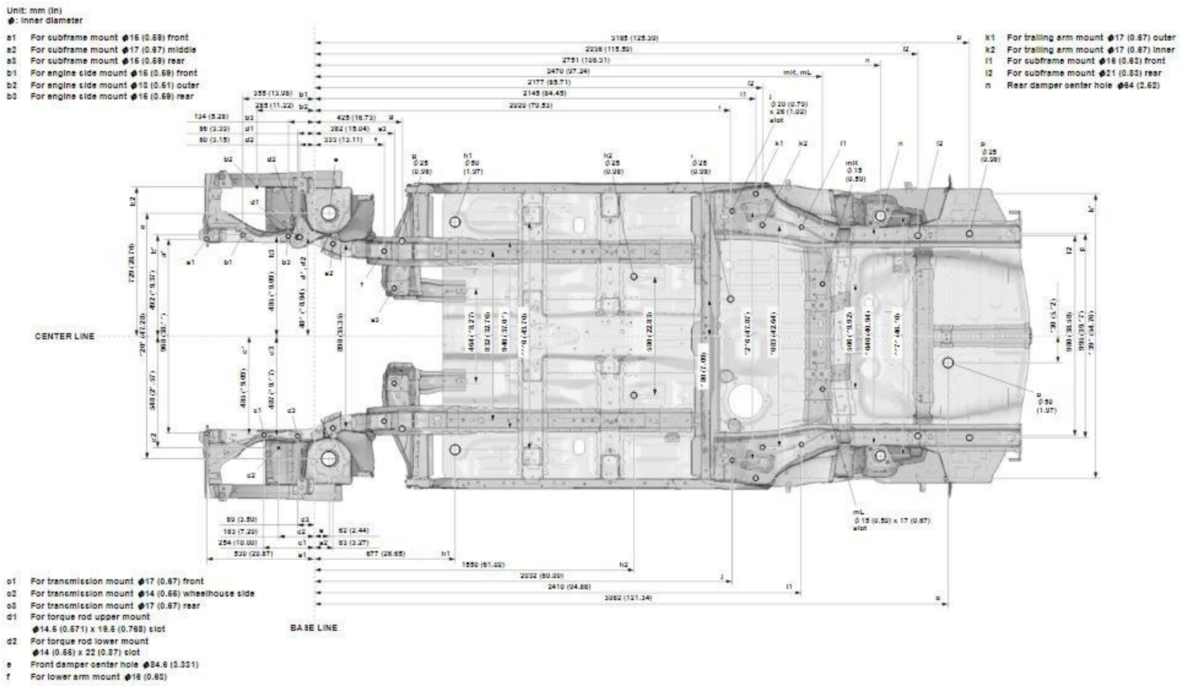
Unit: mm (in)
ϕ: Inner diameter
a1 For subframe mount ϕ15 (0.59) front
a2 For subframe mount ϕ17 (0.67) middle
a3 For subframe mount ϕ15 (0.59) rear
b1 For engine side mount ϕ15 (0.59) front
b2 For engine side mount ϕ13 (0.51) outer
b3 For engine side mount ϕ15 (0.59) rear
k1 For trailing arm mount ϕ17 (0.67) outer
k2 For trailing arm mount ϕ17 (0.67) inner
l1 For subframe mount ϕ16 (0.63) front
l2 For subframe mount ϕ21 (0.83) rear
n Rear damper center hole ϕ64 (2.52)
c1 For transmission mount ϕ17 (0.67) front
c2 For transmission mount ϕ14 (0.55) wheelhouse side
c3 For transmission mount ϕ17 (0.67) rear
d1 For torque rod upper mount ϕ14.5 (0.571) x 19.5 (0.768) slot
d2 For torque rod lower mount ϕ14 (0.55) x 22 (0.87) slot
e Front damper center hole ϕ84.6 (3.331)
f For lower arm mount ϕ16 (0.63)
CENTER LINE
BASE LINE

Fig. 1: Vehicle Frame Dimensions And Measurement Points (Top View)
Courtesy of AMERICAN HONDA MOTOR CO., INC.

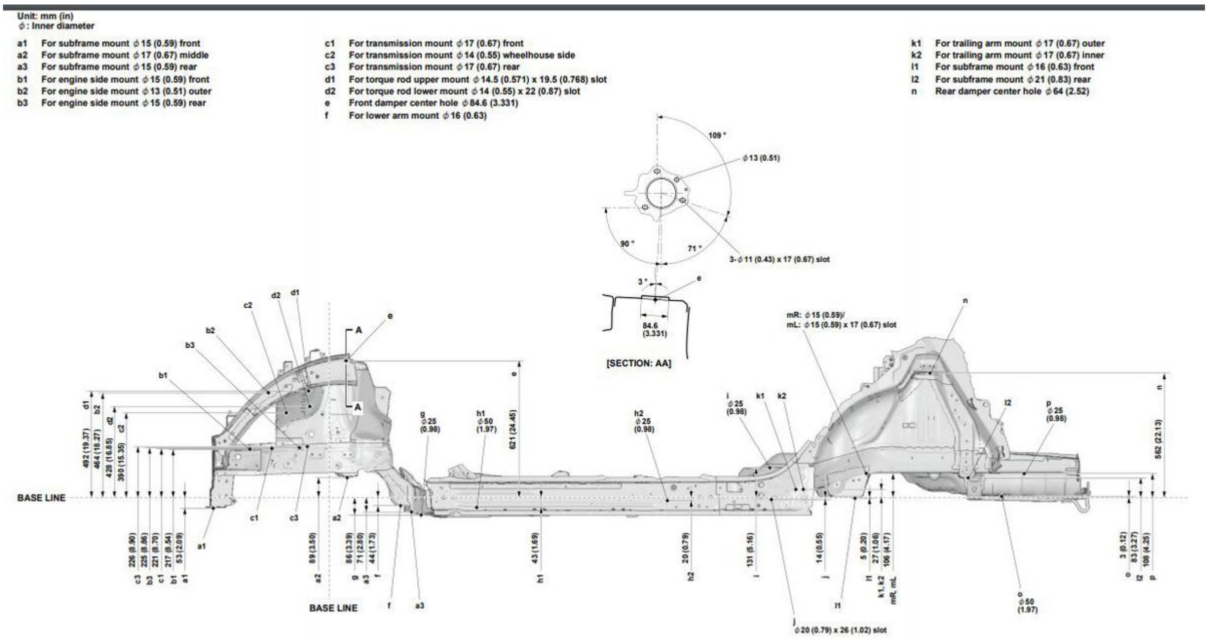
Unit: mm (in)
ϕ: Inner diameter
a1 For subframe mount ϕ15 (0.59) front
a2 For subframe mount ϕ17 (0.67) middle
a3 For subframe mount ϕ15 (0.59) rear
b1 For engine side mount ϕ15 (0.59) front
b2 For engine side mount ϕ13 (0.51) outer
b3 For engine side mount ϕ15 (0.59) rear
c1 For transmission mount ϕ17 (0.67) front
c2 For transmission mount ϕ14 (0.55) wheelhouse side
c3 For transmission mount ϕ17 (0.67) rear
d1 For torque rod upper mount ϕ14.5 (0.571) x 19.5 (0.768) slot
d2 For torque rod lower mount ϕ14 (0.55) x 22 (0.87) slot
e Front damper center hole ϕ84.6 (3.331)
f For lower arm mount ϕ16 (0.63)
k1 For trailing arm mount ϕ17 (0.67) outer
k2 For trailing arm mount ϕ17 (0.67) inner
l1 For subframe mount ϕ16 (0.63) front
l2 For subframe mount ϕ21 (0.83) rear
n Rear damper center hole ϕ64 (2.52)
109 °
ϕ13 (0.51)
90 °
71 °
3-ϕ11 (0.43) x 17 (0.67) slot
84.6 (3.331)
[SECTION: AA]
mR: ϕ15 (0.59)/
mL: ϕ15 (0.59) x 17 (0.67) slot
BASE LINE
ϕ20 (0.79) x 26 (1.02) slot

Fig. 2: Vehicle Frame Dimensions And Measurement Points (Side View)
Courtesy of AMERICAN HONDA MOTOR CO., INC.

UNDER BODY MEASURING DIMENSIONS

FRONT AREA

NOTE: To measure the body dimensions, refer to SYMBOLS DEFINITION .

Reference Front Subframe Position Dimension - Measure

NOTE: The AWD model is shown; the dimensions of the 2WD model are the same as the AWD model.

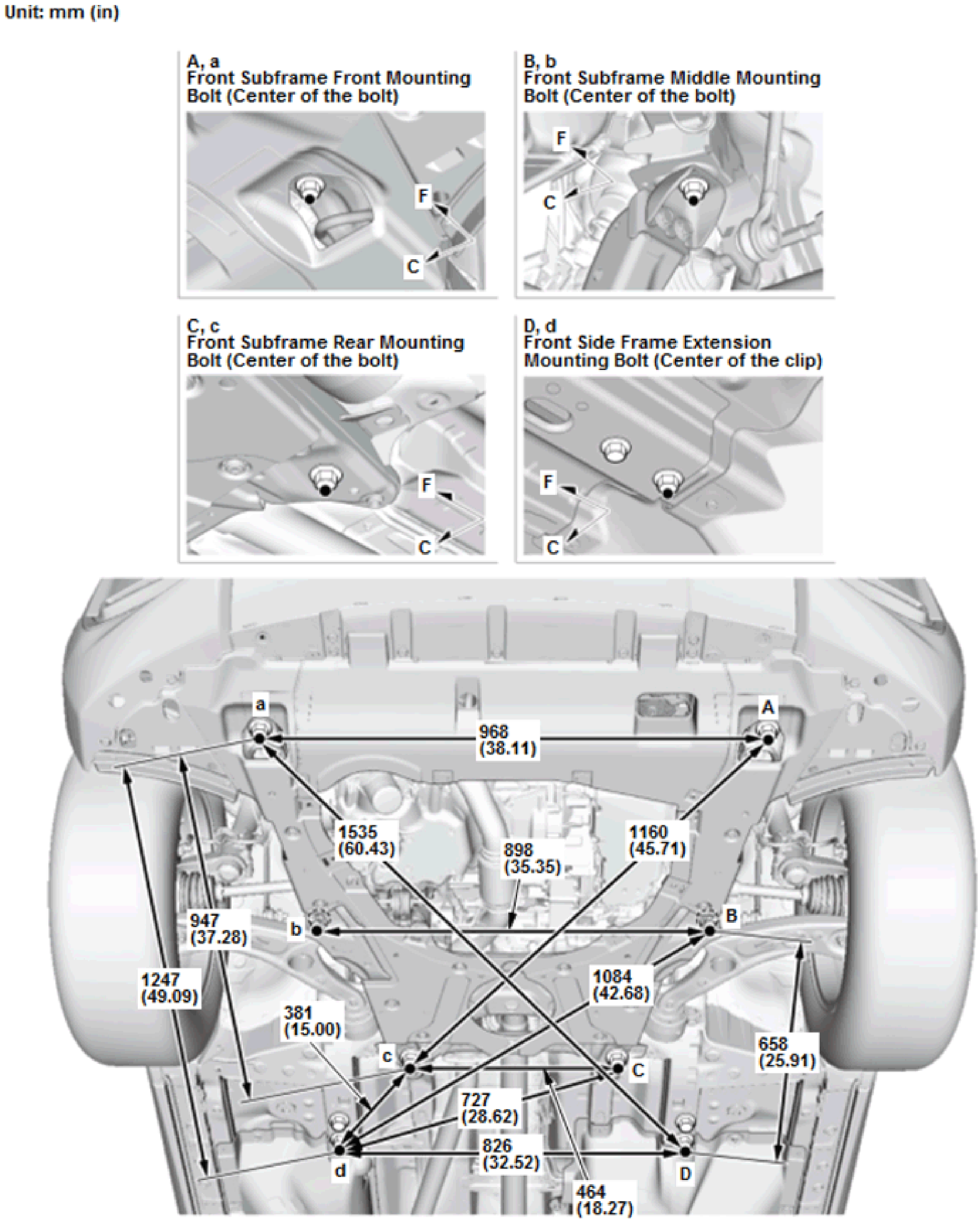

Unit: mm (in)
A, a
Front Subframe Front Mounting Bolt (Center of the bolt)
F
C
B, b
Front Subframe Middle Mounting Bolt (Center of the bolt)
F
C
C, c
Front Subframe Rear Mounting Bolt (Center of the bolt)
F
C
D, d
Front Side Frame Extension Mounting Bolt (Center of the clip)
F
C
a
A
968 (38.11)
1535 (60.43)
898 (35.35)
1160 (45.71)
947 (37.28)
b
B
1247 (49.09)
1084 (42.68)
381 (15.00)
c
C
658 (25.91)
727 (28.62)
826 (32.52)
d
D
464 (18.27)

Fig. 3: Front Subframe Dimensions And Measurement Points
Courtesy of AMERICAN HONDA MOTOR CO., INC.

Engine Compartment And Front Floor, Under View Dimension - Measure

NOTE: The 2WD model is shown; the dimensions of the AWD model are the same as the 2WD model.

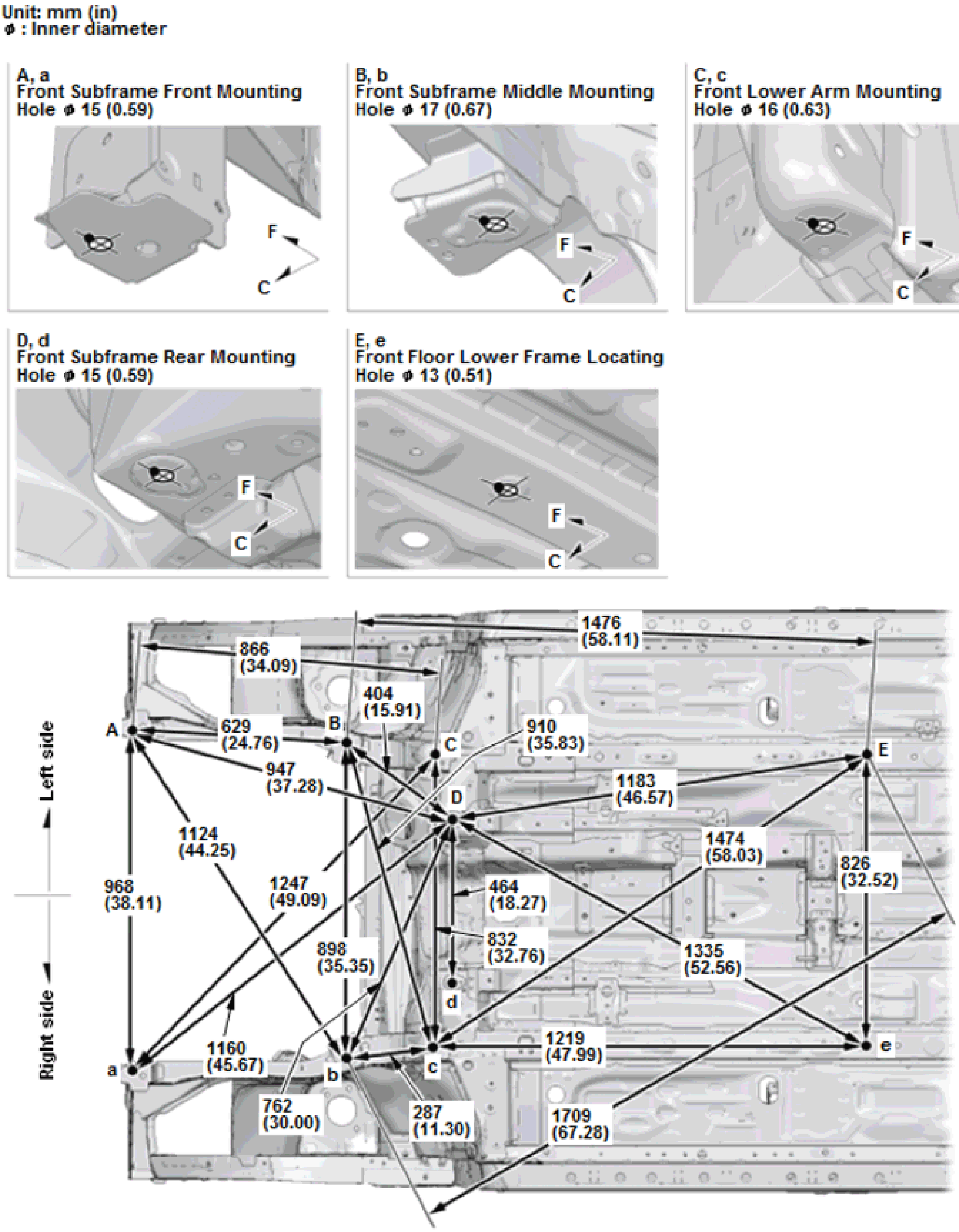
Unit: mm (in)
φ : Inner diameter
A, a
Front Subframe Front Mounting Hole φ 15 (0.59)
B, b
Front Subframe Middle Mounting Hole φ 17 (0.67)
C, c
Front Lower Arm Mounting Hole φ 16 (0.63)
D, d
Front Subframe Rear Mounting Hole φ 15 (0.59)
E, e
Front Floor Lower Frame Locating Hole φ 13 (0.51)
F
C
Left side
Right side
A
B
C
D
E
a
b
c
d
e
866 (34.09)
1476 (58.11)
404 (15.91)
629 (24.76)
910 (35.83)
947 (37.28)
1183 (46.57)
1124 (44.25)
1474 (58.03)
968 (38.11)
1247 (49.09)
464 (18.27)
826 (32.52)
898 (35.35)
832 (32.76)
1335 (52.56)
1160 (45.67)
1219 (47.99)
762 (30.00)
287 (11.30)
1709 (67.28)

[Fig. 4: Engine Compartment And Front Floor Under Side Dimensions And Measurement Points](#)

Courtesy of AMERICAN HONDA MOTOR CO., INC.

REAR AREA

NOTE: To measure the body dimensions, refer to SYMBOLS DEFINITION .

Front Floor And Rear Floor, Under View Dimension - Measure

Unit: mm (in)
φ : Inner diameter

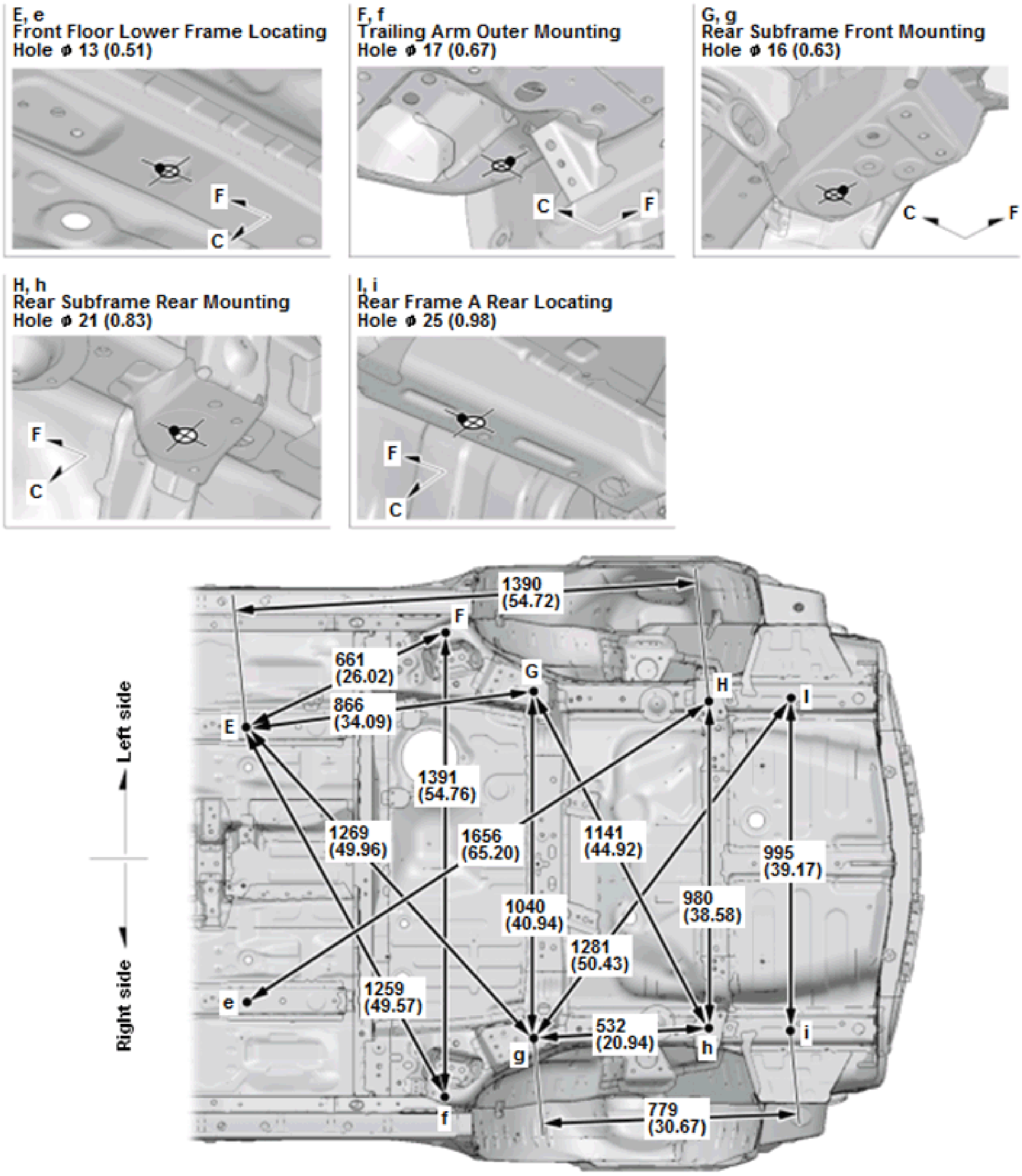

E, e
Front Floor Lower Frame Locating
Hole φ 13 (0.51)

F, f
Trailing Arm Outer Mounting
Hole φ 17 (0.67)

G, g
Rear Subframe Front Mounting
Hole φ 16 (0.63)

H, h
Rear Subframe Rear Mounting
Hole φ 21 (0.83)

I, i
Rear Frame A Rear Locating
Hole φ 25 (0.98)

F
C
Left side
Right side
1390
(54.72)
F
661
(26.02)
G
866
(34.09)
H
I
E
1391
(54.76)
1269
(49.96)
1656
(65.20)
1141
(44.92)
995
(39.17)
980
(38.58)
1040
(40.94)
1281
(50.43)
e
1259
(49.57)
532
(20.94)
g
h
i
f
779
(30.67)

[Fig. 5: Front Floor And Rear Floor Under View Dimensions And Measurement Points (1 Of 2)]
Courtesy of AMERICAN HONDA MOTOR CO., INC.

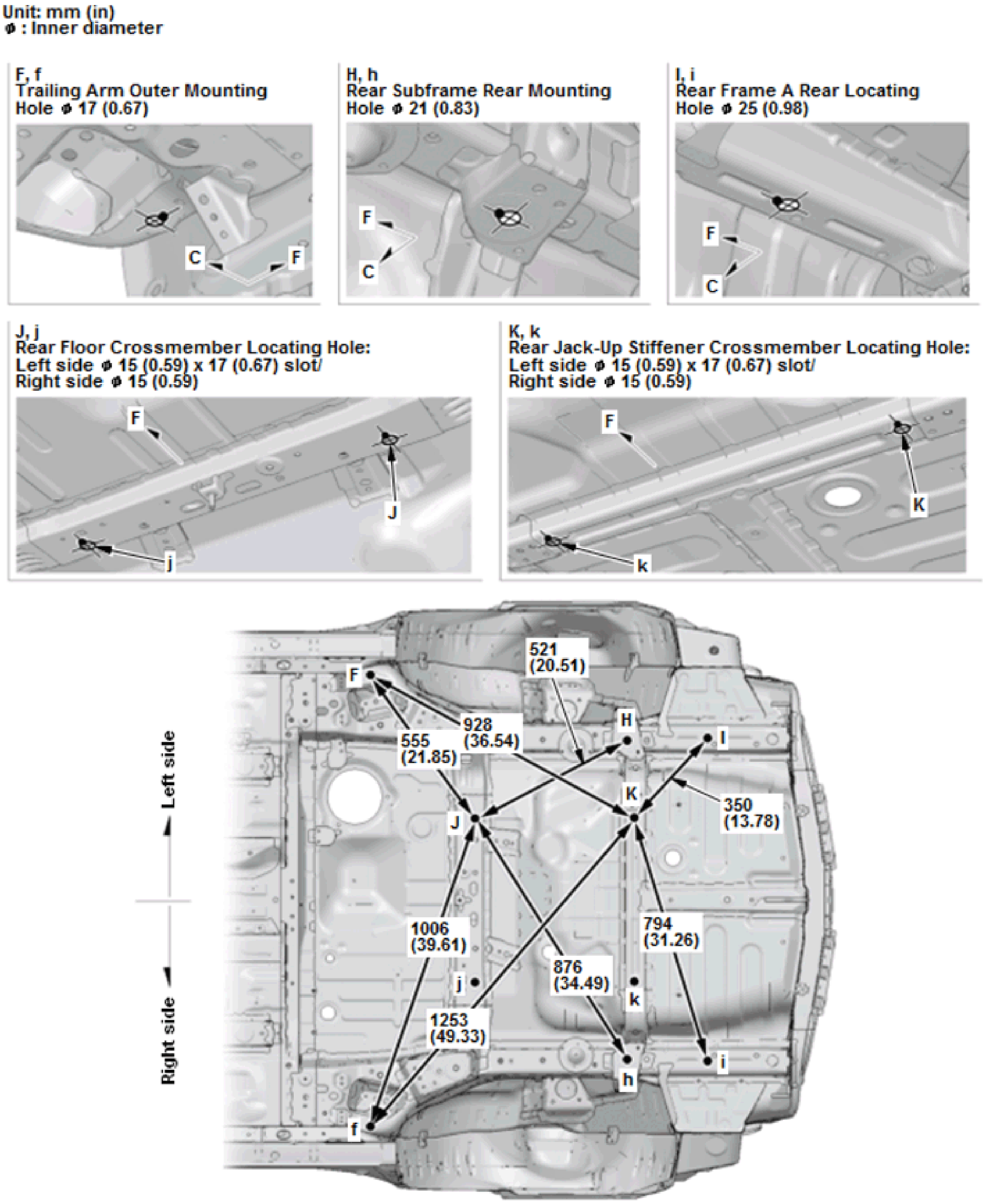
Unit: mm (in)
ɸ : Inner diameter
F, f
Trailing Arm Outer Mounting Hole ɸ 17 (0.67)
C
F
H, h
Rear Subframe Rear Mounting Hole ɸ 21 (0.83)
F
C
I, i
Rear Frame A Rear Locating Hole ɸ 25 (0.98)
F
C
J, j
Rear Floor Crossmember Locating Hole:
Left side ɸ 15 (0.59) x 17 (0.67) slot/
Right side ɸ 15 (0.59)
F
J
j
K, k
Rear Jack-Up Stiffener Crossmember Locating Hole:
Left side ɸ 15 (0.59) x 17 (0.67) slot/
Right side ɸ 15 (0.59)
F
K
k
Left side
Right side
F
521
(20.51)
928
(36.54)
555
(21.85)
H
I
K
350
(13.78)
J
1006
(39.61)
794
(31.26)
876
(34.49)
j
k
1253
(49.33)
h
i
f

Fig. 6: Front Floor And Rear Floor Under View Dimensions And Measurement Points (2 Of 2)

Courtesy of AMERICAN HONDA MOTOR CO., INC.

Inside Sill Positions Dimension - Measure

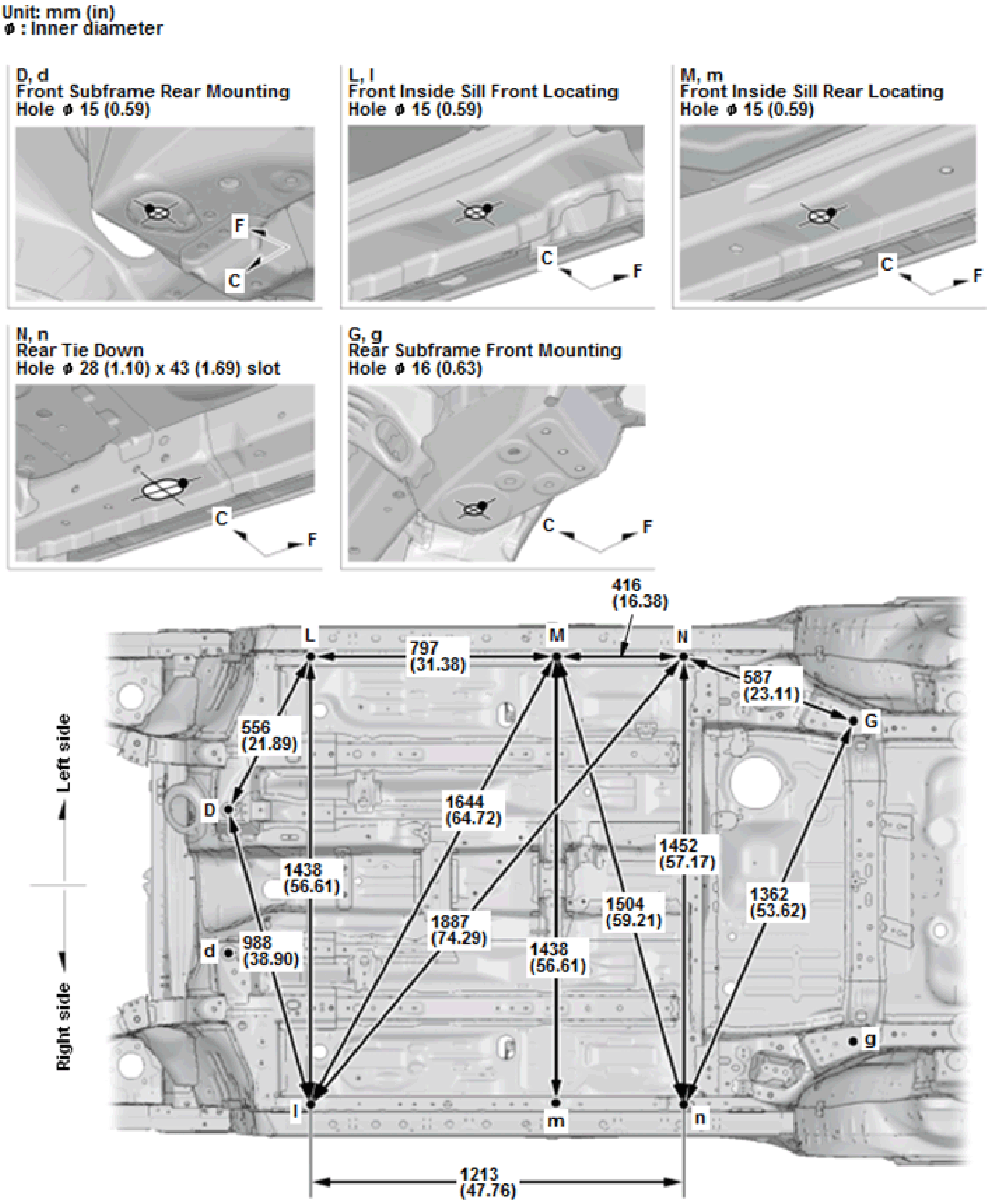
Unit: mm (in)
φ : Inner diameter
D, d
Front Subframe Rear Mounting
Hole φ 15 (0.59)
F
C
L, l
Front Inside Sill Front Locating
Hole φ 15 (0.59)
C
F
M, m
Front Inside Sill Rear Locating
Hole φ 15 (0.59)
C
F
N, n
Rear Tie Down
Hole φ 28 (1.10) x 43 (1.69) slot
C
F
G, g
Rear Subframe Front Mounting
Hole φ 16 (0.63)
C
F
416
(16.38)
L
797
(31.38)
M
N
587
(23.11)
G
556
(21.89)
Left side
D
1644
(64.72)
1452
(57.17)
1438
(56.61)
1504
(59.21)
1362
(53.62)
1887
(74.29)
d
988
(38.90)
1438
(56.61)
Right side
g
l
m
n
1213
(47.76)

Fig. 7: Inside Sill Dimensions And Measurement Points
Courtesy of AMERICAN HONDA MOTOR CO., INC.

UPPER BODY MEASURING DIMENSIONS

EXTERNAL PARTS FITTING POSITIONS

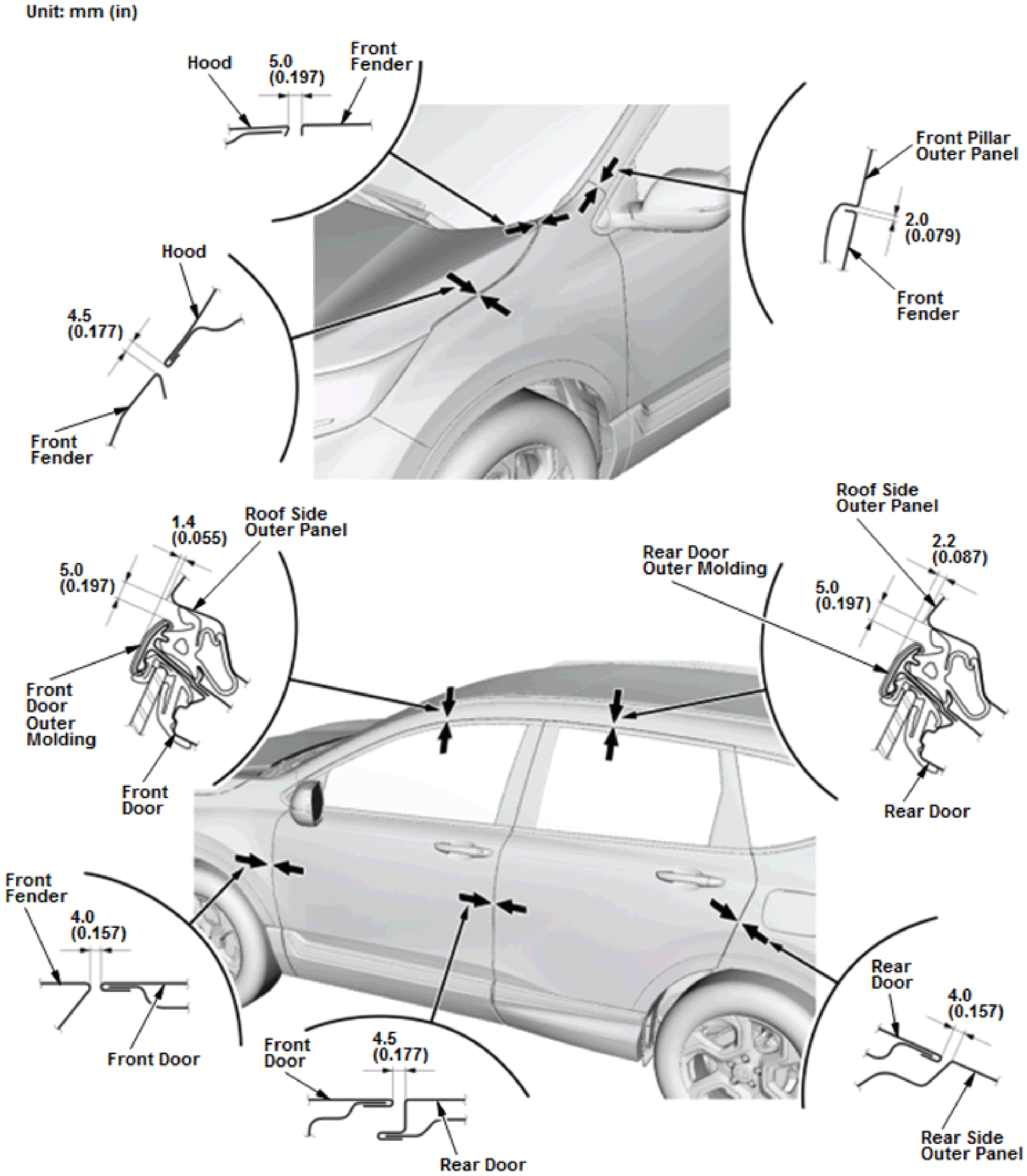

Unit: mm (in)
Hood
5.0 (0.197)
Front Fender
Front Pillar Outer Panel
2.0 (0.079)
Front Fender
Hood
4.5 (0.177)
Front Fender
1.4 (0.055)
Roof Side Outer Panel
5.0 (0.197)
Front Door Outer Molding
Front Door
Roof Side Outer Panel
2.2 (0.087)
Rear Door Outer Molding
5.0 (0.197)
Rear Door
Front Fender
4.0 (0.157)
Front Door
Front Door
4.5 (0.177)
Rear Door
Rear Door
4.0 (0.157)
Rear Side Outer Panel

Fig. 8: External Body Panel Gap Measurements And Measurement Points (1 Of 2)
Courtesy of AMERICAN HONDA MOTOR CO., INC.

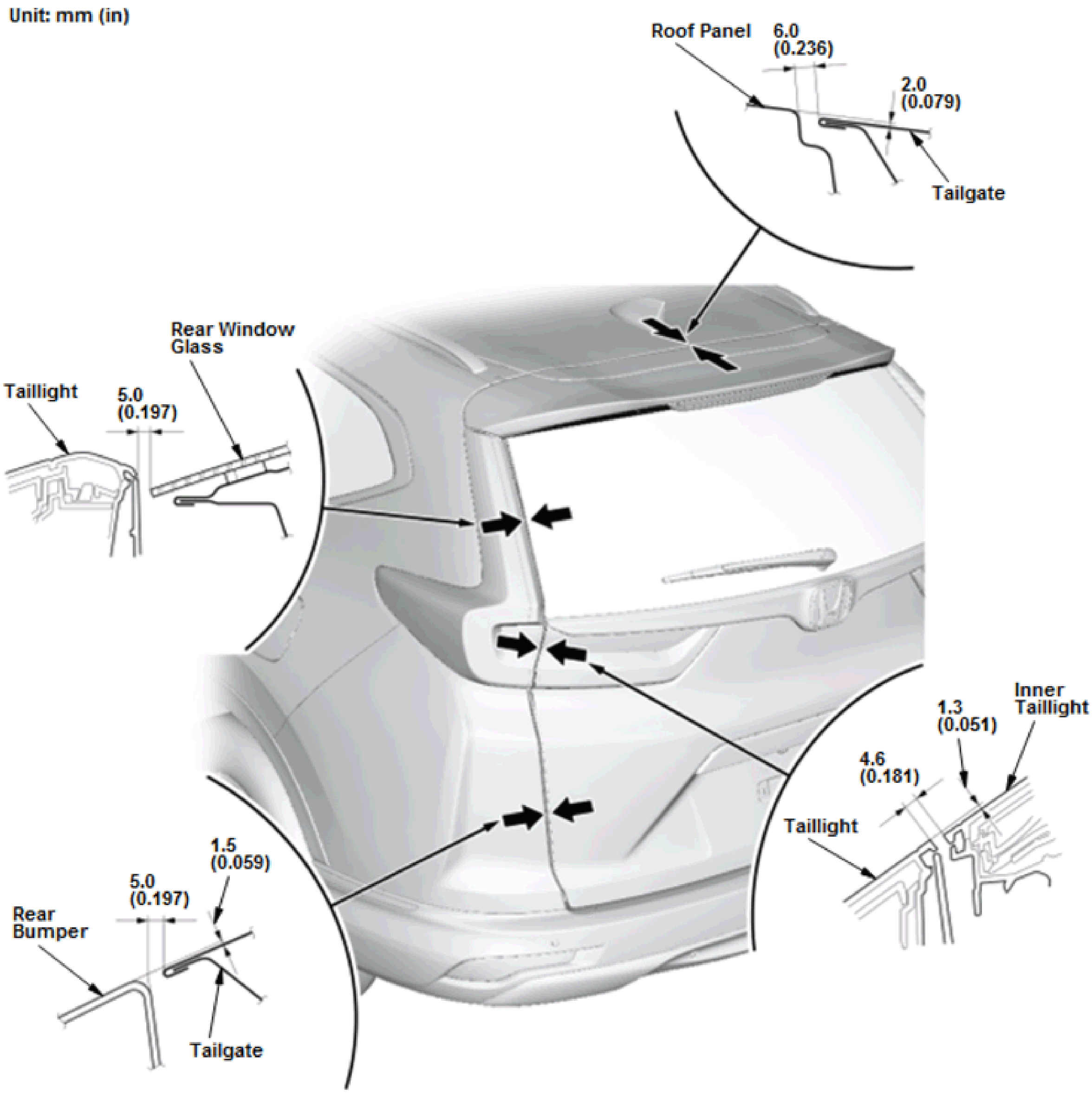
Unit: mm (in)
Roof Panel
6.0
(0.236)
2.0
(0.079)
Tailgate
Rear Window
Glass
Taillight
5.0
(0.197)
Inner
Taillight
1.3
(0.051)
4.6
(0.181)
Taillight
1.5
(0.059)
5.0
(0.197)
Rear
Bumper
Tailgate

Fig. 9: External Body Panel Gap Measurements And Measurement Points (2 Of 2)
Courtesy of AMERICAN HONDA MOTOR CO., INC.

FRONT COMPARTMENT AREA

NOTE: To measure the body dimensions, refer to SYMBOLS DEFINITION .

Reference Front Fender Positions Dimension - Measure

NOTE: The hood, both front fender trim, and both front cowl covers are removed in the illustrations.

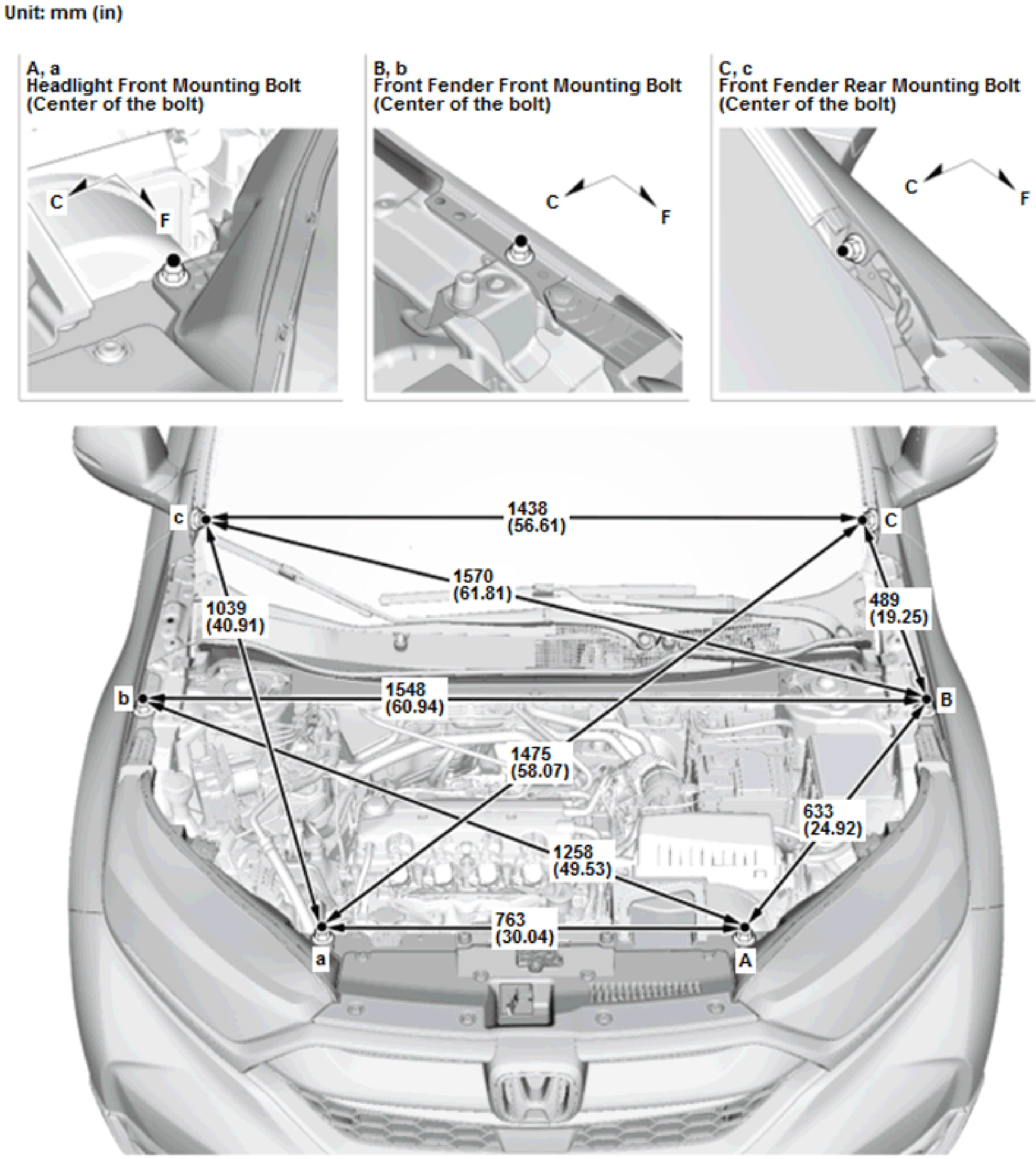
Unit: mm (in)
A, a
Headlight Front Mounting Bolt
(Center of the bolt)
C
F
B, b
Front Fender Front Mounting Bolt
(Center of the bolt)
C
F
C, c
Front Fender Rear Mounting Bolt
(Center of the bolt)
C
F
c
C
1438
(56.61)
1570
(61.81)
1039
(40.91)
489
(19.25)
b
B
1548
(60.94)
1475
(58.07)
633
(24.92)
1258
(49.53)
763
(30.04)
a
A

Fig. 10: Front Fender Dimensions And Measurement Points (Reference)
Courtesy of AMERICAN HONDA MOTOR CO., INC.

Front Bulkhead Position Dimension - Measure

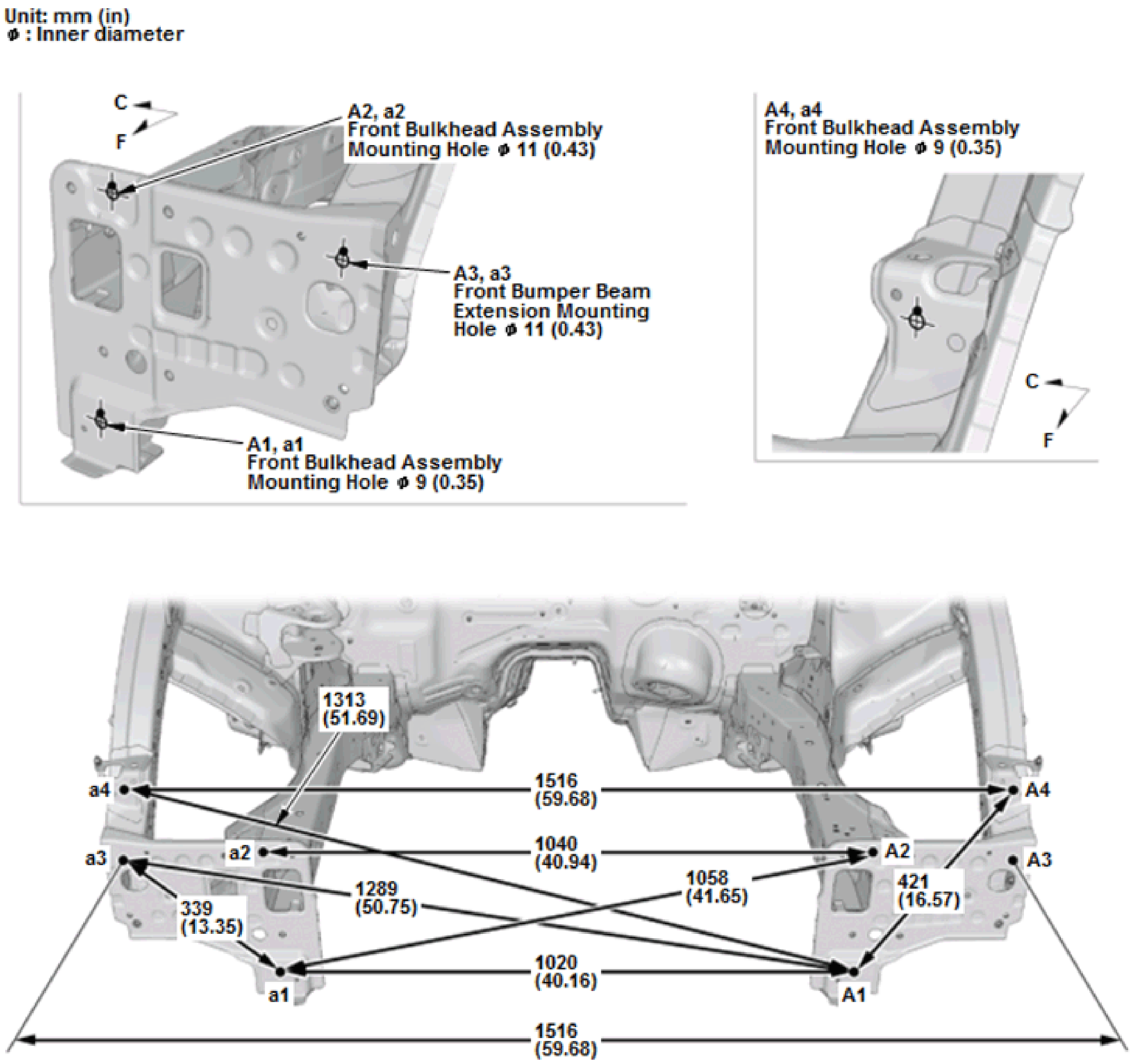
Unit: mm (in)
φ : Inner diameter
C
F
A2, a2
Front Bulkhead Assembly Mounting Hole φ 11 (0.43)
A3, a3
Front Bumper Beam Extension Mounting Hole φ 11 (0.43)
A1, a1
Front Bulkhead Assembly Mounting Hole φ 9 (0.35)
A4, a4
Front Bulkhead Assembly Mounting Hole φ 9 (0.35)
C
F
1313 (51.69)
a4
1516 (59.68)
A4
a3
a2
1040 (40.94)
A2
A3
1289 (50.75)
1058 (41.65)
421 (16.57)
339 (13.35)
1020 (40.16)
a1
A1
1516 (59.68)

Fig. 11: Front Bulkhead Position Dimensions And Measurement Points
Courtesy of AMERICAN HONDA MOTOR CO., INC.

Engine Compartment Dimension - Measure

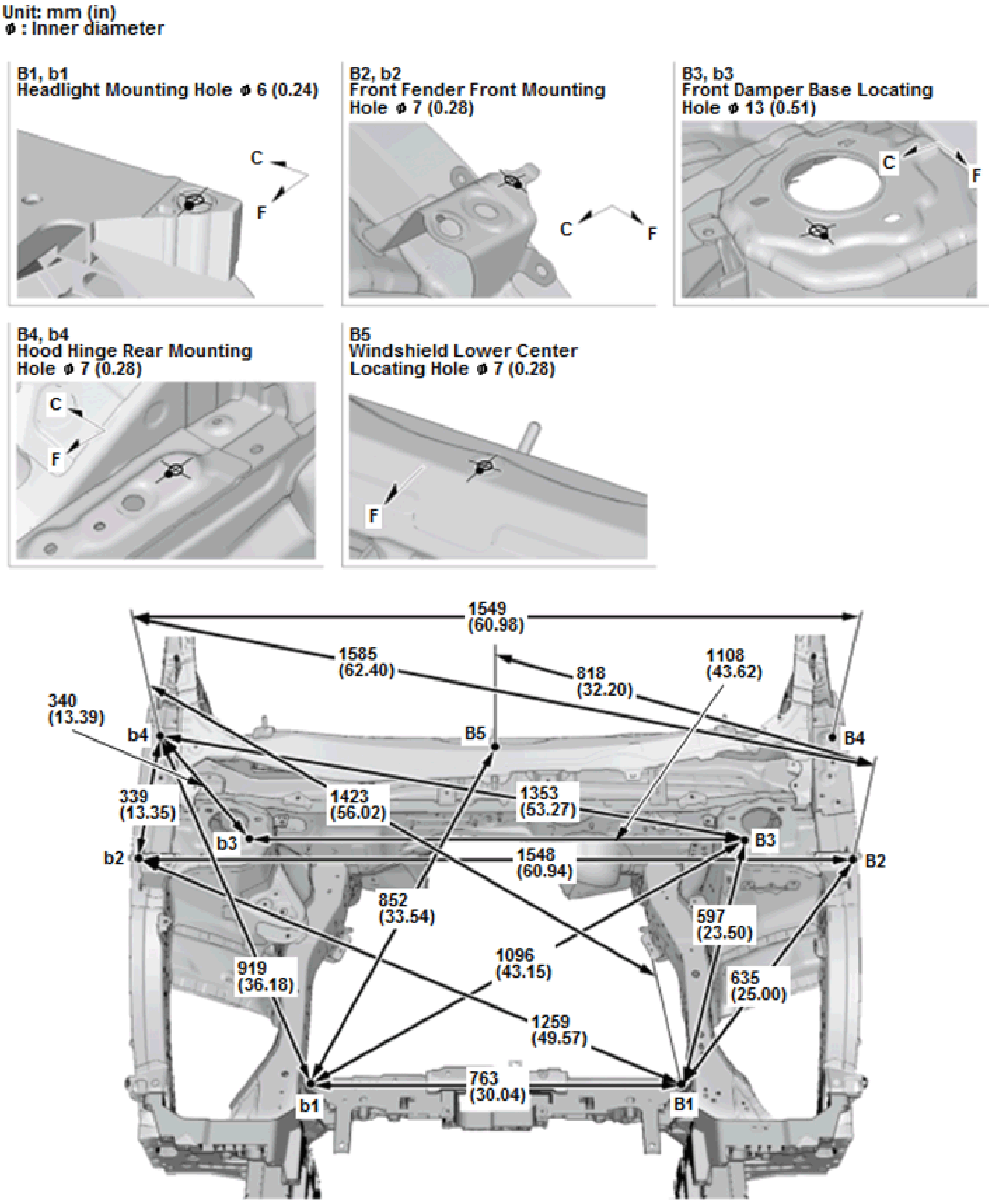
Unit: mm (in)
φ : Inner diameter
B1, b1
Headlight Mounting Hole φ 6 (0.24)
C
F
B2, b2
Front Fender Front Mounting Hole φ 7 (0.28)
C
F
B3, b3
Front Damper Base Locating Hole φ 13 (0.51)
C
F
B4, b4
Hood Hinge Rear Mounting Hole φ 7 (0.28)
C
F
B5
Windshield Lower Center Locating Hole φ 7 (0.28)
F
1549 (60.98)
1585 (62.40)
818 (32.20)
1108 (43.62)
340 (13.39)
b4
B5
B4
339 (13.35)
1423 (56.02)
1353 (53.27)
b3
B3
b2
1548 (60.94)
B2
852 (33.54)
597 (23.50)
919 (36.18)
1096 (43.15)
635 (25.00)
1259 (49.57)
763 (30.04)
b1
B1

Fig. 12: Engine Compartment Dimensions And Measurement Points
Courtesy of AMERICAN HONDA MOTOR CO., INC.

Engine And Transmission Mount Positions Dimension - Measure

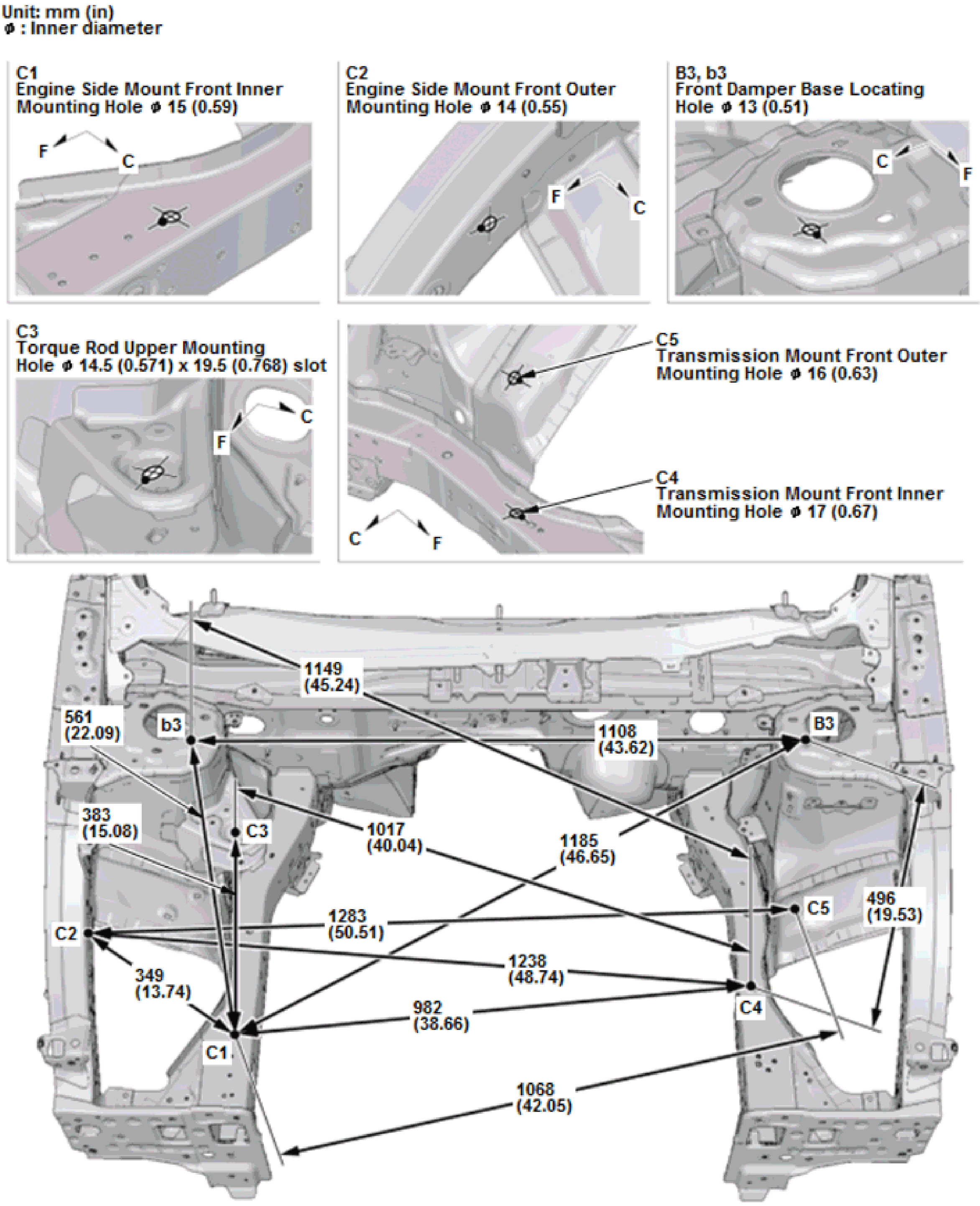
Unit: mm (in)
φ : Inner diameter
C1
Engine Side Mount Front Inner Mounting Hole φ 15 (0.59)
F
C
C2
Engine Side Mount Front Outer Mounting Hole φ 14 (0.55)
F
C
B3, b3
Front Damper Base Locating Hole φ 13 (0.51)
C
F
C3
Torque Rod Upper Mounting Hole φ 14.5 (0.571) x 19.5 (0.768) slot
C
F
C5
Transmission Mount Front Outer Mounting Hole φ 16 (0.63)
C4
Transmission Mount Front Inner Mounting Hole φ 17 (0.67)
C
F
1149
(45.24)
561
(22.09)
b3
B3
1108
(43.62)
383
(15.08)
C3
1017
(40.04)
1185
(46.65)
C2
1283
(50.51)
C5
496
(19.53)
1238
(48.74)
349
(13.74)
C4
982
(38.66)
C1
1068
(42.05)

[Fig. 13: Engine And Transmission Mount Position Dimensions And Measurement Points](#)

Courtesy of AMERICAN HONDA MOTOR CO., INC.

Front Wheelhouse Lower Member Position Dimension - Measure

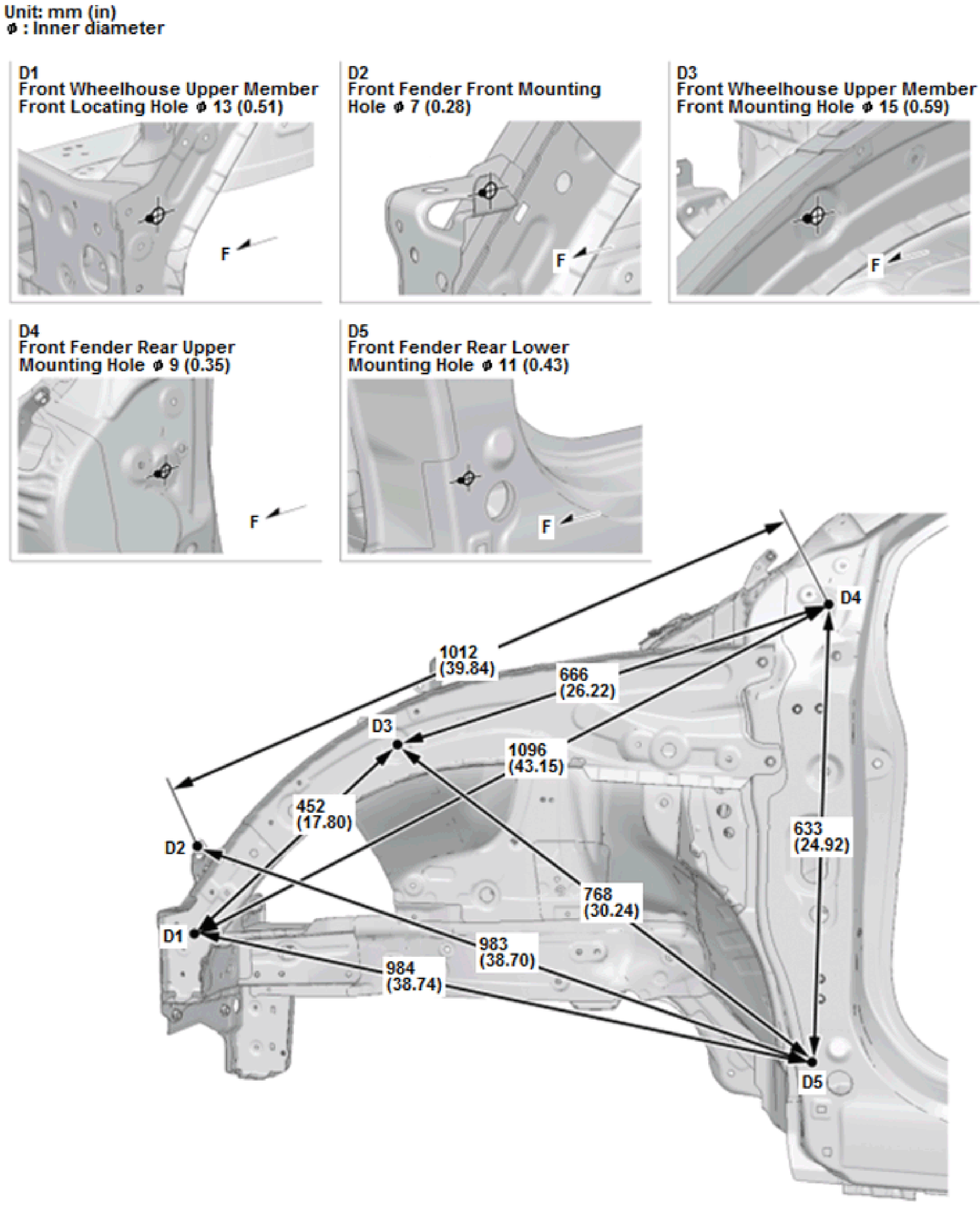
Unit: mm (in)
ϕ : Inner diameter
D1
Front Wheelhouse Upper Member Front Locating Hole ϕ 13 (0.51)
F
D2
Front Fender Front Mounting Hole ϕ 7 (0.28)
F
D3
Front Wheelhouse Upper Member Front Mounting Hole ϕ 15 (0.59)
F
D4
Front Fender Rear Upper Mounting Hole ϕ 9 (0.35)
F
D5
Front Fender Rear Lower Mounting Hole ϕ 11 (0.43)
F
1012 (39.84)
666 (26.22)
D4
D3
1096 (43.15)
452 (17.80)
633 (24.92)
D2
768 (30.24)
D1
983 (38.70)
984 (38.74)
D5

Fig. 14: Front Wheelhouse Lower Member Position Dimensions And Measurement Points
Courtesy of AMERICAN HONDA MOTOR CO., INC.

PASSENGER'S COMPARTMENT AREA

NOTE: To measure the body dimensions, refer to SYMBOLS DEFINITION .

Door Hinge Positions Dimension - Measure

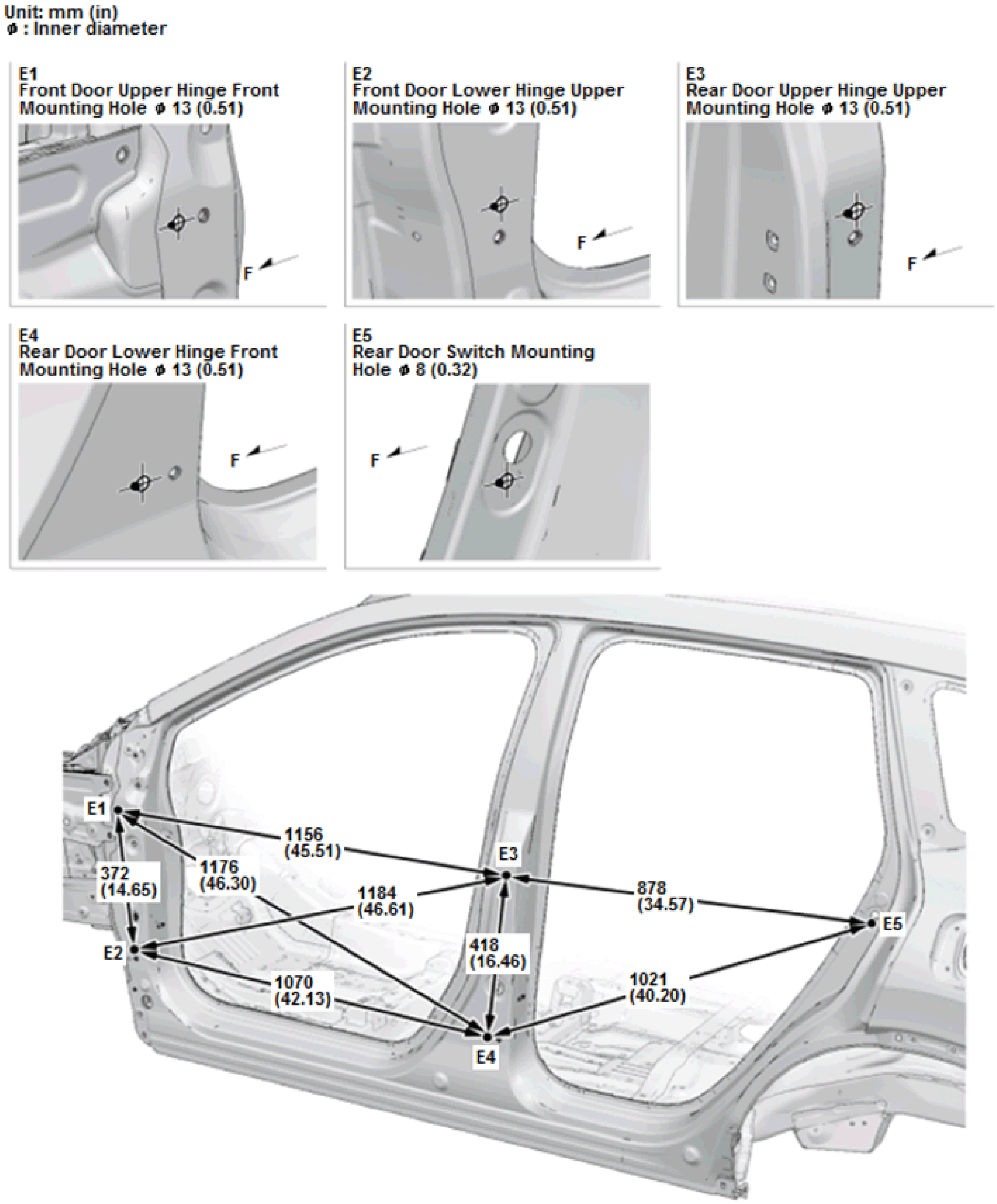
Unit: mm (in)
φ : Inner diameter
E1
Front Door Upper Hinge Front Mounting Hole φ 13 (0.51)
F
E2
Front Door Lower Hinge Upper Mounting Hole φ 13 (0.51)
F
E3
Rear Door Upper Hinge Upper Mounting Hole φ 13 (0.51)
F
E4
Rear Door Lower Hinge Front Mounting Hole φ 13 (0.51)
F
E5
Rear Door Switch Mounting Hole φ 8 (0.32)
F
E1
372 (14.65)
1176 (46.30)
1156 (45.51)
E3
1184 (46.61)
878 (34.57)
E5
E2
418 (16.46)
1070 (42.13)
1021 (40.20)
E4

Fig. 15: Door Hinge Position Dimensions And Measurement Points

Courtesy of AMERICAN HONDA MOTOR CO., INC.

Passengers Compartment Dimension - Measure

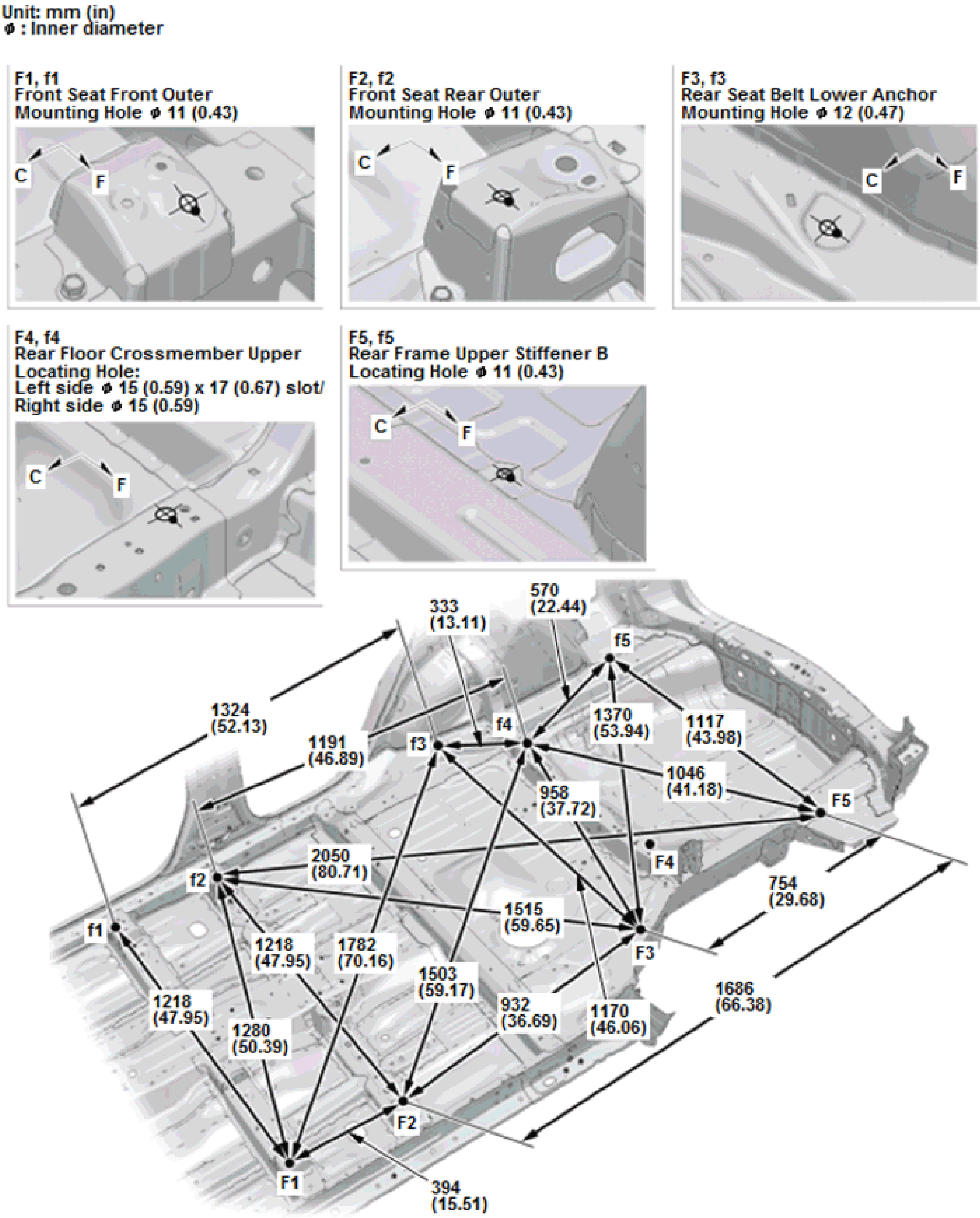
Unit: mm (in)
ϕ : Inner diameter
F1, f1
Front Seat Front Outer
Mounting Hole ϕ 11 (0.43)
C
F
F2, f2
Front Seat Rear Outer
Mounting Hole ϕ 11 (0.43)
C
F
F3, f3
Rear Seat Belt Lower Anchor
Mounting Hole ϕ 12 (0.47)
C
F
F4, f4
Rear Floor Crossmember Upper
Locating Hole:
Left side ϕ 15 (0.59) x 17 (0.67) slot/
Right side ϕ 15 (0.59)
C
F
F5, f5
Rear Frame Upper Stiffener B
Locating Hole ϕ 11 (0.43)
C
F
333
(13.11)
570
(22.44)
f5
1324
(52.13)
1191
(46.89)
f3
f4
1370
(53.94)
1117
(43.98)
1046
(41.18)
958
(37.72)
F5
2050
(80.71)
F4
f2
754
(29.68)
1515
(59.65)
f1
1218
(47.95)
1782
(70.16)
F3
1503
(59.17)
1686
(66.38)
1218
(47.95)
1280
(50.39)
932
(36.69)
1170
(46.06)
F2
F1
394
(15.51)

Fig. 16: Passengers Compartment Dimensions And Measurement Points

Courtesy of AMERICAN HONDA MOTOR CO., INC.

Inner Panel Positions Dimension - Measure

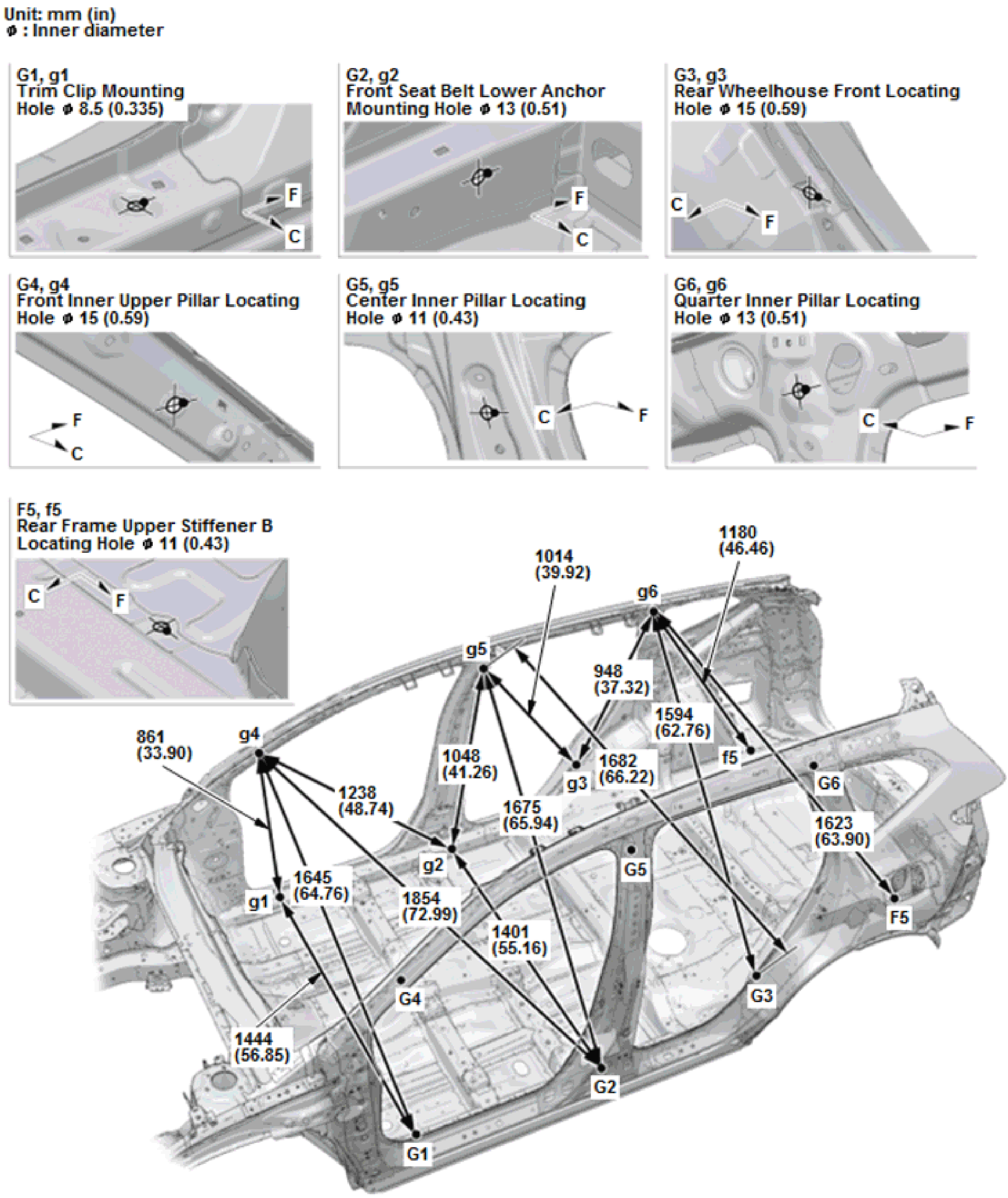
Unit: mm (in)
φ : Inner diameter
G1, g1
Trim Clip Mounting Hole φ 8.5 (0.335)
F
C
G2, g2
Front Seat Belt Lower Anchor Mounting Hole φ 13 (0.51)
F
C
G3, g3
Rear Wheelhouse Front Locating Hole φ 15 (0.59)
C
F
G4, g4
Front Inner Upper Pillar Locating Hole φ 15 (0.59)
F
C
G5, g5
Center Inner Pillar Locating Hole φ 11 (0.43)
C
F
G6, g6
Quarter Inner Pillar Locating Hole φ 13 (0.51)
C
F
F5, f5
Rear Frame Upper Stiffener B Locating Hole φ 11 (0.43)
C
F
1180 (46.46)
1014 (39.92)
g6
g5
948 (37.32)
1594 (62.76)
861 (33.90)
g4
1048 (41.26)
g3
1682 (66.22)
f5
G6
1238 (48.74)
1675 (65.94)
1623 (63.90)
g2
G5
g1
1645 (64.76)
1854 (72.99)
1401 (55.16)
F5
G4
G3
1444 (56.85)
G2
G1

Fig. 17: Inner Panel Position Dimensions And Measurement Points (1 Of 2)
Courtesy of AMERICAN HONDA MOTOR CO., INC.

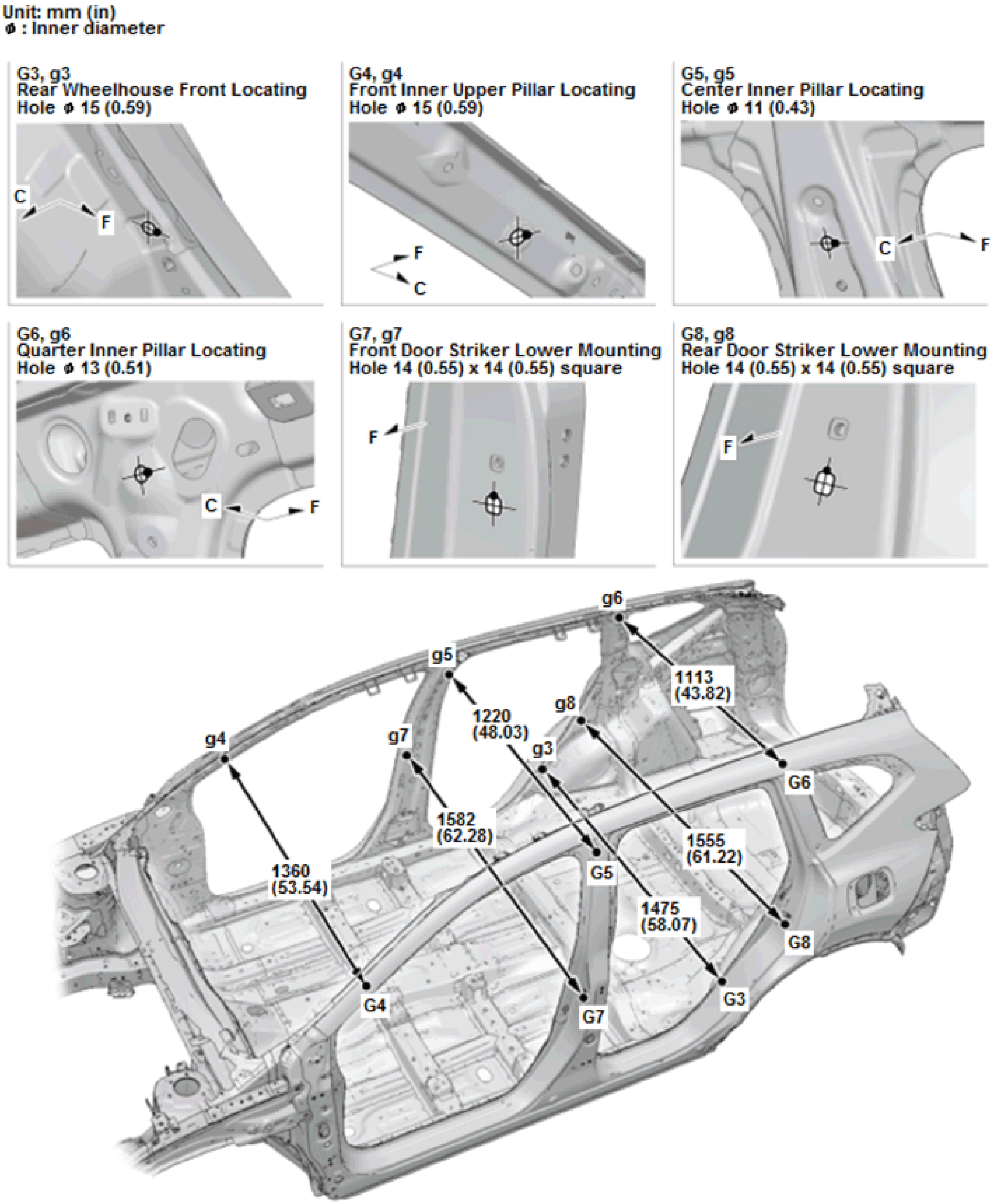
Unit: mm (in)
ϕ : Inner diameter
G3, g3
Rear Wheelhouse Front Locating Hole ϕ 15 (0.59)
C
F
G4, g4
Front Inner Upper Pillar Locating Hole ϕ 15 (0.59)
F
C
G5, g5
Center Inner Pillar Locating Hole ϕ 11 (0.43)
C
F
G6, g6
Quarter Inner Pillar Locating Hole ϕ 13 (0.51)
C
F
G7, g7
Front Door Striker Lower Mounting Hole 14 (0.55) x 14 (0.55) square
F
G8, g8
Rear Door Striker Lower Mounting Hole 14 (0.55) x 14 (0.55) square
F
g6
g5
1113 (43.82)
g8
1220 (48.03)
g4
g7
g3
G6
1582 (62.28)
1555 (61.22)
1360 (53.54)
G5
1475 (58.07)
G8
G4
G7
G3

Fig. 18: Inner Panel Position Dimensions And Measurement Points (2 Of 2)
Courtesy of AMERICAN HONDA MOTOR CO., INC.

Roof Rail Positions Dimension - Measure

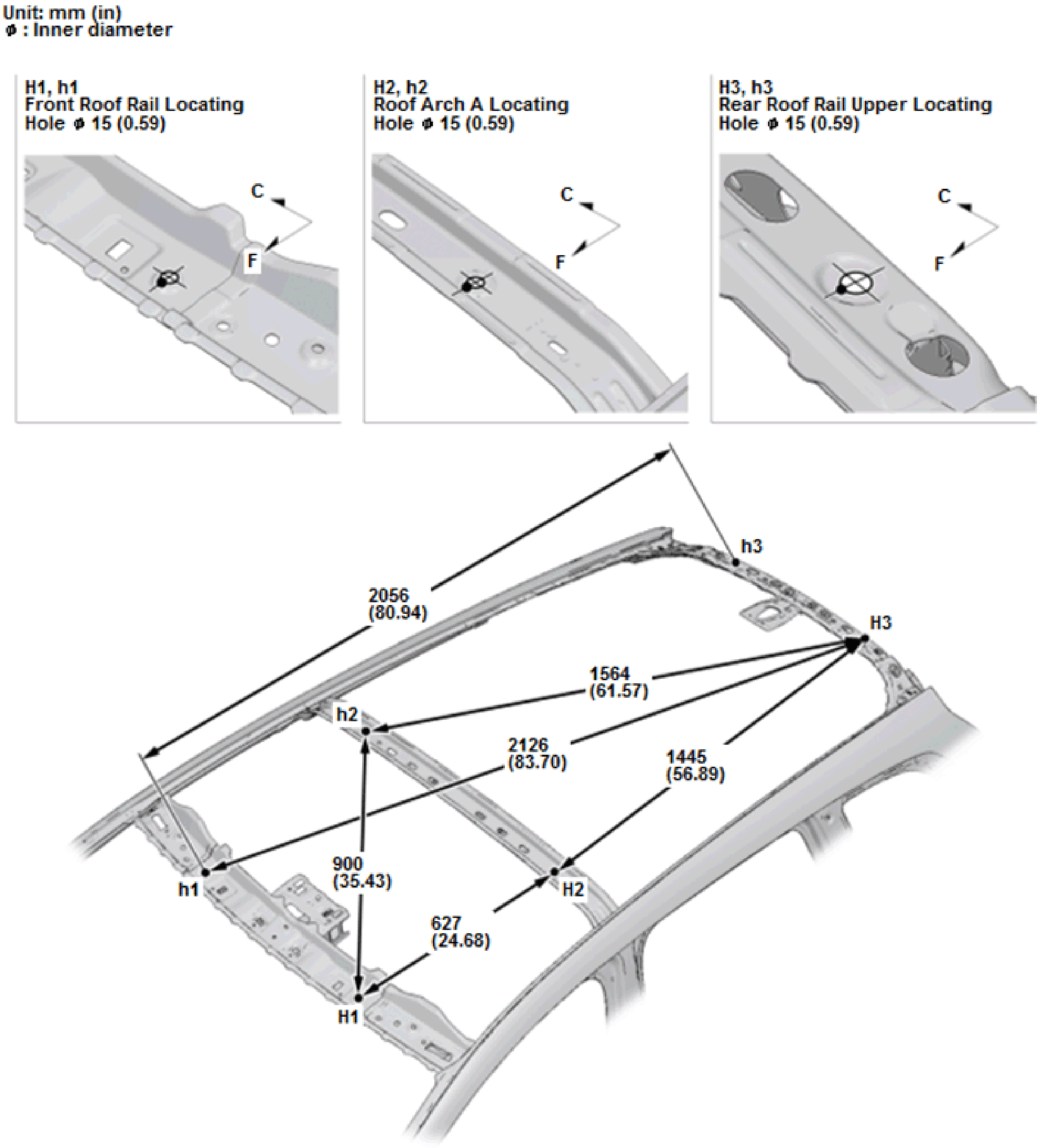
Unit: mm (in)
ϕ : Inner diameter
H1, h1
Front Roof Rail Locating Hole ϕ 15 (0.59)
C
F
H2, h2
Roof Arch A Locating Hole ϕ 15 (0.59)
C
F
H3, h3
Rear Roof Rail Upper Locating Hole ϕ 15 (0.59)
C
F
h3
2056 (80.94)
H3
1564 (61.57)
h2
2126 (83.70)
1445 (56.89)
h1
900 (35.43)
H2
627 (24.68)
H1

Fig. 19: Roof Rail Dimensions And Measurement Points (1 Of 2)
Courtesy of AMERICAN HONDA MOTOR CO., INC.

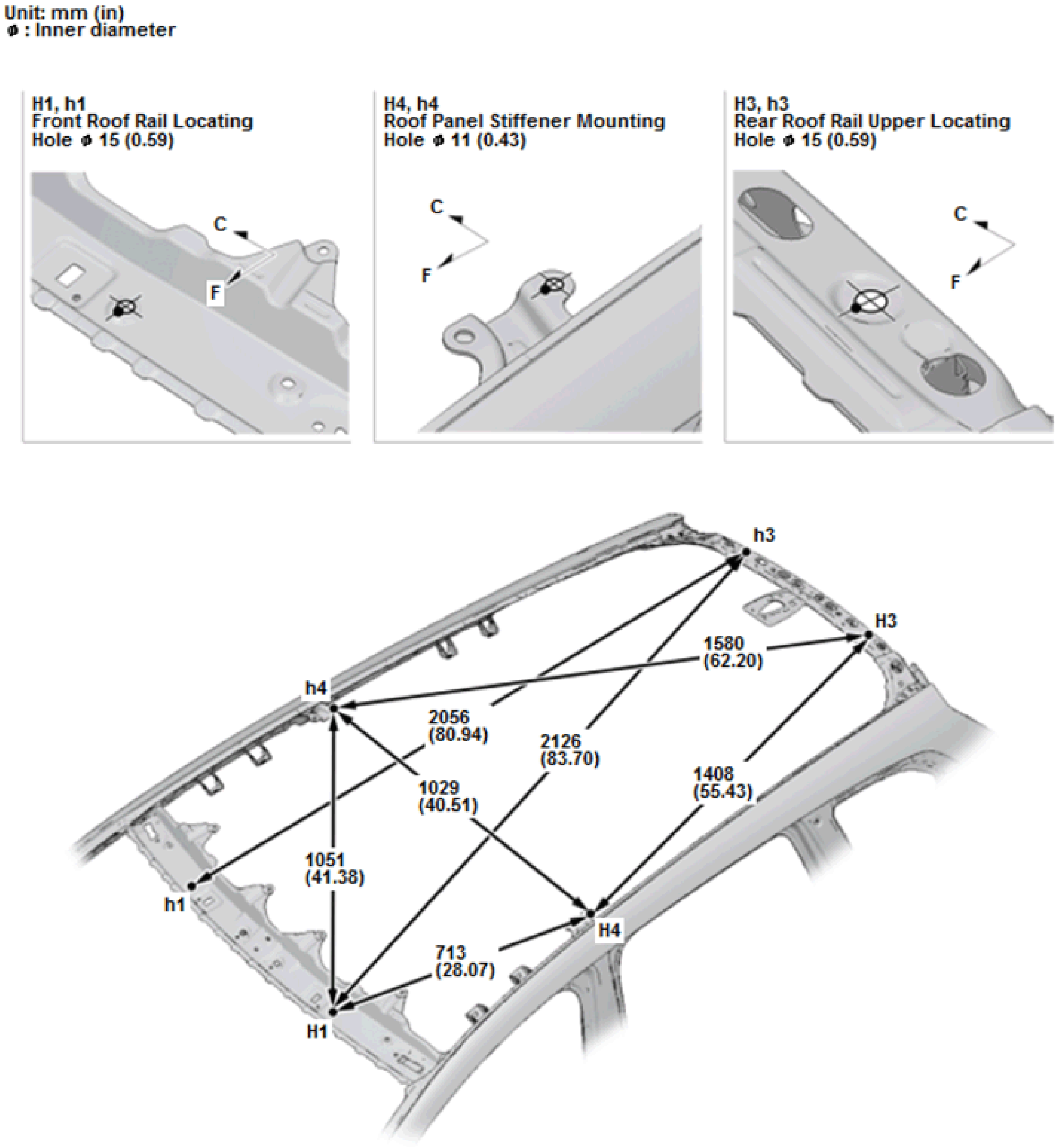
Unit: mm (in)
φ : Inner diameter
H1, h1
Front Roof Rail Locating Hole φ 15 (0.59)
C
F
H4, h4
Roof Panel Stiffener Mounting Hole φ 11 (0.43)
C
F
H3, h3
Rear Roof Rail Upper Locating Hole φ 15 (0.59)
C
F
h3
H3
1580 (62.20)
h4
2056 (80.94)
2126 (83.70)
1029 (40.51)
1408 (55.43)
1051 (41.38)
h1
H4
713 (28.07)
H1

Fig. 20: Roof Rail Dimensions And Measurement Points (2 Of 2)
Courtesy of AMERICAN HONDA MOTOR CO., INC.

REAR AREA (TRUNK AND TAILGATE)

NOTE: To measure the body dimensions, refer to SYMBOLS DEFINITION .

Rear Pillar Gutter And Rear Panel Positions Dimension - Measure

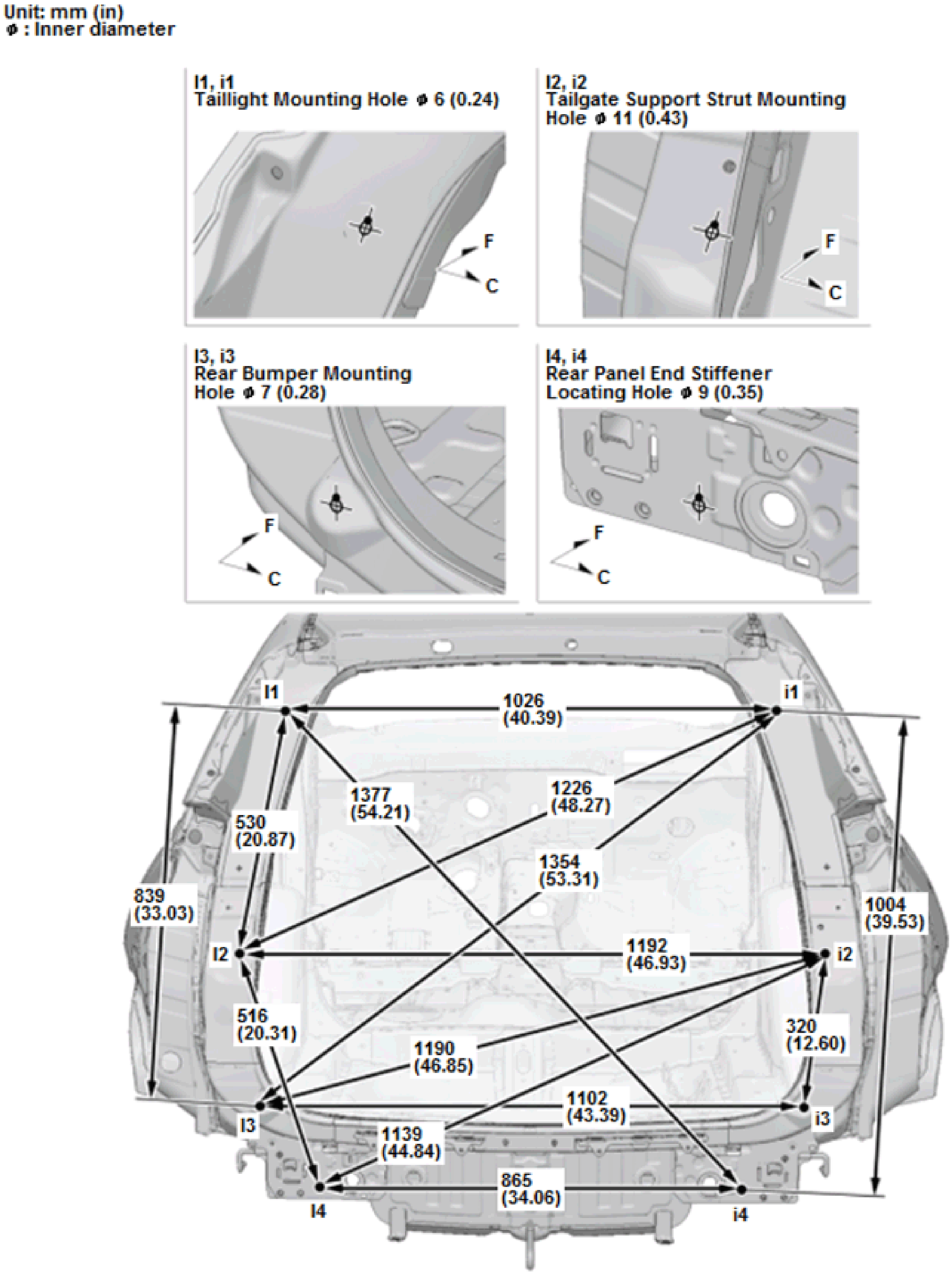
Unit: mm (in)
φ : Inner diameter
I1, i1
Taillight Mounting Hole φ 6 (0.24)
I2, i2
Tailgate Support Strut Mounting Hole φ 11 (0.43)
I3, i3
Rear Bumper Mounting Hole φ 7 (0.28)
I4, i4
Rear Panel End Stiffener Locating Hole φ 9 (0.35)
F
C
I1
i1
1026 (40.39)
1377 (54.21)
1226 (48.27)
530 (20.87)
1354 (53.31)
839 (33.03)
1004 (39.53)
I2
1192 (46.93)
i2
516 (20.31)
320 (12.60)
1190 (46.85)
1102 (43.39)
I3
i3
1139 (44.84)
865 (34.06)
I4
i4

Fig. 21: Rear Pillar Gutter And Rear Panel Dimensions And Measurement Points (1 Of 2)
Courtesy of AMERICAN HONDA MOTOR CO., INC.

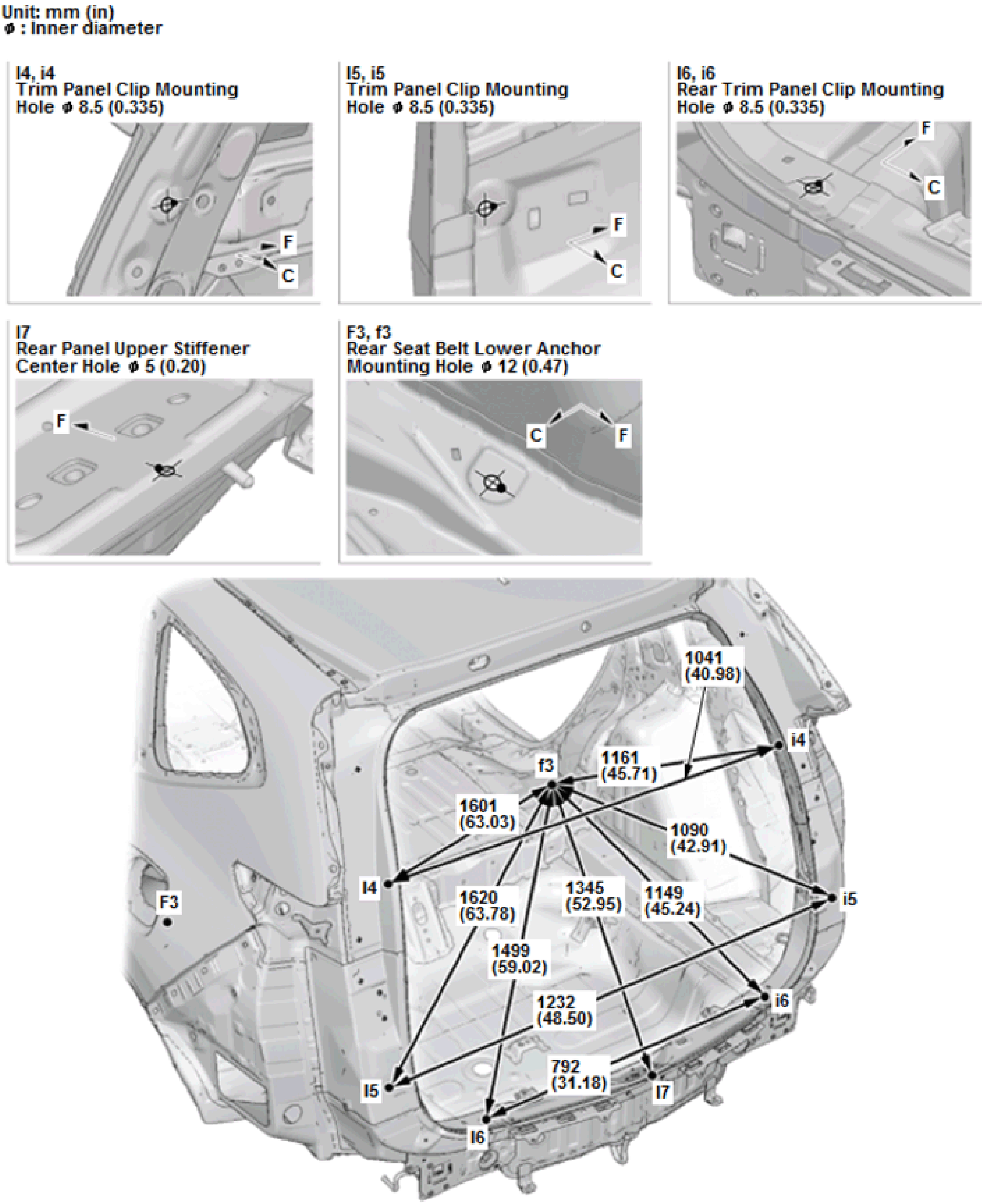
Unit: mm (in)
φ : Inner diameter
I4, i4
Trim Panel Clip Mounting Hole φ 8.5 (0.335)
F
C
I5, i5
Trim Panel Clip Mounting Hole φ 8.5 (0.335)
F
C
I6, i6
Rear Trim Panel Clip Mounting Hole φ 8.5 (0.335)
F
C
I7
Rear Panel Upper Stiffener Center Hole φ 5 (0.20)
F
F3, f3
Rear Seat Belt Lower Anchor Mounting Hole φ 12 (0.47)
C
F
1041 (40.98)
i4
f3
1161 (45.71)
1601 (63.03)
1090 (42.91)
I4
F3
1620 (63.78)
1345 (52.95)
1149 (45.24)
i5
1499 (59.02)
1232 (48.50)
i6
792 (31.18)
I5
I7
I6

Fig. 22: Rear Pillar Gutter And Rear Panel Dimensions And Measurement Points (2 Of 2)
Courtesy of AMERICAN HONDA MOTOR CO., INC.

Blind Spot Information (BSI) Radar Unit Mounting Positions Dimension - Measure

NOTE: **Level the body, and measure the distance between a body center line and the tip of each BSI radar unit mounting bolt.**

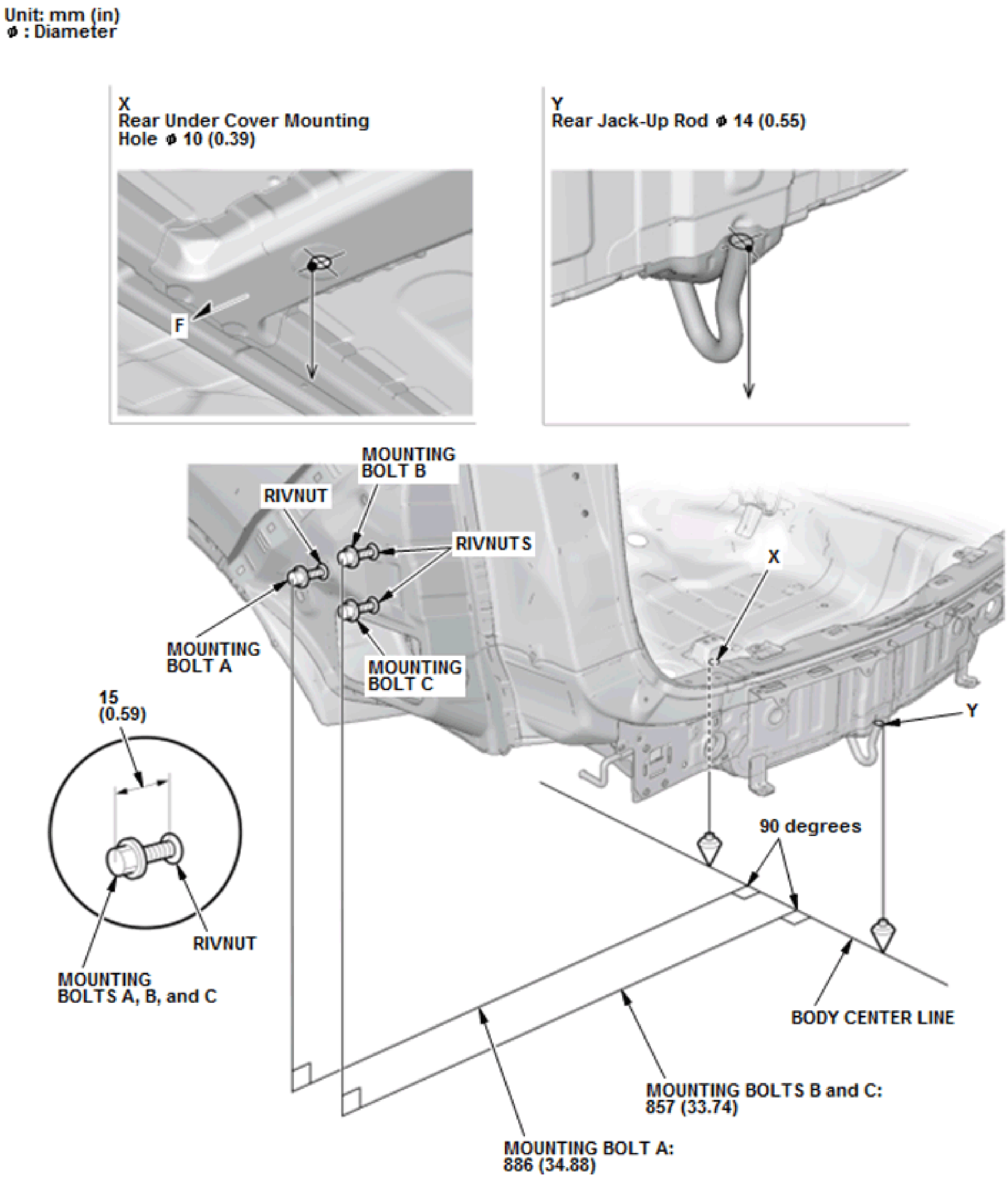
Unit: mm (in)
φ : Diameter
X
Rear Under Cover Mounting Hole φ 10 (0.39)
F
Y
Rear Jack-Up Rod φ 14 (0.55)
MOUNTING BOLT B
RIVNUT
RIVNUTS
X
MOUNTING BOLT A
MOUNTING BOLT C
15 (0.59)
Y
90 degrees
RIVNUT
MOUNTING BOLTS A, B, and C
BODY CENTER LINE
MOUNTING BOLTS B and C: 857 (33.74)
MOUNTING BOLT A: 886 (34.88)

Fig. 23: Blind Spot Information Radar Unit Mounting Position Dimensions And Measurement Points
Courtesy of AMERICAN HONDA MOTOR CO., INC.

TAILGATE OPENING

Tailgate Opening Dimension - Measure

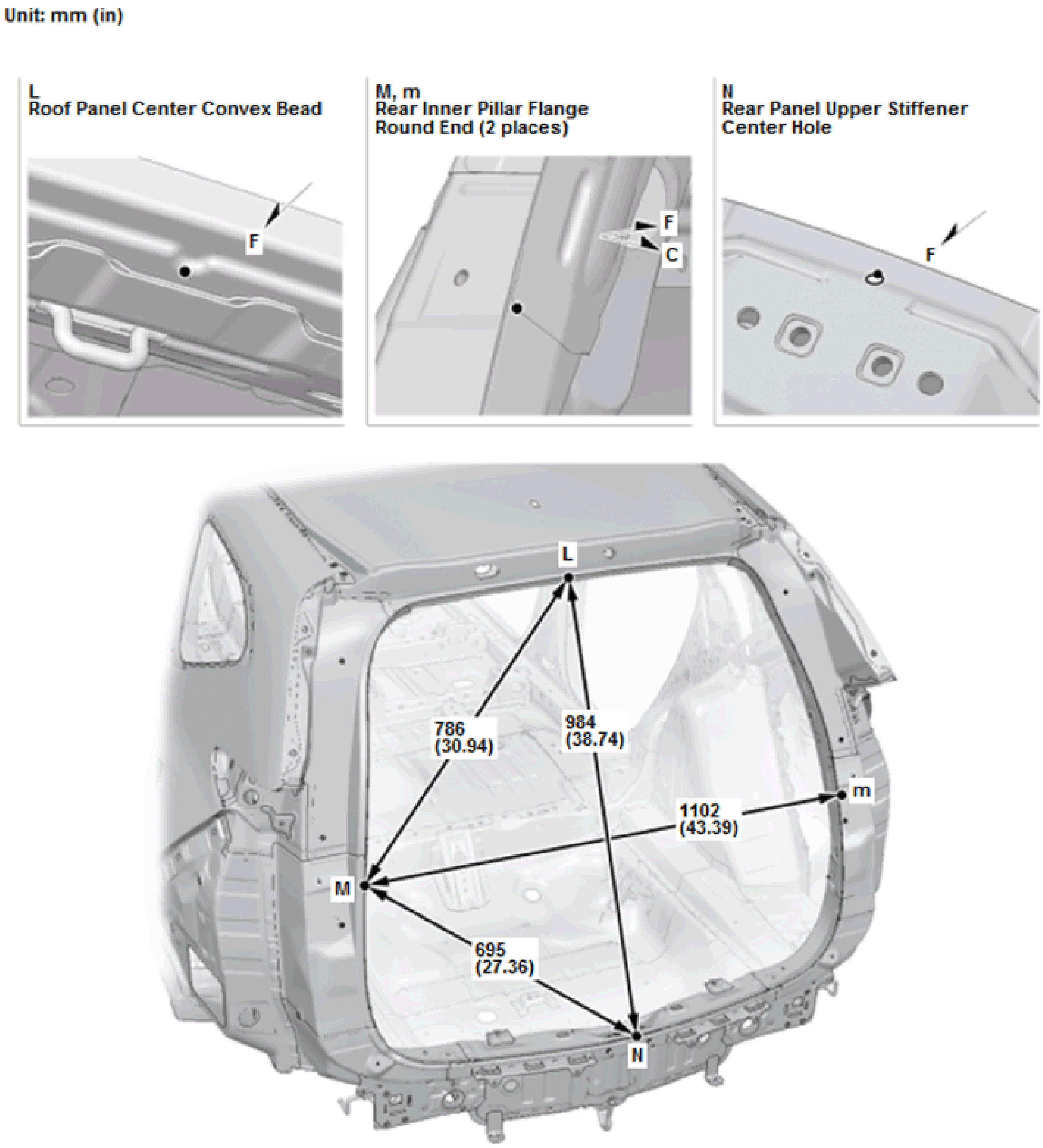
Unit: mm (in)
L
Roof Panel Center Convex Bead
F
M, m
Rear Inner Pillar Flange
Round End (2 places)
F
C
N
Rear Panel Upper Stiffener
Center Hole
F
L
786
(30.94)
984
(38.74)
m
1102
(43.39)
M
695
(27.36)
N

Fig. 24: Tailgate Opening Dimensions And Measurement Points
Courtesy of AMERICAN HONDA MOTOR CO., INC.

WINDSHIELD AND DOOR OPENINGS

Windshield And Door Openings Dimension - Measure

Unit: mm (in)

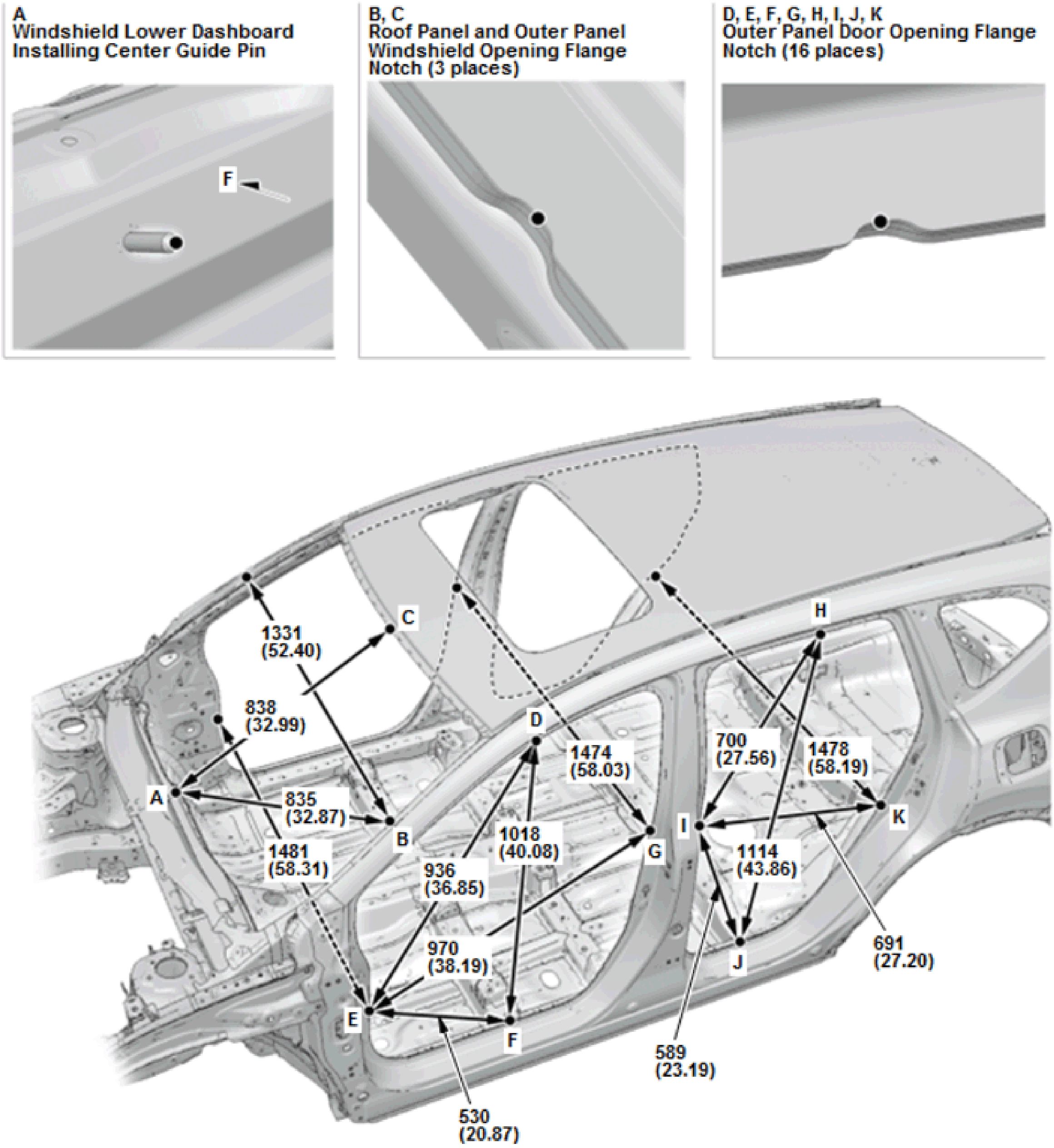
A
Windshield Lower Dashboard Installing Center Guide Pin
F
B, C
Roof Panel and Outer Panel Windshield Opening Flange Notch (3 places)
D, E, F, G, H, I, J, K
Outer Panel Door Opening Flange Notch (16 places)
1331 (52.40)
C
838 (32.99)
D
1474 (58.03)
H
700 (27.56)
1478 (58.19)
A
835 (32.87)
B
1481 (58.31)
1018 (40.08)
G
I
K
1114 (43.86)
936 (36.85)
970 (38.19)
J
691 (27.20)
E
F
589 (23.19)
530 (20.87)

[Fig. 25: Windshield And Door Opening Dimensions And Measurement Points](#)
Courtesy of AMERICAN HONDA MOTOR CO., INC.

BODY PANEL REPLACEMENT

FRONT SIDE FRAME, FRONT-END PARTS REPLACEMENT

Removal

NOTE:

- **High-strength steel is defined as any steel with a tensile strength of 340 MPa or higher. If a part is constructed of, or includes high-strength steel review the important guidelines. (See REPAIR GUIDELINES FOR HIGH-STRENGTH STEEL PARTS).**
- **Welding symbols (The welding symbols with dashed lines have a meaning of the spot welding of the part which is not visible). See SYMBOLS DEFINITION .**
- **(): Any numerical value in between these parentheses indicate the number of welds required.**

1. **Front Bulkhead - Remove** See FRONT BULKHEAD REPLACEMENT.
2. **Mass Production Body Welding Positions And Numbers - Remove**

   Front Side Frame, Front-End Parts

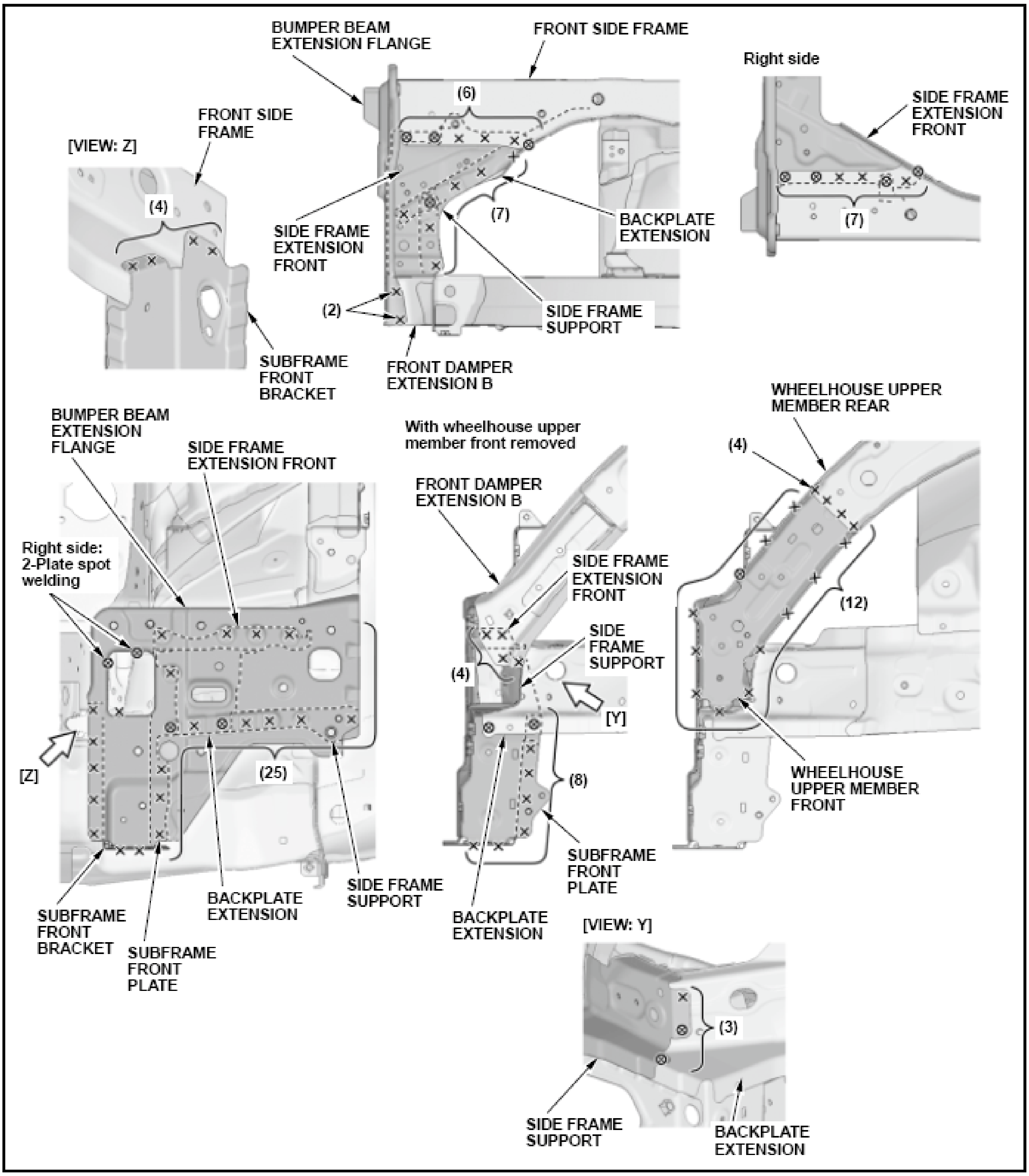
BUMPER BEAM EXTENSION FLANGE
FRONT SIDE FRAME
Right side
SIDE FRAME EXTENSION FRONT
(6)
[VIEW: Z]
FRONT SIDE FRAME
(4)
(7)
BACKPLATE EXTENSION
(7)
SIDE FRAME EXTENSION FRONT
(2)
SIDE FRAME SUPPORT
SUBFRAME FRONT BRACKET
FRONT DAMPER EXTENSION B
WHEELHOUSE UPPER MEMBER REAR
BUMPER BEAM EXTENSION FLANGE
SIDE FRAME EXTENSION FRONT
With wheelhouse upper member front removed
(4)
FRONT DAMPER EXTENSION B
Right side: 2-Plate spot welding
SIDE FRAME EXTENSION FRONT
(12)
SIDE FRAME SUPPORT
(4)
[Y]
[Z]
(25)
(8)
WHEELHOUSE UPPER MEMBER FRONT
SUBFRAME FRONT PLATE
SIDE FRAME SUPPORT
BACKPLATE EXTENSION
SUBFRAME FRONT BRACKET
BACKPLATE EXTENSION
SUBFRAME FRONT PLATE
[VIEW: Y]
(3)
SIDE FRAME SUPPORT
BACKPLATE EXTENSION

NOTE: **Construction - Remove**

Front Side Frame, Front-End Parts

- **This section explains the procedures after removal of all related parts. For the related parts removal procedure, refer to the appropriate Service Information.**
- **The component replacement procedure described here is only for new genuine supplied parts, as needed, according to the area and the degree of damage on the body.**

Check the front side frame, front-end parts position for damage. If necessary, replace them.

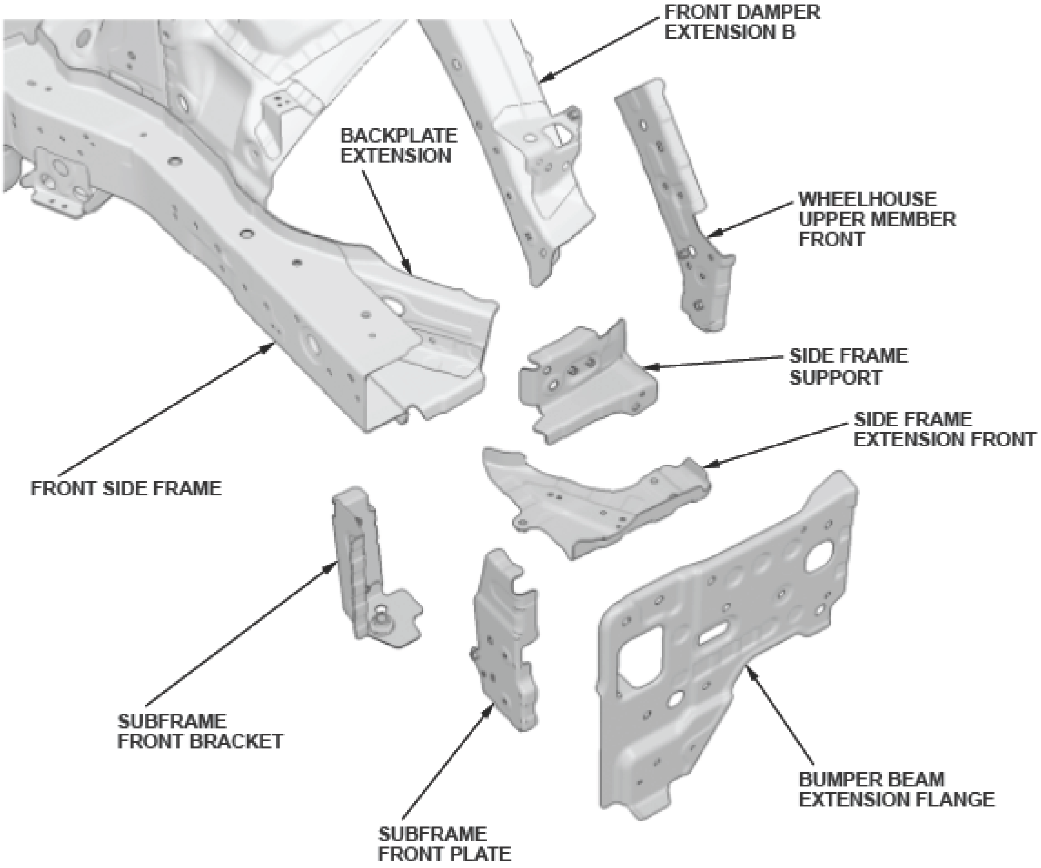
FRONT DAMPER EXTENSION B
BACKPLATE EXTENSION
WHEELHOUSE UPPER MEMBER FRONT
SIDE FRAME SUPPORT
SIDE FRAME EXTENSION FRONT
FRONT SIDE FRAME
SUBFRAME FRONT BRACKET
SUBFRAME FRONT PLATE
BUMPER BEAM EXTENSION FLANGE

Fig. 1: Front Side Frame And Front-End Component Locations
Courtesy of AMERICAN HONDA MOTOR CO., INC.

Installation

NOTE:

- **Position the replacement parts.**

  Before doing the main welding, check the body dimensions:

  - **Front Bulkhead Position See FRONT BULKHEAD POSITION DIMENSION .**
  - **Engine Compartment See ENGINE COMPARTMENT DIMENSION .**
  - **Front Wheelhouse Upper Member Position See FRONT WHEELHOUSE UPPER MEMBER POSITION DIMENSION .**
  - **Engine Compartment And Front Floor, Under View See ENGINE COMPARTMENT AND FRONT FLOOR, UNDER VIEW DIMENSION .**
  - **Frame Repair Chart See FRAME REPAIR CHART .**
- **Temporarily install the related parts, then check for differences in level and clearance. Check the external parts fitting positions. Make sure the body lines flow smoothly. See EXTERNAL PARTS FITTING POSITIONS .**
- **Confirm the sheet thickness, tensile strength, and existence of the zinc treatment on both sides, and set the welder to conform to the welding conditions by according to the Front Body Construction (See FRONT BODY CONSTRUCTION).**
- **Welding symbols (The welding symbols with dashed lines have a meaning of the spot welding of the part which is not visible). (See SYMBOLS DEFINITION).**
- **() and ()*: Any numerical value in between these parentheses indicate the number of welds required.**

Front Side Frame, Front-End Parts - Weld

1. Weld the side frame support (A), the side frame extension front (C), the subframe front plate (D), and the subframe front bracket (E) to the front side frame (F), the backplate extension (G), and front damper extension B.

()*: Welding positions with high-strength steel parts. **Confirm the plug welding conditions.** (See MAG WELDING CONDITIONS FOR HIGH-STRENGTH STEEL PARTS (EXCEPT 1500 MPA) .)

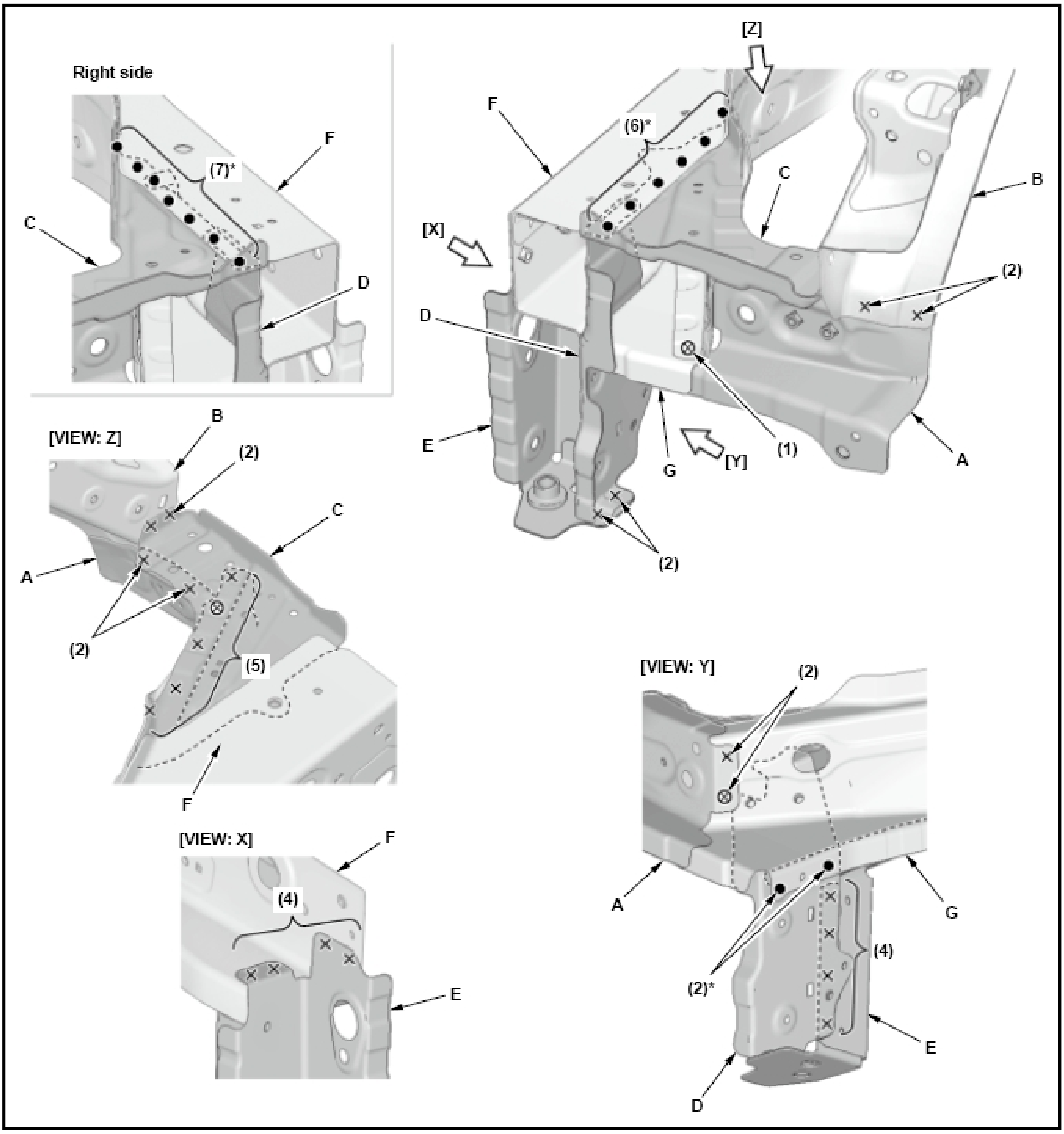
Right side
(7)*
F
C
D
[Z]
F
(6)*
C
B
[X]
D
(2)
E
G
[Y]
(1)
A
(2)
[VIEW: Z]
B
(2)
C
A
(2)
(5)
F
[VIEW: X]
F
(4)
E
[VIEW: Y]
(2)
A
G
(4)
(2)*
E
D

2. Weld the bumper beam extension flange (A).

()*: Welding position with high-strength steel parts. **Confirm the plug welding conditions.** (See MAG WELDING CONDITIONS FOR HIGH-STRENGTH STEEL PARTS (EXCEPT 1500 MPA) .)

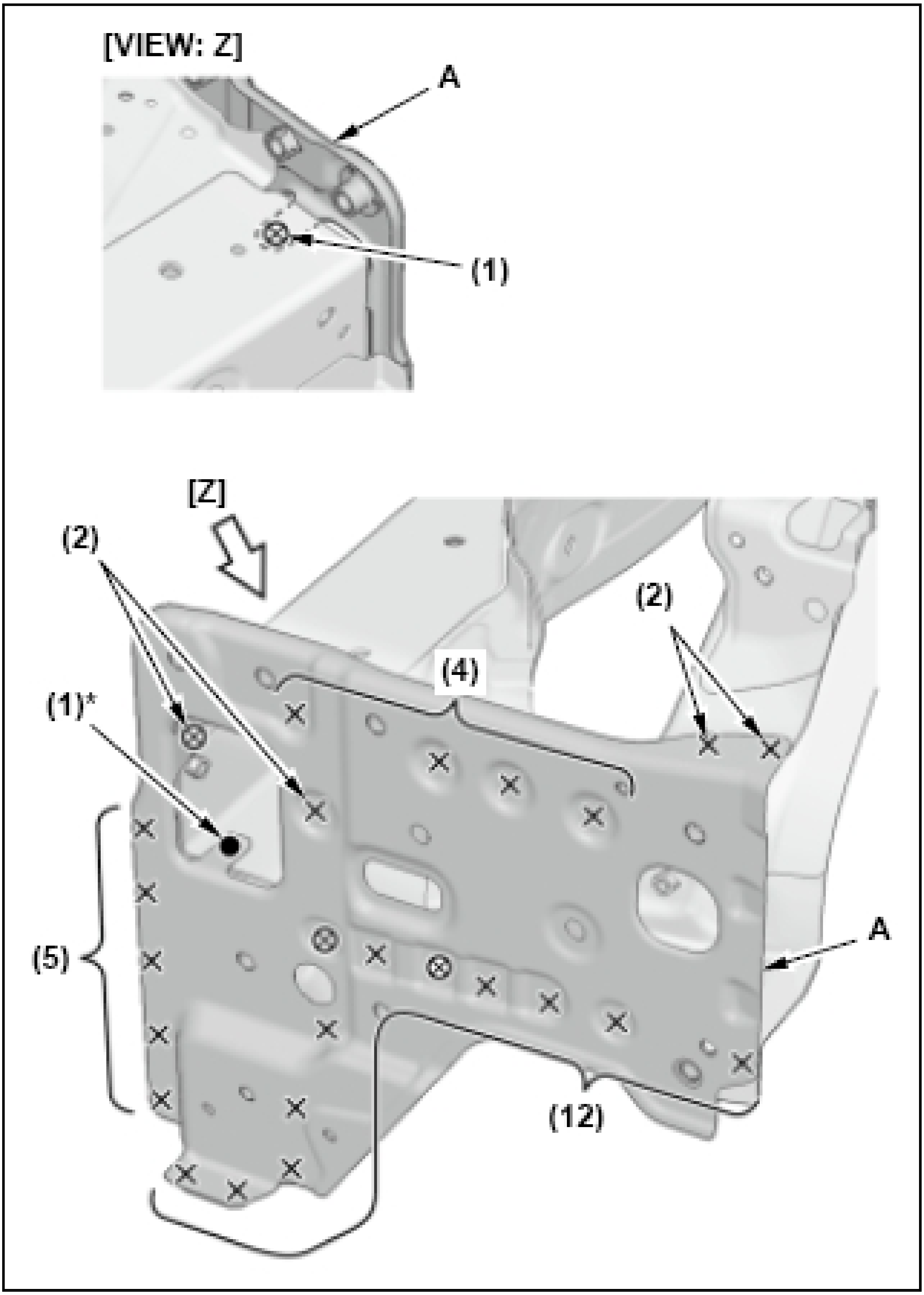

3. Weld the wheelhouse upper member front (A) to front damper extension B, the side frame support (C), the bumper beam extension flange (D), and the wheelhouse upper member rear (E).

   ()*: Welding positions with high-strength steel parts. **Confirm the plug welding conditions.** (See MAG WELDING CONDITIONS FOR HIGH-STRENGTH STEEL PARTS (EXCEPT 1500 MPA) .)

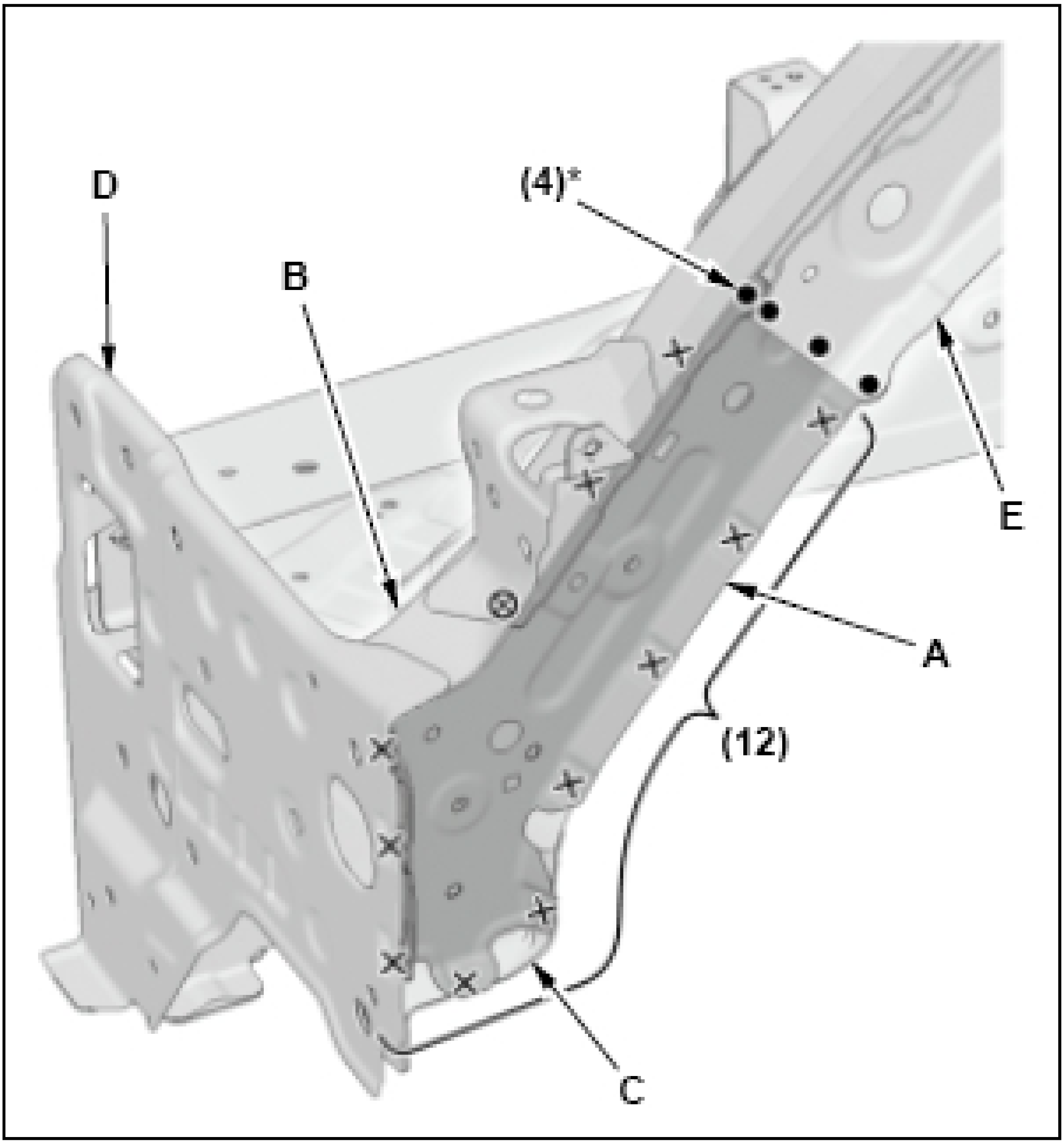

4. Front Bulkhead - Weld

   See FRONT BULKHEAD REPLACEMENT.

FRONT WHEELHOUSE/DAMPER HOUSING REPLACEMENT

Removal

NOTE:

- **High-strength steel is defined as any steel with a tensile strength of 340 MPa or higher. If a part is constructed of, or includes high-strength steel review the important guidelines. See REPAIR GUIDELINES FOR HIGH-STRENGTH STEEL PARTS .**
- **Welding symbols (The welding symbols with dashed lines have a meaning of the spot welding of the part which is not visible). See SYMBOLS DEFINITION .**
- **(): Any numerical value in between these parentheses indicate the number of welds required.**

1. **Front Bulkhead - Remove** See FRONT BULKHEAD REPLACEMENT.
2. **Mass Production Body Welding Positions And Numbers - Remove**

   Wheelhouse Upper Member Front/Rear

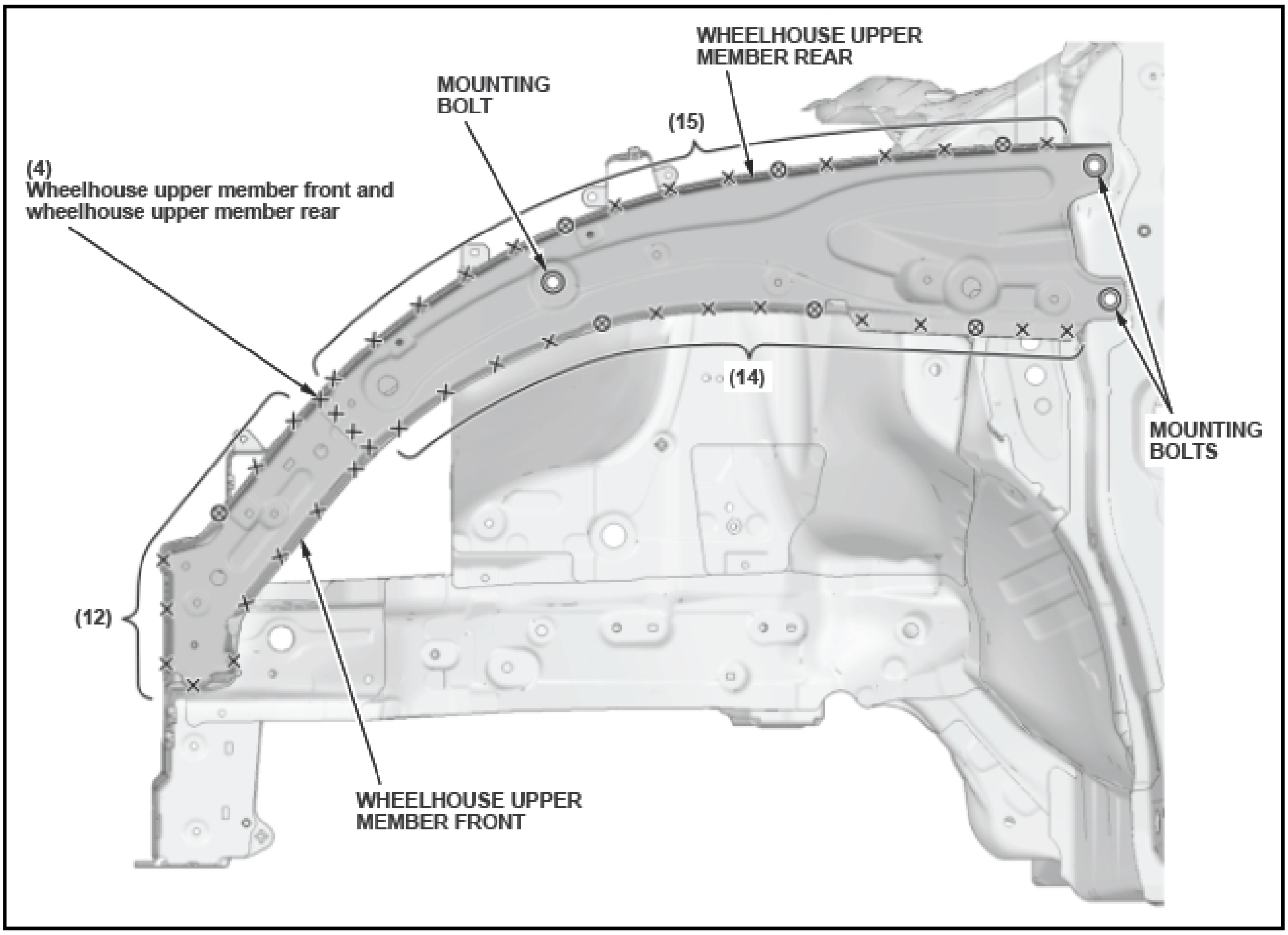
WHEELHOUSE UPPER MEMBER REAR
MOUNTING BOLT
(15)
(4)
Wheelhouse upper member front and wheelhouse upper member rear
(14)
MOUNTING BOLTS
(12)
WHEELHOUSE UPPER MEMBER FRONT

Front Damper Extension Set

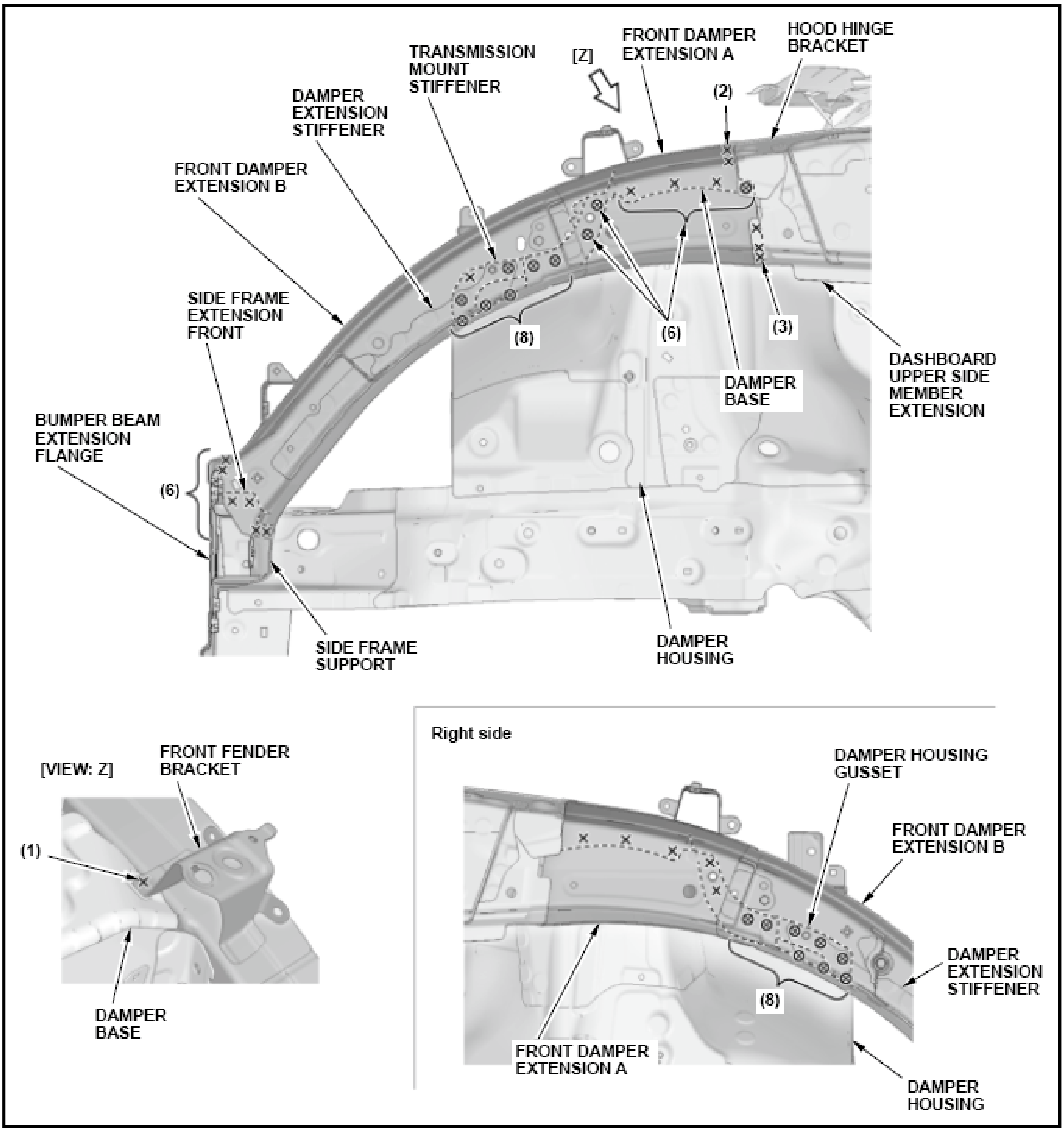
FRONT DAMPER EXTENSION A
HOOD HINGE BRACKET
TRANSMISSION MOUNT STIFFENER
[Z]
DAMPER EXTENSION STIFFENER
FRONT DAMPER EXTENSION B
(2)
SIDE FRAME EXTENSION FRONT
(8)
(6)
(3)
DASHBOARD UPPER SIDE MEMBER EXTENSION
DAMPER BASE
BUMPER BEAM EXTENSION FLANGE
(6)
SIDE FRAME SUPPORT
DAMPER HOUSING
[VIEW: Z]
FRONT FENDER BRACKET
(1)
DAMPER BASE
Right side
DAMPER HOUSING GUSSET
FRONT DAMPER EXTENSION B
DAMPER EXTENSION STIFFENER
(8)
FRONT DAMPER EXTENSION A
DAMPER HOUSING

3. **Construction - Remove**

Wheelhouse Upper Member Front/Rear and Front Damper Extension Set

NOTE:

- **This section explains the procedures after removal of all related parts. For the related parts removal procedure, refer to the appropriate Service Information.**
- **The component replacement procedure described here is only for new genuine supplied parts, as needed, according to the area and the degree of damage on the body.**
- **Remove the wheelhouse upper member front and rear as an assembly, and replace them.**
- **Check the front damper extension set position for damage. If necessary, replace them.**
- **Replace the front damper extension set and the bumper beam extension flange at the same time.**

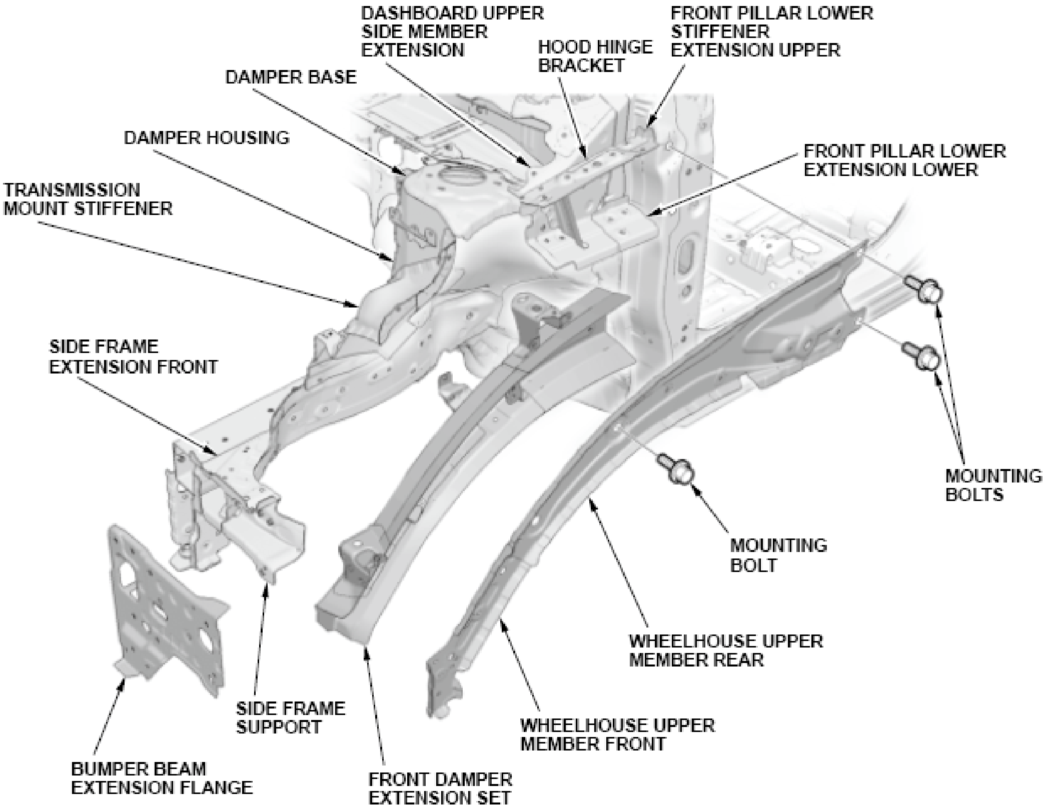
DASHBOARD UPPER SIDE MEMBER EXTENSION
FRONT PILLAR LOWER STIFFENER EXTENSION UPPER
HOOD HINGE BRACKET
DAMPER BASE
DAMPER HOUSING
FRONT PILLAR LOWER EXTENSION LOWER
TRANSMISSION MOUNT STIFFENER
SIDE FRAME EXTENSION FRONT
MOUNTING BOLTS
MOUNTING BOLT
WHEELHOUSE UPPER MEMBER REAR
SIDE FRAME SUPPORT
WHEELHOUSE UPPER MEMBER FRONT
BUMPER BEAM EXTENSION FLANGE
FRONT DAMPER EXTENSION SET

Fig. 2: Front And Rear Wheelhouse Upper Member, Front Damper Extension, Components And Locations
Courtesy of AMERICAN HONDA MOTOR CO., INC.

4. **Mass Production Body Welding Positions and Numbers - Remove**

   Damper Housing Set

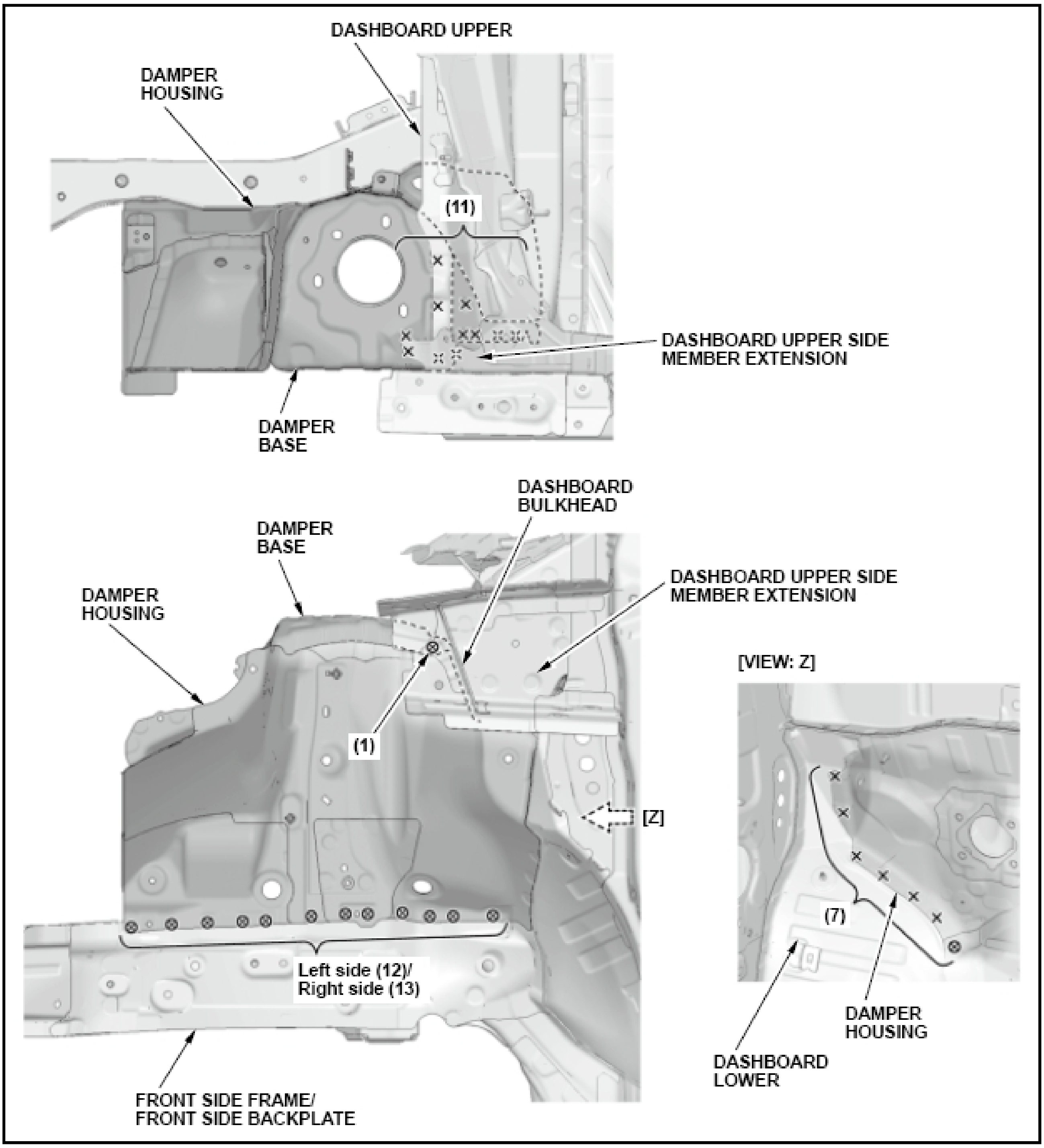
DASHBOARD UPPER
DAMPER HOUSING
(11)
DASHBOARD UPPER SIDE MEMBER EXTENSION
DAMPER BASE
DASHBOARD BULKHEAD
DAMPER BASE
DAMPER HOUSING
DASHBOARD UPPER SIDE MEMBER EXTENSION
[VIEW: Z]
(1)
[Z]
(7)
Left side (12)/
Right side (13)
DAMPER HOUSING
DASHBOARD LOWER
FRONT SIDE FRAME/
FRONT SIDE BACKPLATE

5. **Construction - Remove**

Damper Housing Set

NOTE:

- **This section explains the procedures after removal of all related parts. For the related parts removal procedure, refer to the appropriate Service Information.**
- **The component replacement procedure described here is only for new genuine supplied parts, as needed, according to the area and the degree of damage on the body.**

Check the damper housing set position for damage and if necessary, replace it.

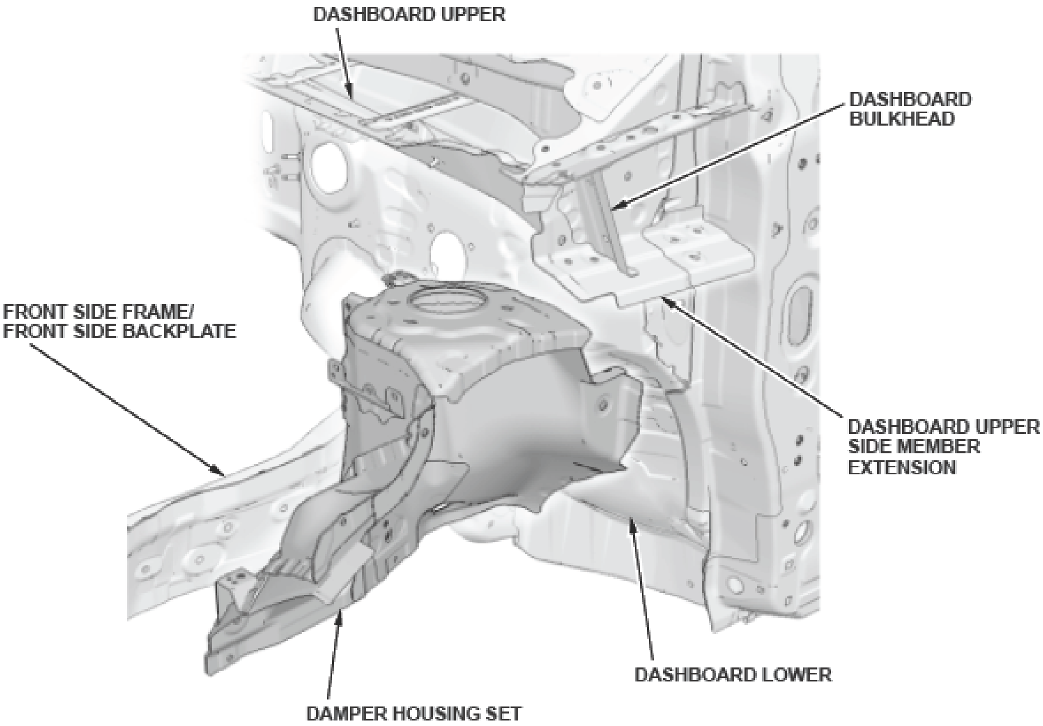
DASHBOARD UPPER
DASHBOARD BULKHEAD
FRONT SIDE FRAME/ FRONT SIDE BACKPLATE
DASHBOARD UPPER SIDE MEMBER EXTENSION
DASHBOARD LOWER
DAMPER HOUSING SET

Fig. 3: Damper Housing Set Component Location
Courtesy of AMERICAN HONDA MOTOR CO., INC.

Installation

NOTE:

- **Position the replacement parts.**

  Before doing the main welding, check the body dimensions:

  - **Front bulkhead position See FRONT BULKHEAD POSITION DIMENSION .**
  - **Engine compartment See ENGINE COMPARTMENT DIMENSION .**
  - **Engine and transmission mount positions See ENGINE AND TRANSMISSION MOUNT POSITIONS DIMENSION .**
  - **Front wheelhouse upper member position See FRONT WHEELHOUSE UPPER MEMBER POSITION DIMENSION .**
  - **Engine compartment and front floor, under view See ENGINE COMPARTMENT AND FRONT FLOOR, UNDER VIEW DIMENSION .**
  - **Frame repair chart See FRAME REPAIR CHART .**
- **Temporarily install the related parts, then check for differences in level and clearance. Check the external parts fitting positions. Make sure the body lines flow smoothly. See EXTERNAL PARTS FITTING POSITIONS .**
- **Confirm the sheet thickness, tensile strength, and existence of the zinc treatment on both sides, and set the welder to conform to the welding conditions by according to the Front Body Construction (See FRONT BODY CONSTRUCTION).**
- **Welding symbols (The welding symbols with dashed lines have a meaning of the spot welding of the part which is not visible). (See SYMBOLS DEFINITION .**
- **() and ()*: Any numerical value in between these parentheses indicate the number of welds required.**
- ☐ **Torque: N.m (lbf.ft)**

1. **Damper Housing Set - Weld**
   - Weld the damper housing set (A) to the dashboard upper side member extension (B), the dashboard bulkhead (C), and the dashboard upper (D).

     ()*: Welding positions with high-strength steel parts. **Confirm the plug welding conditions.** (See MAG WELDING CONDITIONS FOR HIGH-STRENGTH STEEL PARTS (EXCEPT 1500 MPA) .)

[VIEW: Z]

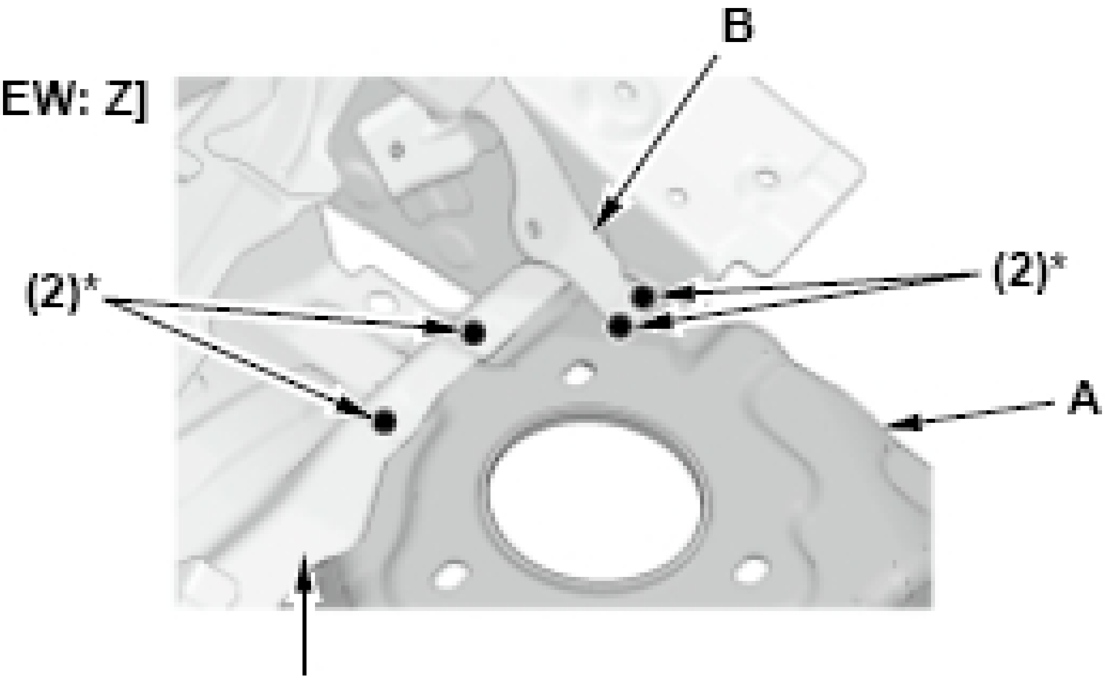

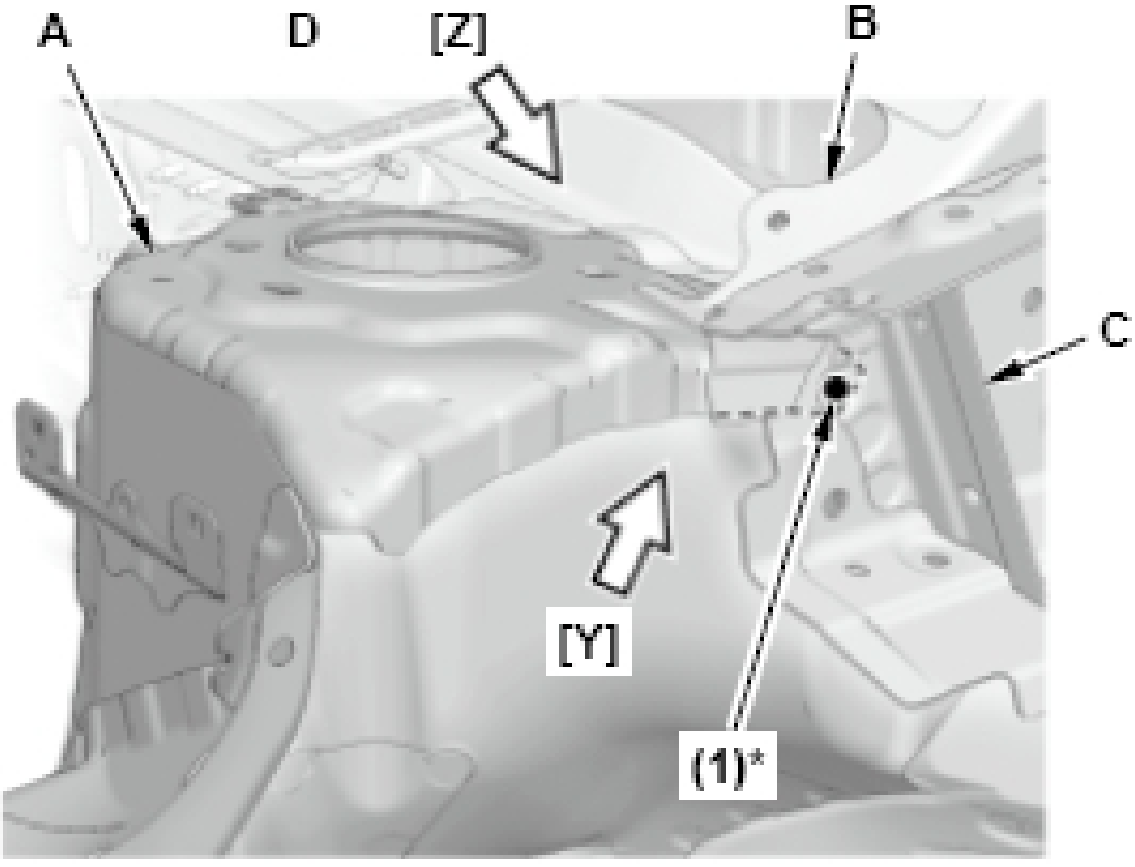

[VIEW: Y]

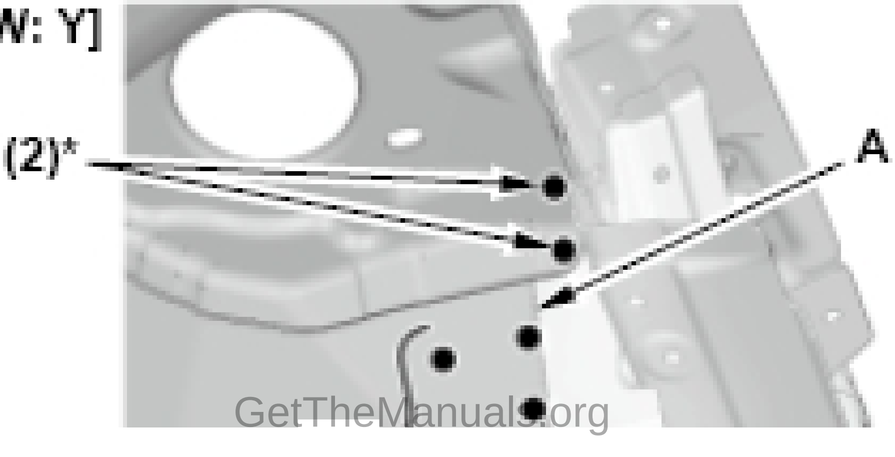

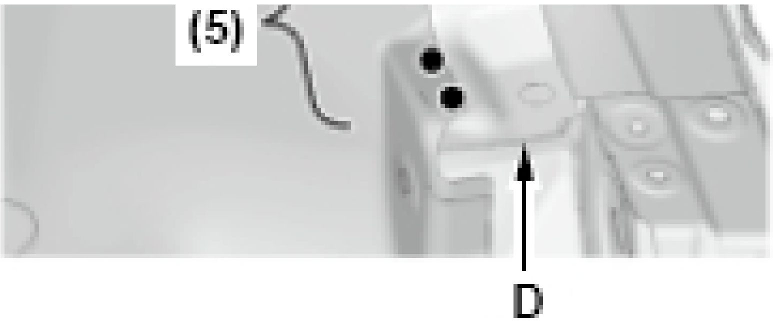

- From the passengers compartment, plug weld the holes in the dashboard lower (A) and the damper housing set (B).

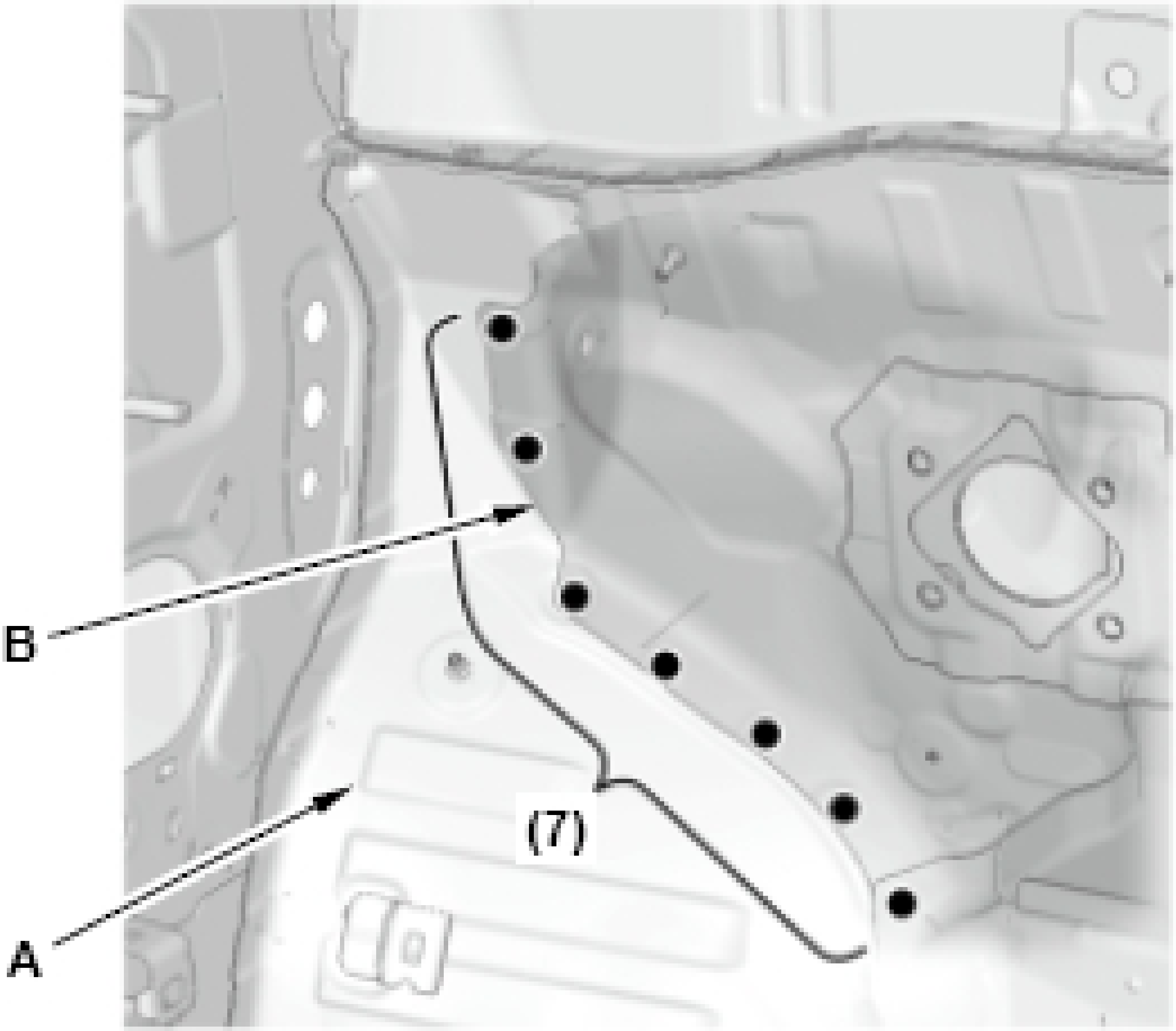

- Weld the damper housing set (A) to the front side frame/front side backplate (B).

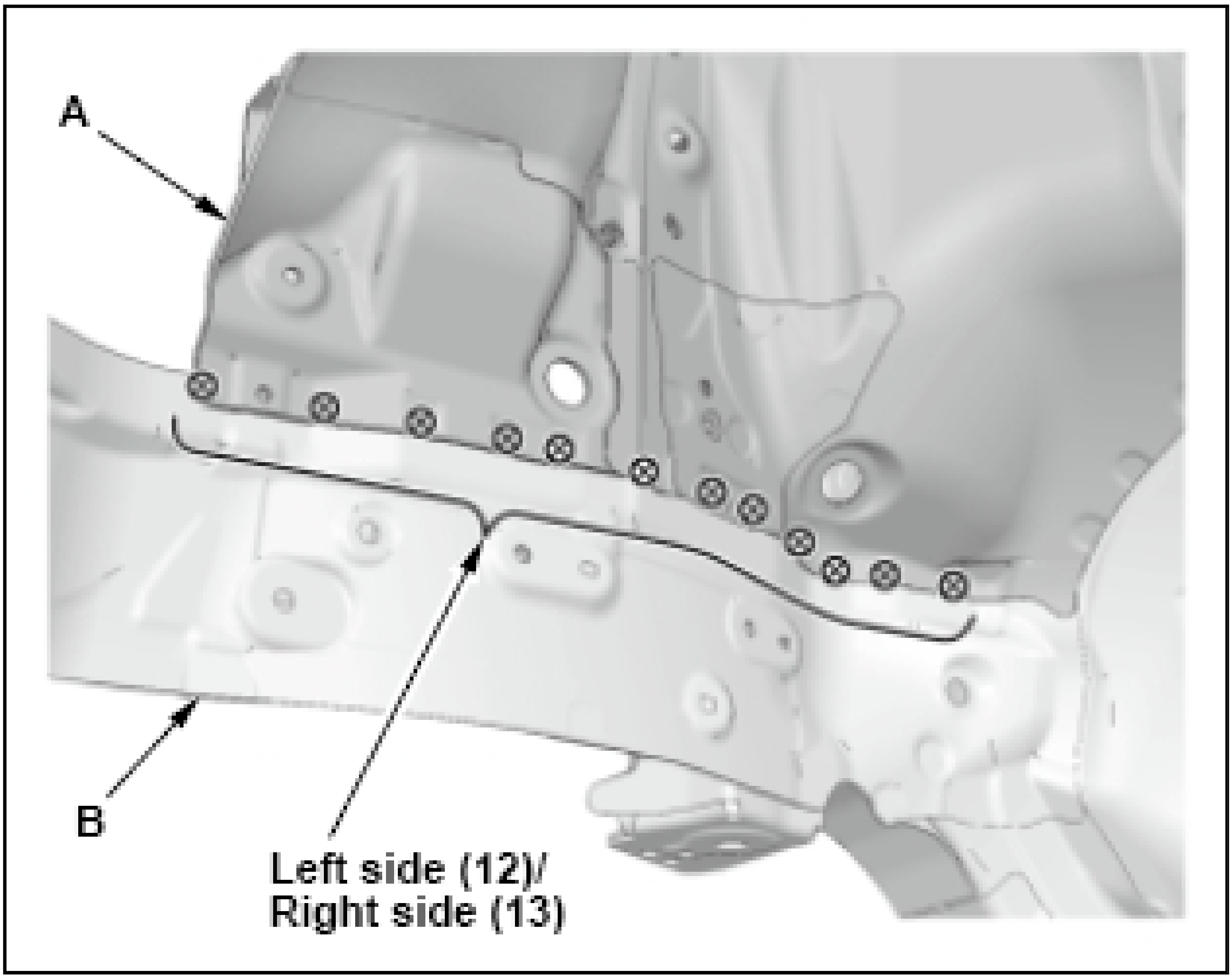
A
B
Left side (12)/
Right side (13)

2. **Bumper Beam Extension Flange - Weld** See FRONT BULKHEAD REPLACEMENT.
3. **Front Damper Extension Set - Weld**
    - Weld the front damper extension set (A) to the hood hinge bracket (B), the dashboard upper side member extension (C), and the damper housing set (D).

      ()*: Welding positions with high-strength steel parts. **Confirm the plug welding conditions.** (See MAG WELDING CONDITIONS FOR HIGH-STRENGTH STEEL PARTS (EXCEPT 1500 MPA) .)

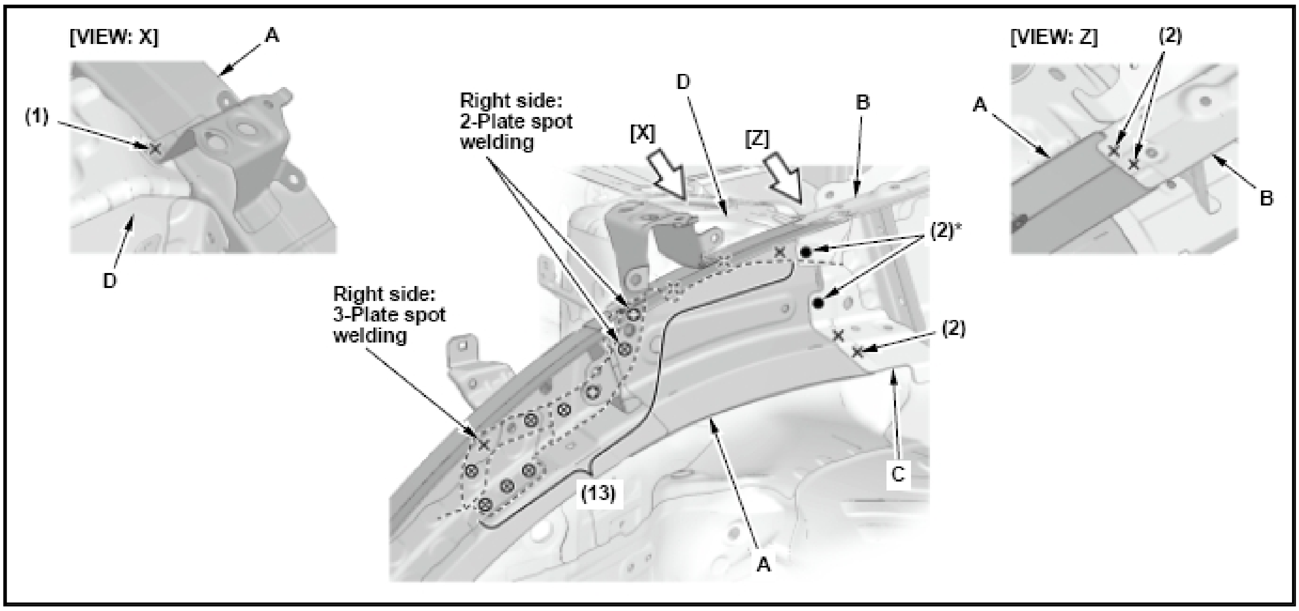
[VIEW: X]
A
(1)
D
Right side:
2-Plate spot
welding
D
[X]
[Z]
B
(2)*
Right side:
3-Plate spot
welding
(2)
(13)
C
A
[VIEW: Z]
(2)
A
B

- Weld the front damper extension set (A) to the bumper beam extension flange (B), the side frame extension front (C), and the side frame support (D).

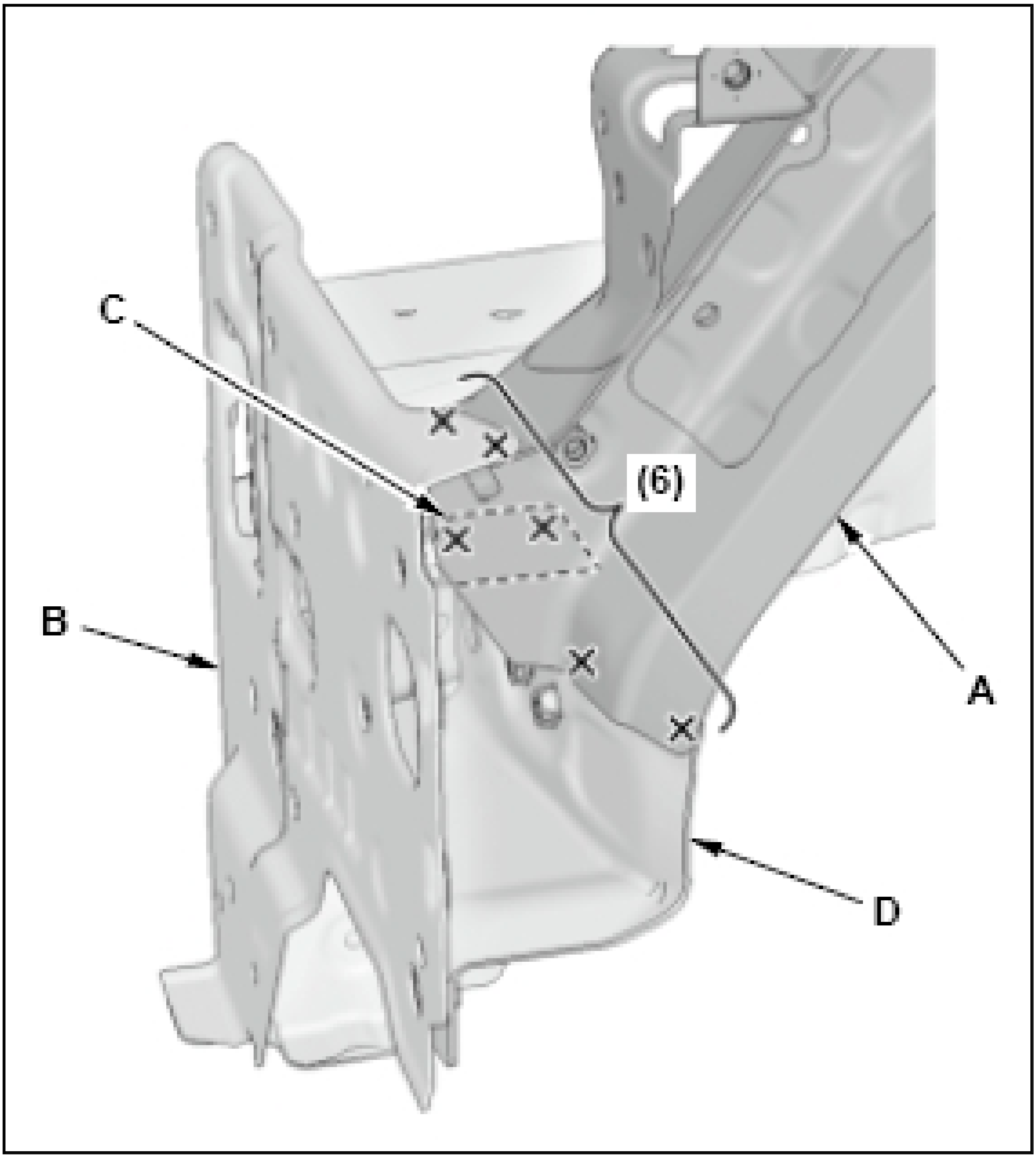

4. **Front Wheelhouse Upper Member - Weld**

- Weld the wheelhouse upper member front (A) and the wheelhouse upper member rear (B) to the front damper extension set (C), the side frame support (D), the bumper beam extension flange (E), the hood hinge bracket (F), the dashboard upper side member extension (G), and the front pillar lower stiffener extension upper/extension lower (H).

  ()*: Welding positions with high-strength steel parts. **Confirm the plug welding conditions.** (See MAG WELDING CONDITIONS FOR HIGH-STRENGTH STEEL PARTS (EXCEPT 1500 MPA) .)

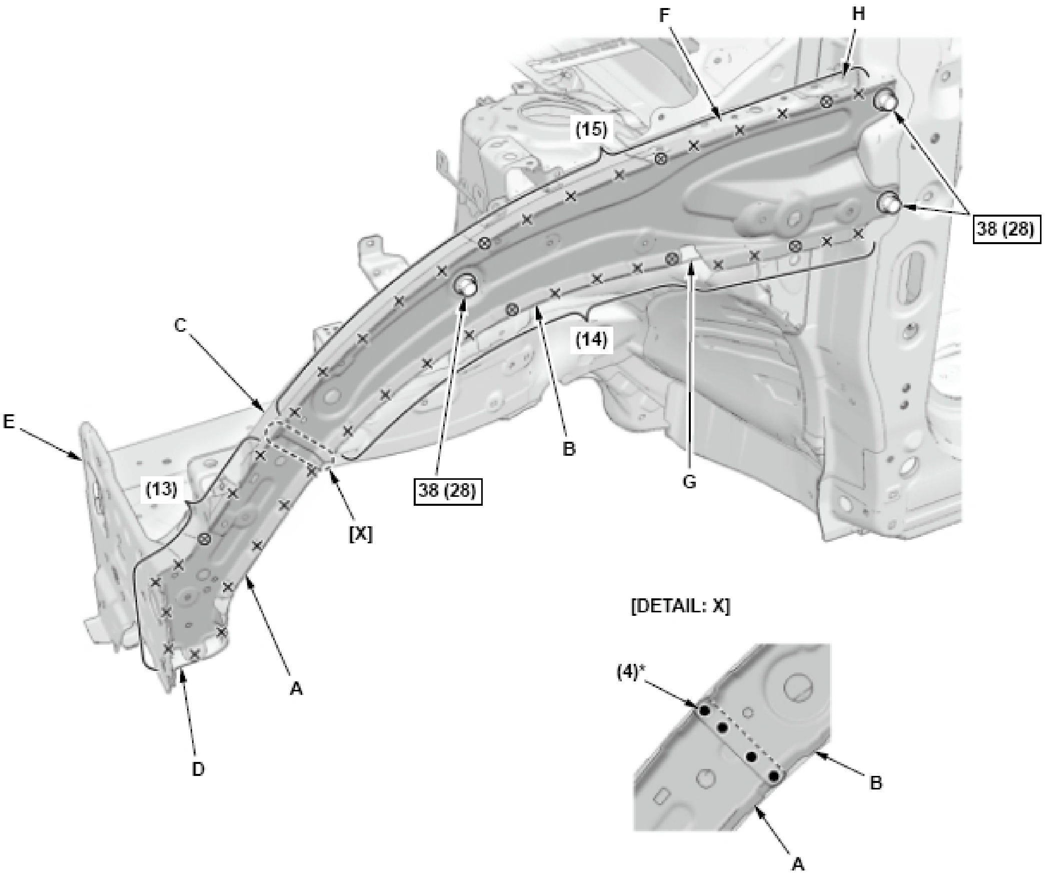

Fig. 4: Front Wheelhouse Upper Member, Components And Hardware Locations With Torque Specifications
Courtesy of AMERICAN HONDA MOTOR CO., INC.

5. **Front Bulkhead - Weld** See FRONT BULKHEAD REPLACEMENT.

FRONT SIDE FRAME REPLACEMENT

Removal

NOTE:

- **High-strength steel is defined as any steel with a tensile strength of 340 MPa or higher. If a part is constructed of, or includes high-strength steel review the important guidelines. See REPAIR GUIDELINES FOR HIGH-STRENGTH STEEL PARTS .**
- **Welding symbols (The welding symbols with dashed lines have a meaning of the spot welding of the part which is not visible). See SYMBOLS DEFINITION .**
- **(): Any numerical value in between these parentheses indicate the number of welds required.**

1. **Front Bulkhead - Remove** See FRONT BULKHEAD REPLACEMENT.
2. **Front Side Frame, Front-End Parts - Remove** See FRONT BULKHEAD REPLACEMENT.
3. **Mass Production Body Welding Positions and Numbers - Remove**
    - **Front Side Frame/Front Side Backplate**

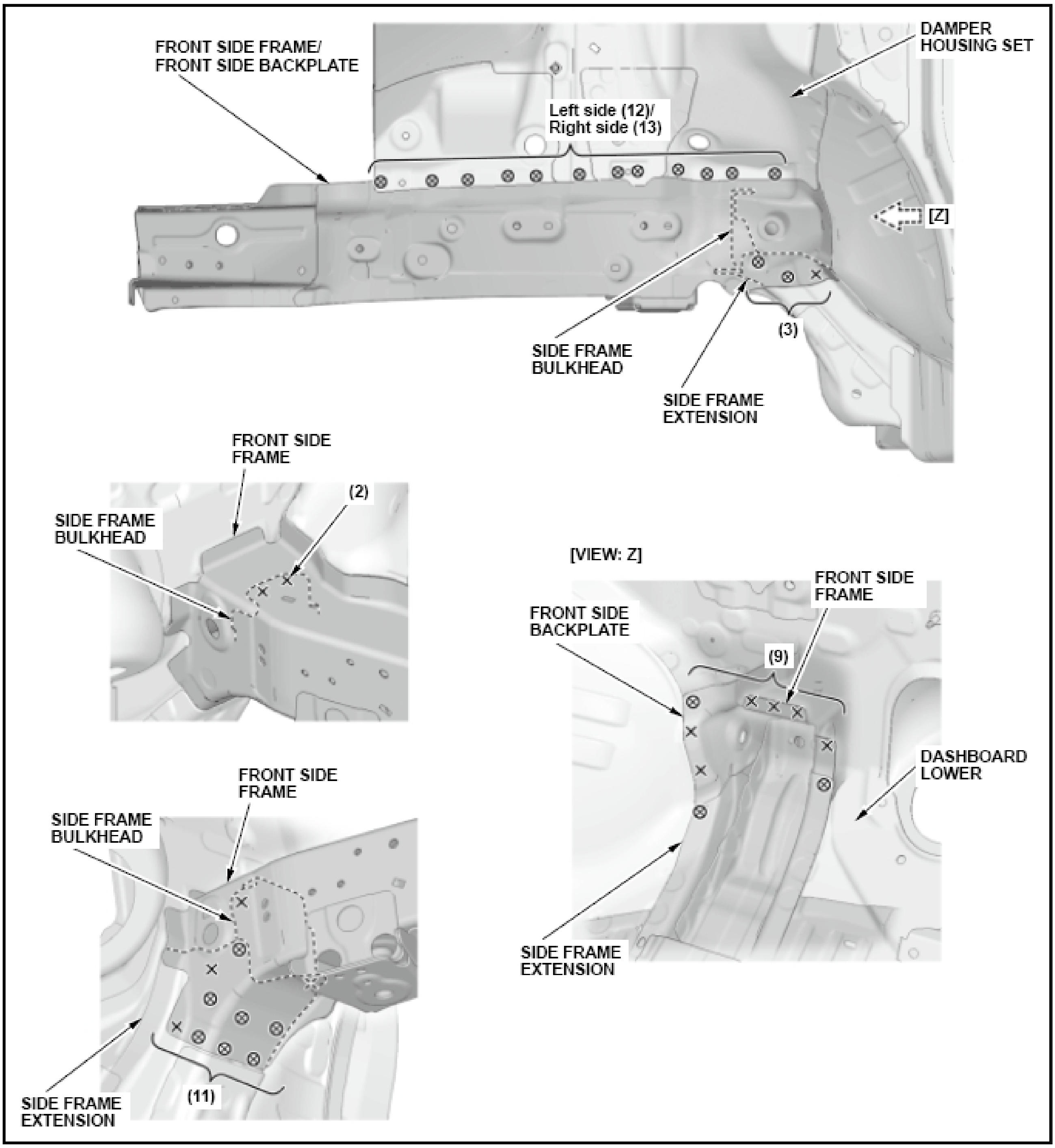
FRONT SIDE FRAME/
FRONT SIDE BACKPLATE
Left side (12)/
Right side (13)
DAMPER
HOUSING SET
[Z]
(3)
SIDE FRAME
BULKHEAD
SIDE FRAME
EXTENSION
FRONT SIDE
FRAME
(2)
SIDE FRAME
BULKHEAD
[VIEW: Z]
FRONT SIDE
FRAME
FRONT SIDE
BACKPLATE
(9)
DASHBOARD
LOWER
SIDE FRAME
EXTENSION
FRONT SIDE
FRAME
SIDE FRAME
BULKHEAD
SIDE FRAME
EXTENSION
(11)

4. **Construction - Remove**

Front Side Frame/Front Side Backplate

NOTE:

- **This section explains the procedures after removal of all related parts. For the related parts removal procedure, refer to the appropriate Service Information.**
- **The component replacement procedure described here is only for new genuine supplied parts, as needed, according to the area and the degree of damage on the body.**

When removing the front side frame and the front side backplate, leave the side frame extension and the side frame bulkhead in place.

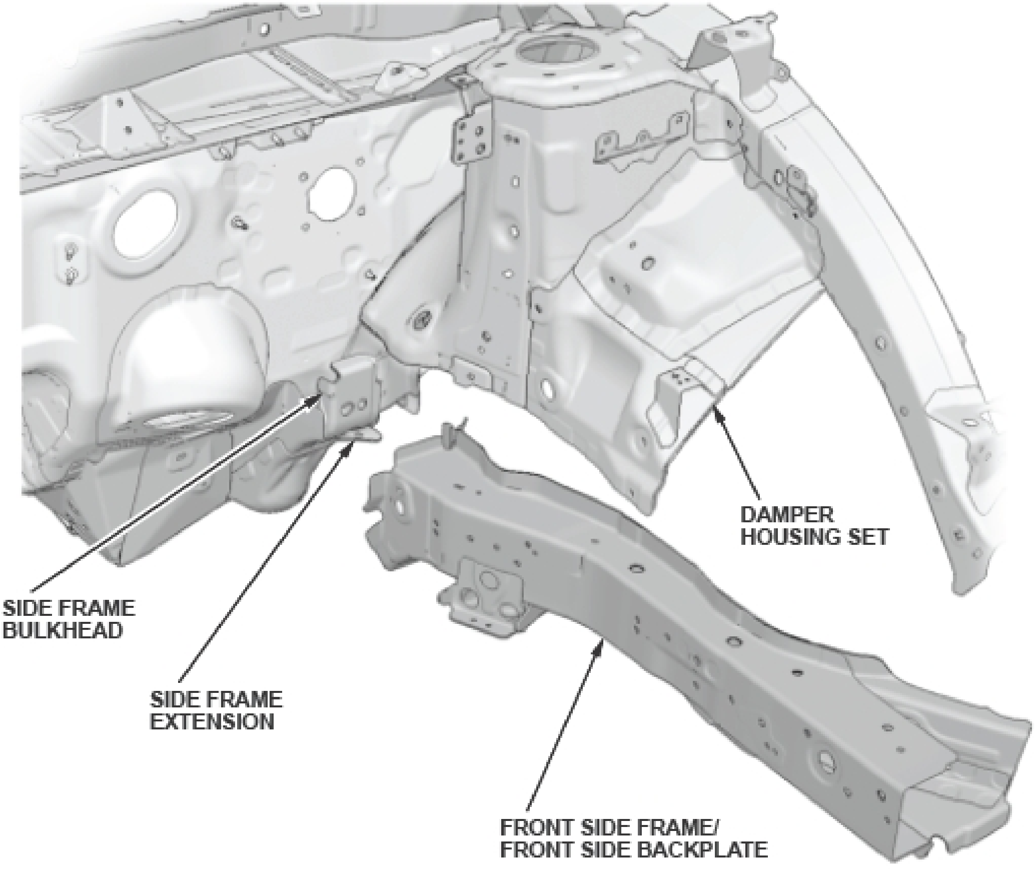

Fig. 5: Front Side Frame And Front Side Backplate Component Locations
Courtesy of AMERICAN HONDA MOTOR CO., INC.

Installation

NOTE:

- **Position the replacement parts.**

  Before doing the main welding, check the body dimensions:

  - **Front bulkhead position See FRONT BULKHEAD POSITION DIMENSION .**
  - **Engine compartment See ENGINE COMPARTMENT DIMENSION .**
  - **Engine and transmission mount positions See ENGINE AND TRANSMISSION MOUNT POSITIONS DIMENSION .**
  - **Front wheelhouse upper member position See FRONT WHEELHOUSE UPPER MEMBER POSITION DIMENSION .**
  - **Engine compartment and front floor, under view See ENGINE COMPARTMENT AND FRONT FLOOR, UNDER VIEW DIMENSION .**
  - **Inside sill positions See INSIDE SILL POSITIONS DIMENSION .**
  - **Frame repair chart See FRAME REPAIR CHART .**
- **Temporarily install the related parts, then check for differences in level and clearance. Check the external parts fitting positions. Make sure the body lines flow smoothly. See EXTERNAL PARTS FITTING POSITIONS .**
- **Confirm the sheet thickness, tensile strength, and existence of the zinc treatment on both sides, and set the welder to conform to the welding conditions by according to the Front Body Construction (See FRONT BODY CONSTRUCTION).**
- **Welding symbols (The welding symbols with dashed lines have a meaning of the spot welding of the part which is not visible). (See SYMBOLS DEFINITION .**
- **() and ()*: Any numerical value in between these parentheses indicate the number of welds required.**

1. **Front Side Frame - Weld**
   1. Weld the front side frame (A) to the side frame extension (B) and the side frame bulkhead (C).

(■)*: Welding positions with the side frame extension, include ultra high-strength steel (1500 MPa) parts. **Perform the spot welding on the conditions of No. 13 and 15 in the table shown below.** (See SPOT WELDING CONDITIONS FOR ULTRA HIGH-STRENGTH STEEL PARTS (1180 AND 1500 MPA)).

SPOT WELDING CONDITION DESCRIPTION

No. 13	8000 A	600 ms	3432 N (350 kgf)
No. 15	9000 A	800 ms	3432 N (350 kgf)

Welding positions (D): Must be welded according to the following conditions.

Plug hole diameter: φ 10 mm (0.39 in) Welding wire: Must use wire with a tensile strength of 980 MPa or higher (142 ksi or higher).

()*: Welding positions with high-strength steel parts. **Confirm the plug welding conditions.** (See MAG WELDING CONDITIONS FOR HIGH-STRENGTH STEEL PARTS (EXCEPT 1500 MPA) .)

2. **Front Side Frame, Front-End Parts - Weld**
   - Weld the side frame extension front (A), the subframe front plate (C), and the subframe front bracket (D) to the front side frame (E) and front damper extension B
3. **Front Side Frame and Front Side Backplate - Weld**
   a. Clamp the front side backplate (A) to the front side frame (B).
   b. Weld the front side backplate (A) to the front side frame (B), the damper housing set (C), and the side frame extension front (D), the subframe front plate (E), the subframe front bracket (F), and the side frame extension (G).

(■)*: Welding positions with the side frame extension, include ultra high-strength steel (1500 MPa) parts.

Welding positions (H): Must be welded according to the following conditions.

Plug hole diameter: φ 10 mm (0.39 in)

Welding wire: Must use wire with a tensile strength of 980 MPa or higher (142 ksi or higher).

Left Side

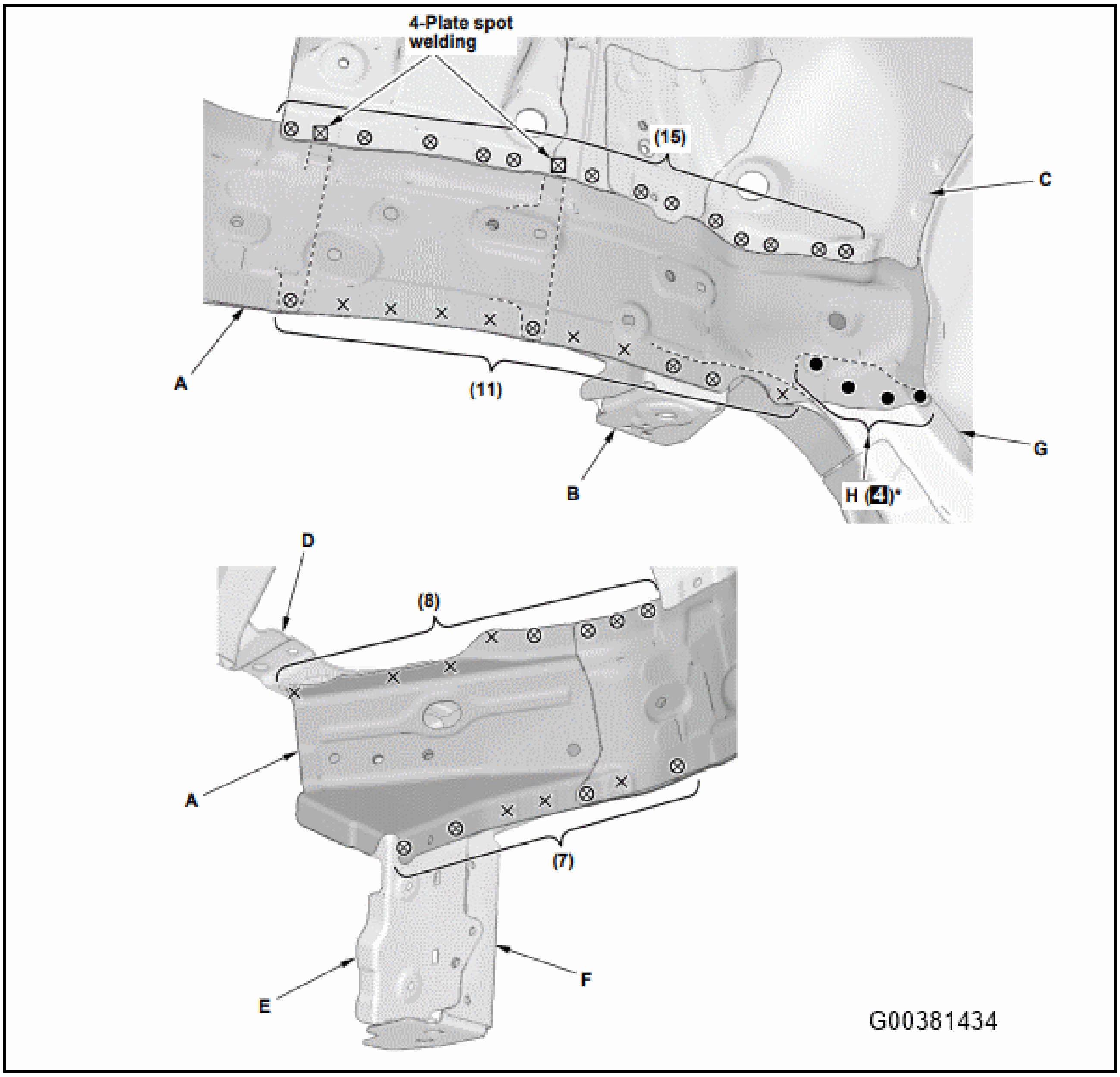
4-Plate spot welding
(15)
C
A
(11)
B
G
H (4)*
D
(8)
A
(7)
E
F
G00381434

Right Side

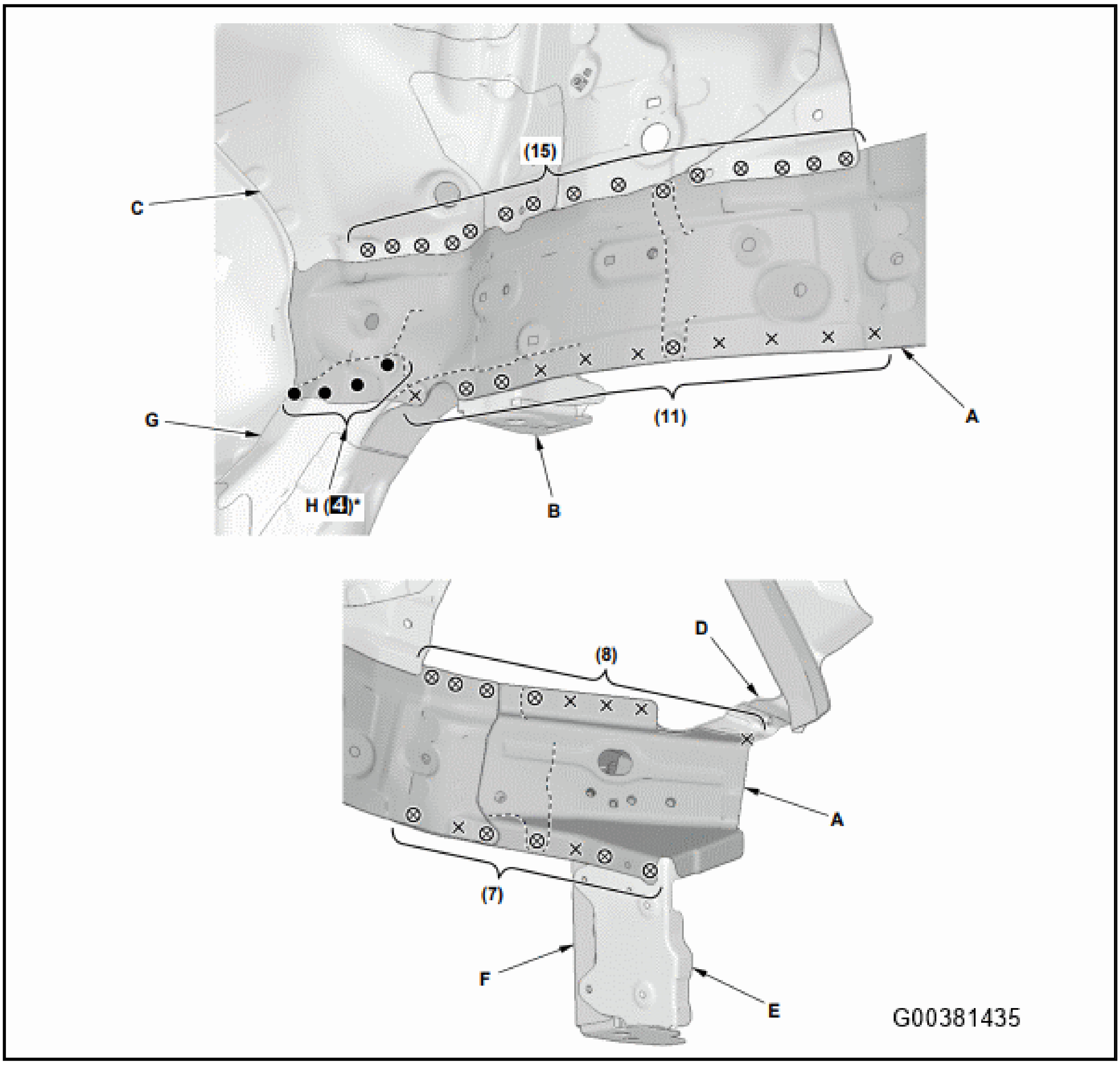

c. From the passengers compartment, weld the front side frame (A) and the front side backplate (B) to the dashboard lower (C).

()*: Welding positions with high-strength steel parts. **Confirm the plug welding conditions.** (See MAG WELDING CONDITIONS FOR HIGH-STRENGTH STEEL PARTS (EXCEPT 1500 MPA) .)

4. **Side Frame Support, Bumper Beam Extension Flange, and Wheelhouse Upper Member Front - Weld** See FRONT SIDE FRAME, FRONT-END PARTS REPLACEMENT.
5. **Front Bulkhead - Weld** See FRONT BULKHEAD REPLACEMENT.

FRONT PILLAR OUTER PANEL REPLACEMENT

Removal

NOTE:

- **High-strength steel is defined as any steel with a tensile strength of 340 MPa or higher. If a part is constructed of, or includes high-strength steel review the important guidelines. See REPAIR GUIDELINES FOR HIGH-STRENGTH STEEL PARTS .**
- **Welding symbols (The welding symbols with dashed lines have a meaning of the spot welding of the part which is not visible). See SYMBOLS DEFINITION .**
- **(): Any numerical value in between these parentheses indicate the number of welds required.**

1. **Mass Production Body Welding Positions and Numbers - Remove**

Front Pillar Outer Panel

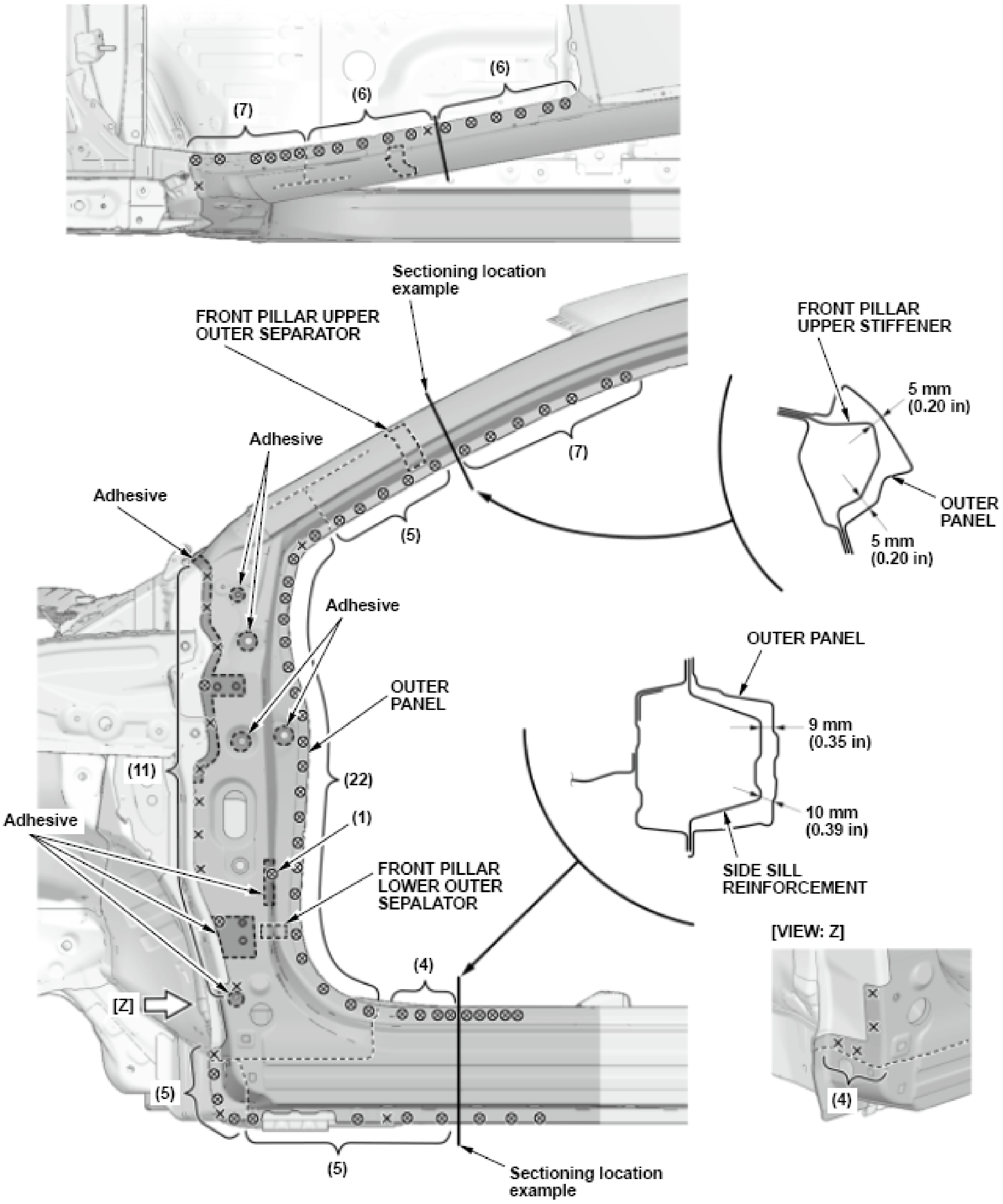
(7)
(6)
(6)
Sectioning location example
FRONT PILLAR UPPER OUTER SEPARATOR
FRONT PILLAR UPPER STIFFENER
5 mm (0.20 in)
OUTER PANEL
5 mm (0.20 in)
Adhesive
Adhesive
(7)
(5)
Adhesive
OUTER PANEL
OUTER PANEL
9 mm (0.35 in)
10 mm (0.39 in)
SIDE SILL REINFORCEMENT
(11)
(22)
Adhesive
(1)
FRONT PILLAR LOWER OUTER SEPALATOR
[VIEW: Z]
(4)
[Z]
(4)
(5)
(5)
Sectioning location example

[Fig. 6: Front Pillar Outer Panel Construction Specifications And Measurement Locations](#)
Courtesy of AMERICAN HONDA MOTOR CO., INC.

2. **Front Wheelhouse Upper Member - Remove** See **FRONT WHEELHOUSE/DAMPER HOUSING REPLACEMENT**.

Mass Production Body Welding Positions and Numbers - Remove

Front Pillar Lower Stiffener

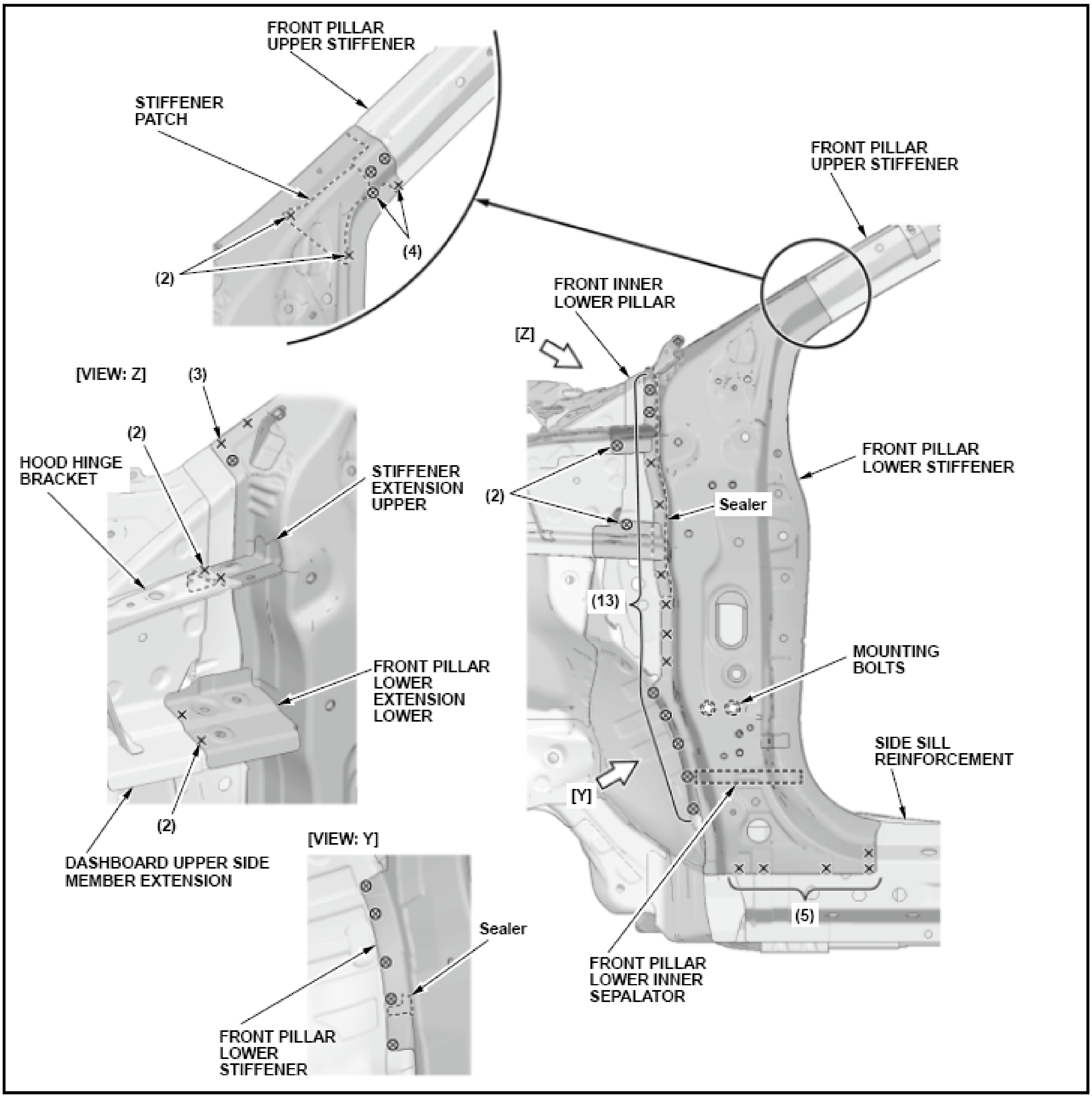
FRONT PILLAR UPPER STIFFENER
STIFFENER PATCH
(2)
(4)
FRONT PILLAR UPPER STIFFENER
FRONT INNER LOWER PILLAR
[Z]
[VIEW: Z]
(3)
(2)
HOOD HINGE BRACKET
STIFFENER EXTENSION UPPER
(2)
Sealer
FRONT PILLAR LOWER STIFFENER
(13)
FRONT PILLAR LOWER EXTENSION LOWER
MOUNTING BOLTS
SIDE SILL REINFORCEMENT
[Y]
(2)
DASHBOARD UPPER SIDE MEMBER EXTENSION
[VIEW: Y]
Sealer
(5)
FRONT PILLAR LOWER INNER SEPALATOR
FRONT PILLAR LOWER STIFFENER

Construction - Remove

NOTE:

- **This section explains the procedures after removal of all related parts. For the related parts removal procedure, refer to the appropriate Service Information.**
- **The component replacement procedure described here is only for new genuine supplied parts, as needed, according to the area and the degree of damage on the body.**
- **Cut and pry off the outer panel at the front pillar and side sill portions.**

  NOTE: **Select the sectioning location in consideration of the front side outer panel replacement.**

- **Check the front pillar lower stiffener position for damage. If necessary, replace it.**
- **Replace the front pillar upper outer separator, the lower outer separator, and the lower inner separator.**

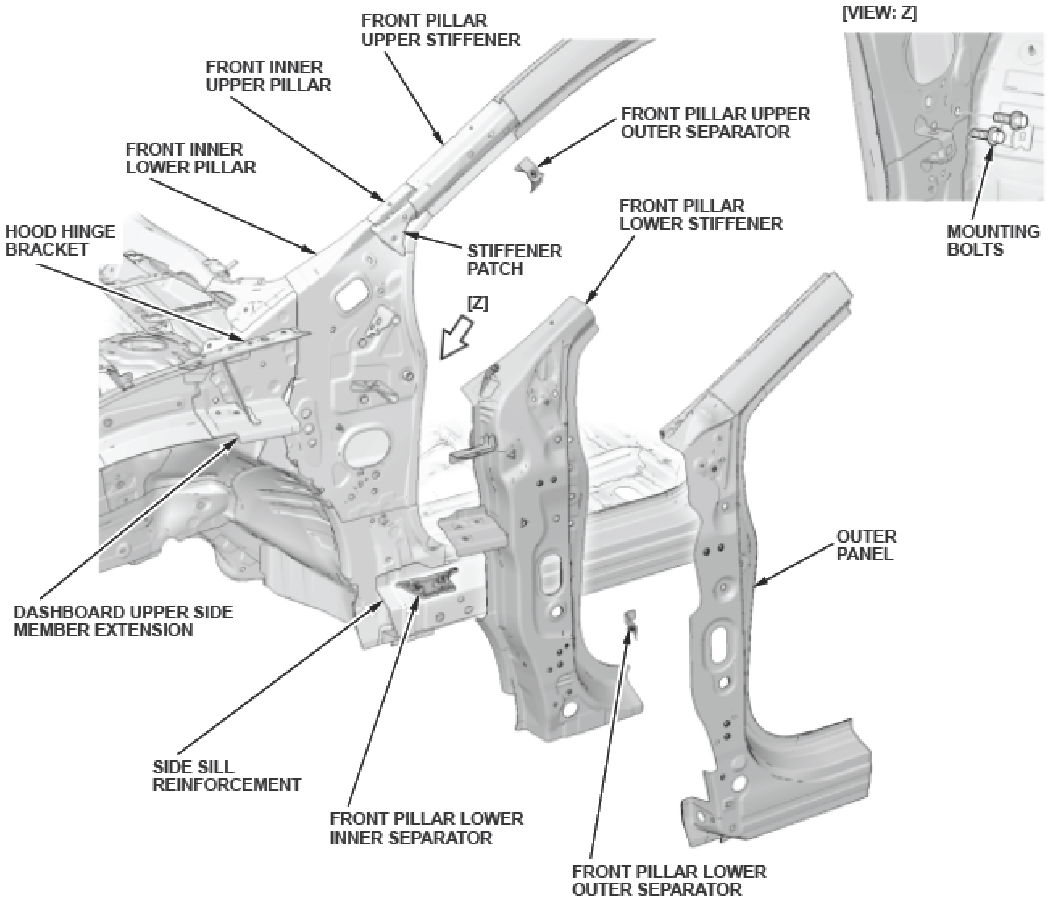
FRONT PILLAR UPPER STIFFENER
[VIEW: Z]
FRONT INNER UPPER PILLAR
FRONT PILLAR UPPER OUTER SEPARATOR
FRONT INNER LOWER PILLAR
HOOD HINGE BRACKET
STIFFENER PATCH
FRONT PILLAR LOWER STIFFENER
MOUNTING BOLTS
[Z]
OUTER PANEL
DASHBOARD UPPER SIDE MEMBER EXTENSION
SIDE SILL REINFORCEMENT
FRONT PILLAR LOWER INNER SEPARATOR
FRONT PILLAR LOWER OUTER SEPARATOR

Fig. 7: Outer Front Pillar, Inner Front Pillar And Components Locations
Courtesy of AMERICAN HONDA MOTOR CO., INC.

Installation

NOTE:

- **Position the replacement parts.**

  Before doing the main welding, check the body dimensions:

  - **Front wheelhouse upper member position See FRONT WHEELHOUSE UPPER MEMBER POSITION DIMENSION .**
  - **Door hinge positions See DOOR HINGE POSITIONS DIMENSION .**
  - **Windshield and door openings See WINDSHIELD AND DOOR OPENINGS .**
  - **Inside sill positions See INSIDE SILL POSITIONS DIMENSION .**
- **Temporarily install the related parts, then check for differences in level and clearance. Check the external parts fitting positions. Make sure the body lines flow smoothly. See EXTERNAL PARTS FITTING POSITIONS .**
- **Confirm the sheet thickness, tensile strength, and existence of the zinc treatment on both sides, and set the welder to conform to the welding conditions by according to the Front Body Construction . (See FRONT BODY CONSTRUCTION).**
- **Welding symbols (The welding symbols with dashed lines have a meaning of the spot welding of the part which is not visible). See SYMBOLS DEFINITION .**
- **() and ()*: Any numerical value in between these parentheses indicate the number of welds required.**
- **▭ Torque: N.m (lbf.ft)**

Front Pillar Lower Stiffener - Weld

1. Install the new front pillar lower inner separator (A) to the front pillar lower stiffener (B). Apply the sealer (C) without gaps all the way around the separator and the front inner lower pillar (D).

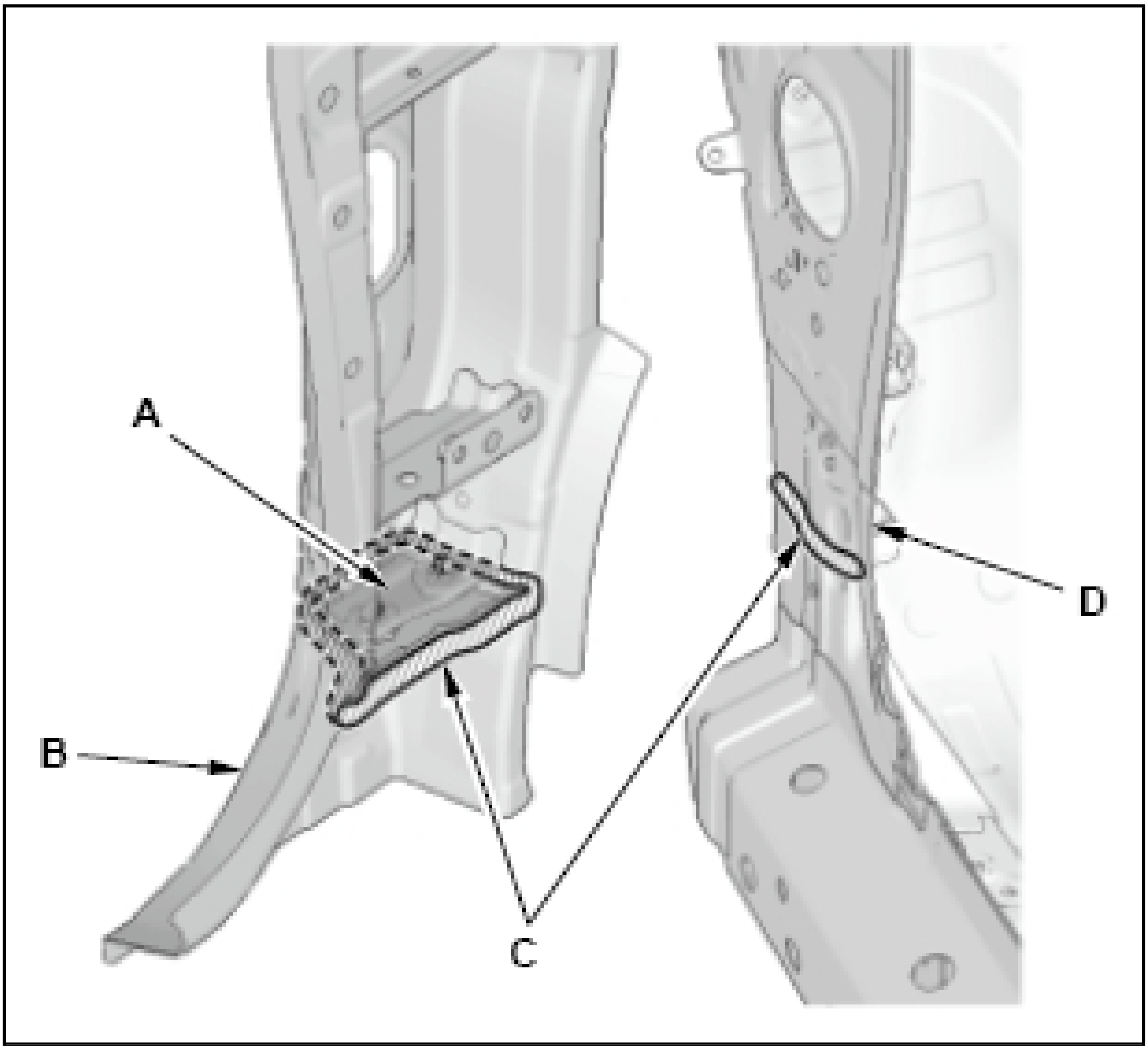

2. Weld the front pillar lower stiffener (A) to the front pillar upper stiffener (B), the side sill reinforcement (C), the front inner lower pillar (D), the hood hinge bracket (E), and the dashboard upper side member extension (F).

   (■)*: Welding positions with the front pillar upper stiffener and the side sill reinforcement, include ultra high-strength steel (1500 MPa) parts. **Perform the spot welding on the conditions of No. 15 in the table shown below. Confirm the MIG brazing conditions.** (See SPOT WELDING CONDITIONS FOR ULTRA HIGH-STRENGTH STEEL PARTS (1180 AND 1500 MPA) And MIG BRAZING CONDITIONS FOR ULTRA HIGH-STRENGTH STEEL PARTS (1180 AND 1500 MPA)).

   SPOT WELDING CONDITION DESCRIPTION

No. 15	9000 A	600 ms	3432 N (350 kgf)

   NOTE: **Welding positions (G): Must be welded according to the following conditions.**
   Plug hole diameter: 10 mm (0.39 in)
   Welding wire: Must use wire with a tensile strength of 980 MPa or higher (142 ksi or higher).
   ()*: Welding positions with high-strength steel parts. Confirm the plug welding conditions. (See MAG WELDING CONDITIONS FOR HIGH-STRENGTH STEEL PARTS (EXCEPT 1500 MPA) .)

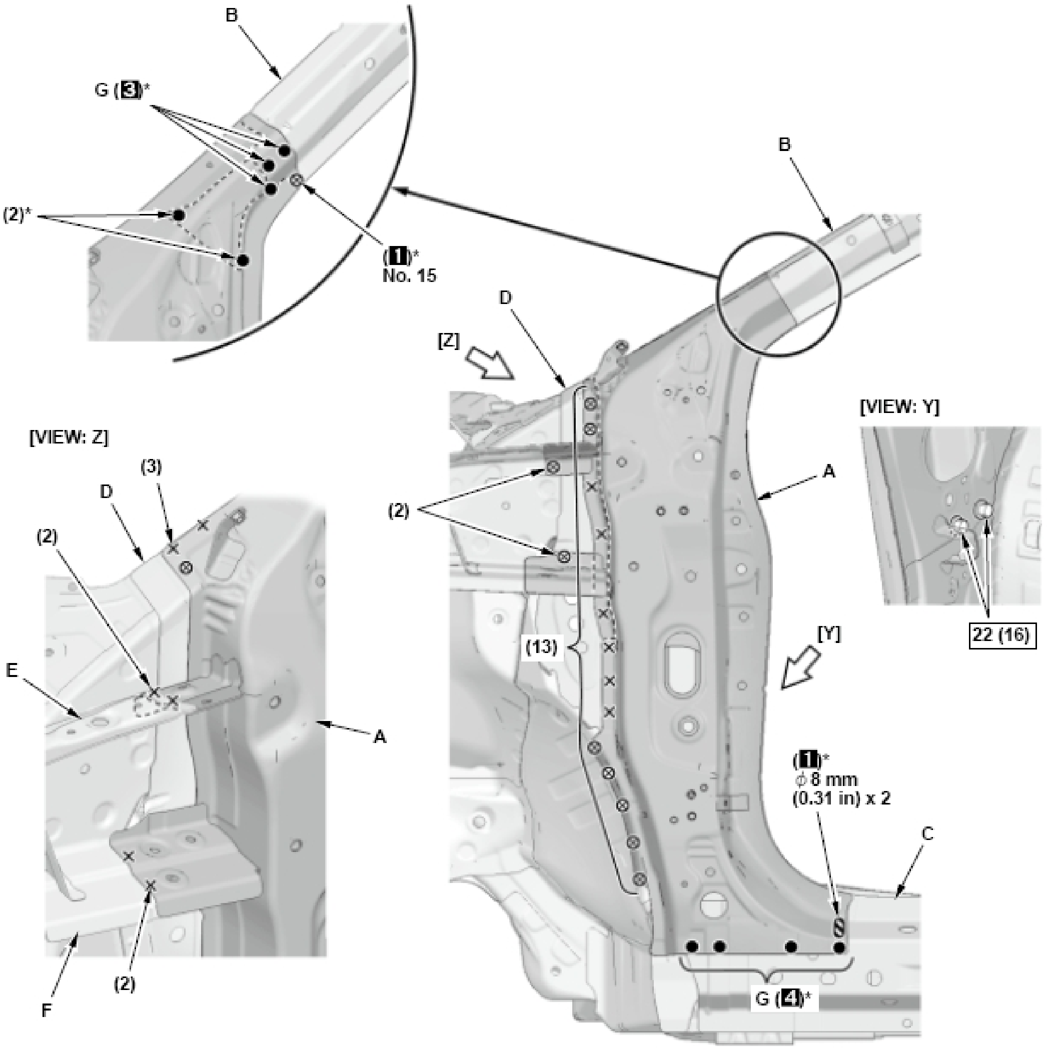
B
G (3)*
(2)*
(1)*
No. 15
B
D
[Z]
[VIEW: Y]
A
(2)
[VIEW: Z]
(3)
D
(2)
E
A
(13)
[Y]
22 (16)
(1)*
ϕ 8 mm
(0.31 in) x 2
C
G (4)*
(2)
F

Fig. 8: Outer Front Pillar Mounting Hardware Locations With Torque Specifications
Courtesy of AMERICAN HONDA MOTOR CO., INC.

Outer Panel Repair Part - Weld

1. Install the new front pillar outer upper separator (A) and the outer lower separator (B) on the front pillar upper stiffener (C) and the front pillar lower stiffener (D). Apply the sealer (E) without gaps all the way around the separator and inside the outer panel repair part (F).

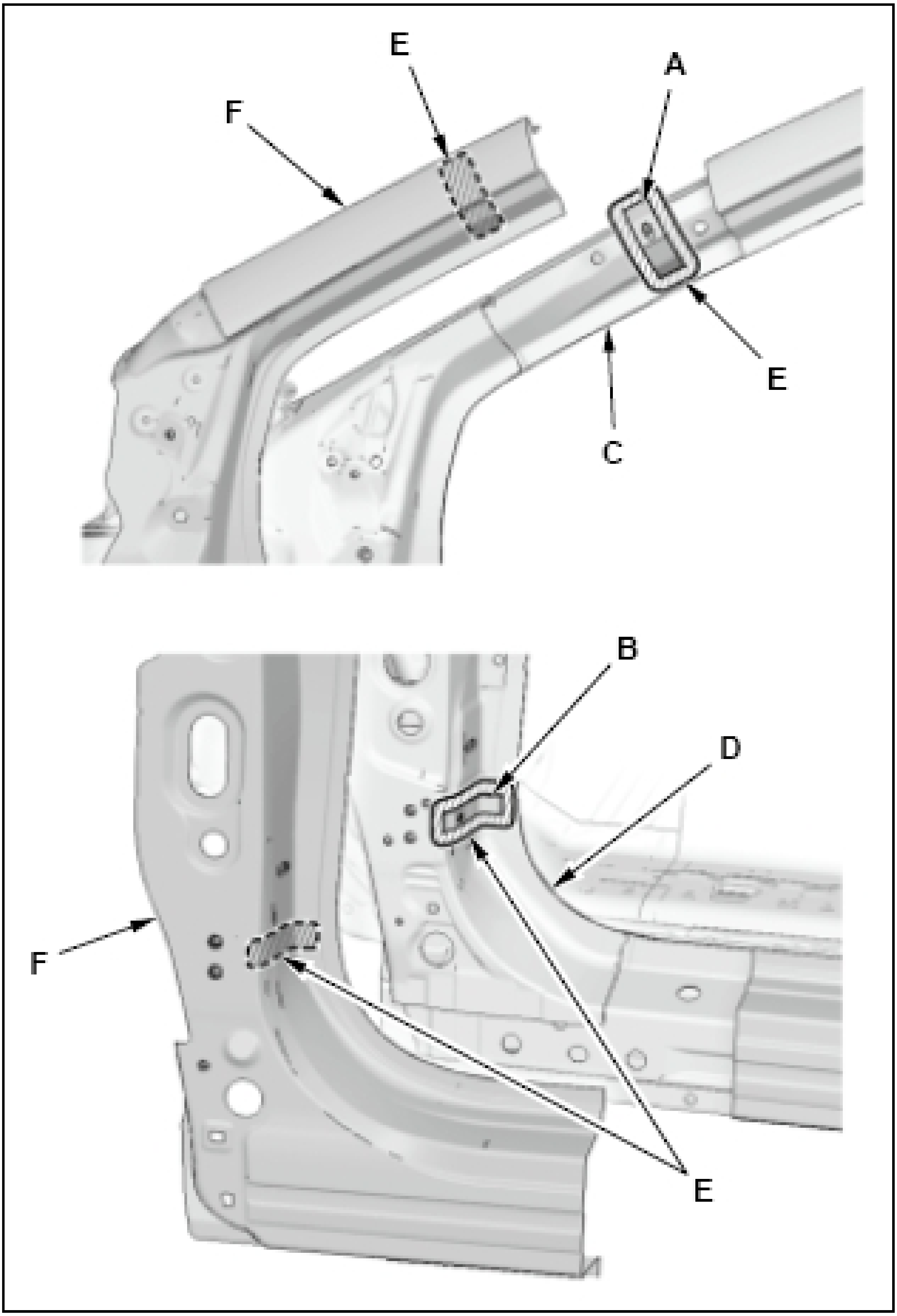

2. Apply the adhesive (A) to areas around holes on the inside of the outer panel repair part (B) and the outside of the front pillar lower stiffener (C) as shown.

Adhesive: 3M 07333 or a commercially available equivalent

NOTE: Refer to the manufacturers instructions for details.

[VIEW: Z]

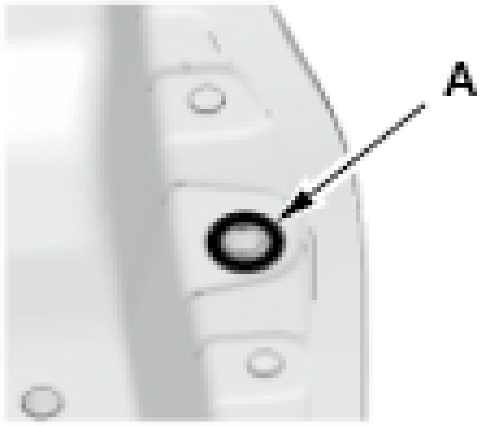

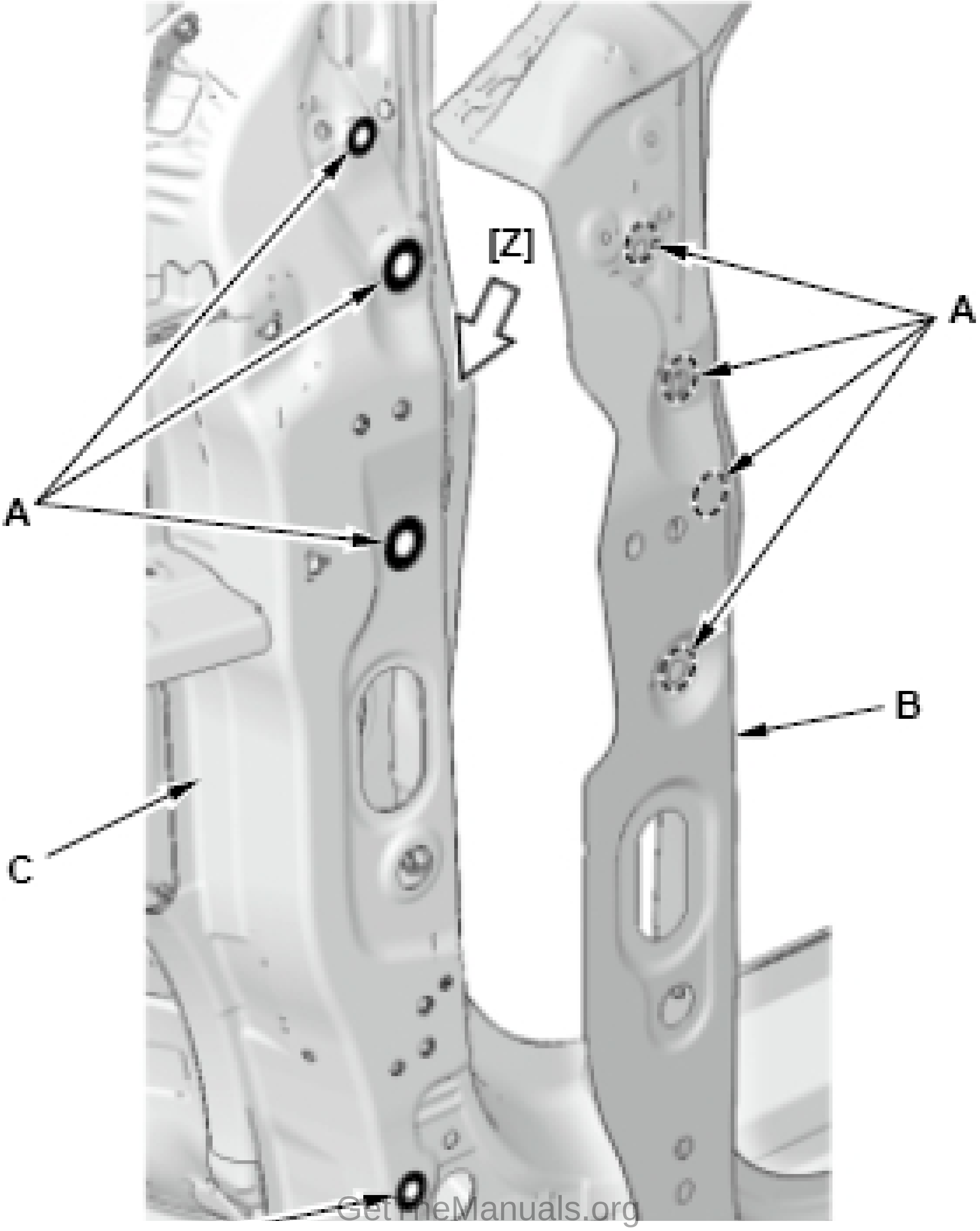

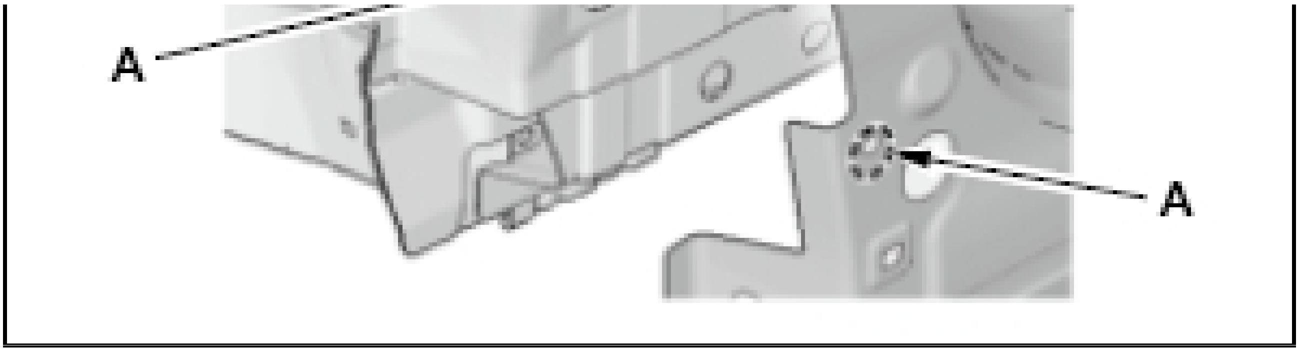

3. Weld the outer panel repair part (A).

(■)*: Welding positions with the front pillar upper stiffener (B), the front inner upper pillar (C), and the side sill reinforcement (D), include ultra high-strength steel (1500 MPa) parts. **Perform the spot welding on the conditions of No. 26, 30, and 31 in the table shown below. Confirm the MIG brazing conditions.** (See SPOT WELDING CONDITIONS FOR ULTRA HIGH-STRENGTH STEEL PARTS (1180 AND 1500 MPA) And MIG BRAZING CONDITIONS FOR ULTRA HIGH-STRENGTH STEEL PARTS (1180 AND 1500 MPA)).

SPOT WELDING CONDITION DESCRIPTION

No. 26	8000 A	800 ms	3432 N (350 kgf)
No. 30	8500 A	1200 ms	3432 N (350 kgf)
No. 31	9000 A	1200 ms	3432 N (350 kgf)

()*: Welding positions with high-strength steel parts. **Confirm the plug welding conditions.** (See MAG WELDING CONDITIONS FOR HIGH-STRENGTH STEEL PARTS (EXCEPT 1500 MPA) .)

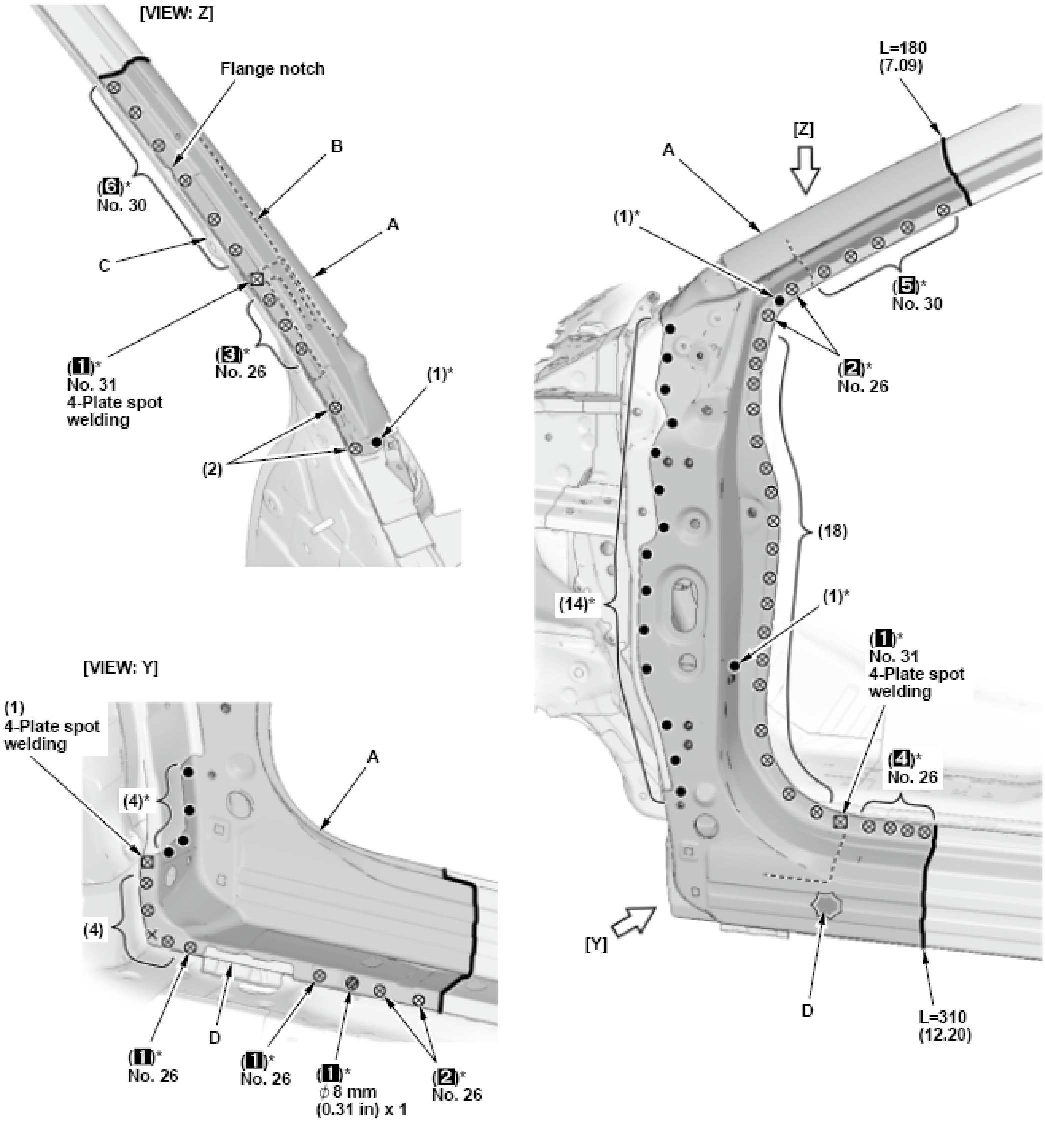
[VIEW: Z]
Flange notch
B
(6)* No. 30
A
C
(1)* No. 31 4-Plate spot welding
(3)* No. 26
(1)*
(2)
L=180 (7.09)
[Z]
A
(1)*
(5)* No. 30
(2)* No. 26
(18)
(14)*
(1)*
(1)* No. 31 4-Plate spot welding
(4)* No. 26
[Y]
D
L=310 (12.20)
[VIEW: Y]
(1) 4-Plate spot welding
(4)*
A
(4)
D
(1)* No. 26
(1)* No. 26
(1)* ϕ8 mm (0.31 in) x 1
(2)* No. 26

Fig. 9: Outer Front Pillar Installation Weld Measurements And Locations
Courtesy of AMERICAN HONDA MOTOR CO., INC.

Wheelhouse Upper Member - Weld See FRONT WHEELHOUSE/DAMPER HOUSING REPLACEMENT.

SIDE SILL OUTER PANEL REPLACEMENT

Removal

NOTE:

- **High-strength steel is defined as any steel with a tensile strength of 340 MPa or higher. If a part is constructed of, or includes high-strength steel review the important guidelines. See REPAIR GUIDELINES FOR HIGH-STRENGTH STEEL PARTS .**
- **Welding symbols (The welding symbols with dashed lines have a meaning of the spot welding of the part which is not visible). See SYMBOLS DEFINITION .**
- **(): Any numerical value in between these parentheses indicate the number of welds required.**
- **The figure shows the size of side sill outer panel repair part.**

Mass Production Body Welding Positions and Numbers - Remove

Side Sill Outer Panel

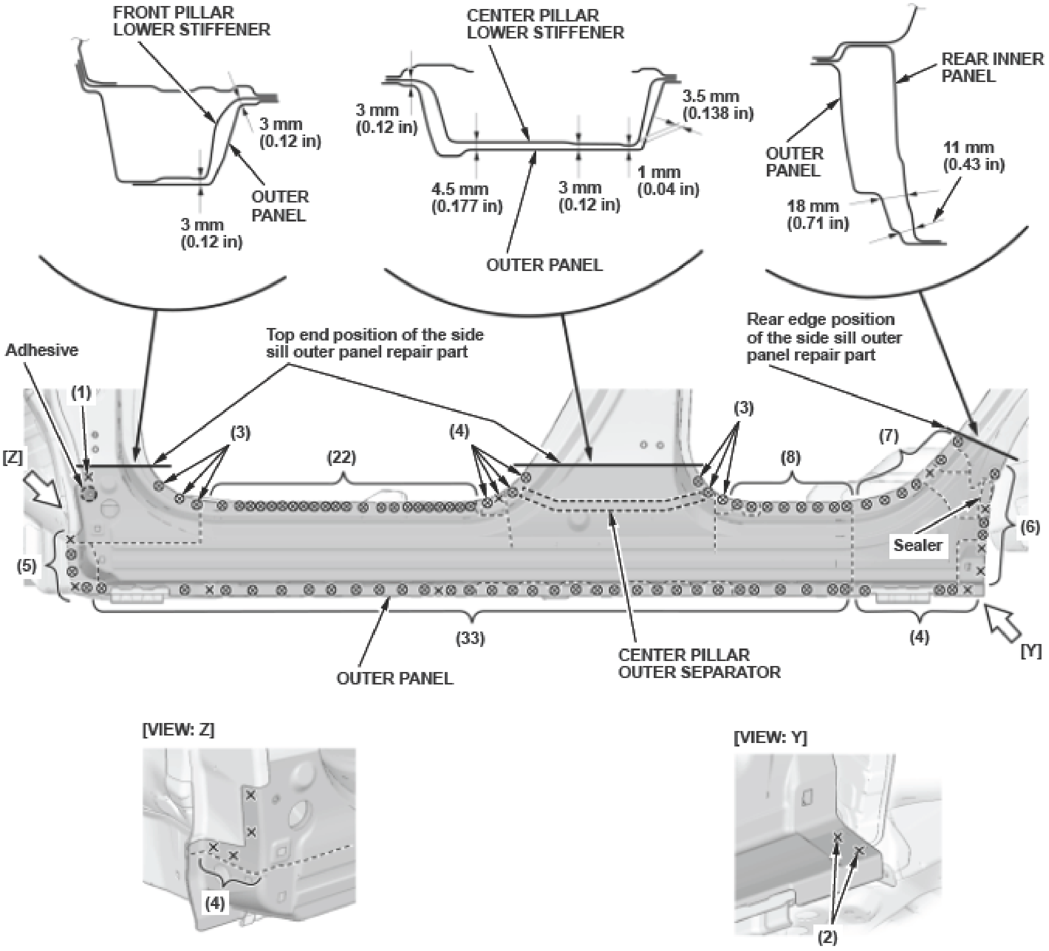
FRONT PILLAR LOWER STIFFENER
3 mm (0.12 in)
OUTER PANEL
3 mm (0.12 in)
CENTER PILLAR LOWER STIFFENER
3 mm (0.12 in)
3.5 mm (0.138 in)
4.5 mm (0.177 in)
3 mm (0.12 in)
1 mm (0.04 in)
OUTER PANEL
REAR INNER PANEL
OUTER PANEL
11 mm (0.43 in)
18 mm (0.71 in)
Adhesive
Top end position of the side sill outer panel repair part
Rear edge position of the side sill outer panel repair part
(1)
[Z]
(3)
(22)
(4)
(3)
(8)
(7)
(6)
Sealer
(5)
(33)
(4)
[Y]
OUTER PANEL
CENTER PILLAR OUTER SEPARATOR
[VIEW: Z]
(4)
[VIEW: Y]
(2)

Fig. 10: Side Sill Panel Construction Specifications And Measurement Locations
Courtesy of AMERICAN HONDA MOTOR CO., INC.

Construction - Remove

Side Sill Outer Panel

NOTE:

- **This section explains the procedures after removal of all related parts. For the related parts removal procedure, refer to the appropriate Service Information.**

- **The component replacement procedure described here is only for new genuine supplied parts, as needed, according to the area and the degree of damage on the body.**

Cut and pry off the side sill outer panel, and replace it.

NOTE: **Select the sectioning location in consideration of the side sill outer panel replacement.**

Replace the center pillar outer separator.

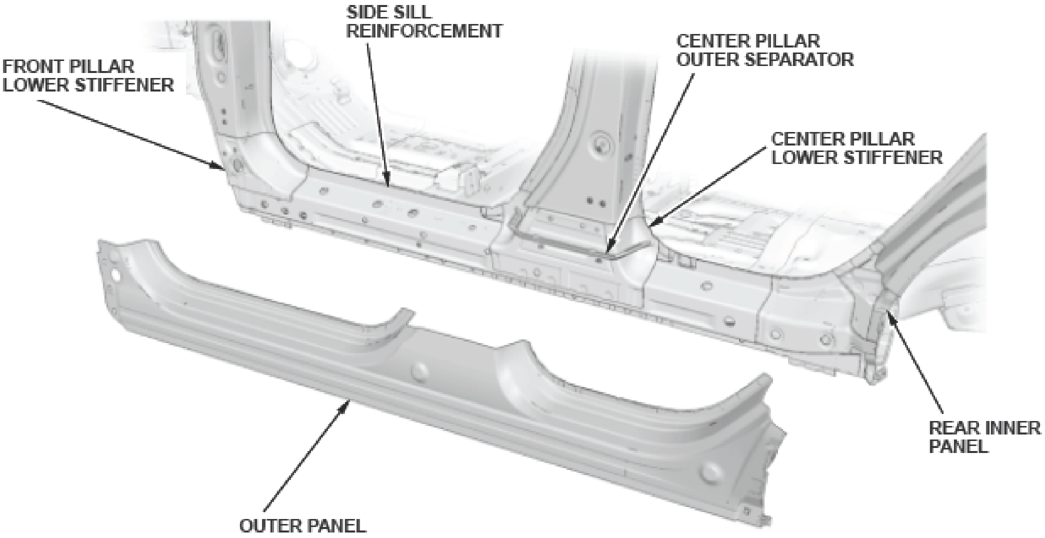
SIDE SILL REINFORCEMENT
FRONT PILLAR LOWER STIFFENER
CENTER PILLAR OUTER SEPARATOR
CENTER PILLAR LOWER STIFFENER
REAR INNER PANEL
OUTER PANEL

Fig. 11: Outer Side Sill Panel Component Location
Courtesy of AMERICAN HONDA MOTOR CO., INC.

Installation

NOTE:

- **Position the replacement parts.**

  Before doing the main welding, check the body dimensions:

  - **Front wheelhouse upper member position See FRONT WHEELHOUSE UPPER MEMBER POSITION DIMENSION .**
  - **Door hinge positions See DOOR HINGE POSITIONS DIMENSION .**
  - **Windshield and door openings See WINDSHIELD AND DOOR OPENINGS .**
- **Temporarily install the related parts, then check for differences in level and clearance. Check the external parts fitting positions. Make sure the body lines flow smoothly. See EXTERNAL PARTS FITTING POSITIONS .**
- **Confirm the sheet thickness, tensile strength, and existence of the zinc treatment on both sides, and set the welder to conform to the welding conditions by according to the Front Body Construction, Roof and Side Panel Construction, and Floor and Rear Body Construction. (See FRONT BODY CONSTRUCTION , ROOF AND SIDE PANEL CONSTRUCTION And FLOOR AND REAR BODY CONSTRUCTION).**
- **Welding symbols (The welding symbols with dashed lines have a meaning of the spot welding of the part which is not visible). See SYMBOLS DEFINITION .**
- **() and ()*: Any numerical value in between these parentheses indicate the number of welds required.**

Outer Panel Repair Part - Weld

1. Install the new center pillar outer separator (A) on the center pillar stiffener (B). Apply the sealer (C) without gaps all the way around the separator and inside the outer panel repair part (D).

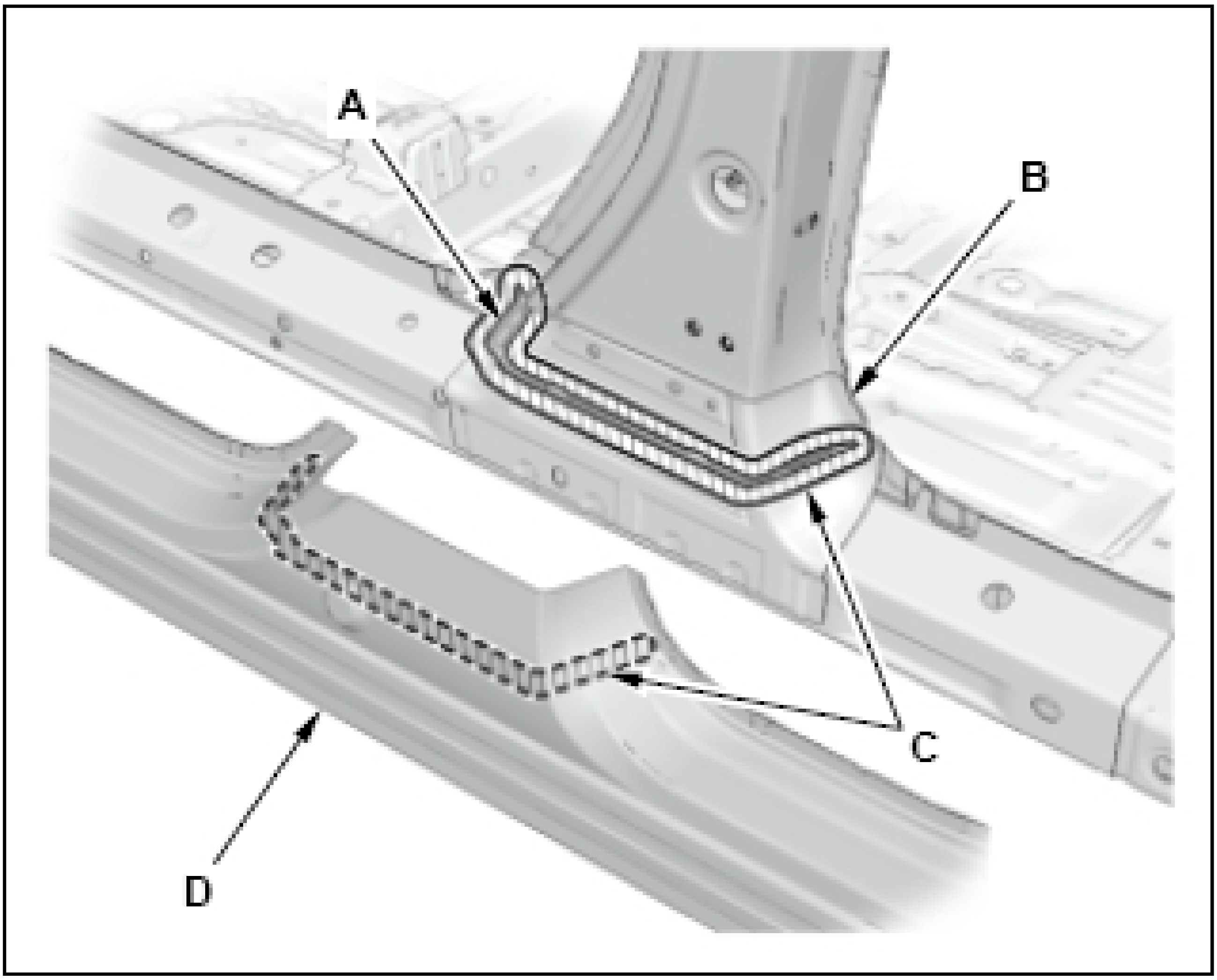

2. Apply the adhesive (A) to areas around holes on the inside of the outer panel repair part (B) and the outside of the front pillar lower stiffener (C) as shown.

   Adhesive: 3M 07333 or a commercially available equivalent

NOTE: **Refer to the manufacturers instructions for details.**

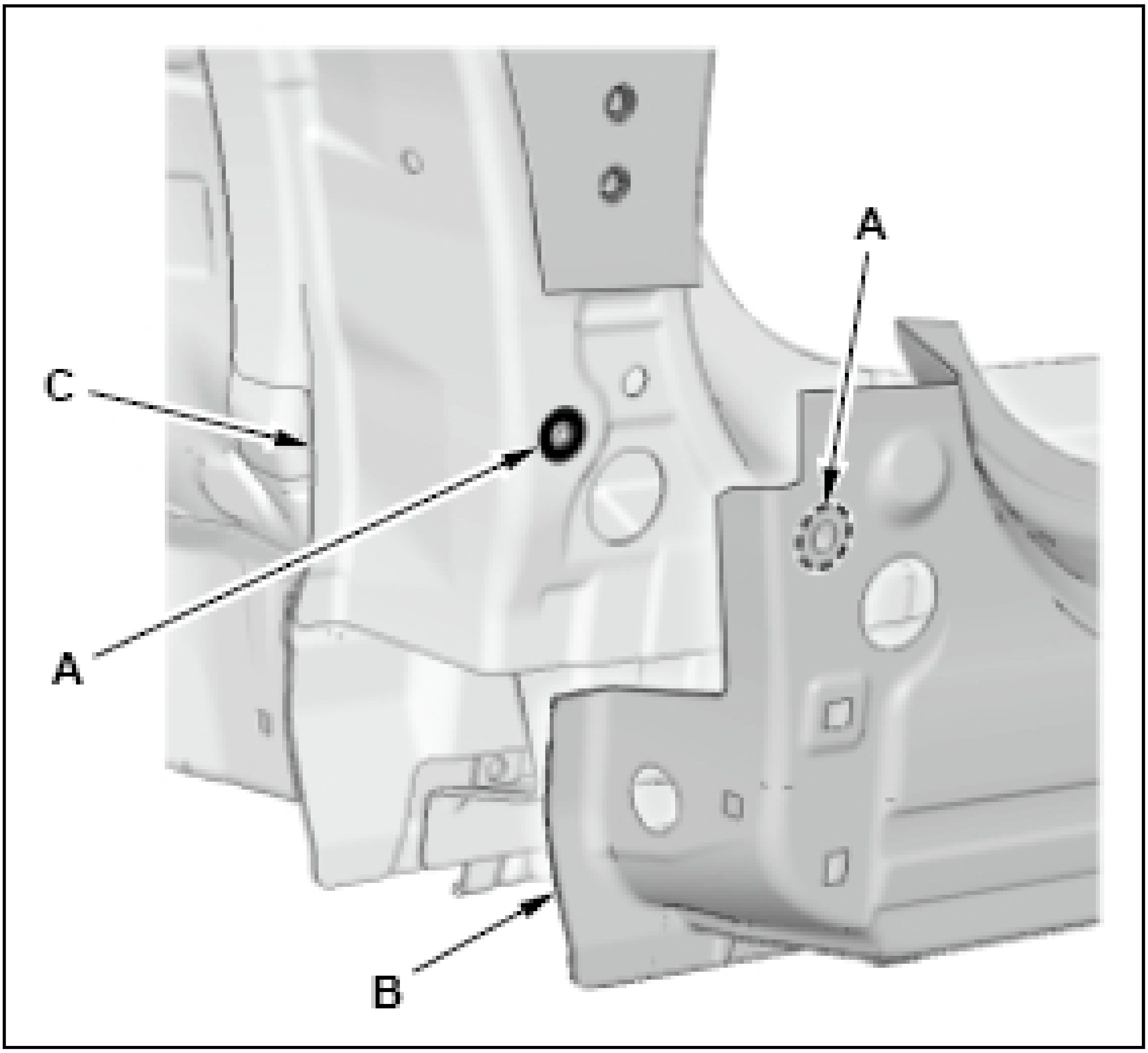

3. Weld the outer panel repair part (A).

(■)*: Welding positions with the side sill reinforcement (B), include ultra high-strength steel (1500 MPa) parts. **Perform the spot welding on the conditions of No. 26, 30, and 31 in the table shown below. Confirm the MIG brazing conditions.** (See SPOT WELDING CONDITIONS FOR ULTRA HIGH-STRENGTH STEEL PARTS (1180 AND 1500 MPA) And MIG BRAZING CONDITIONS FOR ULTRA HIGH-STRENGTH STEEL PARTS (1180 AND 1500 MPA)).

SPOT WELDING CONDITION DESCRIPTION

No. 26	8000 A	800 ms	3432 N (350 kgf)
No. 30	8500 A	1200 ms	3432 N (350 kgf)
No. 31	9000 A	1200 ms	3432 N (350 kgf)

()*: Welding positions with high-strength steel parts. **Confirm the plug welding conditions.** (See MAG WELDING CONDITIONS FOR HIGH-STRENGTH STEEL PARTS (EXCEPT 1500 MPA) .)

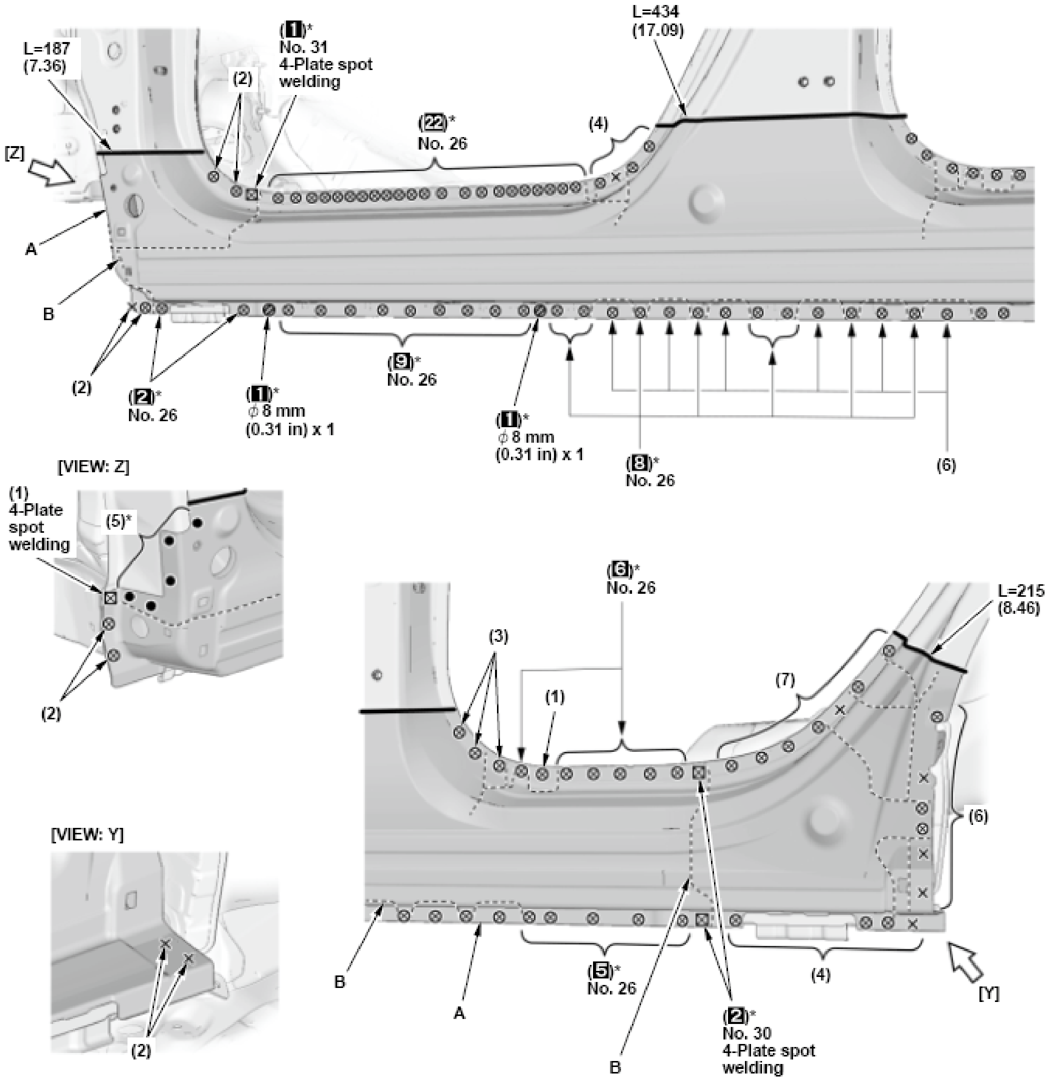
L=187
(7.36)
(2)
(1)*
No. 31
4-Plate spot
welding
L=434
(17.09)
(22)*
No. 26
(4)
[Z]
A
B
(2)
(2)*
No. 26
(1)*
ϕ 8 mm
(0.31 in) x 1
(9)*
No. 26
(1)*
ϕ 8 mm
(0.31 in) x 1
(8)*
No. 26
(6)
[VIEW: Z]
(1)
4-Plate
spot
welding
(5)*
(2)
(6)*
No. 26
L=215
(8.46)
(3)
(1)
(7)
(6)
[VIEW: Y]
(2)
B
A
(5)*
No. 26
B
(2)*
No. 30
4-Plate spot
welding
(4)
[Y]

[Fig. 12: Outer Side Sill Panel Installation Weld Measurements And Locations](#)
Courtesy of AMERICAN HONDA MOTOR CO., INC.

CENTER PILLAR OUTER PANEL REPLACEMENT

Removal

NOTE:

- High-strength steel is defined as any steel with a tensile strength of 340 MPa or higher. If a part is constructed of, or includes high-strength steel review the important guidelines. See REPAIR GUIDELINES FOR HIGH-STRENGTH STEEL PARTS .
- Welding symbols (The welding symbols with dashed lines have a meaning of the spot welding of the part which is not visible). See SYMBOLS DEFINITION .
- (): Any numerical value in between these parentheses indicate the number of welds required.

Mass Production Body Welding Positions and Numbers - Remove

Center Pillar Outer Panel

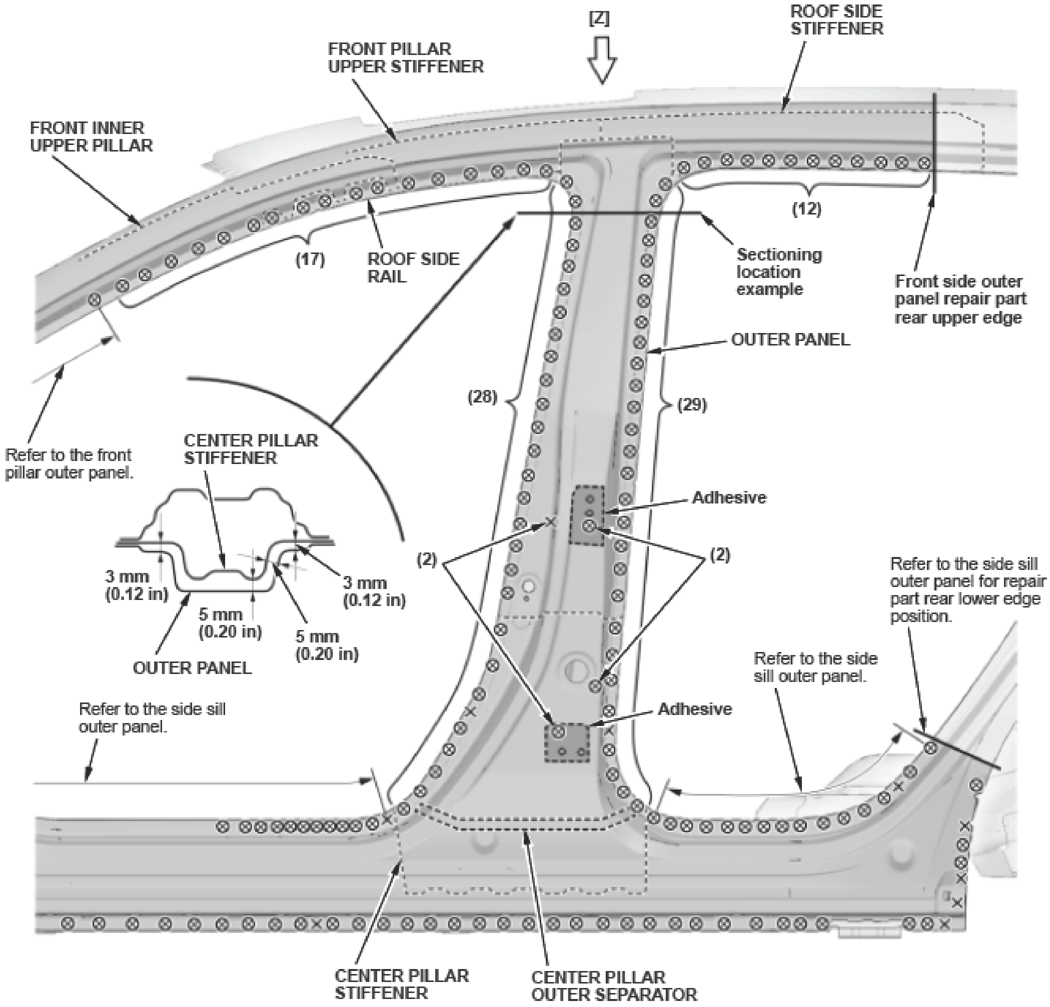
[Z]
ROOF SIDE STIFFENER
FRONT PILLAR UPPER STIFFENER
FRONT INNER UPPER PILLAR
(12)
(17)
ROOF SIDE RAIL
Sectioning location example
Front side outer panel repair part rear upper edge
OUTER PANEL
(28)
(29)
Refer to the front pillar outer panel.
CENTER PILLAR STIFFENER
Adhesive
(2)
(2)
3 mm (0.12 in)
3 mm (0.12 in)
5 mm (0.20 in)
5 mm (0.20 in)
OUTER PANEL
Refer to the side sill outer panel for repair part rear lower edge position.
Refer to the side sill outer panel.
Refer to the side sill outer panel.
Adhesive
CENTER PILLAR STIFFENER
CENTER PILLAR OUTER SEPARATOR

Fig. 13: Center Pillar Outer Panel Construction Specifications And Measurement Locations
Courtesy of AMERICAN HONDA MOTOR CO., INC.

Outer panel welding positions and numbers with roof panel removed

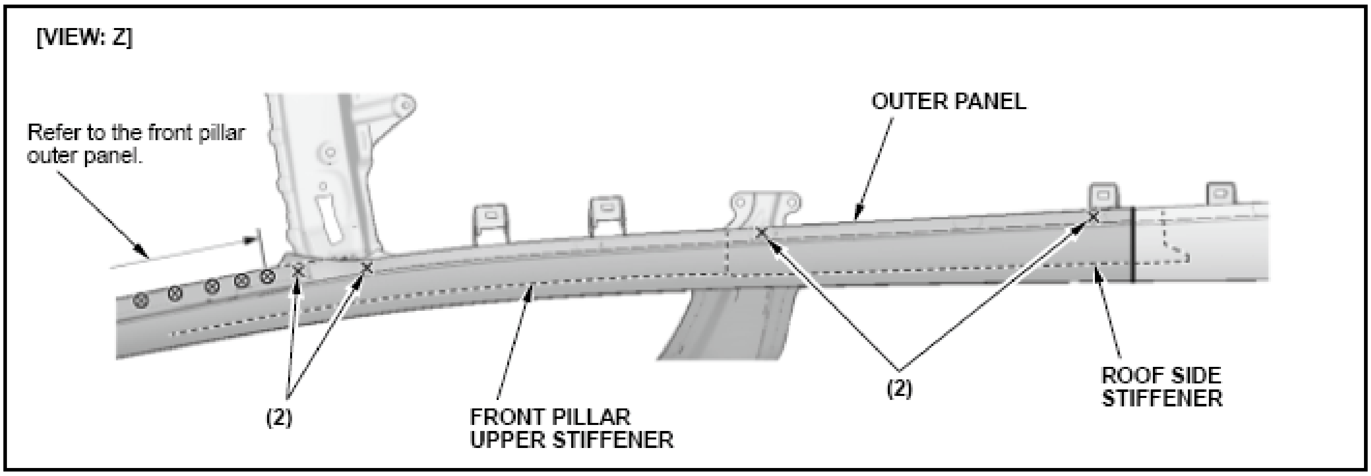
[VIEW: Z]
Refer to the front pillar outer panel.
OUTER PANEL
(2)
FRONT PILLAR UPPER STIFFENER
(2)
ROOF SIDE STIFFENER

Construction - Remove

Center Pillar Outer Panel

NOTE:

- **This section explains the procedures after removal of all related parts. For the related parts removal procedure, refer to the appropriate Service Information.**
- **The component replacement procedure described here is only for new genuine supplied parts, as needed, according to the area and the degree of damage on the body.**
- **If there is any damage to the center pillar, cut and pry off the outer panel, and replace it.**

NOTE: **Select the sectioning location in consideration of the front side outer panel replacement.**

- **Replace the center pillar outer separator.**

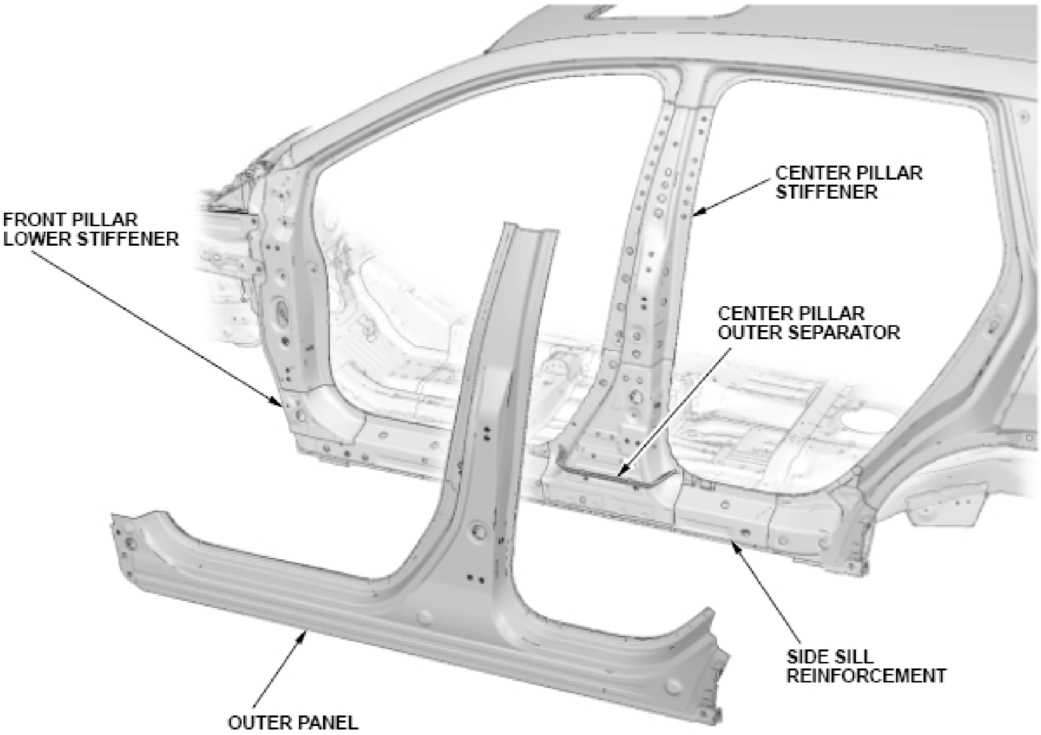
CENTER PILLAR STIFFENER
FRONT PILLAR LOWER STIFFENER
CENTER PILLAR OUTER SEPARATOR
SIDE SILL REINFORCEMENT
OUTER PANEL

Fig. 14: Outer Center Pillar Panel Component Location
Courtesy of AMERICAN HONDA MOTOR CO., INC.

Mass Production Body Welding Positions and Numbers - Remove

Side Sill Reinforcement and Center Pillar Lower Stiffener

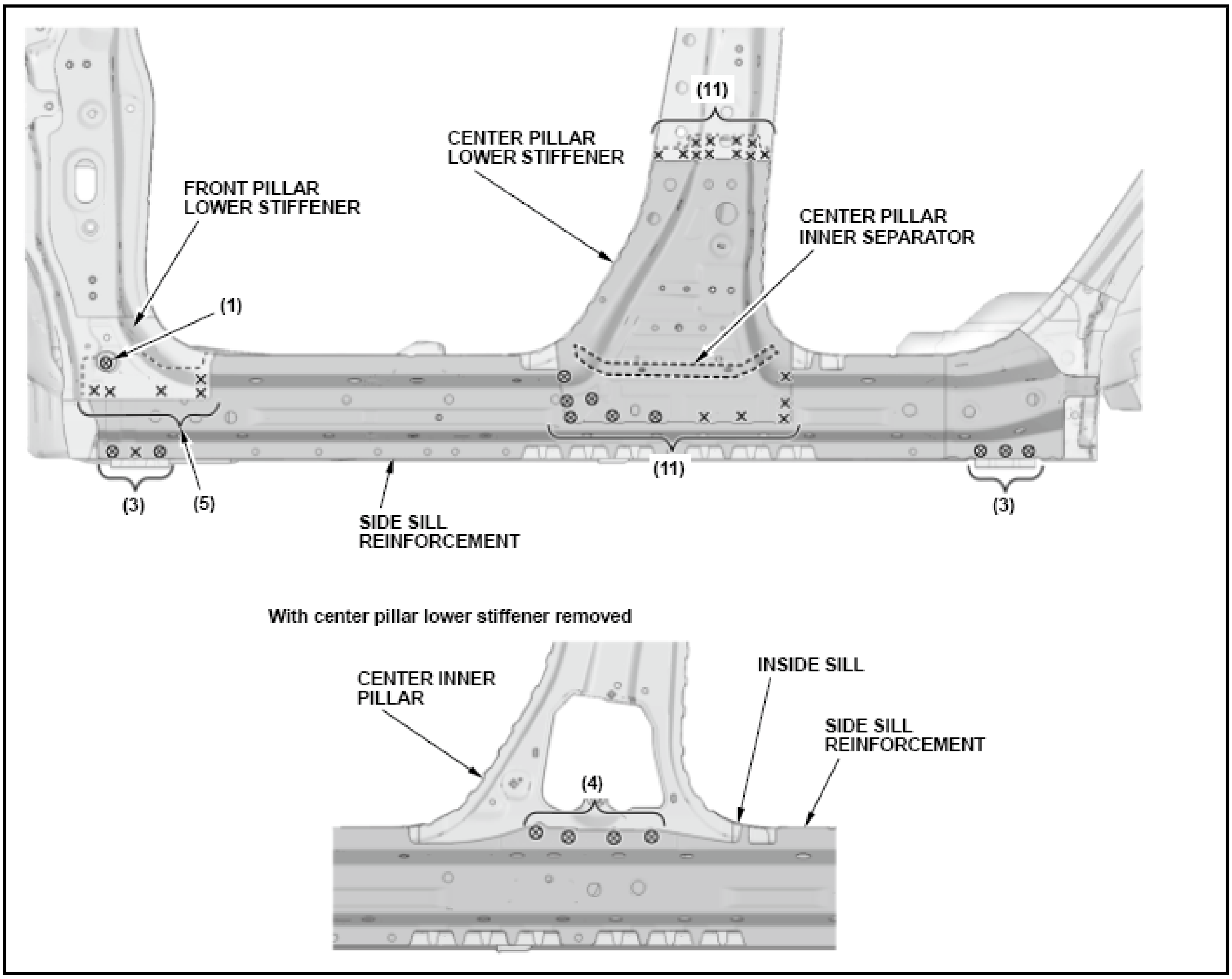
(11)
CENTER PILLAR
LOWER STIFFENER
FRONT PILLAR
LOWER STIFFENER
CENTER PILLAR
INNER SEPARATOR
(1)
(11)
(3)
(5)
SIDE SILL
REINFORCEMENT
(3)
With center pillar lower stiffener removed
CENTER INNER
PILLAR
INSIDE SILL
SIDE SILL
REINFORCEMENT
(4)

Center Pillar Stiffener Complete

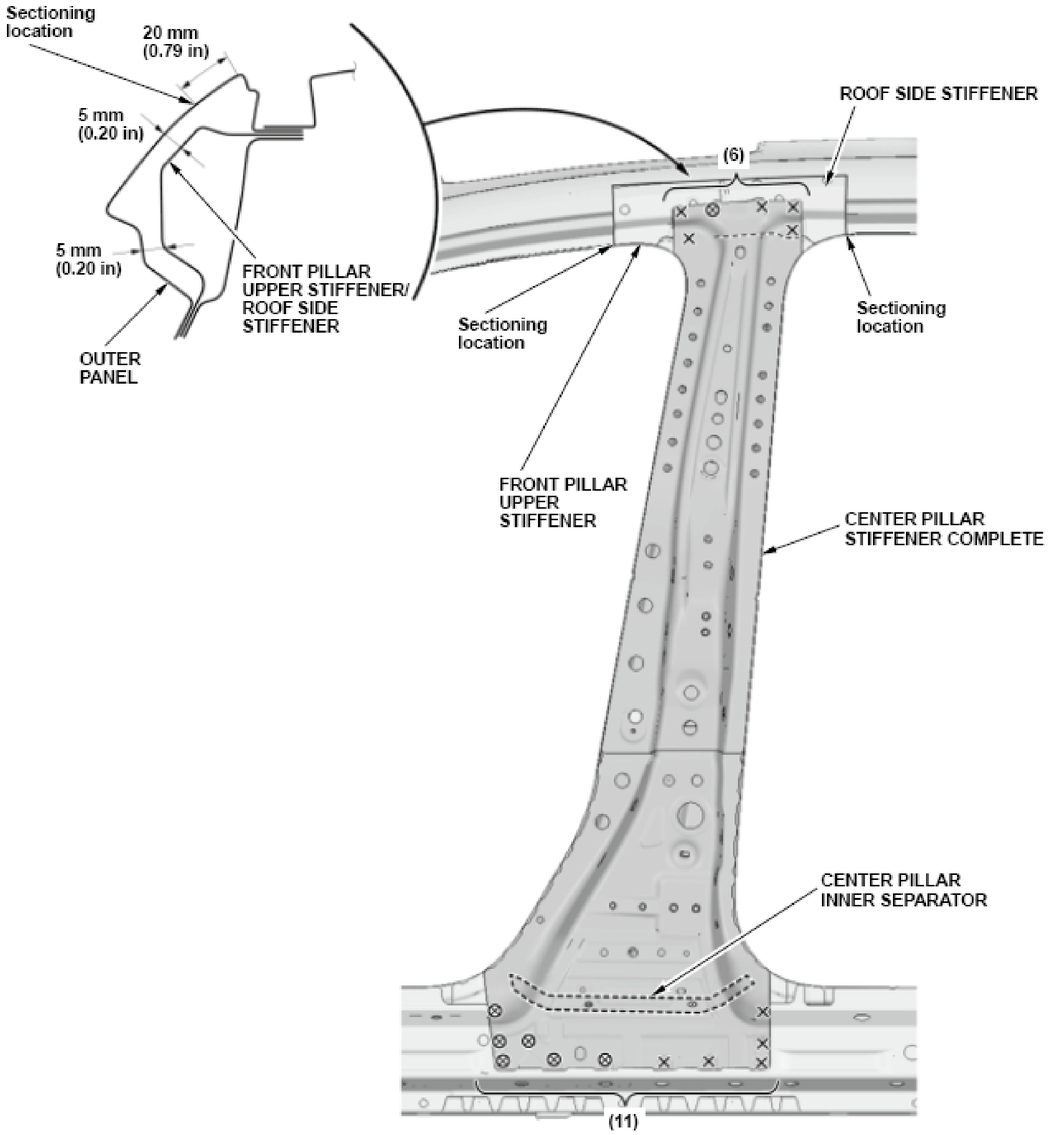
Sectioning location
20 mm (0.79 in)
5 mm (0.20 in)
5 mm (0.20 in)
OUTER PANEL
FRONT PILLAR UPPER STIFFENER/ ROOF SIDE STIFFENER
ROOF SIDE STIFFENER
(6)
Sectioning location
Sectioning location
FRONT PILLAR UPPER STIFFENER
CENTER PILLAR STIFFENER COMPLETE
CENTER PILLAR INNER SEPARATOR
(11)

Fig. 15: Center Pillar Stiffener Complete, Components And Locations
Courtesy of AMERICAN HONDA MOTOR CO., INC.

Construction - Remove

Side Sill Reinforcement, Center Pillar Stiffener Complete, and Center Inner Pillar

NOTE:

- **This section explains the procedures after removal of all related parts. For the related parts removal procedure, refer to the appropriate Service Information.**
- **The component replacement procedure described here is only for new genuine supplied parts, as needed, according to the area and the degree of damage on the body.**
- **Check the side sill reinforcement position for damage. If necessary, replace it.**
- **When removing the side sill reinforcement, remove the center pillar lower stiffener.**
- **Replace the center pillar inner separator.**

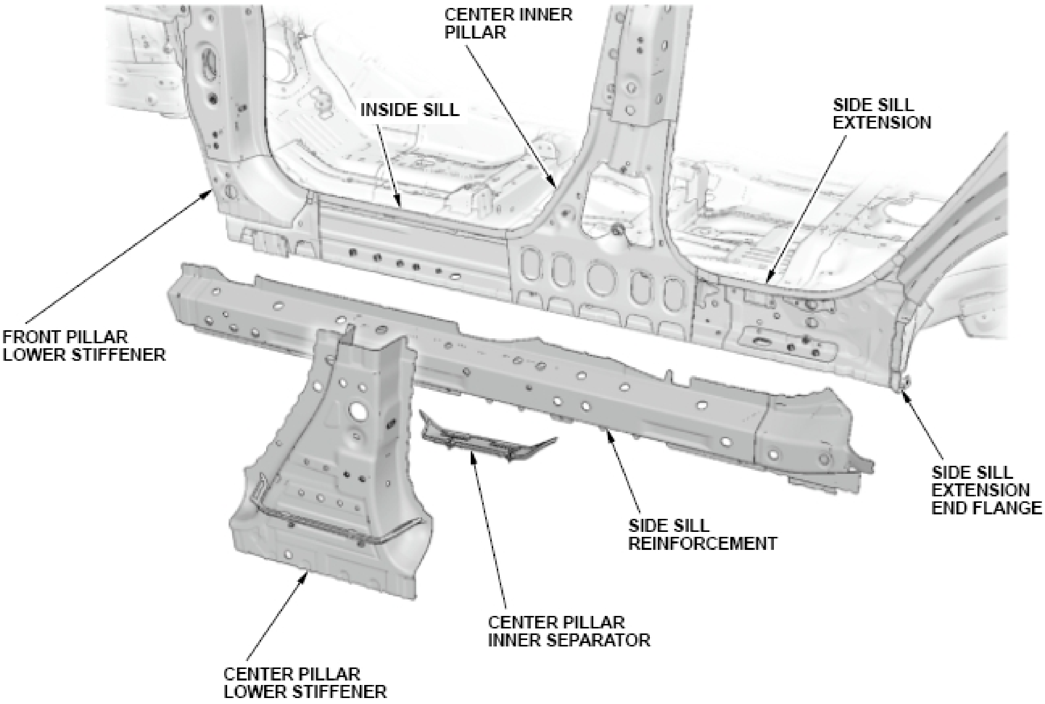
CENTER INNER PILLAR
INSIDE SILL
SIDE SILL EXTENSION
FRONT PILLAR LOWER STIFFENER
SIDE SILL EXTENSION END FLANGE
SIDE SILL REINFORCEMENT
CENTER PILLAR INNER SEPARATOR
CENTER PILLAR LOWER STIFFENER

Fig. 16: Side Sill Reinforcement And Center Pillar Lower Stiffener Component Locations
Courtesy of AMERICAN HONDA MOTOR CO., INC.

- Check the center pillar stiffener and center inner pillar positions for damage.
- If necessary, cut the [A] and [B] positions of the outer panel, and replace the center pillar stiffener.
- When replacing the center pillar stiffener with the side sill reinforcement removed, remove the center pillar upper stiffener and the center inner pillar as an assembly.
- Replace the center pillar stiffener complete and the center inner pillar with new ones.

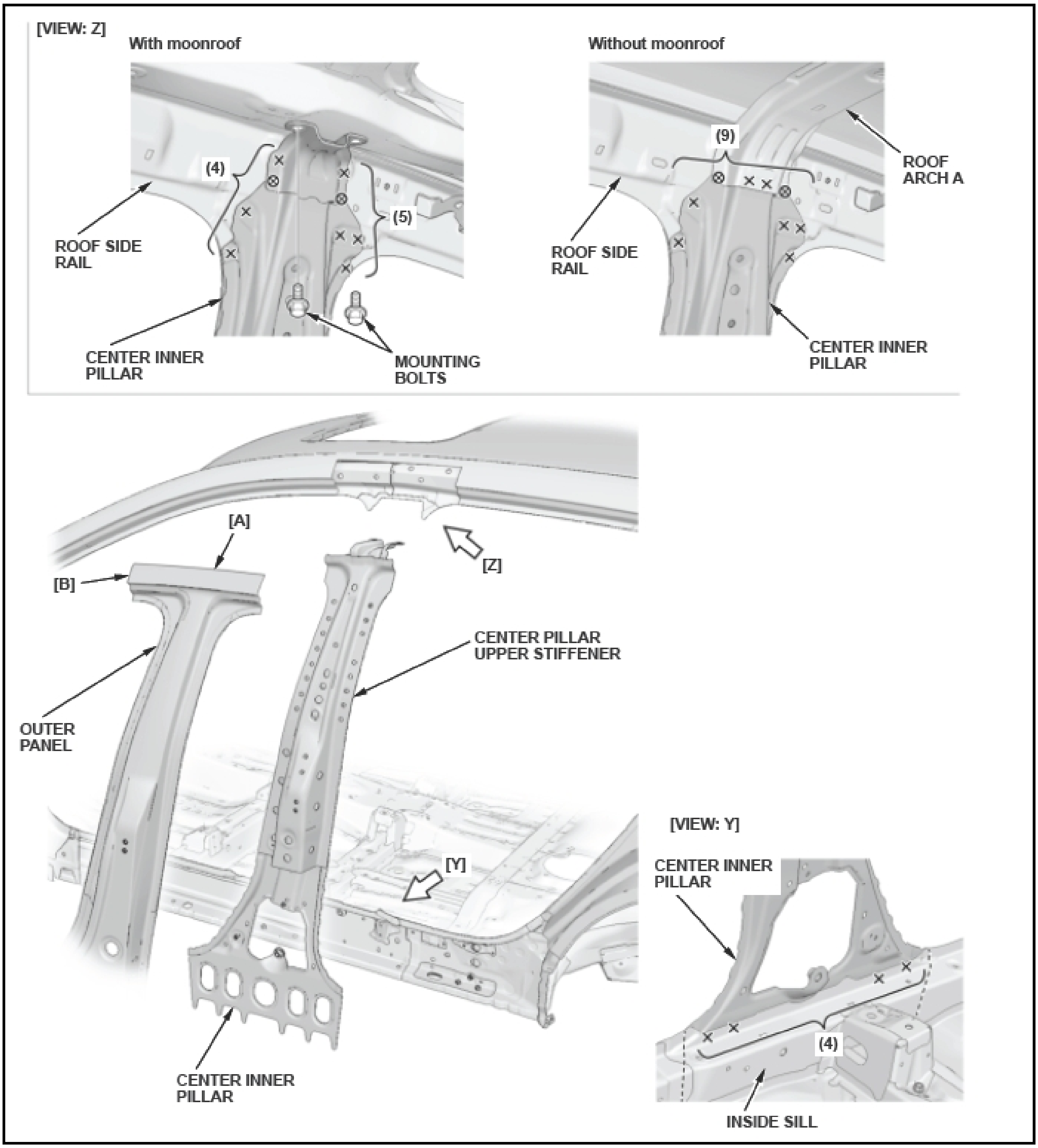
[VIEW: Z]
With moonroof
(4)
(5)
ROOF SIDE RAIL
CENTER INNER PILLAR
MOUNTING BOLTS
Without moonroof
(9)
ROOF ARCH A
ROOF SIDE RAIL
CENTER INNER PILLAR
[A]
[B]
[Z]
CENTER PILLAR UPPER STIFFENER
OUTER PANEL
[Y]
CENTER INNER PILLAR
[VIEW: Y]
CENTER INNER PILLAR
(4)
INSIDE SILL

Installation

NOTE:

- **Position the replacement parts.**

  Before doing the main welding, check the body dimensions:

  - **Front wheelhouse upper member position See FRONT WHEELHOUSE UPPER MEMBER POSITION DIMENSION .**
  - **Door hinge positions See DOOR HINGE POSITIONS DIMENSION .**
  - **Passengers compartment See PASSENGERS COMPARTMENT AREA .**
  - **Inner panel positions See INNER PANEL POSITIONS DIMENSION .**
  - **Windshield and door openings See WINDSHIELD AND DOOR OPENINGS .**
  - **Inside sill positions See INSIDE SILL POSITIONS DIMENSION .**
- **Temporarily install the related parts, then check for differences in level and clearance. Check the external parts fitting positions. Make sure the body lines flow smoothly.**

See EXTERNAL PARTS FITTING POSITIONS .

- **Confirm the sheet thickness, tensile strength, and existence of the zinc treatment on both sides, and set the welder to conform to the welding conditions by according to the Front Body Construction Roof and Side Panel Construction, and Floor and Rear Body Construction. (See FRONT BODY CONSTRUCTION , ROOF AND SIDE PANEL CONSTRUCTION And FLOOR AND REAR BODY CONSTRUCTION).**
- **Welding symbols (The welding symbols with dashed lines have a meaning of the spot welding of the part which is not visible). See SYMBOLS DEFINITION .**
- **() and ()*: Any numerical value in between these parentheses indicate the number of welds required.**
- ▭ **Torque: N.m (lbf.ft)**

Center Inner Pillar - Weld

1. Weld the center inner pillar (B) to roof arch A (without sunroof), the roof side rail (C), the side sill reinforcement (D), and the inside sill (E).

   (■)*: Welding positions with the side sill reinforcement, include ultra high-strength steel (1500 MPa) parts. **Perform the spot welding on the conditions of No. 14 in the table shown below.** (See SPOT WELDING CONDITIONS FOR ULTRA HIGH-STRENGTH STEEL PARTS (1180 AND 1500 MPA)).

   SPOT WELDING CONDITION DESCRIPTION

No. 14	8500 A	600 ms	3432 N (350 kgf)

   ()*: Welding positions with high-strength steel parts. **Confirm the plug welding conditions.** (See MAG WELDING CONDITIONS FOR HIGH-STRENGTH STEEL PARTS (EXCEPT 1500 MPA) .)

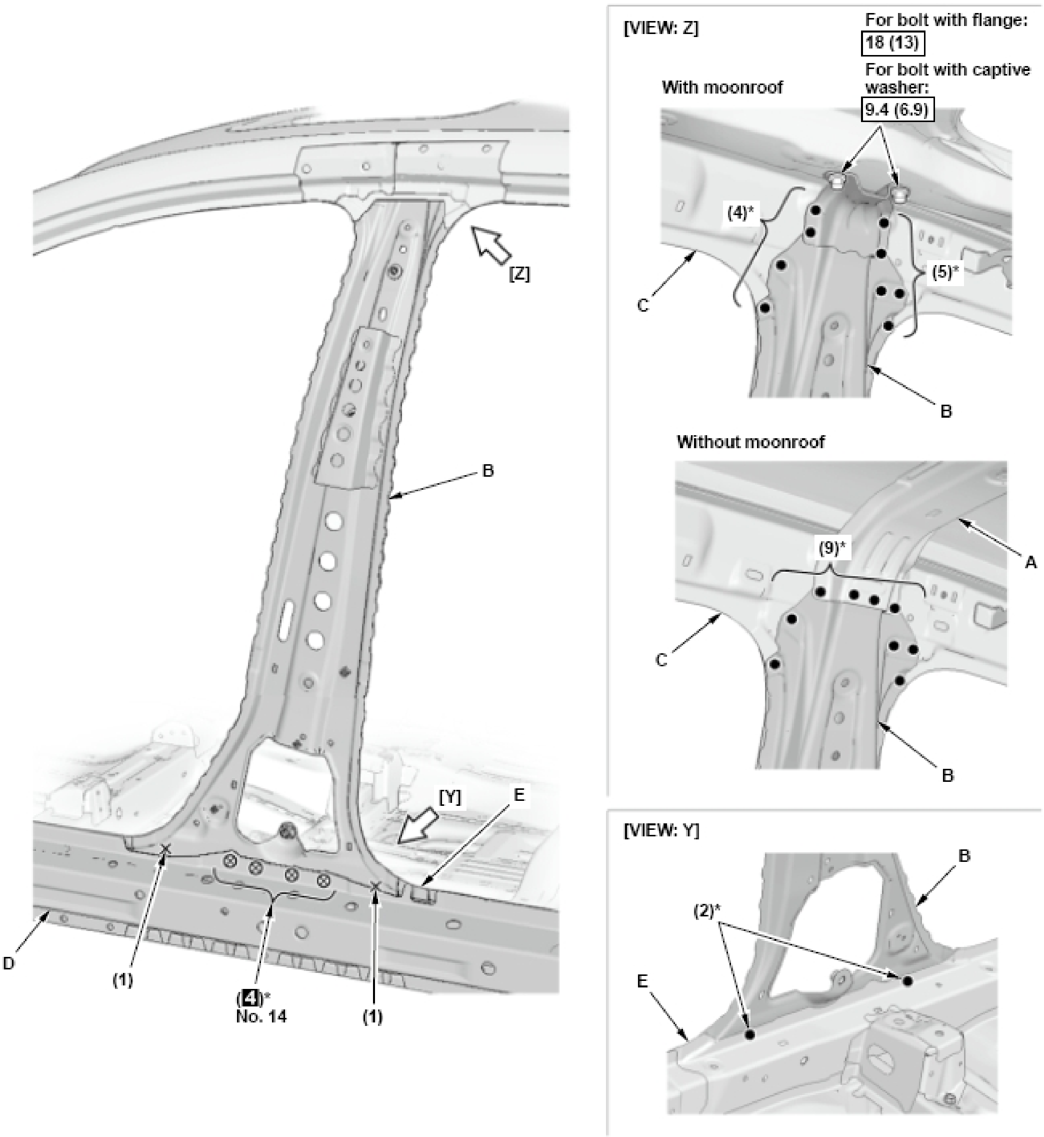
[Z]
B
[Y]
E
D
(1)
(4)*
No. 14
(1)
[VIEW: Z]
For bolt with flange:
18 (13)
For bolt with captive washer:
9.4 (6.9)
With moonroof
(4)*
(5)*
C
B
Without moonroof
(9)*
A
C
B
[VIEW: Y]
B
(2)*
E

Fig. 17: Center Inner Pillar Mounting Hardware Locations With Torque Specifications
Courtesy of AMERICAN HONDA MOTOR CO., INC.

Side Sill Reinforcement - Weld

1. From the passengers compartment, weld the side sill reinforcement (A) to the inner lower pillar extension (B) and the inside sill (C).

   (■)*: Welding positions with the side sill reinforcement, include ultra high-strength steel (1500 MPa) parts. **Confirm the MIG brazing conditions.** (See MIG BRAZING CONDITIONS FOR ULTRA HIGH-STRENGTH STEEL PARTS (1180 AND 1500 MPA)).

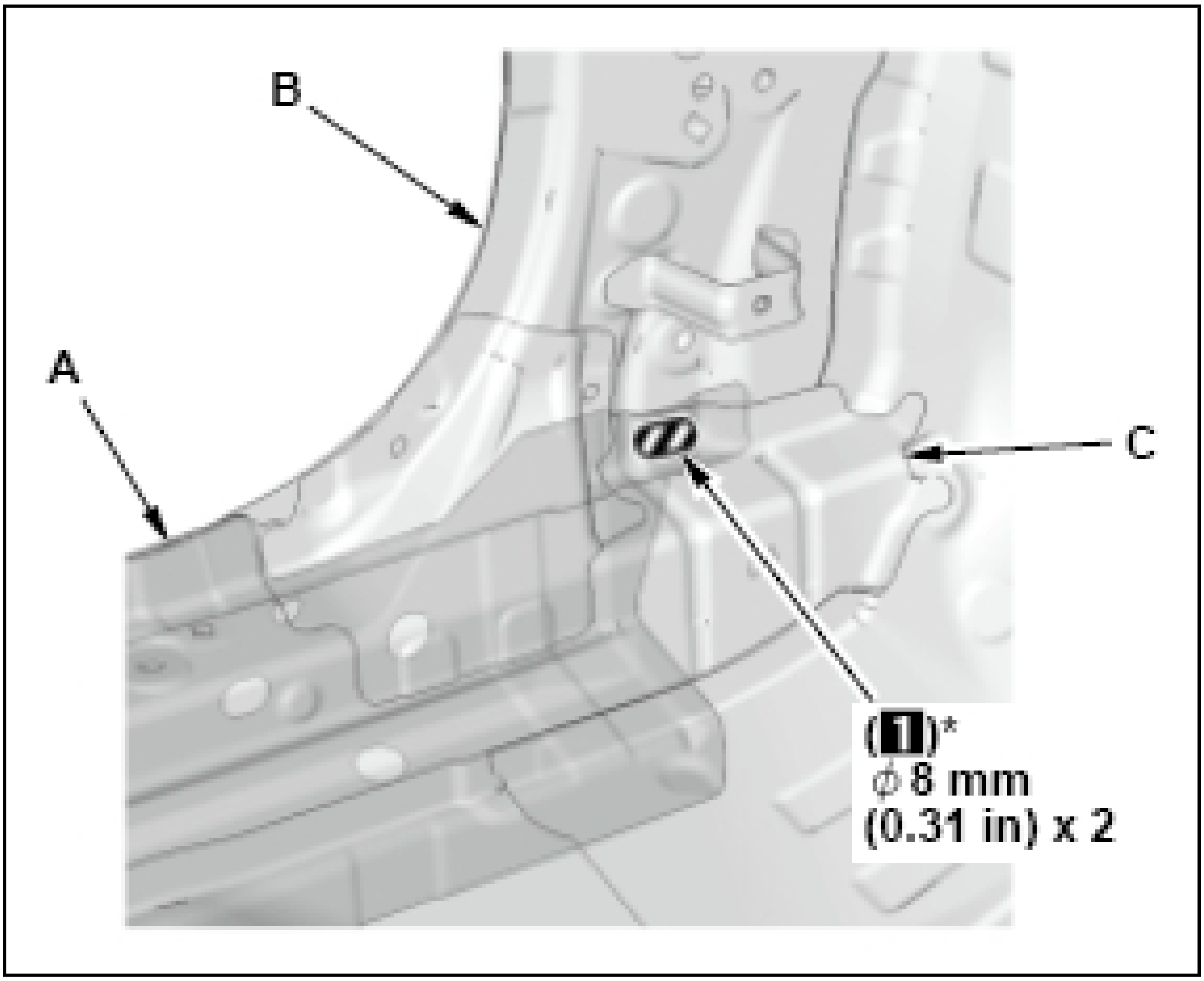

2. Weld the side sill reinforcement (A) to the front pillar lower stiffener (B) and the jack-up base (C).

   (■)*: Welding positions with the side sill reinforcement, include ultra high-strength steel (1500 MPa) parts. **Perform the spot welding on the conditions of No. 13 and 15 in the table shown below. Confirm the MIG brazing conditions.** (See SPOT WELDING CONDITIONS FOR ULTRA HIGH-STRENGTH STEEL PARTS (1180 AND 1500 MPA) And MIG BRAZING CONDITIONS FOR ULTRA HIGH-STRENGTH STEEL PARTS (1180 AND 1500 MPA)).

   SPOT WELDING CONDITION DESCRIPTION

No. 13	8000 A	600 ms	3432 N (350 kgf)
No. 15	9000 A	600 ms	3432 N (350 kgf)

NOTE: **Welding positions (D): Must be welded according to the following conditions.**

Plug hole diameter: φ 10 mm (0.39 in) Welding wire: Must use wire with a tensile strength of 980 MPa or higher (142 ksi or higher).

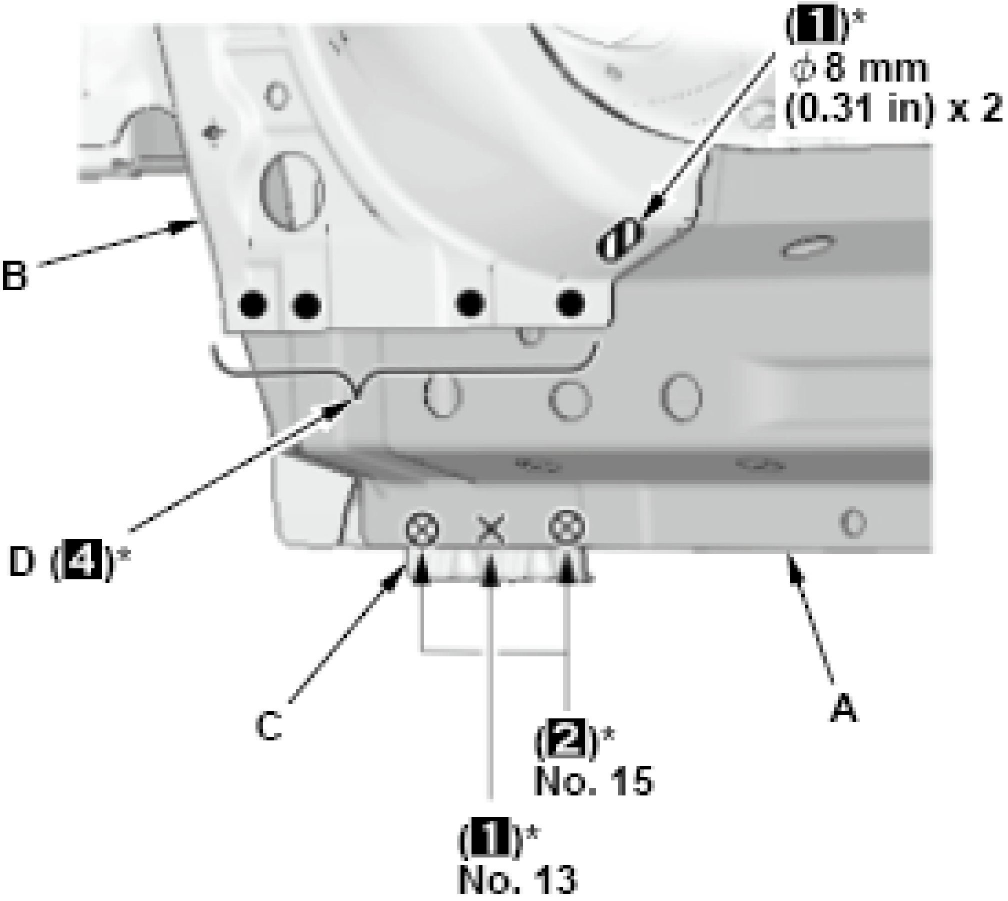
(1)*
φ 8 mm
(0.31 in) x 2
B
D (4)*
C
(2)*
No. 15
(1)*
No. 13
A

Fig. 18: Front Pillar Lower Stiffener Installation Weld Measurements And Locations
Courtesy of AMERICAN HONDA MOTOR CO., INC.

3. Weld the side sill reinforcement extension (A) and the side sill extension (B).

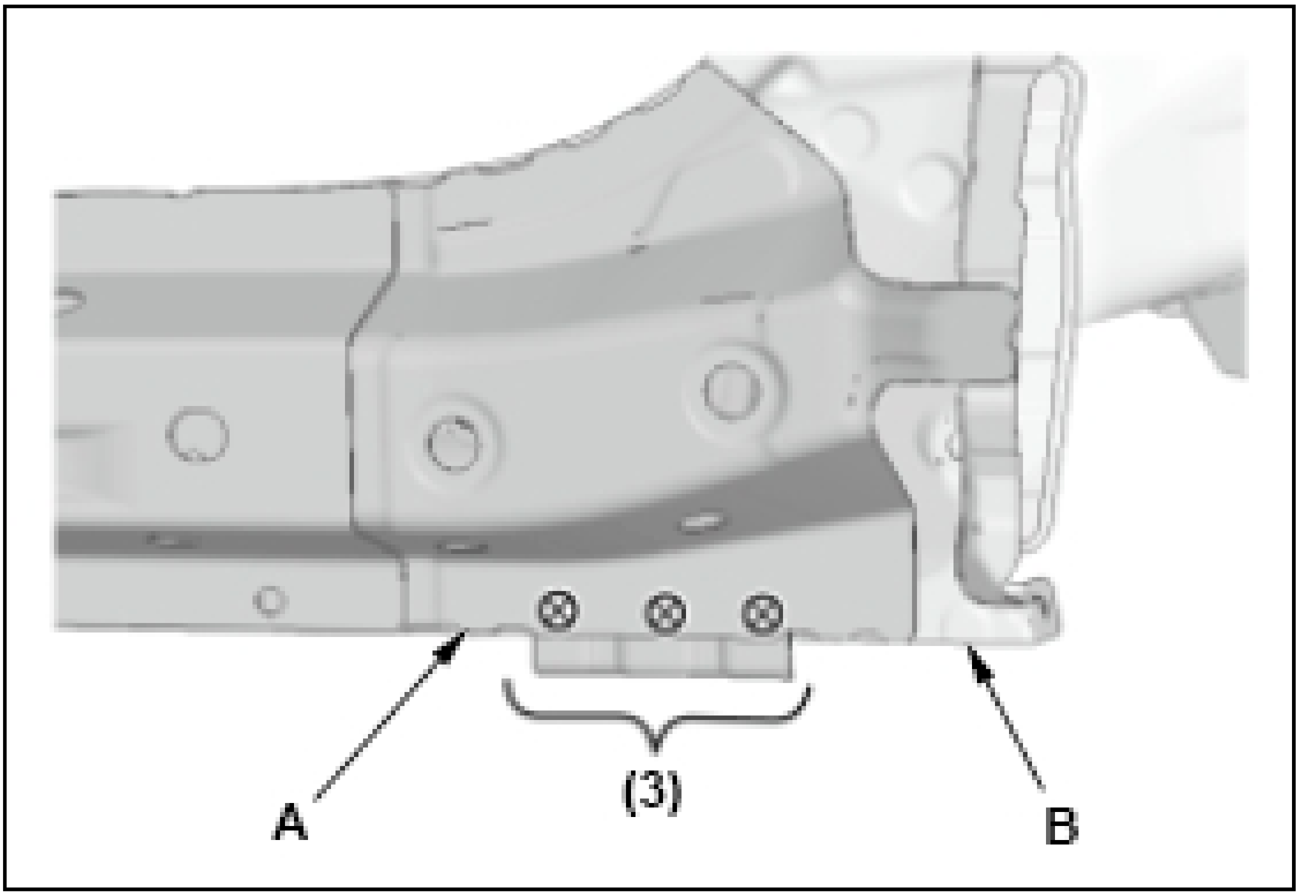

Center Pillar Stiffener - Weld

1. Install the new center pillar inner separator (A) to the center pillar lower stiffener (B). Apply the sealer (C) without gaps all the way around the separator and the center inner pillar (D).

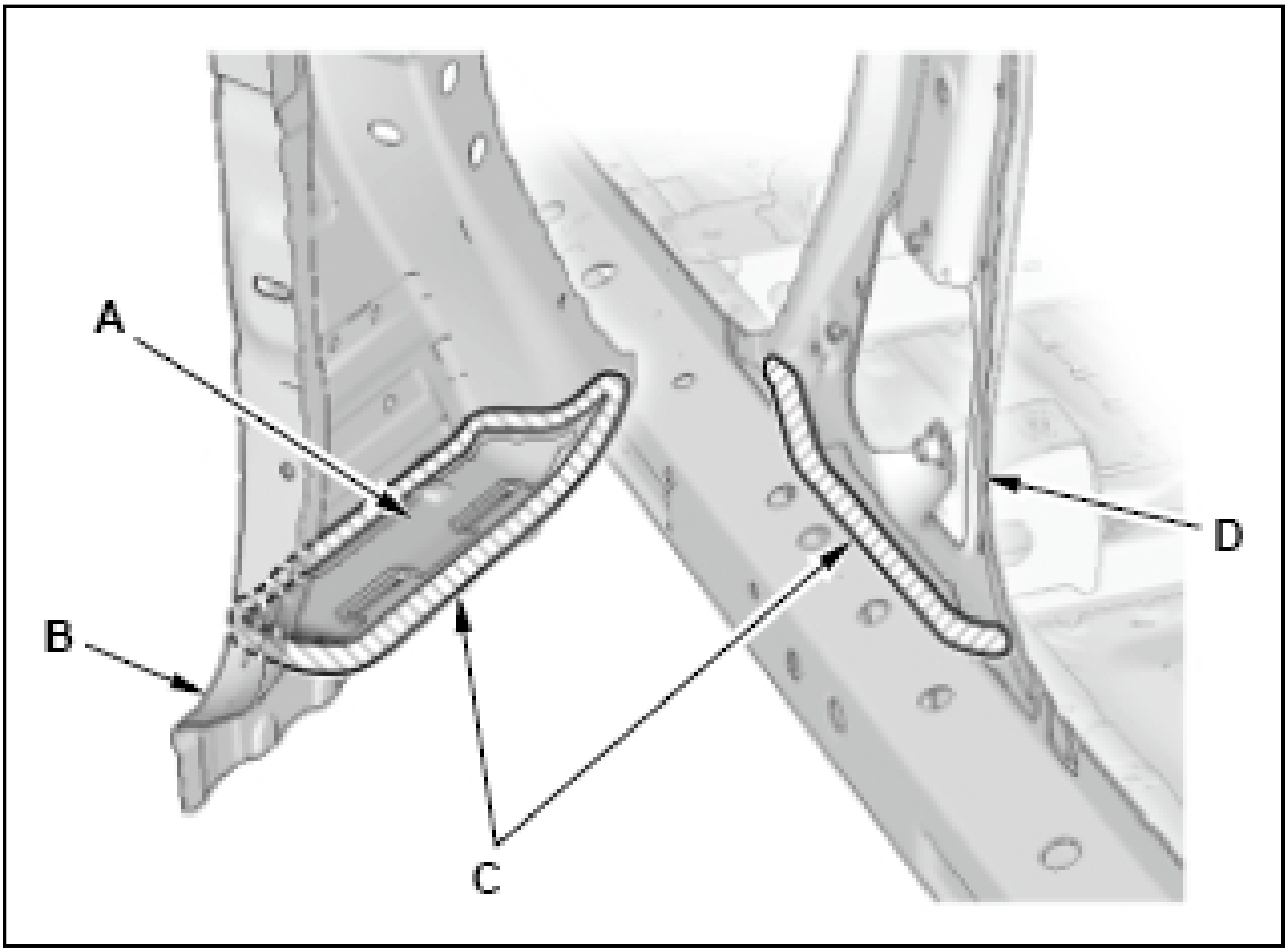

In case of side sill reinforcement replacement with center pillar upper stiffener left on body

2. Weld the center pillar lower stiffener (A) to the center pillar upper stiffener (B) and the side sill reinforcement (C).

(■)*: Welding positions with the side sill reinforcement, include ultra high-strength steel (1500 MPa) parts. **Confirm the MIG brazing conditions.** (See MIG BRAZING CONDITIONS FOR ULTRA HIGH-STRENGTH STEEL PARTS (1180 AND 1500 MPA)).

NOTE: **Welding positions (D): Must be welded according to the following conditions.**

Plug hole diameter: φ 10 mm (0.39 in) Welding wire: Must use wire with a tensile strength of 980 MPa or higher (142 ksi or higher).

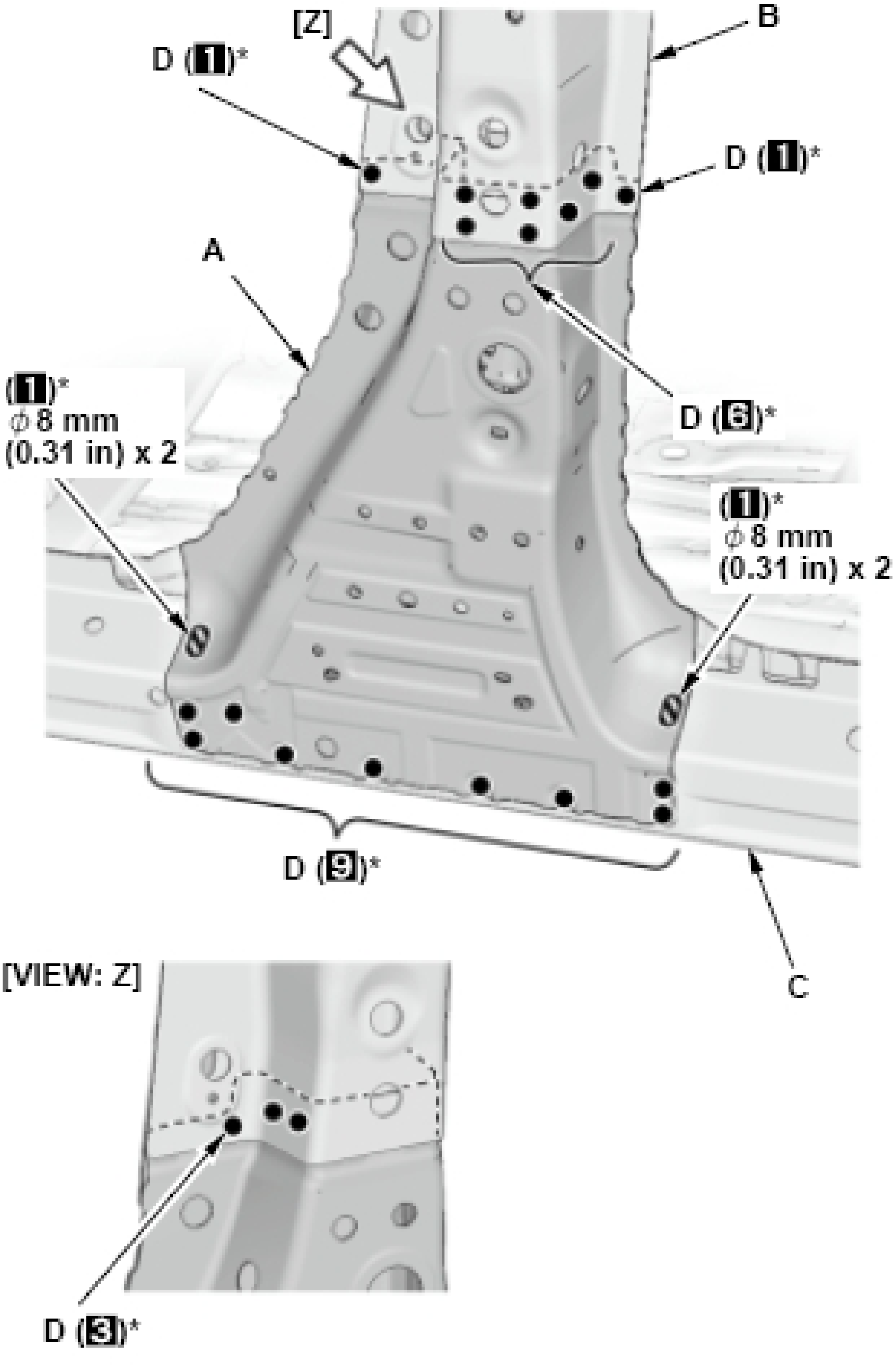
[Z]
B
D (1)*
D (1)*
A
(1)*
φ8 mm
(0.31 in) x 2
D (6)*
(1)*
φ8 mm
(0.31 in) x 2
D (9)*
C
[VIEW: Z]
D (3)*

Fig. 19: Center Pillar Stiffener Installation Weld Measurements And Locations
Courtesy of AMERICAN HONDA MOTOR CO., INC.

In case of center pillar stiffener complete replacement

3. Weld the center pillar upper stiffener (A) to the front pillar upper stiffener (B) and the roof side stiffener (C).

   (■)*: Welding positions with the center pillar upper stiffener and the front pillar upper stiffener, include ultra high-strength steel (1500 MPa) parts.

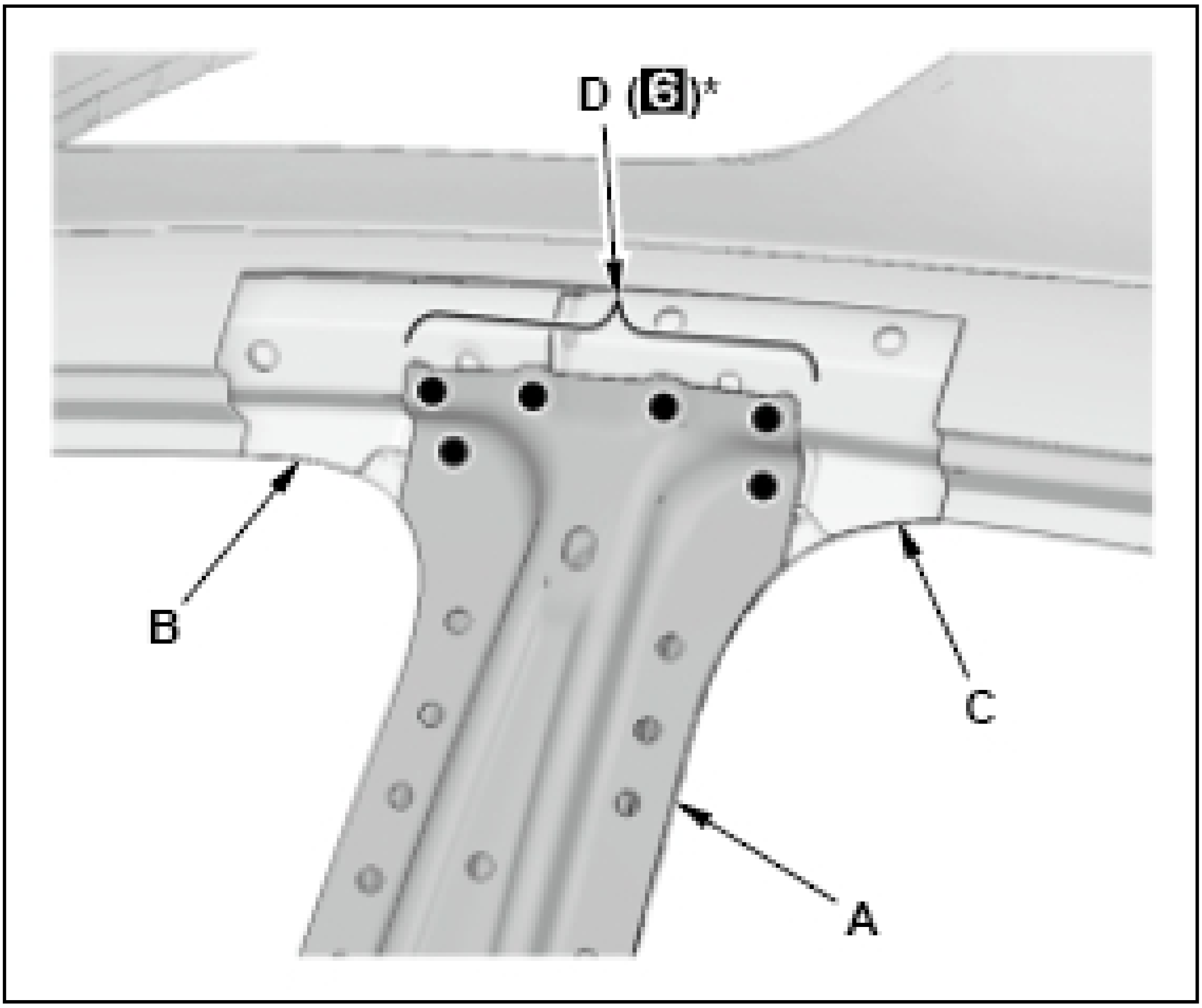

NOTE: **Welding positions (D): Must be welded according to the following conditions.**

Plug hole diameter: φ 10 mm (0.39 in) Welding wire: Must use wire with a tensile strength of 980 MPa or higher (142 ksi or higher).

4. Weld the center pillar lower stiffener (A) to the side sill reinforcement (B).

(■)*: Welding positions with the side sill reinforcement, include ultra high-strength steel (1500 MPa) parts. **Confirm the MIG brazing conditions.** (See MIG BRAZING CONDITIONS FOR ULTRA HIGH-STRENGTH STEEL PARTS (1180 AND 1500 MPA)).

NOTE: **Welding positions (C): Must be welded according to the following conditions N•m.**

Plug hole diameter: φ 10 mm (0.39 in) Welding wire: Must use wire with a tensile strength of 980 MPa or higher (142 ksi or higher).

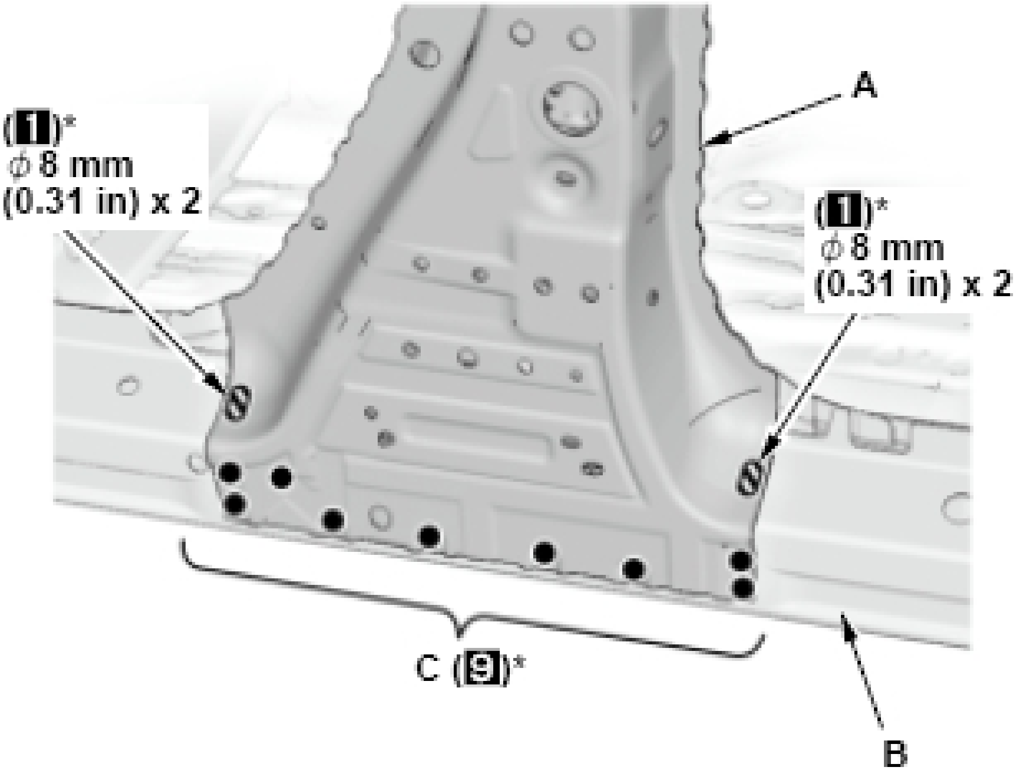

Fig. 20: Center Pillar Lower Stiffener And Side Sill Reinforcement Installation Weld Measurements And Locations
Courtesy of AMERICAN HONDA MOTOR CO., INC.

Outer Panel Repair Part - Weld

In case of part of outer panel repair part (front outer panel set) replacement

1. Weld the outer panel repair part (A).

   (■)*: Welding positions with the front pillar upper stiffener (B), the center pillar upper stiffener (C), and the side sill reinforcement (D), include ultra high-strength steel (1500 MPa) parts. **Perform the spot welding on the conditions of No. 26 and 30 in the table shown below. Confirm the MIG brazing conditions.** (See SPOT WELDING CONDITIONS FOR ULTRA HIGH-STRENGTH STEEL PARTS (1180 AND 1500 MPA) And MIG BRAZING CONDITIONS FOR ULTRA HIGH-STRENGTH STEEL PARTS (1180 AND 1500 MPA)).

   SPOT WELDING CONDITION DESCRIPTION

No. 26	8000 A	800 ms	3432 N (350 kgf)
No. 30	8500 A	1200 ms	3432 N (350 kgf)

   ()*: Welding positions with high-strength steel parts. **Confirm the plug welding conditions.** (See MAG WELDING CONDITIONS FOR HIGH-STRENGTH STEEL PARTS (EXCEPT 1500 MPA) .)

   - **Side sill welding points** See SIDE SILL OUTER PANEL REPLACEMENT.

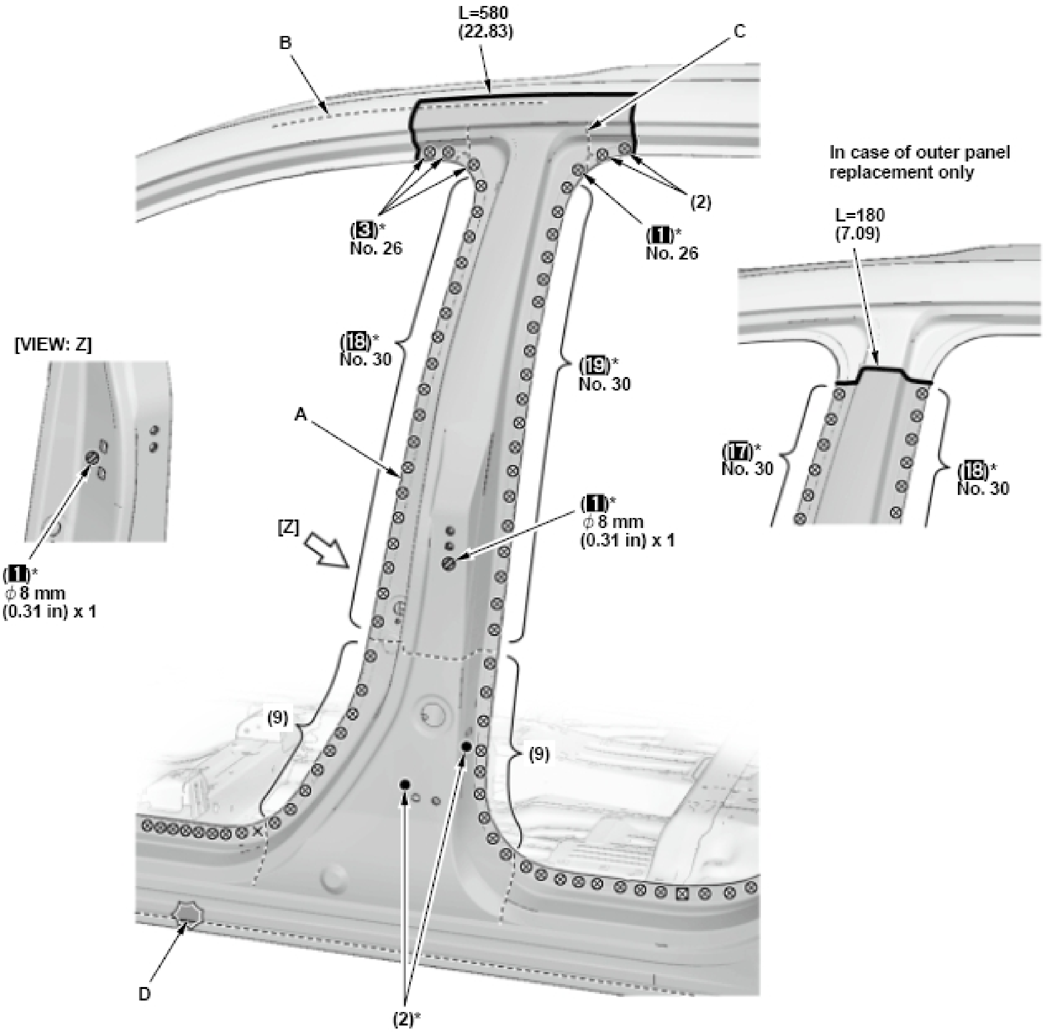
L=580
(22.83)
B
C
(2)
In case of outer panel replacement only
(3)*
No. 26
(1)*
No. 26
L=180
(7.09)
[VIEW: Z]
(18)*
No. 30
(19)*
No. 30
(17)*
No. 30
(18)*
No. 30
A
(1)*
φ 8 mm
(0.31 in) x 1
[Z]
(1)*
φ 8 mm
(0.31 in) x 1
(9)
(9)
D
(2)*

[Fig. 21: Outer Center Pillar Panel Installation Weld Measurements And Locations](#)
Courtesy of AMERICAN HONDA MOTOR CO., INC.

In case of whole of outer panel repair part (front outer panel set) replacement with roof panel removed

2. Weld the outer panel repair part (A).

(■)*: Welding positions with the front pillar upper stiffener (B), the center pillar upper stiffener (C), and the front inner upper pillar (D), include ultra high-strength steel (1500 MPa) parts. **Perform the spot welding on the conditions of No. 26 and 30 shown below. Confirm the MIG brazing conditions.** (See SPOT WELDING CONDITIONS FOR ULTRA HIGH-STRENGTH STEEL PARTS (1180 AND 1500 MPA) And MIG BRAZING CONDITIONS FOR ULTRA HIGH-STRENGTH STEEL PARTS (1180 AND 1500 MPA)).

SPOT WELDING CONDITION DESCRIPTION

No. 26	8000 A	800 ms	3432 N (350 kgf)
No. 30	8500 A	1200 ms	3432 N (350 kgf)

()*: Welding positions with high-strength steel parts. **Confirm the plug welding conditions.** (See MAG WELDING CONDITIONS FOR HIGH-STRENGTH STEEL PARTS (EXCEPT 1500 MPA) .)

- **Front pillar welding points** See FRONT PILLAR OUTER PANEL REPLACEMENT.
- **Side sill welding points** See SIDE SILL OUTER PANEL REPLACEMENT.

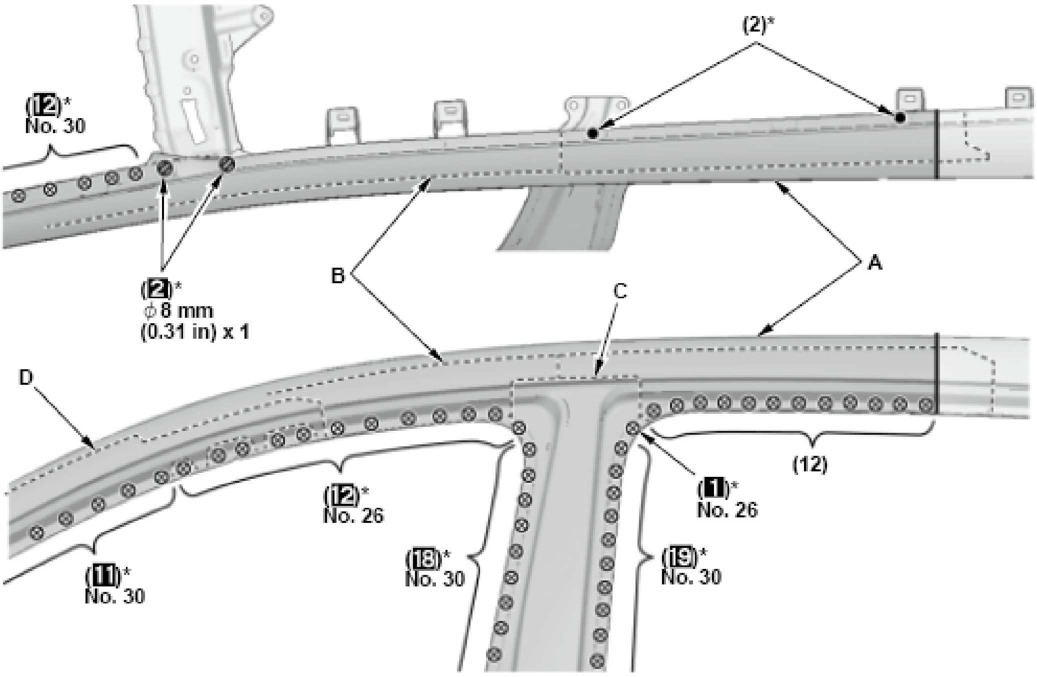

Fig. 22: Center Pillar Upper Stiffener Installation Weld Measurements And Locations
Courtesy of AMERICAN HONDA MOTOR CO., INC.

ROOF PANEL REPLACEMENT

Removal

NOTE:

- **High-strength steel is defined as any steel with a tensile strength of 340 MPa or higher. If a part is constructed of, or includes high-strength steel review the important guidelines. See REPAIR GUIDELINES FOR HIGH-STRENGTH STEEL PARTS .**
- **Welding symbols (The welding symbols with dashed lines have a meaning of the spot welding of the part which is not visible). See SYMBOLS DEFINITION .**
- **(): Any numerical value in between these parentheses indicate the number of welds required.**

Mass Production Body Welding Positions and Numbers - Remove

Roof Panel (With Moonroof)

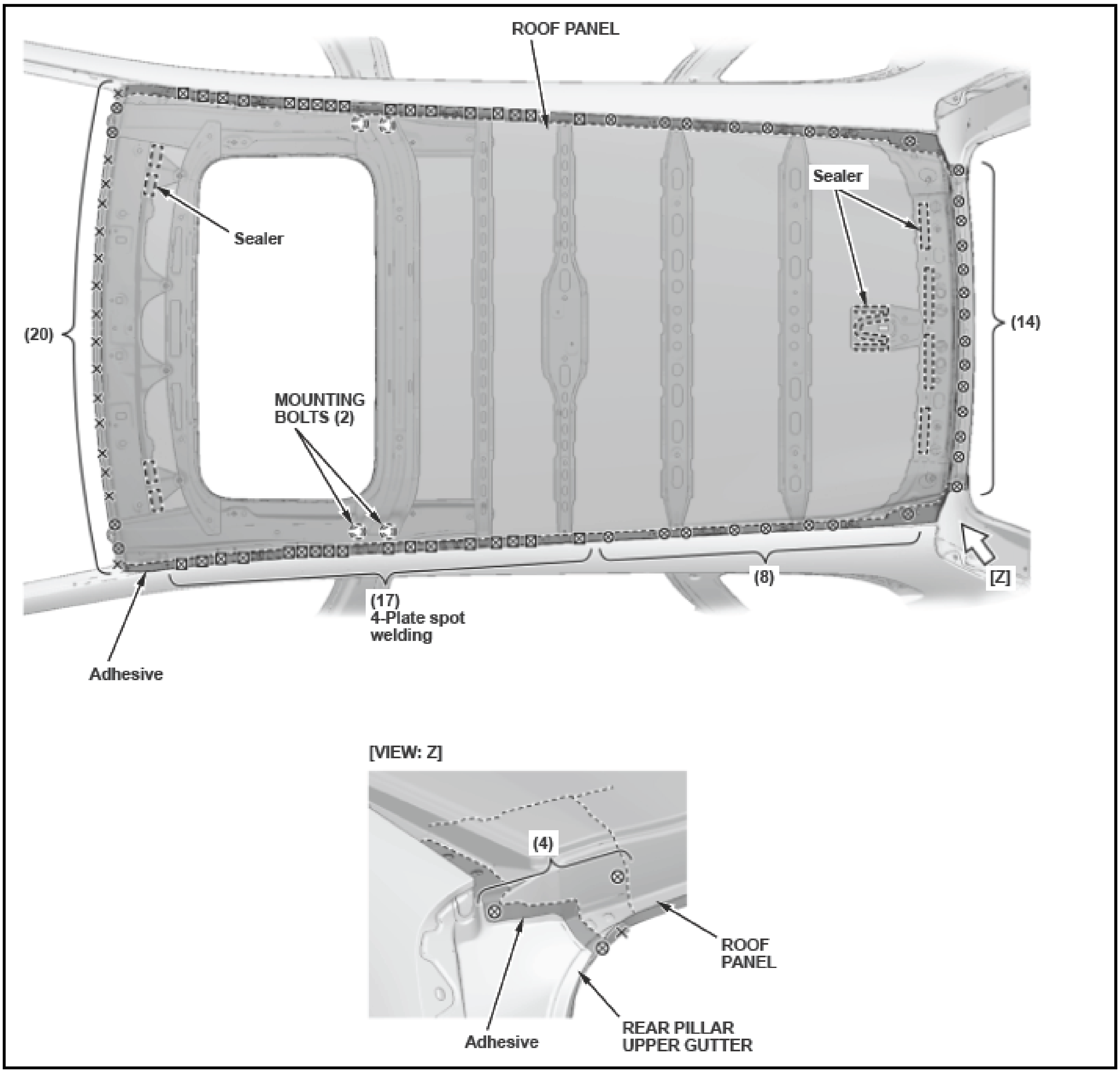
ROOF PANEL
Sealer
Sealer
(20)
(14)
MOUNTING
BOLTS (2)
(8)
[Z]
(17)
4-Plate spot
welding
Adhesive
[VIEW: Z]
(4)
ROOF
PANEL
Adhesive
REAR PILLAR
UPPER GUTTER

Roof Panel (Without Moonroof)

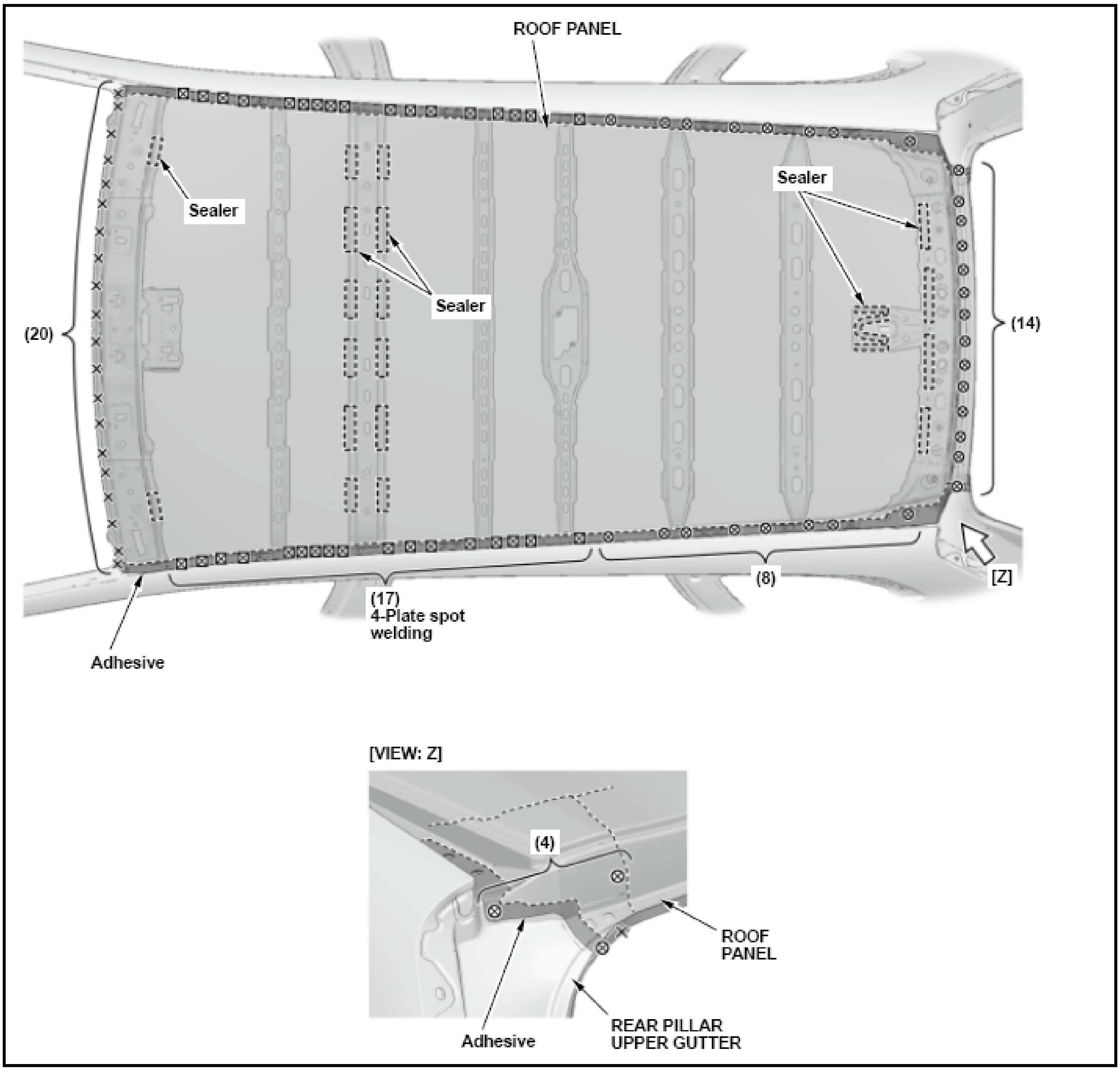
ROOF PANEL
Sealer
Sealer
Sealer
Sealer
(20)
(14)
Adhesive
(17)
4-Plate spot welding
(8)
[Z]
[VIEW: Z]
(4)
ROOF PANEL
Adhesive
REAR PILLAR UPPER GUTTER

Roof Rail and Roof Arch

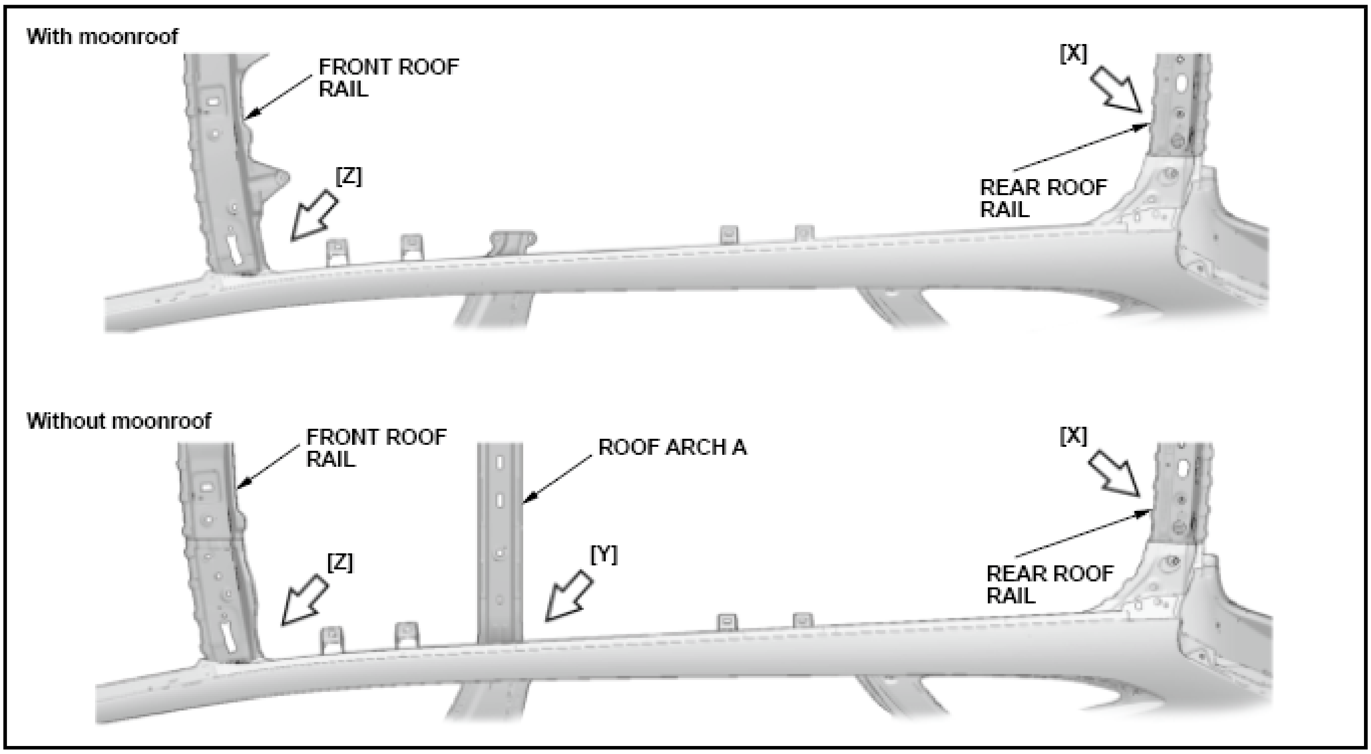
With moonroof
FRONT ROOF RAIL
[Z]
[X]
REAR ROOF RAIL
Without moonroof
FRONT ROOF RAIL
ROOF ARCH A
[Z]
[Y]
[X]
REAR ROOF RAIL

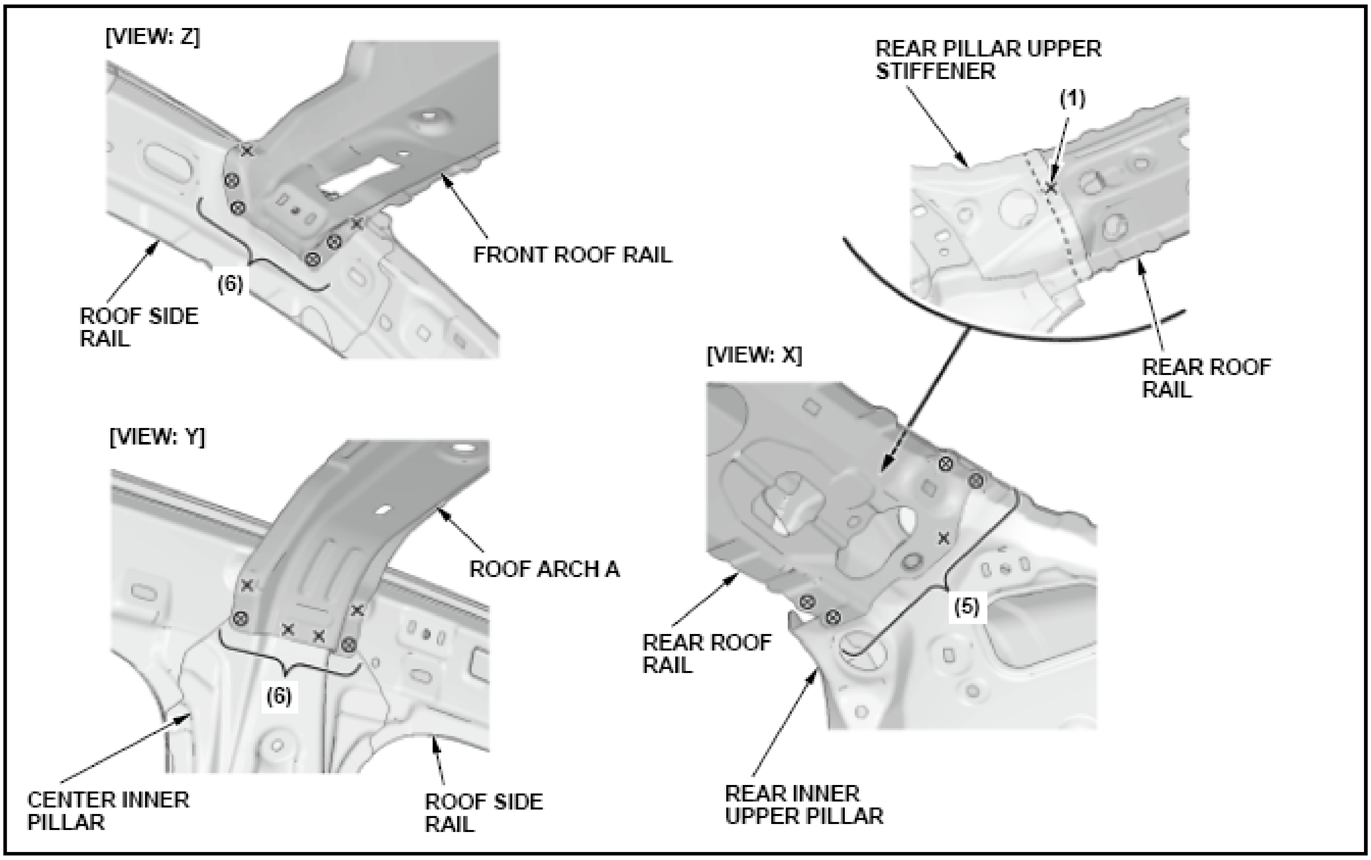
[VIEW: Z]
FRONT ROOF RAIL
(6)
ROOF SIDE RAIL
[VIEW: Y]
ROOF ARCH A
(6)
CENTER INNER PILLAR
ROOF SIDE RAIL
REAR PILLAR UPPER STIFFENER
(1)
REAR ROOF RAIL
[VIEW: X]
(5)
REAR ROOF RAIL
REAR INNER UPPER PILLAR

Construction - Remove

NOTE:

- **This section explains the procedures after removal of all related parts. For the related parts removal procedure, refer to the appropriate Service Information.**
- **The component replacement procedure described here is only for new genuine supplied parts, as needed, according to the area and the degree of damage on the body.**
- **With moonroof: Remove the mounting bolts, leave the front roof rail, the roof stiffener gussets, and the rear roof rail to the body, and replace the roof panel.**
- **Without moonroof: Leave the front roof rail, roof arch A, and the rear roof rail to the body, and replace the roof panel.**

- **Check the front roof rail, roof arch A (without moonroof), and the rear roof rail positions for damage. If necessary, replace them.**

With Moonroof

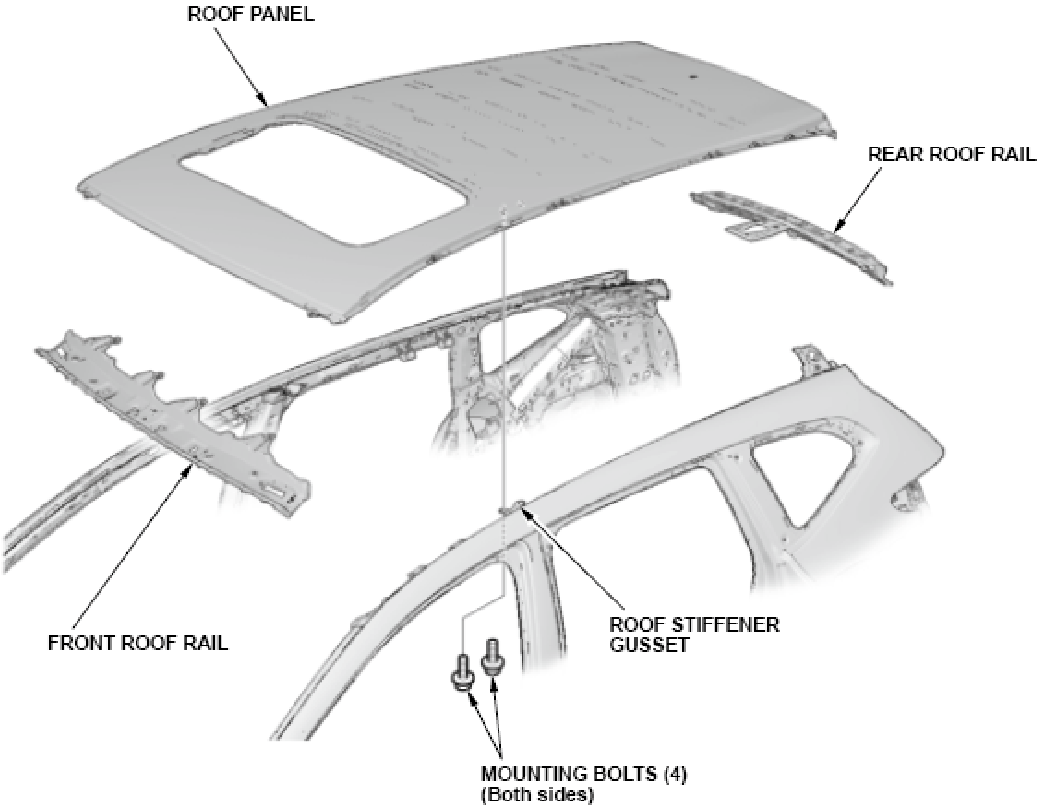
ROOF PANEL
REAR ROOF RAIL
FRONT ROOF RAIL
ROOF STIFFENER GUSSET
MOUNTING BOLTS (4)
(Both sides)

Fig. 23: Roof Panel And Roof Rails Component Locations (With Moonroof)
Courtesy of AMERICAN HONDA MOTOR CO., INC.

Without Moonroof

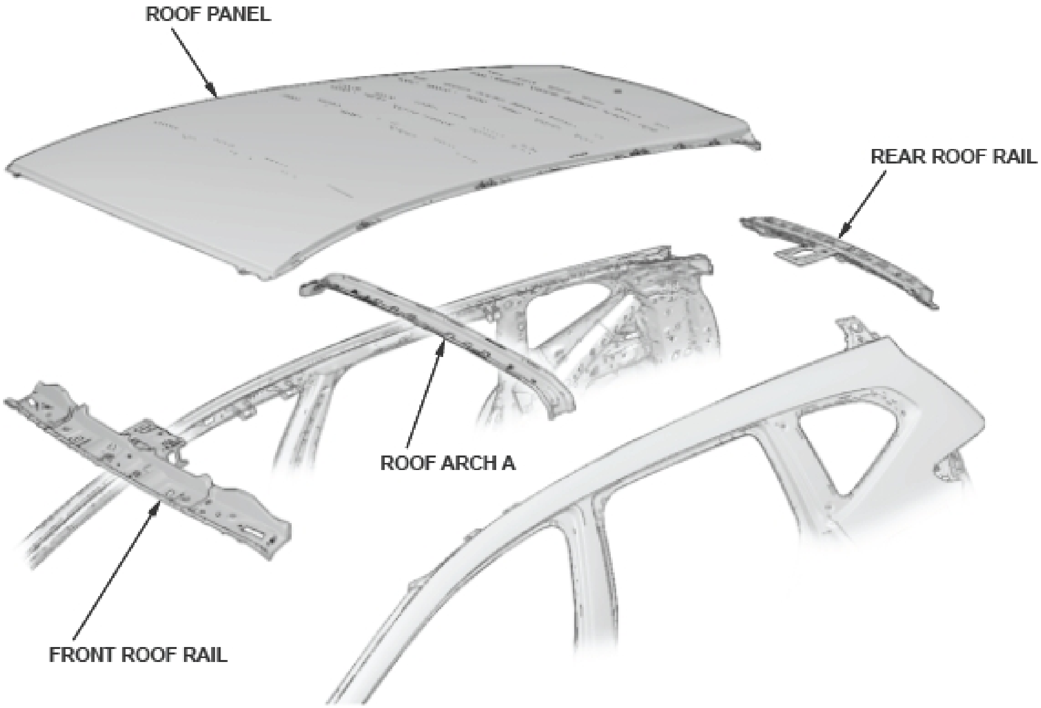
ROOF PANEL
REAR ROOF RAIL
ROOF ARCH A
FRONT ROOF RAIL

Fig. 24: Roof Panel And Roof Rails Component Locations (Without Moonroof)
Courtesy of AMERICAN HONDA MOTOR CO., INC.

Installation

NOTE:

- **Position the replacement parts.**

  Before doing the main welding, check the body dimensions:

  - **Inner panel positions INNER PANEL POSITIONS DIMENSION .**
  - **Rear pillar gutter and rear panel positions See REAR PILLAR GUTTER AND REAR PANEL POSITIONS DIMENSION .**
  - **Windshield and door openings See WINDSHIELD AND DOOR OPENINGS .**
  - **Tailgate opening See TAILGATE OPENING DIMENSION .**
- **Temporarily install the related parts, then check for differences in level and clearance. Check the external parts fitting positions. Make sure the body lines flow smoothly. See EXTERNAL PARTS FITTING POSITIONS .**
- **Confirm the sheet thickness, tensile strength, and existence of the zinc treatment on both sides, and set the welder to conform to the welding conditions by according to the Roof and Side Panel Construction (See ROOF AND SIDE PANEL CONSTRUCTION).**
- **Welding symbols (The welding symbols with dashed lines have a meaning of the spot welding of the part which is not visible). See SYMBOLS DEFINITION .**
- **() and ()*: Any numerical value in between these parentheses indicate the number of welds required.**
- ▭ **Torque: N.m (lbf.ft)**

Roof Rails and Roof Arch A - Weld

1. Weld the front roof rail (A) to the roof side rail (B).

   ()*: Welding positions with high-strength steel parts. **Confirm the plug welding conditions.** (See **MAG WELDING CONDITIONS FOR HIGH-STRENGTH STEEL PARTS (EXCEPT 1500 MPA)** .)

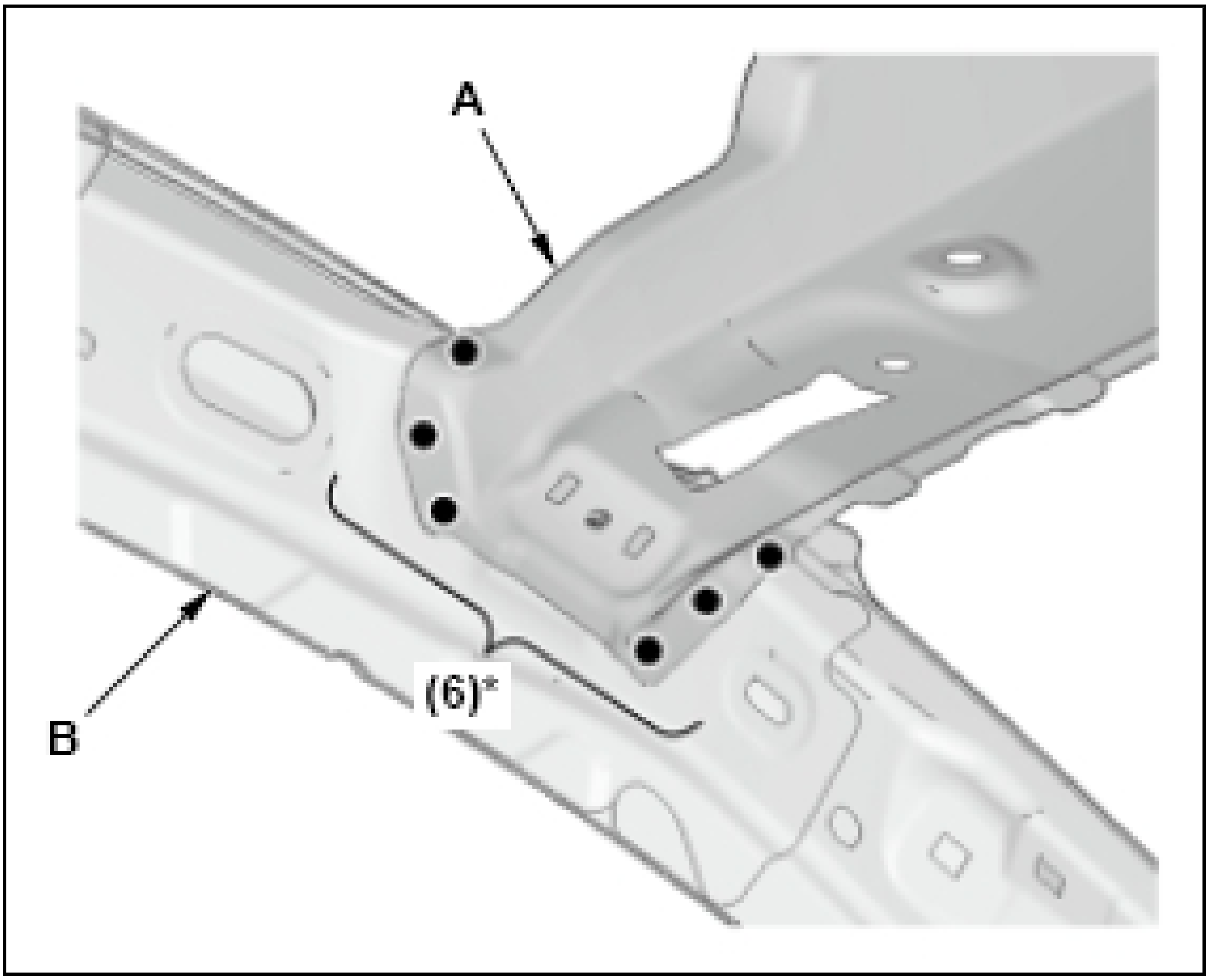

2. Without moonroof: Weld roof arch A to the roof side rail (B) and the center inner pillar (C).

   ()*: Welding positions with high-strength steel parts. **Confirm the plug welding conditions.** (See MAG WELDING CONDITIONS FOR HIGH-STRENGTH STEEL PARTS (EXCEPT 1500 MPA) .)

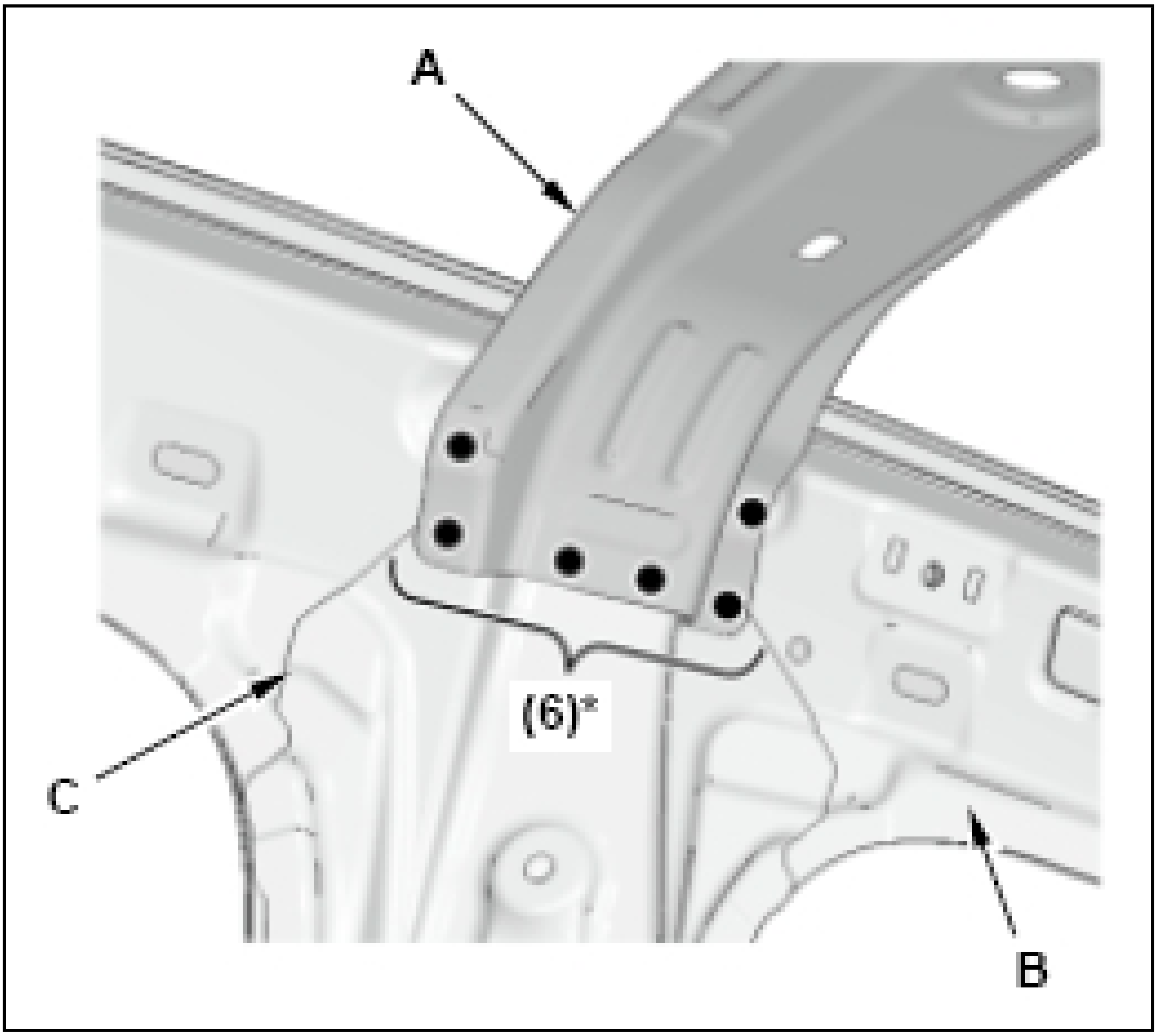

3. Weld the rear roof rail (A) to the rear inner upper pillar (B) and the rear pillar upper stiffener (C).

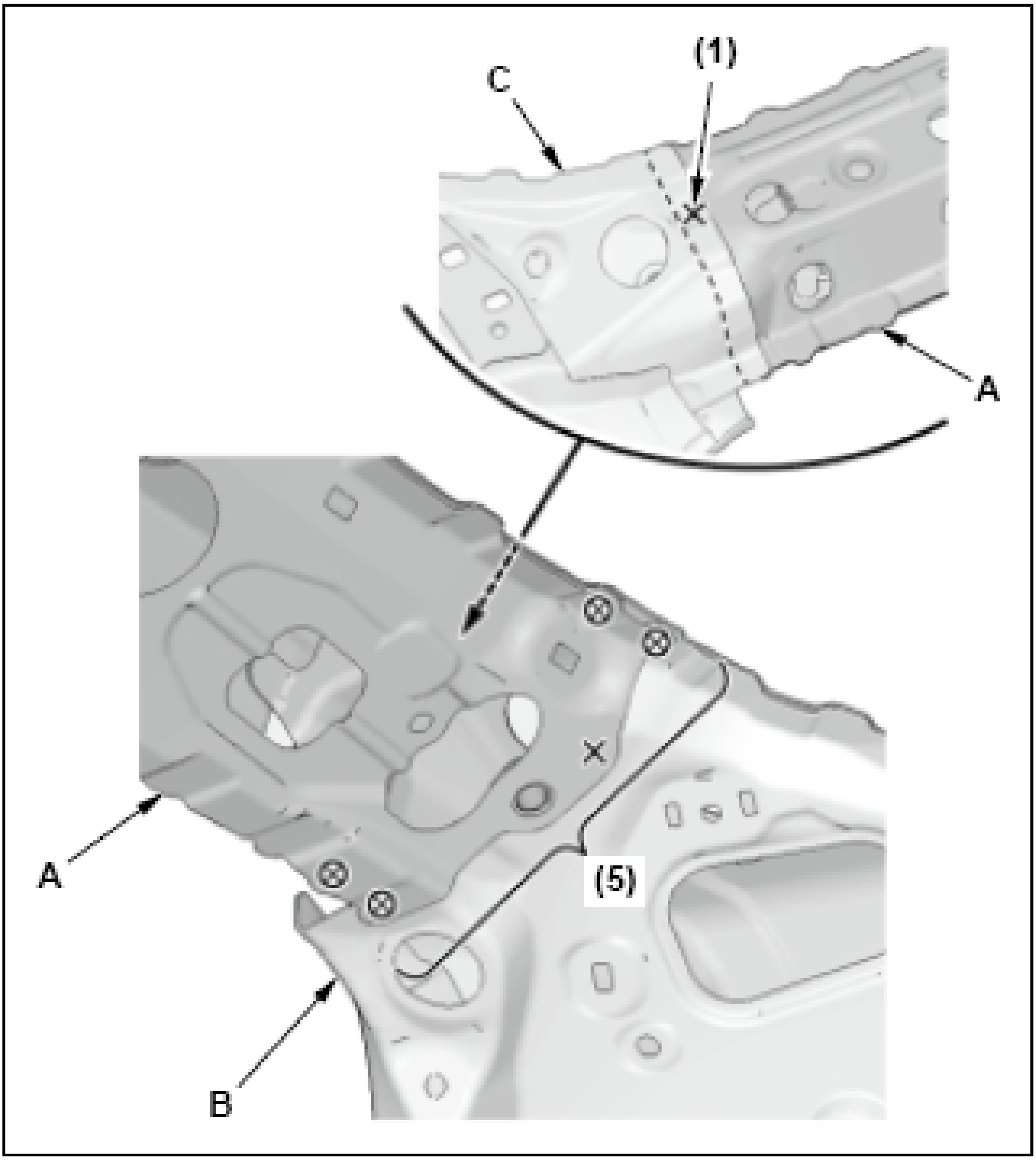

Roof Panel - Weld

1. Apply adhesive (A) on the flanges of the roof panel (B) and the roof gutter areas (C) of the body as shown.

   Adhesive: 3M 07333 or a commercially available equivalent

   NOTE: **Refer to the manufacturers instructions for details.**

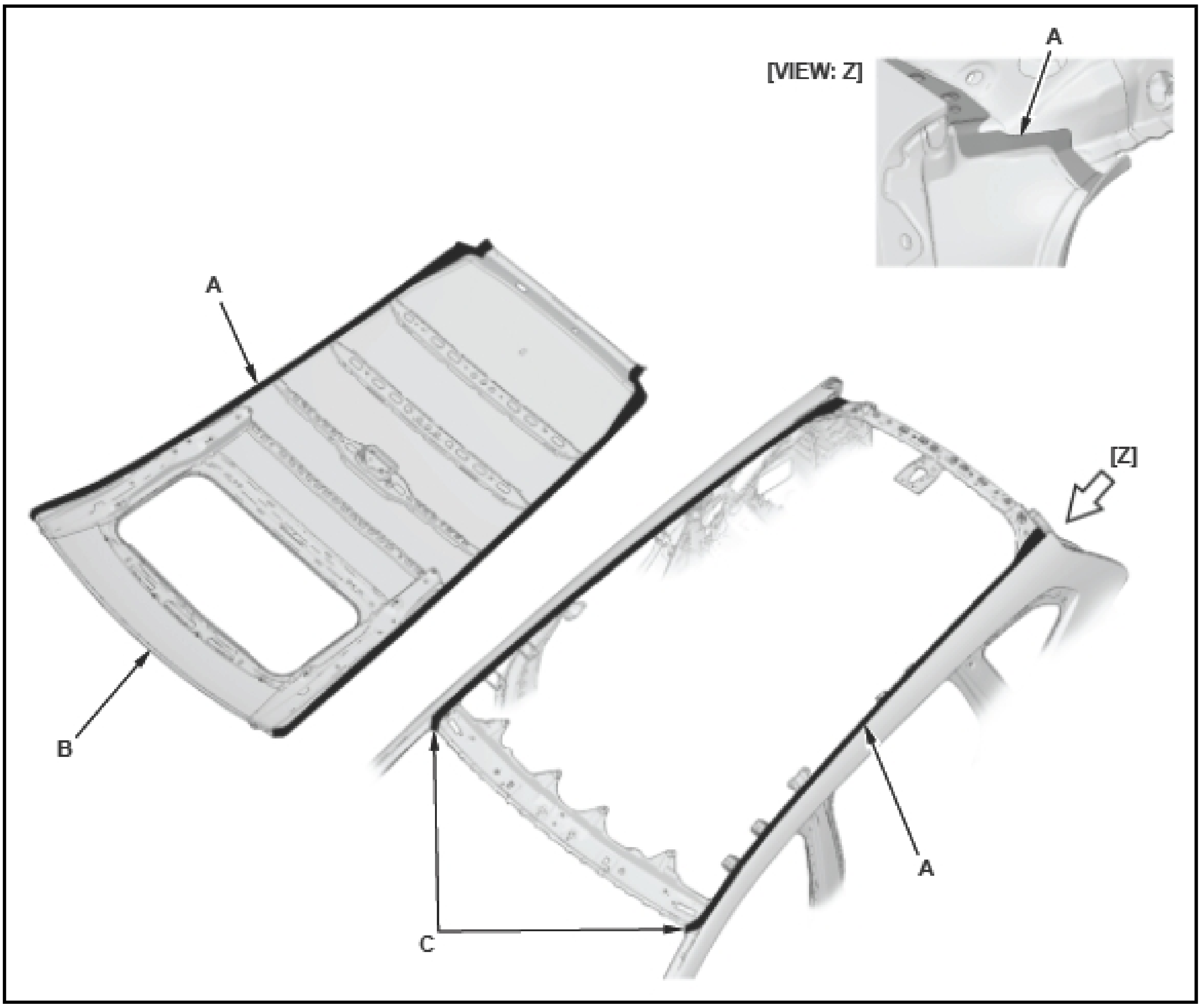
[VIEW: Z]
A
A
[Z]
B
A
C

2. Apply a soft type sealer (B) to the mating surfaces of the front roof rail (C) and roof arch A.

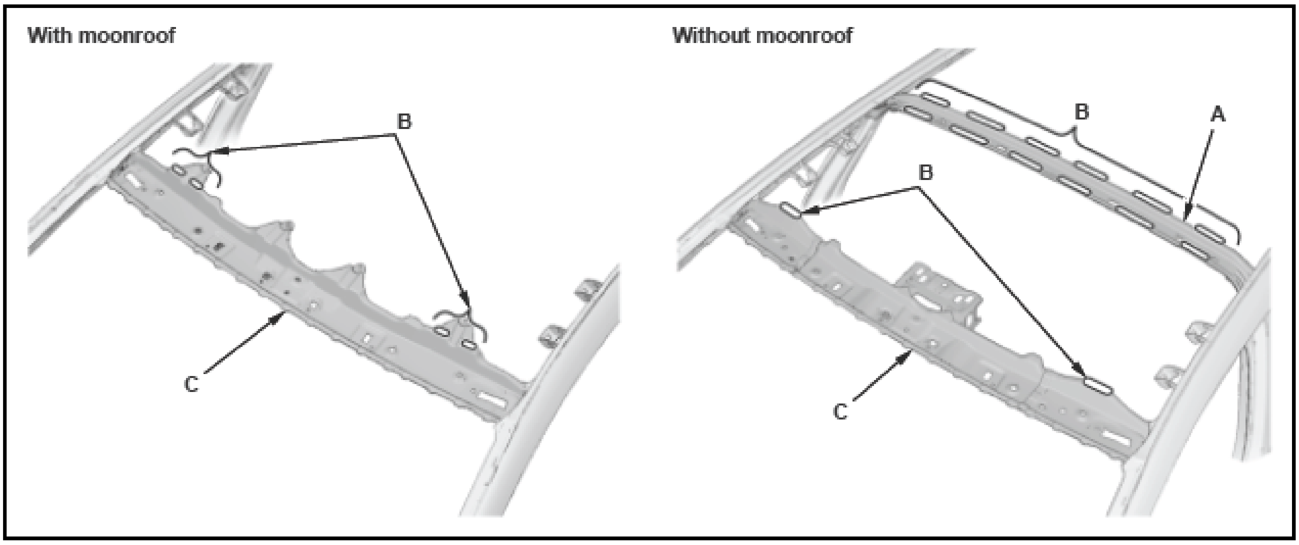
With moonroof
B
C
Without moonroof
B
A
B
C

3. Apply a soft type sealer (A) to the mating surfaces of the rear roof rail (B).

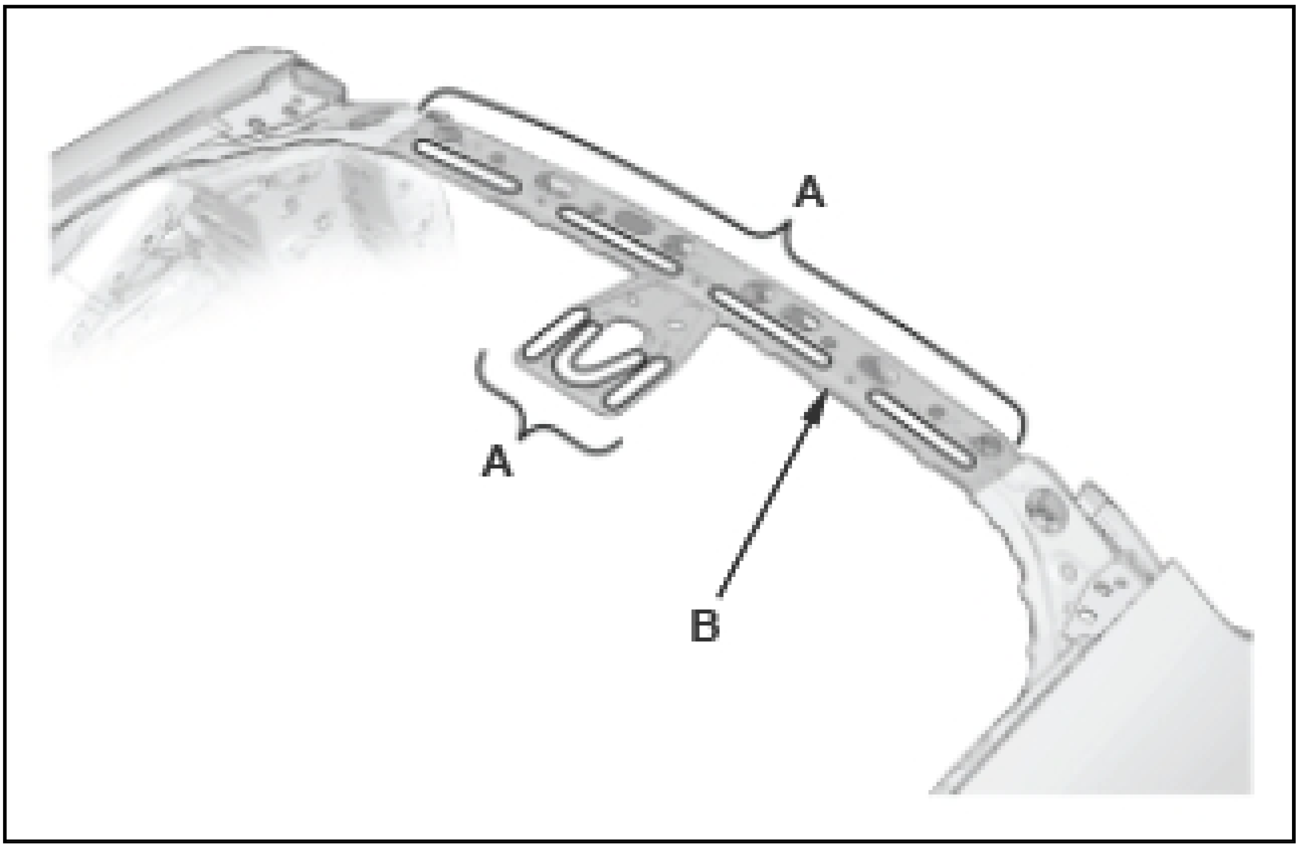

4. With moonroof: Clamp the roof panel (A), attach the front roof rail (B) with the moonroof mounting bolts (C).

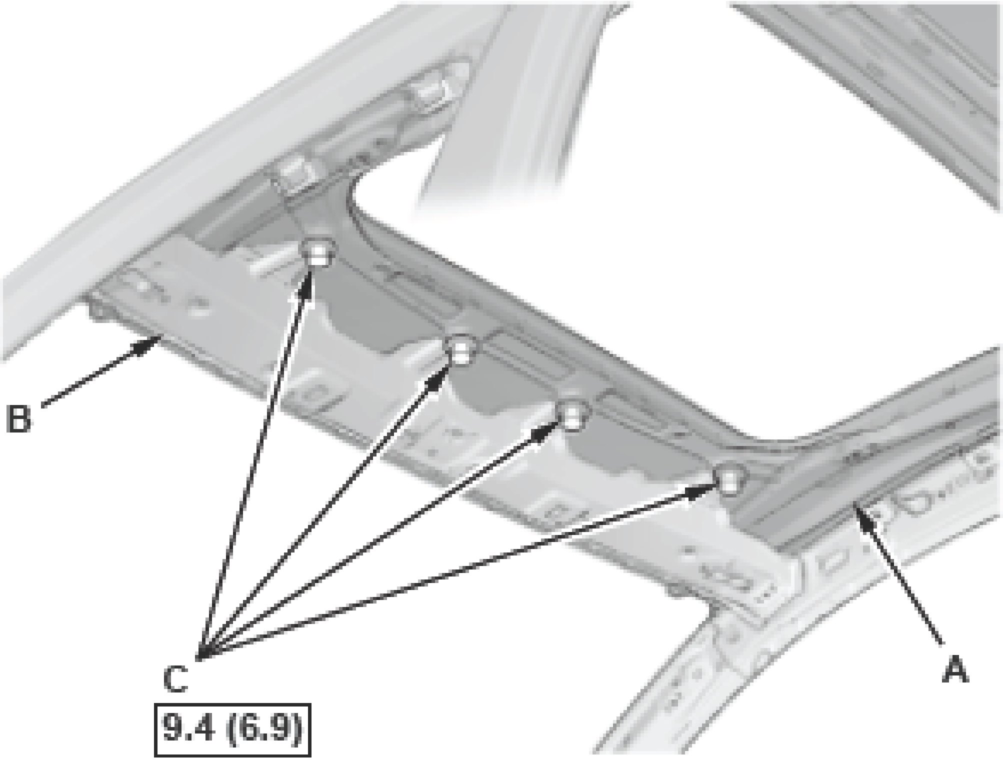

Fig. 25: Front Roof Rail Mounting Hardware Locations With Torque Specifications
Courtesy of AMERICAN HONDA MOTOR CO., INC.

5. With moonroof: Attach the roof stiffener gussets (A) to the roof panel stiffeners (B) with the mounting bolts.

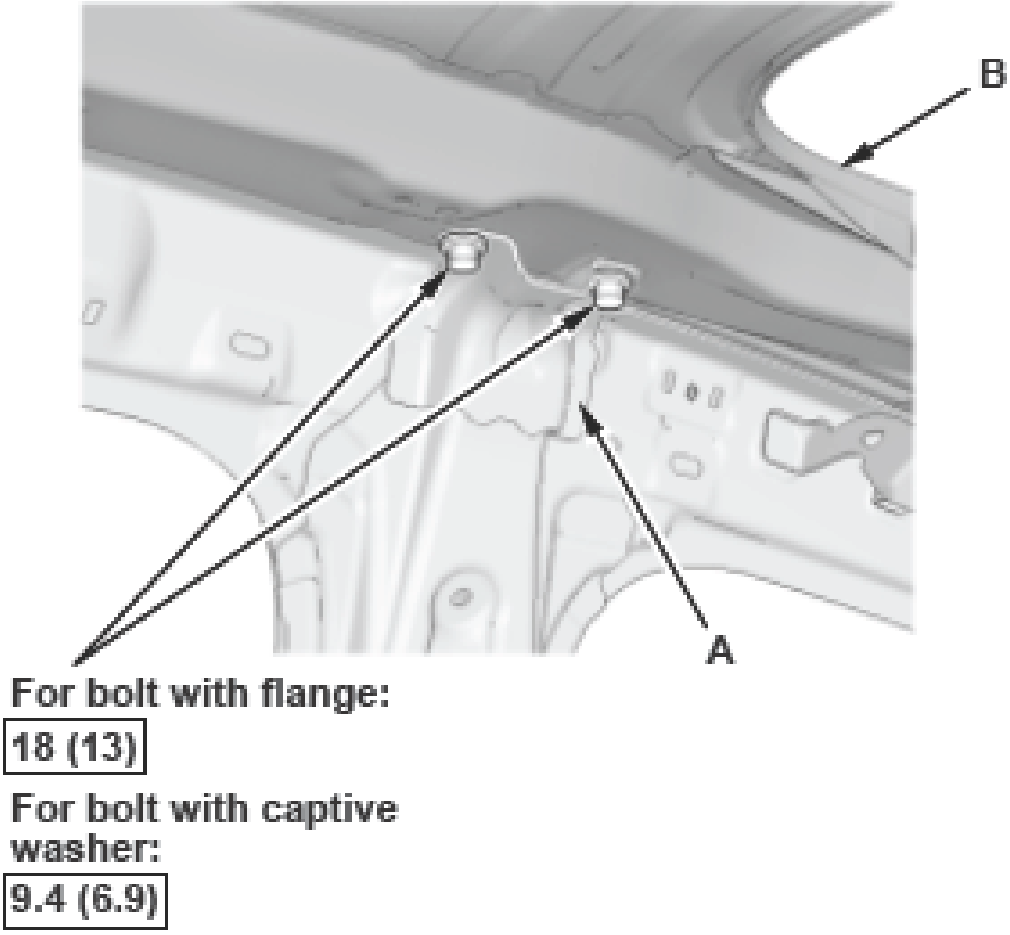
B
A
For bolt with flange:
18 (13)
For bolt with captive washer:
9.4 (6.9)

Fig. 26: Roof Stiffener Gussets And Roof Panel Stiffeners Mounting Hardware Locations With Torque Specifications
Courtesy of AMERICAN HONDA MOTOR CO., INC.

6. Weld the front and rear flanges of the roof panel (A).

   With moonroof

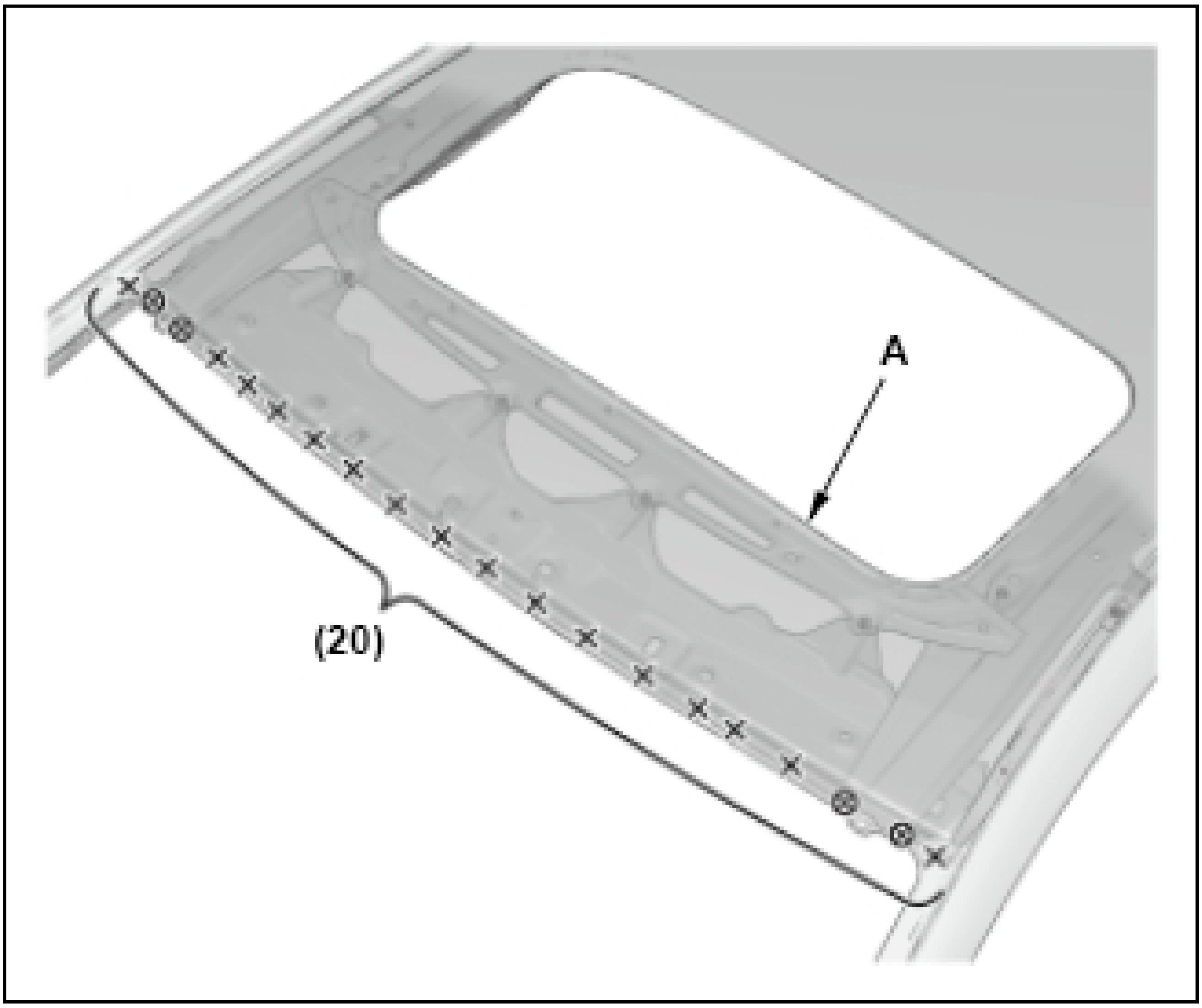

Without moonroof

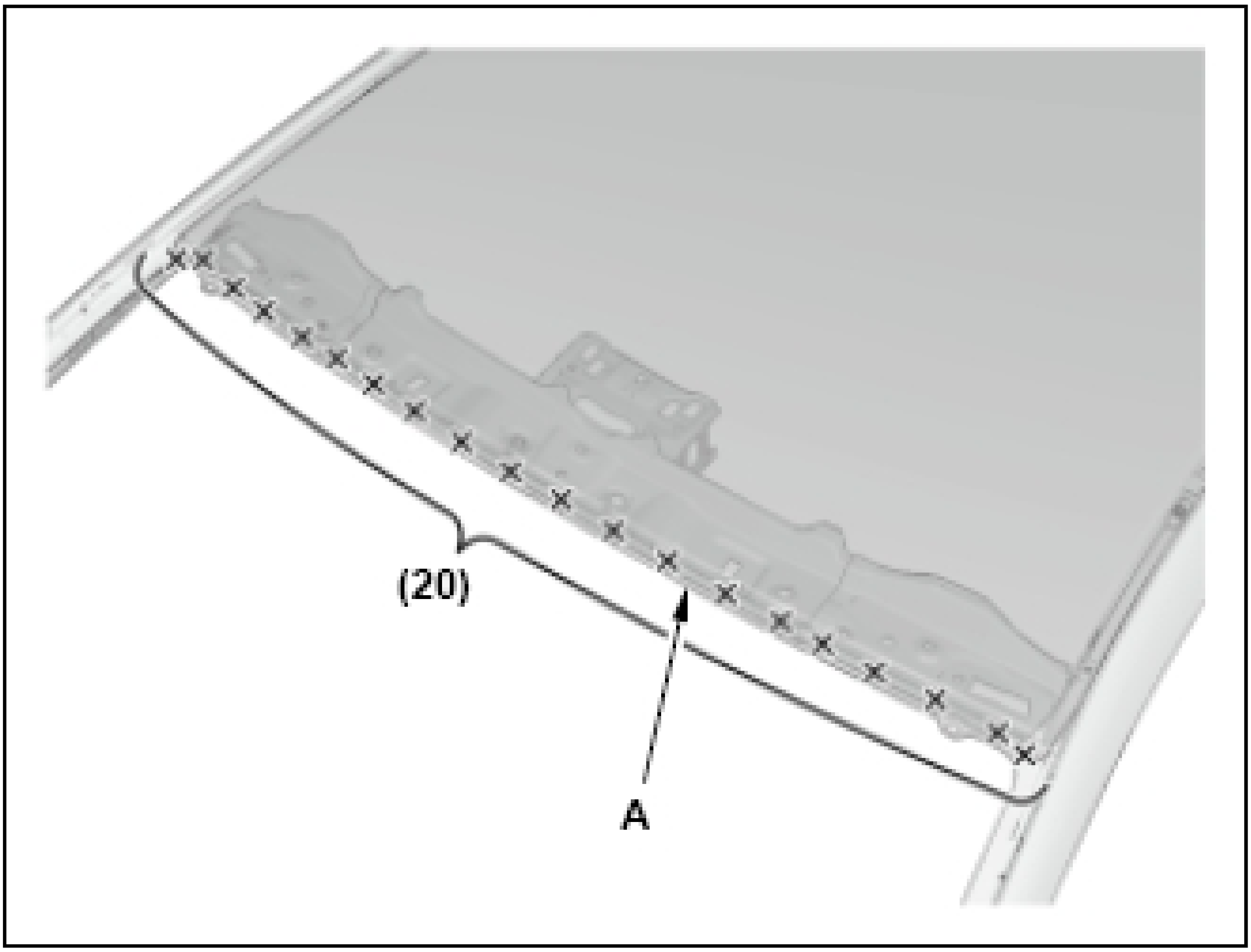

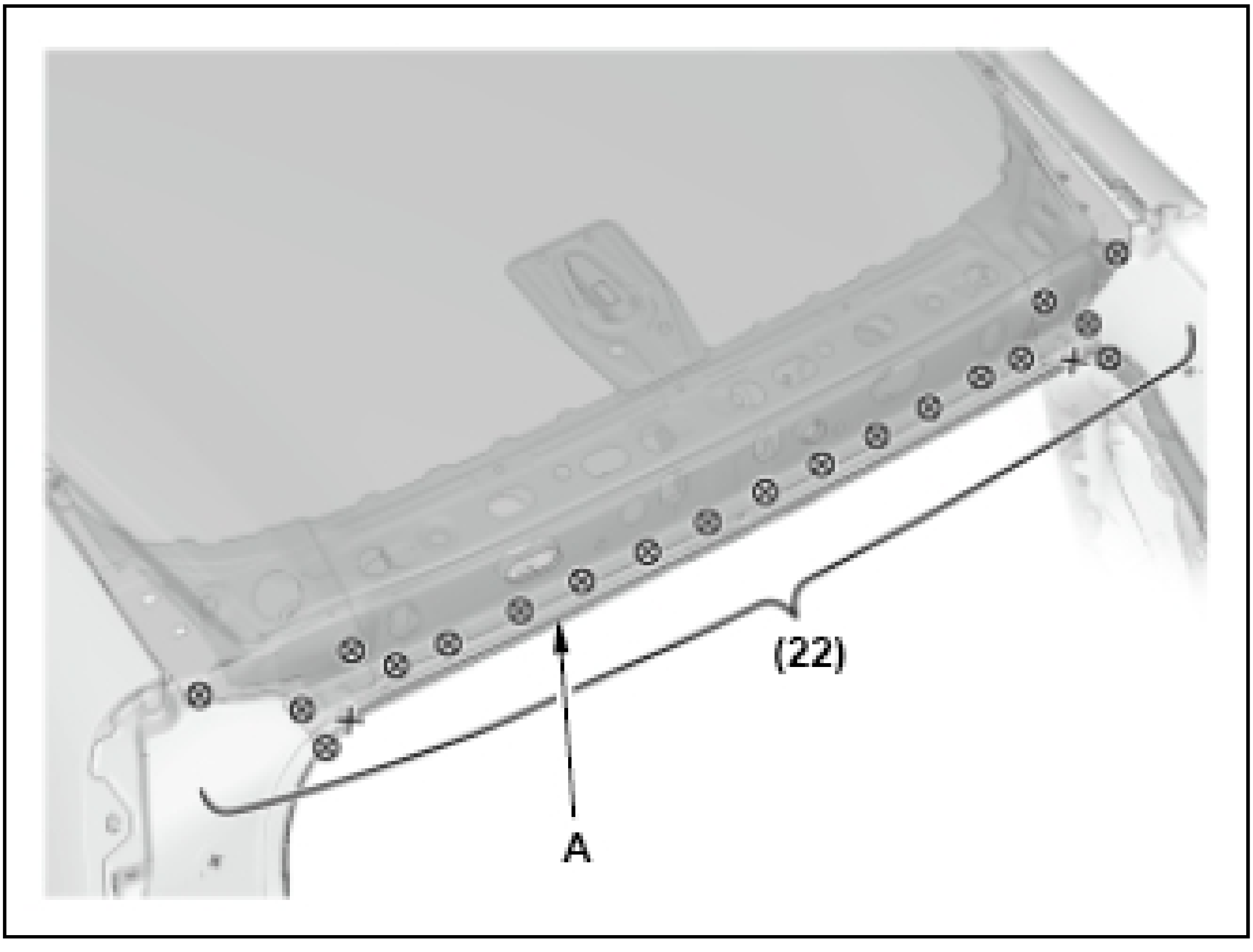

7. Weld the side flanges of the roof panel (A).

(■)*: Welding positions with the front pillar upper stiffener (B), include ultra high-strength steel (1500 MPa) parts. **Perform the spot welding on the conditions of No. 30 in the table shown below.** (See SPOT WELDING CONDITIONS FOR ULTRA HIGH-STRENGTH STEEL PARTS (1180 AND 1500 MPA)).

SPOT WELDING CONDITION DESCRIPTION

No. 30	8500 A	1200 ms	3432 N (350 kgf)

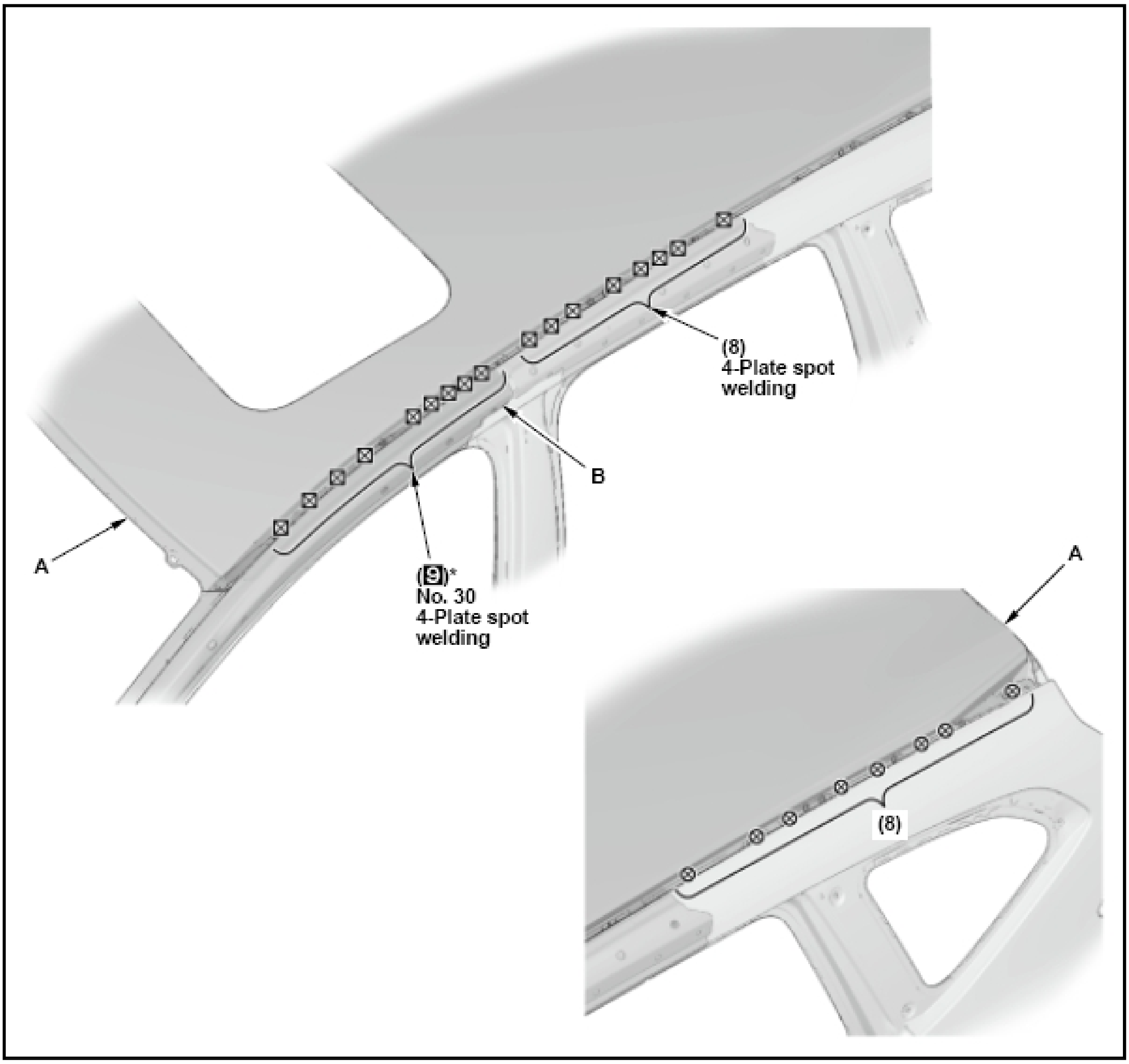

REAR SIDE OUTER PANEL REPLACEMENT

Removal

NOTE:

- **High-strength steel is defined as any steel with a tensile strength of 340 MPa or higher. If a part is constructed of, or includes high-strength steel review the important guidelines. See REPAIR GUIDELINES FOR HIGH-STRENGTH STEEL PARTS .**
- **Welding symbols (The welding symbols with dashed lines have a meaning of the spot welding of the part which is not visible). See SYMBOLS DEFINITION .**
- **(): Any numerical value in between these parentheses indicate the number of welds required.**

Mass Production Body Welding Positions and Numbers - Remove

Rear Side Outer Panel, Rear Pillar Gutter, and Rear Pillar Stiffener

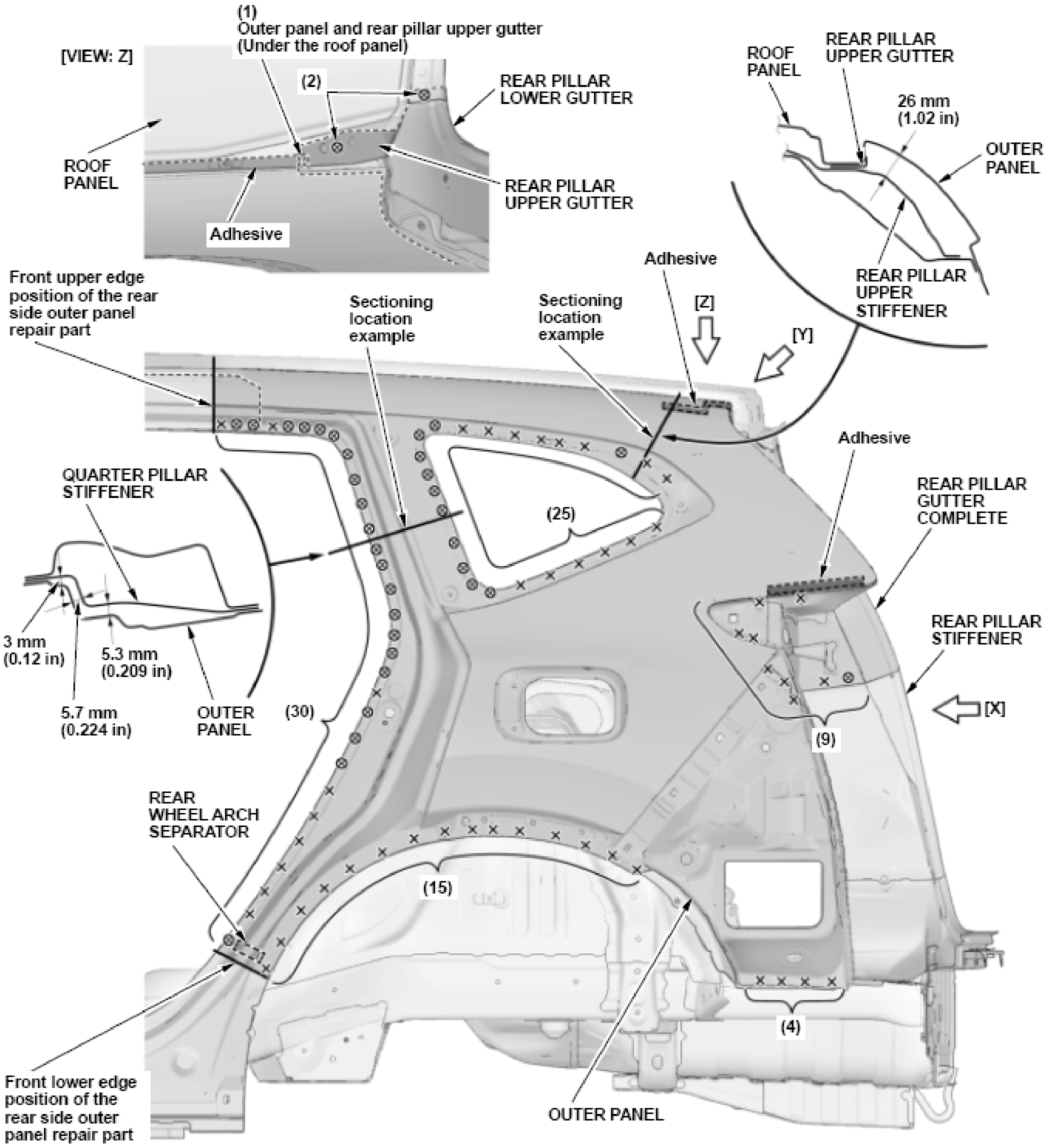
(1)
Outer panel and rear pillar upper gutter
(Under the roof panel)
[VIEW: Z]
(2)
REAR PILLAR LOWER GUTTER
ROOF PANEL
REAR PILLAR UPPER GUTTER
Adhesive
ROOF PANEL
REAR PILLAR UPPER GUTTER
26 mm
(1.02 in)
OUTER PANEL
REAR PILLAR UPPER STIFFENER
Front upper edge position of the rear side outer panel repair part
Sectioning location example
Sectioning location example
Adhesive
[Z]
[Y]
Adhesive
QUARTER PILLAR STIFFENER
(25)
REAR PILLAR GUTTER COMPLETE
REAR PILLAR STIFFENER
3 mm
(0.12 in)
5.3 mm
(0.209 in)
5.7 mm
(0.224 in)
OUTER PANEL
(30)
(9)
[X]
REAR WHEEL ARCH SEPARATOR
(15)
(4)
Front lower edge position of the rear side outer panel repair part
OUTER PANEL

Fig. 27: Quarter Panel Constructions Specifications And Measurement Locations
Courtesy of AMERICAN HONDA MOTOR CO., INC.

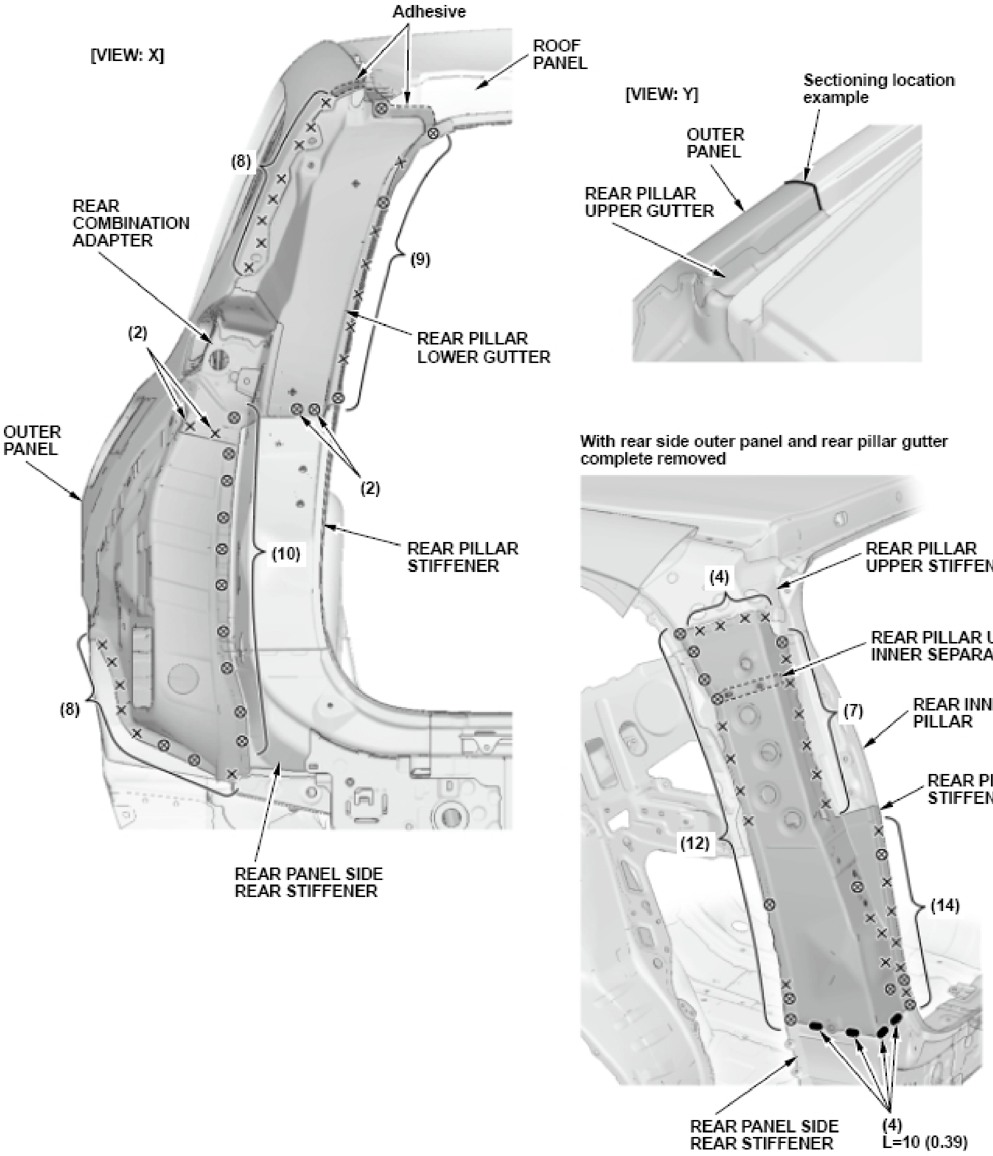
[VIEW: X]
Adhesive
ROOF PANEL
(8)
REAR COMBINATION ADAPTER
(9)
REAR PILLAR LOWER GUTTER
(2)
OUTER PANEL
(2)
(10)
REAR PILLAR STIFFENER
(8)
REAR PANEL SIDE REAR STIFFENER
[VIEW: Y]
Sectioning location example
OUTER PANEL
REAR PILLAR UPPER GUTTER
With rear side outer panel and rear pillar gutter complete removed
REAR PILLAR UPPER STIFFENER
(4)
REAR PILLAR UPPER INNER SEPARATOR
(7)
REAR INNER PILLAR
REAR PILLAR STIFFENER
(12)
(14)
REAR PANEL SIDE REAR STIFFENER
(4)
L=10 (0.39)

Fig. 28: Quarter Panel And Components Removal Weld Measurements And Locations
Courtesy of AMERICAN HONDA MOTOR CO., INC.

Construction - Remove

NOTE:

- **This section explains the procedures after removal of all related parts. For the related parts removal procedure, refer to the appropriate Service Information.**
- **The component replacement procedure described here is only for new genuine supplied parts, as needed, according to the area and the degree of damage on the body.**
- **Cut and pry off the rear side outer panel, and replace it.**

  NOTE: **Select the sectioning location in consideration of the rear side outer panel replacement.**

- **Check the rear pillar gutter position for damage. If necessary, replace the rear pillar gutter complete.**
- **Check the rear pillar stiffener position for damage. If necessary, replace it separately from the rear inner pillar complete.**
- **Replace the rear wheel arch separator and the rear pillar upper inner separator.**

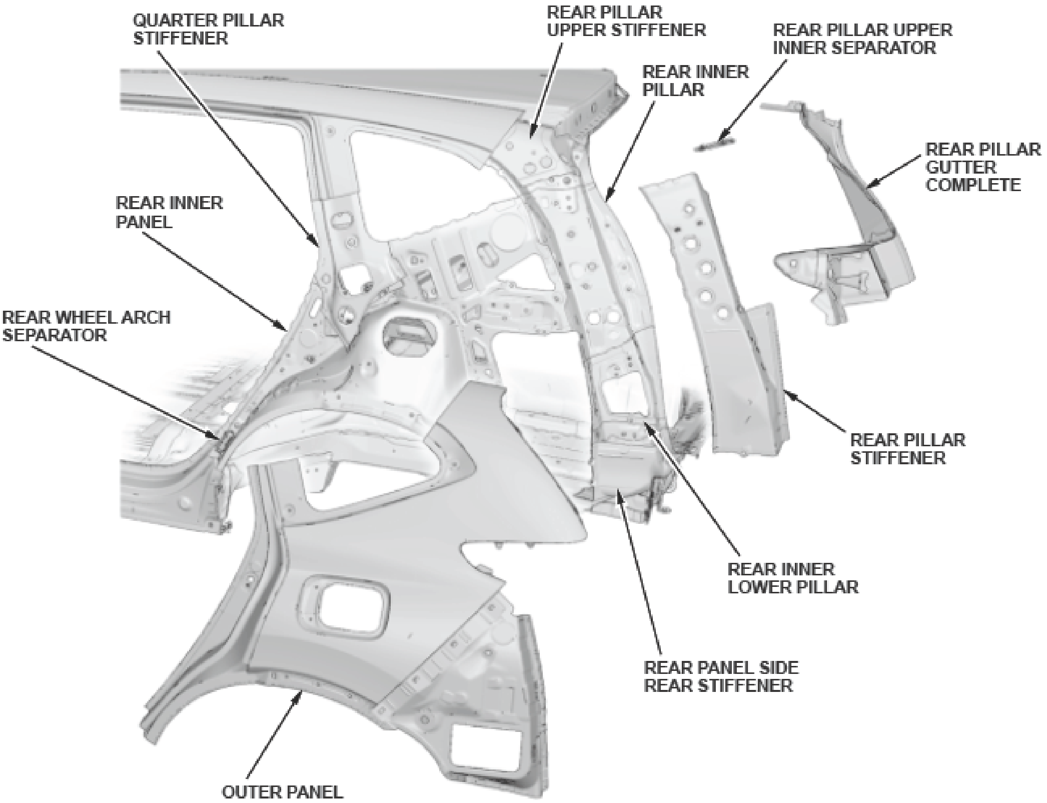
QUARTER PILLAR STIFFENER
REAR PILLAR UPPER STIFFENER
REAR PILLAR UPPER INNER SEPARATOR
REAR INNER PILLAR
REAR PILLAR GUTTER COMPLETE
REAR INNER PANEL
REAR WHEEL ARCH SEPARATOR
REAR PILLAR STIFFENER
REAR INNER LOWER PILLAR
REAR PANEL SIDE REAR STIFFENER
OUTER PANEL

Fig. 29: Outer Quarter Panel, Inner Quarter Panel And Components Locations
Courtesy of AMERICAN HONDA MOTOR CO., INC.

Installation

NOTE:

- **Position the replacement parts.**

  Before doing the main welding, check the body dimensions:

  - **Door hinge positions See DOOR HINGE POSITIONS DIMENSION .**
  - **Rear pillar gutter and rear panel positions See REAR PILLAR GUTTER AND REAR PANEL POSITIONS DIMENSION .**
  - **Windshield and door openings See WINDSHIELD AND DOOR OPENINGS .**
  - **Tailgate opening See TAILGATE OPENING DIMENSION .**
- **Temporarily install the related parts, then check for differences in level and clearance. Check the external parts fitting positions. Make sure the body lines flow smoothly. See EXTERNAL PARTS FITTING POSITIONS .**
- **Confirm the sheet thickness, tensile strength, and existence of the zinc treatment on both sides, and set the welder to conform to the welding conditions by according to the Roof and Side Panel Construction and Floor and Rear Body Construction. (See ROOF AND SIDE PANEL CONSTRUCTION And FLOOR AND REAR BODY CONSTRUCTION).**
- **Welding symbols (The welding symbols with dashed lines have a meaning of the spot welding of the part which is not visible). See SYMBOLS DEFINITION .**
- **(): Any numerical value in between these parentheses indicate the number of welds required.**

Rear Pillar Stiffener - Weld

1. Remove the rear pillar stiffener (A) together with the rear upper inner separator (B) from the new rear inner pillar complete.
2. Apply the sealer (C) without gaps all the way around the new upper inner separator and the rear inner pillar (D).

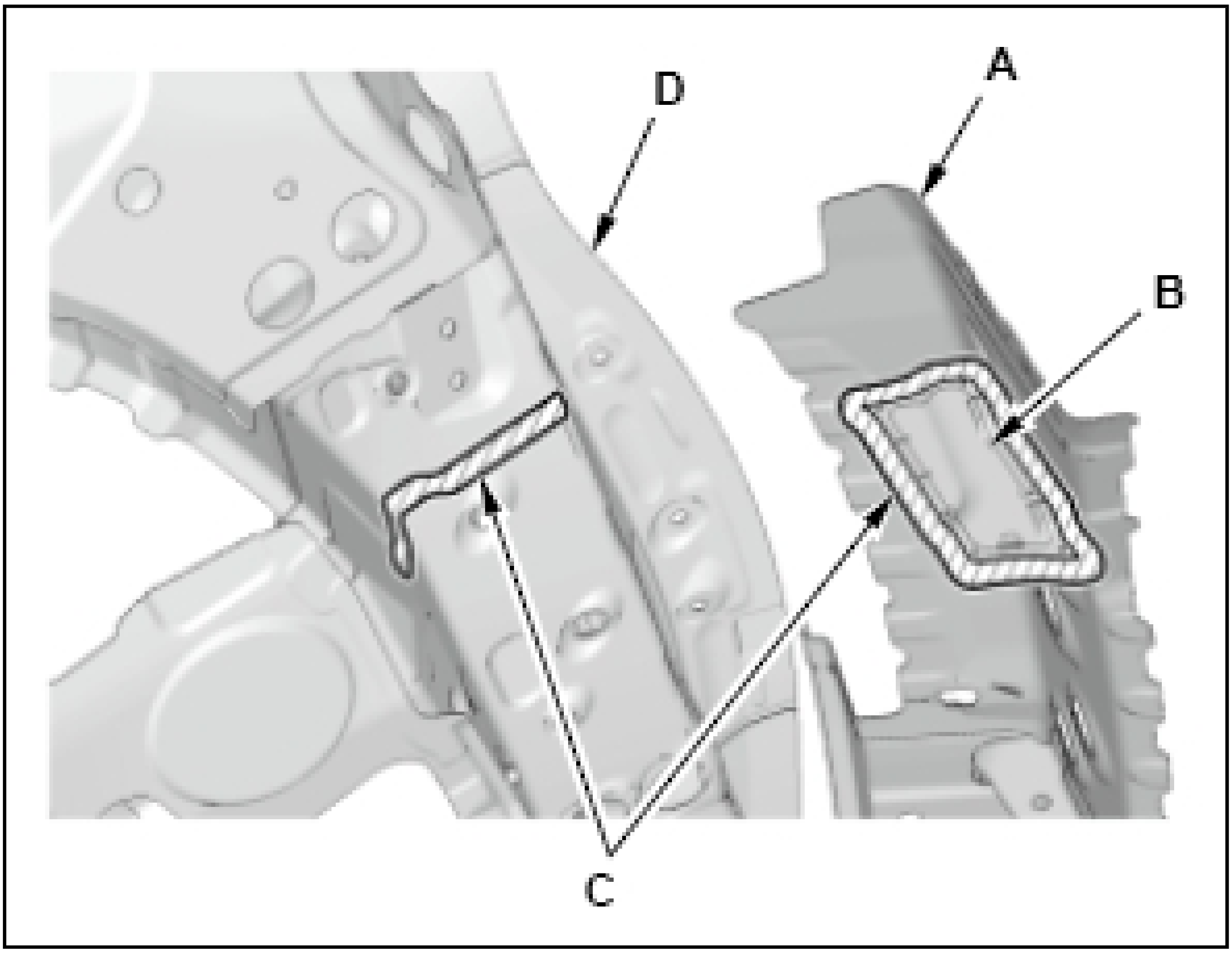

3. Weld the rear pillar stiffener (A) to the rear pillar upper stiffener (B), the rear inner pillar (C), and the rear panel side rear stiffener (D).

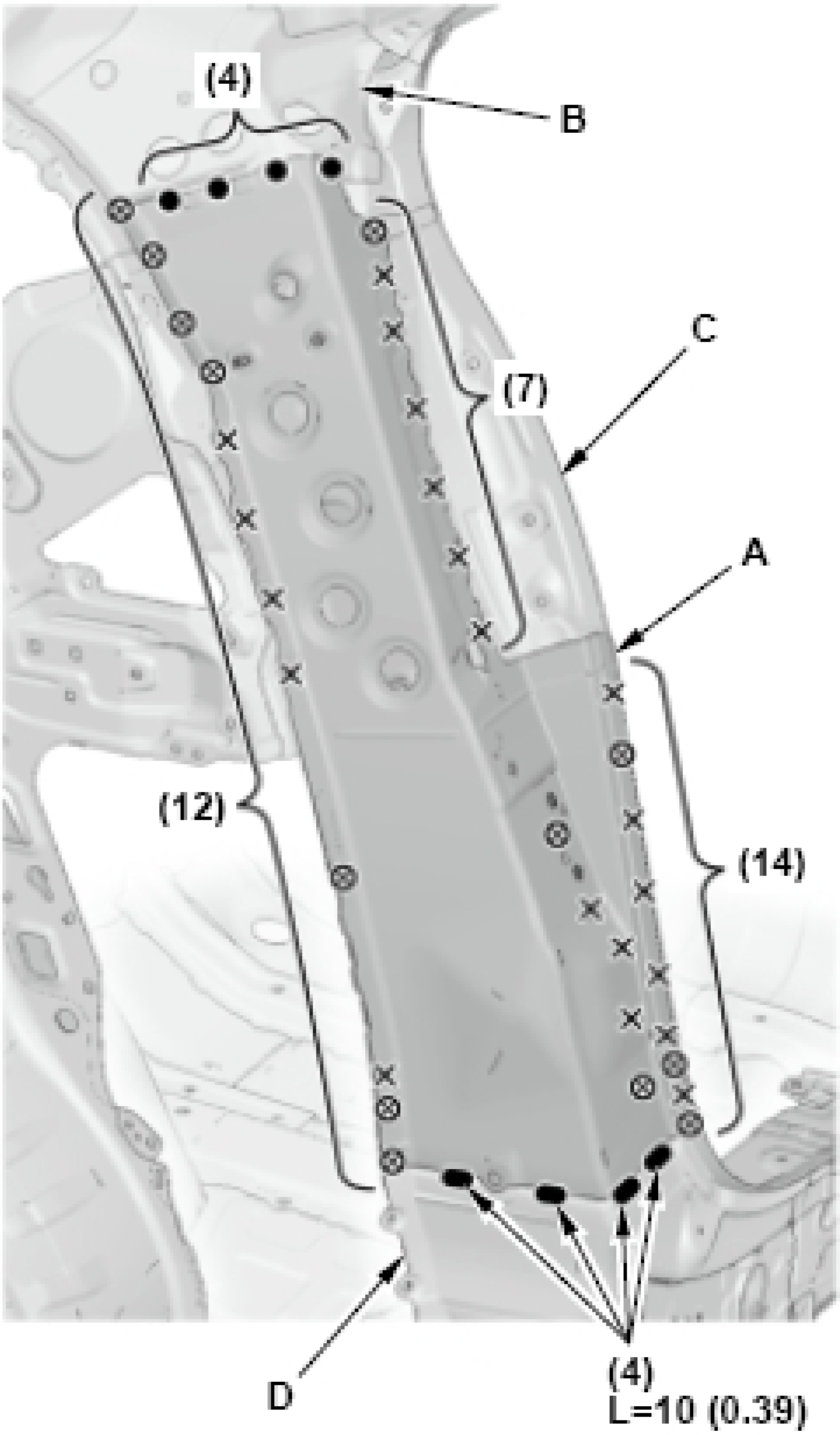

Fig. 30: Rear Pillar Stiffener Removal Weld Measurements And Locations
Courtesy of AMERICAN HONDA MOTOR CO., INC.

Rear Pillar Gutter Complete - Weld

1. Because the original adhesive (A) may burn when welding the rear pillar upper gutter, scrape out the adhesive from the underside of the roof panel (B) with a pick tool (C).

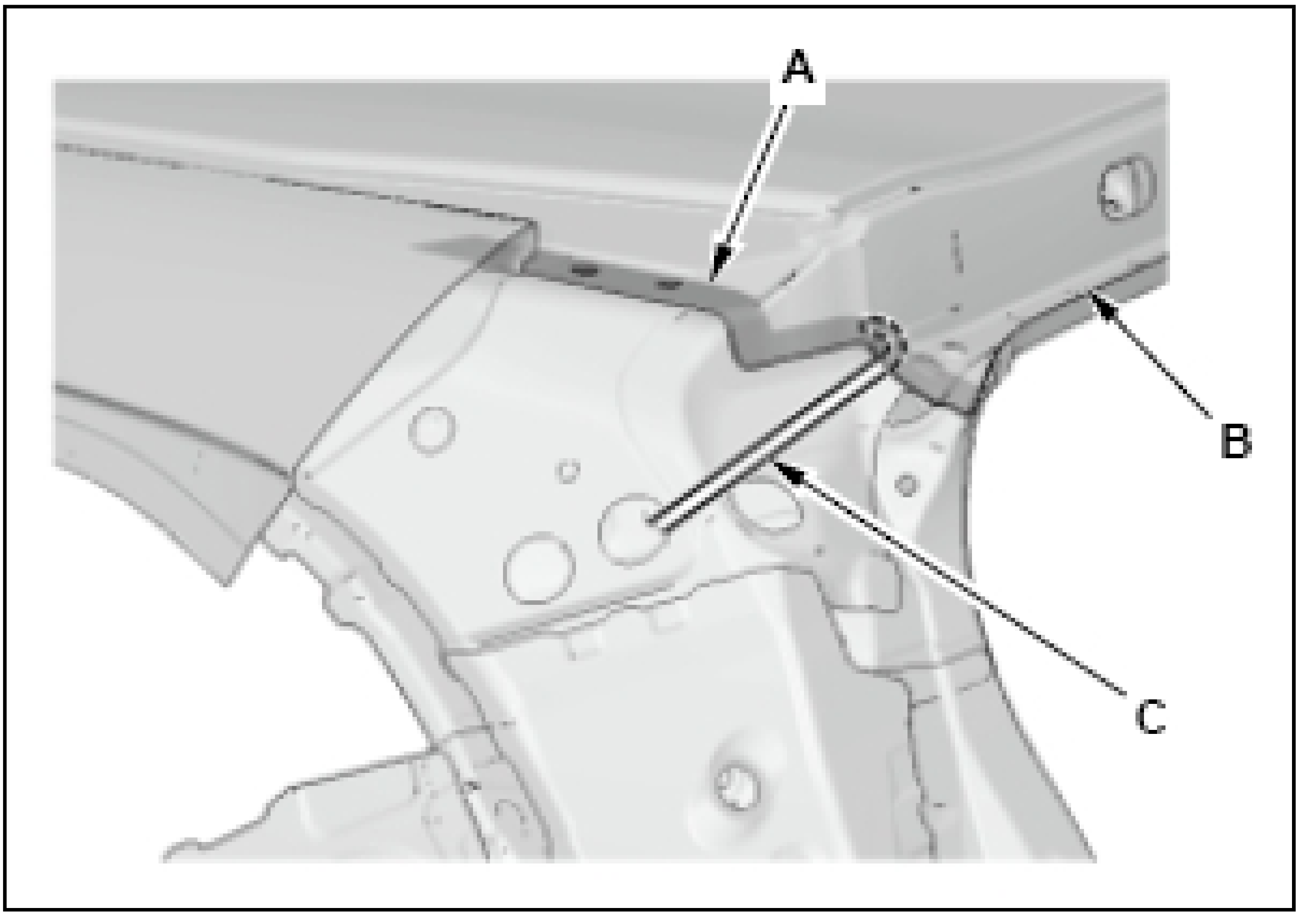

2. Weld the rear pillar gutter complete (A) to the roof panel (B), the outer panel (C), and the rear inner pillar complete (D).

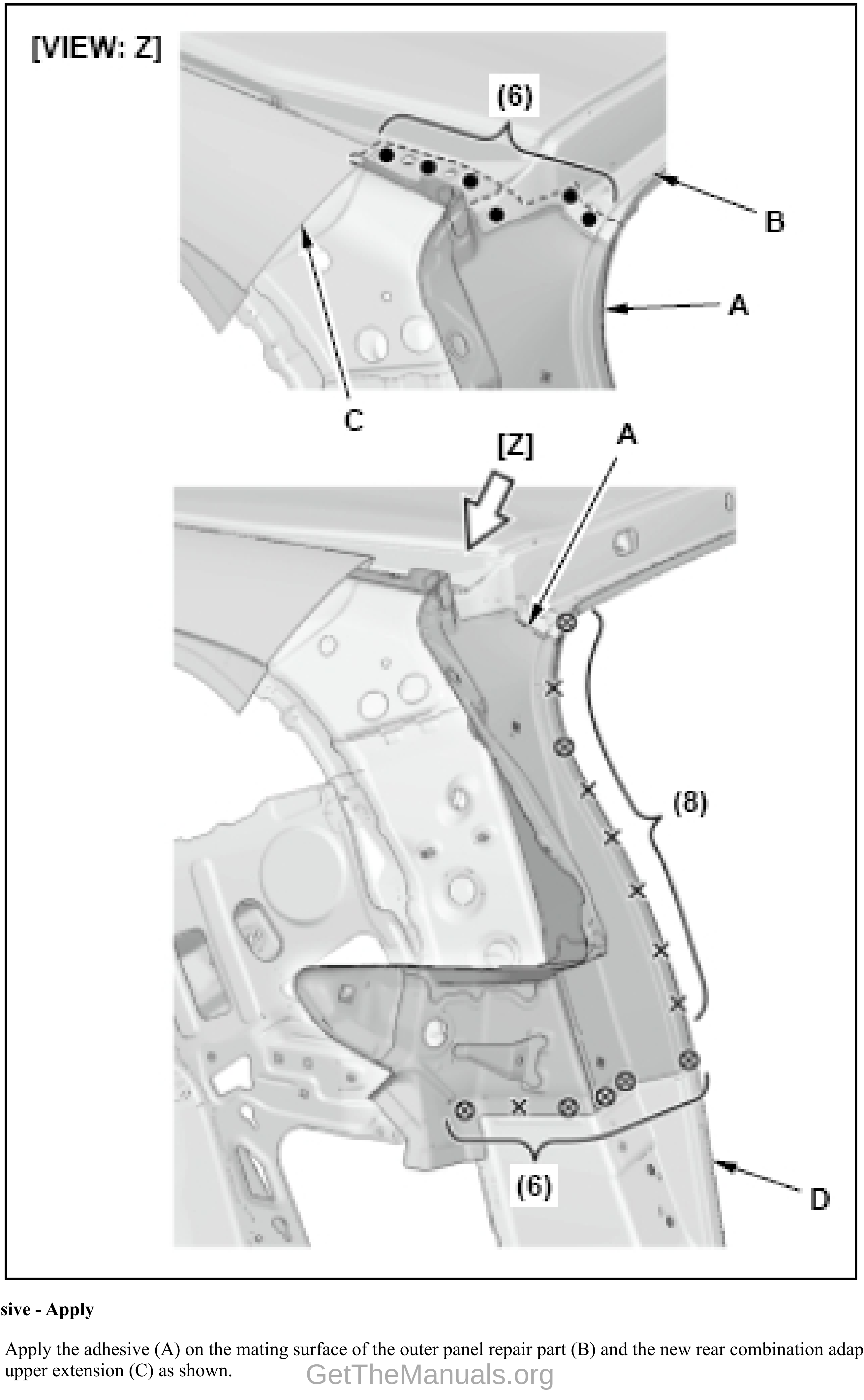

Adhesive - Apply

1. Apply the adhesive (A) on the mating surface of the outer panel repair part (B) and the new rear combination adapter upper extension (C) as shown.

NOTE: **Make sure the adhesive is not applied in areas that will be MAG welded when the outer panel is installed.**

Adhesive: 3M 07333 or a commercially available equivalent

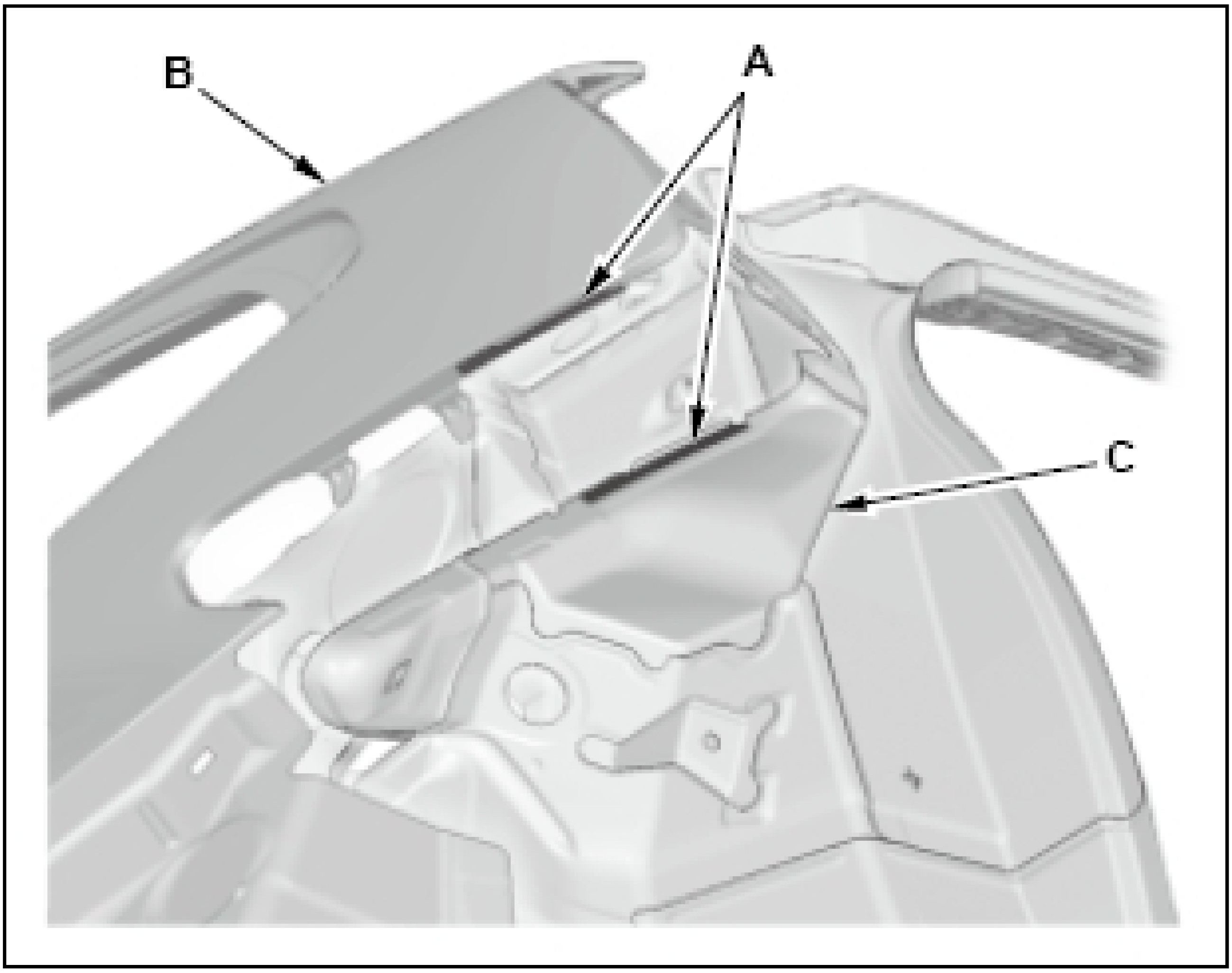

NOTE: **Refer to the manufacturers instructions for details.**

Wheel Arch Separator - Install

1. Install the new wheel arch separator (A) on the rear inner panel (B). Apply the sealer (C) without gaps all the way around the separator and inside the outer panel repair part (D).

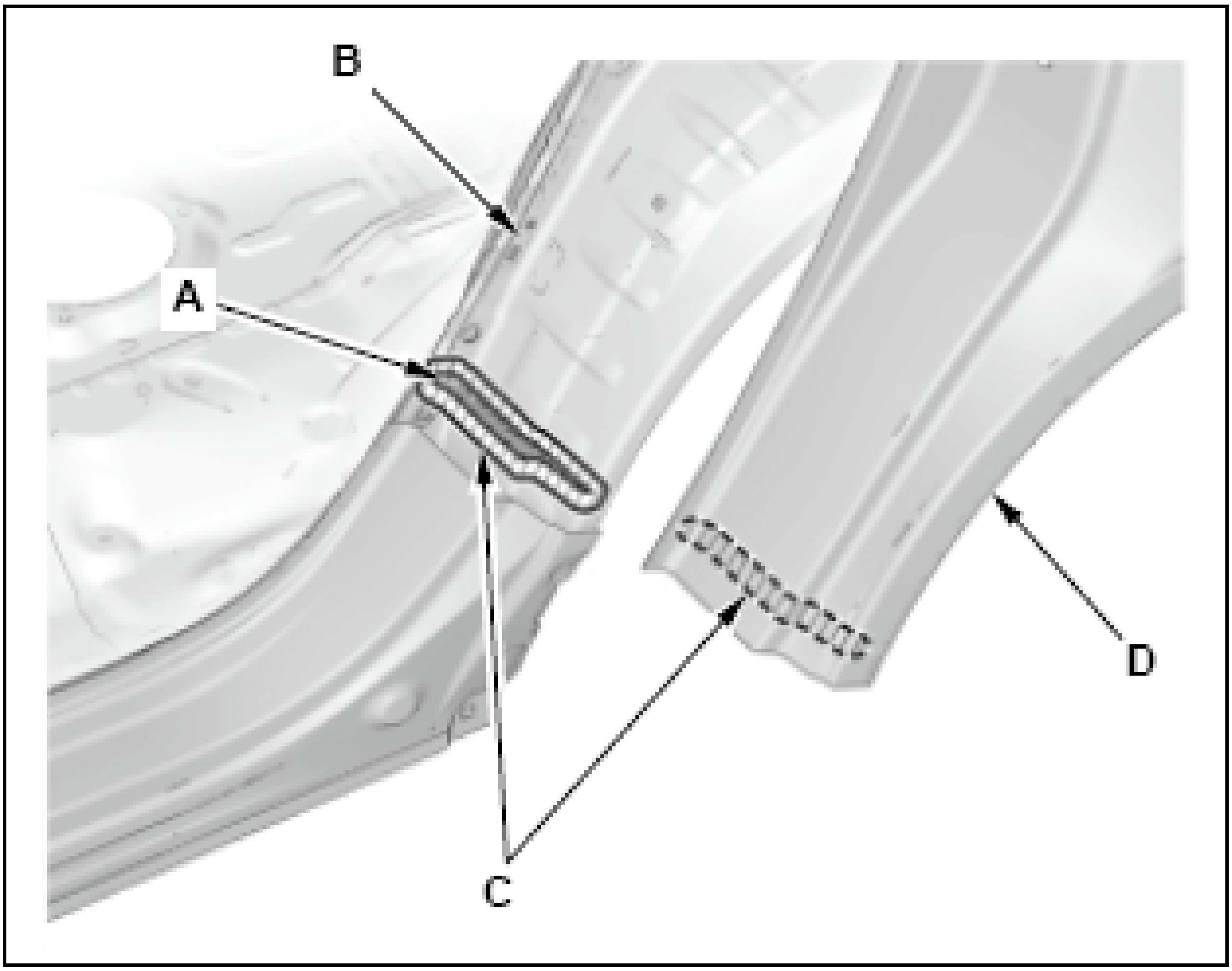

BSI Radar Unit Mounting Area - Check (With BSI radar unit)

1. With Blind Spot Information (BSI) radar unit: Install the new rivnuts (A) to the outer panel repair part (B) with a rivnut tool.
2. **Check the Blind Spot Information (BSI) radar unit mounting positions.**

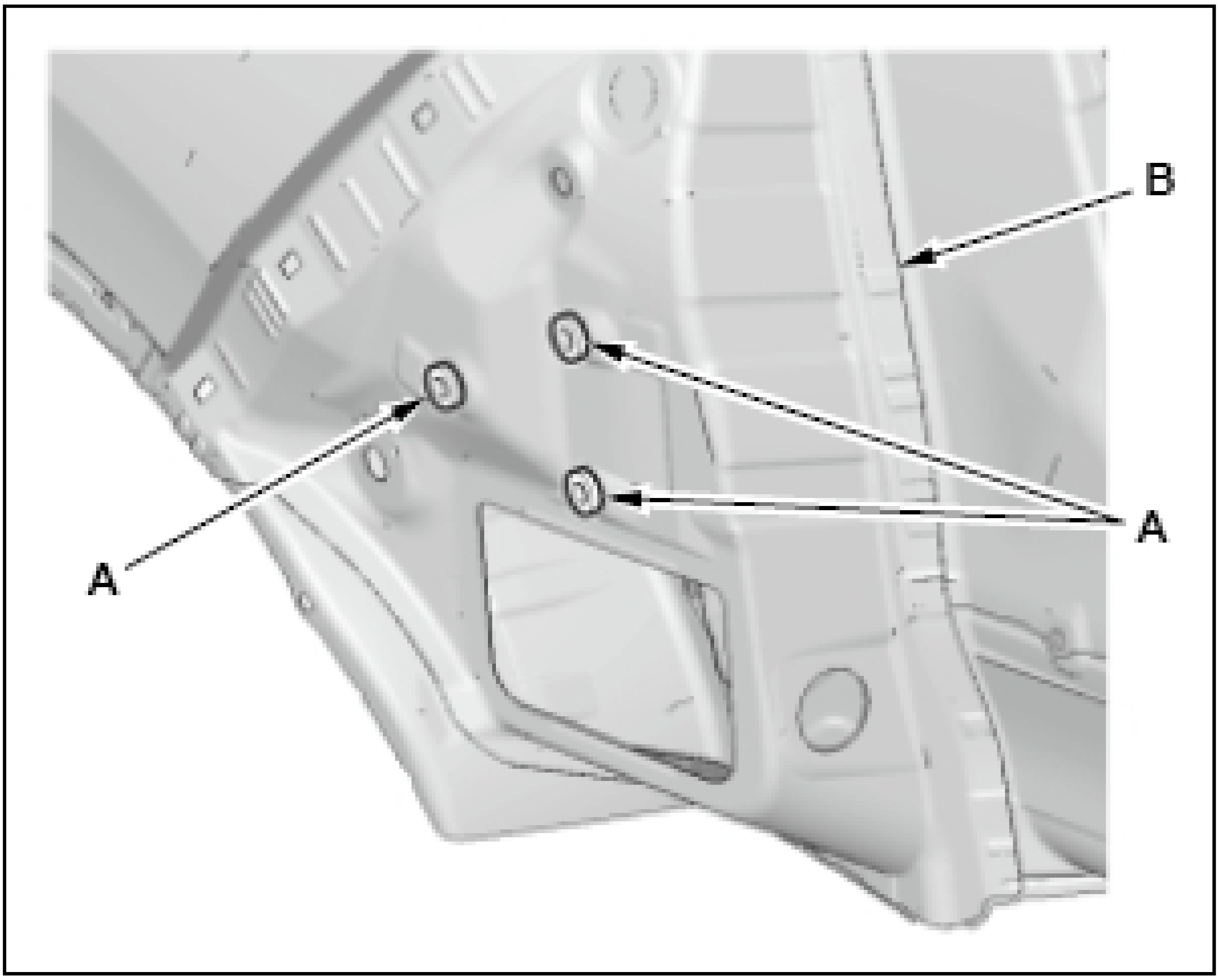

Outer Panel Repair Part - Weld

1. Weld the outer panel repair part (A).

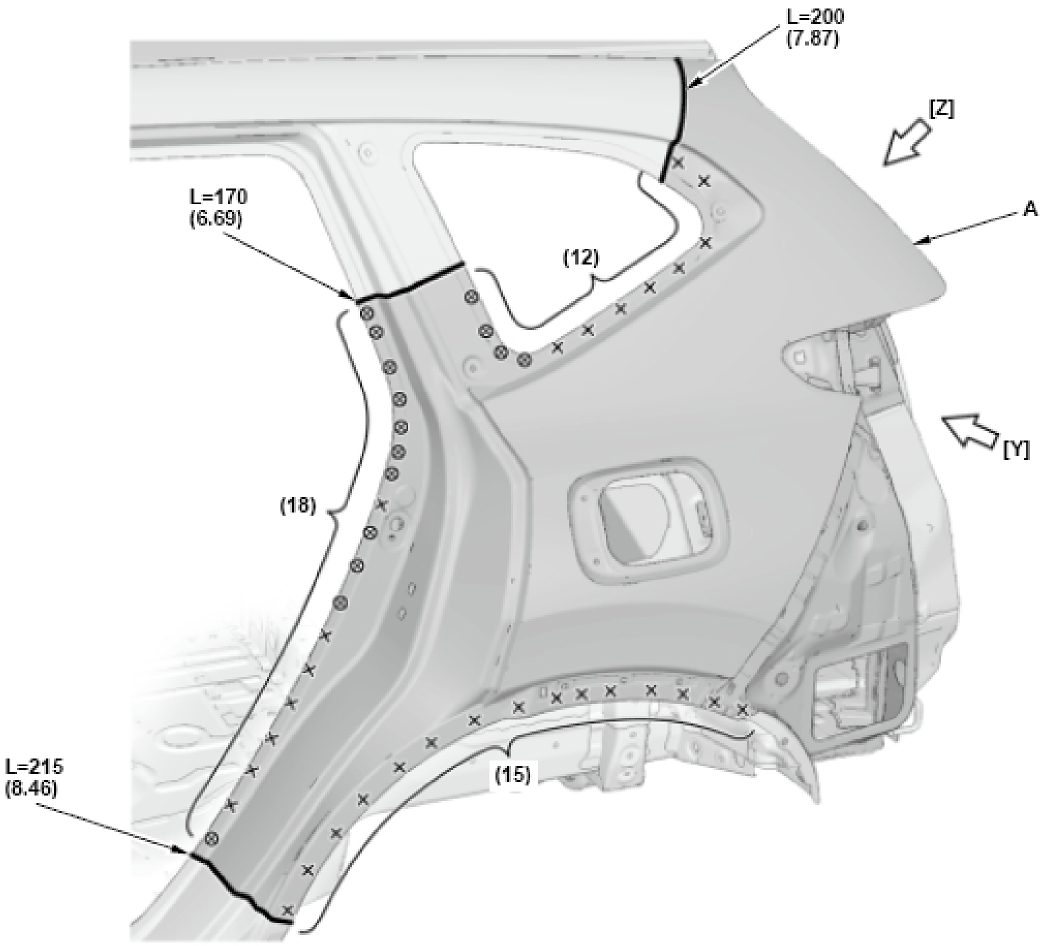
L=200
(7.87)
[Z]
A
L=170
(6.69)
(12)
[Y]
(18)
L=215
(8.46)
(15)

Fig. 31: Outer Quarter Panel Installation Weld Measurements And Locations
Courtesy of AMERICAN HONDA MOTOR CO., INC.

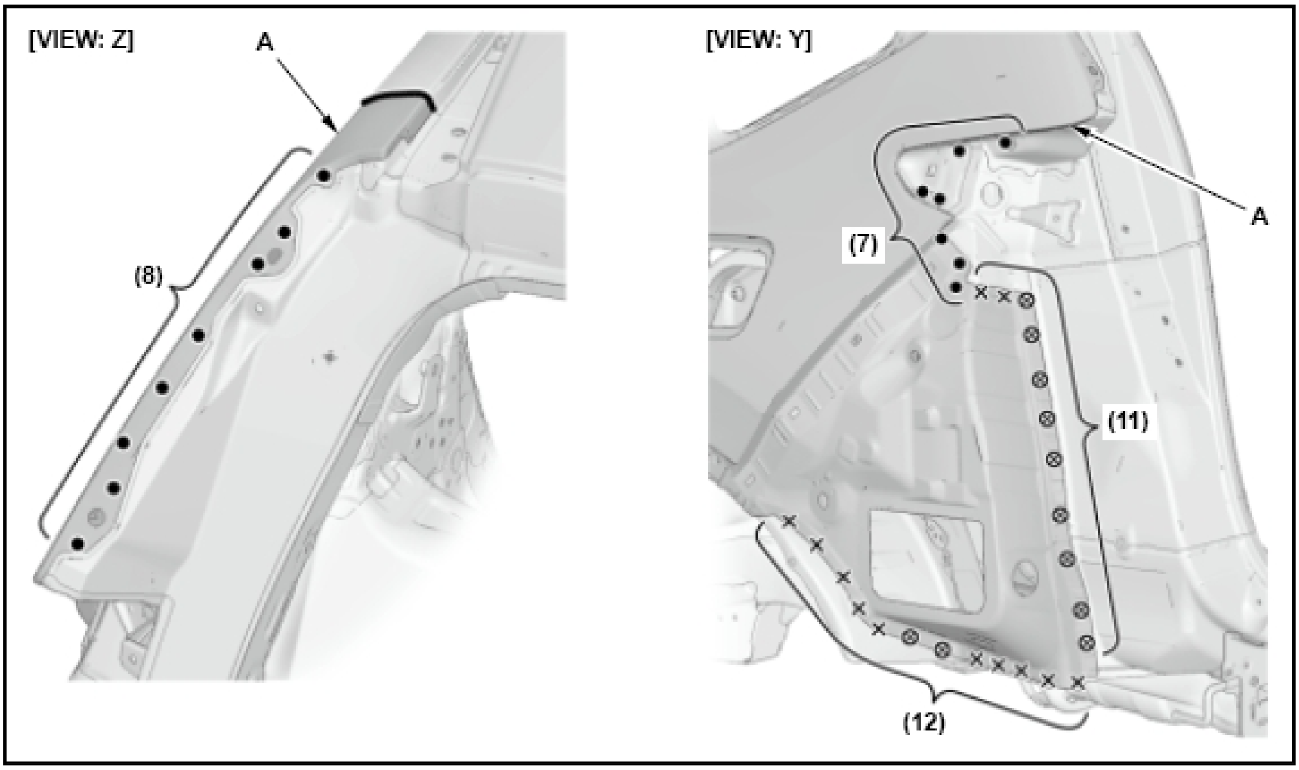
[VIEW: Z]
A
(8)
[VIEW: Y]
(7)
A
(11)
(12)

REAR PANEL REPLACEMENT

Removal

NOTE:

- High-strength steel is defined as any steel with a tensile strength of 340 MPa or higher. If a part is constructed of, or includes high-strength steel review the important

guidelines. See REPAIR GUIDELINES FOR HIGH-STRENGTH STEEL PARTS .

- **Welding symbols (The welding symbols with dashed lines have a meaning of the spot welding of the part which is not visible). See SYMBOLS DEFINITION .**
- **(): Any numerical value in between these parentheses indicate the number of welds required.**

Mass Production Body Welding Positions and Numbers - Remove

Rear Panel

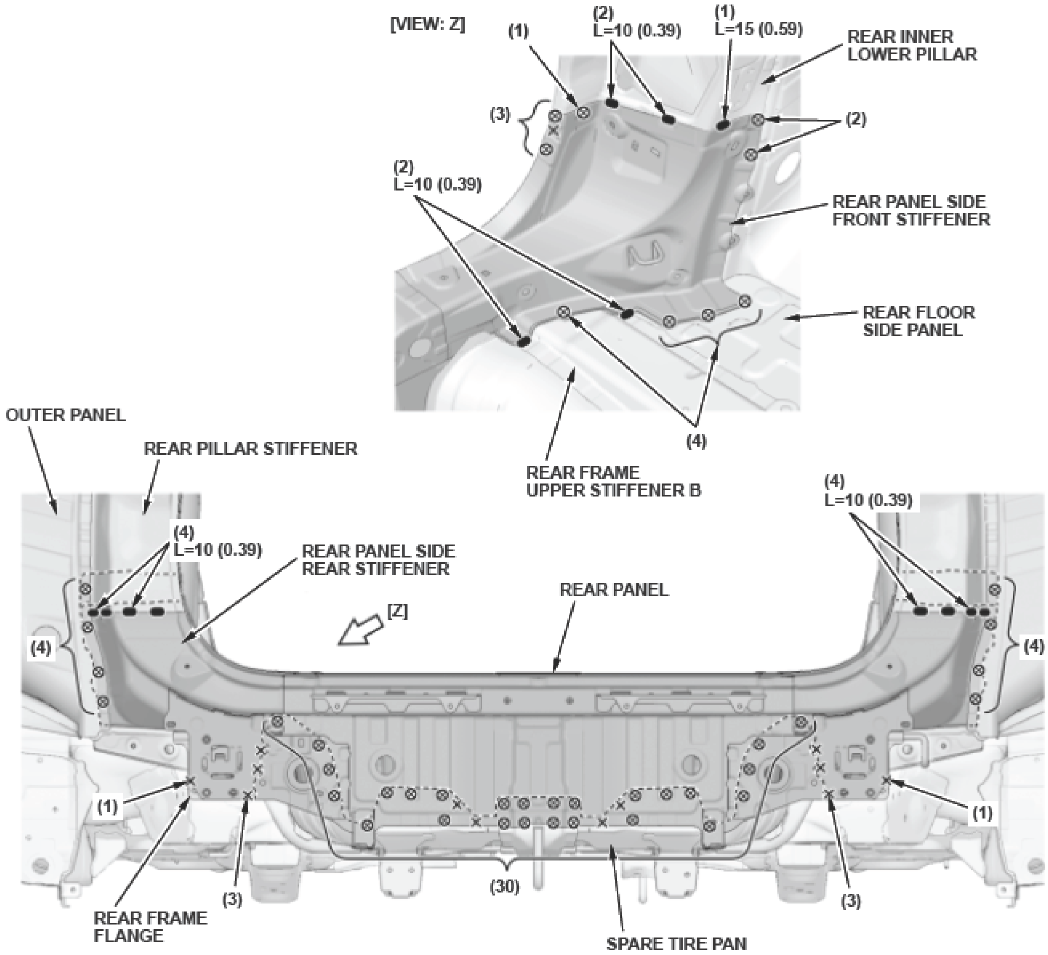

[VIEW: Z]
(1)
(2)
L=10 (0.39)
(1)
L=15 (0.59)
REAR INNER
LOWER PILLAR
(3)
(2)
(2)
L=10 (0.39)
REAR PANEL SIDE
FRONT STIFFENER
REAR FLOOR
SIDE PANEL
(4)
OUTER PANEL
REAR PILLAR STIFFENER
REAR FRAME
UPPER STIFFENER B
(4)
L=10 (0.39)
(4)
L=10 (0.39)
REAR PANEL SIDE
REAR STIFFENER
REAR PANEL
[Z]
(4)
(4)
(1)
(1)
(3)
(30)
(3)
REAR FRAME
FLANGE
SPARE TIRE PAN

Fig. 32: Rear Panel And Rear Panel Stiffener Removal Weld Measurements And Locations
Courtesy of AMERICAN HONDA MOTOR CO., INC.

Construction - Remove

NOTE:

- **This section explains the procedures after removal of all related parts. For the related parts removal procedure, refer to the appropriate Service Information.**
- **The component replacement procedure described here is only for new genuine supplied parts, as needed, according to the area and the degree of damage on the body.**
- **Turn up the outer panel flange, and cut the lower portion of the rear pillar stiffener on both sides. From the passengers compartment, cut the upper portion of the rear panel side front stiffener on both sides.**

  Pull out the rear panel complete backward, and remove it from the body.
- **If necessary, replace the rear frame flange at the same time.**

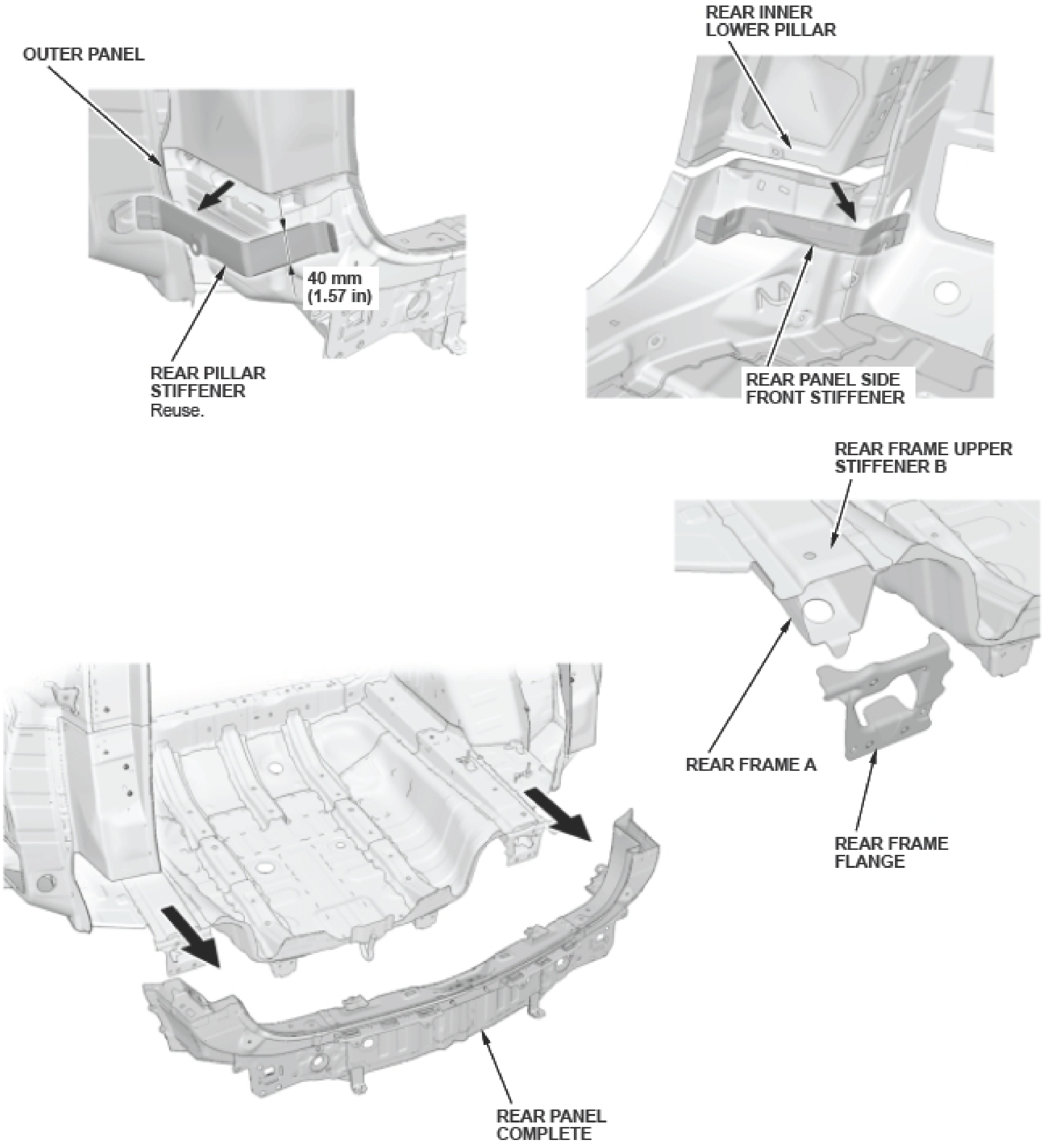
OUTER PANEL
40 mm
(1.57 in)
REAR PILLAR
STIFFENER
Reuse.
REAR INNER
LOWER PILLAR
REAR PANEL SIDE
FRONT STIFFENER
REAR FRAME UPPER
STIFFENER B
REAR FRAME A
REAR FRAME
FLANGE
REAR PANEL
COMPLETE

Fig. 33: Rear Pillar Stiffener Access Window Removal Measurements And Locations
Courtesy of AMERICAN HONDA MOTOR CO., INC.

Installation

NOTE:

- **Position the replacement parts.**

  Before doing the main welding, check the body dimensions:

  - **Rear Pillar Gutter And Rear Panel Positions See REAR PILLAR GUTTER AND REAR PANEL POSITIONS DIMENSION .**
  - **Tailgate Opening See TAILGATE OPENING DIMENSION .**
  - **Front Floor And Rear Floor, Under View See FRONT FLOOR AND REAR FLOOR, UNDER VIEW DIMENSION .**
- **Temporarily install the related parts, then check for differences in level and clearance. Check the external parts fitting positions. Make sure the body lines flow smoothly. See EXTERNAL PARTS FITTING POSITIONS .**
- **Confirm the sheet thickness, tensile strength, and existence of the zinc treatment on both sides, and set the welder to conform to the welding conditions by according to the Roof and Side Panel Construction and Floor and Rear Body Construction. (See ROOF AND SIDE PANEL CONSTRUCTION And FLOOR AND REAR BODY CONSTRUCTION).**
- **Welding symbols (The welding symbols with dashed lines have a meaning of the spot welding of the part which is not visible). See SYMBOLS DEFINITION .**
- **() and ()*: Any numerical value in between these parentheses indicate the number of welds required.**

Rear Frame Flange - Weld

1. Weld the rear frame flange (C) to rear frame upper stiffener B and rear frame A.

   (■)*: Welding positions with rear frame A and rear frame upper stiffener B, include ultra high-strength steel (1500 MPa) parts. **Perform the spot welding on the conditions of No. 13 in the table shown below.** (See SPOT WELDING CONDITIONS FOR ULTRA HIGH-STRENGTH STEEL PARTS (1180 AND 1500 MPA)).

   SPOT WELDING CONDITION DESCRIPTION

No. 13	8000 A	600 ms	3432 N (350 kgf)

   NOTE: **Welding positions (D): Must be welded according to the following conditions.**

   Plug hole diameter: φ 10 mm (0.39 in) Welding wire: Must use wire with a tensile strength of 980 MPa or higher (142 ksi or higher).

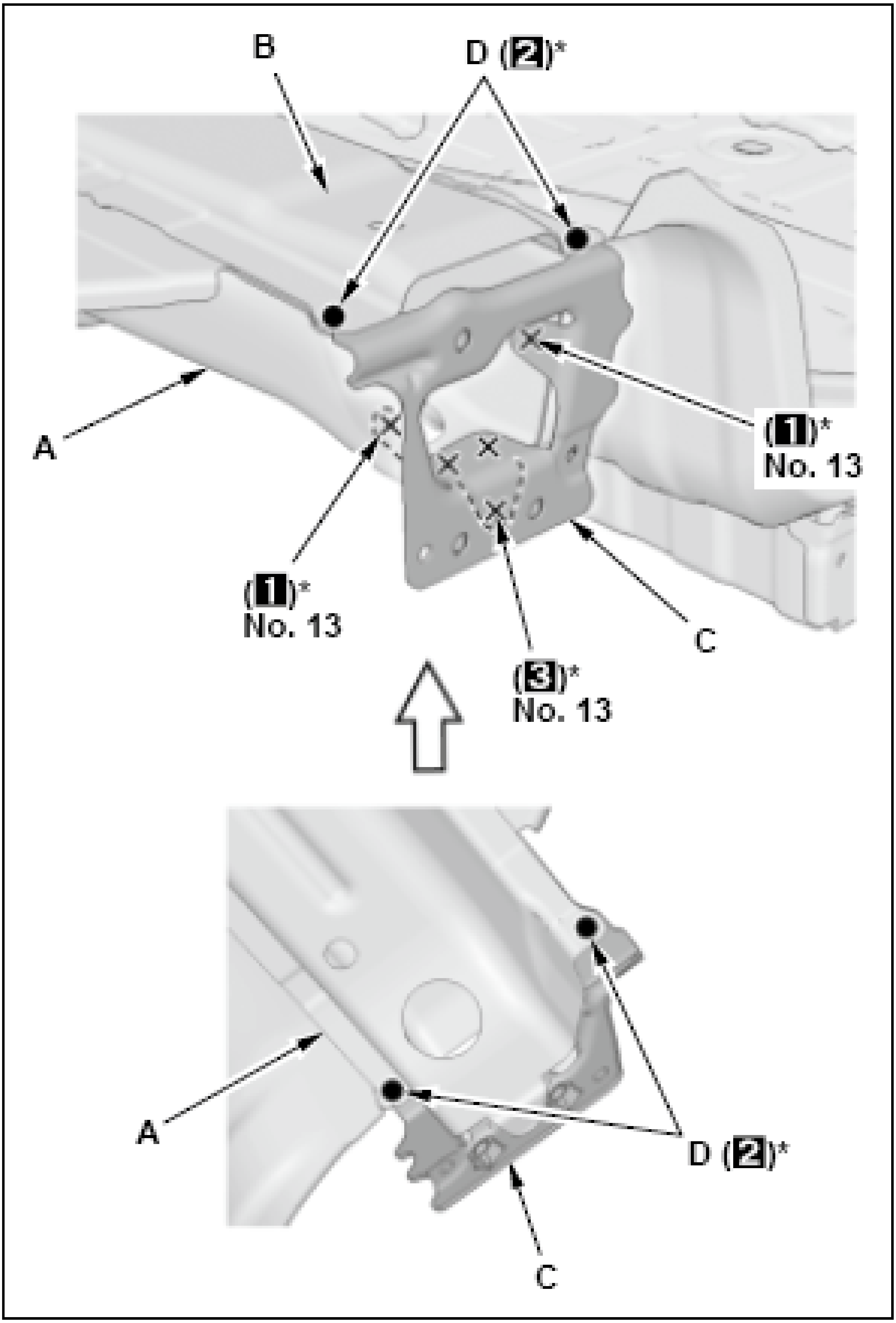
B
D (2)*
A
(1)*
No. 13
(1)*
No. 13
C
(3)*
No. 13
A
D (2)*
C

Rear Panel - Weld

1. Remove the rear panel side front stiffener (A) from the new rear panel complete (B) on both sides.

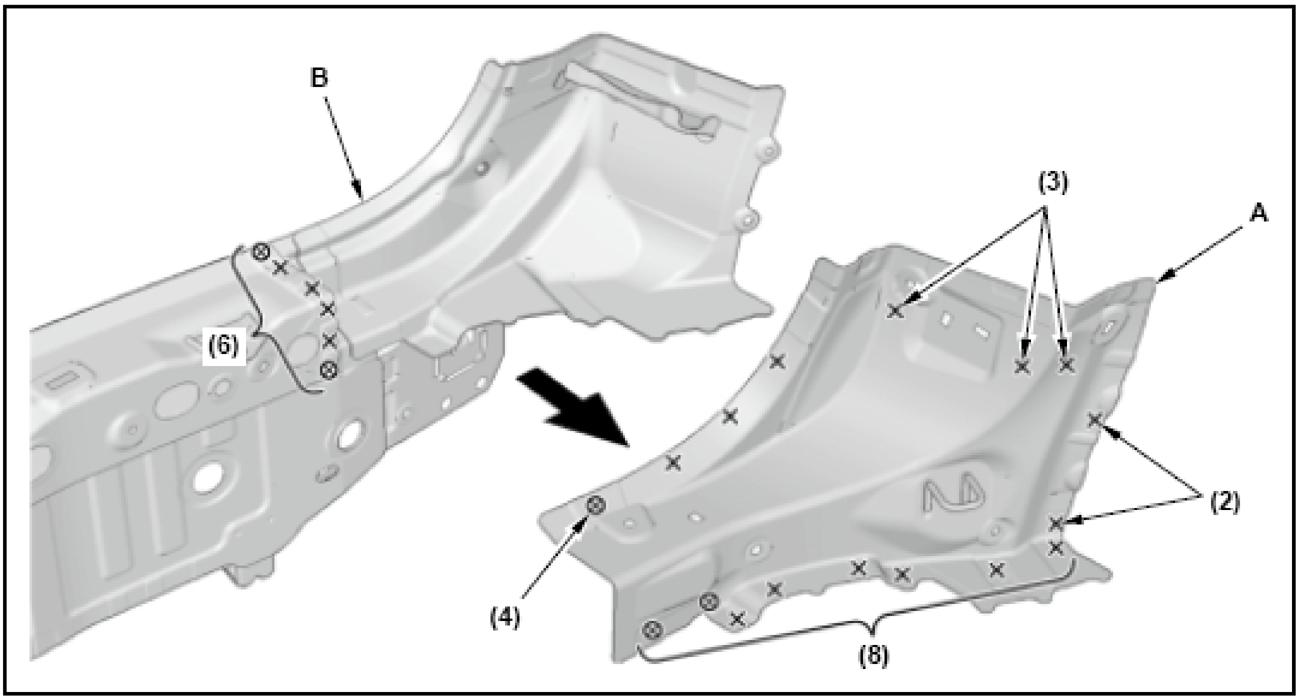

2. Set the new rear panel complete (A) to the body, and check it into position.

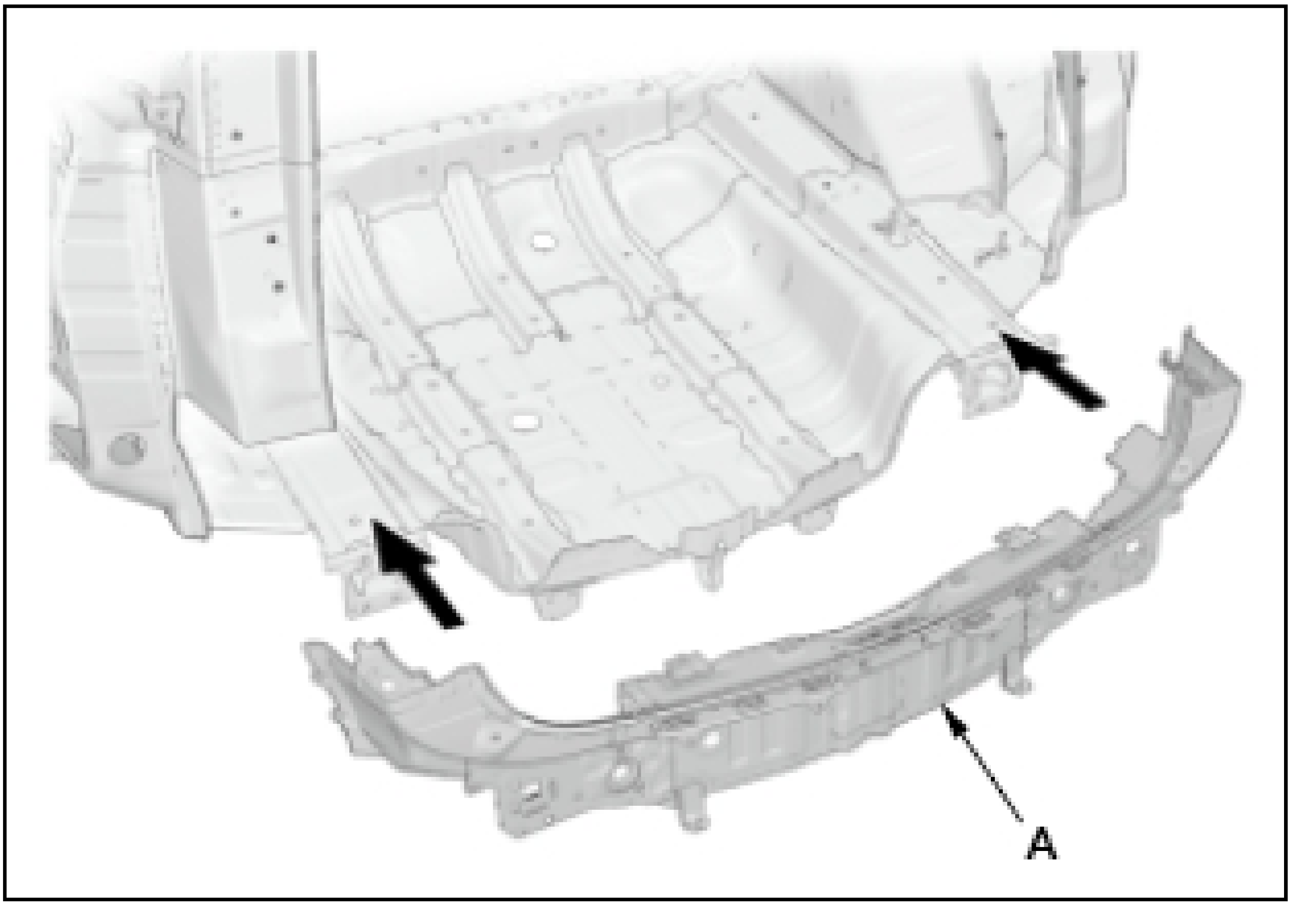

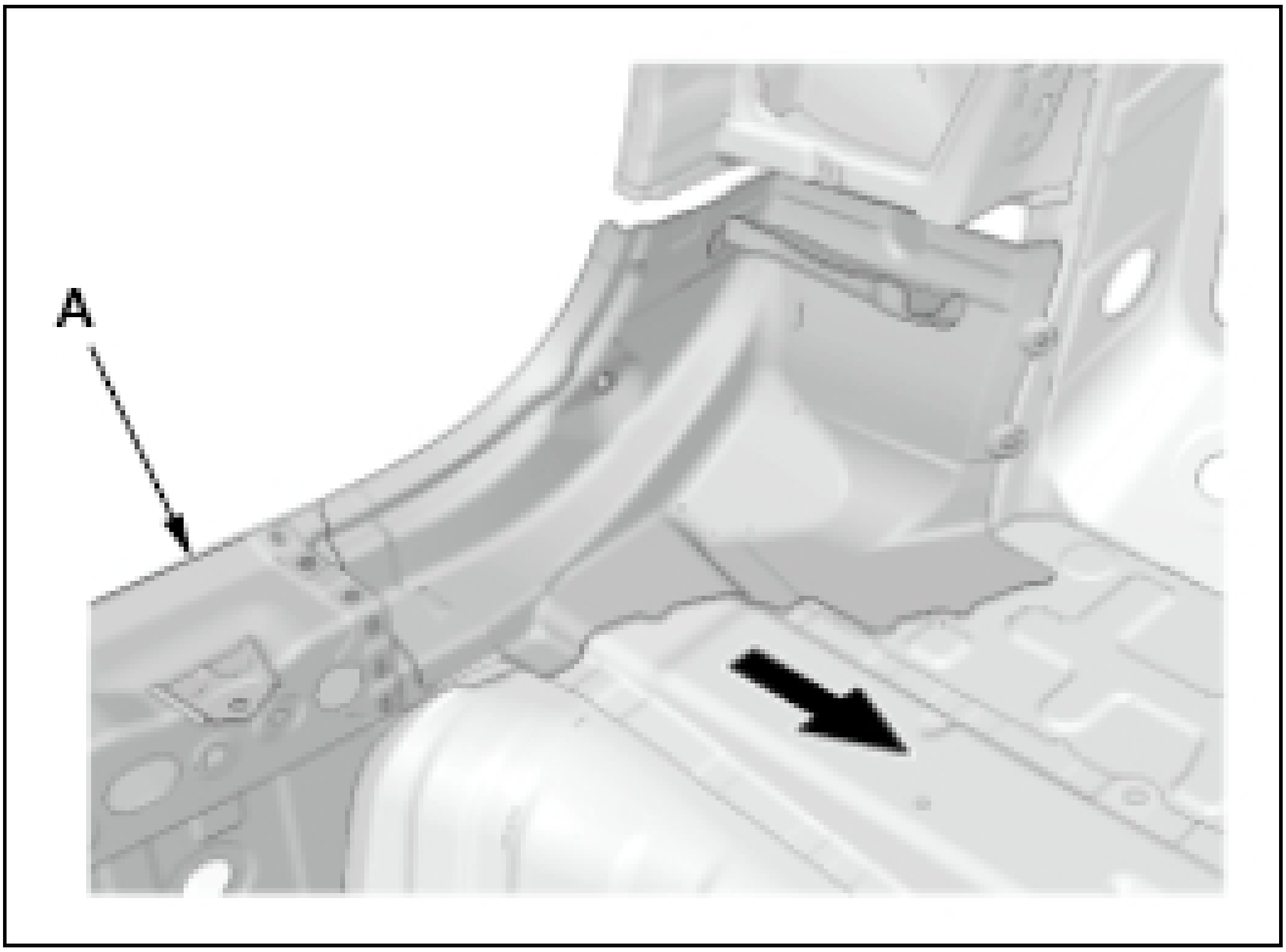

3. Weld the rear panel side front stiffener (A) to the rear panel side rear stiffener (B), the rear inner lower pillar (C), and the rear panel upper stiffener (D) on both sides.

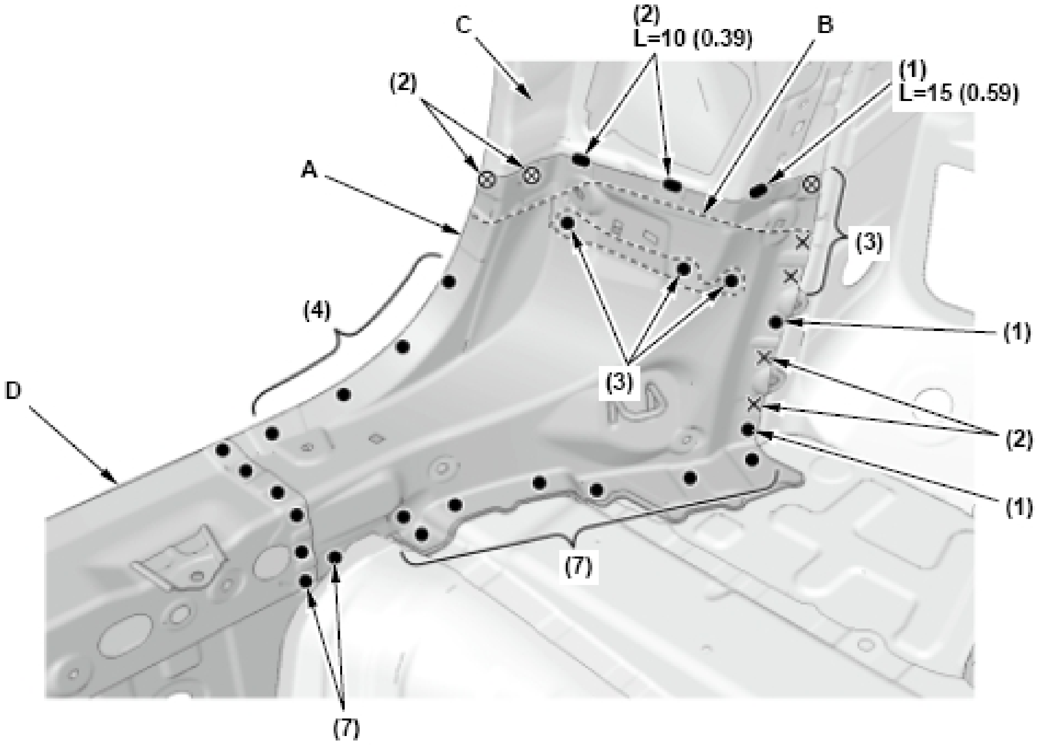

Fig. 34: Rear Panel Stiffener Installation Weld Measurements And Locations (1 Of 2)
Courtesy of AMERICAN HONDA MOTOR CO., INC.

4. Weld the rear panel side front/rear stiffeners (A) to the rear floor side panel (C) and rear frame upper stiffener B on both sides.

(■)*: Welding positions with rear frame upper stiffener B, include ultra high-strength steel (1500 MPa) parts. **Confirm the MIG brazing conditions.** (See MIG BRAZING CONDITIONS FOR ULTRA HIGH-STRENGTH STEEL PARTS (1180 AND 1500 MPA)).

NOTE: **Welding position (D): Must be welded according to the following conditions.**

Plug hole diameter: φ 10 mm (0.39 in) Welding wire: Must use wire with a tensile strength of 980 MPa or higher (142 ksi or higher).

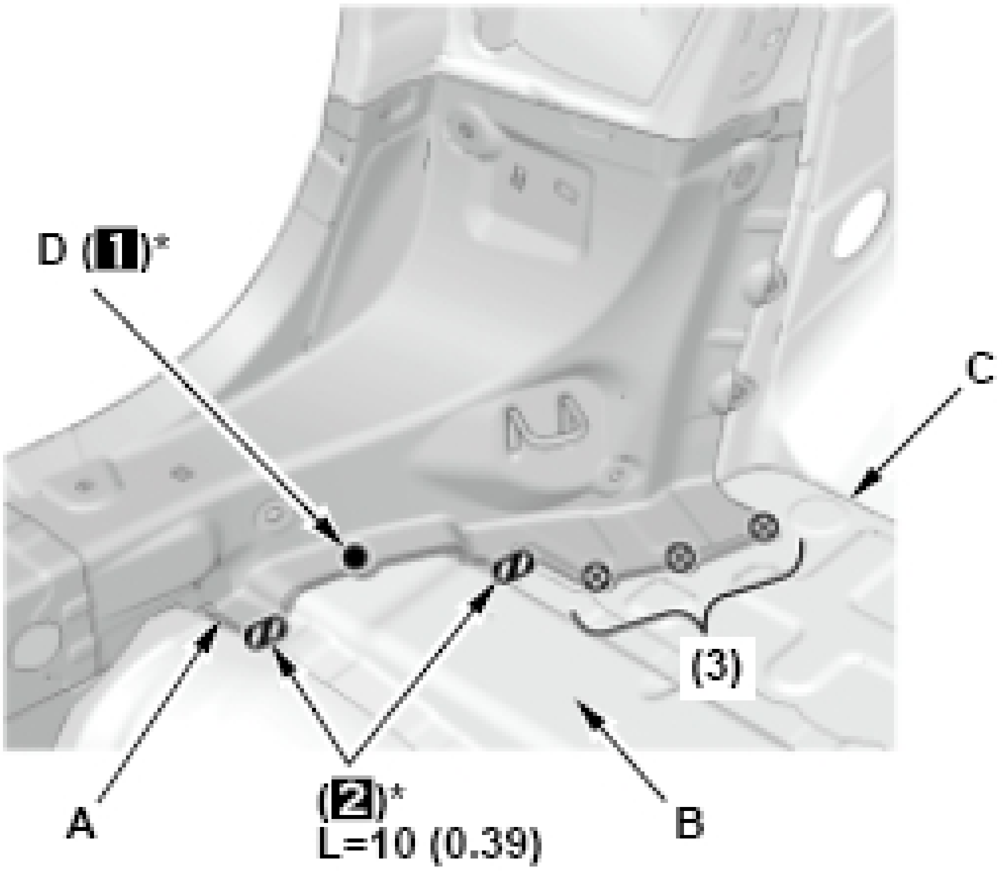

Fig. 35: Rear Panel Stiffener Installation Weld Measurements And Locations (2 Of 2)
Courtesy of AMERICAN HONDA MOTOR CO., INC.

5. Weld the rear panel (A) to the spare tire pan (B) and the rear frame flange (C).

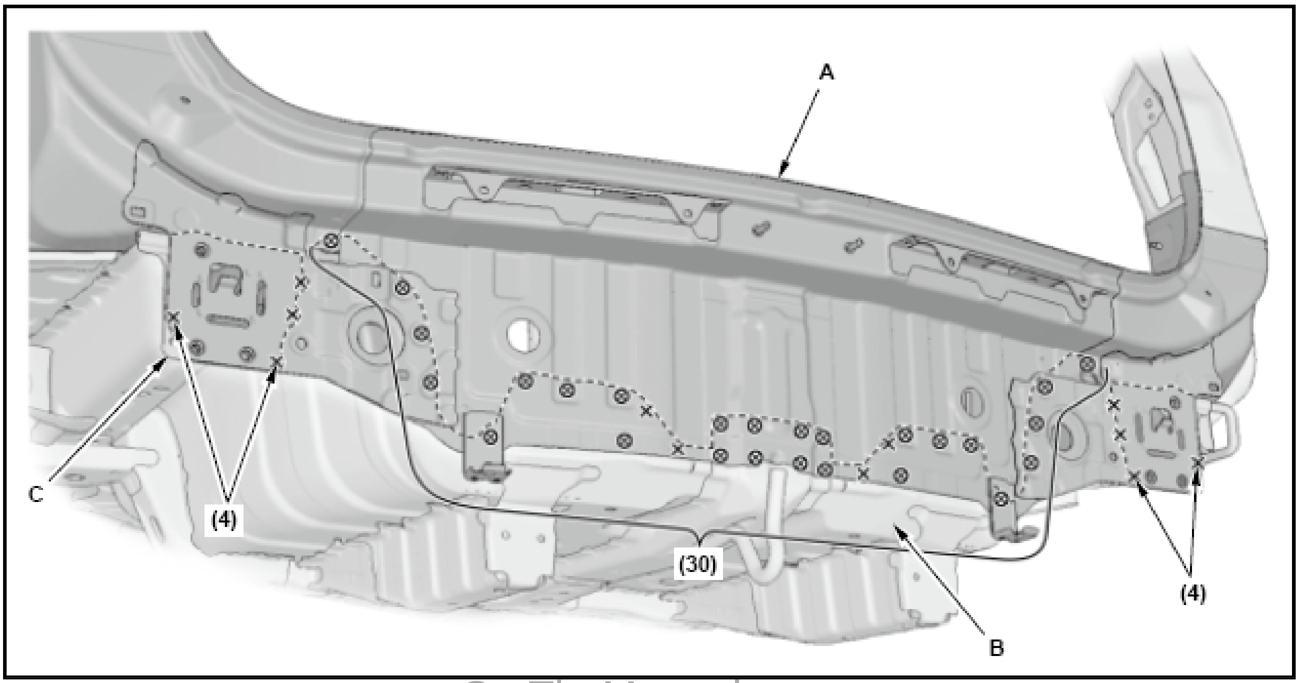

6. Weld the rear pillar stiffener access windows (A) on both sides.

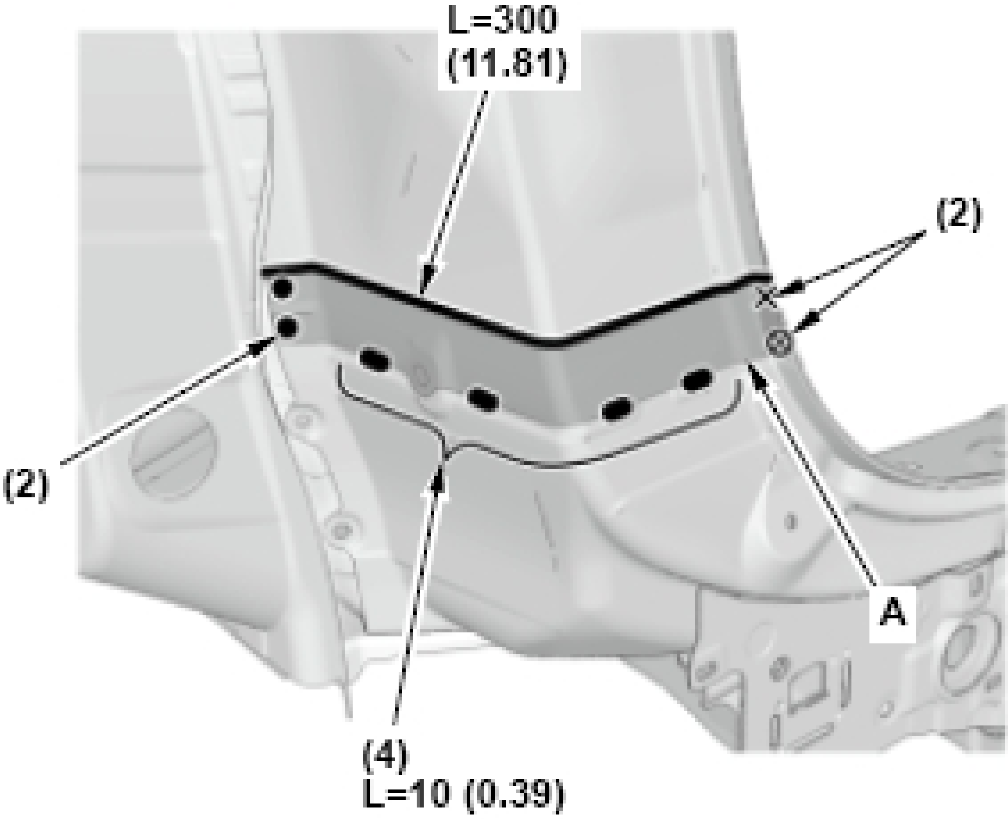

Fig. 36: Rear Pillar Stiffener Access Window Installation Weld Measurements And Locations
Courtesy of AMERICAN HONDA MOTOR CO., INC.

7. Weld the outer panels (A) on both sides.

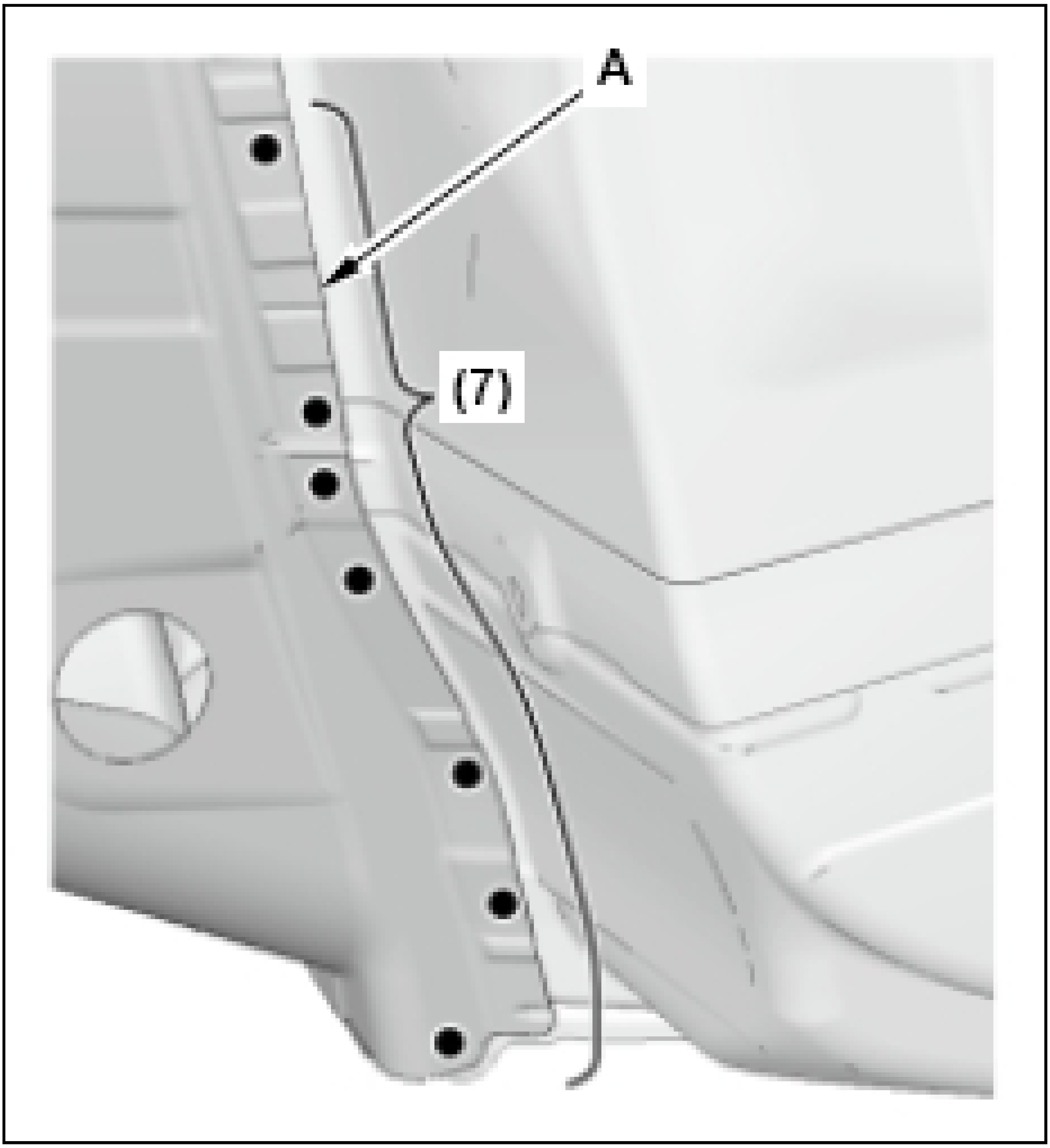

BSI Radar Unit Mounting Area - Check (With BSI radar unit)

1. With Blind Spot Information (BSI) radar unit: If necessary, replace the rivnuts (A) of the outer panel (B) with a rivnut tool.
2. **Check the Blind Spot Information (BSI) radar unit mounting positions.**

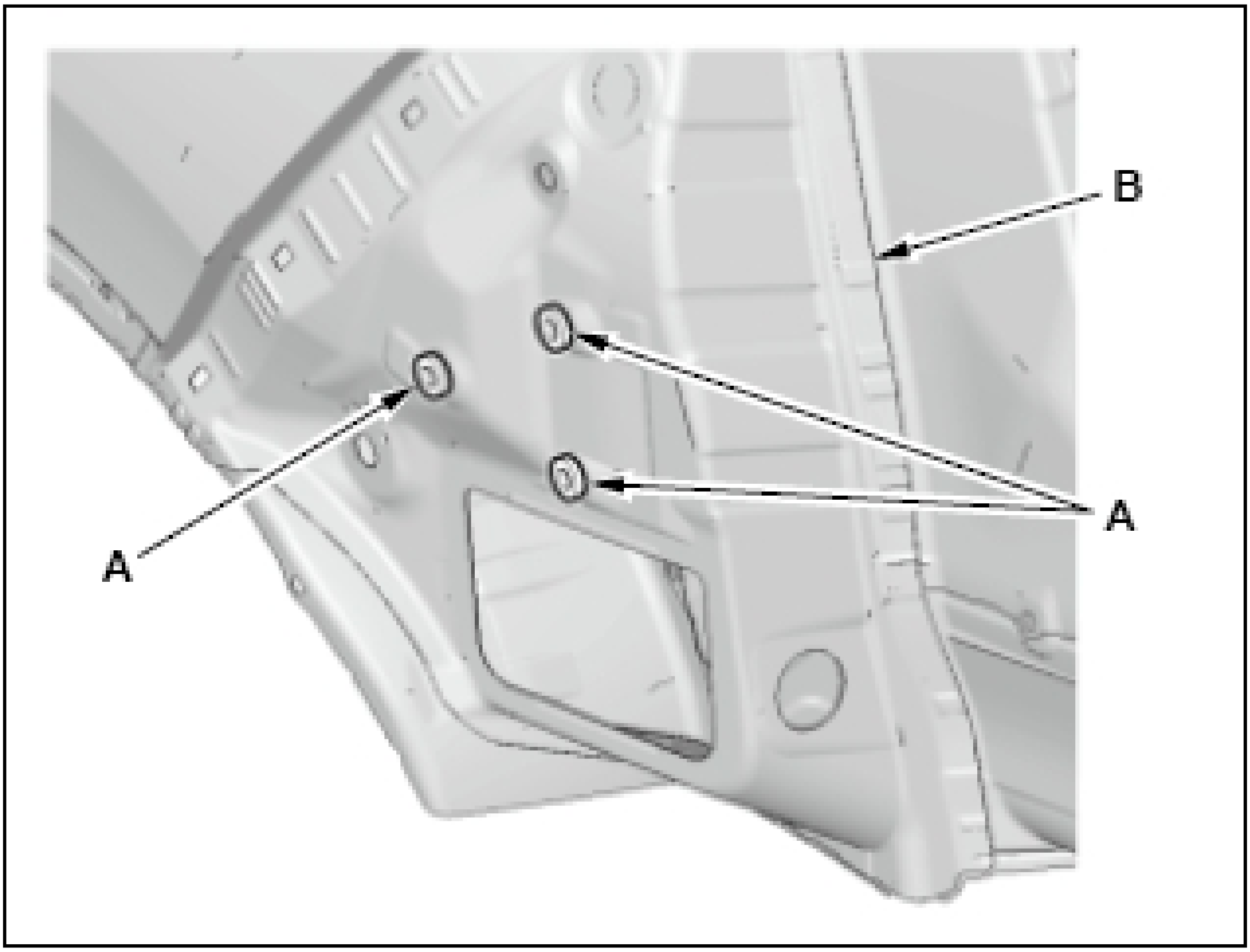

REAR FLOOR/REAR FRAME REPLACEMENT

Removal

NOTE:

- **High-strength steel is defined as any steel with a tensile strength of 340 MPa or higher. If a part is constructed of, or includes high-strength steel review the important guidelines. See REPAIR GUIDELINES FOR HIGH-STRENGTH STEEL PARTS .**
- **Welding symbols (The welding symbols with dashed lines have a meaning of the spot welding of the part which is not visible). See SYMBOLS DEFINITION .**
- **(): Any numerical value in between these parentheses indicate the number of welds required.**

Although rear frame A and rear frame upper stiffener B are made from ultra high-strength steel (UHSS) (1500 MPa), materials in four areas which are shown as [X1], [X2], [X3] and [Y] in these illustrations are partly made from high-strength steel (weaker than 980 MPa), and sectioning is possible at only these areas.

Sectionable Areas of Rear Frame A and Rear Frame Upper Stiffener B

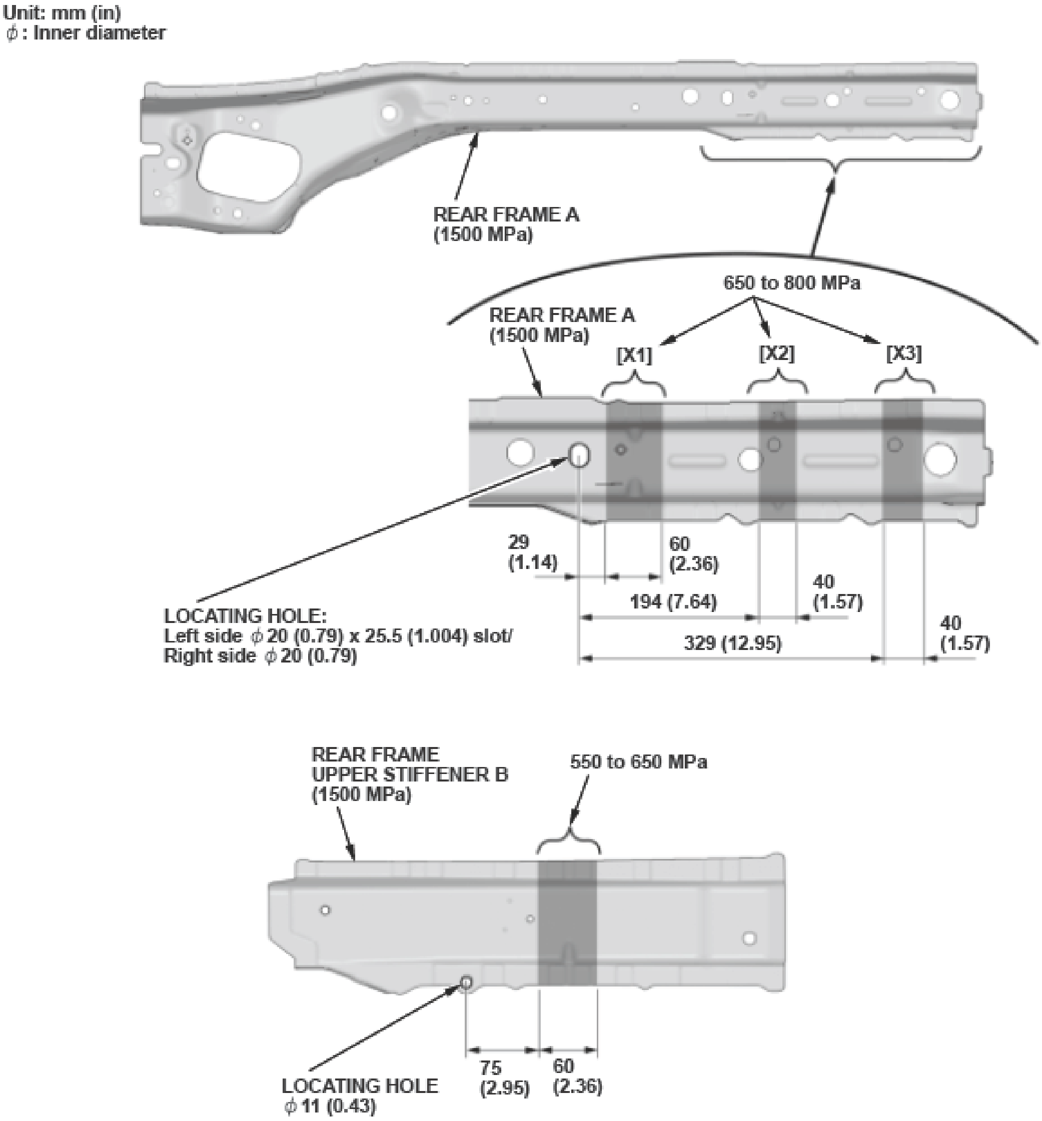
Unit: mm (in)
ϕ: Inner diameter
REAR FRAME A
(1500 MPa)
650 to 800 MPa
REAR FRAME A
(1500 MPa)
[X1]
[X2]
[X3]
29
(1.14)
60
(2.36)
194 (7.64)
40
(1.57)
329 (12.95)
40
(1.57)
LOCATING HOLE:
Left side ϕ20 (0.79) x 25.5 (1.004) slot/
Right side ϕ20 (0.79)
REAR FRAME
UPPER STIFFENER B
(1500 MPa)
550 to 650 MPa
LOCATING HOLE
ϕ11 (0.43)
75
(2.95)
60
(2.36)

Fig. 37: Rear Floor/Rear Frame Sectioning Measurements And Locations
Courtesy of AMERICAN HONDA MOTOR CO., INC.

Rear Panel - Remove

See REAR PANEL REPLACEMENT.

Mass Production Body Welding Positions and Numbers - Remove

Rear Floor Upper Crossmember and Rear Frame Upper Stiffener A/B

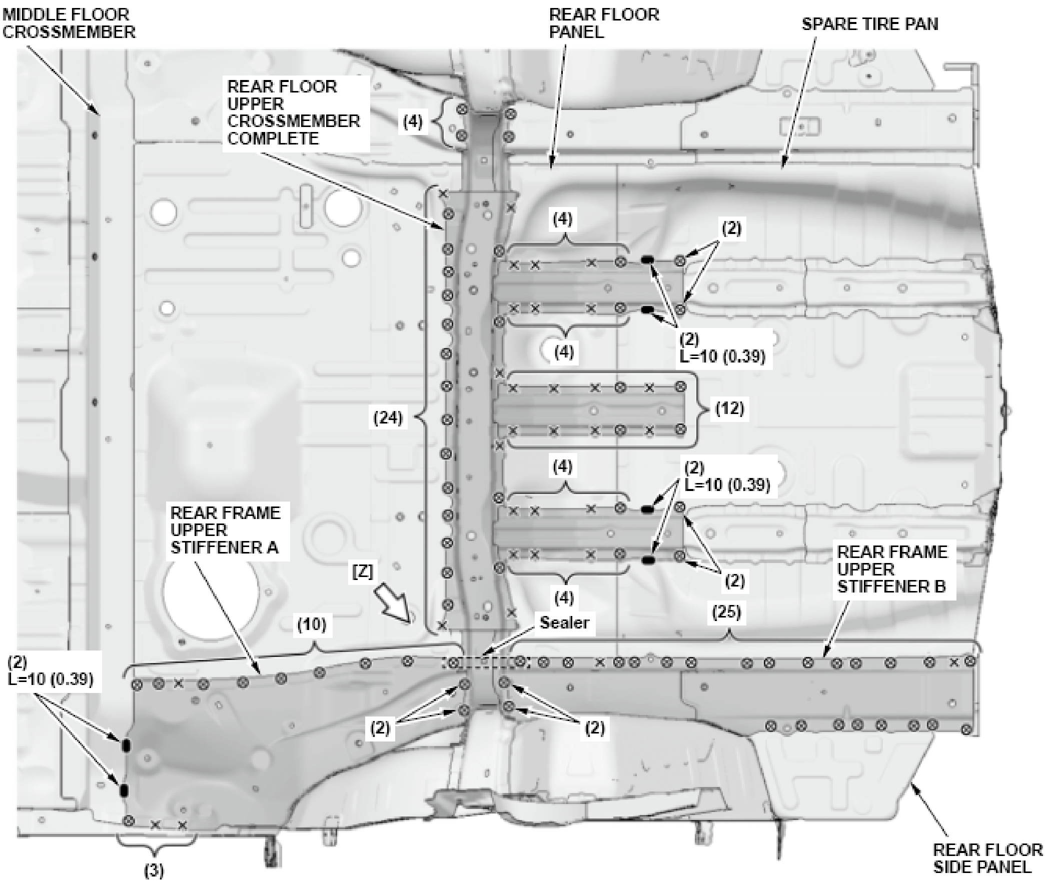
MIDDLE FLOOR CROSSMEMBER
REAR FLOOR PANEL
SPARE TIRE PAN
REAR FLOOR UPPER CROSSMEMBER COMPLETE
(4)
(4)
(2)
(2)
L=10 (0.39)
(4)
(12)
(24)
(4)
(2)
L=10 (0.39)
REAR FRAME UPPER STIFFENER A
[Z]
(2)
REAR FRAME UPPER STIFFENER B
(4)
(10)
Sealer
(25)
(2)
L=10 (0.39)
(2)
(2)
(3)
REAR FLOOR SIDE PANEL

[Fig. 38: Rear Floor Upper Crossmember And Rear Frame Upper Stiffener Removal Weld Measurements And Locations (1 Of 2)]

Courtesy of AMERICAN HONDA MOTOR CO., INC.

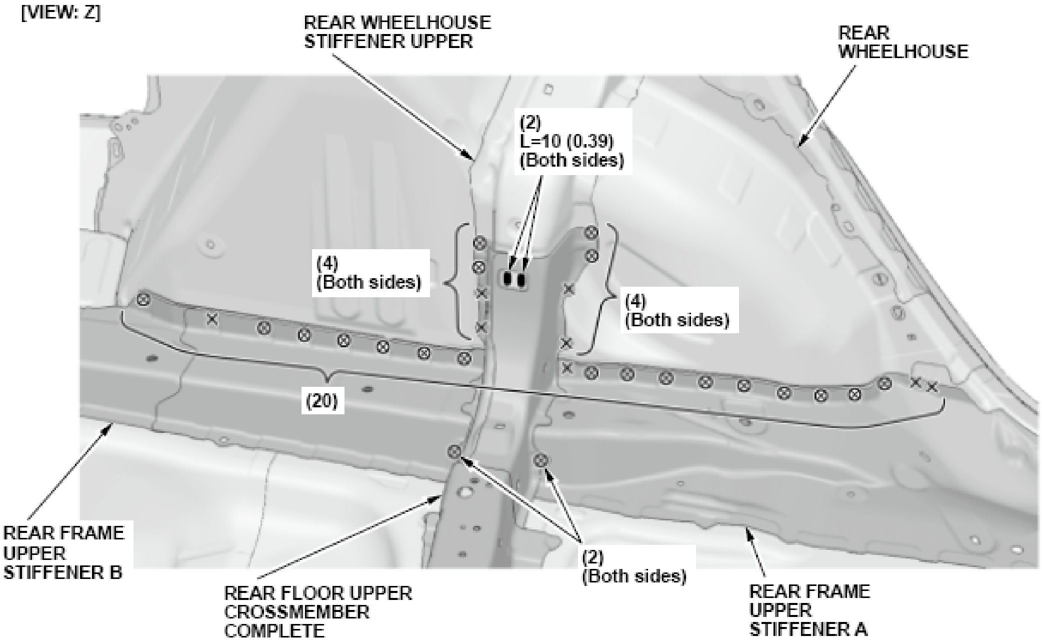
[VIEW: Z]
REAR WHEELHOUSE STIFFENER UPPER
REAR WHEELHOUSE
(2)
L=10 (0.39)
(Both sides)
(4)
(Both sides)
(4)
(Both sides)
(20)
REAR FRAME UPPER STIFFENER B
REAR FLOOR UPPER CROSSMEMBER COMPLETE
(2)
(Both sides)
REAR FRAME UPPER STIFFENER A

[Fig. 39: Rear Floor Upper Crossmember And Rear Frame Upper Stiffener Removal Weld Measurements And Locations (2 Of 2)]

Courtesy of AMERICAN HONDA MOTOR CO., INC.

Construction - Remove

Rear Floor Upper Crossmember and Rear Frame Upper Stiffener A/B

NOTE:

- **This section explains the procedures after removal of all related parts. For the related parts removal procedure, refer to the appropriate Service Information.**

- The component replacement procedure described here is only for new genuine supplied parts, as needed, according to the area and the degree of damage on the body.
- Remove the rear floor upper crossmember complete and rear frame upper stiffener A/B (one side).
- The rear portion of rear frame upper stiffener B may be sectioned. Refer to Parts Sectioning (Cut and Joint) Guidelines. (See PARTS SECTIONING GUIDELINES - CUT AND JOIN).
- If the damage is limited to the rear portion of rear frame upper stiffener B, refer to "Sectionable Areas of Rear Frame A and Rear Frame Upper Stiffener B" for cutting position, and then section it at the [Y] area of rear frame upper stiffener B.
- If the damage reaches the front area of rear frame upper stiffener B, replace rear frame upper stiffener A/B as an assembly.

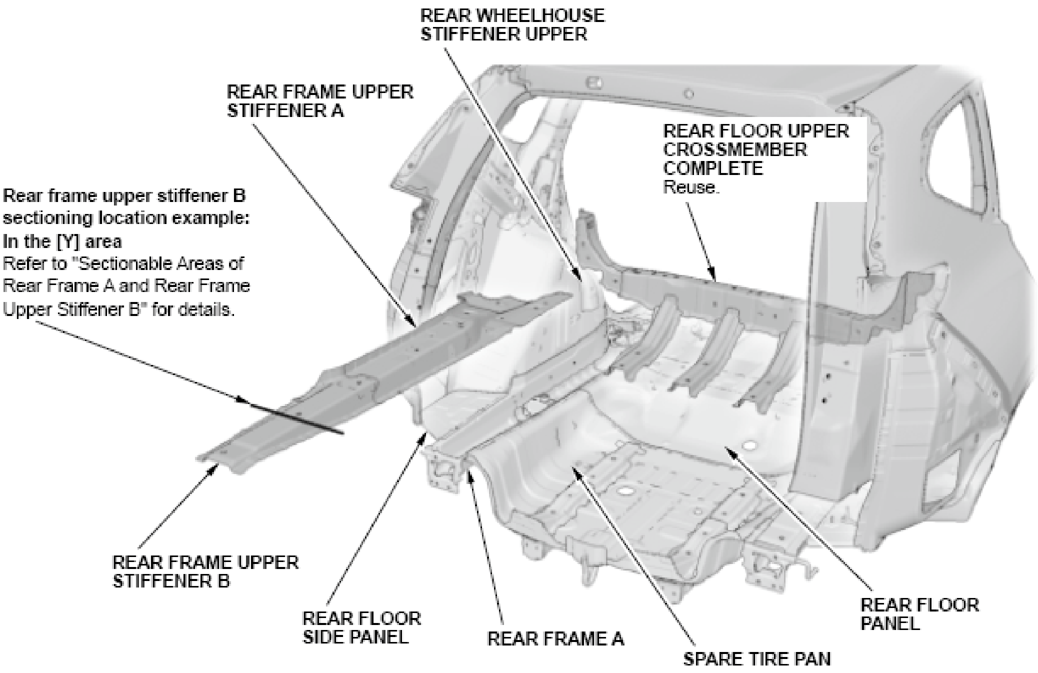
REAR WHEELHOUSE STIFFENER UPPER
REAR FRAME UPPER STIFFENER A
REAR FLOOR UPPER CROSSMEMBER COMPLETE
Reuse.
Rear frame upper stiffener B sectioning location example:
In the [Y] area
Refer to "Sectionable Areas of Rear Frame A and Rear Frame Upper Stiffener B" for details.
REAR FRAME UPPER STIFFENER B
REAR FLOOR SIDE PANEL
REAR FRAME A
SPARE TIRE PAN
REAR FLOOR PANEL

Fig. 40: Rear Floor/Rear Frame Component Location
Courtesy of AMERICAN HONDA MOTOR CO., INC.

Mass Production Body Welding Positions and Numbers - Remove

Spare Tire Pan Complete and Spare Tire Pan Crossmember

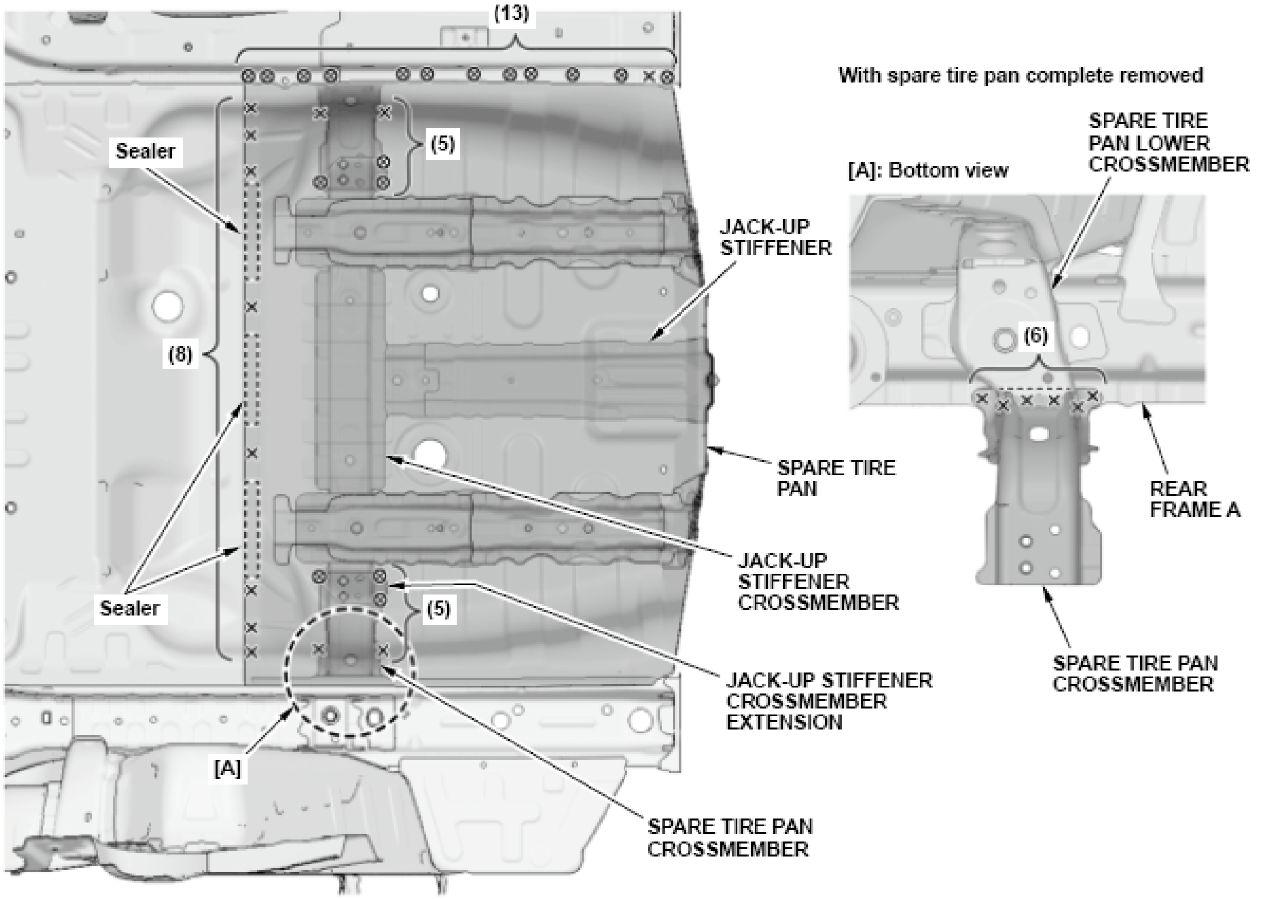
(13)
With spare tire pan complete removed
Sealer
(5)
SPARE TIRE PAN LOWER CROSSMEMBER
[A]: Bottom view
JACK-UP STIFFENER
(6)
(8)
SPARE TIRE PAN
REAR FRAME A
JACK-UP STIFFENER CROSSMEMBER
Sealer
(5)
SPARE TIRE PAN CROSSMEMBER
JACK-UP STIFFENER CROSSMEMBER EXTENSION
[A]
SPARE TIRE PAN CROSSMEMBER

Construction - Remove

Spare Tire Pan Complete and Spare Tire Pan Crossmember

NOTE:

- **This section explains the procedures after removal of all related parts. For the related parts removal procedure, refer to the appropriate Service Information.**
- **The component replacement procedure described here is only for new genuine supplied parts, as needed, according to the area and the degree of damage on the body.**
- **Check the spare tire pan and the jack-up stiffener crossmember positions for damage. If necessary, replace the spare tire pan complete and both of the spare tire pan crossmembers:**
  - **While lifting the spare tire pan complete, move it toward the rear frame A on the side where rear frame upper stiffeners A/B have been removed, and remove its opposite side flange from under rear frame upper stiffeners A/B left on the body.**
  - **If necessary, remove the spare tire pan crossmembers from both sides.**

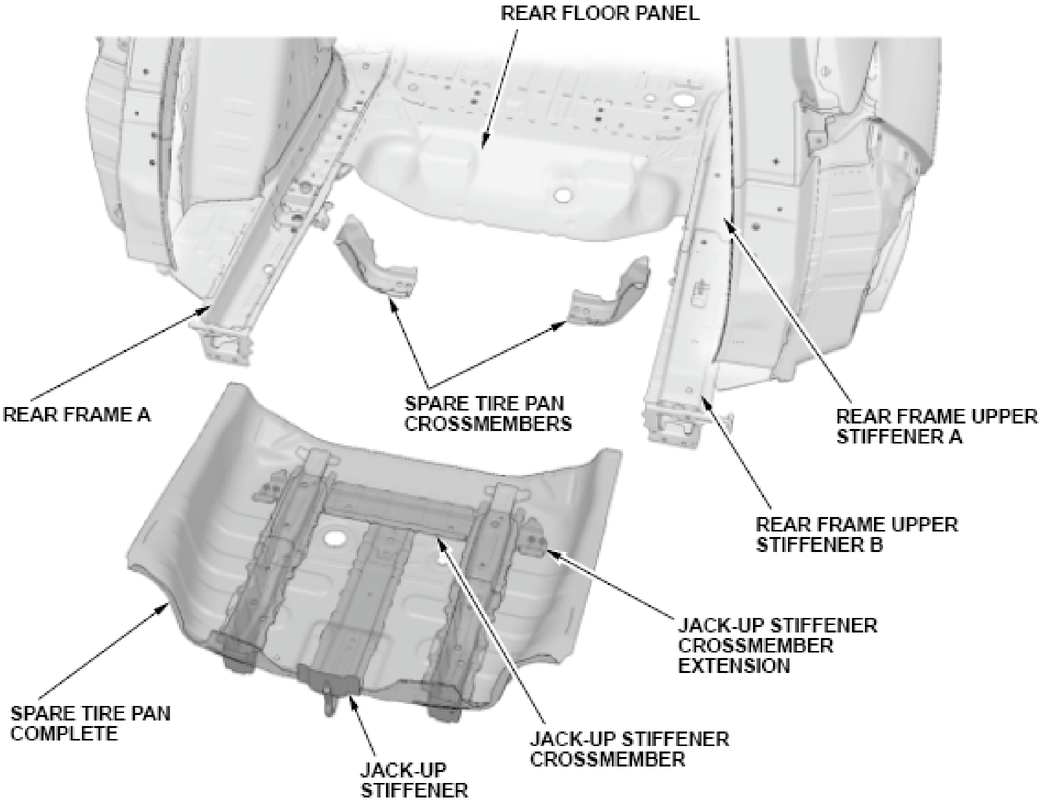
REAR FLOOR PANEL
REAR FRAME A
SPARE TIRE PAN
CROSSMEMBERS
REAR FRAME UPPER
STIFFENER A
REAR FRAME UPPER
STIFFENER B
JACK-UP STIFFENER
CROSSMEMBER
EXTENSION
SPARE TIRE PAN
COMPLETE
JACK-UP STIFFENER
CROSSMEMBER
JACK-UP
STIFFENER

Fig. 41: Spare Tire Pan And Spare Tire Pan Crossmember Component Locations
Courtesy of AMERICAN HONDA MOTOR CO., INC.

Mass Production Body Welding Positions and Numbers - Remove

Rear Floor Side Panel and Rear Frame A

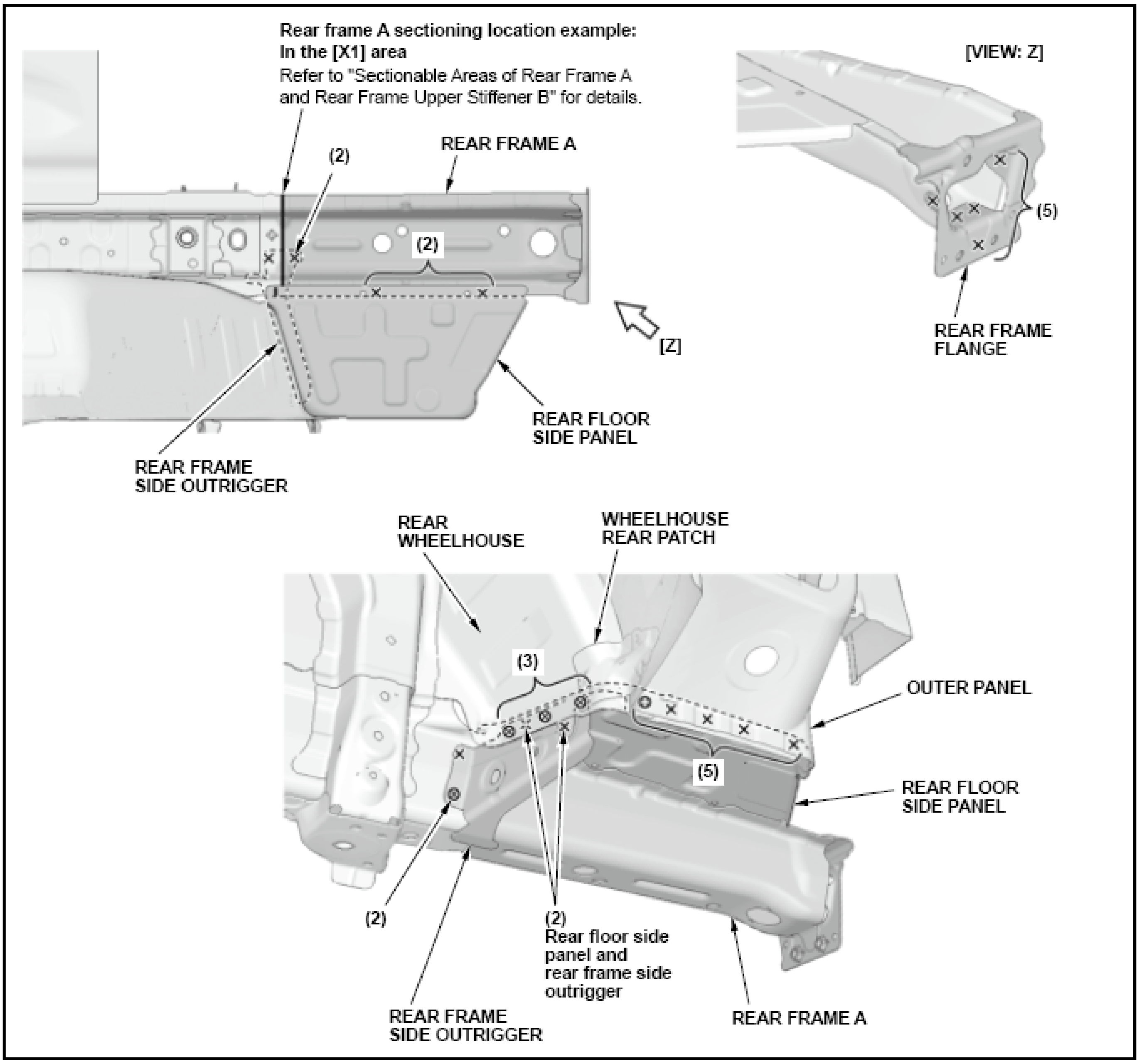
Rear frame A sectioning location example:
In the [X1] area
Refer to "Sectionable Areas of Rear Frame A and Rear Frame Upper Stiffener B" for details.
(2)
REAR FRAME A
(2)
[Z]
REAR FLOOR SIDE PANEL
REAR FRAME SIDE OUTRIGGER
[VIEW: Z]
(5)
REAR FRAME FLANGE
REAR WHEELHOUSE
WHEELHOUSE REAR PATCH
(3)
OUTER PANEL
(5)
REAR FLOOR SIDE PANEL
(2)
(2)
Rear floor side panel and rear frame side outrigger
REAR FRAME SIDE OUTRIGGER
REAR FRAME A

Construction - Remove

Rear Floor Side Panel and Rear Frame A, Rear Portion

NOTE:

- **This section explains the procedures after removal of all related parts. For the related parts removal procedure, refer to the appropriate Service Information.**
- **The component replacement procedure described here is only for new genuine supplied parts, as needed, according to the area and the degree of damage on the body.**
- **Check the rear floor side panel position for damage. If necessary, replace it.**
- **The rear portion of rear frame A may be sectioned. Refer to Parts Sectioning (Cut and Joint) Guidelines. (See PARTS SECTIONING GUIDELINES - CUT AND JOIN).**
- **When cutting rear frame A, refer to "Sectionable Area of Rear Frame A" for cutting position, and then section it at the [X1], the [X2], or the [X3] area.**
- **When replacing rear frame A, carefully remove the rear frame side outrigger from rear frame A.**

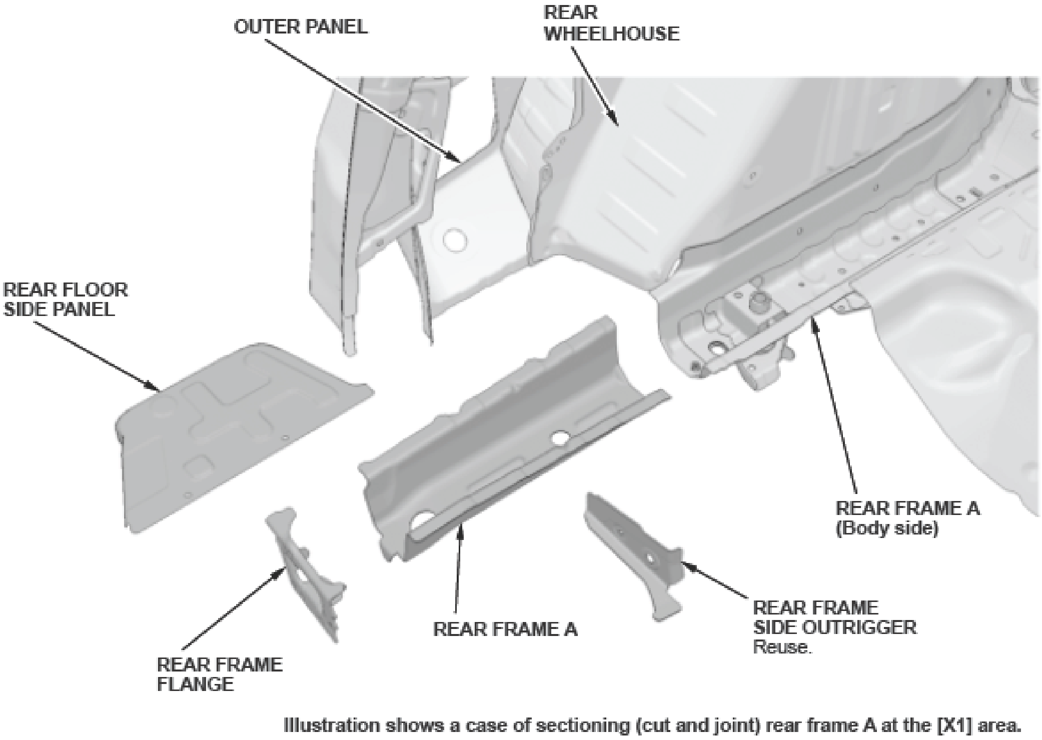
OUTER PANEL
REAR WHEELHOUSE
REAR FLOOR SIDE PANEL
REAR FRAME A (Body side)
REAR FRAME SIDE OUTRIGGER Reuse.
REAR FRAME A
REAR FRAME FLANGE
Illustration shows a case of sectioning (cut and joint) rear frame A at the [X1] area.

Fig. 42: Rear Frame, Rear Floor Side Panel And Components Locations
Courtesy of AMERICAN HONDA MOTOR CO., INC.

Installation

NOTE:

- **Position the replacement parts.**

  Before doing the main welding, check the body dimensions:

  - **Rear panel position See REAR PILLAR GUTTER AND REAR PANEL POSITIONS DIMENSION .**
  - **Rear pillar gutter position See REAR PILLAR GUTTER AND REAR PANEL POSITIONS DIMENSION .**
  - **Tailgate opening See TAILGATE OPENING DIMENSION .**
  - **Front floor and rear floor, under view See FRONT FLOOR AND REAR FLOOR, UNDER VIEW DIMENSION .**
  - **Frame Repair chart See FRAME REPAIR CHART .**
- **Temporarily install the related parts, then check for differences in level and clearance. Check the external parts fitting positions. Make sure the body lines flow smoothly. See EXTERNAL PARTS FITTING POSITIONS .**
- **Confirm the sheet thickness, tensile strength, and existence of the zinc treatment on both sides, and set the welder to conform to the welding conditions by according to the Roof and Side Panel Construction and Floor and Rear Body Construction. (See ROOF AND SIDE PANEL CONSTRUCTION And FLOOR AND REAR BODY CONSTRUCTION).**
- **Welding symbols (The welding symbols with dashed lines have a meaning of the spot welding of the part which is not visible). See SYMBOLS DEFINITION .**
- **() and ()*: Any numerical value in between these parentheses indicate the number of welds required.**

Rear Frame A, Rear Portion - Weld

1. Weld the rear portion of new rear frame A and the body side rear frame A (B).

   L*: Welding positions with high-strength steel parts. **Confirm the butt welding conditions.** See MAG WELDING CONDITIONS FOR HIGH-STRENGTH STEEL PARTS (EXCEPT 1500 MPA) .

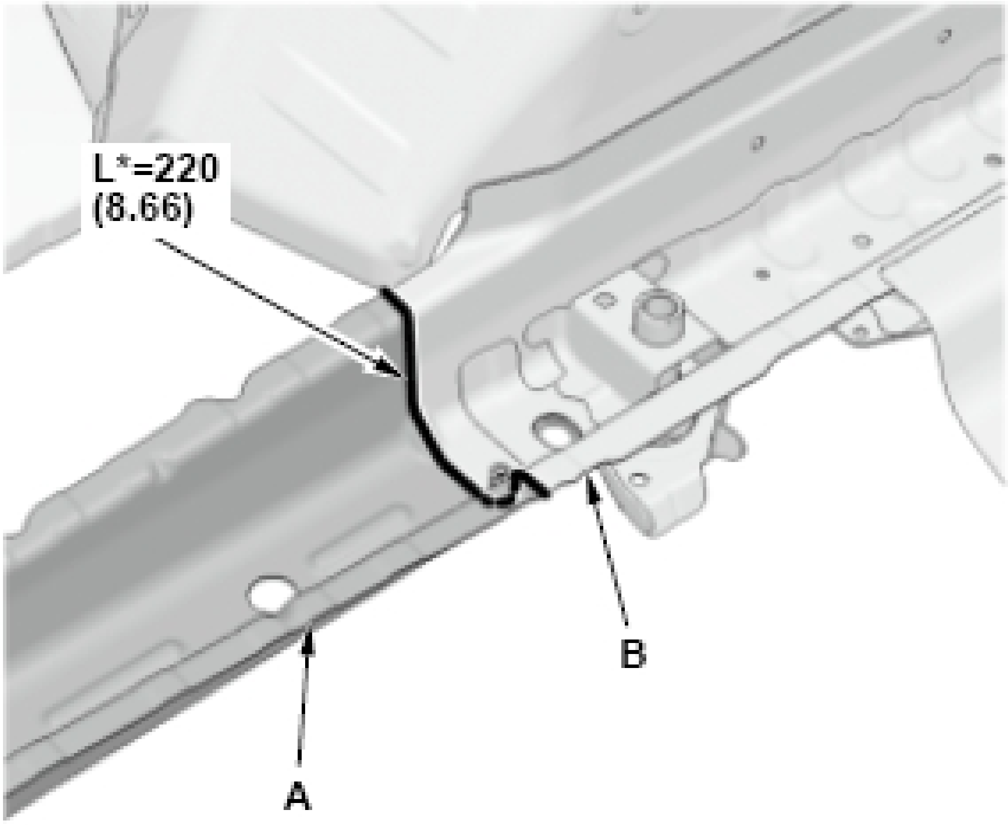

Fig. 43: Body Side Rear Frame Installation Weld Measurements And Locations
Courtesy of AMERICAN HONDA MOTOR CO., INC.

2. Weld the rear frame side outrigger (B) to rear frame A.

(■)*: Welding positions with rear frame A, include ultra high-strength steel (1500 MPa) parts.

NOTE: **Welding positions (C): Must be welded according to the following conditions.**

Plug hole diameter: φ 10 mm (0.39 in) Welding wire: Must use wire with a tensile strength of 980 MPa or higher (142 ksi or higher).

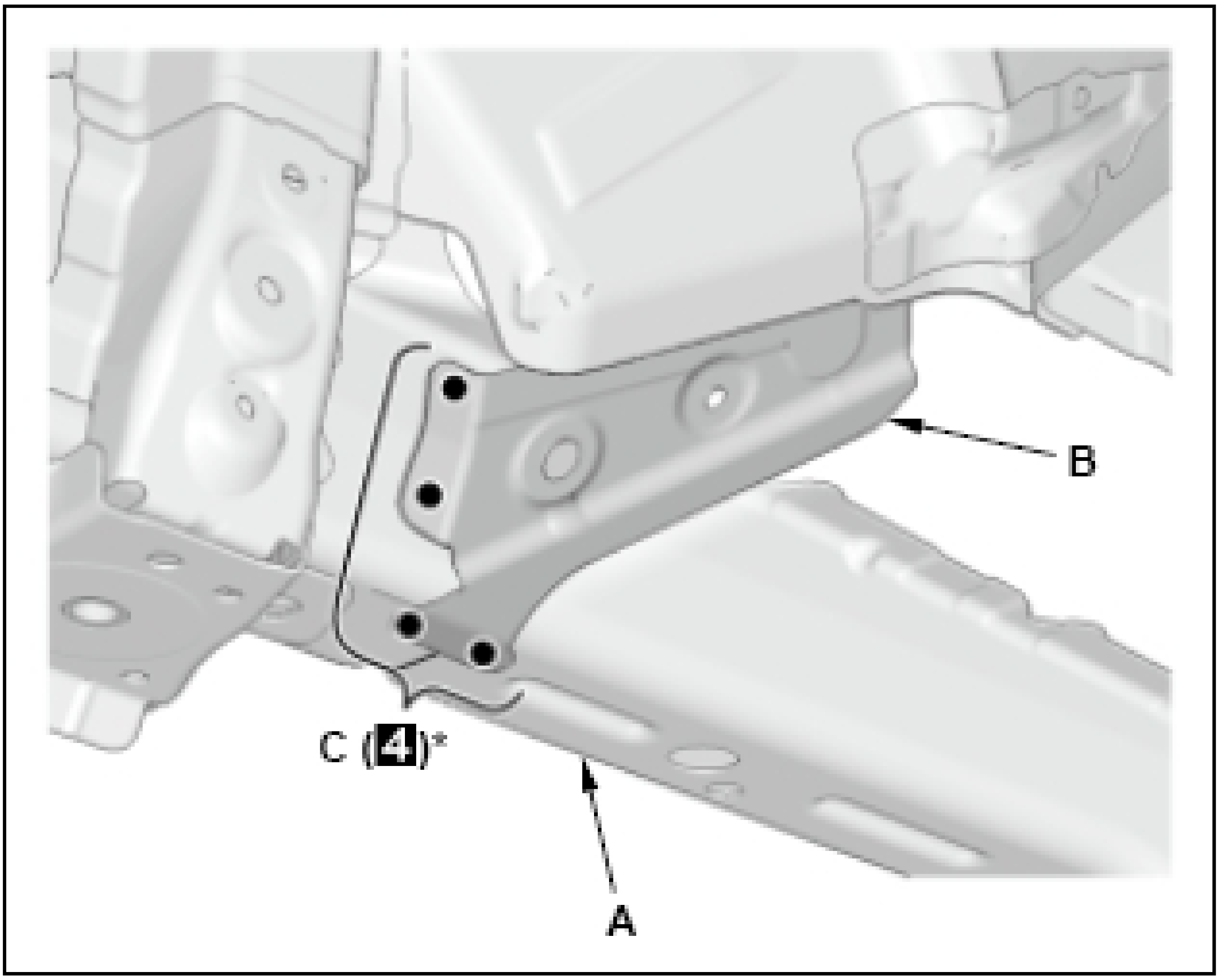

Rear Floor Side Panel - Weld

1. Weld the rear floor side panel (C) to rear frame A, the rear frame side outrigger (B), the rear wheelhouse (D), the wheelhouse upper patch (E), and the outer panel (F).

   (■)*: Welding positions with rear frame A, include ultra high-strength steel (1500 MPa) parts. **Perform the spot welding on the conditions of No. 12 in the table shown below.** (See SPOT WELDING CONDITIONS FOR ULTRA HIGH-STRENGTH STEEL PARTS (1180 AND 1500 MPA)).

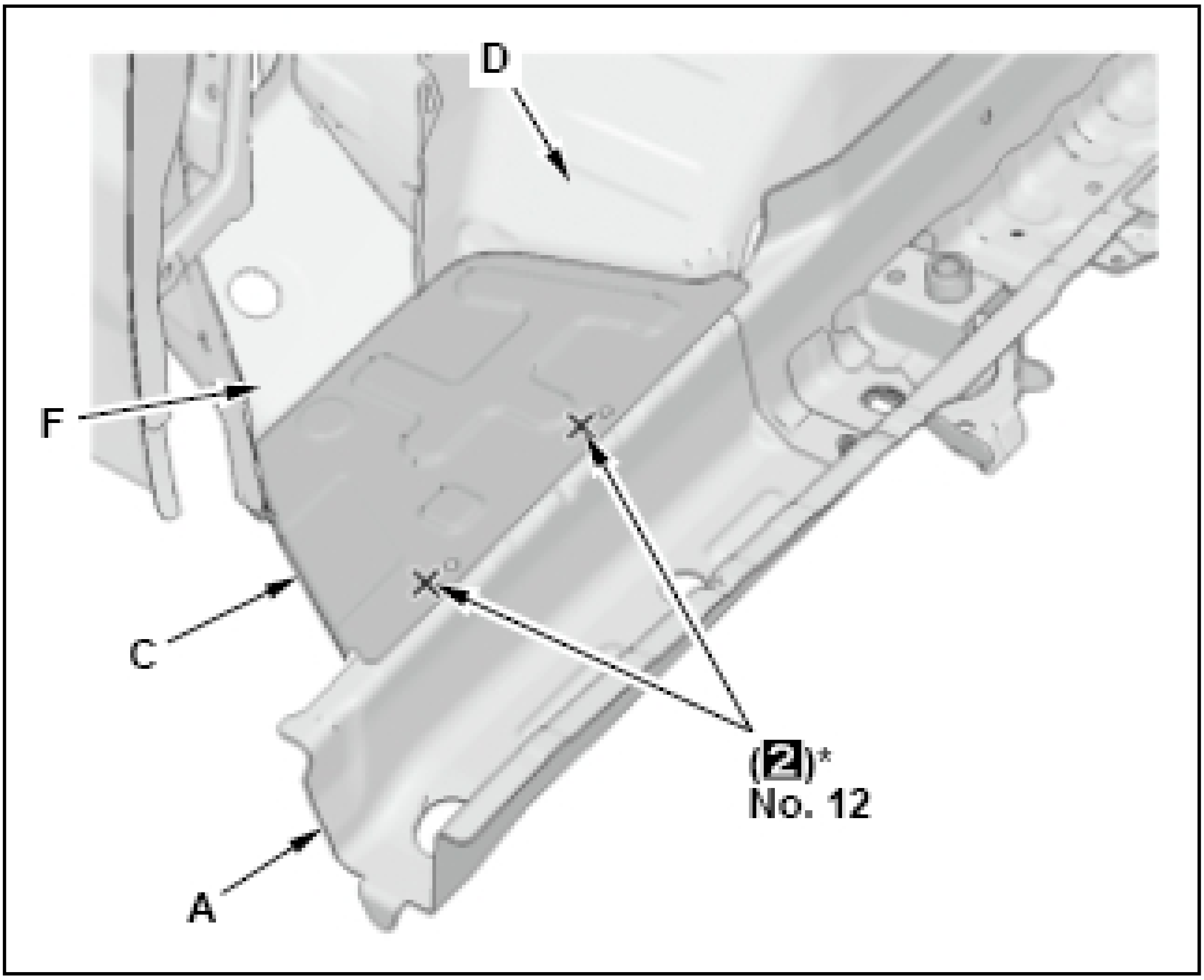

SPOT WELDING CONDITION DESCRIPTION

No. 12	7500 A	600 ms	3432 N (350 kgf)

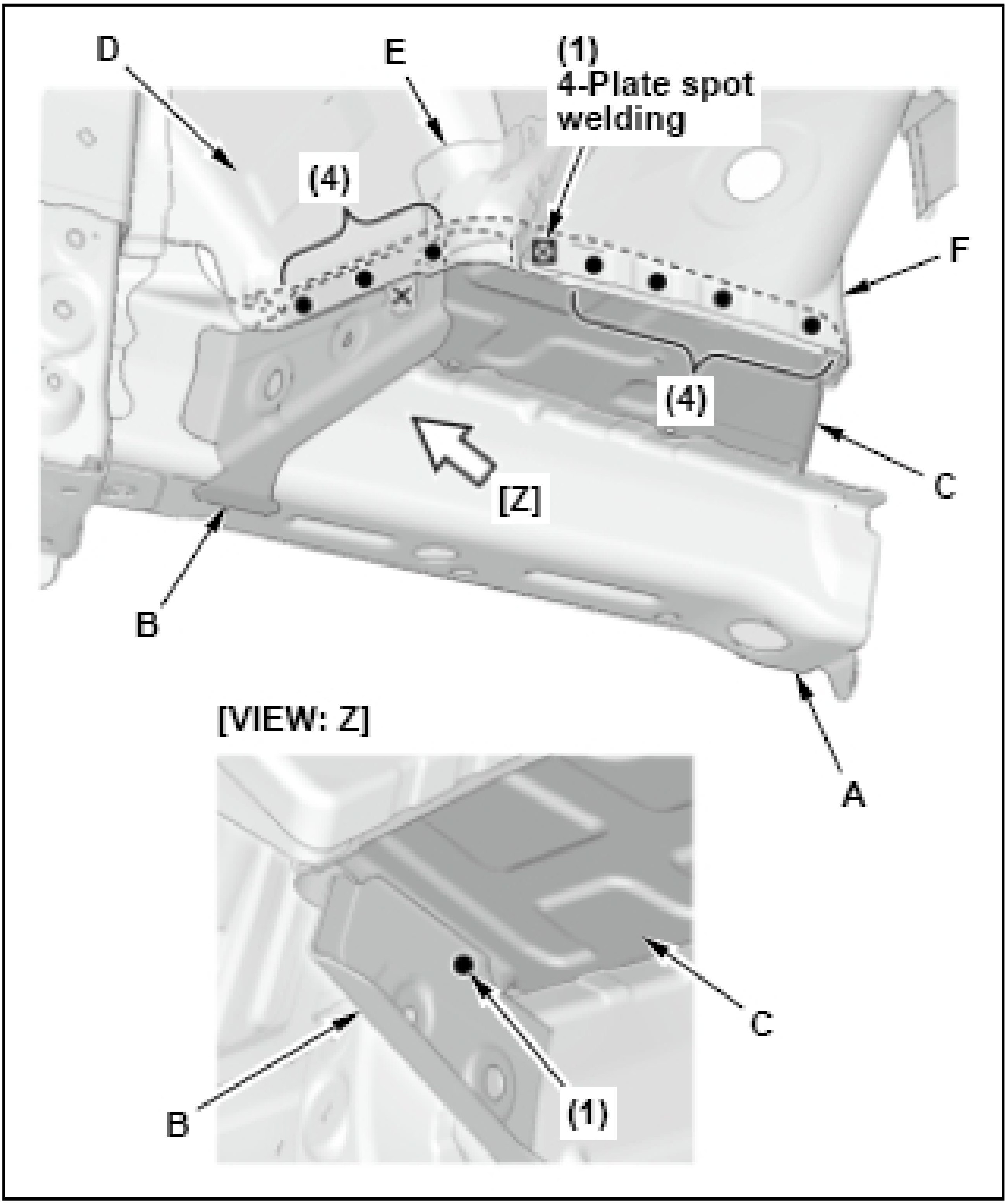
D
E
(1)
4-Plate spot welding
(4)
F
(4)
C
[Z]
B
A
[VIEW: Z]
C
B
(1)

Spare Tire Pan Crossmember - Weld

1. Weld the spare tire pan crossmembers (B) to rear frames A and the spare tire pan lower crossmembers (C) on both sides.

   (■)*: Welding positions with rear frame A, include ultra high-strength steel (1500 MPa) parts. **Perform the spot welding on the conditions of No. 13 in the table shown below.**

   SPOT WELDING CONDITION DESCRIPTION

No. 13	8000 A	600 ms	3432 N (350 kgf)

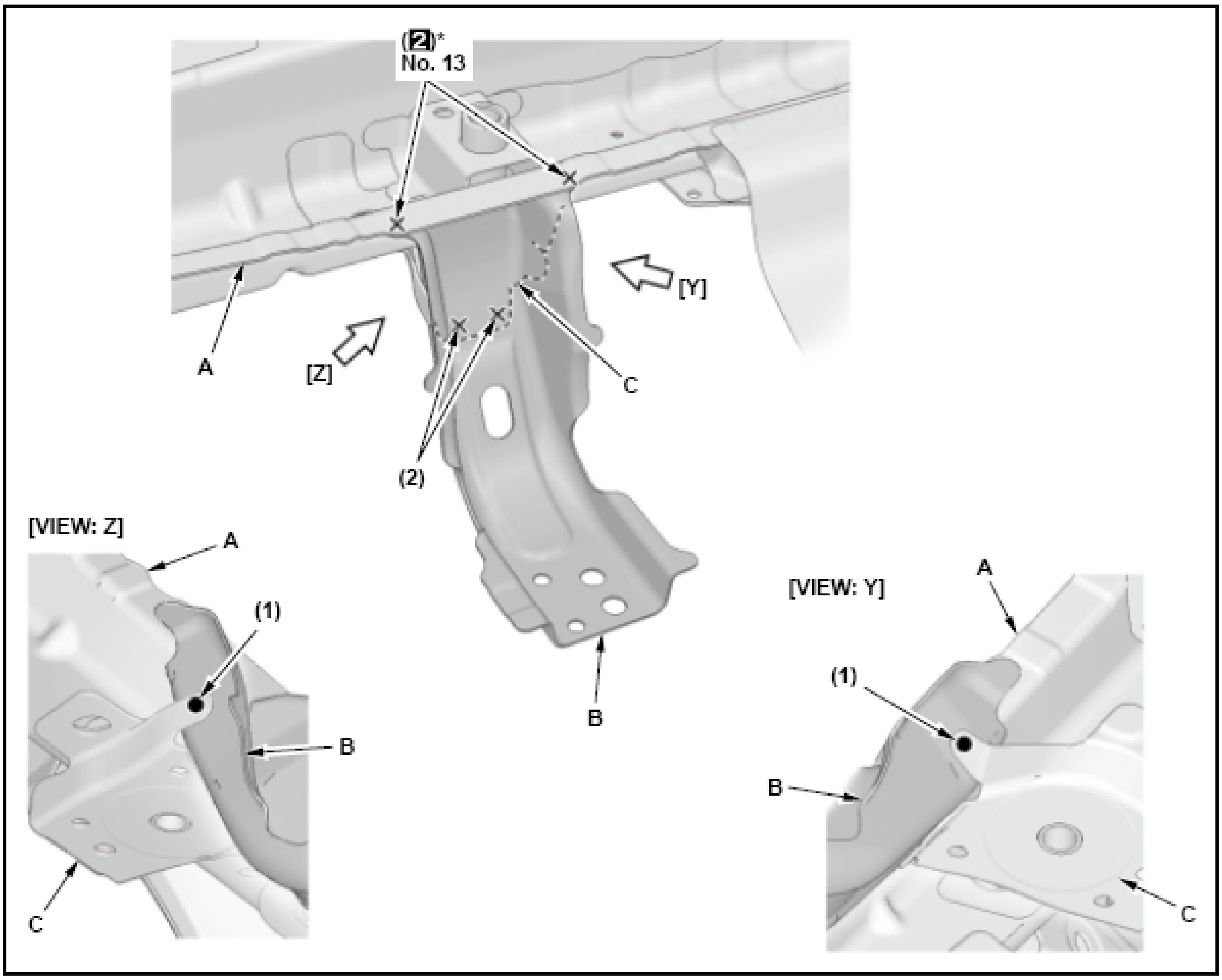

Spare Tire Pan Complete - Weld

1. Weld the new spare tire pan complete (B) to both rear frames A, rear frame upper stiffener A/B (C) (one side), the rear floor panel (D), and both of the spare tire pan crossmembers (E). Weld the rear frame flange (F) to rear frame A.

   (■)*: Welding positions with rear frame A, include ultra high-strength steel (1500 MPa) parts. **Perform the spot welding on the conditions of No. 13 in the table shown below.** (See SPOT WELDING CONDITIONS FOR ULTRA HIGH-STRENGTH STEEL PARTS (1180 AND 1500 MPA)).

SPOT WELDING CONDITION DESCRIPTION

No. 13	8000 A	600 ms	3432 N (350 kgf)

NOTE: **Welding positions (G): Must be welded according to the following conditions.**

Plug hole diameter: φ 10 mm (0.39 in)
Welding wire: Must use wire with a tensile strength of 980 MPa or higher (142 ksi or higher).

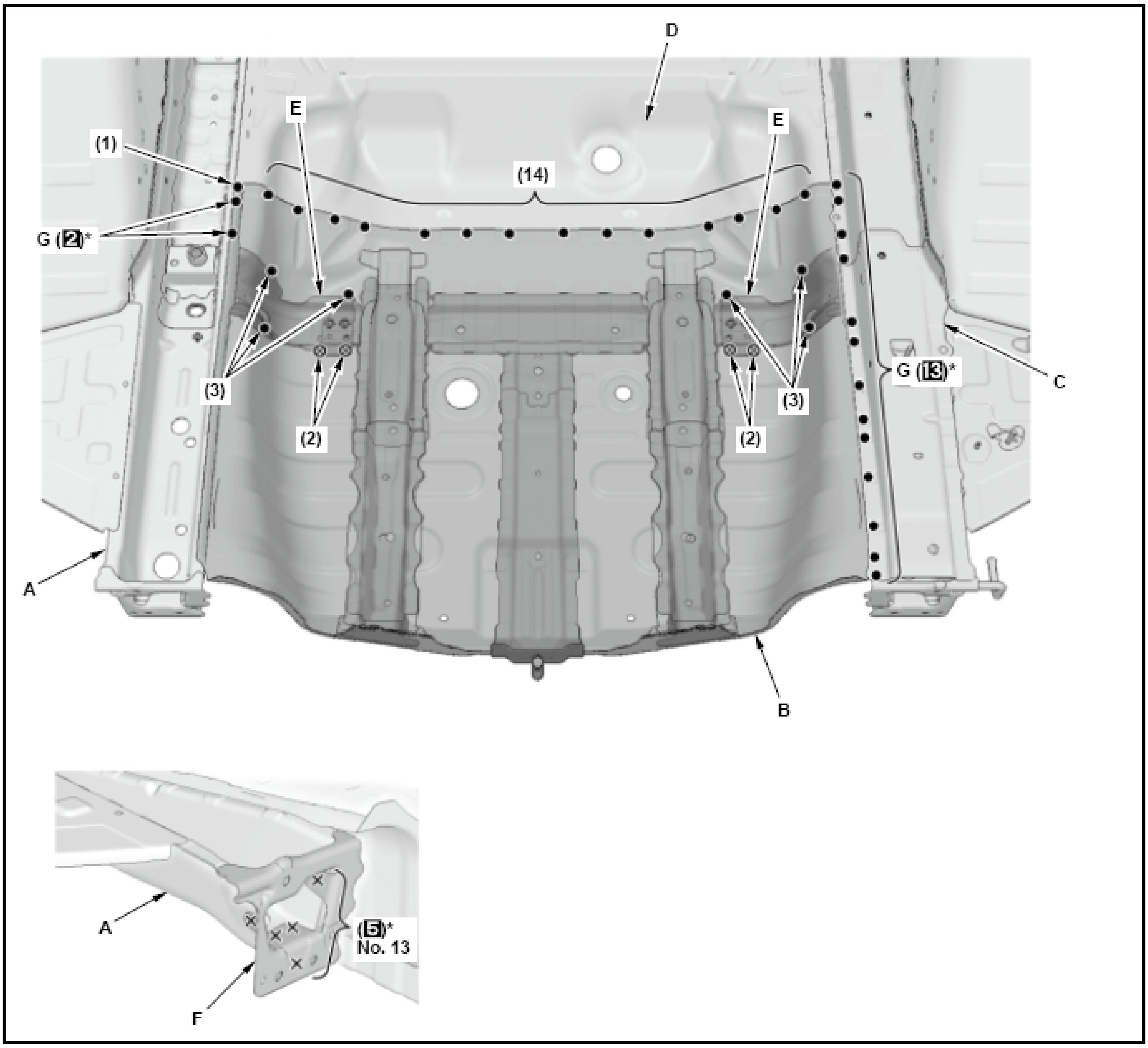

Rear Frame Upper Stiffener A/B (One Side) and Rear Floor Upper Crossmember - Weld

1. In case of sectioning rear frame upper stiffener B: Weld the rear portion of new rear frame upper stiffener B and reused rear frame upper stiffener B (A).

   L*: Welding positions with high-strength steel parts. **Confirm the butt welding conditions.** See MAG WELDING CONDITIONS FOR HIGH-STRENGTH STEEL PARTS (EXCEPT 1500 MPA) .

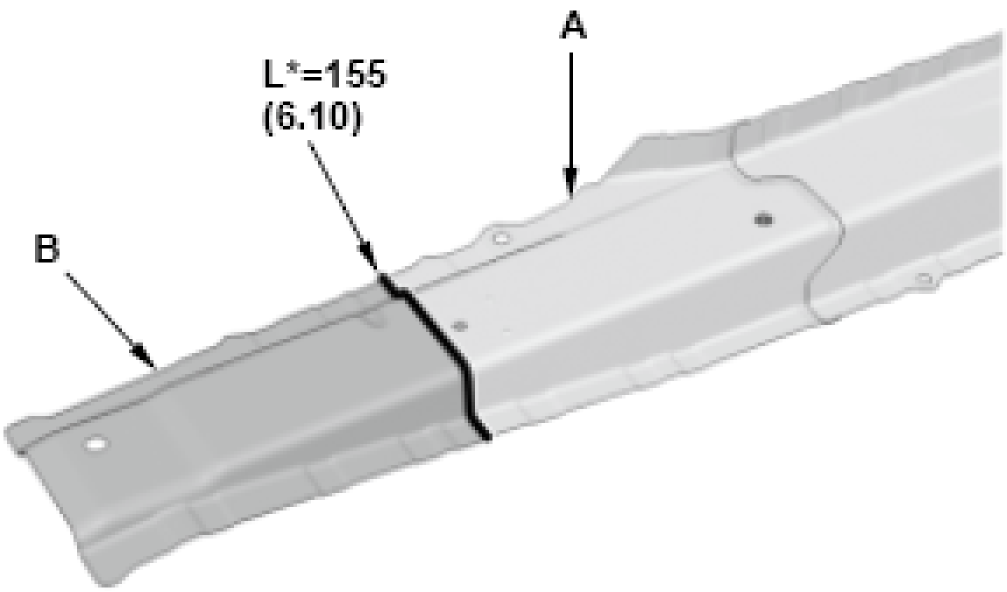

Fig. 44: Rear Frame Upper Stiffener Installation Weld Measurements And Locations
Courtesy of AMERICAN HONDA MOTOR CO., INC.

2. Weld the rear portion of rear frame upper stiffener A and rear frame upper stiffener B to rear frame A (C), the rear floor side panel (D), the rear frame flange (E), the rear wheelhouse (F), the spare tire pan (G), and the rear floor panel (H).

   (■)*: Welding positions with rear frame upper stiffener A/B and rear frame A, include ultra high-strength steel (1500 MPa) parts. **Perform the spot welding on the conditions of No. 13 and 14 in the table shown below.** (See SPOT WELDING CONDITIONS FOR ULTRA HIGH-STRENGTH STEEL PARTS (1180 AND 1500 MPA)).

   SPOT WELDING CONDITION DESCRIPTION

No. 13	8000 A	600 ms	3432 N (350 kgf)
No. 14	8500 A	600 ms	3432 N (350 kgf)

NOTE: **Welding positions (I): Must be welded according to the following conditions.**

Plug hole diameter: φ 10 mm (0.39 in)
Welding wire: Must use wire with a tensile strength of 980 MPa or higher (142 ksi or higher).

NOTE: **The indicated areas (J) are ground locations. Prior to installation of the IPU (high-voltage battery), make sure that these areas are not painted or have any corrosion.**

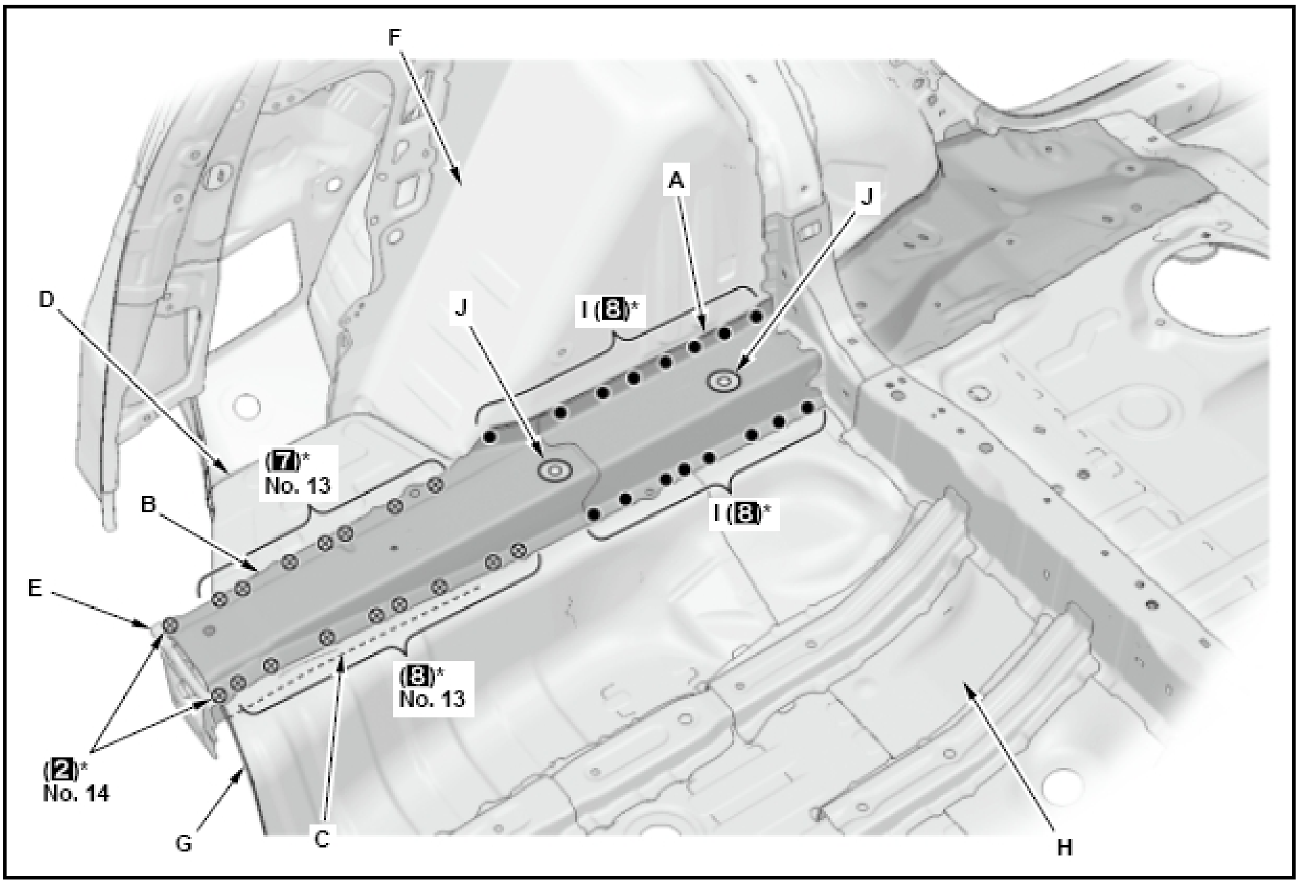

3. Weld the front portion of rear frame upper stiffener A to rear frame A (B), the side sill extension (C), the rear wheelhouse (D), the middle floor crossmember stiffener (E), and the rear floor panel (F).

   If rear frame upper stiffener A is to be reused, plug weld it.

   (■)*: Welding positions with rear frame upper stiffener A and rear frame A, include ultra high-strength steel (1500 MPa) parts. **Perform the spot welding on the conditions of No. 14 in the table shown below. Confirm the MIG brazing conditions.** (See SPOT WELDING CONDITIONS FOR ULTRA HIGH-STRENGTH STEEL PARTS (1180 AND 1500 MPA) And MIG BRAZING CONDITIONS FOR ULTRA HIGH-STRENGTH STEEL PARTS (1180 AND 1500 MPA)).

   SPOT WELDING CONDITION DESCRIPTION

No. 14	8500 A	600 ms	3432 N (350 kgf)

NOTE: **Welding positions (G): Must be welded according to the following conditions.**

Plug hole diameter: φ 10 mm (0.39 in)
Welding wire: Must use wire with a tensile strength of 980 MPa or higher (142 ksi or higher).

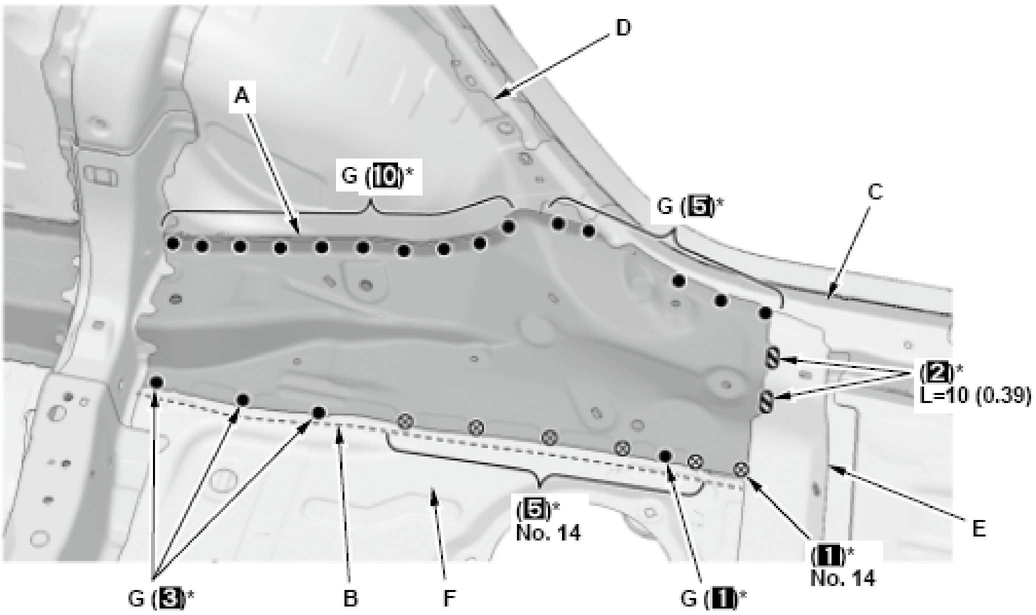

Fig. 45: Rear Frame Upper Stiffener A Installation Weld Measurements And Locations
Courtesy of AMERICAN HONDA MOTOR CO., INC.

4. Weld the rear floor upper crossmember complete (B) to the rear floor panel (C), the spare tire pan complete (D), both rear frame upper stiffeners A, and both rear wheelhouse stiffener uppers (E).

   (■)*: Welding positions with rear frame upper stiffener A, include ultra high-strength steel (1500 MPa) parts.

   NOTE: **Welding positions (F): Must be welded according to the following conditions.**

   Plug hole diameter: φ 10 mm (0.39 in)
   Welding wire: Must use wire with a tensile strength of 980 MPa or higher (142 ksi or higher).

   ()*: Welding position with high-strength steel parts. **Confirm the plug welding conditions.** (See MAG WELDING CONDITIONS FOR HIGH-STRENGTH STEEL PARTS (EXCEPT 1500 MPA) .)

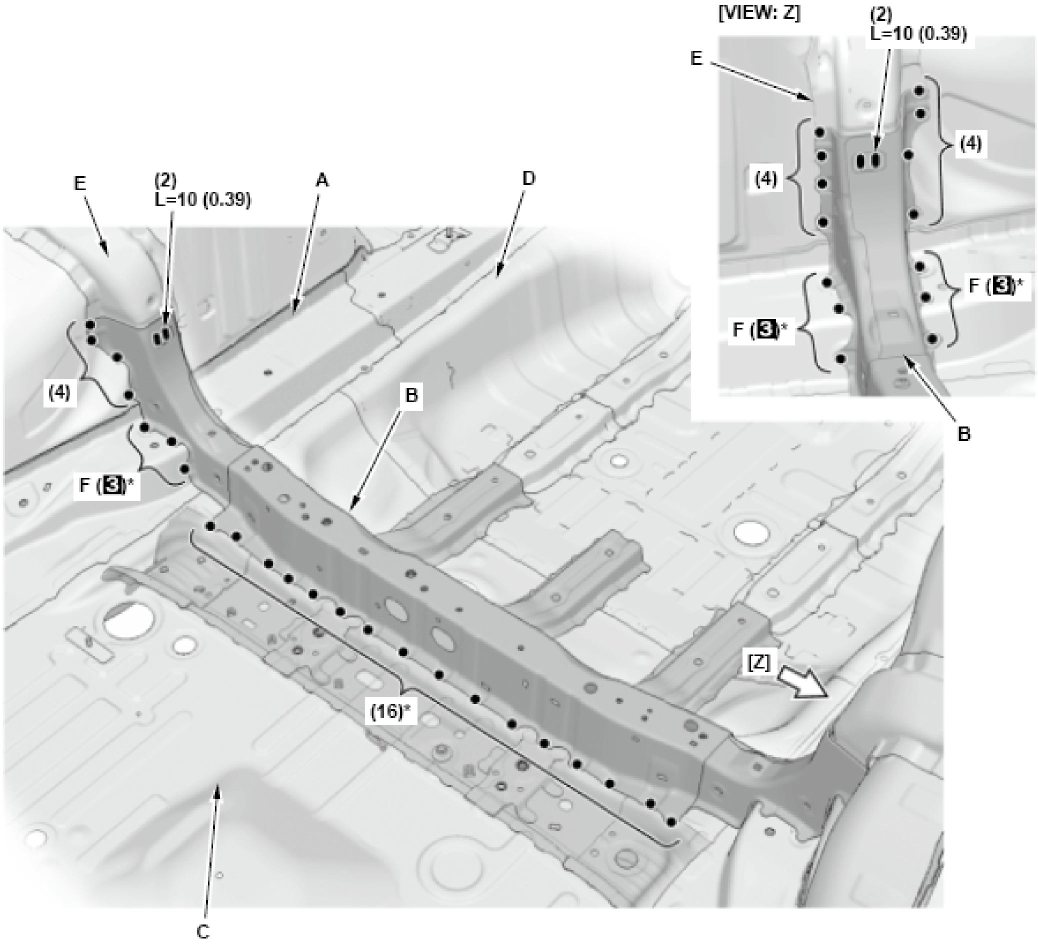
[VIEW: Z]
(2)
L=10 (0.39)
E
(4)
(4)
F (3)*
F (3)*
B
E
(2)
L=10 (0.39)
A
D
(4)
F (3)*
B
[Z]
(16)*
C

Fig. 46: Rear Floor Upper Crossmember Installation Weld Measurements And Locations (1 Of 2)
Courtesy of AMERICAN HONDA MOTOR CO., INC.

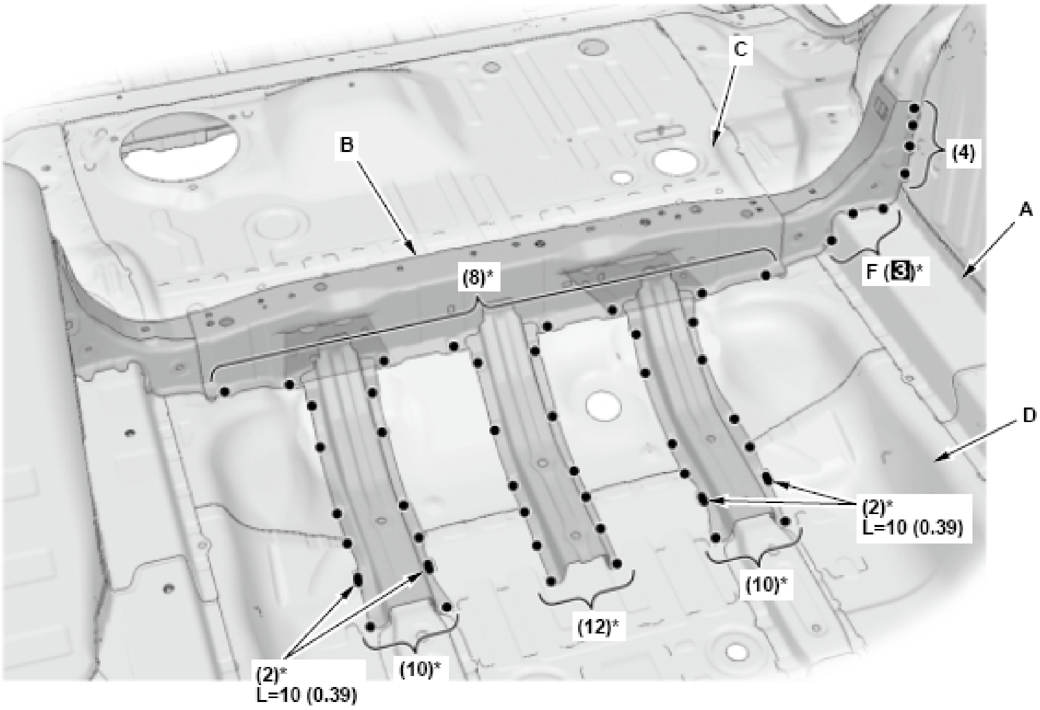
C
B
(4)
A
F (3)*
(8)*
D
(2)*
L=10 (0.39)
(10)*
(12)*
(10)*
(2)*
L=10 (0.39)

Fig. 47: Rear Floor Upper Crossmember Installation Weld Measurements And Locations (2 Of 2)
Courtesy of AMERICAN HONDA MOTOR CO., INC.

Rear Panel - Weld

See REAR PANEL REPLACEMENT.

REAR FRAME COMPLETE REPLACEMENT

Removal

NOTE:

- High-strength steel is defined as any steel with a tensile strength of 340 MPa or higher. If a part is constructed of, or includes high-strength steel review the important guidelines. See REPAIR GUIDELINES FOR HIGH-STRENGTH STEEL PARTS .
- Welding symbols (The welding symbols with dashed lines have a meaning of the spot welding of the part which is not visible). See SYMBOLS DEFINITION .
- (): Any numerical value in between these parentheses indicate the number of welds required.

Spare Tire Pan Complete - Remove

See **REAR FLOOR/REAR FRAME REPLACEMENT**.

Mass Production Body Welding Positions and Numbers - Remove

Rear Floor Panel and Rear Floor Crossmember

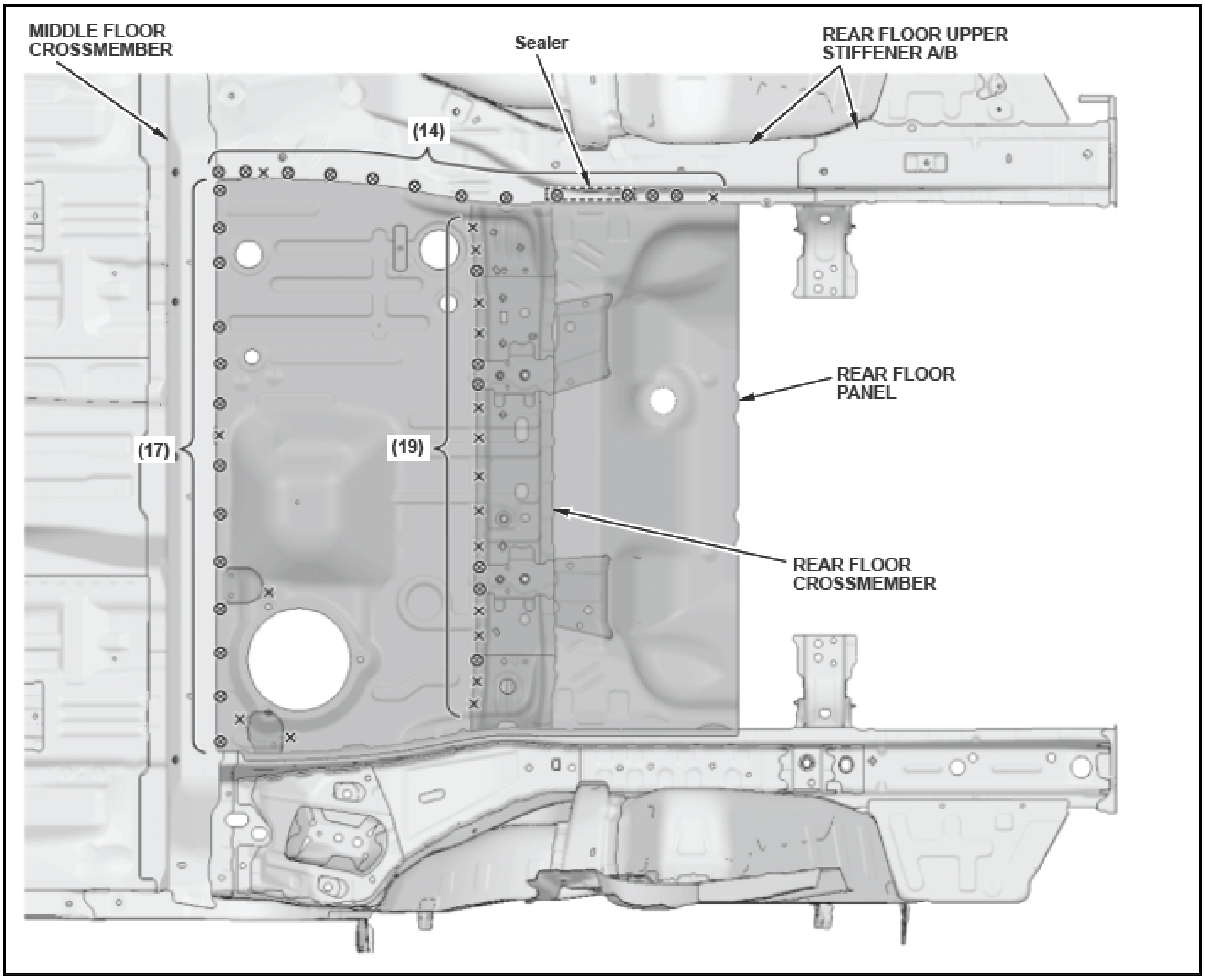

Construction - Remove

Rear Floor Panel and Rear Floor Crossmember

NOTE:

- This section explains the procedures after removal of all related parts. For the related parts removal procedure, refer to the appropriate Service Information.
- The component replacement procedure described here is only for new genuine supplied parts, as needed, according to the area and the degree of damage on the

body.

Remove the rear floor panel and the rear floor crossmember, and replace them.

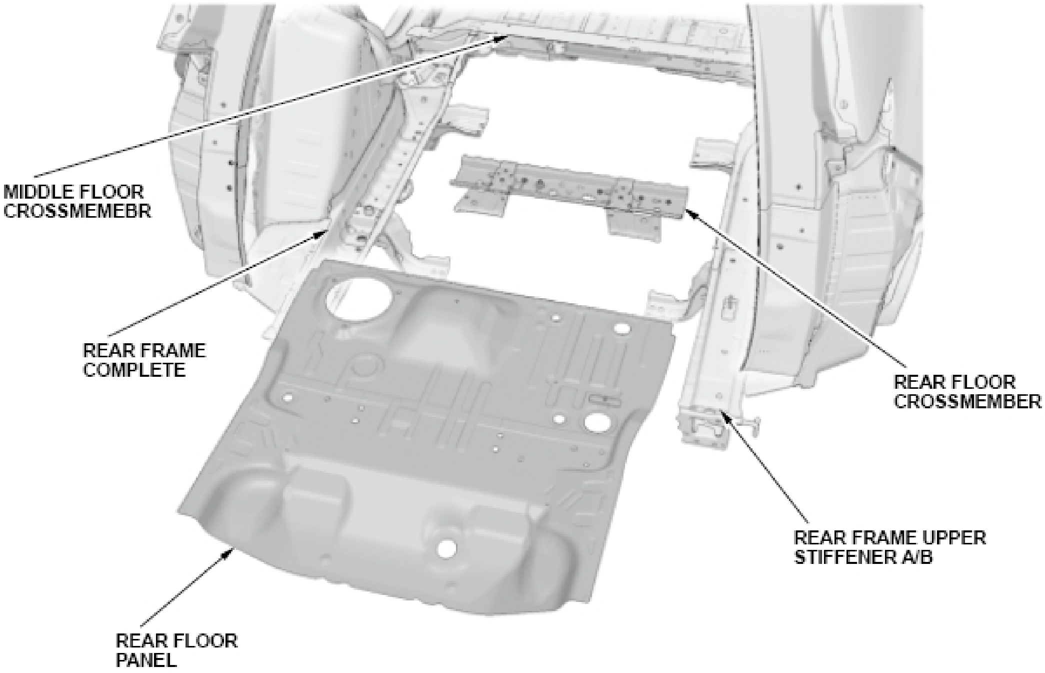
MIDDLE FLOOR CROSSMEMEBR
REAR FRAME COMPLETE
REAR FLOOR CROSSMEMBER
REAR FRAME UPPER STIFFENER A/B
REAR FLOOR PANEL

Fig. 48: Rear Floor Panel And Rear Floor Crossmember Component Locations
Courtesy of AMERICAN HONDA MOTOR CO., INC.

Mass Production Body Welding Positions and Numbers - Remove

Rear Frame Complete

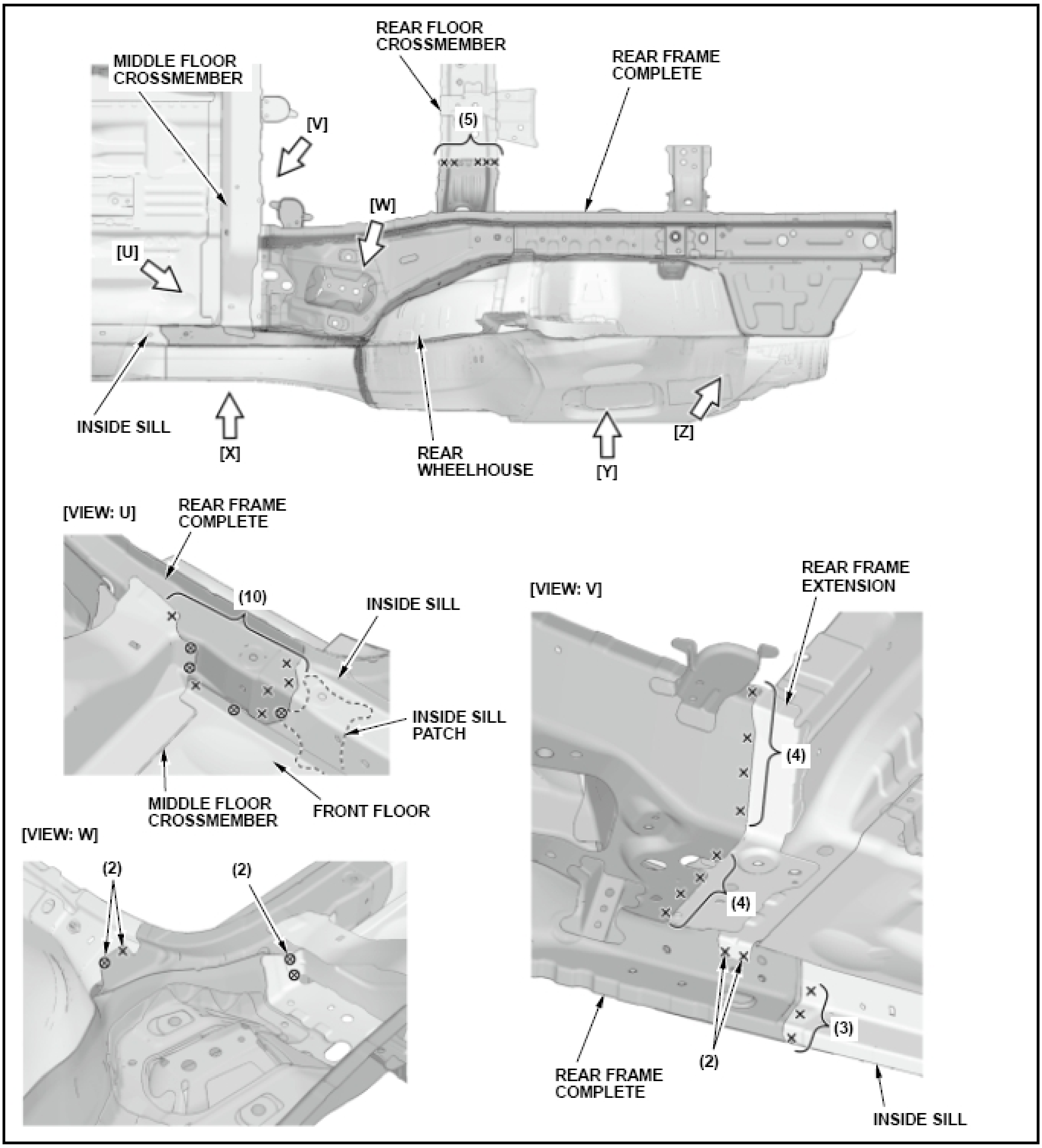
REAR FLOOR CROSSMEMBER
MIDDLE FLOOR CROSSMEMBER
REAR FRAME COMPLETE
(5)
[V]
[W]
[U]
INSIDE SILL
[X]
REAR WHEELHOUSE
[Y]
[Z]
[VIEW: U]
REAR FRAME COMPLETE
(10)
INSIDE SILL
INSIDE SILL PATCH
MIDDLE FLOOR CROSSMEMBER
FRONT FLOOR
[VIEW: V]
REAR FRAME EXTENSION
(4)
(4)
(2)
(3)
REAR FRAME COMPLETE
INSIDE SILL
[VIEW: W]
(2)
(2)

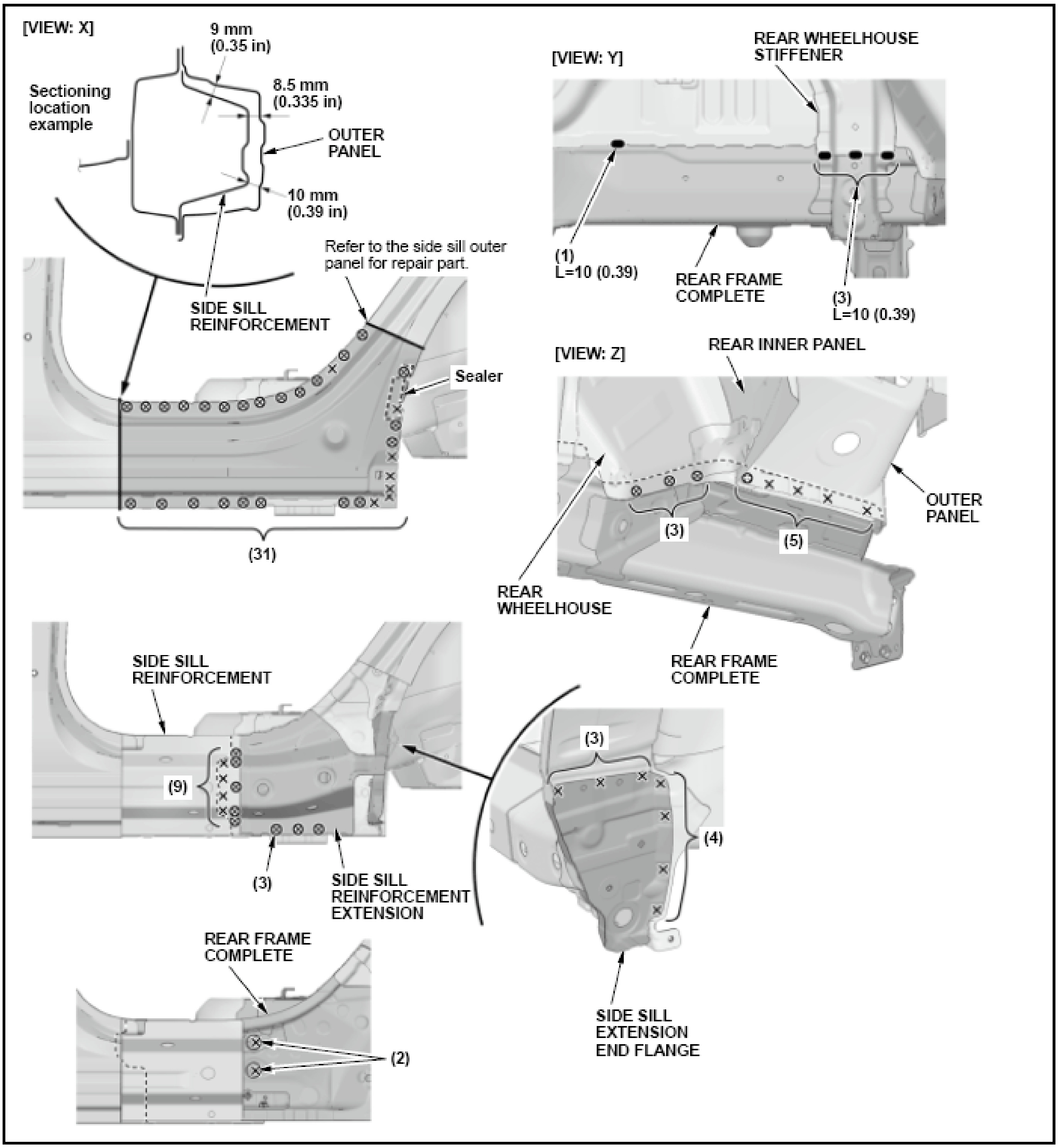
[VIEW: X]
9 mm
(0.35 in)
Sectioning
location
example
8.5 mm
(0.335 in)
OUTER
PANEL
10 mm
(0.39 in)
Refer to the side sill outer
panel for repair part.
SIDE SILL
REINFORCEMENT
Sealer
(31)
[VIEW: Y]
REAR WHEELHOUSE
STIFFENER
(1)
L=10 (0.39)
REAR FRAME
COMPLETE
(3)
L=10 (0.39)
[VIEW: Z]
REAR INNER PANEL
OUTER
PANEL
(3)
(5)
REAR
WHEELHOUSE
REAR FRAME
COMPLETE
SIDE SILL
REINFORCEMENT
(9)
(3)
SIDE SILL
REINFORCEMENT
EXTENSION
(3)
(4)
SIDE SILL
EXTENSION
END FLANGE
REAR FRAME
COMPLETE
(2)

Construction - Remove

Rear Frame Complete

NOTE:

- **This section explains the procedures after removal of all related parts. For the related parts removal procedure, refer to the appropriate Service Information.**
- **The component replacement procedure described here is only for new genuine supplied parts, as needed, according to the area and the degree of damage on the body.**
- **Cut the outer panel, and remove the side sill extension end flange and the side sill reinforcement extension.**
- **Remove the rear frame complete, and replace it.**

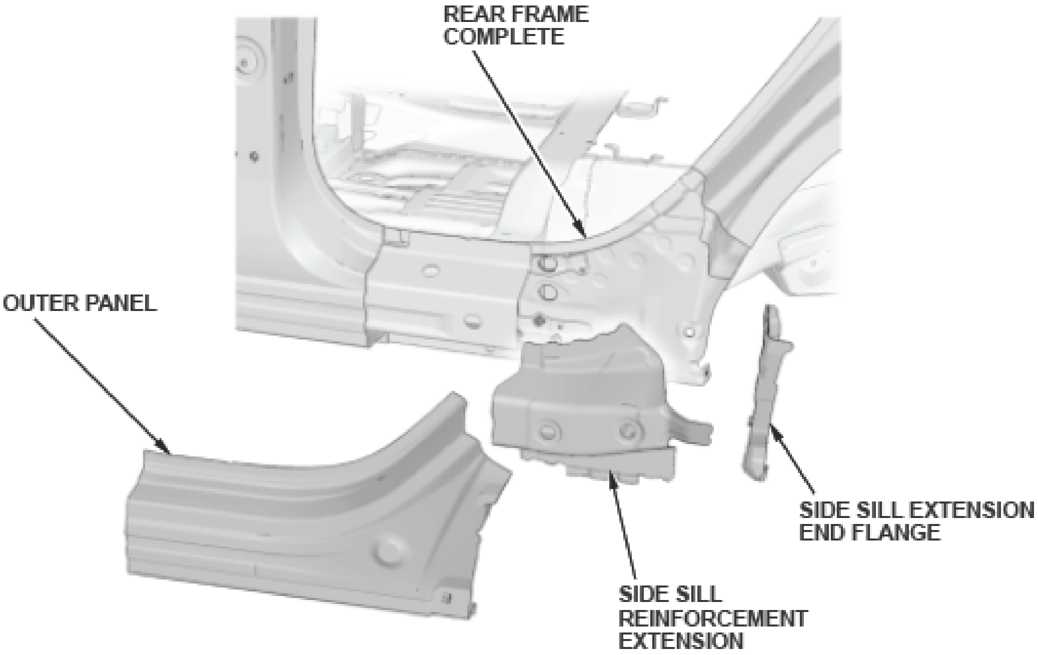
REAR FRAME COMPLETE
OUTER PANEL
SIDE SILL EXTENSION END FLANGE
SIDE SILL REINFORCEMENT EXTENSION

Fig. 49: Outer Side Sill, Side Sill Extension And Reinforcement Component Locations
Courtesy of AMERICAN HONDA MOTOR CO., INC.

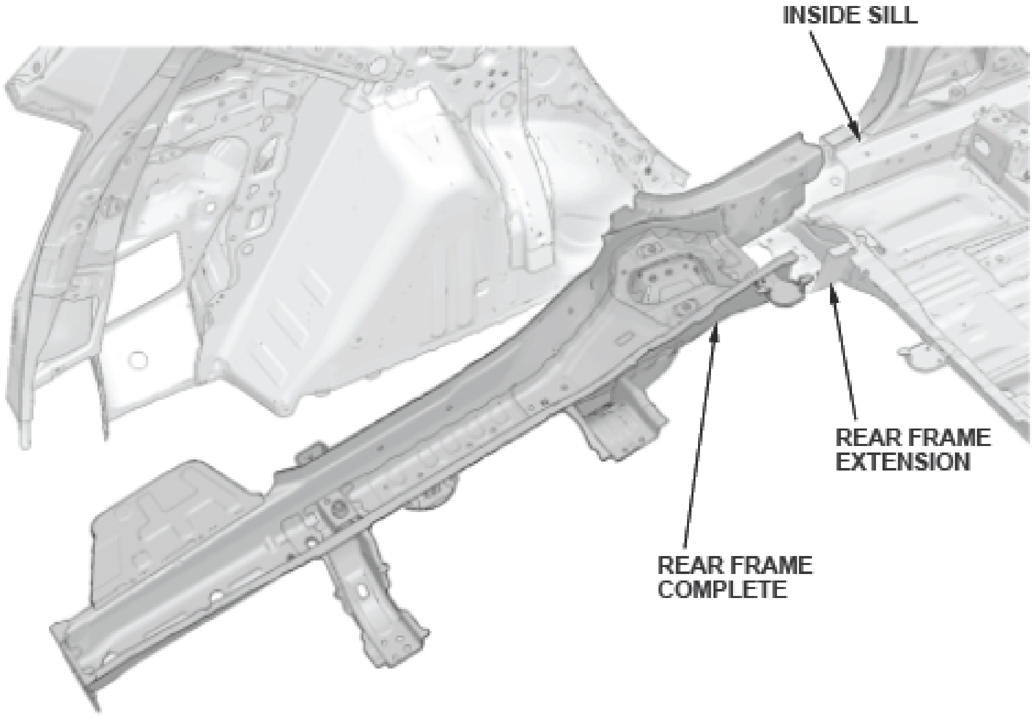
INSIDE SILL
REAR FRAME EXTENSION
REAR FRAME COMPLETE

Fig. 50: Rear Frame Component Location
Courtesy of AMERICAN HONDA MOTOR CO., INC.

Installation

NOTE:

- **Position the replacement parts.**

  Before doing the main welding, check the body dimensions:

  - **Rear pillar gutter and rear panel positions See REAR PILLAR GUTTER AND REAR PANEL POSITIONS DIMENSION .**
  - **Tailgate opening See TAILGATE OPENING DIMENSION .**
  - **Front floor and rear floor, under view See FRONT FLOOR AND REAR FLOOR, UNDER VIEW DIMENSION .**
  - **Frame repair chart See FRAME REPAIR CHART .**

- **Temporarily install the related parts, then check for differences in level and clearance. Check the external parts fitting positions. Make sure the body lines flow smoothly. See EXTERNAL PARTS FITTING POSITIONS .**
- **Confirm the sheet thickness, tensile strength, and existence of the zinc treatment on both sides, and set the welder to conform to the welding conditions by according to the Roof and Side Panel Construction and Floor and Rear Body Construction. (See ROOF AND SIDE PANEL CONSTRUCTION And FLOOR AND REAR BODY CONSTRUCTION).**
- **Welding symbols (The welding symbols with dashed lines have a meaning of the spot welding of the part which is not visible). See SYMBOLS DEFINITION .**
- **() and ()*: Any numerical value in between these parentheses indicate the number of welds required.**

Rear Frame Complete - Weld

1. Remove the side sill extension end flange (A) from the new rear frame complete (B).

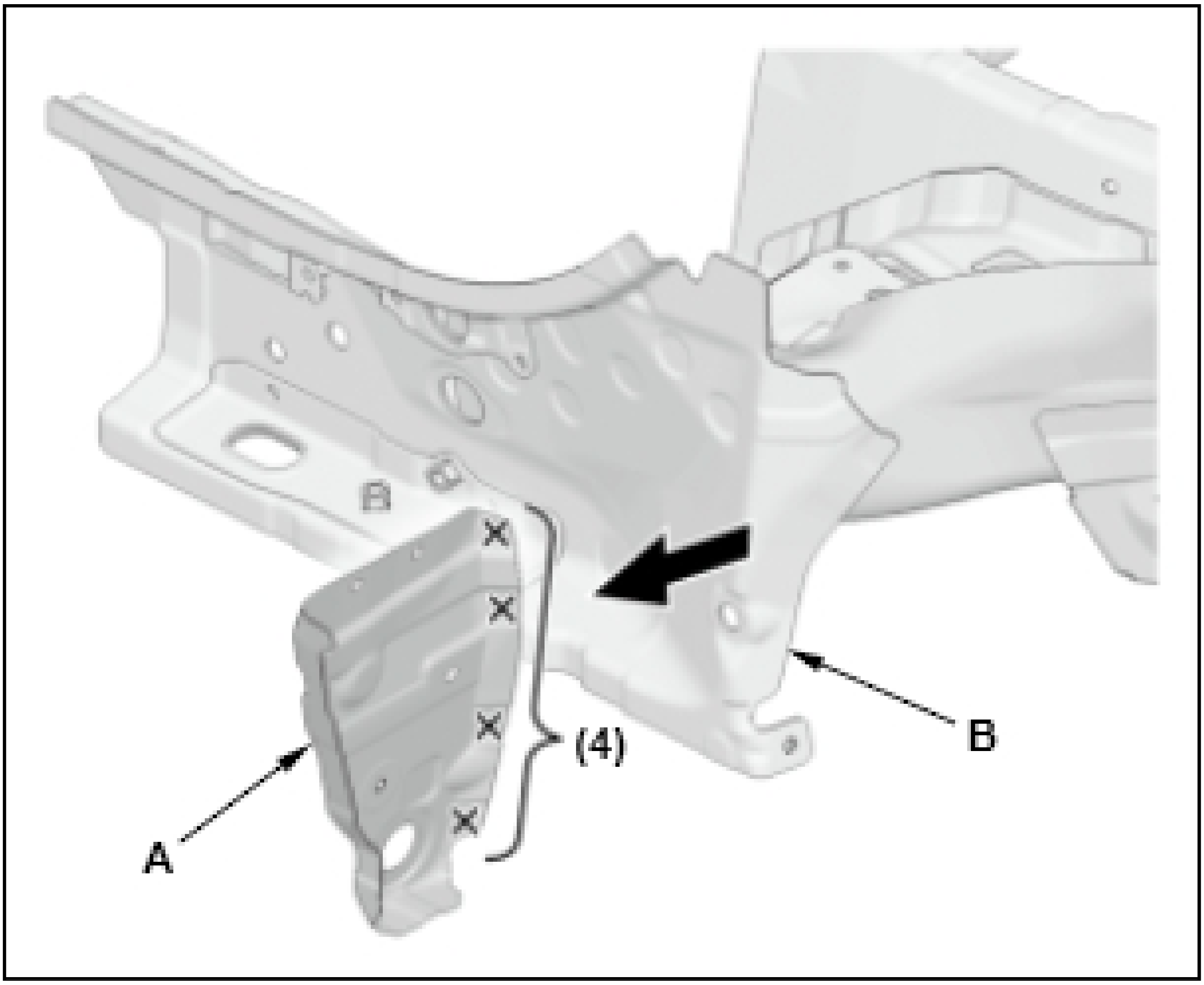

2. Clamp the new rear frame complete (A) to the body, and check it into position. Weld the rear floor crossmember complete (B) and the rear crossmember extension (C).

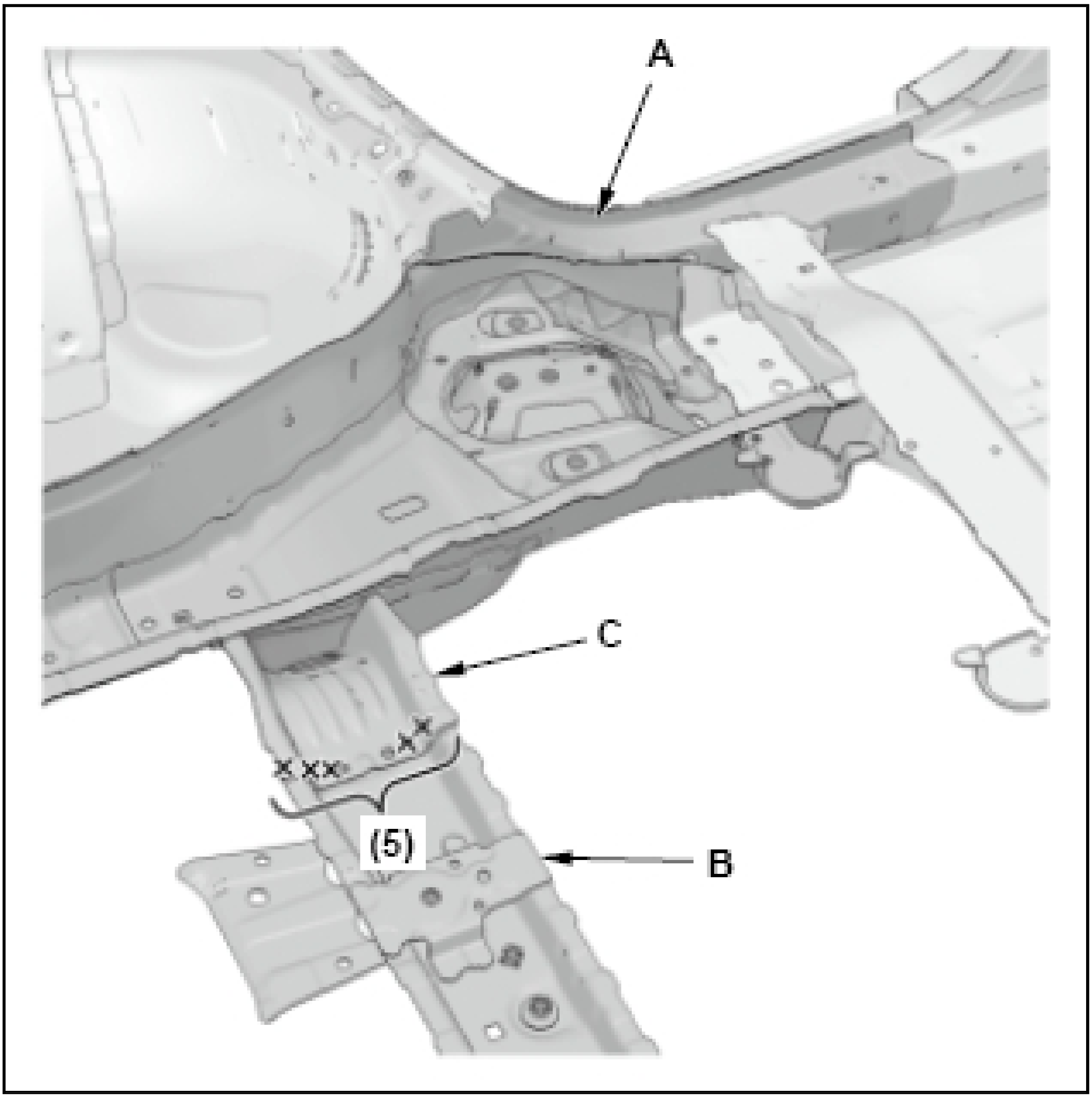

3. Weld rear frame A to the rear frame extension (B).

   (■)*: Welding positions with rear frame A, include ultra high-strength steel (1500 MPa) parts. **Perform the spot welding on the conditions of No. 13 in the table shown below.** (See SPOT WELDING CONDITIONS FOR ULTRA HIGH-STRENGTH STEEL PARTS (1180 AND 1500 MPA)).

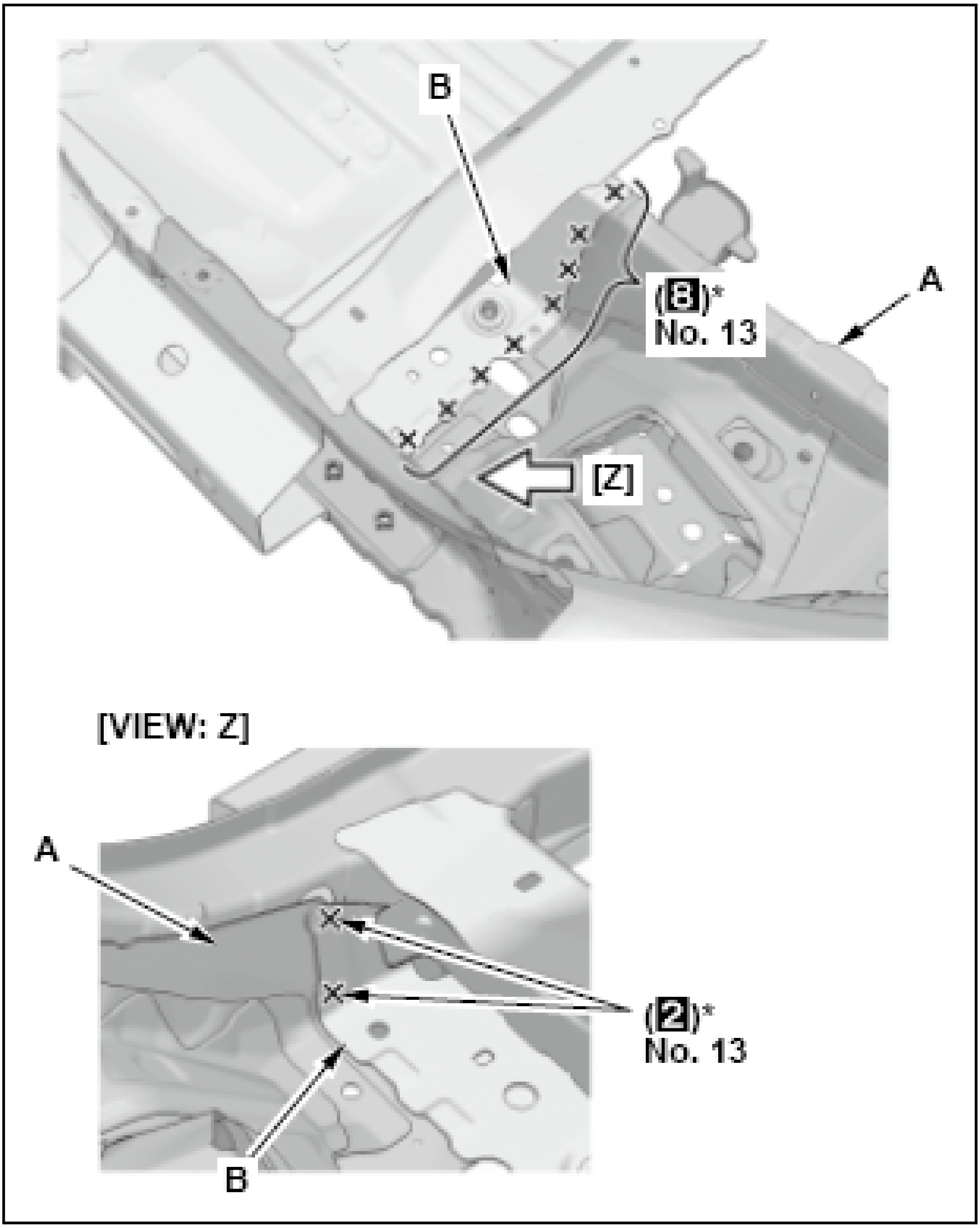

SPOT WELDING CONDITION DESCRIPTION

No. 13	8000 A	600 ms	3432 N (350 kgf)

4. Weld the side sill extension (A) to the middle floor crossmember (B), the inside sill (C), and the front floor (D).

   ()*: Welding positions with high-strength steel parts. **Confirm the plug welding conditions.** (See **MAG WELDING CONDITIONS FOR HIGH-STRENGTH STEEL PARTS (EXCEPT 1500 MPA)** .)

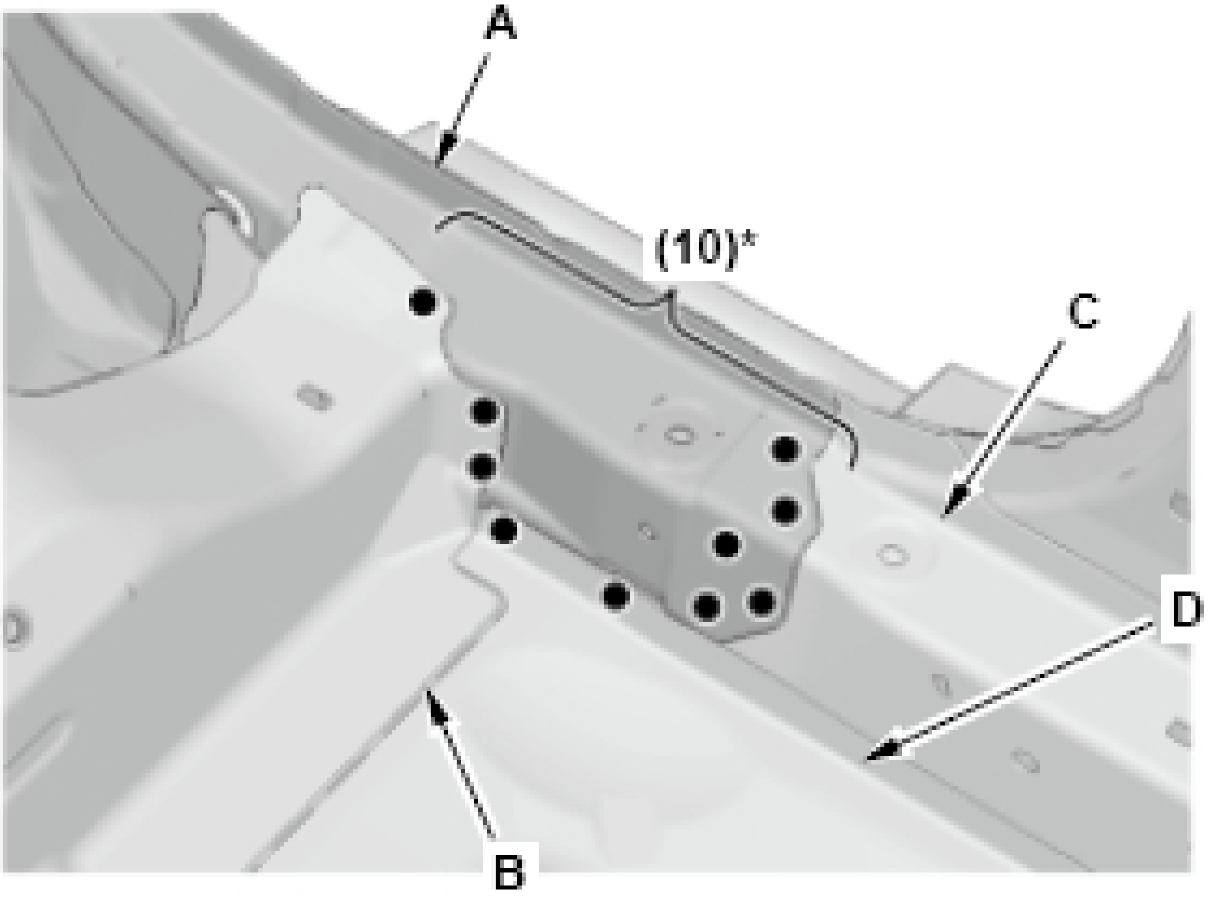

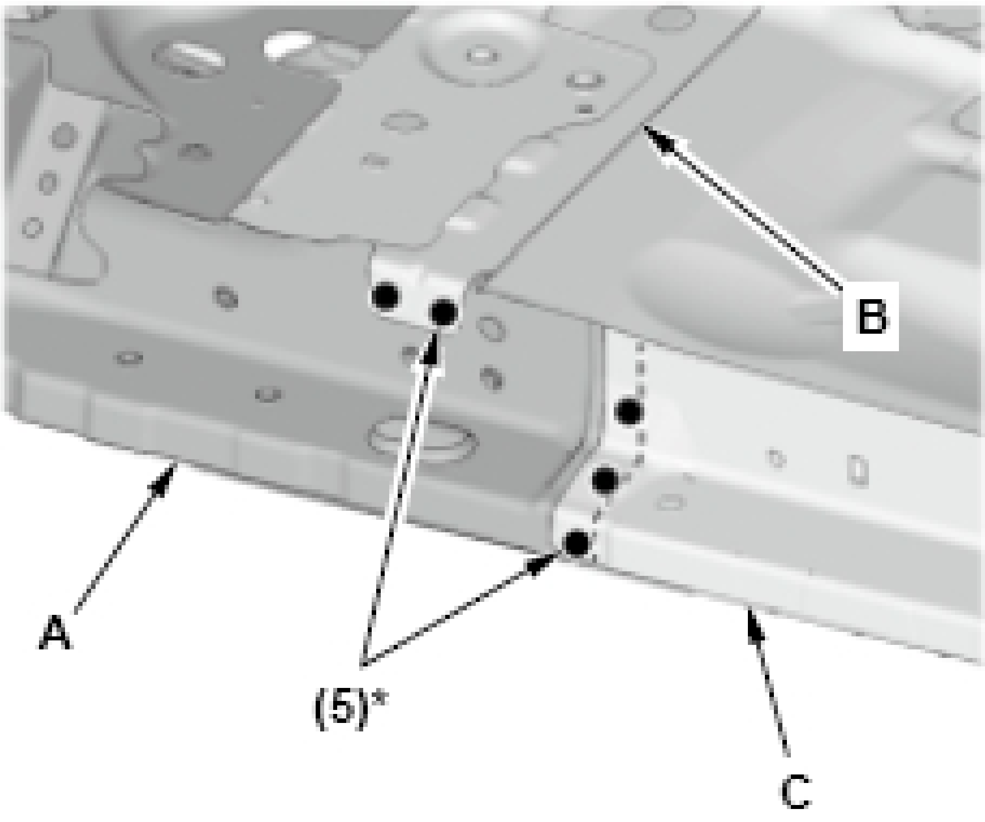

5. Weld the side sill extension (A) to the middle floor crossmember (B) and the rear wheelhouse (C).

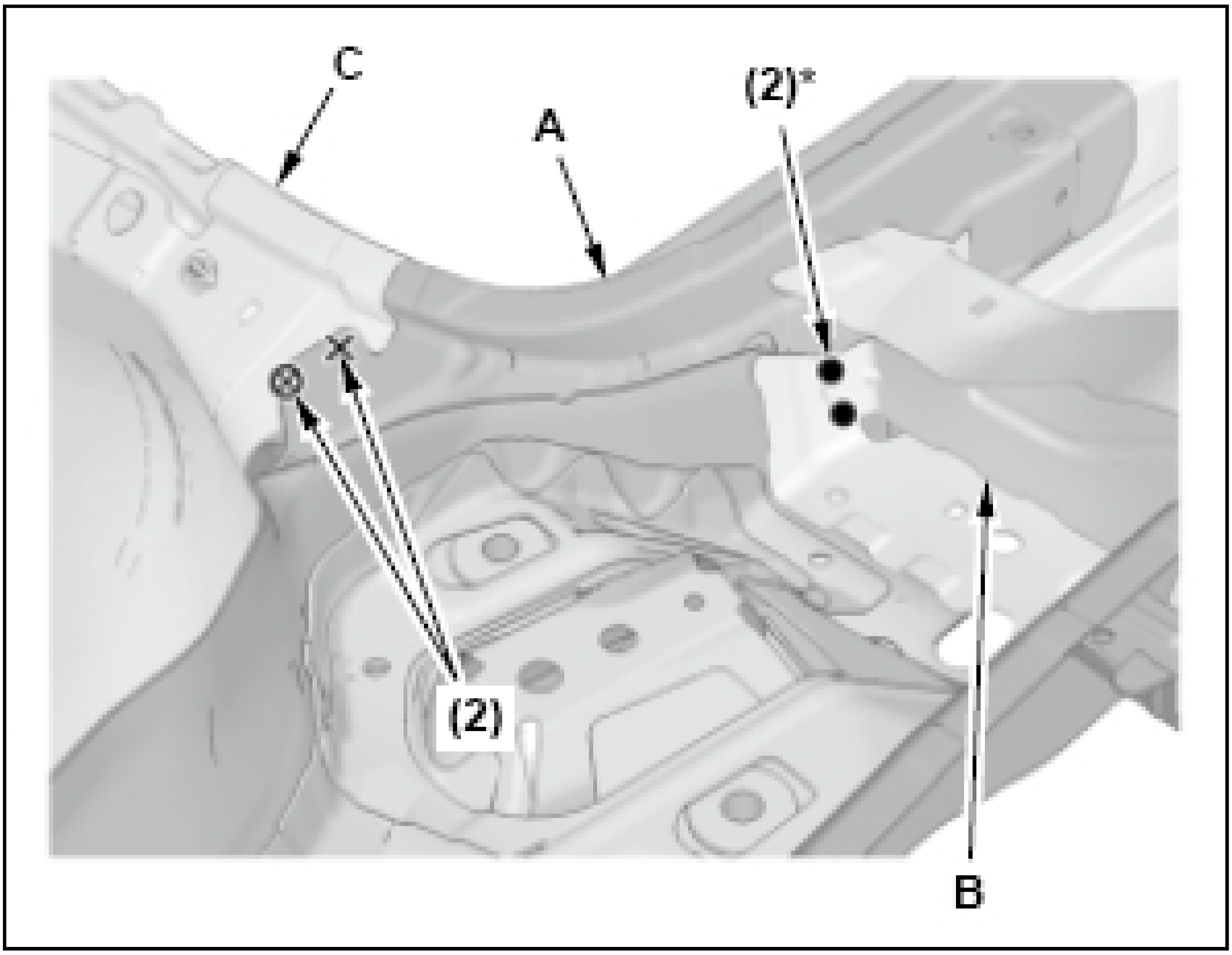

()*: Welding positions with high-strength steel parts. **Confirm the plug welding conditions.** (See MAG WELDING CONDITIONS FOR HIGH-STRENGTH STEEL PARTS (EXCEPT 1500 MPA) .)

6. Weld the spare tire pan upper crossmember (B) to the rear wheelhouse stiffener (C). Weld rear frame A and the rear wheelhouse (D).

   (■)*: Welding positions with rear frame A, include ultra high-strength steel (1500 MPa) parts. **Confirm the MIG brazing conditions.** (See MIG BRAZING CONDITIONS FOR ULTRA HIGH-STRENGTH STEEL PARTS (1180 AND 1500 MPA)).

NOTE: **Welding positions (E): Must be welded according to the following conditions.**

Plug hole diameter: φ 10 mm (0.39 in)
Welding wire: Must use wire with a tensile strength of 980 MPa or higher (142 ksi or higher).

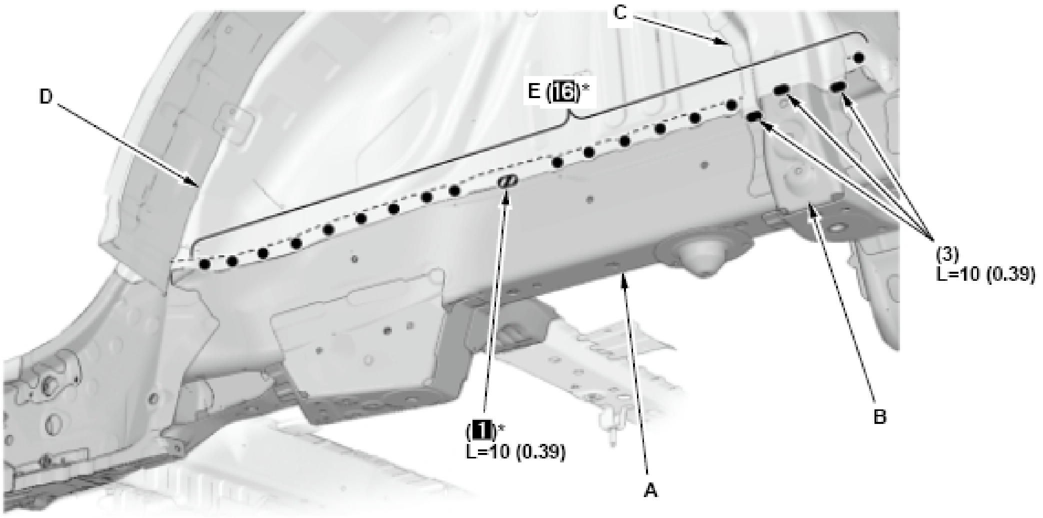

Fig. 51: Rear Frame Installation Weld Measurements And Locations
Courtesy of AMERICAN HONDA MOTOR CO., INC.

7. Weld the rear frame side outrigger (A) and the rear floor side panel (B) to the rear wheelhouse (C), the inner panel (D), and the outer panel (E).

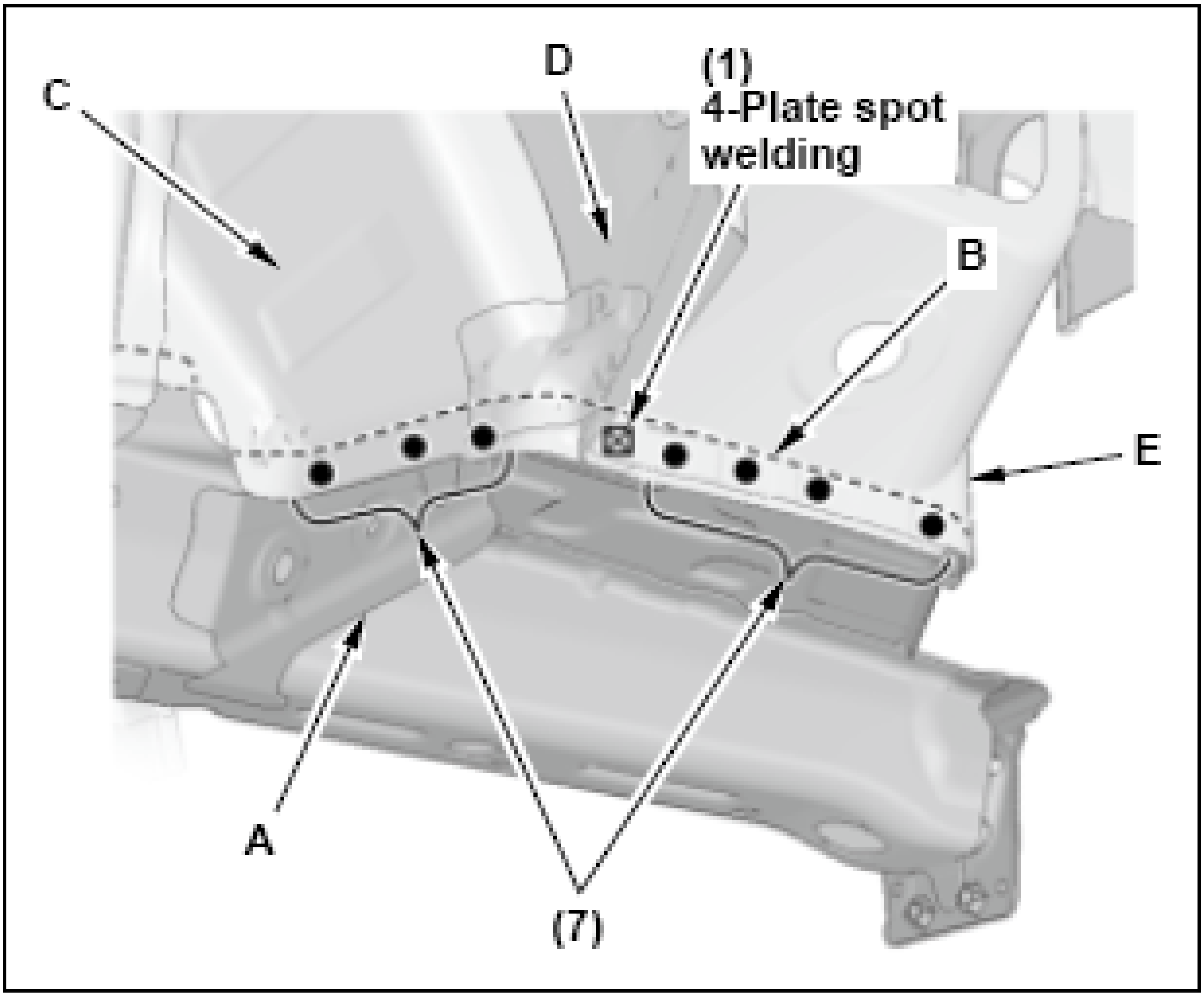

Rear Floor Panel - Weld

1. Place the new DC cable guard bracket (A) within alignment dots (B) of the new rear floor panel (C), and then weld them.

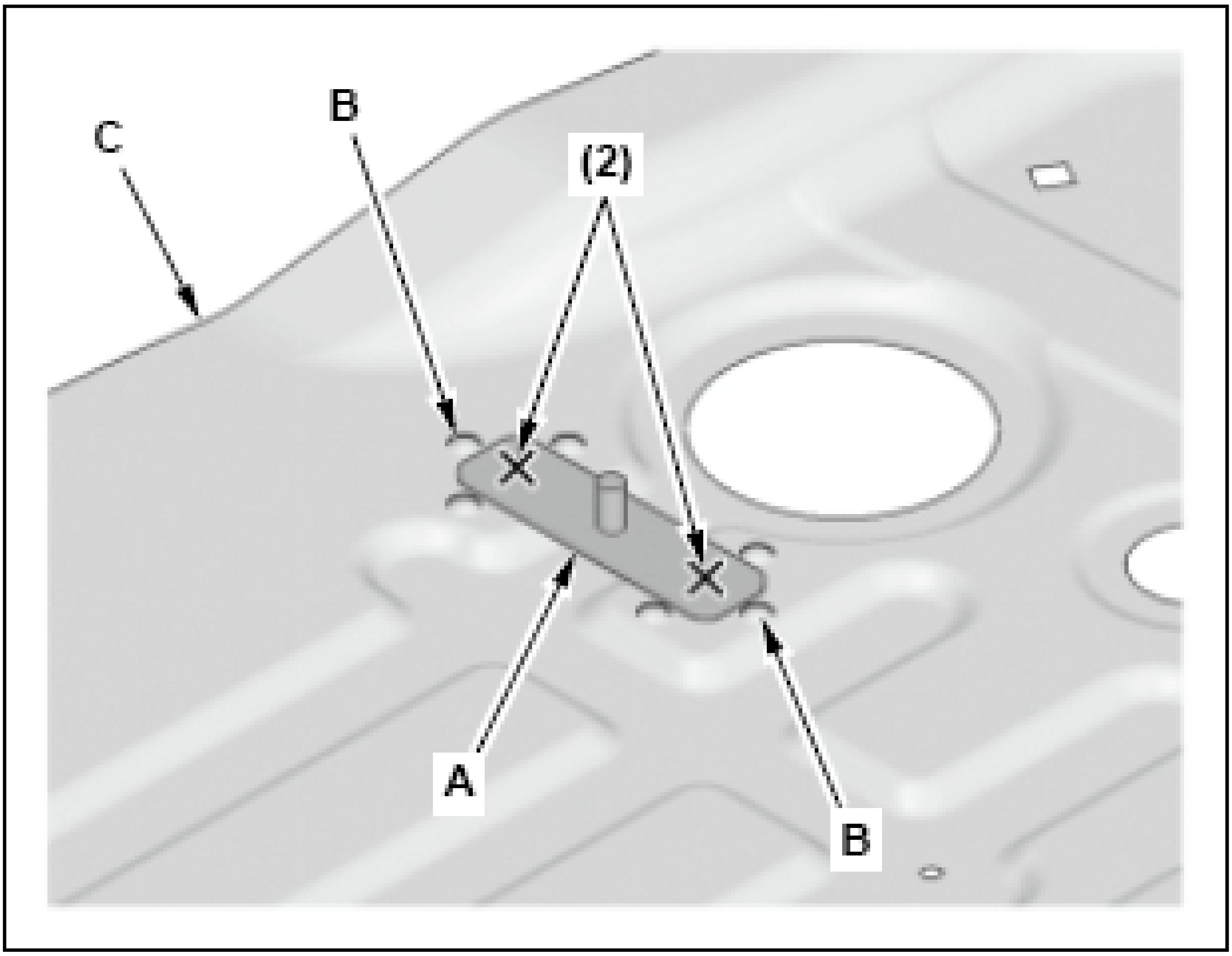

2. Weld the new rear floor panel (B) to rear floor A, rear frame upper stiffener A (C), the middle floor crossmember (D), and the rear floor crossmember (E).

   (■)*: Welding positions with rear frame upper stiffener A, include ultra high-strength steel (1500 MPa) parts. **Perform the spot welding on the conditions of No. 12 in the table shown below.** (See SPOT WELDING CONDITIONS FOR ULTRA HIGH-STRENGTH STEEL PARTS (1180 AND 1500 MPA)).

   SPOT WELDING CONDITION DESCRIPTION

No. 12	7500 A	600 ms	3432 N (350 kgf)

NOTE: **Welding positions (F): Must be welded according to the following conditions.**

Plug hole diameter: φ 10 mm (0.39 in)
Welding wire: Must use wire with a tensile strength of 980 MPa or higher (142 ksi or higher).

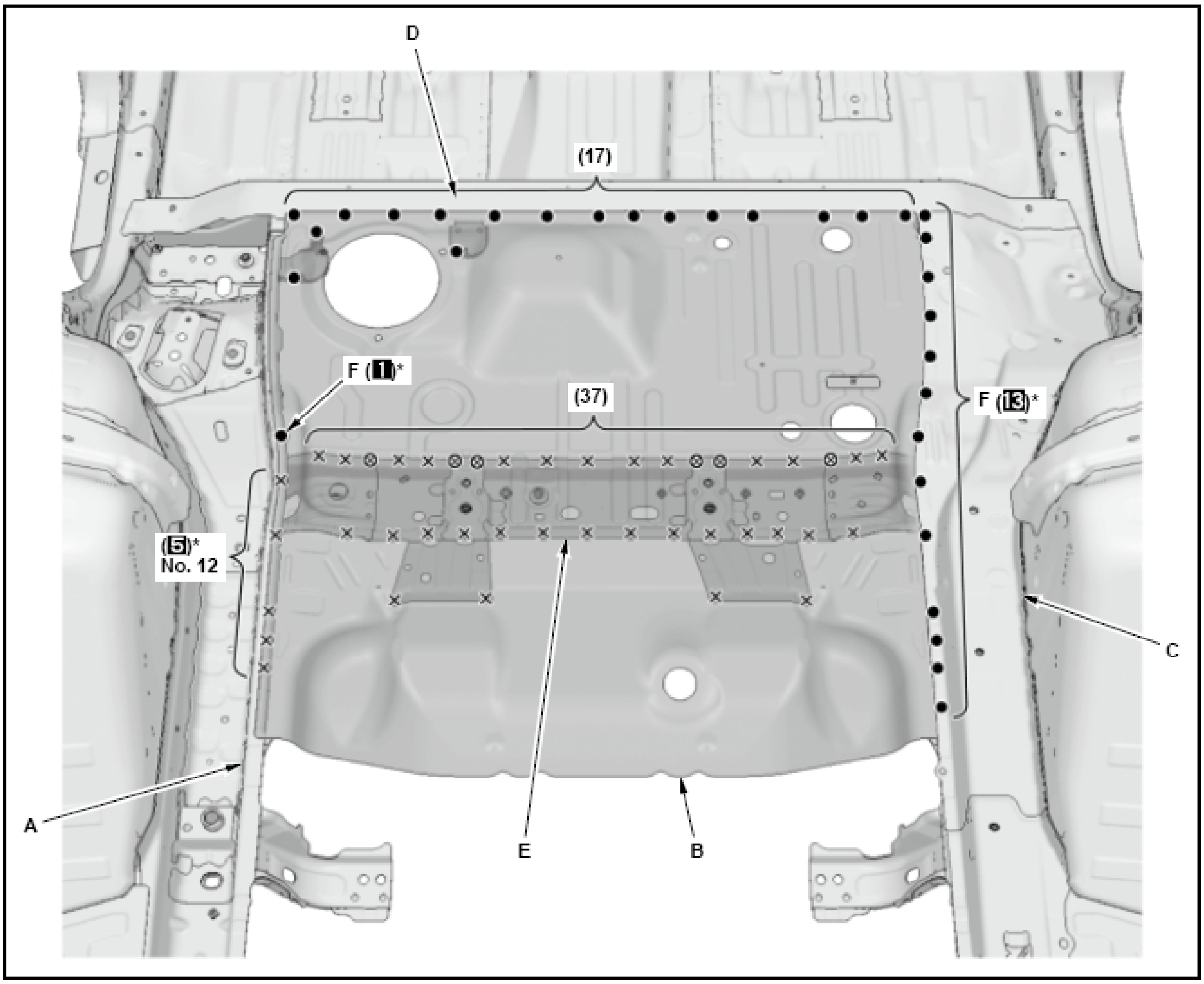

Spare Tire Pan Complete - Weld

See REAR FLOOR/REAR FRAME REPLACEMENT.

Rear Frame Upper Stiffener A/B (One Side) - Weld

1. Weld the new rear floor upper crossmember (B) to rear frame upper stiffener A and the upper stiffener bulkhead (C).

   (■)*: Welding positions with rear frame upper stiffener A, include ultra high-strength steel (1500 MPa) parts. **Perform the spot welding on the conditions of No. 15 in the table shown below.** (See SPOT WELDING CONDITIONS FOR ULTRA HIGH-STRENGTH STEEL PARTS (1180 AND 1500 MPA)).

   SPOT WELDING CONDITION DESCRIPTION

No. 15	9000 A	600 ms	3432 N (350 kgf)

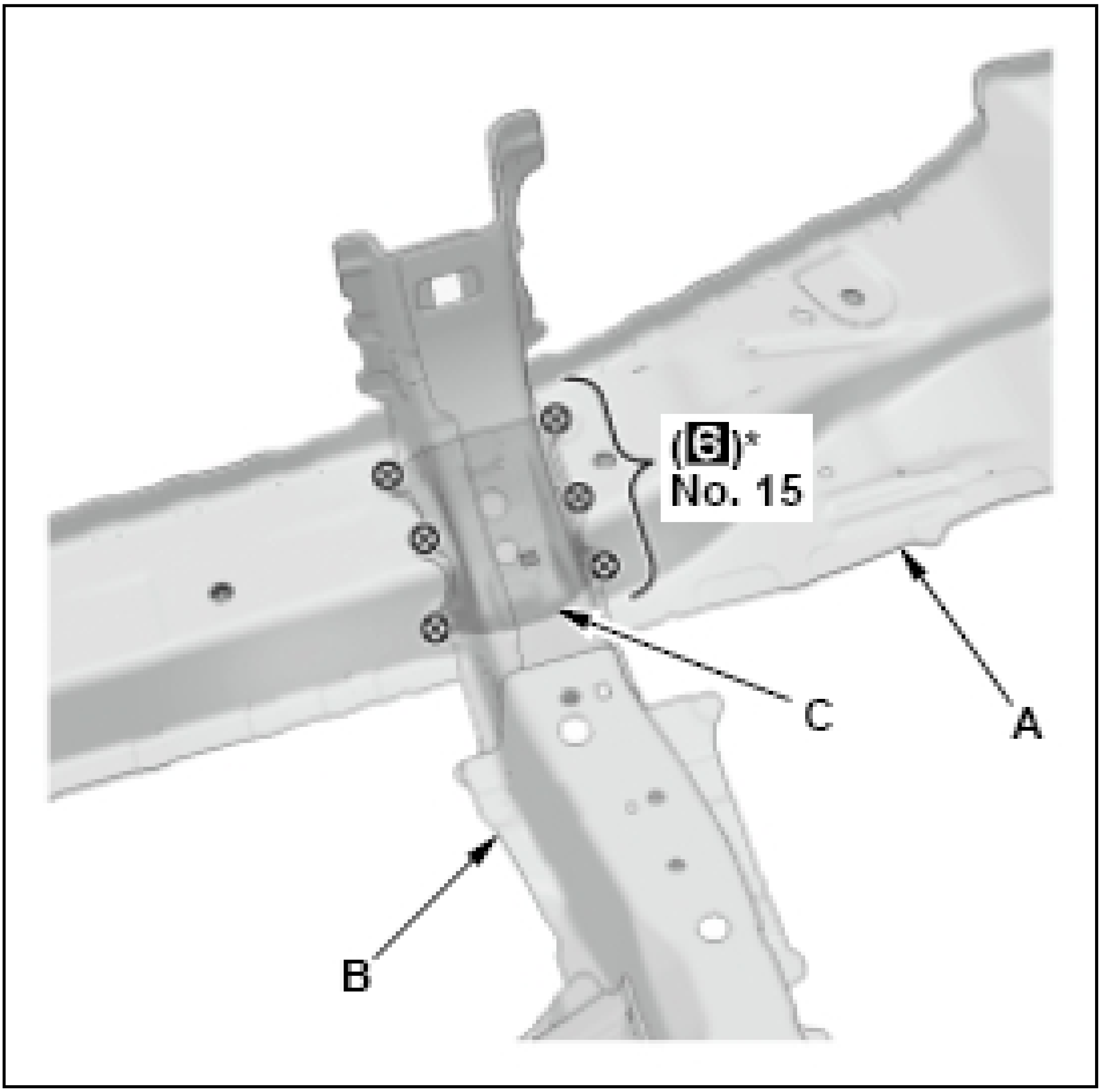

2. Weld the rear portion of rear frame upper stiffener A and rear frame upper stiffener B to rear frame A (C), the rear floor side panel (D), the rear frame flange (E), the rear wheelhouse (F), the spare tire pan (G), and the rear floor panel (H).

(■)*: Welding positions with rear frame upper stiffener A/B and rear frame A, include ultra high-strength steel (1500 MPa) parts. **Perform the spot welding on the conditions of No. 13 and 14 in the table shown below.** (See SPOT WELDING CONDITIONS FOR ULTRA HIGH-STRENGTH STEEL PARTS (1180 AND 1500 MPA)).

SPOT WELDING CONDITION DESCRIPTION

No. 13	8000 A	600 ms	3432 N (350 kgf)
No. 14	8500 A	600 ms	3432 N (350 kgf)

NOTE: **Welding positions (I): Must be welded according to the following conditions.**

Plug hole diameter: φ 10 mm (0.39 in)
Welding wire: Must use wire with a tensile strength of 980 MPa or higher (142 ksi or higher).

NOTE: **The indicated areas (J) are ground locations. Prior to installation of the IPU (high-voltage battery), make sure that these areas are not painted or have any corrosion.**

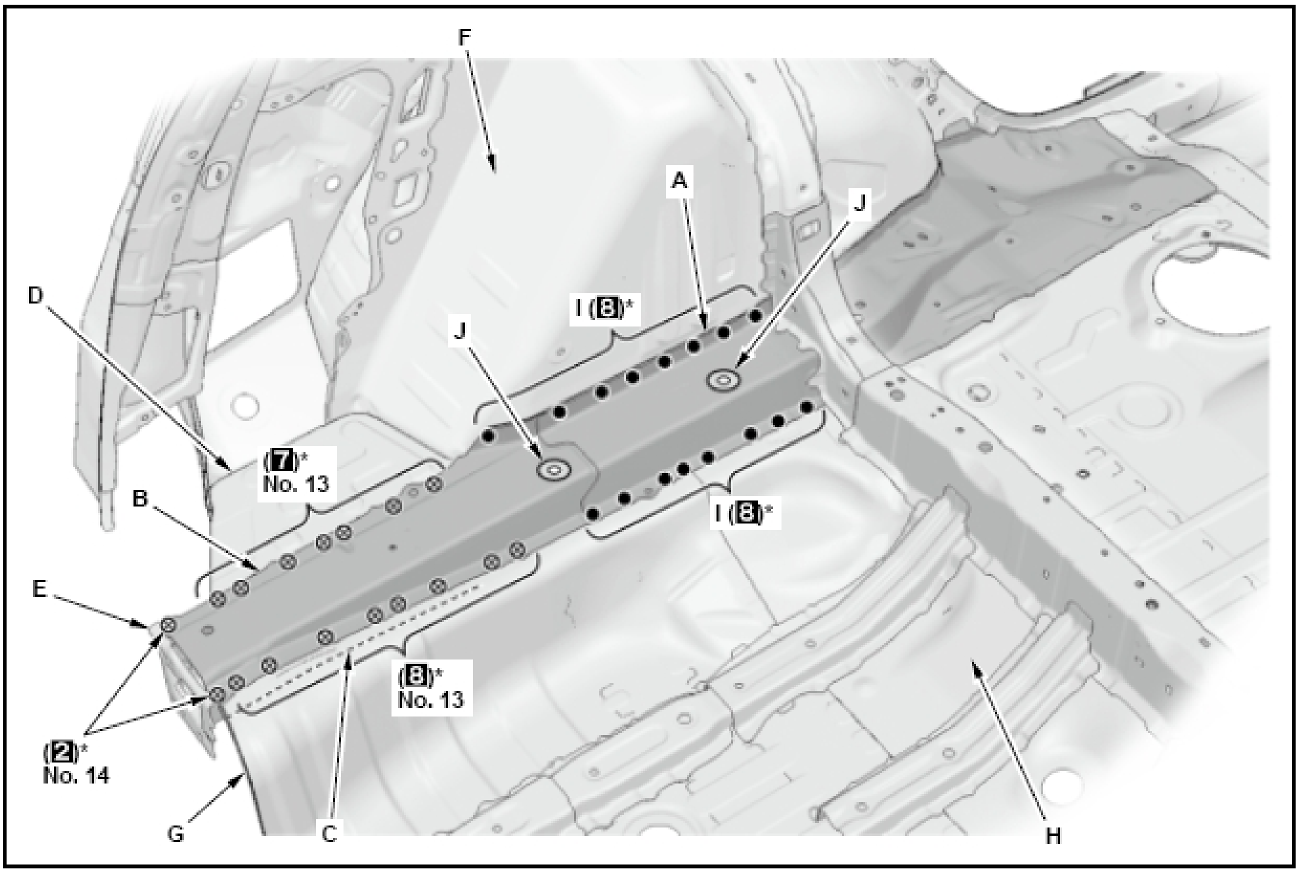

3. Weld the front portion of rear frame upper stiffener A to rear frame A (B), the side sill extension (C), the rear wheelhouse (D), the middle floor crossmember stiffener (E), and the rear floor panel (F).

(■)*: Welding positions with rear frame upper stiffener A and rear frame A, include ultra high-strength steel (1500 MPa) parts. **Perform the spot welding on the conditions of No. 13 and 14 in the table shown below. Confirm the MIG brazing conditions.** (See SPOT WELDING CONDITIONS FOR ULTRA HIGH-STRENGTH STEEL PARTS (1180 AND 1500 MPA) And MIG BRAZING CONDITIONS FOR ULTRA HIGH-STRENGTH STEEL PARTS (1180 AND 1500 MPA)).

SPOT WELDING CONDITION DESCRIPTION

No. 13	8000 A	600 ms	3432 N (350 kgf)
No. 14	8500 A	600 ms	3432 N (350 kgf)

NOTE: **Welding positions (G): Must be welded according to the following conditions.**

Plug hole diameter: φ 10 mm (0.39 in)
Welding wire: Must use wire with a tensile strength of 980 MPa or higher (142 ksi or higher).

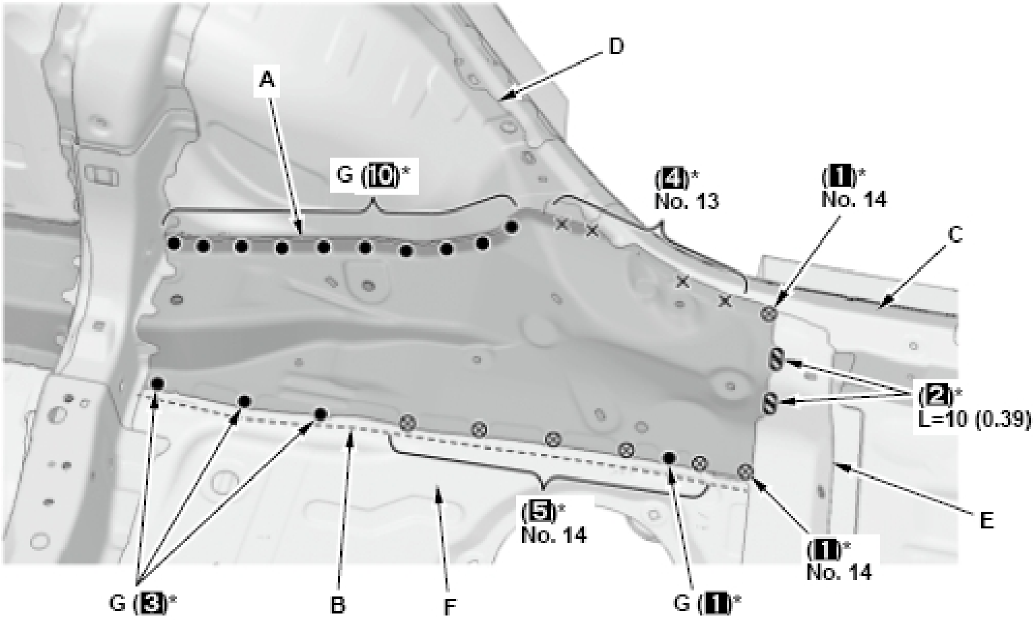

Fig. 52: Rear Frame Upper Stiffener Installation Weld Measurements And Locations
Courtesy of AMERICAN HONDA MOTOR CO., INC.

Rear Floor Upper Crossmember - Weld

See **REAR FLOOR/REAR FRAME REPLACEMENT**.

Side Sill Reinforcement Extension, Side Sill Extension End Flange, and Outer Panel - Weld

1. Weld the new side sill reinforcement extension (A) to the side sill reinforcement (B) and the side sill extension (C).

(■)*: Welding positions with the side sill reinforcement, include ultra high-strength steel (1500 MPa) parts.

NOTE: **Welding positions (D): Must be welded according to the following conditions.**

Plug hole diameter: φ 10 mm (0.39 in) Welding wire: Must use wire with a tensile strength of 980 MPa or higher (142 ksi or higher).

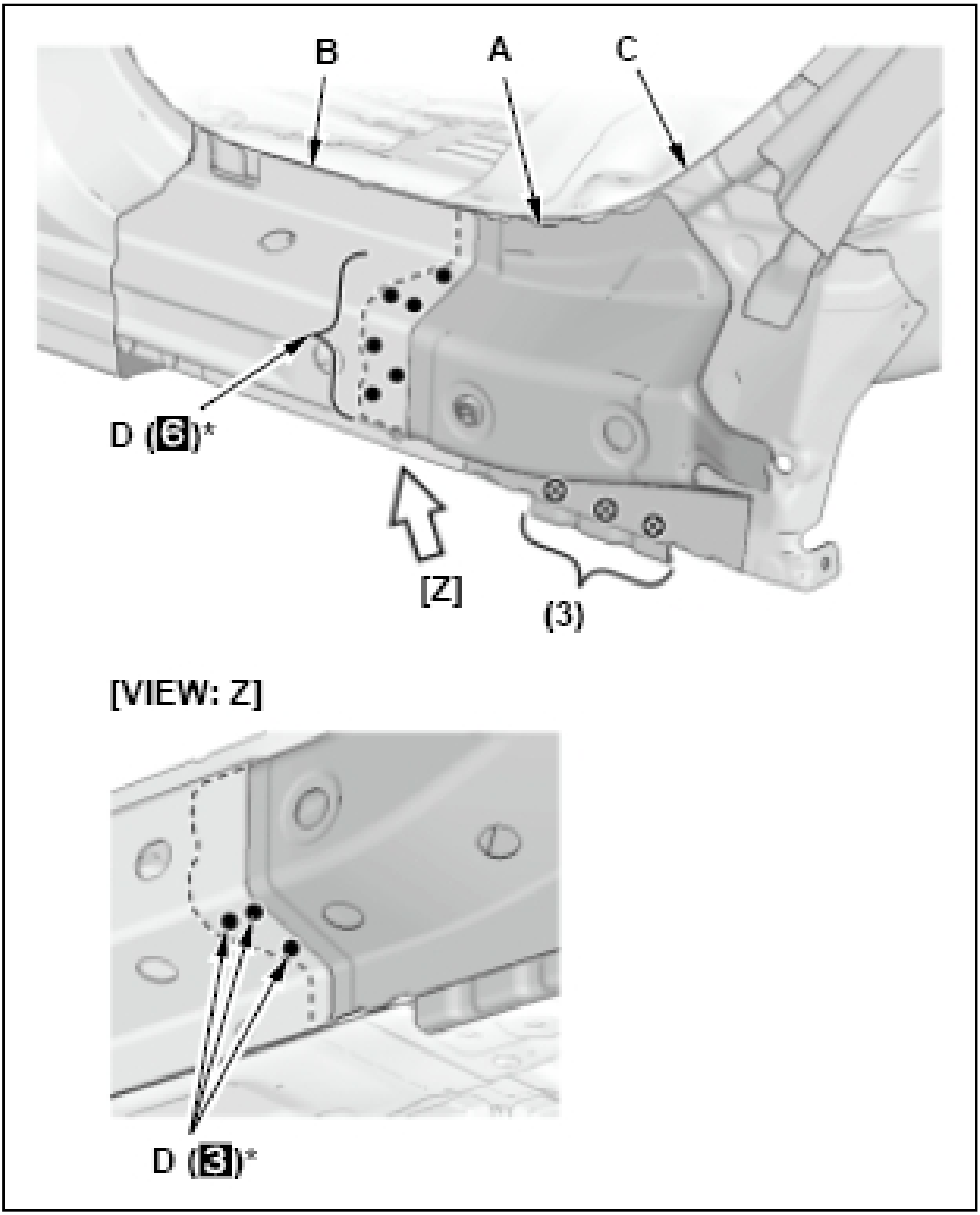

2. Weld the new side sill extension end flange (A) to the rear inner panel (B) and the side sill extension (C).

   ()*: Welding positions with high-strength steel parts. **Confirm the plug welding conditions.** (See MAG WELDING CONDITIONS FOR HIGH-STRENGTH STEEL PARTS (EXCEPT 1500 MPA)).

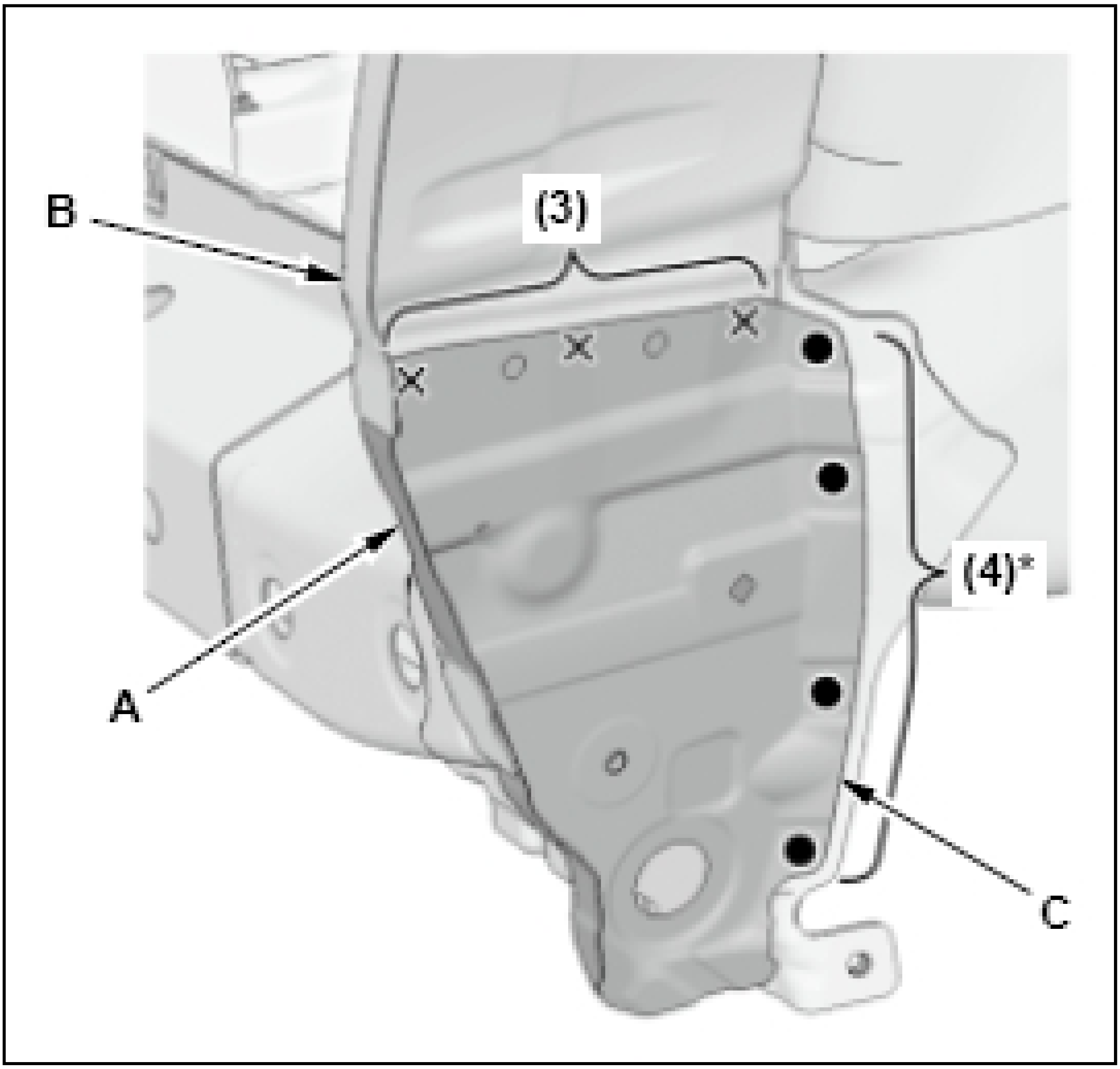

3. Weld the new outer panel access window (A).

   (■)*: Welding positions with the side sill reinforcement (B), include ultra high-strength steel (1500 MPa) parts. **Perform the spot welding on the conditions of No. 26 and 30 in the table shown below.** (See SPOT WELDING CONDITIONS FOR ULTRA HIGH-STRENGTH STEEL PARTS (1180 AND 1500 MPA)).

   SPOT WELDING CONDITION DESCRIPTION

No. 26	8000 A	800 ms	3432 N (350 kgf)
No. 30	8500 A	1200 ms	3432 N (350 kgf)

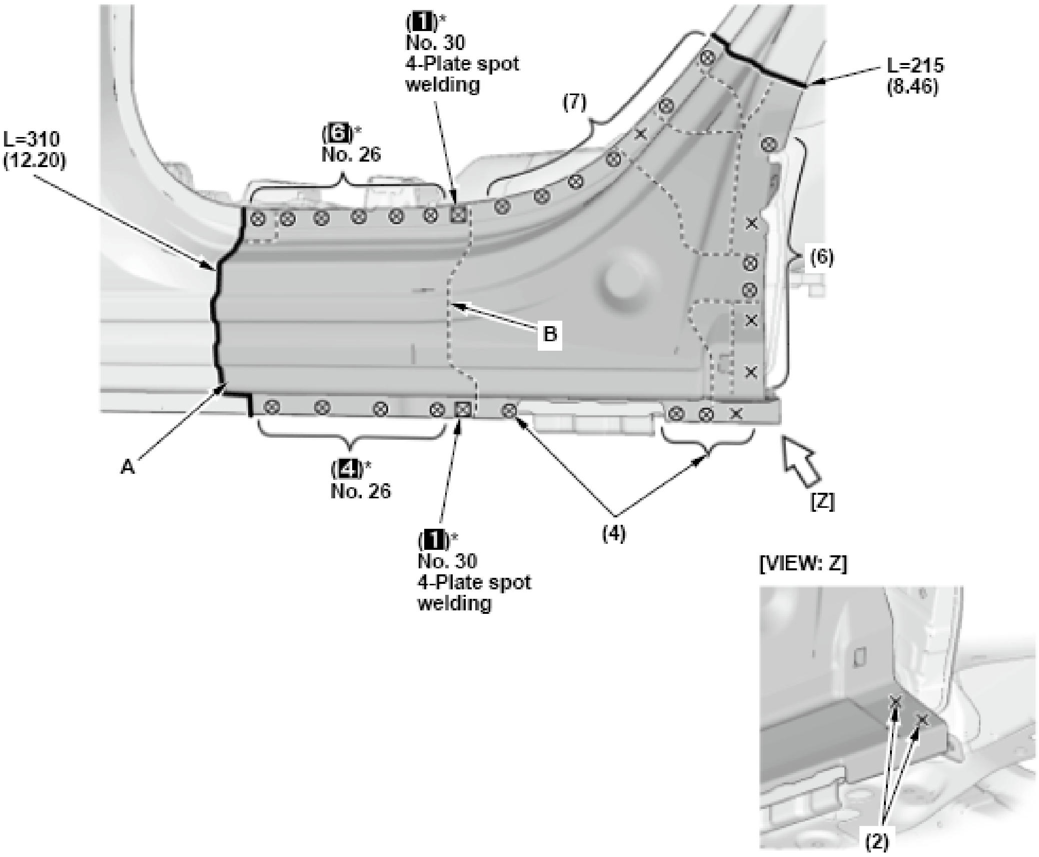
(1)*
No. 30
4-Plate spot
welding
L=215
(8.46)
(7)
L=310
(12.20)
(6)*
No. 26
(6)
B
A
(4)*
No. 26
[Z]
(4)
(1)*
No. 30
4-Plate spot
welding
[VIEW: Z]
(2)

Fig. 53: Outer Side Sill Panel Access Window Installation Weld Measurements And Locations
Courtesy of AMERICAN HONDA MOTOR CO., INC.

Rear Panel - Weld

See **REAR PANEL REPLACEMENT**.

FRONT BULKHEAD REPLACEMENT

Removal

Construction - Remove

Front Bulkhead

NOTE:

- **This section explains the procedures after removal of all related parts. For the related parts removal procedure, refer to the appropriate Service Information.**
- **The component replacement procedure described here is only for new genuine supplied parts, as needed, according to the area and the degree of damage on the body.**

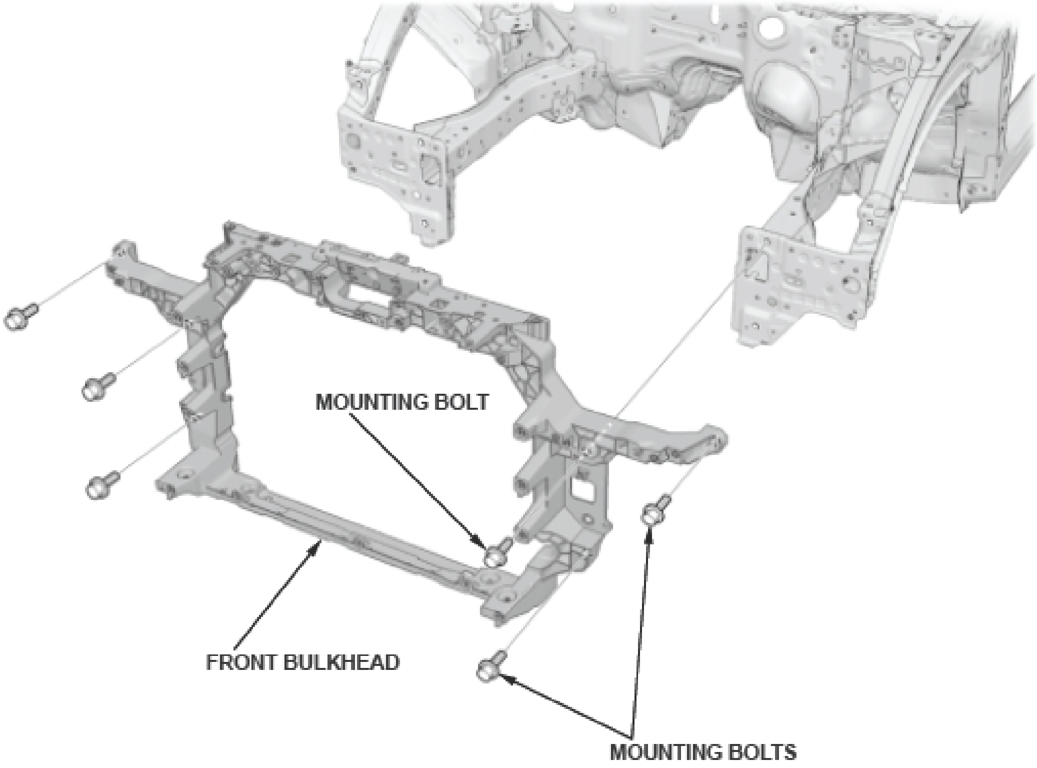

Fig. 54: Front Bulkhead Component Location
Courtesy of AMERICAN HONDA MOTOR CO., INC.

Installation

NOTE:

- **Position the replacement parts.**

  Check the body dimensions:

  - **Front bulkhead position See FRONT BULKHEAD POSITION DIMENSION .**
  - **Engine compartment See ENGINE COMPARTMENT DIMENSION .**
  - **Front wheelhouse upper member position See FRONT WHEELHOUSE UPPER MEMBER POSITION DIMENSION .**
  - **Engine compartment and front floor, under view See ENGINE COMPARTMENT AND FRONT FLOOR, UNDER VIEW DIMENSION .**
  - **Frame repair chart See FRAME REPAIR CHART .**
- **Temporarily install the related parts, then check for differences in level and clearance. Check the external parts fitting positions. Make sure the body lines flow smoothly. See EXTERNAL PARTS FITTING POSITIONS .**
- ▭ **Torque: N.m (lbf.ft)**

Front Bulkhead - Install

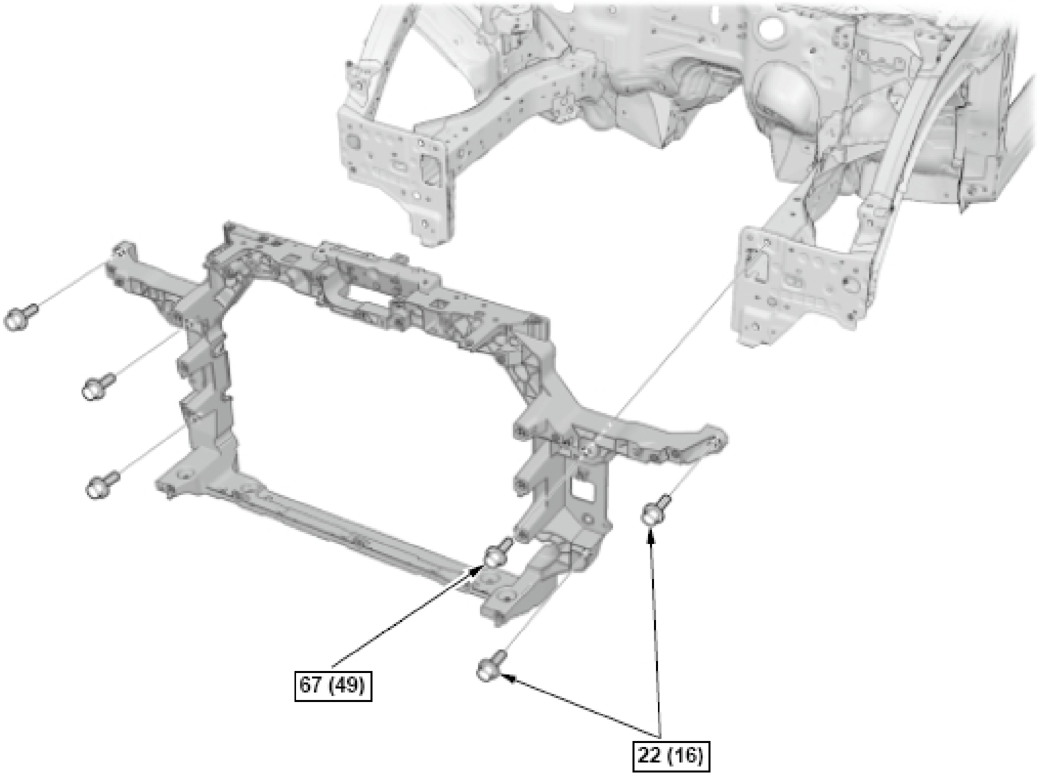

Fig. 55: Front Bulkhead Mounting Hardware Locations With Torque Specifications
Courtesy of AMERICAN HONDA MOTOR CO., INC.

CENTER PILLAR OUTER PANEL REPLACEMENT

REMOVAL

NOTE:

- **High-strength steel is defined as any steel with a tensile strength of 340 MPa or higher. If a part is constructed of, or includes high-strength steel observe the important guidelines. Refer to Repair Guidelines For High-Strength Steel Parts .**
- **Welding symbols (The welding symbols with dashed lines have a meaning of the spot welding of the part which is not visible) ; refer to Symbols Definition .**
- **(): The number of welds**

Mass Production Body Welding Positions and Numbers - Remove

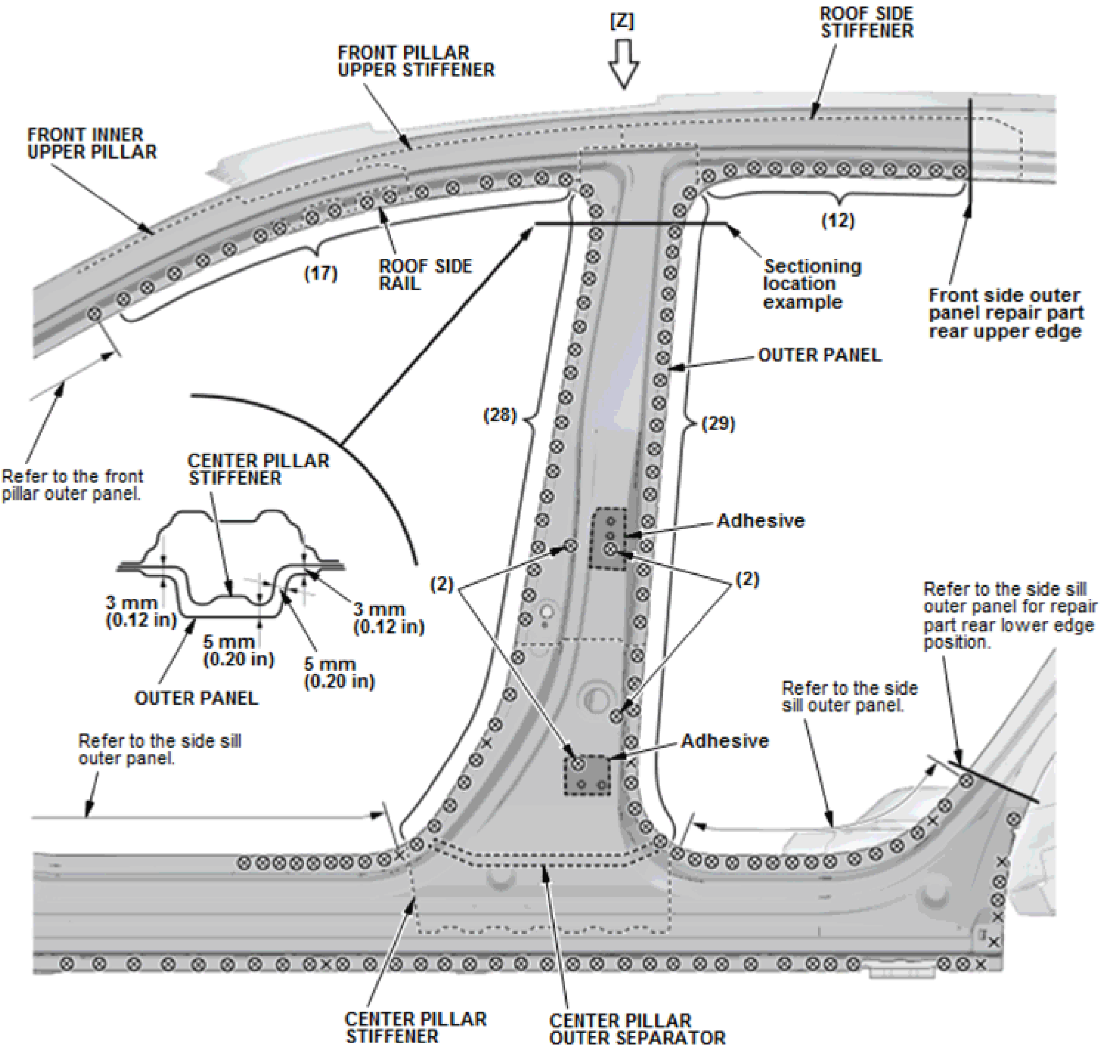
[Z]
ROOF SIDE STIFFENER
FRONT PILLAR UPPER STIFFENER
FRONT INNER UPPER PILLAR
(12)
(17)
ROOF SIDE RAIL
Sectioning location example
Front side outer panel repair part rear upper edge
OUTER PANEL
(28)
(29)
Refer to the front pillar outer panel.
CENTER PILLAR STIFFENER
Adhesive
(2)
(2)
3 mm (0.12 in)
3 mm (0.12 in)
5 mm (0.20 in)
5 mm (0.20 in)
OUTER PANEL
Refer to the side sill outer panel for repair part rear lower edge position.
Refer to the side sill outer panel.
Adhesive
Refer to the side sill outer panel.
CENTER PILLAR STIFFENER
CENTER PILLAR OUTER SEPARATOR

Fig. 1: Center Pillar Outer Panel Removal Weld Counts And Locations (1 Of 2)
Courtesy of AMERICAN HONDA MOTOR CO., INC.

Outer panel welding positions and numbers with roof panel removed

[VIEW: Z]

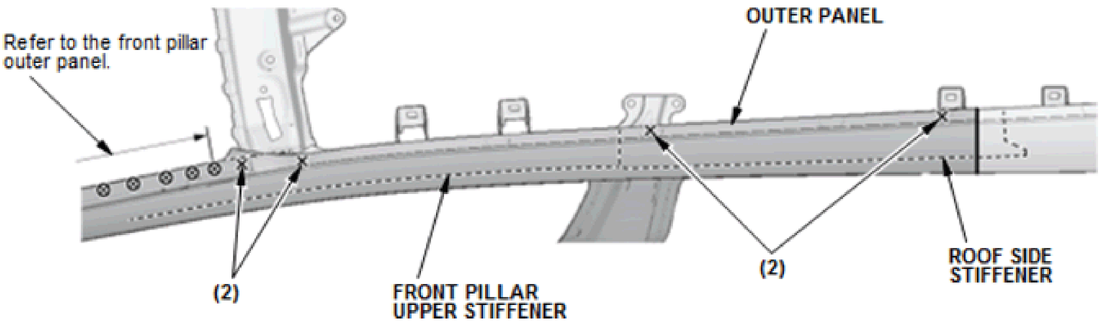
Refer to the front pillar outer panel.
OUTER PANEL
(2)
FRONT PILLAR UPPER STIFFENER
(2)
ROOF SIDE STIFFENER

Fig. 2: Center Pillar Outer Panel Removal Weld Counts And Locations (2 Of 2)
Courtesy of AMERICAN HONDA MOTOR CO., INC.

Center Pillar Outer Panel Component Location

NOTE:

- **This section explains the procedures after Removal of all related parts. For the related parts' Removal procedure, refer to the appropriate service information.**
- **The component replacement procedure described here is only for new genuine supplied parts, as needed, according to the area and the degree of damage on the body.**
- **If there is any damage to the center pillar, cut and pry off the outer panel, and replace it.**

  Select the sectioning location in consideration of the front side outer panel repair part ; refer to Roof And Side Panel Construction .
- **Replace the center pillar outer separator.**

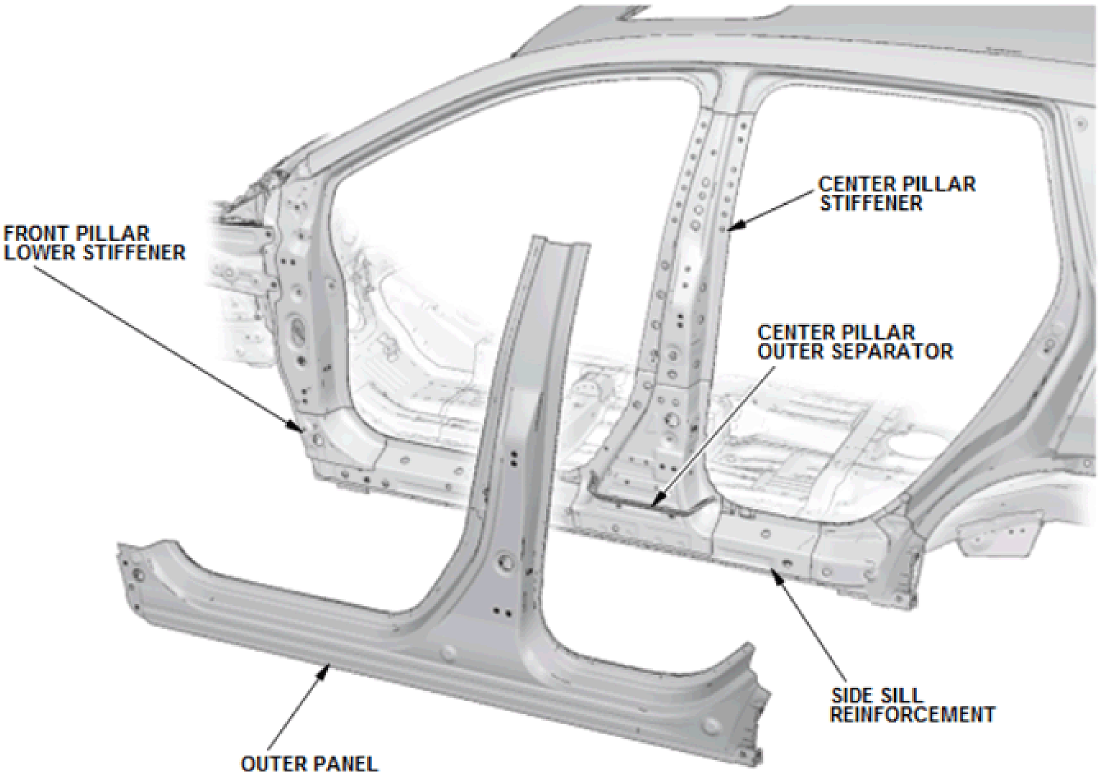
FRONT PILLAR LOWER STIFFENER
CENTER PILLAR STIFFENER
CENTER PILLAR OUTER SEPARATOR
SIDE SILL REINFORCEMENT
OUTER PANEL

Fig. 3: Center Pillar Outer Panel Component Location
Courtesy of AMERICAN HONDA MOTOR CO., INC.

Mass Production Body Welding Positions and Numbers - Remove

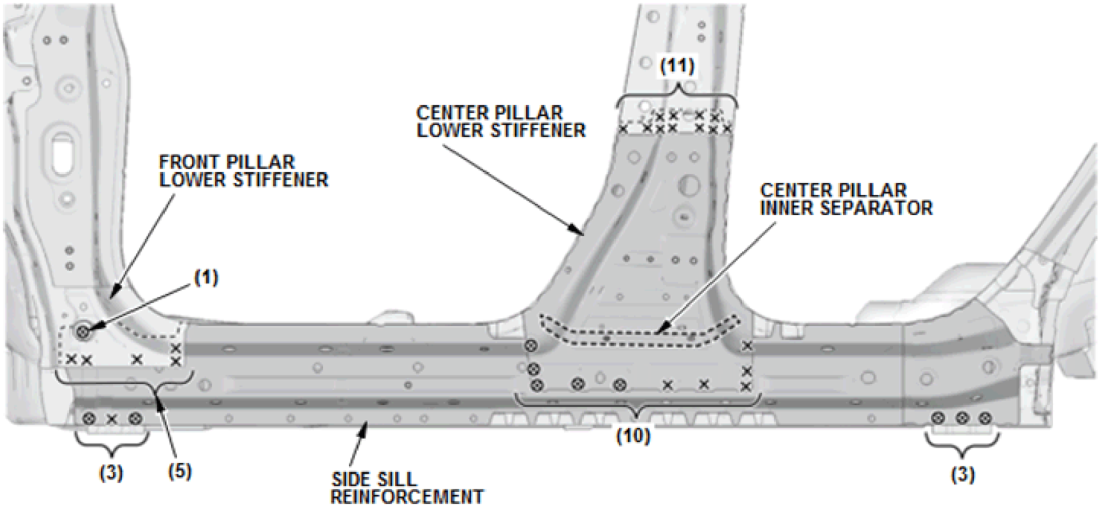
(11)
CENTER PILLAR
LOWER STIFFENER
FRONT PILLAR
LOWER STIFFENER
CENTER PILLAR
INNER SEPARATOR
(1)
(10)
(3)
(5)
SIDE SILL
REINFORCEMENT
(3)

With center pillar lower stiffener removed

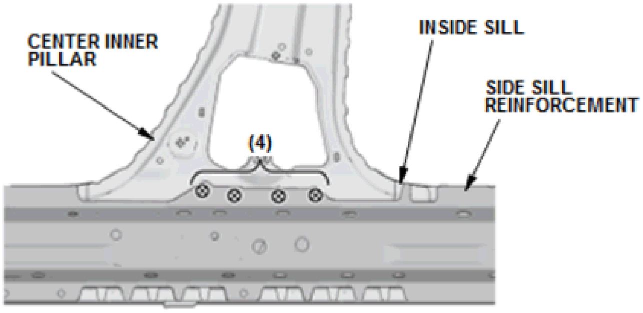
CENTER INNER
PILLAR
INSIDE SILL
SIDE SILL
REINFORCEMENT
(4)

Fig. 4: Side Sill Reinforcement And Center Pillar Lower Stiffener Removal Weld Counts And Locations

Courtesy of AMERICAN HONDA MOTOR CO., INC.

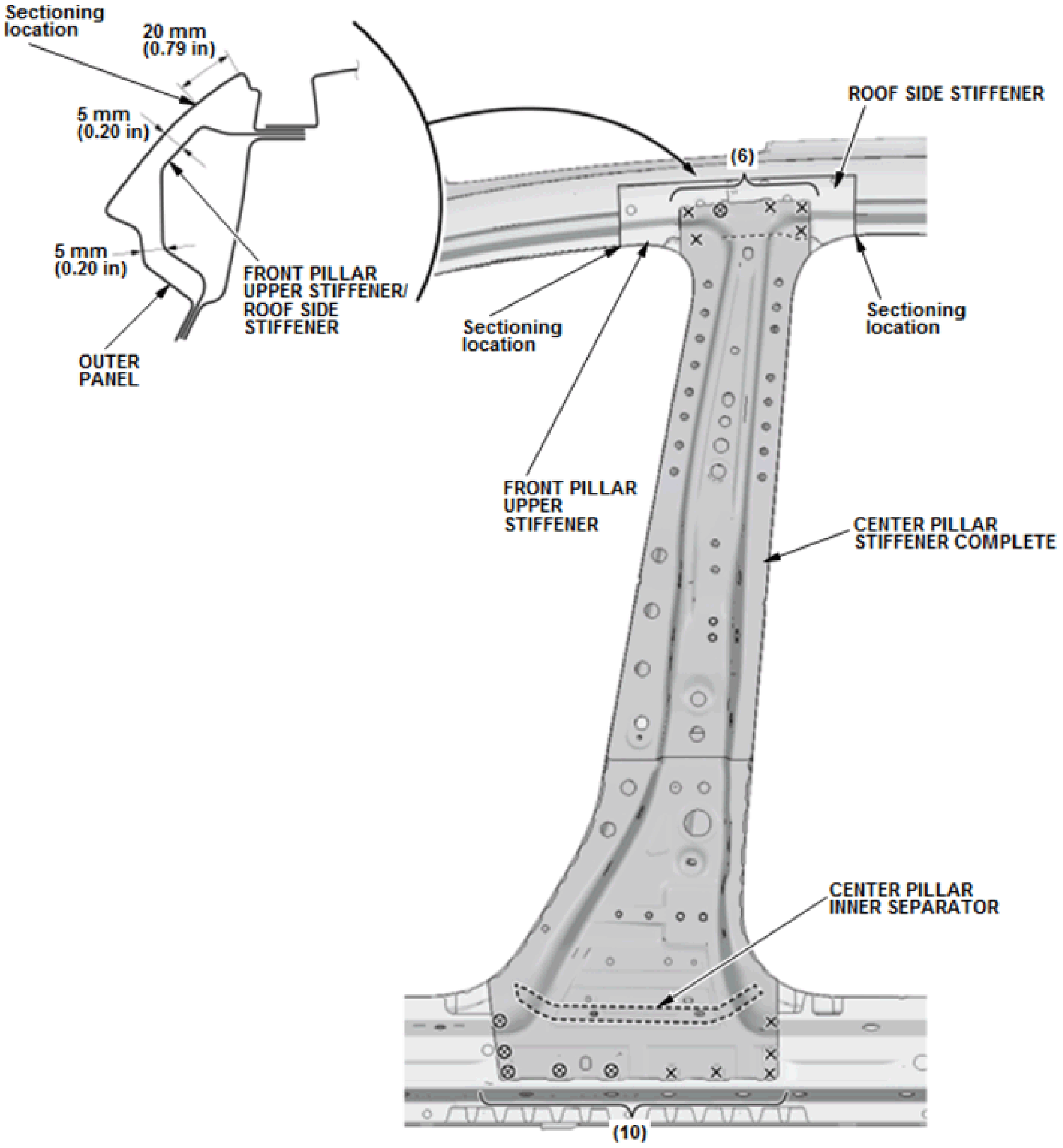
Sectioning location
20 mm (0.79 in)
5 mm (0.20 in)
5 mm (0.20 in)
OUTER PANEL
FRONT PILLAR UPPER STIFFENER/ ROOF SIDE STIFFENER
ROOF SIDE STIFFENER
(6)
Sectioning location
Sectioning location
FRONT PILLAR UPPER STIFFENER
CENTER PILLAR STIFFENER COMPLETE
CENTER PILLAR INNER SEPARATOR
(10)

Fig. 5: Center Pillar Stiffener Complete Removal Weld Counts And Locations
Courtesy of AMERICAN HONDA MOTOR CO., INC.

Side Sill Reinforcement, Component Location

NOTE:

- **This section explains the procedures after Removal of all related parts. For the related parts' Removal procedure, refer to the appropriate service information.**
- **The component replacement procedure described here is only for new genuine supplied parts, as needed, according to the area and the degree of damage on the body.**
- **Check the side sill reinforcement position for damage. If necessary, replace it.**
- **When removing the side sill reinforcement, remove the center pillar lower stiffener.**
- **Replace the center pillar inner separator.**

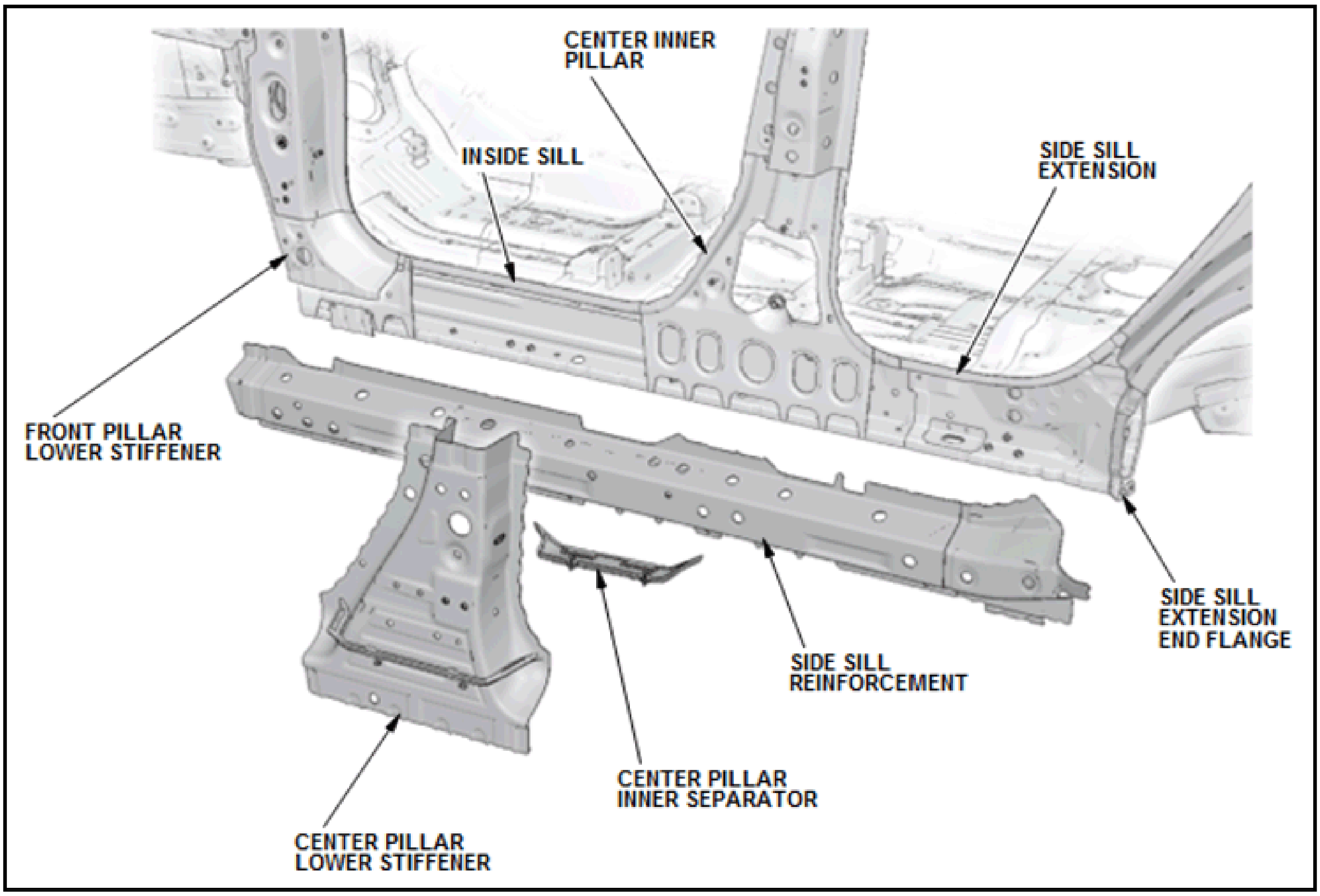
CENTER INNER PILLAR
INSIDE SILL
SIDE SILL EXTENSION
FRONT PILLAR LOWER STIFFENER
SIDE SILL EXTENSION END FLANGE
SIDE SILL REINFORCEMENT
CENTER PILLAR INNER SEPARATOR
CENTER PILLAR LOWER STIFFENER

- Check the center pillar stiffener and center inner pillar positions for damage.
- If necessary, cut the [A] and [B] positions of the outer panel, and replace the center pillar stiffener.
- When replacing the center pillar stiffener with the side sill reinforcement removed, remove the center pillar upper stiffener and the center inner pillar as an assembly.
- Replace the center pillar stiffener complete and the center inner pillar with new ones.

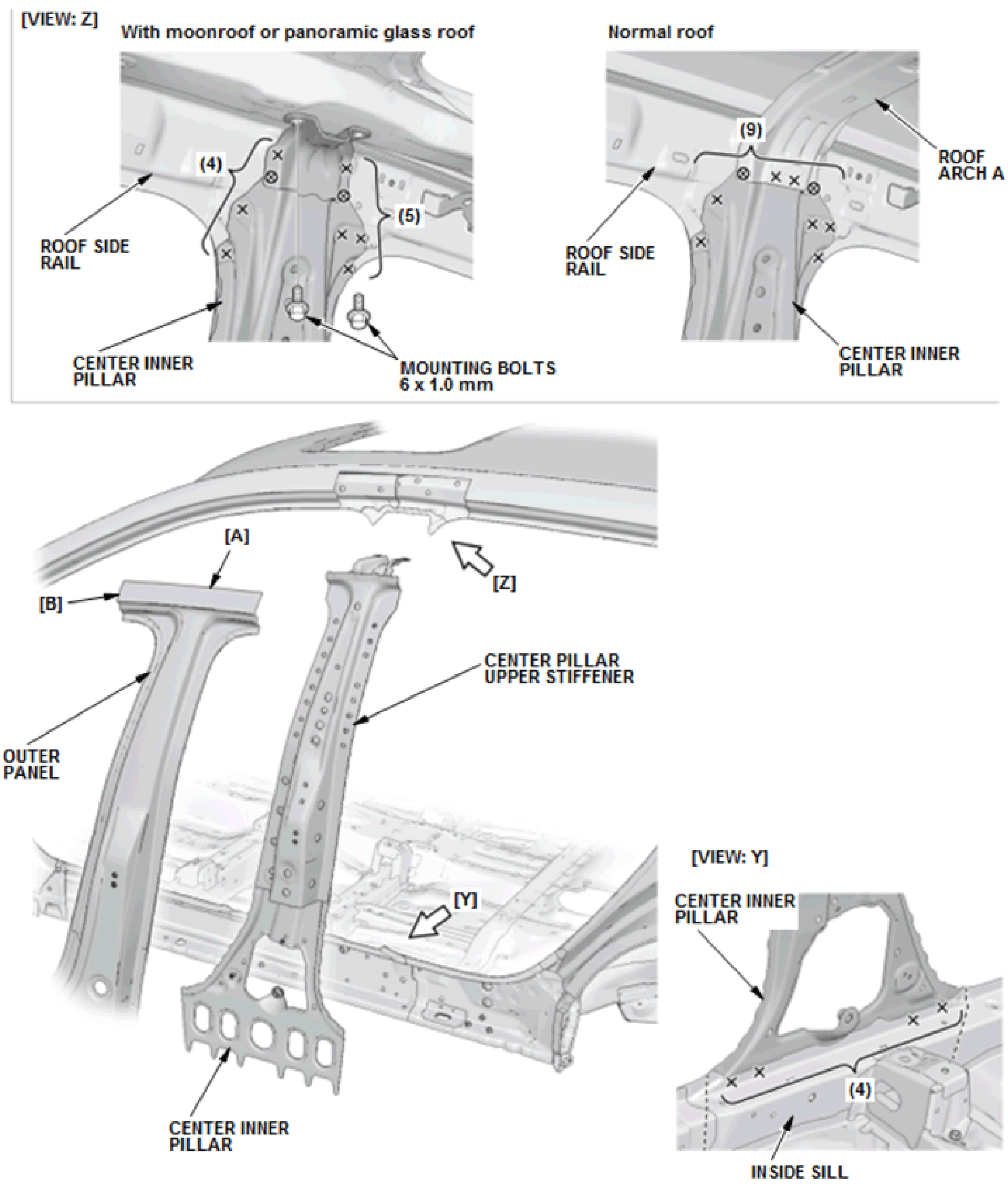
[VIEW: Z]
With moonroof or panoramic glass roof
(4)
(5)
ROOF SIDE RAIL
CENTER INNER PILLAR
MOUNTING BOLTS 6 x 1.0 mm
Normal roof
(9)
ROOF ARCH A
ROOF SIDE RAIL
CENTER INNER PILLAR
[A]
[B]
[Z]
CENTER PILLAR UPPER STIFFENER
OUTER PANEL
[Y]
CENTER INNER PILLAR
[VIEW: Y]
CENTER INNER PILLAR
(4)
INSIDE SILL

Fig. 6: Side Sill Reinforcement, Center Pillar Stiffener Complete, And Center Inner Pillar Removal Hardware, Weld Counts And Locations

Courtesy of AMERICAN HONDA MOTOR CO., INC.

INSTALLATION

NOTE:

- **Position the replacement parts. Before doing the main welding, check the body dimensions:**
  - **Refer to Front Wheelhouse Lower Member Position Dimension - Measure .**
  - **Refer to Door Hinge Positions Dimension - Measure .**
  - **Refer to Passenger's Compartment Dimension - Measure .**
  - **Refer to Inner Panel Positions Dimension - Measure .**
  - **Refer to Windshield And Door Openings .**
  - **Refer to Inside Sill Positions Dimension - Measure .**
- **Temporarily install the related parts, then check for differences in level and clearance. Check the External Parts Fitting Positions; refer to External Parts Fitting Positions . Make sure the body lines flow smoothly.**
- **Confirm the sheet thickness, tensile strength, and existence of the zinc treatment of both sides, and set the welder to conform to the welding conditions**

by referring to Front Body Construction , Roof And Side Panel Construction , and Floor And Rear Body Construction .

- **Welding symbols (The welding symbols with dashed lines have a meaning of the spot welding of the part which is not visible)**
- **() and ()*: The number of welds**

Center Inner Pillar - Weld

1. Weld the center inner pillar (B) to roof arch A (without sunroof), the roof side rail (C), the side sill reinforcement (D), and the inside sill (E).

   (■)*: Welding positions with the side sill reinforcement, include ultra high-strength steel (1500 MPa) parts. Perform the spot welding on the conditions of No. 14 in the table shown below. Refer to Spot Welding Conditions For Ultra High-Strength Steel Parts (1180 And 1500 MPa) .

No. 14	8500 A	600 ms	3432 N (350 kgf)

   ()*: Welding position with high-strength steel parts. Confirm the plug welding conditions; refer to MAG Welding Conditions For High-Strength Steel (Except 1500 MPa) Parts .

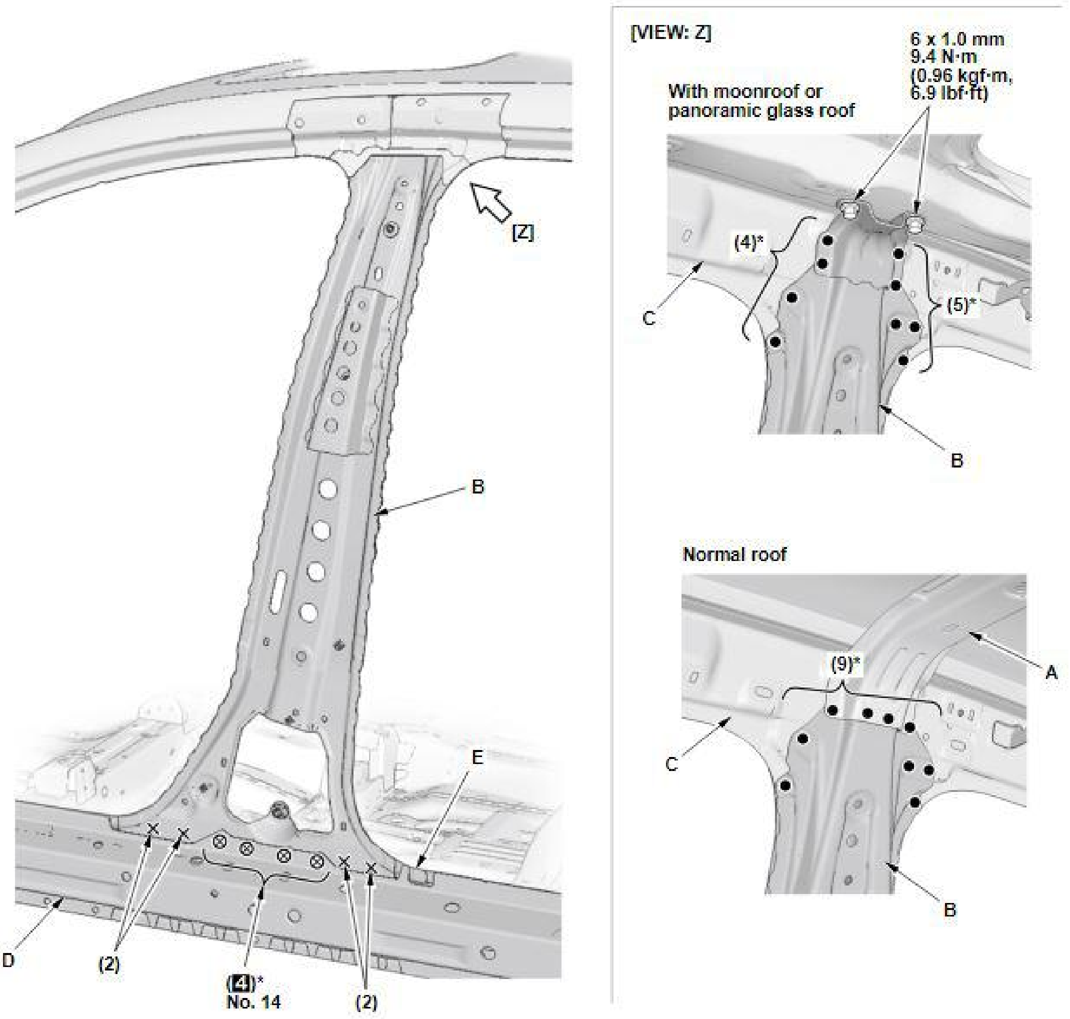

Fig. 7: Center Inner Pillar Installation Weld Counts, Hardware And Locations With Torque Specifications
Courtesy of AMERICAN HONDA MOTOR CO., INC.

Side Sill Reinforcement - Weld

1. From the passenger's compartment, weld the side sill reinforcement (A) to the inner lower pillar extension (B) and the inside sill (C).

(■)*: Welding positions with the side sill reinforcement, include ultra high-strength steel (1500 MPa) parts. Confirm the MIG brazing conditions; refer to MIG Brazing Conditions For Ultra High-Strength Steel Parts (1180 And 1500 MPa) .

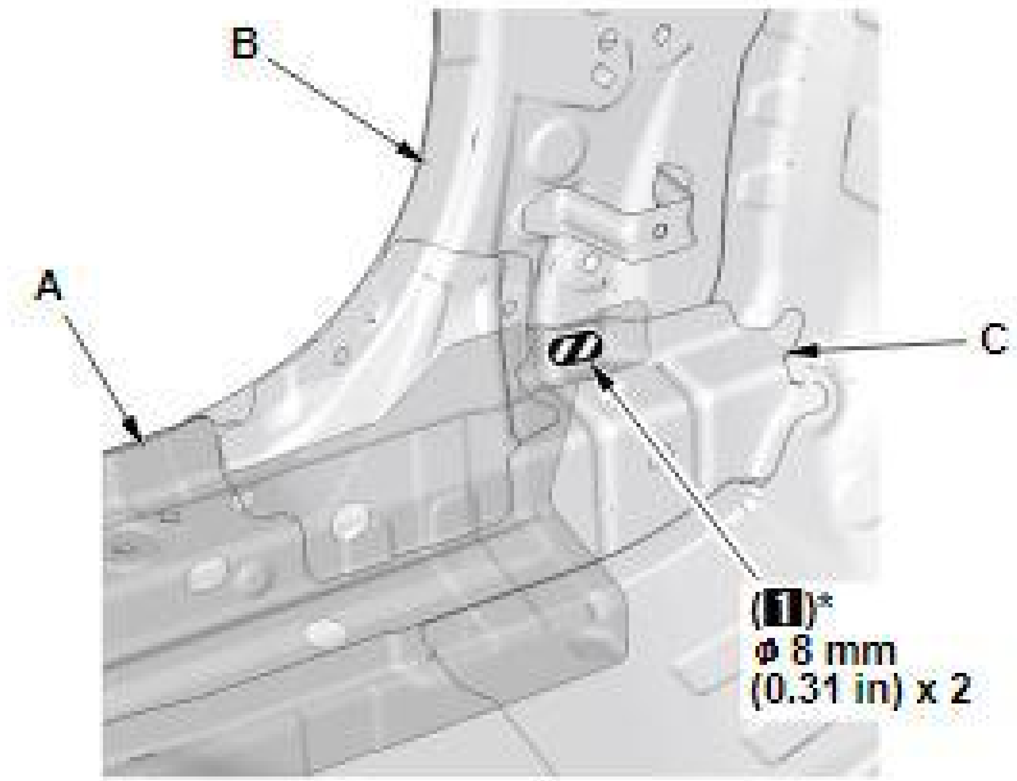

Fig. 8: Side Sill Reinforcement Installation Weld Counts, Measurement And Locations (1 Of 2)
Courtesy of AMERICAN HONDA MOTOR CO., INC.

2. Weld the side sill reinforcement (A) to the front pillar lower stiffener (B) and the jack-up base (C).

(■)*: Welding positions with the side sill reinforcement, include ultra high-strength steel (1500 MPa) parts. Perform the spot welding on the conditions of No. 13 and 15 in the table shown below; refer to Spot Welding Conditions For Ultra High-Strength Steel Parts (1180 And 1500 MPa) . Confirm the MIG brazing conditions; refer to MIG Brazing Conditions For Ultra High-Strength Steel Parts (1180 And 1500 MPa) .

No. 13	8000 A	600 ms	3432 N (350 kgf)
No. 15	9000 A	600 ms	3432 N (350 kgf)

NOTE: **Welding positions (D): Must be welded according to the following conditions.**

Plug hole diameter: Γ□10 mm (0.39 in) Welding wire: Must use wire with a tensile strength of 980 MPa or higher (142 ksi or higher).

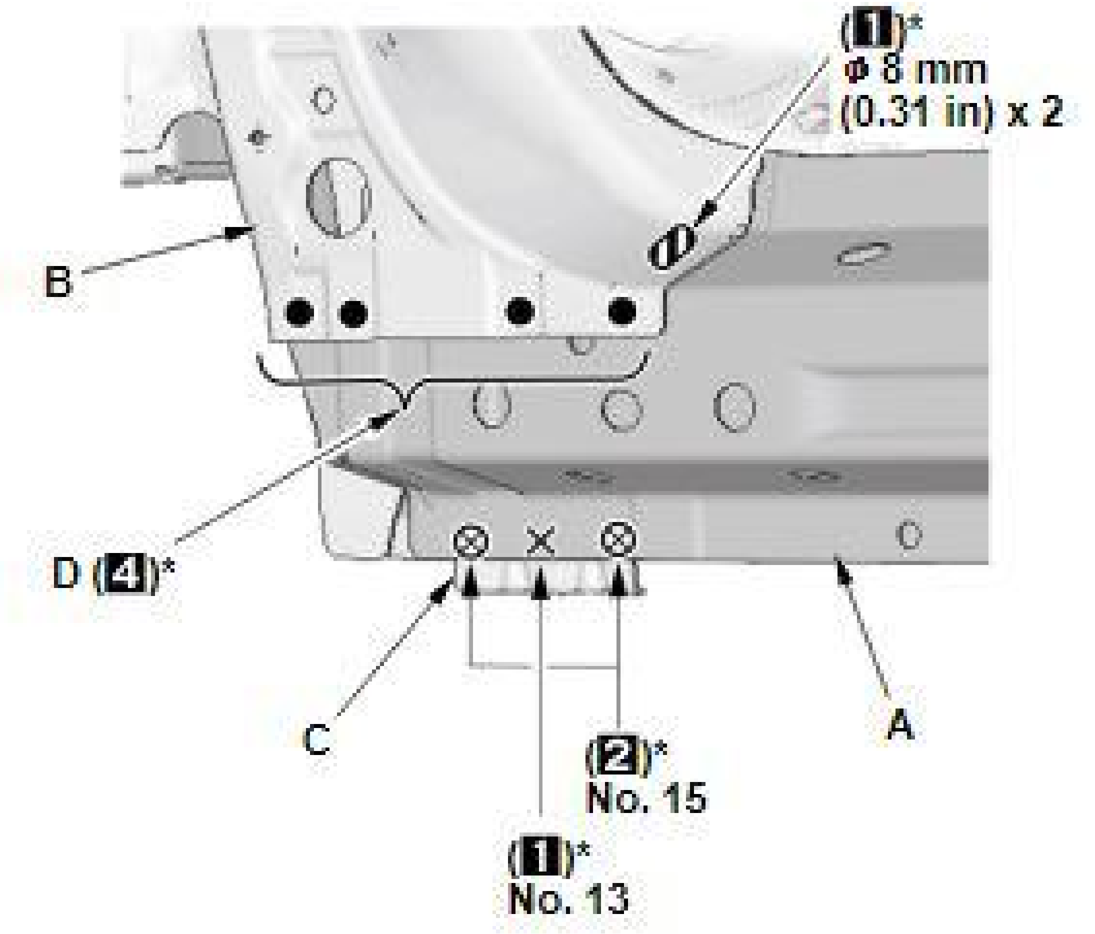
(1)*
φ 8 mm
(0.31 in) x 2
B
D (4)*
C
(2)*
No. 15
(1)*
No. 13
A

Fig. 9: Side Sill Reinforcement Installation Weld Counts, Measurements And Locations (2 Of 2)
Courtesy of AMERICAN HONDA MOTOR CO., INC.

3. Weld the side sill reinforcement extension (A) and the side sill extension (B).

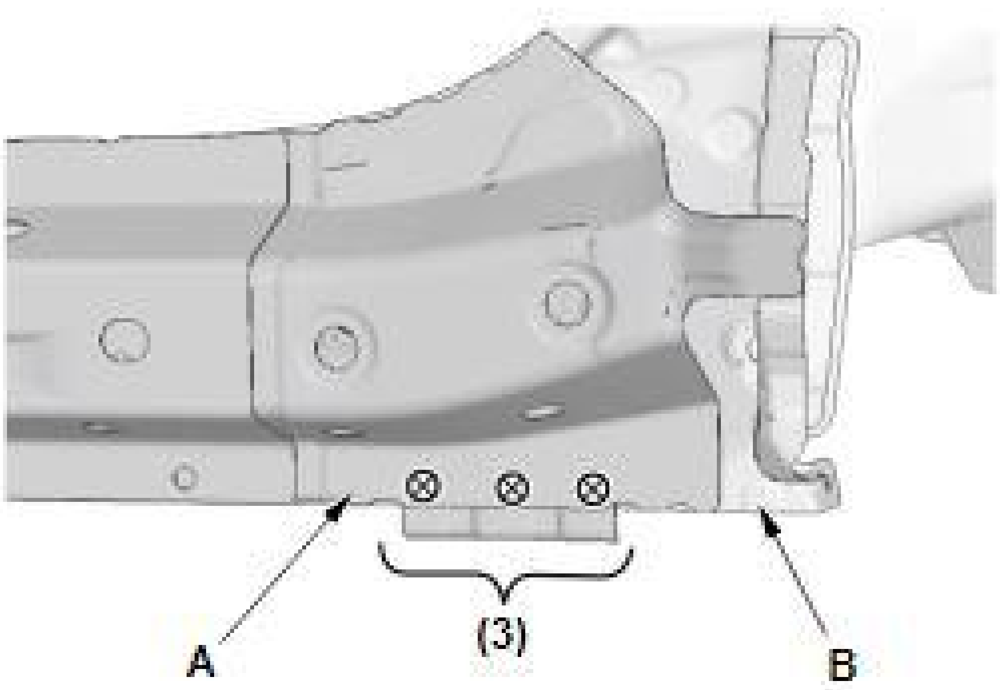

Fig. 10: Side Sill Reinforcement Extension Installation Weld Counts And Locations
Courtesy of AMERICAN HONDA MOTOR CO., INC.

Center Pillar Stiffener - Weld

1. Install the new center pillar inner separator (A) to the center pillar lower stiffener (B). Apply the sealer (C) without gaps all the way around the separator and the center inner pillar (D).

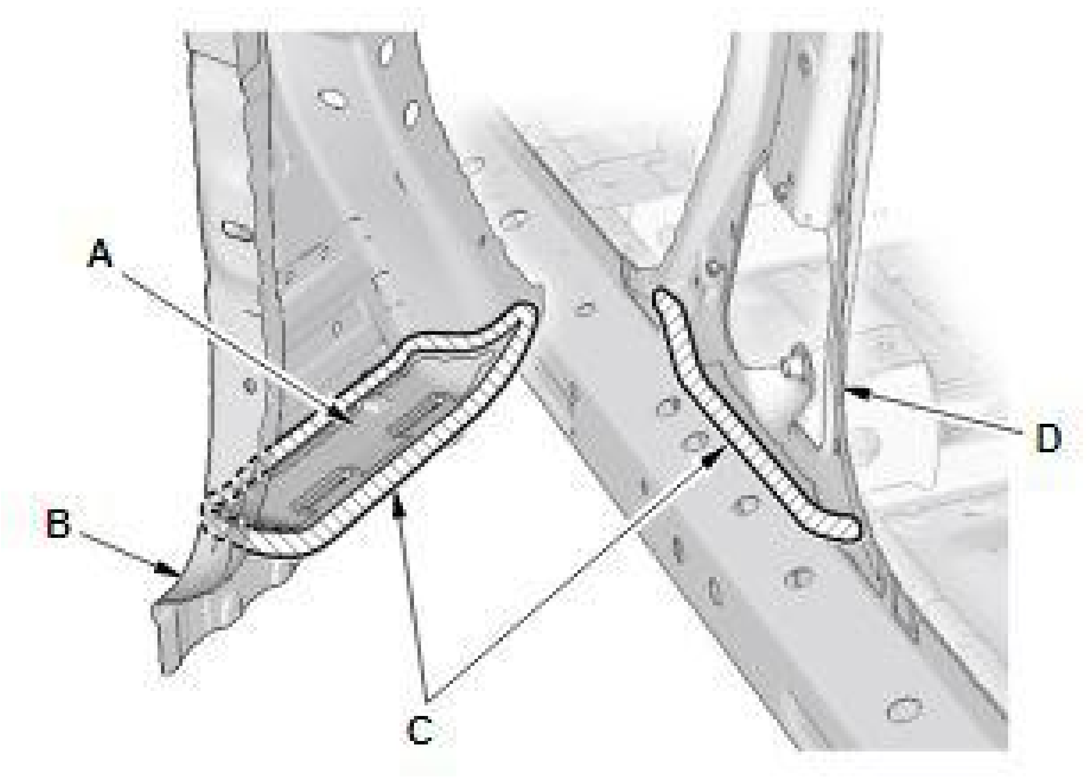

Fig. 11: Center Pillar Stiffener Separator And Body Sealer Installation Areas
Courtesy of AMERICAN HONDA MOTOR CO., INC.

2. **In case of side sill reinforcement replacement with center pillar upper stiffener left on body**

   Weld the center pillar lower stiffener (A) to the center pillar upper stiffener (B) and the side sill reinforcement (C).

   (■)*: Welding positions with the side sill reinforcement, include ultra high-strength steel (1500 MPa) parts. Confirm the MIG brazing conditions; refer to **MIG Brazing Conditions For Ultra High-Strength Steel Parts (1180 And 1500 MPa)** .

NOTE: **Welding positions (D): Must be welded according to the following conditions.**

Plug hole diameter: Γ□10 mm (0.39 in) Welding wire: Must use wire with a tensile strength of 980 MPa or higher (142 ksi or higher).

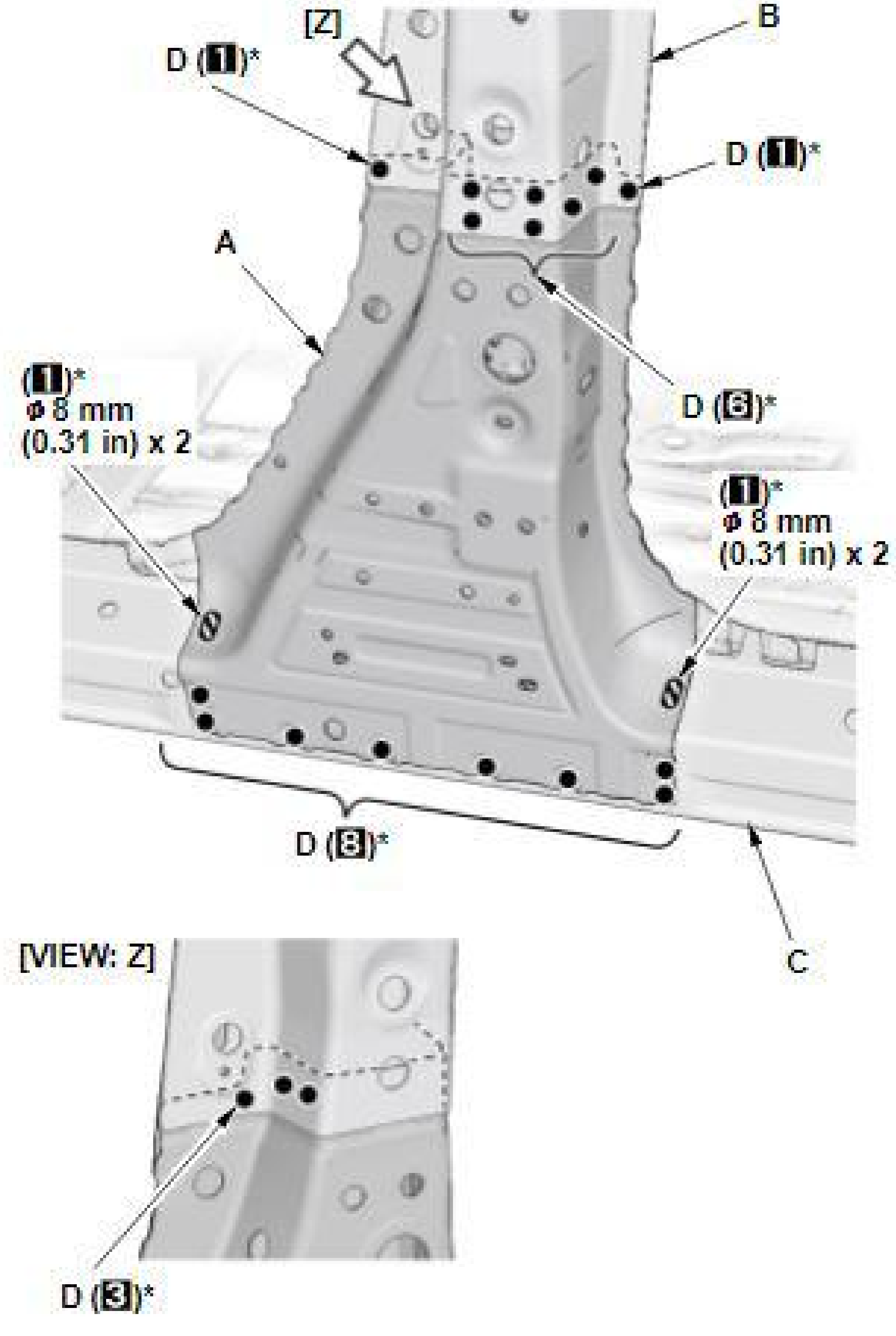

Fig. 12: Center Pillar Lower Stiffener Installation Weld Counts And Locations
Courtesy of AMERICAN HONDA MOTOR CO., INC.

3. **In case of center pillar stiffener complete replacement**

Weld the center pillar upper stiffener (A) to the front pillar upper stiffener (B) and the roof side stiffener (C).

(■)*: Welding positions with the center pillar upper stiffener and the front pillar upper stiffener, include ultra high-strength steel (1500 MPa) parts.

NOTE: **Welding positions (D): Must be welded according to the following conditions.**

Plug hole diameter: Γ□10 mm (0.39 in) Welding wire: Must use wire with a tensile strength of 980 MPa or higher (142 ksi or higher).

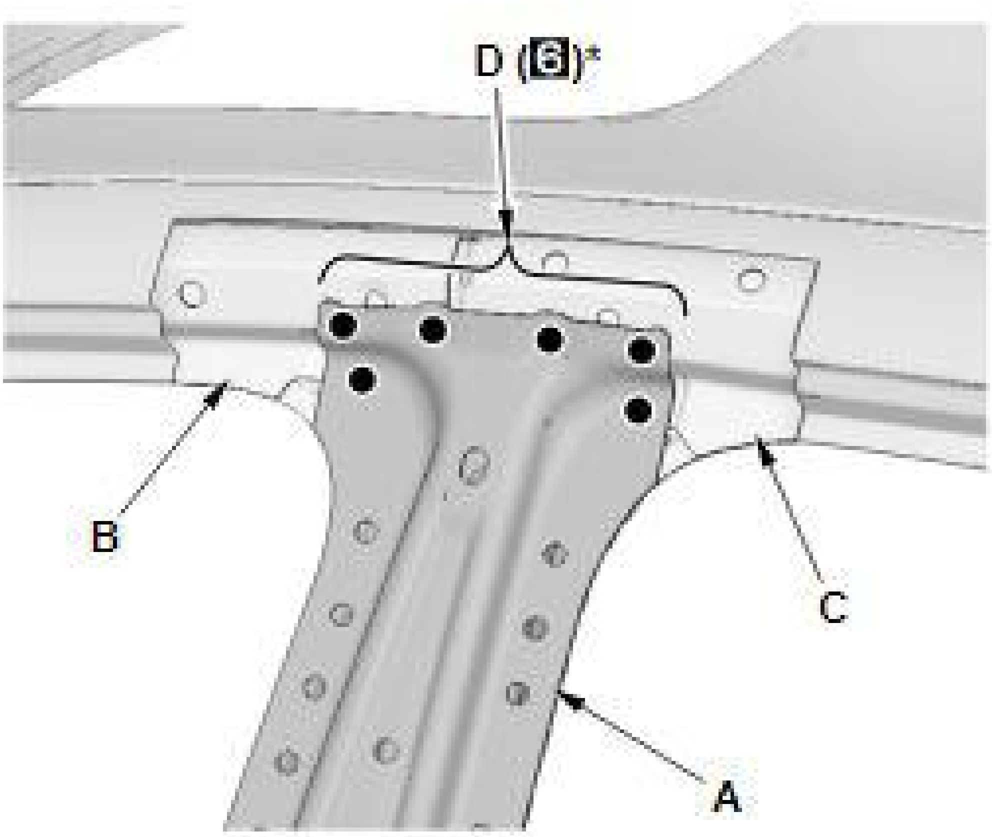

Fig. 13: Center Pillar Upper Stiffener Installation Weld Counts And Locations
Courtesy of AMERICAN HONDA MOTOR CO., INC.

4. Weld the center pillar lower stiffener (A) to the side sill reinforcement (B).

(■)*: Welding positions with the side sill reinforcement, include ultra high-strength steel (1500 MPa) parts. Confirm the MIG brazing conditions; refer to MIG Brazing Conditions For Ultra High-Strength Steel Parts (1180 And 1500 MPa) .

NOTE: **Welding positions (C): Must be welded according to the following conditions.**

Plug hole diameter: Γ□10 mm (0.39 in) Welding wire: Must use wire with a tensile strength of 980 MPa or higher (142 ksi or higher).

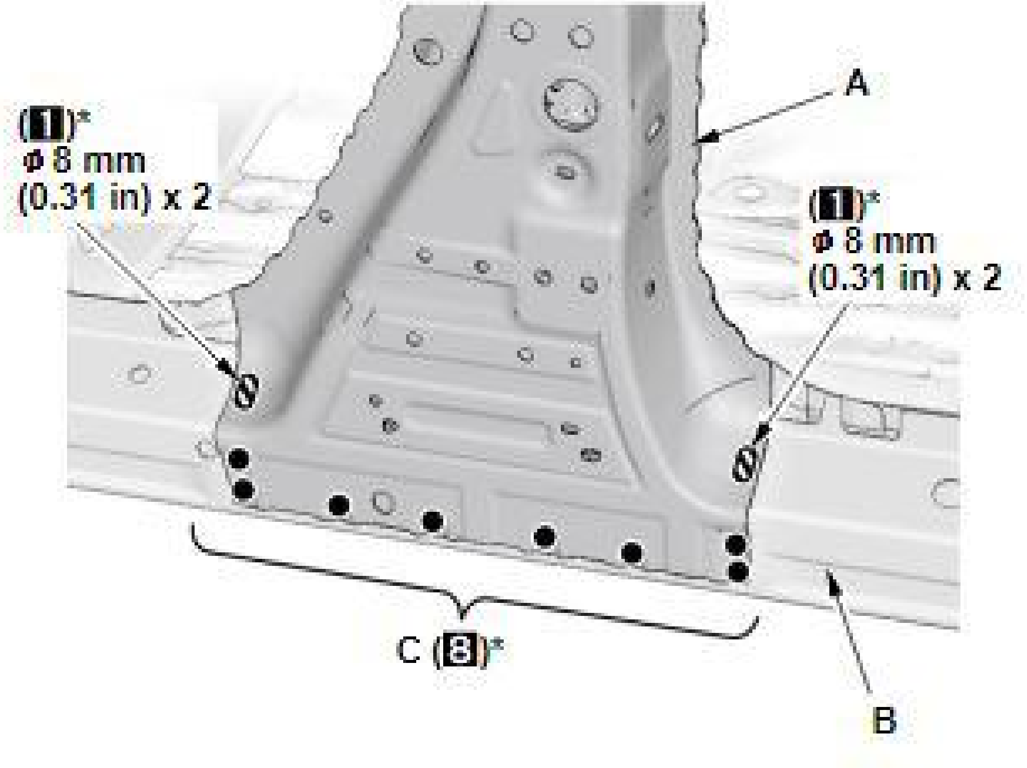

Fig. 14: Center Pillar Lower Stiffener Installation Weld Counts And Locations
Courtesy of AMERICAN HONDA MOTOR CO., INC.

Outer Panel Repair Part - Weld

1. **In case of part of outer panel repair part (front outer panel set) replacement**

   Weld the outer panel repair part (A).

   (■)*: Welding positions with the front pillar upper stiffener (B), the center pillar upper stiffener (C), and the side sill reinforcement (D), include ultra high-strength steel (1500 MPa) parts. Perform the spot welding on the conditions of No. 26 and 30 in the table shown below. Refer to Spot Welding Conditions For Ultra High-Strength Steel Parts (1180 And 1500 MPa) .

No. 26	8000 A	800 ms	3432 N (350 kgf)
No. 30	8500 A	1200 ms	3432 N (350 kgf)

   Refer to Installation for side sill welding points.

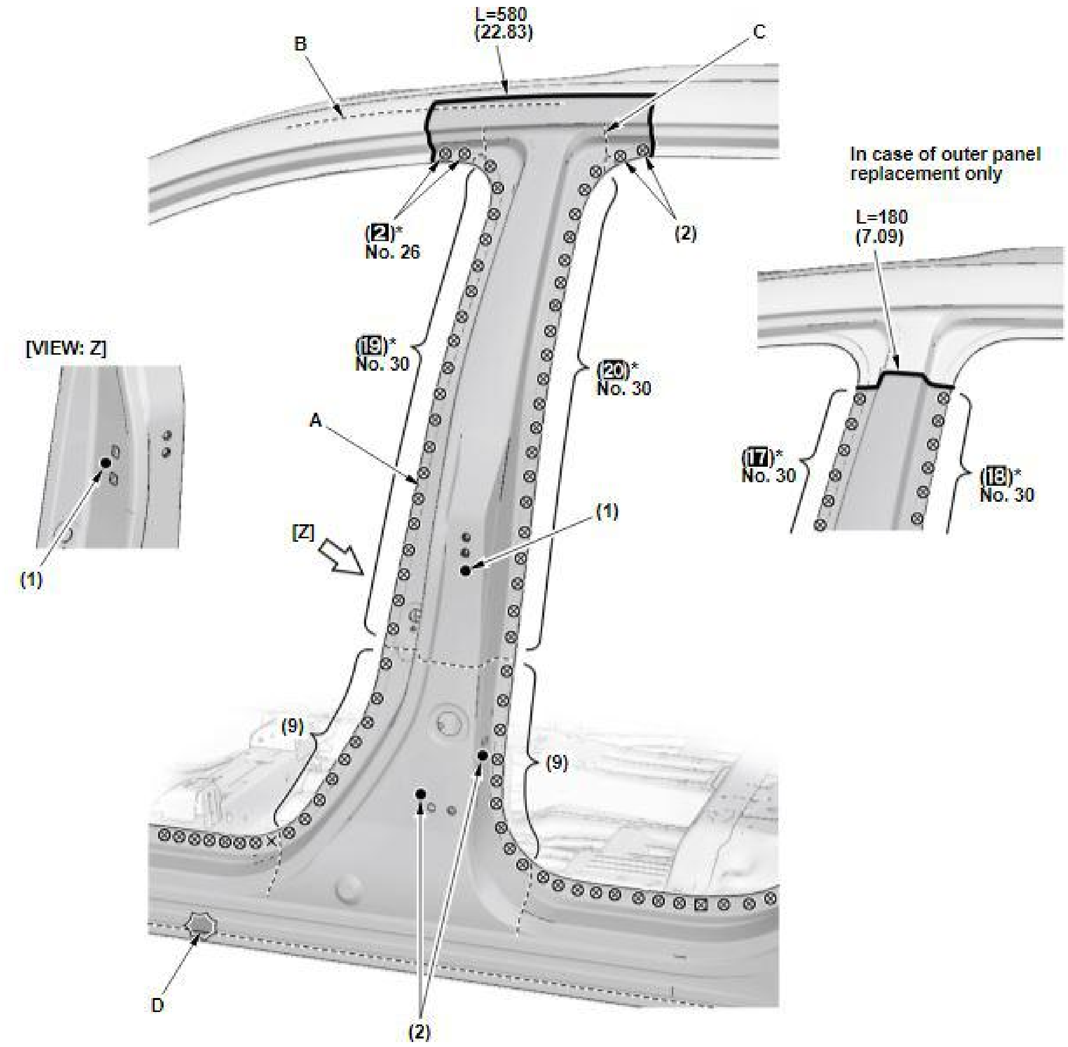
L=580
(22.83)
B
C
In case of outer panel replacement only
(2)*
No. 26
(2)
L=180
(7.09)
[VIEW: Z]
(19)*
No. 30
(20)*
No. 30
(17)*
No. 30
(18)*
No. 30
A
[Z]
(1)
(1)
(9)
(9)
D
(2)

Fig. 15: Center Pillar Outer Panel Installation Weld Counts And Locations (1 Of 2)
Courtesy of AMERICAN HONDA MOTOR CO., INC.

2. **In case of whole of outer panel repair part (front outer panel set) replacement with roof panel removed**

Weld the outer panel repair part (A).

(■)*: Welding positions with the front pillar upper stiffener (B), the center pillar upper stiffener (C), and the front inner upper pillar (D), include ultra high-strength steel (1500 MPa) parts. Perform the spot welding on the conditions of No. 26 and 30 in the table shown below. Refer to Spot Welding Conditions For Ultra High-Strength Steel Parts (1180 And 1500 MPa) .

No. 26	8000 A	800 ms	3432 N (350 kgf)
No. 30	8500 A	1200 ms	3432 N (350 kgf)

Refer to Installation for front pillar welding points.

Refer to Installation for side sill welding points.

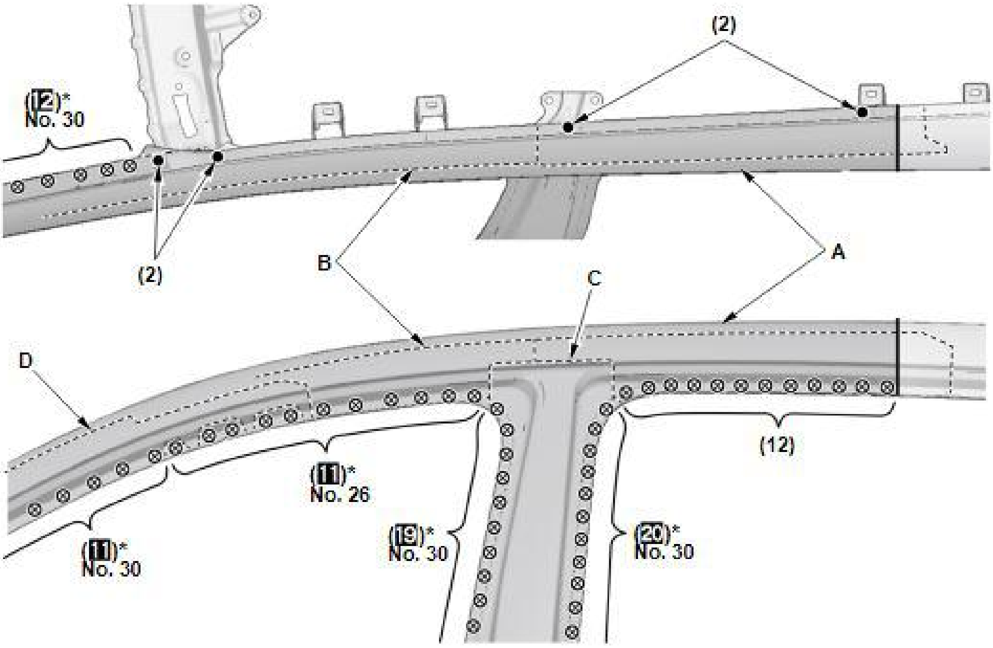

Fig. 16: Center Pillar Outer Panel Installation Weld Counts And Locations (2 Of 2)
Courtesy of AMERICAN HONDA MOTOR CO., INC.

FRONT PILLAR OUTER PANEL REPLACEMENT

REMOVAL

NOTE:

- **High-strength steel is defined as any steel with a tensile strength of 340 MPa or higher. If a part is constructed of, or includes high-strength steel observe the important guidelines. Refer to Repair Guidelines For High-Strength Steel Parts .**
- **Welding symbols (The welding symbols with dashed lines have a meaning of the spot welding of the part which is not visible) ; refer to Symbols Definition .**
- **(): The number of welds**

Mass Production Body Welding Positions and Numbers - Remove

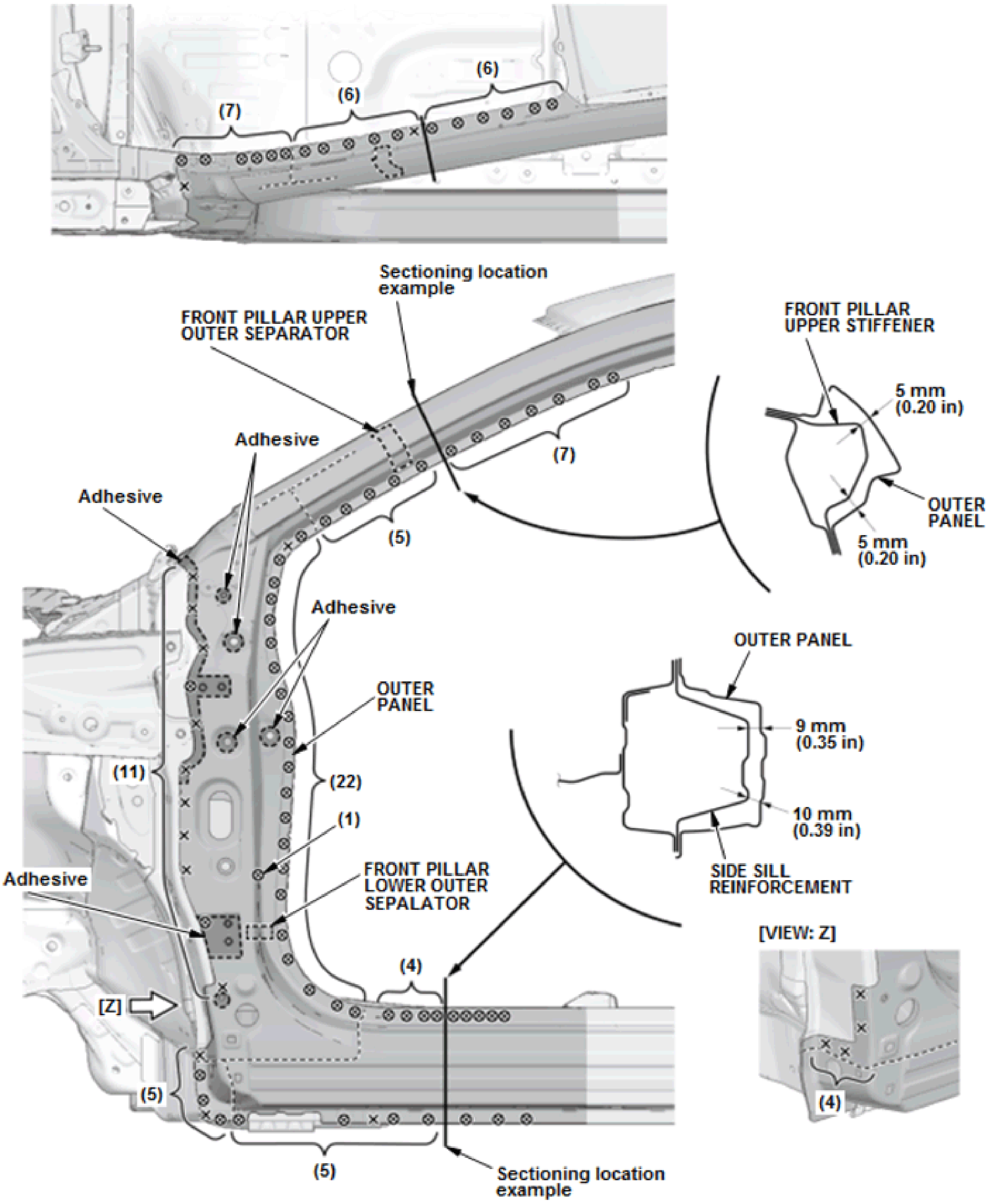
(7)
(6)
(6)
Sectioning location example
FRONT PILLAR UPPER OUTER SEPARATOR
FRONT PILLAR UPPER STIFFENER
5 mm (0.20 in)
Adhesive
(7)
Adhesive
(5)
OUTER PANEL
5 mm (0.20 in)
Adhesive
OUTER PANEL
OUTER PANEL
9 mm (0.35 in)
(11)
(22)
(1)
10 mm (0.39 in)
FRONT PILLAR LOWER OUTER SEPALATOR
SIDE SILL REINFORCEMENT
Adhesive
[VIEW: Z]
(4)
[Z]
(5)
(4)
(5)
Sectioning location example

Fig. 17: Front Pillar Outer Panel Removal Weld Counts And Locations
Courtesy of AMERICAN HONDA MOTOR CO., INC.

Front Wheelhouse Upper Member - Remove

Refer to Removal

Mass Production Body Welding Positions and Numbers - Remove

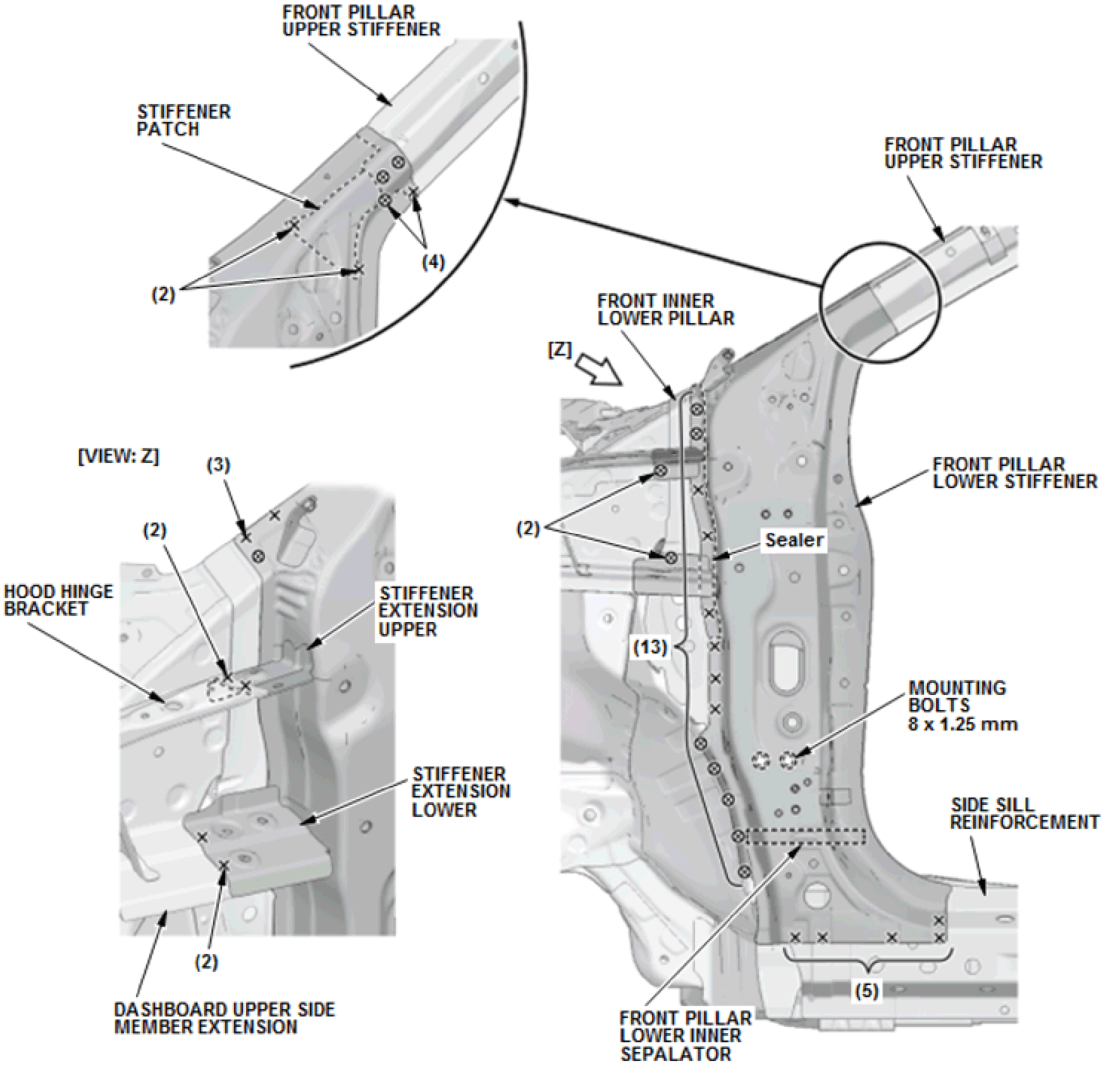
FRONT PILLAR UPPER STIFFENER
STIFFENER PATCH
(2)
(4)
FRONT PILLAR UPPER STIFFENER
FRONT INNER LOWER PILLAR
[Z]
[VIEW: Z]
(3)
(2)
HOOD HINGE BRACKET
STIFFENER EXTENSION UPPER
STIFFENER EXTENSION LOWER
(2)
DASHBOARD UPPER SIDE MEMBER EXTENSION
(2)
FRONT PILLAR LOWER STIFFENER
Sealer
(13)
MOUNTING BOLTS 8 x 1.25 mm
SIDE SILL REINFORCEMENT
(5)
FRONT PILLAR LOWER INNER SEPALATOR

Fig. 18: Front Pillar Lower Stiffener Removal Weld Counts And Locations
Courtesy of AMERICAN HONDA MOTOR CO., INC.

Front Pillar Outer Panel Component Location

NOTE:

- **This section explains the procedures after Removal of all related parts. For the related parts' Removal procedure, refer to the appropriate service information.**
- **The component replacement procedure described here is only for new genuine supplied parts, as needed, according to the area and the degree of damage on the body.**
- **Cut and pry off the outer panel at the front pillar and side sill portions.**

  Select the sectioning location in consideration of the front side outer panel repair part ; refer to Roof And Side Panel Construction .

- **Check the front pillar lower stiffener position for damage. If necessary, replace it.**
- **Replace the front pillar upper outer separator, the lower outer separator, and the lower inner separator.**

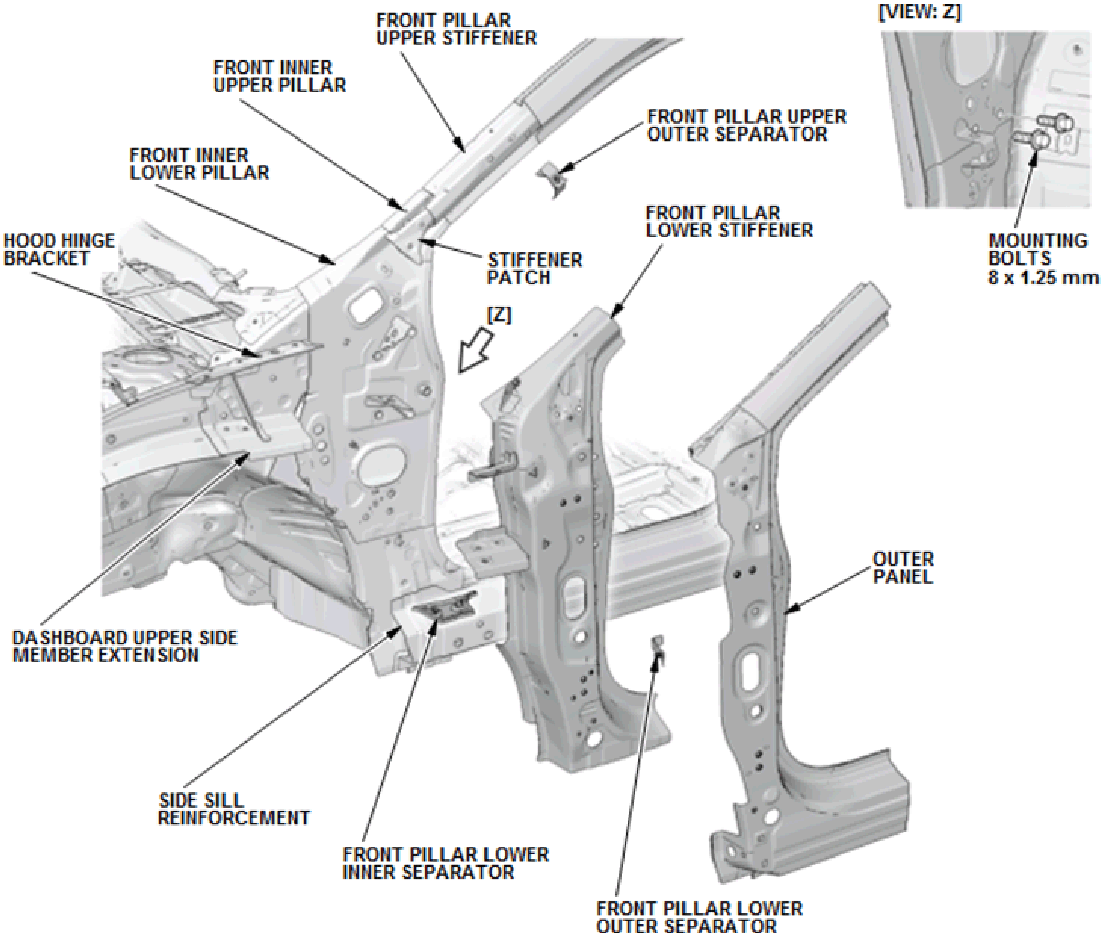
FRONT PILLAR UPPER STIFFENER
FRONT INNER UPPER PILLAR
FRONT INNER LOWER PILLAR
HOOD HINGE BRACKET
FRONT PILLAR UPPER OUTER SEPARATOR
[VIEW: Z]
MOUNTING BOLTS 8 x 1.25 mm
FRONT PILLAR LOWER STIFFENER
STIFFENER PATCH
[Z]
OUTER PANEL
DASHBOARD UPPER SIDE MEMBER EXTENSION
SIDE SILL REINFORCEMENT
FRONT PILLAR LOWER INNER SEPARATOR
FRONT PILLAR LOWER OUTER SEPARATOR

Fig. 19: Front Pillar Outer Panel Replacement Component Location
Courtesy of AMERICAN HONDA MOTOR CO., INC.

INSTALLATION

NOTE:

- **Position the replacement parts. Before doing the main welding, check the body dimensions:**
  - **Refer to Front Wheelhouse Lower Member Position Dimension - Measure .**
  - **Refer to Door Hinge Positions Dimension - Measure .**
  - **Refer to Windshield And Door Openings .**
  - **Refer to Inside Sill Positions Dimension - Measure .**
- **Temporarily install the related parts, then check for differences in level and clearance. Check the External Parts Fitting Positions; refer to External Parts Fitting Positions . Make sure the body lines flow smoothly.**
- **Confirm the sheet thickness, tensile strength, and existence of the zinc treatment of both sides, and set the welder to conform to the welding conditions by referring to Front Body Construction .**
- **Welding symbols (The welding symbols with dashed lines have a meaning of the spot welding of the part which is not visible) ; refer to Symbols Definition .**
- **() and ()*: The number of welds**

Front Pillar Lower Stiffener - Weld

1. Install the new front pillar lower inner separator (A) to the front pillar lower stiffener (B). Apply the sealer (C) without gaps all the way around the separator and the front inner lower pillar (D).

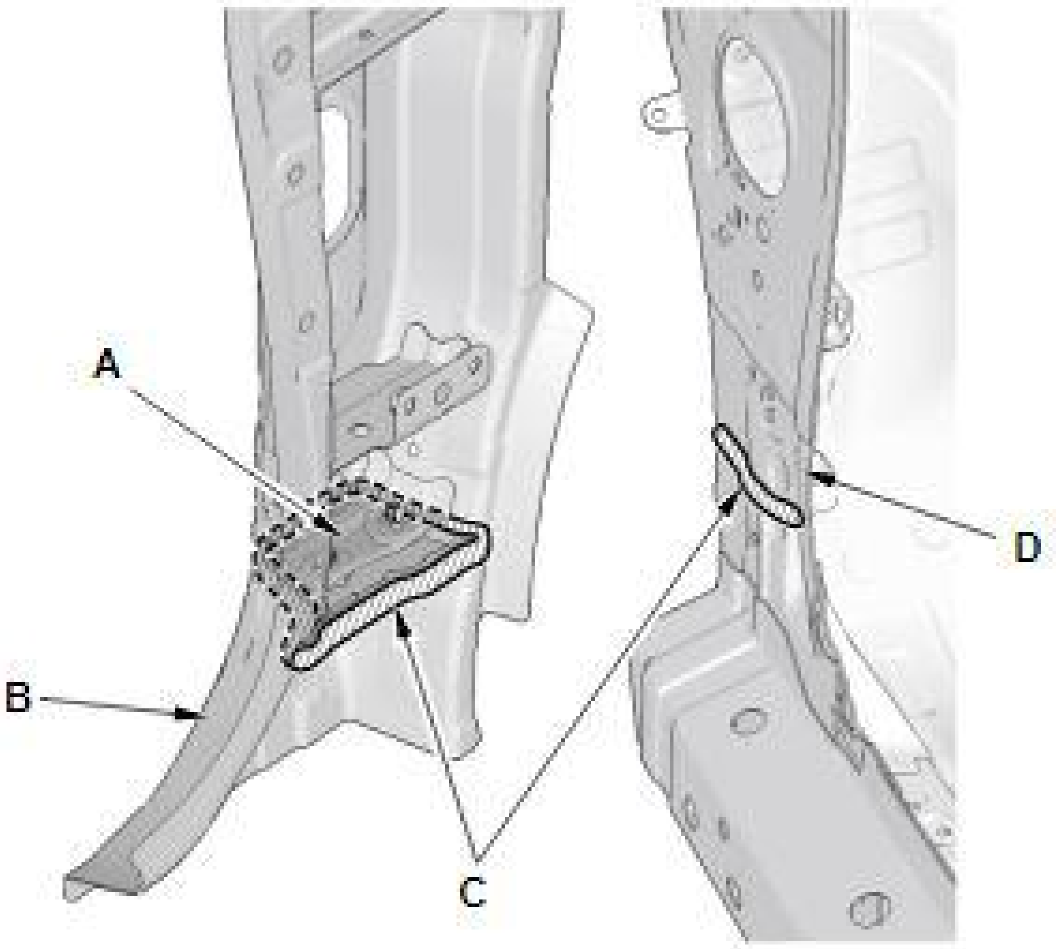

Fig. 20: Front Pillar Lower Inner Separator And Body Sealer Installation Locations
Courtesy of AMERICAN HONDA MOTOR CO., INC.

2. Weld the front pillar lower stiffener (A) to the front pillar upper stiffener (B), the side sill reinforcement (C), the front inner lower pillar (D), the hood hinge bracket (E), and the dashboard upper side member extension (F).

   (■)*: Welding positions with the front pillar upper stiffener and the side sill reinforcement, include ultra high-strength steel (1500 MPa) parts. Perform the spot welding on the conditions of No. 15 in the table shown below; refer to Spot Welding Conditions For Ultra High-Strength Steel Parts (1180 And 1500 MPa) . Confirm the MIG brazing conditions; refer to MIG Brazing Conditions For Ultra High-Strength Steel Parts (1180 And 1500 MPa) .

No. 15	9000 A	600 ms	3432 N (350 kgf)

NOTE: **Welding positions (G) : Must be welded according to the following conditions.**

Plug hole diameter: Γ□10 mm (0.39 in) Welding wire: Must use wire with a tensile strength of 980 MPa or higher (142 ksi or higher).

()*: Welding position with high-strength steel parts. Confirm the plug welding conditions; refer to MAG Welding Conditions For High-Strength Steel (Except 1500 MPa) Parts .

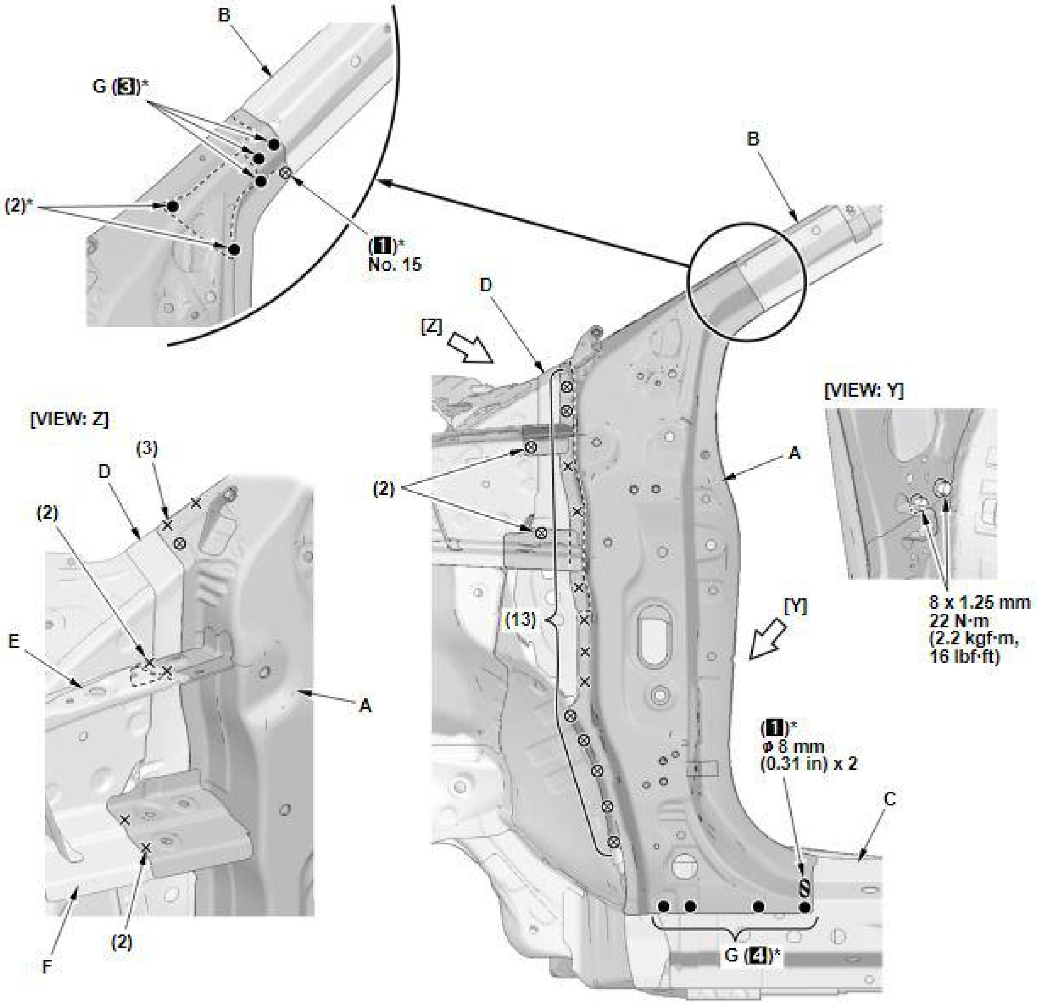
B
G (3)*
(2)*
(1)*
No. 15
B
D
[Z]
[VIEW: Z]
(3)
D
(2)
E
A
F
(2)
(2)
(13)
A
[VIEW: Y]
[Y]
8 x 1.25 mm
22 N·m
(2.2 kgf·m,
16 lbf·ft)
(1)*
ø 8 mm
(0.31 in) x 2
C
G (4)*

Fig. 21: Front Pillar Lower Stiffener Installation Weld Counts And Locations With Torque Specifications
Courtesy of AMERICAN HONDA MOTOR CO., INC.

Outer Panel Repair Part - Weld

1. Install the new front pillar outer upper separator (A) and the outer lower separator (B) on the front pillar upper stiffener (C) and the front pillar lower stiffener (D). Apply the sealer (E) without gaps all the way around the separator and inside the outer panel repair part (F).

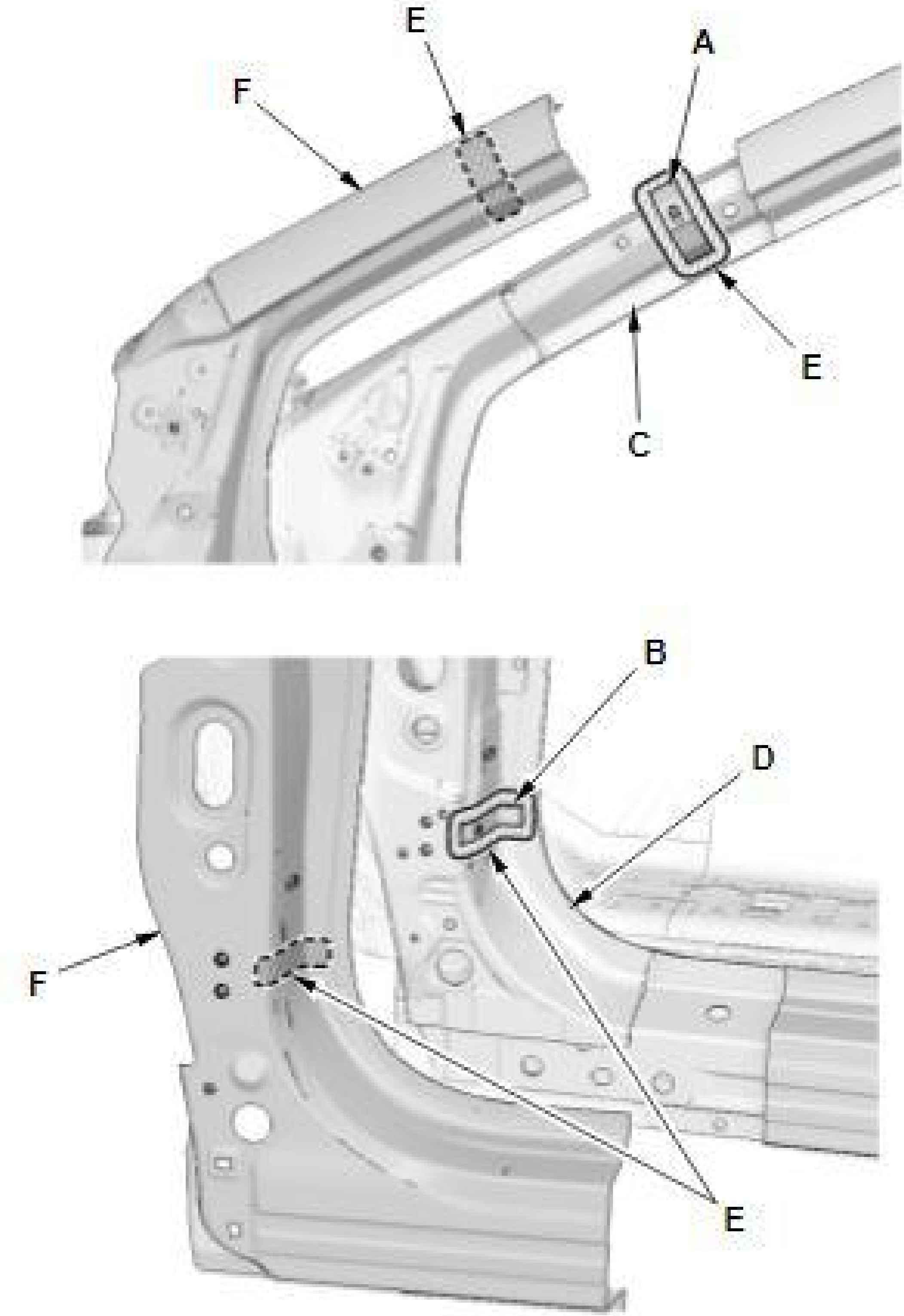

Fig. 22: Front Pillar Outer Separators And Body Sealer Installation Locations

Courtesy of AMERICAN HONDA MOTOR CO., INC.

2. Apply the adhesive (A) to areas around holes on the inside of the outer panel repair part (B) and the outside of the front pillar lower stiffener (C) as shown.

   Adhesive: 3M AUTO MIX Panel Bonding 8115, or equivalent, commercially available

NOTE: **See the adhesive manufacturer's instructions for details.**

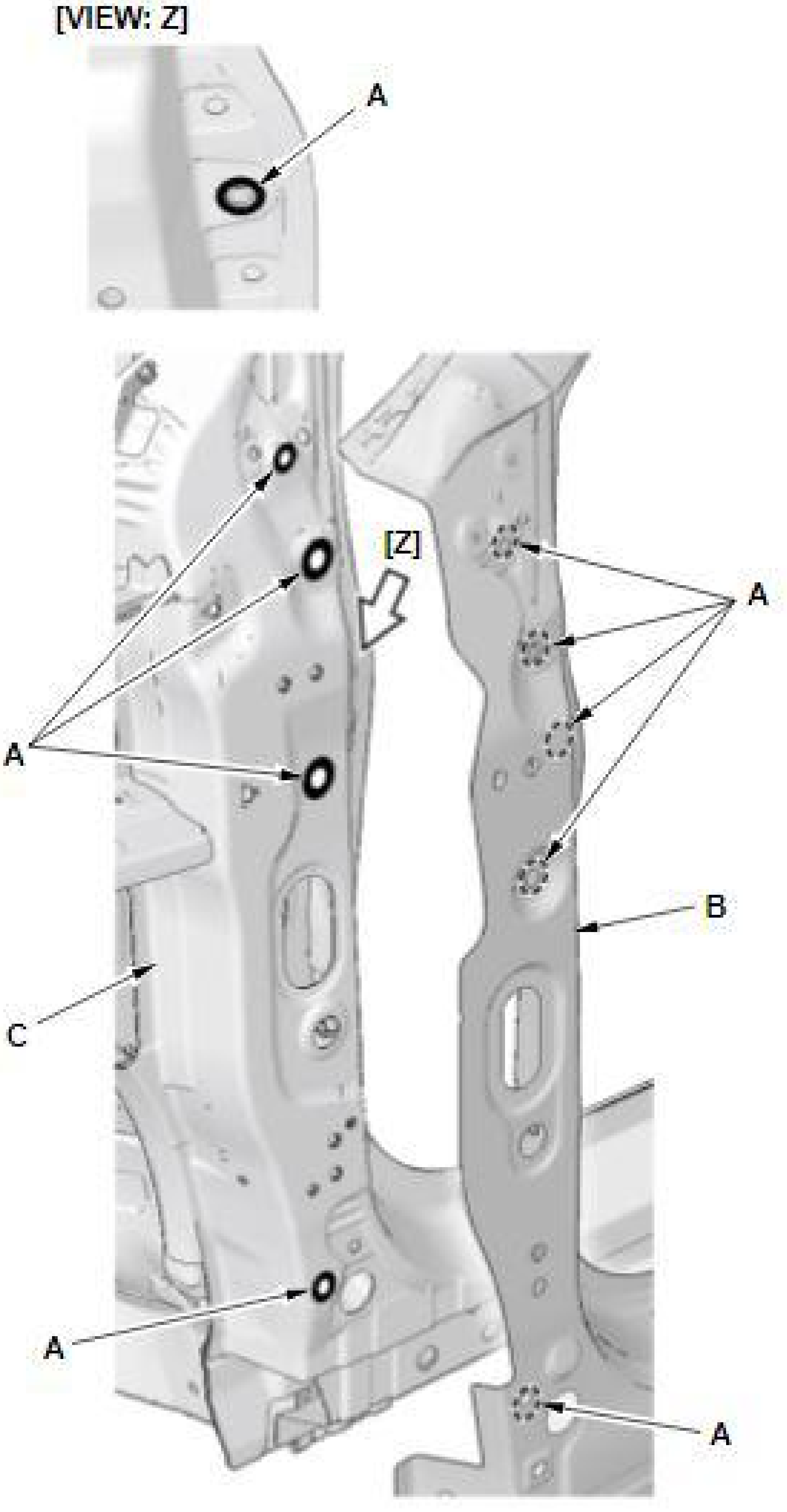
[VIEW: Z]
A
[Z]
A
A
B
C
A
A

Fig. 23: Lower Front Pillar Outer Panel Body Adhesive Installation Locations
Courtesy of AMERICAN HONDA MOTOR CO., INC.

3. Weld the outer panel repair part (A).

(■)*: Welding positions with the front pillar upper stiffener (B), the front inner upper pillar (C), and the side sill reinforcement (D), include ultra high-strength steel (1500 MPa) parts. Perform the spot welding on the conditions of No. 26, 30, and 31 in the table shown below. Refer to Spot Welding Conditions For Ultra High-Strength Steel Parts (1180 And 1500 MPa) .

No. 26	8000 A	800 ms	3432 N (350 kgf)
No. 30	8500 A	1200 ms	3432 N (350 kgf)
No. 31	9000 A	1200 ms	3432 N (350 kgf)

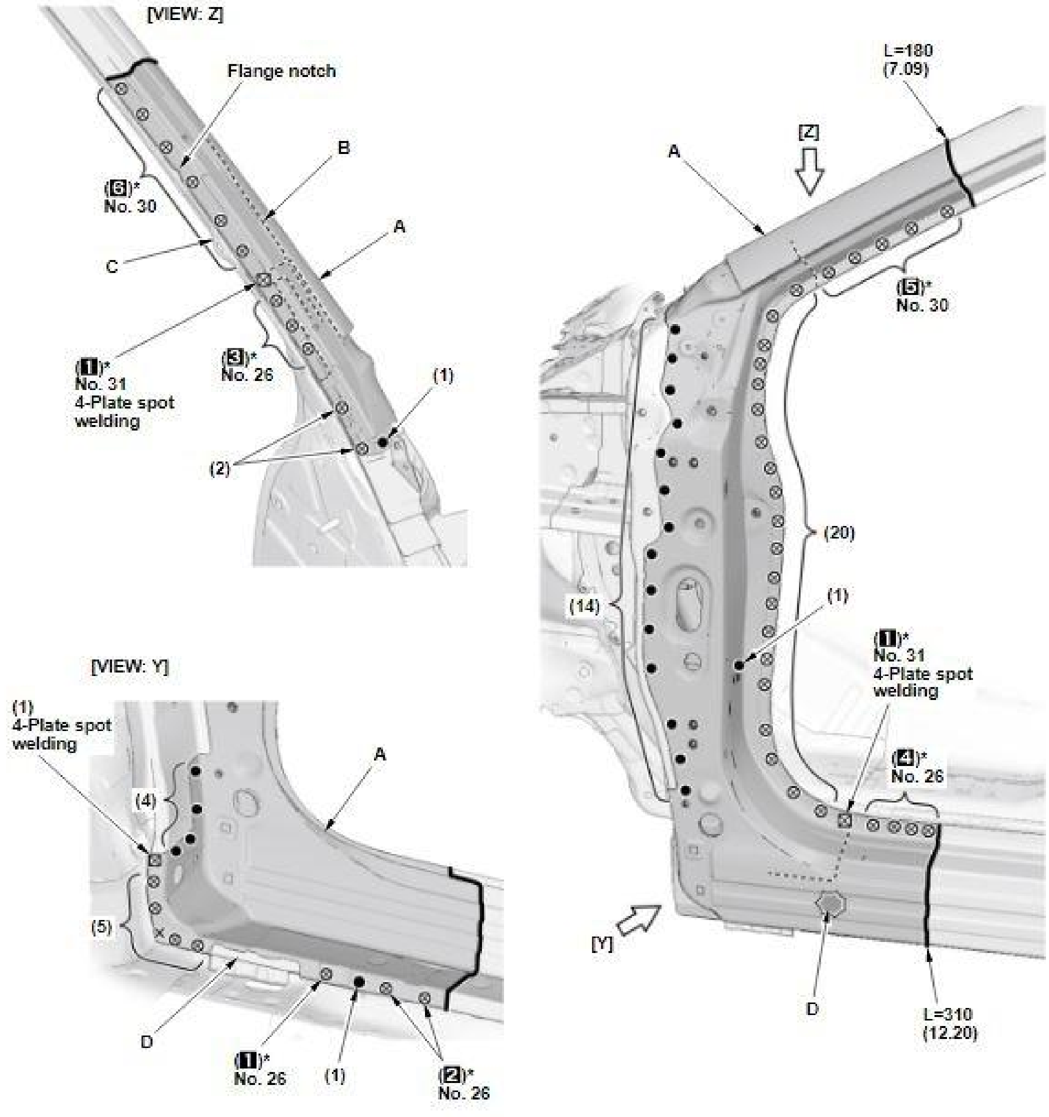
[VIEW: Z]
Flange notch
B
(6)*
No. 30
A
C
(1)*
No. 31
4-Plate spot
welding
(3)*
No. 26
(1)
(2)
L=180
(7.09)
[Z]
A
(5)*
No. 30
(20)
(14)
(1)
(1)*
No. 31
4-Plate spot
welding
(4)*
No. 26
[VIEW: Y]
(1)
4-Plate spot
welding
A
(4)
(5)
D
(1)*
No. 26
(1)
(2)*
No. 26
[Y]
D
L=310
(12.20)

Fig. 24: Front Pillar Outer Panel Installation Weld Counts, Measurements And Locations
Courtesy of AMERICAN HONDA MOTOR CO., INC.

4. Refer to Wheelhouse Upper Member - Installation

FRONT SIDE FRAME REPLACEMENT

REMOVAL

NOTE:

- **High-strength steel is defined as any steel with a tensile strength of 340 MPa or higher. If a part is constructed of, or includes high-strength steel observe the important guidelines. Refer to Repair Guidelines For High-Strength Steel Parts .**
- **Welding symbols (The welding symbols with dashed lines have a meaning of the spot welding of the part which is not visible) ; refer to Symbols Definition**

- **(): The number of welds**

Front Bulkhead - Remove

Refer to Exterior Parts Removal/Installation .

Front Side Frame, Front-End Parts - Remove

Refer to Removal

Mass Production Body Welding Positions and Numbers - Remove

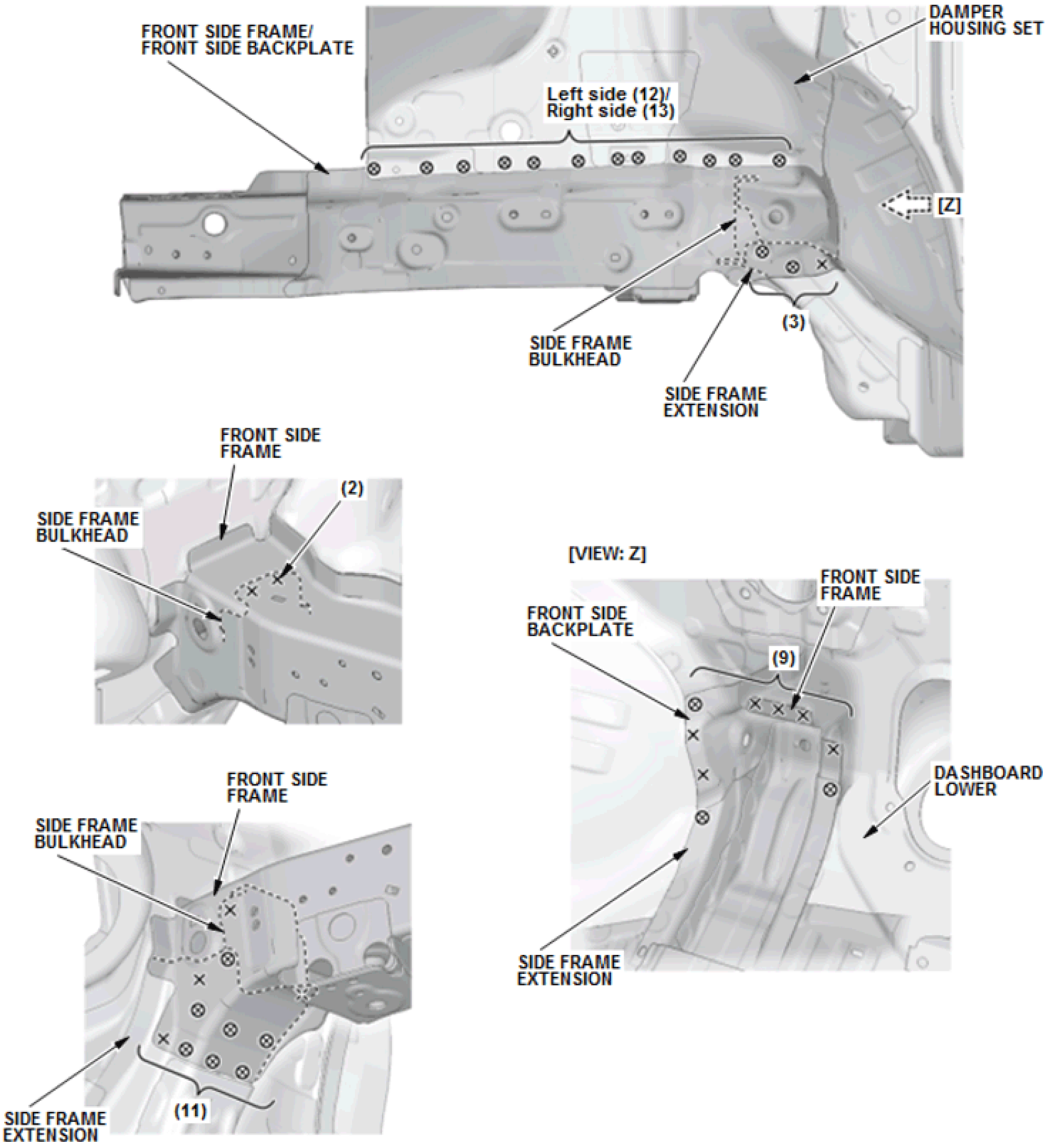
FRONT SIDE FRAME/
FRONT SIDE BACKPLATE
Left side (12)/
Right side (13)
DAMPER
HOUSING SET
[Z]
(3)
SIDE FRAME
BULKHEAD
SIDE FRAME
EXTENSION
FRONT SIDE
FRAME
SIDE FRAME
BULKHEAD
(2)
[VIEW: Z]
FRONT SIDE
FRAME
FRONT SIDE
BACKPLATE
(9)
DASHBOARD
LOWER
SIDE FRAME
EXTENSION
FRONT SIDE
FRAME
SIDE FRAME
BULKHEAD
SIDE FRAME
EXTENSION
(11)

Fig. 25: Front Side Frame And Front Side Backplate Removal Weld Counts And Locations
Courtesy of AMERICAN HONDA MOTOR CO., INC.

Front Side Frame Replacement Component Location

NOTE:

- **This section explains the procedures after Removal of all related parts. For the related parts' Removal procedure, refer to the appropriate service information.**
- **The component replacement procedure described here is only for new genuine supplied parts, as needed, according to the area and the degree of damage on the body.**

When removing the front side frame and the front side backplate, leave the side frame extension and the side frame bulkhead in place.

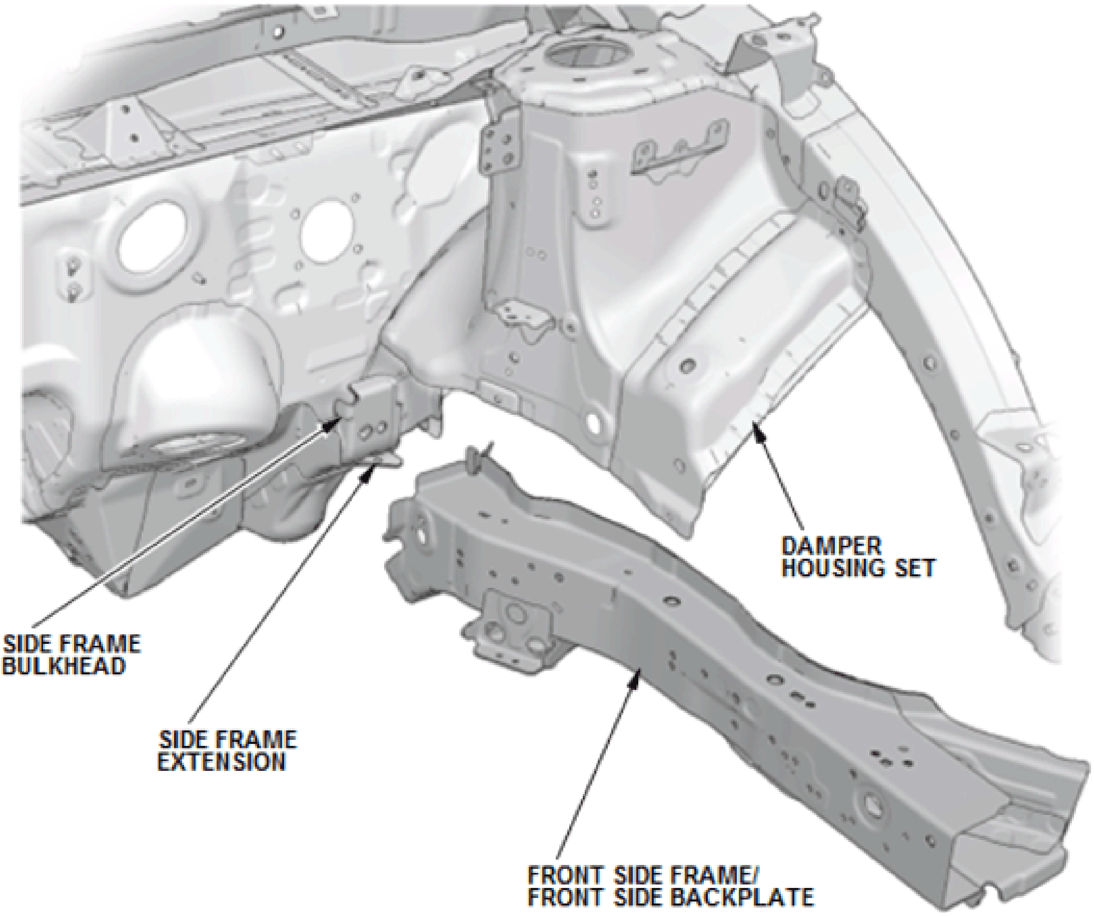

Fig. 26: Front Side Frame Replacement Component Location
Courtesy of AMERICAN HONDA MOTOR CO., INC.

INSTALLATION

NOTE:	- Position the replacement parts. Before doing the main welding, check the body dimensions:
	  - Refer to Front Bulkhead Position Dimension - Measure .
	  - Refer to Engine Compartment Dimension - Measure .
	  - Refer to Engine And Transmission Mount Positions Dimension - Measure .
	  - Refer to Front Wheelhouse Lower Member Position Dimension - Measure .
	  - Refer to Engine Compartment And Front Floor, Under View Dimension - Measure .
	  - Refer to Inside Sill Positions Dimension - Measure .
	  - Refer to Frame Repair Chart .
	- Temporarily install the related parts, then check for differences in level and clearance. Check the External Parts Fitting Positions; refer to External Parts Fitting Positions . Make sure the body lines flow smoothly.
	- Confirm the sheet thickness, tensile strength, and existence of the zinc treatment of both sides, and set the welder to conform to the welding conditions; refer to Front Body Construction .
	- Welding symbols (The welding symbols with dashed lines have a meaning of the spot welding of the part which is not visible) ; refer to Symbols Definition .
	- () and ()*: The number of welds

Front Side Frame - Weld

1. Weld the front side frame (A) to the side frame extension (B) and the side frame bulkhead (C).

   (■)*: Welding positions with the side frame extension, include ultra high-strength steel (1500 MPa) parts. Perform the spot welding on the conditions of No. 13 and 15 in the table shown below. Refer to Spot Welding Conditions For Ultra High-Strength Steel Parts (1180 And 1500 MPa) .

No. 13	8000 A	600 ms	3432 N (350 kgf)
No. 15	9000 A	800 ms	3432 N (350 kgf)

NOTE: **Welding positions (D): Must be welded according to the following conditions.**

Plug hole diameter: Γ□10 mm (0.39 in) Welding wire: Must use wire with a tensile strength of 980 MPa or higher (142 ksi or higher).

()*: Welding position with high-strength steel parts. Confirm the plug welding conditions; refer to MAG Welding Conditions For High-Strength Steel (Except 1500 MPa) Parts .

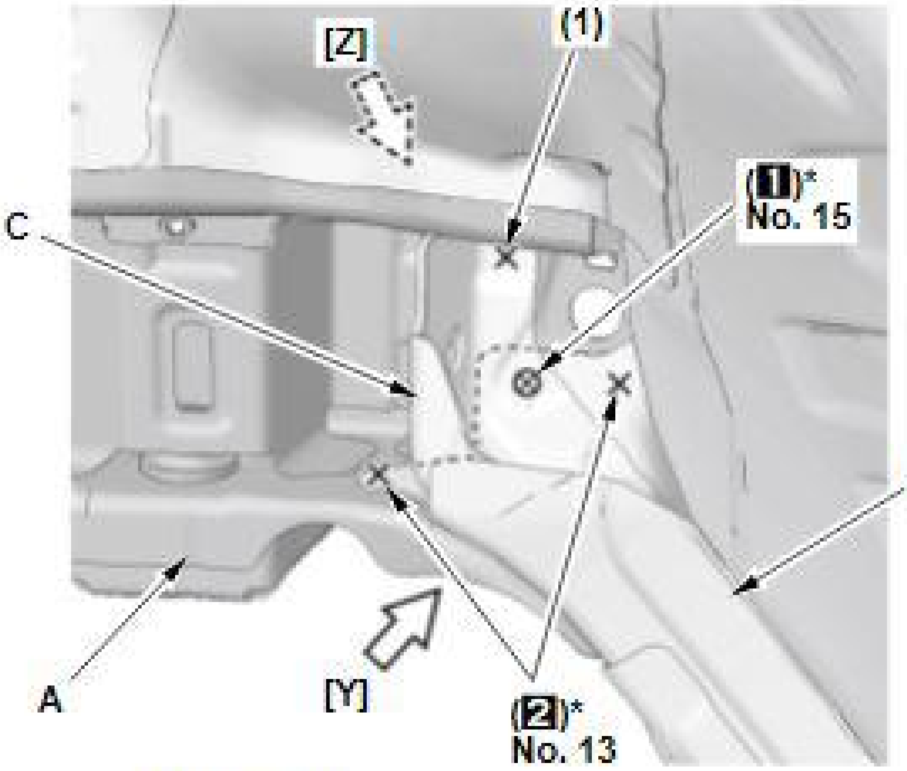
[Z]
(1)
(1)*
No. 15
C
B
A
[Y]
(2)*
No. 13

[VIEW: Z]

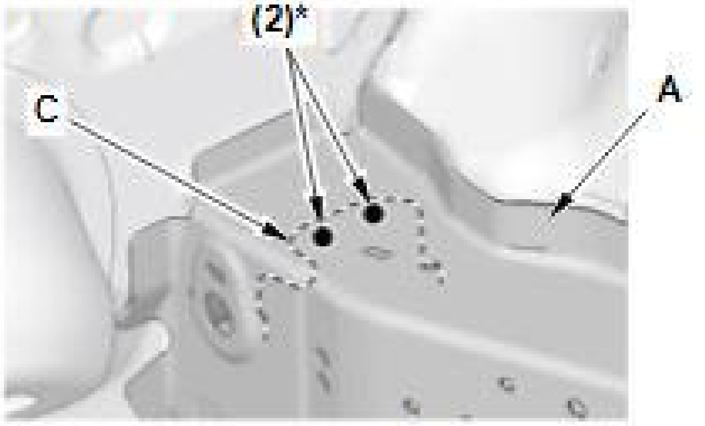

[VIEW: Y]

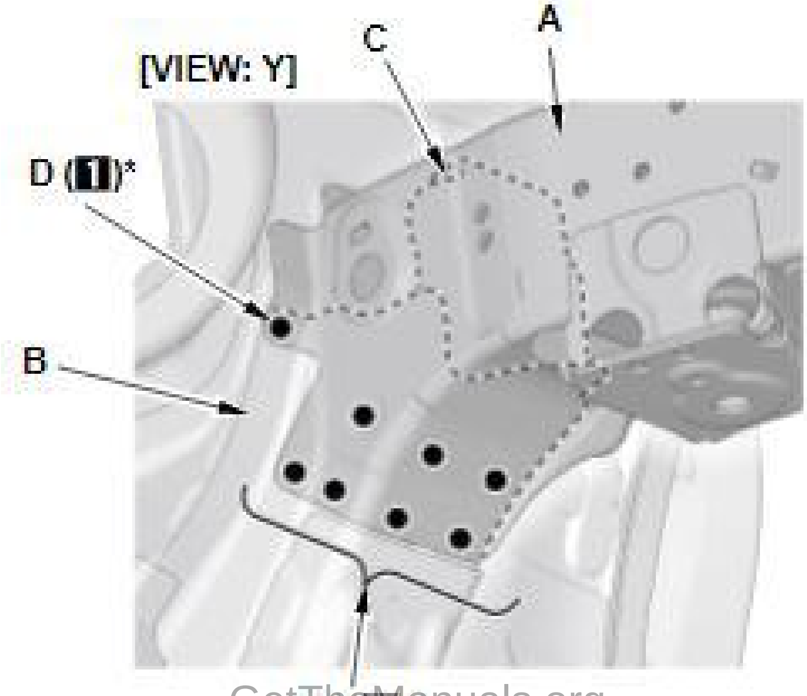

[Fig. 27: Front Side Frame Installation Weld Counts And Locations]

Courtesy of AMERICAN HONDA MOTOR CO., INC.

Front Side Frame, Front-End Parts - Weld

1. Weld the side frame extension front (A), the subframe front plate (C), and the subframe front bracket (D) to the front side frame (E) and front damper extension B.

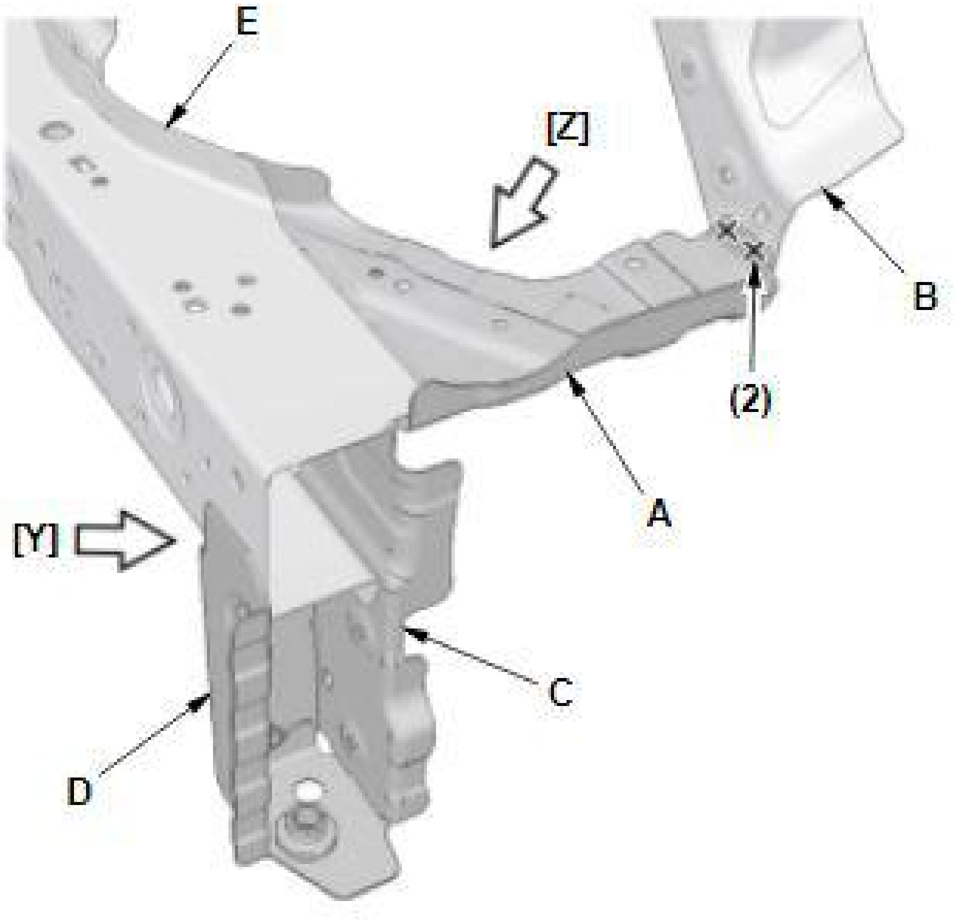

[Fig. 28: Front Side Frame Front-End Part Installation Weld Counts And Locations (1 Of 2)]

Courtesy of AMERICAN HONDA MOTOR CO., INC.

[VIEW: Z]

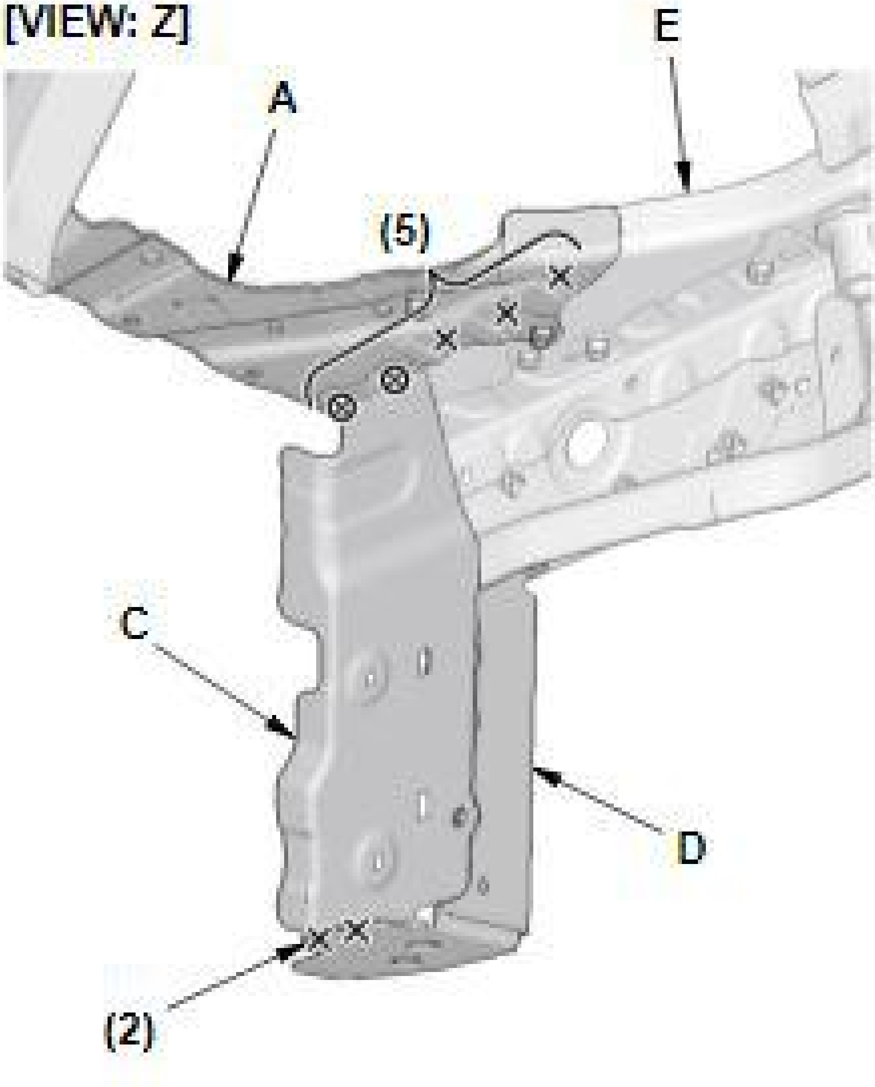

[VIEW: Y]

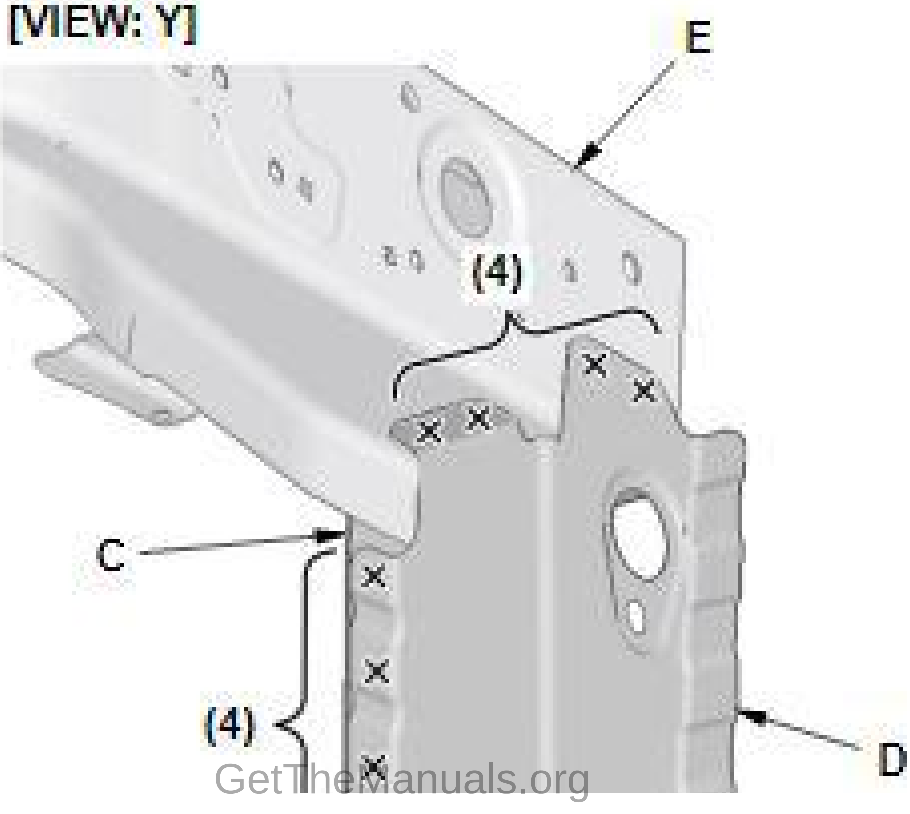

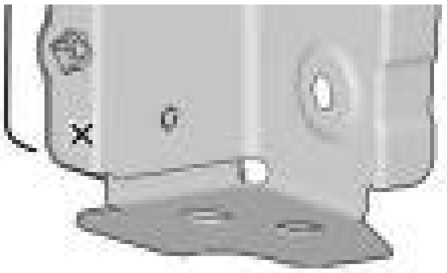

Fig. 29: Front Side Frame Front-End Part Installation Weld Counts And Locations (2 Of 2)
Courtesy of AMERICAN HONDA MOTOR CO., INC.

Front Side Frame And Front Side Backplate - Weld

1. Clamp the front side backplate (A) to the front side frame (B).

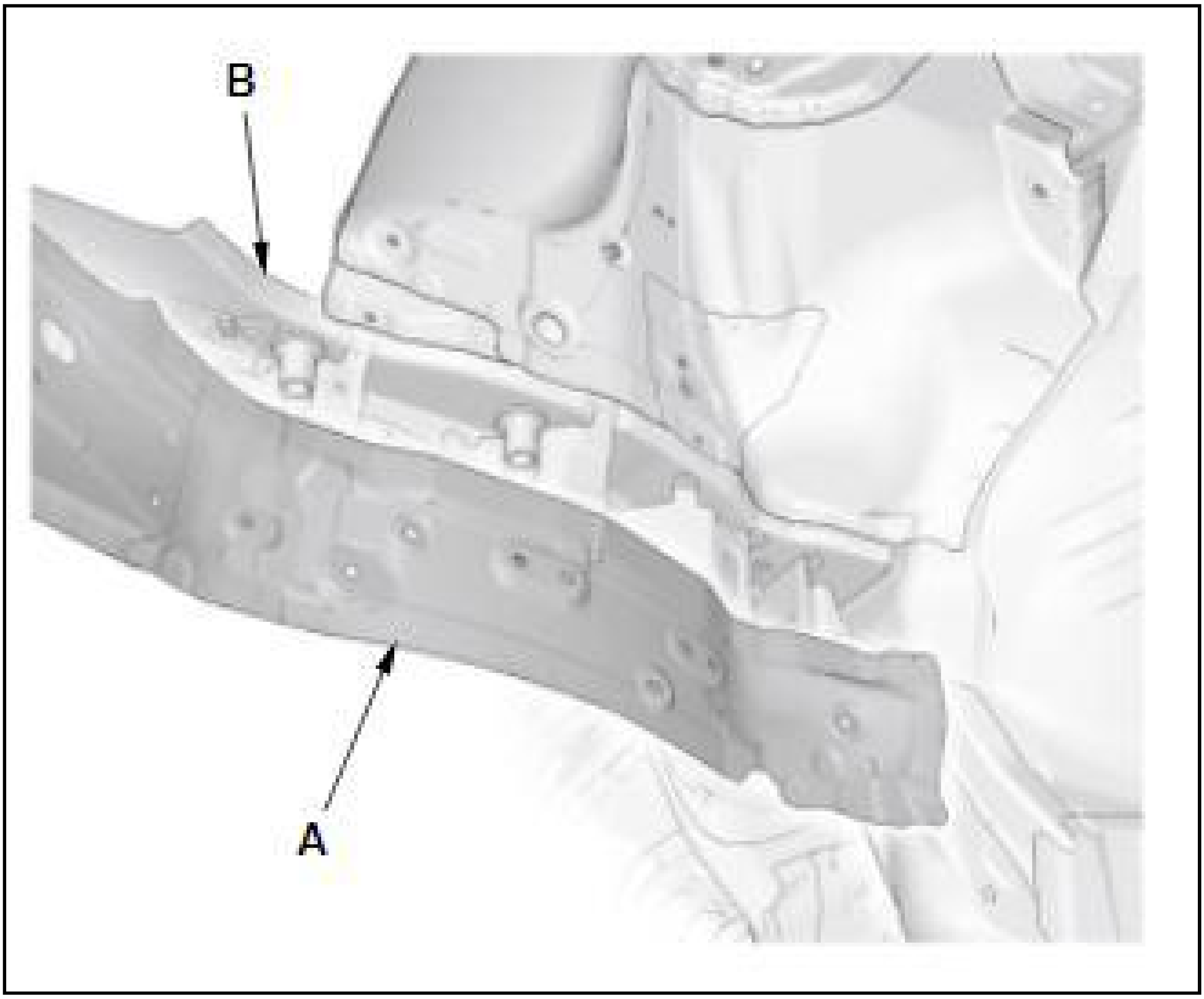

2. Weld the front side backplate (A) to the front side frame (B), the damper housing set (C), and the side frame extension front (D), the subframe front plate (E), the subframe front bracket (F), and the side frame extension (G).

(■)*: Welding positions with the side frame extension, include ultra high-strength steel (1500 MPa) parts.

NOTE: **Welding positions (H) : Must be welded according to the following conditions.**

Plug hole diameter: Γ□10 mm (0.39 in) Welding wire: Must use wire with a tensile strength of 980 MPa or higher (142 ksi or higher).

Left side

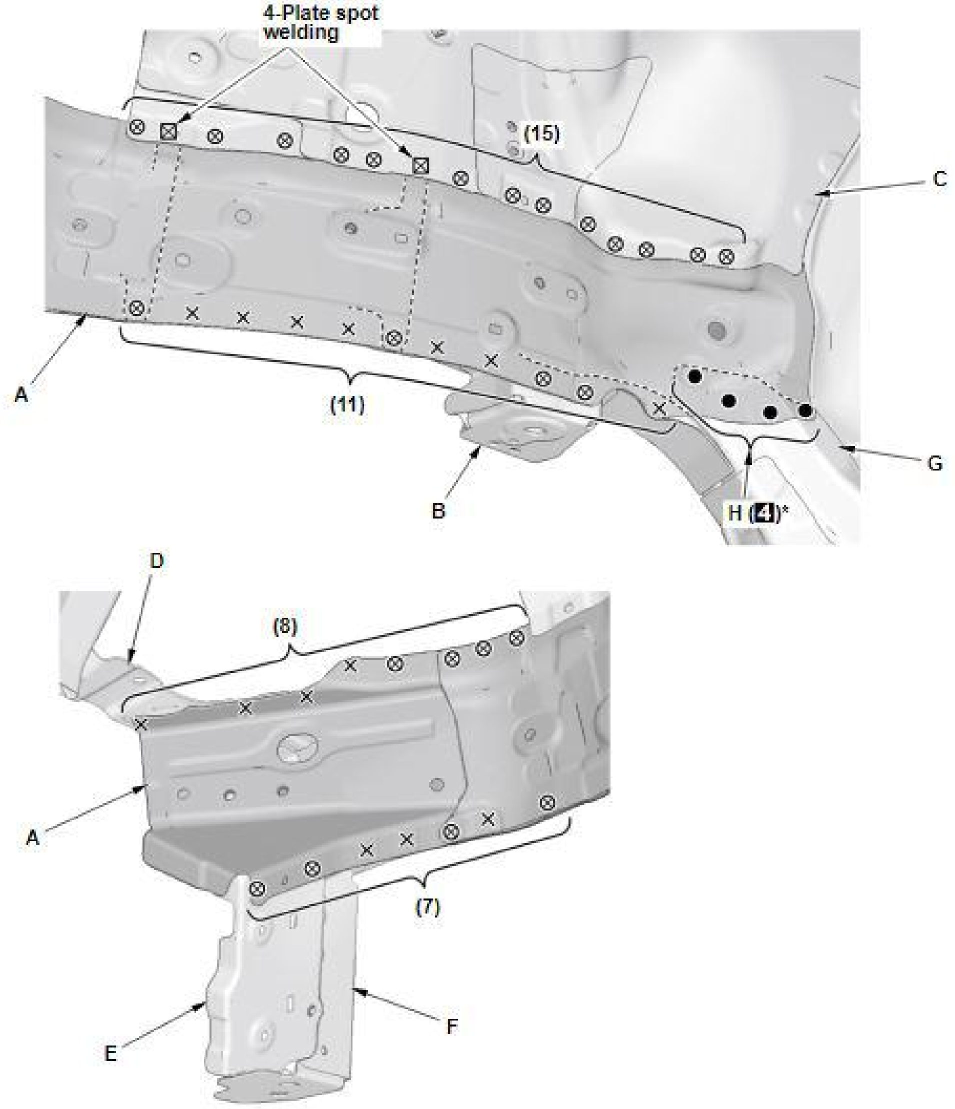
4-Plate spot welding
(15)
C
A
(11)
B
G
H (4)*
D
(8)
A
(7)
E
F

[Fig. 30: Front Side Backplate Installation Weld Counts And Locations (LH)]()
Courtesy of AMERICAN HONDA MOTOR CO., INC.

Right side

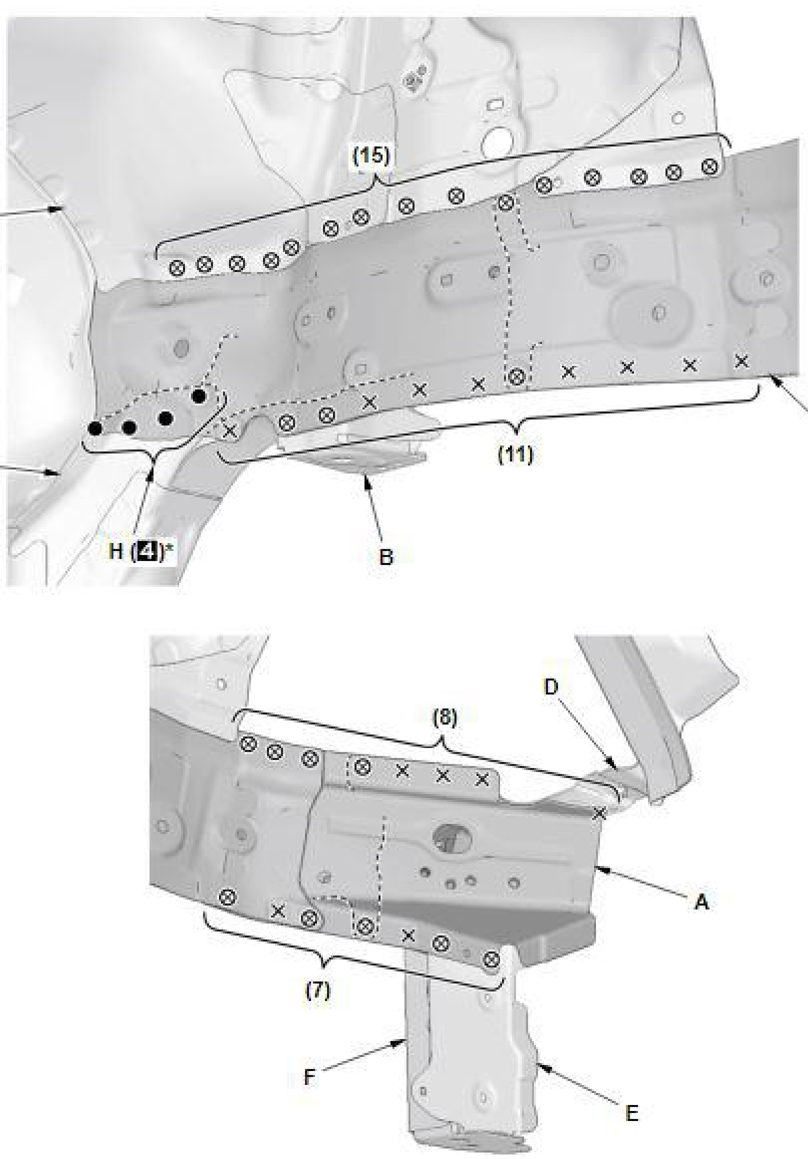

Fig. 31: Front Side Backplate Installation Weld Counts And Locations (RH)
Courtesy of AMERICAN HONDA MOTOR CO., INC.

3. From the passenger's compartment, weld the front side frame (A) and the front side backplate (B) to the dashboard lower (C).

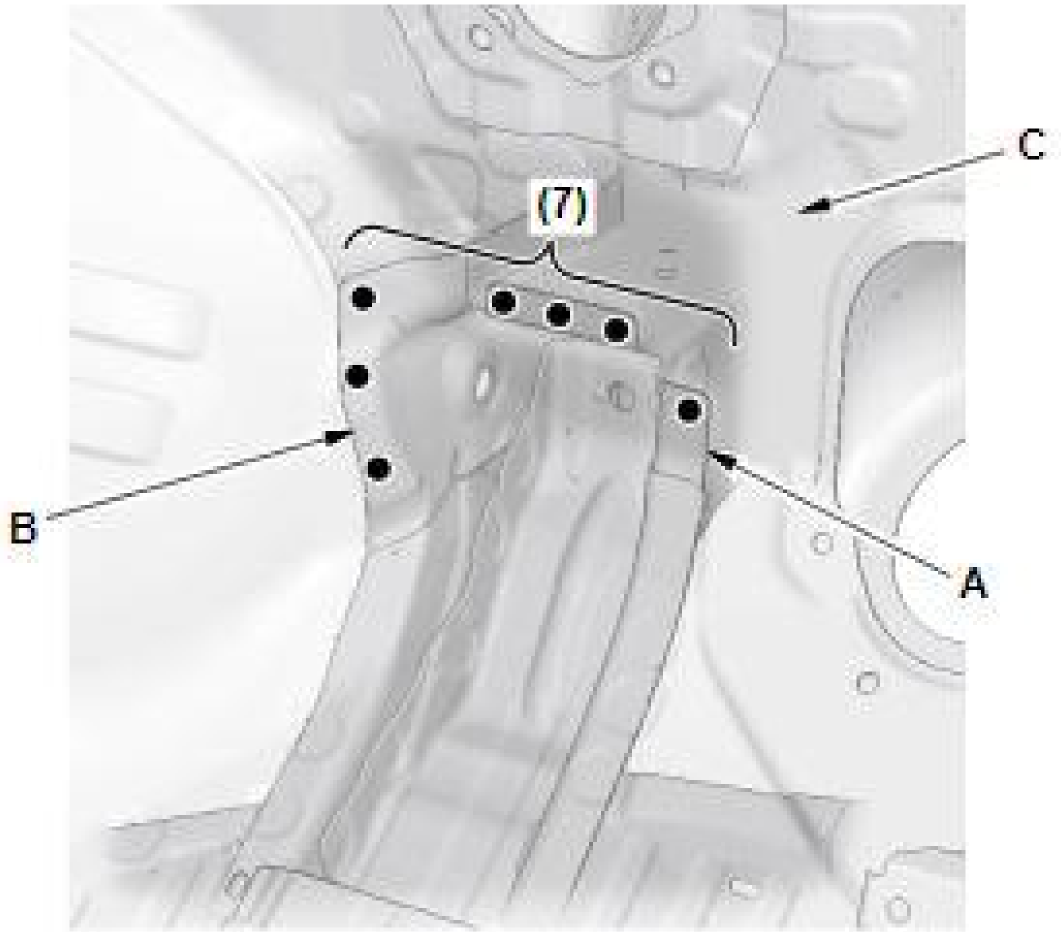

Fig. 32: Front Side Frame And Front Side Backplate Installation Weld Counts And Locations
Courtesy of AMERICAN HONDA MOTOR CO., INC.

4. Refer to Side Frame Support and Bumper Beam Extension Flange - Installation.
5. Refer to Exterior Parts Removal/Installation .

FRONT SIDE FRAME FRONT END PARTS REPLACEMENT

REMOVAL

NOTE:

- **High-strength steel is defined as any steel with a tensile strength of 340 MPa or higher. If a part is constructed of, or includes high-strength steel observe the important guidelines. Refer to Repair Guidelines For High-Strength Steel Parts .**
- **Welding symbols (The welding symbols with dashed lines have a meaning of the spot welding of the part which is not visible) ; refer to Symbols Definition .**
- **(): The number of welds**

Front Bulkhead - Remove

Refer to Exterior Parts Removal/Installation .

Mass Production Body Welding Positions And Numbers - Remove

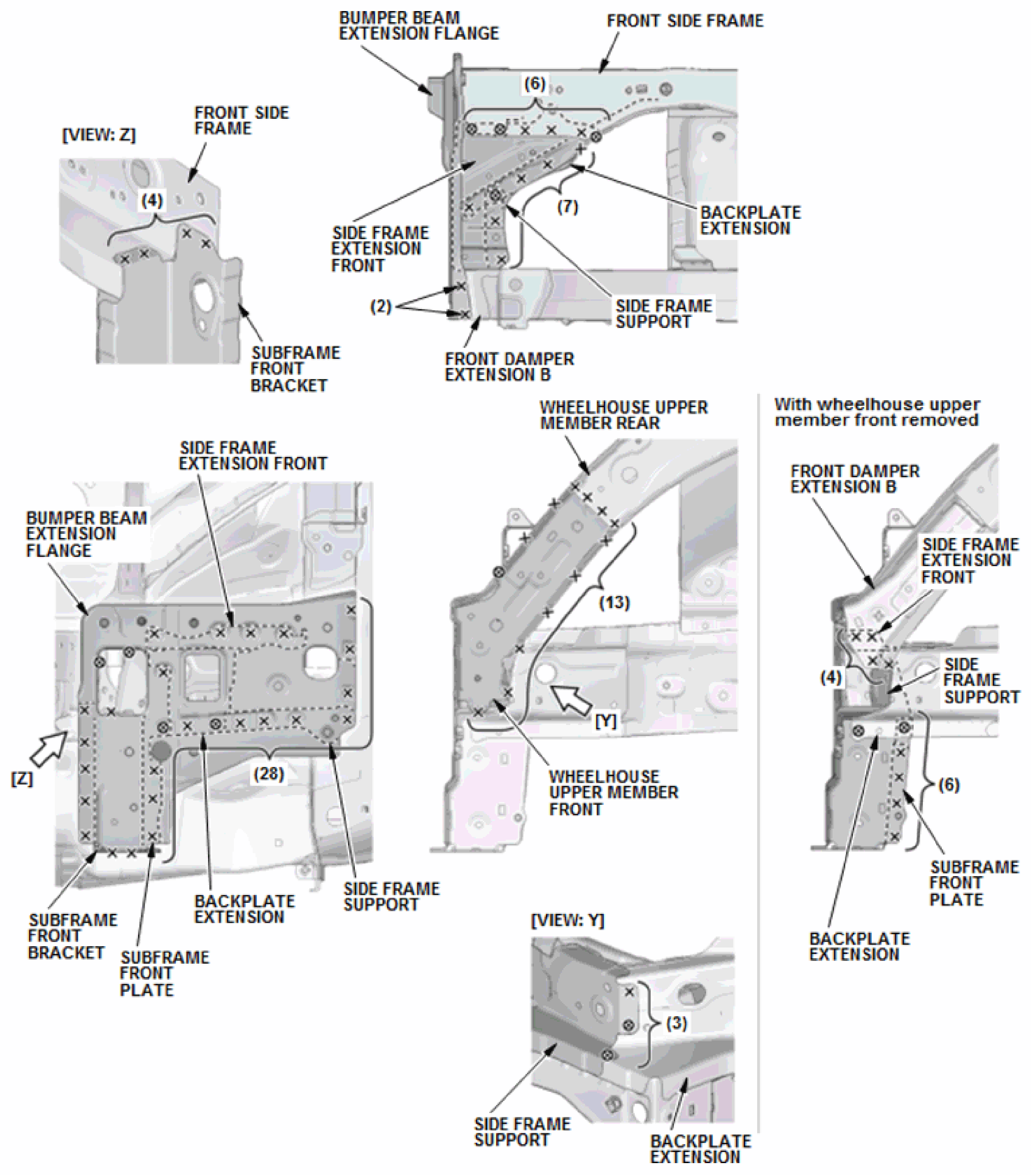
BUMPER BEAM EXTENSION FLANGE
FRONT SIDE FRAME
[VIEW: Z]
FRONT SIDE FRAME
(4)
(6)
(7)
SIDE FRAME EXTENSION FRONT
BACKPLATE EXTENSION
(2)
SIDE FRAME SUPPORT
SUBFRAME FRONT BRACKET
FRONT DAMPER EXTENSION B
WHEELHOUSE UPPER MEMBER REAR
With wheelhouse upper member front removed
SIDE FRAME EXTENSION FRONT
FRONT DAMPER EXTENSION B
BUMPER BEAM EXTENSION FLANGE
SIDE FRAME EXTENSION FRONT
(13)
(4)
SIDE FRAME SUPPORT
[Y]
[Z]
(28)
WHEELHOUSE UPPER MEMBER FRONT
(6)
SUBFRAME FRONT PLATE
SIDE FRAME SUPPORT
BACKPLATE EXTENSION
SUBFRAME FRONT BRACKET
SUBFRAME FRONT PLATE
[VIEW: Y]
BACKPLATE EXTENSION
(3)
SIDE FRAME SUPPORT
BACKPLATE EXTENSION

Fig. 33: Front Side Frame Front-End Parts Removal Weld Counts And Locations
Courtesy of AMERICAN HONDA MOTOR CO., INC.

Front Side Frame Front End Component Location

NOTE:

- **This section explains the procedures after Removal of all related parts. For the related parts' Removal procedure, refer to the appropriate service information.**
- **The component replacement procedure described here is only for new genuine supplied parts, as needed, according to the area and the degree of damage on the body.**

Check the front side frame, front-end parts position for damage. If necessary, replace them.

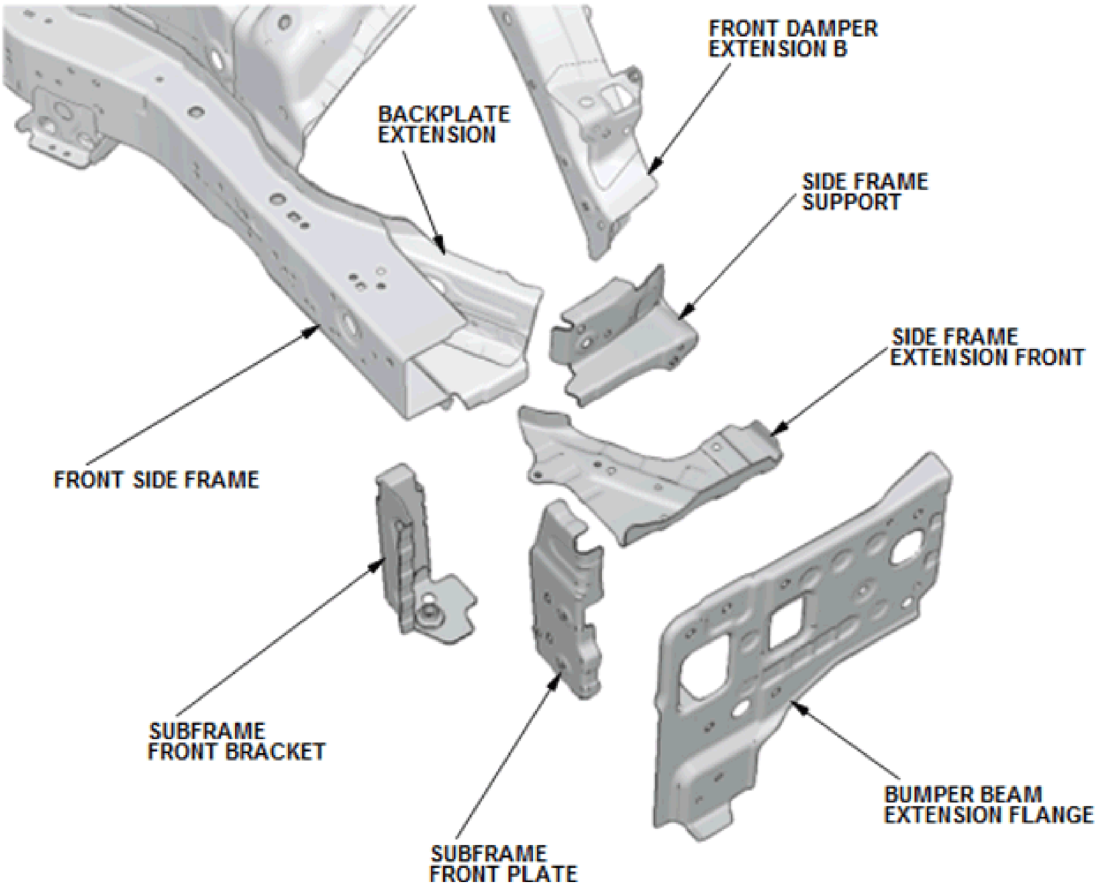
FRONT DAMPER EXTENSION B
BACKPLATE EXTENSION
SIDE FRAME SUPPORT
SIDE FRAME EXTENSION FRONT
FRONT SIDE FRAME
SUBFRAME FRONT BRACKET
BUMPER BEAM EXTENSION FLANGE
SUBFRAME FRONT PLATE

Fig. 34: Front Side Frame Front End Parts Replacement Component Location
Courtesy of AMERICAN HONDA MOTOR CO., INC.

INSTALLATION

NOTE:

- **Position the replacement parts. Before doing the main welding, check the body dimensions:**
  - **Refer to Front Bulkhead Position Dimension - Measure .**
  - **Refer to Engine Compartment Dimension - Measure .**
  - **Refer to Front Wheelhouse Lower Member Position Dimension - Measure .**
  - **Refer to Engine Compartment And Front Floor, Under View Dimension - Measure .**
  - **Refer to Frame Repair Chart .**
- **Temporarily install the related parts, then check for differences in level and clearance. Check the External Parts Fitting Positions; refer to External Parts Fitting Positions . Make sure the body lines flow smoothly.**
- **Confirm the sheet thickness, tensile strength, and existence of the zinc treatment of both sides, and set the welder to conform to the welding conditions by referring to Front Body Construction .**
- **Welding symbols (The welding symbols with dashed lines have a meaning of the spot welding of the part which is not visible) ; refer to Symbols Definition .**
- **() and ()*: The number of welds**

Front Side Frame, Front-End Parts - Weld

1. Weld the side frame support (A), the side frame extension front (C), the subframe front plate (D), and the subframe front bracket (E) to the front side frame (F), the backplate extension (G), and front damper extension B.

()*: Welding position with high-strength steel parts. Confirm the plug welding conditions; refer to MAG Welding Conditions For High-Strength Steel (Except 1500 MPa) Parts .

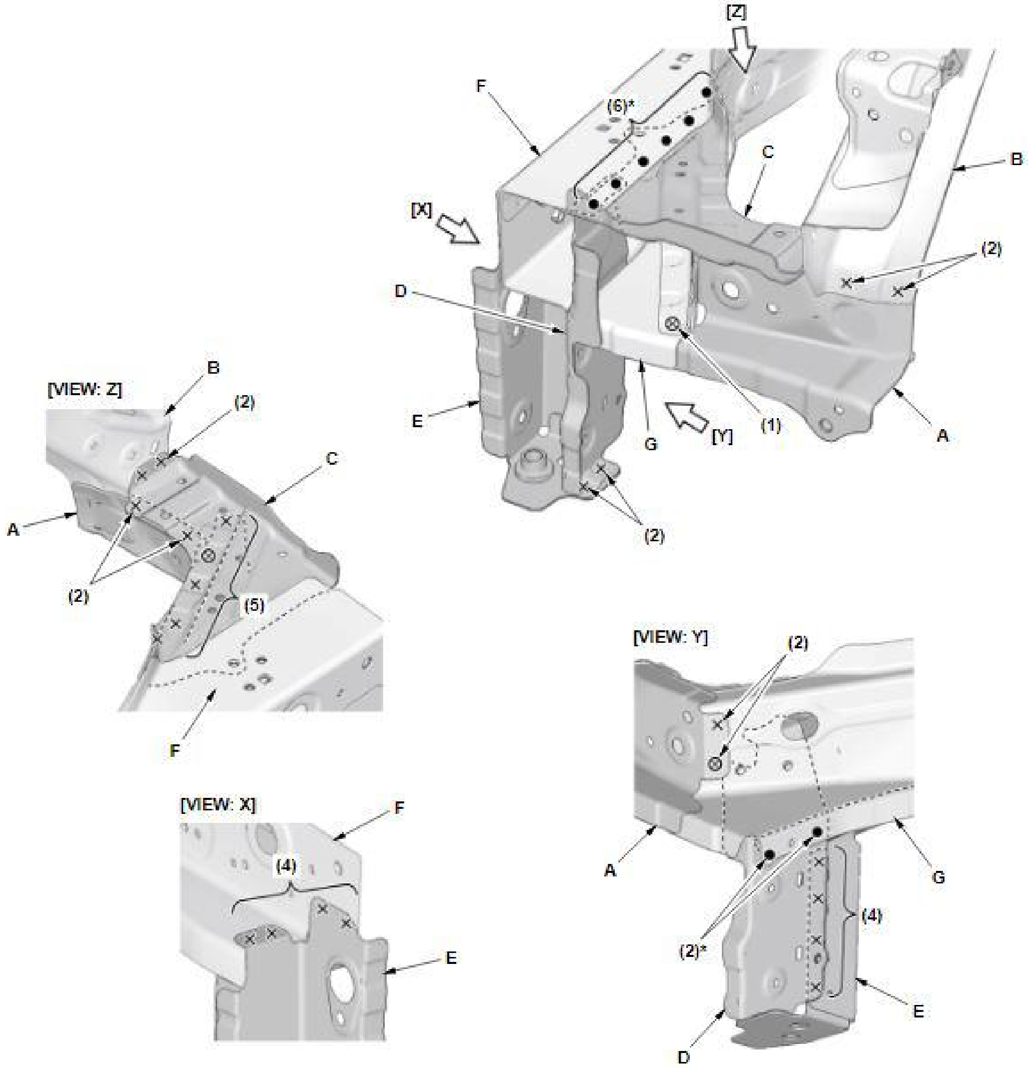
[Z]
F
(6)*
C
B
[X]
(2)
D
E
G
[Y]
(1)
A
(2)
[VIEW: Z]
B
(2)
C
A
(2)
(5)
F
[VIEW: Y]
(2)
A
G
(4)
(2)*
E
D
[VIEW: X]
F
(4)
E

Fig. 35: Front Side Frame Front End Part Installation Weld Counts And Locations
Courtesy of AMERICAN HONDA MOTOR CO., INC.

2. Weld the bumper beam extension flange (A).

   ()*: Welding position with high-strength steel parts. Confirm the plug welding conditions; refer to MAG Welding Conditions For High-Strength Steel (Except 1500 MPa) Parts .

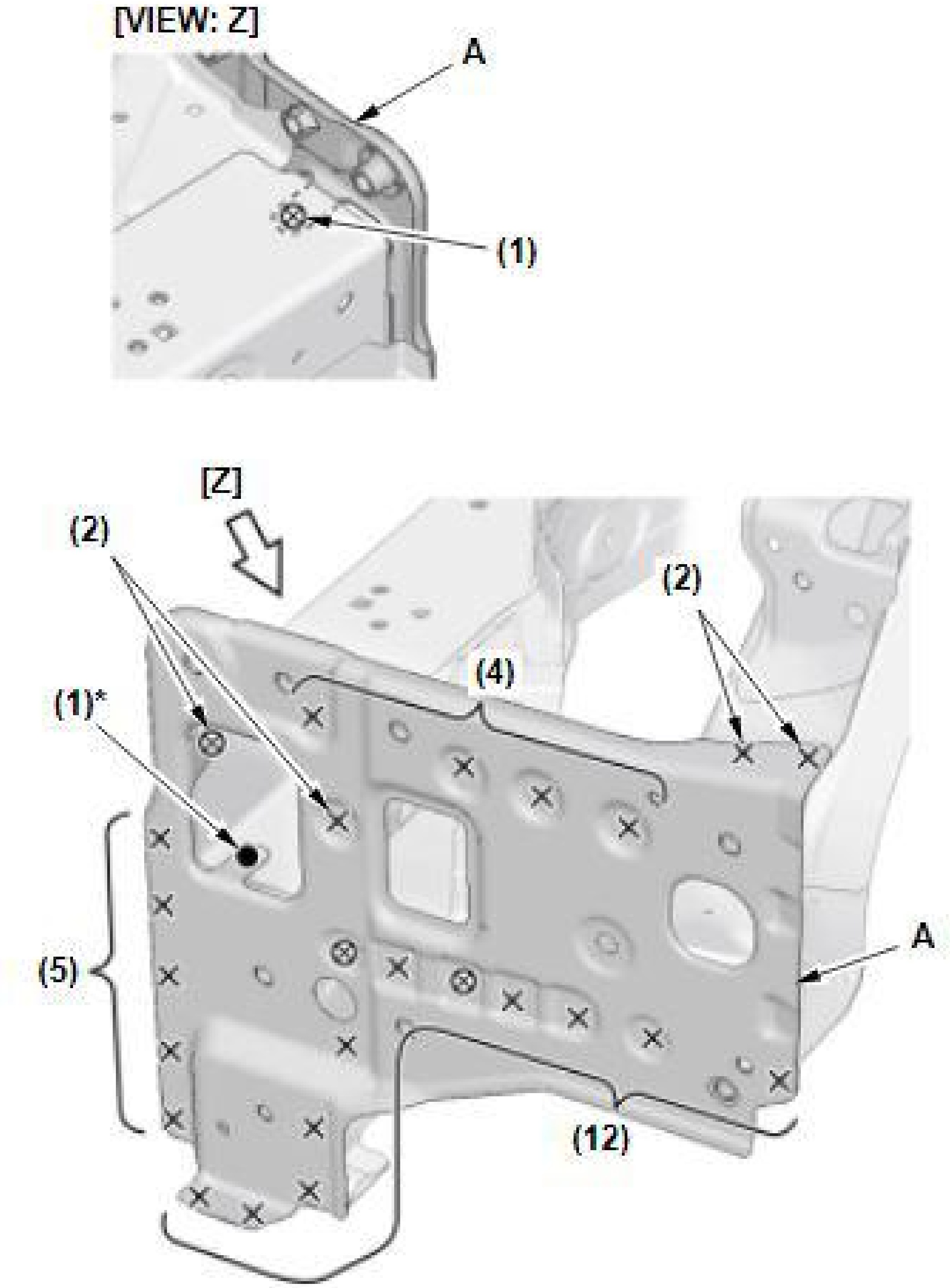

[Fig. 36: Bumper Beam Extension Flange Installation Weld Counts And Locations](#)
Courtesy of AMERICAN HONDA MOTOR CO., INC.

3. Weld the wheelhouse upper member front (A) to front damper extension B, the side frame support (C), the bumper beam extension flange (D), and the wheelhouse upper member rear (E).

   ()*: Welding position with high-strength steel parts. Confirm the plug welding conditions; refer to MAG Welding Conditions For High-Strength Steel (Except 1500 MPa) Parts .

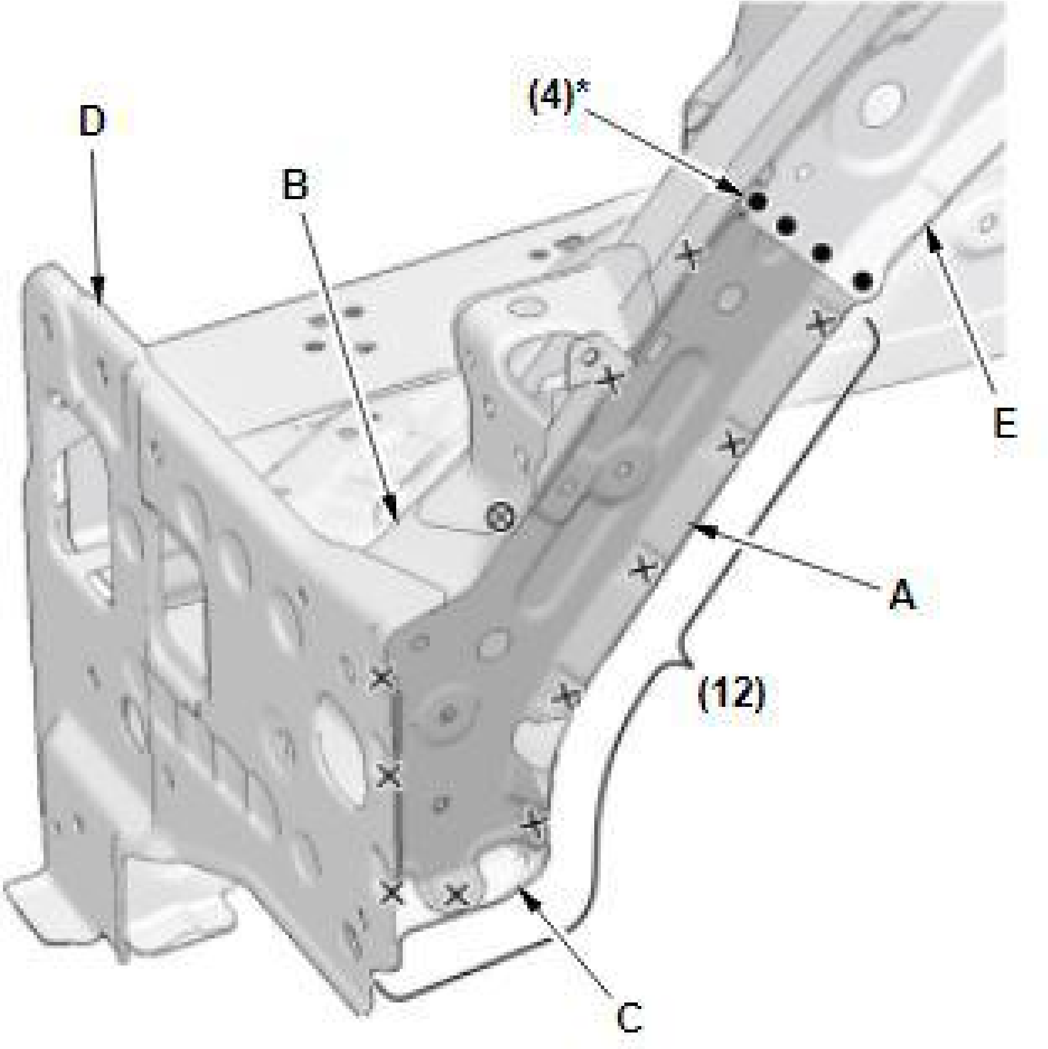

Fig. 37: Wheelhouse Upper Member Front Installation Weld Counts And Locations
Courtesy of AMERICAN HONDA MOTOR CO., INC.

4. Refer to Exterior Parts Removal/Installation .

FRONT WHEELHOUSE/DAMPER HOUSING REPLACEMENT

REMOVAL

NOTE:

- **High-strength steel is defined as any steel with a tensile strength of 340 MPa or higher. If a part is constructed of, or includes high-strength steel observe the important guidelines. Refer to Repair Guidelines For High-Strength Steel Parts .**
- **Welding symbols (The welding symbols with dashed lines have a meaning of the spot welding of the part which is not visible) ; refer to Symbols Definition**
- **(): The number of welds**

Front Bulkhead - Remove

Refer to Exterior Parts Removal/Installation .

Mass Production Body Welding Positions And Numbers - Remove

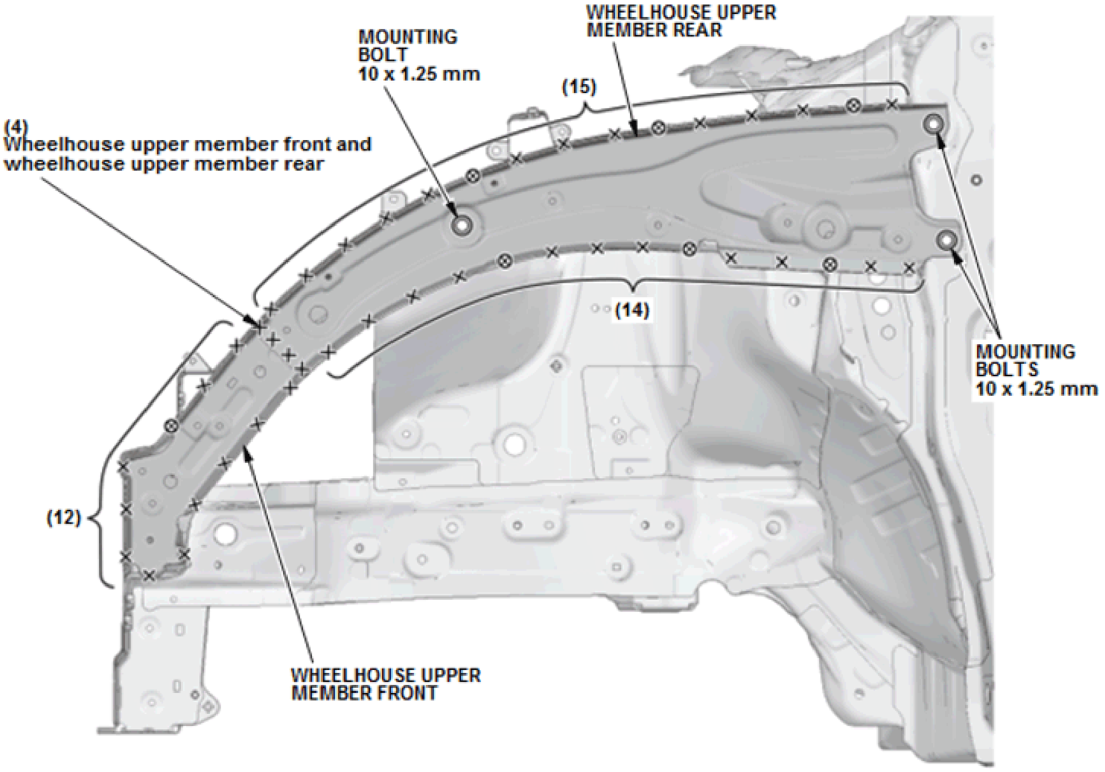
WHEELHOUSE UPPER MEMBER REAR
MOUNTING BOLT 10 x 1.25 mm
(15)
(4) Wheelhouse upper member front and wheelhouse upper member rear
(14)
MOUNTING BOLTS 10 x 1.25 mm
(12)
WHEELHOUSE UPPER MEMBER FRONT

Fig. 38: Wheelhouse Upper Member Removal Hardware, Weld Counts And Locations
Courtesy of AMERICAN HONDA MOTOR CO., INC.

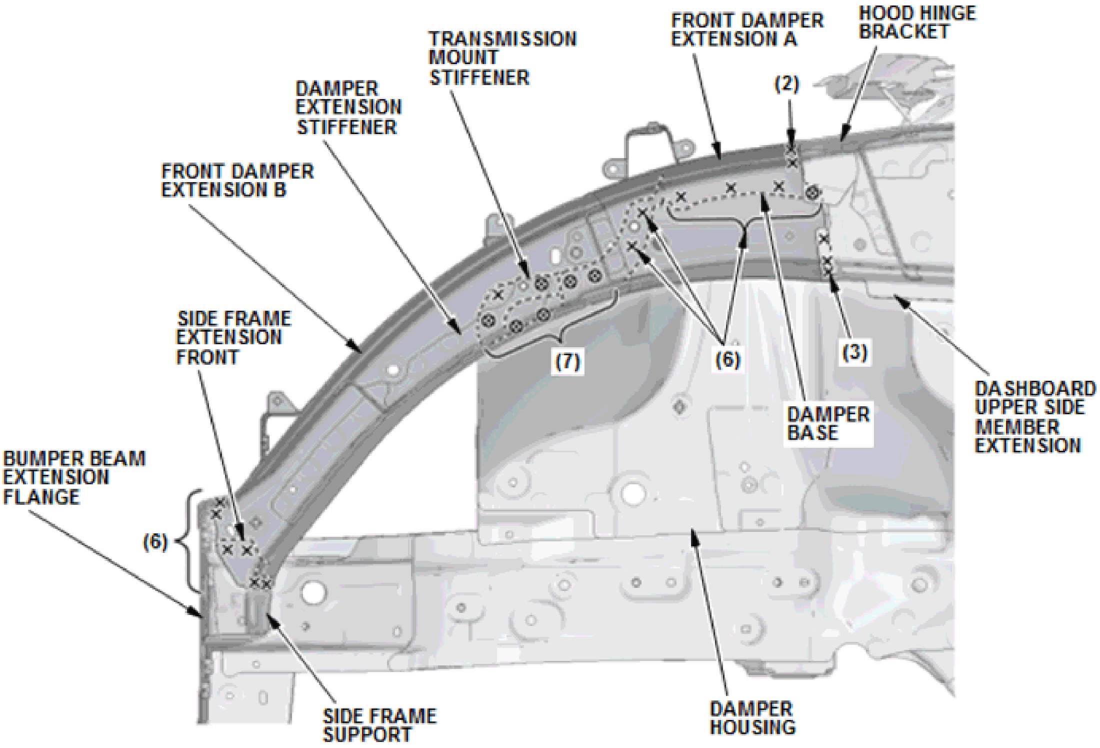
TRANSMISSION MOUNT STIFFENER
FRONT DAMPER EXTENSION A
HOOD HINGE BRACKET
(2)
DAMPER EXTENSION STIFFENER
FRONT DAMPER EXTENSION B
SIDE FRAME EXTENSION FRONT
(7)
(6)
(3)
DAMPER BASE
DASHBOARD UPPER SIDE MEMBER EXTENSION
BUMPER BEAM EXTENSION FLANGE
(6)
SIDE FRAME SUPPORT
DAMPER HOUSING

Right side

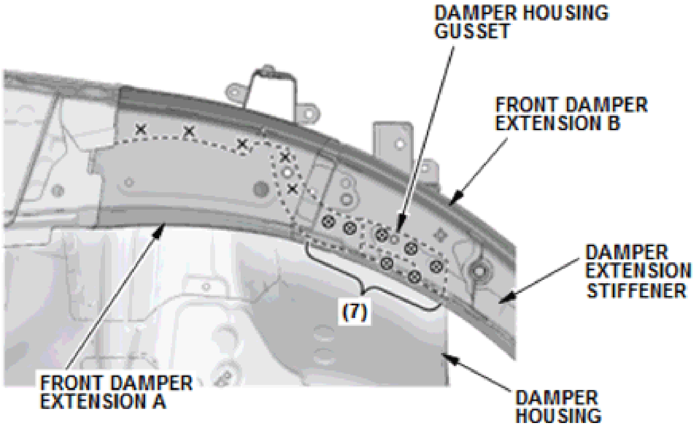
DAMPER HOUSING GUSSET
FRONT DAMPER EXTENSION B
DAMPER EXTENSION STIFFENER
(7)
FRONT DAMPER EXTENSION A
DAMPER HOUSING

Fig. 39: Front Damper Extension Set Removal Weld Counts And Locations
Courtesy of AMERICAN HONDA MOTOR CO., INC.

Front Wheelhouse/Damper Housing Component Location

NOTE:

- **This section explains the procedures after Removal of all related parts. For the related parts' Removal procedure, refer to the appropriate service information.**
- **The component replacement procedure described here is only for new genuine supplied parts, as needed, according to the area and the degree of damage on the body.**
- **Remove the wheelhouse upper member front and rear as an assembly, and replace them.**
- **Check the front damper extension set position for damage. If necessary, replace them.**
- **Replace the front damper extension set and the bumper beam extension flange at the same time.**

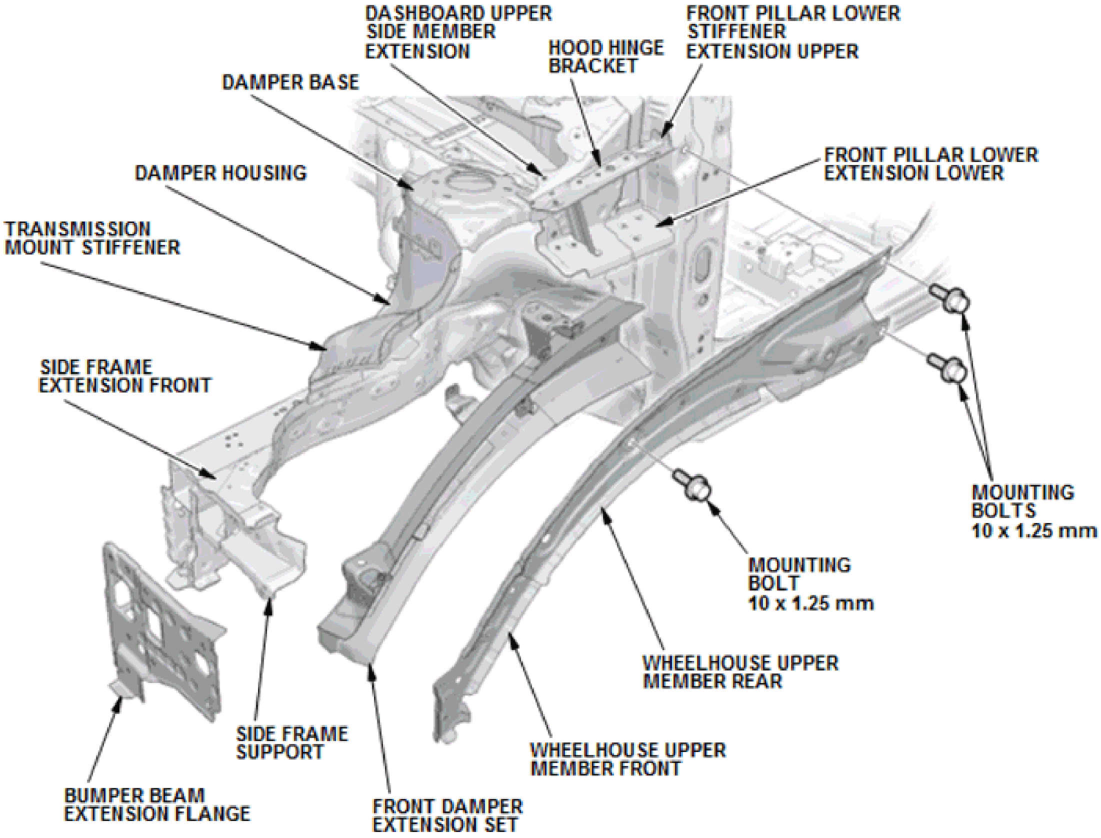
DASHBOARD UPPER SIDE MEMBER EXTENSION
FRONT PILLAR LOWER STIFFENER EXTENSION UPPER
HOOD HINGE BRACKET
DAMPER BASE
FRONT PILLAR LOWER EXTENSION LOWER
DAMPER HOUSING
TRANSMISSION MOUNT STIFFENER
SIDE FRAME EXTENSION FRONT
MOUNTING BOLTS 10 x 1.25 mm
MOUNTING BOLT 10 x 1.25 mm
WHEELHOUSE UPPER MEMBER REAR
WHEELHOUSE UPPER MEMBER FRONT
SIDE FRAME SUPPORT
BUMPER BEAM EXTENSION FLANGE
FRONT DAMPER EXTENSION SET

Fig. 40: Front Wheelhouse/Damper Housing Replacement Component Location
Courtesy of AMERICAN HONDA MOTOR CO., INC.

Mass Production Body Welding Positions and Numbers - Remove

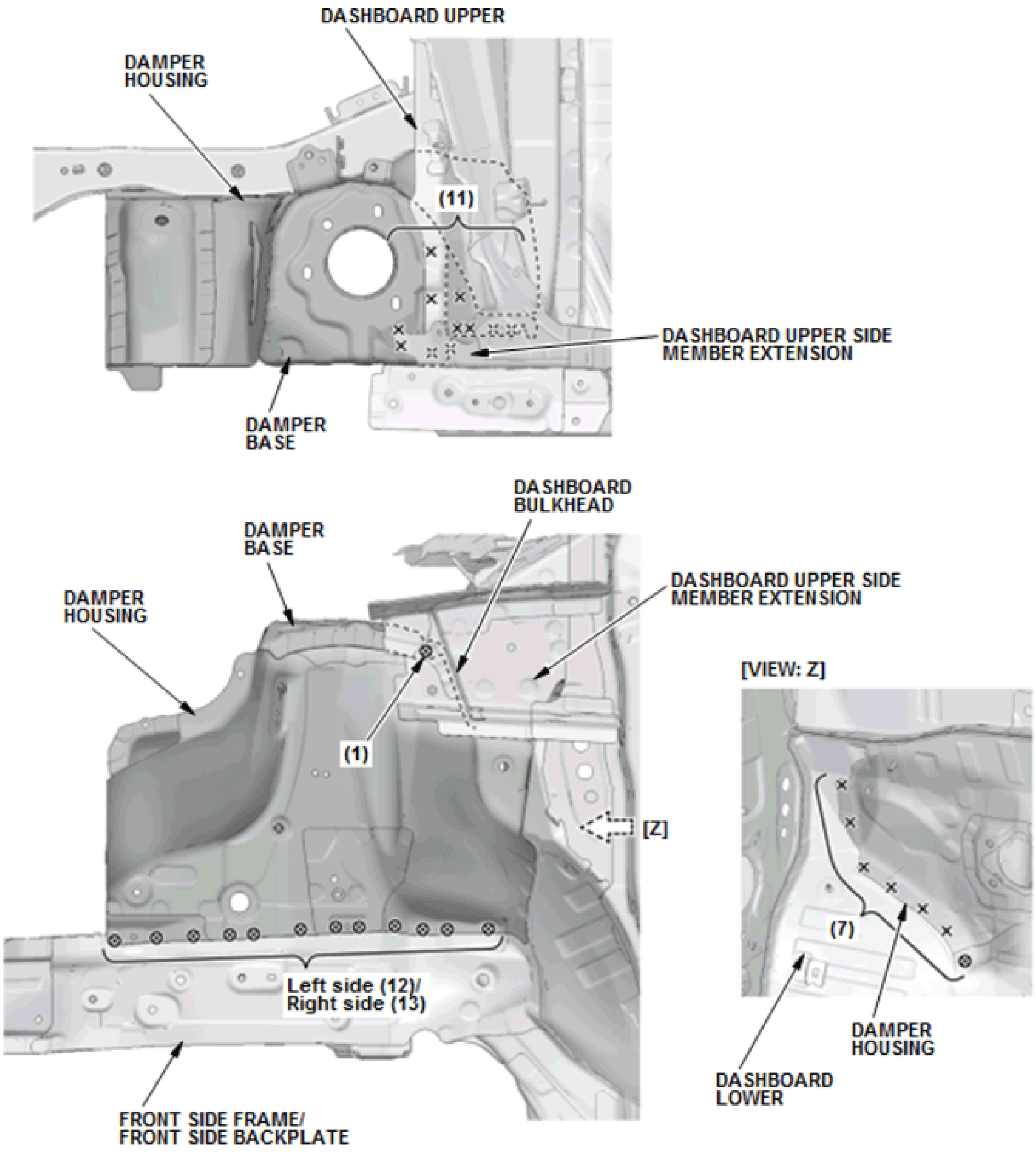
DASHBOARD UPPER
DAMPER HOUSING
(11)
DASHBOARD UPPER SIDE MEMBER EXTENSION
DAMPER BASE
DASHBOARD BULKHEAD
DAMPER BASE
DAMPER HOUSING
DASHBOARD UPPER SIDE MEMBER EXTENSION
[VIEW: Z]
(1)
[Z]
(7)
Left side (12)/
Right side (13)
DAMPER HOUSING
DASHBOARD LOWER
FRONT SIDE FRAME/
FRONT SIDE BACKPLATE

Fig. 41: Damper Housing Set Removal Weld Counts And Locations

Courtesy of AMERICAN HONDA MOTOR CO., INC.

DAMPER HOUSING SET COMPONENT LOCATION

NOTE:

- **This section explains the procedures after Removal of all related parts. For the related parts' Removal procedure, refer to the appropriate service information.**
- **The component replacement procedure described here is only for new genuine supplied parts, as needed, according to the area and the degree of damage on the body.**

Check the damper housing set position for damage and if necessary, replace it.

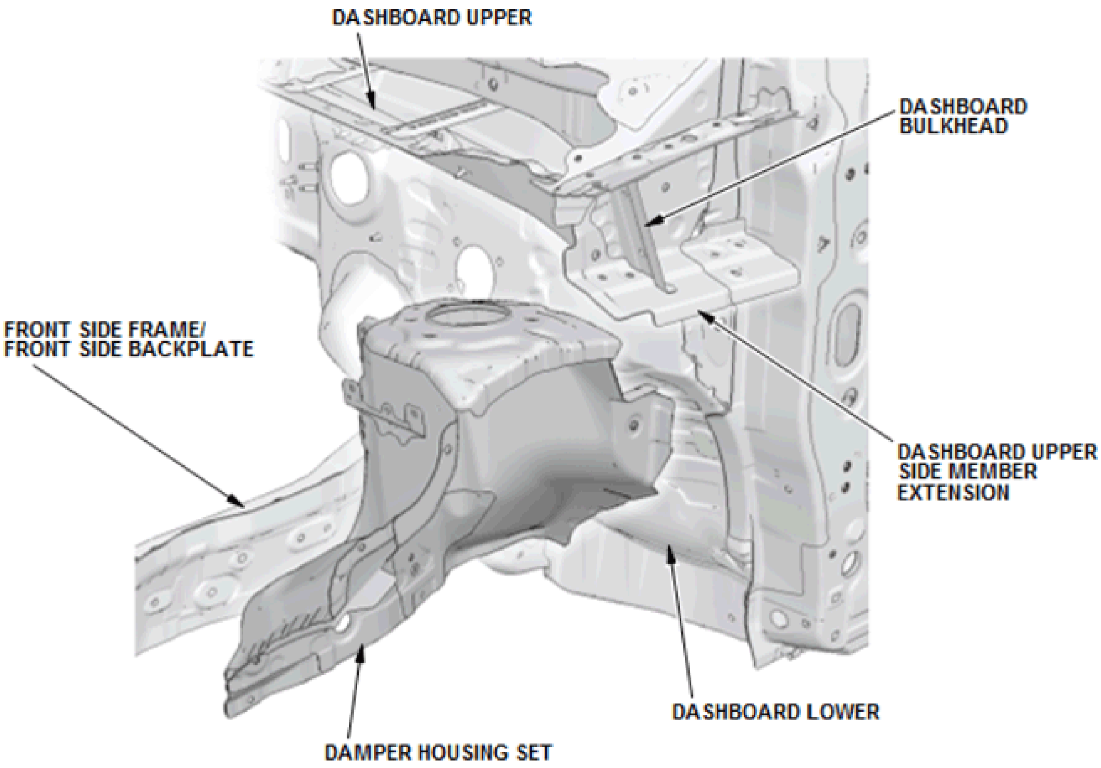
DASHBOARD UPPER
DASHBOARD BULKHEAD
FRONT SIDE FRAME/ FRONT SIDE BACKPLATE
DASHBOARD UPPER SIDE MEMBER EXTENSION
DASHBOARD LOWER
DAMPER HOUSING SET

Fig. 42: Damper Housing Set Component Location
Courtesy of AMERICAN HONDA MOTOR CO., INC.

INSTALLATION

NOTE:

- **Position the replacement parts. Before doing the main welding, check the body dimensions:**
  - **Refer to Front Bulkhead Position Dimension .**
  - **Refer to Engine Compartment Dimension .**
  - **Refer to Engine And Transmission Mount Positions Dimension .**
  - **Refer to Front Wheelhouse Lower Member Position Dimension .**
  - **Refer to Engine Compartment And Front Floor, Under View Dimension .**
  - **Refer to Frame Repair Chart .**
- **Temporarily install the related parts, then check for differences in level and clearance. Check the External Parts Fitting Positions; refer to External Parts Fitting Positions . Make sure the body lines flow smoothly.**
- **Confirm the sheet thickness, tensile strength, and existence of the zinc treatment of both sides, and set the welder to conform to the welding conditions by referring to Front Body Construction .**
- **Welding symbols (The welding symbols with dashed lines have a meaning of the spot welding of the part which is not visible) ; refer to Symbols Definition .**
- **() and ()*: The number of welds**

Damper Housing Set - Weld

1. Weld the damper housing set (A) to the dashboard upper side member extension (B), the dashboard bulkhead (C), and the dashboard upper (D).

   ()*: Welding position with high-strength steel parts. Confirm the plug welding conditions; refer to MAG Welding Conditions For High-Strength Steel (Except 1500 MPa) Parts .

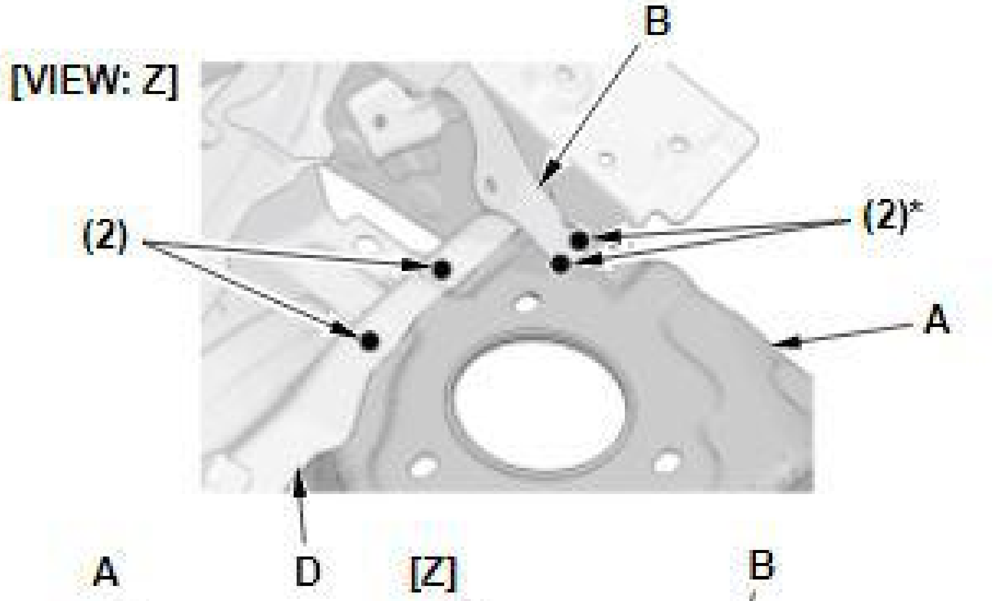
[VIEW: Z]
B
(2)
(2)*
A
D

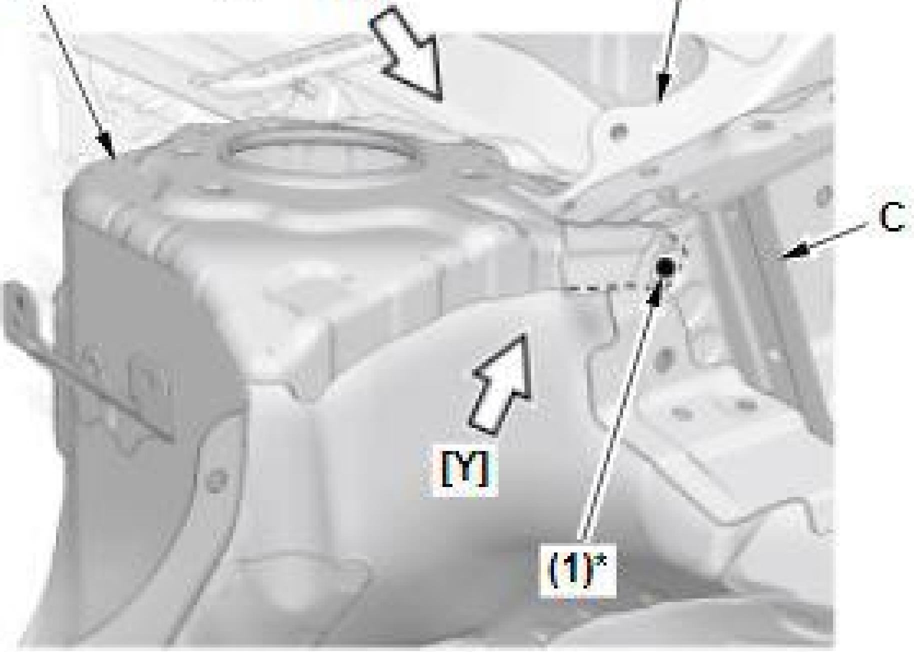
A
D
[Z]
B
C
[Y]
(1)*

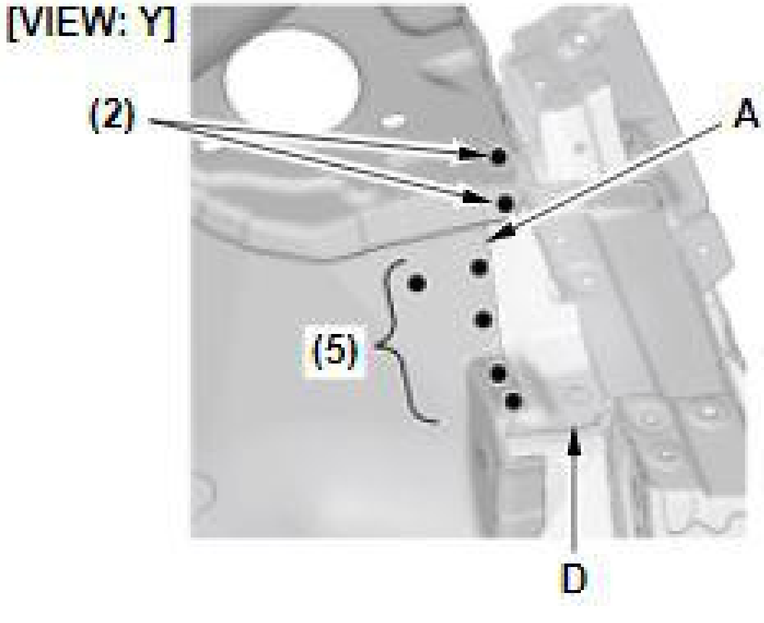
[VIEW: Y]
(2)
A
(5)
D

Fig. 43: Damper Housing Set Installation Weld Counts And Locations
Courtesy of AMERICAN HONDA MOTOR CO., INC.

2. From the passenger's compartment, plug weld the holes in the dashboard lower (A) and the damper housing set (B).

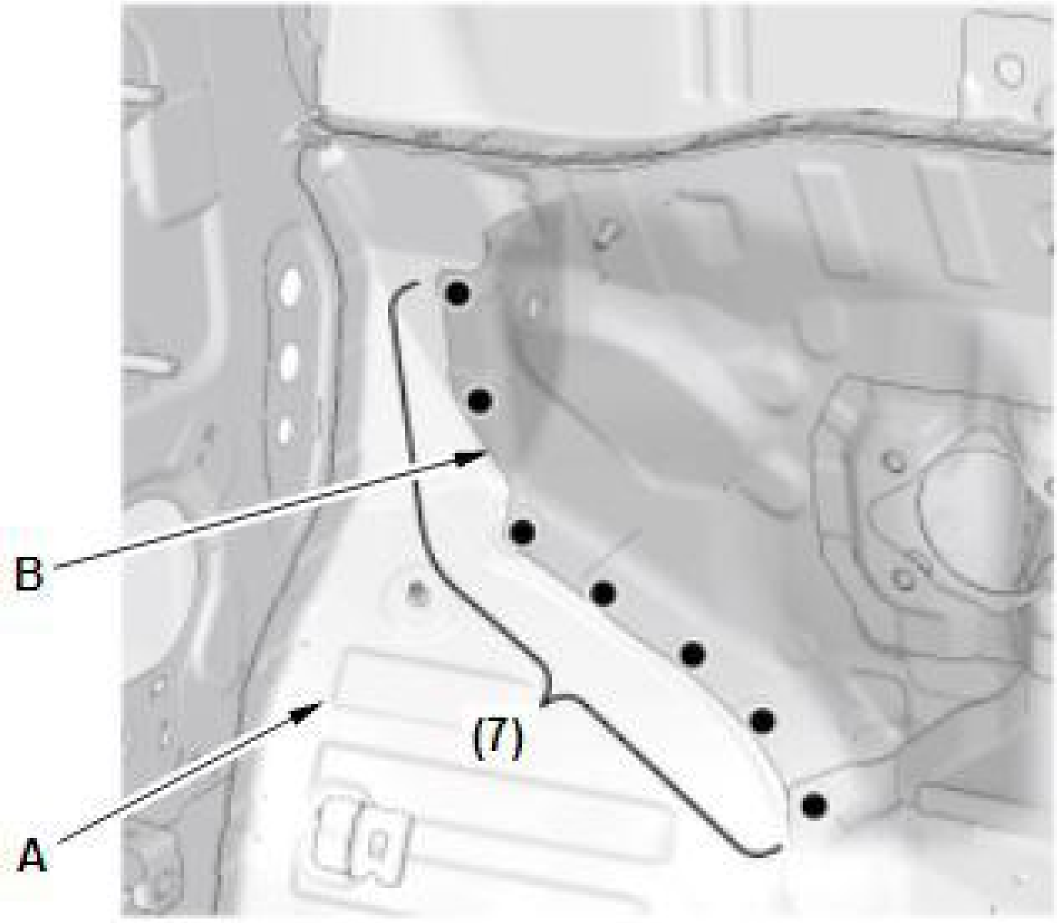

Fig. 44: Dashboard Lower To Damper Housing Set Installation Weld Counts And Locations
Courtesy of AMERICAN HONDA MOTOR CO., INC.

3. Weld the damper housing set (A) to the front side frame/front side backplate (B).

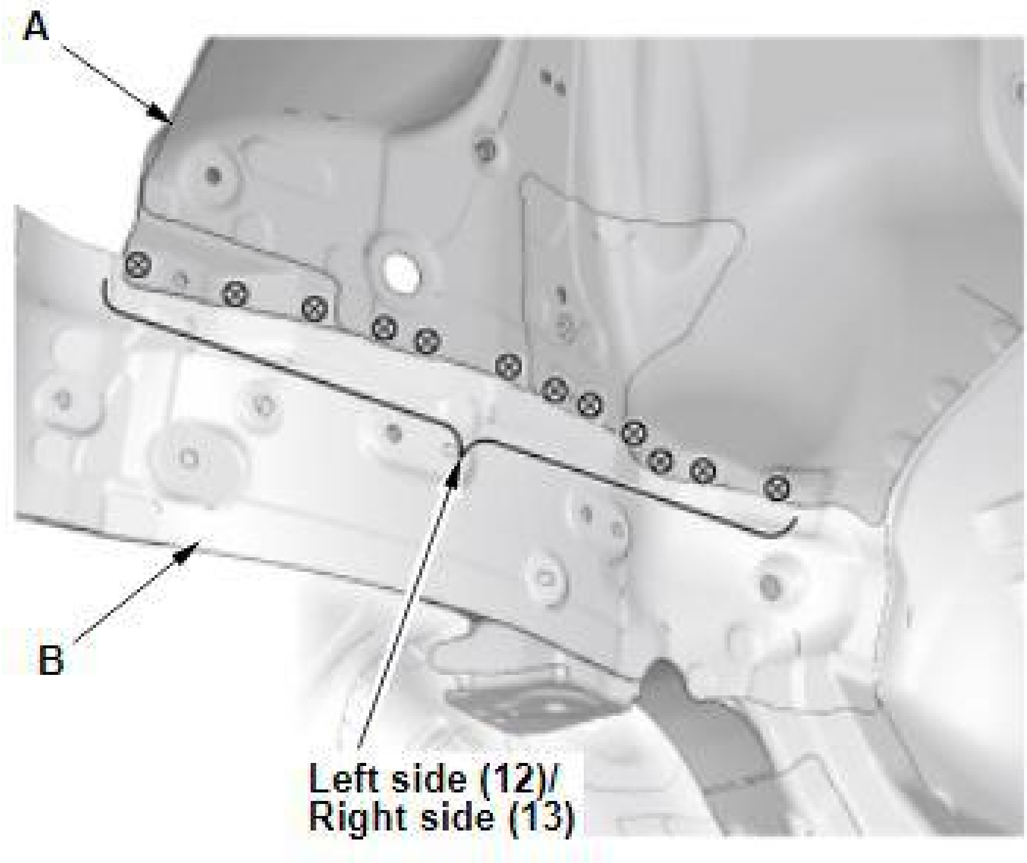

Fig. 45: Front Side Frame To Damper Housing Set Installation Weld Counts And Locations
Courtesy of AMERICAN HONDA MOTOR CO., INC.

4. Refer to **Installation** for bumper beam extension flange weld points.

Front Damper Extension Set - Weld

1. Weld the front damper extension set (A) to the hood hinge bracket (B), the dashboard upper side member extension (C), and the damper housing set (D).

   ()*: Welding position with high-strength steel parts. Confirm the plug welding conditions; refer to **MAG Welding Conditions For High-Strength Steel (Except 1500 MPa) Parts** .

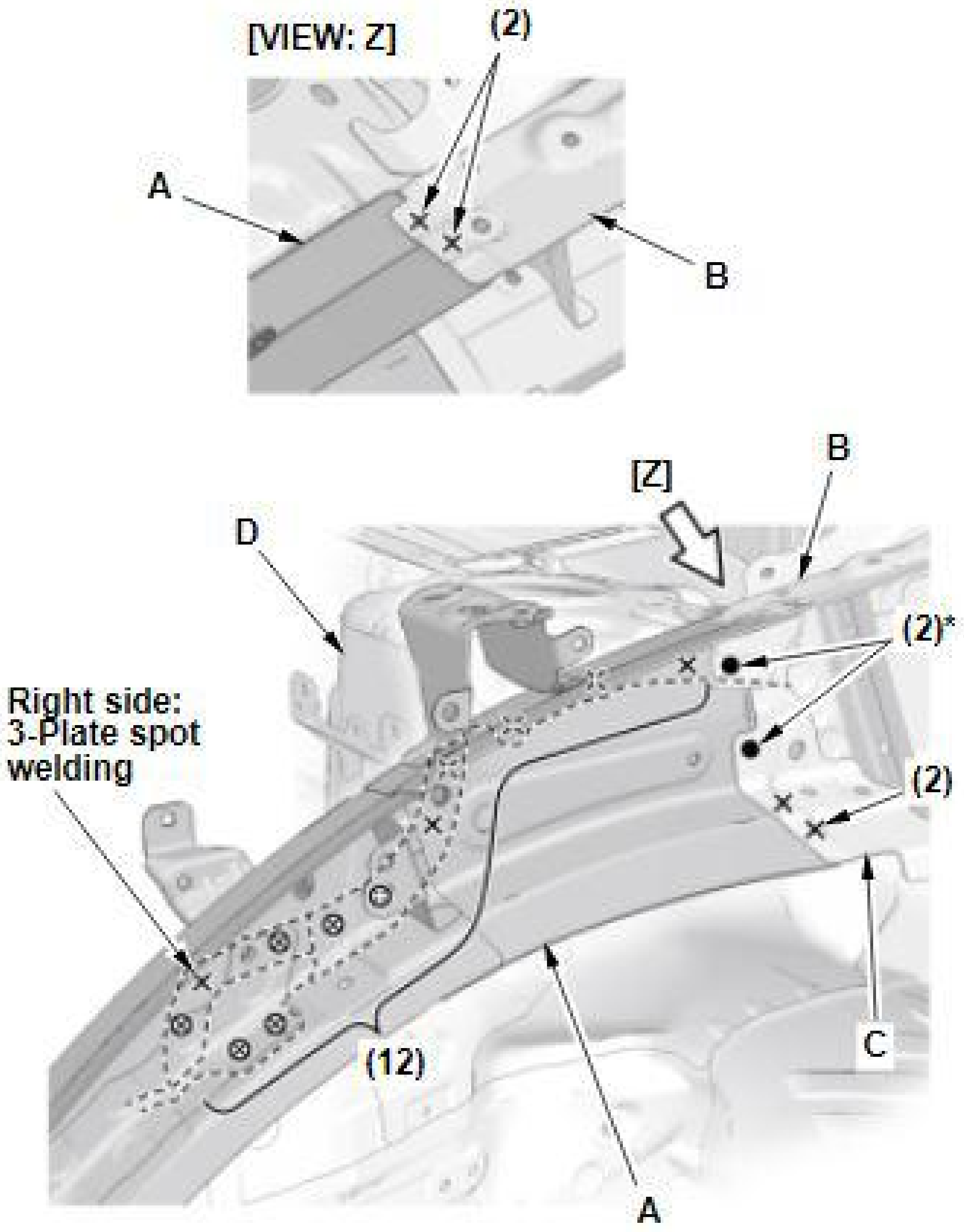
[VIEW: Z]
(2)
A
B
[Z]
B
D
(2)*
Right side: 3-Plate spot welding
(2)
(12)
C
A

Fig. 46: Front Damper Extension Set Installation Weld Counts And Locations (1 Of 2)
Courtesy of AMERICAN HONDA MOTOR CO., INC.

2. Weld the front damper extension set (A) to the bumper beam extension flange (B), the side frame extension front (C), and the side frame support (D).

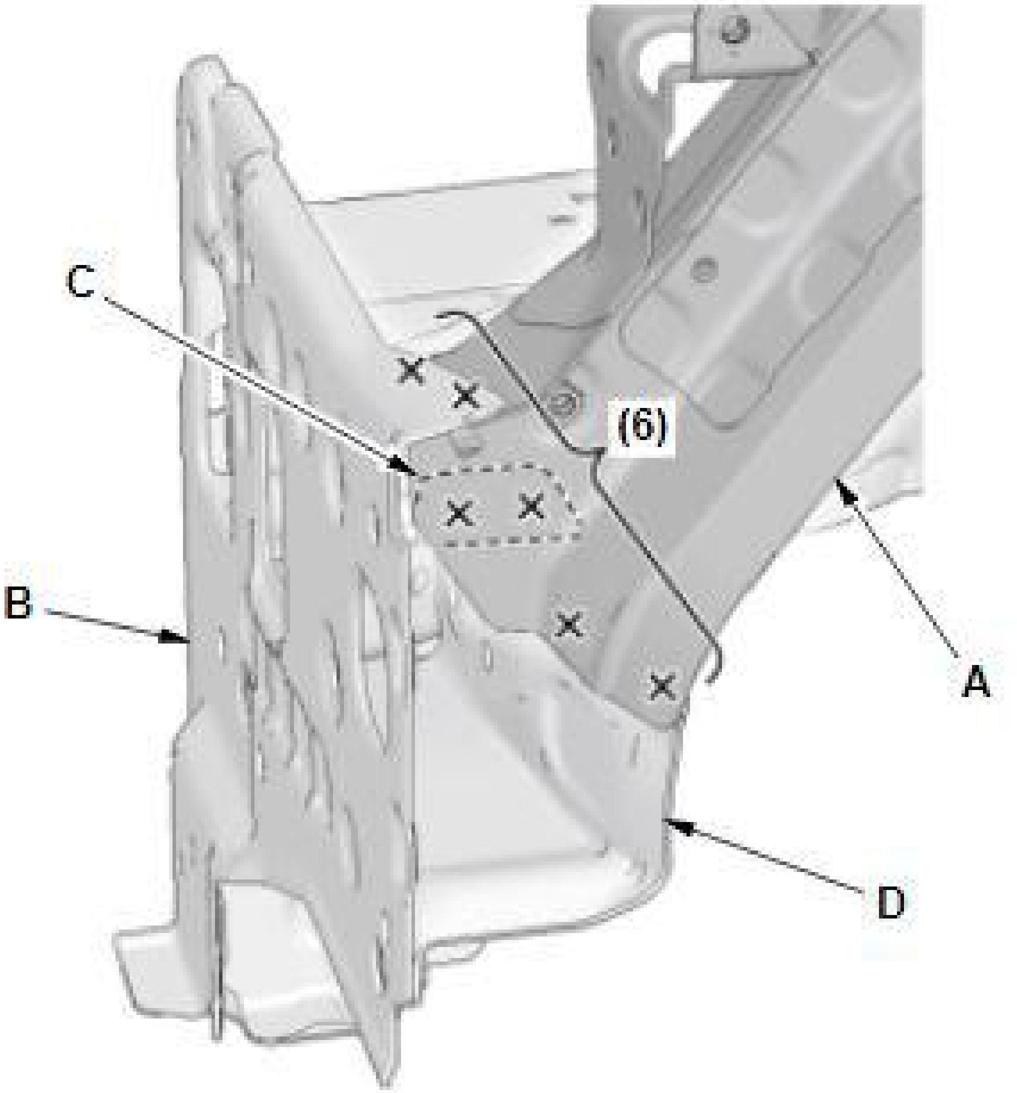

Fig. 47: Front Damper Extension Set Installation Weld Counts And Locations (2 Of 2)
Courtesy of AMERICAN HONDA MOTOR CO., INC.

Front Wheelhouse Upper Member - Weld

1. Weld the wheelhouse upper member front (A) and the wheelhouse upper member rear (B) to the front damper extension set (C), the side frame support (D), the bumper beam extension flange (E), the hood hinge bracket (F), the dashboard upper side member extension (G), and the front pillar lower stiffener extension upper/extension lower (H).

   ()*: Welding position with high-strength steel parts. Confirm the plug welding conditions; refer to MAG Welding Conditions For High-Strength Steel (Except 1500 MPa) Parts .

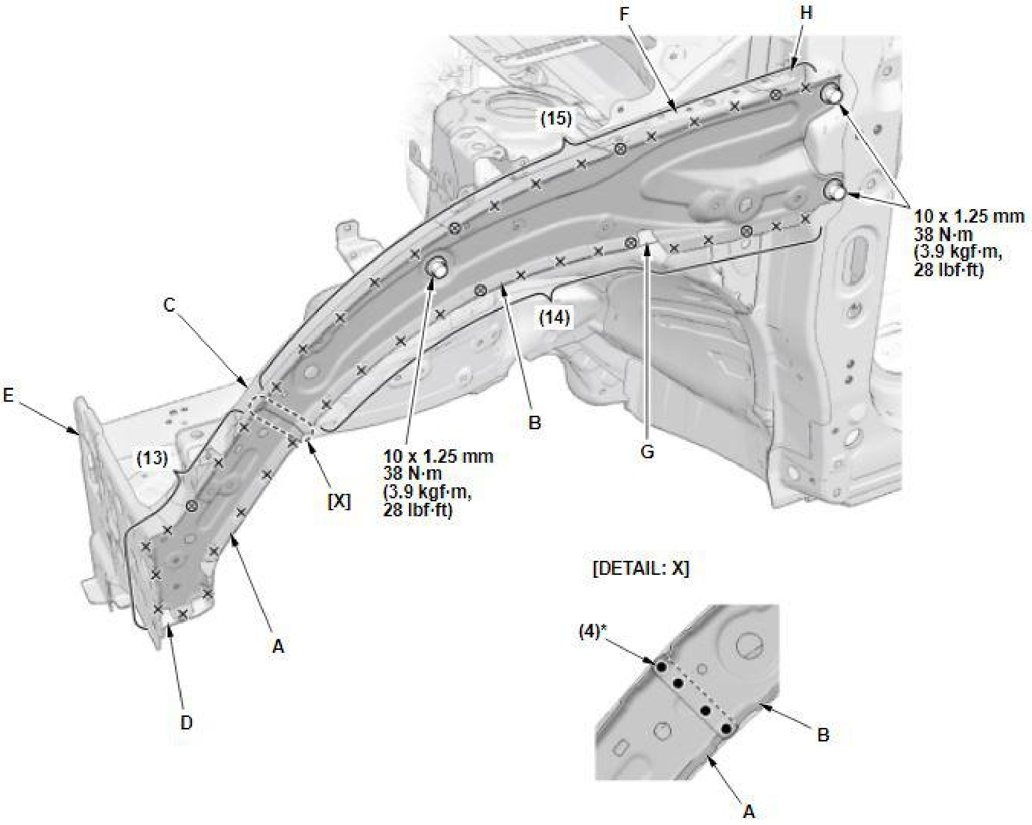

Fig. 48: Wheelhouse Upper Member Front Installation Weld Counts And Locations With Torque Specifications
Courtesy of AMERICAN HONDA MOTOR CO., INC.

2. Refer to Exterior Parts Removal/Installation .

REAR FLOOR/REAR FRAME REPLACEMENT

REMOVAL

NOTE:

- **High-strength steel is defined as any steel with a tensile strength of 340 MPa or higher. If a part is constructed of, or includes high-strength steel observe the important guidelines. Refer to Repair Guidelines For High-Strength Steel Parts .**
- **Welding symbols (The welding symbols with dashed lines have a meaning of the spot welding of the part which is not visible) ; refer to Symbols Definition**
- **(): The number of welds**

Rear frame A and rear frame upper stiffener B are made from ultra high-strength steel (UHSS) (1500 MPa). However, at the [X] and [Y] areas which are shown in the illustrations, each part is made from high-strength steel (except 1500 MPa). For this reason, sectioning is possible at areas [X] and [Y]. Do not cut except the [X] and [Y] areas.

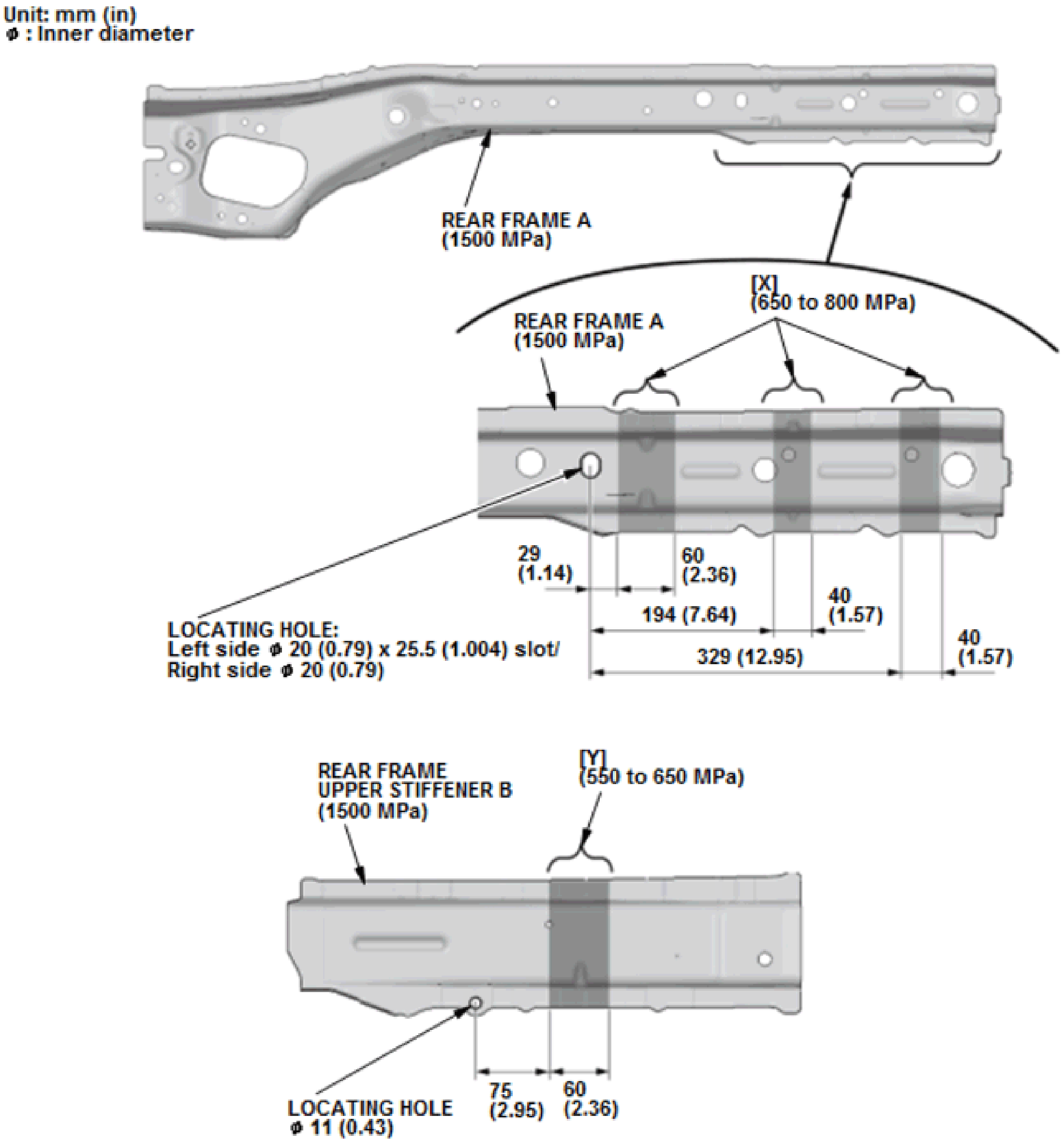
Unit: mm (in)
φ : Inner diameter
REAR FRAME A
(1500 MPa)
[X]
(650 to 800 MPa)
REAR FRAME A
(1500 MPa)
29
(1.14)
60
(2.36)
40
(1.57)
194 (7.64)
329 (12.95)
40
(1.57)
LOCATING HOLE:
Left side φ 20 (0.79) x 25.5 (1.004) slot/
Right side φ 20 (0.79)
REAR FRAME
UPPER STIFFENER B
(1500 MPa)
[Y]
(550 to 650 MPa)
LOCATING HOLE
φ 11 (0.43)
75
(2.95)
60
(2.36)

Fig. 49: Rear Frame Sectioning Locations

Courtesy of AMERICAN HONDA MOTOR CO., INC.

Rear Panel - Remove

Refer to Removal.

Mass Production Body Welding Positions and Numbers - Remove

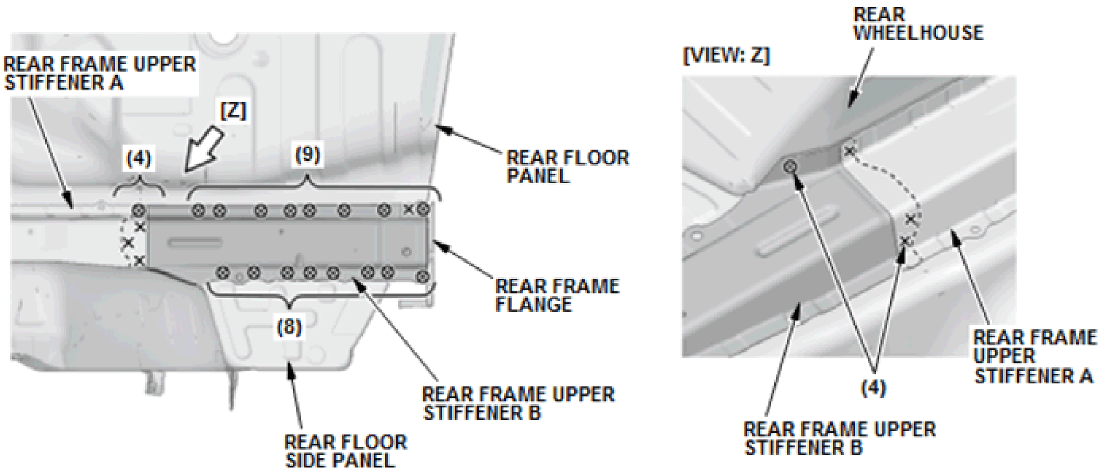
REAR FRAME UPPER
STIFFENER A
[Z]
(4)
(9)
REAR FLOOR
PANEL
REAR FRAME
FLANGE
(8)
REAR FRAME UPPER
STIFFENER B
REAR FLOOR
SIDE PANEL
[VIEW: Z]
REAR
WHEELHOUSE
REAR FRAME
UPPER
STIFFENER A
(4)
REAR FRAME UPPER
STIFFENER B

Fig. 50: Rear Frame Upper Stiffener B Removal Weld Counts And Locations

Courtesy of AMERICAN HONDA MOTOR CO., INC.

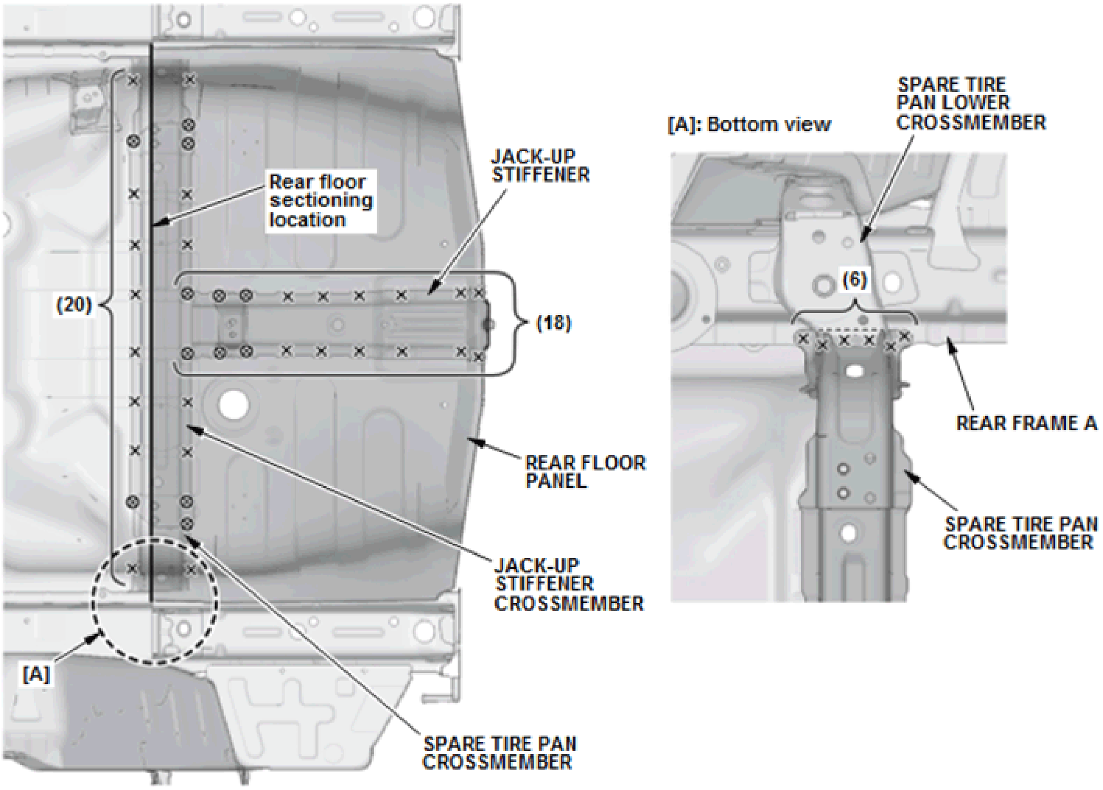
(20)
Rear floor sectioning location
JACK-UP STIFFENER
(18)
REAR FLOOR PANEL
JACK-UP STIFFENER CROSSMEMBER
[A]
SPARE TIRE PAN CROSSMEMBER
[A]: Bottom view
SPARE TIRE PAN LOWER CROSSMEMBER
(6)
REAR FRAME A
SPARE TIRE PAN CROSSMEMBER

Fig. 51: Rear Floor Panel And Jack-Up Stiffener Complete Removal Weld Counts And Locations

Courtesy of AMERICAN HONDA MOTOR CO., INC.

Rear Floor Panel Component Location

NOTE:

- **This section explains the procedures after Removal of all related parts. For the related parts' Removal procedure, refer to the appropriate service information.**
- **The component replacement procedure described here is only for new genuine supplied parts, as needed, according to the area and the degree of damage on the body.**
- **Remove rear frame upper stiffener B.**
- **Cut and pry off the rear floor panel at the line beside both rear edges of rear frame upper stiffeners A, and replace it.**
- **Check the jack-up stiffener crossmember position for damage. If necessary, replace the jack-up stiffener complete (the rear jack-up stiffener and the stiffener crossmember) and both of the spare tire pan crossmembers at the same time.**

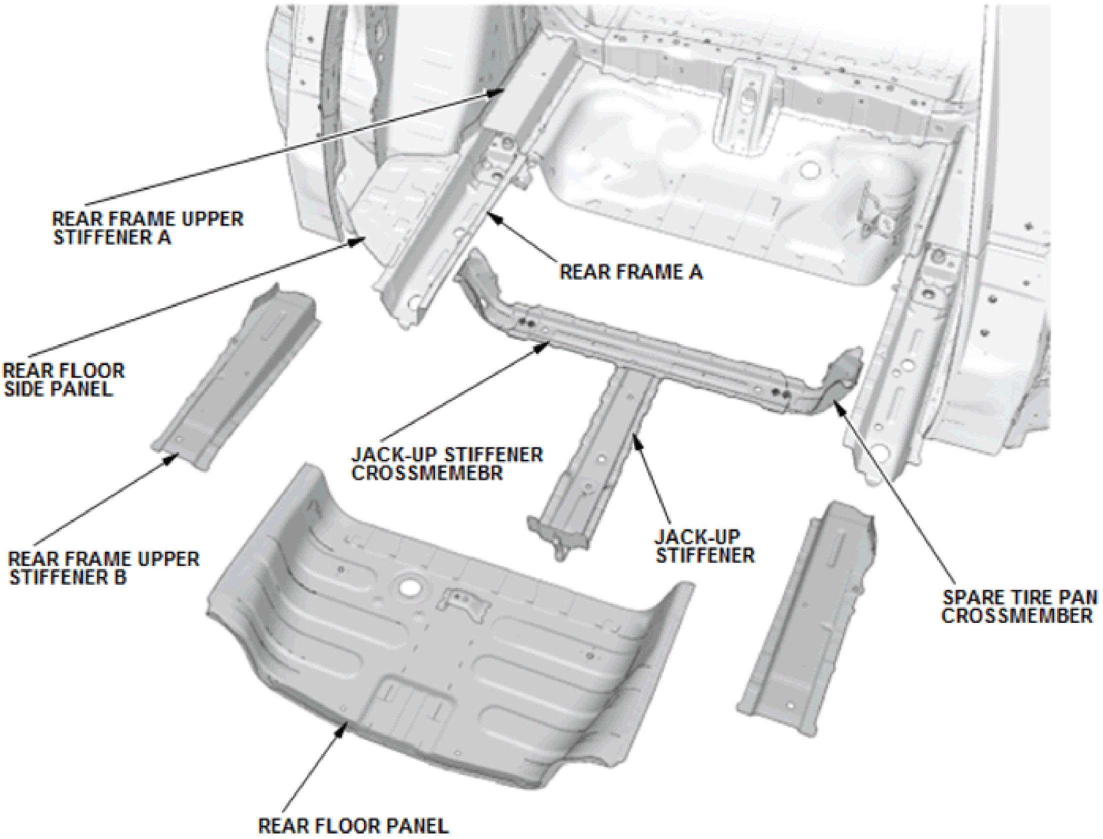
REAR FRAME UPPER STIFFENER A
REAR FRAME A
REAR FLOOR SIDE PANEL
JACK-UP STIFFENER CROSSMEMEBR
REAR FRAME UPPER STIFFENER B
JACK-UP STIFFENER
SPARE TIRE PAN CROSSMEMBER
REAR FLOOR PANEL

Fig. 52: Rear Floor Panel Component Location
Courtesy of AMERICAN HONDA MOTOR CO., INC.

Mass Production Body Welding Positions and Numbers - Remove

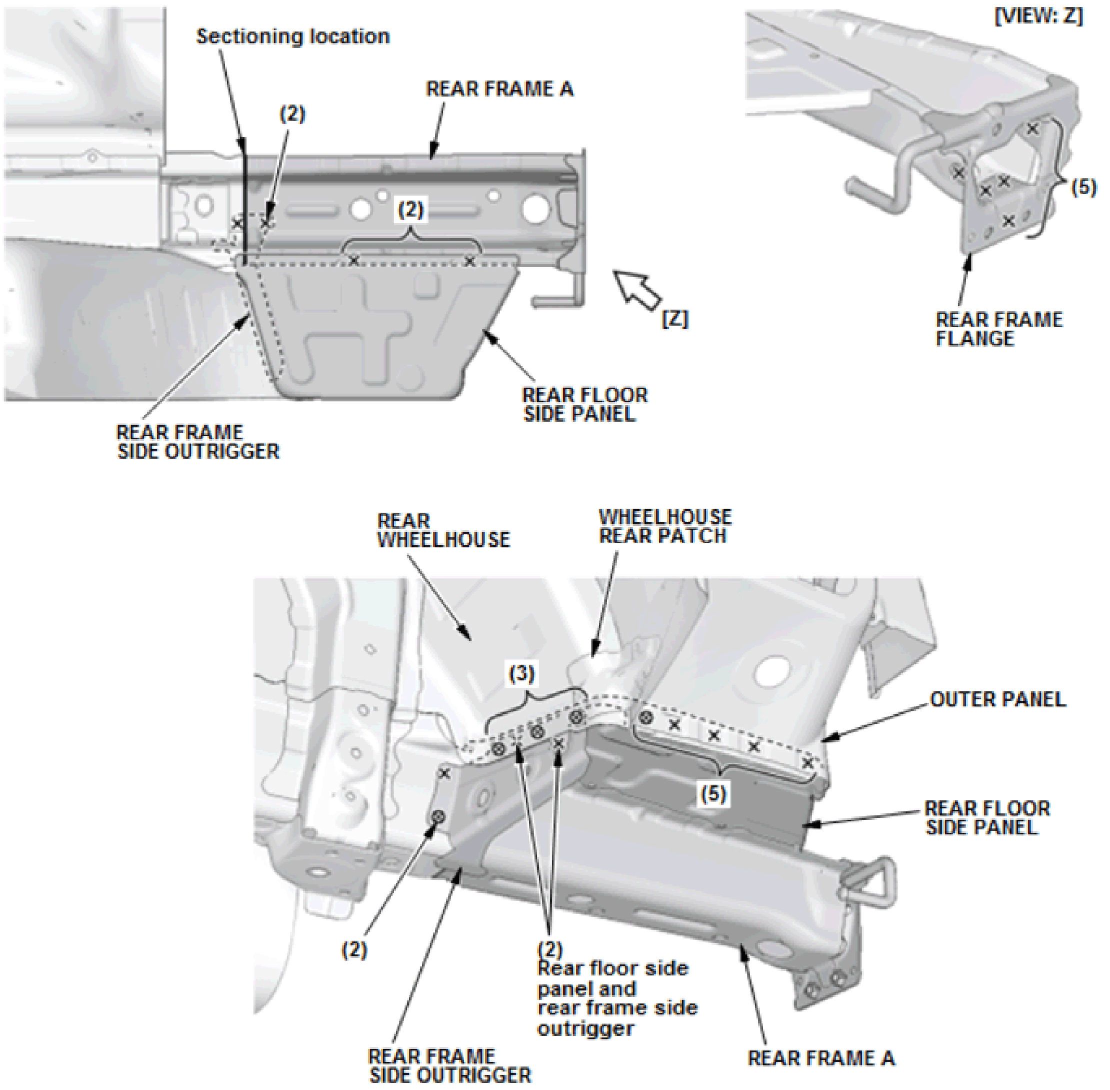
Sectioning location
REAR FRAME A
(2)
(2)
[Z]
REAR FLOOR SIDE PANEL
REAR FRAME SIDE OUTRIGGER
[VIEW: Z]
(5)
REAR FRAME FLANGE
REAR WHEELHOUSE
WHEELHOUSE REAR PATCH
(3)
OUTER PANEL
(5)
REAR FLOOR SIDE PANEL
(2)
(2) Rear floor side panel and rear frame side outrigger
REAR FRAME SIDE OUTRIGGER
REAR FRAME A

Fig. 53: Rear Floor Side Panel And Rear Frame A Removal Weld Counts And Locations
Courtesy of AMERICAN HONDA MOTOR CO., INC.

Rear Floor Side Panel C and Rear Frame A Component Location

NOTE:

- **This section explains the procedures after Removal of all related parts. For the related parts' Removal procedure, refer to the appropriate service information.**
- **The component replacement procedure described here is only for new genuine supplied parts, as needed, according to the area and the degree of damage on the body.**
- **Check the rear floor side panel position for damage. If necessary, replace it.**
- **The rear portion of rear frame A may be sectioned. Refer to Parts Sectioning Guidelines - Cut And Join .**
- **If the damage is limited to the rear portion of rear frame A, cut [Y] position of rear frame A, and replace it.**
- **When replacing rear frame A, carefully remove the rear frame side outrigger from rear frame A.**

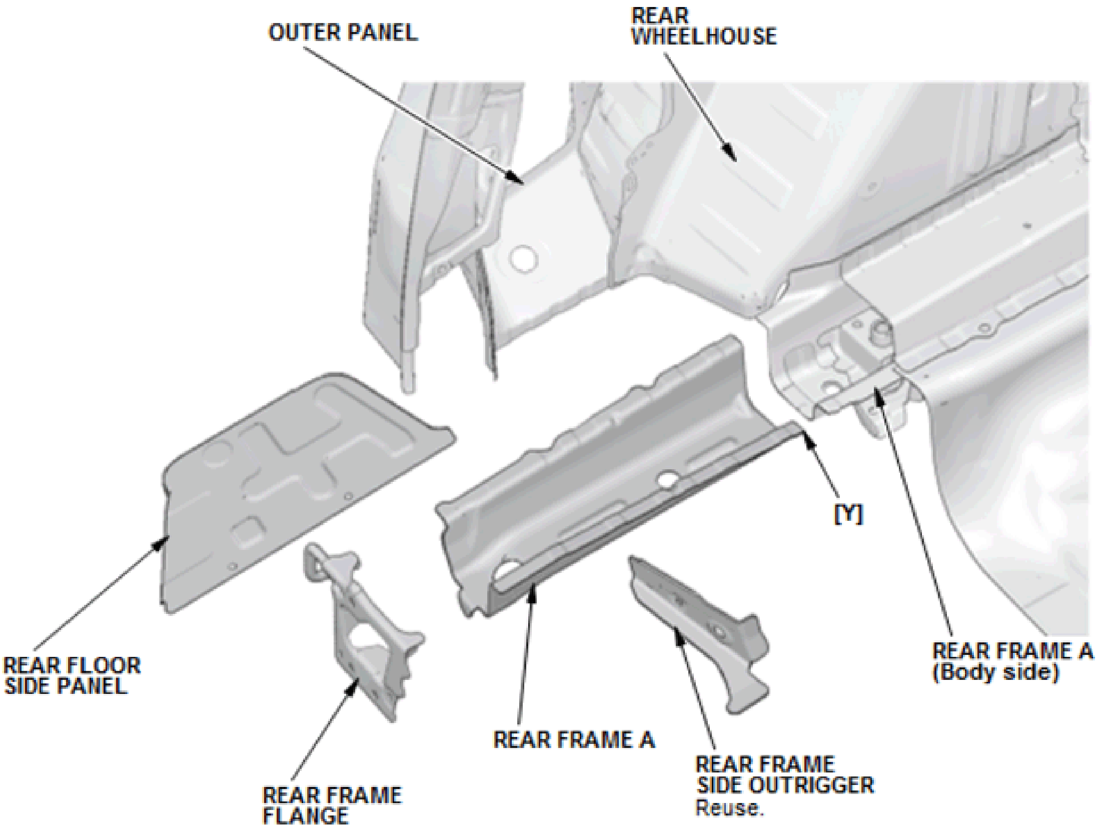

Fig. 54: Rear Floor Side Panel C and Rear Frame A, Rear Portion Component Location
Courtesy of AMERICAN HONDA MOTOR CO., INC.

INSTALLATION

NOTE:

- **Position the replacement parts. Before doing the main welding, check the body dimensions:**
  - **Refer to Rear Pillar Gutter And Rear Panel Positions Dimension .**
  - **Refer to TAILGATE OPENING .**
  - **Refer to Front Floor And Rear Floor, Under View Dimension .**
  - **Refer to Frame Repair Chart .**
- **Temporarily install the related parts, then check for differences in level and clearance. Check the External Parts Fitting Positions; refer to External Parts Fitting Positions . Make sure the body lines flow smoothly.**
- **Confirm the sheet thickness, tensile strength, and existence of the zinc treatment of both sides, and set the welder to conform to the welding conditions by referring to Roof And Side Panel Construction , and FLOOR AND REAR BODY CONSTRUCTION .**
- **Welding symbols (The welding symbols with dashed lines have a meaning of the spot welding of the part which is not visible) ; refer to Symbols Definition .**
- **() and ()*: The number of welds**

Rear Frame A, Rear Portion - Weld

1. Weld the rear portion of new rear frame A and the body side rear frame A (B).

   L*: Welding positions with high-strength steel parts. Confirm the butt welding conditions; refer to MAG Welding Conditions For High-Strength Steel (Except 1500 MPa) Parts .

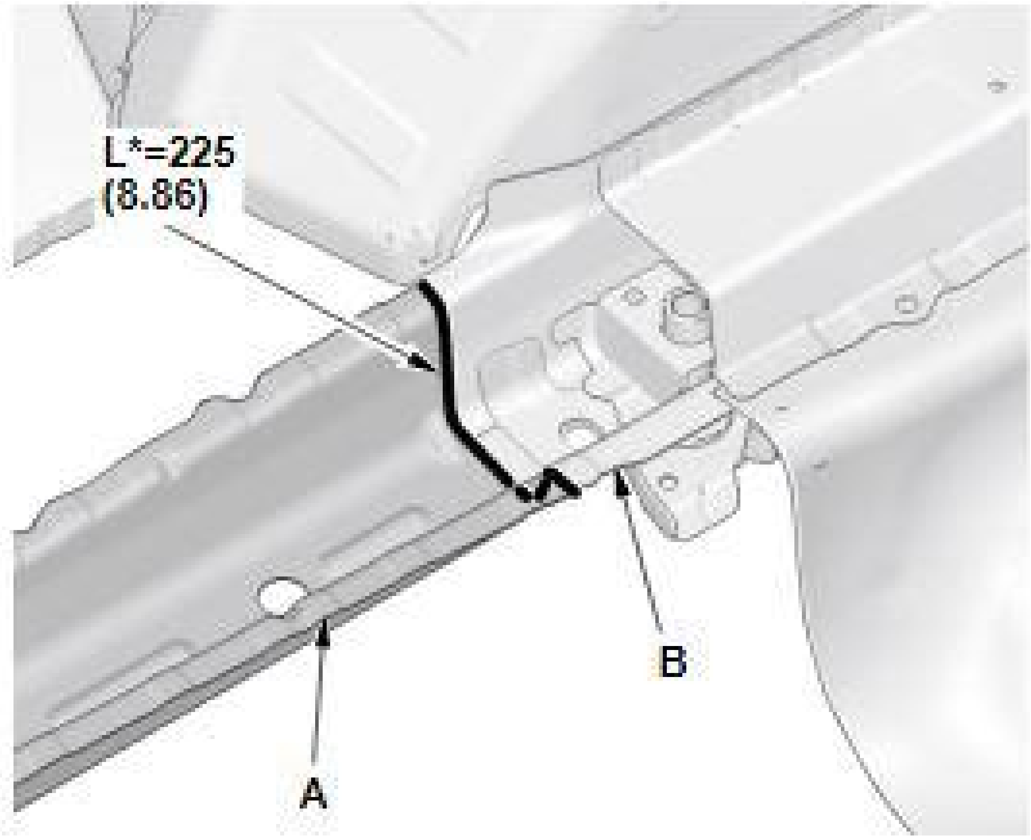

Fig. 55: Rear Frame A Installation Weld Measurements And Locations
Courtesy of AMERICAN HONDA MOTOR CO., INC.

2. Weld the rear frame side outrigger (B) to rear frame A.

(■)*: Welding positions with rear frame A, include ultra high-strength steel (1500 MPa) parts.

NOTE: **Welding positions (C): Must be welded according to the following conditions.**

Plug hole diameter: Γ□10 mm (0.39 in) Welding wire: Must use wire with a tensile strength of 980 MPa or higher (142 ksi or higher).

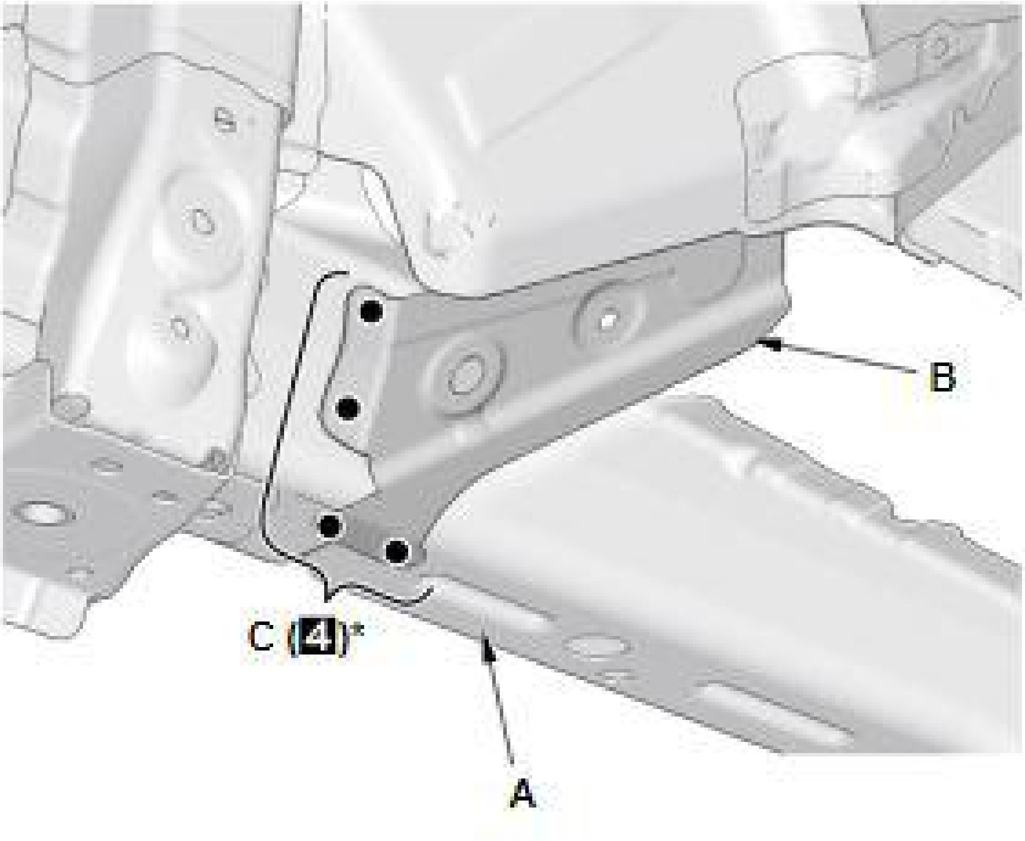

[Fig. 56: Rear Frame Side Outrigger Installation Weld Counts And Locations](#)
Courtesy of AMERICAN HONDA MOTOR CO., INC.

Rear Floor Side Panel - Weld

1. Weld the rear floor side panel (C) to rear frame A, the rear frame side outrigger (B), the rear wheelhouse (D), the wheelhouse upper patch (E), and the outer panel (F).

   (■)*: Welding positions with rear frame A, include ultra high-strength steel (1500 MPa) parts. Perform the spot welding on the conditions of No. 12 in the table shown below. Refer to **Spot Welding Conditions For Ultra High-Strength Steel Parts (1180 And 1500 MPa)** .

No. 12	7500 A	600 ms	3432 N (350 kgf)

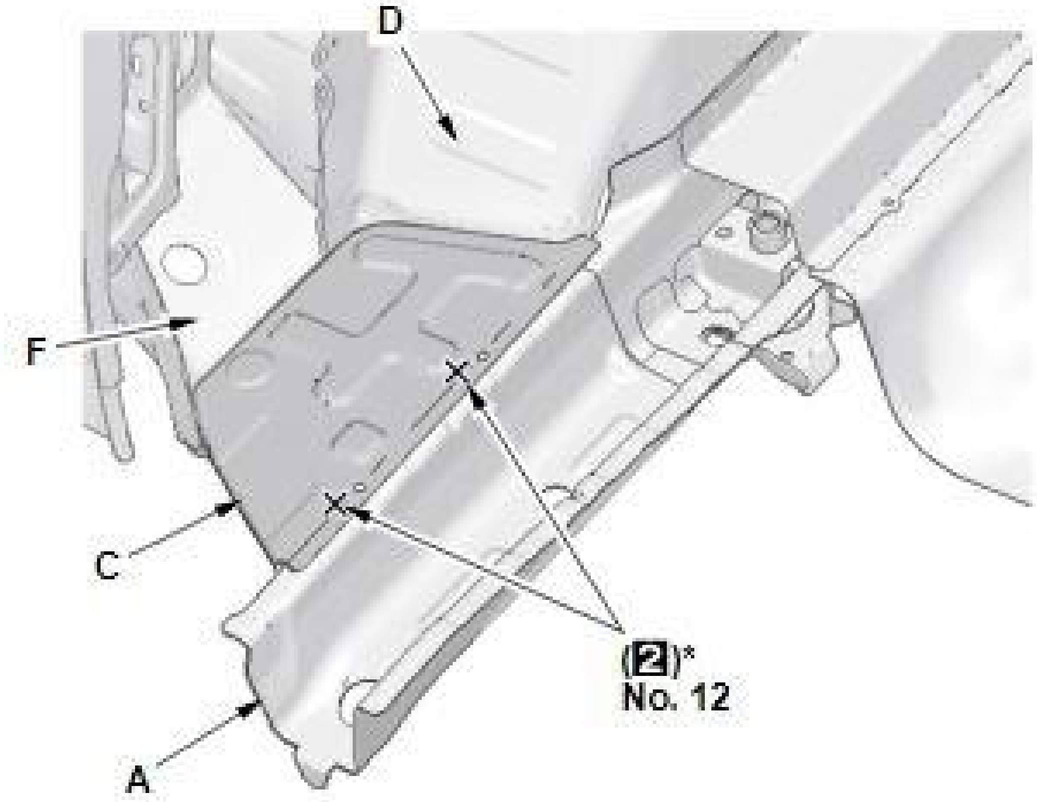
D
F
C
A
(2)*
No. 12

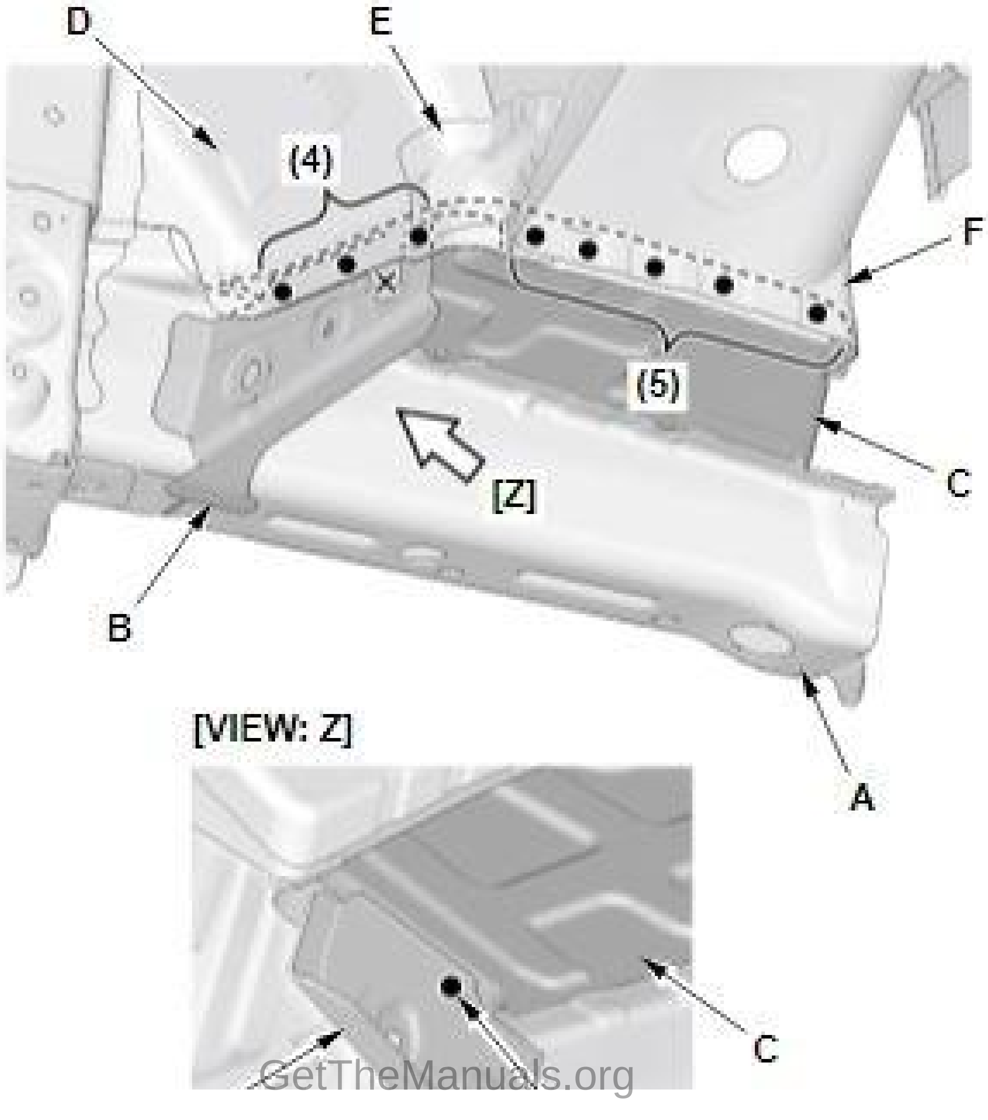
D
E
(4)
F
(5)
C
[Z]
B
A
[VIEW: Z]
C

Fig. 57: Rear Floor Side Panel Installation Weld Counts And Locations
Courtesy of AMERICAN HONDA MOTOR CO., INC.

Jack-Up Stiffener Complete - Weld

1. Temporarily install both of the new spare tire pan crossmembers (A) to the new jack-up stiffener complete (B) with subframe stay mounting bolts (C), and set and clamp them to the body. Check the jack-up stiffener complete positions, and tighten the bolts.

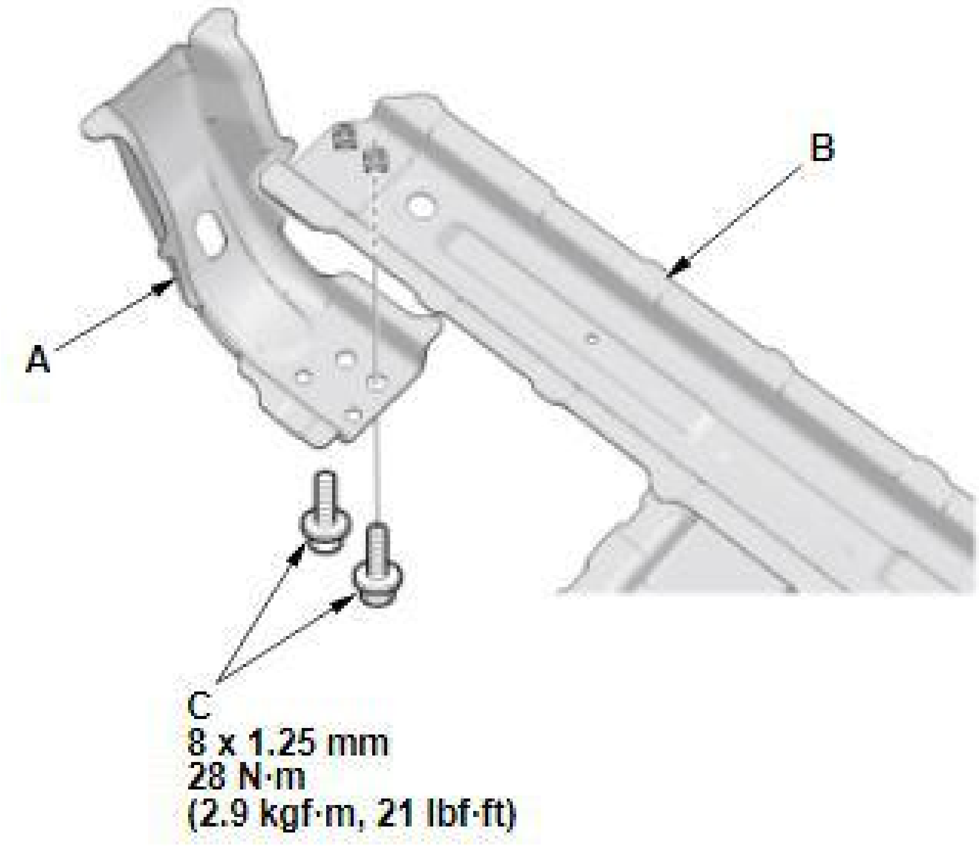

Fig. 58: Jack-Up Stiffener Installation With Torque Specifications
Courtesy of AMERICAN HONDA MOTOR CO., INC.

2. Weld the spare tire pan crossmembers (B) to rear frames A and the spare tire pan lower crossmembers (C) on both sides.

   (■)*: Welding positions with rear frame A, include ultra high-strength steel (1500 MPa) parts. Perform the spot welding on the conditions of No. 13 in the table shown below. Refer to Spot Welding Conditions For Ultra High-Strength Steel Parts (1180 And 1500 MPa) .

No. 13	8000 A	600 ms	3432 N (350 kgf)

NOTE: **Welding positions (D): Must be welded according to the following conditions.**

Plug hole diameter: Γ□10 mm (0.39 in) Welding wire: Must use wire with a tensile strength of 980 MPa or higher (142 ksi or higher).

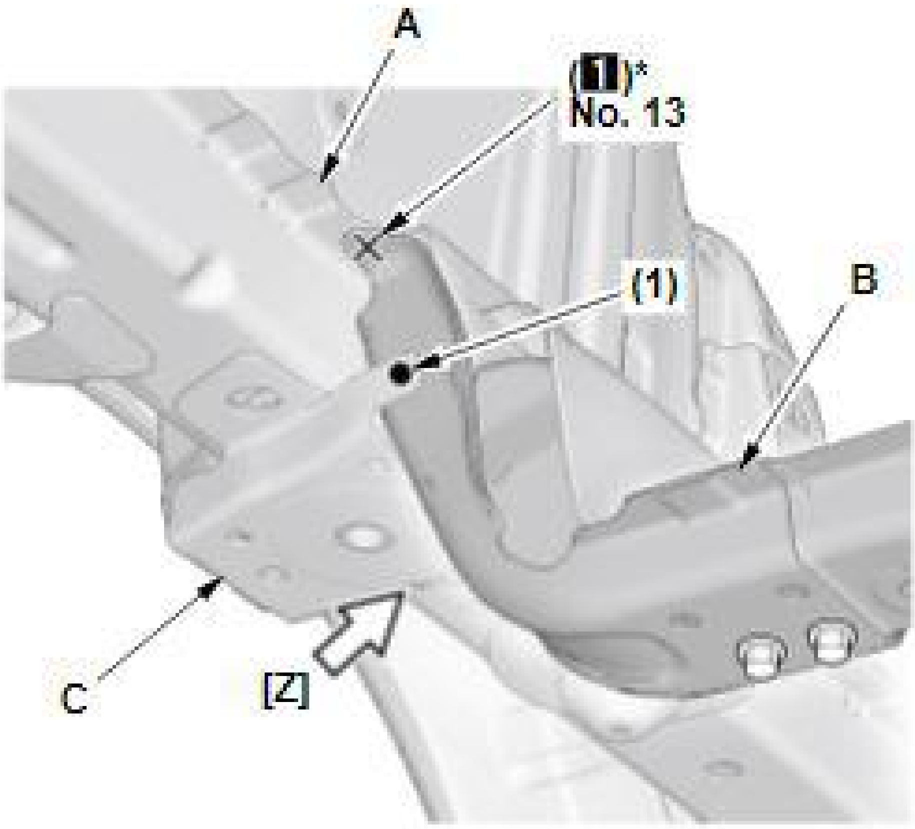
A
(❶)*
No. 13
(1)
B
C
[Z]

[VIEW: Z]

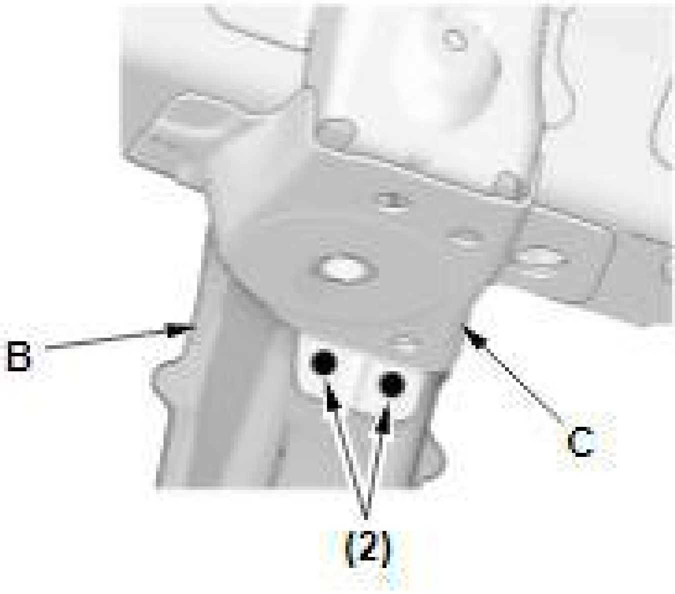

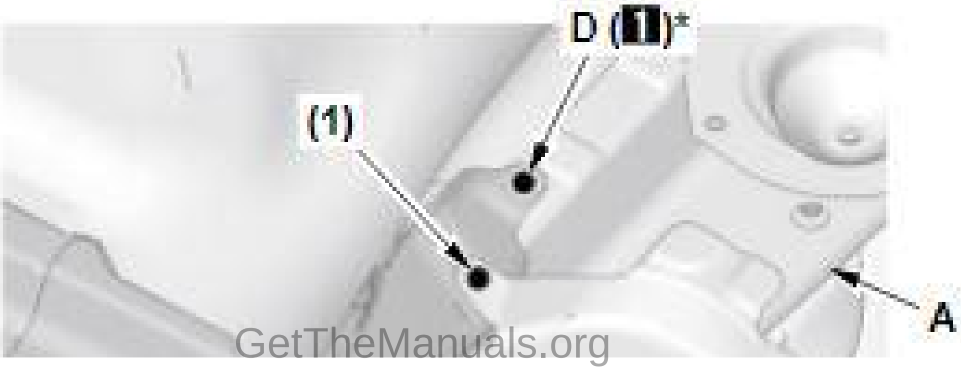

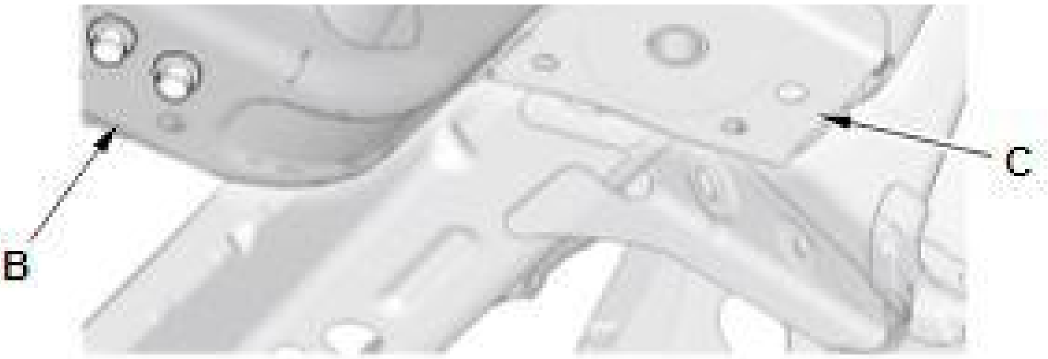

Fig. 59: Spare Tire Pan Crossmember Installation Weld Counts And Locations
Courtesy of AMERICAN HONDA MOTOR CO., INC.

Rear Floor Panel - Weld

1. Cut the new rear floor panel (A) so it overlaps the body side rear floor panel (B) by about 40 mm (1.57 in). Insert the new rear floor panel between the body side rear floor panel and the jack-up stiffener complete (C), and clamp it.

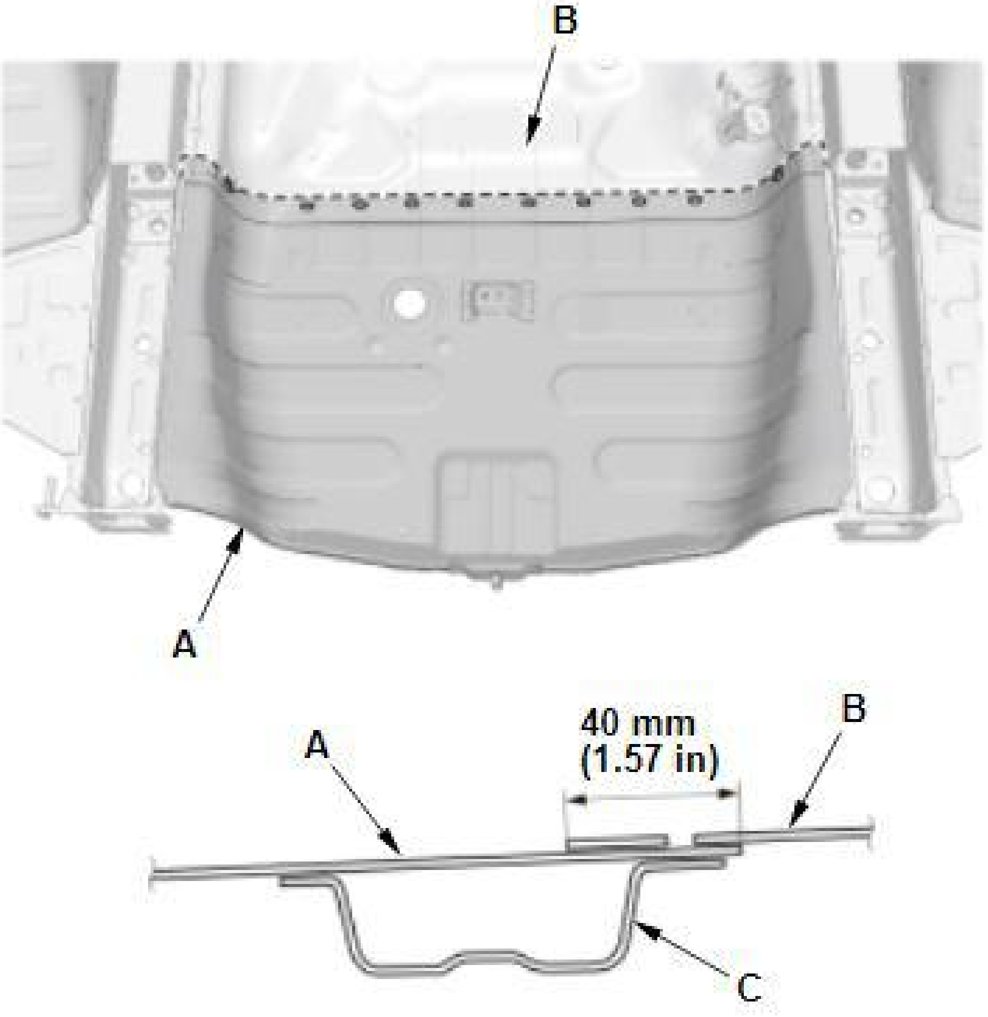

Fig. 60: Rear Floor Panel Installation Weld Counts, Measurements And Locations
Courtesy of AMERICAN HONDA MOTOR CO., INC.

2. Drill the new rear floor panel (A) through holes at the joint for the body side rear floor panel (B) and the jack-up stiffener complete/spare tire pan crossmembers (C).

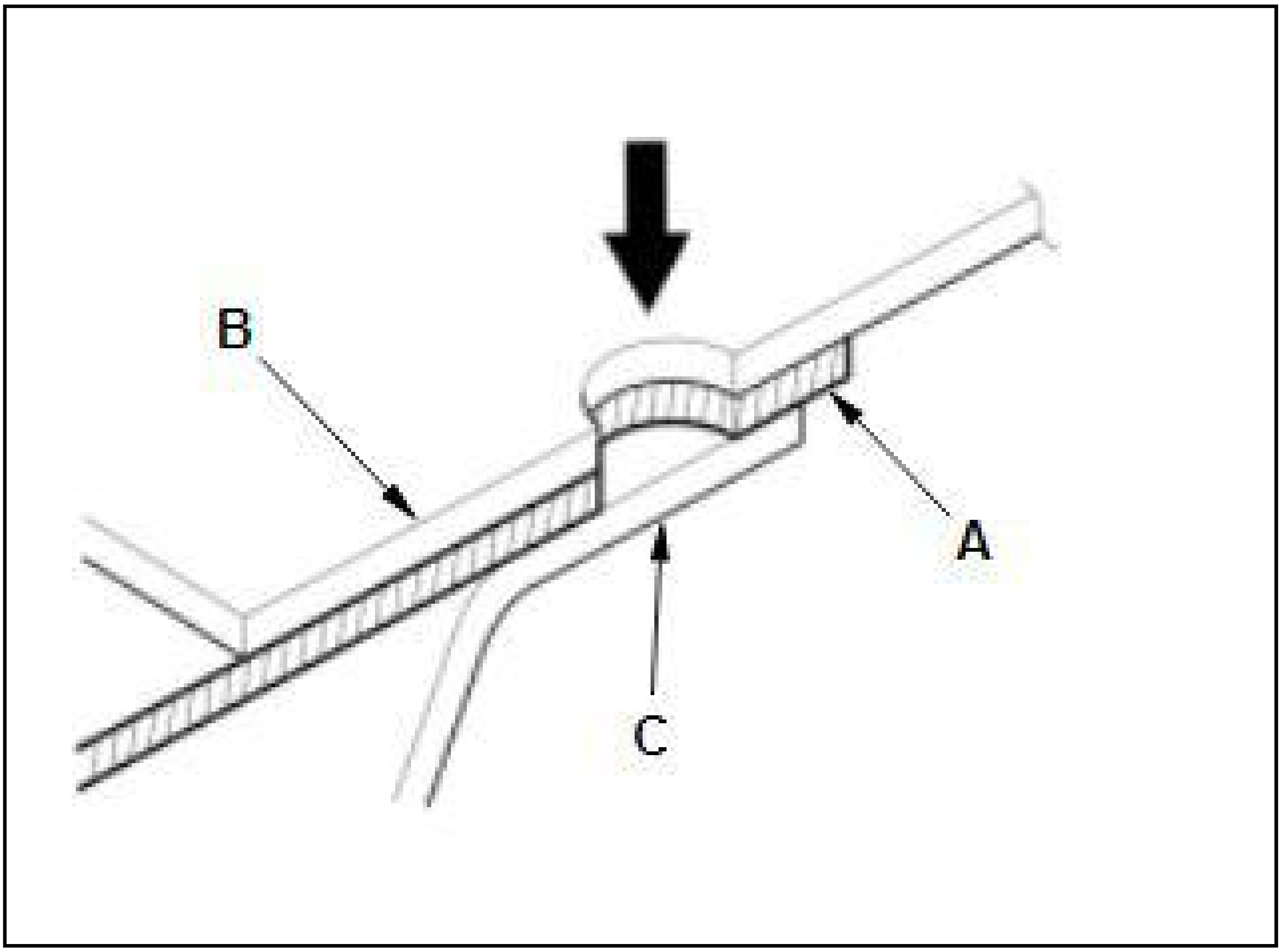

3. Weld the new rear floor panel (B) to the body side rear floor panel (C), the jack-up stiffener complete (D), and both of the spare tire pan crossmembers (E). Weld the rear frame flange (F) to rear frame A.

   (■)*: Welding positions with rear frame A, include ultra high-strength steel (1500 MPa) parts. Perform the spot welding on the conditions of No. 13 in the table shown below. Refer to **Spot Welding Conditions For Ultra High-Strength Steel Parts (1180 And 1500 MPa)** .

No. 13	8000 A	600 ms	3432 N (350 kgf)

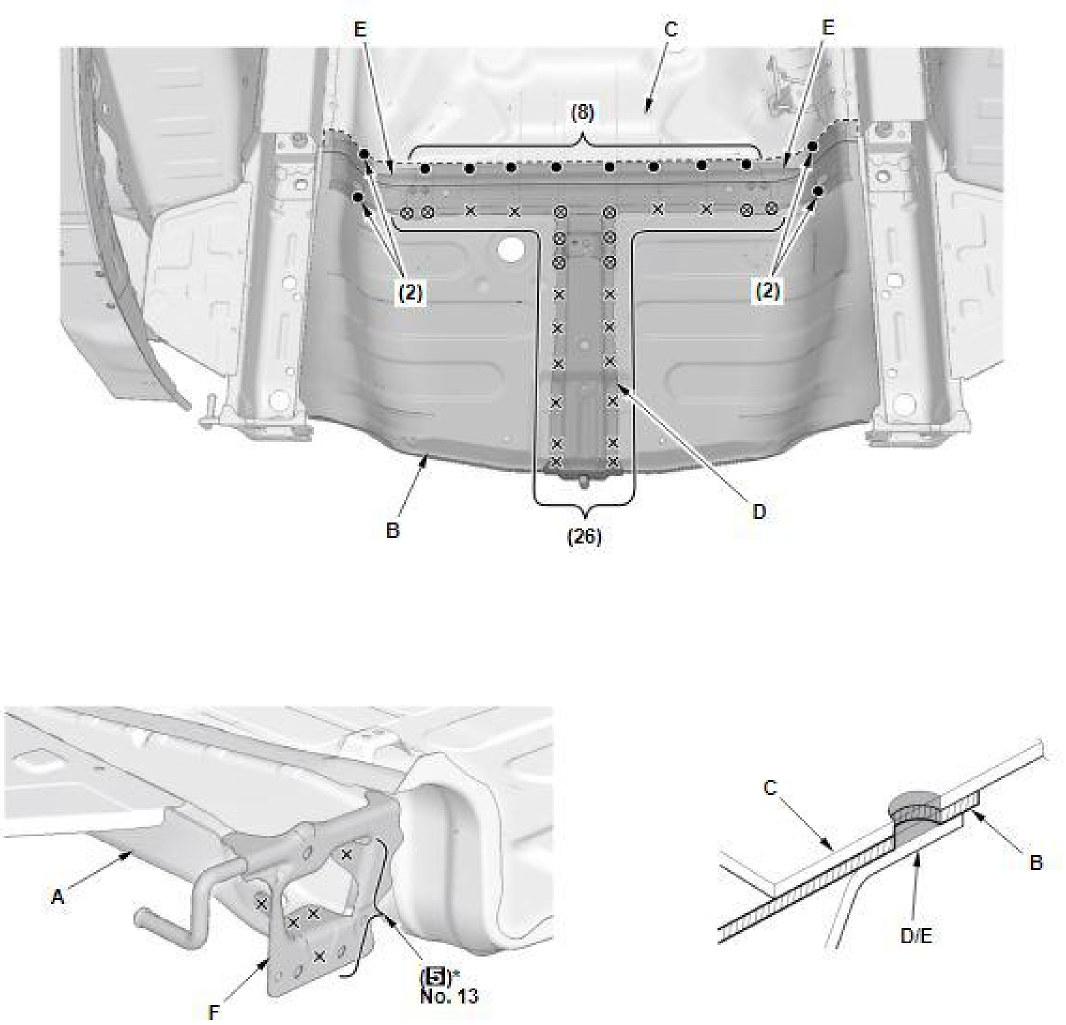

[Fig. 61: Rear Floor Panel And Rear Frame Flange Installation Weld Counts And Locations](#)
Courtesy of AMERICAN HONDA MOTOR CO., INC.

Both Rear Frame Upper Stiffener B - Weld

1. Weld rear frame upper stiffener B to rear frame A, the rear floor side panel (C), rear frame upper stiffener A (D), the rear frame flange (E), and the rear floor panel (F).

   (■)*: Welding positions with rear frame A, include ultra high-strength steel (1500 MPa) parts. Perform the spot welding on the conditions of No. 13 and 14 in the table shown below; refer to [Spot Welding Conditions For Ultra High-Strength Steel Parts (1180 And 1500 MPa)](#) .

No. 13	8000 A	600 ms	3432 N (350 kgf)
No. 14	8500 A	600 ms	3432 N (350 kgf)

NOTE: **Welding positions (C): Must be welded according to the following conditions.**

Plug hole diameter: Γ□10 mm (0.39 in) Welding wire: Must use wire with a tensile strength of 980 MPa or higher (142 ksi or higher).

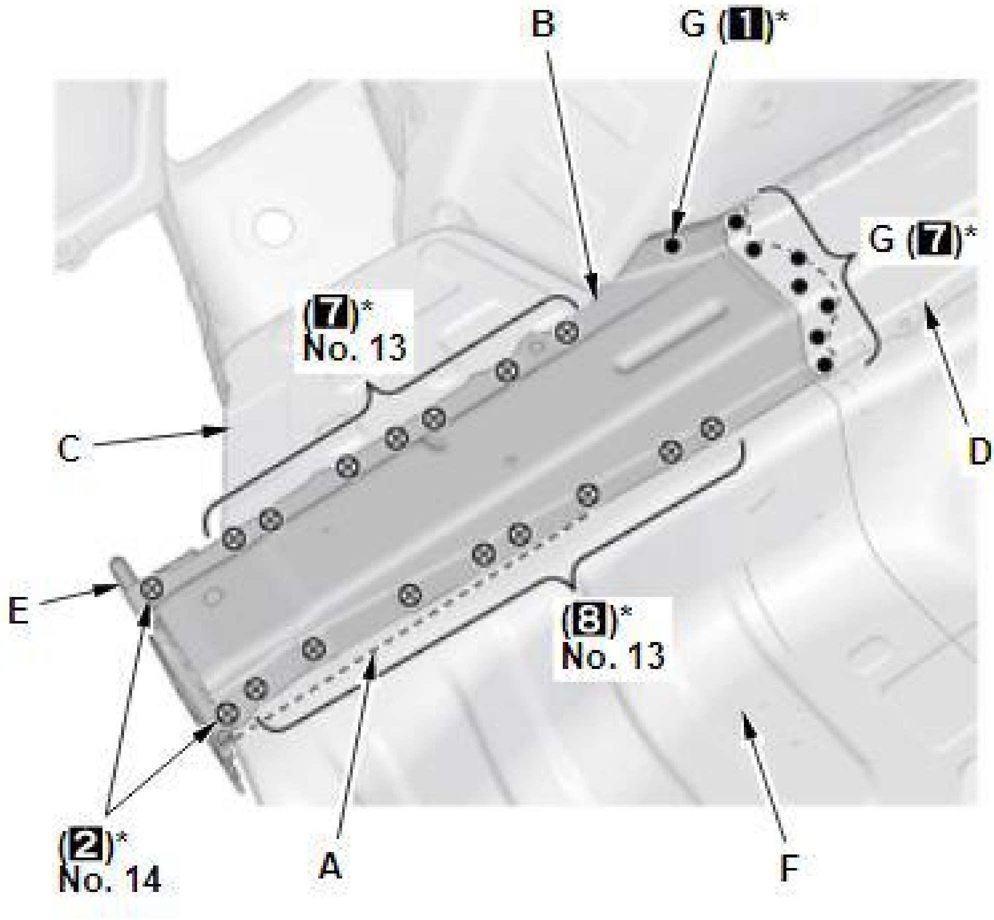

Fig. 62: Rear Frame Upper Stiffener B Installation Weld Counts And Locations
Courtesy of AMERICAN HONDA MOTOR CO., INC.

2. Refer to rear panel - Installation.

REAR FRAME COMPLETE REPLACEMENT

REMOVAL

NOTE:

- **High-strength steel is defined as any steel with a tensile strength of 340 MPa or higher. If a part is constructed of, or includes high-strength steel observe the important guidelines. Refer to Repair Guidelines For High-Strength Steel Parts .**
- **Welding symbols (The welding symbols with dashed lines have a meaning of the spot welding of the part which is not visible) ; refer to Symbols Definition**
- **(): The number of welds**

Rear Panel - Remove

Refer to Removal.

Mass Production Body Welding Positions and Numbers - Remove

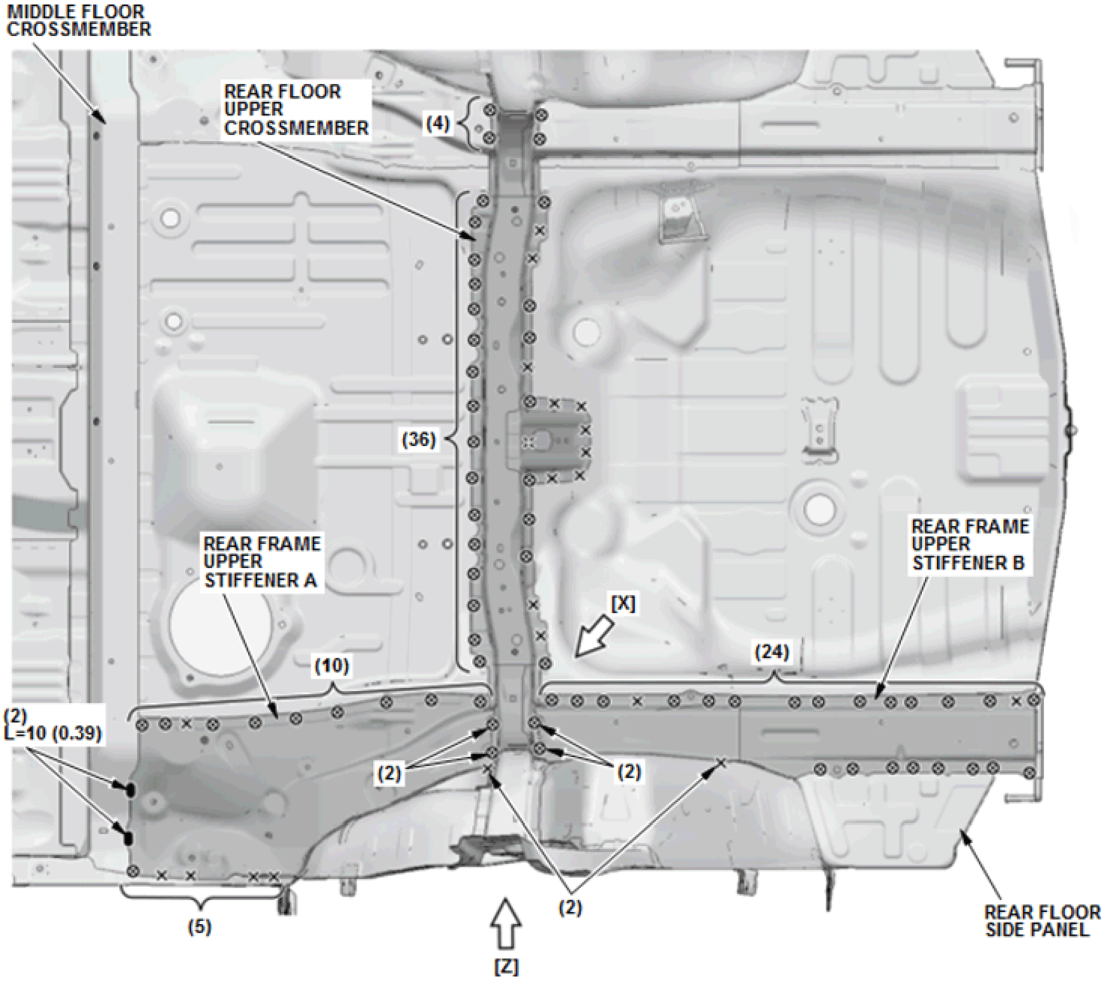
MIDDLE FLOOR CROSSMEMBER
REAR FLOOR UPPER CROSSMEMBER
(4)
(36)
REAR FRAME UPPER STIFFENER A
REAR FRAME UPPER STIFFENER B
[X]
(24)
(10)
(2)
L=10 (0.39)
(2)
(2)
(5)
(2)
[Z]
REAR FLOOR SIDE PANEL

Fig. 63: Rear Frame Upper Stiffeners And Rear Floor Upper Crossmember Removal Weld Counts, Measurements And Location (1 Of 2)

Courtesy of AMERICAN HONDA MOTOR CO., INC.

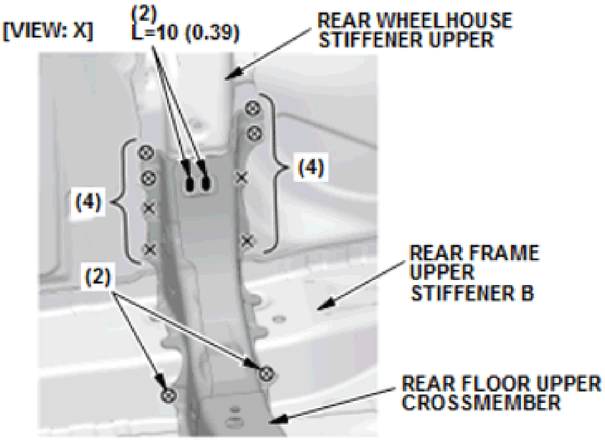
[VIEW: X]
(2)
L=10 (0.39)
REAR WHEELHOUSE STIFFENER UPPER
(4)
(4)
REAR FRAME UPPER STIFFENER B
(2)
REAR FLOOR UPPER CROSSMEMBER

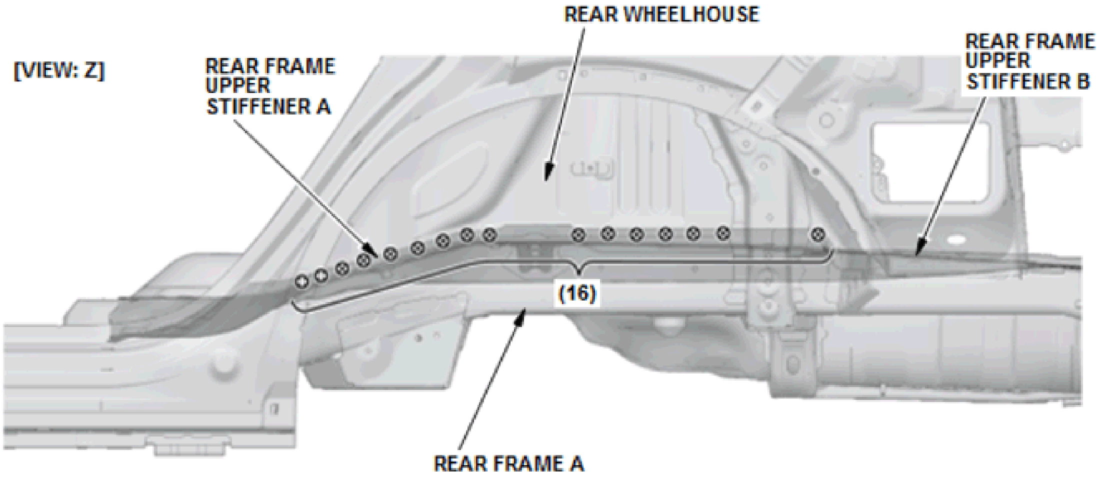
[VIEW: Z]
REAR FRAME UPPER STIFFENER A
REAR WHEELHOUSE
REAR FRAME UPPER STIFFENER B
(16)
REAR FRAME A

Fig. 64: Rear Frame Upper Stiffeners And Rear Floor Upper Crossmember Removal Weld Counts, Measurements And Locations (2 Of 2)

Courtesy of AMERICAN HONDA MOTOR CO., INC.

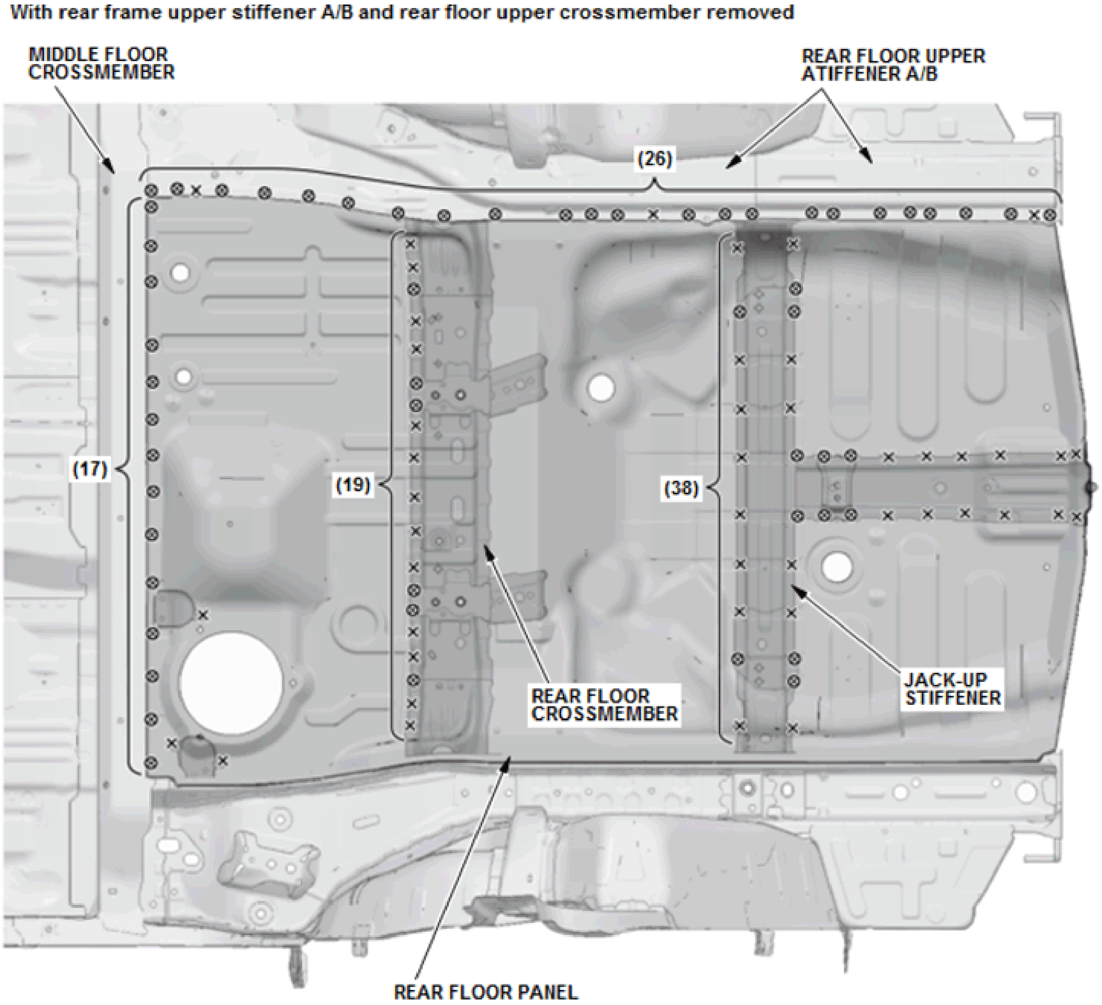
With rear frame upper stiffener A/B and rear floor upper crossmember removed
MIDDLE FLOOR CROSSMEMBER
REAR FLOOR UPPER ATIFFENER A/B
(26)
(17)
(19)
(38)
REAR FLOOR CROSSMEMBER
JACK-UP STIFFENER
REAR FLOOR PANEL

Fig. 65: Rear Floor Panel, Rear Floor Crossmember, And Jack-Up Stiffener Removal Weld Counts And Locations
Courtesy of AMERICAN HONDA MOTOR CO., INC.

Rear Floor Upper Crossmember Component Location

NOTE:

- **This section explains the procedures after Removal of all related parts. For the related parts' Removal procedure, refer to the appropriate service information.**
- **The component replacement procedure described here is only for new genuine supplied parts, as needed, according to the area and the degree of damage on the body.**
- **Remove the rear floor upper crossmember, rear frame upper stiffener A/B (one side), and the upper stiffener bulkhead, and replace them.**
- **Remove the rear floor crossmember and the jack-up stiffener, and replace them.**

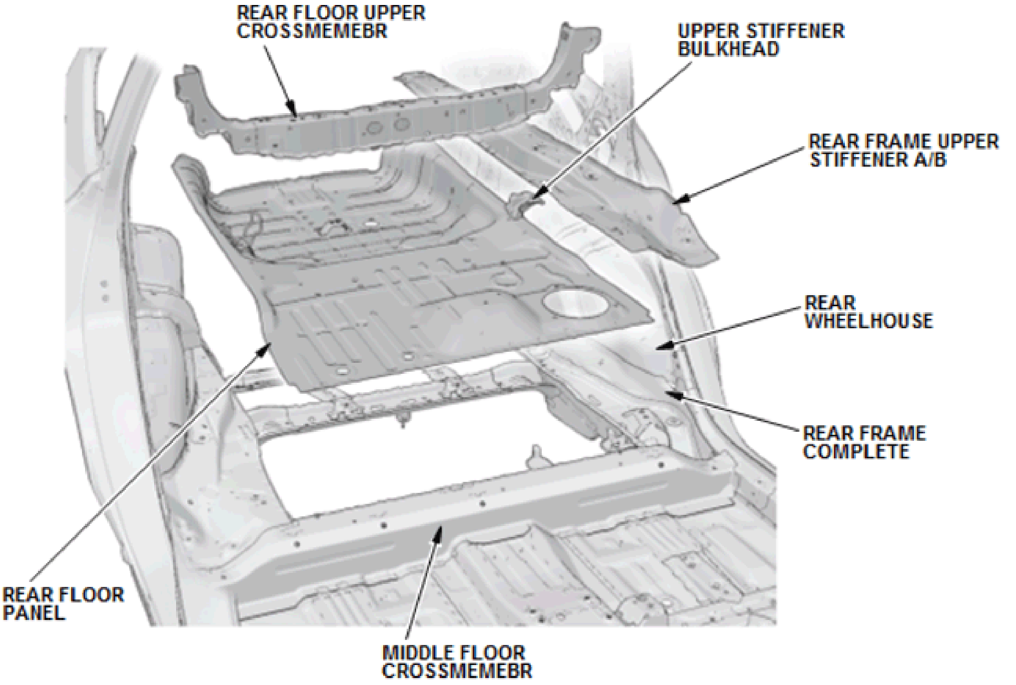
REAR FLOOR UPPER CROSSMEMEBR
UPPER STIFFENER BULKHEAD
REAR FRAME UPPER STIFFENER A/B
REAR WHEELHOUSE
REAR FRAME COMPLETE
REAR FLOOR PANEL
MIDDLE FLOOR CROSSMEMEBR

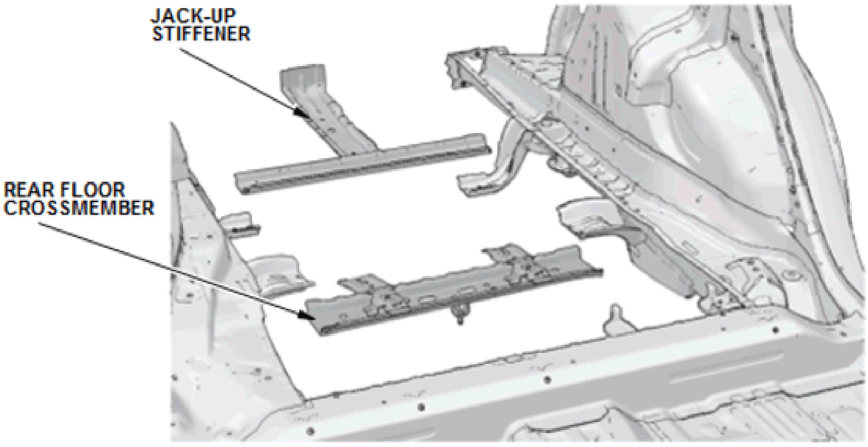
JACK-UP STIFFENER
REAR FLOOR CROSSMEMBER

Fig. 66: Rear Floor Upper Crossmember
Courtesy of AMERICAN HONDA MOTOR CO., INC.

Mass Production Body Welding Positions and Numbers - Remove

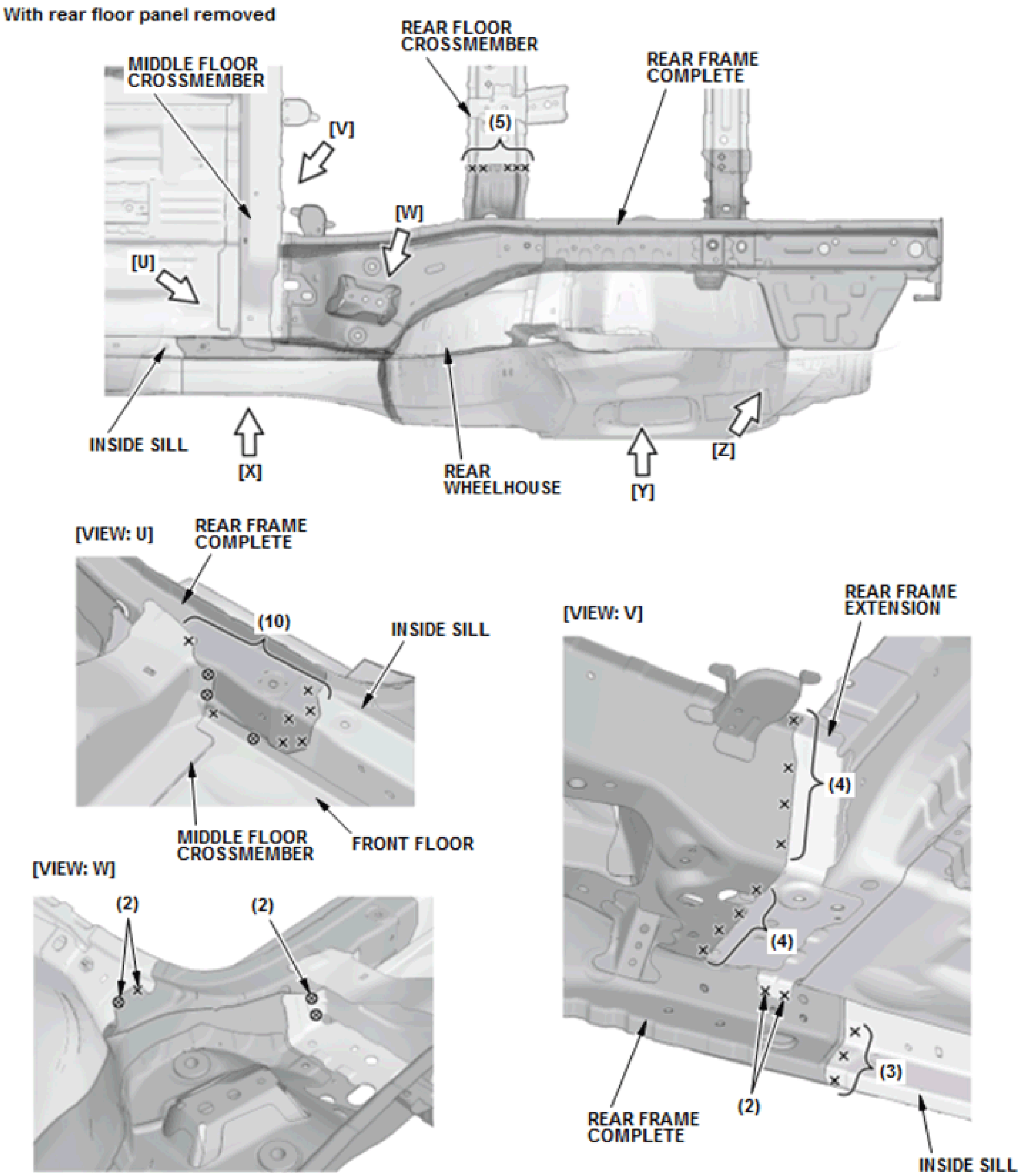
With rear floor panel removed
MIDDLE FLOOR CROSSMEMBER
REAR FLOOR CROSSMEMBER
(5)
REAR FRAME COMPLETE
[V]
[W]
[U]
INSIDE SILL
[X]
REAR WHEELHOUSE
[Y]
[Z]
[VIEW: U]
REAR FRAME COMPLETE
(10)
INSIDE SILL
MIDDLE FLOOR CROSSMEMBER
FRONT FLOOR
[VIEW: V]
REAR FRAME EXTENSION
(4)
(4)
(2)
(3)
REAR FRAME COMPLETE
INSIDE SILL
[VIEW: W]
(2)
(2)

Fig. 67: Rear Frame Complete Removal Weld Counts And Locations (1 Of 2)

Courtesy of AMERICAN HONDA MOTOR CO., INC.

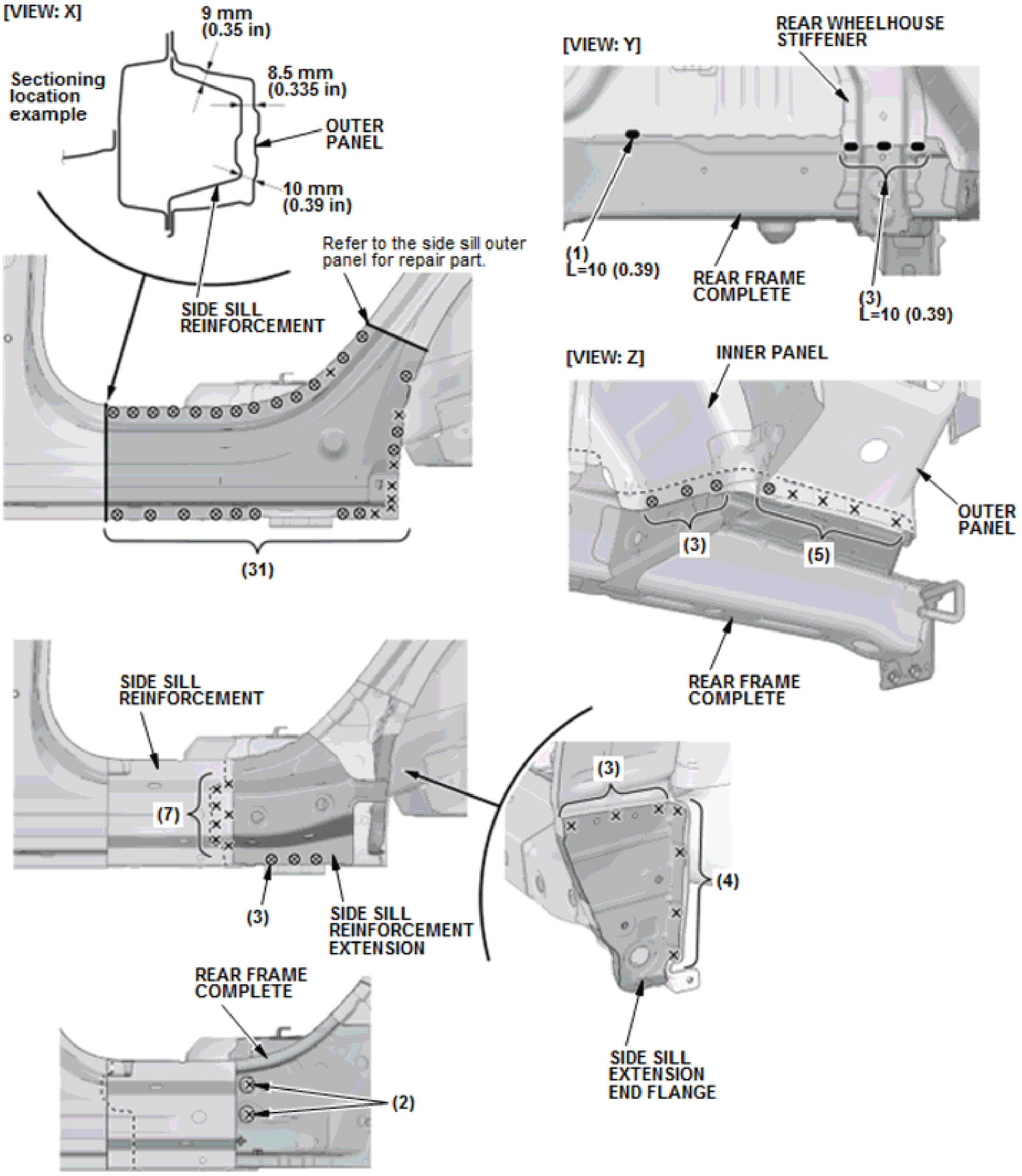
[VIEW: X]
9 mm
(0.35 in)
Sectioning
location
example
8.5 mm
(0.335 in)
OUTER
PANEL
10 mm
(0.39 in)
Refer to the side sill outer
panel for repair part.
SIDE SILL
REINFORCEMENT
(31)
[VIEW: Y]
REAR WHEELHOUSE
STIFFENER
(1)
L=10 (0.39)
REAR FRAME
COMPLETE
(3)
L=10 (0.39)
[VIEW: Z]
INNER PANEL
OUTER
PANEL
(3)
(5)
REAR FRAME
COMPLETE
SIDE SILL
REINFORCEMENT
(7)
(3)
SIDE SILL
REINFORCEMENT
EXTENSION
(3)
(4)
SIDE SILL
EXTENSION
END FLANGE
REAR FRAME
COMPLETE
(2)

Fig. 68: Rear Frame Complete Removal Weld Counts And Locations (2 Of 2)
Courtesy of AMERICAN HONDA MOTOR CO., INC.

Rear Frame Complete Component Location

NOTE:

- **This section explains the procedures after Removal of all related parts. For the related parts' Removal procedure, refer to the appropriate service information.**
- **The component replacement procedure described here is only for new genuine supplied parts, as needed, according to the area and the degree of damage on the body.**
- **Cut the outer panel, and remove the side sill extension end flange and the side sill reinforcement extension.**
- **Remove the rear frame complete, and replace it.**

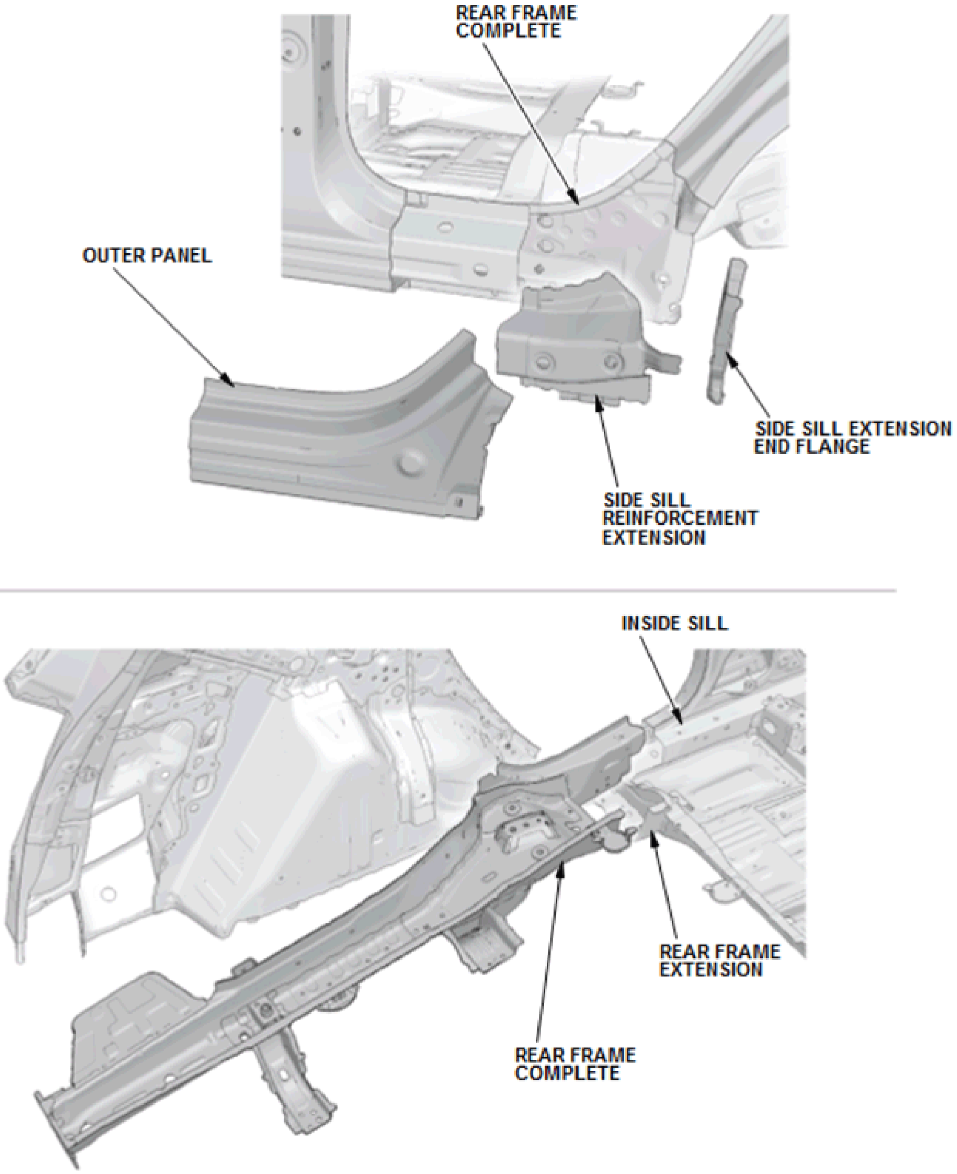
REAR FRAME COMPLETE
OUTER PANEL
SIDE SILL EXTENSION END FLANGE
SIDE SILL REINFORCEMENT EXTENSION
INSIDE SILL
REAR FRAME EXTENSION
REAR FRAME COMPLETE

Fig. 69: Replacement Component Location
Courtesy of AMERICAN HONDA MOTOR CO., INC.

INSTALLATION

NOTE:

- **Position the replacement parts. Before doing the main welding, check the body dimensions:**
  - **Refer to Rear Pillar Gutter And Rear Panel Positions Dimension .**
  - **Refer to TAILGATE OPENING .**
  - **Refer to Front Floor And Rear Floor, Under View Dimension .**
  - **Refer to Frame Repair Chart .**
- **Temporarily install the related parts, then check for differences in level and clearance. Check the External Parts Fitting Positions; refer to External Parts Fitting Positions . Make sure the body lines flow smoothly.**
- **Confirm the sheet thickness, tensile strength, and existence of the zinc treatment of both sides, and set the welder to conform to the welding conditions by referring to Roof And Side Panel Construction , and FLOOR AND REAR BODY CONSTRUCTION .**
- **Welding symbols (The welding symbols with dashed lines have a meaning of the spot welding of the part which is not visible) ; refer to Symbols Definition .**
- **() and ()*: The number of welds**

Rear Frame Complete - Weld

1. Remove the side sill extension end flange (A) from the new rear frame complete (B).

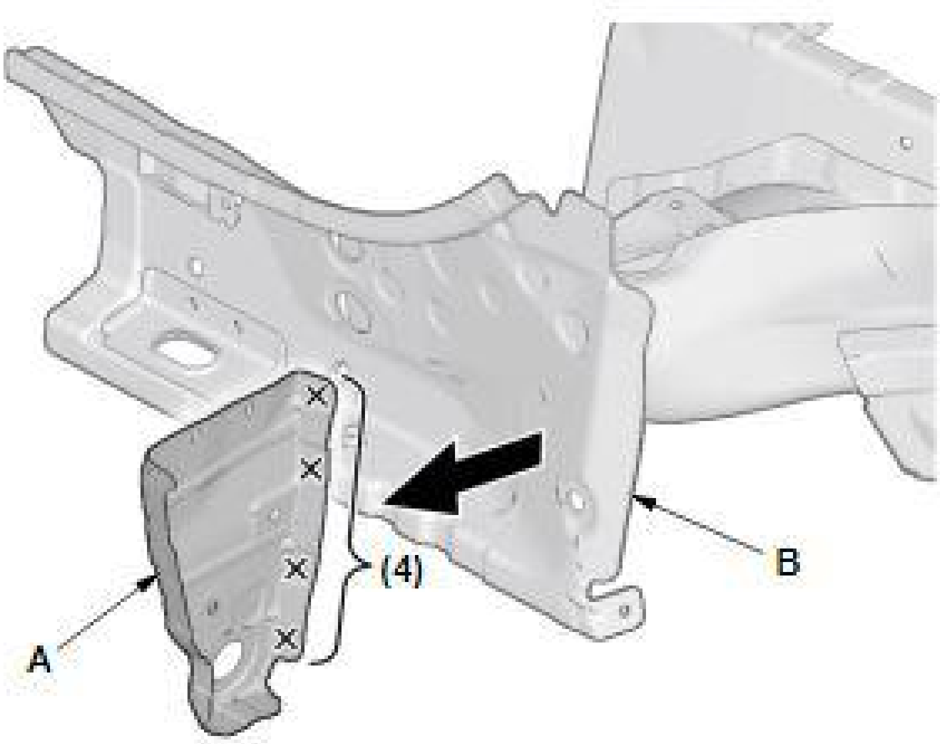

Fig. 70: Side Sill Extension End Flange Removal Weld Counts And Locations
Courtesy of AMERICAN HONDA MOTOR CO., INC.

2. Clamp the new rear frame complete (A) to the body, and check it position. Weld the rear floor crossmember complete (B) and the rear crossmember extension (C).

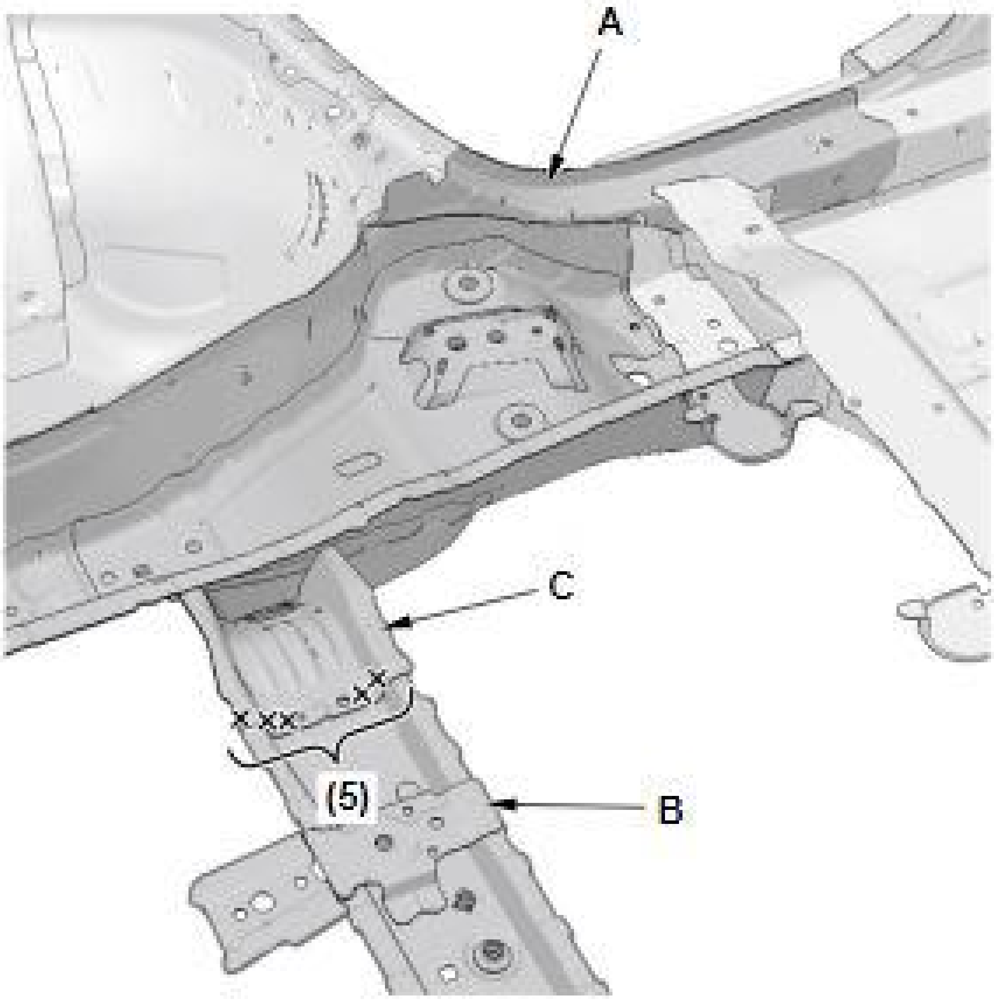

Fig. 71: Rear Floor Crossmember Complete Installation Weld Counts And Locations

Courtesy of AMERICAN HONDA MOTOR CO., INC.

3. Weld rear frame A to the rear frame extension (B).

   (■)*: Welding positions with rear frame A, include ultra high-strength steel (1500 MPa) parts. Perform the spot welding on the conditions of No. 13 in the table shown below. Refer to Spot Welding Conditions For Ultra High-Strength Steel Parts (1180 And 1500 MPa) .

No. 13	8000 A	600 ms	3432 N (350 kgf)

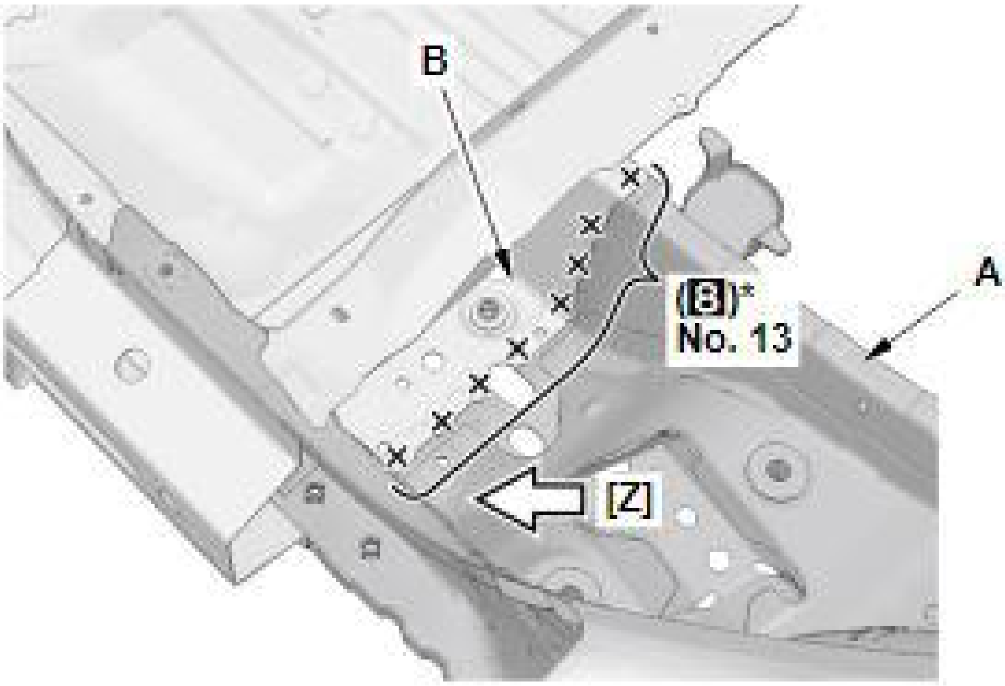

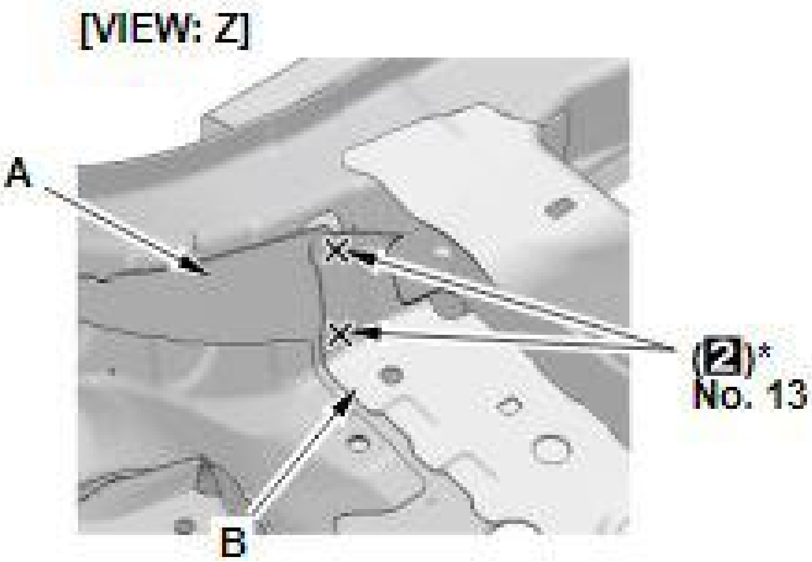

Fig. 72: Rear Frame Installation Weld Counts And Locations
Courtesy of AMERICAN HONDA MOTOR CO., INC.

4. Weld the side sill extension (A) to the middle floor crossmember (B), the inside sill (C), and the front floor (D).

   ()*: Welding position with high-strength steel parts. Confirm the plug welding conditions; refer to MAG Welding Conditions For High-Strength Steel (Except 1500 MPa) Parts .

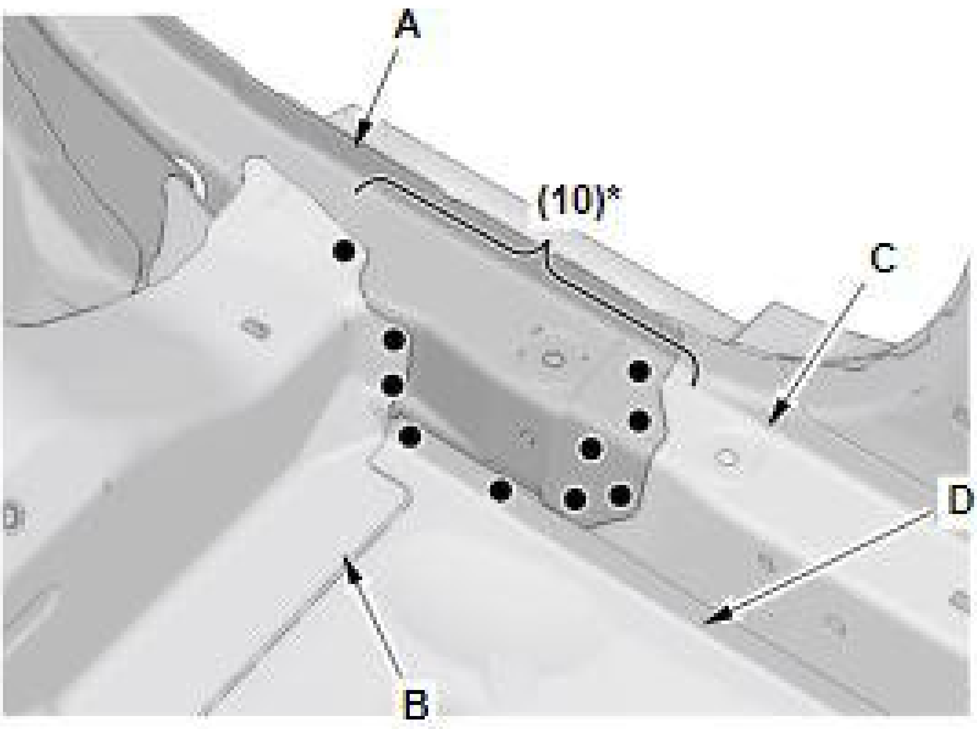

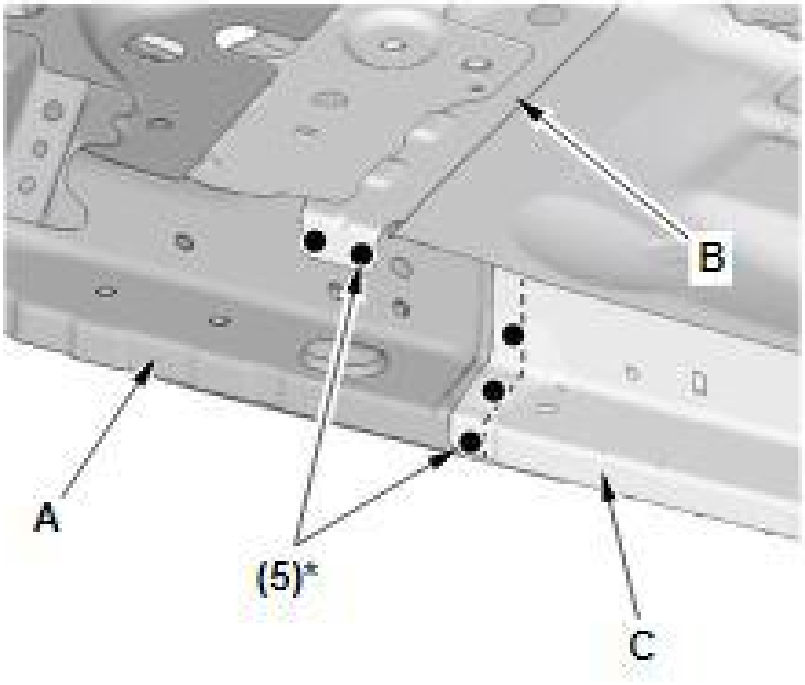

Fig. 73: Side Sill Extension Installation Weld Counts And Locations (1 Of 2)
Courtesy of AMERICAN HONDA MOTOR CO., INC.

5. Weld the side sill extension (A) to the middle floor crossmember (B) and the rear wheelhouse (C).

   ()*: Welding position with high-strength steel parts. Confirm the plug welding conditions; refer to MAG Welding Conditions For High-Strength Steel (Except 1500 MPa) Parts .

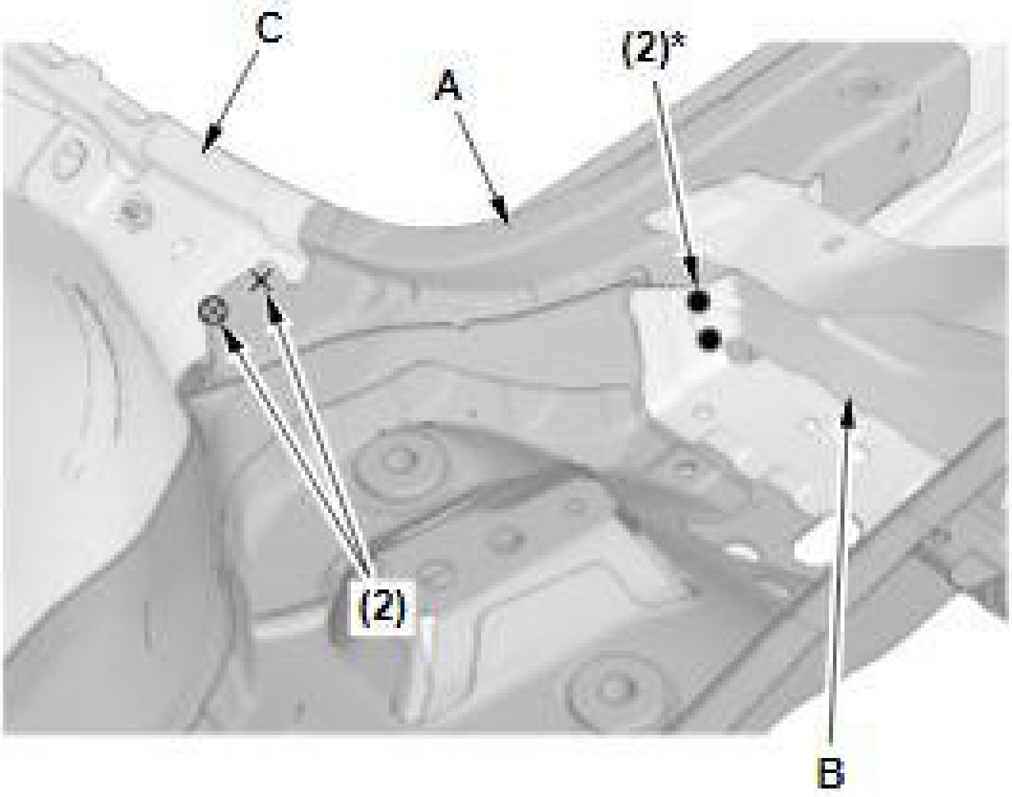

Fig. 74: Side Sill Extension Installation Weld Counts And Locations (2 Of 2)
Courtesy of AMERICAN HONDA MOTOR CO., INC.

6. Weld the spare tire pan upper crossmember (B) to the rear wheelhouse stiffener (C). Weld rear frame A and rear wheelhouse (D).

   ()*: Welding position with high-strength steel parts. Confirm the plug welding conditions; refer to MAG Welding Conditions For High-Strength Steel (Except 1500 MPa) Parts .

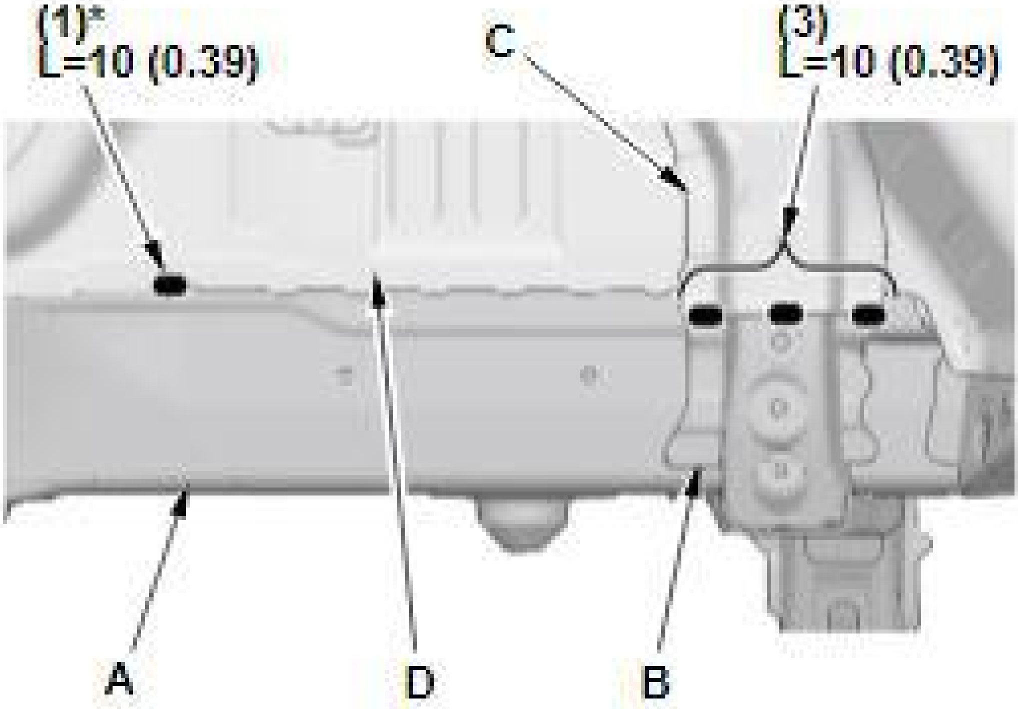

Fig. 75: Spare Tire Pan Upper Crossmember Installation Weld Counts And Locations
Courtesy of AMERICAN HONDA MOTOR CO., INC.

7. Weld the rear frame side outrigger (A) and the rear floor side panel (B) to the rear wheelhouse (C), the inner panel (D), and the outer panel (E).

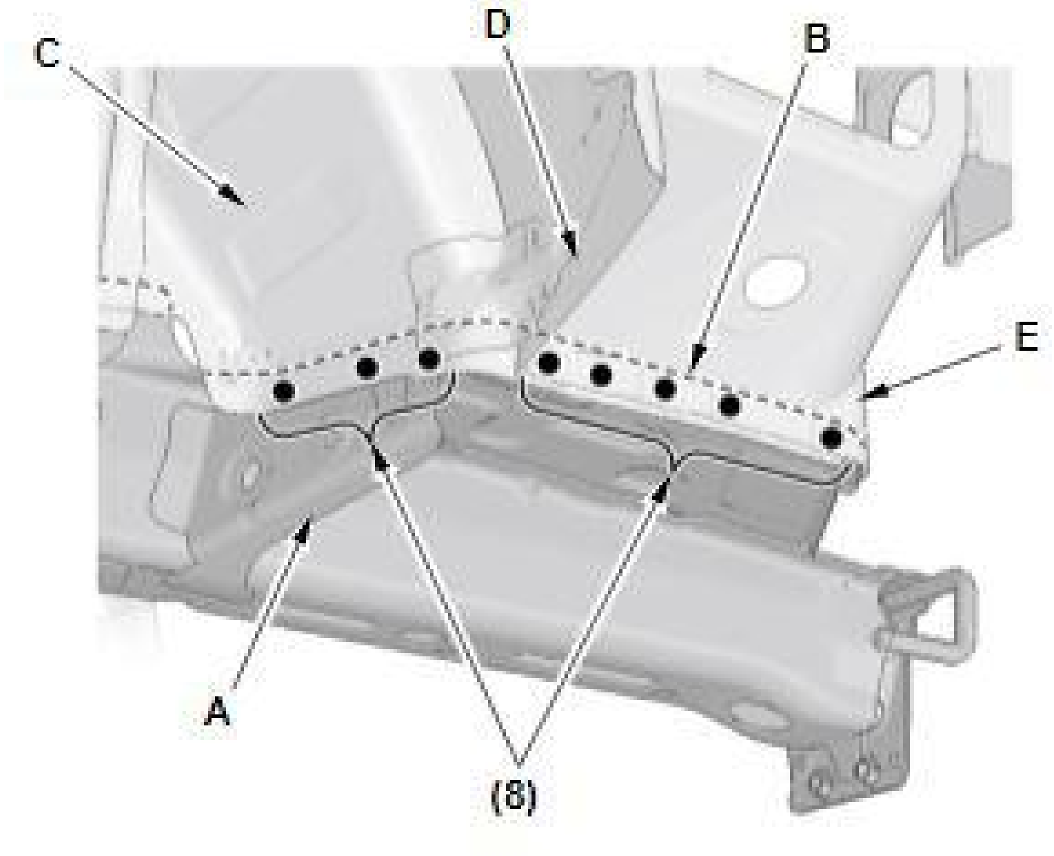

Fig. 76: Rear Frame Side Outrigger And Rear Floor Side Panel Installation Weld Counts And Locations
Courtesy of AMERICAN HONDA MOTOR CO., INC.

Rear Floor Panel - Weld

1. Attach the jack-up stiffener complete (A) to the spare tire pan crossmember (B) with the mounting bolts.

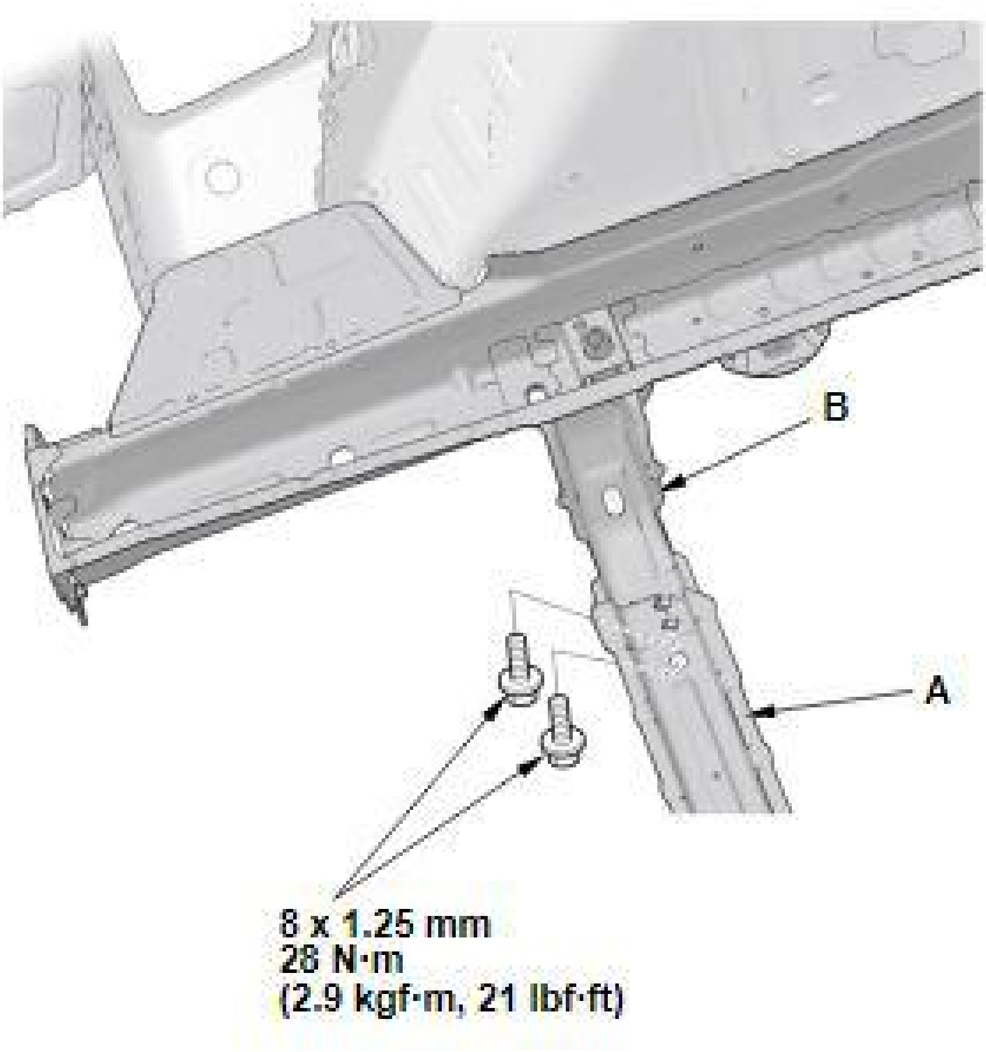

Fig. 77: Jack-Up Stiffener Installation With Torque Specifications
Courtesy of AMERICAN HONDA MOTOR CO., INC.

2. Weld the new rear floor panel (B) to rear frame upper stiffener A, the middle floor crossmember (C), and the rear floor crossmember (D).

   (■)*: Welding positions with rear frame upper stiffener A, include ultra high-strength steel (1500 MPa) parts.

NOTE:	**Welding positions (E) : Must be welded according to the following conditions.** **Plug hole diameter: Γ□10 mm (0.39 in) Welding wire: Must use wire with a tensile strength of 980 MPa or higher (142 ksi or higher).**

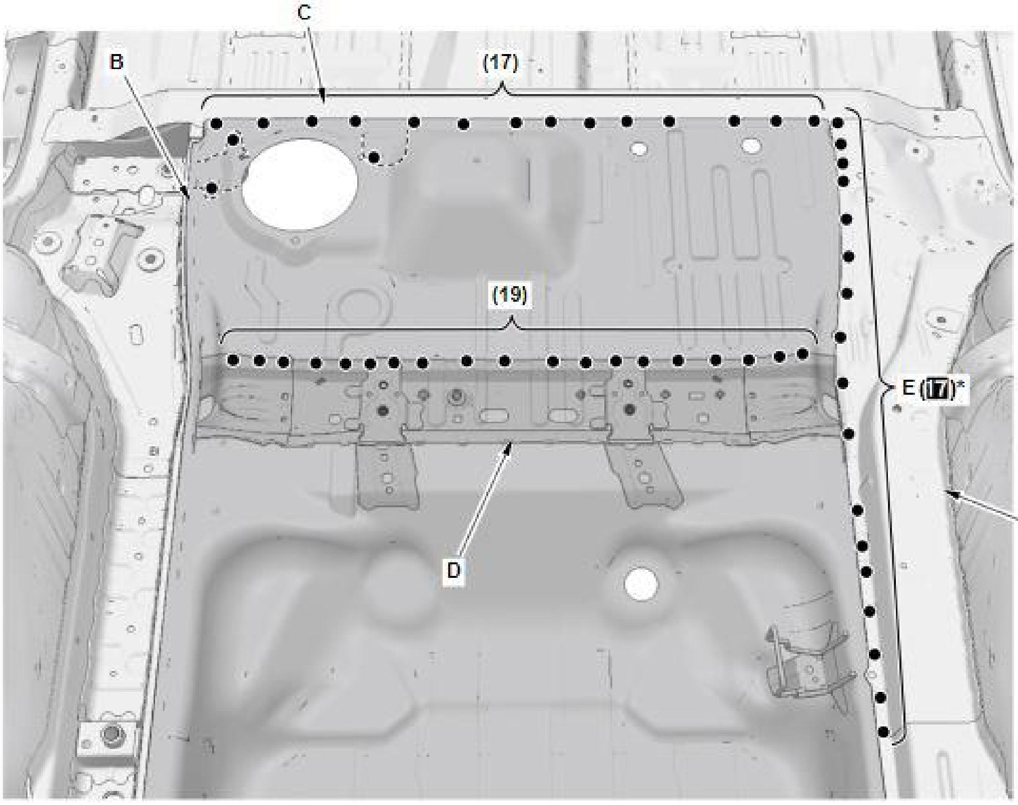

Fig. 78: Rear Floor Panel Installation Weld Counts And Locations (1 Of 2)
Courtesy of AMERICAN HONDA MOTOR CO., INC.

3. Weld the new rear floor panel (A) to rear frame upper stiffener B and the jack-up stiffener complete (C).

   (■)*: Welding positions with rear frame upper stiffener B, include ultra high-strength steel (1500 MPa) parts.

NOTE: **Welding positions (D): Must be welded according to the following conditions.**

Plug hole diameter: Γ□10 mm (0.39 in) Welding wire: Must use wire with a tensile strength of 980 MPa or higher (142 ksi or higher).

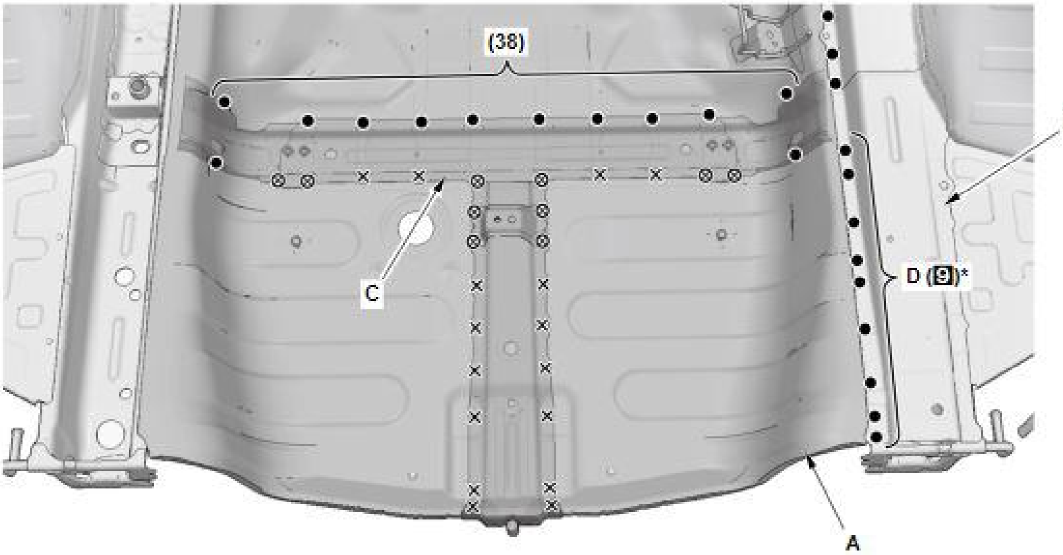

Fig. 79: Rear Floor Panel Installation Weld Counts And Locations (2 Of 2)
Courtesy of AMERICAN HONDA MOTOR CO., INC.

Rear Frame Upper Stiffener A/B (One Side) And Rear Floor Upper Crossmember - Weld

1. Weld new rear frame upper stiffener B and the upper stiffener bulkhead (C) to new rear frame upper stiffener A.

   (■)*: Welding positions with rear frame upper stiffener A/B, include ultra high-strength steel (1500 MPa) parts. Perform the spot welding on the conditions of No. 13 in the table shown below. Refer to **Spot Welding Conditions For Ultra High-Strength Steel Parts (1180 And 1500 MPa)** .

No. 13	8000 A	600 ms	3432 N (350 kgf)

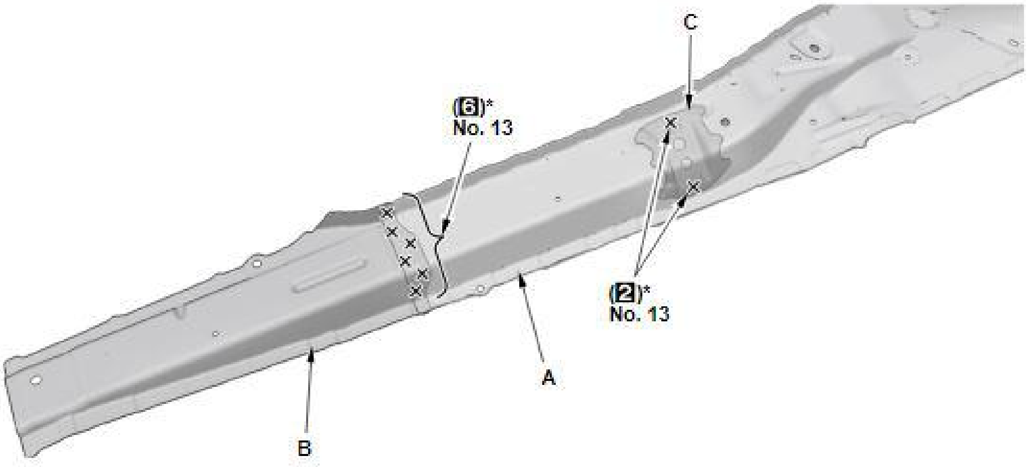

Fig. 80: Rear Frame Upper Stiffener B And Upper Stiffener Bulkhead Installation Weld Counts And Locations
Courtesy of AMERICAN HONDA MOTOR CO., INC.

2. Weld the new rear floor upper crossmember (B) to rear frame upper stiffener A and the upper stiffener bulkhead (C).

   (■)*: Welding positions with rear frame upper stiffener A, include ultra high-strength steel (1500 MPa) parts. Perform the spot welding on the conditions of No. 15 in the table shown below. Refer to **Spot Welding Conditions For Ultra High-Strength Steel Parts (1180 And 1500 MPa)** .

No. 15	9000 A	600 ms	3432 N (350 kgf)

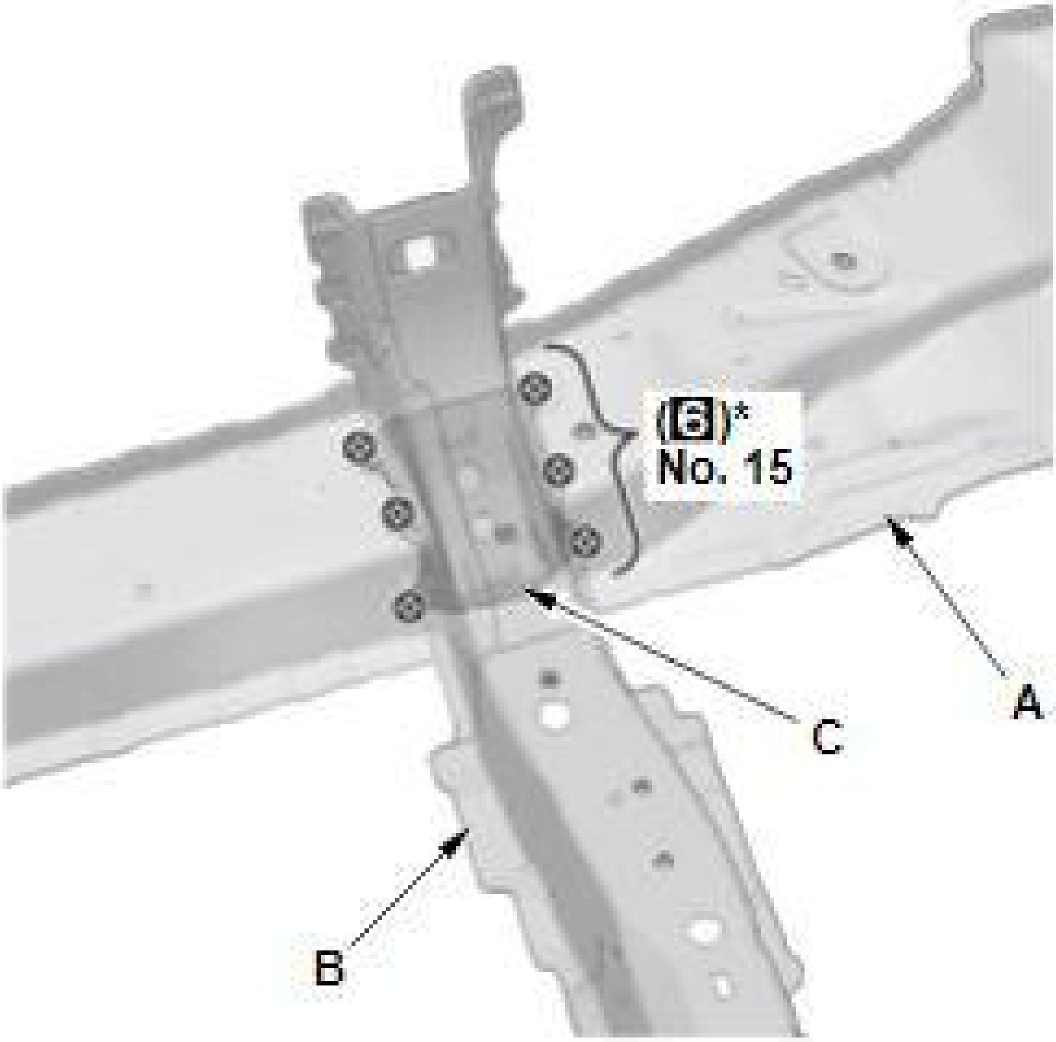

Fig. 81: Rear Floor Upper Crossmember Installation Weld Counts And Locations
Courtesy of AMERICAN HONDA MOTOR CO., INC.

3. Weld the rear portion of rear frame upper stiffener A and rear frame upper stiffener B.

   (■)*: Welding positions with rear frame upper stiffener A/B and rear frame A (C), include ultra high-strength steel (1500 MPa) parts. Perform the spot welding on the conditions of No. 13 and 14 in the table shown below. Refer to Spot Welding Conditions For Ultra High-Strength Steel Parts (1180 And 1500 MPa) .

No. 13	8000 A	600 ms	3432 N (350 kgf)
No. 14	8500 A	600 ms	3432 N (350 kgf)

NOTE: **Welding positions (D): Must be welded according to the following conditions.**

Plug hole diameter: Γ□10 mm (0.39 in) Welding wire: Must use wire with a tensile strength of 980 MPa or higher (142 ksi or higher).

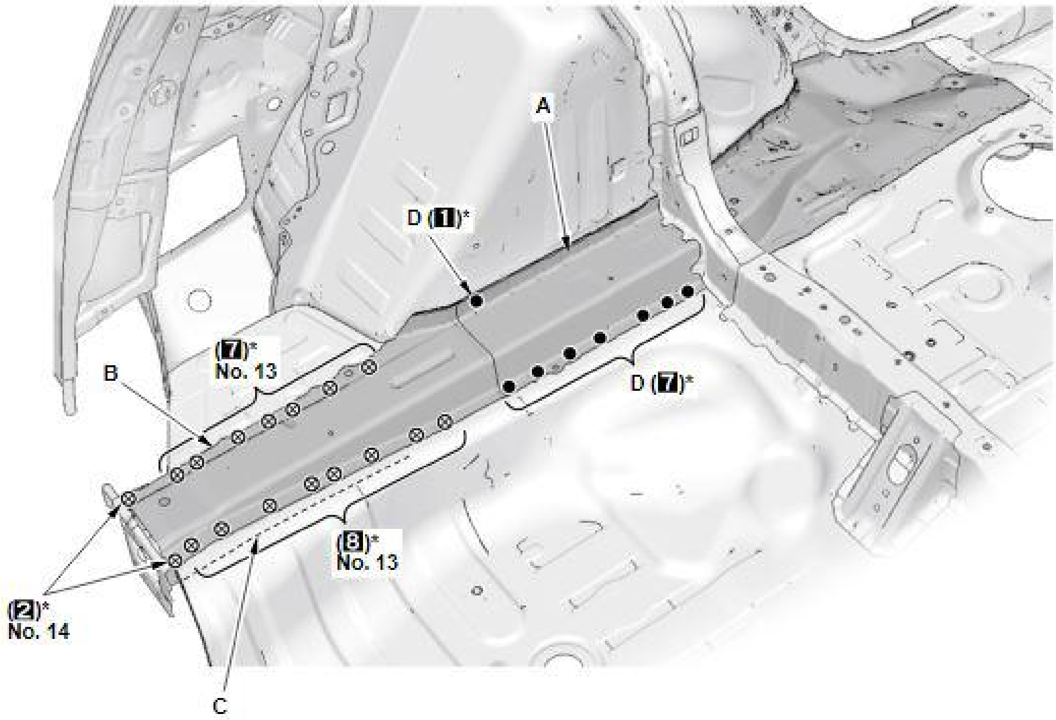

Fig. 82: Rear Frame Upper Stiffener Installation Weld Counts And Locations (1 Of 3)
Courtesy of AMERICAN HONDA MOTOR CO., INC.

4. Weld the front portion of rear frame upper stiffener A.

   (■)*: Welding positions with rear frame upper stiffener A and rear frame A (B), include ultra high-strength steel (1500 MPa) parts. Perform the spot welding on the conditions of No. 13 and 14 in the table shown below. Refer to Spot Welding Conditions For Ultra High-Strength Steel Parts (1180 And 1500 MPa) .

No. 13	8000 A	600 ms	3432 N (350 kgf)
No. 14	8500 A	600 ms	3432 N (350 kgf)

NOTE: **Welding positions (C): Must be welded according to the following conditions.**

Plug hole diameter: Г□10 mm (0.39 in) Welding wire: Must use wire with a tensile strength of 980 MPa or higher (142 ksi or higher).

()*: Welding position with high-strength steel parts. Confirm the plug welding conditions; refer to MAG Welding Conditions For High-Strength Steel (Except 1500 MPa) Parts .

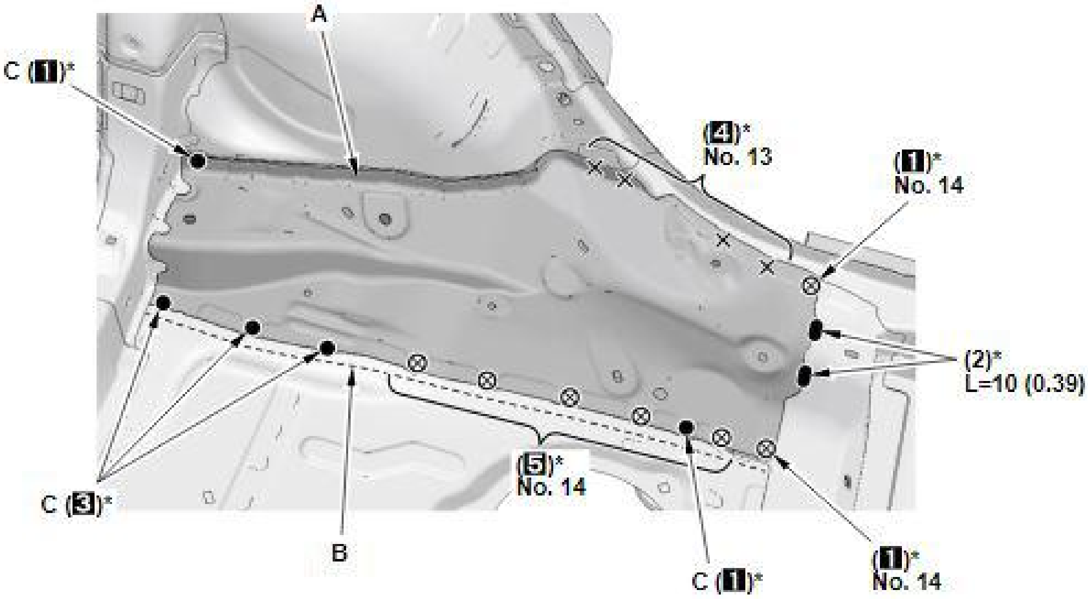

[Fig. 83: Rear Frame Upper Stiffener Installation Weld Counts, Measurements And Locations (2 Of 3)]
Courtesy of AMERICAN HONDA MOTOR CO., INC.

5. Weld rear frame upper stiffener A/B to rear frame A (C) and the rear wheelhouse (D).

   (■)*: Welding positions with rear frame upper stiffener A/B and rear frame A, include ultra high-strength steel (1500 MPa) parts.

   NOTE: **Welding positions (E) : Must be welded according to the following conditions.**

   Plug hole diameter: Γ□10 mm (0.39 in) Welding wire: Must use wire with a tensile strength of 980 MPa or higher (142 ksi or higher).

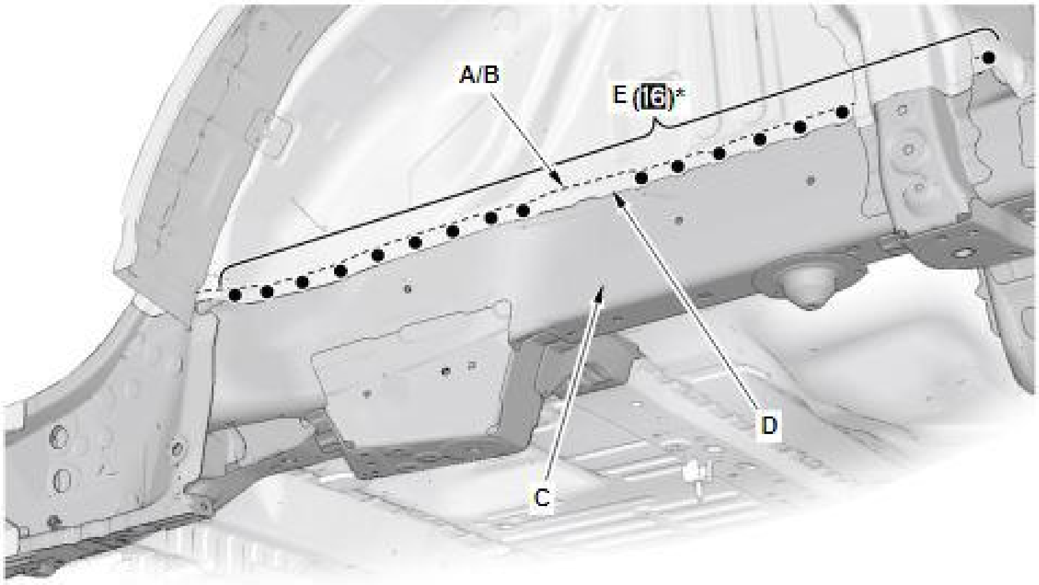

[Fig. 84: Rear Frame Upper Stiffener Installation Weld Counts And Locations (3 Of 3)]
Courtesy of AMERICAN HONDA MOTOR CO., INC.

6. Weld the rear floor upper crossmember complete (B) to the rear floor panel (C), the rear floor crossmember (D), rear frame upper stiffener A, and the rear wheelhouse stiffener upper (E).

   (■)*: Welding positions with rear frame upper stiffener A, include ultra high-strength steel (1500 MPa) parts.

   NOTE: **Welding positions (F) : Must be welded according to the following conditions.**

   Plug hole diameter: Γ□10 mm (0.39 in) Welding wire: Must use wire with a tensile strength of 980 MPa or higher (142 ksi or higher).

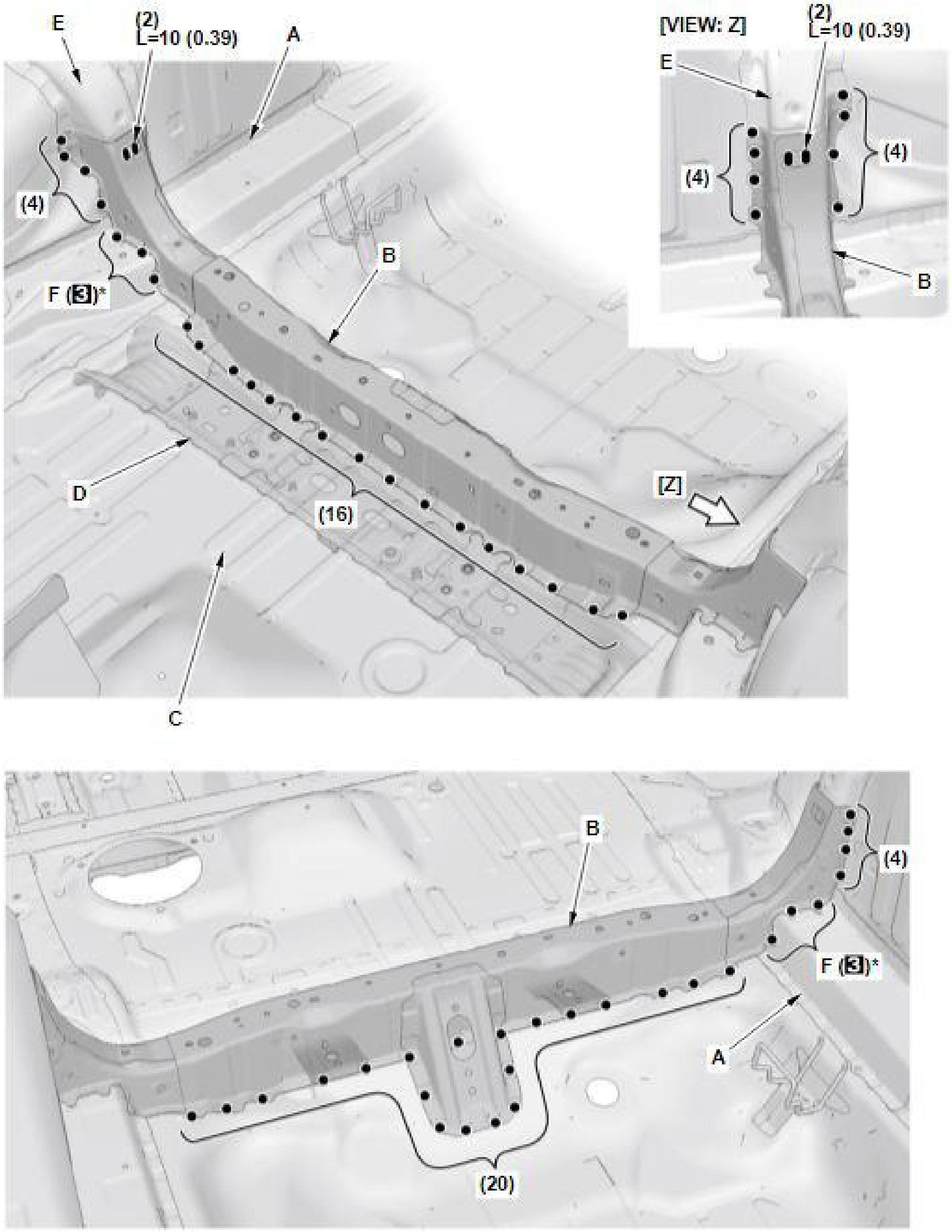

[Fig. 85: Rear Floor Upper Crossmember Complete Installation Weld Counts, Measurements And Locations]

Courtesy of AMERICAN HONDA MOTOR CO., INC.

Side Sill Reinforcement Extension, Side Sill Extension End Flange, And Outer Panel - Weld

1. Weld the new side sill reinforcement extension (A) to the side sill reinforcement (B) and the side sill extension (C).

   (■)*: Welding positions with the side sill reinforcement, include ultra high-strength steel (1500 MPa) parts.

NOTE: **Welding positions (D): Must be welded according to the following conditions.**

Plug hole diameter: Γ□10 mm (0.39 in) Welding wire: Must use wire with a tensile strength of 980 MPa or higher (142 ksi or higher).

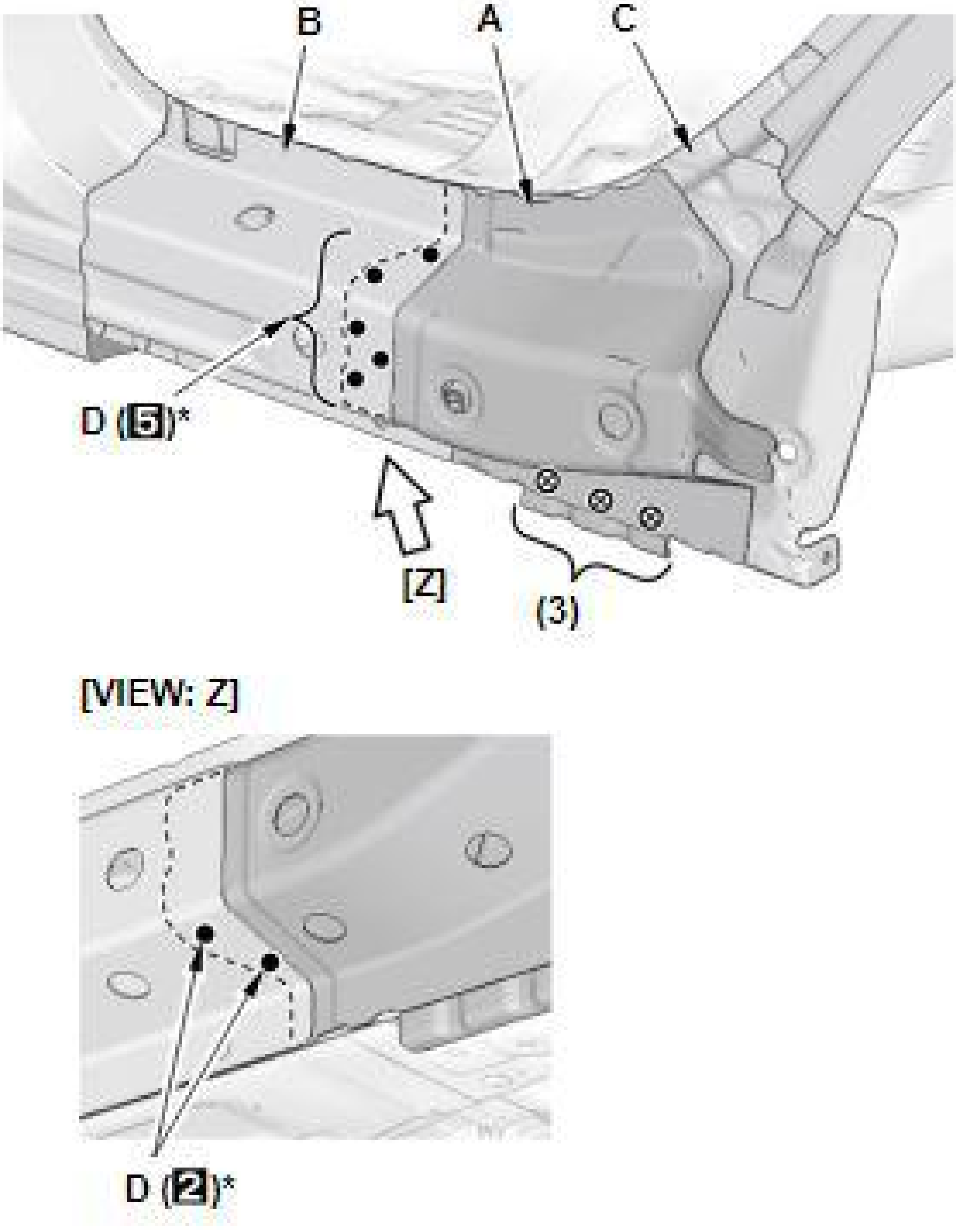

Fig. 86: Side Sill Reinforcement Extension Installation Weld Counts And Locations
Courtesy of AMERICAN HONDA MOTOR CO., INC.

2. Weld the new side sill extension end flange (A) to the rear inner panel (B) and the side sill extension (C).

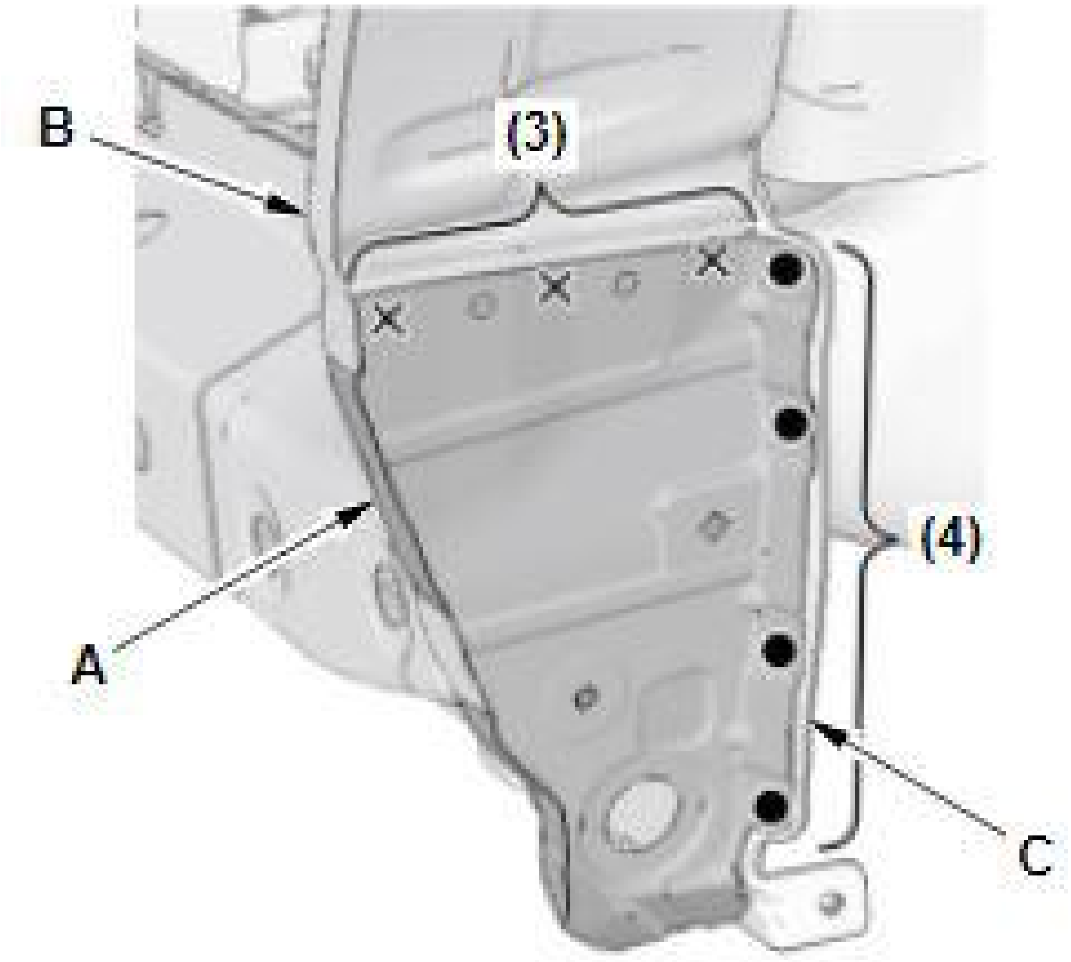

Fig. 87: Side Sill Extension End Flange Installation Weld Counts And Locations
Courtesy of AMERICAN HONDA MOTOR CO., INC.

3. Weld the new outer panel access window (A).

   (■)*: Welding positions with the side sill reinforcement (B), include ultra high-strength steel (1500 MPa) parts. Perform the spot welding on the conditions of No. 26 and 30 in the table shown below. Refer to Spot Welding Conditions For Ultra High-Strength Steel Parts (1180 And 1500 MPa) .

No. 26	8000 A	800 ms	3432 N (350 kgf)
No. 30	8500 A	1200 ms	3432 N (350 kgf)

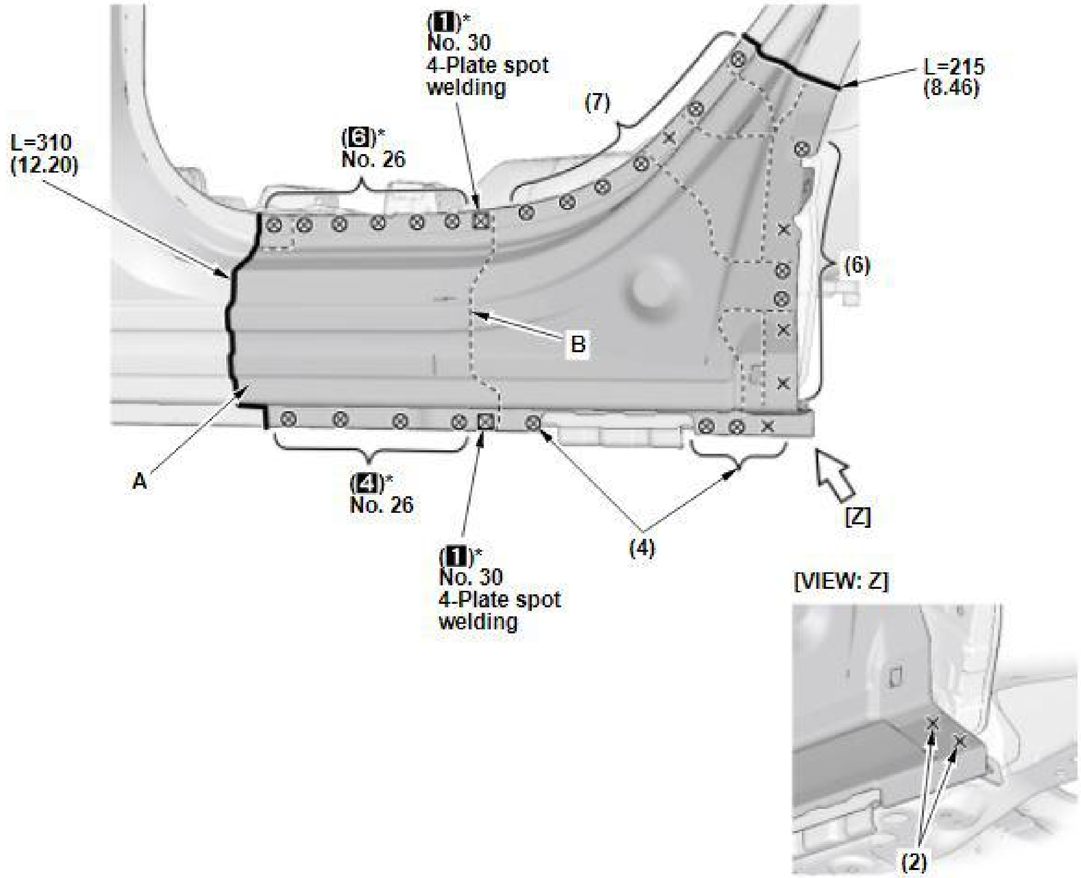
(1)*
No. 30
4-Plate spot
welding
L=310
(12.20)
(6)*
No. 26
(7)
L=215
(8.46)
(6)
B
A
(4)*
No. 26
(1)*
No. 30
4-Plate spot
welding
(4)
[Z]
[VIEW: Z]
(2)

Fig. 88: Outer Panel Access Window Installation Weld Counts, Measurements And Locations
Courtesy of AMERICAN HONDA MOTOR CO., INC.

4. Refer to rear panel - Installation.

REAR PANEL REPLACEMENT

REMOVAL

NOTE:

- **High-strength steel is defined as any steel with a tensile strength of 340 MPa or higher. If a part is constructed of, or includes high-strength steel observe the important guidelines. Refer to Repair Guidelines For High-Strength Steel Parts .**
- **Welding symbols (The welding symbols with dashed lines have a meaning of the spot welding of the part which is not visible) ; refer to Symbols Definition**
- **(): The number of welds**

Mass Production Body Welding Positions and Numbers - Remove

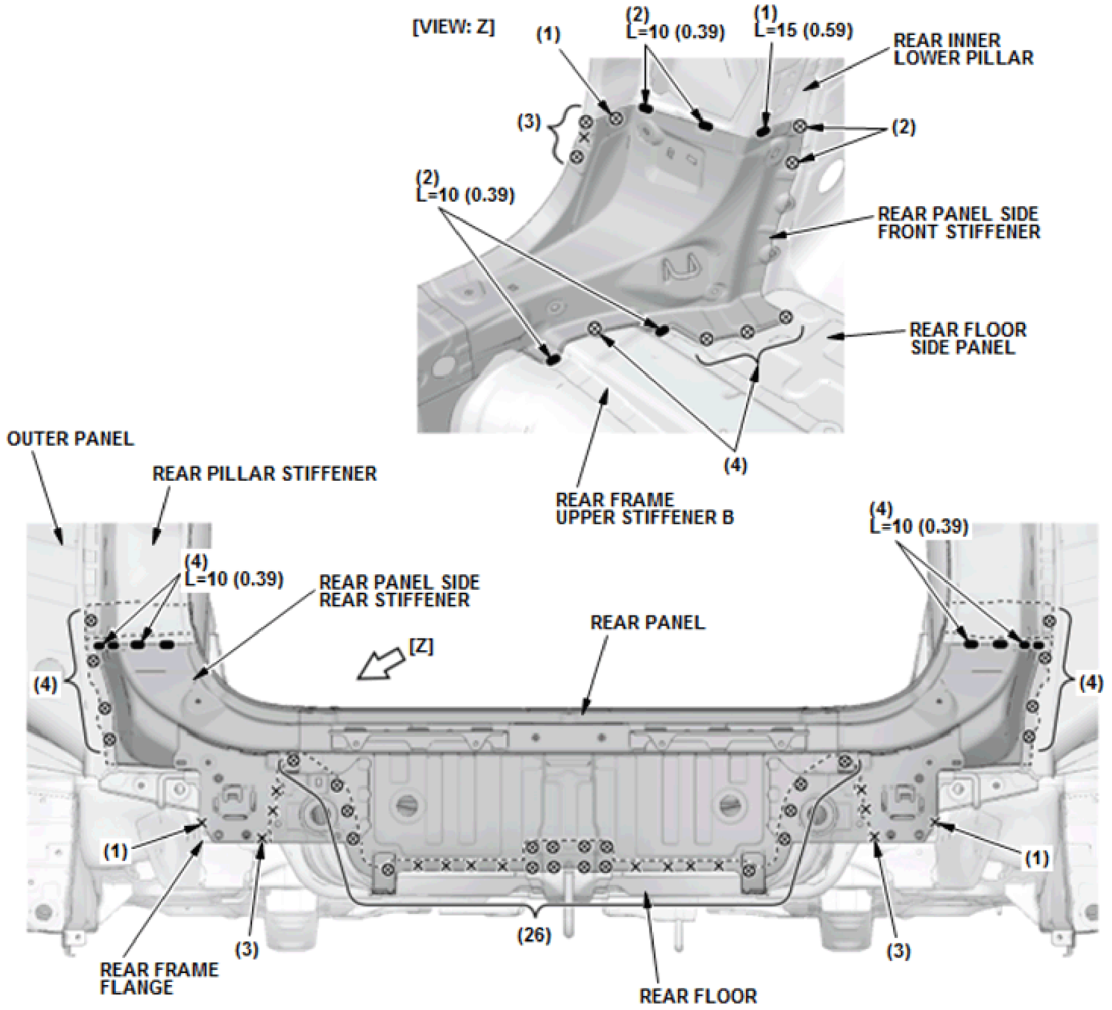
[VIEW: Z]
(1)
(2) L=10 (0.39)
(1) L=15 (0.59)
REAR INNER LOWER PILLAR
(3)
(2)
(2) L=10 (0.39)
REAR PANEL SIDE FRONT STIFFENER
REAR FLOOR SIDE PANEL
(4)
OUTER PANEL
REAR PILLAR STIFFENER
REAR FRAME UPPER STIFFENER B
(4) L=10 (0.39)
(4) L=10 (0.39)
REAR PANEL SIDE REAR STIFFENER
[Z]
REAR PANEL
(4)
(4)
(1)
(1)
(3)
(3)
(26)
REAR FRAME FLANGE
REAR FLOOR

Fig. 89: Rear Panel Removal Weld Counts, Measurements And Locations
Courtesy of AMERICAN HONDA MOTOR CO., INC.

Rear Panel Component Location

NOTE:

- **This section explains the procedures after Removal of all related parts. For the related parts' Removal procedure, refer to the appropriate service information.**
- **The component replacement procedure described here is only for new genuine supplied parts, as needed, according to the area and the degree of damage on the body.**
- **Turn up the outer panel flange, and cut the lower portion of the rear pillar stiffener on both sides. From the passenger's compartment, cut the upper portion of the rear panel side front stiffener on both sides.**
- **Pull out the rear panel complete backward, and remove it from the body.**
- **If necessary, replace the rear frame flange at the same time.**

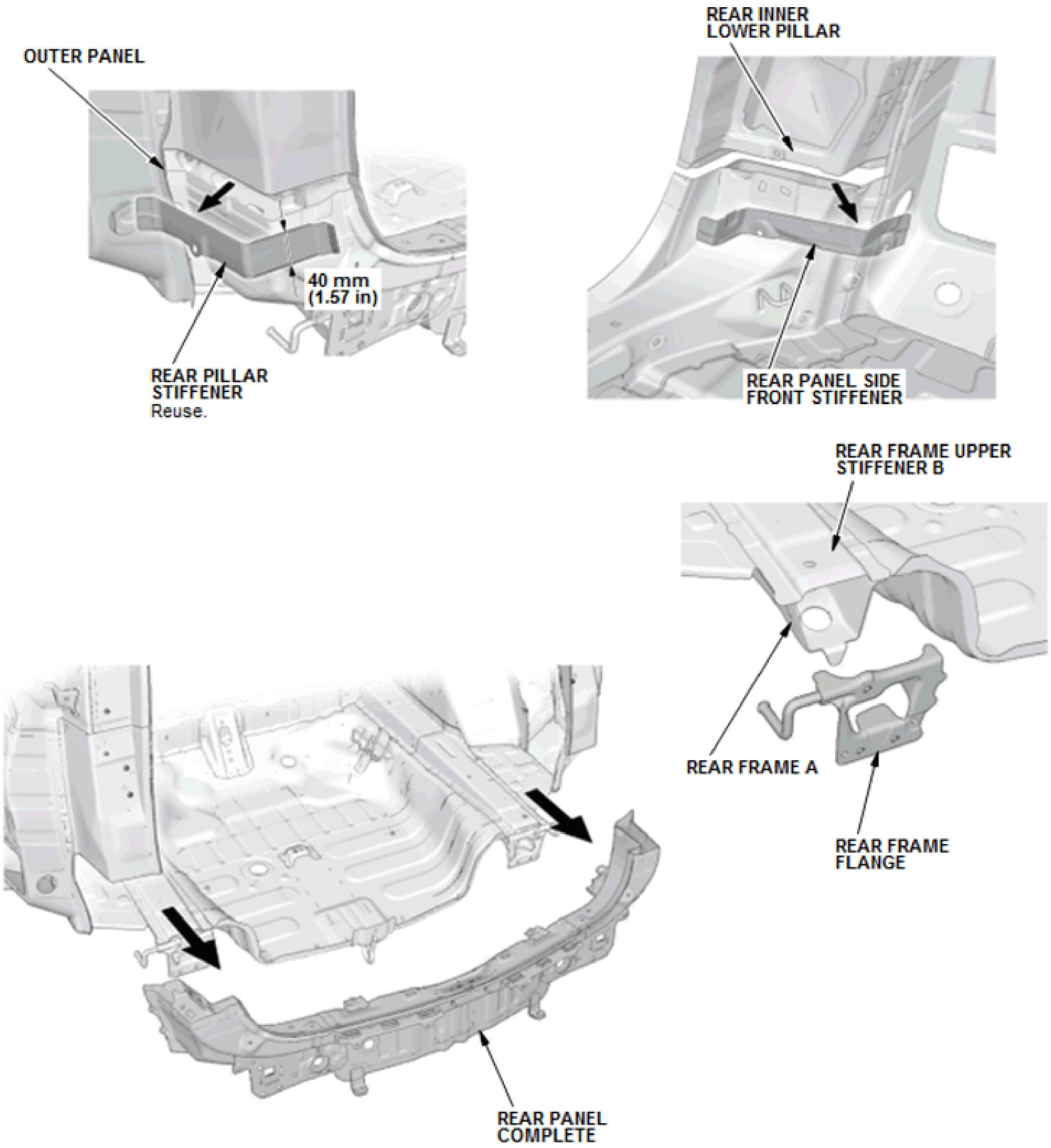
OUTER PANEL
40 mm (1.57 in)
REAR PILLAR STIFFENER
Reuse.
REAR INNER LOWER PILLAR
REAR PANEL SIDE FRONT STIFFENER
REAR FRAME UPPER STIFFENER B
REAR FRAME A
REAR FRAME FLANGE
REAR PANEL COMPLETE

Fig. 90: Rear Panel Replacement Component Location
Courtesy of AMERICAN HONDA MOTOR CO., INC.

INSTALLATION

NOTE:

- **Position the replacement parts. Before doing the main welding, check the body dimensions:**
    - **Refer to Rear Pillar Gutter And Rear Panel Positions Dimension - Measure .**
    - **Refer to TAILGATE OPENING .**
    - **Refer to Front Floor And Rear Floor, Under View Dimension - Measure .**
- **Temporarily install the related parts, then check for differences in level and clearance. Check the External Parts Fitting Positions; refer to External Parts Fitting Positions. . Make sure the body lines flow smoothly.**
- **Confirm the sheet thickness, tensile strength, and existence of the zinc treatment of both sides, and set the welder to conform to the welding conditions by referring to Roof And Side Panel Construction , and FLOOR AND REAR BODY CONSTRUCTION .**
- **Welding symbols (The welding symbols with dashed lines have a meaning of the spot welding of the part which is not visible) ; refer to Symbols Definition .**
- **() and ()*: The number of welds**

Rear Frame Flange - Weld

1. Weld the rear frame flange (C) to rear frame upper stiffener B and rear frame A.

(■)*: Welding positions with rear frame A and rear frame upper stiffener B, include ultra high-strength steel (1500 MPa) parts. Perform the spot welding on the conditions of No. 13 in the table shown below. Refer to Spot Welding Conditions For Ultra High-Strength Steel Parts (1180 And 1500 MPa) .

No. 13	8000 A	600 ms	3432 N (350 kgf)

NOTE: **Welding positions (D): Must be welded according to the following conditions.**

Plug hole diameter: Γ□10 mm (0.39 in) Welding wire: Must use wire with a tensile strength of 980 MPa or higher (142 ksi or higher).

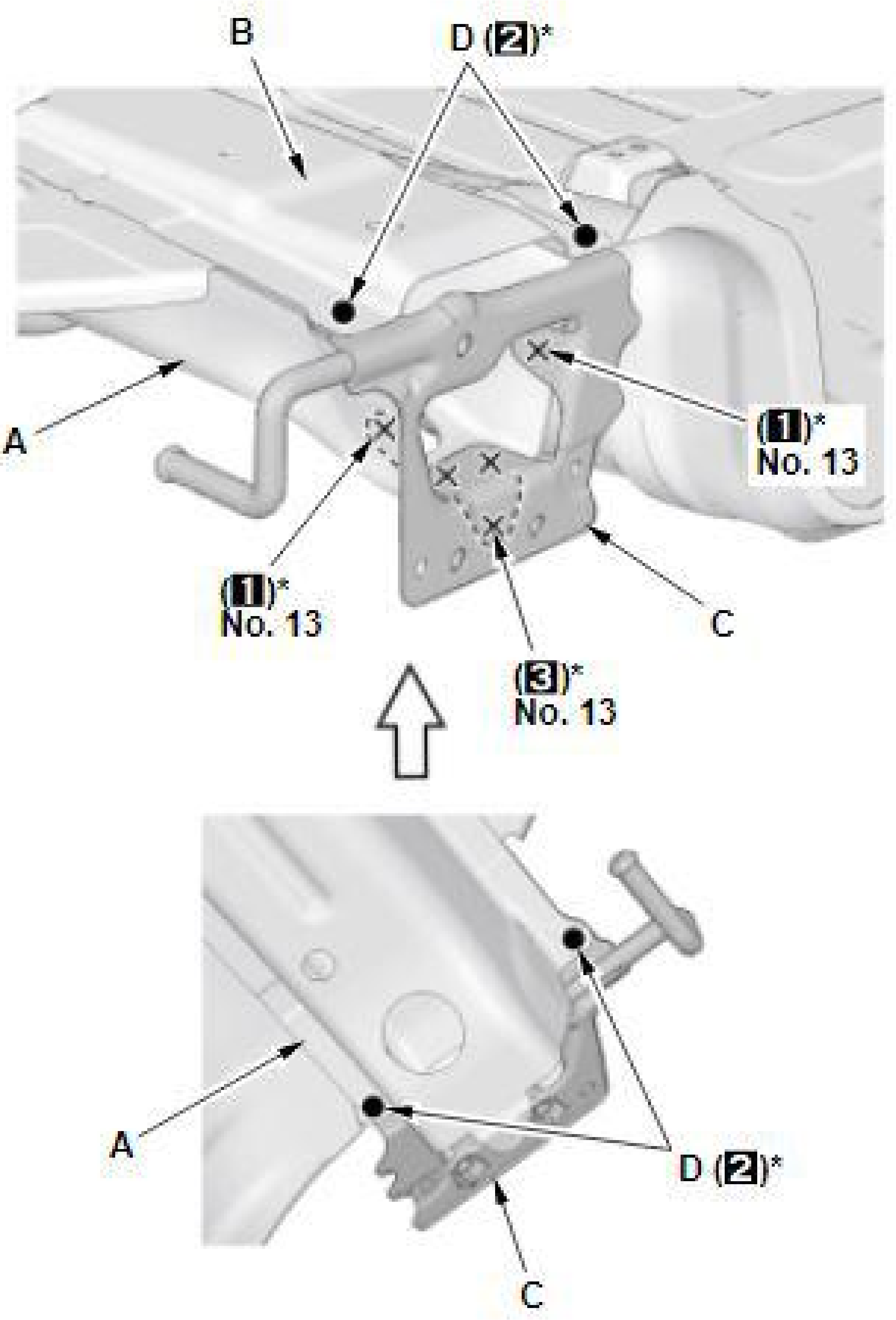

[Fig. 91: Rear Frame Flange Installation Weld Counts And Locations]

Courtesy of AMERICAN HONDA MOTOR CO., INC.

Rear Panel - Weld

1. Remove the rear panel side front stiffener (A) from the new rear panel complete (B) on both sides.

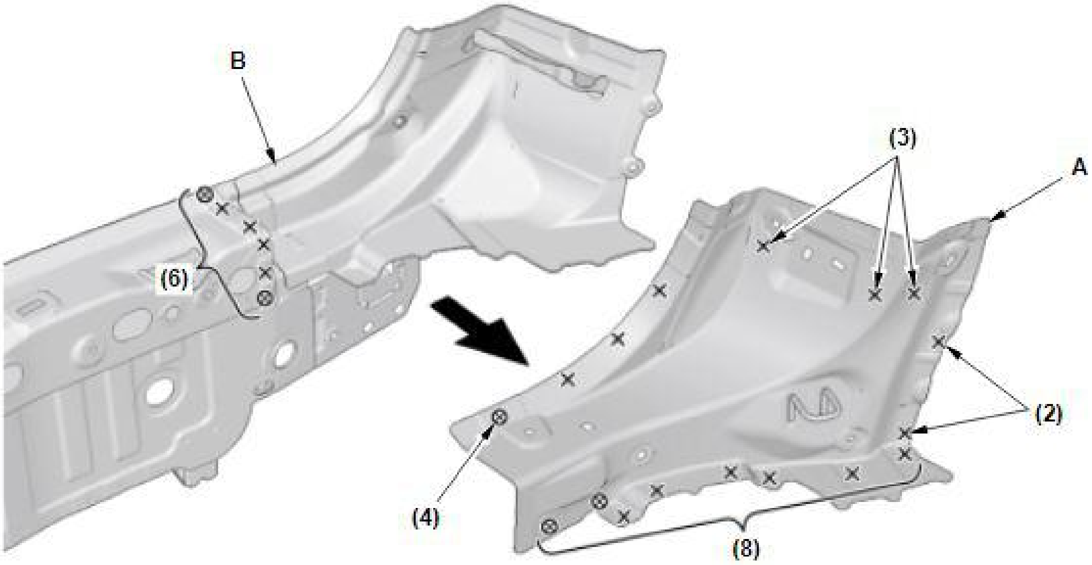

[Fig. 92: Rear Panel Complete Separation Weld Counts And Locations]

Courtesy of AMERICAN HONDA MOTOR CO., INC.

2. Set the new rear panel complete (A) to the body, and check it into position.

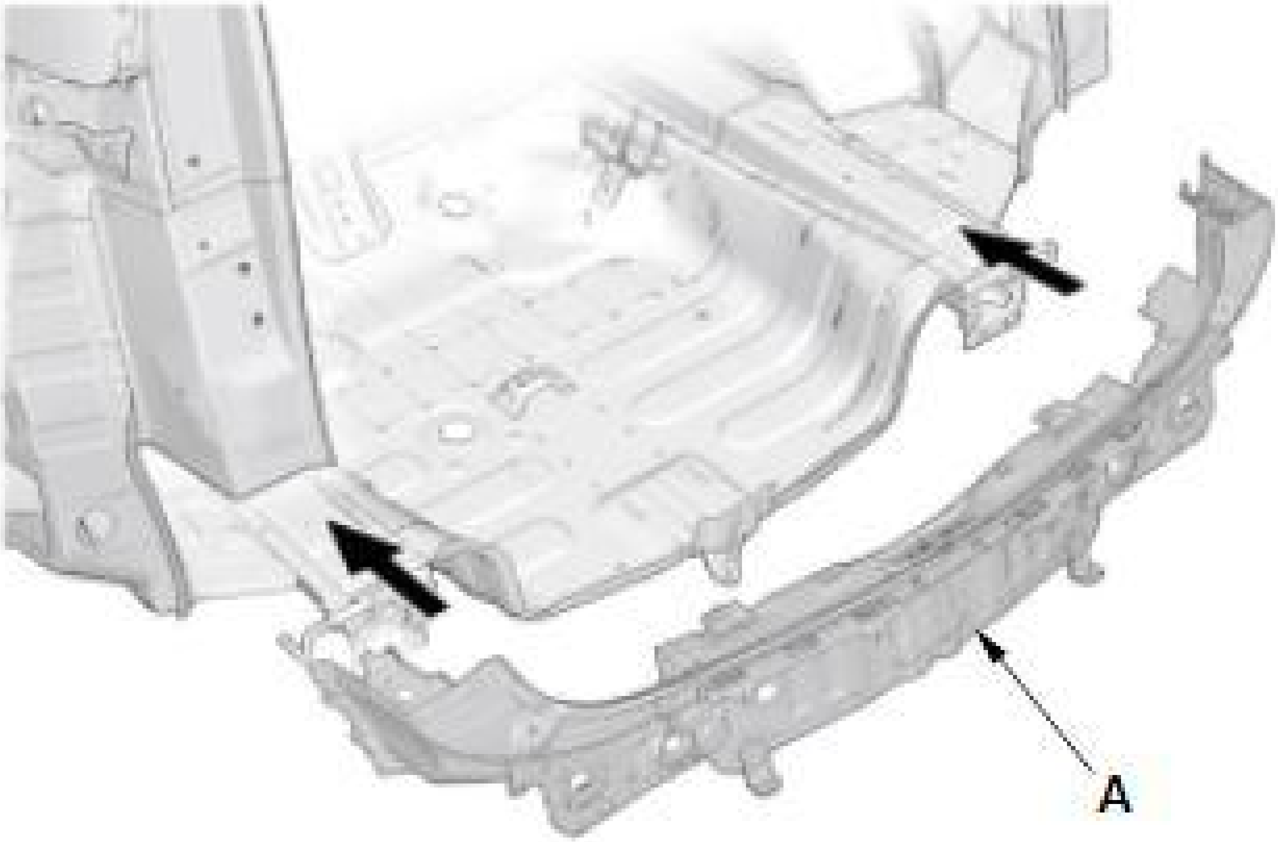

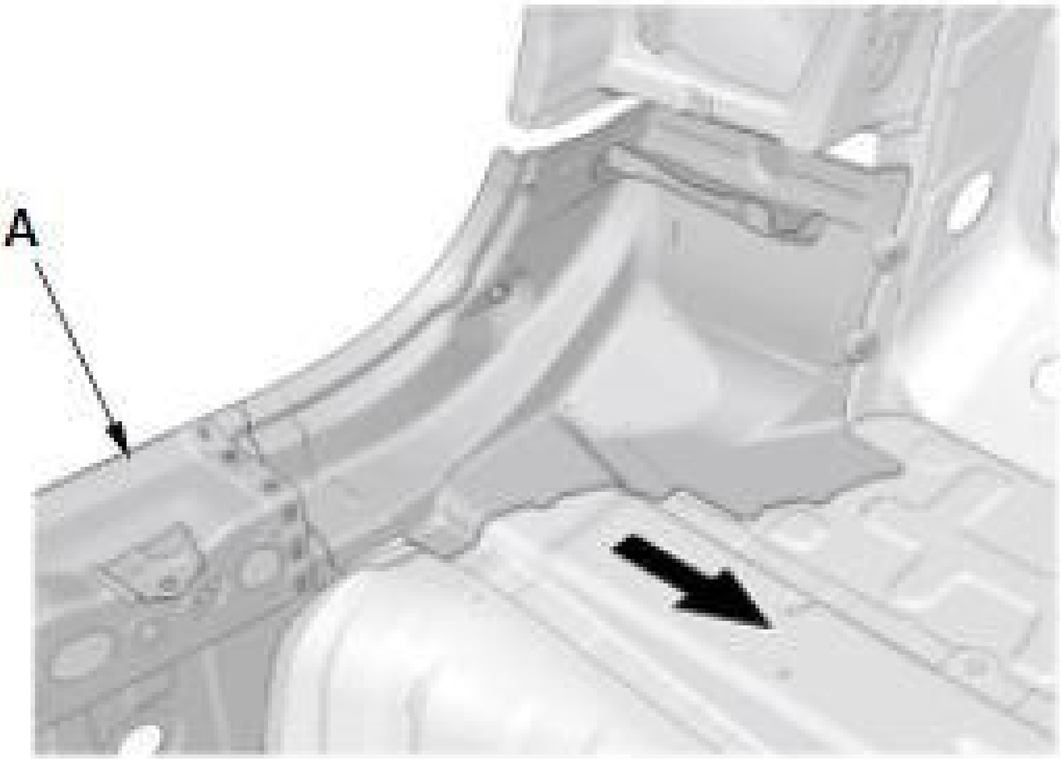

3. Weld the rear panel side front stiffener (A) to the rear panel side rear stiffener (B), the rear inner lower pillar (C), and the rear panel upper stiffener (D) on both sides.

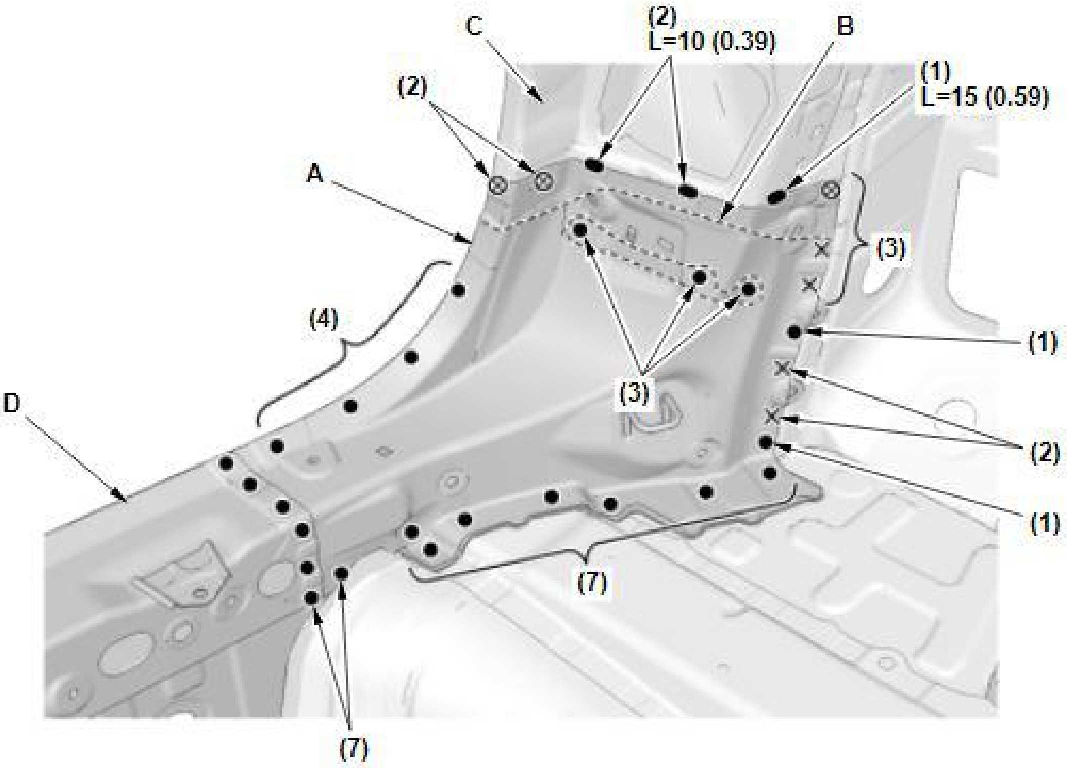

Fig. 93: Rear Panel Side Front Stiffener Installation Weld Counts, Measurements And Locations
Courtesy of AMERICAN HONDA MOTOR CO., INC.

4. Weld the rear panel side front/rear stiffeners (A) to the rear floor side panel (C) and rear frame upper stiffener B on both sides.

   (■)*: Welding positions with rear frame upper stiffener B, include ultra high-strength steel (1500 MPa) parts.

NOTE: **Welding positions (D): Must be welded according to the following conditions.**

Plug hole diameter: Γ□10 mm (0.39 in) Welding wire: Must use wire with a tensile strength of 980 MPa or higher (142 ksi or higher).

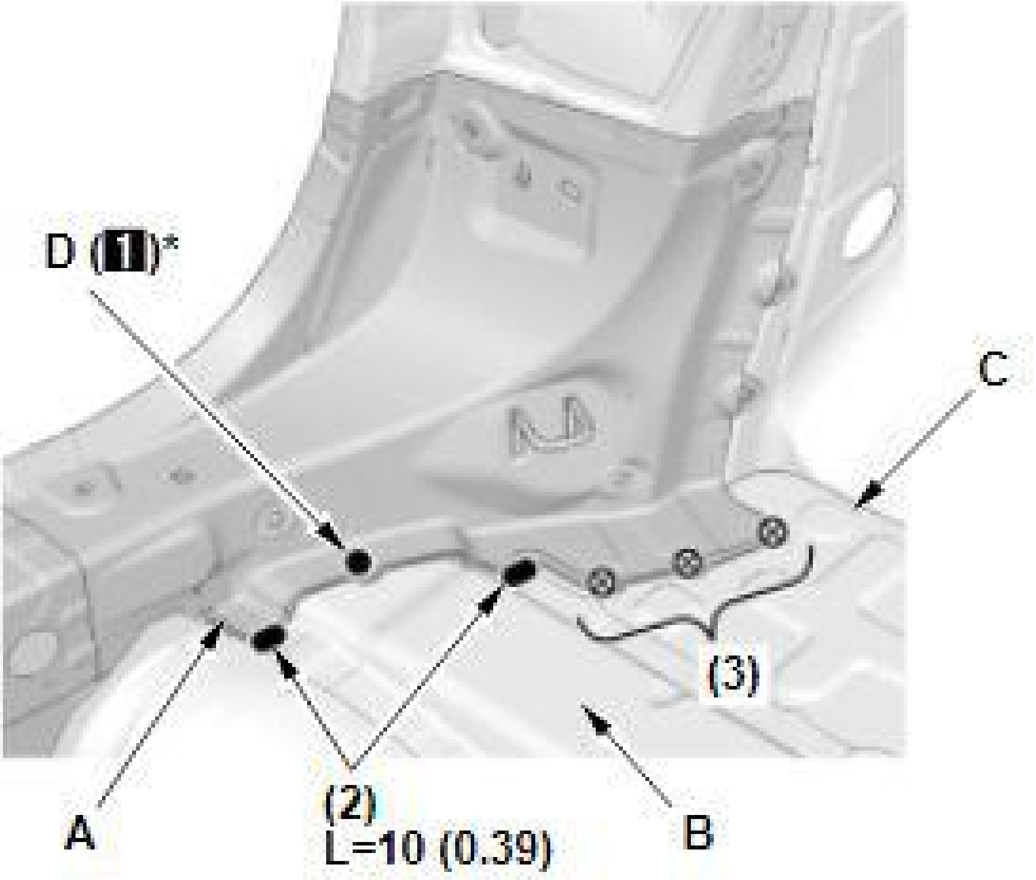

Fig. 94: Rear Panel Side Front And Rear Stiffener Installation Weld Counts, Measurements And Locations
Courtesy of AMERICAN HONDA MOTOR CO., INC.

5. Weld the rear panel (A) to the rear floor (B) and the rear frame flange (C).

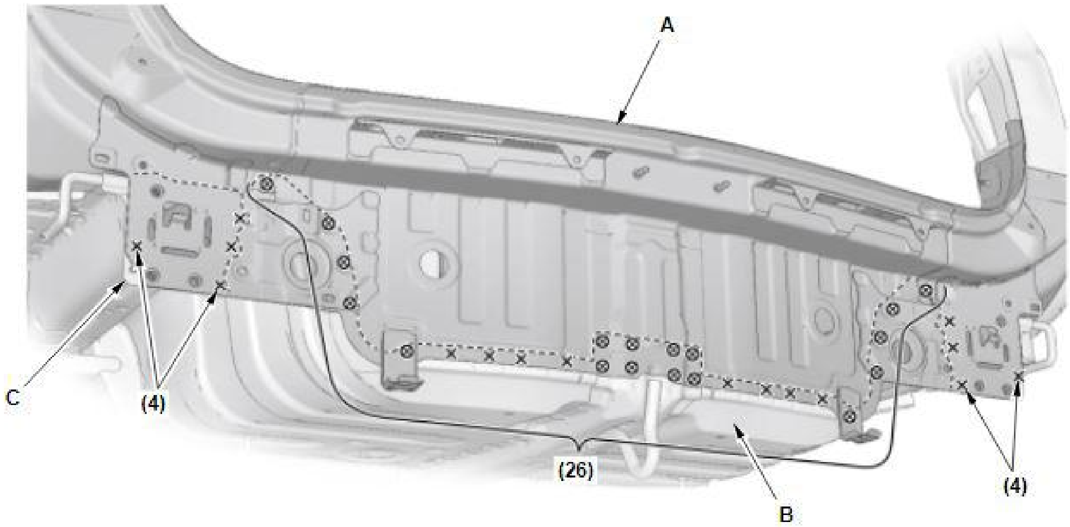

Fig. 95: Rear Panel Installation Weld Counts And Locations
Courtesy of AMERICAN HONDA MOTOR CO., INC.

6. Weld the rear pillar stiffener access windows (A) on both sides.

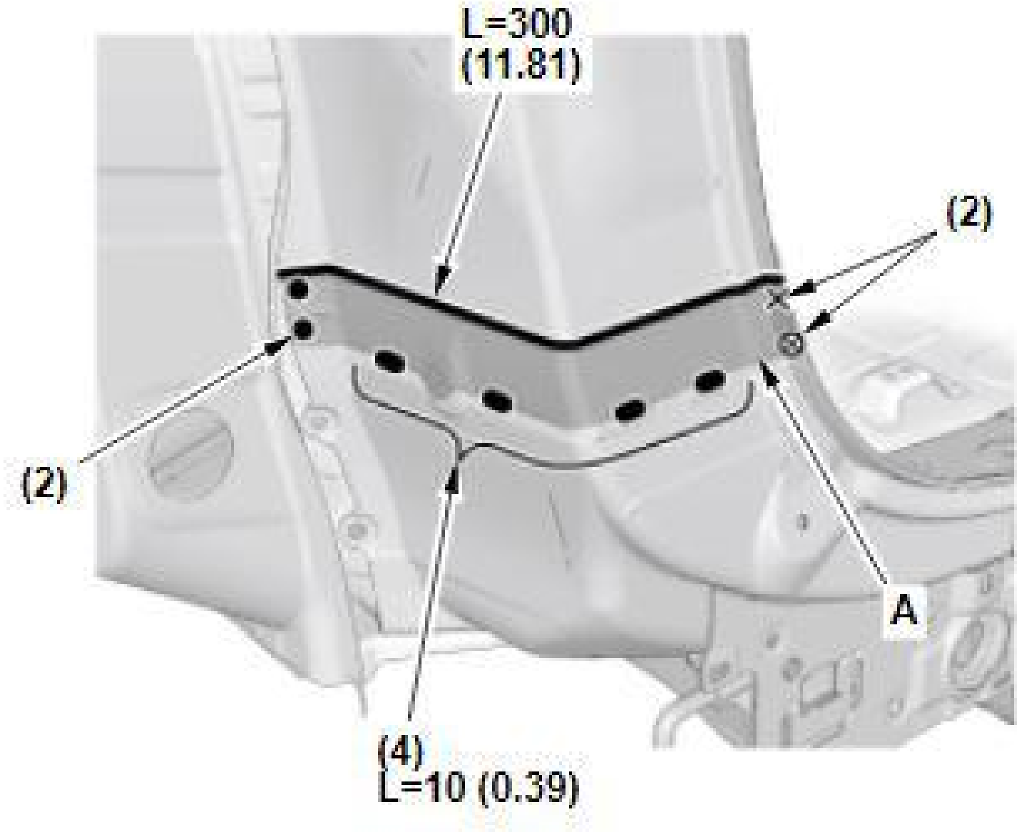
L=300
(11.81)
(2)
(2)
A
(4)
L=10 (0.39)

Fig. 96: Rear Pillar Stiffener Access Window Installation Weld Counts, Measurements And Locations
Courtesy of AMERICAN HONDA MOTOR CO., INC.

7. Weld the outer panels (A) on both sides.

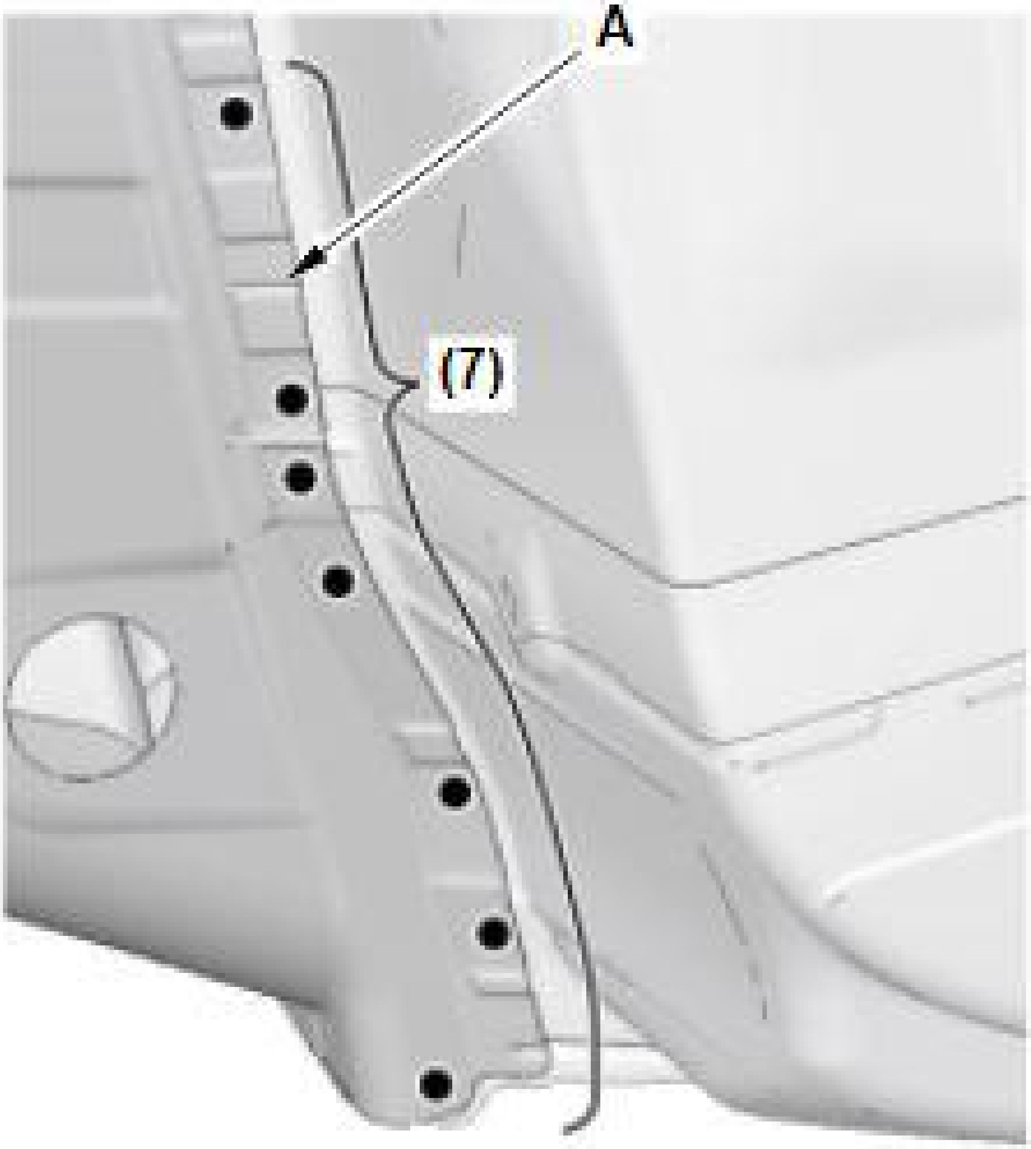

Fig. 97: Outer Panel Installation Weld Counts And Locations
Courtesy of AMERICAN HONDA MOTOR CO., INC.

BSI Radar Unit Mounting Area - Check (With BSI Radar Unit)

1. With Blind Spot Information (BSI) radar unit: Install the new rivnuts (A) to the outer panel repair part (B) with a rivnut tool.

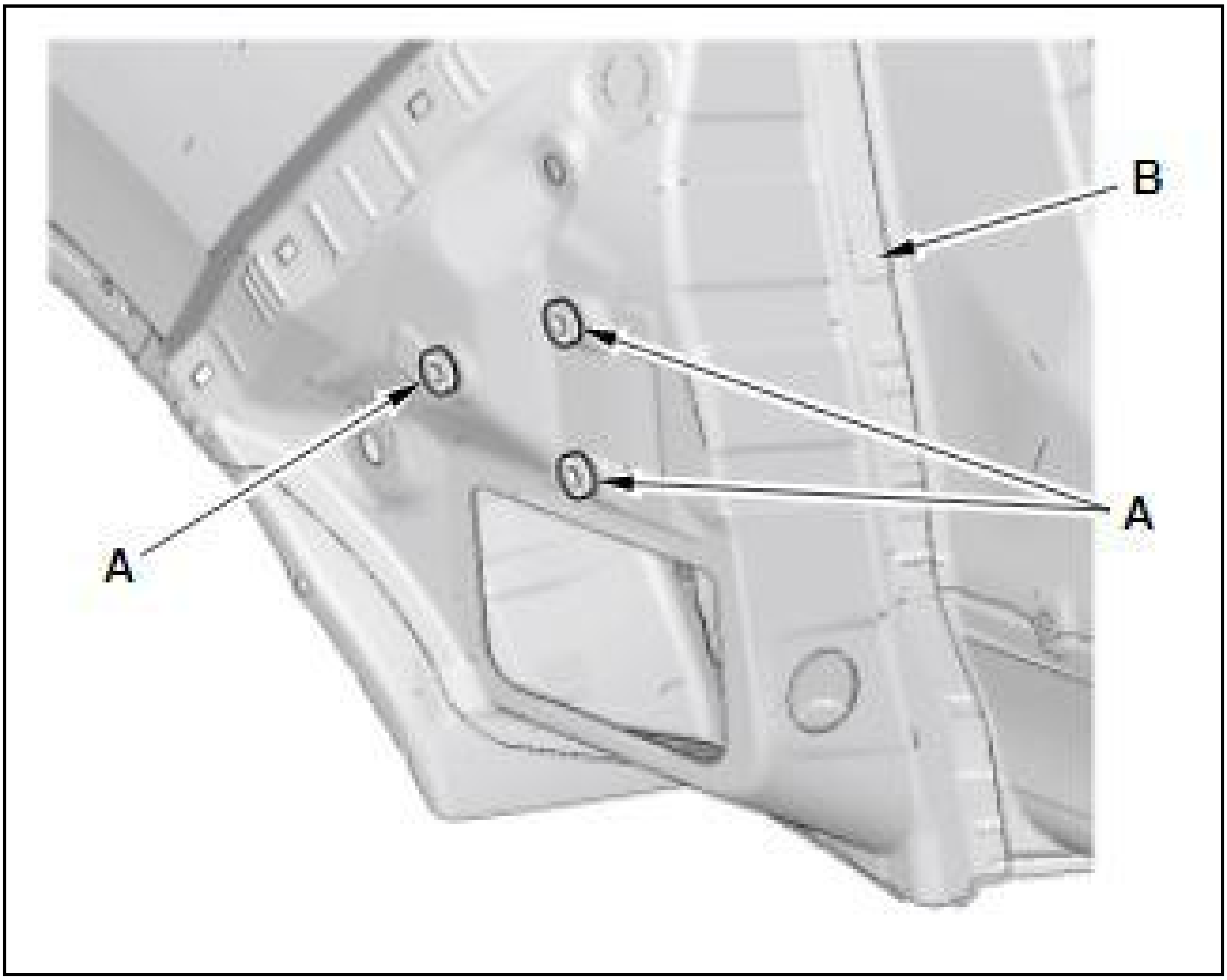

2. Check the Blind Spot Information (BSI) radar unit mounting positions. Refer to **Blind Spot Information (BSI) Radar Unit Mounting Positions Dimension - Measure** .

1. With Blind Spot Information (BSI) radar unit: Install the new rivnuts (A) to the outer panel repair part (B) with a rivnut tool.

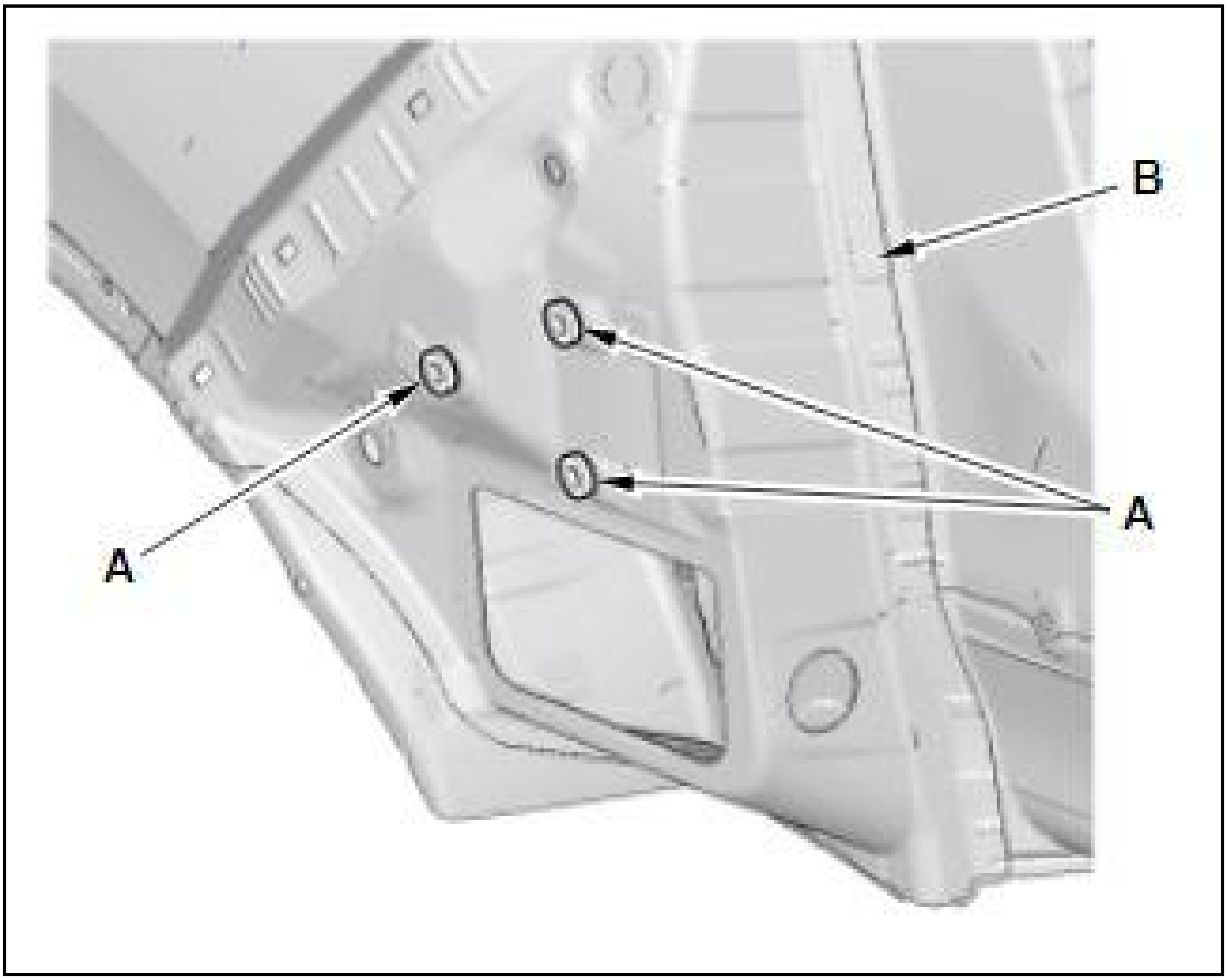

2. Check the Blind Spot Information (BSI) radar unit mounting positions. Refer to Blind Spot Information (BSI) Radar Unit Mounting Positions Dimension - Measure .

REAR SIDE OUTER PANEL REPLACEMENT

REMOVAL

NOTE:

- **High-strength steel is defined as any steel with a tensile strength of 340 MPa or higher. If a part is constructed of, or includes high-strength steel observe the important guidelines. Refer to Repair Guidelines For High-Strength Steel Parts .**
- **Welding symbols (The welding symbols with dashed lines have a meaning of the spot welding of the part which is not visible) ; refer to Symbols Definition**
- **(): The number of welds**

Mass Production Body Welding Positions and Numbers - Remove

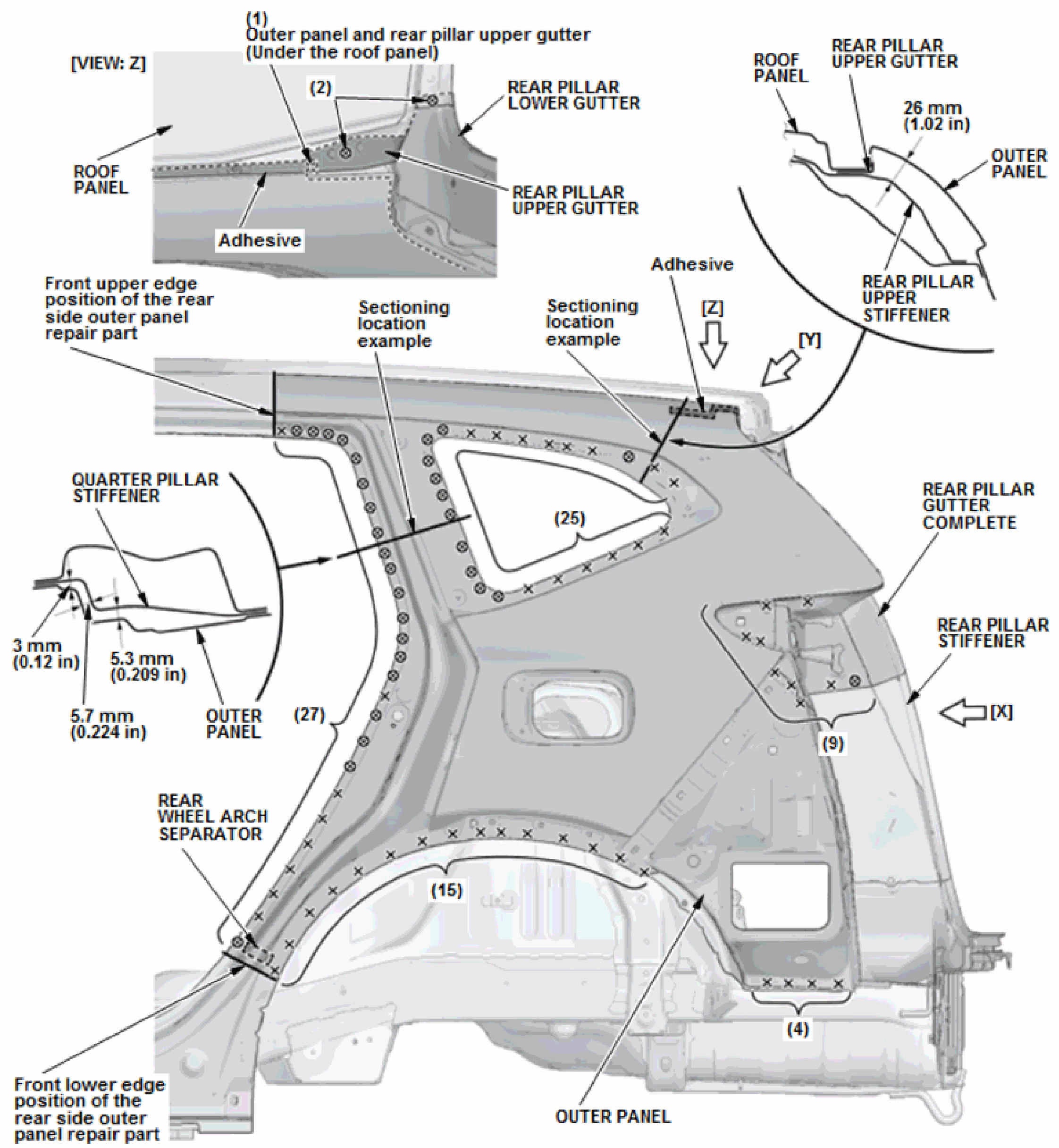
(1)
Outer panel and rear pillar upper gutter
(Under the roof panel)
[VIEW: Z]
(2)
REAR PILLAR LOWER GUTTER
ROOF PANEL
REAR PILLAR UPPER GUTTER
Adhesive
ROOF PANEL
REAR PILLAR UPPER GUTTER
26 mm (1.02 in)
OUTER PANEL
REAR PILLAR UPPER STIFFENER
Front upper edge position of the rear side outer panel repair part
Sectioning location example
Sectioning location example
Adhesive
[Z]
[Y]
QUARTER PILLAR STIFFENER
(25)
REAR PILLAR GUTTER COMPLETE
REAR PILLAR STIFFENER
3 mm (0.12 in)
5.3 mm (0.209 in)
5.7 mm (0.224 in)
OUTER PANEL
(27)
[X]
(9)
REAR WHEEL ARCH SEPARATOR
(15)
(4)
Front lower edge position of the rear side outer panel repair part
OUTER PANEL

Fig. 98: Rear Side Outer Panel, Rear Pillar Gutter, And Rear Pillar Stiffener Removal Weld Counts And Locations (1 Of 2)

Courtesy of AMERICAN HONDA MOTOR CO., INC.

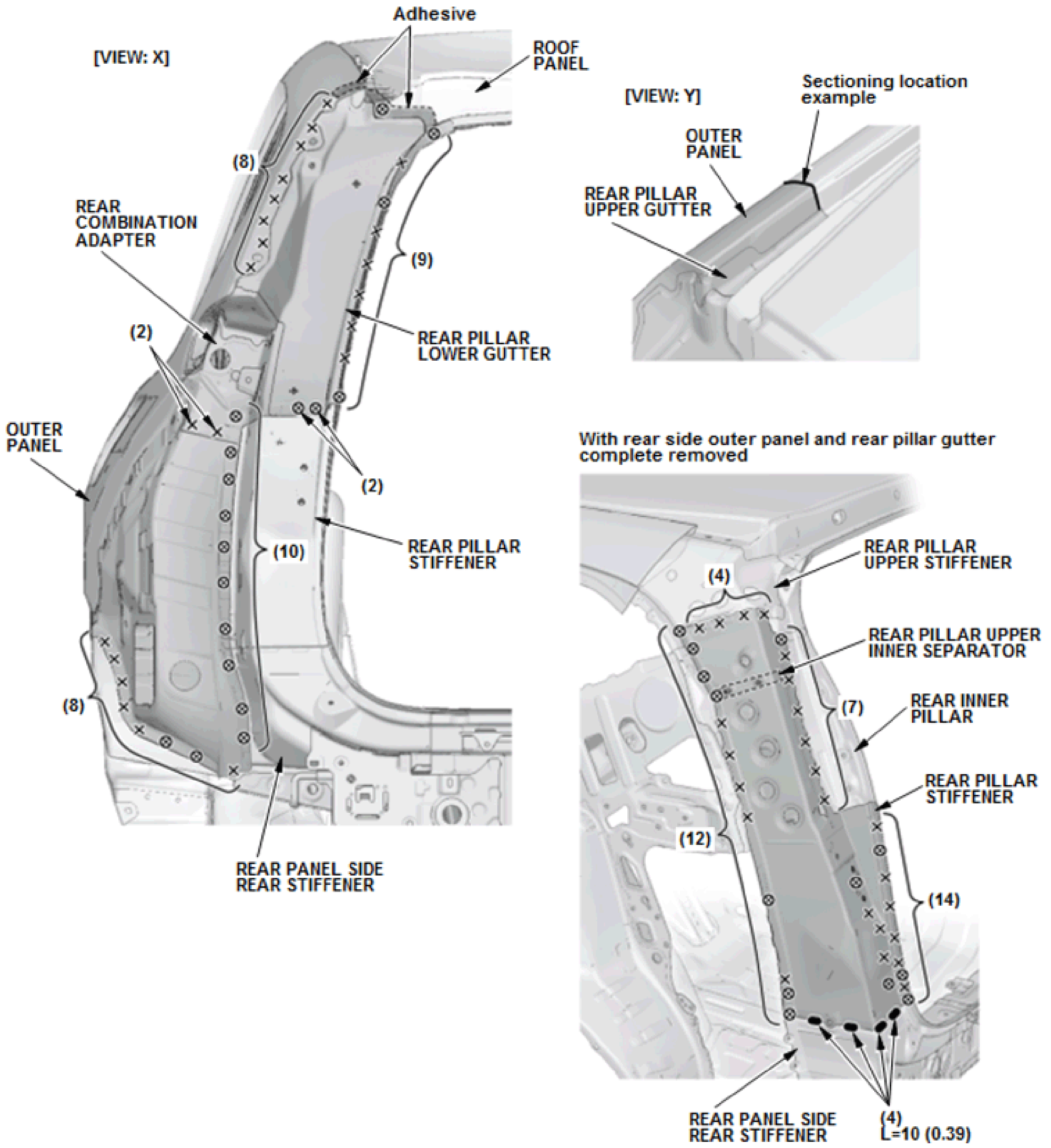
[VIEW: X]
Adhesive
ROOF PANEL
(8)
REAR COMBINATION ADAPTER
(9)
REAR PILLAR LOWER GUTTER
(2)
OUTER PANEL
(2)
(10)
REAR PILLAR STIFFENER
(8)
REAR PANEL SIDE REAR STIFFENER
[VIEW: Y]
Sectioning location example
OUTER PANEL
REAR PILLAR UPPER GUTTER
With rear side outer panel and rear pillar gutter complete removed
REAR PILLAR UPPER STIFFENER
(4)
REAR PILLAR UPPER INNER SEPARATOR
(7)
REAR INNER PILLAR
REAR PILLAR STIFFENER
(12)
(14)
REAR PANEL SIDE REAR STIFFENER
(4)
L=10 (0.39)

Fig. 99: Rear Side Outer Panel, Rear Pillar Gutter, And Rear Pillar Stiffener Removal Weld Counts And Locations (2 Of 2)
Courtesy of AMERICAN HONDA MOTOR CO., INC.

Rear Side Outer Panel Component Location

NOTE:

- **This section explains the procedures after Removal of all related parts. For the related parts' Removal procedure, refer to the appropriate service information.**
- **The component replacement procedure described here is only for new genuine supplied parts, as needed, according to the area and the degree of damage on the body.**
- **Cut and pry off the rear side outer panel, and replace it.**

  Select the sectioning location in consideration of the rear side outer panel repair part ; refer to Roof And Side Panel Construction .
- **Check the rear pillar gutter position for damage. If necessary, replace the rear pillar gutter complete.**
- **Check the rear pillar stiffener position for damage. If necessary, replace it separately from the rear inner pillar complete.**
- **Replace the rear wheel arch separator and the rear pillar upper inner separator.**

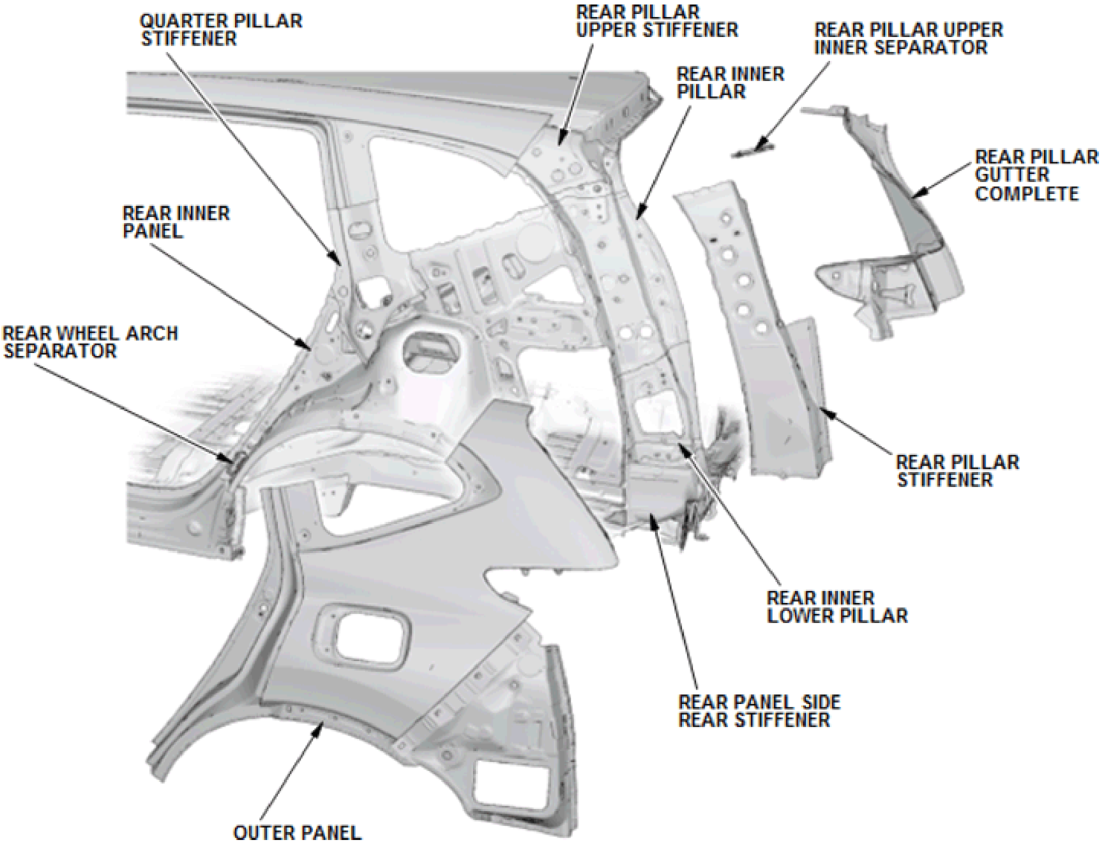
QUARTER PILLAR STIFFENER
REAR PILLAR UPPER STIFFENER
REAR PILLAR UPPER INNER SEPARATOR
REAR INNER PILLAR
REAR PILLAR GUTTER COMPLETE
REAR INNER PANEL
REAR WHEEL ARCH SEPARATOR
REAR PILLAR STIFFENER
REAR INNER LOWER PILLAR
REAR PANEL SIDE REAR STIFFENER
OUTER PANEL

Fig. 100: Rear Side Outer Panel Replacement Component Location
Courtesy of AMERICAN HONDA MOTOR CO., INC.

INSTALLATION

NOTE:

- **Position the replacement parts. Before doing the main welding, check the body dimensions:**
  - **Refer to Door Hinge Positions Dimension .**
  - **Refer to Rear Pillar Gutter And Rear Panel Positions Dimension .**
  - **Refer to WINDSHIELD AND DOOR OPENINGS .**
  - **Refer to TAILGATE OPENING .**
- **Temporarily install the related parts, then check for differences in level and clearance. Check the External Parts Fitting Positions; refer to External Parts Fitting Positions . Make sure the body lines flow smoothly.**
- **Confirm the sheet thickness, tensile strength, and existence of the zinc treatment of both sides, and set the welder to conform to the welding conditions by referring to Roof And Side Panel Construction , and FLOOR AND REAR BODY CONSTRUCTION .**
- **Welding symbols (The welding symbols with dashed lines have a meaning of the spot welding of the part which is not visible) ; refer to Symbols Definition .**
- **() and ()*: The number of welds**

Rear Pillar Stiffener - Weld

1. Remove the rear pillar stiffener (A) together with the rear upper inner separator (B) from the new rear inner pillar complete.

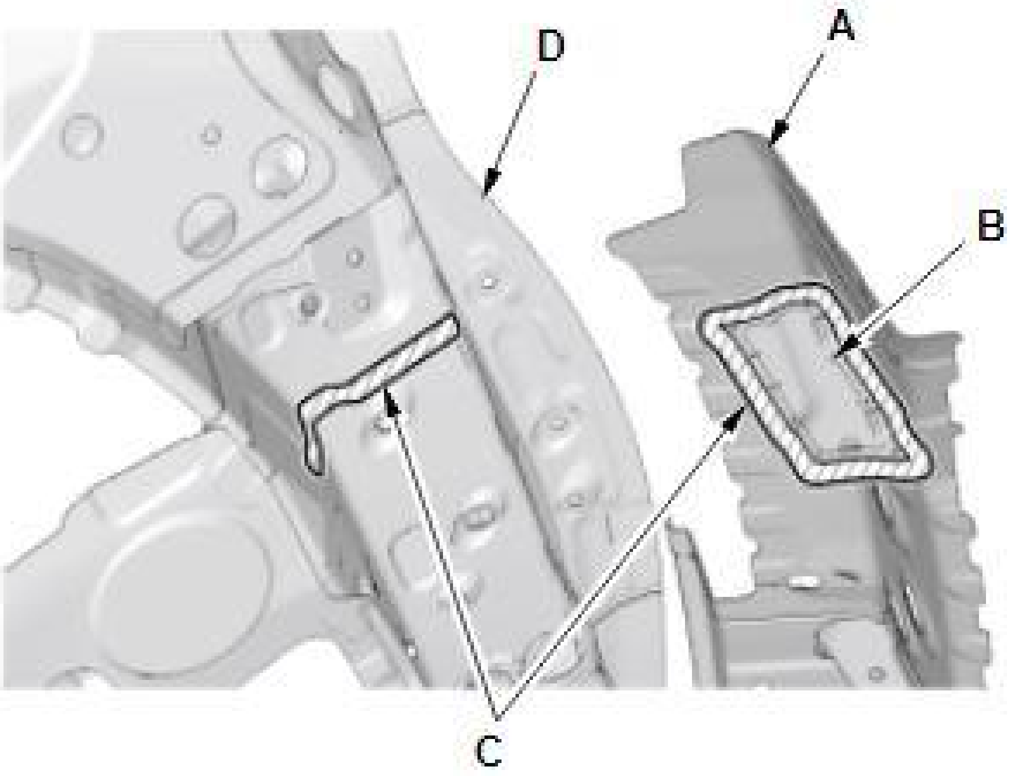

Fig. 101: Rear Upper Inner Separator Removal
Courtesy of AMERICAN HONDA MOTOR CO., INC.

2. Apply the sealer (C) without gaps all the way around the new upper inner separator and the rear inner pillar (D).
3. Weld the rear pillar stiffener (A) to the rear pillar upper stiffener (B), the rear inner pillar (C), and the rear panel side rear stiffener (D).

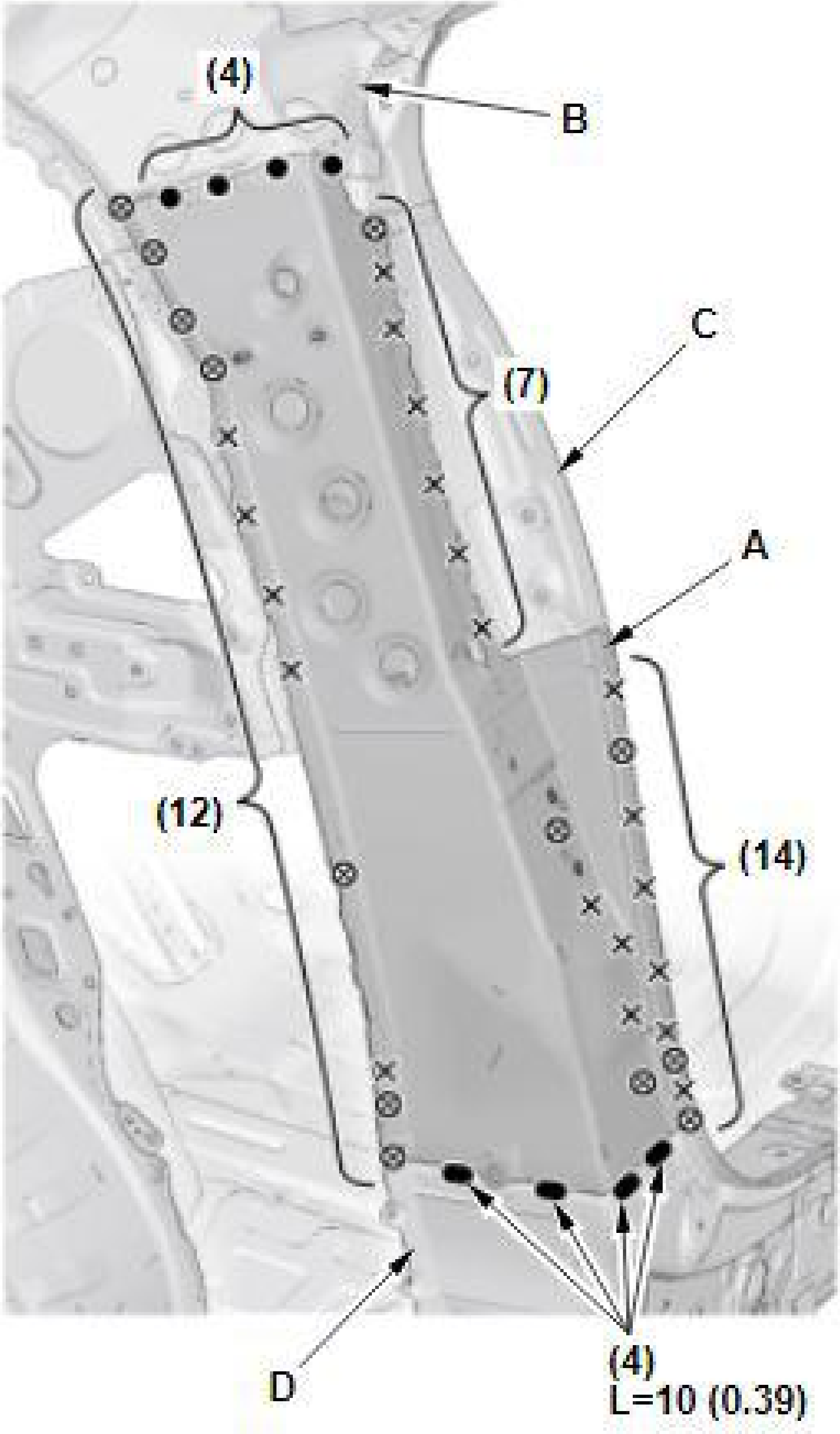
(4)
B
C
(7)
A
(12)
(14)
D
(4)
L=10 (0.39)

Fig. 102: Rear Pillar Stiffener Installation Weld Counts, Measurements And Locations
Courtesy of AMERICAN HONDA MOTOR CO., INC.

Rear Pillar Gutter Complete - Weld

1. Because the original adhesive (A) may burn when welding the rear pillar upper gutter, scrape out the adhesive from the underside of the roof panel (B) with a pick tool (C).

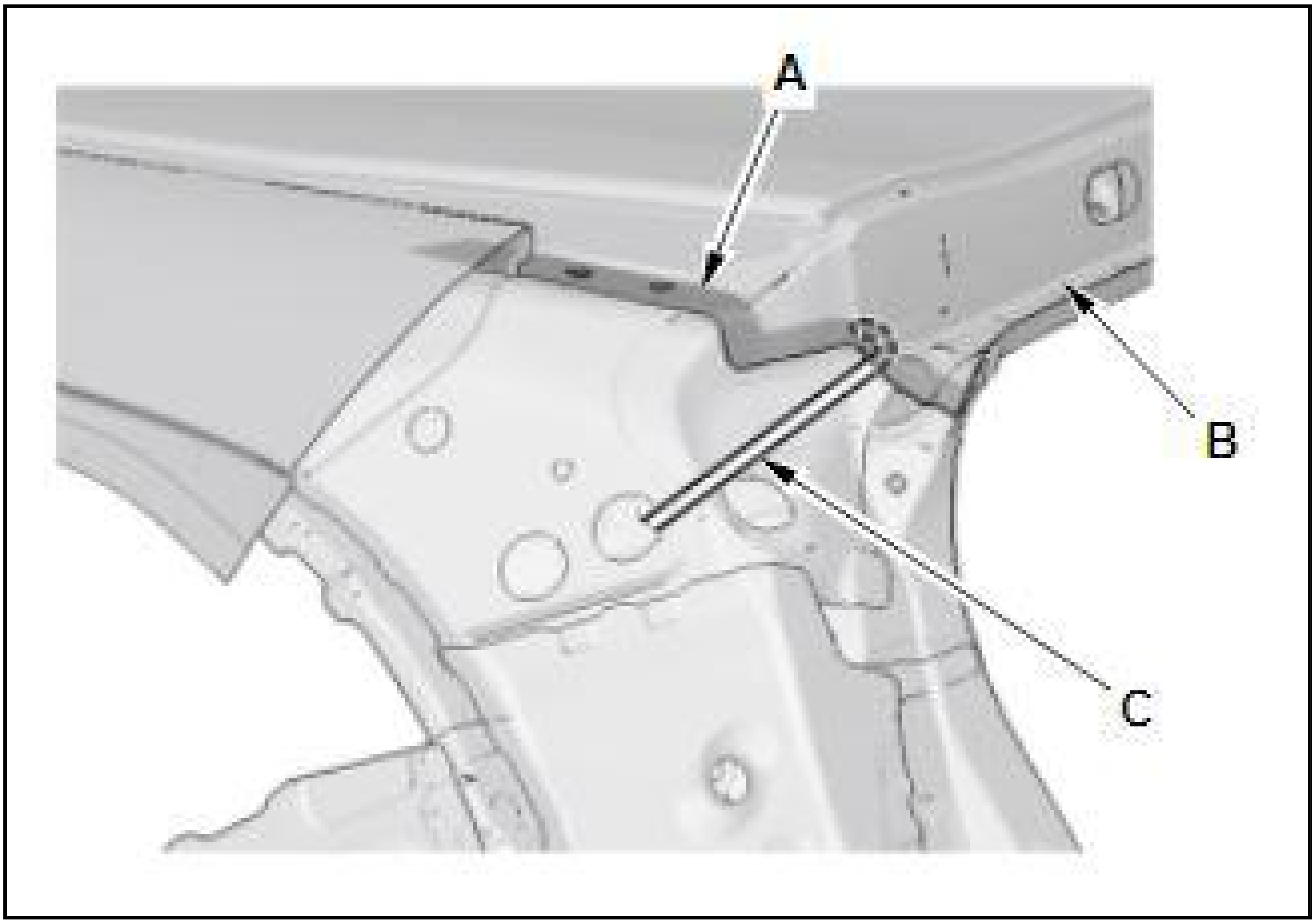

2. Weld the rear pillar gutter complete (A) to the roof panel (B), the outer panel (C), and the rear inner pillar complete (D).

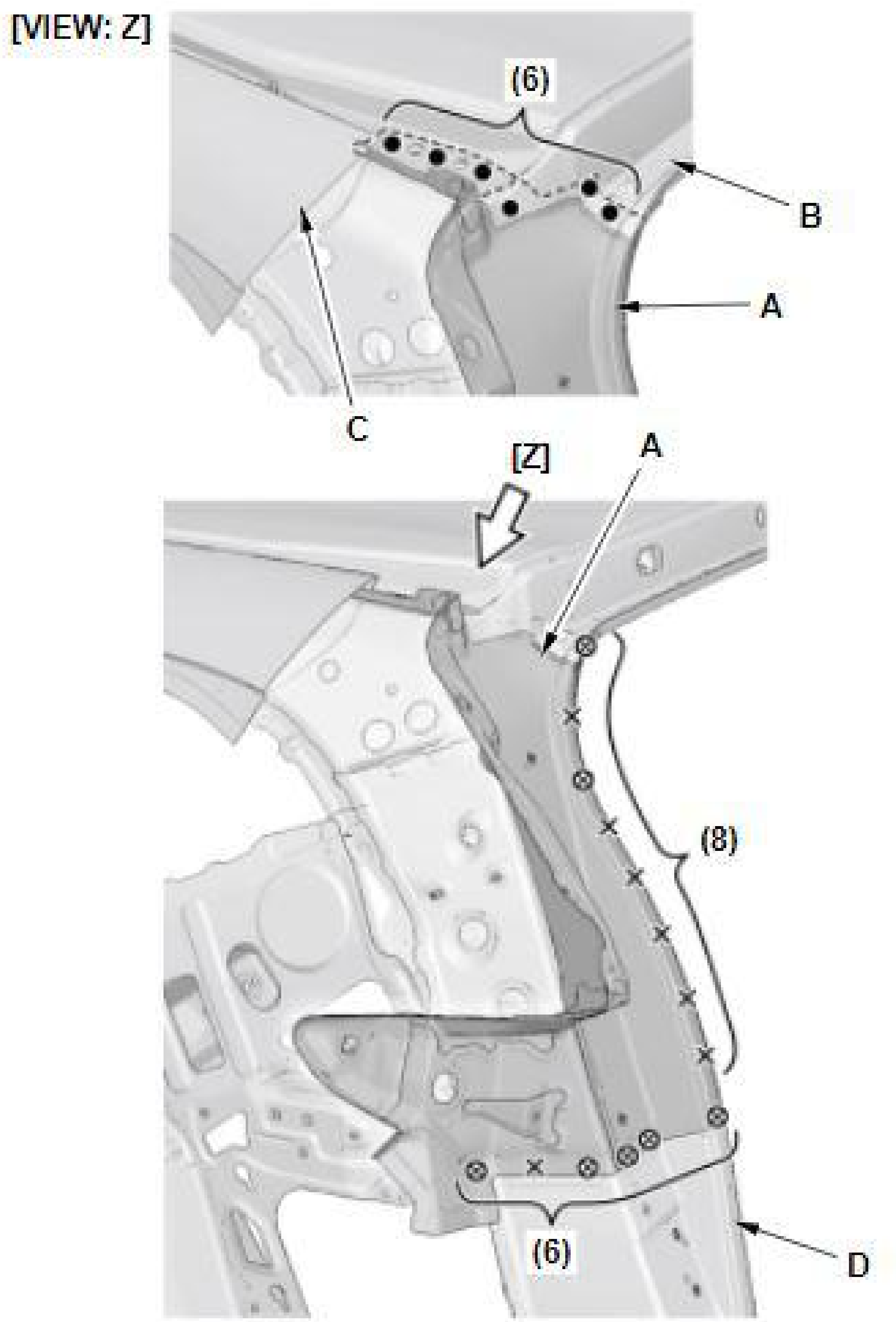

Fig. 103: Rear Pillar Gutter Complete Installation Weld Counts And Locations
Courtesy of AMERICAN HONDA MOTOR CO., INC.

Wheel Arch Separator - Install

1. Install the new wheel arch separator (A) on the rear inner panel (B). Apply the sealer (C) without gaps all the way around the separator and inside the outer panel repair part (D).

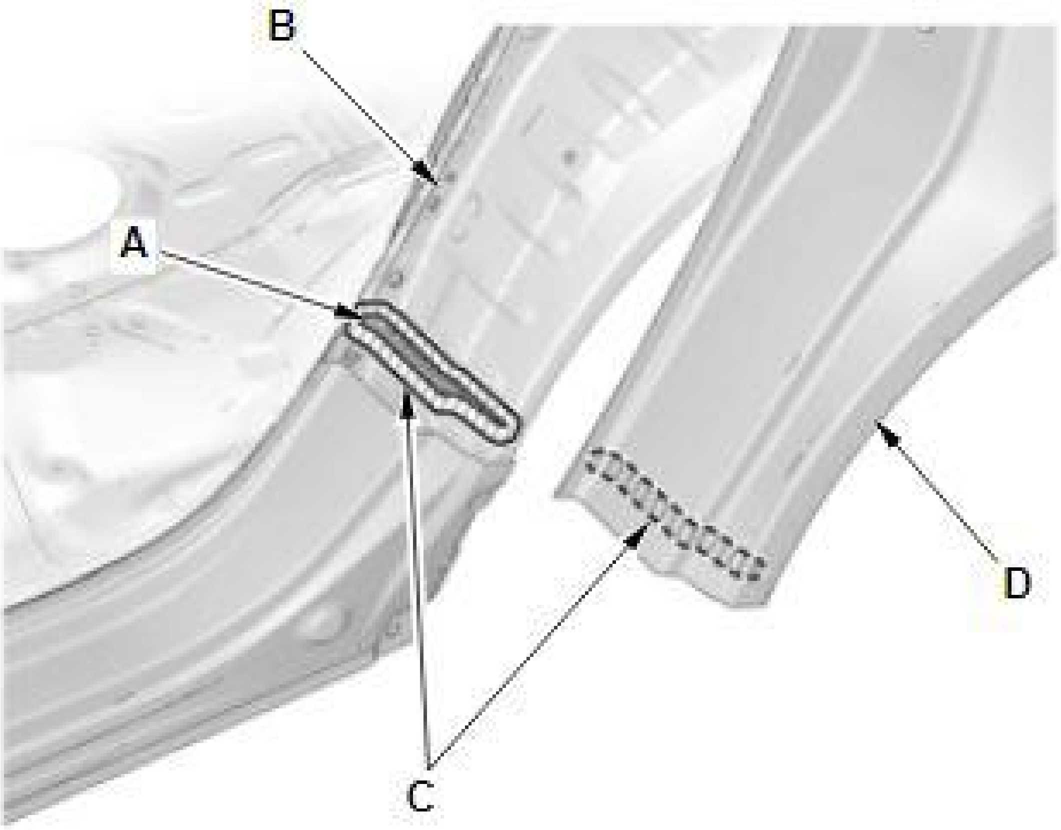

Fig. 104: Wheel Arch Separator And Body Sealer Installation Locations
Courtesy of AMERICAN HONDA MOTOR CO., INC.

BSI Radar Unit Mounting Area - Check (With BSI Radar Unit)

1. With Blind Spot Information (BSI) radar unit: Install the new rivnuts (A) to the outer panel repair part (B) with a rivnut tool.

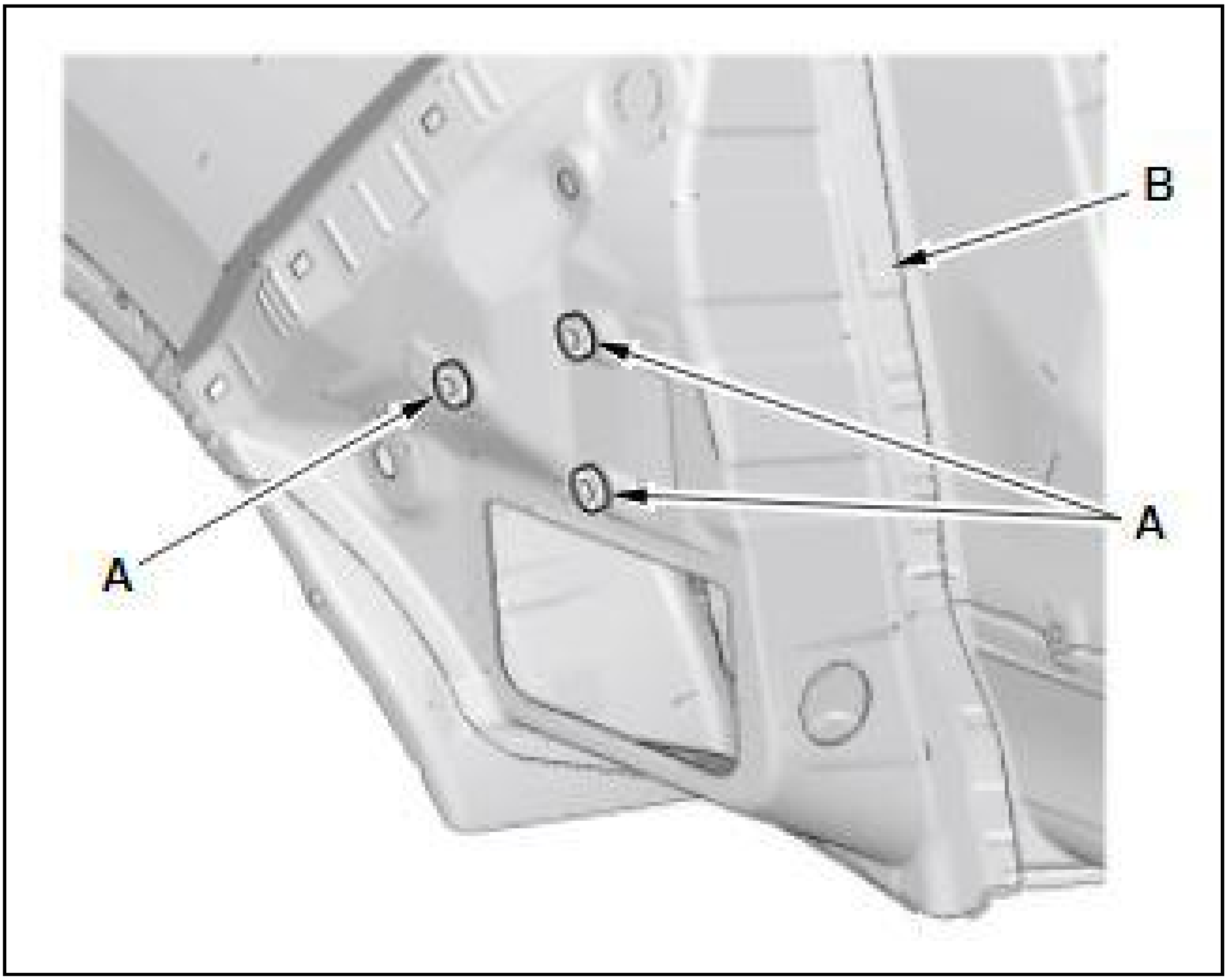

2. Check the Blind Spot Information (BSI) radar unit mounting positions. Refer to **Blind Spot Information (BSI) Radar Unit Mounting Positions Dimension - Measure** .

Outer Panel Repair Part - Weld

1. Weld the outer panel repair part (A).

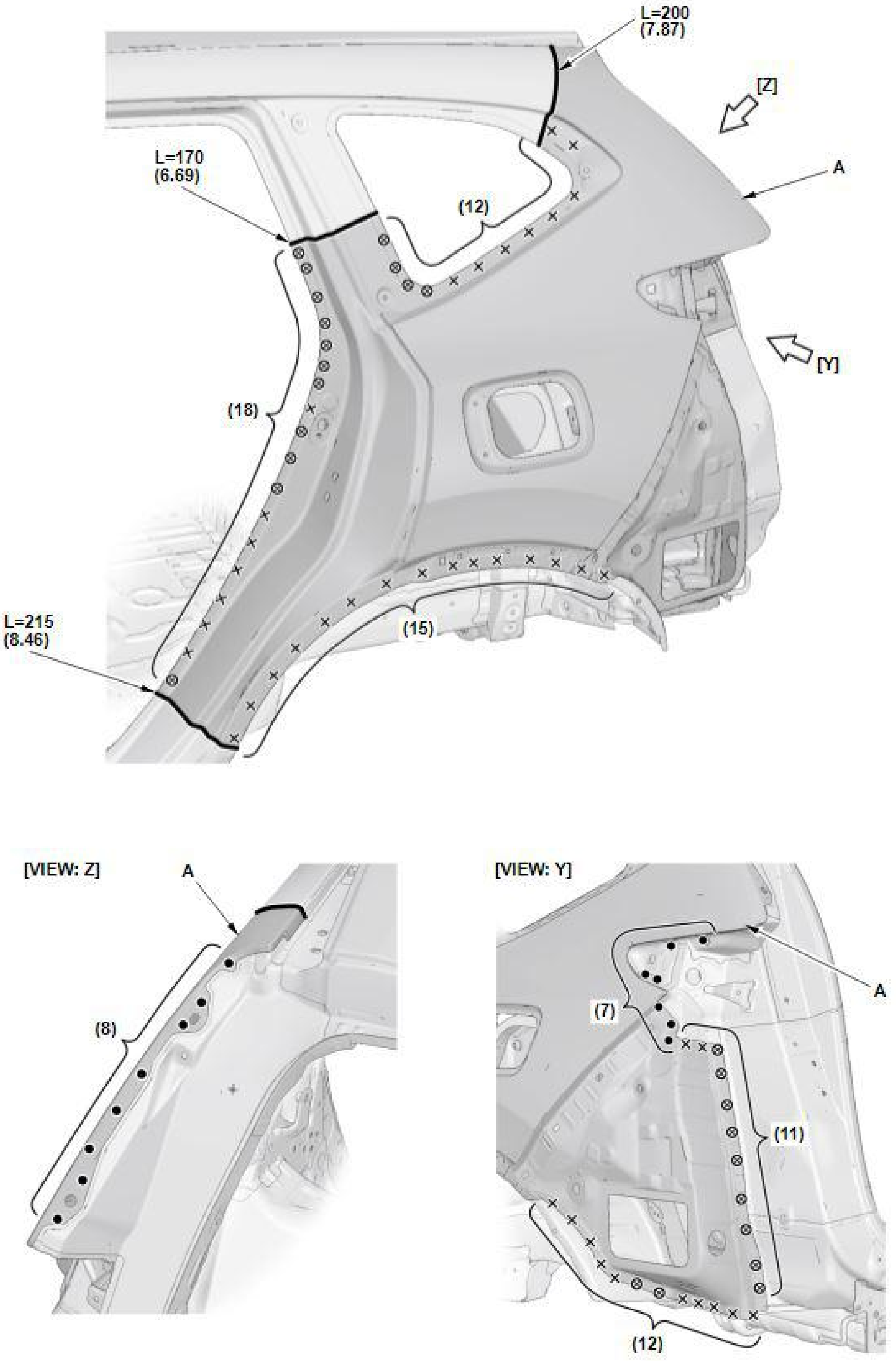
L=200
(7.87)
[Z]
A
L=170
(6.69)
(12)
(18)
[Y]
L=215
(8.46)
(15)
[VIEW: Z]
A
(8)
[VIEW: Y]
(7)
A
(11)
(12)

Fig. 105: Rear Side Outer Panel Installation Weld Counts, Measurements And Locations
Courtesy of AMERICAN HONDA MOTOR CO., INC.

ROOF PANEL REPLACEMENT

REMOVAL

NOTE:

- **High-strength steel is defined as any steel with a tensile strength of 340 MPa or higher. If a part is constructed of, or includes high-strength steel observe the important guidelines. Refer to Repair Guidelines For High-Strength Steel Parts .**
- **Welding symbols (The welding symbols with dashed lines have a meaning of the spot welding of the part which is not visible) ; refer to Symbols Definition .**
- **(): The number of welds**

Mass Production Body Welding Positions and Numbers - Remove

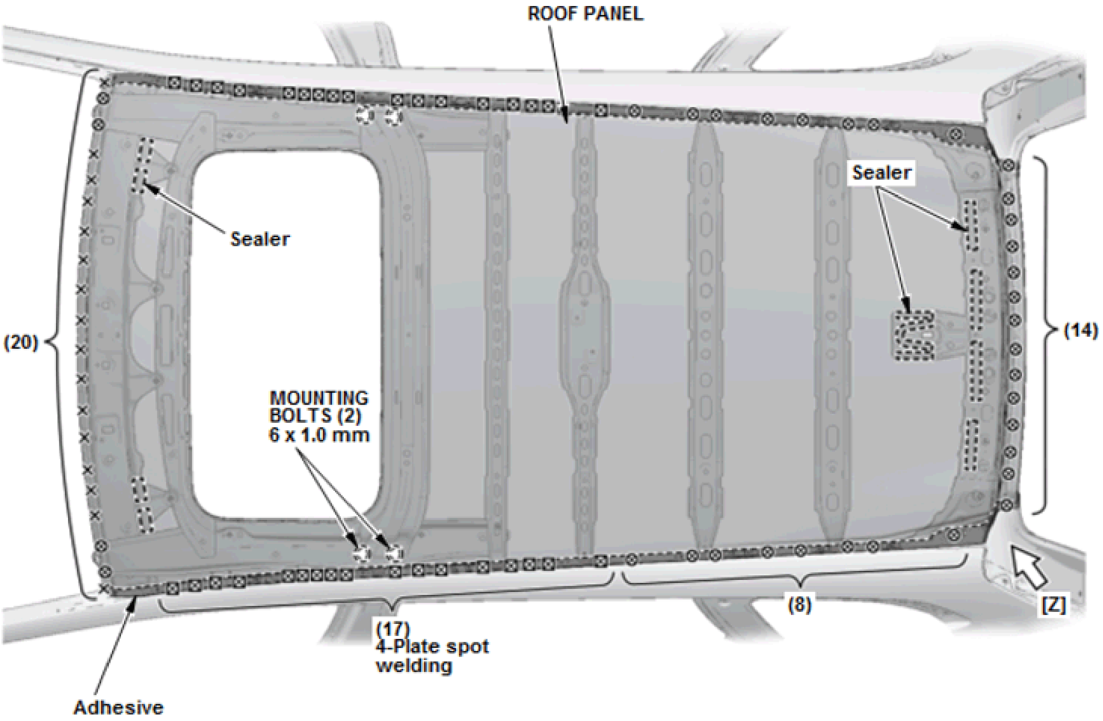
ROOF PANEL
Sealer
Sealer
(20)
(14)
MOUNTING BOLTS (2) 6 x 1.0 mm
(8)
[Z]
(17) 4-Plate spot welding
Adhesive

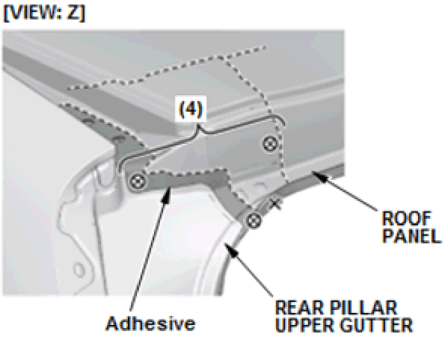
[VIEW: Z]
(4)
ROOF PANEL
REAR PILLAR UPPER GUTTER
Adhesive

Fig. 106: Roof Panel Removal Weld Counts And Locations (With Moonroof)
Courtesy of AMERICAN HONDA MOTOR CO., INC.

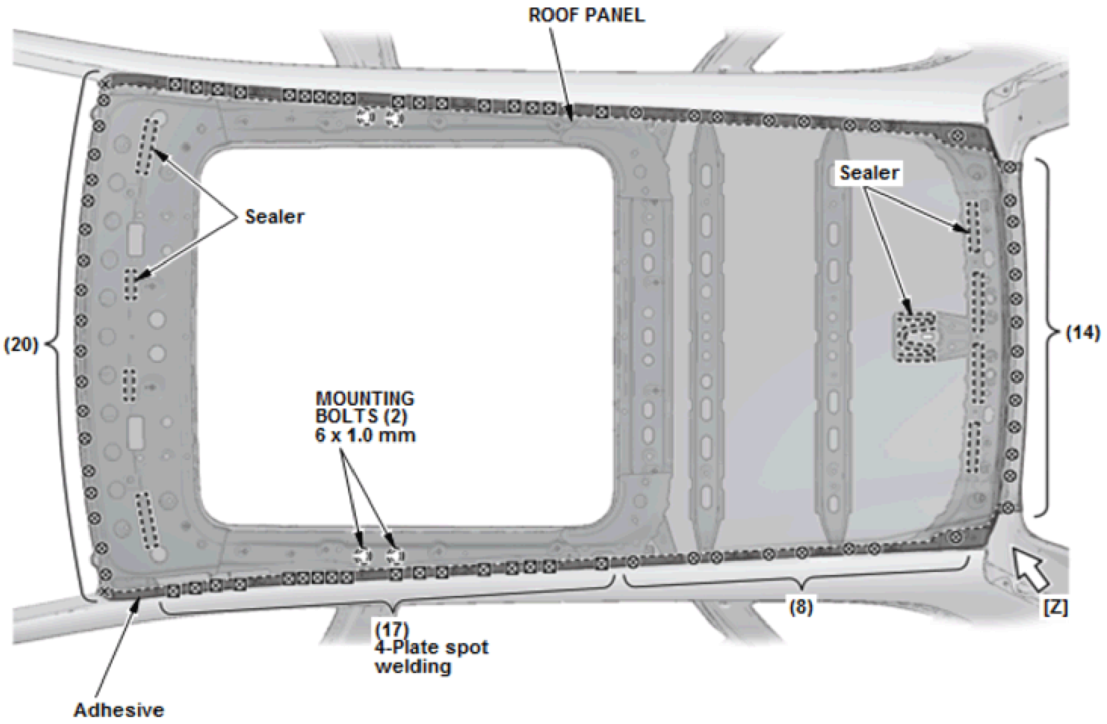
ROOF PANEL
Sealer
Sealer
(20)
(14)
MOUNTING
BOLTS (2)
6 x 1.0 mm
(17)
4-Plate spot
welding
(8)
[Z]
Adhesive

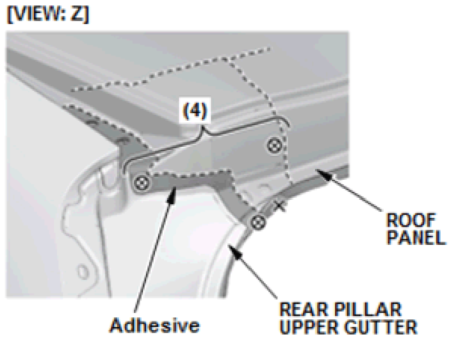
[VIEW: Z]
(4)
ROOF
PANEL
Adhesive
REAR PILLAR
UPPER GUTTER

Fig. 107: Roof Panel Removal Weld Counts And Locations (With Panoramic Glass Roof)
Courtesy of AMERICAN HONDA MOTOR CO., INC.

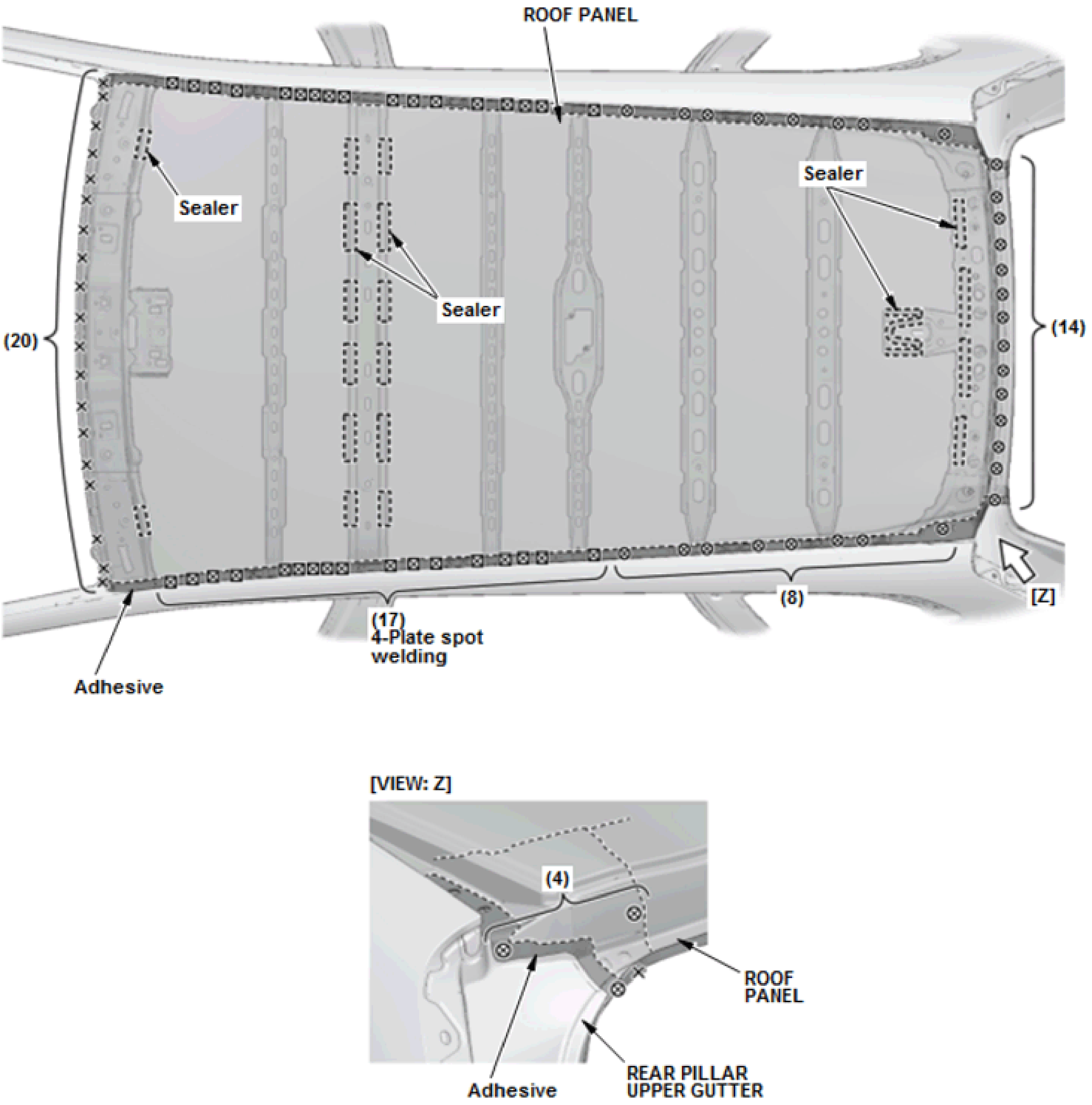
ROOF PANEL
Sealer
Sealer
Sealer
(20)
(14)
(17)
4-Plate spot
welding
(8)
[Z]
Adhesive
[VIEW: Z]
(4)
ROOF
PANEL
Adhesive
REAR PILLAR
UPPER GUTTER

Fig. 108: Roof Panel Removal Weld Counts And Locations (Normal Roof)
Courtesy of AMERICAN HONDA MOTOR CO., INC.

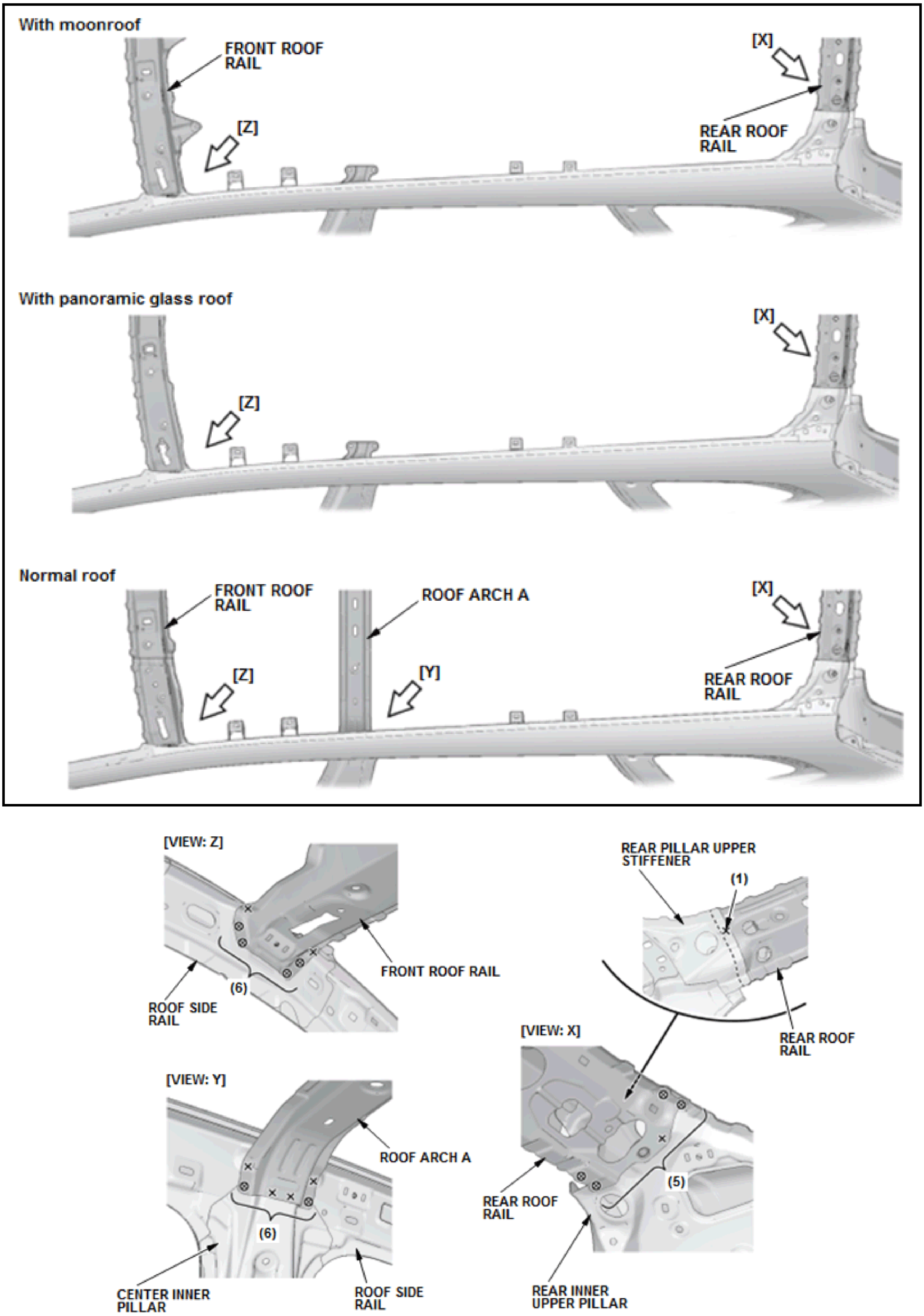
With moonroof
FRONT ROOF RAIL
[X]
[Z]
REAR ROOF RAIL
With panoramic glass roof
[X]
[Z]
Normal roof
FRONT ROOF RAIL
ROOF ARCH A
[X]
[Z]
[Y]
REAR ROOF RAIL
[VIEW: Z]
FRONT ROOF RAIL
(6)
ROOF SIDE RAIL
REAR PILLAR UPPER STIFFENER
(1)
REAR ROOF RAIL
[VIEW: X]
[VIEW: Y]
ROOF ARCH A
(6)
CENTER INNER PILLAR
ROOF SIDE RAIL
(5)
REAR ROOF RAIL
REAR INNER UPPER PILLAR

Fig. 109: Roof Rail And Roof Arch Removal Weld Counts And Locations

Courtesy of AMERICAN HONDA MOTOR CO., INC.

Roof Component Location

NOTE:

- **This section explains the procedures after Removal of all related parts. For the related parts' Removal procedure, refer to the appropriate service information.**
- **The component replacement procedure described here is only for new genuine supplied parts, as needed, according to the area and the degree of damage on the body.**
- **With moonroof or panoramic glass roof: Remove the mounting bolts, leave the front roof rail, the roof stiffener gussets, and the rear roof rail to the body, and replace the roof panel.**
- **Normal roof: Leave the front roof rail, roof arch A, and the rear roof rail to the body, and replace the roof panel.**
- **Check the front roof rail, roof arch A (normal roof), and the rear roof rail positions for damage. If necessary, replace them.**

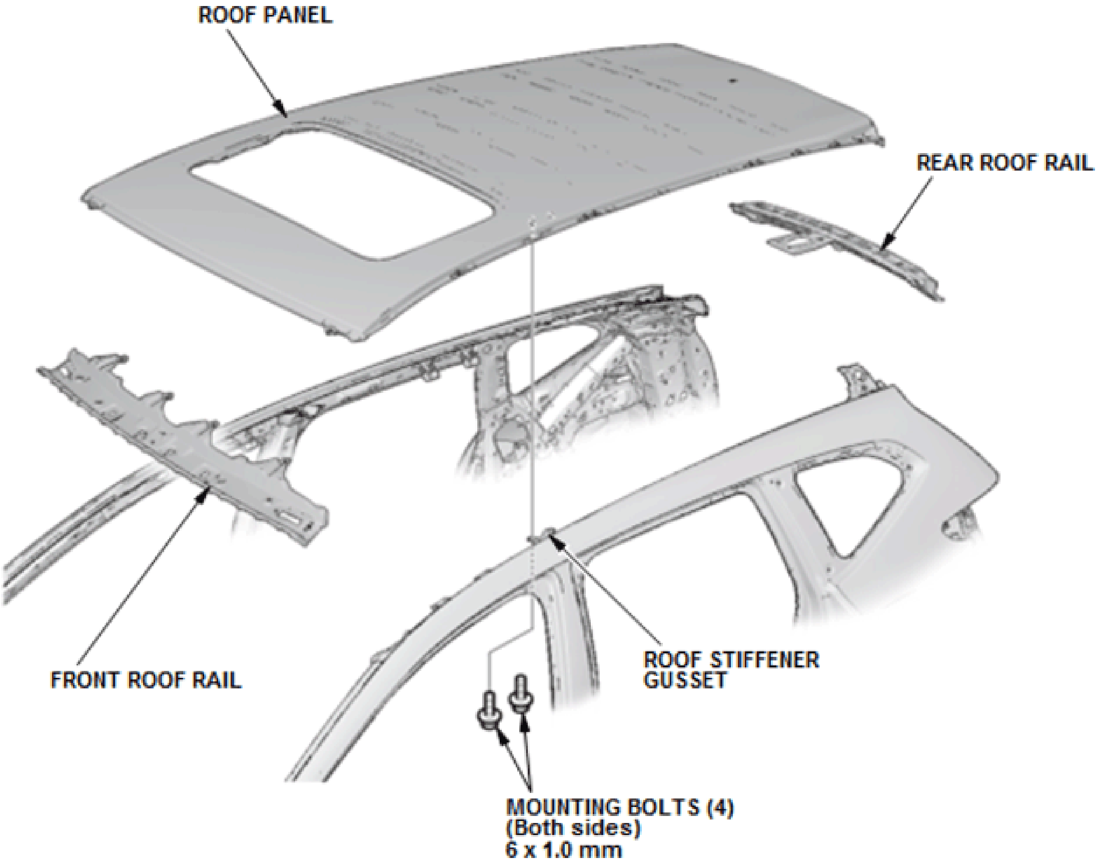
ROOF PANEL
REAR ROOF RAIL
FRONT ROOF RAIL
ROOF STIFFENER GUSSET
MOUNTING BOLTS (4)
(Both sides)
6 x 1.0 mm

Fig. 110: Roof Component Location With Moonroof Component Location
Courtesy of AMERICAN HONDA MOTOR CO., INC.

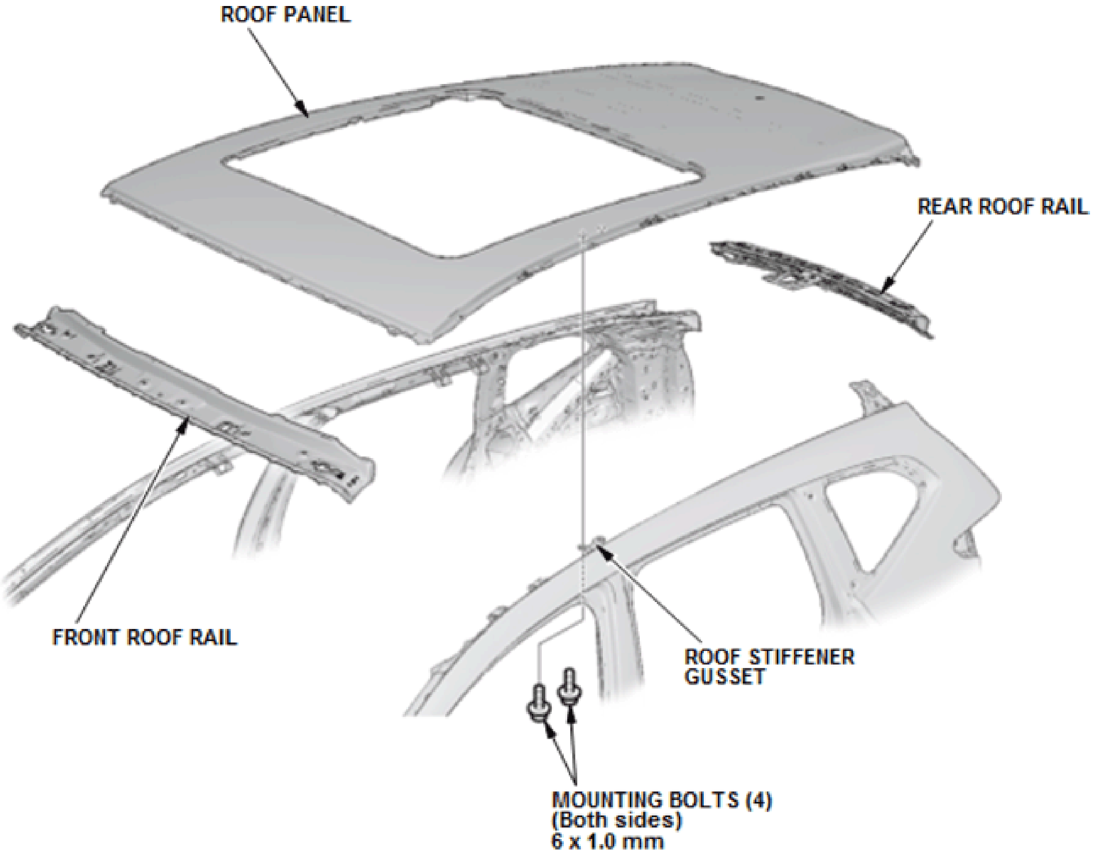
ROOF PANEL
REAR ROOF RAIL
FRONT ROOF RAIL
ROOF STIFFENER GUSSET
MOUNTING BOLTS (4)
(Both sides)
6 x 1.0 mm

Fig. 111: Roof With Panoramic Glass Roof Component Location
Courtesy of AMERICAN HONDA MOTOR CO., INC.

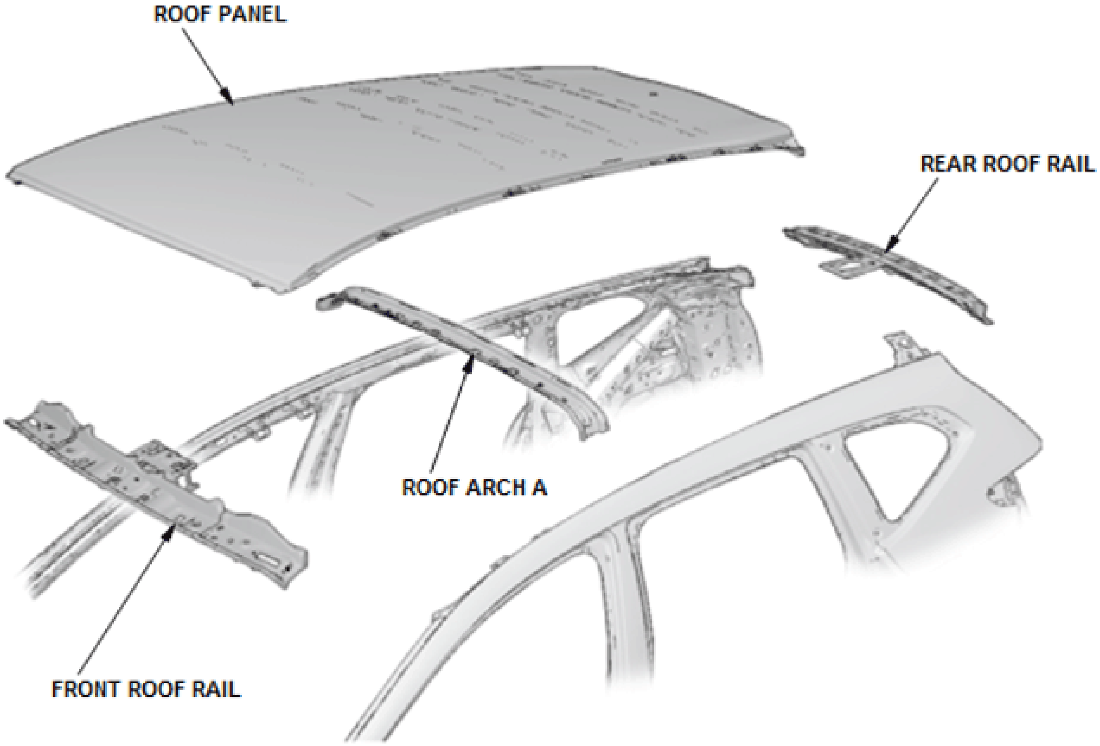
ROOF PANEL
REAR ROOF RAIL
ROOF ARCH A
FRONT ROOF RAIL

Fig. 112: Roof Panel Replacement Component Location (Without sunroof)
Courtesy of AMERICAN HONDA MOTOR CO., INC.

INSTALLATION

NOTE:

- **Position the replacement parts. Before doing the main welding, check the body dimensions:**
  - **Refer to Inner Panel Positions Dimension .**

  - **Refer to Rear Pillar Gutter And Rear Panel Positions Dimension .**
  - **Refer to WINDSHIELD AND DOOR OPENINGS .**
  - **Refer to TAILGATE OPENING .**
- **Temporarily install the related parts, then check for differences in level and clearance. Check the External Parts Fitting Positions; refer to External Parts Fitting Positions . Make sure the body lines flow smoothly.**
- **Confirm the sheet thickness, tensile strength, and existence of the zinc treatment of both sides, and set the welder to conform to the welding conditions by referring to Roof And Side Panel Construction .**
- **Welding symbols (The welding symbols with dashed lines have a meaning of the spot welding of the part which is not visible) ; refer to Symbols Definition .**
- **() and ()*: The number of welds**

Roof Rails And Roof Arch A - Weld

1. Weld the front roof rail (A) to the roof side rail (B).

   ()*: Welding position with high-strength steel parts. Confirm the plug welding conditions; refer to MAG Welding Conditions For High-Strength Steel (Except 1500 MPa) Parts .

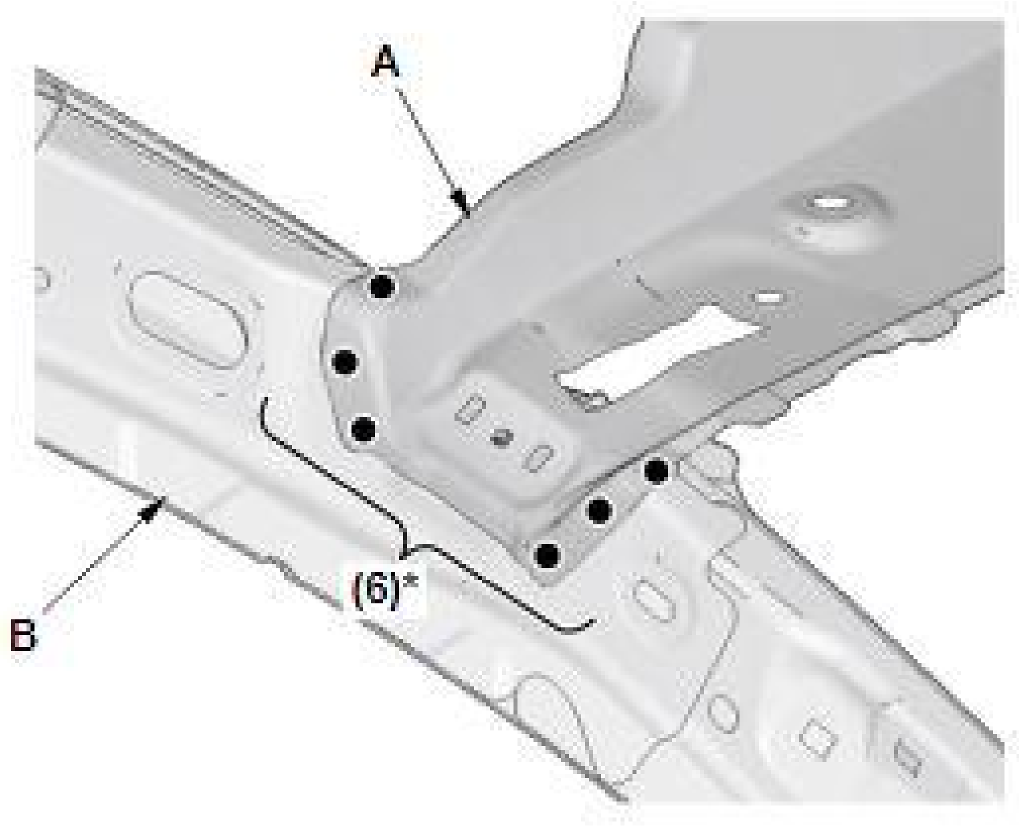

Fig. 113: Front Roof Rail Installation Weld Counts And Locations
Courtesy of AMERICAN HONDA MOTOR CO., INC.

2. Normal roof: Weld roof arch A to the roof side rail (B) and the center inner pillar (C).

   ()*: Welding position with high-strength steel parts. Confirm the plug welding conditions; refer to MAG Welding Conditions For High-Strength Steel (Except 1500 MPa) Parts .

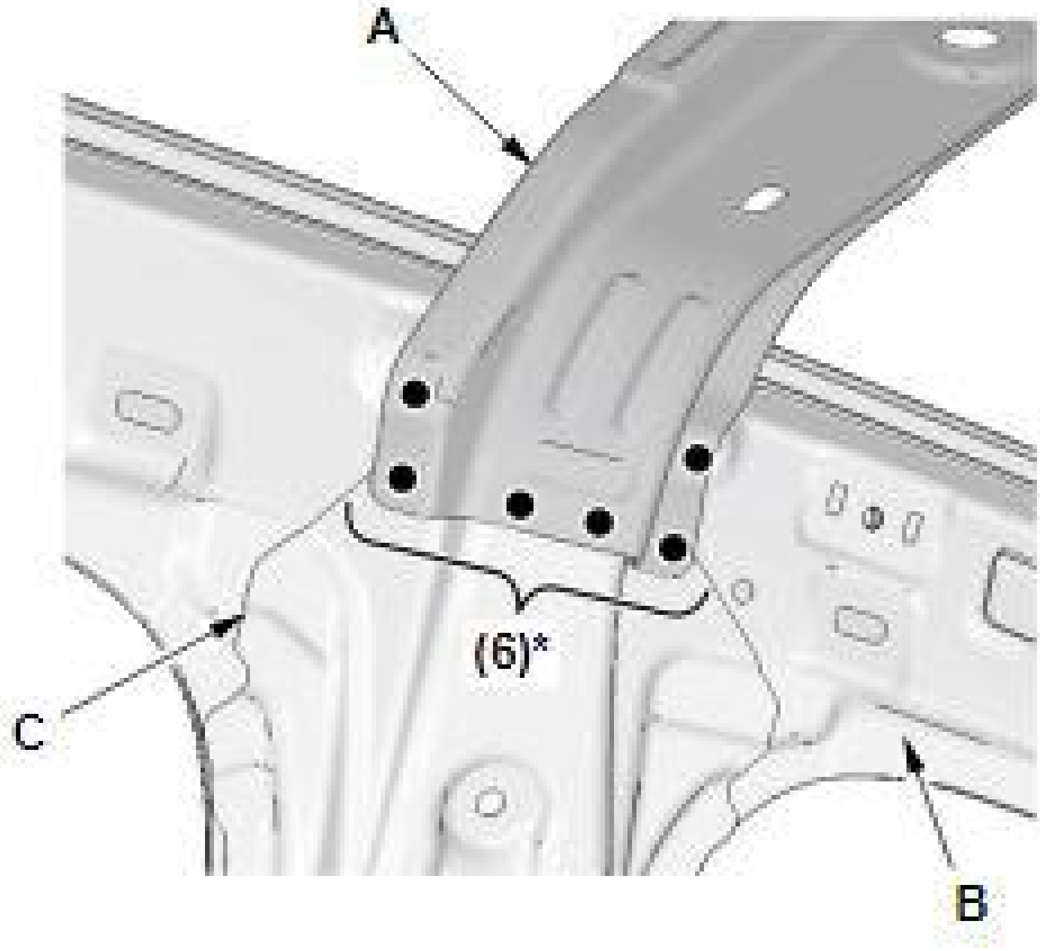

[Fig. 114: Roof Arch A Installation Weld Counts And Locations (Normal Roof)]

Courtesy of AMERICAN HONDA MOTOR CO., INC.

3. Weld the rear roof rail (A) to the rear inner upper pillar (B) and the rear pillar upper stiffener (C).

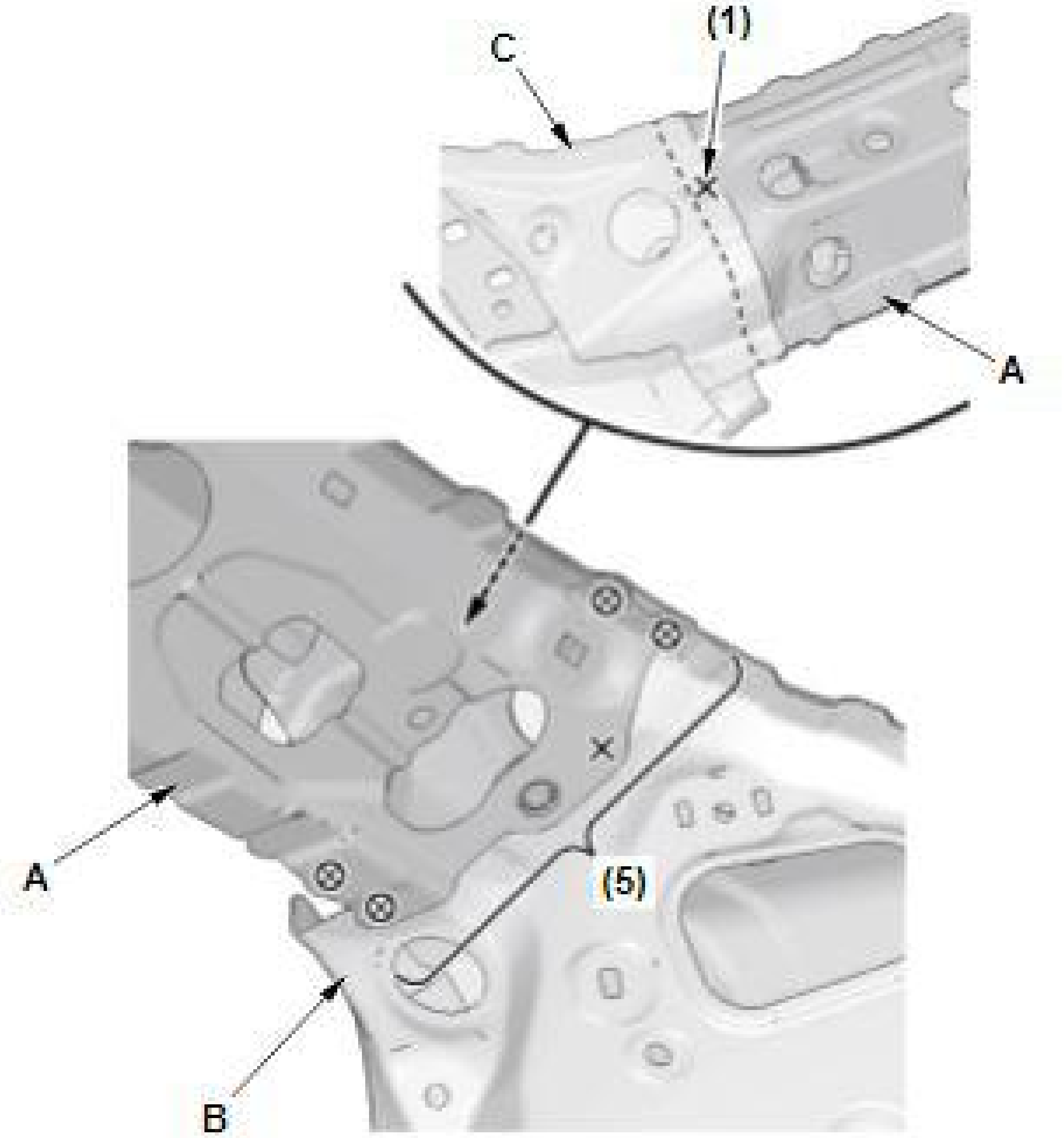

Fig. 115: Rear Roof Rail Installation Weld Counts And Locations
Courtesy of AMERICAN HONDA MOTOR CO., INC.

Roof Panel - Weld

1. Apply adhesive (A) on the flanges of the roof panel (B) and the roof gutter areas (C) of the body as shown.

   Adhesive: 3M AUTO MIX Panel Bonding 8115, or equivalent, commercially available

   NOTE: **See the adhesive manufacturer's instructions for details.**

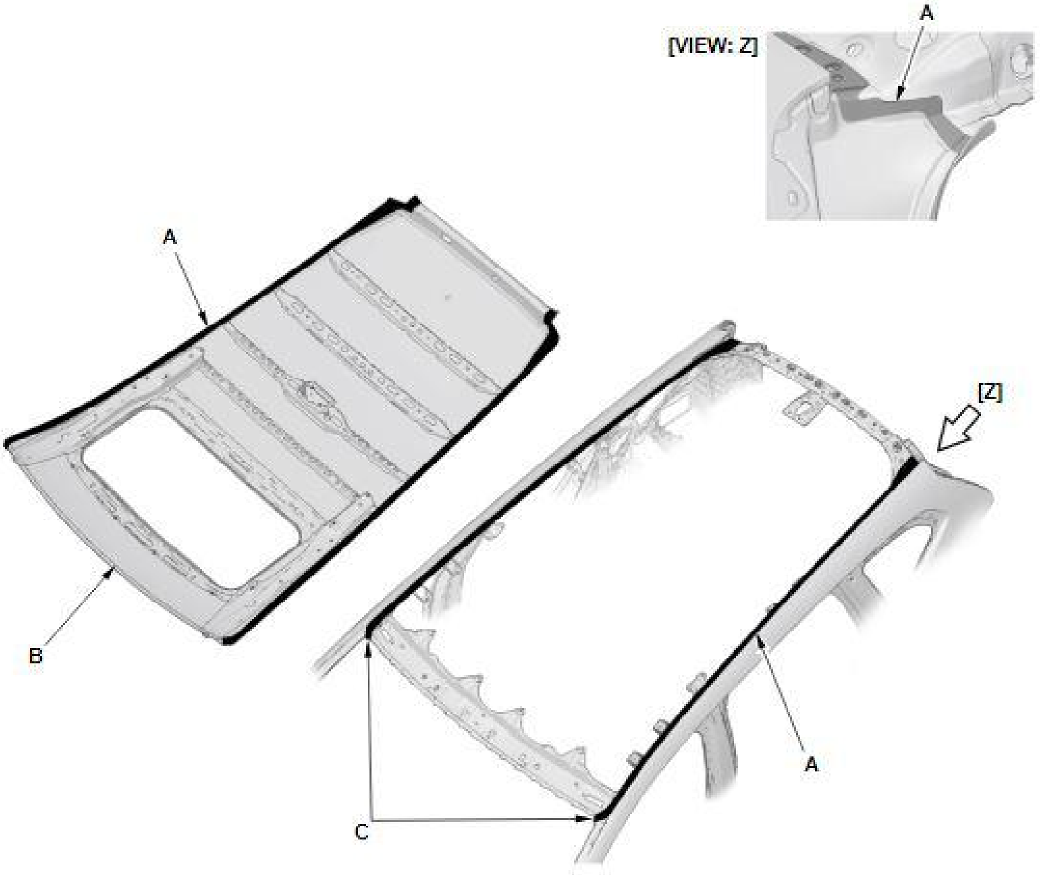
[VIEW: Z]
A
A
B
[Z]
A
C

[Fig. 116: Roof Panel Flange And Roof Gutter Adhesive Installation Locations](#)
Courtesy of AMERICAN HONDA MOTOR CO., INC.

2. Apply a soft type sealer (B) to the mating surfaces of the front roof rail (C) and roof arch A.

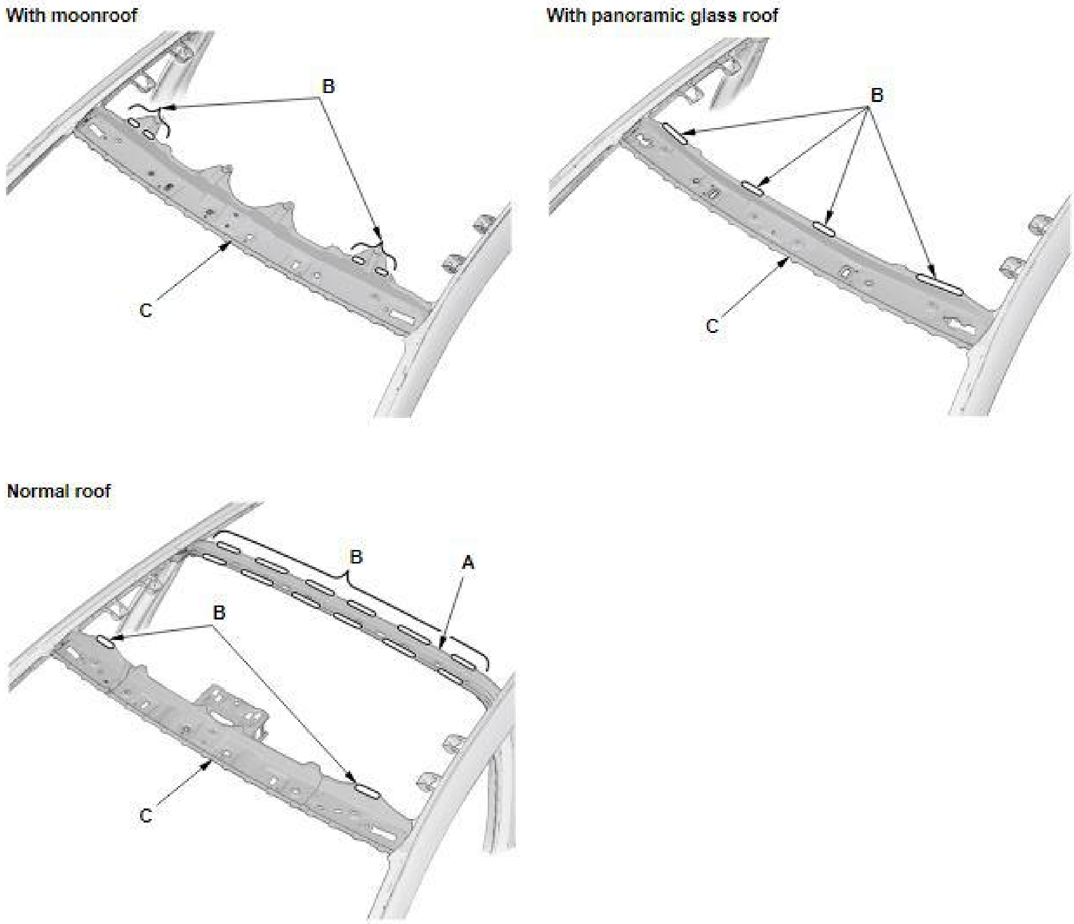
With moonroof
B
C
With panoramic glass roof
B
C
Normal roof
B
A
B
C

Fig. 117: Roof Rail And Roof Arch Body Sealer Installation Locations
Courtesy of AMERICAN HONDA MOTOR CO., INC.

3. Apply a soft type sealer (A) to the mating surfaces of the rear roof rail (B).

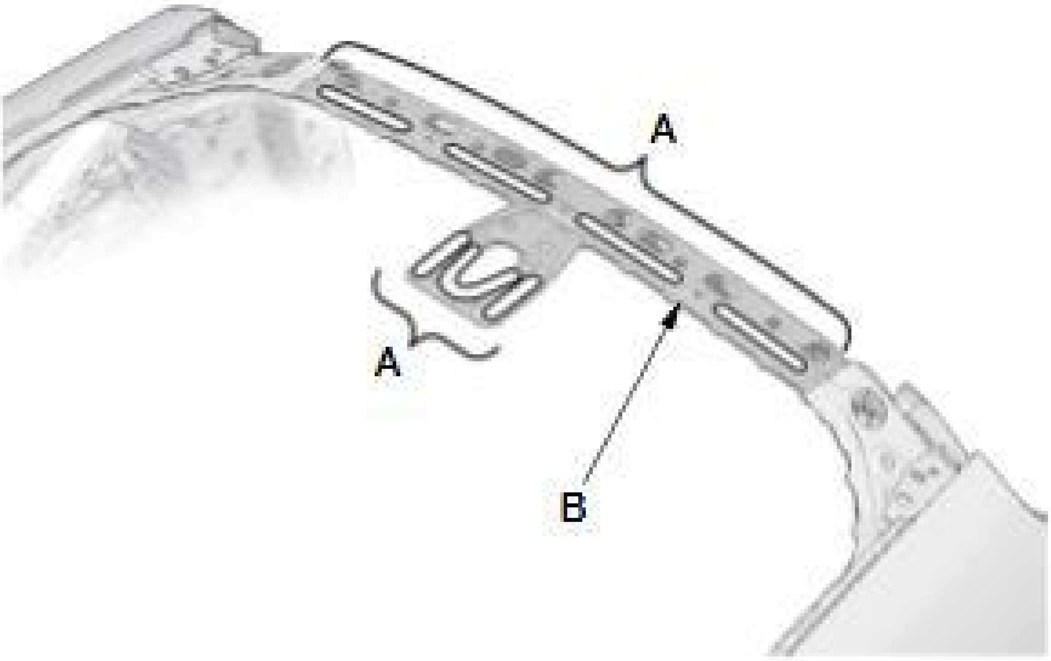

Fig. 118: Rear Roof Rail Body Sealer Installation Locations
Courtesy of AMERICAN HONDA MOTOR CO., INC.

4. With moonroof: Clamp the roof panel (A), attach the front roof rail (B) with the moonroof mounting bolts (C).

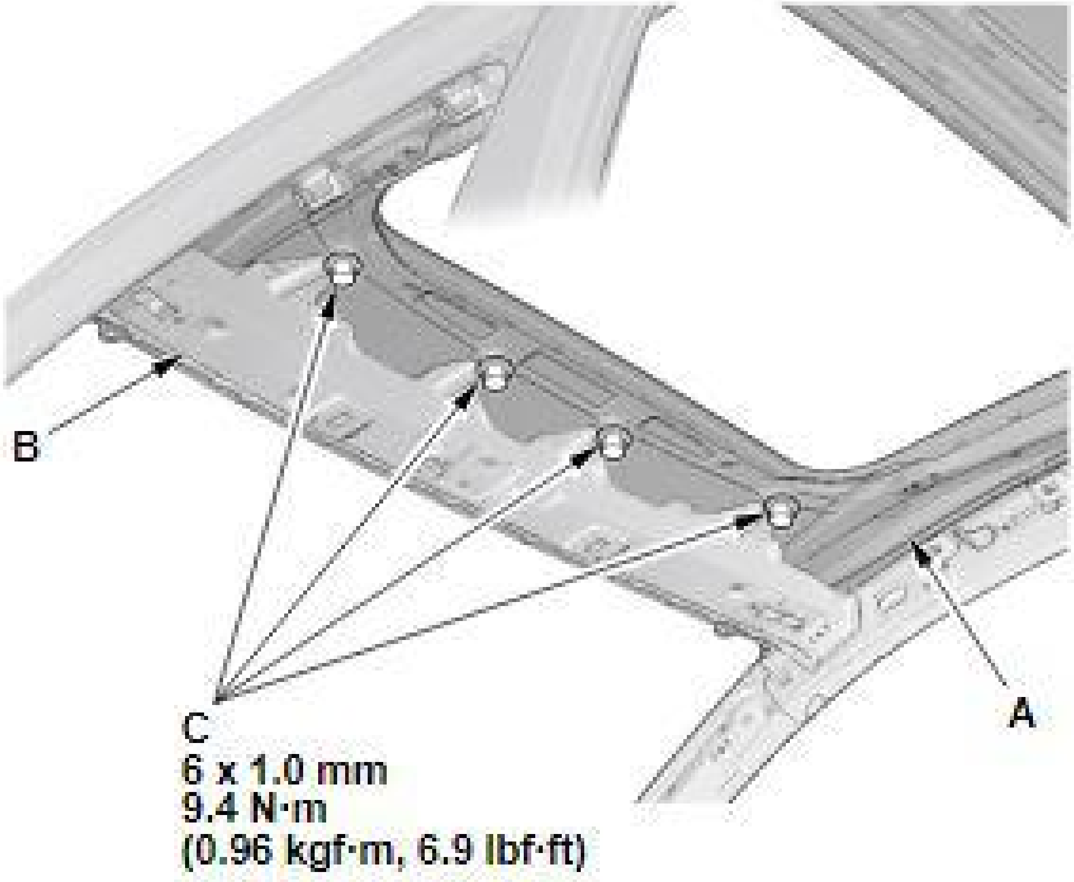

Fig. 119: Moonroof Mounting Bolt Installation With Torque Specifications
Courtesy of AMERICAN HONDA MOTOR CO., INC.

5. With moonroof or panoramic glass roof: Attach the roof stiffener gussets (A) to the roof panel stiffeners (B) with the mounting bolts.

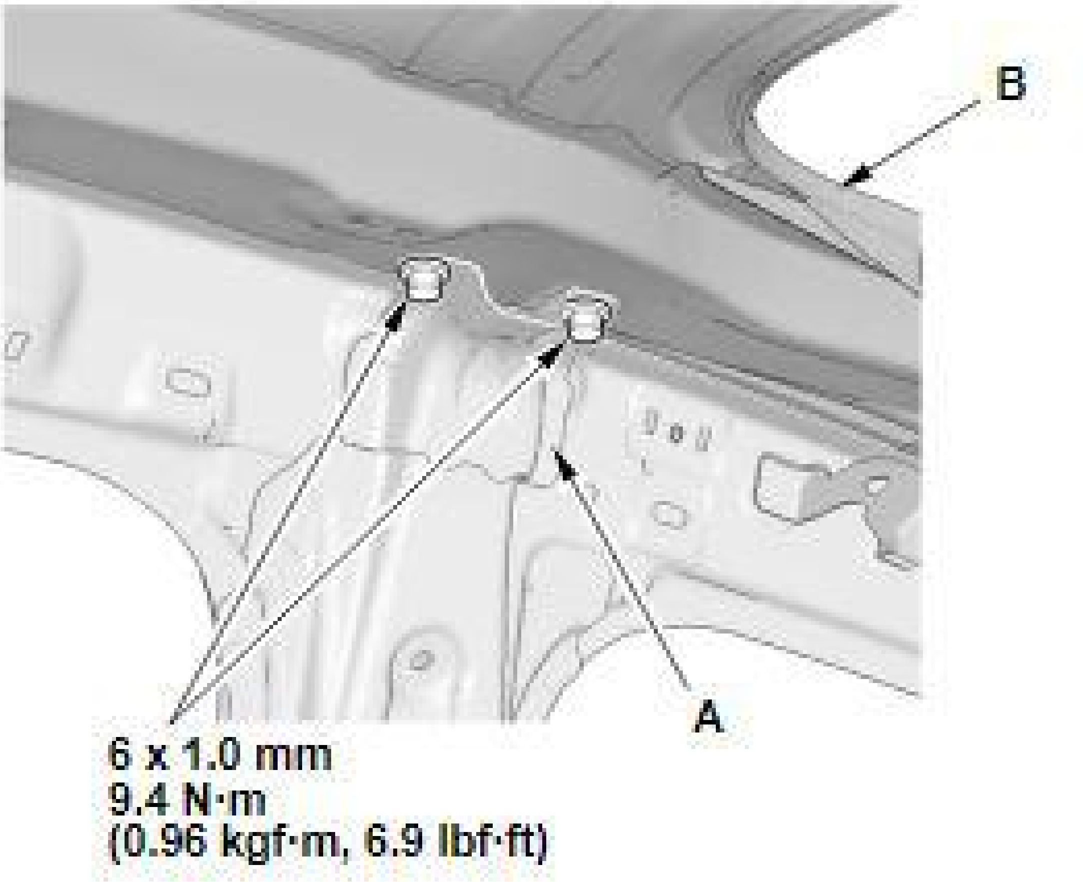

Fig. 120: Roof Stiffener Gusset Installation With Torque Specifications (With Moonroof Or Panoramic Glass Roof)
Courtesy of AMERICAN HONDA MOTOR CO., INC.

6. Weld the front and rear flanges of the roof panel (A).

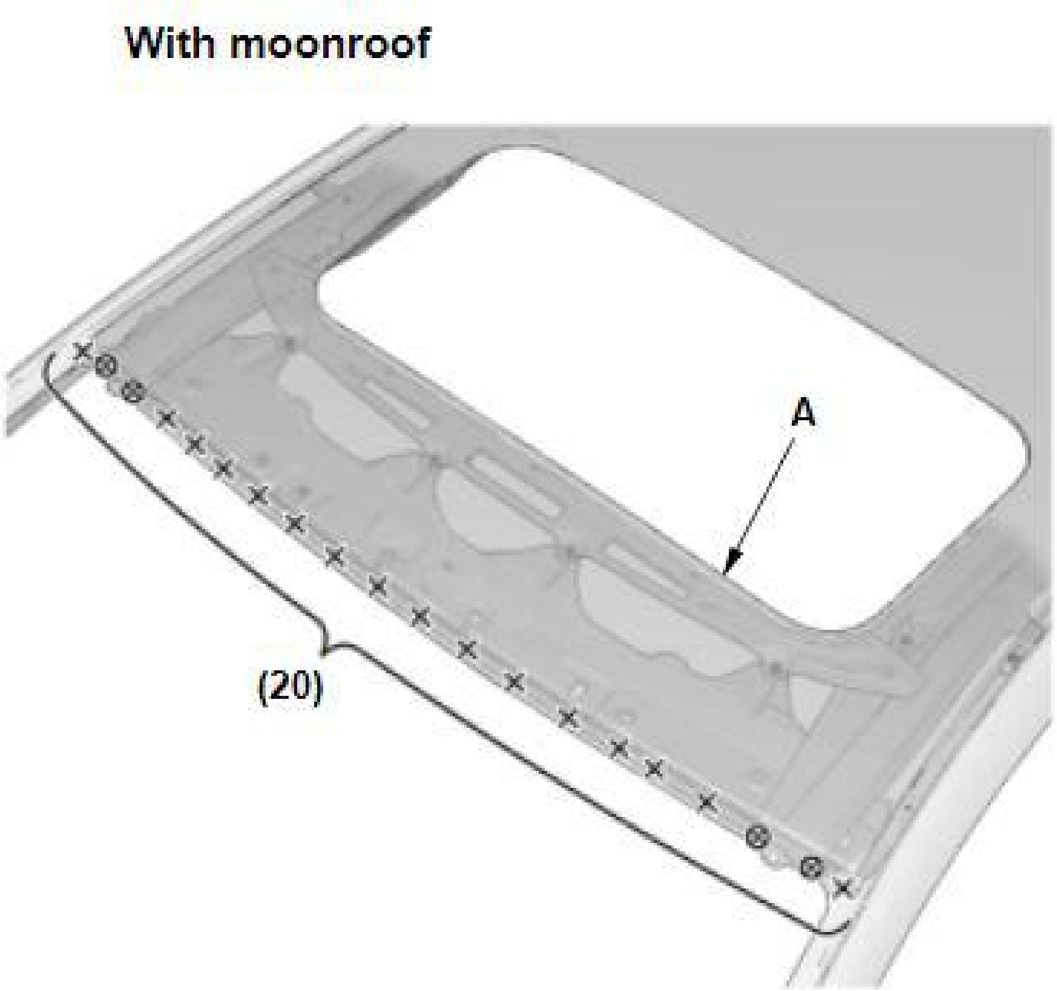
With moonroof
A
(20)

Fig. 121: Front And Rear Roof Panel Flange Installation Weld Counts And Locations (With Moonroof)
Courtesy of AMERICAN HONDA MOTOR CO., INC.

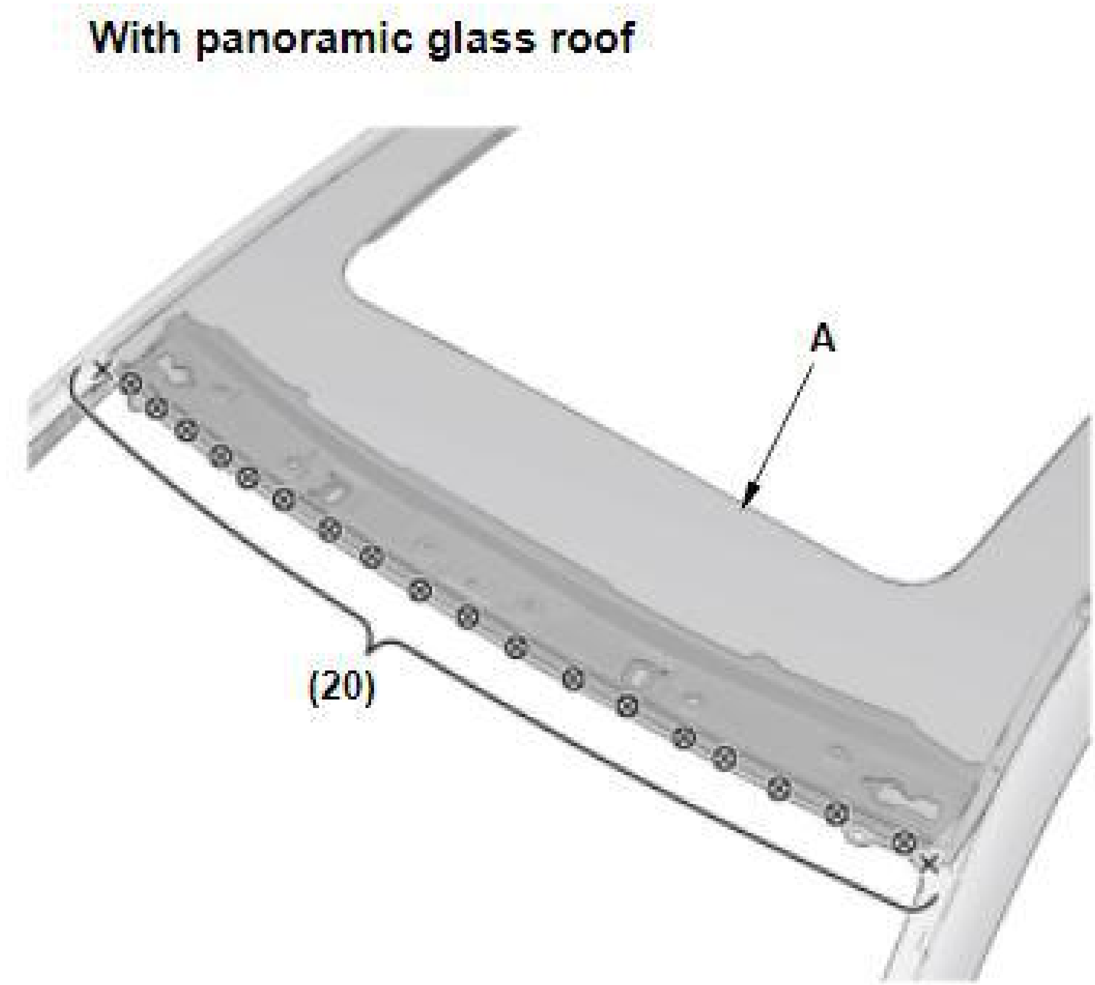
With panoramic glass roof
A
(20)

Fig. 122: Front And Rear Roof Panel Flange Installation Weld Counts And Locations (With Panoramic Glass Roof)

Courtesy of AMERICAN HONDA MOTOR CO., INC.

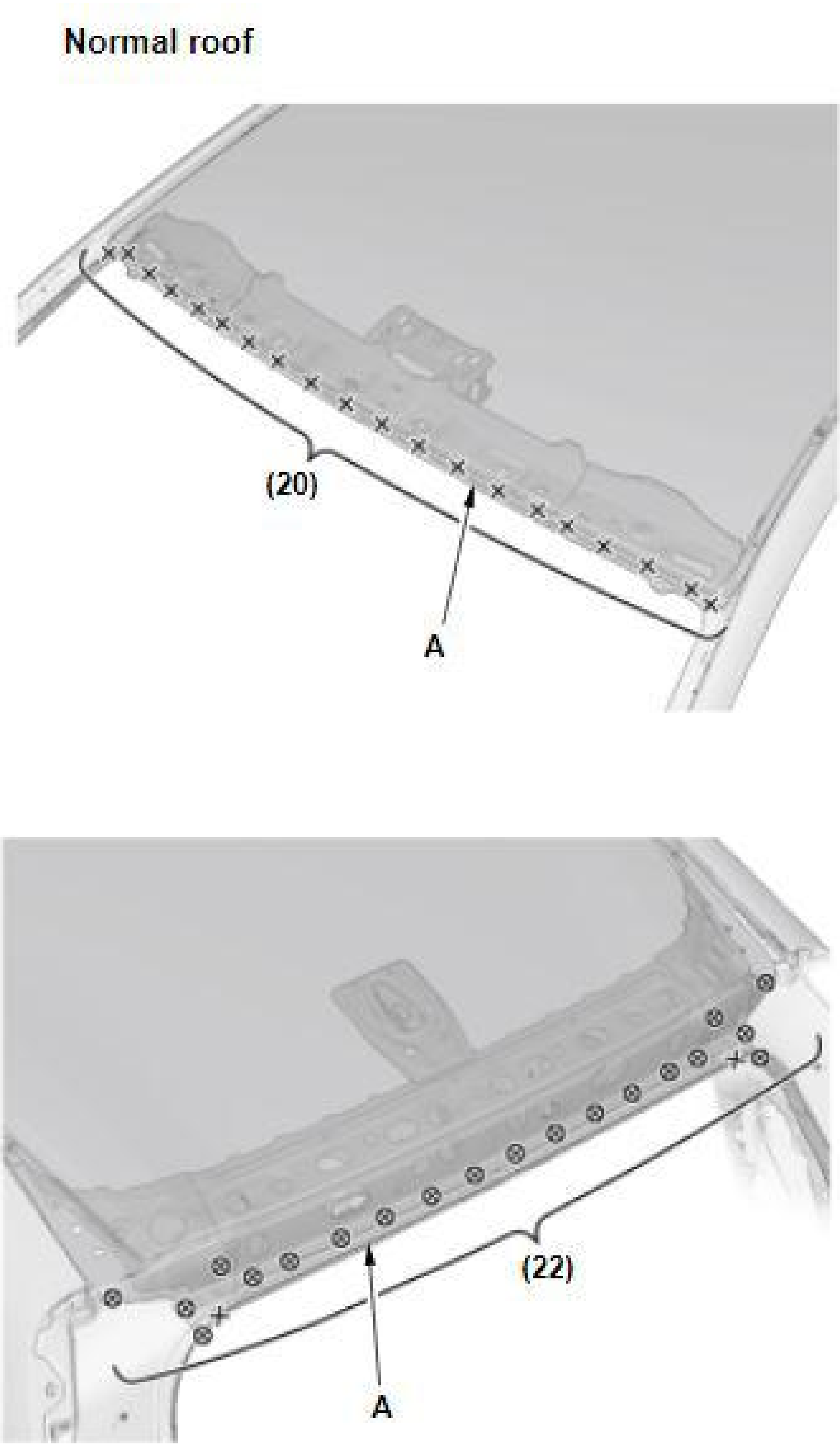

Fig. 123: Front And Rear Roof Panel Flange Installation Weld Counts And Locations (With Normal Roof)
Courtesy of AMERICAN HONDA MOTOR CO., INC.

7. Weld the side flanges of the roof panel (A).

(■)*: Welding positions with the front pillar upper stiffener (B), include ultra high-strength steel (1500 MPa) parts. Perform the spot welding on the conditions of No. 30 in the table shown below. Refer to Spot Welding

Conditions For Ultra High-Strength Steel Parts (1180 And 1500 MPa) .

No. 30	8500 A	1200 ms	3432 N (350 kgf)

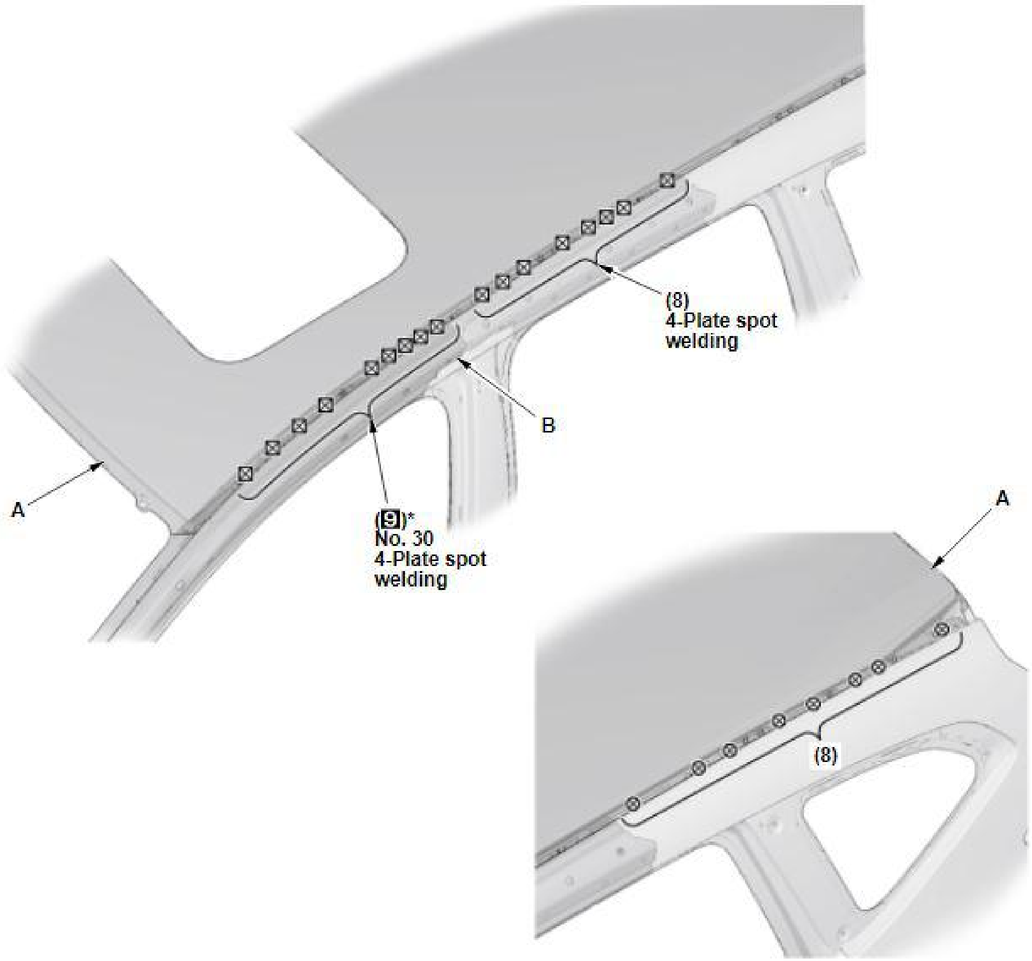

Fig. 124: Roof Panel Side Flange Installation Weld Counts And Locations
Courtesy of AMERICAN HONDA MOTOR CO., INC.

SIDE SILL OUTER PANEL REPLACEMENT

REMOVAL

NOTE:

- **High-strength steel is defined as any steel with a tensile strength of 340 MPa or higher. If a part is constructed of, or includes high-strength steel observe the important guidelines. Refer to Repair Guidelines For High-Strength Steel Parts .**
- **Welding symbols (The welding symbols with dashed lines have a meaning of the spot welding of the part which is not visible) ; refer to Symbols Definition**
- **(): The number of welds**
- **The figure shows the size of side sill outer panel repair part.**

Mass Production Body Welding Positions and Numbers - Remove

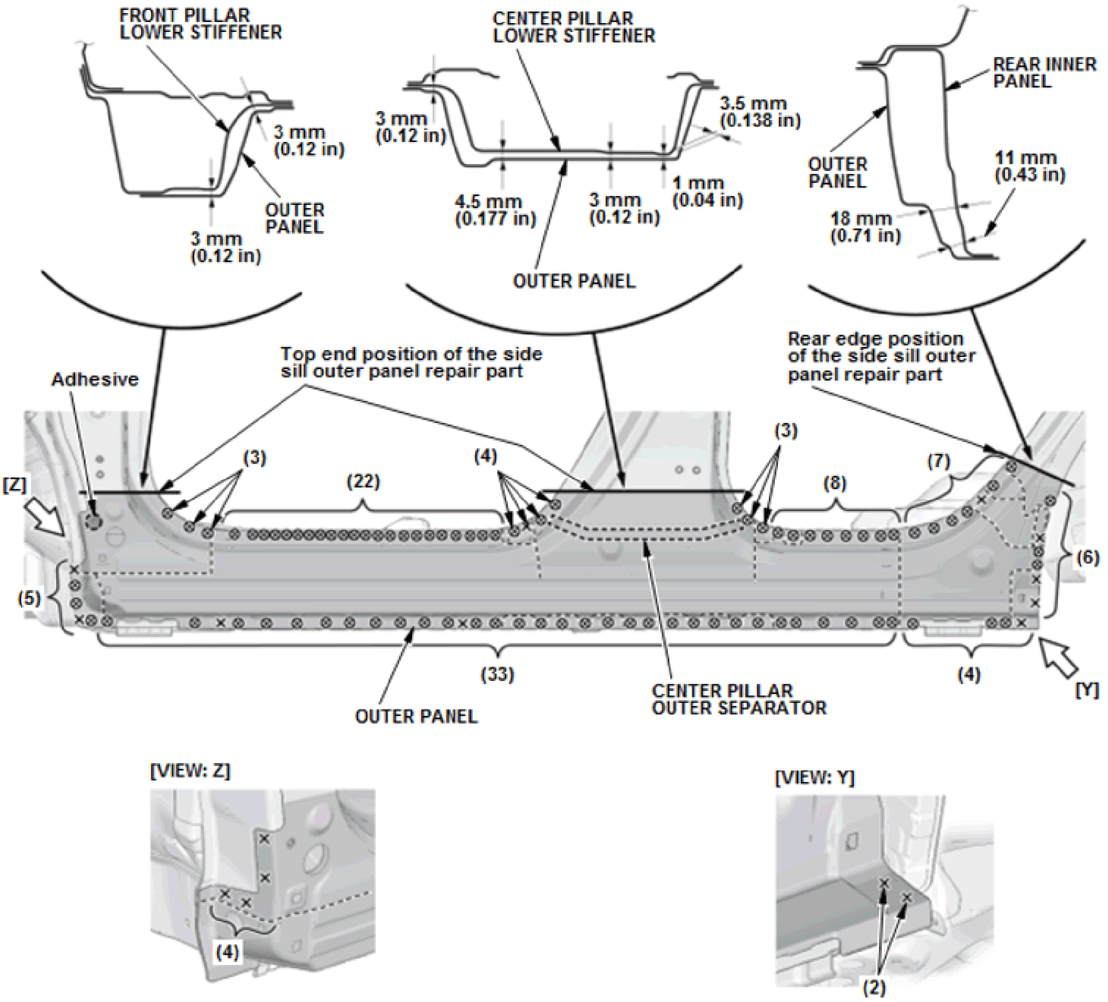
FRONT PILLAR LOWER STIFFENER
3 mm (0.12 in)
OUTER PANEL
3 mm (0.12 in)
CENTER PILLAR LOWER STIFFENER
3 mm (0.12 in)
3.5 mm (0.138 in)
4.5 mm (0.177 in)
3 mm (0.12 in)
1 mm (0.04 in)
OUTER PANEL
REAR INNER PANEL
OUTER PANEL
11 mm (0.43 in)
18 mm (0.71 in)
Adhesive
Top end position of the side sill outer panel repair part
Rear edge position of the side sill outer panel repair part
[Z]
(3)
(22)
(4)
(3)
(8)
(7)
(6)
(5)
(33)
OUTER PANEL
CENTER PILLAR OUTER SEPARATOR
(4)
[Y]
[VIEW: Z]
(4)
[VIEW: Y]
(2)

Fig. 125: Side Sill Outer Panel Removal Weld Counts And Locations
Courtesy of AMERICAN HONDA MOTOR CO., INC.

Side Sill Outer Panel Component Location

NOTE:

- **This section explains the procedures after Removal of all related parts. For the related parts' Removal procedure, refer to the appropriate service information.**
- **The component replacement procedure described here is only for new genuine supplied parts, as needed, according to the area and the degree of damage on the body.**

Cut and pry off the side sill outer panel, and replace it.

NOTE: **Select the sectioning location in consideration of the side sill outer panel repair part ; refer to Roof And Side Panel Construction .**

Replace the center pillar outer separator.

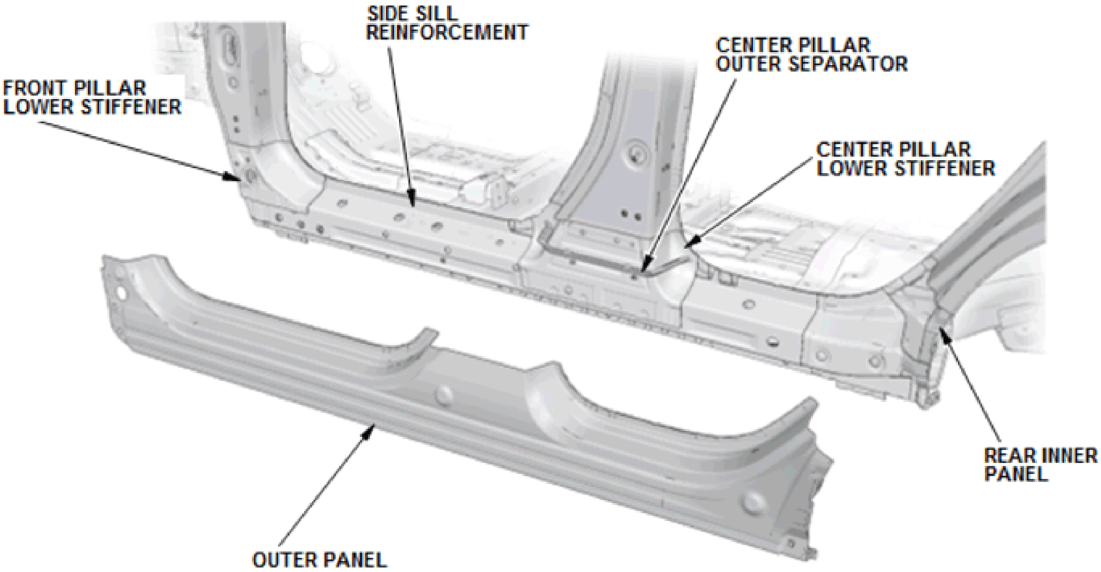
SIDE SILL REINFORCEMENT
CENTER PILLAR OUTER SEPARATOR
FRONT PILLAR LOWER STIFFENER
CENTER PILLAR LOWER STIFFENER
REAR INNER PANEL
OUTER PANEL

Fig. 126: Side Sill Outer Panel Replacement Component Location
Courtesy of AMERICAN HONDA MOTOR CO., INC.

INSTALLATION

NOTE:

- **Position the replacement parts. Before doing the main welding, check the body dimensions:**
  - **Refer to Front Wheelhouse Lower Member Position Dimension .**
  - **Refer to Door Hinge Positions Dimension .**
  - **Refer to WINDSHIELD AND DOOR OPENINGS .**
- **Temporarily install the related parts, then check for differences in level and clearance. Check the External Parts Fitting Positions; refer to External Parts Fitting Positions . Make sure the body lines flow smoothly.**
- **Confirm the sheet thickness, tensile strength, and existence of the zinc treatment of both sides, and set the welder to conform to the welding conditions; refer to Front Body Construction , Roof And Side Panel Construction , and FLOOR AND REAR BODY CONSTRUCTION .**
- **Welding symbols (The welding symbols with dashed lines have a meaning of the spot welding of the part which is not visible) ; refer to Symbols Definition .**
- **() and ()*: The number of welds**

Outer Panel Repair Part - Weld

1. Install the new center pillar outer separator (A) on the center pillar stiffener (B). Apply the sealer (C) without gaps all the way around the separator and inside the outer panel repair part (D).

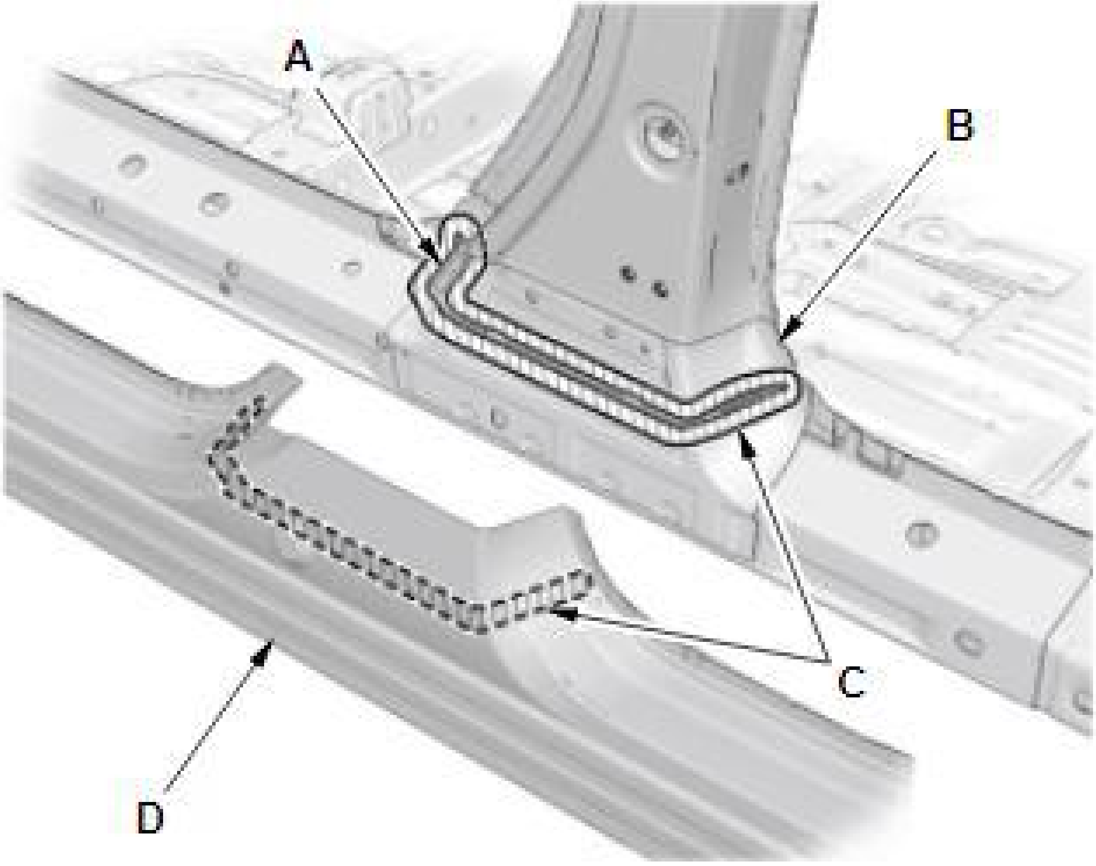

Fig. 127: Center Pillar Outer Separator And Body Sealer Installation Locations
Courtesy of AMERICAN HONDA MOTOR CO., INC.

2. Apply the adhesive (A) to areas around holes on the inside of the outer panel repair part (B) and the outside of the front pillar lower stiffener (C) as shown.

   Adhesive: 3M AUTO MIX Panel Bonding 8115, or equivalent, commercially available

   NOTE: **See the adhesive manufacture's instructions for details.**

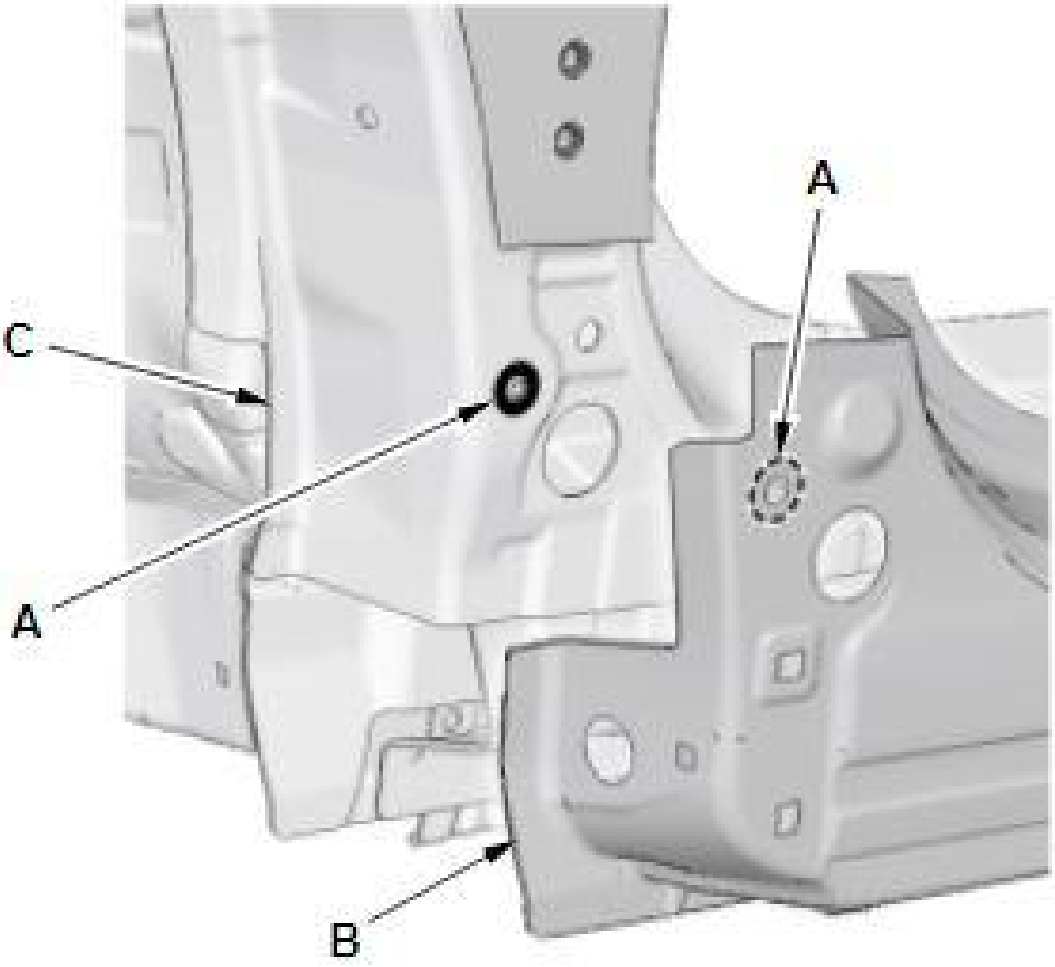

Fig. 128: Side Sill Outer Panel Adhesive Installation Locations
Courtesy of AMERICAN HONDA MOTOR CO., INC.

3. Weld the outer panel repair part (A).

   (■)*: Welding positions with the side sill reinforcement (B), include ultra high-strength steel (1500 MPa) parts. Perform the spot welding on the conditions of No. 26, 30, and 31 in the table shown below. Refer to Spot Welding Conditions For Ultra High-Strength Steel Parts (1180 And 1500 MPa) .

No. 26	8000 A	800 ms	3432 N (350 kgf)
No. 30	8500 A	1200 ms	3432 N (350 kgf)
No. 31	9000 A	1200 ms	3432 N (350 kgf)

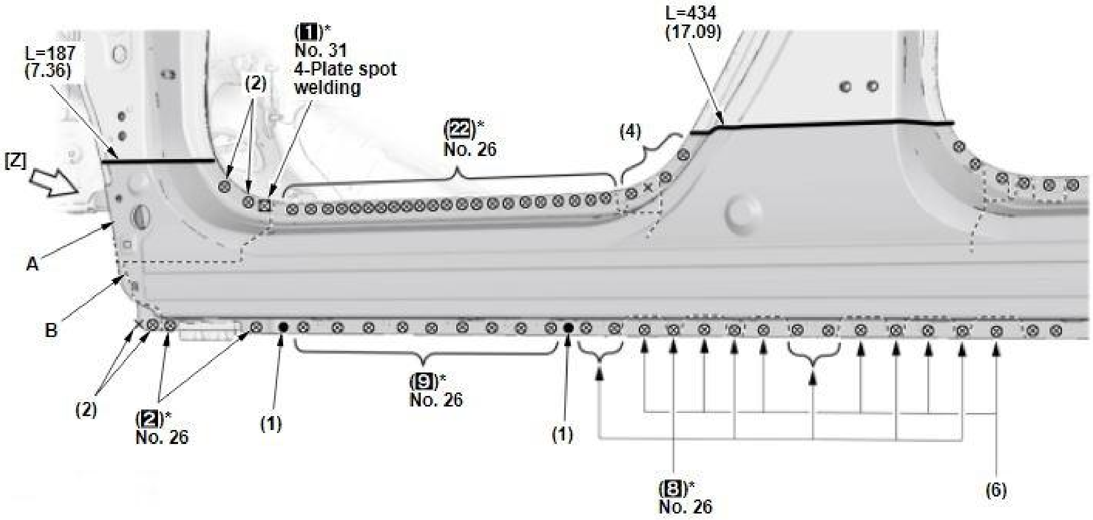
L=187
(7.36)
[Z]
A
B
(2)
(1)*
No. 31
4-Plate spot
welding
(22)*
No. 26
(4)
L=434
(17.09)
(2)
(2)*
No. 26
(1)
(9)*
No. 26
(1)
(8)*
No. 26
(6)

Fig. 129: Side Sill Outer Panel Installation Weld Counts, Measurements And Locations (1 Of 2)
Courtesy of AMERICAN HONDA MOTOR CO., INC.

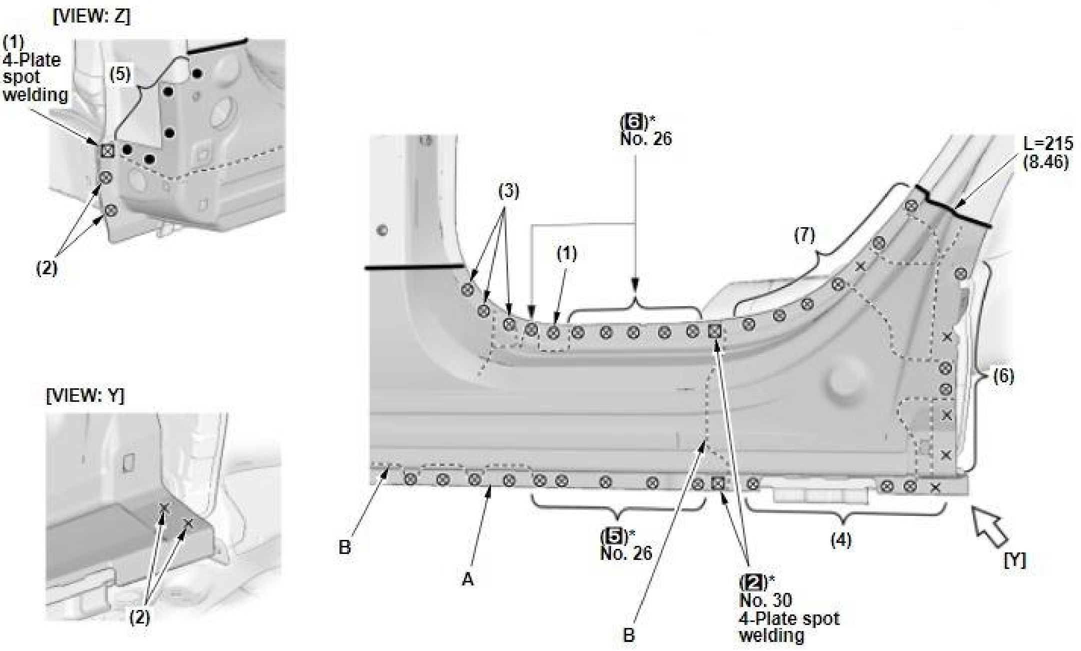
[VIEW: Z]
(1)
4-Plate
spot
welding
(5)
(2)
[VIEW: Y]
(2)
(6)*
No. 26
(3)
(1)
(7)
L=215
(8.46)
(6)
B
A
(5)*
No. 26
(4)
[Y]
B
(2)*
No. 30
4-Plate spot
welding

Fig. 130: Side Sill Outer Panel Installation Weld Counts, Measurements And Locations (2 Of 2)
Courtesy of AMERICAN HONDA MOTOR CO., INC.

INTRODUCTION

This service information explains the basic guidelines to repair automotive sheet metal damaged by a collision or other situation. This service information includes basic body repair information, basic sheet metal repair, and common body repair guidelines.

Please refer to the specific body repair and/or service information for each model when replacing parts, clarifying model specific dimensions, or other situations requiring specific repair information.

Model-specific service information includes the specific and unique repair information for each model, but do not include the general information provided in this service information.

Please note that some models may require particular maintenance even for the items included in this basic service information.

Please refer to the service information for the specific model in such cases:

- All information is based on the latest product information available at the time of publishing. We reserve the right to make changes without notice.
- Honda service and body repair information is edited for those with basic knowledge and skills about Honda and Acura vehicles. Therefore, those without such skills or knowledge may not be able to successfully maintain the vehicle even following the information provided in this service information.

SYMBOLS DEFINITION

Replacement

NOTE: **Welding symbols (The welding symbols with dashed lines have a meaning of the spot welding of the part which is not visible).**

✕ and ⁘	2-Plate spot welding
⊗ and ⊗	3-Plate spot welding
⊠ and ⊠	4-Plate spot welding
●	MAG plug welding
⬬	MAG welding
(■)*	Double Hole MIG brazing (1500 MPa to HSS/UHSS)
( )*	Single Hole MIG brazing (270 MPa to 1500 MPa)
L and L* =	Welding length unit: mm (in)
() and ()*	The number of welds

Body Dimensional Drawings

Body measuring dimensions show the distance between the forward or upper edge of positioning bosses and/or holes shown in the detail illustration. However, the measuring points in the frame repair chart are always the centers of the holes.

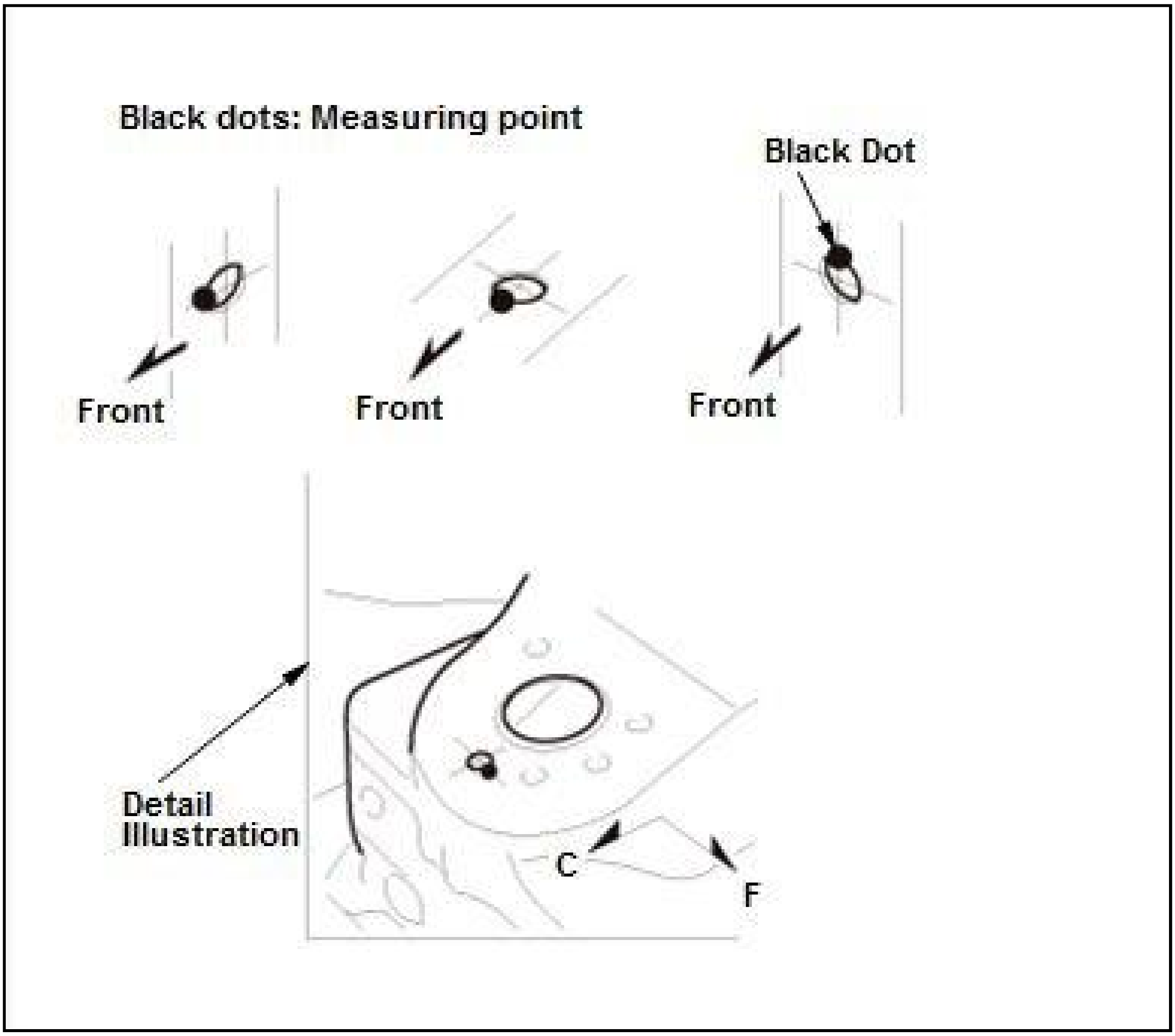
Black dots: Measuring point
Black Dot
Front
Front
Front
Detail Illustration
C
F

Rust Prevention

The following type of illustration shows the areas where sealant is to be applied.

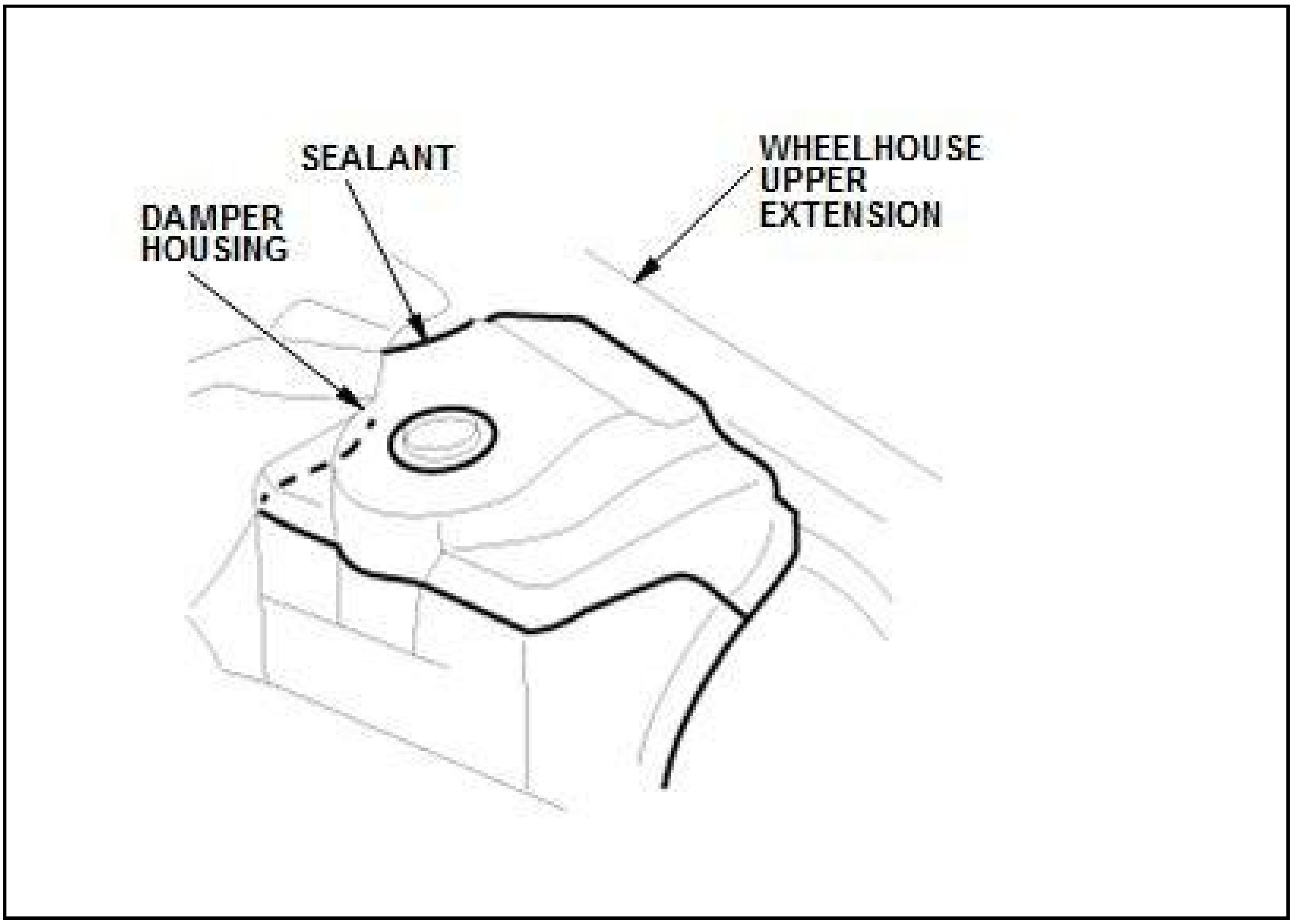

BODY STRUCTURE

BODY DAMAGE INSPECTION

Front Body Damage

- The framework of the front body is composed of the bulkhead, front side frame, wheelhouse and damper housing. In order to evaluate the damage correctly it is important to check not only for the deformation and cracks of the component parts but also to check thoroughly for the deformation of the dashboard and the front pillar.
- Reliance on visual checks alone will overlook some serious damage. Therefore, it is strongly recommended to measure the body using an appropriate gauge. In particular, it is vital to use a gauge to measure the damper housing and side frame positions because both of them greatly influence wheel alignment. The gauge must be used based on the datum point placed on a non-damaged part.
- It is possible to check the damage with the outer panel assembled, but pay attention to the following points:
    - Deformation of front bulkhead
    - Deformation of right/left front wheelhouses/damper housings
    - Deformation of right/left front side frames at frame rear end
    - Deformation of dashboard upper/lower panels

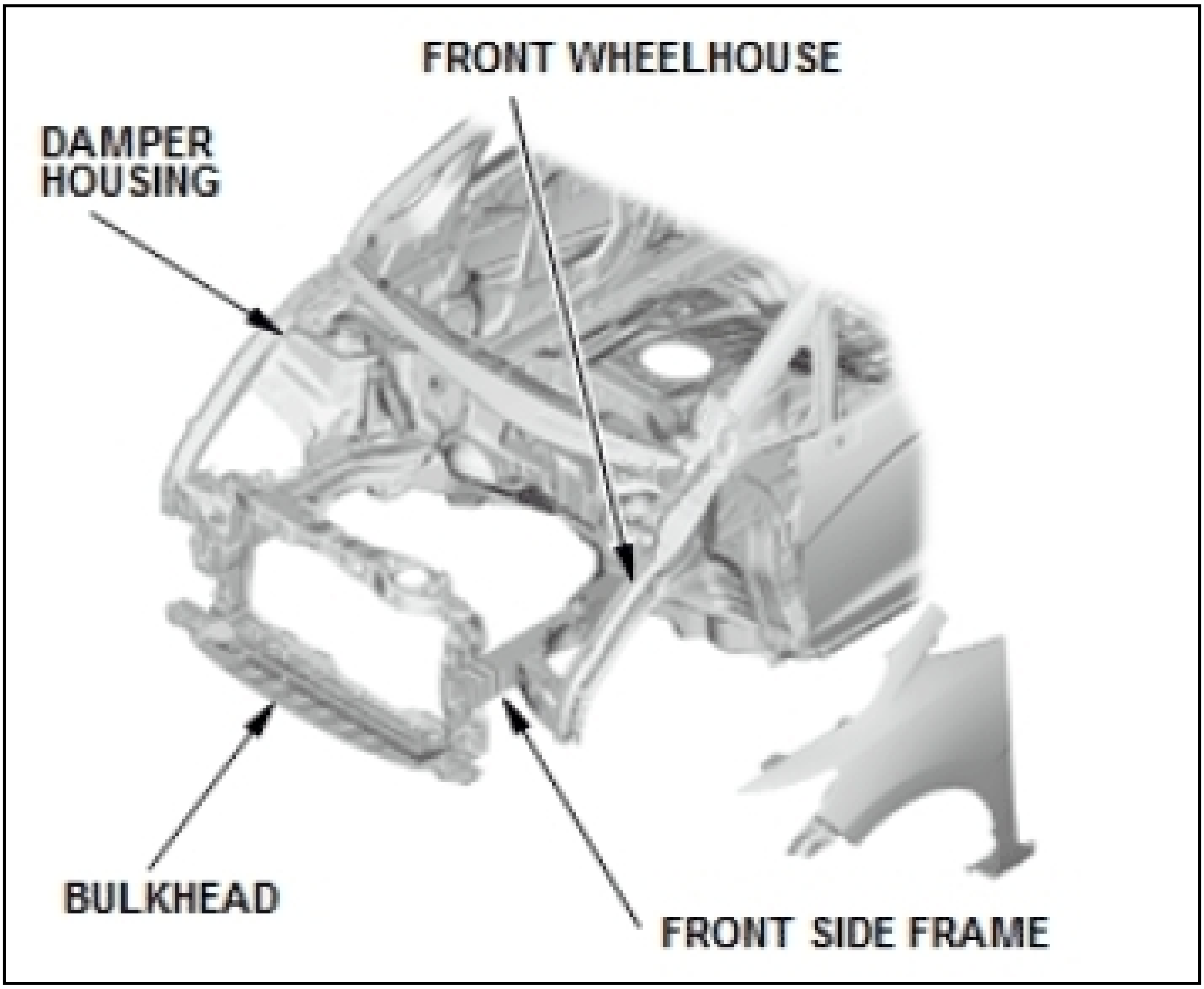
FRONT WHEELHOUSE
DAMPER HOUSING
BULKHEAD
FRONT SIDE FRAME

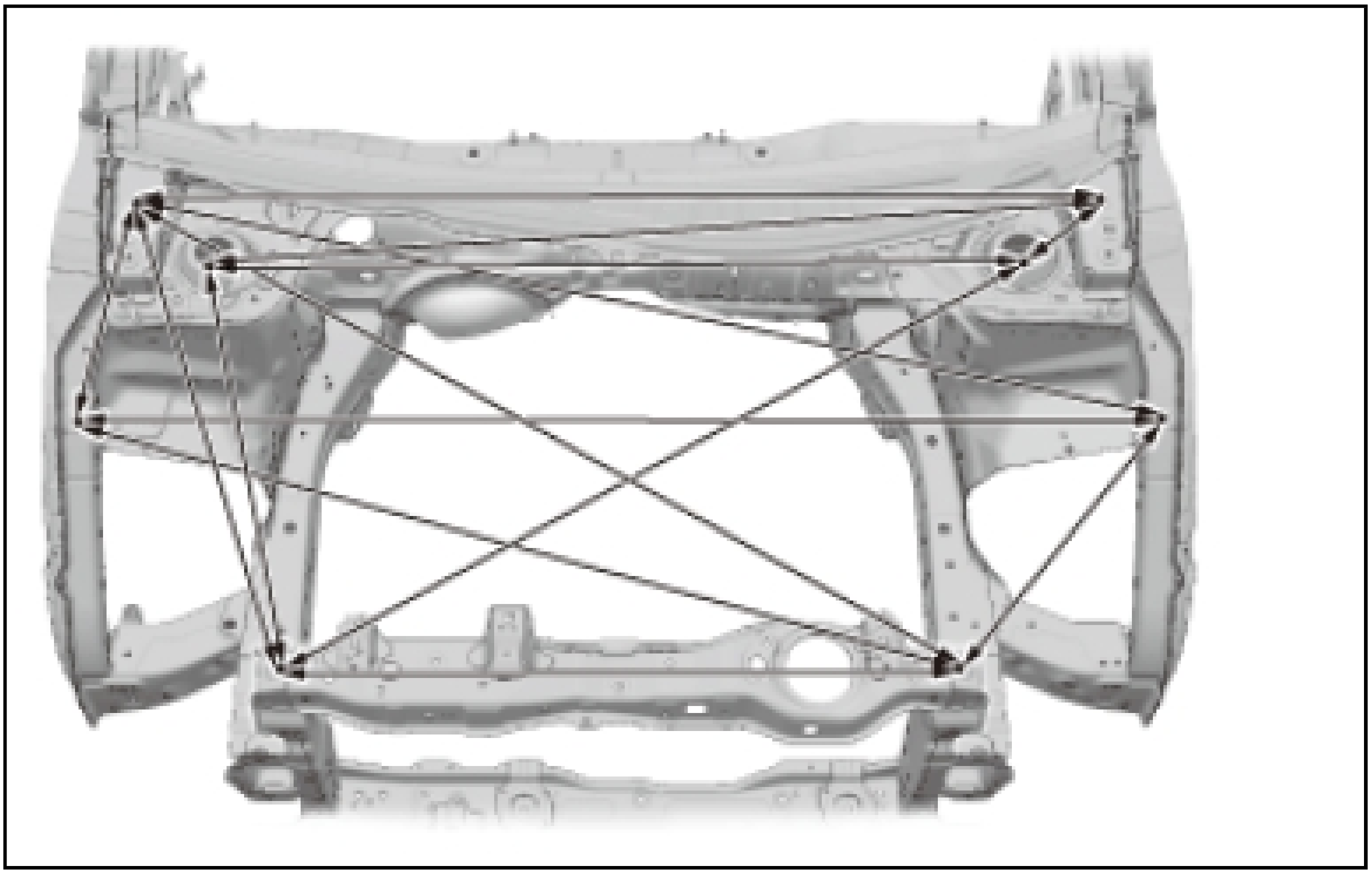

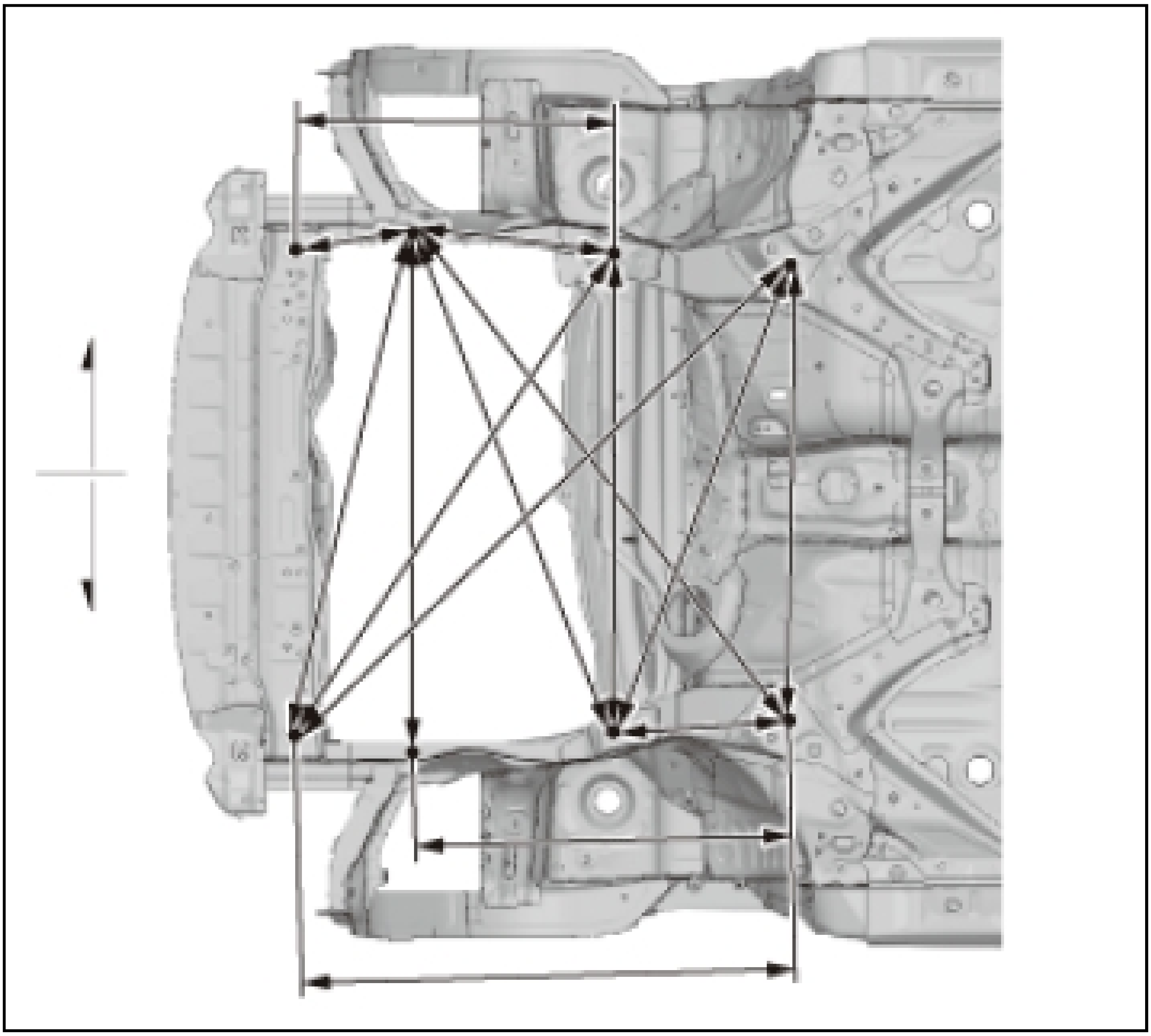

Rear Body Damage

- In addition to inspection of external appearance such as fit and finish of the attached parts, also check for lateral, horizontal, and vertical deformation.
- When measuring damaged parts, place a datum point on a non-damaged part:
  - Deformation of rear panels
  - Deformation of rear side outer panels
  - Fit and finish of trunk/rear inner panels/rear doors
  - Deformation of rear floor and rear frame

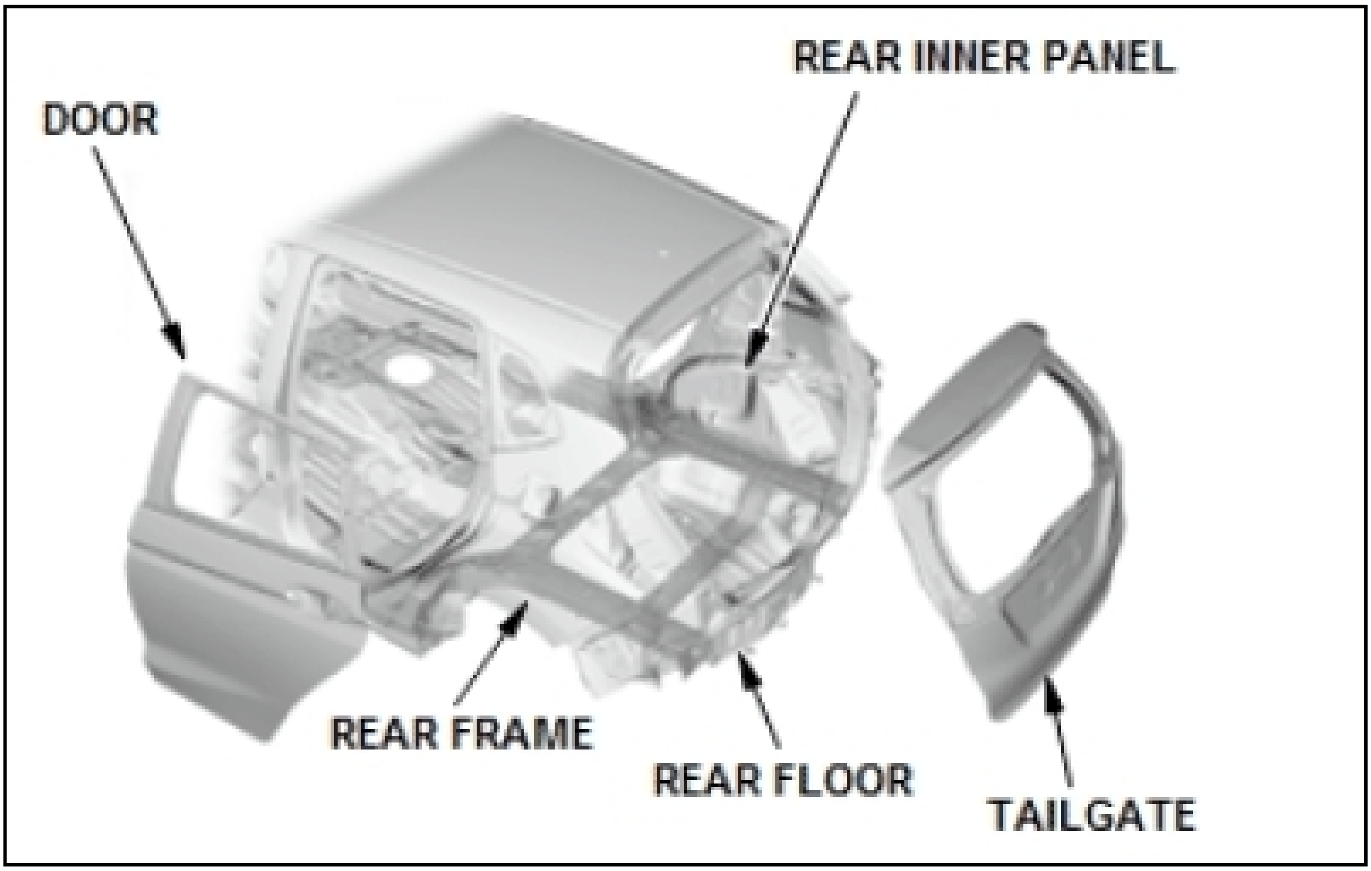
REAR INNER PANEL
DOOR
REAR FRAME
REAR FLOOR
TAILGATE

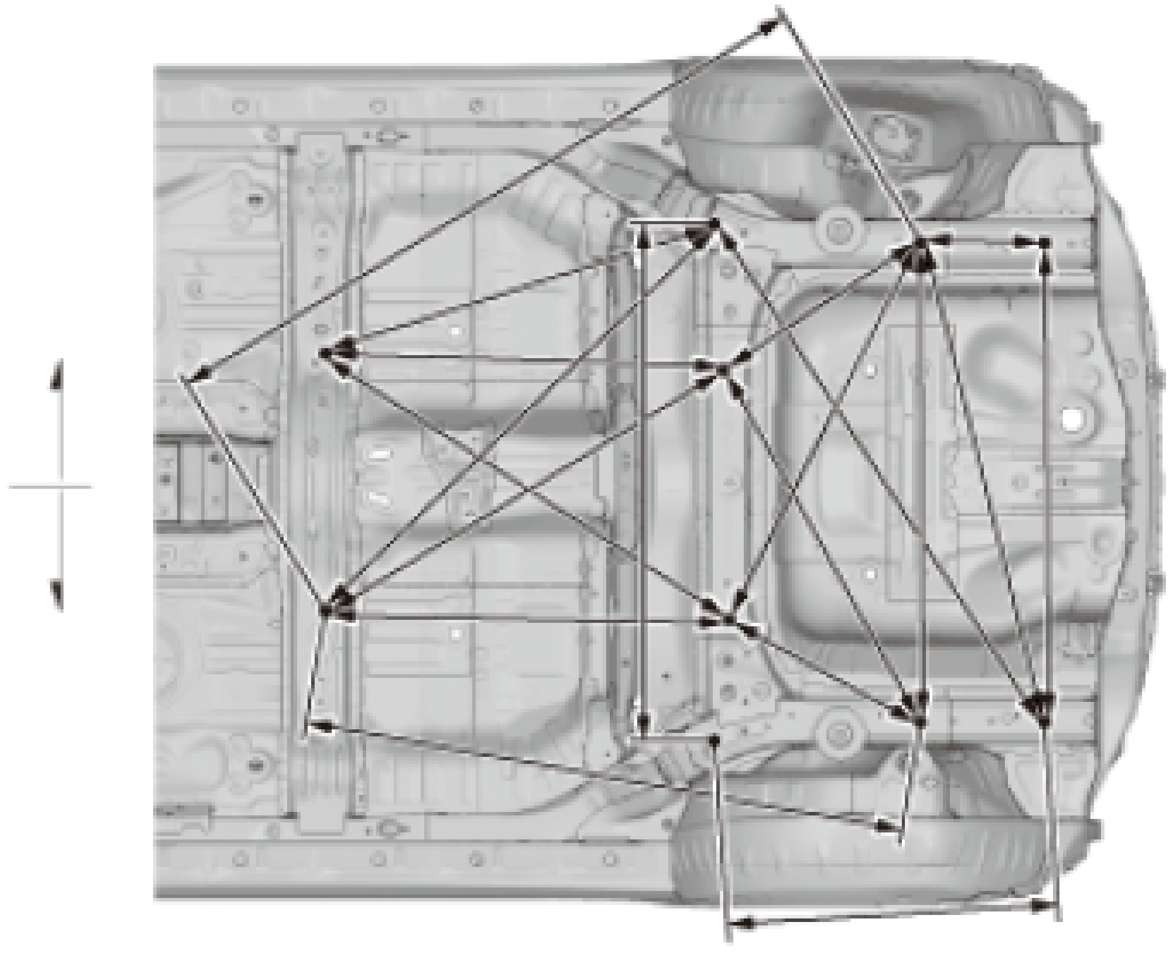

Side Body Damage

In addition to inspection of the external appearance such as fit and finish of the doors, use a gauge to measure the level of damages accurately by placing a datum point on a non-damaged part:

- Deformation of side sills
- Deformation of front/center/rear pillars
- Deformation of roof panel
- Deformation of floor panel

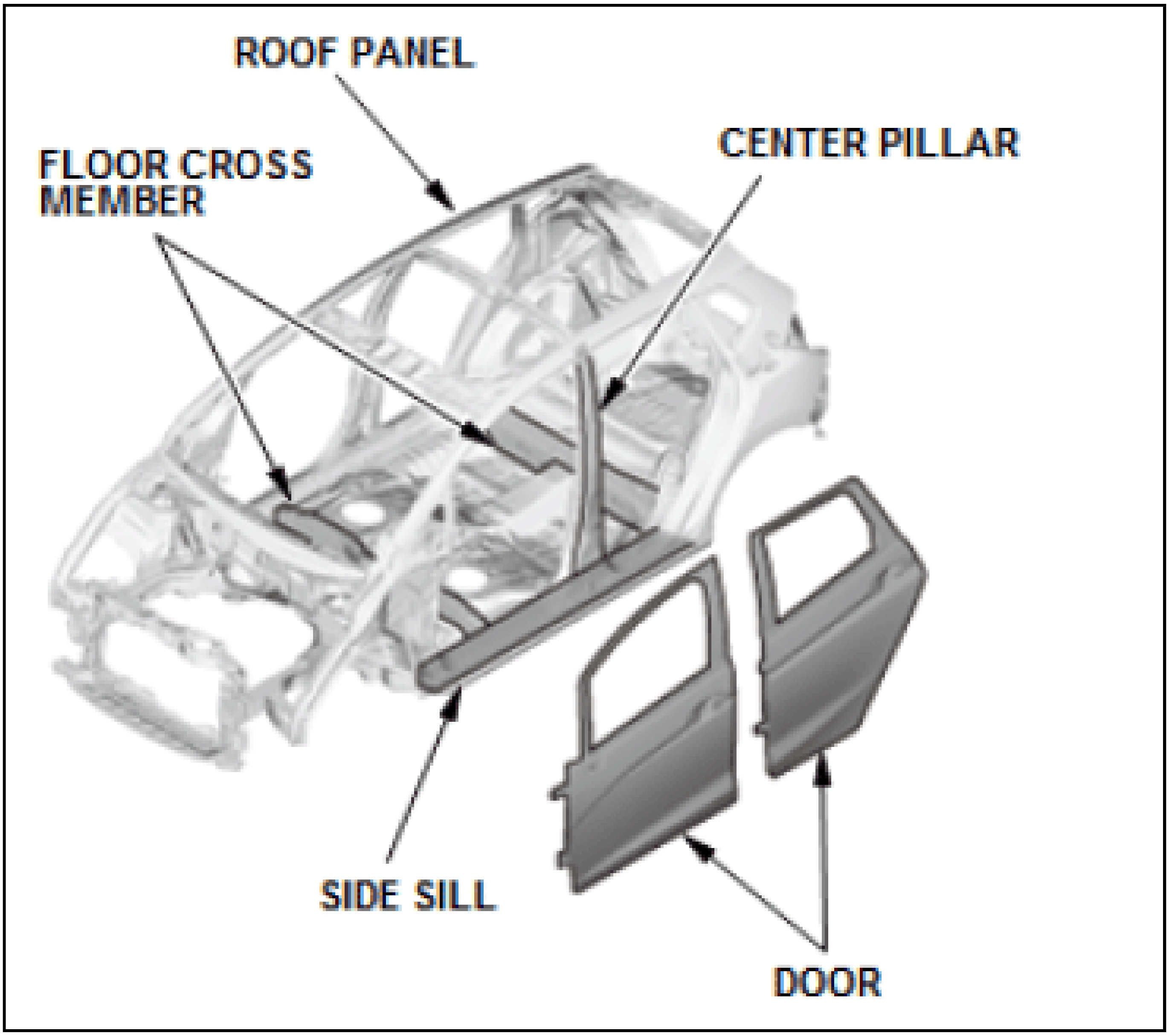
ROOF PANEL
FLOOR CROSS MEMBER
CENTER PILLAR
SIDE SILL
DOOR

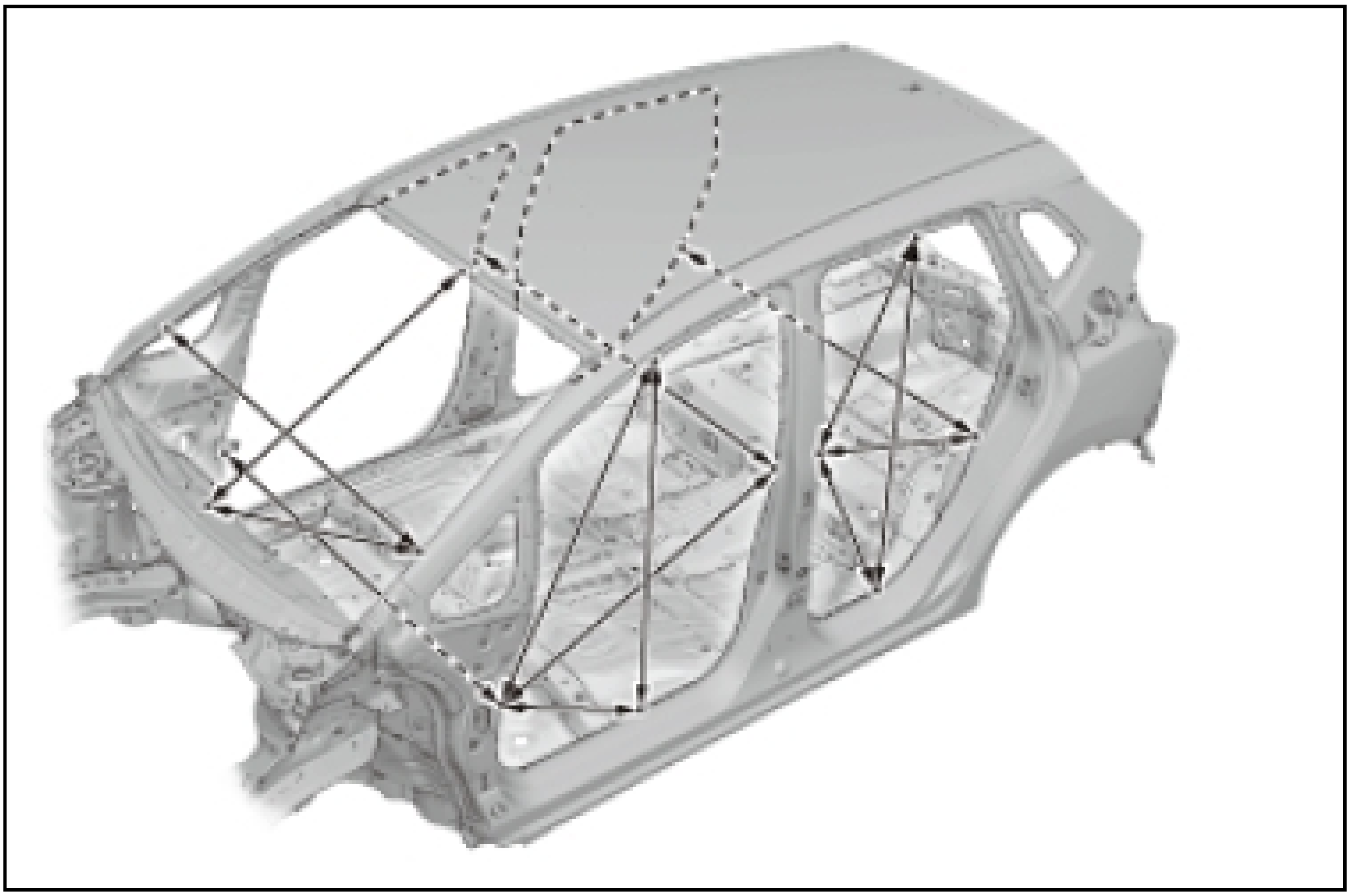

FUNDAMENTALS OF UNIBODY CONSTRUCTION

Basic Body Structure

An automobile body consists of many different component parts, each of which is stamped from a thin steel. Most parts are united into a complete unitized body using electric resistance spot welding. In this fashion, a unitized body or "unibody, structure has no independent frame. Stamped parts are assembled as part of the body Components such as an engine, suspension, and steering system are directly installed to the body structure. Unibody construction is the most common vehicle construction method in the automotive industry.

A unibody is structured by a wide variety of stamped steel parts in different shapes and dimensions, joined by welding into one complete body In order to meet all of the requirements of the body as a whole, each of those parts share the responsibility of meeting the necessary criteria on strength and rigidity as well as weight reduction, accuracy, durability performance etc.

In addition, to protect the passengers in case of collision, the body structure must allow a certain amount of deformation if a front or rear crash impact occurs. By effectively absorbing the impact energy through "crush zones" in the body structure, a "survival space" is maintained in the passenger compartment. Effects of the impact on the vehicle's passengers are also mitigated.

The image below shows typical body crush zones. The passenger compartment is reinforced by structural members to dissipate front and rear impacts. The side frame is similar in strength to the front and rear body receives impact forces. This will cause ripple effects and secondary damage, but the side frame is designed to minimize deformation in the passenger compartment area.

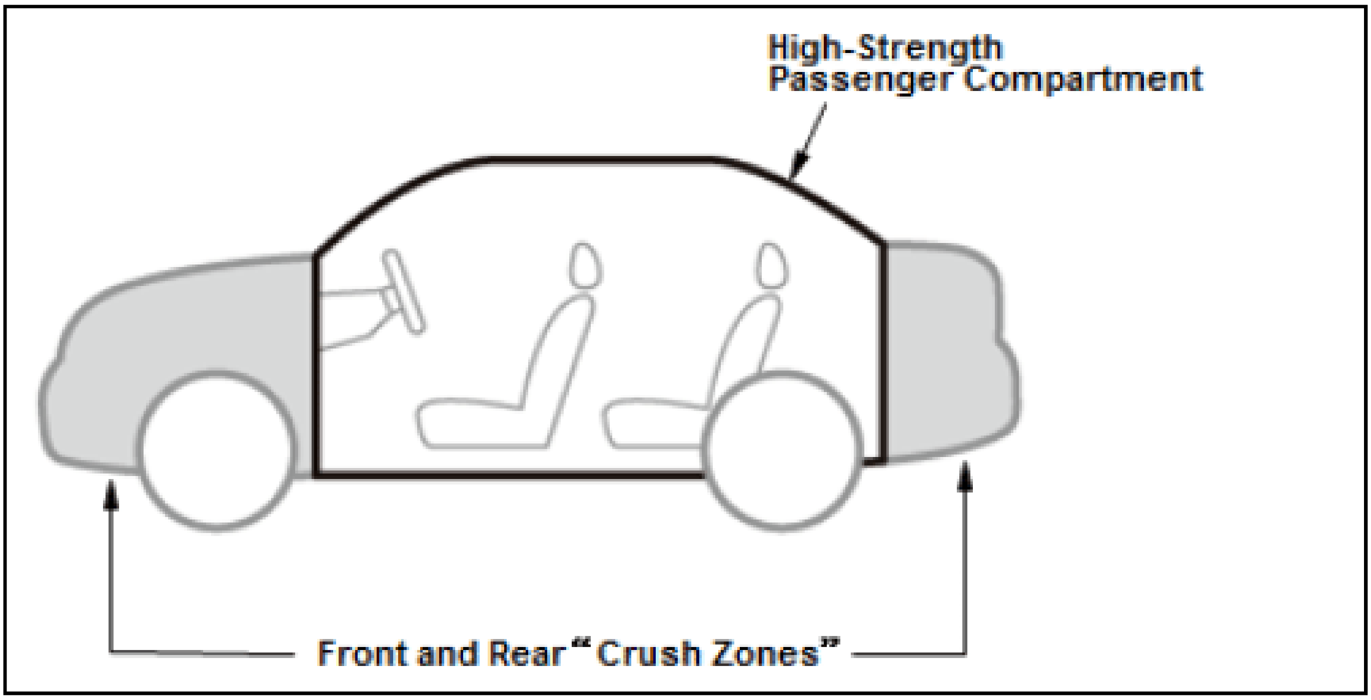

- Floor Is the Core of a Unibody Structure

  The floor is the core part of unibody construction. The floor gets formed by a deep-draw. The floor's strength comes from the drawn floor tunnel and reinforcements installed in lateral, horizontal and angled directions.

  The strength (rigidity) of this floor panel is further increased by joining the front side frame, side sills and crossmembers through spot welding.

- Passenger Compartment (Cabin) Structure

  The passenger compartment is very important because it protects the passengers. On more recent models, passenger compartment has been made much stronger to provide better crash protection in a much wider range of impacts.

  Passenger compartment strength is attained by the combined strength of its individual parts, such as: the floor panel, front pillars, center pillar, rear pillars, dash board, rear body roof side rails and roof panel. The cabin is capable of withstanding a certain level of impact.

Collision Angle And Damage

Collisions can be categorized into two types depending on direction of impact. One is the centripetal-force, or a collision toward the vehicle's center of gravity The other is a tangential-force collision directed off the center of gravity. They result in different degrees of damage.

Centripetal Collision

Causes serious damage because the horizontal movement of the vehicle is constrained during the collision.

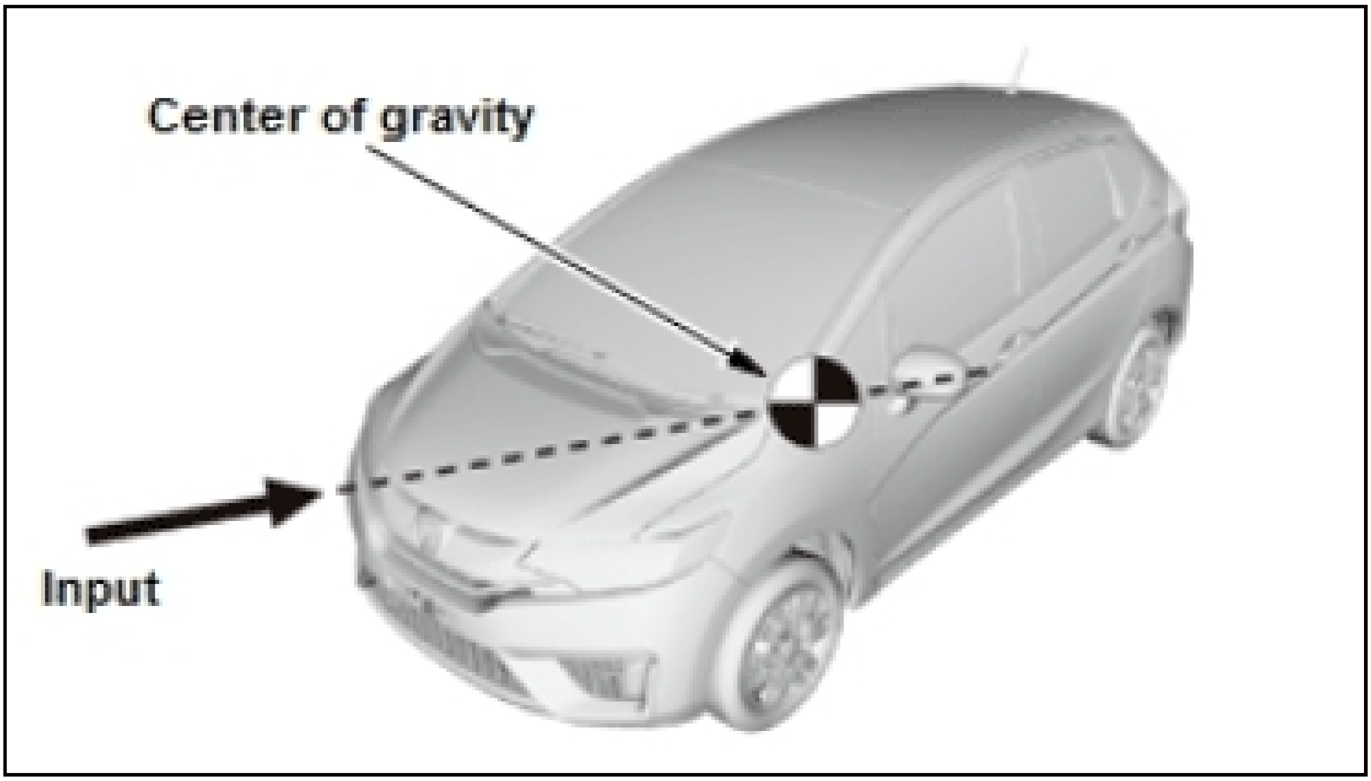
Center of gravity
Input

Tangential Collision

Causes relatively light damage because the vehicles move when impacted and each absorbs some of the energy.

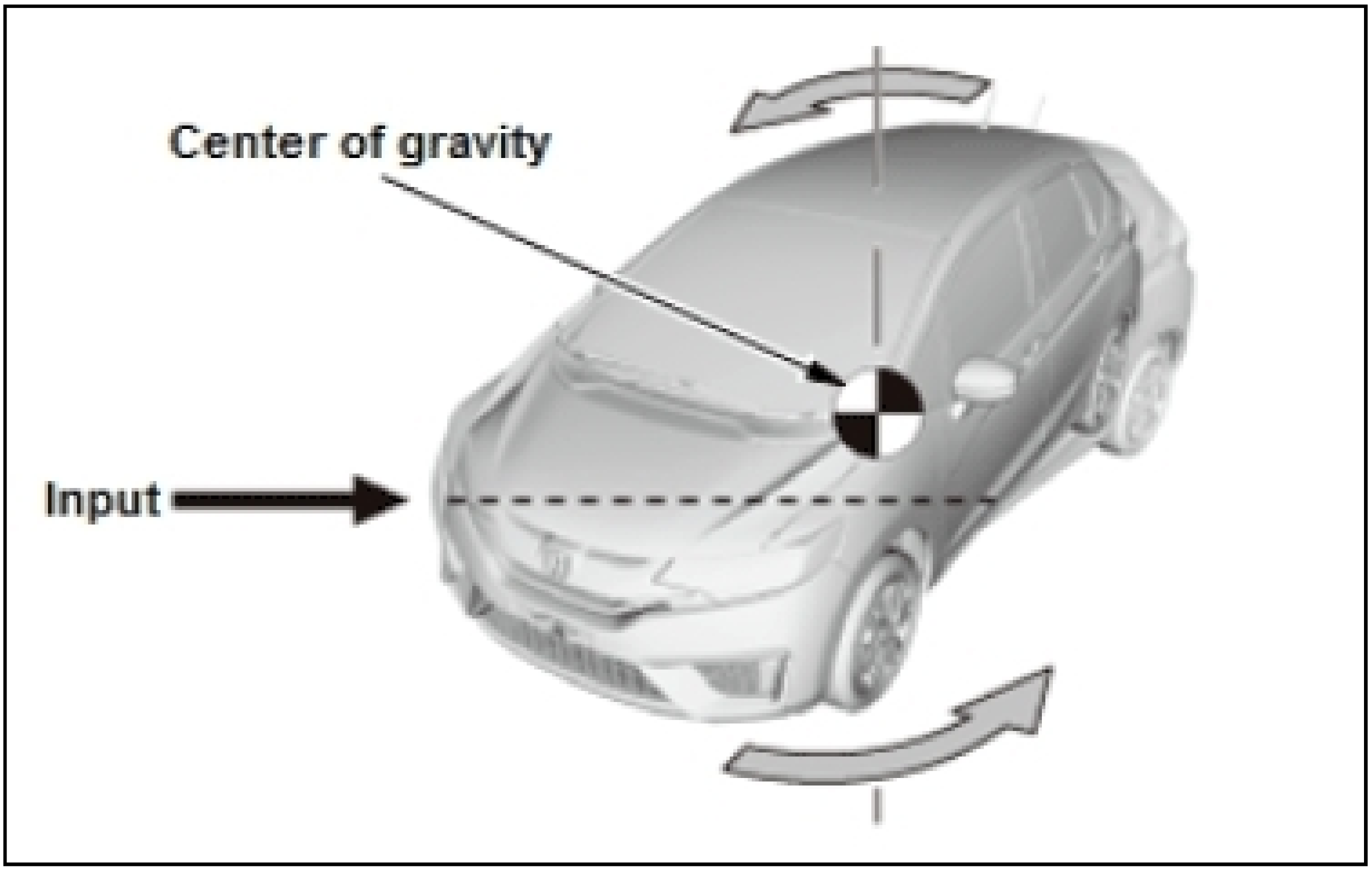
Center of gravity
Input

Collision Target And Damage

Even if the car weight and speed are the same between the two cases at the time of a crash, the degree of the damage will be significantly different depending upon the object that the car crashes into.

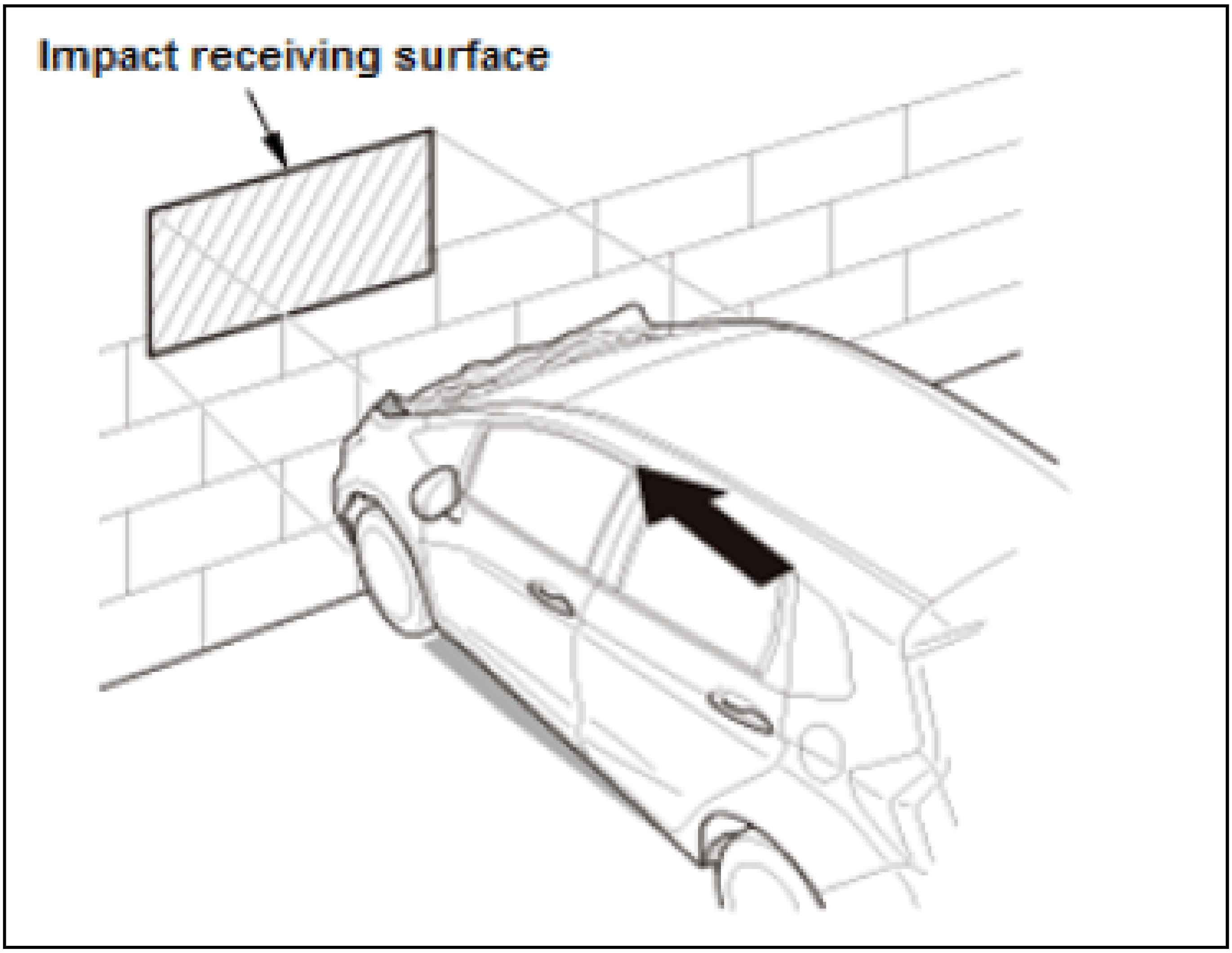

$$\text{Impact force per unit area} = \frac{\text{Input}}{\text{Impact Area}}$$

- When the impact area is wider, such as a wall, the impact force per unit area is smaller. Therefore, the degree of deformation is smaller and the area of damage is larger.
- When the impact area is smaller, such as an electric pole, the impact force per unit area on the car is greater. Therefore, the degree of deformation is also greater.

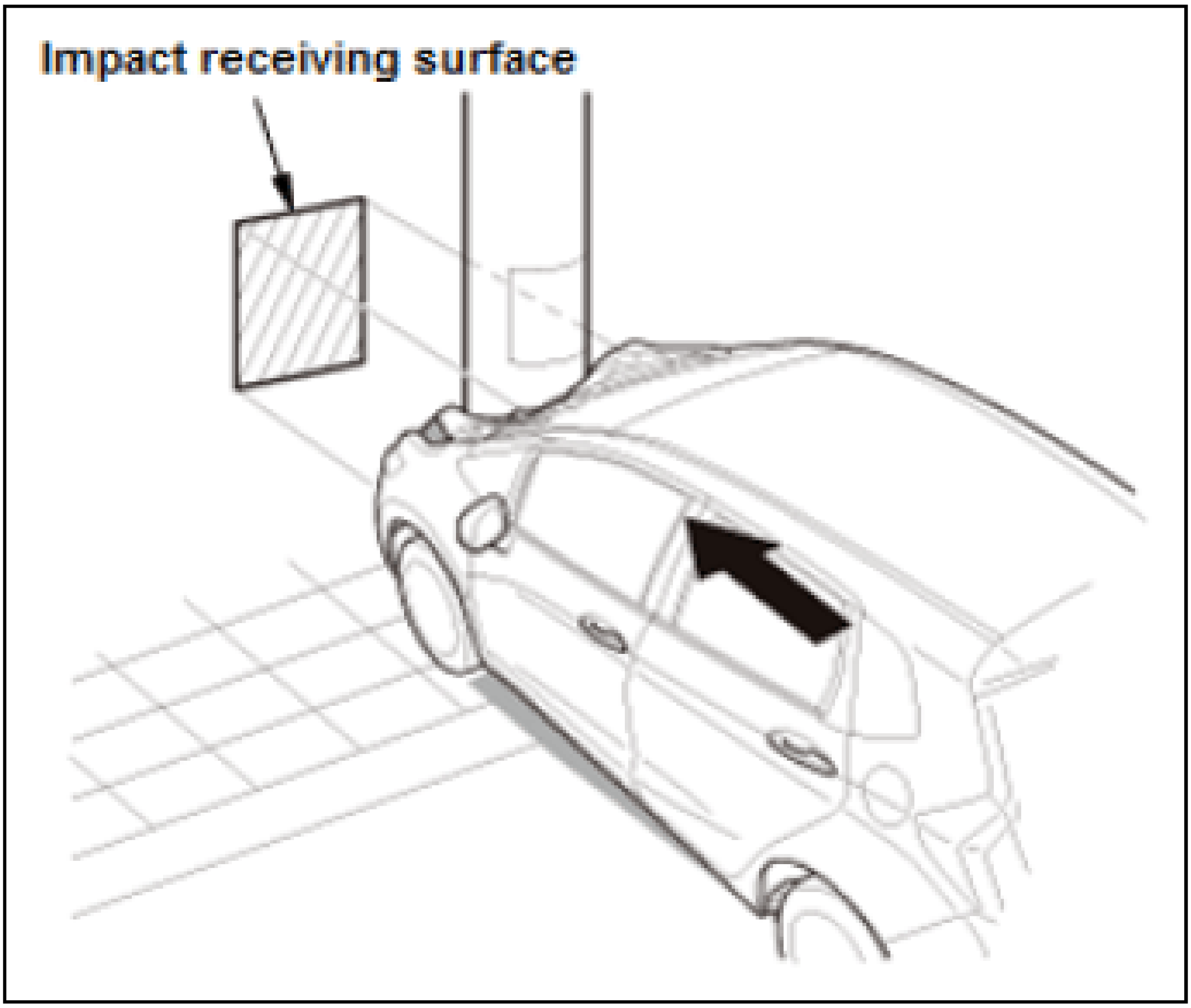

Direction Of Impact

The impact (outer force) consists of three variables:

- Input point
- Angle
- Magnitude

When impact (input) is applied to a vehicle, the force is divided into two or more directions. The divided forces become a dispersed impact onto the body Here is an example:

When the specified force "F1-O" (magnitude) is applied at input point "O" (input point) with angle "a" (direction), F1-O for an actual vehicle is divided into the horizontal forces, F2 and F3 and the vertical force F4.

- F2: Pushes the wheelhouse member towards the rear side
- F3: Pushes the bulkhead upper frame to the center
- F4: Pushes the bulkhead downward

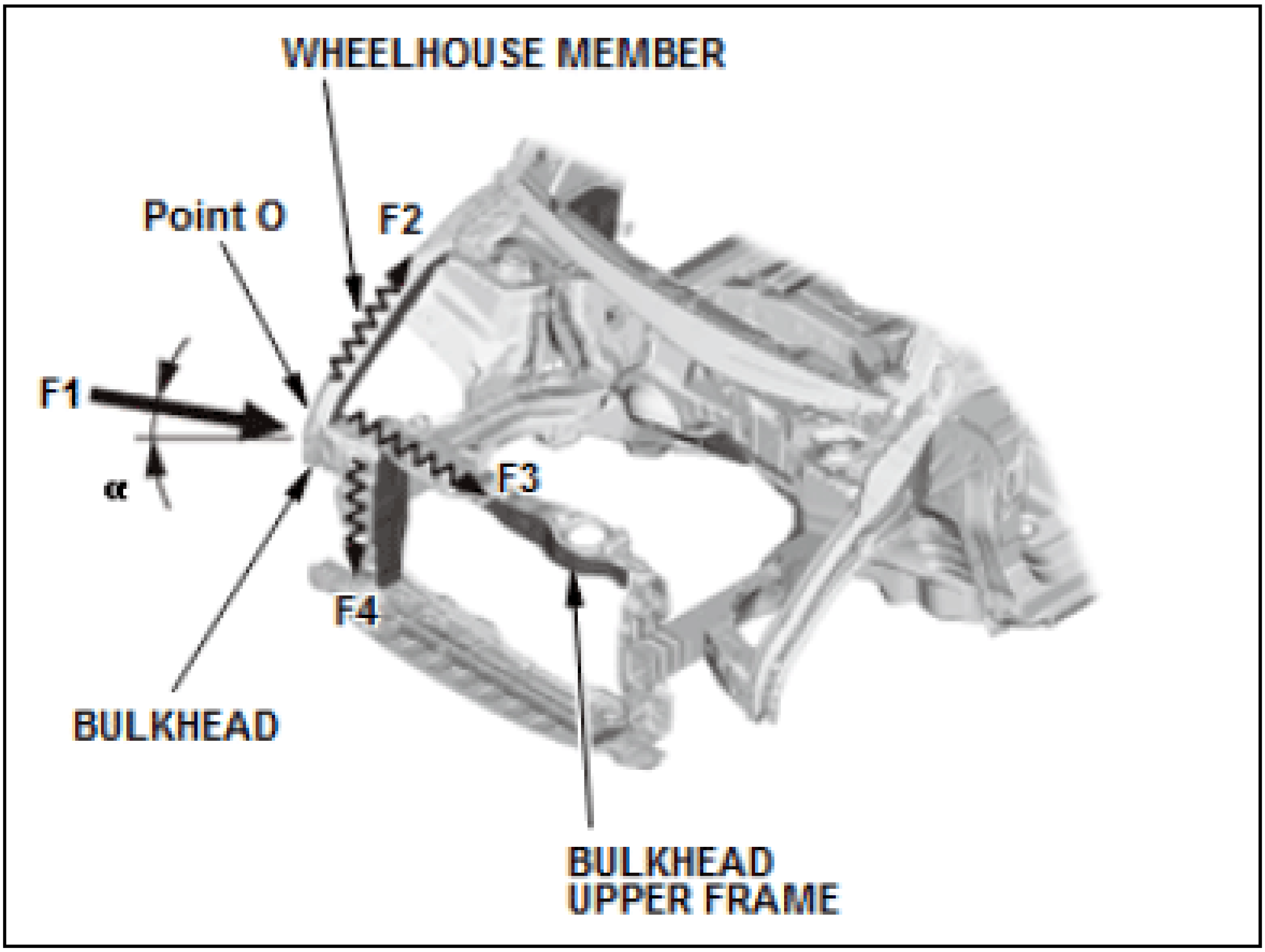
WHEELHOUSE MEMBER
Point O
F2
F1
α
F3
F4
BULKHEAD
BULKHEAD UPPER FRAME

Examples Of Compatible Body

A Large Size Sedan

- The bulkhead upper frame absorbs the upper impact energy.
- The wheelhouse member and member support increase contact with the energy absorption structure of other vehicles.
- The front side frame efficiently absorbs impact energy.
- The remaining energy is dissipated into the floor frame.

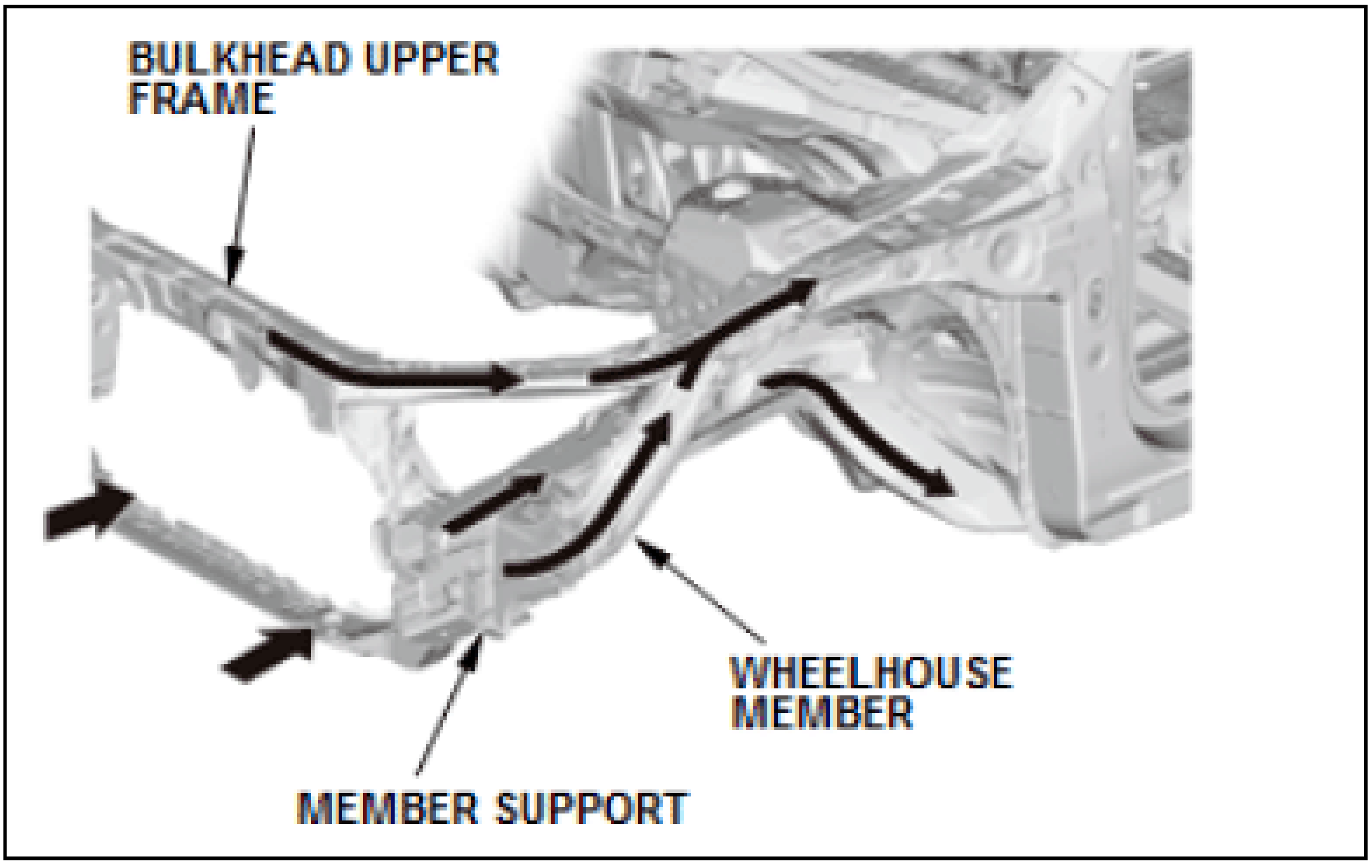
BULKHEAD UPPER FRAME
WHEELHOUSE MEMBER
MEMBER SUPPORT

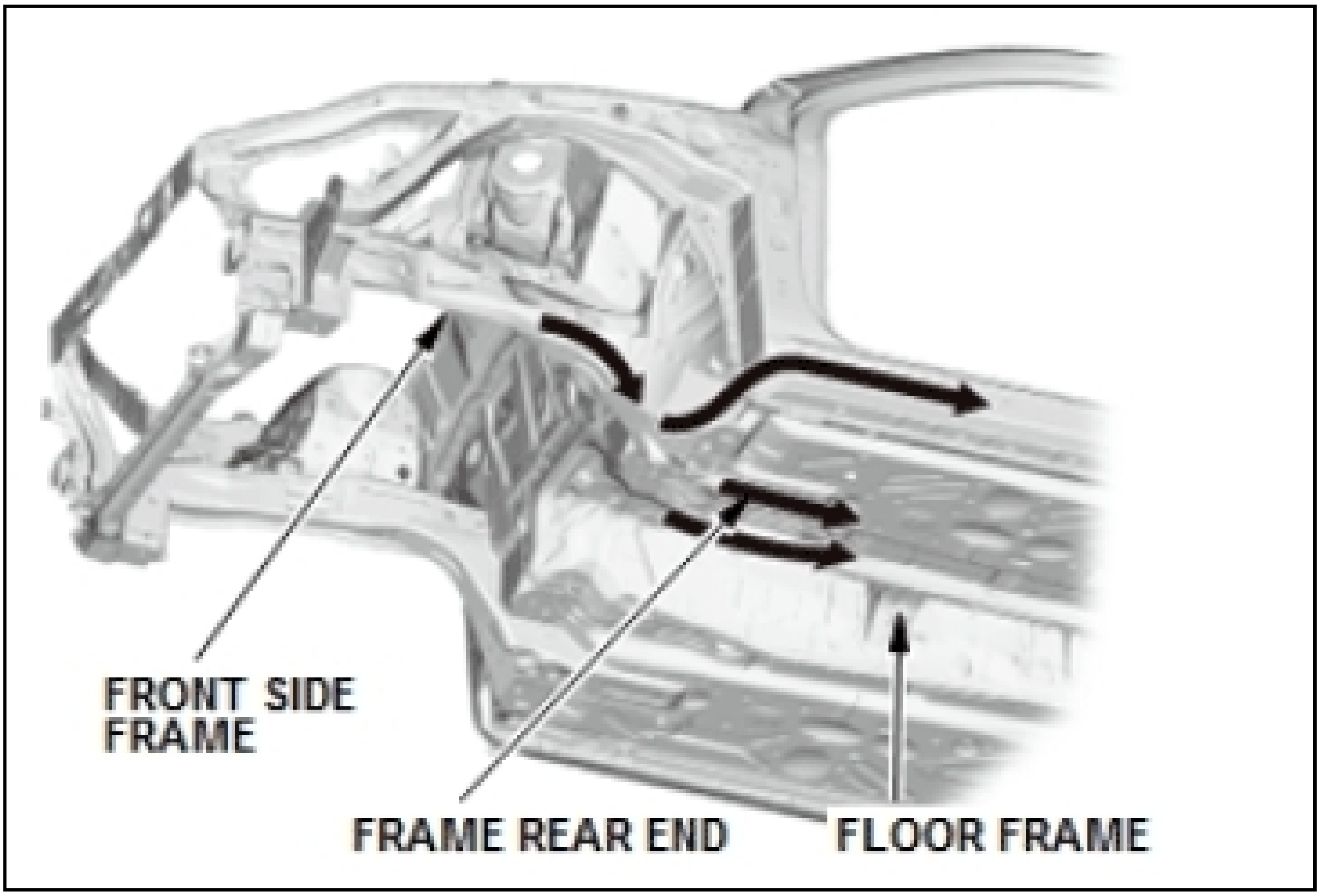
FRONT SIDE FRAME
FRAME REAR END
FLOOR FRAME

A Small Hatchback

- The gusset at the end of front side frame, wheelhouse lower member and bulk head lower cross member increase contact with the energy absorption structure of other vehicles.
- The front side frame efficiently absorbs impact energy.
- The remaining energy is dissipated into the floor frame.

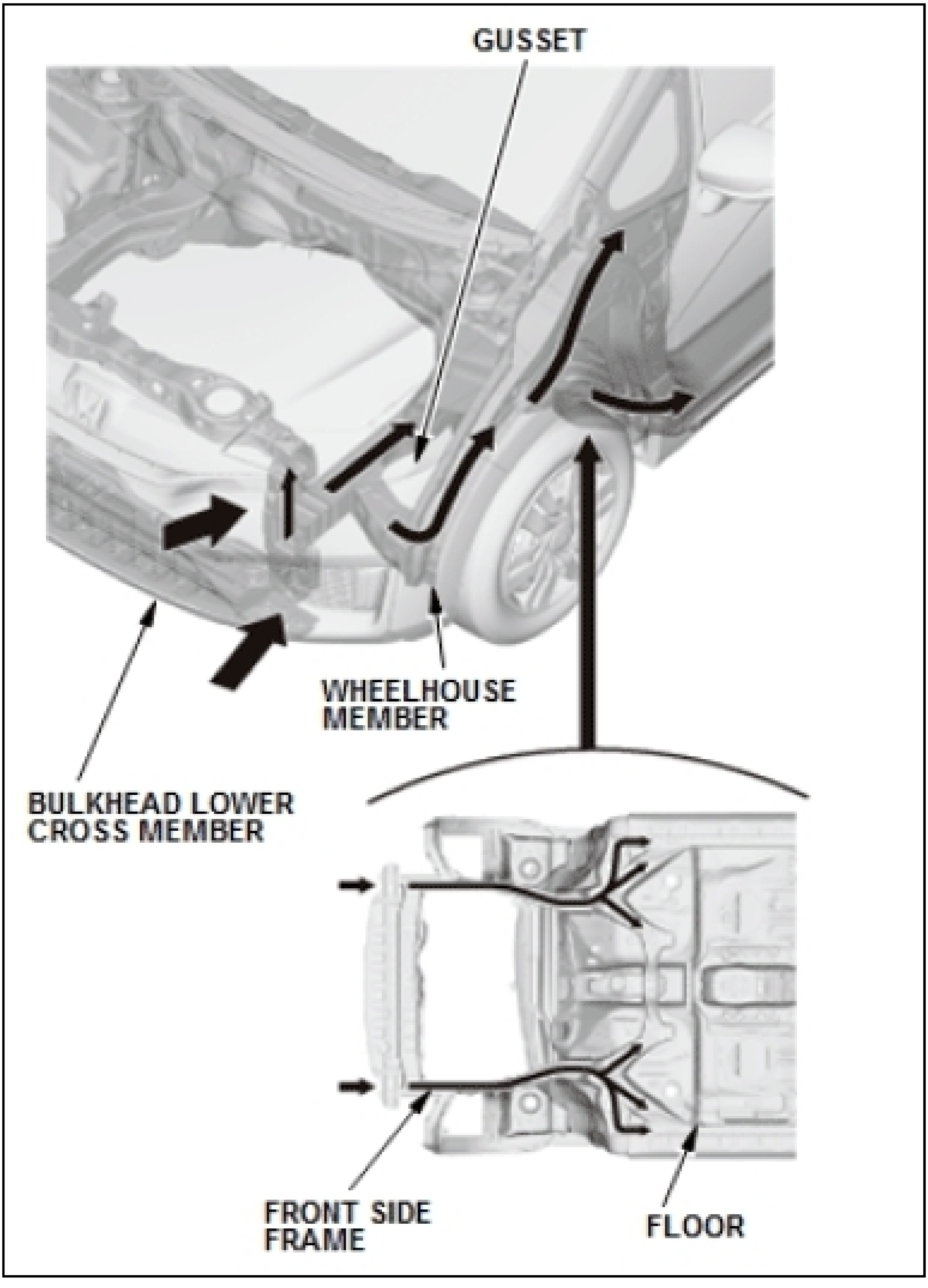
GUSSET
WHEELHOUSE MEMBER
BULKHEAD LOWER CROSS MEMBER
FRONT SIDE FRAME
FLOOR

Honda/Acura Collision Safety Technology (G-CON)

Managing both collision absorption and securing maximum cabin survival space at a high level

When considering collision safety during automobile body design, the coexistence of "energy absorption" and "securing maximum cabin survival space" are the keys to improving body safety. Although those two concepts contradict each other, balancing them is essential to mitigation of passenger injuries. Honda and Acura have developed a technology, called G-CON (Gravity Control). In a full-lap collision, G-CON maximizes "survival space". In an offset collision, it maximizes "energy absorption". G-CON technique has been incorporated into the new collision resistant body for small size vehicles. This reduces passenger compartment deformation and degree of injury to the driver and passengers in both collision types.

Achieving high performance by Honda/Acura unique ideas

When cabin survival space is prioritized, the usual approach is a highly rigid frame to minimize the degree of passenger compartment deformation. However, in this also transfers more impact force to the passengers, generally causing greater injuries (Method A in the figure below).

When passenger safety is prioritized, the impact absorption structure is designed with a comparably low-rigidity frame. This reduces the injury rate, while increasing passenger compartment deformation. (Method B in the figure below). A new collision resistant frame designed by Honda and Acura controls the G-forces applied to the body. This minimizes both passenger compartment deformation and passenger injury rate, balancing the two contradictory concepts at a high level.

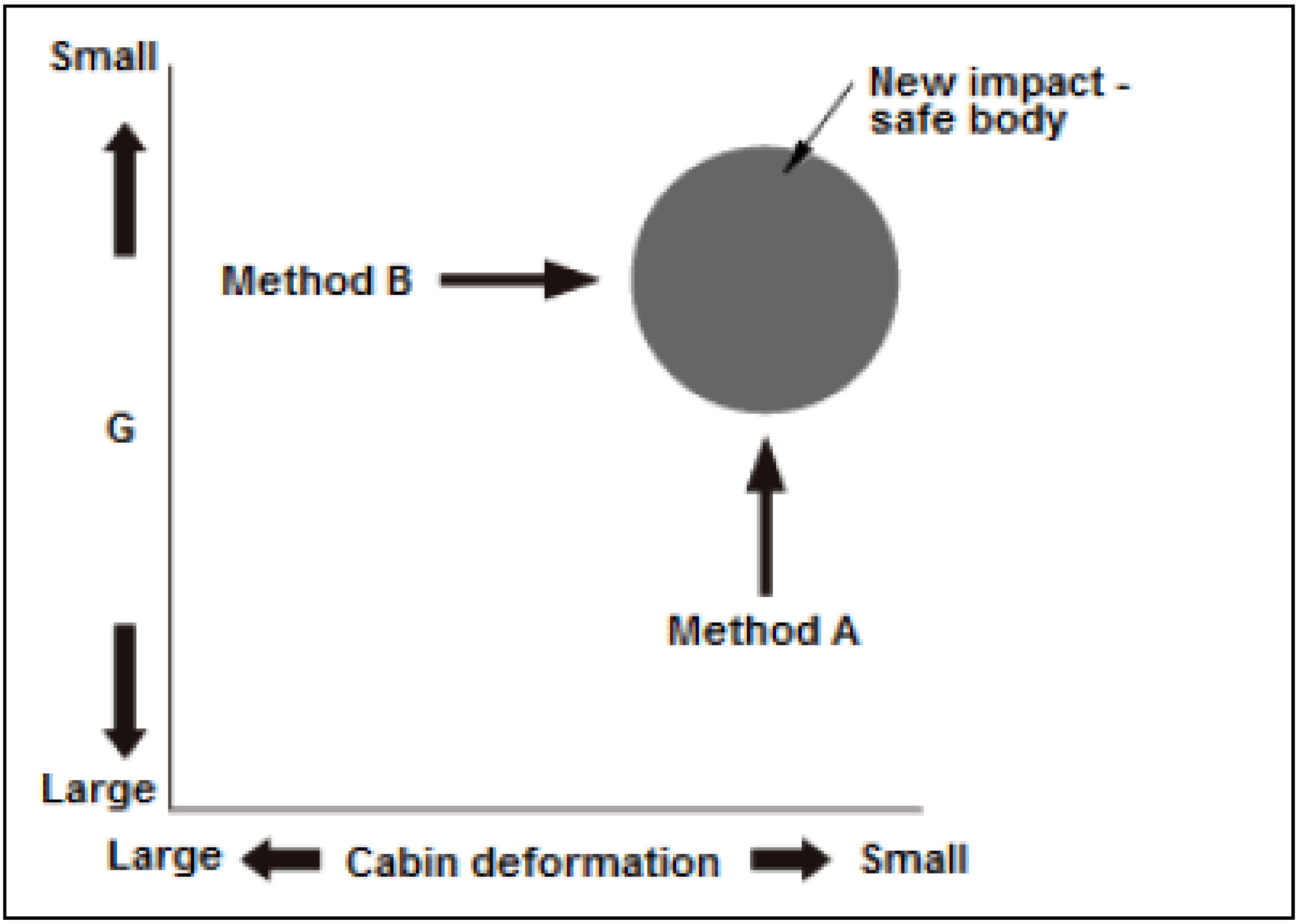

Achieving the world's highest collision safety standard for small size vehicles

Traditionally achieving "impact absorption" while "securing maximum survival space" has been viewed as difficult for small cars. While considering this proposition, Honda and Acura found the solution with a new technique called "G-CON", which produced the world's highest standard of collision safety for small size vehicles.

Wave-form for the frame and for the passengers under the "G" force of a full-lap collision

When the same level of impact is applied, the total surface of G-wave will be the same regardless of the approach/passage. To mitigate the G-force to passengers, it is critical to design the body based on the optimal timing and wave dispersion path of G-force.

Approach A - Prioritize passenger compartment survival space

In order to secure passenger compartment survival space, the frame is of rigid design. However, passengers would receive high collision G-forces:

- Highly rigid frame with small deformation.
- Sufficient survival space is secured, but injury rate is high.

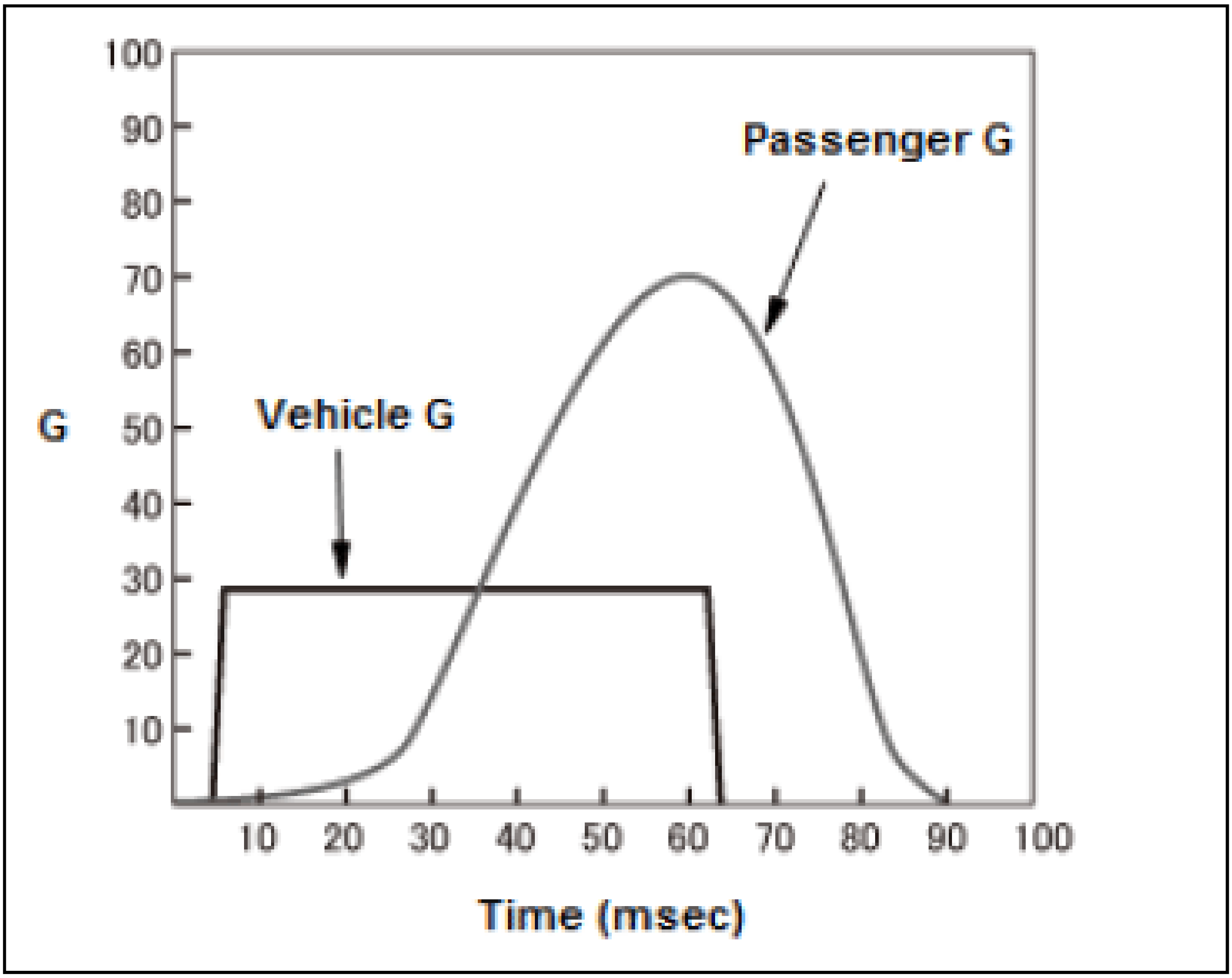

Approach B - Prioritize reduction of passenger injury rate

In order to reduce collision G-forces on passengers, frame rigidity is reduced, and its deformation rate will increase. Therefore, the frame size needs to be expanded:

- Reduce injuries by reducing frame rigidity.
- Larger frame size is required to secure survival space.

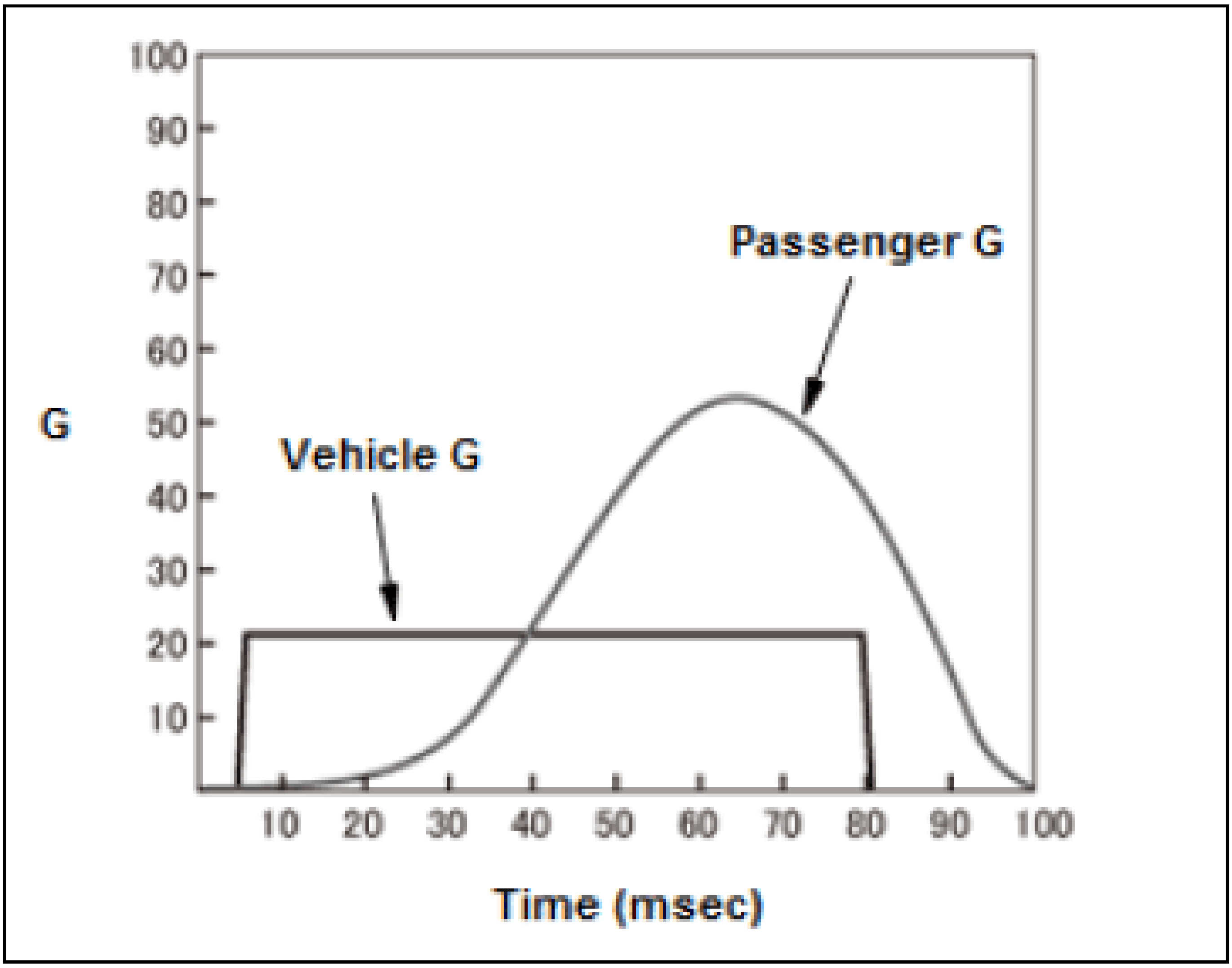

New collision safety frame for small size vehicles

By controlling G-forces to the frame, passenger G-forces are reduced, while maintaining almost the same level of frame deformation. Small size vehicles can secure a survival space and mitigate the injury rate at the same time, by balancing the cabin deformation rate and passenger injury rate at a high level.

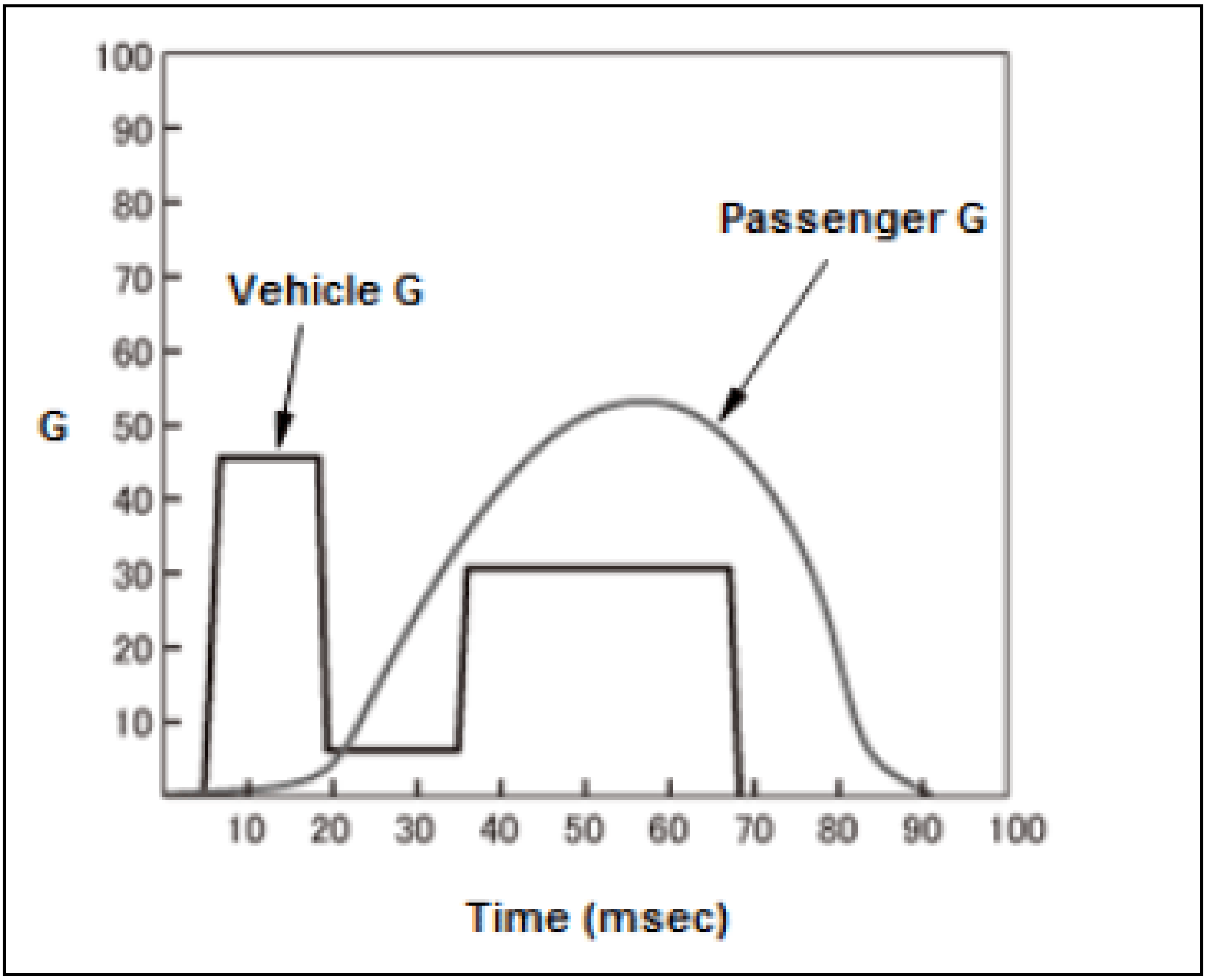

G Control with 3 Stages: Crash, Bend and Withstand

The crash safety frame is a structure which controls impact G in three stages:

- In the first stage, focus is placed on the timing difference between body G generation and passenger G generation. Front Side

  The body is designed so that a high body G is generated through compressed collapse of the front side frame's front portion (compressed collapse: a cylindrical can is collapsed in an axial direction like a bellows or an accordion). By doing so, the passenger G generation timing will be accelerated. In the early stages of the crash where the passenger G is still in a lower state, the passenger G is intentionally forced to occur so that most of it can be evenly absorbed.

- In the second stage, the body G that was increased during the first stage is reduced when the narrow high-offset rear portion of the front side frame deforms quickly This constrains the increase in passenger G and makes it possible to reduce the peak of the passenger G.
- In the third stage, while controlling the passenger G constrained during the second stage, the rigid passenger compartment absorbs impact energy while reducing body deformation as much as possible.

  With these steps, the collision performance of body helps protect the passengers.

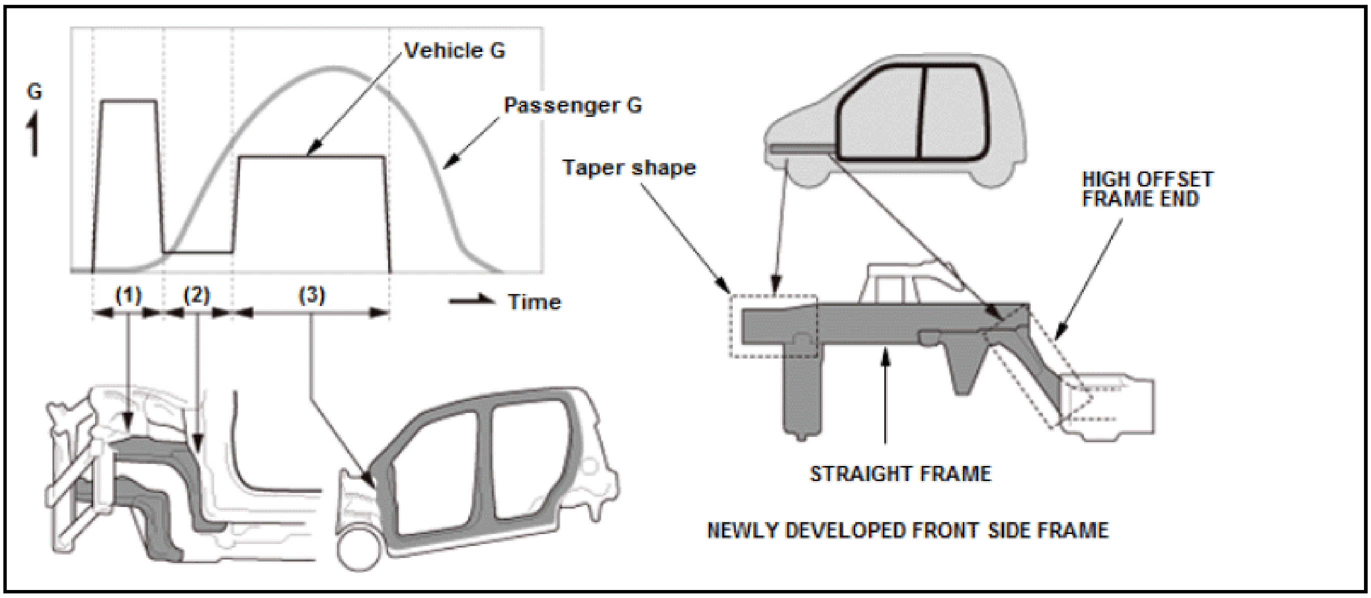

(1):	1st stage damage
(2):	2nd stage damage
(3):	3rd sage damage

Honda/Acura Collision Safety Technology Compatible (ACE™) Body

Compatible Body

Through an advancement of the G Control technology it became possible to improve safety in the impacted vehicle ("self-protection performance"), while also protecting the impacting vehicle in a collision ("damage reduction to other vehicles").

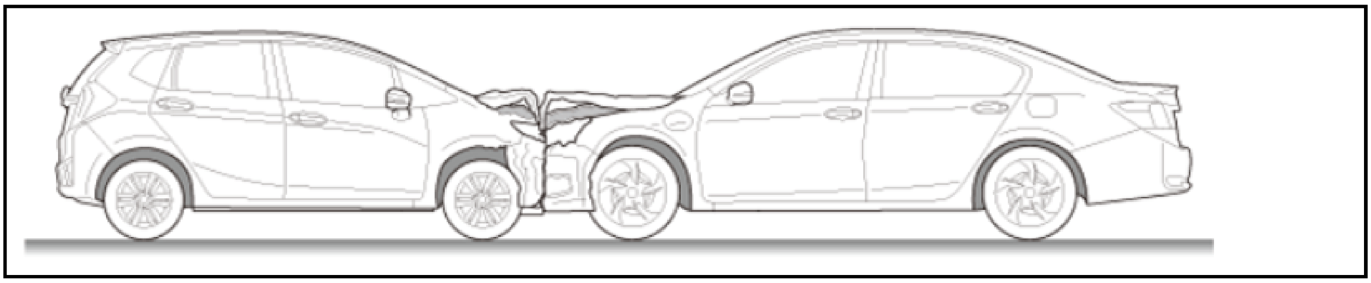

Characteristics of Compatible Body

The frame structure is modified from the traditional structure so that impact energy is received through a wider surface area and energy is more easily dispersed.

For frontal collisions, impact forces will disperse and be absorbed through the bulk head, wheelhouse member and side frames. The forces are then further transmitted to the front pillars, floor frame and side sills. The lower frame member prevents the off-set positioning against the impact absorber of the counter vehicle, and receive the impact on a wide surface area along with the bulk head and upper frame. This achieves significantly higher impact energy absorption performance. This approach not only reduces the forces to the passenger compartment, improving one's own protection safety, but also minimizes damage to the other vehicle in a collision. By also increasing the section of the floor frame as well as making it straight, body rigidity can be further enhanced. Passenger compartment deformation will be limited, increasing self-protection ability.

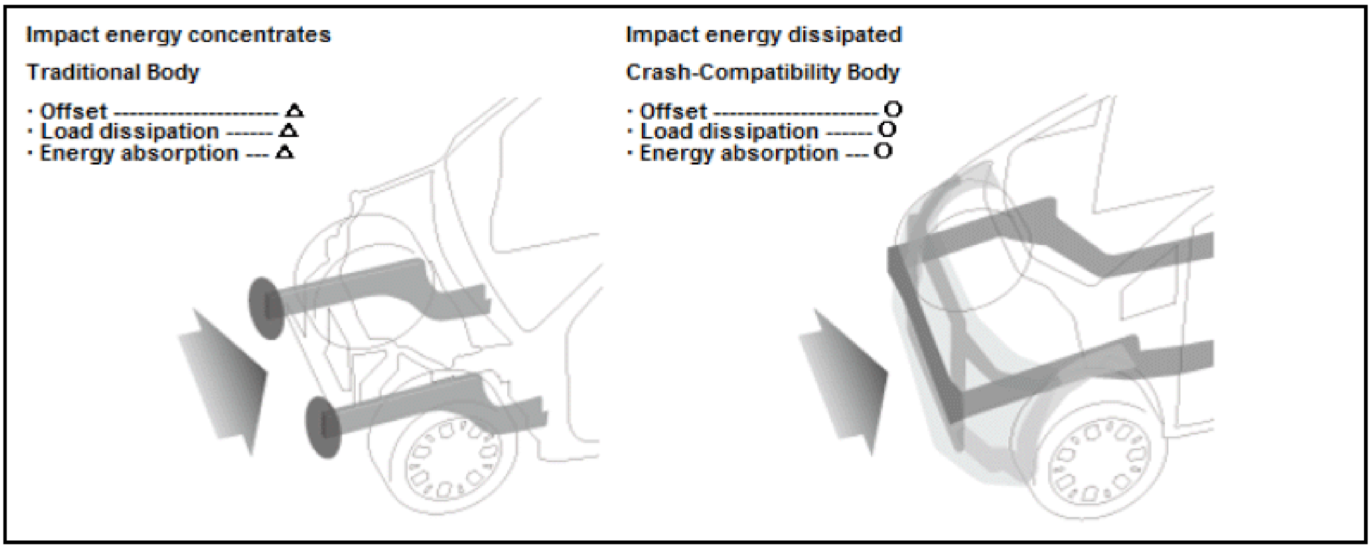
Impact energy concentrates
Traditional Body
· Offset ---------------------- △
· Load dissipation ------ △
· Energy absorption --- △
Impact energy dissipated
Crash-Compatibility Body
· Offset ---------------------- O
· Load dissipation ------ O
· Energy absorption --- O

Honda/Acura Collision Safety Technology Compatible (ACE™) Body Features

Features Of Collision Safety Technology Compatible Body

1. Increase contact with impact absorption structure of the other vehicle.

   The vehicle body is a multi-skeletal structure and is designed with the wheelhouse member positioned outside of front side frame, but joined with large gussets. This mitigates impact with other vehicles in a crash by increasing the area of contact with the other vehicle's impact absorption structure.

   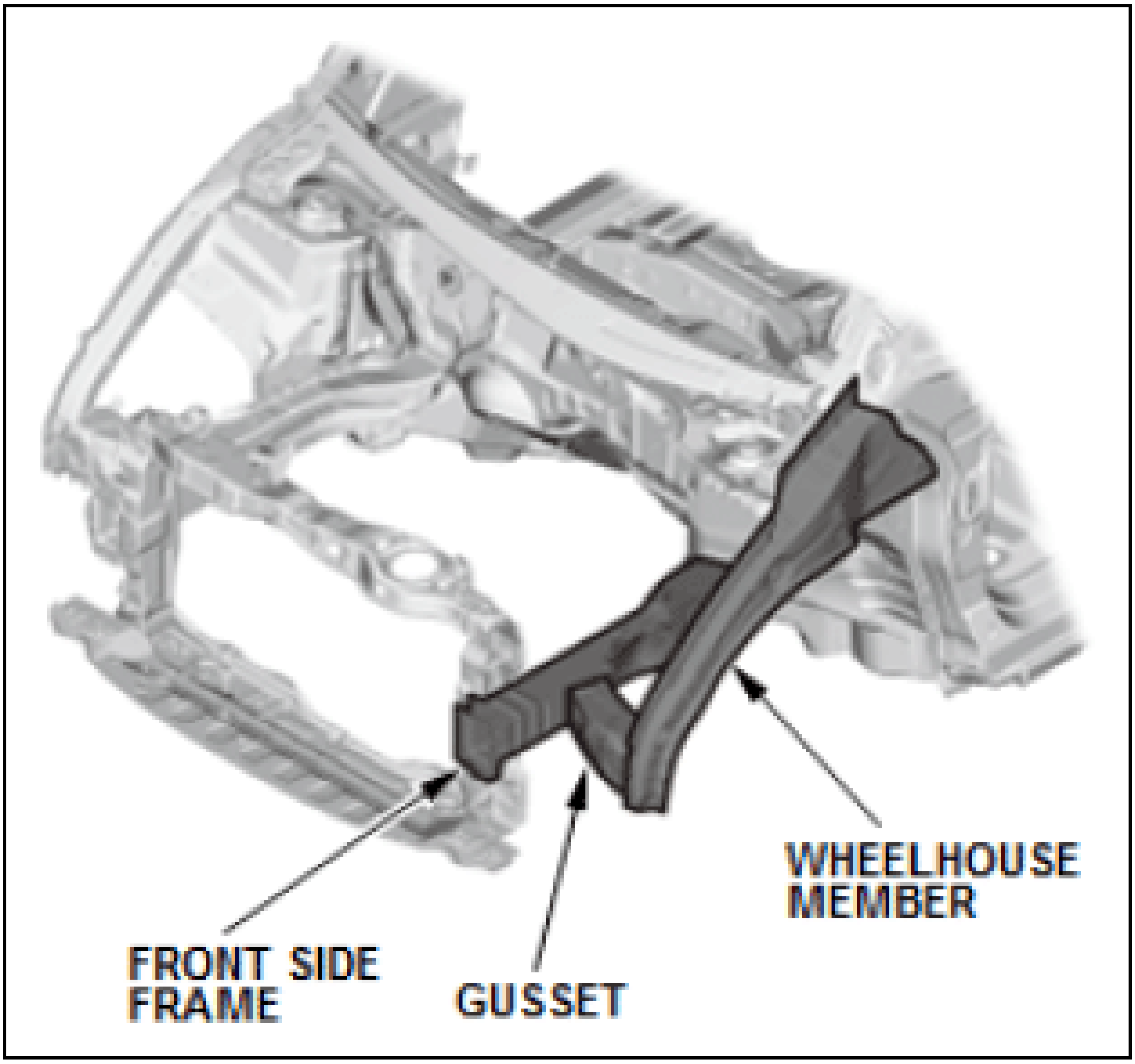
   WHEELHOUSE MEMBER
FRONT SIDE FRAME
GUSSET

2. Dissipation of impact load.

By receiving an impact on a wider surface area including the:

- Bulkhead upper frame
- Wheelhouse member
- Front side frame

The impact forces received are more efficiently dissipated through the structure.

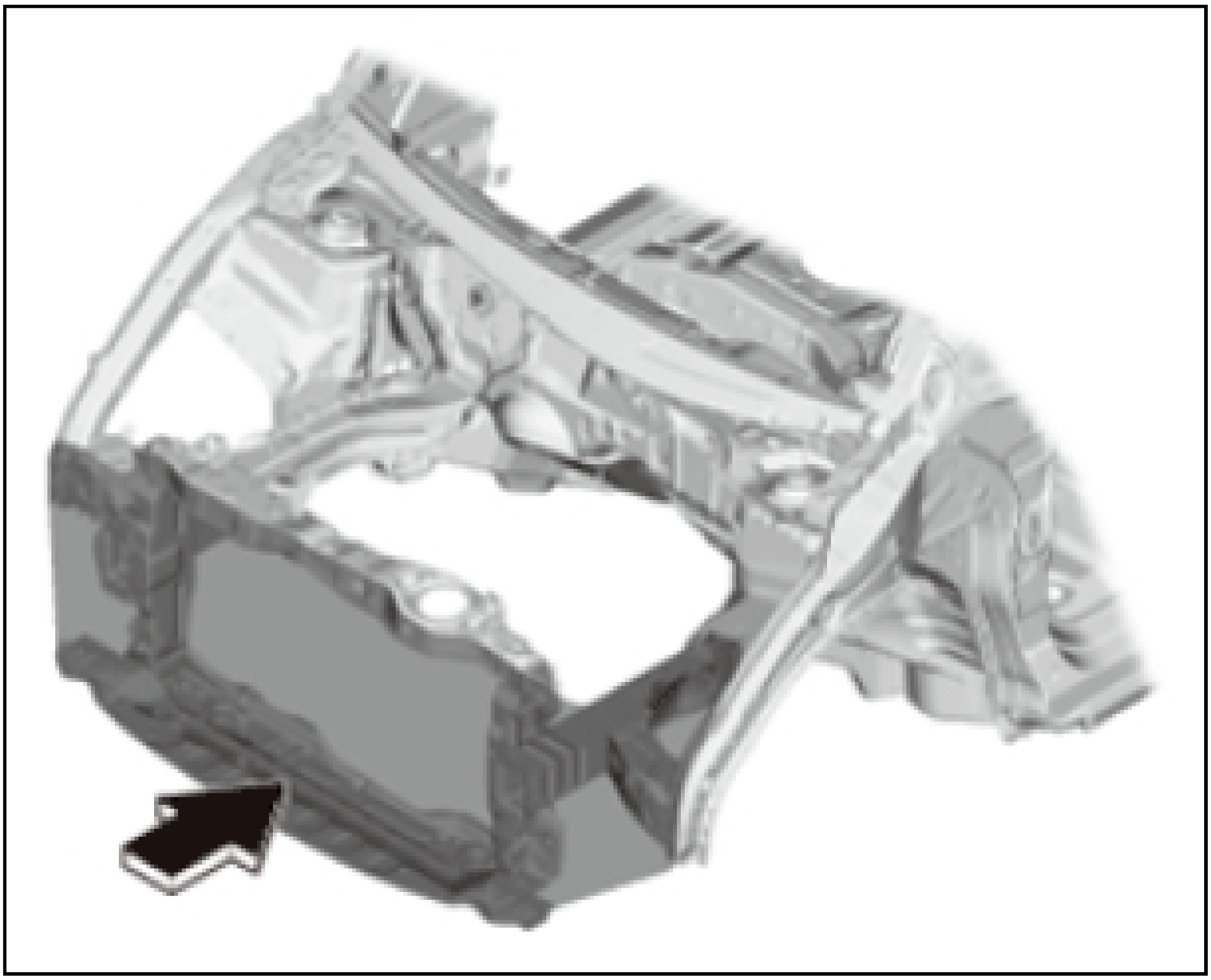

3. Highly efficient absorption of energy.

The optimization of impact absorption parts significantly reduces the load applied to the passenger compartment by improving energy absorption efficiently of the engine compartment.

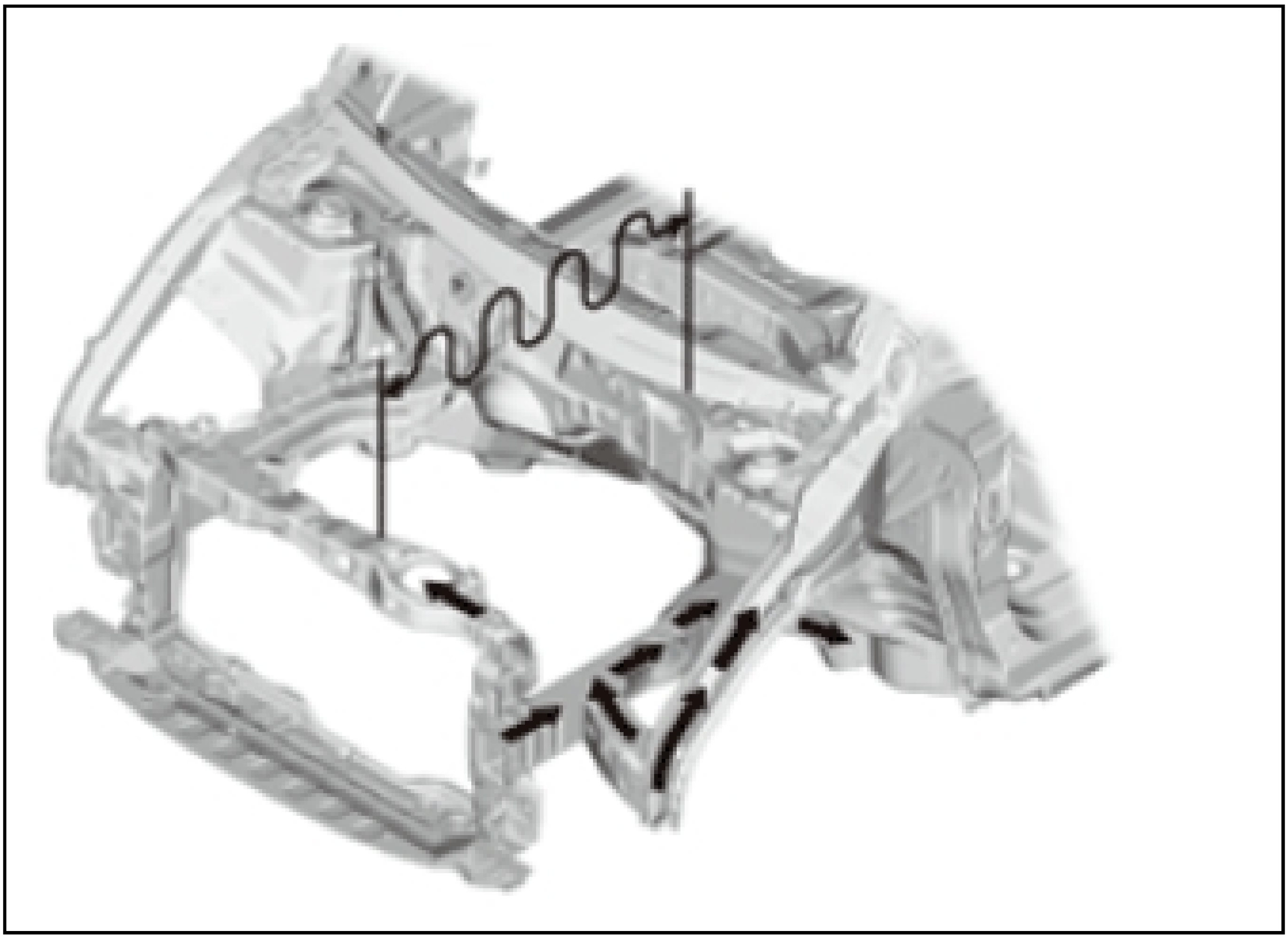

Effectiveness Of Crash-Compatible Body

In case of a collision between a large-and-small-vehicle, the impact absorption structure allows energy to dissipate in a similar way between those two vehicles. Safety is improved for both of the vehicles.

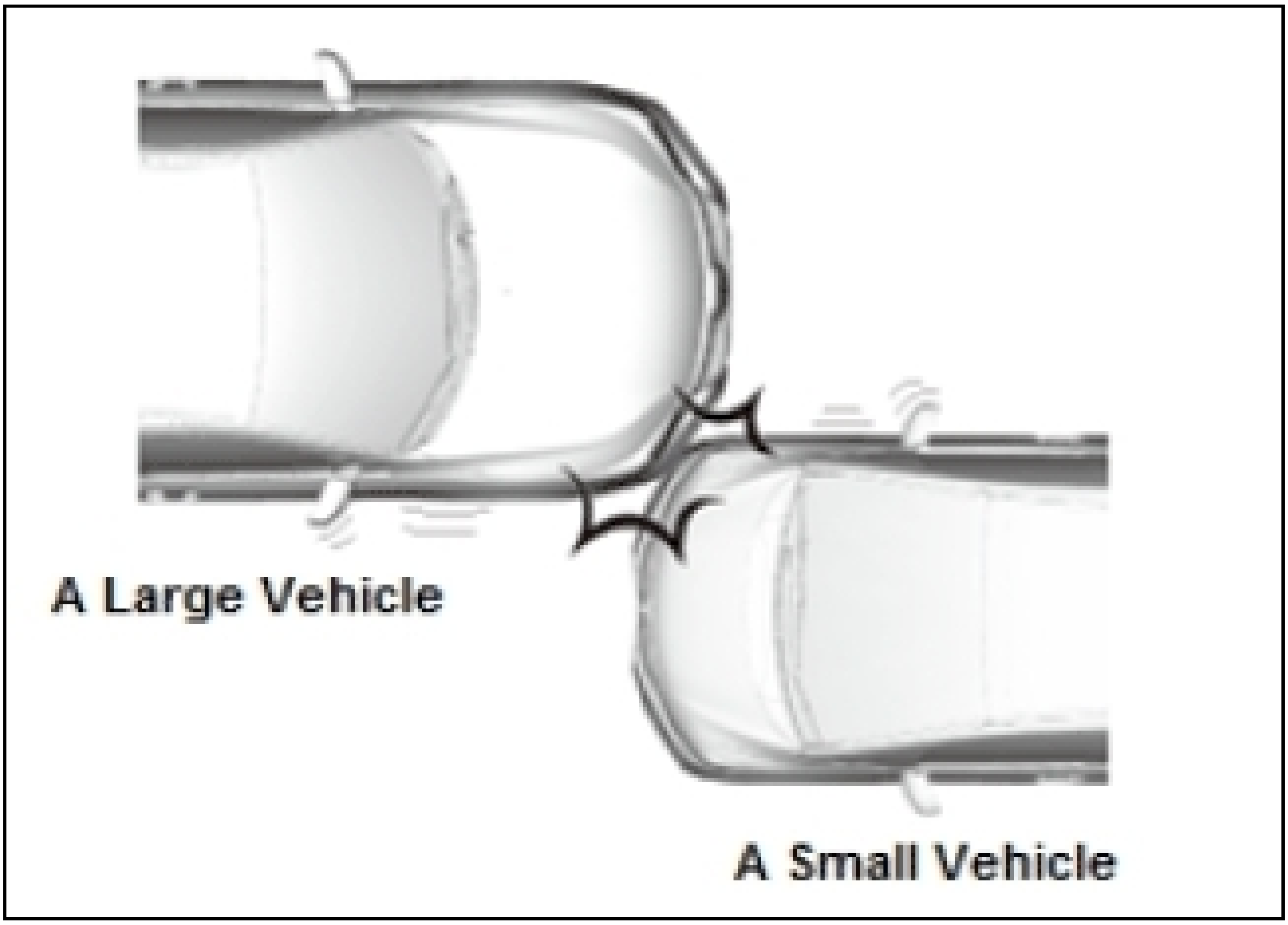
A Large Vehicle
A Small Vehicle

The frame member will be crushed by the impact through the wheelhouse member and gusset in an offset impact. This mechanism helps decrease the impact against a smaller vehicle.

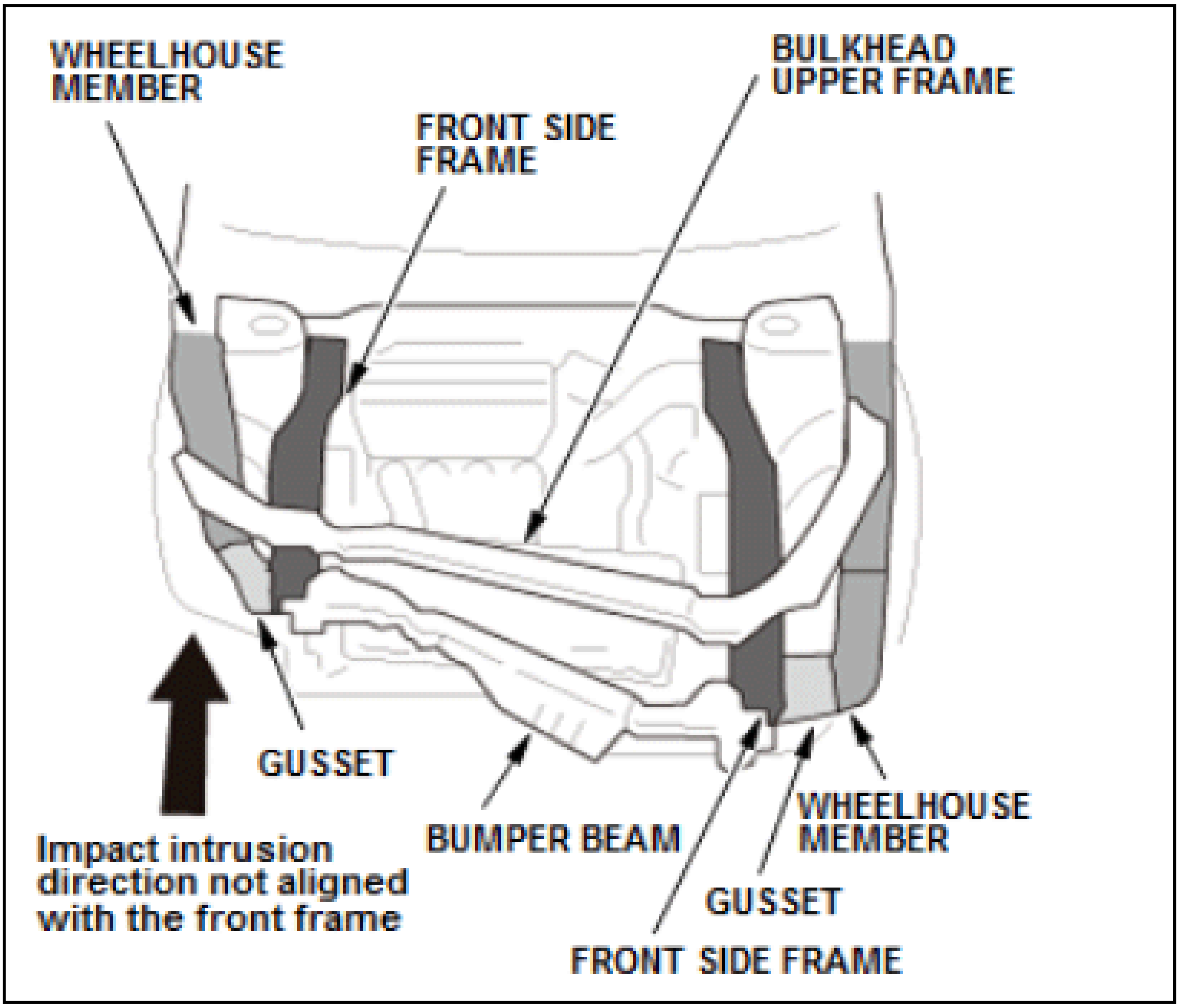
WHEELHOUSE MEMBER
FRONT SIDE FRAME
BULKHEAD UPPER FRAME
GUSSET
Impact intrusion direction not aligned with the front frame
BUMPER BEAM
WHEELHOUSE MEMBER
GUSSET
FRONT SIDE FRAME

Honda/Acura Pedestrian Injury Mitigation Body

The hood, hood hinge, front fender, front bumper, wiper pivot and or brackets are constructed to absorb impacts to minimize pedestrian injuries in a car-to-pedestrian crash.

Clearance secured beneath bumper absorbs passenger impact

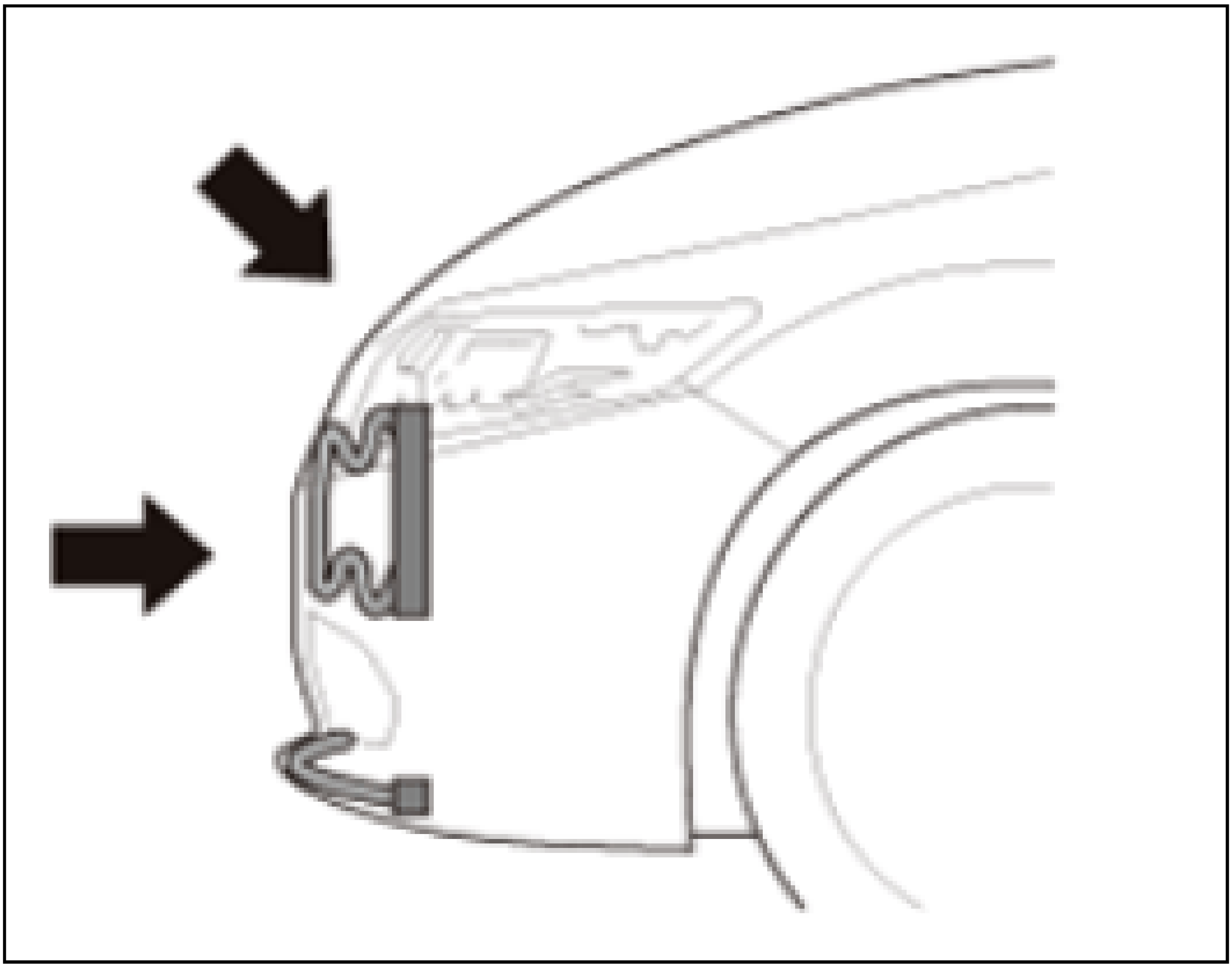

Collapsible hood hinges bend to absorb impact

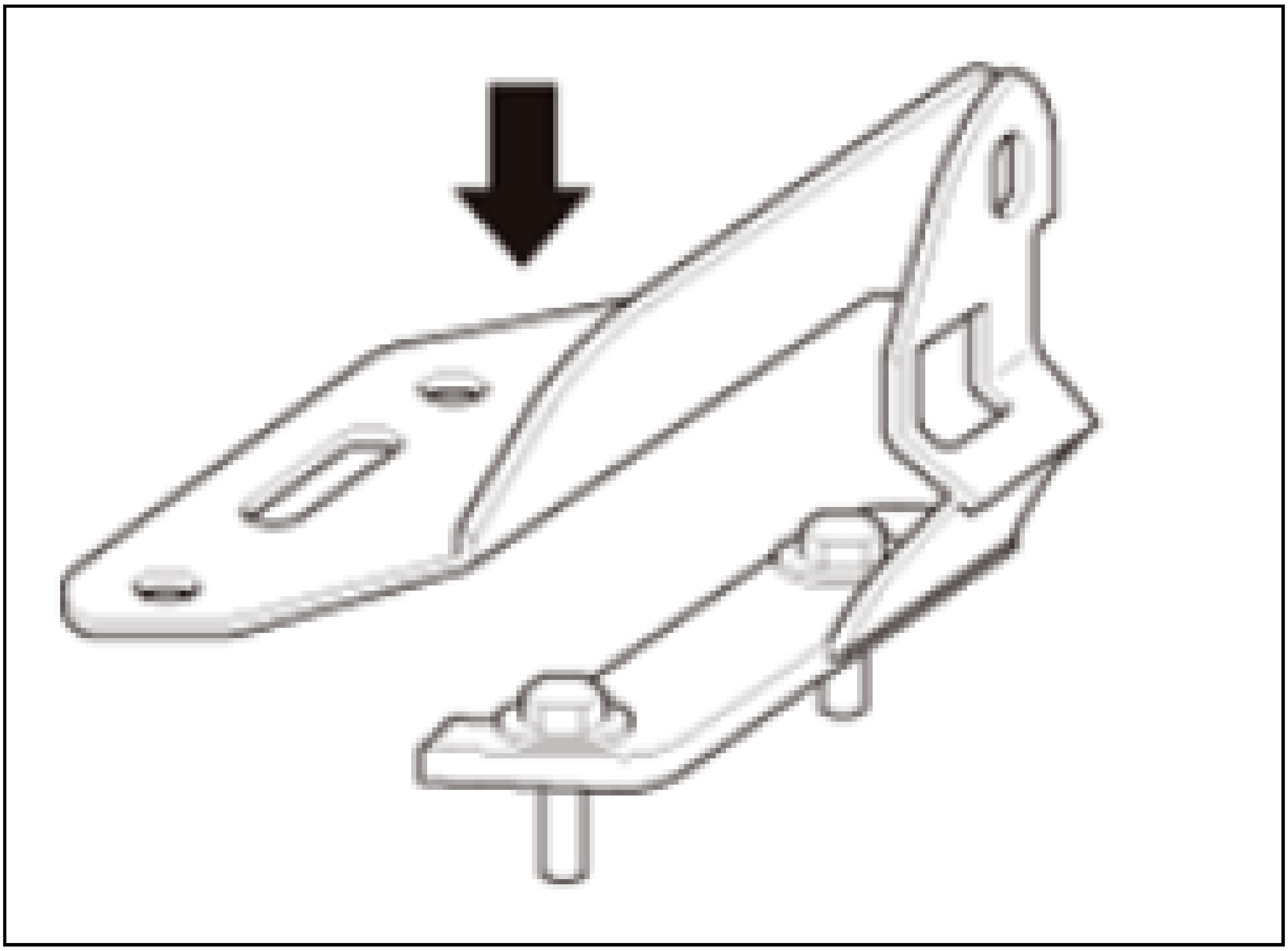

Shaft movement at the base of the wiper pivots absorbs impact

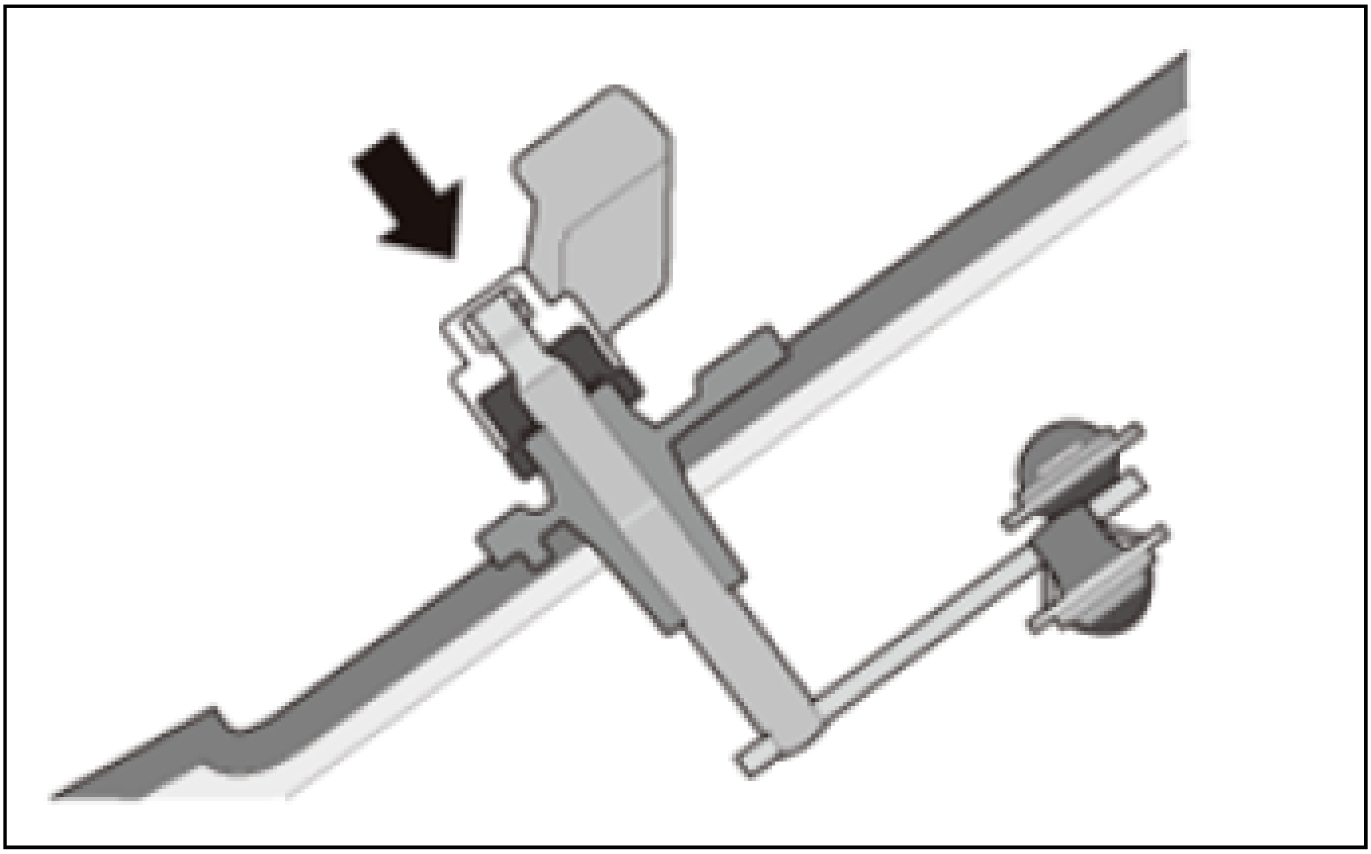

Collapsible fender brackets absorb impact by allowing the fenders to deform

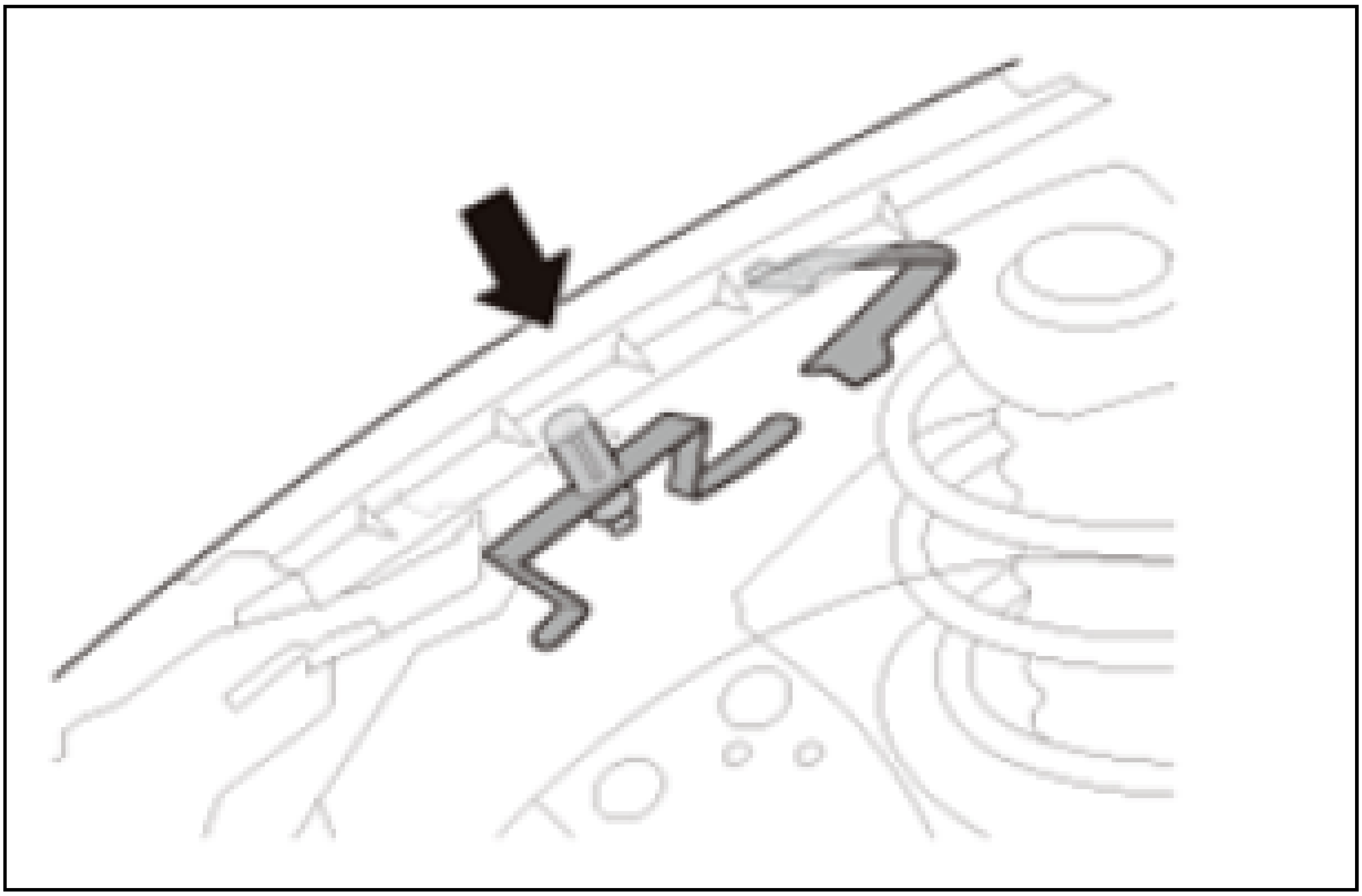

Clearance secured beneath the windshield allows deformation to absorb impact

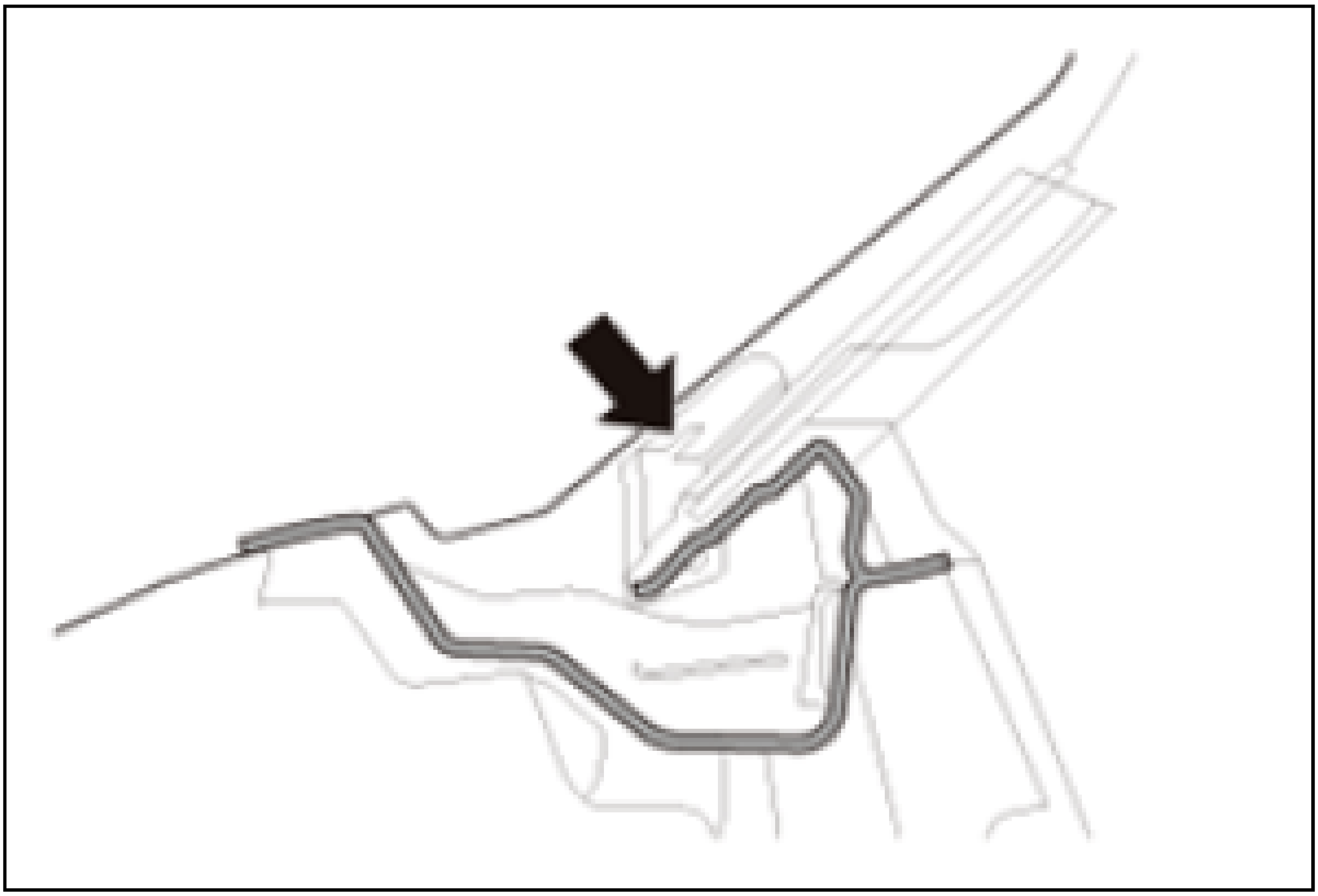

Clearance secured beneath the headlight absorbs impact by the allowing this area to deform easily

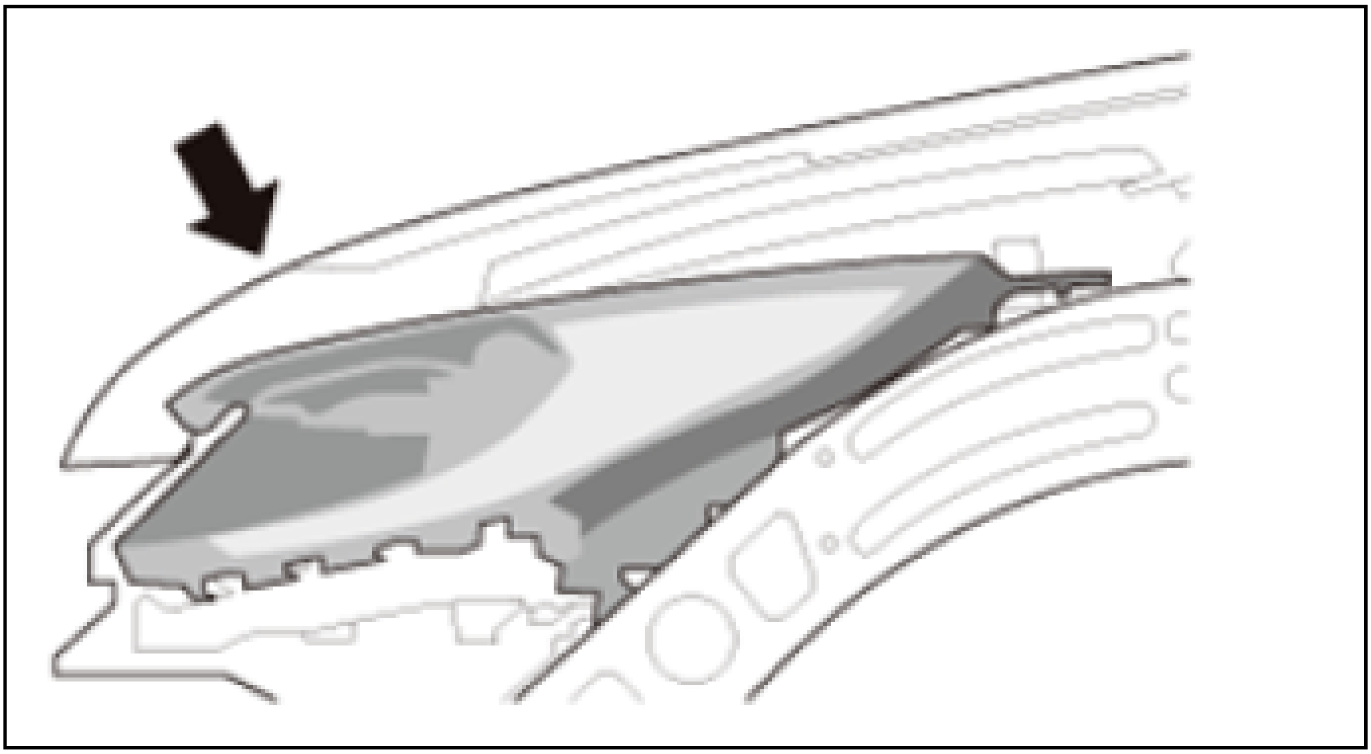

Clearance secured beneath the hood absorbs impact by allowing hood area to deform easily

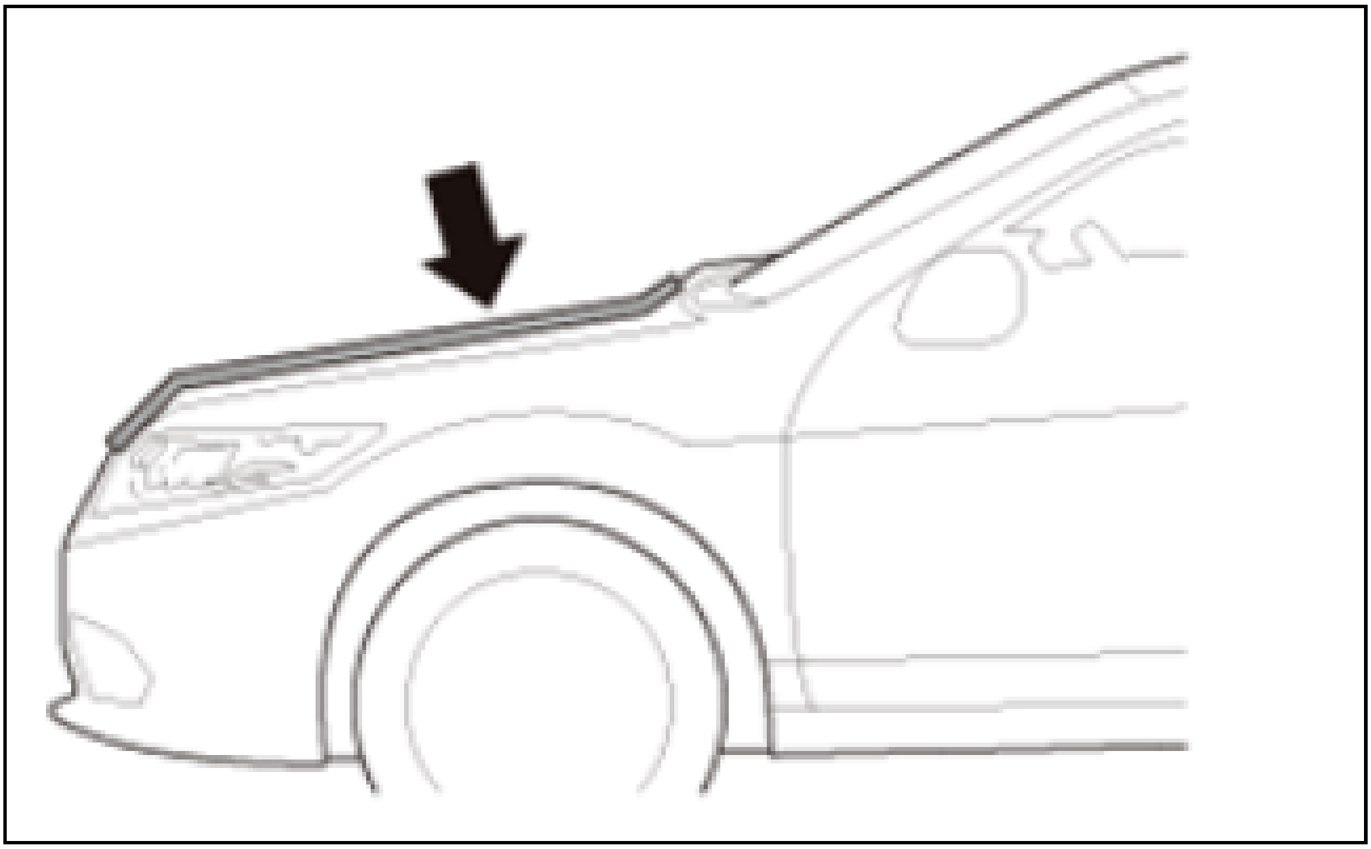

Pop-up hood hinges (some markets) absorb impact by lifting up the rear side of the hood, providing extra deformation space

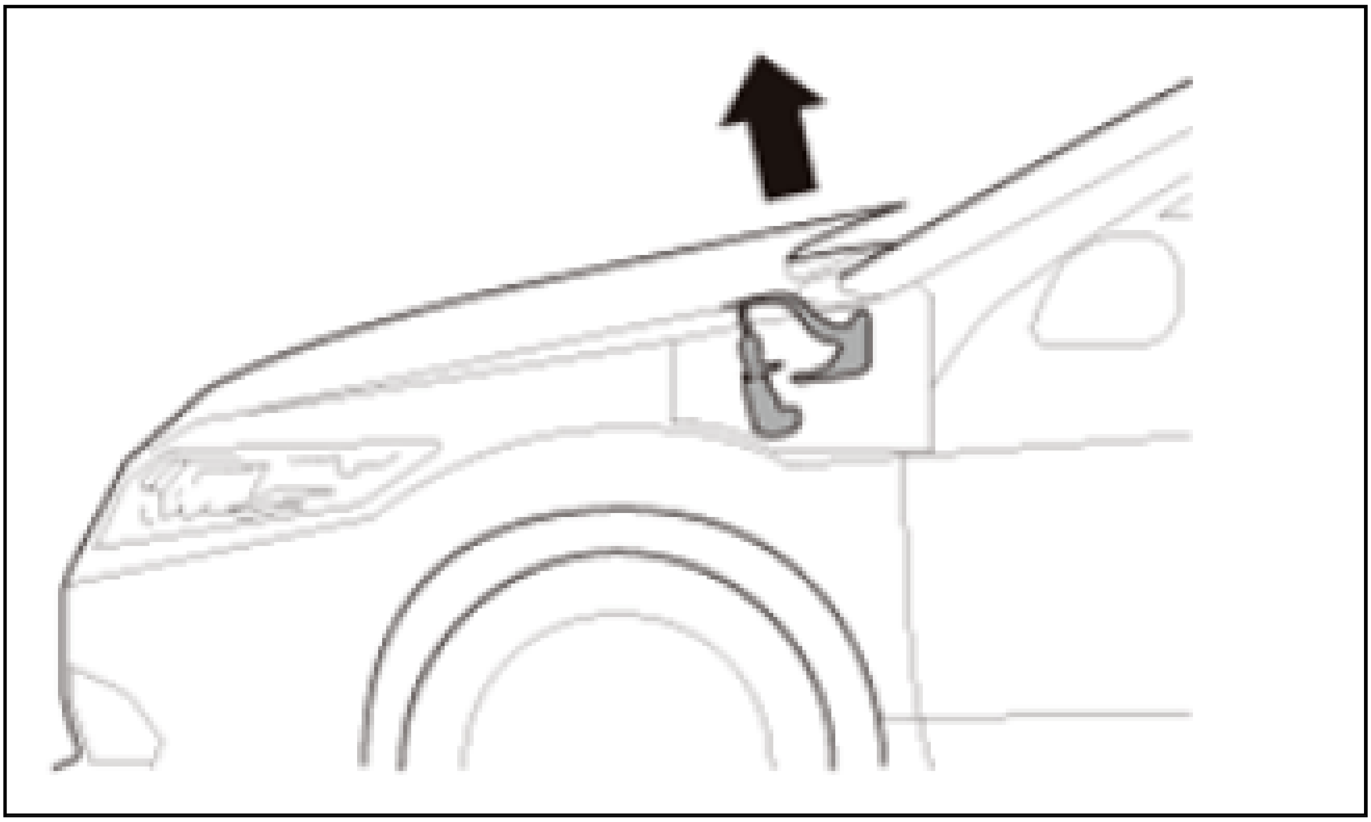

Impact Absorption Structure

The unibody has a crushable structure to absorb collision impact energy through deformation of its body structure. The front and rear compartments are constructed as impact absorbing structures. The center body (passenger compartment) has a rigid structure to disperse collision energy.

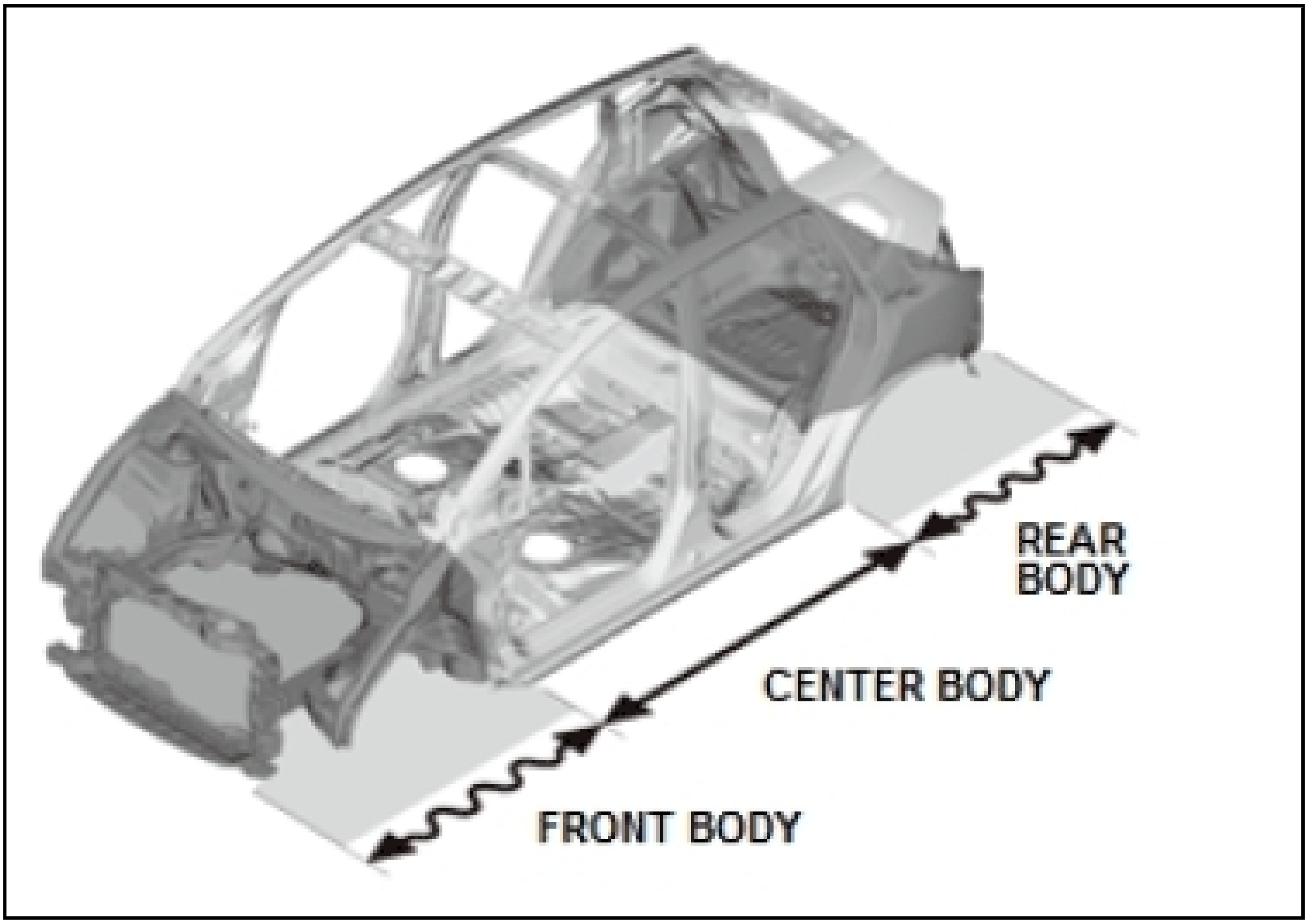

Stress Concentration

- During impact, stress is concentrated where the part shape and surface has been altered. For example, to bend a metal plate, first open a hole at the bending position. When the plate is bent, the stress is concentrated around the hole, and the plate is easily bent there.
- Unibodies have different size side frame sections, plus stamped channels and holes applied to front wheelhouse upper members. These help absorb impact energy by concentrating stress at those locations.

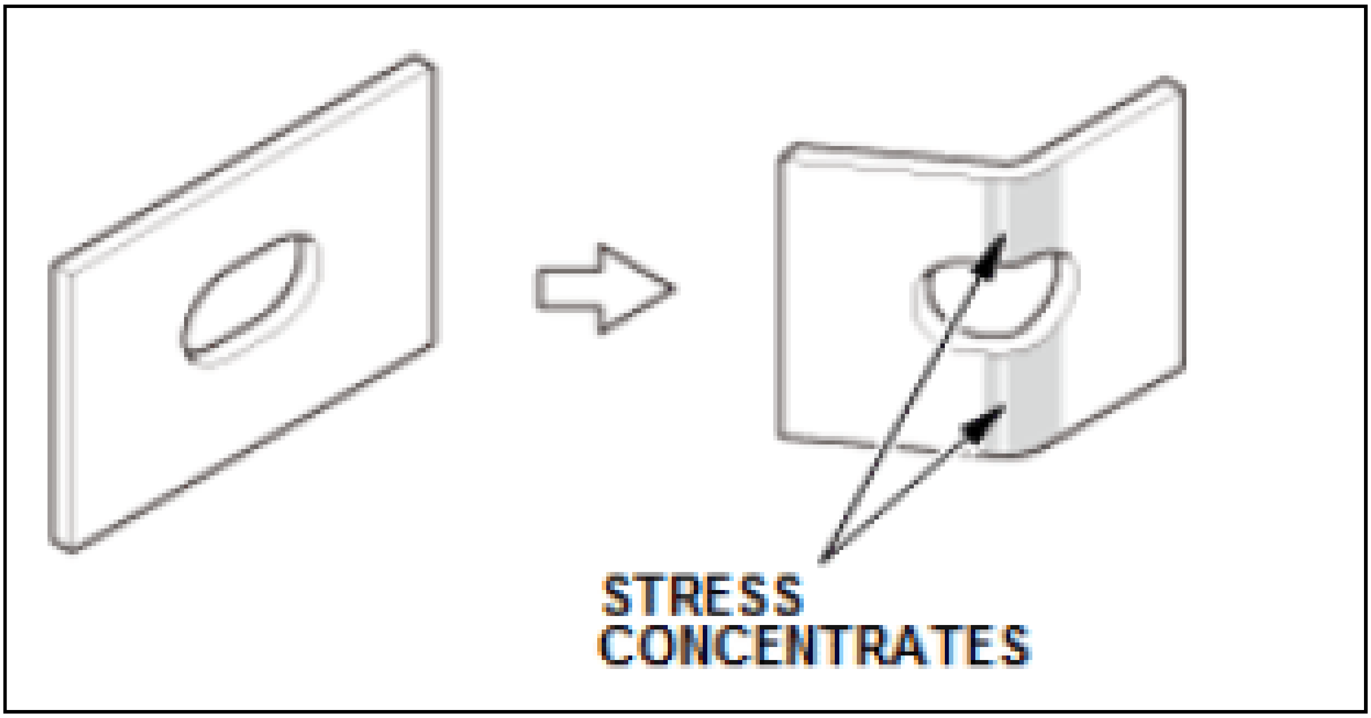

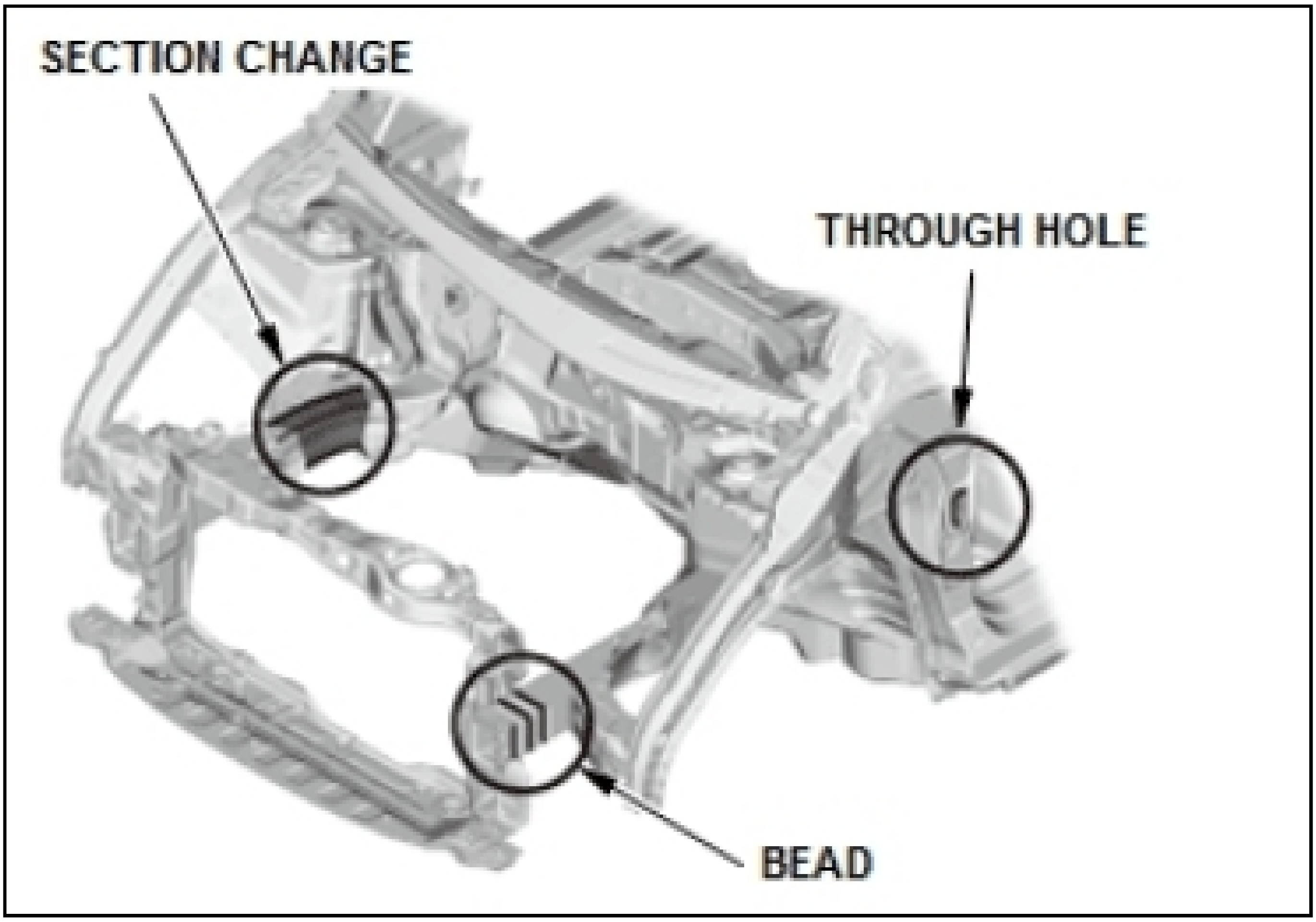

Rahmen Structure

- Rahmen structure is a framework structure constructed by the individual parts assembled together with rigid fixed points (rigid joints). When the body takes external forces, it resists them as one unit because the component members are rigidly joined. A unibody is made up of a series of connected rahmen structures.

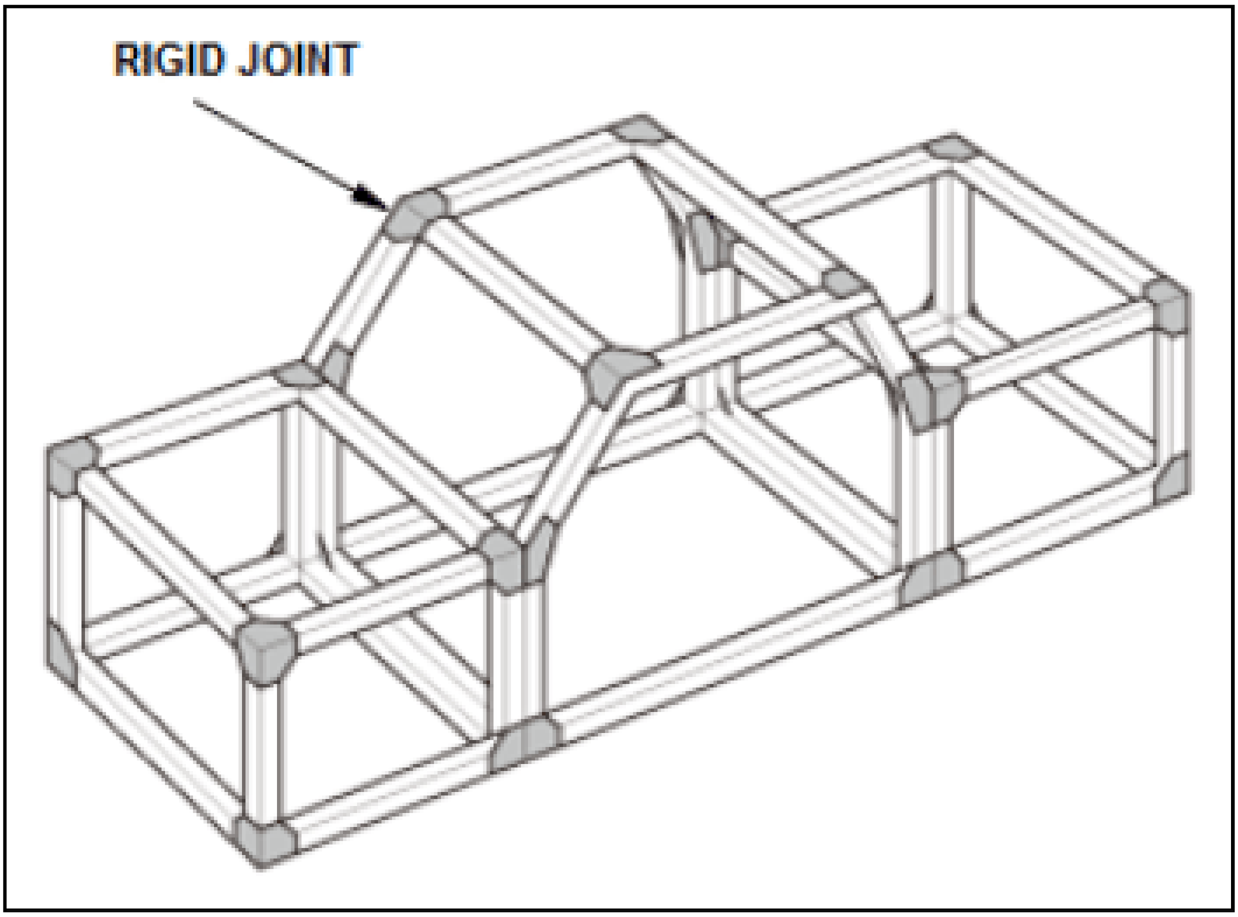

- A unibody is a combination of a number of rahmen structures that are assembled into one with spot welding (rigid points) connecting their component parts. It is designed and manufactured so that, when the body takes forces such as load intruded by:
    - Starting, acceleration and braking
    - Impact from the road surface
    - Bending and twisting (body deformation) during cornering

    The unibody resists those external forces by dispersing across the entire body structure.
- The unibody ensures sufficient strength and rigidity by:
    - Carefully designed structural members such as frames and crossmembers.
    - Thin sheet parts such as skins and panels and reinforcement parts.
- During unibody body repairs, it is important to fully understand the characteristics of Rahmen structure. These characteristics determine how far impact damage traveled through the vehicle's body It is likely that damage may even exist opposite the actual impact area.

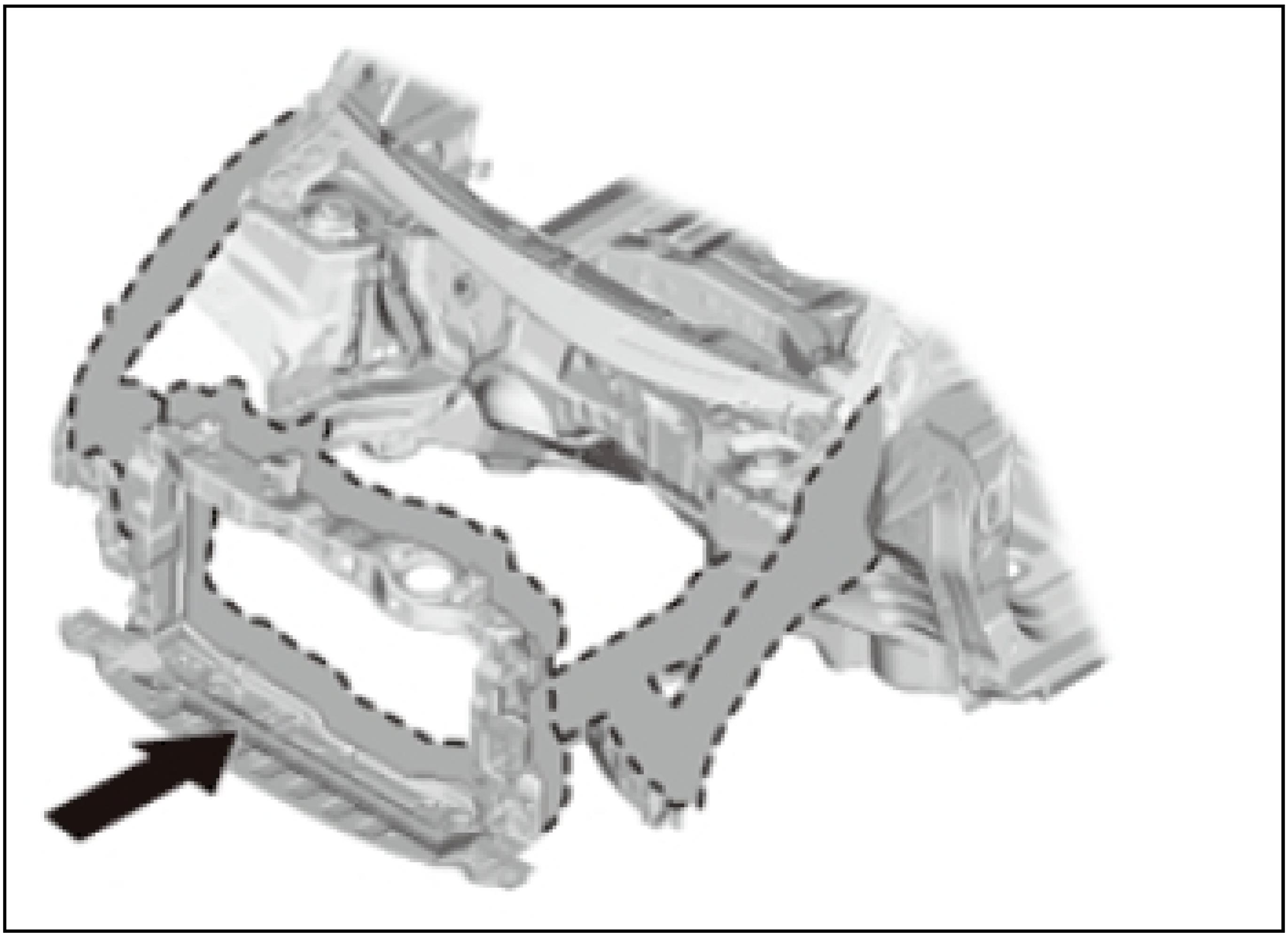

Unibody Characteristics

- Impact Absorption Efficiency and Safety

  A unibody uses the stamped floor pane l and other parts joined using spot welds to manage impact forces.

- Reduced Weight and Improved Fuel Efficiency/Driveability

  By stamping thin steel sheet and spot welding multiple panels, it is possible to reduce vehicle weight while strengthening the structure. Consequently, engine displacement can be reduced resulting in improved fuel efficiency In addition, brake and chassis parts wear is reduced.

- Manufacturing Efficiency

  Unibodies are manufactured using automated systems such as welding robots, saving labor and resulting in significantly higher production efficiency.

- Freedom of Design

  Recently it became possible to stamp a high quality steel sheet for body outer panels. Because of this, the steel sheets can be bent and formed into a wide variety of shapes and combined together. Also, it enhances design freedom. For an example, by shaping the floor panel in an optimal way by drawing (stamping), it is possible to lift the floor surface to provide more legroom. This design provides maximum passenger compartment space even in smaller vehicles.

Unibody Parts Structure

Each automobile part may be called by a different name depending on the supplier and/or auto manufacturer. Body parts are no exception. Keep this in mind when ordering or installing parts. Refer to the specific parts list of each model for more details.

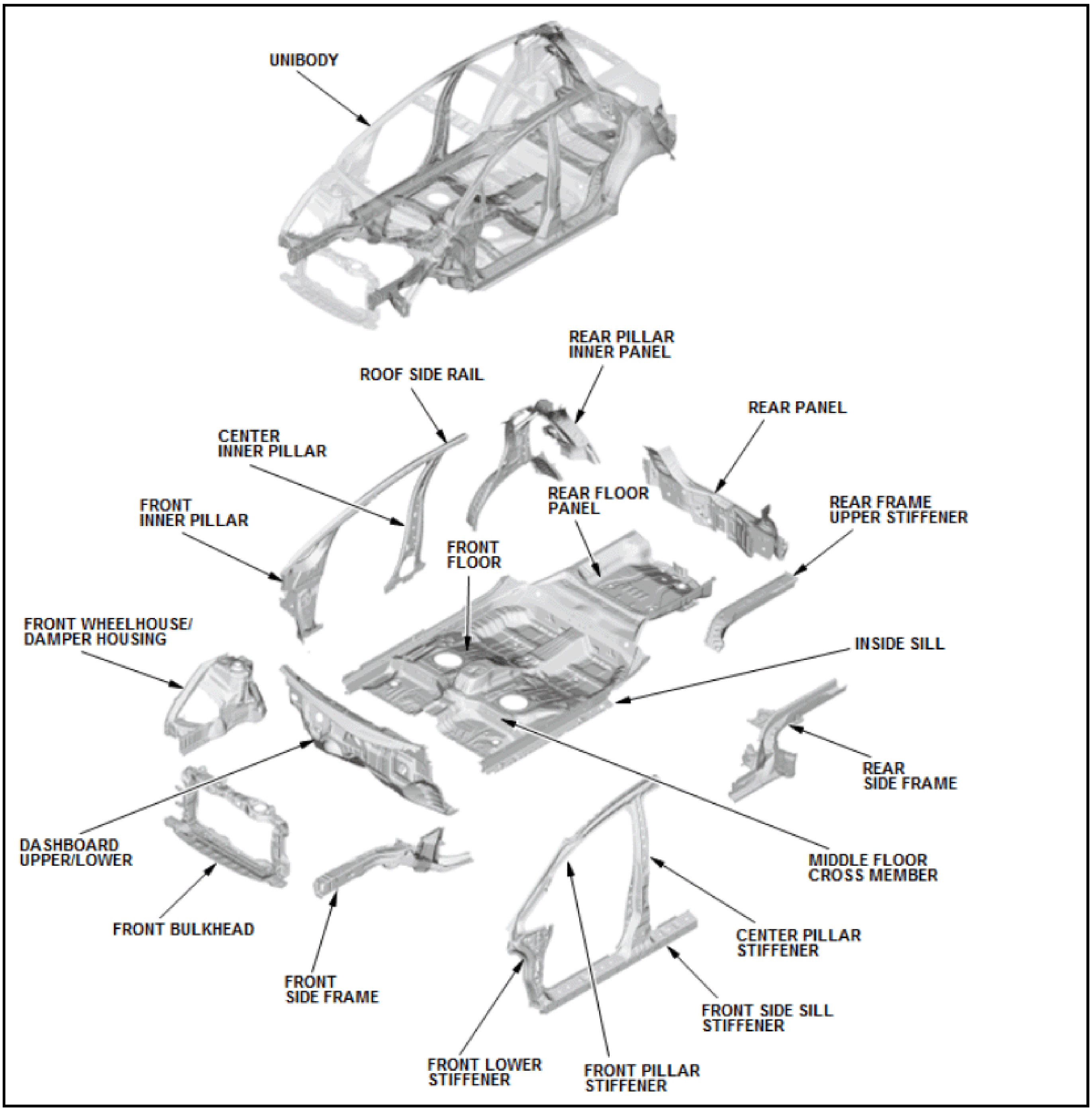
UNIBODY
REAR PILLAR INNER PANEL
ROOF SIDE RAIL
REAR PANEL
CENTER INNER PILLAR
REAR FLOOR PANEL
FRONT INNER PILLAR
REAR FRAME UPPER STIFFENER
FRONT FLOOR
FRONT WHEELHOUSE/ DAMPER HOUSING
INSIDE SILL
REAR SIDE FRAME
DASHBOARD UPPER/LOWER
MIDDLE FLOOR CROSS MEMBER
FRONT BULKHEAD
CENTER PILLAR STIFFENER
FRONT SIDE FRAME
FRONT SIDE SILL STIFFENER
FRONT LOWER STIFFENER
FRONT PILLAR STIFFENER

WHEEL ALIGNMENT

Caster Angle/Toe/Steering Axis Inclination (SAI)

Caster Angle

Caster is the forward or rearward angle of the steering axis compared to true vertical as seen from the side. Caster is measured as the number of degrees that the steering axis varies from true vertical.

- If the top of the steering axis is in front of true vertical, the caster is negative.
- If the steering axis is parallel with true vertical, it has zero caster.
- If it is behind true vertical, the caster is positive.

Caster affects vehicle steering effort, steering wheel returnability, and handling.

Steering wheel returnability refers to the vehicles ability to straighten out and the steering wheel return to center after the vehicle leaves a corner.

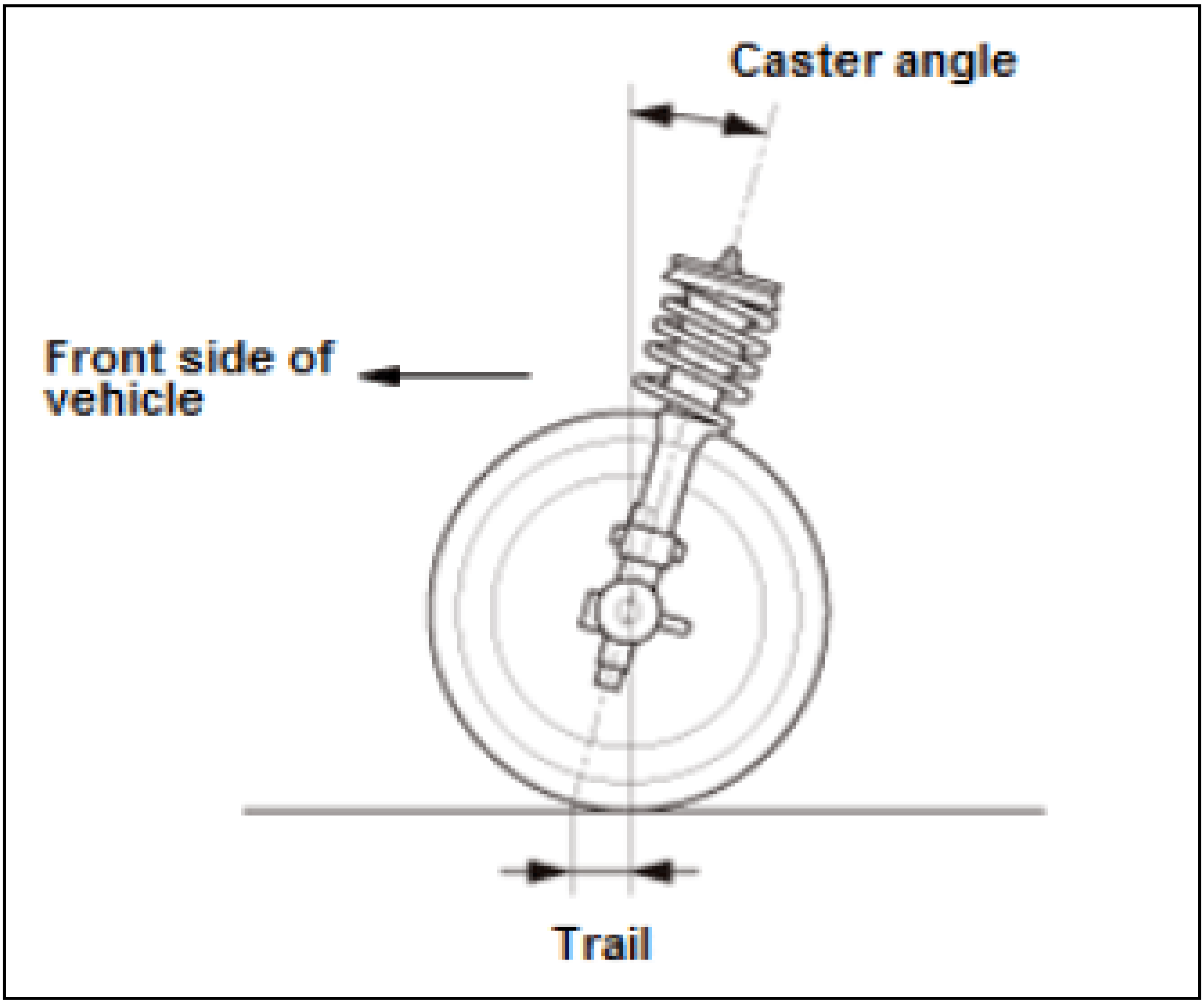

Toe

Toe is the comparison of the distance measured between the front and rear of the tires on the same axle.

Toe affects tire wear, handling and steering wheel alignment. Toe is represented by a measurement in either millimeters or inches calculated by taking the distance between the rear of the tires and subtracting the distance between the front of the tires. This measurement is called total toe:

- If the front of the tires were closer together than the rear, the vehicle would have positive toe, also called toe in.
- If the rear of the tire were closer together than the front, the vehicle would have negative toe, also called toe out.

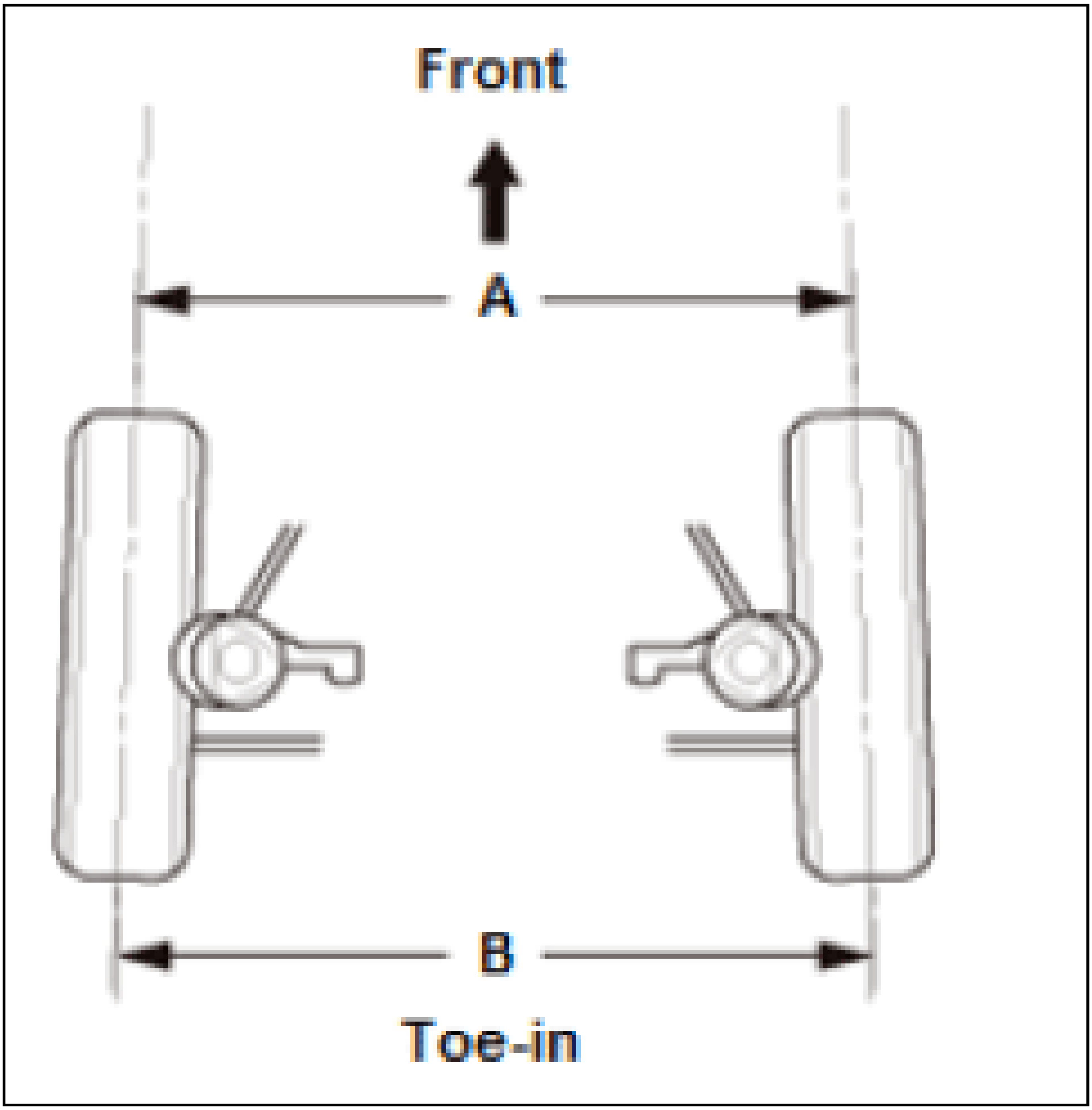
Front
A
B
Toe-in

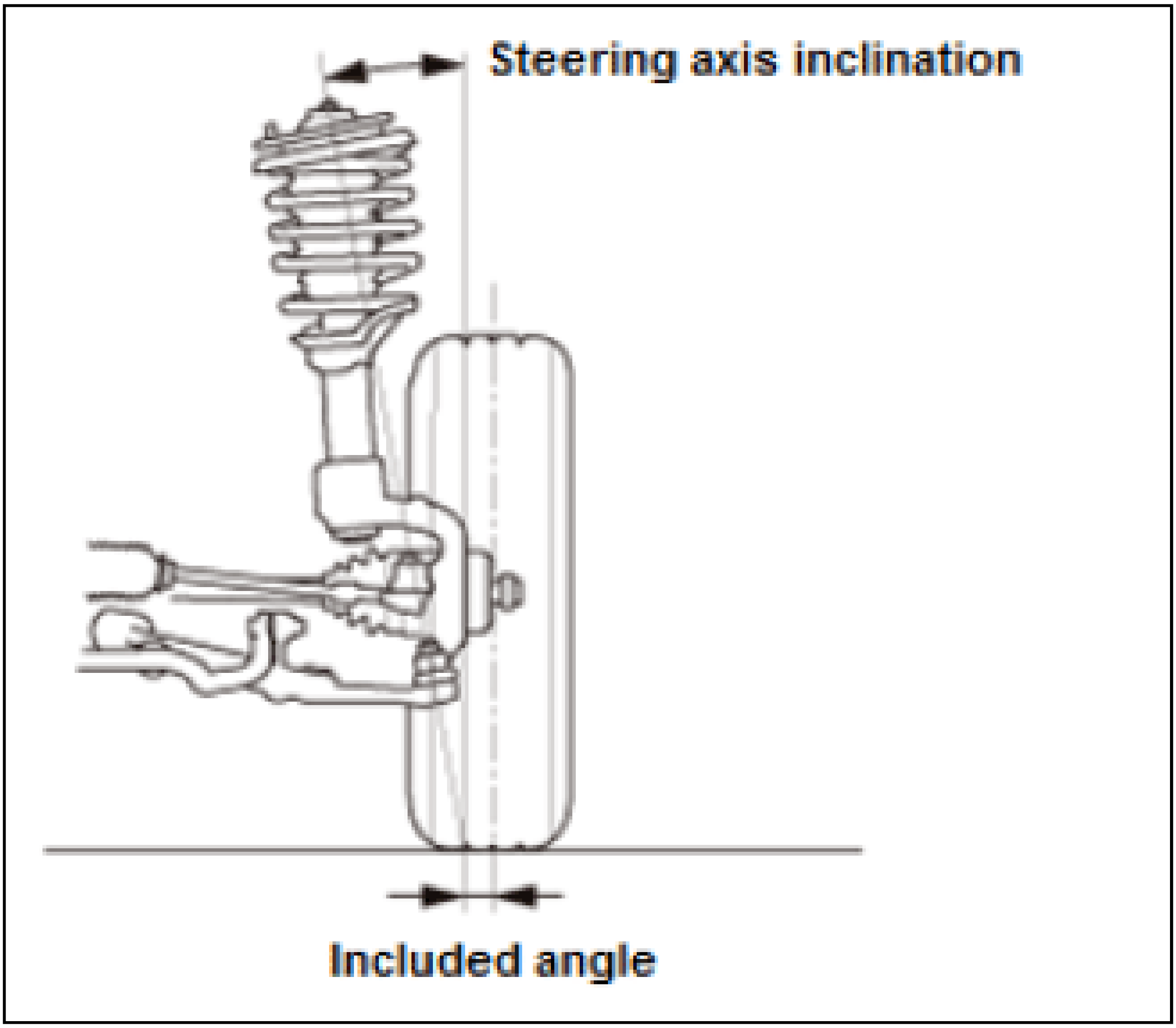
Steering axis inclination
Included angle

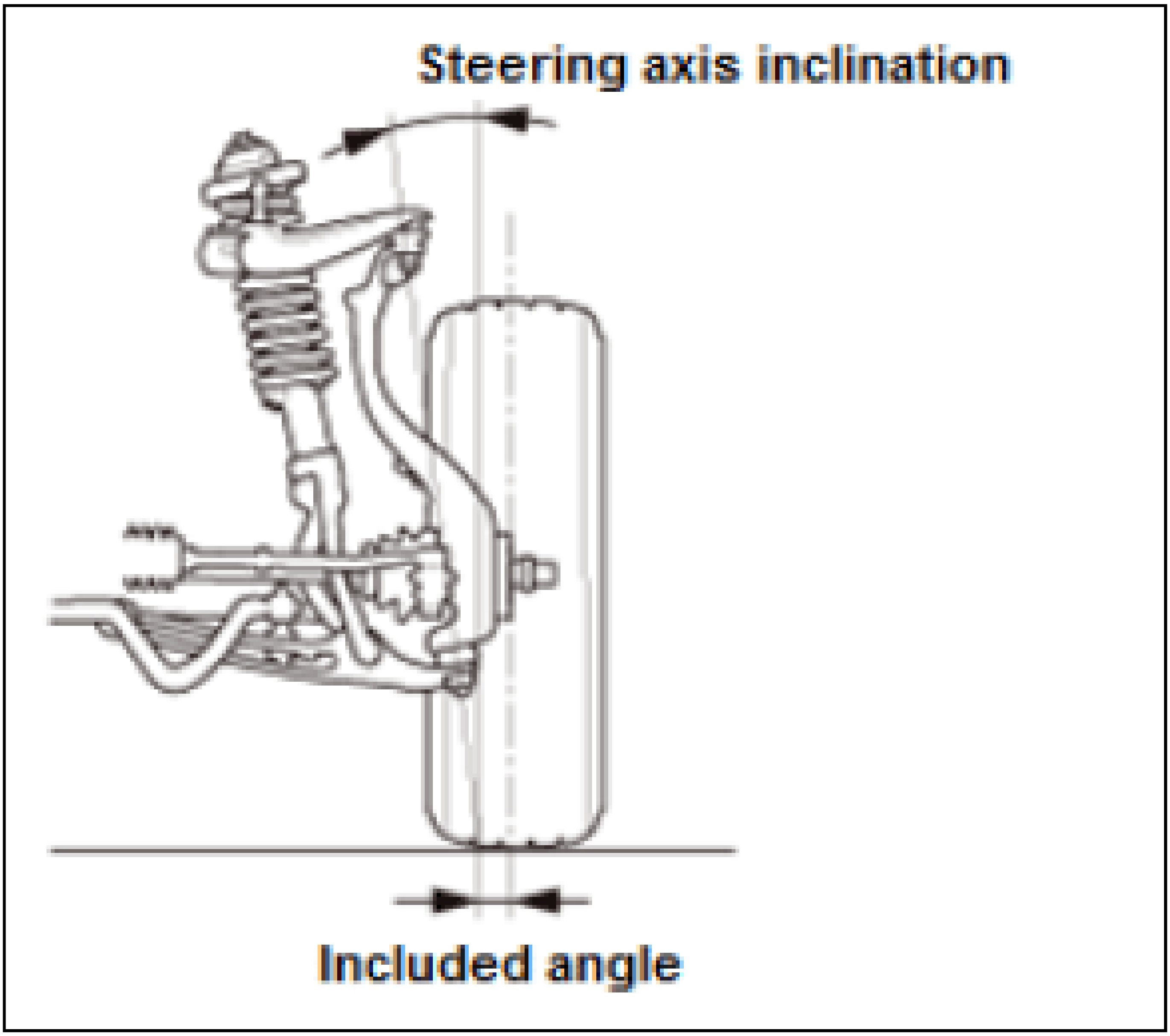

Steering axis inclination, or SAI., is the angle created by drawing a line through the upper and lower pivot points of the knuckle when looking from the front of the vehicle and comparing it to true vertical. Included angle, or I.A., is the combination of SAI. and Camber. If the side to side difference in SAI. or included angle differ 1.5 degrees or more, it may be an indication that the vehicle has damaged components.

Suspension/Camber Angle

The suspension system holds the wheels and axles in position and absorbs road vibrations. It also allows steering, directional stability and recoverability, while minimizing tire wear. In order to achieve all those requirements, the wheels have a steering axis inclination angle, a camber angle, caster angle and toe-in angle. Wheel alignment is the combination of these angles relevant to the wheel.

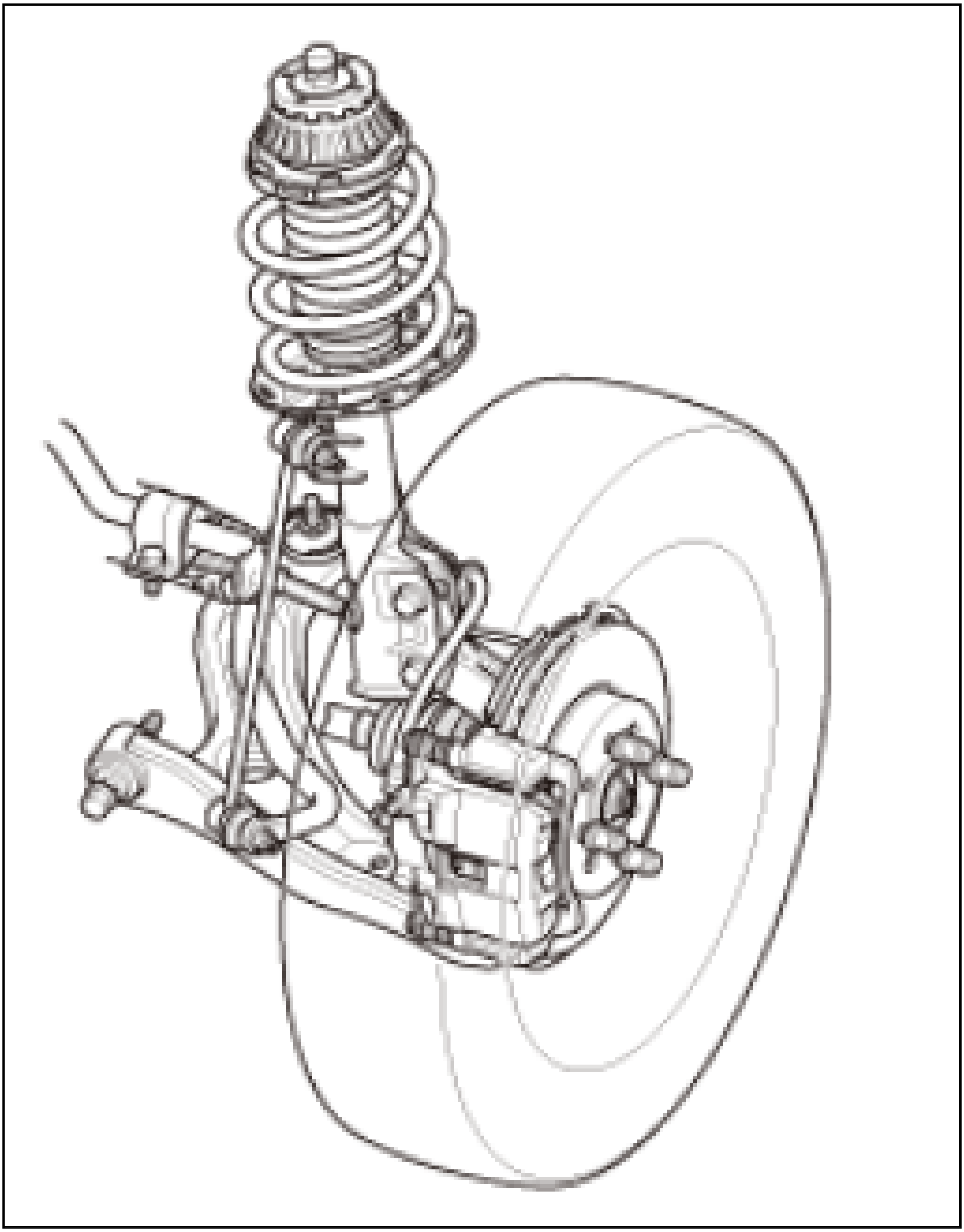

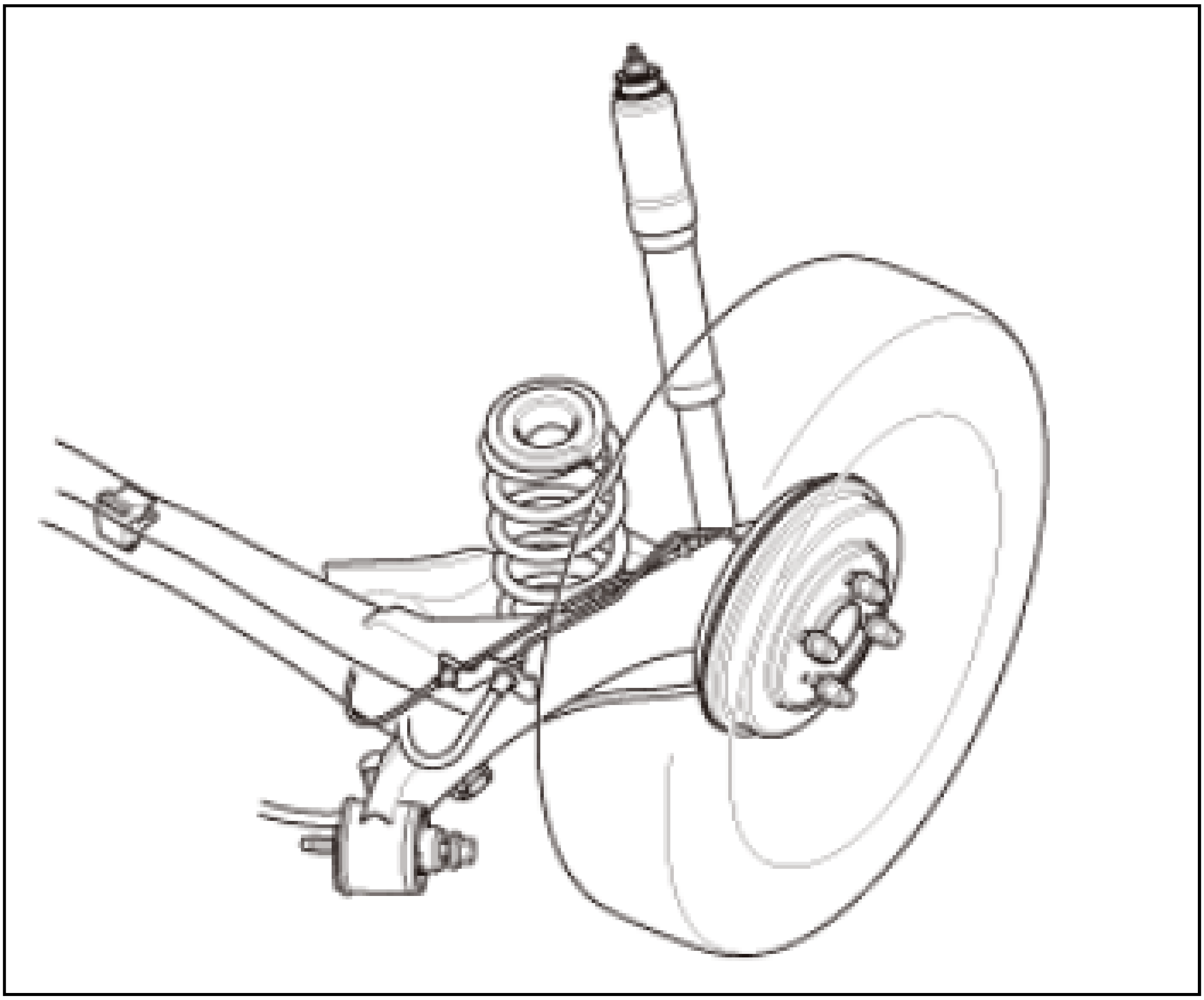

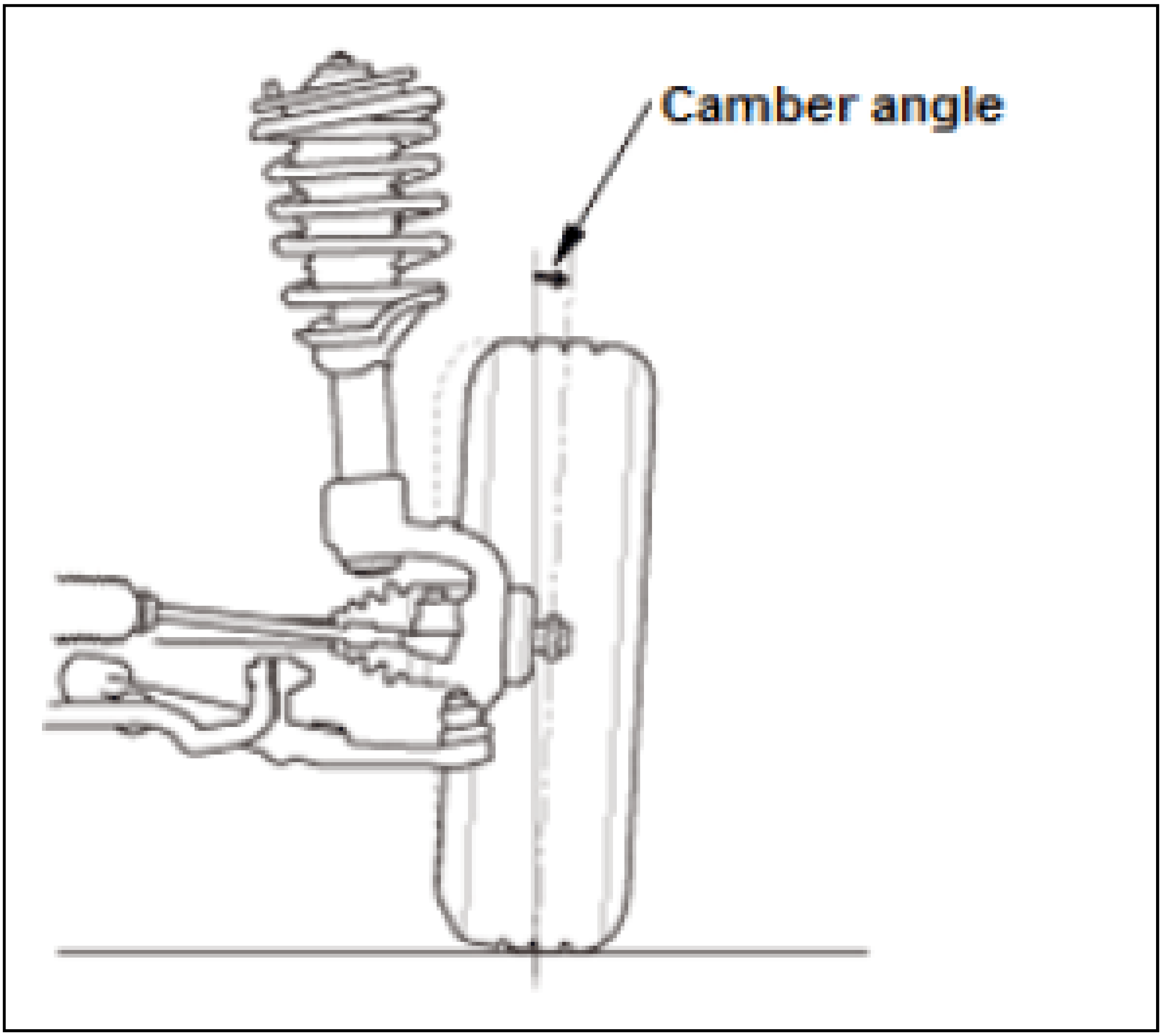
Camber angle

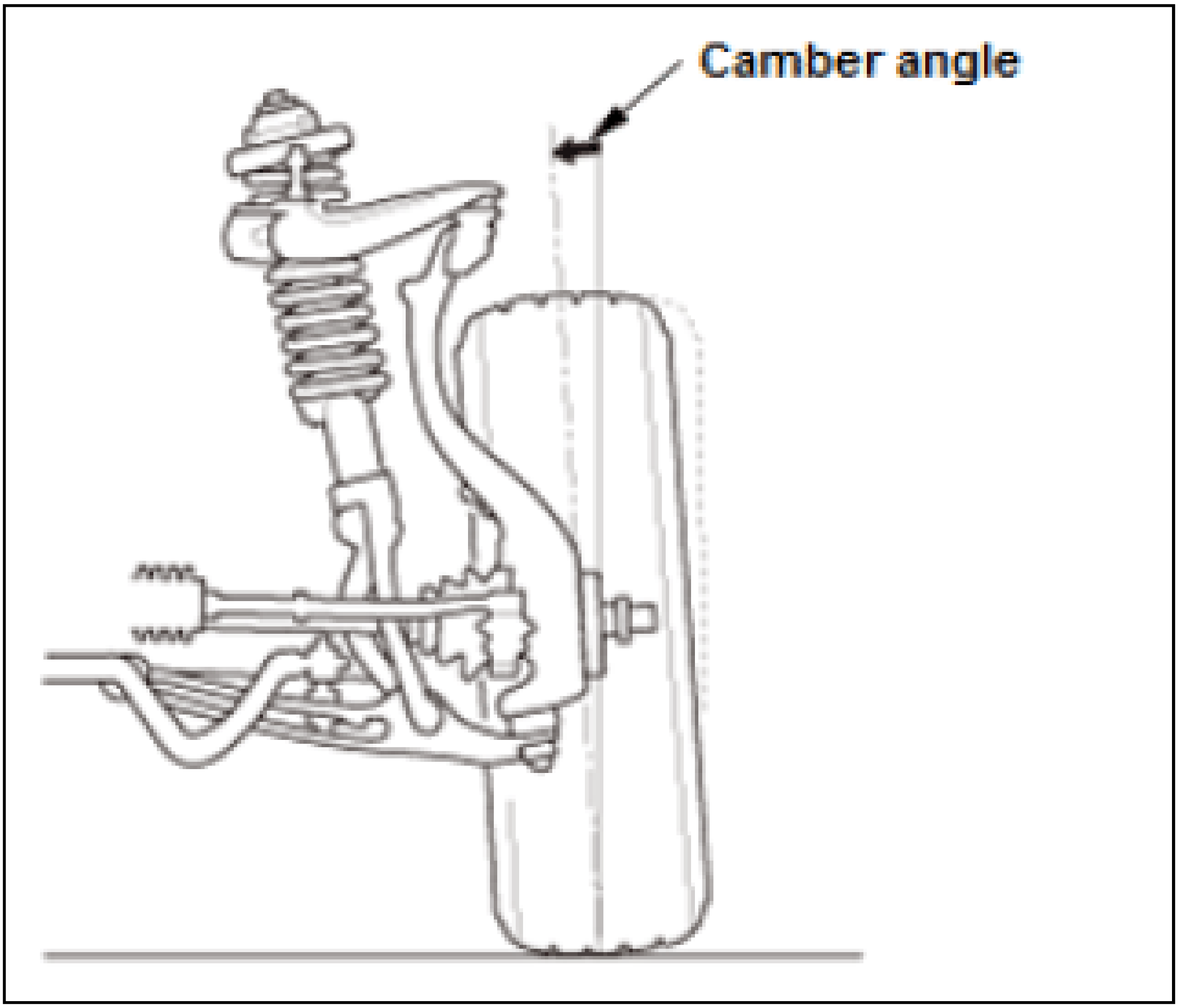

Camber Angle

Camber is the side to side tilt of the tire compared to true vertical as seen from the front of the vehicle. This angle is measured for both the front and rear tires. Camber affects vehicle ride quality, handling and tire wear. Camber is measured as the number of degrees that the tire varies from true vertical:

- If the top of the tire is leaning away from the vehicle, camber is positive.
- If the top of the tire is leaning towards the vehicle, camber is negative.
- If the tire is parallel to true vertical, it has zero camber.

MATERIAL INFORMATION

ALUMINUM

Characteristics Of Aluminum Alloy

1. **Advantages of Aluminum Alloy**

Light	The specific weight of aluminum is 2.7, 1/3 of weight compared to iron (7.8) and copper (8.9)
Strong	The alloy can offer tensile strength ranging from 7 to 60 kg/mm^2 depending on its type and through thermal refining. In addition, it increases strength under a super low temperature environment.
High corrosion resistance	The aluminum easily be oxidized in the air and form a layer of aluminum oxide on the surface. The aluminum oxide layer is superb in corrosion resistance and prevents its own corrosion.
High conductivity	The electrical conductivity is 60% of that of copper, at the same time, the weight is only 1/3 of that of copper. Thus twice of the conductivity is achieved with aluminum alloy compared against the copper when they are the same weight.
High processability	Aluminum has high plastic forming capability and allows to form a variety of shapes. By utilizing a special extrusion method, it is possible to make very complicated shapes easily.

No toxic property	Aluminum is a non hazardous material with no smell. High in sanitation. Thus often used for kettles and other kitchen/food related products.
Easy to recycle	It does not produce industrial waste. It can be recycled with only 3% of energy used for creating a new virgin metal.

2. **Corrosion of Aluminum Alloy**

   After a thin layer of aluminum oxide forms, aluminum alloy has high anti-corrosion performance. However, under some conditions, the corrosion types below can occur:

   - Contact Corrosion (Electric or Galvanic Corrosion)

     When aluminum alloy is placed in conditions where a conductive solution while in contact with different types of metals with lower potential, the electrical potential difference causes galvanic corrosion of the aluminum alloy It is also called electric or galvanic corrosion. The contact corrosion rarely occurs in dry air, however it could happen locally under the environment with presence of water content. It requires a special attention.

     NOTE: **In order to avoid contact corrosion, always refer to the parts catalogue to choose the appropriate bolts, screws and nuts to be used together with aluminum alloy body parts and replace them where specified.**

   - General Corrosion

     Occurs when the protective natural aluminum oxide layer is destroyed by a chemical agent. Aluminum alloy will be corroded by both acid and alkali solutions.

3. **Oxide Layer**

   The melting point of the oxide layer is very high, at 4532Â°F (2500Â°C). The hardness and specific weight of oxide layer is higher than the aluminum alloy itself. The melting point of aluminum alloy is approximately 1182Â°F (640Â°C).

Precautions On Aluminum Alloy Panel Repair

- When aluminum and metal oxide (iron oxide) powders are mixed and ignited for some reasons, a strong redox reaction occurs. This is called thermite reaction and can generates heat up to 5, 432 Â°F (3, 000 Â°C).

  WARNING: **Separate and ventilate aluminum work areas to avoid mixing the aluminum power with other metal powders.**

- Aluminum is non toxic, however due to its light weight, its particles can easily be dissipated into the air. Always use protective equipment to prevent dust from entering the lungs and eyes.
- When aluminum is in contact with other types of metals (especially iron), it will cause galvanic (contact) corrosion on aluminum.

  Because of this characteristic, if the tools used for steel panel repair are then used on aluminum parts, the iron power will adhere to the aluminum surface causing corrosion. Maintain a separate set of tools and work area used only for aluminum repair.

- When aluminum alloy is exposed to the air, an aluminum oxide layer will be generated in a short period of time. This oxide layer can negatively impact putty and paint work, therefore base coat treatment must take place immediately after sanding and degreasing the surface.
- Aluminum is brittle and tends to crack and work harden easily. By heating, workability improves when restoring the deformed areas and work hardening and crack can be prevented. Heating is very effective during repair, however the temperature must be tightly controlled as the workability becomes the best only within a tight optimal temperature range. When the temperature exceeds this range, the aluminum's durability is reduced.

- **Aluminum Sanding Precautions:**
  - Use separate sanding tools and coated abrasives for aluminum repair.
  - Use lower sanding tool speeds to reduce heat tool and avoid continuous heating work.
  - Do not use clogged sanding tools or coated abrasives.
  - Use only stainless wire brushes, never use a regular steel wire brush.
- **Aluminum Welding Precautions:**
  - Clean the repair area before welding.
  - Confirm welding conditions using a test piece before making actual welds. Do not start the welding arc on the joint surface.
  - Do not use a welding wire without referring to the information in the model specific body repair information.

  - Use only 100% argon shielding gas.
  - Welding wire must be stored in a dry, temperature-controlled area inside a closed container. Do not use wire that has been stored for a long time.
  - Do not use an oxyacetylene gas torch for welding or soldering.
- **Aluminum Metal Work Precautions:**
  - If cracking is observed in the buckled area of structural components, replace the parts. Do not attempt repair.
  - The buckled area of 5000 grade aluminum parts must be straightened using heat within a tight temperature range. Do not cold straighten this type of aluminum. Do not repair damaged aluminum castings.
  - Do not clamp tools directly to the aluminum.
  - Do not use a file-faced hammer.
  - Do not solder aluminum parts to repair them.
  - Always apply epoxy based primer before putty application.
- **Aluminum Assembly Work Precautions:**
  - Only use specified screws and bolts.
- Aluminum Inspection Precautions:
  - After straightening and welding work on the structural parts is completed, make sure to check for cracks.

Types Of Aluminum Alloy

Aluminum with a purity of 99.00% or higher is called pure aluminum. Aluminum alloy is the combination of aluminum and various different types of elements in order to improve the strength and other characteristics.

Aluminum alloy can be categorized into two major types of rolled alloy and cast alloy the type chosen depends on the application requirements. Rolled alloy is mainly used in a form of plates, pipes, sticks, wires, and some casting parts. Cast alloy is mainly used for casting parts and die cast. They are also subcategorized into non heat-treatable and heat-treatable alloys.

Non heat-treatable alloy can achieve the specified strength by a cold work including rolling process, meanwhile heat-treatable alloy can achieve the specified strength by heat treatment including hardening and normalizing processes.

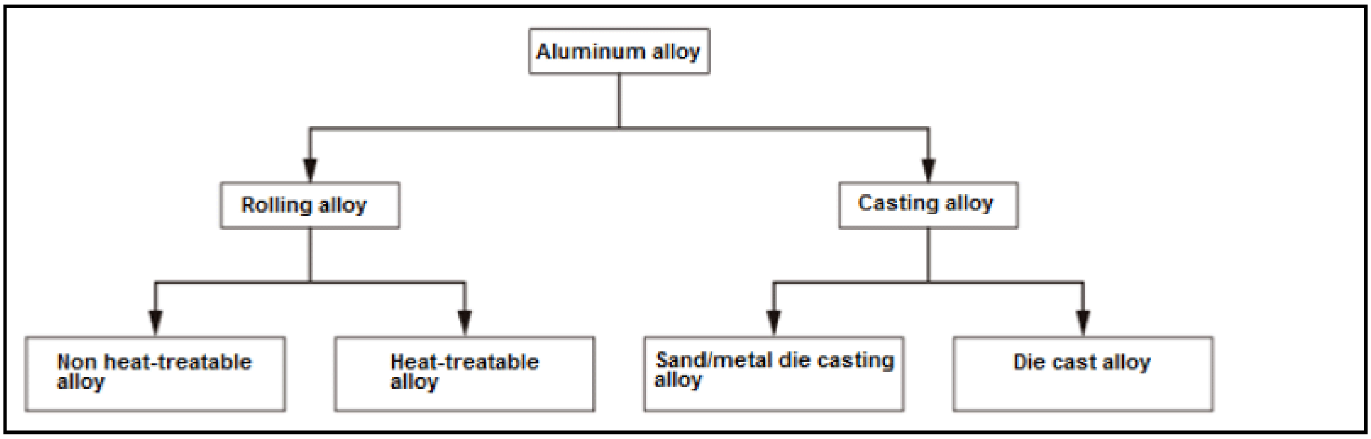

Non heat-treatable alloy		Heat-treatable alloy	
Types	**Characteristics**	**Types**	**Characteristics**
1000 type (pure aluminum)	Good in processability corrosion resistance, electro/thermal conductivity. Poor in strength.	2000 type Al-Cu-Mg type alloy	Equivalent strength as steel panels. Known as duralumin.
3000 type Al-Mn type alloy	Good in processability, corrosion resistance and strength.	6000 type Al-Mg-Si type alloy	Good in strength and corrosion resistance. Suitable for extrusion processes.
4000 type Al-Si type alloy	Good in heat and wear resistance.	7000 type Al-Zn-Mg type alloy	The strongest alloy of all aluminum alloy.
5000 type Al-Mg type alloy	Good in corrosion resistance and welding capability A wide variety of types are available offering wide range of application.	Â	Â

BODY PANEL TECHNICAL REQUIREMENTS

Overview

- Steel sheets used for automobile bodies are mostly carbon steels (carbon-ferrous alloy) because of the stamping requirements and resistance to severe usage conditions that vehicles must endure.

- Depending upon the steel's carbon content, technical properties of the metal are changed. Higher the carbon content increases impact resistance, but the formability and weldability are reduced. Even panel repair would be difficult. For these reasons most body parts are made from low carbon steels, with a carbon content of 0.1 to 0.4% or less.
- Recently more high-strength steel has been used. Though much thinner than conventional soft steel, it provides the same level of strength. High-strength steel sheet has a higher tensile strength, 340 MPa or higher, and a higher yield point. This makes it possible to reduce the total weight of a body while maintaining collision safety
- Where required, zinc-plated sheets are used to improve corrosion resistance.
- Body component parts have different section requirements. Because most are press formed from a thin steel sheet, different rigidities are specified, depending upon where strength is needed, by adding different thicknesses or reinforcements.

Example: Main parts using high-strength steel and zinc-plated sheets

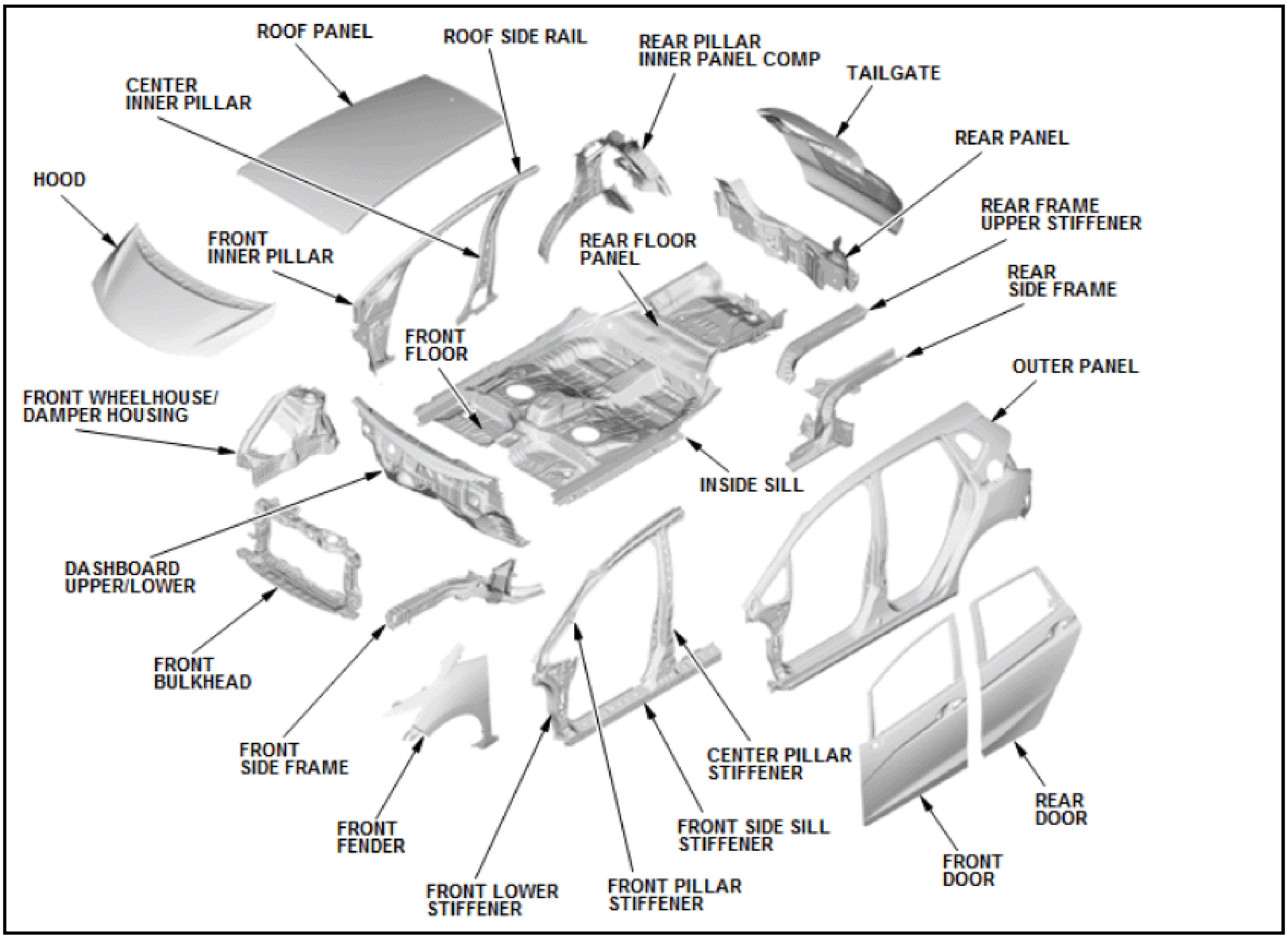
ROOF PANEL
ROOF SIDE RAIL
REAR PILLAR INNER PANEL COMP
TAILGATE
CENTER INNER PILLAR
REAR PANEL
HOOD
REAR FRAME UPPER STIFFENER
FRONT INNER PILLAR
REAR FLOOR PANEL
REAR SIDE FRAME
FRONT FLOOR
OUTER PANEL
FRONT WHEELHOUSE/ DAMPER HOUSING
INSIDE SILL
DASHBOARD UPPER/LOWER
FRONT BULKHEAD
CENTER PILLAR STIFFENER
FRONT SIDE FRAME
REAR DOOR
FRONT SIDE SILL STIFFENER
FRONT FENDER
FRONT DOOR
FRONT LOWER STIFFENER
FRONT PILLAR STIFFENER

CHARACTERISTICS OF STEEL SHEET

Bending And Strength

While considering design and strength, automotive body panels are press-formed in various shapes. By giving a steel panel its own designed shape, strength is increased. By assembling that panel with other parts, body rigidity is enhanced.

Steel Sheet Bending

- Automotive body panels are press formed with sharp bent areas where higher strength is necessary. Those sharply bent areas are called a crowns and have the following categories:

  <Low Crown>

  The bend radius of the curve is great or the edge is very gently sloping.

  <High Crown>

  The bend radius is very small or the edge is very sharp.

  <Combination Crown>

  A low crown and high crown are combined on one panel.

<Reverse Crown>

An edge sharply curved inward toward the panel.

- When repairing a damaged body or panel, smaller loads are required for a low crowned panel because it has a large radius. A high crowned panel for deep-draw has a small radius and requires a certain level of pulling force against the deformation area. A reverse crown is incorporated in a panel that has a sharp inward curvature. Because of this, the strength is so concentrated that repair becomes difficult.

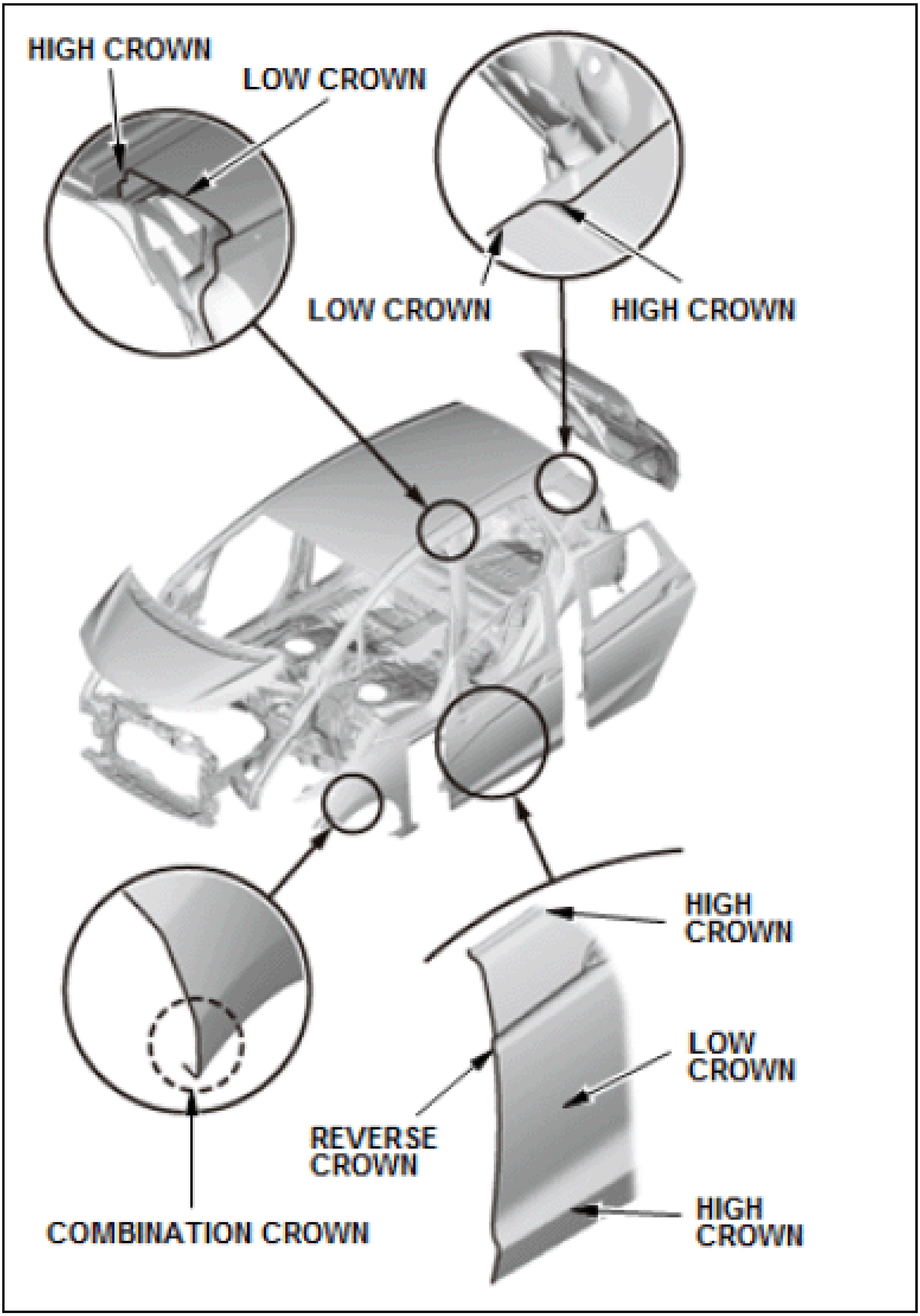
HIGH CROWN
LOW CROWN
LOW CROWN
HIGH CROWN
HIGH CROWN
LOW CROWN
REVERSE CROWN
HIGH CROWN
COMBINATION CROWN

Angle Bending

Panel is bent at a right angle. This is mainly used for doors, fenders and some outer panels.

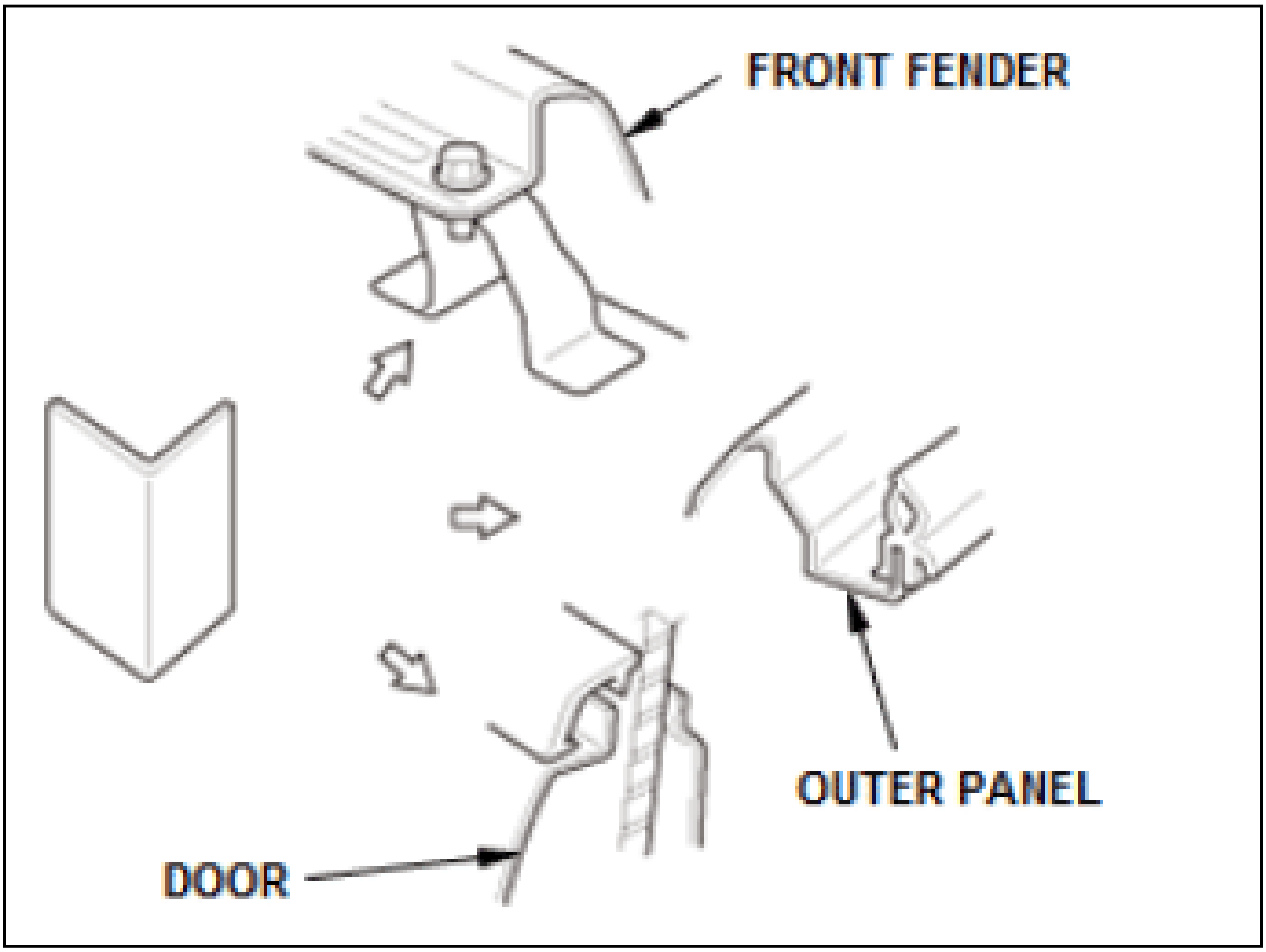
FRONT FENDER
OUTER PANEL
DOOR

Channel Bending

This steel sheet bending method has greater strength than angle bending. It is mainly used for under-body component parts such as stiffeners, rear frame, cross members or a floor frame.

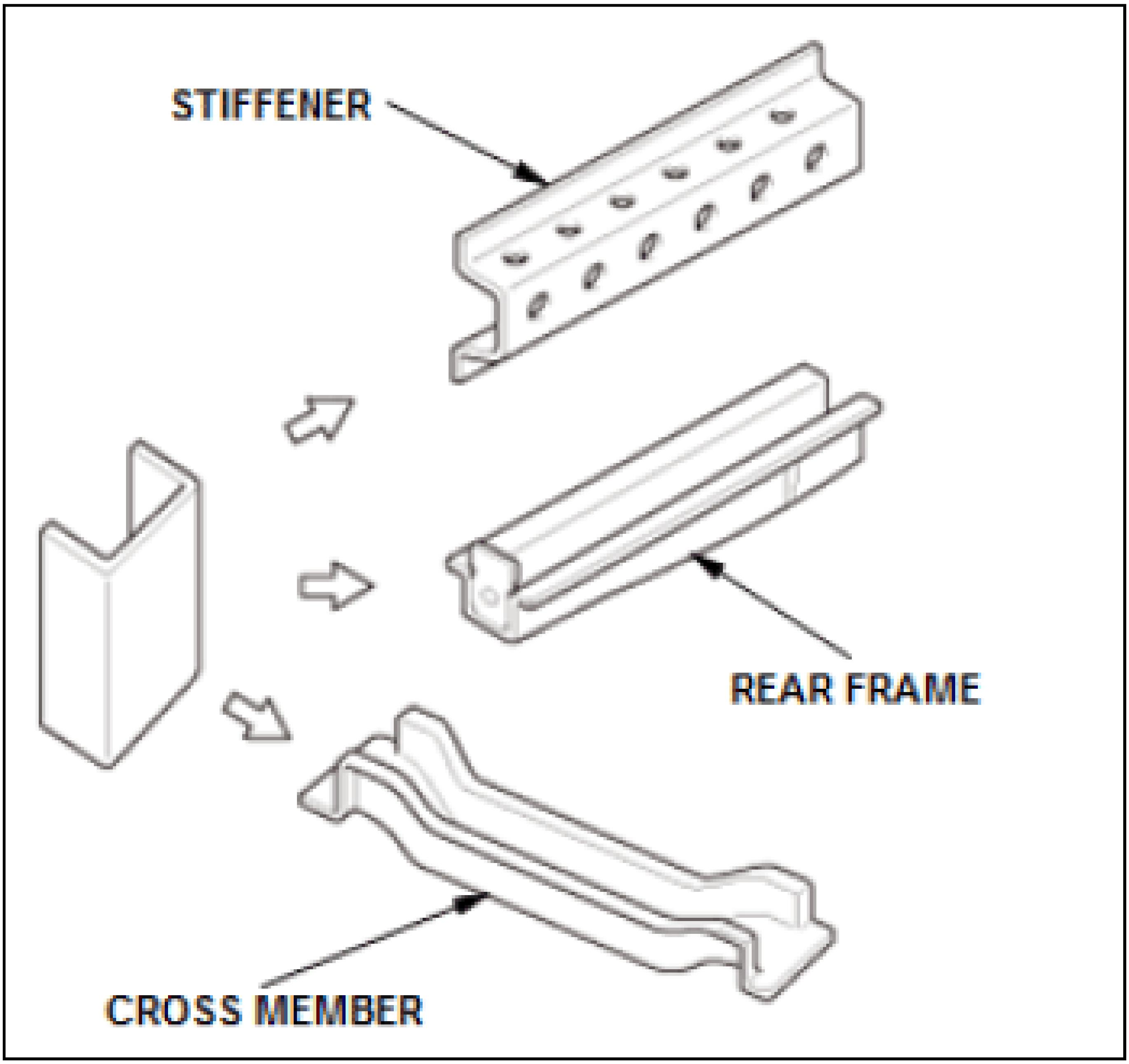
STIFFENER
REAR FRAME
CROSS MEMBER

Box Gutter

Used for parts that require higher strength such as side sills, pillars, roof side rail, and front side frame.

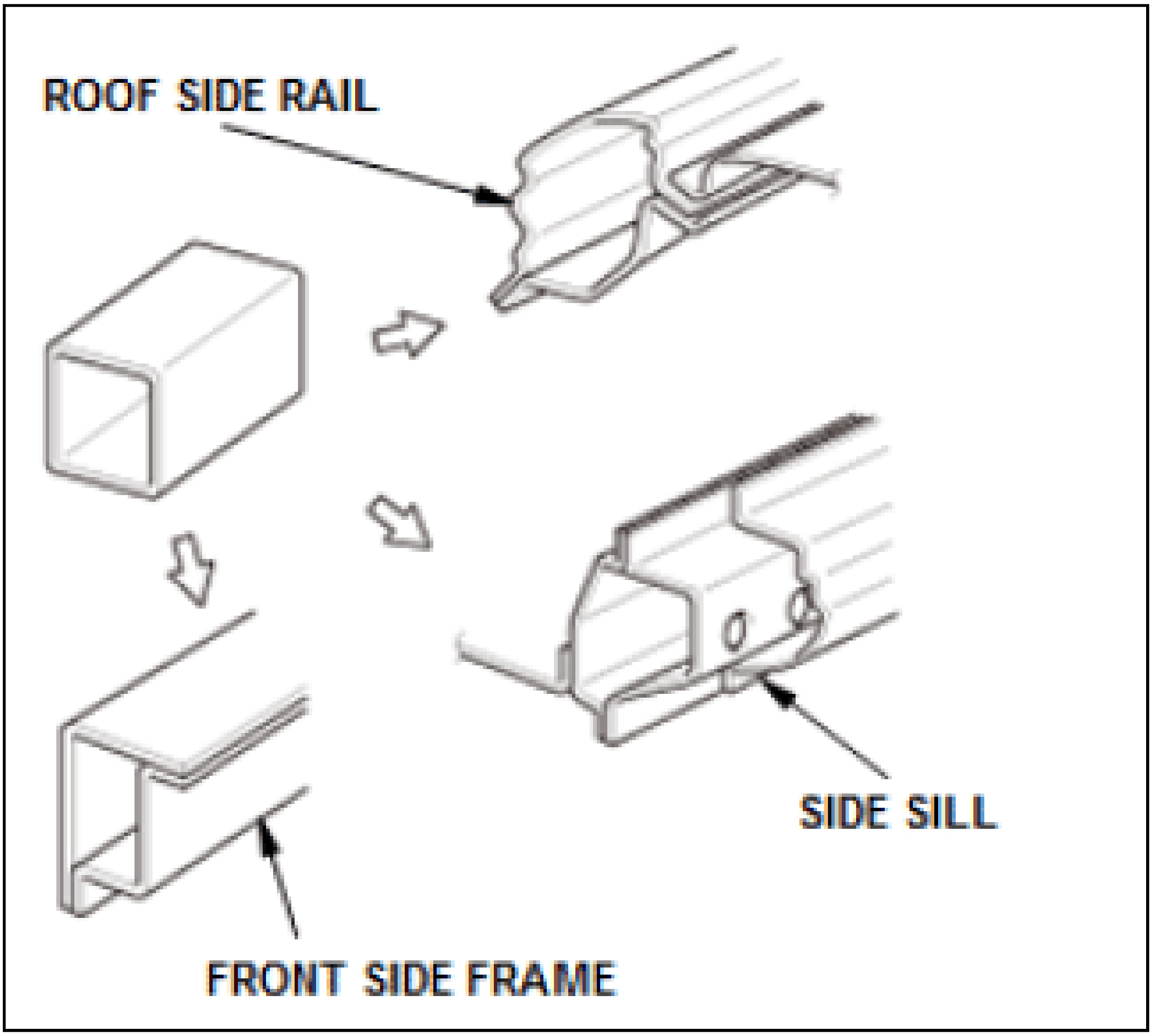
ROOF SIDE RAIL
SIDE SILL
FRONT SIDE FRAME

Beading

Used for large panels such as the floor and roof, where the grooves strengthen the entire panel.

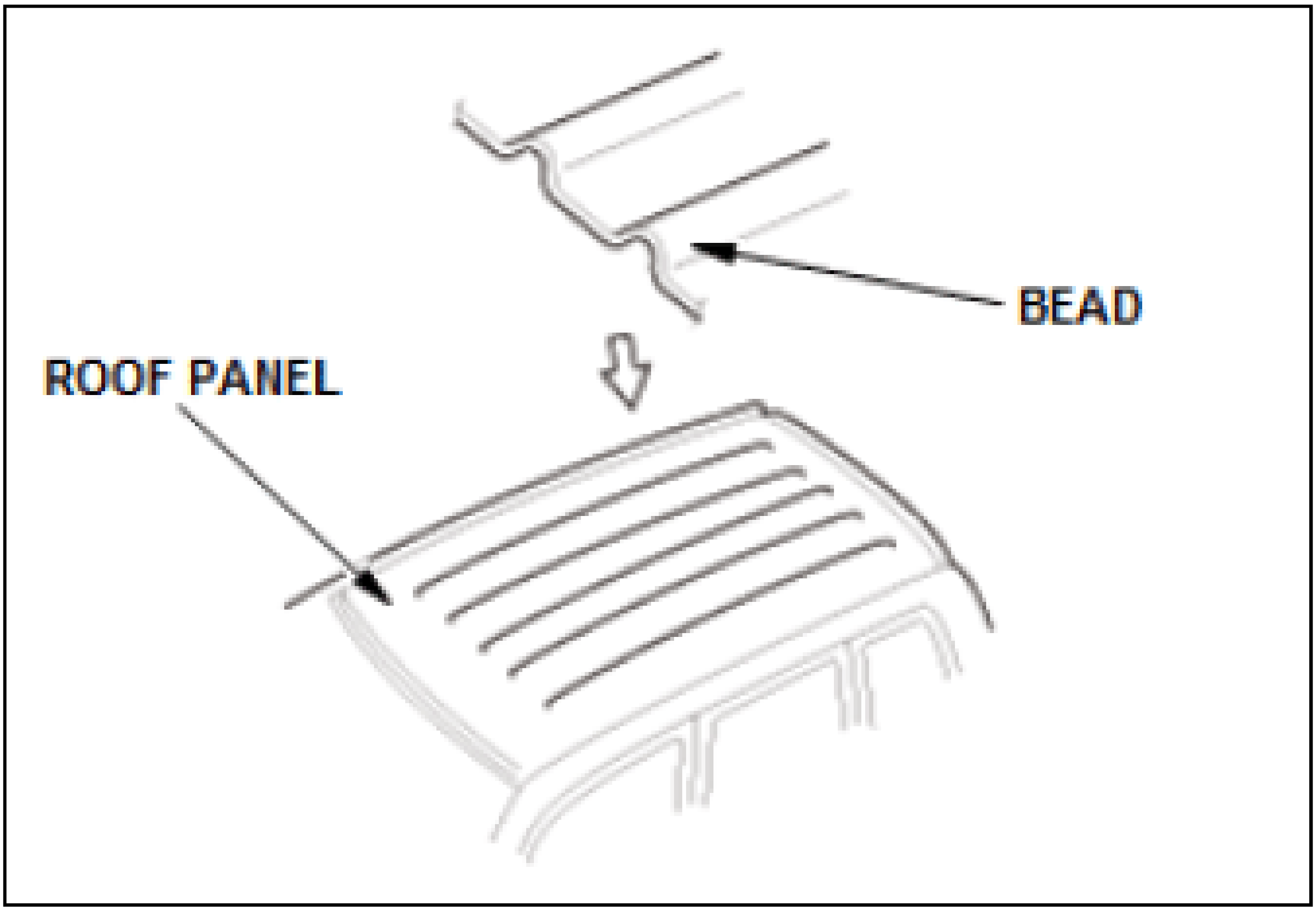
BEAD
ROOF PANEL

Hemming

Used to joint skin panels such as hood, door and trunk to an inner frame or panel. It is also used in the rear wheel arch area of some models.

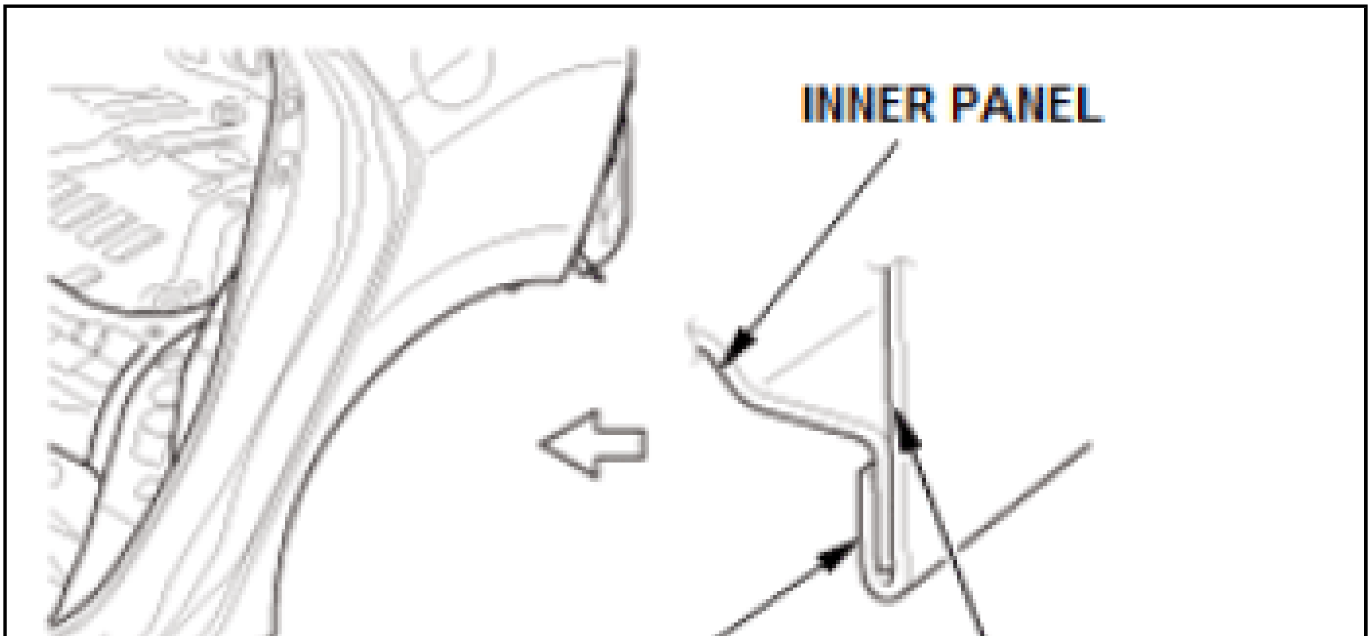
INNER PANEL
HEMMING
OUTER PANEL

Burring

Used around the punched water drain holes in floor panels. The projected edge around the hole increases panel strength.

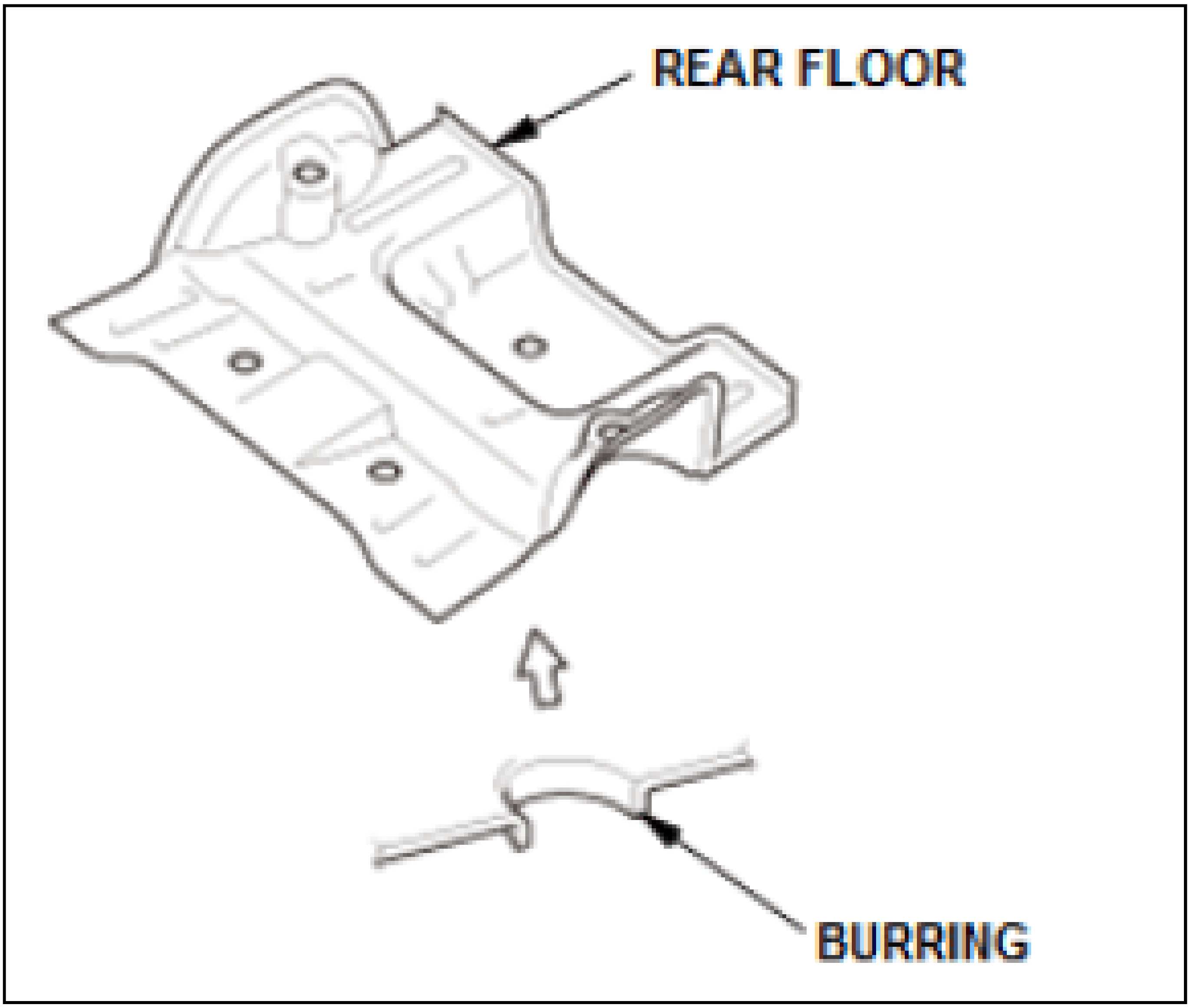

Elasticity

Elastic deformation

- Elasticity is a property of metal which allows the returns to its original shape when a deformation force is removed. Even if a steel plate is bent with your fingers it returns to the original shape when the force is removed from the plate without leaving any deformation. This returnable deformation is called an elastic deformation and this characteristic of metals is known as "elasticity".
- If more pressure is applied beyond the point of elasticity the deformation remains even after the pressure is removed and the metal does not return to its original shape. This occurs when the force exceeds the metal's elastic limit. The harder the steel, the greater the elasticity. Therefore, as the steel is hardened, elasticity is increased.

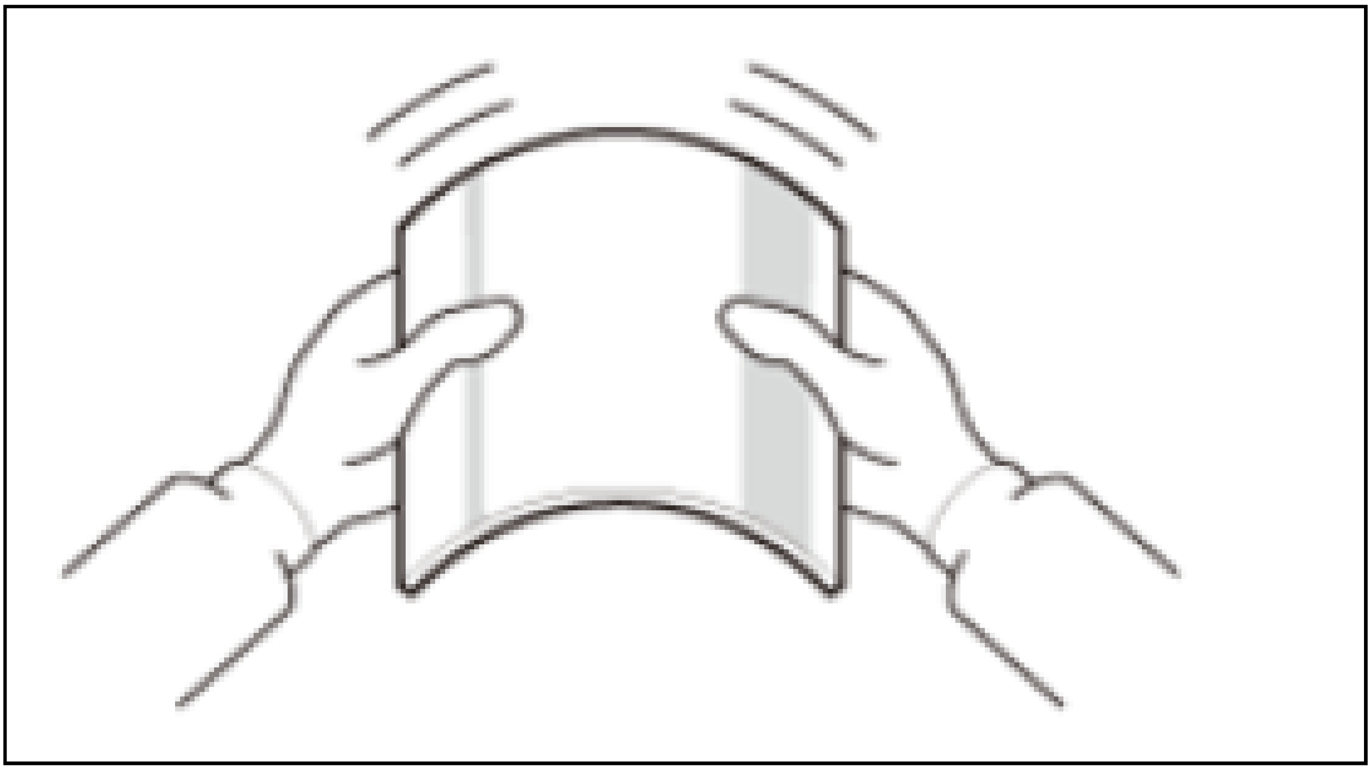

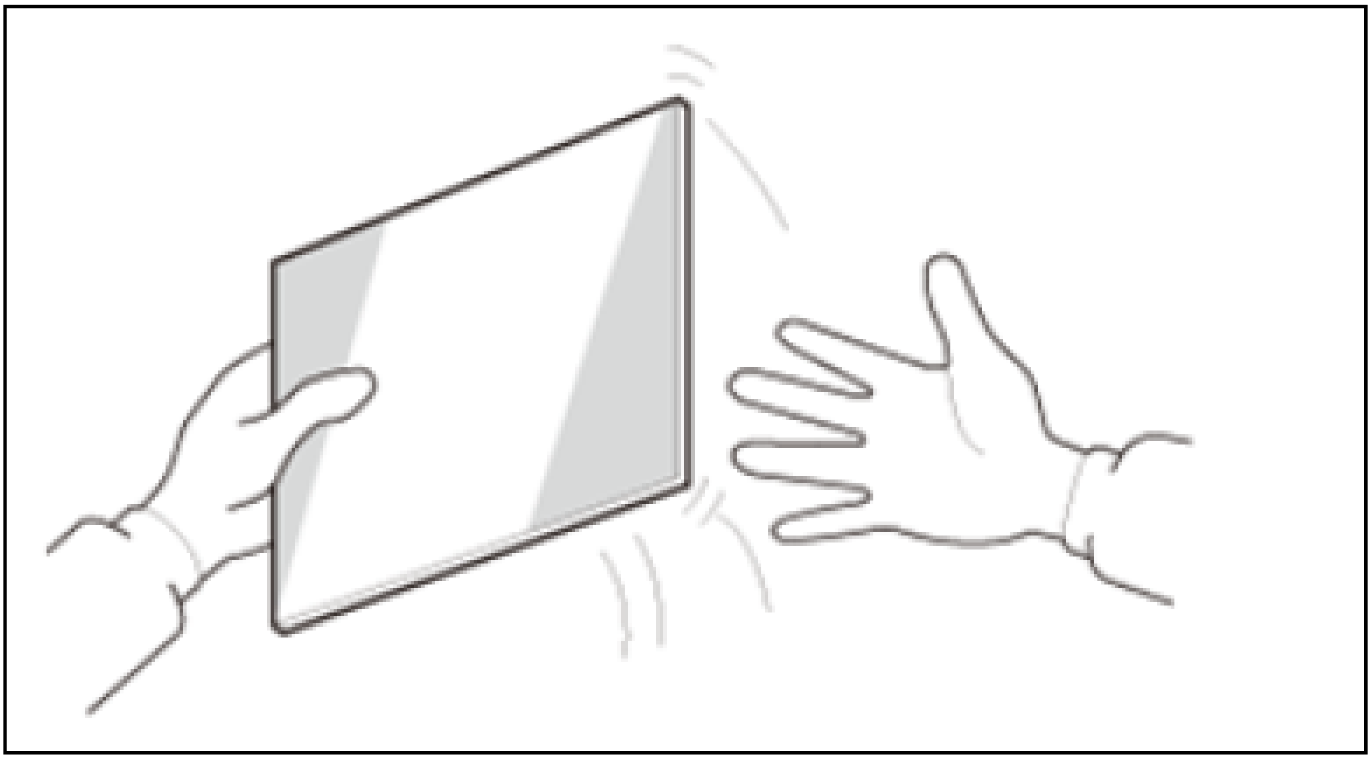

Heat Change

Changes in steel sheets due to heat application can be divided into the following types:

- Scale (iron scorch = Thin oxidized layer that appears on heated steel)
- Change to molecular structure
- Expansion and shrinkage

These changes to steel panels mainly occur through heating during body panel welding work, oxyacetylene torch heating, and friction heat from grinding or sanding.

As steel sheet is heated, the color changes until it starts to melt at 2132Â°F (1500Â°C).

Color	Temperature Range Â°F (Â°C)	Color	Temperature Range Â°F (Â°C)
Dark Red	1112 (600)	Yellow	1832 (1000)

Color	Temperature Range Â°F (Â°C)	Color	Temperature Range Â°F (Â°C)
Red	1292 (700)	Orange	2012 (1100)
Rose-pink	1562 (850)	White	2192 (1200)
Yellowish Red	1652 (900)	Bright White	2282 (1250) or higher

Heating Temperature And Material Change

As a steel sheet is heated, its plasticity increases. However, if the temperature of the sheet exceeds a certain point, it becomes hard and brittle. Therefore, it is important not to exceed 1333Â°F (723Â°C) during steel processing to prevent this structural change. At 392-482Â°F (200-250Â°C), blue heat brittleness happens to the sheet. If 1328Â°F (720Â°C) is exceed, red brittleness occurs. Further, if it goes to over 1652Â°F (900Â°C), the steel grains become large and rough causing oxidation and weakening of the material.

Brittleness

Generally the more heat applied to a metal, the softer it becomes and the easier it is to work with. But, where soft steel is concerned, hardness and tensile strength peak then elongation decreases at a certain temperature.

Heat Treatment

As temperature increases, structural change (transformation) takes place in the metal. If the cooling speed is quickened, the progress of the transformation is delayed and, as a result, a metal structure that is unusual at a normal temperature can be obtained. Heat treatment is a technical process to obtain metallic features to meet desired requirements through heating and cooling.

Hardening and Tempering

A kind of heat treatment used for cutting tools and blades that have to be harder than what they are cutting:

- Hardening is done by quickly heating up the material up to a high temperature 1472Â°F (800Â°C) and then submerging it in water or oil. As the result of this process, the steel becomes a few times harder. Hardened steel also becomes brittle.
- Tempering heats up the metal to around 1112Â°F (600Â°C) then gradually cools it. This process increases the toughness of steel.

Normalizing

This heat treatment process decreases metallic grain size after they are made large and rough during heating or casting. By removing eccentric crystallization and residual stress, the metal's properties are returned to normal. Usually the metal is heated up to 1472-1652Â°F (800-900Â°C) and then gradually cooled down.

Annealing

This heat treatment process alters the physical and sometimes chemical properties of a material to increase its ductility and to make it more workable. This may be required after a material has been work hardened by cold working or a hardened. Depending upon the kinds and use of materials, heating temperature, time duration of holding temperature, cooling temperature, and speed has to be adjusted.

Plasticity

Plastic deformation

- When a steel plate is severely bent, it may partially return to its original shape, but it remains permanently bent. This is called "plastic deformation" and the characteristic of not returning to the original shape is called "plasticity".
- Automotive body panels such as fenders, hood, roof panel and others are press formed into each required shape from large steel sheets. In this way the characteristic that the shape of an object remains changed after a pressure is applied is plasticity It is also possible to change the shape of an object by pulling (tension strength) or pressing it. The deformation caused by pulling is called "ductility" and the one by pressing is called "malleability". The result of ductile deformation is an elongation and the one of pressing deformation is compression.

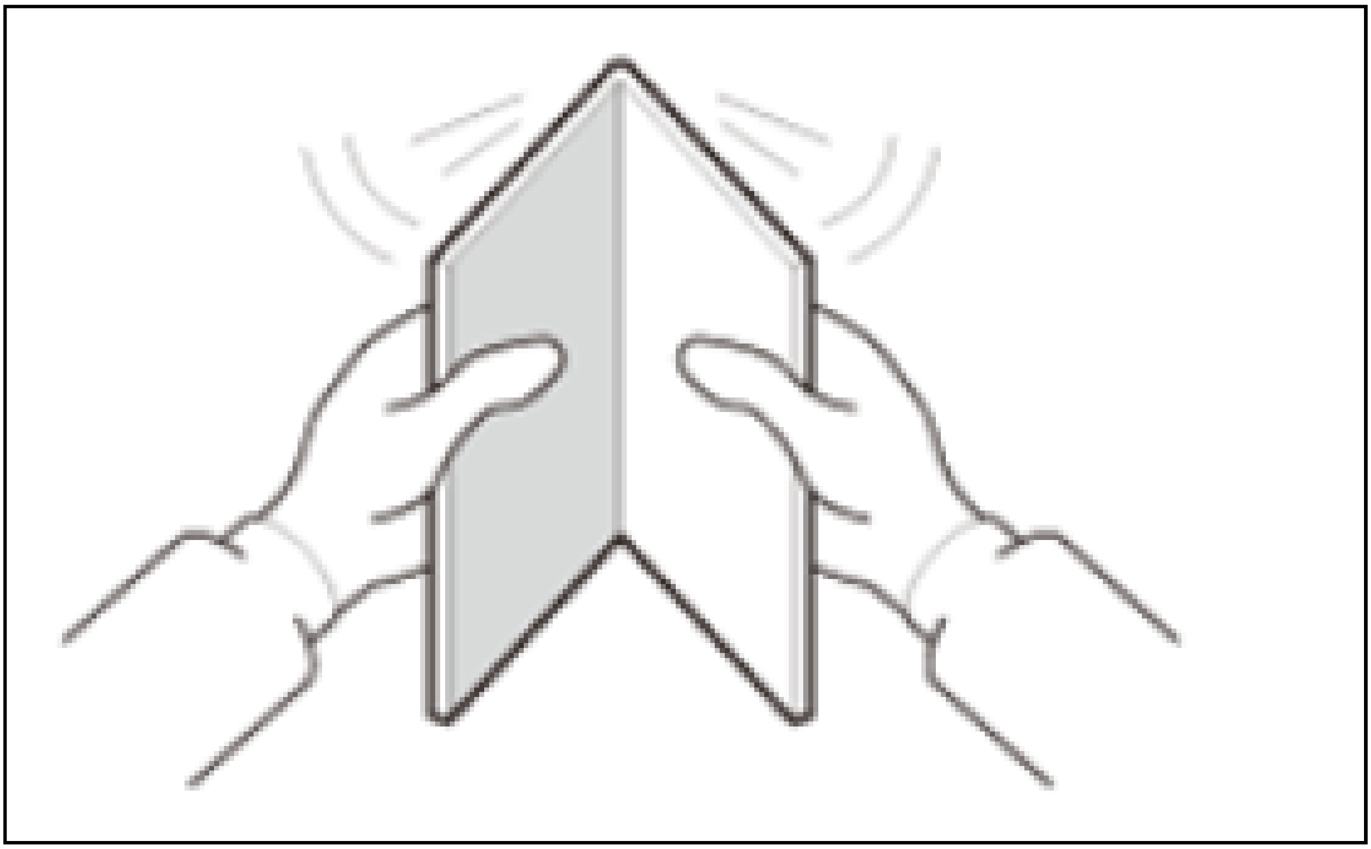

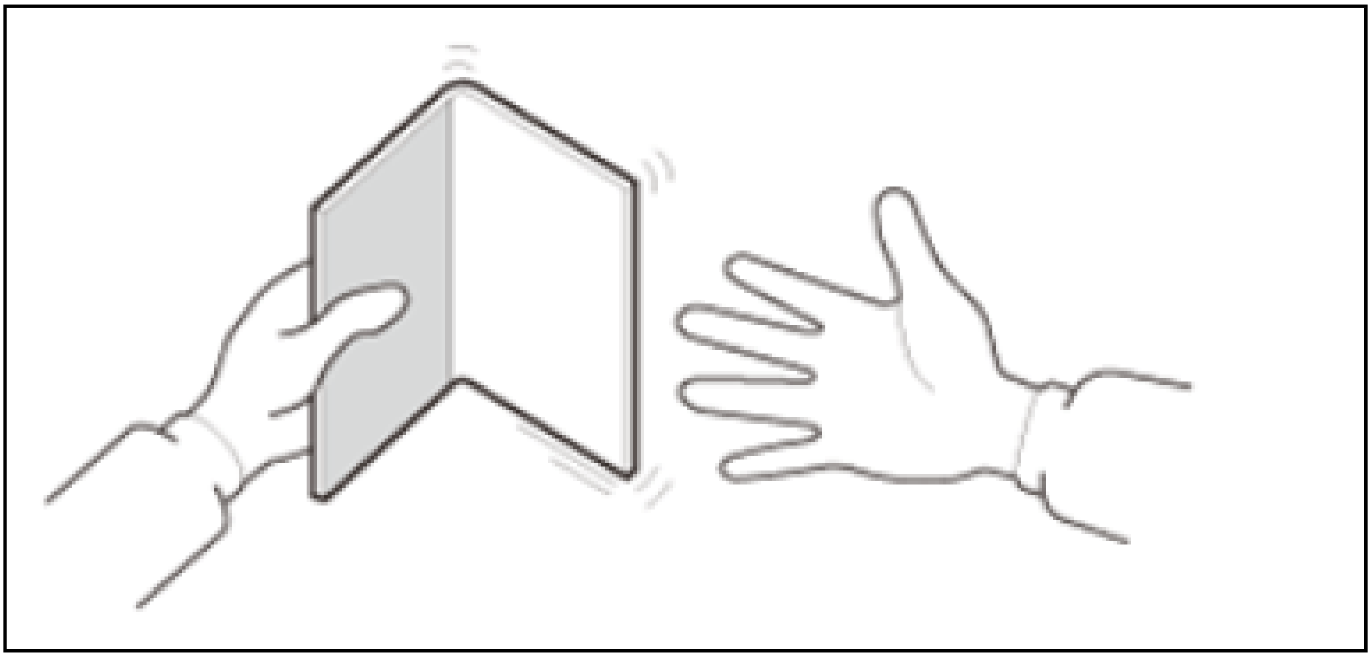

Work Hardening

- When a metal wire is repeatedly bent and straightened, it is gradually hardened. In the same way a steel sheet becomes hardened and strong through work hardening (plastic deformation).

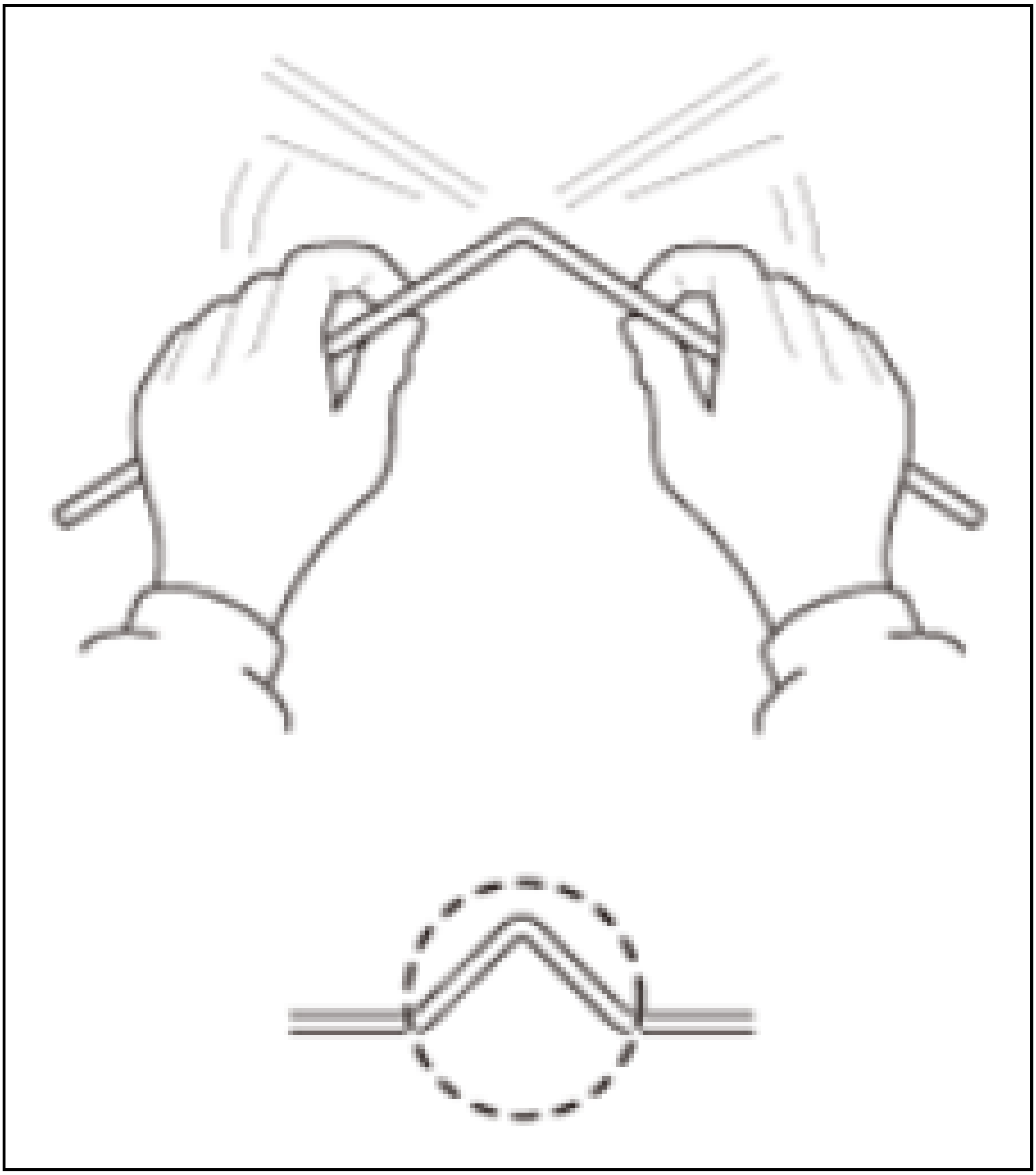

- When a flat steel sheet is bent and straightened, the first bent area (A) remains and the new bent areas are formed on both sides of the sheet. It happens because the first bent area becomes hardened and strong through work hardening. In the same way when a body panel is press-formed (plastic deformation), work hardening occurs.

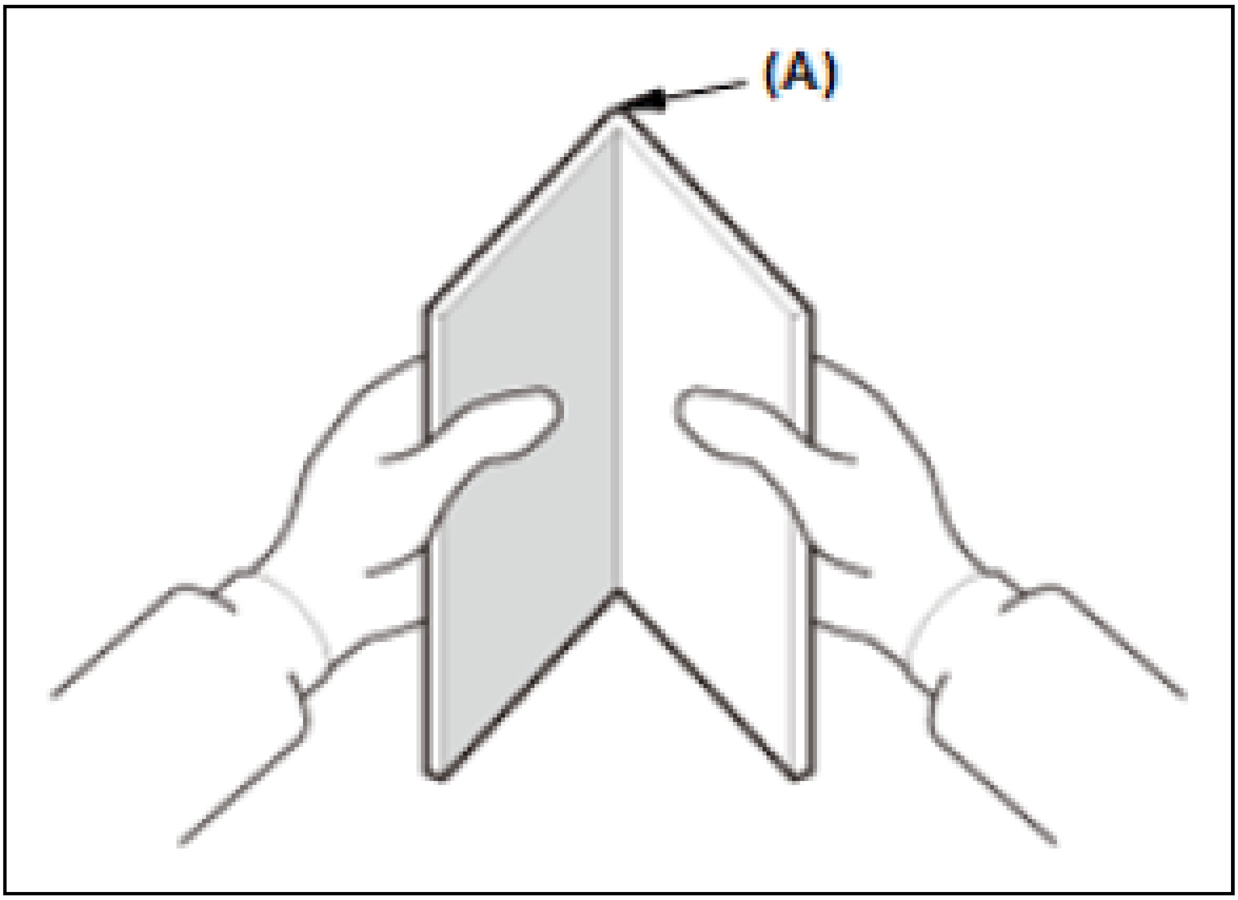

- On a collision damaged vehicle, the same work hardening occurs where parts were buckled (buckling) due to the external impact force. Work hardening also takes place when the parts are repaired.

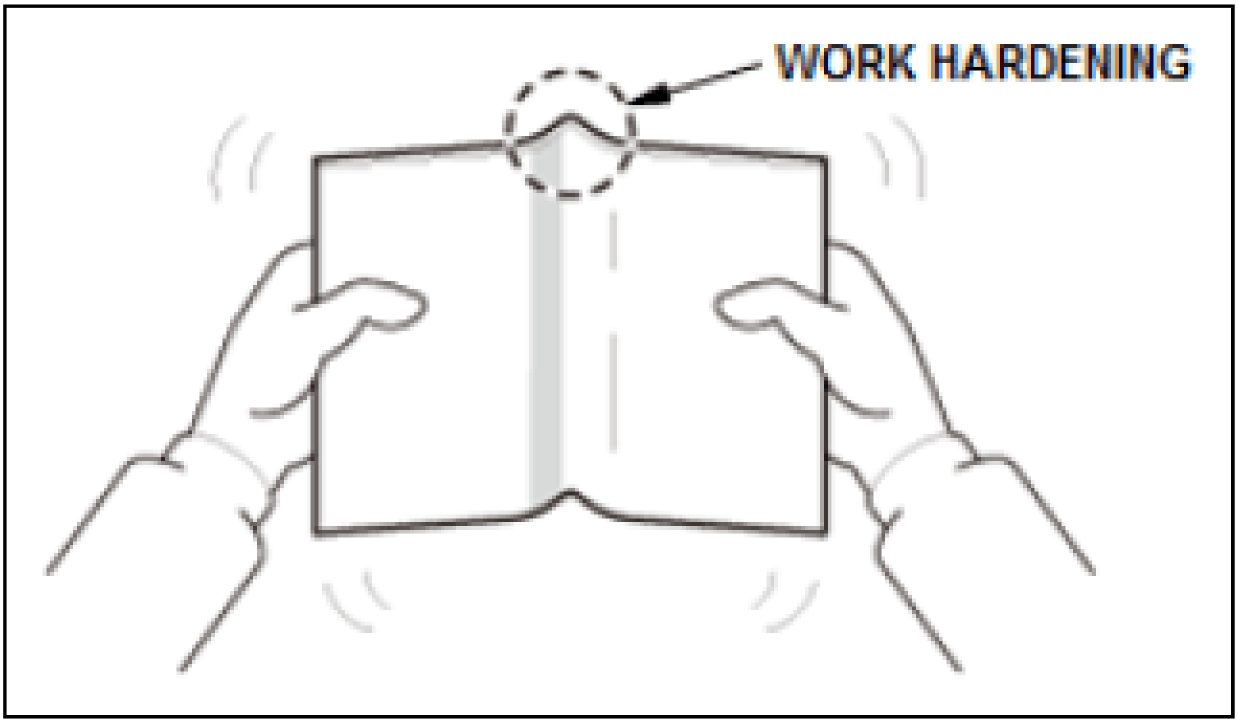

FUNDAMENTALS OF AUTOMOTIVE STEEL SHEETS

Anti-Rust Steel Sheets

In order to increase corrosion resistance, some steel sheets are electro-plated with zinc, tin or aluminum on their surfaces. Zinc-plated steel sheets have the highest corrosion resistance, this type is the most widely used for automotive component parts requiring this protection. Some of the well-known zinc-plated steel sheets are an electro-zinc plated steel sheet, molten zinc plated steel sheet, and alloyed molten zinc plated steel sheet.

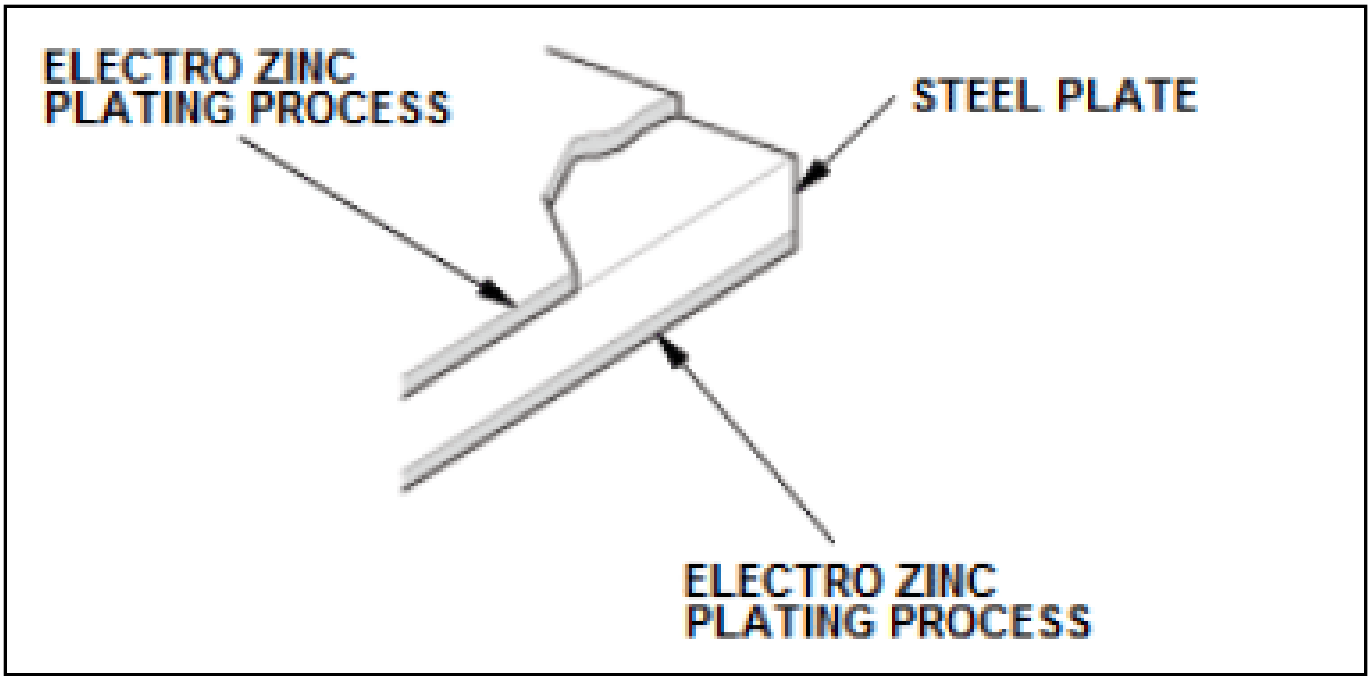
ELECTRO ZINC PLATING PROCESS
STEEL PLATE
ELECTRO ZINC PLATING PROCESS

Electro-Zinc Plated Steel Sheet

Corrosion resistant steel sheet with high purity zinc deposited on the sheet surface through electric plating process. Though its zinc-plated thickness is thinner than that of the molten plated steel sheet, the surface condition is even. Therefore it is superior in workability, welding and painting processes. But, it is inferior to the molten zinc plated steel sheet in corrosion protection as it cannot be thick-plated.

Molten Zinc Plated Steel Sheet (Dipping Method)

Corrosion resistant steel sheet is covered with molten zinc plating by immersing it. Although it is superior in corrosion protection performance as the plating layer is thick, is inferior to the electro-zinc plated steel sheet in welding and painting.

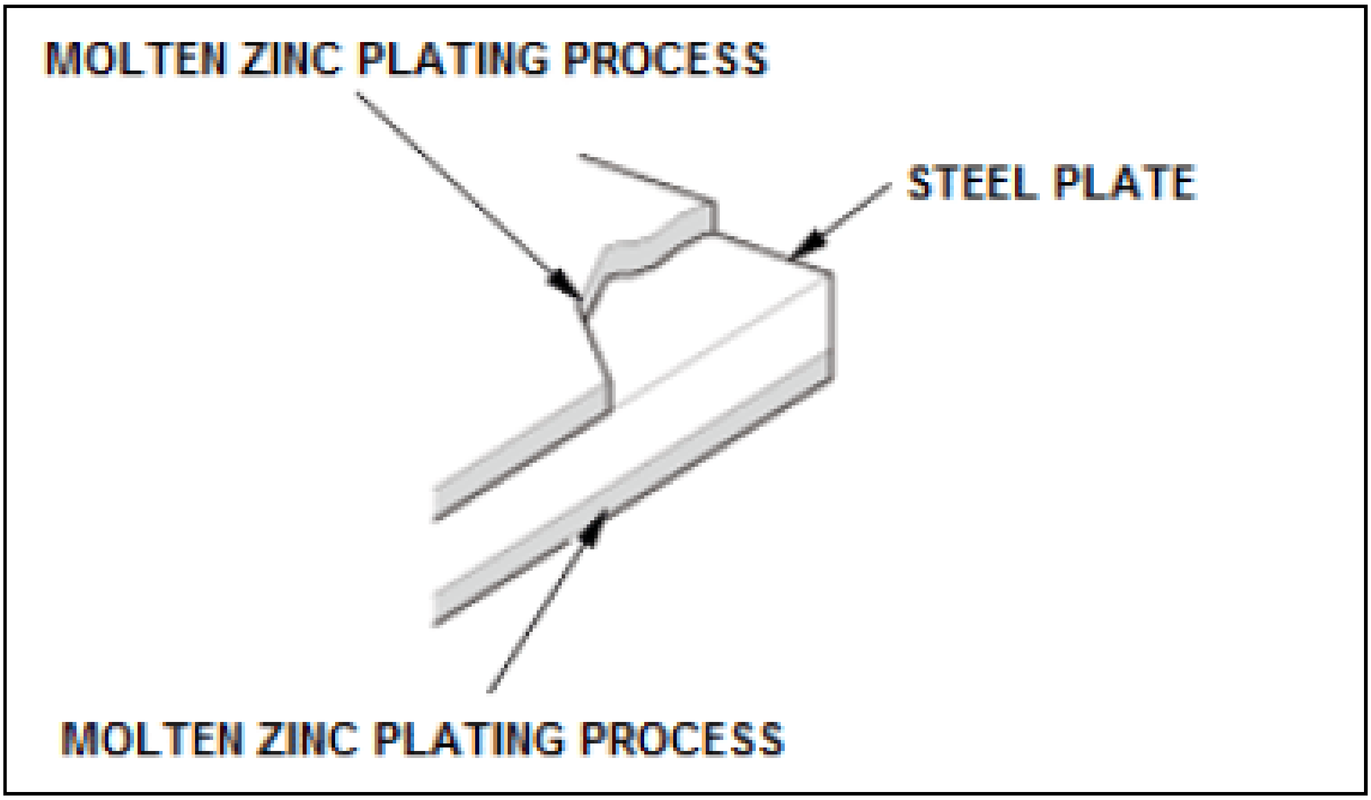
MOLTEN ZINC PLATING PROCESS
STEEL PLATE
MOLTEN ZINC PLATING PROCESS

Alloyed Molten Zinc Plated Steel Sheet

In order to compensate for imperfections of electro-zinc plated and molten zinc plated steel sheets, alloys of iron and zinc or nickel and zinc are plated on the surface to improve ease of welding and painting.

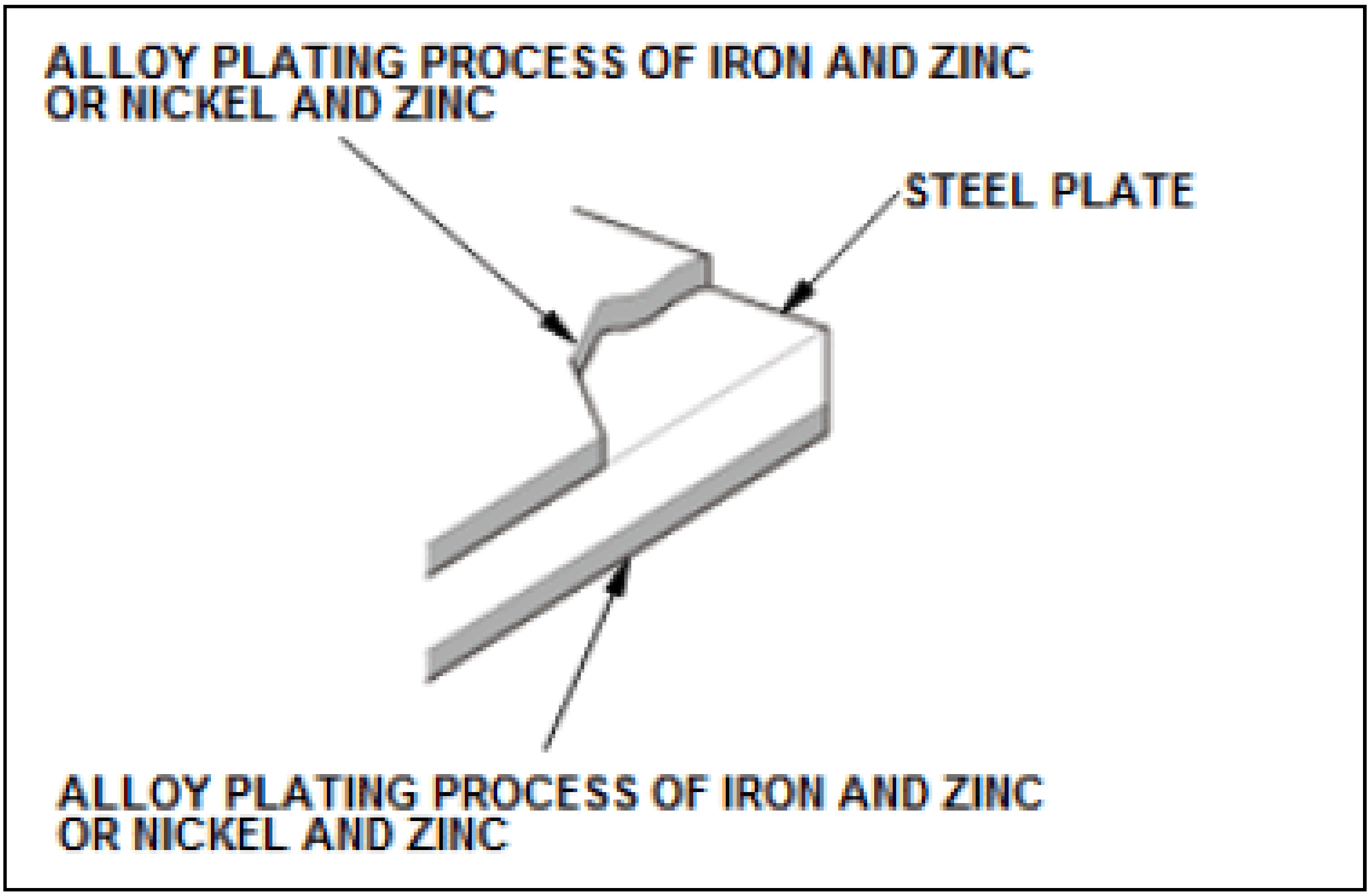
ALLOY PLATING PROCESS OF IRON AND ZINC OR NICKEL AND ZINC
STEEL PLATE
ALLOY PLATING PROCESS OF IRON AND ZINC OR NICKEL AND ZINC

Characteristics Of Steel Sheets

Steel sheets are of two types; hot rolled or cold rolled:

- Hot rolled steel sheet is rolled above re-crystallization temperature (normally 1472-1652Â°F (800-900Â°C)).
- Cold rolling occurs with the metal below its recrystallization temperature (usually at room temperature).

In automotive body components, hot rolled steel sheets are used for frames and other parts of vehicles that carry heavy loads such as trucks. Cold rolled steel sheets are mostly used for unibodies of passenger vehicles. Because corrosion resistance is required for such parts as outer panels, side frames and wheelhouses, zinc plated cold rolled steel sheets are widely used:

- Sheet thickness

  During the hot rolling process, slabs must be rolled while they are still hot. As they are cooled while being rolled, they cannot be rolled thin flat. Cold rolled steel sheets can be rolled at normal temperature, making it possible to manufacture thin steel sheets.

- Sheet surface

  As hot rolled steel sheets are rolled at a high temperature, black oxidation, or mill scale, appears on the sheet's surface. Sheets that have been washed with oxide (pickling washer) have gray surfaces. The surface of a cold rolling steel sheet is smooth and glossy often called polished sheet. It is subjected to the picking process, cold rolling, annealing, and temper rolling process after the hot rolling process.

- Workability

  Most of the body component parts are press formed. The workability on presswork is determined by technical specifications of materials. Those technical specifications are, in turn, determined by material contents as well as the extent of temper rolling.

  When the workability compared in terms of elongation rate obtained by an elongation test, hot rolled steel has about 35% while a cold rolled steel has about 43%, indicating that a cold rolled steel sheet has better workability.

High-Strength Steel Sheets

High-strength steel has higher tensile strength than normal, or "mild" steel. Generally, high strength steel is defined as steel with a 340 MPa or higher tensile strength. However, this definition may vary depending on vehicle manufacturer, suppliers, and countries. Steel with a tensile strength of 980 MPa and higher is called "Ultra High-Strength Steel" to differentiate it during repairs because the repair methods are restricted.

In addition, there are several types of high-strength steel sheets available. Solid solution strengthened and precipitation strengthened steel adding elements such as nickel (Ni), silicone (Si) manganese (Mn) etc. to increase strength. Composite structure strengthened steel is hardened after press forming.

Type		Strengthening Mechanism
Solid Solution Strengthened		The very basic method. To form a solid solution of the alloy elements to crystal lattice. There are two type of solution; one is called substitutional solid solution which forms solid solution by replacing with iron atoms such as silicone (Si), manganese (Mn) and phosphorus (P), another one is called interstitial solid solution which forms solid solution by intruding such as carbon and nitrogen.
Precipitation Strengthened		To interrupt the rearrangement by precipitate through precipitation of carbide or nitride such as titan (Ti) or niobium (Nb).
Composite Structure Strengthened	DP Steel (Dual Phase)	To change the internal composition through heat treatment (strengthened by martensite with a high hardness obtained by quickly cooled down austenite generated in heated steel at a high temperature).
	TRIP Steel (Transformation Induced Plasticity)	To change the internal composition through heat treatment (strengthened by bainite or residual austenite obtained by quickly cooled down austenite generated in heated steel at a high temperature).

Characteristics

- High tensile strength
- High yield point (the point where material changes from elastic to plastic)
- High yield rate (yield point/tensile strength)

Other High-Strength Steel Sheets

- **Bake Hardened (BH) Steel Sheet:**
  - BH steel is originally soft, but increases its strength through the baking process after being work-hardened by the stamping process.
- **Cold Stamping:**
  - It is a stamping process to press form one of the high-strength steel types called high-tensile steel under a normal temperature. The steel sheets used for this process contains a small amount of precious metal to increase the strength by several times higher than the normal steel sheets. It is difficult to form the steel to the requirements through this process, but it is possible to produce light parts similar to hot stamping.

Steel Material

The carbon steel sheets used for most of the automobile body account for about 50% of the total weight of a general passenger vehicle. The main reasons steel sheet is used are: availability ease of manufacturing, and low cost. The ability to alloy steel with other elements allows adjustments to material strength, hardness, and toughness.

The carbon content in the steel greatly impacts its characteristics greatly with some categories based on the carbon content volume alone.

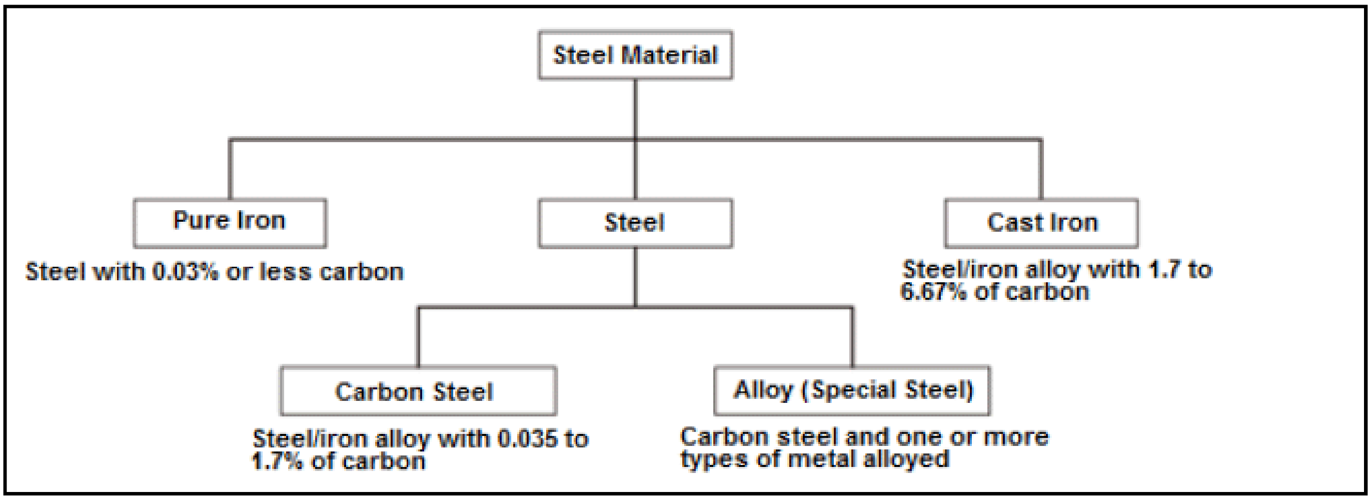
Steel Material
Pure Iron
Steel with 0.03% or less carbon
Steel
Cast Iron
Steel/iron alloy with 1.7 to 6.67% of carbon
Carbon Steel
Steel/iron alloy with 0.035 to 1.7% of carbon
Alloy (Special Steel)
Carbon steel and one or more types of metal alloyed

Pure iron contains almost no other elements other than iron (Fe) and is very soft, thus its use is very limited. One of the few examples of automotive uses is for electromagnets. Cast iron cannot be wrought, so it is mainly used for cast parts. Steel can be categorized into carbon steel and alloy steel (special steel). It can also be categorized by purpose of use its shape (stick, plate, pipe, etc.).

Carbon Steel

Most of the steel panels used for automotive bodies are made of carbon steel (alloy of iron and carbon) based on the design requirements of formability durability and endurance.

Carbon steel is an alloy with the main composition of iron (Fe) and 0.035 to 1.7% of carbon (C), and small amount of silicon (Si), manganese (Mn), phosphorus (P) and sulfur (S). Among those compositions, carbon has the most significant impact on the steel's characteristics.

In case of using high-carbon steel which contains a high amount of carbon, the body panels will have a very strong impact resistance but a poor formability and welding capability. Because of this, low-carbon steel is mainly used for body panels. It generally contains a lower amount of carbon (0.1 to 0.4% or less).

Tailored Blank Material

- Tailored blank materials are multiple stamped steel sheets jointed together by welding to meet different requirements and purposes.
- The original purpose of the tailored blanks was to make use of mill ends or various types of steel sheets combined together, increasing yield and reducing cost by welding before stamping. Today tailored blanks are being increasingly used for automobile body parts to reduce weight and enhance rigidity in certain areas of some parts.
- By welding tailored blank materials with different thickness and material features together, it becomes possible to optimize the parts to their use. Strong or thick materials can be used for where rigidity is required, while using thinner materials for other areas. It is now possible to layout parts with optimal characteristics exactly where needed.

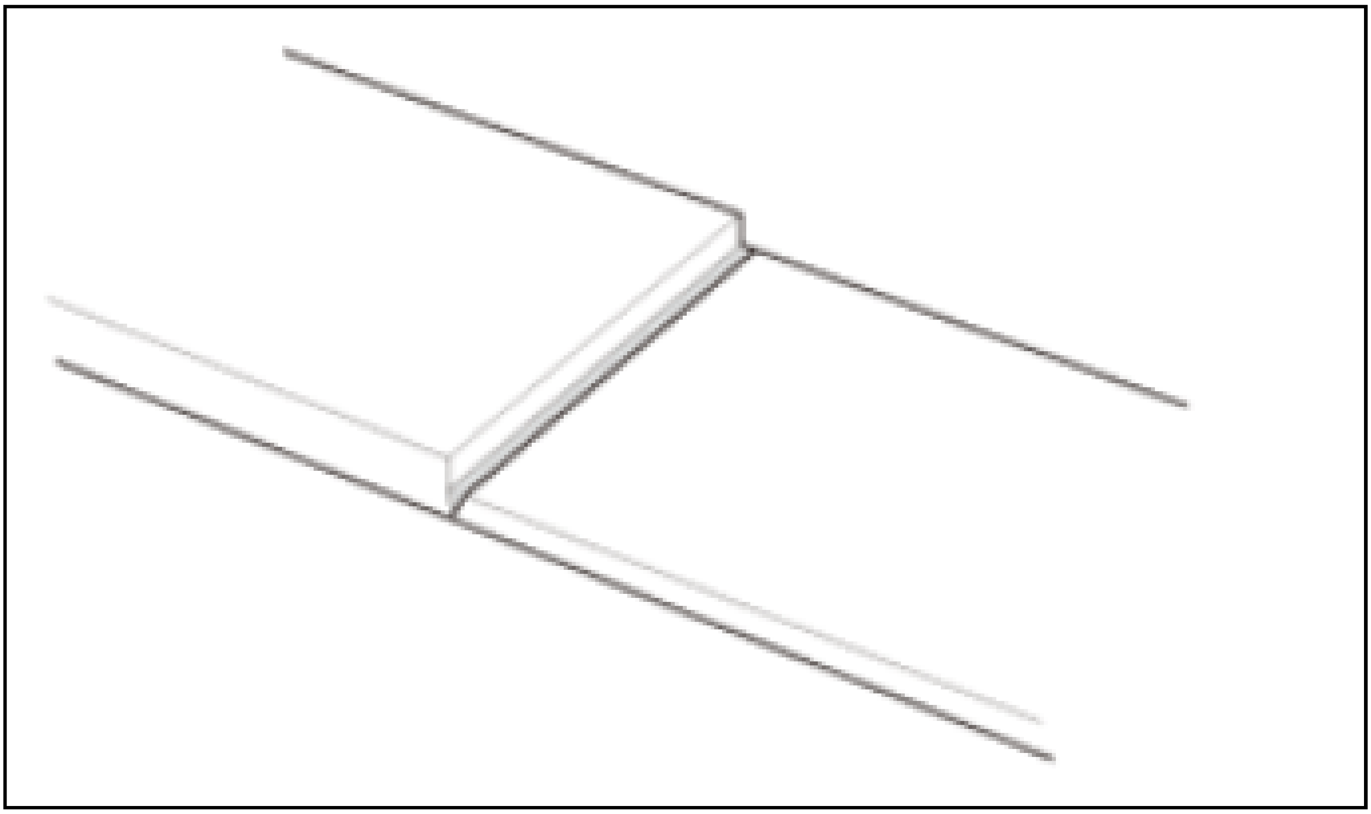

Types Of Tailored Blank Welding

There are three types of tailored blank (TB) welding; laser, mushroom and plasma method. Details are as follows.

- **TB Laser Welding:**
  - A method of welding by concentrating a laser beam onto approximately a 0.5 mm (0.020 in) diameter spot to melt and join the two surfaces.

    The steel's appearance, quality and material characteristics are only slightly changed by the laser's heat.

    The width of the laser welding bead is less than 1 mm. Laser welded tailored blanks are most commonly used for automobile parts.
- **TB Mushroom Welding:**
  - A method of welding where two layers of steel panels are overlaid and pressure is applied to while the parts are eclectically welded. Mushroom welding is superb in formability but poor in appearance.

The width of the welding bead is roughly 5 mm (0.20 in).

- **TB Plasma Welding:**
  - A method of welding where a high temperature plasma current is applied to the butted area joining the parts using thermal conduction.

    It is suitable for automated processes with a low equipment cost.

    The width of the welding bead is 3-4 mm (0.12-0.16 in).

Ultra High-Strength Steel Sheets (1500 MPa Grade)

Stamping takes place when the steel sheet is heated to 1, 652 Â°F (900 Â°C) and softened. By cooling the steel part down to a normal temperature while still in the stamping die, the hardening process will be improved and a 1500 MPa grade tensile strength is achieved. This process is called hot stamping.

When compared to normal steel stamping processes, hot stamping is capable of producing parts with significantly higher strength. Therefore, the parts produced through this process can offer the same strength level with thinner material in comparison with parts made using normal stamping process. This contributes to vehicle weight reduction and improved fuel efficiency.

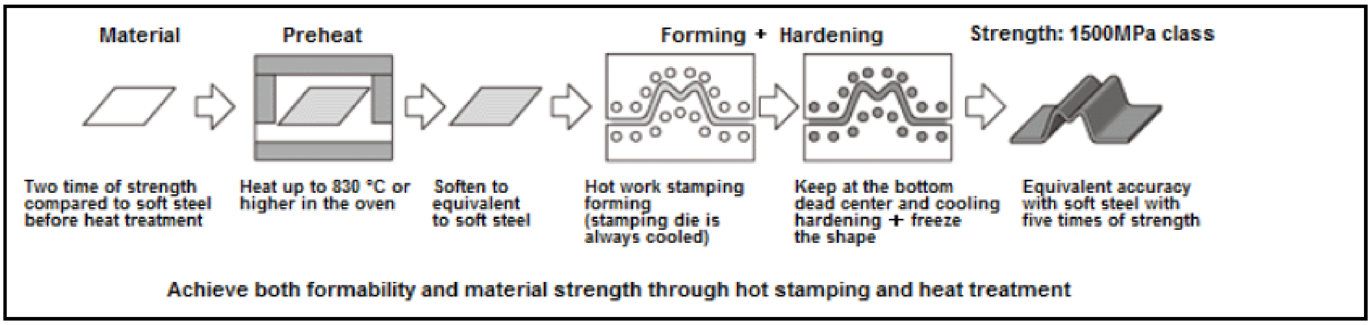
Material
Preheat
Forming + Hardening
Strength: 1500MPa class
Two time of strength compared to soft steel before heat treatment
Heat up to 830 °C or higher in the oven
Soften to equivalent to soft steel
Hot work stamping forming (stamping die is always cooled)
Keep at the bottom dead center and cooling hardening + freeze the shape
Equivalent accuracy with soft steel with five times of strength
Achieve both formability and material strength through hot stamping and heat treatment

Use Of Tailored Blank Material

Laser welded tailored blank materials are used for the front side frames, dashboard lower, and door inner panels.

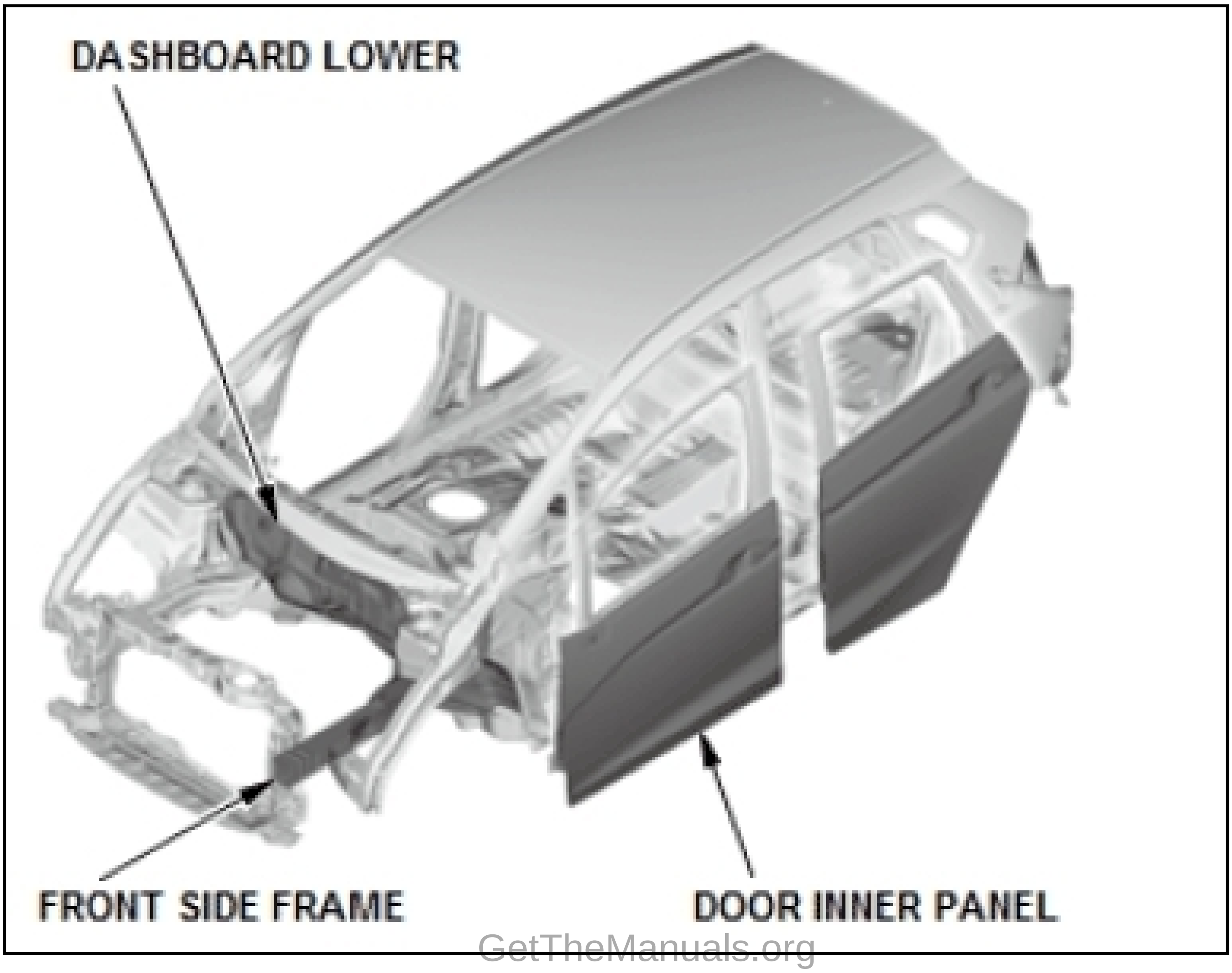
DASHBOARD LOWER
FRONT SIDE FRAME
DOOR INNER PANEL

Front Side Frame (including back plate)

Butting of high-strength steel sheets with different thickness

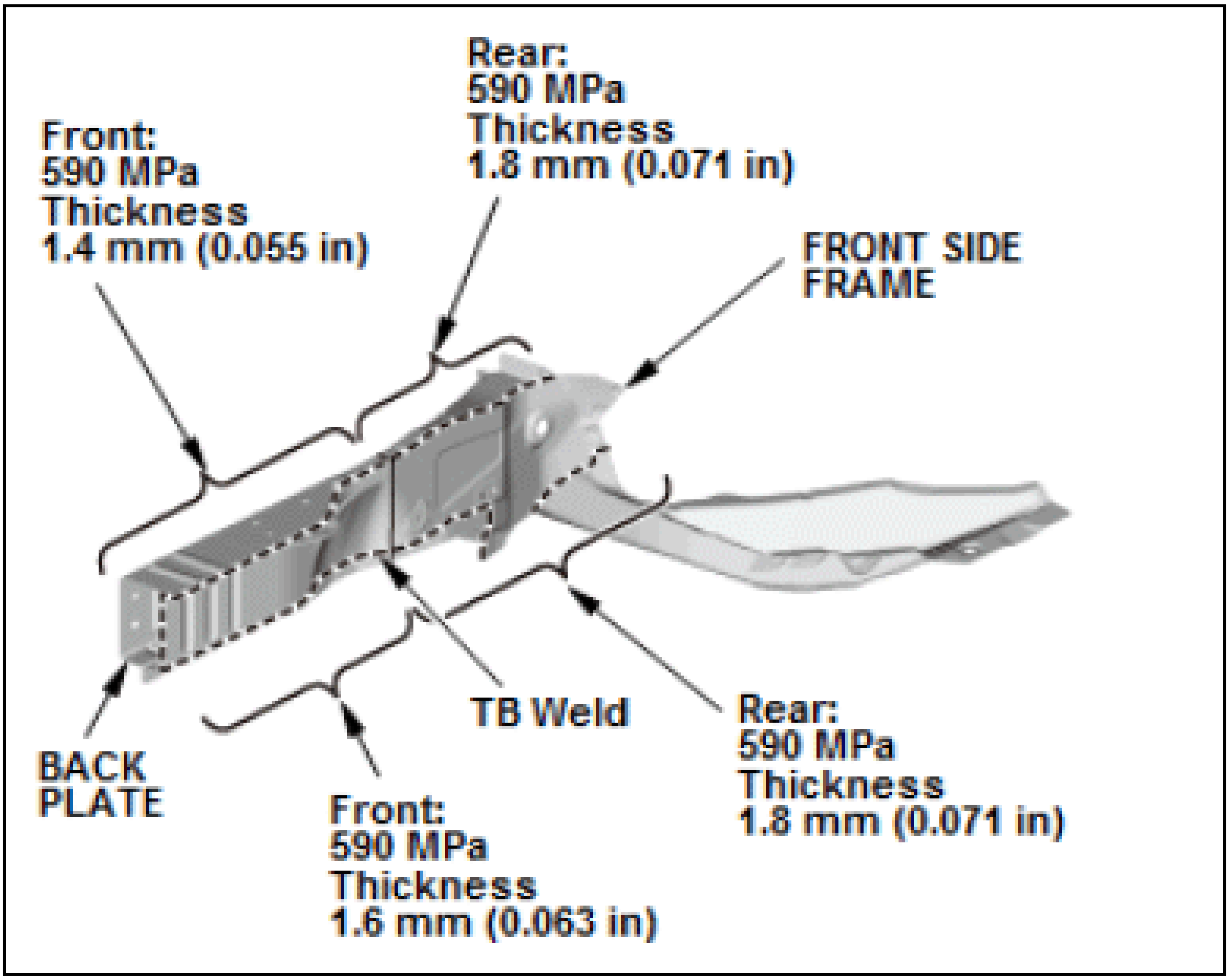
Rear:
590 MPa
Thickness
1.8 mm (0.071 in)
Front:
590 MPa
Thickness
1.4 mm (0.055 in)
FRONT SIDE FRAME
TB Weld
BACK PLATE
Rear:
590 MPa
Thickness
1.8 mm (0.071 in)
Front:
590 MPa
Thickness
1.6 mm (0.063 in)

Dashboard Lower

Butting of high-strength and mild steel sheets with different thickness

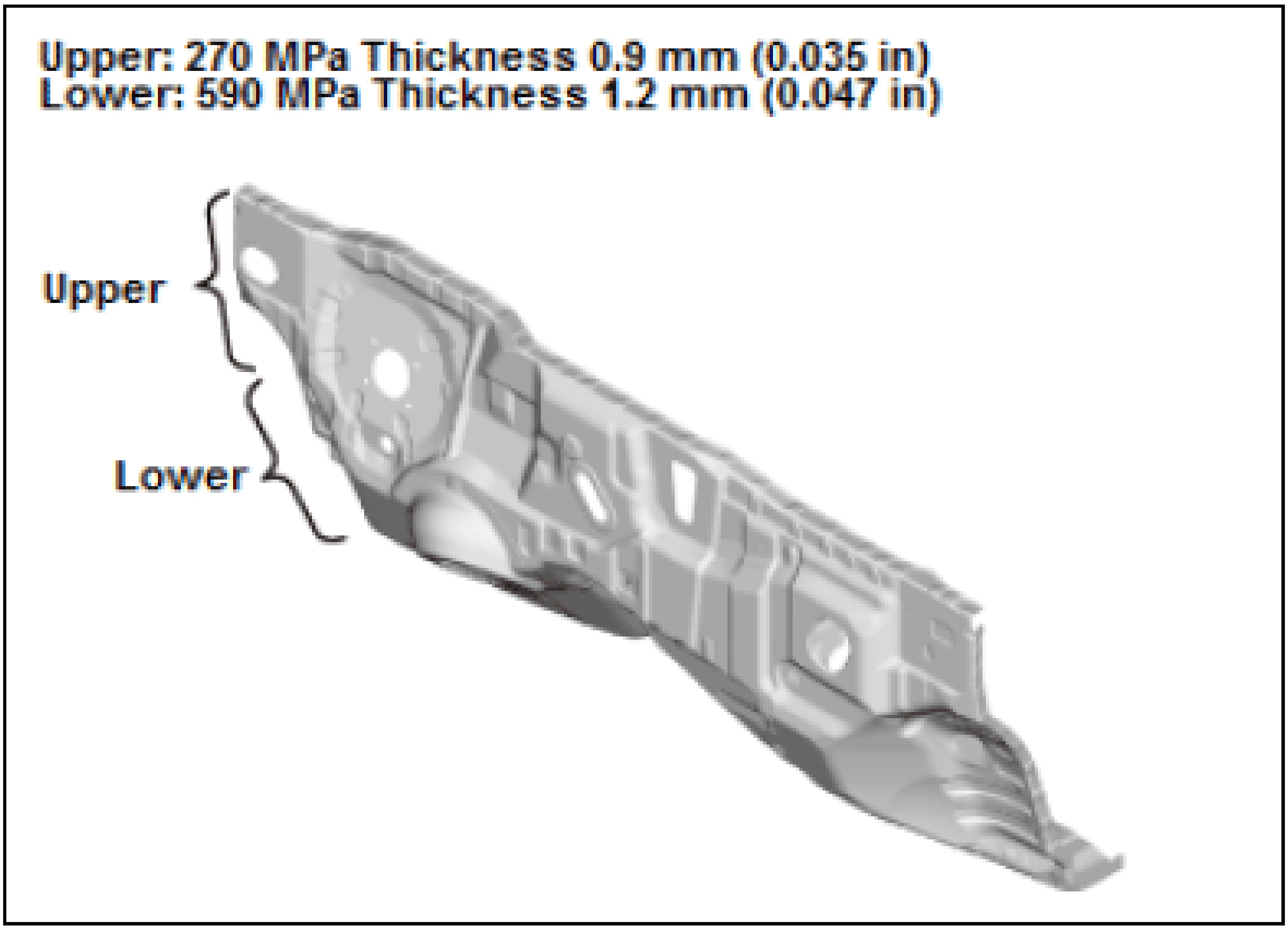
Upper: 270 MPa Thickness 0.9 mm (0.035 in)
Lower: 590 MPa Thickness 1.2 mm (0.047 in)
Upper
Lower

Door Inner Panel

Butting of mild steel sheets with different thickness

Front door
Front: 270 MPa Thickness 1.4 mm (0.055 in)
Rear: 270 MPa Thickness 0.7 mm (0.028 in)

Rear door
Front: 270 MPa Thickness 1.2 mm (0.047 in)
Rear: 270 MPa Thickness 0.65 mm (0.0256 in)

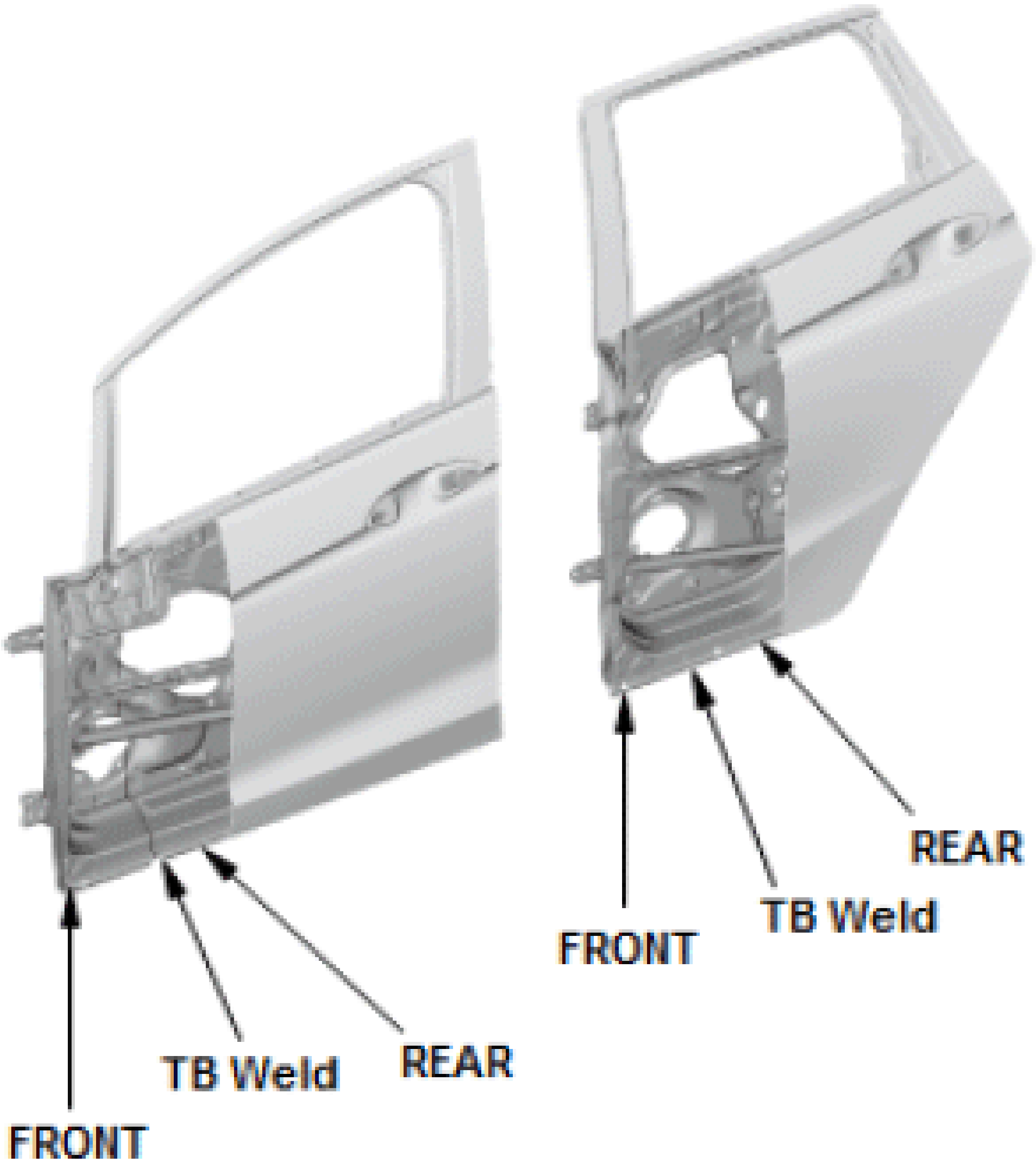

GLASS

Installation Of Glass

Front and rear window glass sealing has two basic functions:

- Prevent wind, rain, dust, noise, and outer air from entering the passenger compartment
- Hold the glass in position during a collision

Two sealing methods are used, adhesive and weatherstrip.

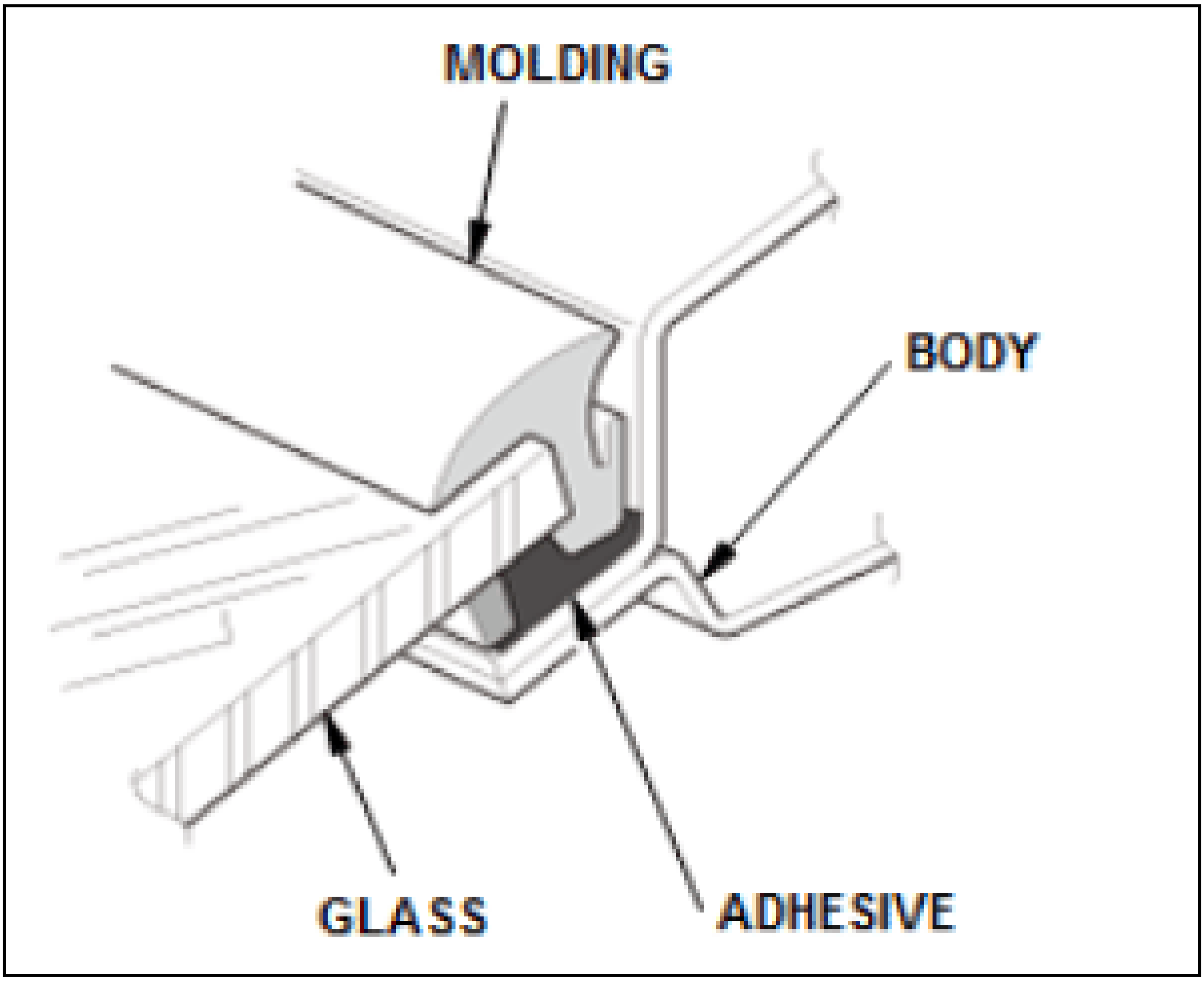

Adhesive Type

- The glass pane is directly attached to the body with a urethane-based sealer. In order to improve the adhesive effect between the body and glass and also to heighten the rigidity of the window opening area and tightness, glass primer and body primer are applied to the glued areas.
- Installing this type of glass has a safety advantage because the glass is securely retained during a collision. Wind noise is also reduced through its flash surface effect.
- This adhesive type is used for front windshield, rear windows (including tailgate), and quarter windows (excluding an open/closing type),

Weatherstrip Type

- The glass is fixed in the body by being tucked into a rubber weatherstrip that is weather and solvent-proof.
- During glass installation, sealer is applied on the contact surface to prevent entry of dust, water, and noise. The sealer also helps prevent the glass from falling out of the weatherstrip during a collision.
- This adhesive type is most often used for rear and side windows of commercial vehicles such as panel vans and pick-ups.

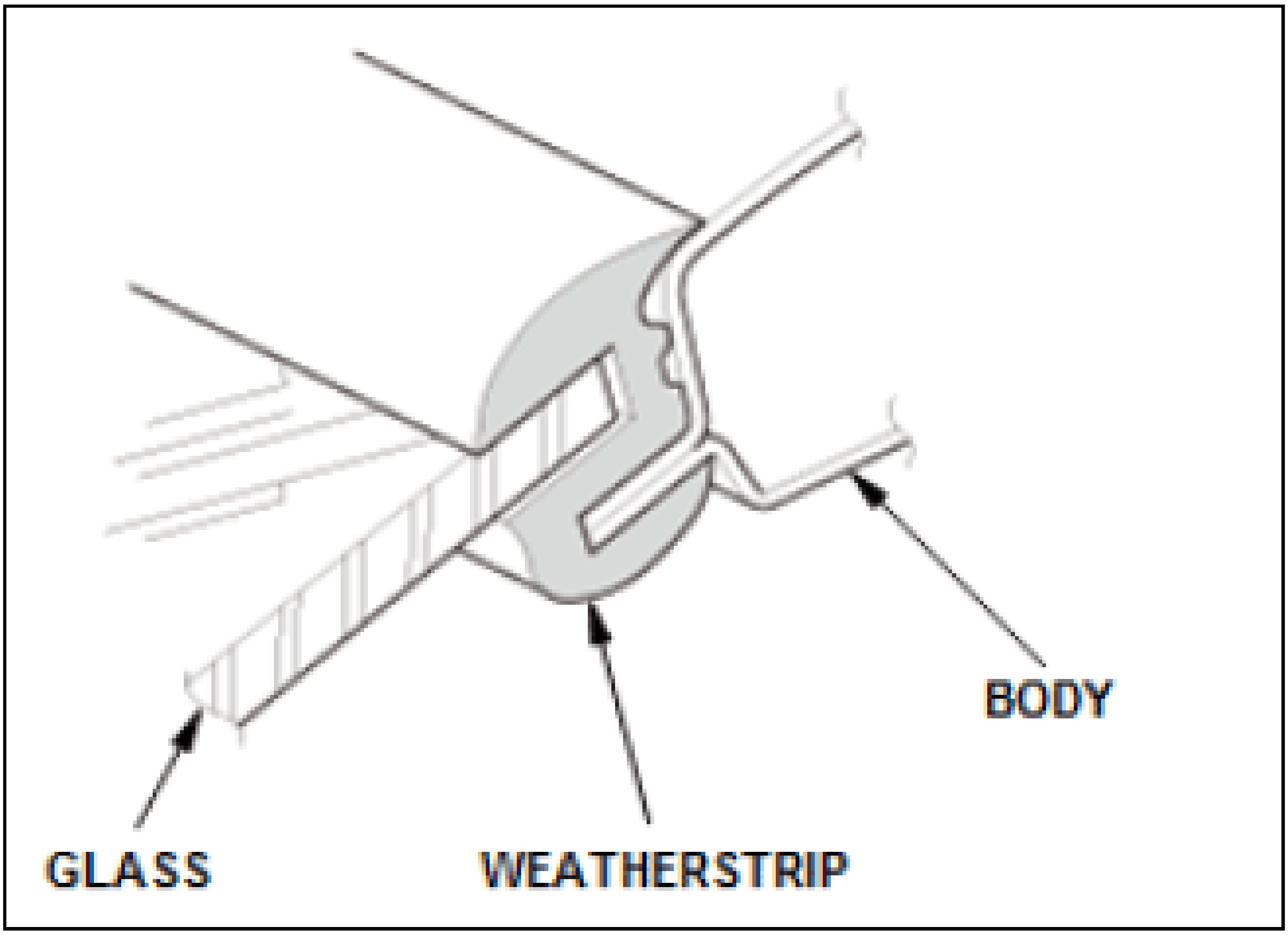

Types Of Glass

As the vehicle collision performance improves, requirements are increased for automobile glass as well; better visibility, improved safety from external impact, isolation of noise from the passenger compartment, and enhanced appearance.

Tempered Glass

This glass is a specially processed with a high strength by heating a glass to the softening temperature about 1202Â°F (650Â°C) and then evenly and quickly air-cooling the surface. Another characteristic is that it instantaneously shatters into tiny pieces when broken.

Partially Tempered Glass

A type of tempered glass. It was designed to improve the visibility problems created when normal tempered glass breaks. By reducing the level of tempering, cracking of the glass is reduced and the driver can maintain his/her visibility.

Laminated Glass

Two glass panes are compressed together with a transparent, high adhesive film resin in between. As a result, even if the glass is impacted and broken by an external force, it does not separate into sharp pieces. It is most commonly used for windshields.

NOTE: **In body repair, if the body is straightened with the glass in position, the glass may break.**

Types of Glass	Characteristics	Main Use
Heater printed glass	Electric conducive powders are printed in the shape of a hot wire on the surface of glasses before heat treatment.	Windshield and rear window
Heat absorption (colored) glass	A small amount of metal such as cobalt or iron is mixed in a normal glass to color it so that it can absorb infrared rays (heat rays).	All
Partially shaded glass	Only upper part of a glass is colored to reduce transillumination rate. The color becomes darker as it goes to the upper part and thinner as it does down to the lower part.	Windshield
Antenna-buried glass	Antenna line for receiving radio transmission is buried in the middle layer of the laminated glass or the line is printed on the glass surface. There is also a type that has both a buried wire and printed wire.	Rear window and side windows

RESIN

Identification Of Resin Type

- It is necessary to be able to repair plastic parts as similar to the other body parts since there are many plastic parts used for vehicle exterior.
- The repair methods and materials used depend on the materials that the plastic parts are made from.
- Refer to the stamped code (ID) on the backside of the parts and the appropriate service information for detailed material identification.
- Always check the plastic resin characteristics before repairing.

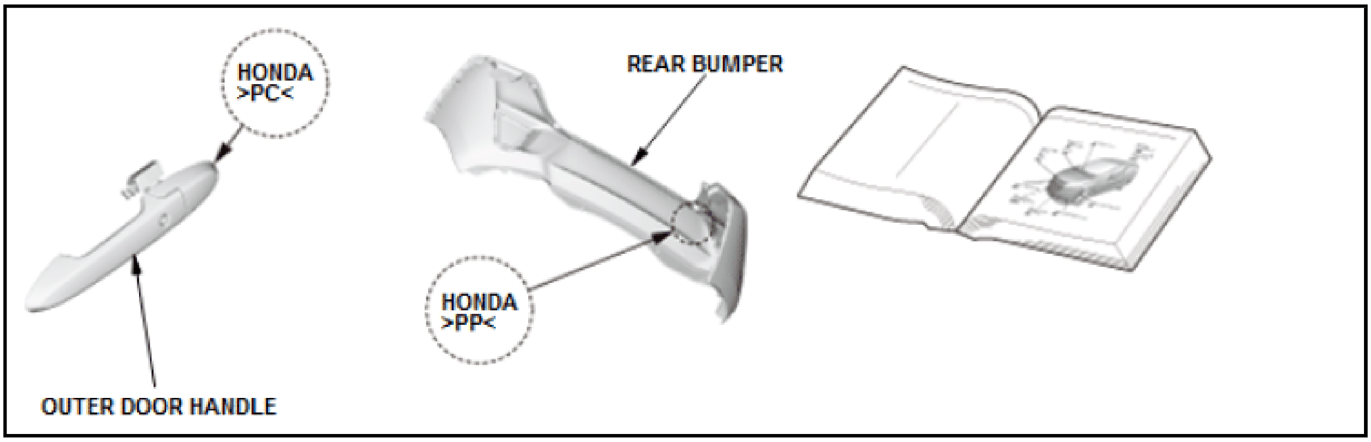

Plastic Resin Types

Many different kinds of plastic resins are used for automotive parts depending upon their purposes. Plastic resin characteristics are also very different from one to another. It is important to know the material names and their chemical and mechanical characteristics.

Plastic resins can be roughly divided into two categories: thermoplastic resins and thermosetting resins.

- Characteristics and Main Types of Thermoplastic Resins

  When heated, these resins become soft. If heated further, they will melt. When the temperature is reduced, they return to a solid state.

Resin Materials	Codes	Features
Polyethylene	PE	Good in cold resistant, electrical characteristic, and chemical-resistant properties. Impenetrable except air. Though inferior in strength, rigidity and thermal resistant properties, as density is increased, rigidity and thermal resistant property is improved.
Polypropylene	PP	The lightest in weight of all the resins. Used for large size parts like bumpers. Its strength, rigidity, and surface hardness are greater than those of Polyethylene (PE). It has a high thermal resistant temperature. Good in electric characteristics, anti-water and chemical-resistant properties. Strong in bending. Inferior in adhesiveness and weatherproof property.
Polyvinyl chloride	PVC	Through addition of plasticizer, it is possible to adjust its property from soft to hard. Good in electrical characteristics, chemical-resistant, and weather resistant properties. Inferior in anti-shock and anti-bending properties.
ABS resin	ABS	Good in mold forming, anti-shock property, and metal-plating properties. Easy secondary processing. Inferior in weatherproofing, heat resistant, and chemical resistant properties.
Acrylic resin	PMMA	Great in appearance. Used for lens for tail light lens. High transparent rate. Good in strength, weather proofing, and workability. Inferior in anti-shock, anti-solvent, heat-resistant properties.
Polyamide (Nylon)	PA	Used for structural member parts because of its high strength and tenacity. Good in self-lubricant, anti-wear, anti-solvent properties. Wide range of temperatures for use. High water absorption rate. A change of dimensions and or softening due to water absorption may cause troubles.
Polycarbonate	PC	Strong in shock absorption. Good in heat resistant and cold-resistant properties, electrical characteristics, self-digesting and weather proofing properties. Low fatigue strength. Stress cracks and solvent cracks may happen.

- Characteristics and Main Types of Thermosetting Resins

  Once this type of resins is heated and, as the result, hardened, they are not softened again even if they are heated again.

Resin Materials	Codes	Features
Polyurethane	PUR	High elasticity. Good in anti-wear, anti-deterioration, anti-oil, and cold-resistant properties. Weak in alkali and hydrolytic dissociation easily takes place. Its hard foam is good for heat insulation and sound-insulation. As an adhesive, it can be hardened at room temperature and is strong.
Unsaturated polyester	UP	A typical material based on glass-based fiber for FRP. Good mold forming property Cheaper than epoxy resin. Good in strength, rigidity and electrical characteristics. Weak in alkali and hydrolytic dissociation easily takes place. Greatly shrinks when hardened. Insufficient heat-resistant property.
Glass fiber enhanced plastic	FRP	Resin (= matrix) is reinforced by fiber (= reinforcing material) to significantly increase the strength. A fiber reinforced plastic which offers a various superior features. There are a wide variety of properties available for both resin (unsaturated polyester resins, epoxy resin, phenol resin etc.) and reinforcing materials (glass fibers, carbon fiber, aramid fiber etc.) and the combinations can achieve many types of characteristics.

Use of Resin Parts

Example:

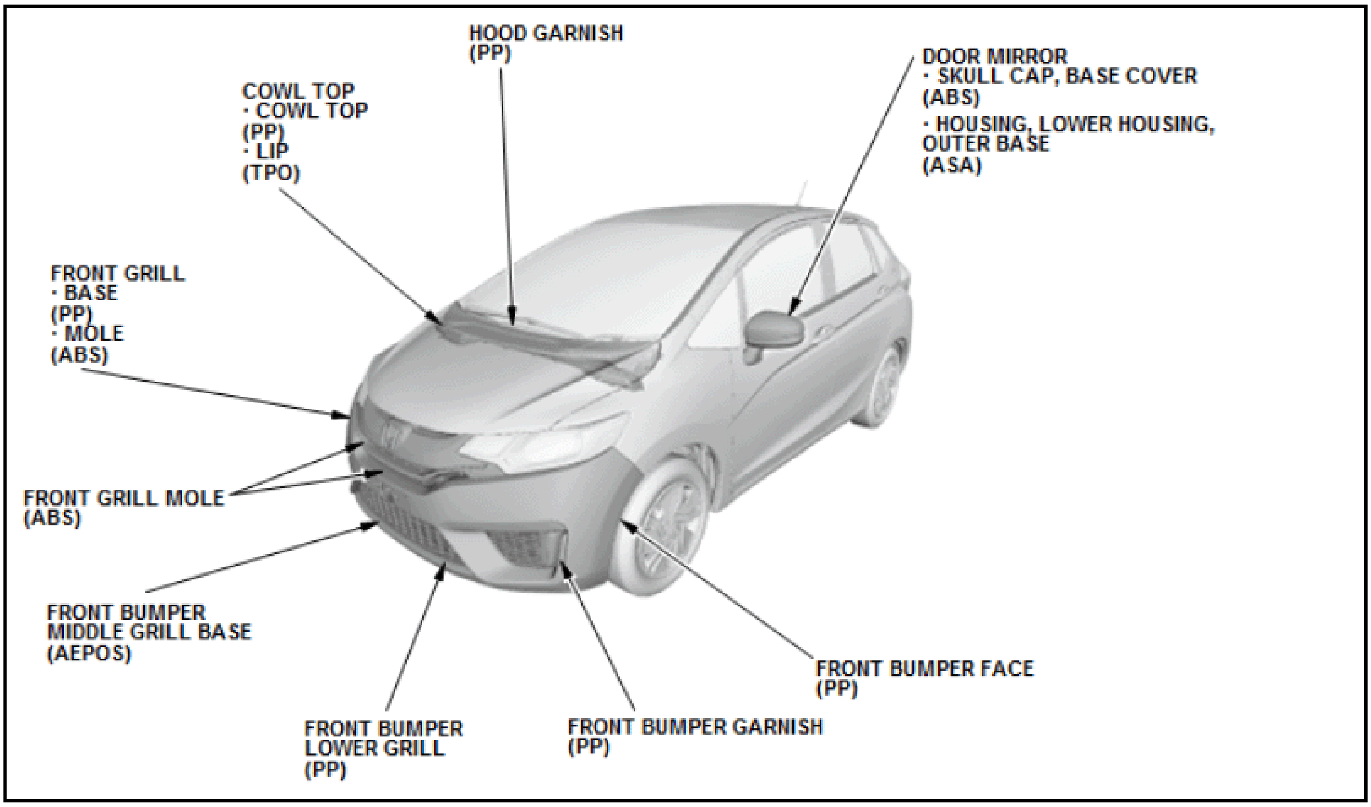
HOOD GARNISH
(PP)
COWL TOP
· COWL TOP
(PP)
· LIP
(TPO)
DOOR MIRROR
· SKULL CAP, BASE COVER
(ABS)
· HOUSING, LOWER HOUSING, OUTER BASE
(ASA)
FRONT GRILL
· BASE
(PP)
· MOLE
(ABS)
FRONT GRILL MOLE
(ABS)
FRONT BUMPER MIDDLE GRILL BASE
(AEPOS)
FRONT BUMPER FACE
(PP)
FRONT BUMPER LOWER GRILL
(PP)
FRONT BUMPER GARNISH
(PP)

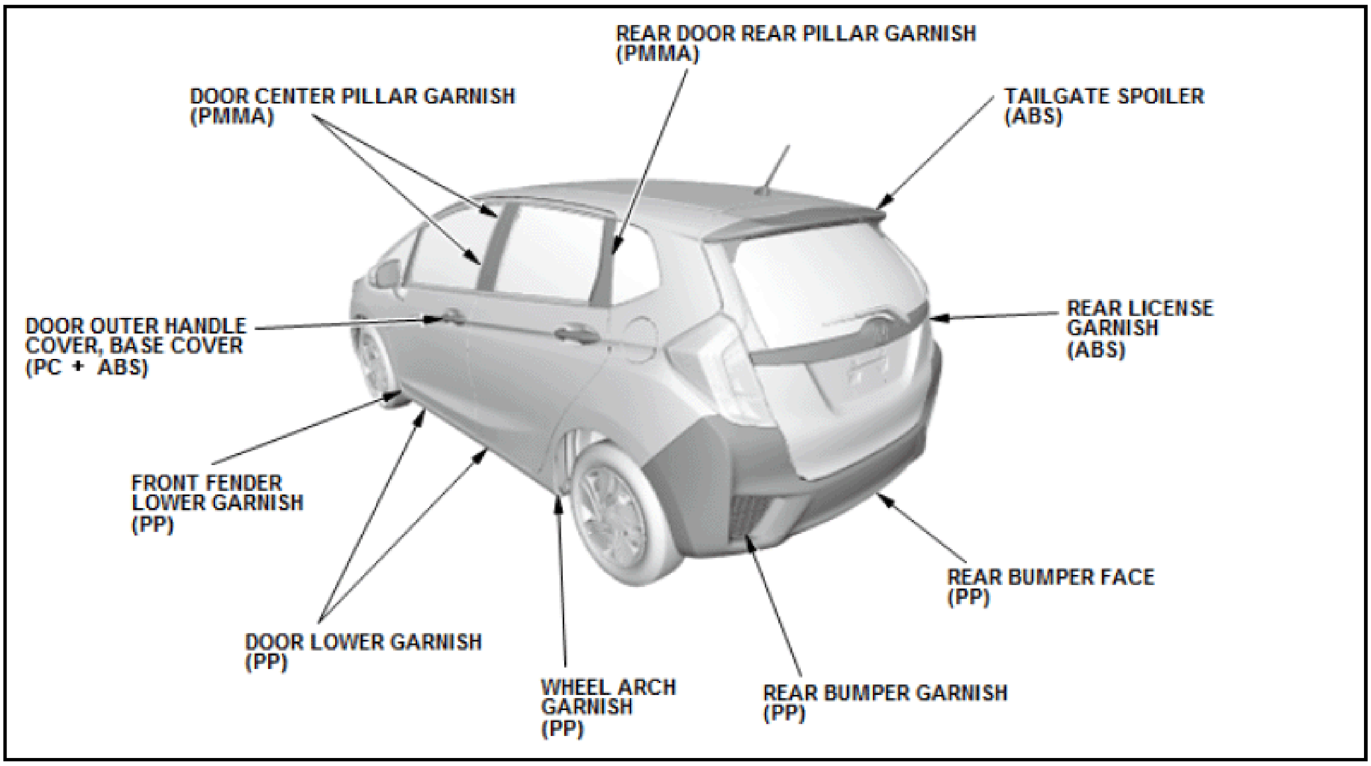
REAR DOOR REAR PILLAR GARNISH (PMMA)
DOOR CENTER PILLAR GARNISH (PMMA)
TAILGATE SPOILER (ABS)
DOOR OUTER HANDLE COVER, BASE COVER (PC + ABS)
REAR LICENSE GARNISH (ABS)
FRONT FENDER LOWER GARNISH (PP)
REAR BUMPER FACE (PP)
DOOR LOWER GARNISH (PP)
WHEEL ARCH GARNISH (PP)
REAR BUMPER GARNISH (PP)

SEALER (ADHESIVE)

Types And Use Of Sealer

- Sealers can be categorized according to their ingredients, applications, hardening types, functions or effectiveness. There are three kinds of sealers (adhesive) used for car manufacturing. One type is a structural use, used for adhering structural components together that need a strong adhesion.

  The second type is a non-structural use, used for adhering interior upholsteries, and the third type is a quasi-structural use, used to fill-in clearances between the body component parts.

- For quasi-structural use sealer, there is a mastic sealer that is used for improving panel rigidity preventing vibration and noise, and a body sealer that is effective for preventing entry of water, dust and wind.

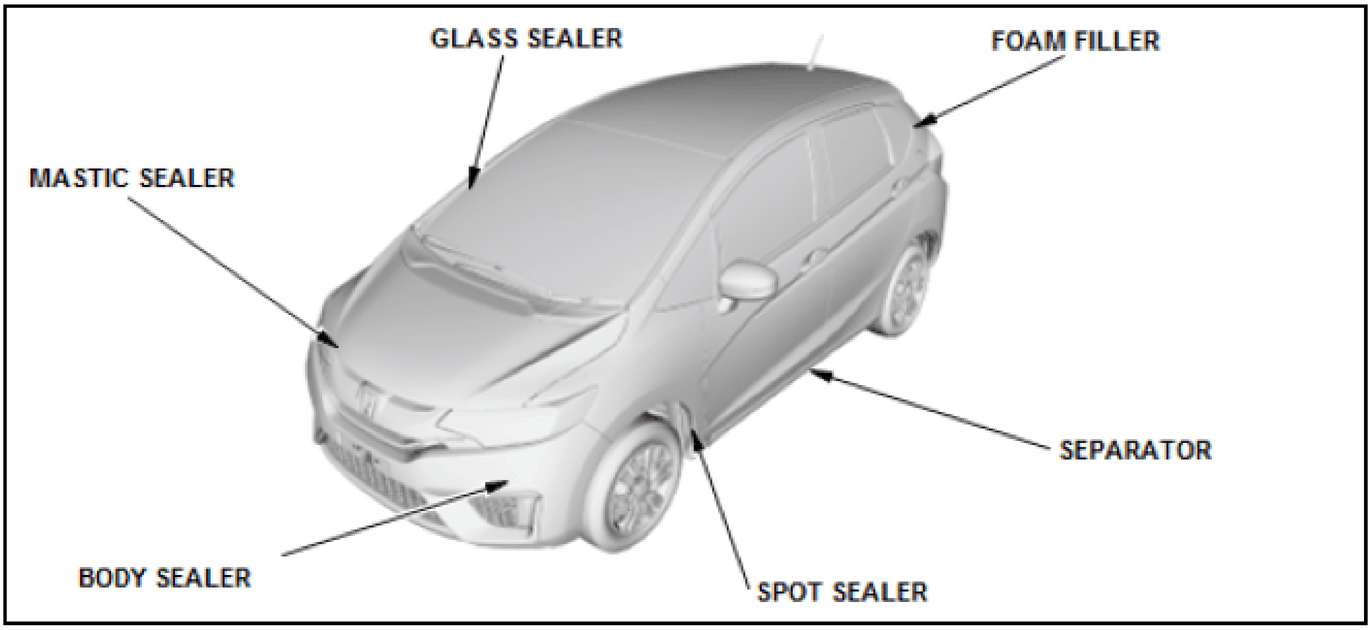
GLASS SEALER
FOAM FILLER
MASTIC SEALER
SEPARATOR
BODY SEALER
SPOT SEALER

- Mastic Sealer

  Used to adhere the hood, trunk, door and roof with outer panels. It not only joins them together, but also contributes to increased rigidity of the panels, helping to prevent vibration and noise form the outer panels.

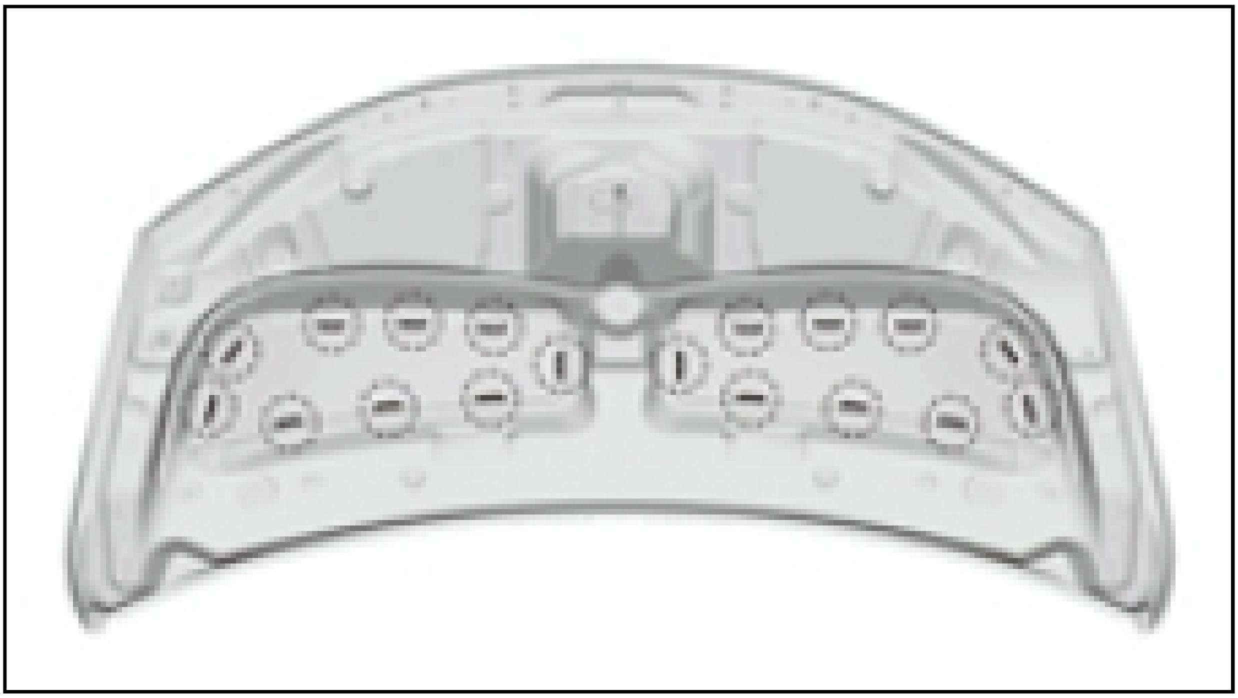

- Body Sealer (Paint Sealer)

  Applied to part contact surfaces to prevent entry of water and dust. It also has a rust-prevention effect for the edges of steel sheets and is used to improve exterior appearance.

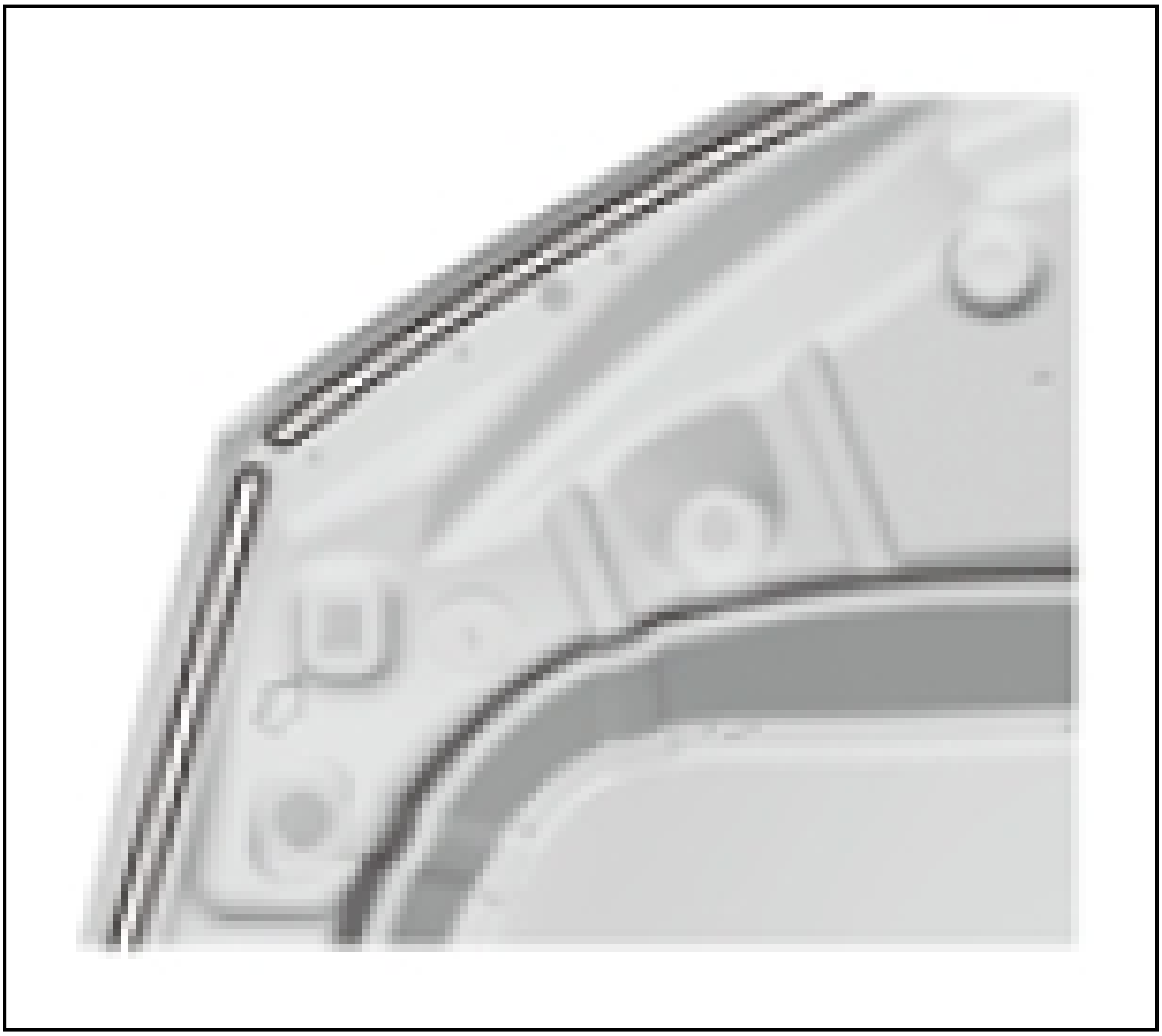

- Glass Sealer (Urethane-based Sealer)

  For glasses and other external parts (including the side protector), a urethane-based sealer that is hardened at room temperature is used.

The automobile window glasses are attached with a method called direct glazing, which directly adheres the laminated glasses onto the painted body.

In this method, one-component moisture-curing polyurethane type adhesive is used. The adhesion surfaces are a ceramic coated glass and painted steel panel. To improve the adhesion, primer is applied on both surfaces.

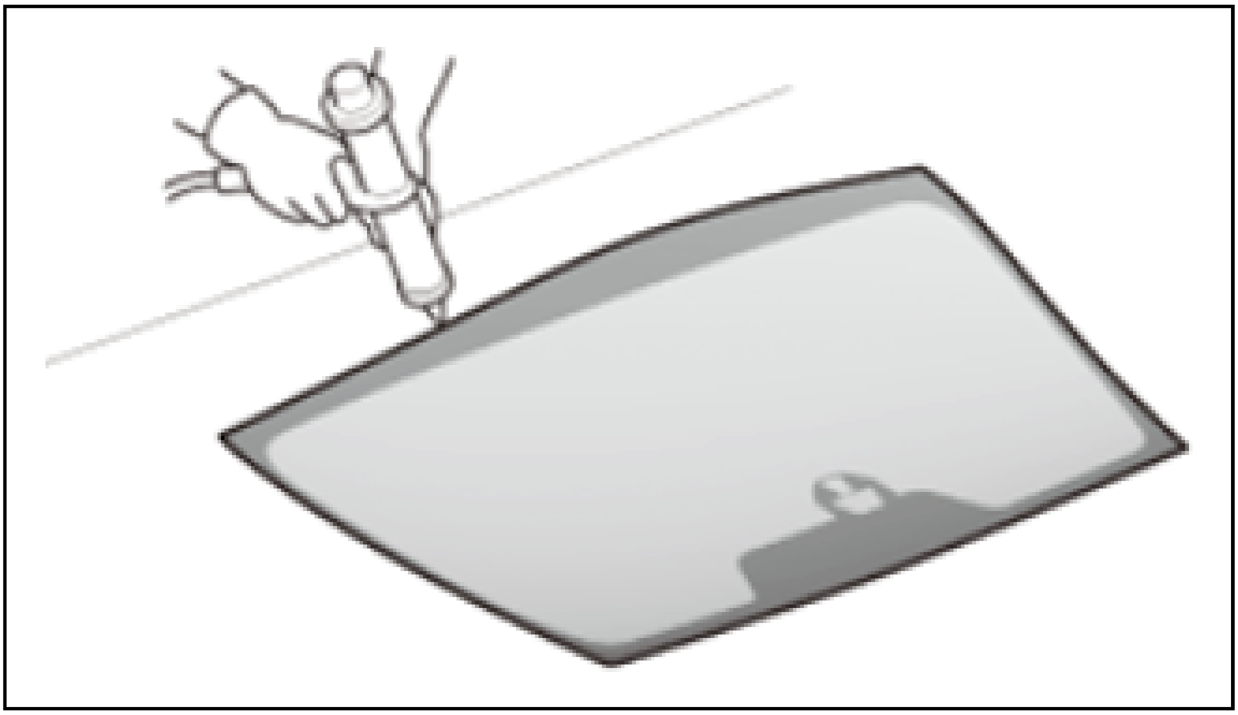

- Spot Sealer (aka Weld-Through Primer)

  Used to prevent rust on the mating surfaces of spot welds.

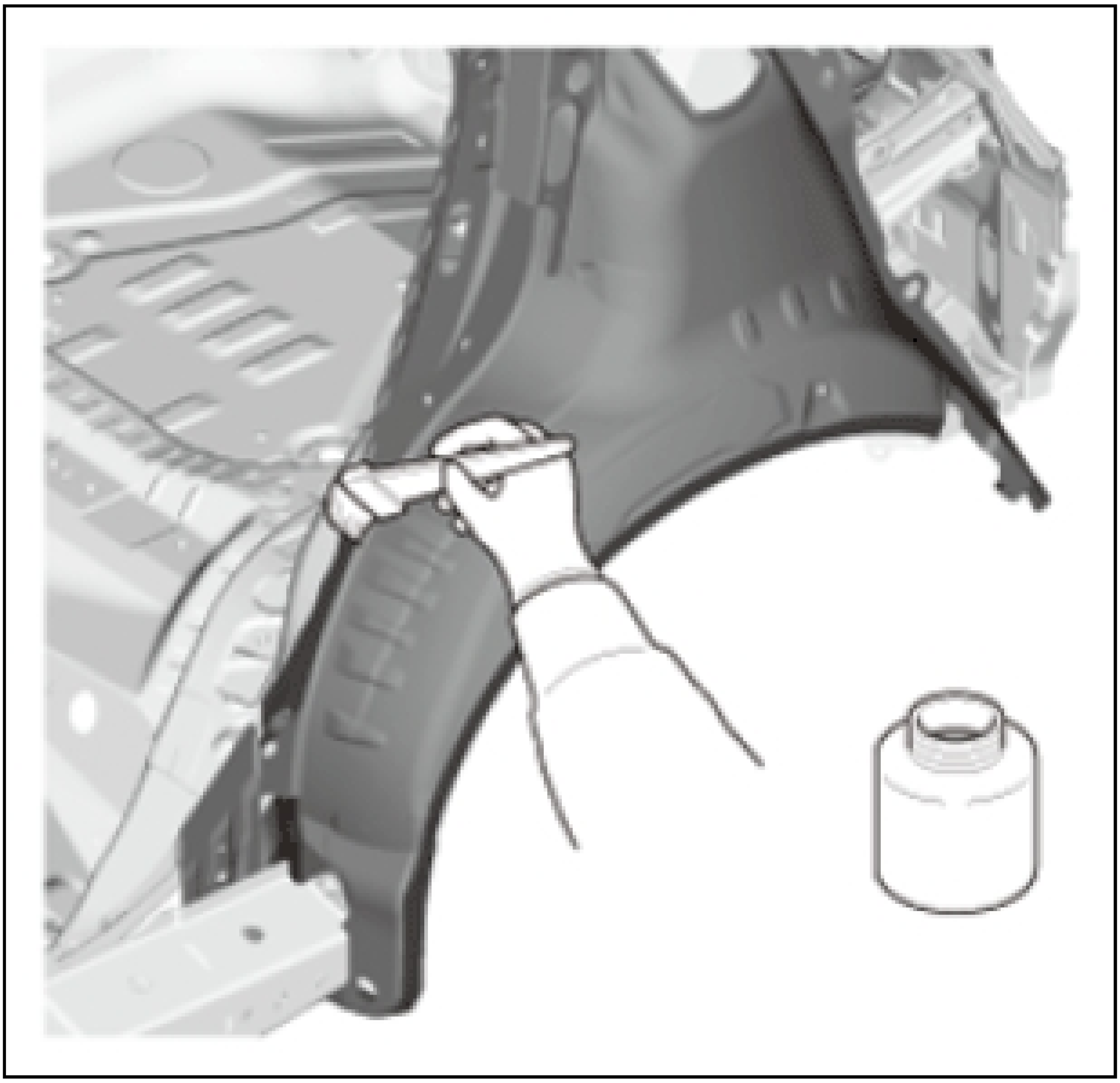

- Foam Filler Material

Significantly reduces the amount of passenger compartment road noise when applied to close off body cavities.

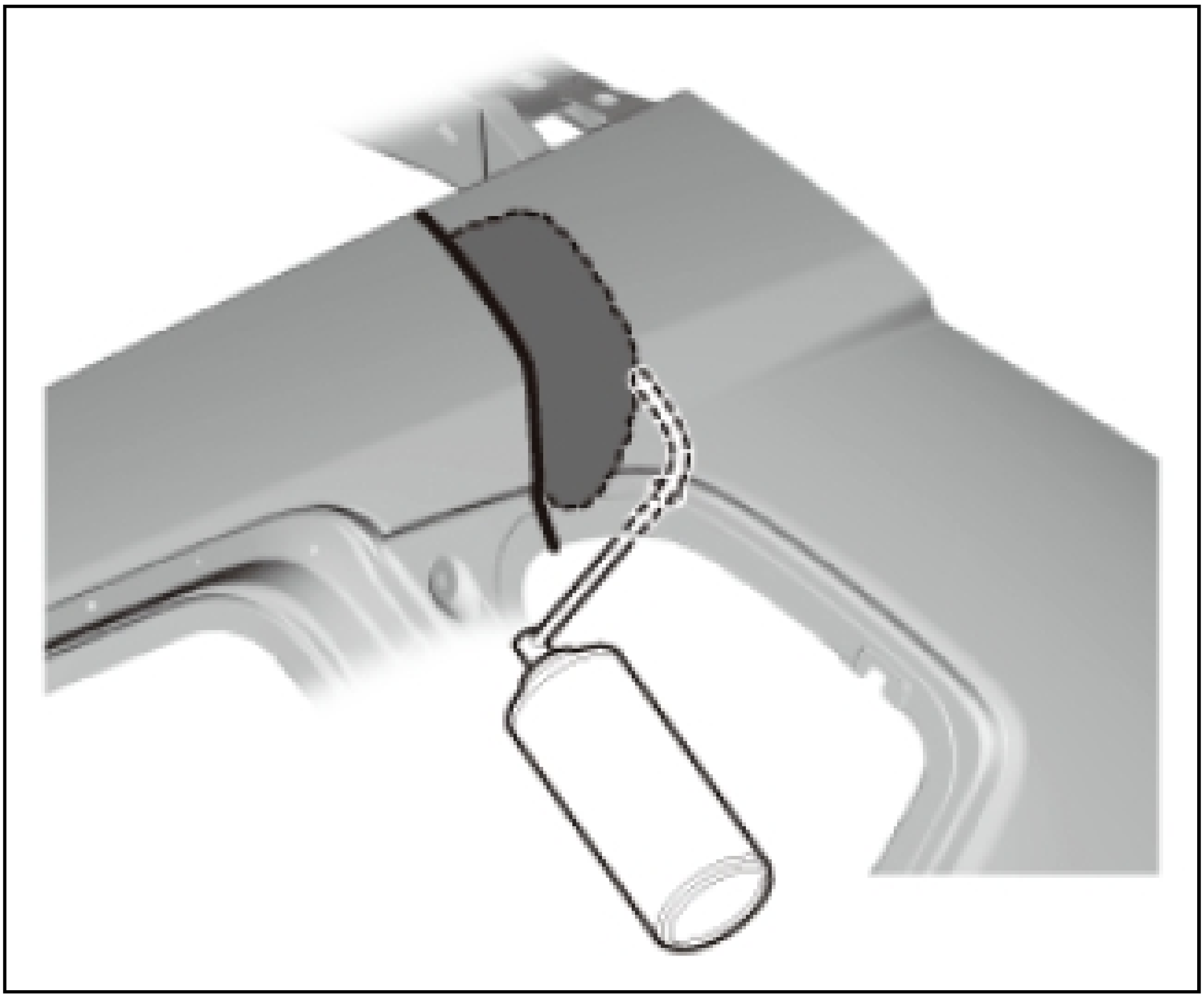

- Separator

  Separators are installed in between the panels of mass produced vehicles. Foam is generated around the separators by heat during paint baking process fill up body cavities. Some newer models use expandable foam applied through the inner panel holes for this same purpose.

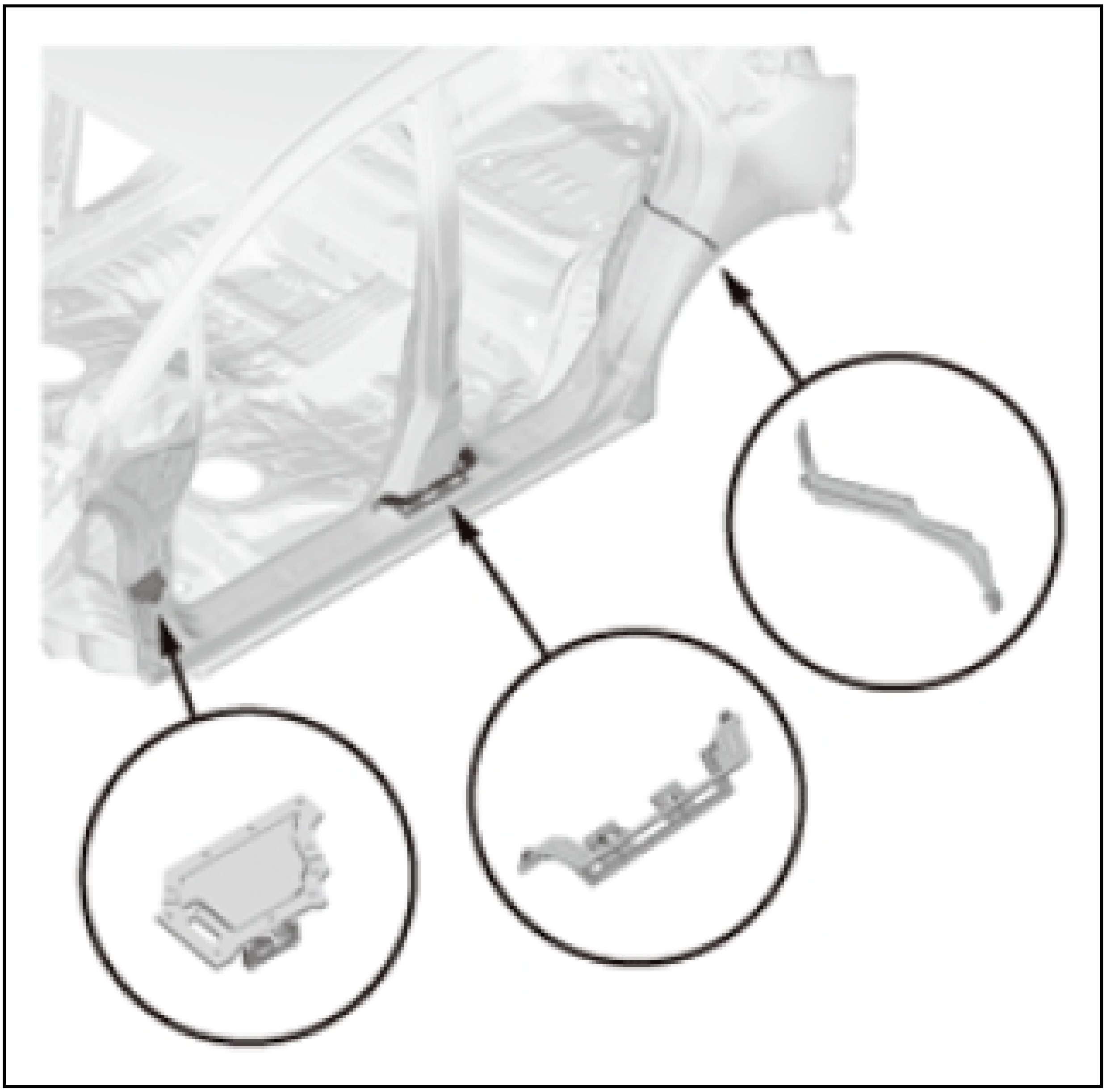

BASIC WELDING INFORMATION

GENERAL WELDING INFORMATION

Automobile Body Welding

Most of the body is welded using spot welding during mass production in order to achieve maximum strength and efficiency. Spot welding is also the preferred method for repairing body damage to ensure the same level of strength and durability as a mass production body. However, spot welding cannot be applied in every instance due to the way the parts are assembled or for other reasons. Use MAG (plug or butt welding) or MIG brazing (plug welding) as specified in the model specific service information instead.

NOTE: **Do not use gas welding during automobile body repair.**

Joint Types

Vehicles are assembled by various joining methods categorized as follows:

Mechanical Joint

Parts are joined by bolts, nuts, rivets, etc. It is necessary to machine the affected parts before for joining.

Chemical Joint

Parts are glued together. It is usually unnecessary to machine the affected parts before joining.

Metallurgic Joint

Surfaces to be joined are melted to join them together. Welding falls into this classification. Welding types include: pressure welding, fusion welding, and soldering:

- **Pressure Welding**

  This method melts parts together by electrical current and resistance without using filler material while pressure is applied to the joint. Spot welding is a common example.

- **Fusion Welding**

  This method melts the parts together using a filler material such as welding wire or rod. MAG and MIG welding are common examples.

- **Braze Welding**

  This method bonds two pieces of metal without melting them by using a filler material (brazing filler material) that has a lower melting point than the materials being joined.

MAG WELDING

Butt Welding

1. Tack welding:
    - To prevent distortion and ensure precision of joints, make several tack welds along the area to be butt welded.
    - The thinner the panel, the smaller the pitch of the tack weld.

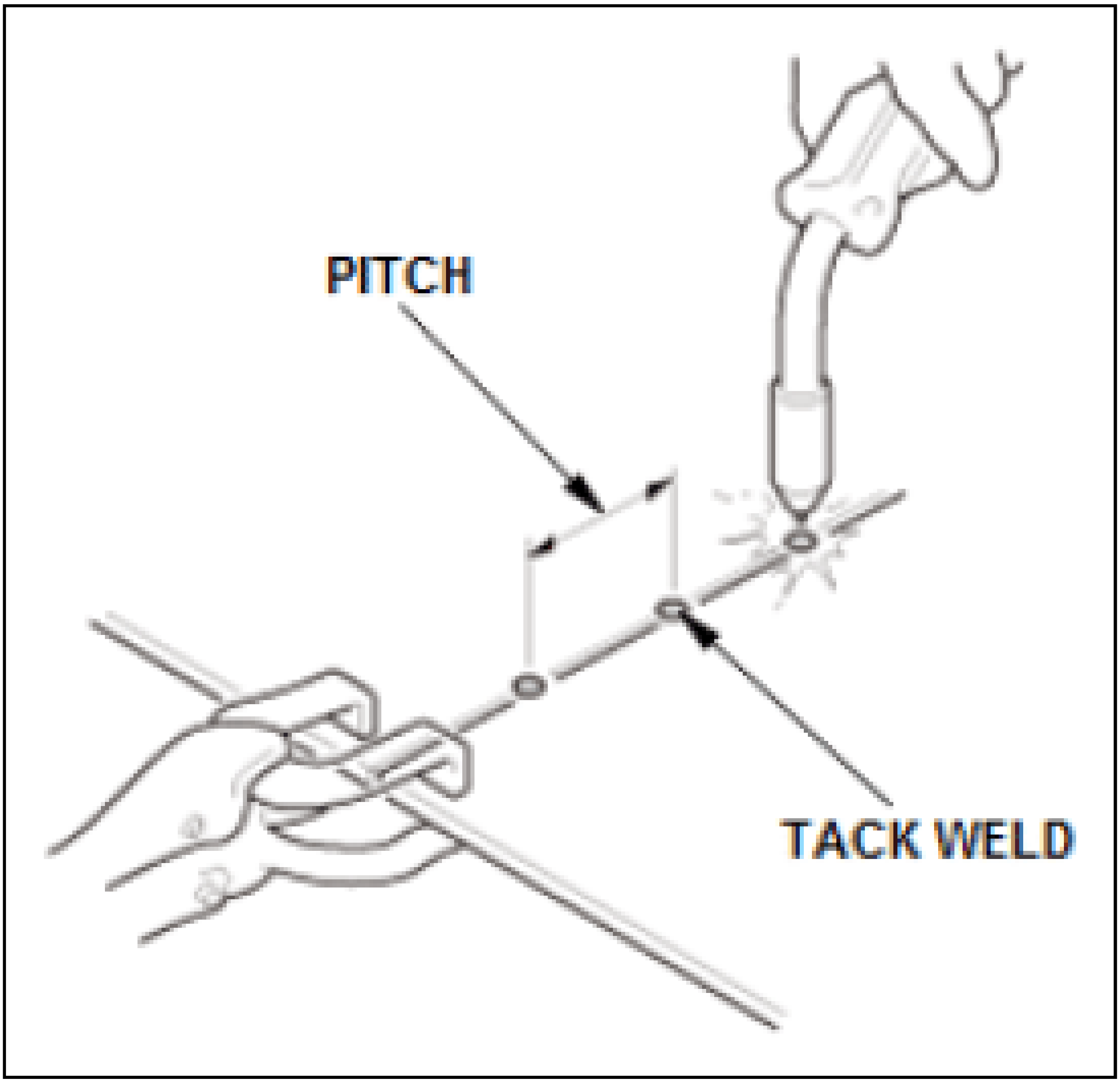

2. Main welding:
    - Tilt the torch 10 to 15 degrees and use the push (forward) welding method to weld along the mating line.

- To prevent an unsteady hand while welding, place yourself in a comfortable and supported position to help maintain the correct tip-to- work clearance and torch angle.
- Move the torch at a steady speed while confirming adequate weld penetration.
- When welding thin panels, such as an outer panel, use a skip or stitch welding technique, by moving the torch to different areas of the butt weld. This will help avoid overheating the panels, which can cause warpage or burn through.

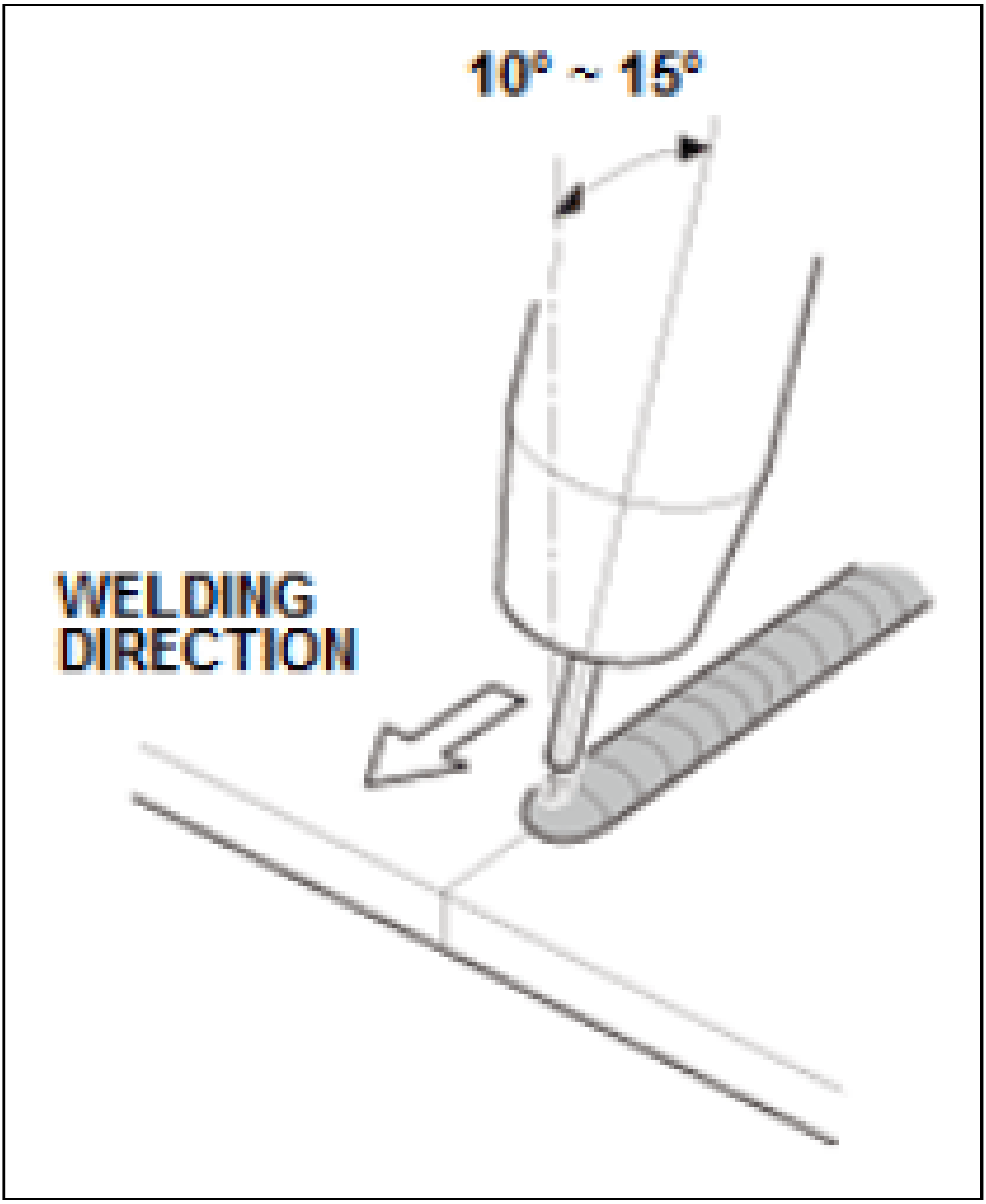

3. Butt Weld Visual Inspection

Penetration

Examples of typical faults:

- Lack of penetration resulting in insufficient strength Weld may fail or cracks when it is being ground smooth.
- Arc length too long.
- Sufficient penetration, but bead is too high requiring excessive grinding to finish.

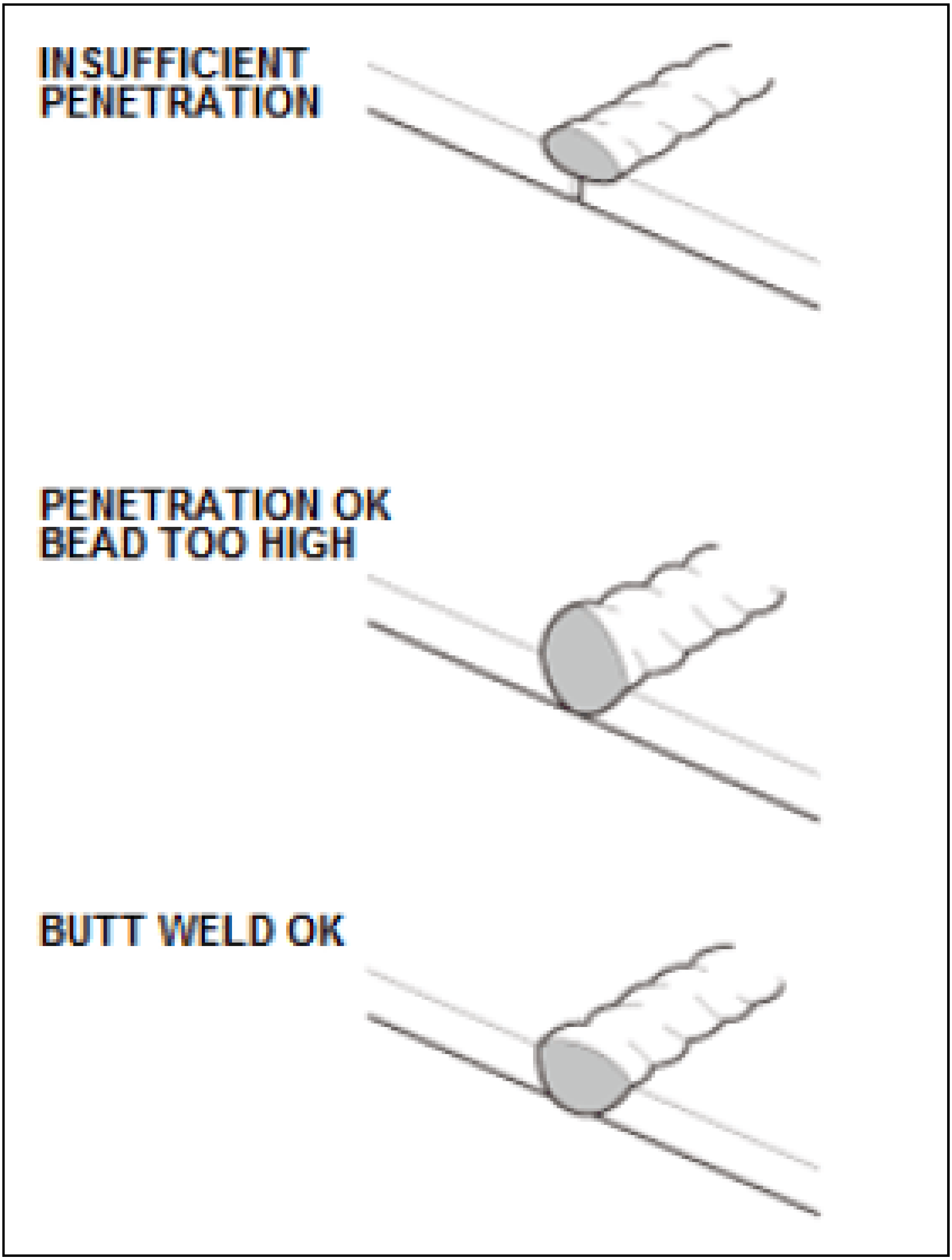
INSUFFICIENT PENETRATION
PENETRATION OK BEAD TOO HIGH
BUTT WELD OK

MAG Welding Conditions For High-Strength Steel Parts (Except 1500 MPa)

If a high-strength steel part (340 MPa or higher) is MAG welded, the welding wire used must have a tensile strength equal to, or greater than, the lowest tensile strength of the parts being welded. The wire below, or equivalent, may be used for 980 MPa or less (except butt welding for 980 MPa, which is prohibited) high-strength steel welding.

MAG Welding Wire

Must use 0.8 mm (0.031 in) diameter wire with a tensile strength of 980 MPa or higher (142 ksi or higher).

Tensile strength of steel plate and welding method

Tensile Strength (MPa)	Welding Method	
	MAG Weld	
	Plug	Butt
340	◦	◦
440	◦	◦
590	◦	◦
780	◦	◦
980	◦	x
1180	◦(1)	x
1500	◦(1)	x

(1) MAG plug welding is only allowed on these steel grades in selected locations as specified in the body repair information. Welding instructions must be followed exactly as specified to ensure adequate weld strength.

NOTE: **Be sure to check the product specifications issued by the manufacturers for details on welding wire.**

Plug Weld

- Drill plug holes according to the sheet thickness referring to the table below.
- To determine the thickness of the parts being welded, refer to the appropriate body construction information.

Thickness mm (in)	Less than 1.0 (0.039)	1.0-1.5 (0.039-0.059)	1.6-2.3 (0.063-0.091)
Hole diameter Ã˜ mm (in)	6.0 (0.24)	8.0 (0.31)	10 (0.39)

Plug Welding

- Start welding 1.0 mm (0.039 in) from the outer circumference of the edge of the plug hole.
- Weld upper and lower plates completely around the edge of the hole.
- Perform a trial weld to confirm welded finish using test parts. Then perform the actual welding.

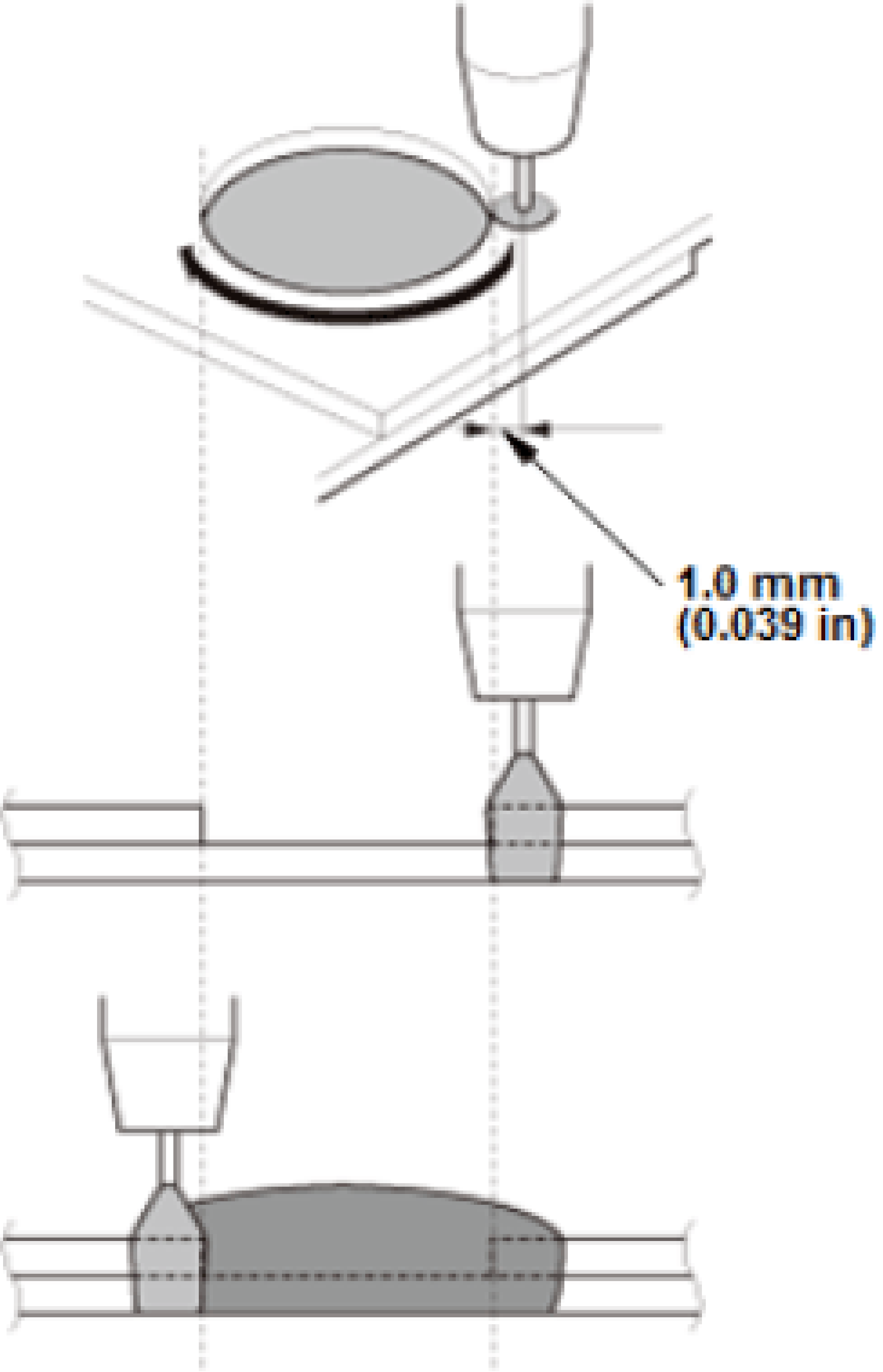

Butt Welding

- Perform a trial weld using the same welding conditions as the actual welding you will be doing. Confirm that the bead protrudes from the back side of the weld.
- To ensure adequate weld strength, grind the test weld flat and then perform the welding so that the bead will protrude from the back side of the weld.

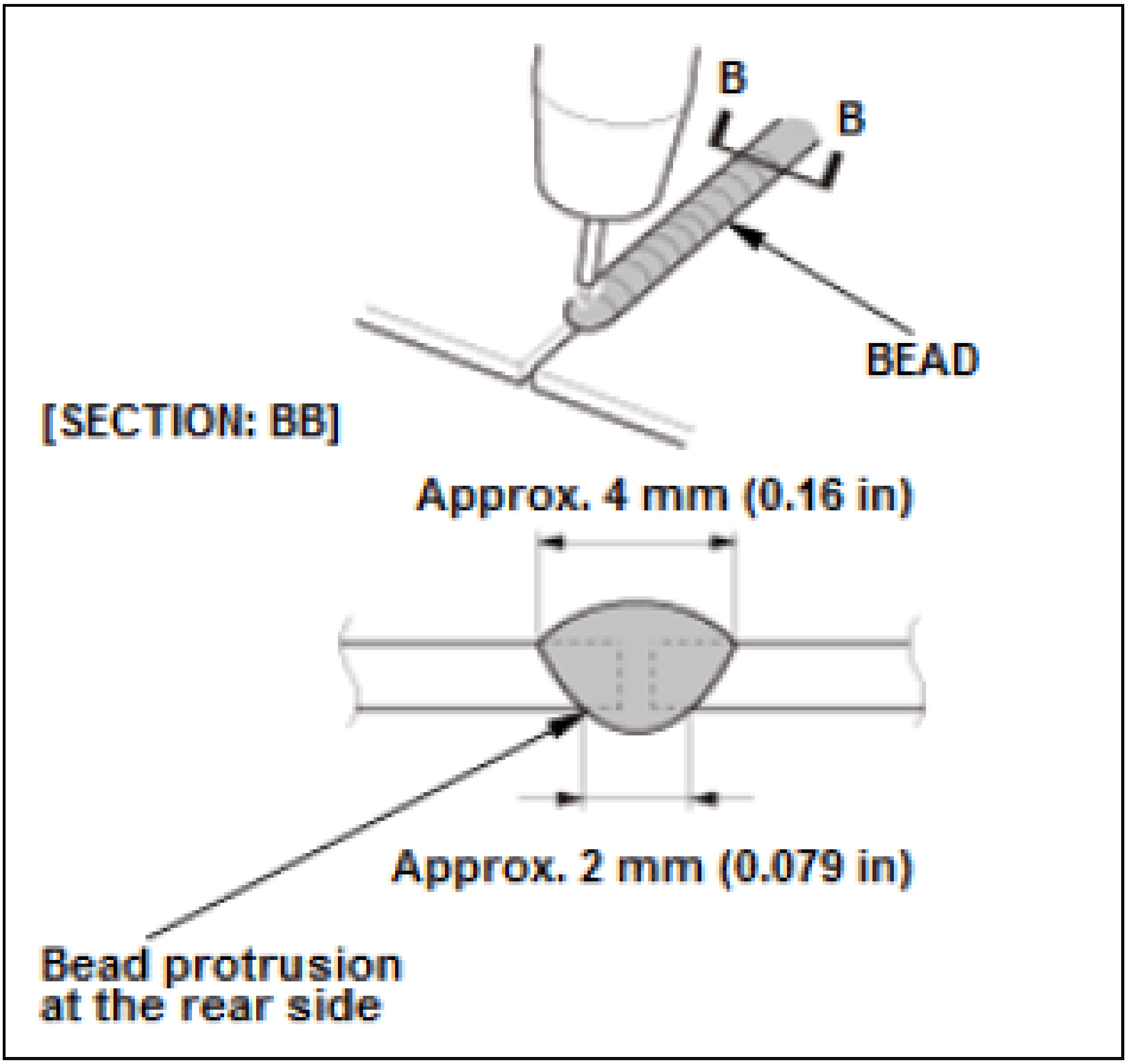
B
B
BEAD
[SECTION: BB]
Approx. 4 mm (0.16 in)
Approx. 2 mm (0.079 in)
Bead protrusion
at the rear side

Plug Welding

1. Plug hole drilling:
    - Drill holes for plug welding in the upper panel.
    - To ensure adequate weld strength, the proper hole diameter must be chosen based upon the metal thickness.
    - Use 0.8 mm (0.031 in) MAG welding wire equal to or greater than lowest tensile strength of the parts being welded to ensure adequate weld strength.

Thickness mm (in)	**Less than 1.0 (0.039)**	**1.0-1.5 (0.039-0.059)**	**1.6-2.3 (0.063-0.091)**
Hole diameter mm (in)	6.0 (0.24)	8.0 (0.31)	10 (0.39)

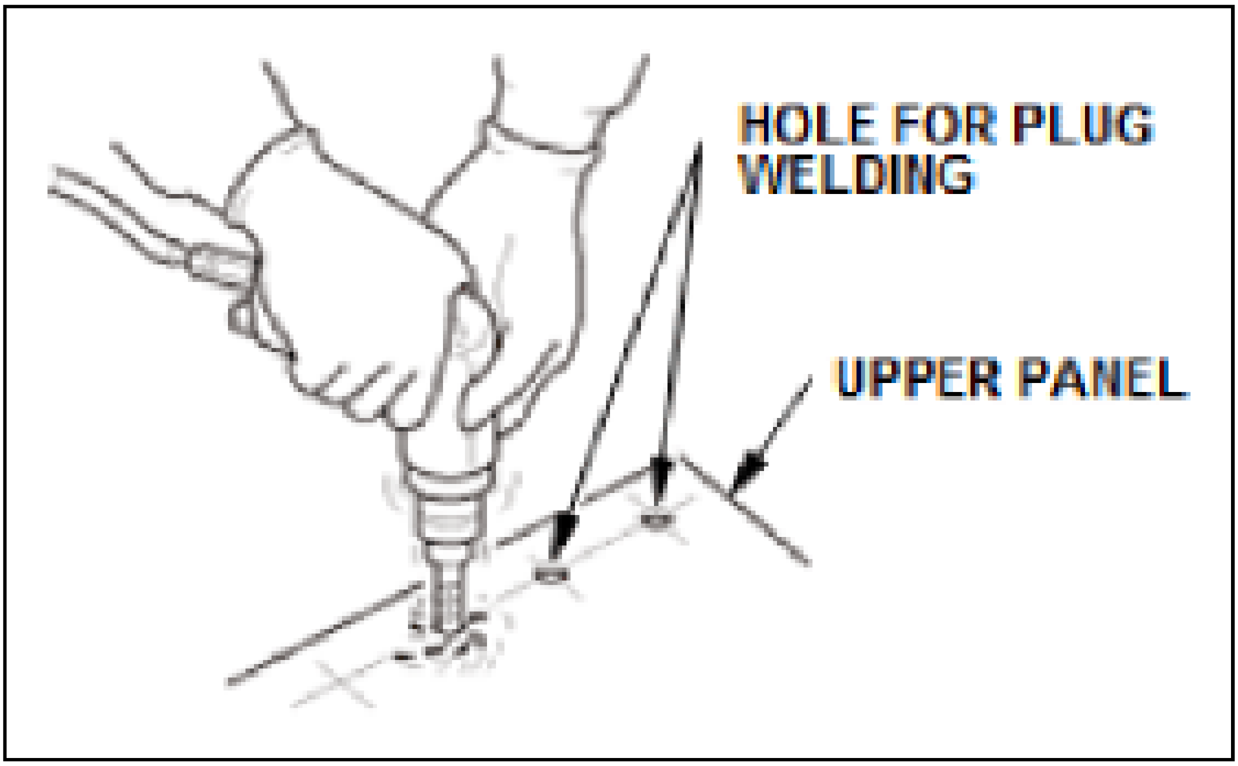
HOLE FOR PLUG WELDING
UPPER PANEL

2. Clamping weld location:
    - Use vise grip type pliers to tightly clamp the upper and lower panels together.
    - Use a hammer to correct any deformation and ensure a tight fit between the panels.

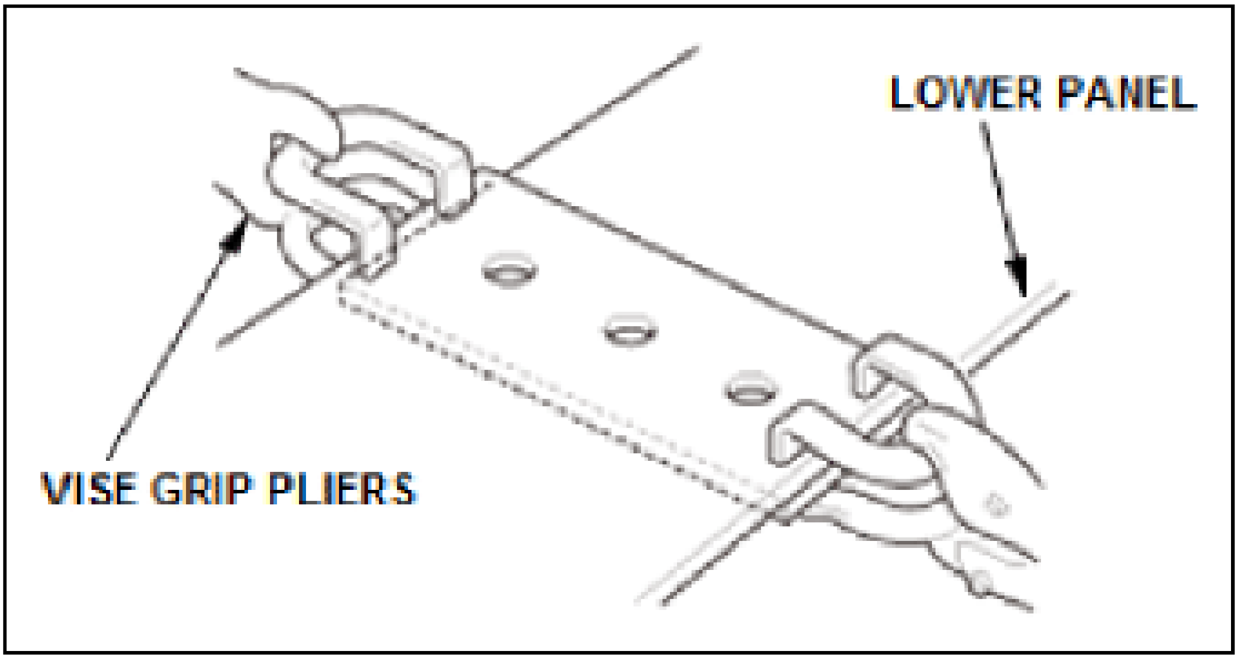
LOWER PANEL
VISE GRIP PLIERS

3. Making the plug weld:
    - Hold the torch firmly at a right angle to the plug welding hole.
    - Move the torch in a circular motion along the hole inner diameter to weld it closed.
    - Check penetration depth and ensure adequate penetration of the bottom panel.

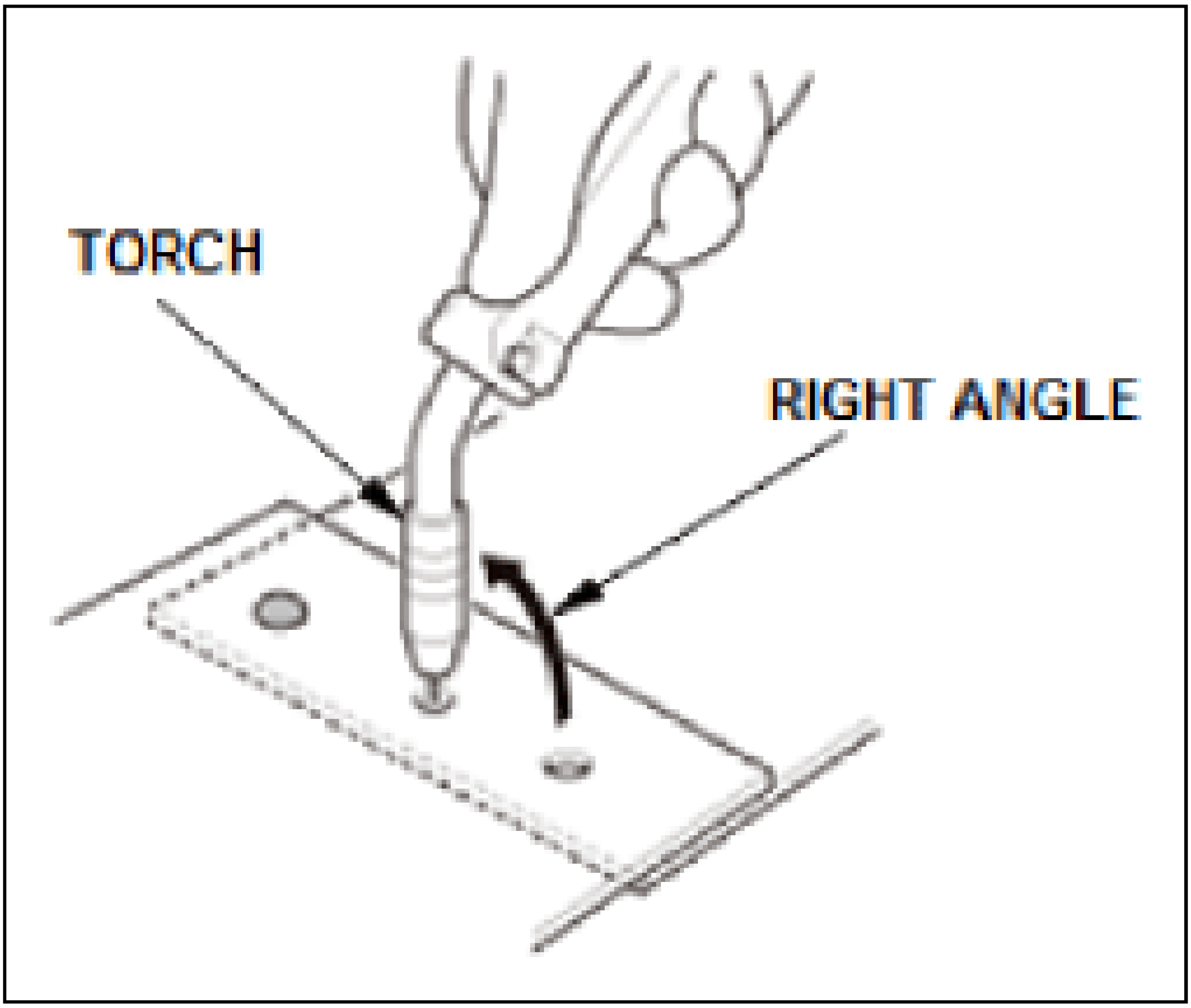
TORCH
RIGHT ANGLE

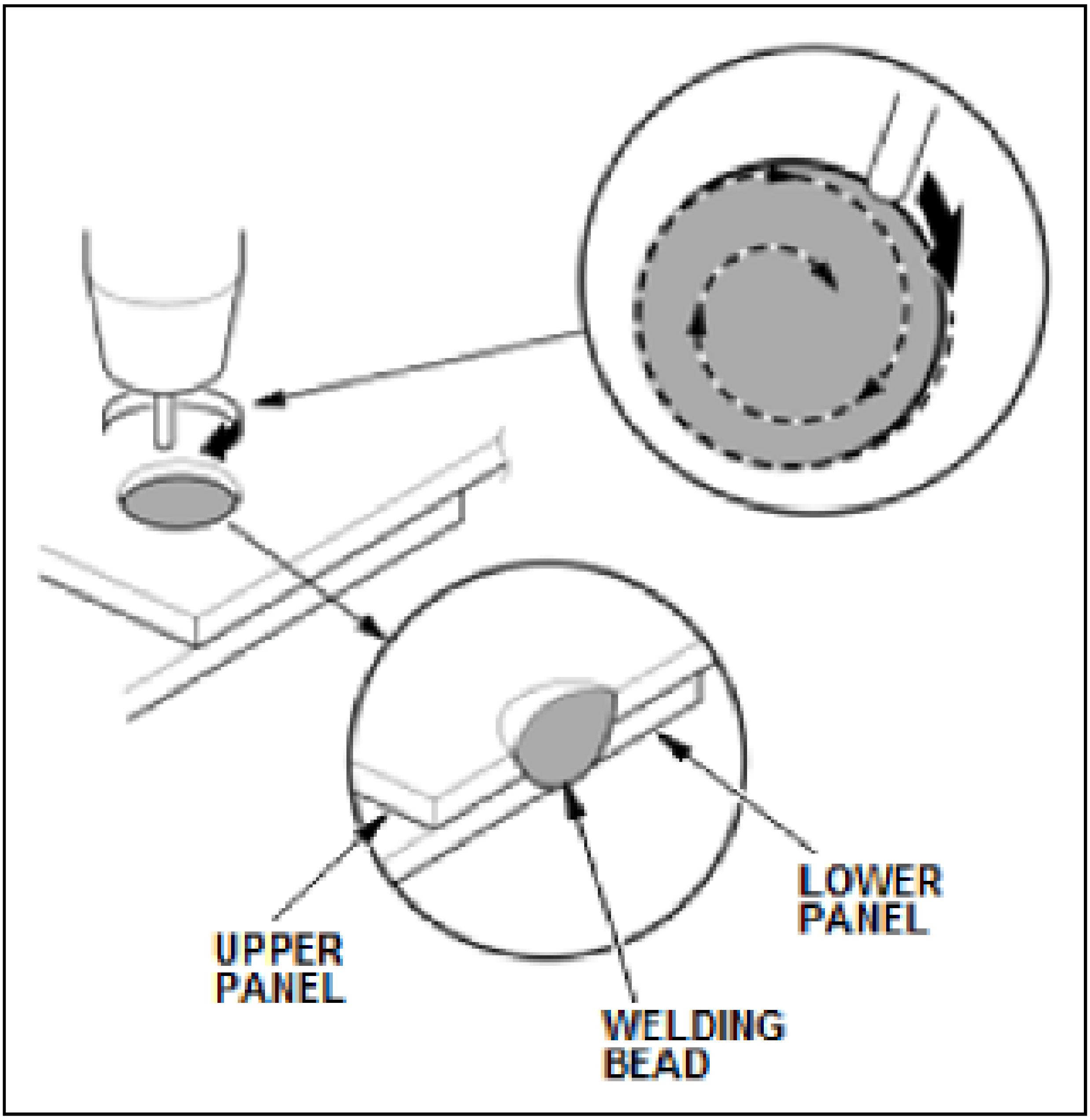
UPPER PANEL
WELDING BEAD
LOWER PANEL

4. Plug weld inspection

If the ripples (round marks) appear on the bottom panel due to the welding heat, weld penetration is sufficient.

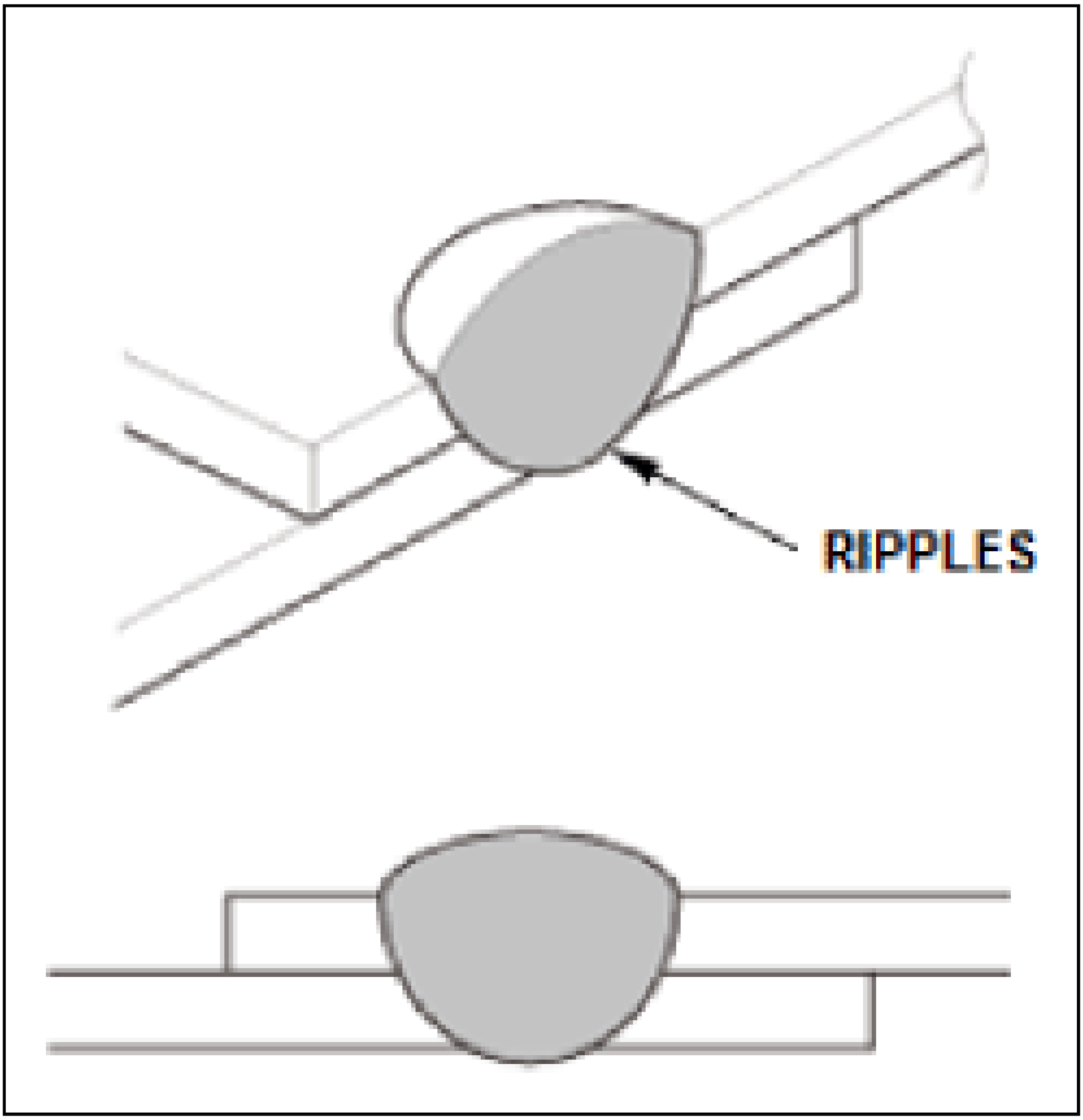

Bead shape

Example of typical faults:

- Lack of penetration resulting in insufficient strength.
- Insufficient welding current.

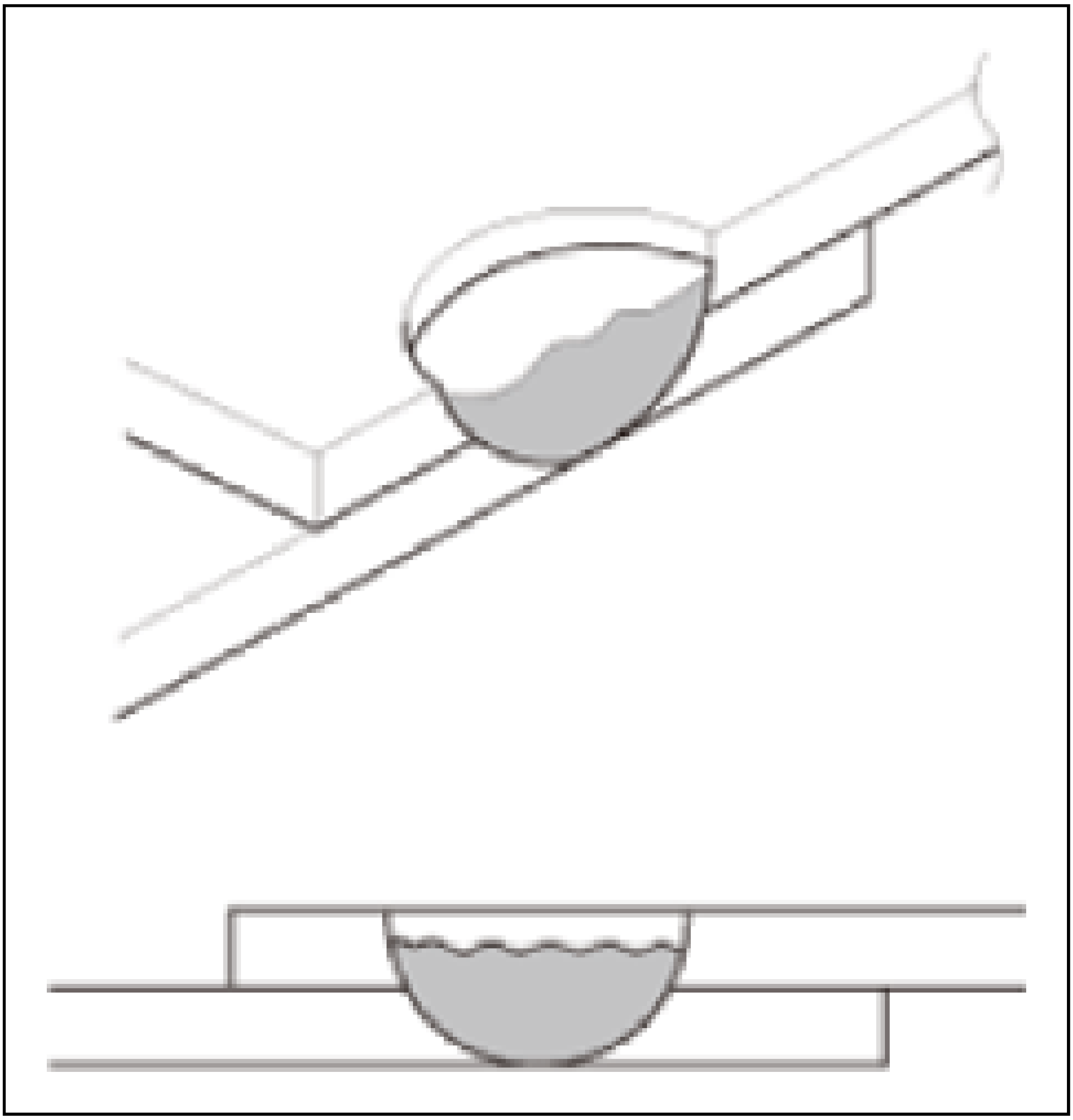

- Though penetration is sufficient, if the beads protrudes from the panel too far, it will take longer to grind smooth.

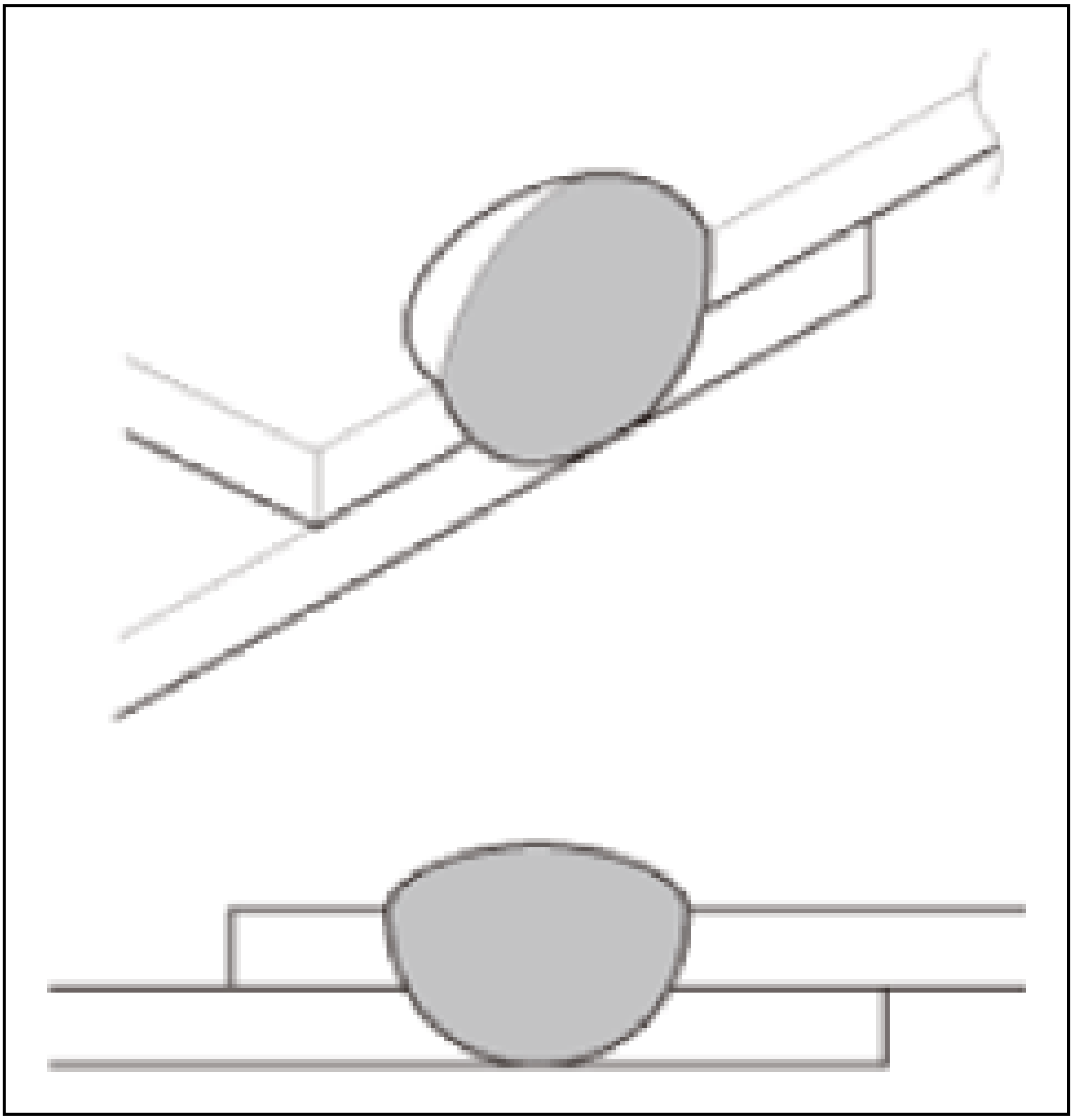

<Good Example>

- A moderate bead height

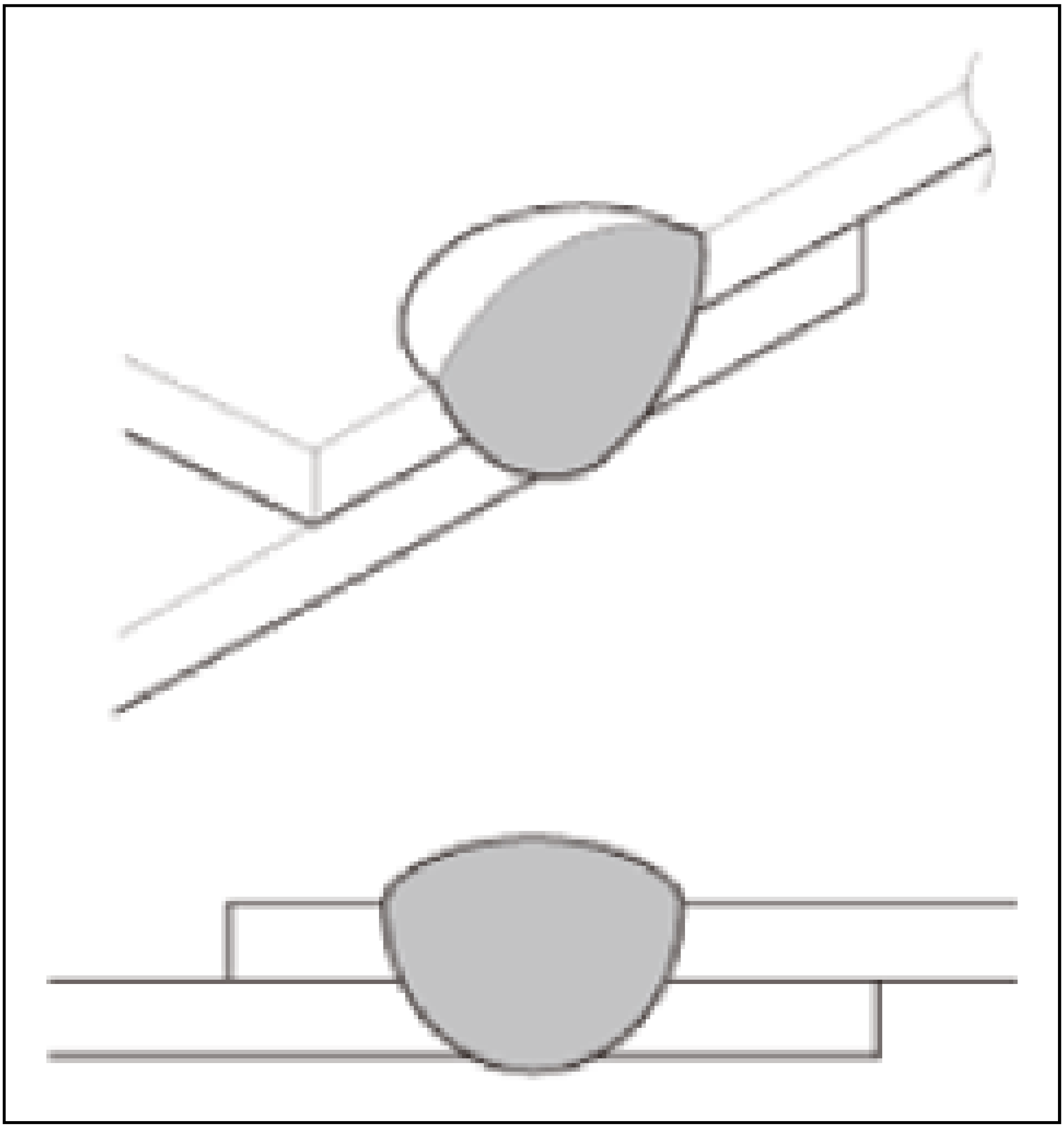

Principles And Characteristics

MAG welding is a gas metal arc welding (GMAW) method where an electric arc forms between the consumable welding wire and the work piece, which heats and melts the wire and work piece, welding them together. The welding wire is automatically fed at a constant sped, based on the welder settings.

During welding, shielding gas is supplied from a gas cylinder protect the welding area from atmospheric gases such as nitrogen and oxygen. These gases can cause fusion defects, porosity and weld metal embrittlement if they come in contact with the electrode, the arc, or the welding metal.

In carbon-dioxide gas-arc welding, a unique, melt-drop-transfer process know as the "short circuit method" is used. When welding thin panels, problems such as distortion and burn through tend to occur. To prevent such problems, it is necessary to reduce the heat input. The short-circuit method illustrated below keeps the depth of penetration lower for optimum welding of thin panels.

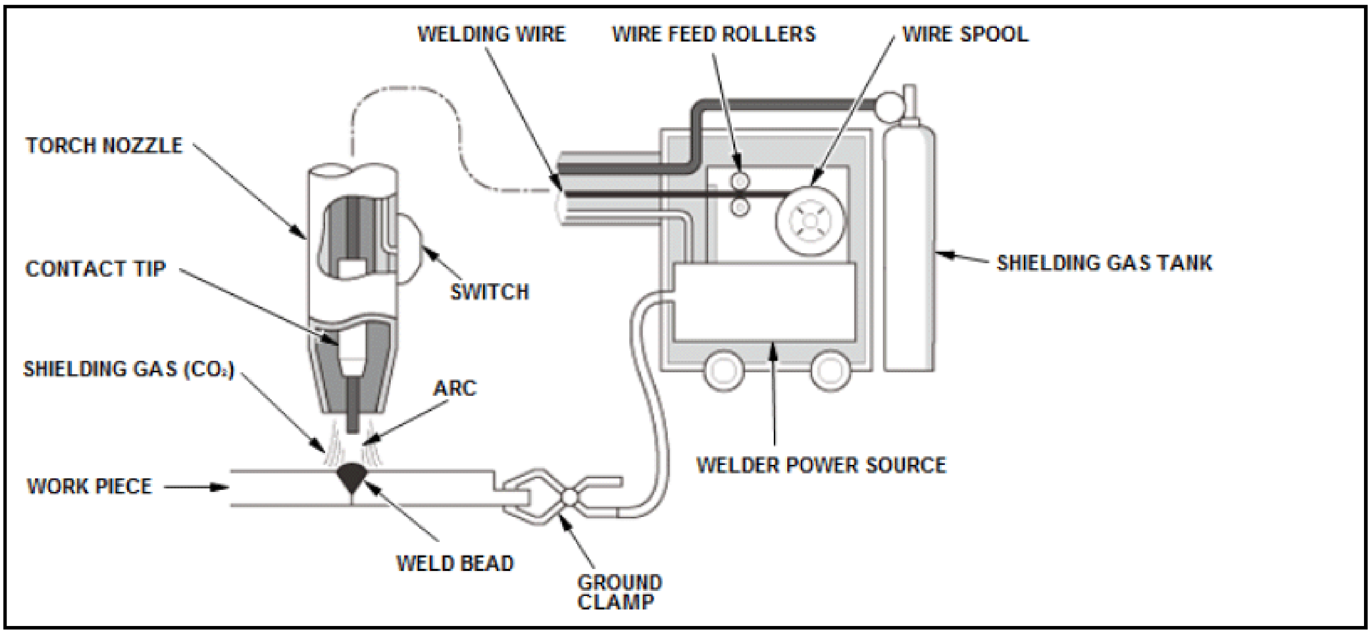
WELDING WIRE
WIRE FEED ROLLERS
WIRE SPOOL
TORCH NOZZLE
CONTACT TIP
SWITCH
SHIELDING GAS TANK
SHIELDING GAS (CO_2)
ARC
WORK PIECE
WELDER POWER SOURCE
WELD BEAD
GROUND CLAMP

Transfer of molten droplets in short-circuit welding

The end of the welding wire melts due to heat from the arc. This makes a molten droplet that contacts the work piece, creating a short circuit, which briefly extinguishes the arc. As the short circuit occurs, high current passes until surface tension of the weld pool pulls the molten metal bead off electrode tip. The Arc then restarts again and the process repeats itself about 100 times per second.

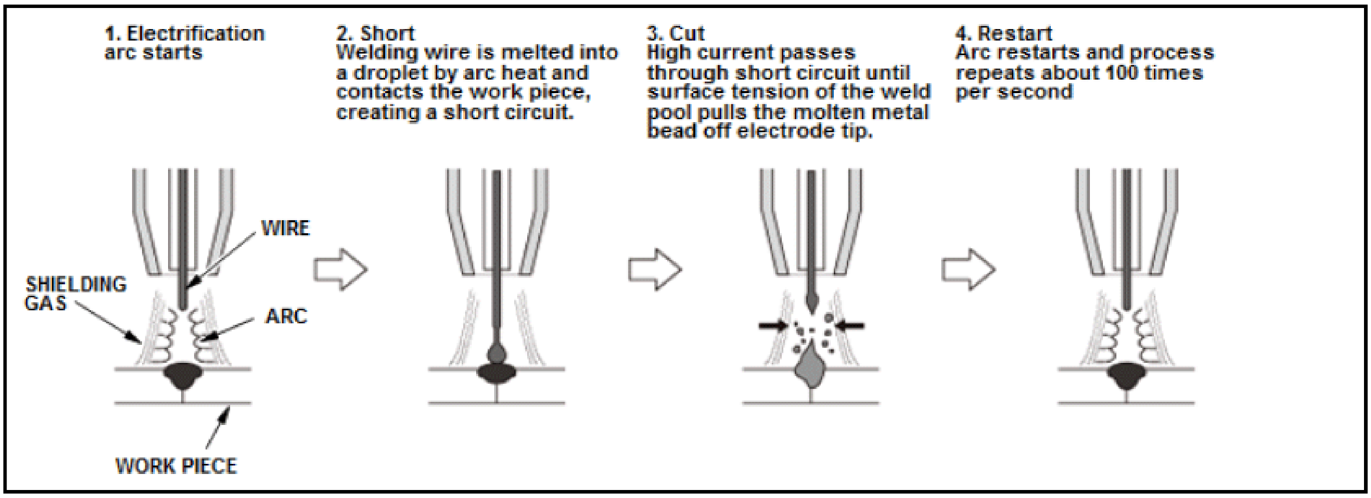
1. Electrification arc starts
2. Short Welding wire is melted into a droplet by arc heat and contacts the work piece, creating a short circuit.
3. Cut High current passes through short circuit until surface tension of the weld pool pulls the molten metal bead off electrode tip.
4. Restart Arc restarts and process repeats about 100 times per second
WIRE
SHIELDING GAS
ARC
WORK PIECE

Characteristics of MAG Welding

- The risk of distortion and burn through is reduced, allowing thin plates to be welded.
- Simple to learn. Weld quality is not dependent upon the welder's skill level.
- Low molten metal temperature, little fluidity, all position welding is possible with high workability.
- Very little formation of welding slag, so there is no need to remove it.
- Because shielding gas must remain around welding area, it is unsuitable for welding outdoors or where a strong breeze exists.

NOTE:

- **MAG welding**

  Metal Active Gas welding where the shielding gas used is pure carbon dioxide (CO_2), or contains a mixture carbon dioxide (CO_2) and other gases. It is considered active because the CO_2 undergoes a limited reaction with the molten weld pool. MAG welding reaches a temperature of approximately 2732Â°F (1500Â°C).

- **MIG welding**

  Metal Inert Gas welding where an inert shielding gas such as 100% argon (Ar) is used. Because argon is inert, it does not react with the molten weld pool.

- **MIG Brazing**

A metal jointing method that bonds the work pieces together using a filler material at a much lower temperature than MAG welding, approximately 1742Â°F (950Â°C). The base metal remains below a temperature that would weaken UHSS such as 1500 MPa steel. A pulsed MIG welder, Silicon bronze wire (CuSi-A or CuSi3), and inert 100% Argon (Ar) shielding gas must be used.

Starting The Arc

1. Thoroughly remove paint or other contaminants from the area to be welded.
2. Check the length of the wire projecting from the contact tip (stick out). If the stick out is too long, or the wire's tip is round, the arc will not start smoothly Adjust the wire length by cutting it with a pair of side (diagonal) cutters.

NOTE: **When cutting wire, keep the torch facing down and away from your face to avoid being struck by the clipped end.**

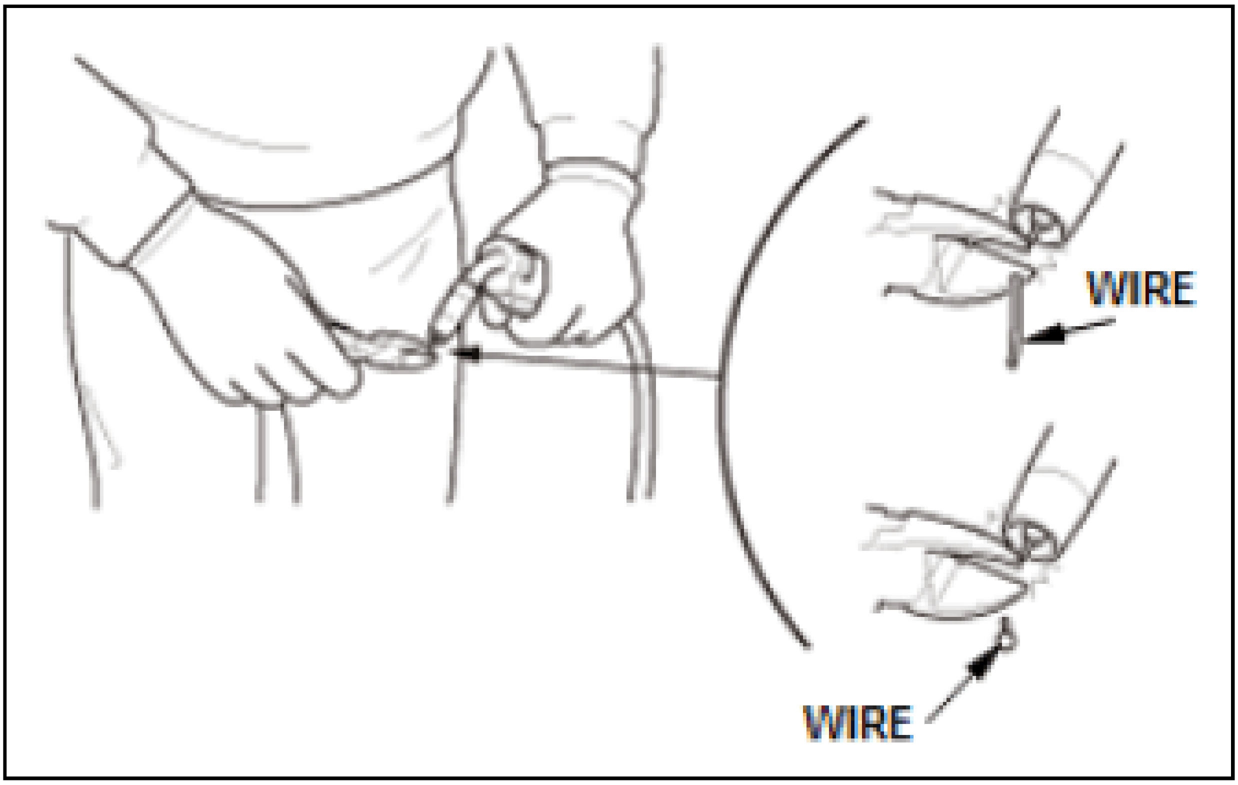

3. Start the arc.

   As you pull the trigger (torch switch), shielding gas and welding wire will be fed out. Touch the work piece with the tip of the wire to start arc. By keeping a narrower tip-to-work clearance, the arc will start easier.

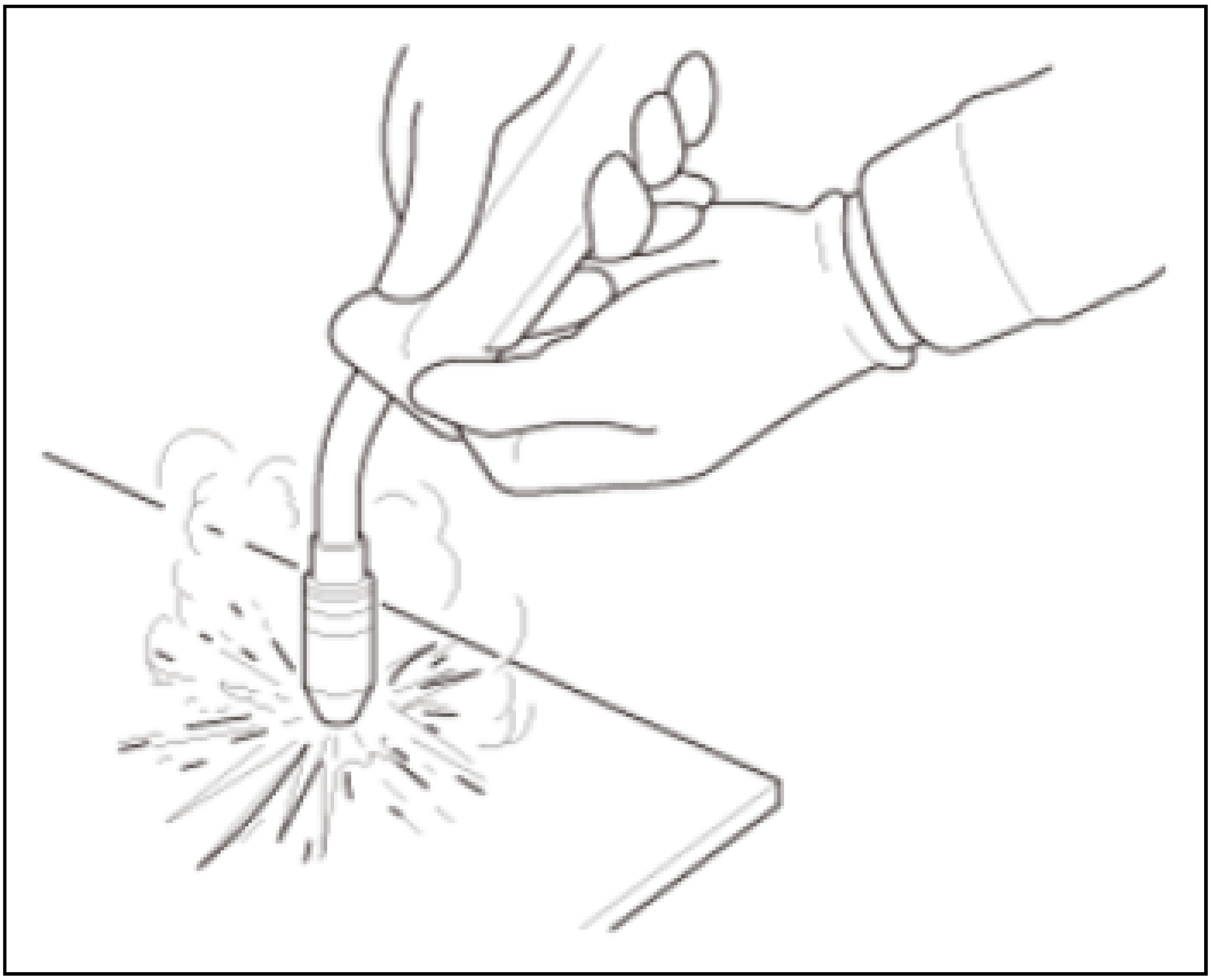

Welding Equipment Structure

MAG welding equipment consists of the torch, wire feeder, shielding gas supply control unit and the welding power supply. The wire feeder and welding power supply are integrated in most modern welders.

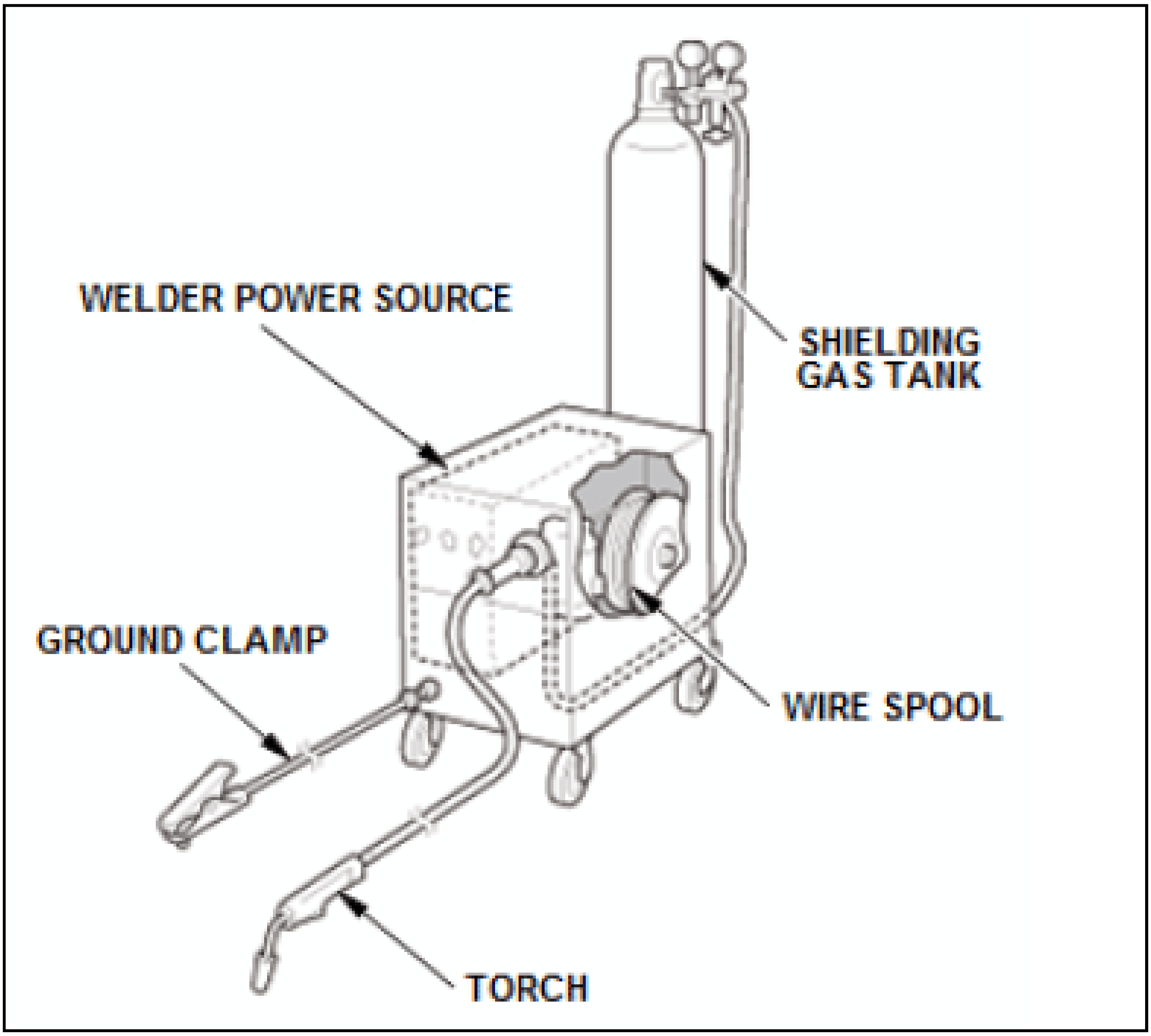
WELDER POWER SOURCE
SHIELDING GAS TANK
GROUND CLAMP
WIRE SPOOL
TORCH

a. Torch

- Provides a stream of shielding gas to the weld area.
- Allows current to flow through the wire and generate an electric arc:
  - Attached on the end of the torch is a nozzle that guides the shielding gas to the welding area, and the contact tip, which transmits current to the welding wire.
  - A multipurpose cable connect the torch to the welder. Inside is an electrical cable that carries the welding current to the contact tip, a flexible conduit liner to allow the welding wire to feed smoothly and a passage that carries the shielding gas.

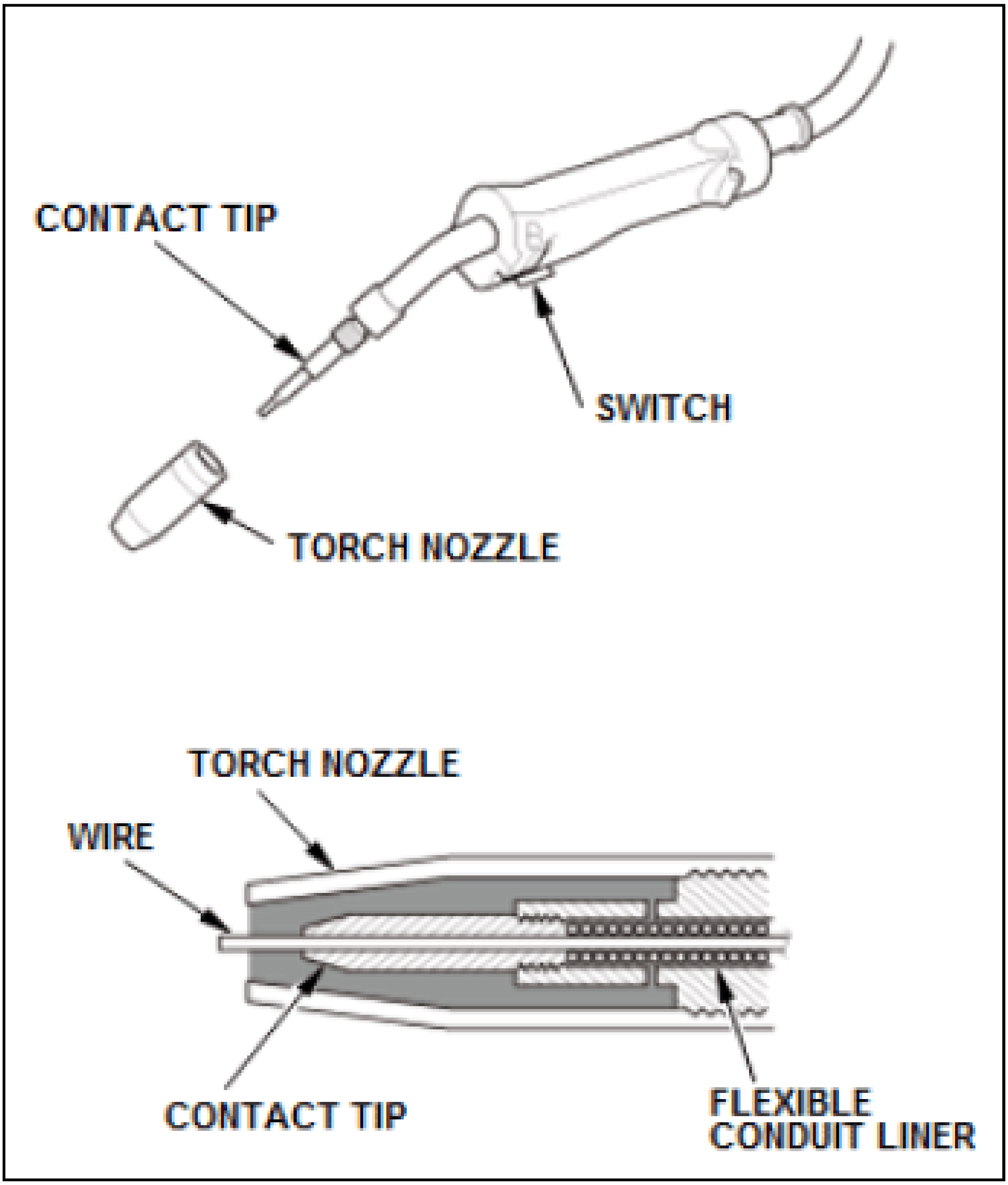
CONTACT TIP
SWITCH
TORCH NOZZLE
TORCH NOZZLE
WIRE
CONTACT TIP
FLEXIBLE CONDUIT LINER

b. Wire Feeder and Wire

- The wire feeder is the device that sends the wire, which acts like a welding rod, to the torch. It consists of the feed motor, reduction gear, feed roller, and press roller.
- The spinning of the motor is transmitted to the feed roller via the reduction gear. The wire is then sent to the torch by pinching it between the press roller and the feed roller. The wire is provided at a desired speed based on the welder settings.
- The wire is a long, single string of steel rod. The welding wire must have a tensile strength equal to, or greater than the lowest tensile strength of the parts being welded.
- The wire is coated with thin copper plating to prevent corrosion and to improve conductivity with the contact tip.

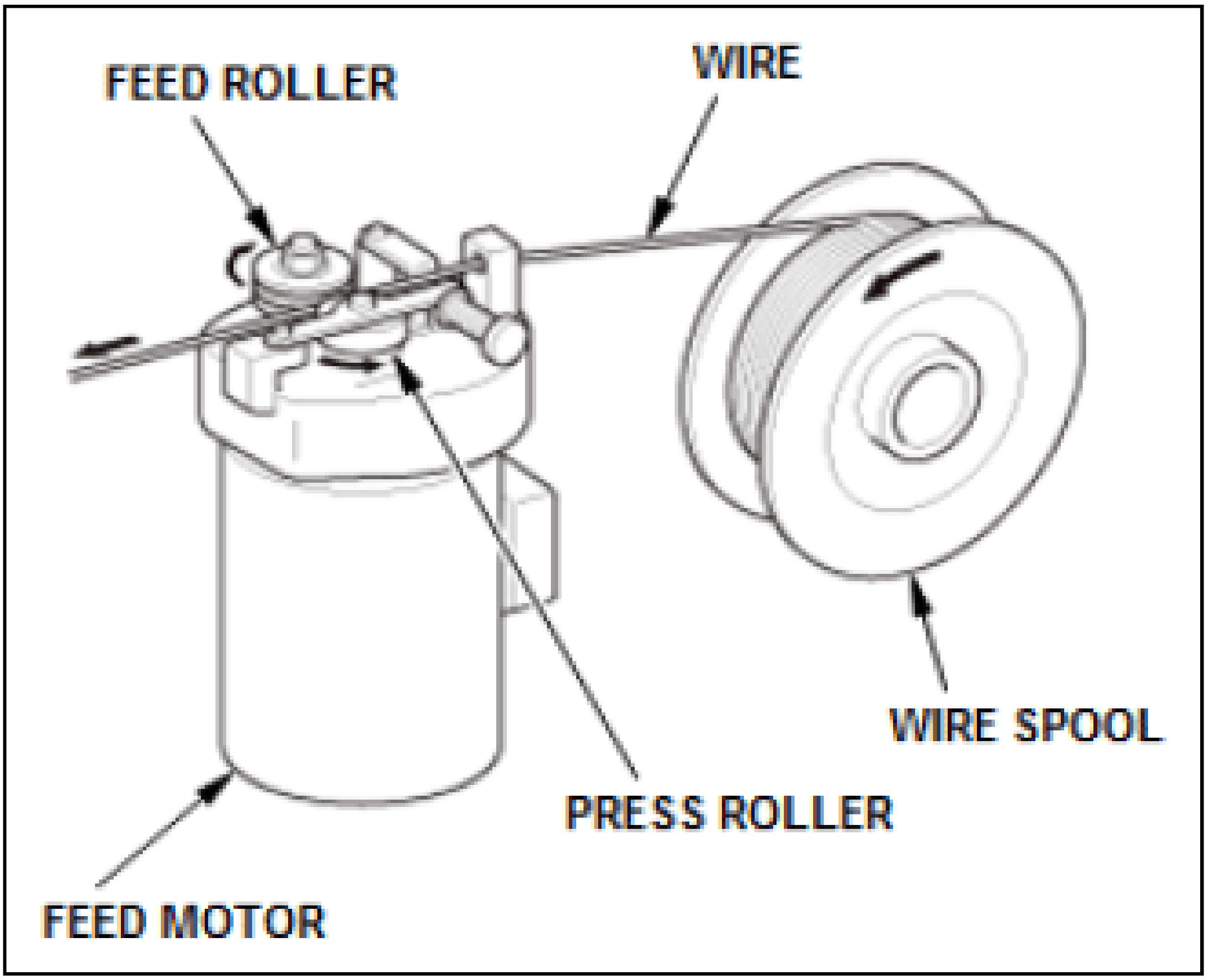
FEED ROLLER
WIRE
WIRE SPOOL
PRESS ROLLER
FEED MOTOR

c. Shielding Gas Supply

The shielding gas supply is a device that directs the shield gas from the gas cylinder to the torch. It consists of the regulator, which reduces the high pressure in the gas cylinder to the required low pressure for welding. It also allows a flow rate adjustment and has a solenoid valve starts and stop the shielding gas flow as the welder operates.

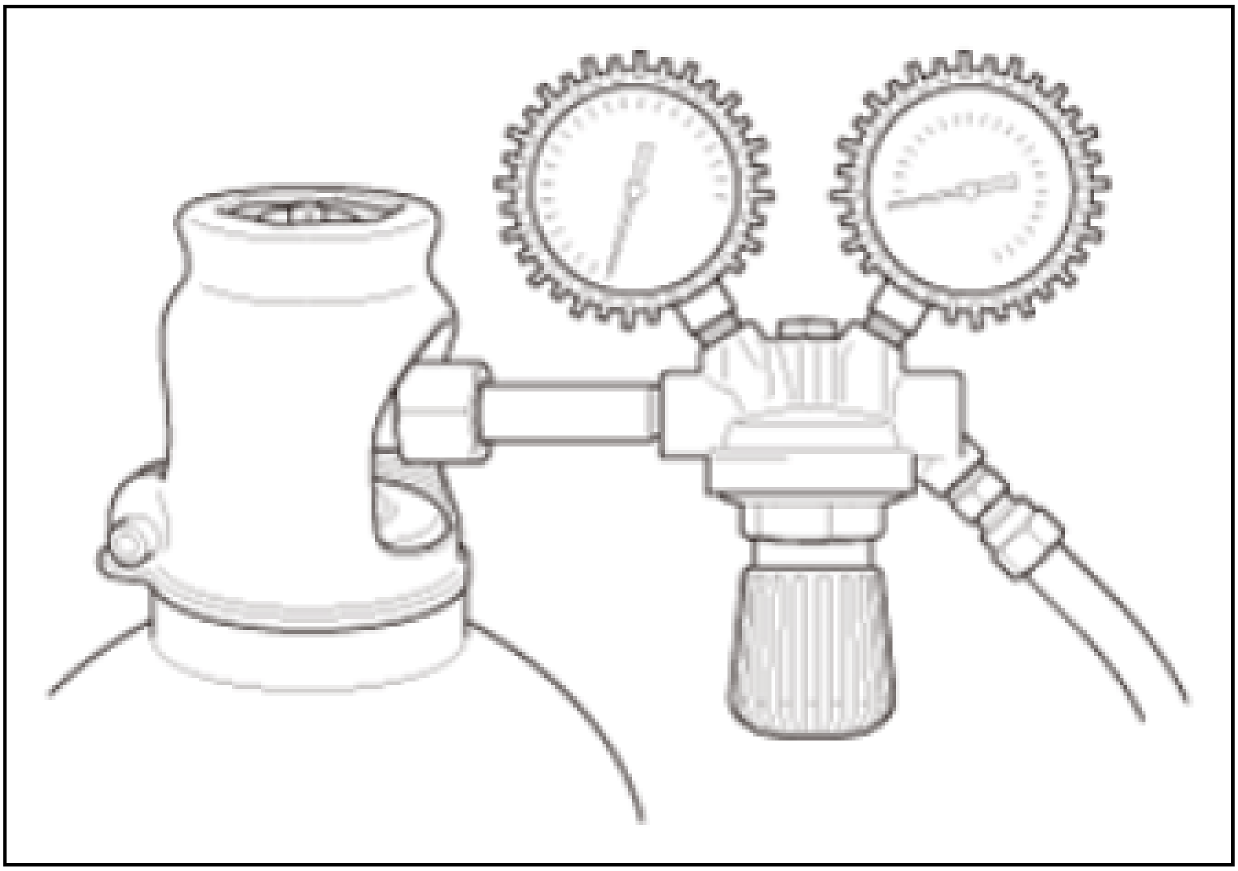

d. Control Unit

- The control unit receives signals from the torch switch and then:
  - Switches the welding power supply on and off
  - Regulates welding wire feed
  - Controls the shielding gas supply
- The most important roles are wire feed regulation and speed control in proportion with current and voltage to maintain as constant an arc length as possible. A large number of semi-conductors are used in the power unit's electrical circuits.

e. Power Unit

The power unit provides the electrical energy to generate an arc. It converts energy from the power supply to the desired voltage level for welding using a transformer and rectifier.

Precautions

Welding Current

Welding current affects the depth of penetration and the melting speed of the wire. It also affects arc stability and the amount of weld spatter. As welding current increases, penetration increases along with the welding bead height and width.

Wire Diameter mm (in)	Current (A)
0.6 (0.024)	40 to 90
0.8 (0.031)	50 to 120
1.0 (0.039)	60 to 150

Thickness mm (in)	Wire Diameter mm (in)	Current (A)
0.8 (0.031)	0.8 (0.031)	60 to 70
1.0 (0.039)	0.8 (0.031)	60 to 70
1.2 (0.047)	0.8 (0.031)	70 to 75
1.6 (0.063)	0.8 (0.031)	80 to 85

Arc Voltage

- To ensure high weld quality the correct arc length is required. Arc length depends on the arc voltage. Any change results in a large change in heat input and current.
- As voltage increases, arc length also increases, causing the weld beads to become shallow and wide. Conversely when the arc voltage decreases, weld beads become deep and high. If the voltage is excessively high voltage reduces the short circuit's frequency resulting in a poor weld quality Excessively low voltage causes the wire to contact the work piece, causing the arc instability.

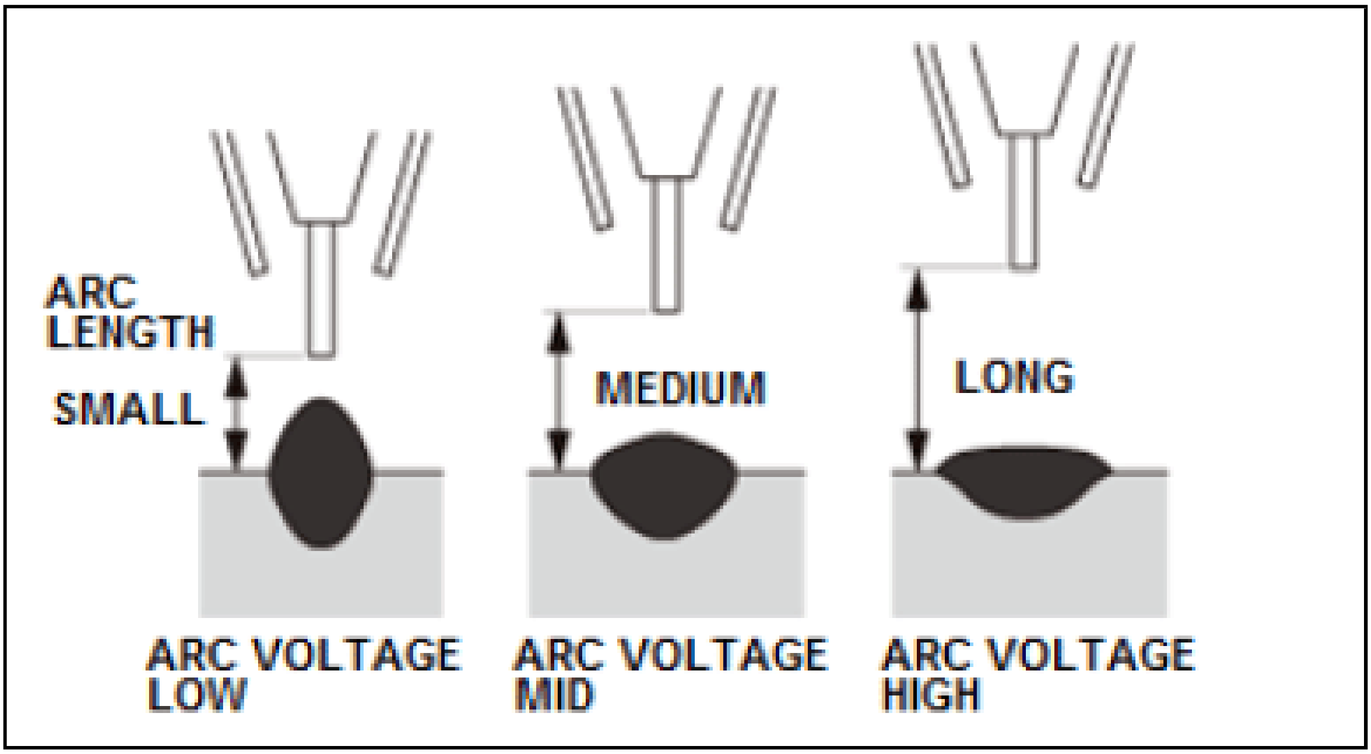

Contact Tip-To-Work Piece Clearance (AKA Stick Out)

- If the clearance between the contact tip and work piece is excessive, the welding wire overheats and melts too quickly due to the excessive length of the protruding wire. Welding current and penetration decrease.
- If the clearance between the contact tip and work piece is too large or small, the effects of the shielding gas are deteriorated, which wastes gas and negatively affects weld quality The standard clearance is 8-15 mm (0.3-0.6 in).

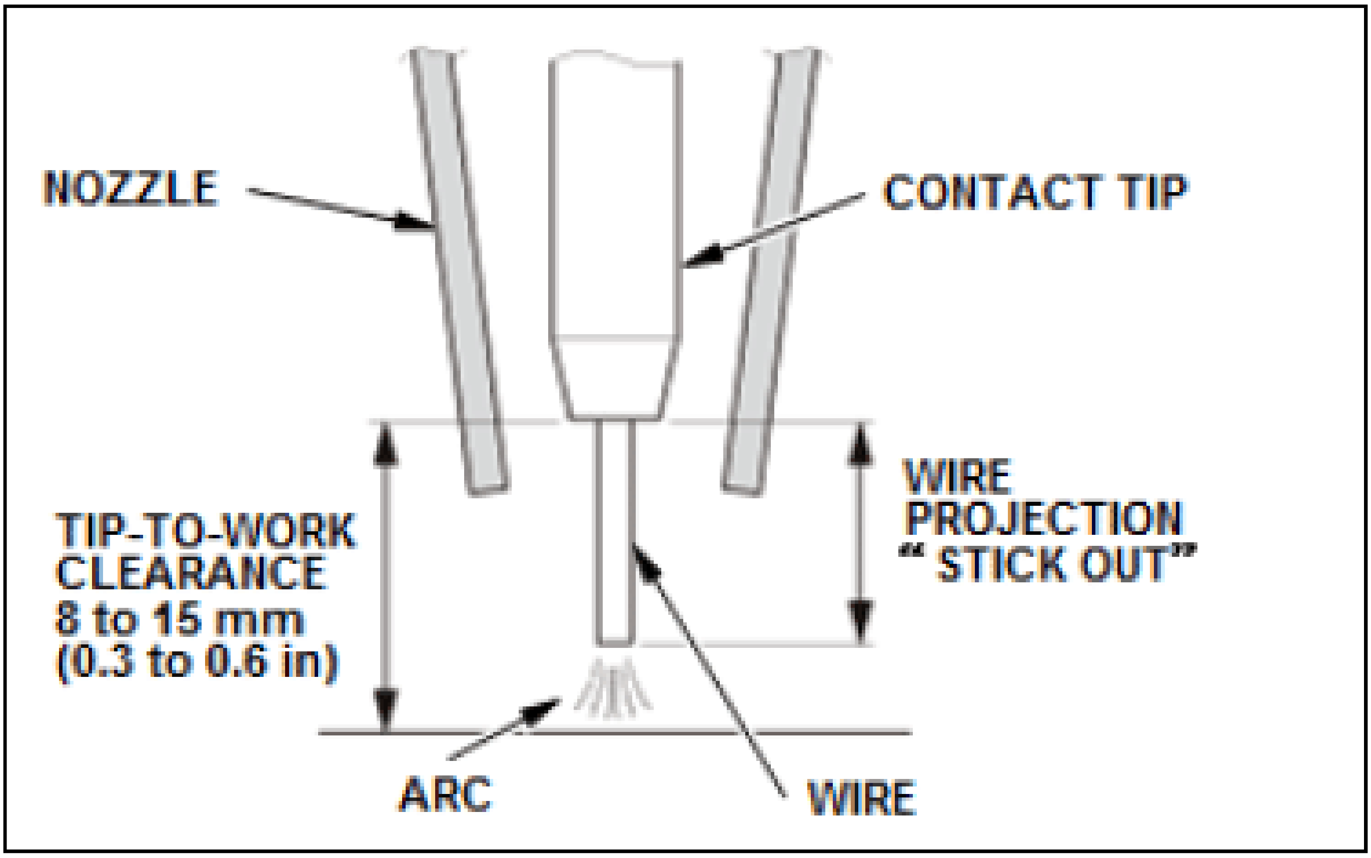
NOZZLE
CONTACT TIP
TIP-TO-WORK CLEARANCE 8 to 15 mm (0.3 to 0.6 in)
WIRE PROJECTION "STICK OUT"
ARC
WIRE

Torch Angle And Direction Of Welding

- There are two directions in welding; forward and reverse. These are more commonly known as push or forehand, and pull, drag, or backhand technique.
- The push or forward welding technique usually produces lower penetration and a wider, flatter bead because the arc force is directed away from the weld puddle.
- The pull or reverse welding technique points the torch back toward the weld puddle and it is dragged away from the deposited metal. Pulling typically produces deeper penetration and a higher, narrower bead with more buildup.
- With either technique, the torch should be held at an angle of 10 to 30 degrees.

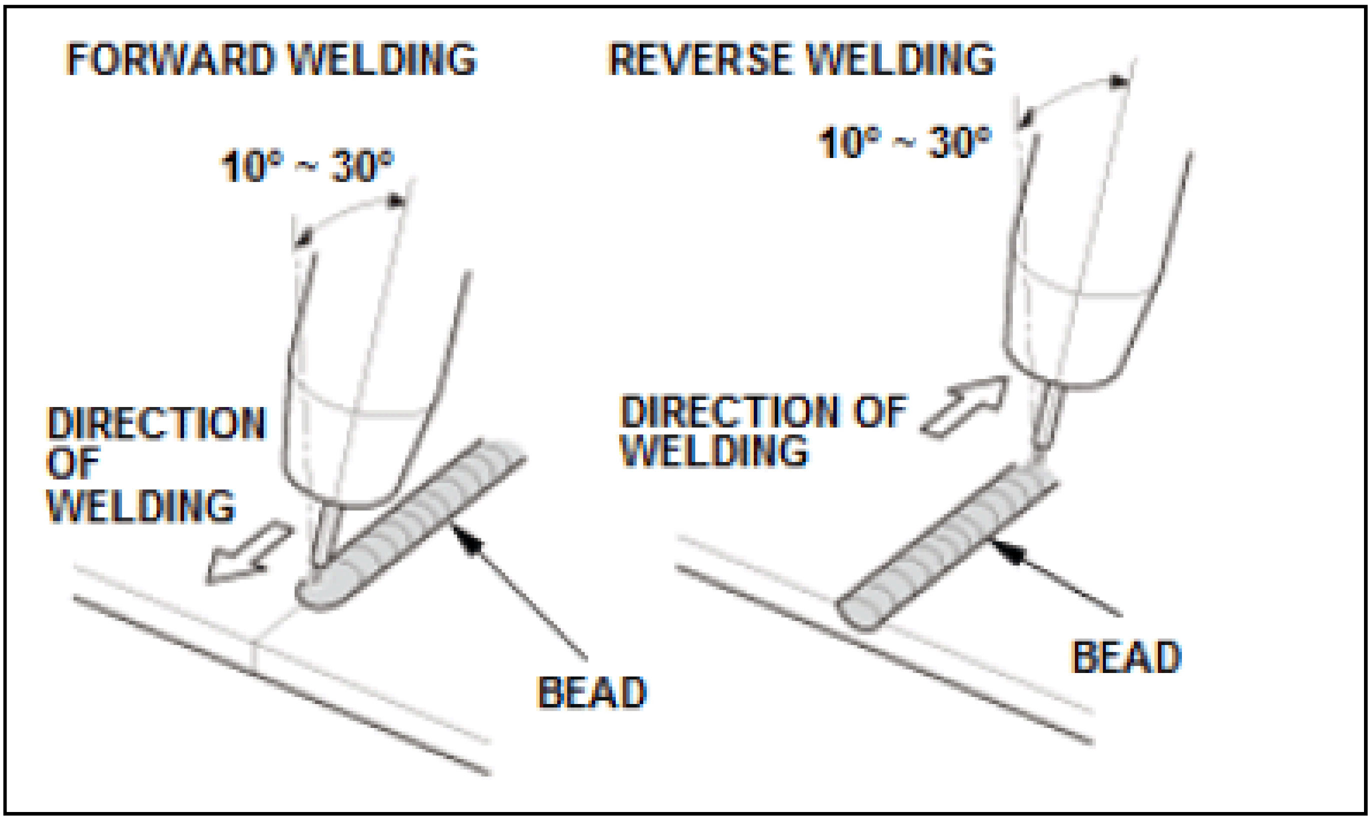
FORWARD WELDING
10° ~ 30°
DIRECTION OF WELDING
BEAD
REVERSE WELDING
10° ~ 30°
DIRECTION OF WELDING
BEAD

Shielding Gas Volume

- A larger quantity of shielding gas doesn't always ensure good shielding effects. Excessive gas flow prevents the gas from remaining around the weld, reducing its shielding effects.
- The gas supply must be regulated depending on the nozzle-to-work clearance, welding current, welding speed and welding environment (wind velocity). The standard flow rate is 21 to 32 cubic feet per hour, or 10 to 15 liters per minute.

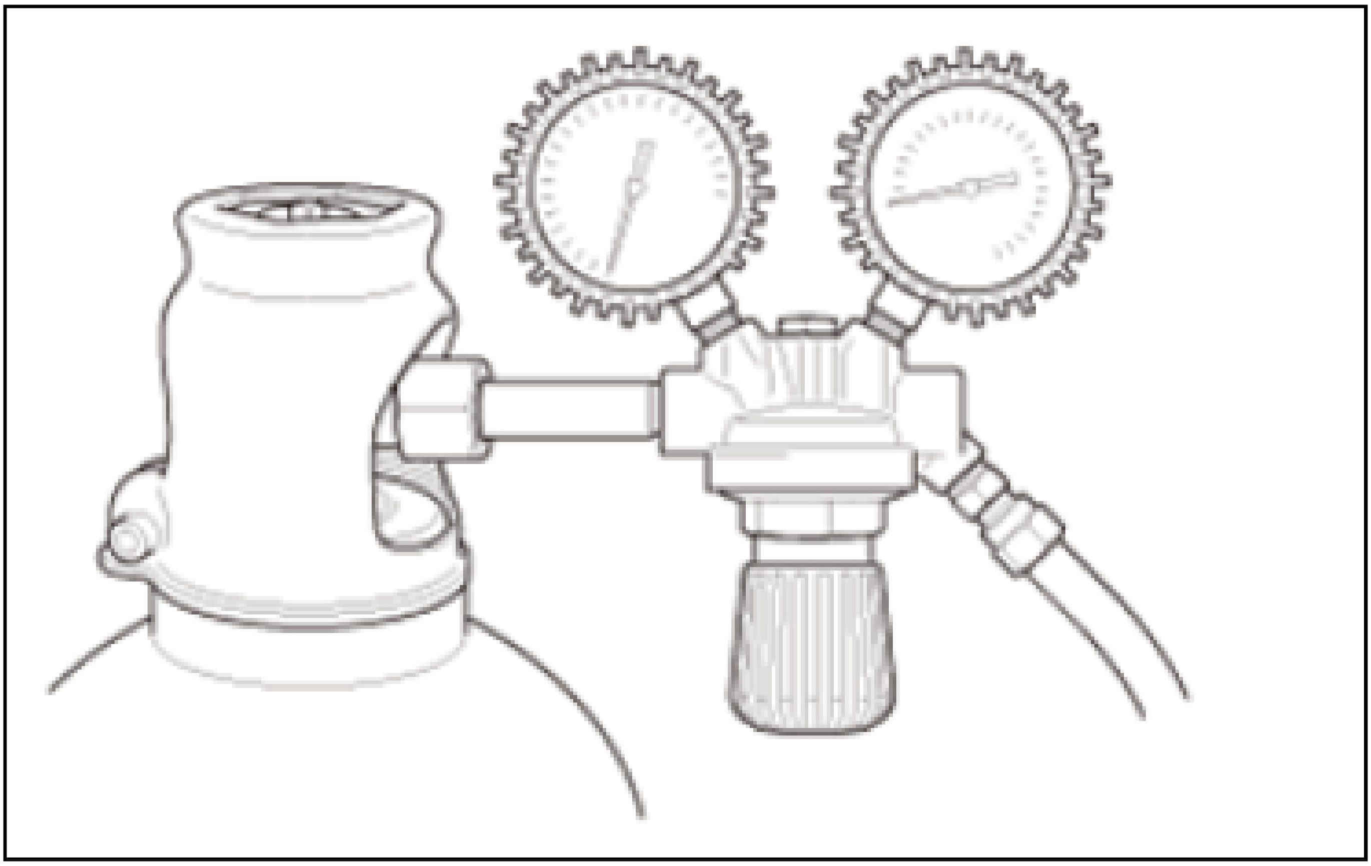

Welding Speed

- As welding speed increases, weld penetration depth is reduced and the bead becomes tall and narrow. Continuing to increase of welding speed may cause an undercut.

- As welding speed decreases, welding performance is reduced. Generally speaking, welding speed must be increased for thinner panels.

MIG BRAZING

MIG Brazing Conditions For Ultra High-Strength Steel Parts (1180 And 1500 MPa)

MIG brazed joint locations for ultra high-strength steel (1500 MPa/1180 MPa) parts are specified in the part installation instructions contained in the model specific body repair information. You must follow the conditions detailed below to ensure adequate joint strength.

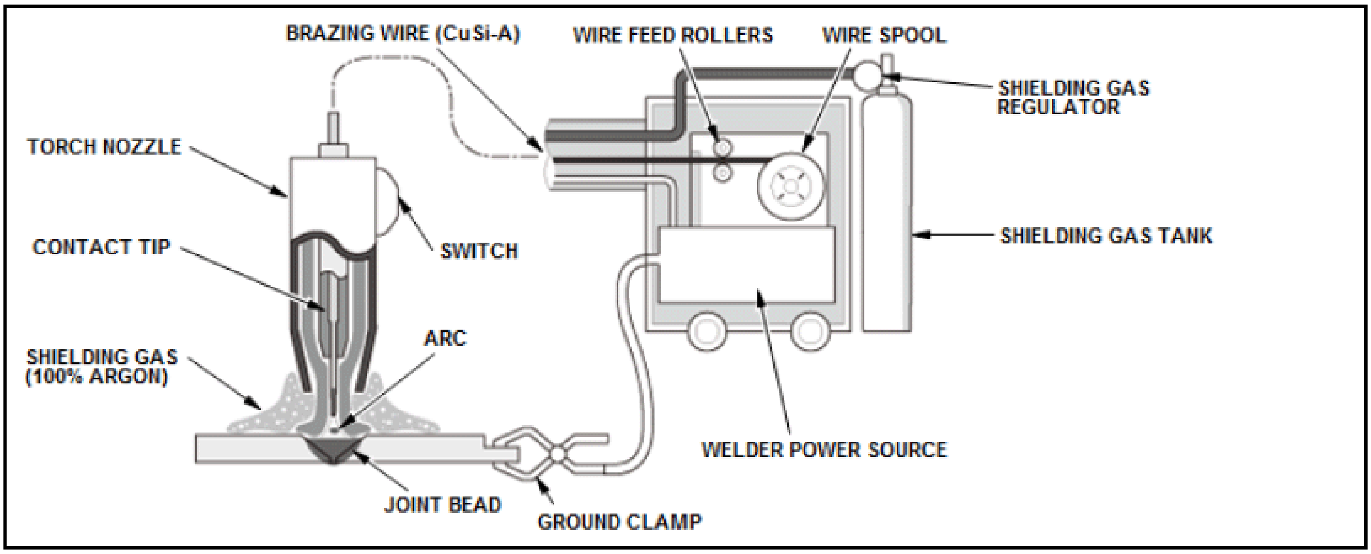
BRAZING WIRE (CuSi-A)
WIRE FEED ROLLERS
WIRE SPOOL
SHIELDING GAS REGULATOR
TORCH NOZZLE
SHIELDING GAS TANK
CONTACT TIP
SWITCH
ARC
SHIELDING GAS (100% ARGON)
WELDER POWER SOURCE
JOINT BEAD
GROUND CLAMP

MIG brazing conditions:

- Pulsed MIG Welder Set-up for brazing
- Wire:
  - CuSi3
  - AWS ER CuSi-A
  - Silicon bronze (0.8 mm (0.031 in) diameter)
- Shield gas: Argon gas 100%

NOTE:

- **For details about correct welding current and voltage, refer to the equipment manufacturer's recommendations.**
- **MIG welding/brazing: Metal inert gas welding or brazing where 100% Argon (Ar) shielding gas is used. Argon is inert and does not react with the molten weld pool or brazing operation.**

MIG Brazing To Structural Parts

NOTE: **To prevent decreased joint strength, don't grind a MIG braze to a structural part.**

If a high-strength steel (1500 MPa) part is being brazed to another high-strength structural steel part (340 MPa or higher). Drill two 8 mm (0.31 in) holes with approximately 10 mm (0.39 in) distance between them (distance between the centers of holes) for each MIG brazed joint location shown in the model specific body repair information.

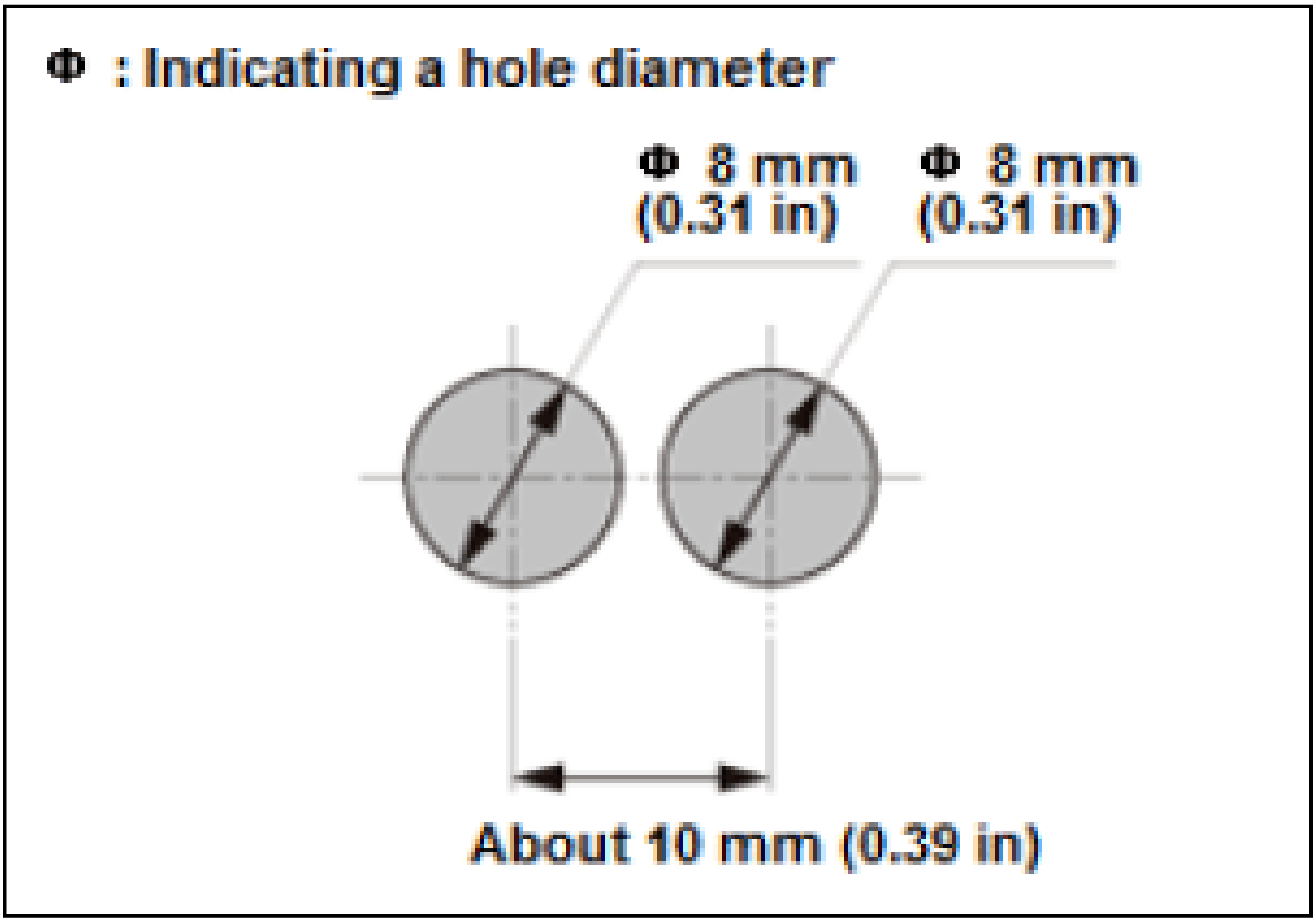
Φ : Indicating a hole diameter
Φ 8 mm (0.31 in)
Φ 8 mm (0.31 in)
About 10 mm (0.39 in)

MIG Brazing To Outer (Mild Steel) Panels

NOTE: **MIG brazed joints to an outer panel that are visible to the customer may be ground smooth.**

If a high- strength steel (1500 MPa) part is being brazed to 270 MPa part (mild steel plate) such as an outer panel, drill one hole of diameter 8 mm (0.31 in) in the 270 MPa plate for each MIG brazed joint location shown in the model specific body repair information.

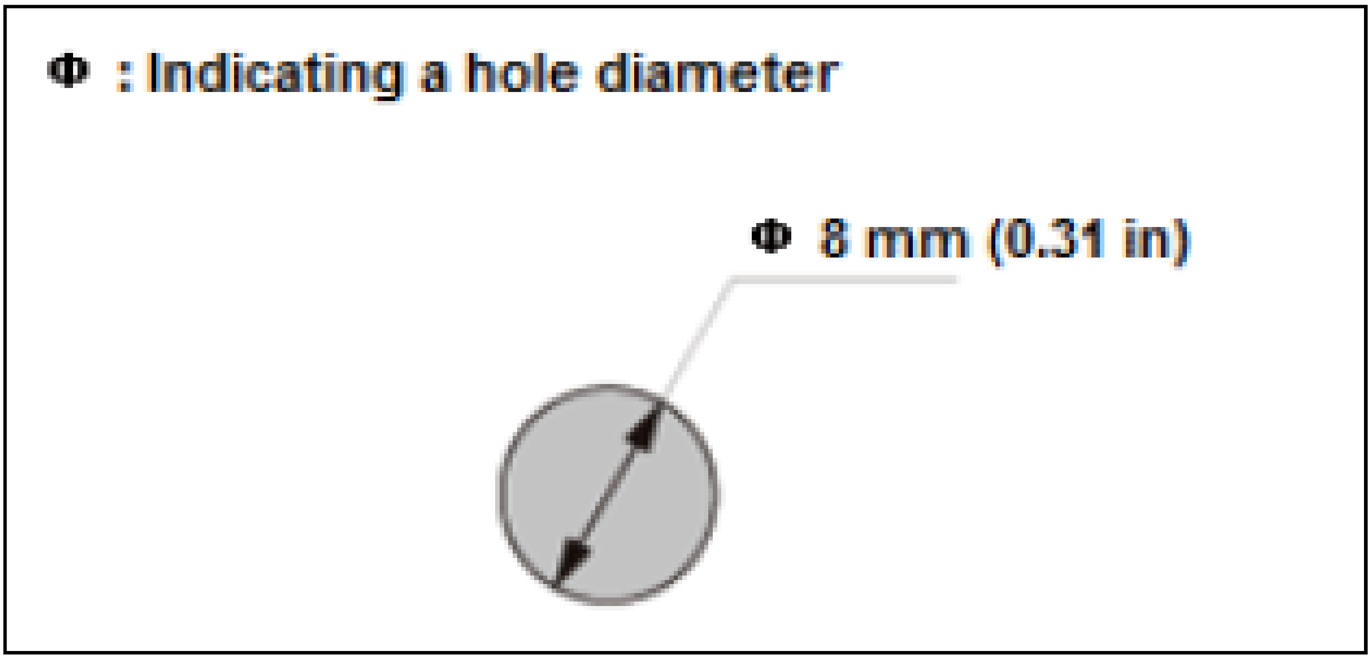
Φ : Indicating a hole diameter
Φ 8 mm (0.31 in)

MIG Brazing Method

To ensure adequate joint strength, use a pulsed MIG welder with specified wire and the following brazing technique. This will create a capillary action in order to liquefy the MIG filler wire so that it can penetrate into the upper and lower plates:

- Begin brazing about 5 mm (0.20 in) before the hole(s).

- Move the torch across the hole in a zigzag pattern as you close the hole(s).
- Continue the brazing operation about 10 mm (0.39 in) past the hole(s).

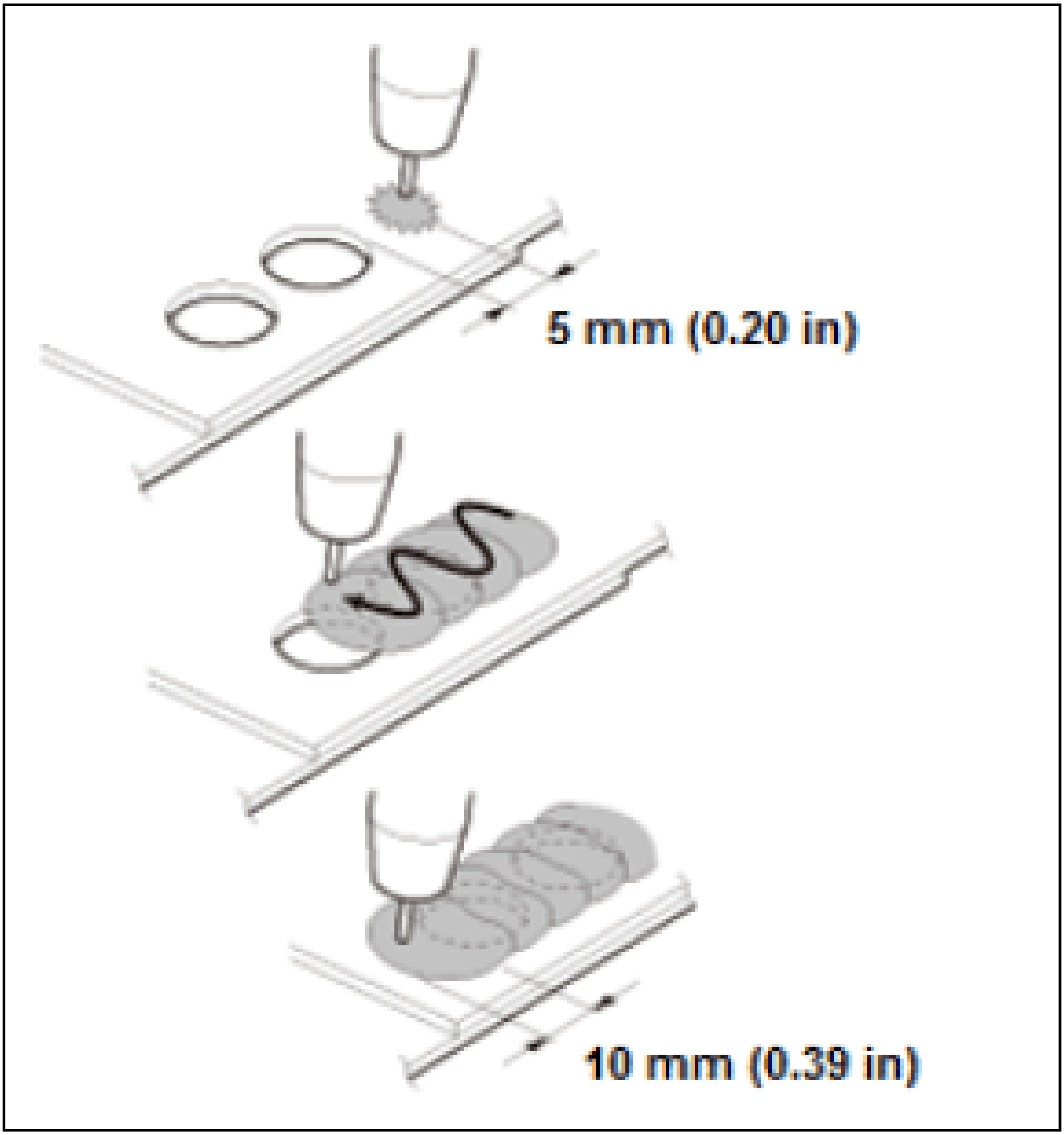

MIG Brazing Joint Inspection

Visual Inspection

Brazing must achieve penetration in the overlapped joint area. To make this possible, both plates need to be the same temperature.

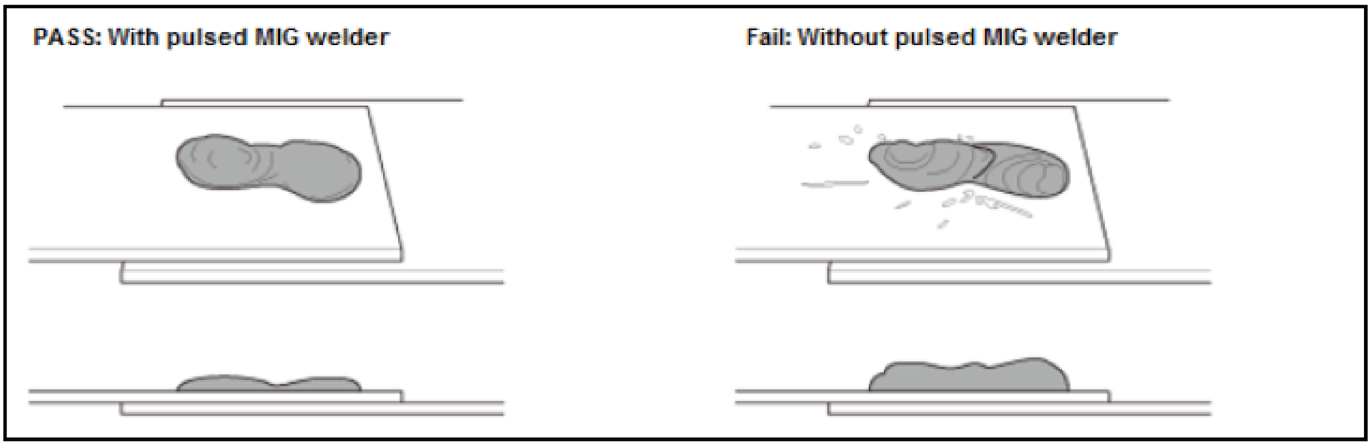
PASS: With pulsed MIG welder
Fail: Without pulsed MIG welder

Destructive test

Cut the test piece to separate lengthwise as shown: Joint passes inspection if there is copper silicone filler wire transfer on the lower plate as shown below.

Without a pulsed MIG welder, it is difficult for the lower plate to reach the required temperature. If the bottom plate does not reach the correct temperature, brazing filler remains on surface, and you cannot achieve sufficient strength.

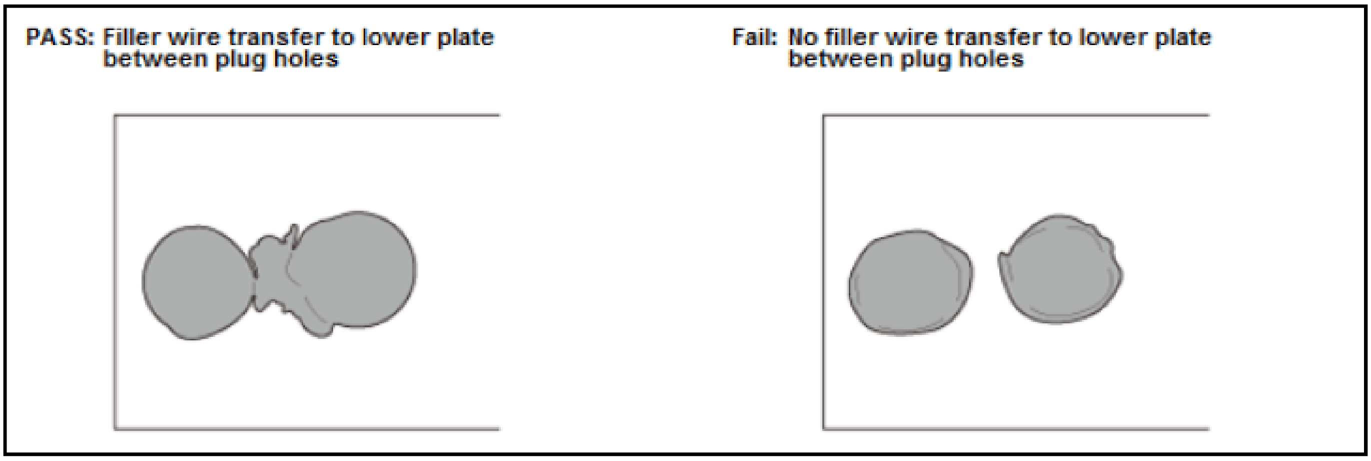
PASS: Filler wire transfer to lower plate between plug holes
Fail: No filler wire transfer to lower plate between plug holes

SPOT WELDING

Principles And Characteristics

Spot welding is a type of electric resistance welding that also uses pressure. Two or more metal plates are held under pressure between two electrodes. When an electric current is applied, the heat occurring from the electrical resistance fuses a small areas of the parts together. The processes are as follows:

Spot Welding Processes

1. Pinching (Tight Holding)

   Allows the current concentration in the welding area, the work pieces are held tight by electrode pressure.

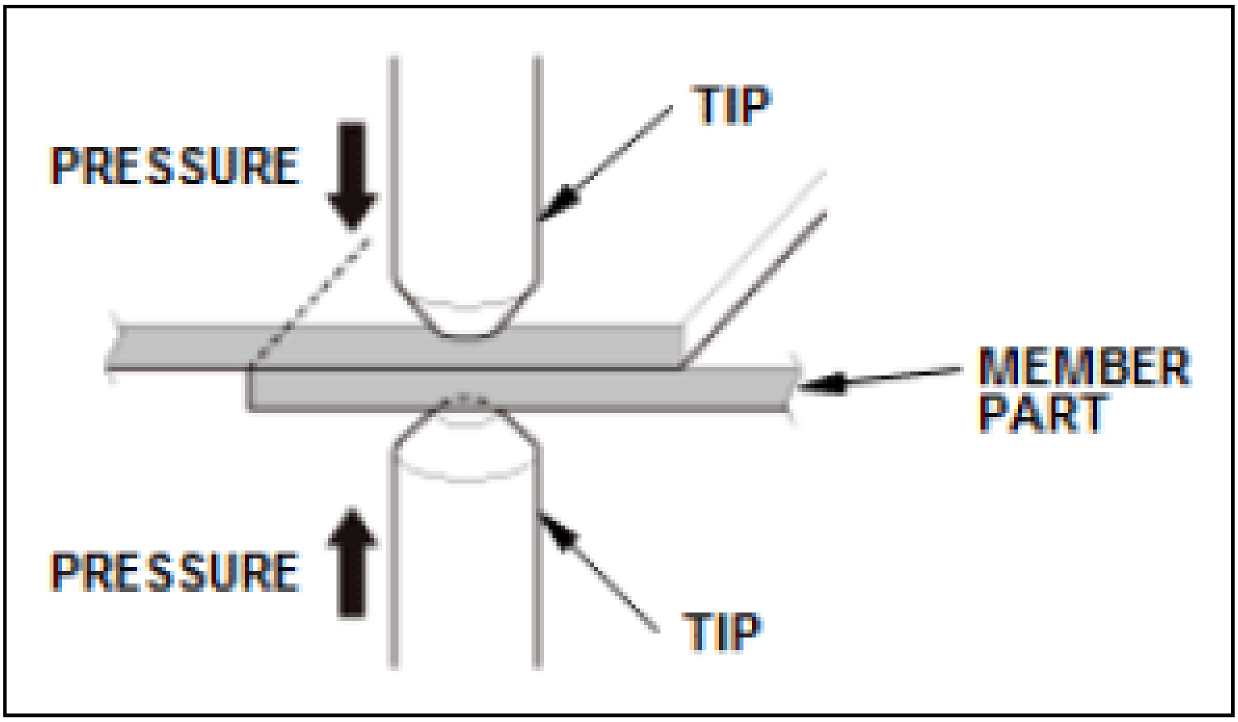
TIP
PRESSURE
MEMBER PART
PRESSURE
TIP

2. Electricity Fusion

While the work pieces are pinched together, a high current is applied to melt the and join contact surfaces of the metal layers under the electrodes.

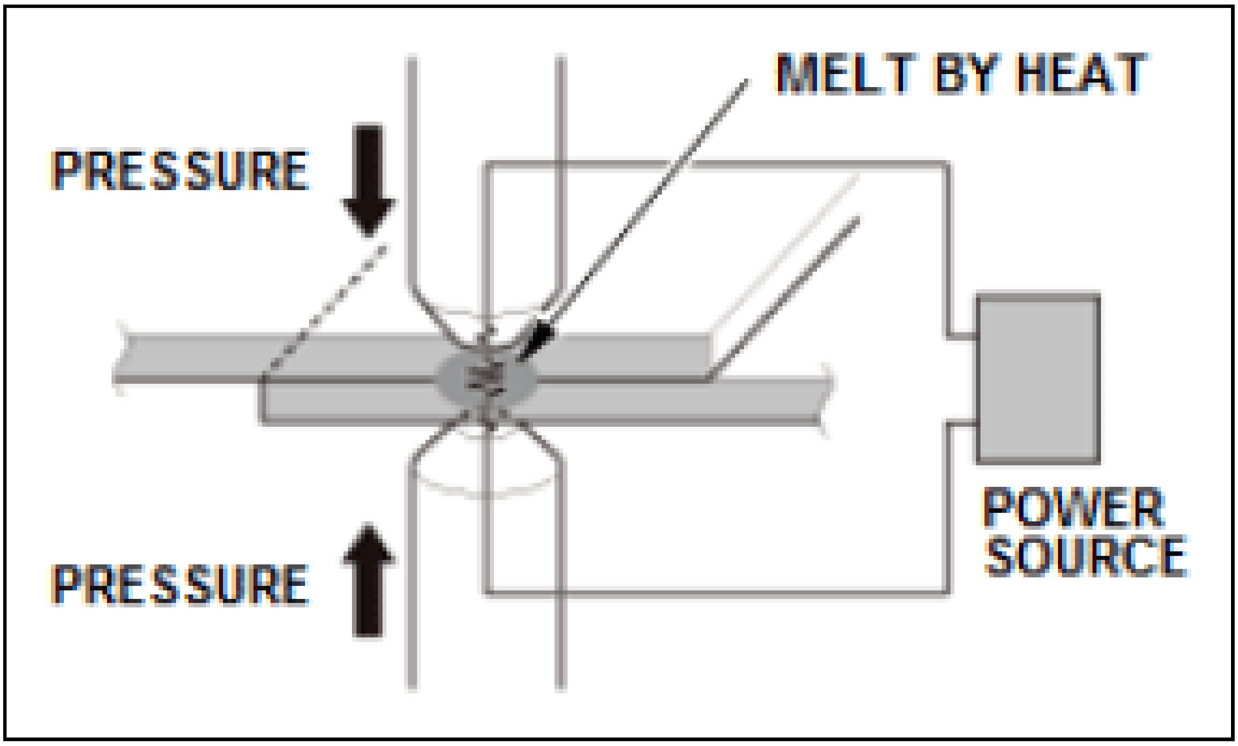
MELT BY HEAT
PRESSURE
POWER SOURCE
PRESSURE

3. Pressure Holding

After applying the current, pressure is held until the melted surfaces cool down to reinforce the welded area (nugget).

4. Release

Releasing the pressure moves electrode tips away from the joint area.

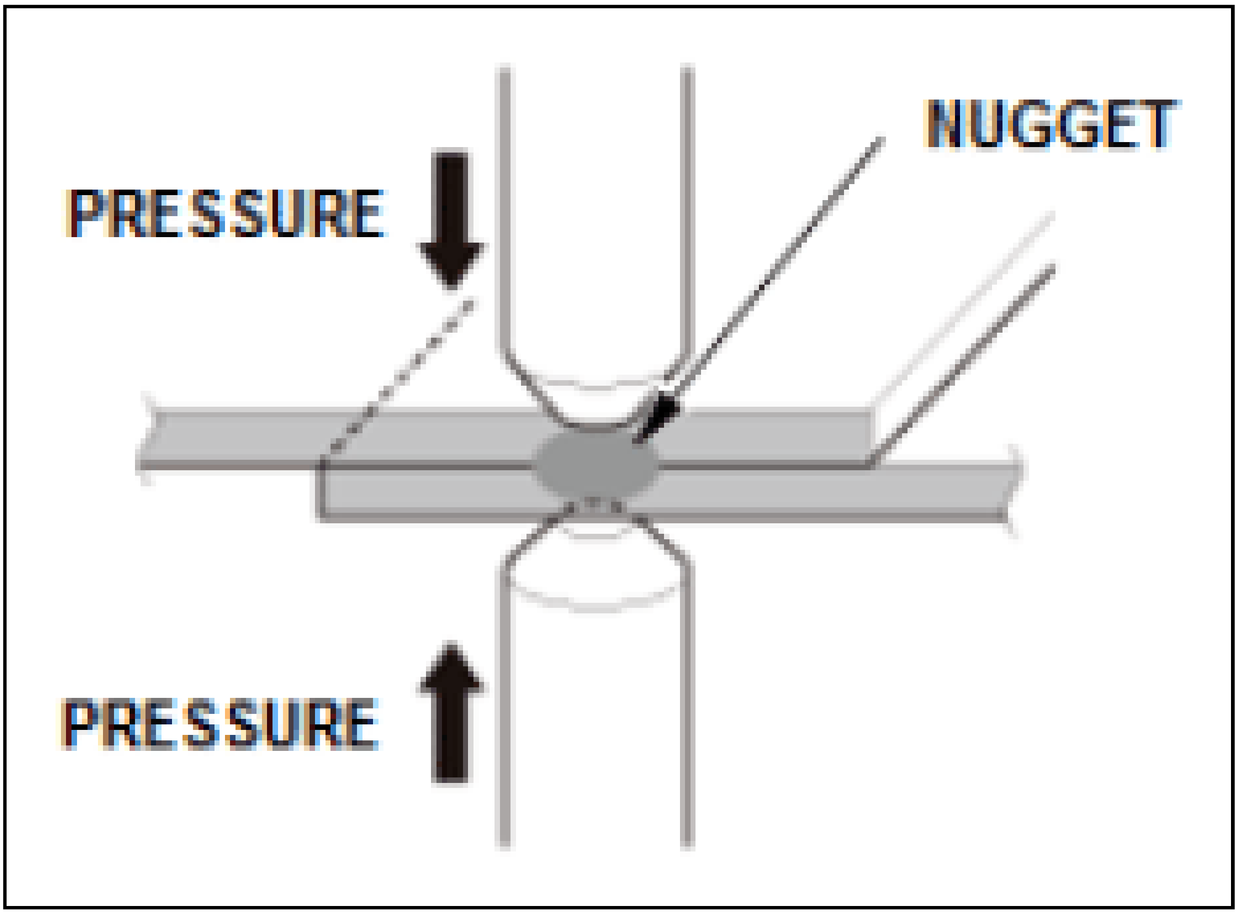

Characteristics Of Spot Welding

- Welding time is short and heat in localized, minimizing distortion.
- Best suited for thin sheet steel.
- Required skills or technical expertise is lower than other weld types.
- Difficult to visually inspect weld quality as the welded parts are layered on top of each other.

Electrode Tip Design And Shape

Spot Welder Electrode Tip Design And Shape

- There are two electrode designs; one-piece type and cap type.
- The cap type is more popular due to its high cooling performance and ease of replacement.

Spot Welder Electrode Roles

- Allows electrical current to pass through the parts being welded
- Applies pressure to the weld area to prevent spatter
- Acts as a heat sink to cool down the parts after welding

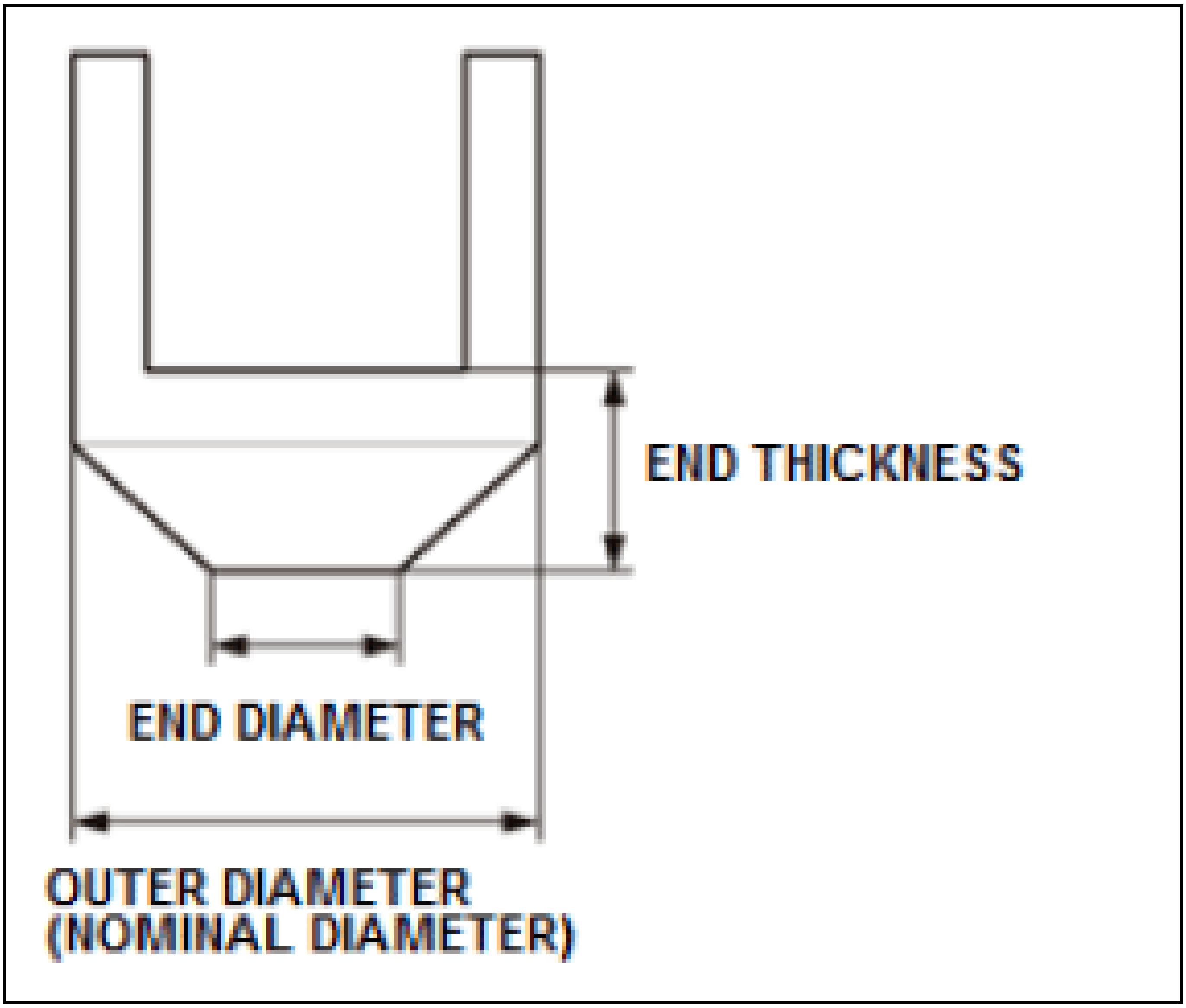

Selecting Electrode Tips

NOTE: **There is no single electrode tip design required for spot welding Honda and Acura vehicles. The appropriate tip may vary based on vehicle design, welding task, and welding equipment design. Consult the welder manufacturer about their recommended electrode tip to produce the test piece results detailed in "Weld Inspection".**

Electrode tips

Type	Shape	Information
F Type	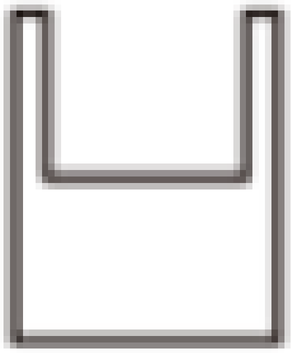	Used when a flat surface is desired on the work piece. The opposite electrode must be a P, C, or R type. If both electrodes tip are F types, the current flow through the welded parts cannot be pinpointed, resulting in poor weld quality.

Type	Shape	Information
CF Type	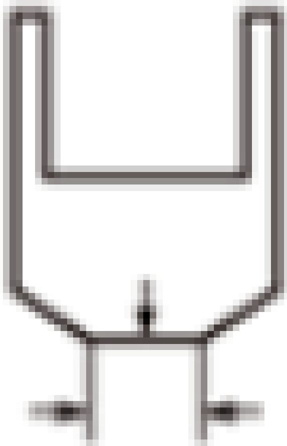	The tip design allows the welding current to be easily pinpointed through the he tip ends. However, when welding thin plates with a thickness of 1 mm or less (0.040 in. or less), this tip design can cause distortion and/or dents unless the two electrodes are perfectly aligned in parallel. Nonparallel electrode tip positions will cause partial contact.
CR Type	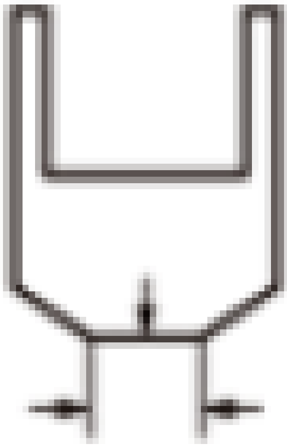	This tip design has a truncated cone shape with a rounded tip surface, It is often used because of it's high current flow controllability, similar to R type.
R Type	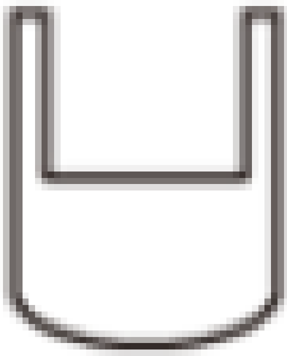	This tip design offers high current flow controllability. Because the electrode tip is rounded, the electrode easily sinks deeper into the work piece surface as the welded surface softens. This increases contact between electrode tip and the work piece allowing efficient current flow. This allows electrode tip contact always remain proportional to the amount of current flow This proportional relationship achieves high quality nuggets, even with slight current fluctuation.

Type	Shape	Information
D Type	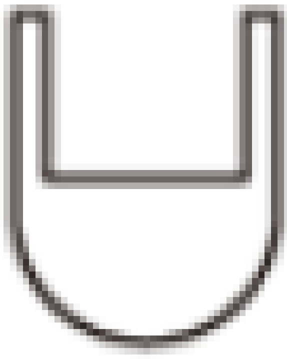	Same as R type design above, except the tip radius is 1/2 the outer diameter (nominal diameter) of the electrode tip.
DR Type	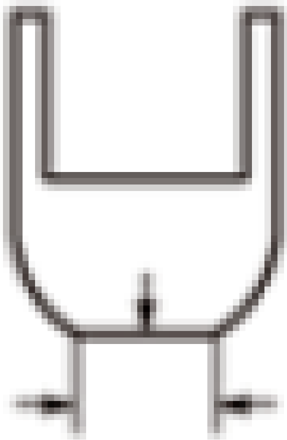	D type electrode tip with a flat area on the end of a rounded point diameter is known as a DR Type.

Spot Welding Conditions For Ultra High-Strength Steel Parts (1180 And 1500 MPa)

The welding conditions (condition numbers and setting descriptions) for the spot welding positions including ultra high-strength steel (1500 MPa/1180 MPa) positions are described in the model specific body repair information. Always refer to the welding conditions to help ensure adequate weld strength.

NOTE:

- **For spot welding positions excluding high-strength steel (1500 MPa/1180 MPa), confirm the sheet thickness, tensile strength and existence of the zinc treatment of both sides, and set the welder to confirm to the welding conditions by referring to the model specific body construction information.**
- **For the actual settings of the welder, refer to the specifications supplied by the welder manufacturer.**

Condition No.	Welding current A	Welding time ms	Applied force N (kgf)	Condition No.	Welding current A	Welding time ms	Applied force N (kgf)
1	6500	300	2452 (250)	17	8500	700	3432 (350)
2	7000	300	2452 (250)	18	9000	700	3432 (350)
3	7500	300	2452 (250)	19	9500	700	3432 (350)
4	6500	400	2942 (300)	20	8500	800	3432 (350)
5	7000	400	2942 (300)	21	9000	800	3432 (350)
6	7500	400	2942 (300)	22	9500	800	3432 (350)
7	8000	400	2942 (300)	23	10500	700	3432 (350)
8	7000	500	3432 (350)	24	10500	800	3923 (400)
9	7500	500	3432 (350)	25	8000	1500	3432 (350)
10	8000	500	3432 (350)	26	8000	800	3432 (350)
11	8500	500	3432 (350)	27	8500	1500	3432 (350)
12	7500	600	3432 (350)	28	7500	800	3432 (350)
13	8000	600	3432 (350)	29	8000	1200	3432 (350)

Condition No.	Welding current A	Welding time ms	Applied force N (kgf)	Condition No.	Welding current A	Welding time ms	Applied force N (kgf)
14	8500	600	3432 (350)	30	8500	1200	3432 (350)
15	9000	600	3432 (350)	31	9000	1200	3432 (350)
16	8000	700	3432 (350)	Â	Â	Â	Â

NOTE:

- **The condition numbers of the above list show the type of the spot welding conditions of the spot welding points including the ultra high-strength steel (1500 MPa/1180 MPa) parts of Honda and Acura vehicles.**
- **The welding condition values described in the above list are determined by experiments using test pieces, zinc primer coating, preheat, and specified tip shapes (Round-16).**
- **For spot welds involving 1500 MPa steel parts, manual spot welder settings provided in the BRM (or a Honda-specific program) are recommended. Honda does not recommend using the spot welder's AUTO mode for this steel grade because these settings may not achieve adequate weld strength.**

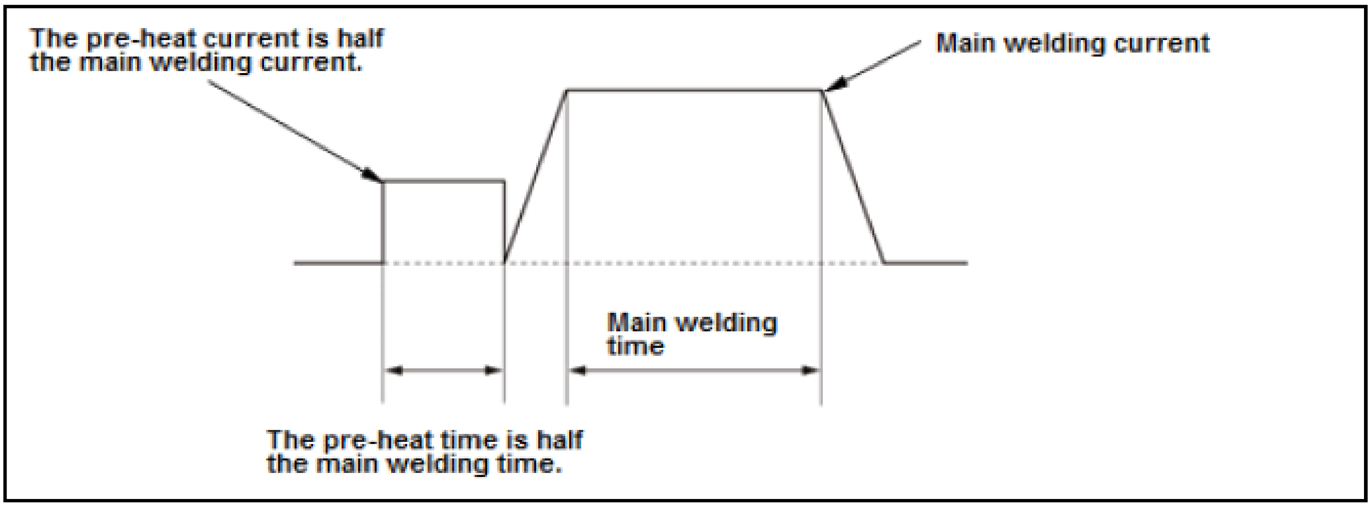
The pre-heat current is half the main welding current.
Main welding current
Main welding time
The pre-heat time is half the main welding time.

Weld Inspection

Both visual inspection and destructive testing are used for spot weld inspection. One of the drawbacks of spot welding is visual inspection difficulty because the steel layers are stacked on top of each other. Because of this, destructive testing is the main inspection method. However, visual inspection is still important to check for the finishing quality. Destructive testing often requires equipment not found in most shops, such as a tensile strength test machine. The chart below details the easiest and most practical spot weld inspections.

Inspection Points	Judgment Criteria
Spot locations	• Nugget is located in the middle of flange, no holes, and no nugget overflow into flange edge. • The repair spot welds avoid original spot weld locations where possible.
Number of spots and pitch	• Number or spot welds is slightly increased over the factory number of welds where possible. • Welding pitch is set according to the model specific body repair information.
Pinhole	No visible holes.
Spatter	No excessive spatter.

Destructive Inspection

Destructive Inspection Using Test Piece

1. Prepare test pieces made of the same material and thickness as the parts to be welded and weld together as illustrated.
2. Apply force in the directions shown by the arrows to separate the spot weld. Then inspect the condition of the broken test parts.

   When testing thicker test pieces, use a vise to hold one piece and hammer the other piece to rotate and separate the weld nugget area.

3. There are three types of spot weld fractures:

- Plug fracture (Nugget pullout).
- Interfacial fracture.
- Partial plug fracture.

4. Spot welds pass inspection if the weld nugget diameter is equal to or greater than 4.5 times the square root of one plate thickness.

NOTE: **In general, high-strength steel contains a higher amount of carbon and hardens the weld nugget more than mild steel. This means high strength steel has a lower workability (ductility) and fractures more easily than mild steel.**

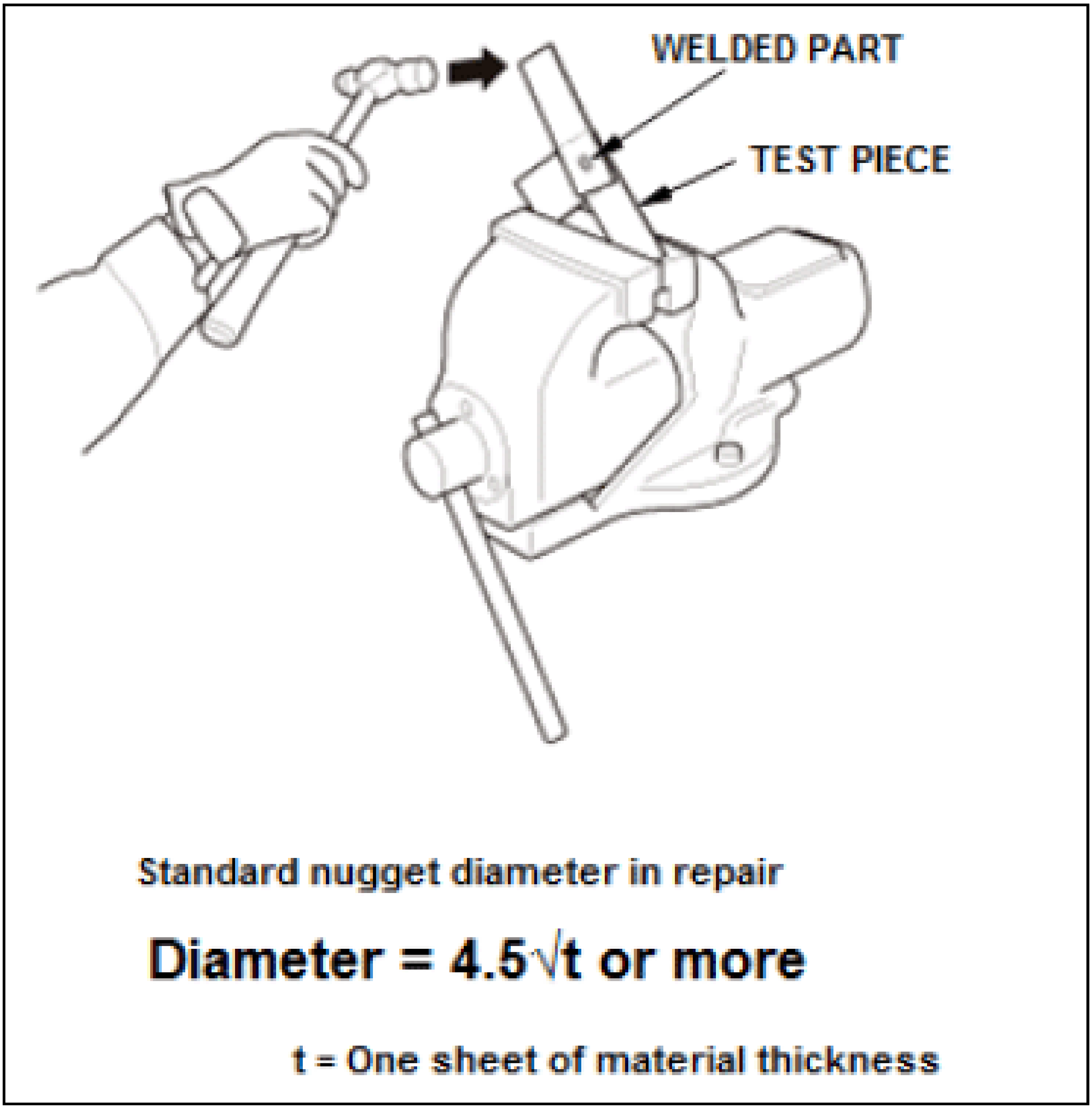

Standard nugget diameter in repair

Diameter = $4.5\sqrt{t}$ or more

t = One sheet of material thickness

Plug Fracture (Nugget Pullout)

The weld nugget pulls completely out of one of the test pieces, along the outer diameter of the spot welded area.

The weld diameter or nugget diameter is calculated as [d1 + d2]/2, to get a mean diameter. However, because the diameter of plug fracture is larger than the weld nugget diameter as illustrated, calculate using the weld nugget diameter.

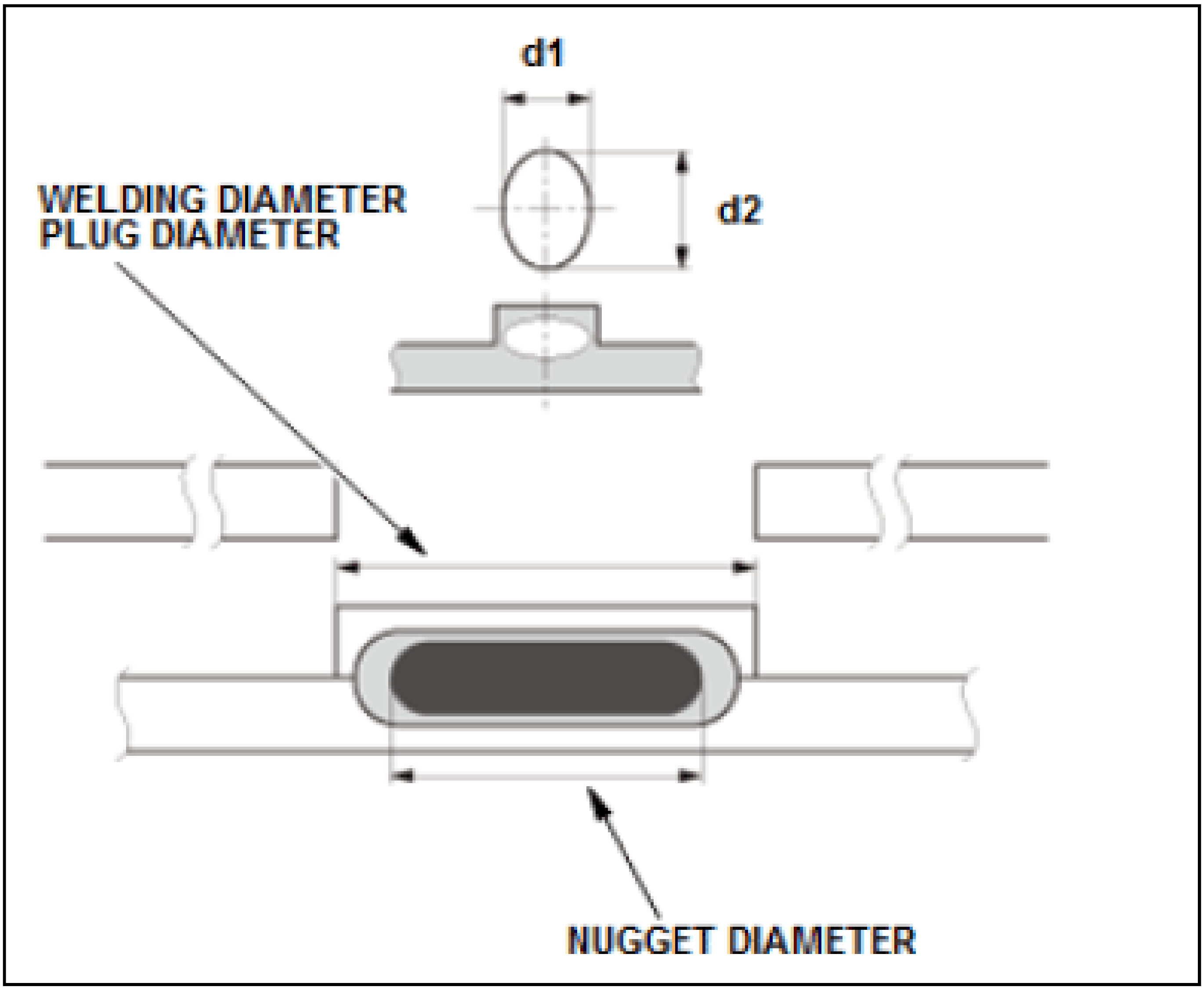
d1
d2
WELDING DIAMETER
PLUG DIAMETER
NUGGET DIAMETER

Interfacial Fracture

The weld nugget fails by cracking through the spot welded area of the test pieces.

The weld nugget diameter of interfacial fracture is calculated as [d1 + d2]/2 to get a mean diameter.

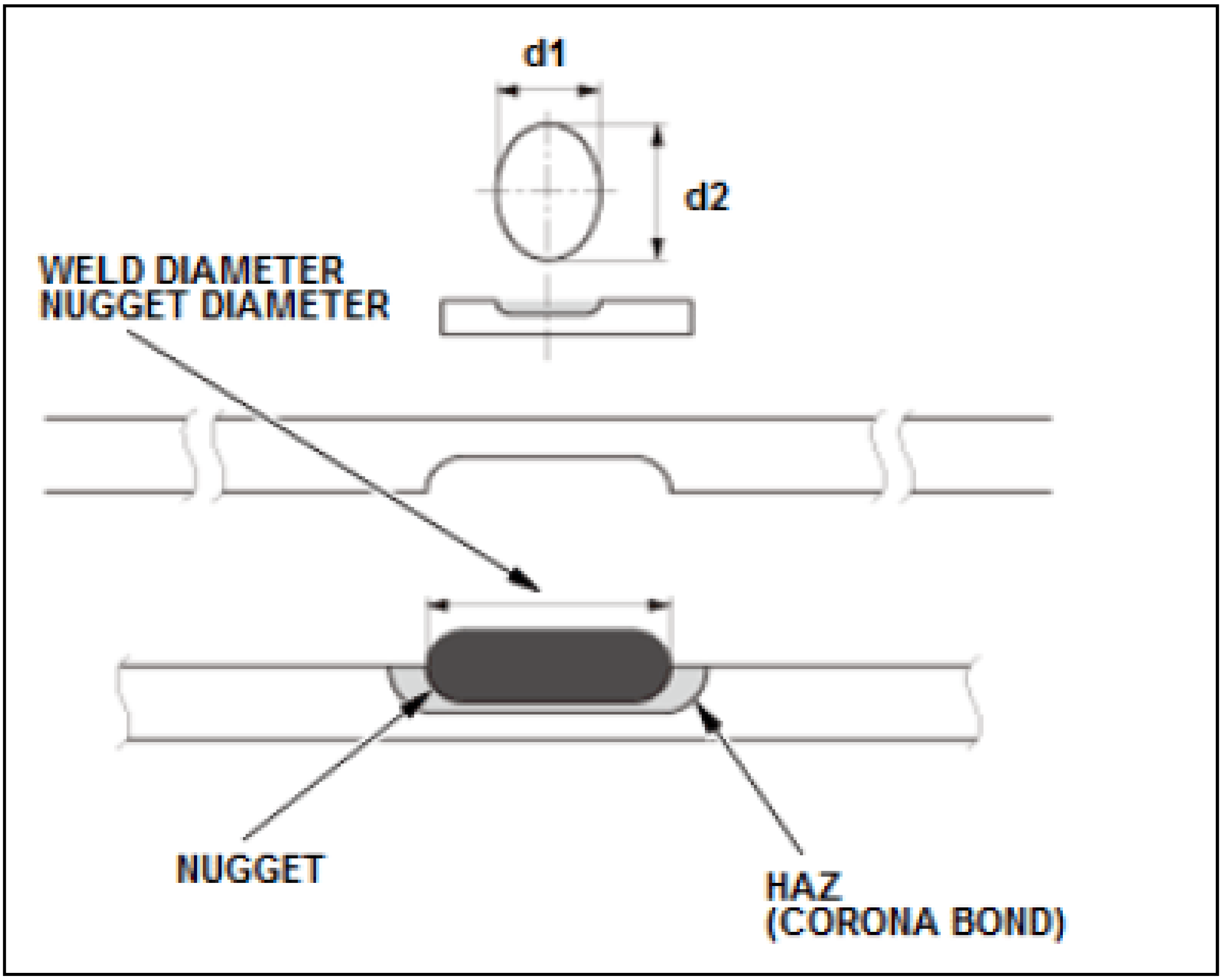
d1
d2
WELD DIAMETER
NUGGET DIAMETER
NUGGET
HAZ
(CORONA BOND)

Weld Terminology

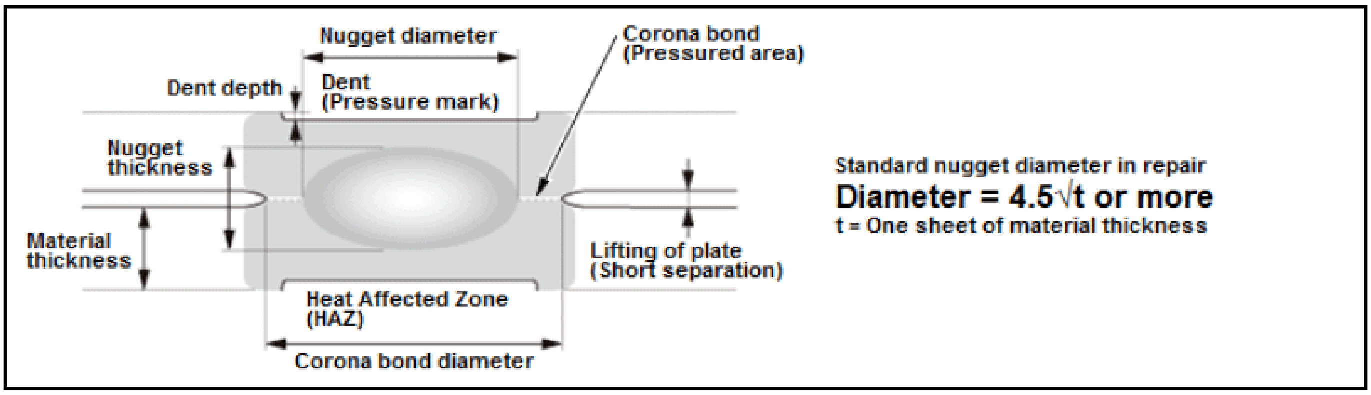
Nugget diameter
Corona bond
(Pressured area)
Dent depth
Dent
(Pressure mark)
Nugget
thickness
Material
thickness
Lifting of plate
(Short separation)
Heat Affected Zone
(HAZ)
Corona bond diameter
Standard nugget diameter in repair
Diameter = 4.5√t or more
t = One sheet of material thickness

- Nugget

  The small area where the base metal is melted and hardened during spot welding. The nugget's cross-section is oval shaped and arched. The nugget diameter is the actual welded/fused area between the parts. The strength of a spot weld is largely dependent on nugget size.

- Corona Bond

  The area where electrode pressure was applied the weld nugget. It prevents the melted metal to spatter. If the weld nugget and corona bond sizes become similar, the pressurized area won't be able to hold the melted metal and spattering will occur.

- Heat Affected Zone

  The heated area around the weld nugget. The heat changes the metal structure of this area, but there is no melting.

Welding Conditions

There are several elements to achieving a good weld. The welding pressure, welding current, and welding time have a great impact on the quality. They are called as "Three Major Welding Conditions". In addition, the shape of the electrode tip also has a great impact on the current supply and cooling processes, which helps determine the end quality of the weld. With the electrode shape included, there are "Four Major Welding Conditions".

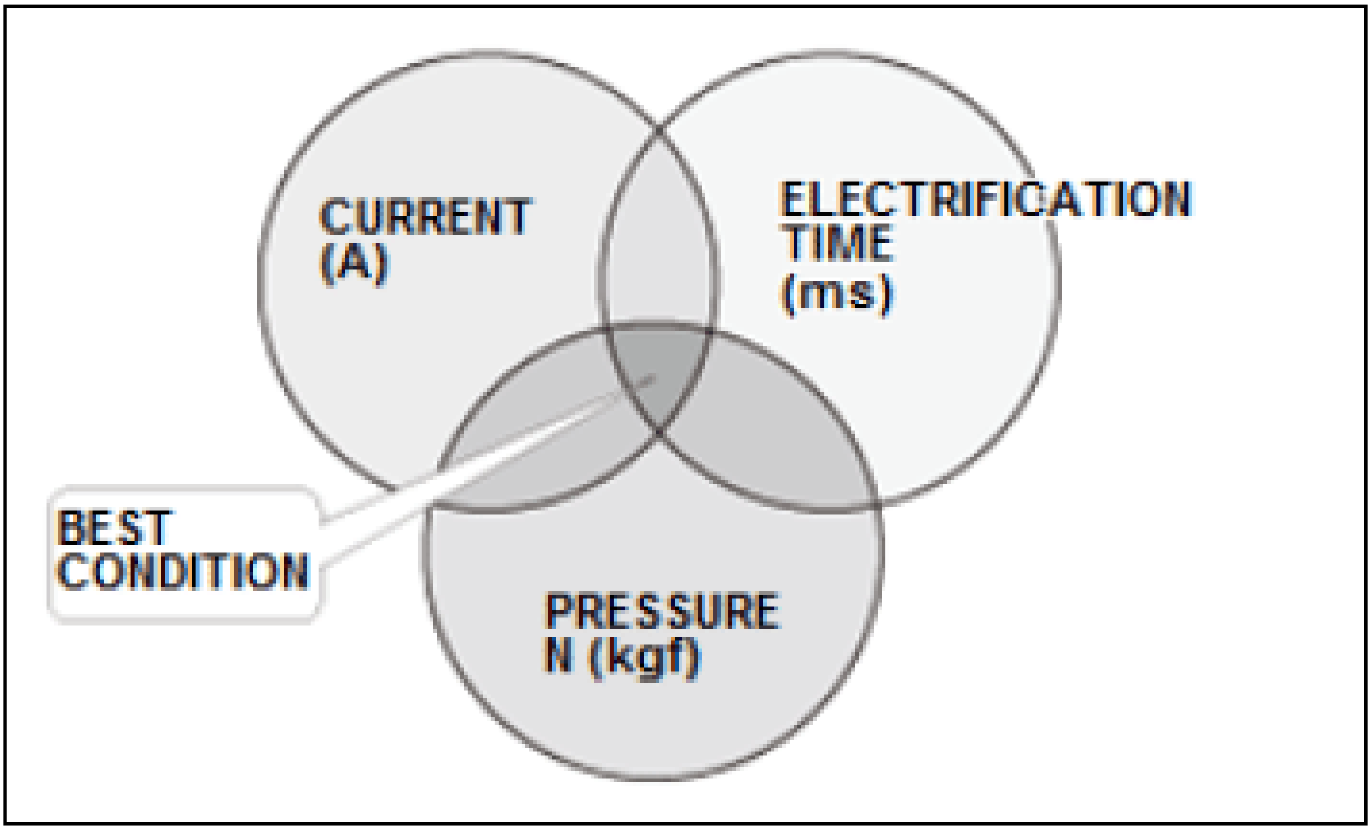

Welding Pressure

Welding pressure minimizes the occurrence of "welding spatter" while supplying the current to the parts being joined. It also stabilizes the strength of the welded parts by holding pressure even after the current is applied. If the welding current and time remain the same and only the welding pressure is changed, the higher the pressure applied, the smaller the nugget will be and lower the strength of the welded parts. The reason for this phenomenon can be explained this way:

When two work pieces are held together by the welding tips, the current will run through the pressurized part, in other words a slightly wider area of work pieces around the tips. When the pressure is high, the surface area of which the current runs becomes larger. Under these conditions, the current does not fully concentrate (lowering of current density) and the temperature does not become high enough to melt the parts being welded thoroughly As a result, the nugget becomes smaller.

WEAK	PRESSURE	STRONG
LARGE	HEAT	SMALL
SPATTER	BEST	NO NUGGET

Welding Current

The larger the welding current becomes, the bigger the diameter of nugget becomes. Increasing the current generates "spatter", but by applying a high welding pressure to work pieces, "spatter" is minimized because the electrified surface becomes larger. In other words, spatter occurs when high current is applied in combination with low welding pressure. As such, current and pressure have a correlation.

Welding Time

Welding time impacts the size and quality of the weld nugget. A long welding time generates a large amount of heat resulting in a large nugget.

The amount of heat dissipation around the welding area and tips increases as the welding time gets longer. After a certain variable amount of time, the temperature of welding area saturates. Increasing welding time beyond that point doesn't increase the weld nugget size, but it does increase pressure dents from the weld tips and heat deflection, resulting in weld quality issues.

Electrode Tip Diameter And Current Density

- The major functions of the welding electrodes are:
  - Allows electrical current to pass through the parts being welded

    - Applies pressure to the weld area to prevent spatter
    - Acts as a heat sink to cool down the parts after welding
- Electrodes must have high conductivity, wear-resistance, and thermal conductivity.
- After making repeated welds, the electrode contact tips become larger, reducing current density and heat transfer. This results in a smaller weld nugget size and a low weld strength.

Welding Equipment Structure

A spot welder consists of the welding gun, transformer to increase welding current, and the controller to control "welding current", "welding pressure", and "welding time".

Welding Gun

- The welding tips provide pressure to the welding area, apply current, and allow the weld area to cool while being held tightly To resist deformation and conduct heat efficiently the tips are made of copper alloy (chromium copper).
- The arms feed current to the tips to suit various requirements. They are available in many different shapes and lengths.
- Compressed air is usually used to move the tips up and down to hold work pieces tightly.

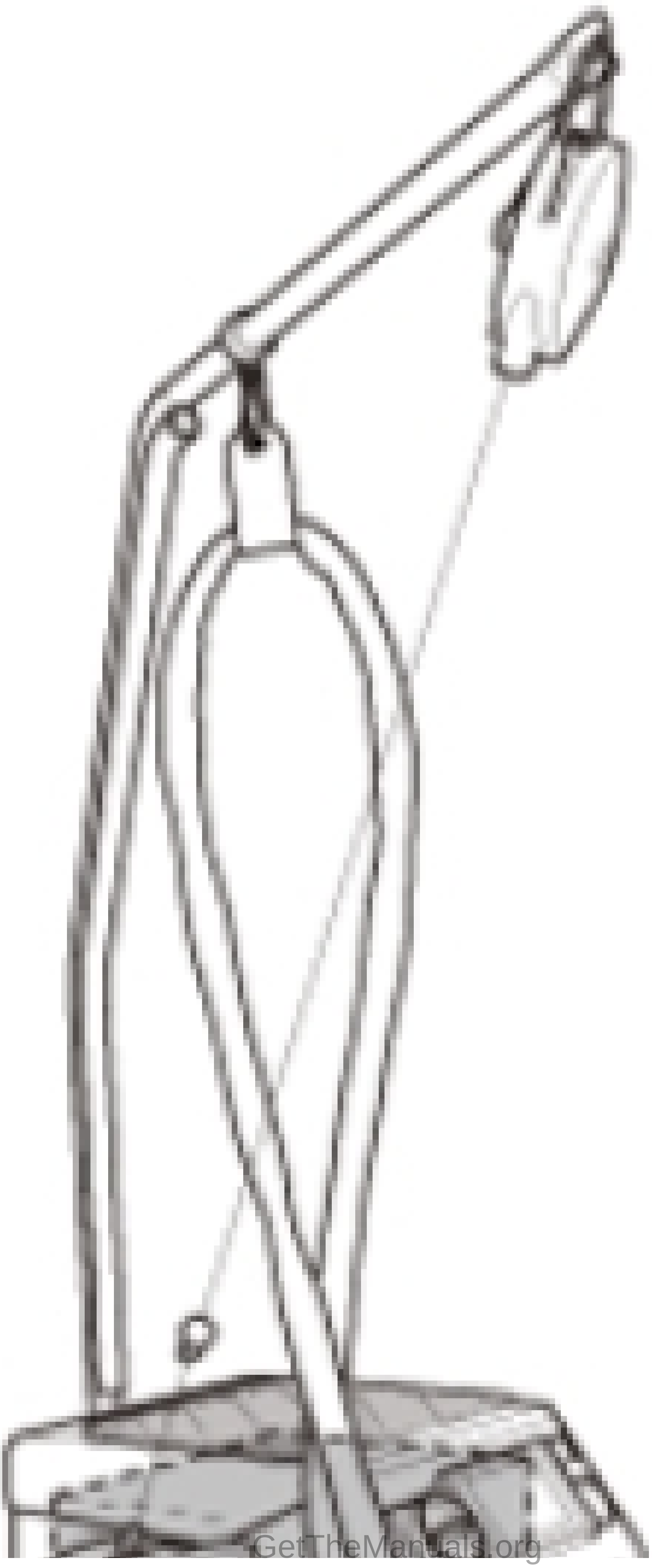

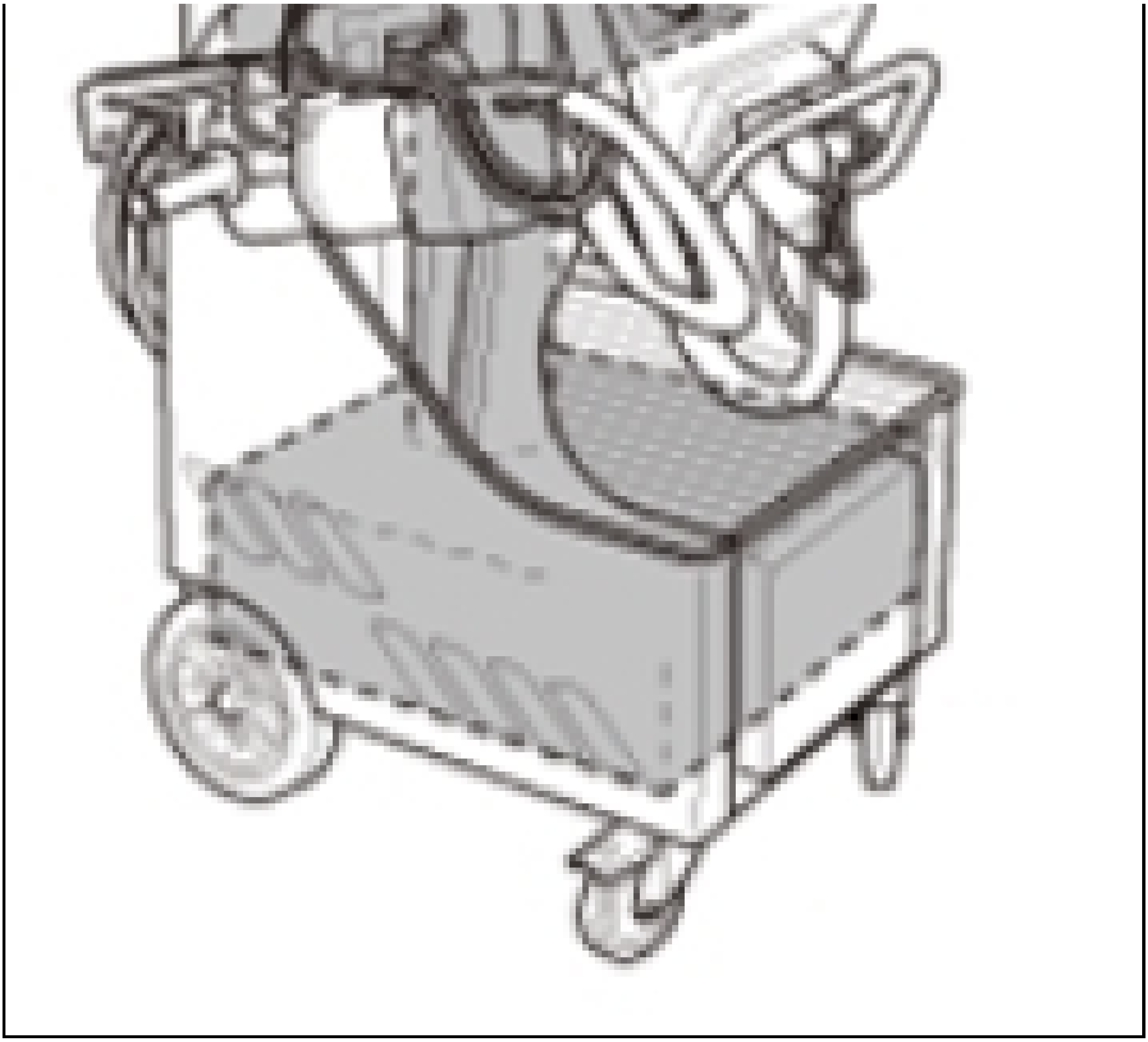

Transformer

Converts the input (primary) voltage to the low voltage and high current, required for spot welding.

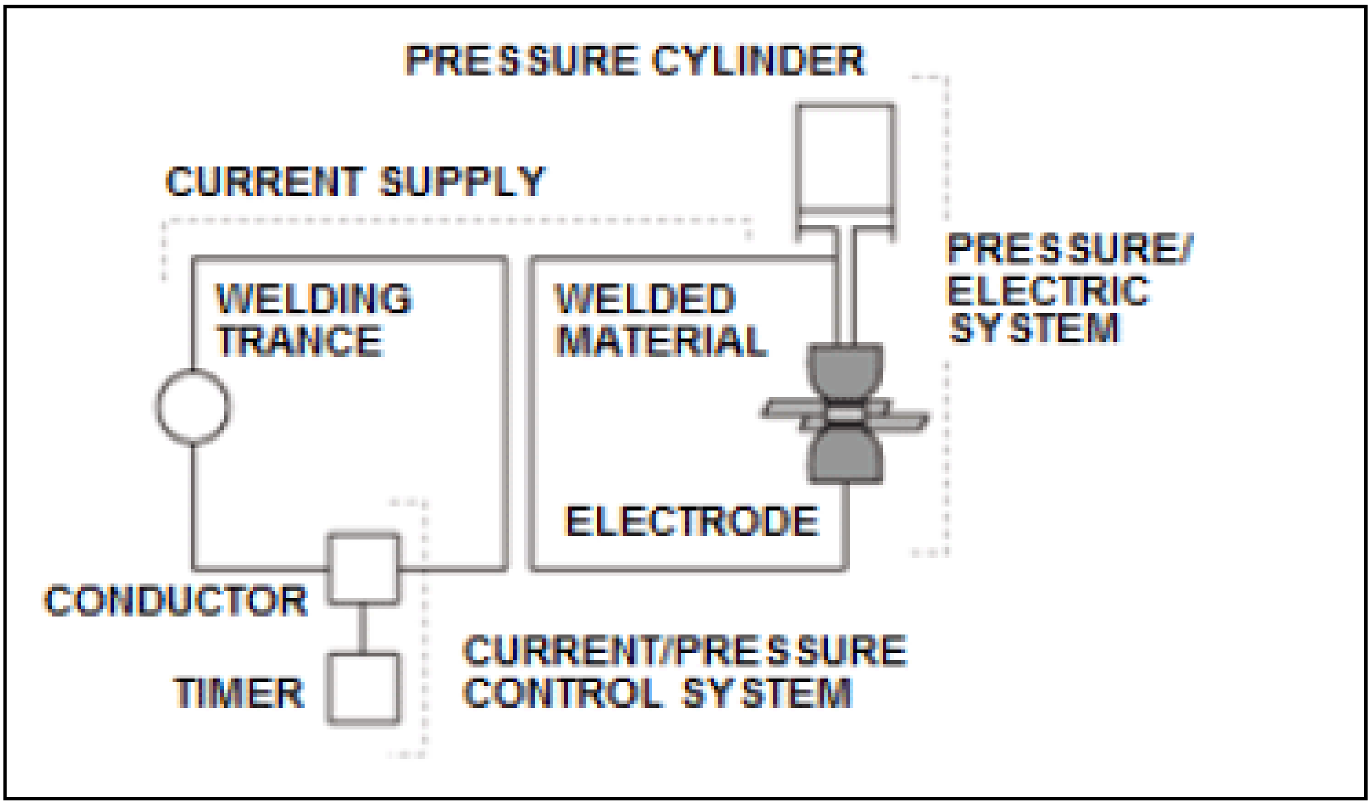
PRESSURE CYLINDER
CURRENT SUPPLY
WELDING TRANCE
WELDED MATERIAL
PRESSURE/ ELECTRIC SYSTEM
ELECTRODE
CONDUCTOR
TIMER
CURRENT/PRESSURE CONTROL SYSTEM

Controller

Controls the three major conditions of the spot welding process:

- Welding current
- Welding pressure
- Welding time

Welding Precautions

1. **Conditions of Welding Part:**
    - Contaminated welding surfaces will not allow sufficient welding current penetration. Remove paint film and rust by sanding the areas being welded with a small belt sander.
    - Use tools like vise grip welding pliers to tightly clamp parts being welded.

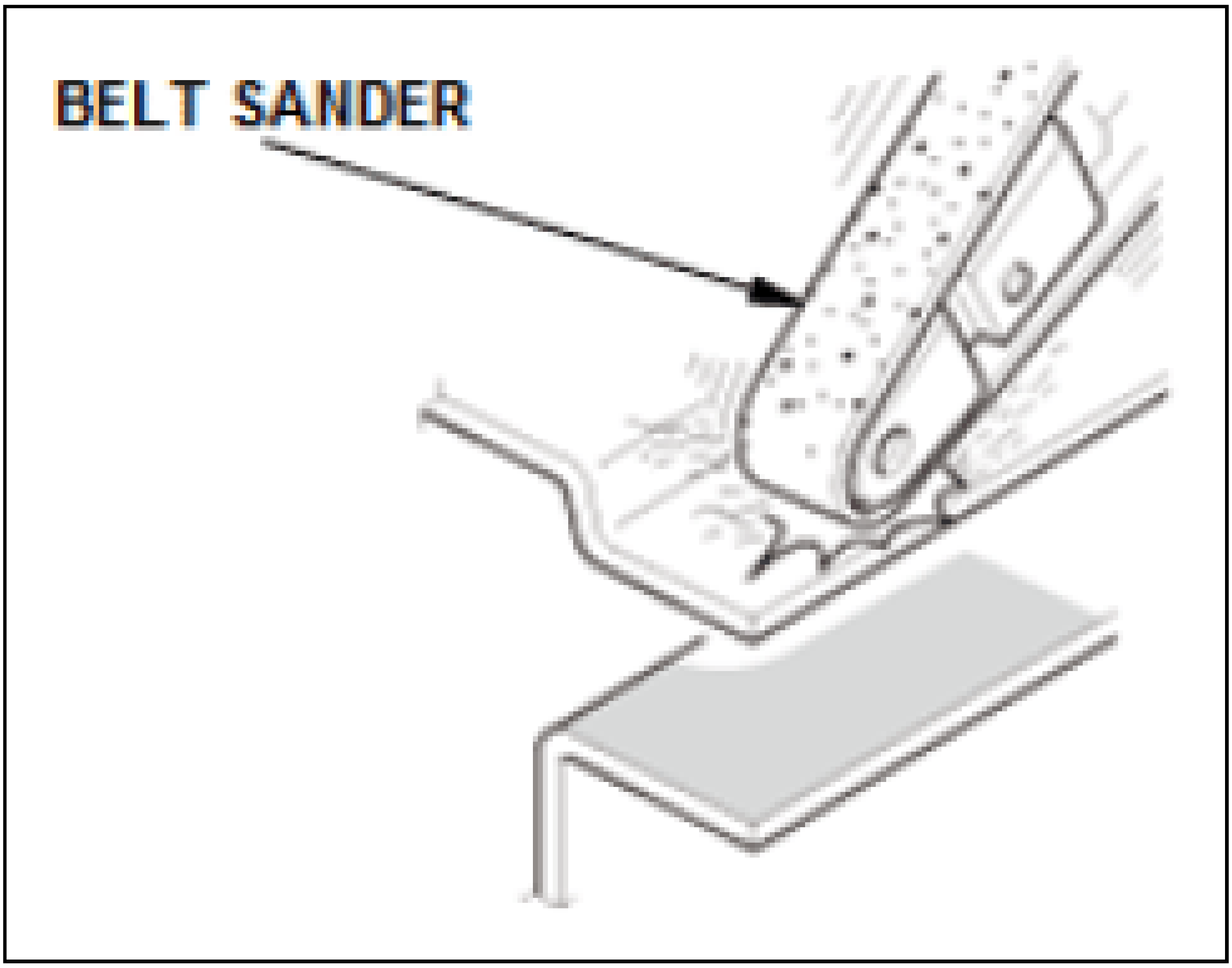
BELT SANDER

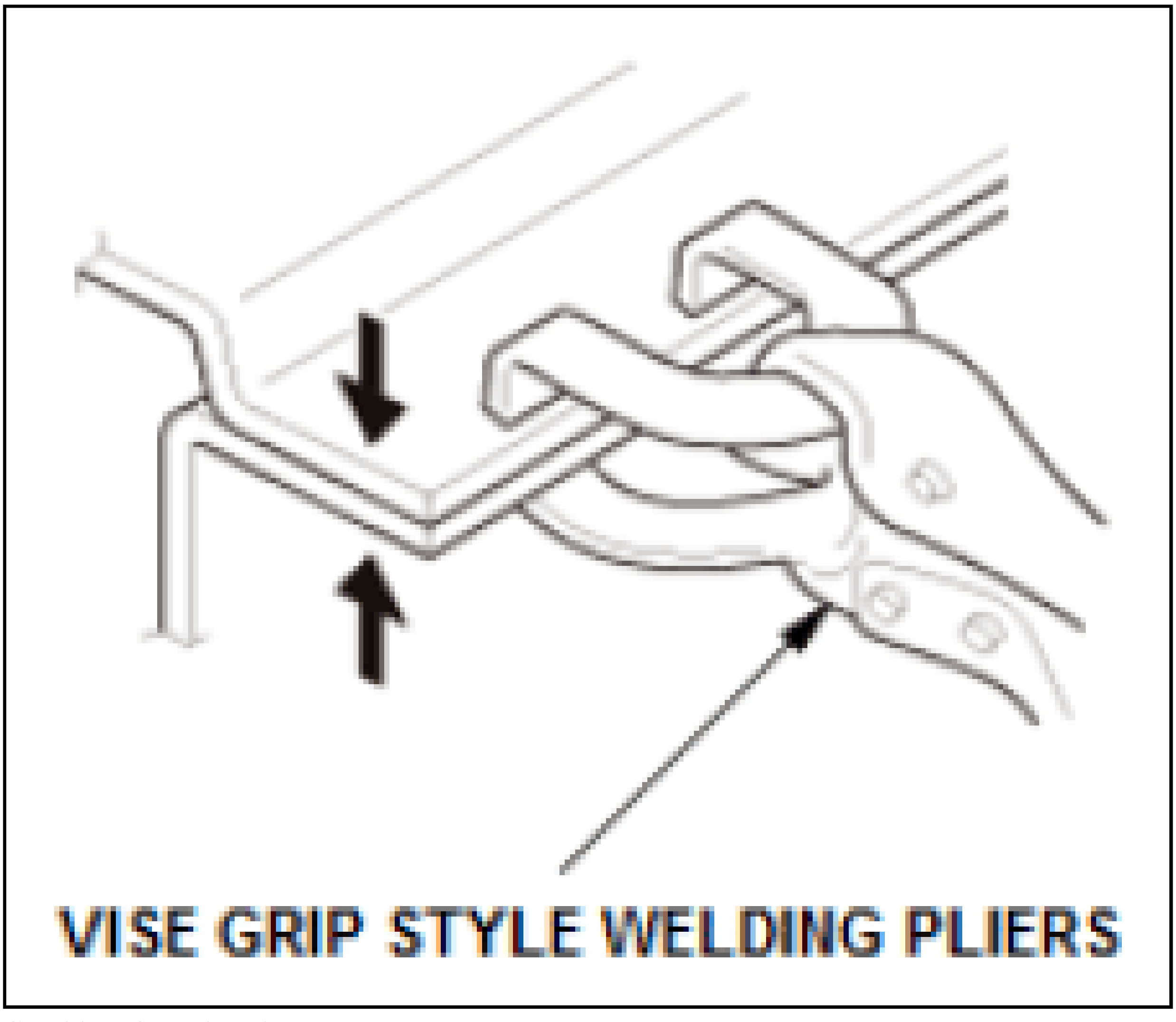
VISE GRIP STYLE WELDING PLIERS

2. **Condition of Welding Tips:**

- Make sure there is no contamination, damage or deformation of the welding electrode tips before use.
- When the of the welding electrode tips degrades with use, current flow is reduced, resulting in poor welding nugget quality.
- Dress or replace the electrode tips, before each use to ensure optimal welding performance.

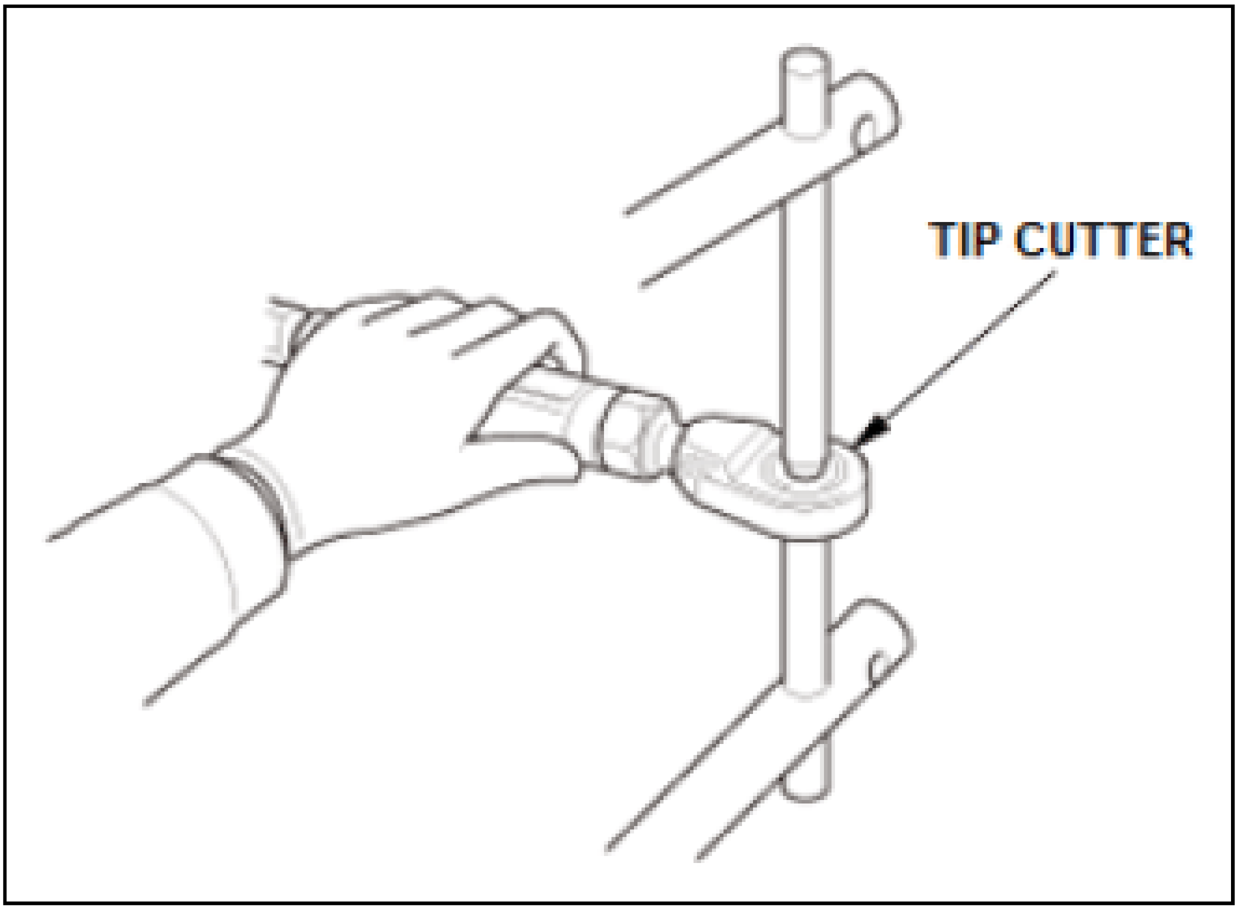

3. **Setting Arm**

   The arms selected must adjust to allow the welding electrode tips to align in a straight line.

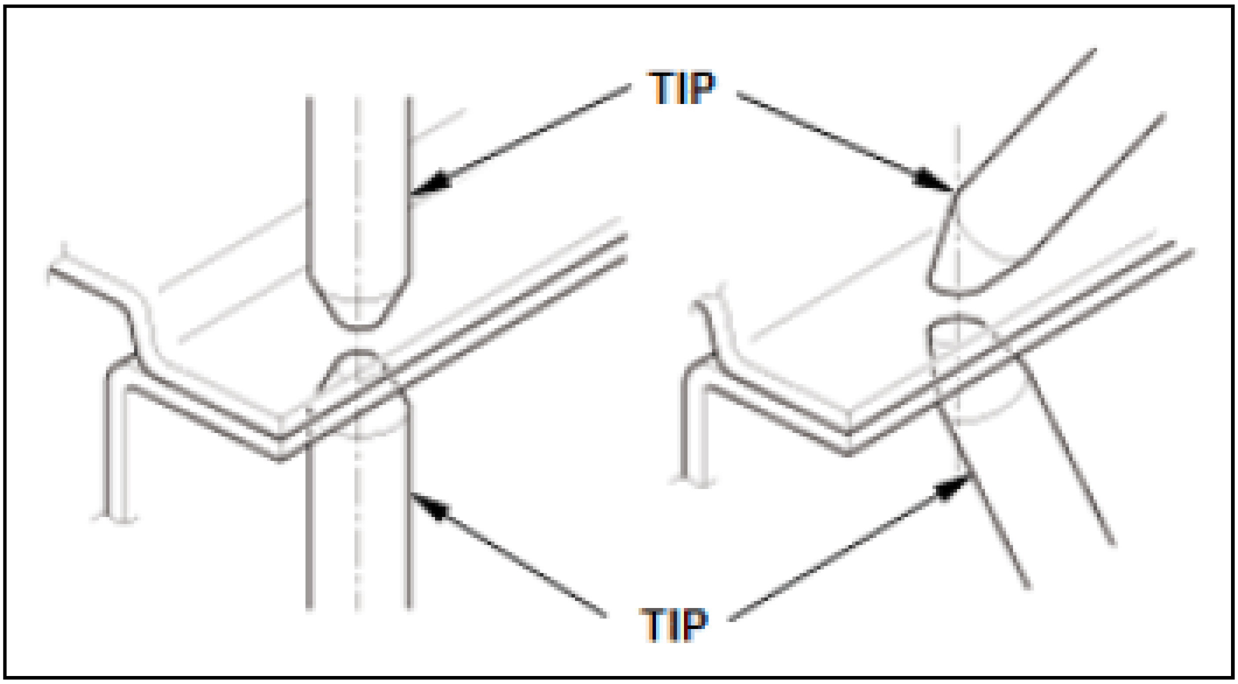

4. **Welding Pitch:**
   - When spot welds are place too close together, some of the welding current is "shunted" through the previously-welded spot. This current is then not available to complete the spot weld being made, resulting in a weaker joint. Check the welding conditions compared to the chart below and adjust as necessary to prevent shunted current.

- When the spot is too close to the edge of flange, the nugget overflows outside the flange surface reducing the welding strength. Weld spot must be located on the center of the weld flange.
- The welding pitch (distance between the spot welds) and the distance from the flange edge must be set according to the material thickness. Use the chart below as a reference for spot weld location and pitch.

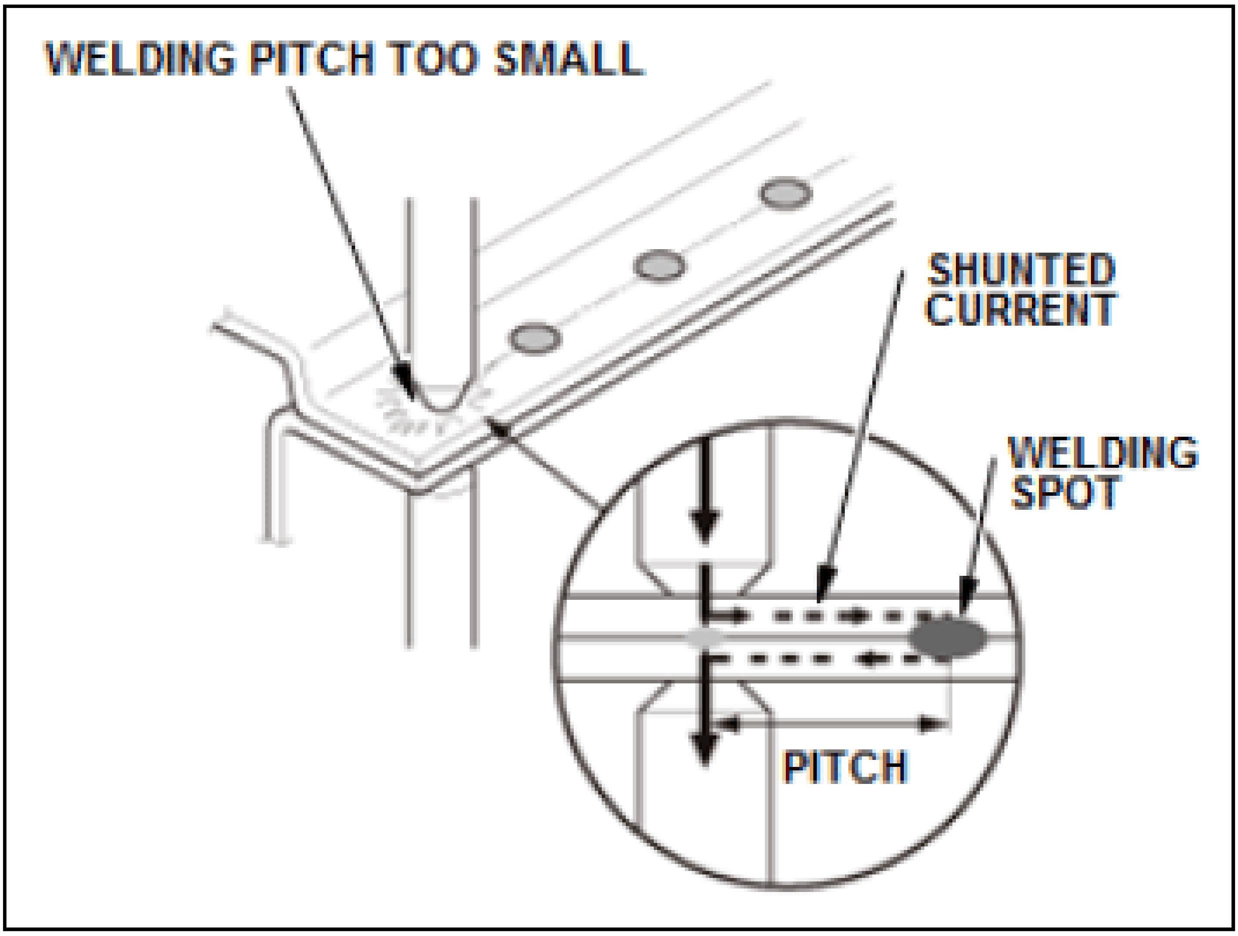
WELDING PITCH TOO SMALL
SHUNTED CURRENT
WELDING SPOT
PITCH

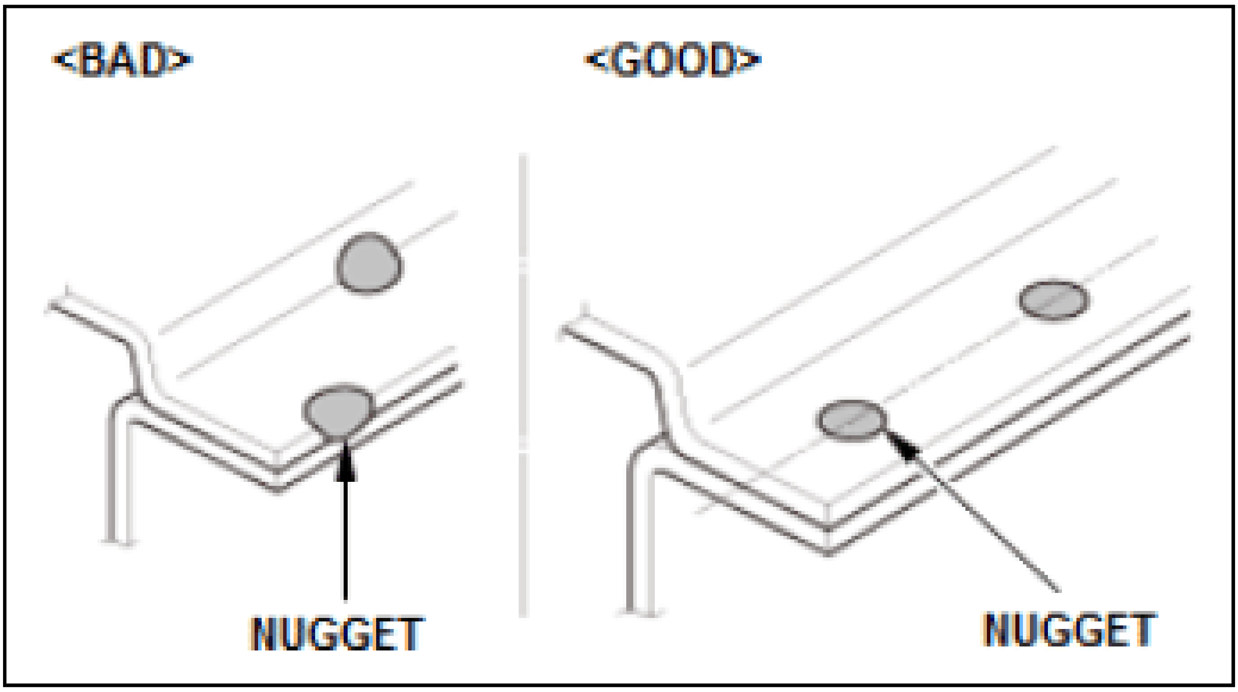
<BAD>
<GOOD>
NUGGET
NUGGET

Thickness mm (in)	Pitch P mm (in)	End Distance E mm (in)
0.6 (0.024)	11+ (0.43+)	5+ (0.20+)
0.8 (0.031)	14+ (0.55+)	5+ (0.20+)
1.0 (0.040)	18+ (0.71+)	6+ (0.24+)
1.2 (0.047)	22+ (0.87+)	7+ (0.28+)
1.6 (0.063)	29+ (1.14+)	8+ (0.31+)

- When you are making a number of spot welds at once, be sure to check the spot welder's settings and allow adequate space between each weld.

NOTE: **When doing spot welding, check the shape and condition of the welding electrode tips often.**

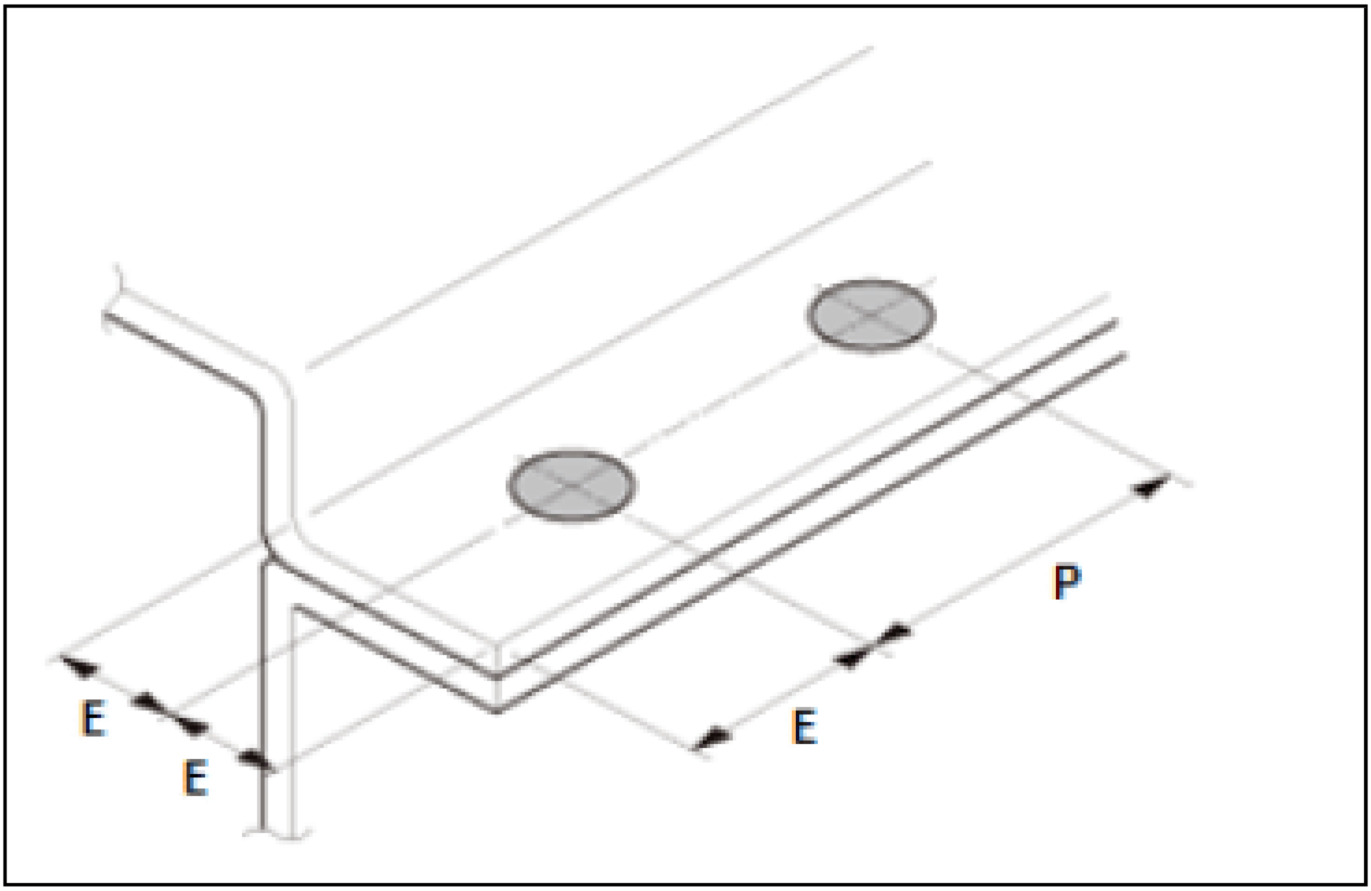

WELDING ON ALUMINUM ALLOY BODIES

Butt Welding

1. Grooving

If thickness is less than 3 mm (0.12 in):

There is no need to chamfer the edges of the plates. Butt the work pieces together without a gap.

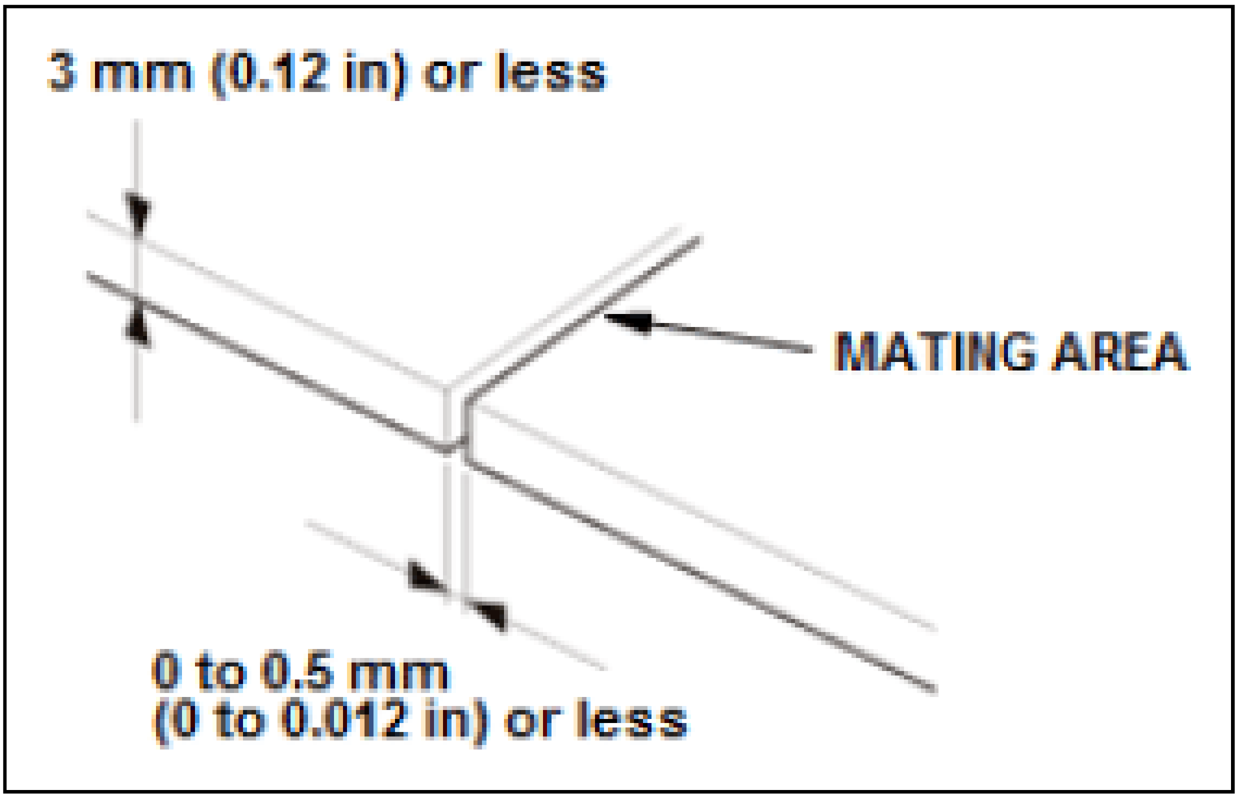
3 mm (0.12 in) or less
MATING AREA
0 to 0.5 mm
(0 to 0.012 in) or less

If thickness is more than 3 mm (0.12 in):

- Use a disk grinder, or course file (rough, vixen file) to make a V-groove, or chamfer, along the mating line (V-shape grooving).
- Smooth the ground surface using a disk sander (P80) or fine file.
- With a V-groove, back beads are easily formed.

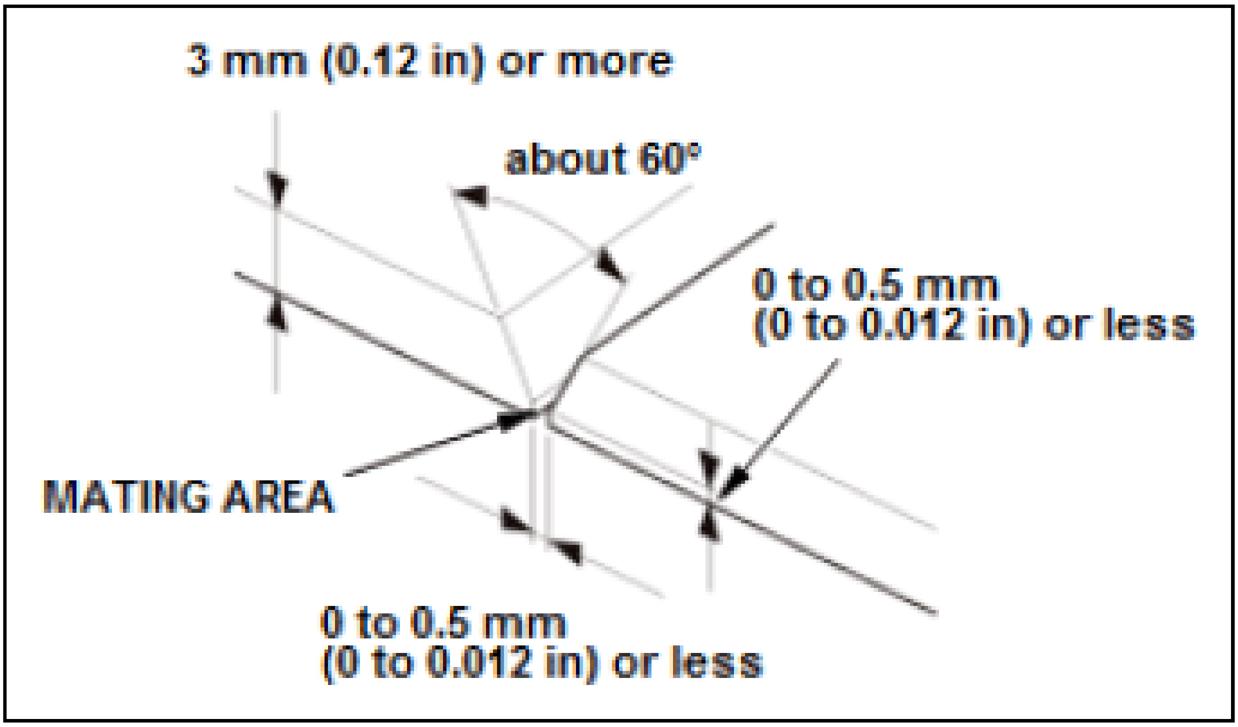
3 mm (0.12 in) or more
about 60°
0 to 0.5 mm
(0 to 0.012 in) or less
MATING AREA
0 to 0.5 mm
(0 to 0.012 in) or less

2. Cleaning and removal of oxidized layer:
    - Remove contamination and oil content from the area to be welded using degreaser.
    - Sand off paint film using a disk sander (P80).
    - Remove the oxidized layer using a stainless wire brush.
        - Remove oxidized layer from the hatched areas.

When thickness is 3 mm (0.12 in) or less:

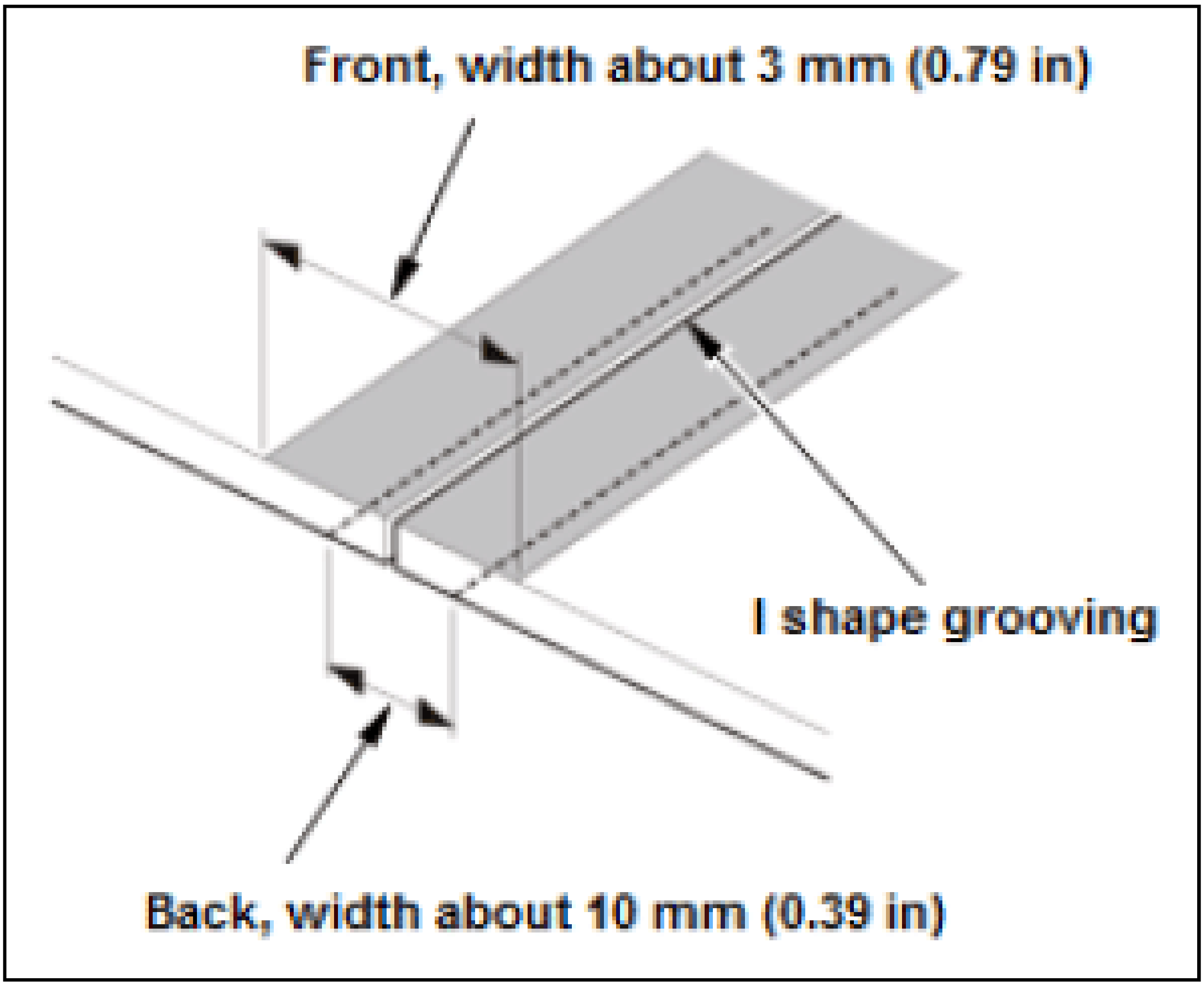
Front, width about 3 mm (0.79 in)
I shape grooving
Back, width about 10 mm (0.39 in)

When thickness is 3 mm (0.12 in) or more:

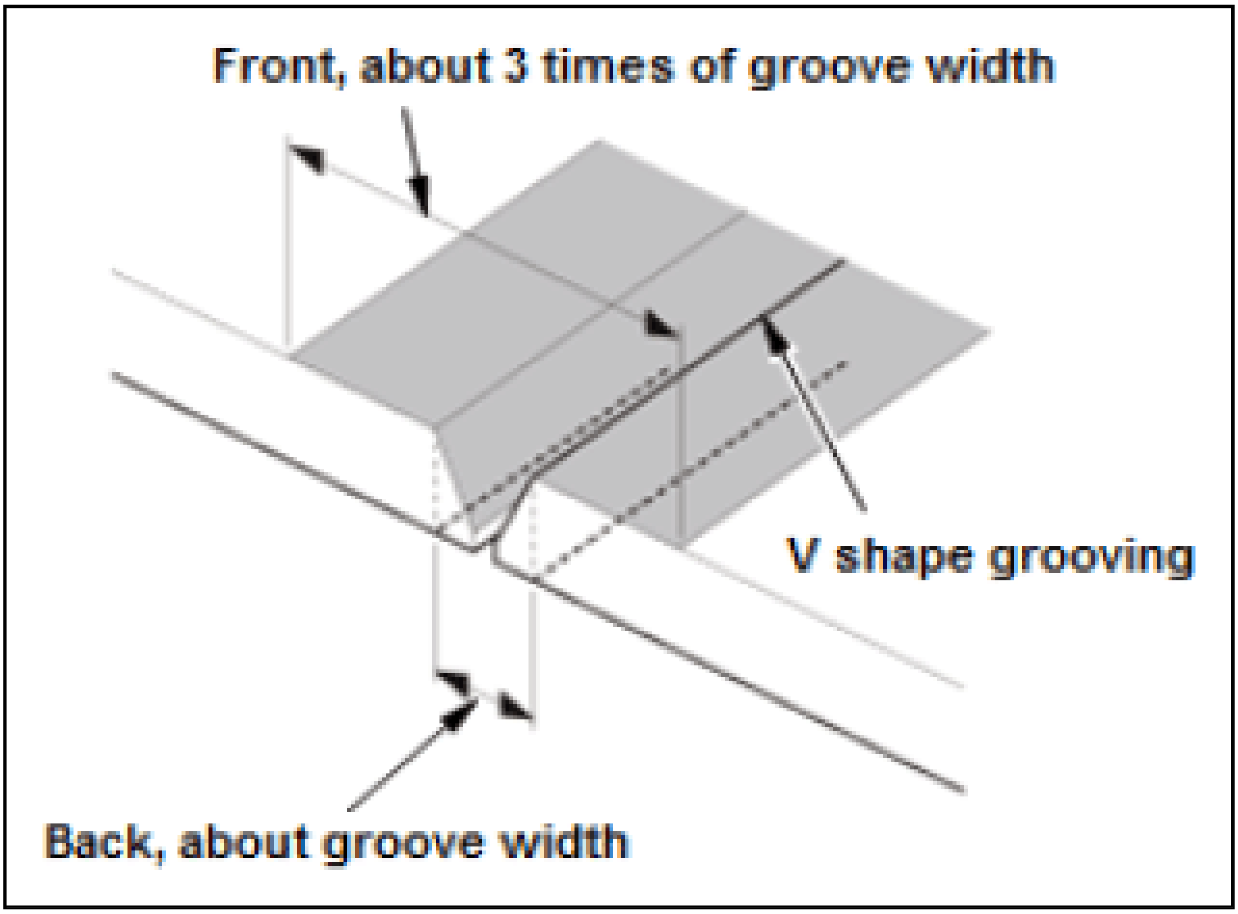
Front, about 3 times of groove width
V shape grooving
Back, about groove width

3. Tack welding:

- Basically same as the welding of steel panels. Tack welding is required to reduce distortion for precision of the welded joint.
- Weld short beads at several places. The thinner the panel, the smaller the welding pitch. Do not weld the end or corner of the work piece.

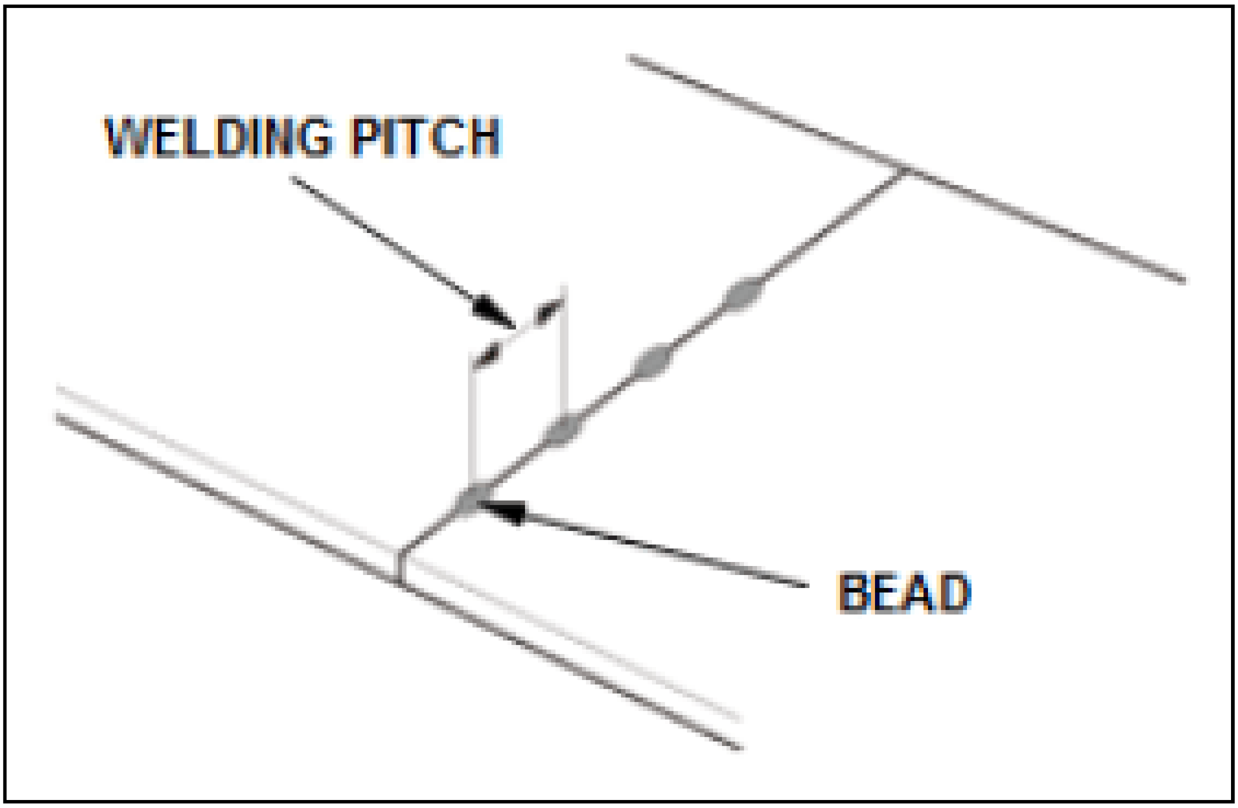

4. Main welding:
    - Clean the welding area with a stainless wire brush just before welding.
    - Hold and tilt the torch 5 to 15 degrees then weld along the mating line and use a push or forward welding technique.
    - While checking the tip-to-work clearance, torch angle and penetration, adjust torch feed speed.
    - As your welding skill improves, you can increase the torch feed speed using high power (current). Such quick welding reduces heat transfer into the work and minimizes distortion.
    - When welding thin panels, burn through can be prevented by using a skip or stitch welding technique.
    - If the welding equipment has a stitch mode, use it for stitch welding.

FORWARD WELDING

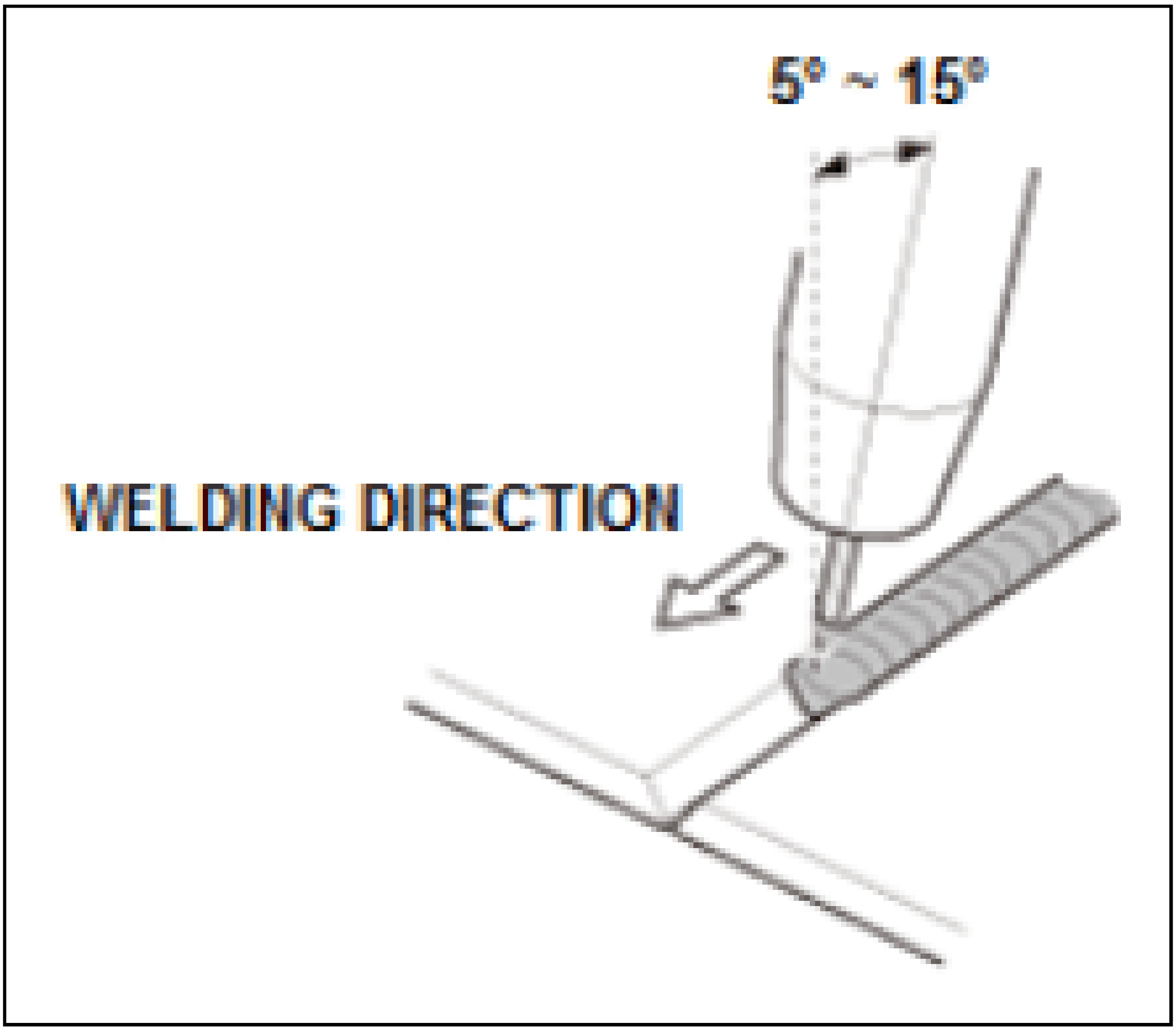

5. Filling a crater:
    - Stop the torch once you reach the end of welding bead and fill in the crater.
    - Stop and start the arc repeatedly to fill up a crater that occurs at the end of a welding bead.
6. Distortion-free welding

    Similar to welding steel panels, a large distortion occurs when excessive heat is applied to aluminum alloy work pieces. The thinner the panel, the more distortion occurs. Refer to the steel panel welding for tips on distortion-free welding.

7. Be sure to check for cracks after welding.

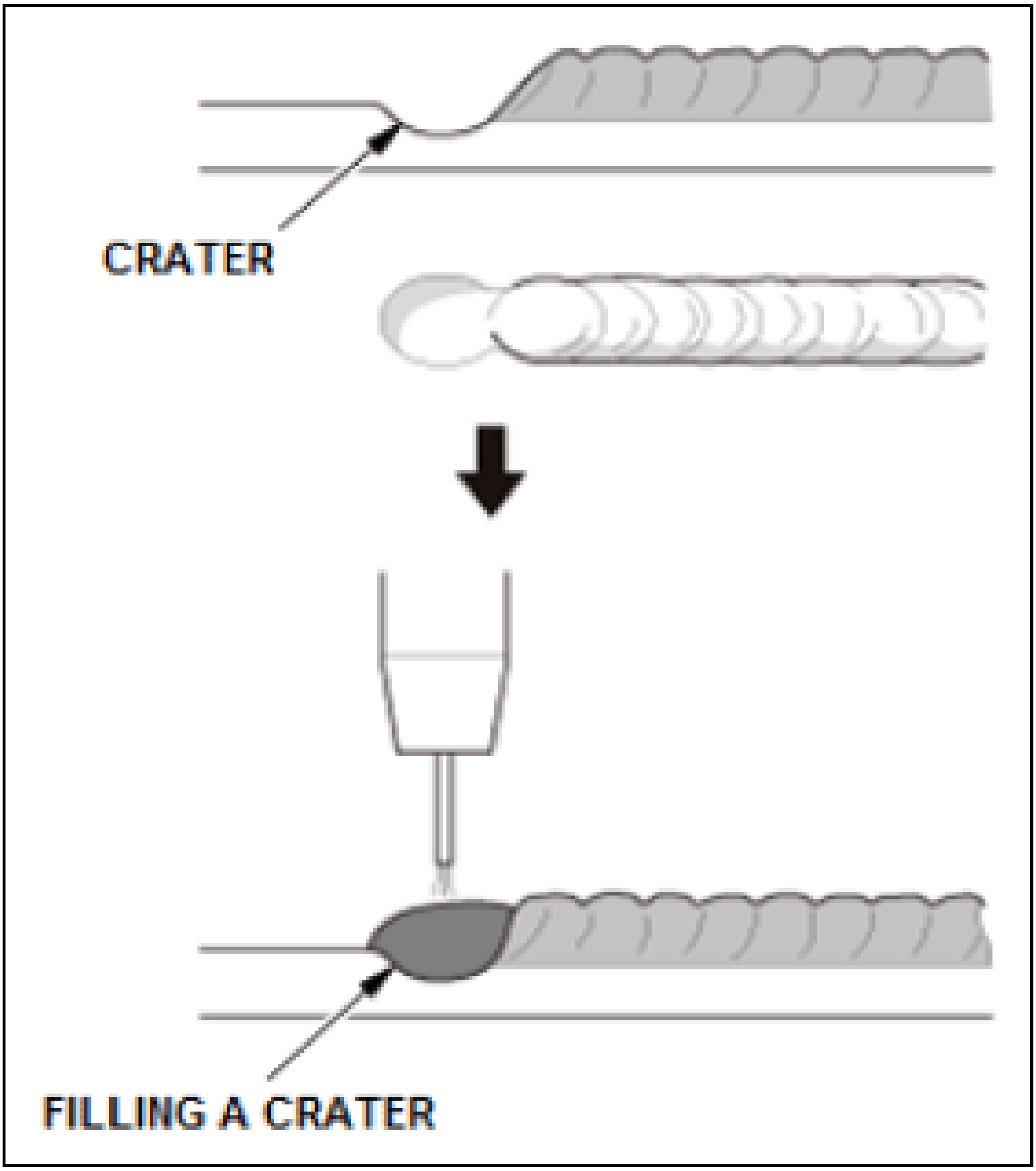
CRATER
FILLING A CRATER

Butt Welding Defects And Causes

If you make a defective weld, use the chart below to quickly determine the cause. Then make the required correction(s) that will achieve optimum results.

Defect	Defect Example	Cause
Bead crack	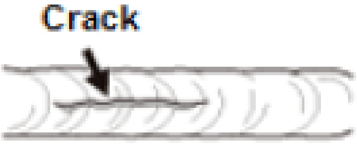	Welding amperage too high Incorrect filler material (Welding wire)
Crater crack	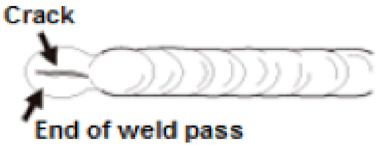 Crack End of weld pass	Craters not filled at end of weld pass

Defect	Defect Example	Cause
Undercut	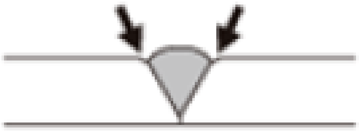	- Incorrect torch position - Welding amperage too high - Welding torch speed too fast
Overlap	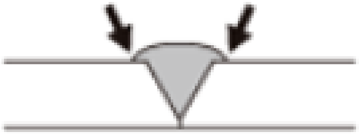	- Welding amperage too low - Welding torch speed too slow
Incomplete fusion	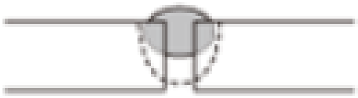	- Welding amperage too low - Incorrect joint preparation - Welding torch speed too fast
Porosity/Blowhole	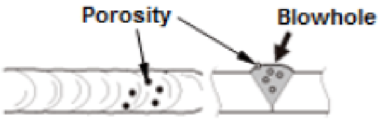	- Welded Material dirty/contaminated - Incorrect shielding gas - Welding in high humidity conditions
Uneven bead	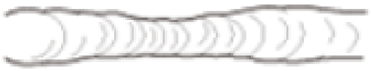	- Welding wire speed too fast - Welding torch speed too fast
Burn through	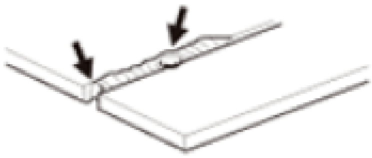	- Welding amperage too high - Material gap at joint too wide
Spatter	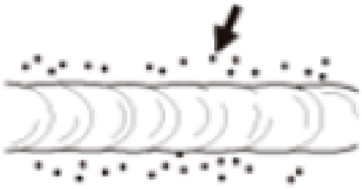	- Incorrect torch angle - Incorrect shielding gas - Welded Material dirty/contaminated

Fillet Welding

Fillet welding is used to join panels of different thickness or when added strength is required.

1. Cleaning and removal of oxidized layer:
    - Remove contamination and oil content from the area to be welded using degreaser.
    - Sand off paint film using a disk sender (P80).
    - Remove the oxidized layer using a stainless wire brush.
        - Remove oxidized layer from the hatched areas.
2. Upper and lower panels must be positioned tightly against each other.

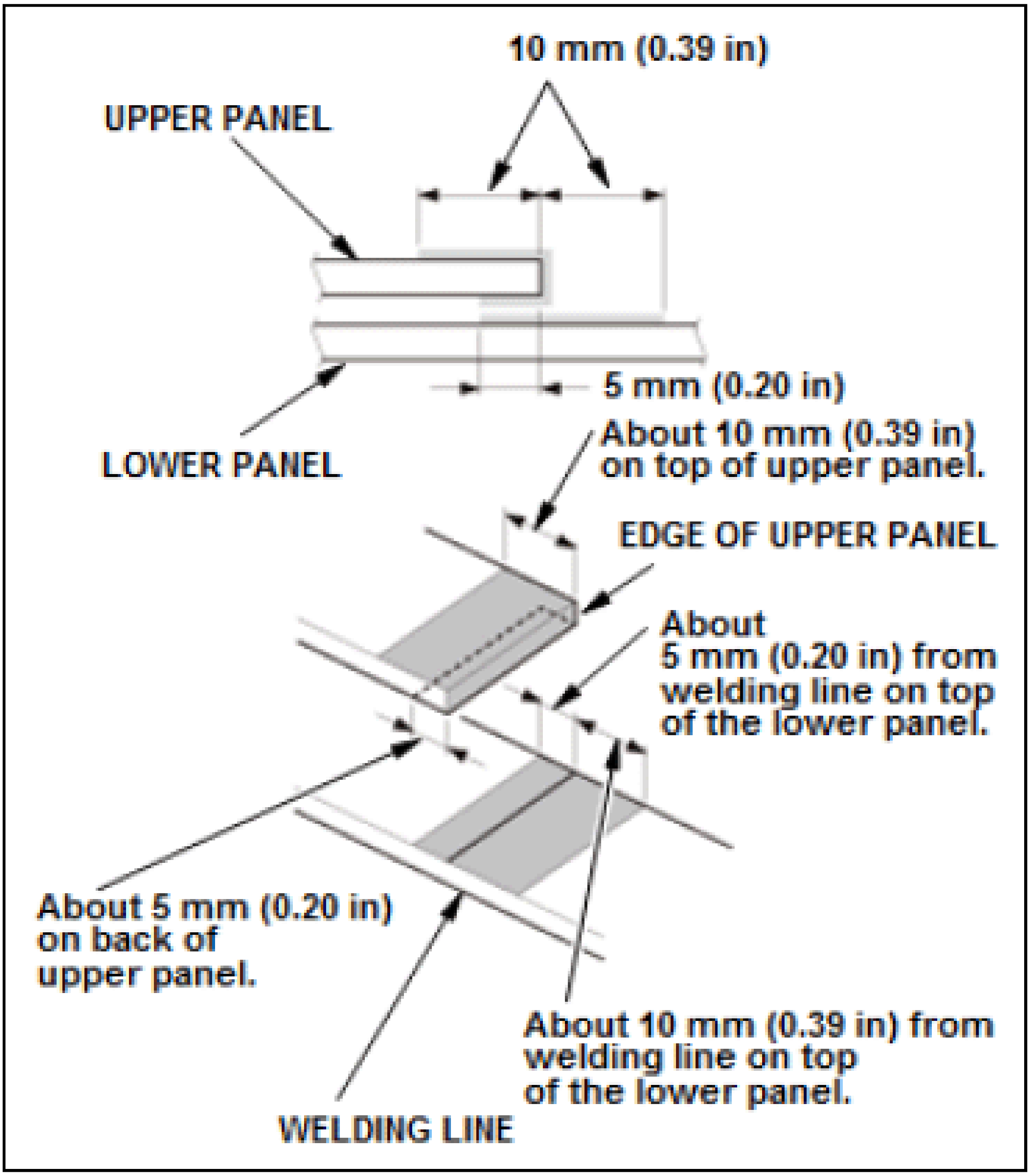
10 mm (0.39 in)
UPPER PANEL
5 mm (0.20 in)
LOWER PANEL
About 10 mm (0.39 in) on top of upper panel.
EDGE OF UPPER PANEL
About 5 mm (0.20 in) from welding line on top of the lower panel.
About 5 mm (0.20 in) on back of upper panel.
About 10 mm (0.39 in) from welding line on top of the lower panel.
WELDING LINE

3. Welding:
    - Clean the welding area with a stainless wire brush just before welding.
    - In fillet welding, penetration occurs quickly at the edge of the upper panel and slowly in the middle of the lower panel.
    - The current should be slightly lower than for butt welding. Check for proper penetration through lower plate while welding.
    - Weld while holding the torch with an angle (approximately 10 degrees) against the welded surface.

      In particular, when the thickness is different between the upper and lower panels, pay extra attention to the penetration condition while welding.

    - The beads should be of the same height as the panel thickness or slightly higher. When the thickness of the upper and lower panels is different, adjusting to the thin panel helps to reduce distortion.
    - Weld intermittently.

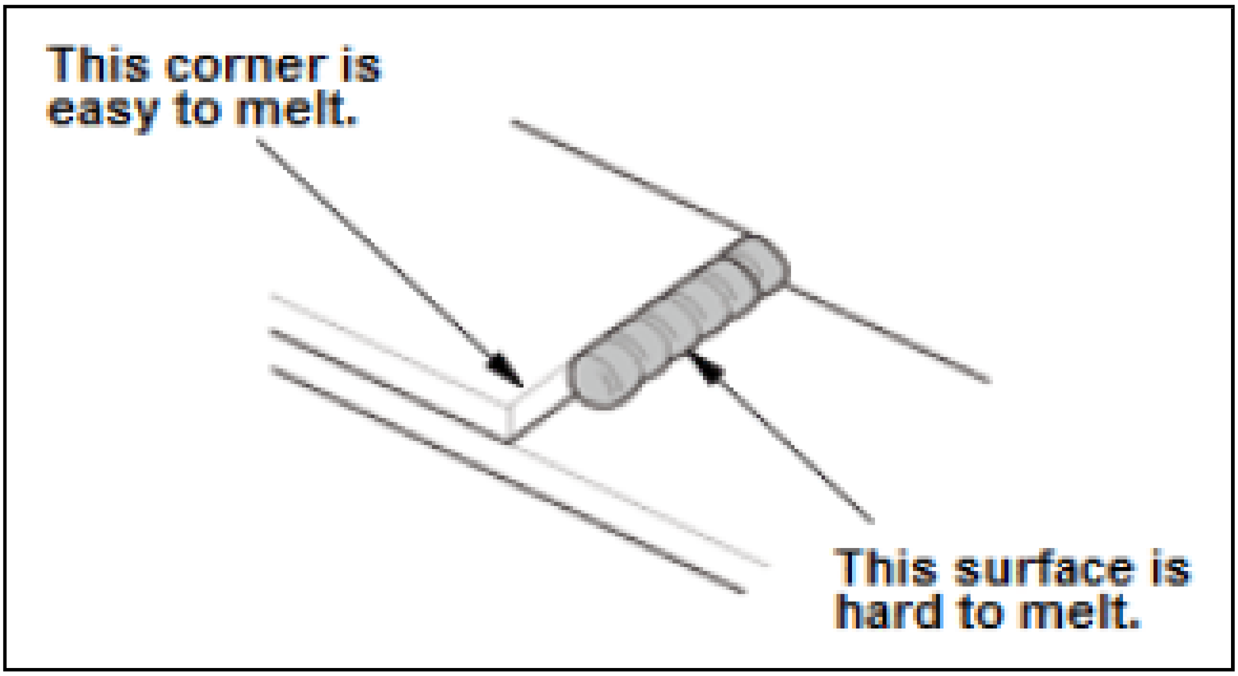
This corner is easy to melt.
This surface is hard to melt.

FORWARD WELDING

4. Be sure to check for cracks after welding.

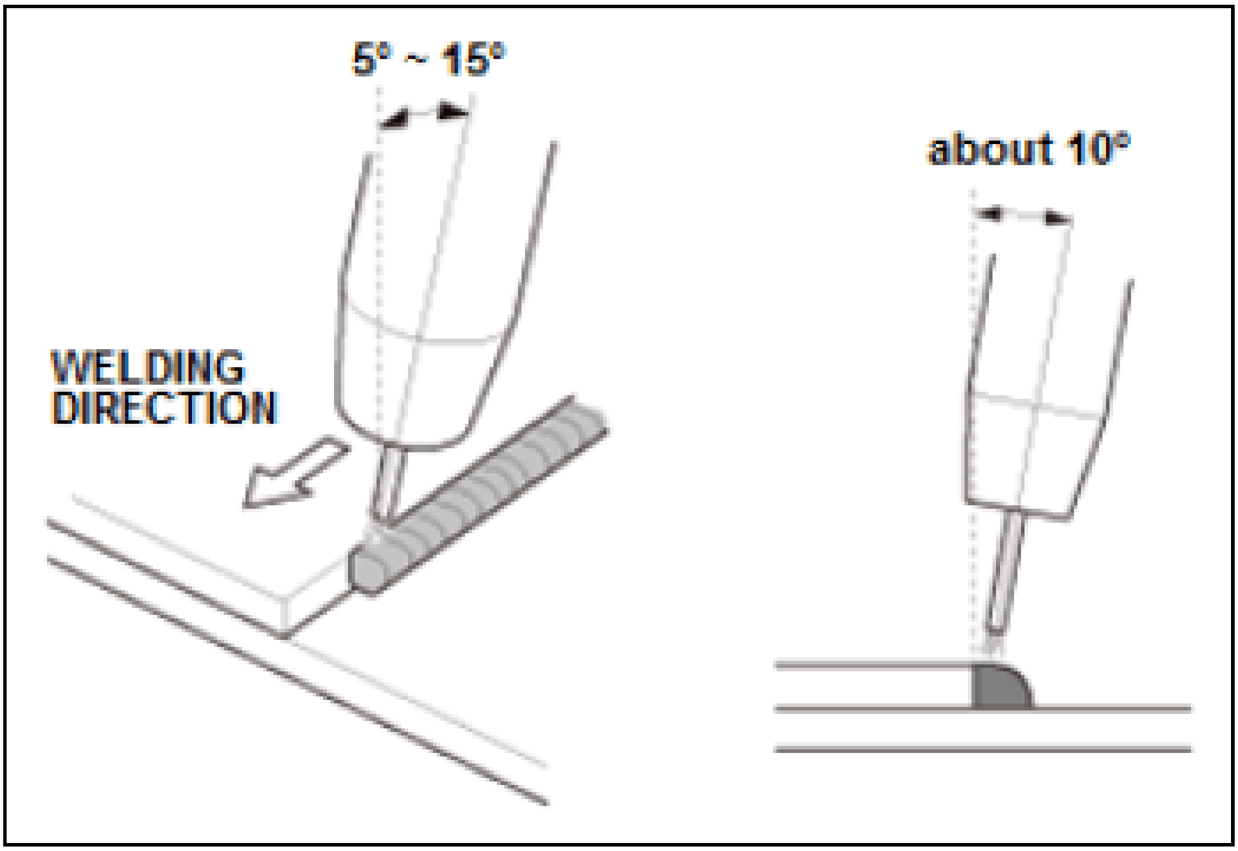
5° ~ 15°
about 10°
WELDING DIRECTION

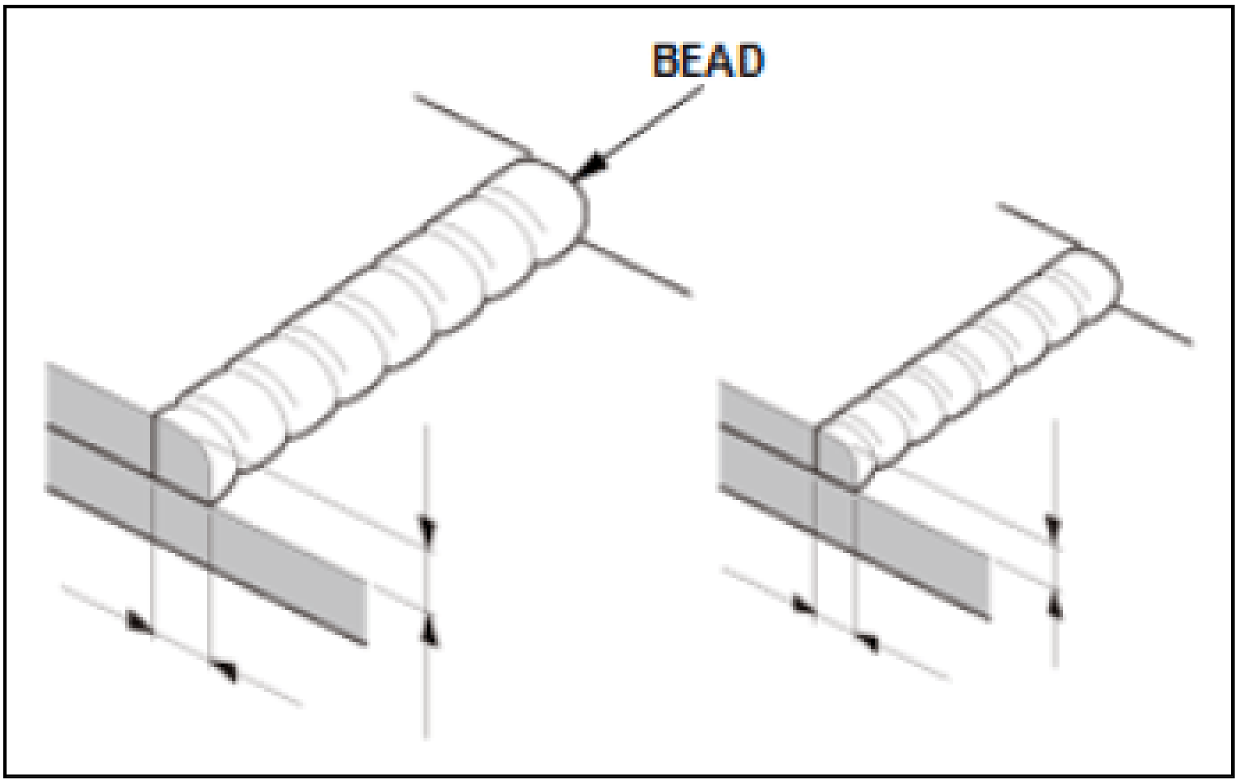

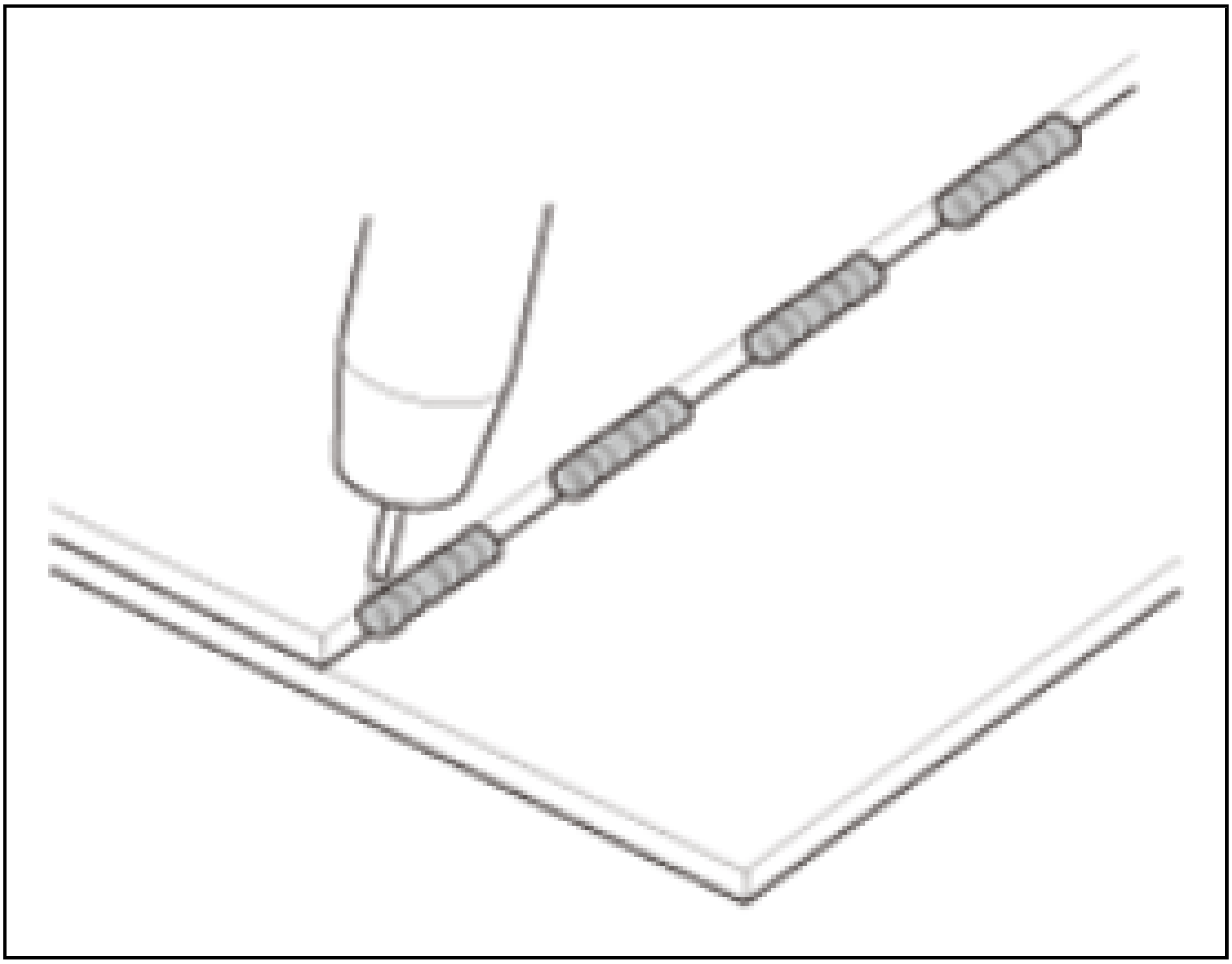

Fillet Welding Defects And Causes

If you make a defective weld, use the chart below to quickly determine the cause. Then make the required correction(s) that will achieve optimum results.

Defects	Defect Condition	Main Causes
Excessive penetration of upper panel	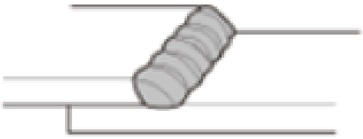	Torch angle Torch position Excessive current
Insufficient penetration	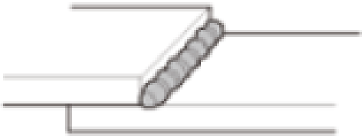	Insufficient welding current
Incorrect welding position	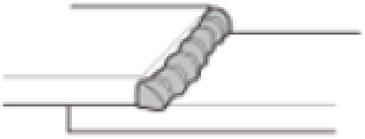	Incorrect torch feeding position
Uneven beads	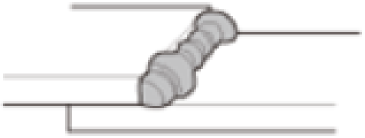	Inconsistent torch feed speed Torch height
Insufficient penetration of lower plate	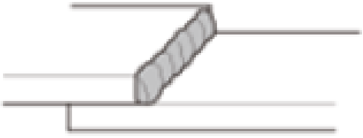	Incorrect torch feeding position Insufficient current

General Information

Due to the high heat conductivity of aluminum alloy the heat generated from the electric current and contact resistance dissipates quickly. This makes spot welding unsuitable for repair of aluminum panels. To spot-weld aluminum alloy an extremely strong current of well over ten thousand amperes is required. For that reason, "MIG welding" must be used to weld an aluminum alloy automobile body.

MIG Welding

MIG welding is a gas metal arc welding (GMAW) method where an electric arc forms between the consumable welding wire and the work piece, which heats and melts the wire and work piece, welding them together. During welding, inert argon shielding gas is supplied from a gas cylinder protect the welding area from atmospheric gases such as nitrogen and oxygen. The welding wire is automatically fed at a constant sped, based on the welder settings.

MIG Welding Conditions

- Must provide a maximum current of approximately 200 A
- Should allow dual purpose MIG welding of aluminum alloy and MAG welding of steel by changing attachments.
- Most often used welding panels are 1.6 to 3.0 mm thick, but this depends on a skill level of the welder. Some newer equipment allows welding of panels of less than 1 mm thickness.

NOTE: **Refer to the welding equipment product specifications issued by the manufacturers.**

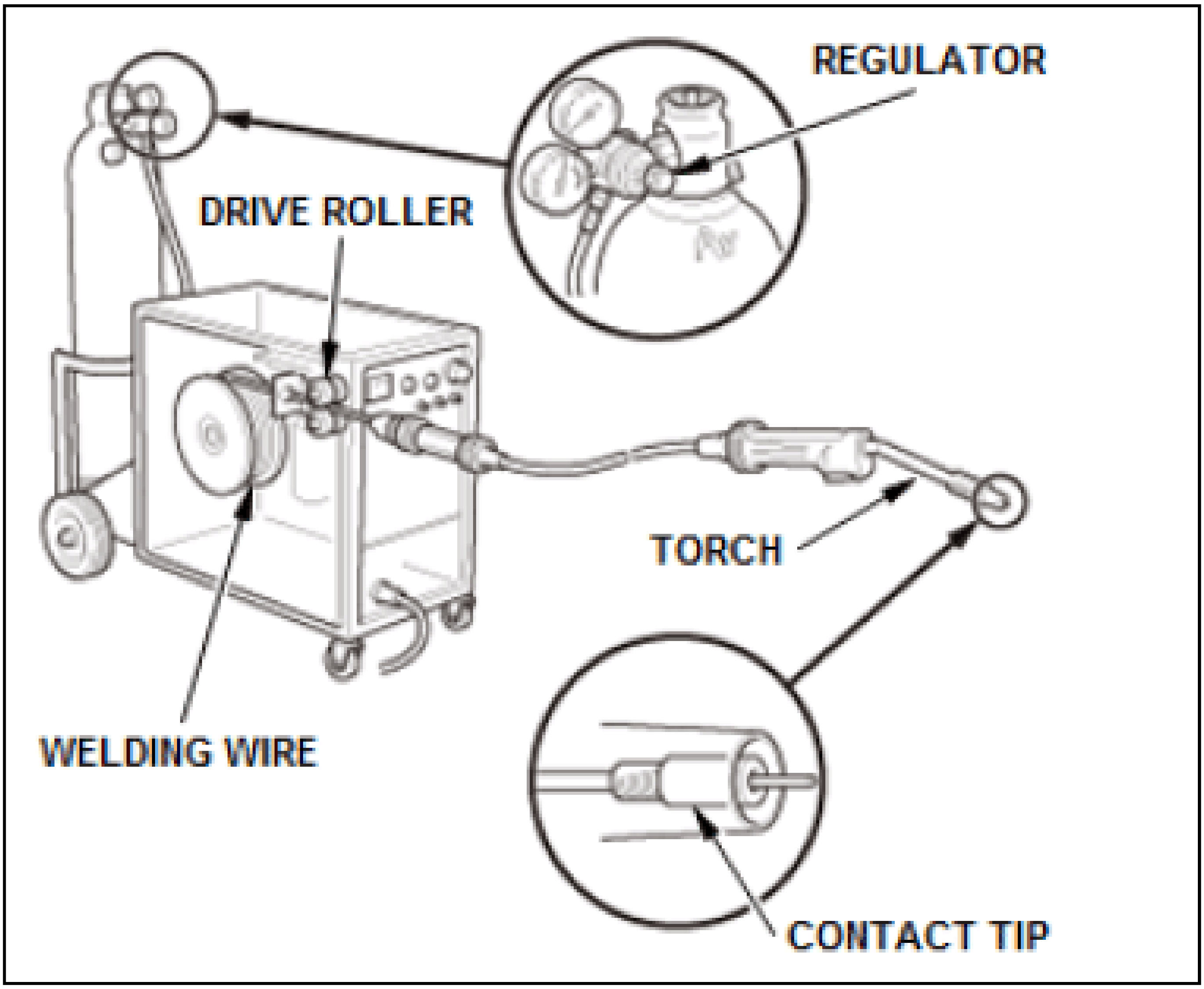

Use a wire specified for MIG welding. Select an appropriate wire which results in the desired qualities (defect, strength, toughness, corrosion resistance etc.).

NOTE: **The electrode wire for Honda/Acura's aluminum alloy vehicle body should be with a diameter of 0.8 to 1.2 mm depending on the thickness of the work pieces.**

100% argon gas must be used.

Thickness mm (in)	1.6 (0.063)	2.0 (0.079)	2.5 (0.098)	3.0 (0.12)	5.0 (0.2)
Wire diameter mm (in)	0.8 (0.031)	0.8-1.0 (0.031-0.040)	1.0-1.2 (0.040-0.047)	←	←
Current (A)	50-70	60-110	80-120	100-140	120-170
Voltage (V)	10.0-11.0	12.0-15.0	13.0-16.0	15.0-18.0	17.0-20.0
Gas Volume L/min (CFH) 100% Ar	15-18 (32-38)	←	17-20 (36-42)	←	10-20 (21-42)

Plug Welding

1. Removal and installation of aluminum parts:
    - Drill and remove the spot weld nugget using a 10 mm (0.39 in) diameter spot weld cutter.
    - For welding use the hole drilled when removing, or drill a new plug hole (Ã˜8-10 mm (0.31-0.39 in)).

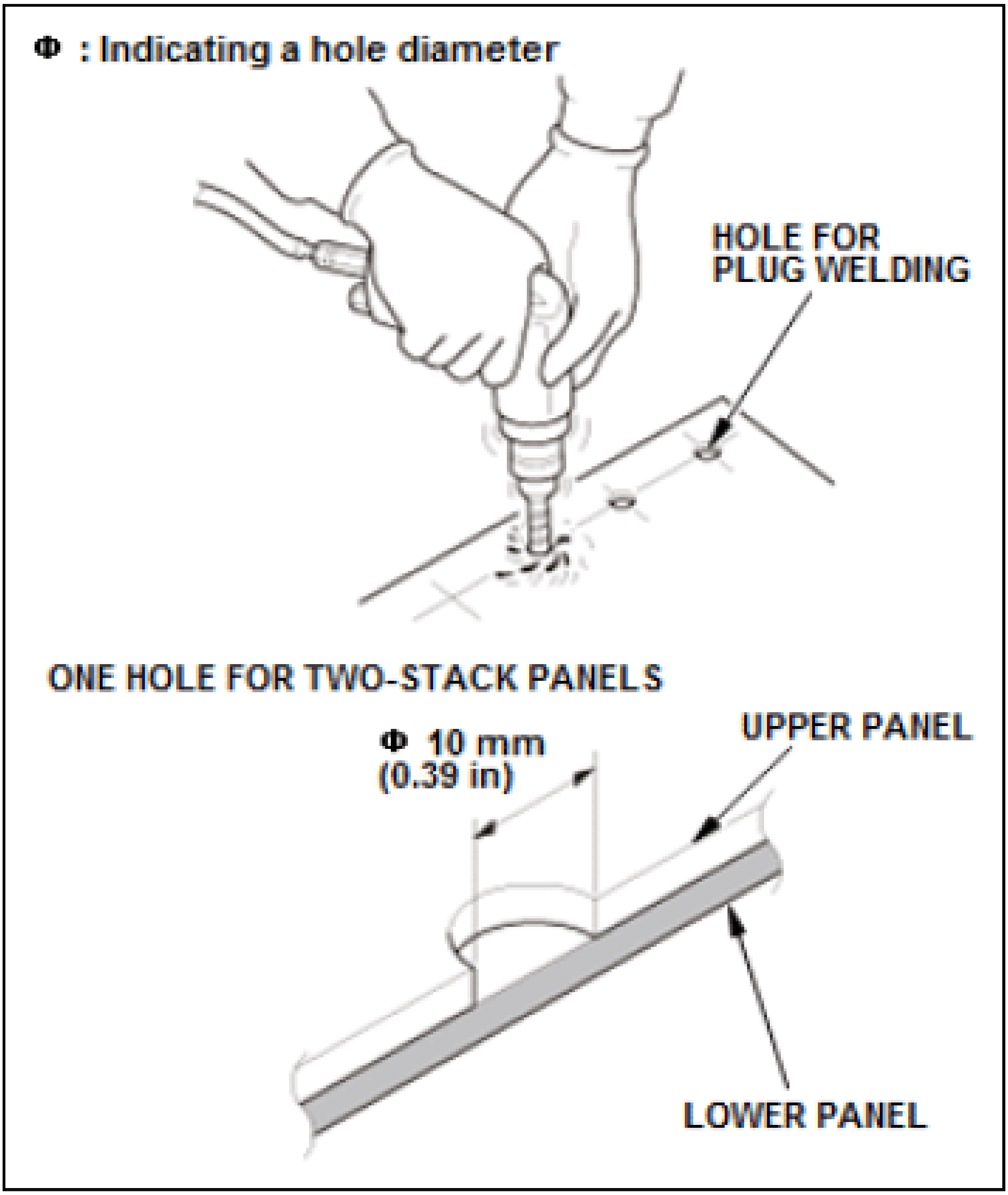
Φ : Indicating a hole diameter
HOLE FOR PLUG WELDING
ONE HOLE FOR TWO-STACK PANELS
Φ 10 mm (0.39 in)
UPPER PANEL
LOWER PANEL

2. Cleaning and removal of aluminum surface oxidation layer:
   - Remove contamination and oil residue from the area to be welded using degreaser.
   - Sand off paint film using a disk sander (P80).
   - Remove the oxidized layer using a stainless wire brush.
3. Firmly clamp the two panels being welded together. If there is excessive clearance, the weld will be defective.

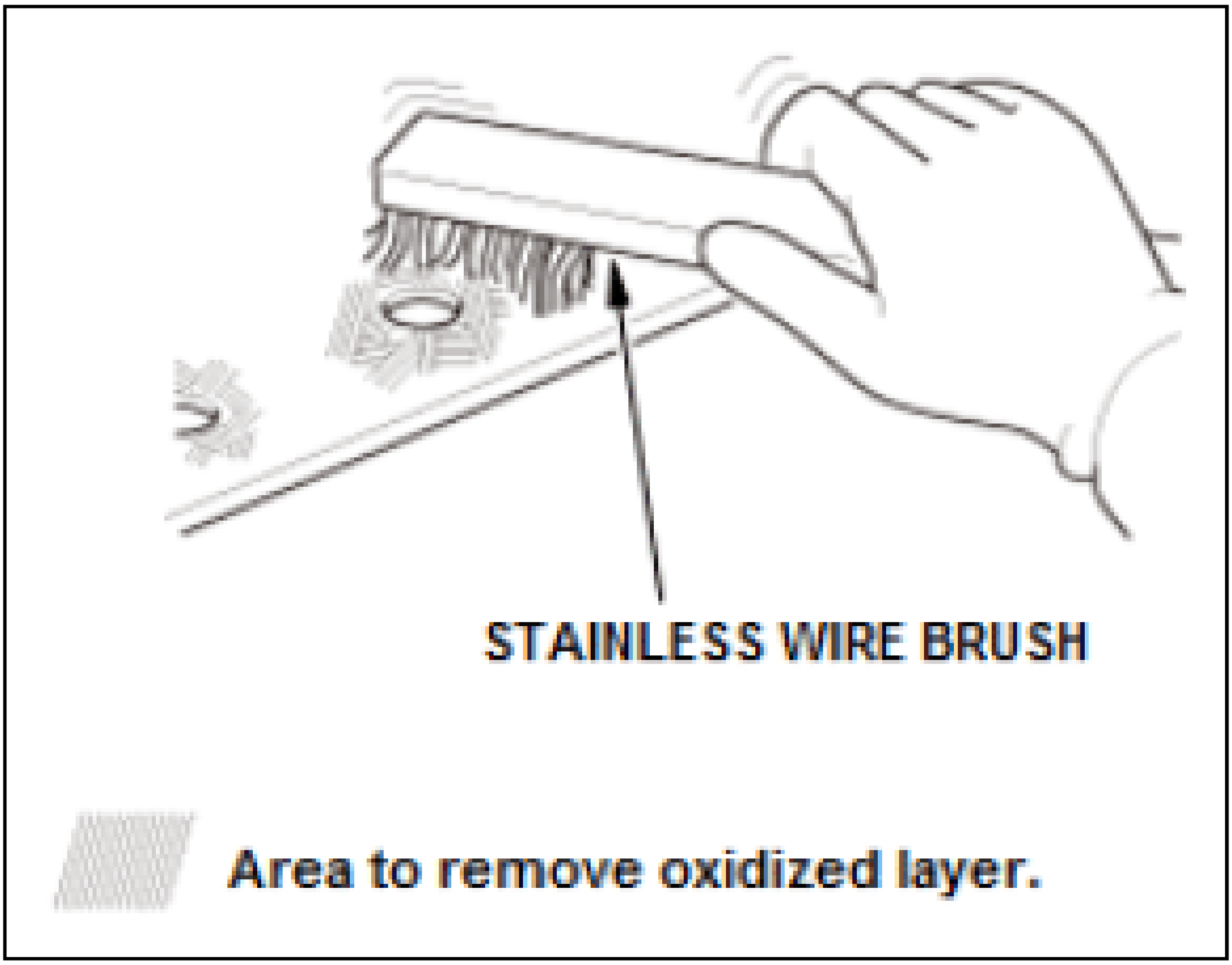
STAINLESS WIRE BRUSH
▨ Area to remove oxidized layer.

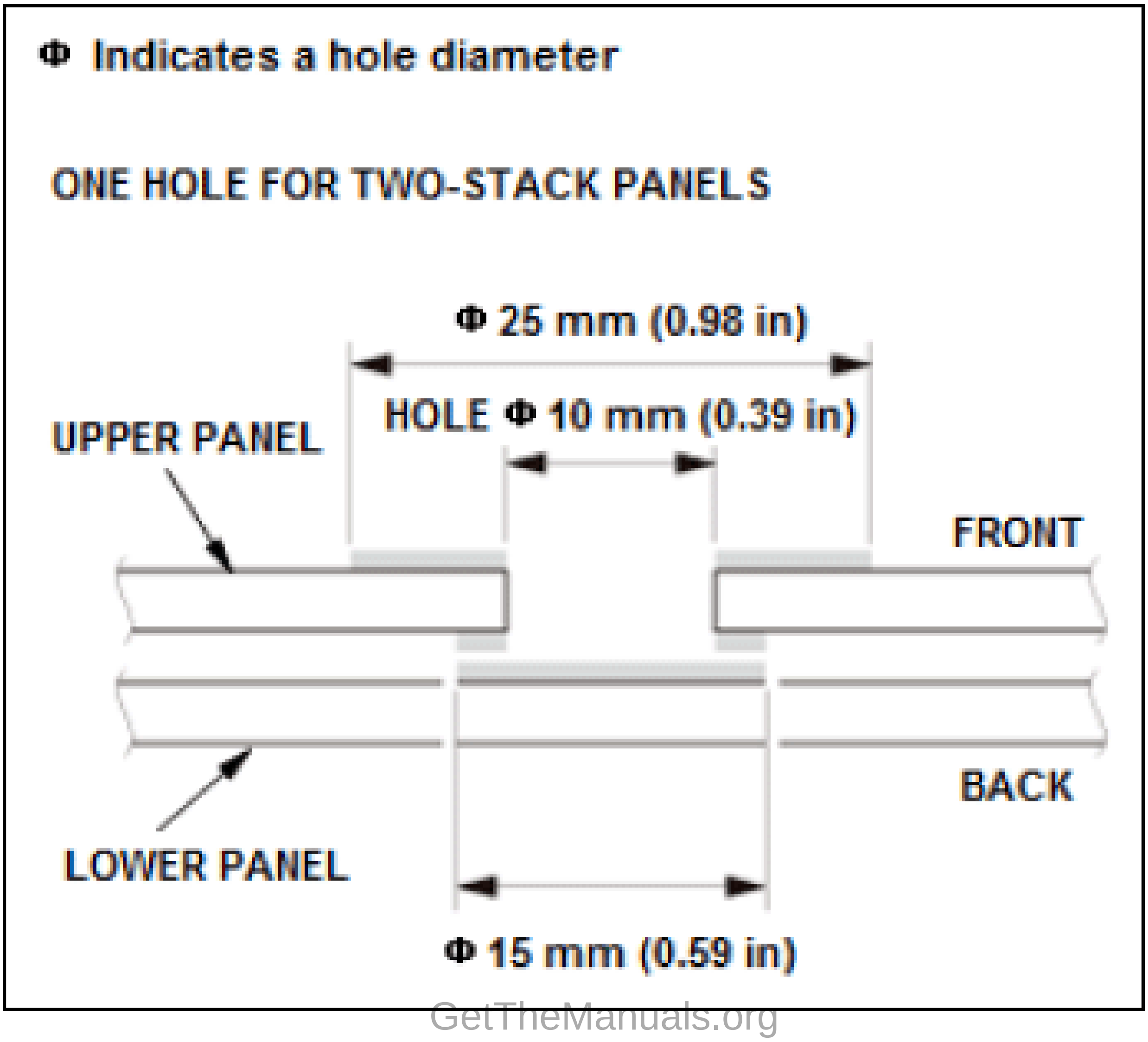
Φ Indicates a hole diameter
ONE HOLE FOR TWO-STACK PANELS
Φ 25 mm (0.98 in)
HOLE Φ 10 mm (0.39 in)
UPPER PANEL
FRONT
BACK
LOWER PANEL
Φ 15 mm (0.59 in)

4. Plug Welding:
    - Clean the area to be welded with a stainless wire brush just before welding to remove any oxidation.
    - Use plug welding technique, starting from outside.
    - Start from about 15 mm (0.59 in) outside of the hole to preheat the area and ensure confirmation of adequate penetration.
    - When starting, hold the torch firmly and place your body in a comfortable, supported position which also allows a clear view of the welding area.
    - While checking for the penetration status, move the torch along the edge of the hole.
    - If you are new to aluminum plug welding, be careful not to allow excessive tip-to-work clearance.

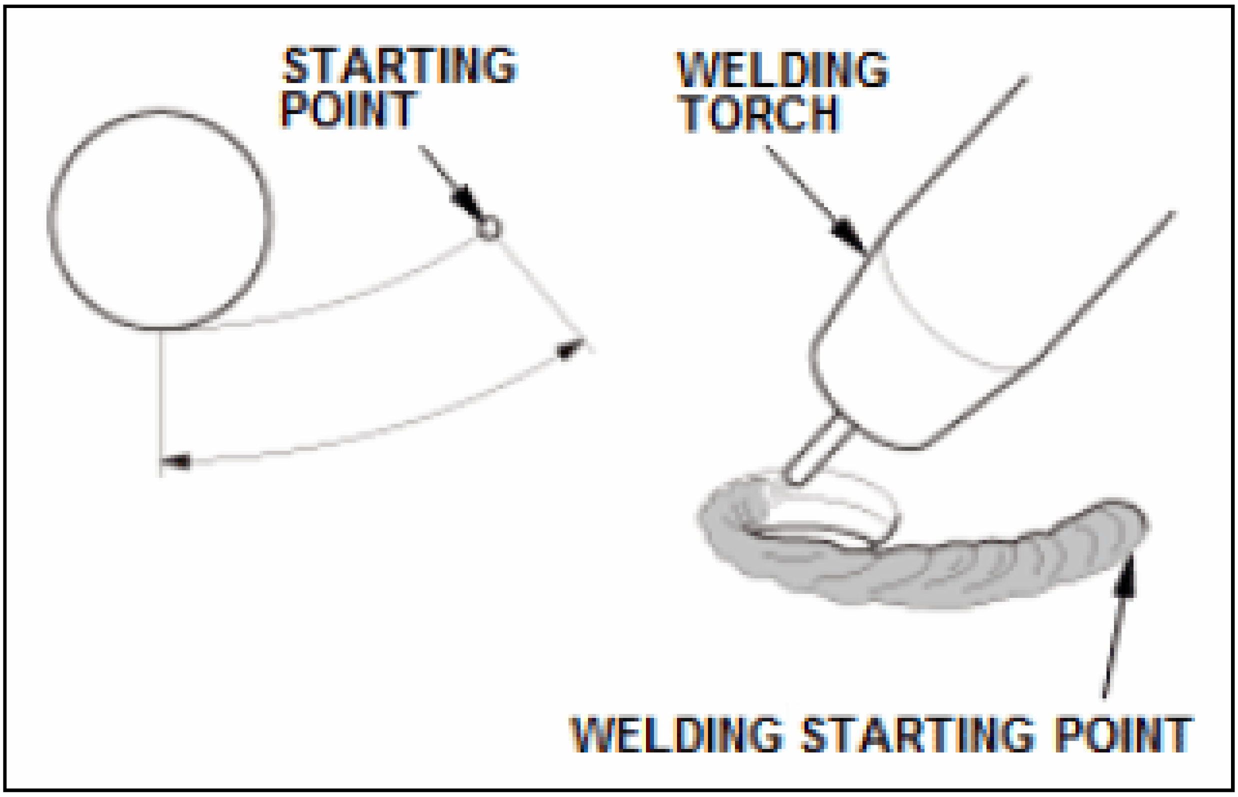

Welding Double Layer (Two-Stack Panels):

- Weld while aiming the torch at the edge of the hole on the mating surface between the upper and lower panels.
- Check penetration:
    - Depth of penetration should be 1/2-2/3 of the thickness of the bottom plate.
    - Ripples or beads (round marks) appearing on the back surface are a proof of adequate penetration.

Welding Triple Layer (Three-Stack Panels):

Weld the mating surface of the middle panel and the lower panel.

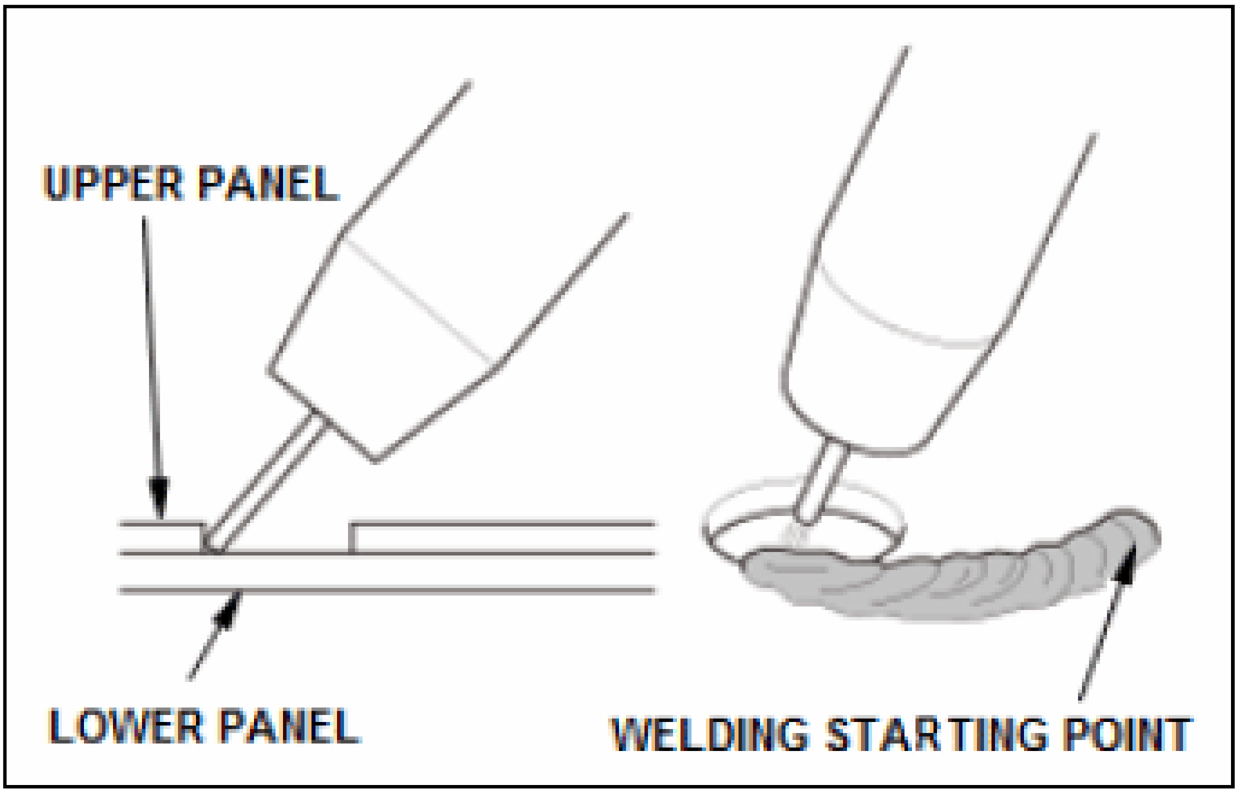
UPPER PANEL
LOWER PANEL
WELDING STARTING POINT

5. Be sure to check for cracks after welding.

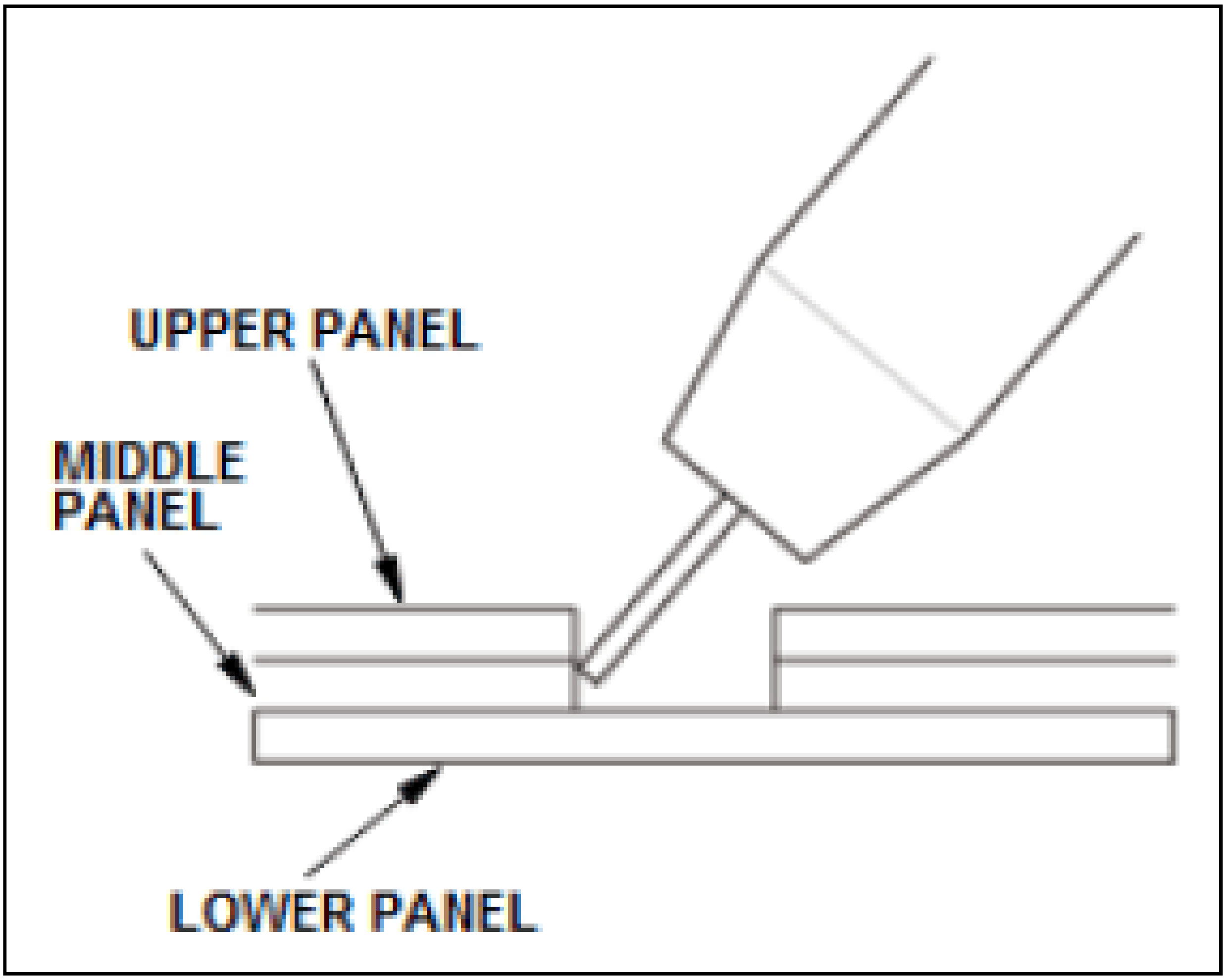
UPPER PANEL
MIDDLE PANEL
LOWER PANEL

Welding Precautions

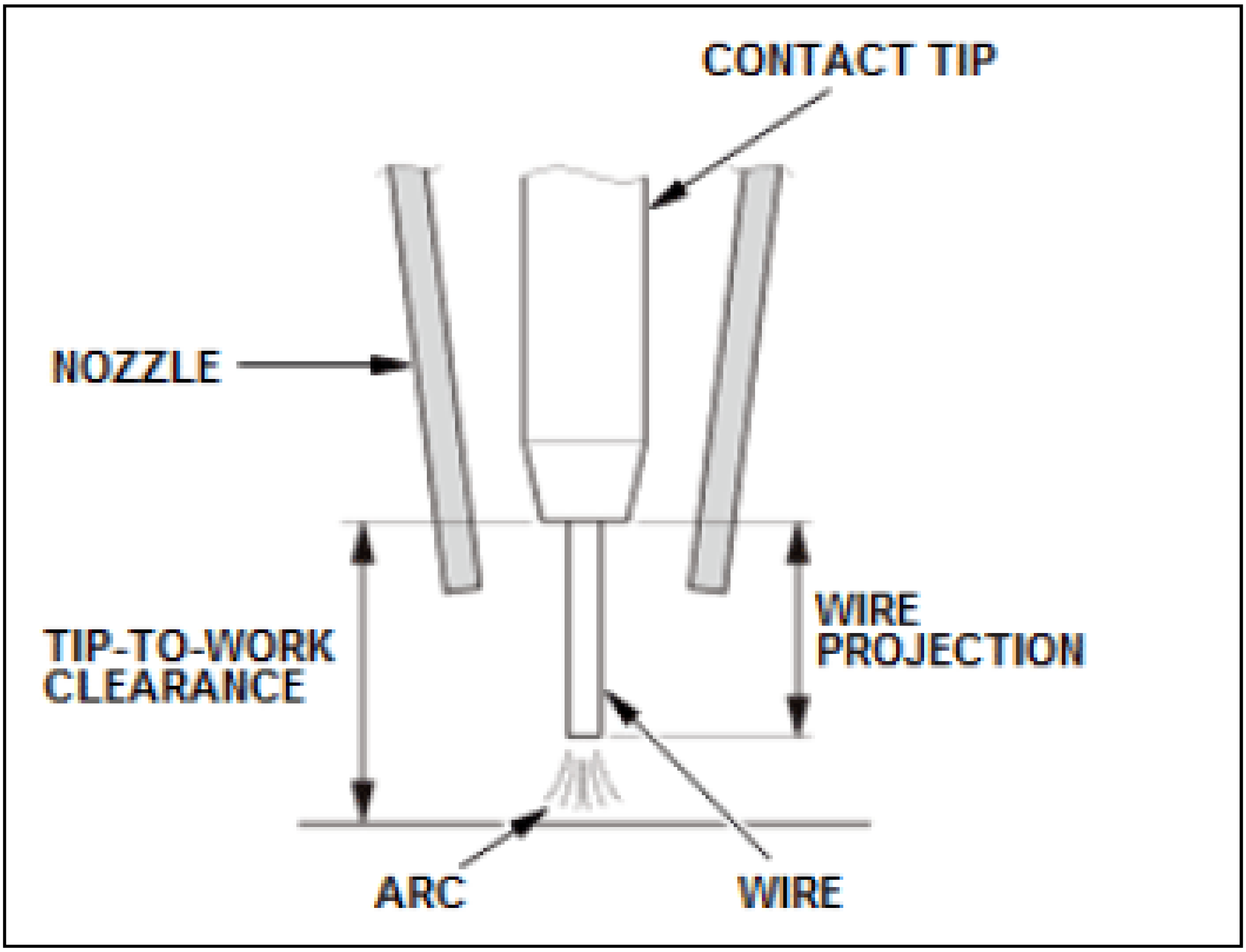
CONTACT TIP
NOZZLE
TIP-TO-WORK CLEARANCE
WIRE PROJECTION
ARC
WIRE

Forward Welding

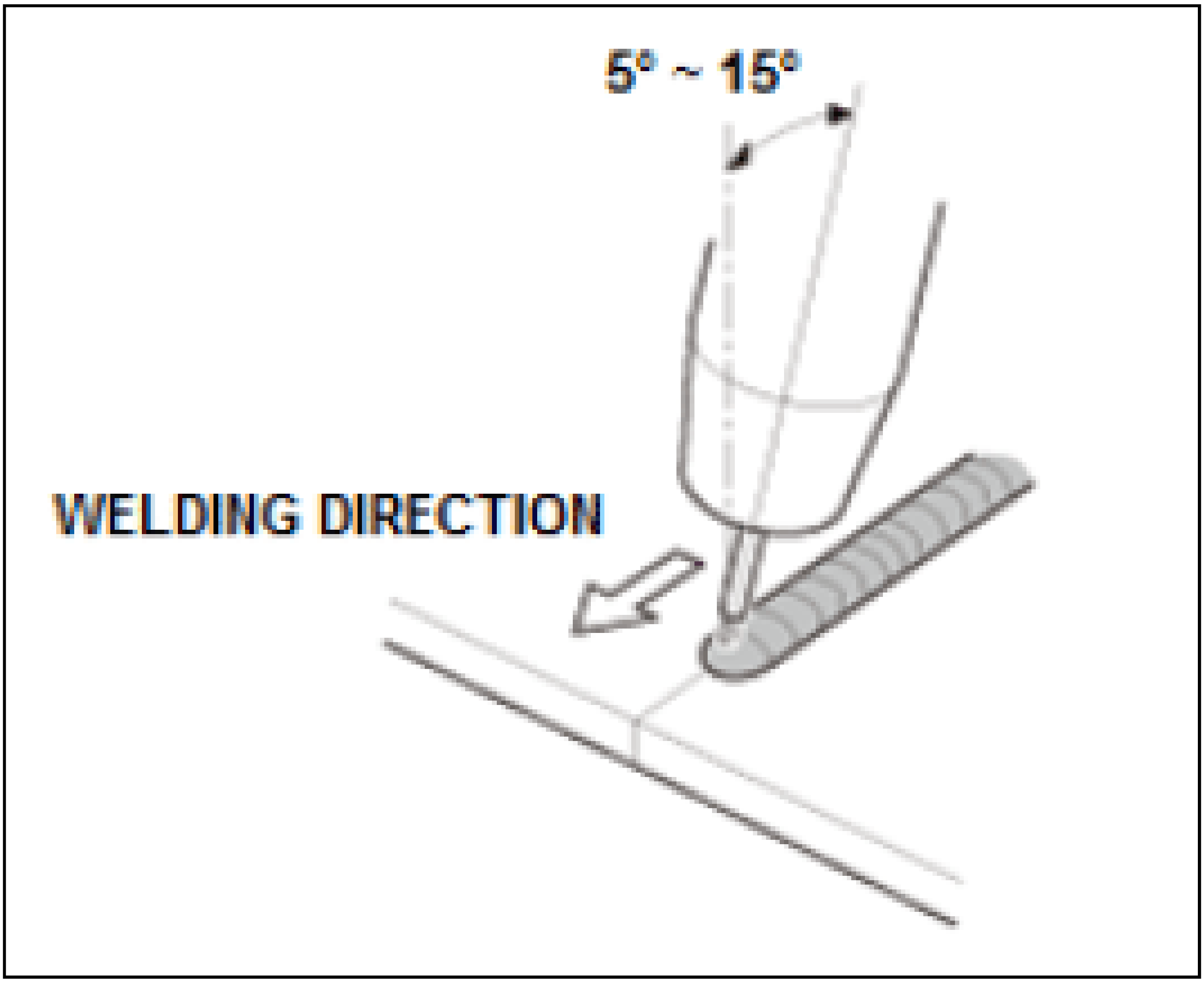

- The welding conditions for aluminum alloy must be set correctly and adjusted precisely during welding, because the allowable thickness range is rather limited when compared to welding steel panels.
- Compared to welding of steel panels, about 50% more shielding gas is required.
- When setting up the welding wire to the welding equipment, clean up the wire tip (edge) using sandpaper and push the wire through the torch by hand.

NOTE: **Care should be taken to avoid damaging the inner liner of the welder's cable.**

- Drive roller tension must be adjusted lower than when welding with steel wire. Hold the wire lightly at the contact tip and adjust the tension to allow slippage of the wire at the drive roller when the torch switch is turned on. If the drive roller tension is excessive, the wire can "bird's nest", or become jammed. Insufficient tension causes inconsistent wire speed.
- The wire feed speed is typically higher than when welding steel panels.
- The tip-to work clearance should basically be the same as when welding steel panels 8-15 mm (0.31-0.59 in).
- Use a push or forward welding technique with a torch of 5 to 15 degrees from the right angle against the work surface.

CAUTION:

- **Aluminum alloy tends to spatter during welding. Since it is very light, the weld spatter can be thrown over a considerable distance. Aluminum weld spatter is also difficult to see.**
- **It is important to provide protection for both the welder and also anyone in the surrounding areas.**
- **The edge of torch nozzle and contact tip attract spatter easily. If the spatter deposits, it disturbs the shield gas flow resulting in a poor welding quality Be sure to remove the spatter thoroughly using anti- adhesion agent.**
- **The ware of torch nozzle and contact tip will be more excessive compared to the steel welding.**

BODY REPAIR

ALUMINUM ALLOY BODY REPAIR

Body And Frame Correction

- Generally, the thickness of the core structural body parts (such as the frame) is 1.5 to 2 times thicker than those for a steel panel body.
- During pulling correction of an aluminum alloy body more resistance will be felt than for a steel panel body.
- When an aluminum alloy body is collapsed by collision impact, the parts are easily cracked because of work hardening. If the parts are pulled as is, cracking will occur, making repair impossible. Therefore use aluminum's elongation characteristics and pull the damaged area using a body and frame correction equipment while heating the aluminum parts being straightened.

Heating And Temperature Control Of Aluminum Alloy

- When aluminum alloy is heated over 392Â°F (200Â°C), its elongation characteristics are improved. However its melting point is as low as 1184Â°F (640Â°C).
- Heated aluminum does not change color like steel sheet. So there is no way to accurately judge the amount of heat input. Therefore, it is extremely important to carefully monitor the heating temperature by external means.
- To accurately monitor and control the correct heating temperature, always use heat detection crayon or paint that changes color at 230Â°F (110Â°C).

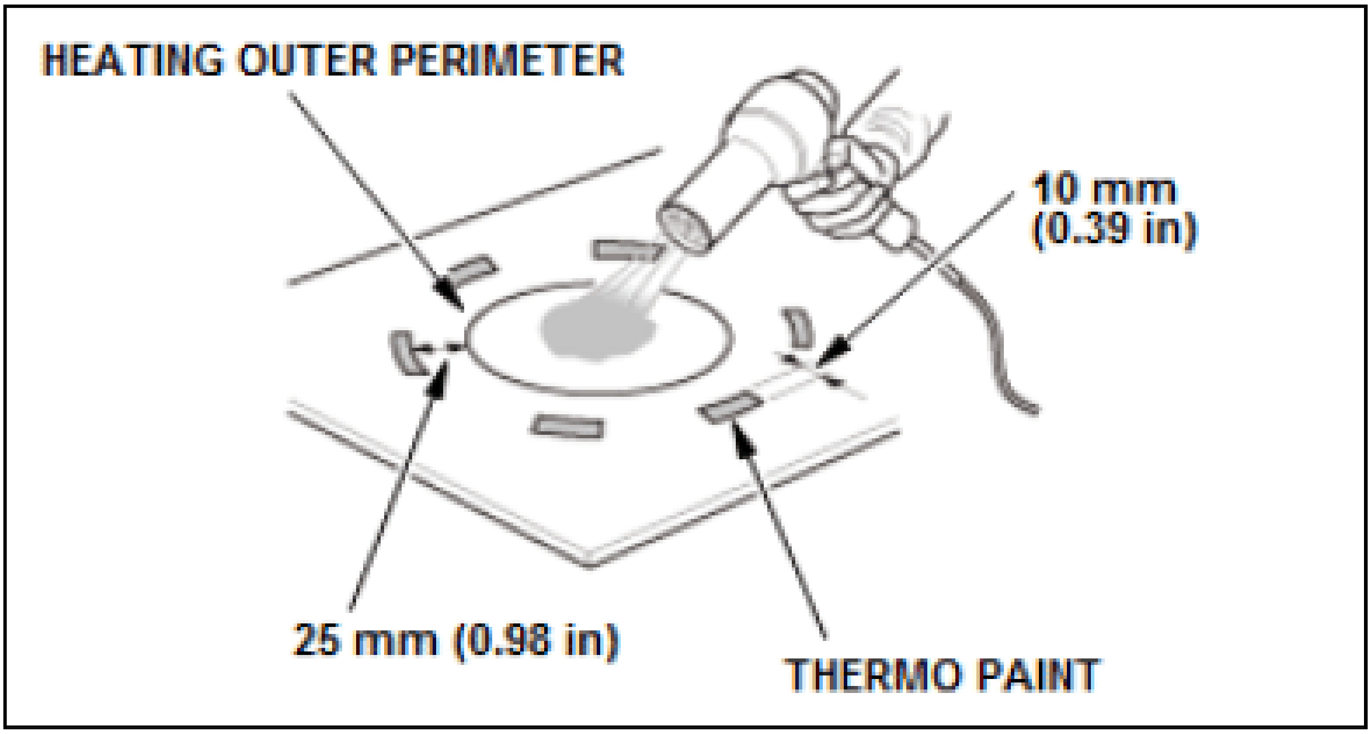

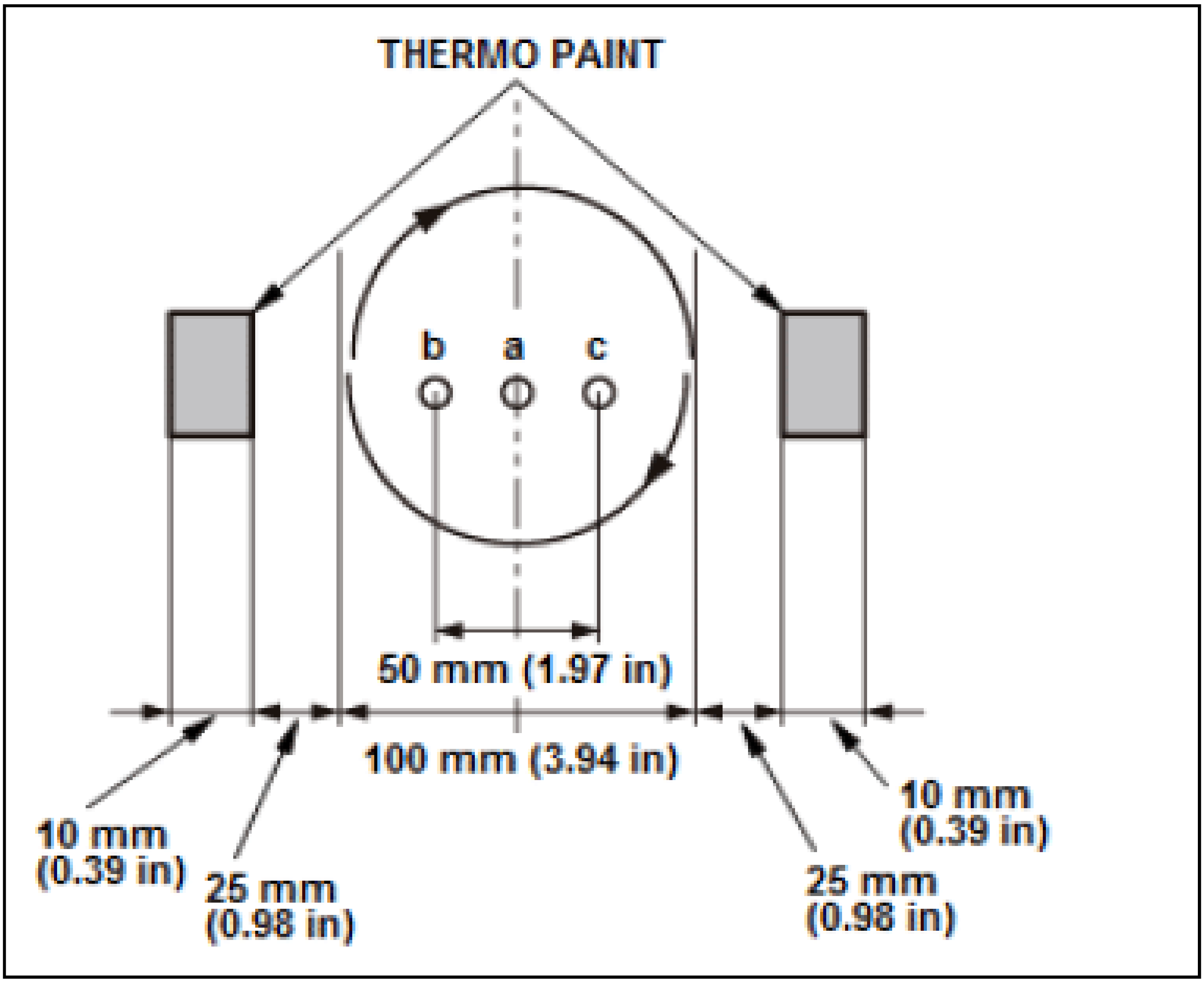
THERMO PAINT
b
a
c
50 mm (1.97 in)
100 mm (3.94 in)
10 mm
(0.39 in)
25 mm
(0.98 in)
10 mm
(0.39 in)
25 mm
(0.98 in)

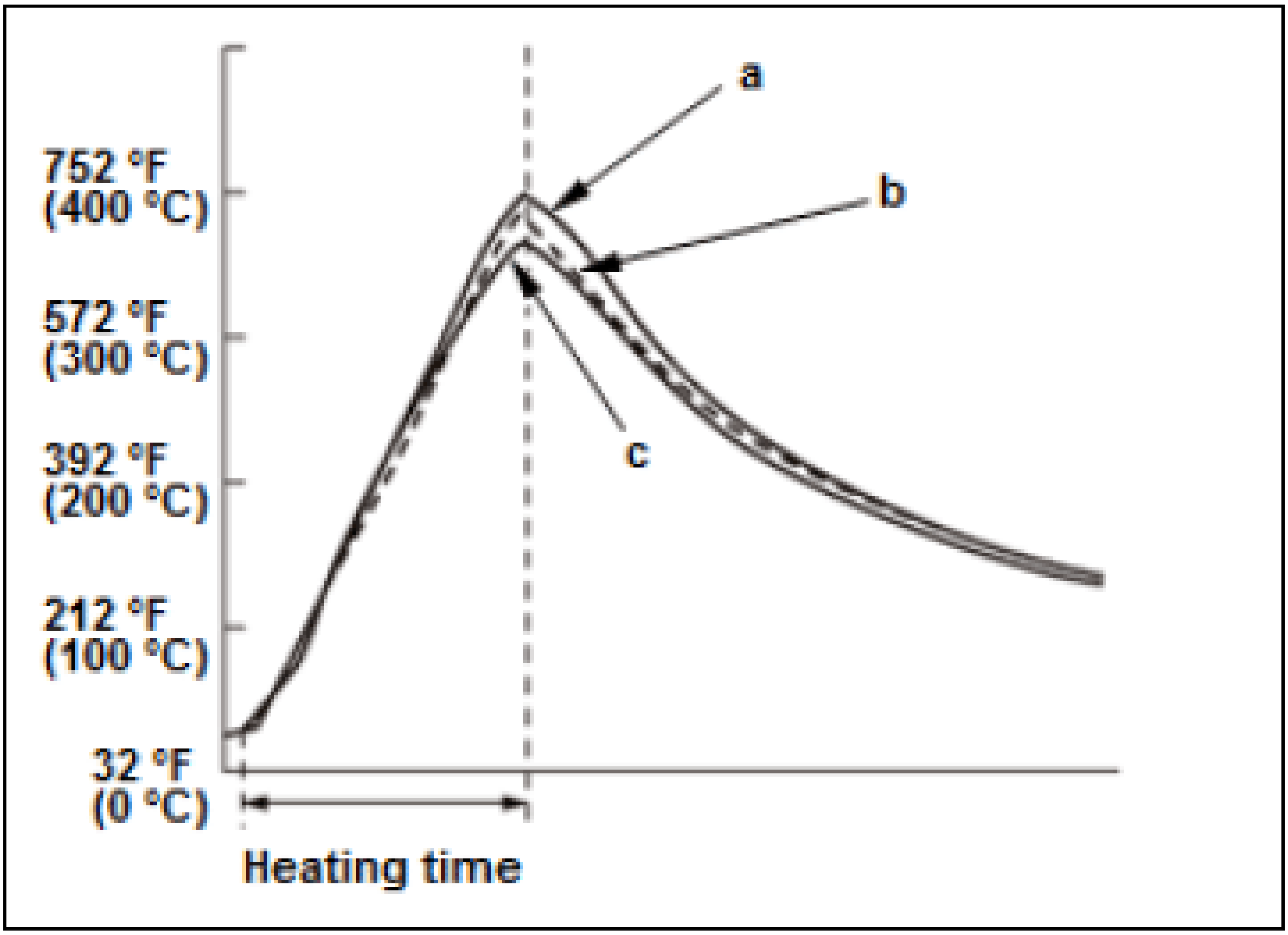

1. Apply heat detection crayon or paint about 25 mm (0.98 in) away from the border of the flame contact area shown in the figure with a width of about 10 mm (0.39 in).

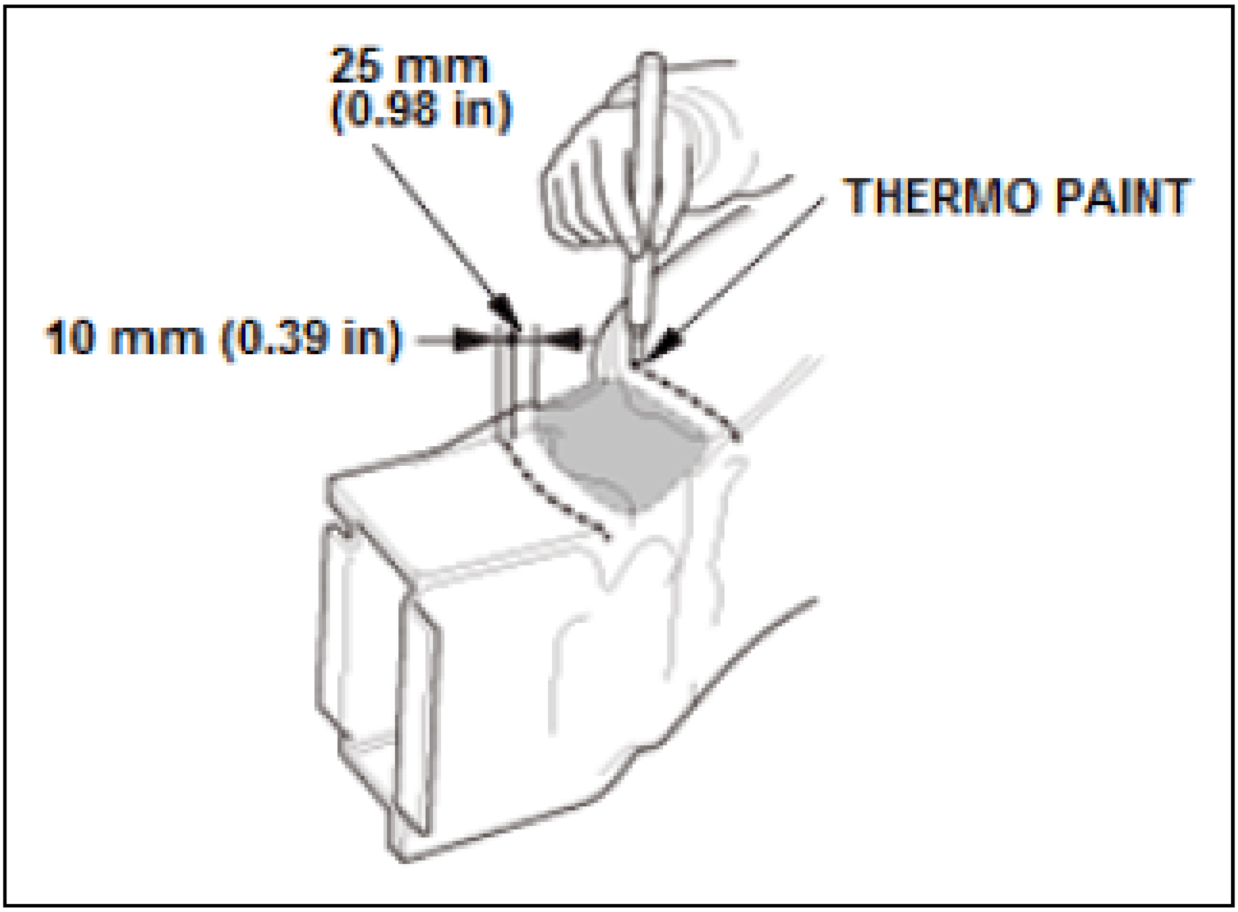
25 mm (0.98 in)
THERMO PAINT
10 mm (0.39 in)

2. Always move the flame tip around. Do not keep it at a fixed point.

3. Stop heating when the heat detection crayon or paint fully changes color.

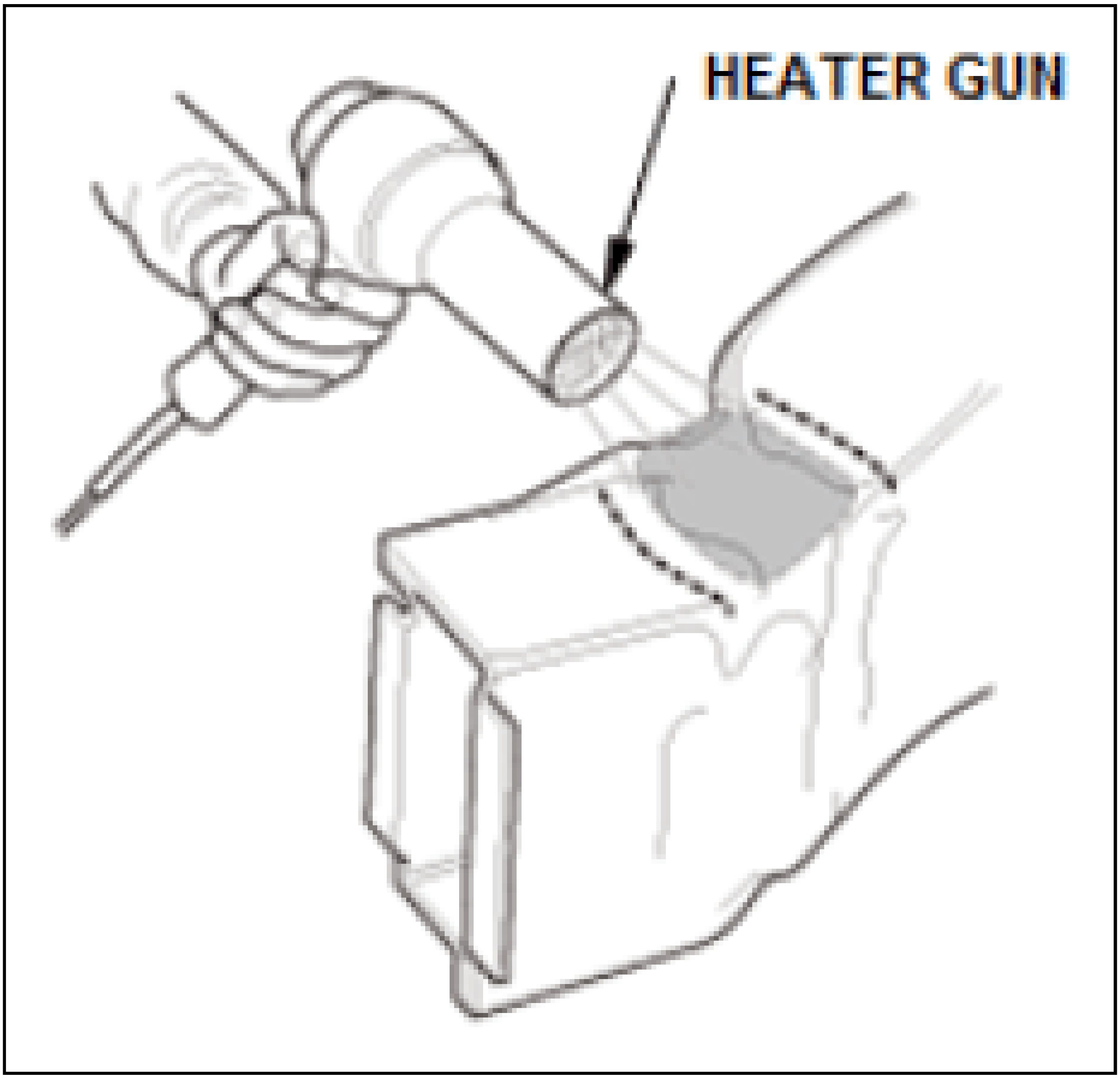

4. Restore the frame dimensions by pulling using a body and frame correction machine. Repeat this process as necessary.
5. Be sure to check for cracks after the repair.

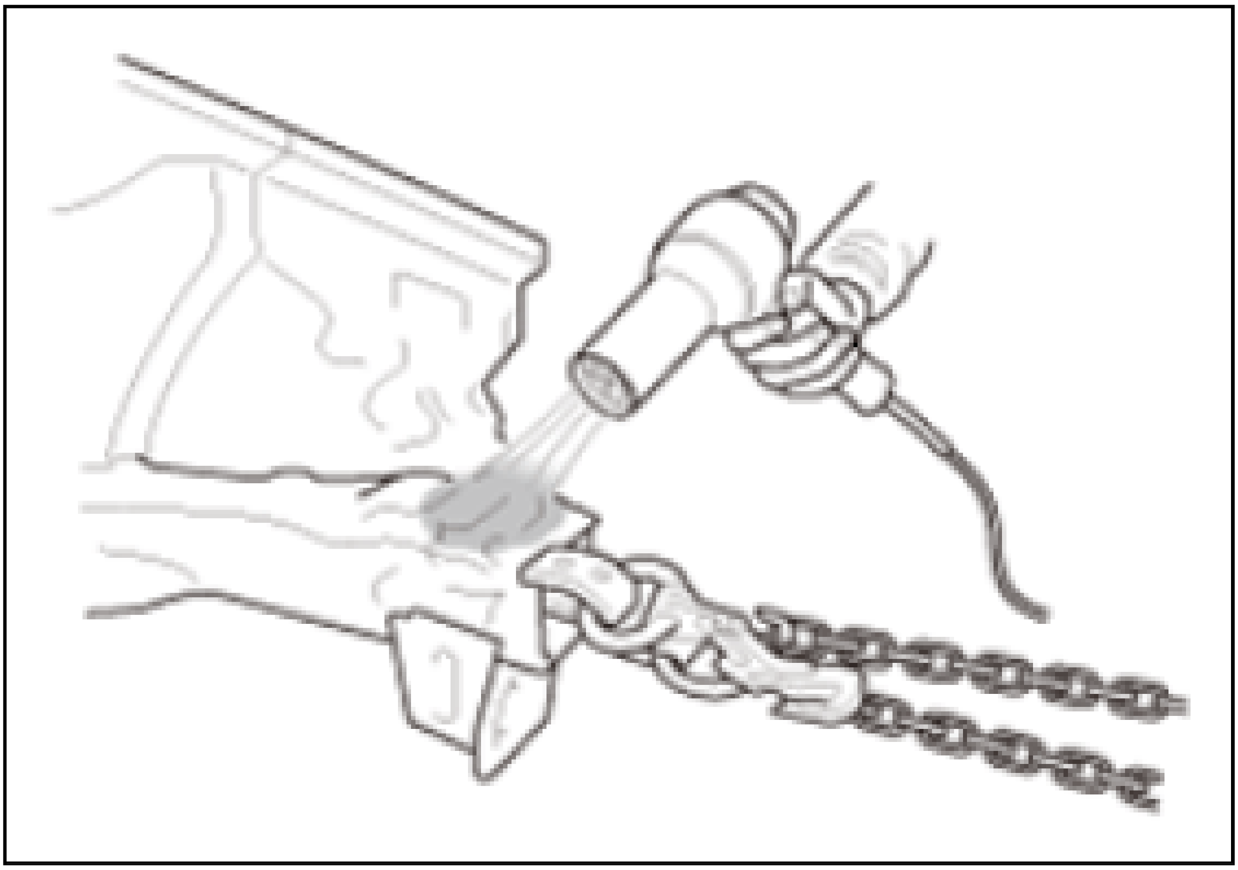

Crack Inspection

Always do crack inspections on aluminum alloy using a dye penetrant testing after welding and correction processes.

- Penetrant Test

  Dye penetrant uses its capillary action and strong penetration capability to reveal minute cracks and defects that cannot be seen during visual inspection.

- Dye Penetrant Testing Method

  Use a dye penetrant with a high contrast color against the developer in a well lit area for better visibility.

Inspection Steps

1. Prepare penetrant, developer and remover.
2. Clean dye and developer from the inspection areas using the remover.

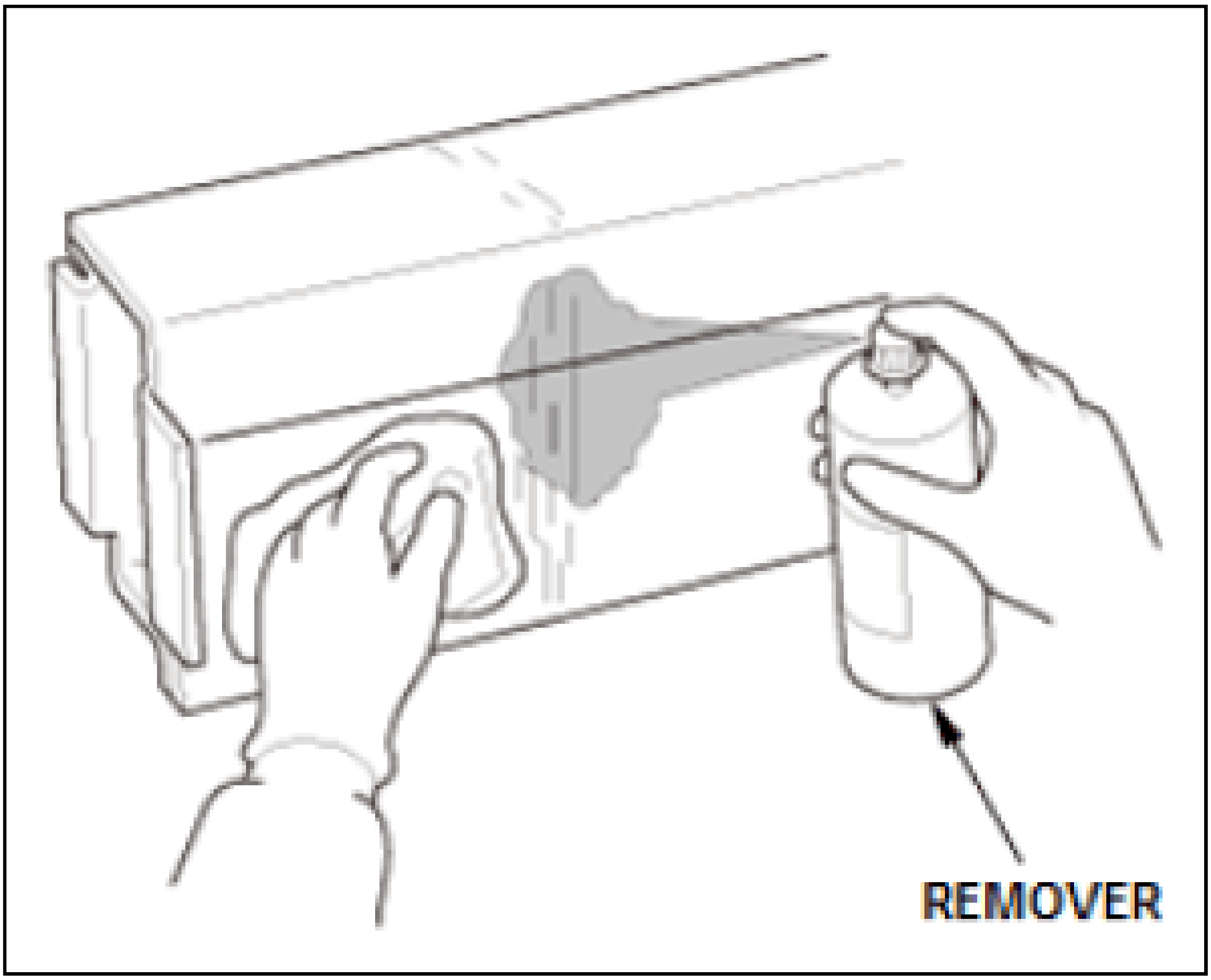

3. Apply penetrant in the inspection areas. Let it stand for a period of time to allow it to soak into the surface.

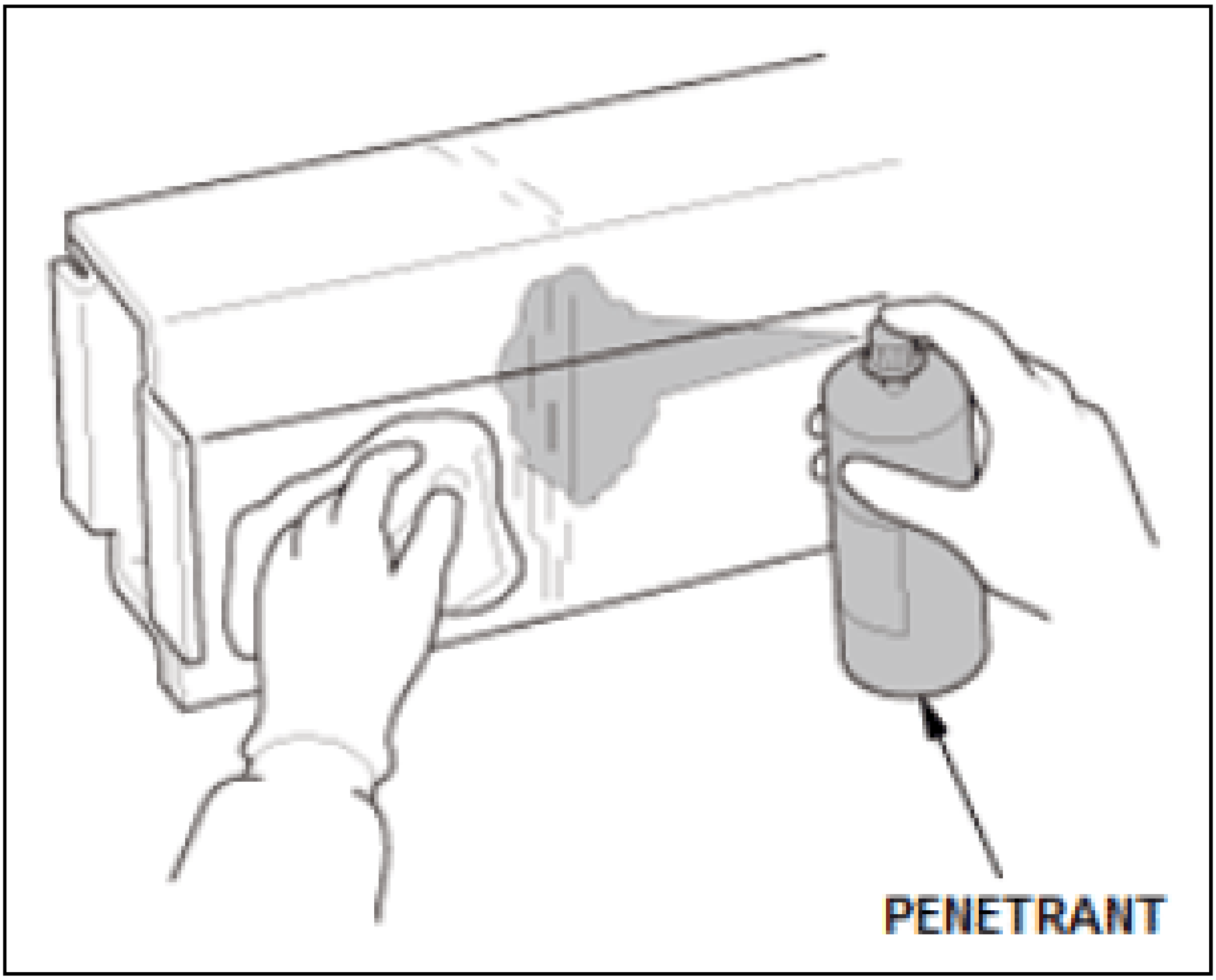

4. Remove excess penetrant from the inspection areas.
5. Apply developer to the inspection areas. Cracks will be detected by a color change.

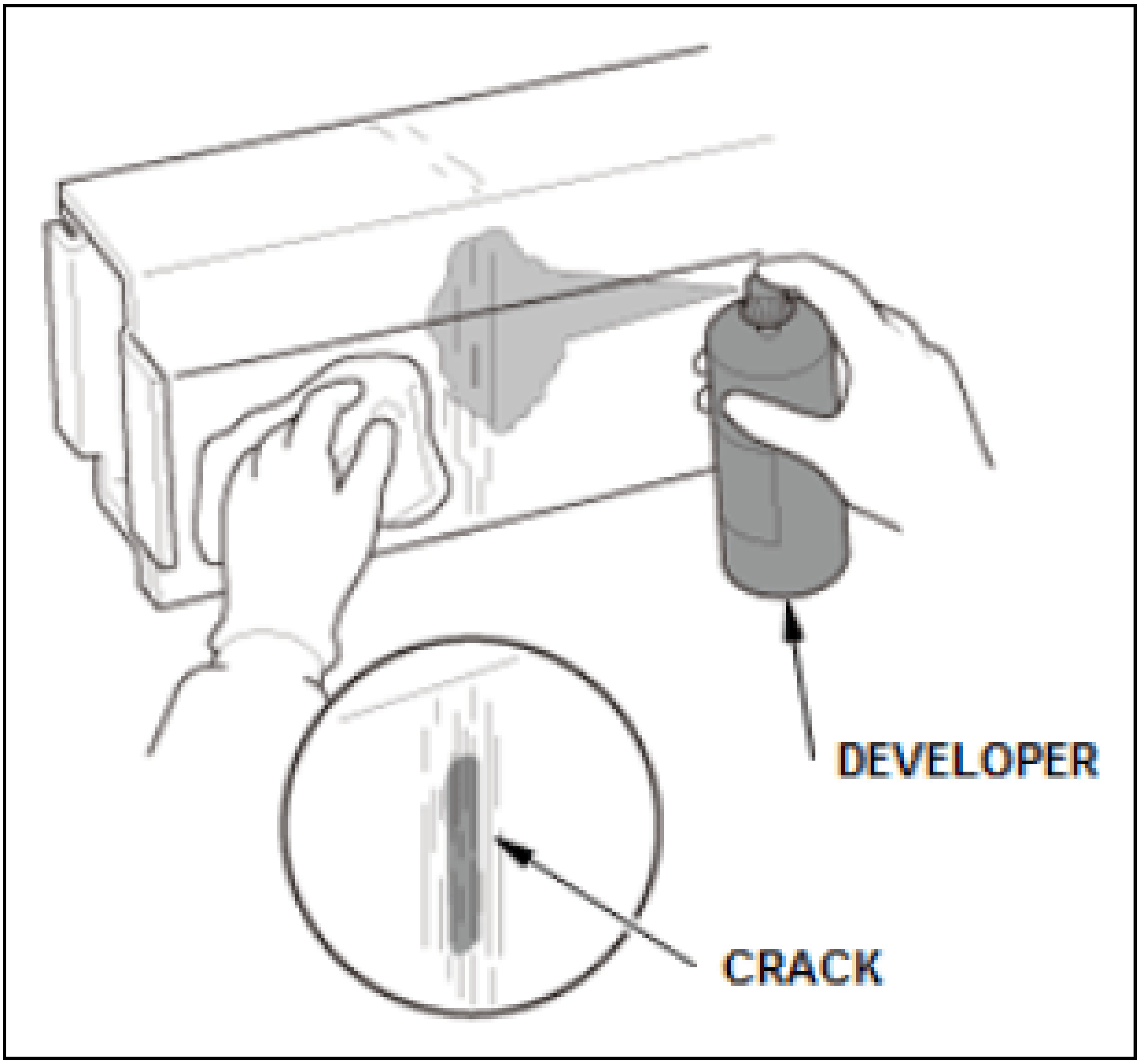

Overview

Aluminum alloy body repairs are basically done in a similar manner as for a steel body. However there are some points that are different from each other due to aluminum's characteristics. In particular, repair tools for aluminum-alloyed bodies are completely different, and must be isolated from, those for steel panel bodies.

Pulling And Correction Repair

Because some aluminum parts cannot be reformed due to their high rigidity refer to the model specific body repair information to identify those parts.

Welding

- For welding methods, refer to the appropriate service information.
- Be sure to check for cracks after welding.

Sanding

- Never use sanding tools that have been used for steel panels. If tools used for steel panels are used for aluminum alloy panel repairs, iron powder will remain on the aluminum panel, contaminating the welding area.
- Always use only stainless steel wire brushes.
- When a sanding tools such as a disc sander is used, set their rotational speed lower than for a steel panels. Do not press the sander as hard against the aluminum panel. The heat of friction caused by excessive pressure cause the aluminum alloy surface to peel, clogging the sanding disc surface. It will also deeply scratch the aluminum surface.

Aluminum Sheet Repair

- Do not use a shrinking hammer.
- Do not repair using solder.
- Heated aluminum does not change color like steel sheet. Always use heat detection crayon or paint to measure and control the heat input during repairs.

Parts Installation:

Be sure to use fasteners specific deigned with anti-corrosion treatment for attaching aluminum parts.

WARNING: **Beware of possible thermite reactions while working. Refer to FIRE AND EXPLOSION RISKS under safety and cleanliness section.**

Panel Repair

Correction Using Hammers And Dollies

- Hammering out should be done, basically the same way as for steel panels.
- Because aluminum alloy has a higher elongation rate than steel, select use wood or plastic hammers depending upon the repair requirements.
- Always keep the hammer and dolly surfaces polished so they do not damage the panel surfaces.
- The hammer off dolly technique is used most it tends to cause less elongation and work hardening. When a hammer on dolly technique is required, pay careful attention to the elongation and tap lightly.

NOTE: **To prevent cracks and deterioration in aluminum parts, do not use solder to repair aluminum alloy panels.**

Hammer off dolly

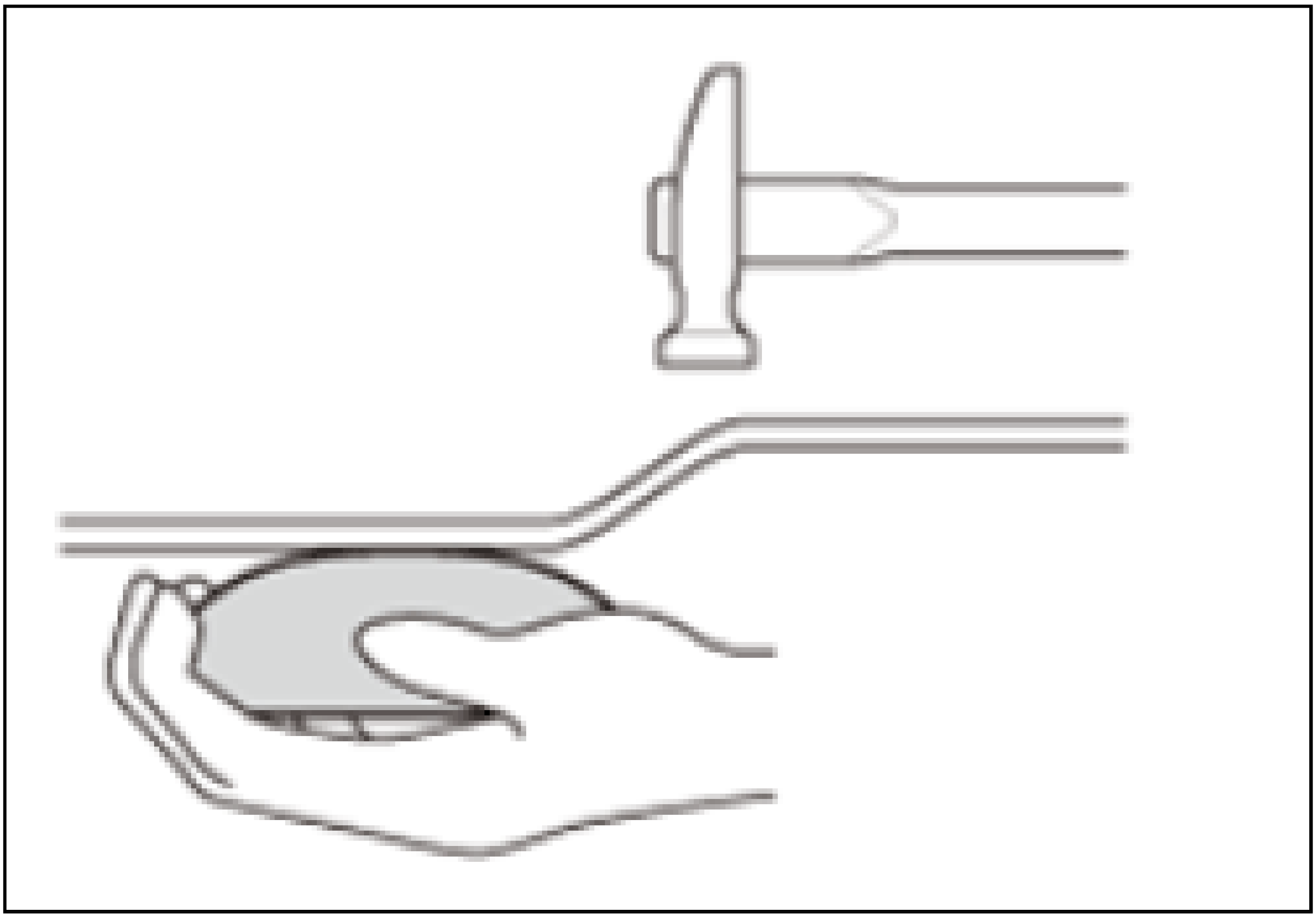

Hammer on dolly

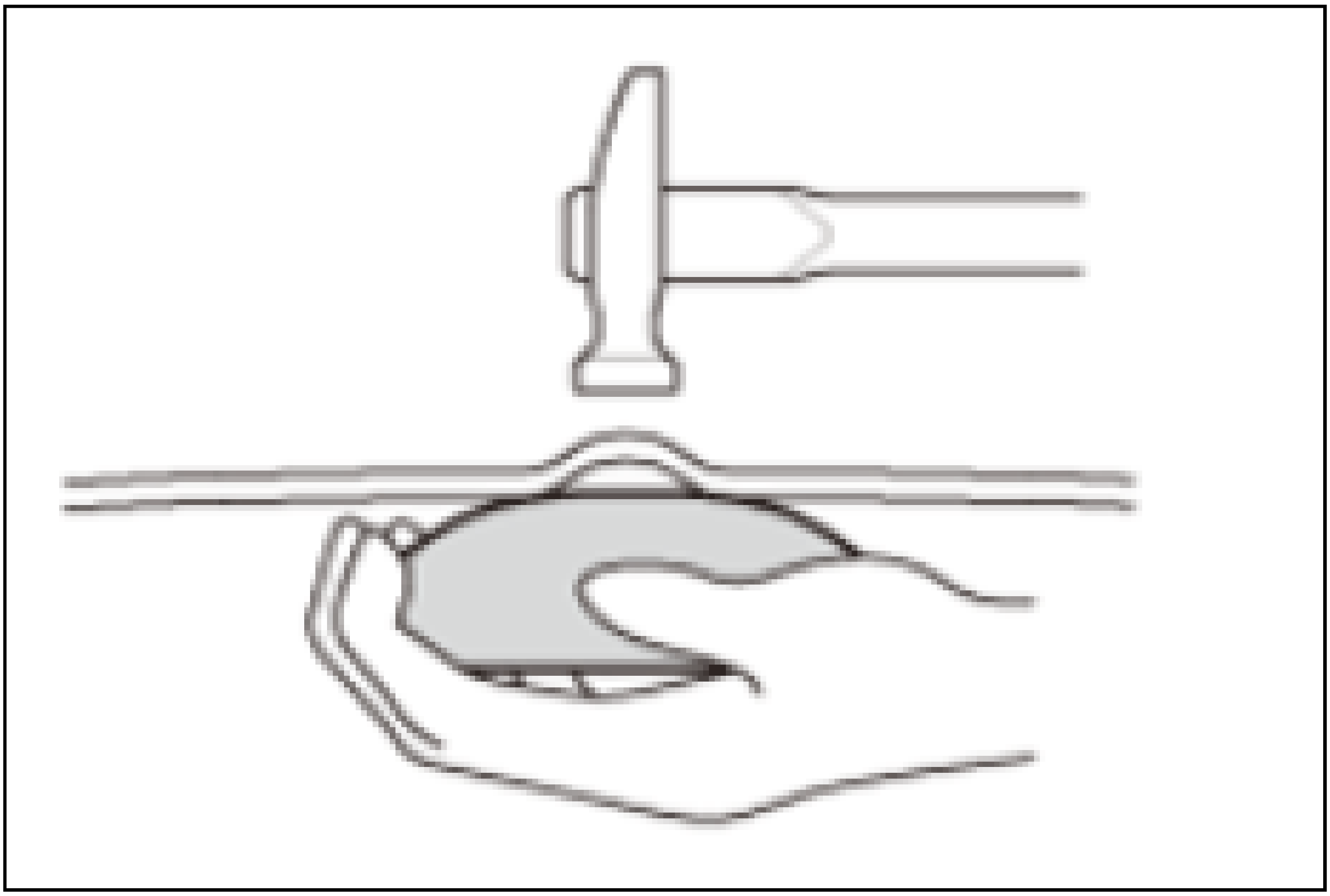

Shrinking (Drawing)

- Shrinking of aluminum alloy panels is done the same way as steel panels.
- Always use heat detection crayon or paint to measure and control the heat input during repairs.

NOTE: **When using a hammer for finishing, do not use a serrated shrinking hammer or dolly like those used for steel panels because it may cause cracks.**

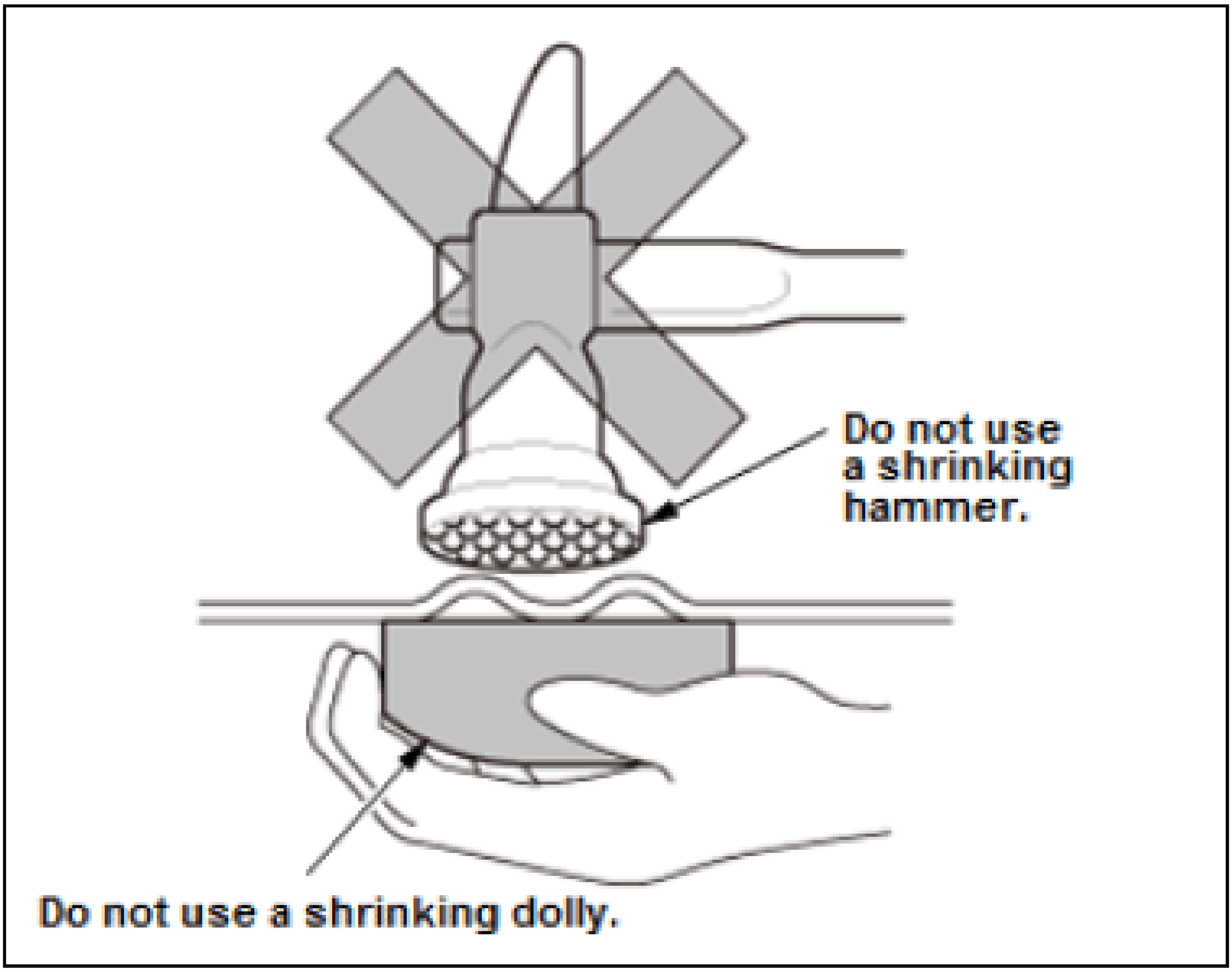

Body Filler (Putty) Repairs

- Proceed with correction and repair the same as for steel panels.
- When removing old paint layers on aluminum alloy panels, apply less pressure to the disc sander than for steel panels to prevent distortion.

  Use a sanding disk with P80 to P120.

- Finish sand filled surfaces with P80 sandpaper.
- Featheredge the repair area using P120 sandpaper.
- Somebody fillers cannot be directly applied on a raw aluminum alloy surface. In this case, apply epoxy-based primer to the surface before body filler application.

NOTE: **Refer to the specifications issued by the body filler and paint manufacturers for the appropriate body filler or putty to be used on aluminum alloy.**

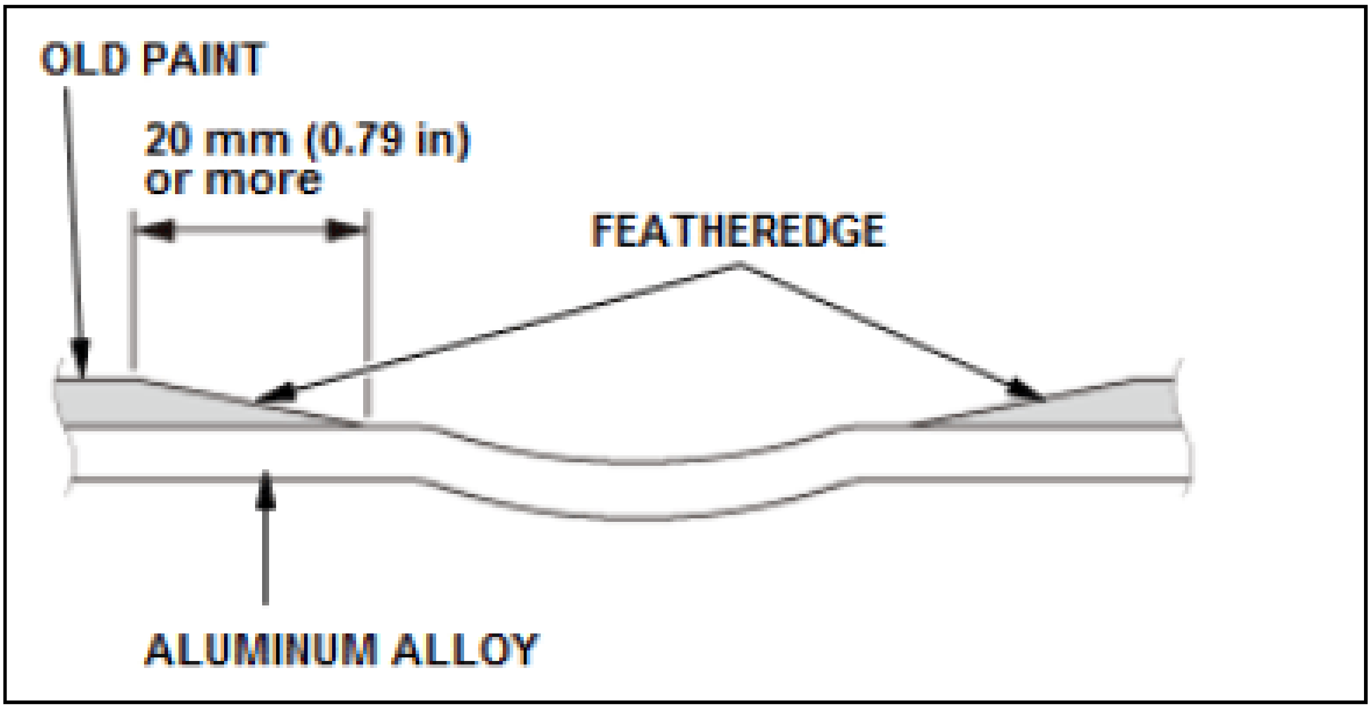
OLD PAINT
20 mm (0.79 in)
or more
FEATHEREDGE
ALUMINUM ALLOY

Repairing A Crack

If any cracks are discovered during inspection, be sure to repair them.

Welding Area

Sand down the bead twice the length of the crack and correctly re-weld.

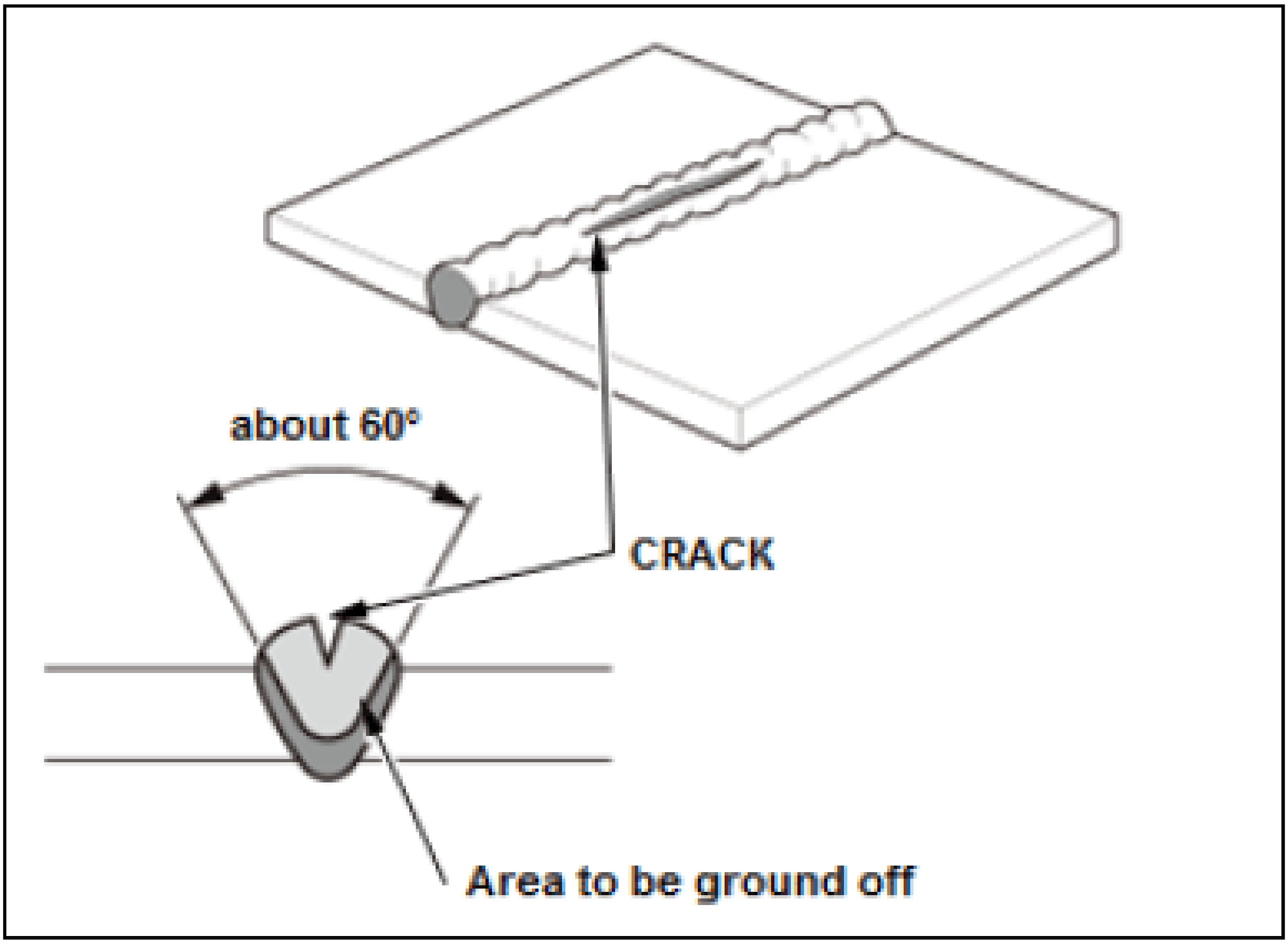
about 60°
CRACK
Area to be ground off

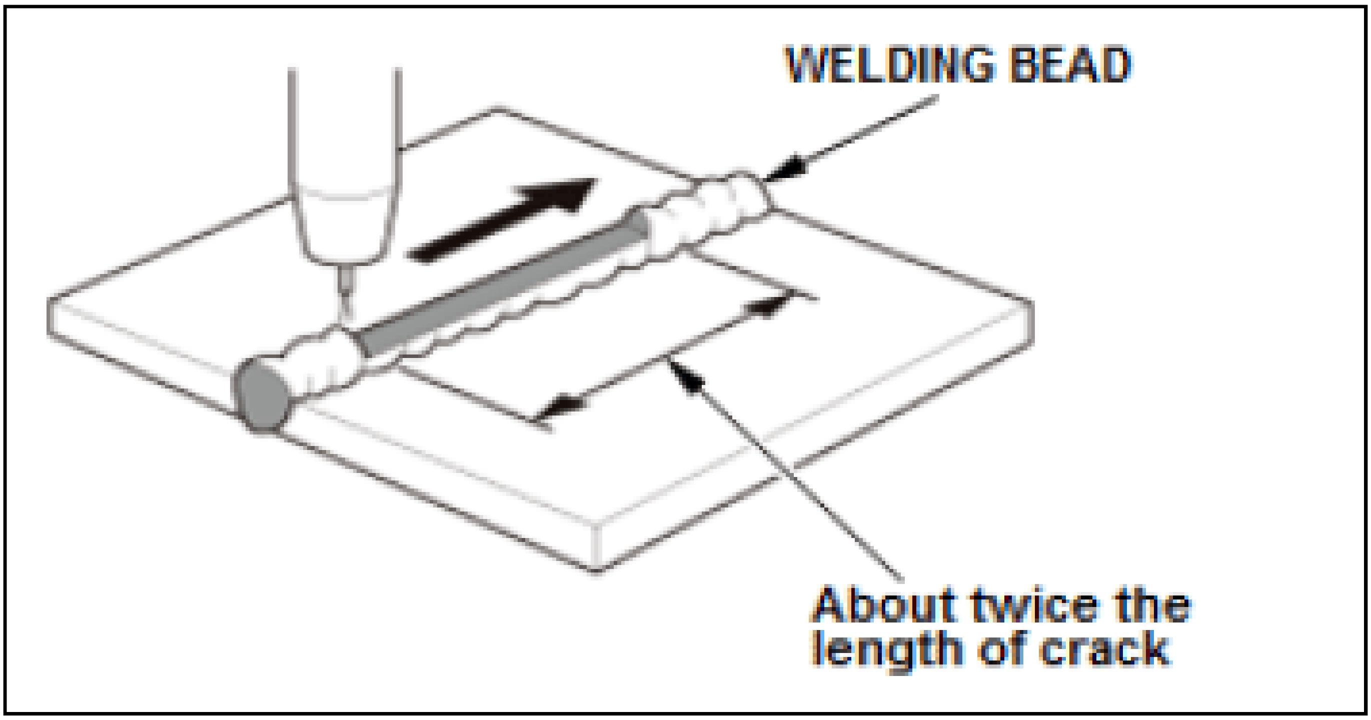
WELDING BEAD
About twice the length of crack

Panel Repair Area

- Drill about 2 mm (0.079 in) holes at both ends of the crack to stop further progression.

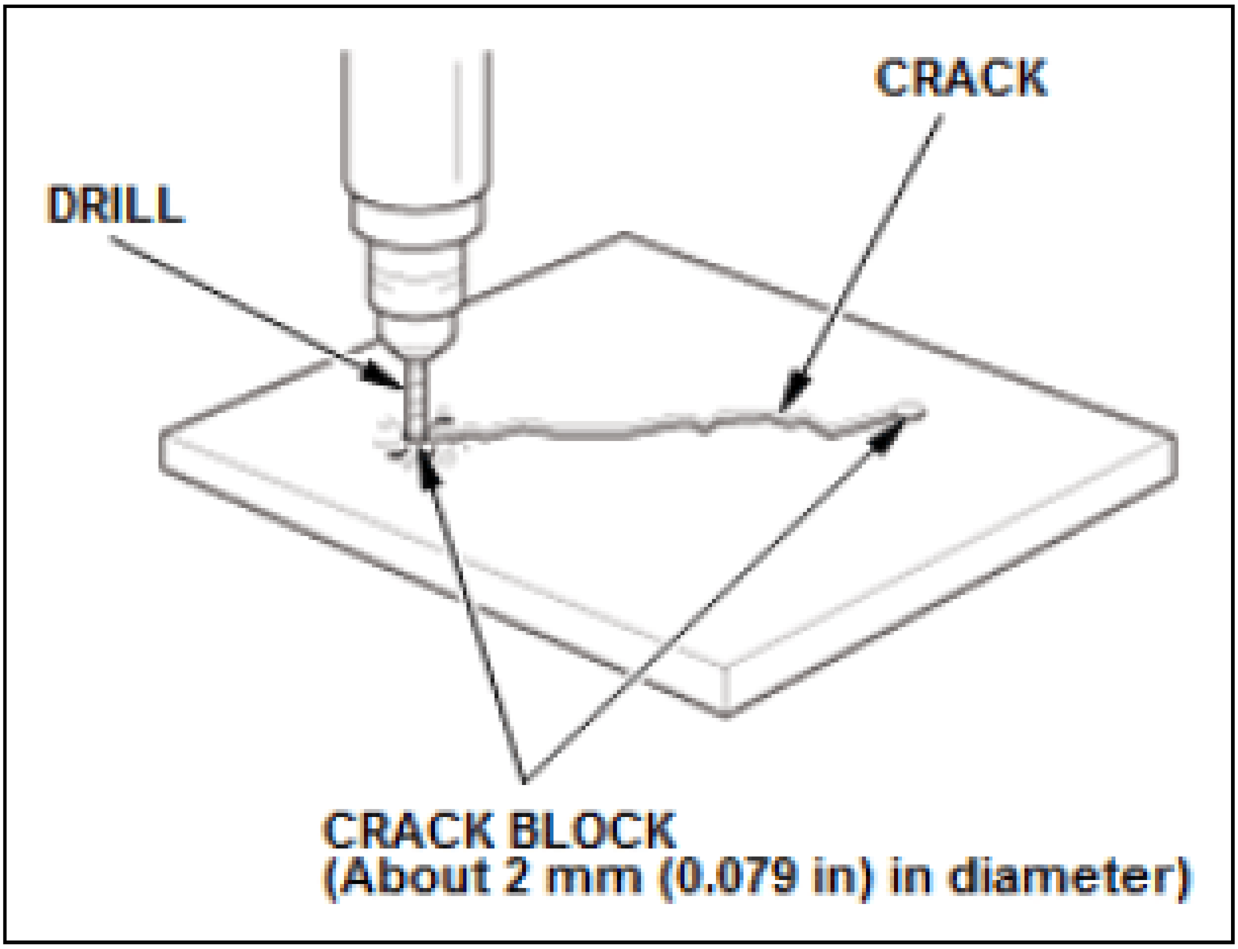
CRACK
DRILL
CRACK BLOCK
(About 2 mm (0.079 in) in diameter)

- Weld the crack thoroughly.

NOTE: **If a crack appears during the pulling, be sure to replace that part with a new one. Do not weld it.**

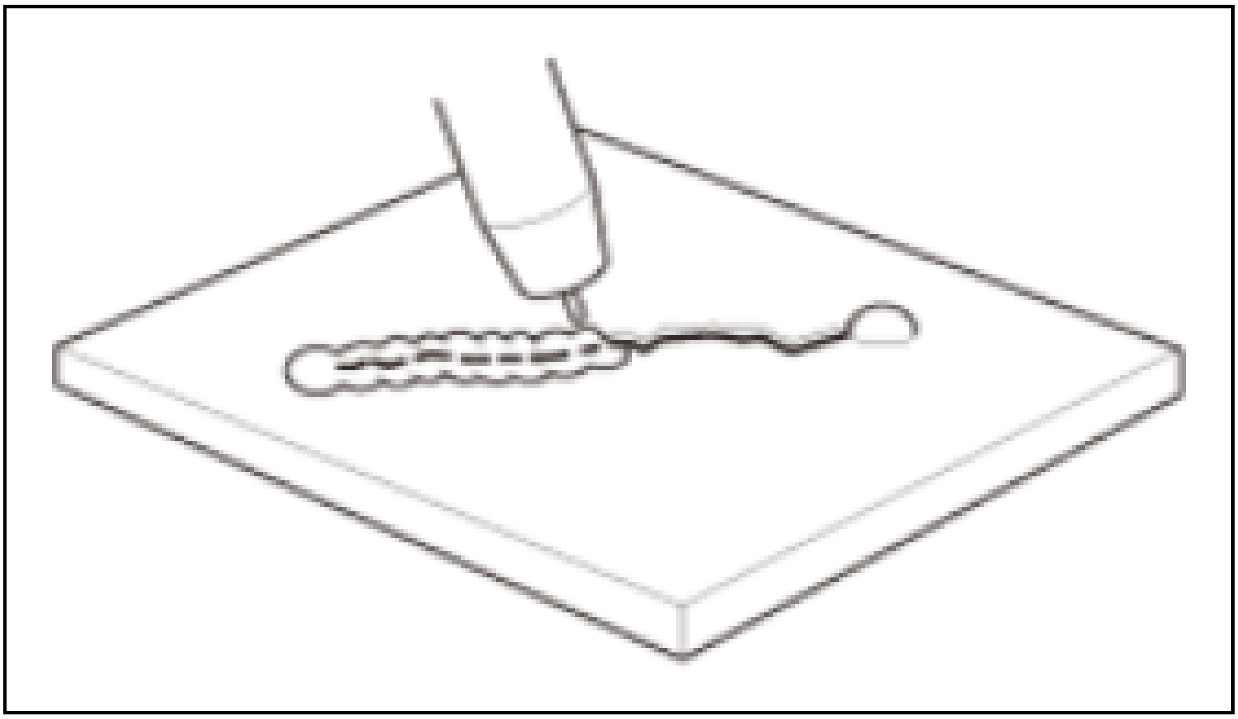

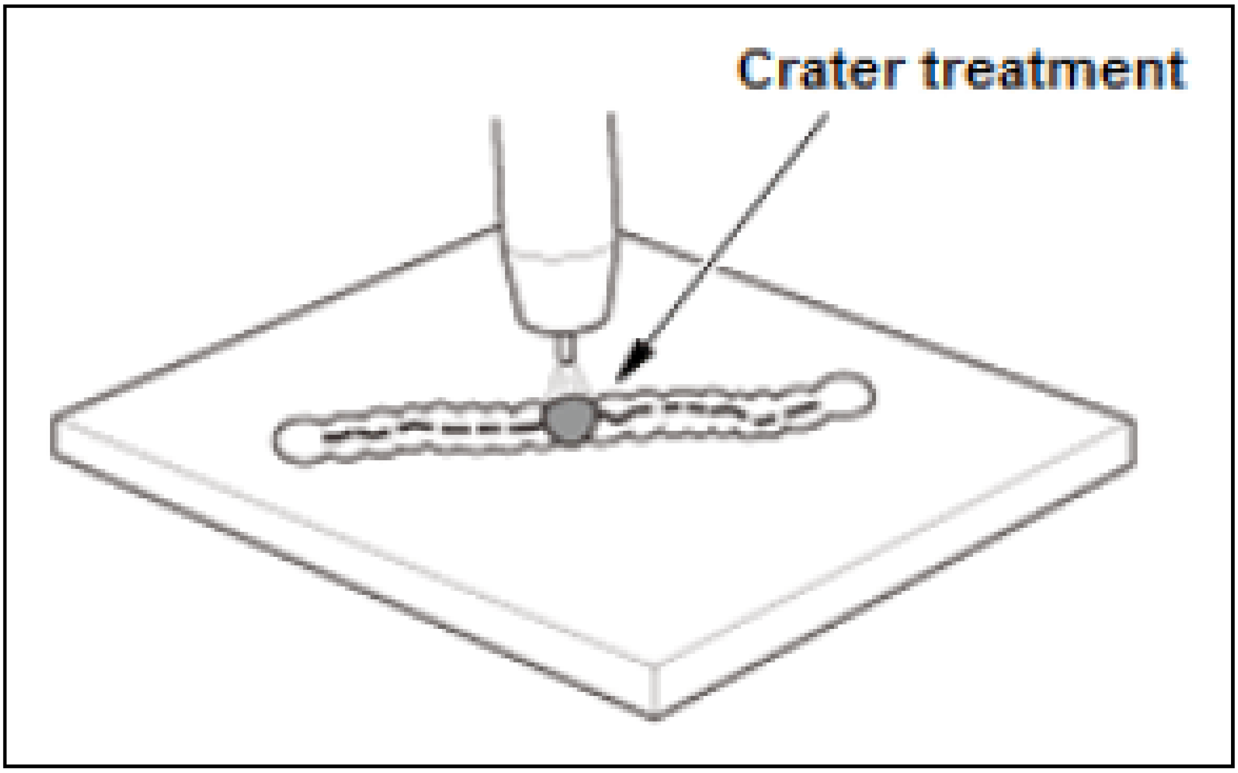

FINAL INSPECTION

Final inspection of collision repairs using the four perspectives below is required for customer satisfaction:

- Appearance restoration
    - Exterior finish
- Safety assurance
    - Driving performance
- Maintaining strength
    - Welding, interfacing
- Durability and anti-rust quality assurance
    - Rust, corrosion
- External appearance inspection:
    - Paint finish

      Inspect for contaminants, paint runs, sanding scratches, unevenness on filled surfaces, color match, etc.

  - Fit and finish inspection

    Inspect for gaps, steps, off-set and operation performance of hood, fender, doors, bumpers, lights, etc.

  - Assembly damage inspection

    Inspect for scratches and contamination on the painted surfaces.

  - Assembly defect inspection

    Inspect for soft set electrical connectors, wiring errors, missing screws, paint peeling due to bolt installation, etc.

  - Paint and overspray inspection

    Inspect for excessive paint or paint overspray on body components, or glass due to insufficient masking.

  - Inspect for contamination and odors

    Inspect for remaining body filler, sanding dust, and other contaminants in engine compartment, wheels, tires, underbody and chassis components, Passenger compartment and trunk spaces. Also inspect for remaining odors from painting processes.

- Safety inspection:
  - Wheel alignment

    Check and adjust (camber, caster, toe, etc.). If non-adjustable alignment angles are out of specification, body or suspension component damage may be present that was missed during the original repairs.

  - Brake related system

    Inspect for fluid leakage and air mixing etc.

  - Lights

    Check the operation of all exterior and interior lights and signals. Adjust the headlight aim if necessary etc.

  - Fuel system

    Inspect for fuel leakage.

- Maintenance and assurance of strength

  High quality welding done according to published procedures is absolutely necessary to maintain and assure body strength. However it is difficult to thoroughly inspect welding quality only after welding work is complete. It is very important to also do intermediate inspections during the repair process to assure welding quality in addition to the final welding quality inspection.

- Inspection for anti-rust:
  - Under body

    Check the application status of undercoating.

  - Mating of panels

    Check the application area and status of body sealer.

  - Water intrusion (rain intrusion test)

    Check for water leaks where panels or other parts mate (glass, taillight etc.), weatherstrips on doors, etc.

REPAIR OVERVIEW

Door And Bumper Reinforcement Beams

Door reinforcement beams and bumper reinforcement beams, should NEVER be repaired!

The entire door, or bumper beam, must be replaced if they are damaged.

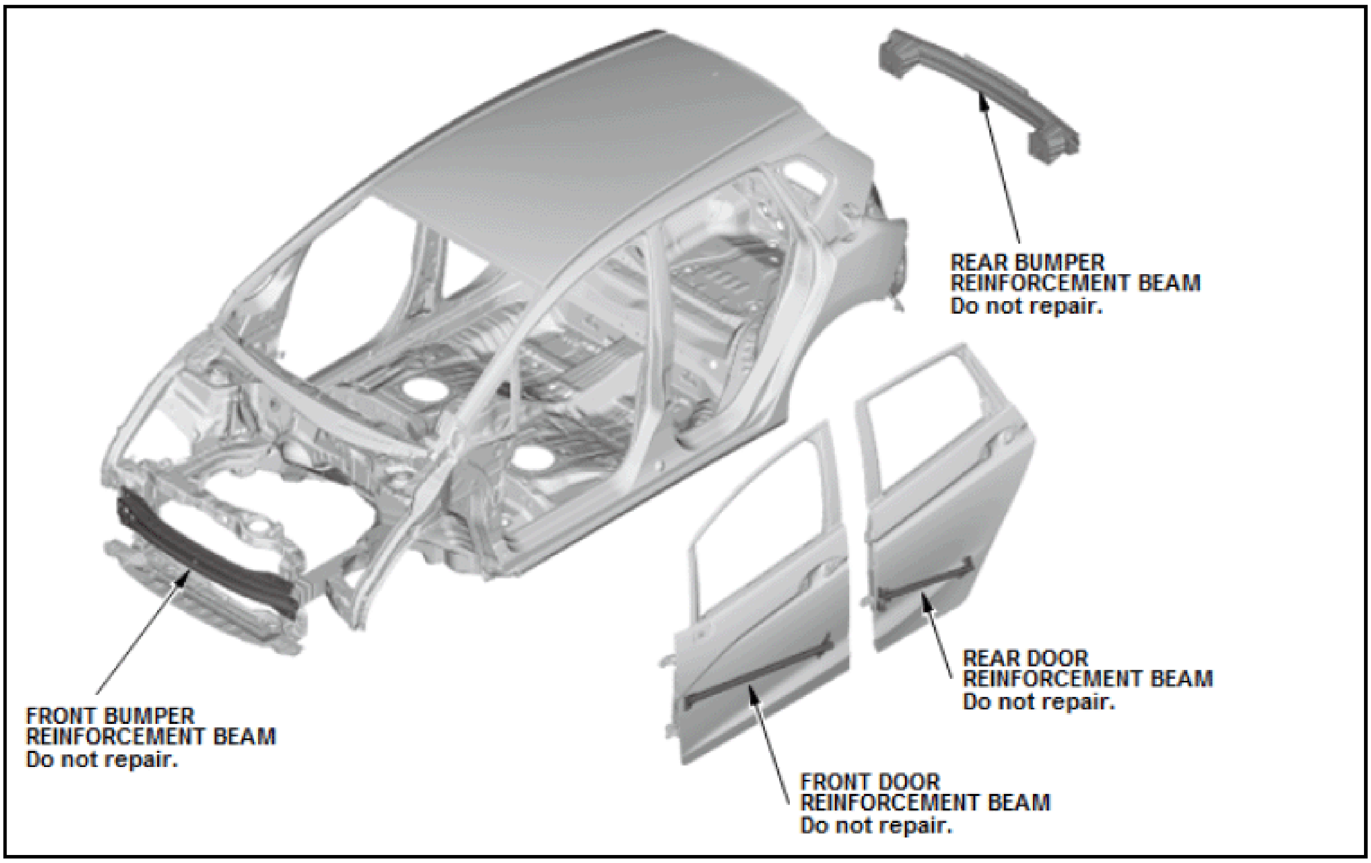
REAR BUMPER REINFORCEMENT BEAM
Do not repair.
REAR DOOR REINFORCEMENT BEAM
Do not repair.
FRONT BUMPER REINFORCEMENT BEAM
Do not repair.
FRONT DOOR REINFORCEMENT BEAM
Do not repair.

High Strength Steel Sheet Welding Overview

Spot welding is the recommended and preferred procedure for the welding for high-strength steel parts same as for a mild steel plate welding. In areas that cannot be accessed by a spot welder, perform the MAG welding or MIG brazing as specified in the Replacement procedures.

Tensile strength and welding method

Tensile Strength (MPa)	Welding Method		
	Spot welding	MAG Weld	
		Plug	Butt
270	◦	◦	◦
340	◦	◦	◦
440	◦	◦	◦
590	◦	◦	◦
780	◦	◦	◦
980	◦	◦	x
1180	◦	◦(1)	x
1500	◦	◦(1)	x

(1) MAG plug welding is only allowed on these steel grades in selected locations as specified in the body repair information. Welding instructions must be followed exactly as specified to ensure adequate weld strength.

- MIG welding/brazing: Metal inert gas welding or brazing where 100% Argon (Ar) shielding gas is used. Argon is inert and does not react with the molten weld pool or brazing operation.
- MAG welding: Metal active gas welding where the shielding gas being used contains a mixture of 80% Argon (Ar) and 20% Carbon Dioxide (CO_2). It is considered active because the CO_2 undergoes a limited reaction with the molten weld pool. A shielding gas mixture of 75% argon (Ar) and 25% carbon dioxide (CO_2), is also acceptable.

Parts Sectioning Guidelines - Cut And Join

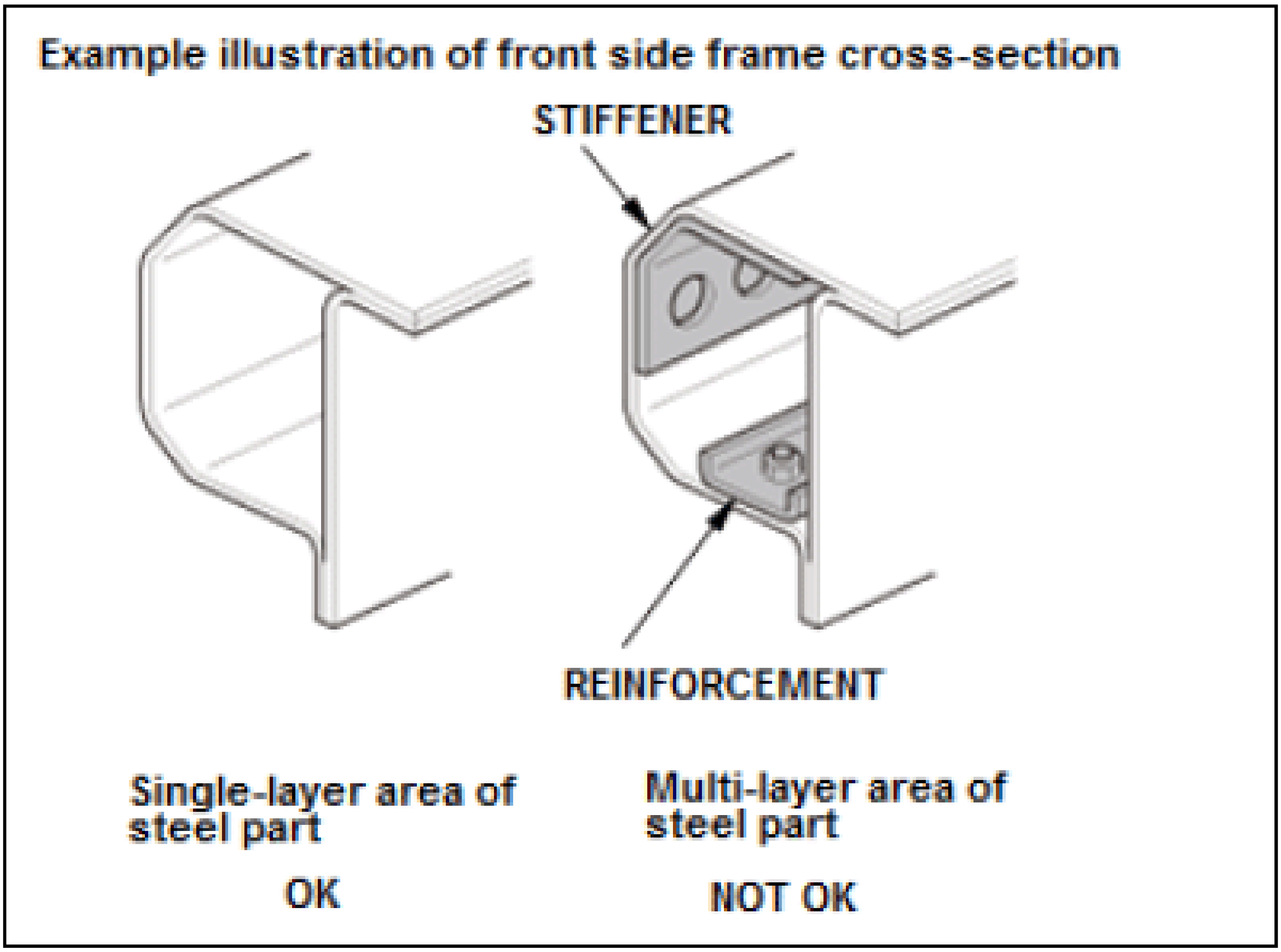
Example illustration of front side frame cross-section
STIFFENER
REINFORCEMENT
Single-layer area of steel part
OK
Multi-layer area of steel part
NOT OK

Replacement of steel parts at factory seams and matching the replacement part configuration remain the preferred repair methods. However, these methods alone are not always practical nor cost effective in all body repair situations. While some limited sectioning procedures are provided in the body repair information, it is not possible to develop published procedures covering every type and angle of impact. The revised guidelines detailed below are intended as "basic rules" for properly trained collision repair professionals to use when sectioning steel parts on Honda and Acura vehicles.

Follow these guidelines to avoid an unsafe repair:

- Outer body and floor panels may be sectioned as necessary. Specific sectioning procedures are not provided in the service information.
- Depending on the type of vehicle damage, steel parts with a tensile strength of 780 MPa or less may be sectioned provided all three of the following conditions are met:
  - Sectioning must be done in a single-layer area of the part.
  - Multi-layer internal steel reinforcements and stiffeners must not be cut.
  - Do not section in load bearing areas, such as engine, transmission, or suspension mounting points.
- To determine if a part has a single-layer area that can be sectioned, do the following:
  - Check the appropriate body repair information to determine the steel grade(s) and part configurations of the parts being replaced.
  - Inspect the original and replacement parts to confirm if there are internal reinforcements and/or stiffeners.
  - Spot welds not directly on a flange or joint indicate a reinforcement or stiffener inside.
  - The appropriate service information shows some internal reinforcements as shown.
- If any of the above sectioning conditions cannot be met, replace those body structural components (stiffeners, reinforcements, and other multi-layered steel parts) as assemblies that match the replacement parts configuration.

Partial Panel Replacement At Factory Seams

When you are determining whether to replace a body part as supplied, or do a partial replacement at the factory seams, follow these guidelines:

- Replacement of body service parts as supplied at factory seams is the preferred repair method, except when it may cause unnecessary or excessive intrusion into the body structure.
- In these cases, the service part may be disassembled at factory seams as required to replace only the damaged portion.

- For example, if only the vehicle's rear wheelhouse is damaged, that part may be removed from the rear inner panel service part assembly at the factory seams and installed on the vehicle.
- All basic welding & sectioning guidelines specified in the electronic service information must be observed during partial panel replacement.

Repair Basics

Assuring Repair Quality

The purpose of collision repair is to restore the quality and performance of the vehicle to its pre-loss condition. The four basic principles below must be assured during collision repairs.

- Appearance restoration...... exterior finish
- Safety assurance...... driving performance
- Maintaining strength...... welding, interfacing
- Durability and anti-rust quality assurance...... rust, corrosion

Protecting Vehicle

- Washing before repair:
  - Helps identify the damaged area and prevent overlooking any damage. (check also for other scratches and dents outside the repair area).
  - Reduces the introduction of dirt, dust, and other contaminants into your workshop.
  - Reduces time required to polish and correct errors and contamination after the painting process.
- Protecting and storing the removed parts...... To avoid damages (scratches), deformation and contamination
- Passenger compartment, tires, engine compartment, etc....... Help reduce entry of hidden contamination during repair and painting. These increase repair time.
- Helps prevent weld spatter (sparks)...... Possible burns and damage to glass and paint.

Damage Inspection

Wash the vehicle as it is impossible to properly inspect a dirty vehicle for damage.

Closely inspect the vehicle from all angles to prevent overlooking damaged areas, or degree of damage.

Before beginning collision repairs, compare the repair estimate to the actual vehicle condition. Check the identified repairs and compare them to the actual damage. Then develop a repair plan.

The general confirmation steps are as follows:

- Visual Check:
  - Closely inspect the damaged area from multiple angles so that the dents can be captured more accurately.
  - Also use extra lighting to help identify damage during your inspection for greater accuracy.
  - Inspect panel alignment and gaps in the damaged and surrounding areas. Also compare them to the undamaged side of the vehicle if possible.
- Feel Check:
  - Gently feel across the damaged surfaces with your fingers and palm to confirm to confirm any unevenness after the vehicle and damaged areas have been thoroughly cleaned.
  - Cloth gloves are recommended to increase touch sensitivity.
  - Feel In addition, touch thoroughly from multiple directions in order to avoid any overlook.
- Repair Bench Confirmation:
  - Confirm the body dimensions using your body and frame measurement equipment.
  - Document primary (directly) damaged areas and secondary (induced) damage.
  - Confirm the original dimensions of the damaged area, then develop a plan to restore the correct measurements.

Handling Removed Parts

- Remove all attached parts in the repair area to make repairs easier.
- Pay extra attention to the removed parts not to damage and store them in a protected location.
- Confirm that the repair estimate documents any prior damage or missing parts not part of the current repair. Immediately report any inconsistencies between the vehicle and estimate.
- If you damage any parts during removal, report this immediately and order replacements.
- To avoid confusion during reassembly, organize the removed fasteners by grouping them per panel or part.

Repair Guidelines For High-Strength Steel Parts

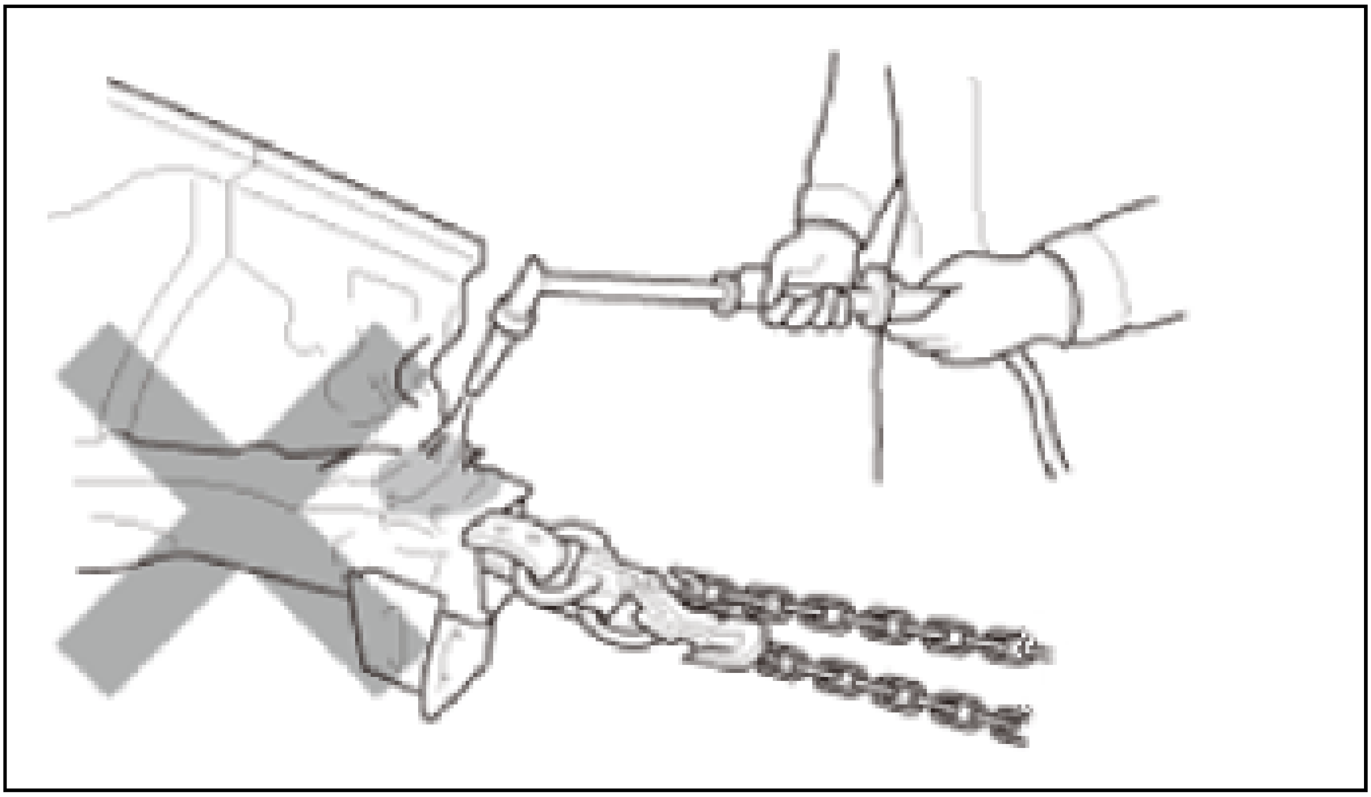

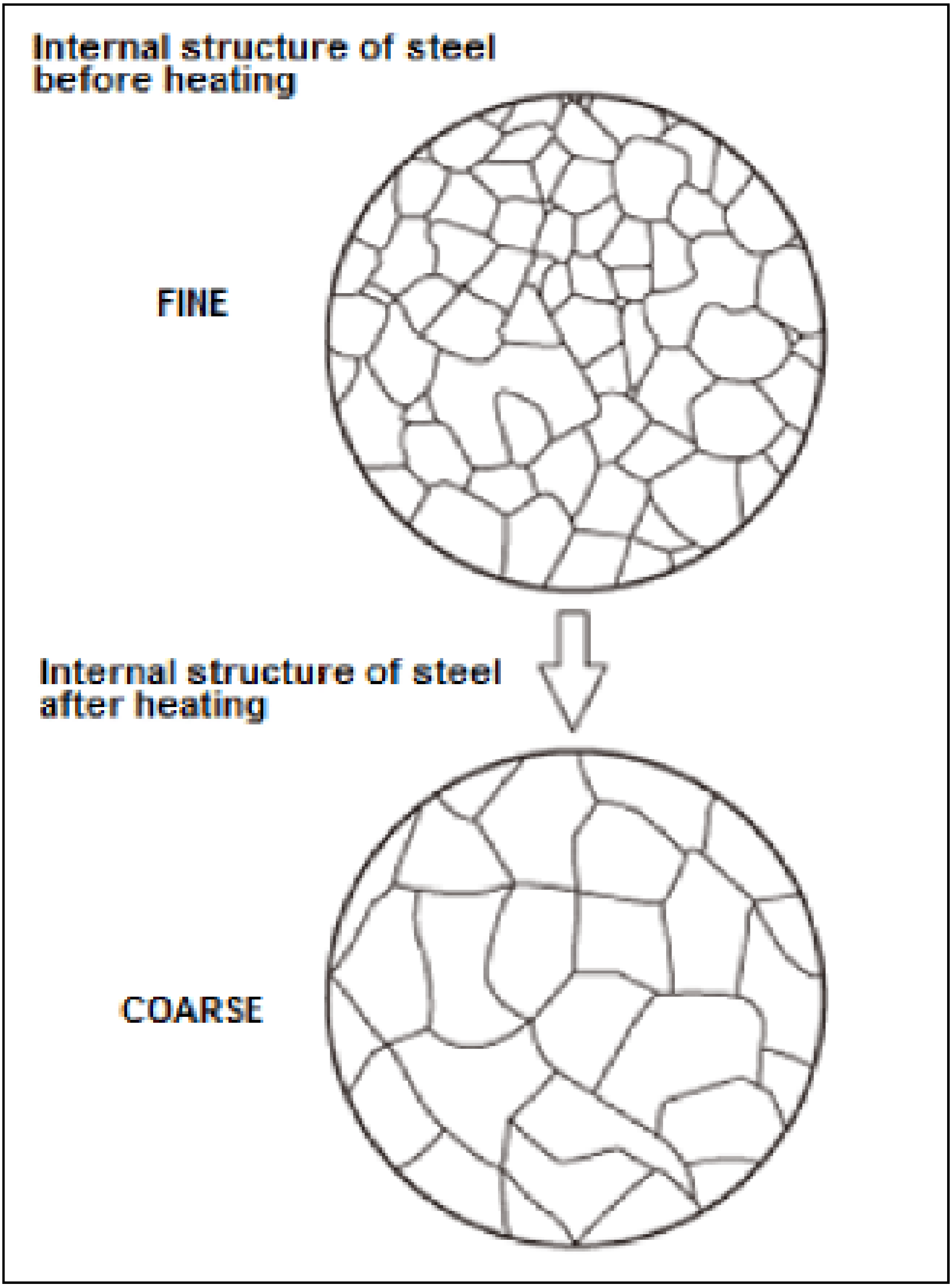
Internal structure of steel before heating
FINE
Internal structure of steel after heating
COARSE

WARNING: High strength steel is defined as any steel with a tensile strength of 340 MPa or higher. Ultra high strength steel is defined as any steel with a tensile strength of 980 MPa or higher. If a part is constructed of, or includes, high-strength steel, observe the following important guidelines.

High-strength steel is more rigid and has more memory than traditional steel, making it more difficult to straighten. To prevent further body damage when using frame straightening equipment, apply pulling force gradually and closely monitor body dimensions during the straightening process to ensure the body dimensions are returned to the proper specifications.

High strength steel parts over 590 MPa must not be straightened. These parts should be replaced with new parts if damaged.

NOTE: **Do not apply heat, such as an oxyacetylene torch, to any body part during straightening. This may compromise the internal structure and high-strength steel parts. Any of these parts that had heat applied to them during straightening MUST be replaced with new parts. Ignoring these instructions may significantly reduce occupant protection in any subsequent collision.**

Removing Spot Welds

Use a spot weld cutter or drill bit designed for high-strength steel to remove spot weld nuggets from the steel parts being removed. If the cutting performance of the spot cutter decreased, grind the spot cutter using a grinder as soon as possible. Or change the spot cutter to a new one. Decreased cutting performance unnecessarily increase cutting time and generates heat that may compromise the internal structure of high-strength steel parts. An automotive file belt sander may also be used to remove spot welds.

NOTE: **In order to protect the blade of the spot cutter, mark the center of the spot welding nugget using a center punch and grind the edge of the nugget to be flat using a belt sander (about P60) and then begin the cutting work. Apply the specific cutting oil to protect the blade during the cutting work.**

Repair Process

The degree of damage determines the collision repair workflow.

For minor body damage, the repair process includes: Repairing the damaged part by washer welding or using hammers and dollies, body filler repairs, and refinishing.

For major body damage, the repair process includes: Body and frame correction, Replacing the damaged panels and frame parts with new ones, anti-rust treatment, sealing, and refinishing. Plastic parts repair or replacement may also be necessary.

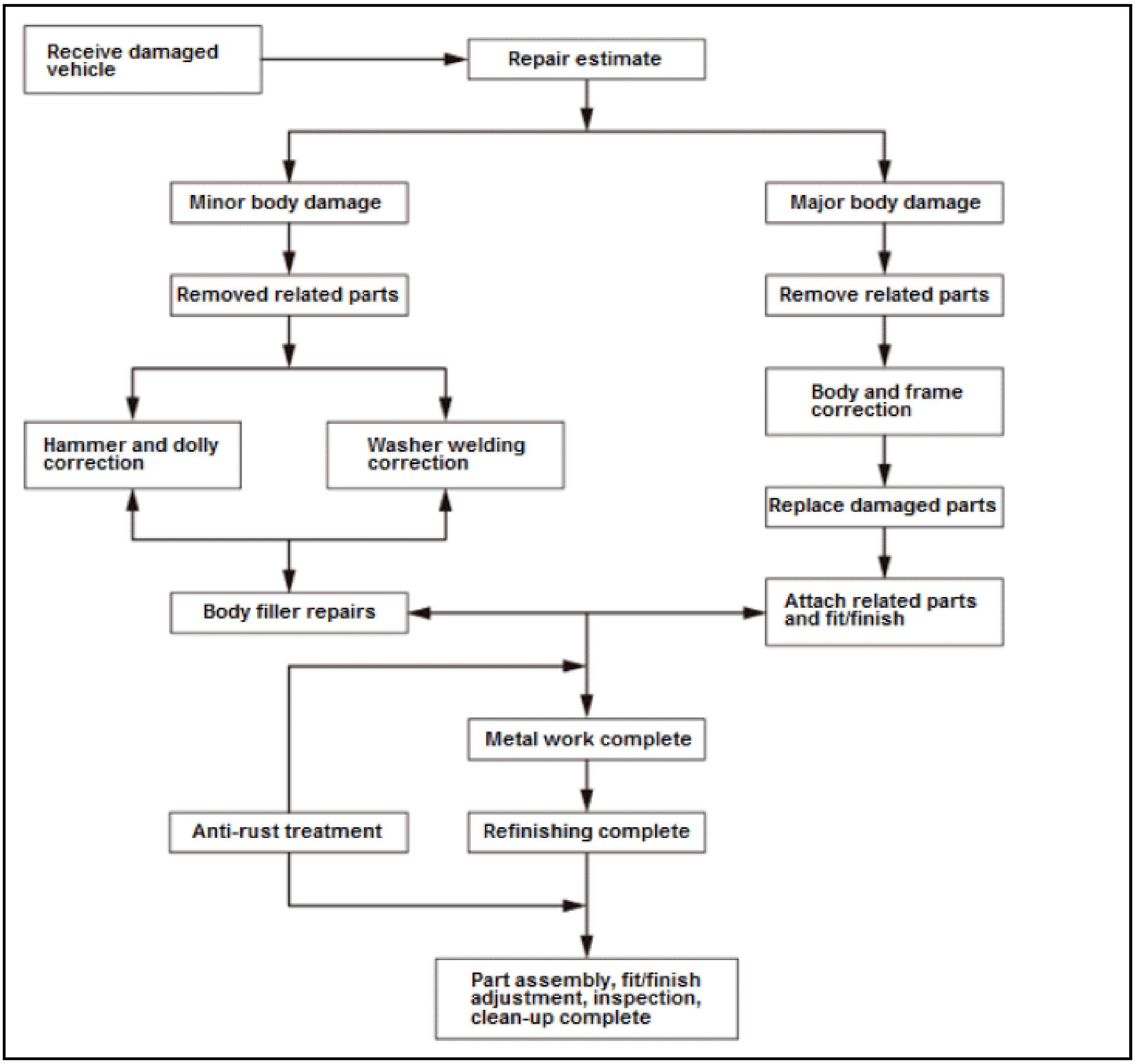
Receive damaged vehicle
Repair estimate
Minor body damage
Major body damage
Removed related parts
Remove related parts
Body and frame correction
Hammer and dolly correction
Washer welding correction
Replace damaged parts
Body filler repairs
Attach related parts and fit/finish
Metal work complete
Anti-rust treatment
Refinishing complete
Part assembly, fit/finish adjustment, inspection, clean-up complete

REPAIRING MAJOR BODY DAMAGE

Internal Anti-Rust Treatment (After Paint)

- During collision repairs, body pulling and welding destroy the e-coat film on inner panels.

  This will quickly allow rust to form on those panels. Thoroughly apply anti-rust agent on inner surfaces in the repaired areas prevent corrosion.

- Always apply anti-rust agents a little beyond the actual repair areas.
- For the basic locations of anti-rust agent application, refer to the model specific body repair information:
  - Apply internal anti-rust agent through part installation holes, inner panel openings, grommet installation holes, etc. Apply anti-rust agent liberally until it bleeds through the panel mating seams.
  - When applying anti-rust agent to a wide area, use spray equipment specifically designed for anti-rust agent application and the most appropriate nozzle (360 degree nozzle, L nozzle, etc.).

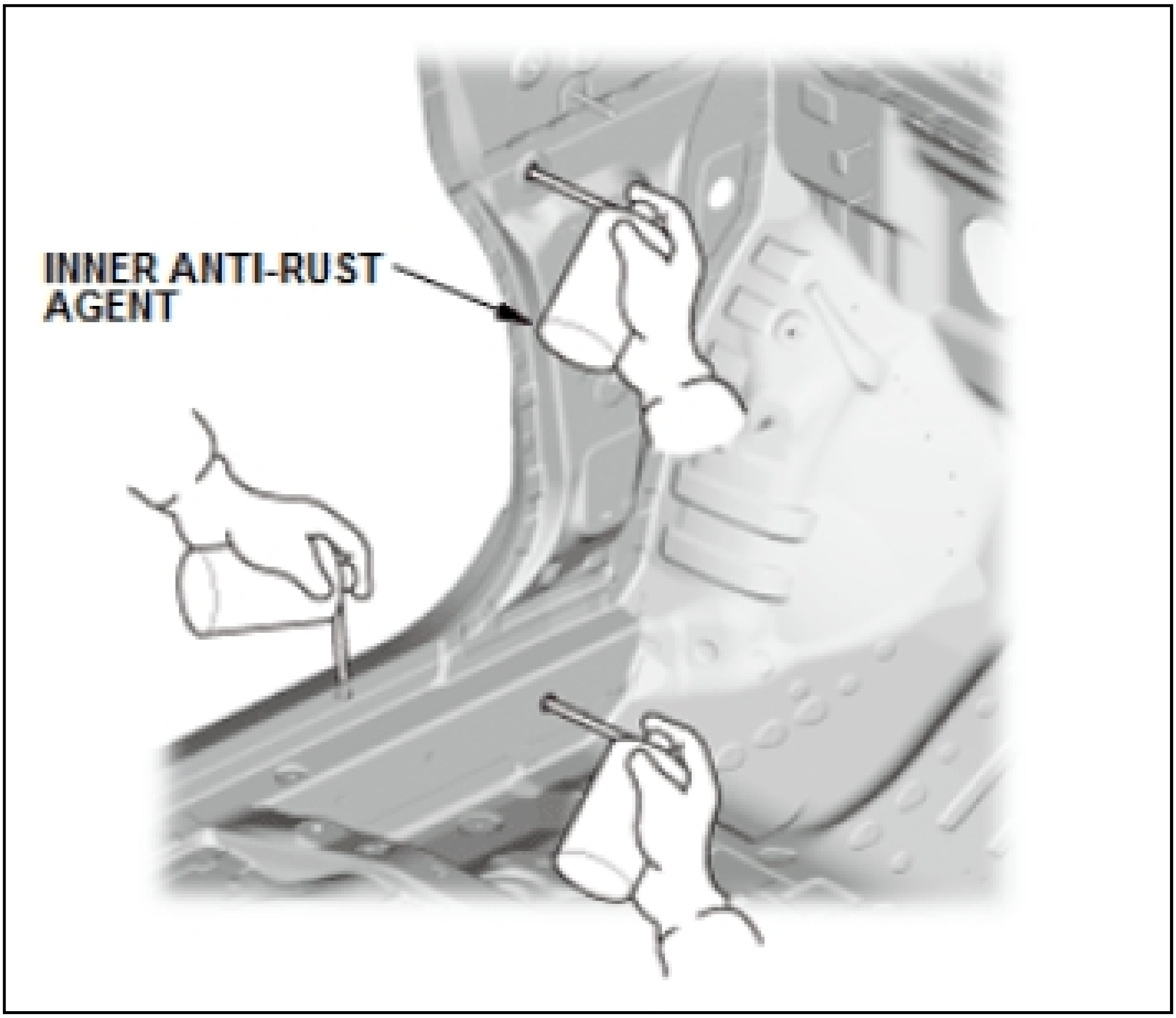
INNER ANTI-RUST AGENT

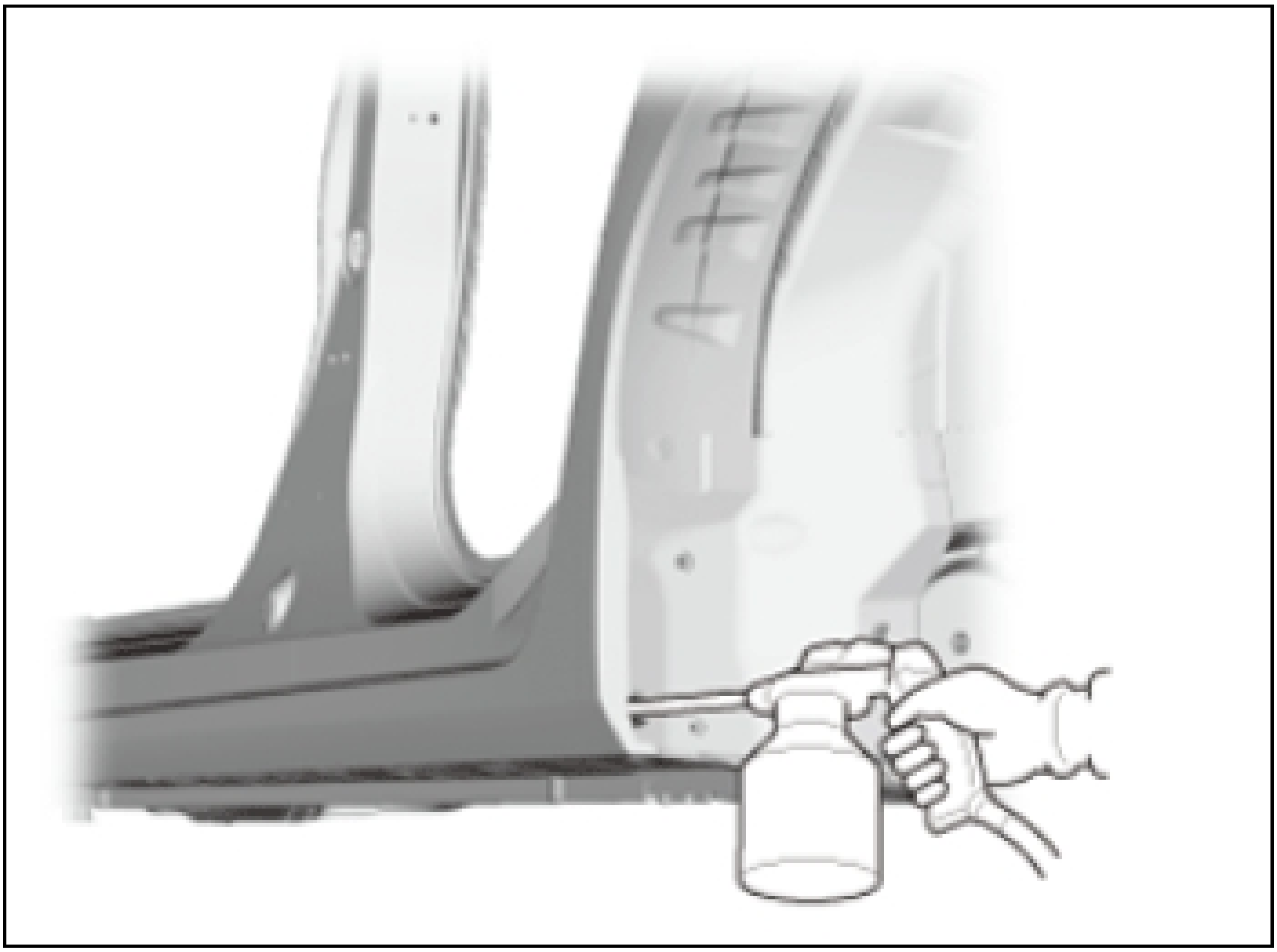

Internal Anti-Rust Treatment (Before Paint)

Sealing

- To prevent water and dust entry, as well as to prevent rust, apply sealer where at body panel joints.
- As for where sealer should be applied, refer to the model specific body repair information or use the corresponding parts on the opposite side of the vehicle as a reference:
  - Clean and degrease the sealer application area. Remove any excess weld-through primer (spot sealer) using reducer.

    Apply primer surfacer and then sealer.
  - The outer panels, engine compartment, and trunk gutter influence exterior appearance of the vehicle and must be finished equivalent to their pre-loss condition.
  - In installation areas for the taillights and the like, use care to limit the height of the sealer bead to prevent interference. Use a brush to flatten the sealer bead.

NOTE: **Handle the body sealer material with care and observe all instructions issued by the sealer manufacturer.**

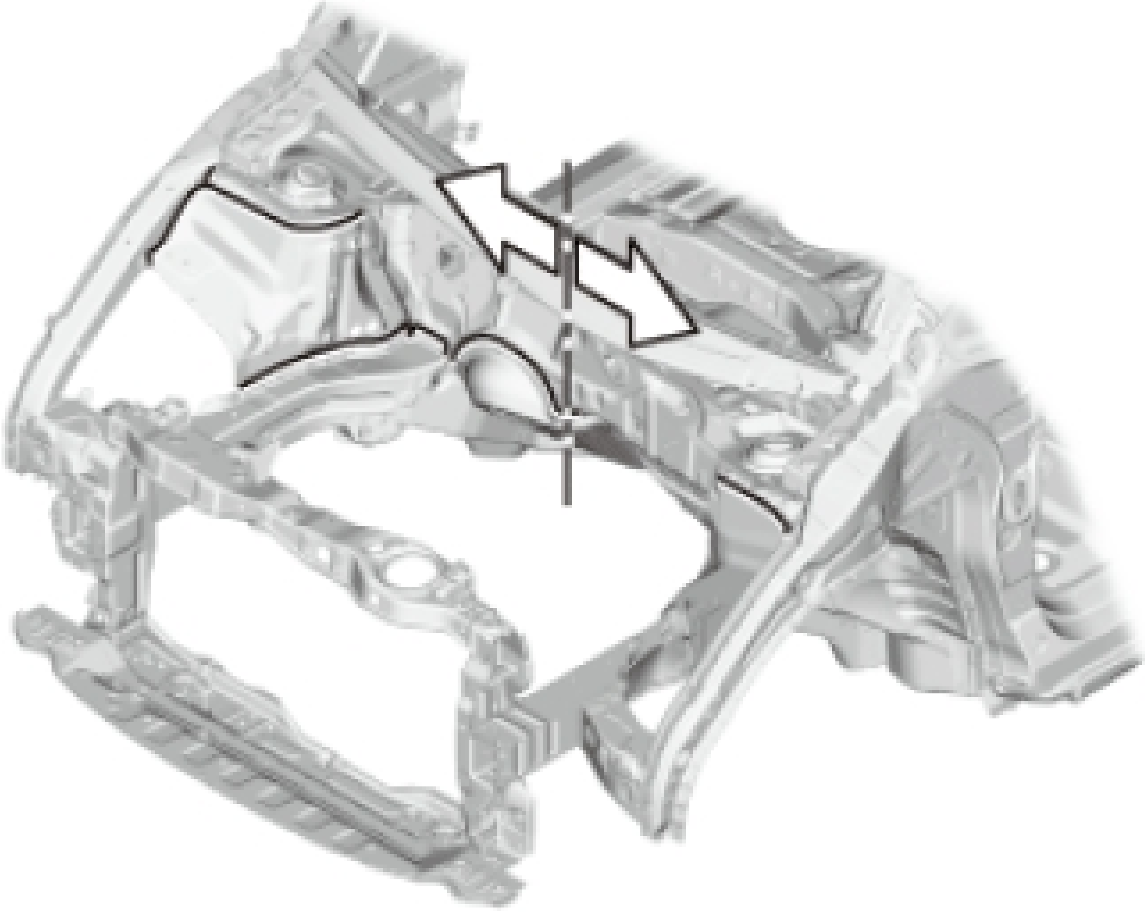

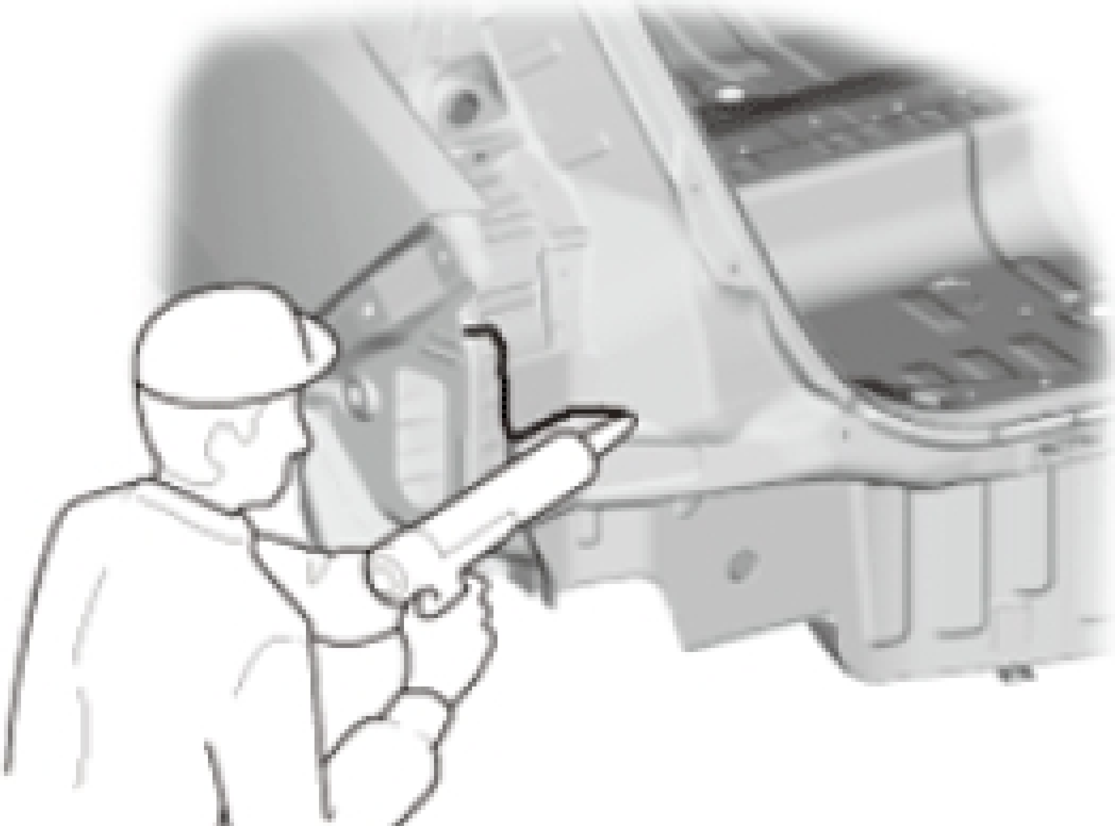

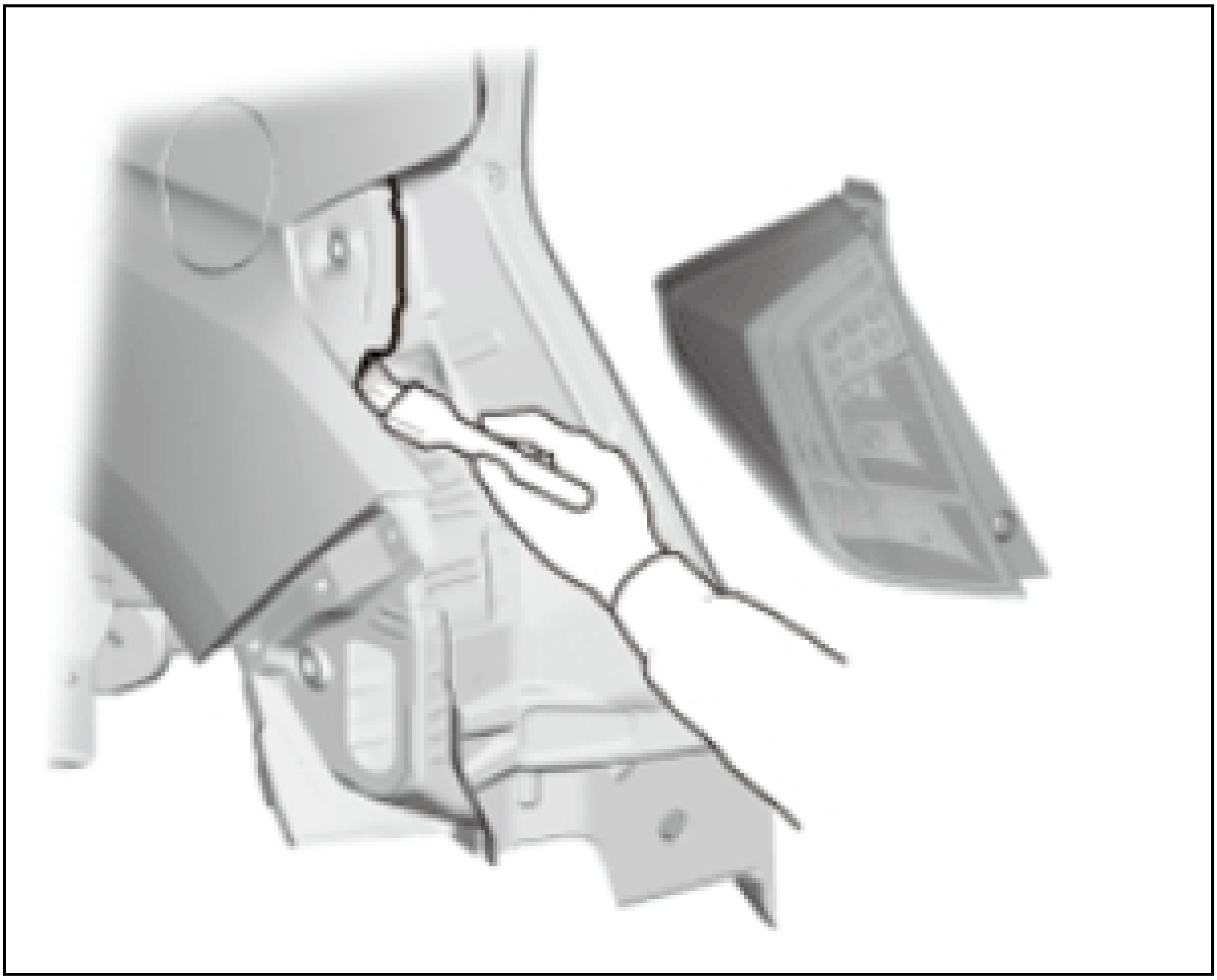

Undercoating

- To prevent chipping damage caused by flying stones, apply undercoat over the underbody and wheelhouse surfaces.
- Refer to the model specific body repair information for sealer application locations:
  - Clean and degrease the undercoating application areas. Apply primer surfacer then undercoat.
  - Use masking tape, where necessary, to prevent undercoat from being applied to the suspension, drive train and exhaust related parts, or parts installation areas.
  - Apply undercoat using only spray equipment designed for undercoat.

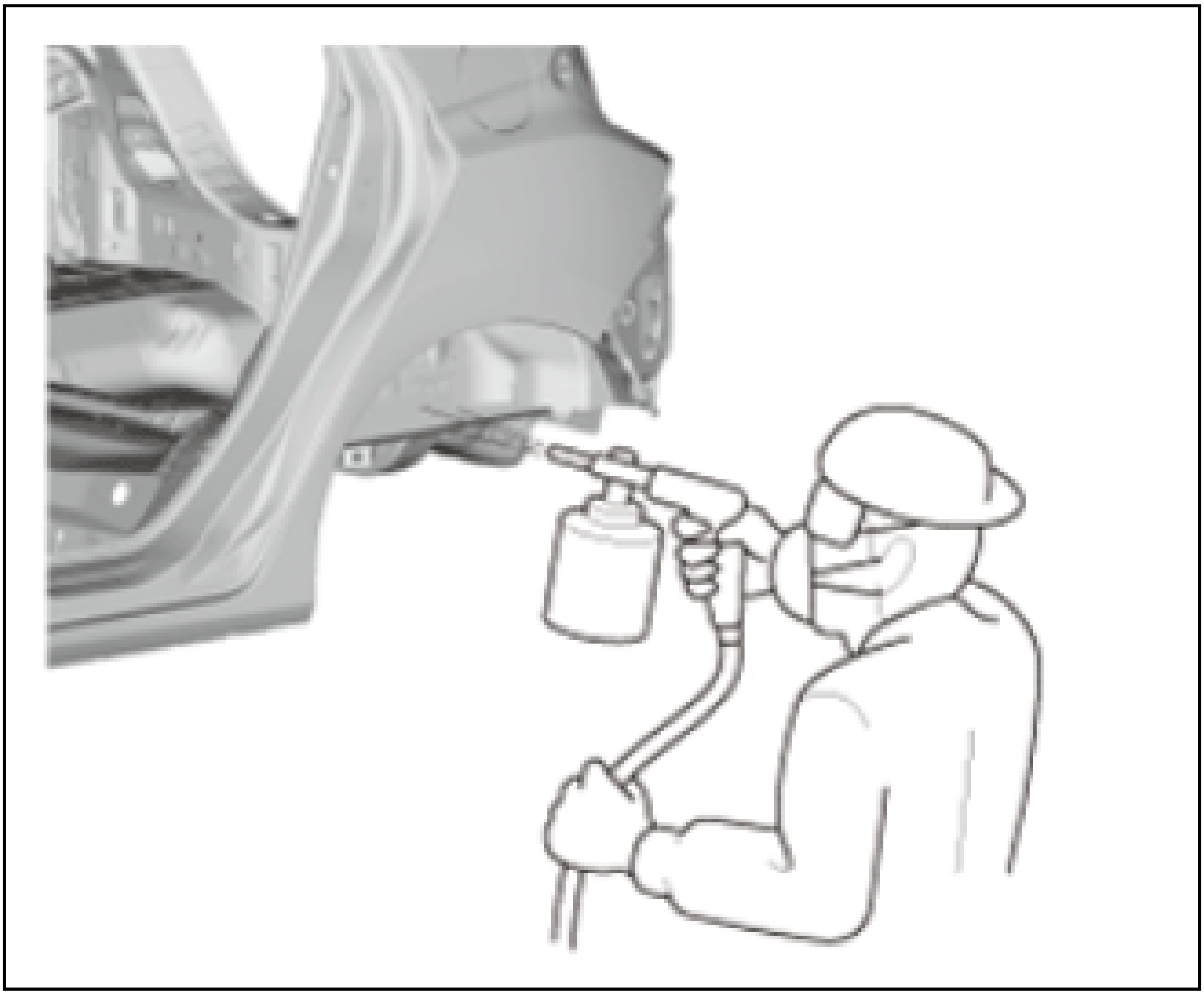

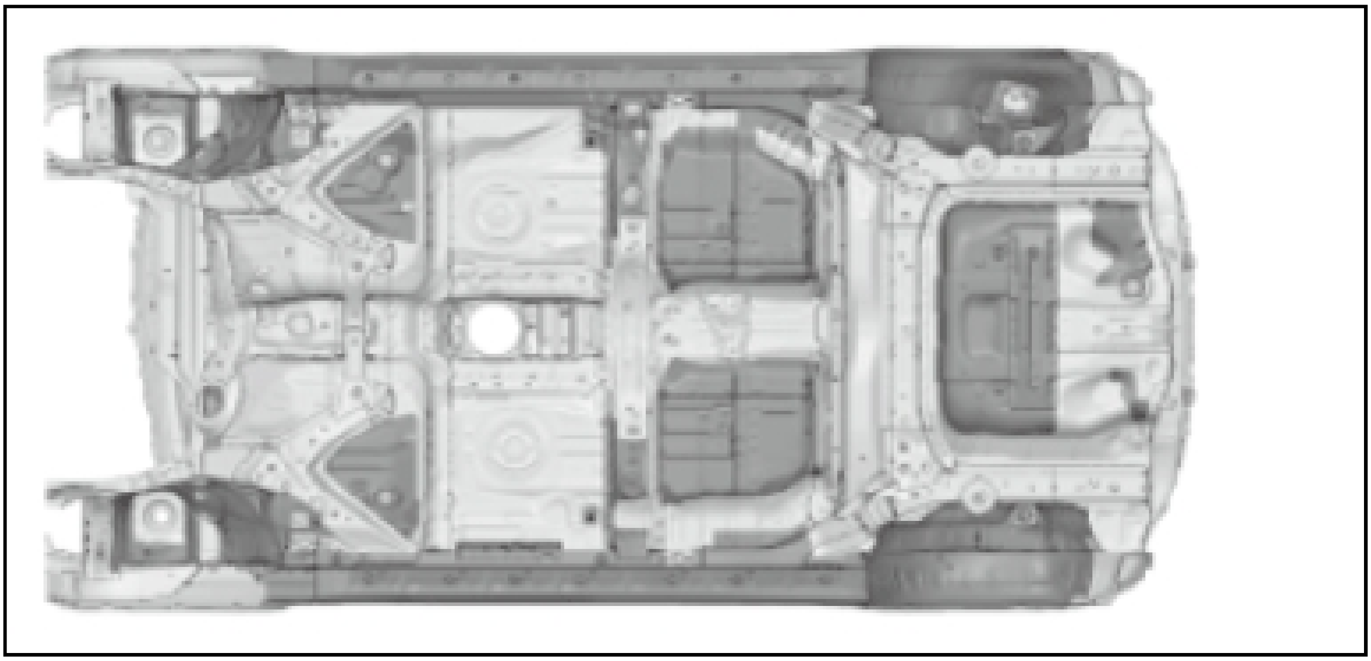

Urethane Foam Repairs

If expandable urethane foam was used in the body instead of traditional acoustic separators, replace any removed foam through holes on the inner body panels as directed in the model specific body repair information. This is required to reduce transmission of road noise into the passenger compartment in specified areas.

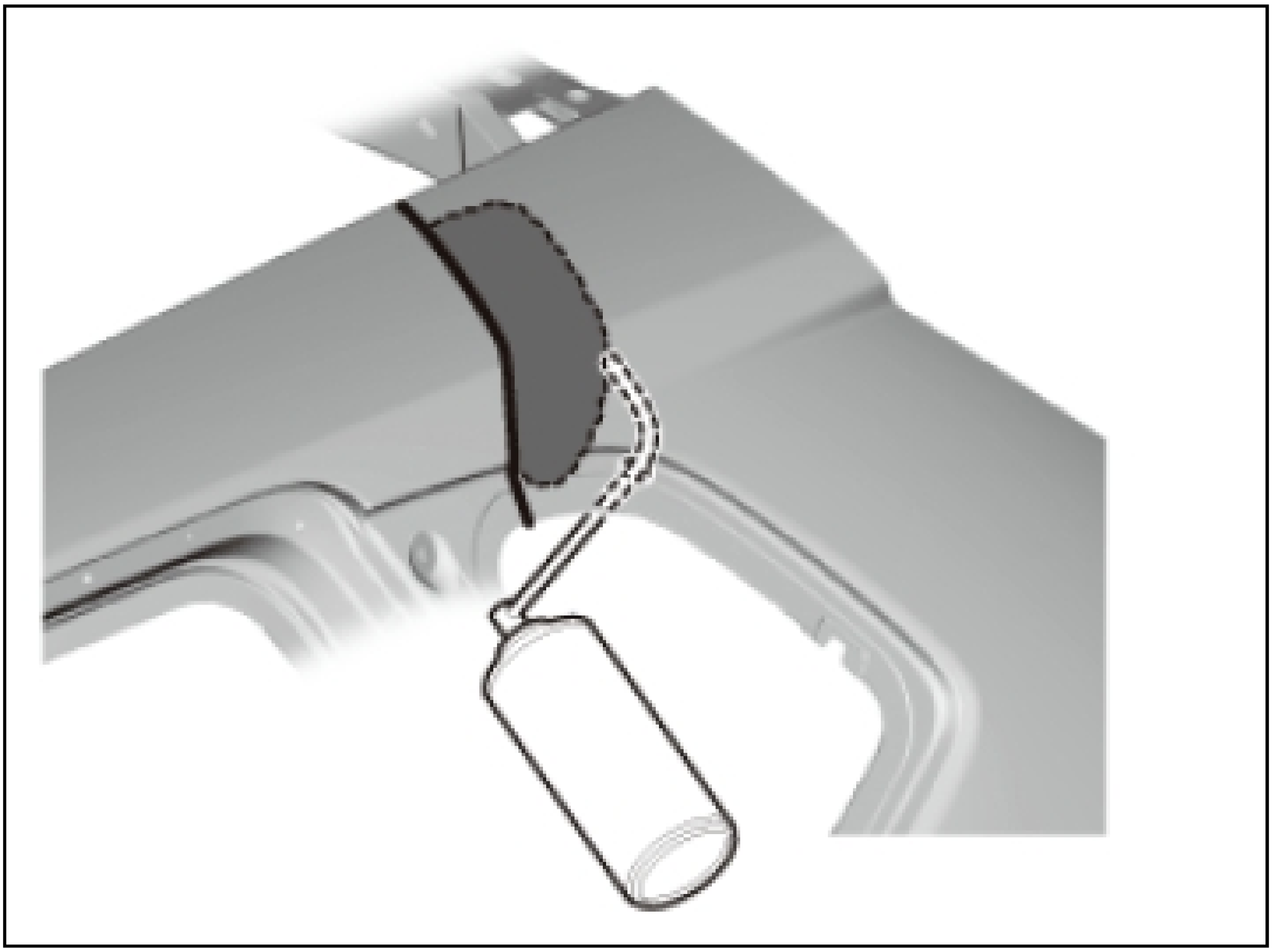

NOTE: When doing paint work, mask the ground wire terminal. Protect the ground wire mounting hole threads with a spare bolt (do not use the actual ground bolt) or a commercially available silicone bolt hole plug.

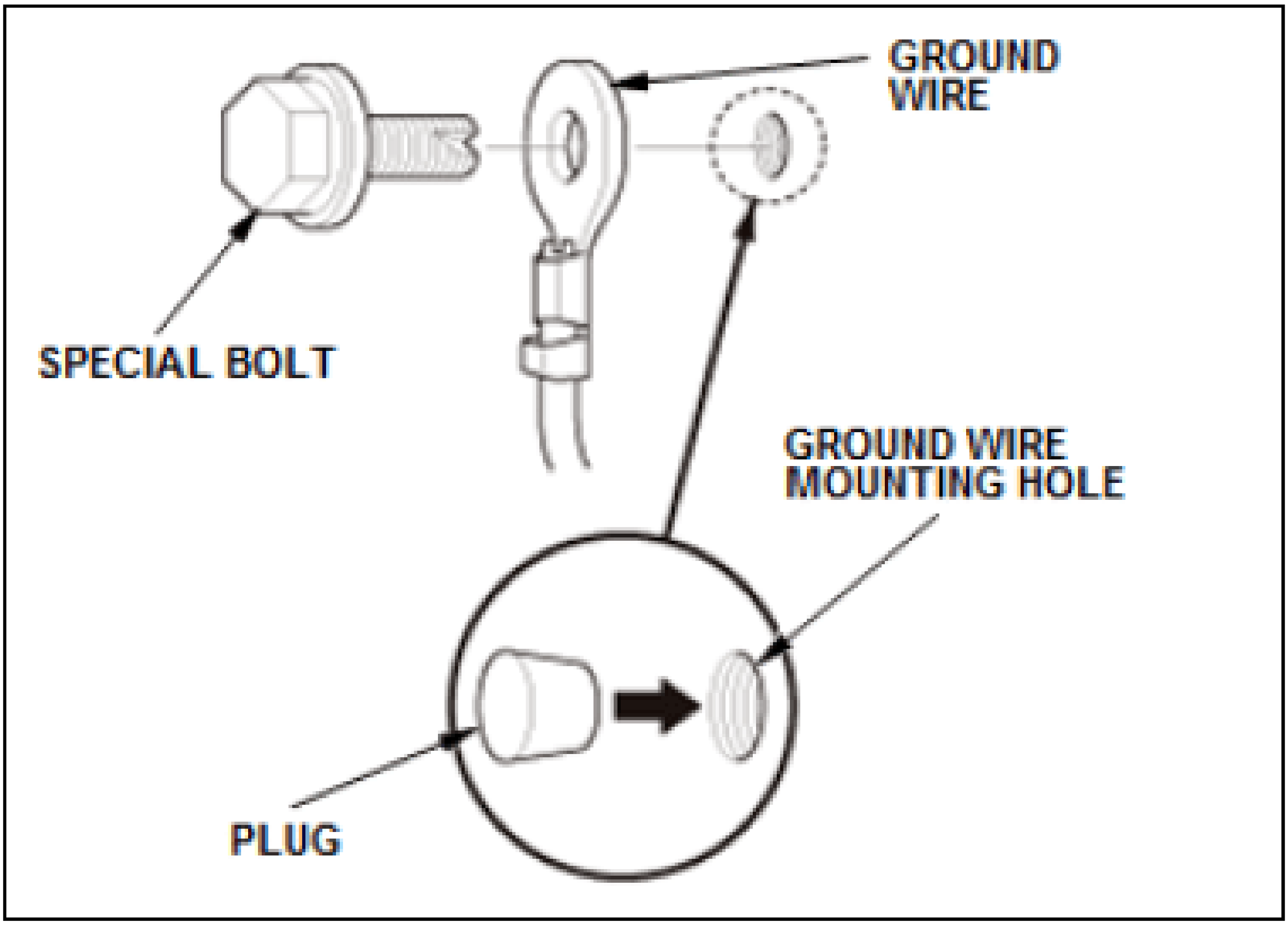

Basic Work Processes

Some collision damage reaches the body's structural parts, with damage so extensive that core body parts may be bent, twisted and stressed. Therefore, use of body and frame correction equipment is necessary. Outer panels will also need to be repaired or replaced.

During major body damage repairs, it is vitally important to measure the entire vehicle body not just the impact area, to correctly diagnose dispersed damage. The amount of estimated and actual repair hours is heavily dependent upon correct preliminary body damage measurements and diagnosis.

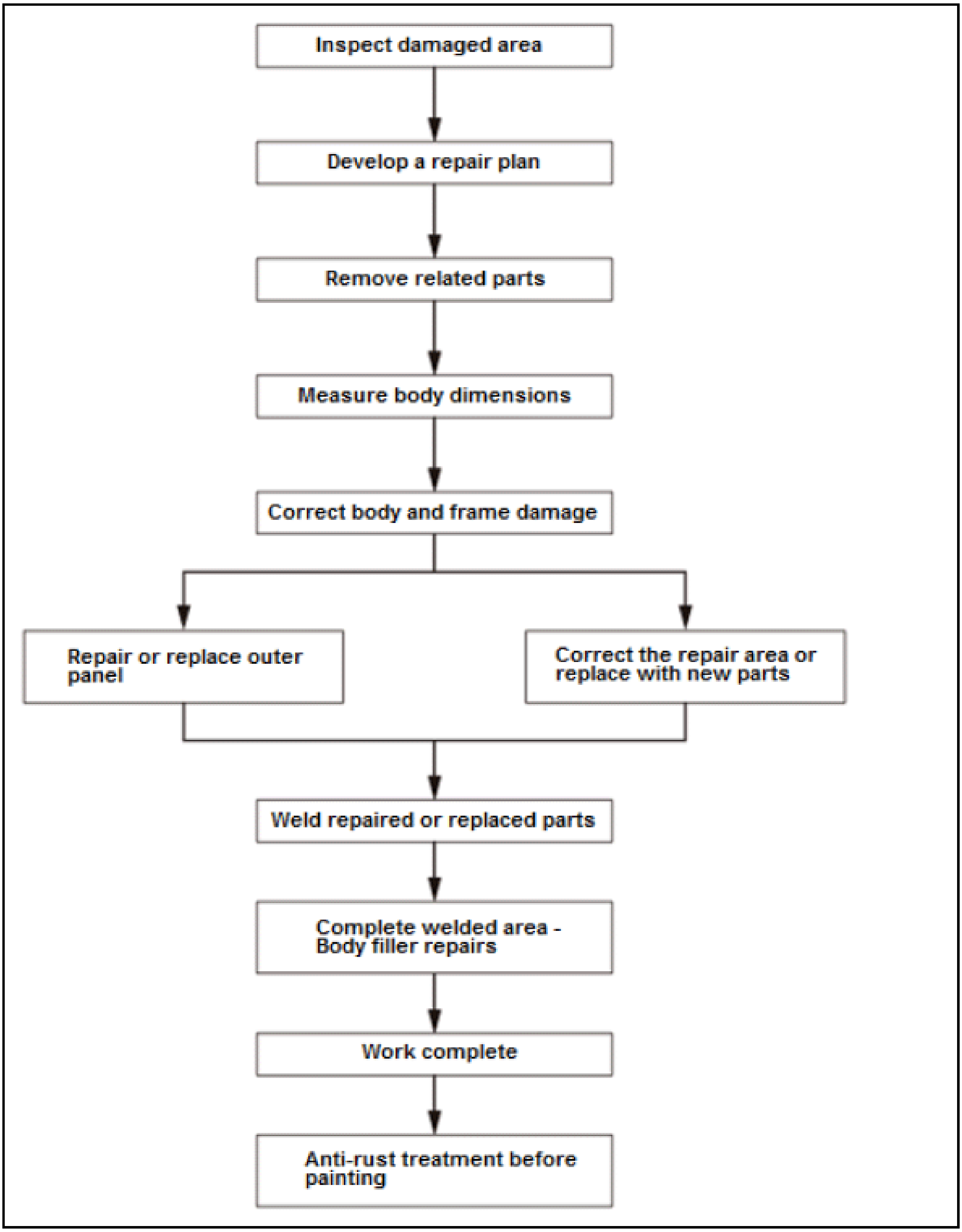
Inspect damaged area
Develop a repair plan
Remove related parts
Measure body dimensions
Correct body and frame damage
Repair or replace outer panel
Correct the repair area or replace with new parts
Weld repaired or replaced parts
Complete welded area - Body filler repairs
Work complete
Anti-rust treatment before painting

Body And Frame Correction For Front Damage

Front damage example: The side bulkhead, front side frame, and the front wheelhouse are damaged on the left side. The damper housing and dashboard are damaged. Extended damage is also seen on the front pillar, front side frame, and front wheelhouse on the right side. Impact forces were also dispersed into the roof panel causing distortion there as well.

1. Develop a repair plan:
    - Pull out the damaged area to restore both right and left side parts installation points back to near the original dimensions.
    - Repair and reform the installation points for the new replacement parts.

- Remove the damaged part (left side) and install a new part.

2. Attach the body to the body and frame correction equipment. Firmly attach the vehicle so it does not move during the pulling operation.

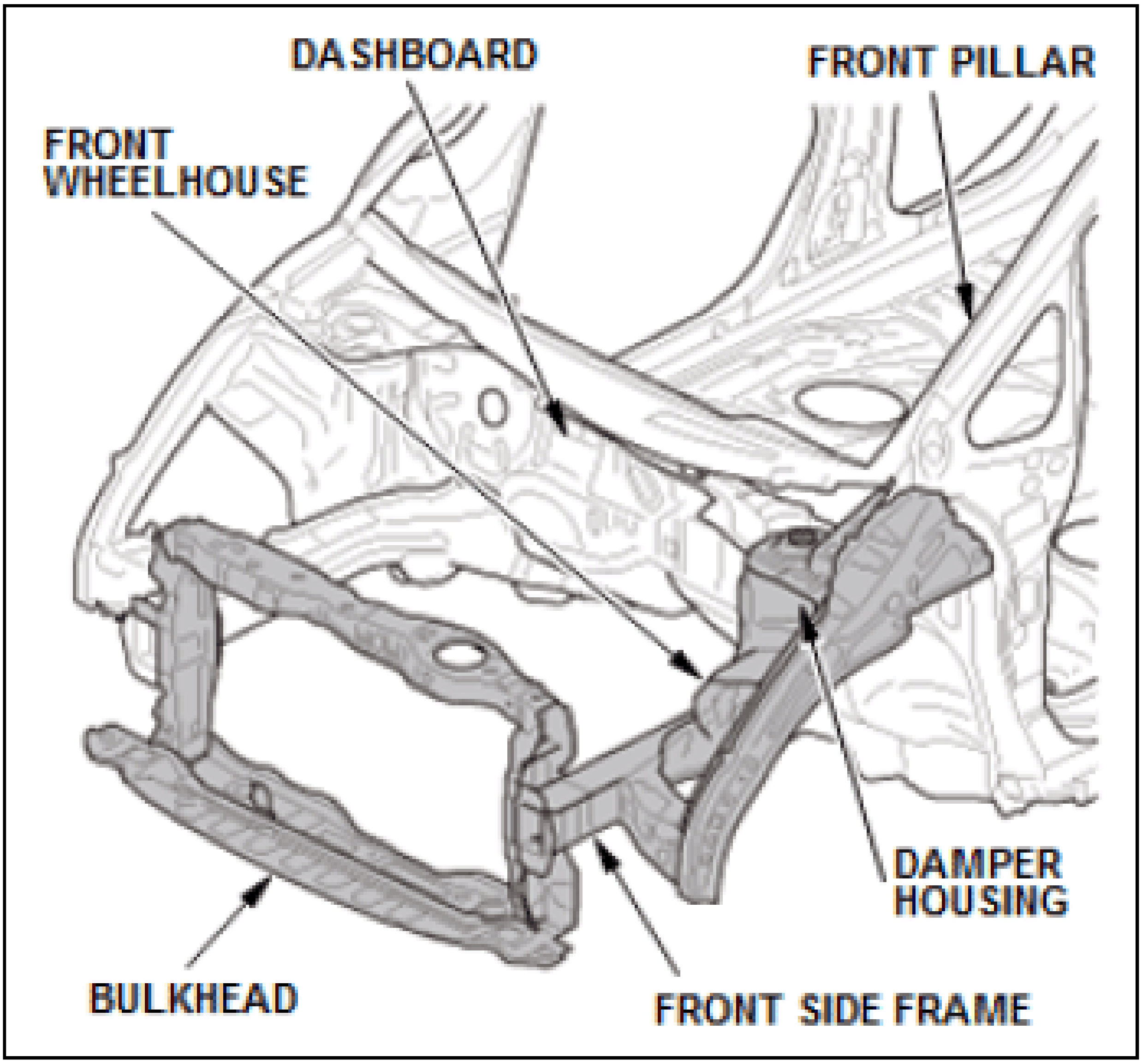
DASHBOARD
FRONT PILLAR
FRONT WHEELHOUSE
DAMPER HOUSING
BULKHEAD
FRONT SIDE FRAME

3. Determine the pulling direction, then pull-out slowly and gradually While pulling, repair the joint areas where the replaced parts are installed. At the same time, reform the front side frame, front wheelhouse and the damper housing on the right side.
4. Measure the dimensions and determine the pulled-out position.

   Repeat the pulling operation until each point is back to the correct position.

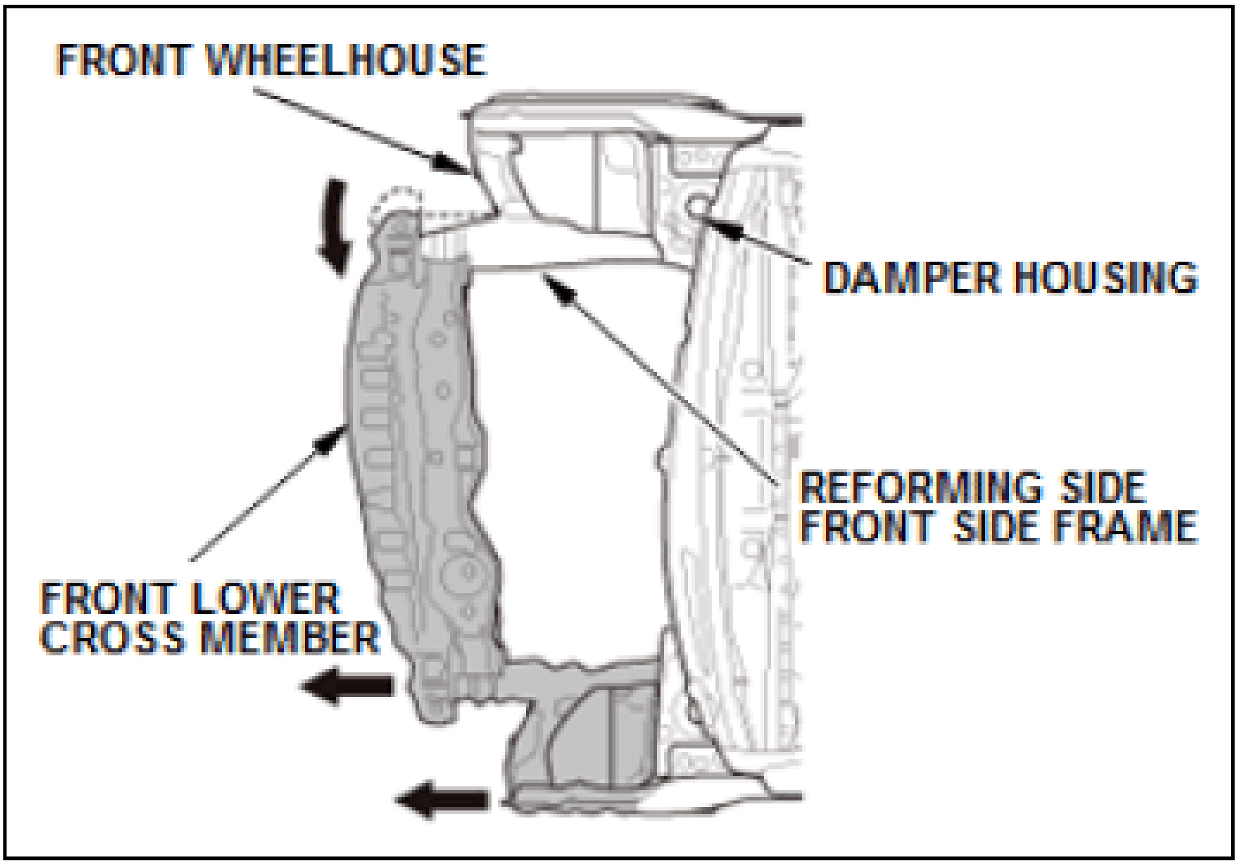
FRONT WHEELHOUSE
DAMPER HOUSING
REFORMING SIDE FRONT SIDE FRAME
FRONT LOWER CROSS MEMBER

5. Repair the front side frame, front wheelhouse and damper housing on the right side and bring them back to the correct position.

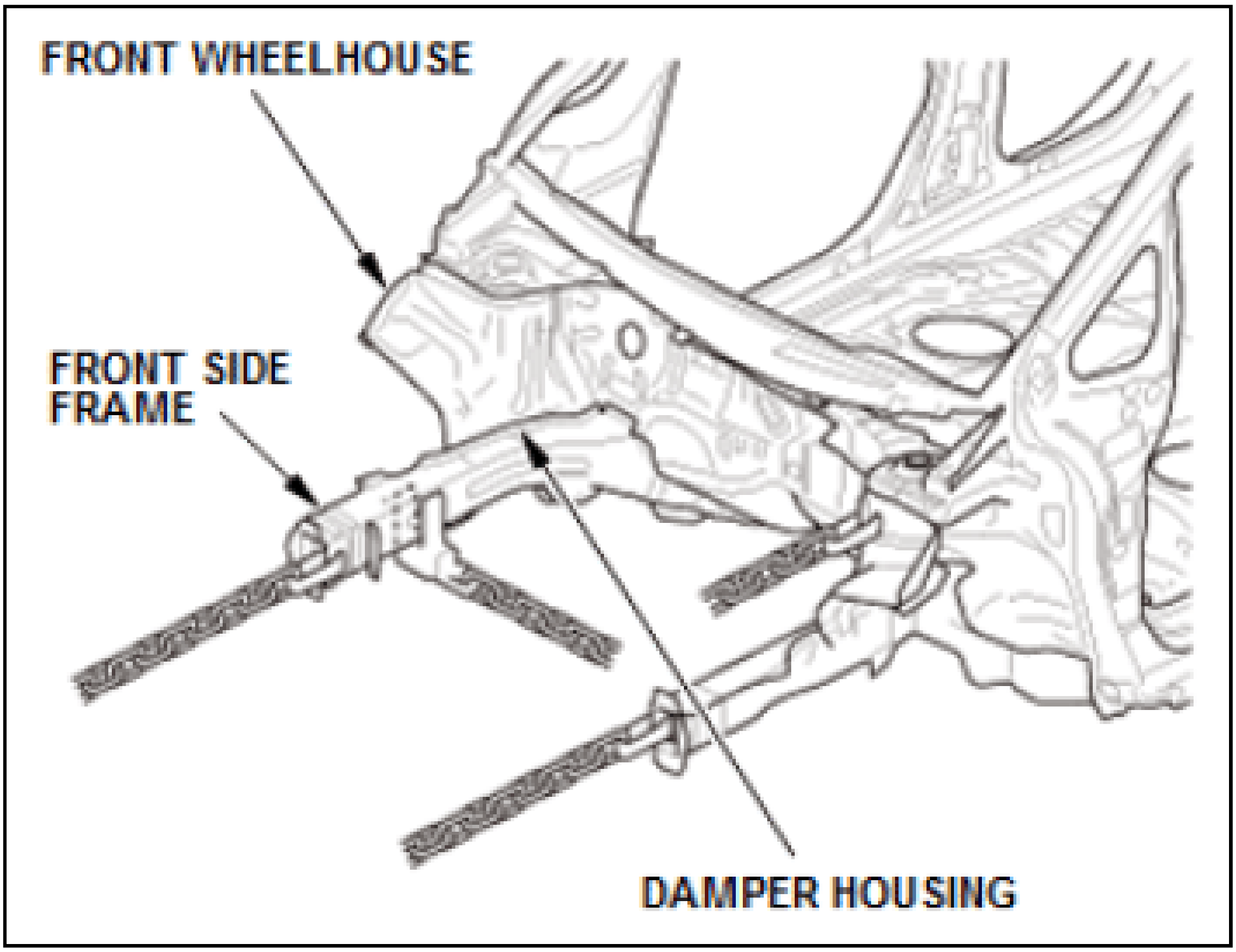
FRONT WHEELHOUSE
FRONT SIDE FRAME
DAMPER HOUSING

6. If the damper housing, dashboard, dashboard upper side member and front pillar on the left side cannot be fully reformed, cut the front side frame and damper housing, and then pull-out the root of dashboard upper side member and front side frame.

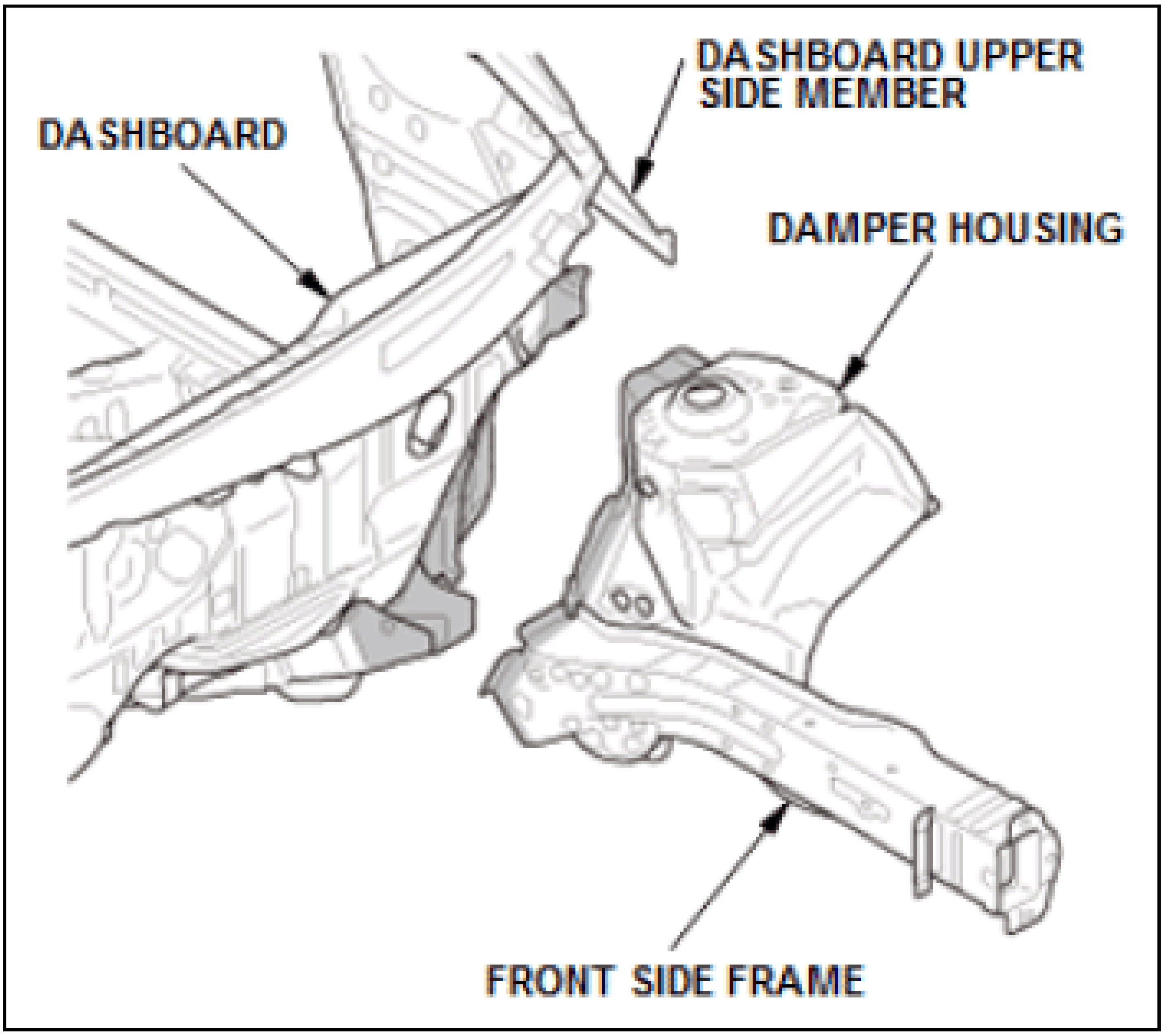
DASHBOARD UPPER SIDE MEMBER
DASHBOARD
DAMPER HOUSING
FRONT SIDE FRAME

7. For the front pillar damage, use a porta-power to push it from inside the passenger compartment while pulling in a forward direction.

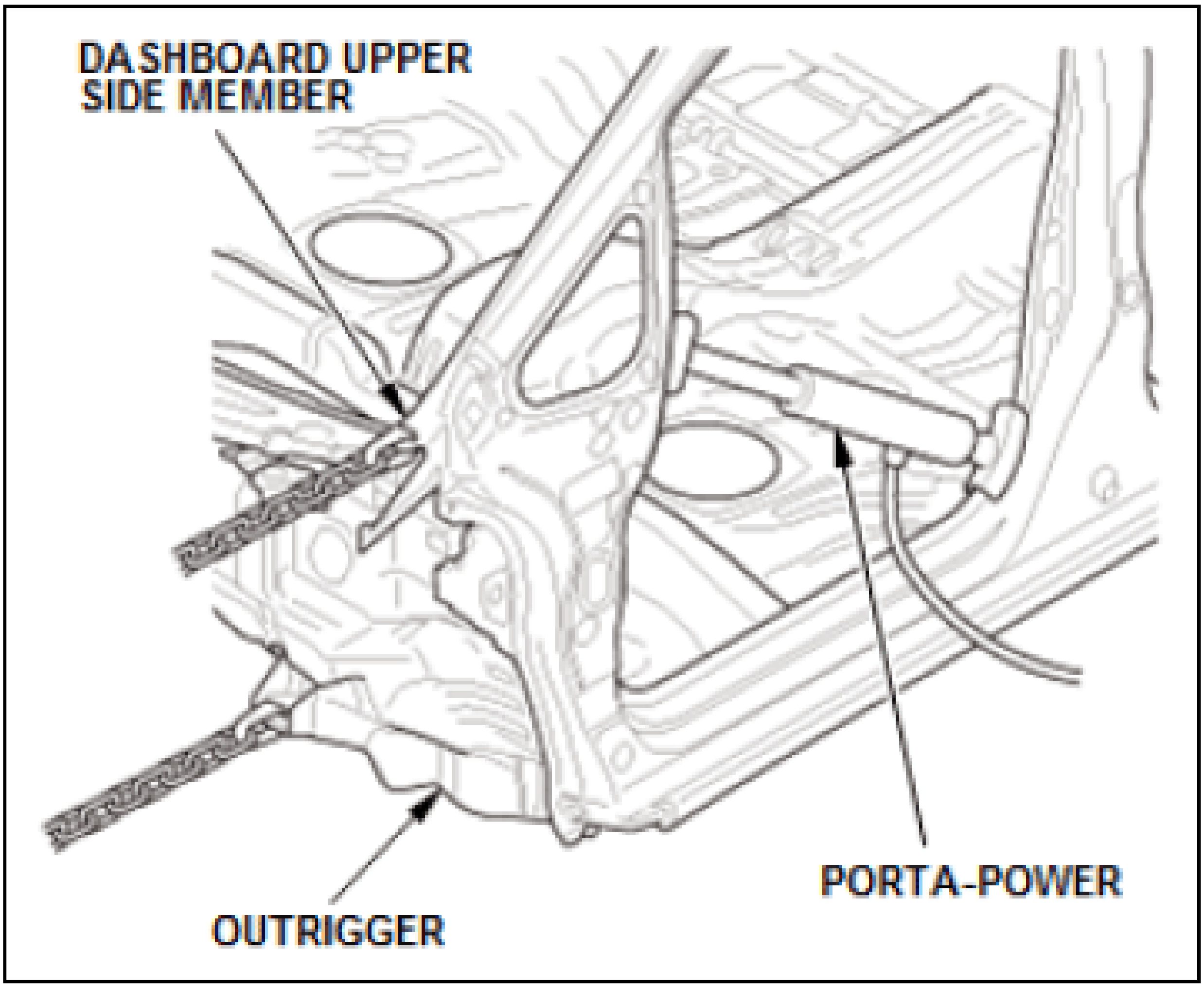

Body And Frame Correction For Rear Damage

Rear damage example: The rear panel, rear outer panel, rear floor and rear frame are damaged. the rear frame is bent due to a concentrated stress.

In the upper body damage will disperse as far as the rear wheelhouse, rear inner panel, and rear pillar with distortion also in the roof panel.

1. Develop a repair plan:
   - Pull out the damaged area to restore it to near the original dimensions.
   - Repair and reform the installation points for the new replacement parts.
   - Remove the damaged part (left side) and install a new part.
2. Attach the body to the body and frame correction equipment. Firmly attach the vehicle so it does not move during the pulling operation.

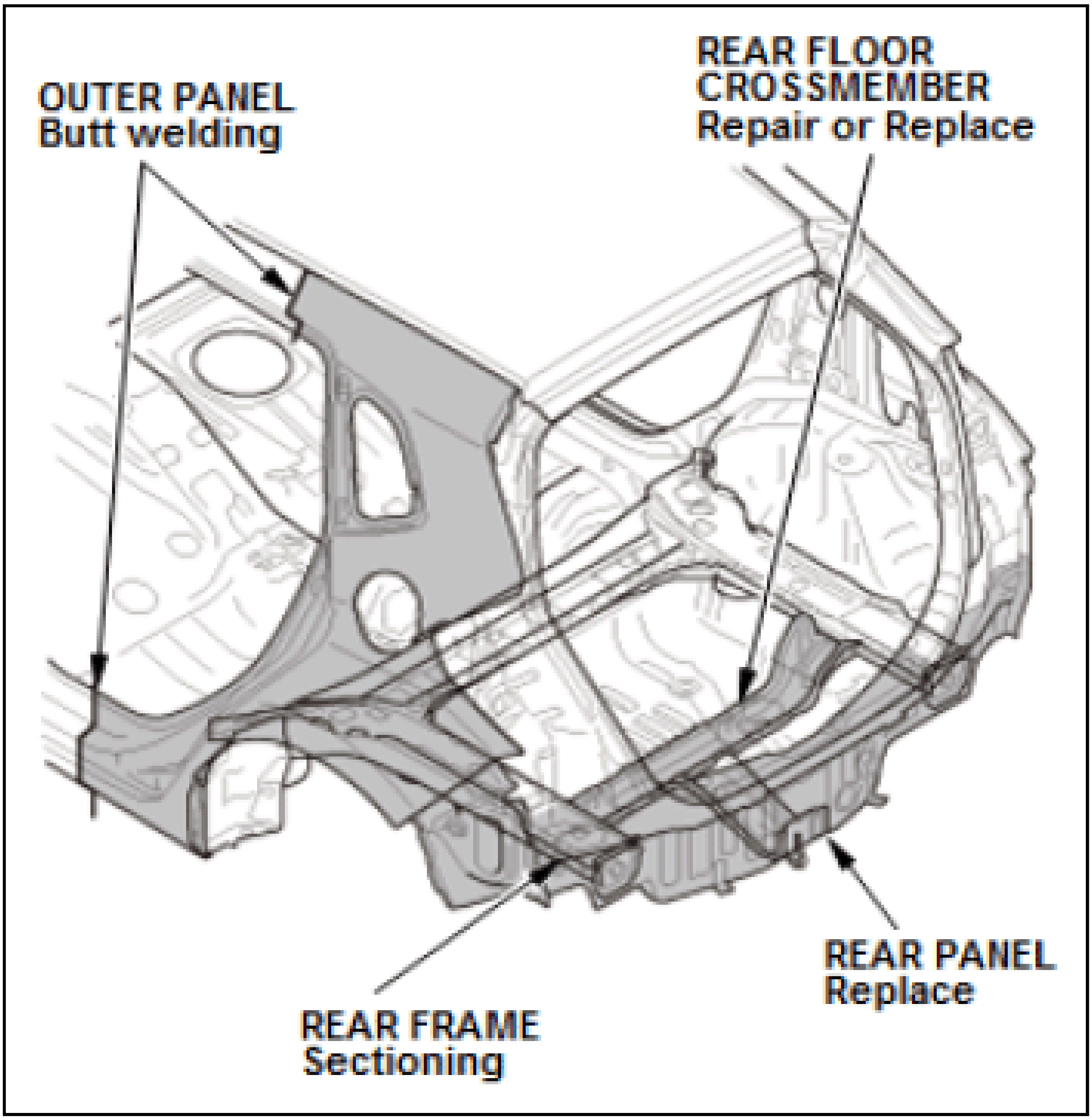
OUTER PANEL
Butt welding
REAR FLOOR
CROSSMEMBER
Repair or Replace
REAR PANEL
Replace
REAR FRAME
Sectioning

3. Determine the pulling direction opposite the impact force, then pull-out slowly and gradually pull out the rear panel, rear floor, and the rear frame. While pulling, repair the rear floor. Do not directly pull on the rear outer panels during repair.

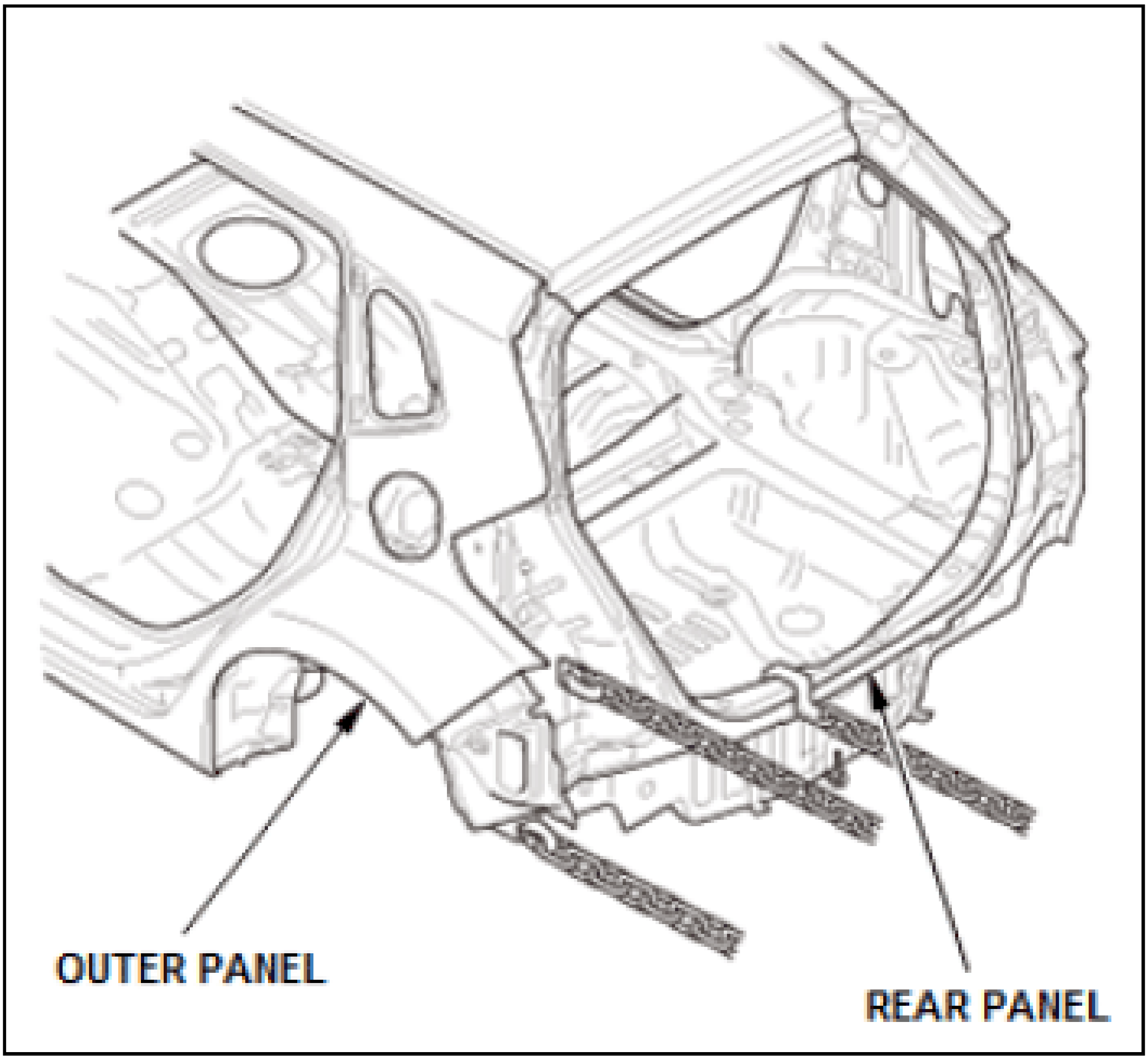

4. If it is impossible to pull it out fully cut the rear panel or rear floor and restore the damaged area by pulling it directly.
5. Measure the dimensions of rear frame, rear wheelhouse, rear damper positions after the repair.

   Also check the clearances between rear doors and rear out side panels.

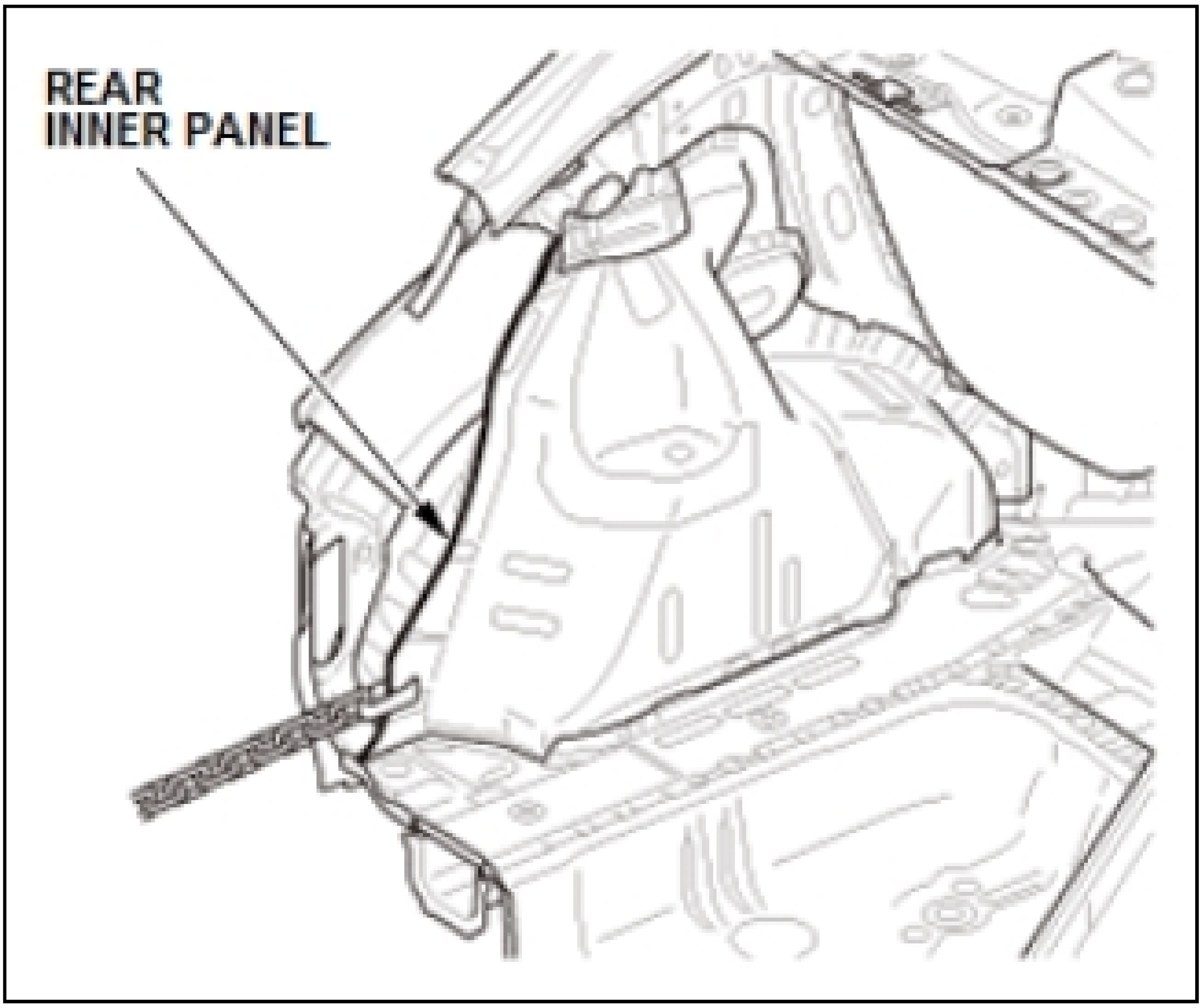

Body And Frame Correction For Side Damage

An example of damages: Due to the side impact, together with the side sills, the floor is crashed and the center pillar is bent.

The whole body is bent like a boomerang and the wheel base is shrunk.

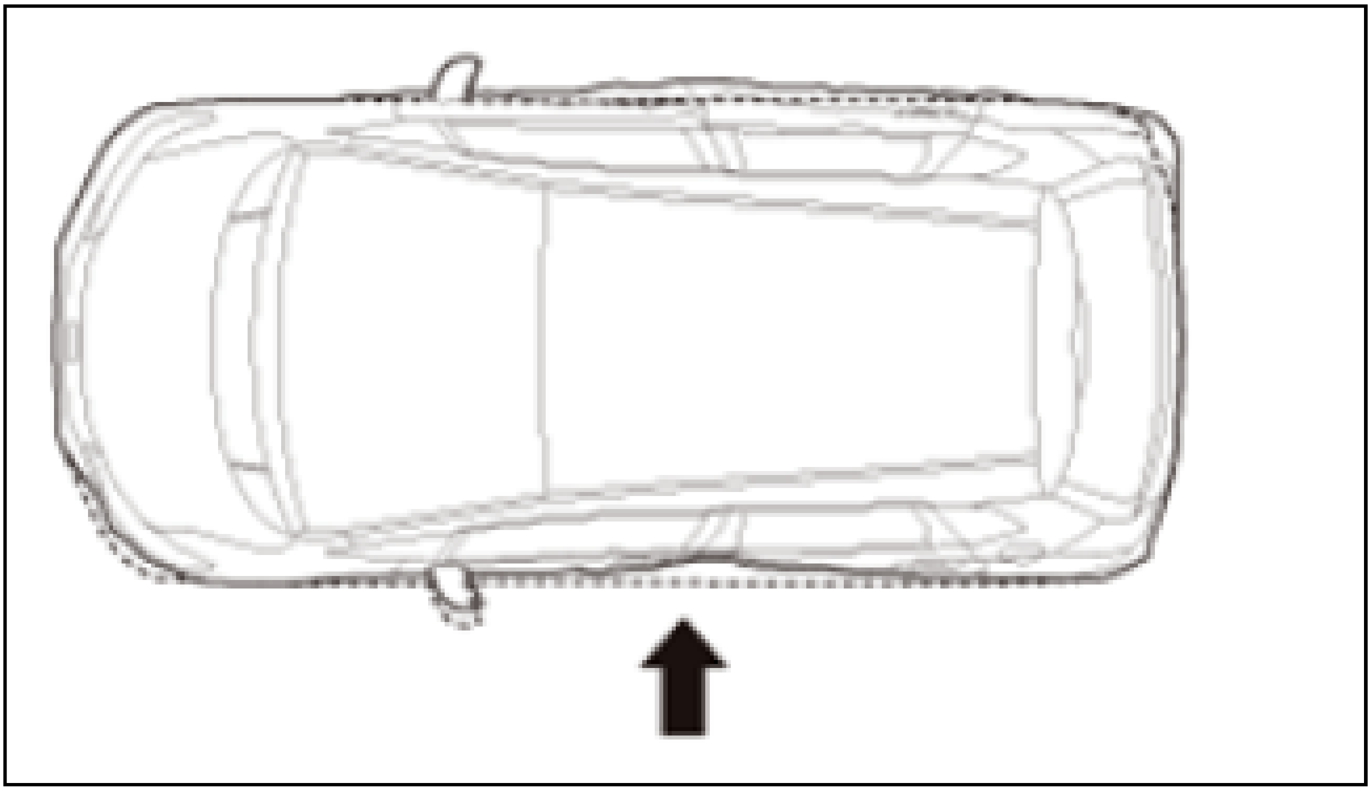

1. Develop a repair plan:

- Pull out the damaged area to restore it to near the original dimensions.
- Repair and reform the installation points for the new replacement parts.
- Remove the damaged part (left side) and install a new part.

2. Attach the body to the body and frame correction equipment.

   Firmly attach the vehicle so it does not move during the pulling operation.

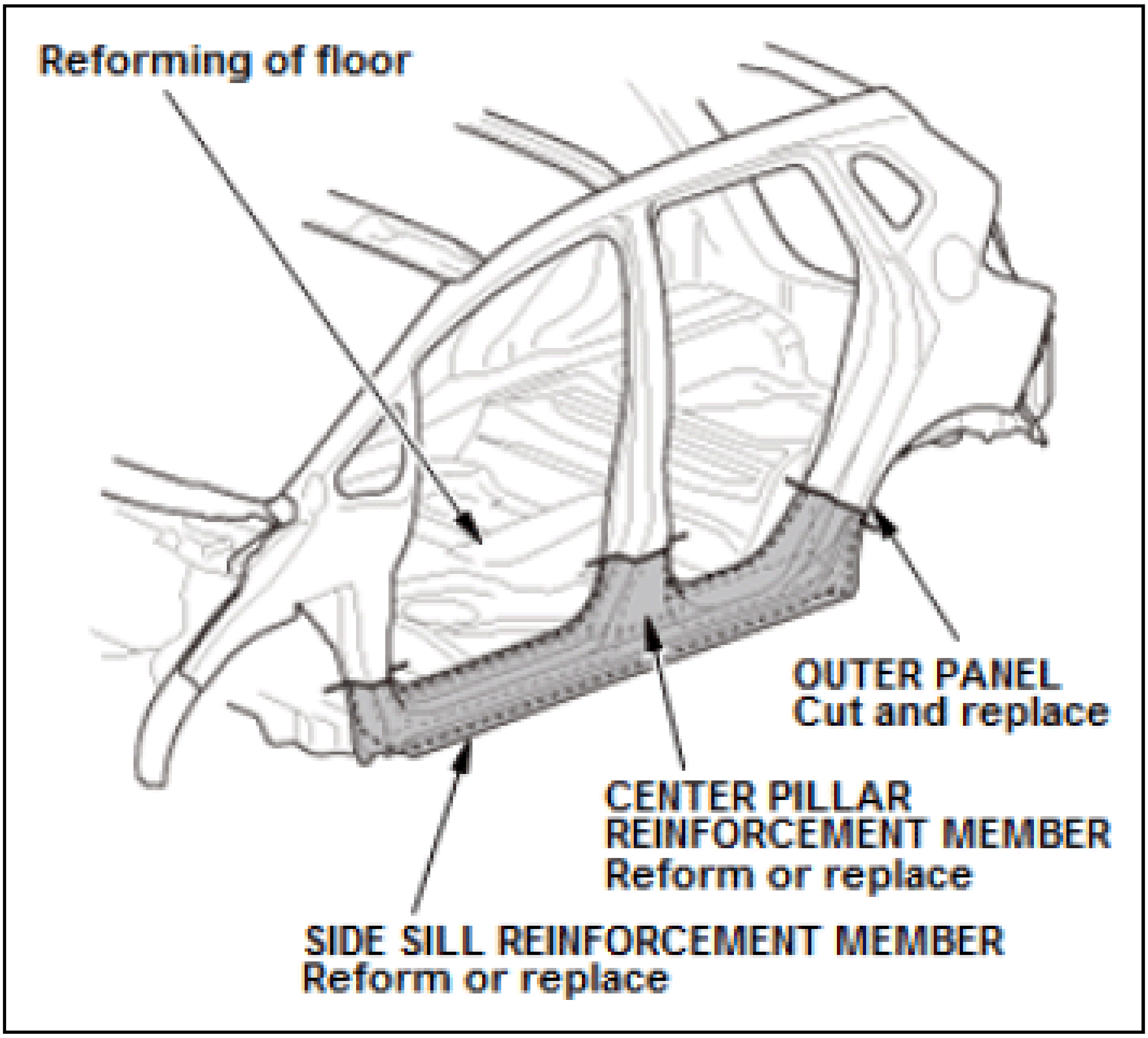
Reforming of floor
OUTER PANEL
Cut and replace
CENTER PILLAR
REINFORCEMENT MEMBER
Reform or replace
SIDE SILL REINFORCEMENT MEMBER
Reform or replace

3. The most effective way is to pull it out in three directions. While pulling out the side sill and the center pillar in the direction (A), opposite to the impact force, pull out the side sill in the front and rear direction (B) at the same time. While pulling, repair the floor panel and door opening area.
4. Measure the dimensions and confirm the pulled-out points.

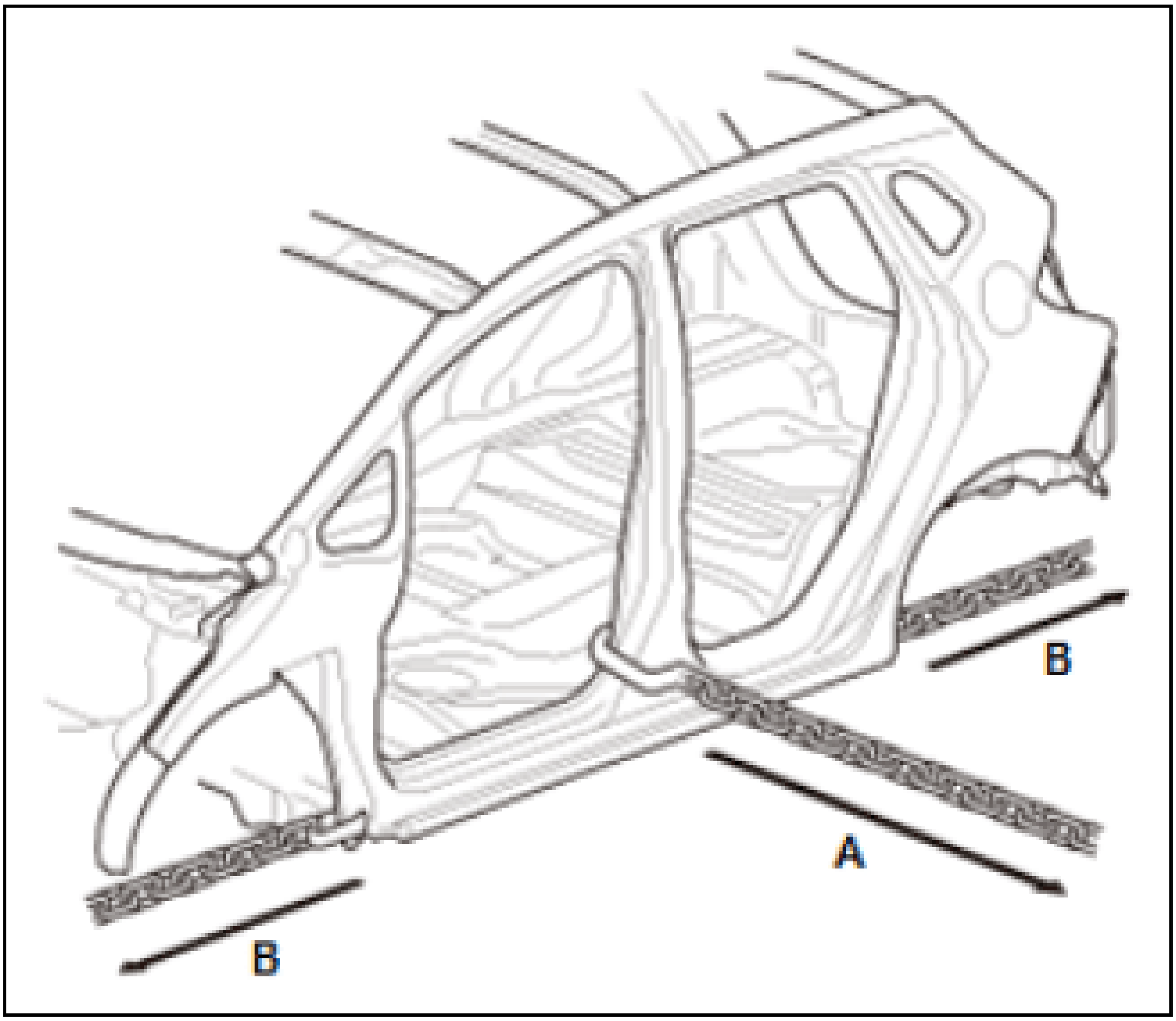

Body And Frame Correction Overview

This work is very important in collision repair. Using body and frame correction equipment, the deformed area of the wrecked vehicle is pulled out nearly to the original shape. In order to complete this work satisfactorily measurements must be made correctly before beginning this work.

If the body is not correctly restored to the original dimensions, the exterior appearance, driveability steering, handling, and tire wear will be greatly influenced.

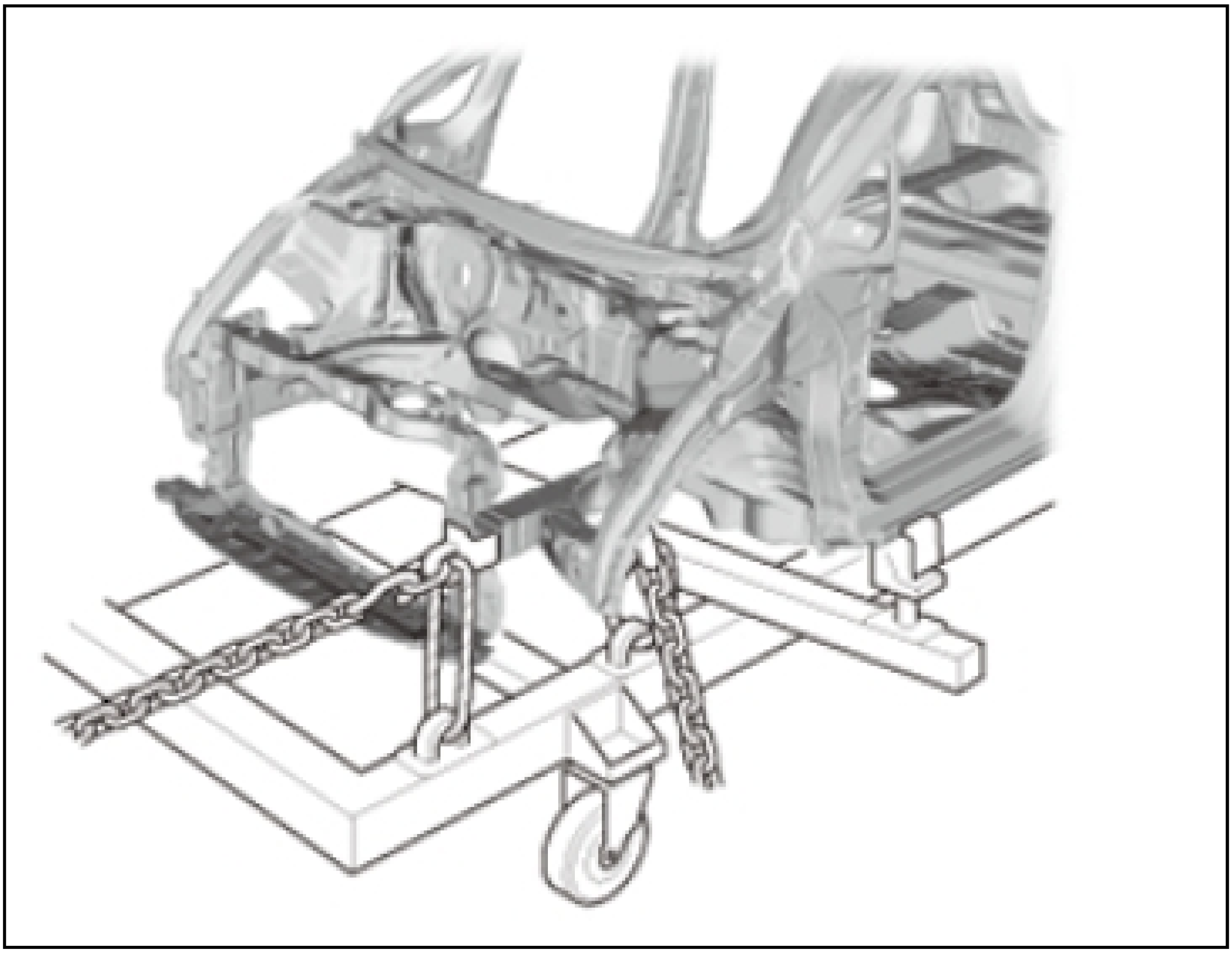

Body Damage Inspection

Check the damaged portion of the vehicle visually and by feel to estimate the extent of the collision damage.

1. Observe the entire vehicle and count the number of impacts, evaluate their magnitude and determine the damage sequence.

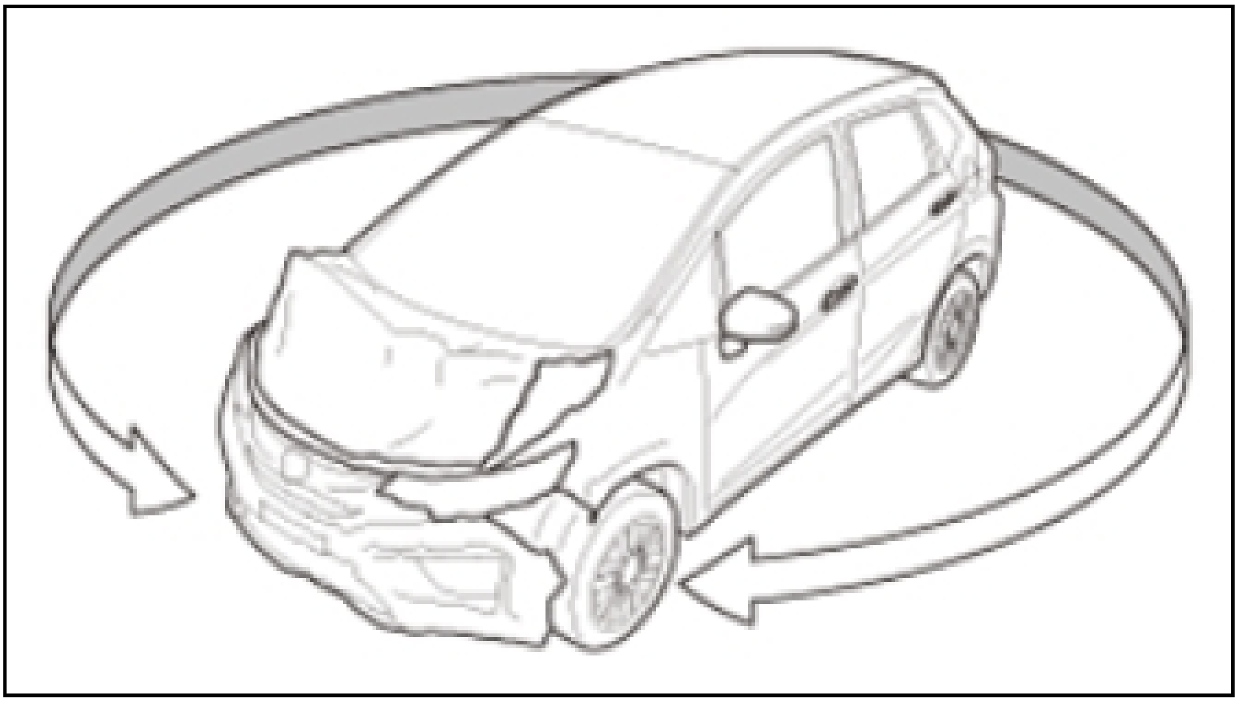

2. Check external damage and deformation

   Observe the vehicle from the front, rear, and sides and check lateral and vertical bends, twists, out-of true lines on the side view, and body high spots or depressions. Also check panel deformation away from the impact areas.

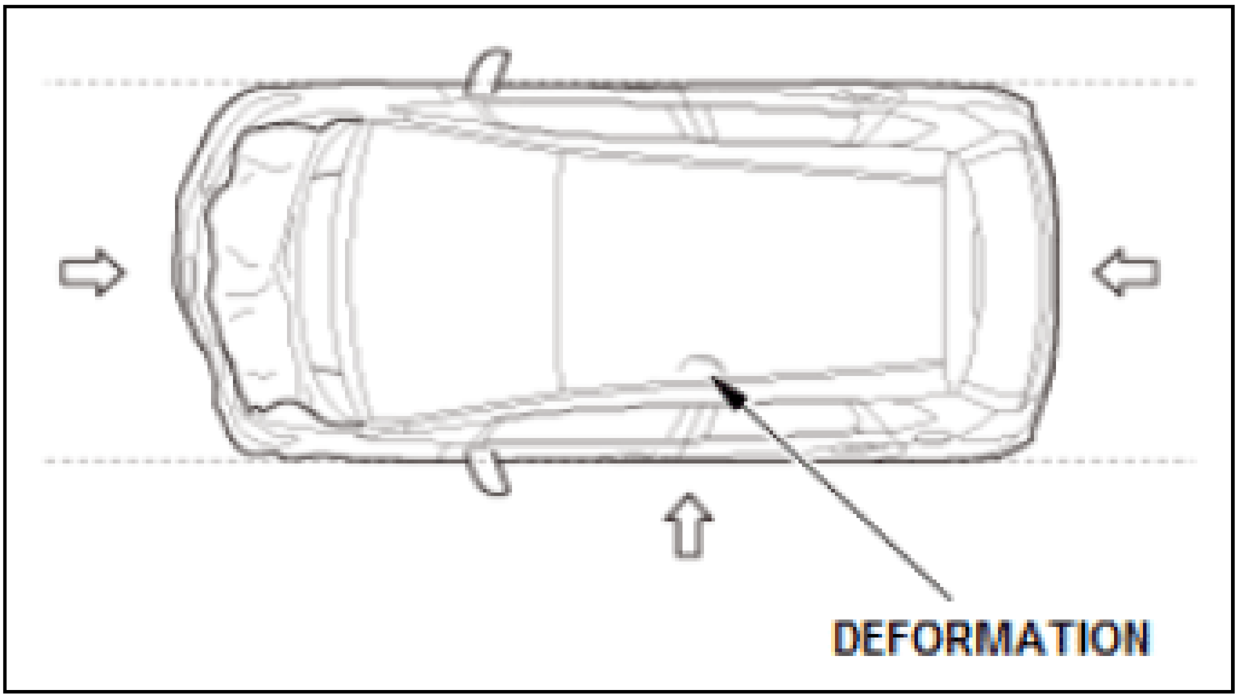

3. Check the alignment (fit/finish) of the exterior body parts Close doors, hood and trunk lid to carefully inspect the gap, steps and clearance against the adjoining panels, and check for any striker contact while opening and closing.

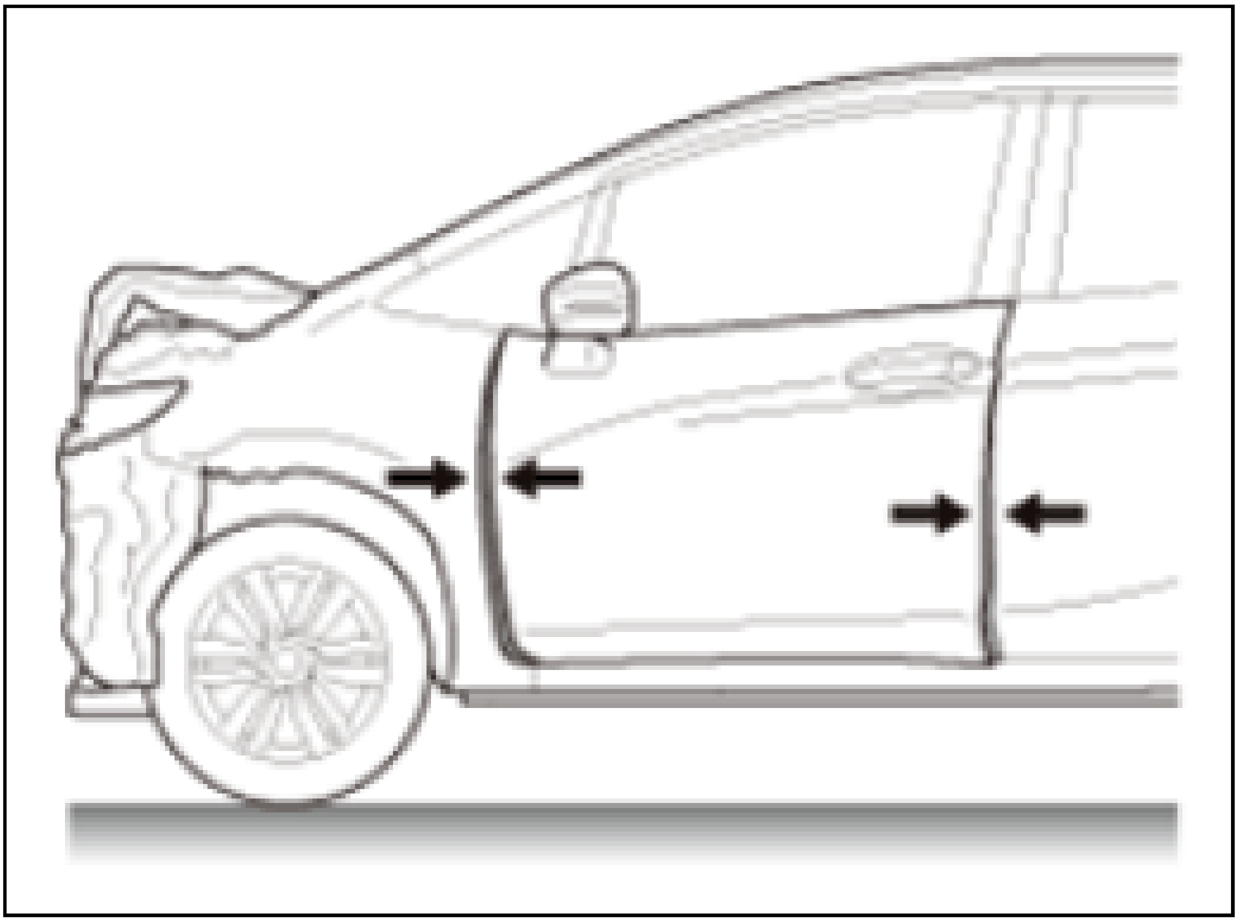

4. Check for damage caused by passengers and cargo:
    - Inspect for secondary damage caused by crash inertia.
    - Inspect the damage to steering, instrument panel, seat and seat belt in the passenger compartment.

Also inspect the for deformation of body panel in the trunk or cargo area caused shifting cargo.

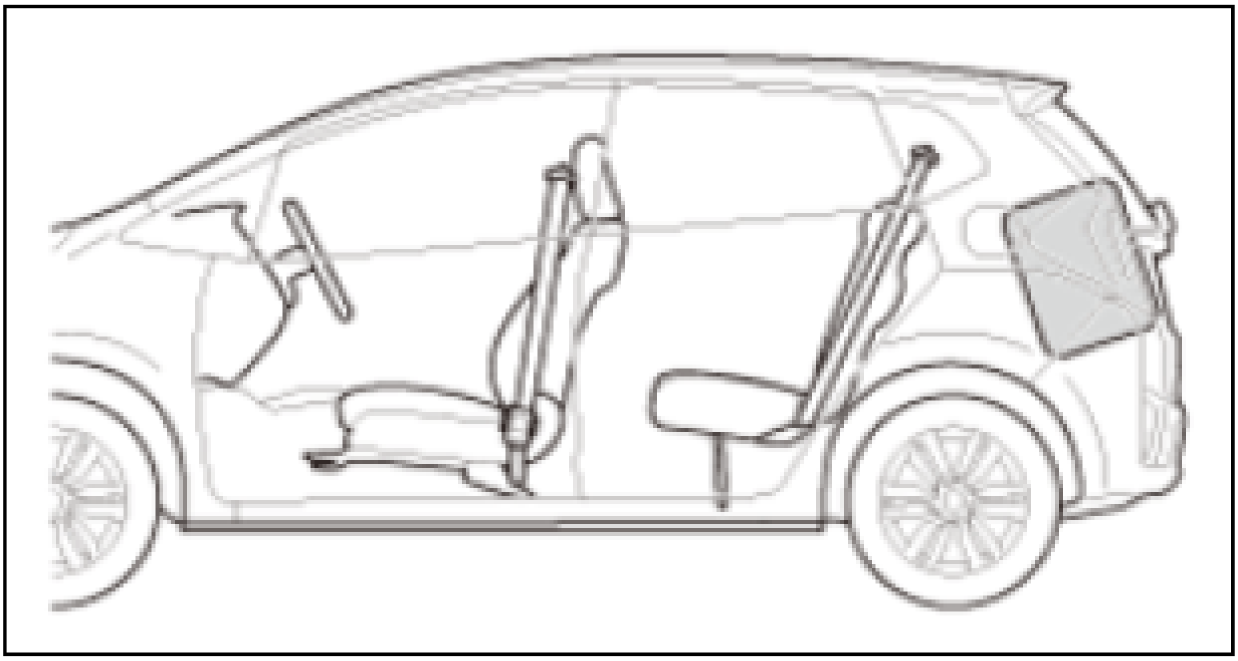

5. Check the engine compartment:
   - Check deformation or damaged:
     - Engine mounts.
     - Transmission mounts and brackets.
     - Contact between auxiliary systems and the body.
     - Wiring harnesses pinching or damage.
   - Check for deformation in each part of the body and for sealer cracking or peeling from any welded joints.

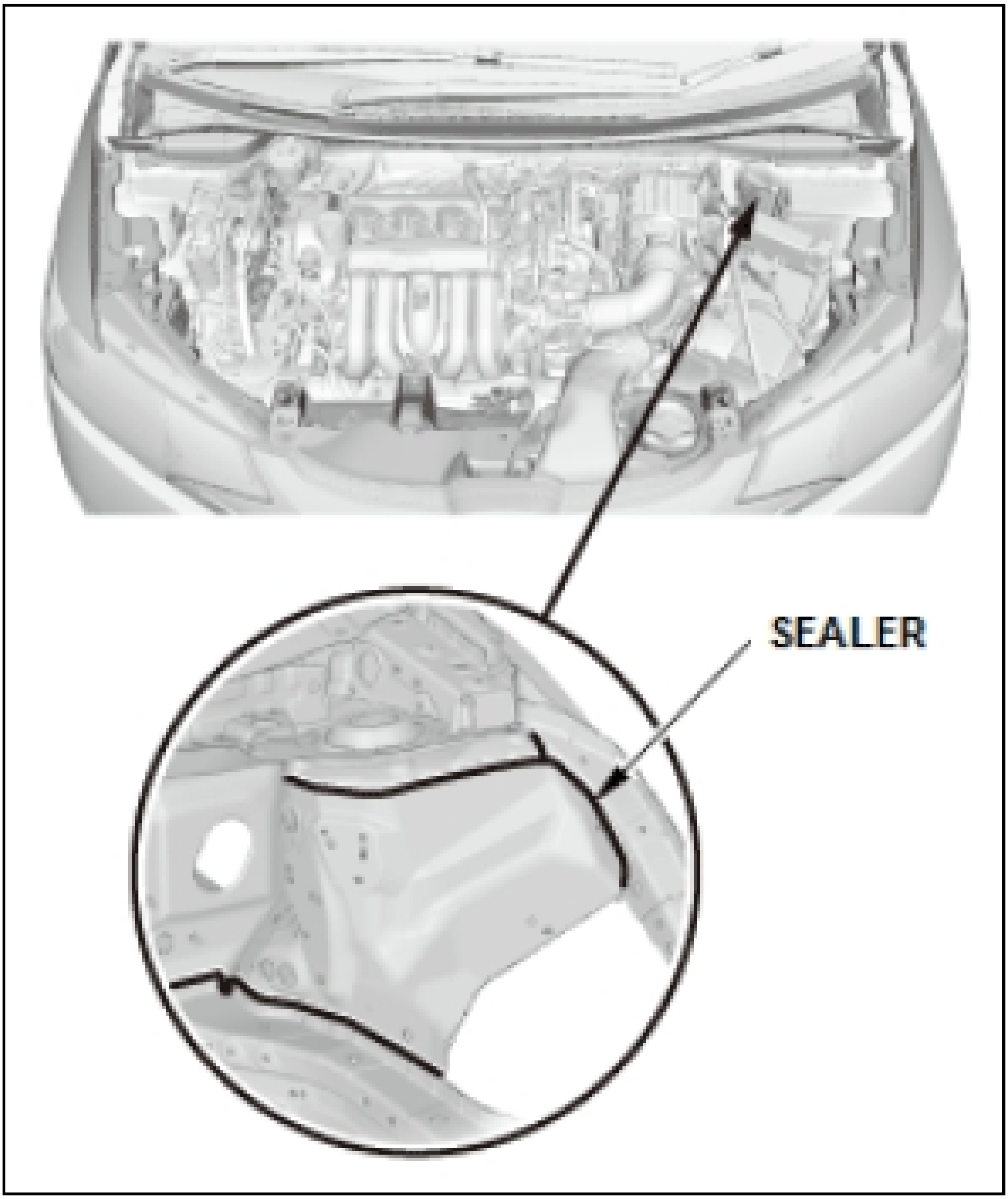

6. Check the under body.
    - Lift the vehicle and check for damage in the suspension or the sub frame.
    - Check for leakage of engine oil, coolant, transmission and brake fluids.
    - Check for deformation in each part of the body and for sealer cracking or peeling from any welded joints.
7. Check the vehicle system functions:
    - Start the engine and check whether any abnormal vibrations, noise, or contact noise exists.
    - Operate the clutch, brake pedal, parking brake lever and the shift lever to check their function. Operate all electrical lighting and accessory systems to check their function.

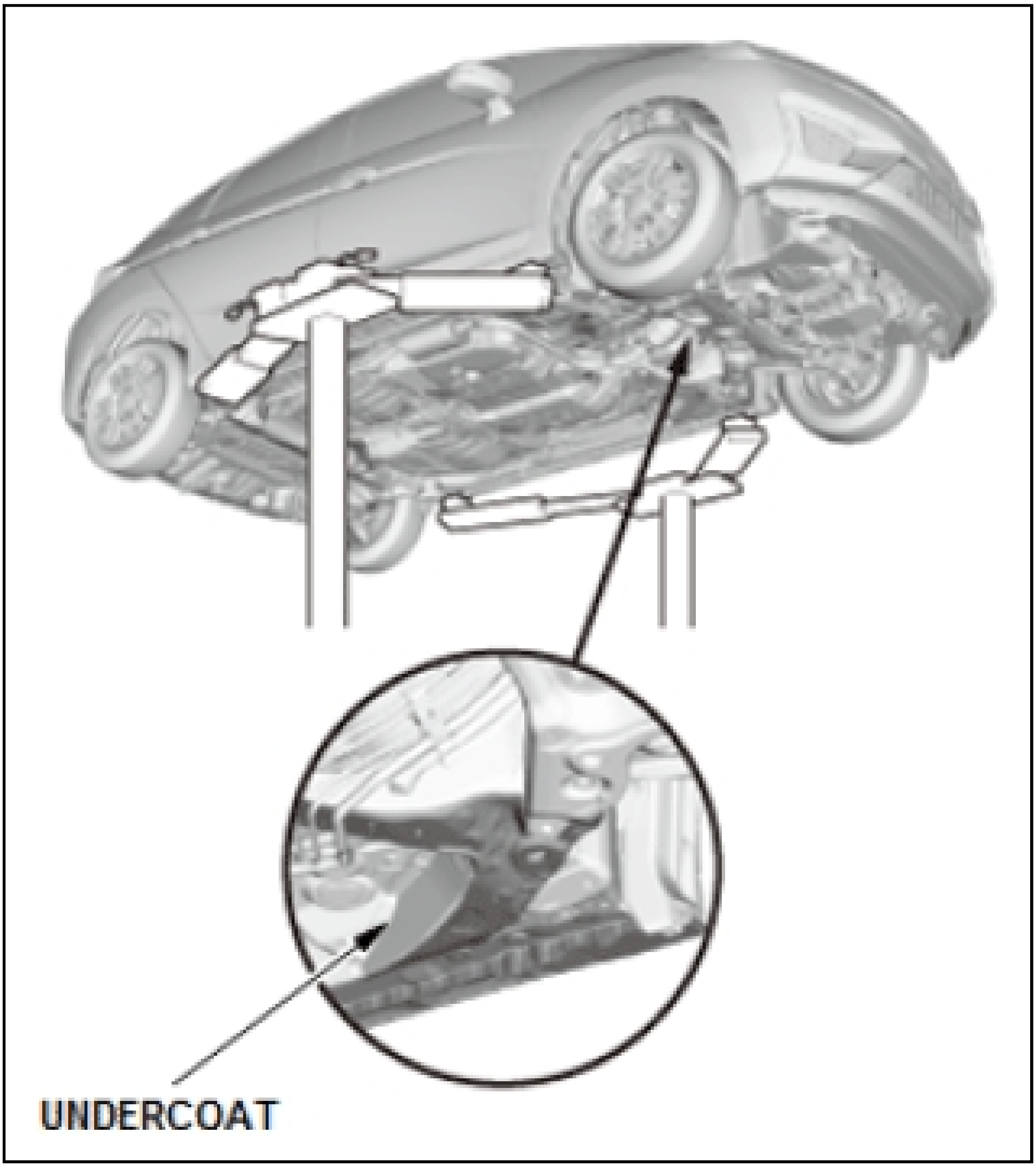

Measuring Dimensions

With reference to the body centerline, measure the major dimensions of the damaged body with the use of measurement equipment. This makes numerical evaluation of to body damage amount possible. Body dimensions that influence wheel alignment are particularly important. Visual inspection alone is not sufficient.

Measurement Method

- Diagonal measurements (X measurements)
- Measure using the body measuring dimensions in the model specific body repair information (Actual measurement figures)
- Measurements with the use of a frame repair chart (flat view data)

By combining the measurement methods above, diagnosis of the overall body damage level is possible.

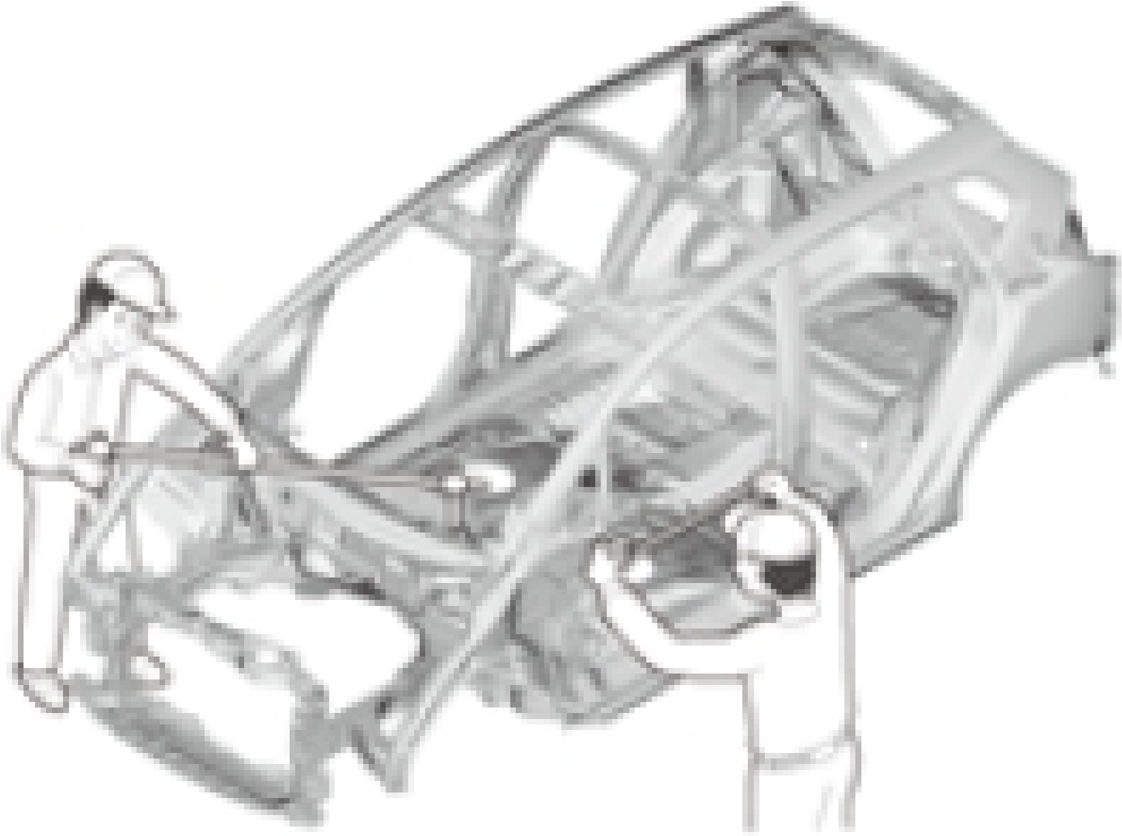

Diagonal Measurements

Using a part installation hole or reference hole, which is one of two symmetrical right and left positions as a measuring point, diagonally measure the lengths of the front body, windows, passenger compartment, trunk or cargo area, tailgate opening, or under body From this data, the deformation of the vehicle as a whole can be judged.

NOTE: **Always combine the diagonal measurement with another measuring method as the diagonal measurement may not show all the deformation that exists.**

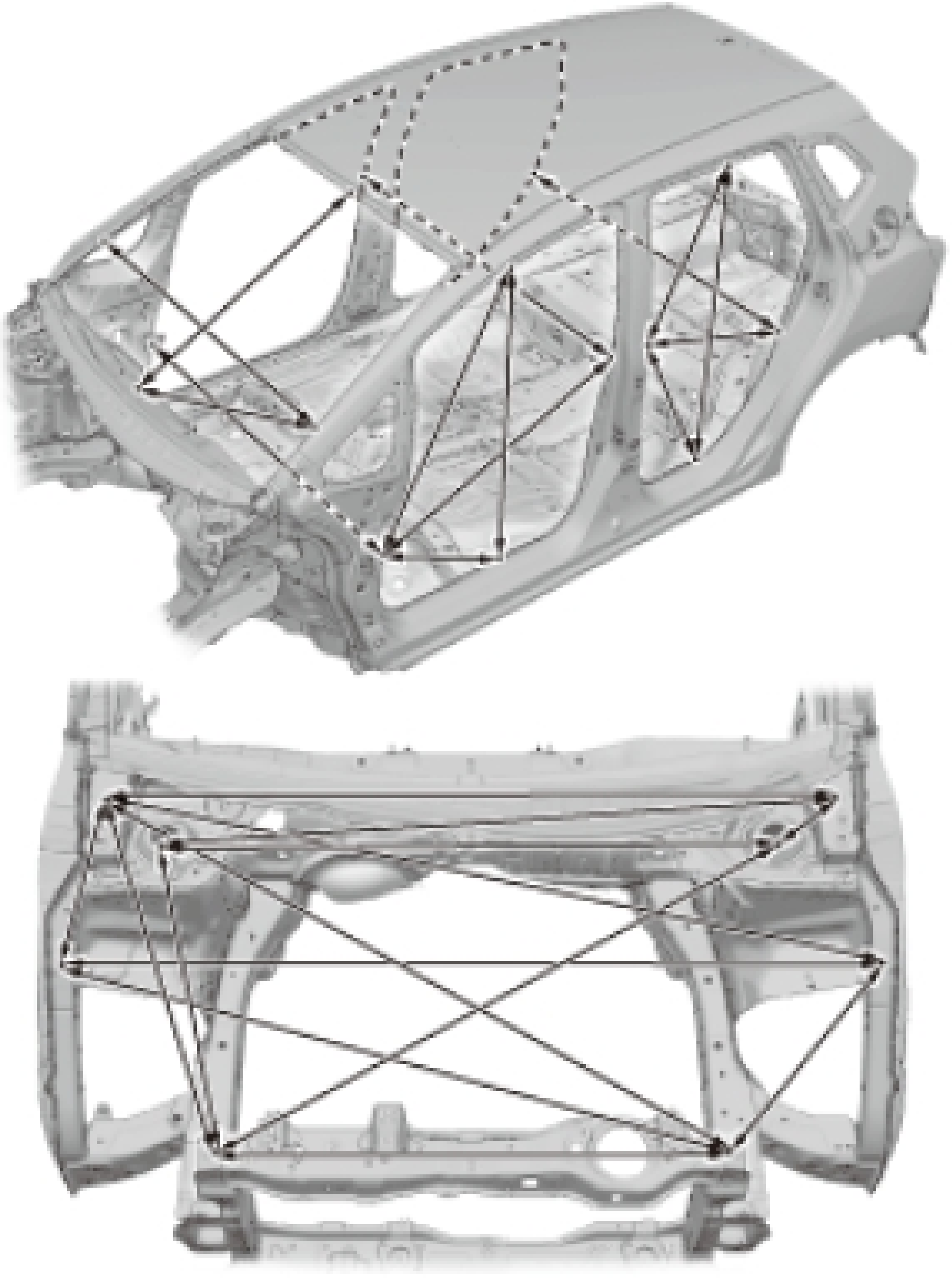

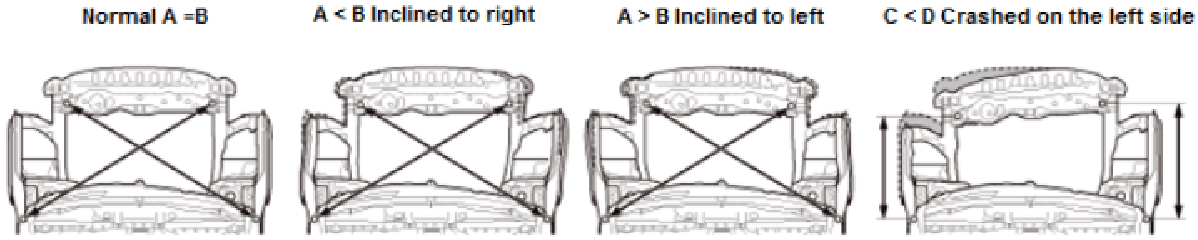
Normal A =B
A < B Inclined to right
A > B Inclined to left
C < D Crashed on the left side

Reference To The Drawing Of Body Dimensions

While referring to the body dimensional drawing shown in the model specific body repair information, measure the corresponding dimensions on the actual vehicle in fore and aft, right and left and diagonal directions to evaluate the damage level.

Depending on the amount of damage, the measurements from the undamaged parts of the vehicle may also be used for to evaluate damage levels.

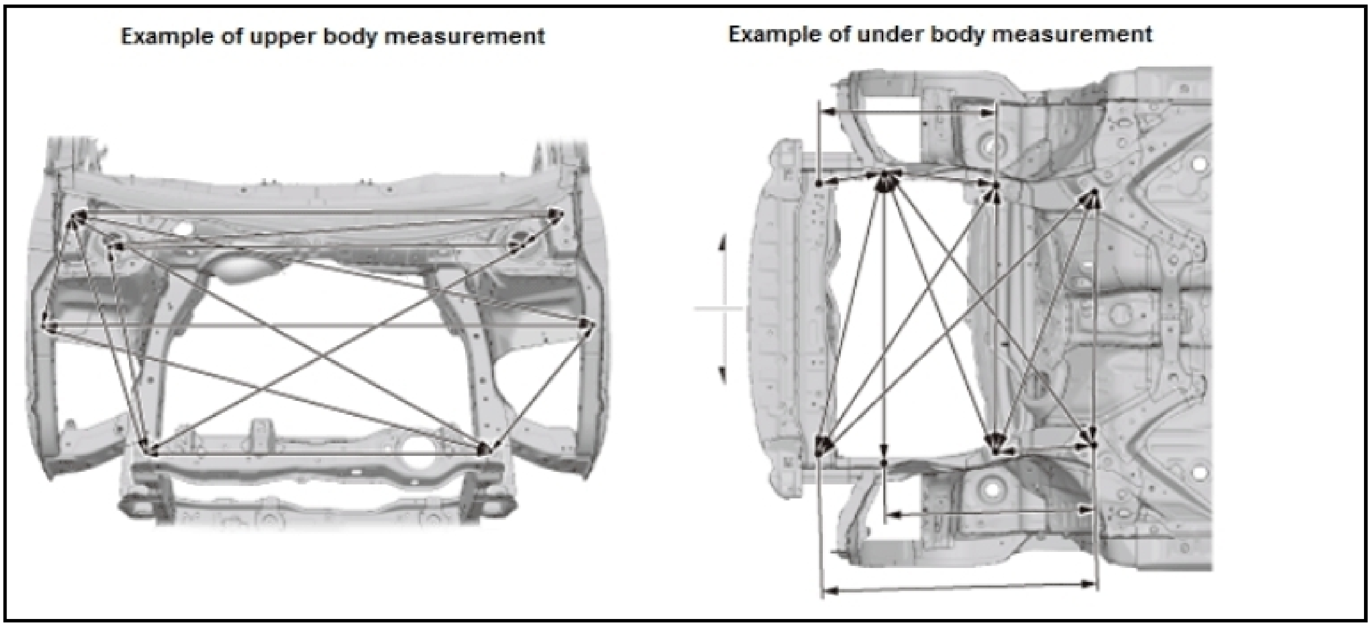
Example of upper body measurement
Example of under body measurement

Measurements According To The Frame Repair Chart

Measure the plain dimensions referring to the frame repair chart of the model specific body repair information.

The measurement points in the repair chart use the installation positions of critical components of a vehicle as datum points; such as the installation holes of the sub frame, engine, transmission, suspension related parts.

NOTE: **Always be sure to use equipment or gauges designed for vehicle body repair.**

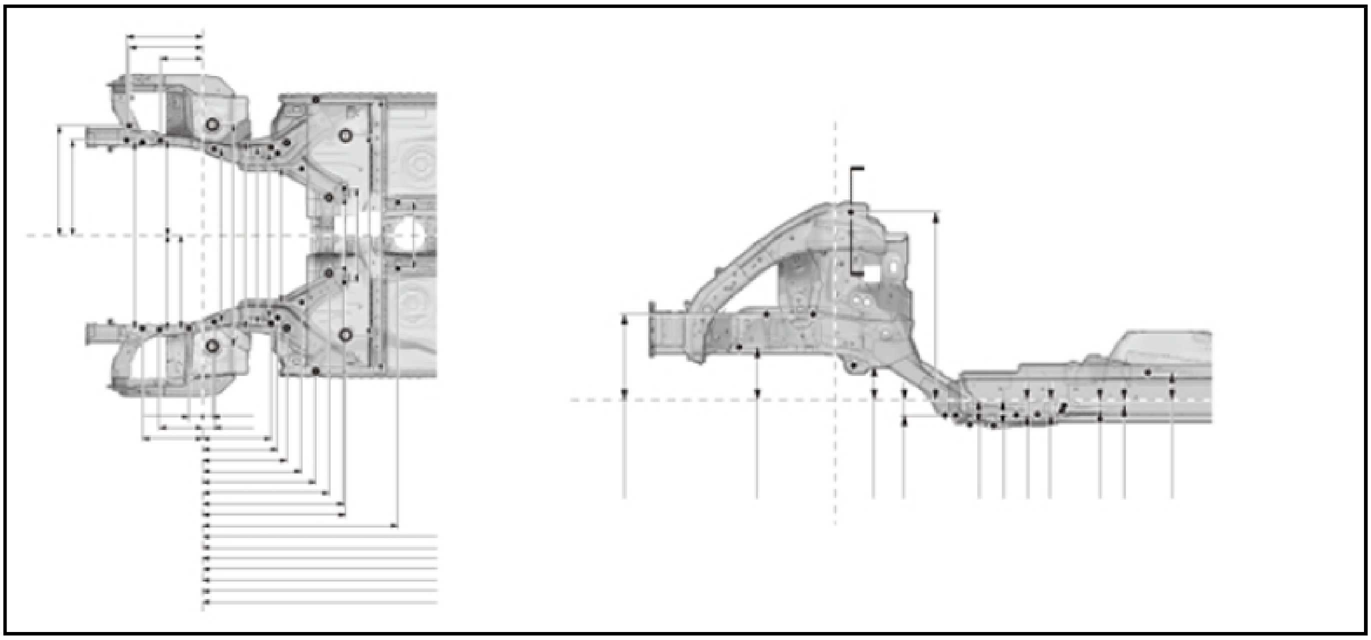

Parts Replacement

Parts Replacement

1. Cutting welded joints:
    - Spot welding is mostly used for the mass produced body welding. MAG welding may also be used occasionally.
    - When separating the weld joints, use hole punching and grinding tools according to the joint conditions.

    NOTE: **Confirm the assembly status of the replacement panels and make sure not to damage the parts being reused.**

Cutting spot welded joints:

Remove the weld nuggets.

Cutting MAG Welded joints:

Remove the weld beads and plugs.

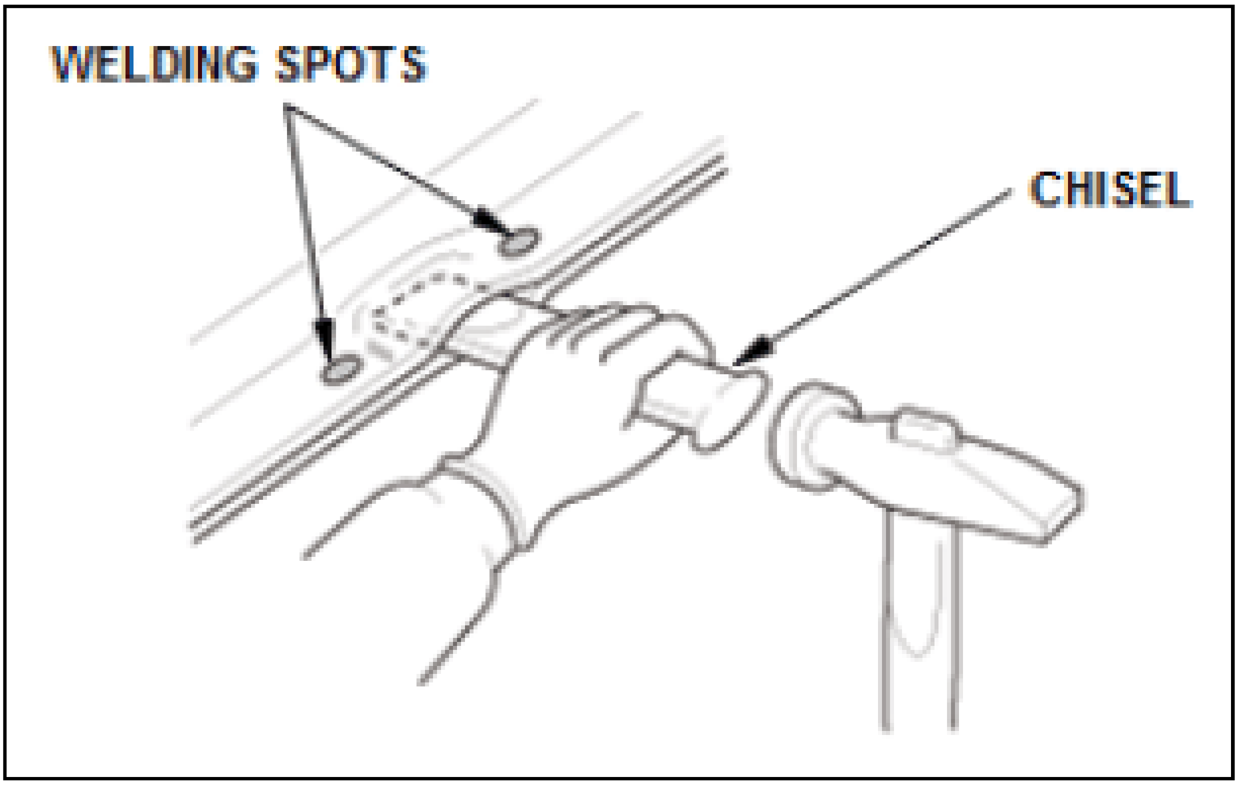
WELDING SPOTS
CHISEL

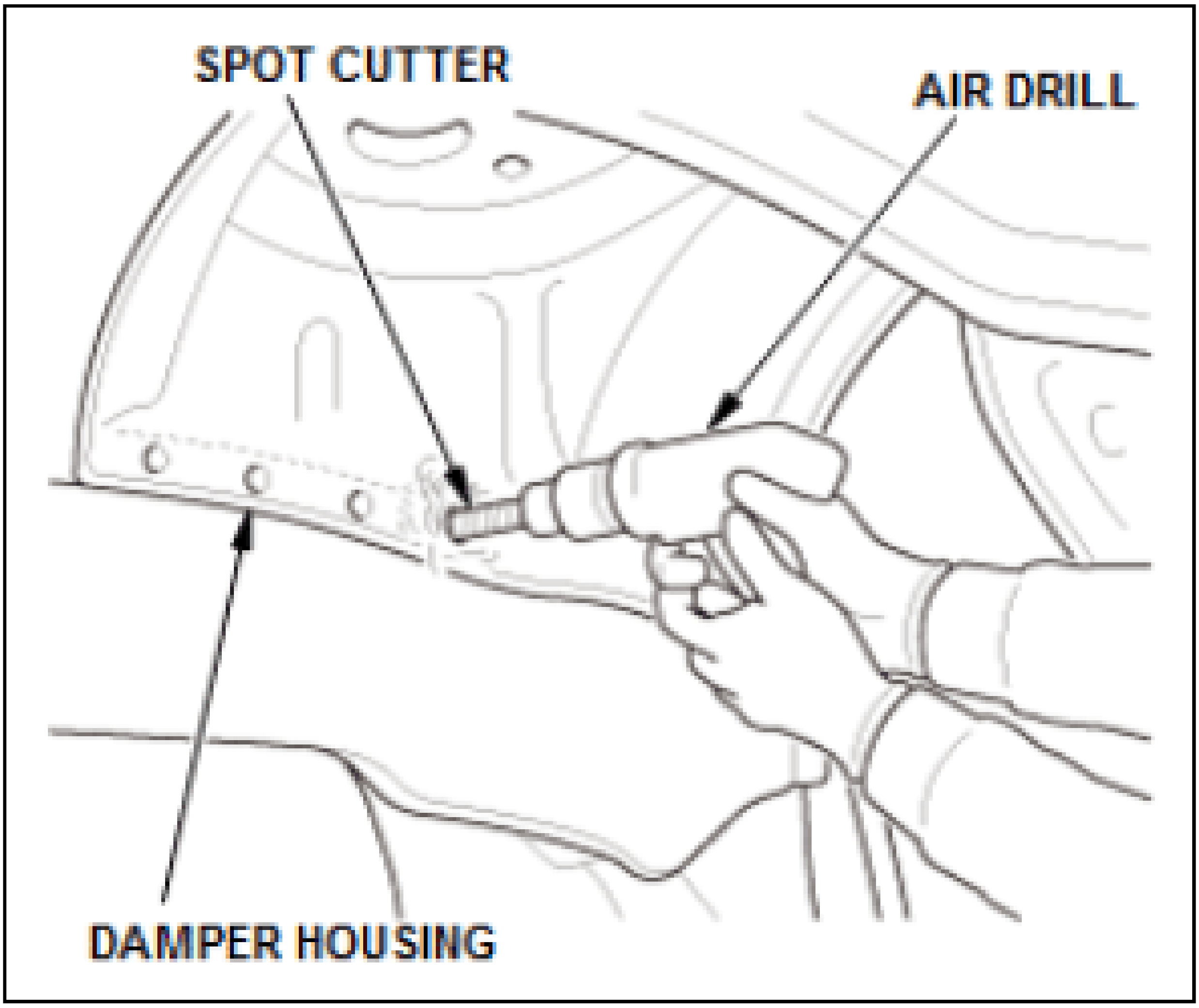
SPOT CUTTER
AIR DRILL
DAMPER HOUSING

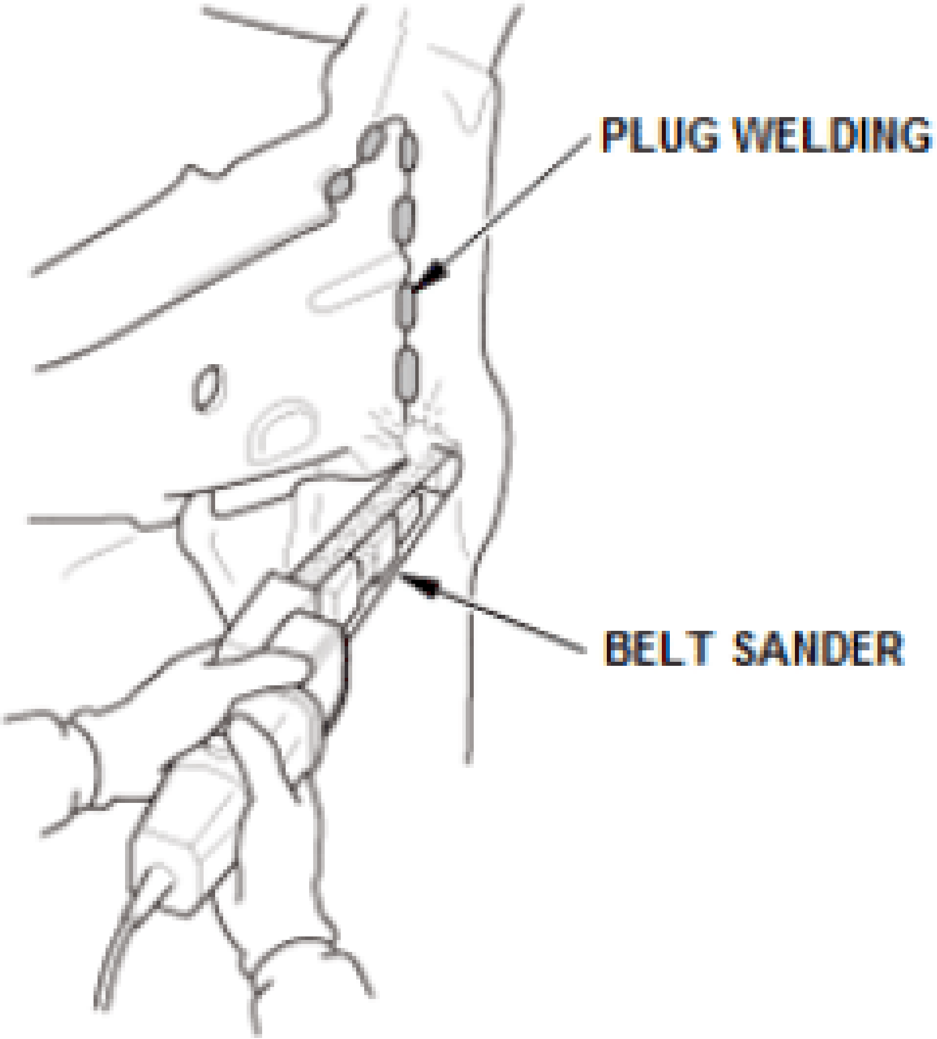
PLUG WELDING
BELT SANDER

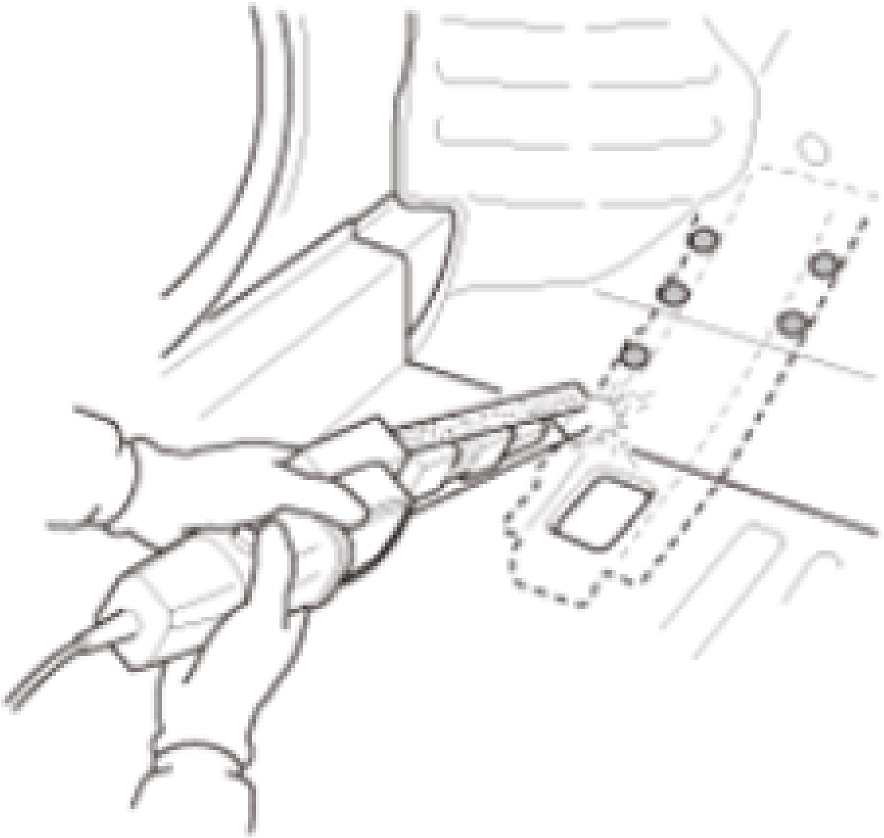

2. Repair the interfacing areas and apply anti-rust treatment.
    1. Reform the weld flange where the new parts will be installed using a hammer and a dolly Repair holes and cracks by welding if the steel grade allows this. Otherwise replace the damaged part.
    2. Sand the both sides of welding area using a belt sander to remove basecoats, rust and contamination.

       NOTE: **Do not over-sand the welding area.**

    3. Anti-rust treatment

       Thoroughly apply electrically-conductive weld through primer (spot sealer) evenly on the mating surfaces in the welding area.

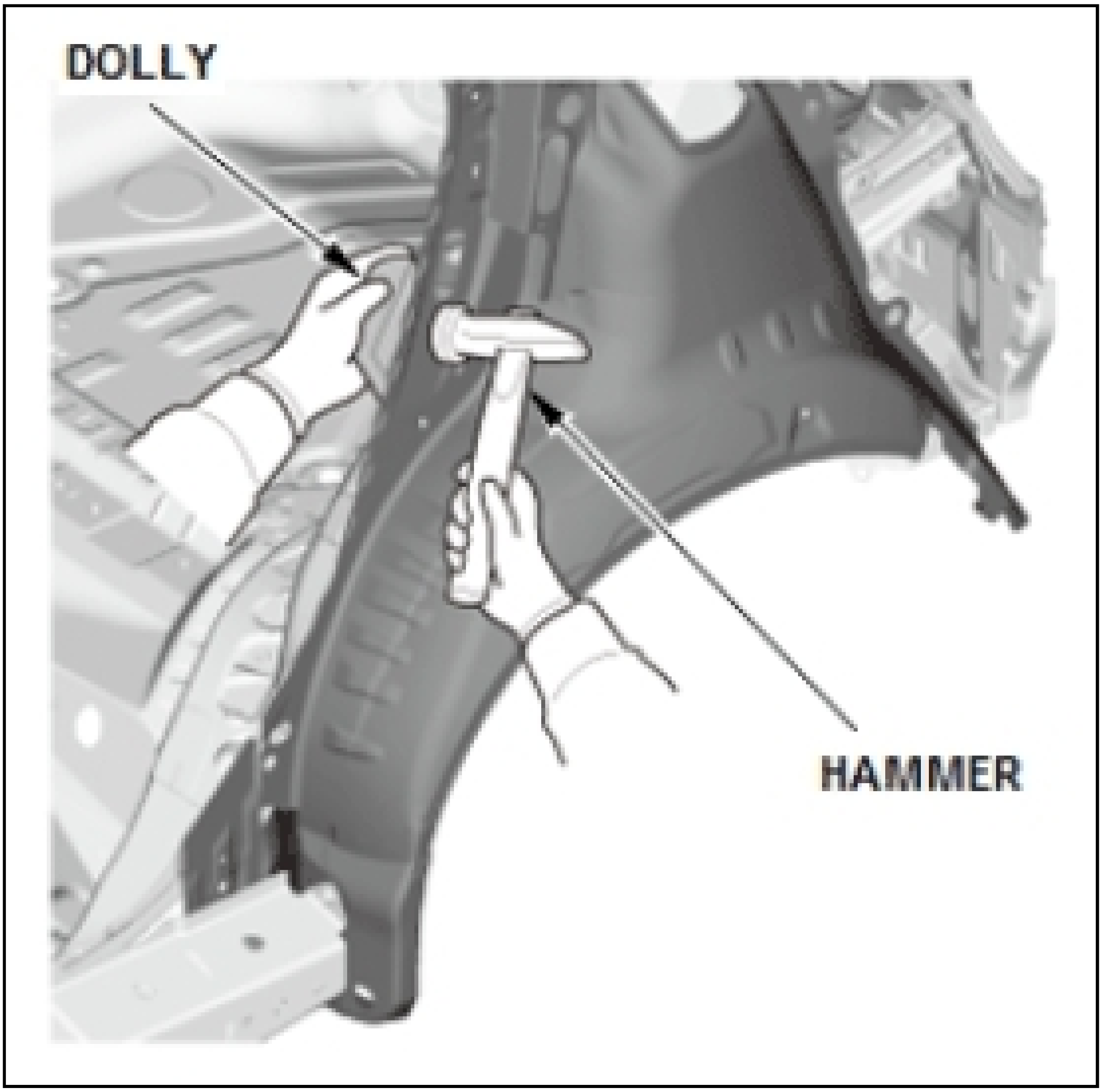

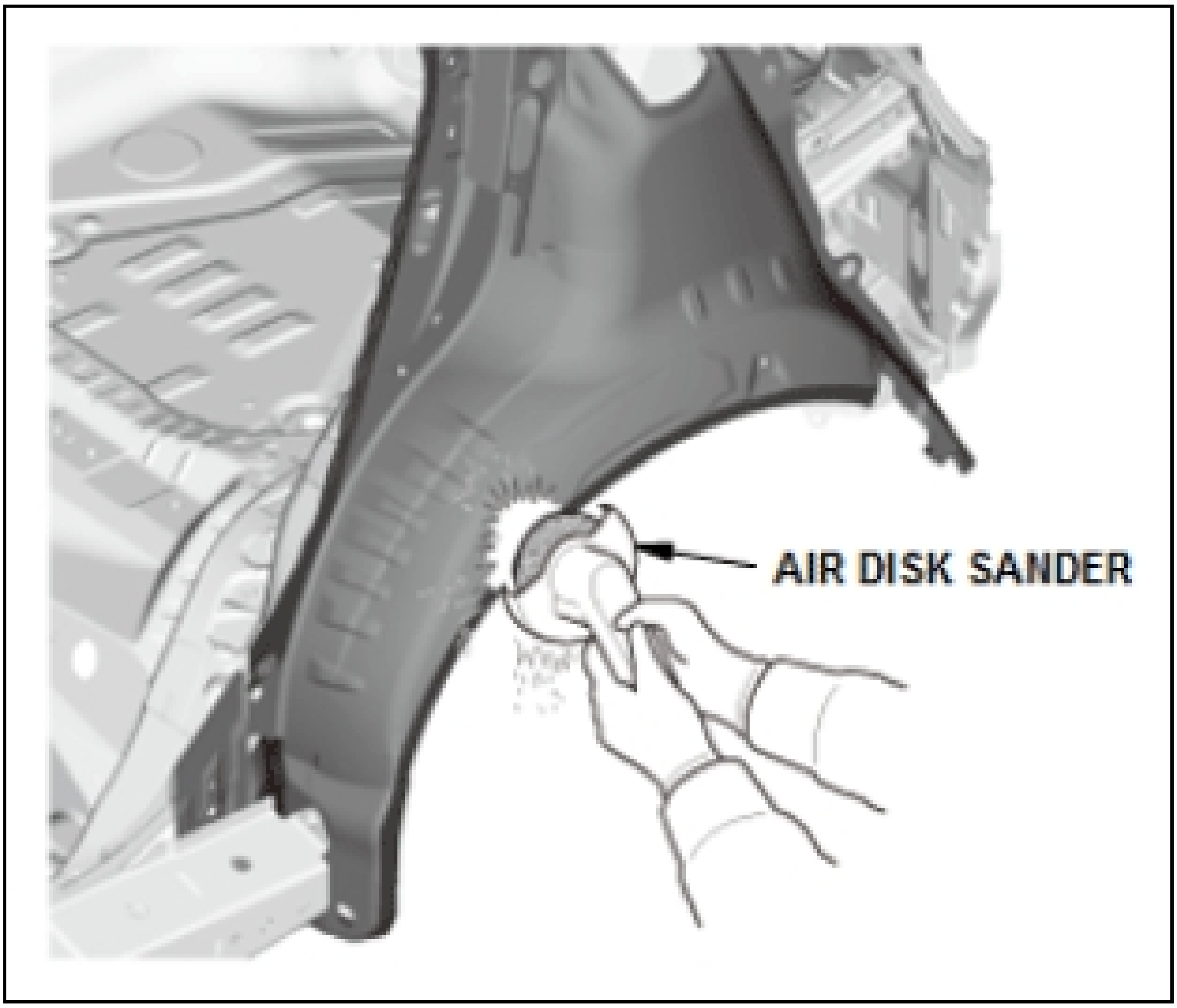
AIR DISK SANDER

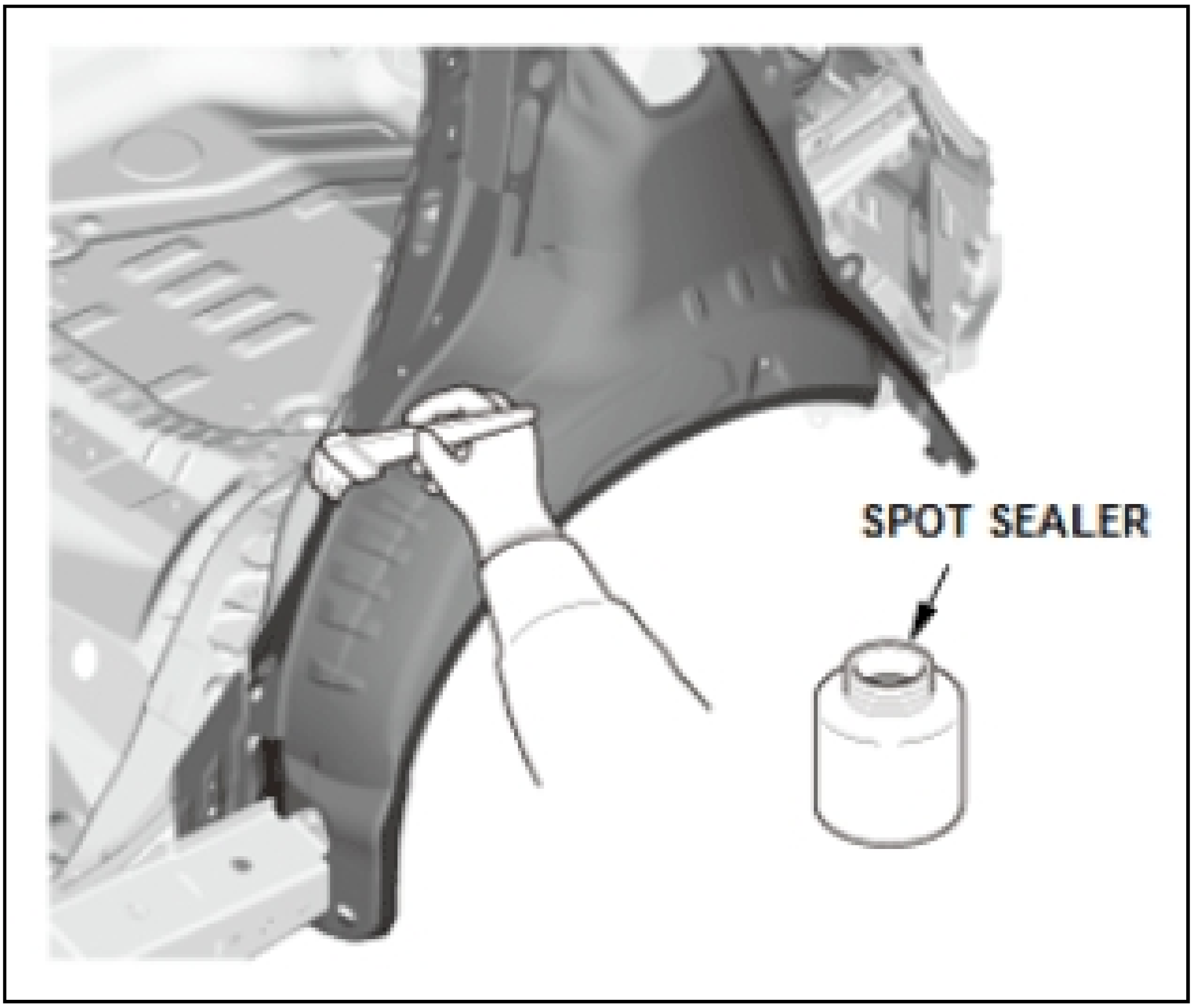

3. Installing new parts and anti-rust treatment.

   Spot Welding of a New Part:

   1. Remove basecoat (E-coat primer) layer Basecoat (black E-coat primer) is applied to new parts. Completely remove this basecoat in the weld areas prior to welding.

      NOTE: **Do not over-sand the steel panel.**

   2. Anti-rust treatment

      Thoroughly apply electro-conductive weld-through primer (spot sealer) evenly on the areas to be spot welded after removing the paint and E-coat.

      Wipe off excess primer.

      Plug Welding a New Part:

      - Place holes for plug welding on the new part using a drill or hole punch.
      - Decide on how many holes to be made according to the mass production body welding drawing in the model specific body service information or the old part.
      - Refer to **Plug Welding** for the appropriate hole diameter as compared to panel thickness.

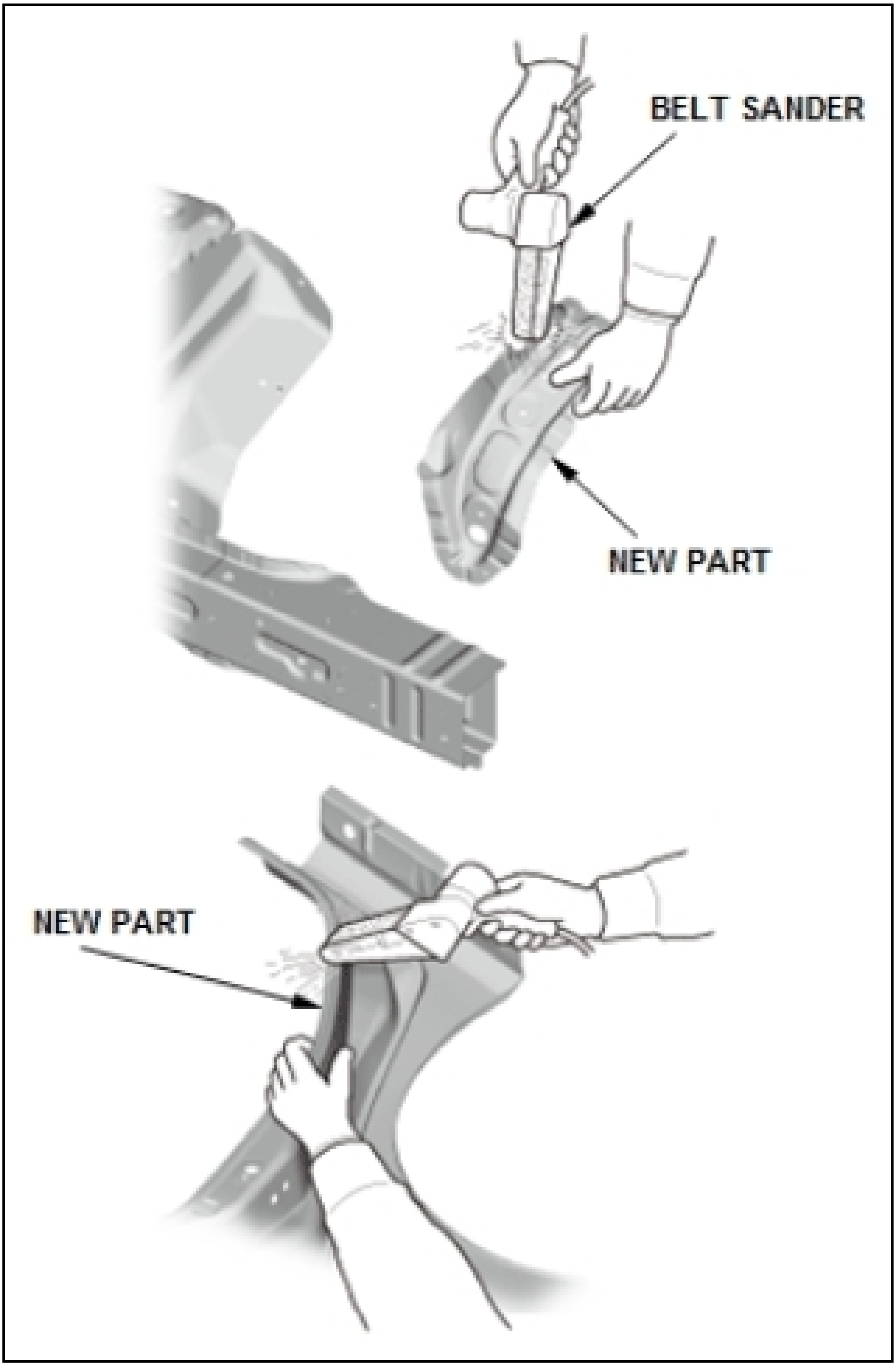
BELT SANDER
NEW PART
NEW PART

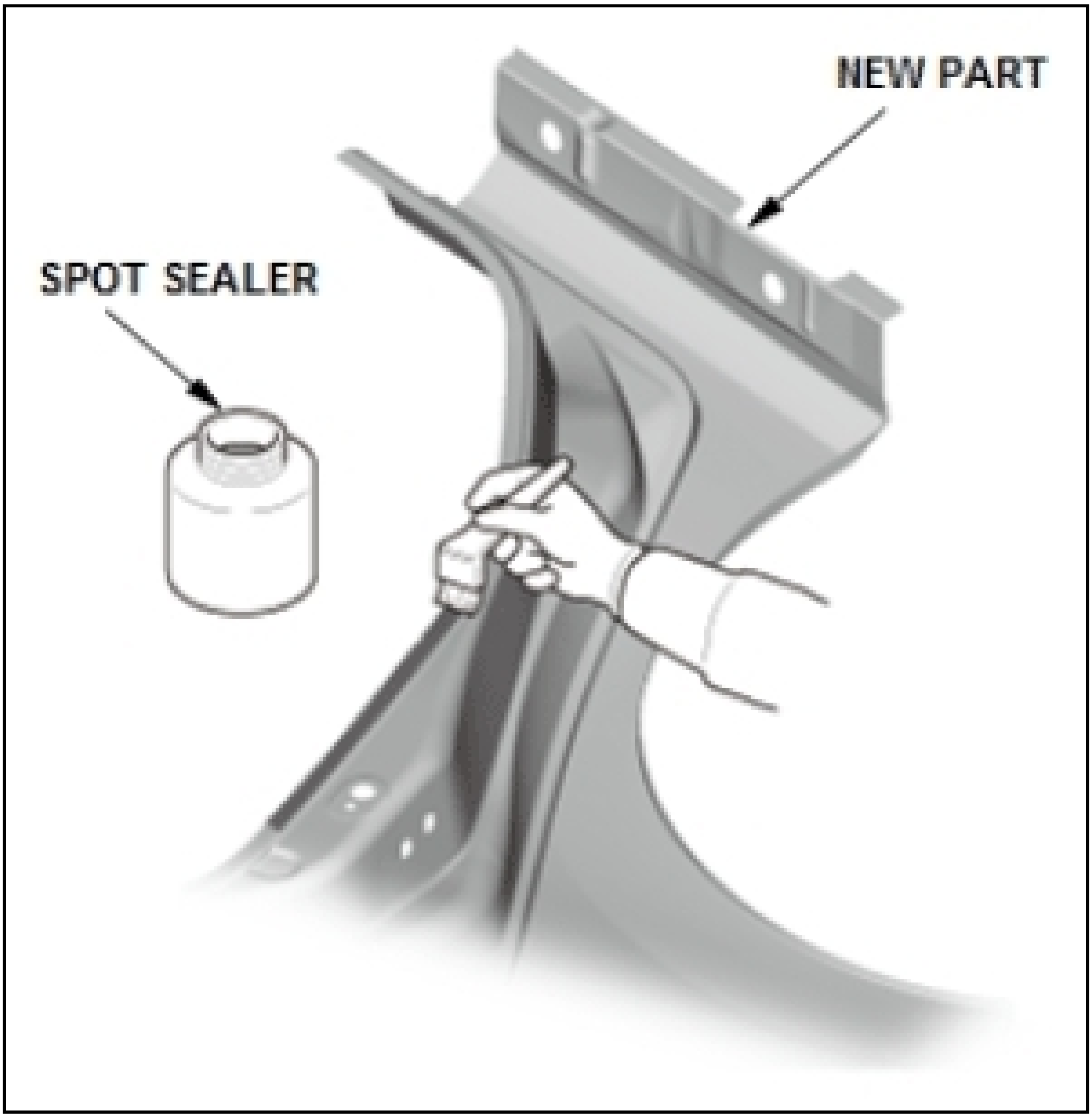
NEW PART
SPOT SEALER

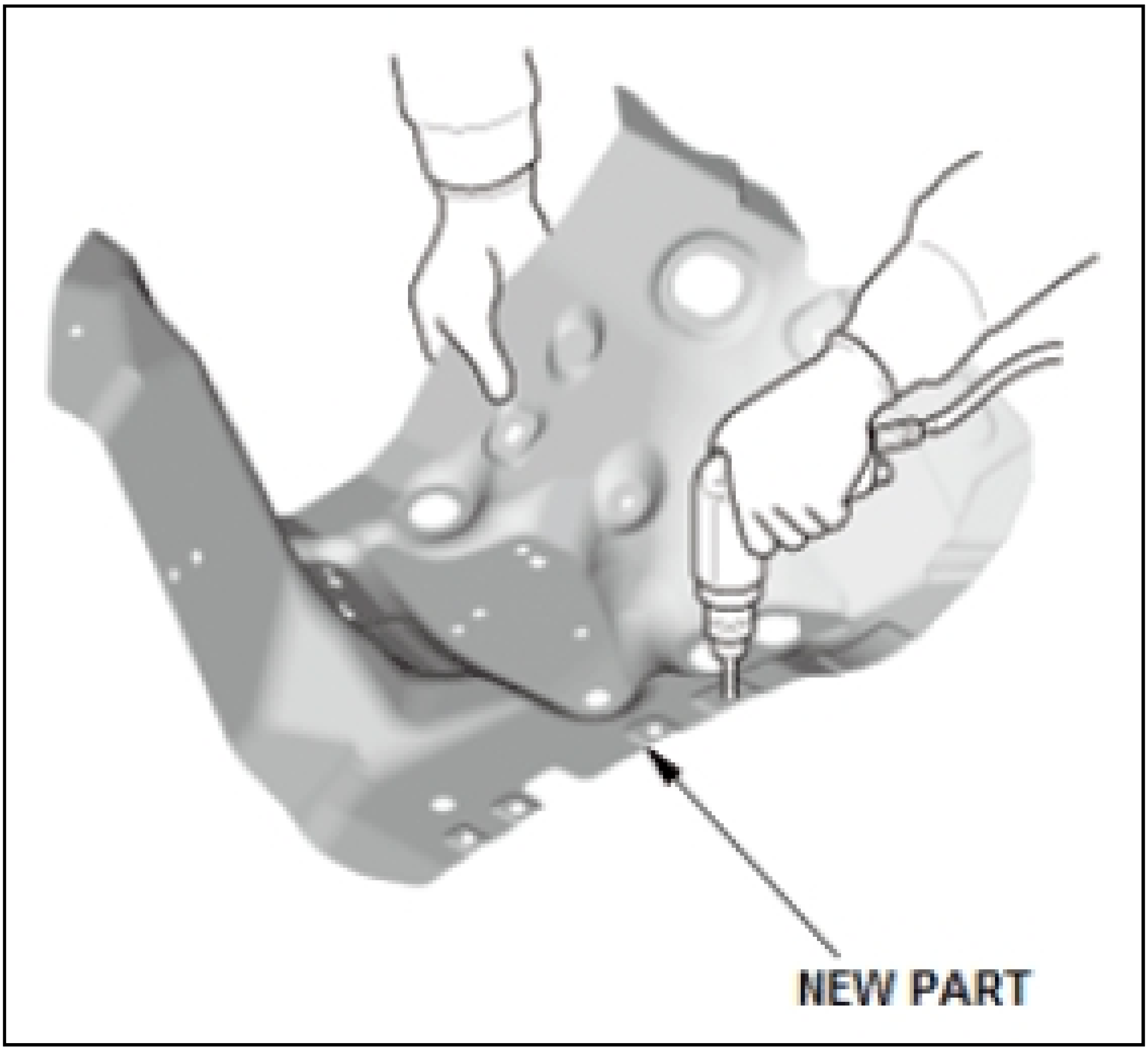

Zinc-Plated Steel Parts Repair

The zinc-plated steel plate used in some panels of the Honda and Acura vehicles requires different repair techniques and personal safety protection than ordinary steel plate. Refer to the model specific body repair information to determine which parts are zinc plated.

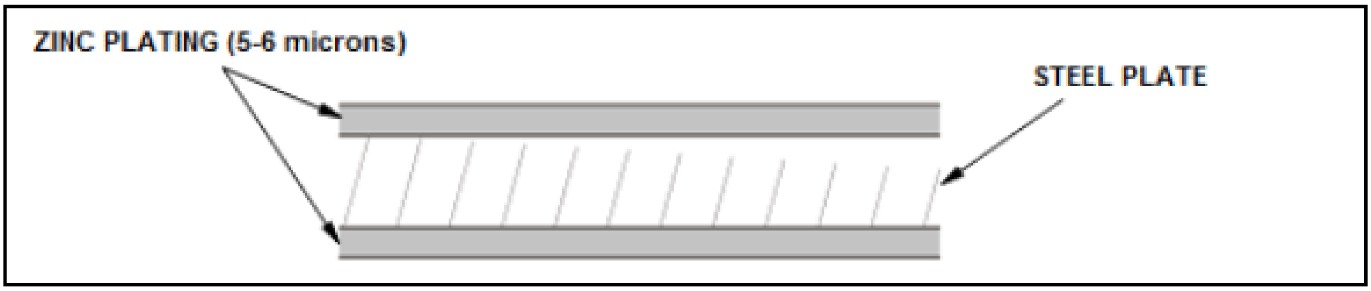

WARNING: **Zinc fumes are generated during grinding and welding of zinc-plated steel parts and the application of weld-through primers (spot sealer). This can cause an illness known as "metal fume fever" that causes temporary flu-like symptoms. Additional health problems may result from long-term exposure to zinc fumes. Always use approved respiratory protection that provides zinc fume protection when working around zinc plated steel and weld-through primers (spot sealer).**

1. Before spot welding the zinc-plated steel, remove the paint or E-coat from both sides of the flanges being welded. Apply weld-through primer (spot weld sealer) to the flanges before welding.

   NOTE: **Seal the sanded surfaces thoroughly to prevent rust.**

2. Before applying body filler or putty to zinc-plated steel, sand the zinc plating thoroughly Apply epoxy primer to promote adhesion and prevent blistering.

NOTE: **Use body filler and putty (one part filler/putty, one part harder), that are compatible with zinc-plated steel and follow the manufacturer's specifications.**

Parts Installation

1. Sectioning the new part (cut and joint replacement).

WARNING: **Before sectioning any part, refer to Parts Sectioning Guidelines - Cut And Join for important information.**

- If a new part, such as an outer panel, is being sectioned, cut the old and new parts using an air saw or grinder, so that the joint area can be overlapped about 20-30 mm (0.79-1.18 in).

When there is an acoustic separator on the panel mating surface:

- Damaged separators should be replaced with a new one. The replacement separator does not include the heat-activated expandable foam used in production. Apply body sealer around the separator to fill in the gaps between the separator and body panels.

NOTE: **If you make your cuts with too much body overlap, it will be difficult to position the replacement panel for fit and finish.**

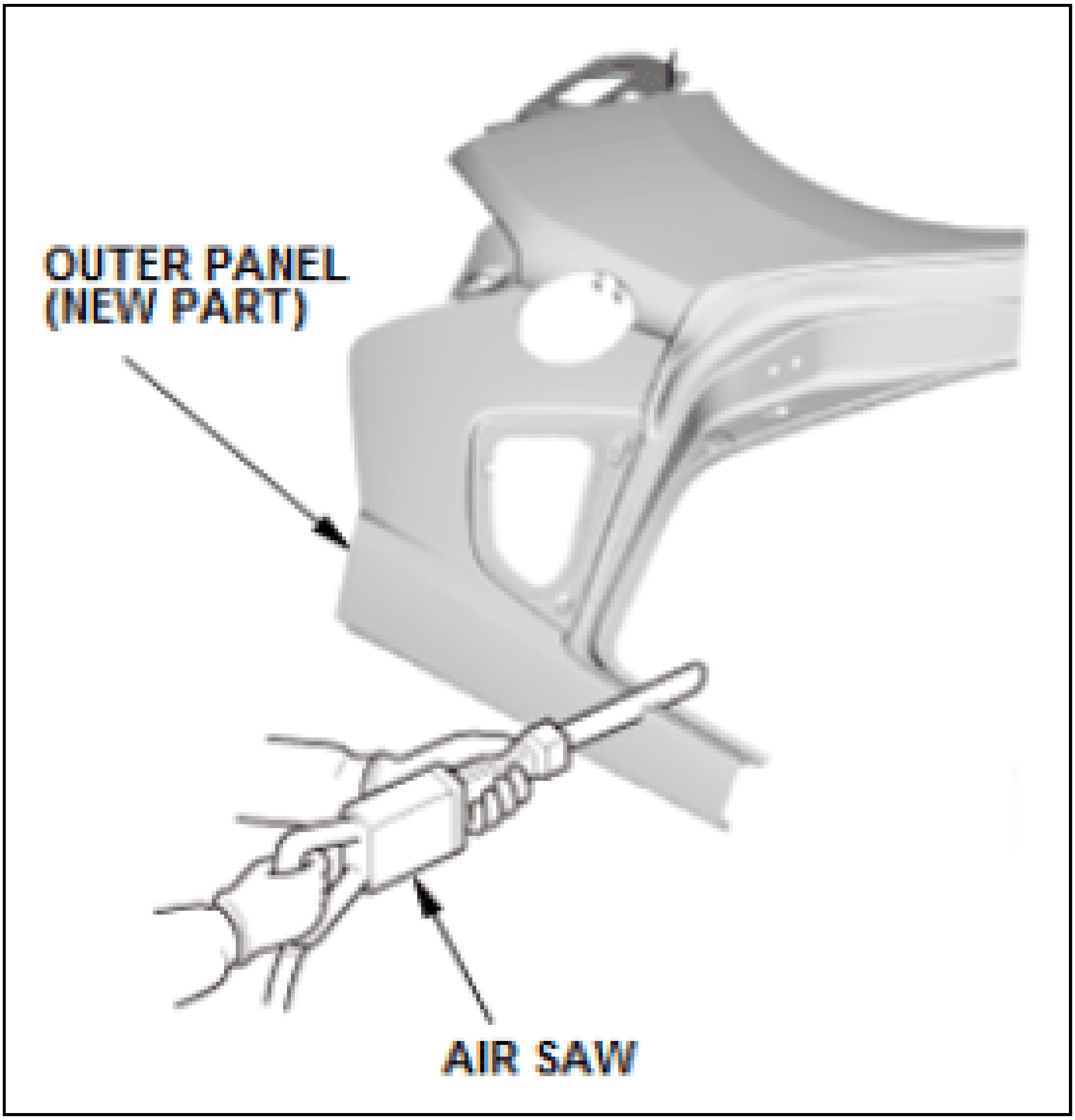

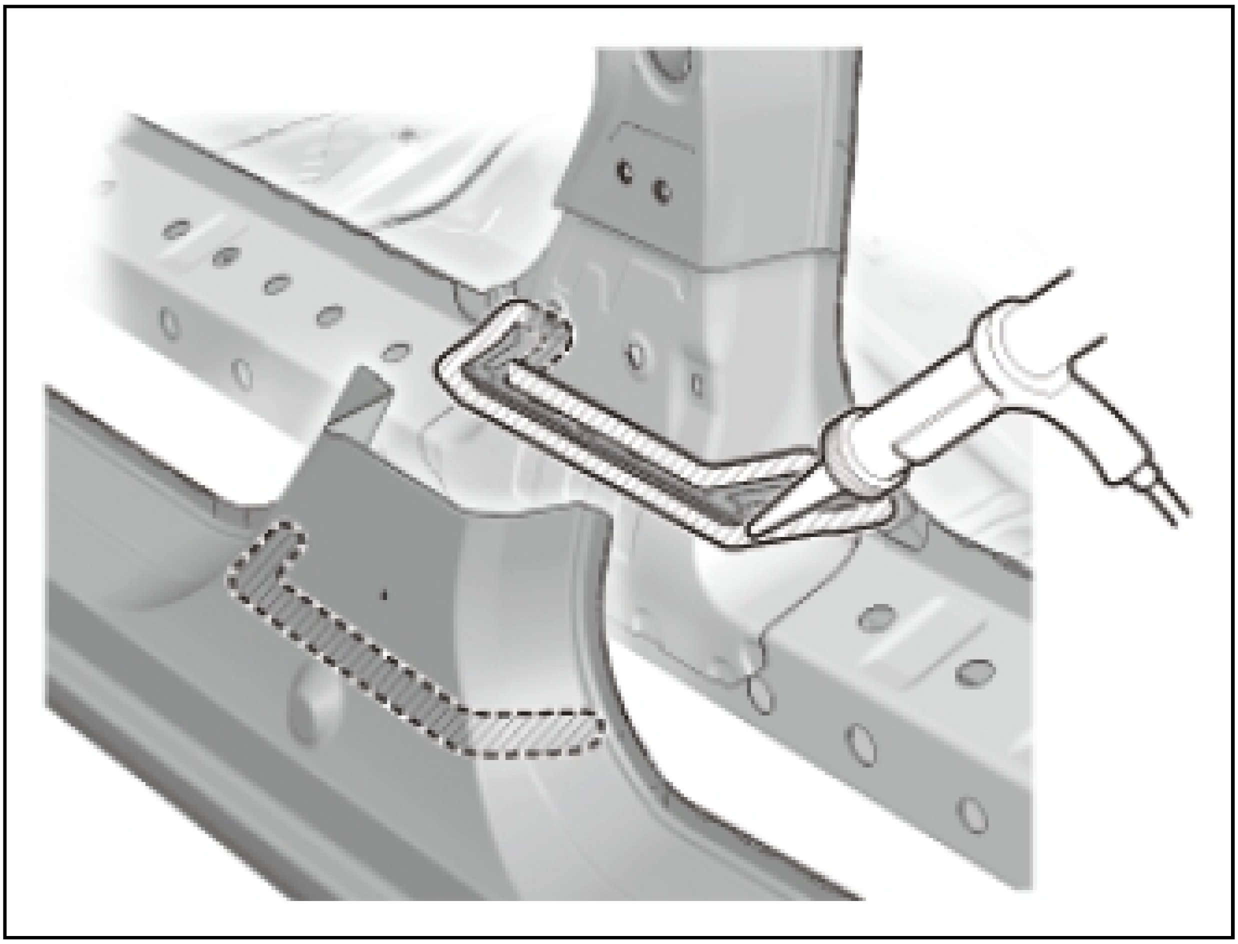

2. Positioning the new part:
   - Align the new part to body reference holes, or old part position and attach it to the body using clamps, vise-grip type pliers, or other commercially available panel attachment tools.
   - If these tools are not available, attach the new part using bolts or self-tapping screws.
   - Measure the body dimensions to confirm panel positioning.
   - It is extremely important to attach the frame and damper housing parts to the correct positions because they directly affect wheel alignment. (It is recommended to use jig-type body and frame correction equipment or those with built-in measurement systems for greater accuracy.)
   - Fit and finish of exterior parts is also extremely important as it will greatly impact the exterior appearance. Make sure to install all exterior parts for a final confirmation before permanent attachment.

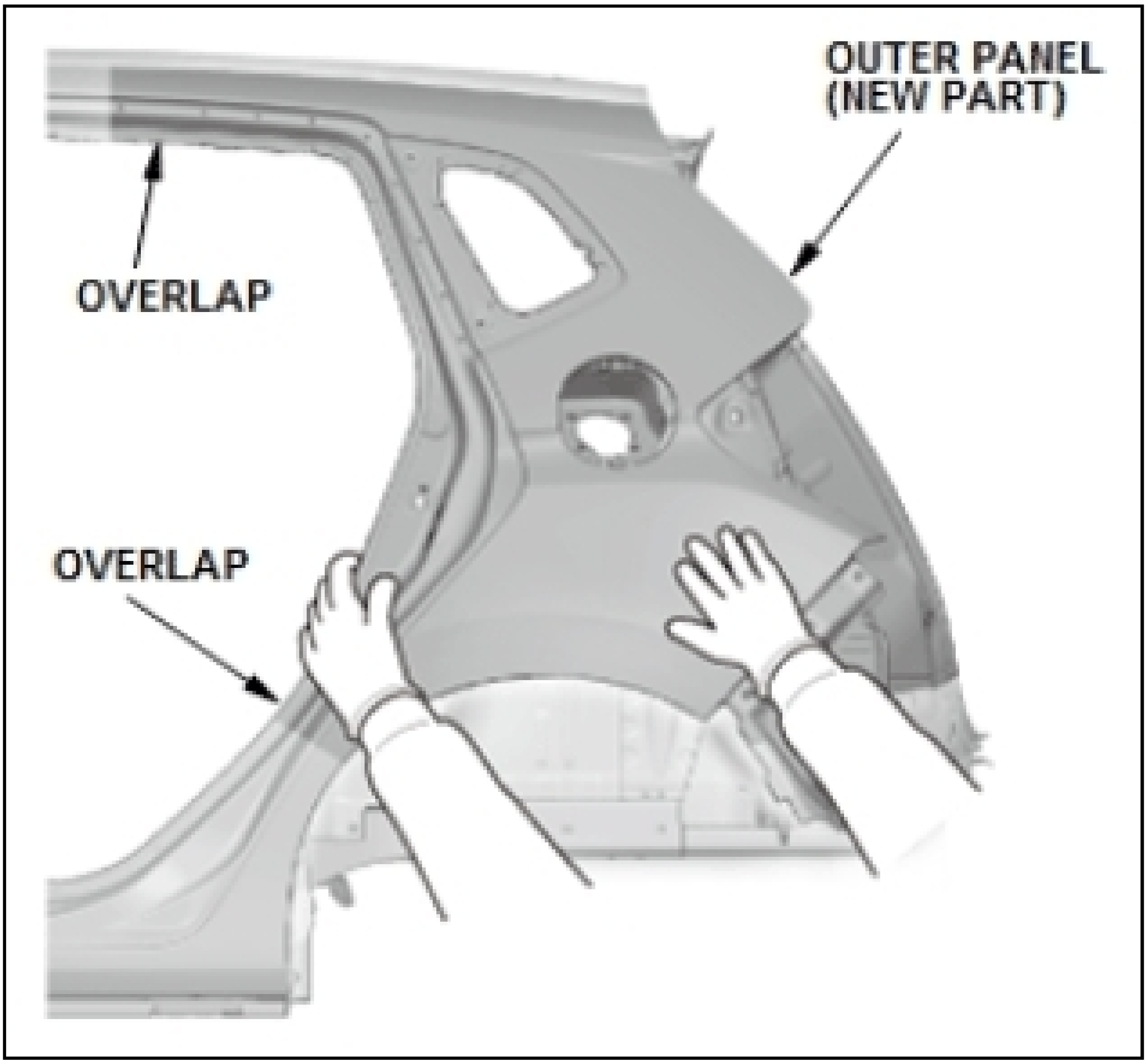
OUTER PANEL
(NEW PART)
OVERLAP
OVERLAP

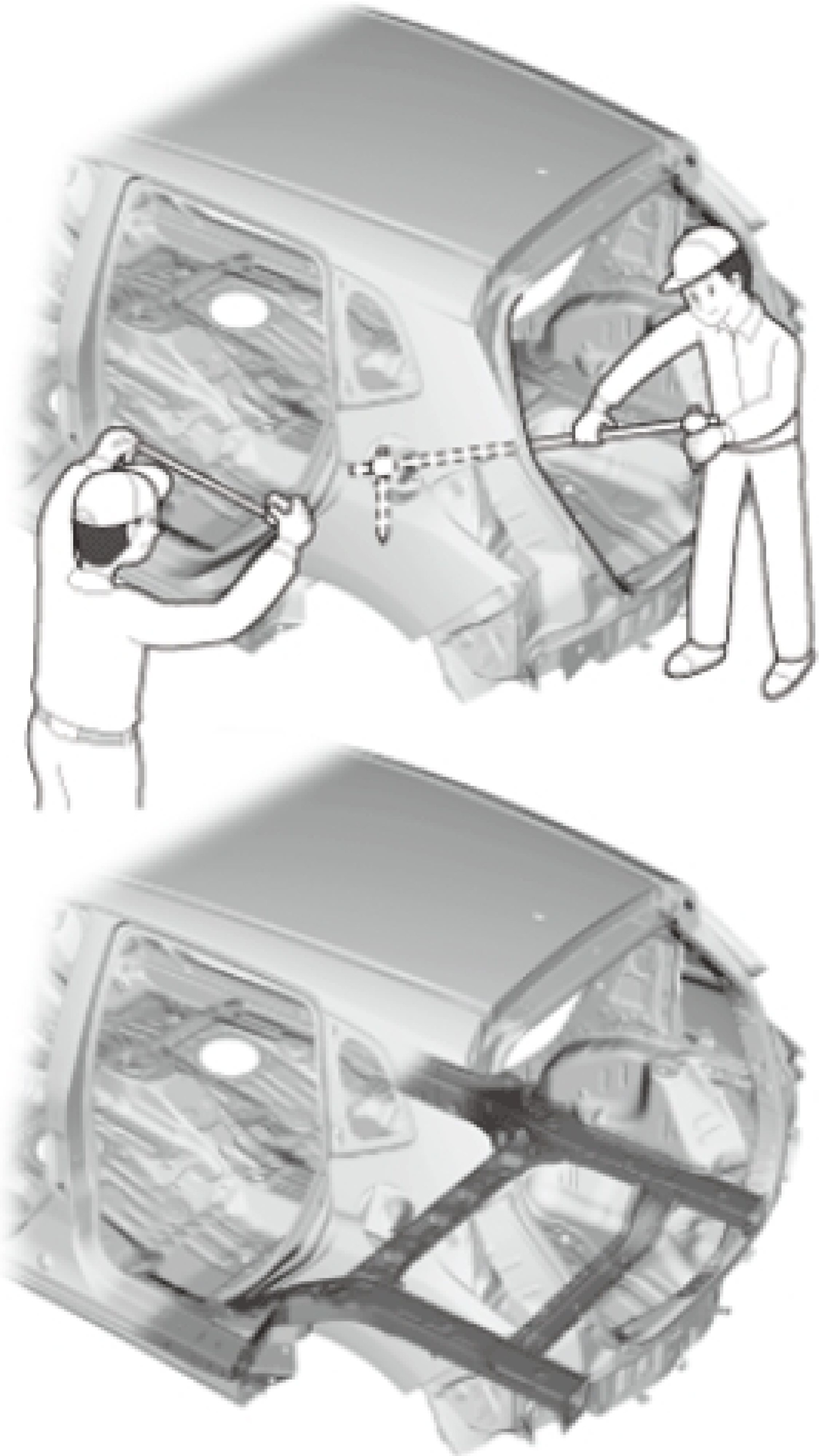

3. Welding the new part.

NOTE: **Cover the interior accessories, glasses and body painted surfaces with the heat-resistant inflammable cover (welding blankets) to protect them before welding.**

Key Points For Spot Welding:

- Using vise grip type pliers or similar tools, clamp the welding areas tightly with no gaps.
- Try to avoid the old spot welds as much as possible and place them with an even pitch.
- For the areas that cannot be spot welded, use MAG welding or MIG brazing instead if permitted. Always follow the welding instructions for high strength steel parts in **Overview**.
- Dress the spot welder electrode tips to maintain their condition using a tip cutter. Replace the tips when dressing them no longer restores proper appearance and function.
- When welding, refer to the specifications in the manual issued by the welding equipment manufacturer.

Key Points For MAG Welding:

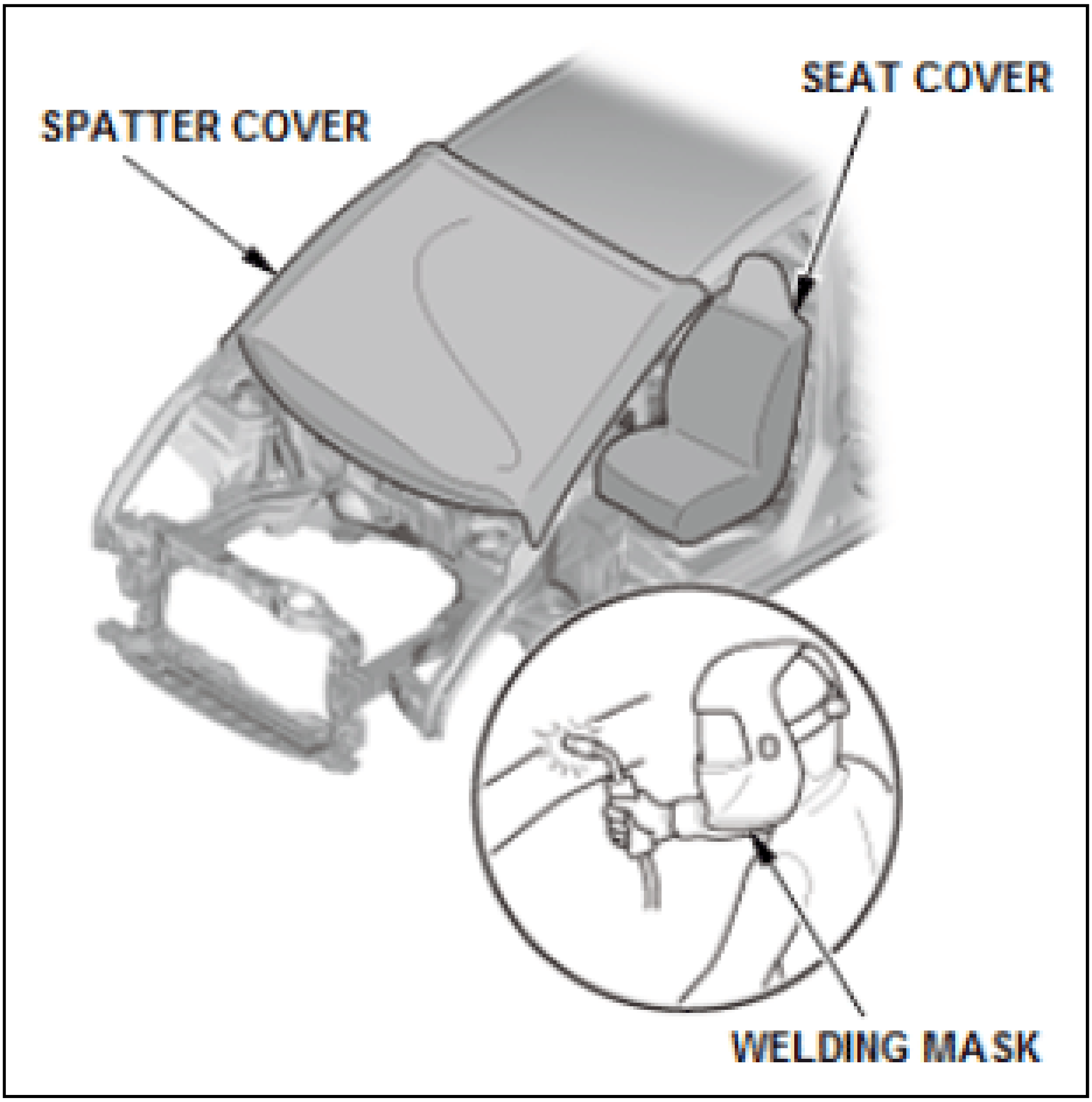

NOTE: **Be sure to attach the welder's ground cable as close as possible to the welding area.**

- Using vise grip type pliers or similar tools, clamp the welding areas tightly with no gaps.
- If these tools cannot be used because of space limitations, use a hammer and dolly to make tight contact.

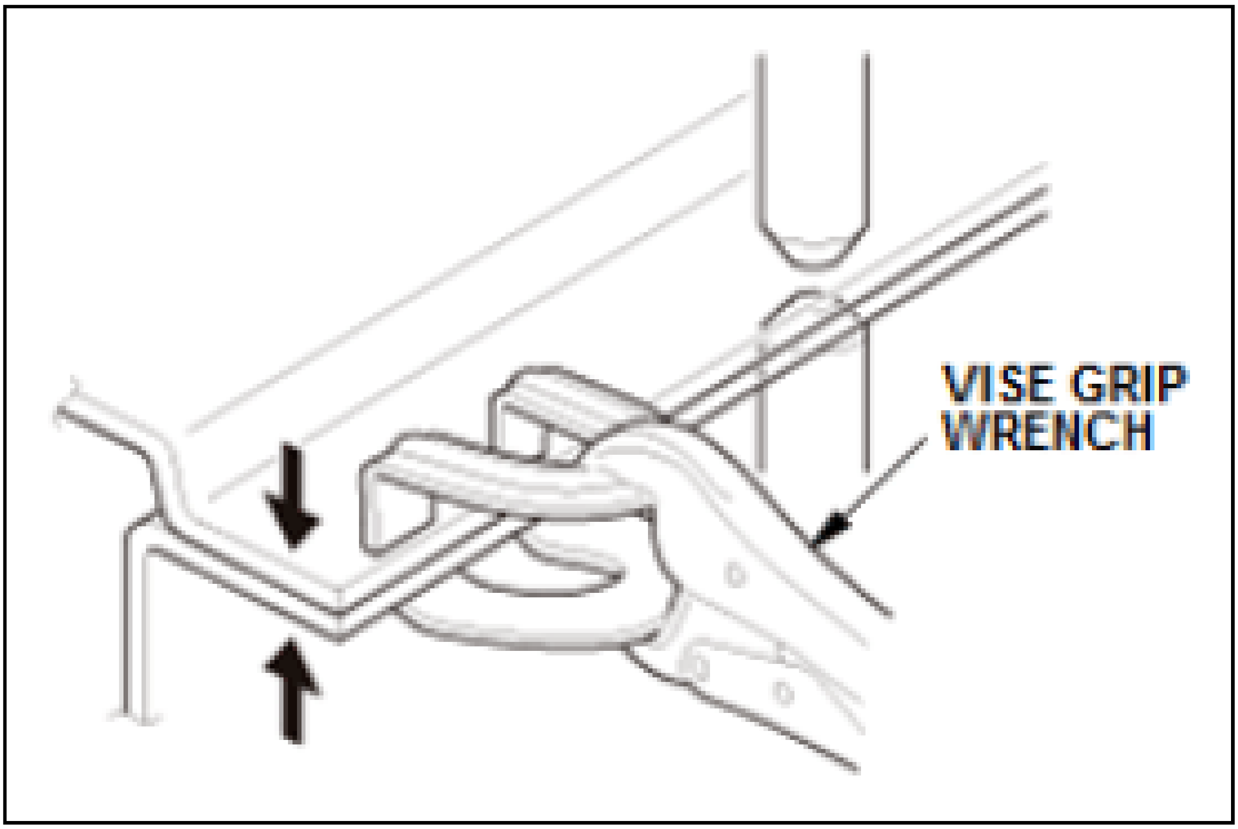
VISE GRIP WRENCH

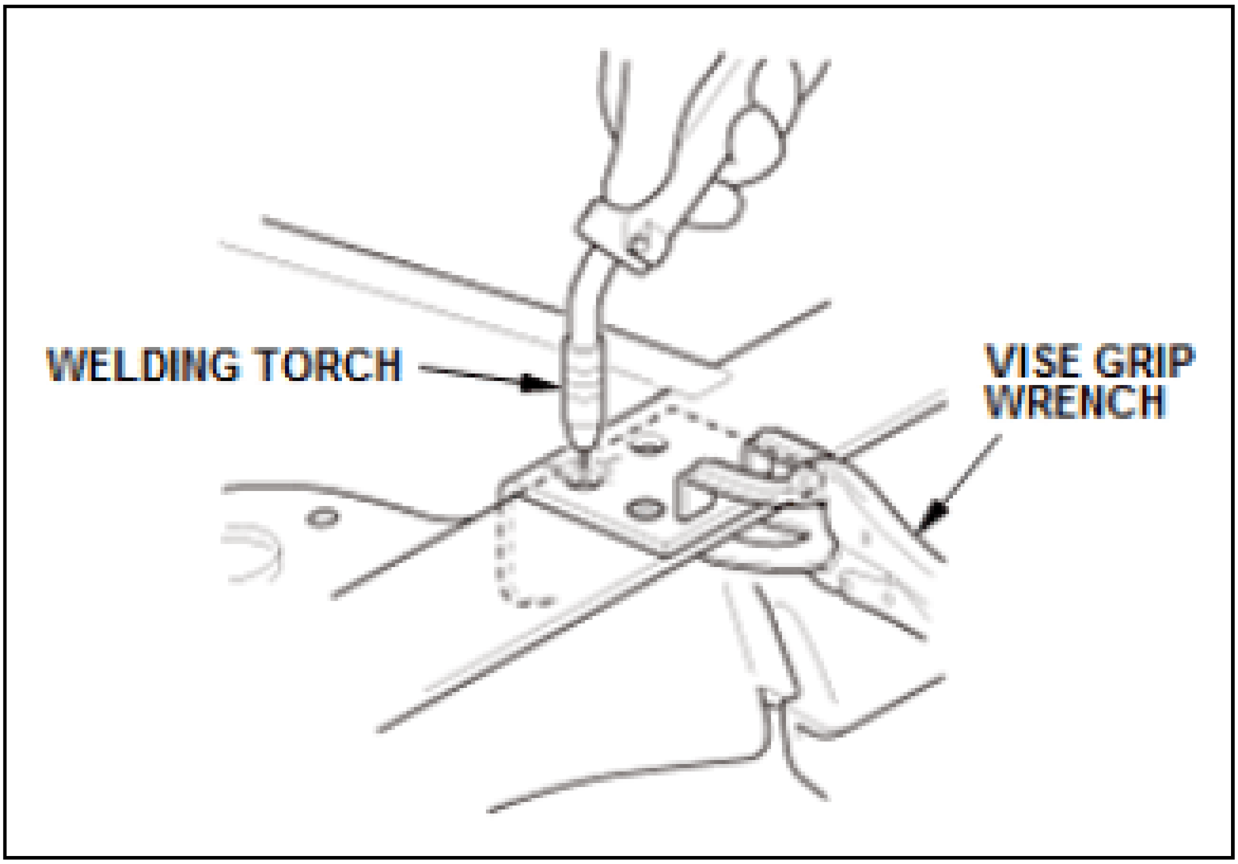
WELDING TORCH
VISE GRIP WRENCH

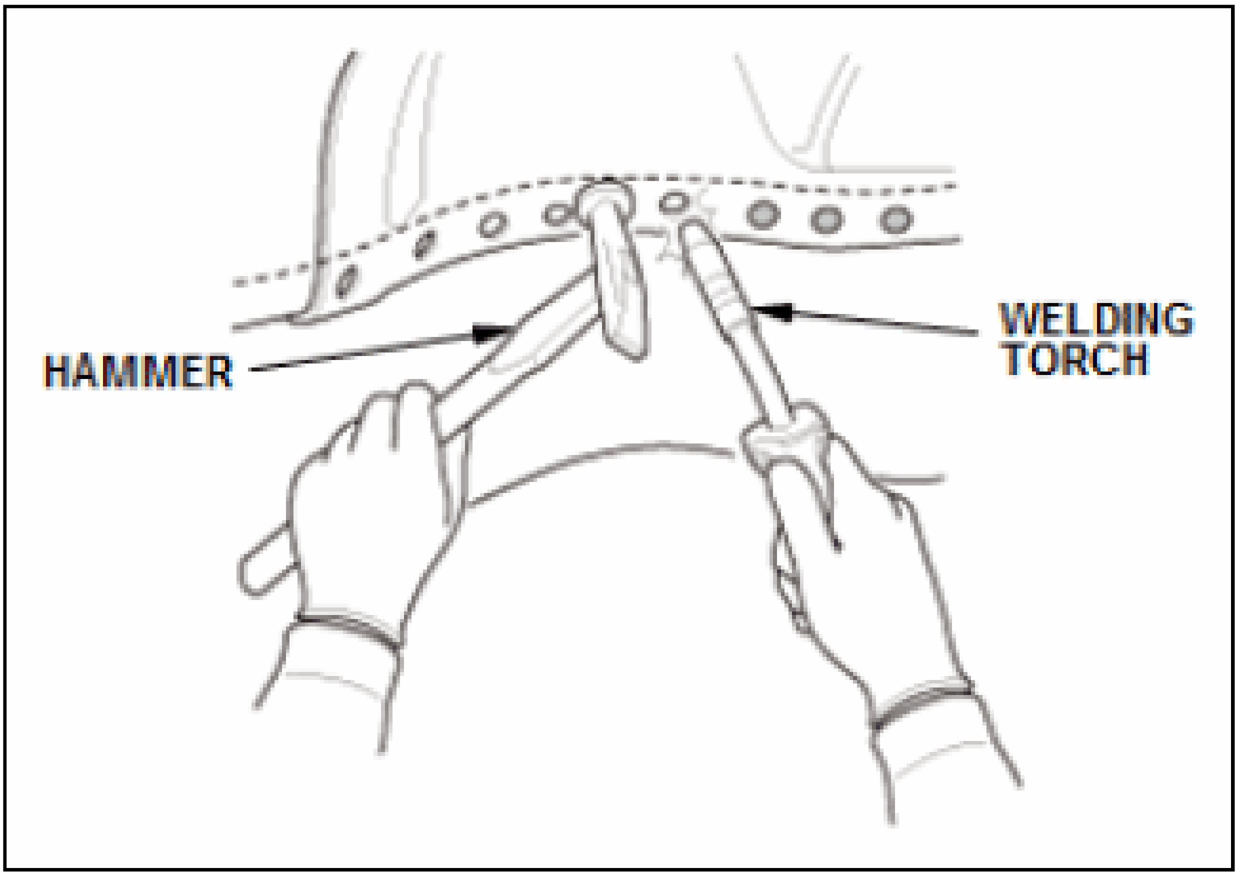

4. Inspect the welded area

   Thoroughly inspect the welded area to ensure all required welding operations are completes before finishing.

5. Finishing the welding:
   - To finish, grind the plug or joint welded area with an angle grinder or equivalent.
   - Do not over-grind to prevent weakening the welds.
   - In glass contacts areas, completely remove any steps or projections.
   - Apply body filler to finish butt welded areas.

NOTE:

- **Avoid separator installation points when repairing, cutting and welding panels. If the separator's urethane foam is damaged (peeled or burnt), restoration is not possible.**
- **Damaged separators should be replaced with a new one. The replacement separator does not include the heat-activated expandable foam used in production. Apply body sealer around the separator to fill in the gaps between the separator and body panels.**

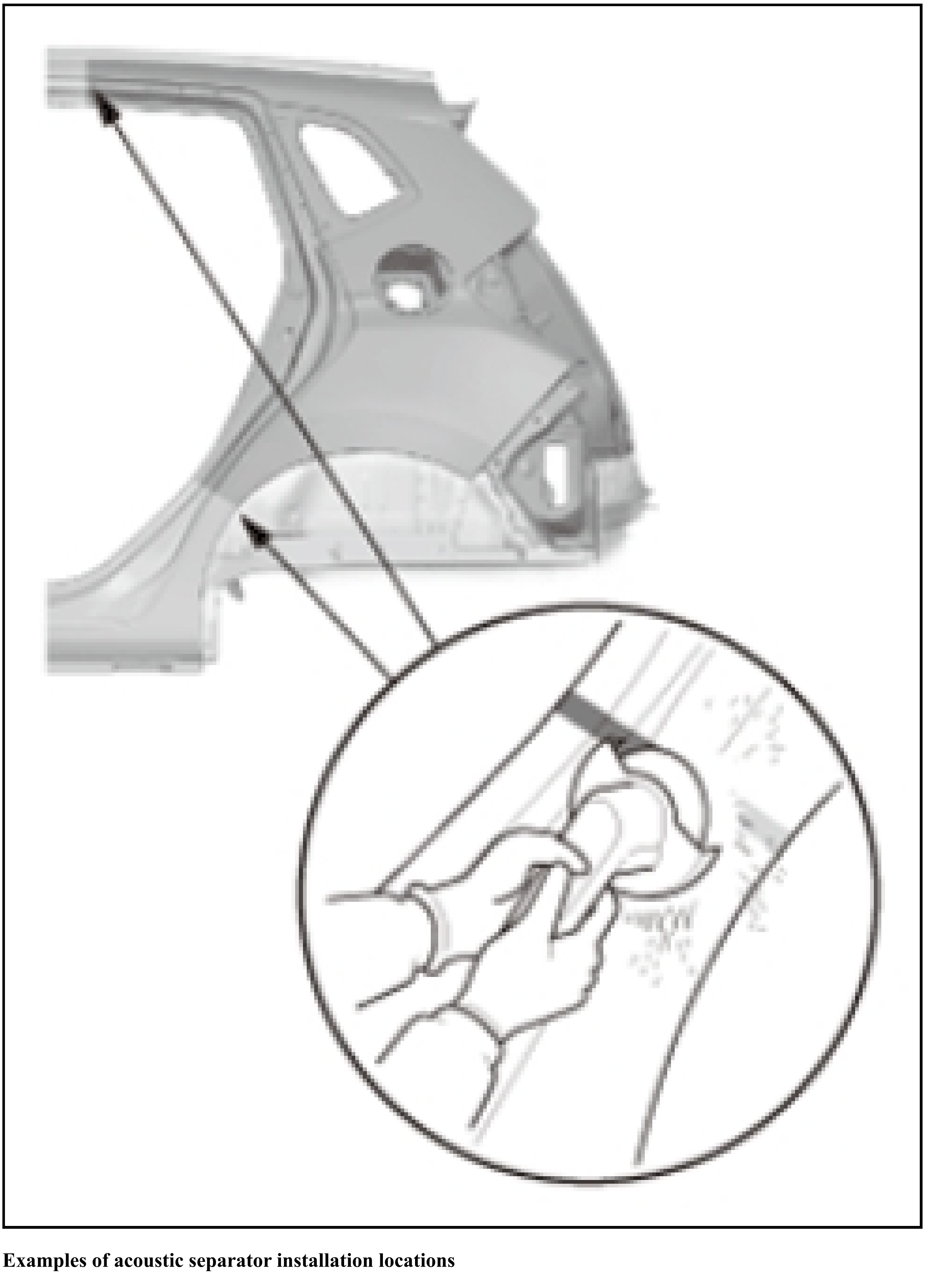

Examples of acoustic separator installation locations

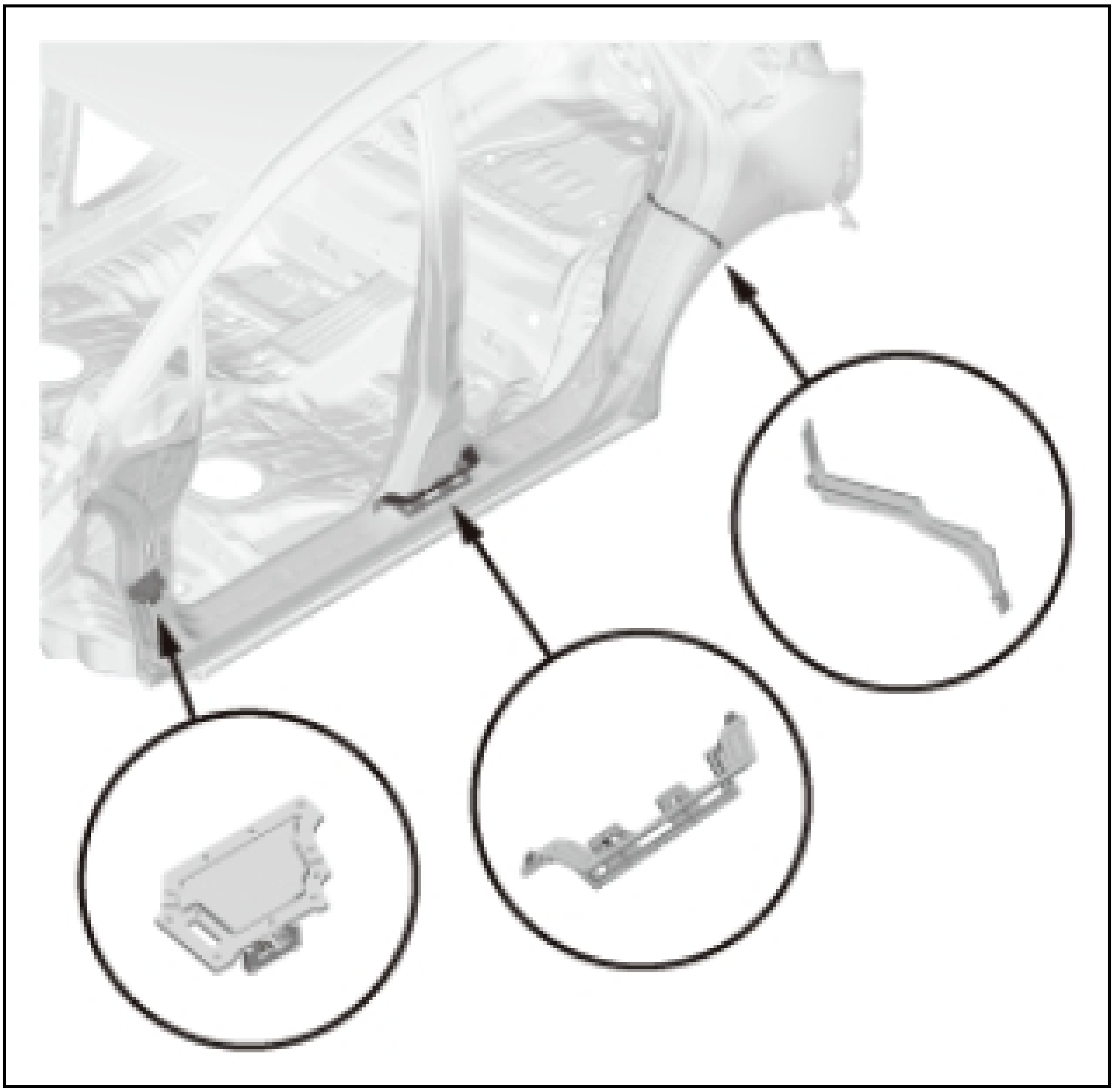

Preparation For Body And Frame Correction

Attachment of Body

During body and frame correction, it is extremely important to firmly attach the vehicle's body to the repair equipment. Depending upon the damage level, it is usually necessary to pull out the body from more than one direction.

Basic anchor points

While different attachment points may be necessary depending upon the damage level, the preferred attachment locations are the reinforced lifting points located under the side sills in the pinch weld area.

Auxiliary anchor points

Depending on the correction forces and direction, auxiliary anchor points may need to be added to prevent further distortion of the undamaged body parts. Because there are many different equipment and attachment designs, always consult the manufacturer of your body and frame correction equipment for their recommendations about anchoring methods and points.

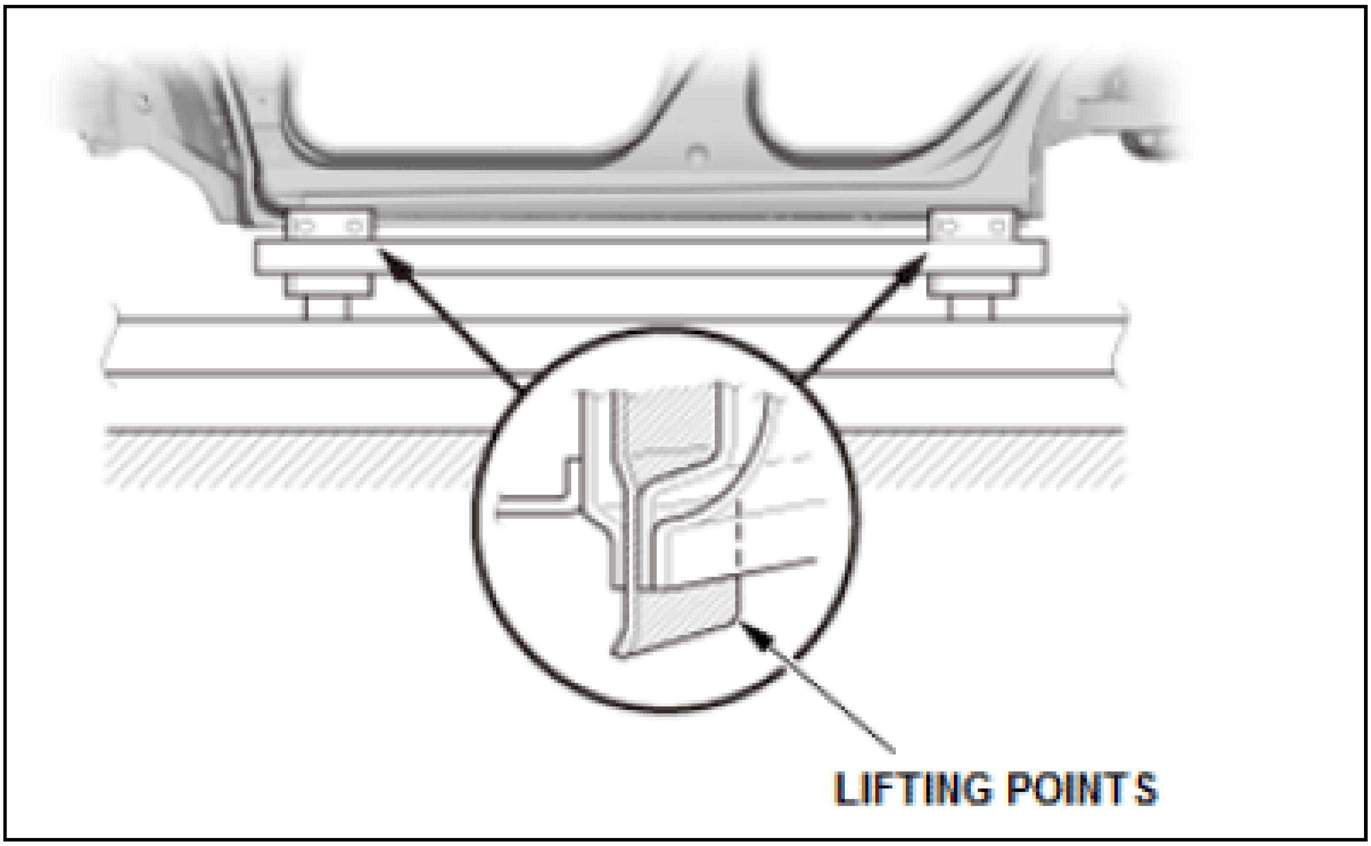
LIFTING POINTS

Setting Pulling Clamp

When installing clamps at the pulling points, align the extended line of the pulling direction to the center of the clamp.

WARNING: **If the clamp is out of alignment, the clamp may disengage violently during a pull, which is very dangerous.**

NOTE: **Be sure there is no contamination on the clamp's teeth.**

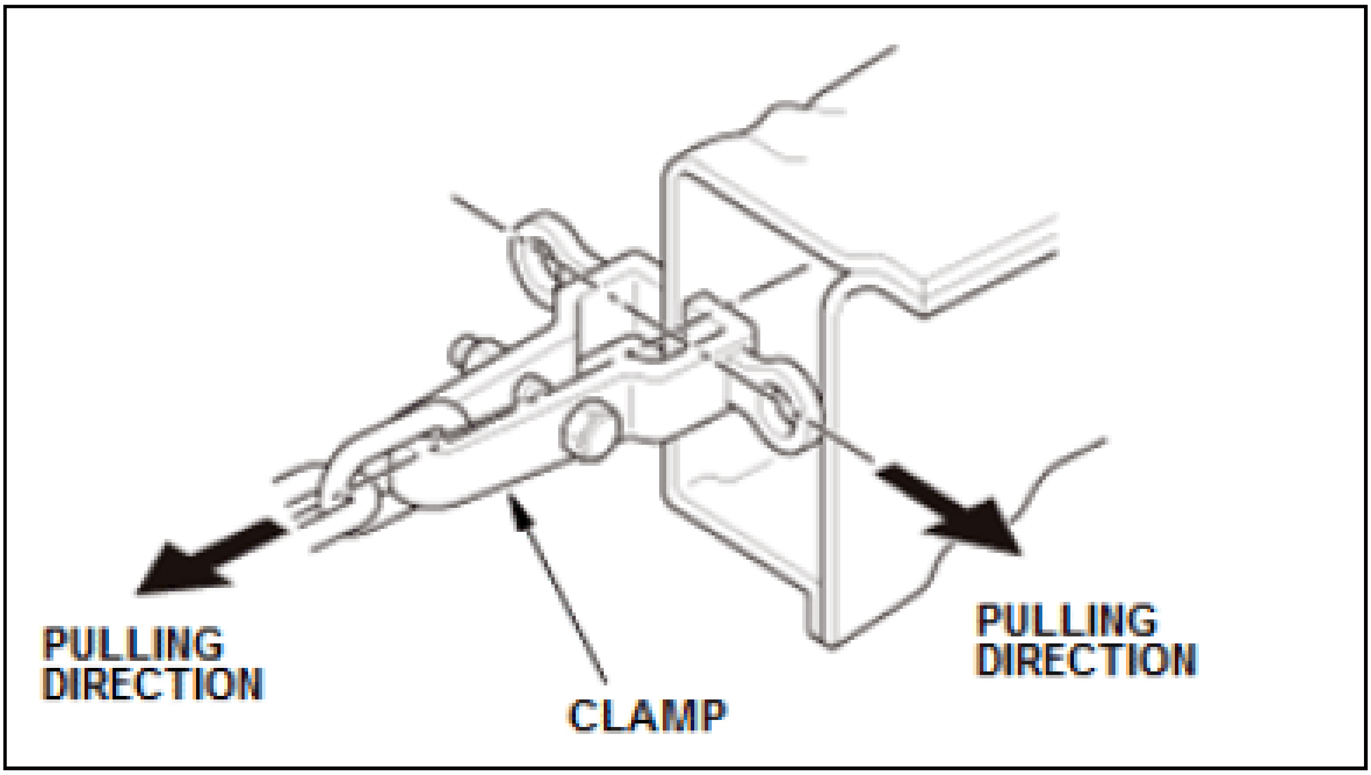
PULLING DIRECTION
CLAMP
PULLING DIRECTION

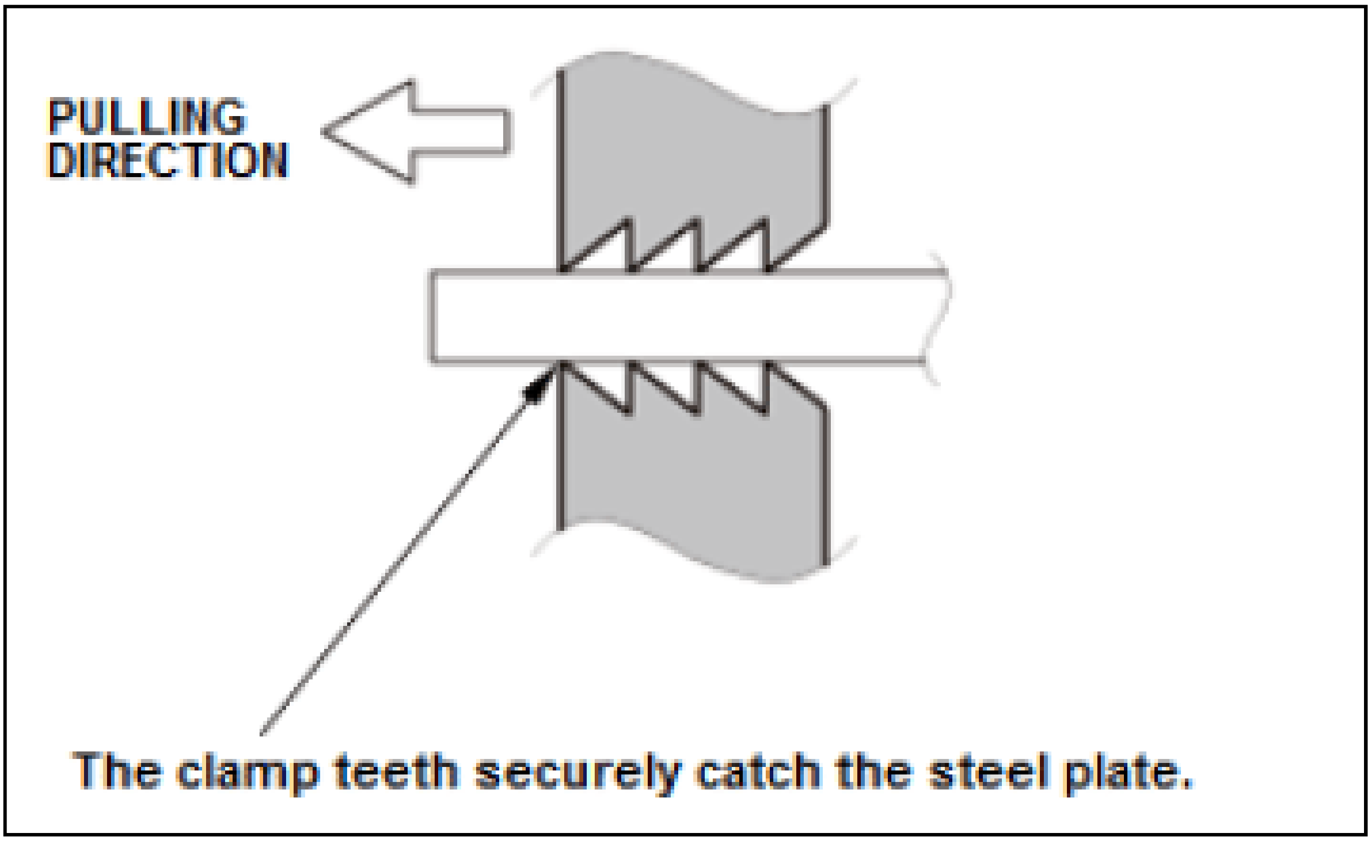
PULLING DIRECTION
The clamp teeth securely catch the steel plate.

Pulling Direction

Diagonal Pull-out

Adjust the pulling force of (A) and (B) by changing the pull angles.

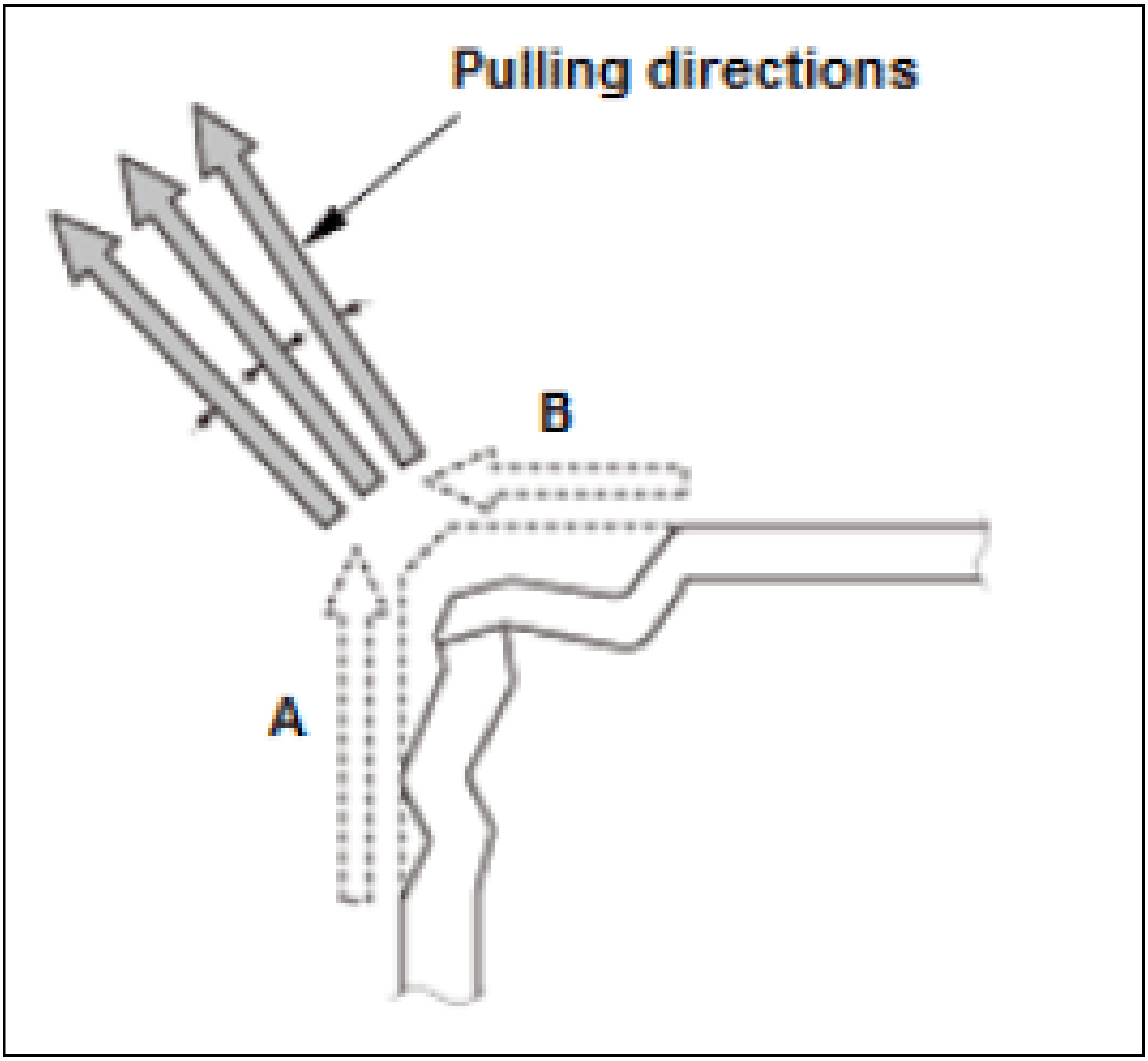
Pulling directions
B
A

Perpendicular Pull-out

- Add the pulling forces (A) and (B) perpendicularly while adjusting their magnitude.

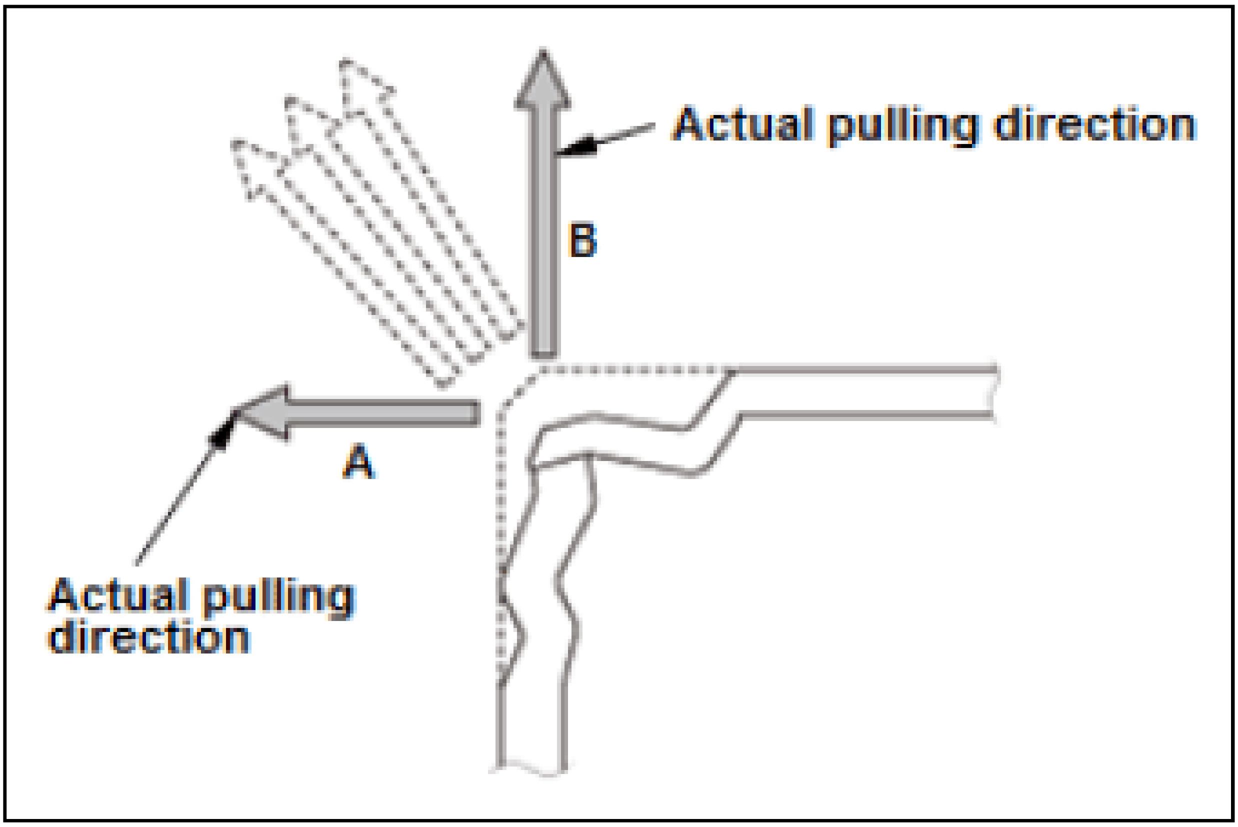
Actual pulling direction
B
A
Actual pulling direction

- By pulling the body from two perpendicular directions, it is easier to control the change of direction of the composite force. This allows easier, step by step body dimensional restoration while confirming restoration progress.

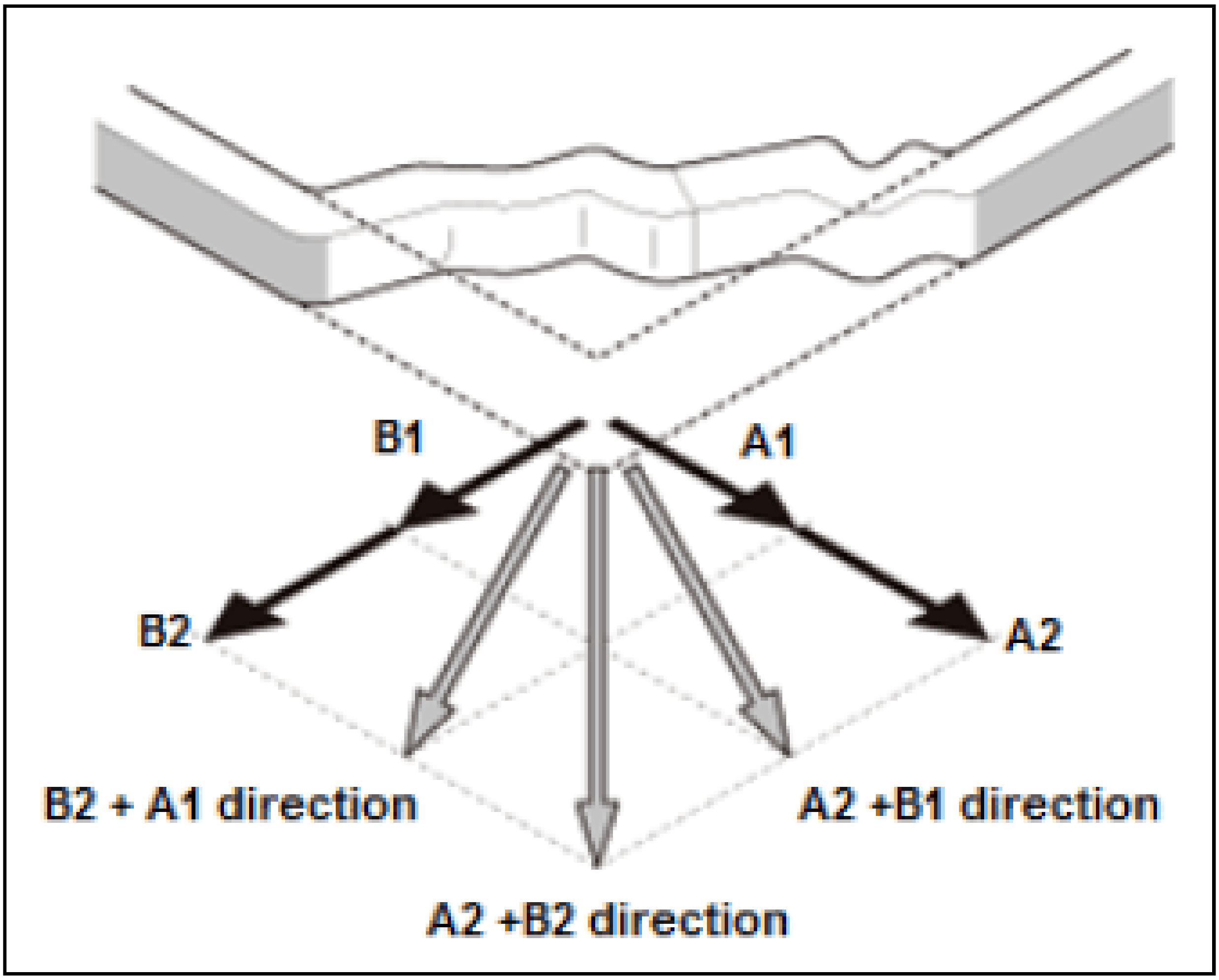
B1
A1
B2
A2
B2 + A1 direction
A2 +B1 direction
A2 +B2 direction

- When estimating the restored shape of the body set the pulling anchor point on an extended line in the required direction. By gradually pulling that part of the body, the damaged section is eventually restored to the proper shape.

The pulling directions should be determined based on the skill level of the operators and/or the characteristics of the body and frame correction equipment used.

NOTE: **Refer to the manual issued by the body and frame correction equipment manufacturer for detailed specifications and information.**

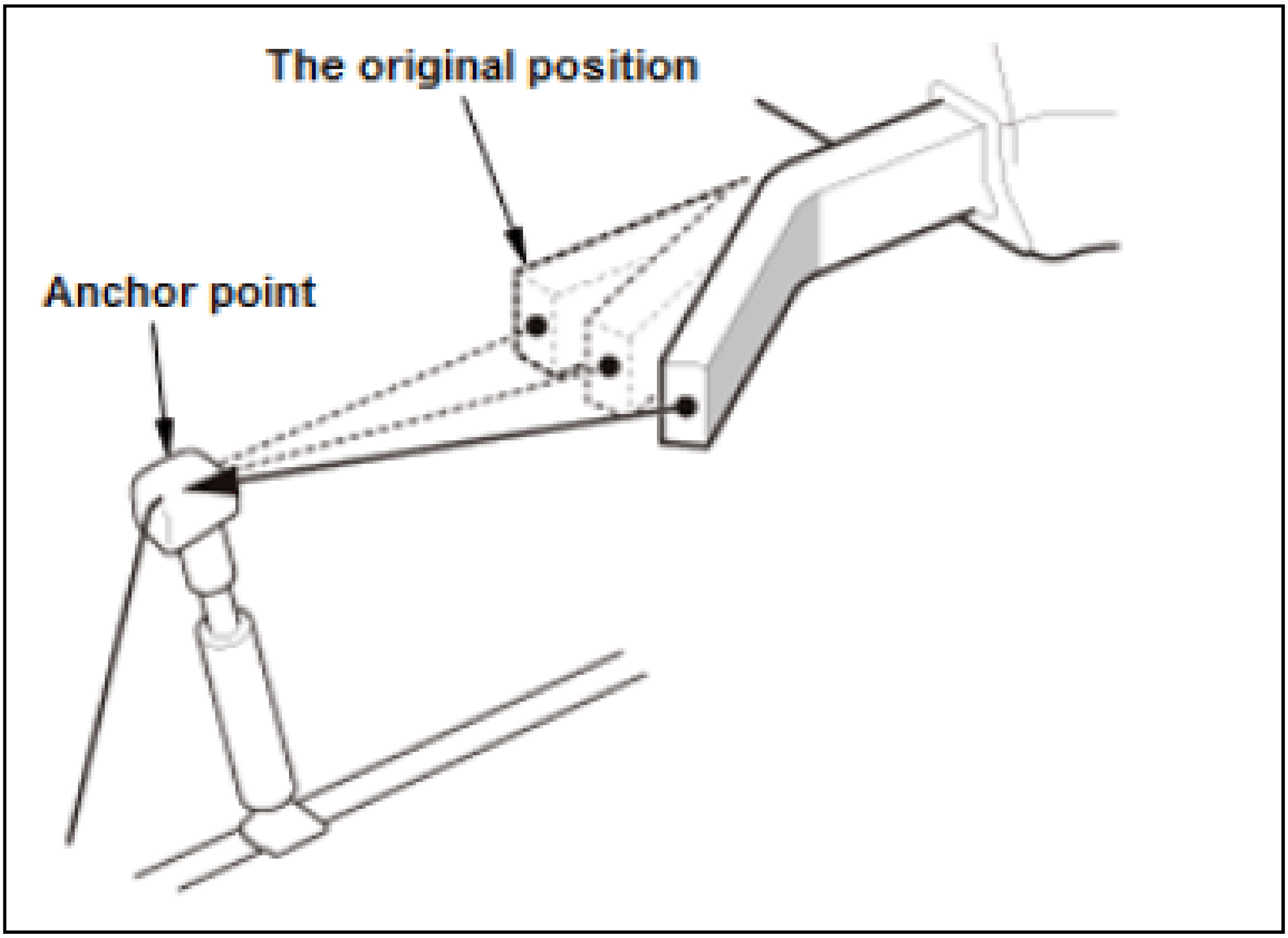

Impact Force Direction

1. The impact force deforms the body through the divided elements of (A) and (B). Apply an equivalent or greater force to the body from the opposite direction to pull-out and restore the deformed shape back to original as much as possible.
2. As the body stiffness varies from section to section, it is necessary to adjust the pulling forces and directions accordingly. The shape may not be restored completely by pulling only in the opposite direction.

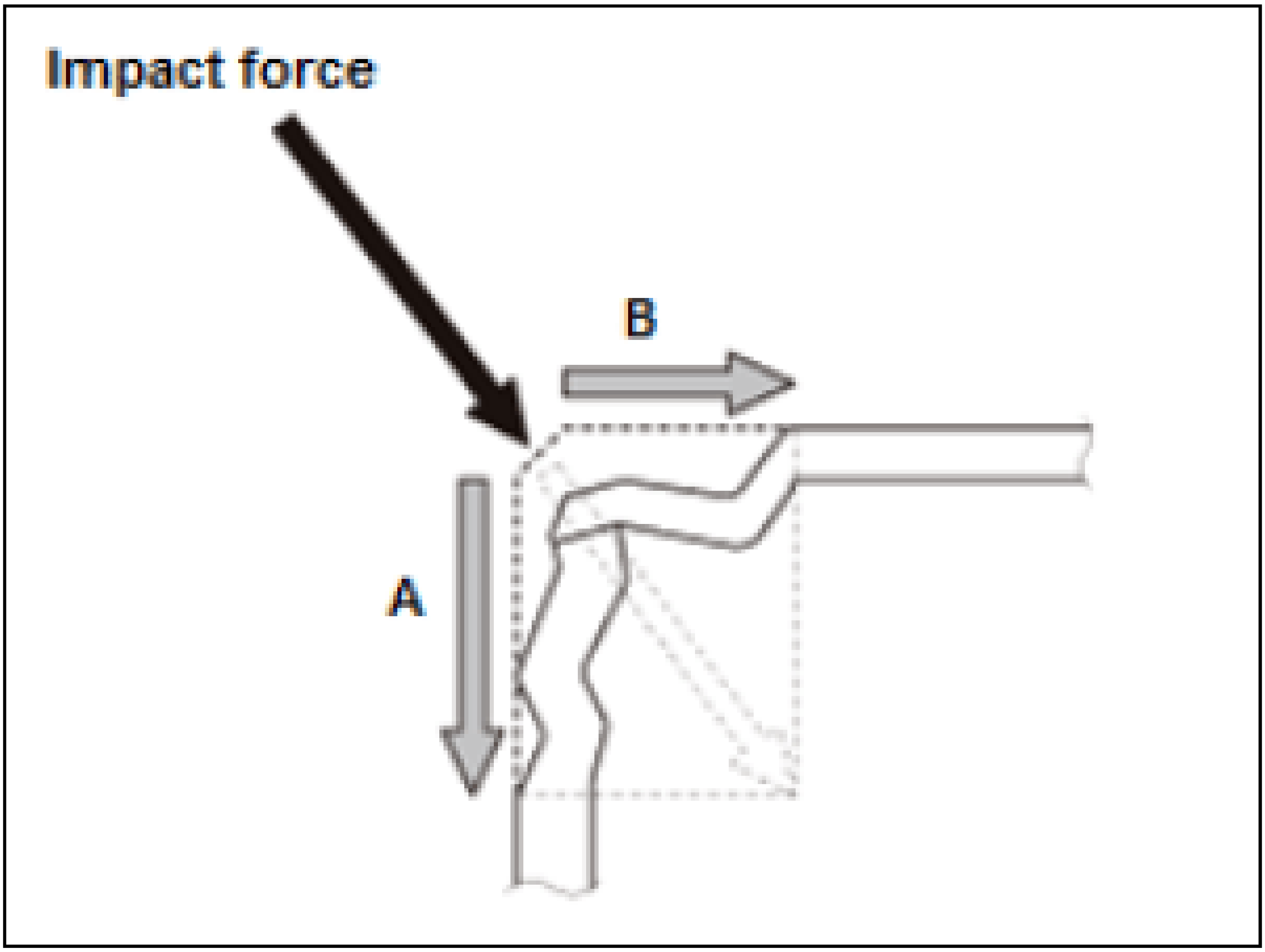

REPAIRING MINOR BODY DAMAGE

Anti-Rust Treatment

- Apply anti-rust treatment to the inside surface of the panel because the paint layer will be damaged due to heat from the previous repair processes.
- Apply anti-rust agent to the inside of the repair area through the interior or exterior parts installation holes or through body openings.

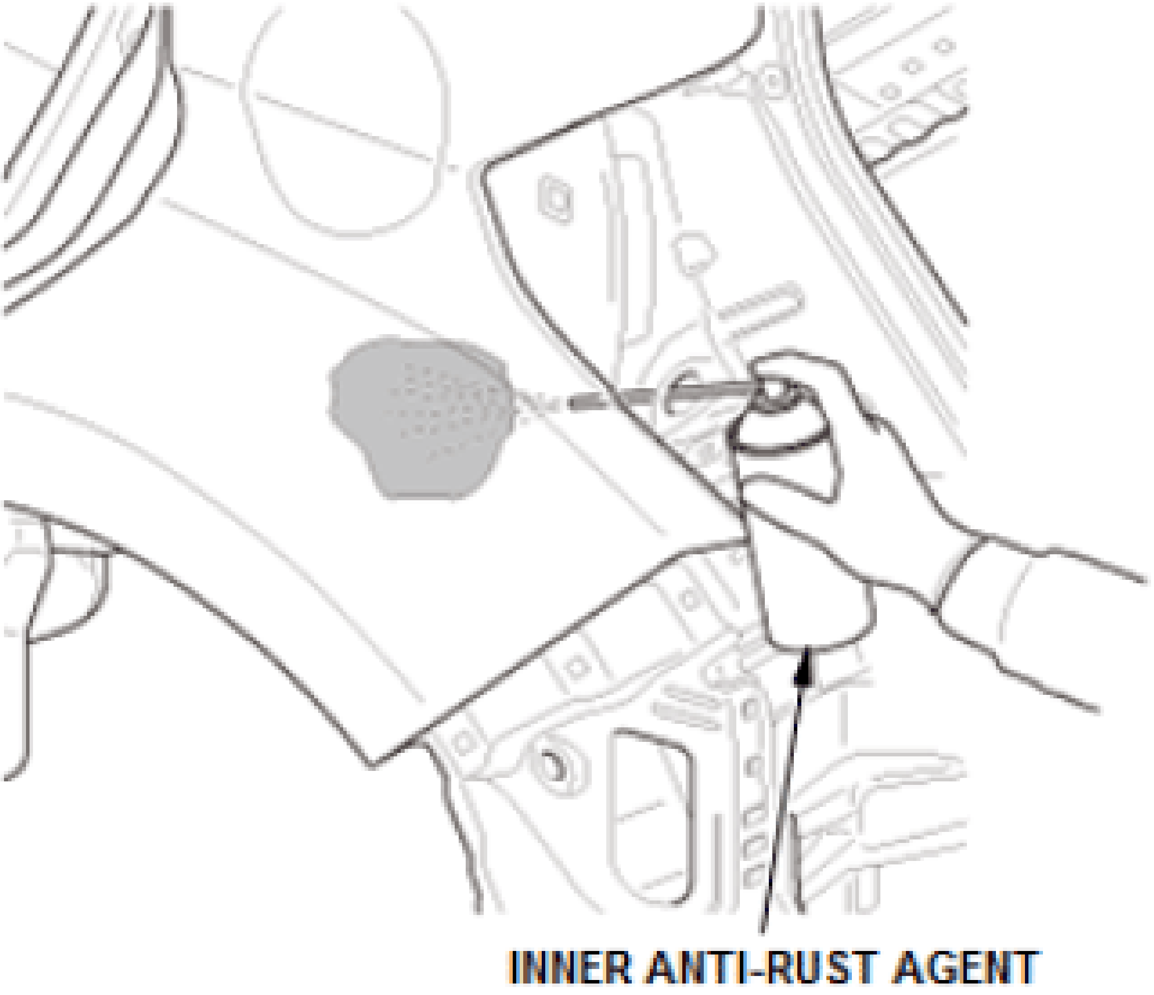

Basic Work Processes

Minor body damage usually involves correction of outer panels or externally installed parts. This kind of work is usually done by correction using hammers and dollies or washer welding. Both of these methods require body filler repairs to restore the original body contours. The best way of repairing body panels is to correct the damage as close as possible to the original contours using a hammer-out or washer welding method, then applying the minimum amount of body filler.

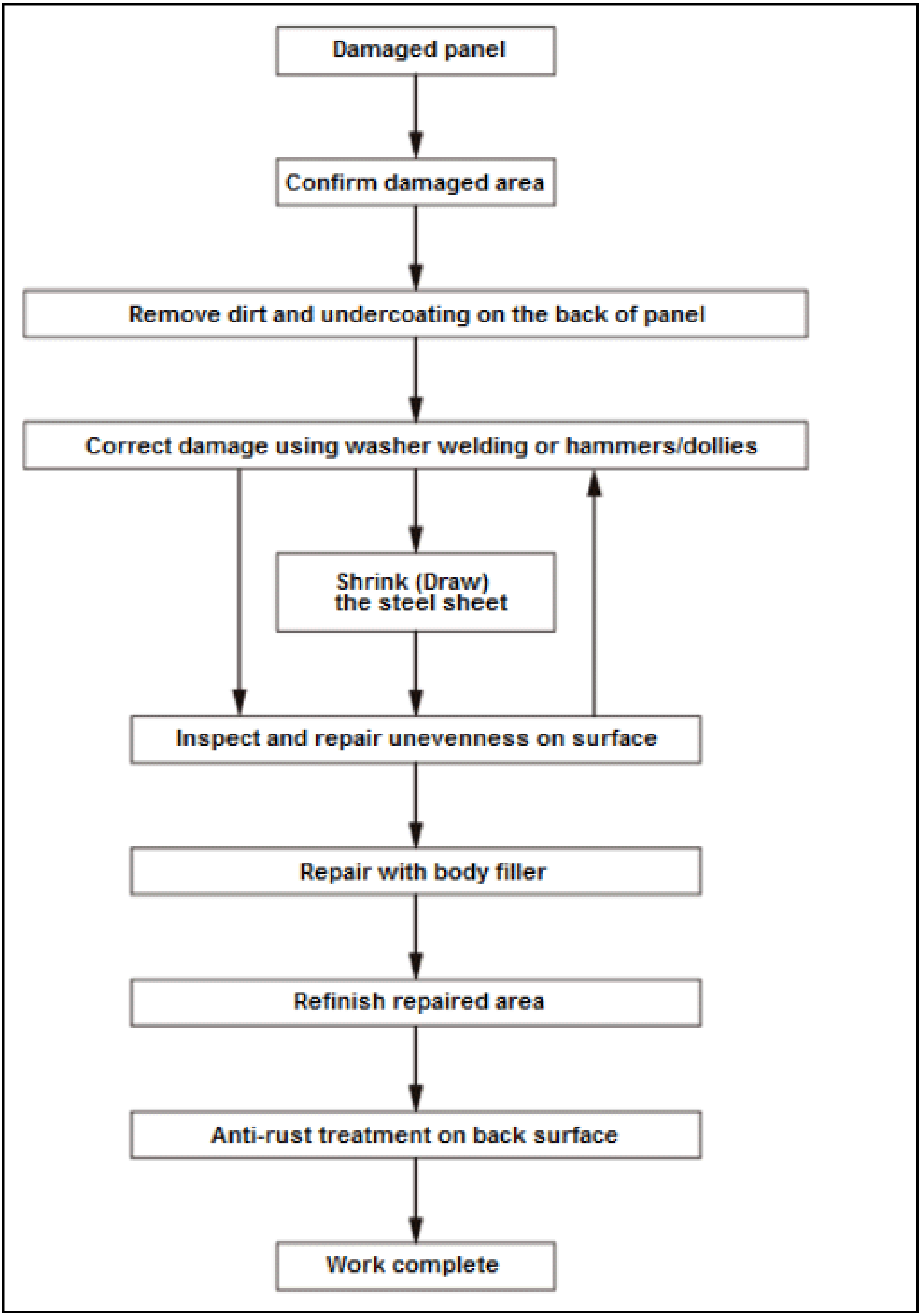
Damaged panel
Confirm damaged area
Remove dirt and undercoating on the back of panel
Correct damage using washer welding or hammers/dollies
Shrink (Draw) the steel sheet
Inspect and repair unevenness on surface
Repair with body filler
Refinish repaired area
Anti-rust treatment on back surface
Work complete

Body Filler (Putty) Repairs

Selection of Putty

- For body filler repairs, it is extremely important to select the most appropriate type of filler or putty for the work.
- The filer type determines the resulting appearance or the repair time required. To select the most appropriate product, it is vitally important to know the technical characteristics of panel putty, intermediate putty, polyester putty, lacquer putty, etc.
- For a depression deeper than 3 mm (0.12 in), begin with panel or intermediate filler, form the surface with polyester putty, then apply paint primer surfacer. Use spot or lacquer putty to remove fine scratches. Save time by using polyester putty as much as possible.

NOTE: **Repairs where filler is applied directly over old paint layers may be easier, but care must be taken. Some paint layers types don't accept filler well and will crack or peel when filler is applied. Always check the old paint layer type and condition. Do not apply filler directly over degraded or lacquer paint layers.**

Filler Application Steps

1. Remove paint layers on steel panel and clean:
    - Remove the paint layer to bare metal from a slightly wider area than the immediate filler application area using a disc sander. Make sure to completely remove old paint layer and any rust. Smooth the surface to make a gradual blend it with the surrounding painted areas.
    - Sand using a double action sander with P80 to P120 sandpaper to smooth out the surface between the bare steel panel and old paint layers. Make a featheredge of 20-30 mm (0.79-1.18 in) while removing fine scratches.

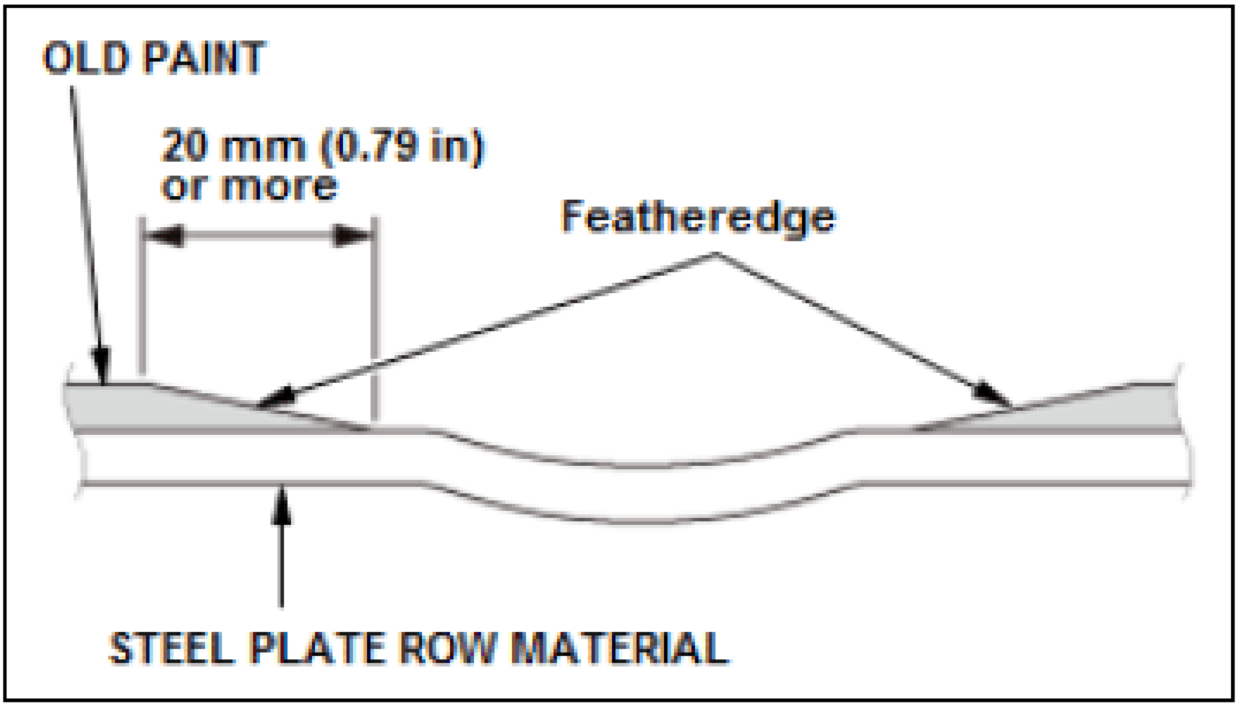

2. Clean and degrease the filler application area:
    - Use compressed air to remove dust, dirt, and water. Remove oils with a degreaser.
    - In rainy or humid weather, warm the surface with an infrared heater to eliminate moisture.
    - On very cold days, preheating the panel makes body filler easier to spread and reduces drying time.

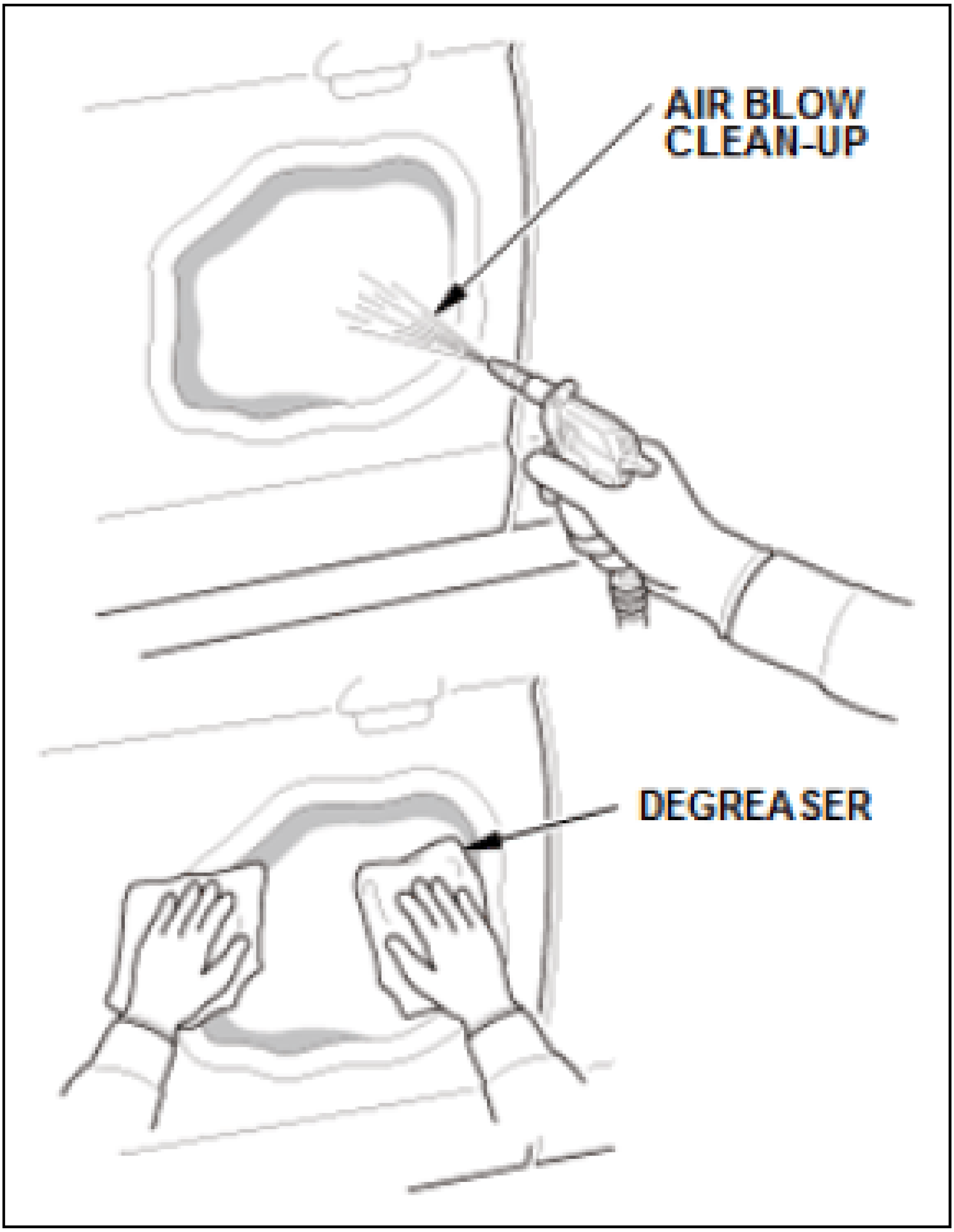

3. Mix the filler and hardener.

   Using a plastic or wooden body filler scoop, remove the necessary amount of filler from the can. Add the filler and specified ratio of hardener to the mixing board.

   NOTE: **Check the appropriate mixing ratio in the product specifications issued by the filler manufacturer.**

   To prevent air bubbles, knead the filler until the color becomes even while twirling the scoop or spreader.

   NOTE: **Do not attempt to mix a large amount of filler at one time because it may harden during application. When a large amount is needed, mix and apply the filer in small quantities.**

   Body filler scoop and spreader maintenance. Straighten the end of body filler scoops or spreaders using sandpaper and allow a slight bow. Completely remove hardened filler and keep the tools clean at all times.

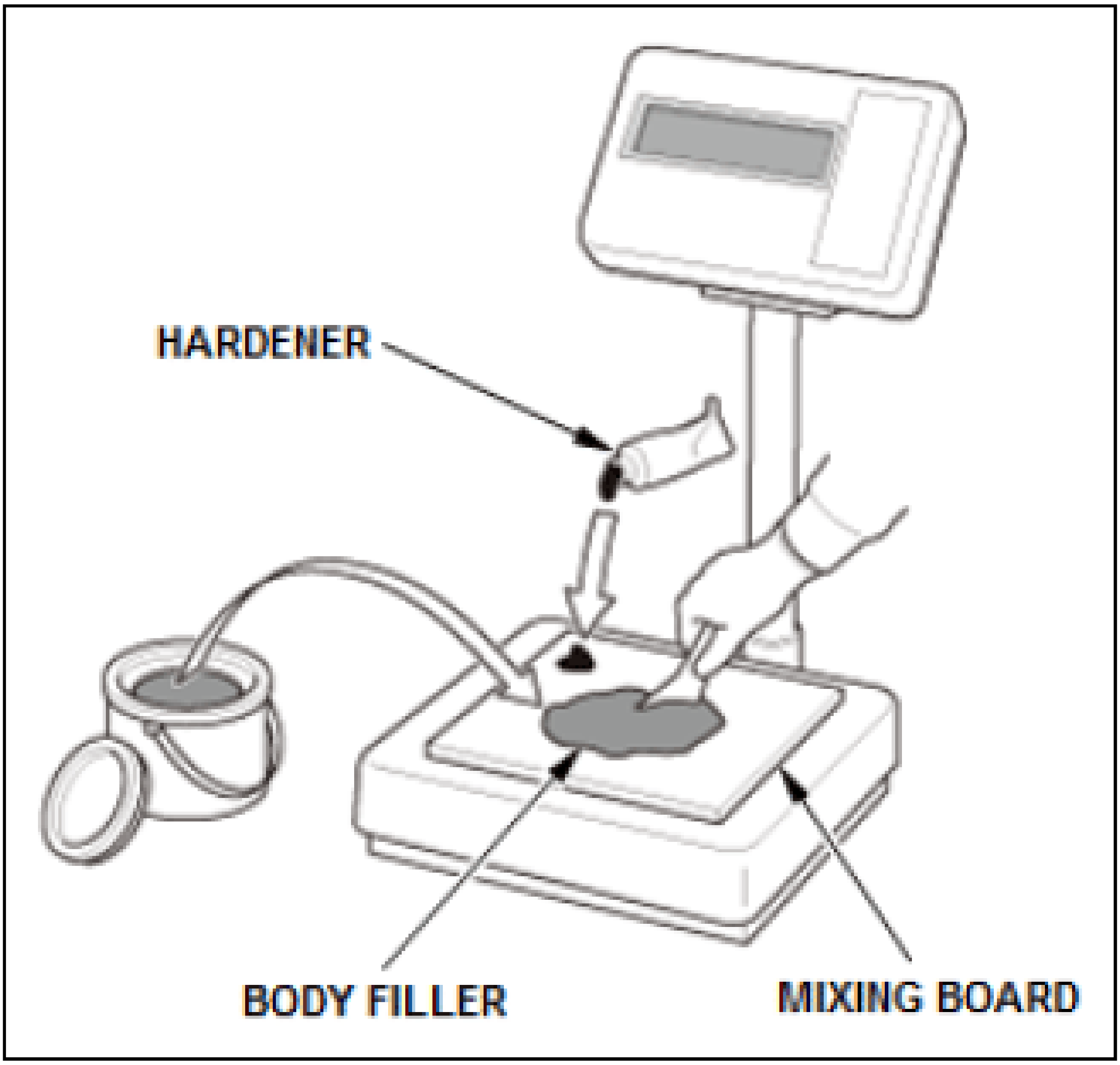
HARDENER
BODY FILLER
MIXING BOARD

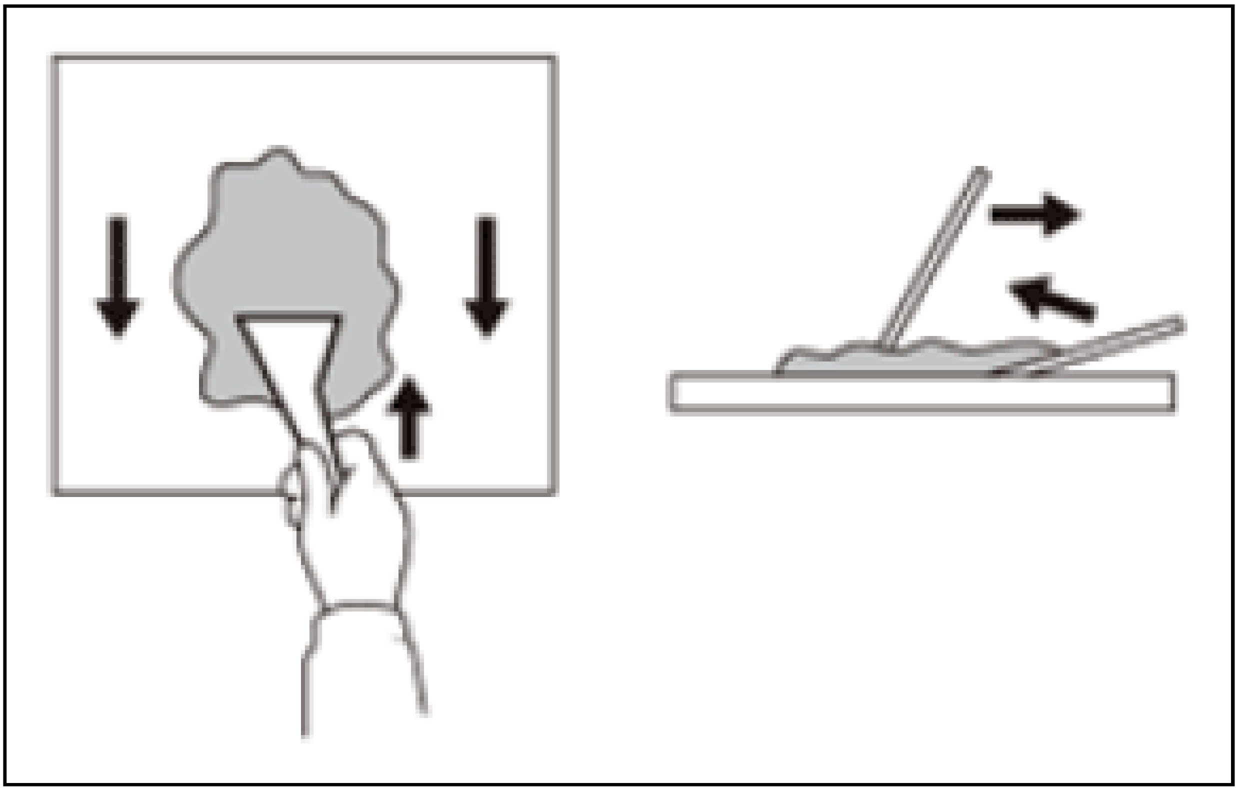

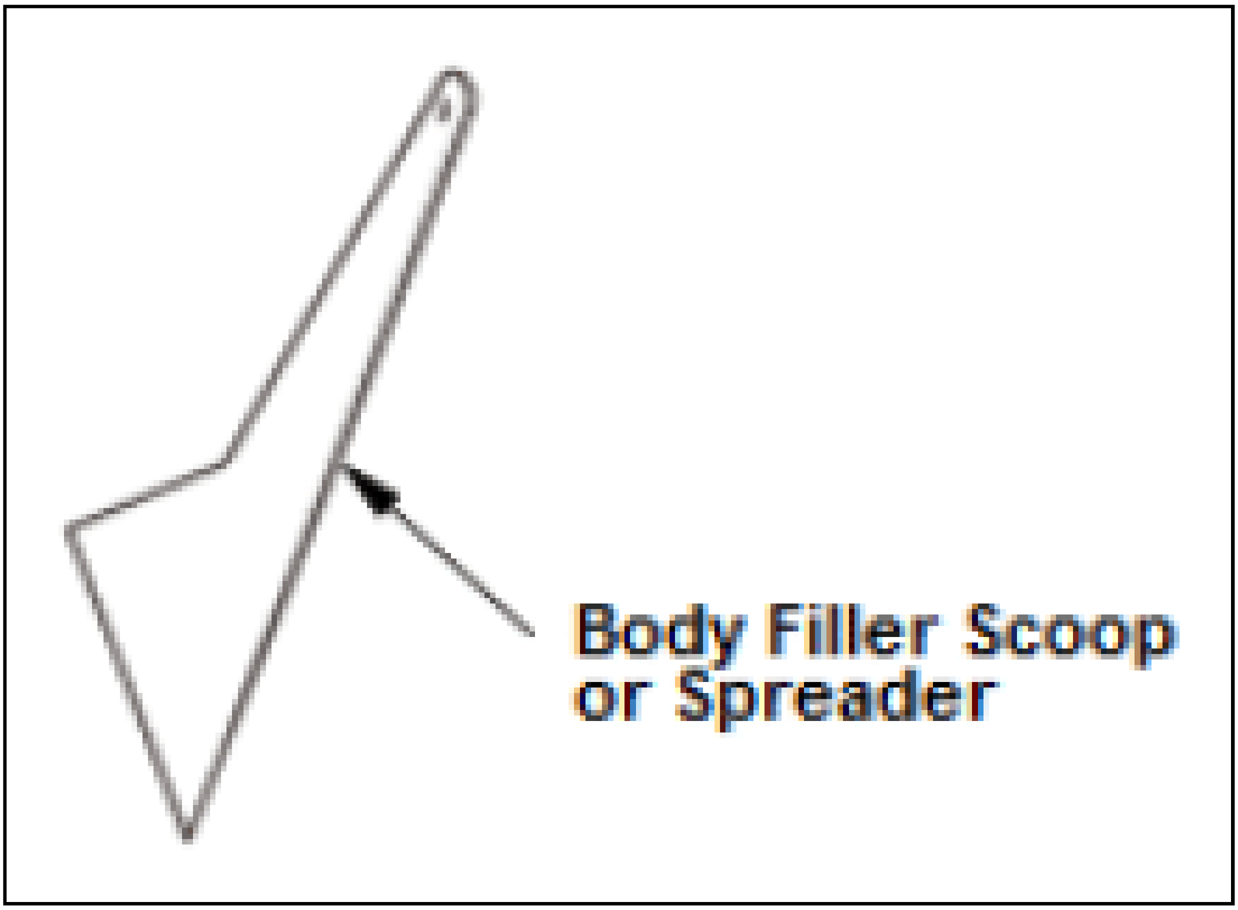

4. Using a body filler spreader

   When the filler application area is rectangular, move the spreader in a long direction.

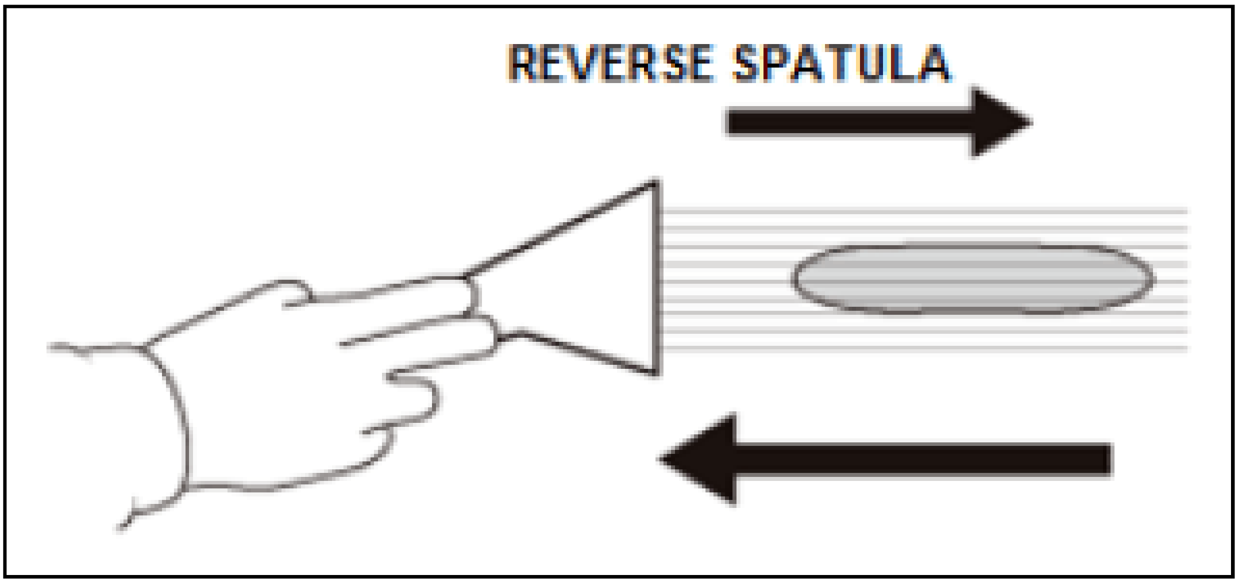

5. Basic filler application
   1. The initial layer of filer should be applied to remove sanding scratches. Hold the spreader almost vertically and apply a thin layer of filler while pressing down slightly.
   2. Apply slightly more filler than necessary in light coats to prevent cavities in the filler caused by air bubbles.
   3. The final layer of filler should be applied to smooth out the surface by laying the spreader down closer to the surface.

NOTE: **Sanding becomes much easier if filler is used to restore the original shape as much as possible.**

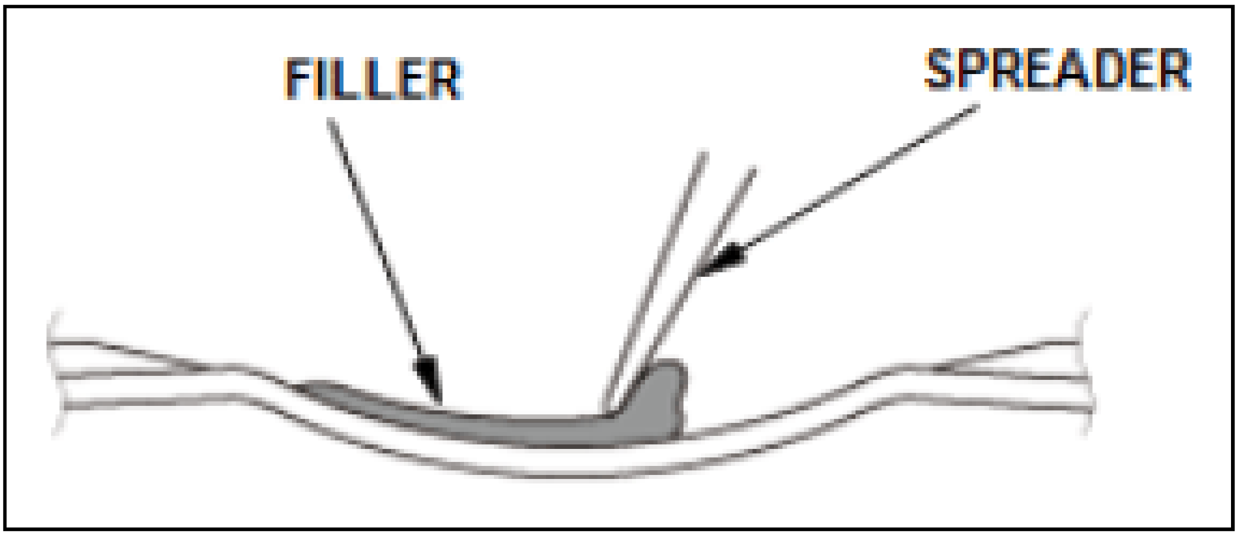
FILLER
SPREADER

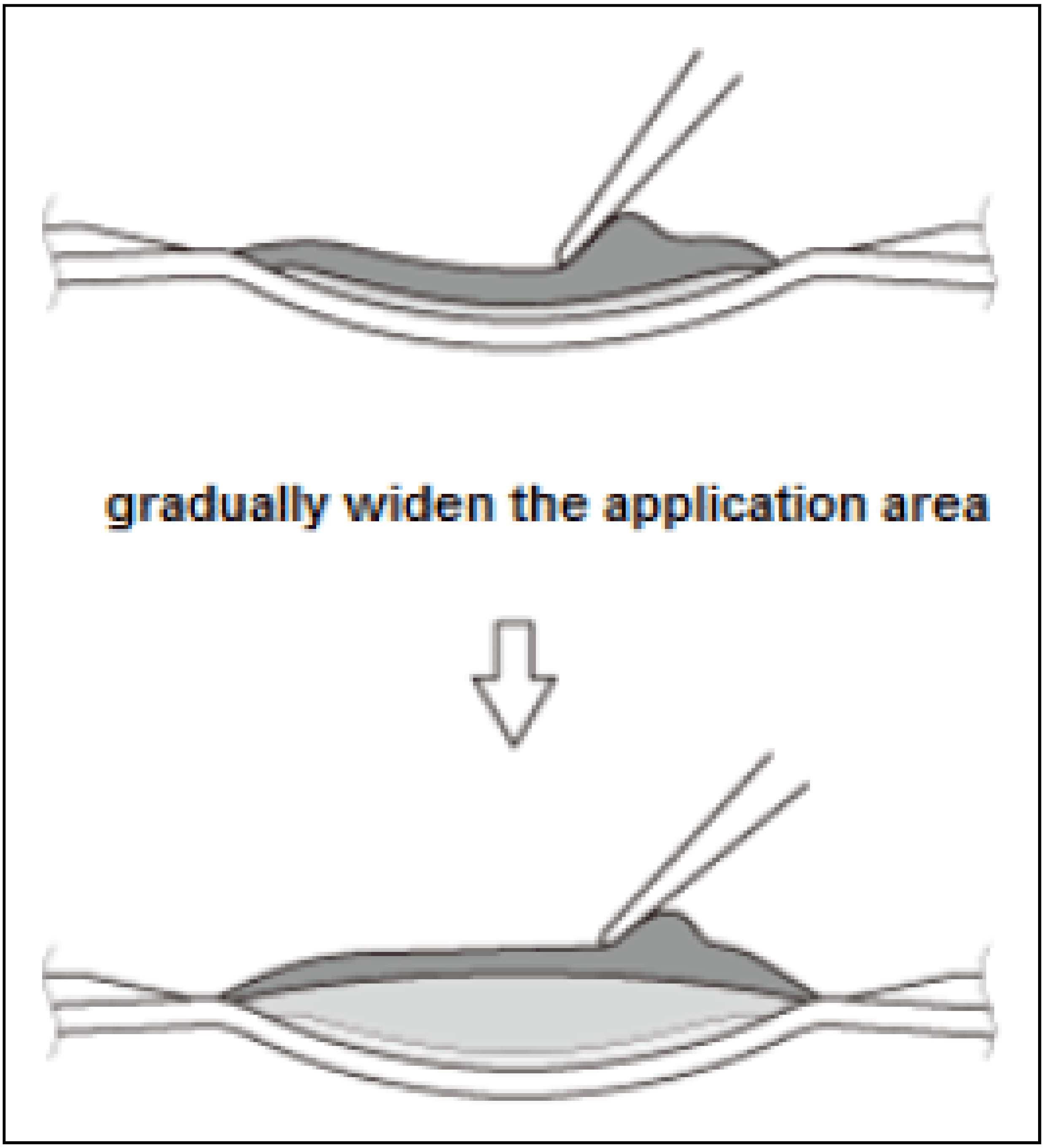
gradually widen the application area

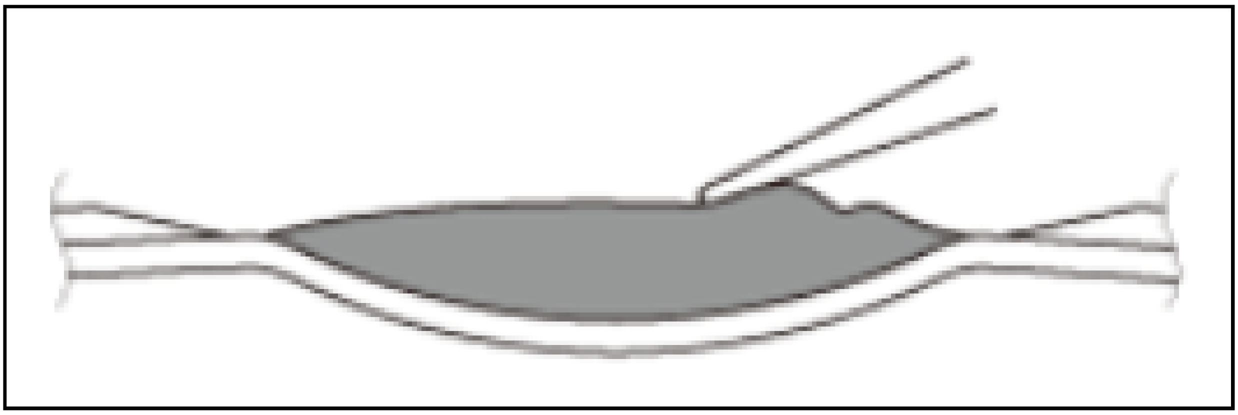

Applying Filler at Body Corners

Using a flexible rubber spreader, apply body filler along the corner area. Apply enough filler to account for sanding required to restore the body contours.

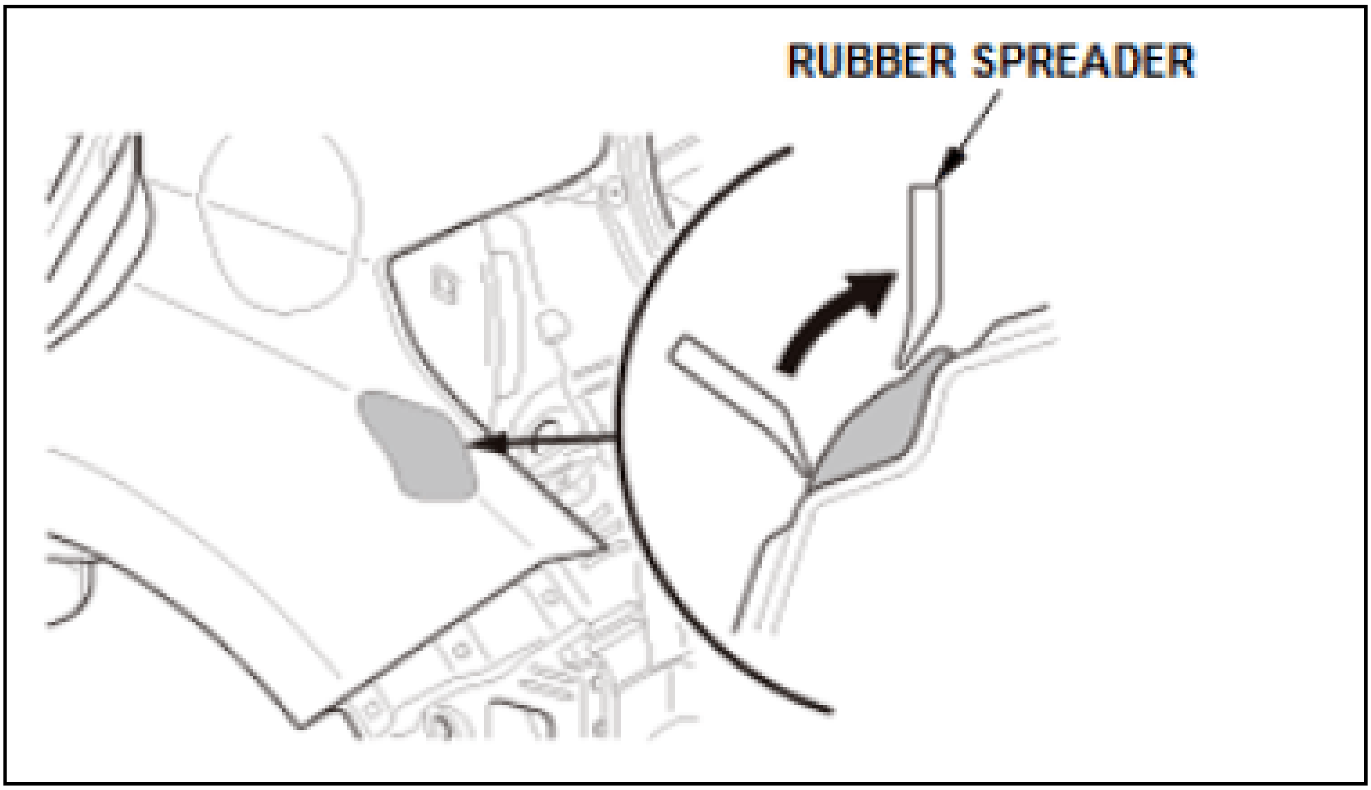

Applying Filler at Stamping Line

1. Apply masking tape along the stamping line and apply body filler to the lower side.

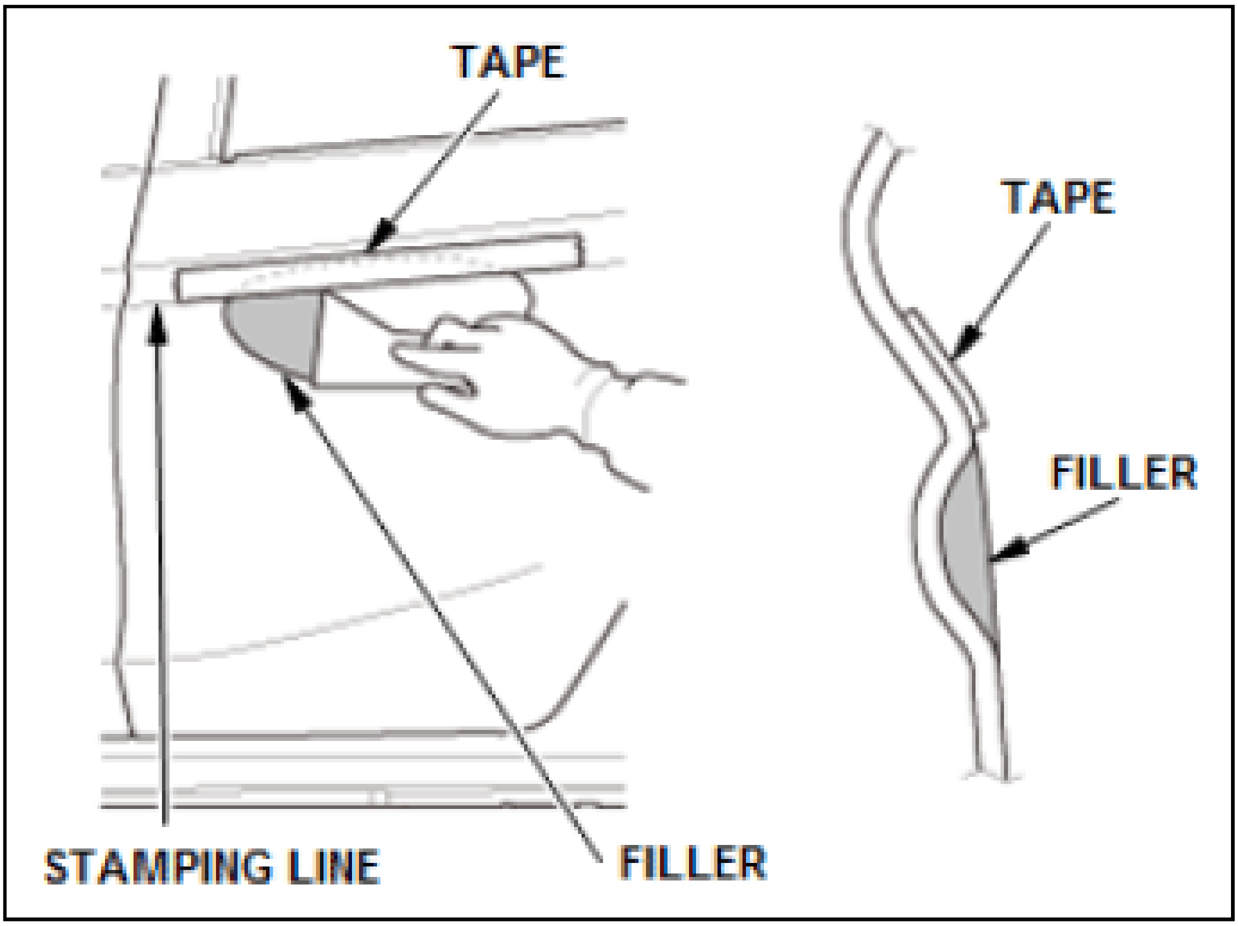
TAPE
TAPE
FILLER
STAMPING LINE
FILLER

2. After the filler is halfway set (dried), remove the tape.
3. Apply tape along the filler line previously applied.

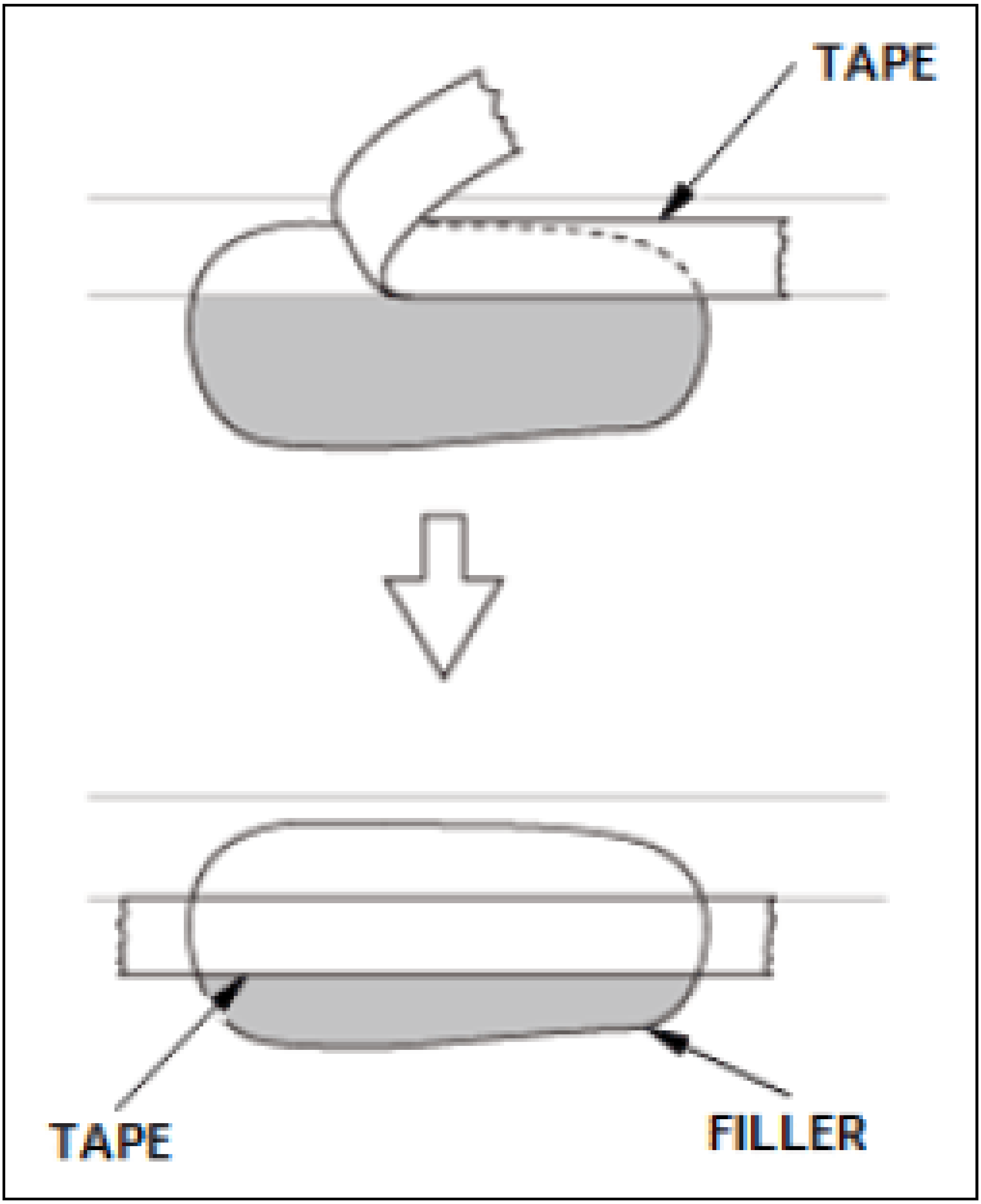
TAPE
TAPE
FILLER

4. Apply filler on the upper side of the tape.

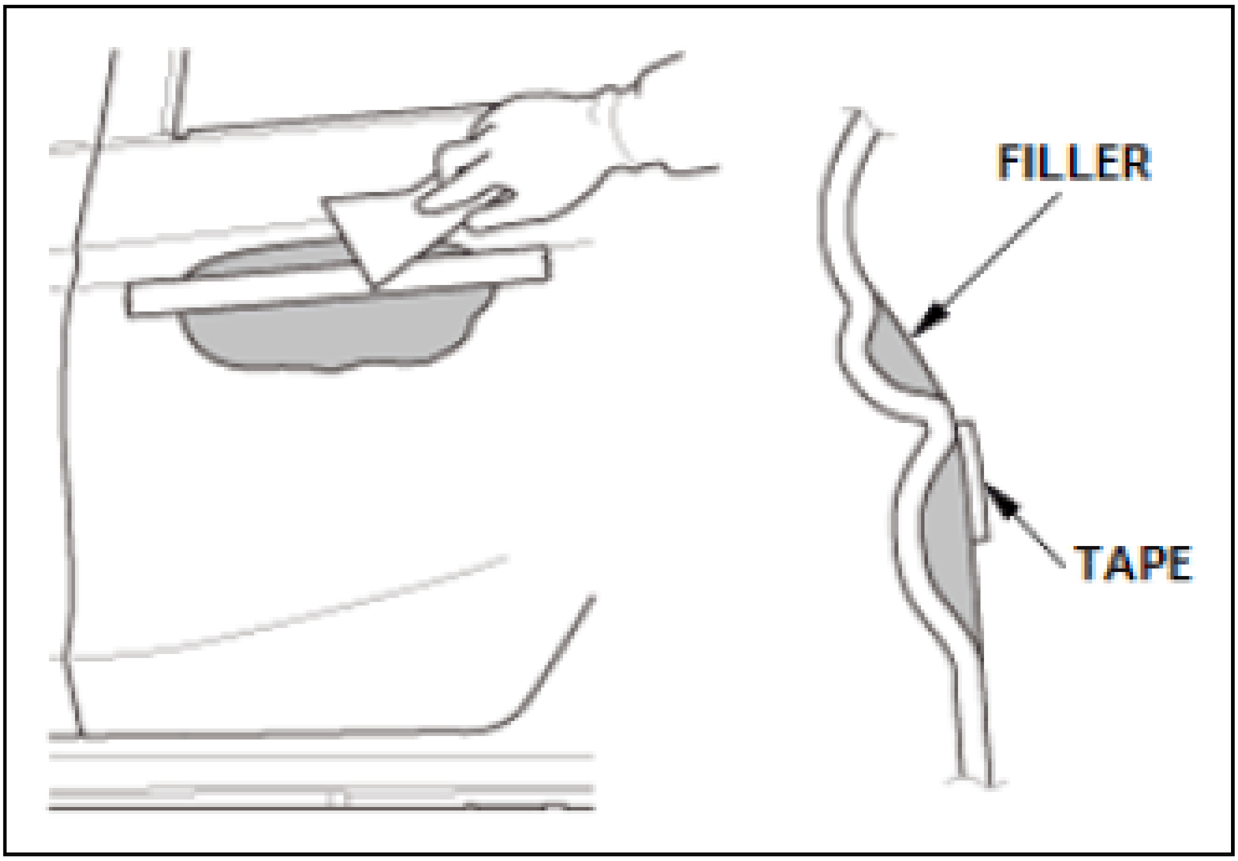

Applying Filler On Combined Surface

On a combined surface area such as a fender wheel arch, where there are both flat and curved surfaces, correct the body contours with filler as much as possible. Otherwise, sanding and polishing time will be increased.

1. Apply filler on the upper side of rounded panel area. To make the surface flat, spread the filler from the edge sideways.

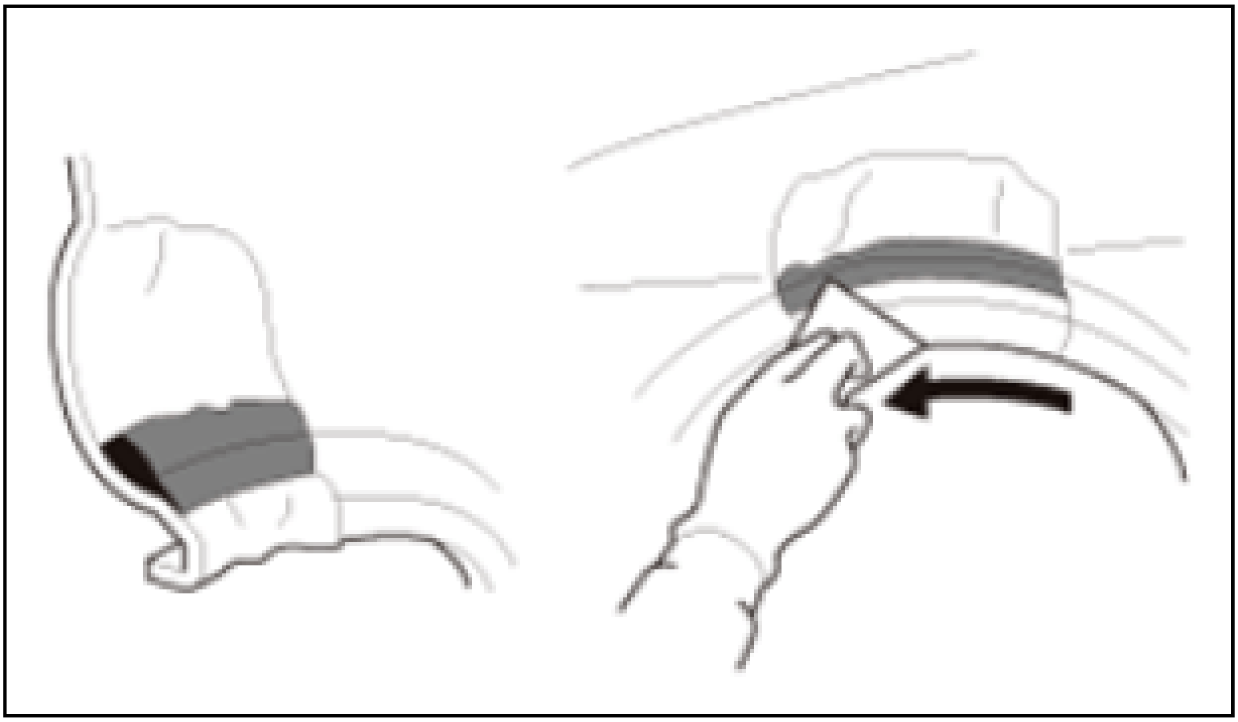

2. Apply filler on the lower side of the rounded area.

   To make the surface flat, spread the filler from the edge sideways.

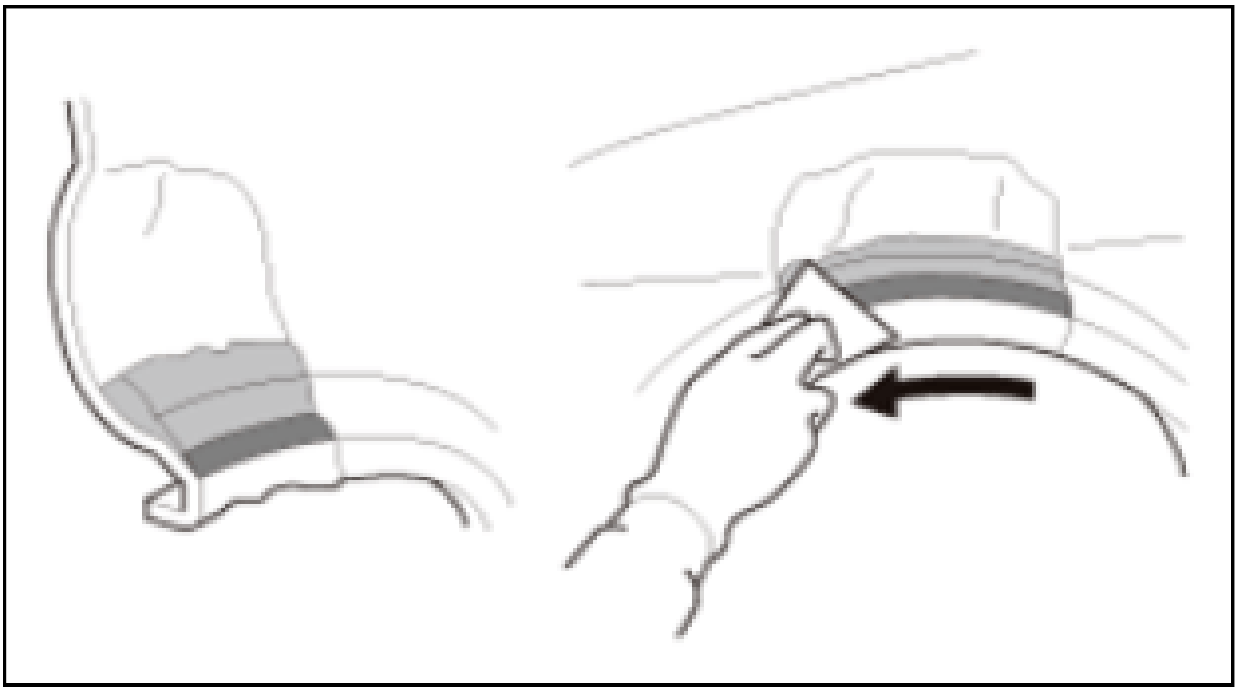

3. Apply the necessary amount of body filler on the side surface of the rounded area. Use a spreader to move the filler sideways. Repeat for the other side of the rounded area.

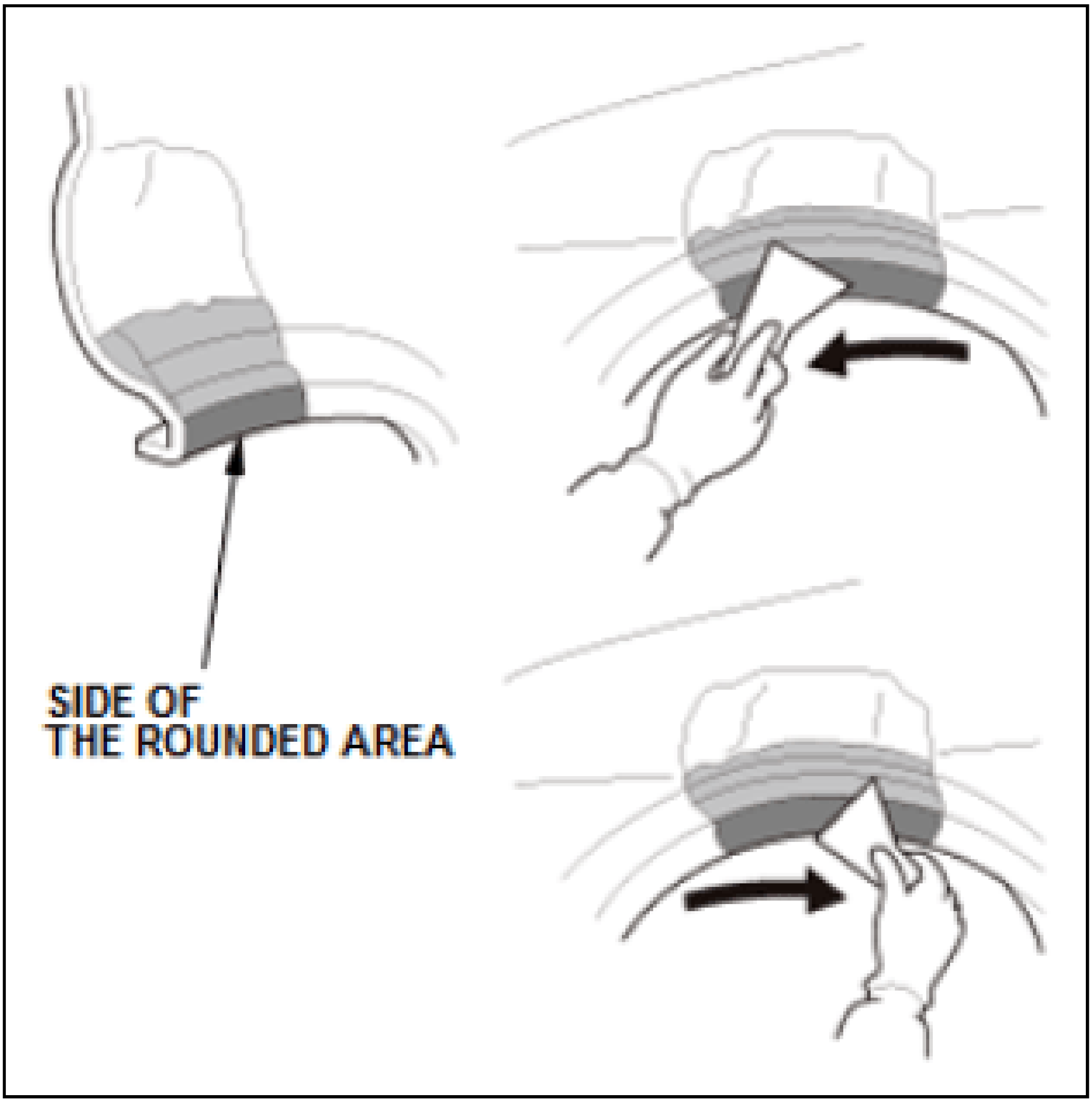
SIDE OF
THE ROUNDED AREA

4. Apply filler on sides:

- Apply necessary amount of filler on the side plane.
- Smooth the surface by moving the spreader sideways while avoiding the curved area.
- Smooth the entire surface with repeated motions of the spreader.

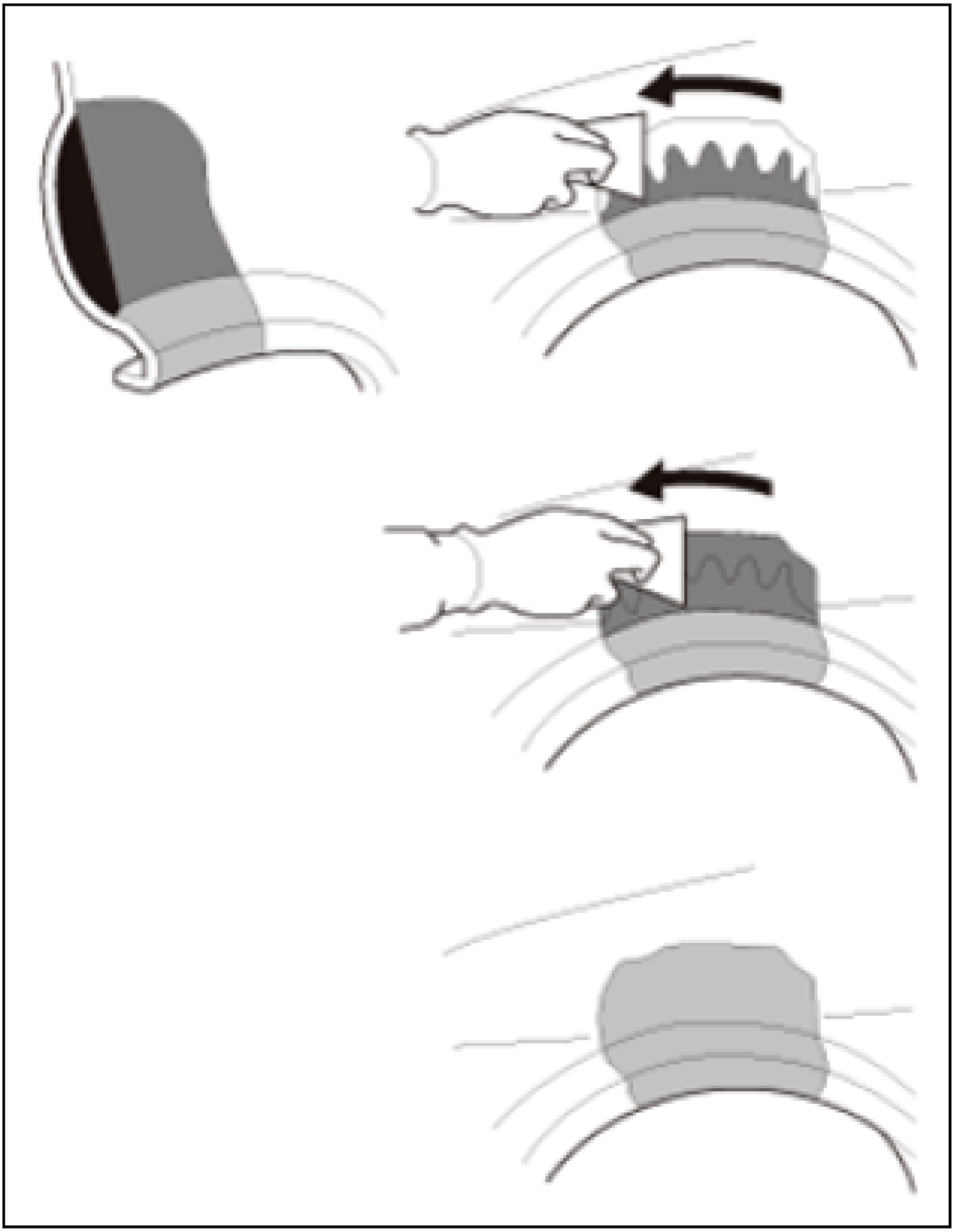

Drying Body Filler

- Body filler hardens enough to be sanded in 20 to 30 minutes at 68 Â°F (20 Â°C) after application. Low temperatures or high humidity will increase the hardening time required. Forced drying may be used to reduce repair time.

NOTE: **Rapid or excessive temperature changes will cause body filler to blister, crack or detach from the repair area.**

- The hardening speed depends on the filler's thickness. A thick filler application will dry faster than a thinner one.

NOTE: **Follow the body filler or putty manufacturer's instructions for drying time.**

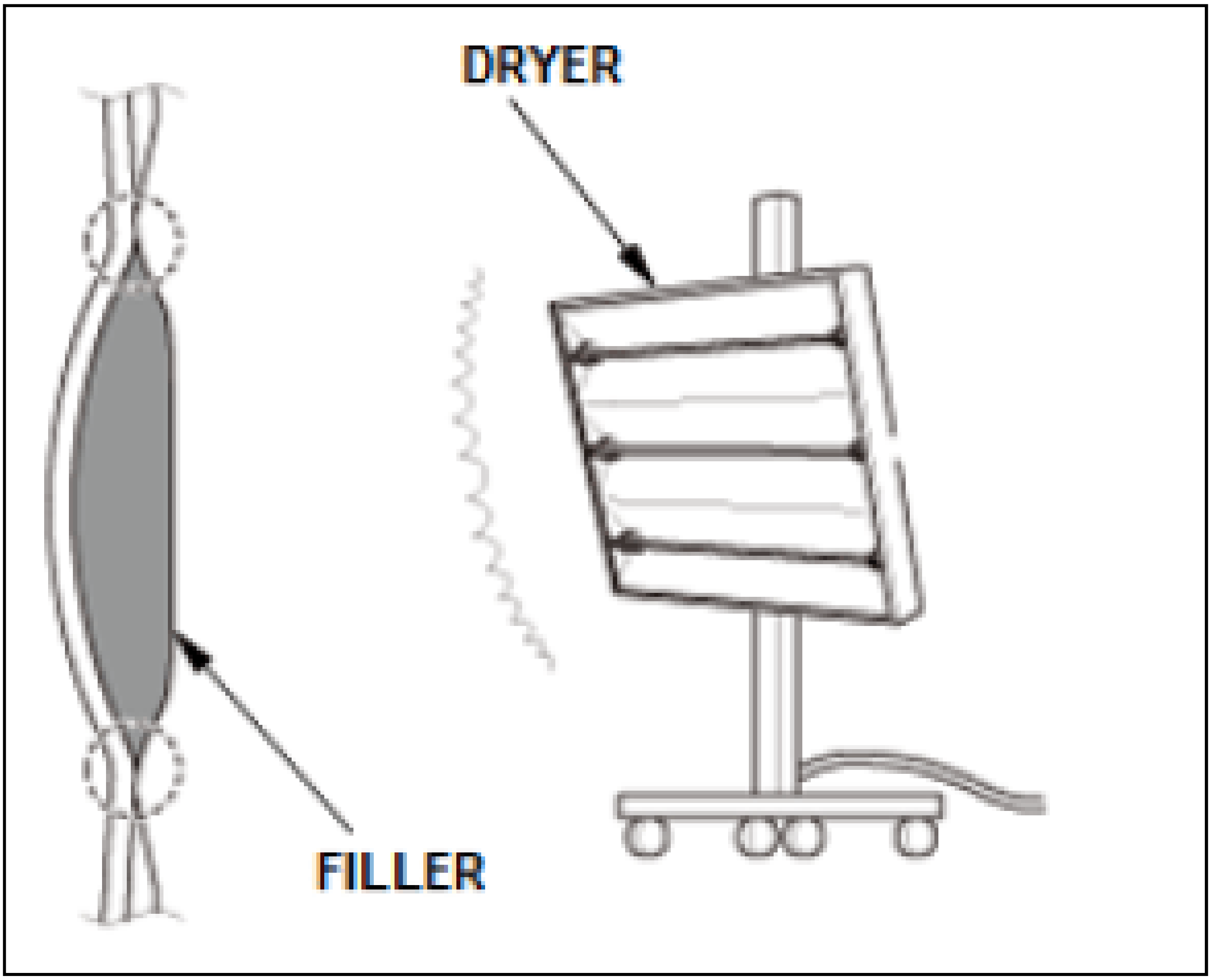

Sanding Body Filler

1. Rough sanding
    1. Rough sand on the entire filler surface until it is smooth.
    2. When the filler is completely hardened, sand its surface until almost flush with the body surface. Do not over sand! Leave a finishing margin for hand sanding.

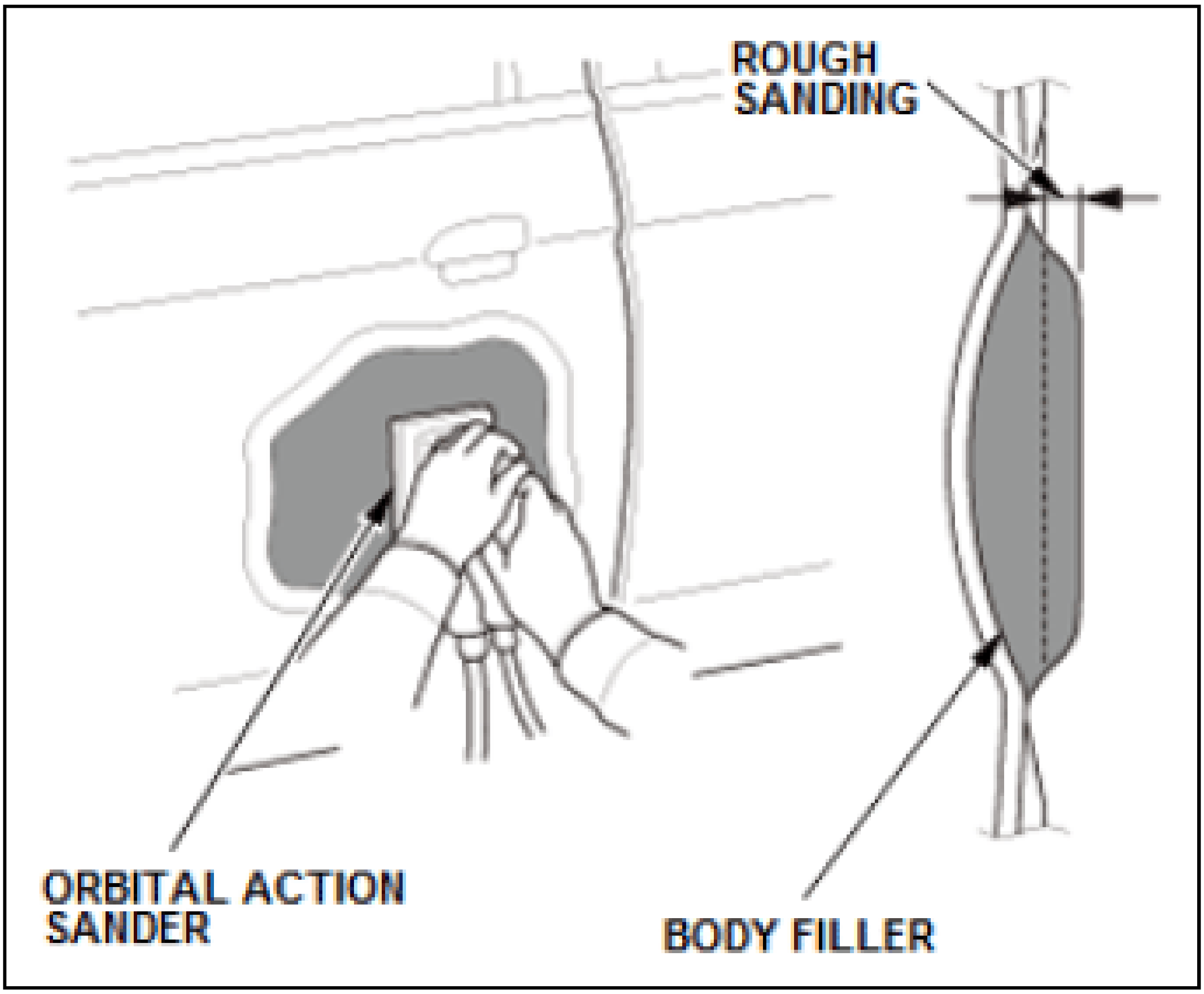
ROUGH SANDING
ORBITAL ACTION SANDER
BODY FILLER

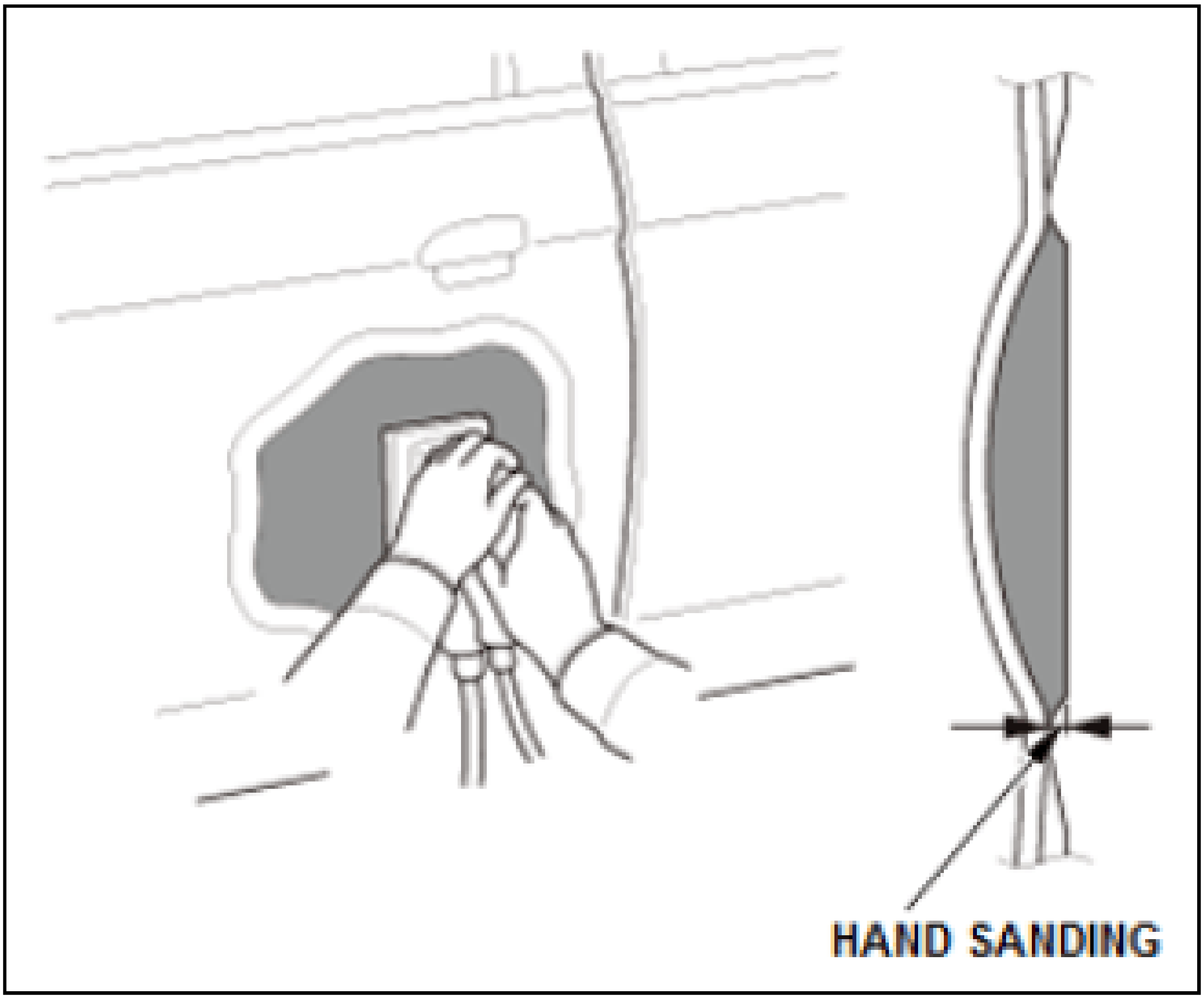
HAND SANDING

2. Finishing

Hand sand the filler surface to match the surrounding panel surface using a hand file.

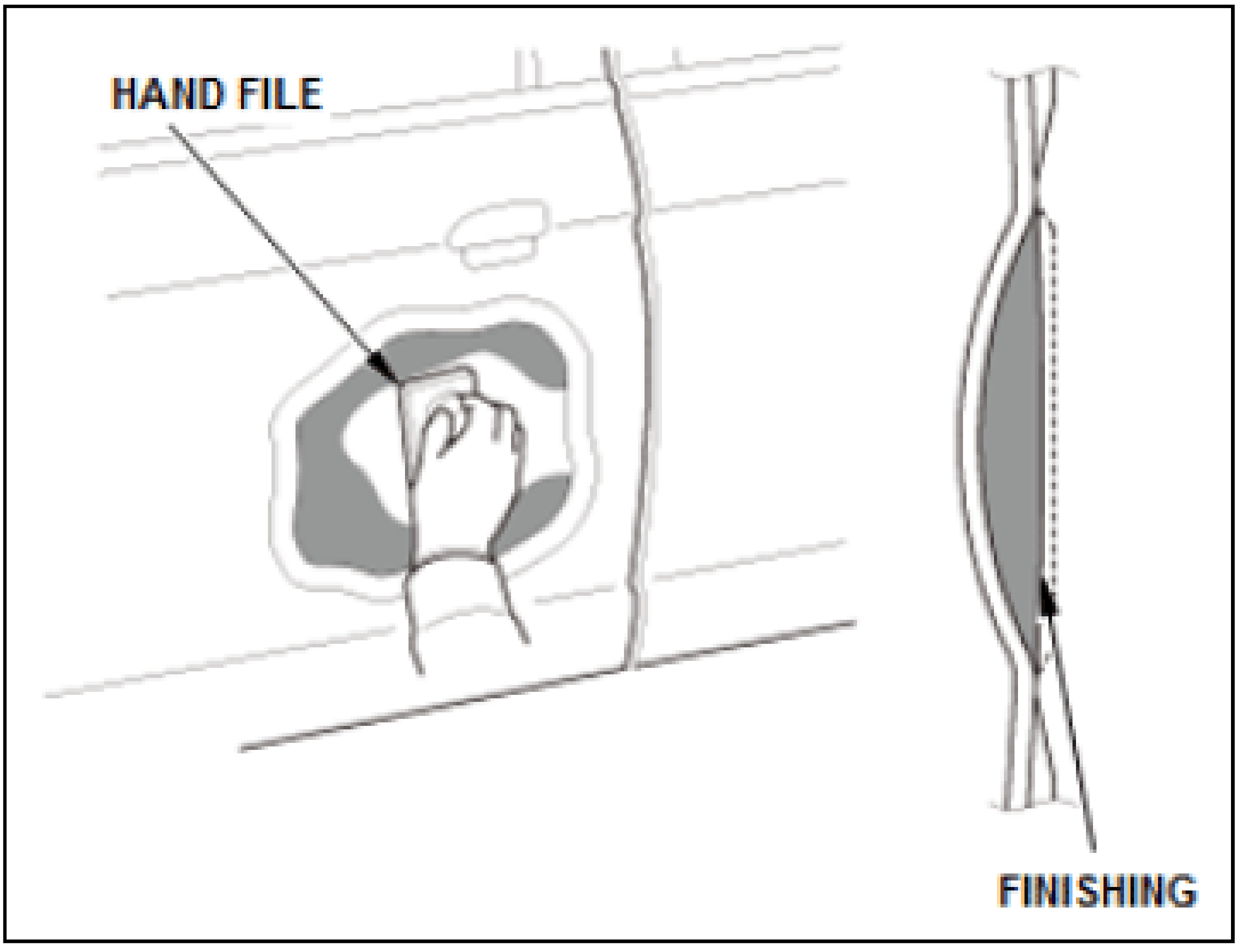

Hammer And Dolly Panel Repair

Hammer And Dolly Panel Repair Diagram

Reforming body contours using hammers and dollies can be done by hand without employing any special equipment, but because it requires high expertise, the quality of the work depends on the technician's workmanship.

With hammers and dollies, it is extremely difficult to finish the repair work to the same level of its undamaged pressed part. So, parts replacement may be necessary depending on the level of the damage. Collision repairs require a variety of handwork that is not difficult individually. If the damaged areas can be easily accessed, hammer and dolly use is recommended because it can be done easily and in a short time.

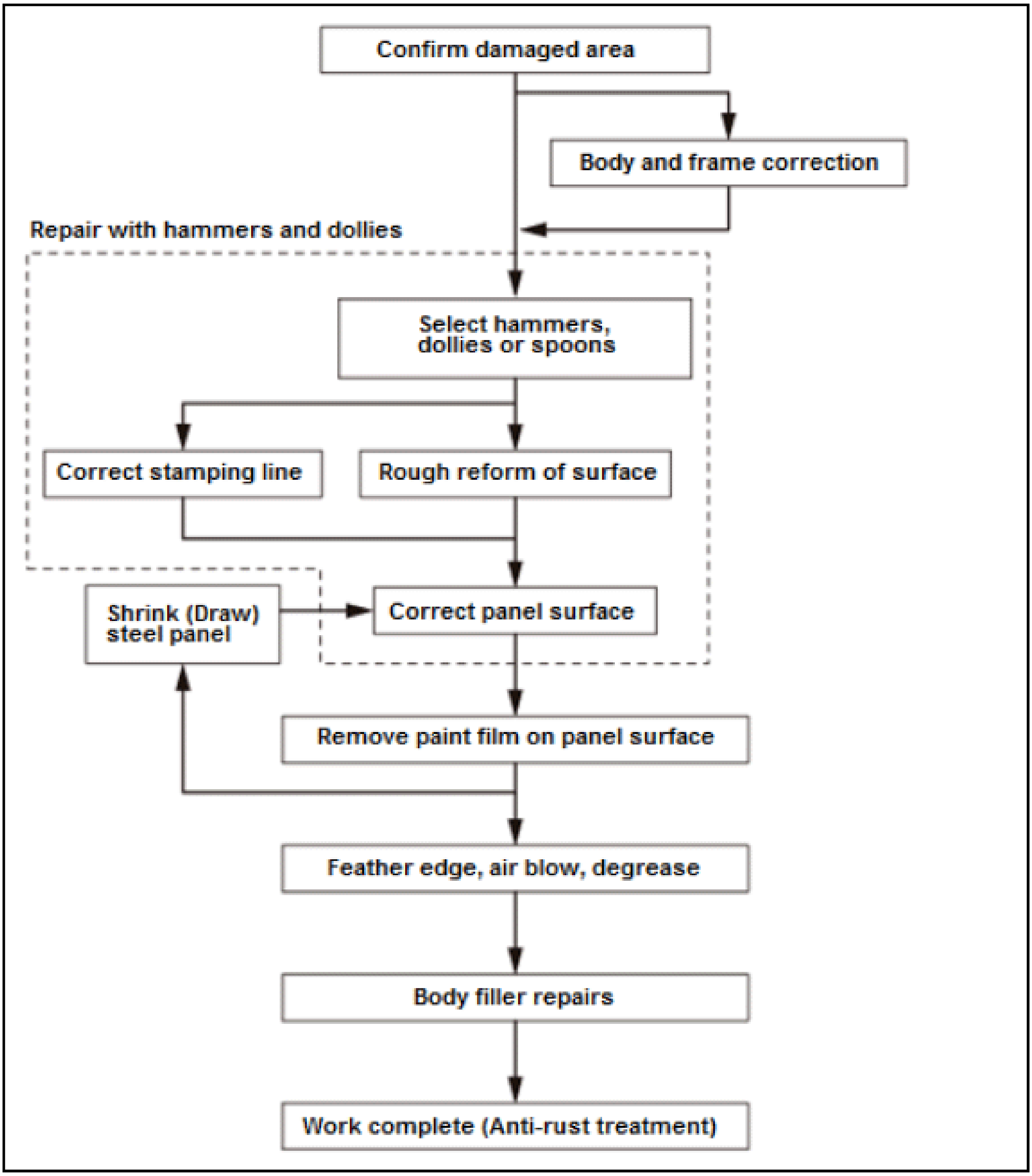
Confirm damaged area
Body and frame correction
Repair with hammers and dollies
Select hammers, dollies or spoons
Correct stamping line
Rough reform of surface
Shrink (Draw) steel panel
Correct panel surface
Remove paint film on panel surface
Feather edge, air blow, degrease
Body filler repairs
Work complete (Anti-rust treatment)

Repair Steps

1. Confirm damaged area:
    - Before starting the repair work, make sure to confirm the deformation of the damaged area.
    - Use visual and feel inspection methods for minor body damage.
    - Some obvious damage only requires a visual inspection. Other damage is more difficult to spot and requires projected light to identify damage by reflection. For these types of damage, it is important to check the damaged areas from multiple angles.
    - Gently touch the damaged areas with your hands to judge the damage by feel. Wear cloth gloves or put a thin cloth between the surface and hand when touching to improve the sensitivity. Move your hands in m any directions for an accurate inspection.

    (Reference)

    Bent or swelled installed parts, such as a front fender, may sometimes be returned back to the original shape by removing their installation fasteners (bolts).

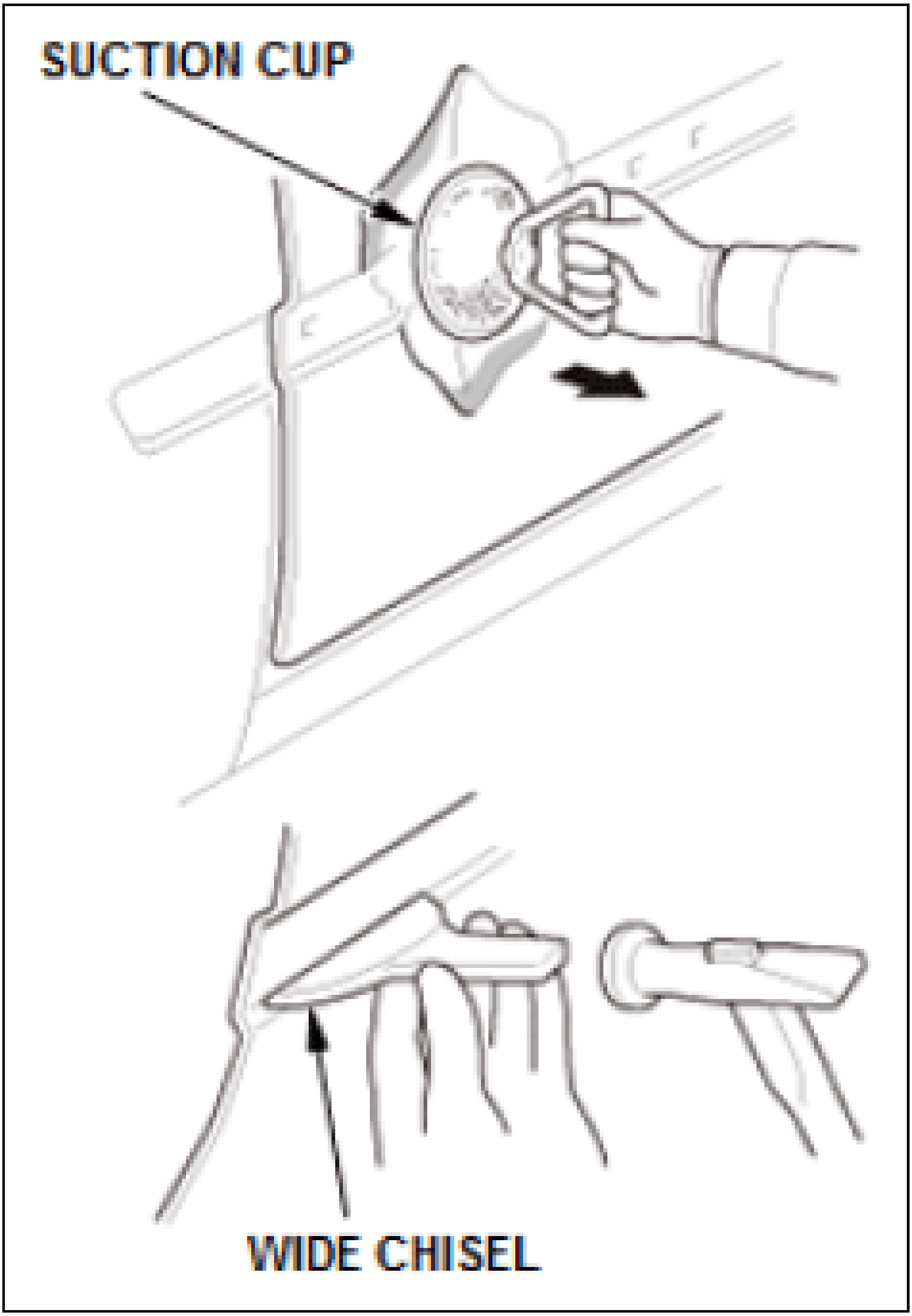
SUCTION CUP
WIDE CHISEL

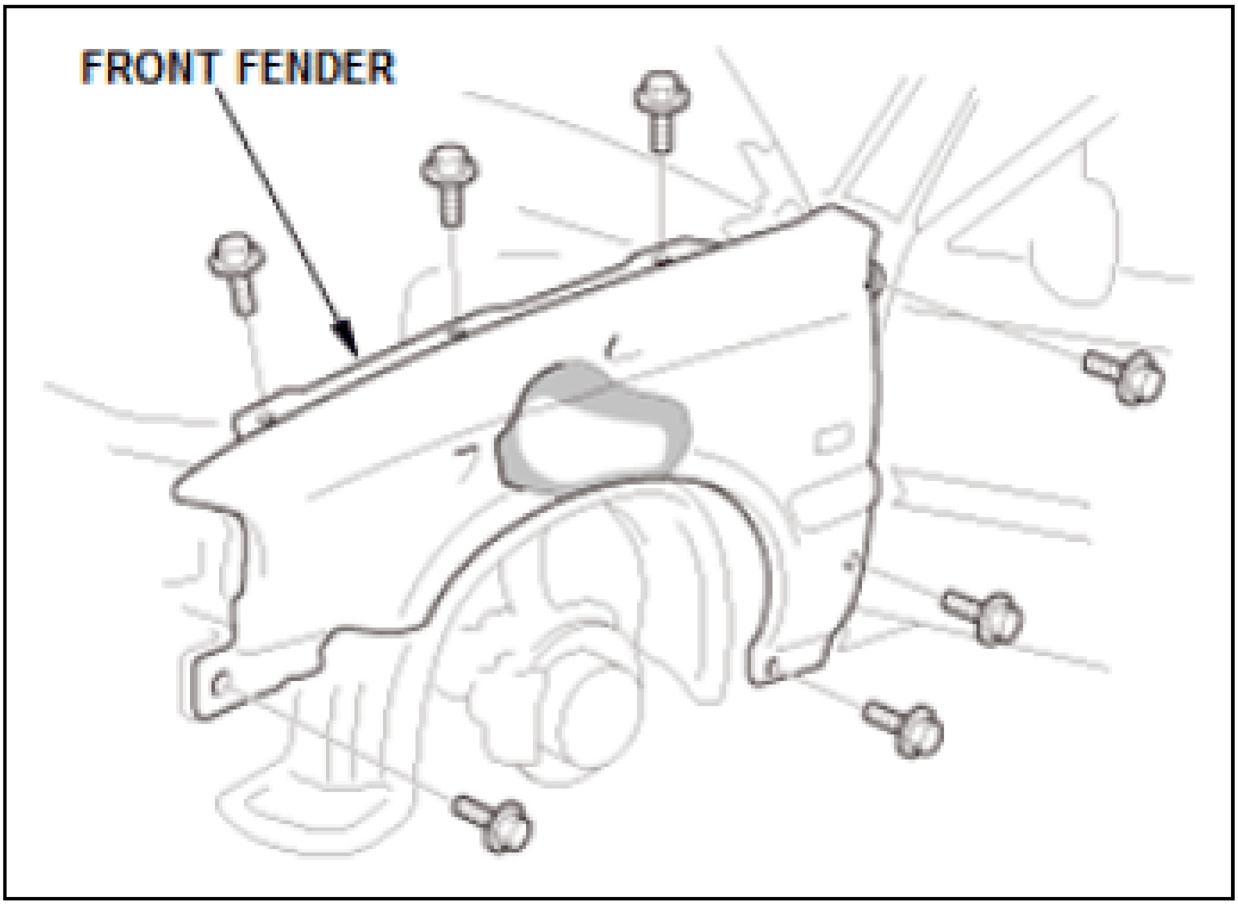

2. Remove foreign materials adhered to the backside of the panel Remove all the foreign materials such as undercoat, sealer, and clay adhered to the rear surface with a scraper etc. so that the dolly or spoon can directly contact the actual steel back surface.

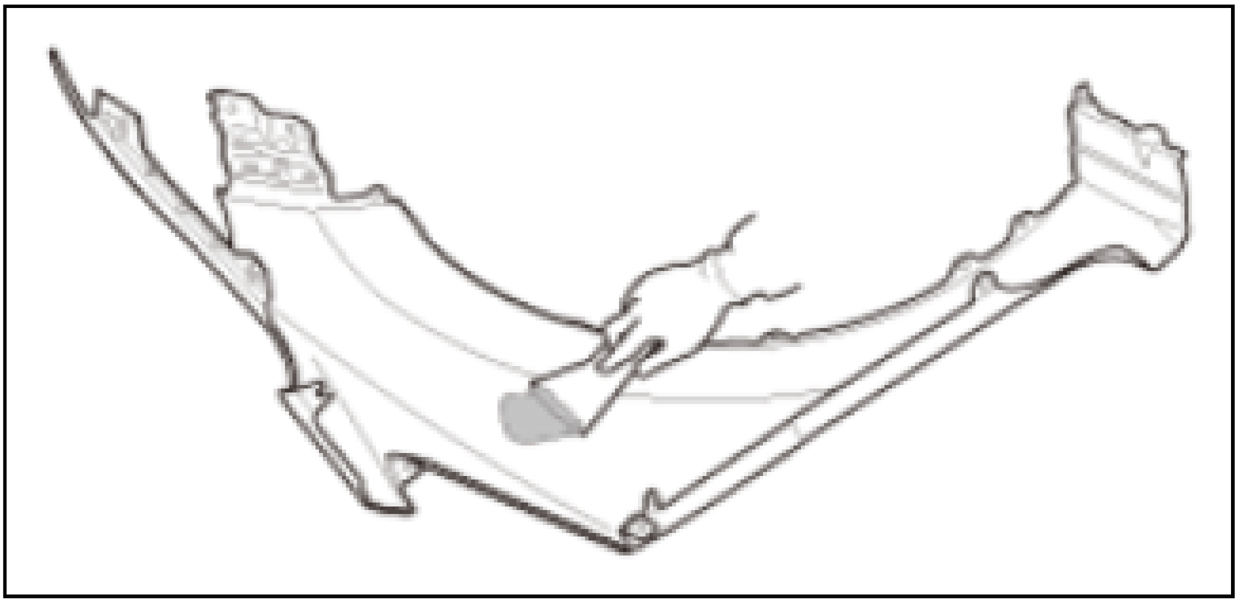

3. Rough panel correction

   Pull-out the damaged area using a body puller.

   Using the body puller with a variety of attachments, a variety of parts can be pulled-out.

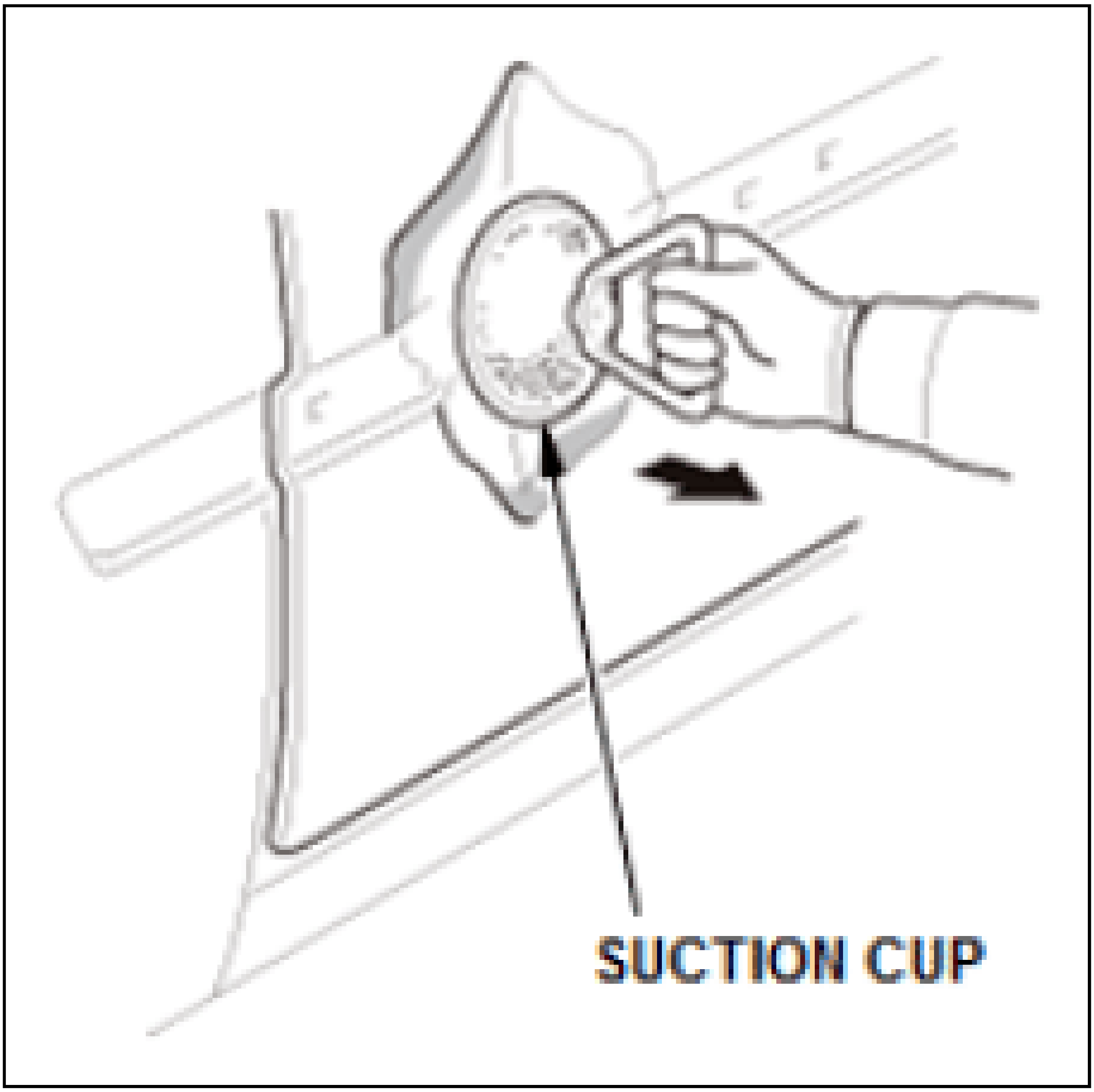
SUCTION CUP

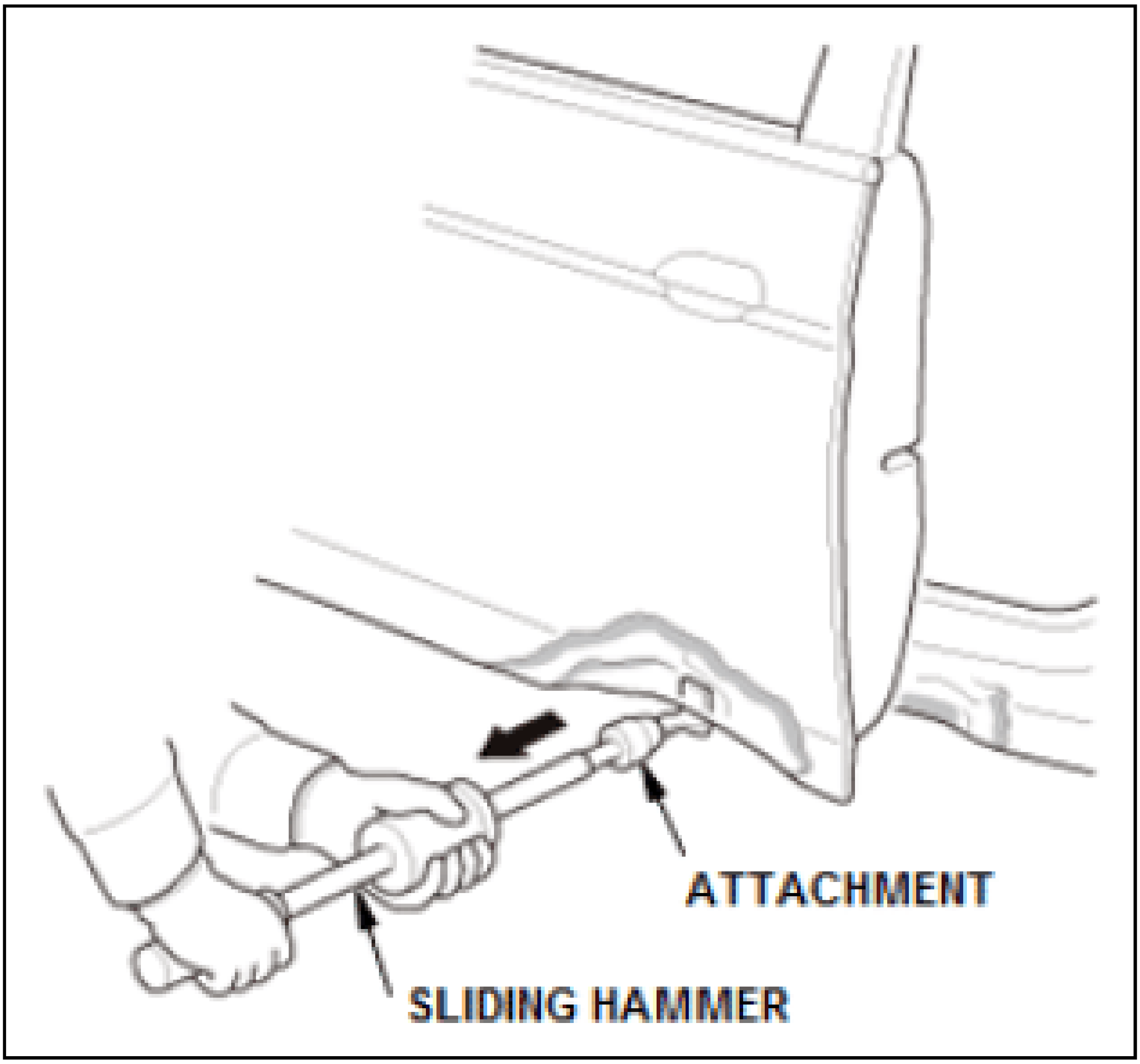

4. Select hammers, dollies or spoons:
   - Select the most appropriate hammers, dollies, and spoons to the curves on the repaired panel.
   - If the curves of the damaged part of the panel do not perfectly fit to any of those of the dollies or spoons available, select dollies or spoons of which curves are smaller than those of the panel dam aged area.

NOTE: **Make the surface of hammers, dollies and spoons are smooth so they don't cause any damage or scratching of the repaired surface.**

5. Hand contour repair using a hammer

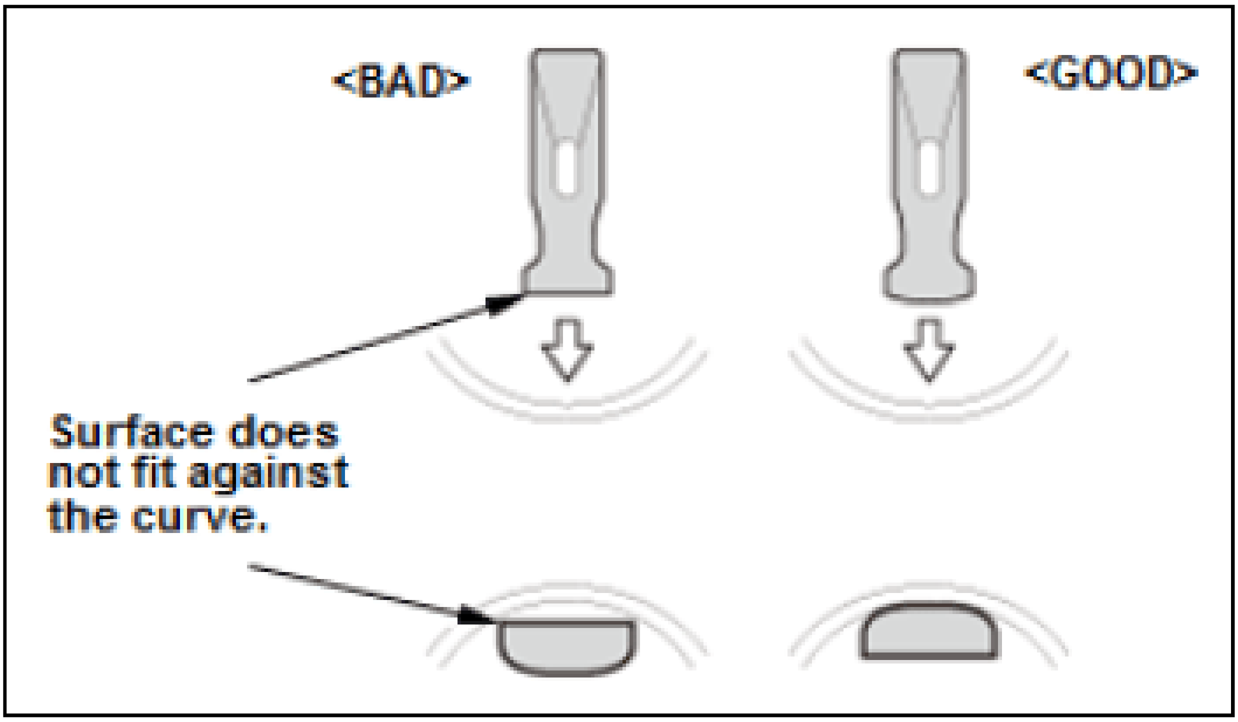

Hammer Technique

- Lightly hold the hammer near the end of the handle and swing it using your wrist.

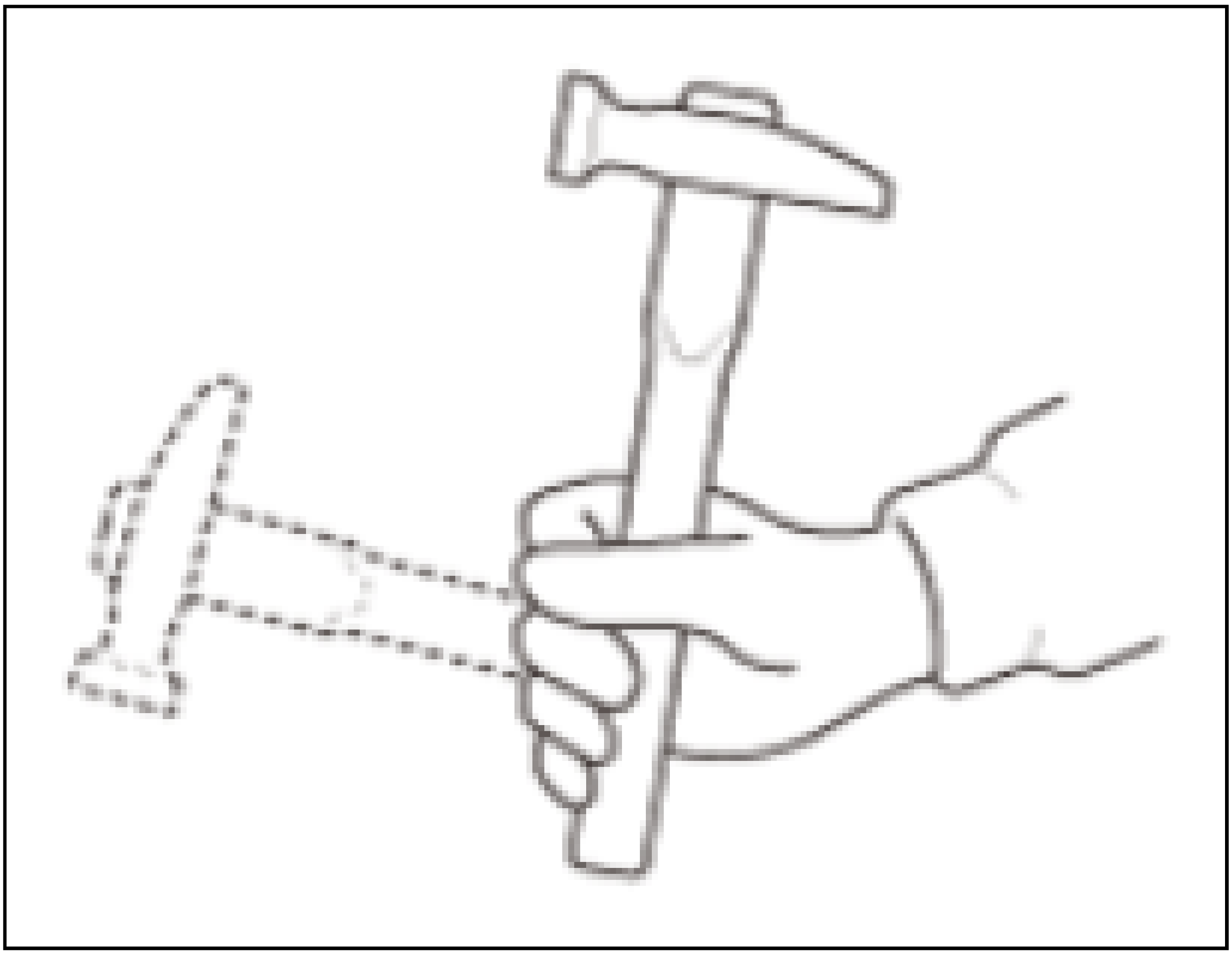

- When striking with a hammer, the hammer face must always make flat and even contact with the panel surface.

NOTE: **When striking with a hammer, the hammer face must always make flat and even contact with the panel surface. If the edge of the hammer face contacts the surface, a crescent shaped mark or dent will be left on the panel that is very difficult to remove. Do not use too much force. Strike the panel as if you were bouncing the hammer. If the panel is struck with too much force, it will be elongated and require shrinking (drawing) work later.**

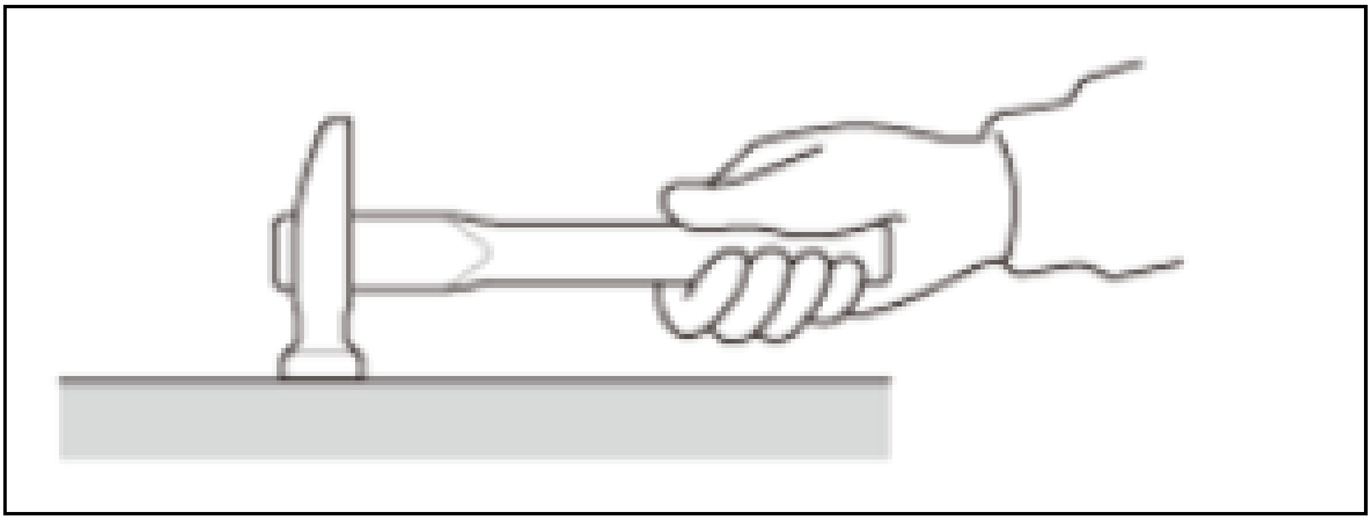

Hammering Off Dolly And Hammering On Dolly

Hammer off dolly

- Hammering off dolly is used to correct comparatively large unevenness. The recess is stricken out with a dolly. Hold the dolly right beneath the depressed area and strike the raised areas around it using the hammer.

  The raised areas will be gradually lowered by the hammer impact and the depressed area will be raised by the dolly contact, due to the reaction of the hammer impact.

  It is very important to maintain a good balance between the hammer impact and holding force to keep the dolly in position.

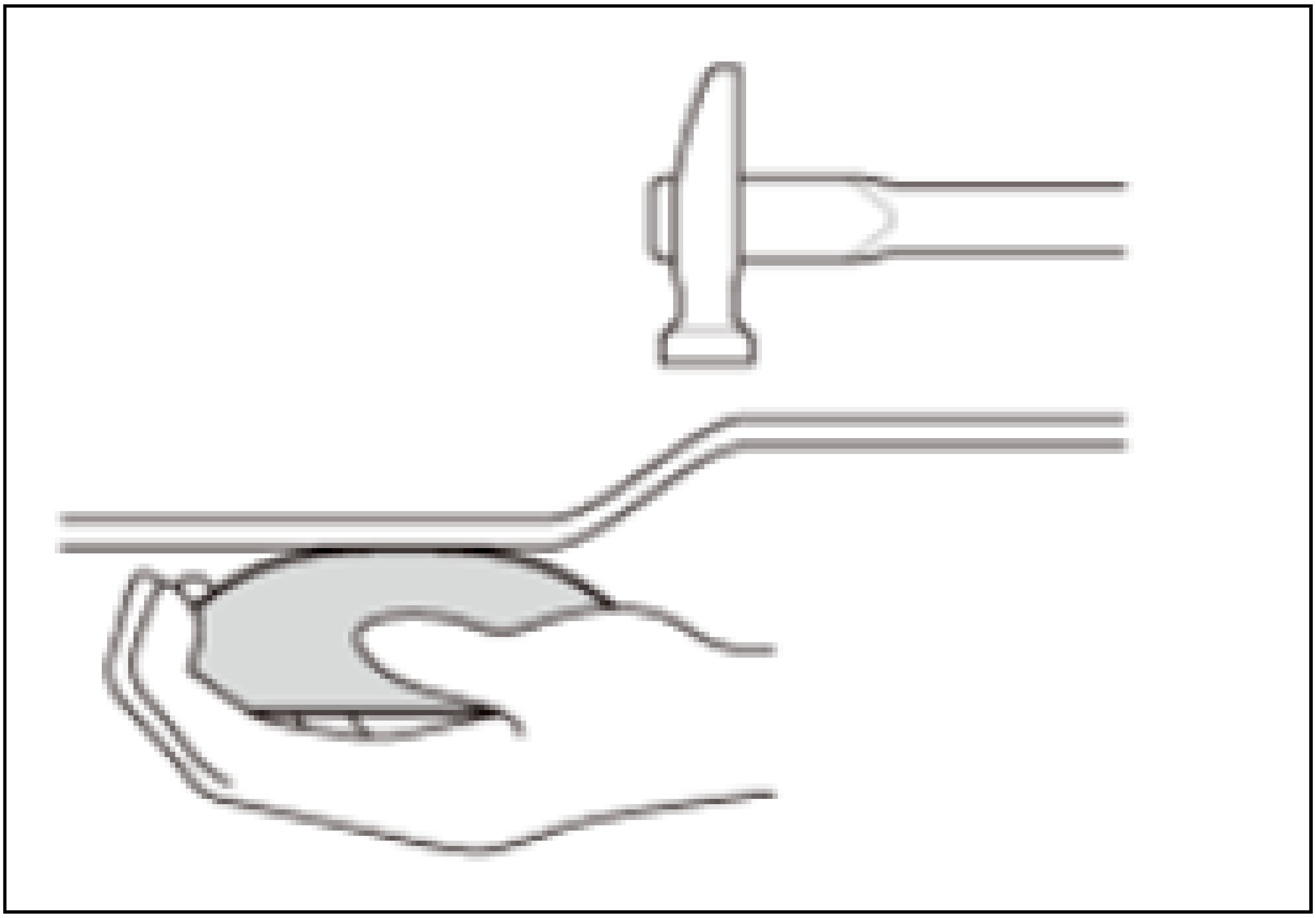

Hammer on dolly

- Hammering on the dolly is used to correct small raised areas on the repair surface.

  Place the dolly directly under the raised area and strike the area from above with a hammer. While the hammer impact is flattening the raised area, the dolly rebounds due to the hammer impact. To completely flatten the area, repeat this work along the repaired panel surface while moving the hammer and dolly.

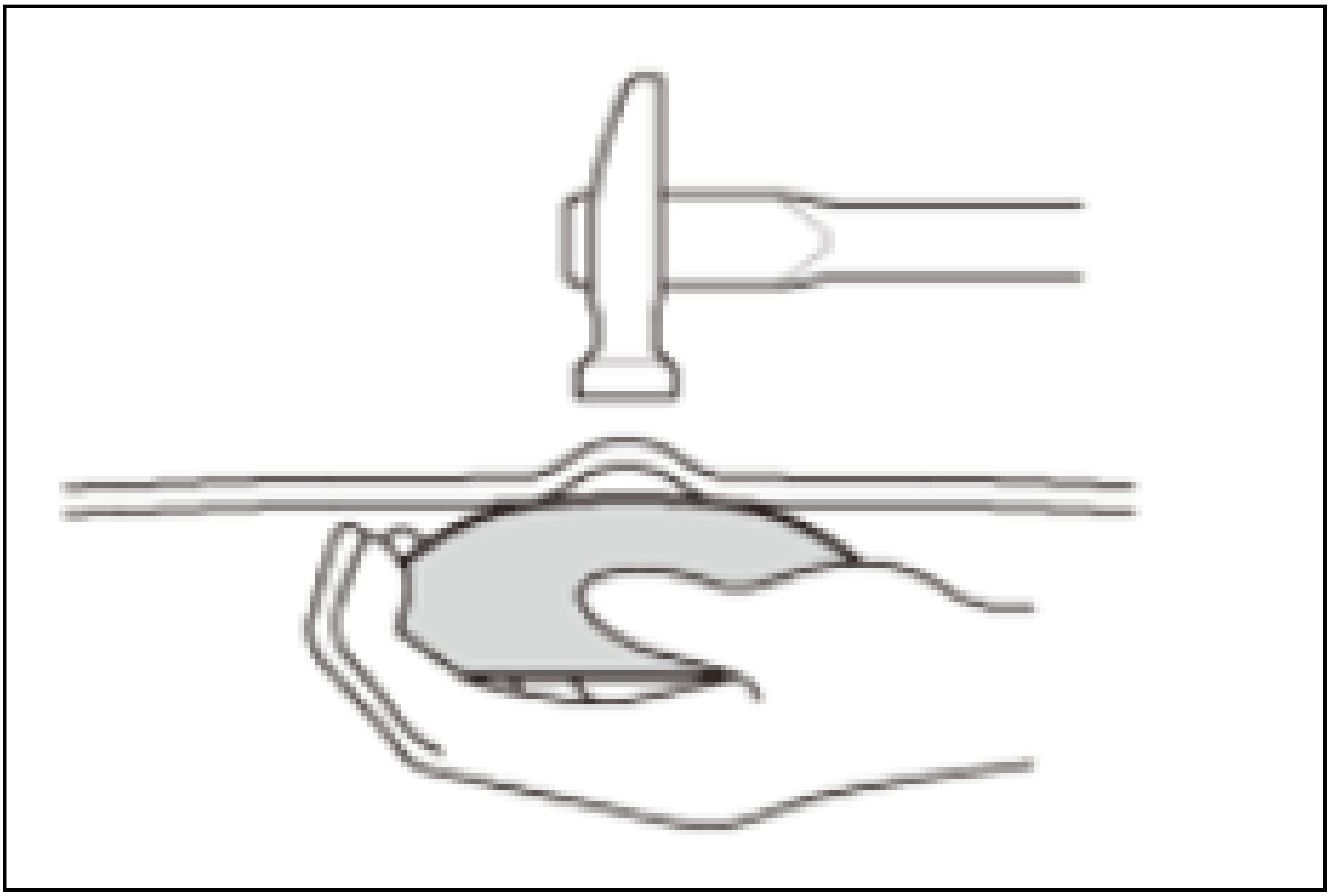

Using A Body Spoon (Example)

While pushing against the inside of the panel using a spoon, strike the outside of the panel with a hammer. Use this technique for difficult to access areas such as door panels, rear wheelhouse, etc.

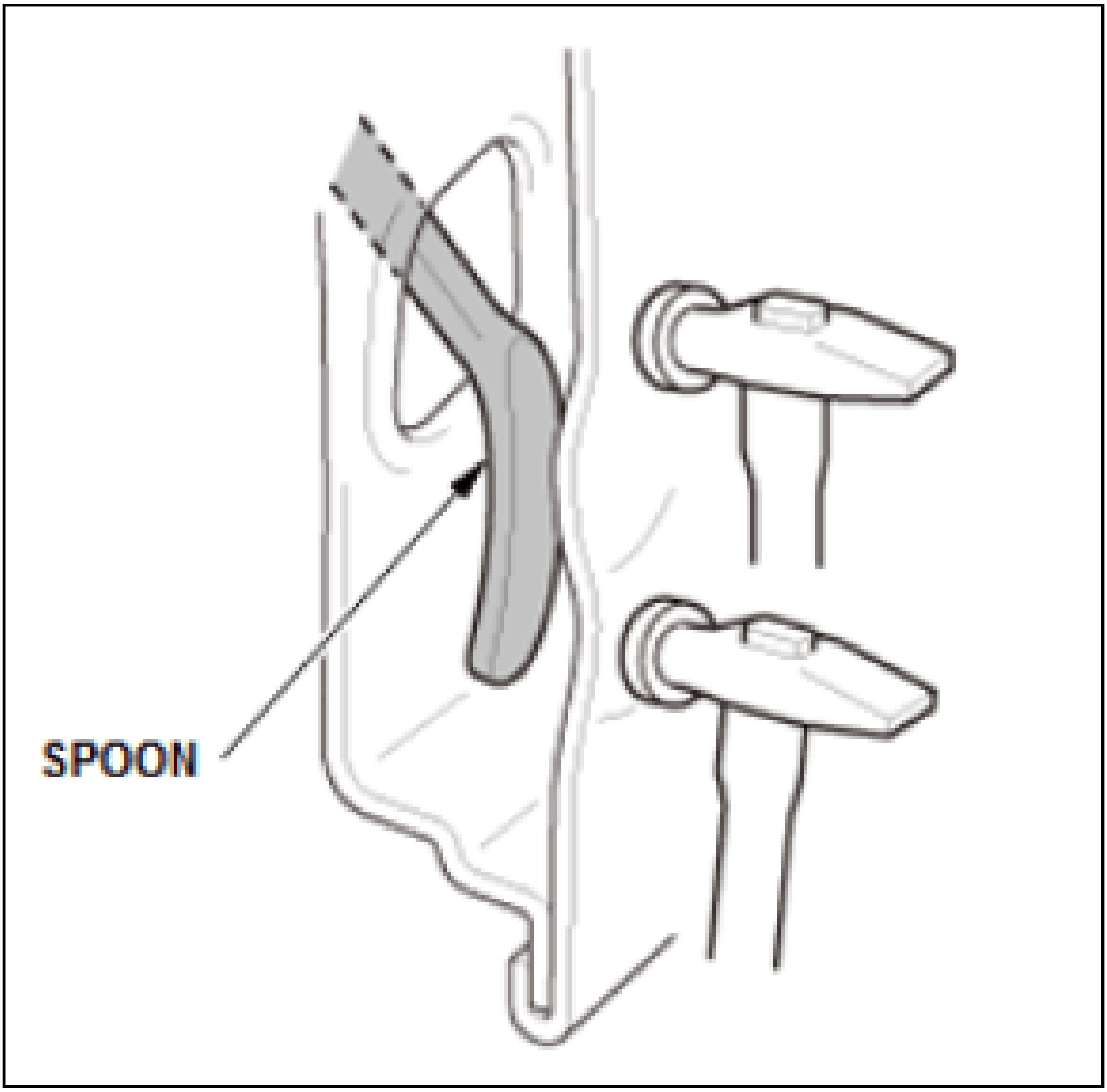

Deep Dents

1. Correct the depressed area of the part using a dolly from inside.

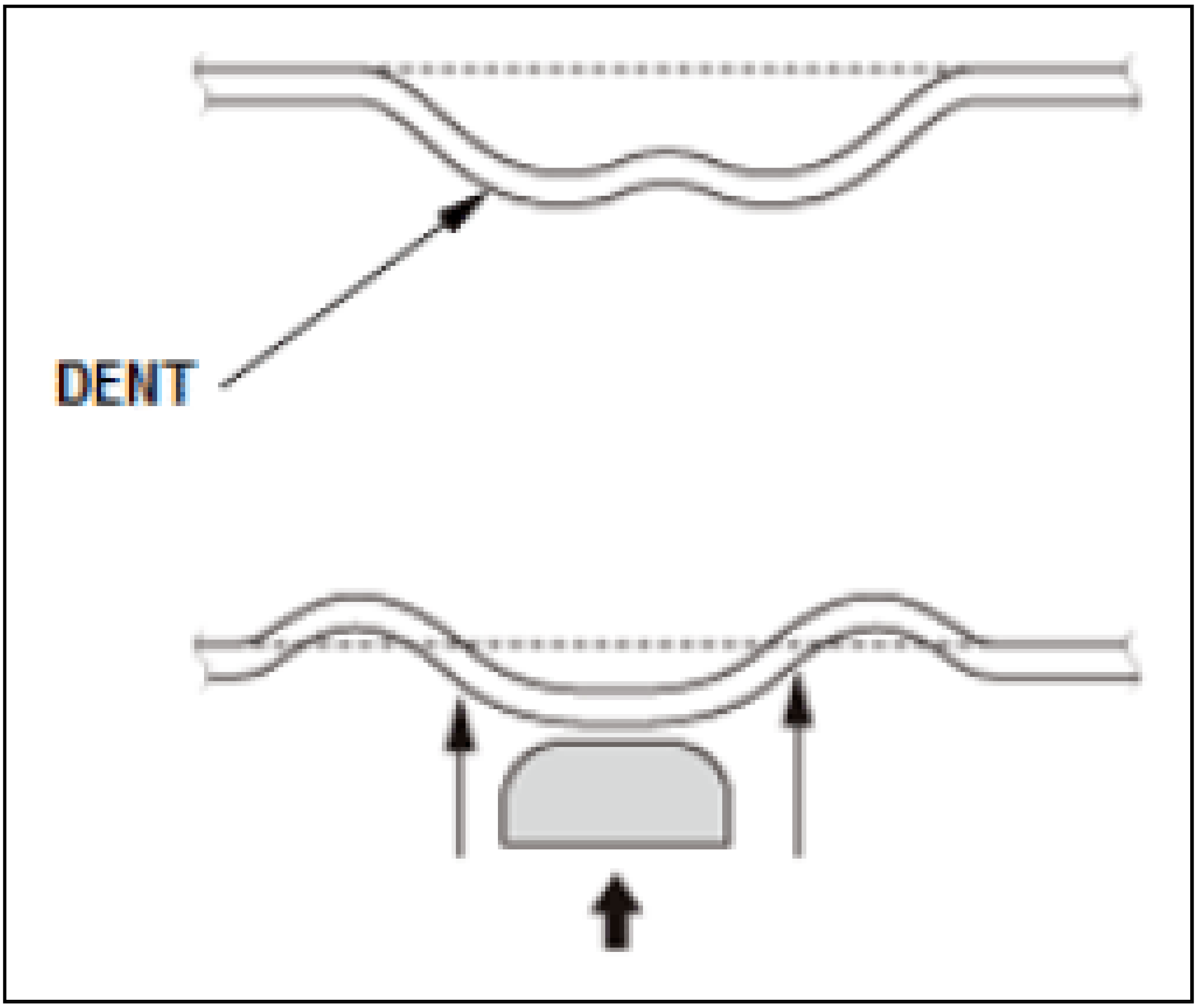

2. Flatten by alternately repeating hammer off dolly and on dolly techniques.

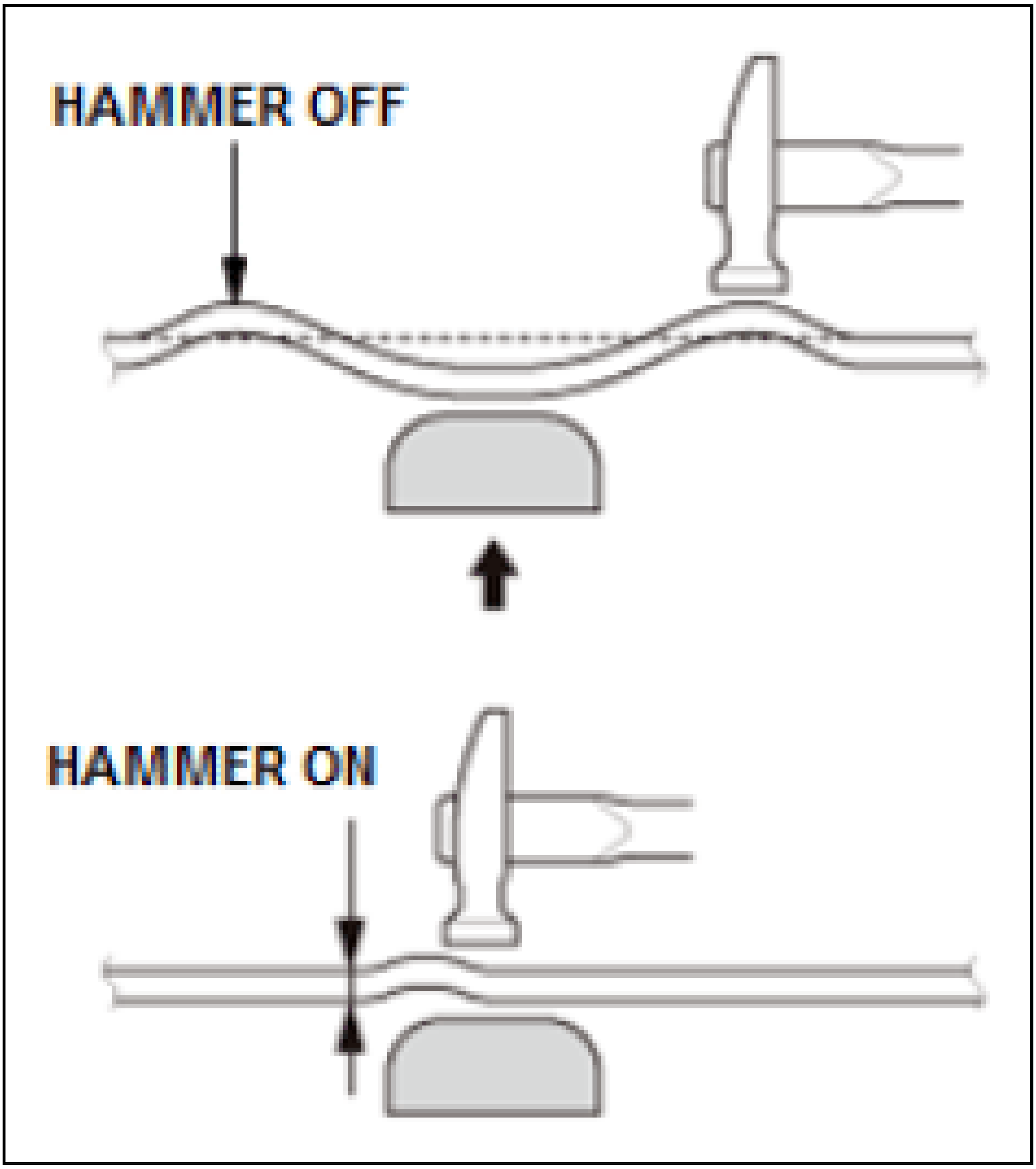

Continuous Small Deformation

1. Press the dolly against the rear of the depressed area and strike the raise area from above with a hammer.
2. Repeat the step above while moving the hammer and dolly together along the panel surface, repeat the work.

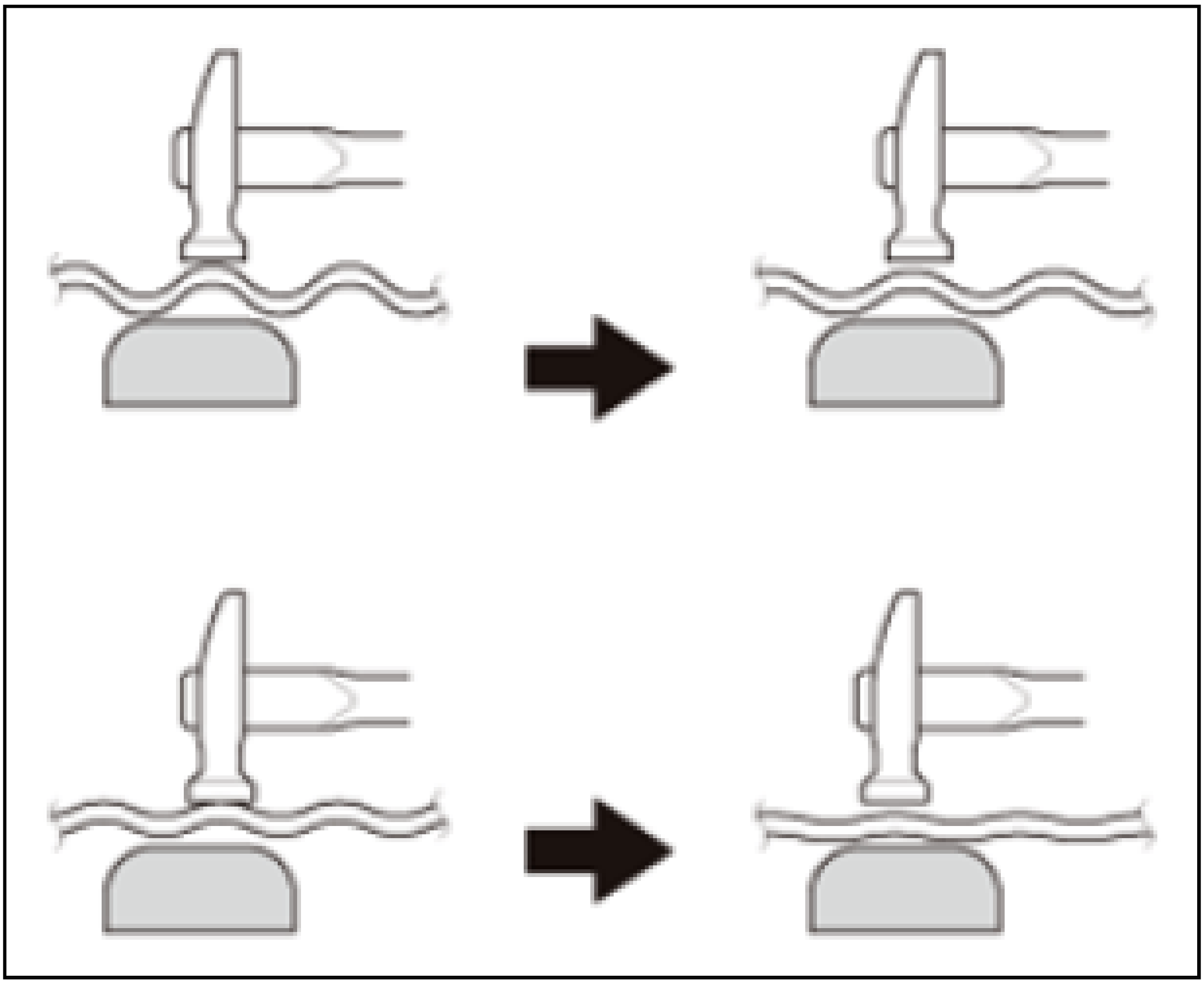

Partial Plastic Deformation

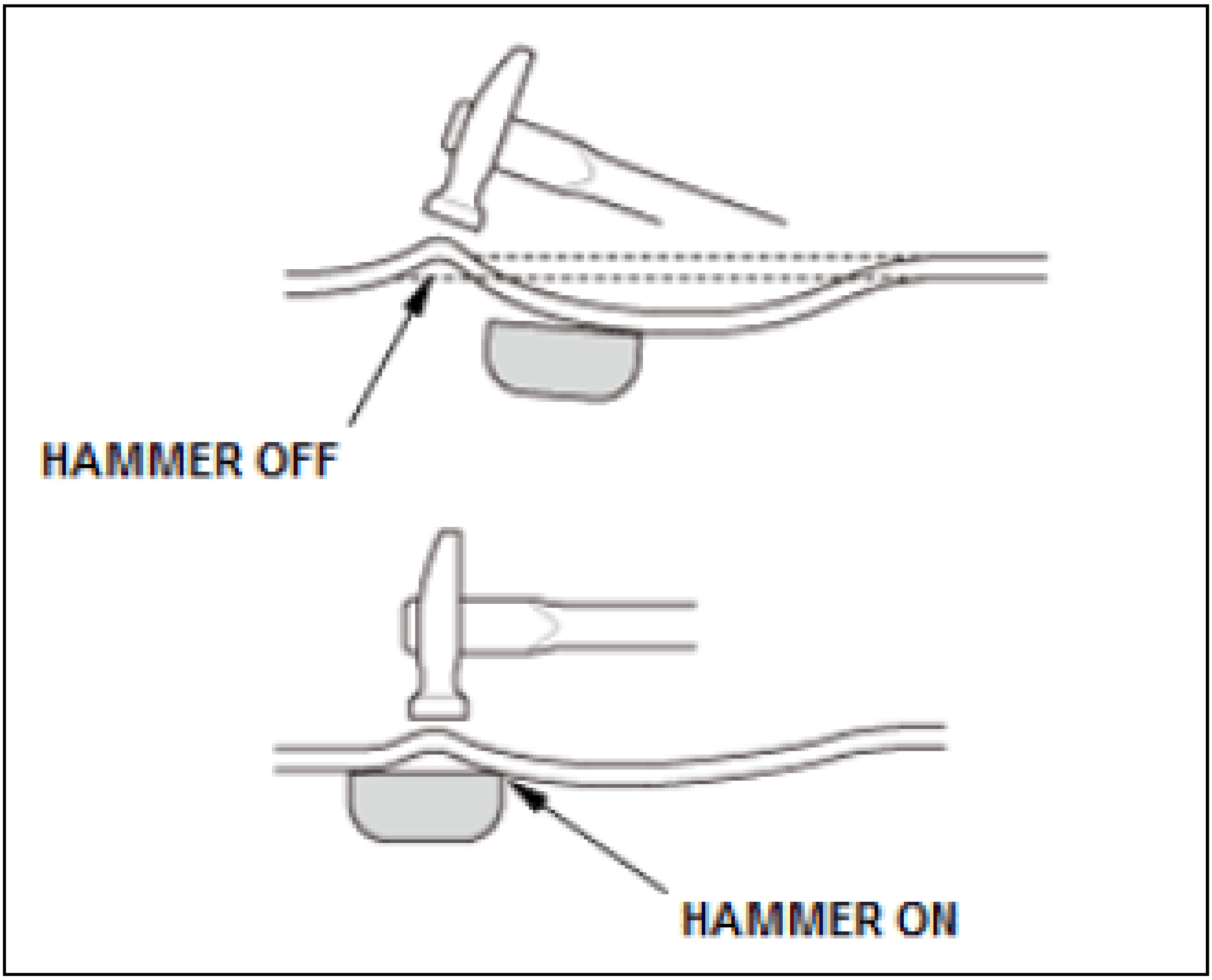

Deformation At Corner

- Flat strike the uneven or depressed area with a dolly bring the surface back towards its original shape.
- A way to repair dents on a sharply curved area. Alternate using the hammer and dolly.

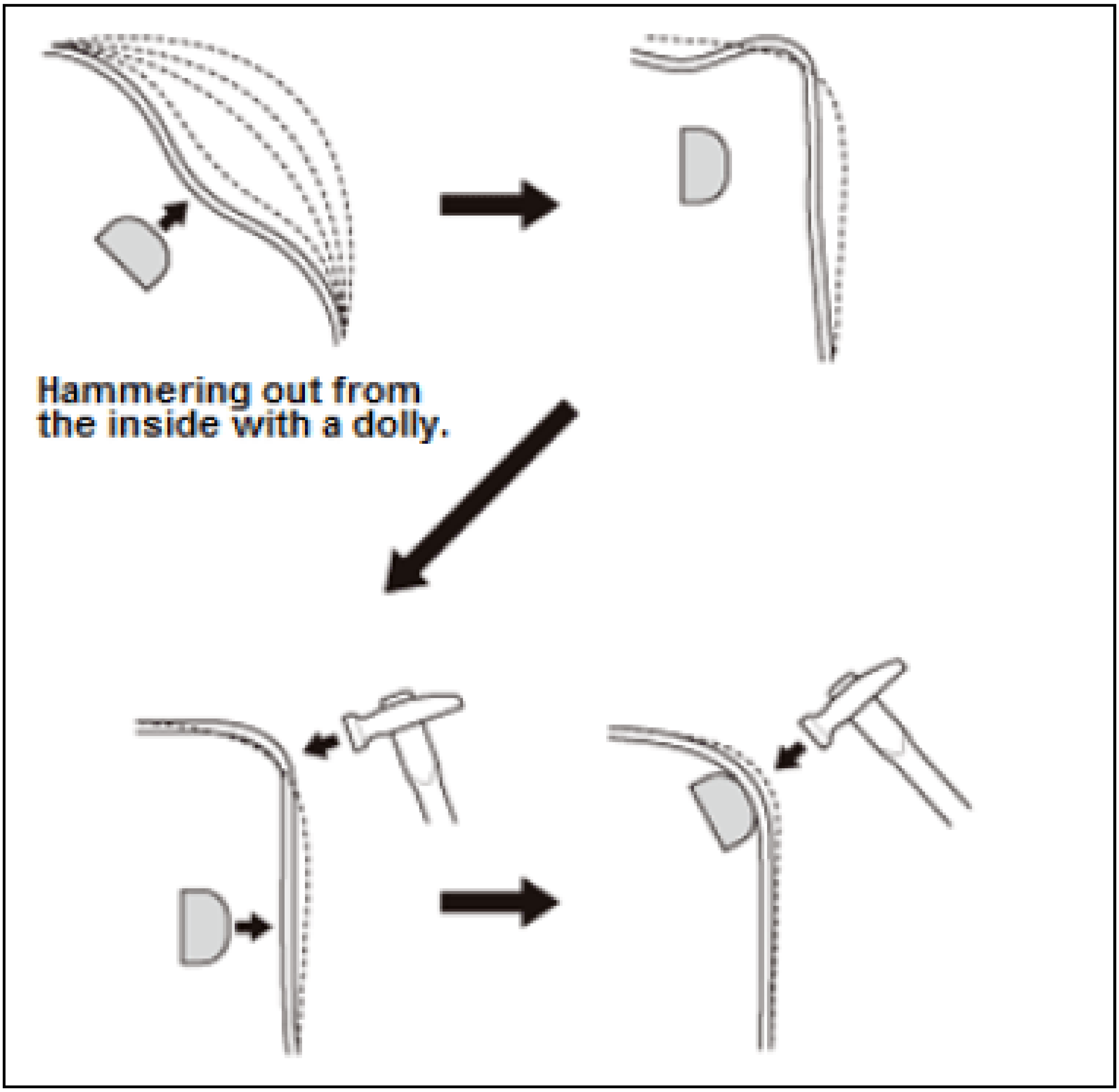
Hammering out from the inside with a dolly.

Inspection And Repair After Sheet Metal Work

1. Use hands, rulers or guide coat to check the contours of the repair area.

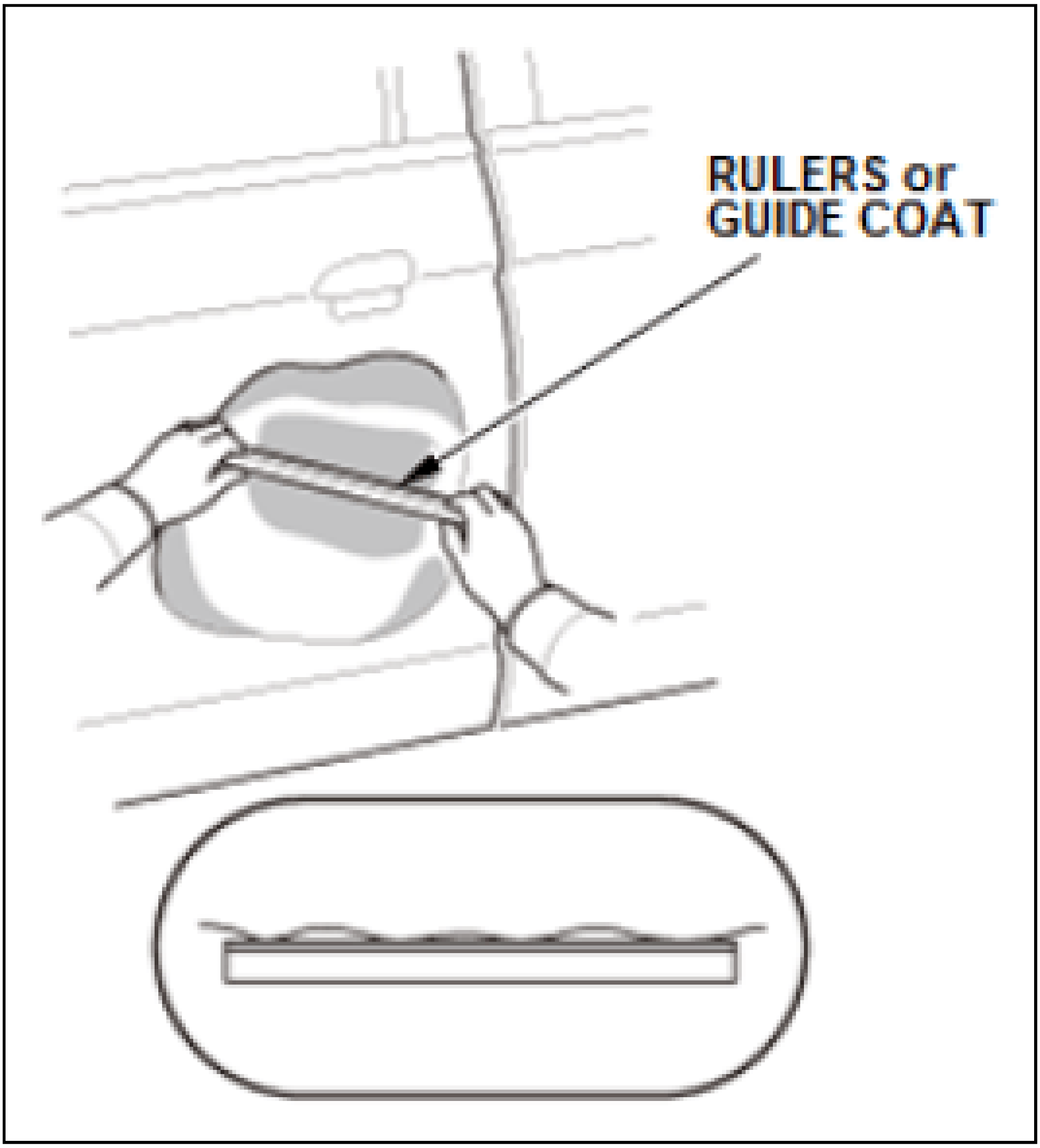
RULERS or
GUIDE COAT

2. If the repaired area will requires excessive body filler, raise the depressed area using a hammer or dolly Correct high spots by lightly hitting them with a pick hammer.

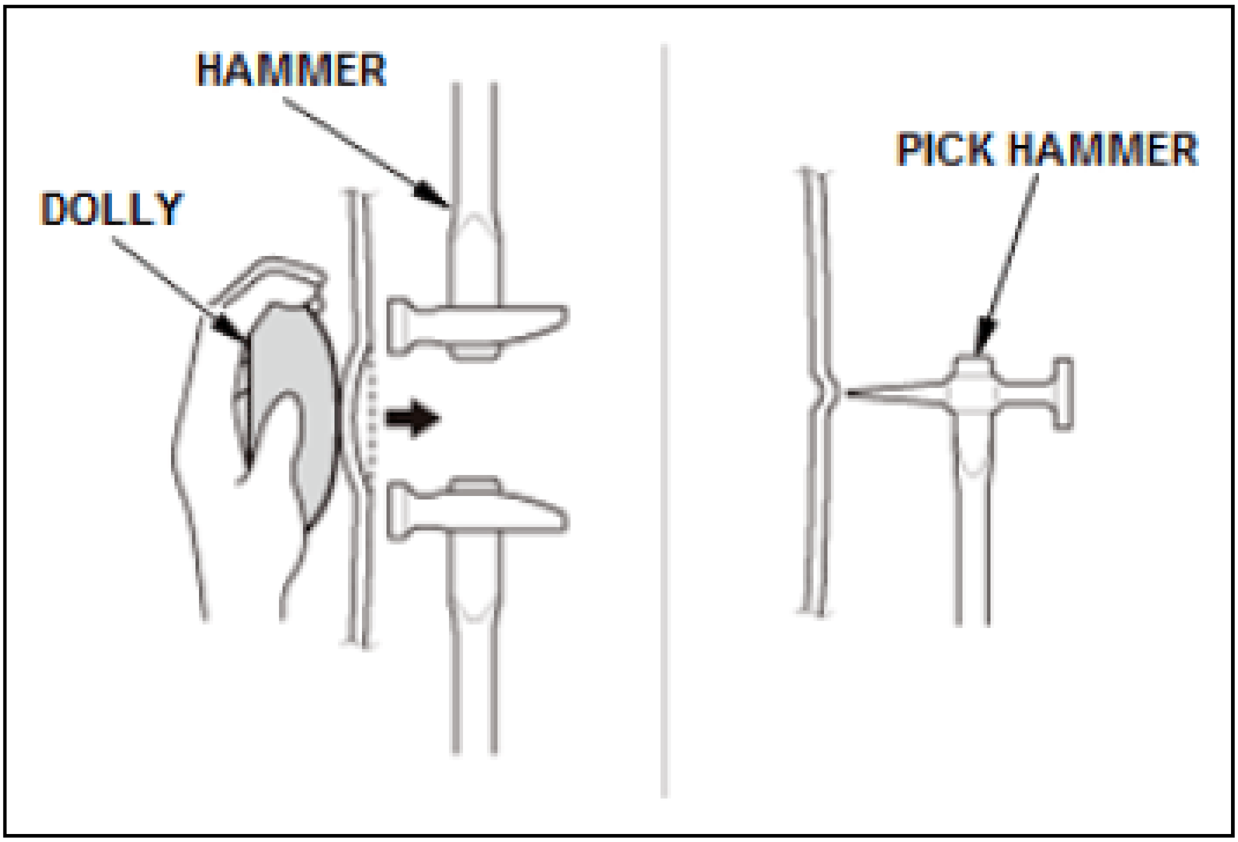
HAMMER
DOLLY
PICK HAMMER

3. To inspect the final repair, use gloved hands. Touch the surface gently to check for any unevenness.

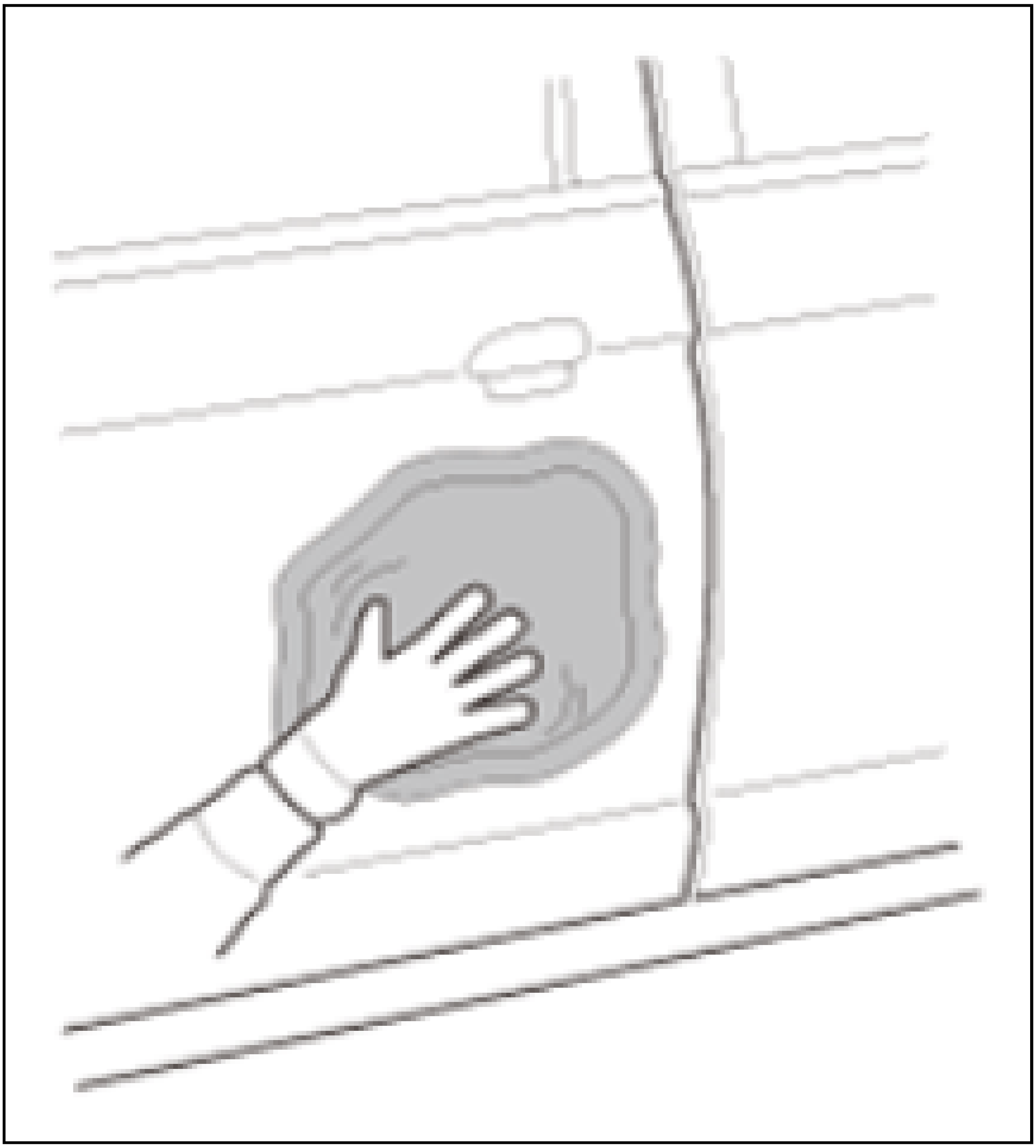

Shrinking (Drawing) Steel Sheet

If stress and unevenness remain after the panel repair, shrink the elongated area to their original shape.

The shrinking (drawing) process is possible by heating and cooling cycles, along with use of a hammer or dolly.

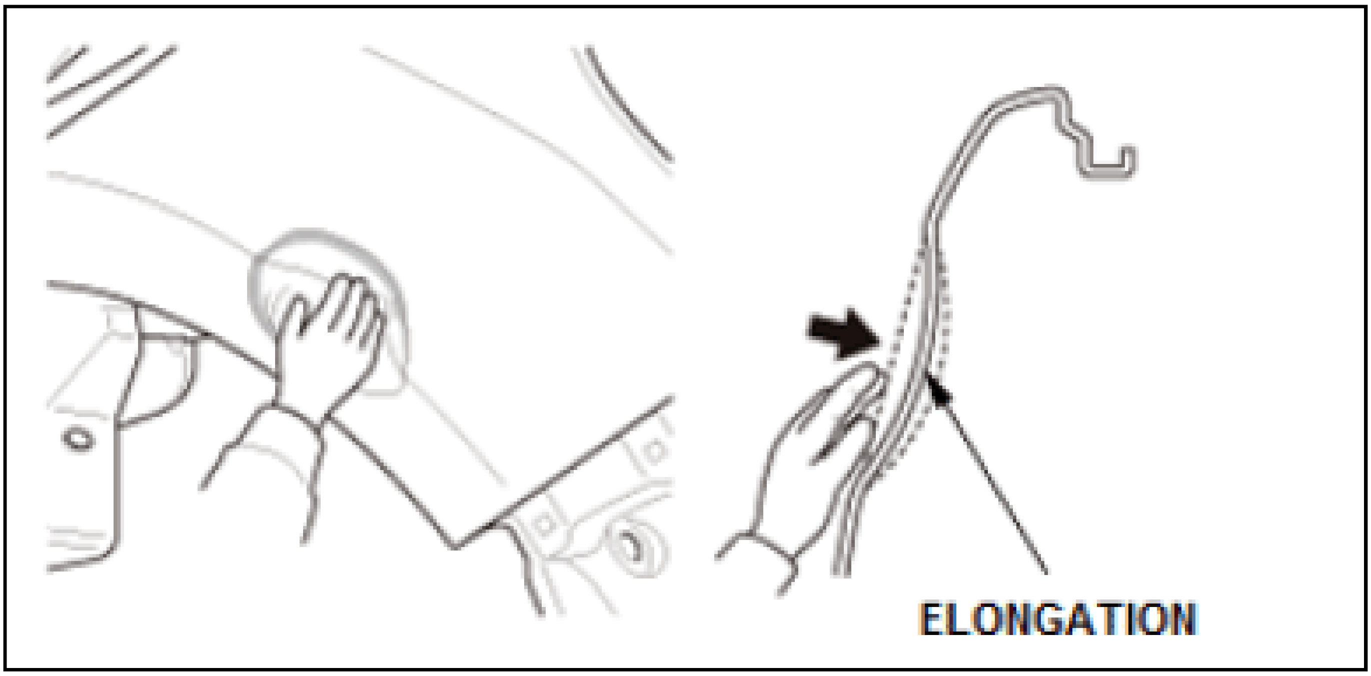

Shrinking By Heating And Cooling

If an area on the steel sheet is heated, that heated area expands. If heating is continued, elongation becomes constrained by the surrounding unheated area and further expansion becomes difficult. The surrounding area constrains and compresses the expansion. The expansion is contained to the vertical direction in the heated area. When this area is quickly cooled with water, the steel shrinks.

NOTE: **Do not use a torch for shrinking during actual collision repairs, because the heat is difficult to control.**

Drawing By Electric Resistance

- This method makes it possible to shrink panels from the outside when full access is difficult or requires additional disassembly.
- This method suitable for relatively wide and shallow damage repair.
- Replace the washer welder's electrode before use.

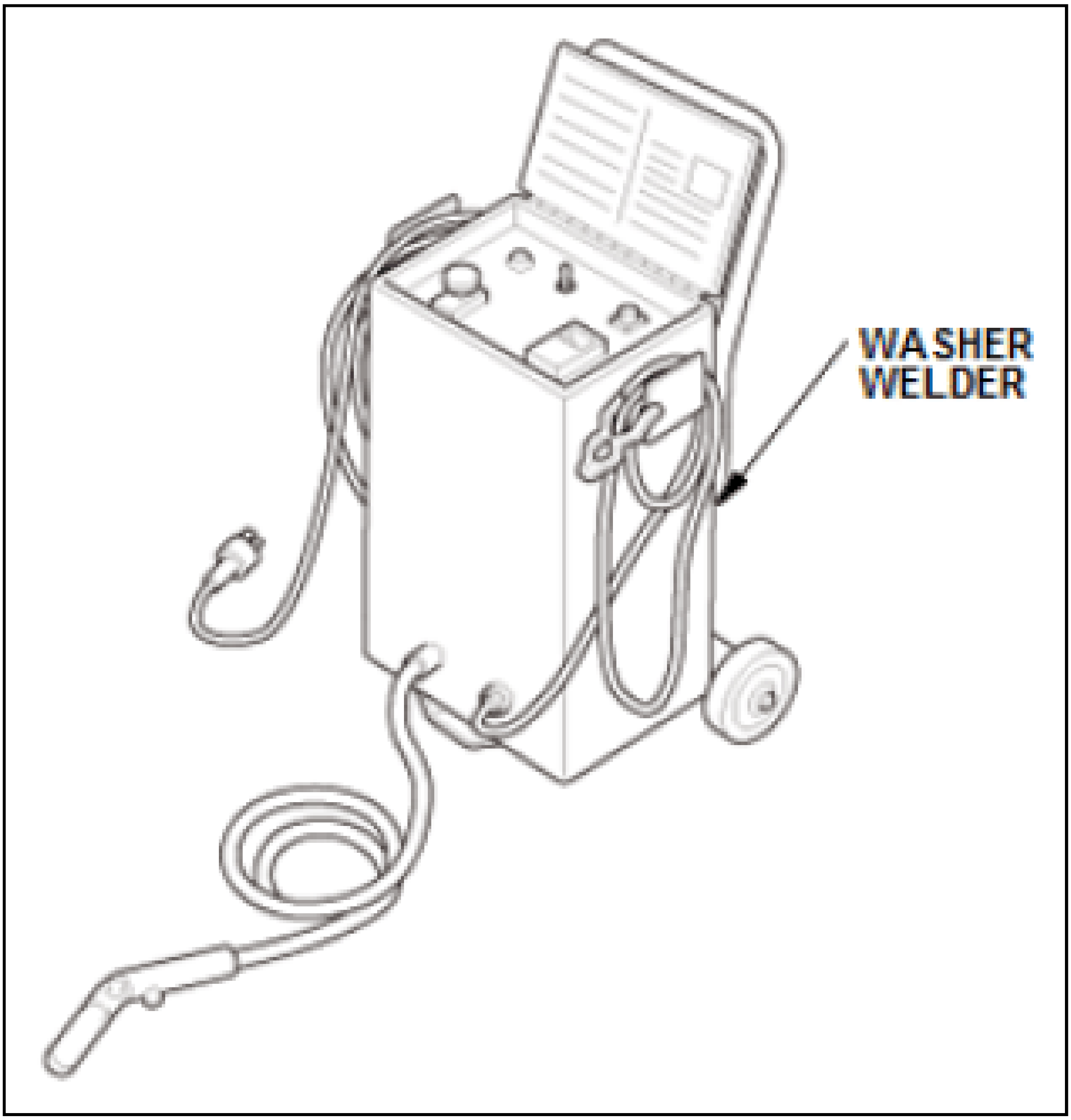

- Press the electrode against the center of the stressed area, and turn on the switch. Shrink by moving the electrode to heat from the center of the damage outward.
- Remove any warpage caused by the shrinking process by hitting lightly with a hammer and dolly.

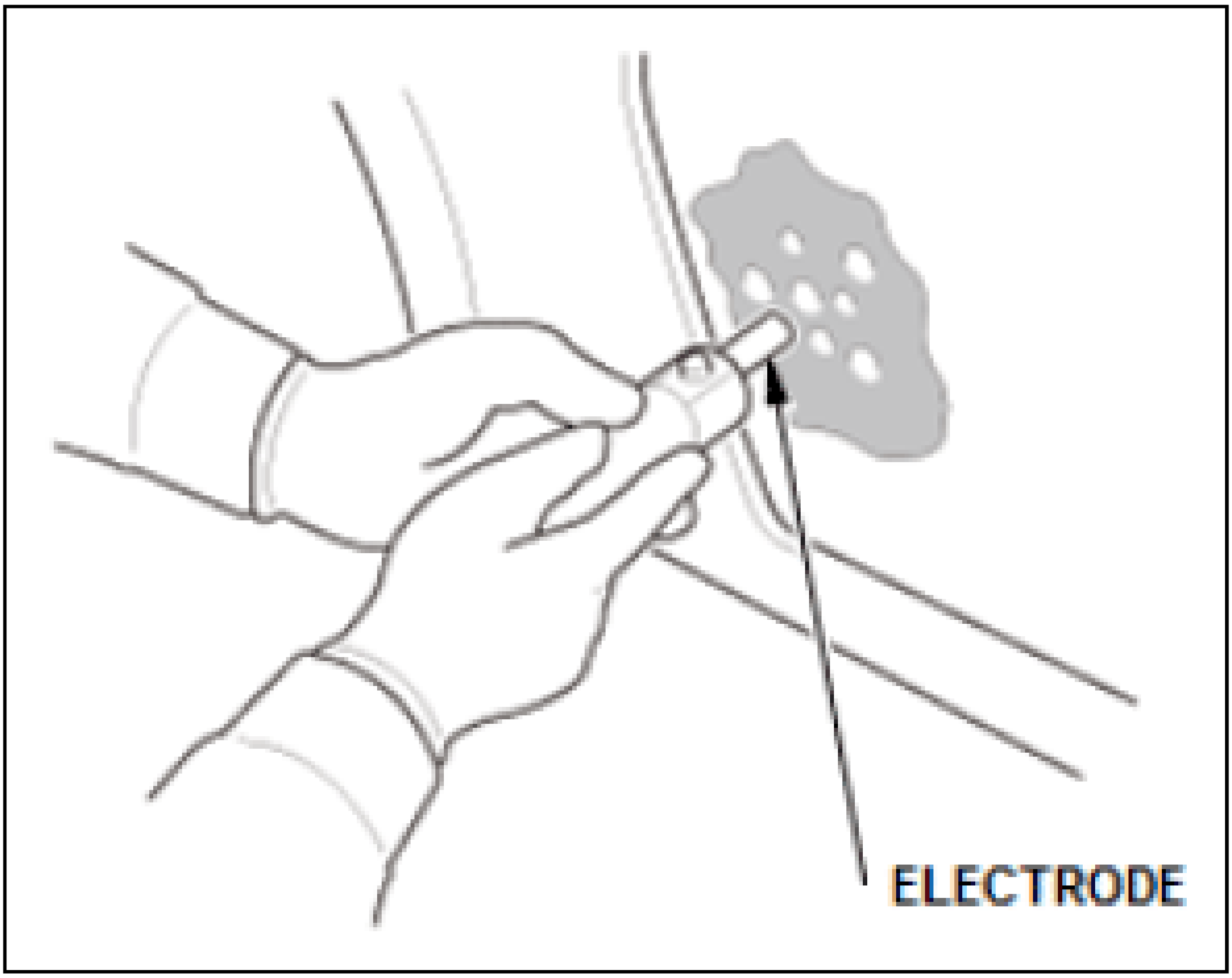

- When a carbon electrode is used, heat the stressed area in a spiral pattern moving outside toward the center as illustrated. Then air cool the area.
- Remove any warpage caused by the shrinking process by hitting lightly with a hammer and dolly.

NOTE: **Flatten using light hammer force. If excessive force is applied, the shrunken area will be elongated again.**

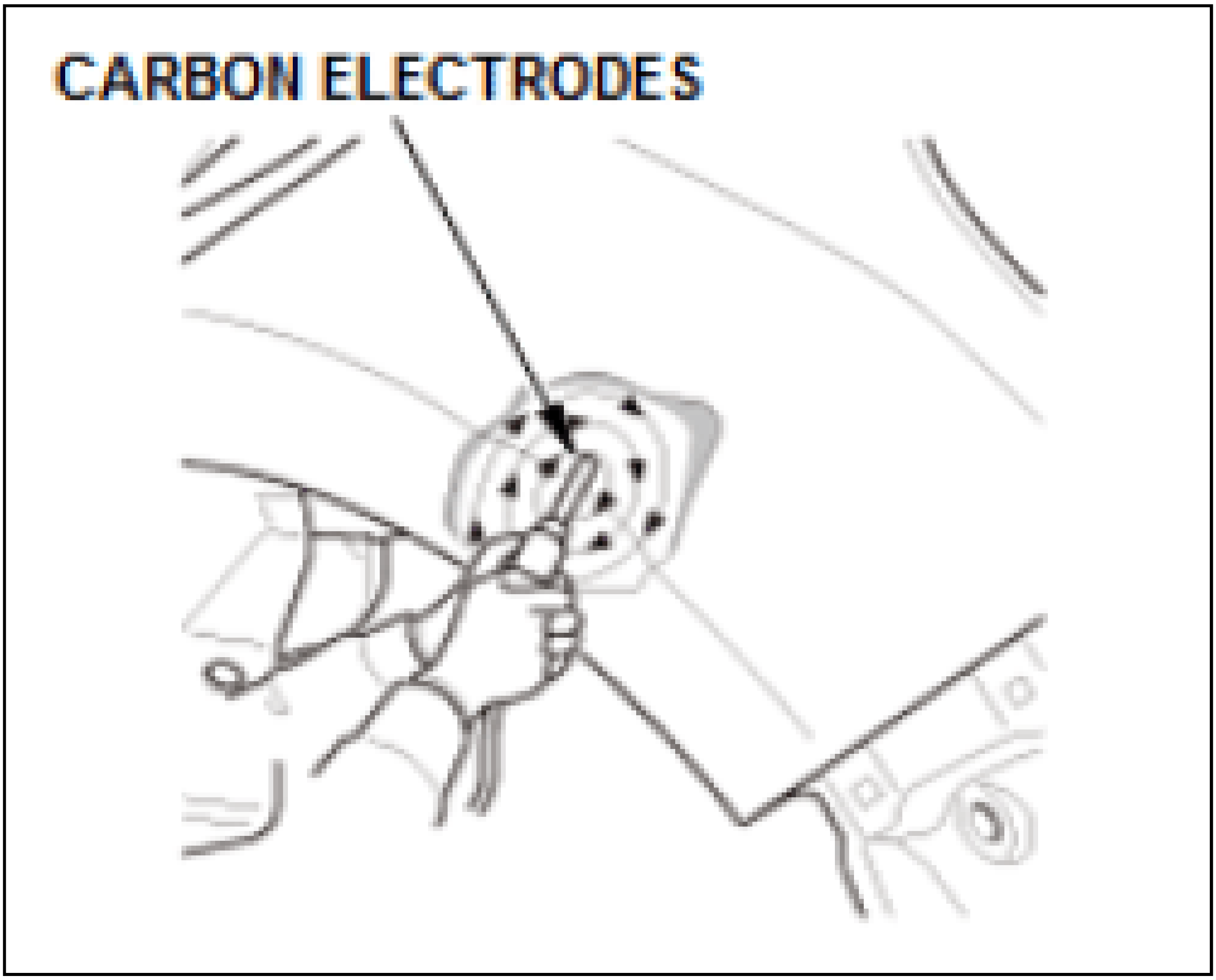

Using A Shrinking Hammer And Dolly

- Using a hammer or dolly that has a grid of pyramidal projections on the striking surface, hit the damaged area. When the panel is hit, tiny expansions take place, but the panel shrinks as a whole.
- This method is used to repair rather small damage areas that don't require heating.

NOTE: **Do not use the shrinking hammer and dolly at the same time. If a shrinking hammer or dolly is used, the counter tool must be a non-shrinking type.**

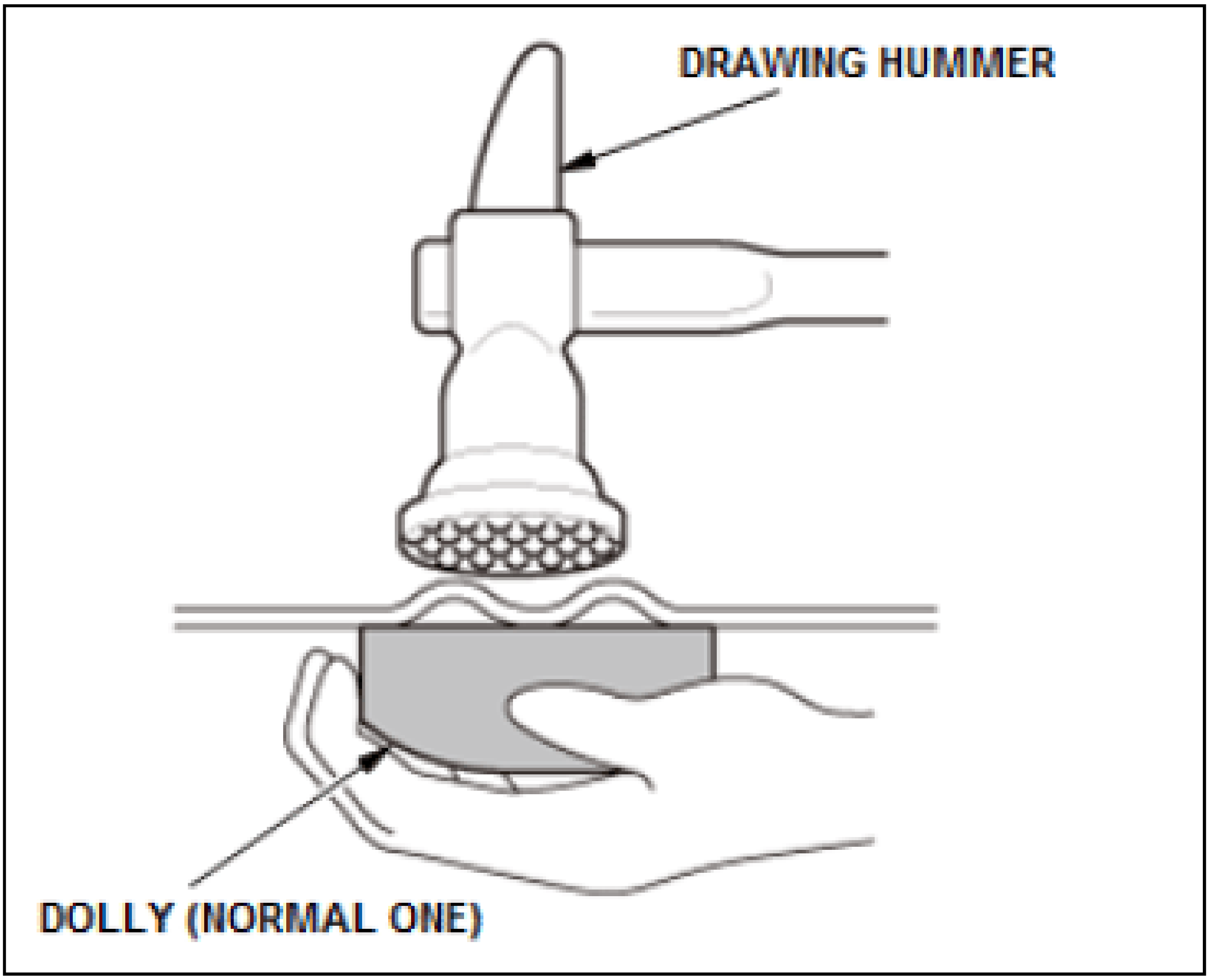

Washer Welding Repair

- This repair method is used to repair recessed areas where the back side of the damaged cannot be easily accessed such as a door panel, pillar, side sill, or rear wheel arch.
- Because the heat generated while welding washers will damage the paint or anti-rust coating inside the panel, it is necessary to treat the area with anti-corrosion materials after the repair.
- A related repair method uses welded on studs instead of washers, but the processes are similar.

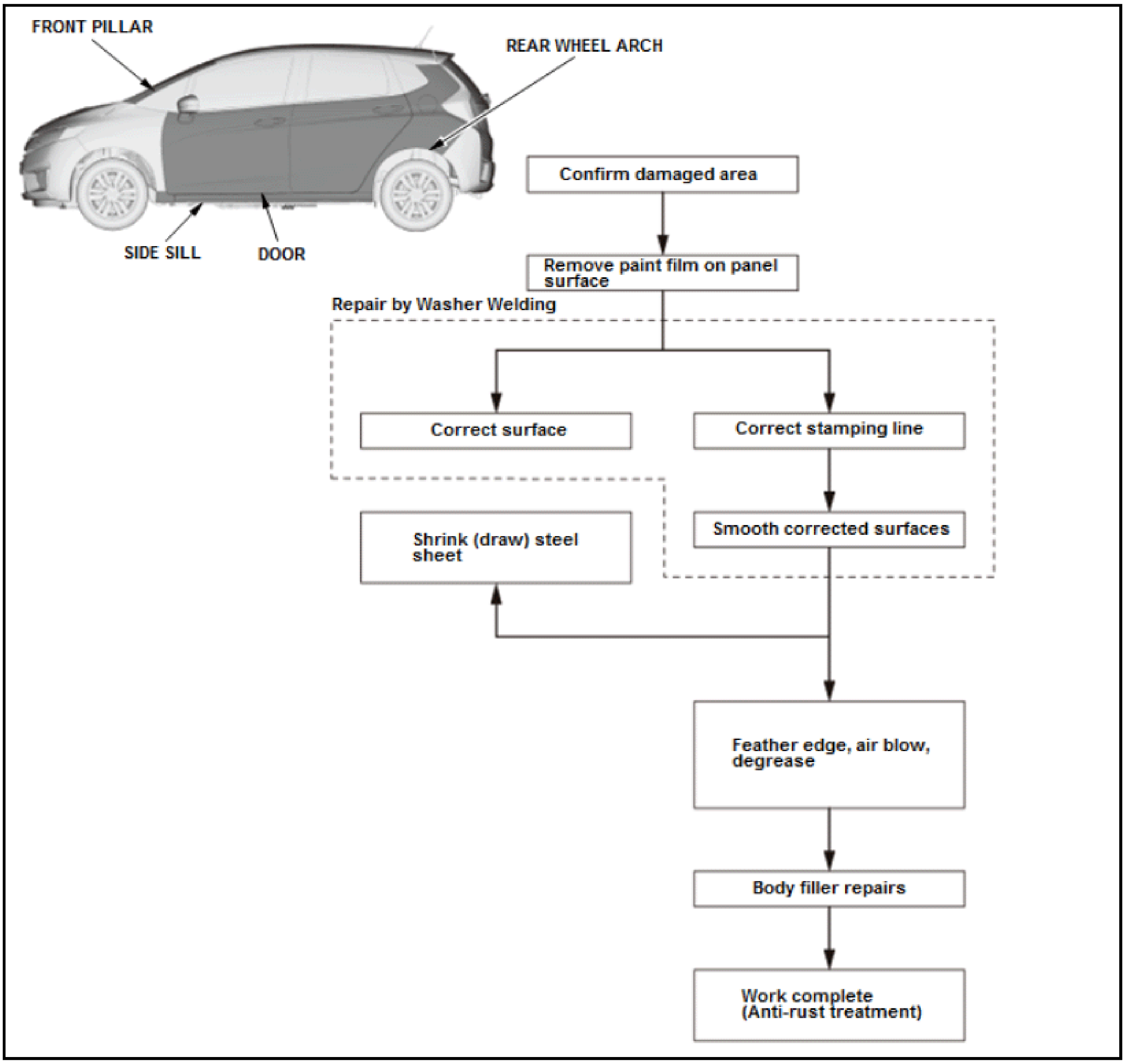
FRONT PILLAR
REAR WHEEL ARCH
SIDE SILL
DOOR
Confirm damaged area
Remove paint film on panel surface
Repair by Washer Welding
Correct surface
Correct stamping line
Smooth corrected surfaces
Shrink (draw) steel sheet
Feather edge, air blow, degrease
Body filler repairs
Work complete (Anti-rust treatment)

Repair Steps

1. Confirm damaged area:
    - Before starting the repair work, make sure to confirm the deformation of the damaged area.
    - Use visual and feel inspection methods for minor body damage.
    - Some obvious damage only requires a visual inspection. Other damage is more difficult to spot and requires projected light to identify damage by reflection. For these types of damage, it is important to check the damaged areas from multiple angles.
    - Gently touch the damaged areas with your hands to judge the damage by feel. Wear cloth gloves or put a thin cloth between the surface and hand when touching to improve the sensitivity. Move your hands in many directions for an accurate inspection.

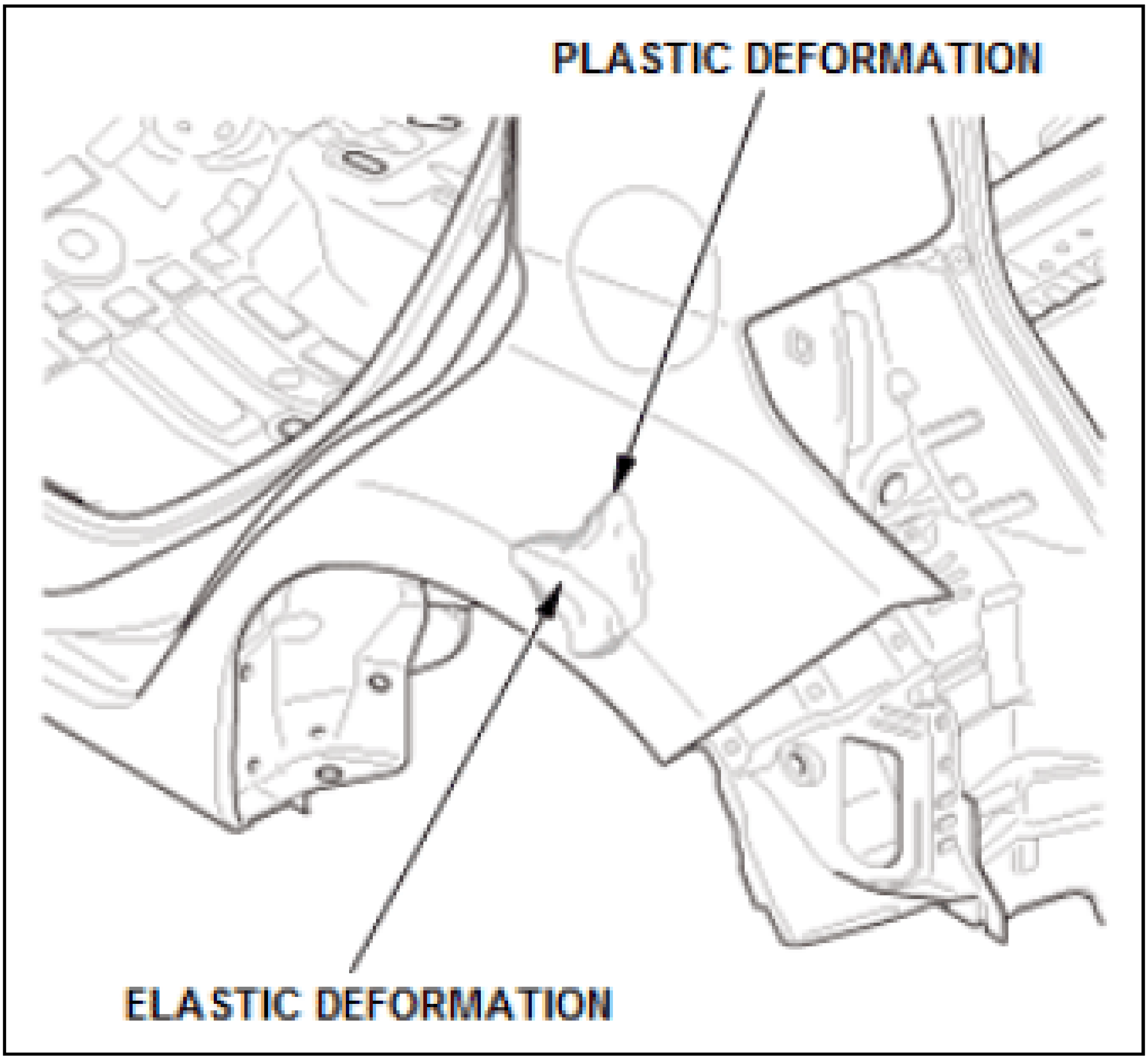
PLASTIC DEFORMATION
ELASTIC DEFORMATION

2. Remove paint from panel surface.

   Grind off the paint layers from the damaged area using a disc sander.

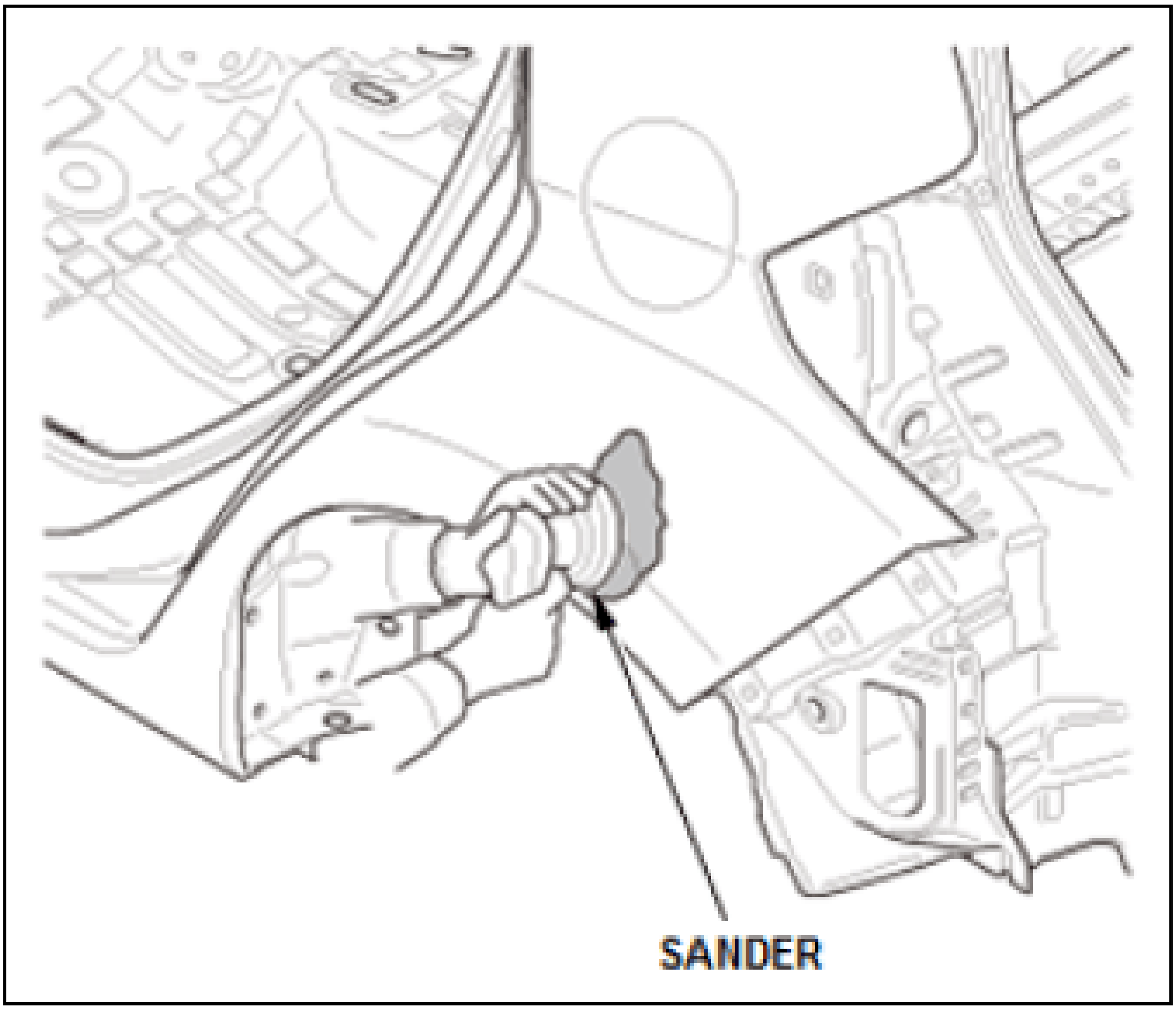

3. Repair work:
   - Because the stamping line maintains body panel rigidity, major stress occurs when stamping lines are deformed. Correct repair of this stamping line can relieve this strain.
   - Repair the stamping line first and then reform the flat surface damage.
   - If the stress cannot be relieved with stamping line repair alone because the damage is too serious, panel rigidity loss is partially due to elongation caused by plastic deformation on the plain surface.
   - If elongation of the flat surface is identified, shrink (draw) the panel to relieve the stress.

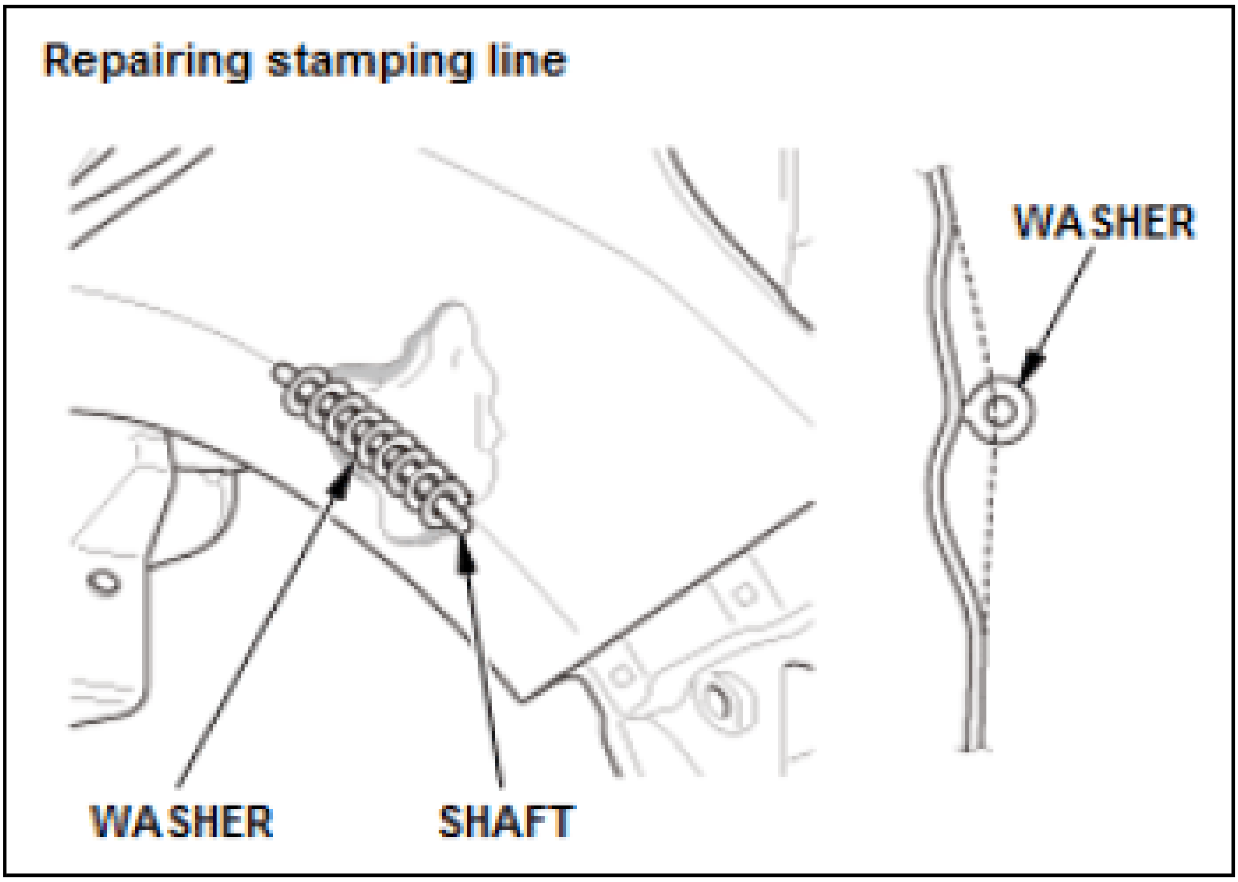

1. When repairing a stamping line, weld washers along the stamping line then pull out the damage by inserting a shaft through the washers. This will make stamping line repair easier. If the shaft cannot go through the washers, re-weld the washers so that a shaft can be inserted.
2. Hook a chain around the center of the shaft and pull out the damage using a slide hammer and hold tension.

NOTE: **Do not apply excessive pulling force.**

3. Correct the depressed area on the stamping by tapping on wide chisel along the body creases.

NOTE: **Do not apply excessive hammer force.**

4. Correct around the welded washers to smooth out the surface by hitting lightly with a hammer. Be careful not to apply excessive hammer force.

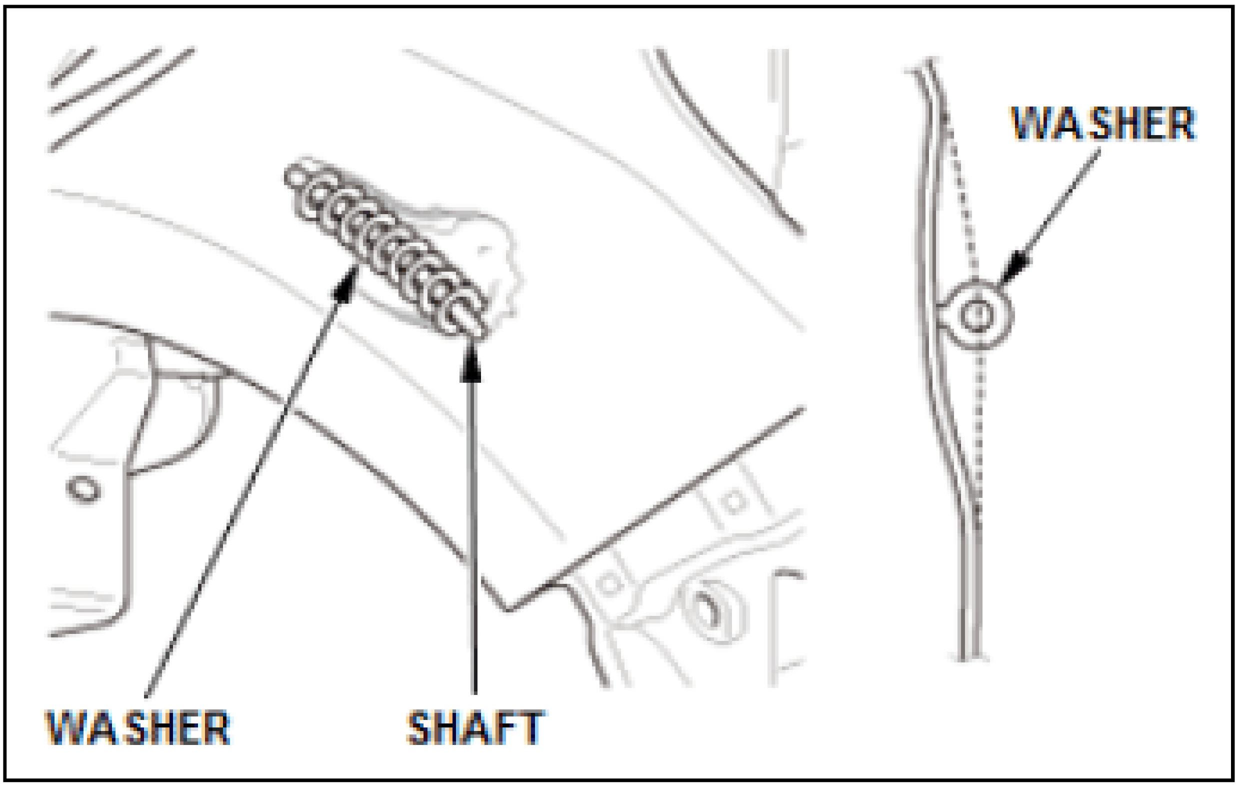
WASHER
WASHER
SHAFT

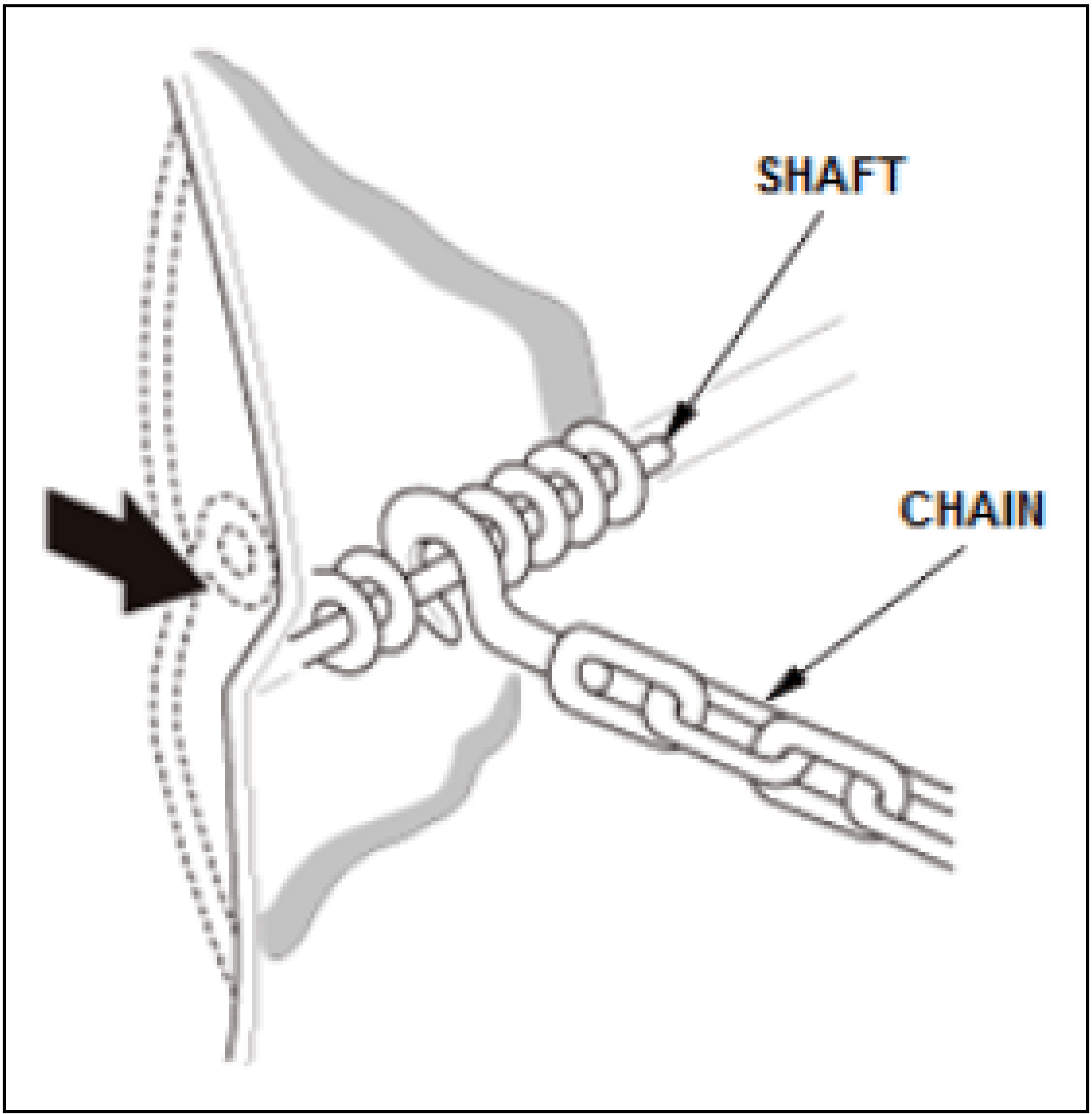
SHAFT
CHAIN

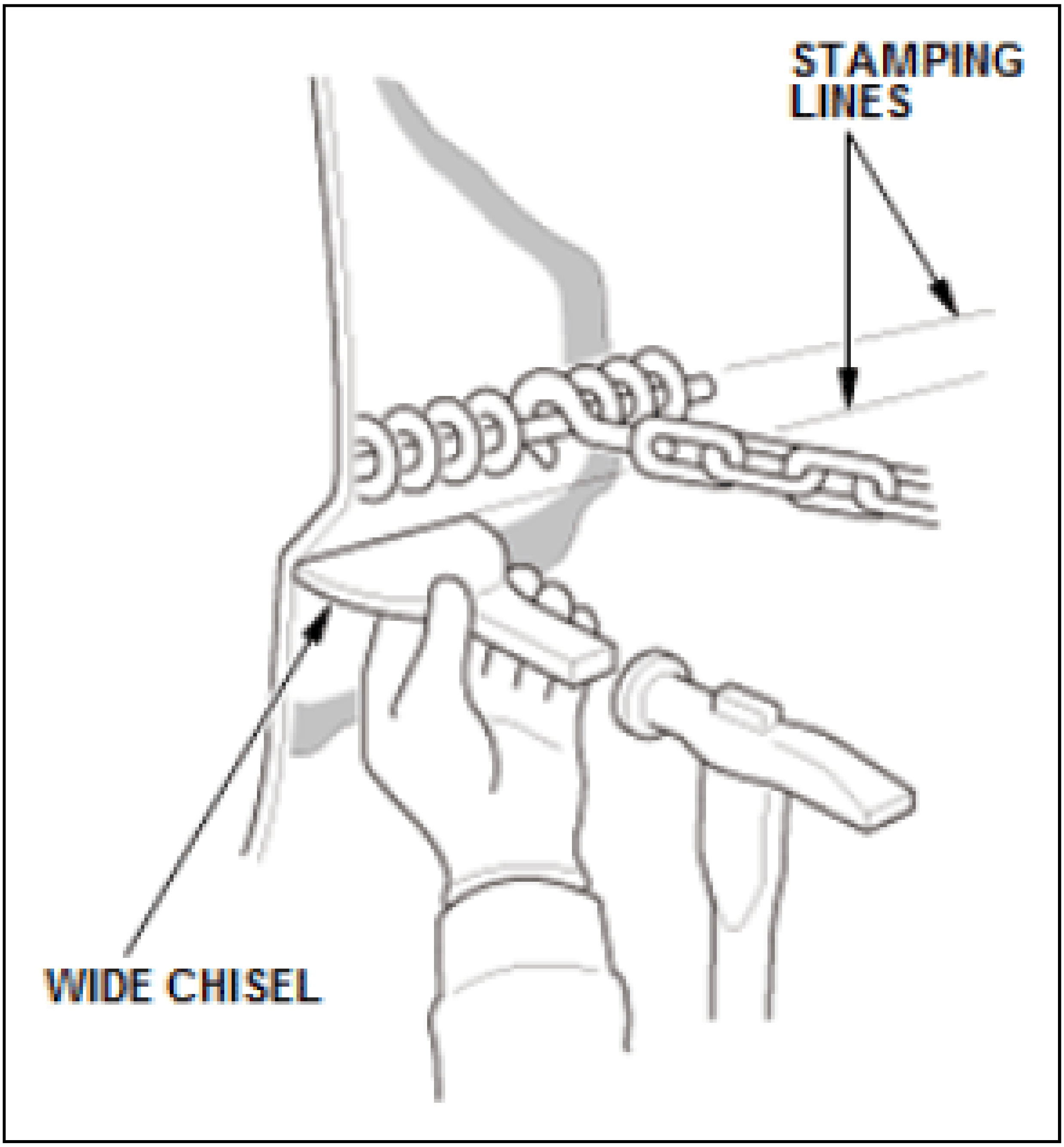
STAMPING LINES
WIDE CHISEL

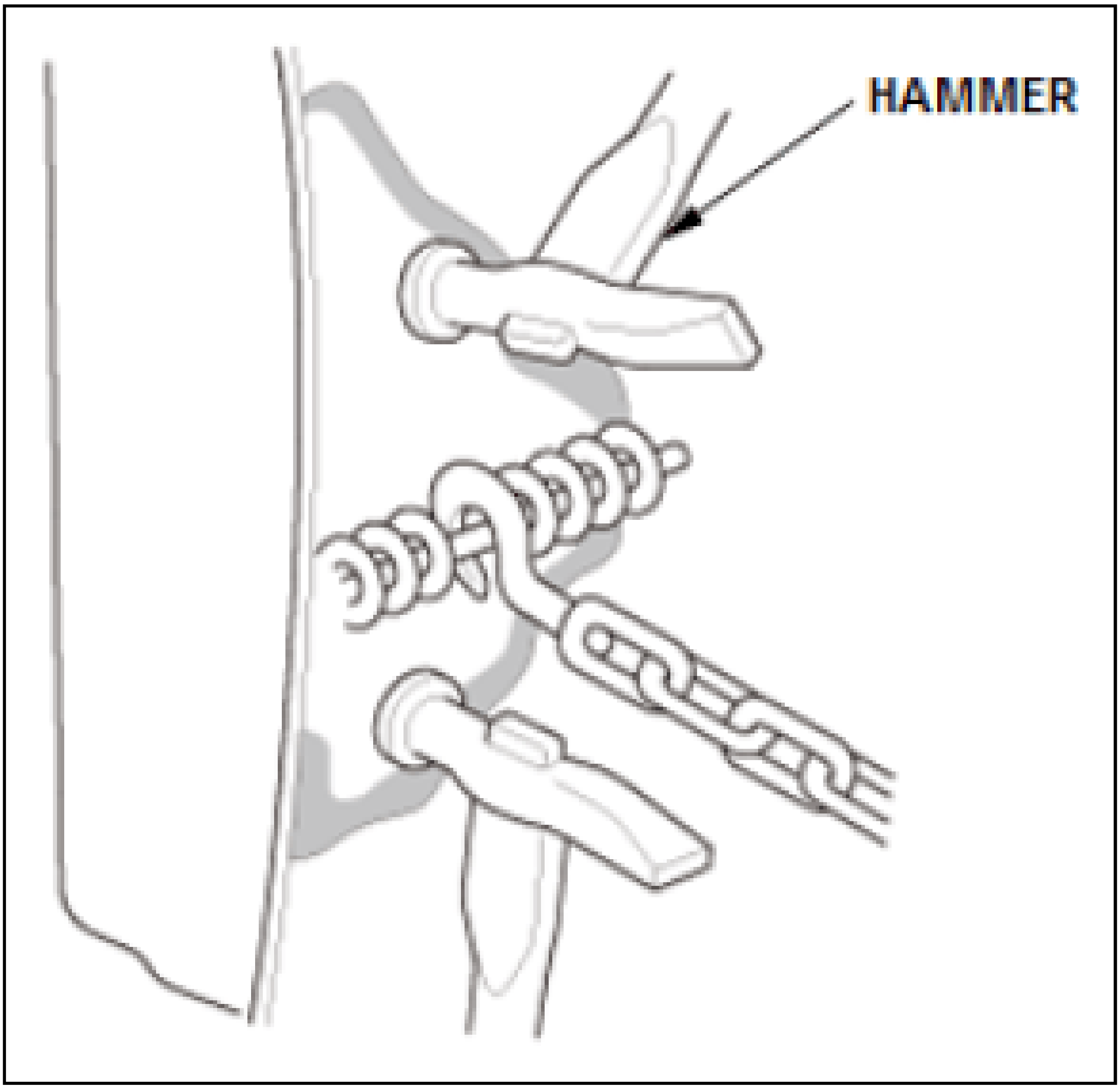

REPAIRING PLASTIC PARTS

PP Polypropylene Bumper Repair Procedures

1. Filler

   Fill in the damaged area using epoxy-type body filler.

   1. Apply primer for PP bumper in the damaged area where filler will be applied.
   2. Mix the filler and hardener.
   3. Restore the part's original shape by applying sufficient filler to the damaged area using 2-3 separate thin coats.

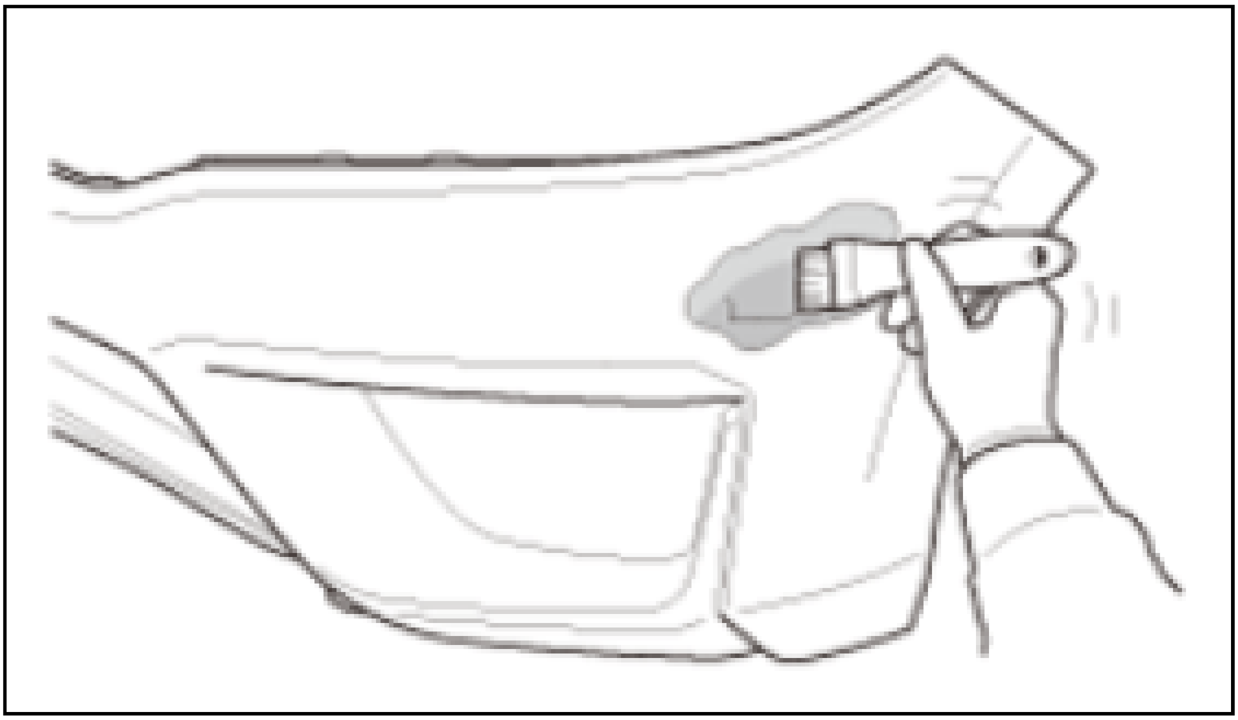

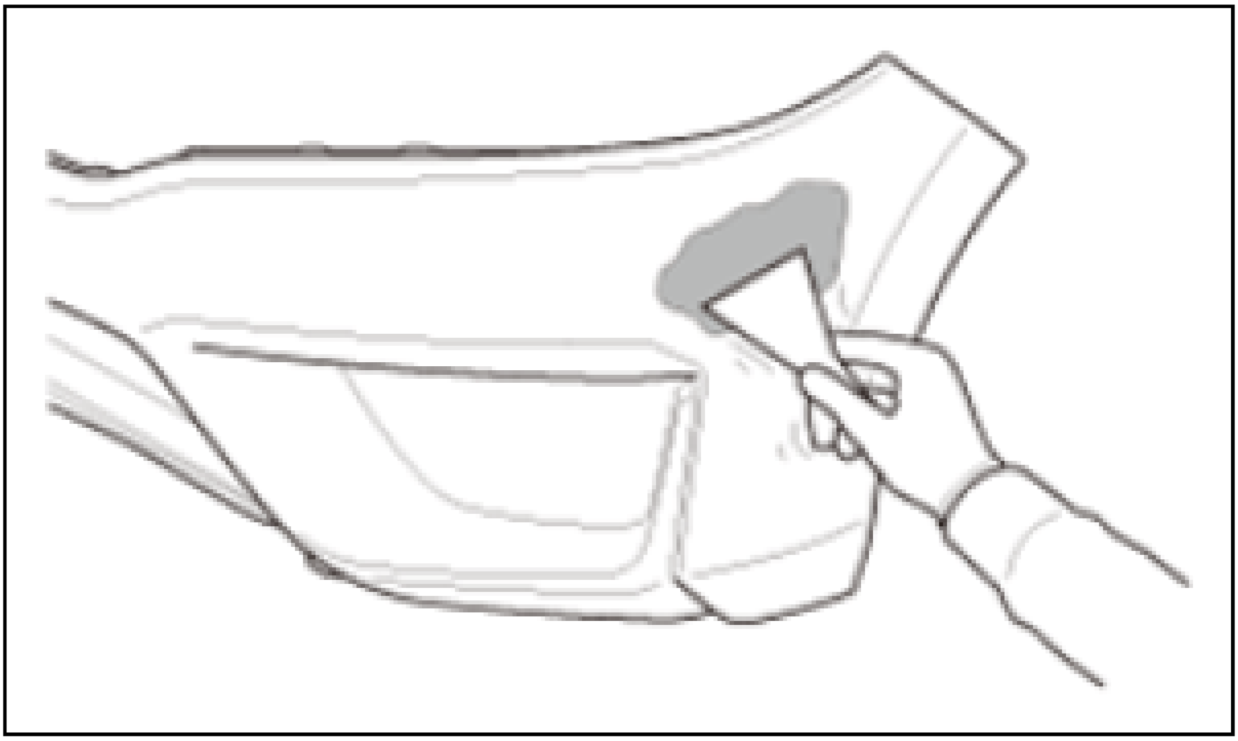

2. Sanding and surfacing:
    - Rough sand with P120 sandpaper first and finish sand the surface with P180 to P240 sandpaper.
    - Use the wet sanding method when possible.
3. Refinish the part (base coat/clear coat)

    Refer to the appropriate paint information.

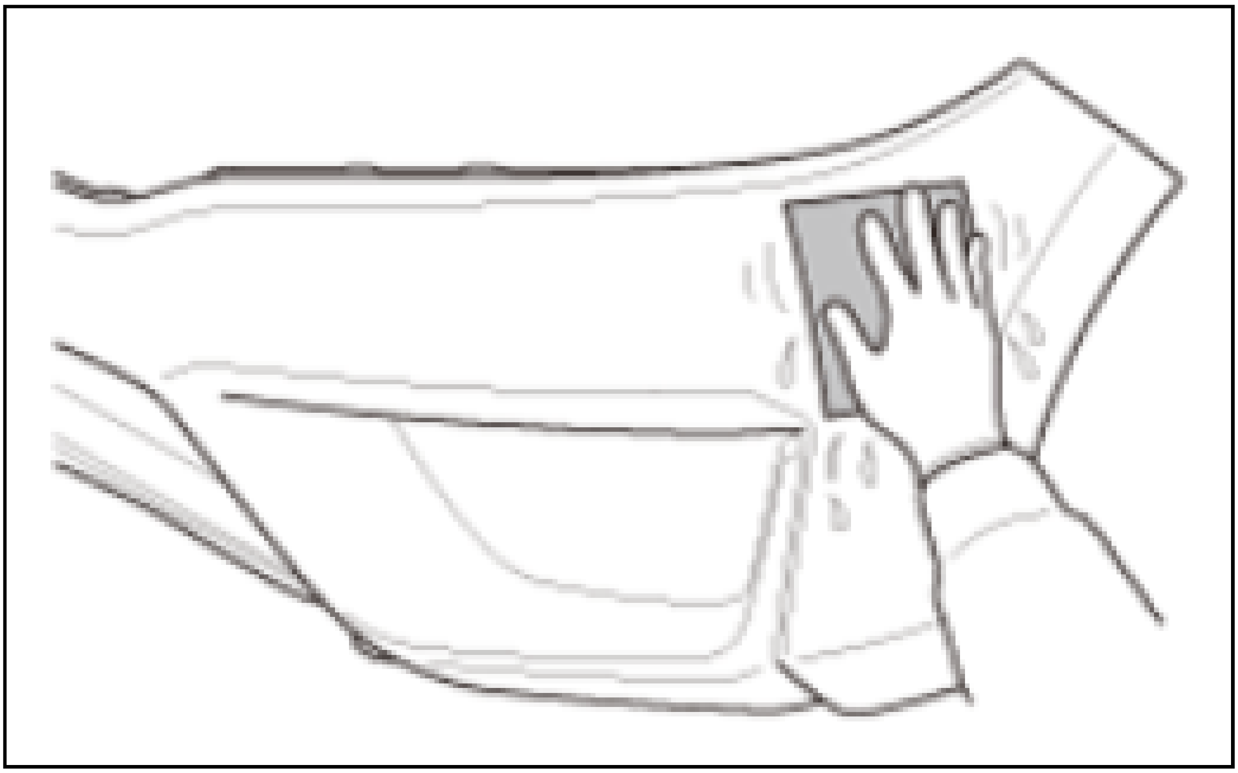

Plastic Part Repair Methods

Many plastic parts are used for exterior parts of a vehicle. In addition to sheet metal repairs, it is sometimes necessary to repair plastic parts. The major large plastic parts include: bumpers, side sill garnishes, and spoilers. They may be constructed of PP, ABS, PC, or nylon-polyester-based materials. In many damage situations, plastic part replacement is preferred over repair.

NOTE:

- **Before attempting repairs, identify the plastic part's construction and select the most appropriate repair materials.**
- **Follow the manufacturer's instructions for the repair materials.**
- **Be careful to avoid part deformation and damage during forced-dry with heat during the repair process, be careful with the.**

Example of damage: Scratches and hairlines on PP bumper.

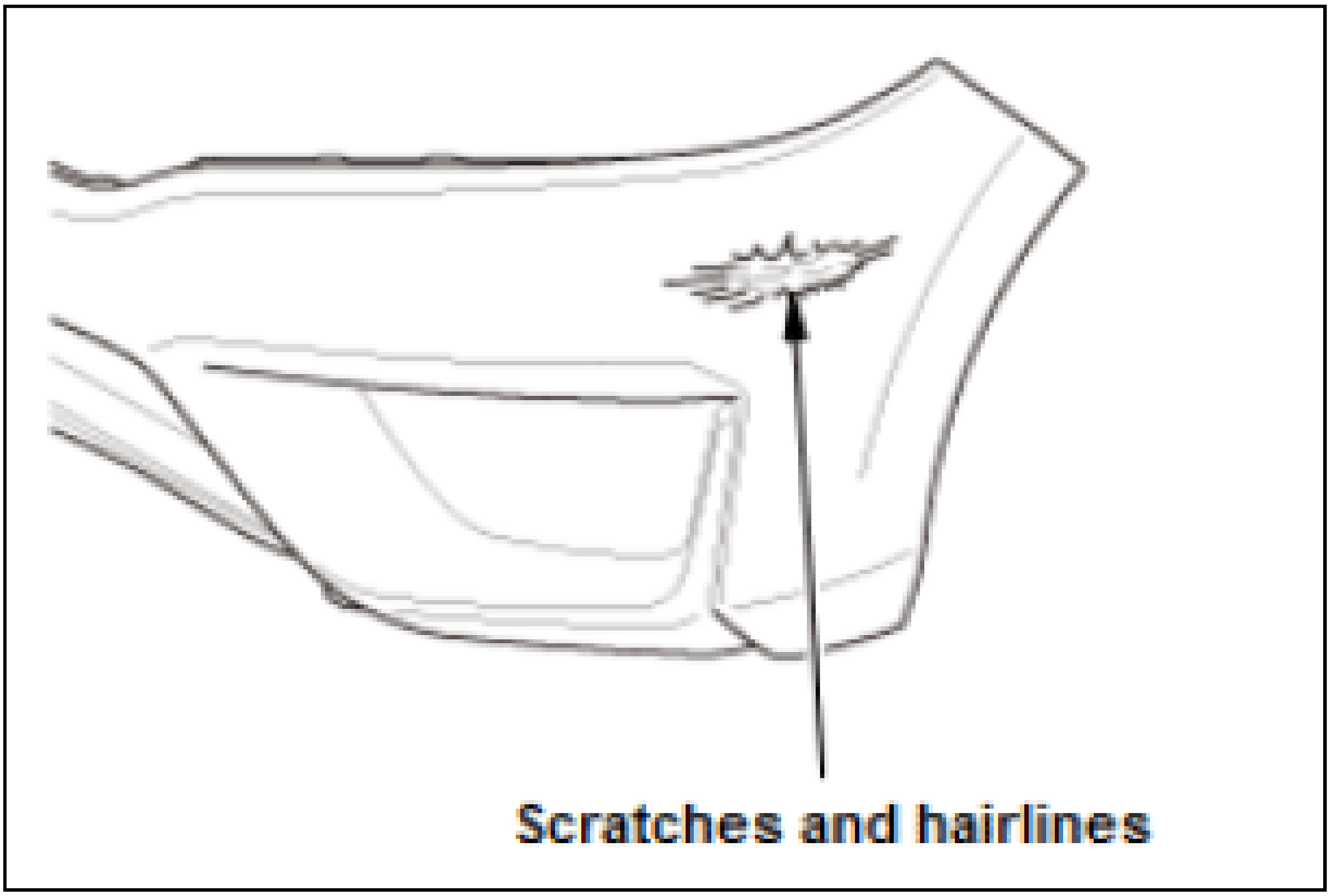
Scratches and hairlines

1. Preparation and cleaning:
    - Wash the damaged area with water.
    - Thoroughly clean both the front and rear sides of the damaged area using a degreaser to remove wax and oils.

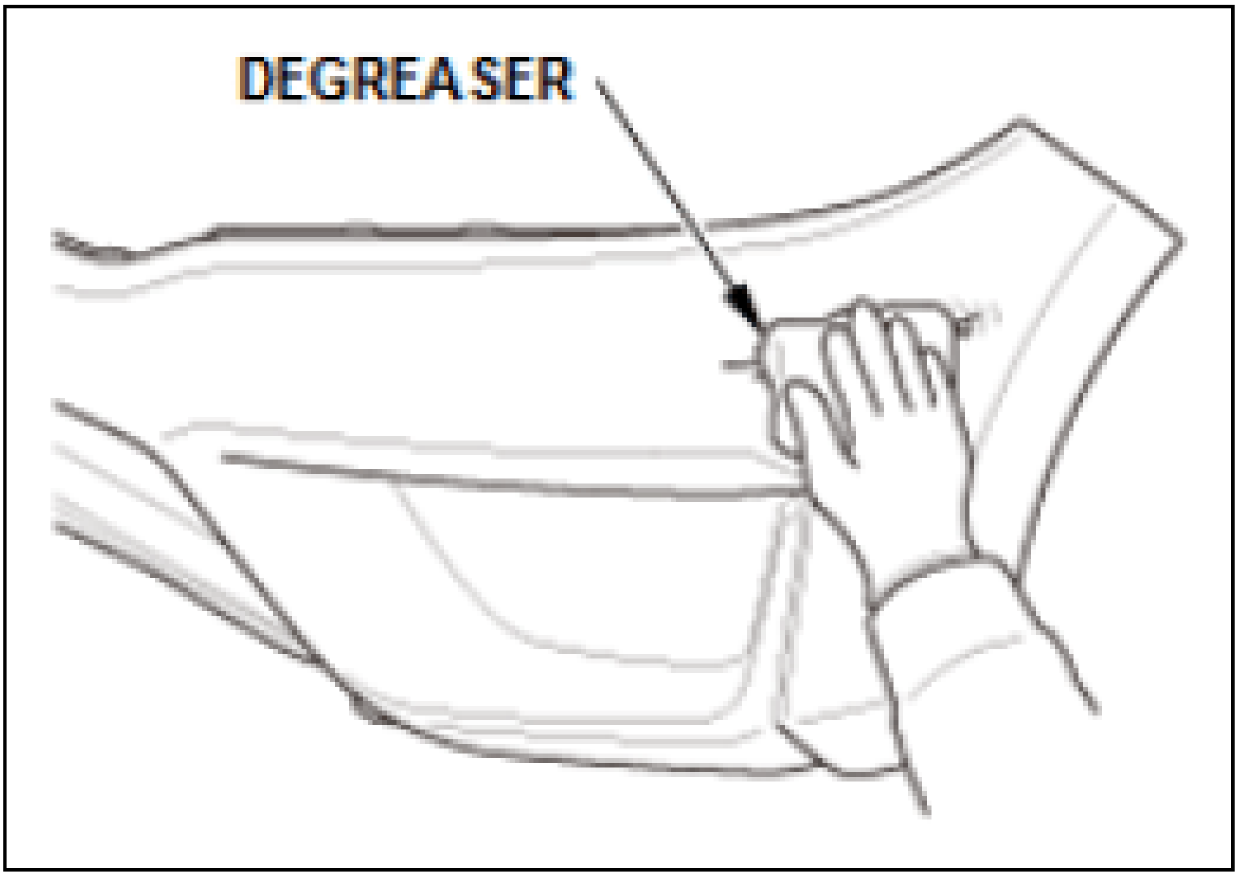

2. Stand and study raw surface

   Featheredge the damaged area using P80 to P120 sandpaper.

Then degrease the surface.

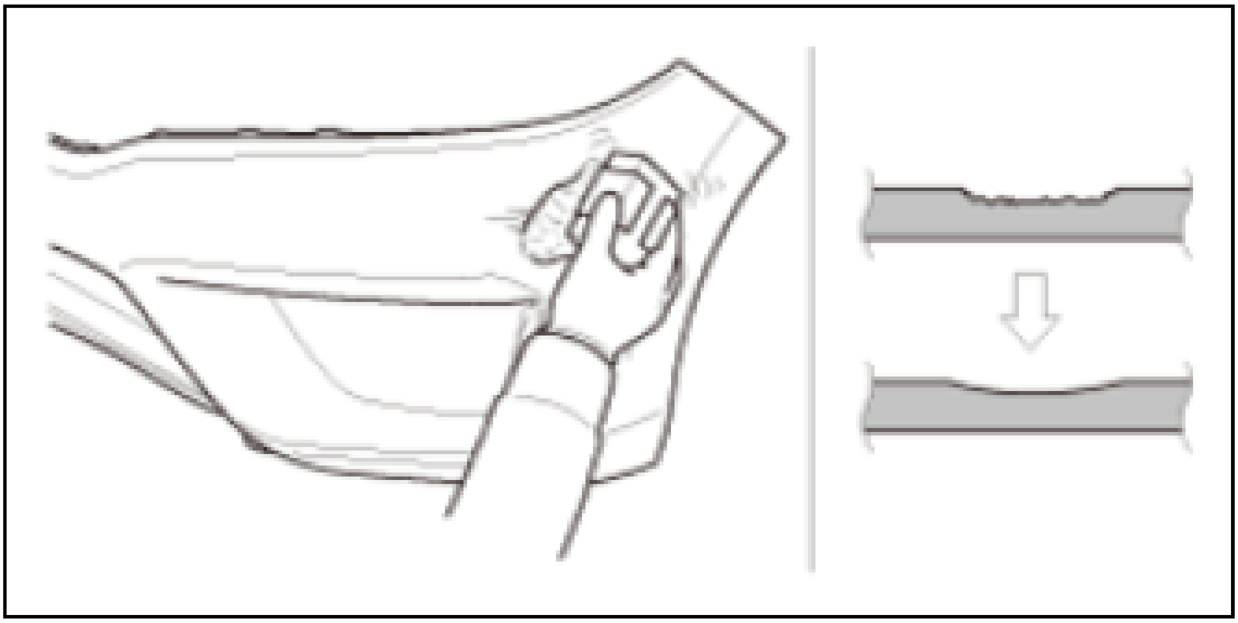

TOOLS AND EQUIPMENT

CUTTING TOOLS

Air Saw

- Used to cut outer panels.
- Makes quick, clean cuts, but noise and vibration can be significant.

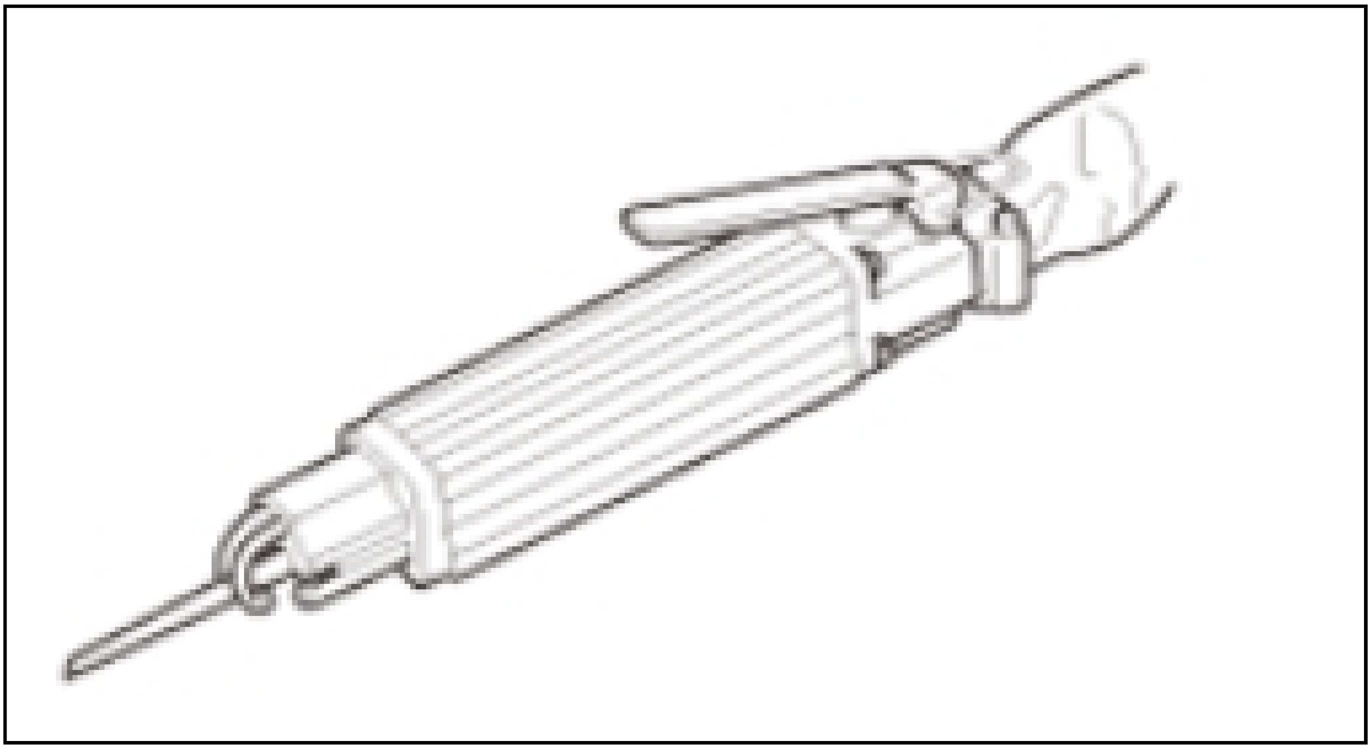

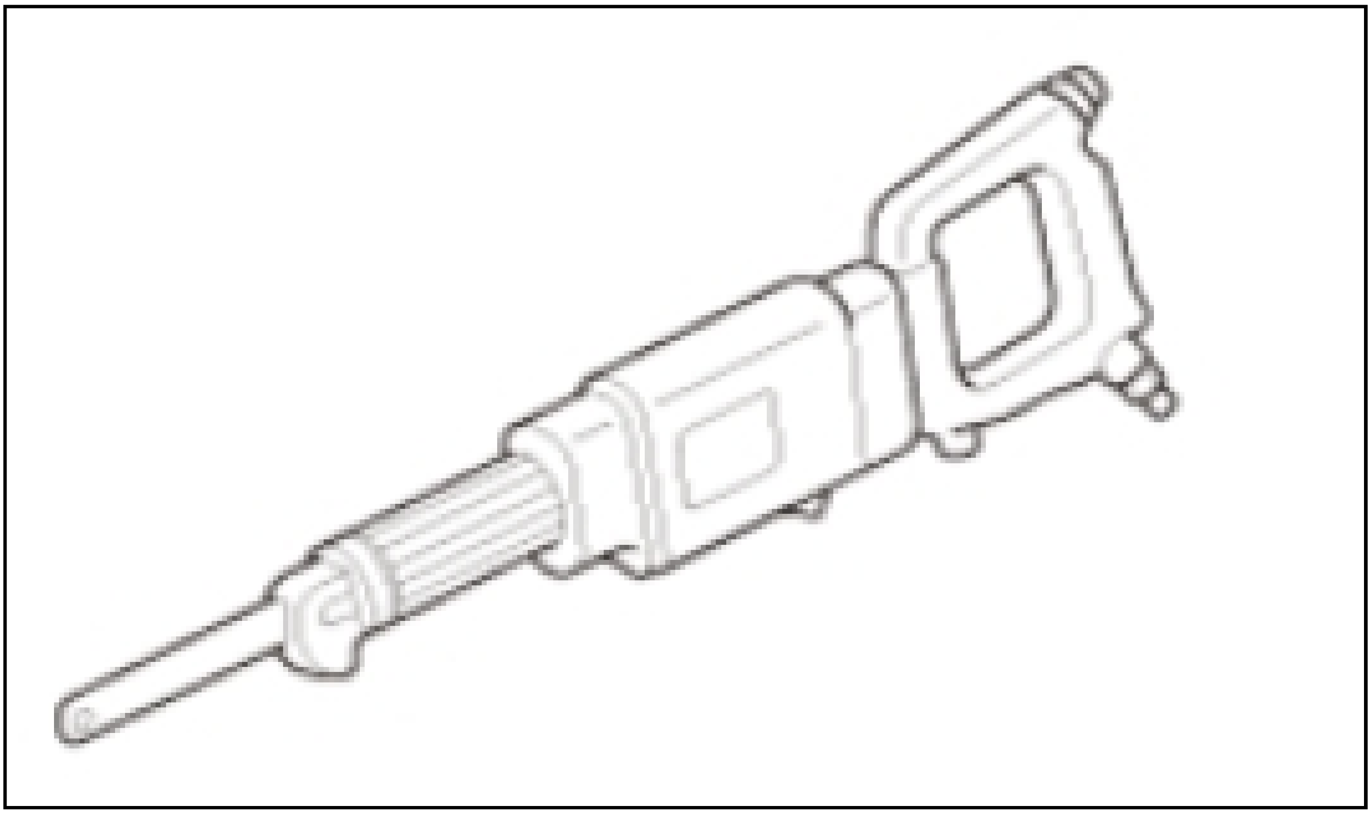

Air Chisel

- Used for rough cutting when removing damaged parts.
- Compact and light in weight. Excellent for hammering out damage to access other parts.
- Can cut straight, curved, or along stamping lines when cutting panels.
- No cutting chips produced.
- Noise and vibration are significant.

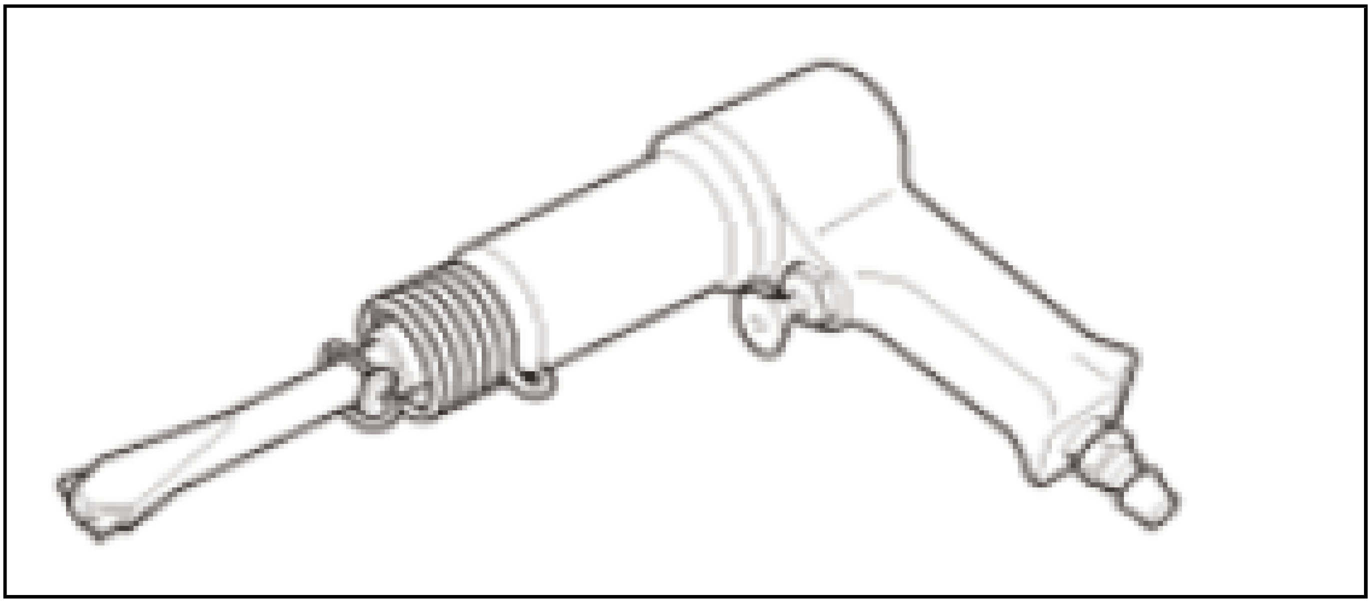

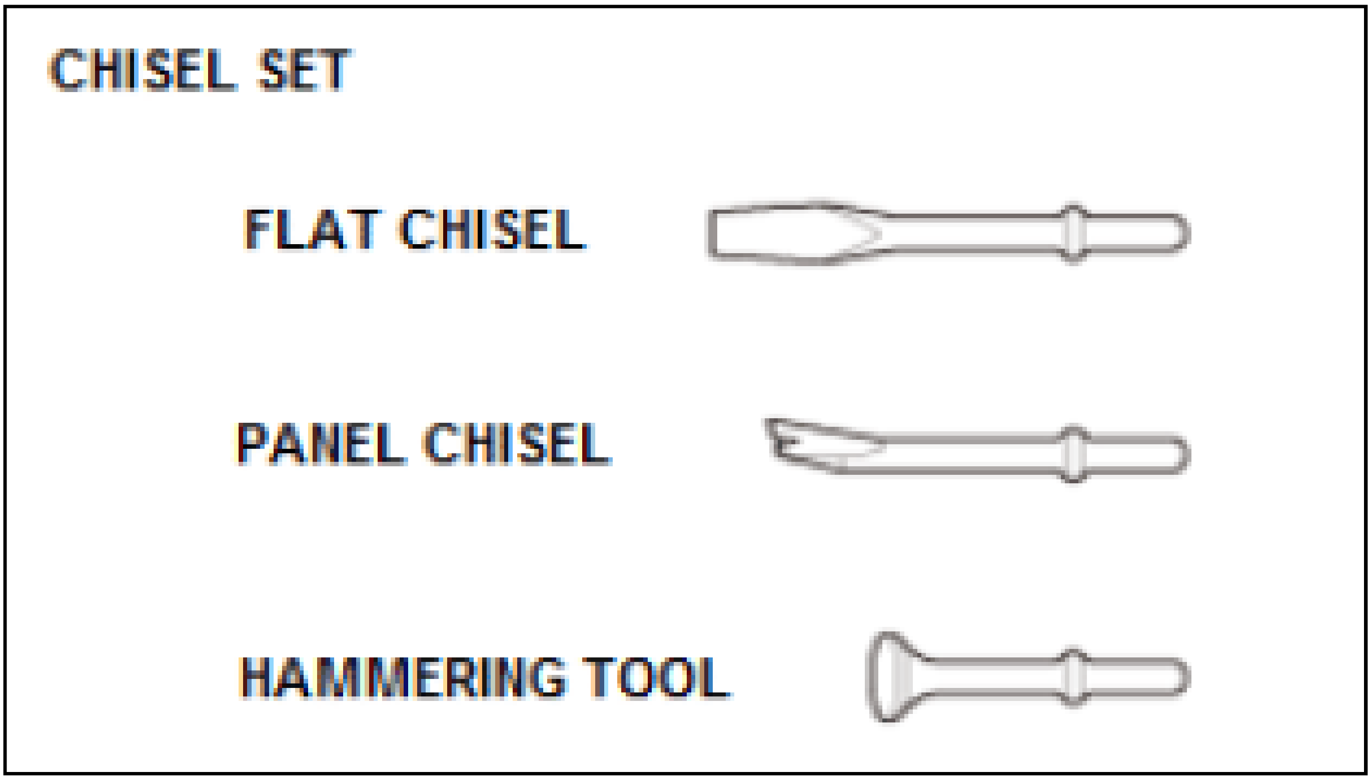

GRINDING AND SANDING TOOLS

Putty Grinder/Sander

Dual-Action (DA) Sander

- Used for many types of sanding such as feathering, scuffing, rough and intermediate body filler or putty sanding etc.
- Eccentric and rotatory motion achieves highly efficient sanding, with a minimum of sanding scratches.
- This sander spins a circular pad and the pad moves in a circular direction simultaneously and sands a wide area.
- Changing the orbit diameter size allows use in a wide variety of sanding applications such as rough body filler sanding and primer surfacer polishing.

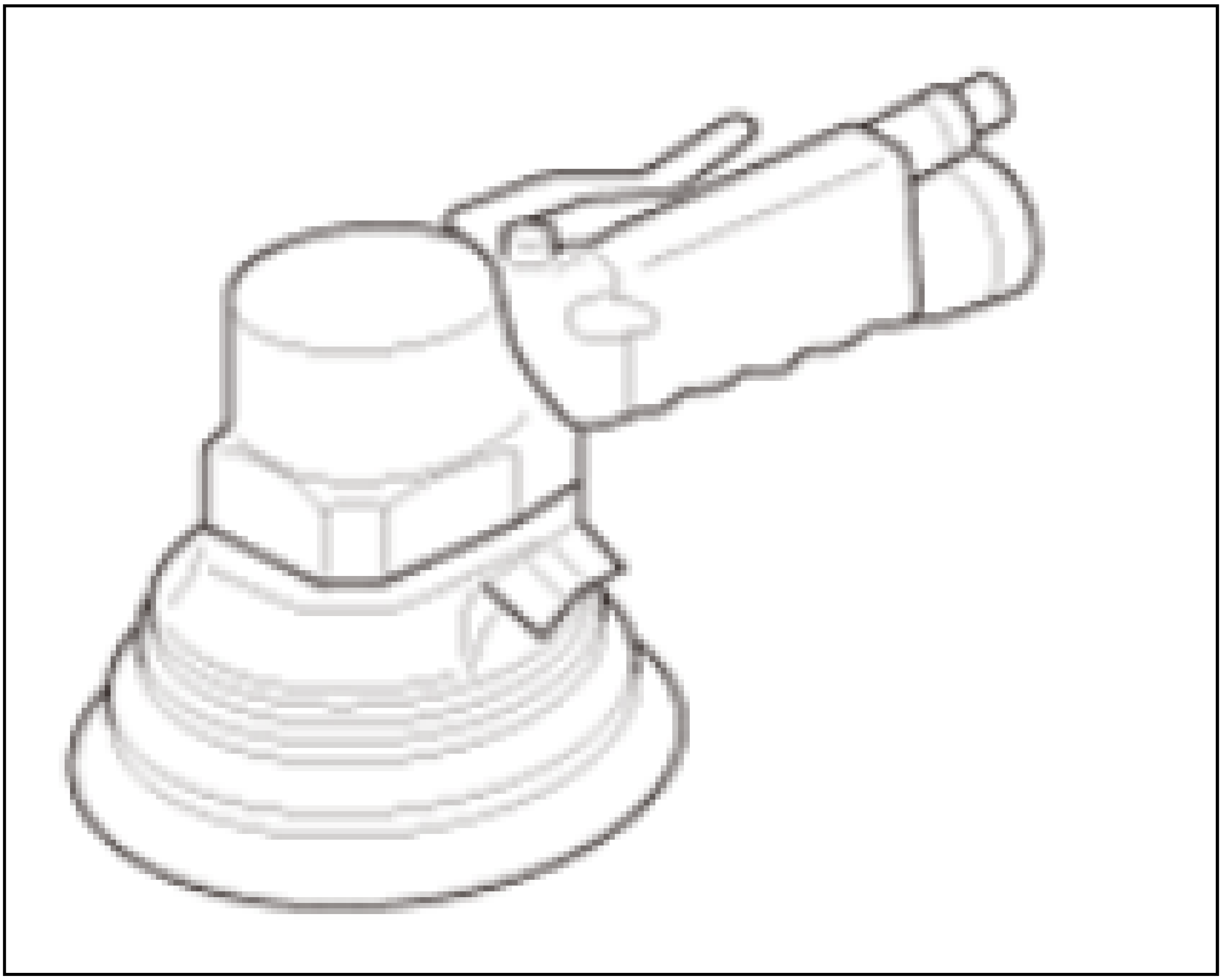

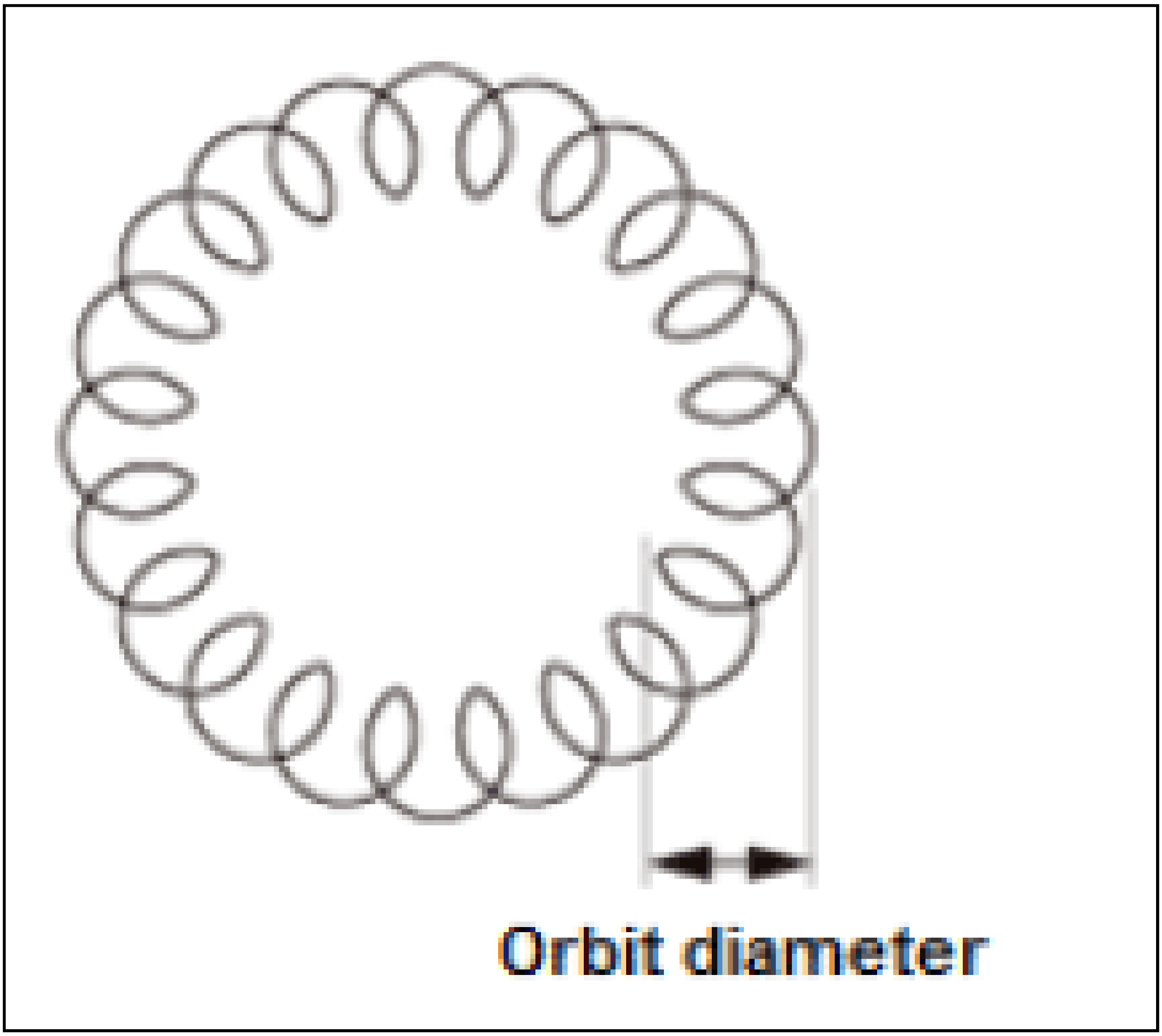

Orbital Action Sander

- Used for rough and intermediate sanding of surfaces with body filler or putty.
- Because it has a wide contact surface, distortion can easily be removed.

- This sander vibrates a rectangular pad along an oval path when sanding a surface.
- It can be used for a wide variety of applications from removing putty distortion to primer surfacer polishing depending on the size of orbit diameter.

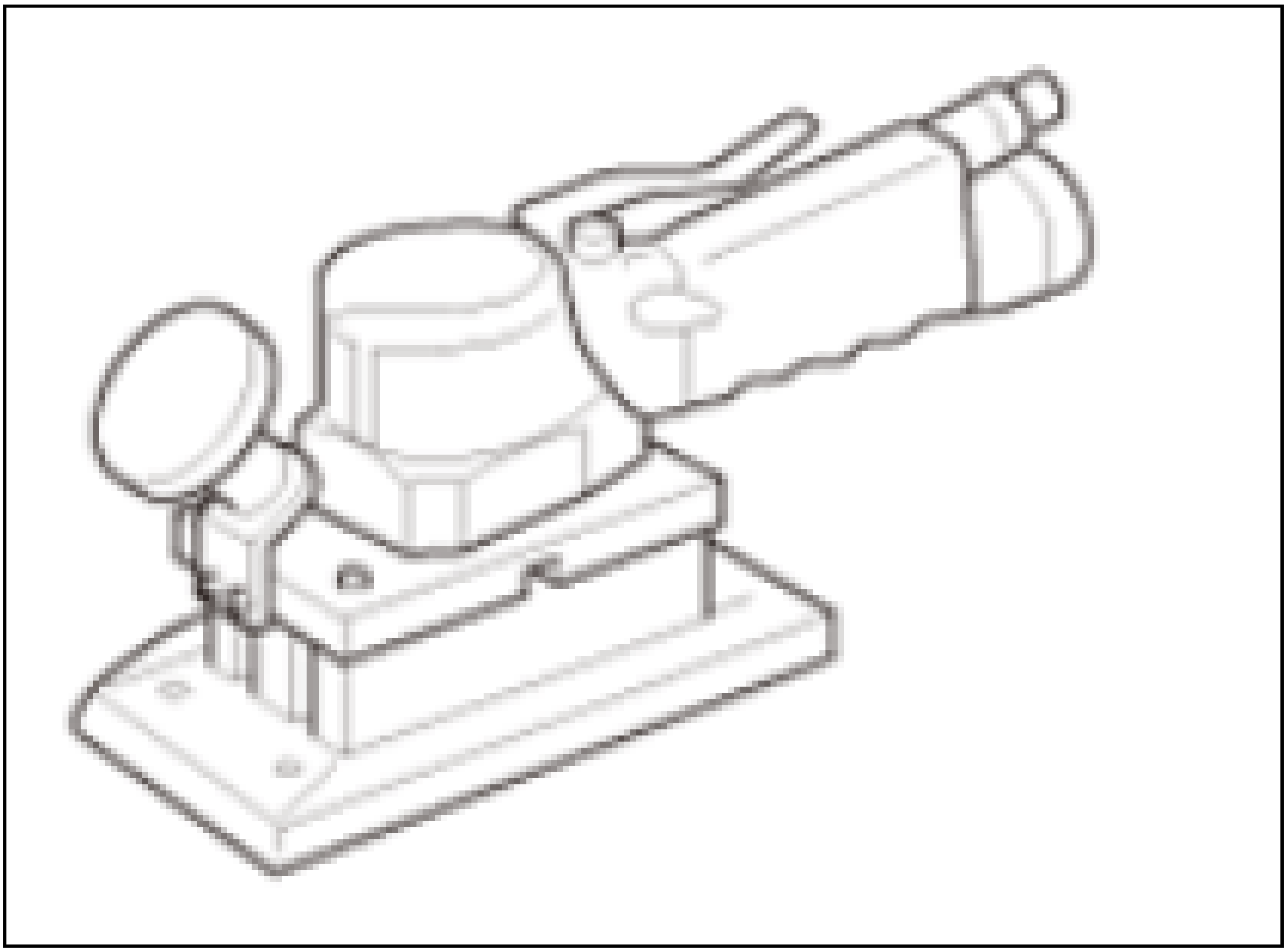

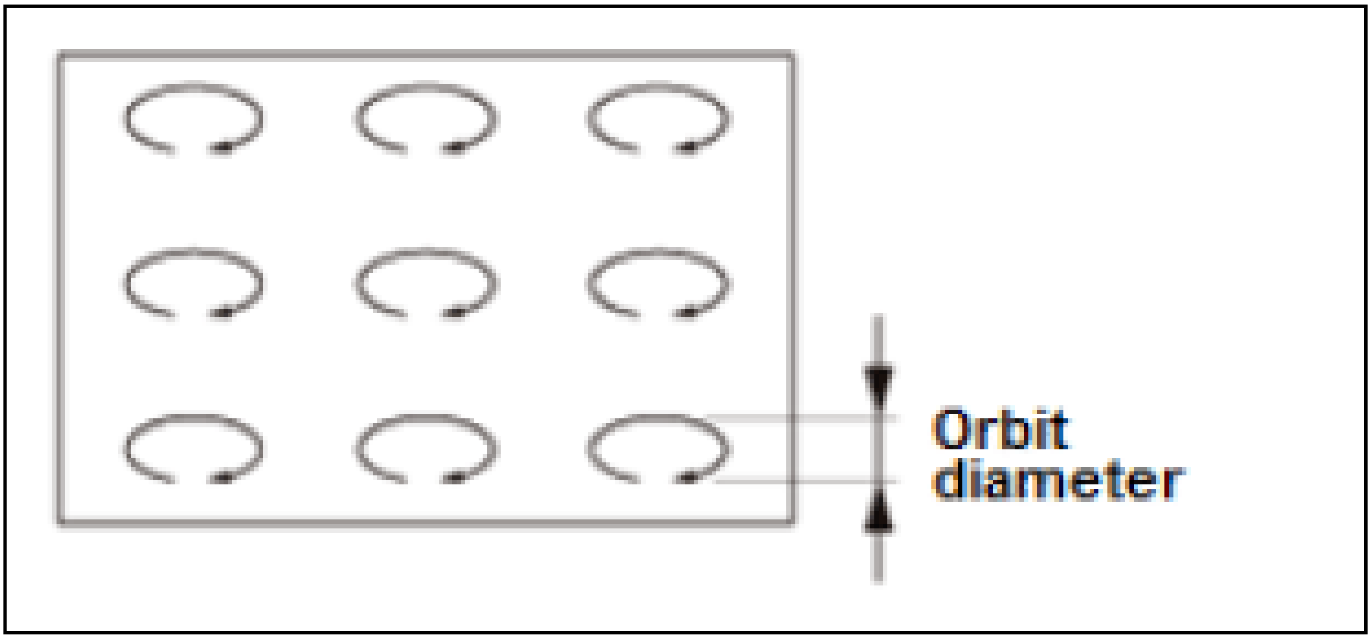

Straight Line Sander

- Used for rough polishing of filled or puttied surfaces.
- Good for polishing work on wide surfaces.
- This sander moves a rectangular pad in a straight line front to back when sanding a surface.
- Rather than sanding a large surface area, it is often used to remove distortion on a body surface as a part of final processes.

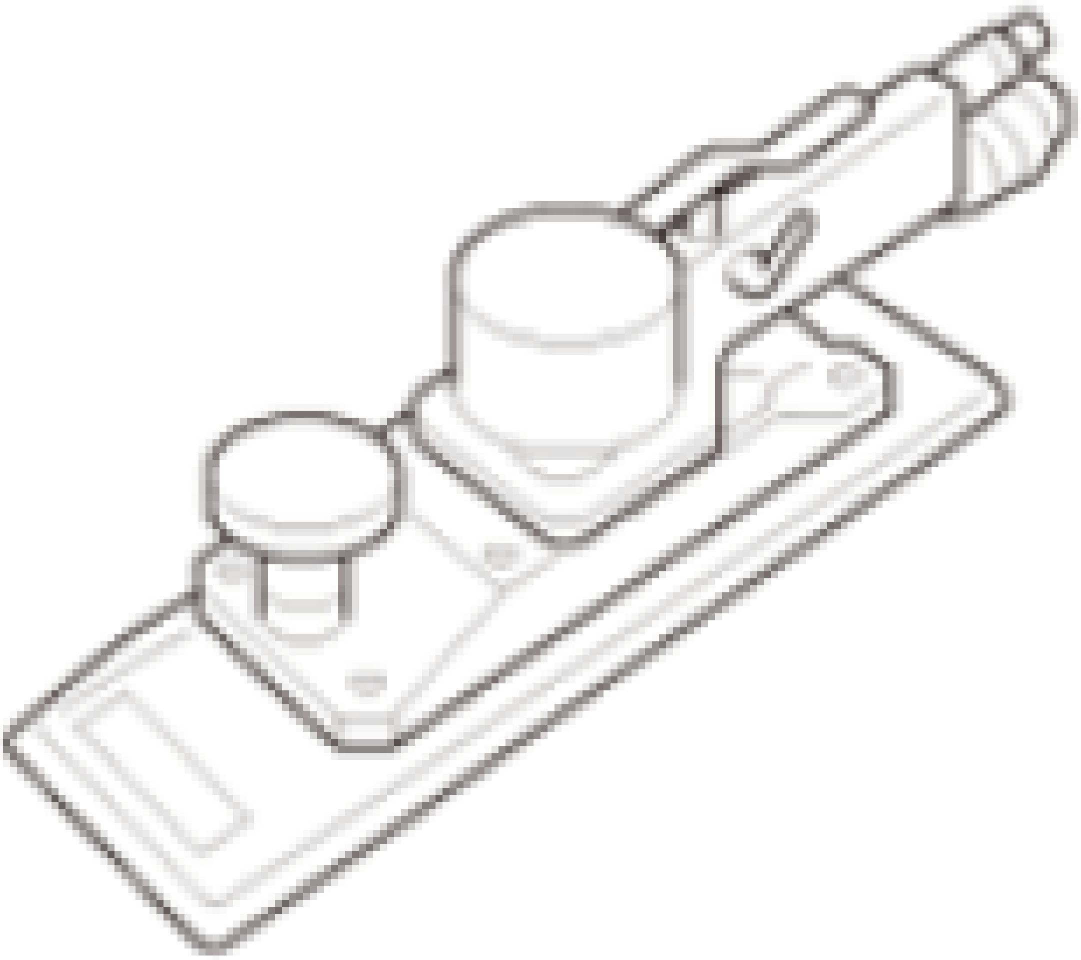

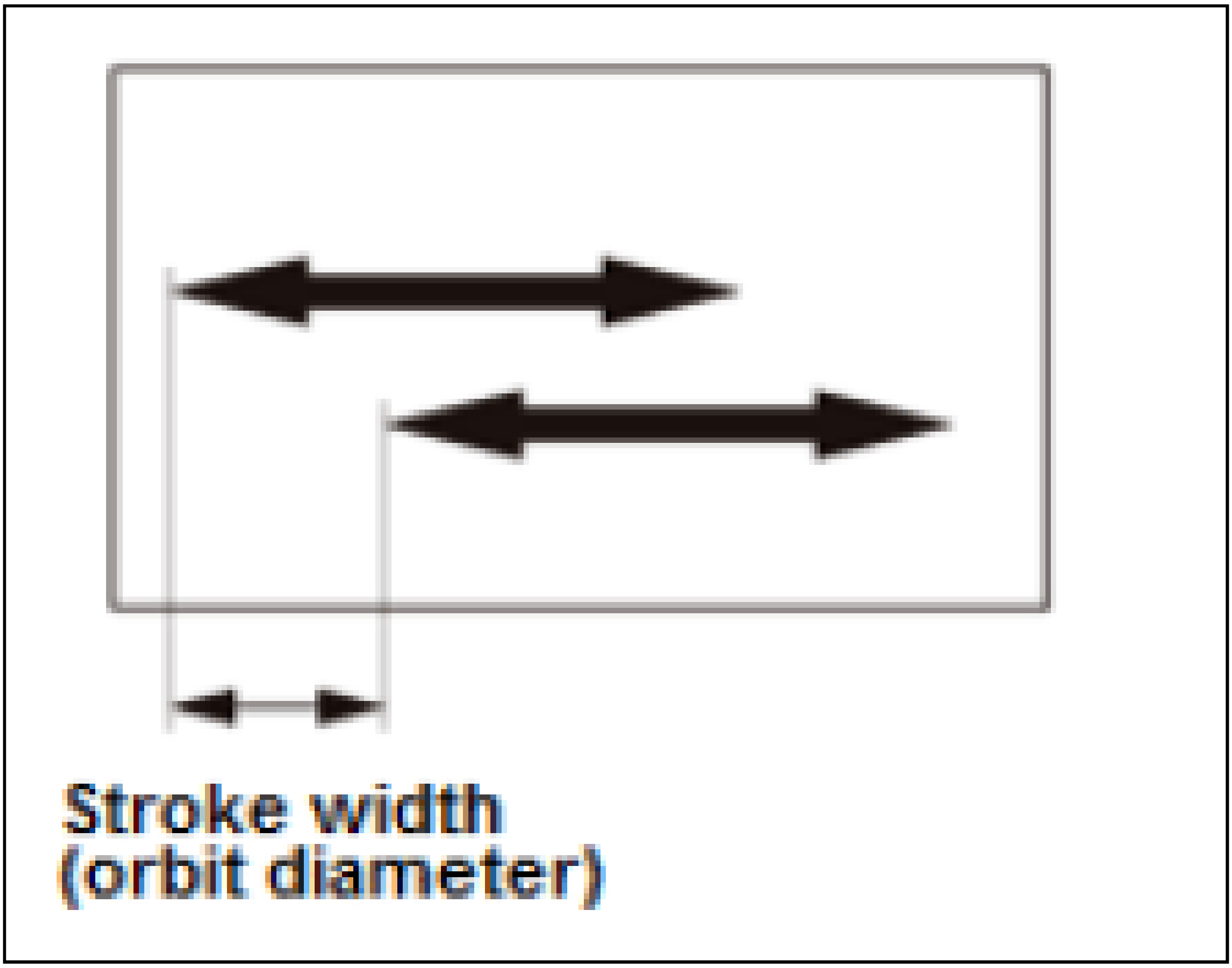
Stroke width
(orbit diameter)

Steel Sheet Grinder/Sander

Angle (Disc-Type) Grinder

- Used for polishing after welding.
- There are two types; air and electric powered.

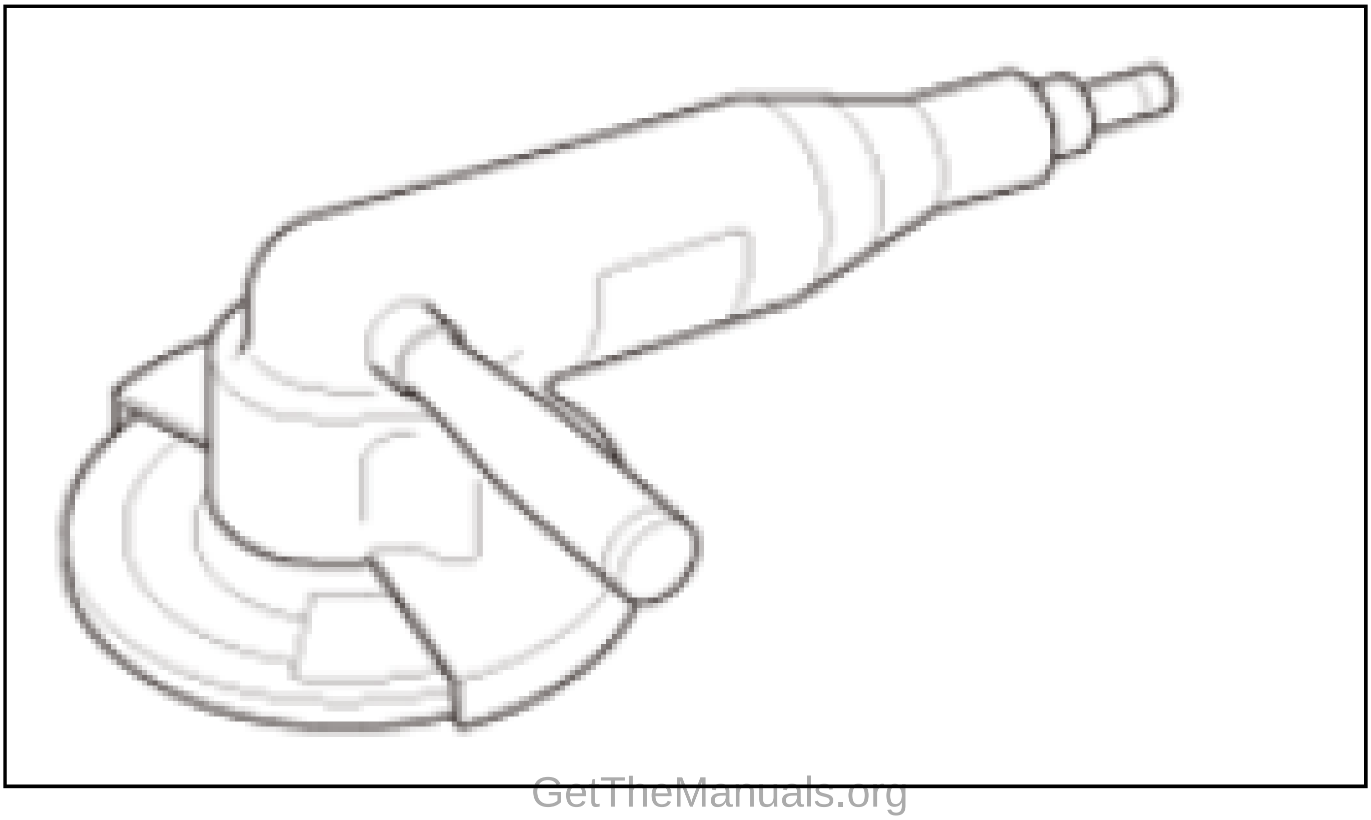

Single Action Sander

Used to remove paint layers.

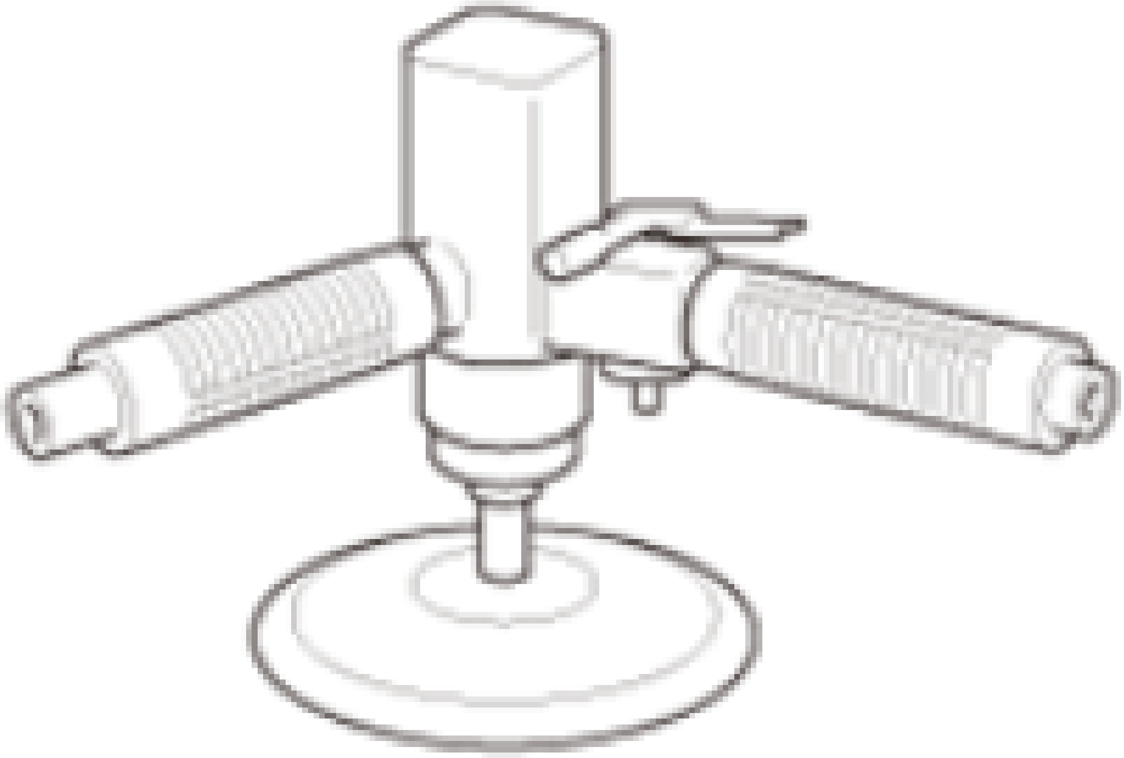

Belt Sander

- Used to peel off paint layers on welding areas.
- Also may be used to remove spot welds, especially in areas that cannot be accessed with a drill.
- Can be used in tight spaces where a disc sander cannot access.
- Lightweight and compact, allows one-handed work.
- Multiple belt widths available.

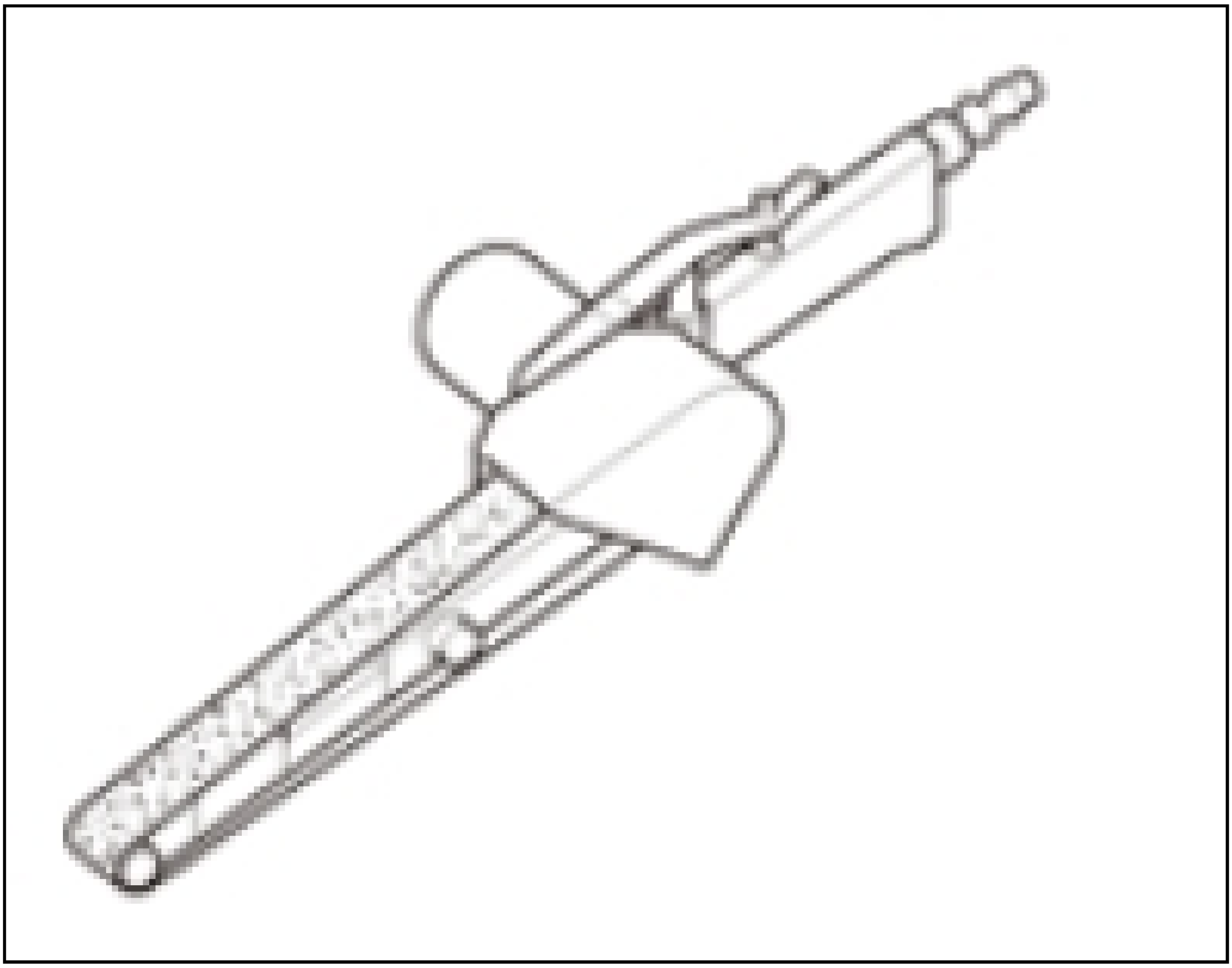

INSTALLATION TOOLS

Parts Positioning And Holding Tools

Vise-Grip Pliers

- Used to temporary hold parts during welding.
- Jaw opening and clamping force adjustments can be easily made.

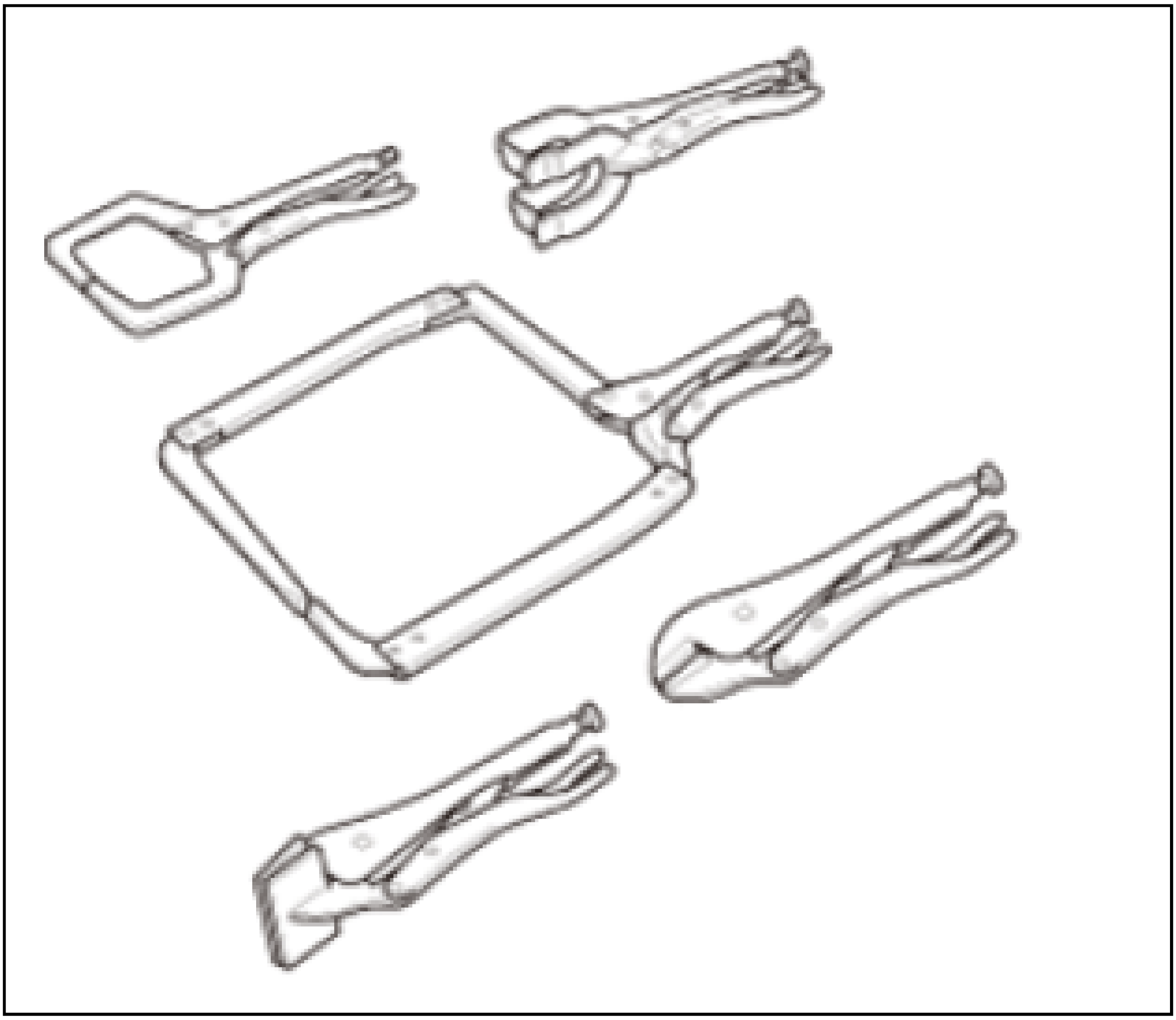

90 Degrees Vise Grip Pliers

- Used to temporary hold parts during welding.
- Jaw opening and clamping force adjustments can be easily made.
- 90 degree jaw angle allows fit of doors and trunk lid to be confirmed.

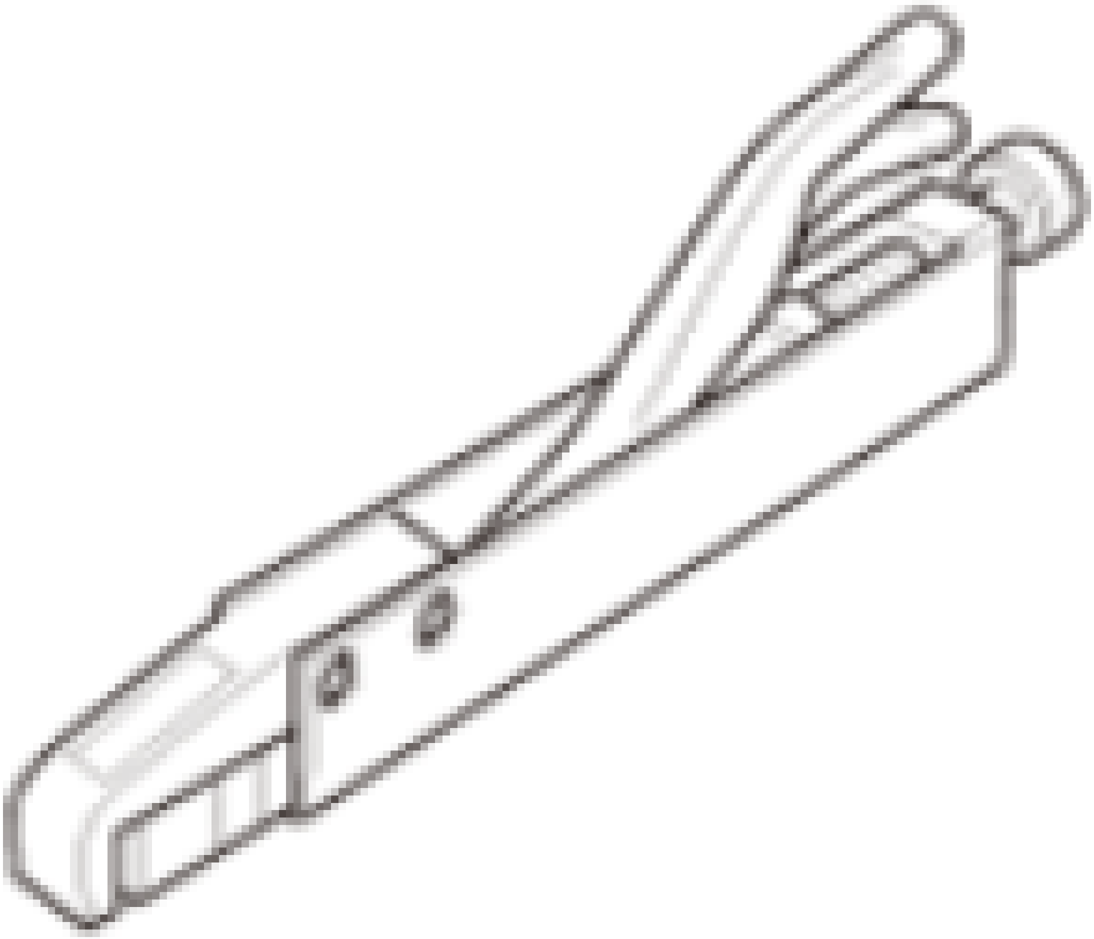

Screw Clamp

- Used to assemble panels and hold parts during welding.
- Screw opening dimensions and clamping force adjustments can be easily made.
- Less likely to scratch or mark panels than vise-grip pliers.

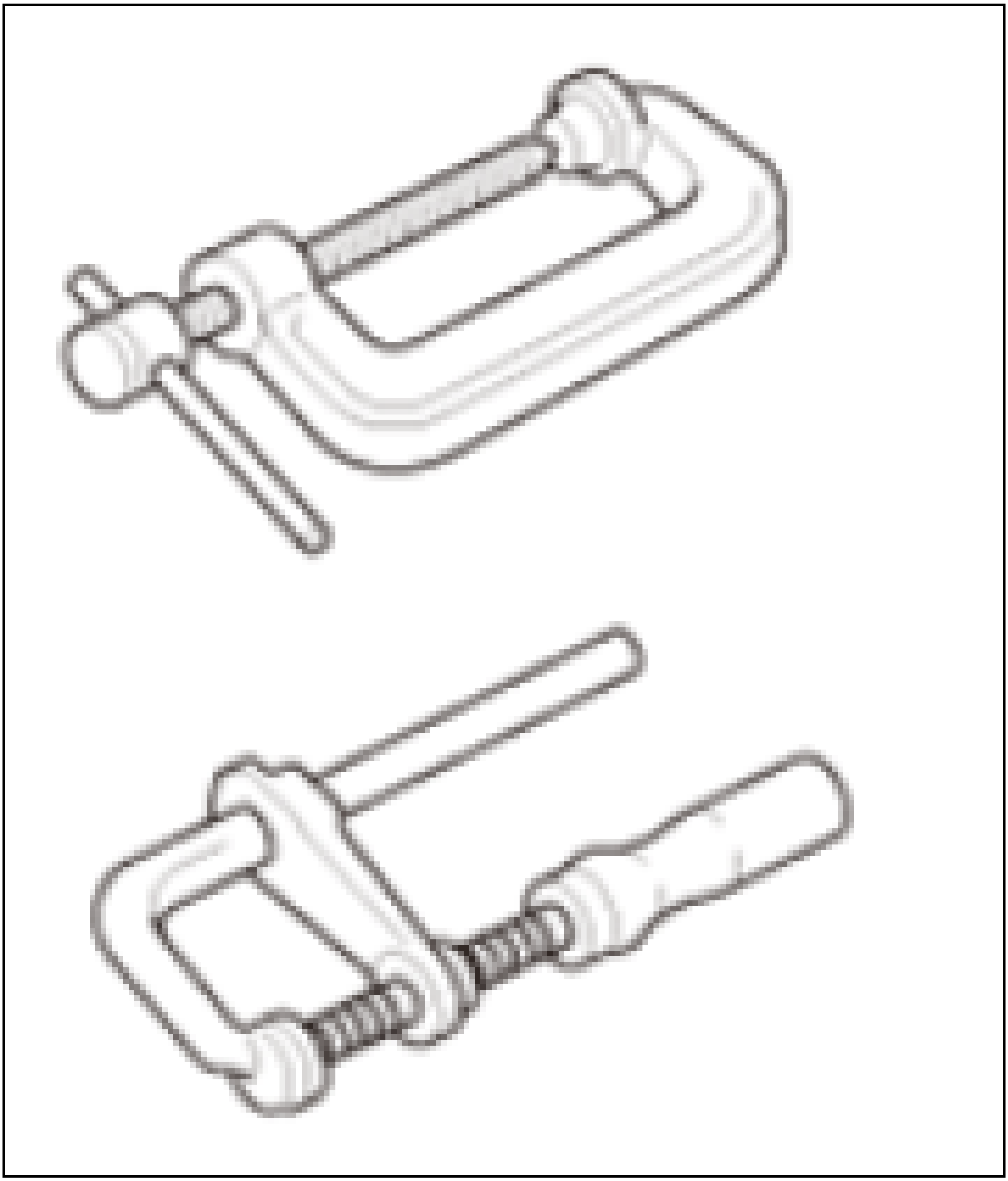

MEASURING TOOLS

Body Dimension Measuring Tool

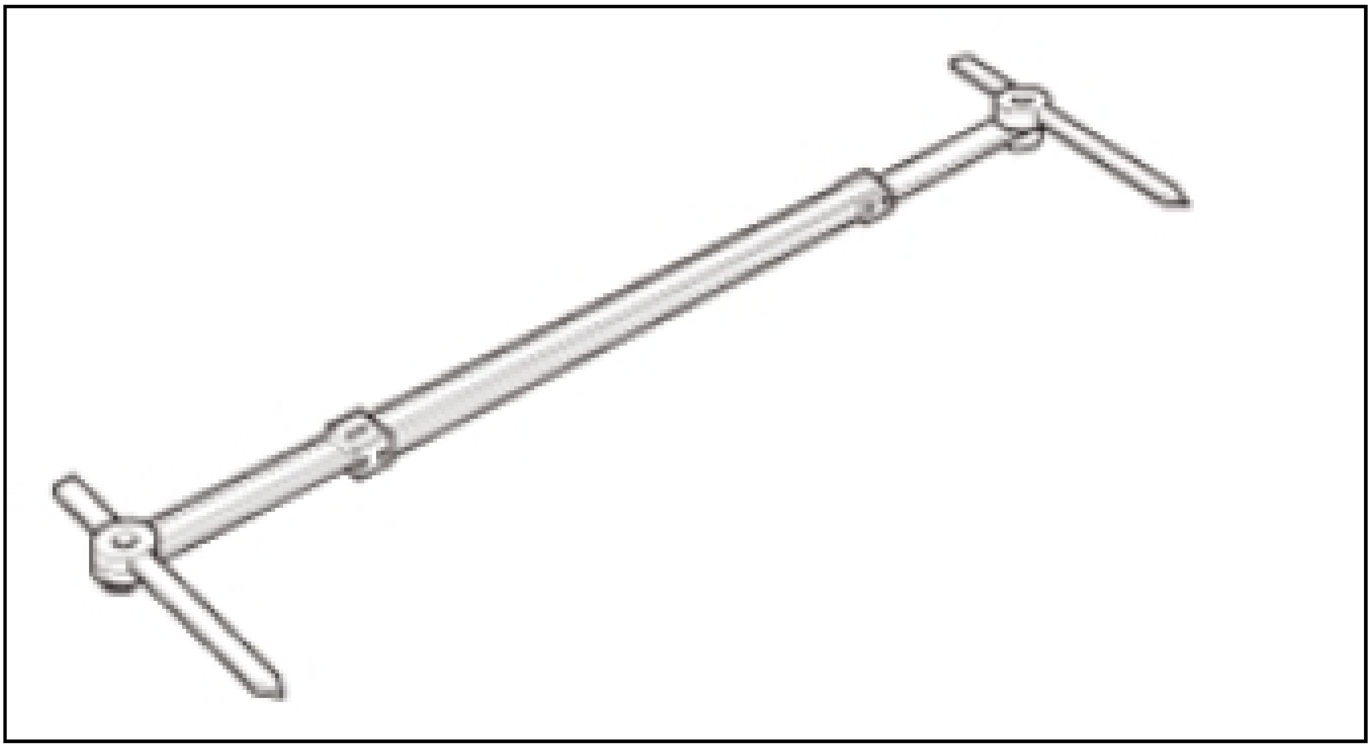

Tram Gauge

- Used to measure the various body dimensions to check for upper body and underbody structural damage.
- Because of its expandable measuring probes, it can be widely used for a variety of measurements.

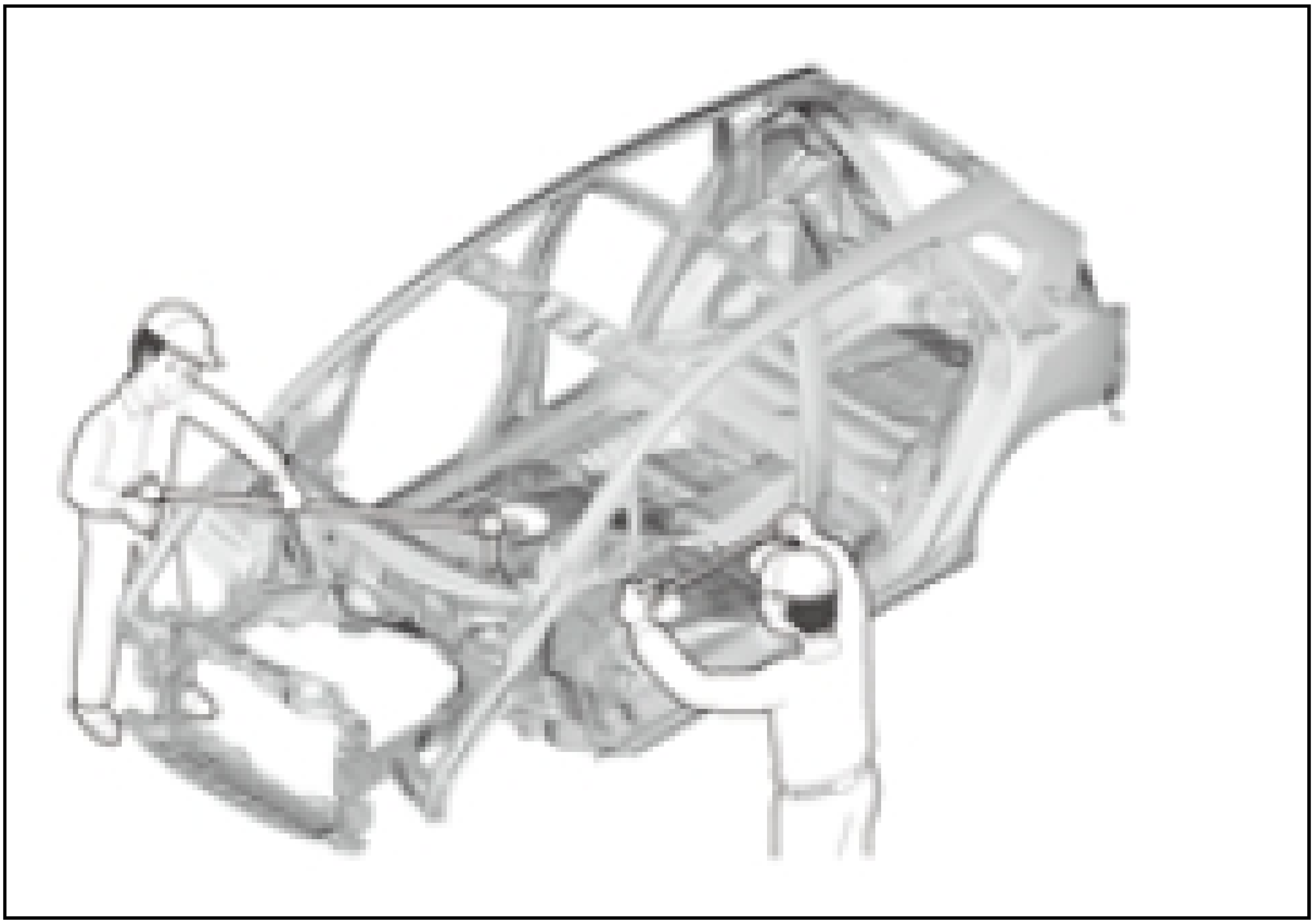

- Used to measure body dimensions when correcting the body structure on a bench.
- There are two types; mechanical type and jig type.

Mechanical type

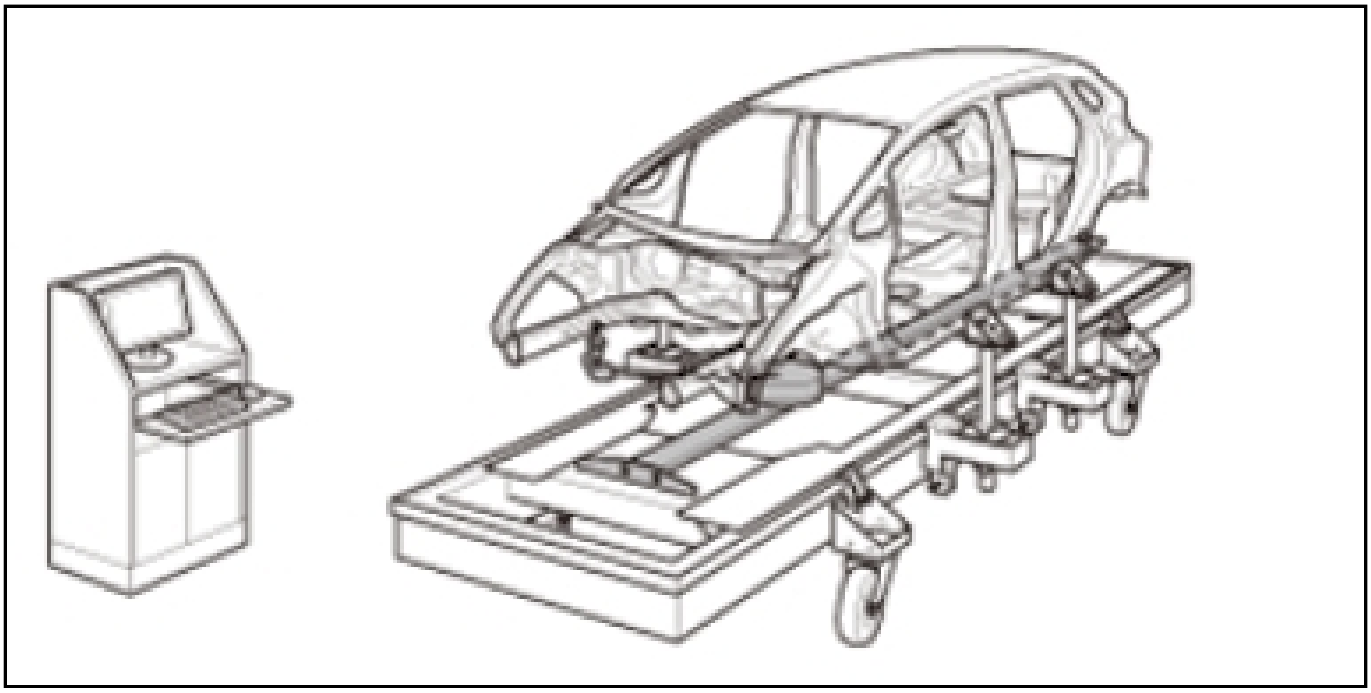

Jig type

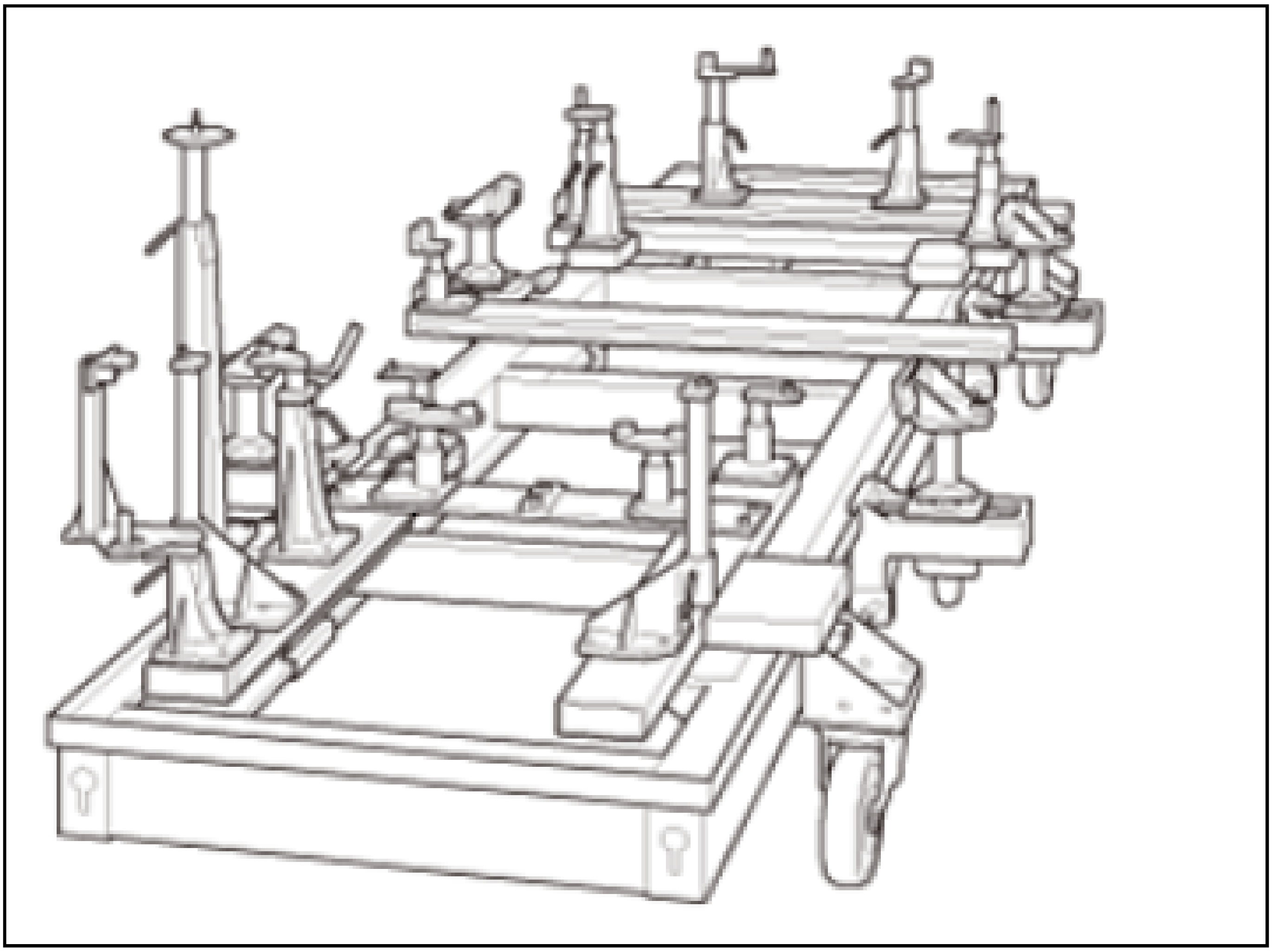

Frame Correction Machine

Bench Type

- Used for heavier damage levels.
- Bench can be used as a standard to obtain accurate body dimensional measurements before and during pulling.
- Tight clearances between the bench and vehicle body can make some underbody work difficult.

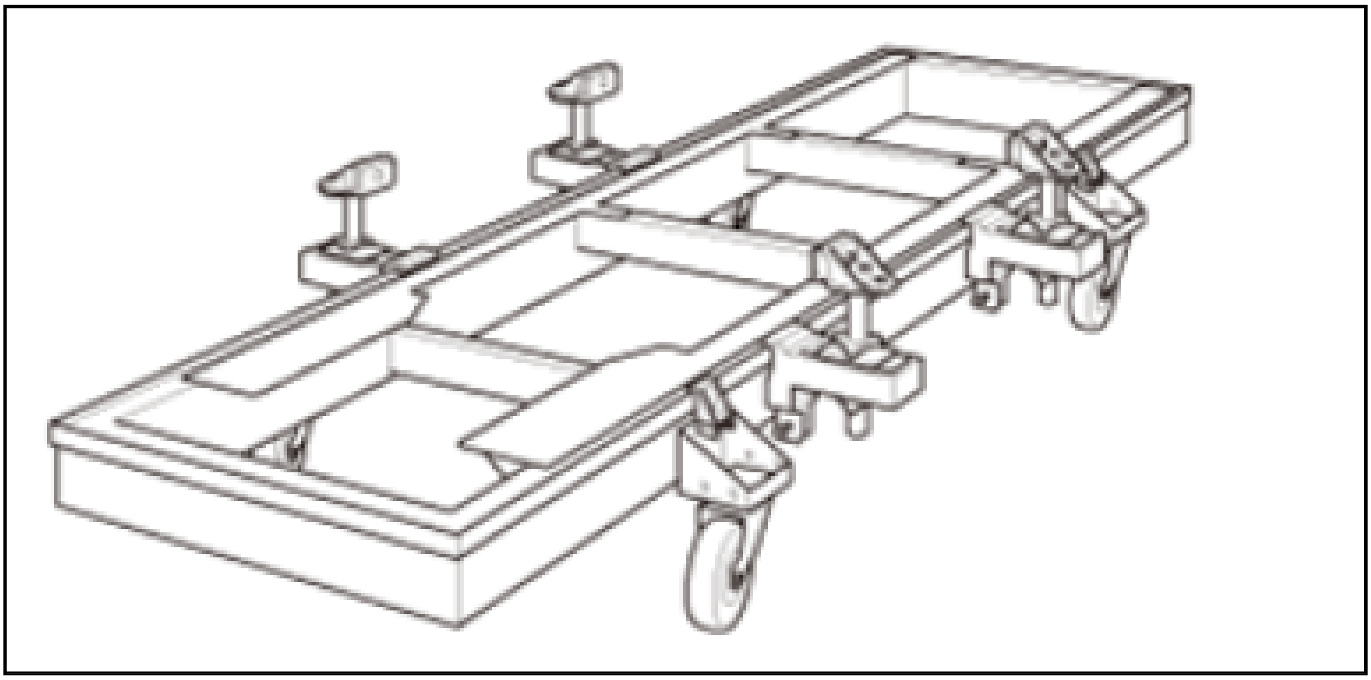

Floor Type

- Used for relatively light damage.
- Set up is easier than bench type equipment.
- Allows pulls to be made in multiple directions with multiple points.

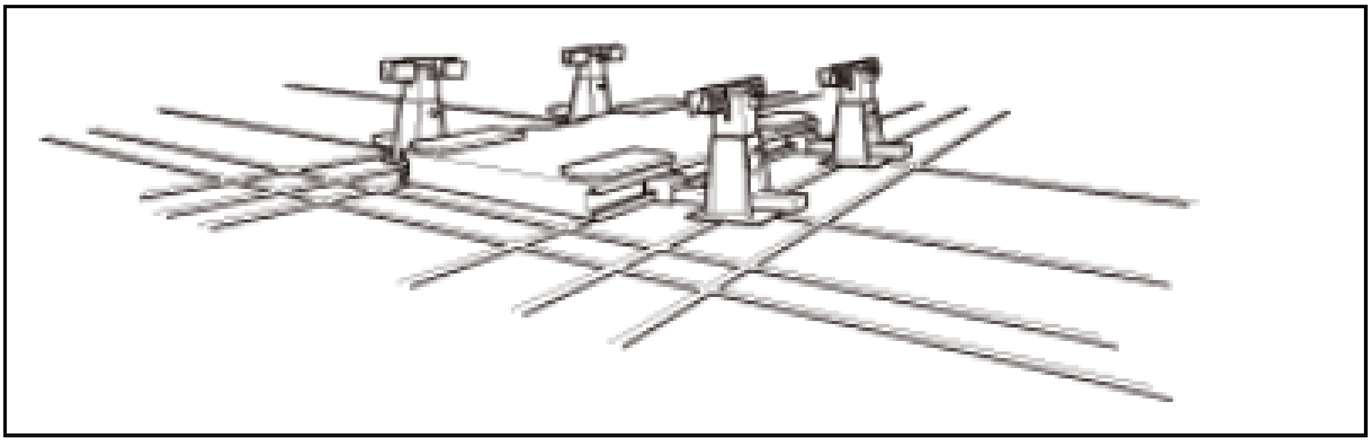

OTHER TOOLS

Air Chuck Grinder

- Heads can be changed according to the type of work, making this a very versatile tool.

Main usage types:

- Grinding wheels

  Used to remove spot welds where a spot weld cutter cannot be used due to space limitations.

- Rotating wire brush

  Can be used to remove body sealer, paint layers and rust.

- Rotary cutter

  Used to peel off fillet welding on aluminum alloy body.

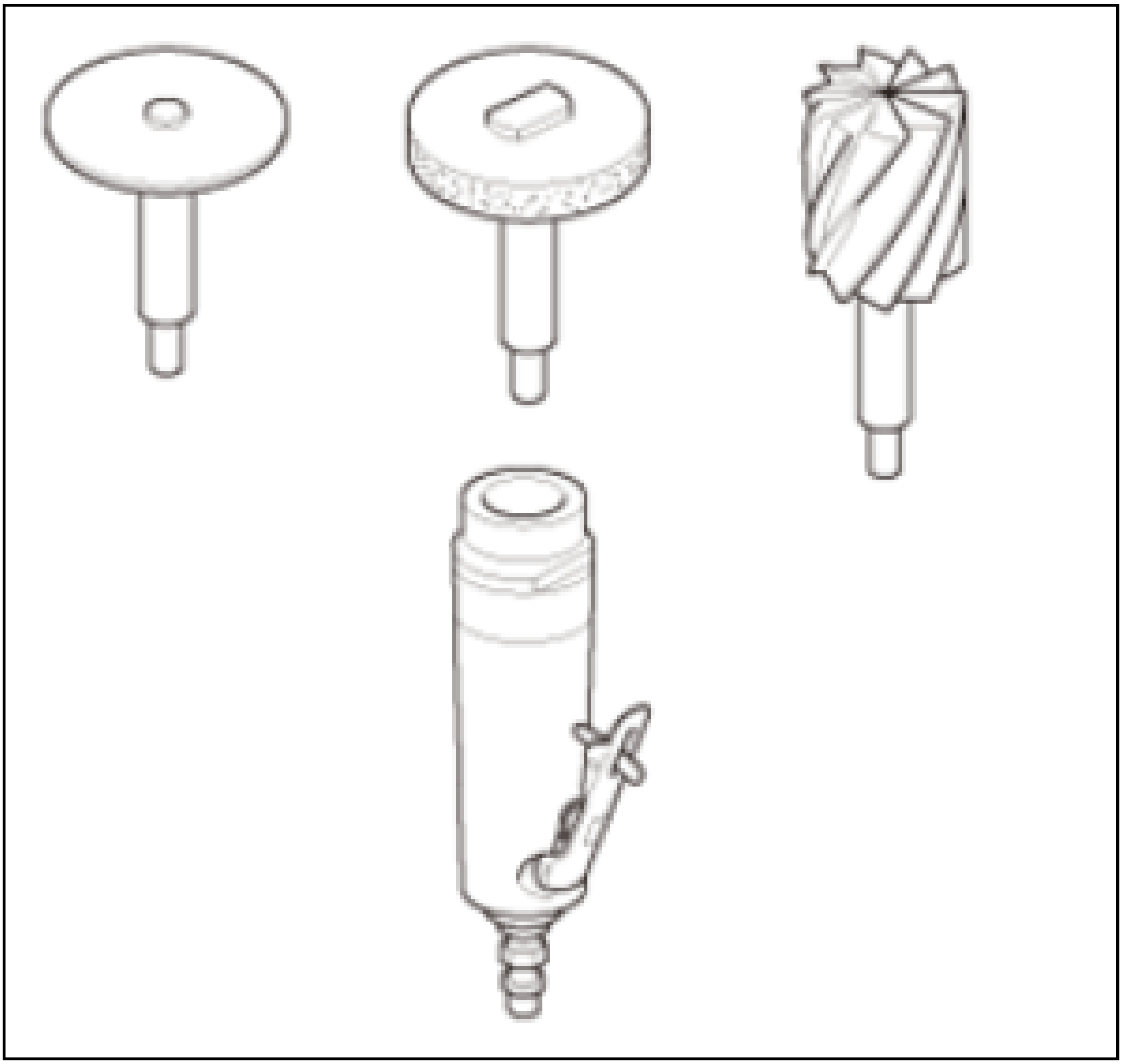

PANEL REFORMING TOOLS

Drawing By Carbon Electrode

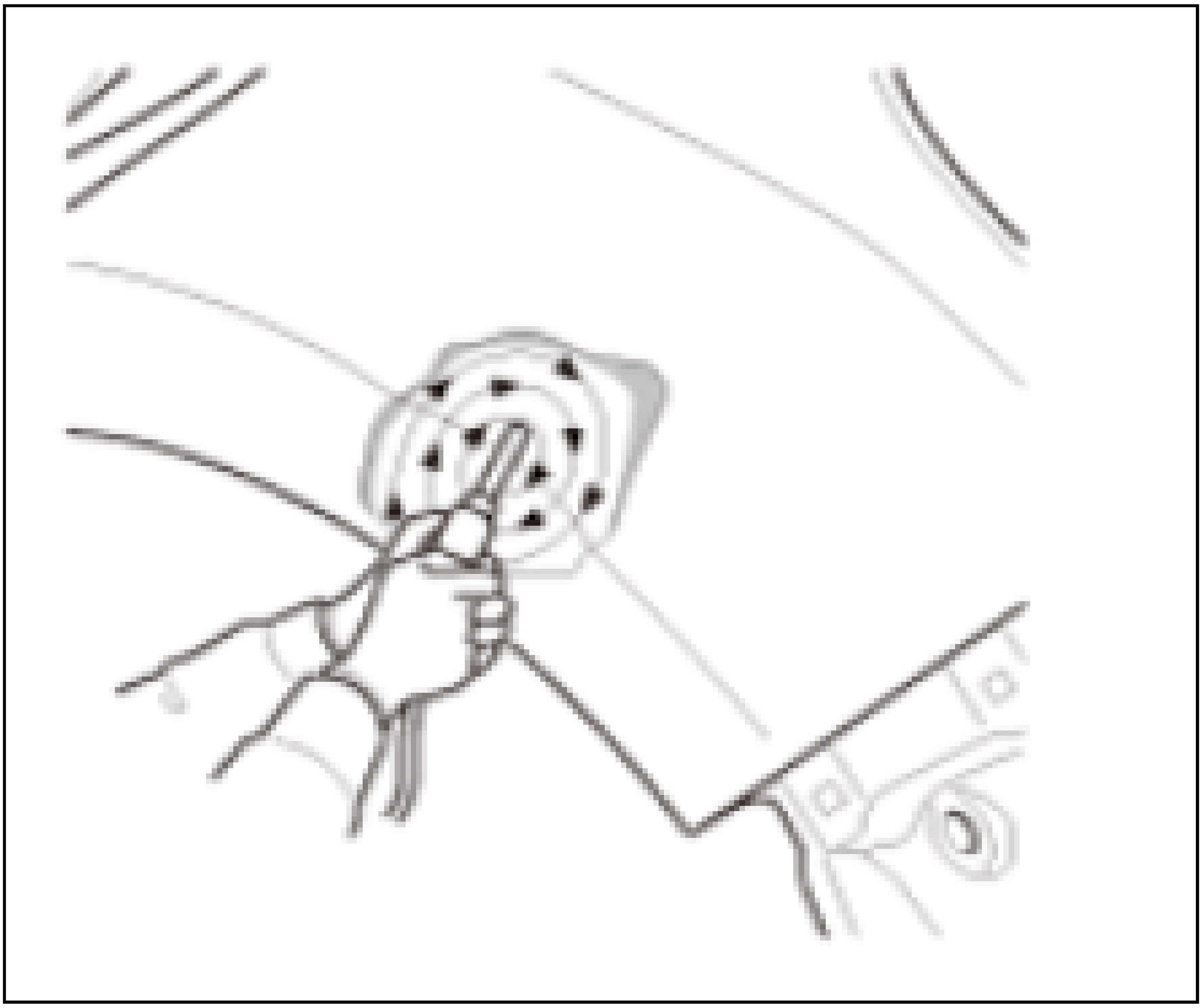

Washer Or Stud Welding Machine

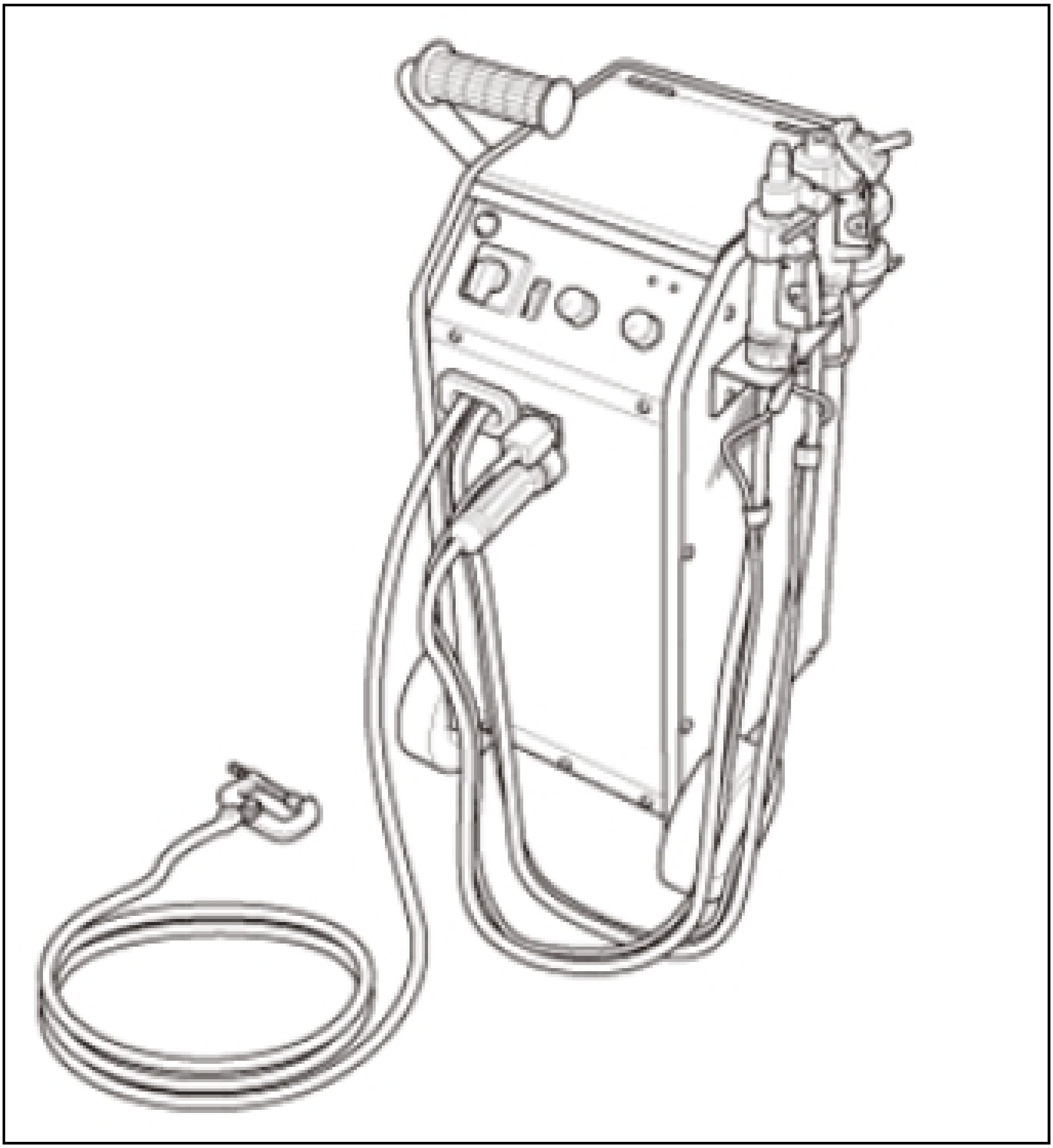

- Used to pull out damaged panels by attaching metal washers or studs.
- Allows working the panel from the outside when the back side of the damage is not accessible.
- Drawing work is possible with the use of carbon electrode.

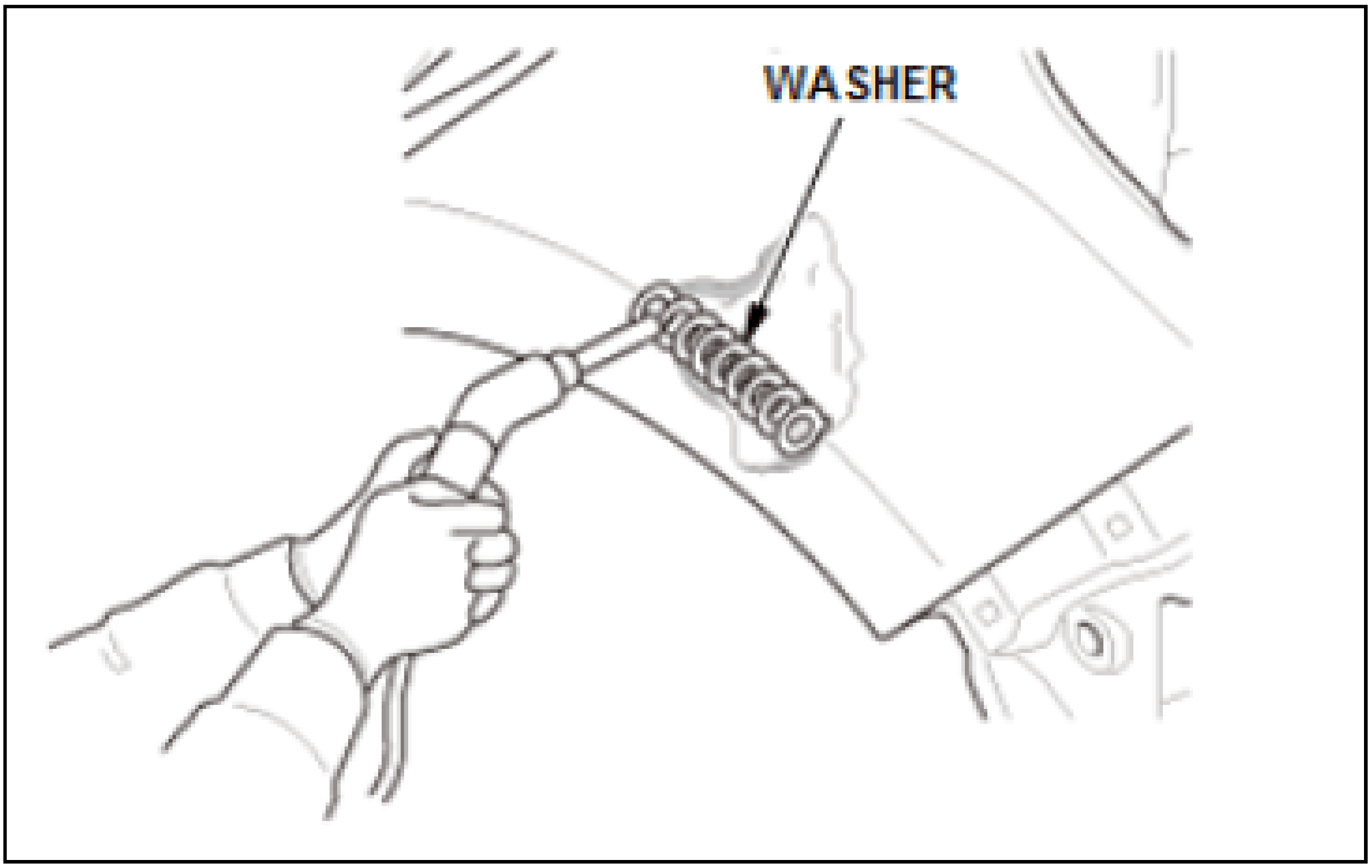

Hammers

- **Leveling Hammer**

  Used with a dolly and spoon for panel reforming.

  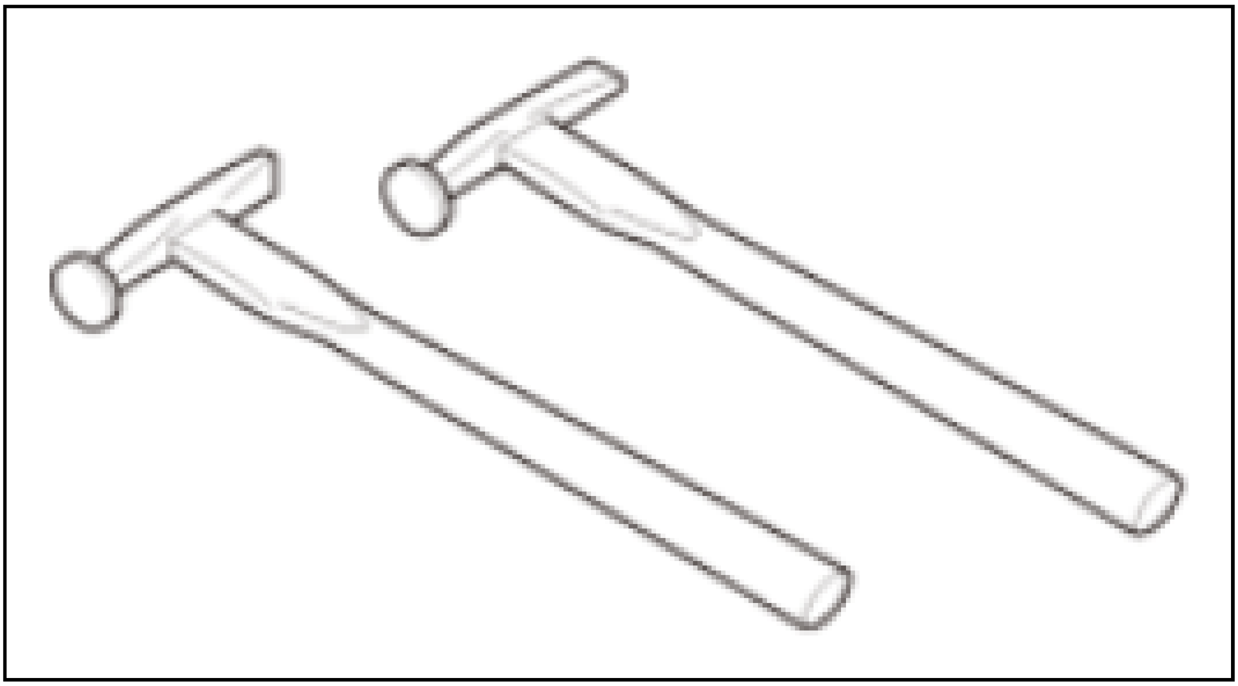

- **Pick Hammer**

  Used with a dolly and spoon for panel reforming.

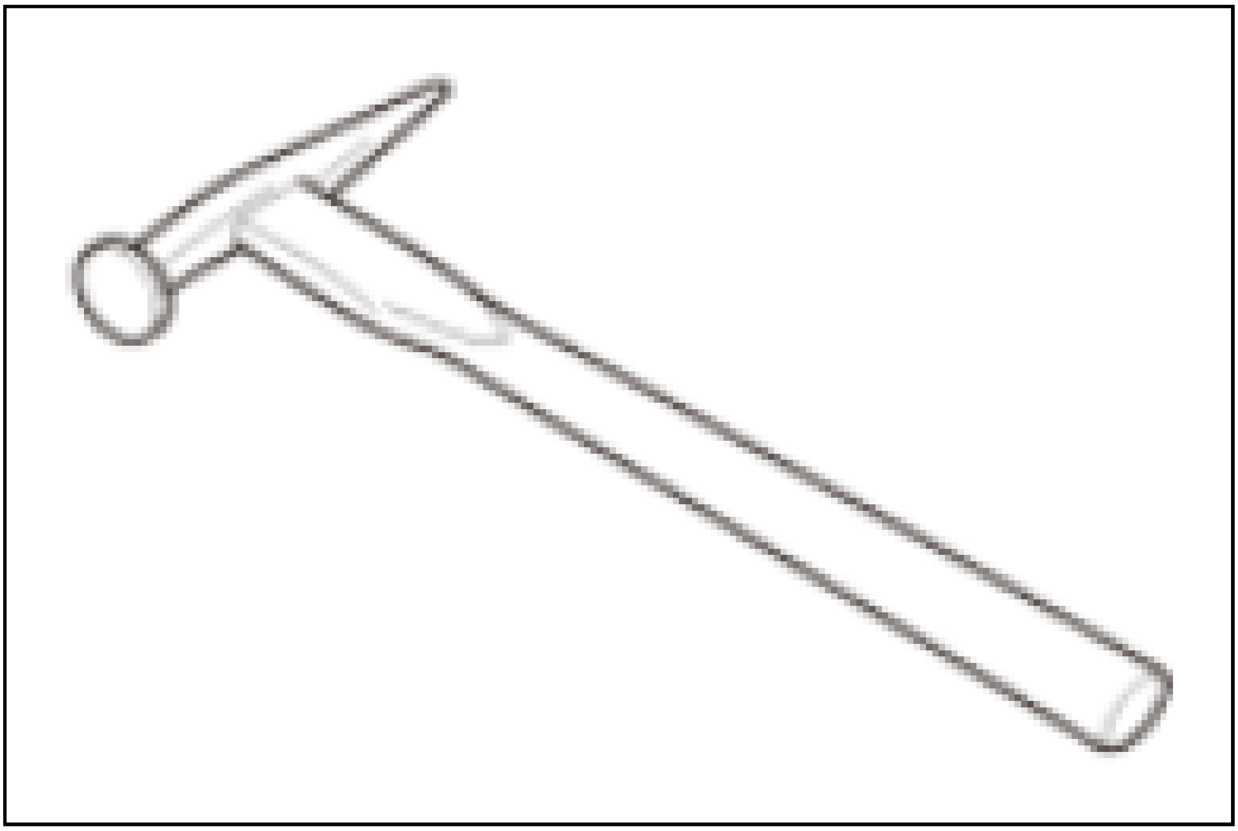

- **Rough Pulling out Hammer**

  Used with a body/frame correction machine and/or a porto-power for rough repairs. Also can be used to remove outer panels.

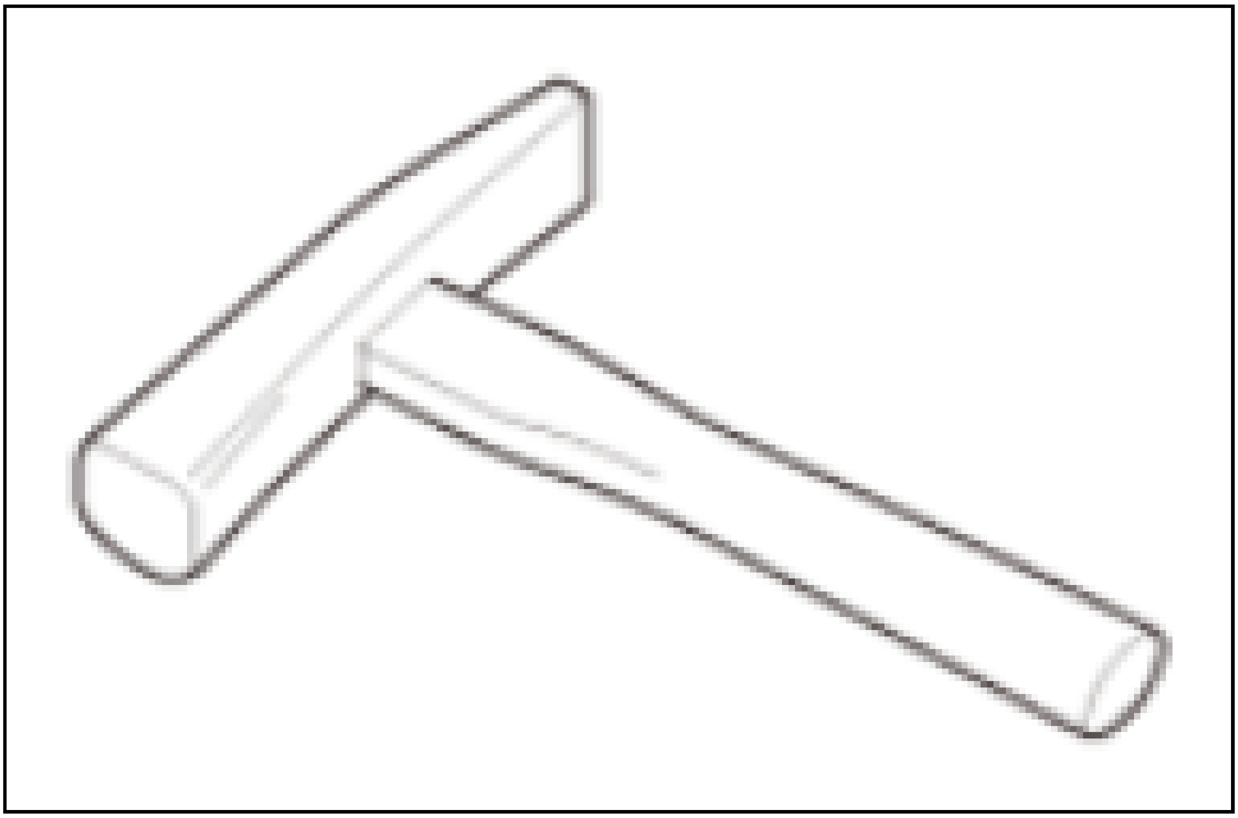

- **Wooden Hammer**

  Used for reforming steel using a drawing process or for reforming a steel panel without elongating it.

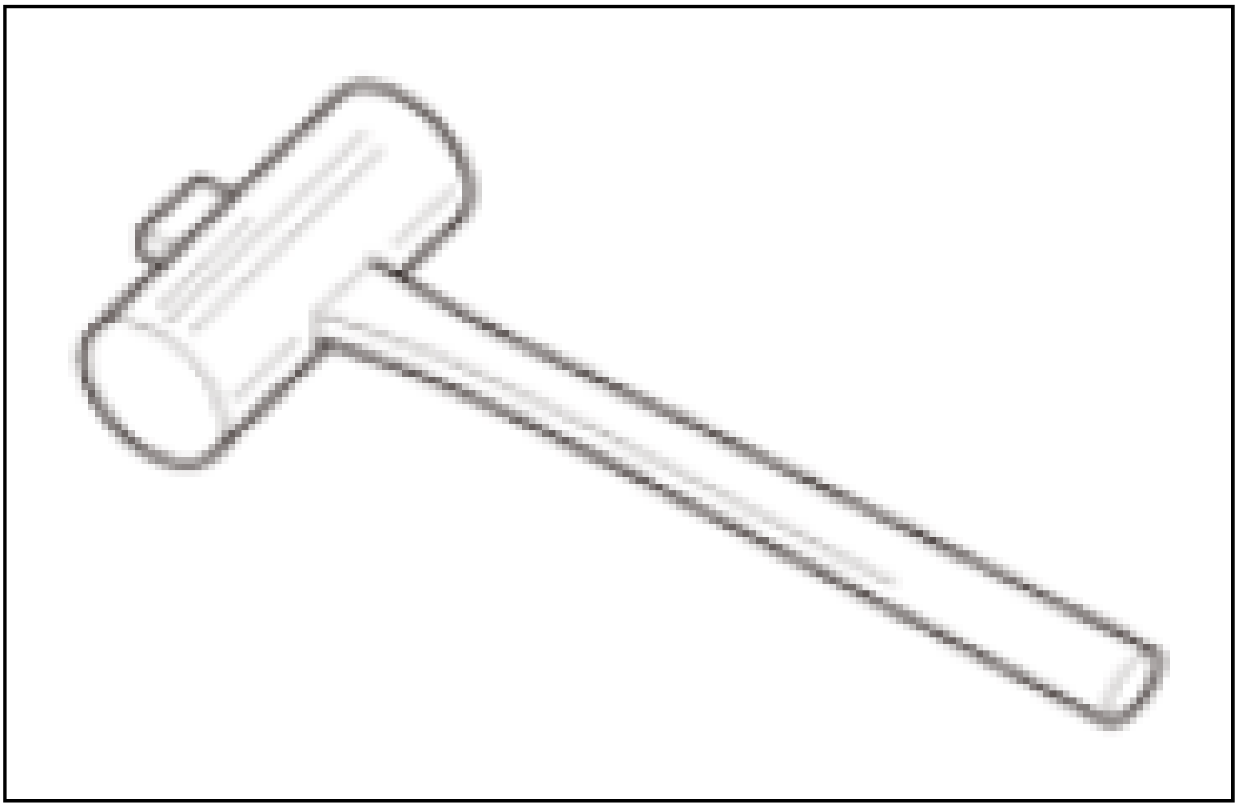

Dolly

- Used with a hammer to reform panels.
- Choose the most appropriate one according to the shape of the panel.

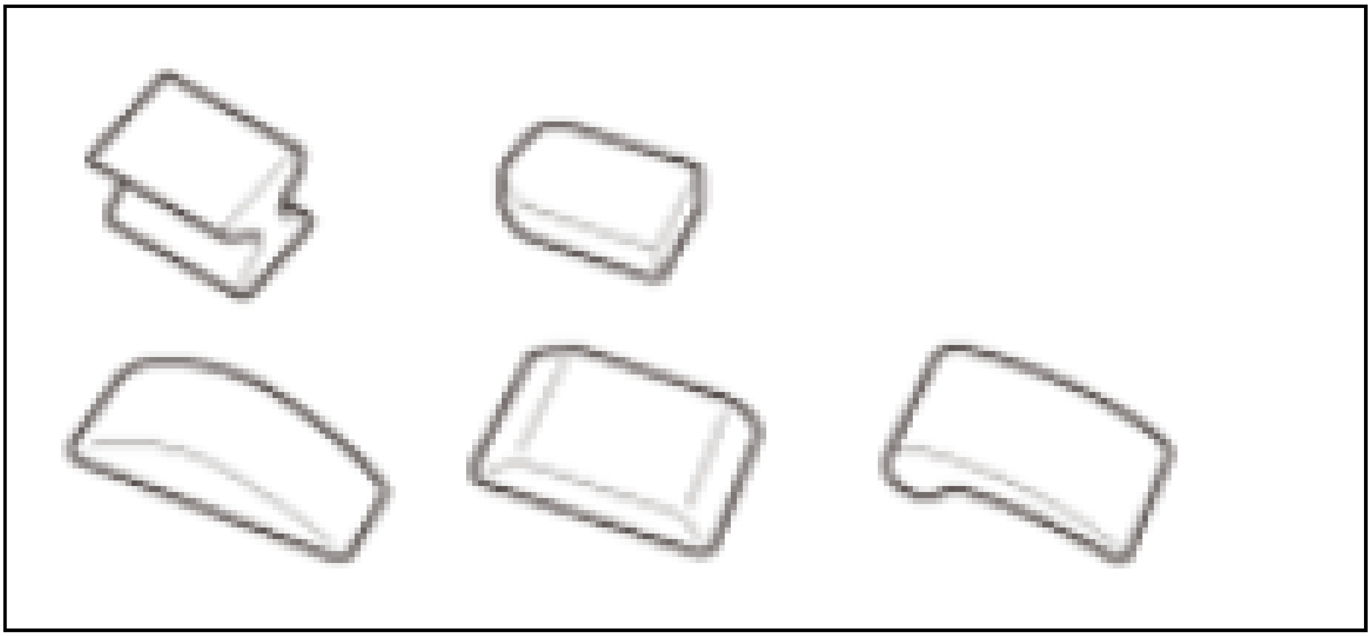

Spoon

- Used where a dolly cannot be used because of a space limitations.
- Very durable because of it's special material construction.
- Select the most appropriate one according to the shape of the panel.

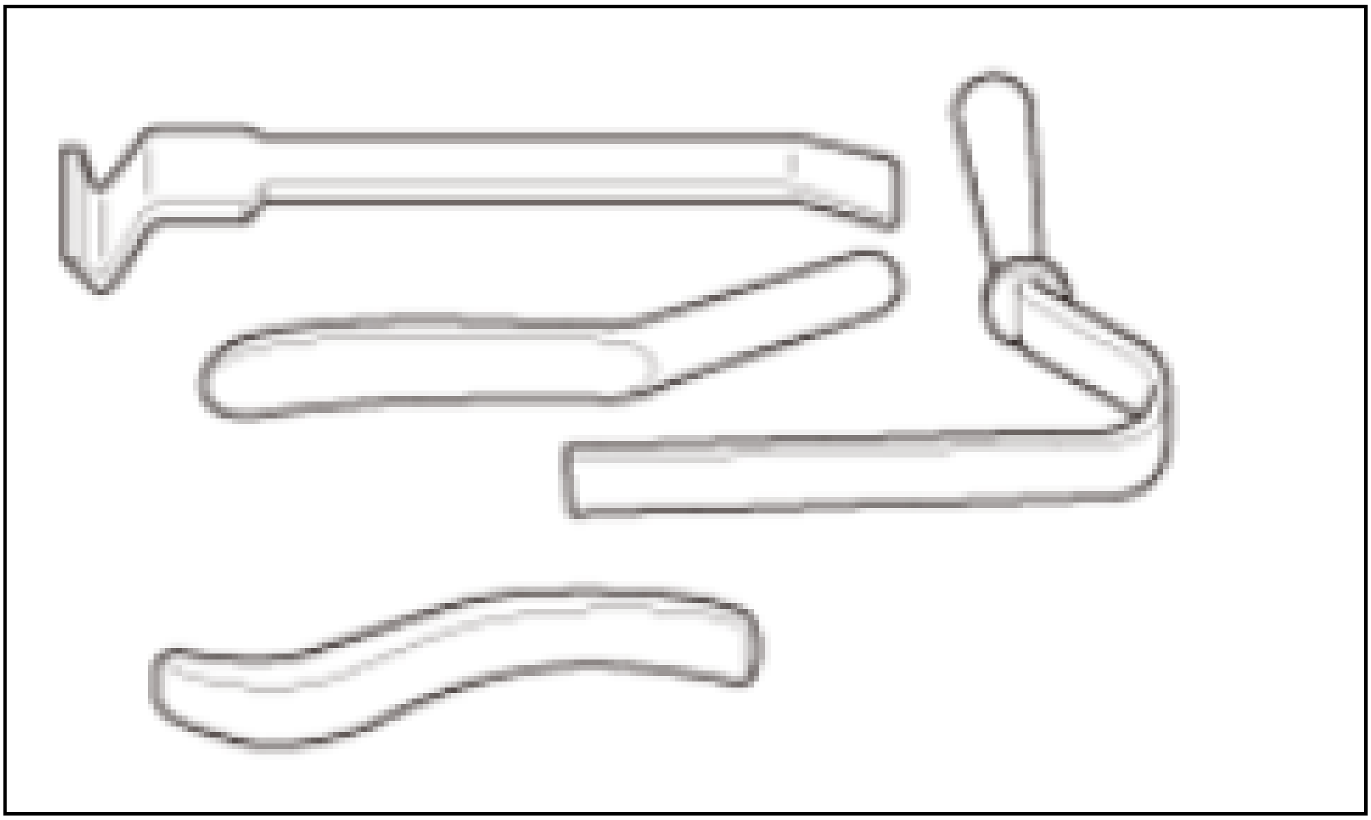

Body/Dent Puller (Slide Hammer)

- Used to pull-out panels with minor damage.
- Used for a wide range of applications by the combination of attachments and slide hammers.

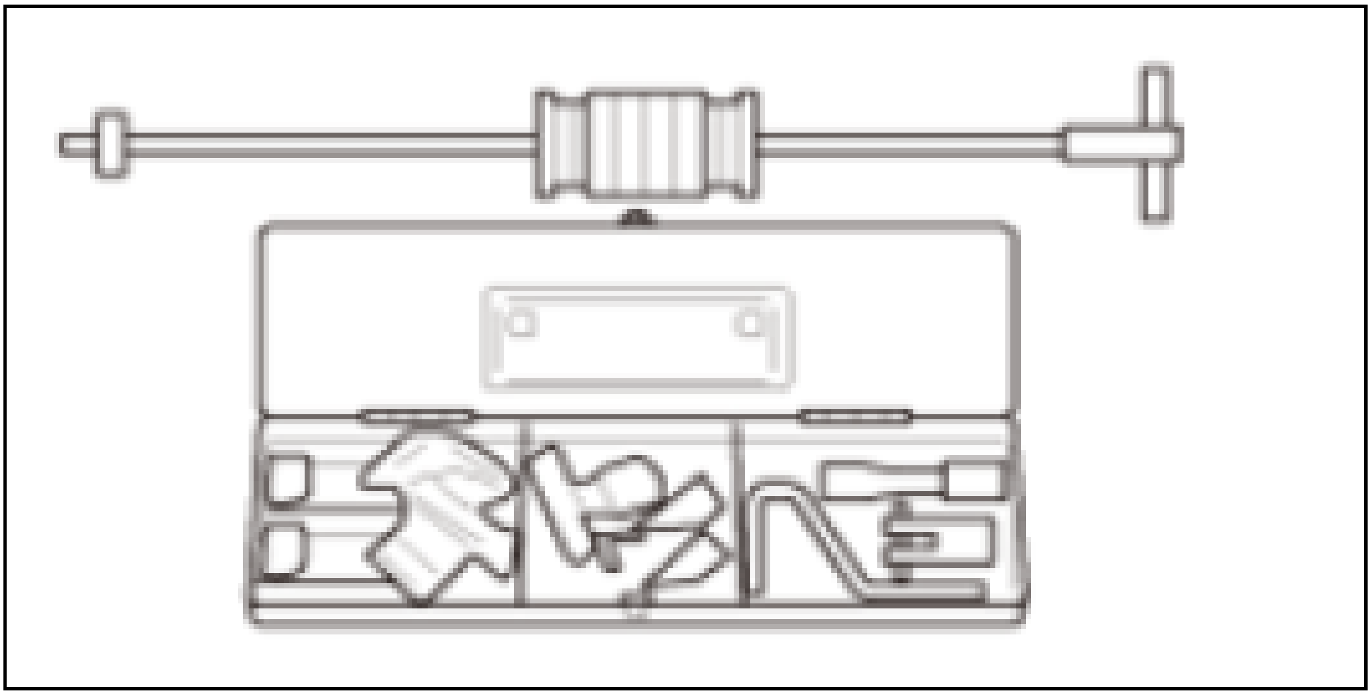

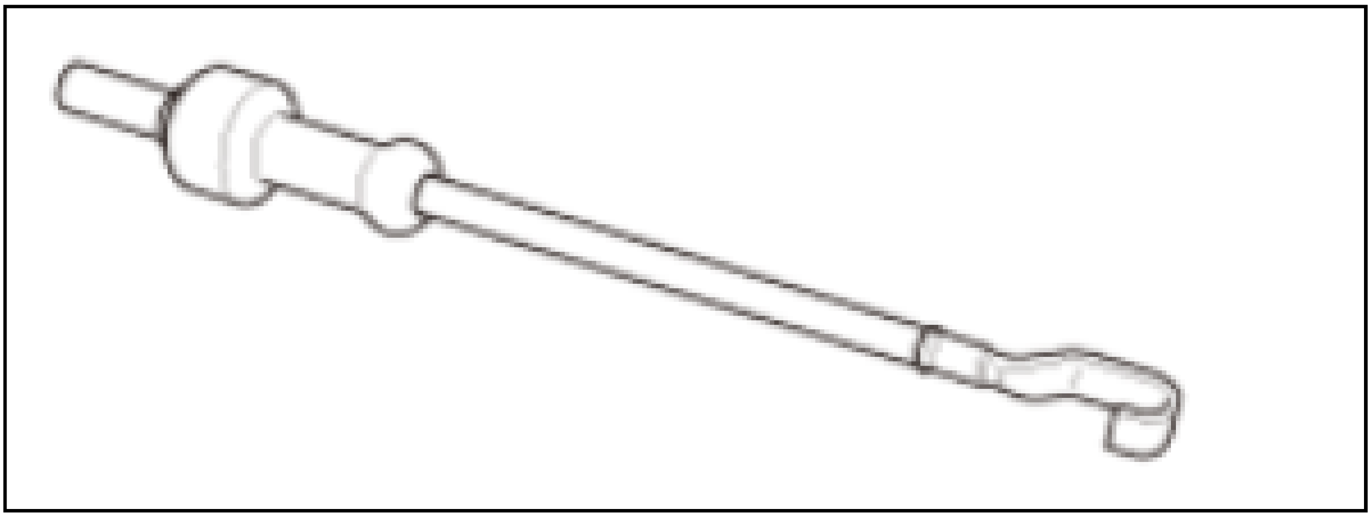

SPOT WELD REMOVAL TOOLS

Spot Weld Cutter (Drill Type)

- Used with an air drill to remove spot welds.
- Makes finishing work easy because it does not leave any nuggets on the base material.

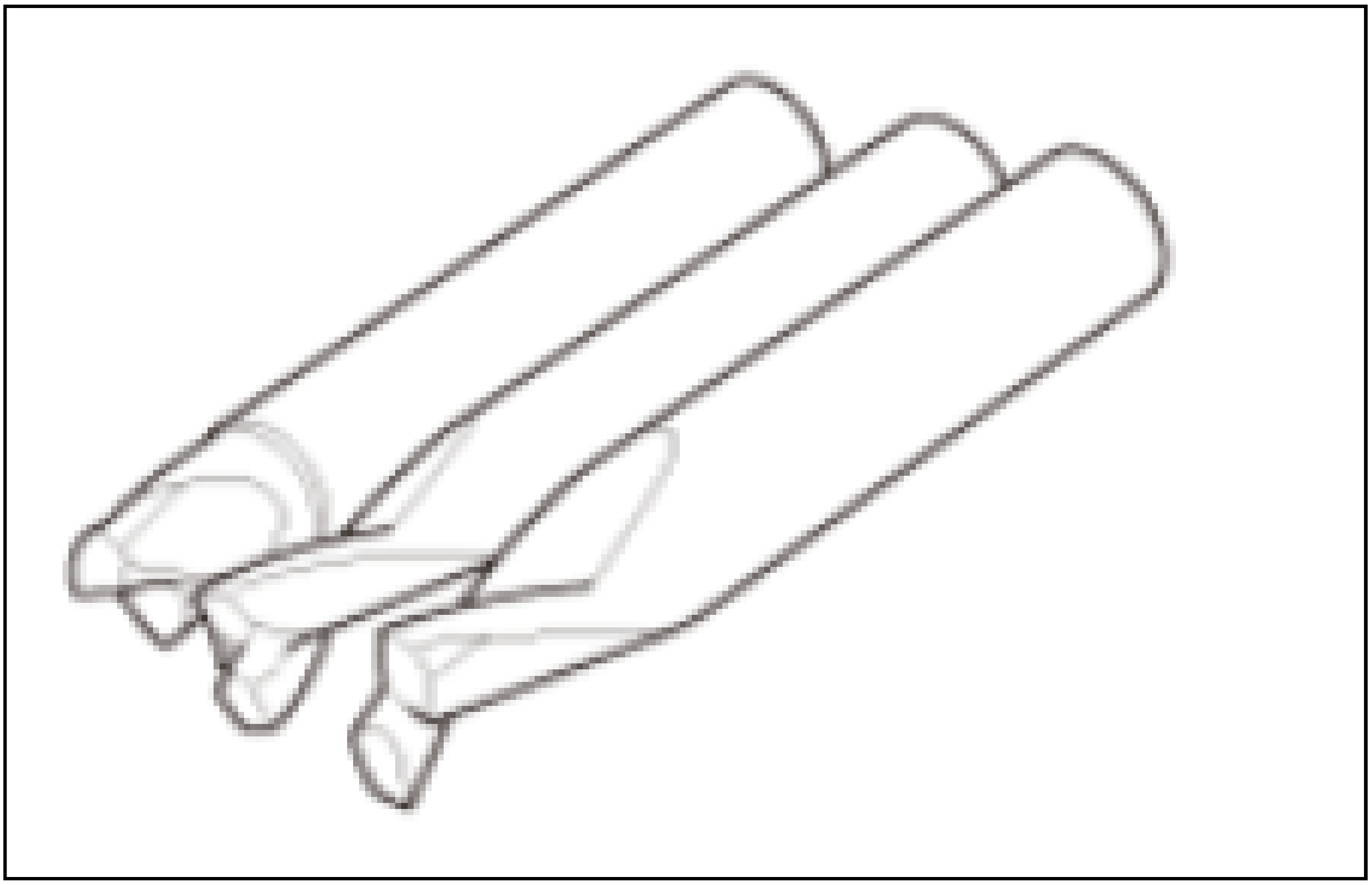

Spot Weld Drill

- Dedicated tool used to remove spot welds.
- Some models are specifically designed for cutting spot welds on high and ultra high strength steel parts.
- Maintains pressure and centering on the weld nugget while cutting.

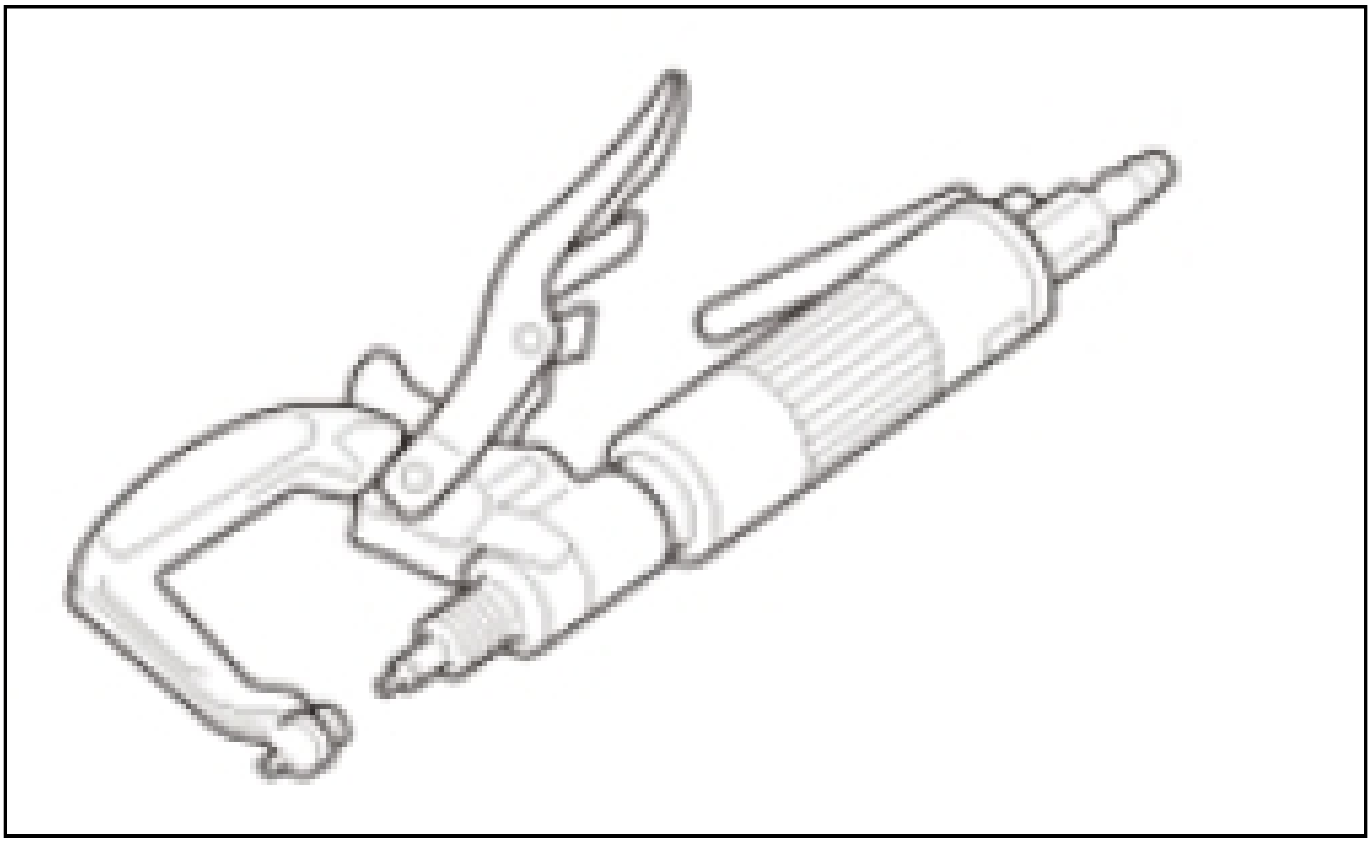

Spot Weld Cutter Sharpening (Grinding) Machine

- Used for grinding and sharpening spot weld cutters.
- Easily and quickly grinds and sharpens spot weld cutters.

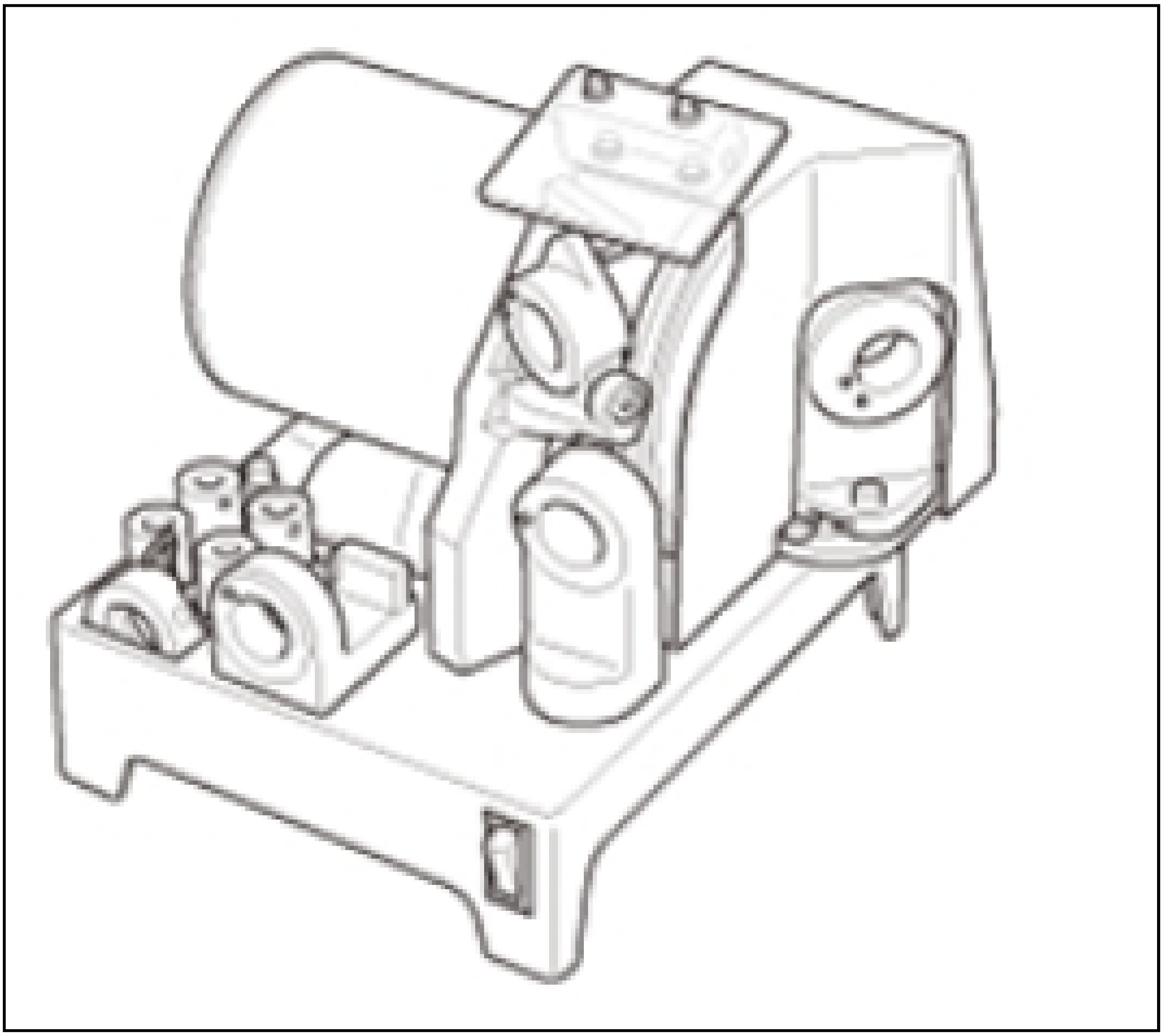

PANEL REPLACEMENT AND CRIMPING TOOLS

Steel Hole Punch

- Used to make holes for MAG plug welding.
- Reduces time required for making holes - No drilling.
- Makes burr-free holes.
- There are two types; manual type and air type.
- May be difficult to use on some higher strength steels.

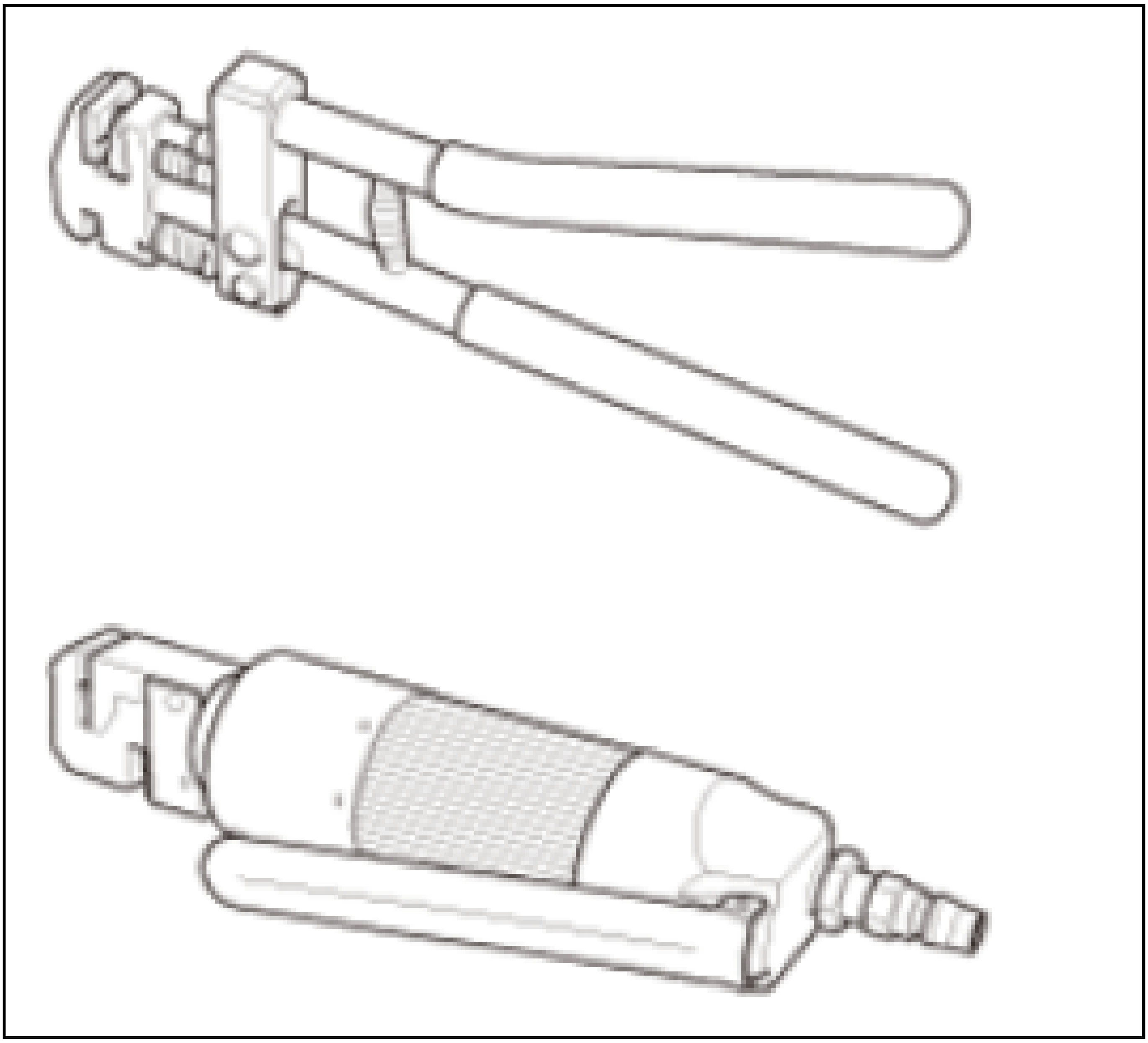

Hemming Tool

- Used for hemming work for outer door panels.
- Expertise or high skills not required.
- Clean finish.

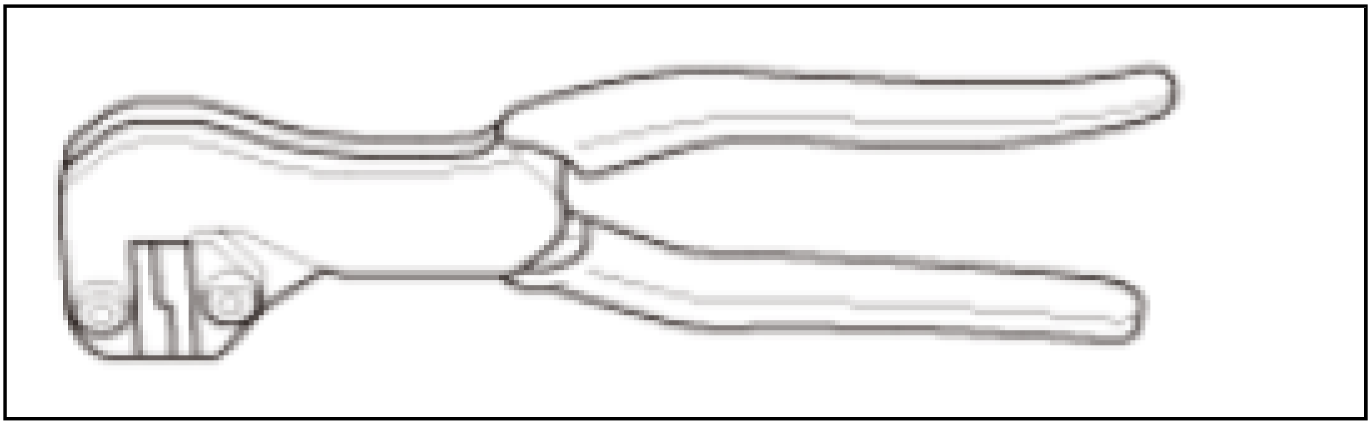

Hemming Pliers

- Used for wheel arch area when replacing rear outer panels.
- Flanging work easily done.
- Air powered versions available.

WELDER

MAG/MIG Welder

- Used for MAG welding or MIG brazing of steel panels or aluminum.
- A high quality weld can be achieved because shielding gas prevents oxidation and nitriding, reducing distortion.
- Because welding can be done only from one side, the range of application is wide.

NOTE: **The shielding gas used varies depending on the welding or brazing type.**

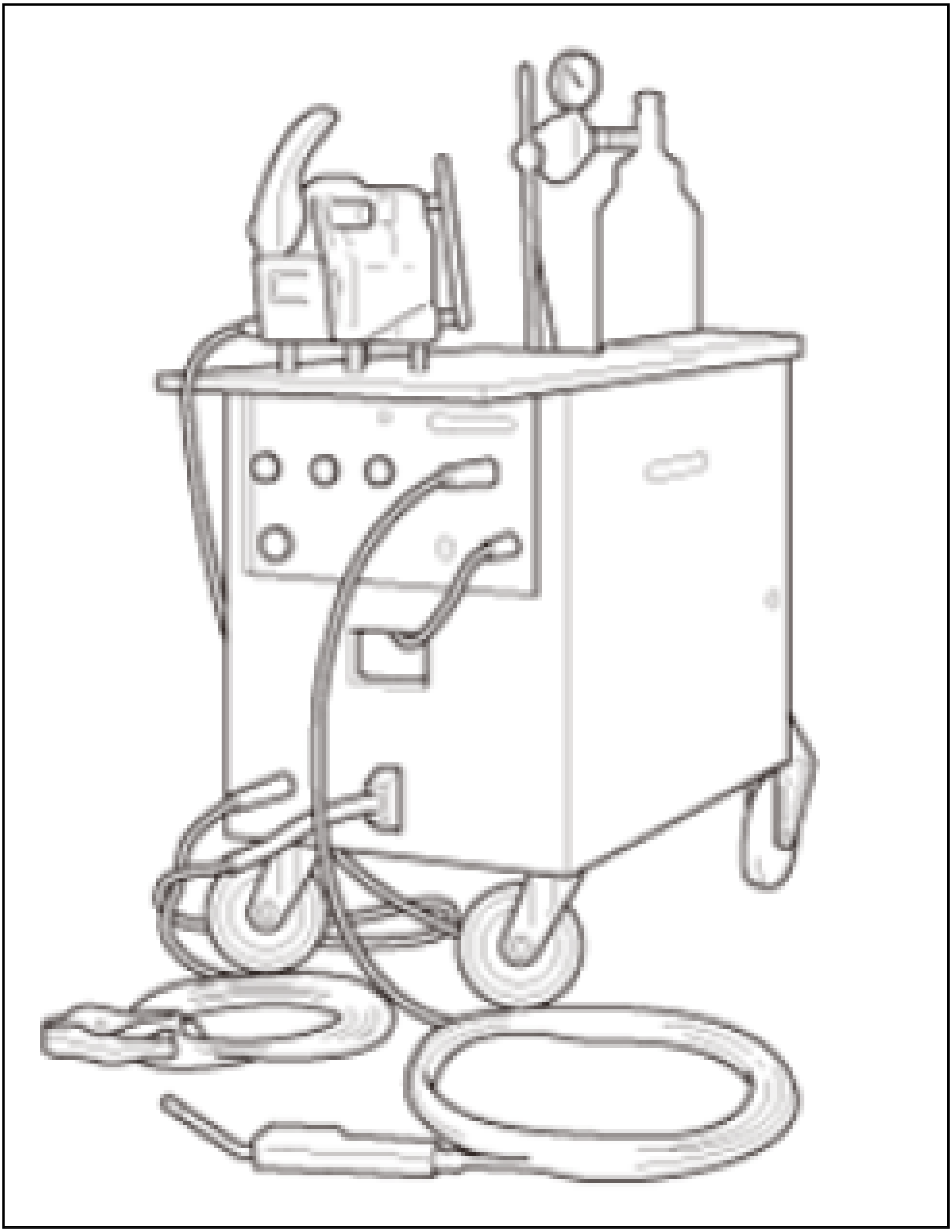

Squeeze-Type Resistance Spot Welder (STRSW)

- Used to clamp and weld steel panels.
- Because the time required for welding is short and heat application is localized, heat affect zone (HAZ) and distortion are minimal.
- Required when welding with ultra high strength steels (>980 MPa)
- Also good for welding thin panels.
- Faster and more efficient than MAG plug welding.

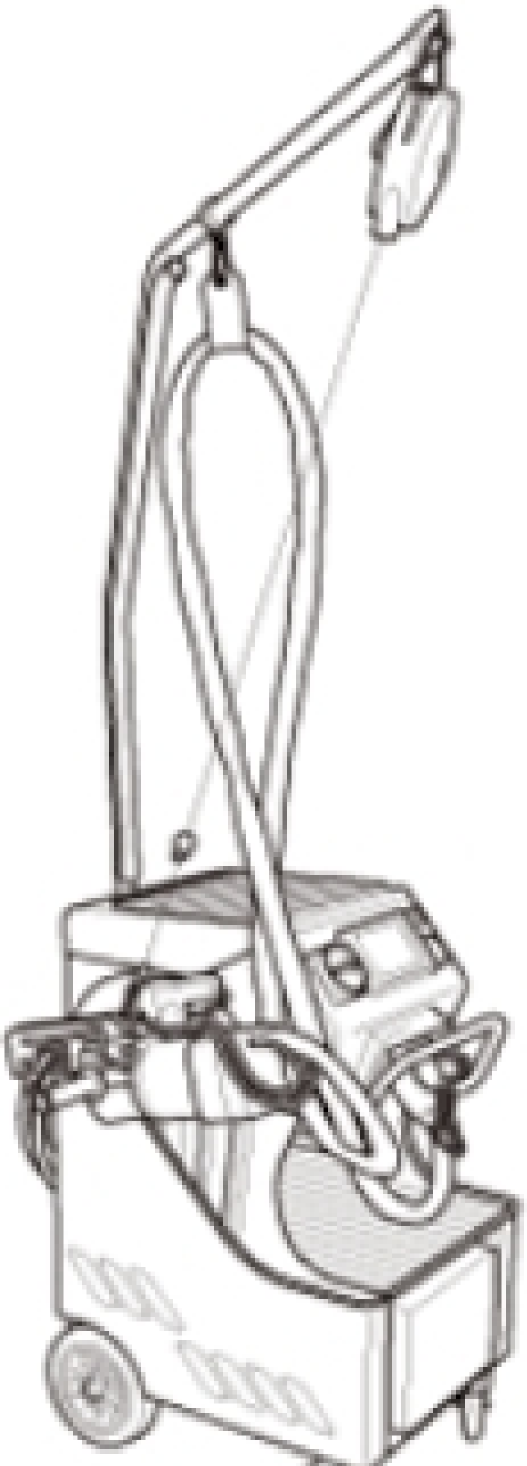

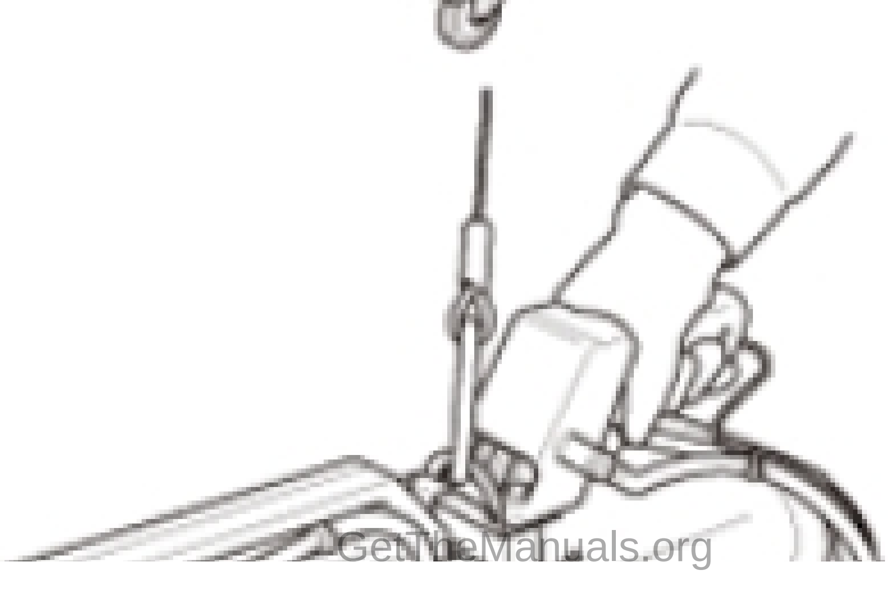

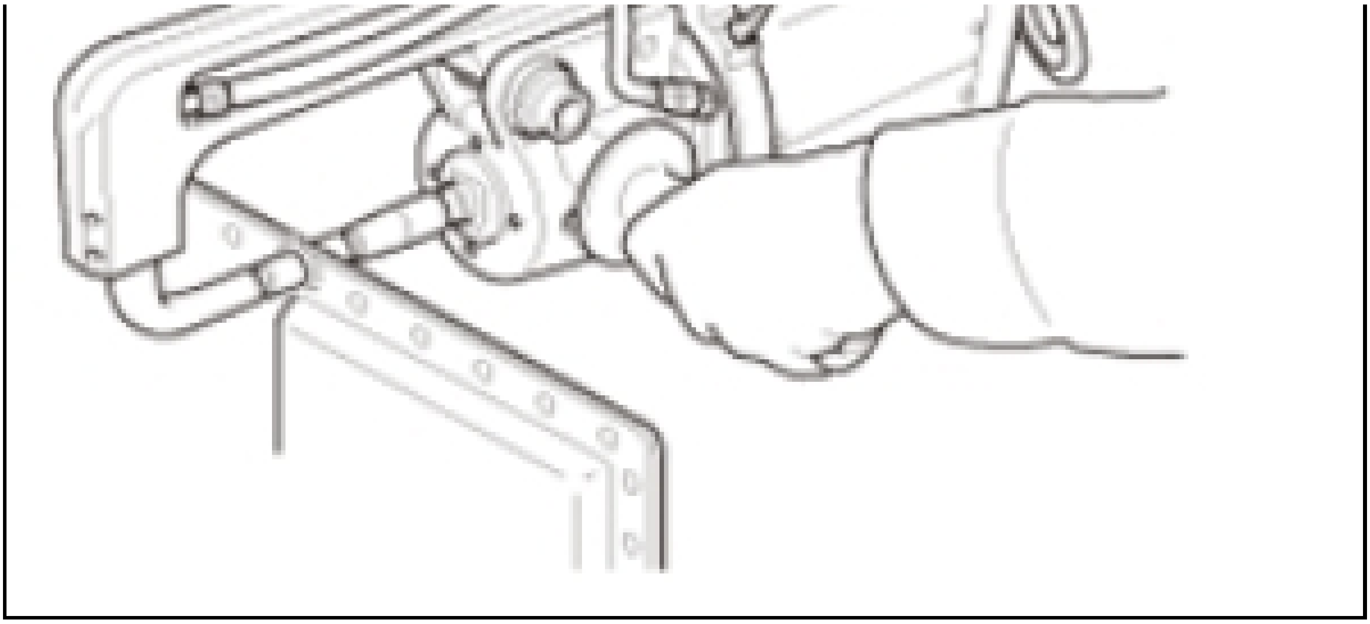

SAFETY AND CLEANLINESS

5S (ORGANIZATION OF WORK ENVIRONMENT)

5S means:

- Sort (Seiri)
- Straighten (Seiton)
- Shine (Seisou)
- Standardize (Seiketsu)
- Sustain (Sitsuke)

Use of the 5S process is required to build a safe and comfortable working environment. It also promotes efficient and smooth workflow:

- Sort (Seiri): Sort out what is necessary and unnecessary. Remove or clean up unnecessary items.
- Straighten (Seiton): Organize the items so they can be accessed and used immediately when needed.
- Shine (Seisou): Keep your work environment clean at all times.
- Standardize (Seiketsu): Maintain organized and clean working conditions at all times.
- Sustain (Sitsuke): Enforce the above rules for all work areas.
  - Building a standardized and clean work environment contributes directly to a highly efficient workflow. In addition, it provides a positive impression to customers and helps generate repeat business.
  - It is very important to comply with the rules and common sense in order to cultivate healthy and respectful business and work relationships.

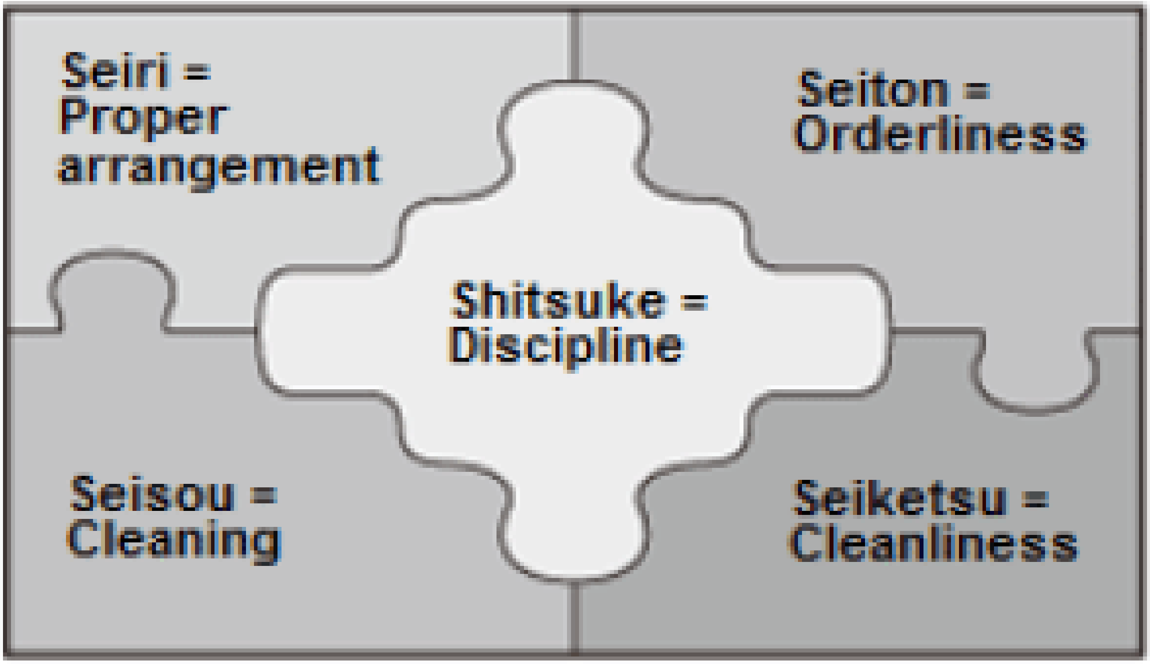
Seiri = Proper arrangement
Seiton = Orderliness
Shitsuke = Discipline
Seisou = Cleaning
Seiketsu = Cleanliness

DUST AND FUMES

Size Of Dust

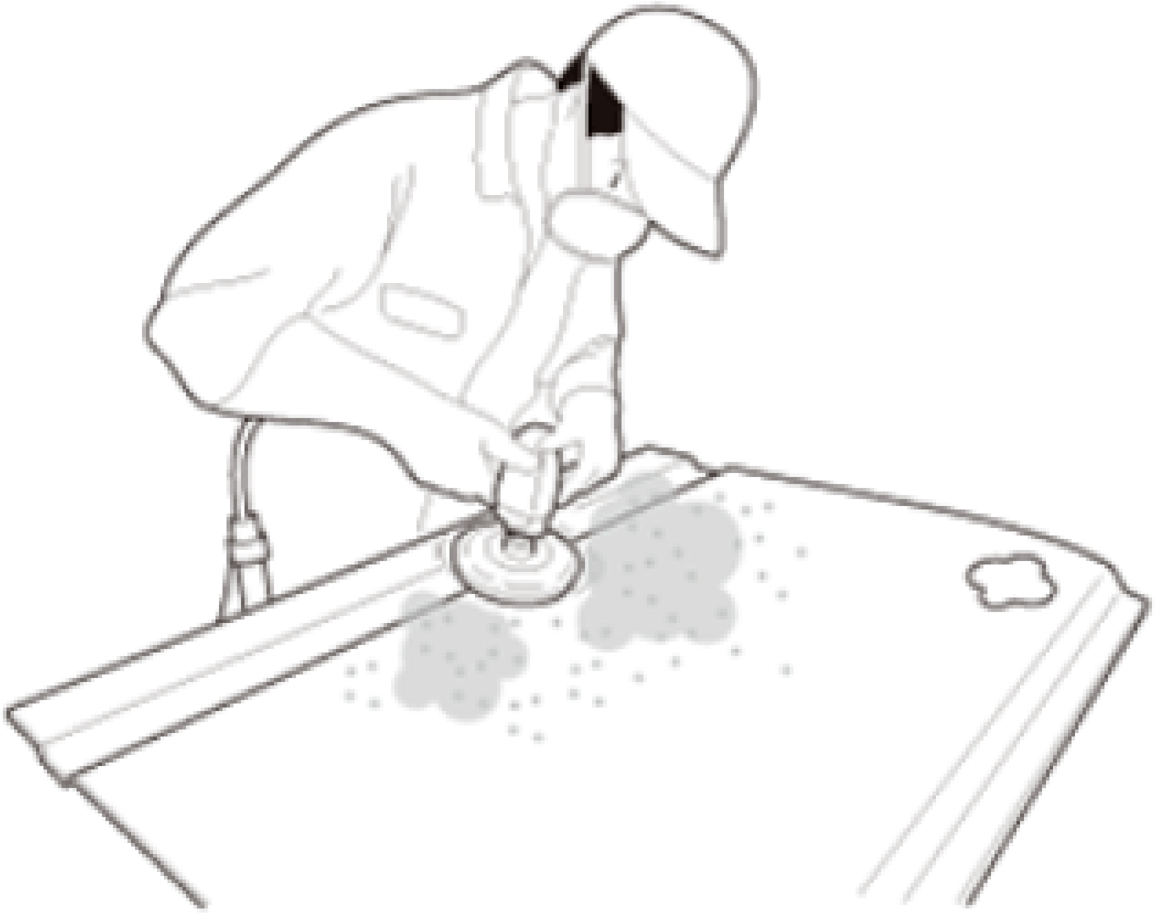

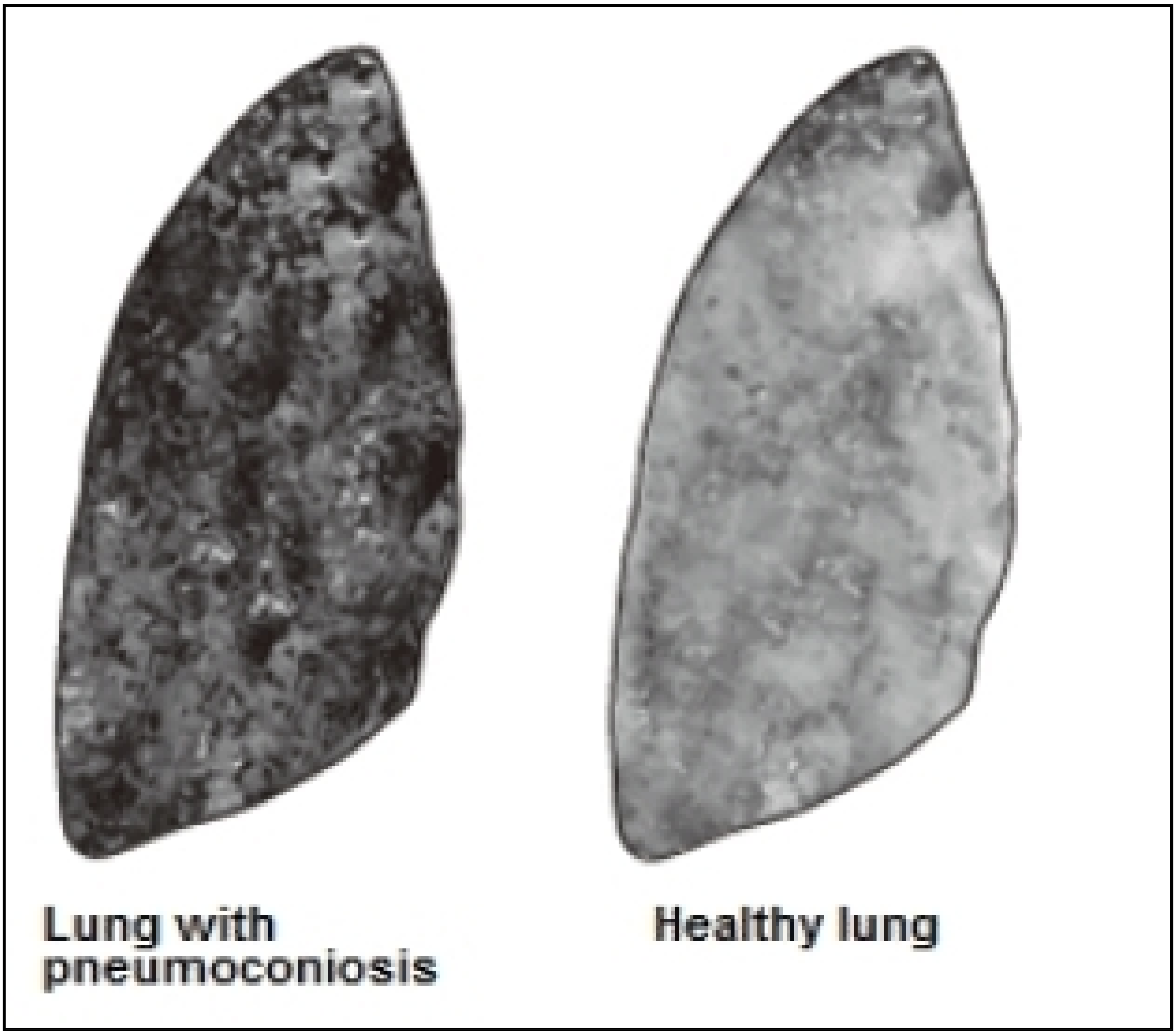

Dust

- Tiny particles generated during grinding and welding processes are commonly called dust.
- Dust can enter into the lungs and may cause respiratory disorders such as Pneumoconiosis.

Pneumoconiosis is classified as an occupational lung disease. It is a restrictive lung disease caused by long term inhalation of dust particles.

Protection Equipment: Always wear a respirator or dust mask approved for the materials you are working with:

- Although the size of dust particles may differ depending on the material, those sized 0.1 to 5µm generally end up in the lungs most frequently.
- Most dust is inhaled during breathing.

Welding Fumes

Welding fumes are tiny airborne particles generated during arc welding, such as MAG or MIG, when the base material and welding wire are heated to the point of vaporization. Prolonged breathing of welding fumes can cause these particles to accumulate in the lungs and may result in "welder's lung", which is a kind of pneumoconiosis.

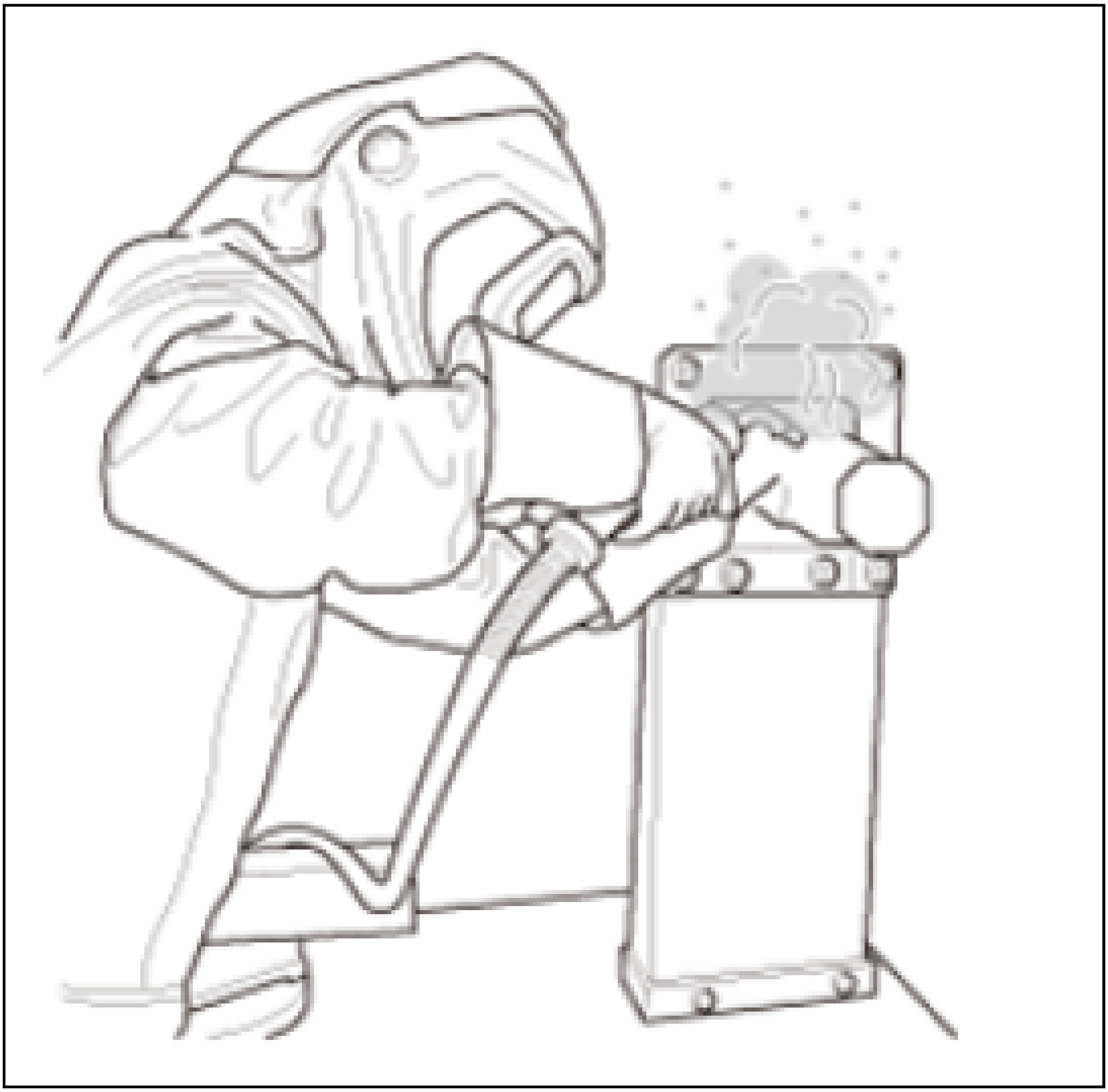

Zinc Fumes

Many steel parts are zinc plated for corrosion resistance. When the zinc coating is vaporized during cutting, welding, or brazing of galvanized steel, exposure to these fumes can cause an acute allergic condition known as "Metal Fume Fever". The symptoms of metal fume fever are very similar to those of common influenza. This condition can be avoided by adequately ventilating the work area and wearing a respirator approved for use with zinc fumes.

FIRE AND EXPLOSION RISKS

Organic Solvents:

Vapors created by organic solvents are generally heavier than air. They generally sink to floor level and stagnate in recessed areas. Organic solvents are generally considered as a hazardous materials, so extra caution is required during storage and handling.

The symbols at left on packaging indicate that the chemical contained inside is Flammable (will ignite and burn readily) or an Oxidizer (may, generally by yielding oxygen, cause or enhance the combustion of other materials):

- Most of the paint used for automobile refinishing is flammable.
- Hardening agents (catalysts) used with body fillers and fiberglass may be flammable, an oxidizer, and also generate heat during curing.

WARNING:

- **Ventilation systems should be installed at the lowest point on the shop floor for thorough vapor removal.**

- **Keep lids on containers of organic solvents such as paint and reducers.**
- **Follow established precautions for flammable material storage and dispensing, such grounding containers to prevent static discharge.**

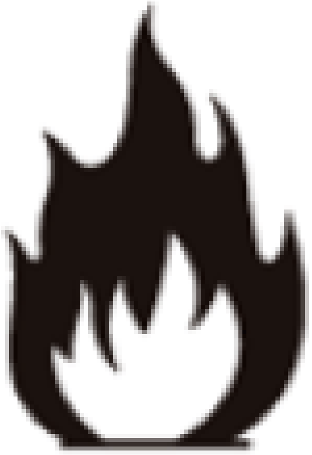

Flammable Symbol

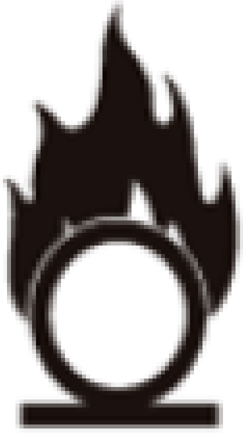

Oxidizer Symbol

Example of ventilation system:

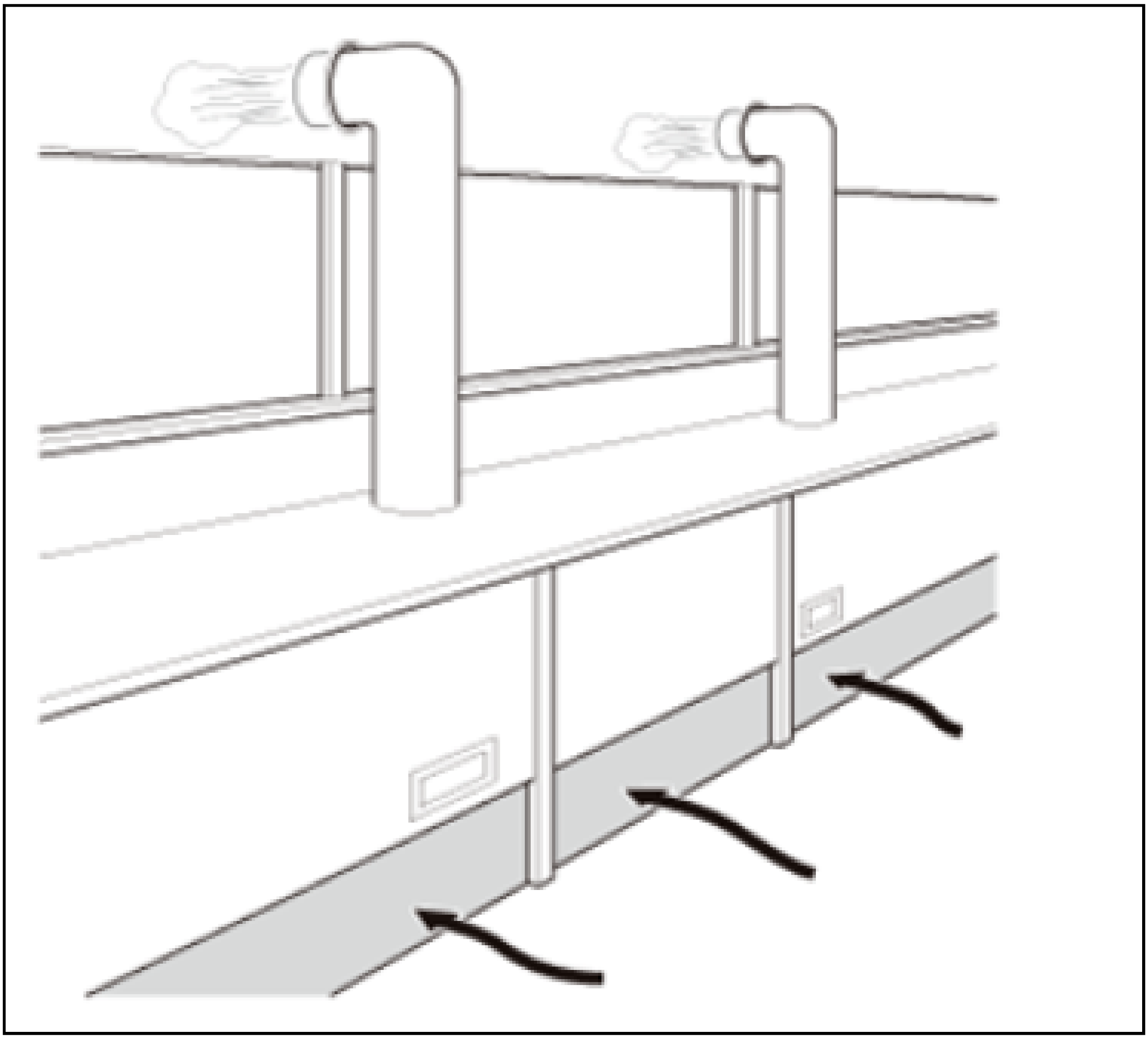

Keep lids on containers of chemicals such as paint and reducers or thinners.

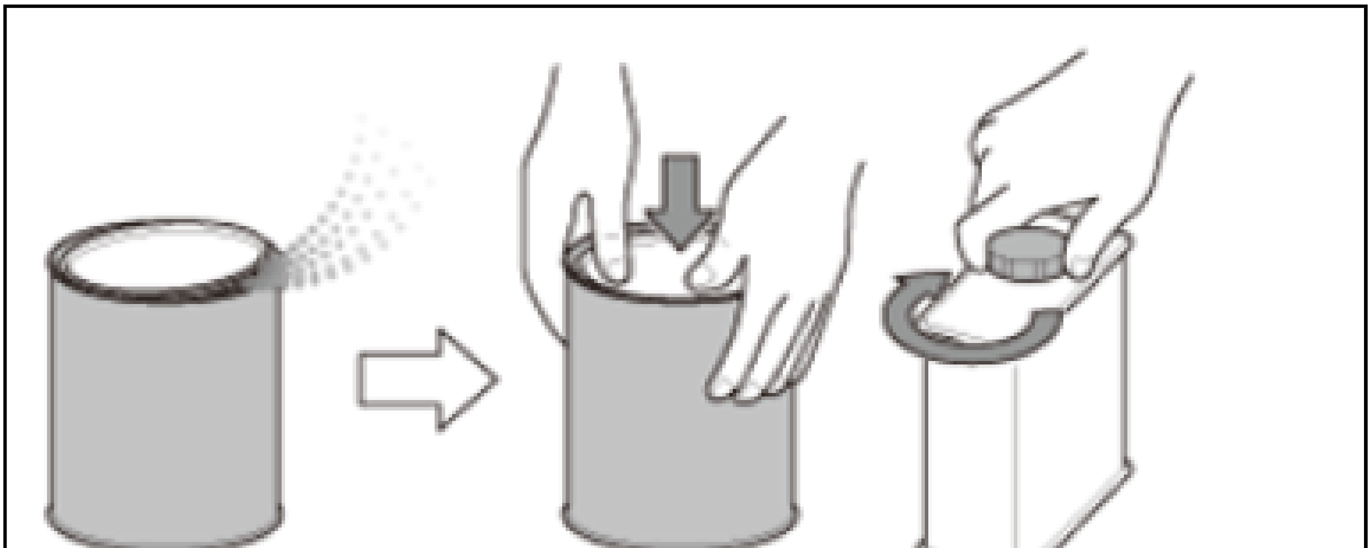

Grounded flammable material container:

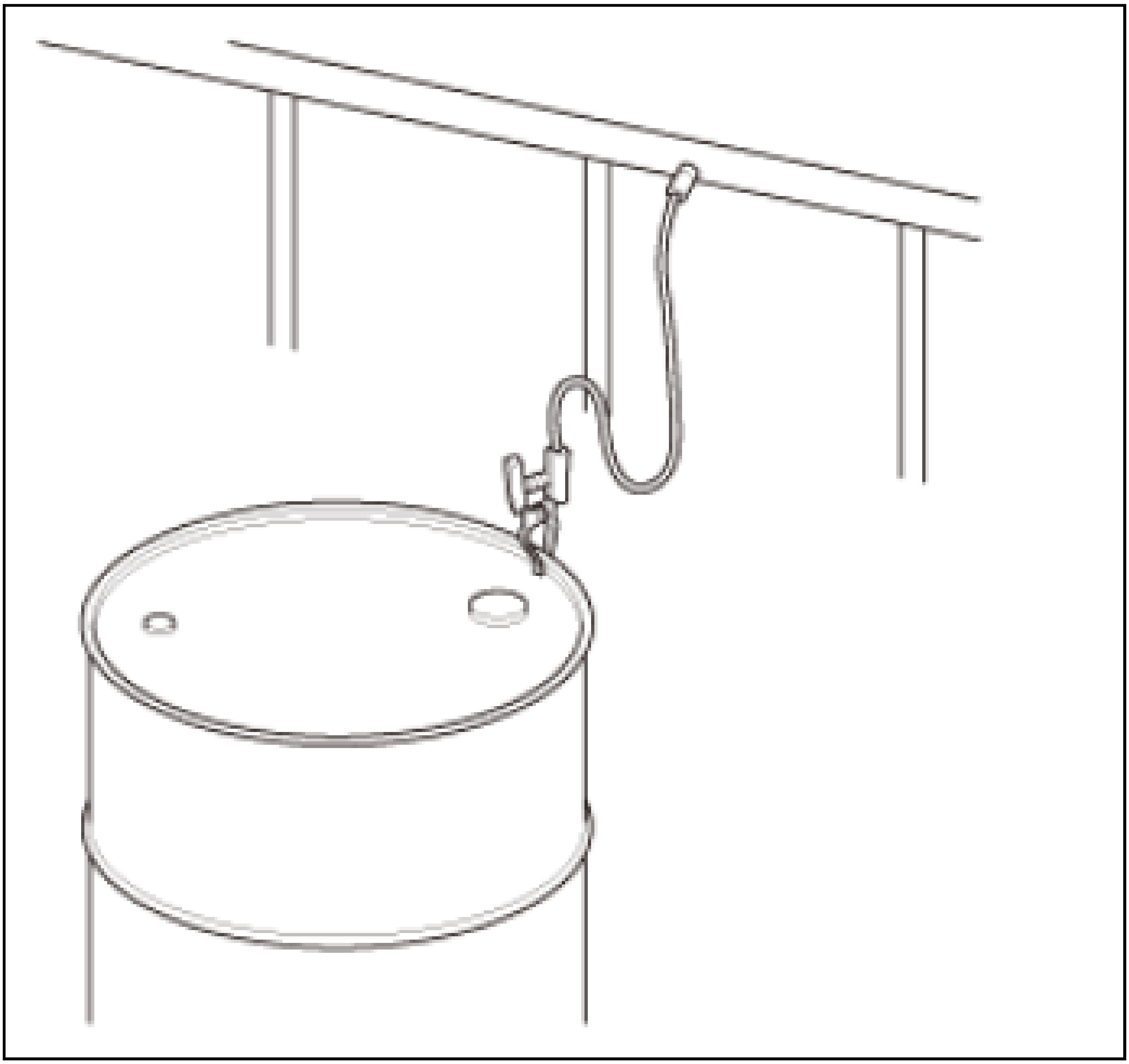

Thermite reaction

WARNING: **Aluminum repair areas should be completely separated by wall or curtains to prevent aluminum dust from mixing with iron oxide or any other material**

Thermite reaction is an active oxidation-reduction reaction when powdered aluminum and iron oxide (rust) powders are allowed to mix. Once ignited, it will combust at temperatures in excess of 4500Â°F (2500Â°C).

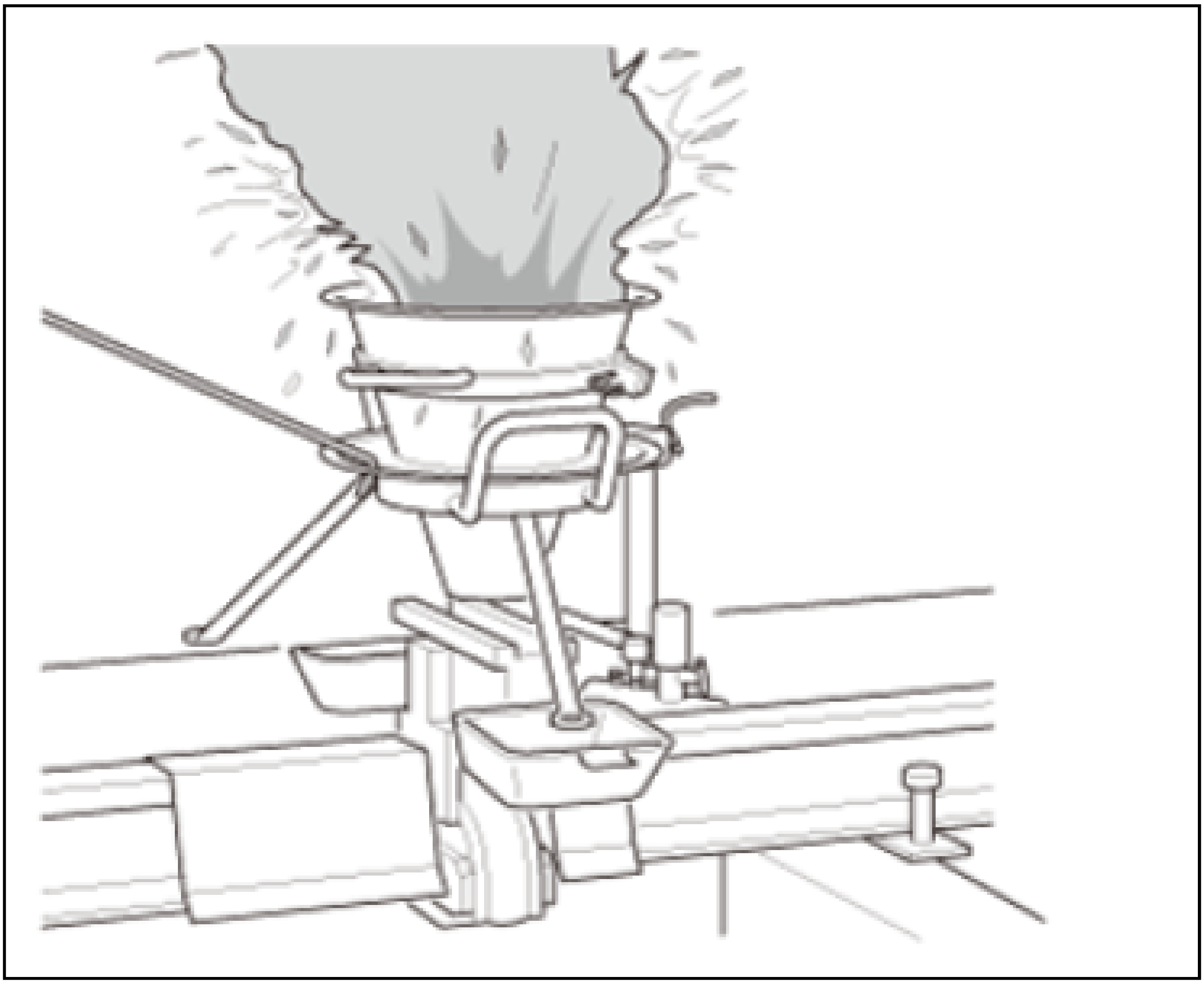

ORGANIC SOLVENT TOXICITY

Toxic Effects Of Organic Solvents

Organic solvents may enter the human body by inhalation of the vapors, or direct skin contact. They tend to concentrate in organs with high amounts of fat, such as the liver. Depending on the amount and length of exposure, symptoms can become acute or chronic. The main symptoms are shown below:

- Skin rash
- Respiratory (breathing) difficulty
- Mental confusion
- Dizziness, anemia etc. (blood generation stops)
- Symptoms of poisoning (acute, chronic)

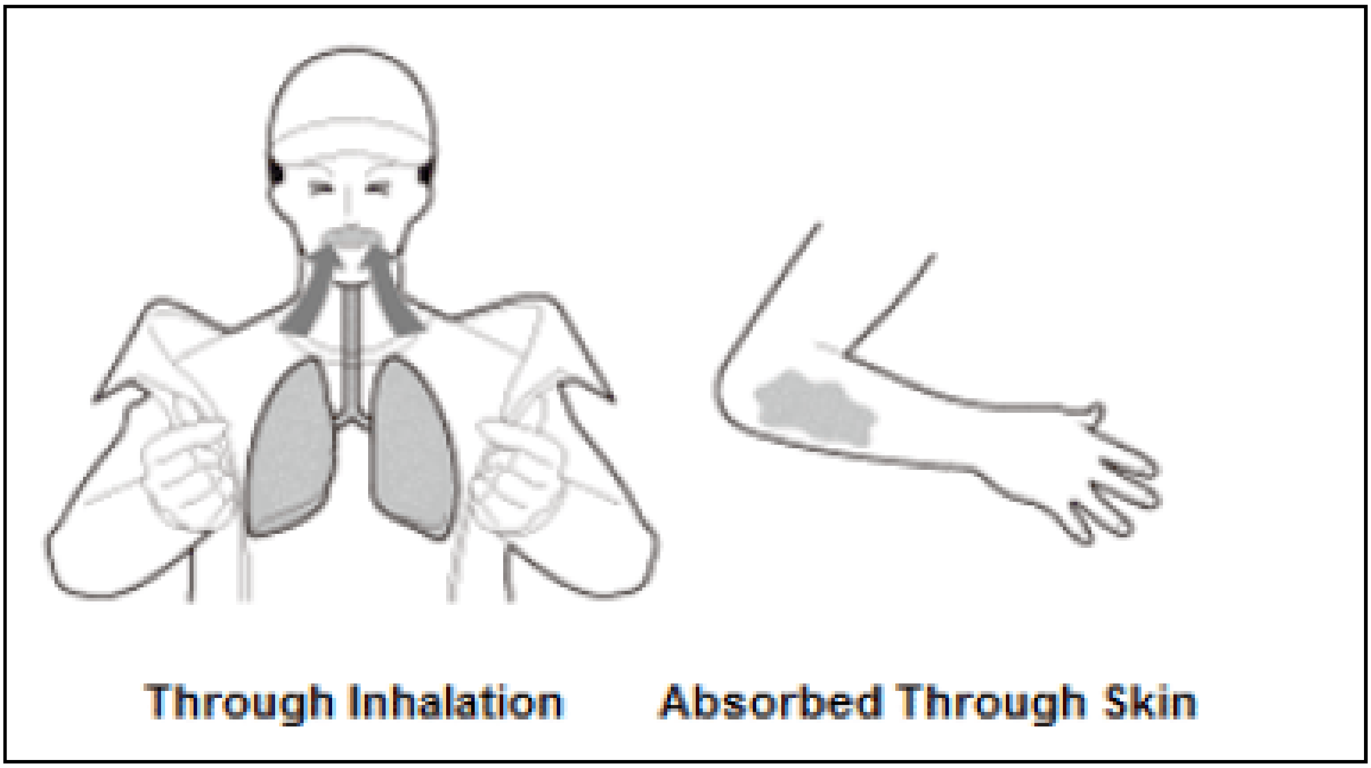

Health Hazards Associated With Solvent Exposure

- Toxicity to the nervous system
- Reproductive system damage

  Liver and kidney damage, respiratory impairment, cancer, and dermatitis

Precautions For Isocyanate Group (-NCO) Compounds

- Hardeners used with two-component urethane paints contain isocyanate compounds.
- Health effects of isocyanate exposure include: irritation of skin and mucous membranes, chest tightness, and difficulty breathing.
- Isocyanates include compounds also classified as potential human carcinogens and known to cause cancer in animals.
- Always wear a respirator, protective clothing, and gloves designed and approved for use with isocyanates. when working with chemicals containing these compounds.
- If you experience any of the above symptoms, stop using isocyanate compounds immediately and seek medical attention.

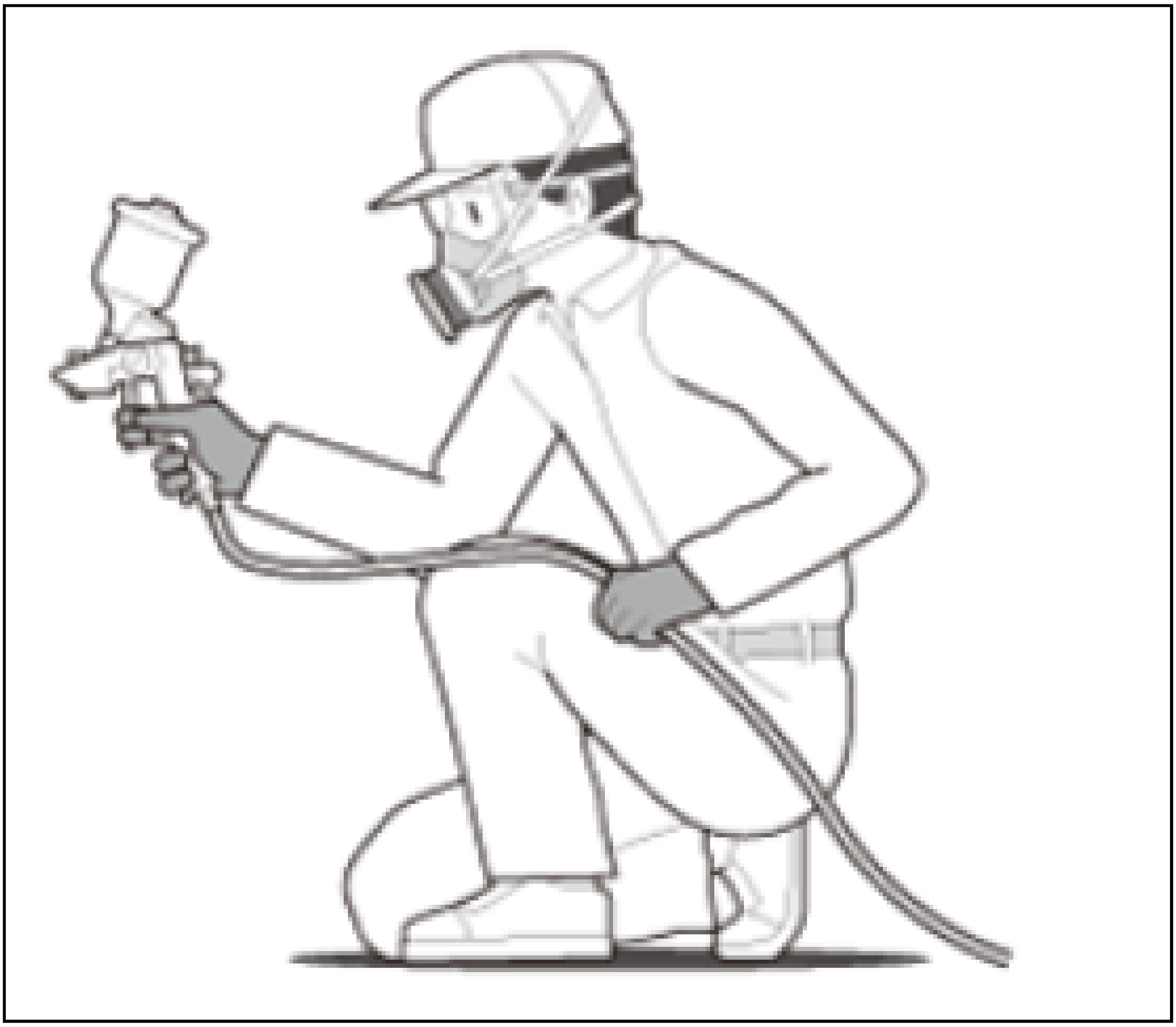

WHAT IS AN MSDS

MSDS stands for "Material Safety Data Sheet". It is intended to provide workers and emergency personnel with procedures for handling or working with that substance in a safe manner.

Always review the MSDS before using any chemical so you know how to safely use it and what to do in case of a problem such as a spill occurs.

Information Included In a Typical MSDS

- Material name and contents volume
- Physical data (melting point, boiling point, flash point, etc.)
- Toxicity
- Health effects
- First aid
- Reactivity
- Storage requirements
- Disposal
- Protective equipment
- Spill-handling procedures

Note that MSDS formats can vary from source to source within a country depending on national requirements.

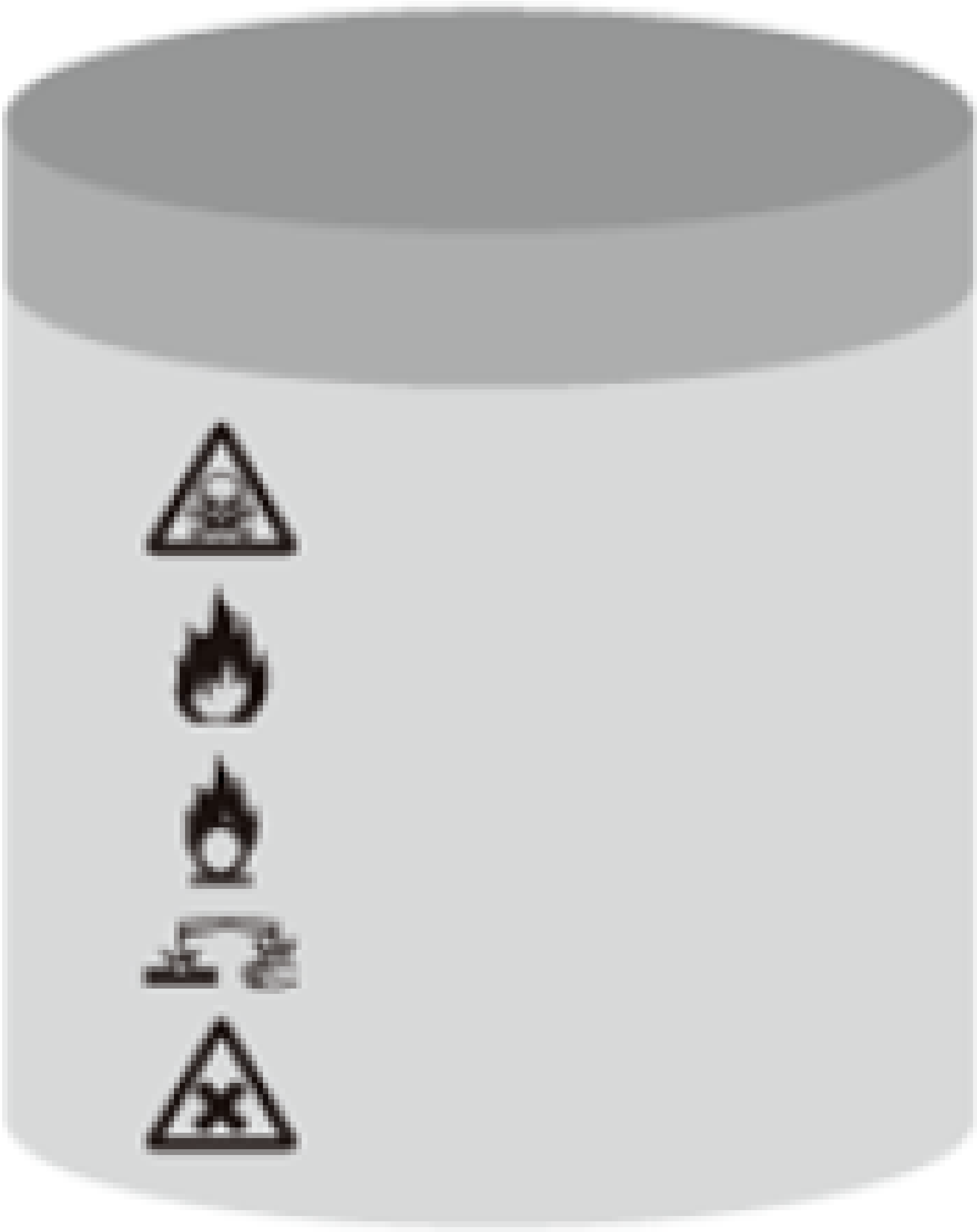

This mark indicates a toxic substance. Do not inhale or take internally and avoid direct skin contact.

This mark indicates a substance is oxidizer and may easily react with other products, generally by yielding oxygen, and cause or enhance the combustion of other materials.

This mark indicates a flammable product that will ignite at relatively low temperatures, such as room temperature.

EQUIPMENT MAINTENANCE CHECKS

- In order to maintain a safe working environment, all equipment and machines in the workshop must function properly for their intended purposes. It is very important to conduct regular inspection and maintenance before using any shop tools or equipment.
- Always make sure your work area has properly functioning ventilation and that any hazardous materials are properly stored, etc.

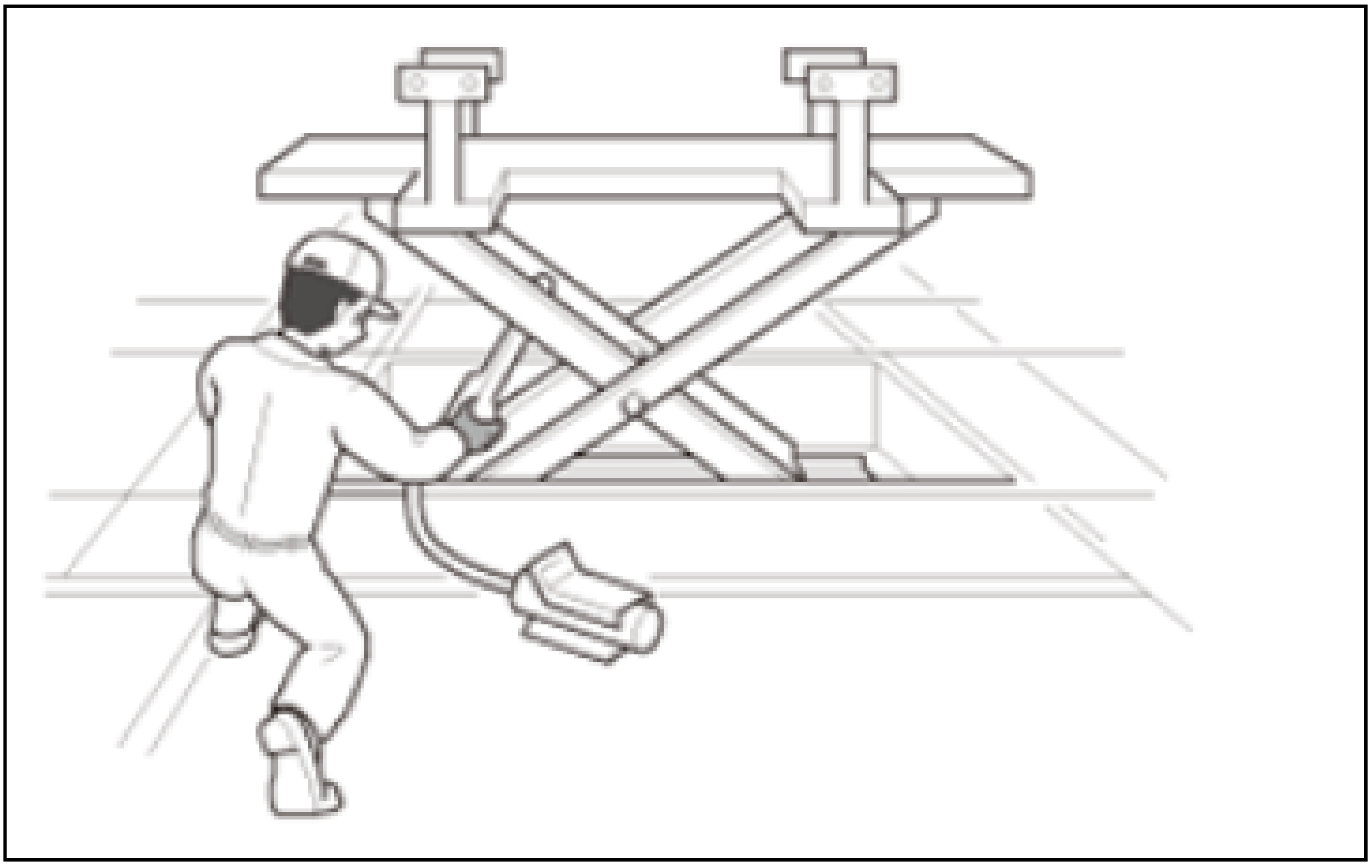

PRECAUTIONS FOR OPERATION

Vehicle Jacking

- Do not use a floor jack on sloped or weak ground as this may result in the vehicle falling.
- If a vehicle has an excessive weight imbalance due to cargo on board, do not use a floor jack.
- Always set wheel chocks on both sides of the wheels not being raised.
- After the vehicle is jacked up, always use jack stands to hold the vehicle in place.
- Never crawl under the vehicle while the vehicle is raised using a jack alone, even for a short time. If the vehicle falls, it may result in serious injury or death.

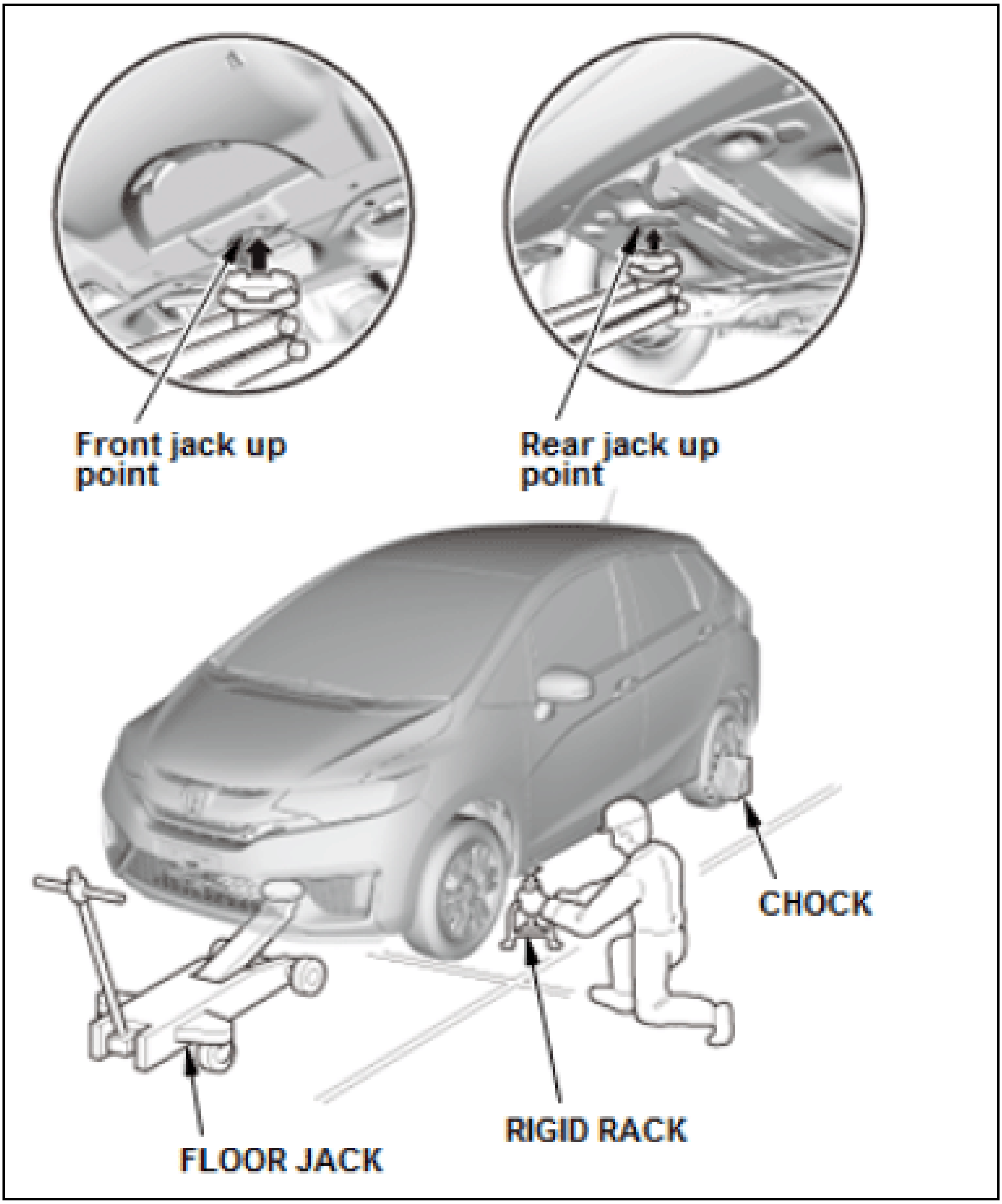

Vehicle Lifts

- Set the lift arms and pads securely at the specified lift points. If the lift blocks are positioned at places other than those specified, the vehicle may be damaged or fall off of the lift.
- If major assemblies are being removed, always put an equivalent weight at the opposite end of the vehicle to maintain the weight balance.
- Never lift only one side of a vehicle using a lift.
- When lifting a vehicle, always watch the vehicle's condition and confirm that no unsafe conditions exist.
- Stop lifting the vehicle only when all four wheels are suspended off the ground and confirm that the vehicle is securely positioned before continuing.
- Never go under the vehicle while the lift is operating.

- After the vehicle is raised to your working level, make sure the all of lift's safety catches engage and hold the vehicle securely.

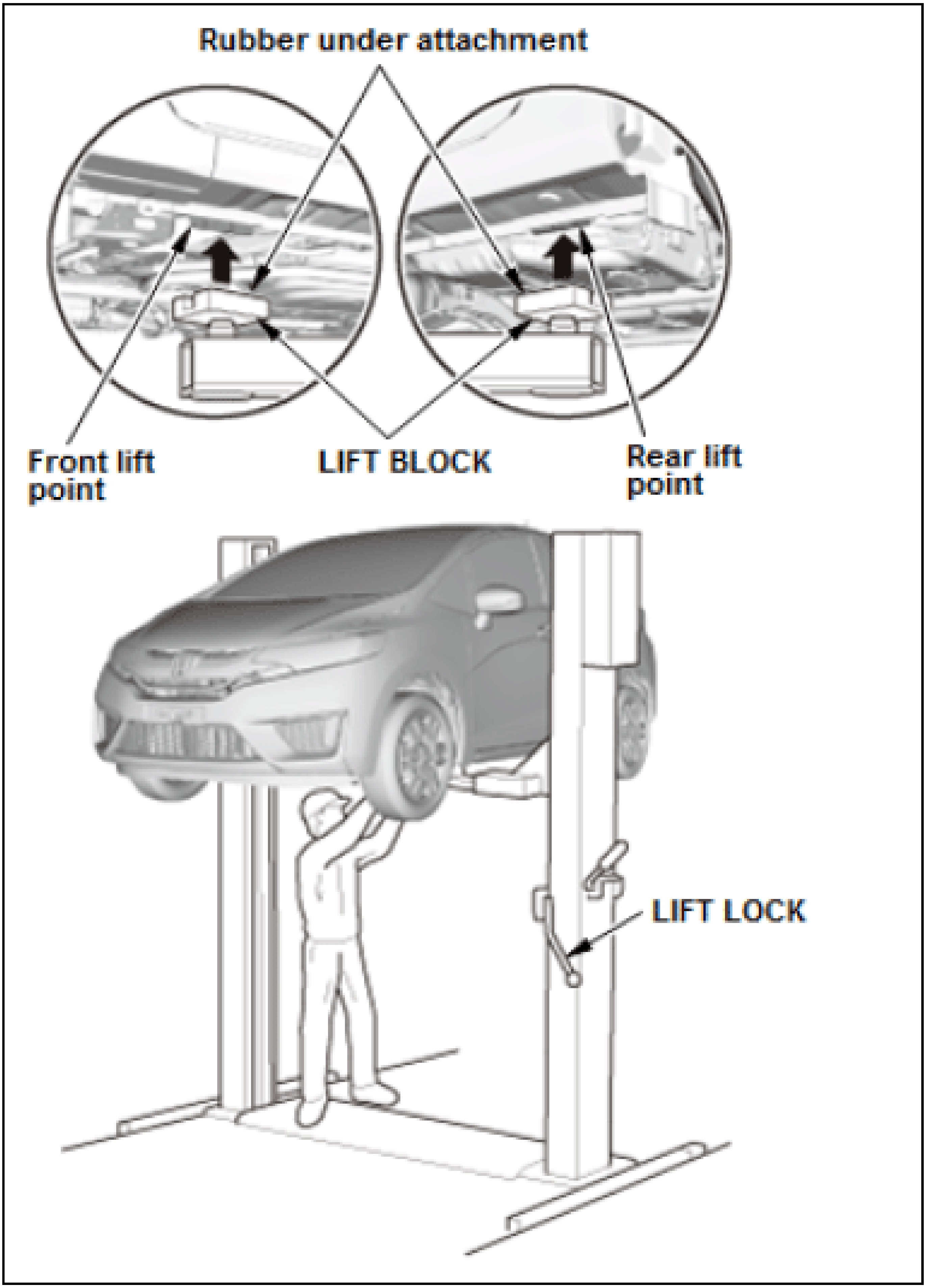
Rubber under attachment
Front lift point
LIFT BLOCK
Rear lift point
LIFT LOCK

Frame And Body Straightening

- Check the condition of the clamps and chains before using the equipment. Do not use deformed or cracked clamps or chains.
- Use appropriate capacity clamps and chains. Using inadequate clamps or chains may result in violent failures.
- If straightening equipment is being used for rough frame correction, do not enter the chain's pulling direction. Always stand in a safe place.
- Always use safety wires on chains and clamps to reduce the chance of injury or vehicle damage if a chain fails.

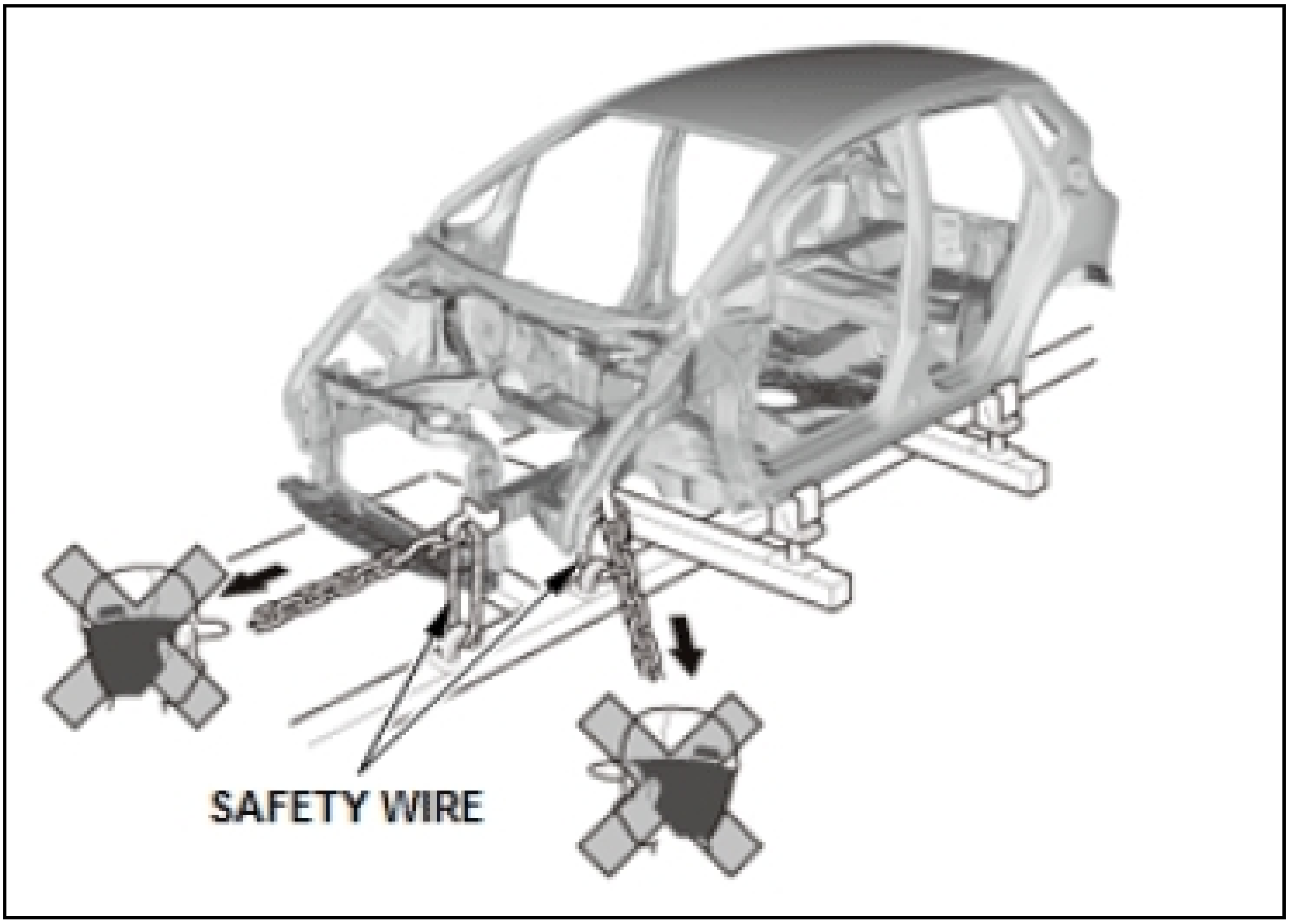

Welding Operations

- Remove the fuel tank if welding near the tank or combustible materials located in close proximity to the fuel tank.
- Protect the vehicle with a welding blanket.

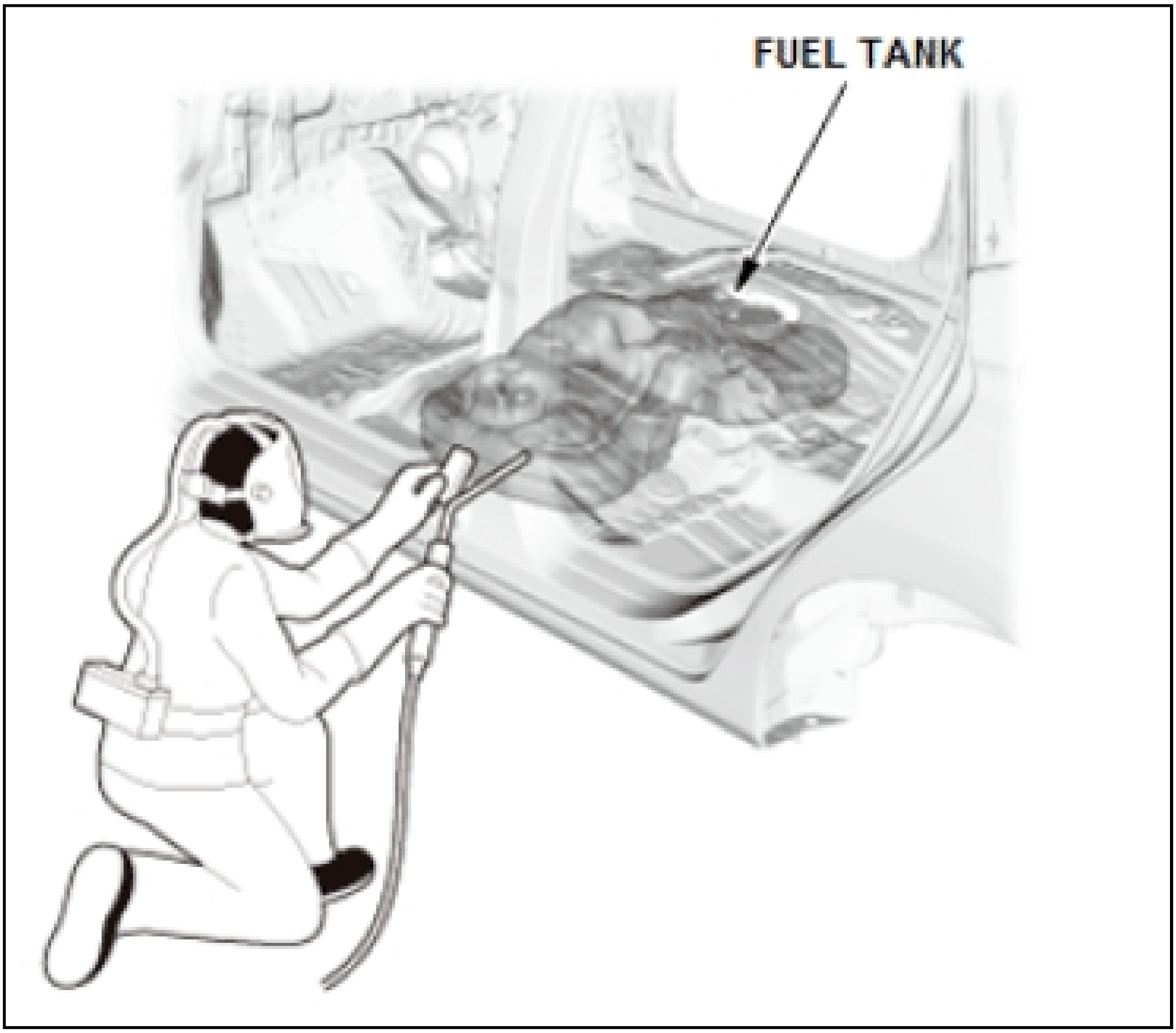

Drying Work

Do not put inflammable things near the painting booth or dryer.

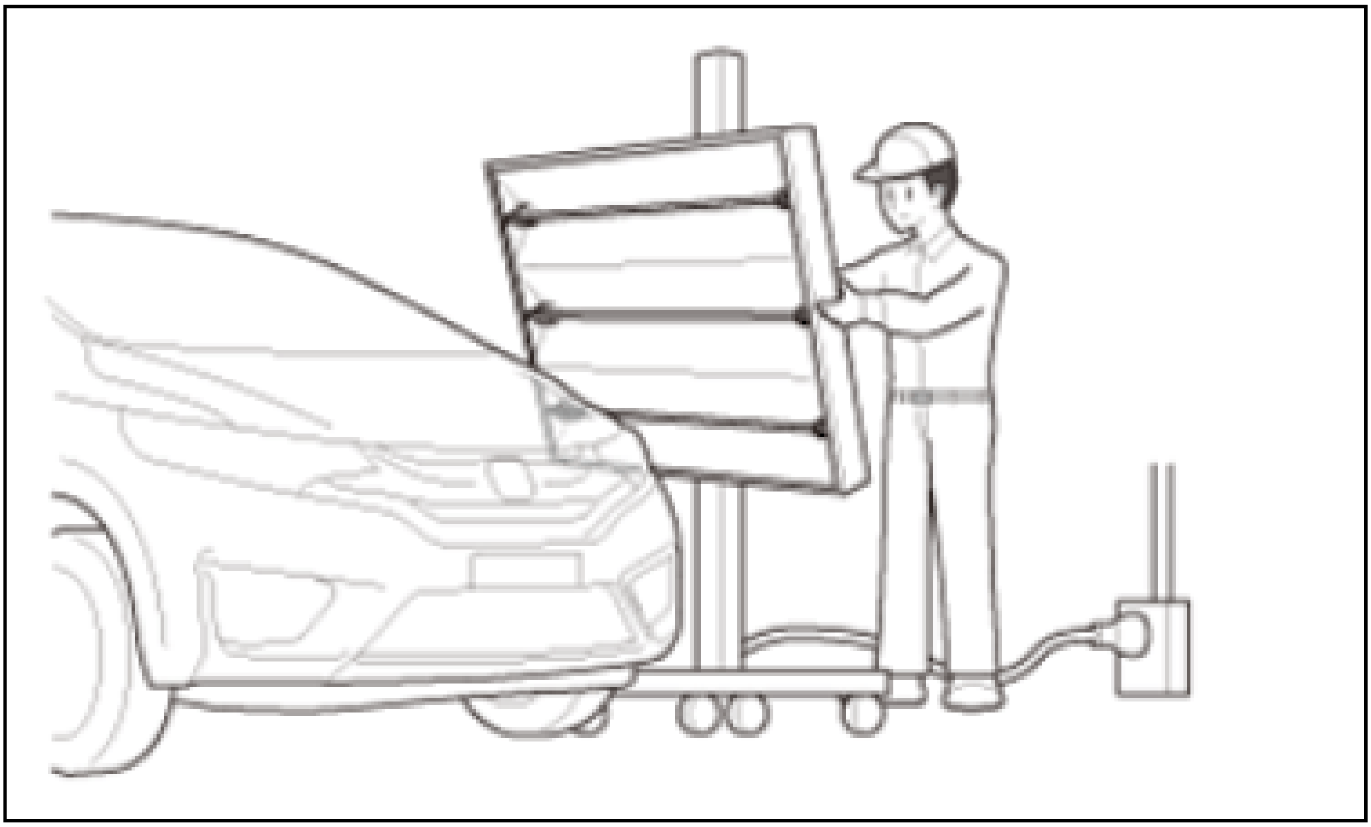

SAFETY EQUIPMENT

Collision repair technicians must wear a long sleeve clothing, a cap and safety shoes. When necessary put on safety glasses, gloves, ear plugs, a respirator or dust mask, etc. to ensure personal safety.

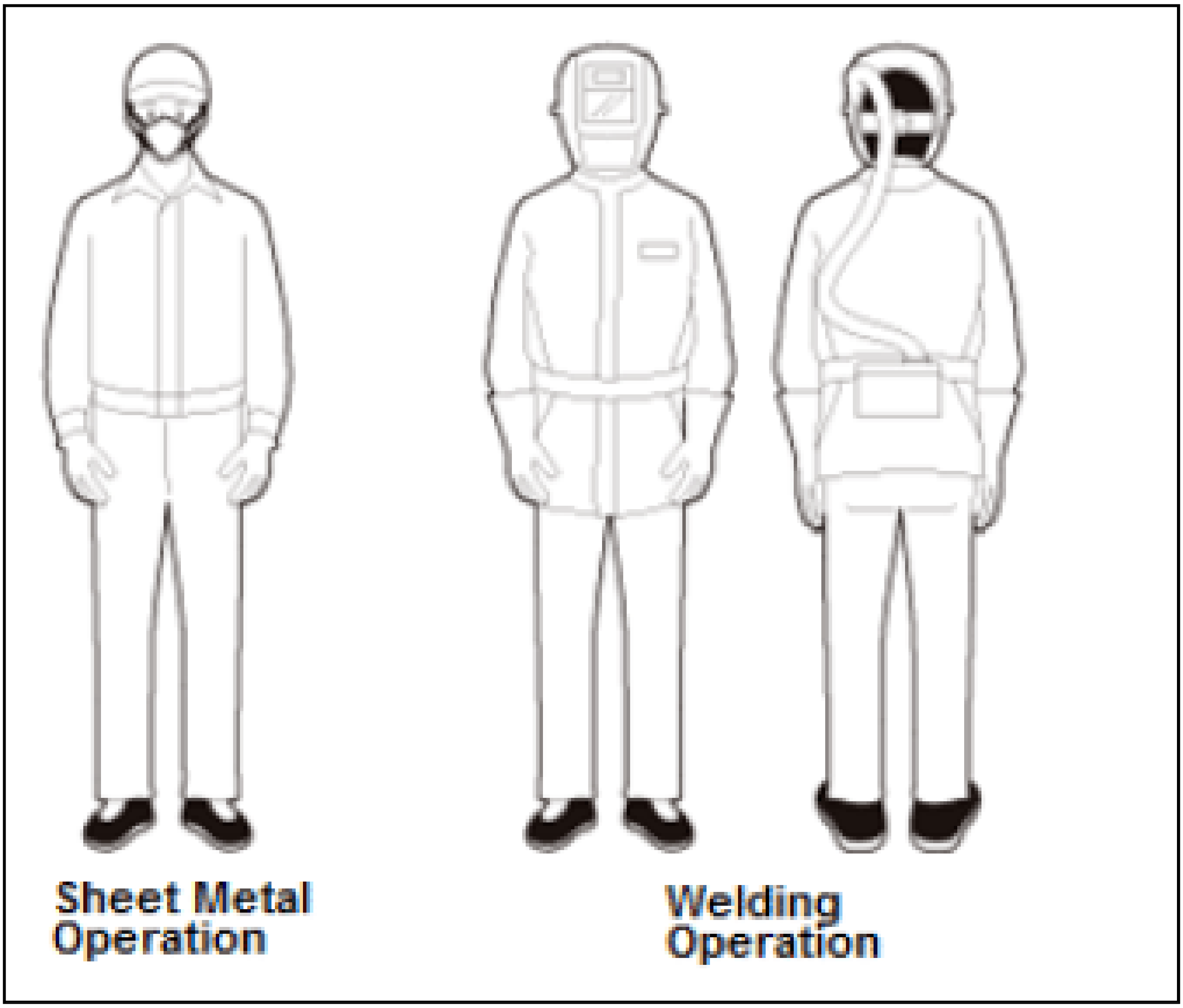

- Work uniform, Dustproof work wear

  It is important to wear protection equipment for your safety and health. It also is important to wear appropriate equipment according to the operation and tasks.

  Purpose of work uniform: Prevention of injuries and protection of customers' vehicles from external damages.

  Purpose of dust proof work wear: Prevents absorption of organic solvents through the skin.

- Cap

  Prevention of head injuries.

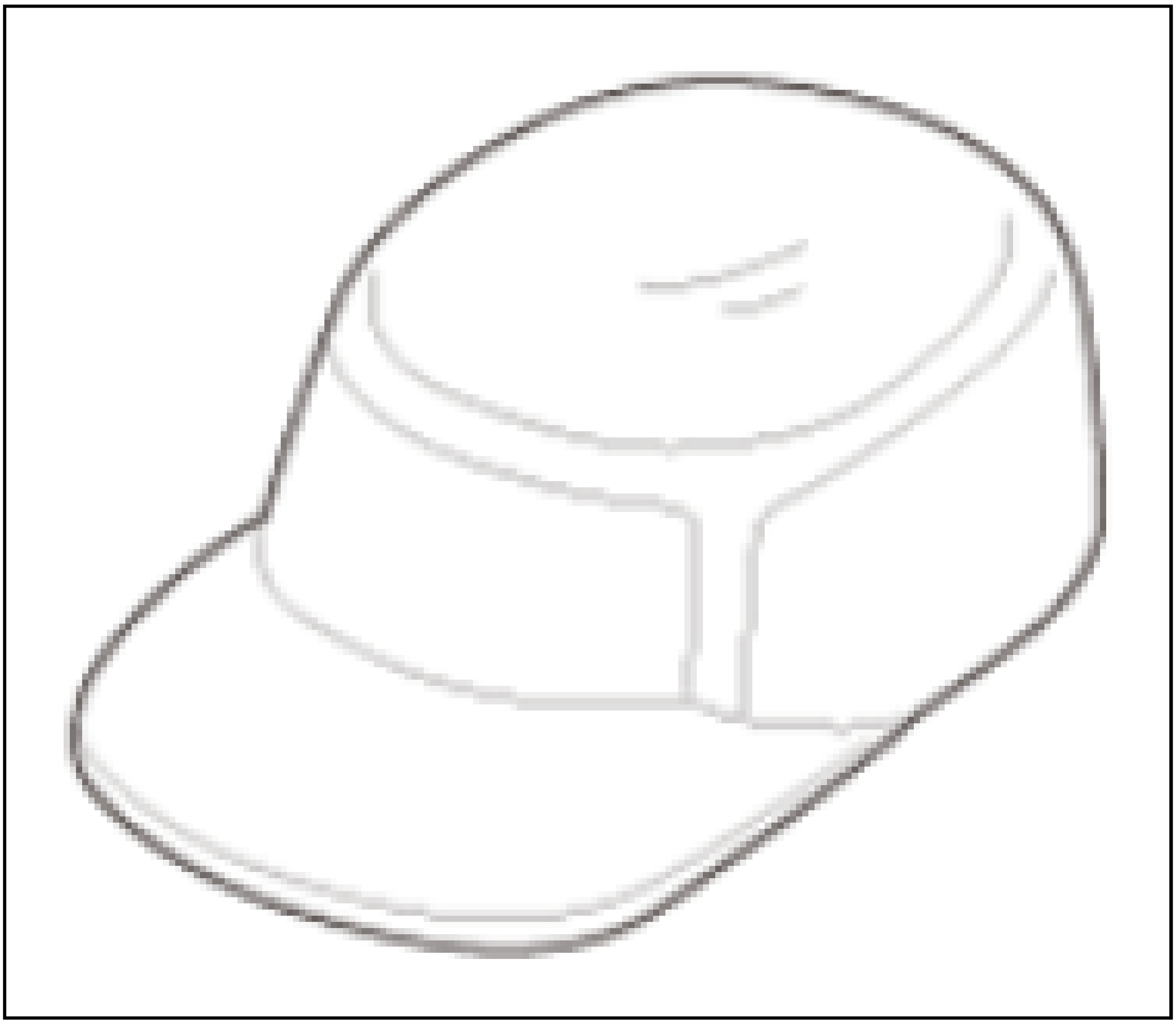

- Face shield

  Protects eyes and face from dust and sparks during grinding.

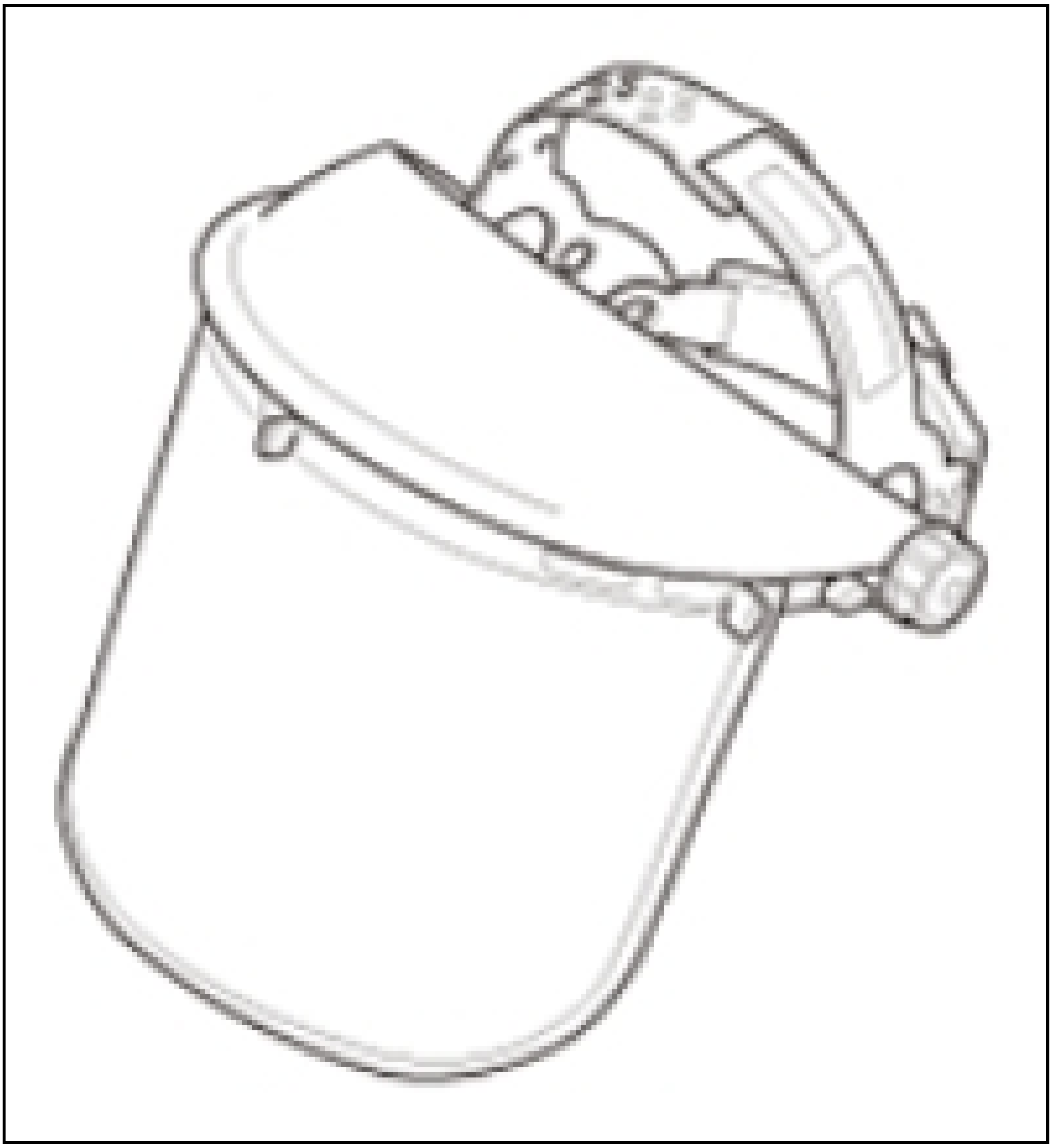

- Safety glasses

  Protect eyes from air-borne dust, dispersed liquid, organic solvent gas and paint mist.

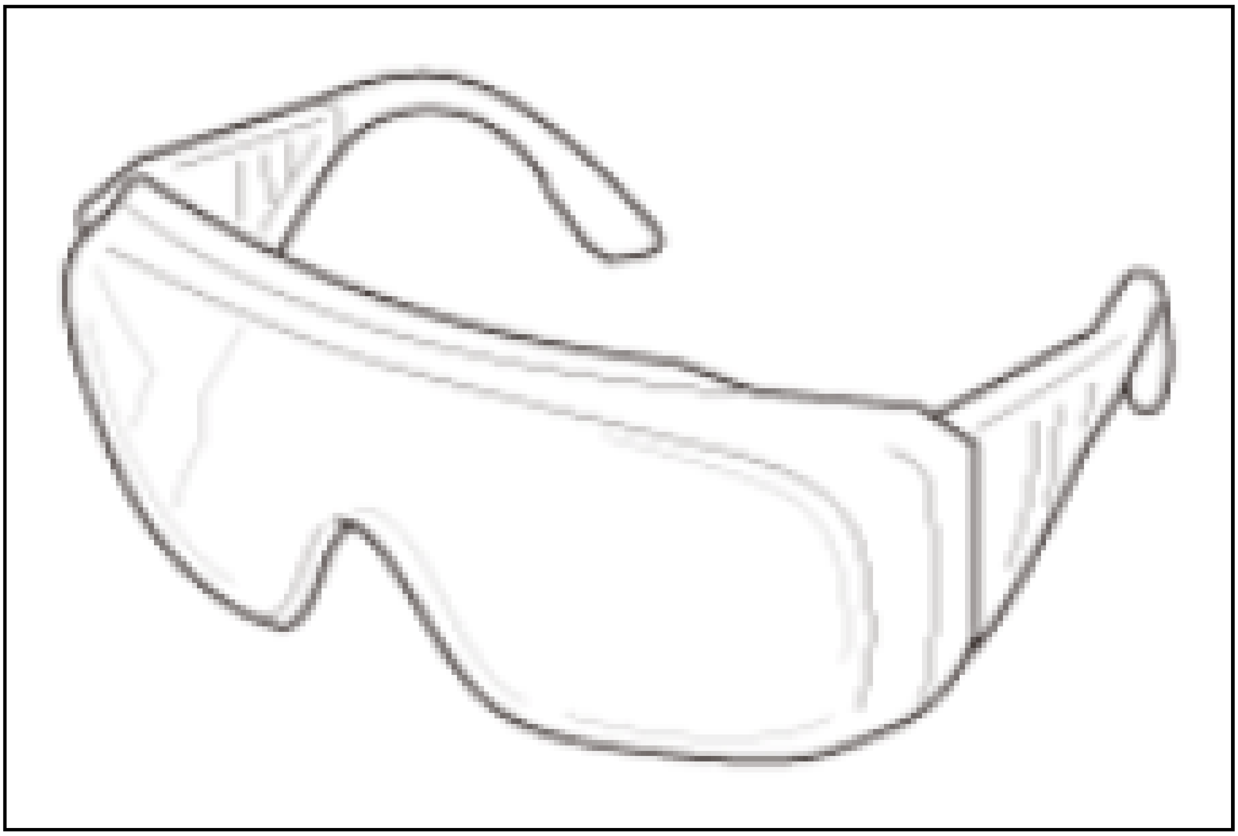

- Ear plugs

  Protect ears from excessive noise levels during equipment operation.

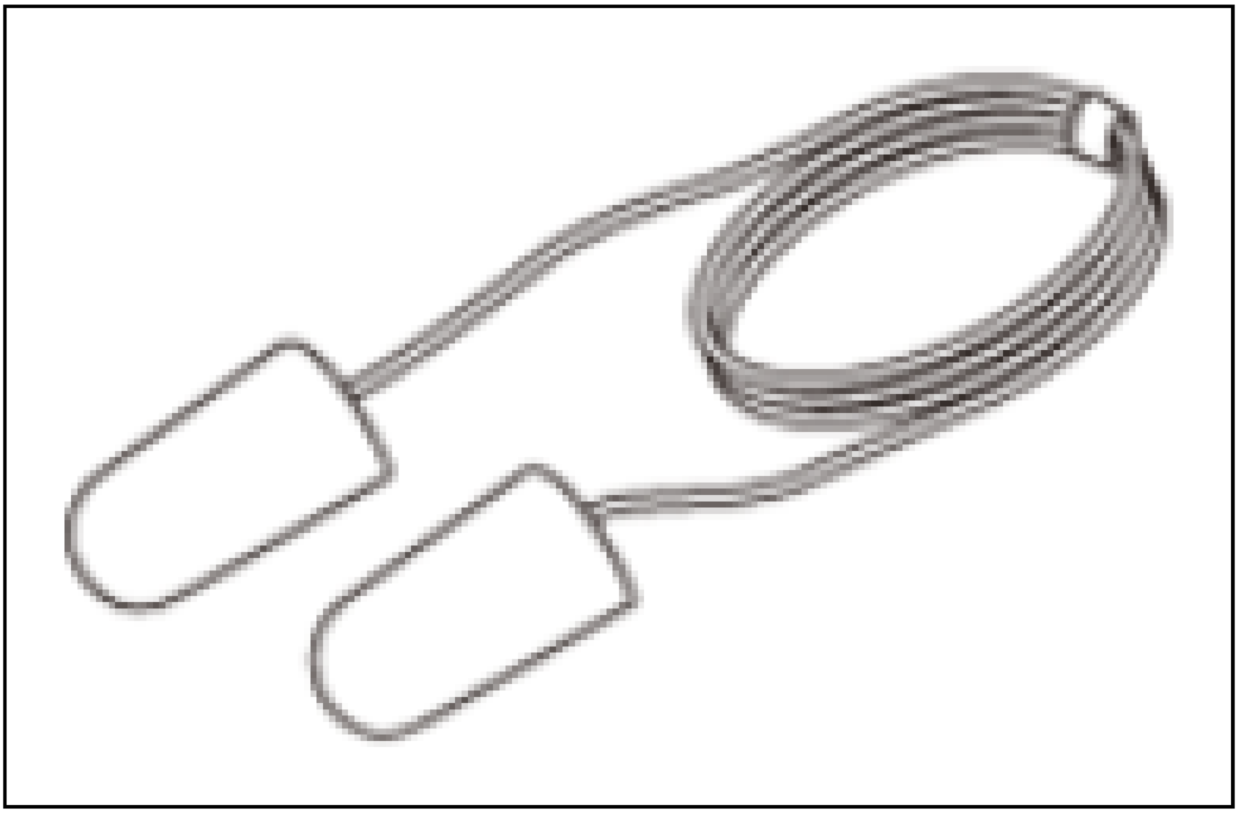

- Dust mask

  Protects lungs from dust inhalation during sanding or grinding.

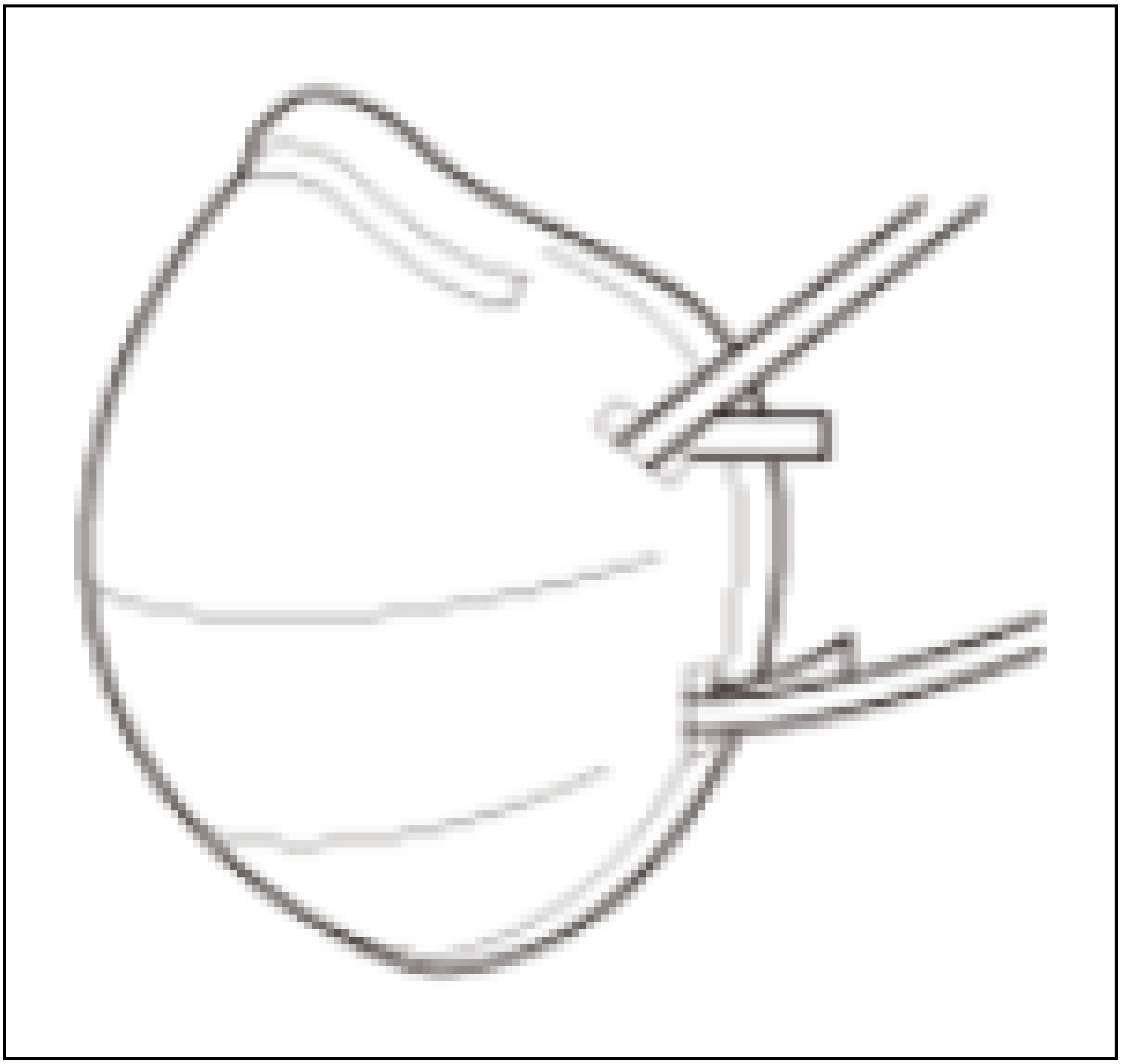

- Respirator

  Prevents inhalation of toxic solvents and dust during painting or welding.

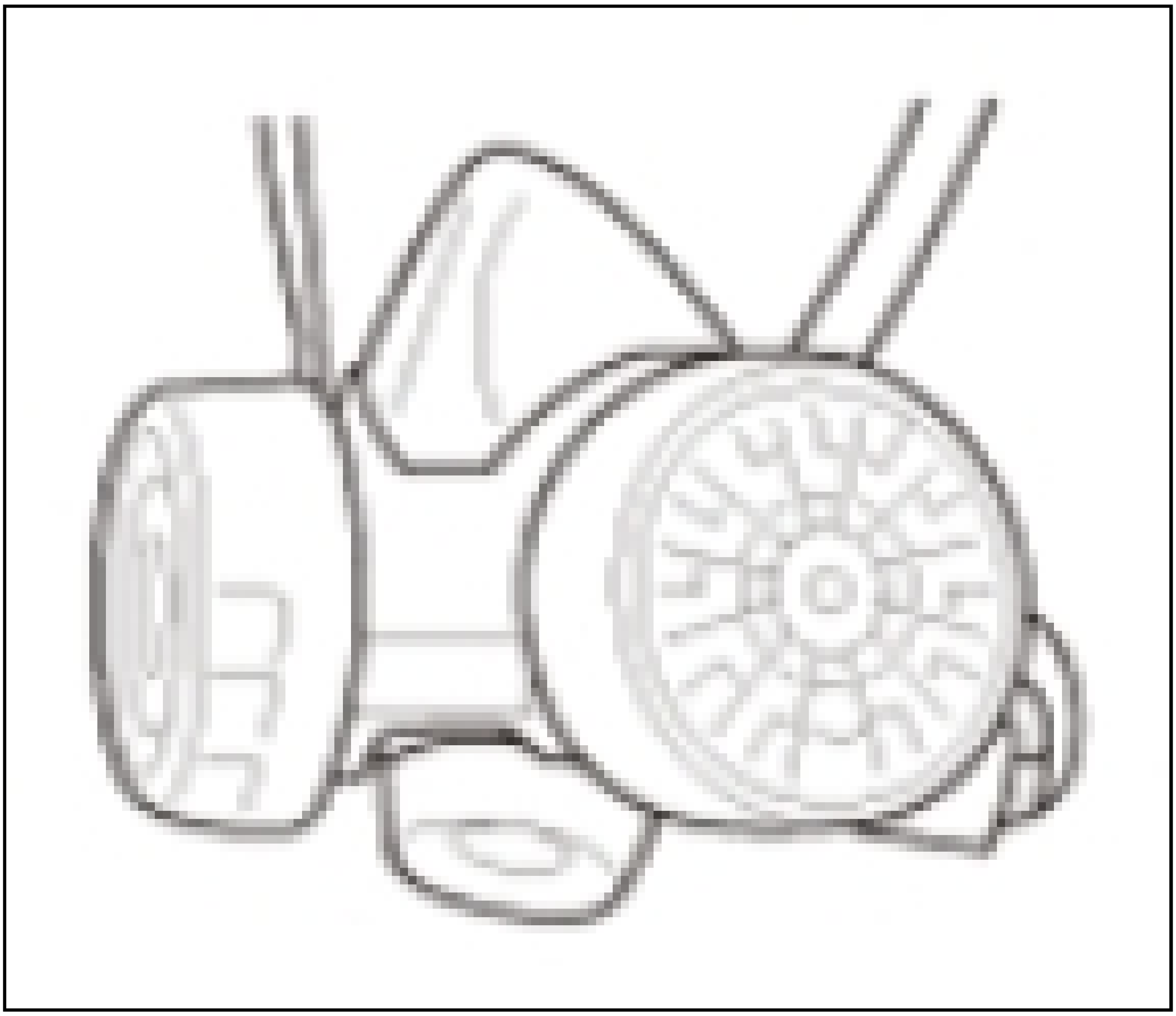

- Gloves

  Protect hands during general body repair operations.

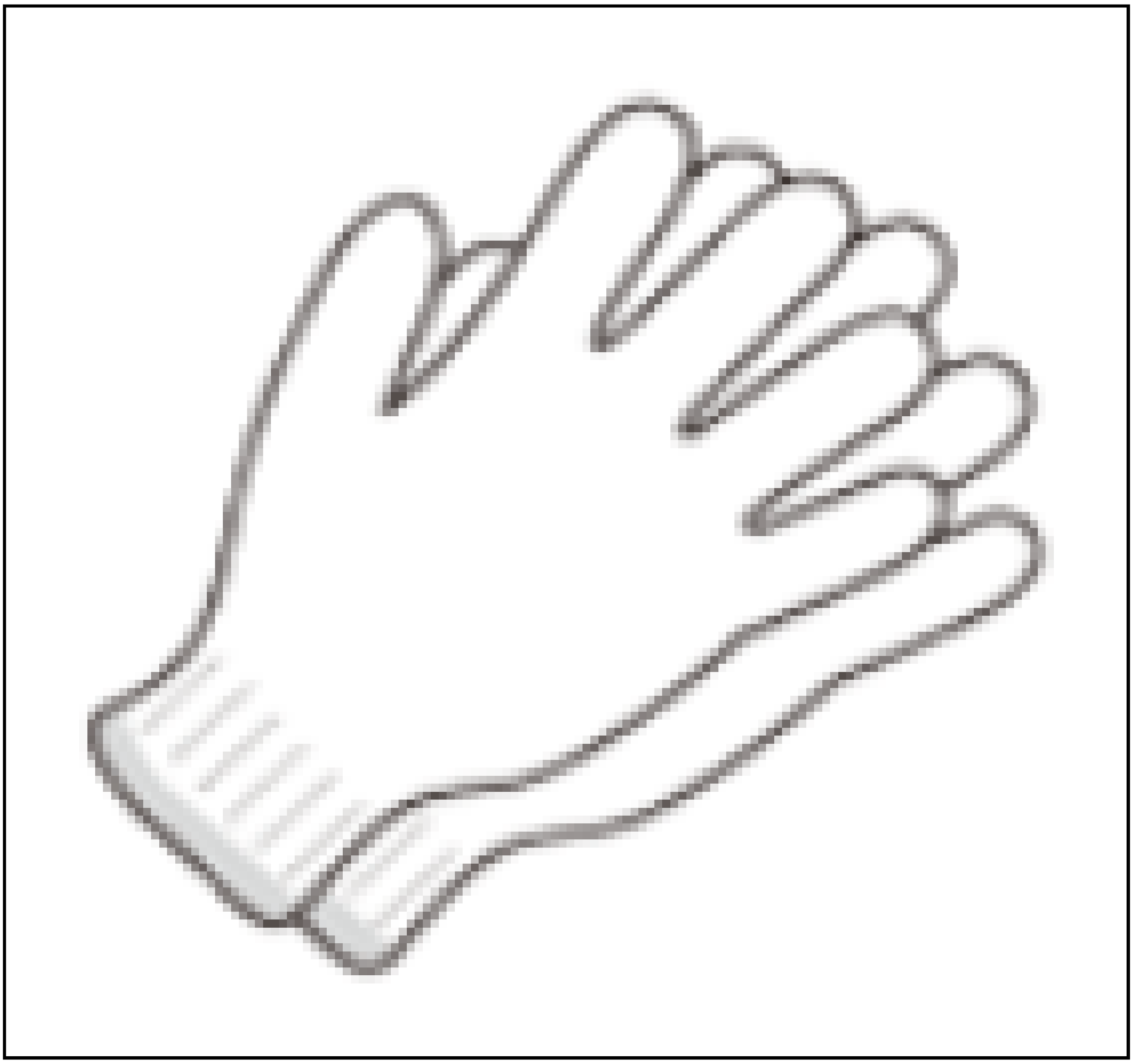

- Solvent gloves

  Prevent absorption of organic solvents through the skin.

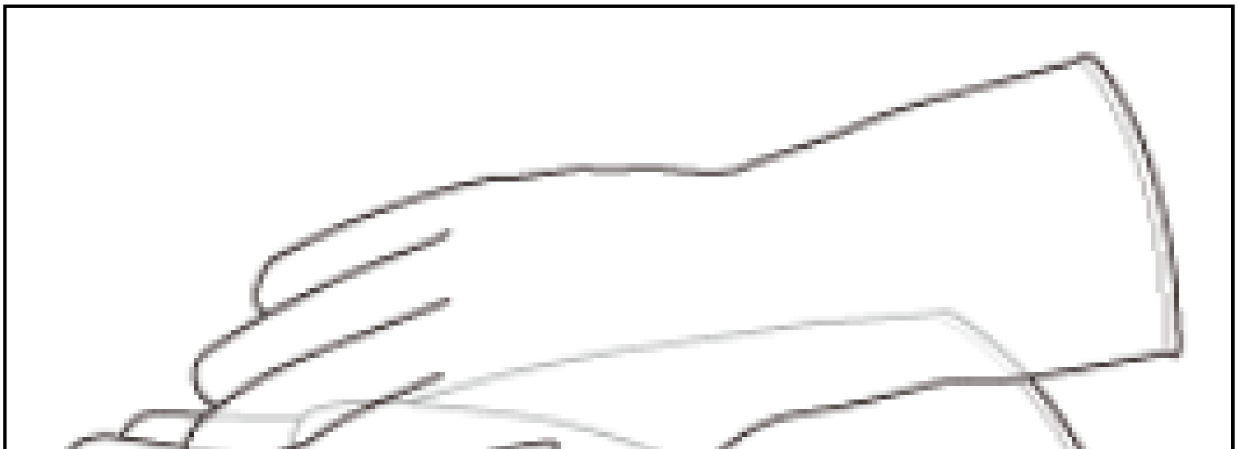

- Welding helmet

Protects eyes, face and neck from flash burn, ultraviolet light, sparks, infrared light, and heat during welding. Auto darkening helmets make welding much easier and safer.

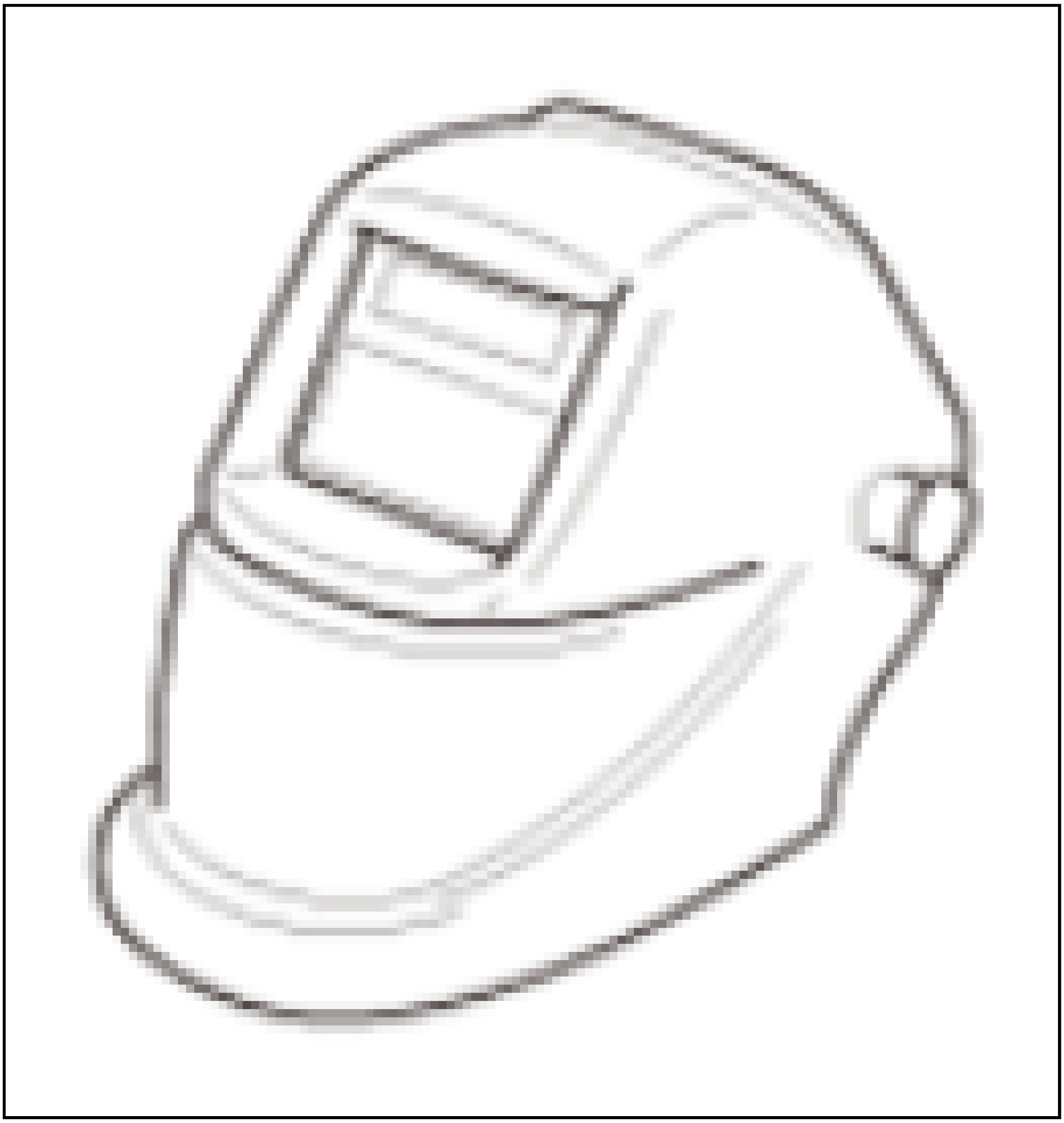

- Welding gloves

Protect hands from heat, sparks, and hot metal slag during welding.

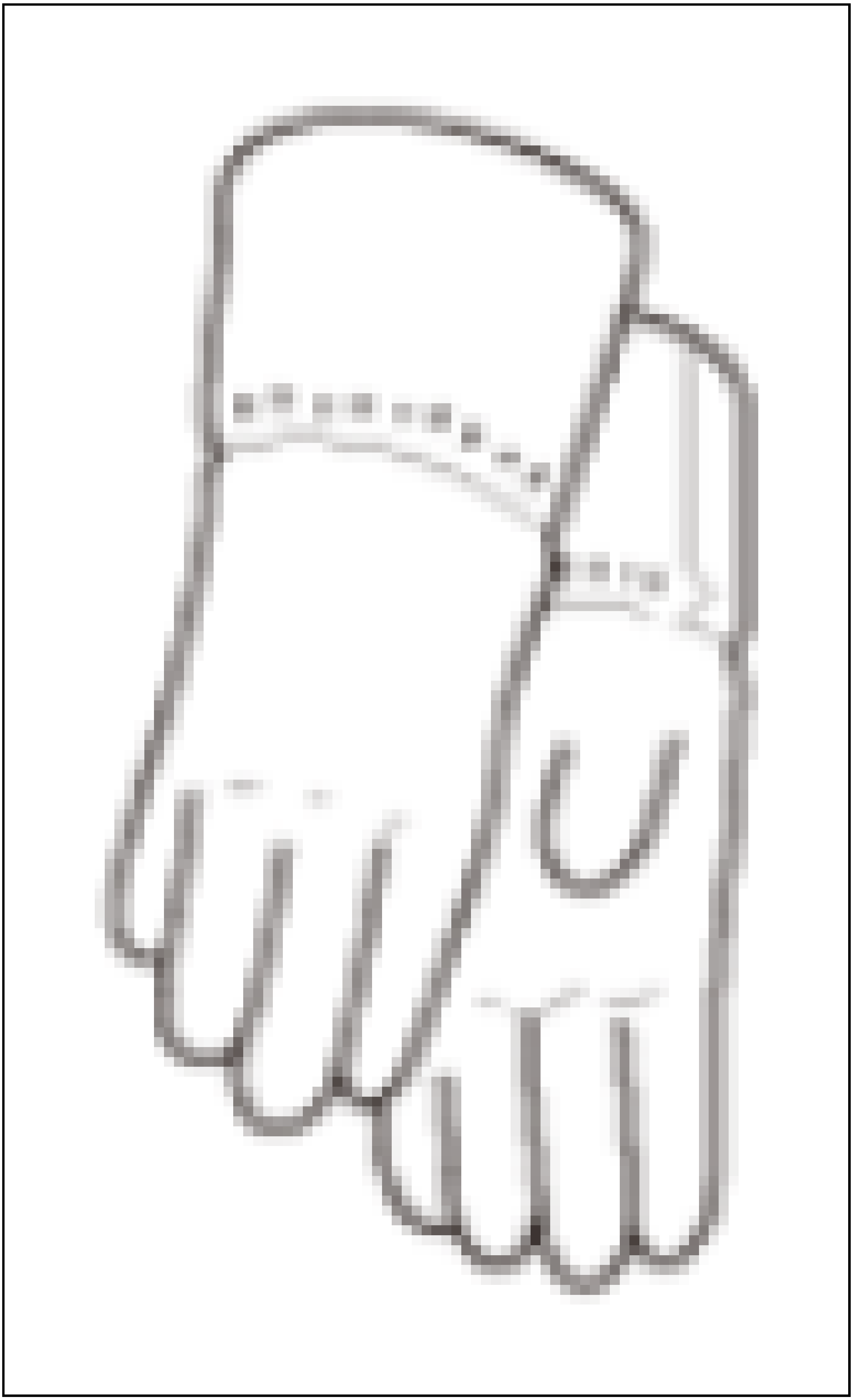

- Welding apron, arm/leg cover, hood

Protect arms, legs and other body parts from flash burn, ultraviolet light, sparks, infrared light, and heat during welding.

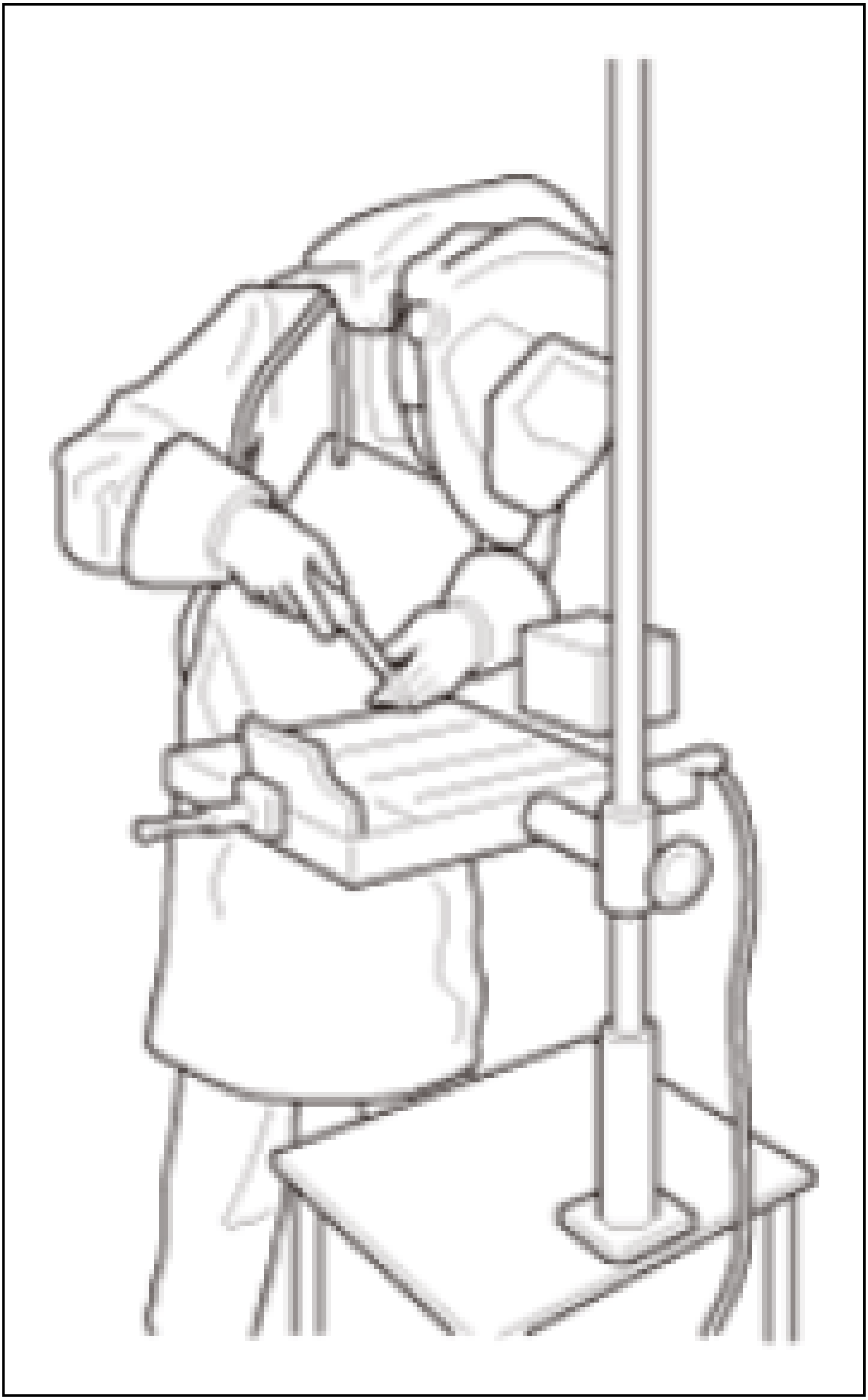

- Safety shoes (static electricity free shoes)

Protect toes from heavy falling objects.

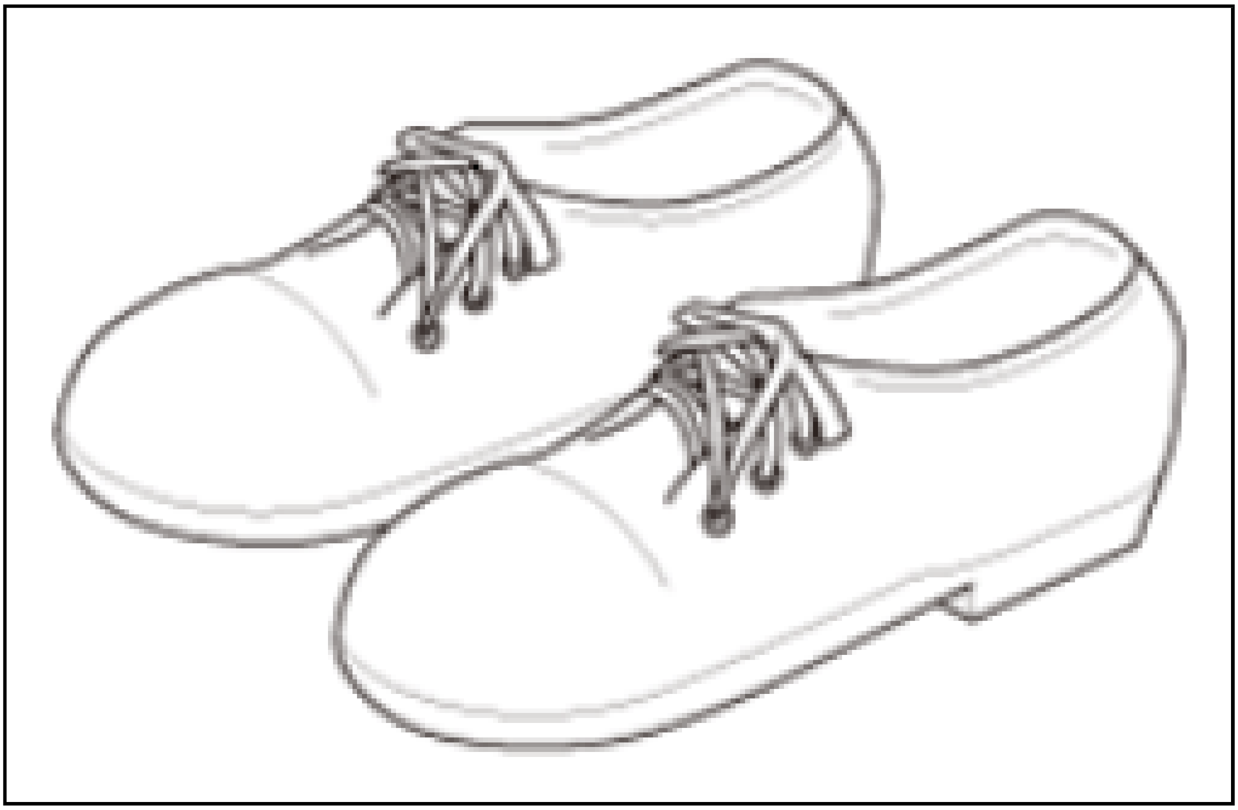

- Safety Wires
  - Used for body and frame repair and straightening operations.
  - Help prevent injuries if a pulling chain fails or detaches while under tension.

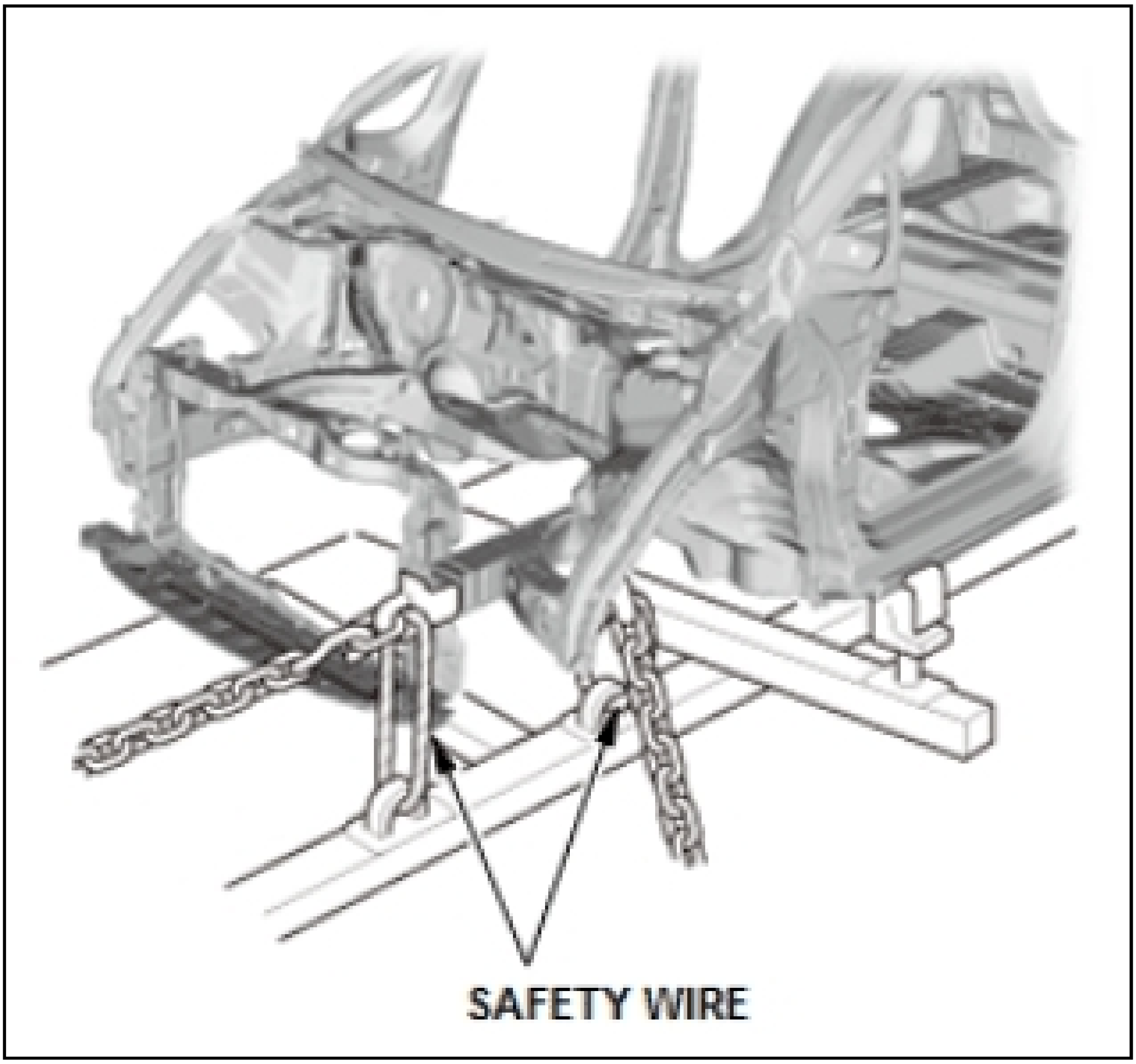

- Welding Blankets
  - Fireproof and/or heat resistant covers used to protect body parts such as glass and seats during welding operations.
  - Some use fireproof material such as carbon fiber.

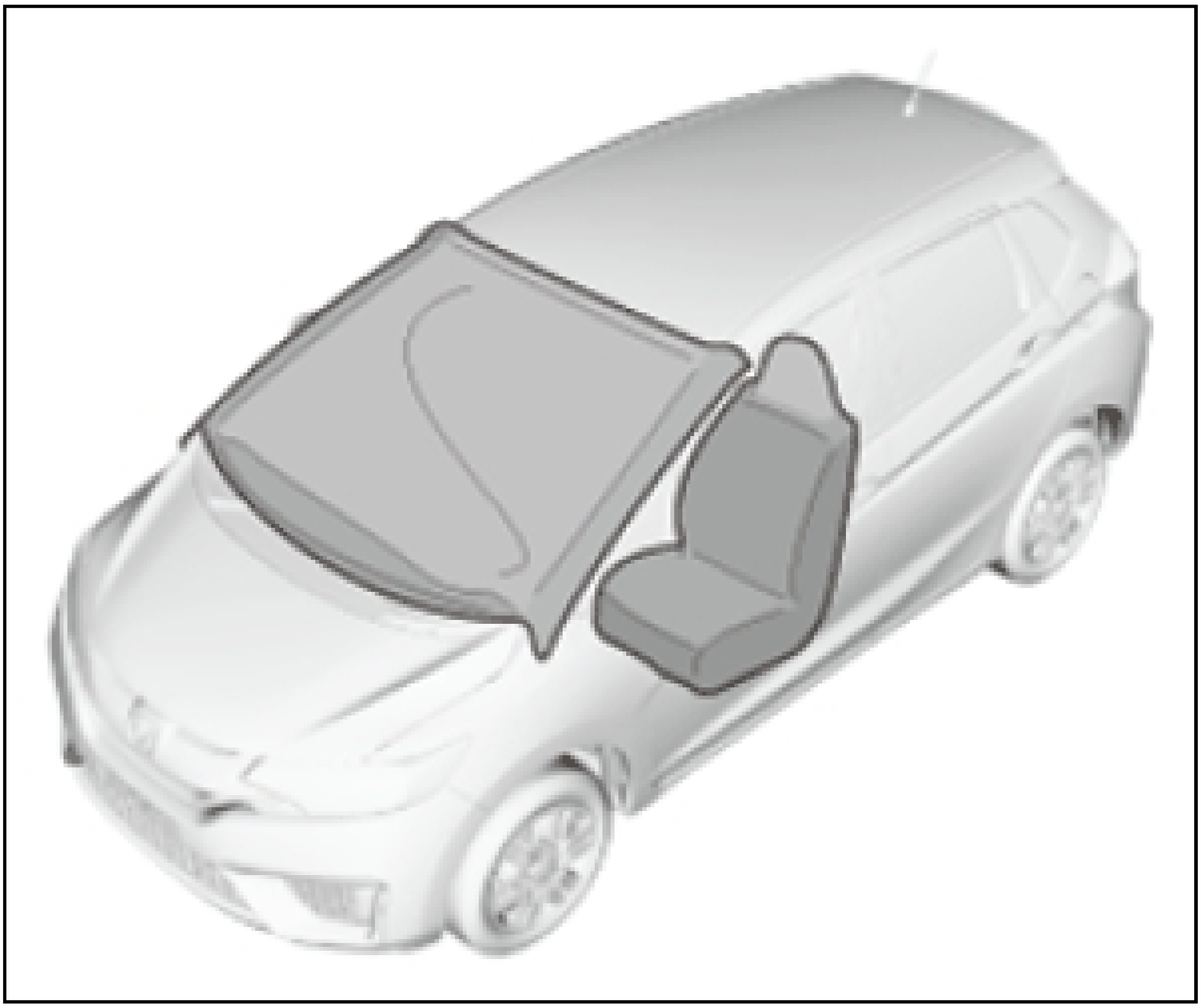

- Fume Collector

  Collects welding fumes which can cause pneumoconiosis, emphysema, or other respiratory disorders during metal welding.

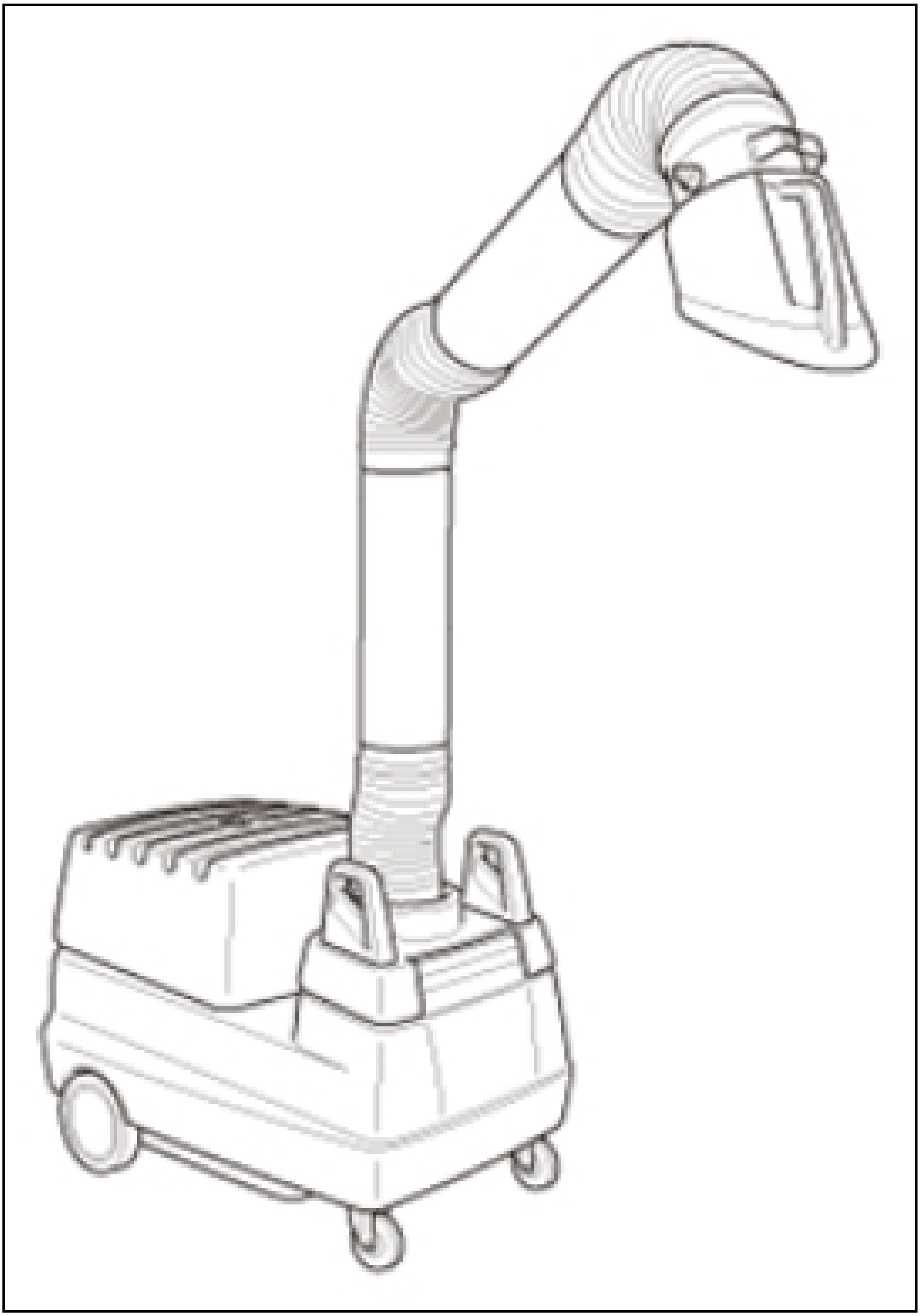

AIR POLLUTION

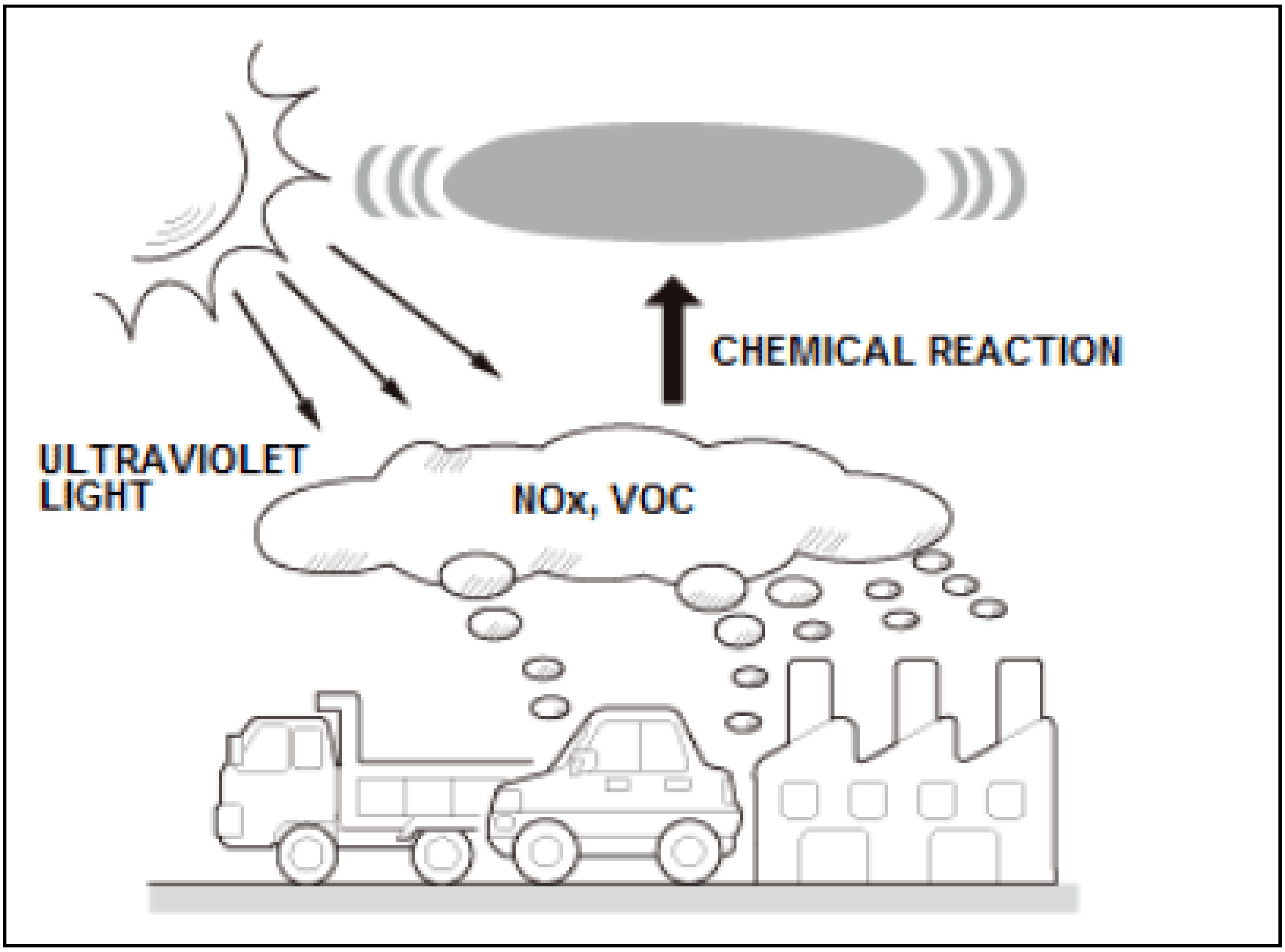

Photochemical oxidant (ozone) is a secondary contaminant generated by the photochemical reaction through solar exposure. The primary contaminant, which contains NOx and VOC as a main component, is emitted from factories and vehicles into air. It has been proven that photochemical oxidants are harmful to human health.

*VOC (volatile organic compounds) is a collective term for organic compounds such as toluene, xylene, ethyl acetate and many other substances. These VOC vapors travel through the air.

REDUCTION OF VOC

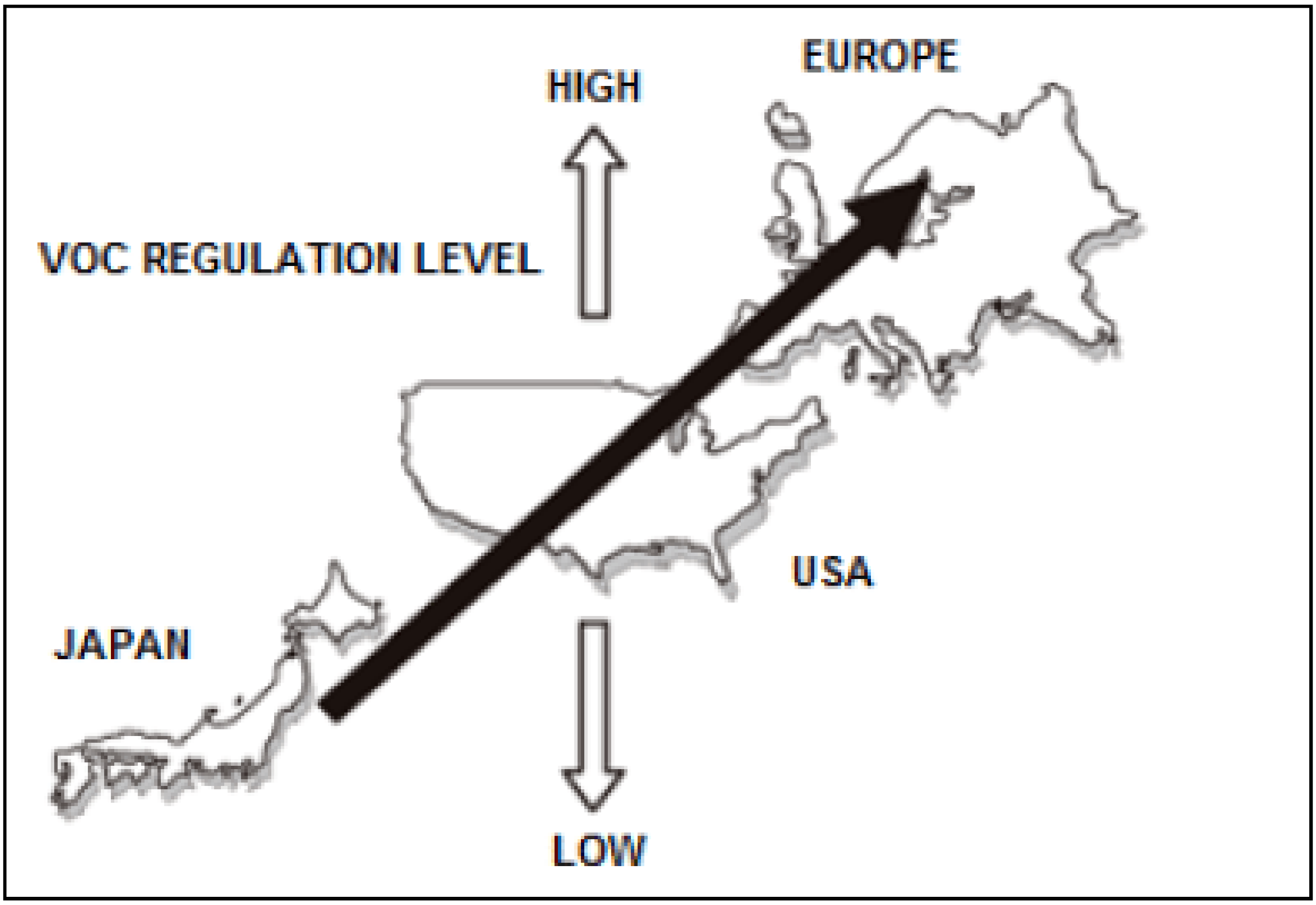
EUROPE
HIGH
VOC REGULATION LEVEL
USA
JAPAN
LOW

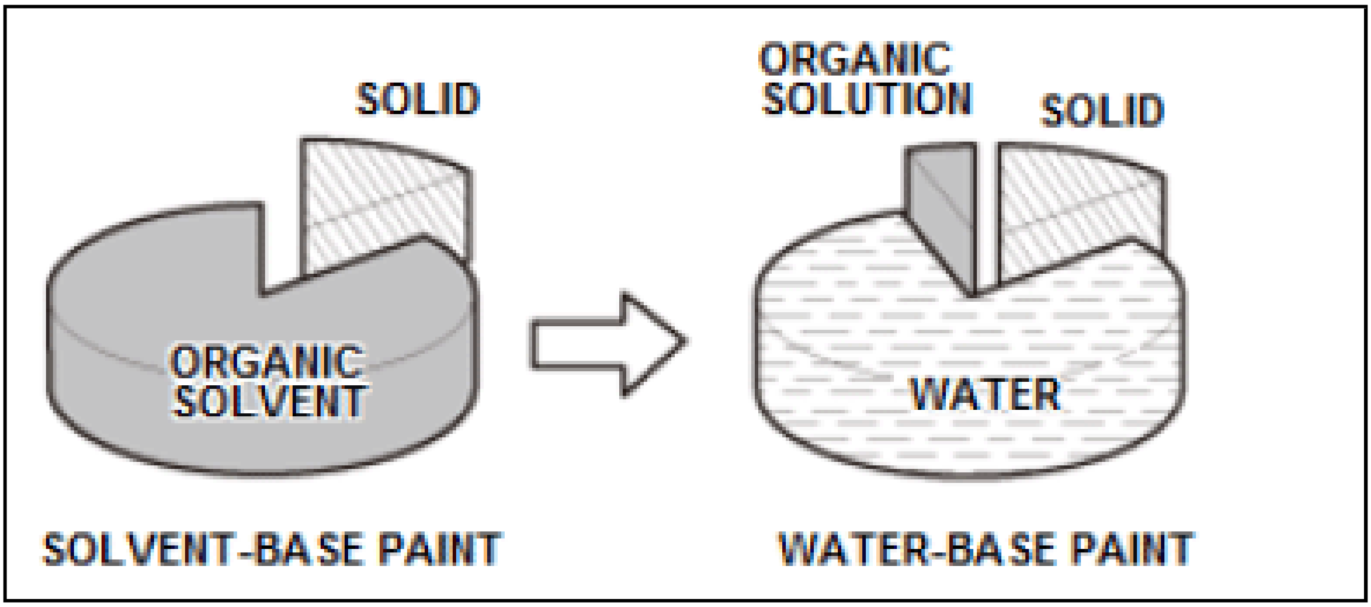
SOLID
ORGANIC SOLUTION
SOLID
ORGANIC SOLVENT
WATER
SOLVENT-BASE PAINT
WATER-BASE PAINT

Variety of activities to reduce VOC which is a cause of photochemical oxidant emission is carried out by the wide range of business fields globally Paint suppliers are not an exception. They have introduced products such as high-solids type paint and solvent-free borne paint. Honda, along with the rest of the automotive industry, has adopted use of borne base coats in production.

NOTE: **VOC Level Regulations Vary by Country**

Europe has the strictest standards because of shared borders and critical air pollution issues.

The collision repair industry has also moved toward widespread adoption of borne paint in order to further reduce VOC emissions.

BASIC FINISH AND PAINT INFORMATION

AUTOMOTIVE REFINISHING PRODUCTS

Body Filler And Spot Putty

Putty is a paste-like paint used to fill deep dents that cannot be filled by other types of undercoat or secondary coats. There are three types of commonly used fillers/putties:

- Metal putty
- Polyester putty
- Lacquer putty

Apply fillers/putties selectively, depending on the depth of the dent to be filled. Putty is normally applied thickly by a body filler scoop, or spatula, to fill the dent, then sanded smooth later.

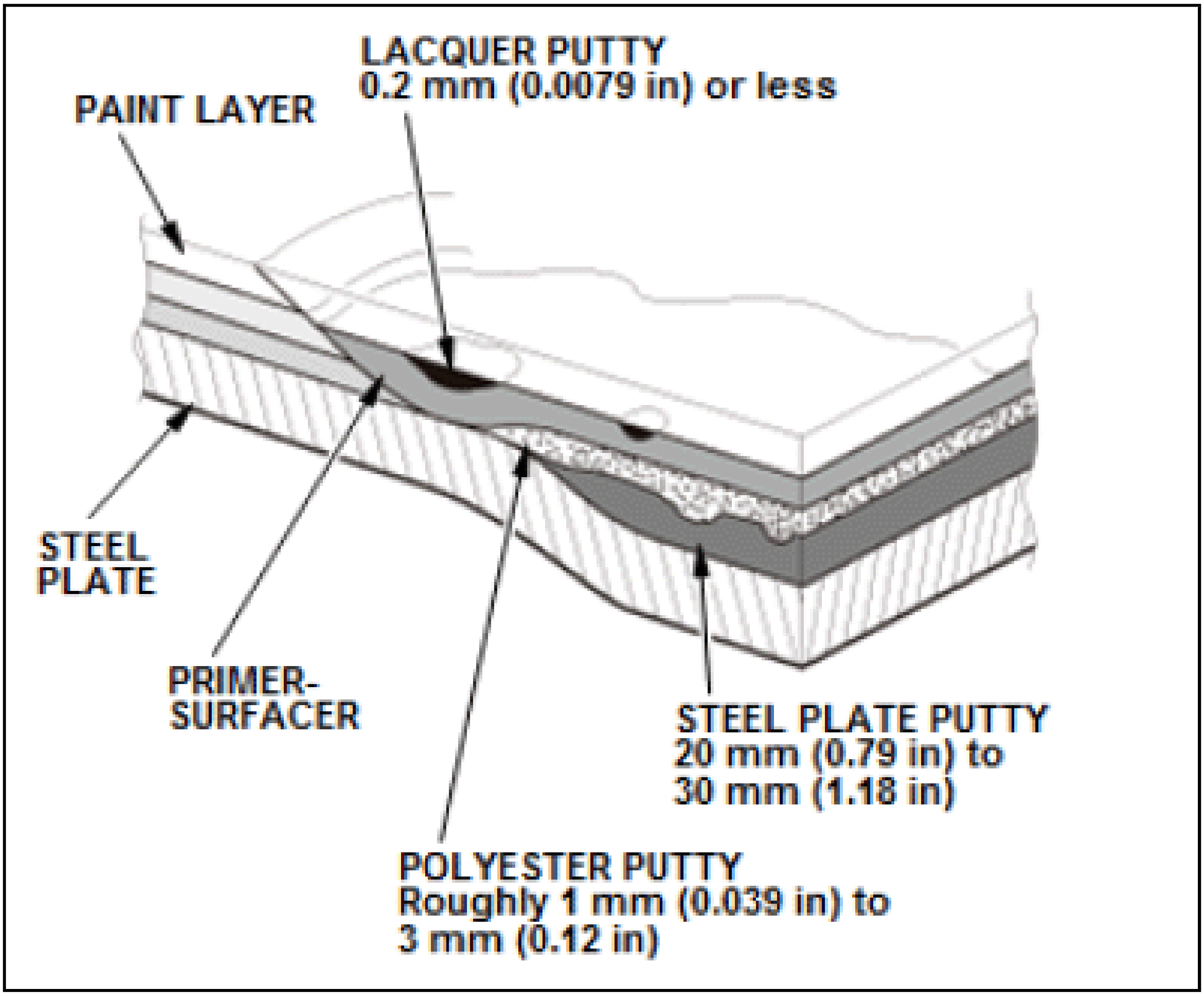

Metal Putty

A dual-component paint mainly consisting of an unsaturated polyester resin. It hardens when mixed with organic peroxides (hardener). This putty is used mainly to correct surface irregularities on the base metal during sheet metal repair. It is very flexible and can be applied in very thick coats up to around 30 mm (1.2 in). Metal putty is very porous and is difficult to sand.

Polyester Putty

A dual-component paint mainly consisting of an oil-modified unsaturated polyester resin. It hardens when mixed with organic peroxides (hardener). This putty is used mainly to correct pores and shallow dents remaining after application of metal putty It has a very fine and flexible texture and primer-surfacer can be applied directly over it. It cannot be applied to in a thick coat approx over 3 mm (0.12 in). This putty should not be applied directly over the bare metal due to low adhesion under those conditions.

Spot (Lacquer) Putty

This is a single-component putty mainly consisting of nitrocellulose and alkyd or acrylic resin. It is used mainly to fill shallow sanding scratches, pores, or dents remaining after the primer-surfacer application.

NOTE: **Presently there is a combination putty available which combine the best characteristics of several different putty types into one.**

Thickness Limitation of Putty:

There are limitations to the application thickness, which vary by filler or putty type can be applied at once per putty type.

Drying Water-Based Paint

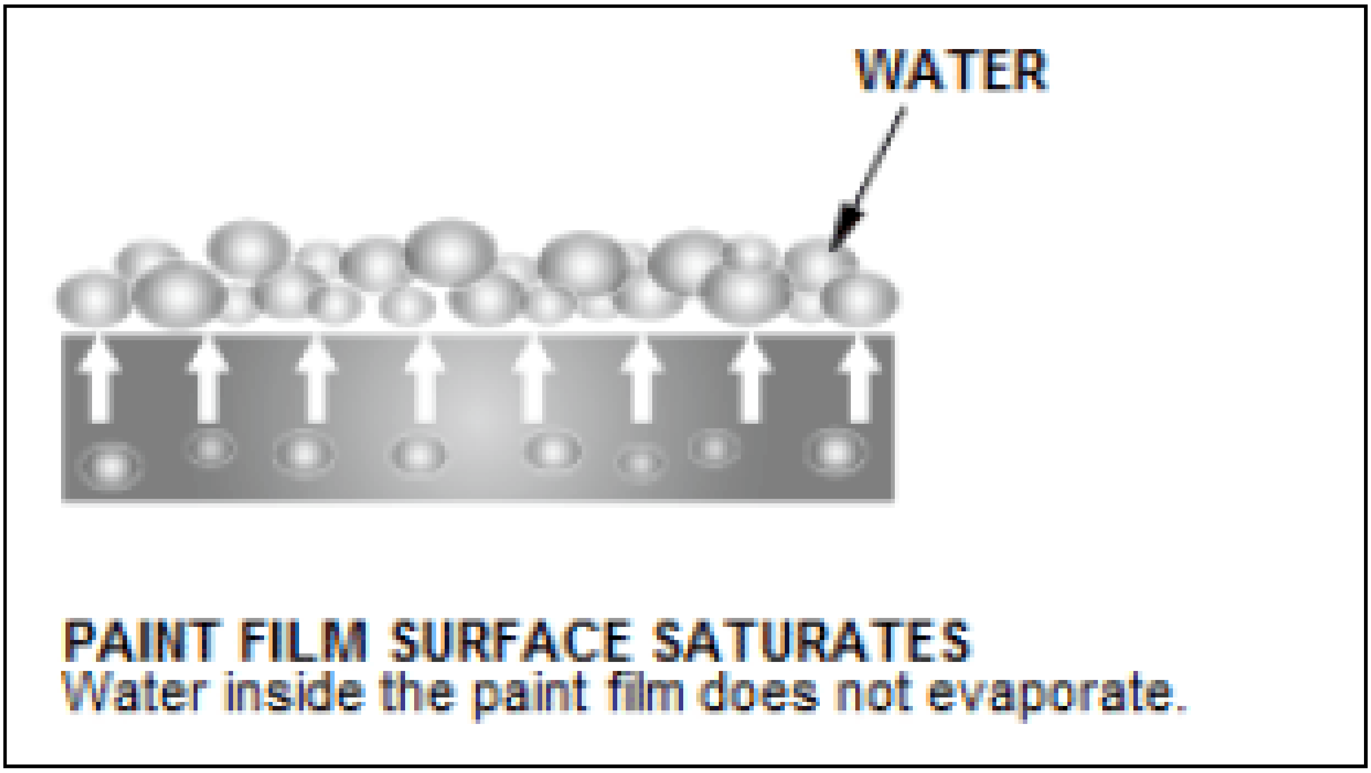
WATER
PAINT FILM SURFACE SATURATES
Water inside the paint film does not evaporate.

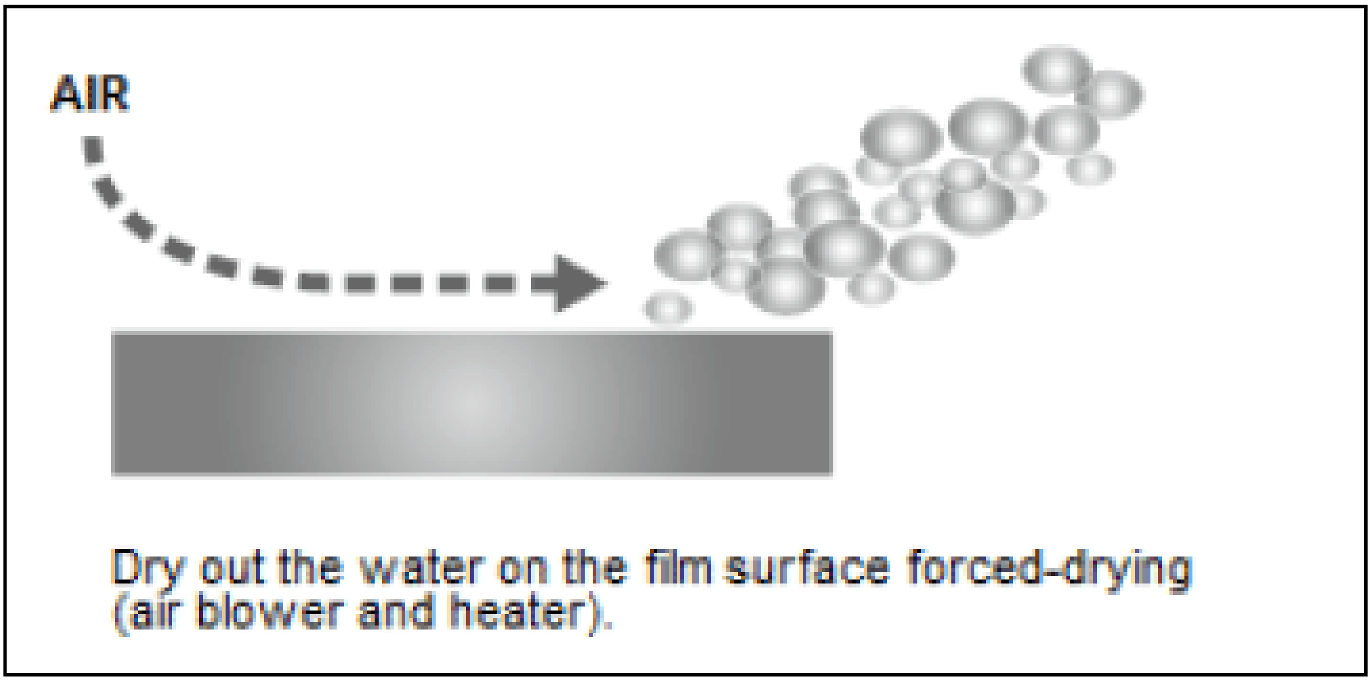
AIR
Dry out the water on the film surface forced-drying (air blower and heater).

When using water-based paint, the paint film is formed as the water evaporates and dries. This is a similar method to de drying laundry, so humidity and air flow rate have a significant impact. In order to shorten the drying time of water-based paint, water evaporation is accelerated by forcing a higher air flow (by using a blower) and higher temperature (using a heater to reduce humidity).

Paint Performance Criteria

Automotive paint finishes require multiples layers of coatings, each with different performance criteria, to achieve the required performance and durability levels.

Paint Film Layers for Production Vehicles (Ex.)

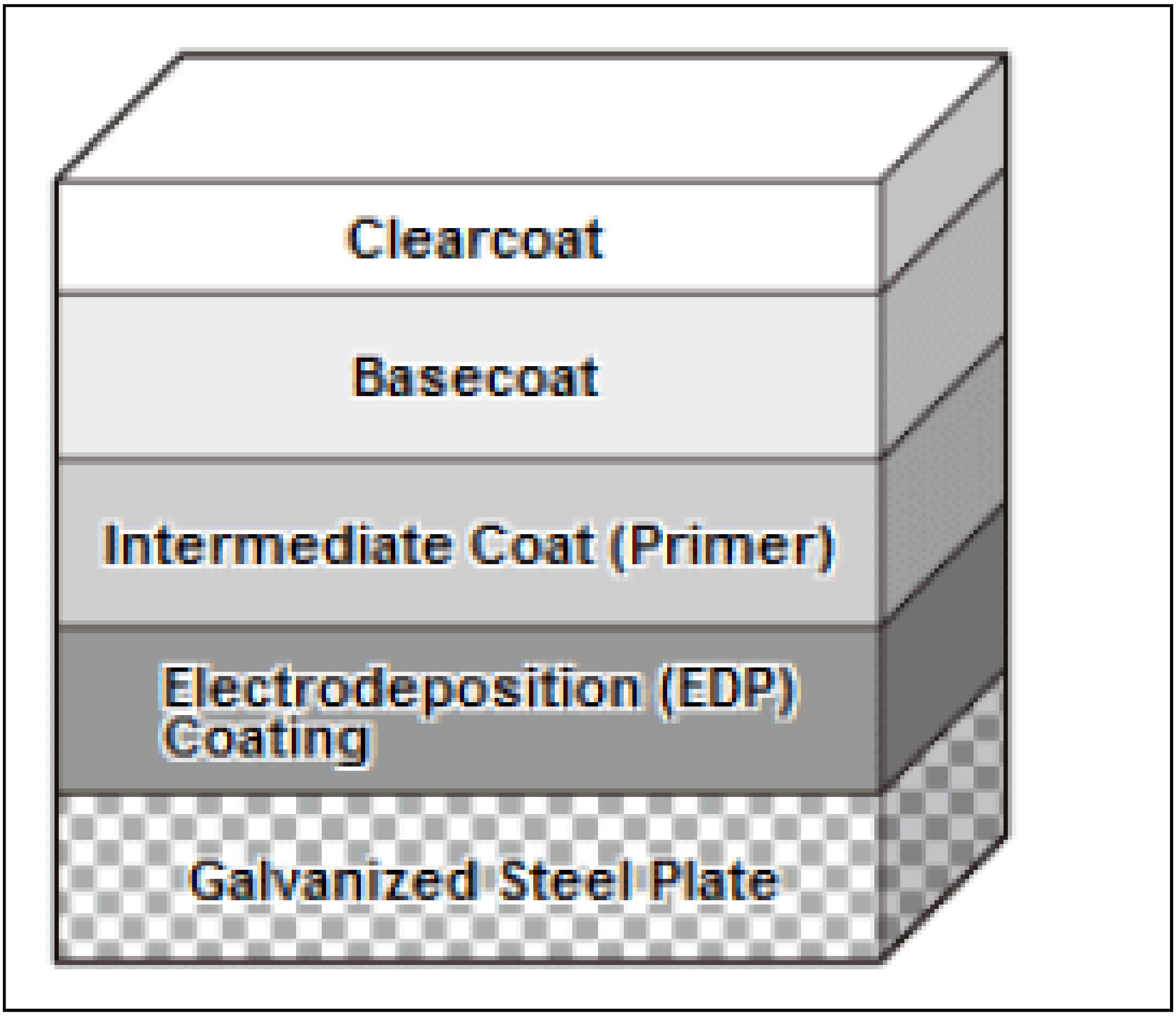
Clearcoat
Basecoat
Intermediate Coat (Primer)
Electrodeposition (EDP) Coating
Galvanized Steel Plate

Paint Film Layers for Repair (Ex.)

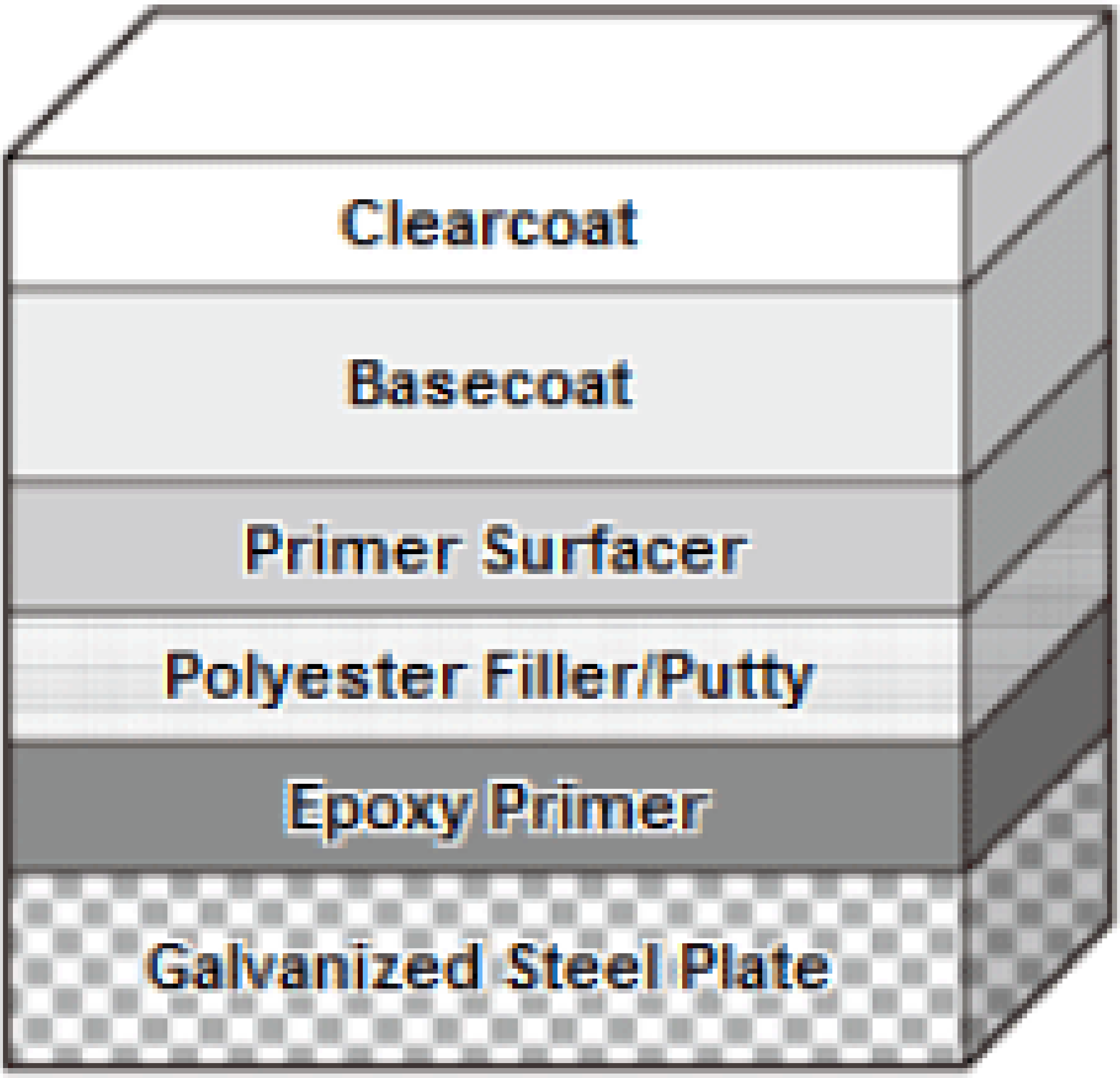

- Rust Prevention:

  Rust prevention performance is crucial to the undercoat (putty primer-surfacer, etc.) that is applied directly to the steel surface.

- Filling:

  Used to fill dents in the damaged bodywork, sanding scratches and pin holes in the undercoat.

- Absorption Prevention (Sealing):

  Undercoating materials often have many tiny holes. When the top coat is applied directly over those porous materials, those holes will absorb the wet paint and the top coat will lose its luster. To protect the top coat from absorption, a sealer must be applied before the topcoats.

- Luster:

  When applied properly paint gives the color, luster and smoothness to the surface. In addition, all these elements will be very durable.

- Adhesiveness:

  The base metal or the undercoat must firmly hold the new coat of paint to prevent peeling away from each other.

- Workability:

  The ease of handling and work speed of the paint finish processes.

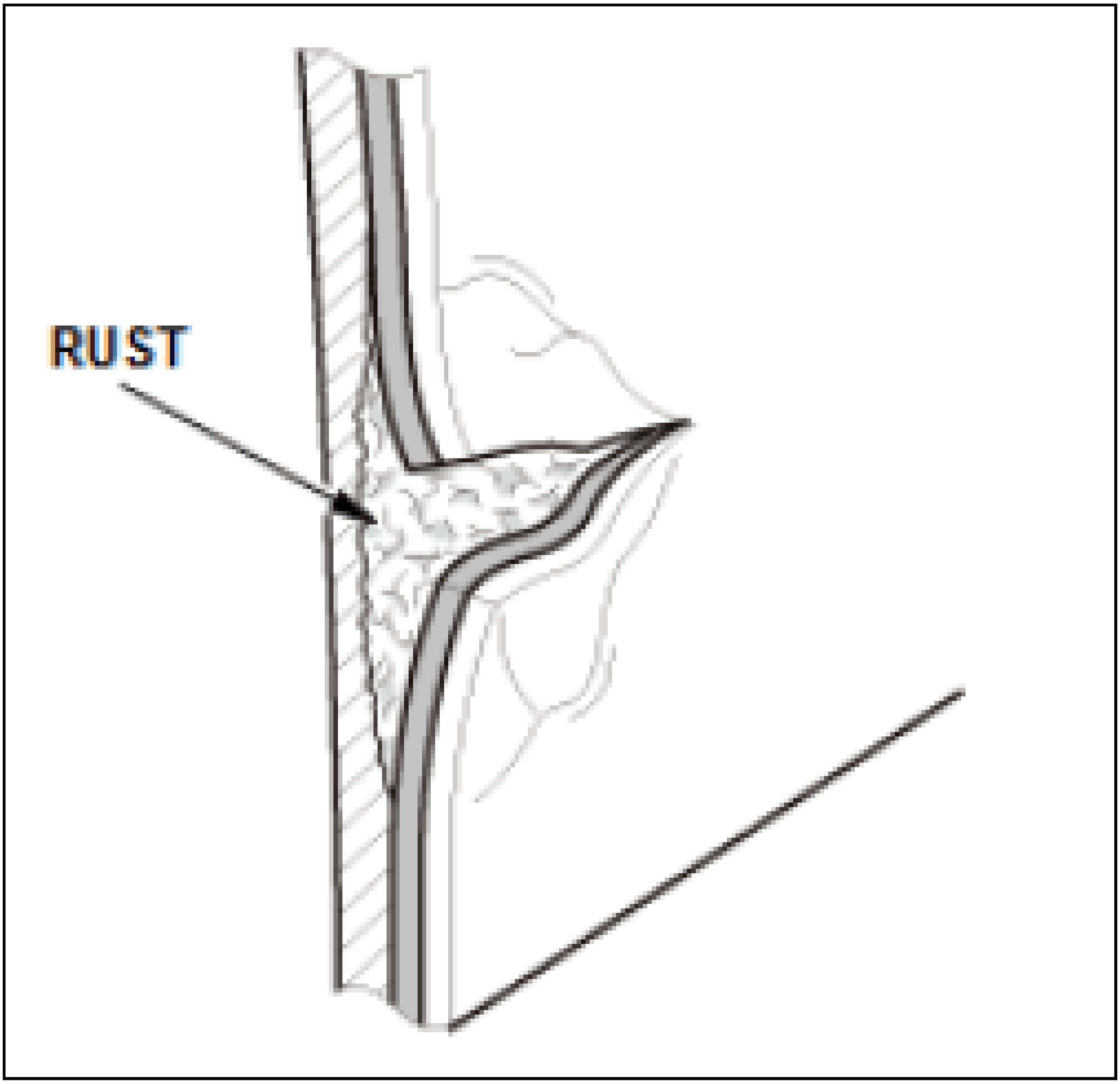
RUST

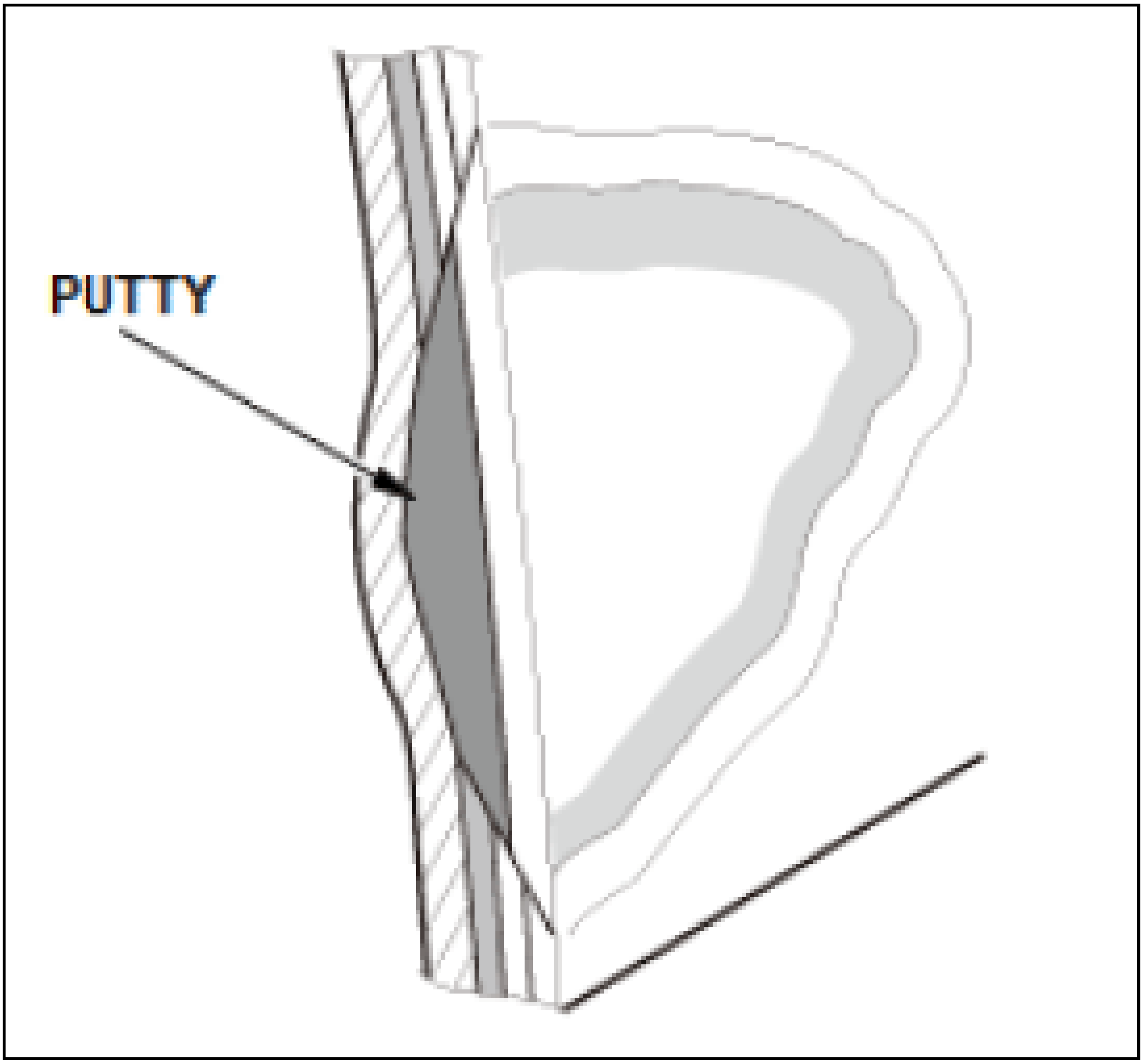

Primer

Primer is applied directly onto the bare metal to prevent corrosion and promote adhesion of the next paint coat. It is generally applied as a very thin coat and does not require sanding. There are several kinds of primer. However, a pure primer is less often used today in repairs and repainting, because a new product, primer-surfacer, has been developed to replace it.

Etching Primer

Also sometimes called wash primer. Etching primer mainly consists of vinyl butyral resins and zinc chromate (rust preventive pigments) and an additive with phosphoric acid as a main base resin. Etching primer is available in two types, a single-component type and a dual-component type. The dual-component type wash primer provides better rust preventive. Etching primer must be applied very carefully because its adhesion power reduced if applied too thick or left to dry more than necessary.

Urethane Primer

A dual-component type primer mainly consisting of alkyd resins. It hardens when mixed with isocyanate (hardener). Urethane primer provides outstanding corrosion protection and adhesion power, but requires hot air around 140Â°F (60Â°C) for drying. Drying under normal temperature 68Â°F (20Â°C) or below is a very slow process.

Epoxy Primer

This is a dual-component type primer mainly consisting of epoxy resins. It hardens when mixed with an amine family hardener. Similar to urethane primer, it also provides outstanding corrosion protection and adhesion power and requires hot air around 140Â°F (60Â°C) for drying. Drying under normal or low temperatures is a very slow process.

Primer Surfacer

Primer-surfacer has characteristics of both traditional primers and surfacers. The most recent primer-surfacer has a stronger characteristic as a surfacer:

- Corrosion resistance (required for primer)
- Smoothness (required for surfacer)
- Sealing or absorption prevention (required for surfacer)
- Adhesion (required for both primer and surfacer)

Urethane Primer-Surfacer

The two-liquid paint and base resin and hardener to be mixed before use. It will not dissolve in paint reducer/thinner after completely dry and has high sealing performance. The drying process is slow, so forced drying is recommended.

Thermoset Aluminum Alkyd Primer-Surfacer

A thermoset type of primer-surfacer often used for paint repairs. Baking is required at 230-284Â°F (110-140Â°C) for 20-40 minutes. Resulting fill qualities are same as a new vehicle.

Surfacer

Surfacer helps adhesion of primer and topcoats. It also improves paint durability and water resistance. In addition, it can remove sanding scratches filled or basecoat surfaces to improve paint finish quality. Has been mostly replaced by primer-surfacer today.

Refinish Product Categories And Purposes

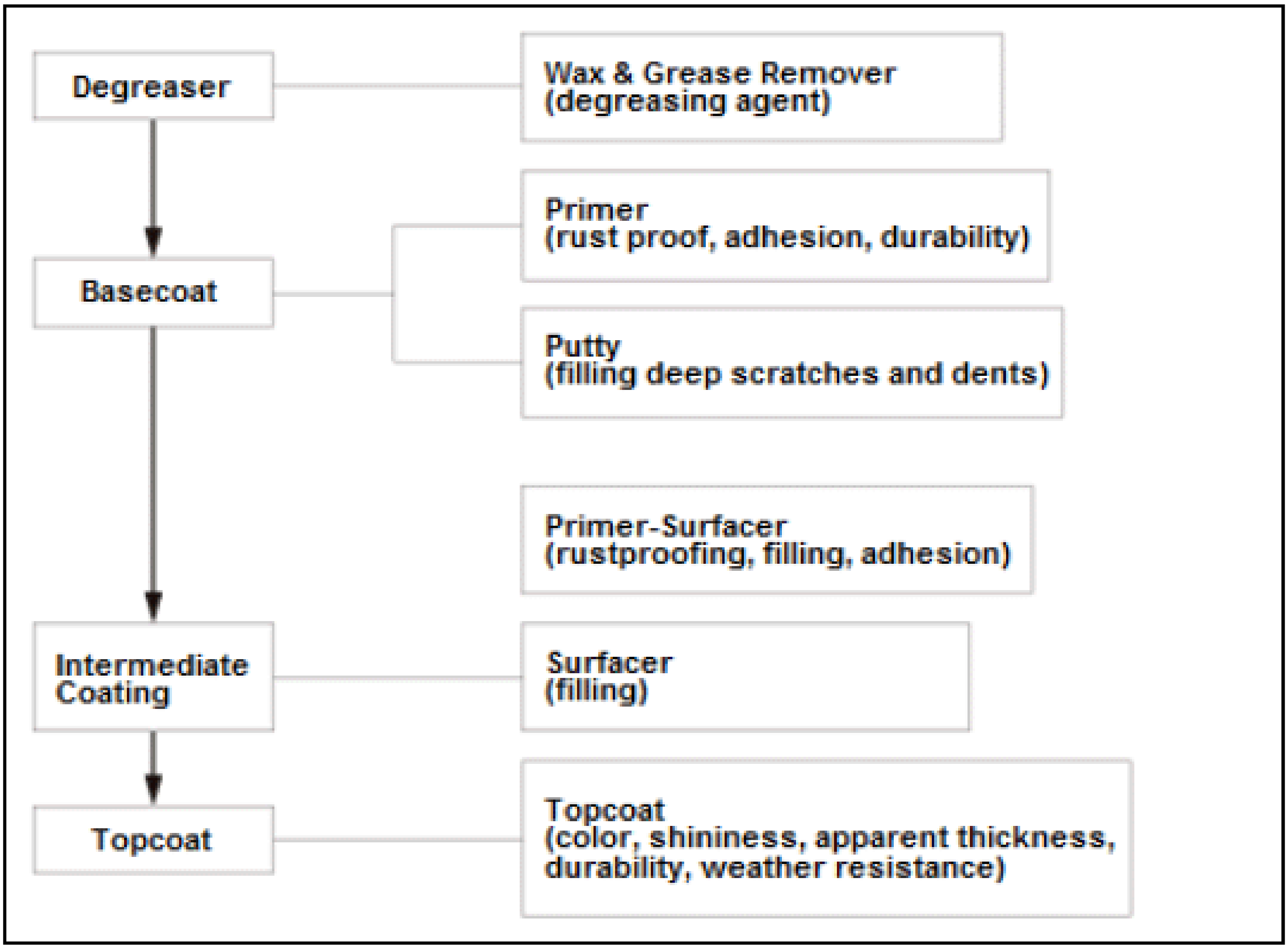
Degreaser
Wax & Grease Remover (degreasing agent)
Basecoat
Primer (rust proof, adhesion, durability)
Putty (filling deep scratches and dents)
Primer-Surfacer (rustproofing, filling, adhesion)
Intermediate Coating
Surfacer (filling)
Topcoat
Topcoat (color, shininess, apparent thickness, durability, weather resistance)

Specialized Paint Products

- Paint Stripper (Coating Remover)

  Chemical paint stripper is sometimes used when removing old paint film layers.

  Chlorinated hydrocarbons are the main component, which is adjusted by a thickener to allow brush coating. A small amount of paraffin is also found in paint stripper. Always rinse surfaces thoroughly with water after removing.

- Plastic Bumper Paint

Used for urethane bumpers because of its high flexibility and improved adhesion.

- Weld Through Primer (Spot Sealer)

  A high performance, rust proof and electrically conductive primer applied to the areas where spot or MAG plug welding is being done. It is water-based and allows spot welding after coating.

- Soft Chipping Guard Primer (Paint)

  Special primer applied to the lower or bottom part of vehicles to protect parts from chipping damage cause by stones kicked up from the road surface. It has a better appearance than undercoating and general film thickness is 100-200 µm (0.004-0.008 in). Its color is gray and chipping resistance (impact resistance, adhesiveness, elasticity) is high.

- Degreaser

  Remove contaminants such as wax and silicone from surfaces being prepared for paint.

Topcoats

Topcoats are applied last to give the color, luster, smoothness and other cosmetic qualities to the vehicle. Topcoats must also protect these qualities over a long period of time from external factors (sunlight, rain, bird droppings, etc.). Topcoats may be divided into several groups as shown below.

Topcoat Categories

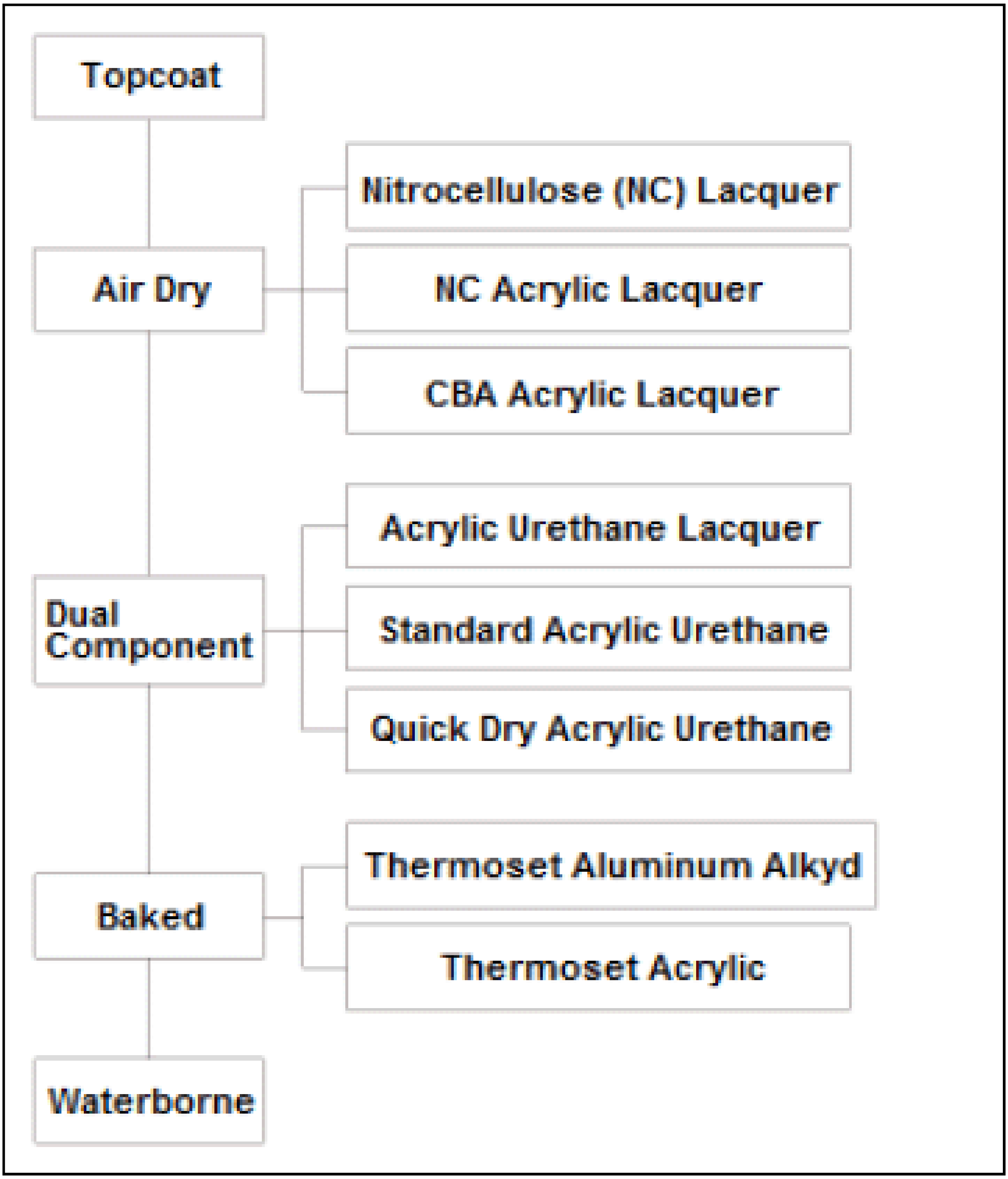
Topcoat
Air Dry
Nitrocellulose (NC) Lacquer
NC Acrylic Lacquer
CBA Acrylic Lacquer
Dual Component
Acrylic Urethane Lacquer
Standard Acrylic Urethane
Quick Dry Acrylic Urethane
Baked
Thermoset Aluminum Alkyd
Thermoset Acrylic
Waterborne

Air Dry Type (Lacquer Type)

This type of top coats is commonly known as lacquers, and is divided into NC lacquers, NC acrylic lacquers and CAB acrylic lacquers by the kind of resins used. Air-dry type topcoats have the following properties:

- Quick-drying, but requires polishing when dry.
- Far less resistant against weathering or chemicals than more recent topcoat types.
- Not used much anymore due to durability and environmental issues.

Dual-Component Type (Urethane Type)

Topcoat where drying process includes a urethane reaction, which forms a net-like structure. The main agent and the hardener, are kept separate until they are mixed together just before application.

The urethane type dual-component topcoats are further divided into following three groups by resins type and drying time.

- Urethane Lacquer

  Dual component acrylic urethane is blended with nitrocellulose to quicken the drying speed. It hardens when mixed with an isocyanate hardener. Nitrocellulose does not react with urethane hardener, and does not dissolve in solvent completely so it is not suitable for quick repairs. Has been mostly replaced by quick dry acrylic urethanes.

- Standard Acrylic Urethane

  Commonly referred to as just "urethane" or "acrylic urethane," this dual-component topcoat mainly consists of acrylic resins. It hardens when mixed with an isocyanate hardener. It has an outstanding coating performance, but dries very slowly unless force dried. It is suitable for painting large areas.

- Quick Dry Acrylic Urethane

  Often referred to as a quick-drying urethane. It is designed to shorten drying time without affecting the coating performance. Made mainly of acrylic resins and hardens when mixed with an isocyanate hardener. Commonly used for paint repairs because of its quick drying property and outstanding coating performance.

Baked Type

These are single-component type paints that harden when heated to about 284Â°F (140Â°C). Baked type paints that are used in vehicle production lines are also sometimes used for repainting.

Examples of baked type topcoats are shown below.

- Thermoset Aluminum Alkyd

  Also called melamine baked paint, this is a solid type paint mainly consisting of melamine and alkyd resins. Mainly used for solid colors.

- Thermoset Acrylic

  Metallic paint mainly consisting of melamine and acrylic resins.

Waterborne Coating

A type of paint with a special water-based acrylic resin and very little organic solvent. This makes it more user and environmentally friendly Because this type of paint becomes thinner when shaken or agitated, it is relatively easy to handle and especially suited for even application of metallic colors. When used with a solvent-based clear coat, the finish quality and workability are basically equivalent to acrylic urethanes.

Water-Based Paint Characteristics

Water-based paint specifications vary slightly by product, but most share the basic characteristics below.

Paint Performance

- Environmentally friendly with low volatile organic compounds (VOC)
- Little irritating smell specific to organic solvent
- High coverage and durability
- High blending performance and even application of paint film
- Consistent color even under different painting conditions

Tools & Equipment

- Requires clean air supply
- Requires high volume low pressure (HVLP) spray gun due to high viscosity
- Requires forced air drying

Coating, Drying Process

- No special skills required
- Painting method is different from solvent based paint. Initial coat is wet, subsequent coats are gradually thinner
- Must be allowed to dry completely before the next coat

Storing and Handling

- Store at a stable temperature

- Keep from freezing temperatures
- Need temperature controlled paint booth depending on the region
- Avoid long term storage
- Fire resistant and non-hazardous material

Water-Based Paint Structure

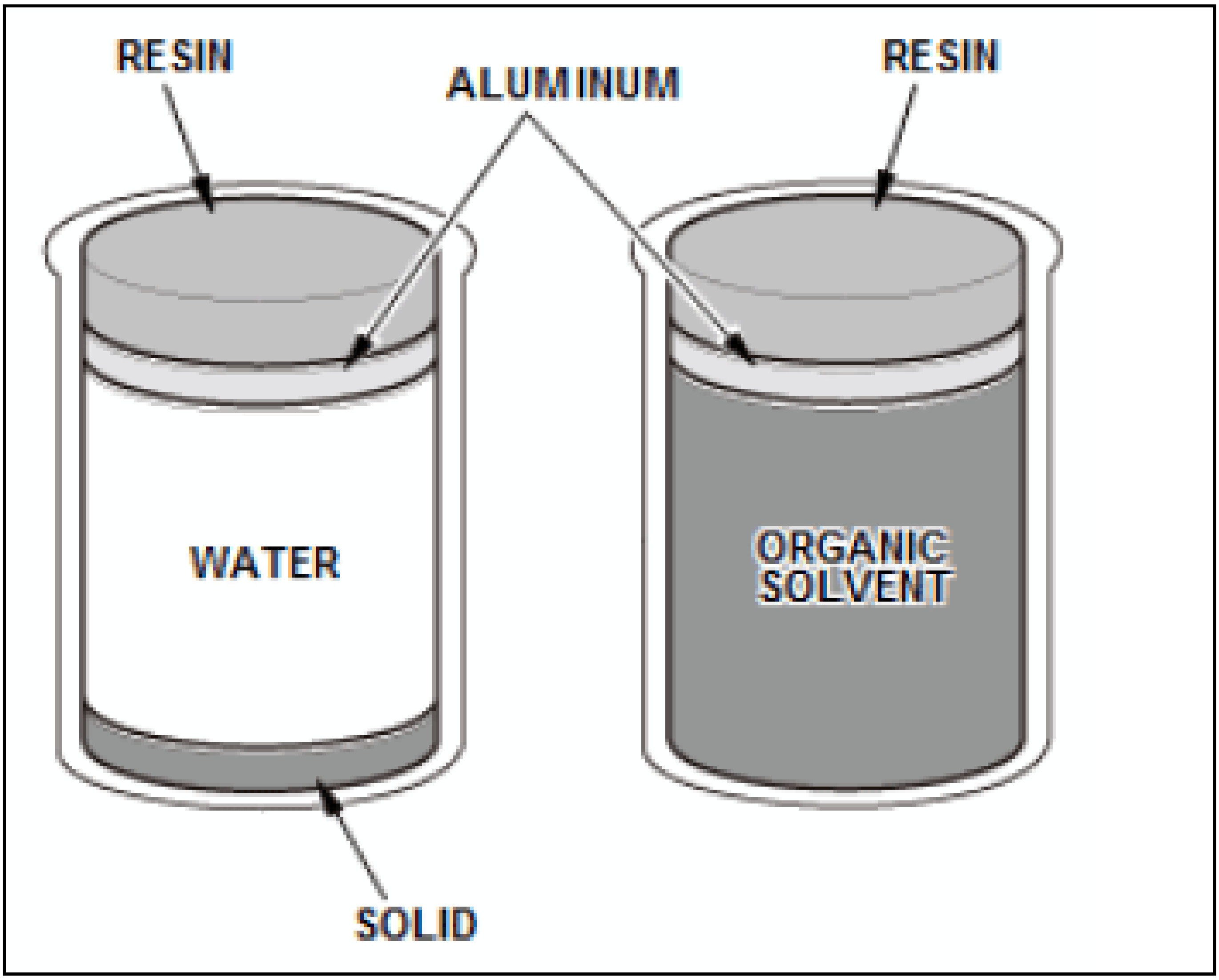

Pigment

Water-based paints, use the same basic pigments as solvent-based paint. The solvent is simply replaced with water, and additives are used to ensure stability when mixed. Some water-based paints also contain a small amount of solid matter.

Resin

Cold setting (drying) urethane resin is generally used because it will achieve performance similar to a solvent-based paint.

Solvent

Water is used as a solvent. Additives used for controlling the paint's viscosity and drying performance are also basically water-based. However, specially distilled water (not tap-water) is used.

Wax And Grease Remover

Degreasing Agents:

- Degreases metal surfaces, old paint films, and basecoats. Also removes oil (grease) and contamination after sanding/grinding.
- Fast drying with a low solvent effect. No risk of dissolving basecoats or old paint films.
- There are several types depending on parts being painted and anti-static requirements.
- There is a specific wax & grease remover for water-based paint.

DEFINITION AND PURPOSE OF FINISH (PAINTING)

Definition Of Finish

A term used to describe the entire process to form a paint film on vehicle bodies and parts using paint in liquid or powder form.

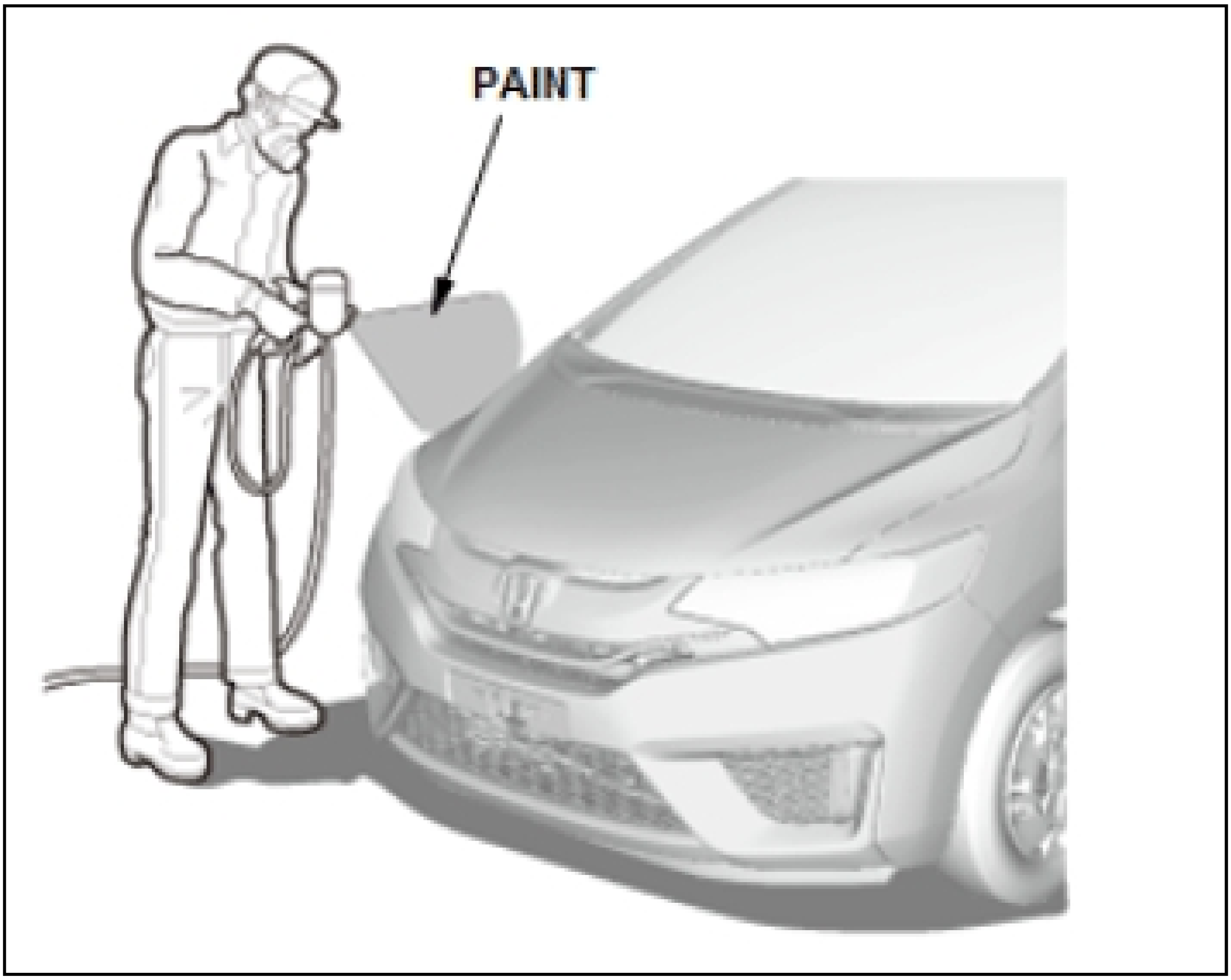

Purpose Of Finish

Steel Protection

Automobiles are made of steel (steel sheet) for the most part. Left unprotected, steel oxidizes with exposure to and oxygen in the air, resulting in rust. The main purpose of the vehicle's finish is to protect steel parts from rusting.

Appearance Improvement

Automobiles use a wide variety of surfaces and styling lines. These complex forms create a pleasing, dynamic image with a sense of speed. Automotive finishes provide a three-dimensional color sense, and a beautiful appearance, which enhances the value of the product.

Safety Indicators

Finish coatings are also applied to some vehicles, road signs and even highways as lane markings to help prevent accidents and contribute to overall traffic safety.

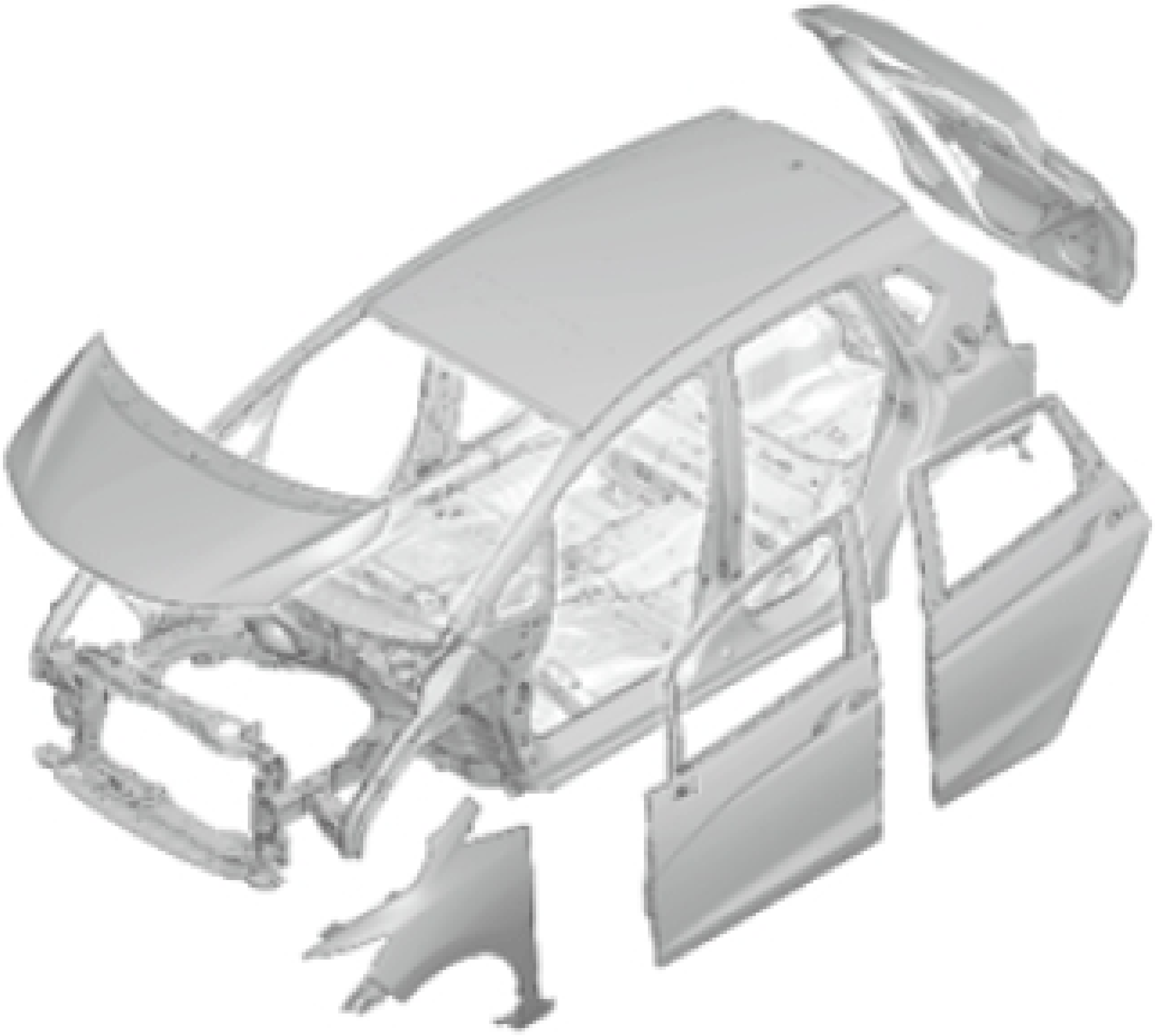

FACTORY PAINT FINISH INFORMATION

Factory Paint Finish Application Process

There are many requirements for body coating such as external finish (appearance), durability, corrosion resistance and others, as it has a significant impact on quality and marketability of the vehicle. Mass production vehicles go through a multi-layered painting process, including chemical conversion coating and basecoating for corrosion resistance and improved durability. The middle and topcoats provide a high quality external finish. There are also many more paint processes require to produce high quality automobile bodies and parts.

1. Chemical Conversion Coating Process:

   The vehicle body is fully immersed (dipped) into acrylic washer fluid to remove oil and contaminants. This also form a crystalized film of zinc phosphate similar to the dip method.

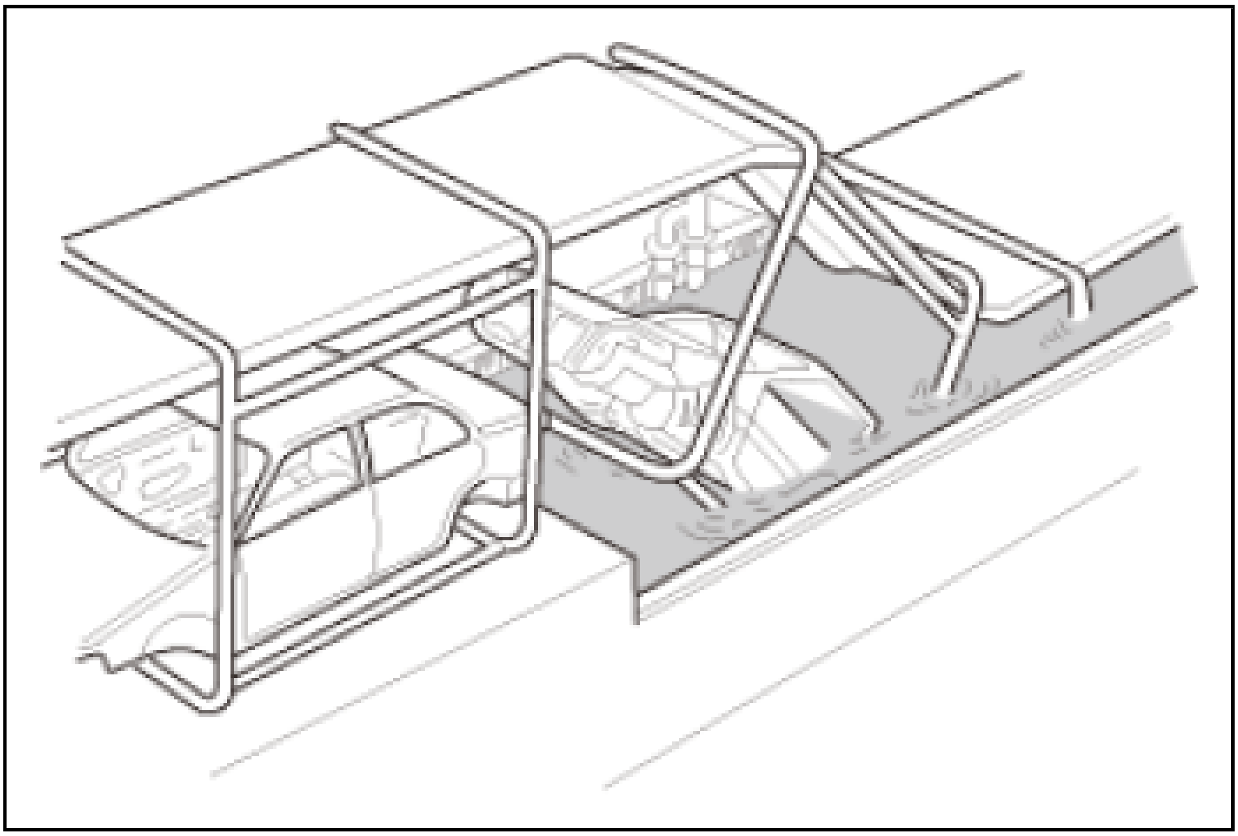

2. Basecoat Process:

   The vehicle body is fully immersed (dipped) and electrodeposition (ED) coating is applied. Primer or paint coats the entire part without missing any areas, which improves anti-corrosion durability. ED coating uses epoxy group resin paint.

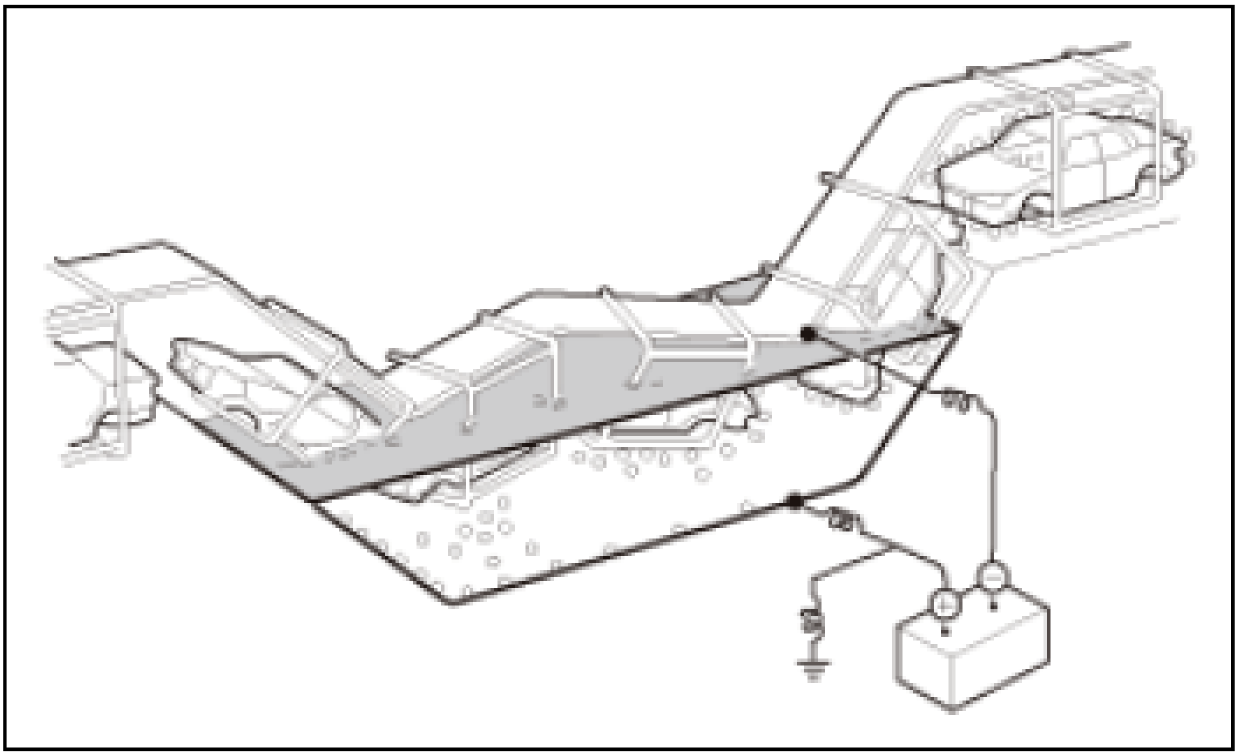

3. Sealing Process:

   Seals fitted parts of the body after welding and in joint areas such as hemmed parts like doors force-fed sealer gun. Body sealer helps prevent dust and water entry and also improves corrosion resistance.

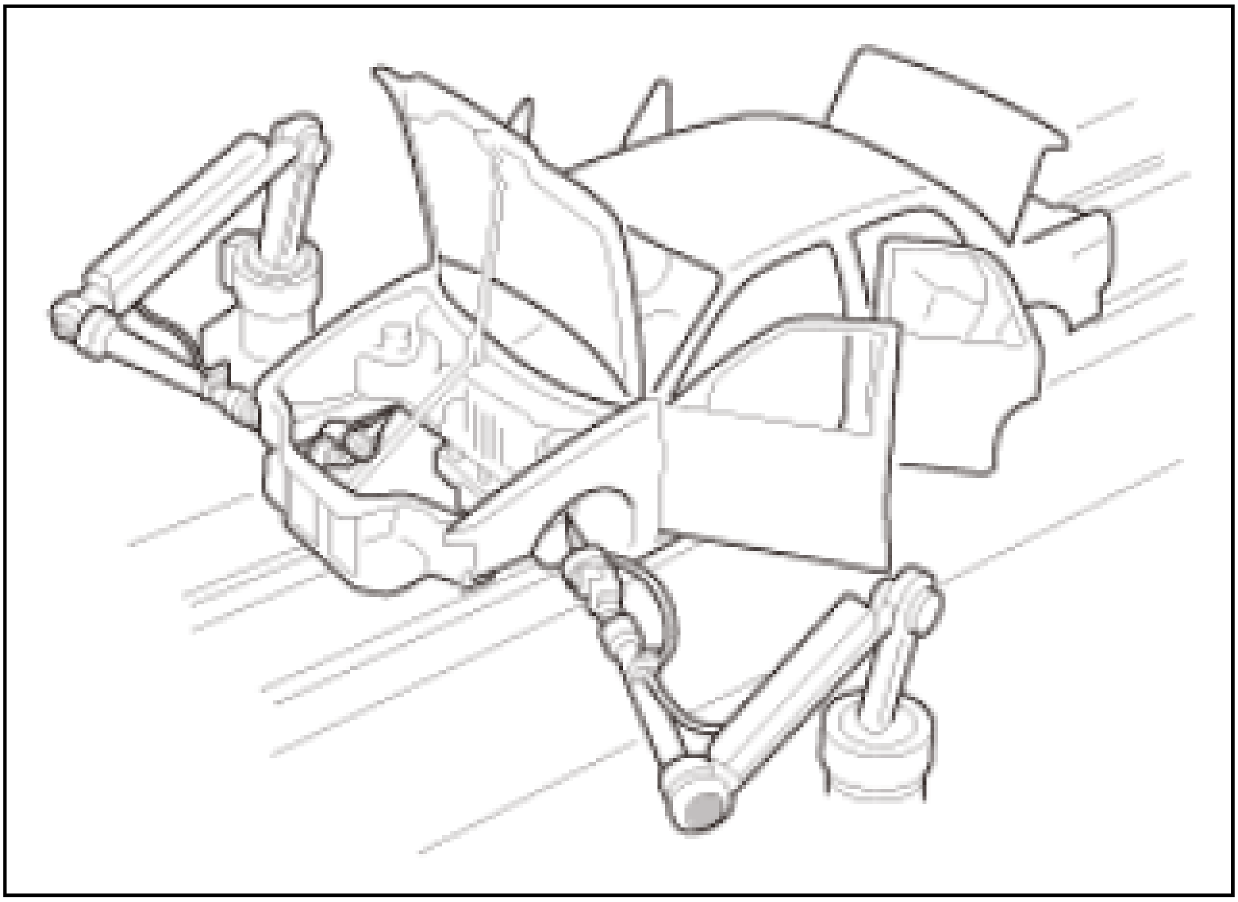

4. Undercoating Process:

   PVC (polyvinyl chloride) is applied to the lower body including the front and rear wheel houses. Helps prevent paint and body damage from rock chips and other causes. Also contributes to sound, heat, and vibration control.

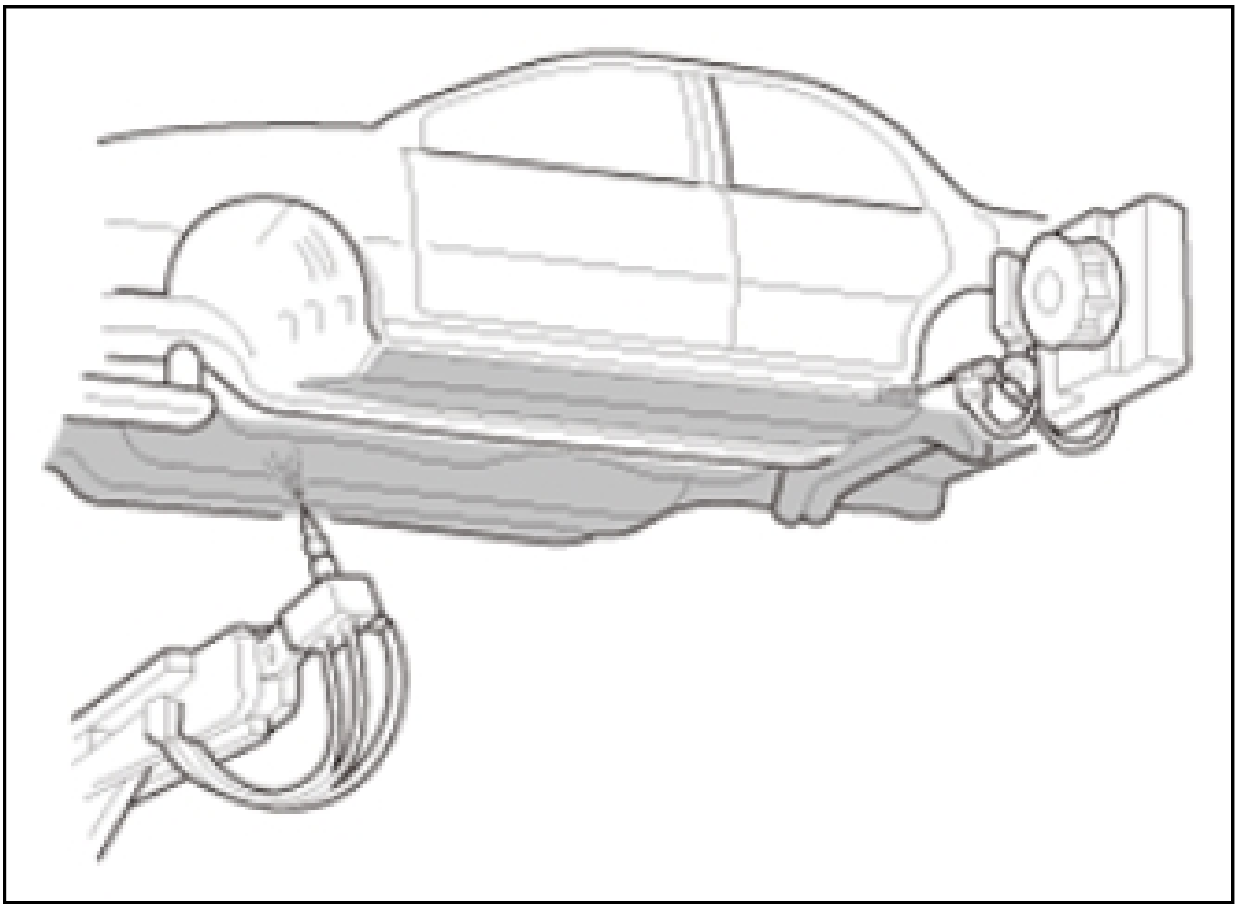

5. Hard Chip Guard Coating Process:

   Chip guard primer is applied to side sill surface. It helps prevent paint film damage to side sill caused by rock chips, etc.

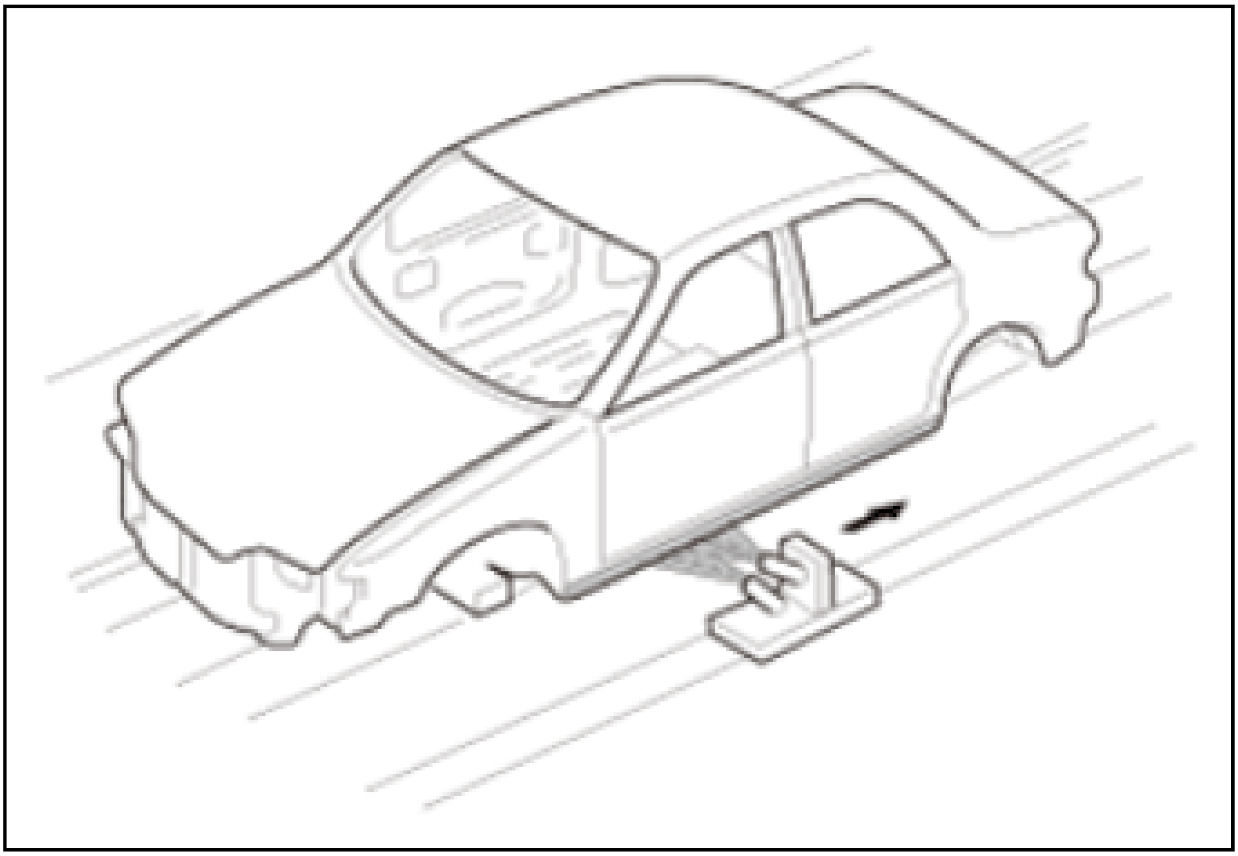

6. Soft Chip Guard Coating Process (only for high corrosion areas):

   Soft chip guard primer is applied to the edges of hood, roof and doors etc. It helps preventing paint film damage and rust cause by rock chips.

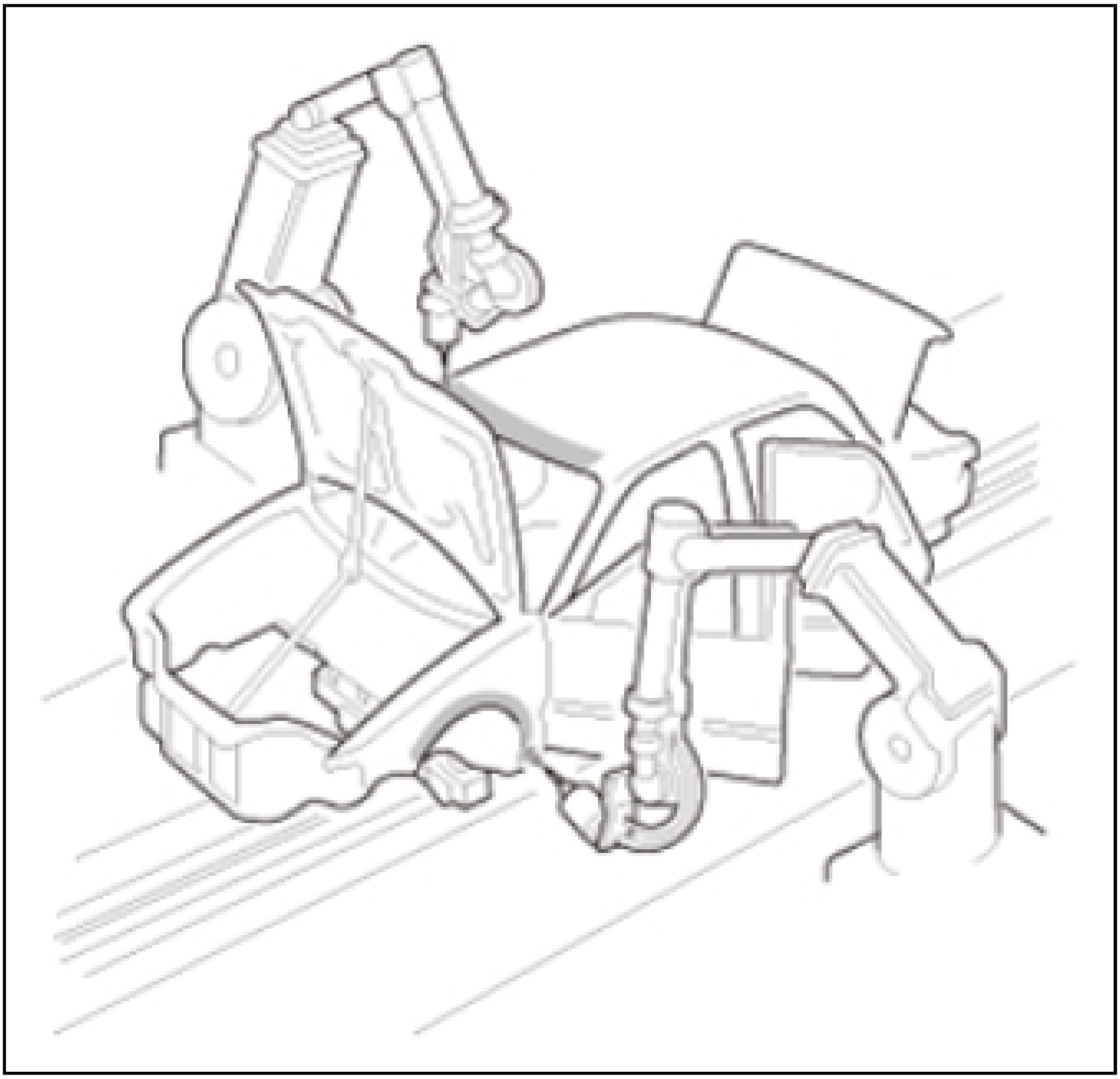

7. Intermediate Coating Process:

   Maintains paint film thickness and improves clarity and corrosion resistance of the total body paint film, including the topcoats. Bell type coating conveyor lines maintain film thickness consistency.

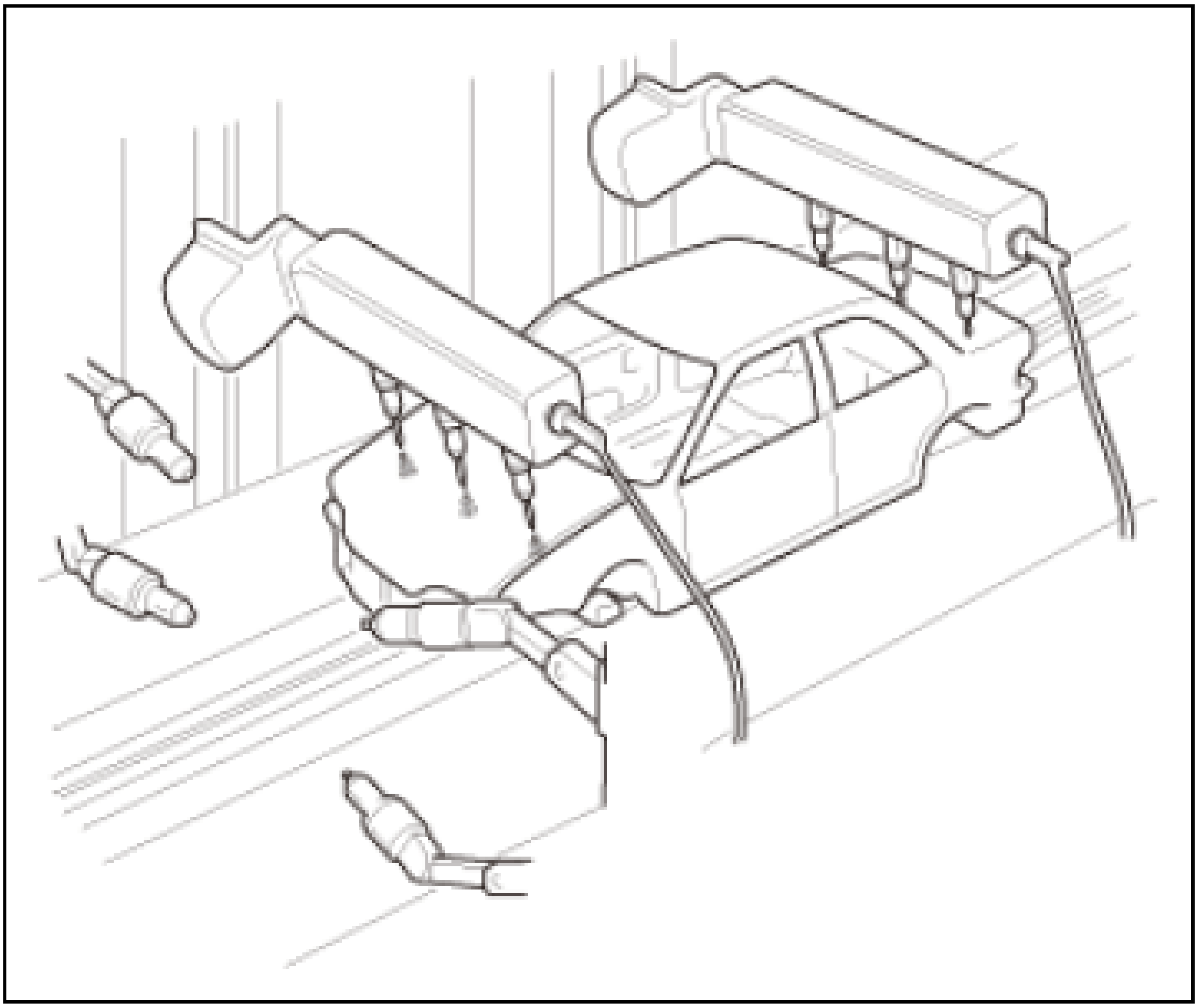

8. Intermediate Coat Sanding Process:

Intermediate coating paint film is sanded in order to improve the smoothness of the film surface and adhesion of the topcoats.

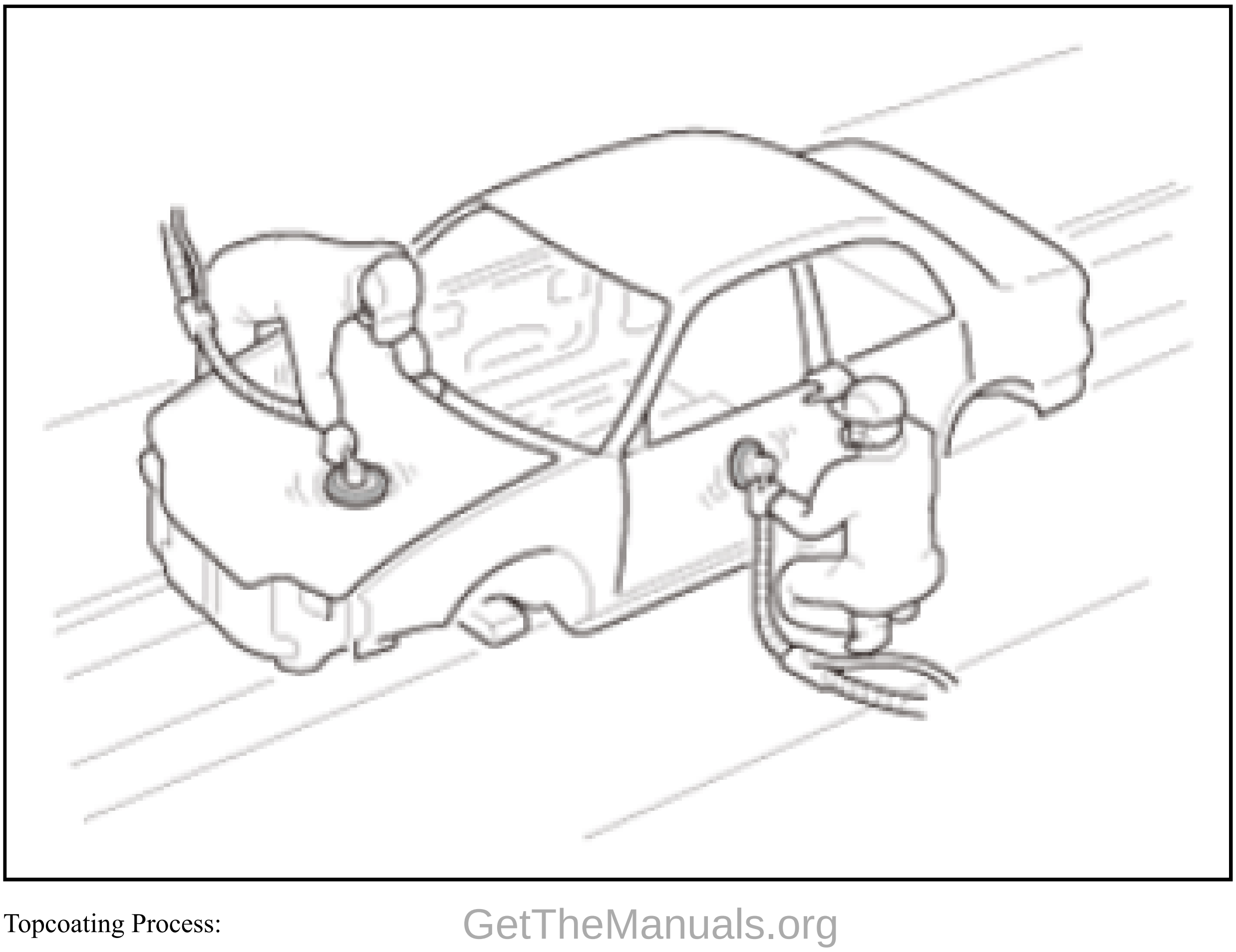

9. Topcoating Process:

Enamel paint is applied to inside and outside of body using robotic painting equipment. For metallic and pearl paint, a clearcoat is applied after the enamel paint. A high quality baked acrylic type paint or waterborne paint is used to improve corrosion resistance and appearance.

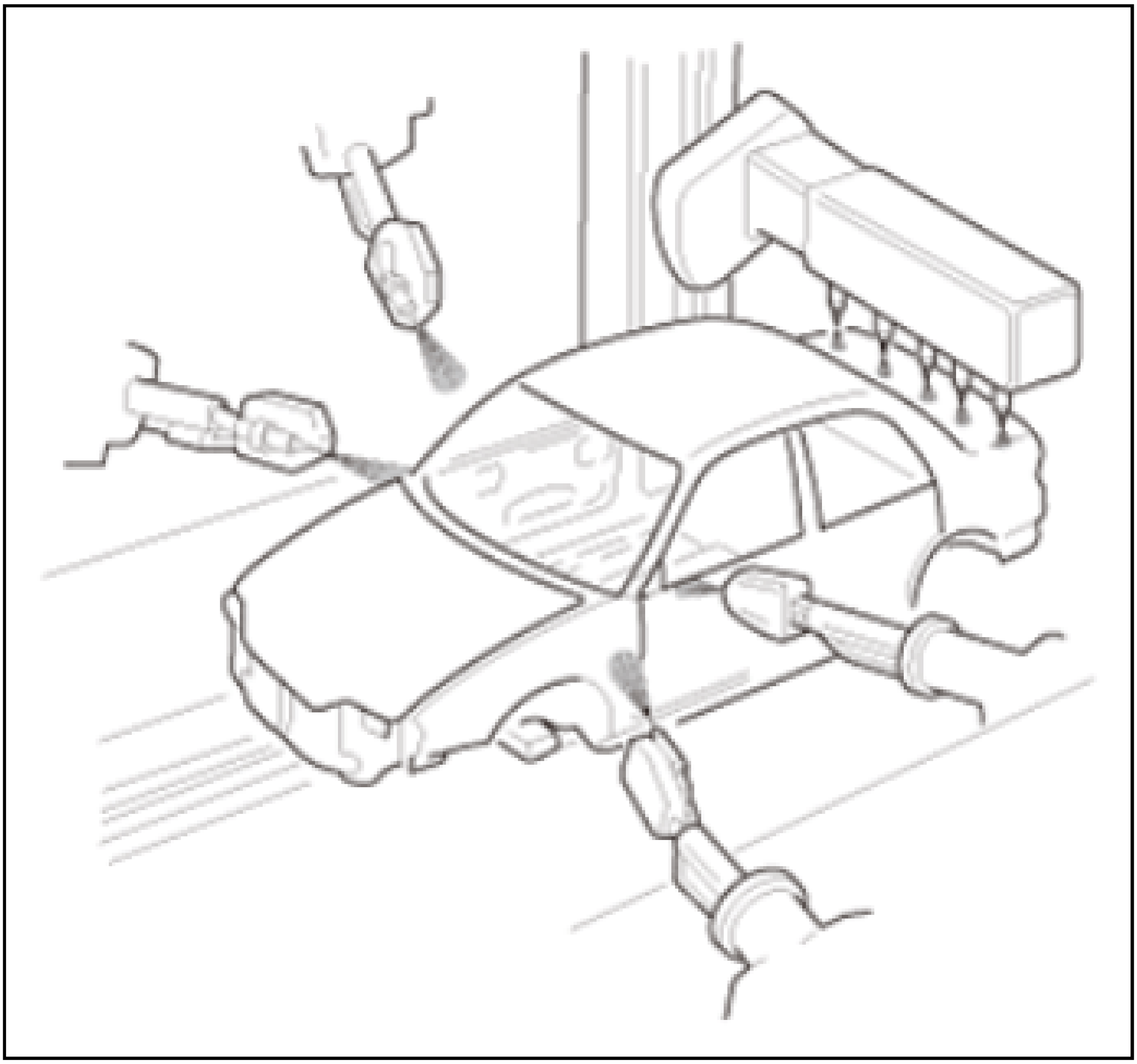

10. Paint Inspection Process:

    Paint quality is inspected to judge OK/NG based on the inspection criteria. Coating condition, film thickness, film hardness, adhesion, etc. are thoroughly checked by visual and mechanical means.

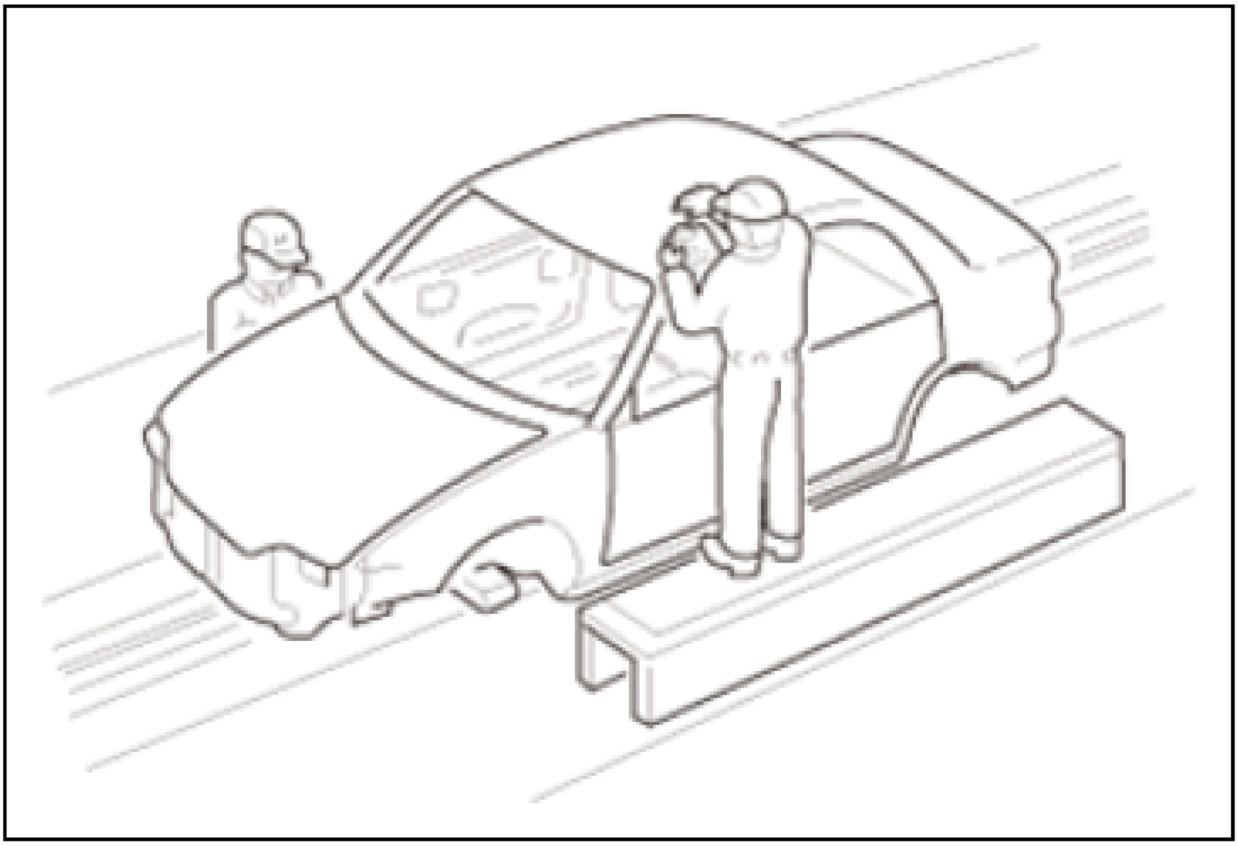

11. Two-Tone Paint Process (Special Paint):

    (Example) Two-tone paint may be applied after topcoating depending on specifications.

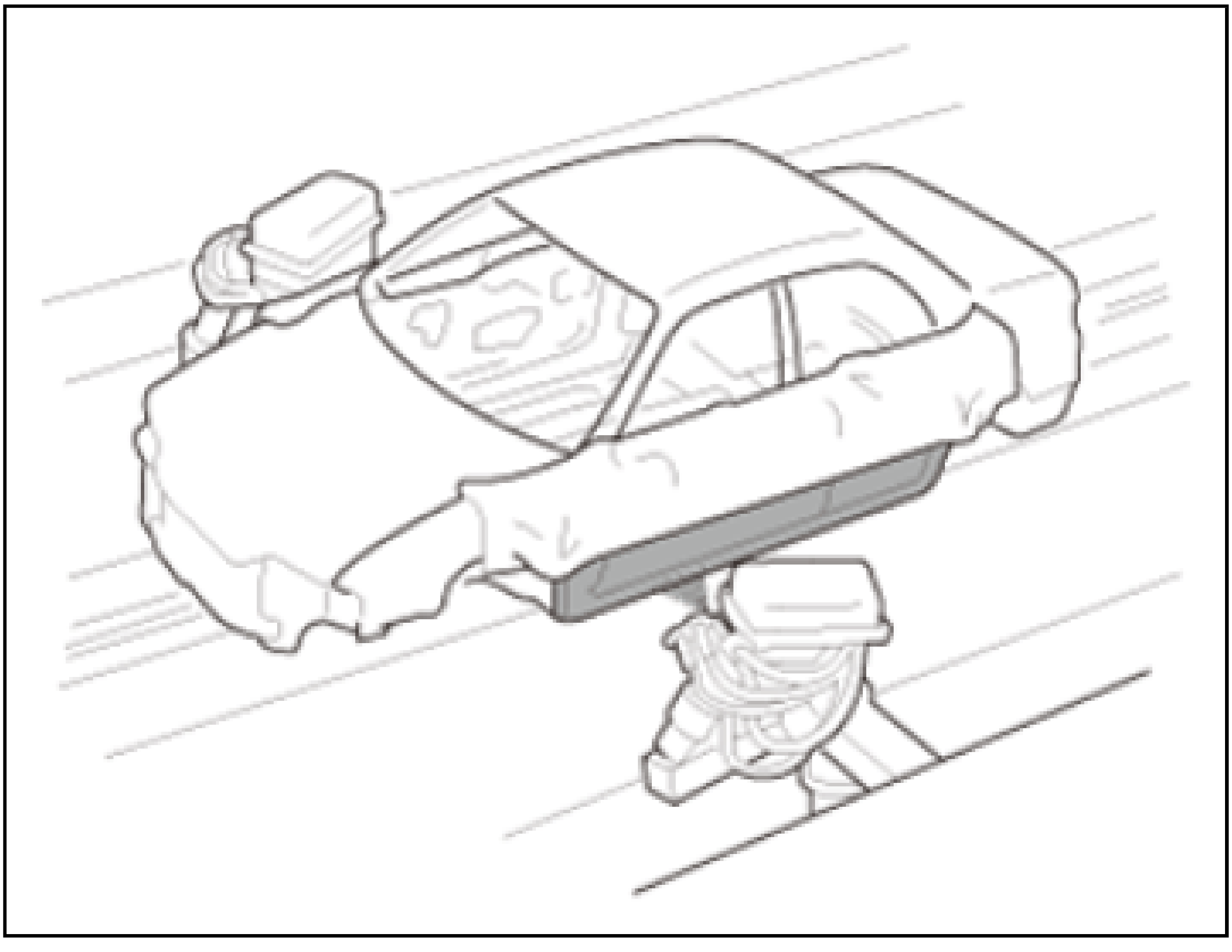

12. Internal Rust Proofing Process:

    A special zinc-based rust proof paint or wax is applied to the critical areas that requires rustproofing treatment using spray guns in order to further enhance anti-corrosion performance.

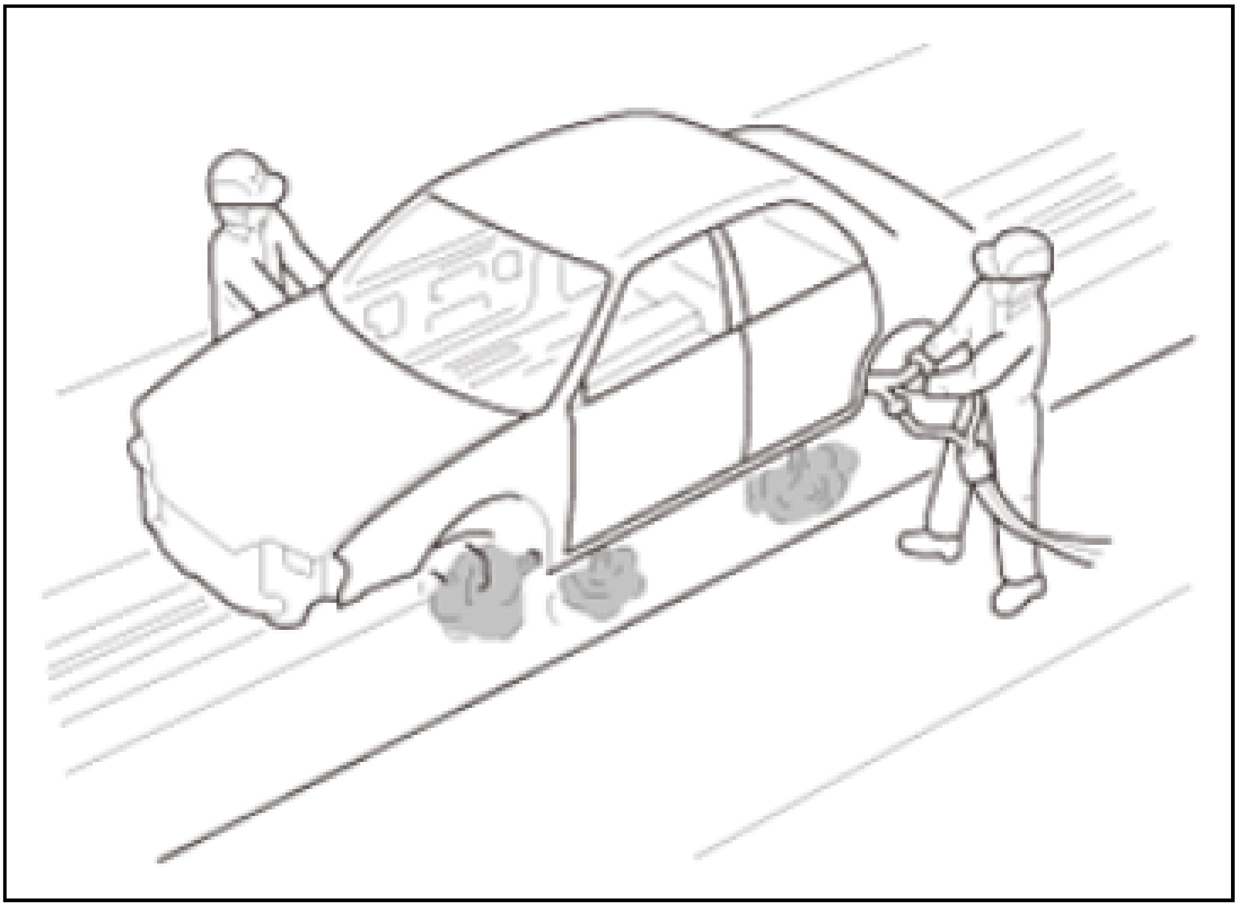

13. Complete Build Unit Rust Proof Process:

    Inside and outside rustproofing. The wax coating is even applied inside the tail gate, doors, and to the underbody for anti-corrosion performance enhancement.

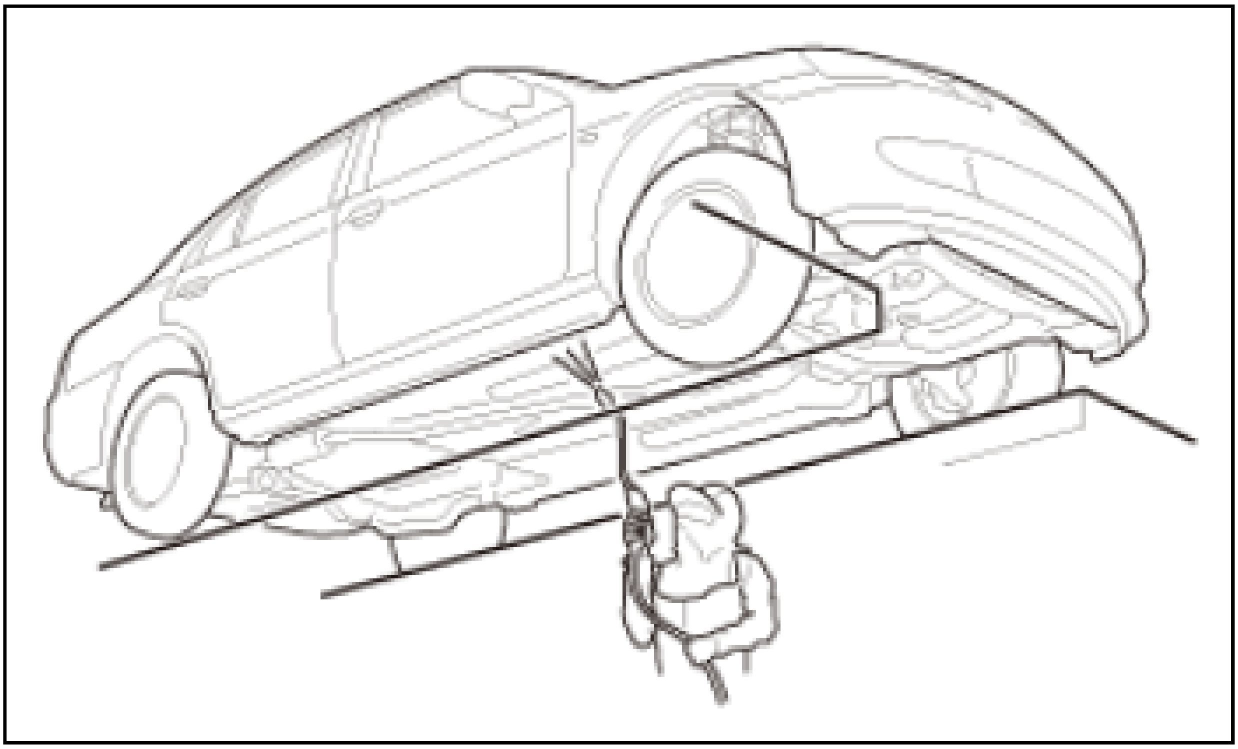

Paint Film Structure

Paint Film For General Mass Production Vehicles

Many different paints are used on vehicles. They are chosen based on the requirements of each part such as:

- Rust prevention
- Sound insulation
- Anti-chipping

- Cosmetic appearance
- Adhesion promote

The following information show the different coating layers commonly used on new vehicle bodies.

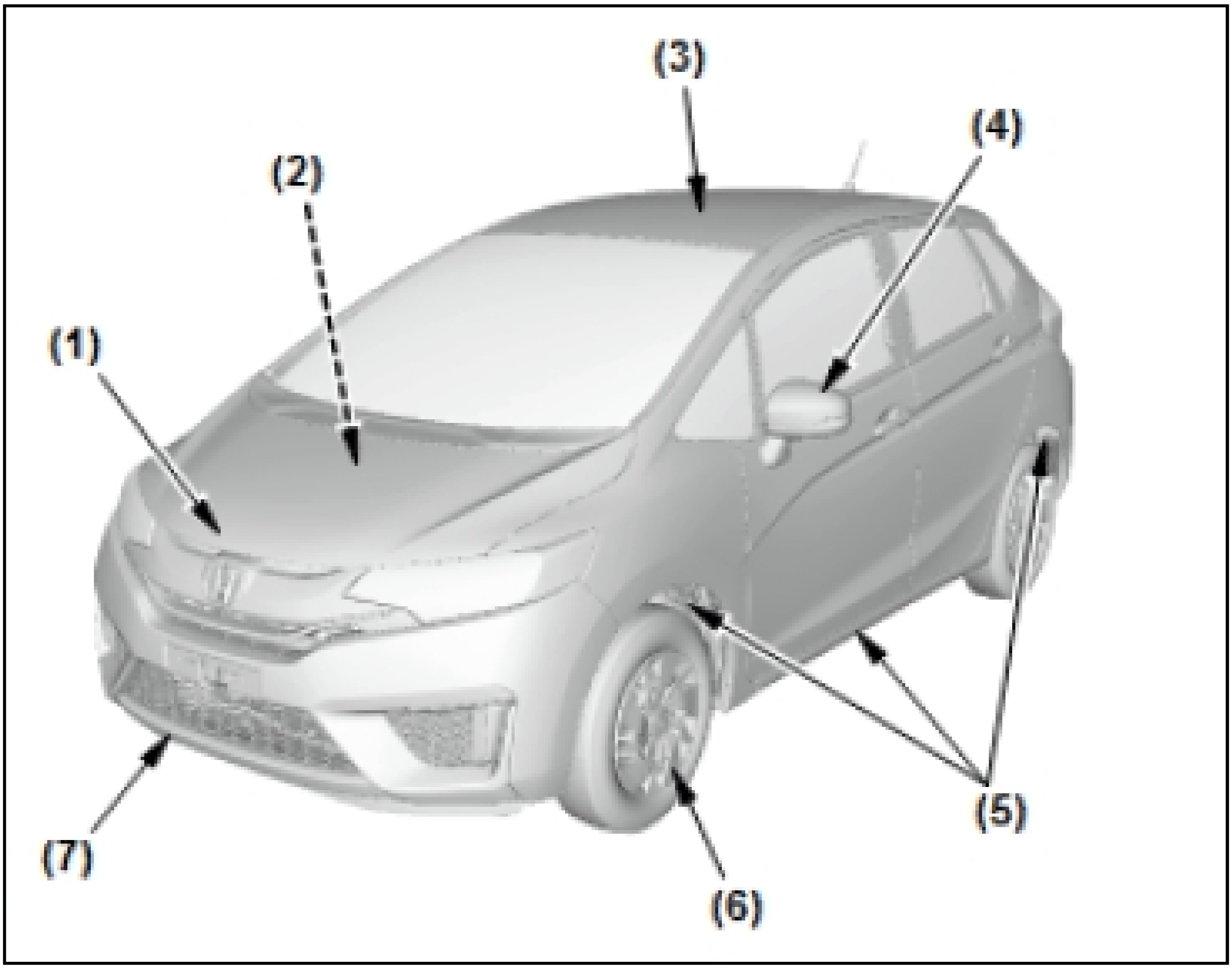

1. **Soft Chipping Guard Primer Coating**

   Topcoat: Thermoset aluminum alkyd resin paint

   Intermediate Coating: Polyester resin paint

   Rock Chip Protection: Chipping guard primer

   Basecoat: Polybutadiene resin paint, epoxy resin paint (primer)

   Steel Plate

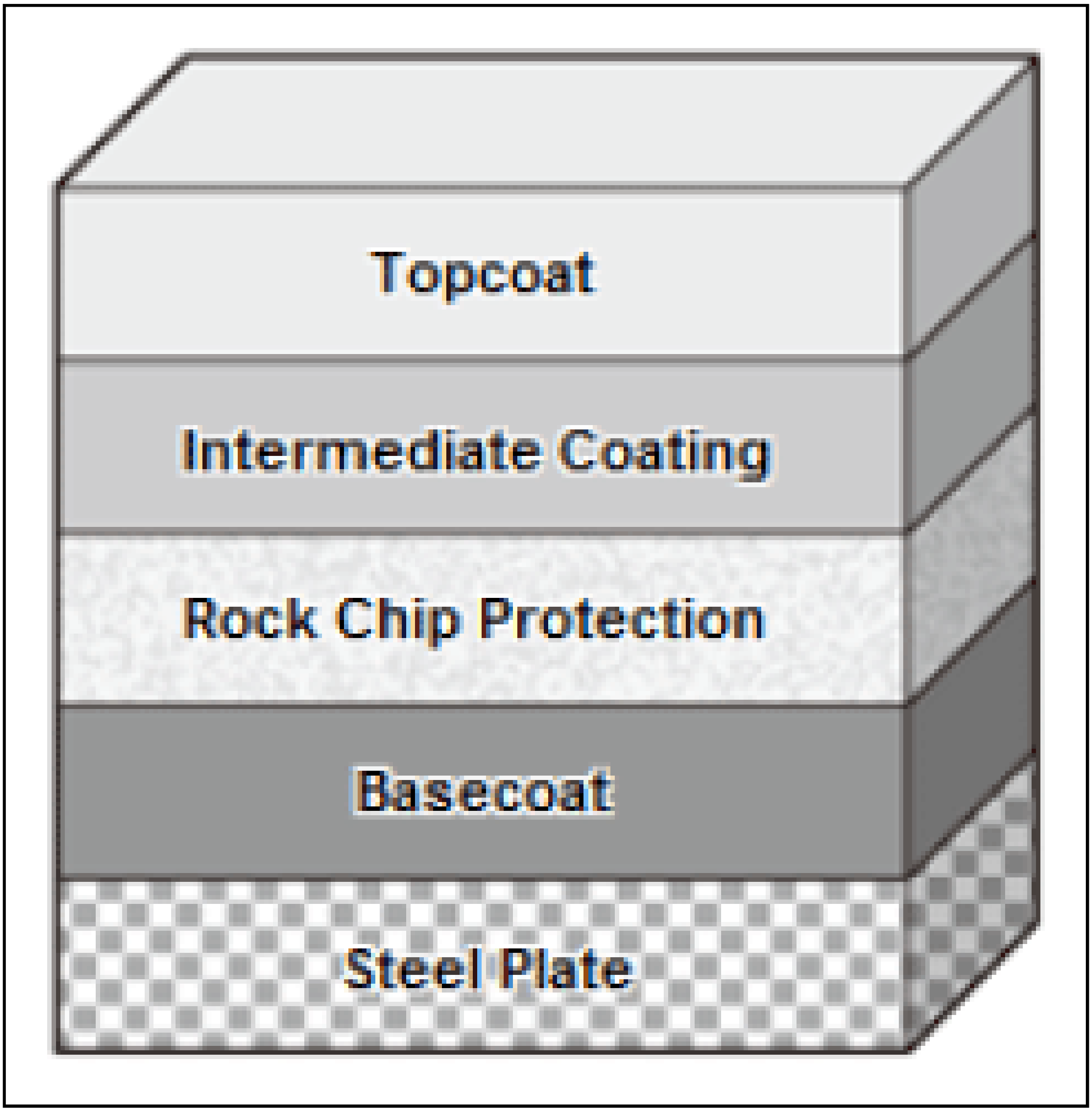
Topcoat
Intermediate Coating
Rock Chip Protection
Basecoat
Steel Plate

2. **Body Inner Plate**

   Inner Plate Color Layer: Thermoset aluminum alkyd resin paint

   Basecoat: Polybutadiene resin paint, epoxy resin paint

   Steel Plate

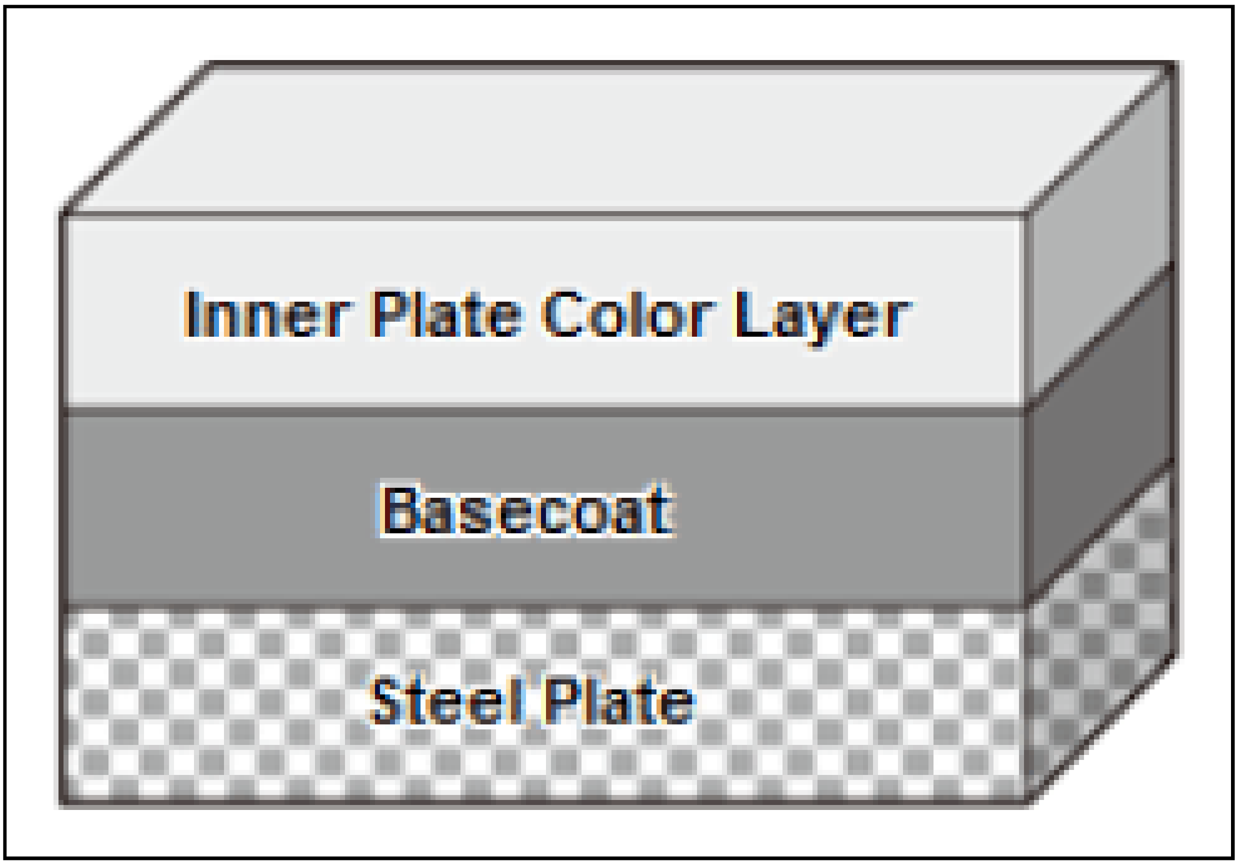
Inner Plate Color Layer
Basecoat
Steel Plate

3. **Body Outer Plate**

   Topcoat: Thermoset aluminum alkyd resin paint, thermoset acrylic resin paint

   Intermediate Coating: Polyester resin paint

   Basecoat: Polybutadiene resin paint, epoxy resin paint

   Steel Plate

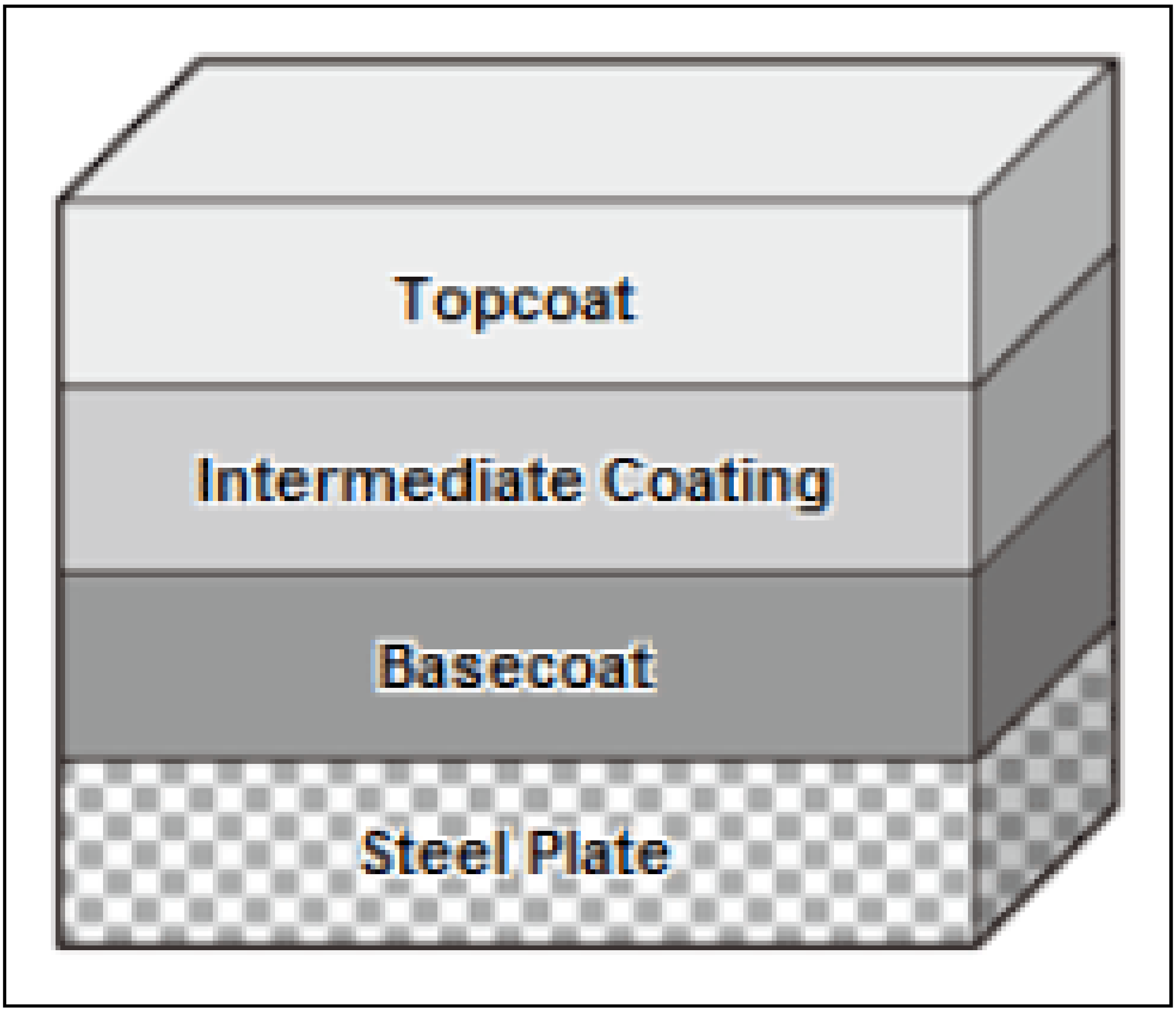
Topcoat
Intermediate Coating
Basecoat
Steel Plate

4. **ABS Resin Part**

   Topcoat: acrylic lacquer resin paint, two-liquid urethane resin paint

   ABS Resin

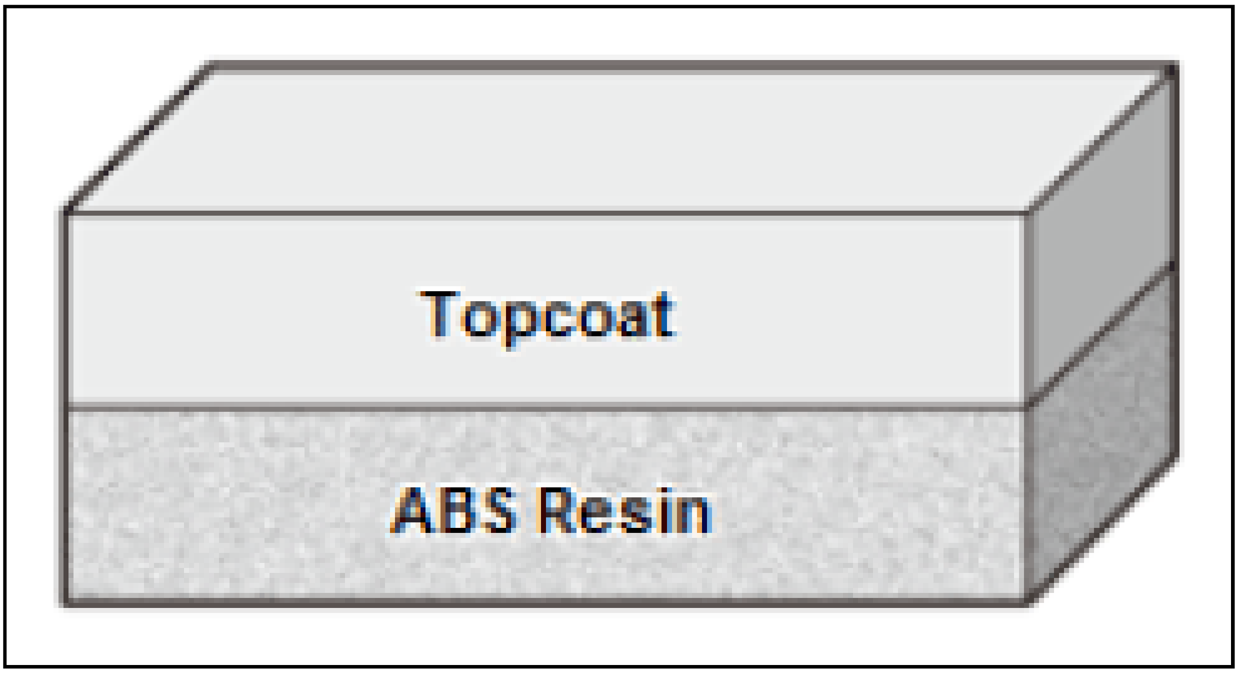
Topcoat
ABS Resin

5. **Under Floor, Wheel House**

   Insulation Coating: Undercoat (bituminous paint for insulation)

   Basecoat: Polybutadiene resin paint, epoxy resin paint

Steel Plate

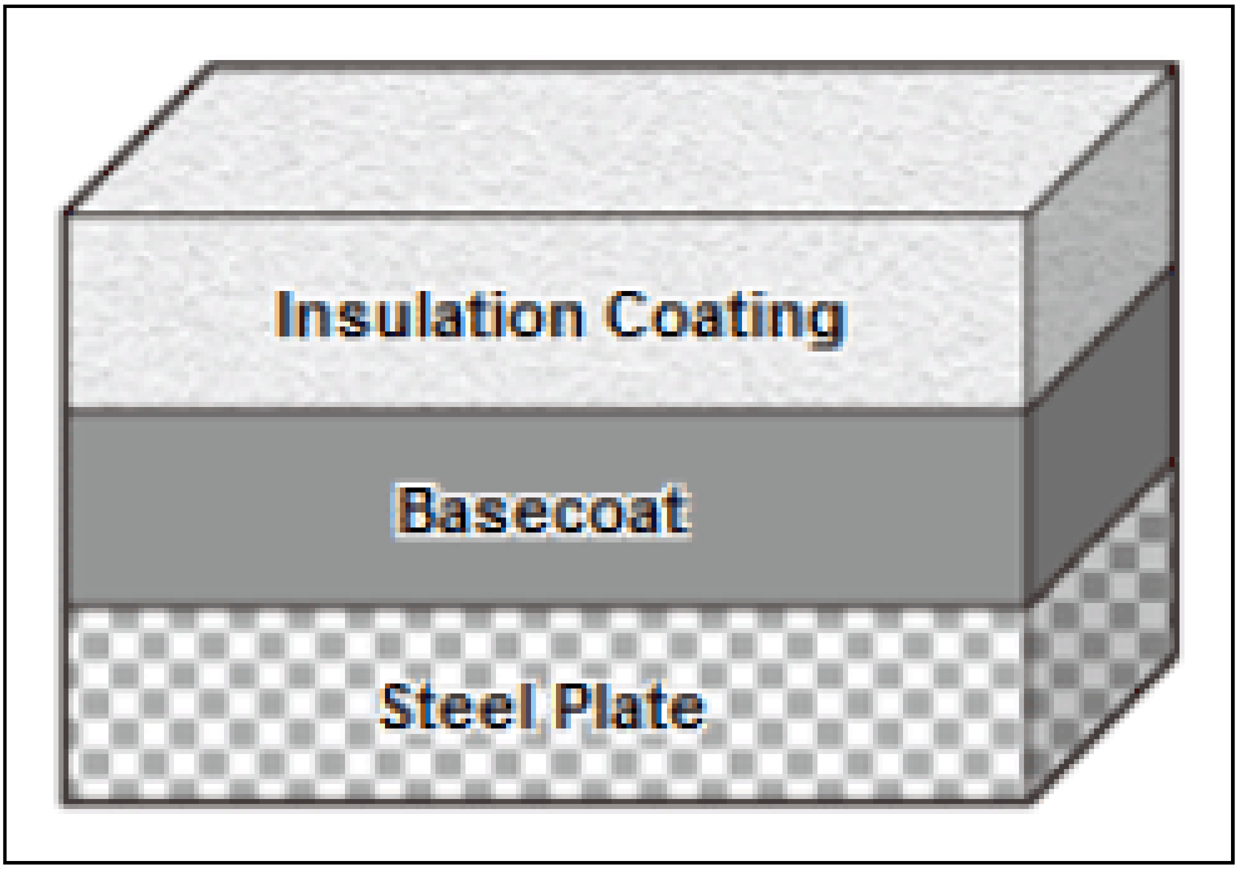
Insulation Coating
Basecoat
Steel Plate

6. **Aluminum Wheel**

Topcoat: Thermoset aluminum alkyd resin paint, thermoset acrylic resin pain

Basecoat: Epoxy resin paint

Aluminum

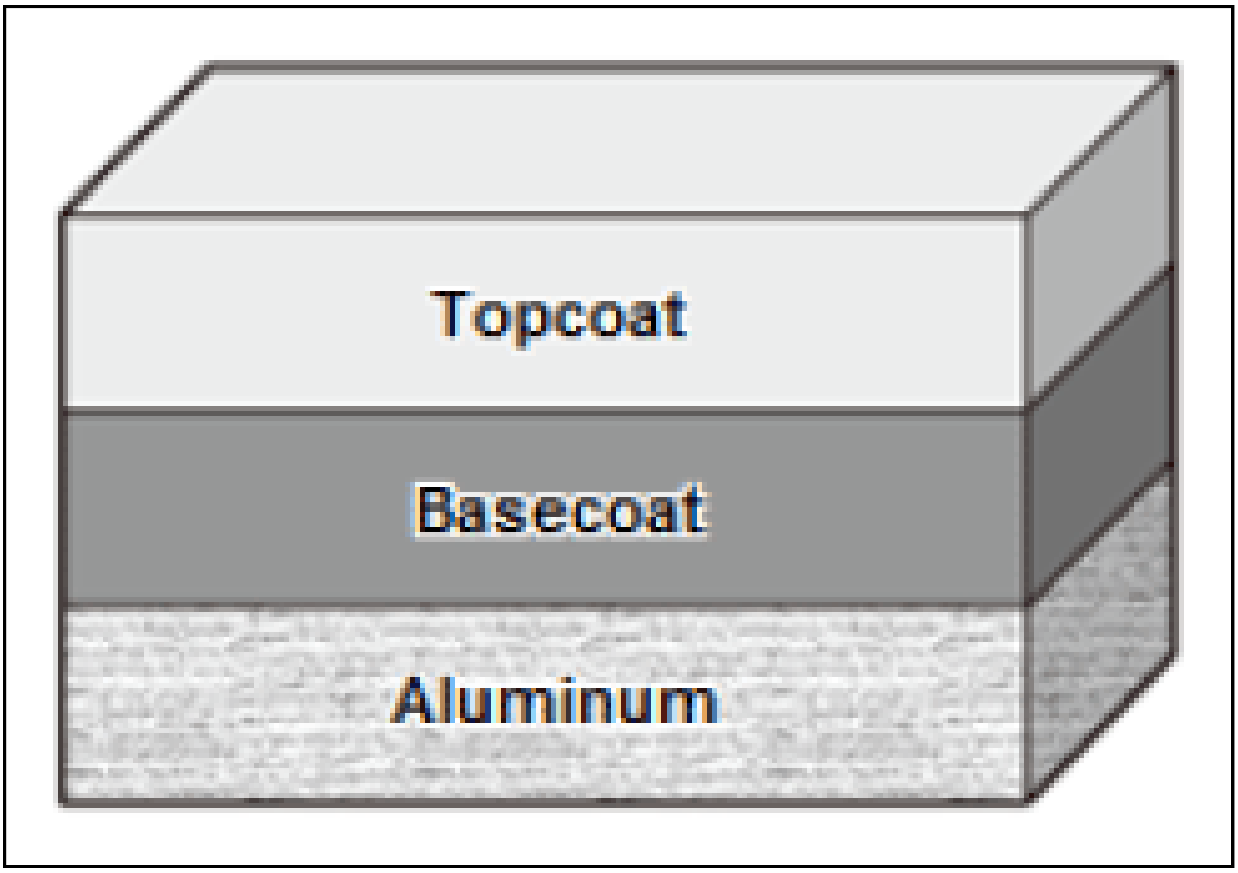
Topcoat
Basecoat
Aluminum

7. **PP Resin Part**

Topcoat: One-pack urethane resin paint

Basecoat: Acrylic resin paint (PP exclusive primer)

PP Resin

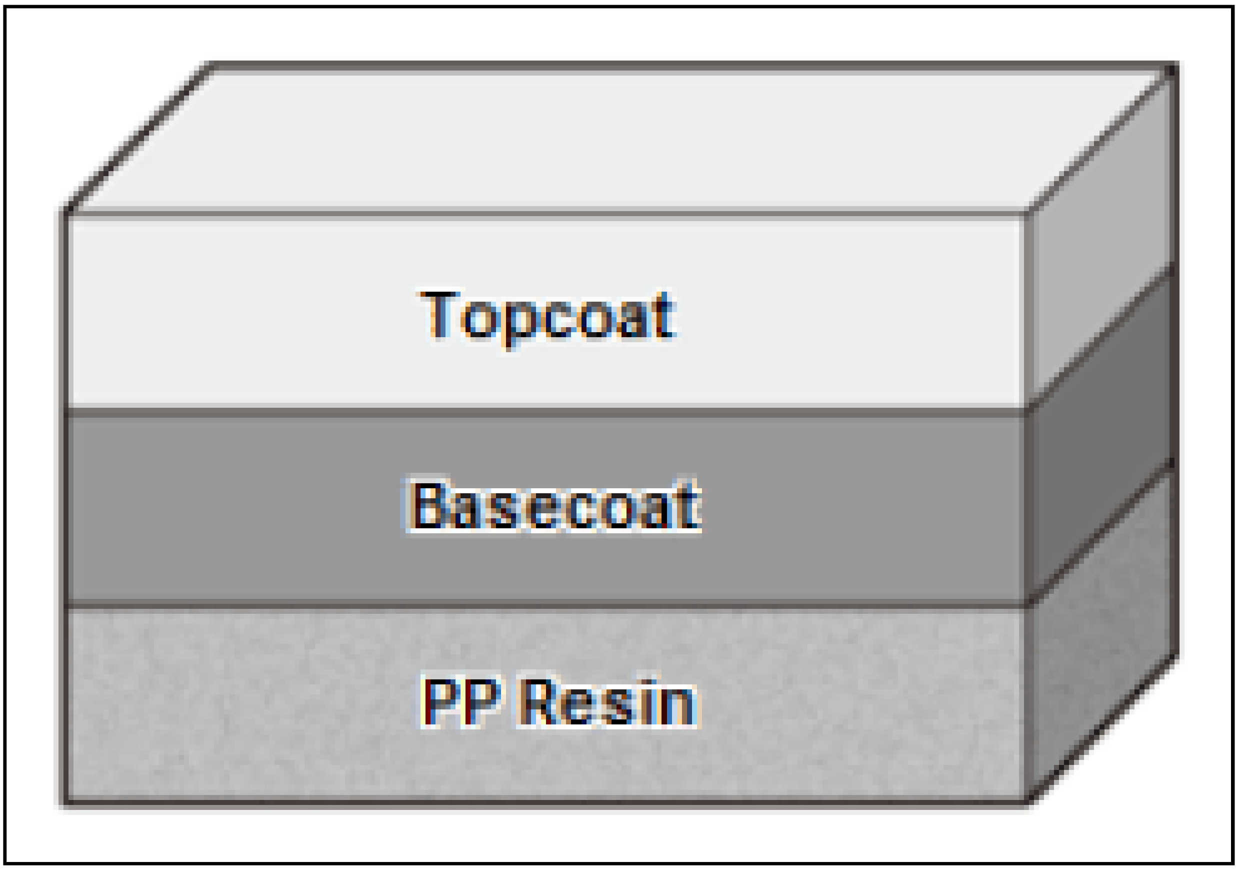
Topcoat
Basecoat
PP Resin

PAINT DRYING AND CURING

Drying Processes

The process in which a liquid-like paint is hardened and forms a hard coat is called drying. The chemical structure of paint changes between before and after drying.

Paint can be categorized as shown left based on the drying method.

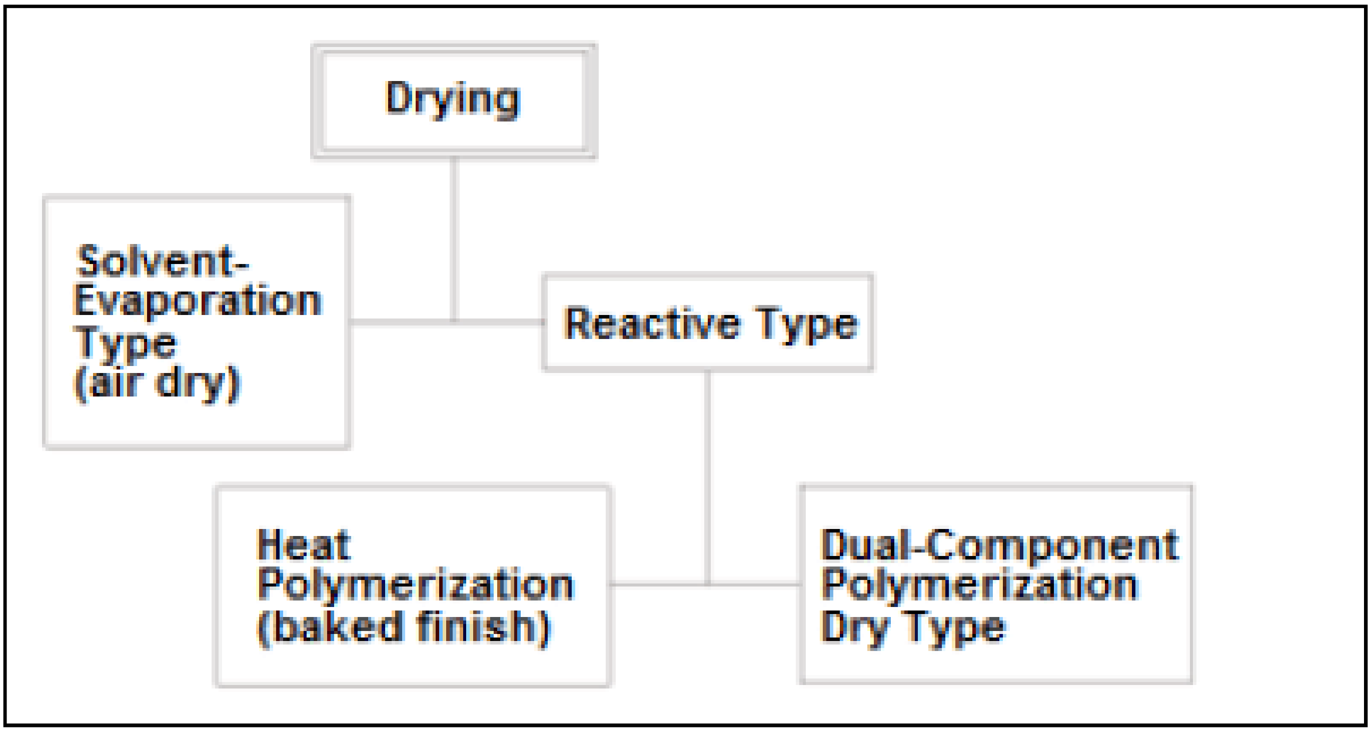
Drying
Solvent-Evaporation Type (air dry)
Reactive Type
Heat Polymerization (baked finish)
Dual-Component Polymerization Dry Type

Reactive Type

In this type of paint, the solvent and thinner in the paint evaporate and, in addition, resins are hardened and dried by a chemical reaction (called polymerization):

- While heat is not required to dry and from a film, applying heat will accelerate the chemical reaction. The paint's structure also changes from a paint molecule to polymer coating. It then becomes a high performance, weatherproof, and solvent resistant paint film.
- Resin molecule forms high-molecular-weight compound through chemical reactions and binding of low-molecular-weight compound.

1. Coating condition immediately after painting.

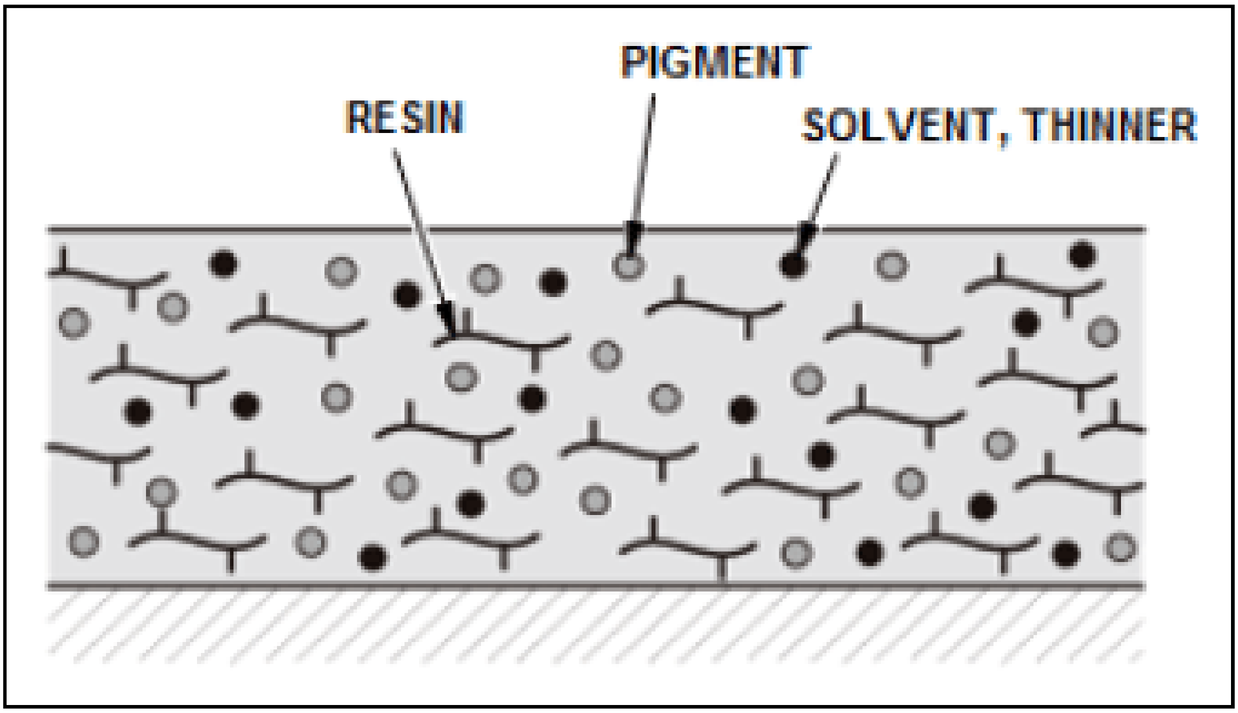

2. Resin molecules in the paint start to react along with the evaporation of paint reducer/thinner and solvent during drying process.

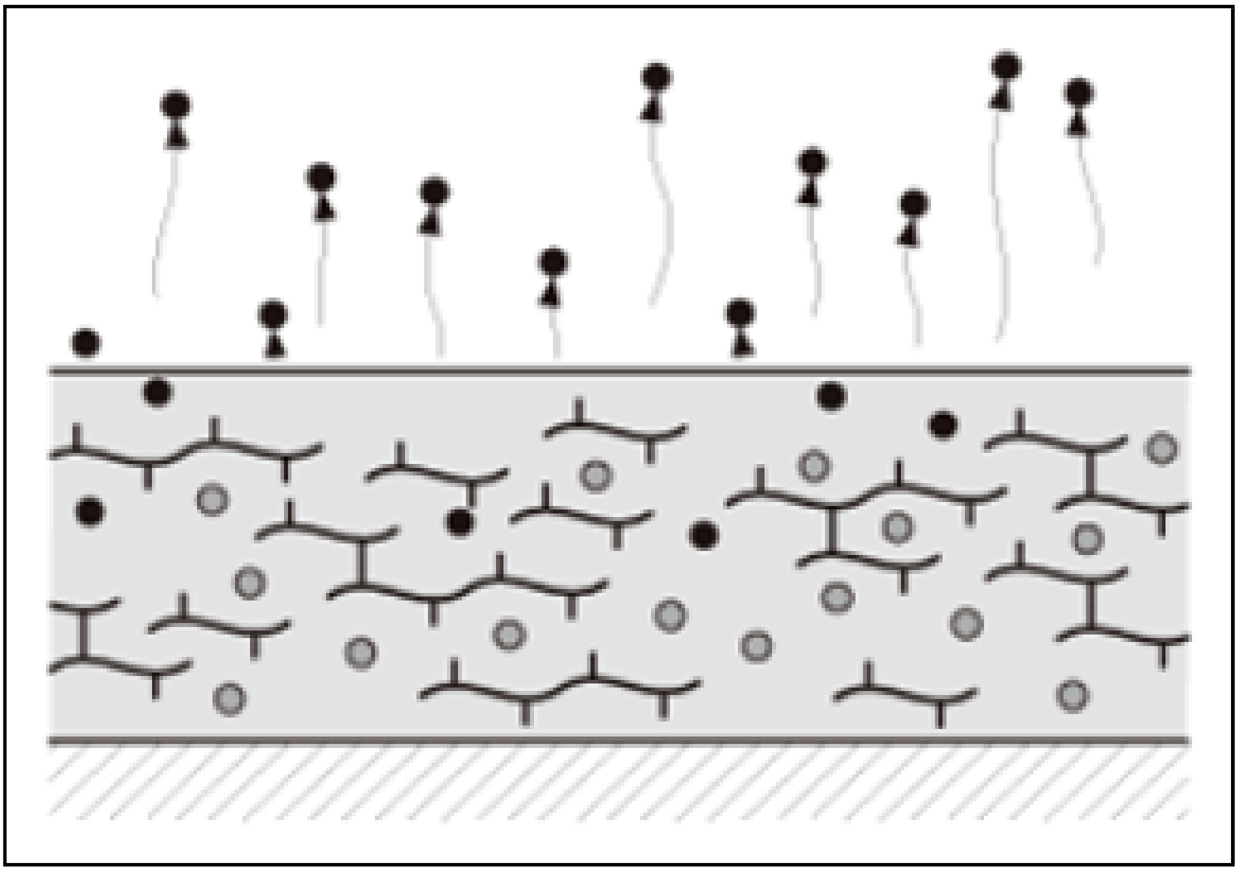

3. The coat is completely free of solvents or thinners. The chemical reaction of the resin molecules is completed and they form a net-like coat (3D paint structure).

Heat Polymerization:

- This type of paint is called baked finish paint. These paints start a chemical reaction when heated (typically over 248Â°F (120Â°C) for 20 to 30 minutes) after application. This forms a net-like structure as the paint hardens, ensuring outstanding coating performance and are high solvent resistance once completely dried.
- Most of the paint used for automobile production is the heat polymerization type, including thermoset aluminum alkyd (baking melamine) and thermoset acrylic.
- This paint type is rarely used for repairs because plastic parts and electric components would need to be removed from the affected area in the car, or otherwise protected from heat.

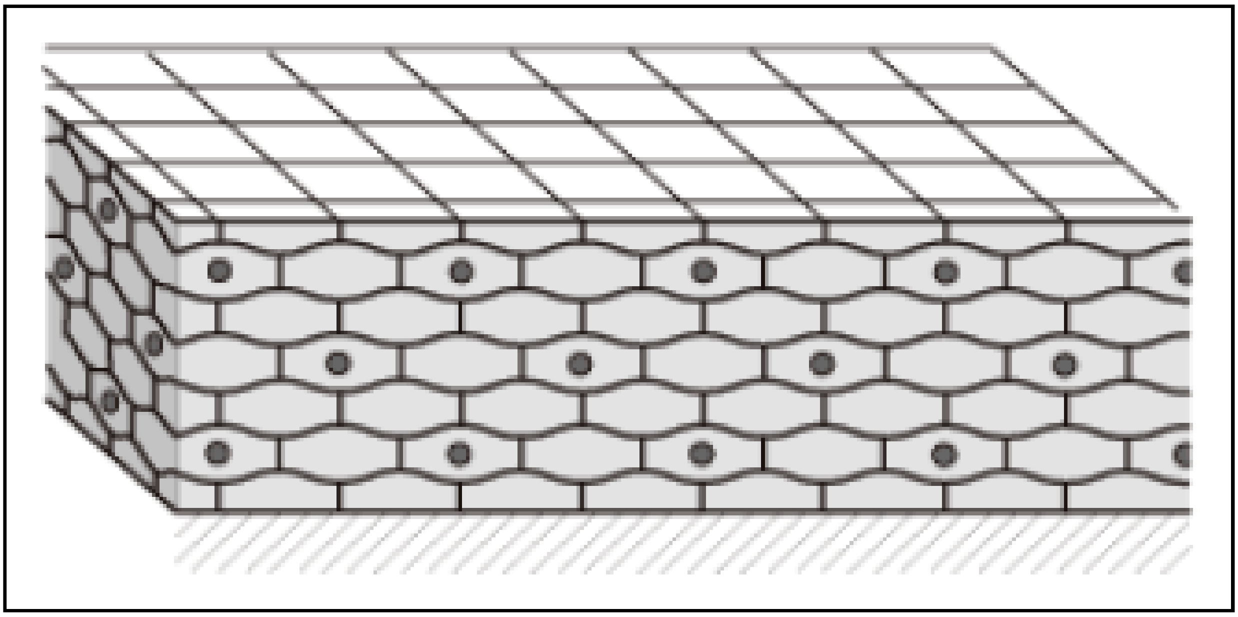

Dual-Component Polymerization (Dual-Component Paints):

- This type of paint is commonly known as dual-component paint because an additive called hardener (kept in a separate container) is added to the paint to start a reaction and form a hard netted coat. This reaction takes places at a normal temperature, although it can be accelerated at higher temperatures 104-140Â°F (40-80Â°C).

Solvent-Evaporation Type (Air Dry)

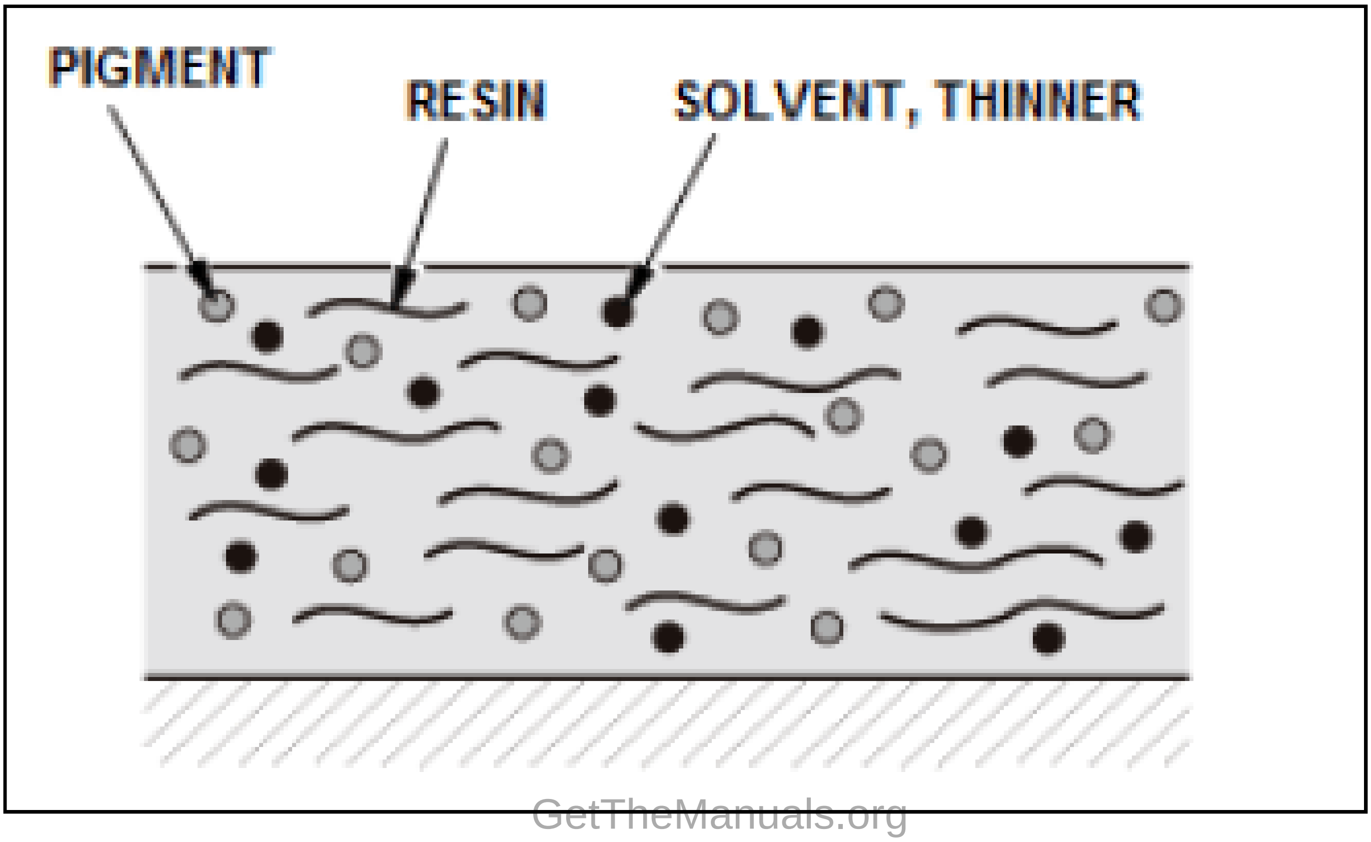

- This type of paints forms a coat when the solvent and thinner in them evaporate. Resins remain unchanged after the formation of the coat. Therefore, the hardened coat can be wiped off easily with a reducer/thinner.
- Air dry type paints are not used often anymore due low solvent and weather resistance.

1. Coating condition immediately after painting.

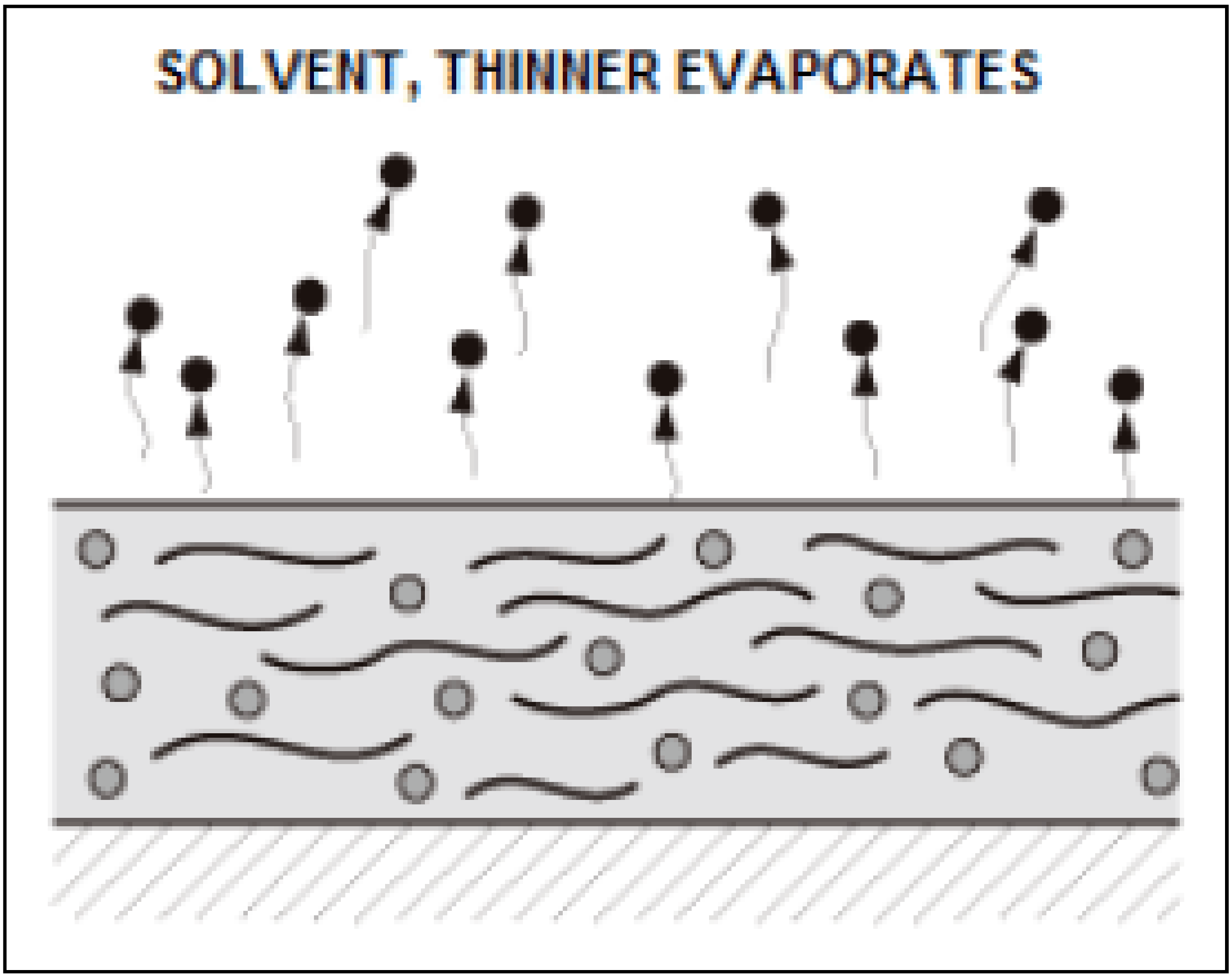

2. A layer of paint film is formed through air drying process as paint thinner and solvent evaporate.

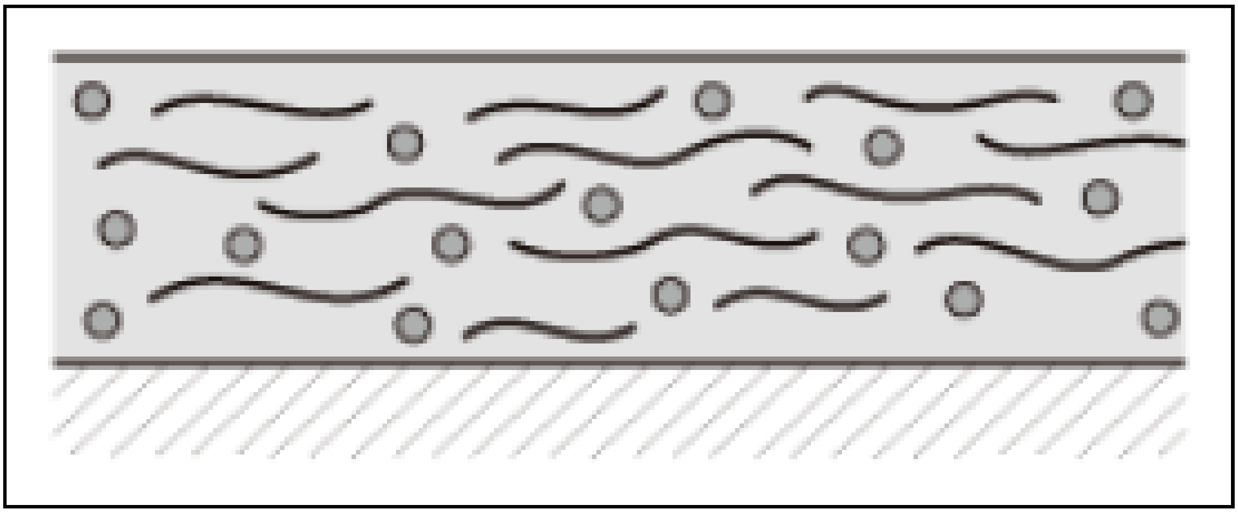

3. Resin molecule reaction stops when completely dried, and a horizontally aligned paint film gets formed (2D paint structure).

PAINT FINISH COMPONENTS

Hardener

Hardener reacts and molecularly-bonds with the main resin component to form the paint film:

- Two pack paint requires hardener to be mixed with the base resin to achieve complete paint film performance.
- Acrylic urethane is mainly used for automobile repair along with an Isocyanate-based hardener.

(Reference)

Pay an extra attention when handling and storing isocyanates, such as hardener. They react very easily with water (H-O-H) and alcohol solvents (-OH group).

Paint Structure

Paint is a high viscosity liquid with the mixed constituents such as shown below. It normally is mixed with reducer or thinner to a sprayable and/or usable viscosity and combined with a chemical hardener. In addition, the paint can be categorized into clear (without pigment), enamel with pigment and basecoat.

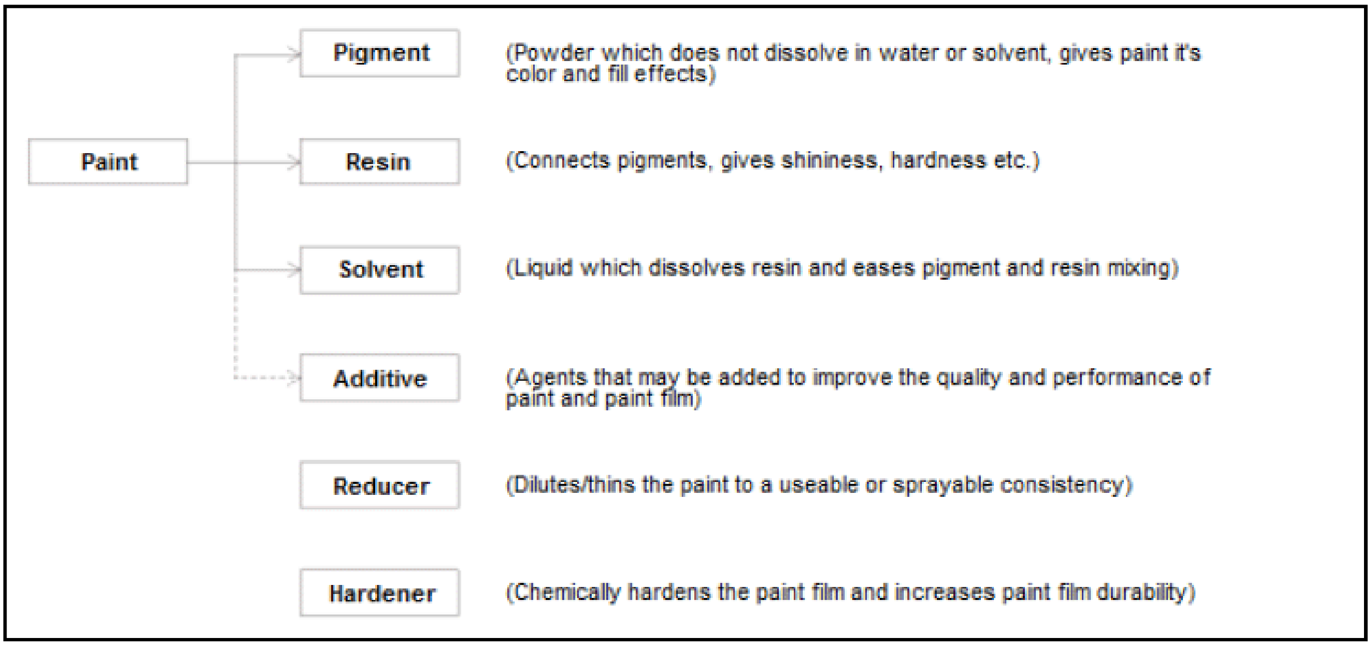

Pigment	(Powder which does not dissolve in water or solvent, gives paint it's color and fill effects)
Resin	(Connects pigments, gives shininess, hardness etc.)
Solvent	(Liquid which dissolves resin and eases pigment and resin mixing)
Additive	(Agents that may be added to improve the quality and performance of paint and paint film)
Reducer	(Dilutes/thins the paint to a useable or sprayable consistency)
Hardener	(Chemically hardens the paint film and increases paint film durability)

Pigment

Pigment is solid powder and does not dissolve in or solvent. It is kneaded into resin (film forming component) and dispersed so that the paint becomes usable.

Categories Of Pigment

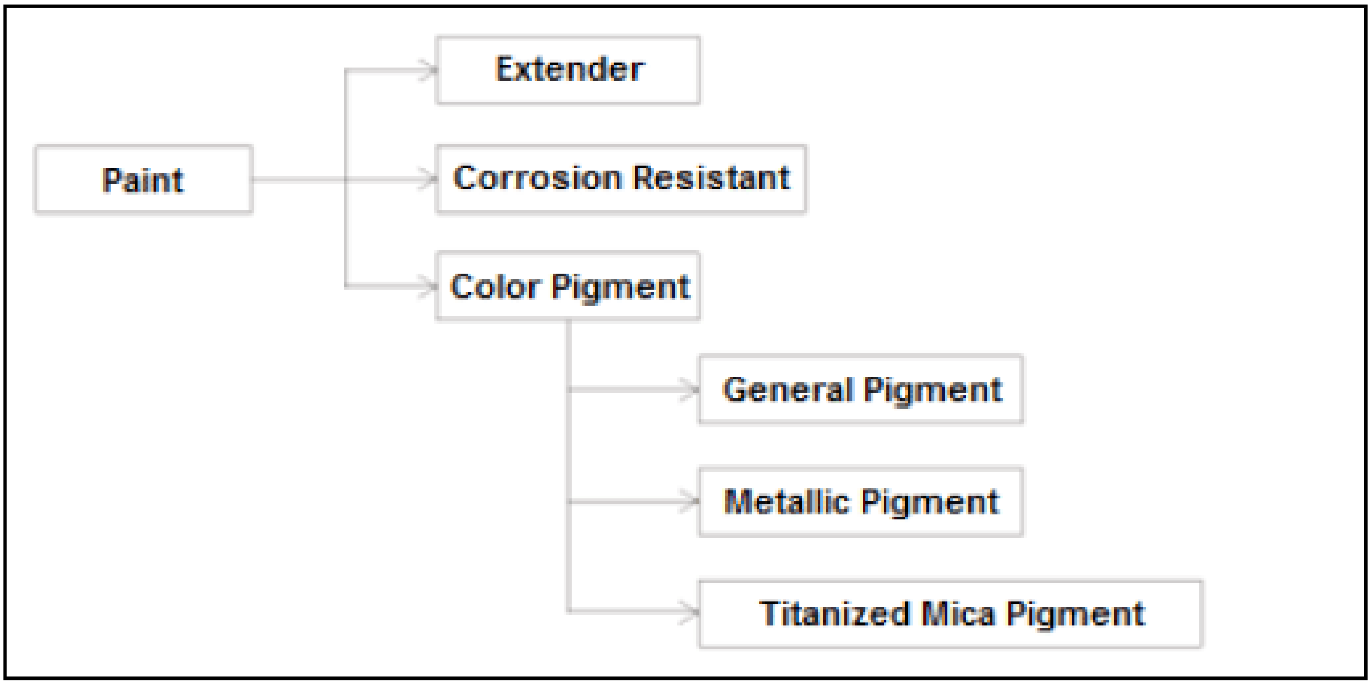

Extender

Mostly used for base coat to reinforce and add body to the paint film.

Corrosion Resistant

Mainly used in basecoats to prevent rust.

Color Pigment

Color pigments are used mainly in top-coat paints to give colors and hiding power to the coating:

- **General Pigment**

  Gives various colors to paint such as red, blue and yellow.

- **Metallic Pigment**

  Metallic pigments are tiny flakes of aluminum and are used to give shiny and metallic look to the coating.

- **Titanized Mica Pigment**

  These pigments consist of flakes of mica coated with titanium oxides and give pearl-like luster to the coating.

Resin

Resins, together with pigments, are main components of coating. Generally a resin is a viscous and transparent liquid which is applied over an object and forms a coat when dried.

Types of Resin

Natural Resins

A type of resin extracted from plants or animals, mainly used for lacquer type finishes.

Synthetic Resins

A type of resin made through chemical synthesis. It can be categorized as thermoplastics resin and thermosetting resin:

- **Thermoplastic Resins**

  Thermoplastic resins can be softened repeatedly by heating and hardened again on cooling. Most of them are highly flexible, and are dissolved by solvents. Typically they include such materials as nitrocellulose, cellulose acetate butyrate, polypropylene and nylon.

- **Thermosetting Resins**

  Thermosetting resins are initially soft but change irreversibly to a hard rigid form when heated. They are generally very hard but brittle, and resistant against solvents. Typically they include amino resins, polyurethane resins and epoxy resins

Solvent Or Paint Reducer/Thinner

Solvent is a liquid that dissolves another substance to form a solution. In the process of making paints, a solvent is used to dissolve resins so that pigments are mixed easily with the resins. A thinner is a mixture of solvents. It is used to dilute paints to an appropriate viscosity level for application. Solvents and thinners evaporate as the paint is dried, and do not remain in the coating.

Because of this, the specific blends of several types of solvents are required for specific paint types. In addition, reducer/thinners are available in different evaporation rates to compensate for ambient temperatures and conditions.

Type	Solvent
Alcohol	Methanol, isopropyl alcohol (IPA), butanol
Ester	Ethyl acetate, butyl acetate
Ketone	MEK, acetone, MIBK, DIBK
Ether	Ethyl cellosolve
Aromatic Hydrocarbon	Toluene, xylol
Aliphatic Hydrocarbon	Petroleum benzene, solvent naphtha
Water	Water

REFINISH METHODS

Dip-Type Methods

Painting method where parts are immersed in a paint bath. This is done either by dipping or electrodeposition. These processes are best suited for large scale production rather than repairs.

Dip Coating

Vehicle body parts are coated by dipping them into a tank filled with paint.

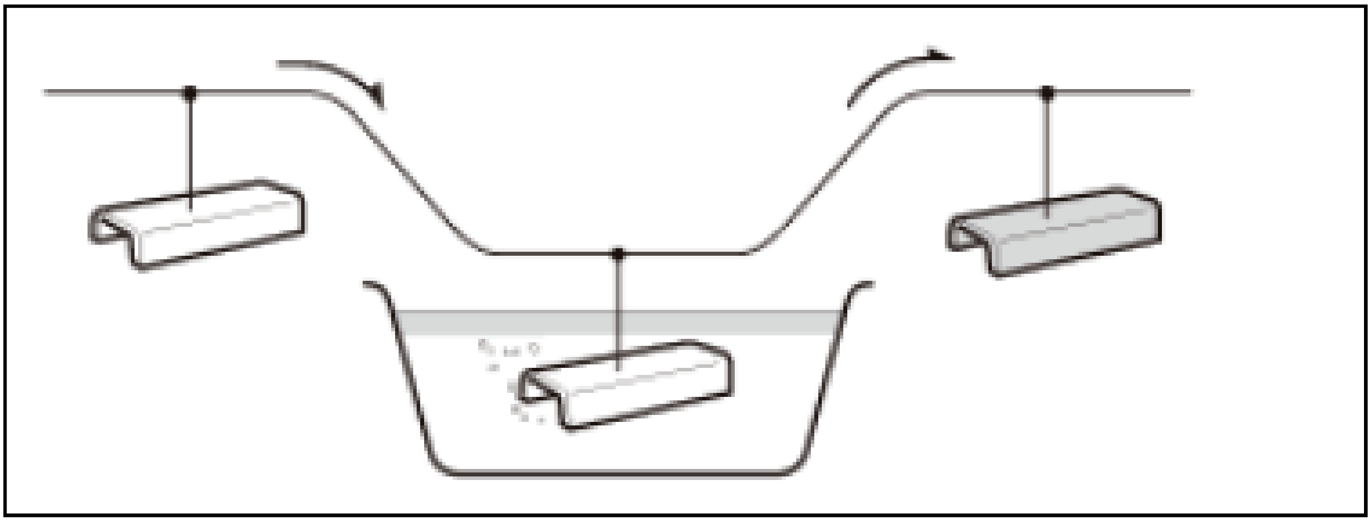

Electrodeposit Coating

Painting method also known as ED coating, in which electricity is applied to a tank containing the parts being coated and the primer or paint. The coat is formed by adhesion of the paint to the parts through a process called electrocrystallization. Electrodeposition ensures an even coating thickness, relatively free of drips and runs because the coating thickness can be controlled accurately by regulating the electric current. It also ensures coating in invisible sections and seams.

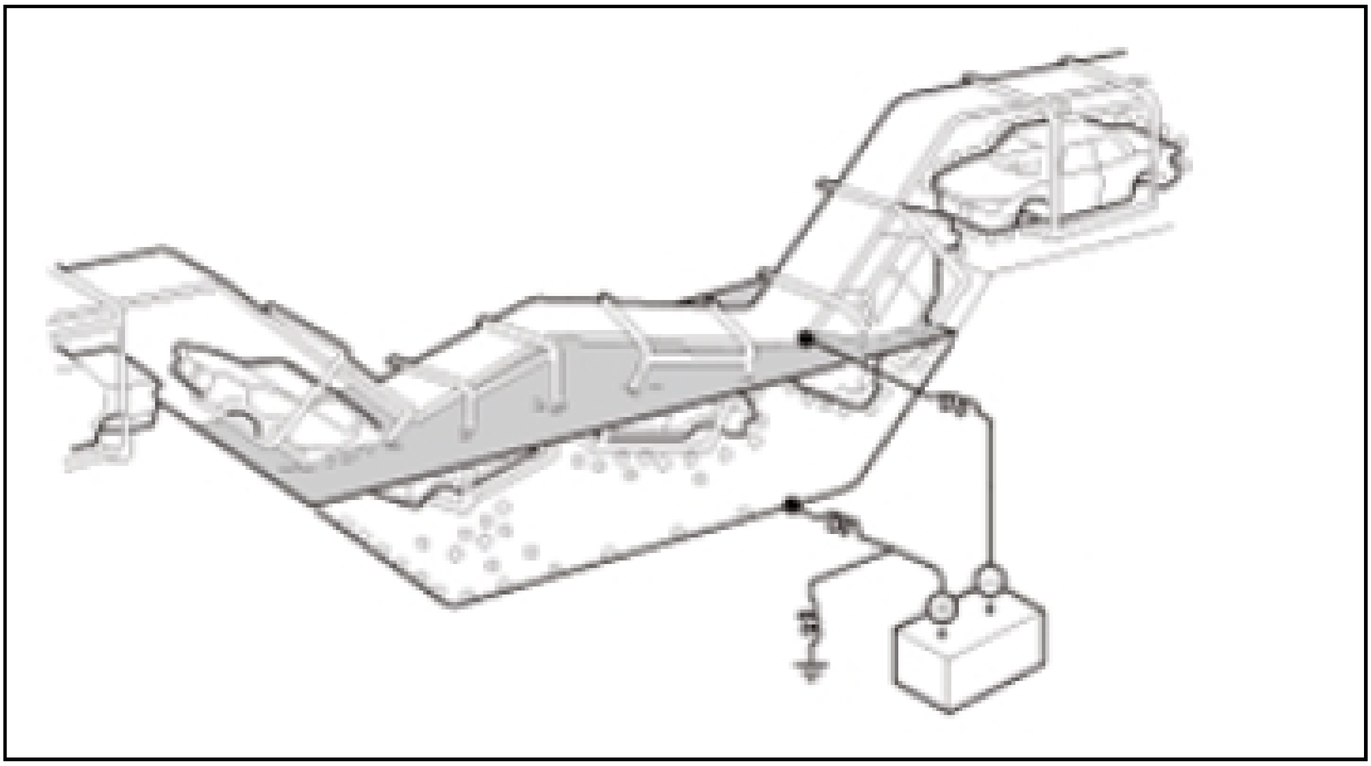

1. Tank is filled with water-based primer or paint. Parts soak inside the tank. Connecting the positive charge electrode to the part charge the tank with the negative electrode.

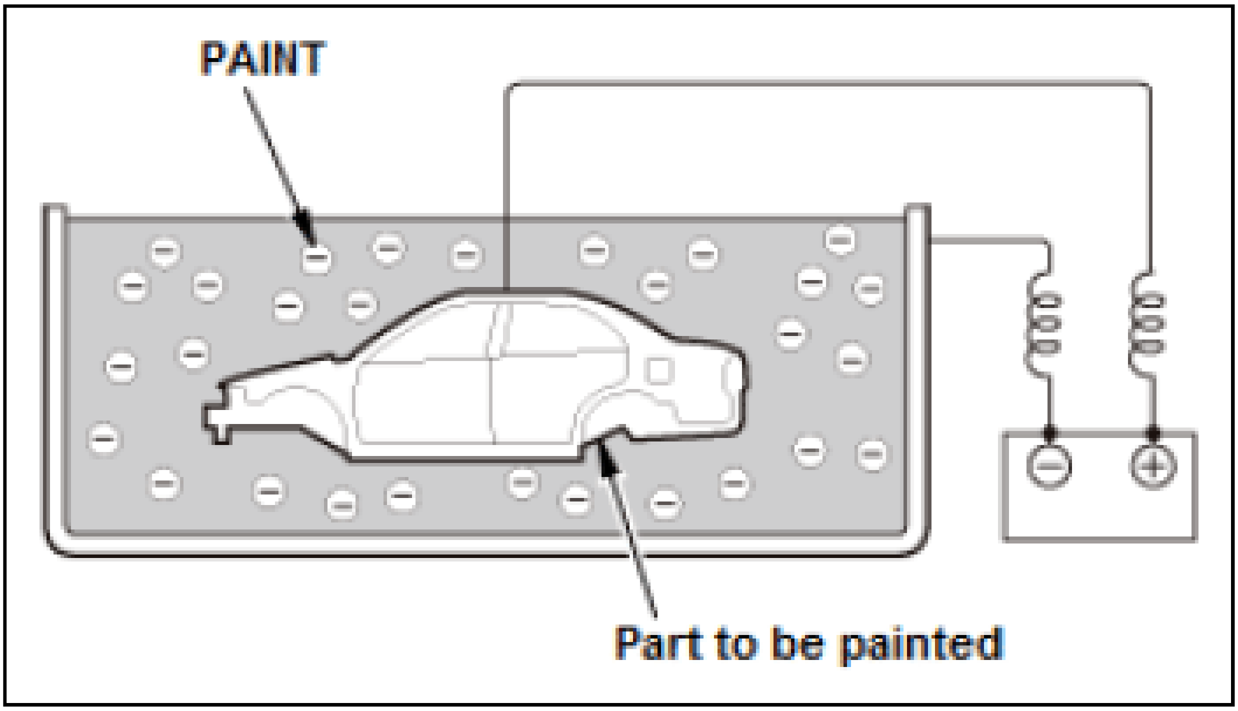

2. Electrical current passes between the electrodes and primer or paint electrically adheres to the surface of the part because of opposite charges.

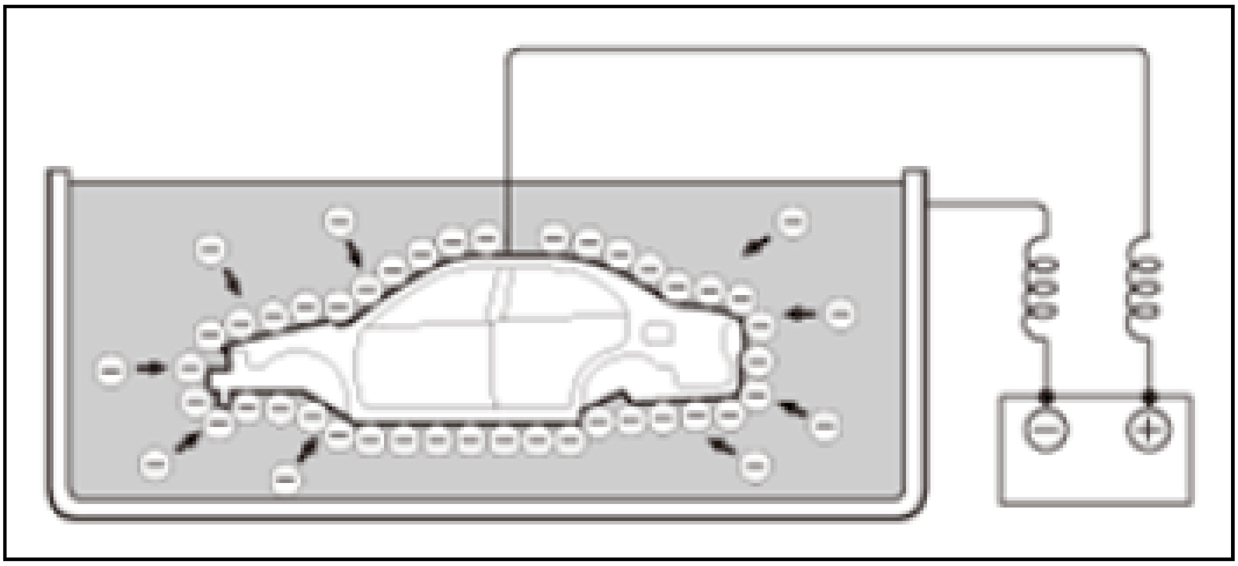

NOTE: **Electrodeposit coating is normally called ED paint or primer. It is used to apply the black colored basecoat on replacement steel body parts.**

Spray-Type Methods

Spray painting is a way to apply small particles of paint to objects by a spray gun with compressed air.

Spray Gun Coating

The same mechanism with as a spray bottle. Compressed air blows out from outside the paint nozzle and the air at the tip of nozzle gets pushed away. This creates a vacuum condition and paint gets suctioned out.

This process atomizes the paint into a mist of tiny particles. This is the most popular method today.

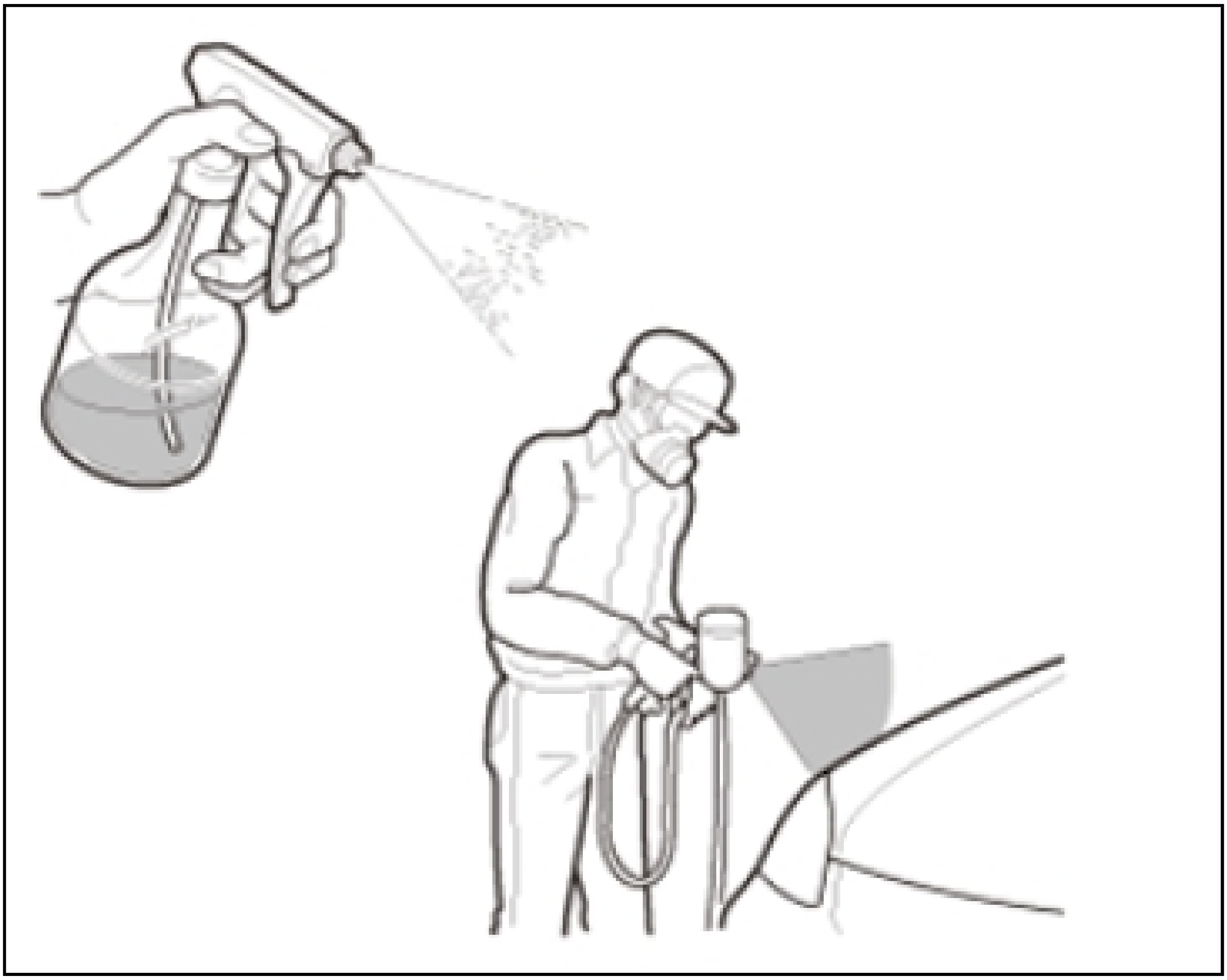

Airless Spray Gun Coating

Airless spray gun applies a high pressure to paint which discharges through a small nozzle. When doing so, air is forced into the paint to atomize it. Overspray is minimal and large spray patterns are possible. This method is efficient and able to handle high viscosity paints.

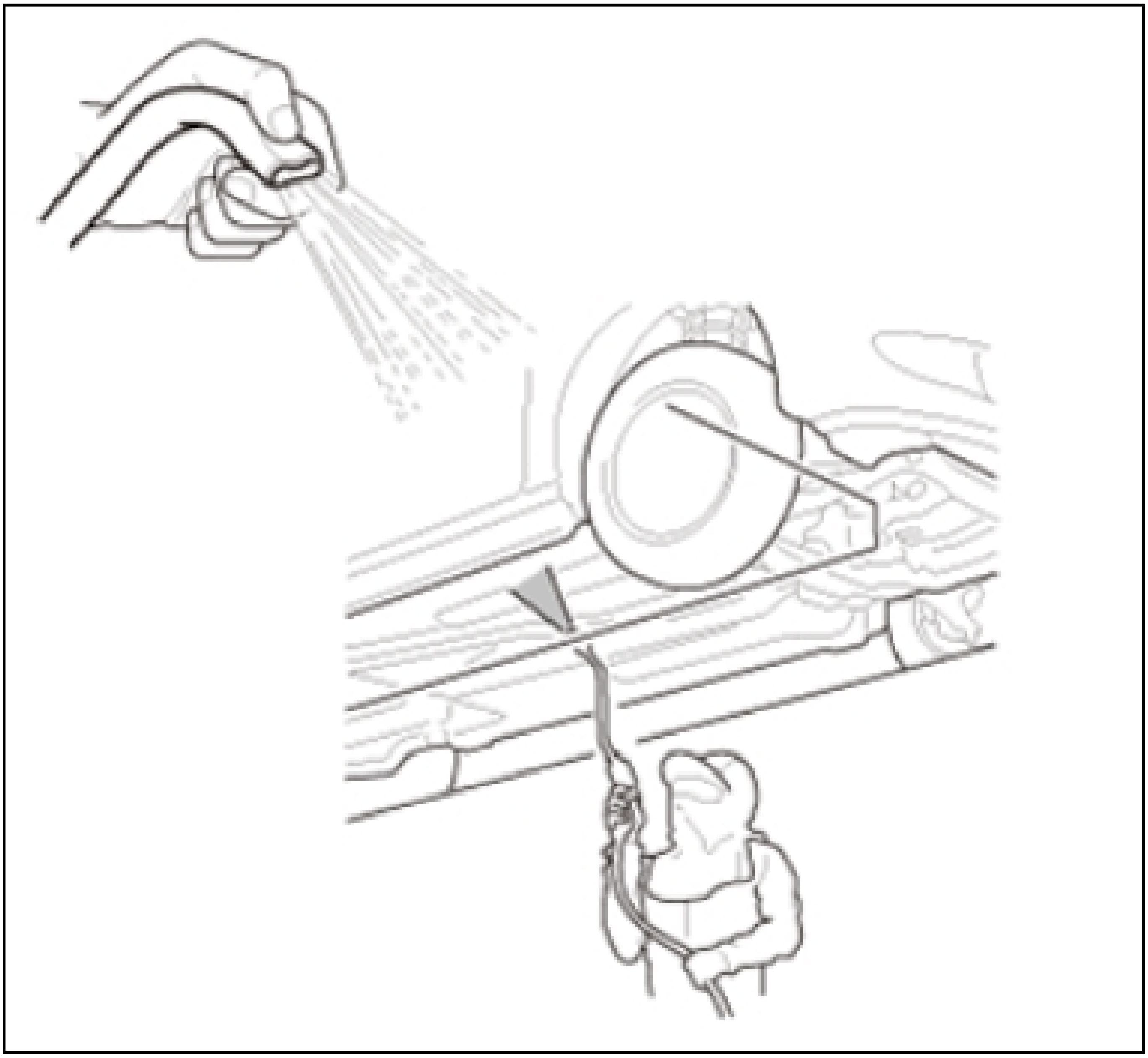

Electrostatic Coating

Electrostatic painting is a method based on the principle that the positive and negative electrical charges attract while like electrical charges repel each other. The paint is charged negatively in a high voltage generator while the body is charged positively as it is grounded. Since paint particles from the paint applicator are charged negatively they repel each other and are atomized. These negatively-charged particles are attracted by the positively-charged body and adhere to it.

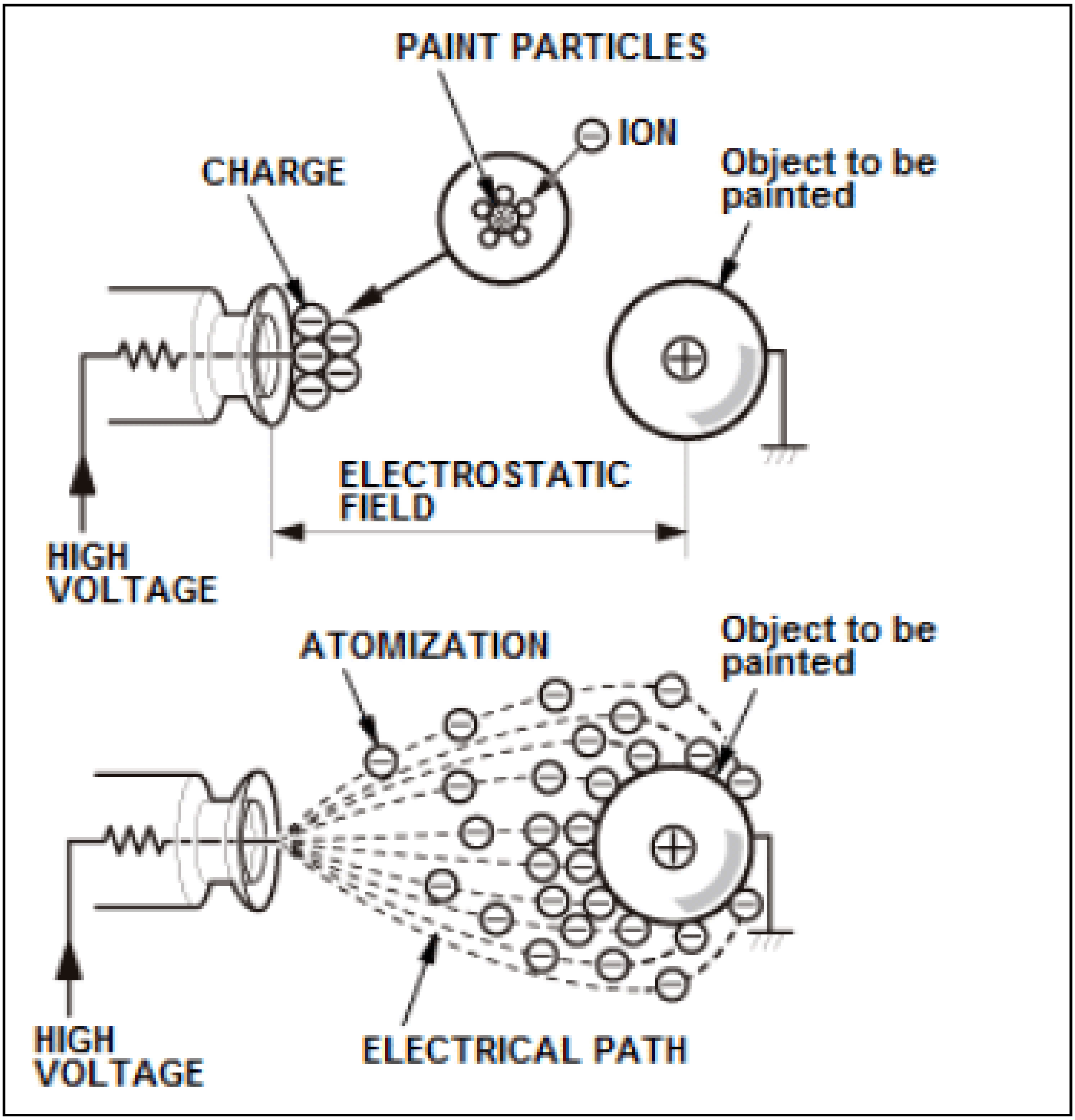
PAINT PARTICLES
ION
CHARGE
Object to be painted
ELECTROSTATIC FIELD
HIGH VOLTAGE
ATOMIZATION
Object to be painted
HIGH VOLTAGE
ELECTRICAL PATH

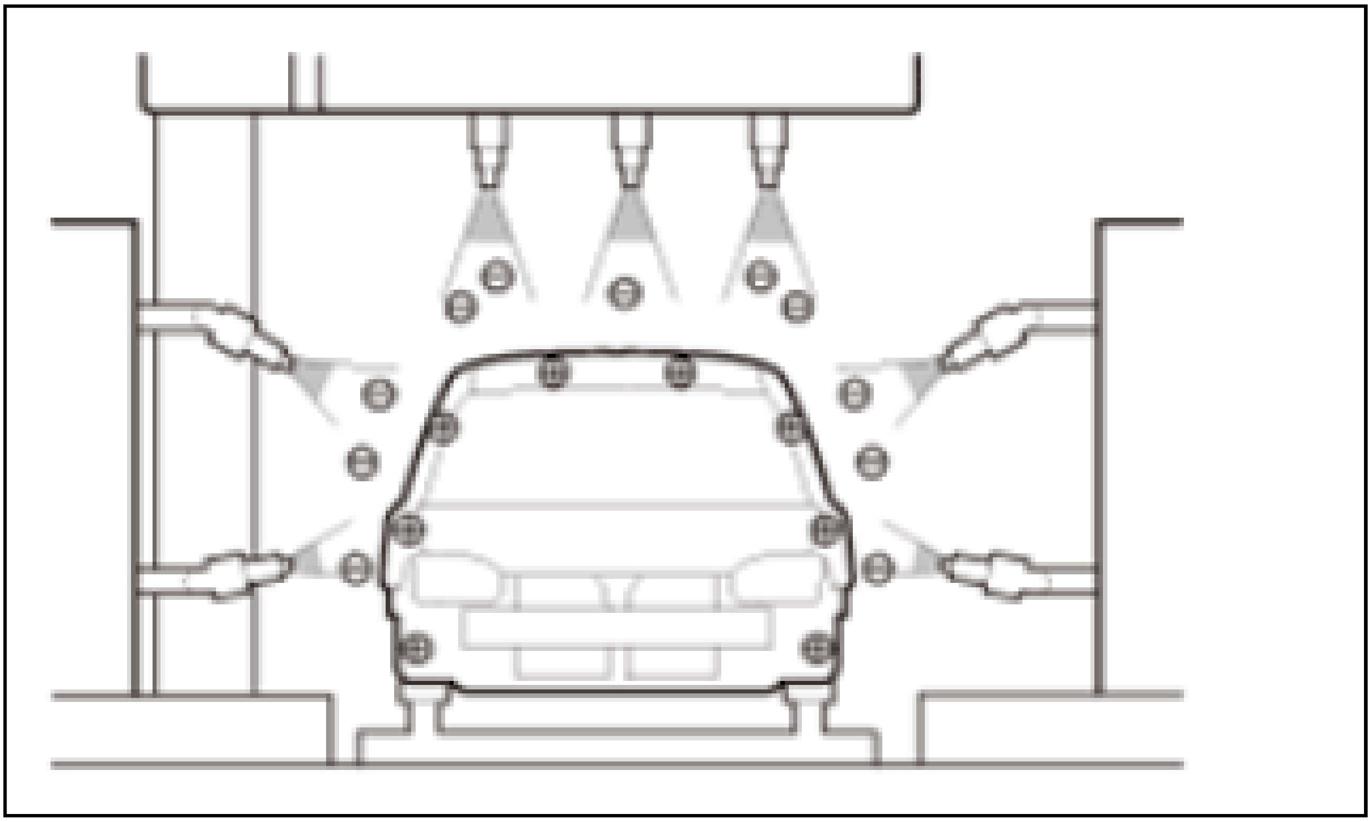

PAINT REPAIR TOOLS AND EQUIPMENT

PAINT REPAIR EQUIPMENT

Air Compressor

The air compressor is one of the most important pieces of equipment used in paint repair.

An air compressor is a machine that squeezes air and raises its pressure, enabling you to use spray guns and other air powered tools.

Select the compressor type to meet your shop's requirements. Air compressors are classified as follows:

Stages	Single Stage Pressure	Dual Stage Pressure
Application	Use when compressed air consumption is comparatively small.	When air pressures exceeding 980 kPa (10 kgf/cm^2 , 142 psi) are constantly required. Also best when constantly using multiple high consumption air tools, or when air supply pipes are very long.

Method	Start/Stop	Load/Unload
Operation	Intermittent Operation	Continuous Operation
Feature	• The motor shuts off when the air pressure exceeds its specified value, and it resumes its operation automatically when the pressure drops below the cut-in pressure. • This is suitable for applications where a single operator operates an air toll repeatedly with the air pressure ranging from 785-980 kPa (7-10 kgf/cm^2 , 114-142 psi).	• Unloader valves allow no-load compressor operation when the air pressure exceeds a prescribed level. The compressor begins developing air pressure when the air pressure drops below the cut-in pressure. • This is suitable for continuous and simultaneous use of several air tools with the air pressures ranging from 490-686 kPa (5-7 kgf/cm^2 , 71-100 psi).

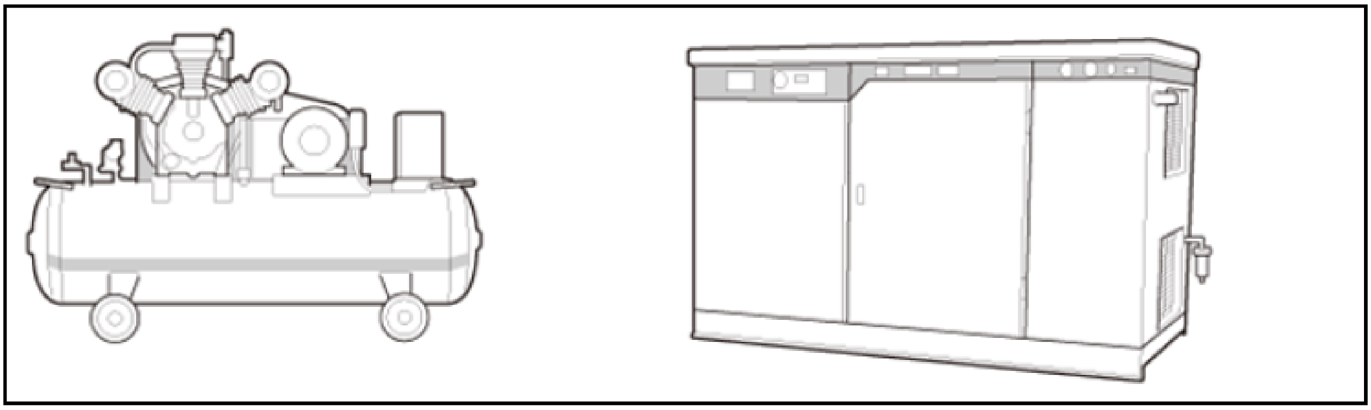

Compressor Installation Location

- Should be located on a level floor and protected from rain or other water sources. The location should also have adequate ventilation and avoid excessive humidity and dust.
- The location's temperature should remain under 104Â°F (40Â°C), even during the hottest weather. Direct sunlight should be avoided.
- There should be enough space for maintenance and inspection. Maintain a distance of 30 cm (12 in), or more, from the wall.
- If the compressor is located inside the workshop, it must be an explosion-proof type to prevent fire and explosion hazards.

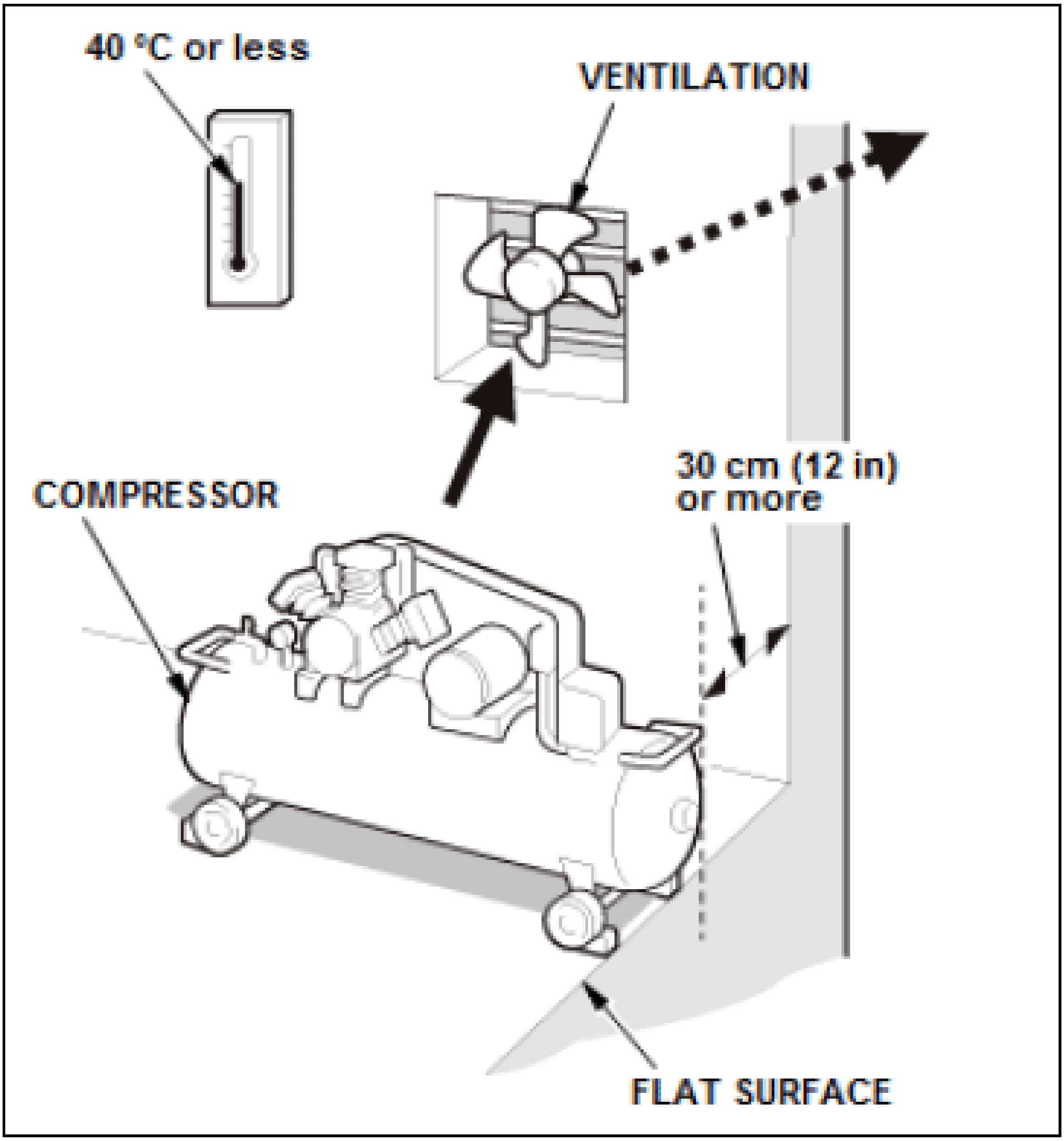
40 °C or less
VENTILATION
COMPRESSOR
30 cm (12 in)
or more
FLAT SURFACE

Inspection Of Compressor

Daily Checks

- Oil Level Check
- Open drain valve to remove water from tank Especially when using dual-component polyurethane resin coatings, you may need to open up the drain valve and drain the water and oil inside the tank more often because the hardener will react with water inside reducing the paint film's performance.

Monthly Checks

- Clean intake air filers
- Check safety valve operation
- Check the drive belt tension
- Change compressor oil

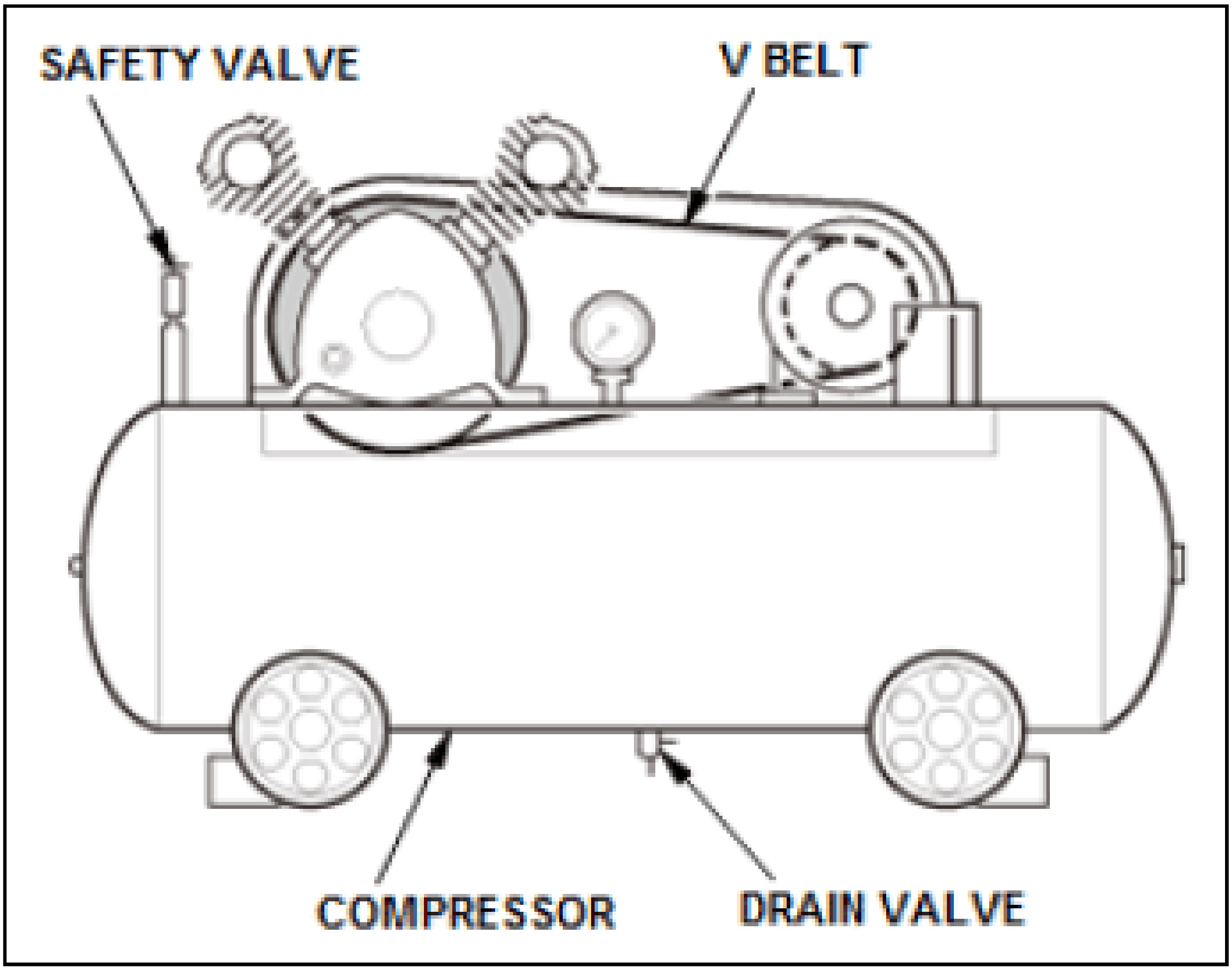

Air Pipes And Equipment

Observe the followings when you install air pipes in the workshop, or connect tools to air hoses.

1. Air Pressure Drop:

   The smaller the inner diameter of the air pipe or hose, the larger the pressure drop and the poorer the water separating capability will be. Use larger diameter air pipes and hoses whenever possible.

2. Water Removal:

   All compressed air contains water which condenses into droplets as the air cools. Using a spray gun without a water separator will cause paint defects and possible equipment damage. Install water separators on air lines used for spray guns. Also slope the air supply pipe runs slightly to allow water drainage.

Shop Compressed Air Pipe Layout Example

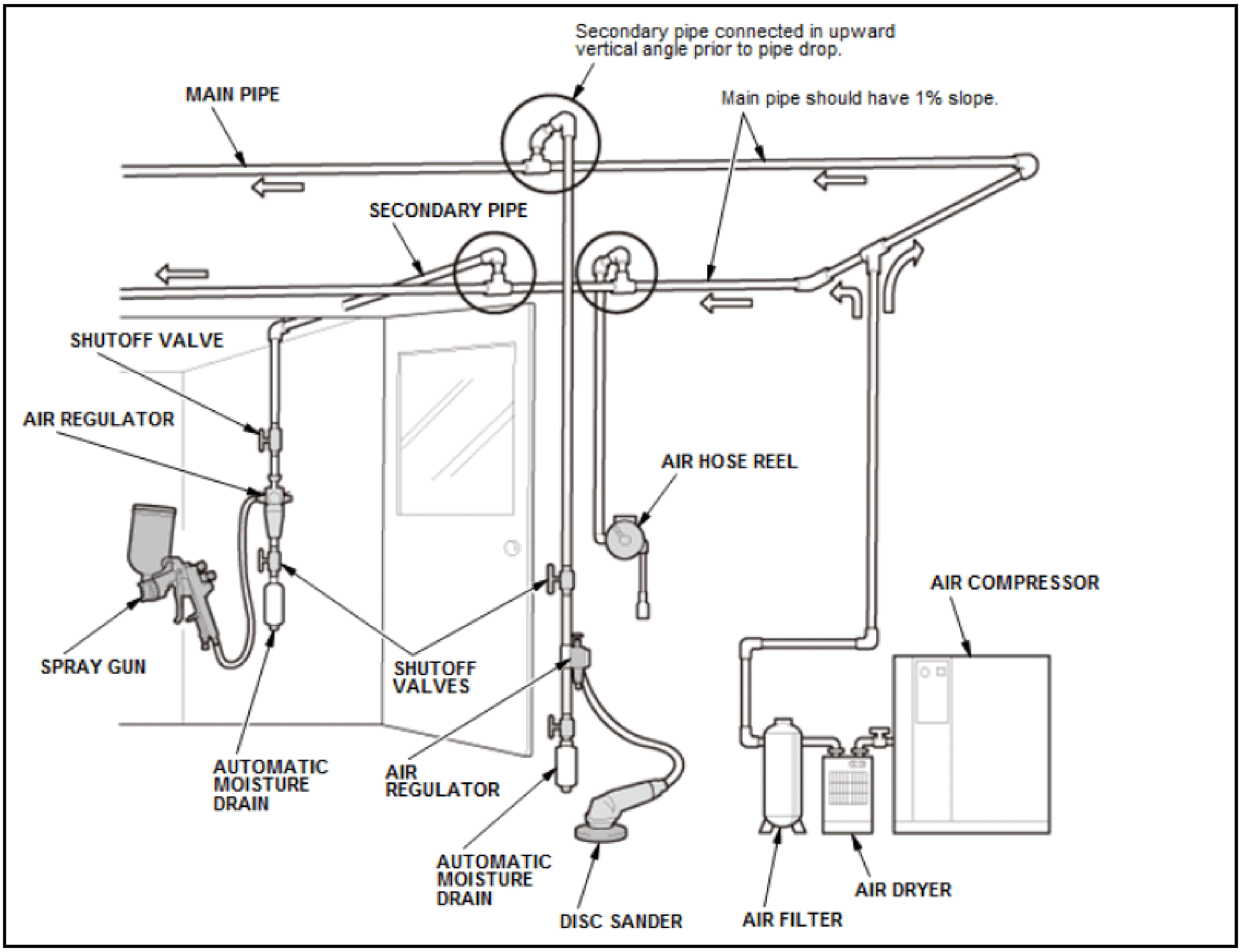
Secondary pipe connected in upward vertical angle prior to pipe drop.
MAIN PIPE
Main pipe should have 1% slope.
SECONDARY PIPE
SHUTOFF VALVE
AIR REGULATOR
AIR HOSE REEL
AIR COMPRESSOR
SPRAY GUN
SHUTOFF VALVES
AUTOMATIC MOISTURE DRAIN
AIR REGULATOR
AUTOMATIC MOISTURE DRAIN
DISC SANDER
AIR FILTER
AIR DRYER

Other Air Handling Equipment

Air Dryer (Refrigerated Type)

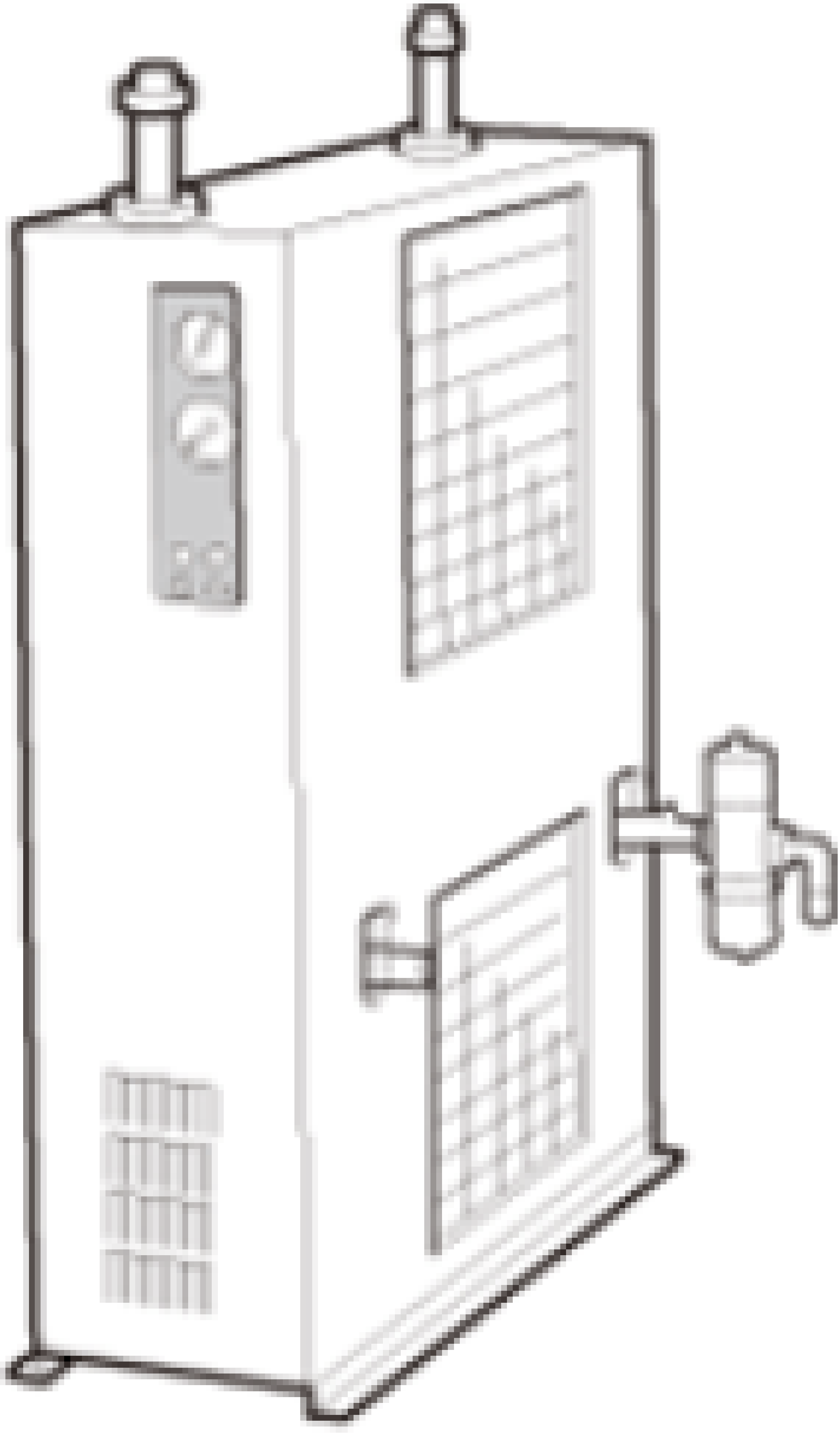

- Uses refrigeration equipment and heat exchangers to reduce the temperature of the hot air discharged the compressor.

- By reducing the compressed air's temperature significantly below ambient, the moisture it contains is condensed and removed.

Air Separator

- The air separator removes moisture, oil and dirt from the compressed air by applying the cyclone motion of the built-in deflector.
- The air filter is installed between the air dryer and air pressure regulator. It is designed to remove even the very small droplets or mist of contaminants from the cooled compressed air.

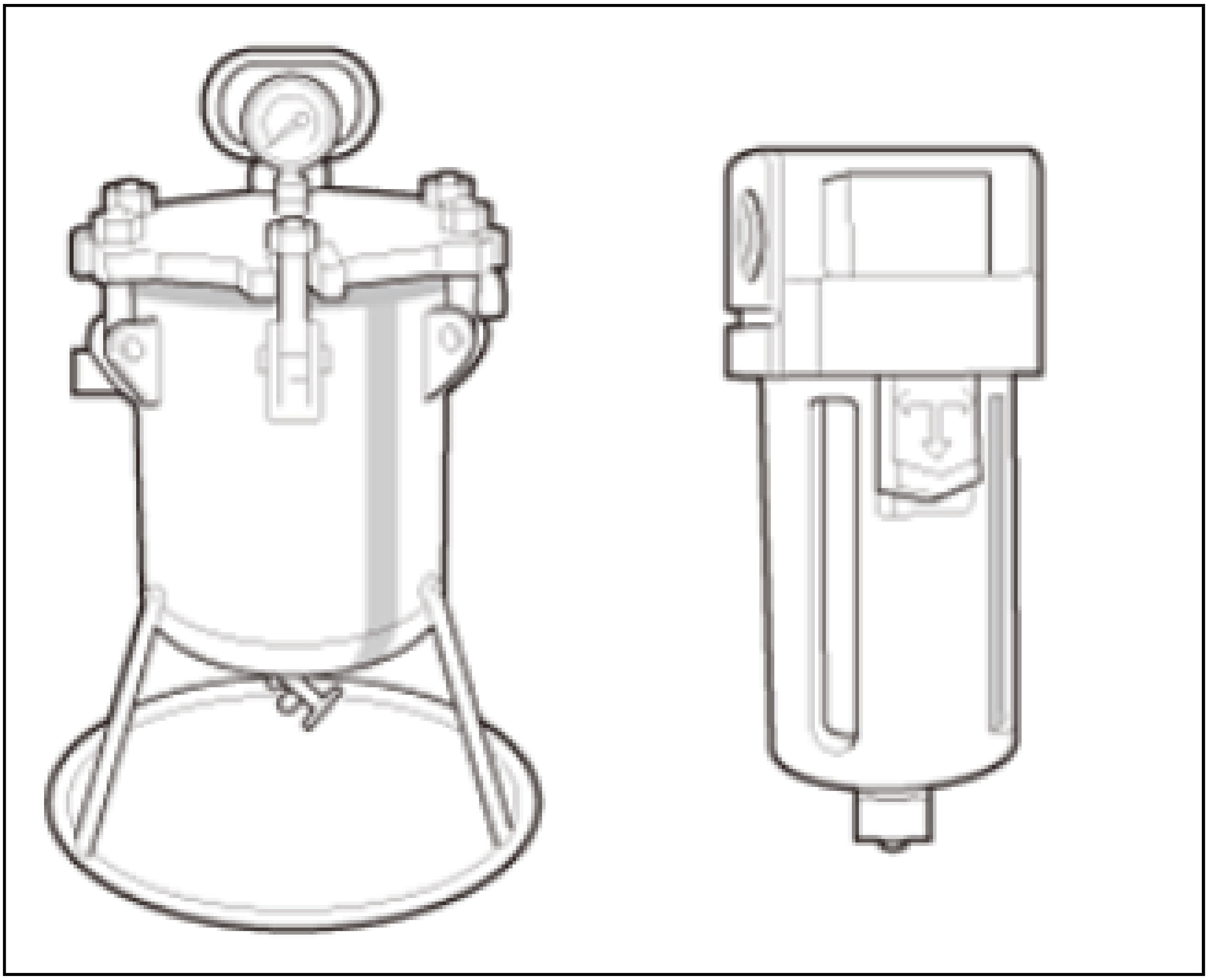

Air Pressure Regulator

- Air pressure regulators are adjustable to drop the shop air pressure to a working pressure for spray gun or other air tool use.
- The built-in air filer can remove water, oil and dirt from compressed air.
- Regulators are positioned at end of an air pipe. An air hose generally connects directly to the regulator
- Check and drain the regulator daily.

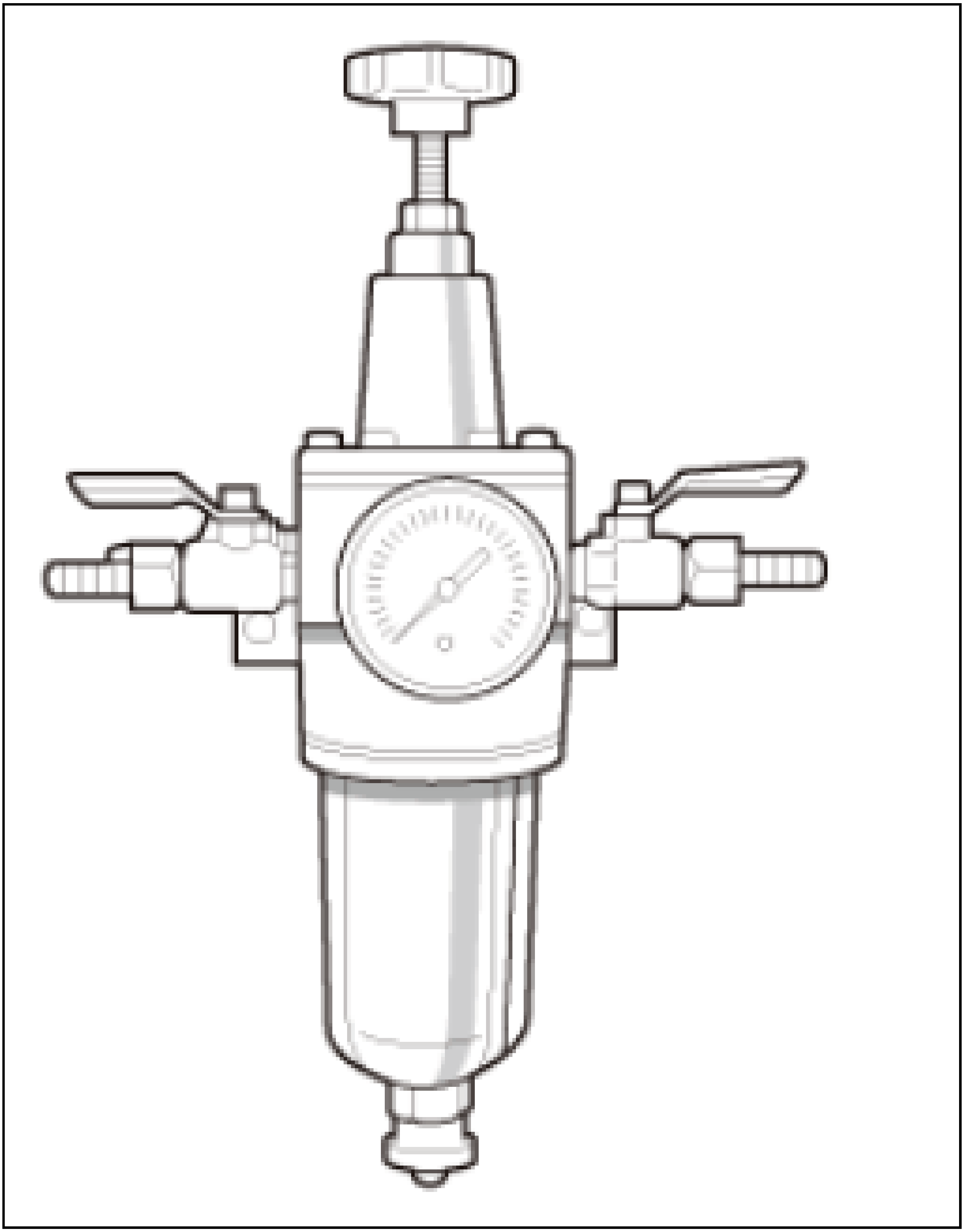

Other Paint Drying Equipment

Exhaust Hood

When making colorimetric plates for tinting or paint matching, a small exhaust hood will be required. This is also helps keep the painting area clean.

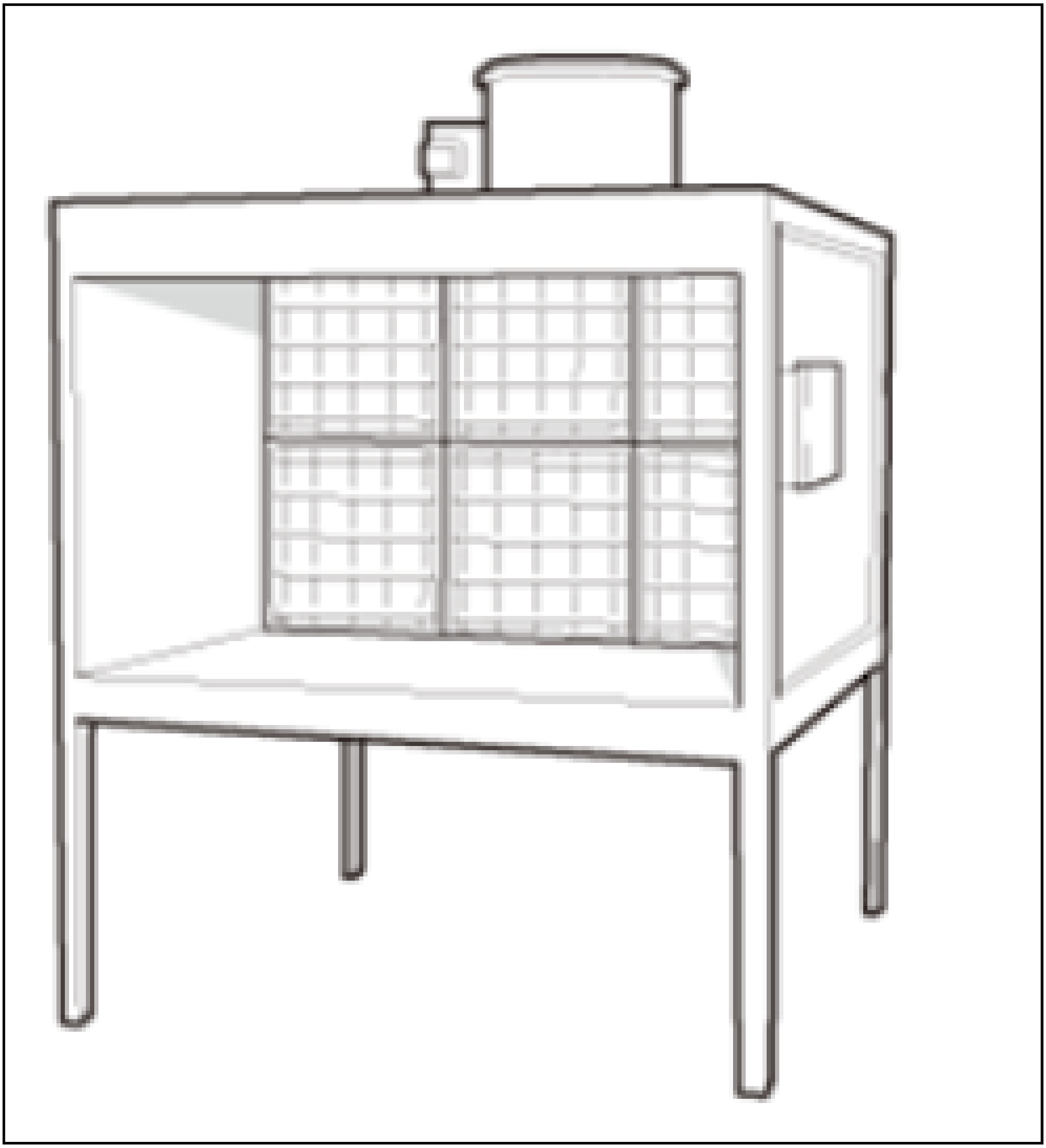

Colorimetric Plate Drying Device

When tinting or matching colors, several fully dried colorimetric plates are needed. In order to reduce the drying time, a small sized drying device will be necessary for the colorimetric plates.

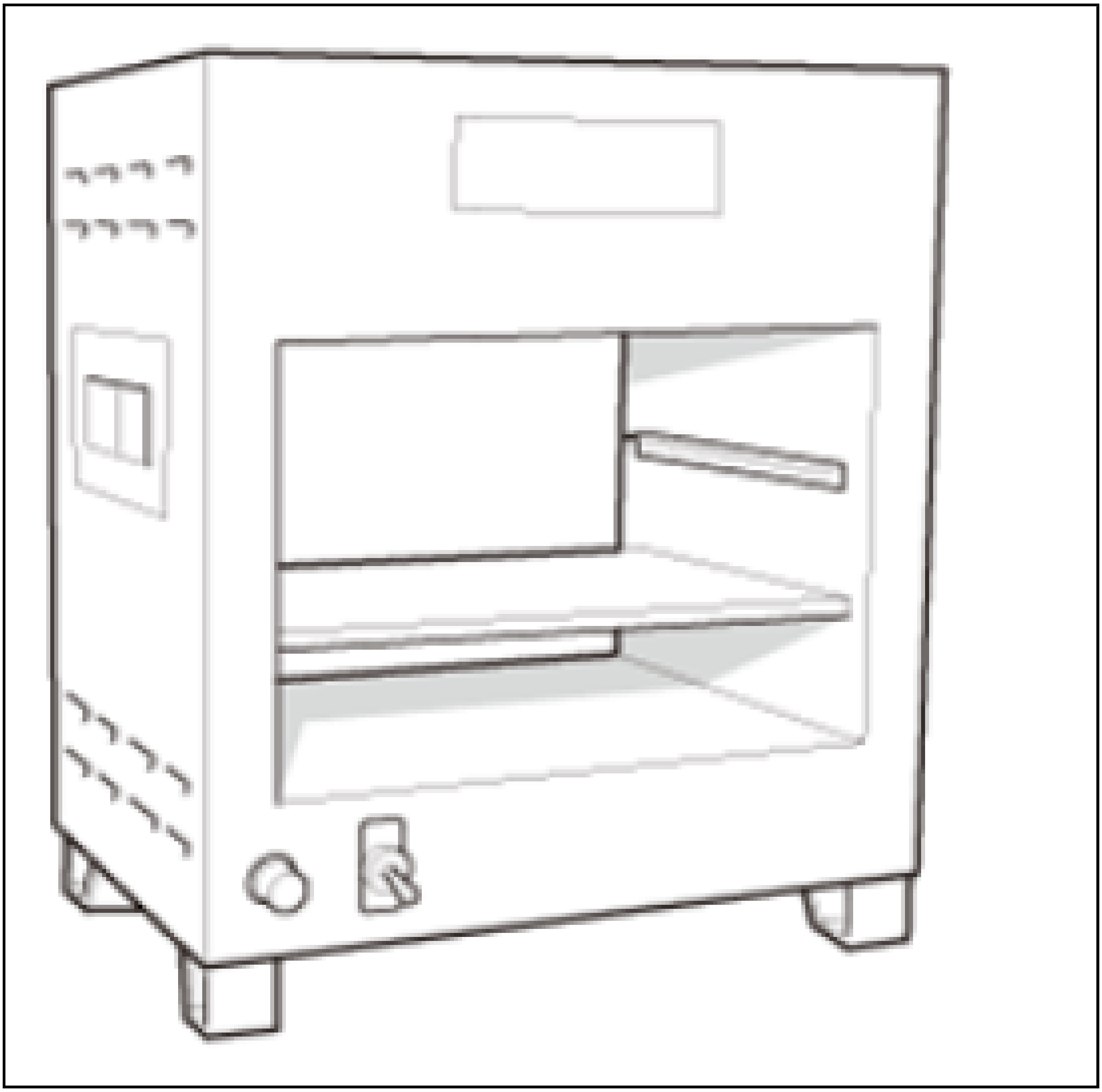

Paint Booth

Spray coating application generates considerable paint overspray mist and solvent vapors. These can be a health and safety issue, cause various paint defects, and pollute the environment. Therefore, paint and other coatings should only be applied in a specially designed paint booth.

Paint Booth Function:

- The forced ventilation system help protect painters from inhaling paint mist and hazardous organic solvent vapors.
- The intake air filters provide clean air to protect the surface being painted from dirt and dust.
- Exhaust air filters collect paint mist and prevent it's release into the shop and environment.

Paint Booth Types:

- Natural Intake/Forced Exhaust Type

  Force ventilates only the exhaust side, so the inside of the booth remains at the ambient air pressure. This booth type tends to allow more dust and dirt entry through doors and small openings.

- Forced Intake/Forced Exhaust Type (Push Pull Type)

  Force ventilates both intake and exhaust sides, so the inside of the booth is pressurized slightly above ambient. Because of this pressure differential, most dust and dirt are prevented from entering the booth.

Structure of Push Pull Type Paint Booth

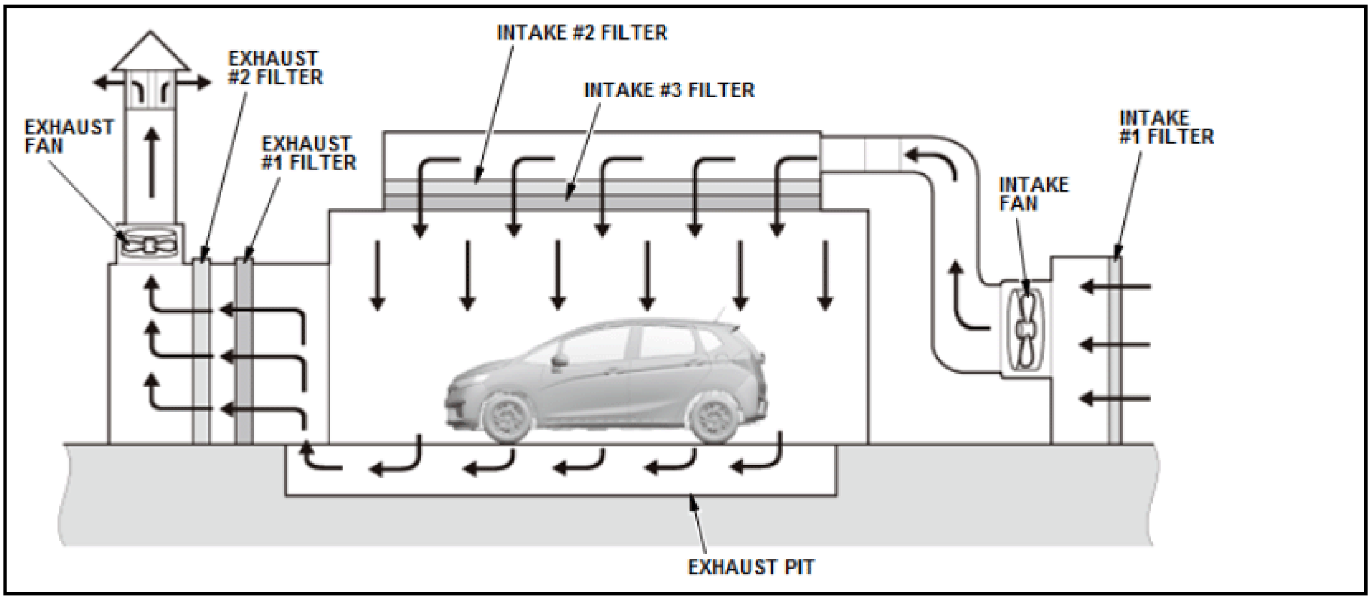
INTAKE #2 FILTER
EXHAUST #2 FILTER
INTAKE #3 FILTER
EXHAUST FAN
EXHAUST #1 FILTER
INTAKE #1 FILTER
INTAKE FAN
EXHAUST PIT

Paint Drying Tools And Equipment

- Force drying paint and other coatings with heat helps save time, provides better coating performance, etc. than ambient temperature drying methods.
- There are three types of heat transfer: thermal conduction, convection, and radiation. Convection and radiation of hot air and infrared rays are the most common drying methods for paint and coatings.
- Drying equipment should be chosen based on the repair requirements. A portable type dryer is generally used for paint repair. Hot-air blowers are usually used for complete paint jobs.

Near-Infrared Drying

This uses infrared bulbs as its heat reservoir. They are portable, adjustable, and widely used.

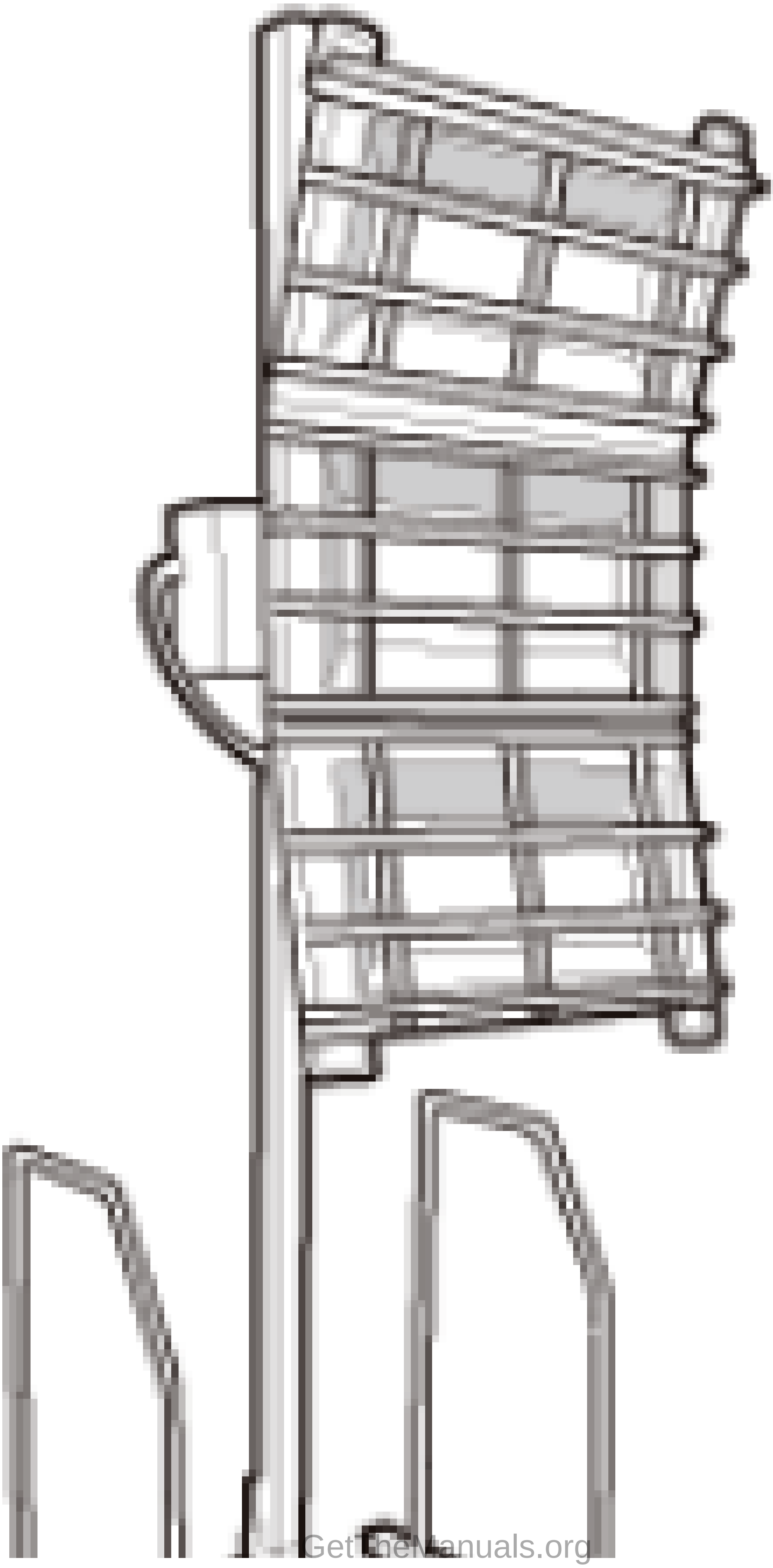

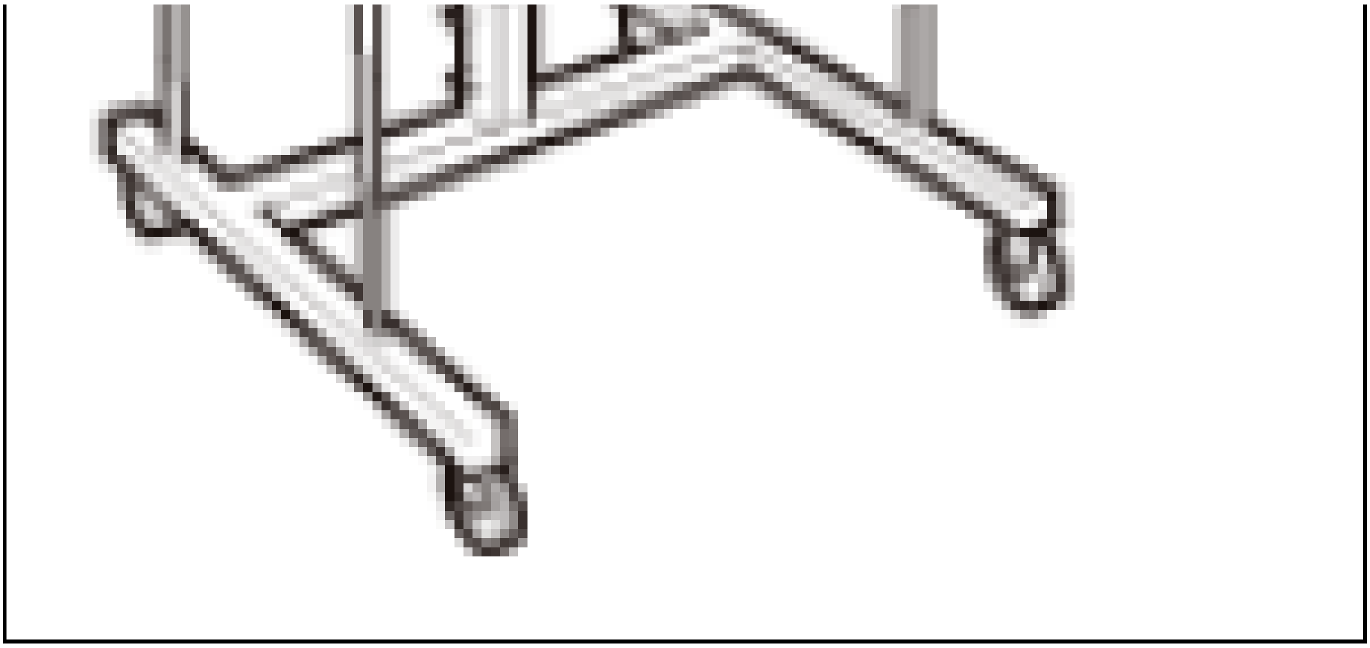

Far-Infrared Drying

This equipment works by the radiant heating of far-infrared radiation from the tube and panel heated by gas or electricity.

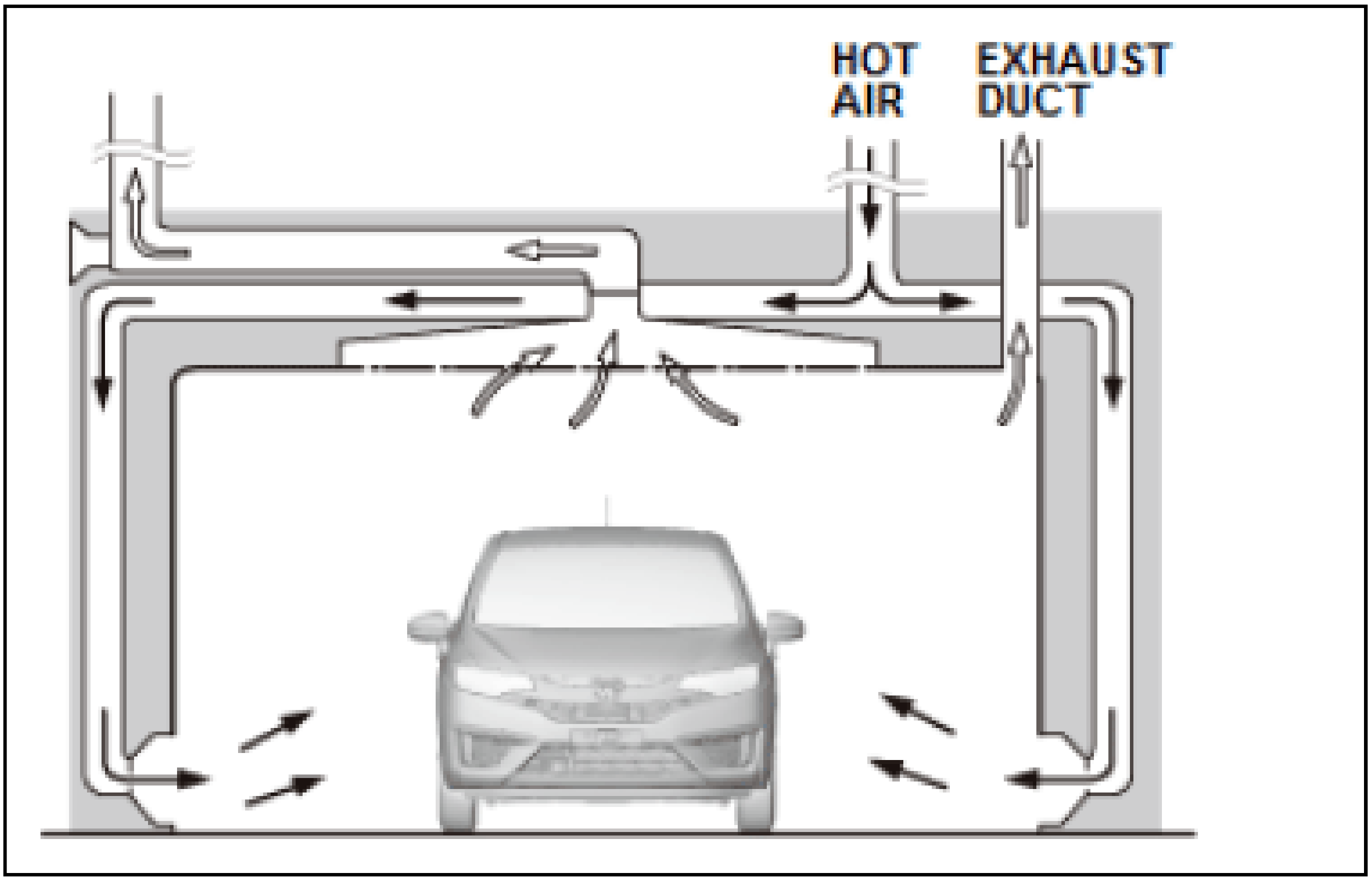

Hot Air Type Drying Oven

- This enclosure is designed to use forced hot air to dry the paint film.
- Heat is created by burning fuel or consuming electricity.
- Generally forced air drying temperatures should be kept at or below 140Â°F (60Â°C).
- Some Baked finishes require higher curing temperatures of around 212-302Â°F (100-150Â°C).
- However, when using forced air drying during paint repair, it is recommended to dry at the lower 140Â°F (60Â°C) temperature to avoid damaging batteries and electrical components.

Direct Hot Air Oven

High thermal efficiency:

- Compact and inexpensive.
- Quick heat-up time.
- By-products of combustion may cause paint defects.

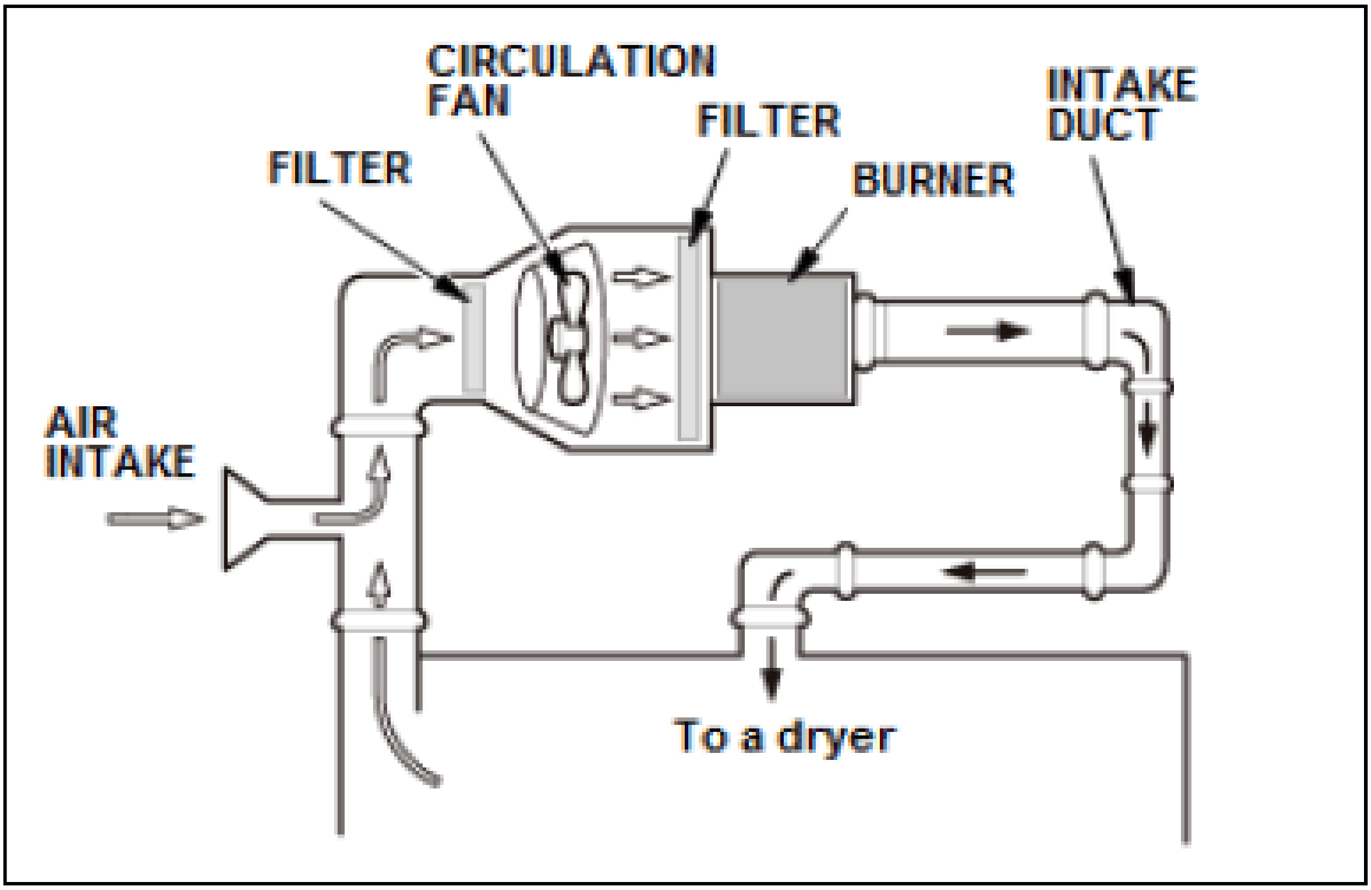
CIRCULATION FAN
FILTER
FILTER
INTAKE DUCT
BURNER
AIR INTAKE
To a dryer

Indirect Hot Air Oven

A burner heats a heat exchanger that is circulating air through the oven:

- Low fire or explosion risk, flame is isolated from air circulating in oven.
- No potential contamination by combustion by-products.
- Low thermal efficiency.
- Longer heat-up time.
- Equipment is large and expensive.

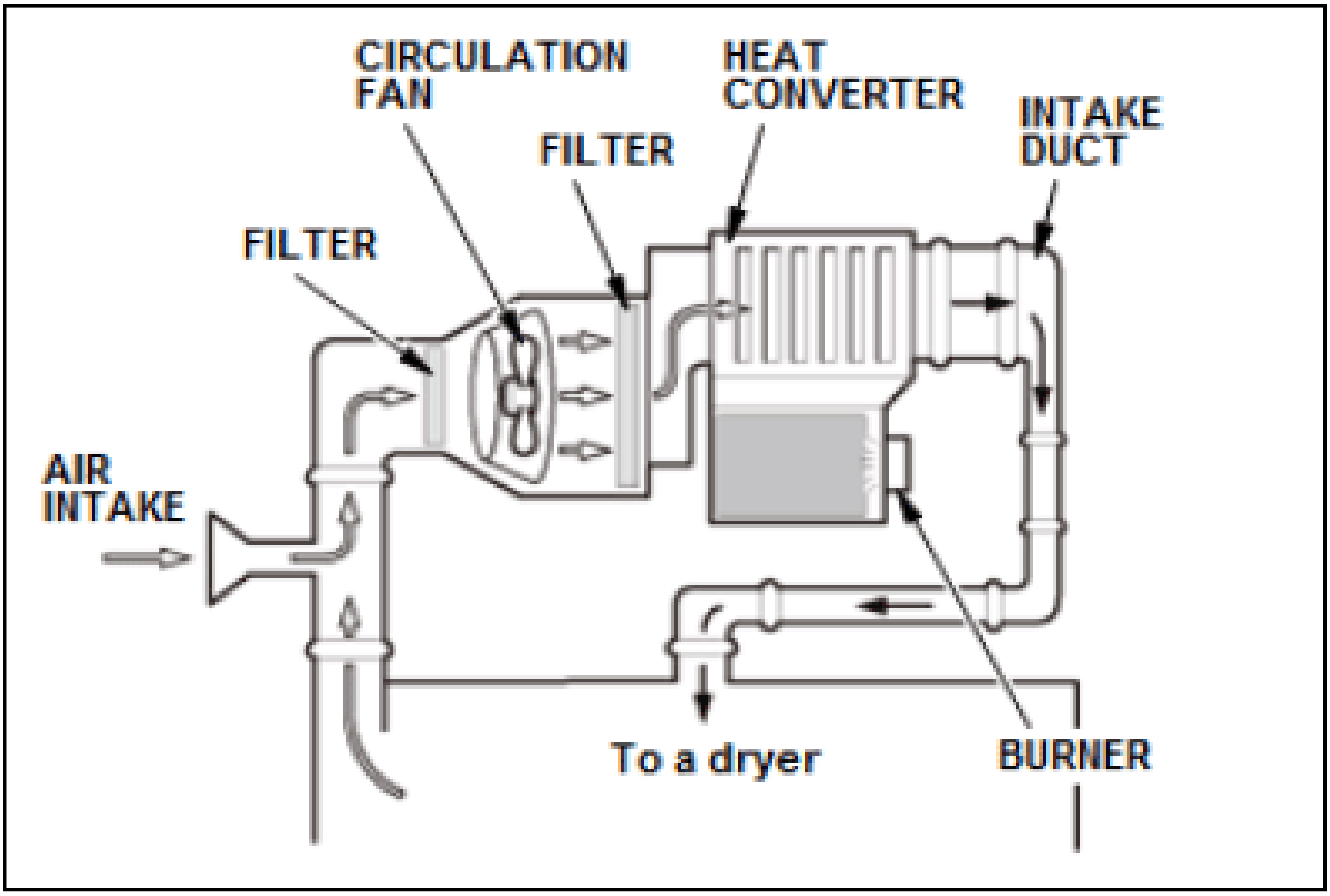
CIRCULATION FAN
HEAT CONVERTER
FILTER
INTAKE DUCT
FILTER
AIR INTAKE
To a dryer
BURNER

PAINT REPAIR TOOLS

Other Tools And Equipment

File, Sanding Block

Use to manually surface or sand body filler/putty and primer-surfacer coating.

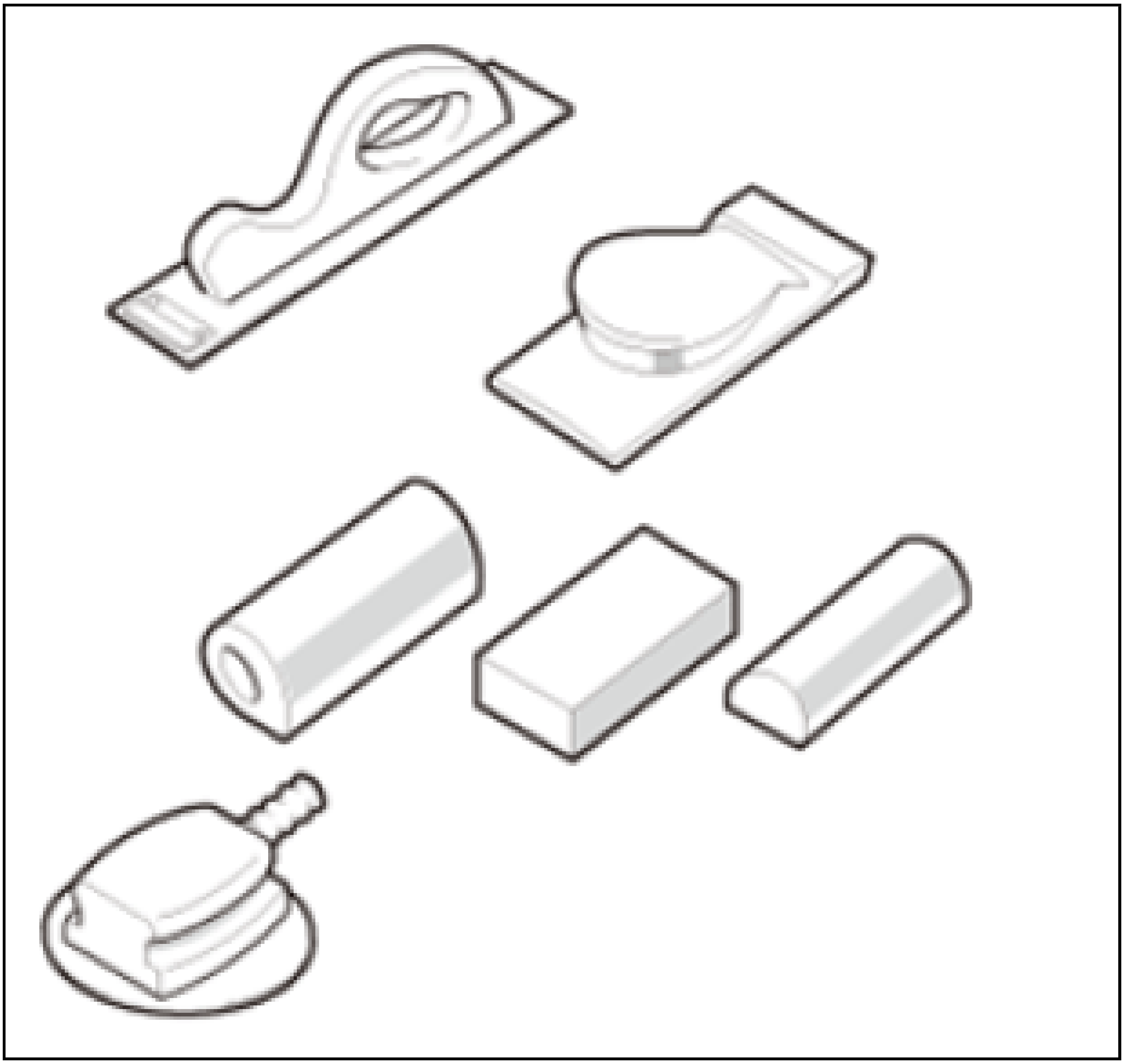

Scoops and spreaders

Used for building body filler/putty layers on dents, scratches and holes. Many different sizes and materials. Select the one most suitable for the surface characteristics (flat or curved) and the size of application surface.

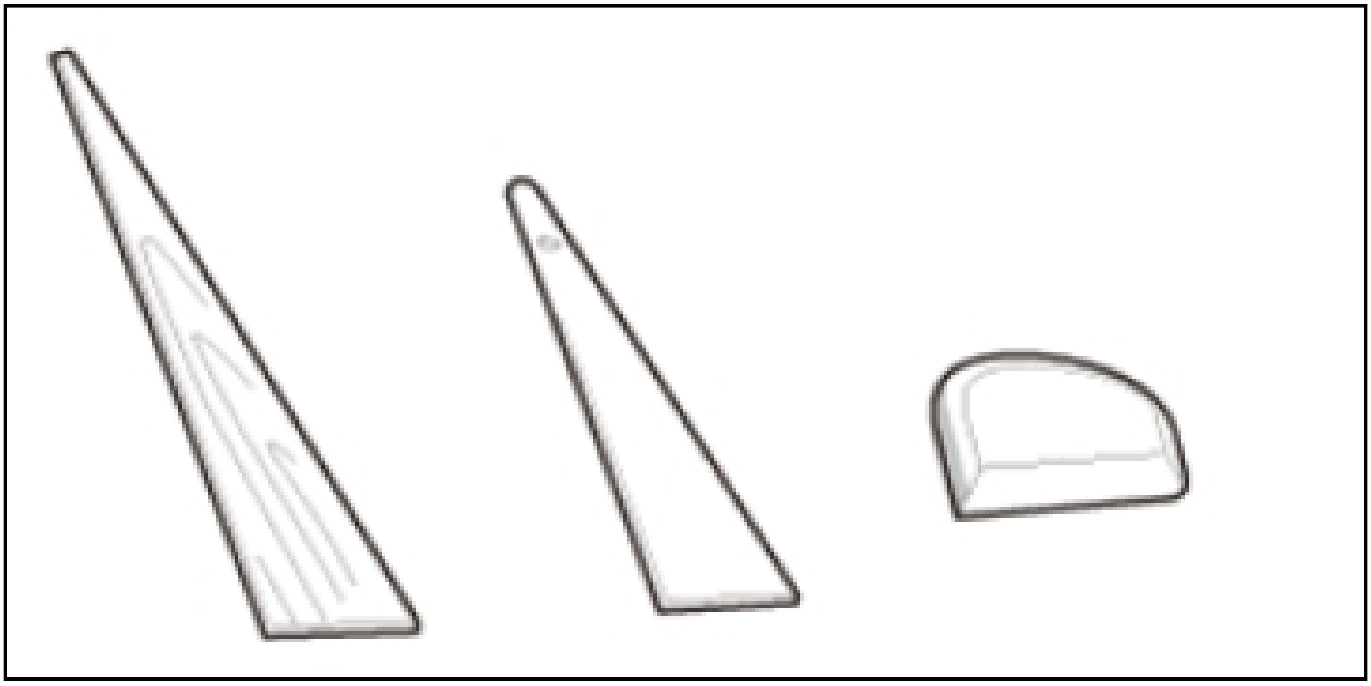

Body Filler/Putty Mixing Board

Used to mix body filler/putty and hardener.

Constructed of metal, plastic, and cardboard (disposable).

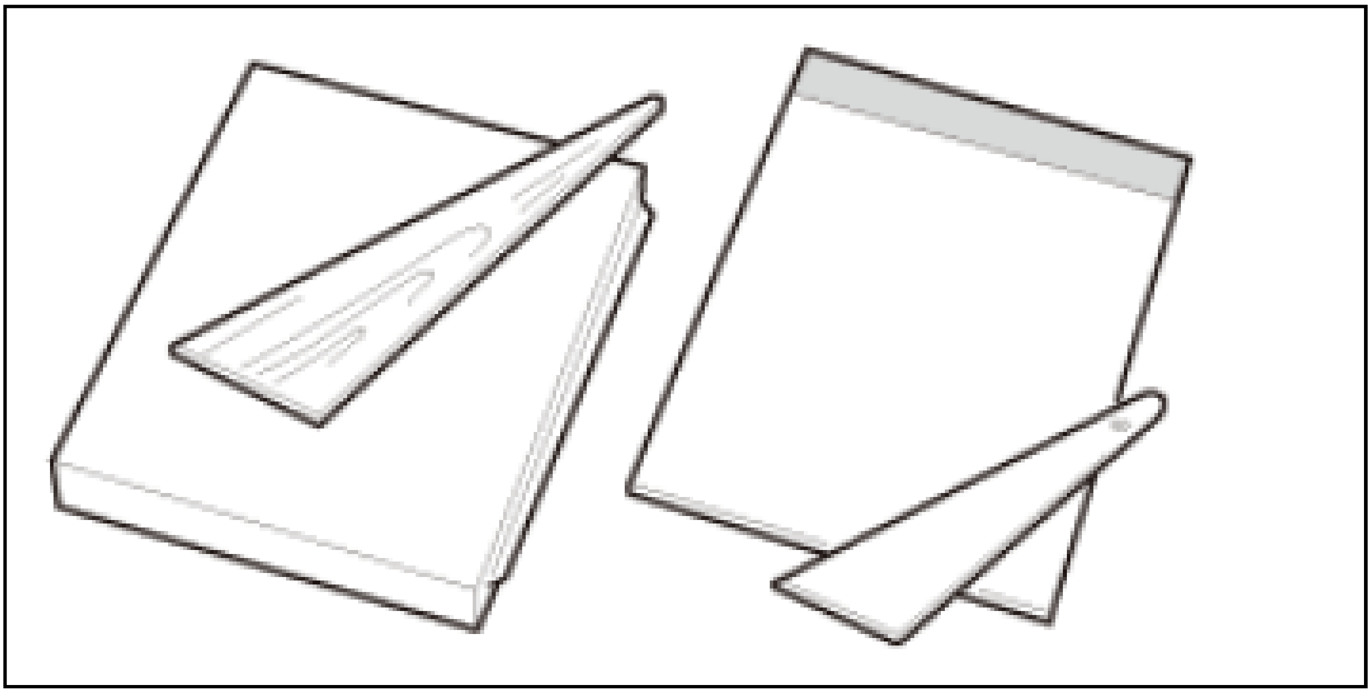

Waste Cloth (Wiping Cloth)

- Used but well washed cloth is suitable for paint repairs. New cloths tend to retain oils and other substances, so they are not effective for absorbing or wiping up fluids.
- Paper absorption twice its weight of water and oil, and is highly effective for wiping up fluids.

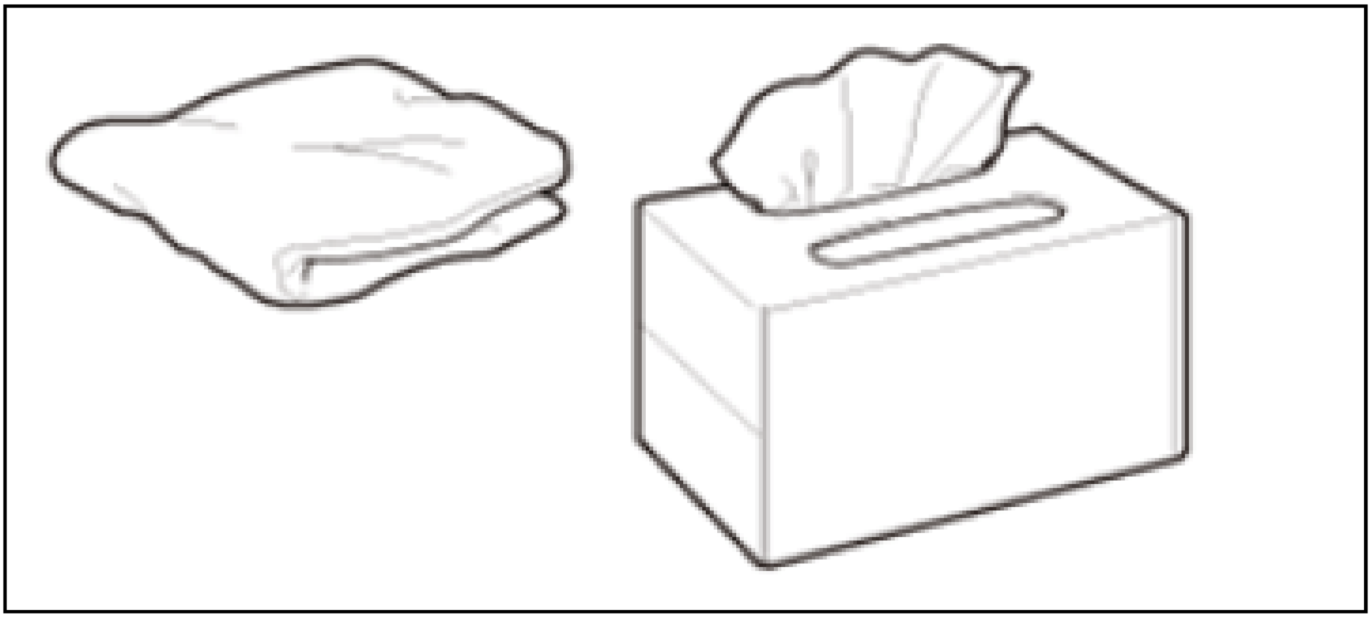

Paint Strainer

Used to filter dust and foreign substances from paint before application.

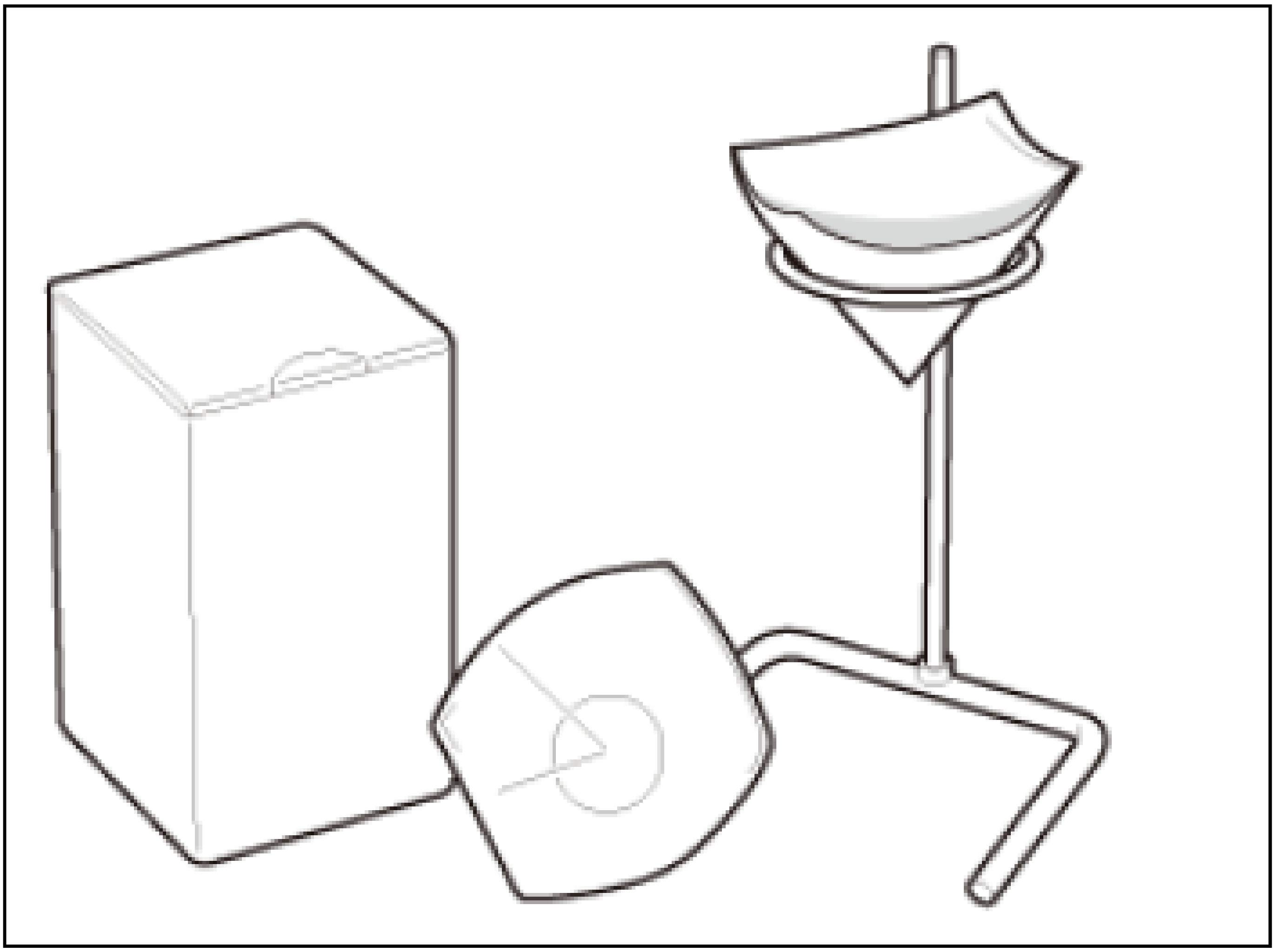

Tack Cloth

Cloth impregnated with high viscosity varnish. Used for removing dirt, dust, and sand from a surface before painting.

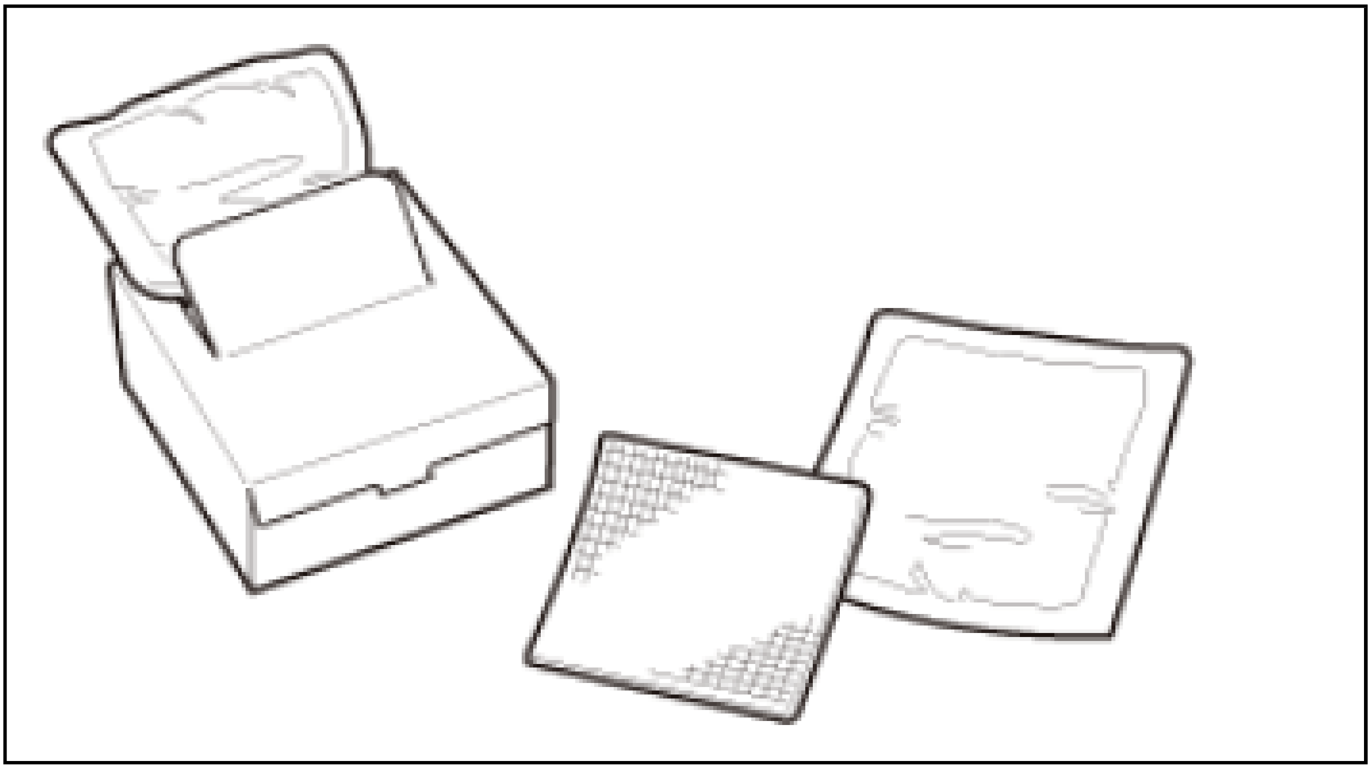

Masking Material

Refer to masking tools and materials:

- Masking tape
- Masking paper
- Other covers for masking

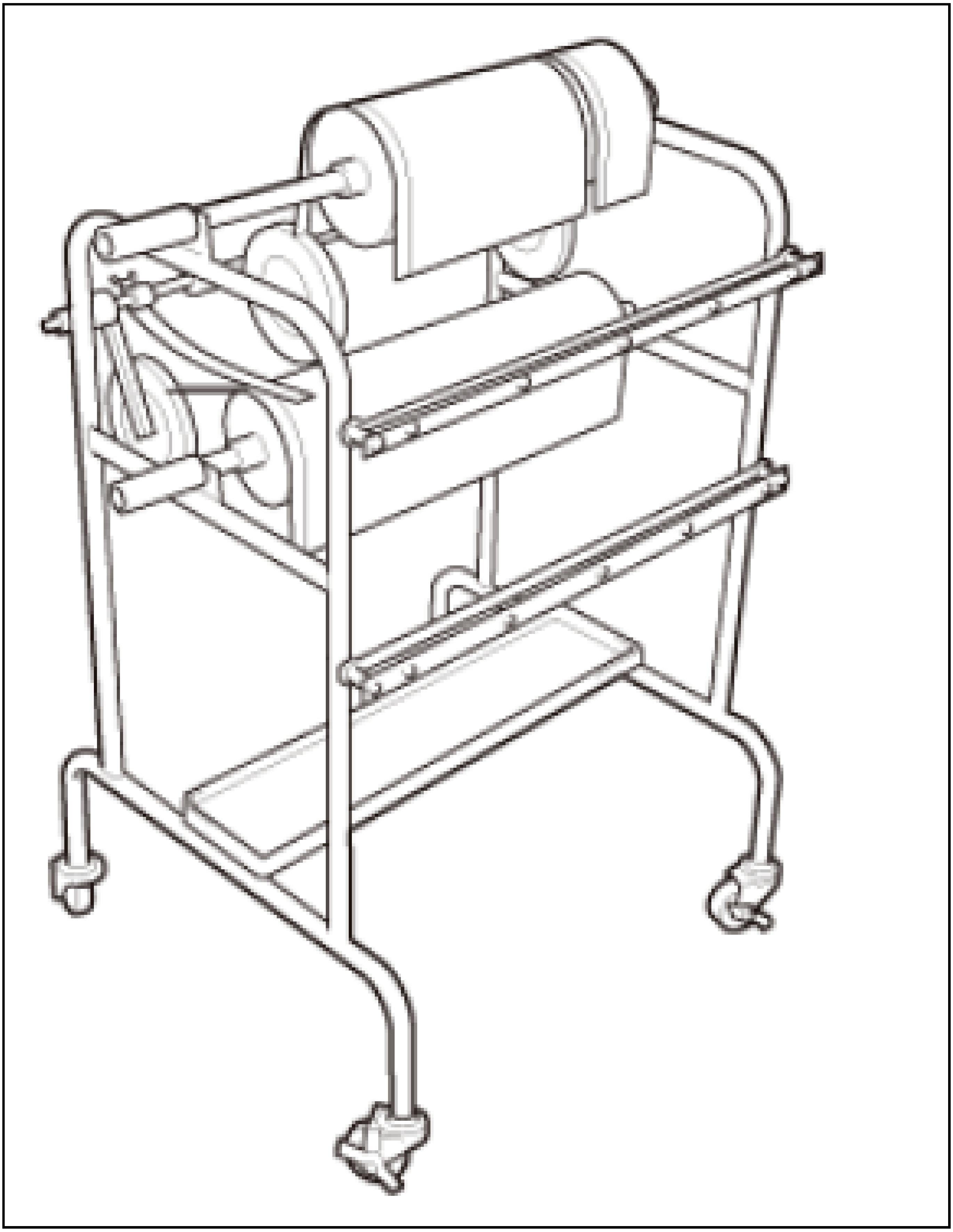

Tools for Color Mixing

Refer to COLOR MIXING TOOLS AND EQUIPMENT.

Heavy Duty Scuffing Pad

Used for scuffing/polishing complex panel shapes where sander and sandpaper cannot be properly used. Abrasive particles are bonded to synthetic fiber, so they are very water resistant.

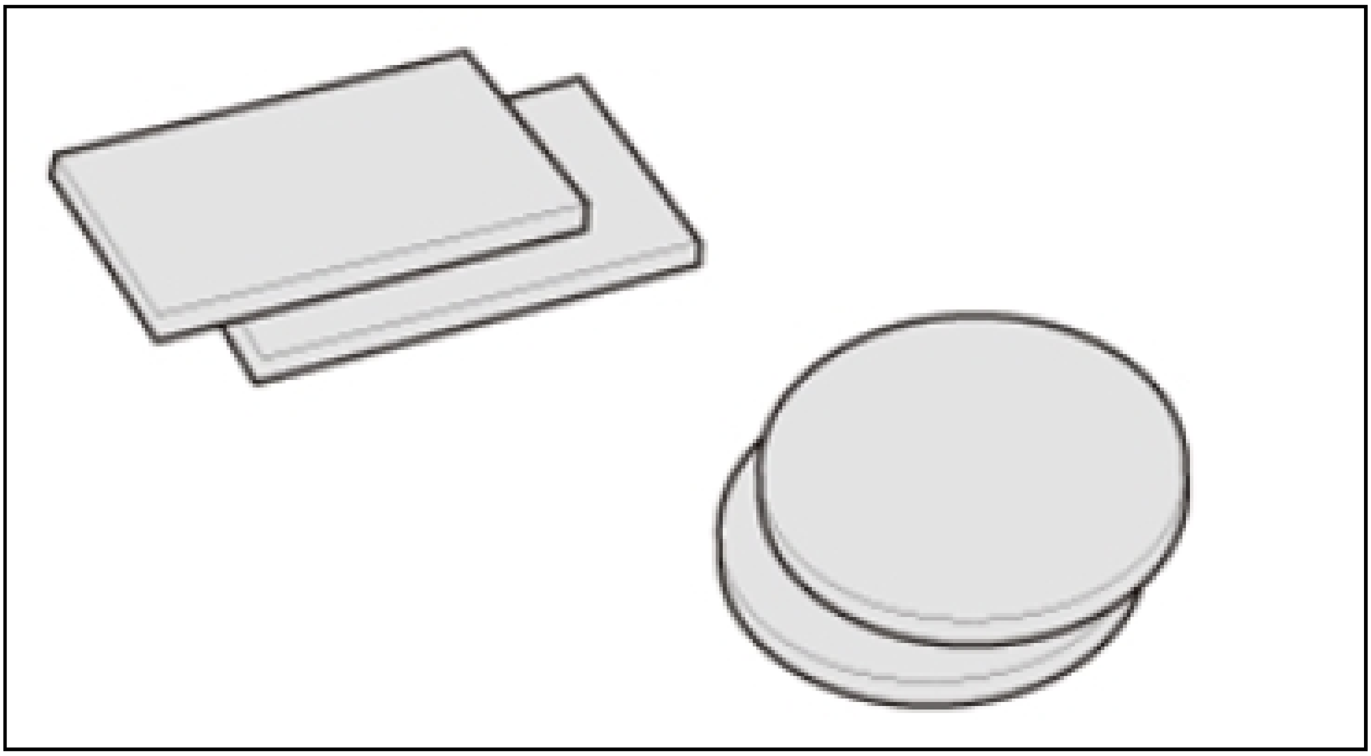

Sandpaper

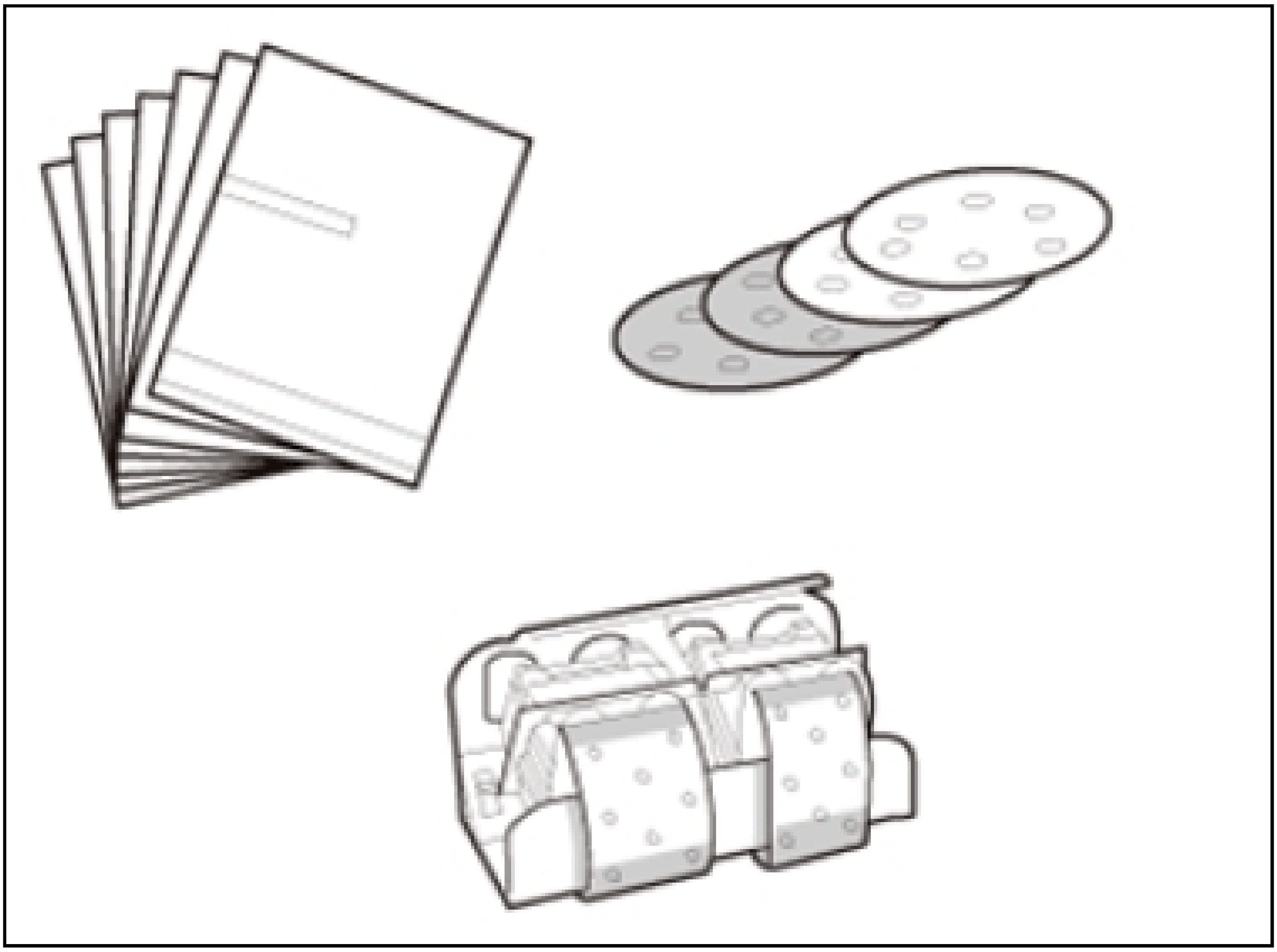

- Sandpaper is paper or cloth that has a coating of abrasives. There are a number of types and grits available.
- Sandpaper also comes in wet and dry types and should be applied accordingly based on the purpose. Generally, dry sanding is used on metal and polyester body filler/putty. Wet sanding is used on primer- surfacer and topcoats.
- Sandpaper is made for use with both sanding blocks and disc-type sanders.
- The grit size of sandpaper is defined as (P) and sanding capability differs based on this value. The smaller the (P) value is, the larger the grit size and the stronger the sanding power.

For Hand Sand	For Machine Sand	Usage
Â	P16-P40	Separation of old paint film/Rough sanding for rust removal
P60-P80	P60-P80	Metal putty sanding
P80-P120	P80-P120	Polyester putty sanding
P320-P800	P320-P600	Primer-surfacer sanding
P1000-P1200	Â	Contaminant removal before polishing with compound
P1200-P2000	Â	Color sanding and clearcoat dust removal

Structure And Material

Abrasive material:

- Aluminum oxide and silicon carbide are the main abrasive types used.
- Aluminum oxide is brown or white and suitable for polishing the hard film surfaces with a high abrasive capability.
- Silicon carbide is black. It is suitable for polishing soft film surfaces.

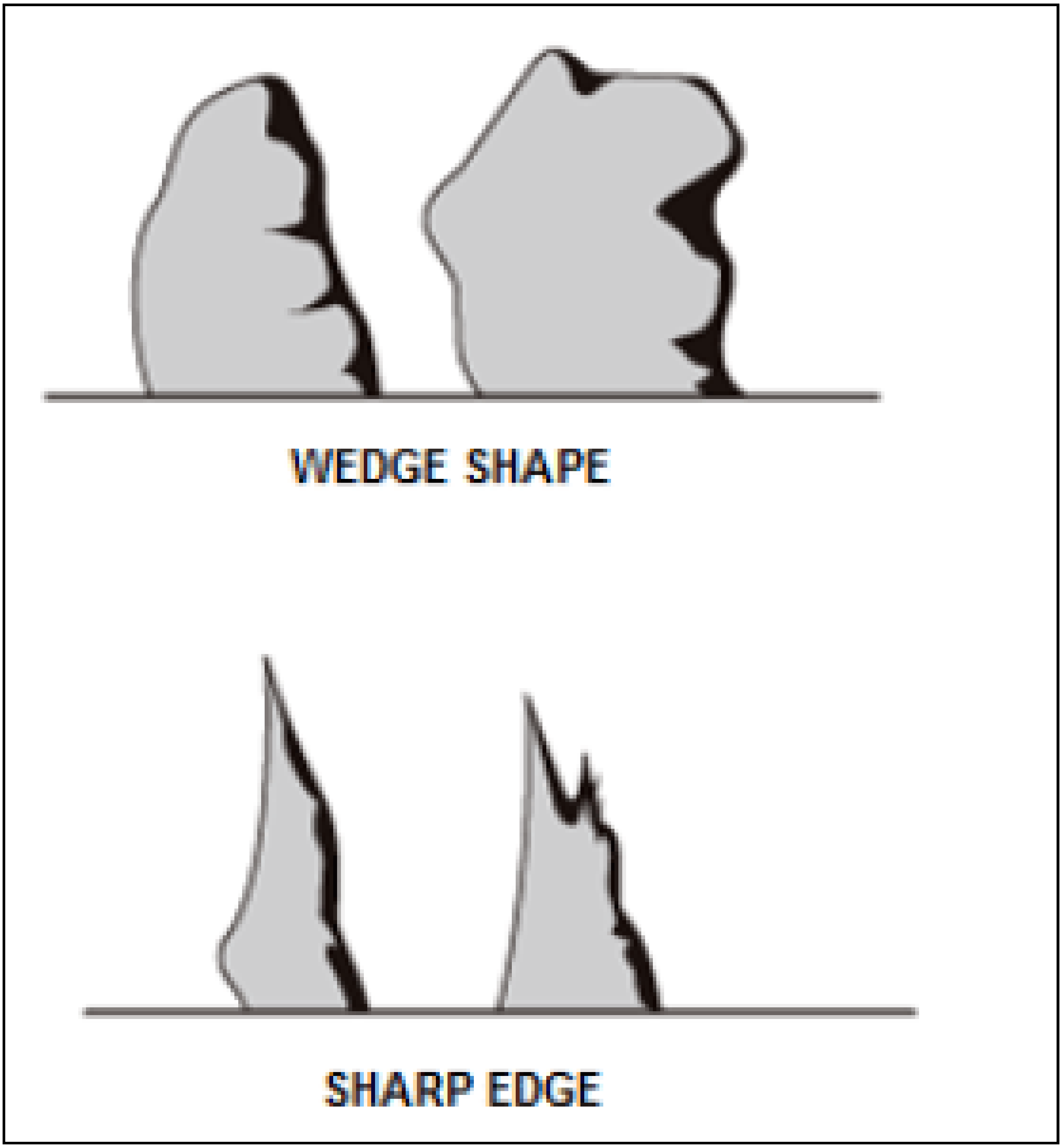

Backing

Sandpaper is abrasive grains are adhered to backing of paper, cloth, wet-or-dry paper, fiber, etc. The grit size, the thickness of the backing and grain material are usually indicated on the backing.

Grit Adhesive Methods

- There are two kinds of adhesives; open and closed coat.
- Open coat is mainly used for dry sanding because the grit distance is far apart to resist clogging.
- Closed coat is used for wet sanding because the grit is more densely distributed.

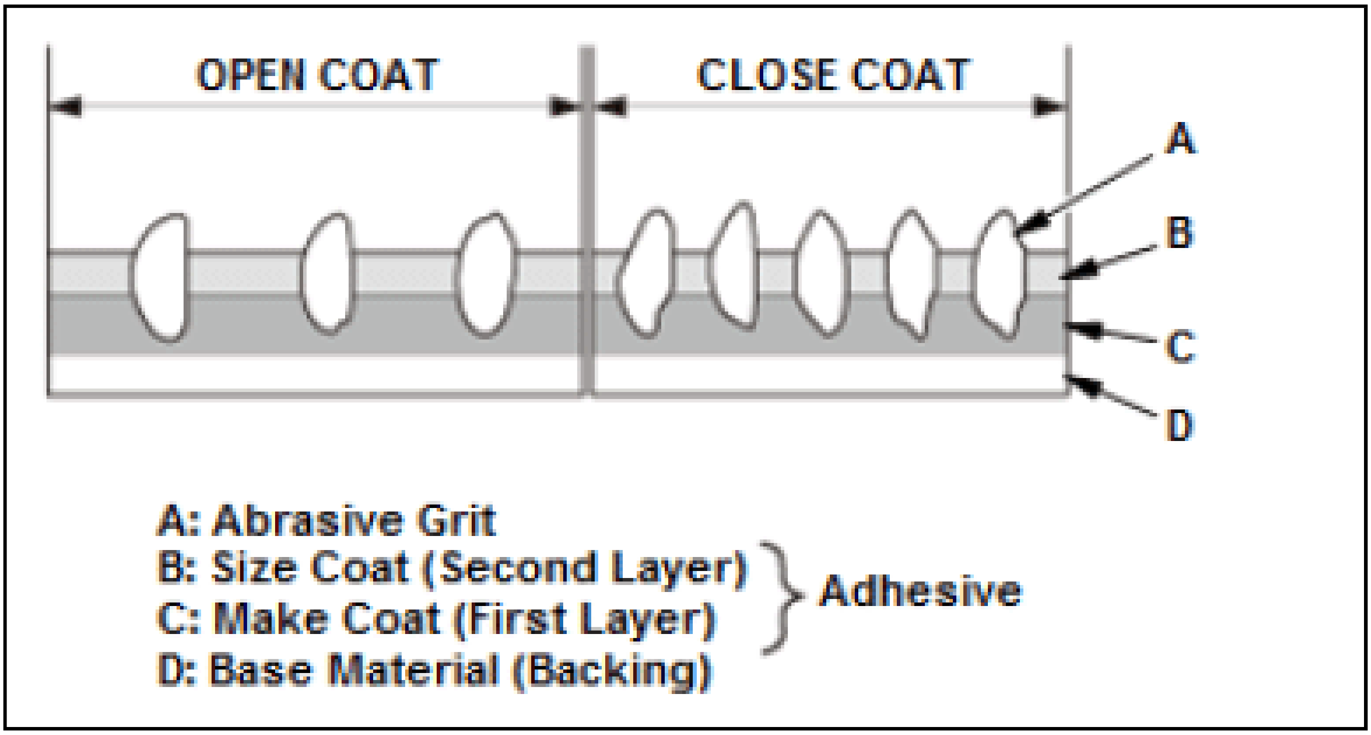
OPEN COAT
CLOSE COAT
A
B
C
D
A: Abrasive Grit
B: Size Coat (Second Layer)
C: Make Coat (First Layer)
D: Base Material (Backing)
Adhesive

Sanding And Polishing Tools

Sander

- Generally used for removing rust from an old paint layer, basecoat layer, or steel plate.
- Sandpaper is mounted on the back-plate which circulates and reciprocates for abrasion.
- Available in both electric and air powered types.

Sander Types and Usage

Disc Sander:

- Removal of old paint layers
- Removal of rust from steel plate

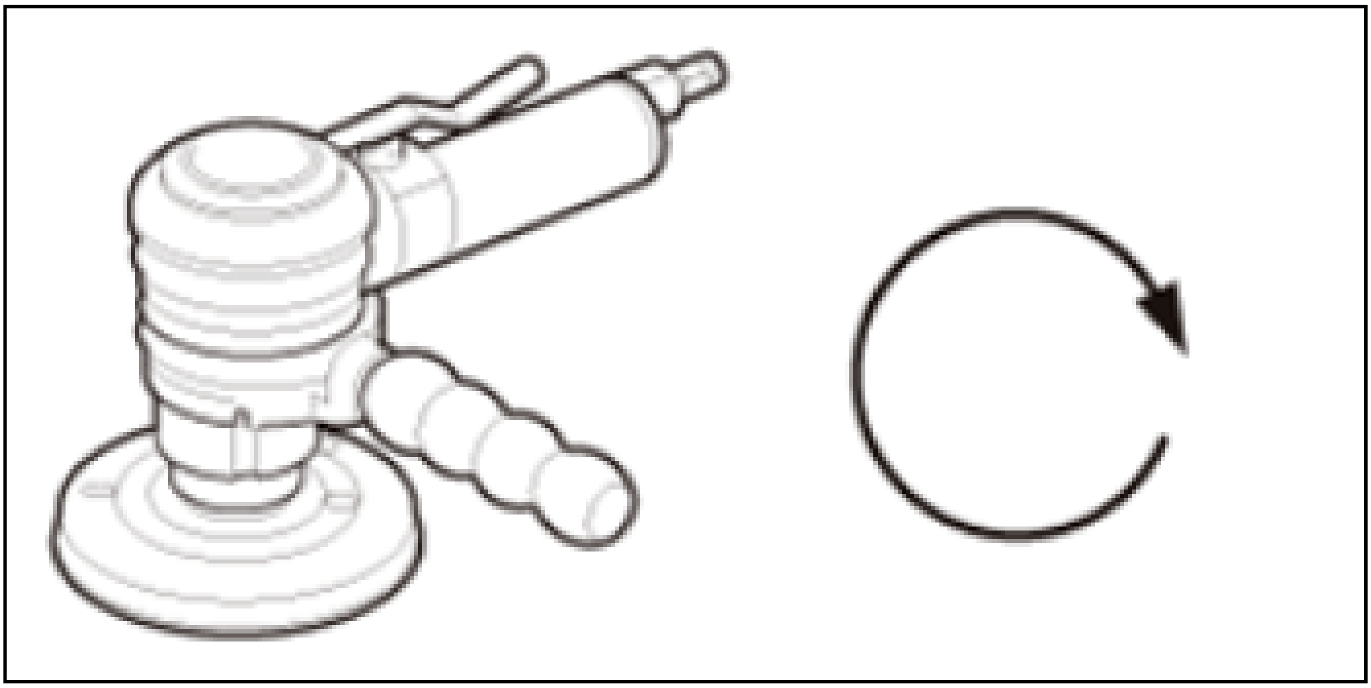

Orbital Sander:

- Rough sanding of metal filer/putty polyester body filler/putty
- Sanding of primer-surfacer, old pant layers

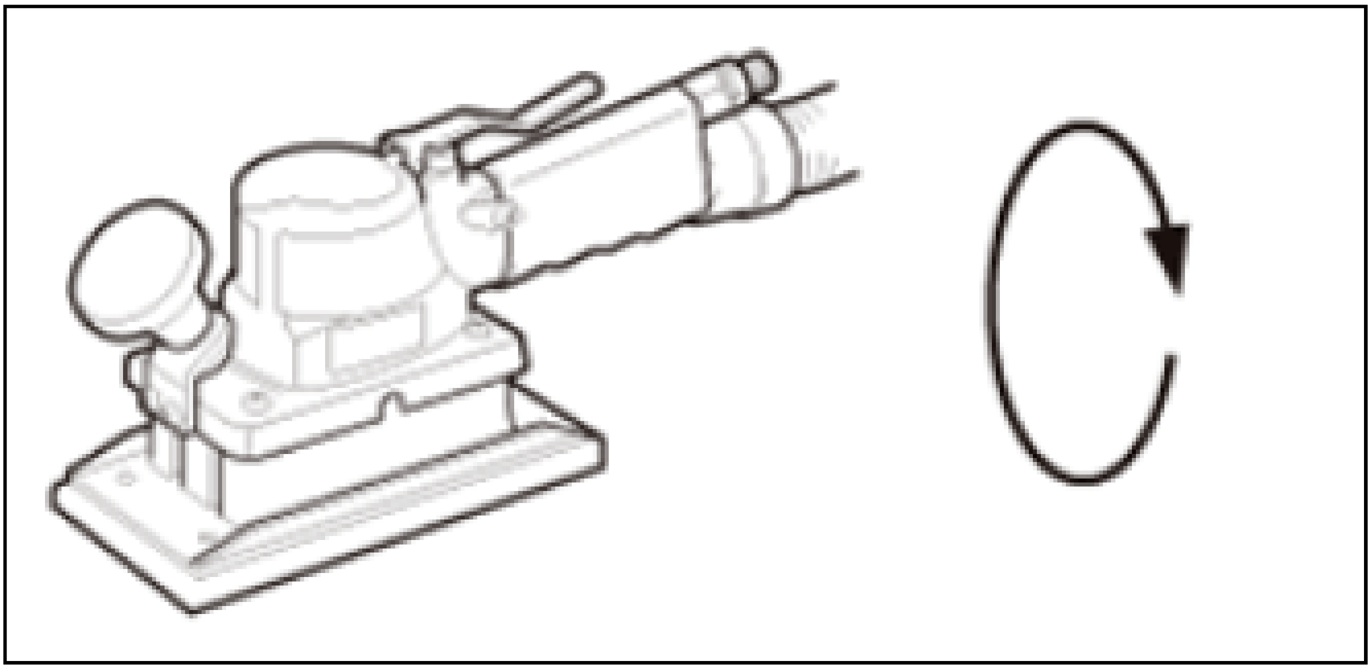

Dual-Action (DA) Sander:

- Sanding of metal filler/putty, polyester body filler/putty, surfacing
- Feather-edge sanding
- Sanding of primer-surfacer, old paint layers

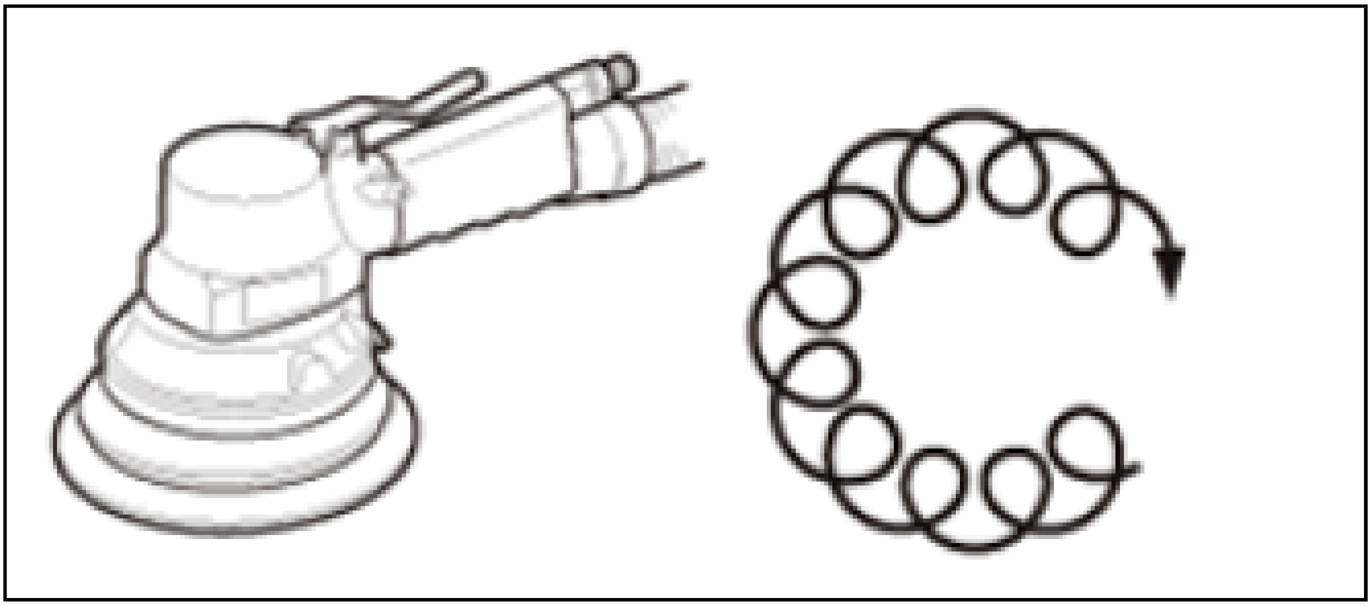

Straight-Line Sander:

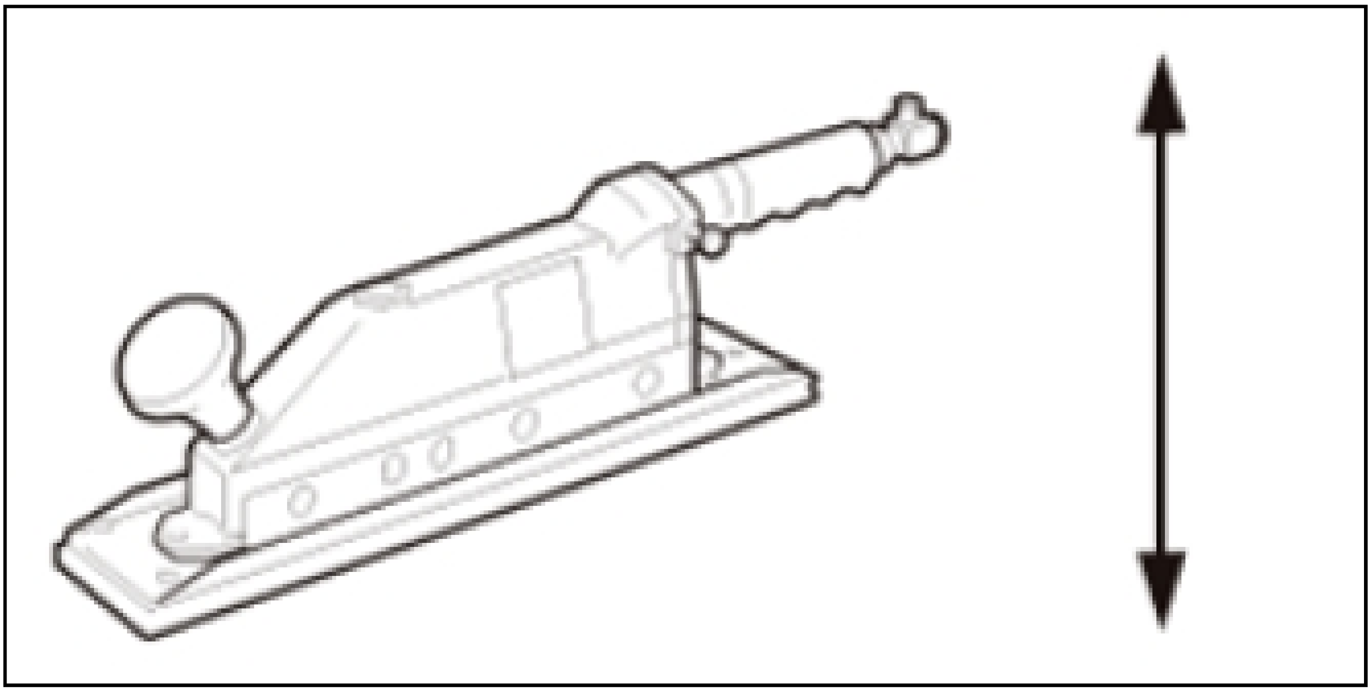

Sanding of metal filler/putty polyester body filler/putty, surfacing

Polisher

- Polishers are used to finish topcoat paint film for sanding and polishing work.
- Various kinds of buffing pads can be attached to the polisher's pad.
- Available in both electric and air powered types.

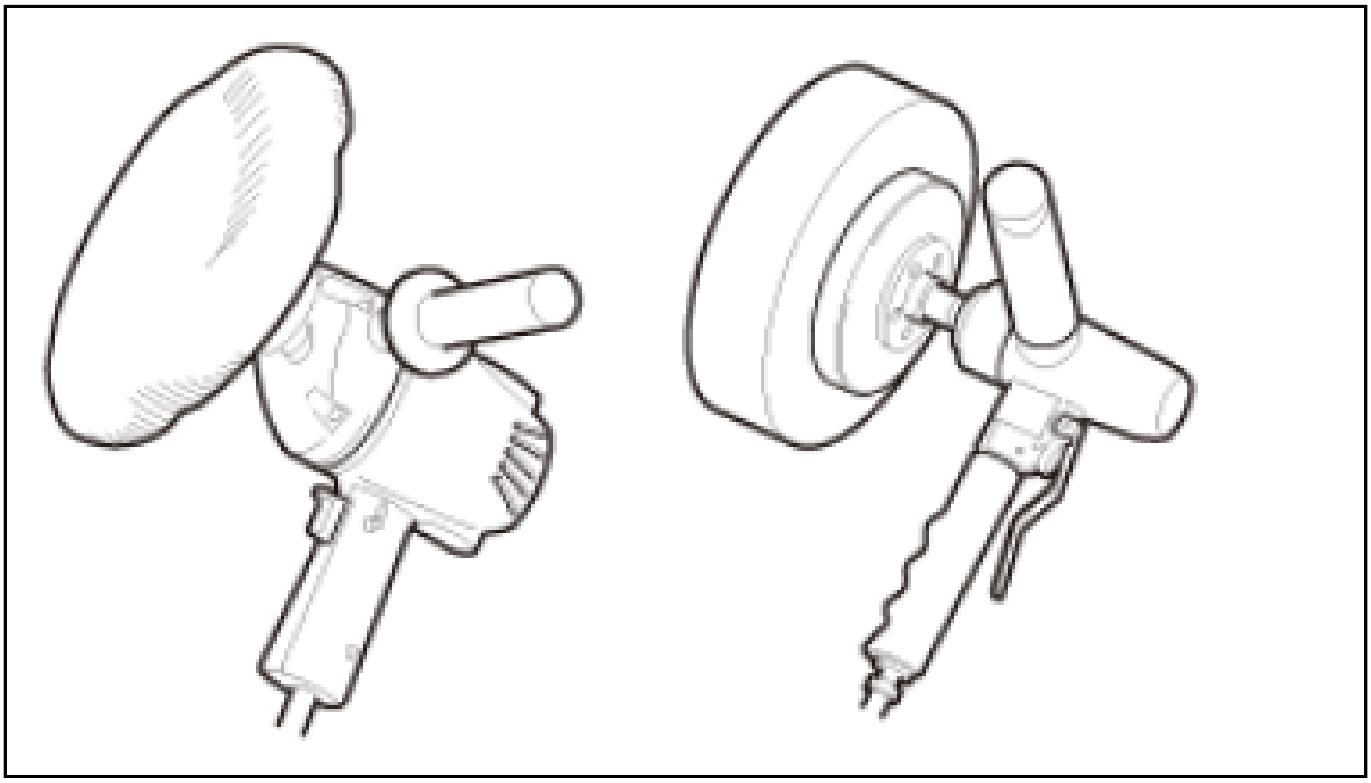

Kinds of Buffs and Usage

Towel Buff:

- Suitable for buffing rough and medium compounds.
- Buffing power is relatively strong.

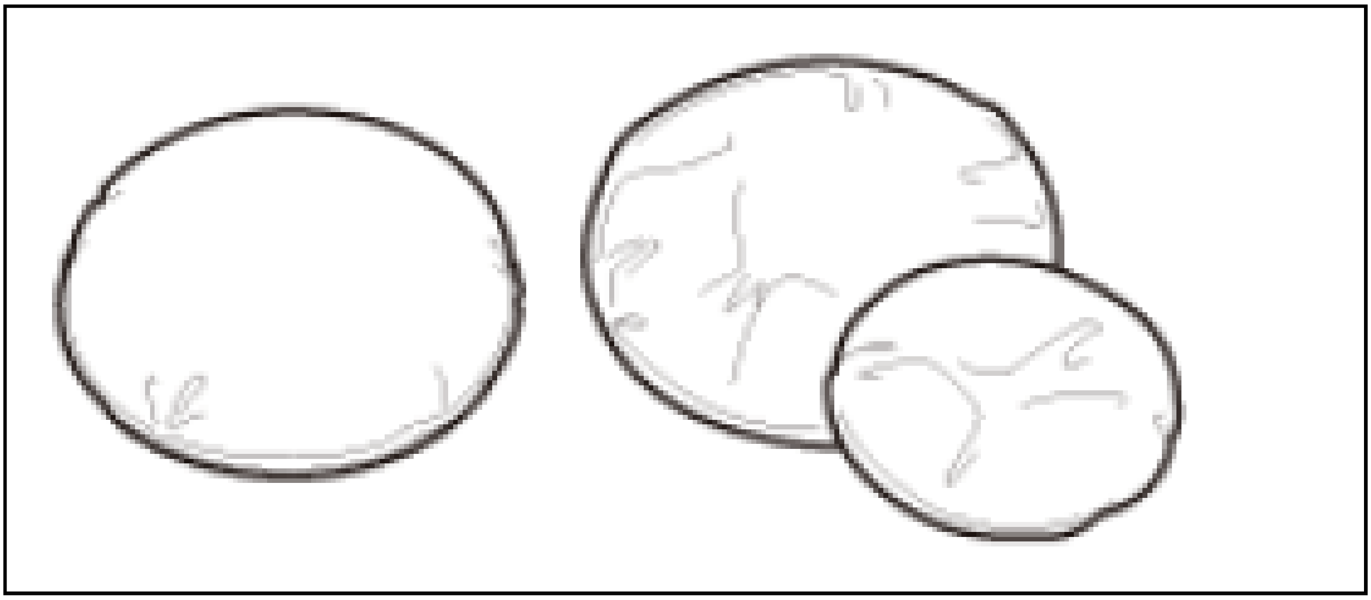

Wool Buff:

Suitable for buffing fine or extremely fine polishing compounds.

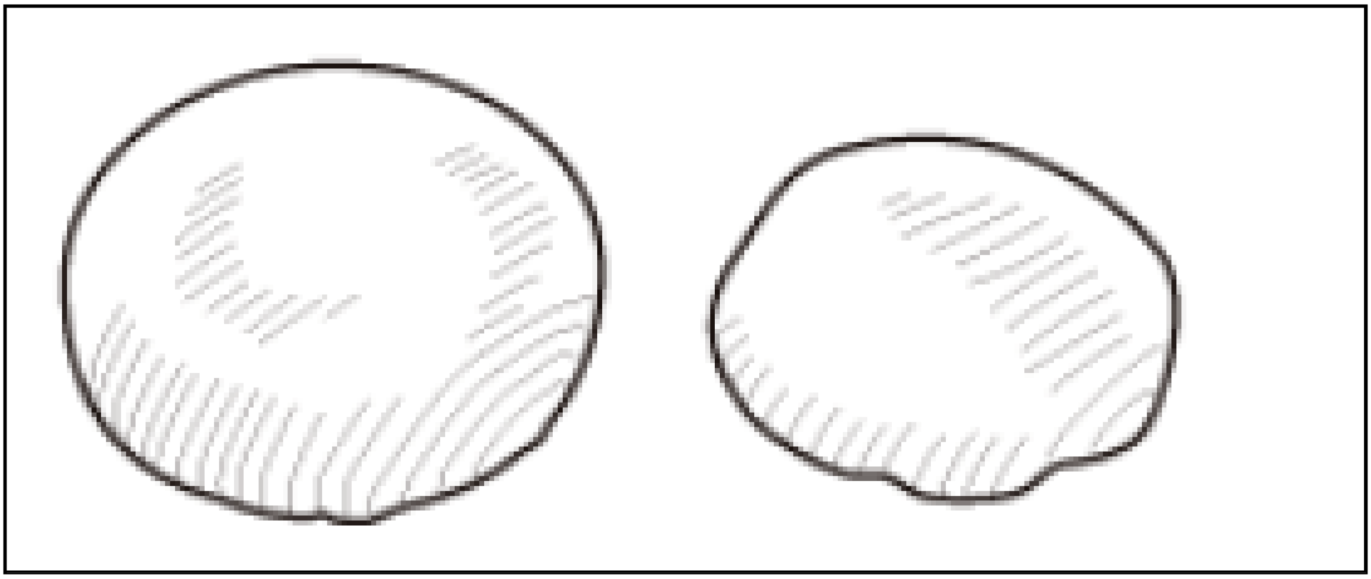

Sponge Buff:

Suitable for buffing ultra fine particle polishing compounds for final finish.

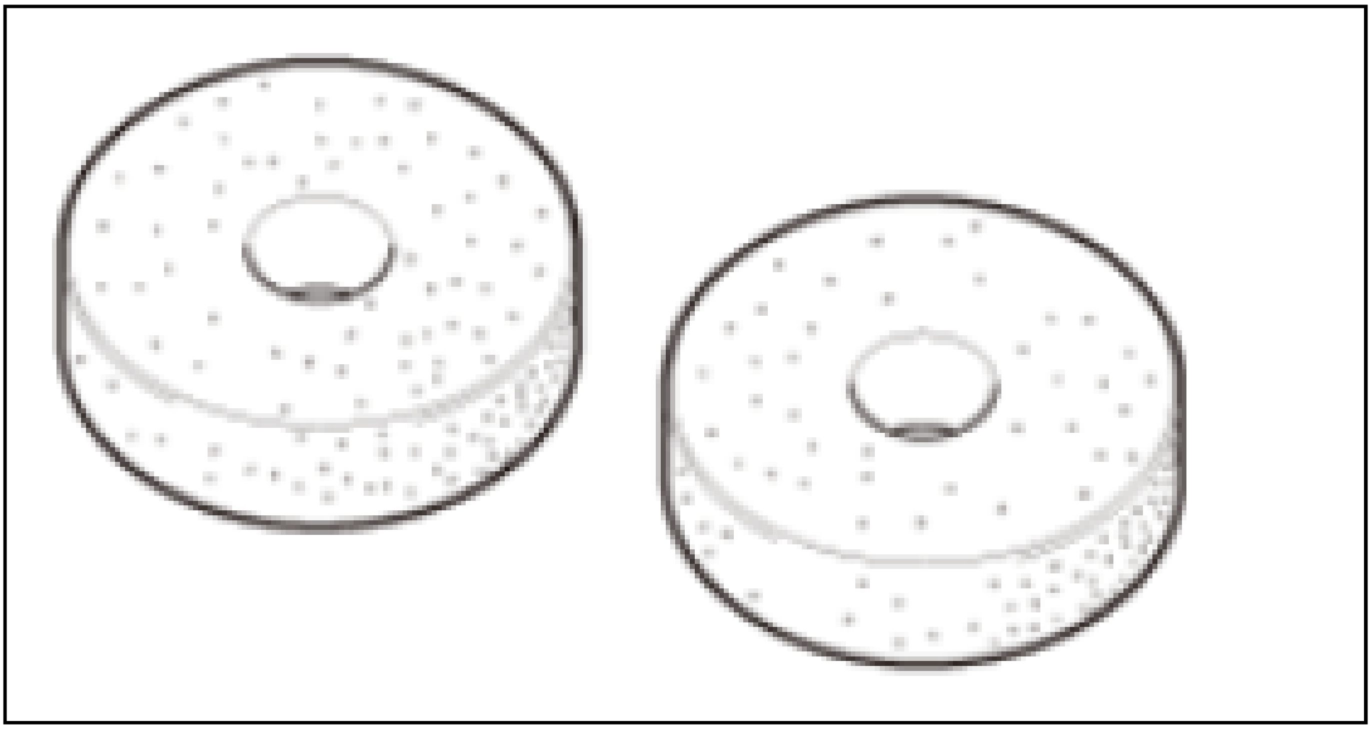

WATER-BASED PAINT REPAIR TOOLS AND EQUIPMENT

Most collision repair shops should have no problem handling water-based paint. However, water-based paint is much more sensitive to air quality than the solvent-based type. Contaminated compressed air may cause paint defects. Be sure to maintain the air compressor and supply pipes thoroughly and use well-maintained water and oil separators.

Other Tools

Paint Strainer

Normal paint strainers use water-soluble glue and may come apart during use. Choose a paint strainer specifically designed for water-based paint.

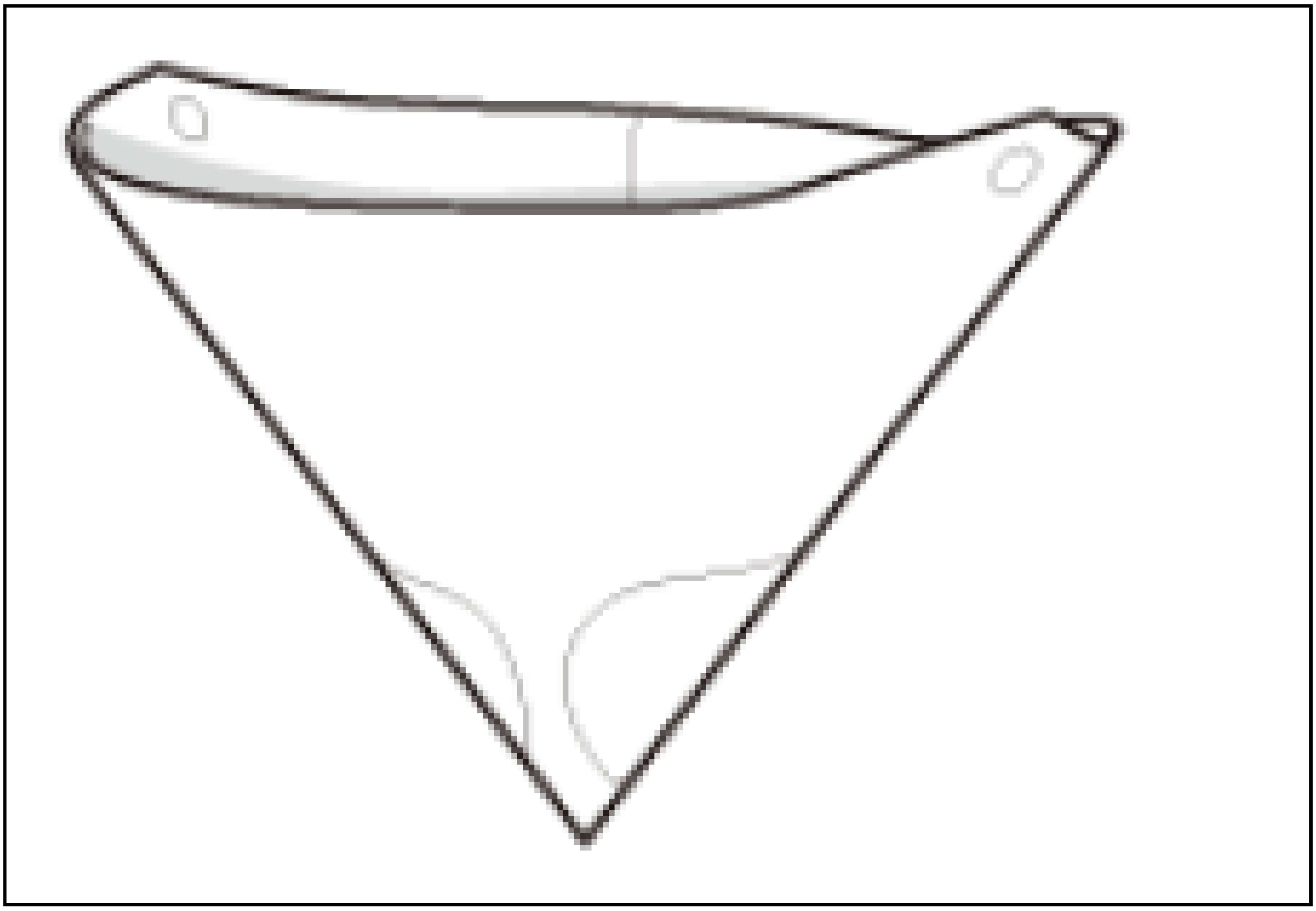

Gun Cleaner

- Water-based paint residue is much harder to remove than solvent- based paint residue. A special high pressure spray gun cleaner is required for water-based paint. Use care when using solvent or other cleaning agents for cleaning spray guns as it may cause paint residue buildup inside the gun.
- The water used for cleaning should be filtered and reused where possible. Dispose of cleaning water according to local regulations.

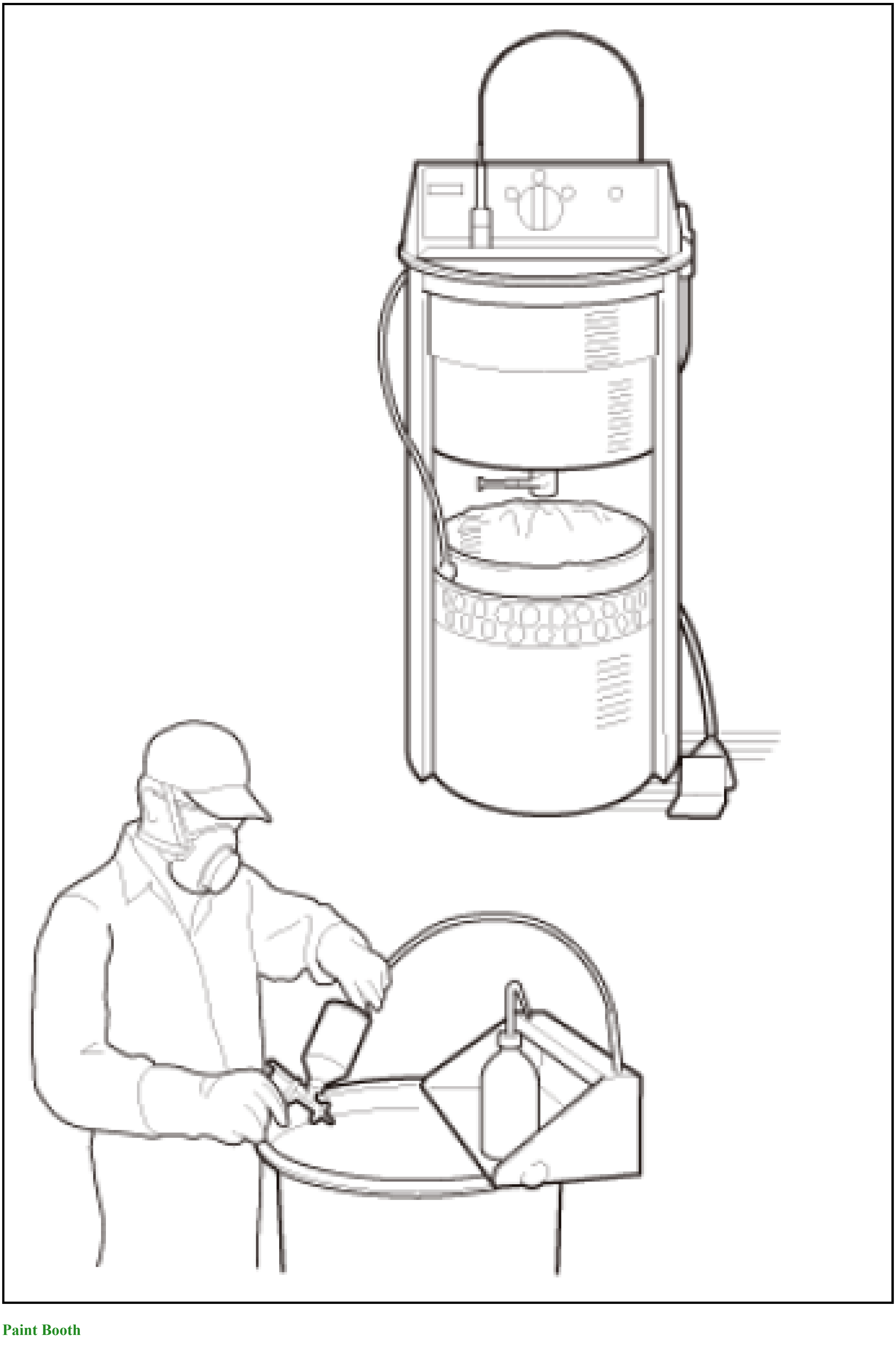

Paint Booth

Converting a traditional paint booth into the one that can handle water-based paint requires additional equipment to generate a strong flow of air inside the booth. Dedicated water-based paint booths are more expensive, with fewer choices available. Some have intake and exhaust fan motors to increase internal air velocity. Others have blowers that mount to the booth ceiling or walls. It is also possible to install a fan inside a traditional paint booth to create the required air flow. In all cases, confirm the spec information issued by suppliers and select the most appropriate equipment.

Paint Booth for Water-Based Paint (Example)

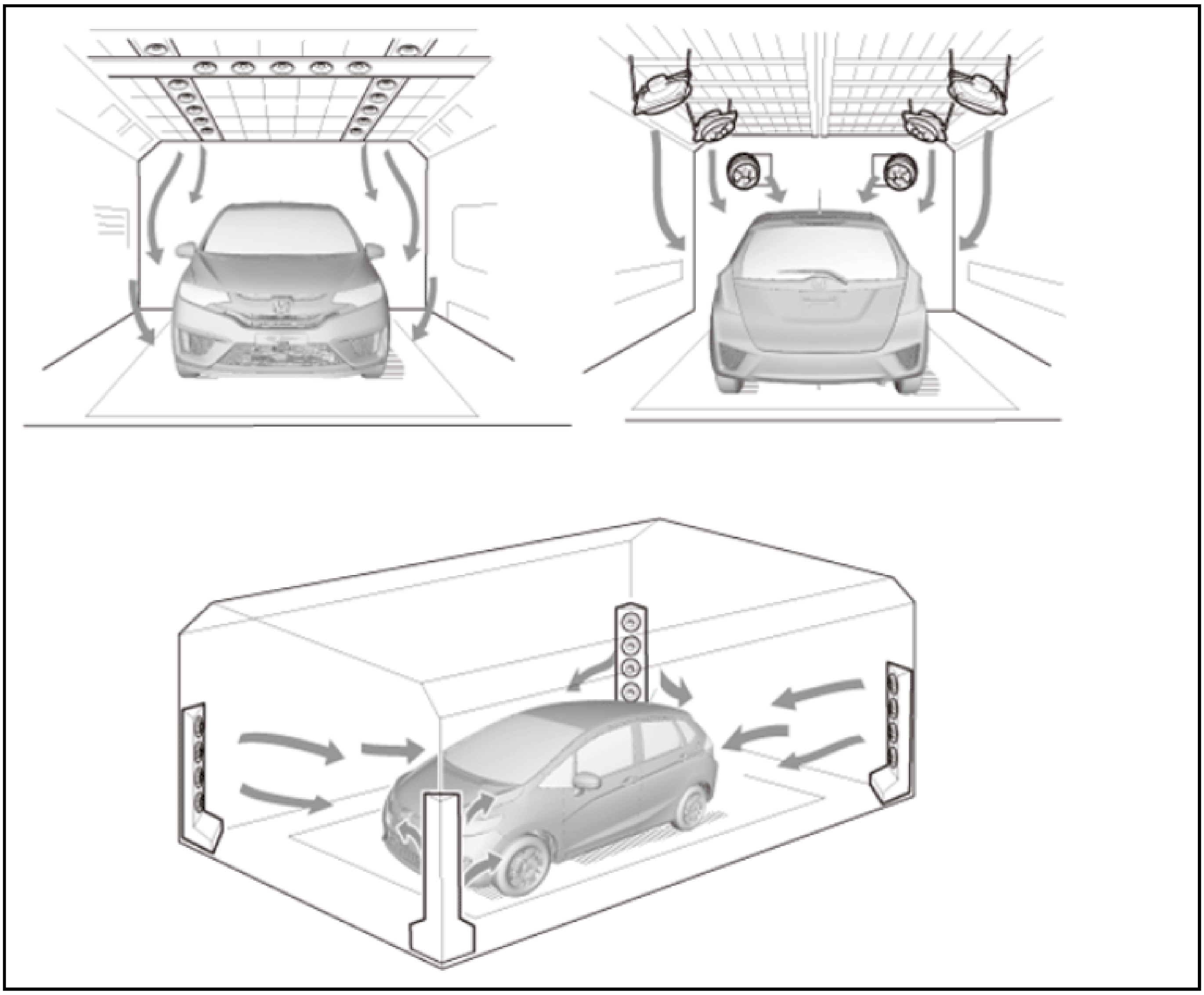

Paint Drying Equipment

Portable dryers used to dry small to mid-size painted surfaces.

Blower Attachment

It can be used anywhere an air hose and gun are available, Capable of drying small repaired areas of 1 or 2 panels.

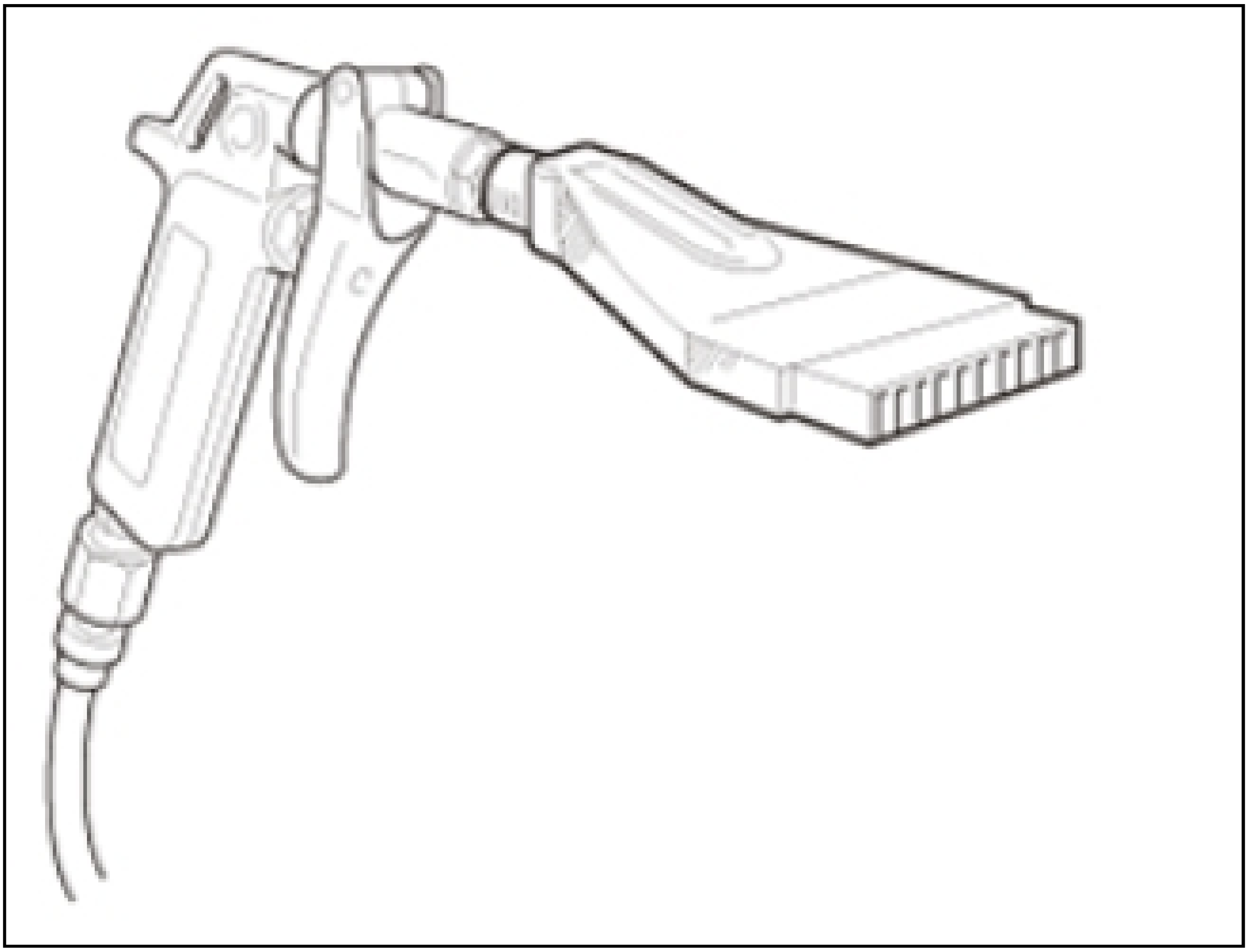

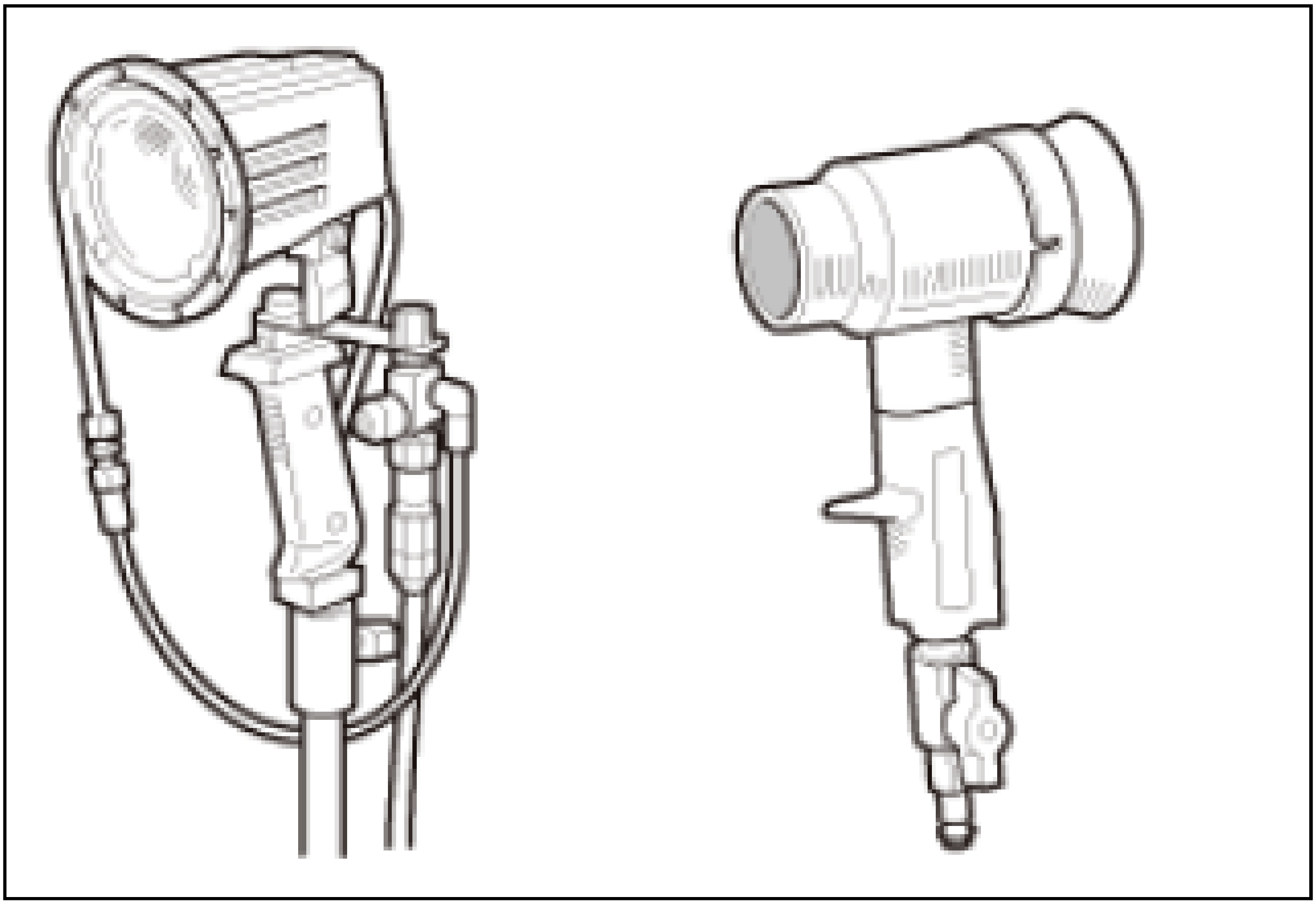

With a Stand (Example)

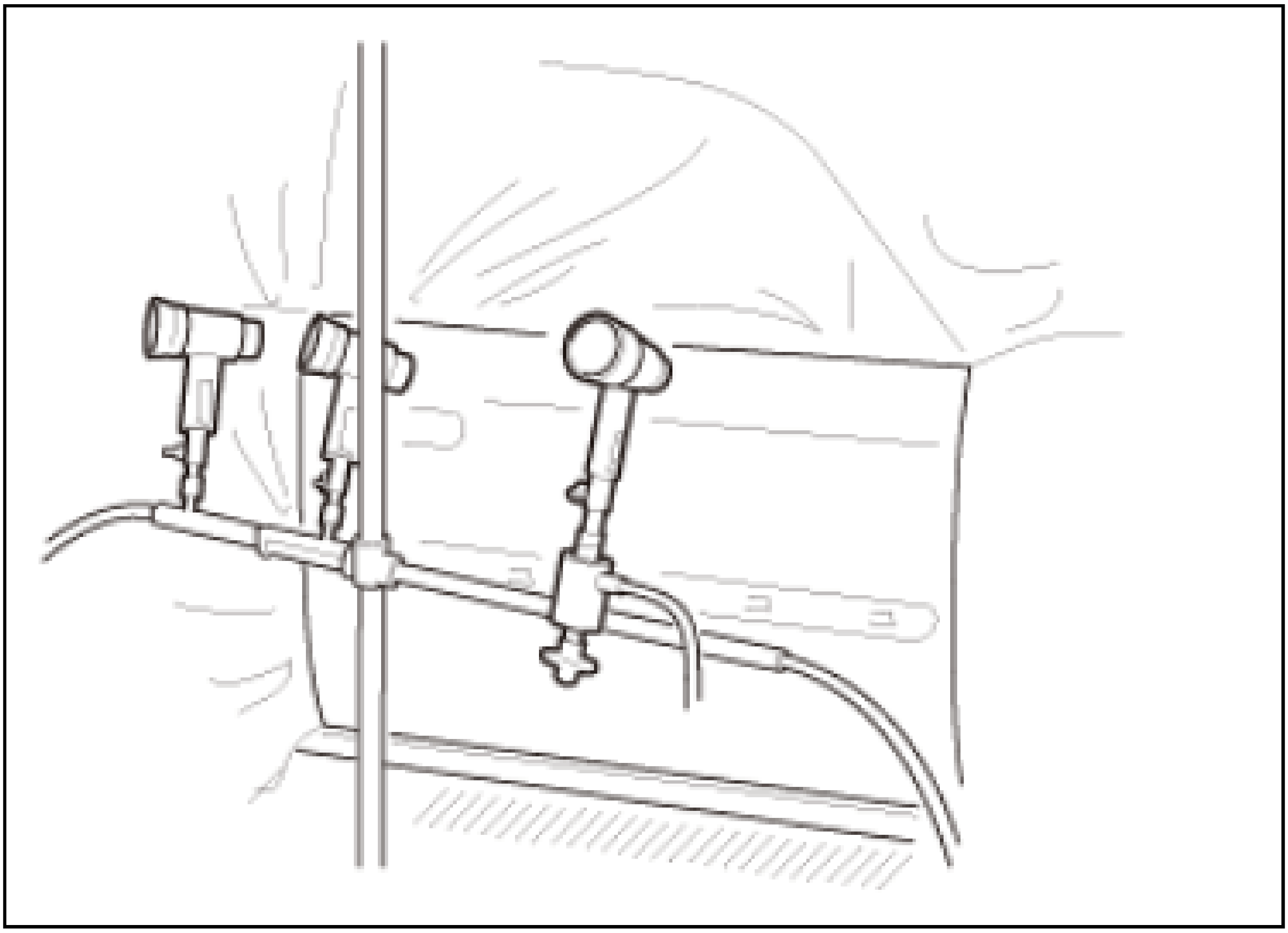

Handy-Type Blow Gun

Use by hand or with a stand. Capable of drying small repaired areas of 1 or 2 panels.

Electrical Resistance Heater/Blower

Uses carbon-based heating elements with air blown across them by an electric blower motor. Suitable for drying midsized paint repair areas.

NOTE: **Be sure to confirm the product spec issued by the paint manufacturers for drying temperature.**

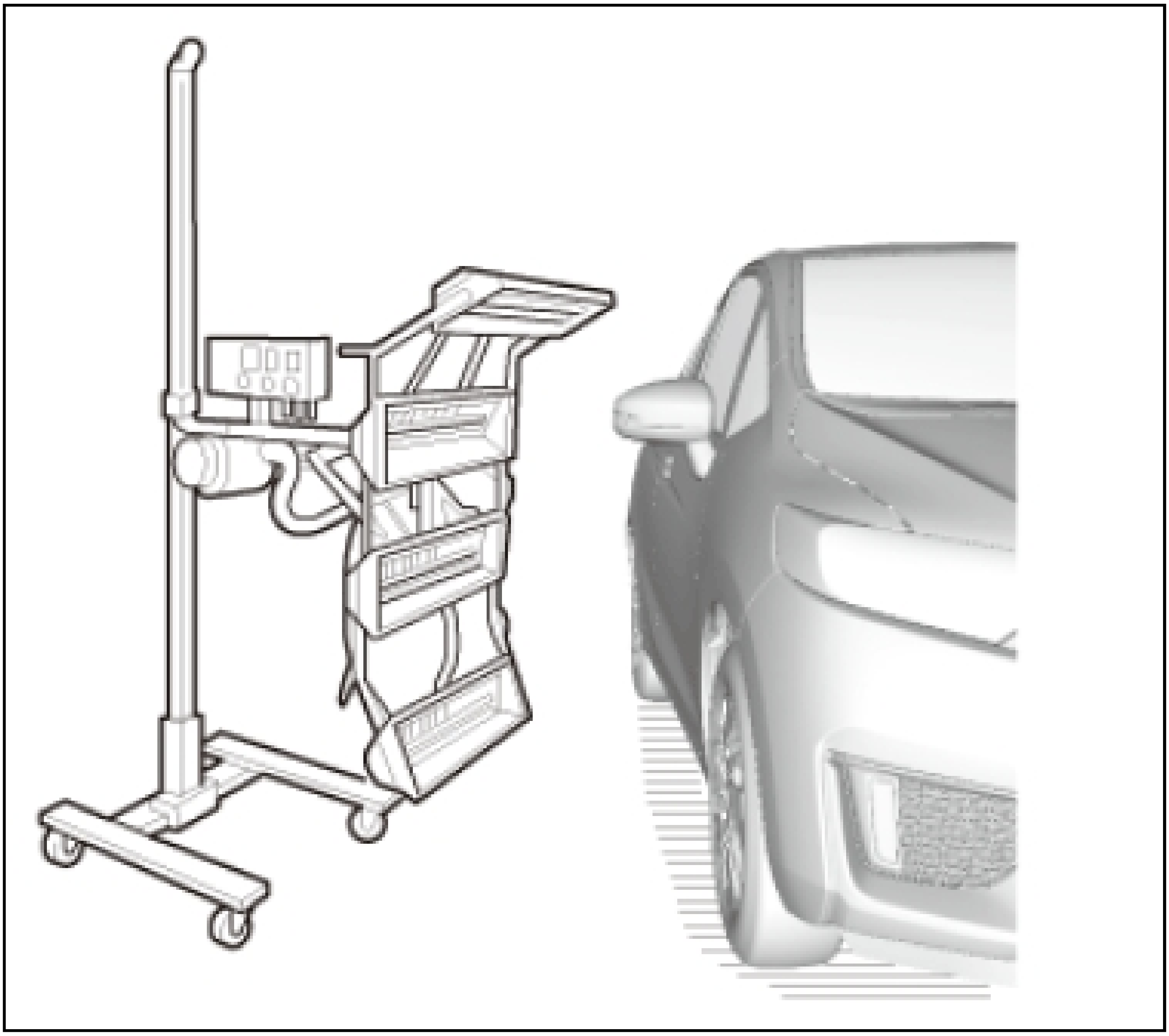

Paint Storage And Handling

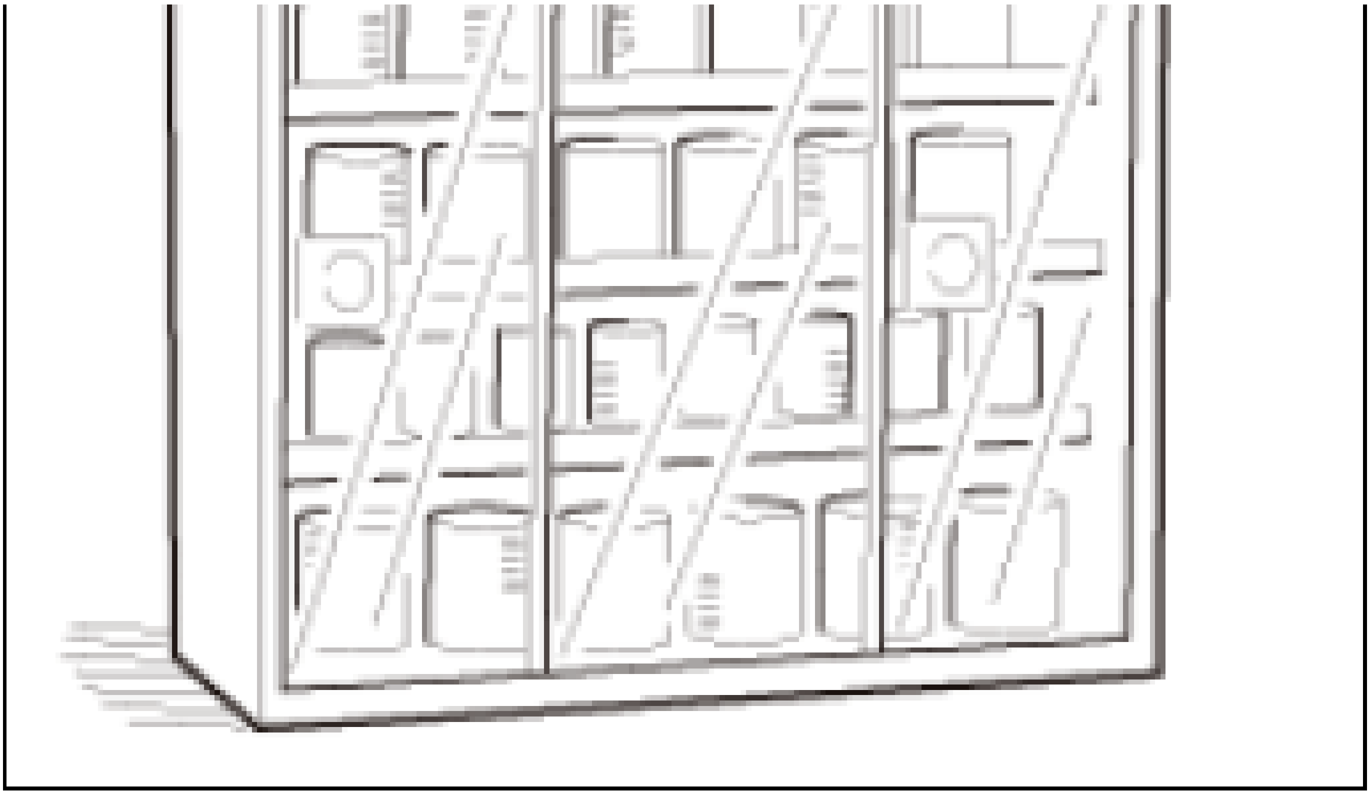

- Water-based paint may freeze at low temperatures. It is no longer usable if frozen.
- Avoid direct sunlight and store in a low humidity area with a temperature range of 41 - 95Â°F (5 - 35Â°C). In areas where the temperature drops below 41Â°F (5Â°C) a heated storage area may be required.
- The ideal storage temperature is the same as for painting 68 - 77Â°F (20 - 25Â°C).
- In order to avoid paint quality deterioration due to corrosion, store the paint in plastic containers, or steel ones with anti-corrosion coating.
- Water-based paint is highly resistant to pigment and resin separation, but always stir it thoroughly before use.
- There is no special fire prevention precautions when using water- based paint. Its ignition point is much higher than solvent-based paint.
- Handling and storage methods may differ depending upon paint type. Refer to product spec issued by the paint manufacturer.

Spray Gun

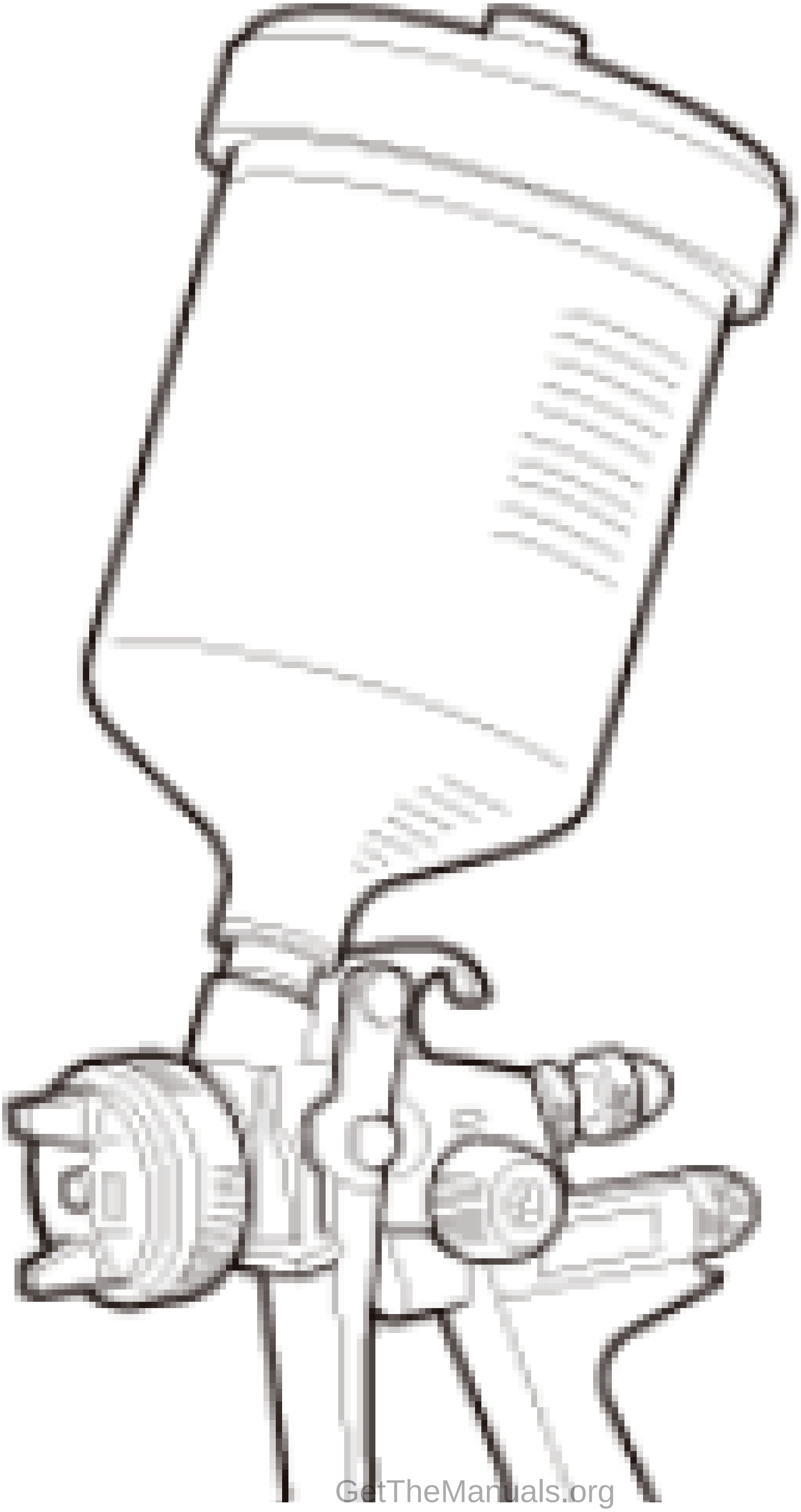

- Spray guns used for water-based paint should not be used for solvent- based paint.
- Generally, use a high volume low pressure (HVLP) type spray gun for water-based paint.
- HVLP type is designed to be eco-friendly by operating at lower pressures than a conventional spray gun. This creates less overspray, reducing VOC emissions.
- Different nozzle diameters and cup volumes are commercially available. Select the best suitable spec for the work being done.

*HVLP Type is a high-flow-rate/low-pressure spray gun which offers superior paint adhesion capabilities. Normal spray guns only apply 20-30% of the paint sprayed to a surface. HVLP spray guns apply 65% of the paint sprayed higher. Less paint volume is required when using a HVLP type gun, reducing material costs.

MIXING AND TINTING (MIXING COLORS)

PAINT MATCHING (COLOR MIXING WORK)

Before Mixing Colors

Confirming Paint Colors For Honda And Acura Vehicles

Confirm the paint ID on the exterior color label, model type and frame No. plate which can be found in the various places listed below. Check the vehicle service information for specific location.

(The location of model type information and frame No. plate differ depending on the vehicle model; driver's door jamb, front bulkhead, front damper housing, dashboard upper etc.)

Exterior Color Label Location

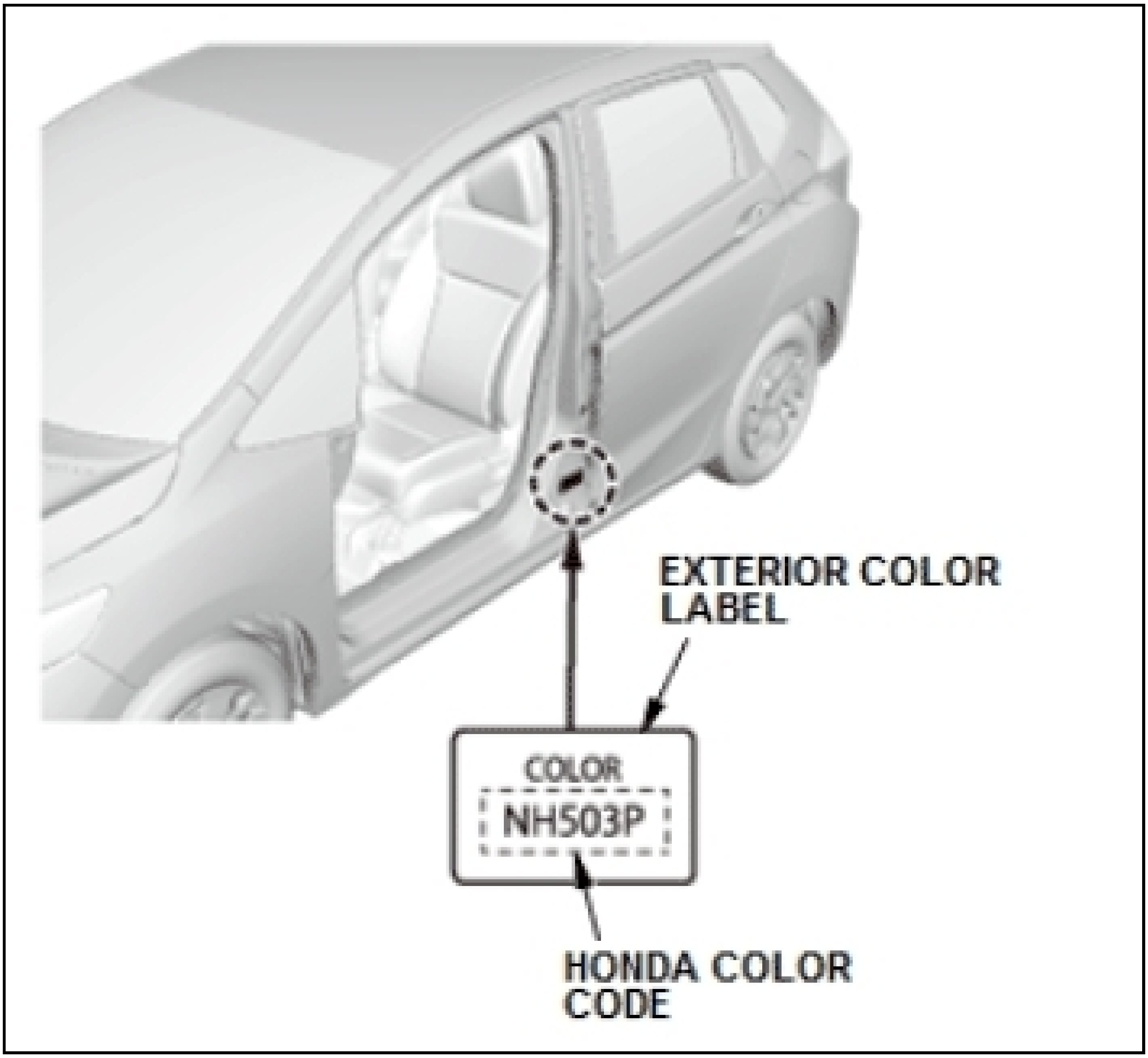
EXTERIOR COLOR LABEL
COLOR
NH503P
HONDA COLOR CODE

Confirming Color Mixing Data And Color Mixing Process

Confirm the data based on the mixing color composition table for repair paint issued by the paint manufacturer. By accessing accurate color mixing data, errors and problems are less likely to occur, saving you time.

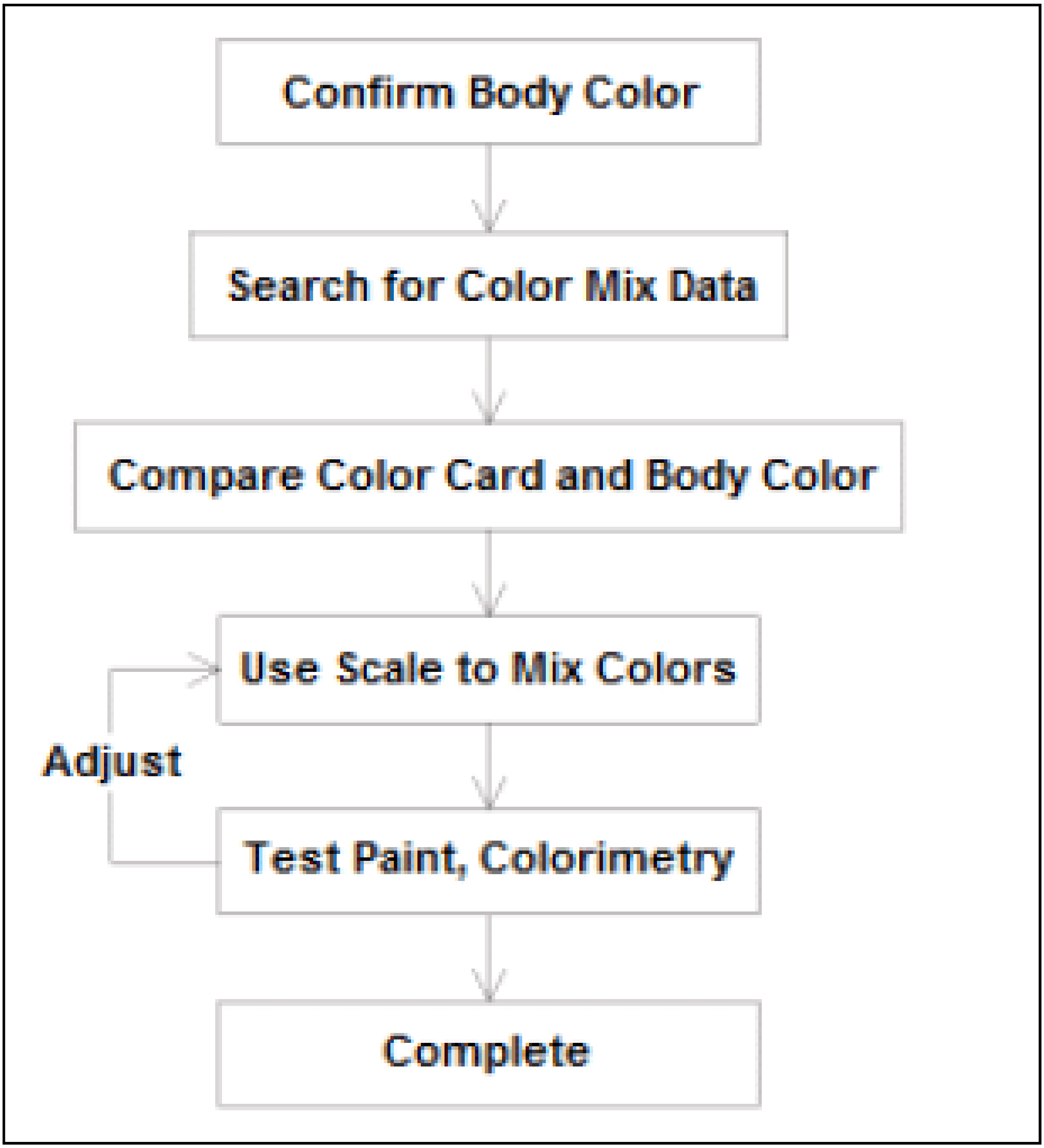
Confirm Body Color
Search for Color Mix Data
Compare Color Card and Body Color
Use Scale to Mix Colors
Adjust
Test Paint, Colorimetry
Complete

Color Mixing Steps

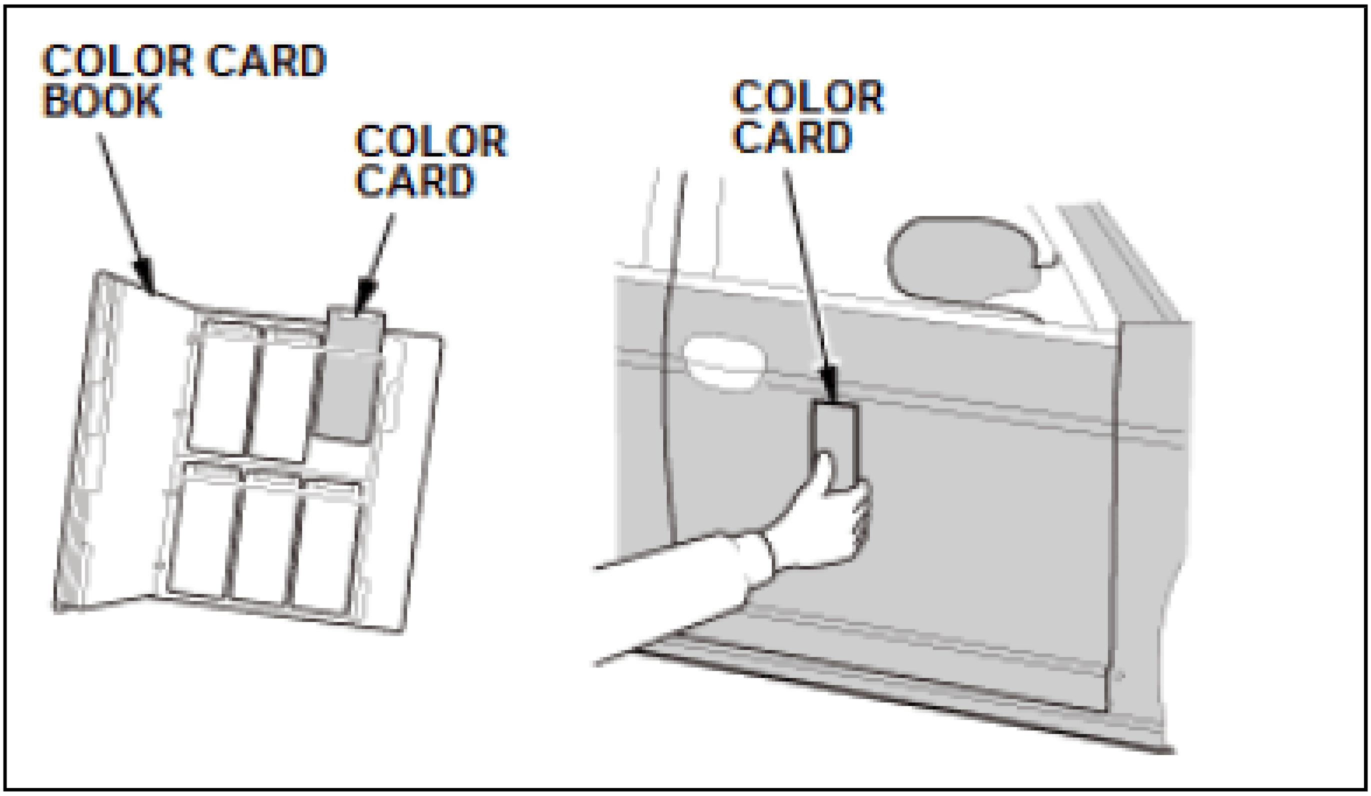

1. Comparison of Color Code and Body Color:
    - Confirm the color difference between the color card attached to the color sample book and the color surrounding the damaged area on the actual car.
    - If no color sample is available but color mixing specs are available, use a small amount of paint to mix some sample color. Test spray the sample to create a sample plate and compare against the actual color on the vehicle.
    - If the color sample and actual vehicle colors difference is too great, check availability of a different and/or new color mixing spec.

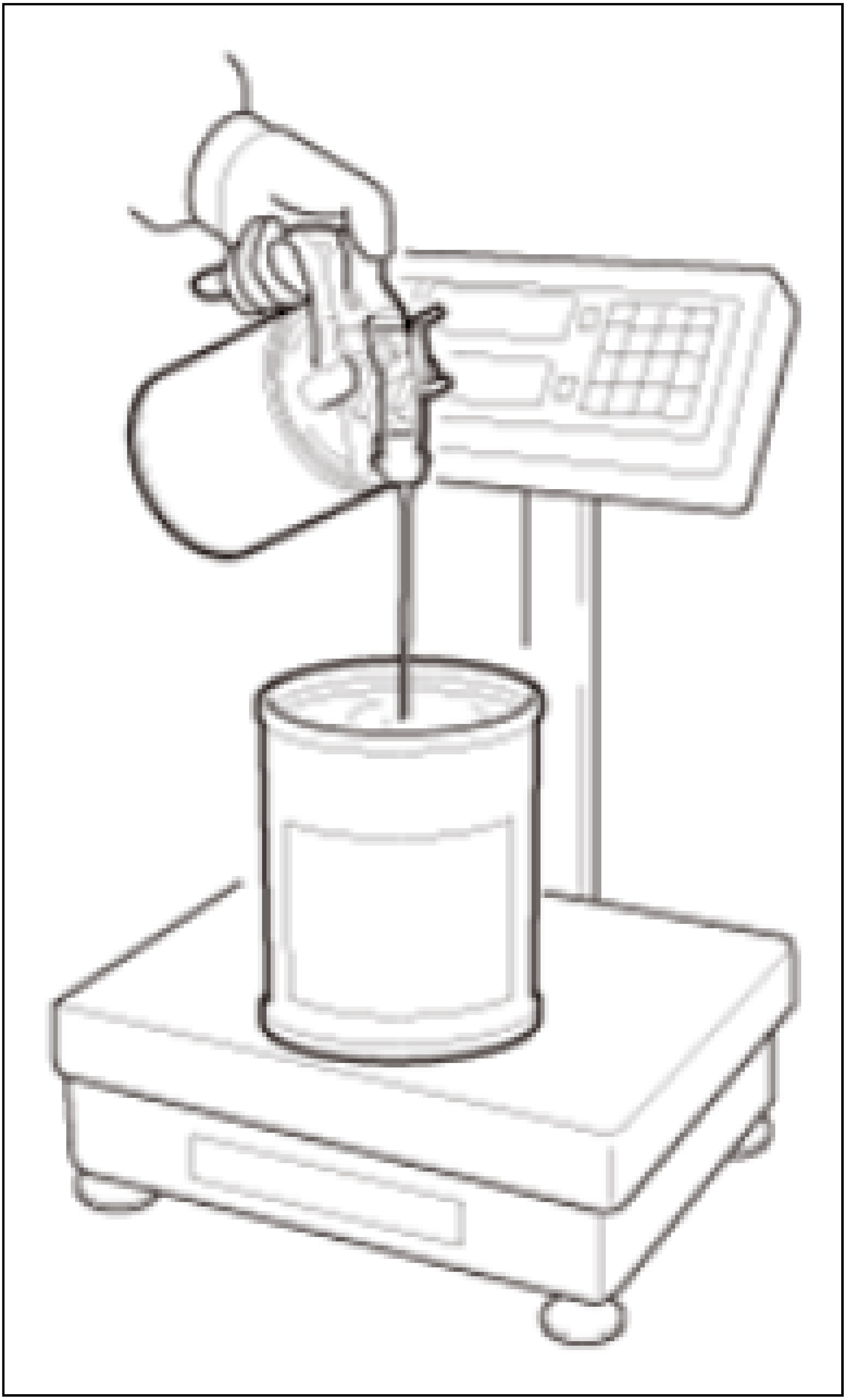

2. Measured Color Mixing:

- Compare the color code against the actual color on the vehicle and when there are no significant differences in hue, shade of color and direction, mix the colors according to the mixing color spec.
- If the difference is too great, adjust the color using primary colors.

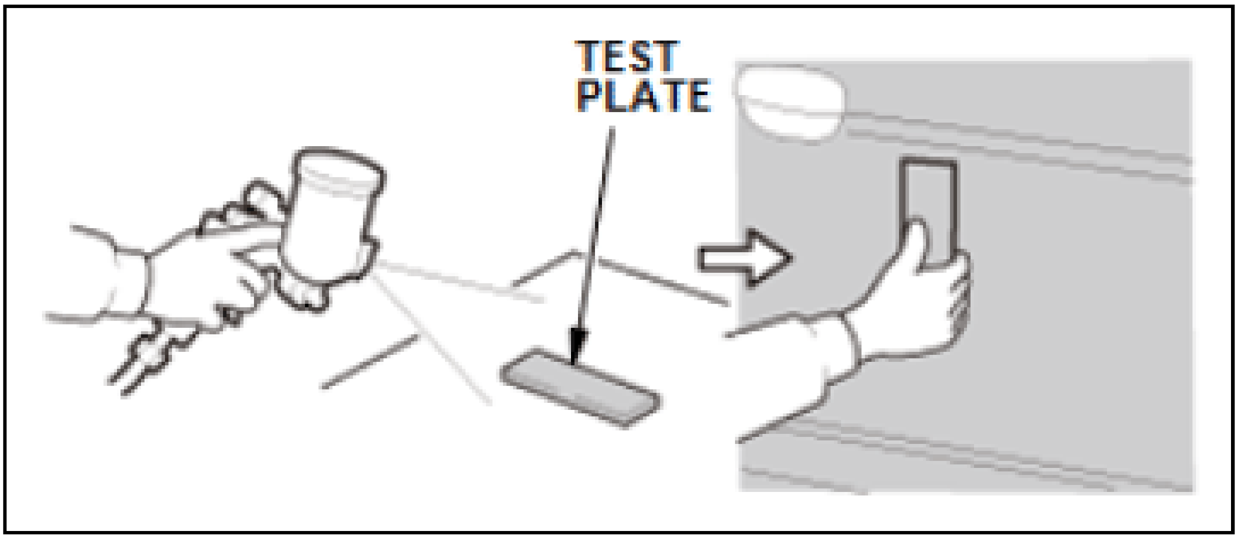

3. Test Painting, Colorimetry:
    - Test paint should be conducted under the same conditions as the actual paint repair. In particular, pay extra attention in handling pearl and metallic colors as painting conditions can greatly impact the results.
    - Compare fully dried test plates against the actual vehicle color for color difference, conditionally identical colors, direction, size of metallic or pearl grain and brightness, etc. under various light sources.

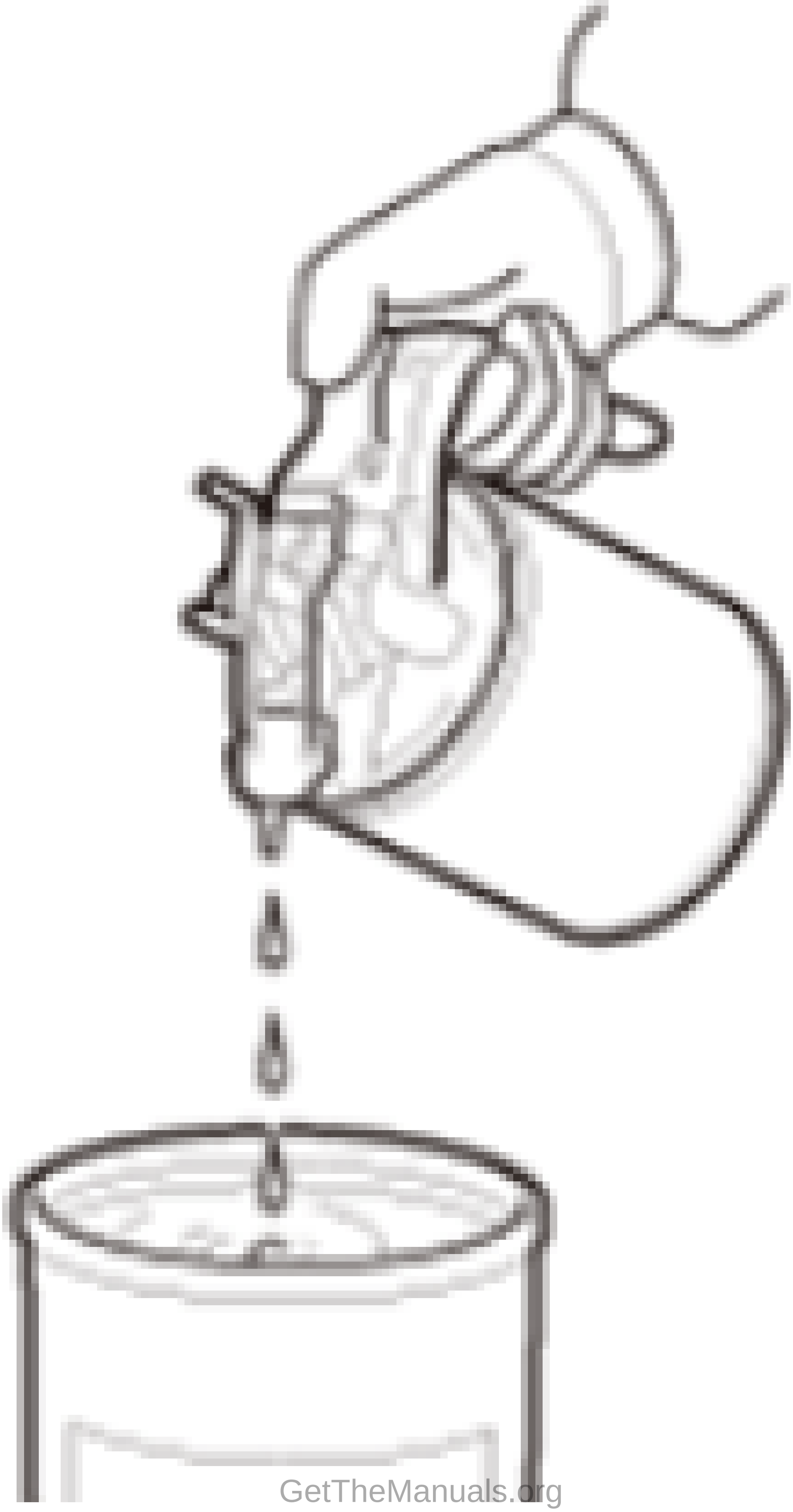

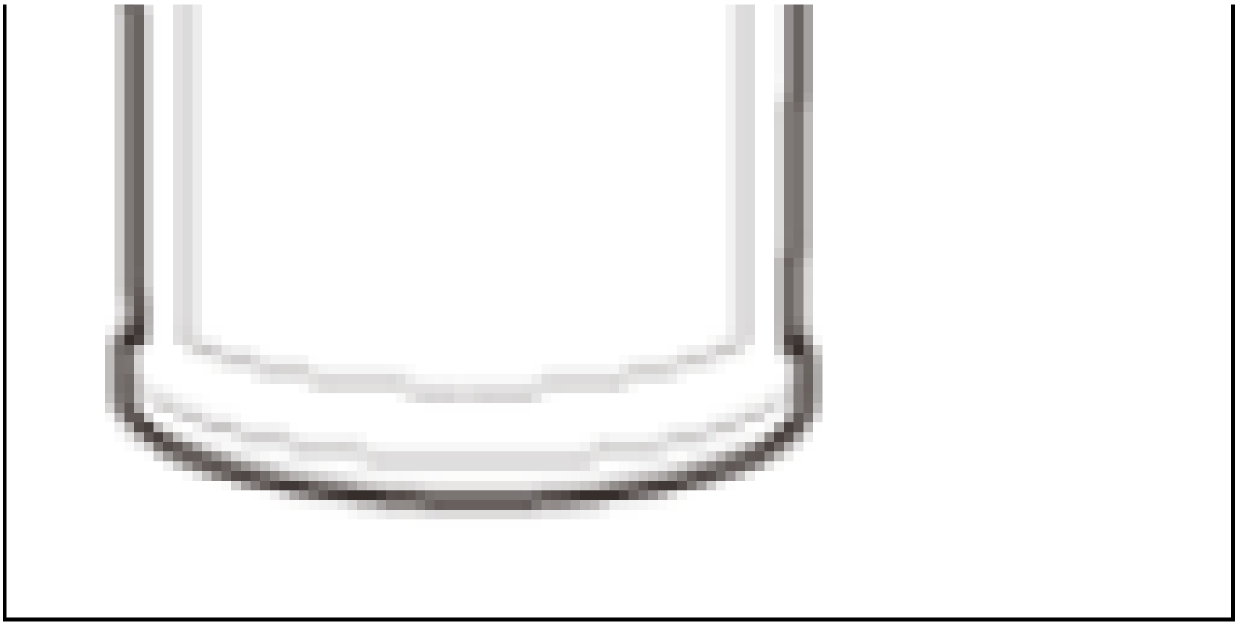

4. Fine Adjustment of Color:
   - As a basic rule, use a small amount of the paint indicated in the color mixing spec to make an adjustment. However in some cases a new color can be added if necessary
   - Repeat the test paint, colorimetry work and adjustment until the desired color is obtained.
5. Complete.

Key Points In Color Comparison And Matching

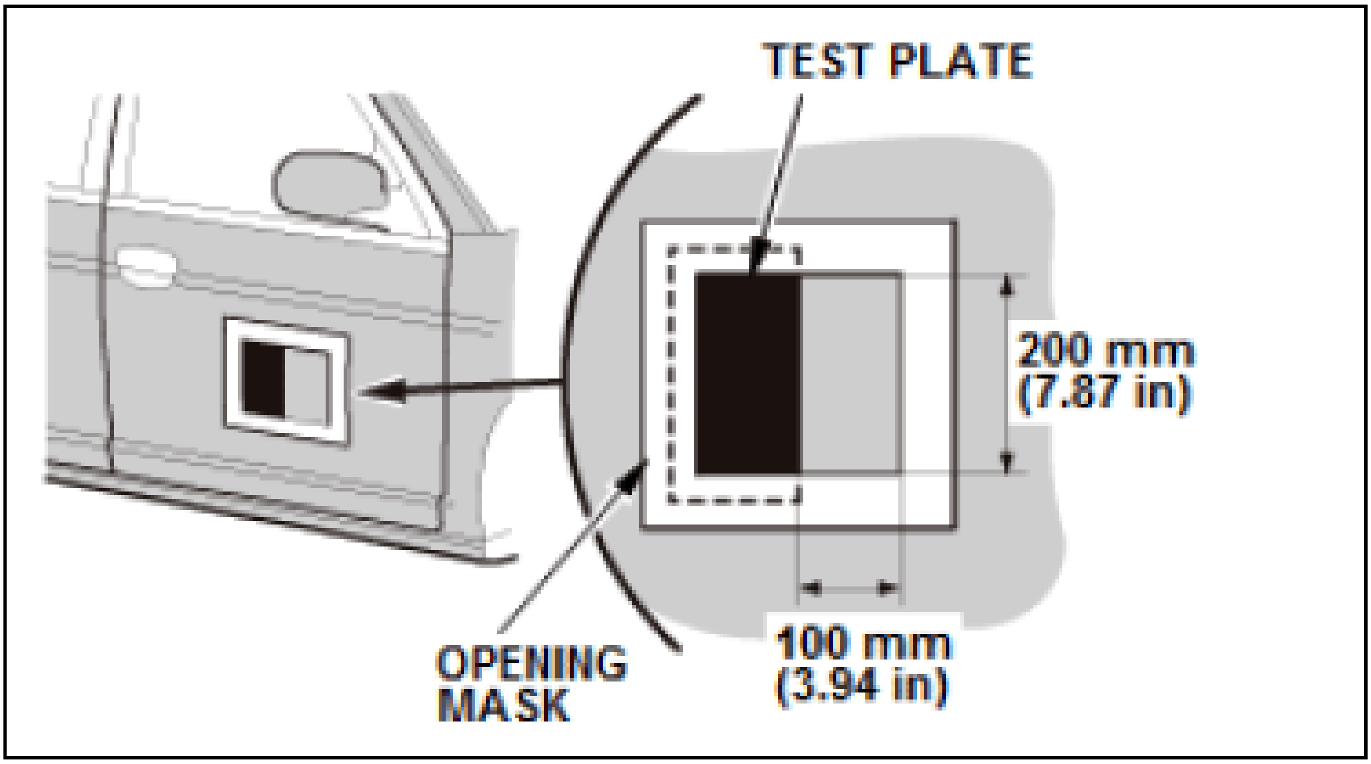

1. Colorimetry Steps:
   - When comparing colors, usually the body panel right next to the repair area is used. Make sure to remove any stains on the panel by polishing with a very fine compound for an accurate comparison.
   - Prepare a test piece of the same material and size. For ease of comparison, pace the test plate on top of the actual vehicle panel. Then place an achromatic colored magnet sheet with an opening on top.

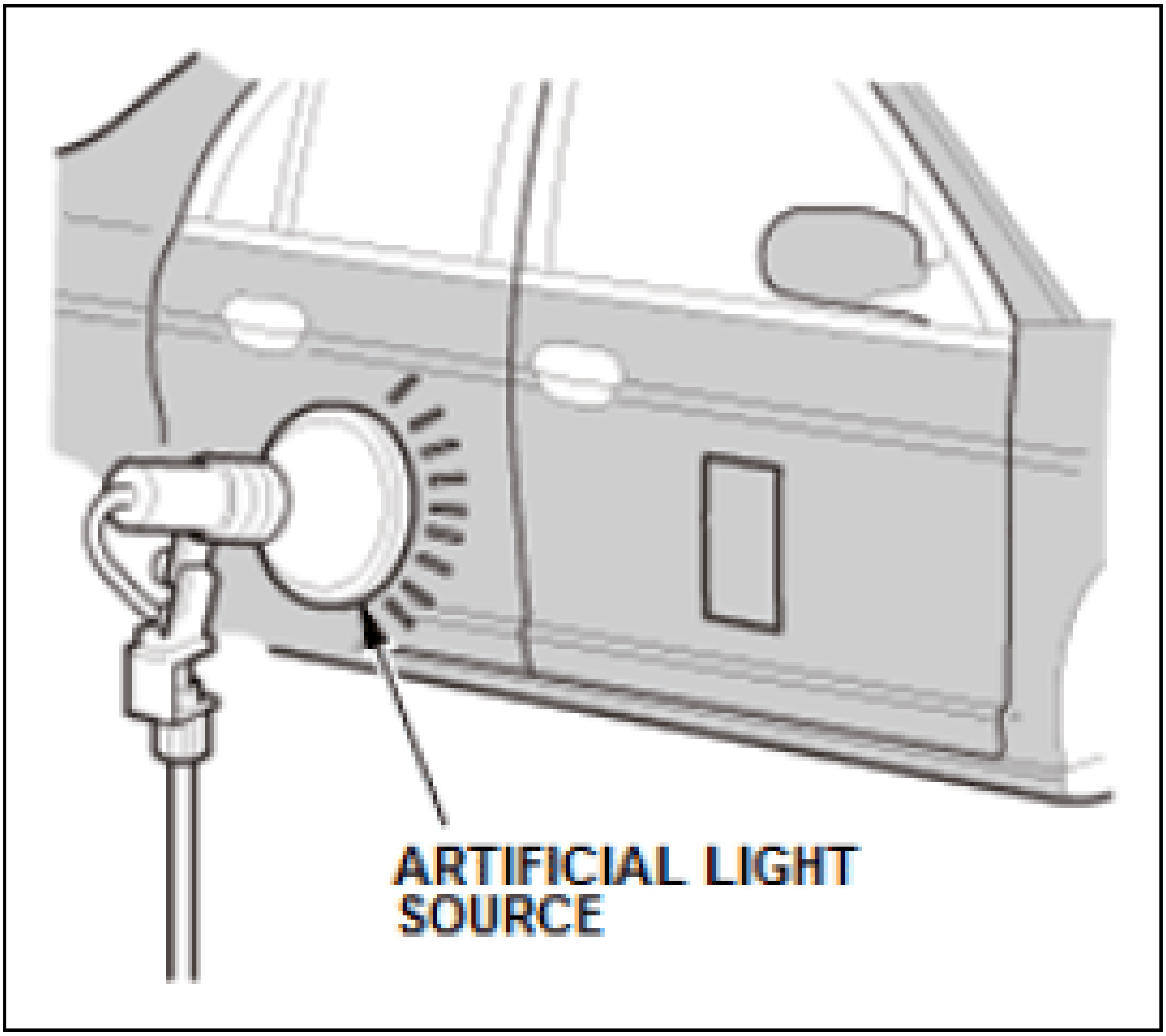

2. Lighting and Environment:
   - The ideal type of light when comparing colors is diffused daylight. However, color matching is not always done outside under daylight. In such cases, use an artificial light source which offers a wavelength very close to sunlight.
   - In case of using an artificial light source to compare colors, prepare a light with 1500 to 3000 lux of illuminance. The actual required level of illuminance differs by color.

NOTE: **The definition of diffused daylight is a light from a North facing window that avoids direct sunlight from three hours after sunrise until three hours before sunset.**

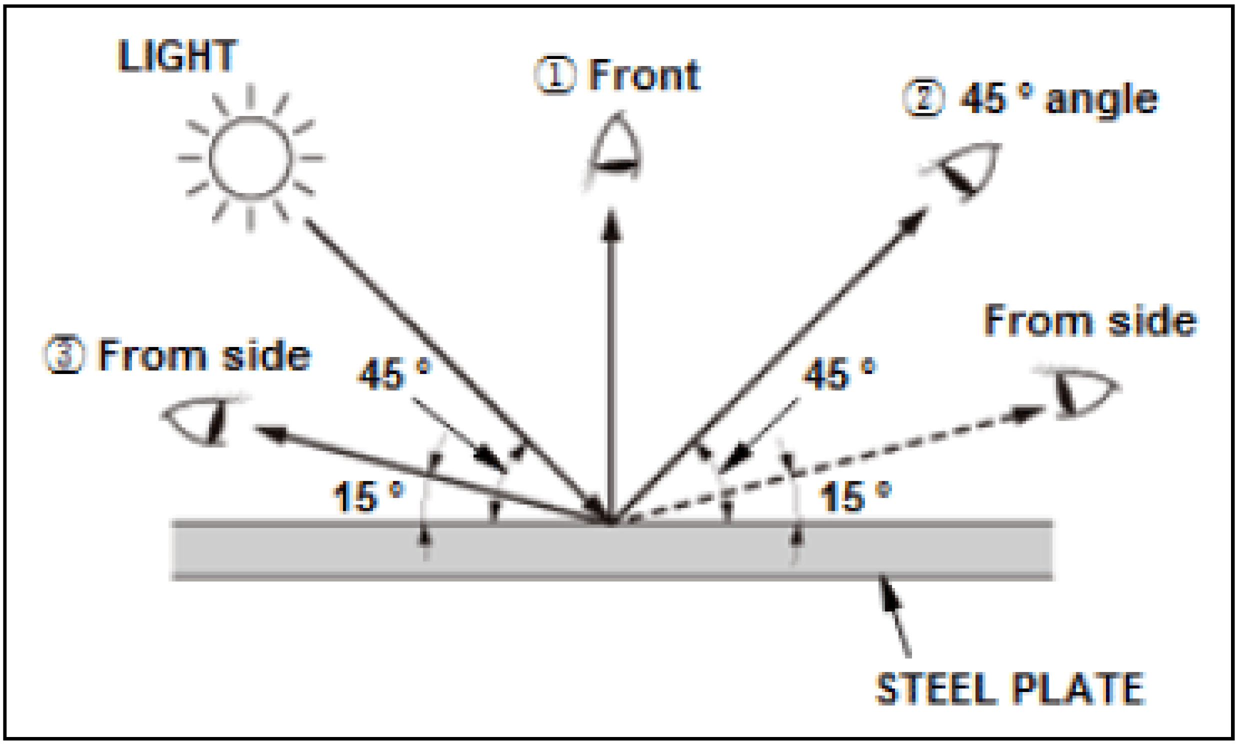
LIGHT
① Front
② 45 ° angle
③ From side
From side
45 °
45 °
15 °
15 °
STEEL PLATE

3. View Angle and Distance:

   Check from at least three different directions at a distance of 3-5 m (10-16 ft) away.

4. Color Change Between Immediately After Painting and After Dry:

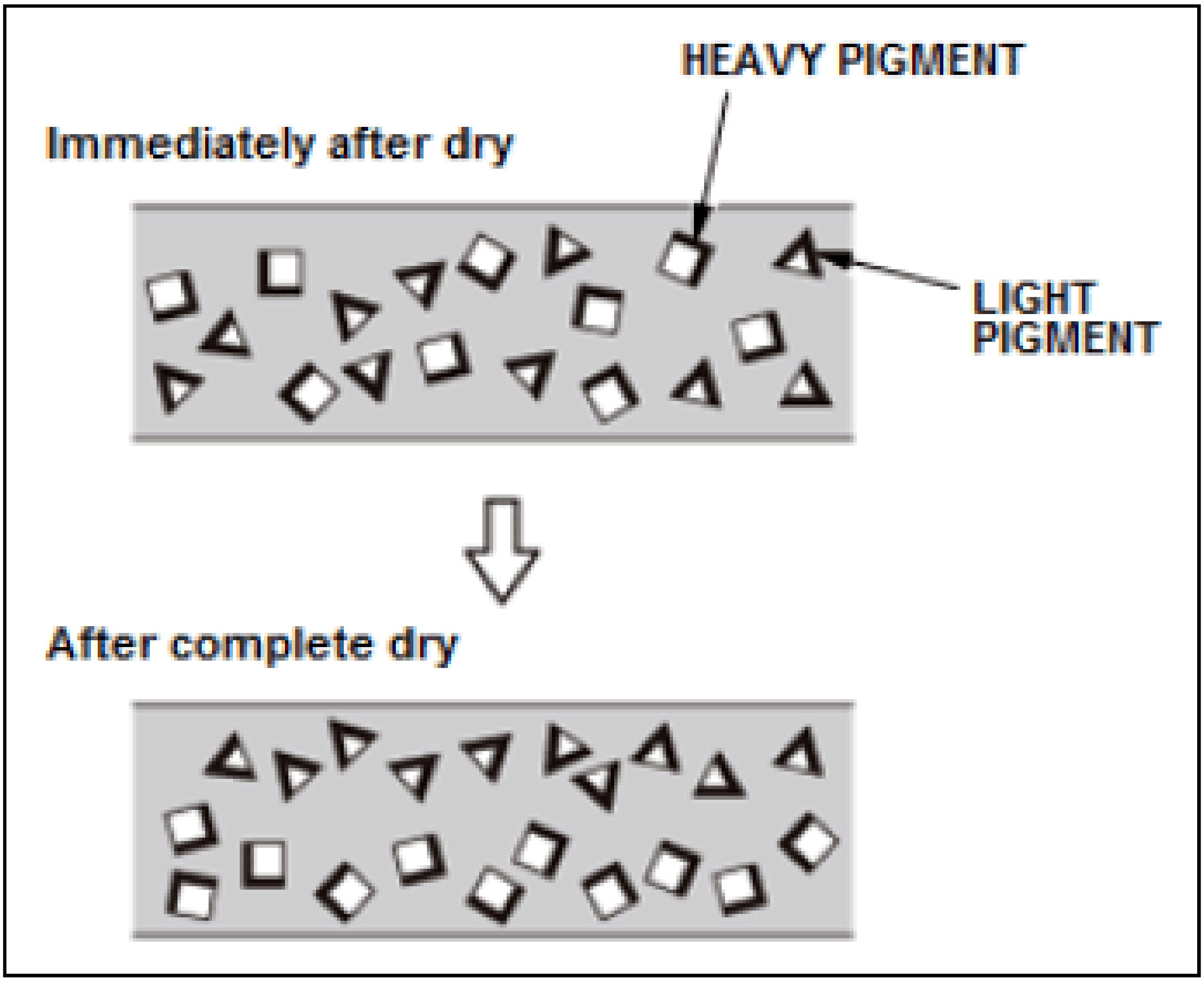
HEAVY PIGMENT
Immediately after dry
LIGHT PIGMENT
After complete dry

- The color on the test plate immediately after painting and after complete drying will be different. This is due to specific weight of pigment. Pigments with light specific weight will rise to the surface when the paint dries
- In normal cases, solid colors tend to be darker and metallic pearl colors tend to be lighter as they dry. Make sure to compare colors for matching only after they are completely dry.

5. Color Changes Caused by Clearcoat:

   Metallic, pearl, and solid colors change their hues after clearcoat application. When working with clearcoat paint, only compare the colors for match only after clearcoat is applied when using clear coating.

Paint Colors		**After Clearcoat**
Solid	General Colors	Becomes yellowish if painted repeatedly
	Black	Looks whitish when seen from the side angle
Metallic, Pearl	Silver Metallic	Looks whitish when seen from the side angle, darken from 45Â°
	Colored Metallic, Pearl	Becomes deeper and brighter

6. Color Changes Caused by Polishing:

   Some paint colors change after polishing. For these types of paint, fully dry then polish the test piece. Compare the colors after polishing.

7. Mixing Hardener:

   Dual-component paints tendency to lighten the base resin color when mixed with a hardener. Compare the color match only after the specified amount of hardener has been mixed with the paint.

8. Color Change as the Result of Spray Condition:
   - In particular, metallic and pearl colors may change hue according to the paint particle arrangement. This can be affected by the type and amount of paint reducer/thinner dilution or spray gun adjustment.
   - Generally, because a wet paint coat has a systematic arrangement of metallic particles, dense pigments stay close to the surface of the paint layer which makes the paint look deeper. Dry paint coats have an irregular arrangement of metallic particles, where irregularly arranged pigments stay close to the surface of the layer. This makes the paint appear lighter.

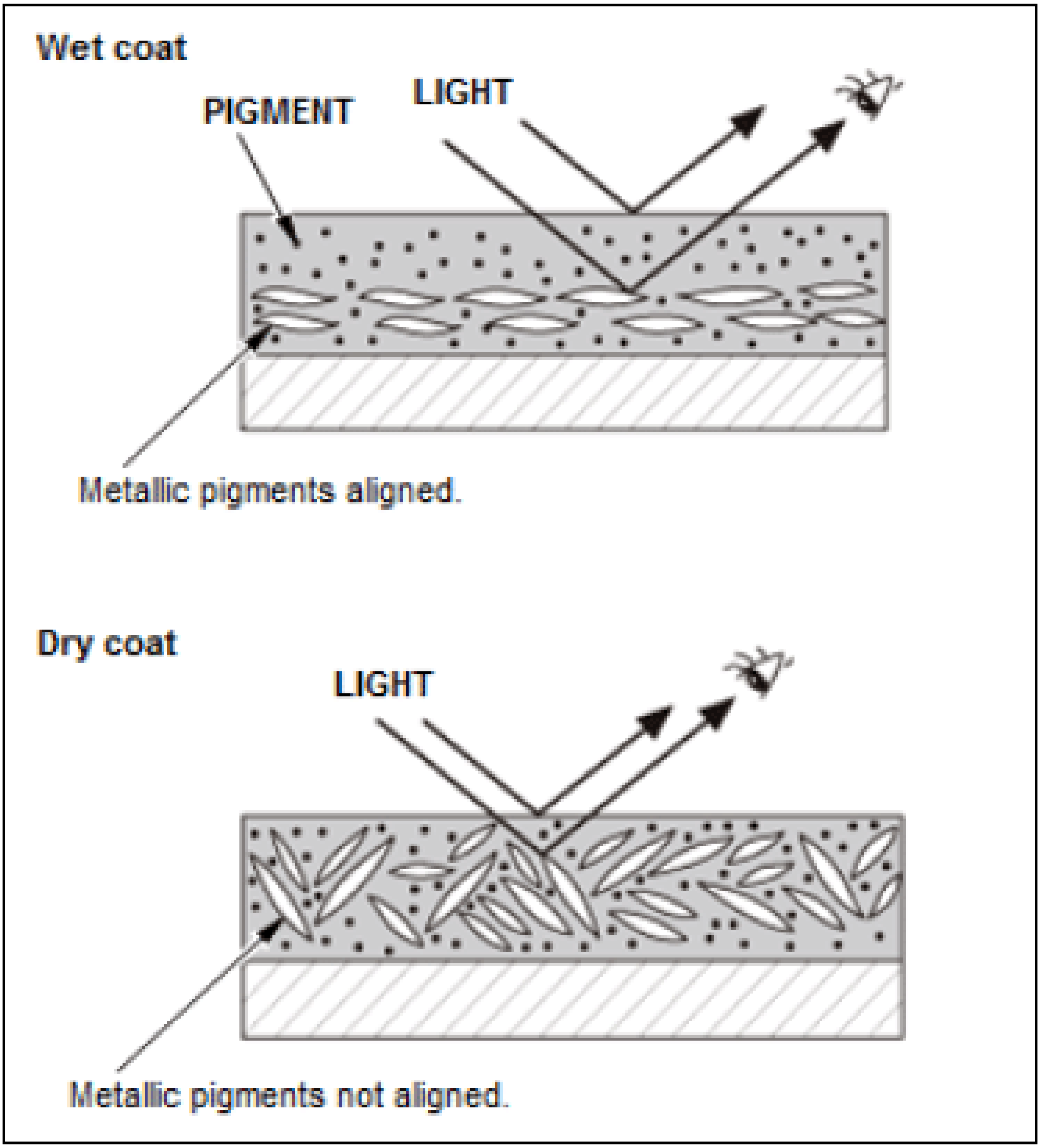
Wet coat
PIGMENT
LIGHT
Metallic pigments aligned.
Dry coat
LIGHT
Metallic pigments not aligned.

Key Points In Mixing And Matching Pearl Colors

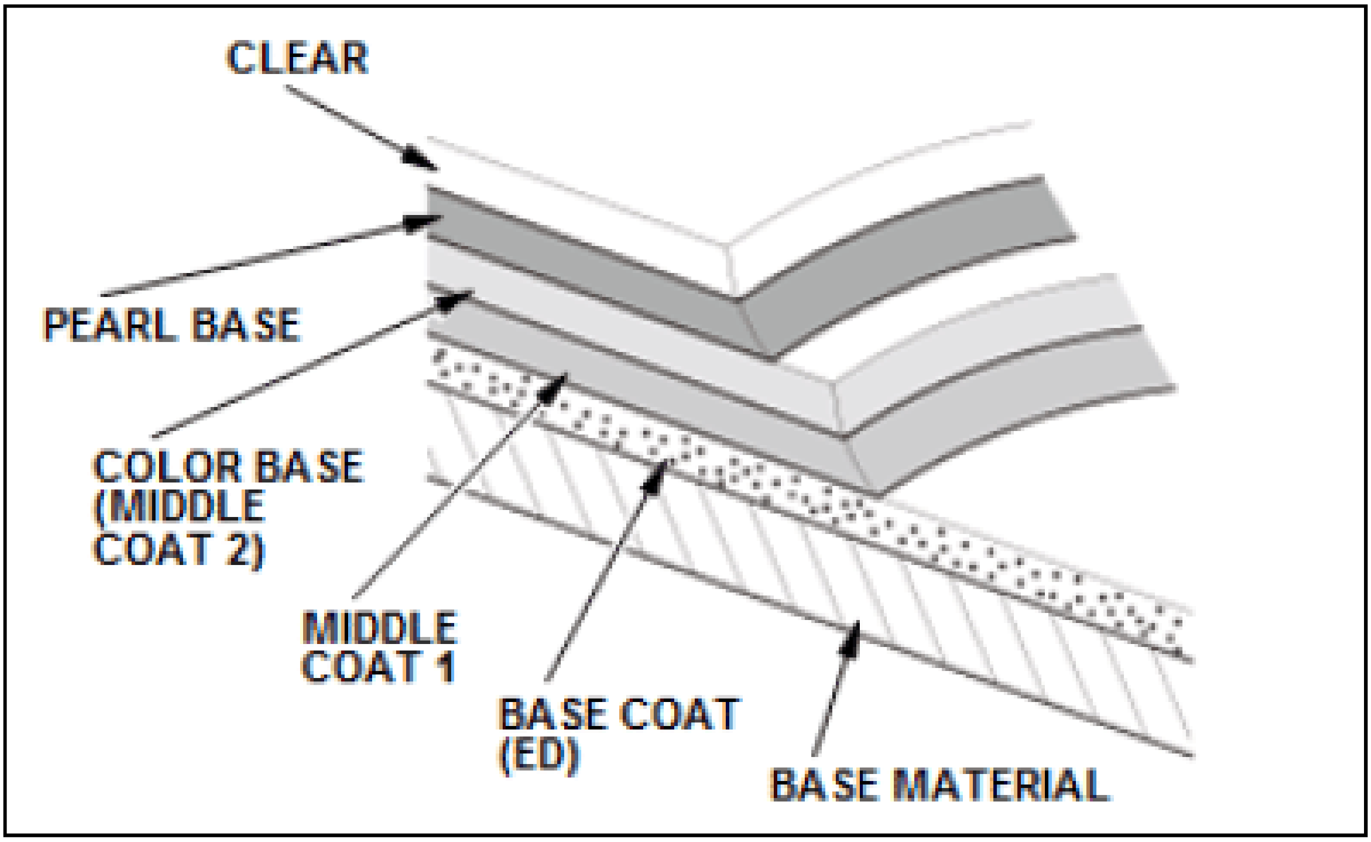
CLEAR
PEARL BASE
COLOR BASE (MIDDLE COAT 2)
MIDDLE COAT 1
BASE COAT (ED)
BASE MATERIAL

Three-Coat Pearl: Color Base Mixing

Because these pearl colors look transparent through the color base, it is necessary to match the color to the color base film (intermediate coat 2) after polishing the top coat down to the color base layer (intermediate coat 2).

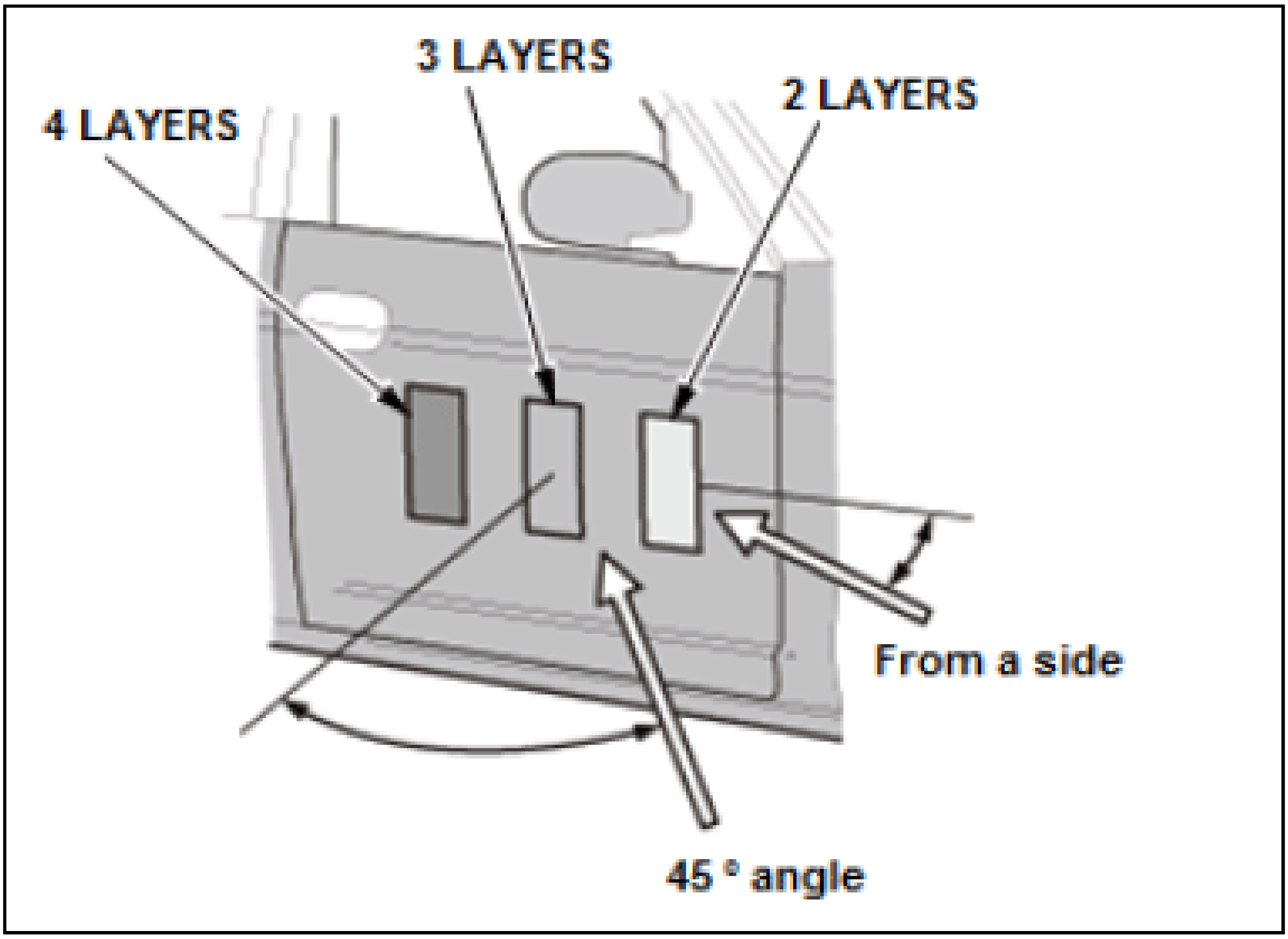
4 LAYERS
3 LAYERS
2 LAYERS
From a side
45 ° angle

Pearl Base Film Thickness

- Because the color changes greatly due to the thickness of pearl base paint film, prepare 3 to 4 test paint pieces, each with a different number of spray gun passes of pearl base paint. Then choose the one closest to the actual body color. When applying paint to the repair area, use the number of spray gun passes as the matching test piece.
- Generally with the white pearl colors, thicker paint layers increase the brightness as viewed from a 45Â° angle. However, the color viewed from the side becomes deeper. Interference pearl paints show a deeper hue when viewed from a 45Â° angle, and its complementary color becomes deeper when viewed from the side.

Two-Coat Pearl

- Some two-coat pearl paints have a metallic base in addition to pearl mica. Select the necessary metallic base in addition to the pearl base for these type paints.
- The colors of paints with only pearl mica are greatly affected by paint viscosity and spray pressure. When viscosity is low and spray pressure is high, the color becomes lighter because the pearl mica content becomes stronger.

  When the paint contains both pearl mica and metallic bases, it should be applied the same way as a metallic base paint.

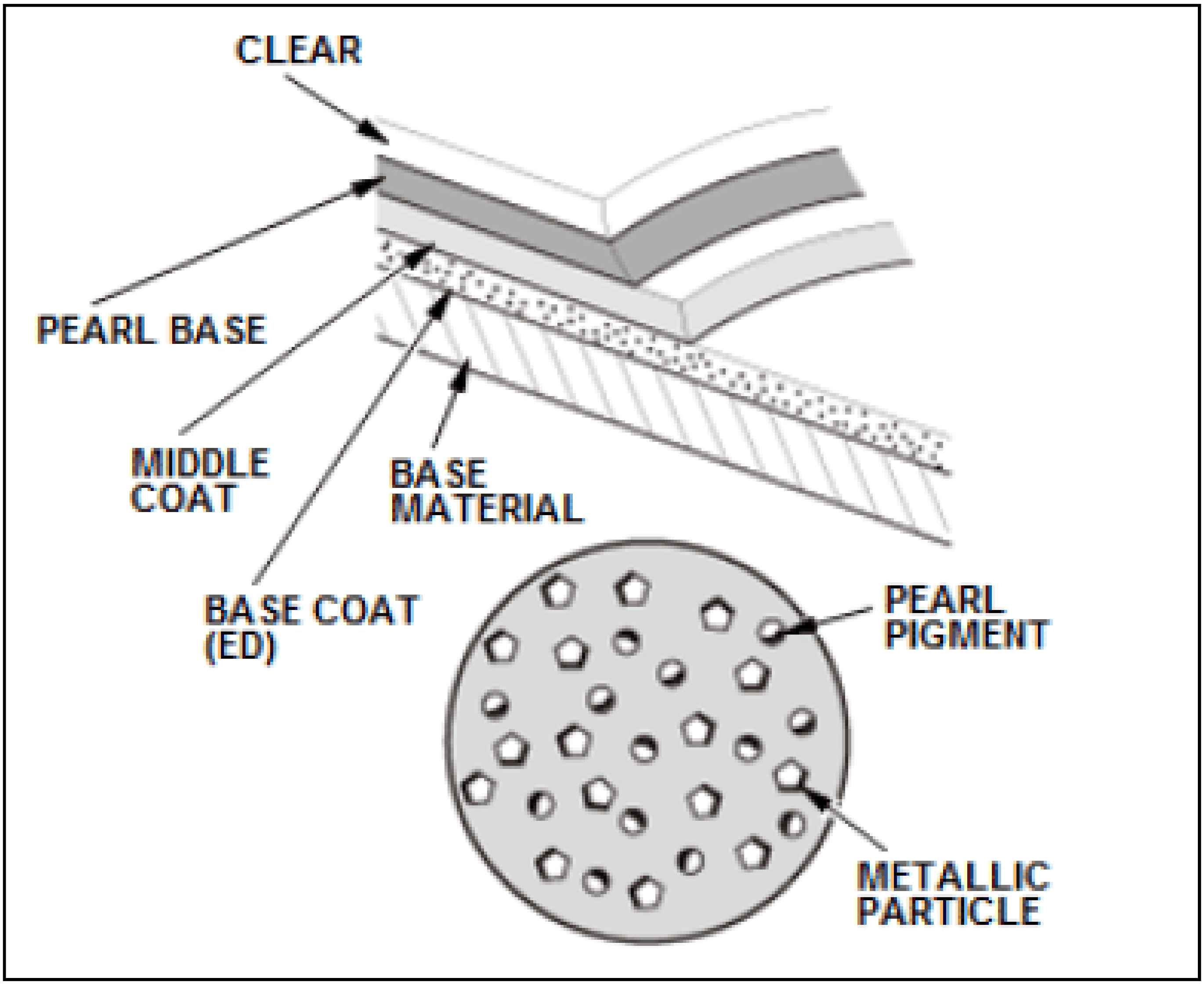

Work Environment

A good work environment is necessary for matching colors, colorimetric work and test painting:

- The most important factor is a brightness. Abundant natural light including direct sunlight is required.
- Fluorescent light with high color rendering properties should be used.
- The work area should be painted in a soft achromatic color, such as white or gray
- Driers, spray devices and other necessary tools should be organized for efficient workflow.

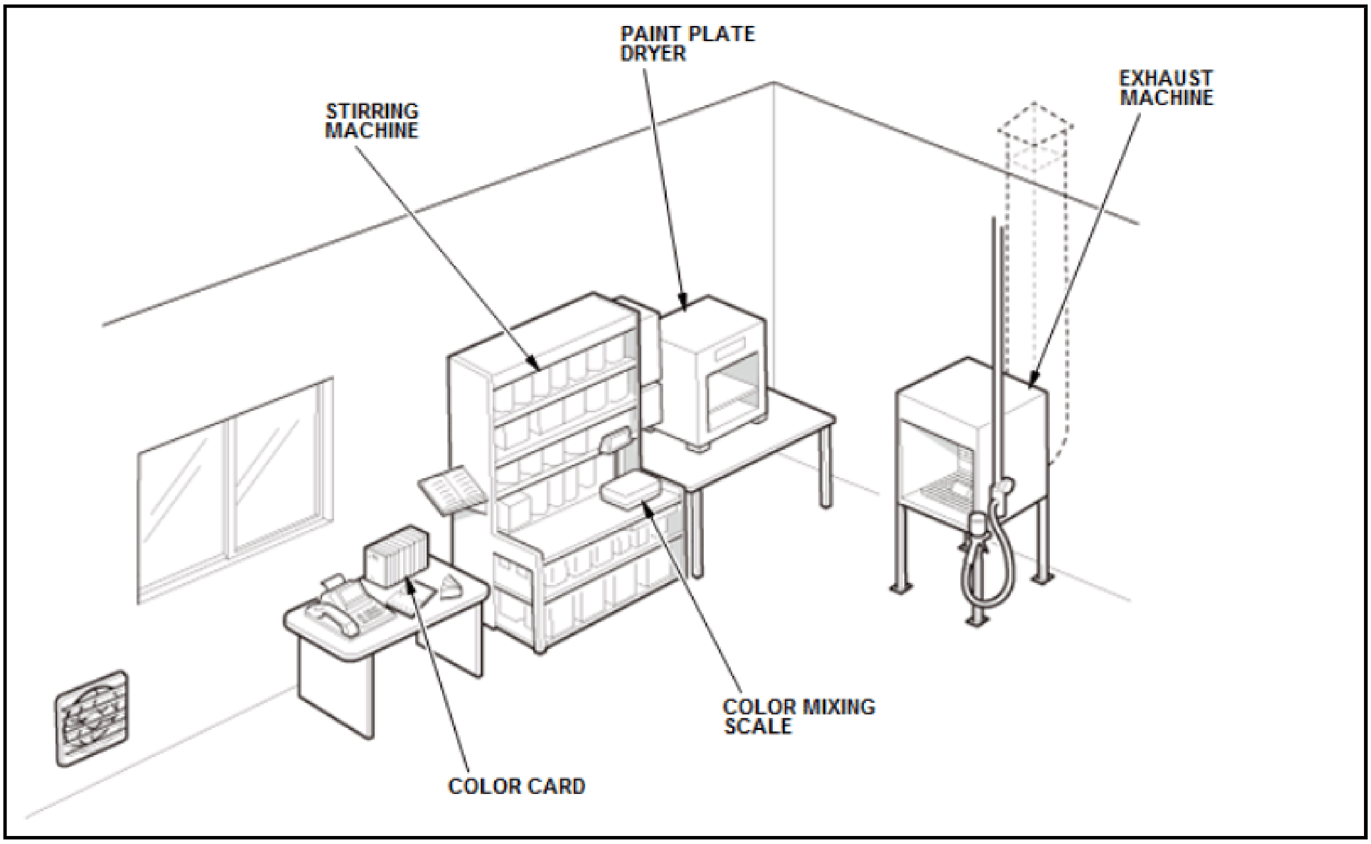
PAINT PLATE DRYER
STIRRING MACHINE
EXHAUST MACHINE
COLOR MIXING SCALE
COLOR CARD

TINTING BASICS (MIXING COLORS)

Basic Color Features

Light And Colors

- While a very wide spectrum of light rays come from the sun, human eyes can only see the visible rays within a wavelength range of 380 to 780 nanometers (nm). Light rays with wavelengths shorter than 380 nm are called ultraviolet rays. These cause deterioration of paint layers and fade colors. Light rays with wavelengths longer than 780 nm are called infrared rays. Beyond that with even longer wavelengths are far-infrared rays. Both infrared and far-infrared rays are called heat rays. These are often used for the heat sources of paint dryers and room heaters.
- Visible rays in the sunlight look white. When sunlight is passed through a prism, the visible rays become a spectrum of different colors ranging from red to violet.

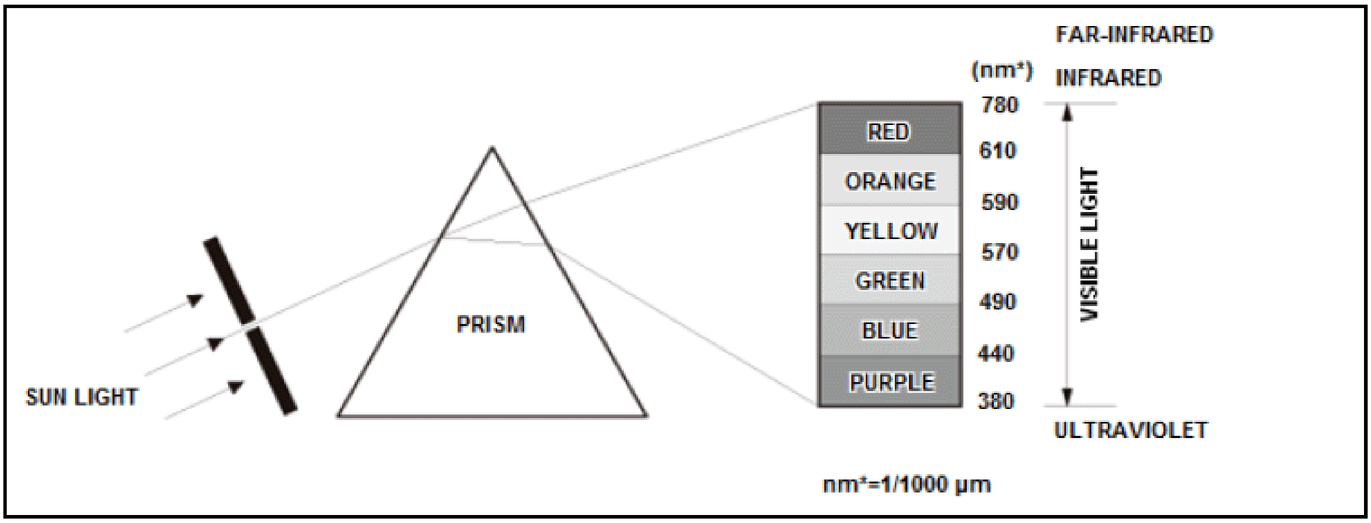
FAR-INFRARED
(nm*)
INFRARED
780
RED
610
ORANGE
590
YELLOW
570
GREEN
490
BLUE
440
PURPLE
380
VISIBLE LIGHT
ULTRAVIOLET
PRISM
SUN LIGHT
nm*=1/1000 µm

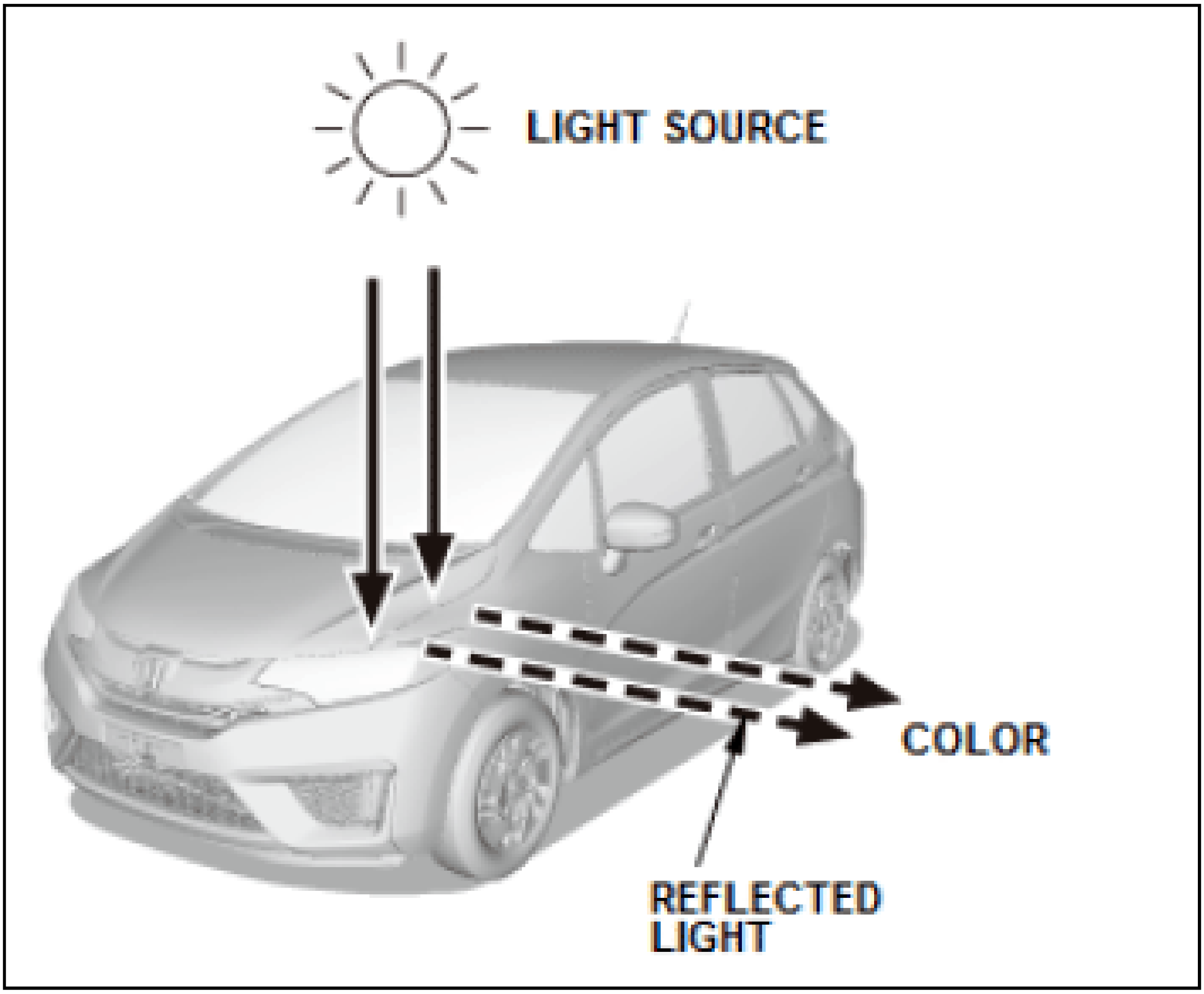

- When a visible light ray hits an object and is reflected, the light ray reaches the human eye and its color is recognized. If only long wavelength light rays are reflected, the color is recognized as red. And if only short wavelength light rays are reflected, the color is recognized as blue.
- Colors can be generally divided into two groups, chromatic colors and non-chromatic colors. Chromatic colors: Red/Blue/Yellow: colors that have hue or tint.

  Non-chromatic colors: White/Gray/Black: colors that have no hue or tint.

Three Factors Of Colors

A chromatic color is comprised of three factors: Hue, Value, and Chroma. Non-chromatic colors have only one value: Brightness

- Hue: The feature that characterizes each color like red, blue, yellow, and green.
- Value: The degree of brightness.
- Chroma: The degree of freshness, apart from the degrees of hue and value.

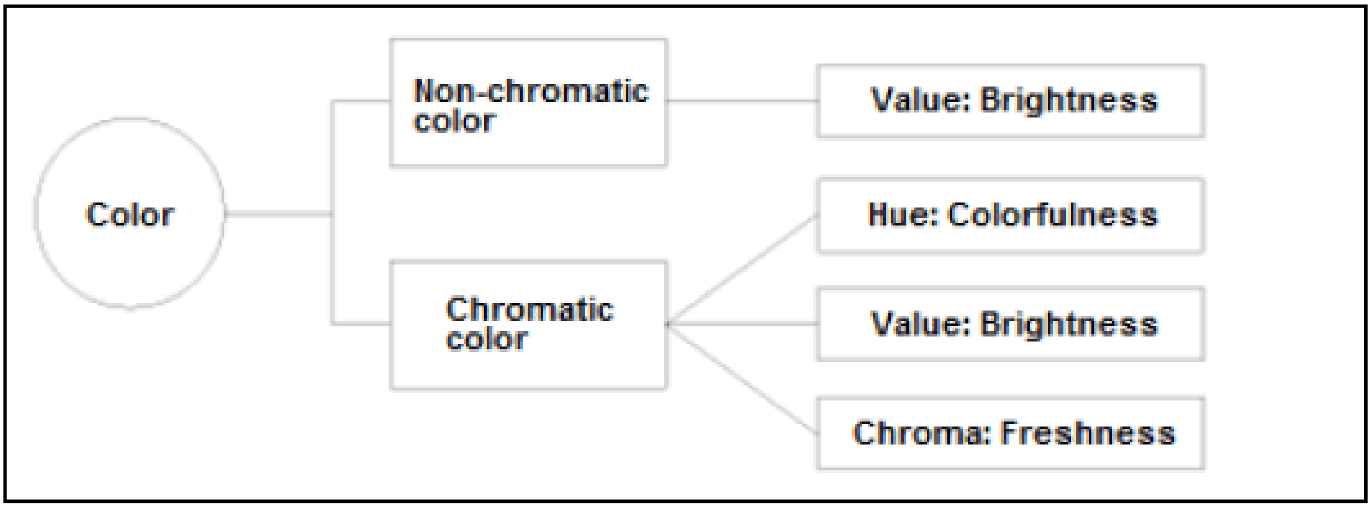
Color
Non-chromatic color
Value: Brightness
Chromatic color
Hue: Colorfulness
Value: Brightness
Chroma: Freshness

Munsell's color ring

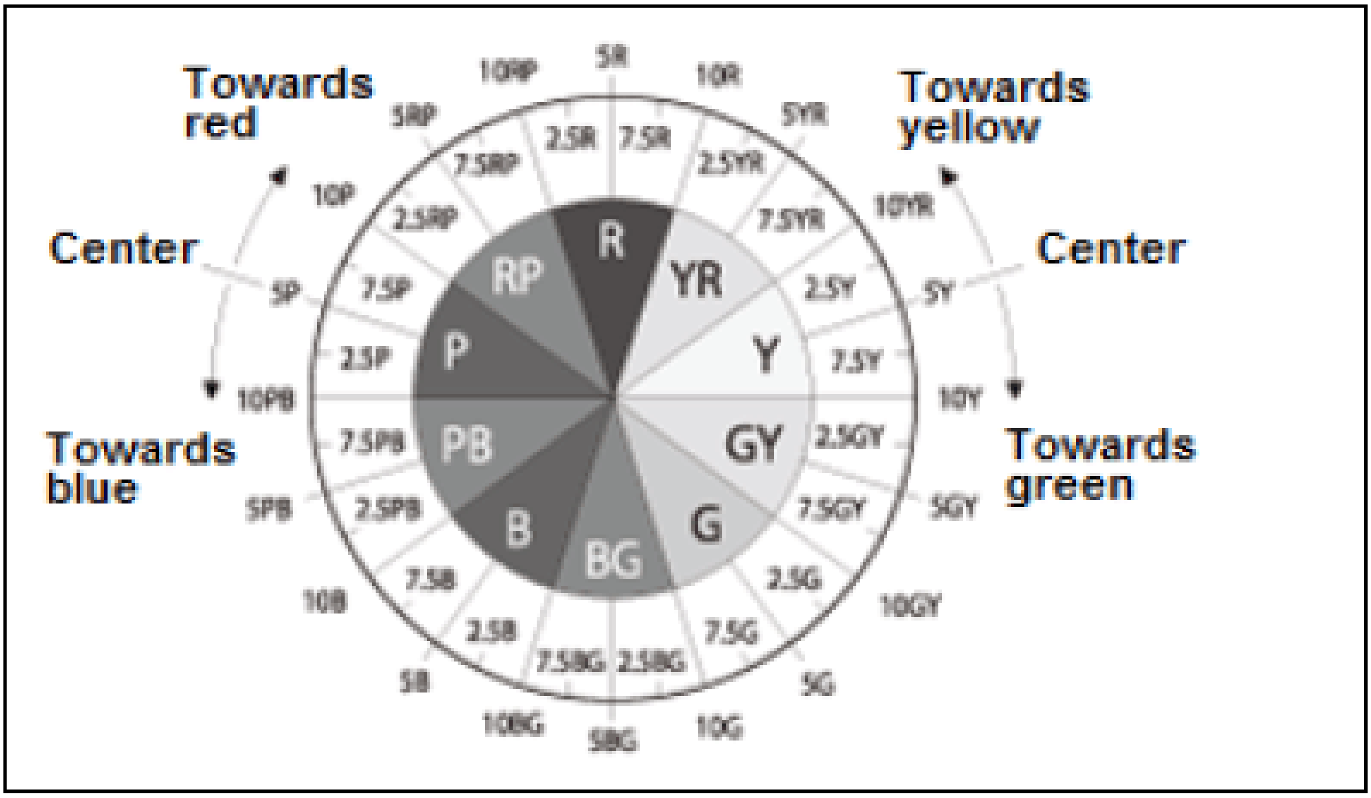
Towards red
Towards yellow
Center
Center
Towards blue
Towards green
R
YR
Y
GY
G
BG
B
PB
P
RP
5R
10R
5YR
10YR
5Y
10Y
5GY
10GY
5G
10G
5BG
10BG
5B
10B
5PB
10PB
5P
10P
5RP
10RP
2.5R
7.5R
2.5YR
7.5YR
2.5Y
7.5Y
2.5GY
7.5GY
2.5G
7.5G
2.5BG
7.5BG
2.5B
7.5B
2.5PB
7.5PB
2.5P
7.5P
2.5RP
7.5RP

Indication Of Colors

Hue Ring

Hue Ring is a ring shaped relative arrangement of ten main colors. There are five main colors: Red (R), Yellow (Y), Green (G), Blue (B), and purple (P). Another 5 colors are relatively placed between the main colors: Yellow red (YR), Yellow green (GY), Blue green (BG), Blue purple (BP), Red purple (RP). Each hue is divided into 4 even spaces with an interval of 2.5 and the center is shown at 5.

Munsell Color System

Munsell Color System is a color measurement system introduced by Abert H. Munsell, an American an artist and professor (1858-1918). In this system, colors are measured in the three dimensions of Hue, Value, and Chroma. Munsell published the 1st edition of Munsell Atlas of Color in 1915. Then he later revised it a few times, and in 1943, he introduced the revised color system that is still used.

Indicated Code (Munsell Code)

Non-chromatic colors are indicated in N. Chromatic colors are designated in the order of hue, value and chroma.

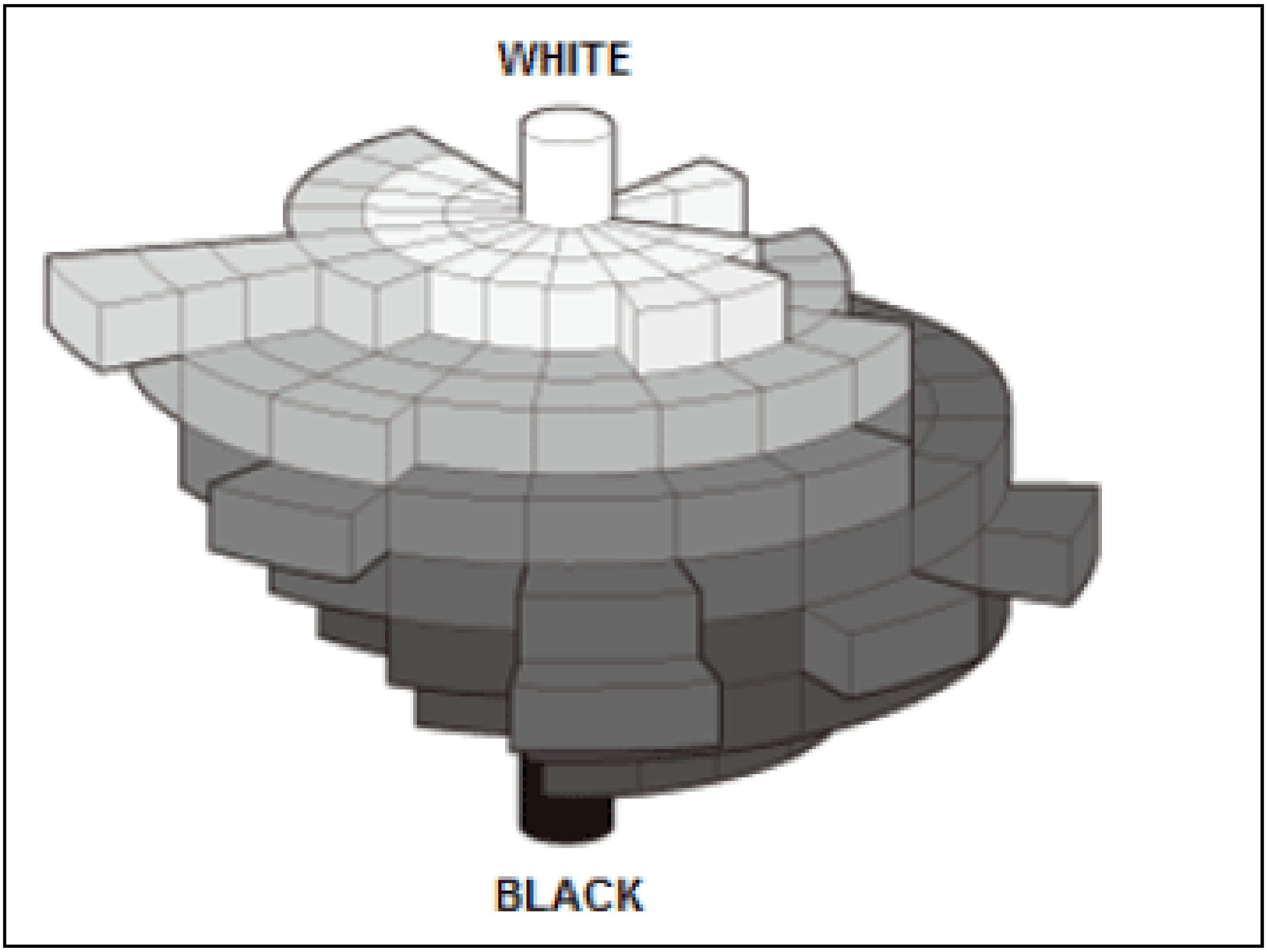

Example: N-3

5R 4/10

where:

5R: Hue; 4: Value; 10: Chroma

Accurate paint color mixing cannot be attained using only the Munsell code. Always use actual color samples.

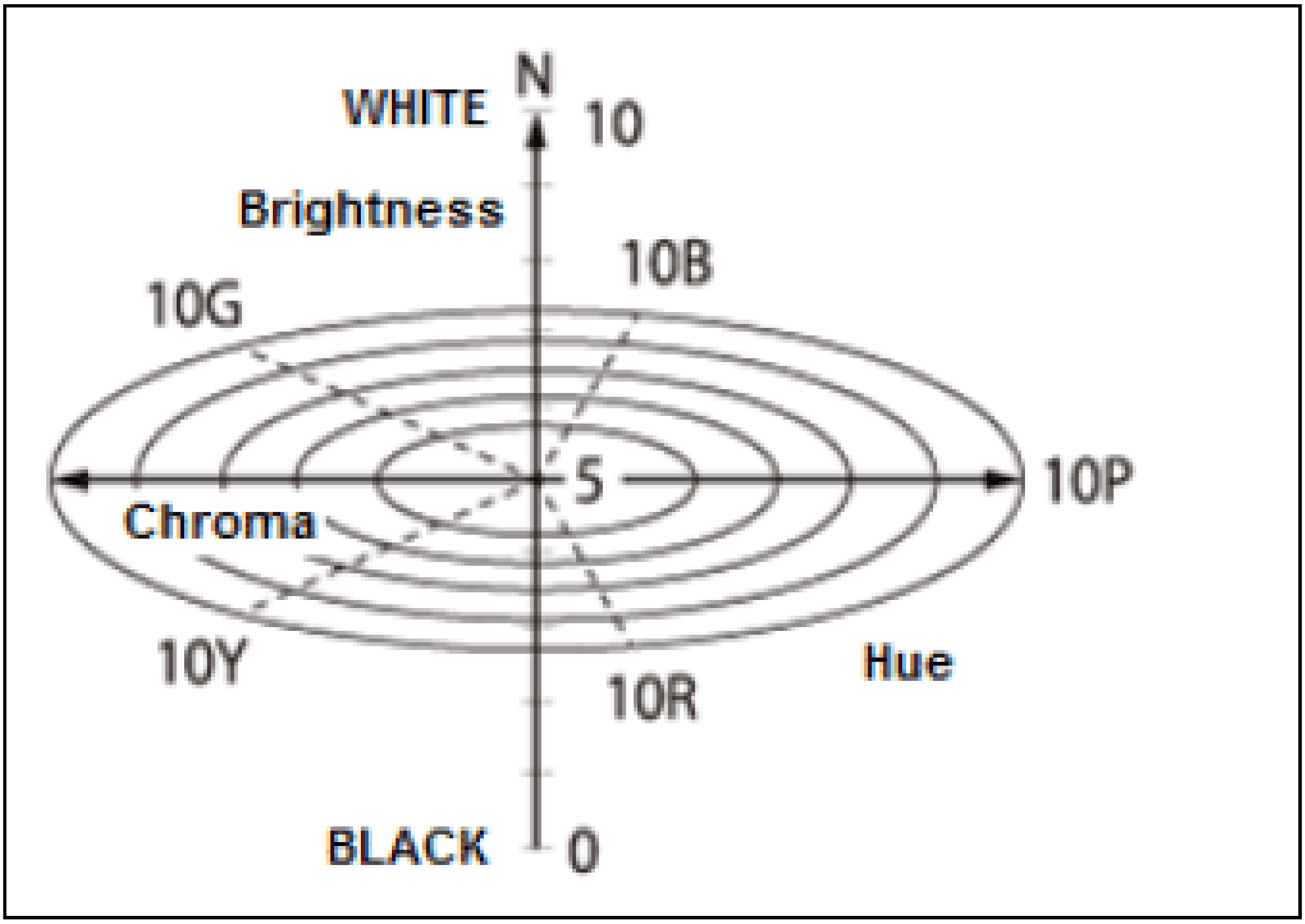
N
WHITE
10
Brightness
10B
10G
5
10P
Chroma
10Y
Hue
10R
BLACK
0

Complementary Color

- In the Hue Ring, the two colors located directly opposite from each other are termed as complementary colors. If red and blue green, or yellow and blue purple are mixed in an appropriate ratio, they turn out to be a non- chromatic color.
- It is possible to use the relationship of complementary colors in order to weaken a color's degree of the hue. This can be done by adding a small amount of its complementary color. Because the color may become slightly muddy or hard to return to original, this is not recommended.

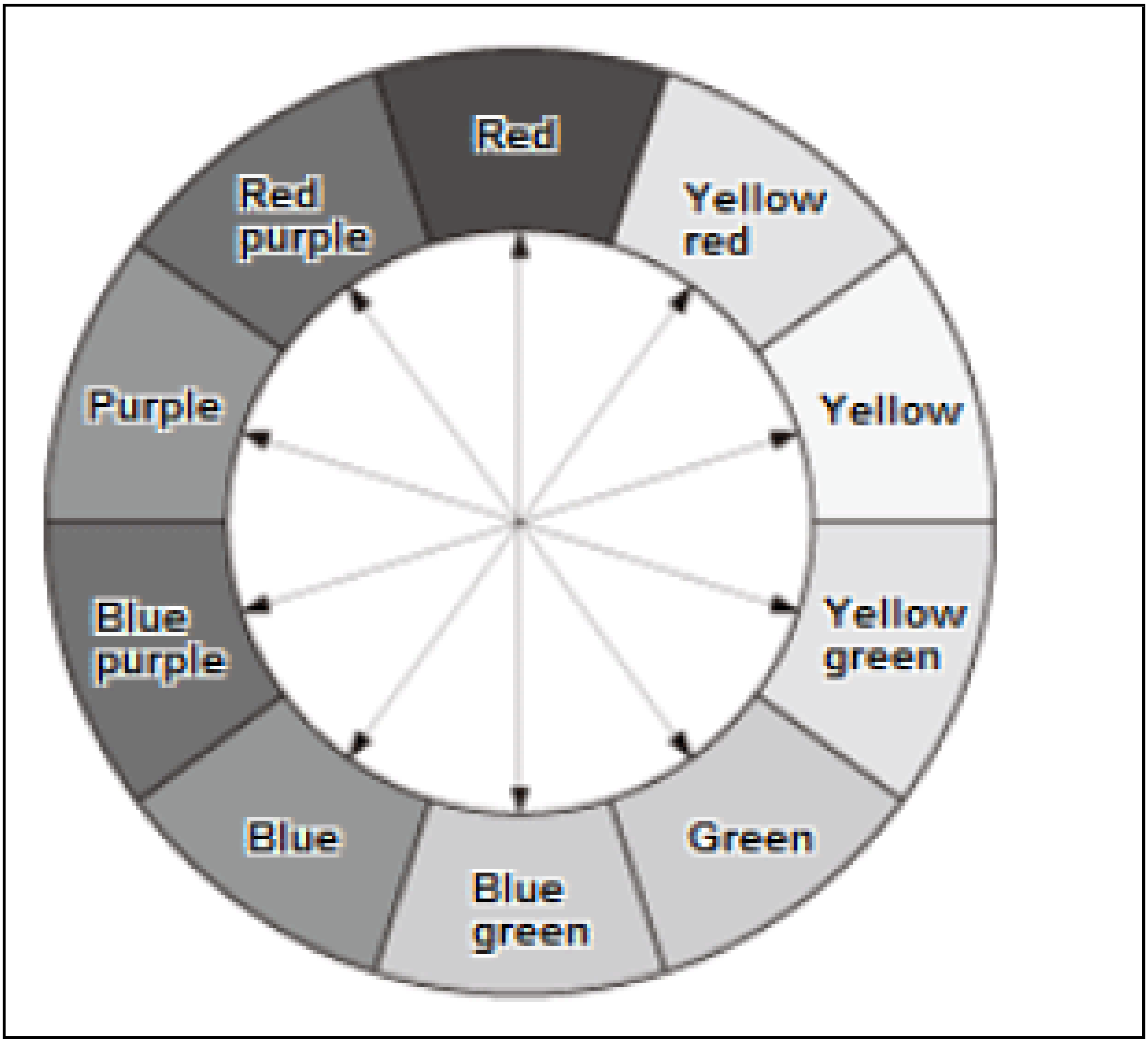
Red
Yellow red
Yellow
Yellow green
Green
Blue green
Blue
Blue purple
Purple
Red purple

Color Mixing Tools And Equipment

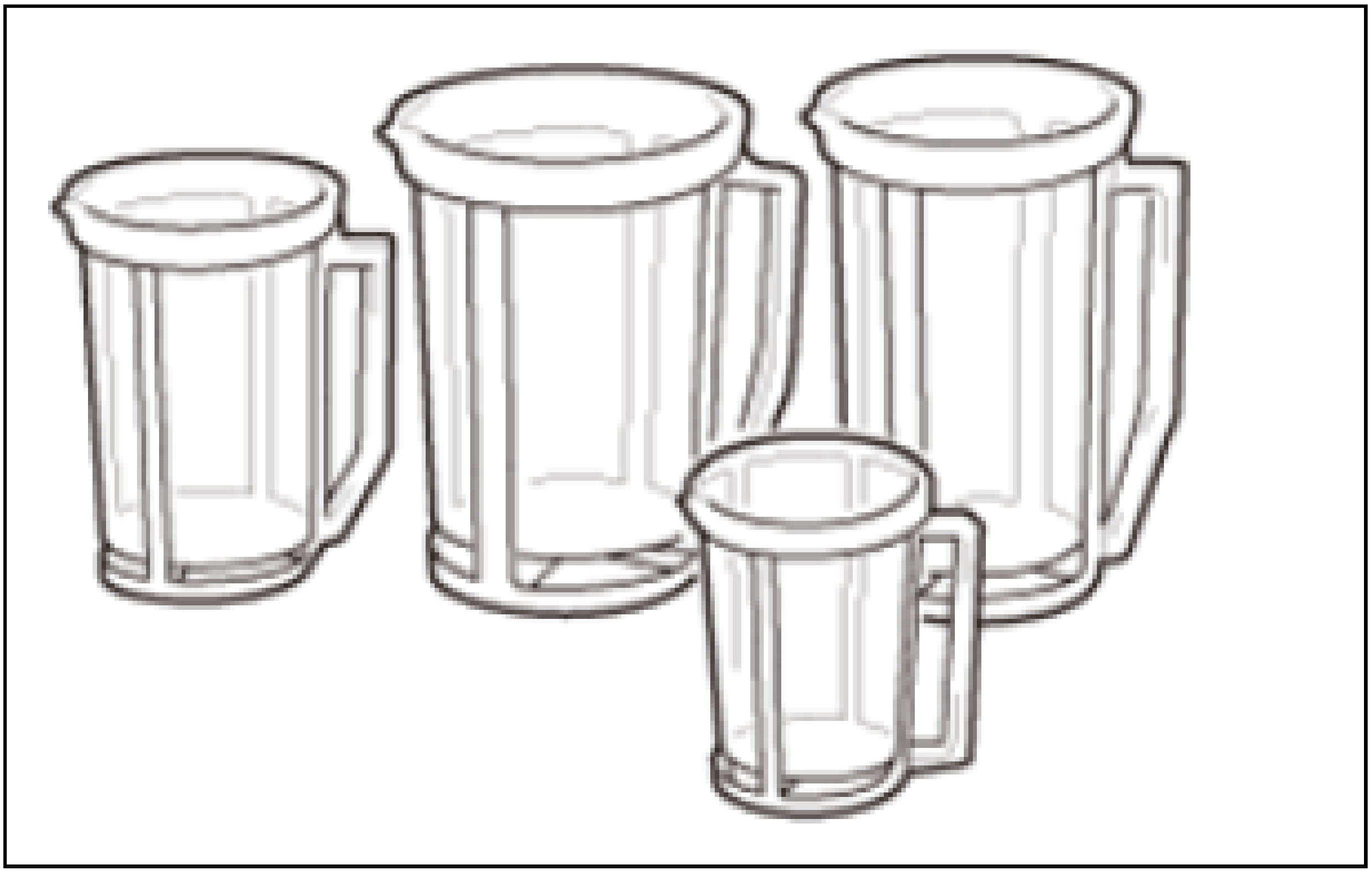

In order to mix paint colors as needed accurately and quickly the following tools and equipment are necessary.

Color Mixing Containers

- According to the amount of paints needed, prepare several cans or plastic containers sized from 0.2 - 18 L (6.76 fl oz - 4.76 gal).
- Plastic disposable containers are used most often.

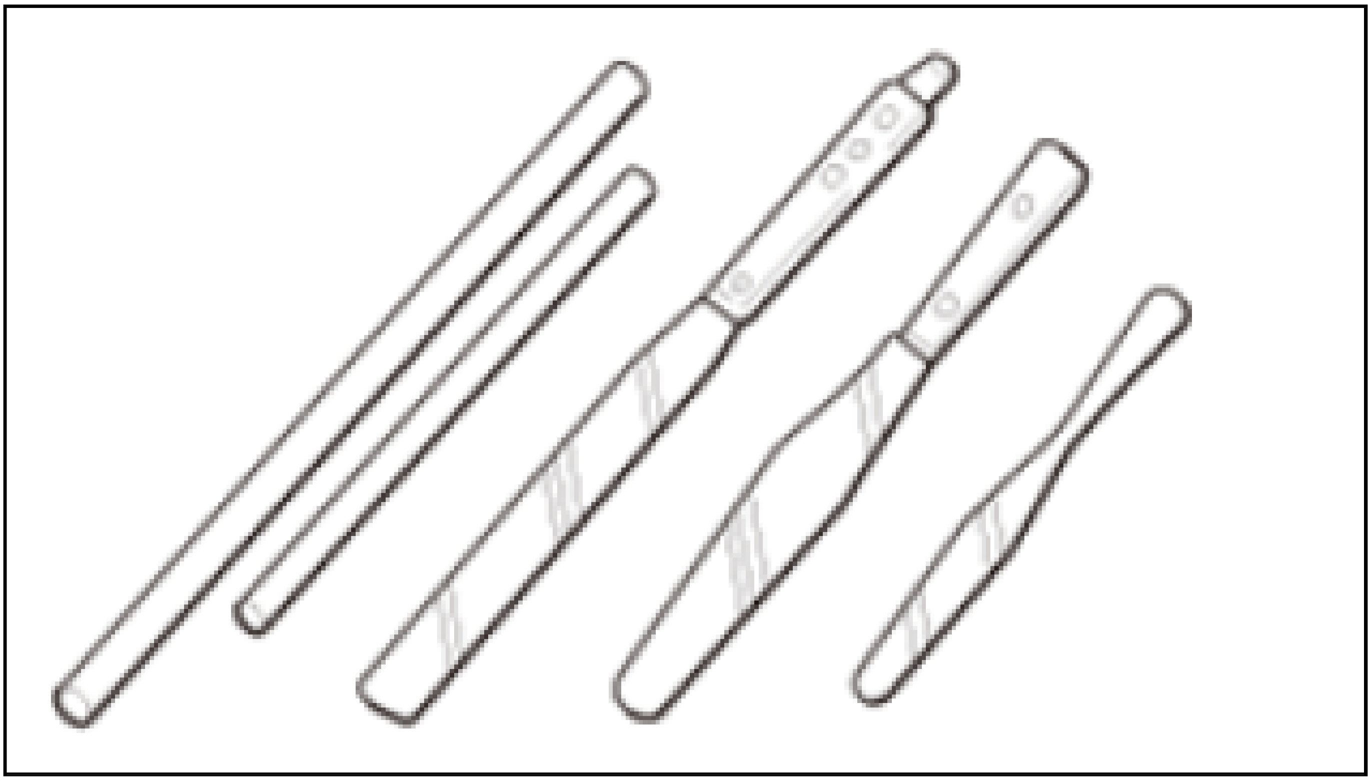

Stirring Sticks, Spatula

- There are also some stirring sticks combined with spatulas. Depending upon the amount of paint required, select the proper lengths and sizes.
- Both plastic and metal types are available.

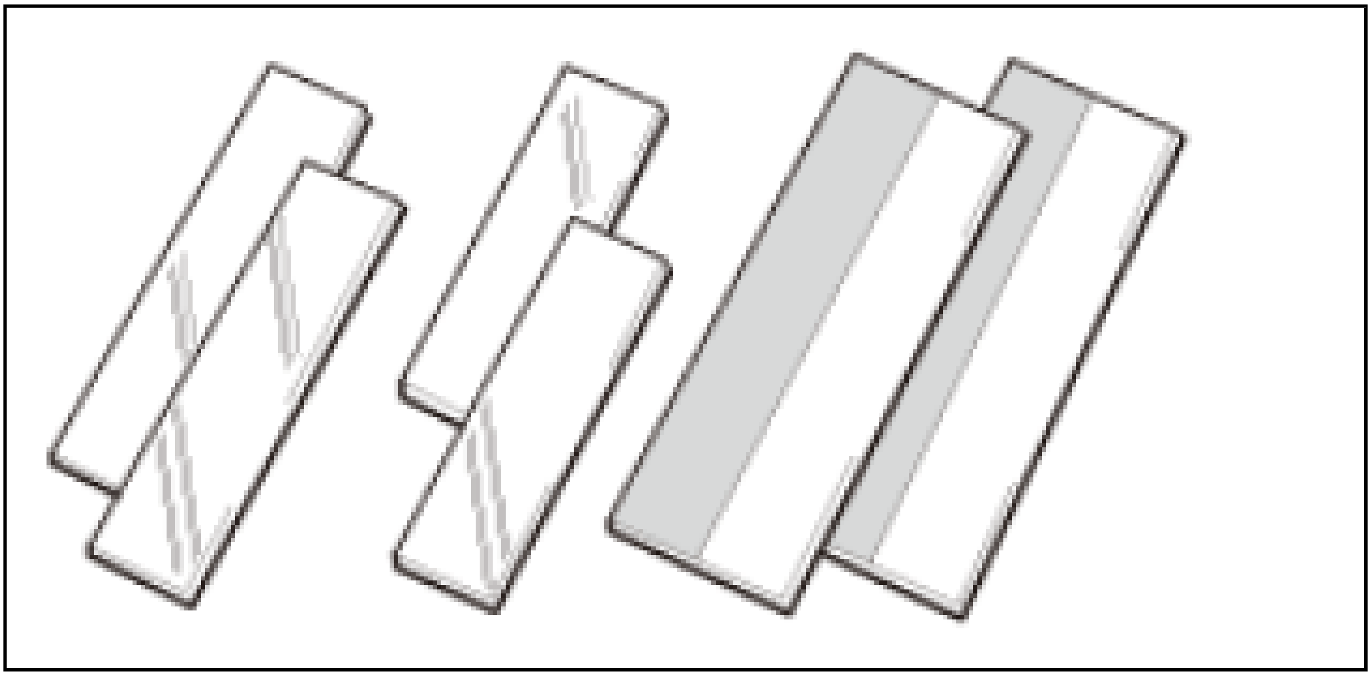

Test Plates

Tinplate, thick papers or magnetic sheets. Used for paint match testing to check color combinations

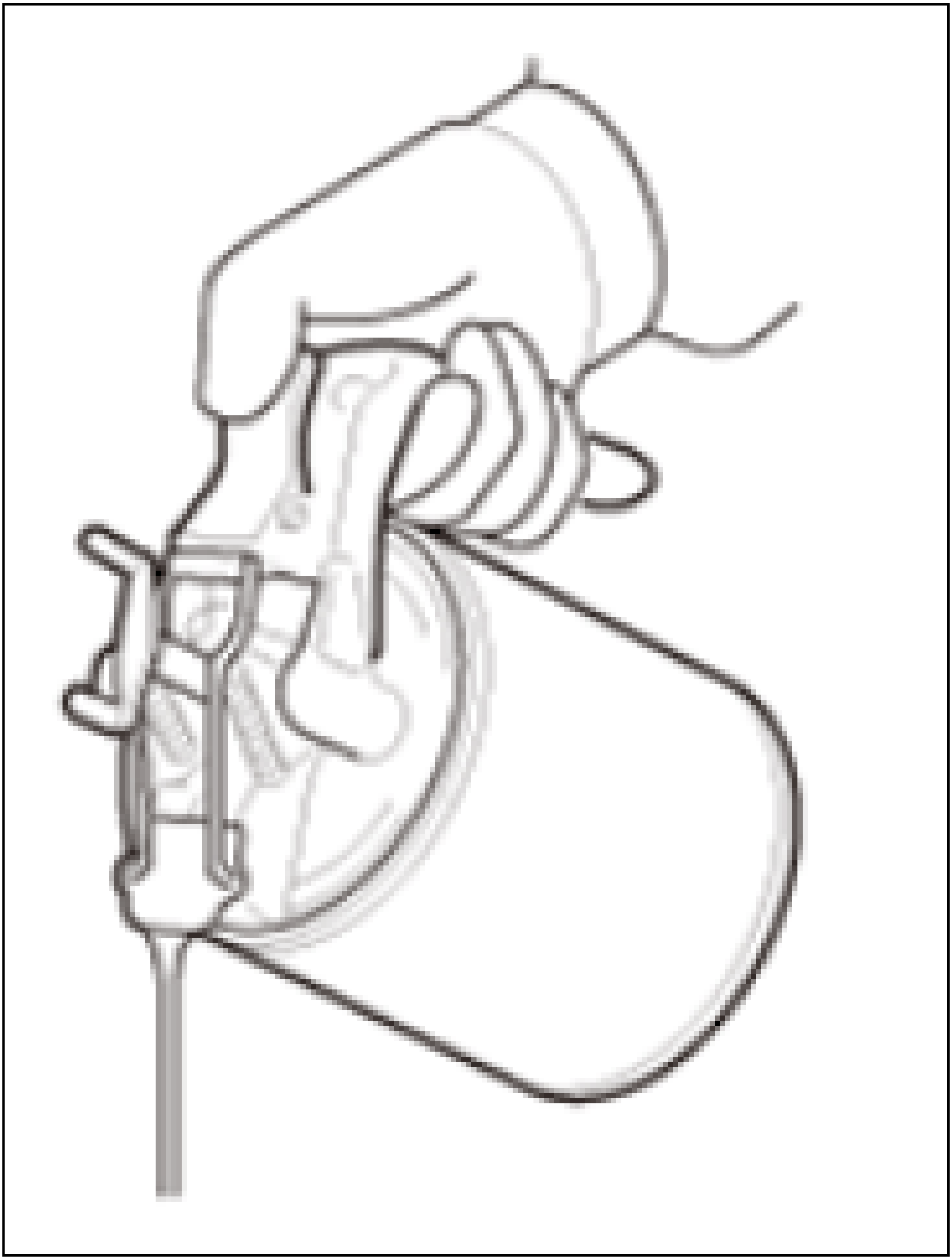

Agitator Covers

- Used to prevent the solvent content in the paint from evaporating. It helps easy stirring and pouring of paint. It is absolutely necessary for measured color mixing.
- Stainless steel is used for covers designed for water-based paint, to prevent corrosion.

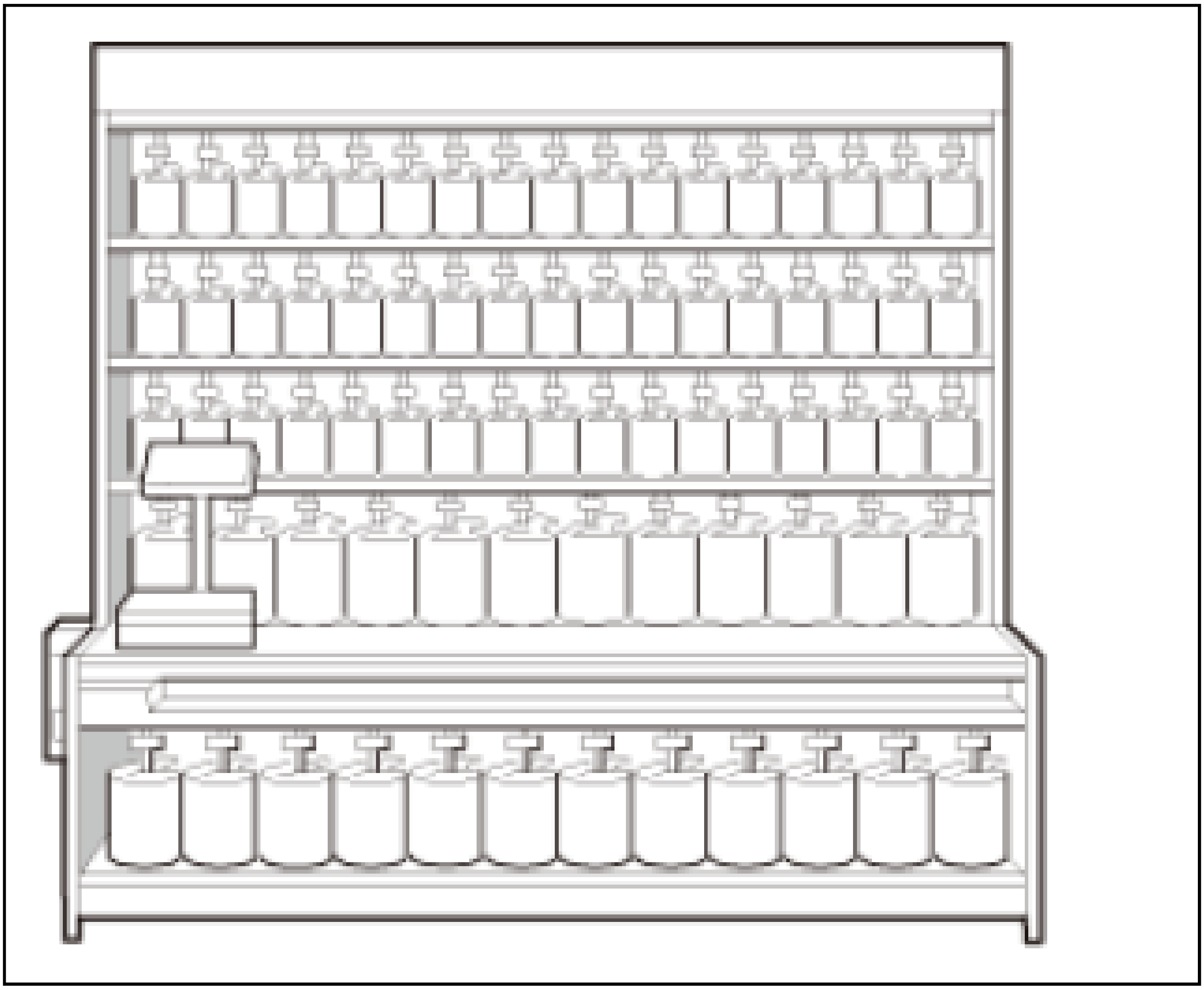

Paint Stirring Machine

Electrically powered shelf which enables to stir multiple paint containers at once.

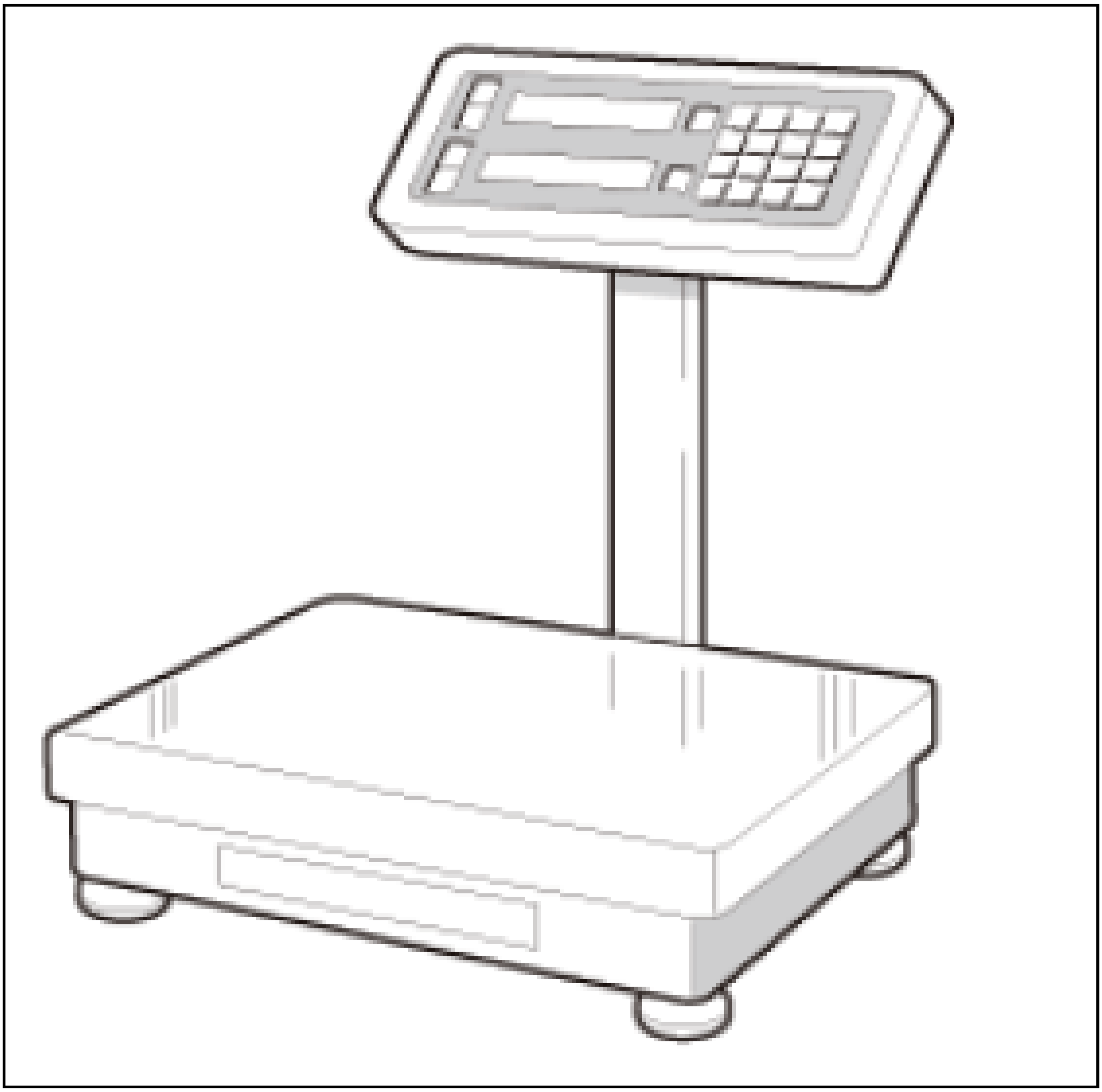

Color Mixing Scale

Microcomputer scale offers multiple functions and accurate measurement for mixing colors. It should measure up to 6 kg (13.23 lb) in increments of 0.1 kg (0.22 lb). The scale can also be used for mixing dual-component paint and paint reducer/thinner.

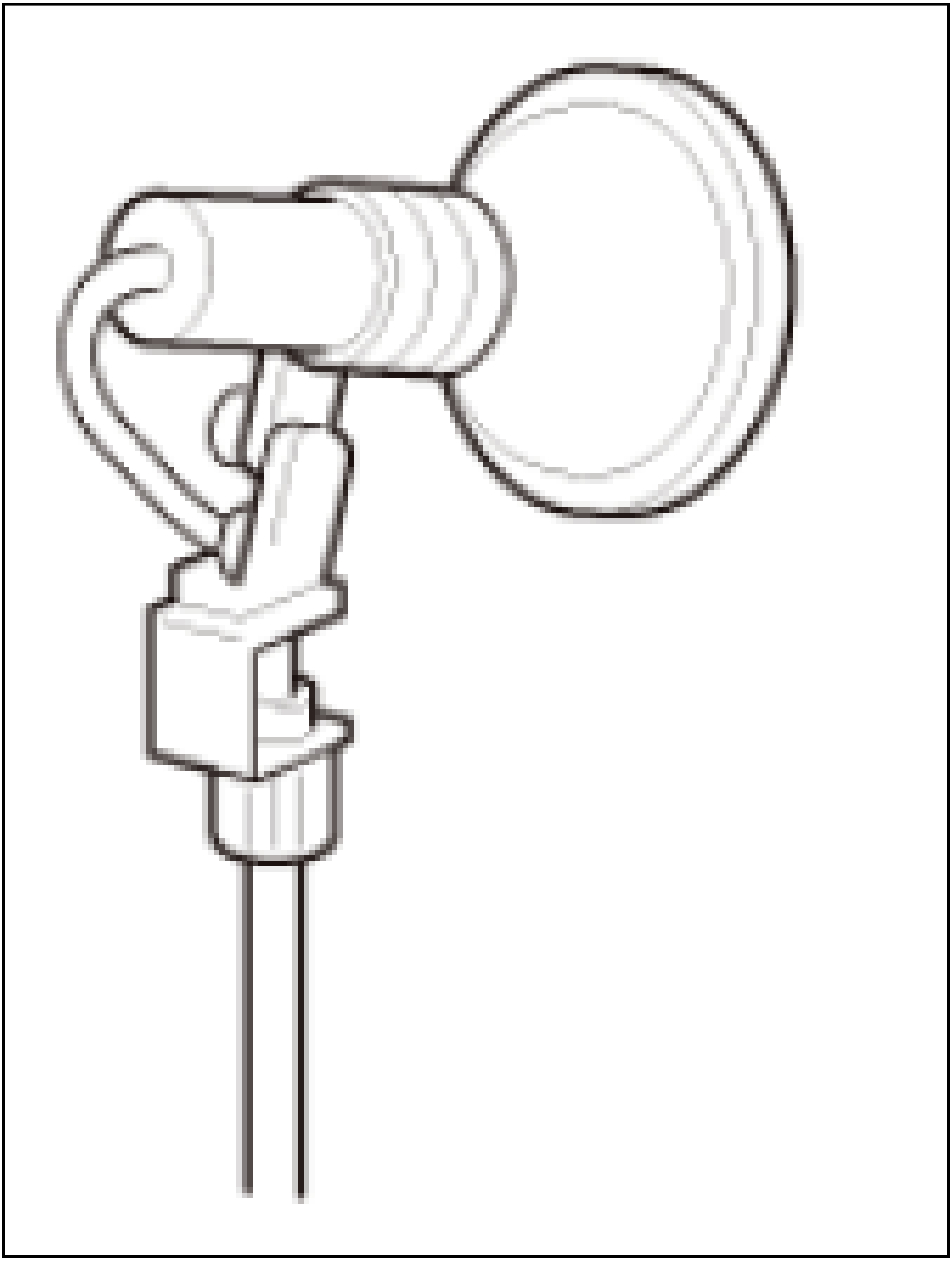

Color Mixing Light

This light offers a wavelength distribution very close to natural sunlight and is suitable for mixing colors indoors.

Colorimetry

Example of mechanical color measuring device (Computerized color measuring machine)

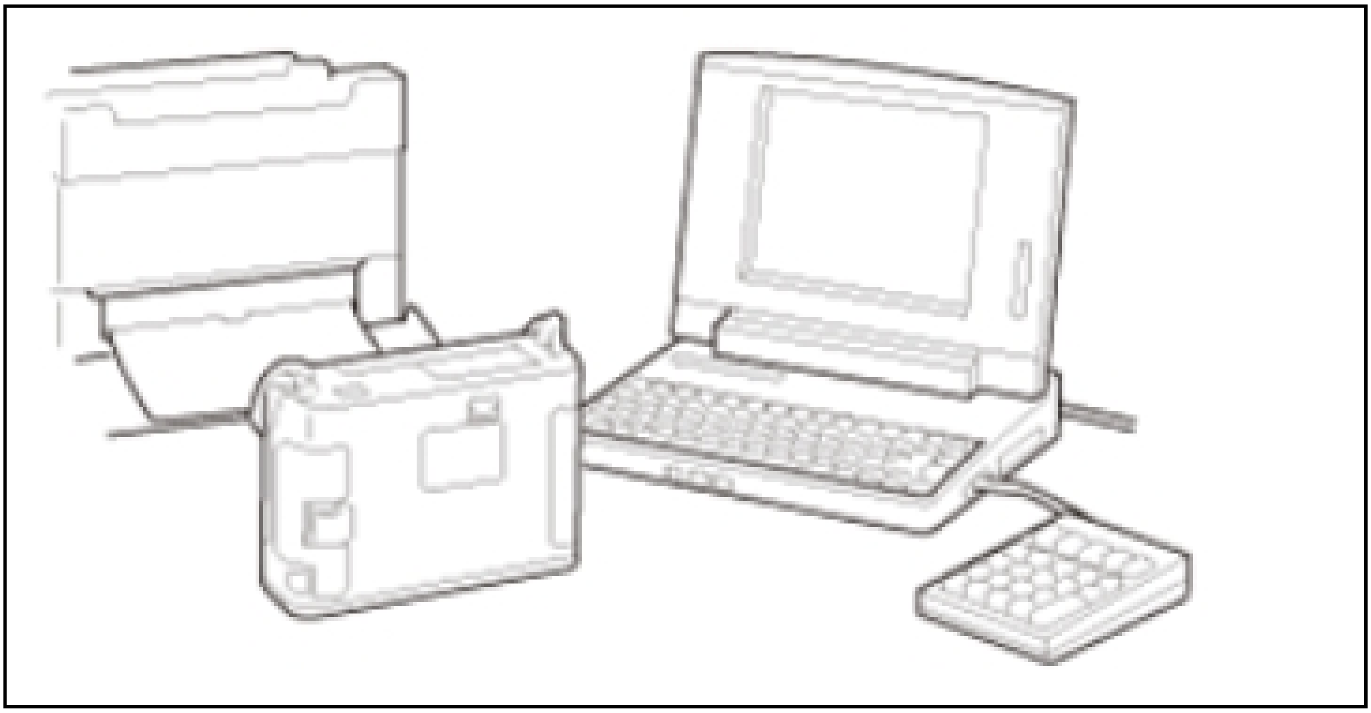

Comparison of two different colors is Colorimetry, which is very important for paint repair. There are two methods to do Colorimetry. One is visual comparison and the other is by using a colorimeter. During paint repair, especially for metallic and pearl colors, it is extremely difficult to use a mechanical device to accurately measure color. The visual approach is most common in shops.

Visual Color Colorimetry

- Vehicles are viewed under all sorts of light sources including the sunlight, florescent light, mercury lamp, etc. The repaired color on a car body must be perfectly matched with the surrounding color under any light source. Therefore, the mixed color must be compared under all possible light sources.
- The color of the light source is stipulated by CIE (Committee of International Electric Lighting).

A light source: Electric light equivalent to that of a tungsten electric bulb.

B light source: Light equivalent to that of the direct sunlight at noontime.

C light source: Daylight including the light from the blue sky.

D65 light source: Artificial light equivalent to the light at noontime.

(Source) CIE light sources

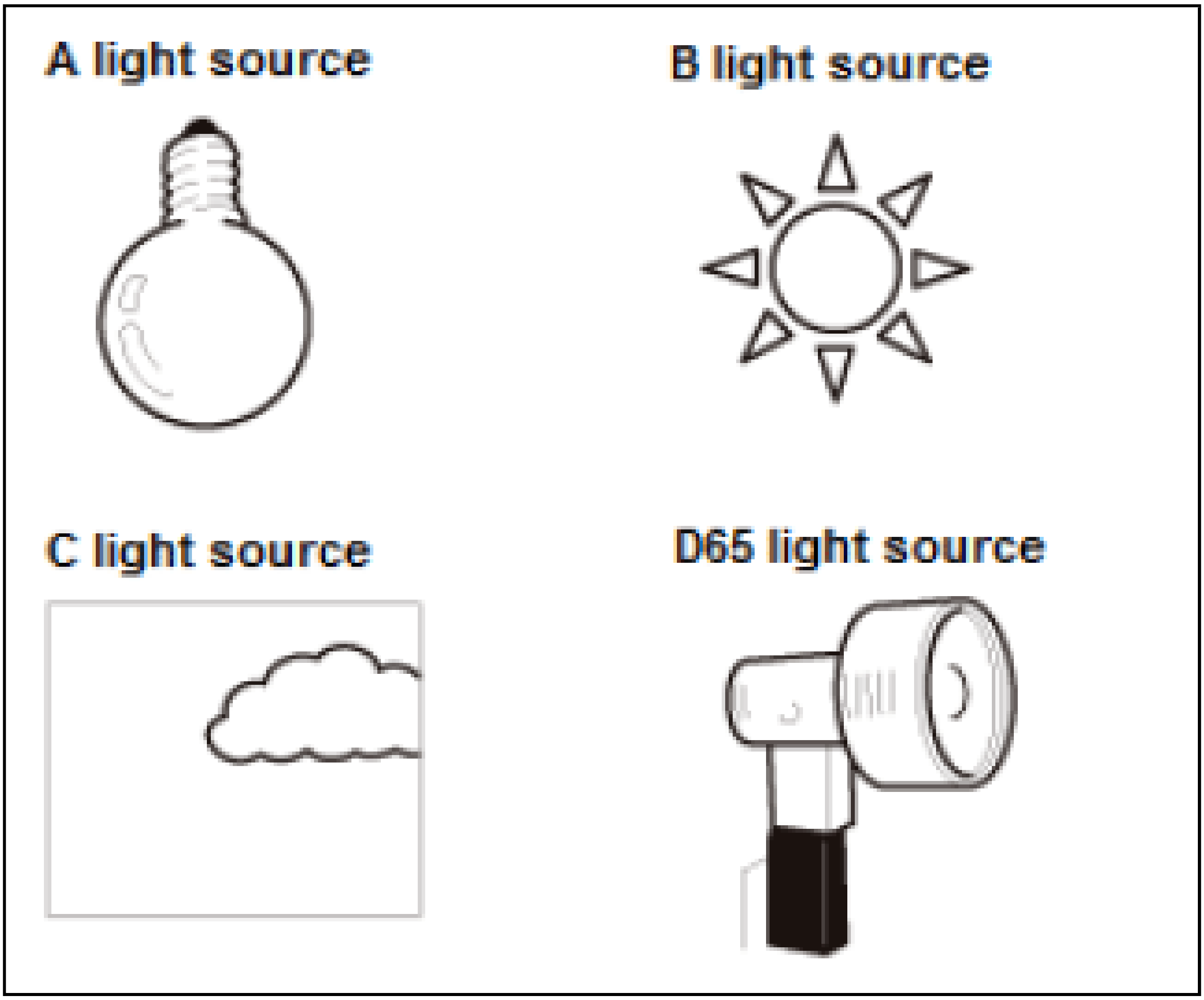
A light source
B light source
C light source
D65 light source

Color Viewing Angle

When comparing colors, it is not sufficient to check the color only from one particular angle. For metallic and pearl colors in particular, the color will look different according to the direction of sight. Always check colors from different angles.

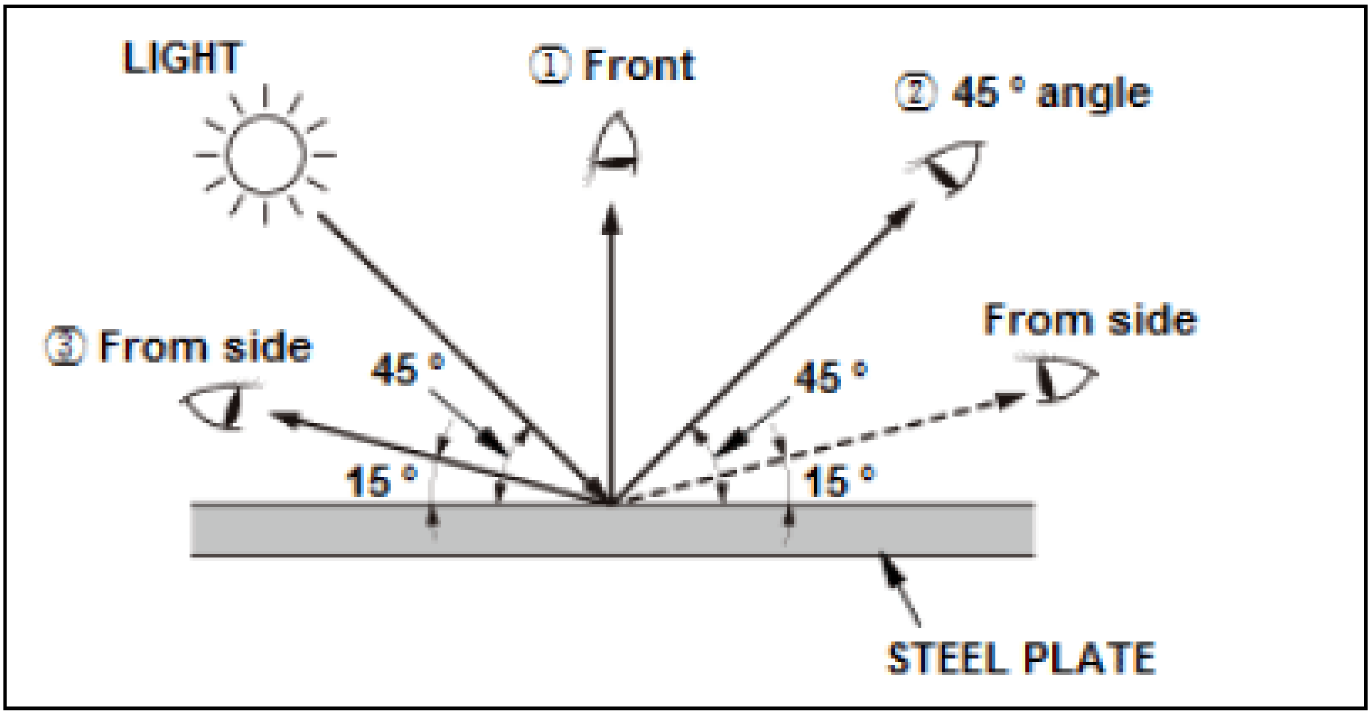
LIGHT
① Front
② 45 ° angle
③ From side
45 °
15 °
45 °
From side
15 °
STEEL PLATE

Angles to check and their terms:

Check basic colors from the following angles:

1. Front (straight ahead)
2. At a 45Â° angle
3. Side (at 15Â° angle)

Outside

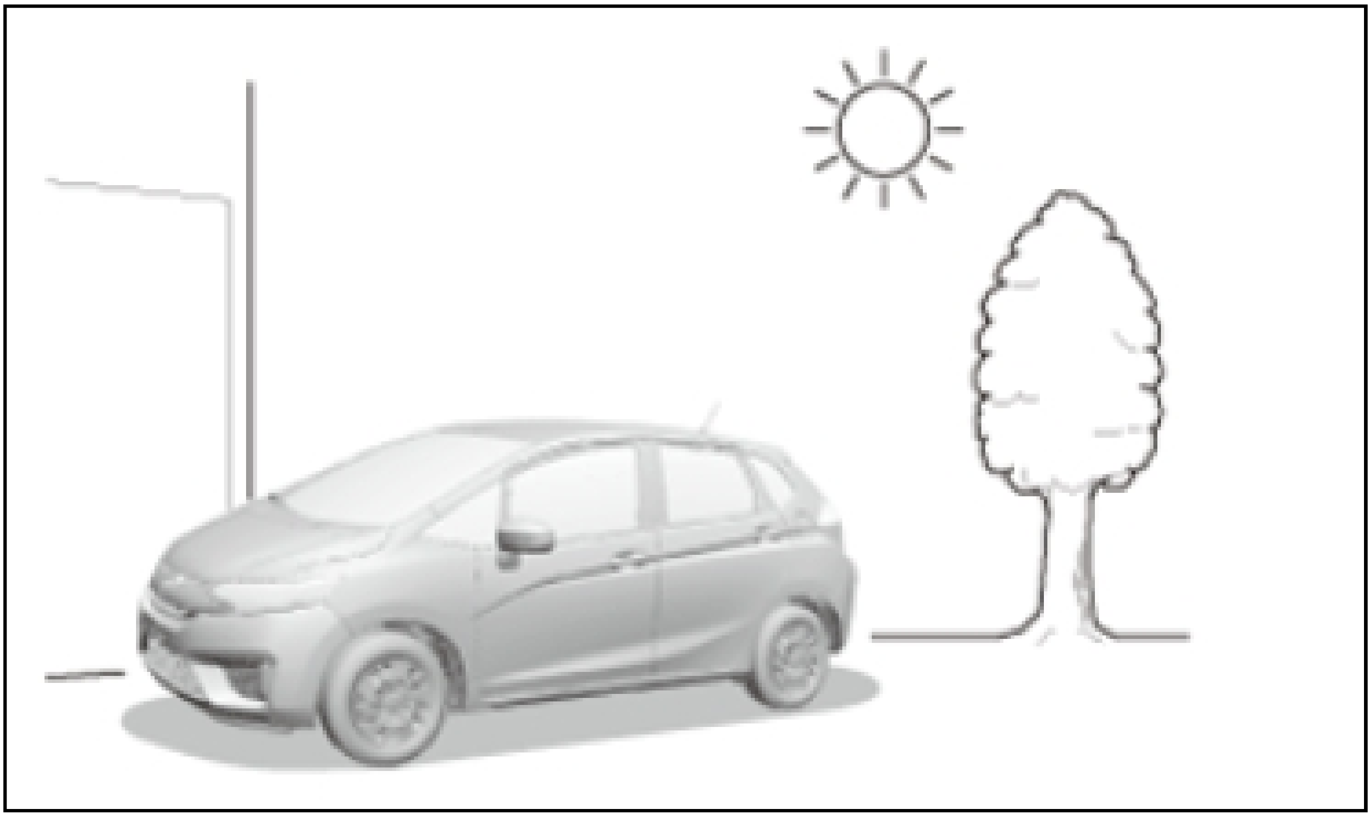

Inside

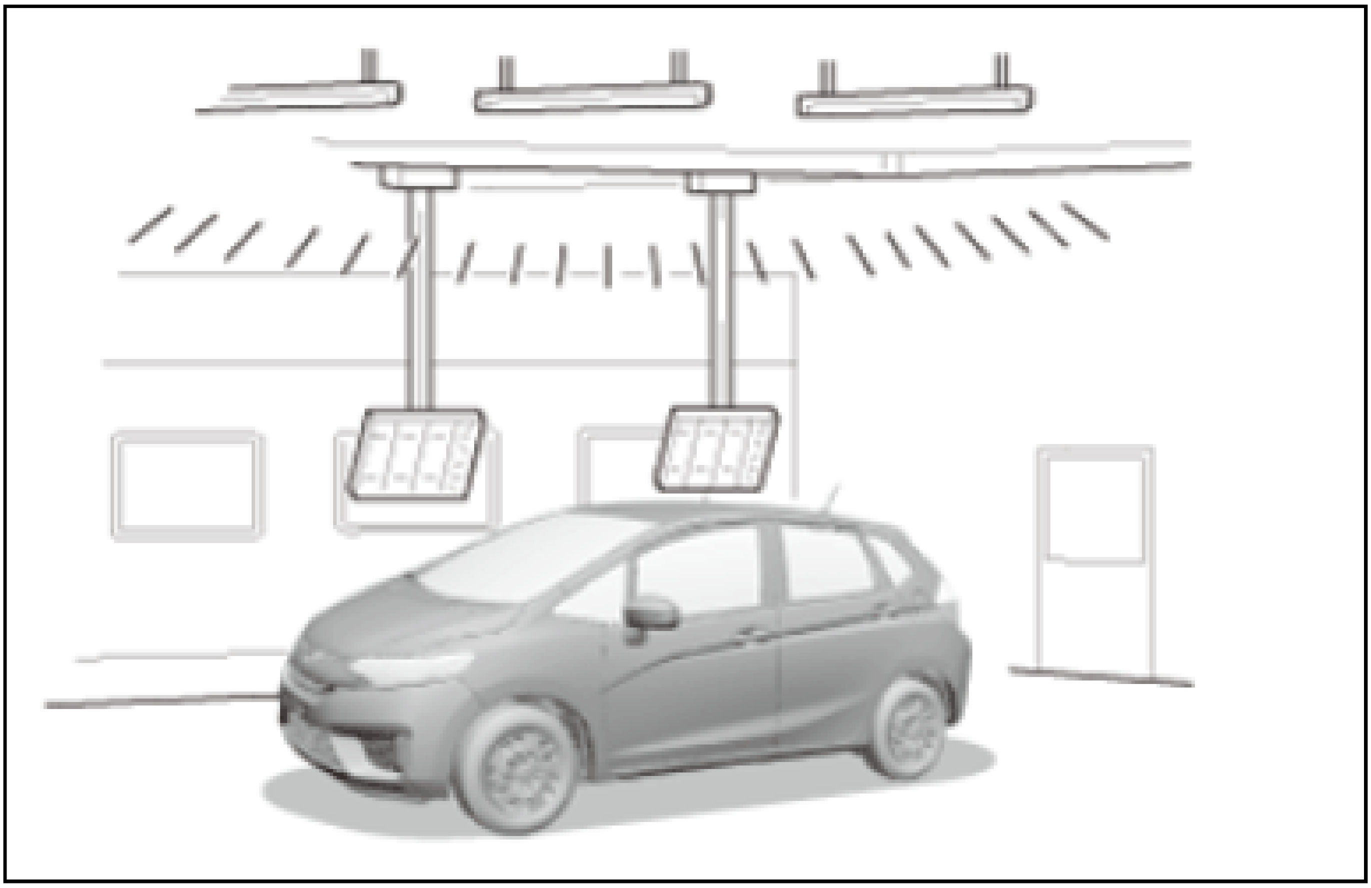

Conditional Identical Color (Metamerism)

- A phenomenon where two different colors look the same under a certain light source. This phenomenon occurs because of the spectral diffraction between the two colors. To avoid errors caused by this phenomenon, always use the same color pigments as those used in the color samples.
- In order to confirm whether the colors are conditionally identical or not, compare the colors under the natural light (outdoors), and then again under the florescent and/or infrared lights (indoors).

Flip-Flop Phenomenon

A phenomenon where two colors that look the same from a certain angle are seen differently when viewed from different angles. This phenomenon is caused by the differences in the levels of transparency caused by the kinds and sizes of pigment used.

It often happens that the two colors look the same when viewed straight ahead, but different when viewed at an angle.

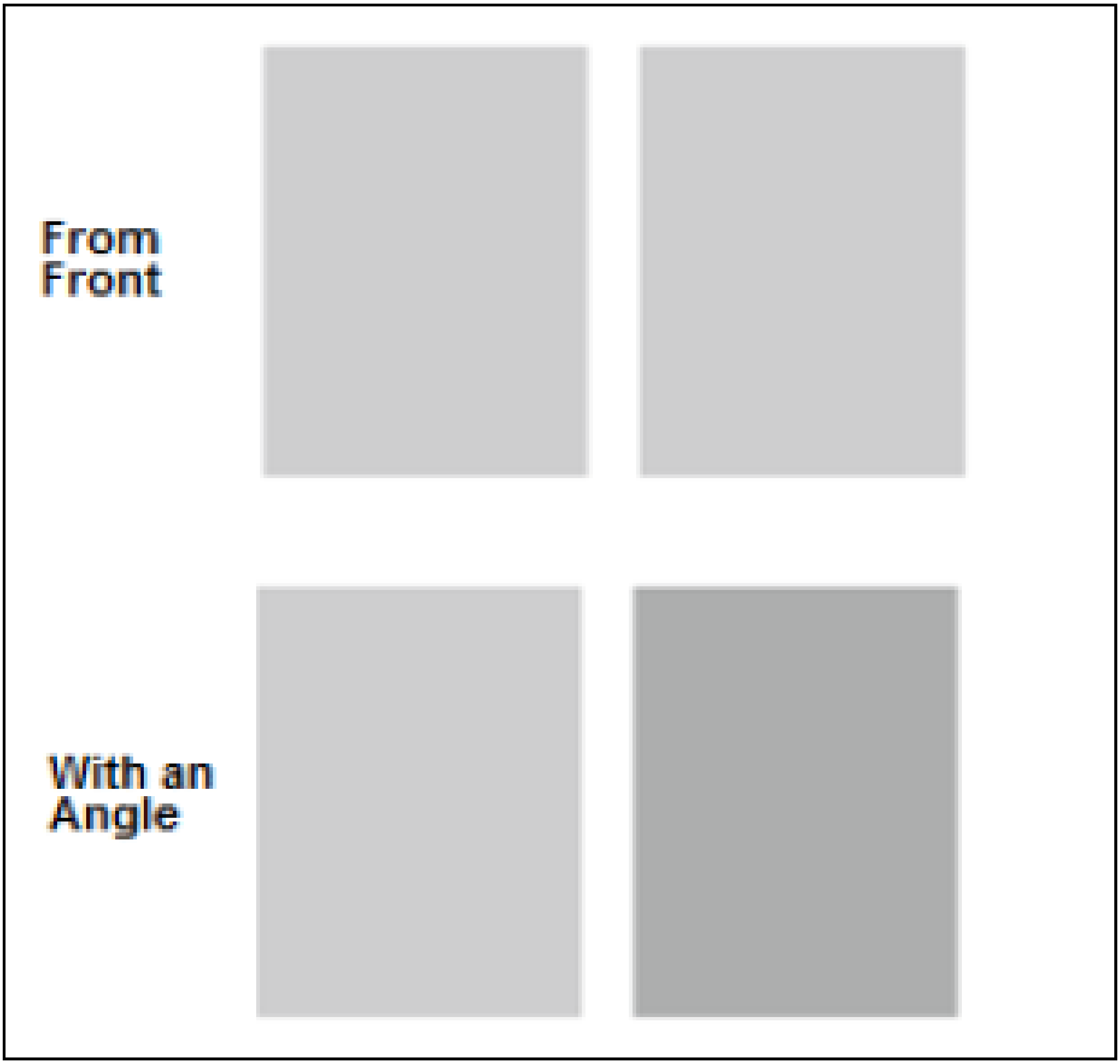

Primary Color Characteristics

When mixing colors, it is important to recognize the characteristics of primary colors in whitening, transparency, and weather resistance, etc. Unless the problems of conditionally identical colors and the directions of metallic colors are well understood, correct color matching is unlikely.

White Mixing Of Primary Colors

The hue produced when white is mixed to a primary color is called "Whitened tint" of the color. It is very important to understand the nature of tone and its direction of the primary colors, particularly for mixing metallic base with primary colors, and mixing primary colors with white.

Transparency

The transparency of a certain color depends upon the amount of pigment in the primary color, but more than that, upon the size of pigment particles. Even if the same pigments are used, the more transparent it is, the finer the size of the pigments are. Transparency level is one of the main factors effecting the direction of the metallic color.

Weather Resistance

Most primary colors have good weather resistance. But they can also fade quickly if incorrectly handled.

Bleeding

Bleeding is a phenomenon in which the old paint layers' color blots into the newly painted surface.

Bronzing

Bronzing is a phenomenon in which a golden metallic luster appears on the surface of a newly painted layer. It tends to occur when blue or green colors are used without being diluted mixed other colors or liquid.

Metallic Base

Metallic paint has tiny dispersed aluminum particles. There are many types of metallic paints. When shooting metallic colors, it is important to understand their characteristics such as direction, size of particles, luster, brightness, whiteness, etc. It is also extremely important to compare the color from various angles and under different light sources.

Pearl Base

- A special kind of paint containing pigments with pearl luster (pearl pigments). There are many different kinds depending upon colors, size of pigment particles, etc. When mixing paint, the most appropriate pearl base must be used that corresponds to the color sample
- There are two methods of applying pearl paints, three-coat pearl painting and the two-coat pearl painting. Unlike normal metallic painting, deep tone color layers can be achieved, depending upon the luster and tint of the pearl pigments

Three-Coat Pearl Painting

This paint is a compound of base colors and pigments with pearl luster. The paint layer visible to the eyes is comprised of color base, pearl base, and clear base.

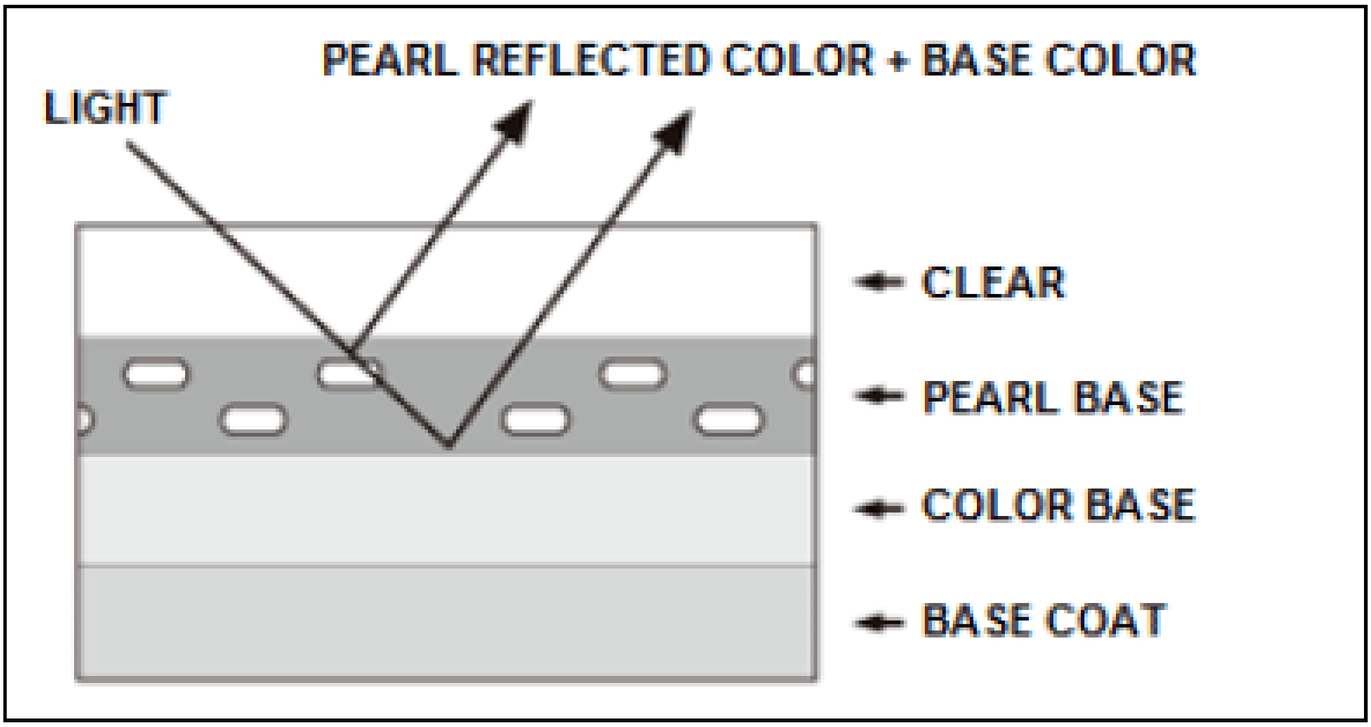

Two-Coat Pearl Painting

This paint is a compound of pearl pigments, chromatic pigments and aluminum power. The paint layers are the same as standard metallic colors.

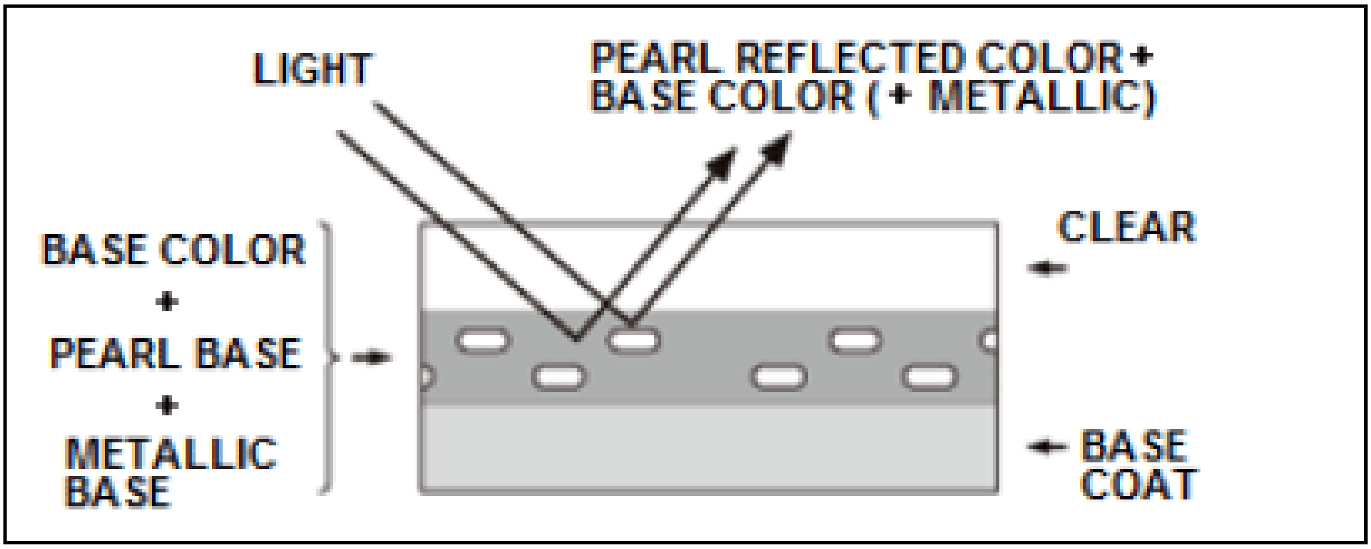
LIGHT
PEARL REFLECTED COLOR + BASE COLOR (+ METALLIC)
BASE COLOR
+
PEARL BASE
+
METALLIC BASE
CLEAR
BASE COAT

Differences Between Pearl Pigments And Aluminum Pigments

Pearl Pigments

Mica is a colorless and translucent mineral with pearl-like luster. It has been widely used for cosmetic products. The pearl pigments used for vehicles includes mica filmed with titanium oxide to give brightness. The pearl pigments used in pearl paint, are also called mica paint.

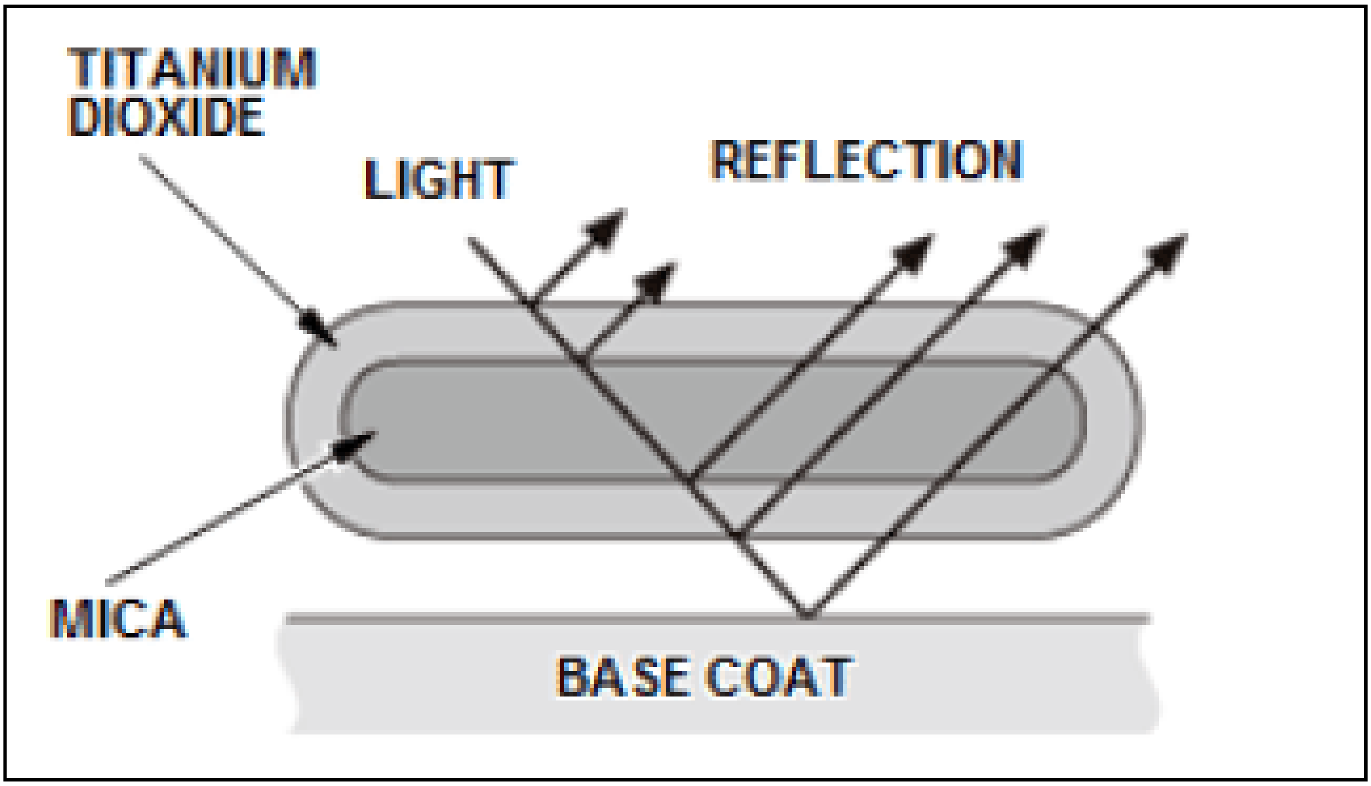
TITANIUM DIOXIDE
LIGHT
REFLECTION
MICA
BASE COAT

Aluminum Pigments

Aluminum foil is powdered and ground into a fine flake form, and it gives brightness in the paint film by reflecting light. There are many sizes in aluminum flake particles (mostly 10 to 20 µm) available. The larger flakes provide a more garish brightness and the smaller flakes provide a smoother brightness.

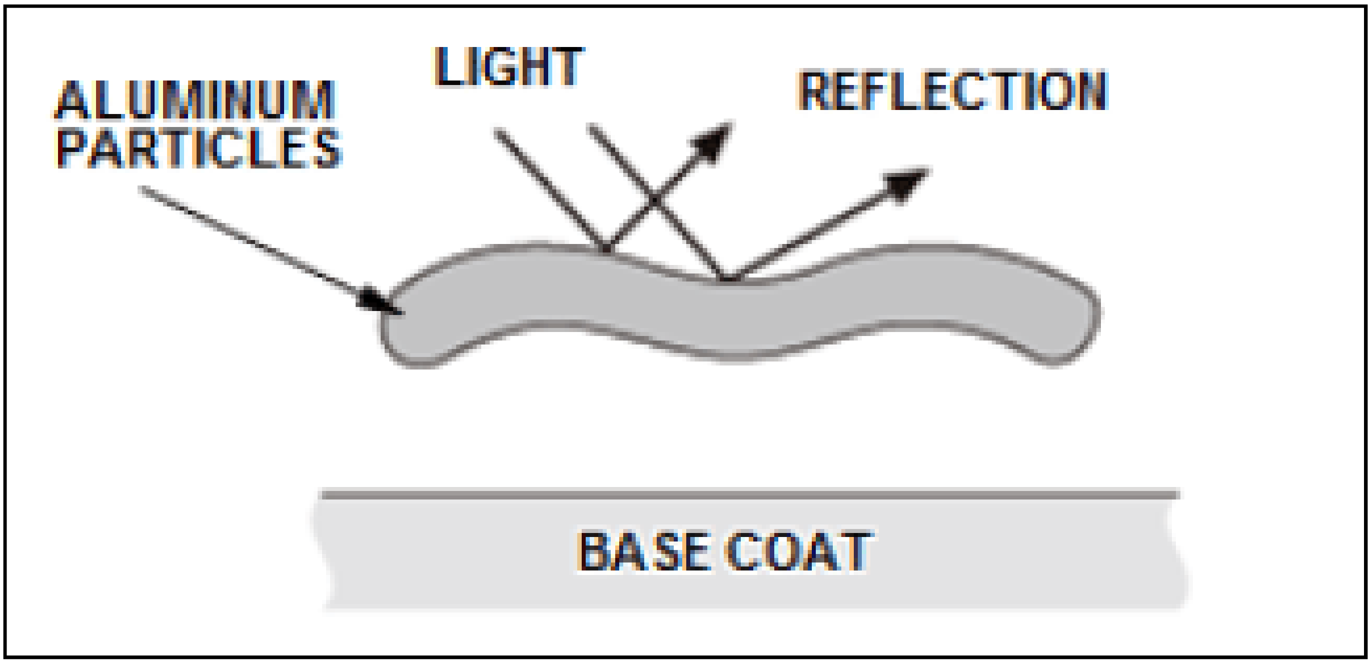
ALUMINUM PARTICLES
LIGHT
REFLECTION
BASE COAT

Graphite Base

- Graphite pigment is one of the graphite allotropes. It has been traditionally used as a pigment for flexible primer for plastic parts. However it is now also widely used in paint topcoat colors.
- The particle size of graphite is almost 5 times of a carbon pigment, which is widely used for black. In spite of its dark gray luster, the gap between particles is too large to have a high covering capability.

Comparison between graphite color and metallic color

When viewed from straight ahead, metallic or pearl shininess is visible in low light over the whole for metallic or two-coat pearl paint. Mixed with graphite pigment and viewed from low angles, its luminosity becomes much lower and deeper with less brightness and shine.

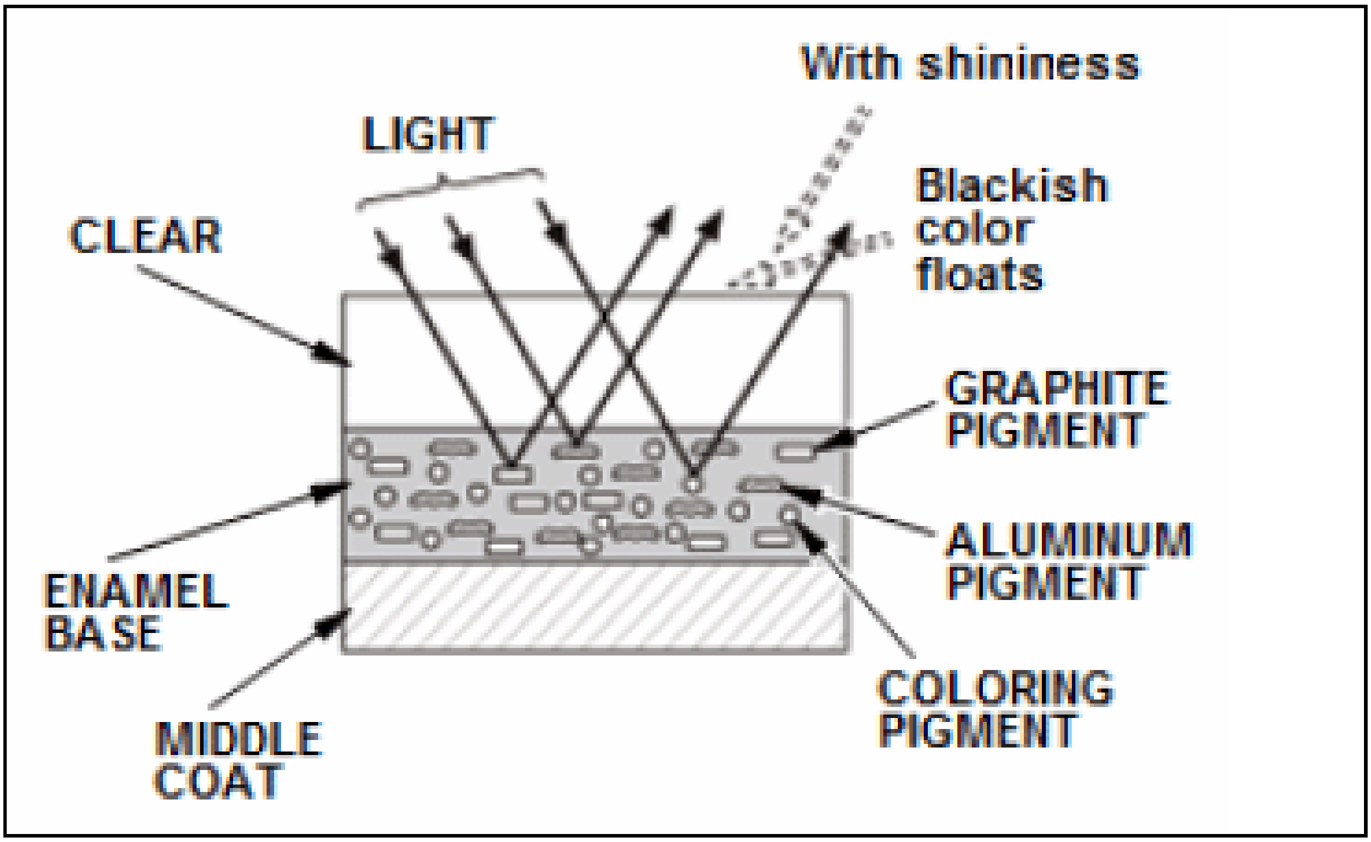
With shininess
LIGHT
CLEAR
Blackish color floats
GRAPHITE PIGMENT
ALUMINUM PIGMENT
ENAMEL BASE
COLORING PIGMENT
MIDDLE COAT

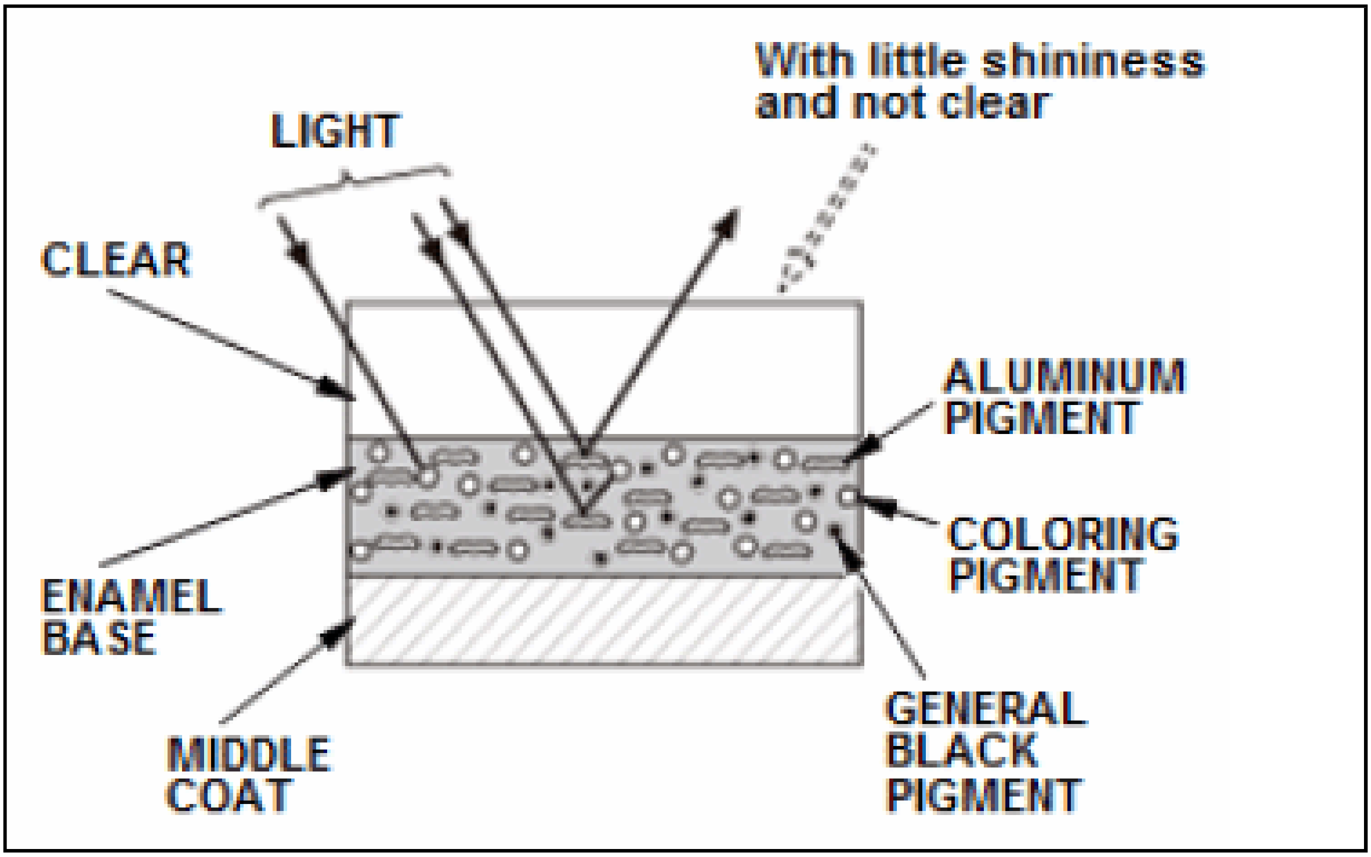
With little shininess
and not clear
LIGHT
CLEAR
ALUMINUM
PIGMENT
COLORING
PIGMENT
ENAMEL
BASE
MIDDLE
COAT
GENERAL
BLACK
PIGMENT

M.I.O. Base

MIO (micaceous iron oxide) is a ferric oxide of a crystal structure of size 15pm. This pigment has unique features that are not shared with the conventional pigments as follows:

- It is very thick (almost ten times that of aluminum pigment) and reflects light on its side surface strongly
- The paint surface is very smooth and reflects light strongly.
- When exposed to light, it shines strongly and three dimensionally like a diamond.
- Its drawback is that, because of its heavy specific gravity it tends to be deposited in the paint.
- Indoors or in shade, it appears to be a dark and deep solid color. However under direct sunlight, it shines like many diamonds buried under the paint's surface. Because of this unique feature, this color cannot be accurately mixed using a metallic or pearl base substitute.

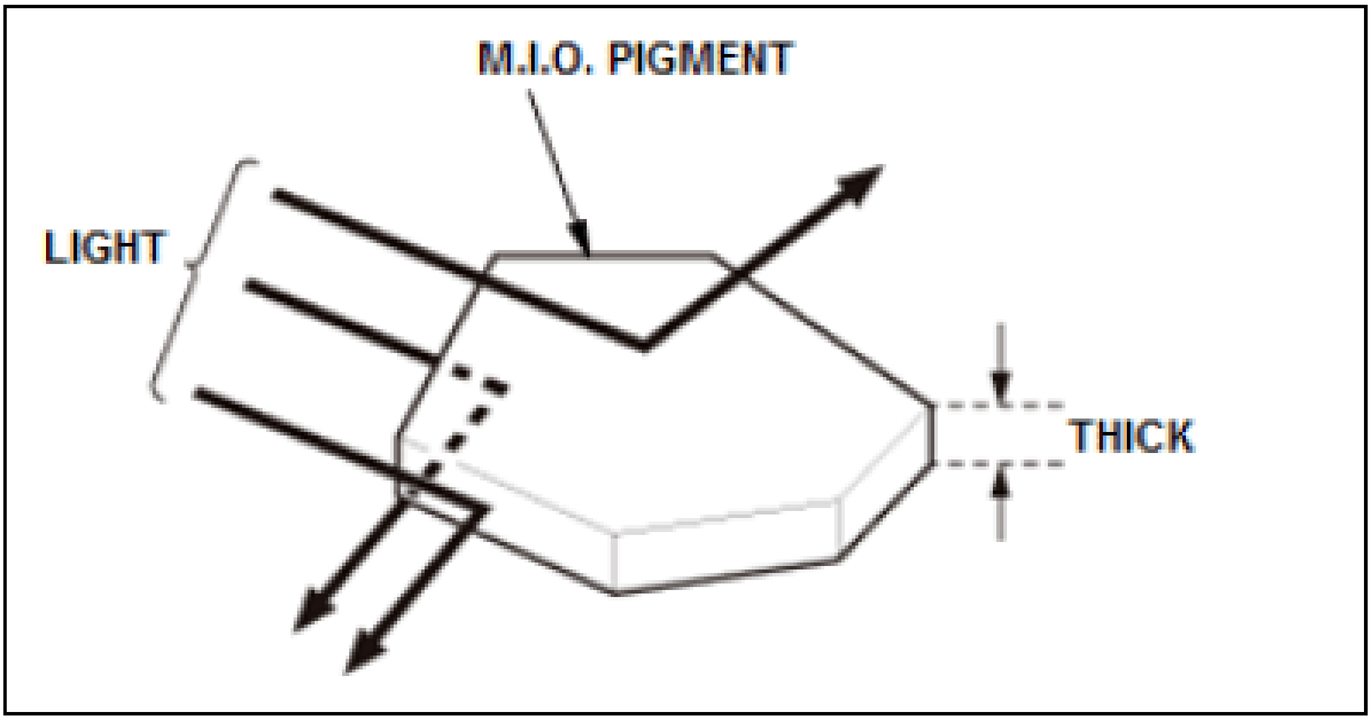
M.I.O. PIGMENT
LIGHT
THICK

Opal White

Though the composition of pigments are the same as that for ordinary white paints, this paint is translucent as the titanium dioxide pigment's size is very small. Because of this, coverage capacity is limited. It is normally used as opal base (opal color), with other colors or mixed with aluminum pigments.

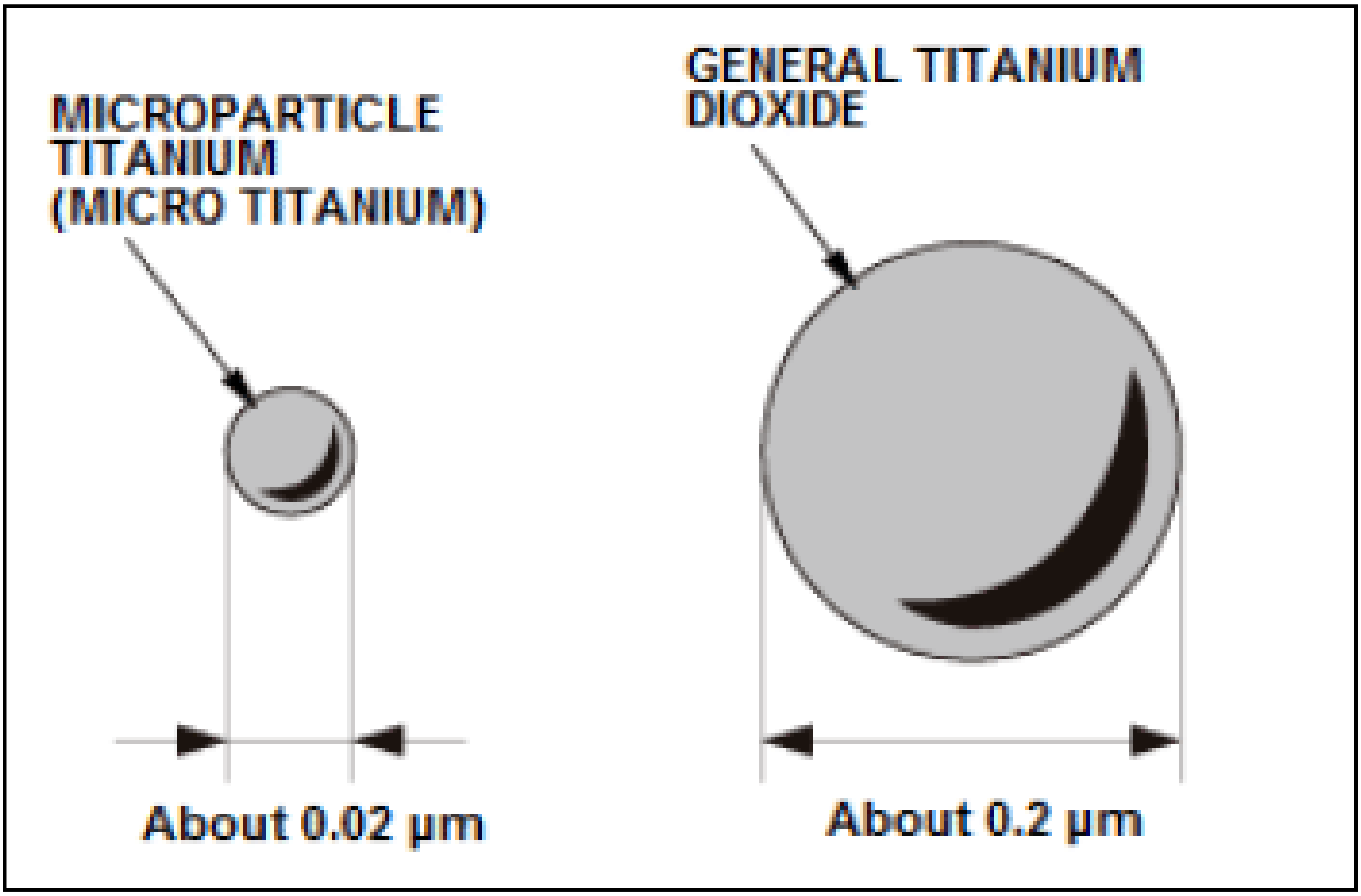
MICROPARTICLE TITANIUM (MICRO TITANIUM)
GENERAL TITANIUM DIOXIDE
About 0.02 μm
About 0.2 μm

Features of Opal Color

This paint has the same paint layer structure as that of metallic paints with fine grain titanium (micro titanium) used as a base coat. When this paint is applied, the yellowish metallic base color is seen from straight ahead. When viewed from a low angle sideways, it looks bluish. As a whole, it has a charm of a two-color opal tone

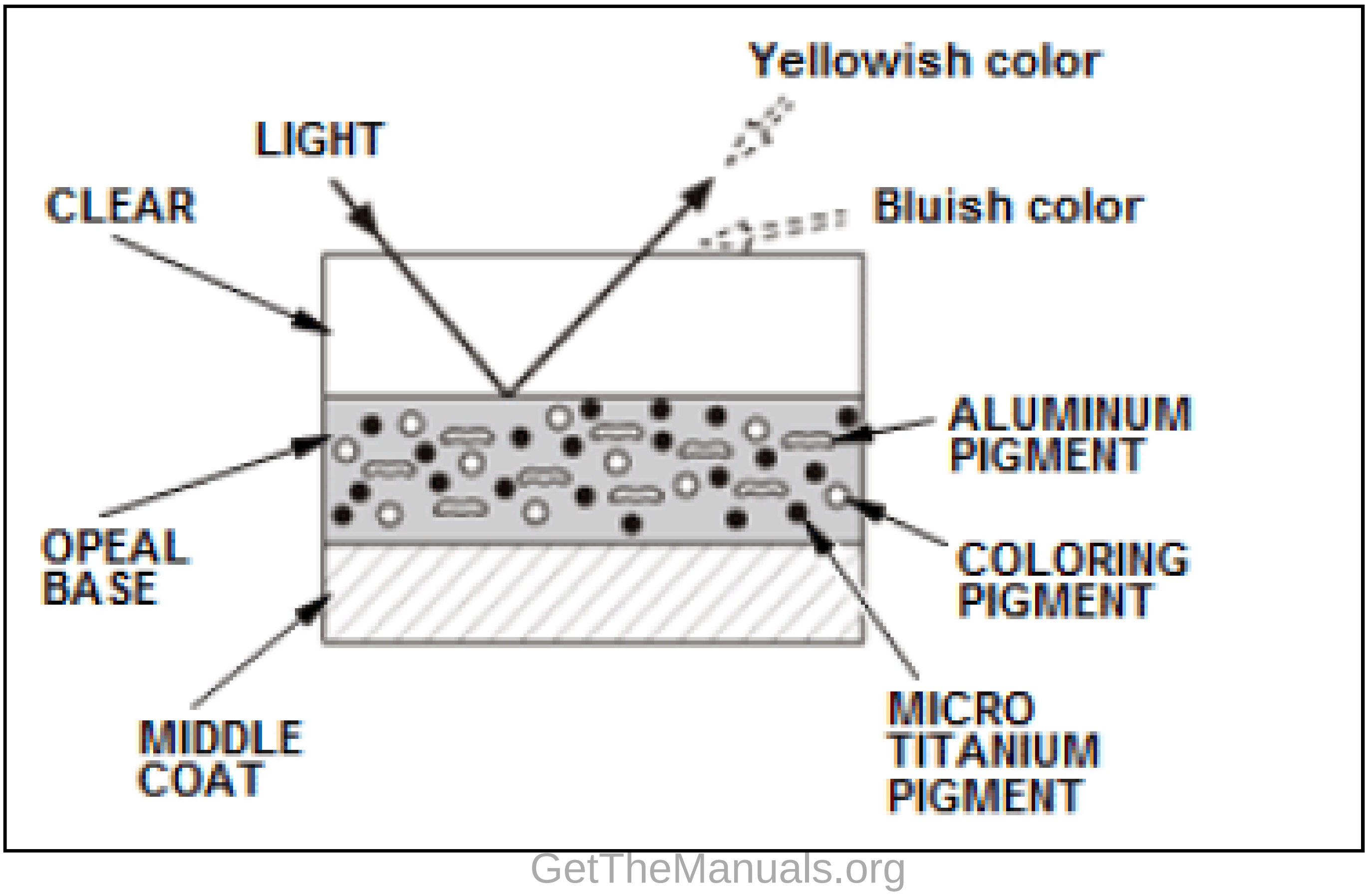
Yellowish color
LIGHT
CLEAR
Bluish color
ALUMINUM PIGMENT
OPEAL BASE
COLORING PIGMENT
MIDDLE COAT
MICRO TITANIUM PIGMENT

Crystal Blue (Phthalocyanine Flake Pigment)

The phthalocyanine pigment used as ordinary blue color is crystallized and flaked for this crystal blue pigment. The light reflected on the surface shines like bronze and light penetrated through the paint surface reflects blue.

Crystal Brown (Plate-Like Iron Oxide Pigment)

The main component of this pigment is a flake-like iron oxide that is also used for red rust colored pigment. It is thin and shines like pearl mica.

BODY PAINT REPAIR

BEFORE STARTING PAINT REPAIR

Determining Paint Finish And Compatible Repair Materials

In paint repair, it is important to identify the old paint layer type and its state of deterioration. To correctly evaluate the old paint layer and decide on the type of paints to be used, follow these methods.

Visual Check

Check the surface appearance and level of polish.

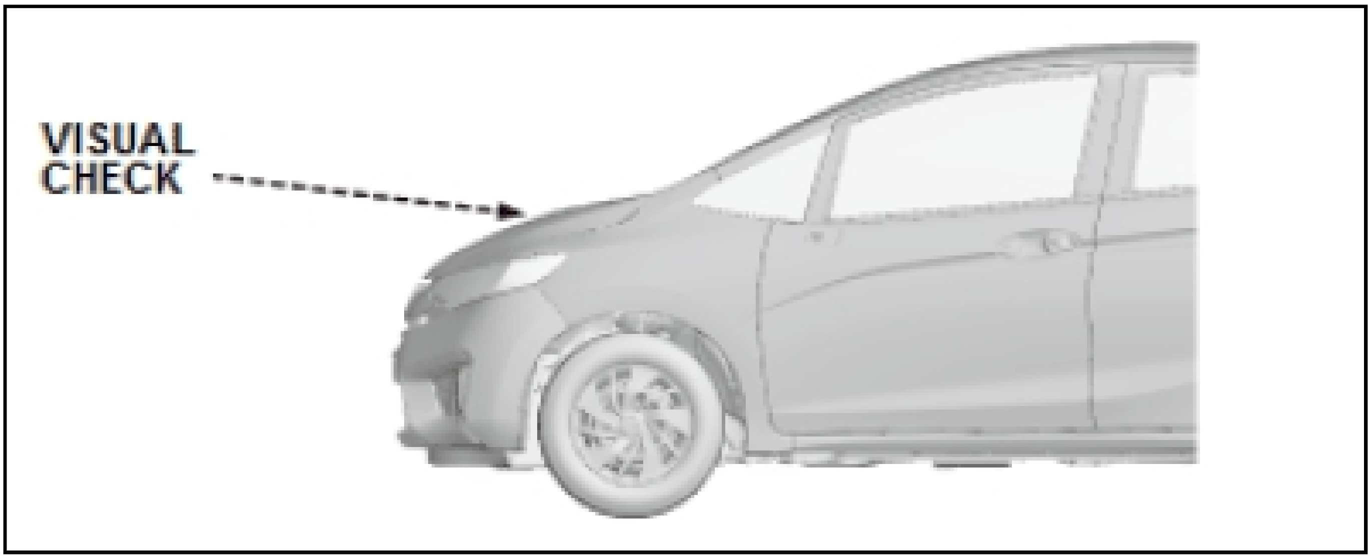

Solvent Method

Wipe the paint film using a cloth wetted with lacquer thinner.

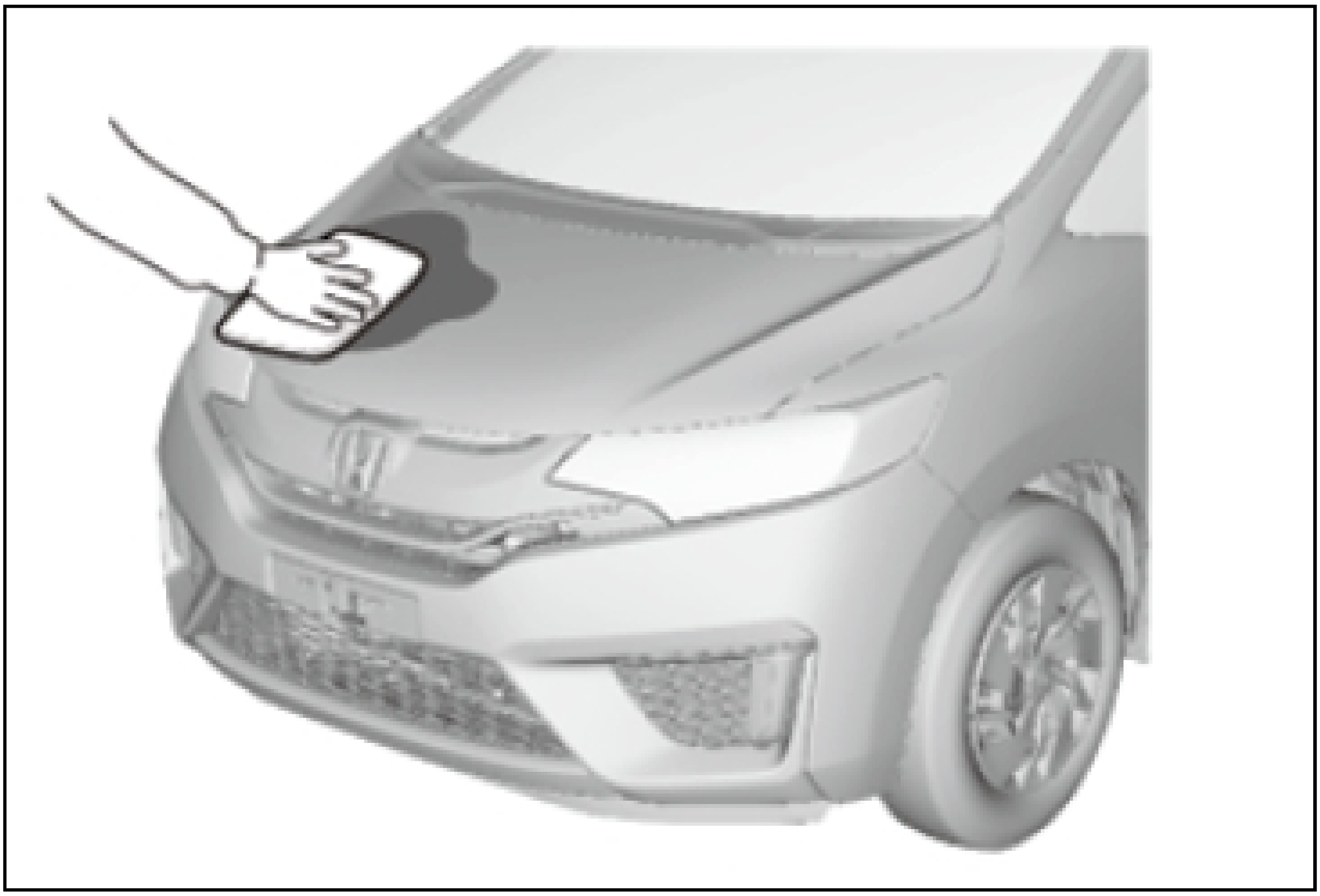

Thermal Method

Polish with P800 to P1000 sandpaper, and heat the sanded area with an infrared lamp to 176Â°F (80Â°C) or higher.

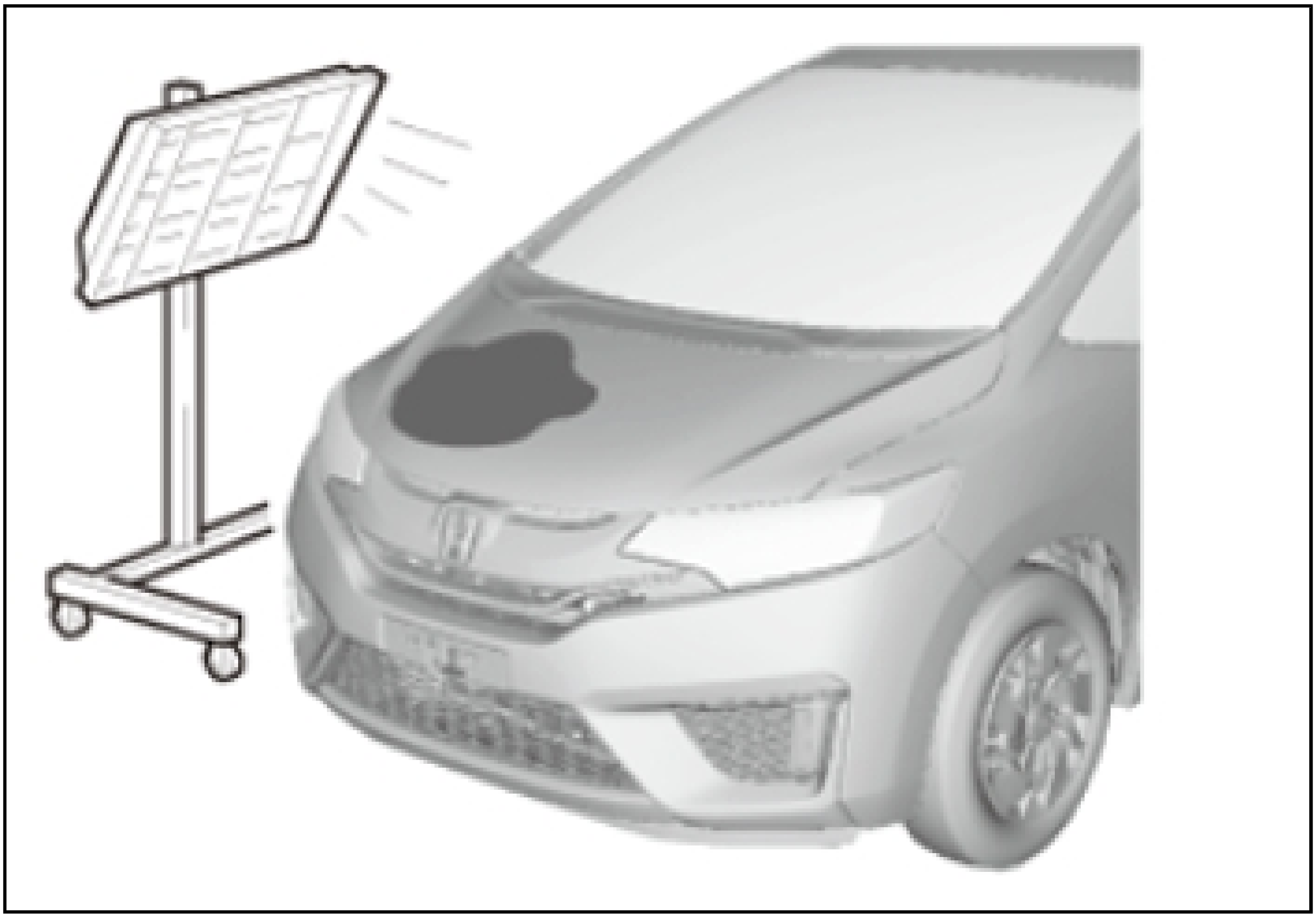

Quick Check Pencil Method

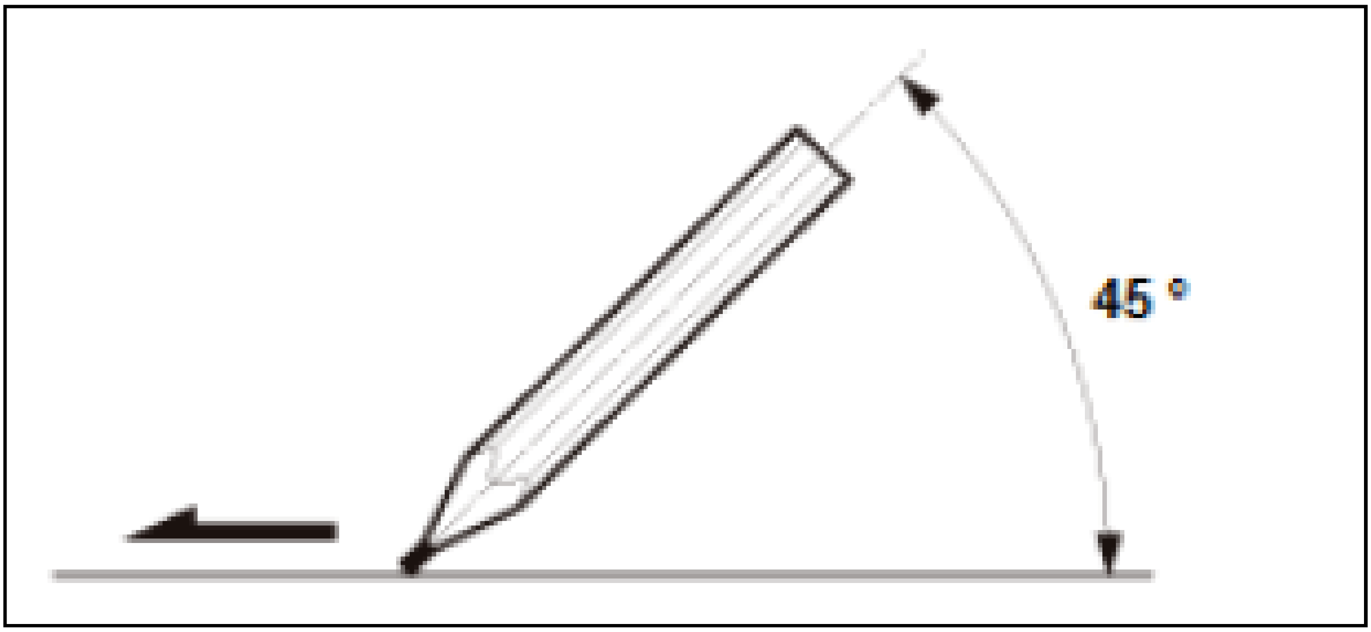

Press a flattened drawing pencil tip on the paint layer as shown. The hardness of the pencil which does not mar the paint layer identifies the paint layer hardness in the chart on the next page.

Old Paint Film Status By Judgment Method

Type of Paint Film	Judgment Method			
	Visual Check	Solvent Method	Thermal Method	Pencil Check
Melamine baked type	Granulated	Insoluble	No change	2H
Acrylic baked type	Finely granulated	Insoluble	No change	2H
Baked primer type	-	Insoluble	No change	HB-H
NC lacquer type	Polished	Soluble	No change	F-H
NC denatured acrylic lacquer type	Polished	Soluble	Slightly softened	B-HB
CAB straight acrylic lacquer type	Polished	Soluble	Softened	B-HB
Acrylic Urethane Type	Mirrored	Insoluble	No change	H-2H
Quick drying acrylic urethane type	Mirrored	Hard to be solved	No change	H-2H

- Not all paint types can be used for paint repairs, depending on the condition of the old paint layers.
- When the old paint layers are a baked or an acrylic urethane type that is not dissolved by lacquer thinner. Or if the old paint layers are totally removed, including the basecoat, lifting rarely occurs.
- If the old paint layer is a lacquer type that is dissolved by lacquer thinner, lifting often occurs during paint repair.
- For this reason, repair paint types are limited.
- Types of top coat paint corresponding to old paint layers.

Â	Baked type paint	NC lacquer	NC denatured acrylic lacquer	CAB straight acrylic lacquer	Acrylic urethane	Quick drying acrylic urethane
NC lacquer	•	•	•	•	•	•
NC denatured acrylic lacquer type	•	•	•	•	•	•
Acrylic urethane	•	◦	◦	◦	•	•
Quick drying acrylic urethane type	•	◦	◦	◦	•	•
CAB straight acrylic lacquer type	•	◦	◦	•	•	•

•: Can be used, but when primer-surfacer is applied, use the same type of paint

◦: Can be used depending upon the condition, but select the right primer-surfacer

After deciding on the paint type to be used, confirm the below processes.

Repairing Condition	**Paint Layers with Damage**			**Paint Layers without Damage**
Steps	**Shallow damage on top coating only (scratches, chipping etc.)**	**Deep damage down to base coating**		**Repainting new parts**
		Dent due to collision	**Crack, peeling, blister of paint**	
Wash vehicle	•	•	•	◦
Remove attached parts.	◦	◦	◦	◦
Separate old paint layer and polish raw steel sheet surface	-	•	•	-
Set reference surface	•	•	-	-
Degrease	•	•	•	-
Check on the type of steel	-	•	•	◦
Apply metal surface treatment	-	◦	◦	-
Fill or putty and sand	-	•	•	-
Degrease	-	•	•	-
Apply polyester boy filler/putty and sand	◦	◦	◦	-
Scuff old paint layer	•	•	•	•
Scuff for ED primer	-	-	-	•
Mask for primer-surfacer painting	•	•	•	•
Degrease	•	•	•	•
Paint primer-surfacer	•	•	•	•
Fill/Putty low spots and sand	◦	◦	◦	◦
Masking	•	•	•	•
Clean and degrease	•	•	•	•
Spray topcoat	•	•	•	•
Polishing	◦	◦	◦	◦
Install removed parts, clean	◦	◦	◦	◦

•: Required step

◦: Optional step as needed

Paint Repair Methods

Spot Gradation Painting

A repair method to be used for a narrow range of the damage for doors, hood etc. In order to minimize the differences in colors and surface appearances between the repainted area and the surrounding panel, gradation paint is applied.

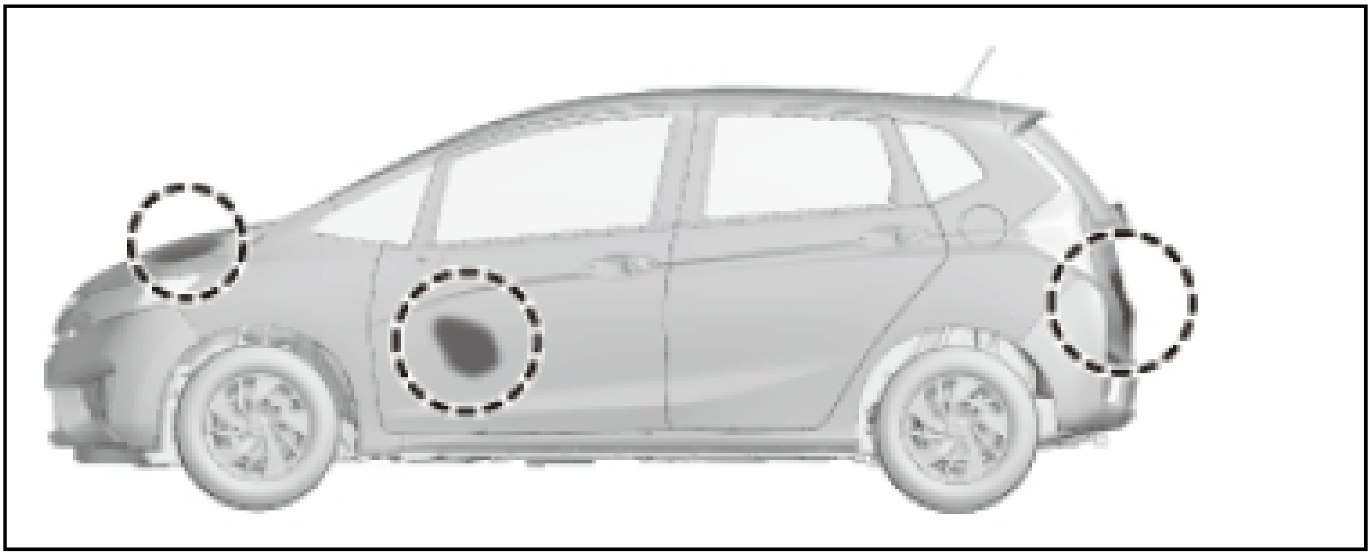

Block Gradation Painting

A repair method for enamel base with metallic colors by applying the gradation painting partially Clear is painted to a section of block (the whole panel). It also is used for solid colors in some cases.

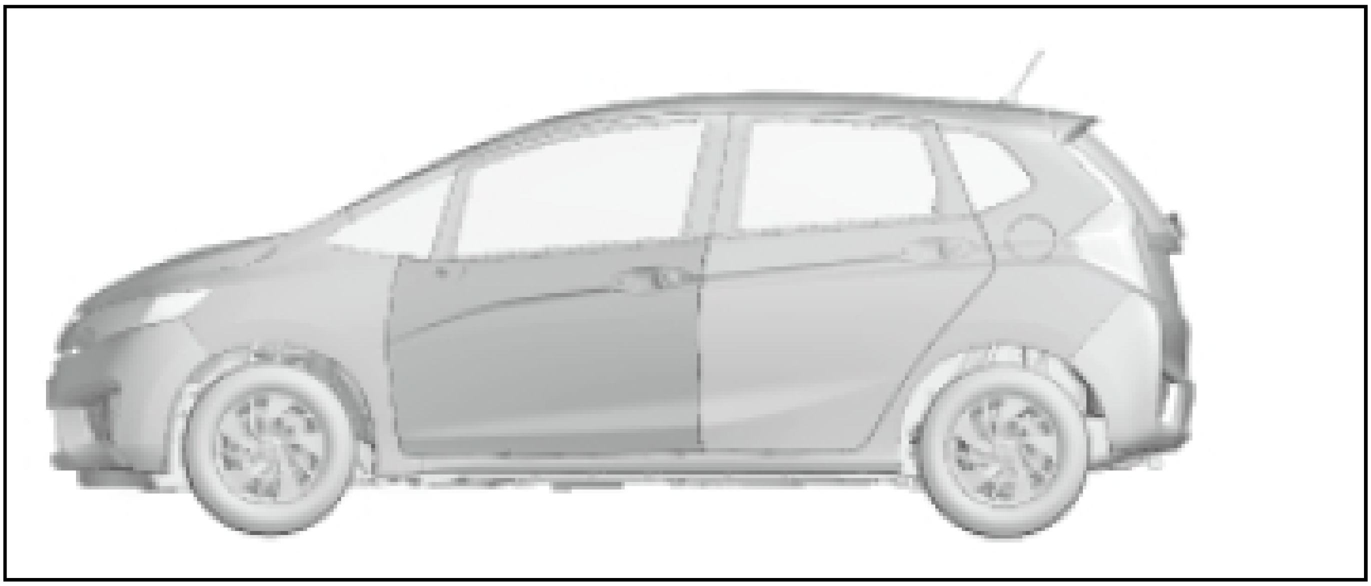

Block Painting

A repair method to apply paint for each panel, as the body panels are divided into individual blocks such as a door, hood etc. The entire panel is painted. No gradation painting usually is applied except for the part between roof panel and rear pillar depending on the situation.

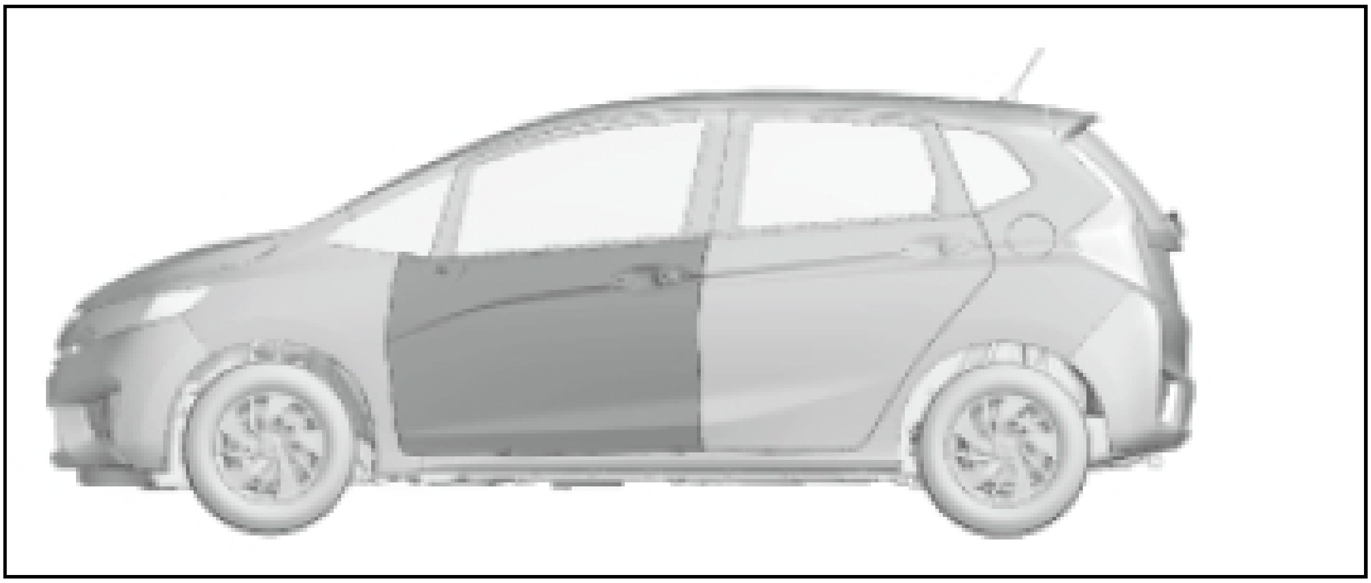

Whole Painting

A repair method to apply the same color or new color to the entire vehicle body.

In a case of numerous damaged spots spread over the vehicle body the whole painting is much better than the partial color repairing.

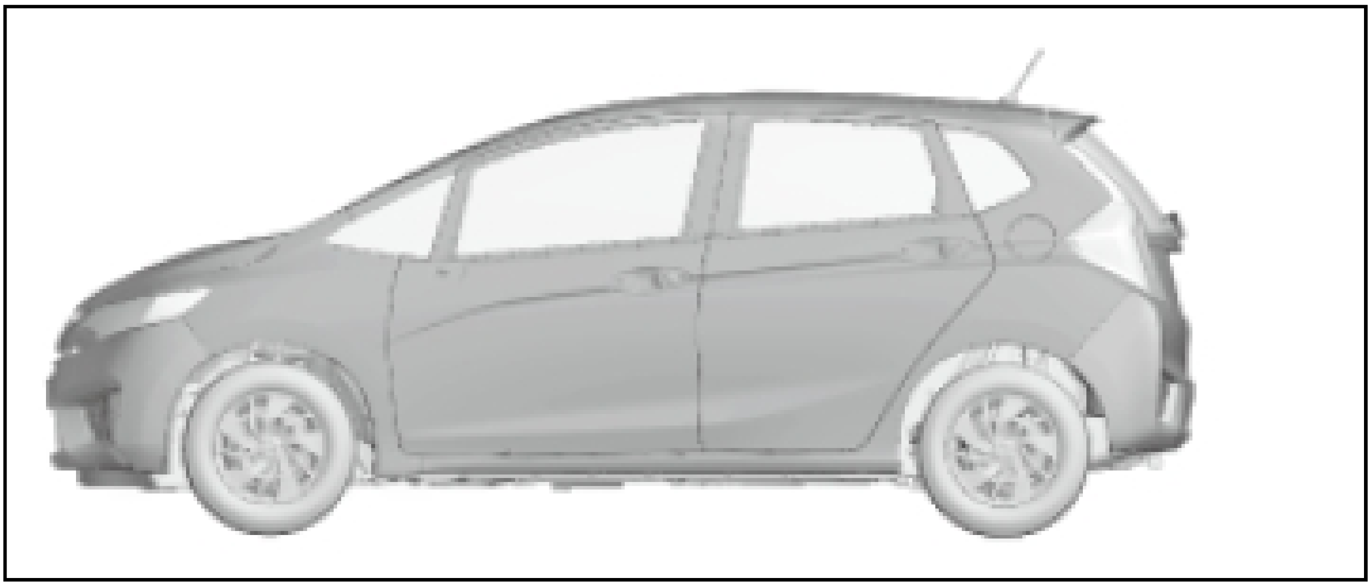

Work Processes And Descriptions

Generally, paint repair on a vehicle body is carried out using these steps.

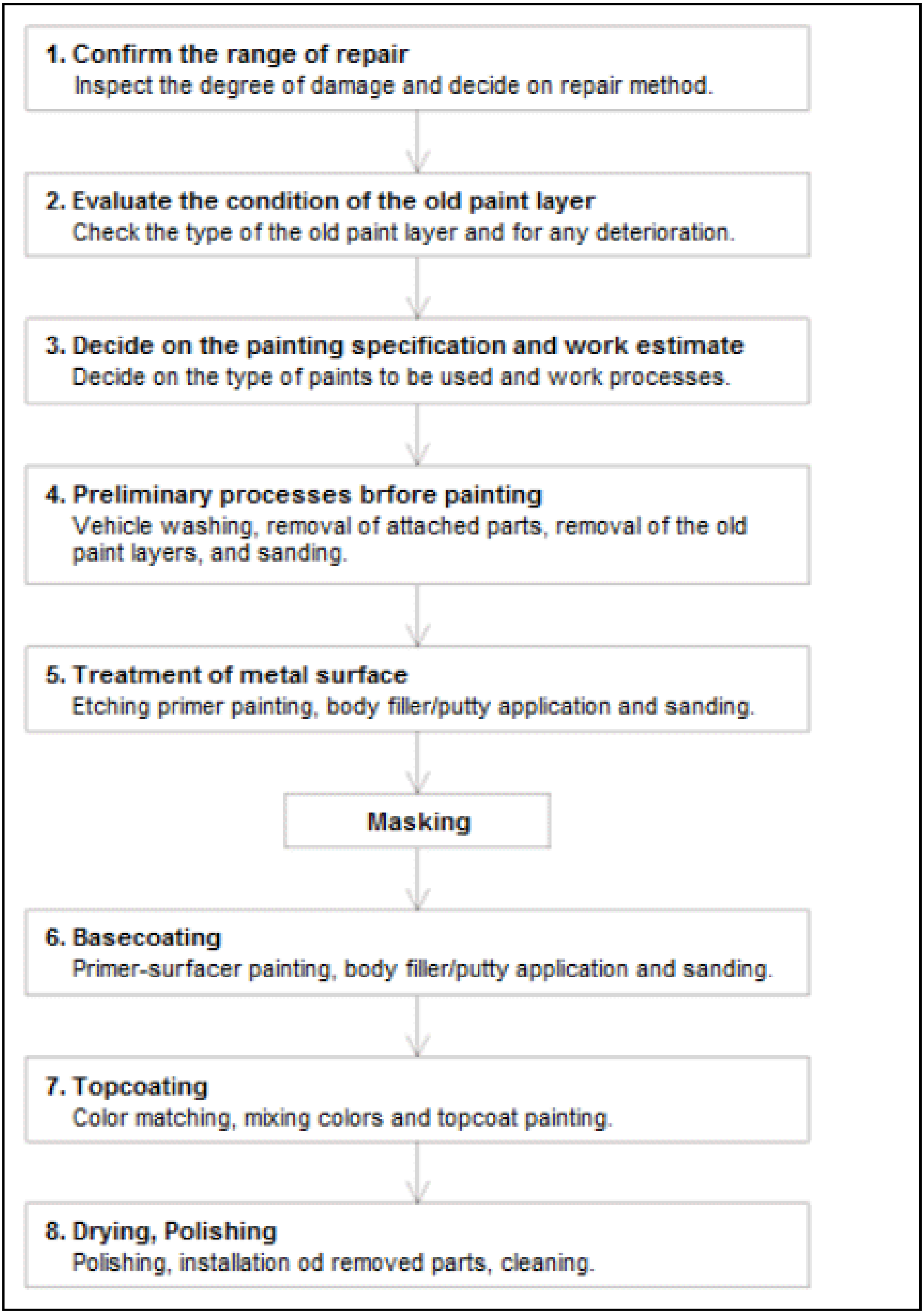

1. Confirm the range of repair
Inspect the degree of damage and decide on repair method.

2. Evaluate the condition of the old paint layer
Check the type of the old paint layer and for any deterioration.

3. Decide on the painting specification and work estimate
Decide on the type of paints to be used and work processes.

4. Preliminary processes brfore painting
Vehicle washing, removal of attached parts, removal of the old paint layers, and sanding.

5. Treatment of metal surface
Etching primer painting, body filler/putty application and sanding.

Masking

6. Basecoating
Primer-surfacer painting, body filler/putty application and sanding.

7. Topcoating
Color matching, mixing colors and topcoat painting.

8. Drying, Polishing
Polishing, installation od removed parts, cleaning.

PAINT REPAIR

Attached Parts Removal

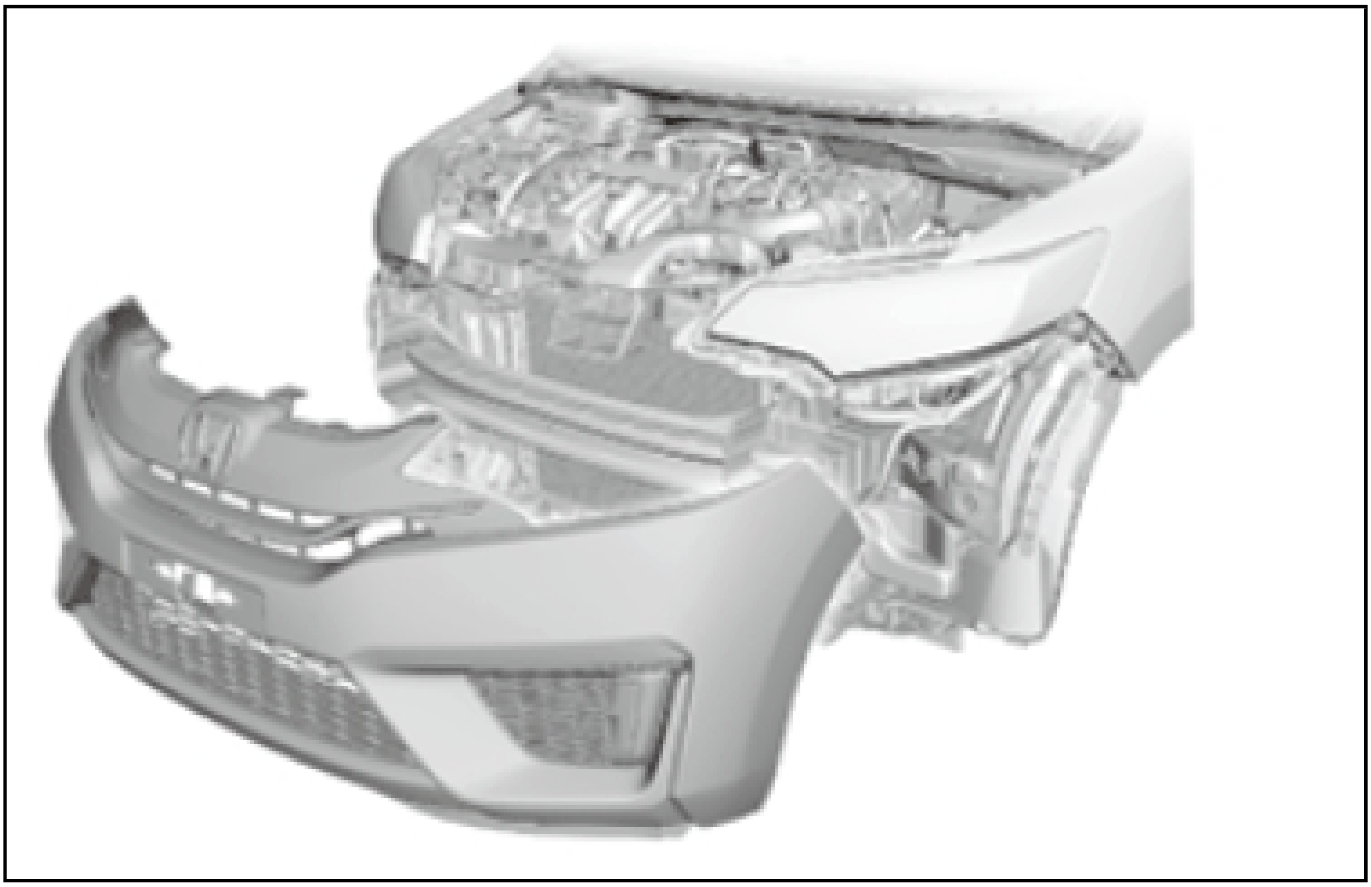

1. Wash Vehicle:
    - Water wash from the roof downward. Move to the hood, trunk lid and side panels.
    - Remove wax with neutral detergent to help prevent contaminants from entering the paint shop area.
2. Removal of Attached Parts:
    - Refer to the appropriate service information for chassis maintenance.
    - Where necessary remove attached parts and use an air blow gun remove dust and dirt. Remove any water from the paint surface.
    - When a heater is used for drying, be sure to remove heat-sensitive plastic parts from the area being repaired.

Basecoat (Primer-Surfacer) Application

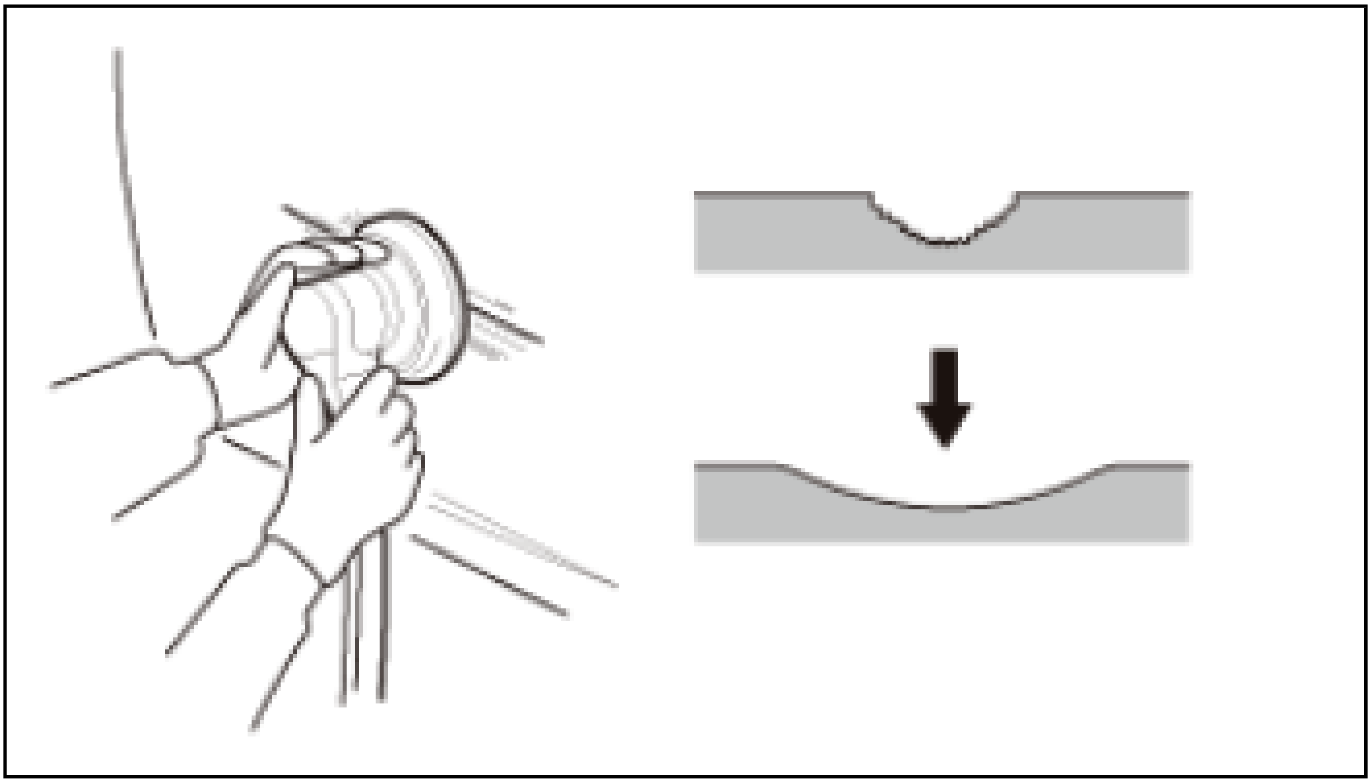

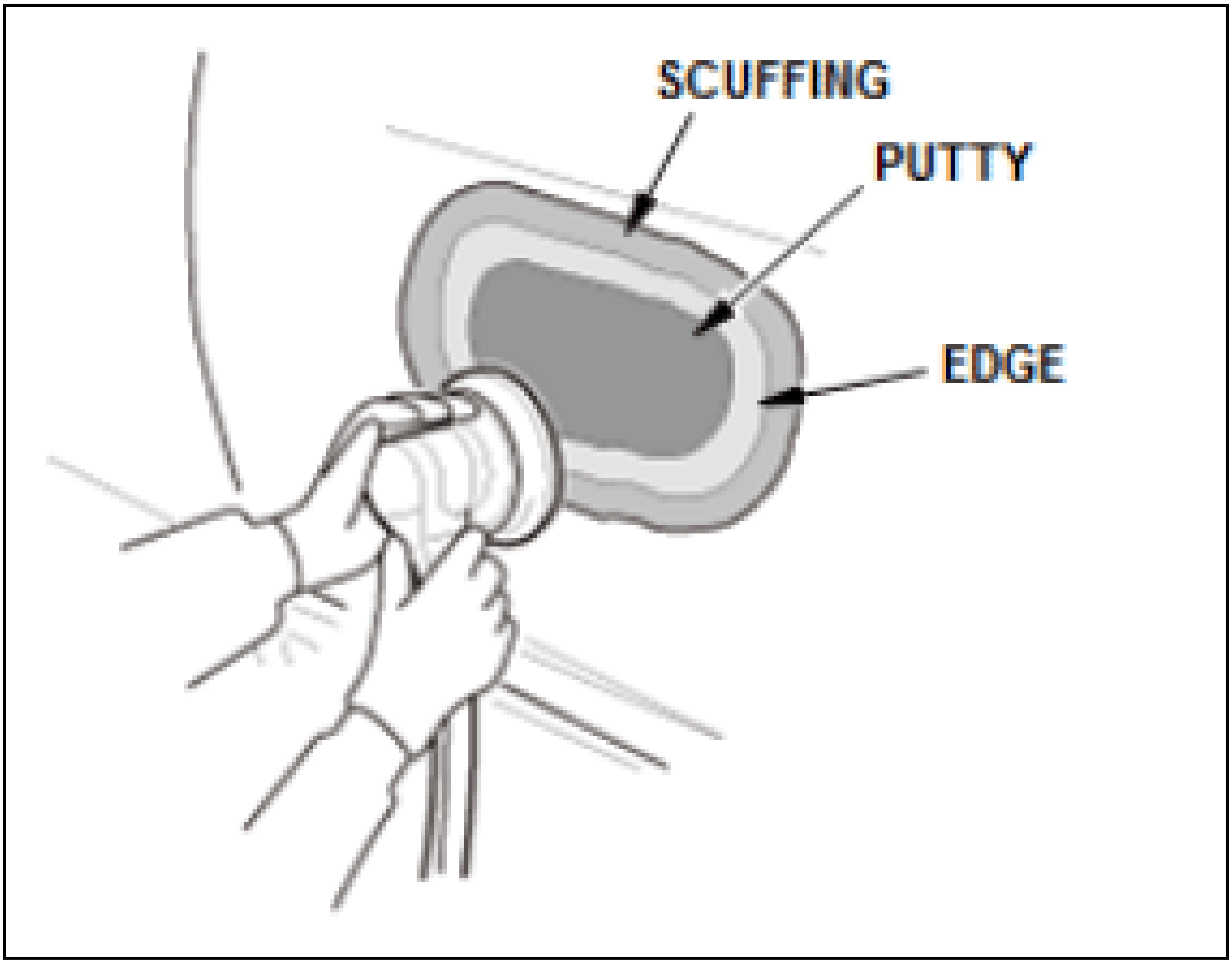
SCUFFING
PUTTY
EDGE

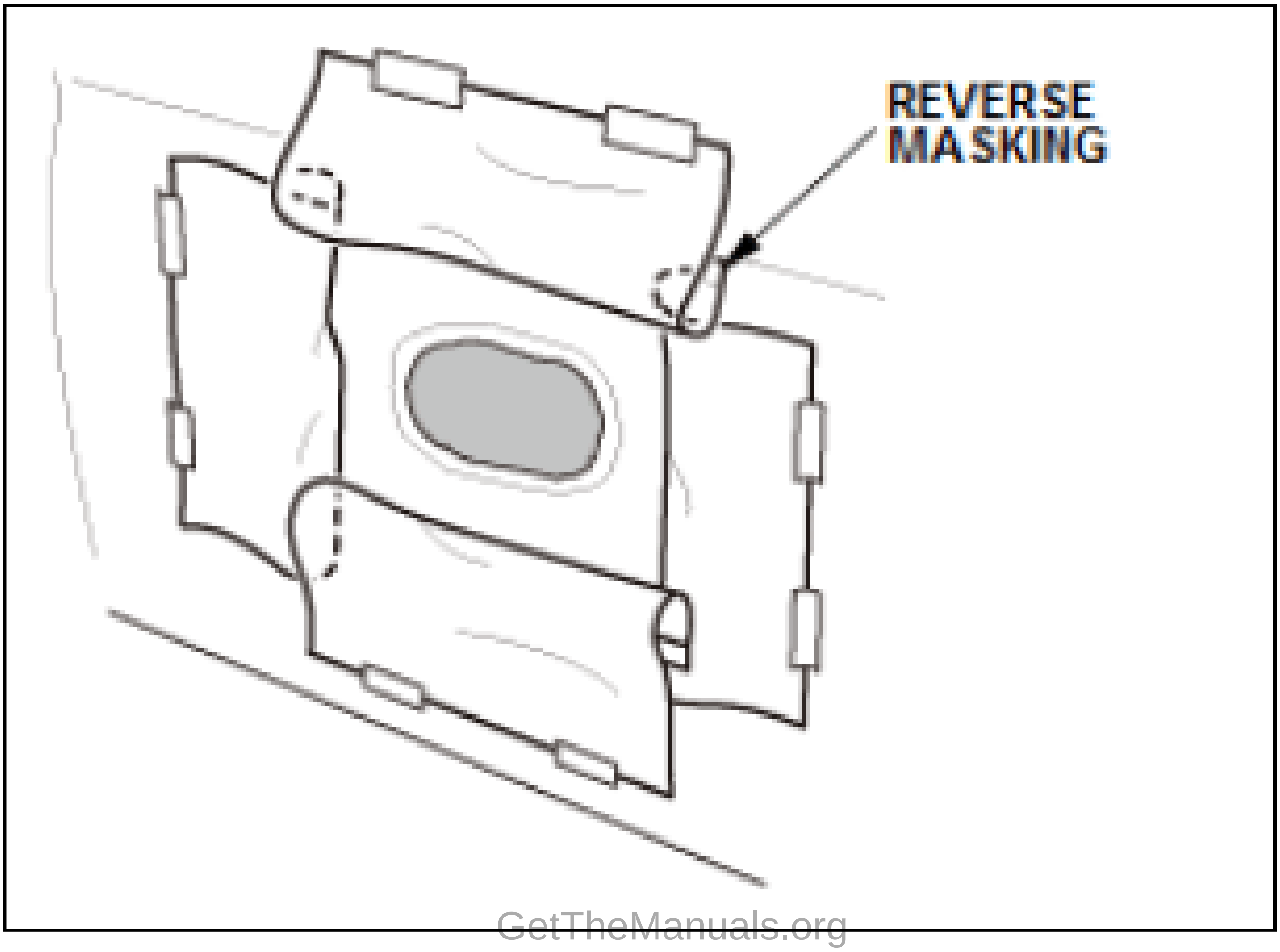
REVERSE MASKING

Quick Dry Urethane Primer-Surfacer Use Example

1. Before Coating:
    1. Checking the coating surface:
        - Before applying the primer-surfacer, be sure to inspect the coating surface. Deep surface damage will remain even after the primer- surfacer is applied. Then it would become necessary to repair the damage after the primer surfacer is applied.
        - When it is necessary to sand deep surface damage, use a double action sander with P240 to P400 sandpaper.
        - Use a hand file together with P400 to P600 sandpaper to remove damage where a sander cannot be used.
    2. Scuffing (for primer-surfacer coating):
        - Use a double action sander with P320 sandpaper to sand the hairline sanding scratches on the filled/putted surface.
        - Use a hand file, for the areas a sander cannot access, along with P600 sandpaper to remove sanding scratches.
        - Apply scuffing up to approximately 10 cm (4 in) away from the edge of filled/puttied area.
    3. Air blow all dust, dirt and body filler/putty residue from the area.
    4. Apply reverse masking slightly outside the primer-surfacer coating area with a margin.
    5. Degrease and clean up the primer-surfacer application area.
2. Preparation of Primer-Surfacer:

    Spec of Primer-Surfacer (reference)

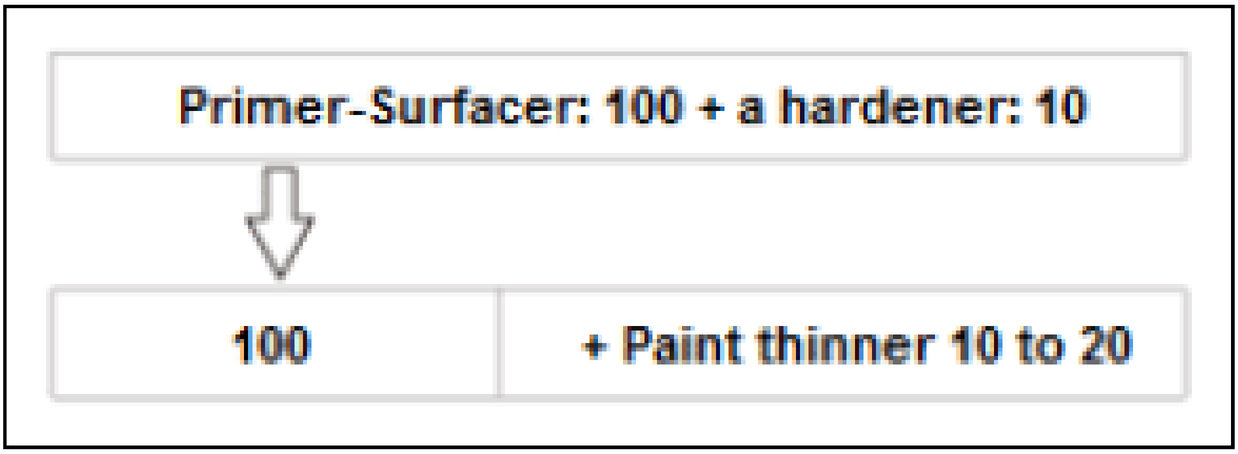

Primer-Surfacer: 100 + a hardener: 10

100 + Paint thinner 10 to 20

3. Applying and Drying Primer-Surfacer:

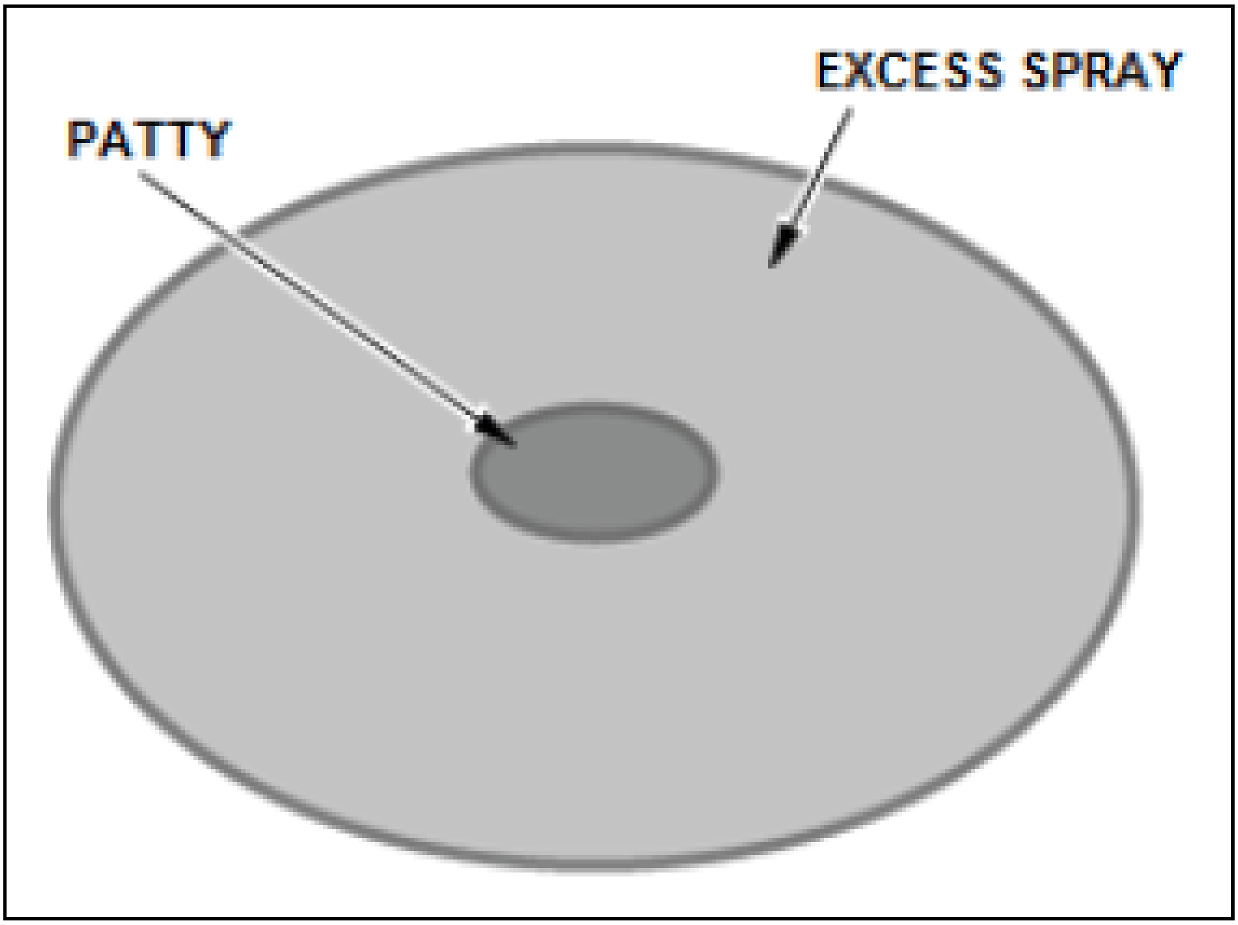

The nozzle diameter of spray guns used for primer-surfacer should be 1.5 to 1.8 mm (0.050 to 0.070 in), depending upon the size of the repair area.

1. Retouching.

   Spray primer-surfacer to the entire repair area.

2. Within the retouch area, spray while making the surface flat.

   Repeat two to three times based on the basecoat condition.

3. Allow sufficient flash time.
4. Continue to apply, narrowing the application surface to avoid overspray.
5. Dry the primer-surfacer.

   Force-dry after allowing sufficient set-up time.

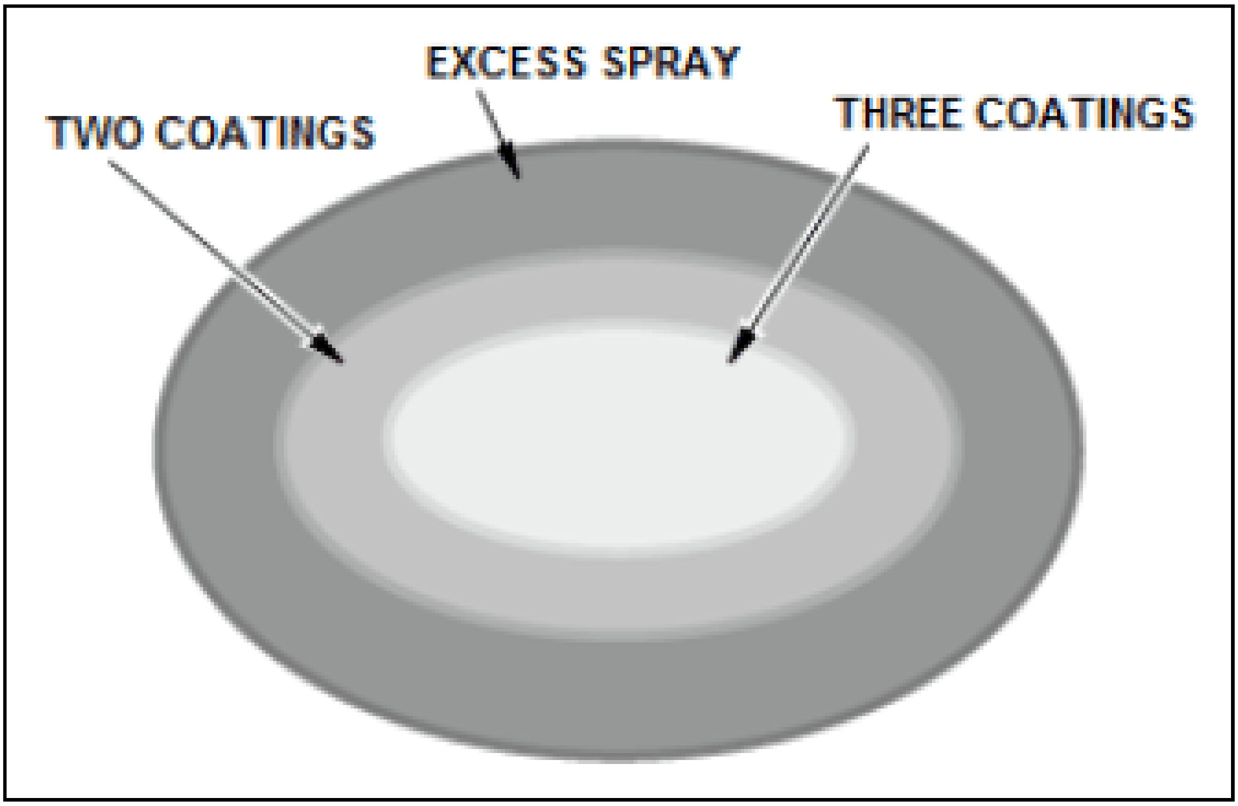
EXCESS SPRAY
TWO COATINGS
THREE COATINGS

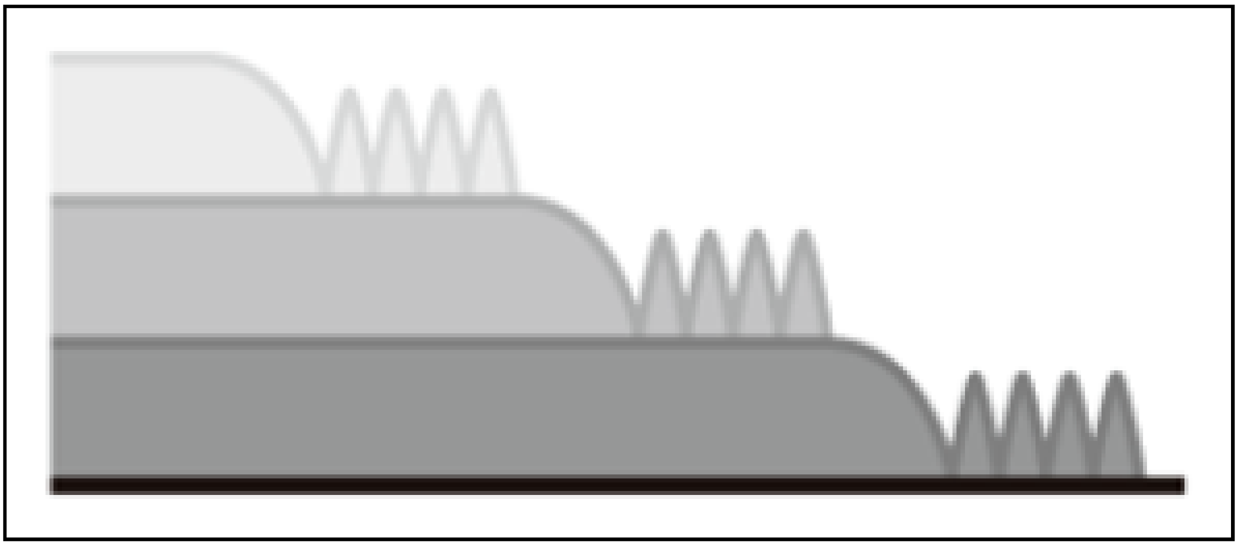

4. Confirmation of Primer-Surfacer Coating Surface and Spot Putty:
   - Thoroughly inspect the primer-surfacer coated surface for hairline sanding scratches and cavities.
   - When scratches or cavities are found, fill them with spot putty (touch- up putty).

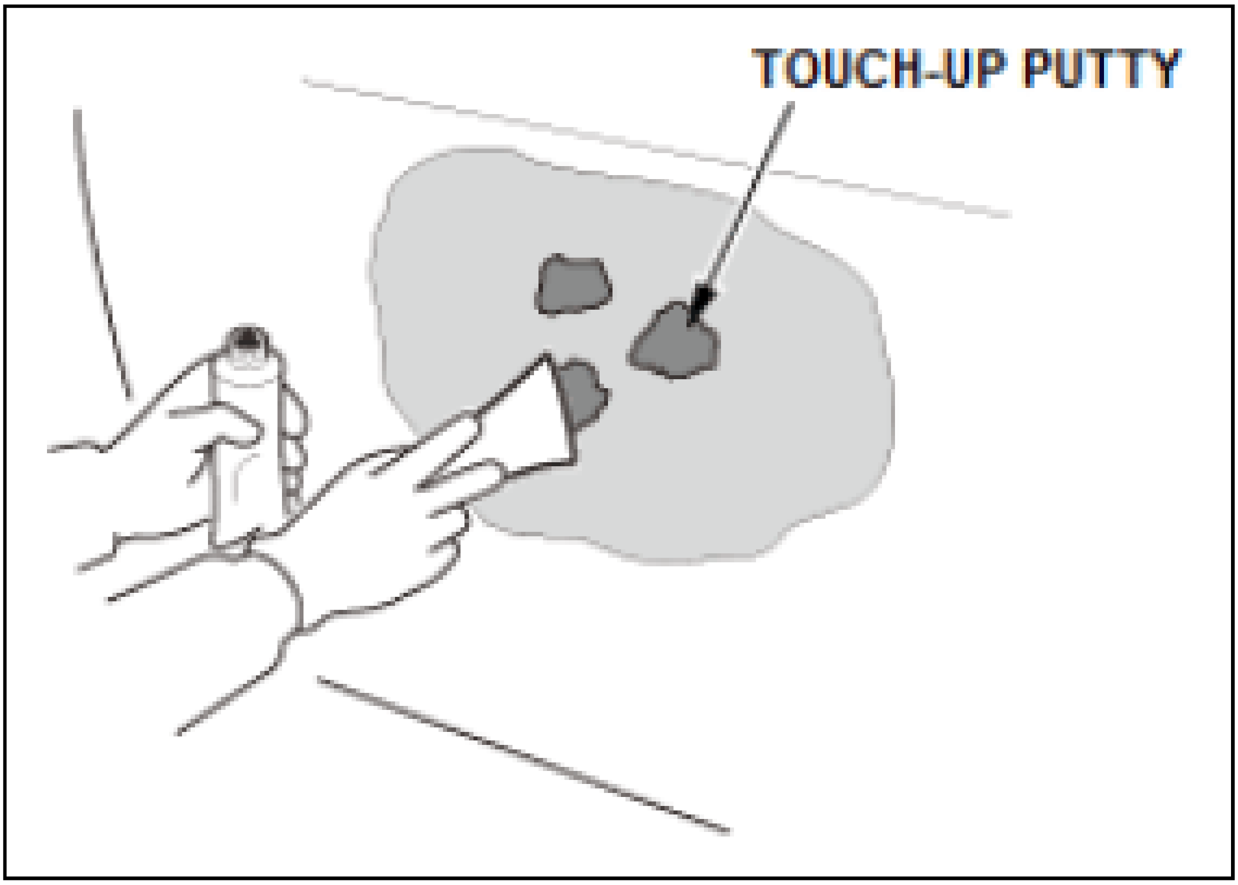

5. Sanding Primer-Surfacer Coating (including spot putty):

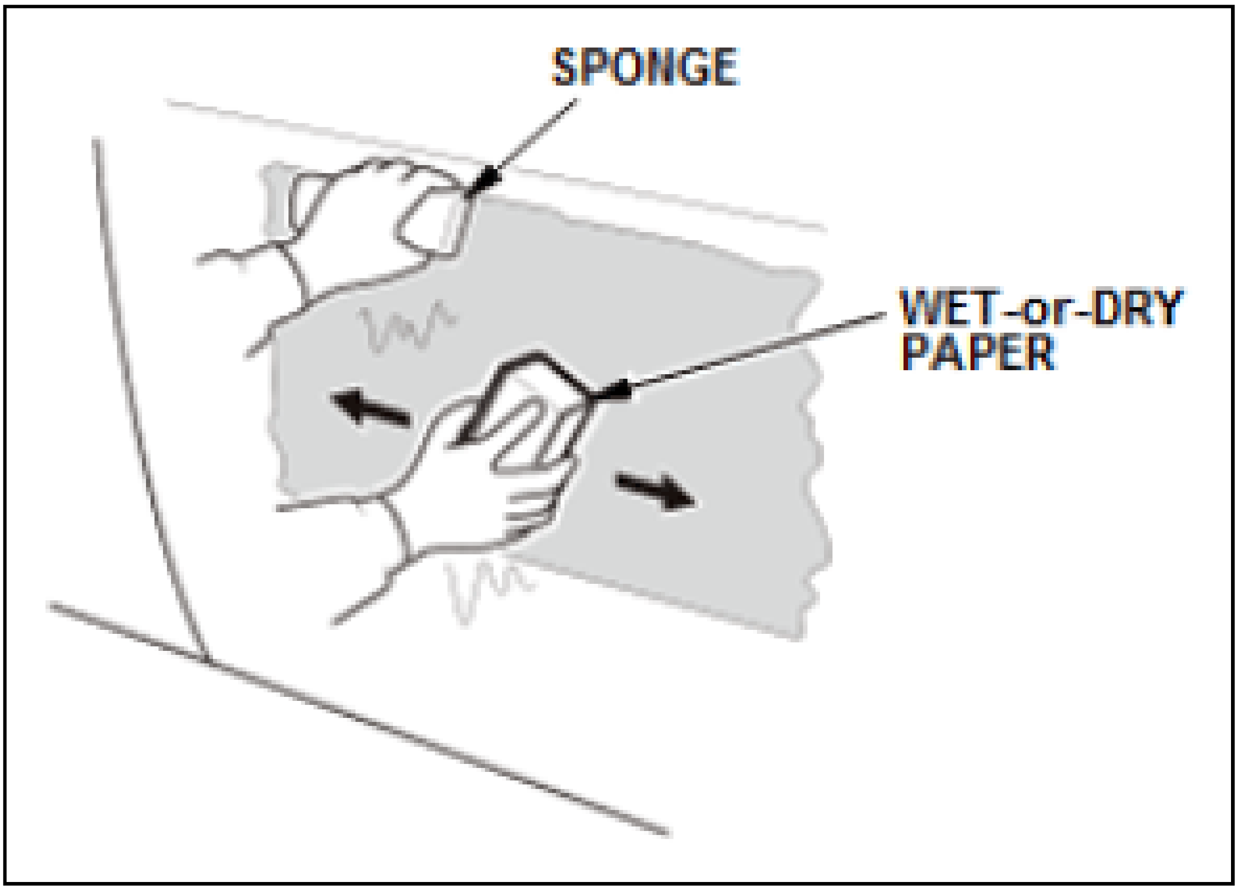

1. Sand the spot putty and primer surfacer coated surface by dry or wet sanding to finish the surface.

NOTE: **Do not over sand as it will result in exposure of bare metal or body filler.**

Dry Sanding:

- For hand sanding, use P600 to P800 sandpaper together with a rubber sanding block. Continuously remove any sanding dust to avoid clogging the sandpaper.

    - When using a double action sander, use P400 sandpaper.

    Wet Sanding:

    - Manually sand using P400 to P800 wet-or-dry sandpaper.
    - While wet sanding, use a sponge soaked with water to keep the sanding surface sufficiently moistened.

  2. Completely dry the surface with a compressed air blow gun and infrared lights after wet water sanding.

  NOTE: **Use a dry sprayed guide coat to visually check surface flatness.**

6. Inspection and Repair after Sanding:
   - Inspect the state of the finished primer-surfacer coated surface.
   - If the surface is OK without any thin or uncoated spots, move on to the topcoating process.
   - If any defect is found on the surface including thin or unpainted spots, exposed filler/putty, or bare steel panel, repeat the primer-surfacer coating and sanding processes.

Basic Topcoat Application Process

Use Of 2K Paint (Example)

1. Light Coating:
   - Spray a light coat to check for any issues with the paint.
   - When lifting is found on the surface of coating, fill with dry coating.

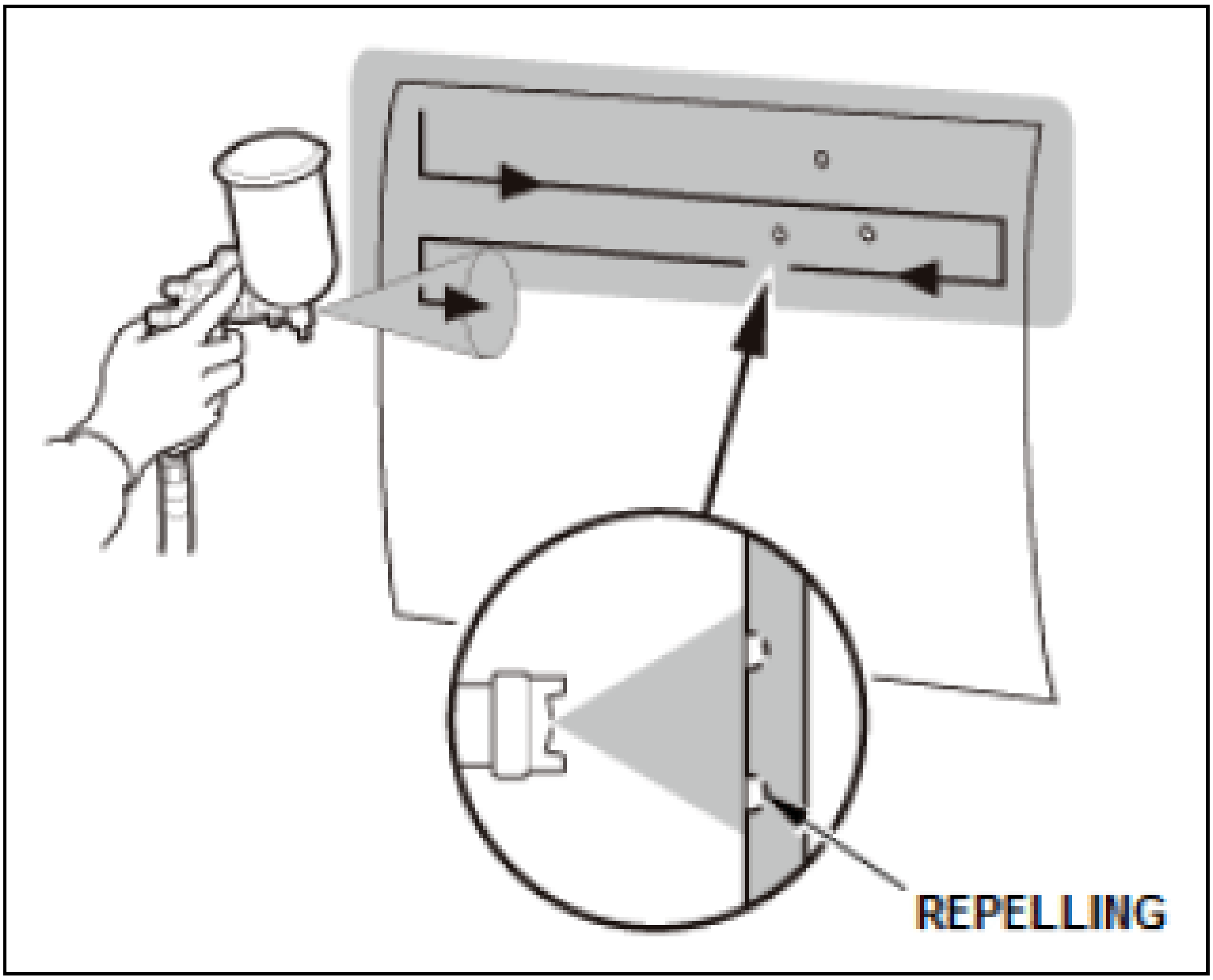

2. Fixing Color:
   - Spray a medium coat.
   - Continue spraying until the basecoat is completely covered.
   - Do not attempt to spray one thick coat. Apply several thin coats with sufficient flash time in between.

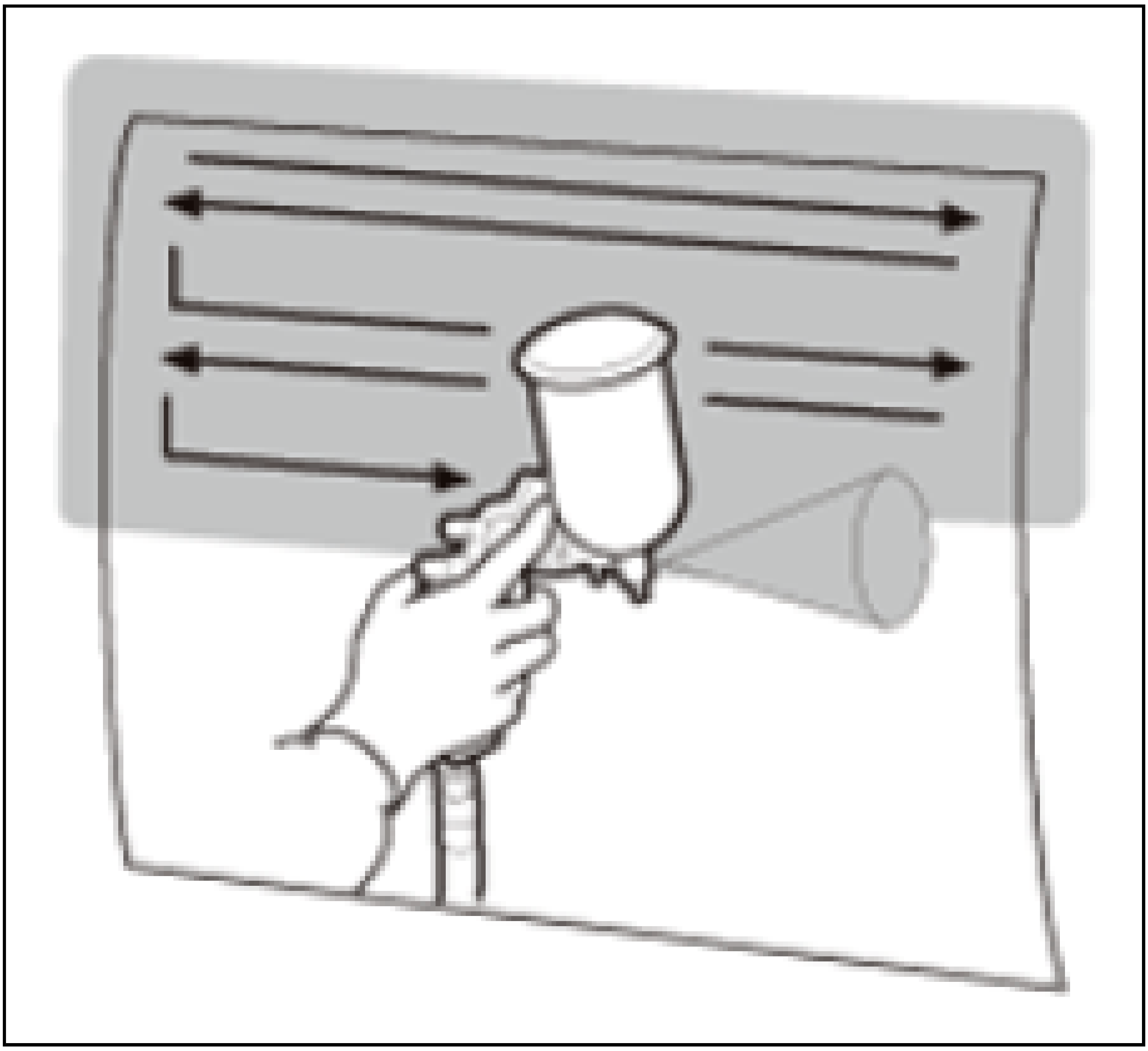

- For metallic colors, spray carefully not to create color unevenness. Pay attention to overlap pattern.

3. Removing Unevenness (Metallic Color, Pearl Color):
    - Maintain the same spray size as the color fixing process and hold the gun slightly further away from the coating surface. Move the gun more slowly to leave the surface a little wetter.
    - By keeping the surface a little wet with paint, it is possible to let metallic and pearl base arrange regularity, which reduce any uneven surface appearance.
    - Overlap spray gun passes repeatedly until the paint film surface evens out.

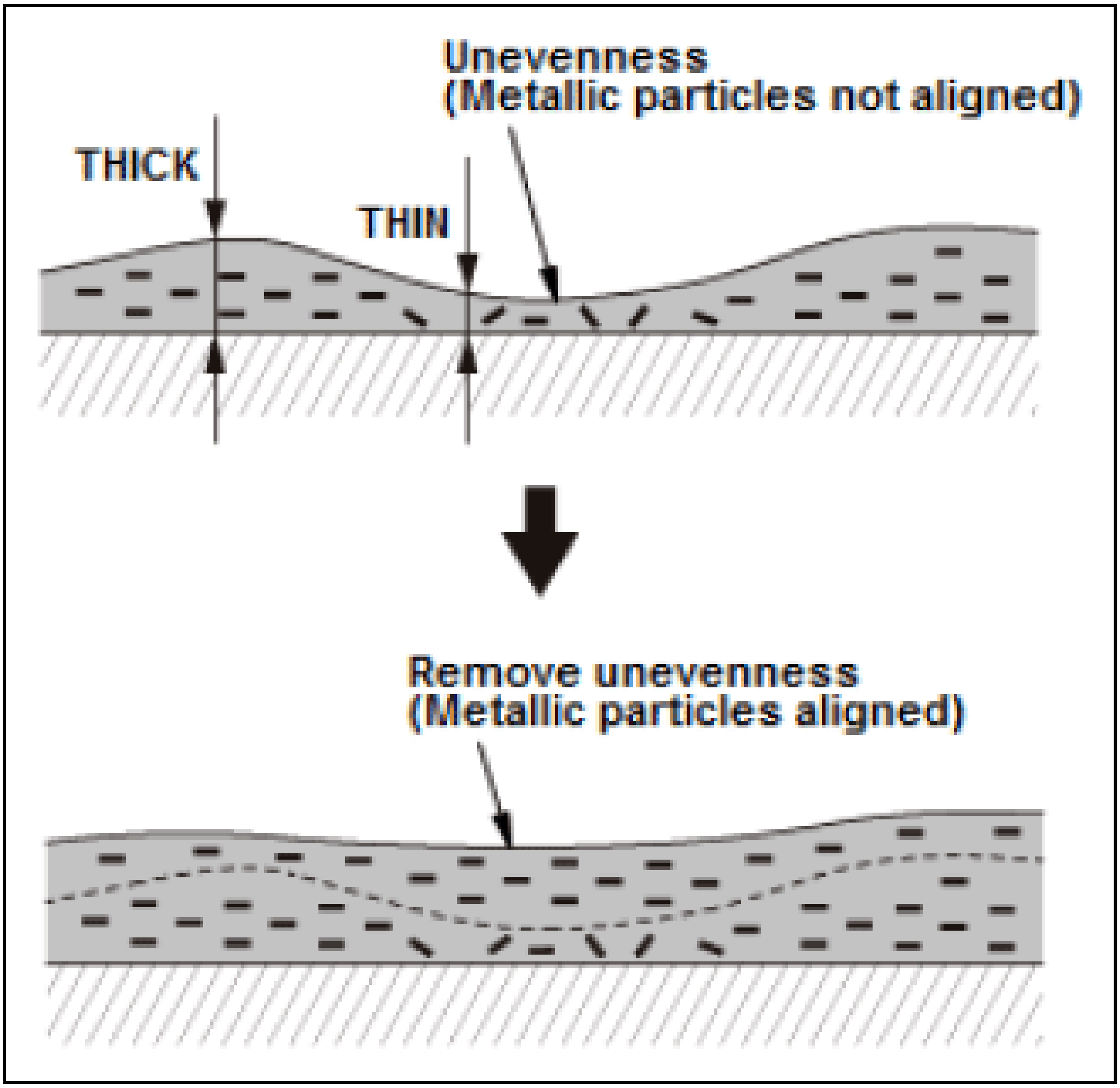
Unevenness
(Metallic particles not aligned)
THICK
THIN
Remove unevenness
(Metallic particles aligned)

4. Finishing:
    - **1-Coat Solid**

      Finish the coated surface smoothly and match the adjoining panels surface quality.

    - **Metallic, Pearl and 2-Coat Solid**

      Spray clearcoat to smoothly finish the coated surface

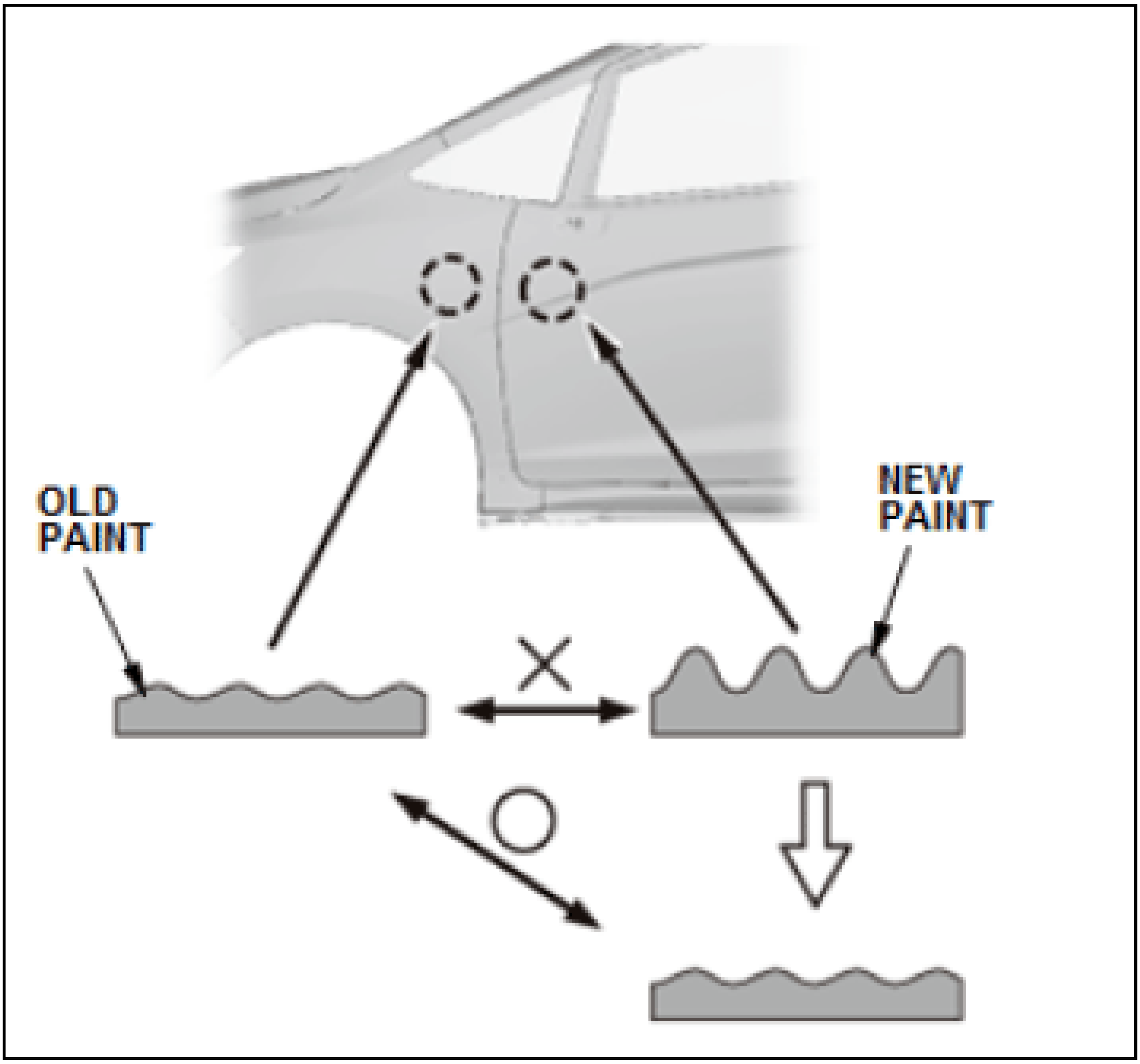

Surface coating method	Type of Surface		Roughness of Surface	
	Fine surface	**Rough surface**	**High**	**Low**
Spray Gun Nozzle Diameter	Small	Large	Large	Small
Paint Viscosity	Low	High	High	Low
Spray Pressure	High	Low	Low	High
Distance of Spray Gun	-	-	Far	Near
Speed of Spray Gun	Fast	Low	Low	Fast
Thinner Evaporation Speed	Fast	Low	Fast	Low
Flash Time	-	-	Required	Not Required

Flash Time And Set-Up Time

Flash Time (Interval between paint coats)

When layering several coatings, allow paint solvent to evaporate somewhat before applying another coat. This waiting time between the paint coats is called flash time.

Set-Up Time

The time between completion of painting and starting of the force-drying process. If the painted surface is heated immediately after application where the solvent is still very actively evaporating, paint defects such as pinholes will occur.

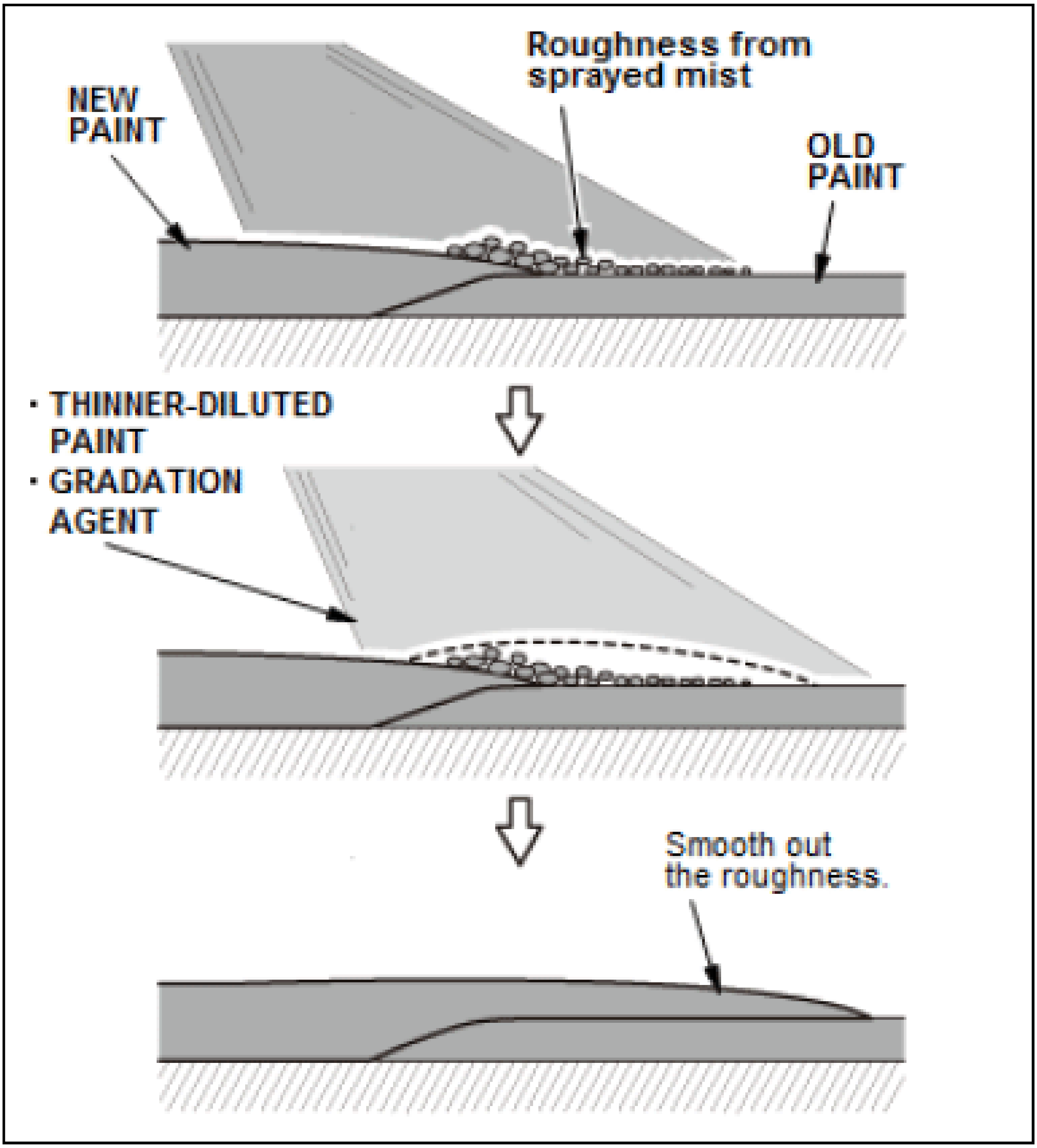
Roughness from sprayed mist
NEW PAINT
OLD PAINT
· THINNER-DILUTED PAINT
· GRADATION AGENT
Smooth out the roughness.

Steps Of Gradation Paint - Solid And Clear

NOTE: **Gradation paint is a clear paint diluted by the paint reducer/thinner. Its viscosity is very low and it applies in very thin layers.**

1. Spray so that the luster will be even with the old painted surfaces.
2. Dilute the finishing paint following the paint manufacturer's instructions.
3. Spray the gradation paint so that the new and old surfaces blend with each other.

Steps Of Gradation Paint - Metallic And Pearl

NOTE: **Gradation paint is a clear paint diluted by the paint reducer/thinner. Its viscosity is very low and it applies in very thin layers.**

When using under clear coating:

1. Spray under clearcoating roughly around the repair area.

2. Spray a base color on the under cleared area.
3. Repeat these steps until no differences between the old and new paint layer in color while keeping the under clear wet.

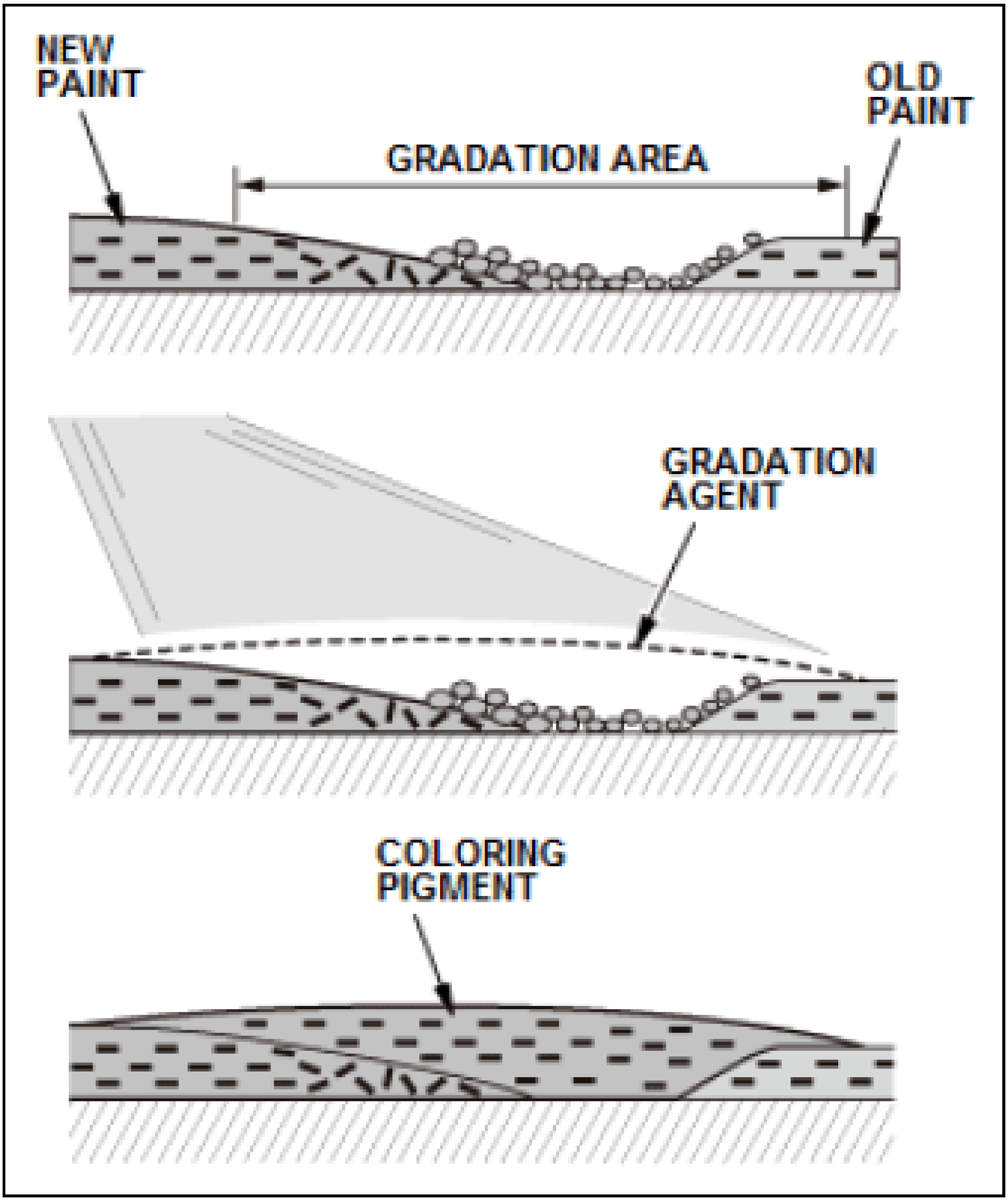
NEW PAINT
OLD PAINT
GRADATION AREA
GRADATION AGENT
COLORING PIGMENT

Cleaning And Degreasing

1. Compressed Air Blow Gun:

   If the material or paint layer surface is not completely cleaned of dust, contaminants, oil, etc., adhesion defects may occur after painting.

NOTE: **Thoroughly remove all dust and dirt from inside jambs and between panels with a compressed air blow gun.**

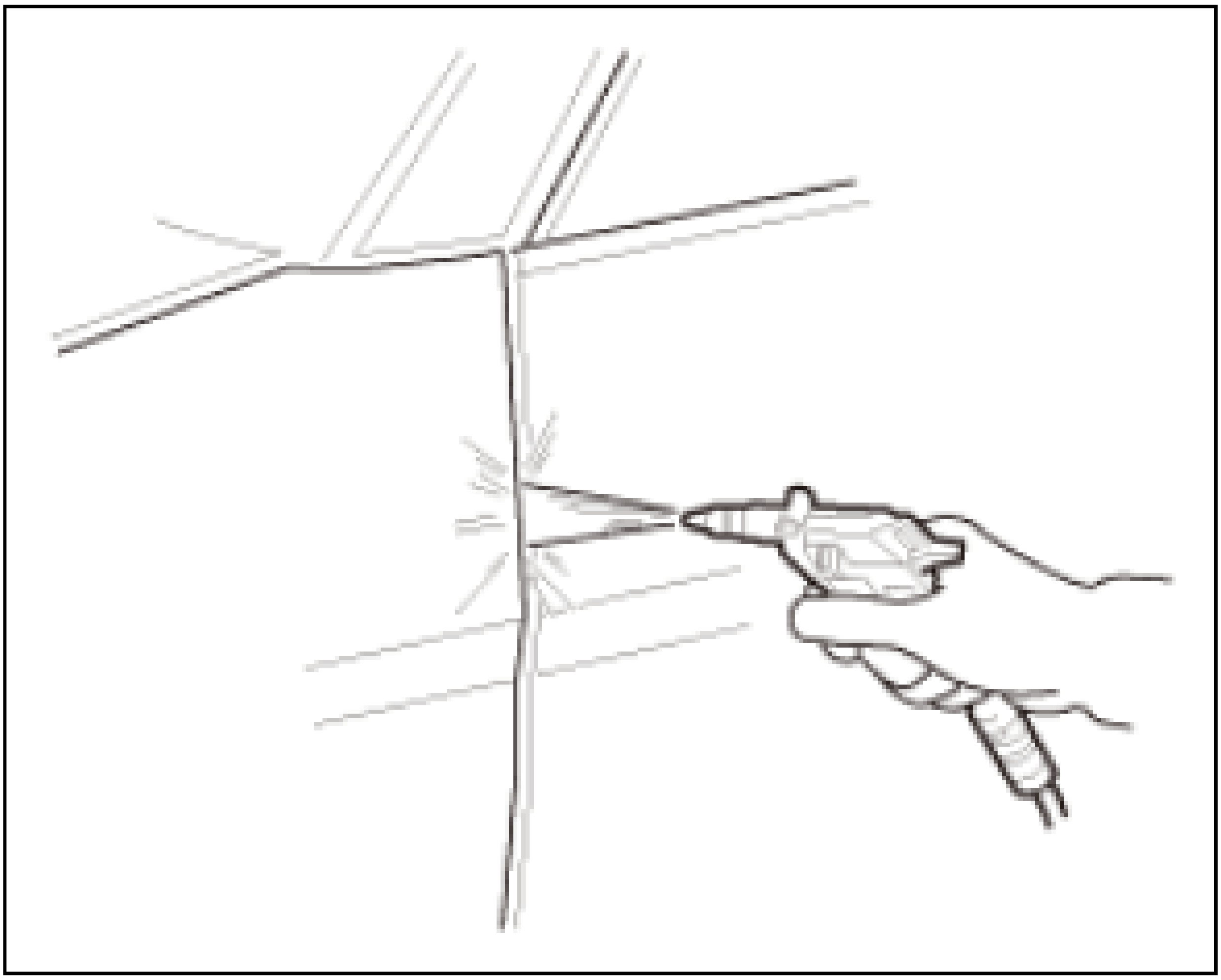

2. Degreasing:

   Wet a clean cloth with degreaser and apply to the panel surface being painted. Make sure the surface is fully moistened then wipe the area with a second clean dry cloth.

NOTE: **Always do this step before painting.**

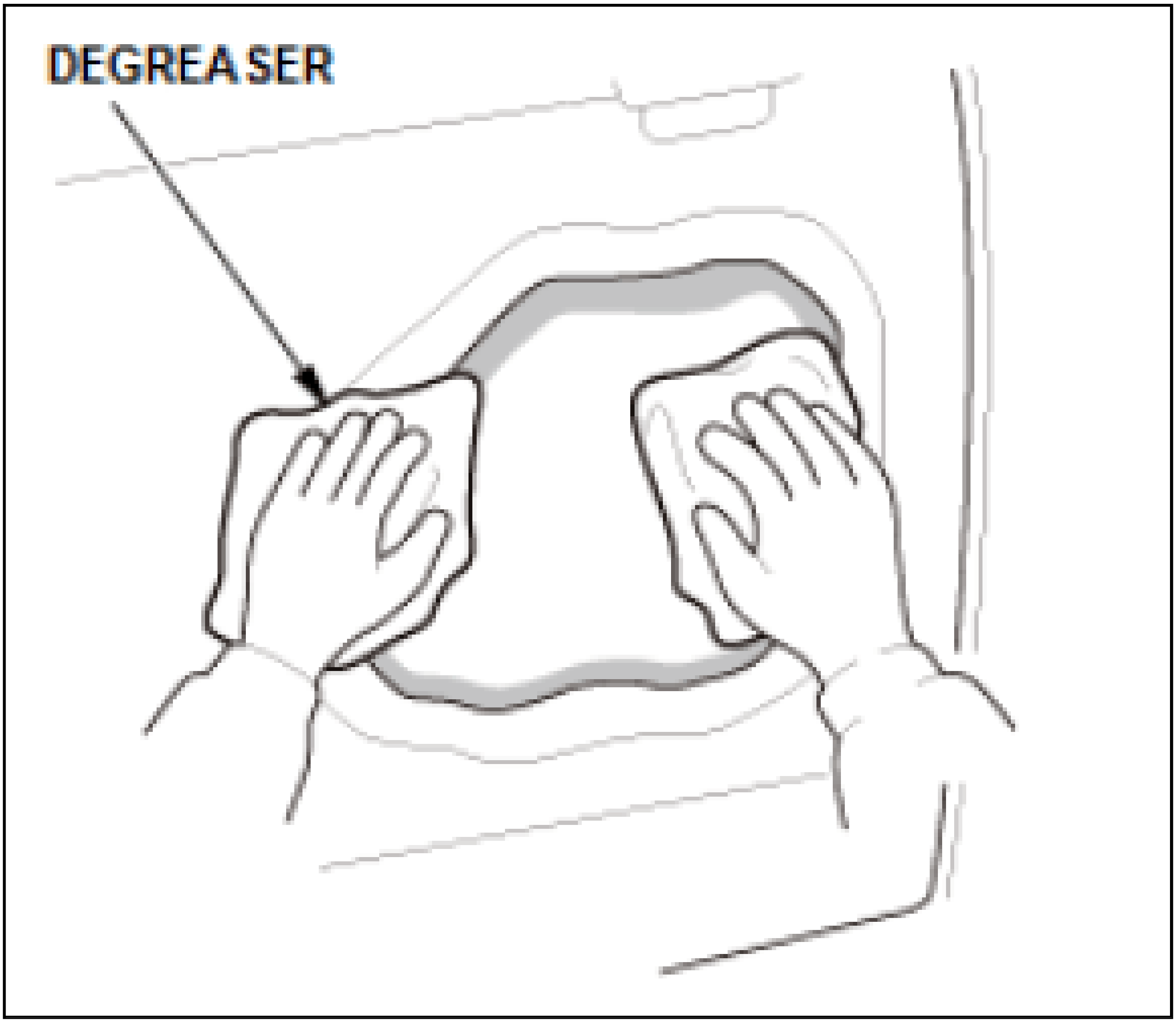

Masking Methods

Example Of Outer Panel And Door Edge

1. Place the masking tape with the glued surface toward the painted surface at the outer panel corner area.

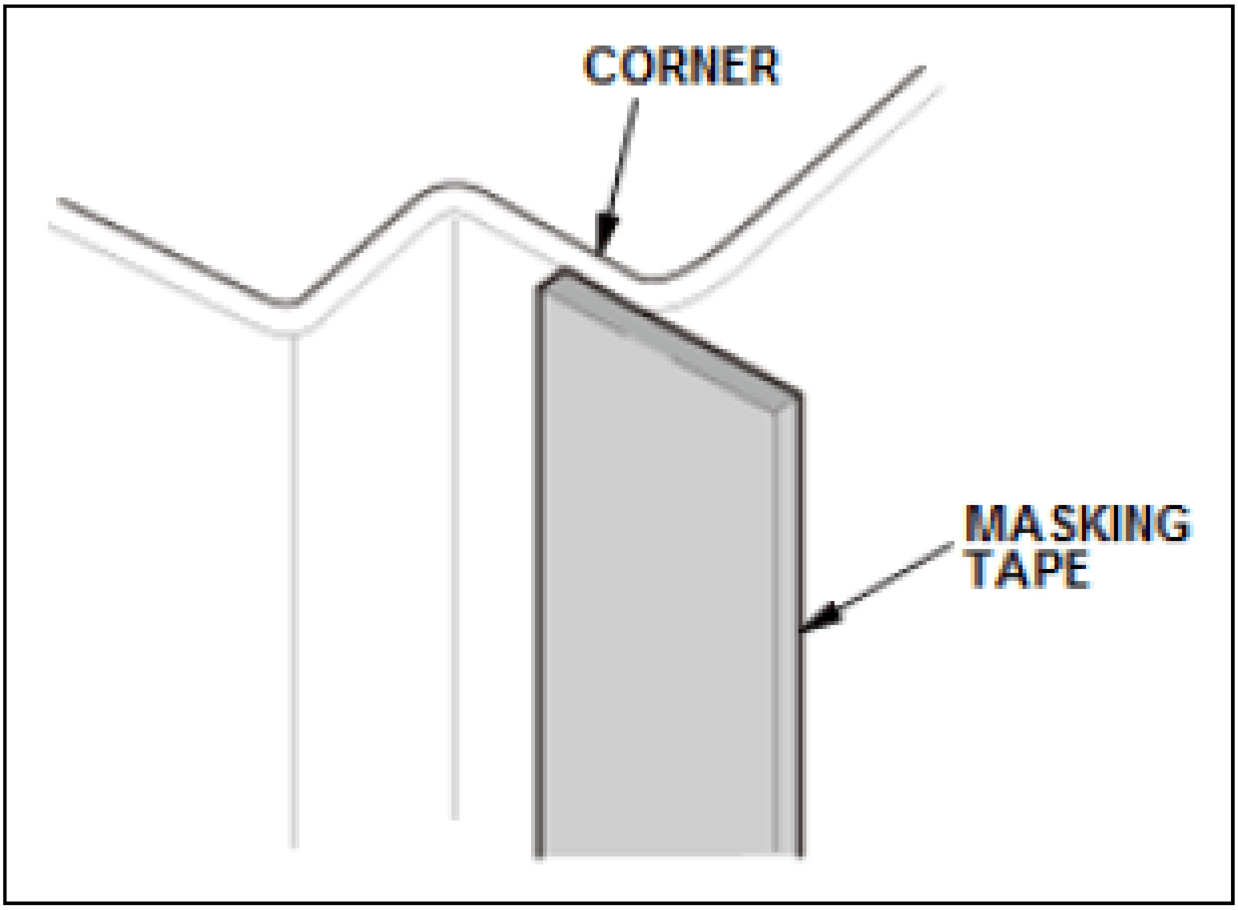
CORNER
MASKING TAPE

2. Close the door.

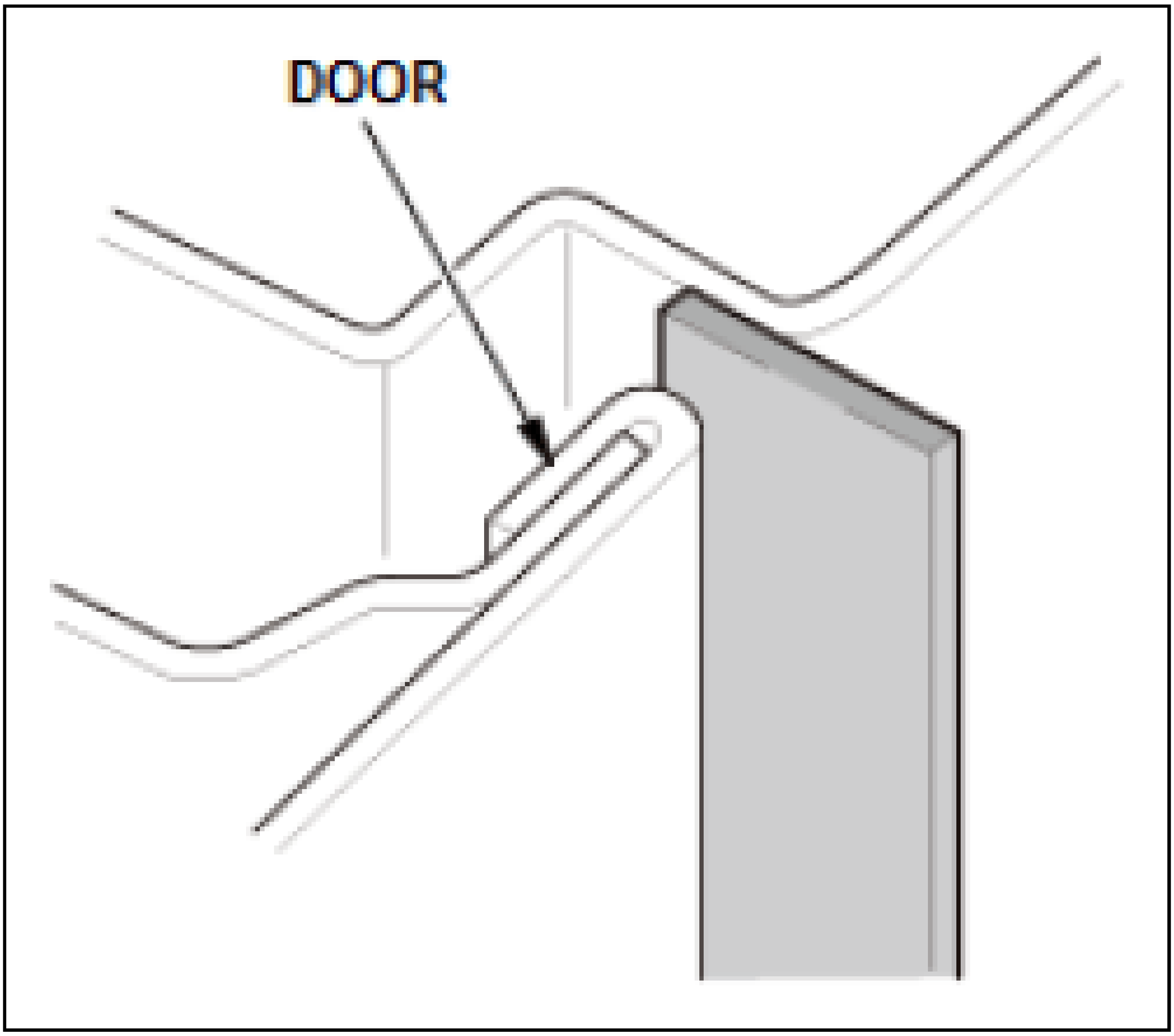

3. Bend the masking tape along the outer panel surface towards the door making sure the tape extends further inside the panel corner. And then place another masking tape to fix the position.

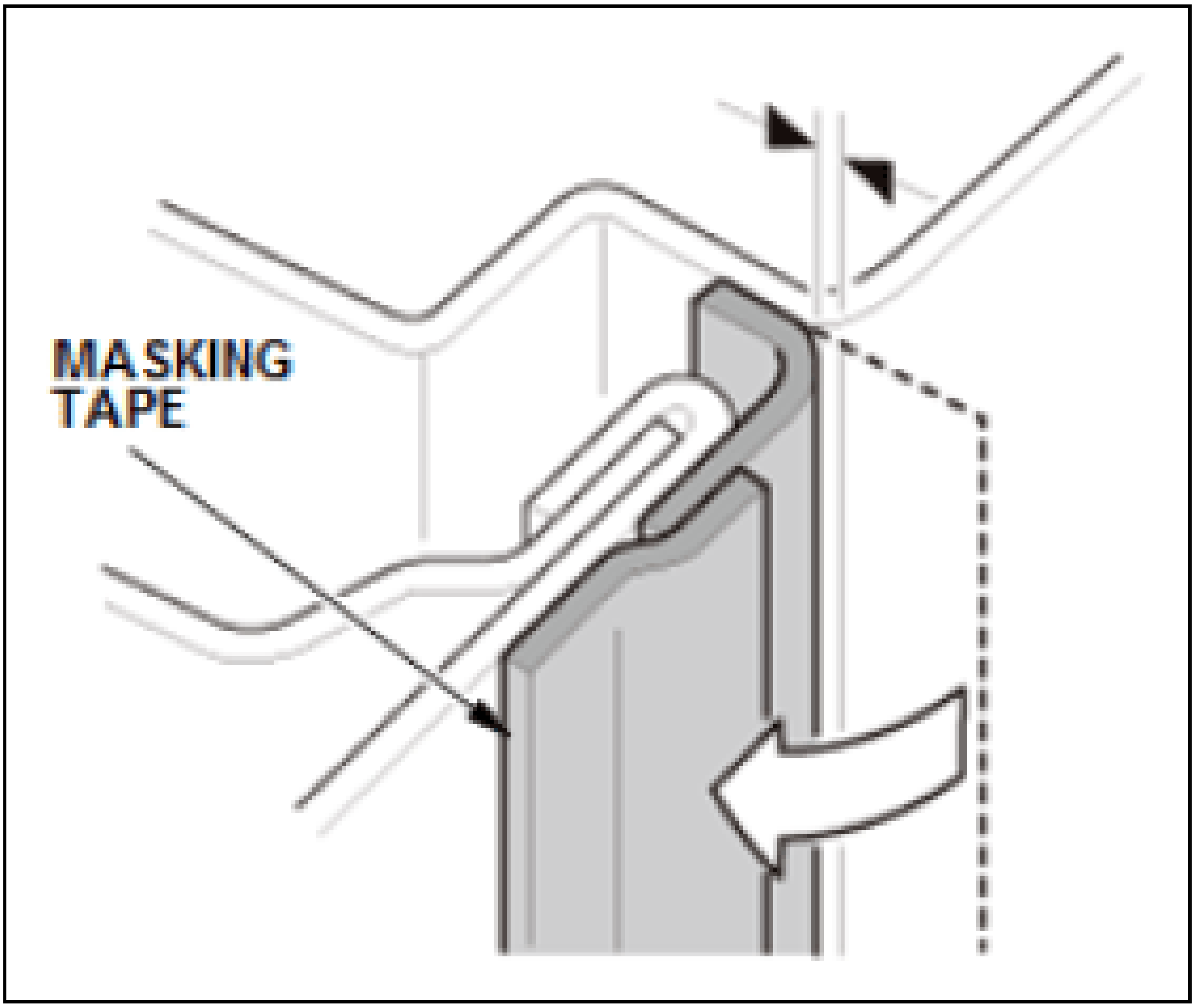

4. Mask the whole door.

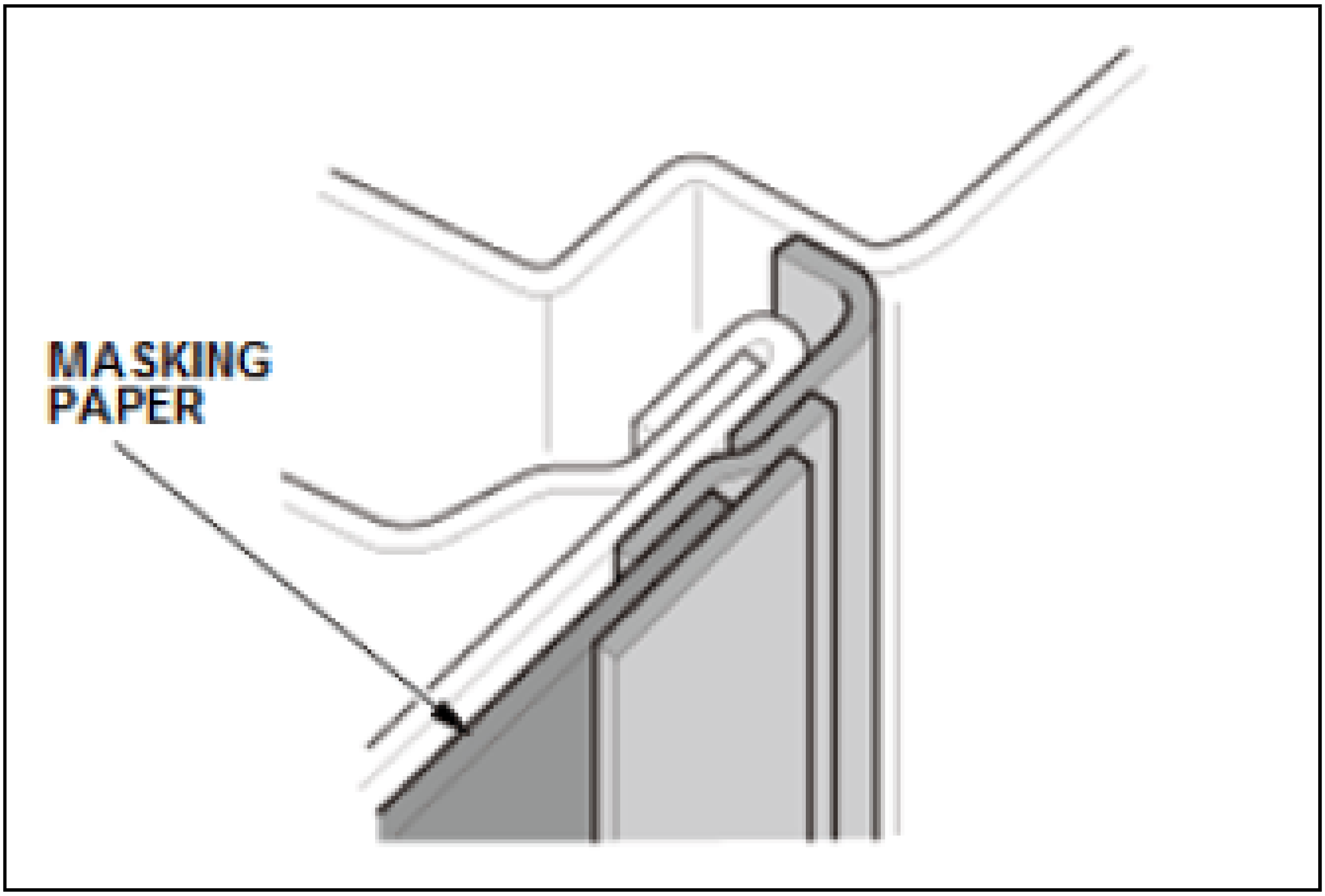

Reverse Masking

- Round up the masking paper to create a soft edge corner so that paint mist is applied thinly towards the end of line.
- Use masking paper for the flat surface, and masking tape for the corners.
- There are two reverse masking methods. One is to use a masking tape and another is to use a masking paper.

NOTE: **Painting the way to the separation line defeats the purpose of reverse masking. Consider the size of repair area and apply masking with an ample margin.**

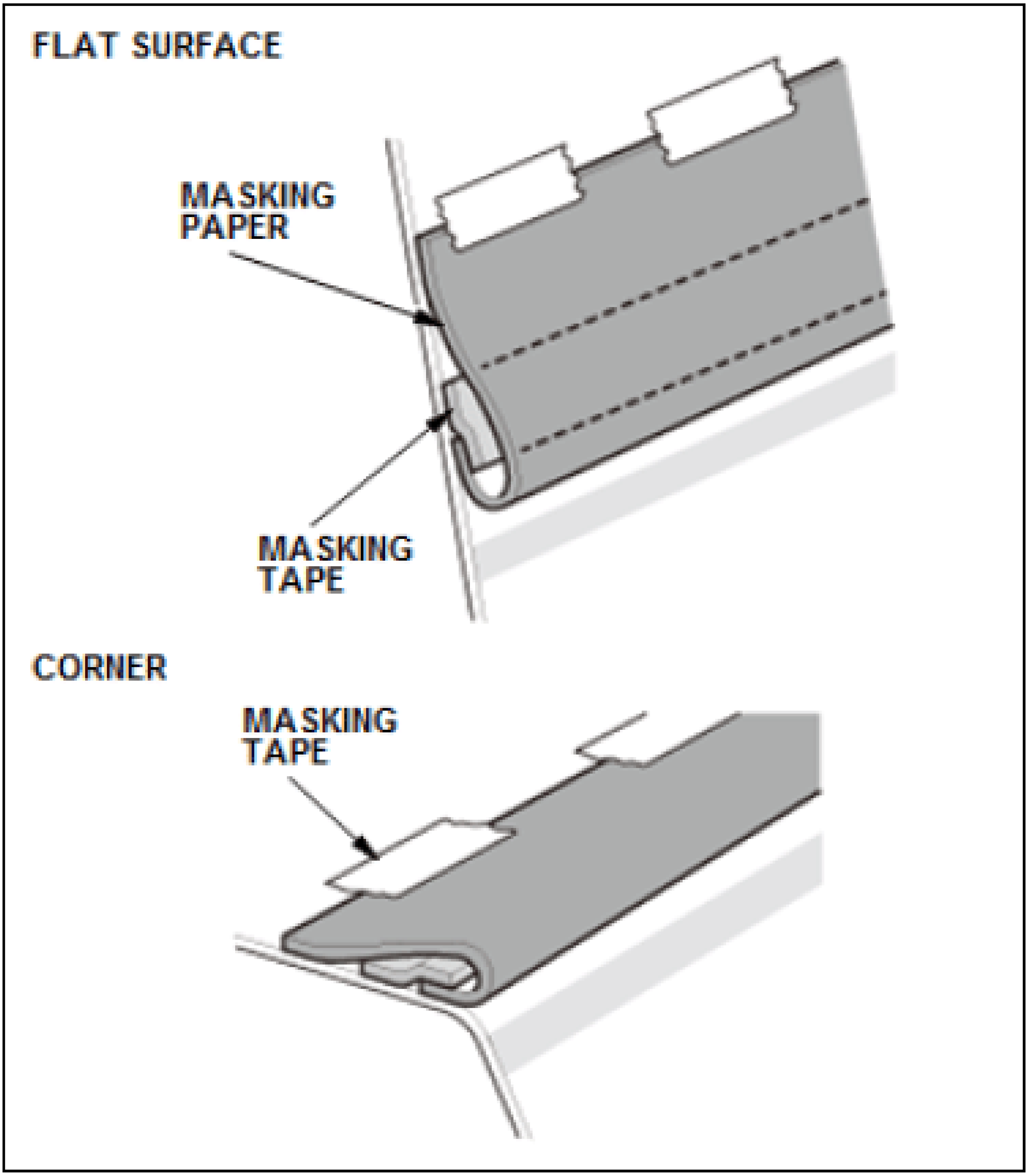
FLAT SURFACE
MASKING PAPER
MASKING TAPE
CORNER
MASKING TAPE

Tunnel Masking

When giving a gradation paint to a pillar or similar parts, lift the masking paper from the repair part to create a tunnel-like space so that ending line of the paint becomes fuzzy resulting in smooth color gradation of the repair part to the original colored part. In some cases, the masking is lifted at two or three stages based on the cycles of the gradation paint

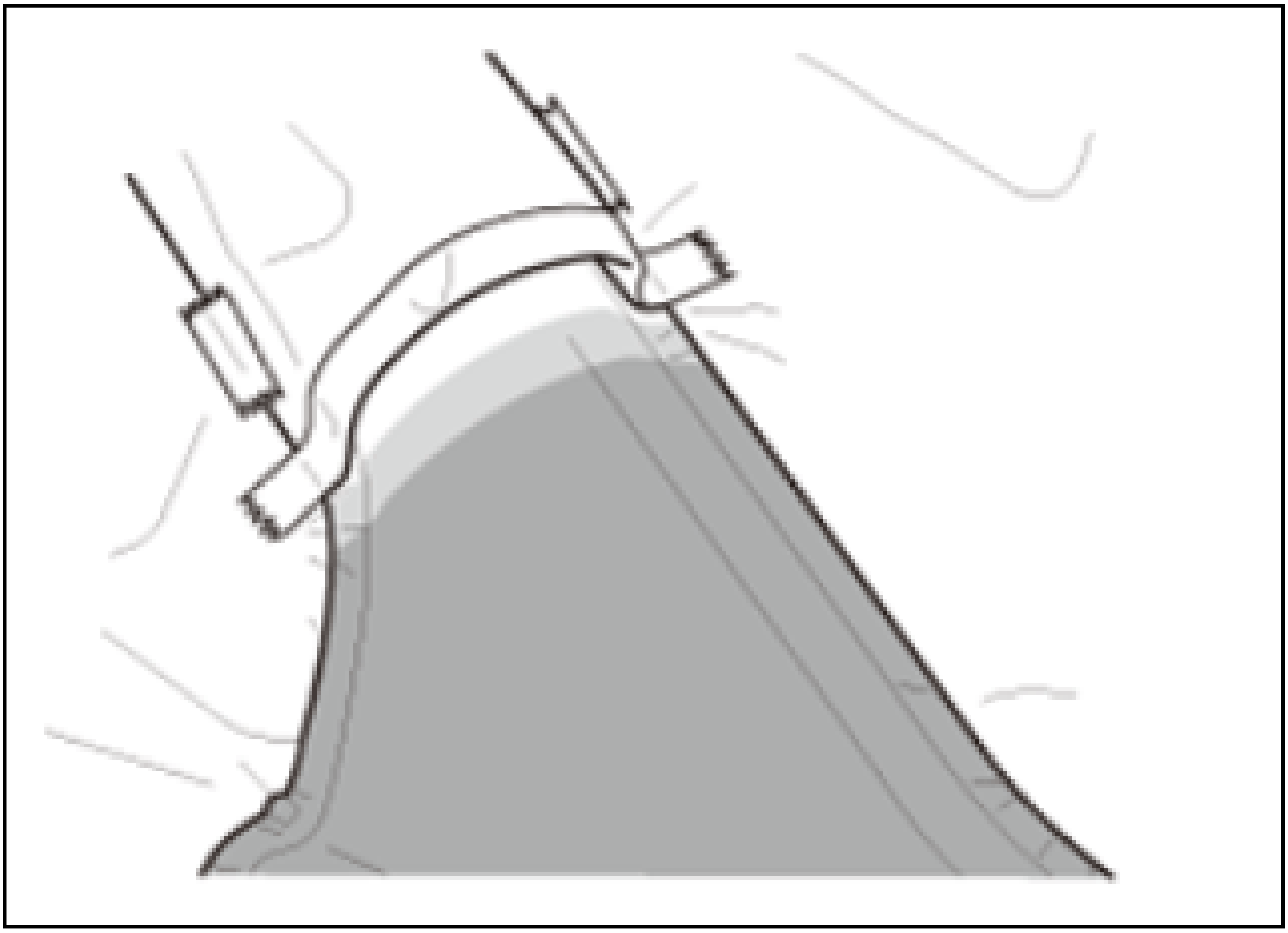

Masking Process

- Masking is conducted when lower coat (primer-surfacer) and topcoat are applied.
- The purpose of masking is to prevent the paint from adhering to areas other than the repair area. It also prevents paint overspray dust, and dirt into the vehicle.
- The work processes or methods may differ depending on the repaired area and painting method, but the general steps of masking are as follows:

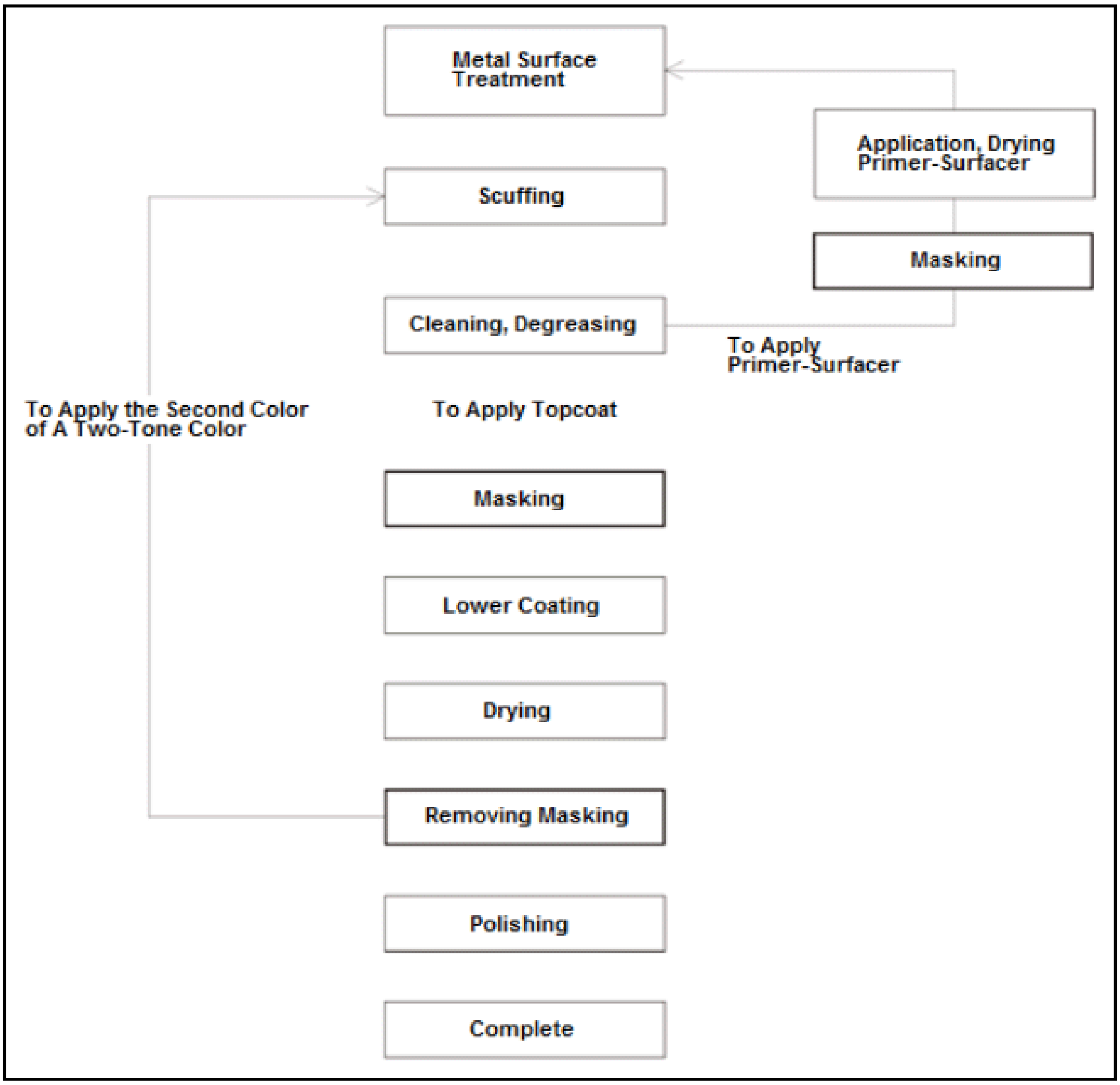
Metal Surface Treatment
Application, Drying Primer-Surfacer
Scuffing
Masking
Cleaning, Degreasing
To Apply Primer-Surfacer
To Apply the Second Color of A Two-Tone Color
To Apply Topcoat
Masking
Lower Coating
Drying
Removing Masking
Polishing
Complete

Masking Tools And Materials

Masking Paper

- Masking paper is a cover or paper applied in order to prevent unwanted adhesion of paint and overspray outside of the work area.
- There are several different kinds of masking paper available. Some resist solvent penetration or high temperatures. A liquid type-masking agent is also available that can be applied with a spray gun.

Masking Tape

- Masking tape for paint repair may be used with a masking paper or by itself.
- Paper-based masking tape is most common, but there are also metallic tapes which are heat resistant, and plastic tapes which create sharp masking lines depending upon the purposes.

Composition of Masking Tape

- Back Surface Treatment Agent: Prevent tape from sticking to another tape.
- Backing: Tape base made of paper, cloth, plastic etc.
- Primer: Enhances adhesion of glue to the base material and prevents glue residue on the applied surfaces.
- Adhesive: Material with gluing capability.

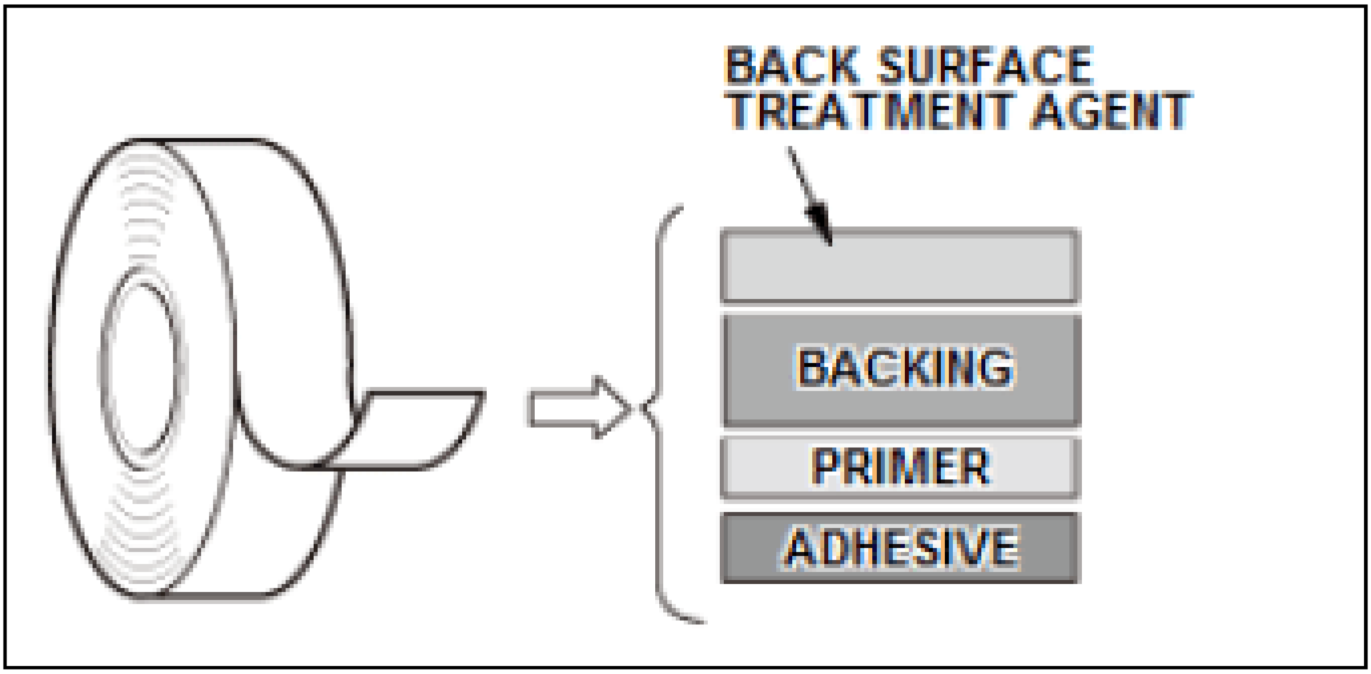

Usage Based on Backing Material

- Masking tape often used for automotive repair is made of Japanese paper, and has high heat and solvent resistance. It also is designed not to leave adhesive residue on body surfaces after tape removal.
- Plastic tape is ideal for edging, trimming, and separation of curved surfaces or and two-tone painting, etc.
- There are two types of backing surface texture; one normal type with a flat surface and another called crape-tape with fine wrinkles. The crape-tape stretches and shrinks slightly so it is suitable for masking curved surfaces.

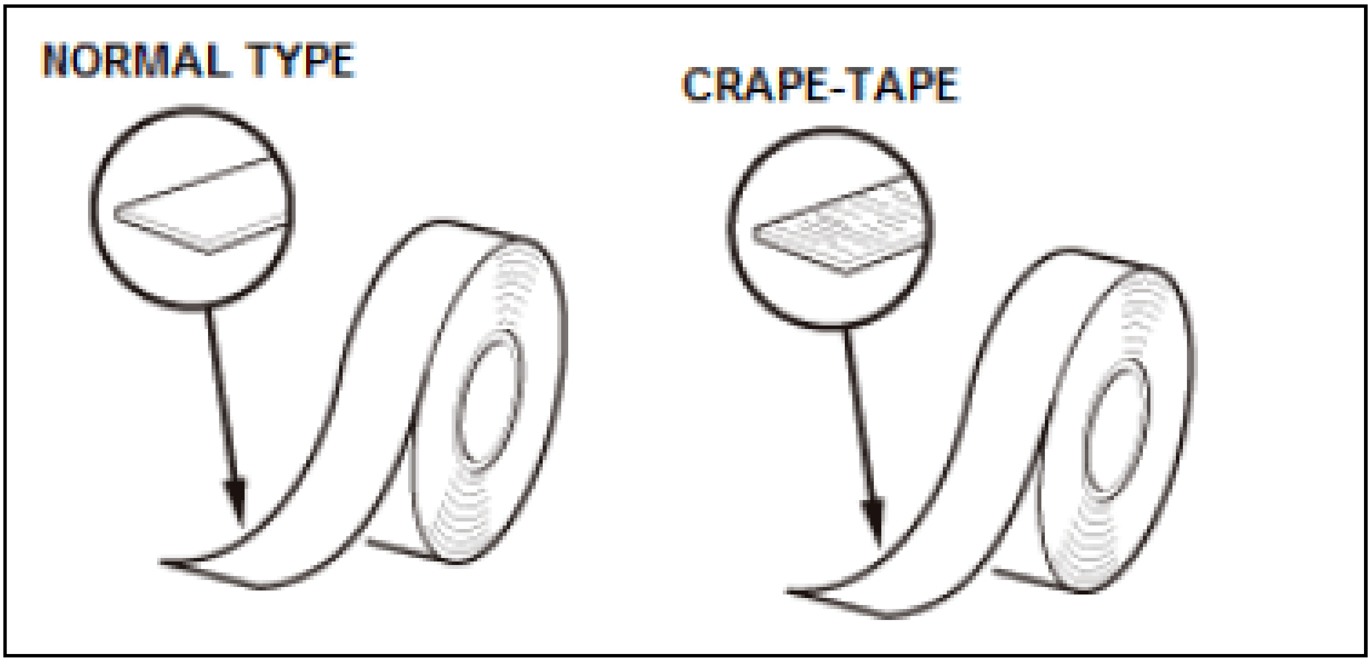

Other Types Of Masking Tape

Masking Tape for Two-Tone Paint

This type of tape is called vinyl tape, trimming tape, or fine line tape. It is ideal for separating curved lines of surfaces, or separating color tones. It can create a clean masking line without fuzziness.

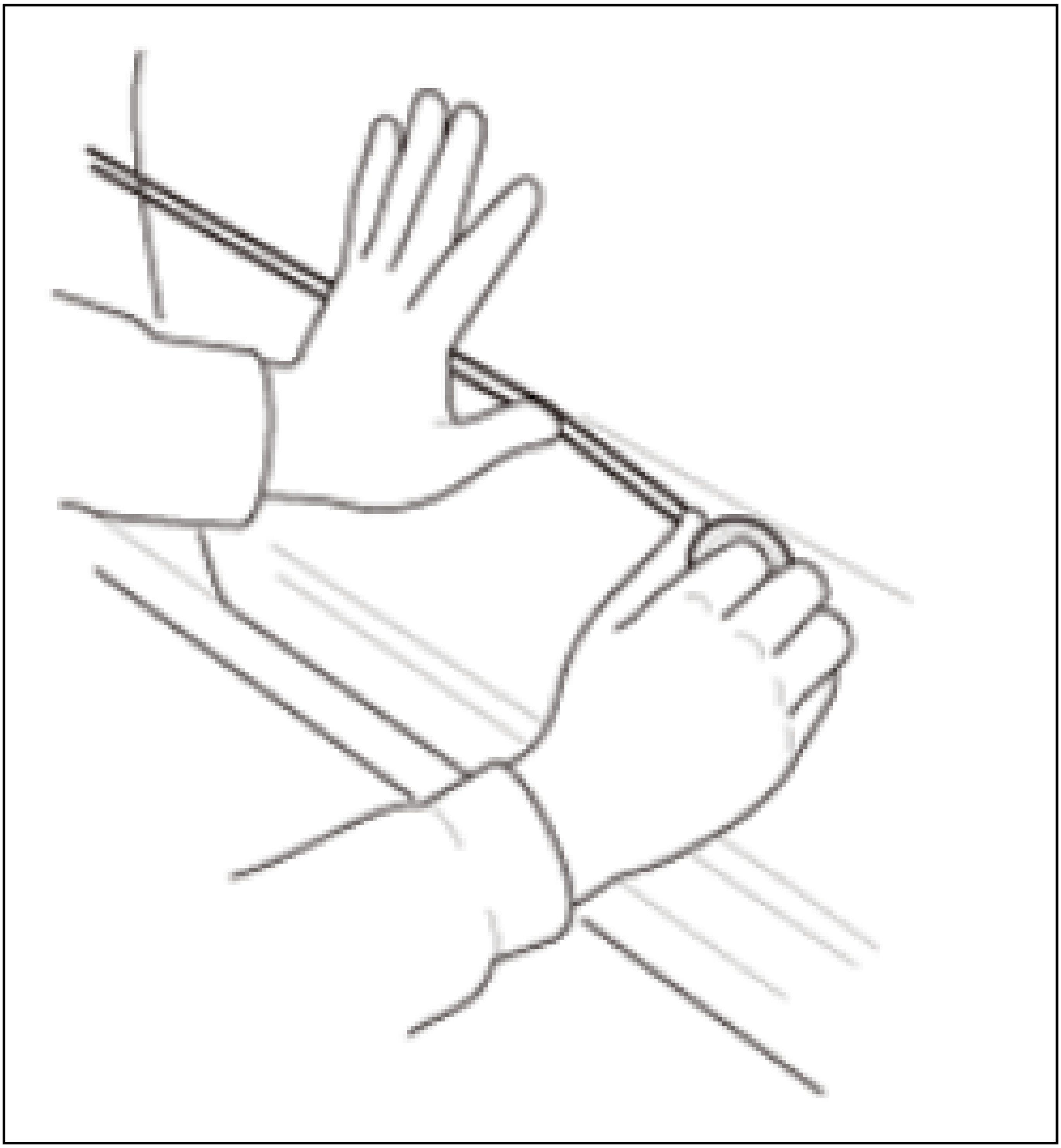

Tape for Painting Lines

This tape has scored lines of various width, so it can be used for paining multi-width lines.

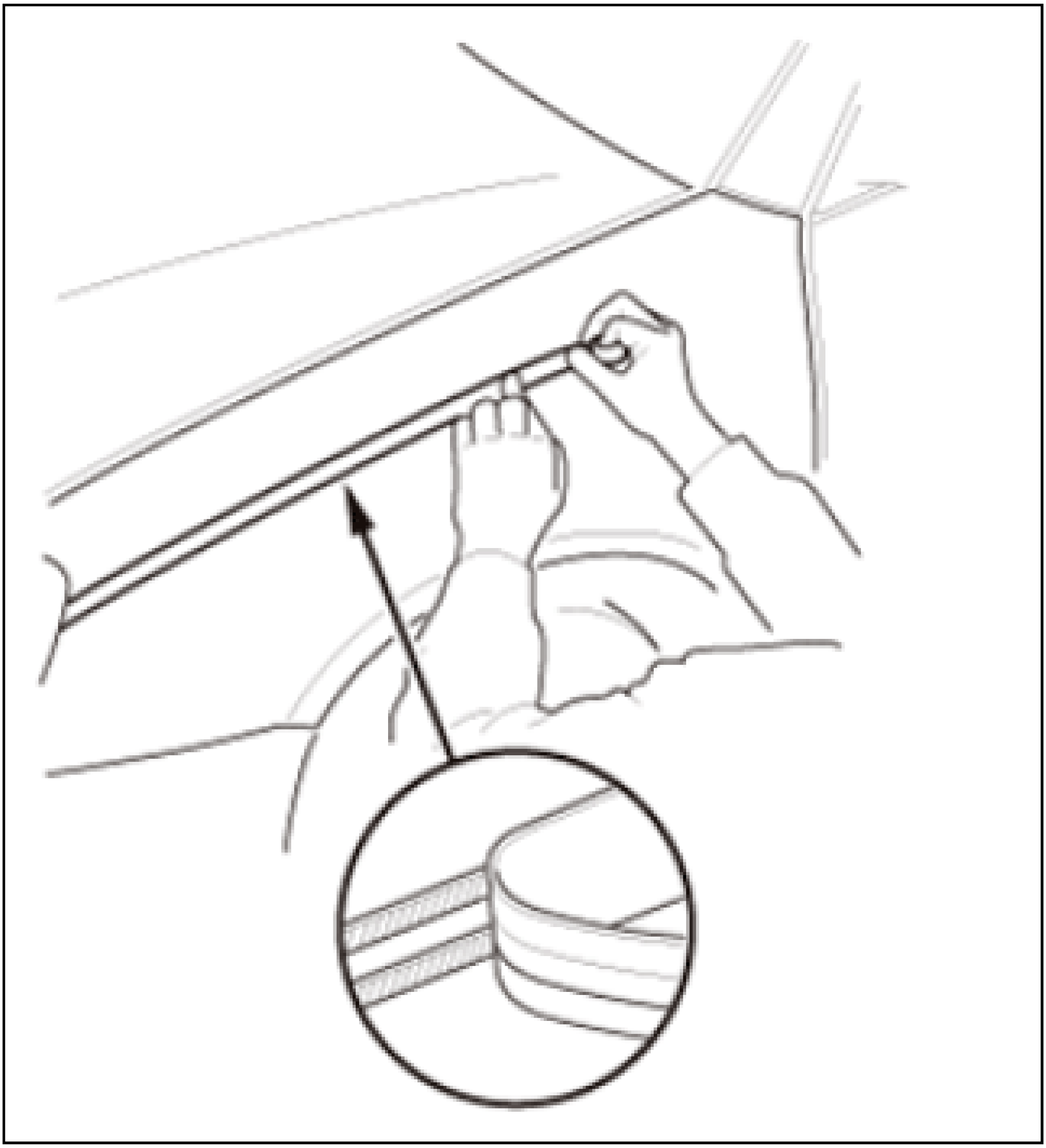

Paper Dispenser

In the device, rolled masking paper and masking tape are matched. This allows you to remove the required masking paper size with tape already applied. This device also makes it possible to set different sized masking paper simultaneously.

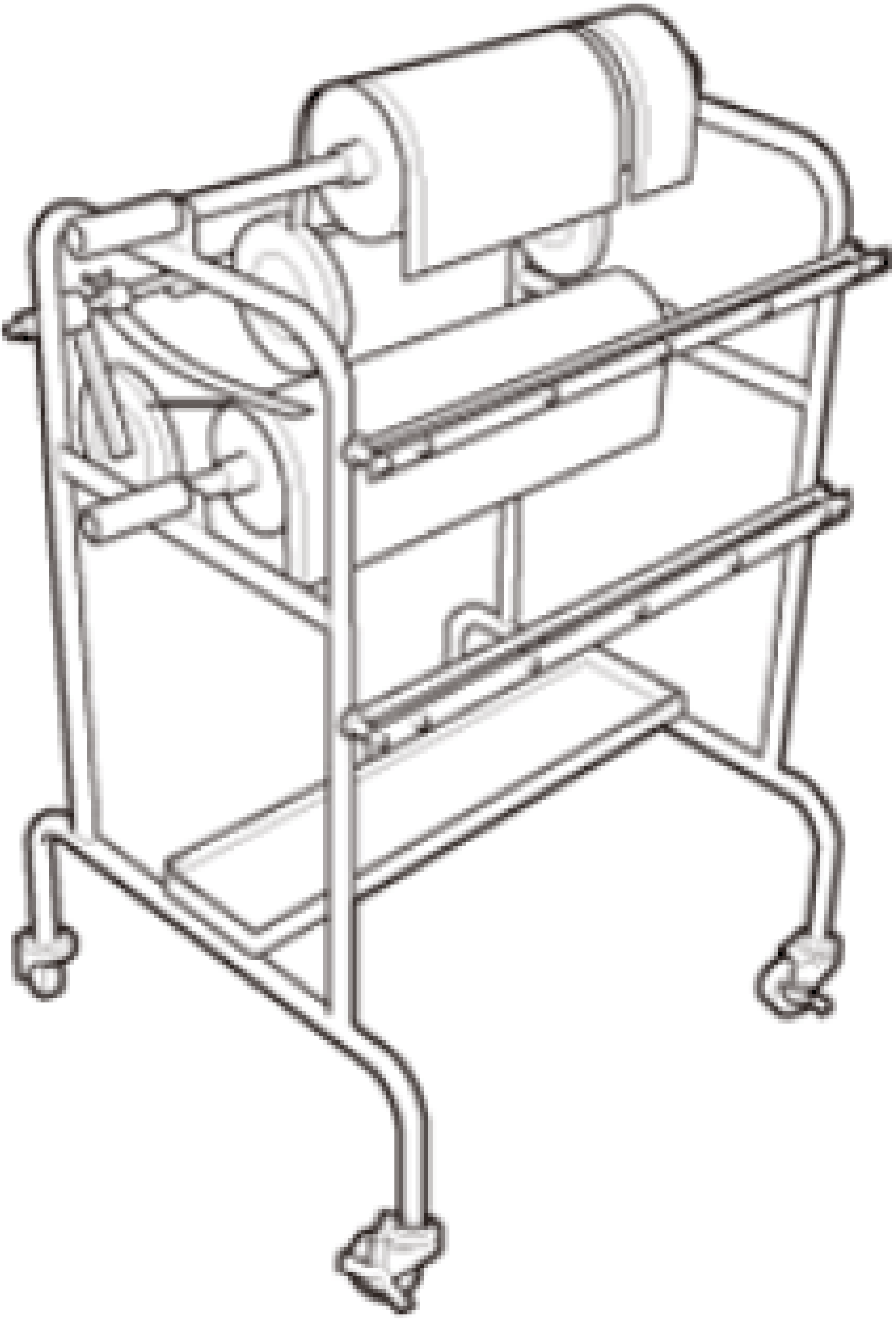

Polyvinyl Sheet

This sheet is composed of three combined layers, polyethylene, polypropylene, and polymer for use as an automotive masking sheet. It absorbs and retains paint overspray mist and powder.

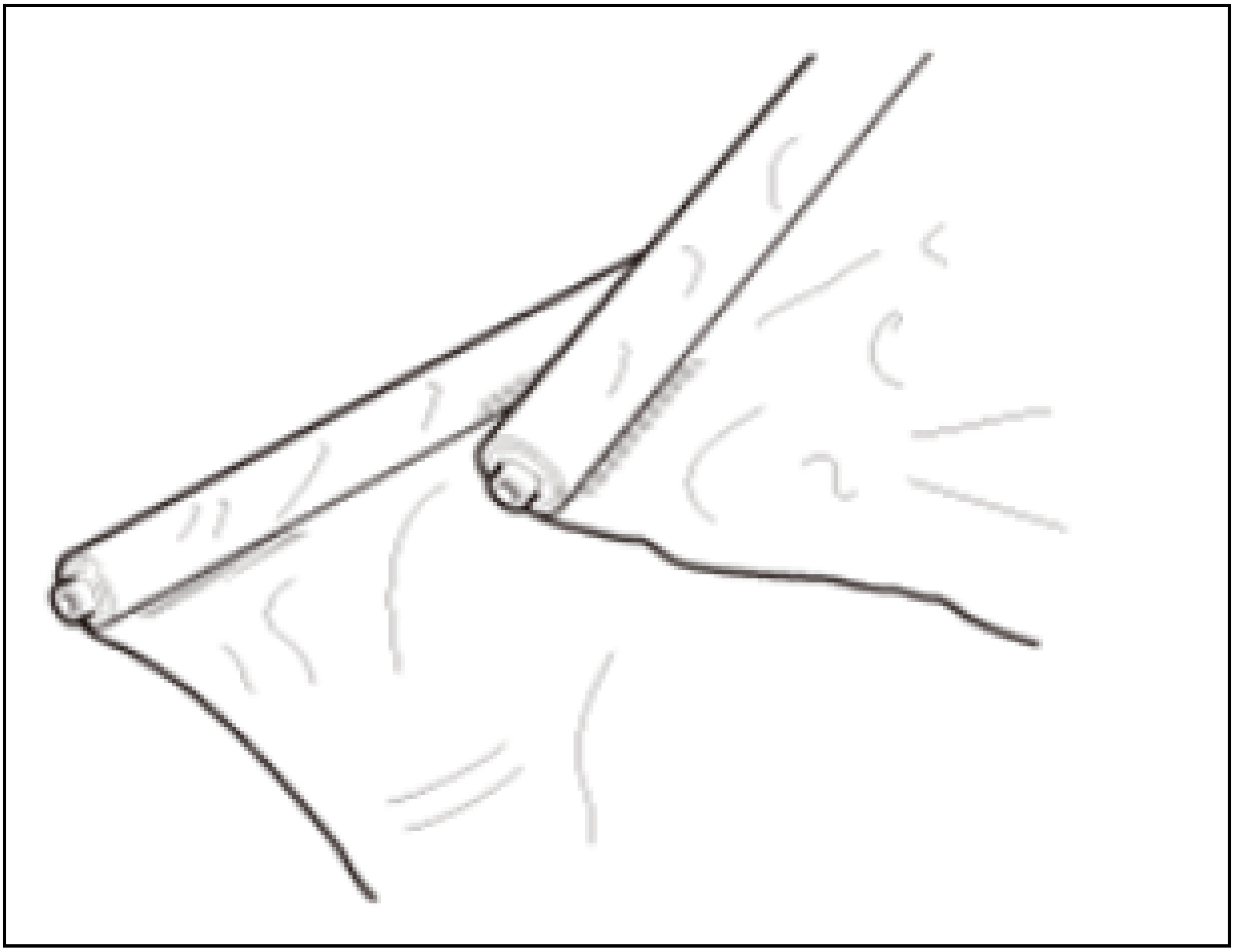

Sheet Dispenser

Using this stand it is easier to dispense polyvinyl sheet.

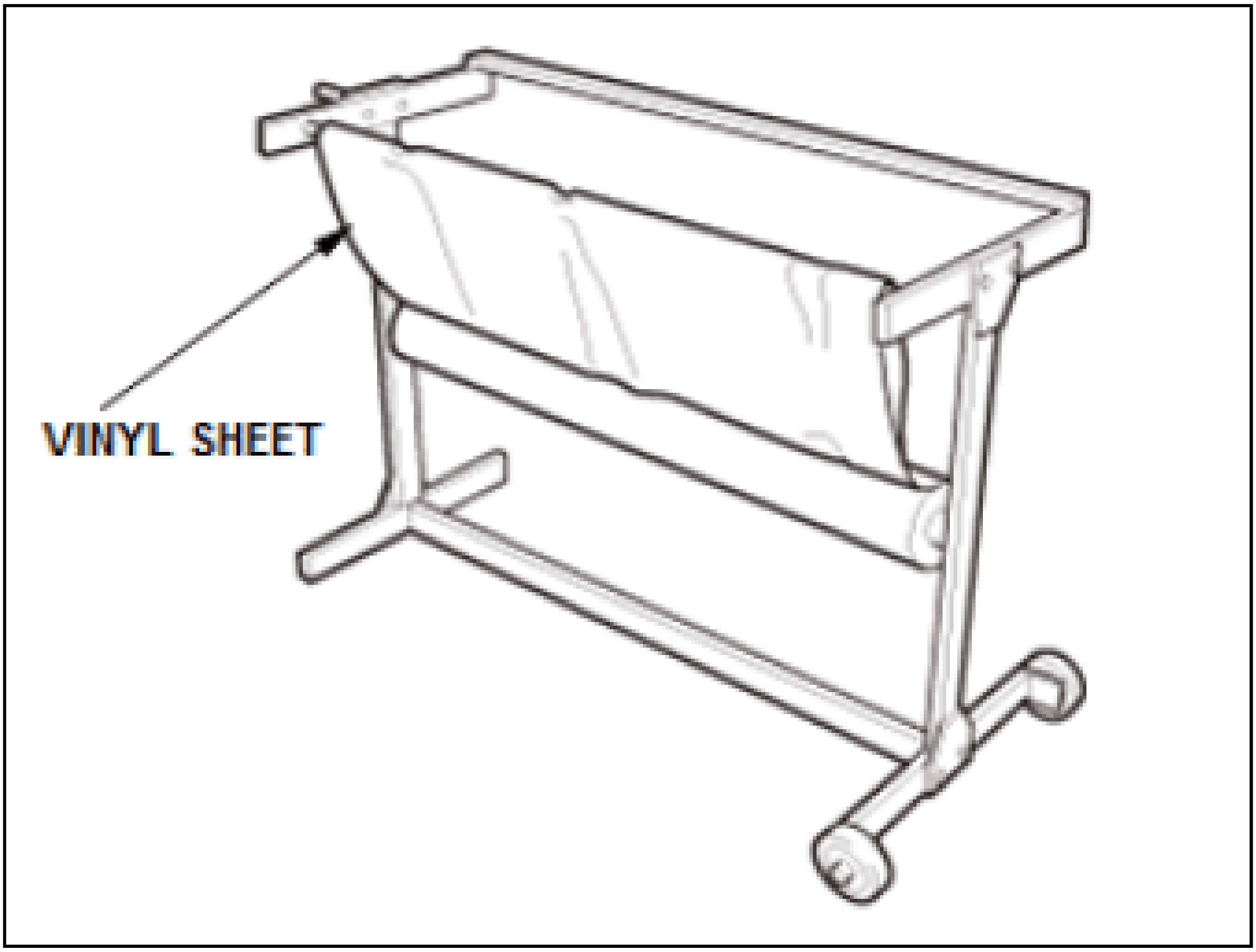

Magnet

It is used to attach vinyl sheet on the vehicle or press tight a wrinkled vinyl sheet in a pulled state. Magnets make it possible to shift the vinyl sheet's position as required.

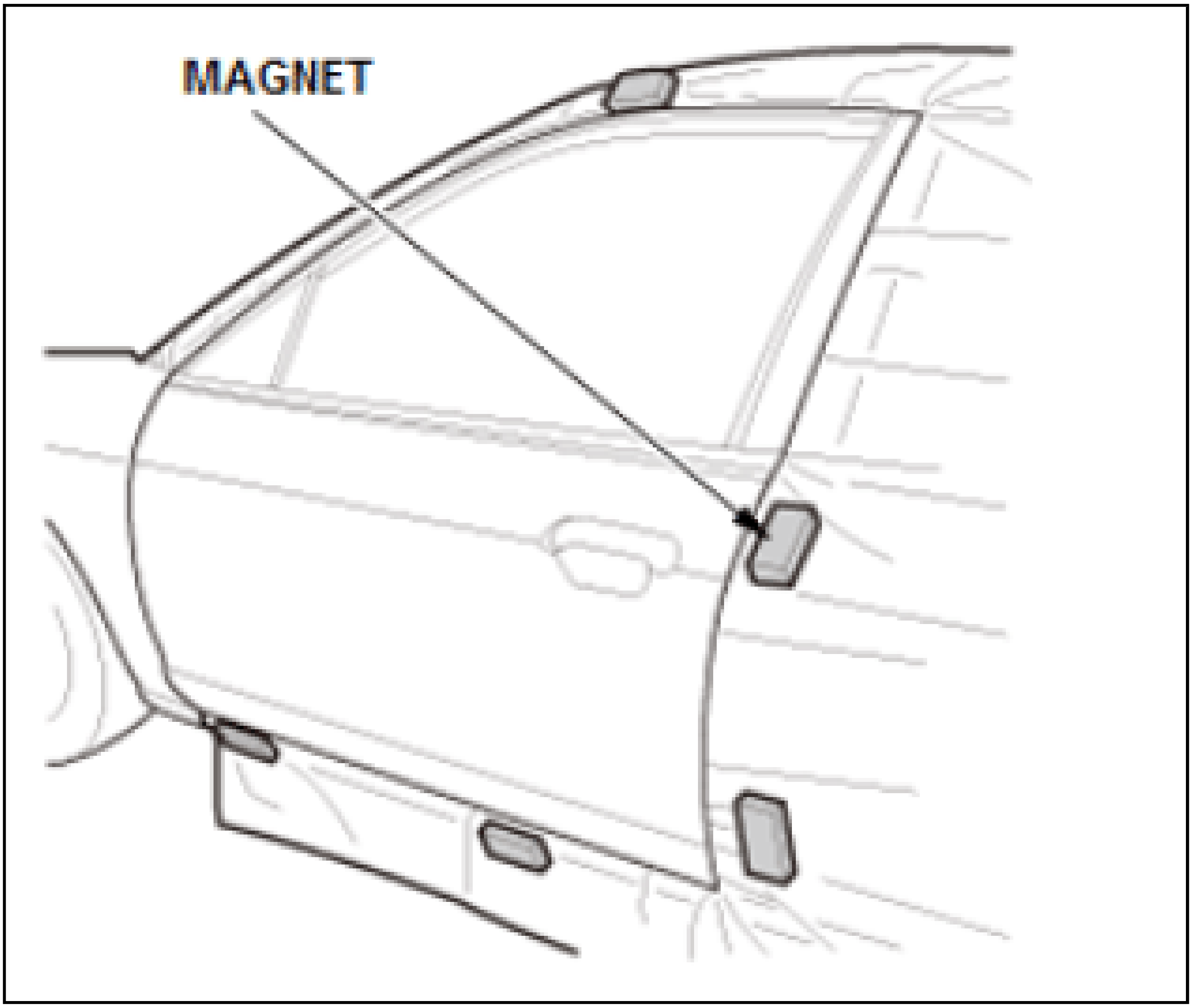

Special Covers

There are body covers available for a variety of uses made of special synthetic paper or treated fabric. Some cover the whole body others cover just part of it. In addition, there are wheel covers and interior covers that protect the passenger compartment.

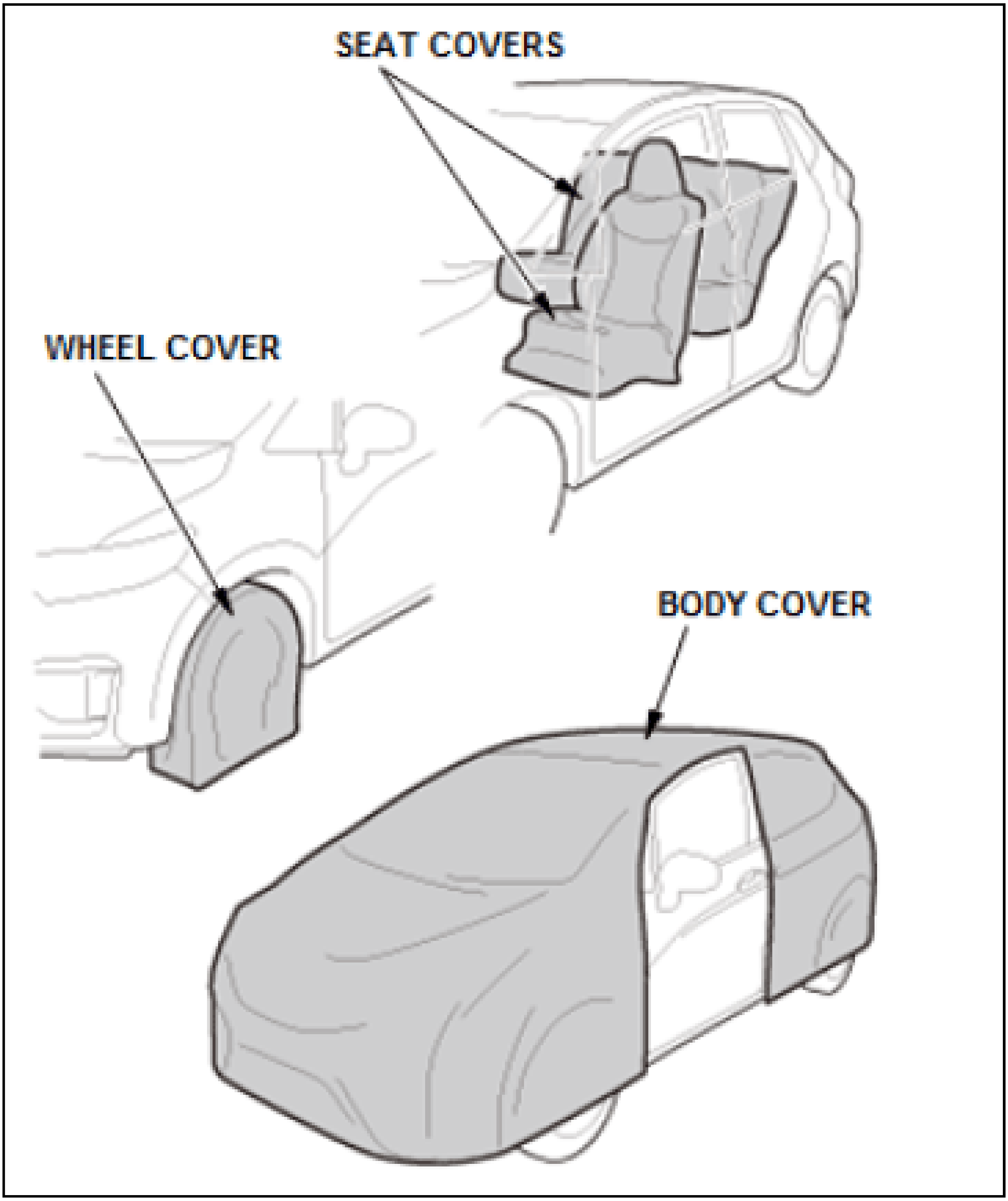
SEAT COVERS
WHEEL COVER
BODY COVER

Trim Lifting and Masking Tape

This tape is used to prevent the rubber weatherstrips around glass from being paint-stained. By inserting it between the rubber weatherstrip and body, the strip can be held away from the body.

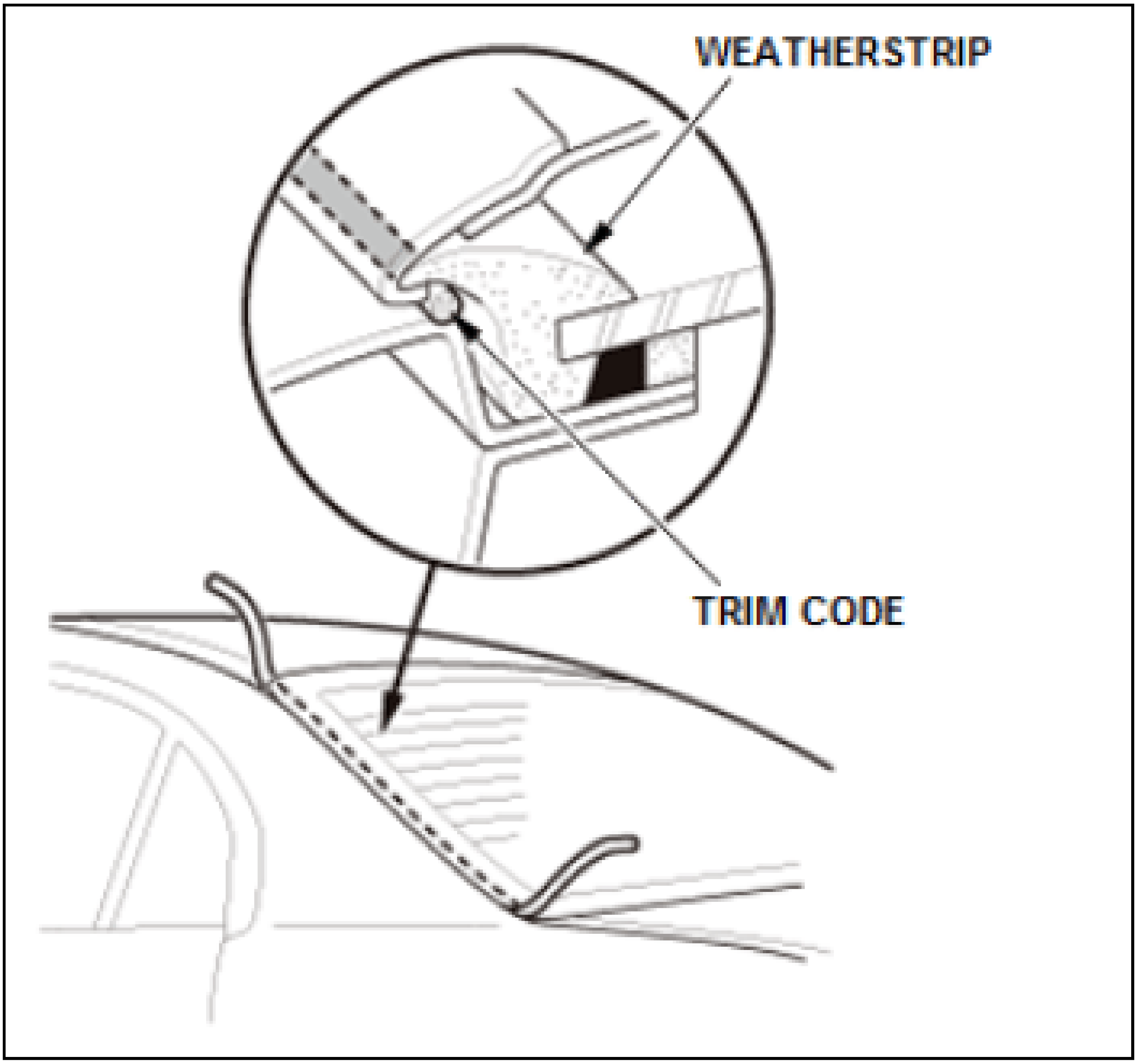
WEATHERSTRIP
TRIM CODE

Metal Surface Treatment

Metal Surface Treatment (Epoxy Primer Coating)

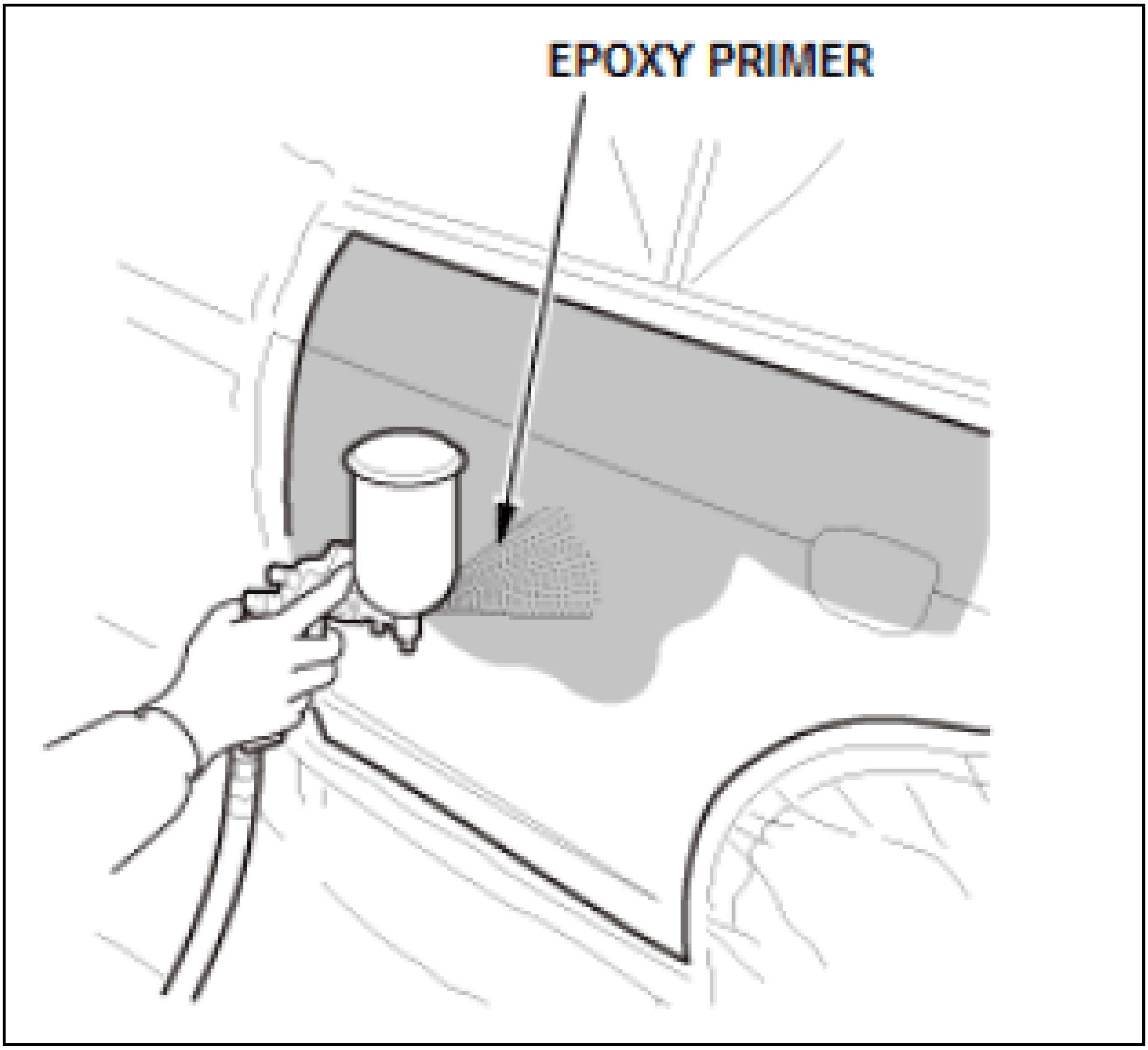

When bare metal surfaces are exposed to air after sanding, corrosion will form quickly. Apply epoxy primer to the surface in order to prevent corrosion and to improve topcoat adhesion:

1. Mix the main agent with its additives and dilute it with the correct reducer/thinner.
2. Apply one or two layers using a spray gun or brush.
3. Allow the epoxy primer to dry.

Drying time should be around about 60 minutes at 68Â°F (20Â°C). Force-drying will improve the paint quality. Check for the epoxy primer manufacturer's product spec for the actual required drying time.

Selection Of Body Filler/Putty

There are different kinds of body filler or putty.

- Metal filler is good for rough filling when thickness is needed.
- Light-weight panel filler sands very smooth.
- Polyester putty which dries fast and sands very smooth, etc.

Each has its own characteristics, so choose a body filler or putty most suitable for the work being done. In the following work process example, we will use intermediate body filler/putty. This type has characteristics of both panel and polyester fillers.

Preparing Intermediate Filler/Putty

1. Stir the putty until it is a smooth consistency
2. Remove the required amount of filler/putty and place it on a mixing board. Then mix with the correct amount of hardener.
3. Knead and mix the filler and hardener with a spatula until the color becomes even. Be careful not to entrap air in the filler.

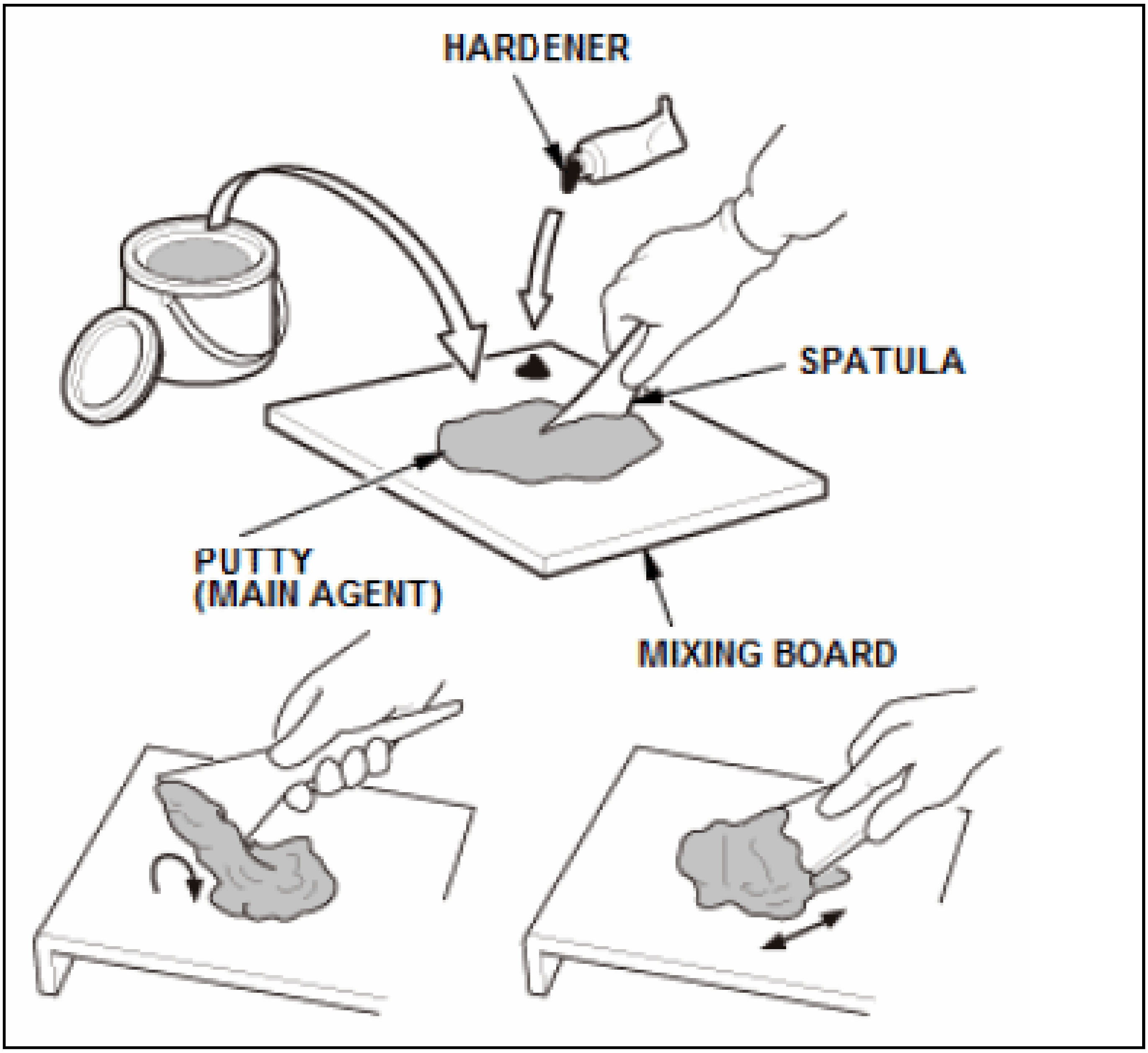
HARDENER
SPATULA
PUTTY
(MAIN AGENT)
MIXING BOARD

Application Of Intermediate Filler/Putty

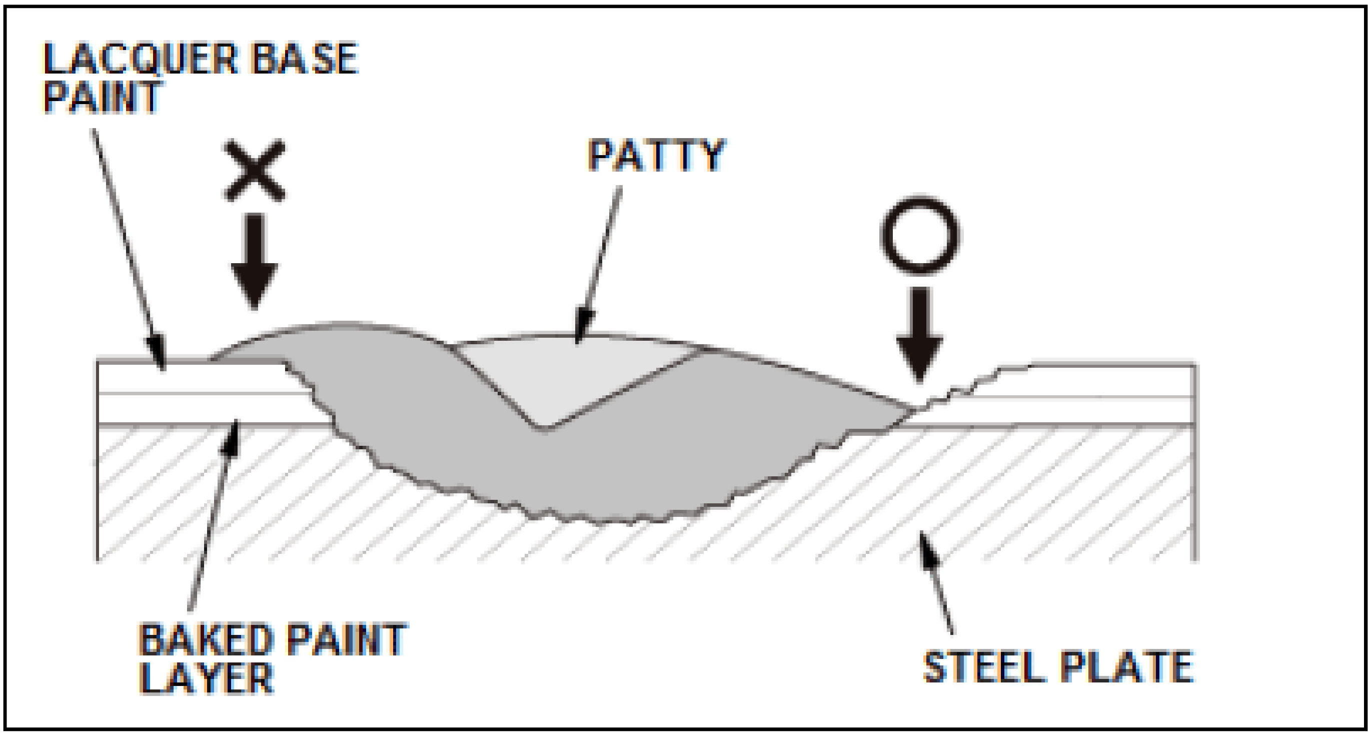
LACQUER BASE
PAINT
✕
PATTY
○
BAKED PAINT
LAYER
STEEL PLATE

Apply intermediate filler/putty with a spreader into the recess of the damaged area.

NOTE: **When the old paint layer is a lacquer type, be careful not to put the filler/putty directly on the old paint surface. If it happens, the filled area mark show through the new topcoat paint.**

Basics Of Body Filler/Putty Application

Do not apply filler/putty in a single thick layer. Instead, apply it in several thinner layer with sufficient drying time allowed between each.

NOTE: **Be careful not to trap air in the filler/putty.**

1. Covering:

   At the first application of the filler/putty, stand the spatula nearly straight up apply the filler/putty very thinly so that it penetrates into the hairline sanding scratches.

   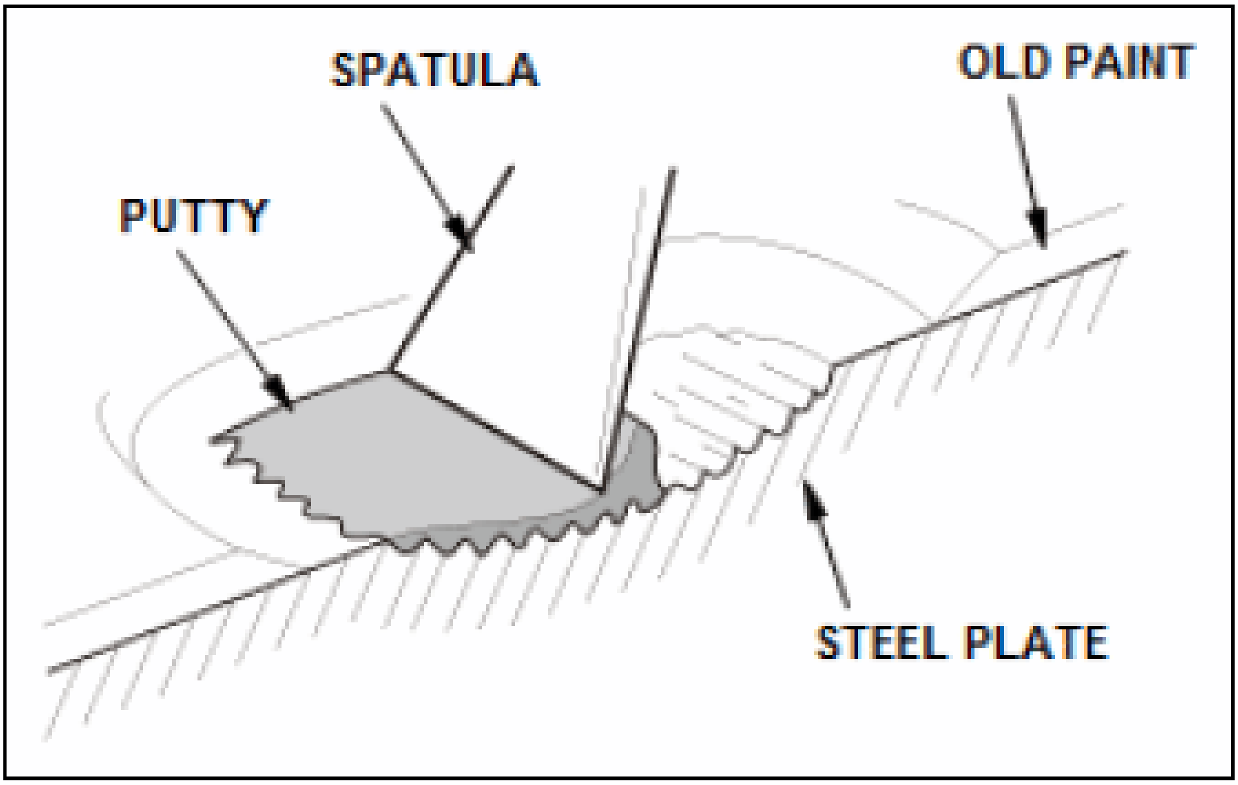

2. Thickening:

   Build up the filler/putty using a spreader held at a small angle.

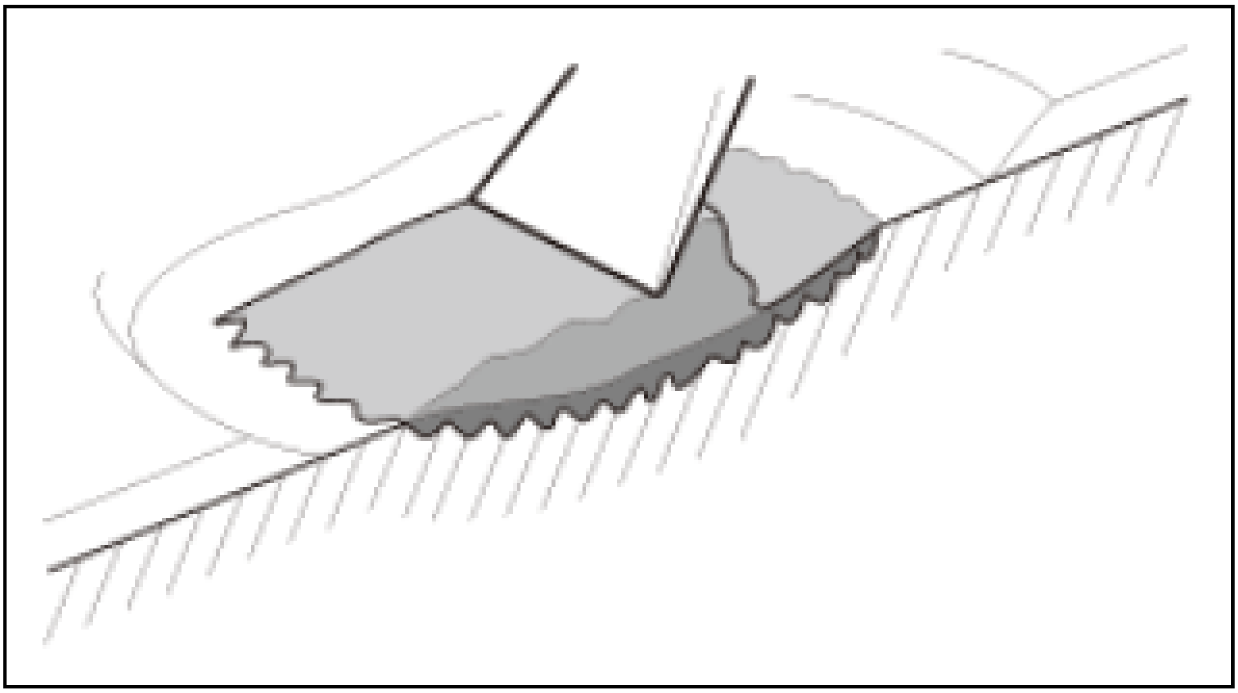

3. Flattening:
   - If the spreader leaves unevenness filler/putty surface, remove them by flattening the spreader's angle.

     NOTE: **Surface unevenness is cause by the step-shape at end of spreader. Don't push the spatula too hard, and completely smooth the filler/putty before it starts to dry up.**

     NOTE: **If a large amount of putty is applied at one time, air may be entrapped in the putty causing air pockets.**

   - Use the proper spreader direction and angle depending on the filler/putty surface desired for paint repair.

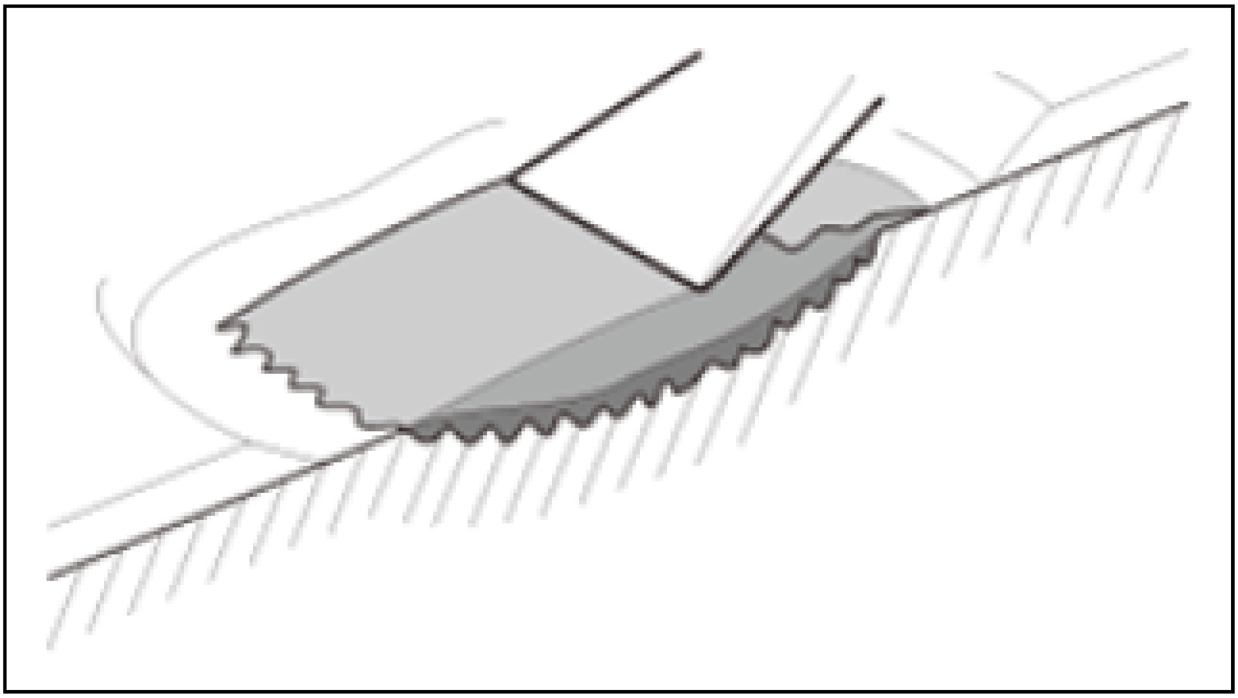

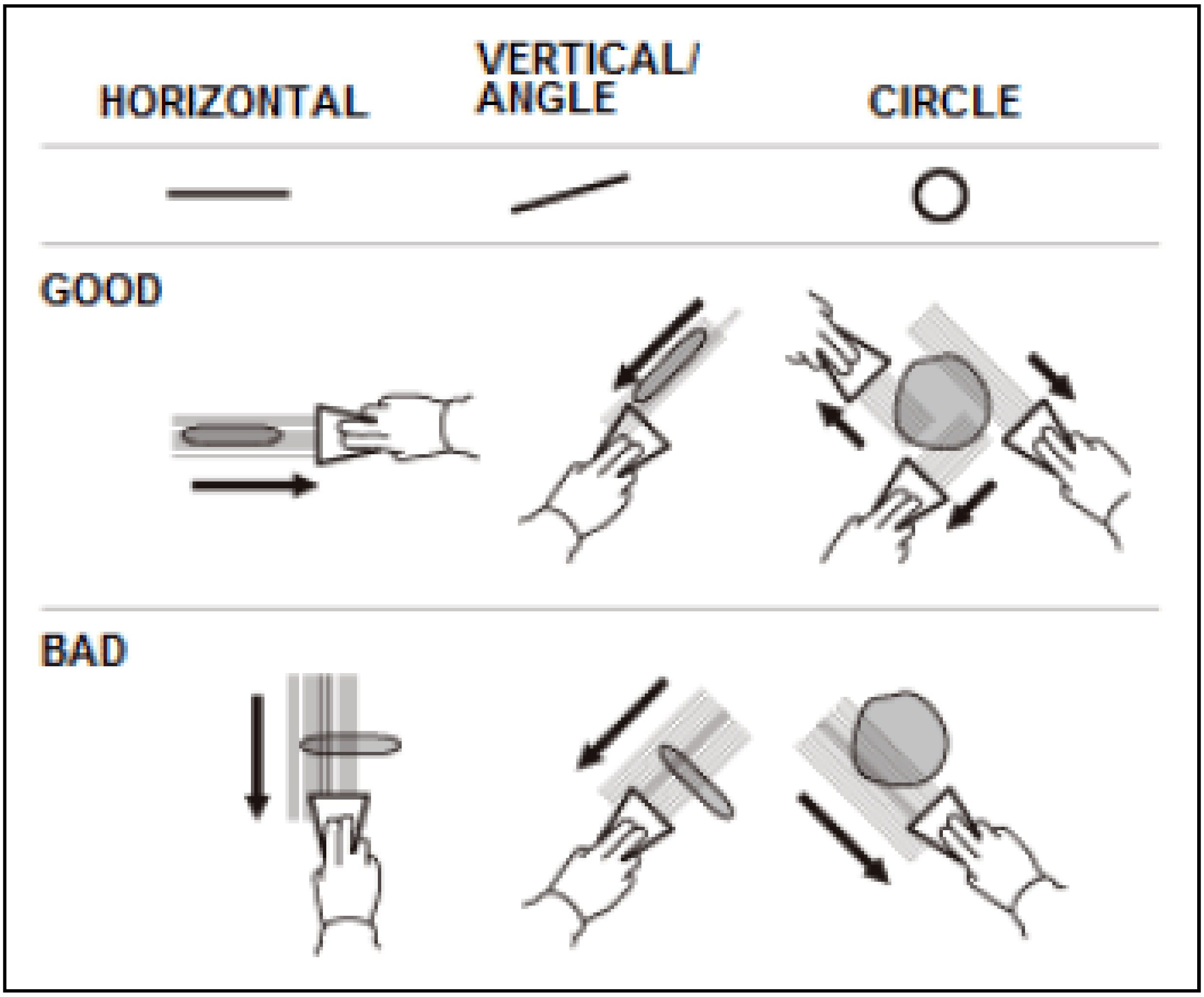
HORIZONTAL
VERTICAL/ ANGLE
CIRCLE
GOOD
BAD

Filler/Putty Application On Curved Surface

1. Apply filler/putty to the damaged area (a) with a plastic spreader.
2. Apply filler/putty to the damaged area (c) with a rubber spreader.
3. Apply filler/putty along the line on the reverse curved surface of the damaged area (b) using a rubber spreader.

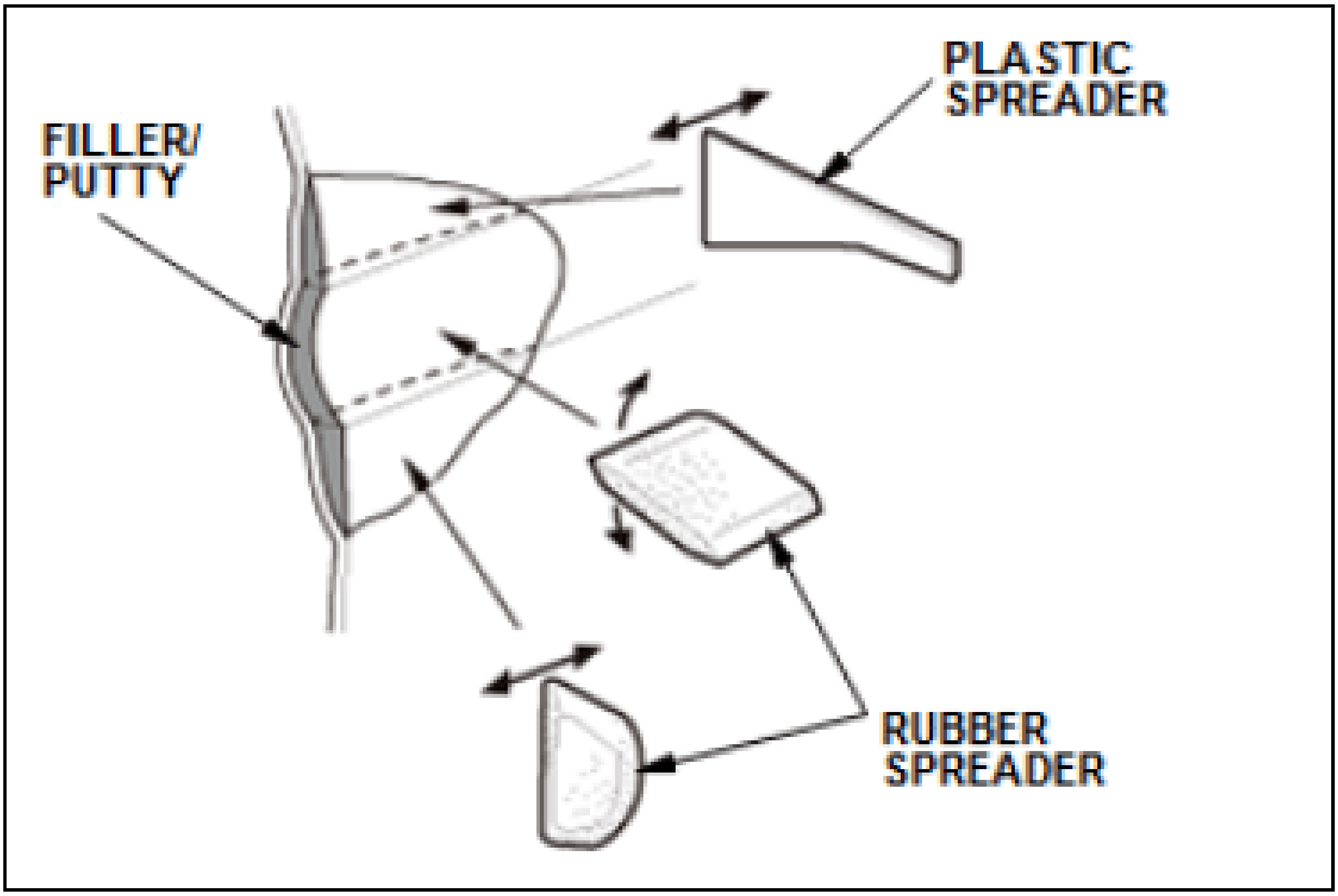
PLASTIC SPREADER
FILLER/ PUTTY
RUBBER SPREADER

Putty On Stamping Line

Use masking tape for applying filler/putty on a straight-line area like the stamping line.

1. Place the masking tape along the upper and lower stamping lines of the dam aged area (b).
2. Apply filler/putty to the damaged area (a) and surface (c).

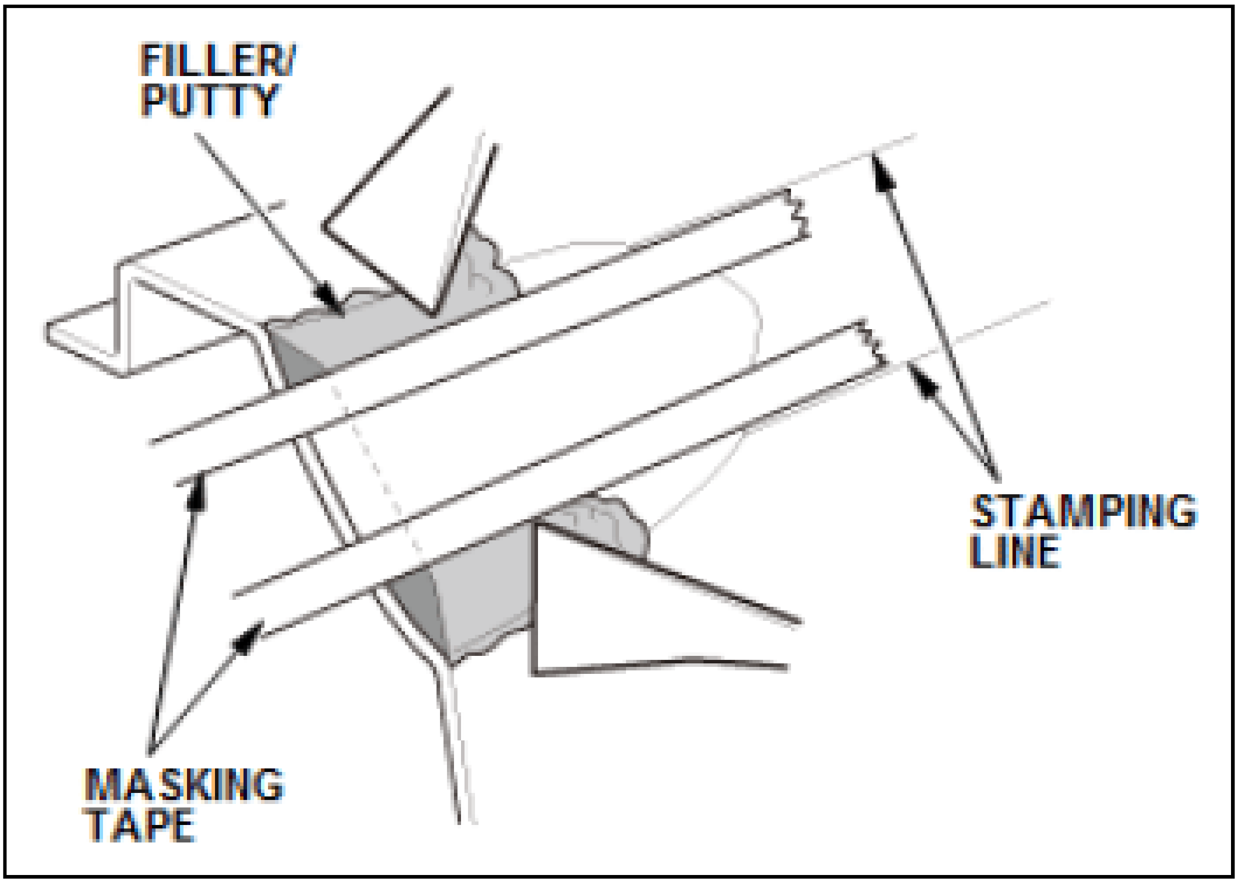
FILLER/ PUTTY
STAMPING LINE
MASKING TAPE

3. Remove the masking tape after putty dries.

4. Place the masking tape along the stamping lines of damaged area (a) and (c) and apply putty on the damaged area (b).

NOTE: **Disposing Filler/Putty**

- **Body filler or putty generates heat via thermal reaction while hardening.**

  Place leftover filler/putty into a fireproof disposal can.
- **Wait until the filler/putty cools down before disposing in a regular trash can.**
- **Do not dispose of filler/putty with flammable materials due to the risk of fire.**

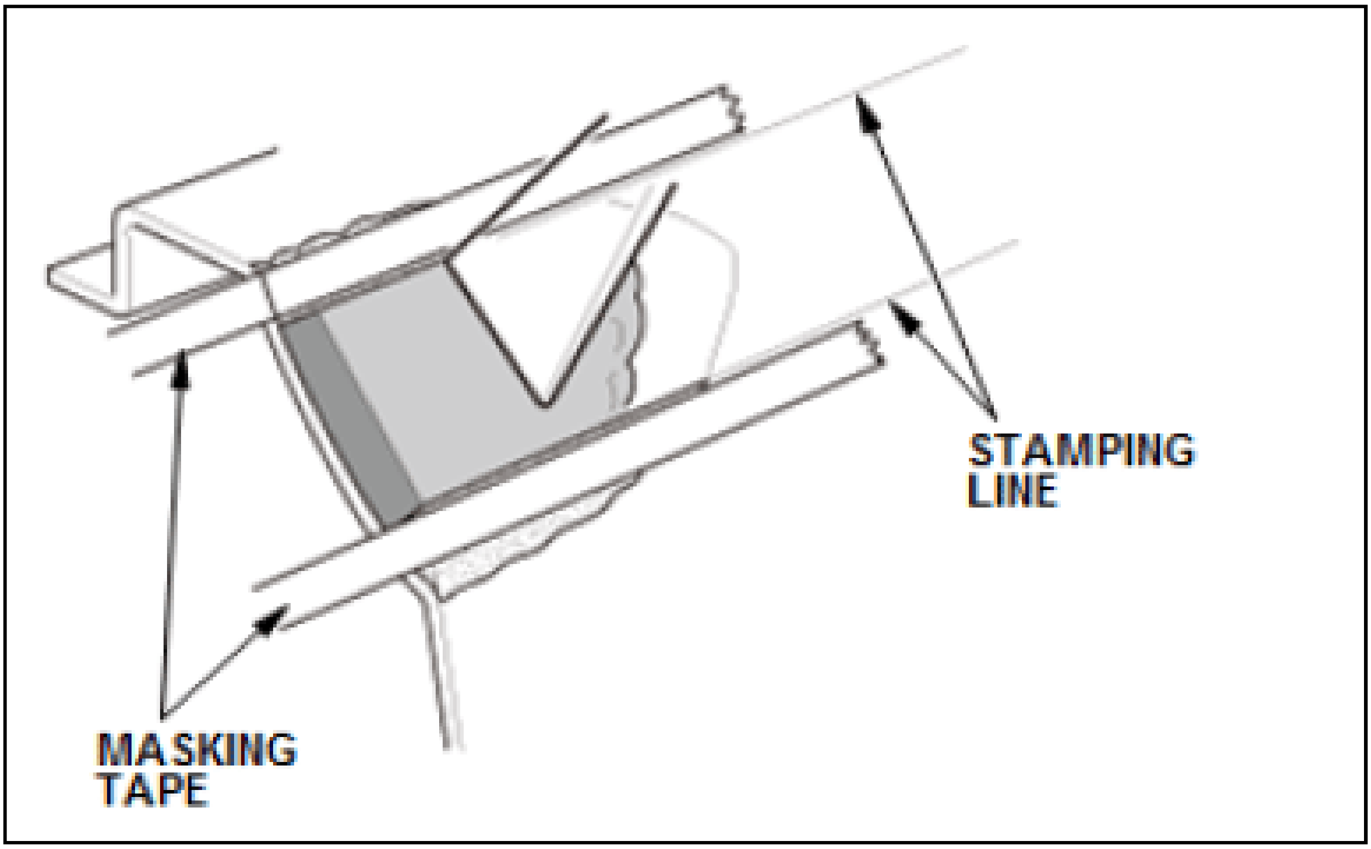

Drying Intermediate Filler/Putty

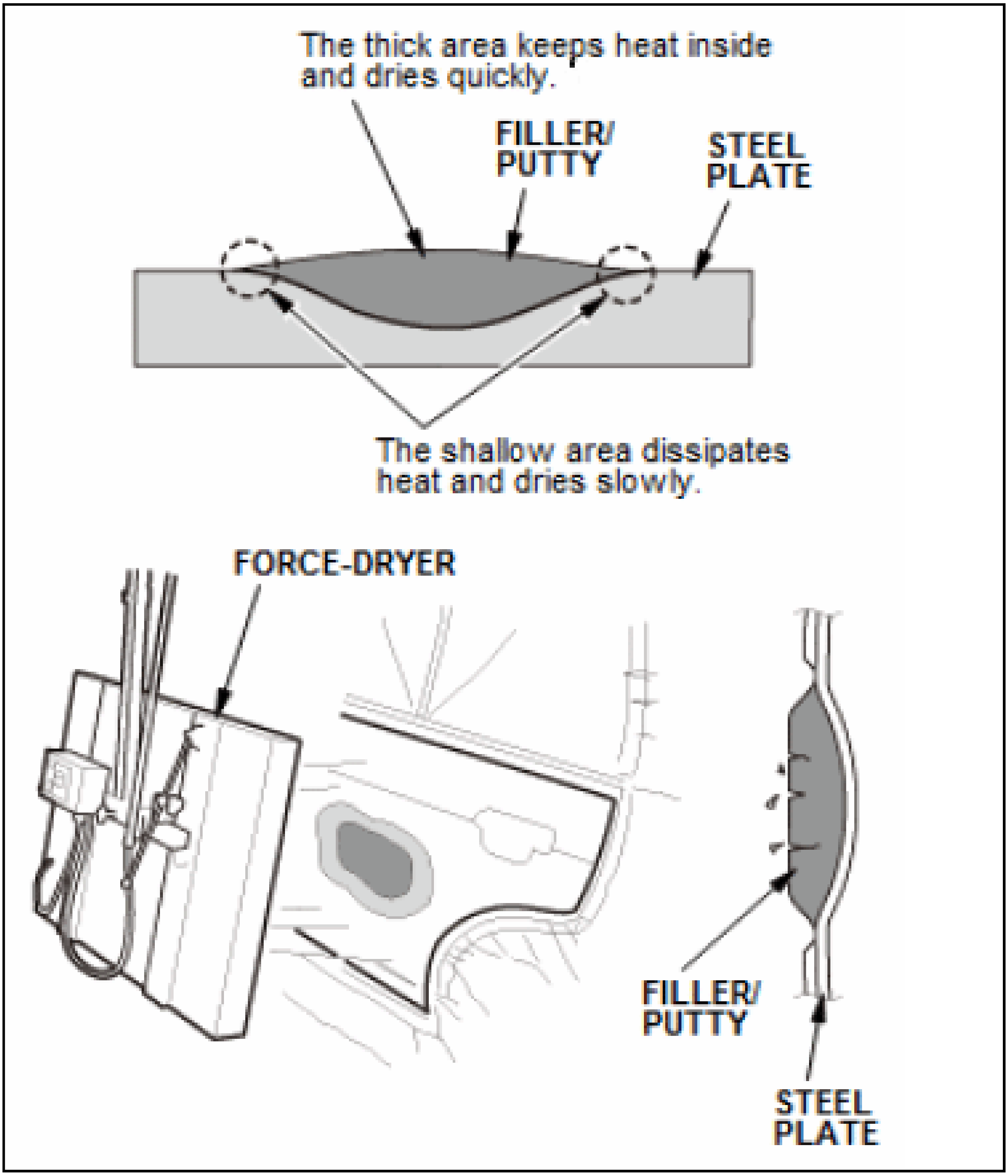
The thick area keeps heat inside and dries quickly.
FILLER/ PUTTY
STEEL PLATE
The shallow area dissipates heat and dries slowly.
FORCE-DRYER
FILLER/ PUTTY
STEEL PLATE

The drying time depends greatly upon ambient temperature. Filler/putty thickness also affects the drying time because a thermal reaction takes place while it is drying. Thicker filler/putty layers trap heat, increasing the internal temperature and accelerating the drying time.

NOTE:

- **Check the filler/putty manufacturer's instructions for drying time.**
- **Before starting forced drying, allow sufficient set-up time. Force dry at a temperature of approximately 122-140Â°F (50-60Â°C). Higher temperatures may degrade the hardener.**
- **Avoid rapid heating or cooling as it may cause distortion of the steel body panel and cracking or peeling of the filler/putty.**

Sanding Of Intermediate Filler/Putty

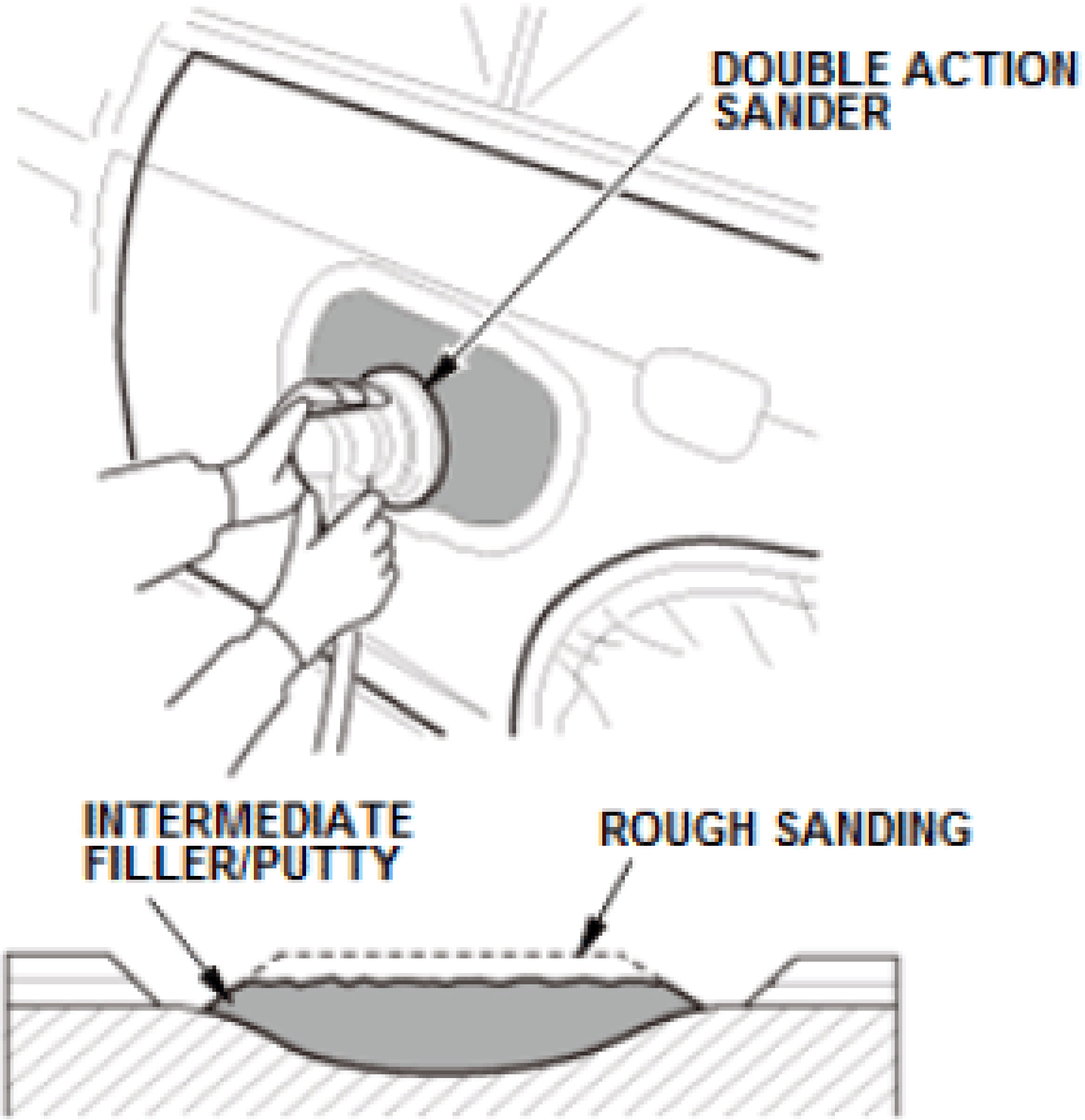

1. Sanding with Sander (Rough Sanding):

   Use a double action sander or orbital sander with P80 to P120 sandpaper depending on the filler/putty condition and sanding surface area. Sand the filler/putty surface to a rough surface shape. Filler/putty must be dry-sanded.

   NOTE: **Use a dry sprayed guide coat to visually check the flatness of the filled surface.**

2. Manual Sanding (Rough Surfacing):

   While feeling the rough sanded surface with your fingertips, bring the surface to the final finish using P120 to P180 sandpaper together with a file and a rubber block.

   NOTE: **Be careful not to sand the area excessively.**

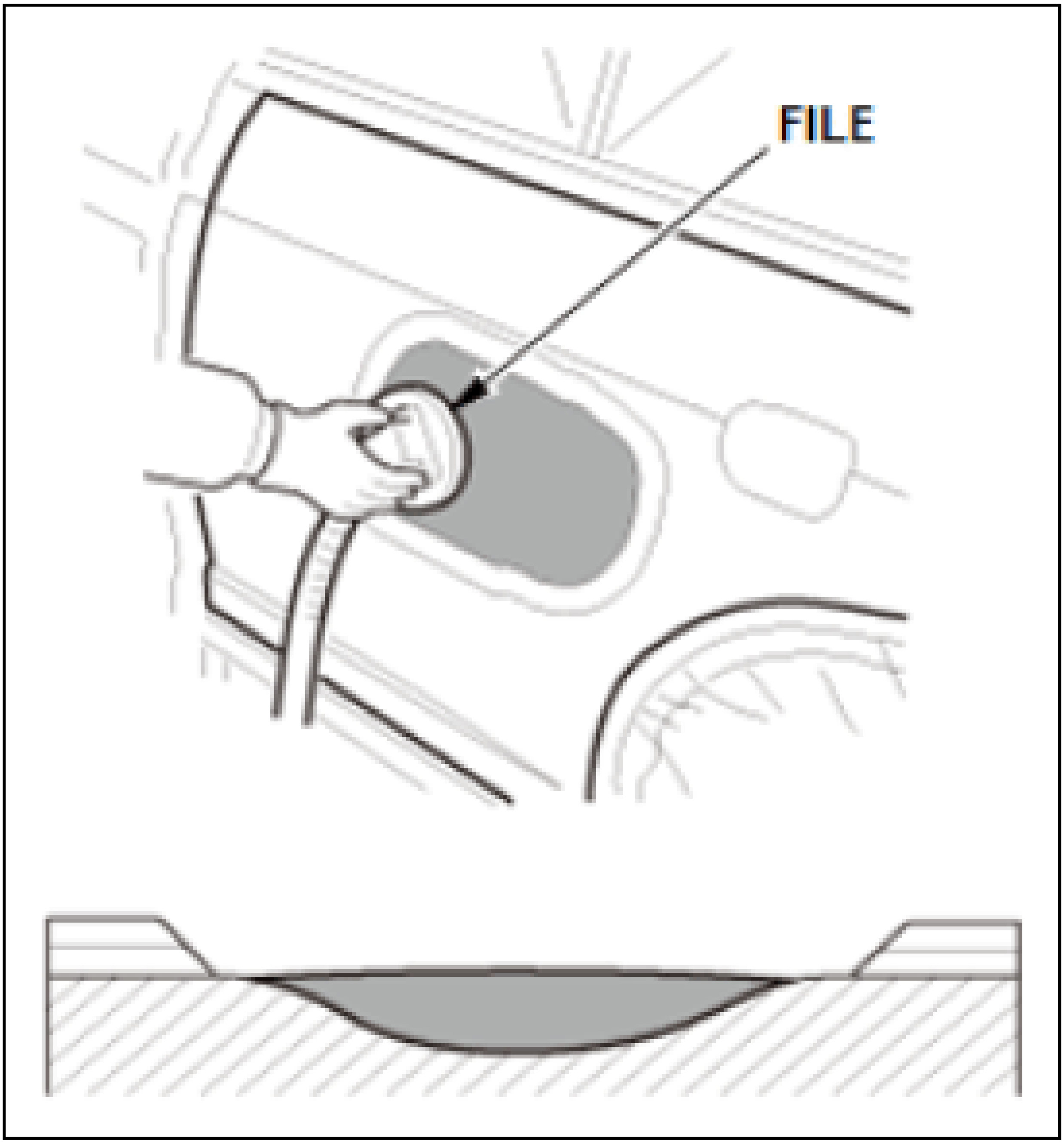

3. Confirmation after Intermediate Filler/Putty Surfacing:
    - Check the surface for cavities or hairline scratches by feeling it with your fingertips. Then move on to the primer-surfacer process.
    - If a dent could not be filled with body filler or putty the first time, or there are low spots apply additional filler/putty again to correct them. Use polyester filler/putty in this case.
    - Use a surform tool when rough sanding wax type metal filler because it is difficult to sand.
    - Sanding becomes more difficult after the filler/putty hardens too much. It is the best to sand approximately 2 to 10 minutes from the start of hardening. Note that the edges of body filler/putty adhere slower than the center, so start sanding from the center in a radial direction.

NOTE: **After a metal puttied surface is sanded, a number of hollow cavities remain on its surface. Because it is difficult to fill tiny air cavities with a primer-surfacer, use polyester filler/putty instead.**

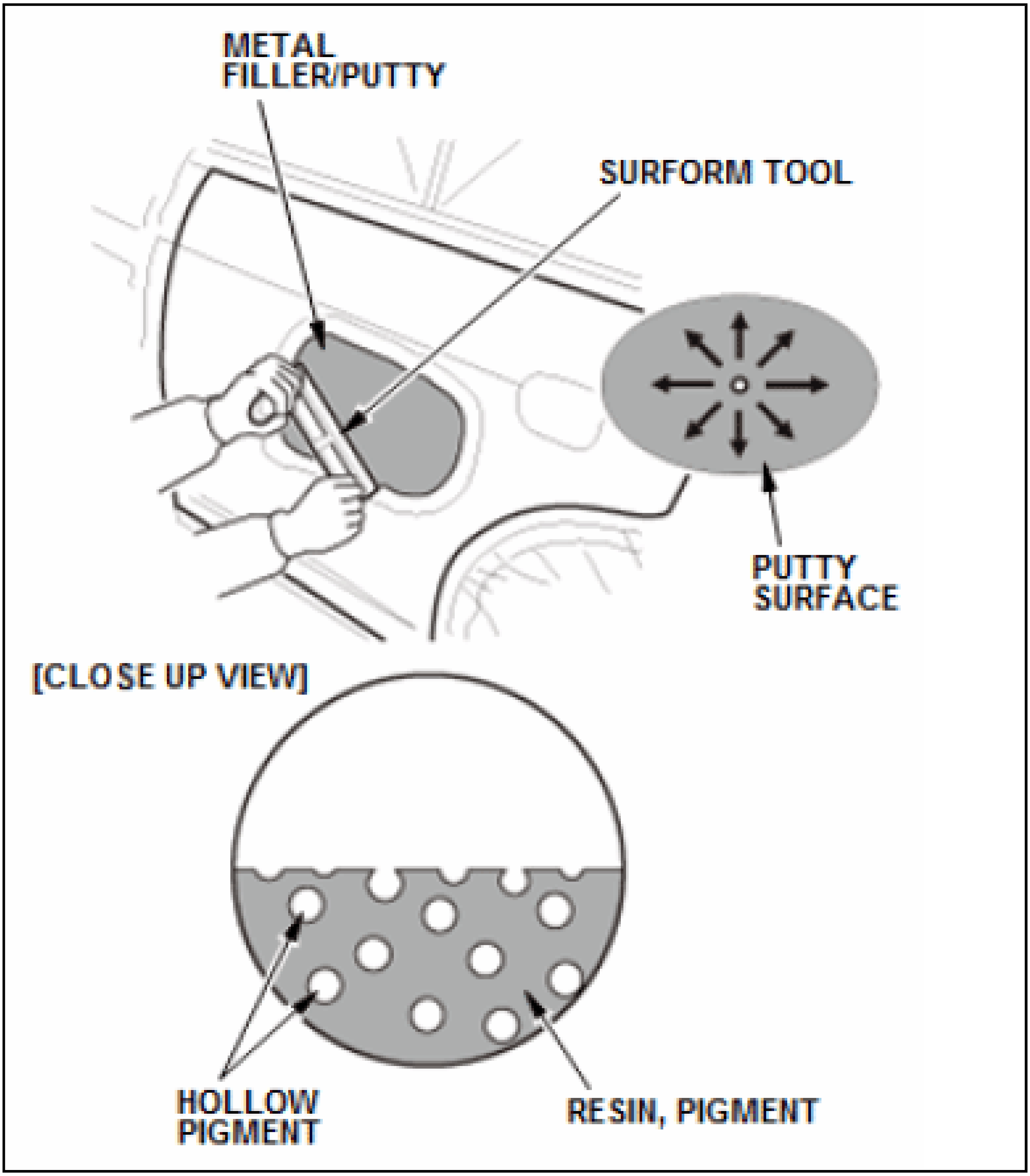
METAL FILLER/PUTTY
SURFORM TOOL
PUTTY SURFACE
[CLOSE UP VIEW]
HOLLOW PIGMENT
RESIN, PIGMENT

Cleaning And Degreasing

Blow air on the filled surface and remove any oily residue with solvent.

NOTE: **Remove sanding residues from cavity holes.**

Preparation Of Polyester Filler/Putty

Mix the filler/putty with the required amount of hardener and knead it until its color becomes even.

Application Of Polyester Filler/Putty

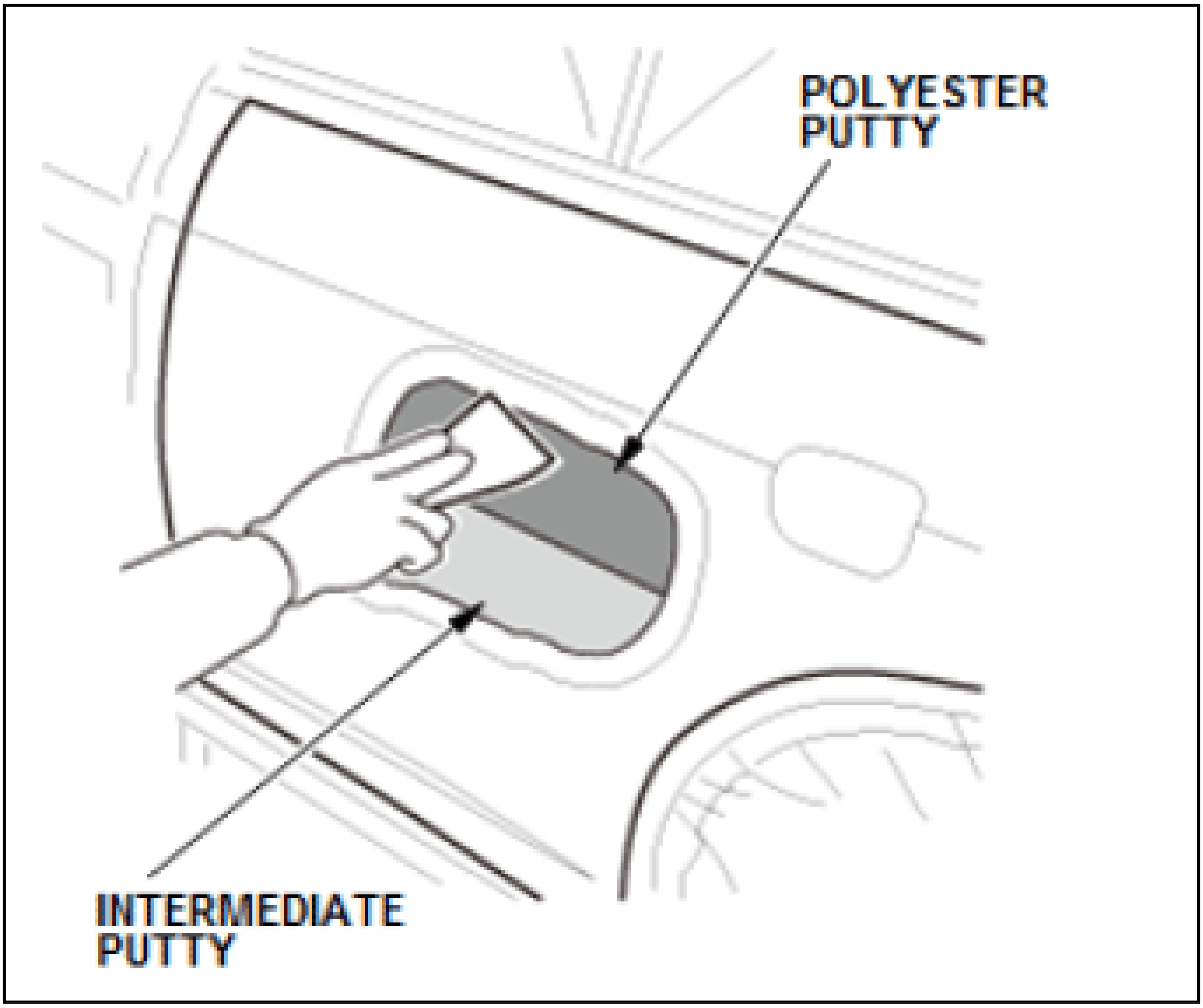
POLYESTER PUTTY
INTERMEDIATE PUTTY

Apply polyester filler/putty.

Drying Polyester Filler/Putty

Dry polyester filler/putty.

Sanding And Finishing Polyester Filler/Putty

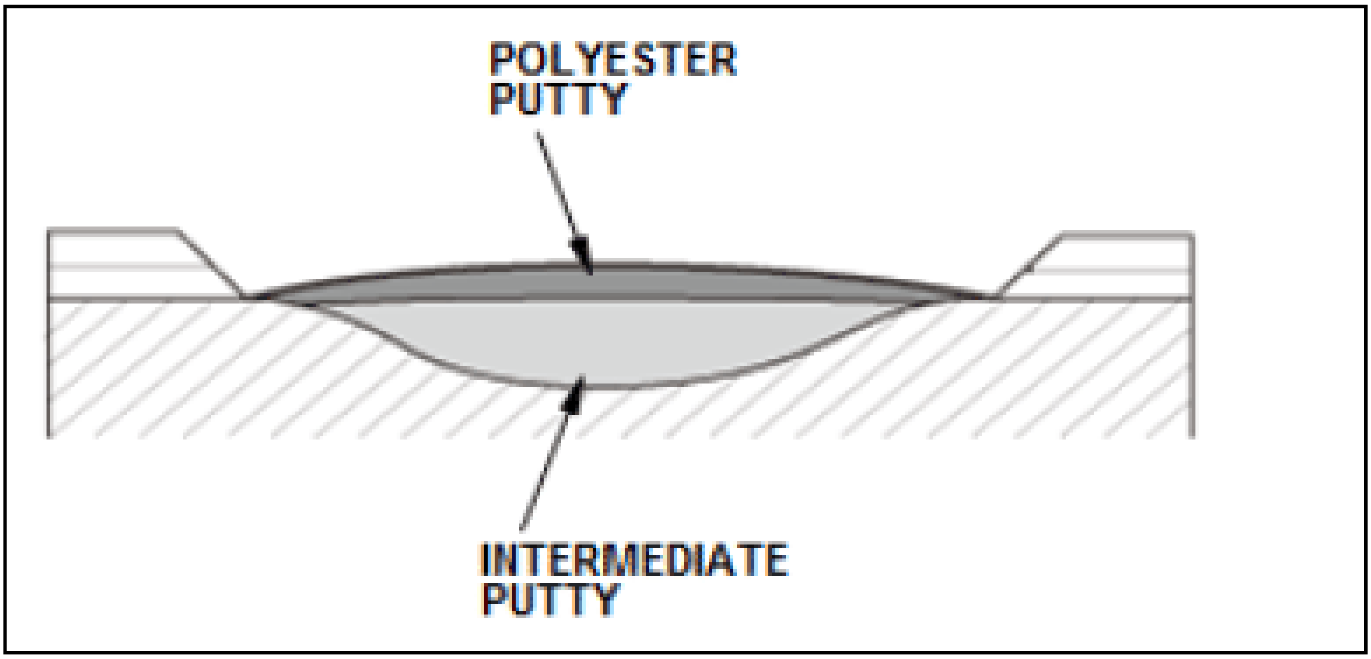
POLYESTER PUTTY
INTERMEDIATE PUTTY

- Use P180 to P240 sandpaper when manually sanding.
- Use P120 to P180 sandpaper when using a disc sander.

NOTE: **Be careful not to sand excessively.**

Featheredge (Scuffing For Basecoat)

- Depending upon the situation, make the sanded old paint layer an even slope without steps.
- For the old paint layer where primer-surfacer will be applied, scuff it with sandpaper for better adhesion to the new paint

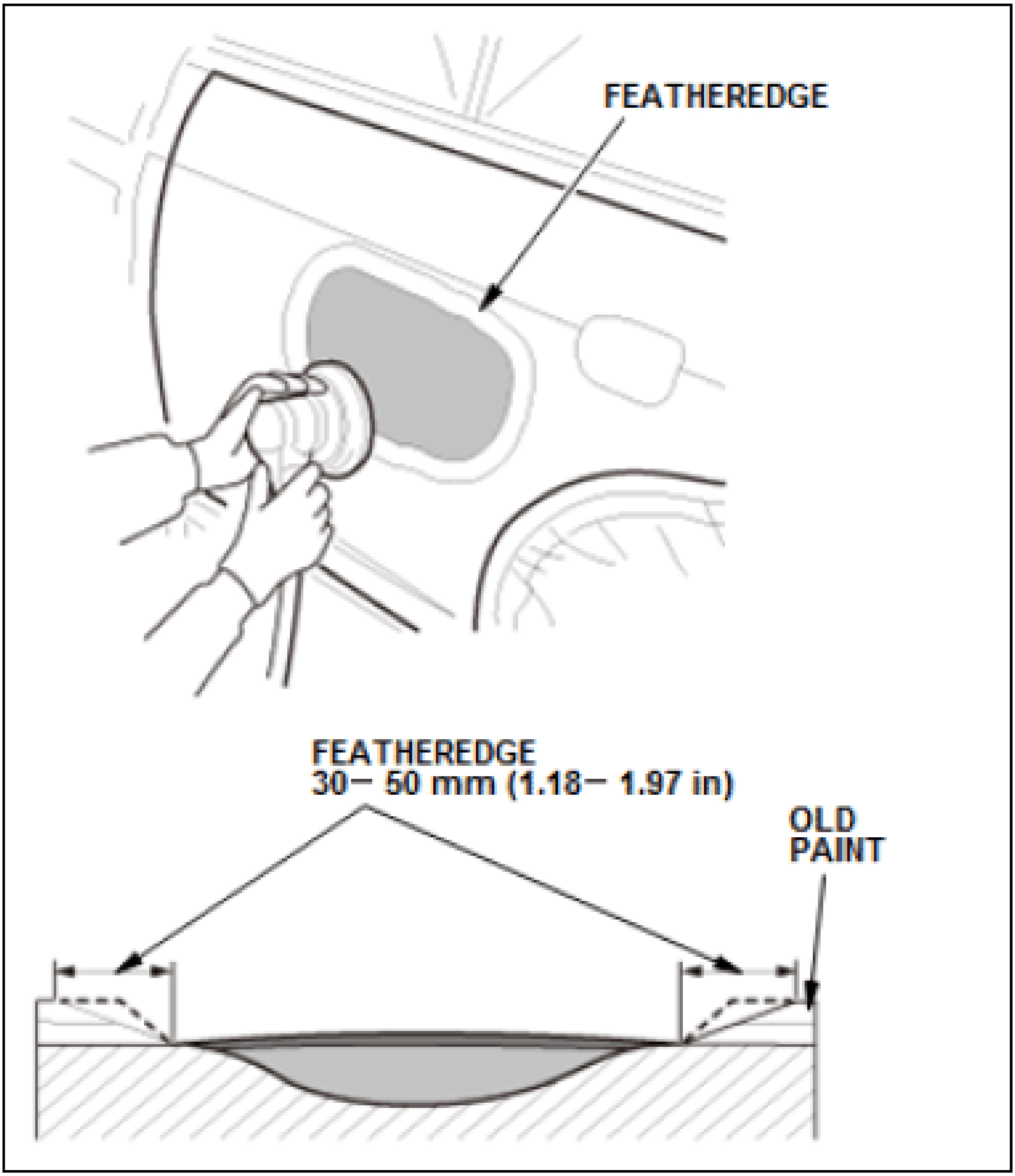

Paint Stripping

If Using Paint Stripper

- Use a chemical paint stripper to remove the old paint layers if the damage is too deep or its deterioration is extensive.

- Paint stripper can also be used on large repair areas.

1. Place the masking tape about 1-2 cm (0.4 - 0.8 in) inside from the edge of the area being stripped to protect the surrounding surfaces.

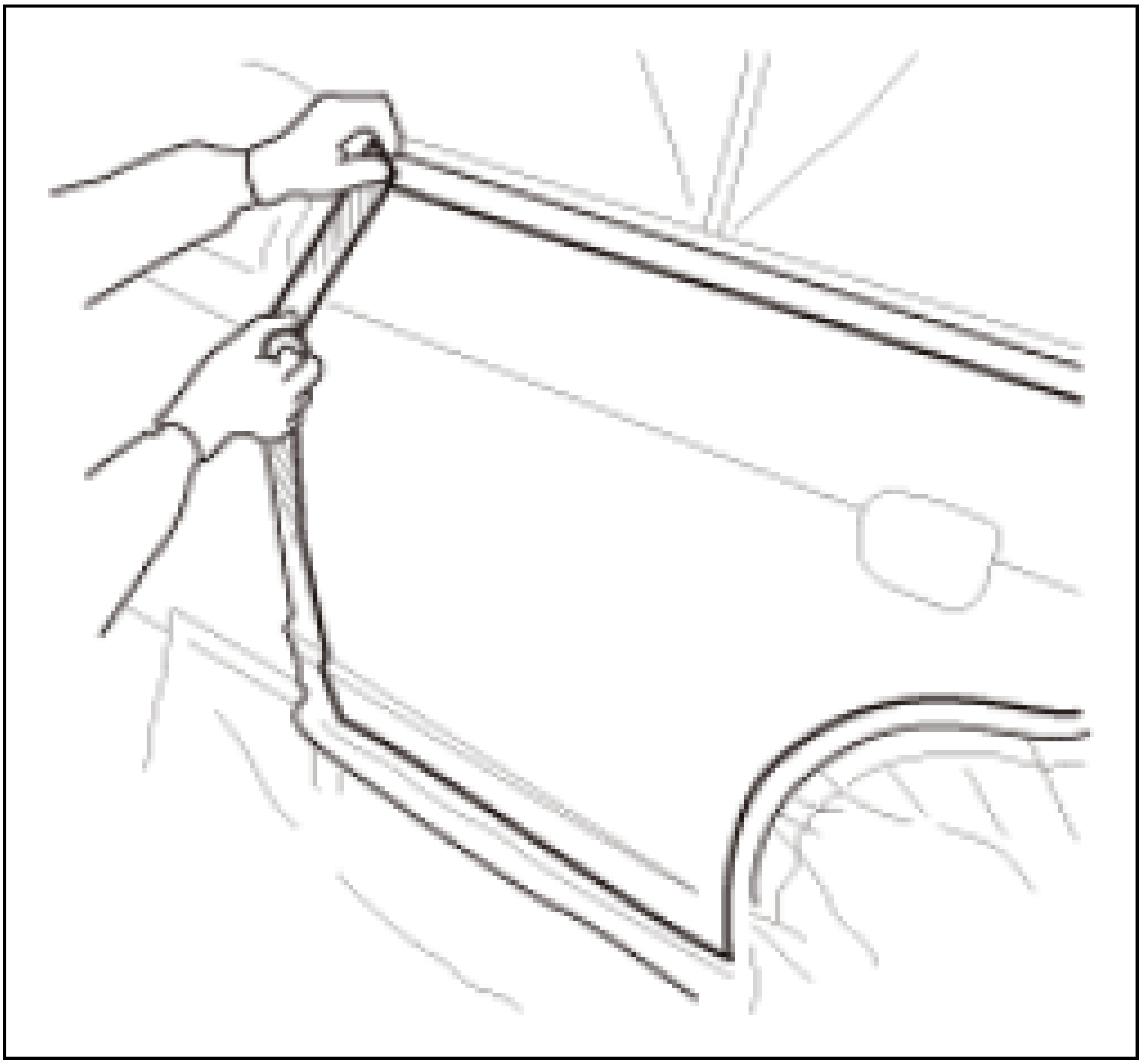

2. Sand the surface to be stripped with P60 to P80 sandpaper to improve penetration of the paint stripper.

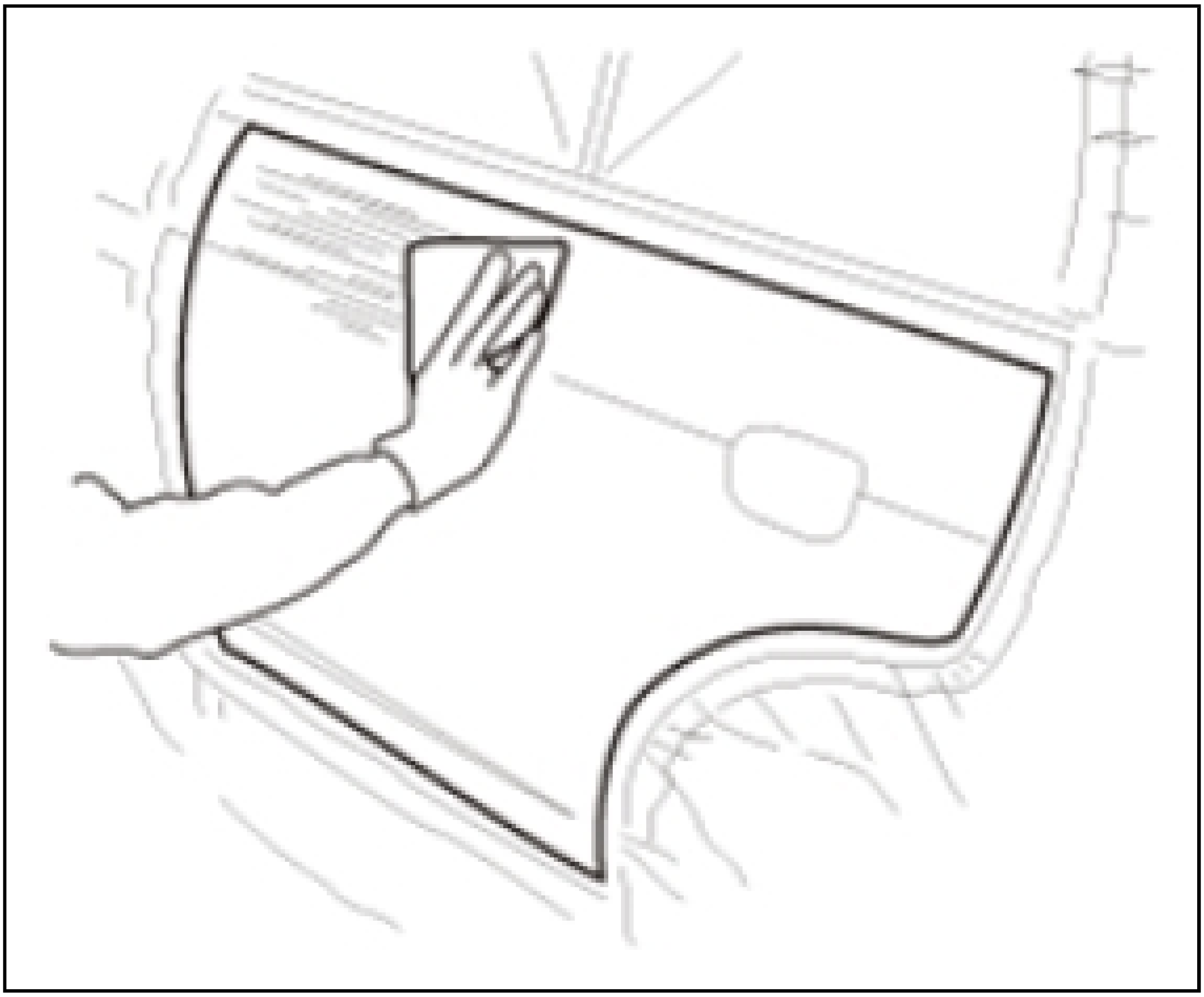

3. Liberally apply the paint stripper on the surface with a brush in one direction only.

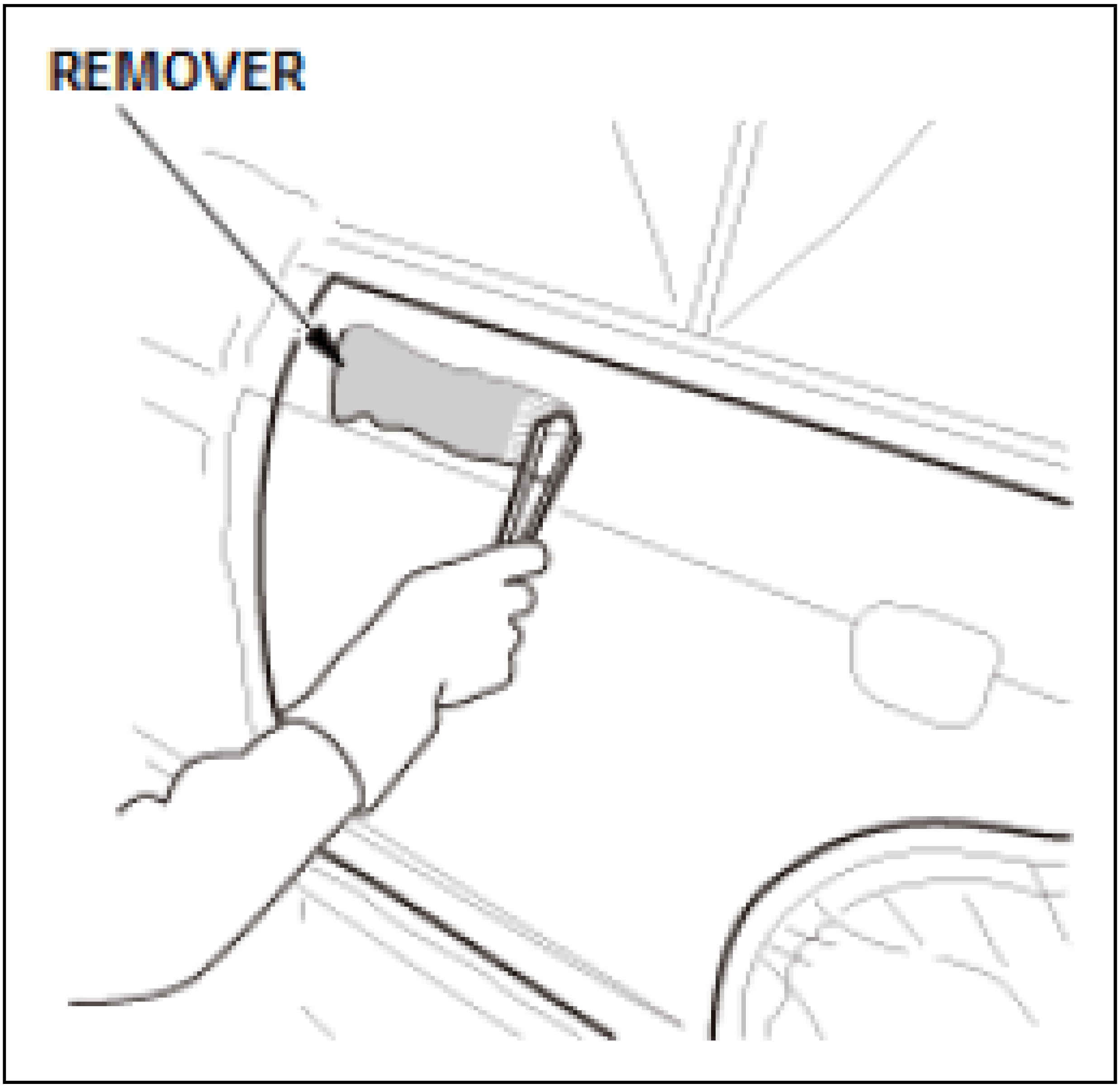

4. When the paint layer becomes softened, remove it with a scraper or spatula.
5. Remove any remaining paint stripper and other residue by rinsing thoroughly with water.
6. If any paint or masking tape marks remain on the surface, sand them off with P60 to P80 sandpaper. Clean the area using degreaser after sanding.

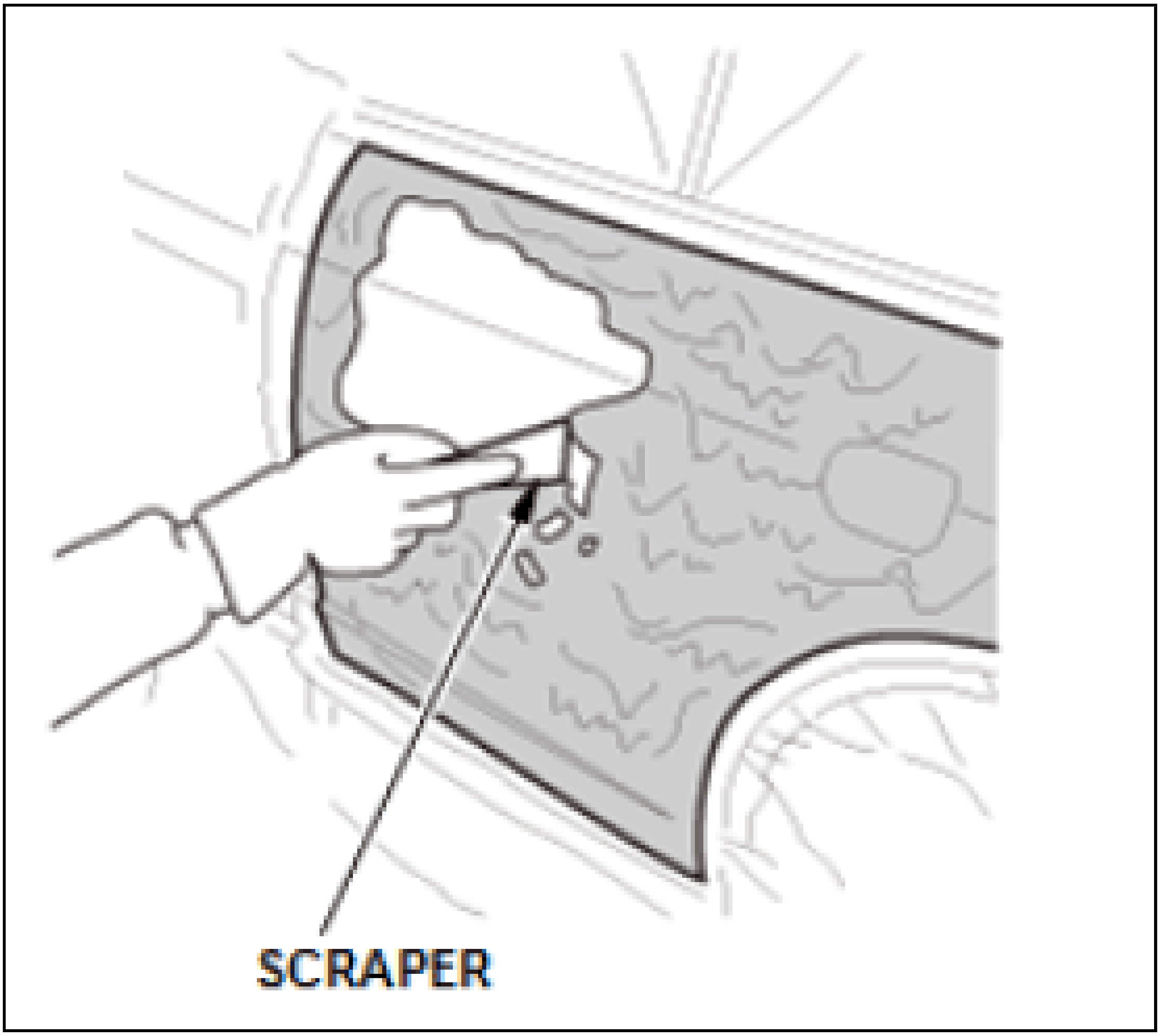

Removal With Disc Sander

If the repair area is small, use a disc sander to remove the old paint layer.

NOTE: **There is no need to apply excessive pressure to the sander. Press down lightly on the sanding disc at an angle of 10Â° - 15Â° against the paint layer.**

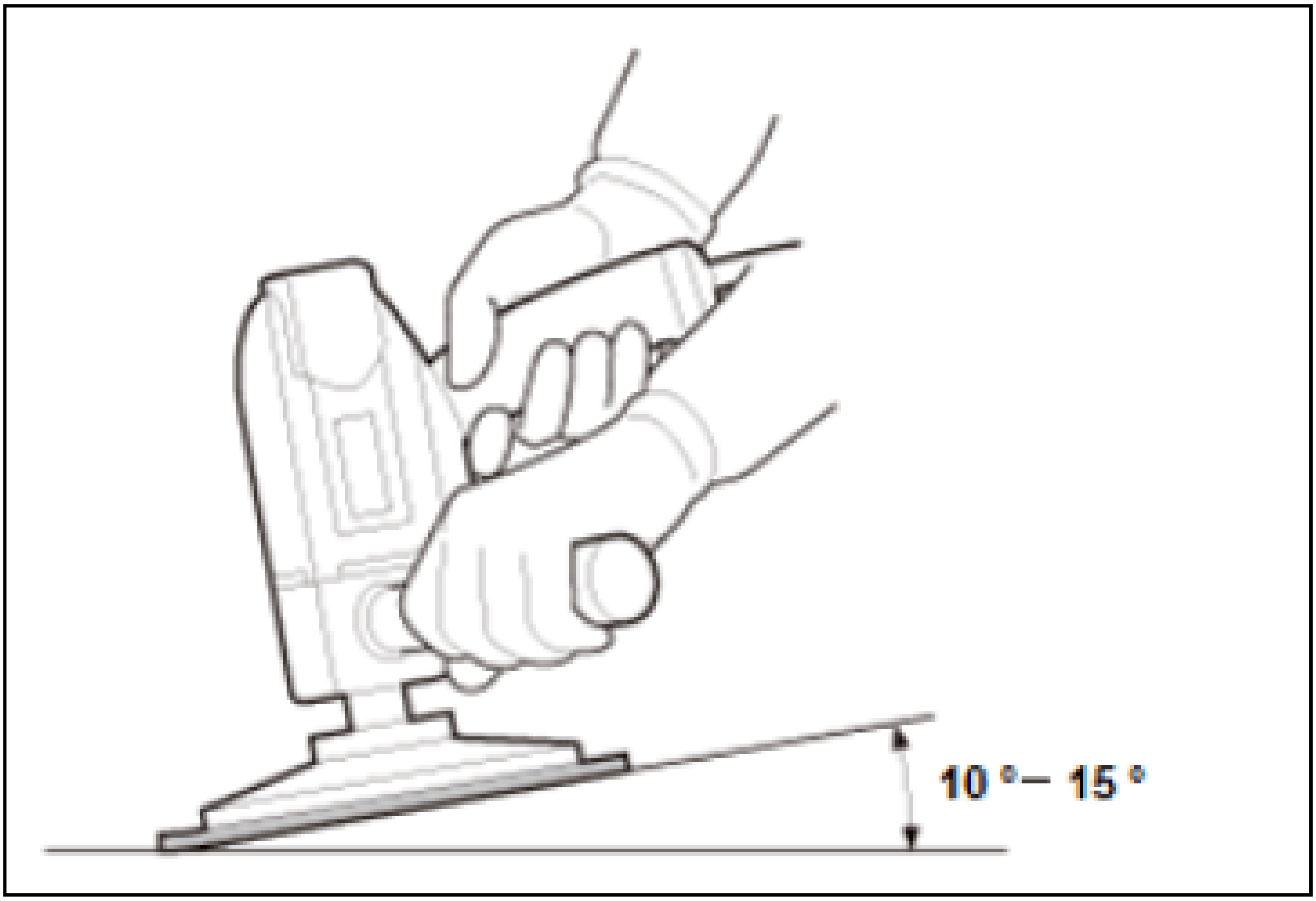

Attach P60 to P80 sandpaper to the disk to sand the damaged or deteriorated area smooth.

NOTE: **Remove any decals or trim attachment tape using a razor spatula or scraper. Use a degreaser to completely remove any glue residue.**

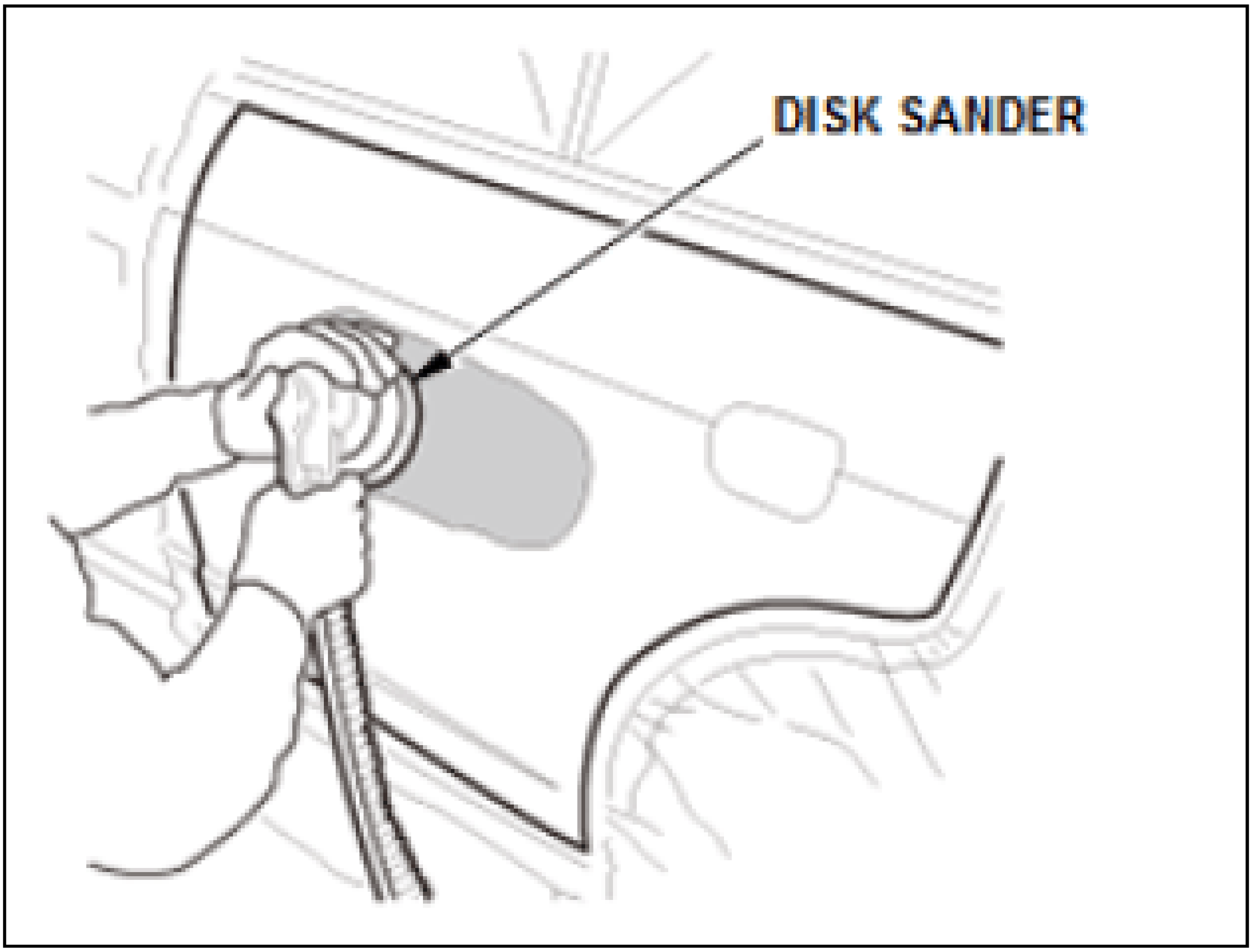
DISK SANDER

Polishing

1. Removing Small Cavities or Paint Grains:
    - Remove small cavities and paint grains with a honing stone or wet-or-dry sandpaper.
    - Start with a rough wet-or-dry sandpaper and finish up with a fine P2000 to P3000 paper.

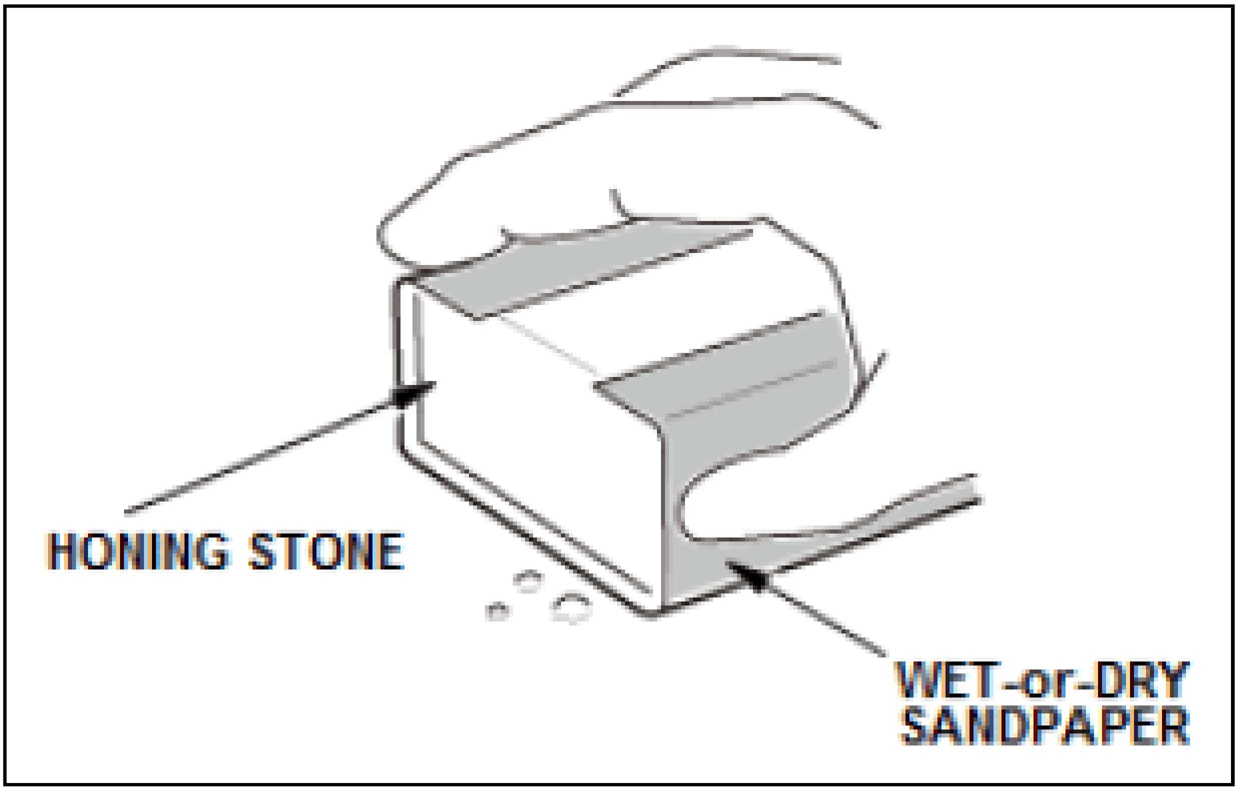
HONING STONE
WET-or-DRY SANDPAPER

2. Finishing of Painted Surface:

Sand the painted surface in one direction with water or soapy water using P1200 to P3000 wet-or-dry sandpaper to flatten the surface. Wipe off any remaining sanding particles using a cloth.

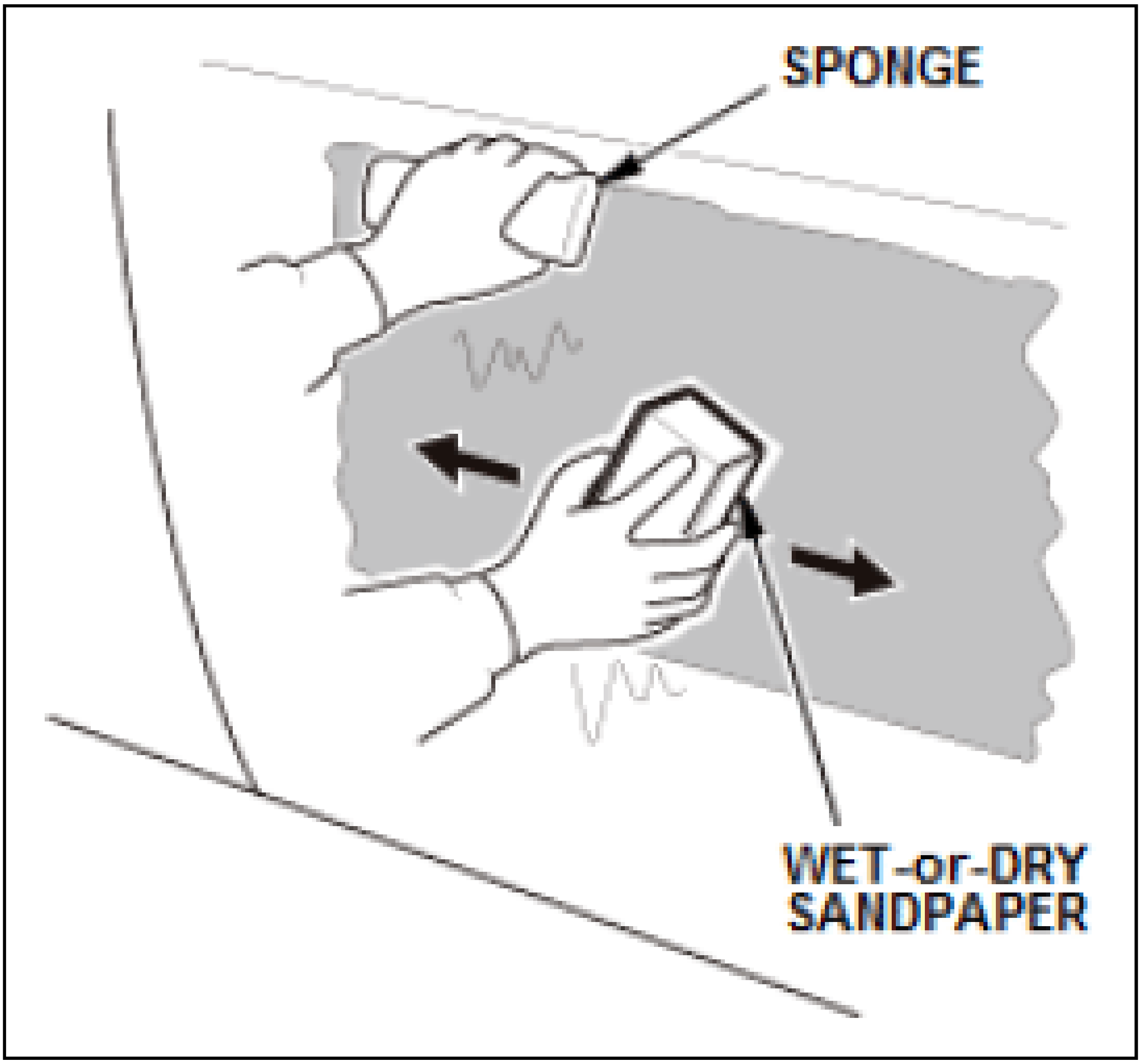

3. Matching Surface Quality and Polishing:
    - With fine compound, polish the surface with a polisher set with a towel buff or intermediate sponge buff to remove hairline sanding scratches. Finally, polish it out with finer compound.
    - Remove compound residue frequently to avoid damaging the paint surface.

NOTE: **Turn on the polisher power switch after it is touching the painted surface.**

Polishing

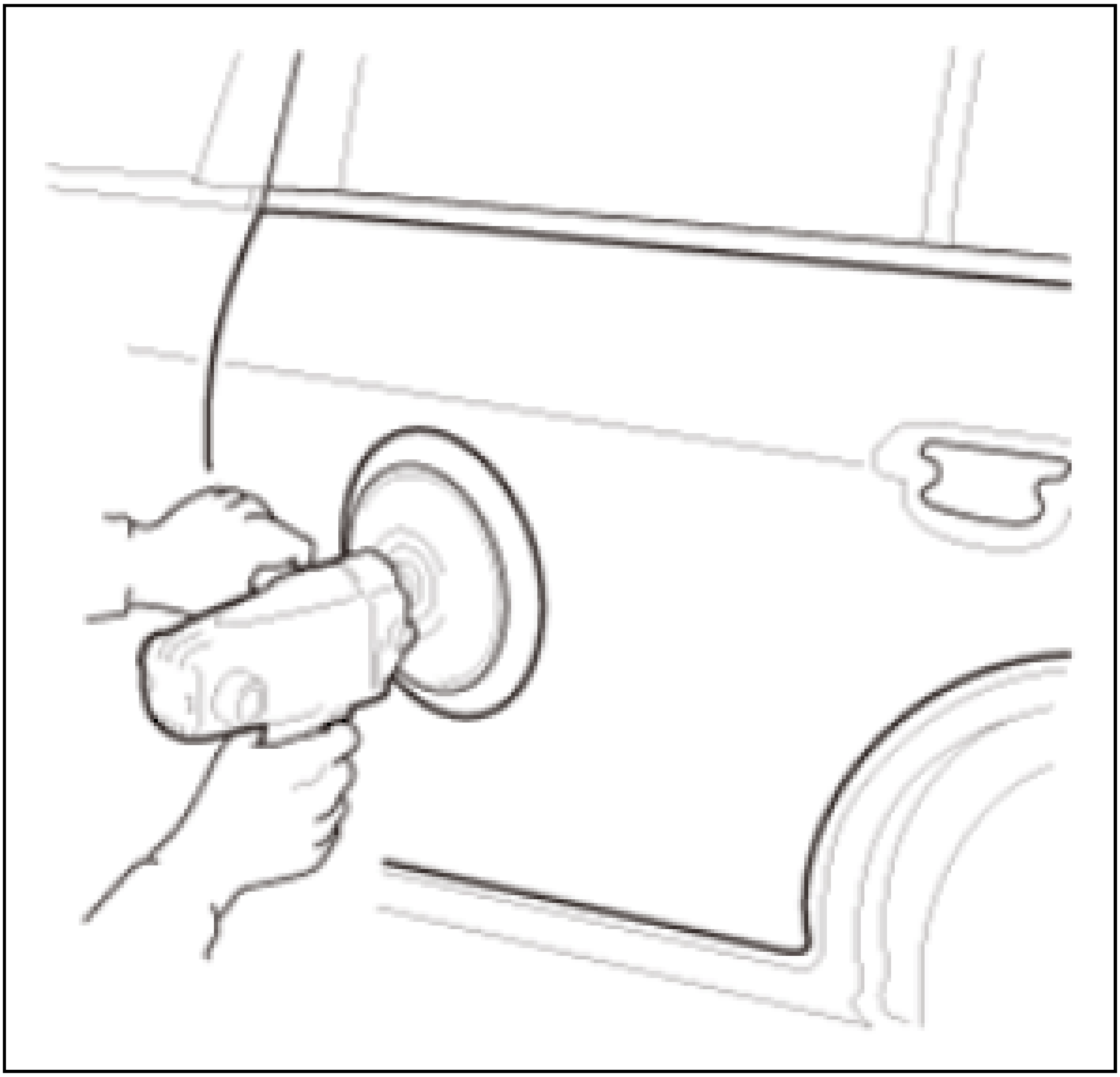

Finessing

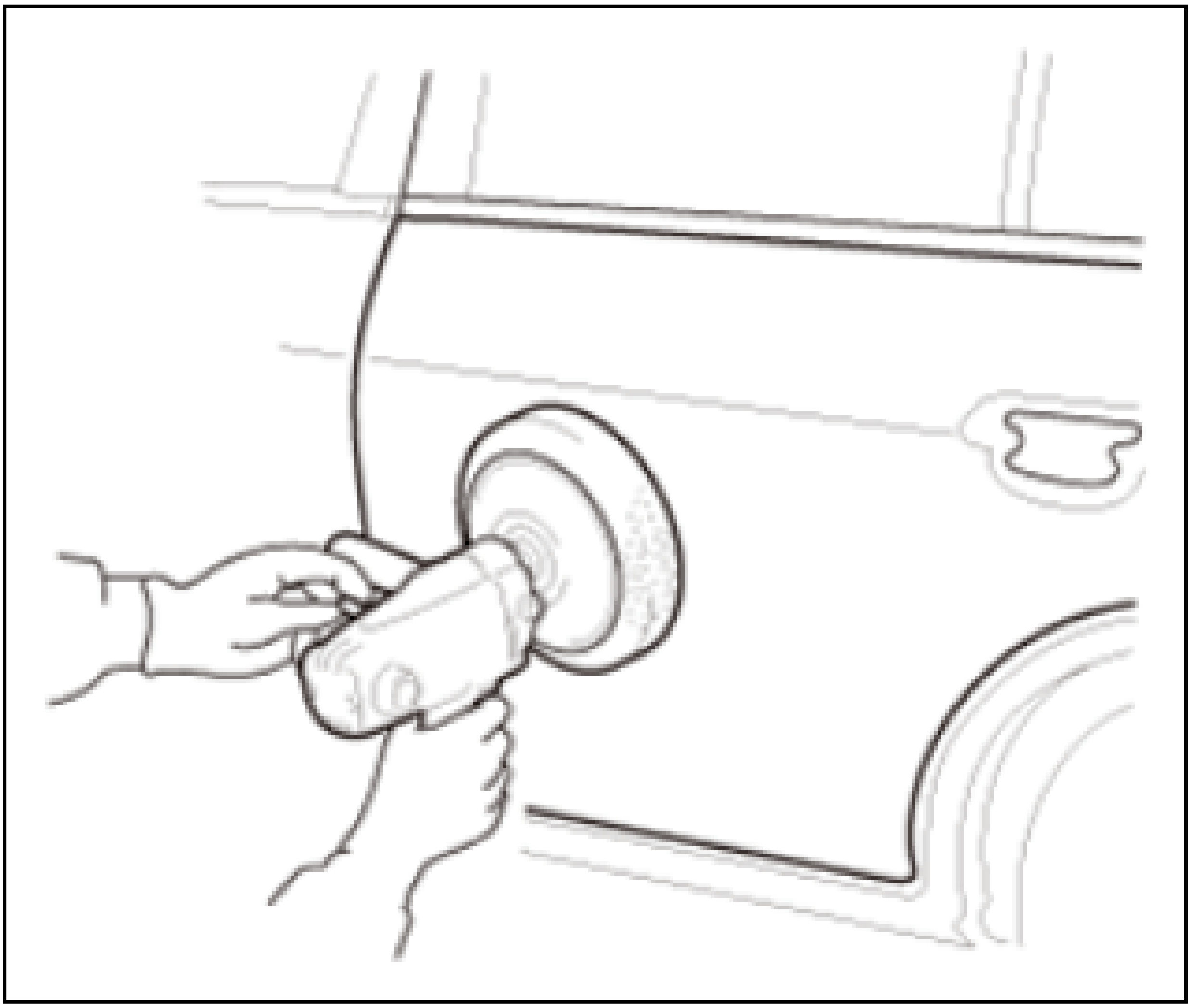

4. Move the polisher along the panel surface parallel to the ground (horizontal direction).

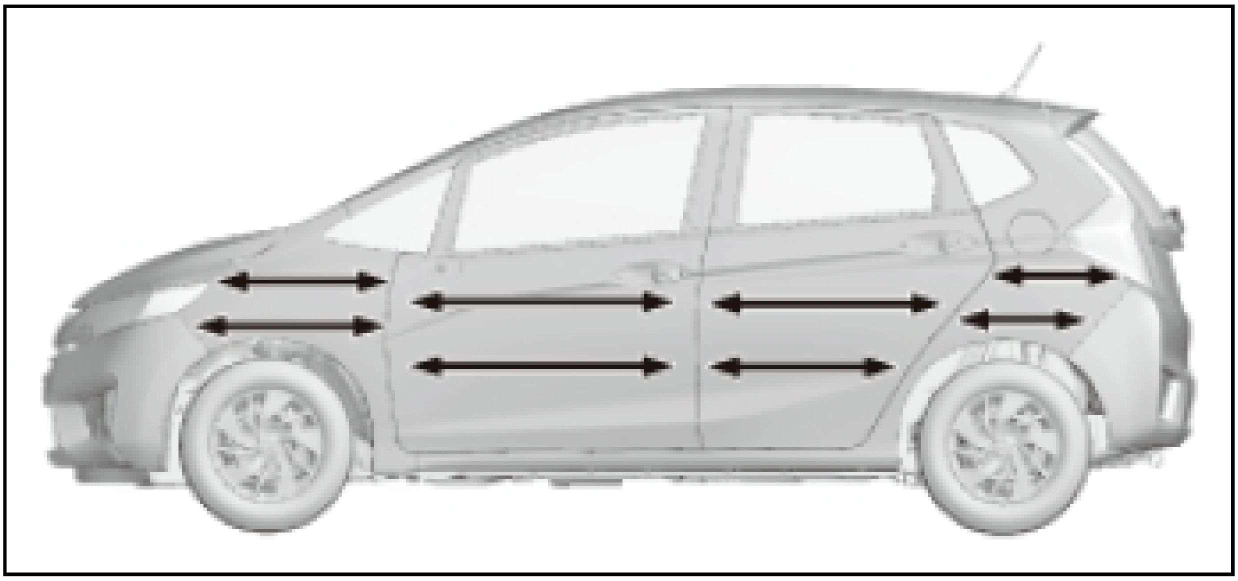

5. Where the paint is repaired in gradation, move the polisher from the newly painted area to the old painted area.

NOTE: **Moving the polisher in a wrong direction may expose the paint border.**

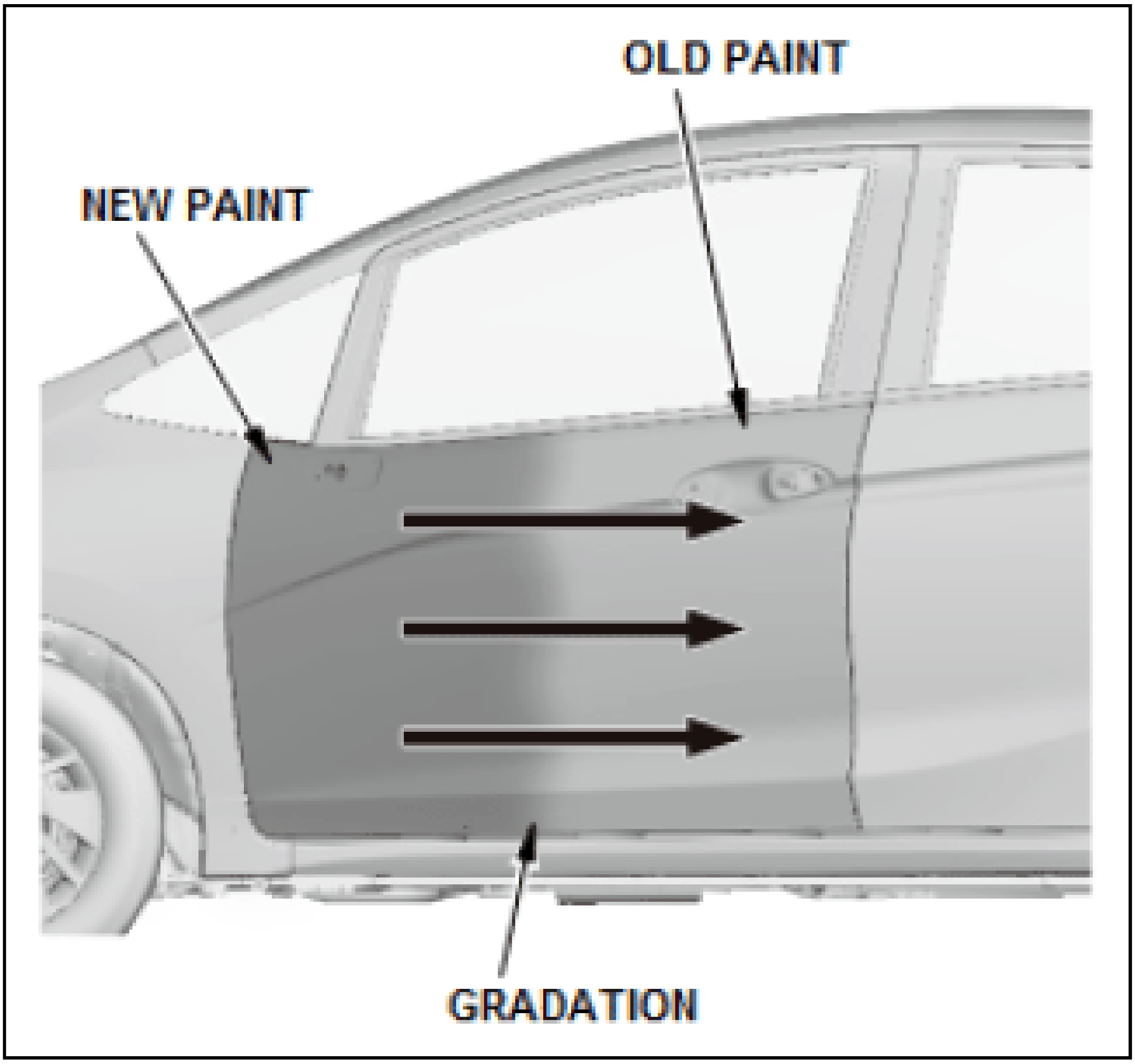
OLD PAINT
NEW PAINT
GRADATION

6. Hand-polish the stamping lines or near weatherstrips.

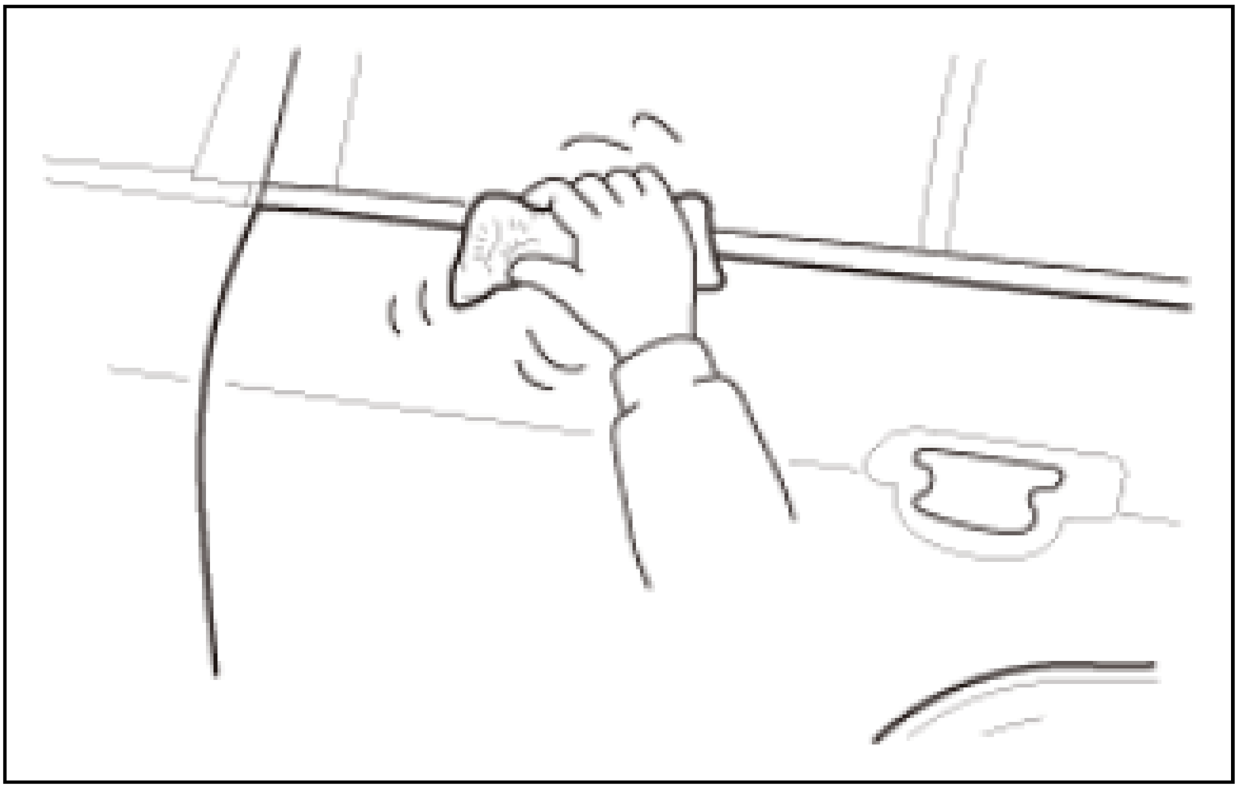

NOTE: **Machine polishing may remove too much paint from stamping lines, so hand polish these areas.**

7. Apply more compound for finessing. Move it in a horizontal direction for the final polishing.

Primer-Surfacer Application On New Parts

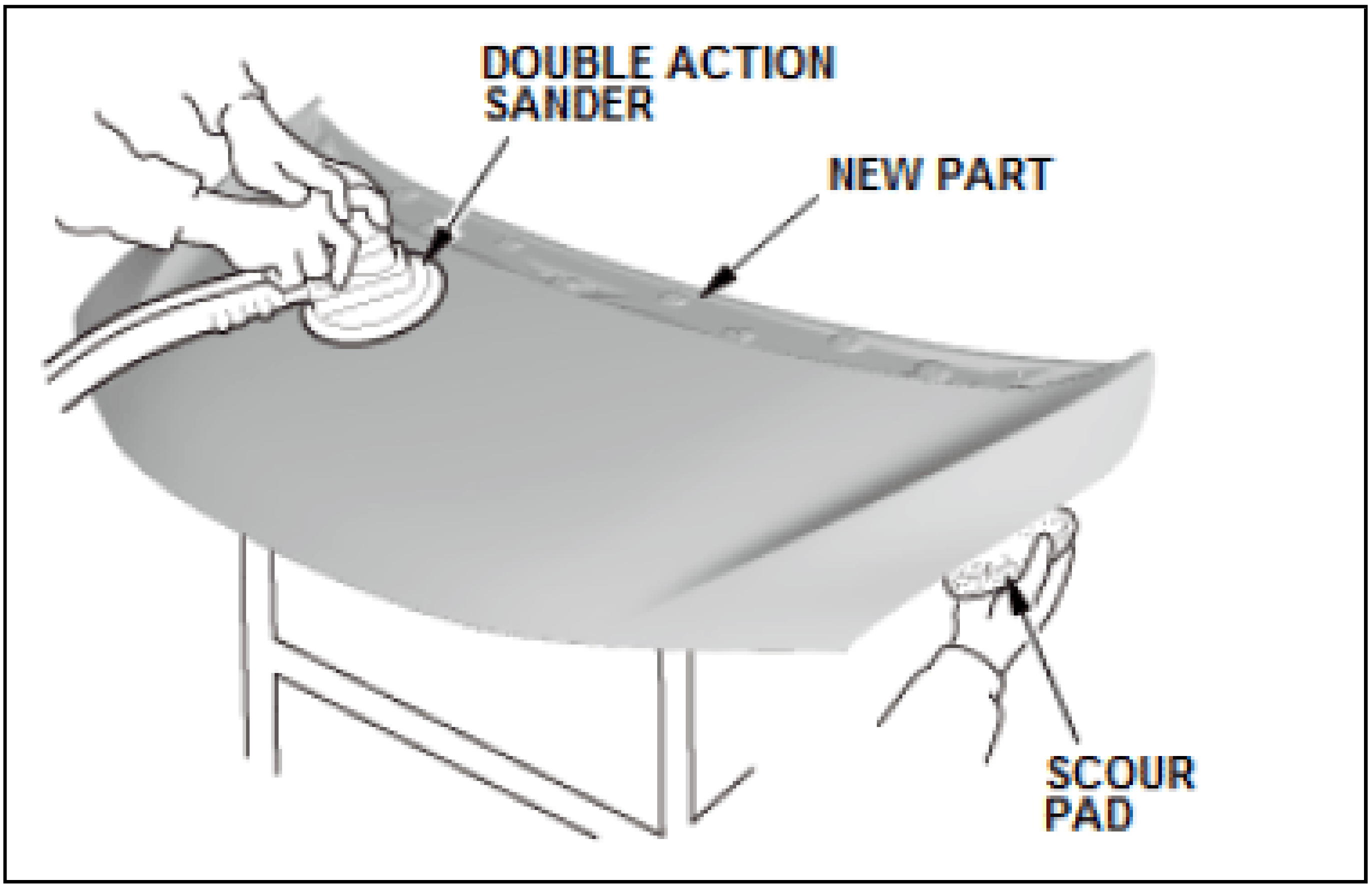

If you are replacing hood and door panels with brand new parts

1. Dry sand the panel with a double action sander and P320 sandpaper. Manually sand using a sandpaper or a scuffing pad where the sander cannot access.
2. Degrease and clean after air blowing away any debris.

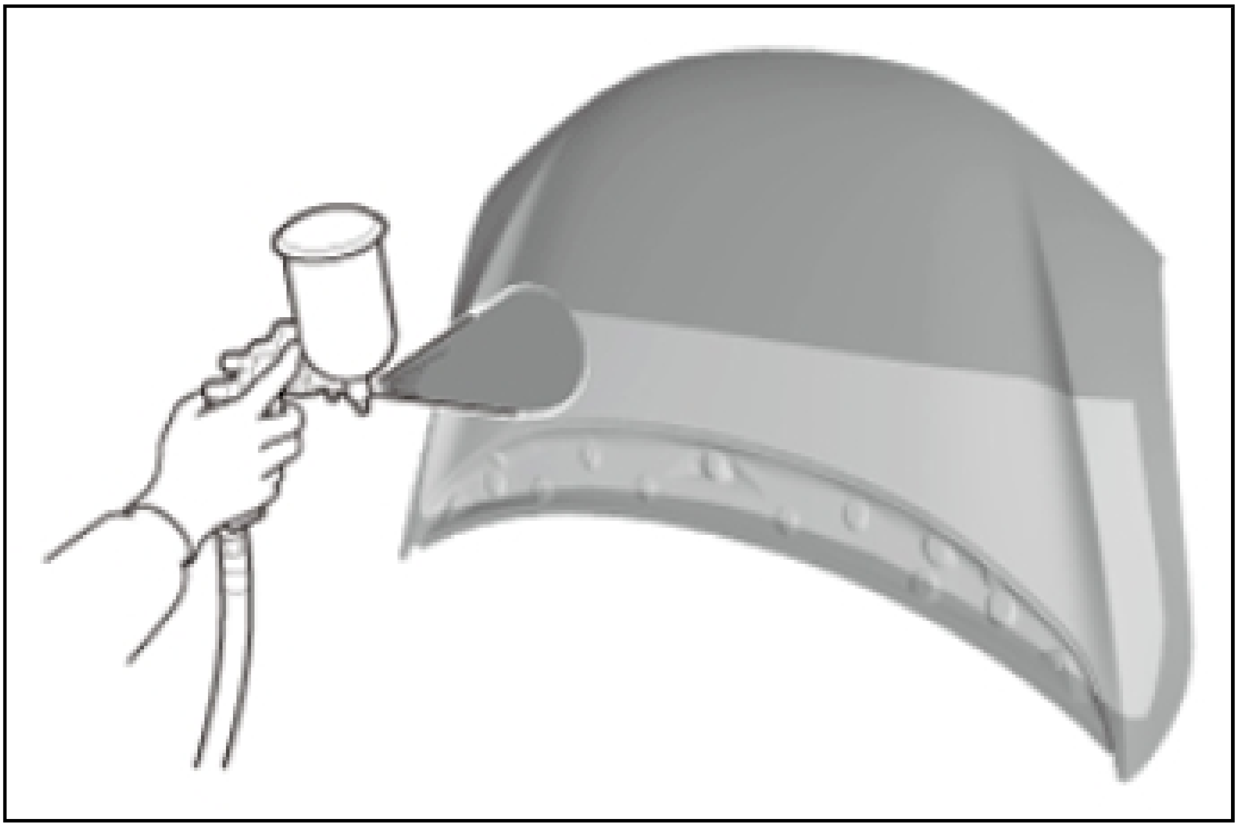

3. Spray the primer-surfacer (mist coat to form a thin layer) over the whole panel and inspect for any lifting or other defects.

4. Allow sufficient flash time.
5. Applying primer-surfacer to the entire surface, making sure the texture and appearance are even.
6. **Sand off the primer-surfacer coating** .

Surface Preparation (Featheredge)

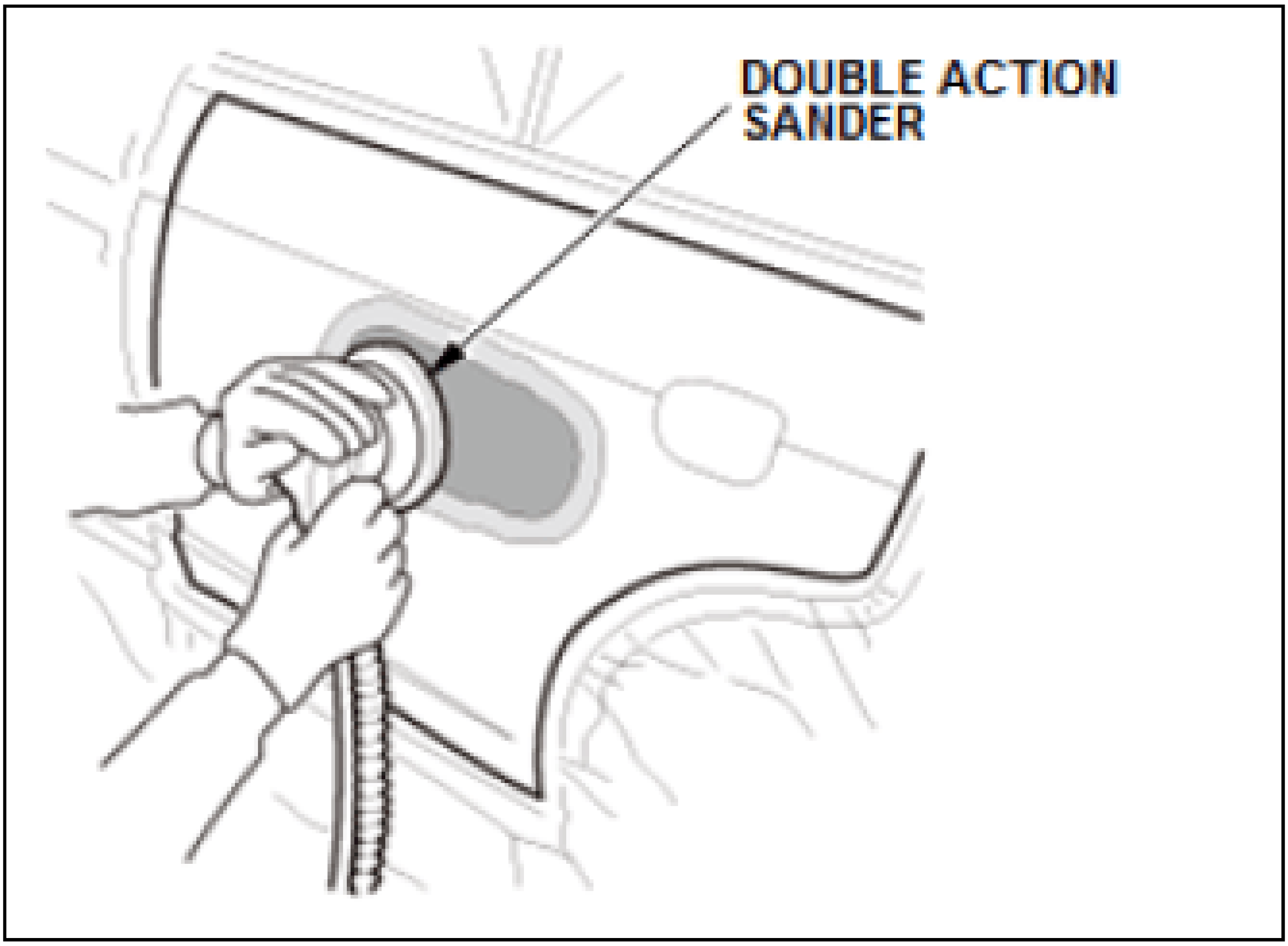

- Create a reference featheredge surface on the old paint layer.

NOTE: **The featheredge quality greatly affects the final repair results.**

- Using a double action sander, featheredge the area to match the paint thickness of the damaged and surrounding areas.

For Shallow Paint Damage

Featheredge with a double action sander and P240 sand paper.

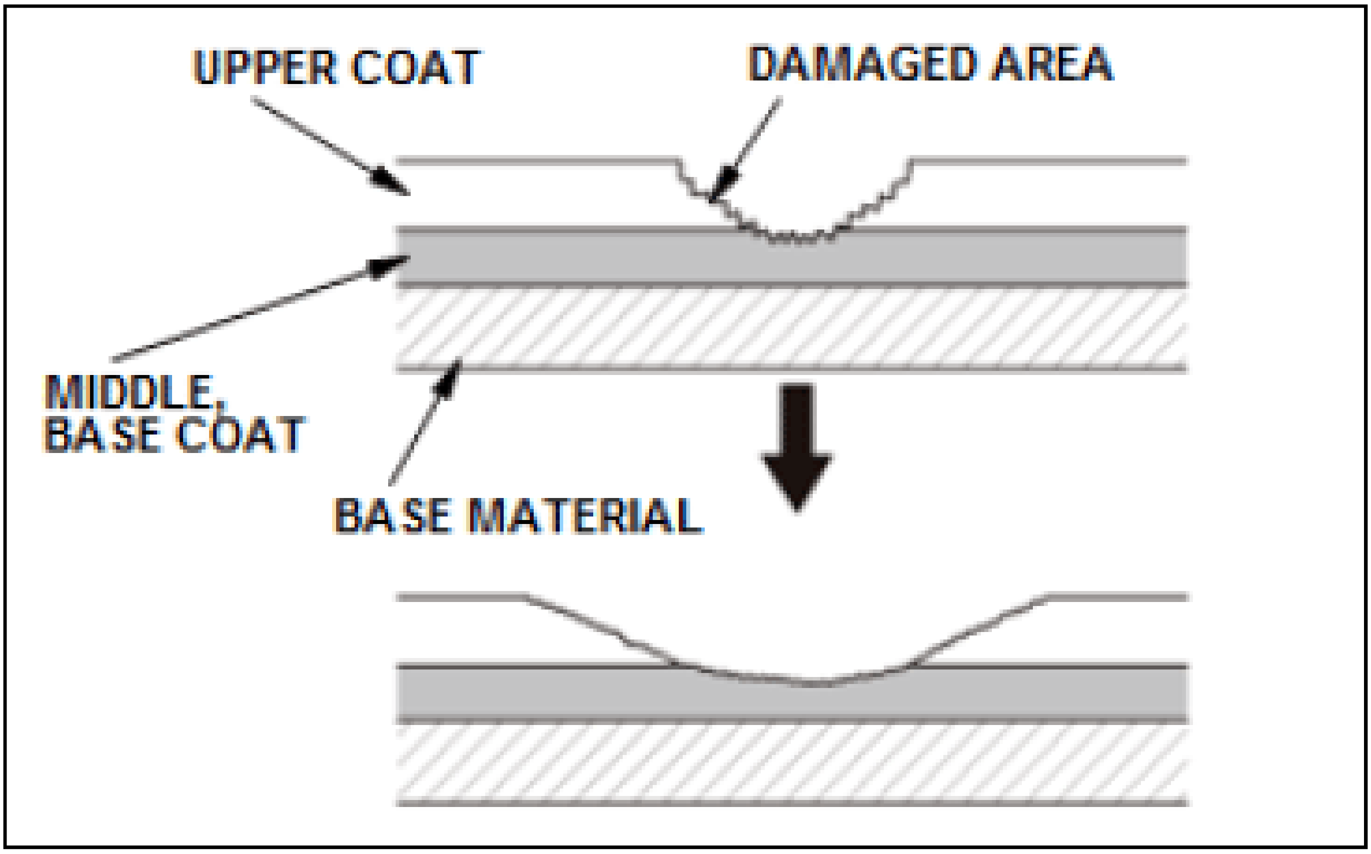
UPPER COAT
DAMAGED AREA
MIDDLE, BASE COAT
BASE MATERIAL

For Extensive Paint Damage

1. Remove the paint layers using a single action sander with P60 to P80 sandpaper.
2. Form a reference surface using double action sander with P80 sandpaper.
3. Featheredge using double action sander with P80 to P120 sandpaper.

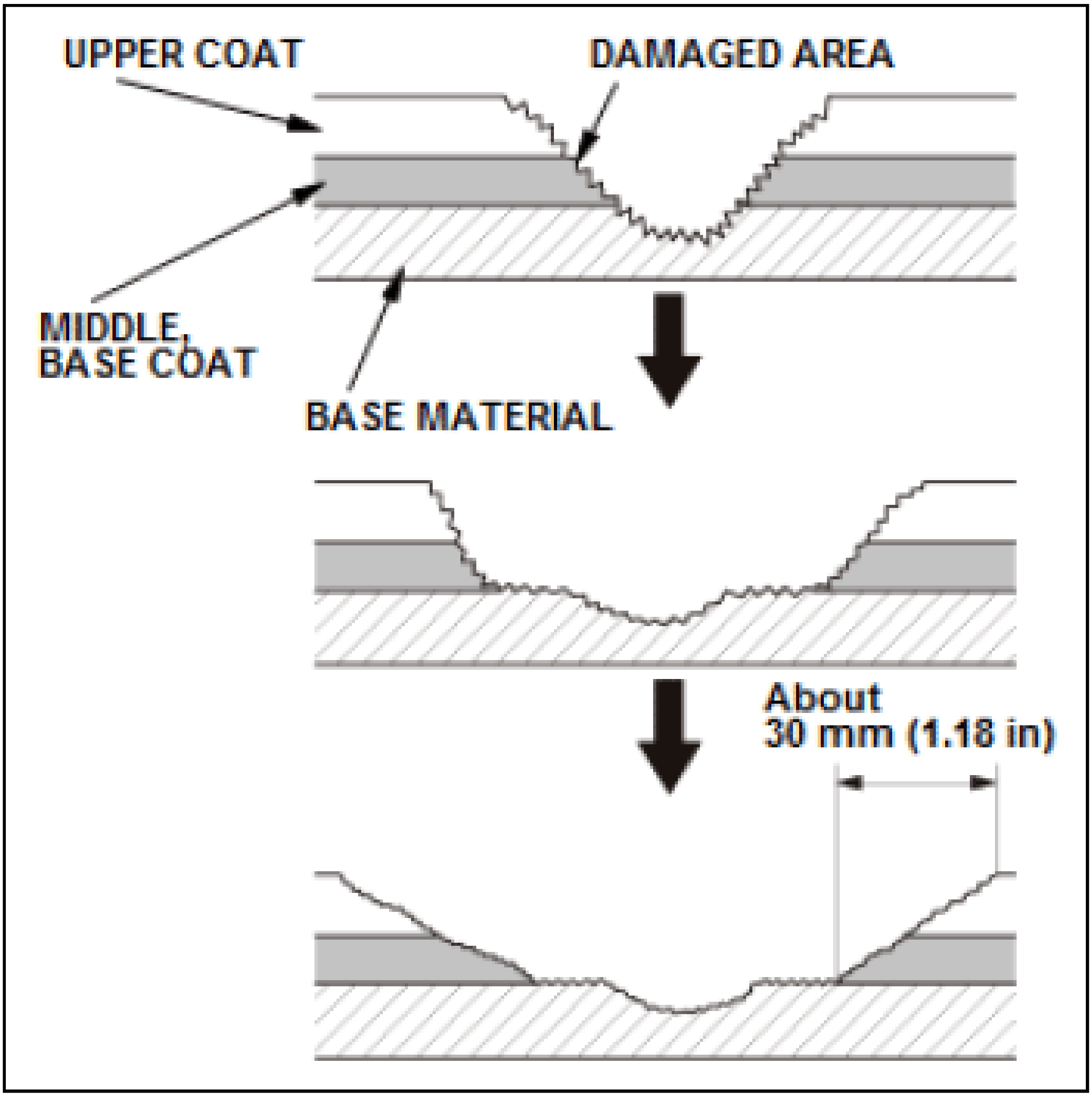
UPPER COAT
DAMAGED AREA
MIDDLE, BASE COAT
BASE MATERIAL
About 30 mm (1.18 in)

Topcoating Preparation

Scuffing is done to increase adhesion of the old paint layer to the new topcoat.

When Block Painting or Overall Painting (Overall Recoloring)

- Sand the topcoated area using a double action sander with P400 sandpaper.
- Manually sand with P600 to P800 sandpaper where the sander cannot access. Be careful not to miss any spots.
- Sand only in one direction so that sanding scratches are not as noticeable.

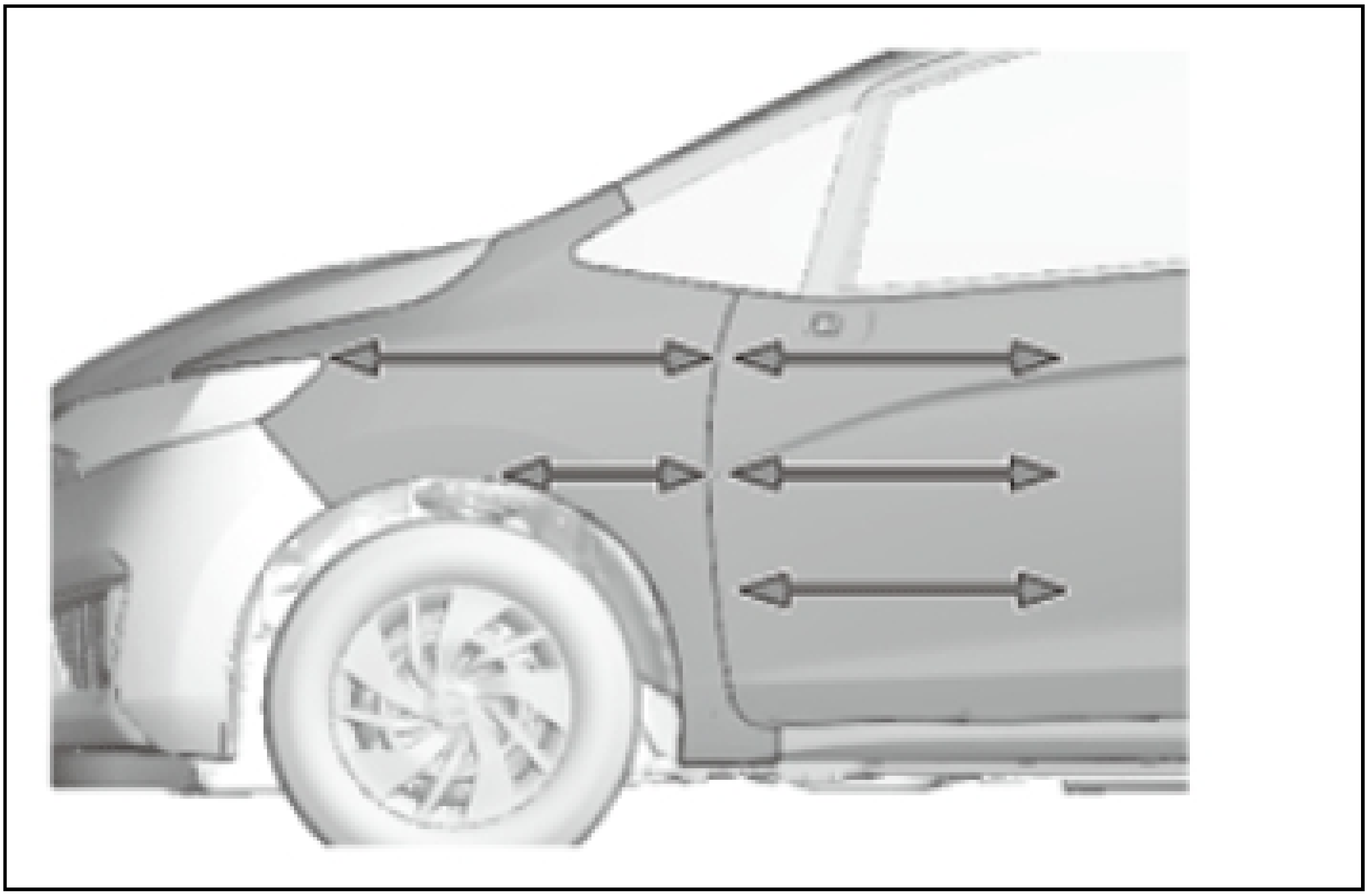

When Gradation Painting

- Scuff off the old paint layer of the primer-surfacer coating area with some extra margin so that scuffed area is a little wider than the gradation border.
- For a light solid colored surface, sand with an intermediate compound, or with P1500 wet-or-dry sandpaper.
- For a metallic, pearl, or deep solid colored surface, sand with a fine compound or with P1500 wet-or-dry sandpaper.
- After scuffing the old paint layer, **mask it for topcoating** .

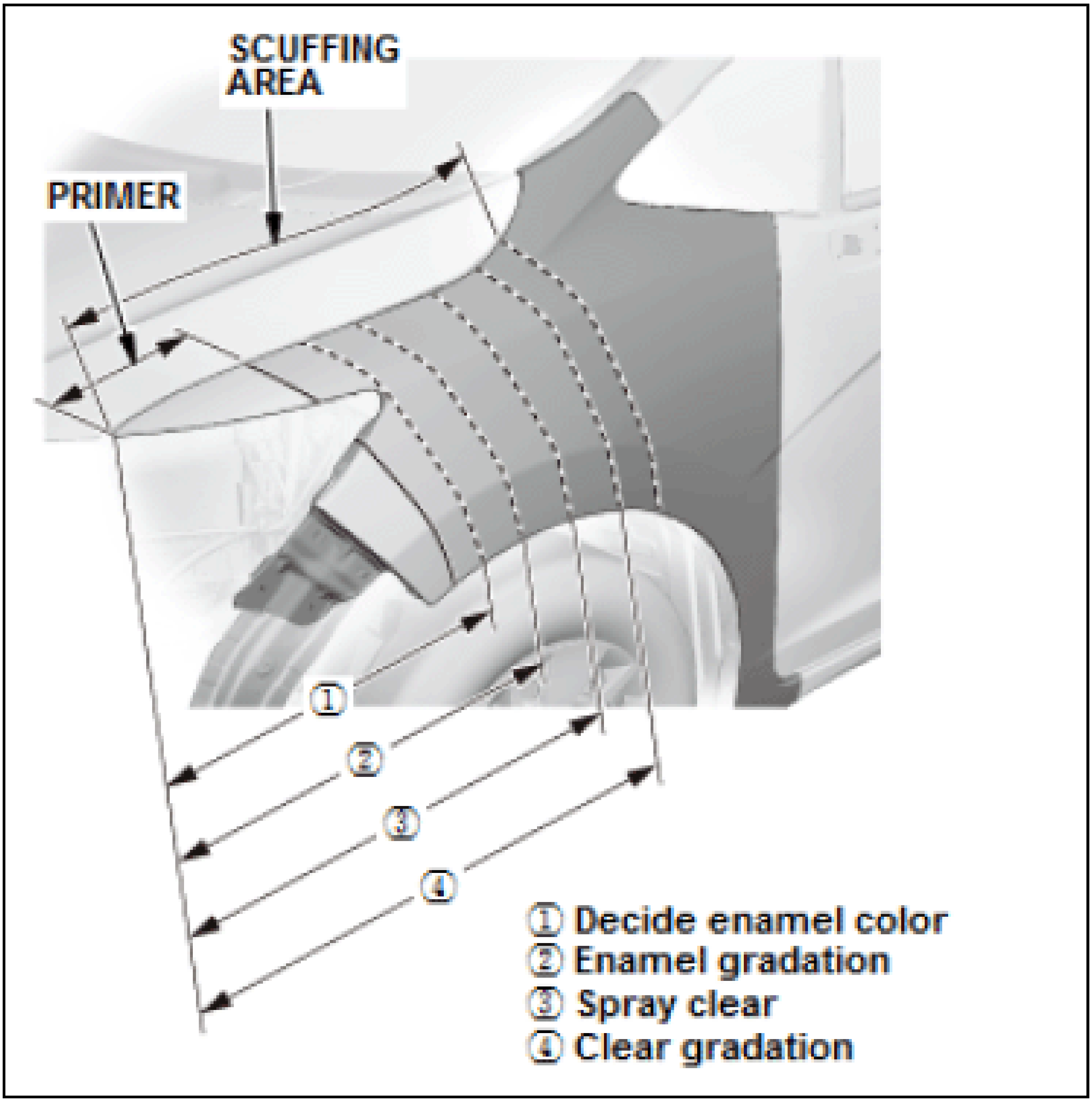
SCUFFING AREA
PRIMER
①
②
③
④
① Decide enamel color
② Enamel gradation
③ Spray clear
④ Clear gradation

1. Transfer and Cleaning of Vehicle:

   Clean any dust and dirt in the paint both first and wet the floor with water. Then transfer the vehicle into the paint booth.

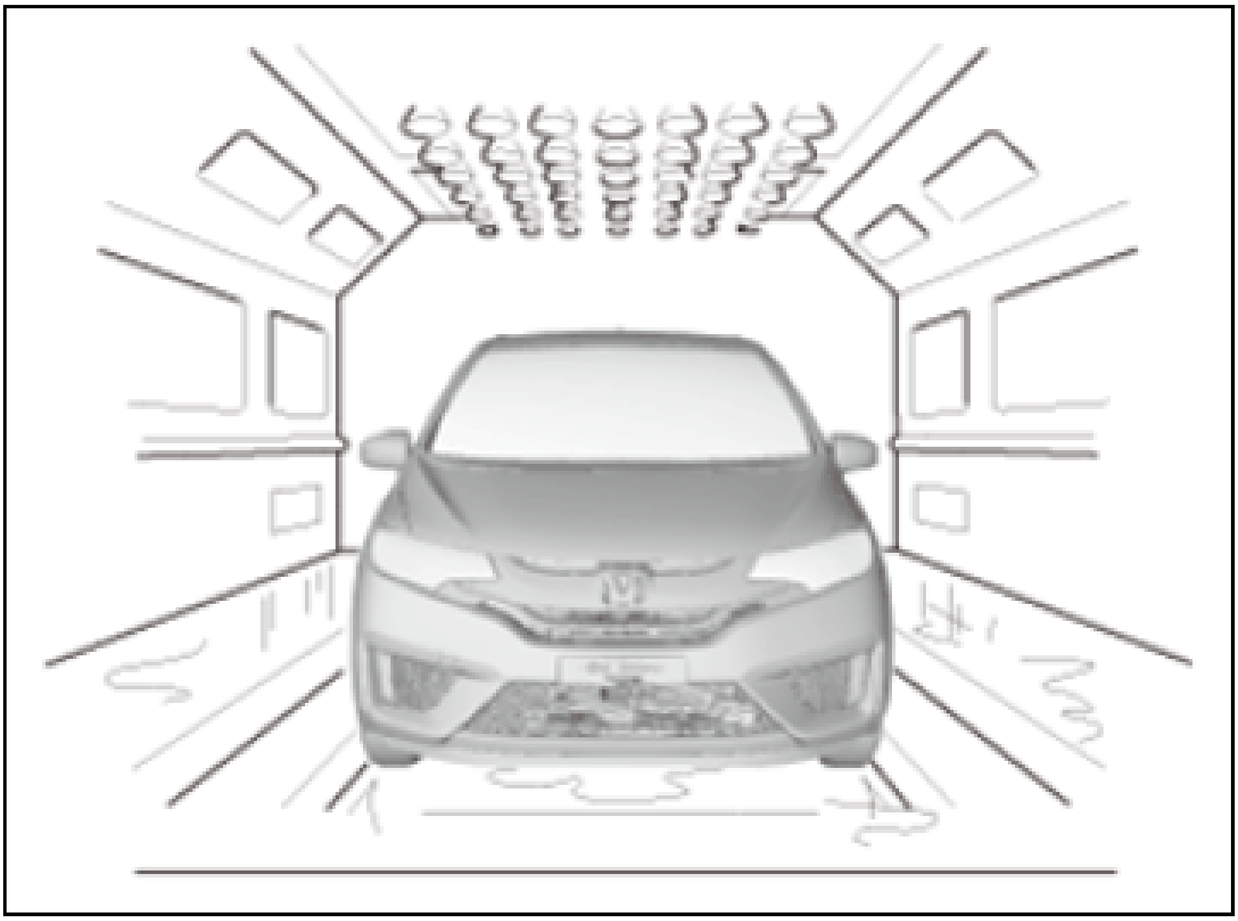

2. Air Blow Cleaning and Degreasing of Coating Surface:
    - Degrease and clean the surface, check the masking paper and coating surface for any lifting or peeling. Use a compressed air blow gun to thoroughly remove all dust and dirt from the gaps between parts and panels.
    - Just before topcoating, wipe the entire coating surface with a tack cloth. Be careful not to apply too much pressure against the surface or the cloth may leave varnish residue on the surface.

NOTE: **Do not touch the degreased surface with your bare hands.**

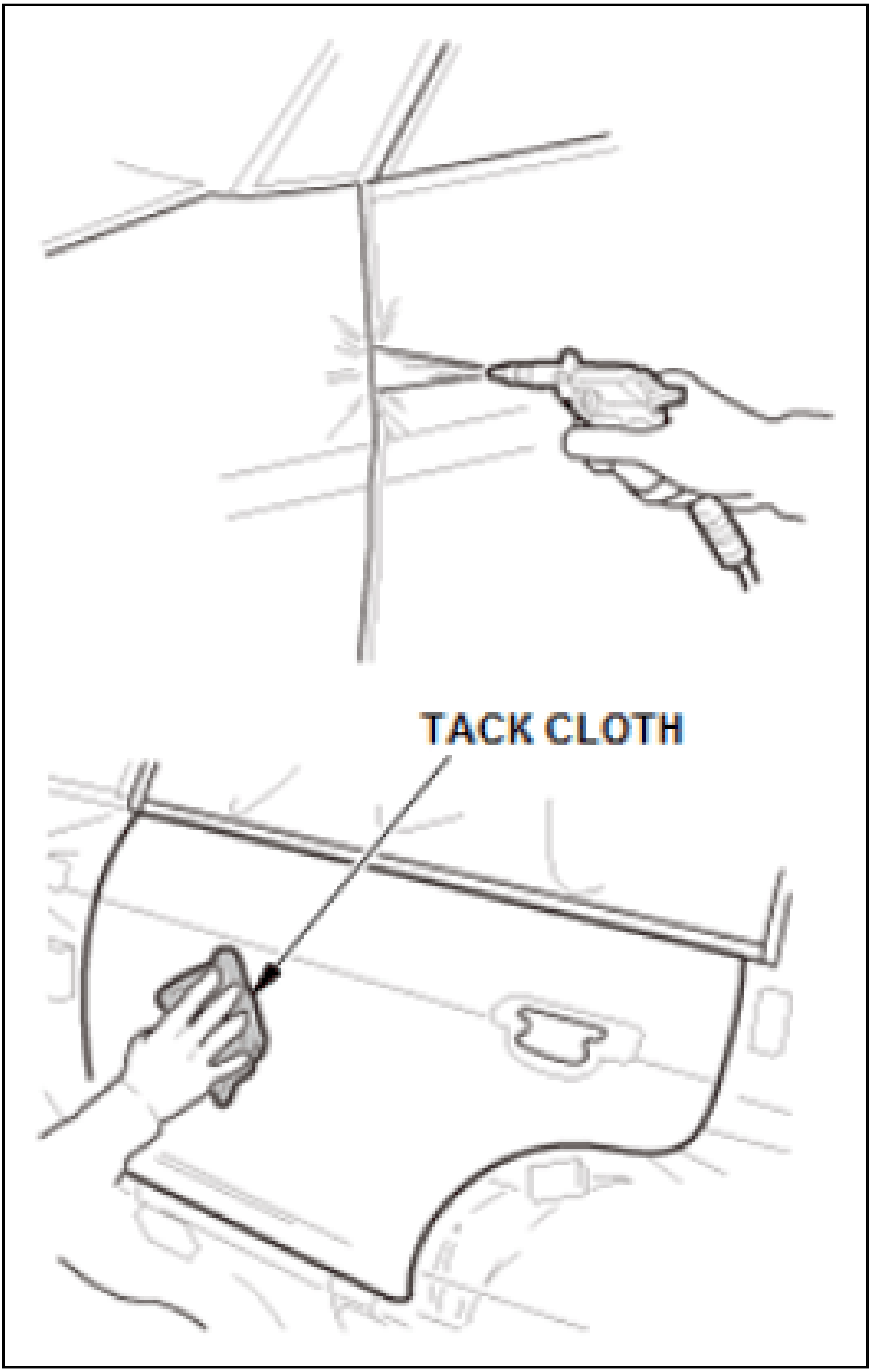

3. Wear safety protection and clean work wear to avoid dust and dirt adhering to the surfaces being painted.
4. Paint Mixing:
   - Mixing Hardener and Additive.

NOTE: **Follow the manufacturer's instructions for correctly mixing paint.**

- Mixing Paint:
  - Mix the paint, hardener, and paint reducer/thinner to the correct ratio according to the paint manufacturer's instructions using a microcomputer scale. The amount of hardener must absolutely be correct or it will cause defects after topcoating. The use of a digital measuring instrument is widely used for color mixing.

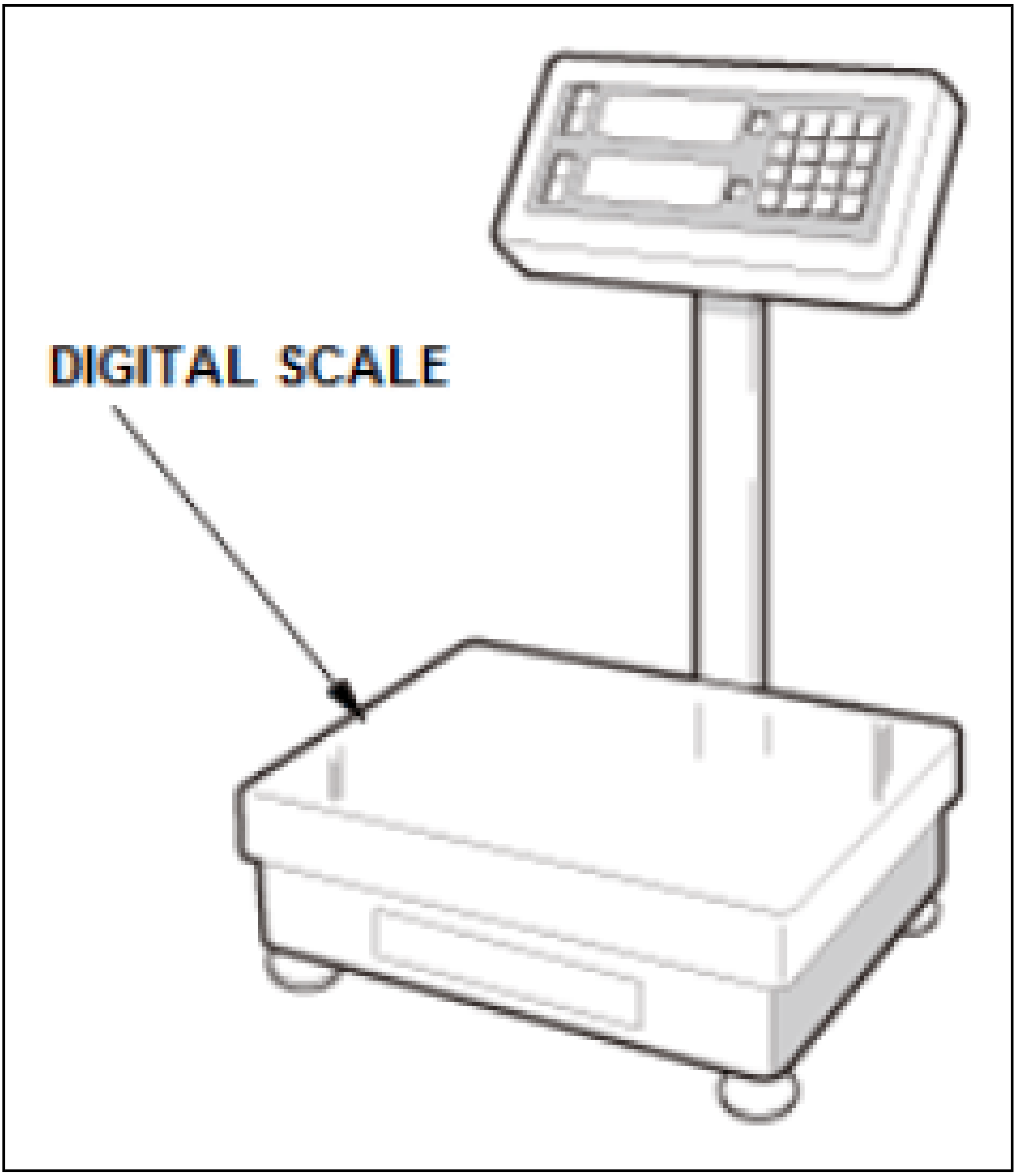

  - It is important to select the appropriate paint reducer/thinner depending upon the ambient conditions.

Type of Paint Thinner	Temperature (reference)
Ultra quick drying type (very cold season)	50Â°F (10Â°C) or lower
Quick drying type (cold season)	50-59Â°F (10-15Â°C)
Normal type (warm/cool season)	About 68Â°F (20Â°C)
Slow drying type (hot season)	77-95Â°F (25-35Â°C)
Ultra slow drying type (very hot season)	95Â°F or higher (35Â°C) or higher

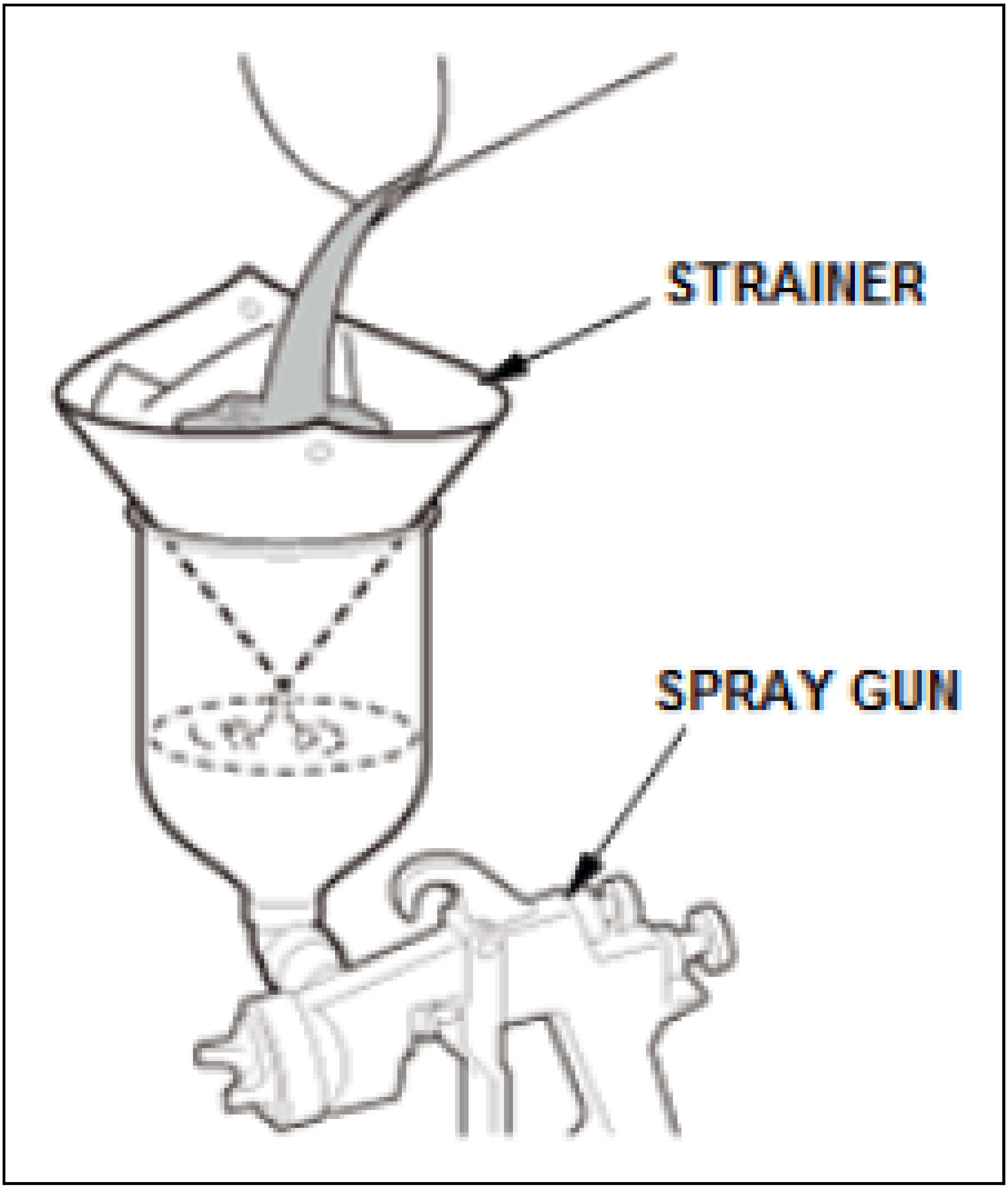
STRAINER
SPRAY GUN

5. Mix the hardener and paint reducer/thinner thoroughly with the paint, filter it with a strainer, and pour it into the spray gun.

Topcoat Drying

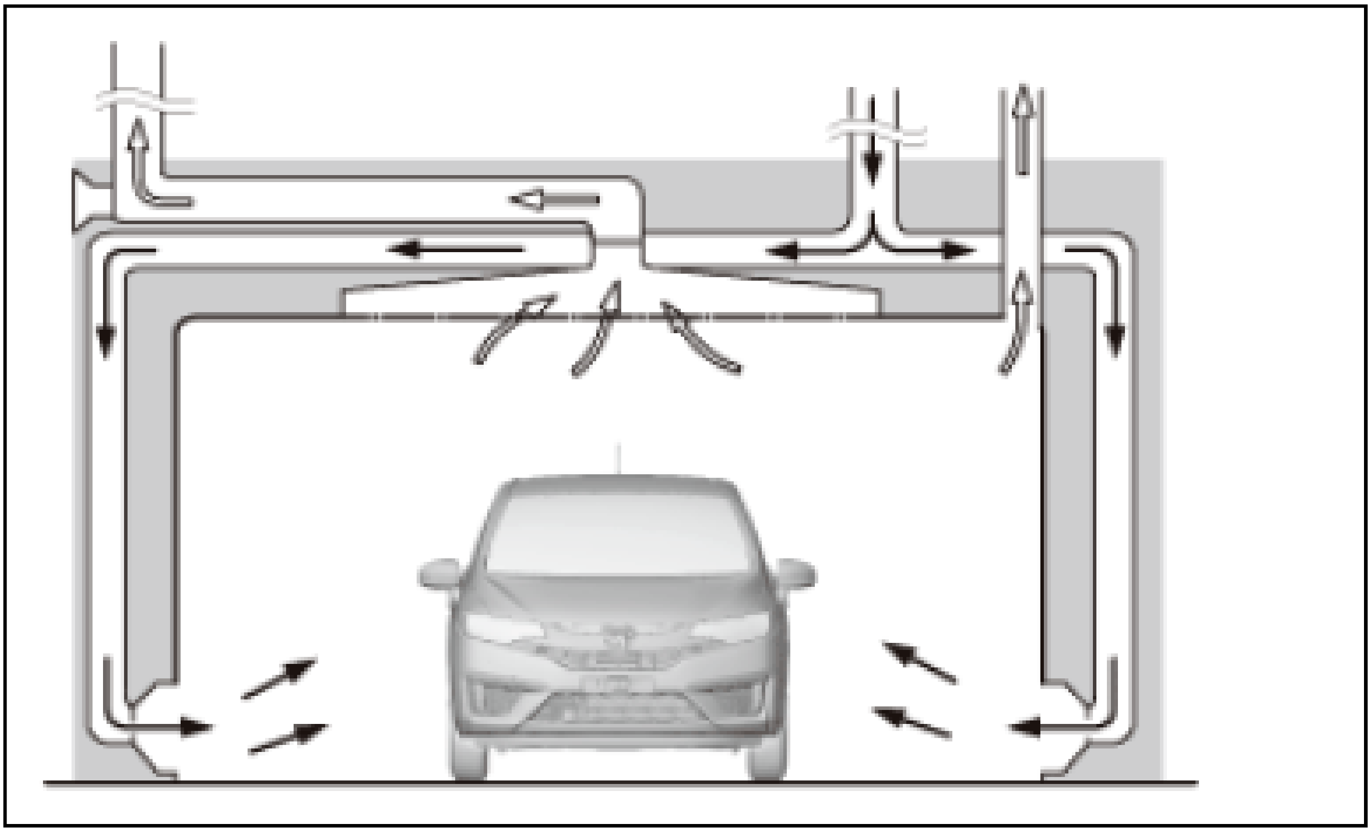

1. Allow sufficient set-up time:

   After painting, leave the surface as is for about 10 to 20 minutes, in order to let the solvent evaporate and prevent defects during forced drying.

   NOTE: **Check the paint manufacturer's instructions because set-up time changes according to ambient temperature and paint layer thickness.**

2. Force Drying Topcoat:
   - Force dry the surface for approximately 30 to 40 minutes at a temperature of 140Â°F (60Â°C).
   - Always refer to the paint manufacturer's instructions for the appropriate drying time.

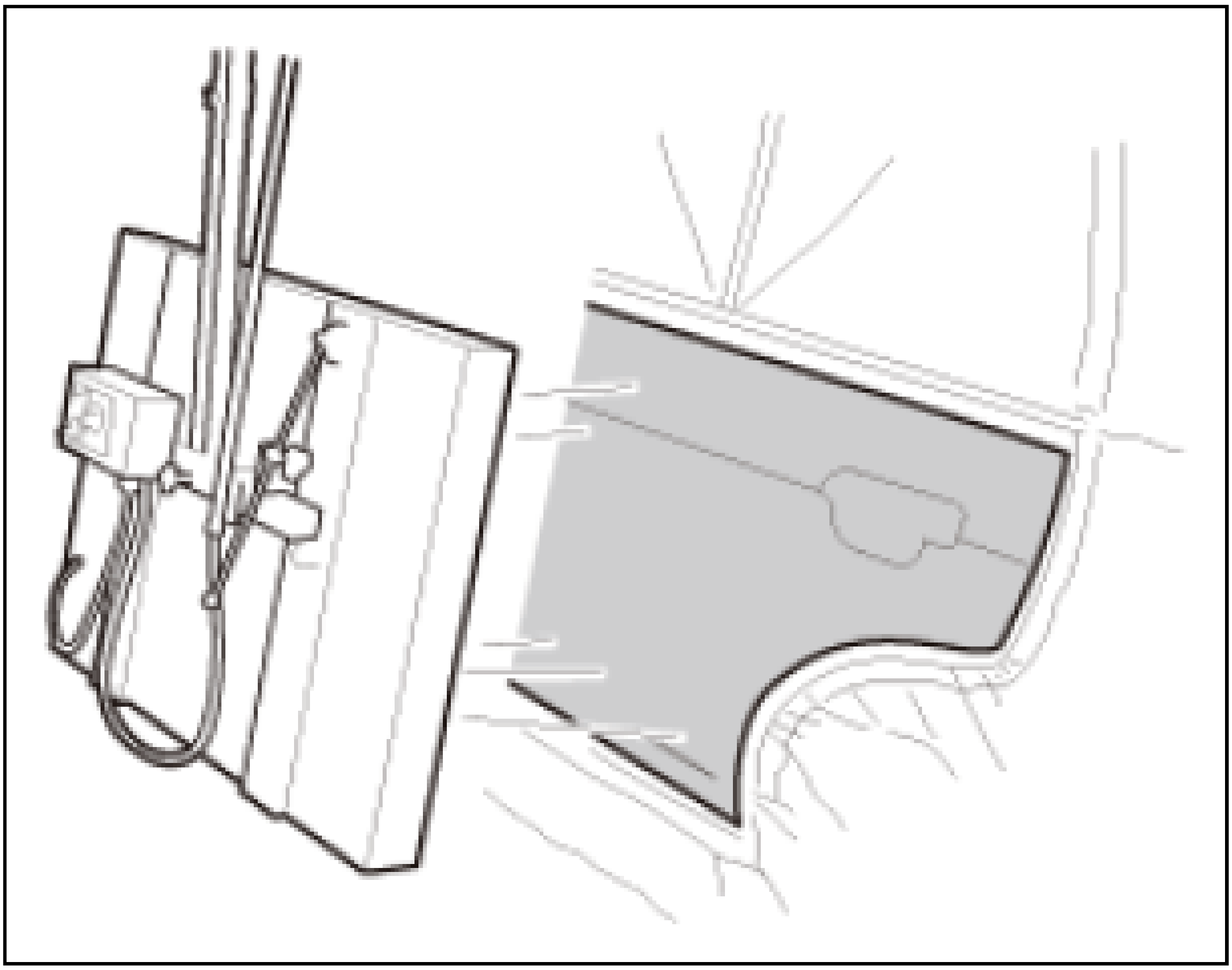

Topcoating Information

Partial Repair

For each process, refer to the corresponding basic process.

Spot Gradation Coating

Using a technique of gradation, match the color and luster with those of the surrounding paint surface.

In Case of Solid Color

1. Light coat and fix the color.

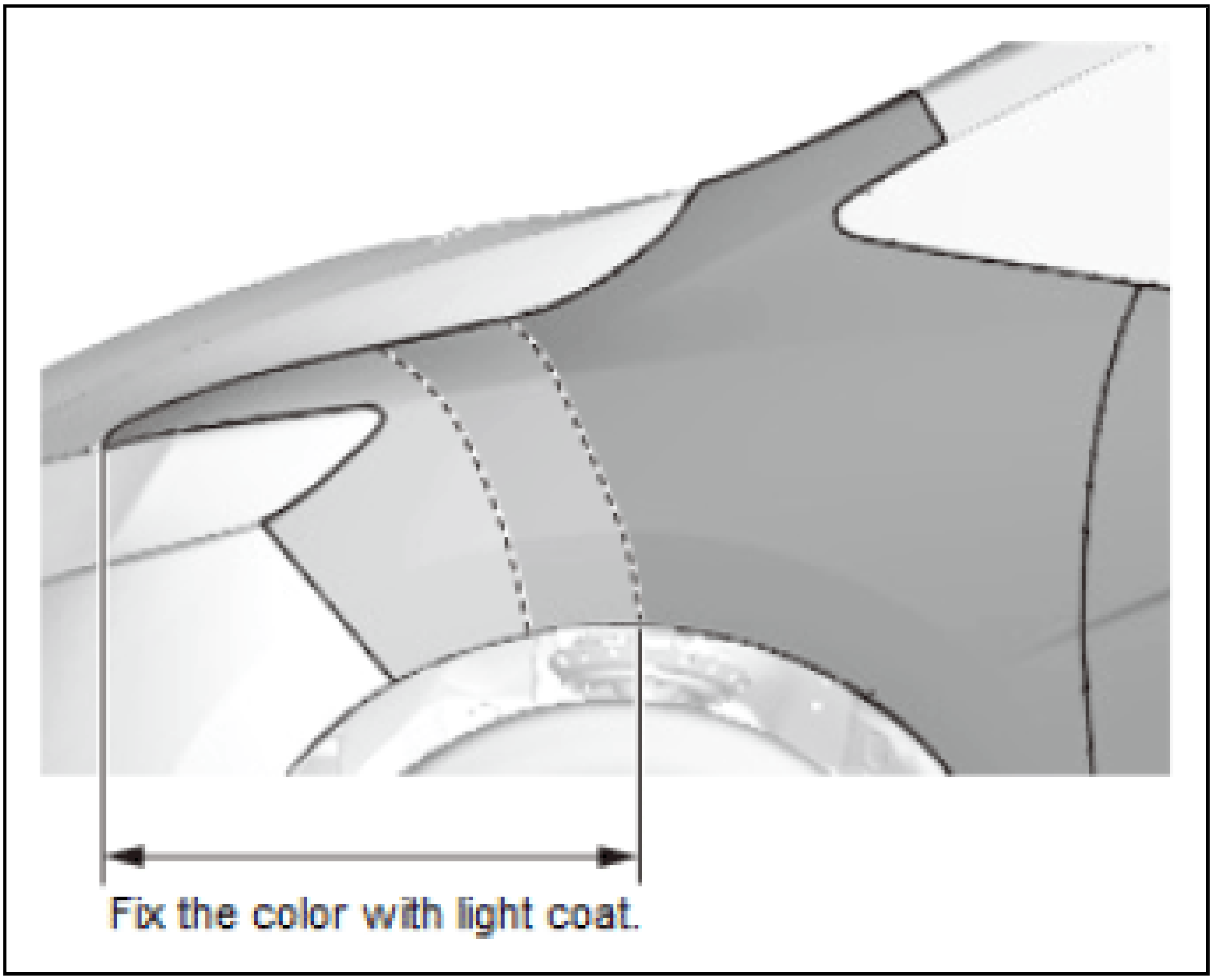
Fix the color with light coat.

2. Finish coat.

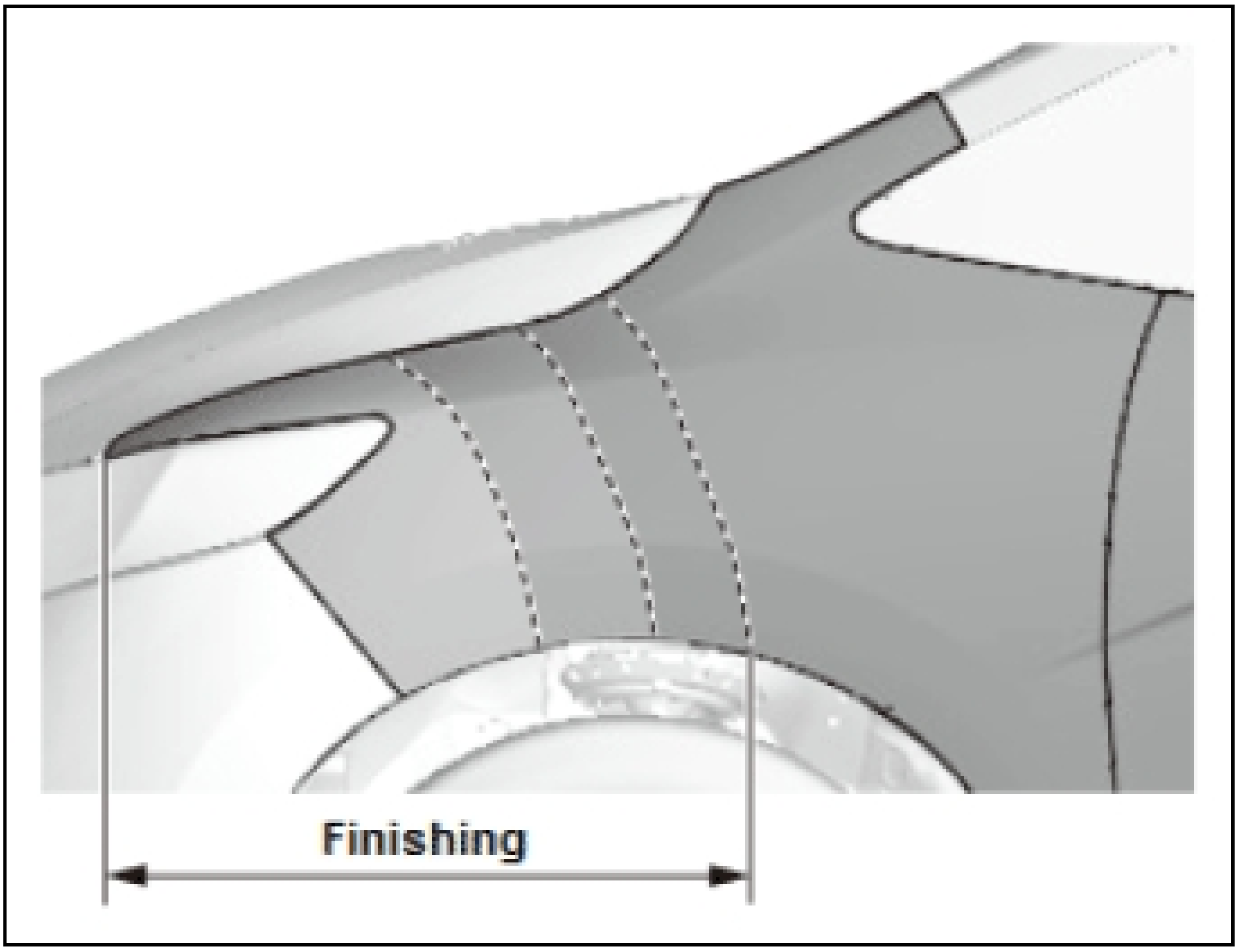

3. Gradation.

4. Dry.

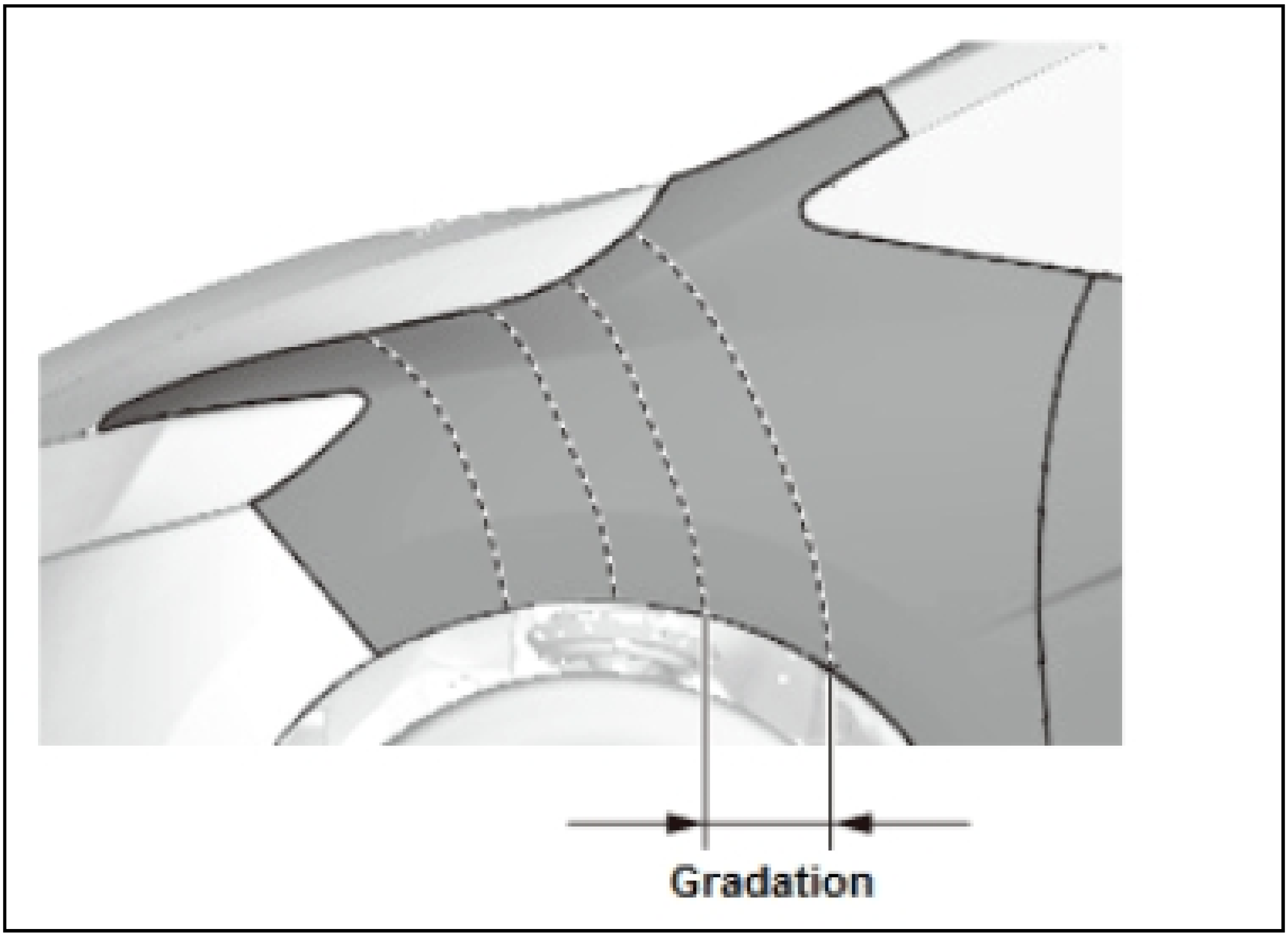

Block Gradation Coating

Provides a gradation effect to the enamel base area before applying clearcoat to each panel (block). It is effective for dark solid colors to help prevent color fading.

In Case of Solid Color

1. Fixing the enamel base color.

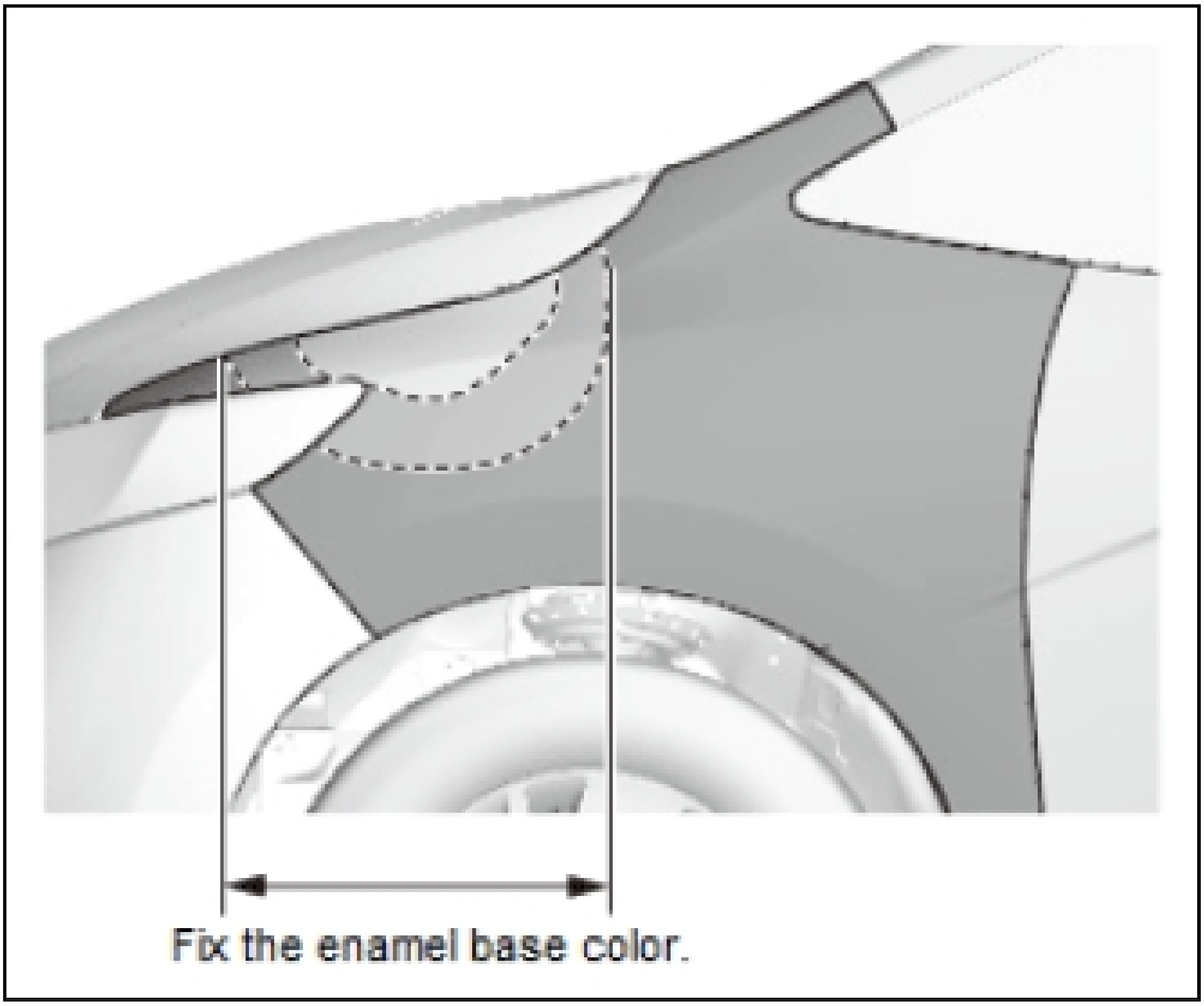
Fix the enamel base color.

2. Remove unevenness and give gradation to the enamel base.

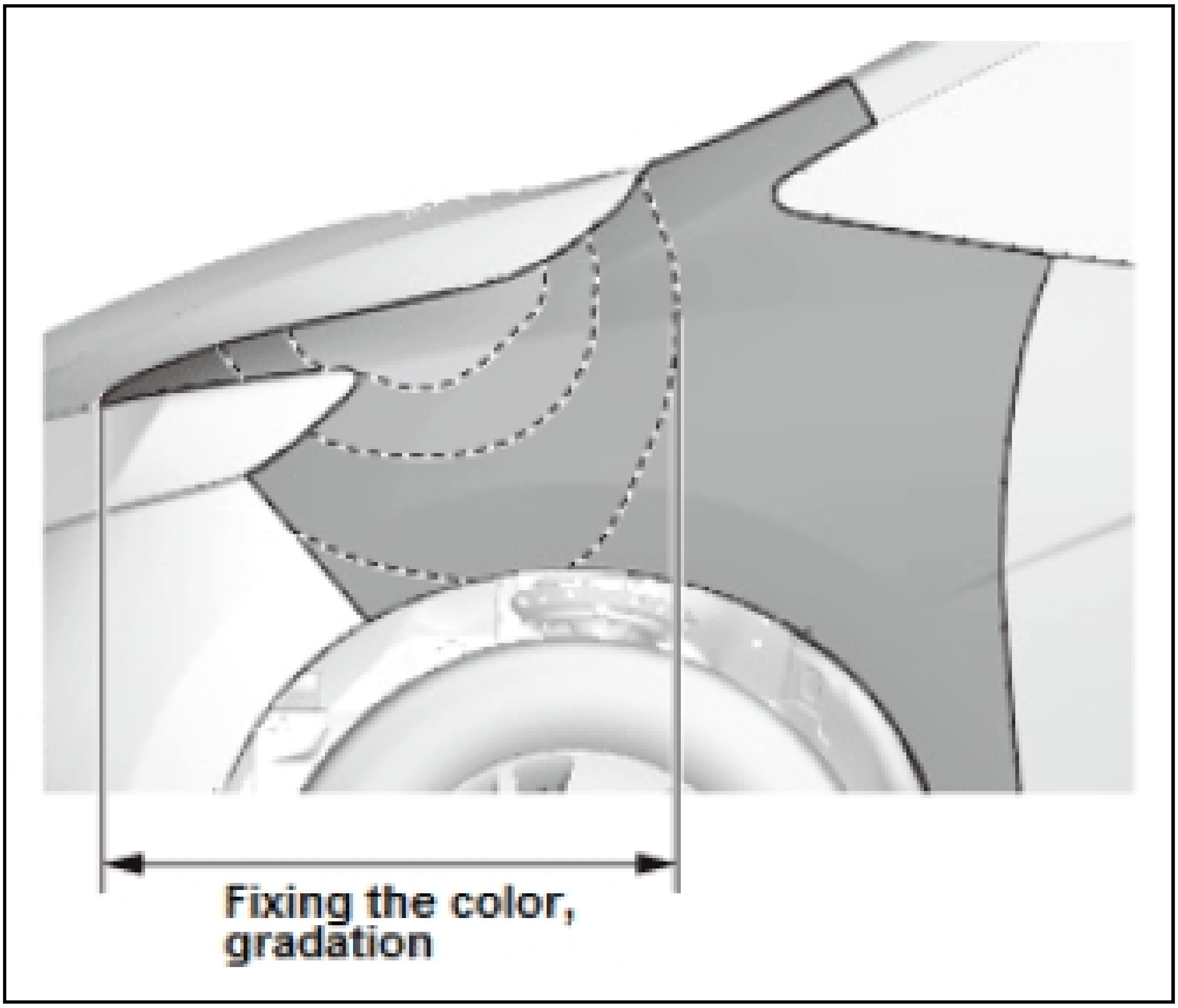
Fixing the color, gradation

3. Light coat with clear.
4. Finish with clear.

   The same area as the light coat.

5. Dry.

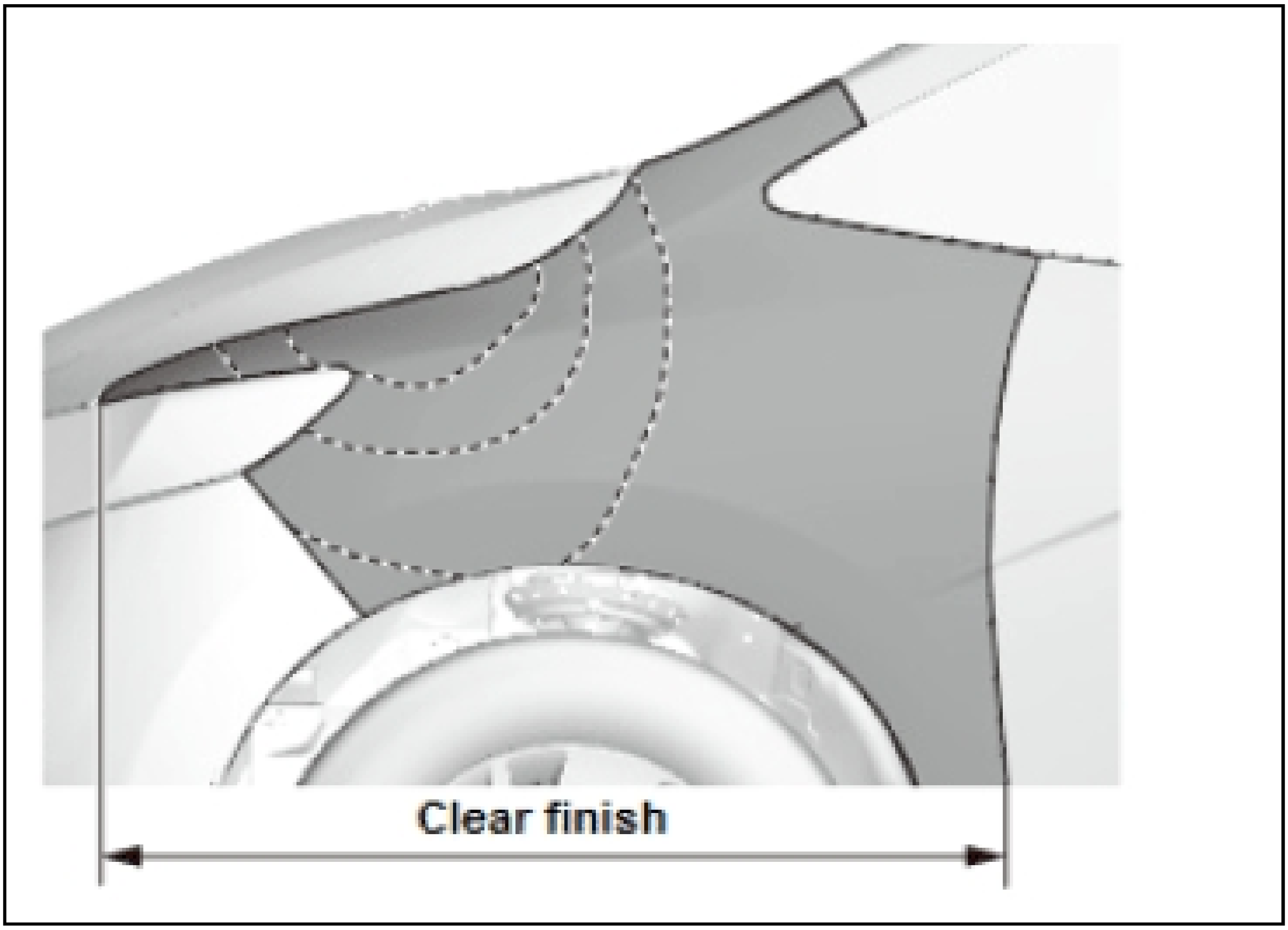
Clear finish

In Case of Metallic Color

1. Apply a light coat of enamel base color.

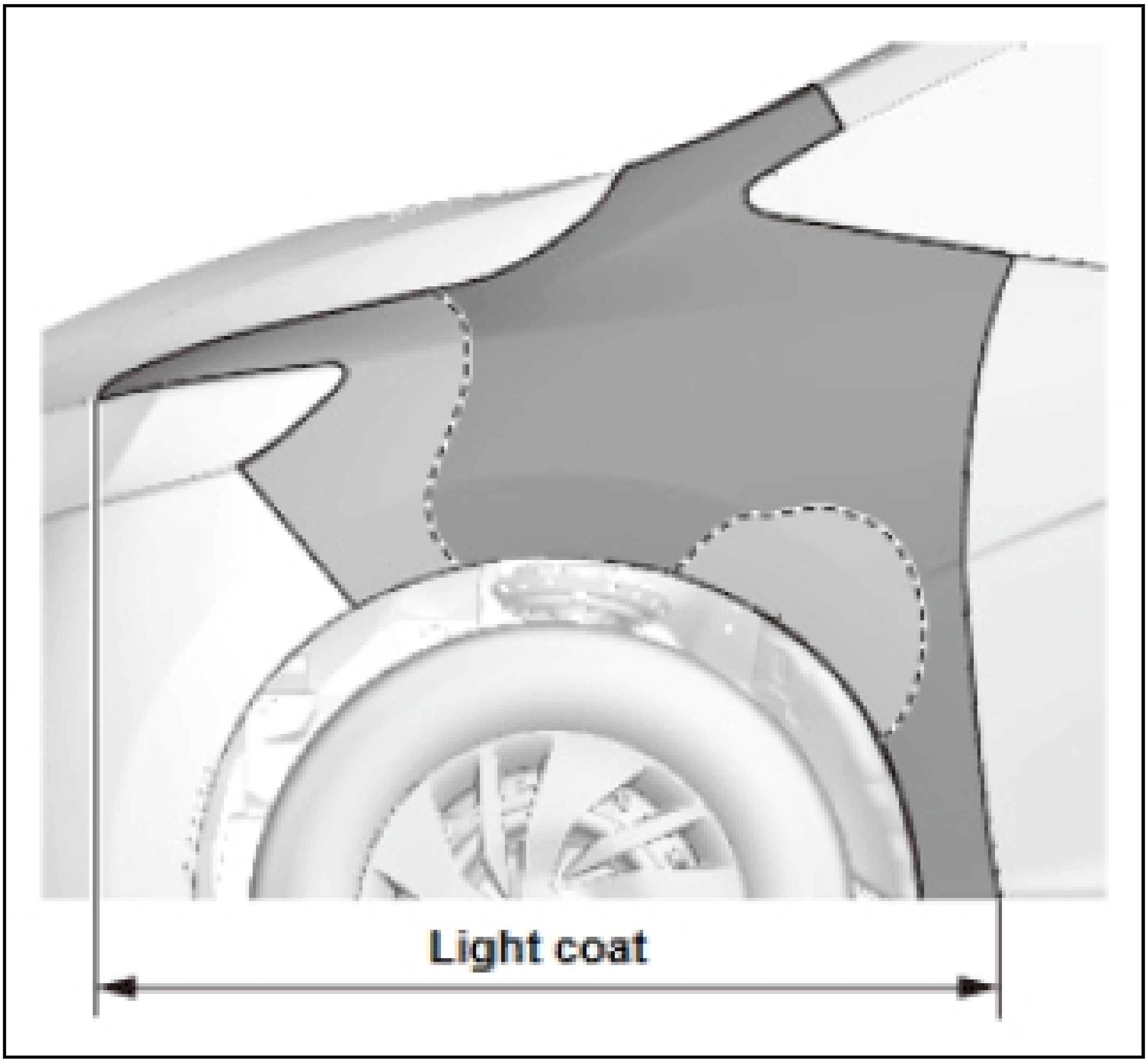

2. Finish applying the enamel base color.

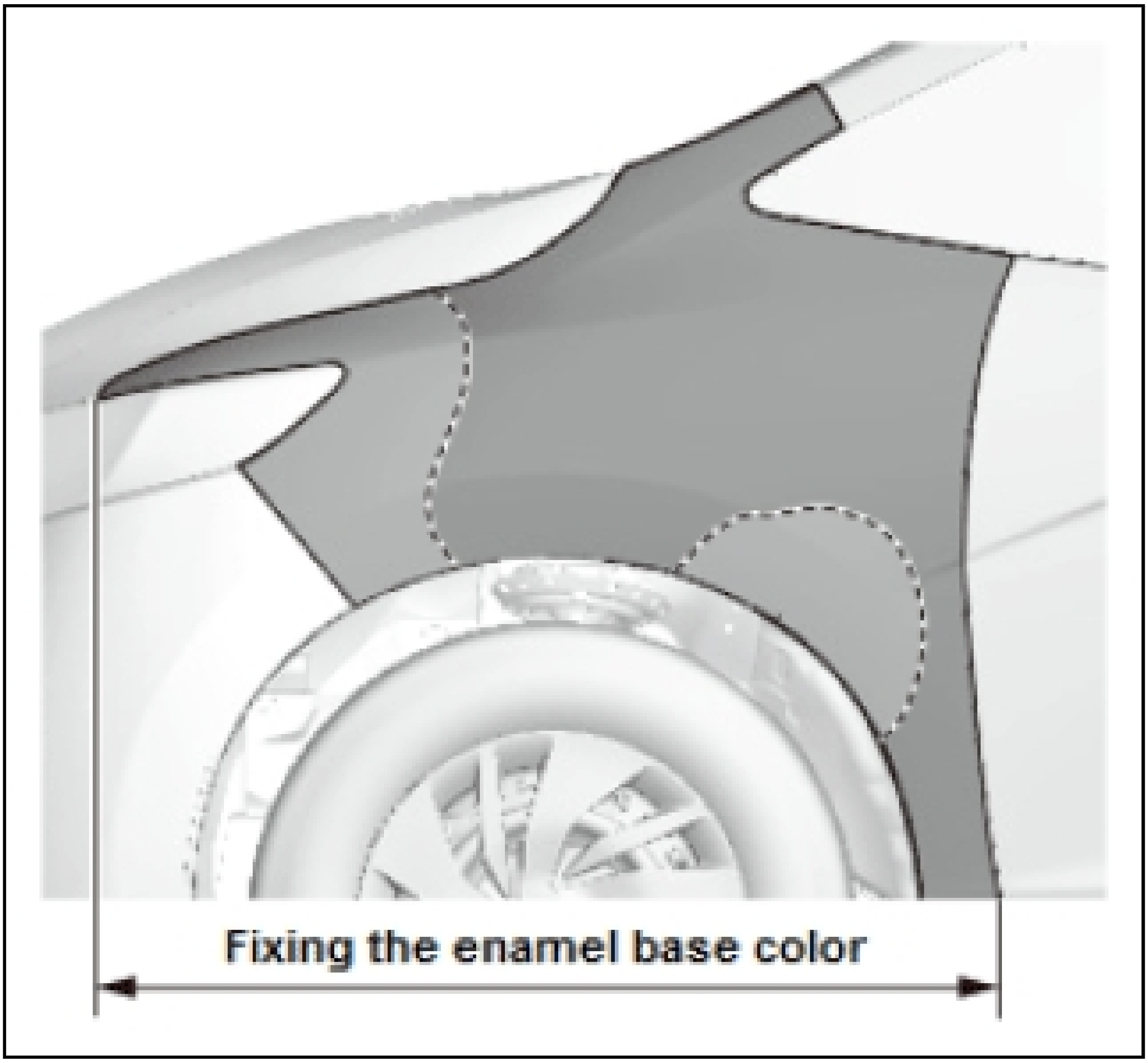
Fixing the enamel base color

3. Remove any unevenness in the enamel base.
4. Light coat with clear.
5. Finish with clear.
6. Dry.

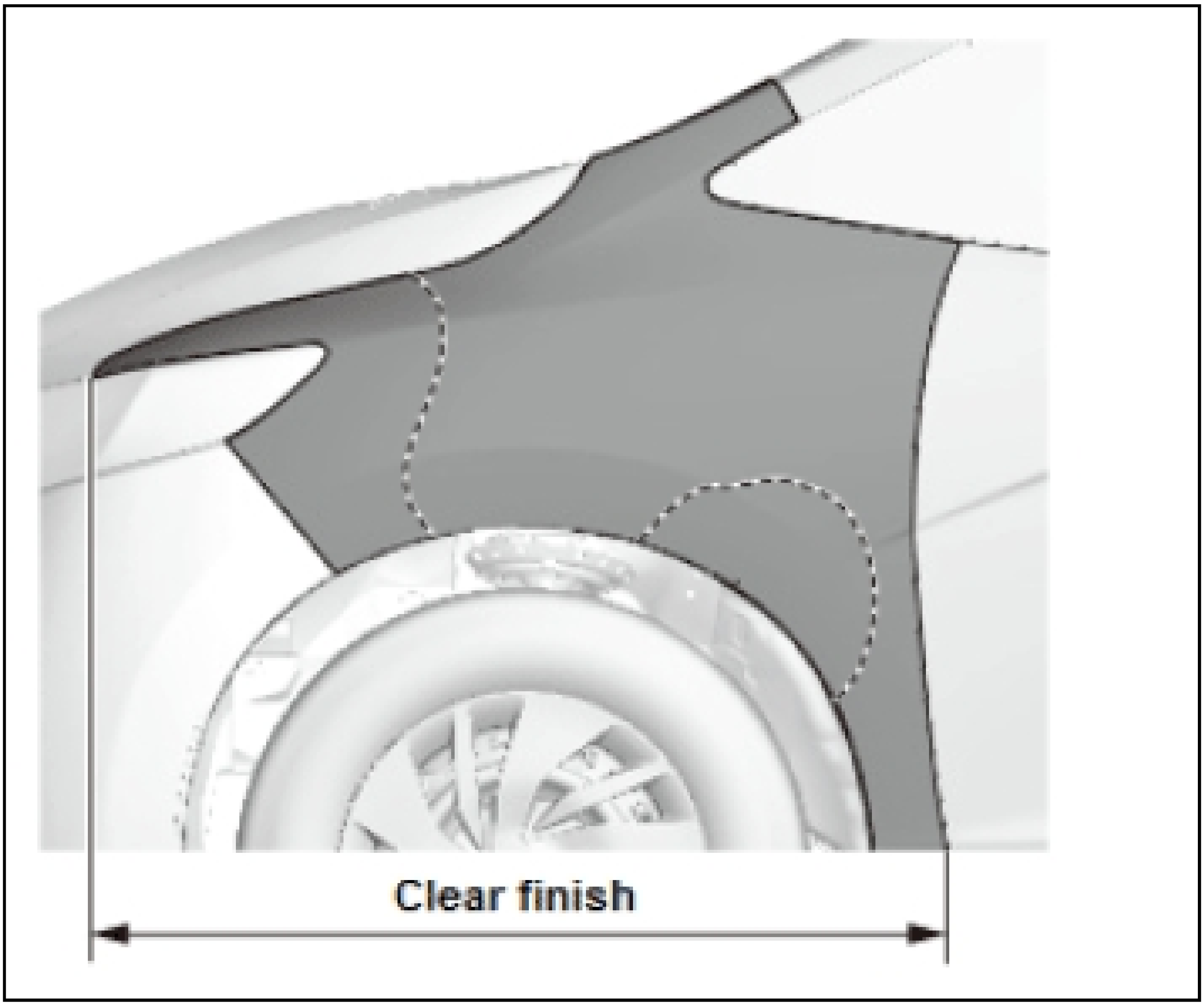

Water-Based Topcoat Application

1. Preparation of Water-Based Topcoats:

   Mixing Paint and Paint Reducer/Thinner:

   - Stir the paint thoroughly before mixing colors.
   - Combine the primary colors and adjust with a paint reducer/thinner.

   NOTE:

   - **The viscosity of water-based paint is adjusted by adding reducer or paint thinner exclusively for the water-based paint.**
   - **There are several types of reducer; such as standard type and slow-dry type. Select the most appropriate type depending upon the ambient conditions and accurately measure the required amount.**
   - **When too much reducer/thinner is added, coverage capability is reduced. Selecting the wrong type of reducer/thinner, greatly increases drying time, slowing your work efficiency Confirm the product spec information issued by the paint manufacturer.**

   Coating Condition

   NOTE: **The setting of your spray gun has significant impact on the finish quality Make sure to apply the correct settings after confirming the production spec information issued by the paint manufacturer.**

   Settings for Low Pressure Spray Gun (Example):

   - Air Pressure

     Block Paint: 130-200 kPa (1.3-2.0 bar, 20-30 psi)

Gradation Paint: 150-180 kPa (1.5-1.8 bar, 22-26 psi)

Removal of Unevenness: 130-150 kPa (1.3-1.5 bar, 18-22 psi)

- Discharge Rate: Open 3 to 3.5 turns from full close
- Pattern: Open 3/4 turn from full close
- Spray Distance: 15-20 cm (6-8 in)

The setting value will change depending on the size or shape of the coating surfaces.

2. Sanding and Degreasing before Topcoating:
   - Scuff with P600 to P800 sandpaper.
   - Degreasing should be done in two steps; one with solvent type degreaser and another with water-based type degreaser.
3. Water-Based Color Basecoating:
   1. Apply medium coat so that the entire surface will be lustered.

NOTE: **Apply in thin coats or the water won't be able to escape from the paint film, reducing your work efficiency In addition, thickly applied paint layers may become whitish.**

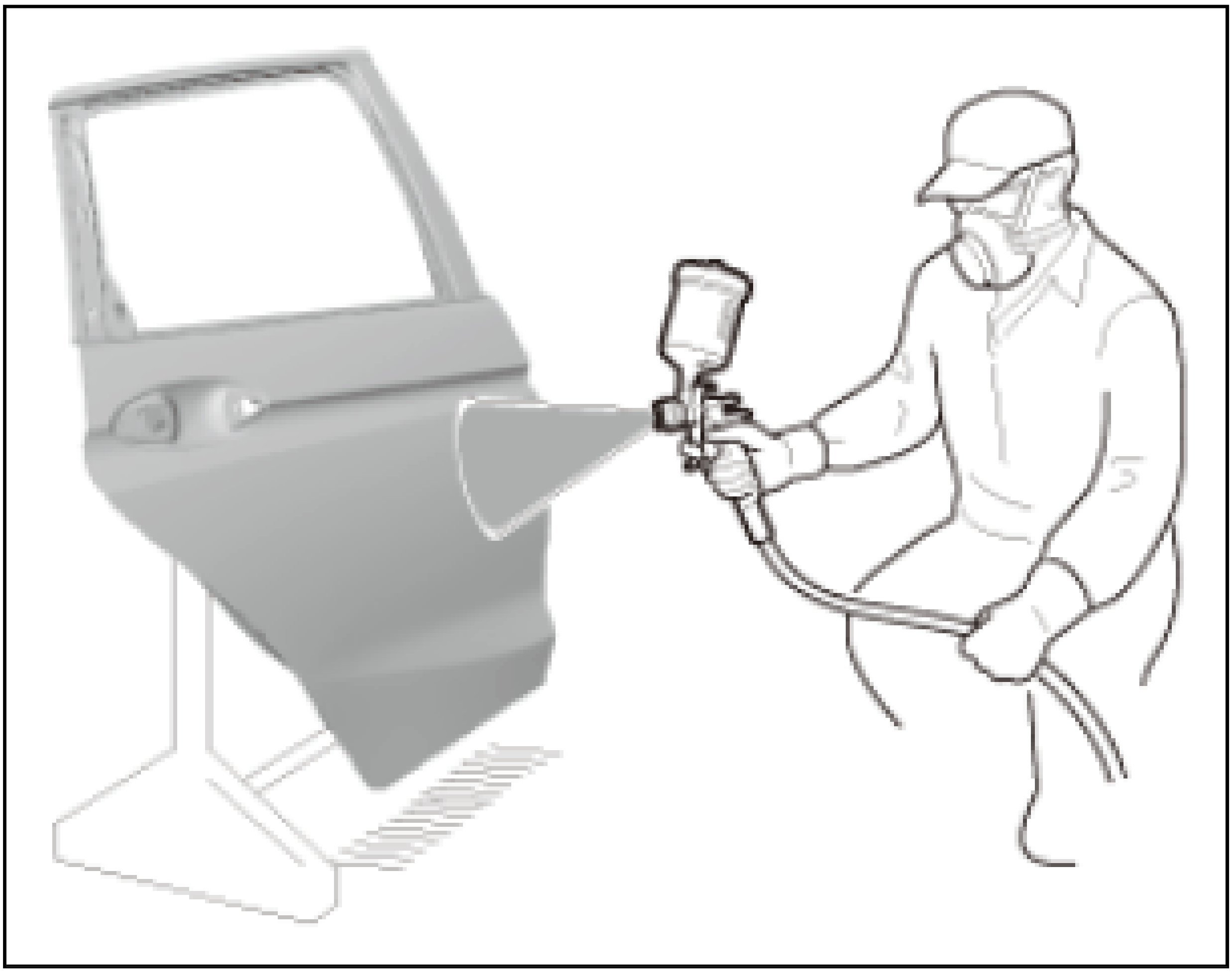

   2. Dry the color basecoat.

After allowing sufficient flash time, use a portable air blower/heat gun to completely remove water content from the paint layer until it has a flat appearance.

NOTE: **Refer to the paint manufacturer's instruction for the appropriate flash time and drying temperature.**

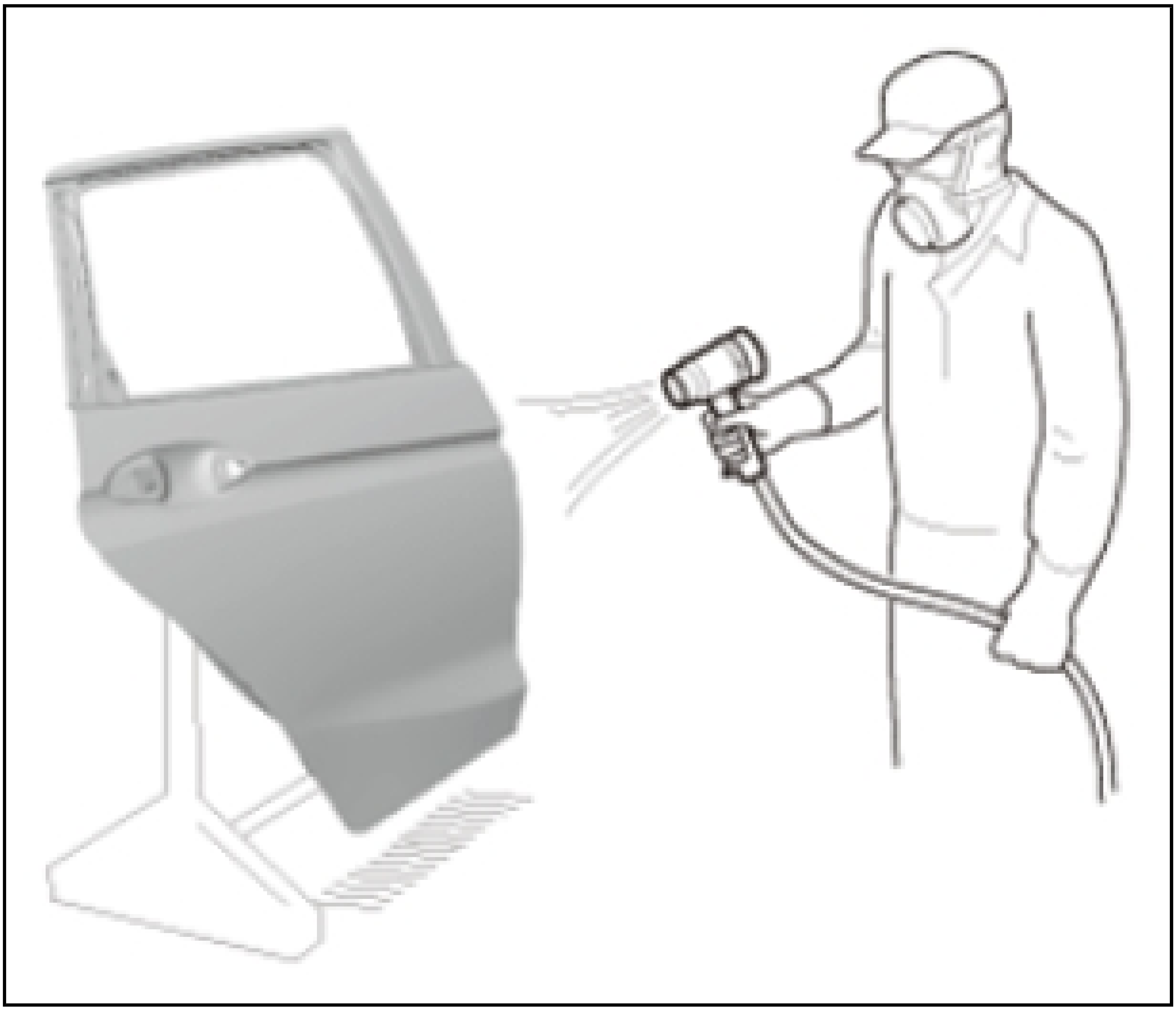

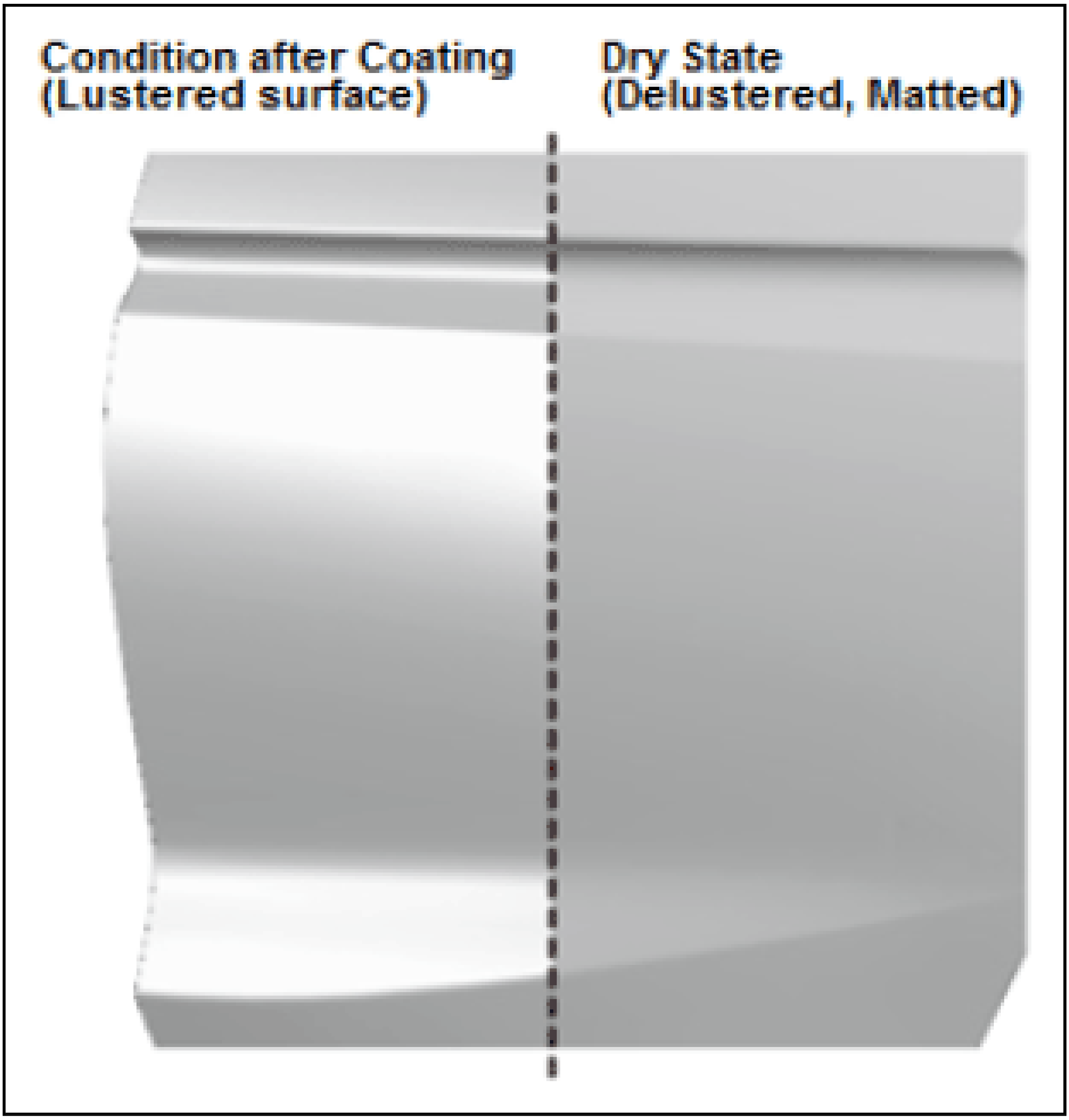

NOTE: **Flash time can be greatly impacted by the ambient humidity.**

Comparison of Flash Time (Example):

Conditions (in paint booth for water-based paint)

- Coating Surface: Door Panel
- Color: Silver Metallic
- Dilution Rate: 20%
- Coating Condition: Block Coating
- Ambient Conditions: Temperature 70Â°F (21Â°C)/Humidity 60% RH

No.	Drying Location	Flash Time
1	Below the booth fan	8 min 41 sec
2	Away from the booth fan	10 min 15 sec
3	Below the booth fan with air blower	3 min 35 sec
	Same as above conditions 30% RH humidity	2 min 10 sec

3. Repeat the processes of (1) and (2) (coating and drying) and layer the color base to cover the surface completely

NOTE:

- **Normally spray 1 to 2 times to cover the surface.**
- **Gradually widen the coating area at each layer when applying gradation coating.**

- **When foreign substances adhere to the surface, dry sand with a sandpaper of P1000 or higher after complete dry Do not wet sand.**

4. Remove unevenness.

   Color unevenness rarely occurs, so apply as needed.

   NOTE:
   - **When removing unevenness, place the spray gun a little further away from the surface being painted and spray with a lightly lower pressure.**
   - **Apply light coat for gradation coating.**
   - **Confirm the paint manufacturer's instructions. Some paint may require use of exclusive paint reducer/thinner for the gradation paint.**

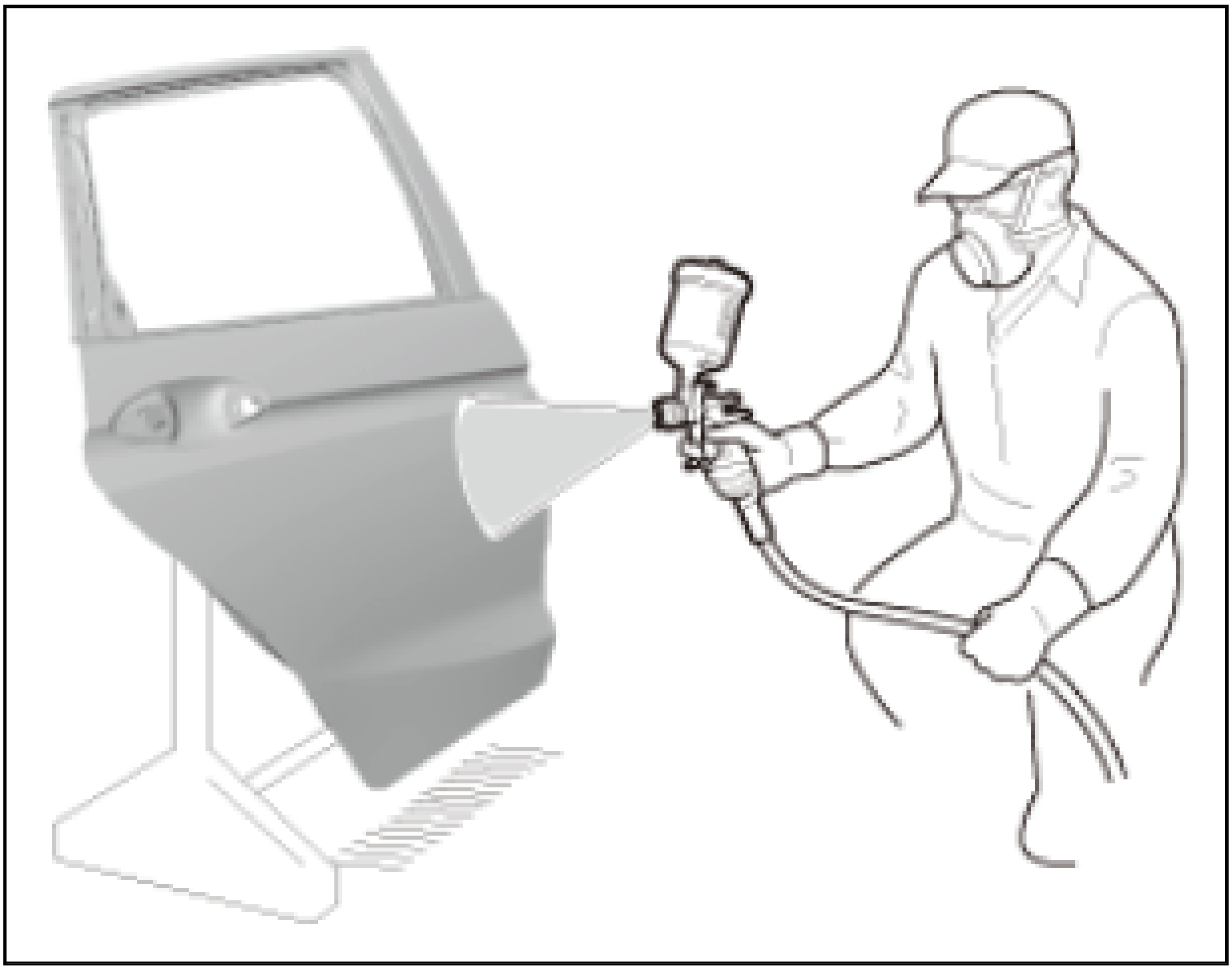

4. Drying Topcoated Layer:

   Allow sufficient set-up time and let the color base completely dry.

5. Clearcoating:

   Generally apply two coats, allowing it to match the adjoining panel's surface quality.

   NOTE: **After the first light coat, allow flash time and wet coat (finishing).**

6. Drying Clear:

   Allow sufficient set-up time before force-drying.

   NOTE: **Confirm the paint manufacturer's instructions for the appropriate setting time and drying temperature.**

7. Polishing.

PLASTIC PARTS PAINT REPAIR

External Plastic Parts Examples

- Because plastic parts are extensively used for exterior parts on vehicles, they may also require paint repairs like other steel body parts.
- The paint repair method and used materials are different depending upon the construction material of the plastic parts.
- In order to confirm the plastic material type, refer to the code stamped on the rear surface of the part, or the appropriate service information.
- Understand the characteristics of the plastic materials before beginning paint repairs.

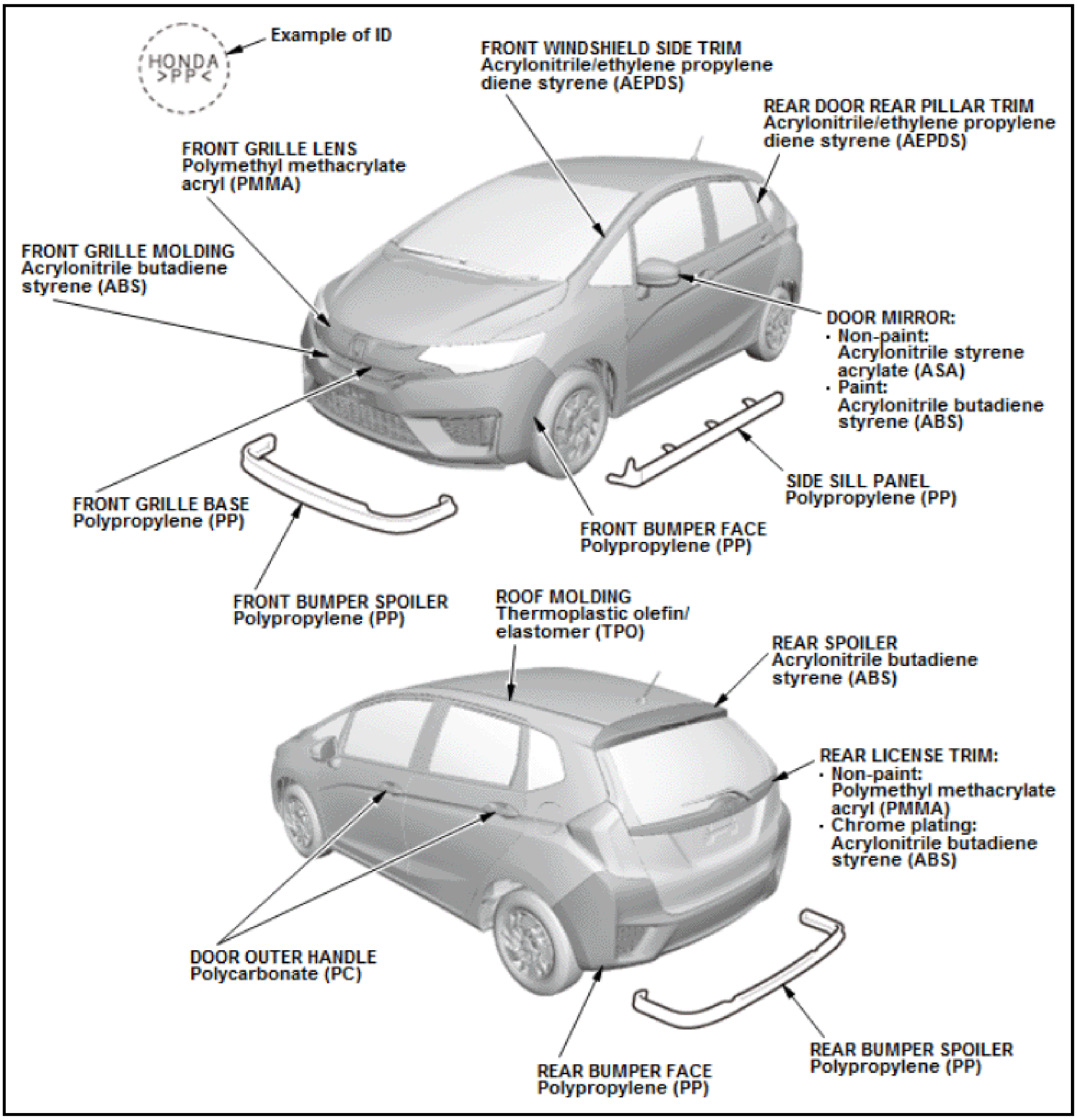
HONDA
>PP<
Example of ID
FRONT WINDSHIELD SIDE TRIM
Acrylonitrile/ethylene propylene diene styrene (AEPDS)
REAR DOOR REAR PILLAR TRIM
Acrylonitrile/ethylene propylene diene styrene (AEPDS)
FRONT GRILLE LENS
Polymethyl methacrylate acryl (PMMA)
FRONT GRILLE MOLDING
Acrylonitrile butadiene styrene (ABS)
DOOR MIRROR:
· Non-paint:
Acrylonitrile styrene acrylate (ASA)
· Paint:
Acrylonitrile butadiene styrene (ABS)
SIDE SILL PANEL
Polypropylene (PP)
FRONT GRILLE BASE
Polypropylene (PP)
FRONT BUMPER FACE
Polypropylene (PP)
FRONT BUMPER SPOILER
Polypropylene (PP)
ROOF MOLDING
Thermoplastic olefin/ elastomer (TPO)
REAR SPOILER
Acrylonitrile butadiene styrene (ABS)
REAR LICENSE TRIM:
· Non-paint:
Polymethyl methacrylate acryl (PMMA)
· Chrome plating:
Acrylonitrile butadiene styrene (ABS)
DOOR OUTER HANDLE
Polycarbonate (PC)
REAR BUMPER FACE
Polypropylene (PP)
REAR BUMPER SPOILER
Polypropylene (PP)

Plastic Part Types And Characteristics

- Before repairing plastic parts, confirm the temperature for forced (heated) drying and solvent resistance.
- Refer to the chart below to avoid heat or solvent damage to plastic parts.

Standard Plastic Parts Symbol	Name	Heat Resistance Temperature Â°F (Â°C)	Solvent Resistance	Note
AAS	Acrylonitrile acrylic styrene	176 (80)	Short time, a small amount of alcohol OK (to wipe off for degreasing etc.)	Organic solvent such as gasoline NG aromatic substance NG.
ABS	Acrylonitrile butadiene styrene	176 (80)	Short time, a small amount of alcohol OK (to wipe off for degreasing etc.)	Organic solvent such as gasoline NG aromatic substance NG.

Standard Plastic Parts Symbol	Name	Heat Resistance Temperature Â°F (Â°C)	Solvent Resistance	Note
AES	Acrylonitrile ethylene styrene	176 (80)	Short time, a small amount of alcohol OK (to wipe off for degreasing etc.)	Organic solvent such as gasoline NG aromatic substance NG.
AEPDS	Acrylonitrile/ethylene propylene diene styrene	176 (80)	Short time, a small amount of alcohol OK (to wipe off for degreasing etc.)	Organic solvent such as gasoline NG aromatic substance NG.
AS	Sthylene-acrylonitrile copolymer	176 (80)	Short time, a small amount of alcohol, gasoline OK	Dipping in organic solvent such as gasoline and alcohol NG, contact with organic solvent NG.
ASA	Acrylonitrile styrene acrylate	176 (80)	Short time, a small amount of alcohol OK (to wipe off for degreasing etc.)	Organic solvent such as gasoline NG aromatic substance NG.
CAB	Cellulose acetate butylate	176 (80)	Short time, a small amount of alcohol OK (to wipe off for degreasing etc.)	Organic solvent such as gasoline NG aromatic substance NG.
EPDM	Ethylene propylene diene terpolymer	176 (80)	Short time, a small amount of alcohol OK (to wipe off for degreasing etc.)	Organic solvent such as gasoline NG aromatic substance NG.
E/VAC	Ethylene-vinyl acetate	176 (80)	Short time, a small amount of alcohol, gasoline OK	Dipping in organic solvent such as gasoline and alcohol NG, contact with organic solvent NG.
PA	Polyamide	176 (80)	Alcohol, gasoline OK	Buttery fluid (sulfuric acid) NG.
PBT	Polybutylene terephthalate	320 (160)	Alcohol, gasoline OK	Almost all solvent OK.
PC	Polycarbonate plastics	248 (120)	Short time, a small amount of alcohol OK	Organic solvent such as brake fluid, wax, wax remover and gasoline NG.
PE	Polyethylene	176 (80)	Alcohol, gasoline OK	Almost all solvent OK.
PF	Phenol formaldehyde	176 (80)	Very short time, a s m all alcohol OK (to wipe off for degreasing etc.)	Dipping in organic solvent such as gasoline and alcohol NG, contact with organic solvent NG.
PMMA	Polymethyl methacrylate (acryl)	176 (80)	Short time, a small amount of alcohol OK (to wipe off for degreasing etc.)	Dipping in organic solvent such as gasoline and alcohol NG, contact with organic solvent NG. Thoroughly wash off remover.
POM	Polyoxymethylene polyacetal	212 (100)	Alcohol, gasoline OK	Almost all solvent OK.
PP	Polypropylene	176 (80)	Alcohol, gasoline OK	Almost all solvent OK.
PPE	Polypropylene oxide	212 (100)	Short time, a small amount of alcohol OK	Dipping in organic solvent such as gasoline and alcohol NG, contact with organic solvent NG.
PS	Polystyrene (styrol)	140 (60)	Short time, a small amount of alcohol OK	Dipping in organic solvent such as gasoline and alcohol NG, contact with organic solvent NG.
PUR	Thermosetting polyurethane	176 (80)	Very short time, a small amount of alcohol OK (to wipe off for degreasing etc.)	Dipping in organic solvent such as gasoline and alcohol NG, contact with organic solvent NG.
PVC	Polyvinyl chloride	176 (80)	Short time, a small amount of alcohol, gasoline OK (to wipe off for degreasing etc.)	Dipping in organic solvent such as gasoline and alcohol NG, contact with organic solvent NG.

Standard Plastic Parts Symbol	Name	Heat Resistance Temperature Â°F (Â°C)	Solvent Resistance	Note
SMC	Sheet molding compound	356 (180)	Alcohol, gasoline OK	Almost all solvent OK.
TPE	Thermoplastic polyester elastomer	176 (80)	Alcohol OK, gasoline for a short period of time OK (to wipe off for degreasing etc.)	Dipping in organic solvent such as gasoline and alcohol NG, contact with organic solvent NG. Thoroughly wash off remover.
TPO	Thermoplastic olefin/elastomer	176 (80)	Alcohol OK, gasoline for a short period of time OK (to wipe off for degreasing etc.)	Dipping in organic solvent such as gasoline and alcohol NG, contact with organic solvent NG. Thoroughly wash off remover.
TPS	Thermoplastic styrene elastomer	176 (80)	Short time, a small amount of alcohol, gasoline OK (to wipe off for degreasing etc.)	Dipping in organic solvent such as gasoline and alcohol NG, contact with organic solvent NG. Thoroughly wash off remover.
TPU	Thermoplastic/urethane/elastomer	176 (80)	Short time, a small amount of alcohol, gasoline OK (to wipe off for degreasing etc.)	Dipping in organic solvent such as gasoline and alcohol NG, contact with organic solvent NG. Thoroughly wash off remover.
UP	Polyester	230 (110)	Alcohol, gasoline OK (to wipe off for degreasing etc.)	Alkali NG.

NG= No Good - Do not use

- Heating plastic parts to temperatures at or above the "Heat resistance temperature" may deform them.
- For two plastic parts constructed of the same material, heat and solvent resistance may differ based on the polymerization.

Repair Processes

Many plastic parts are used for exterior parts of a vehicle. In addition to sheet metal repairs, it is sometimes necessary to repair plastic parts. The major large plastic parts include: bumpers, side sill garnishes, and spoilers. They may be constructed of PP, ABS, PC, or nylon-polyester-based materials. In many damage situations, plastic part replacement is preferred over repair.

NOTE:

- **Before attempting repairs, identify the plastic part's construction and select the most appropriate repair materials.**
- **Follow the manufacturer's instructions for the repair materials.**
- **Be careful to avoid part deformation and damage during forced-dry with heat during the repair process.**

PP Polypropylene Bumper Repair Processes

Example of damage: Scratches and hairlines on PP bumper.

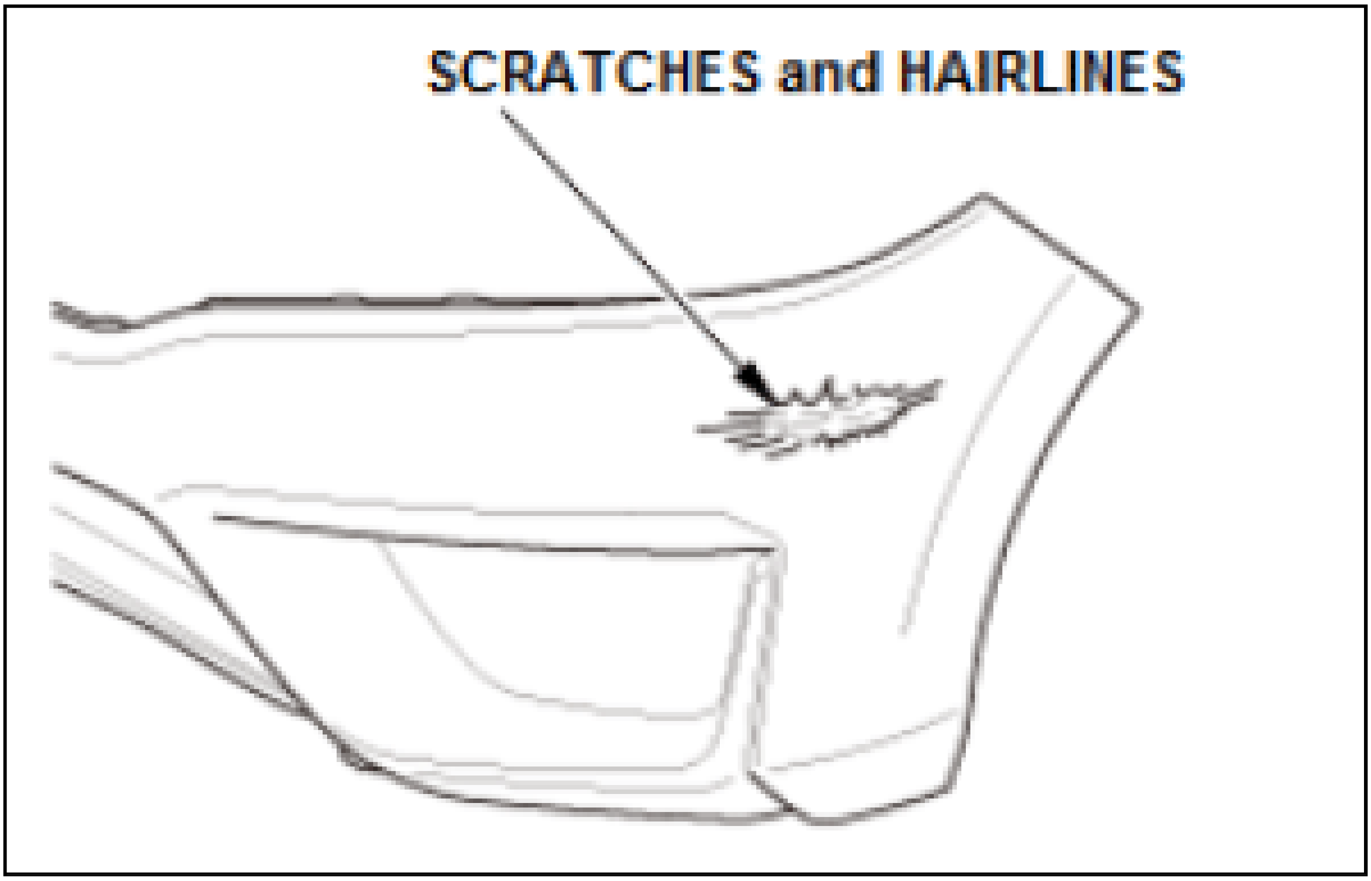
SCRATCHES and HAIRLINES

1. Preparation and cleaning:
    - Wash the damaged area with water.
    - Thoroughly clean both the front and rear sides of the damaged area using a degreaser to remove wax and oils.

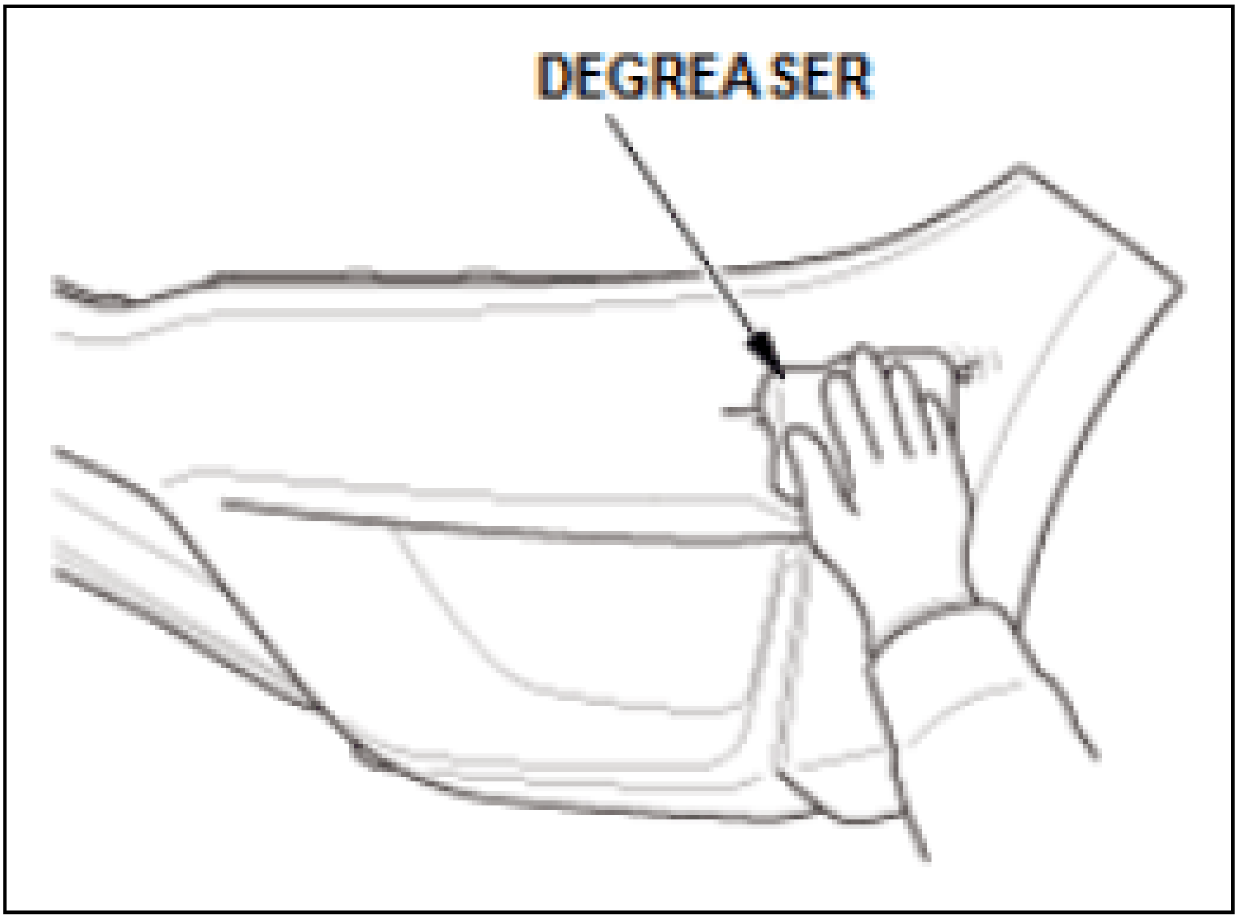

2. Stand and study raw surface.

    Featheredge the damaged area using P80 to P120 sandpaper.

Then degrease the surface.

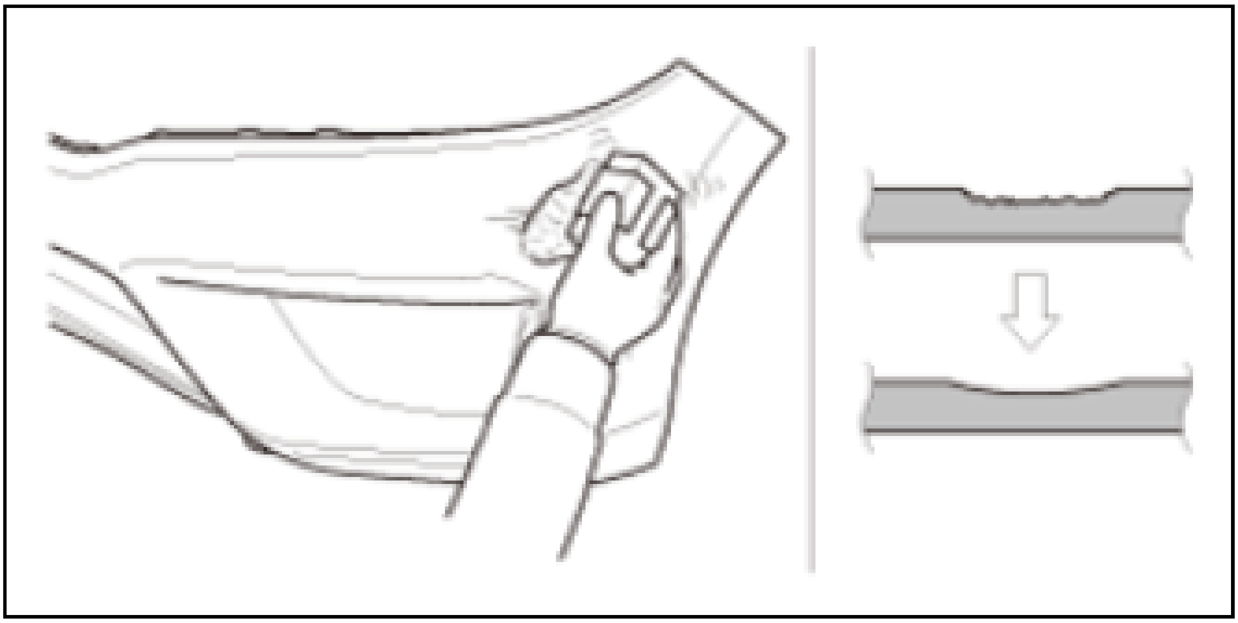

3. Application of primer.

   Apply primer for PP bumper in the damaged area where filler will be applied.

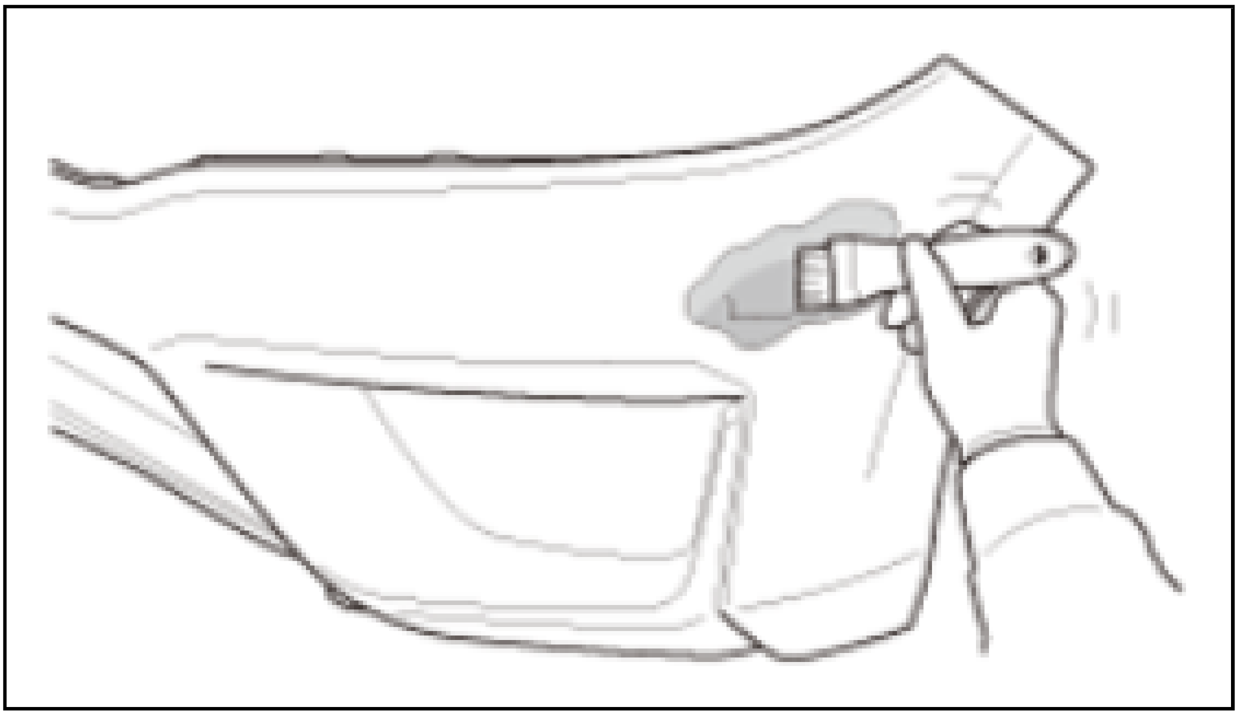

4. Mix the filler and hardener.
5. Filler:
   - Fill in the damaged area using epoxy-type body filler.
   - Restore the part's original shape by applying sufficient filler to the damaged area using 2-3 separate thin coats.

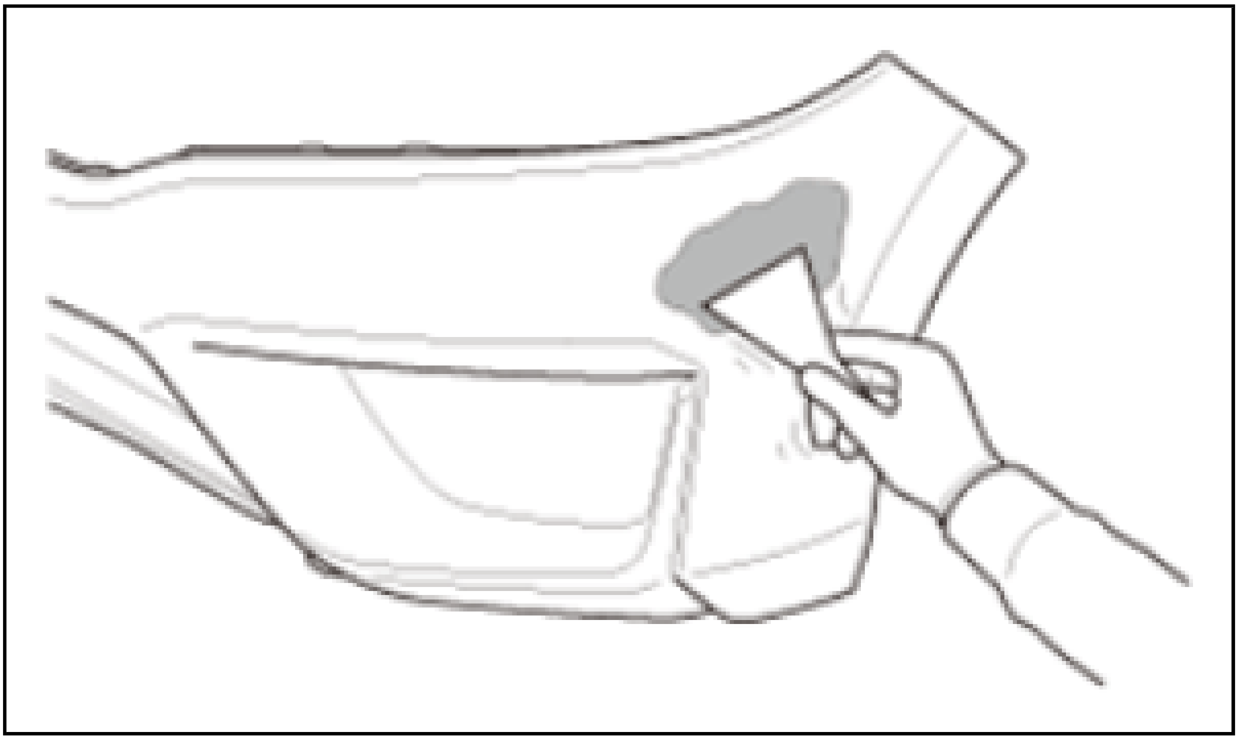

6. Standing and surfacing:
   - Rough sand with P120 sandpaper first and finish sand the surface with P180 to P240 sandpaper.
   - Use the wet sanding method when possible.
7. Refinish the part (base coat/clear coat).

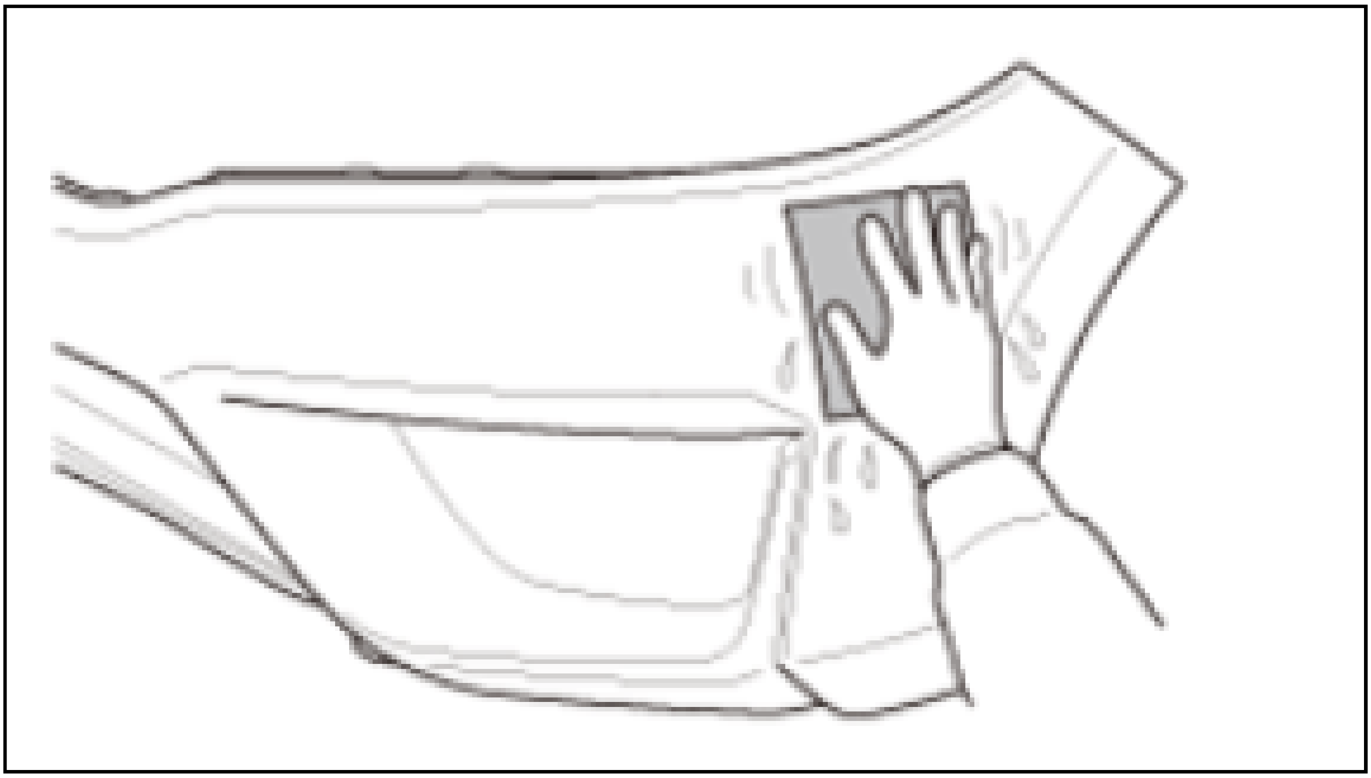

SPECIALIZED PAINTING PROCESSES

Colored Clearcoat Painting

Composition of Color Clear Paint Layer

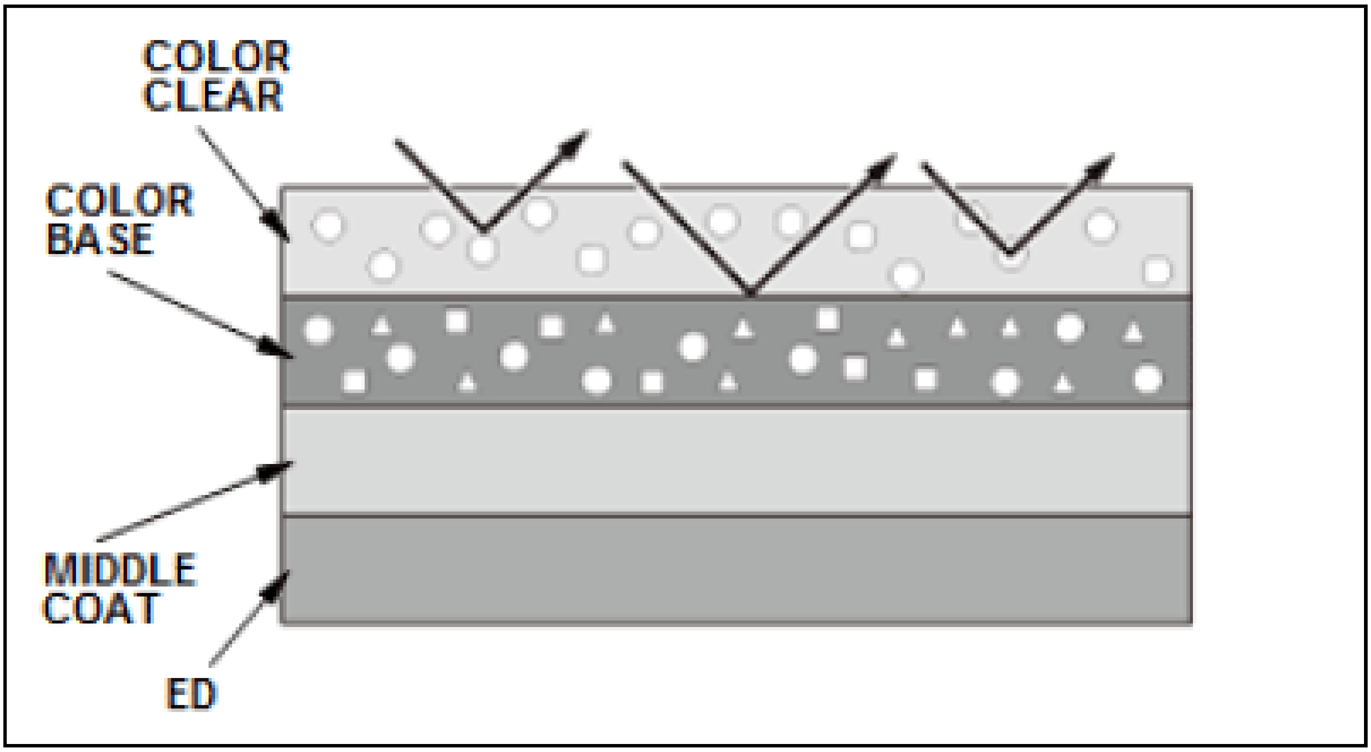
COLOR CLEAR
COLOR BASE
MIDDLE COAT
ED

- Color clear paint is a mixture of clear coat used for metallic painting topcoat, with transparent pigment and dyes. This paint provides vivid, deep, and transparent colors.
- The paint color will be a combination of the translucent colored clear layer and the color base beneath it.

NOTE:

- **Because colored clear paint is translucent and looks different depending upon the paint layer thickness, prepare several paint samples with different layers to compare the color, the same as you would for three-coat pearl.**
- **If the paint used as a color base has poor coverage capability, apply a base color that offers a greater coverage first. Then apply the color base paint.**

Intermediate Chip Guard Painting

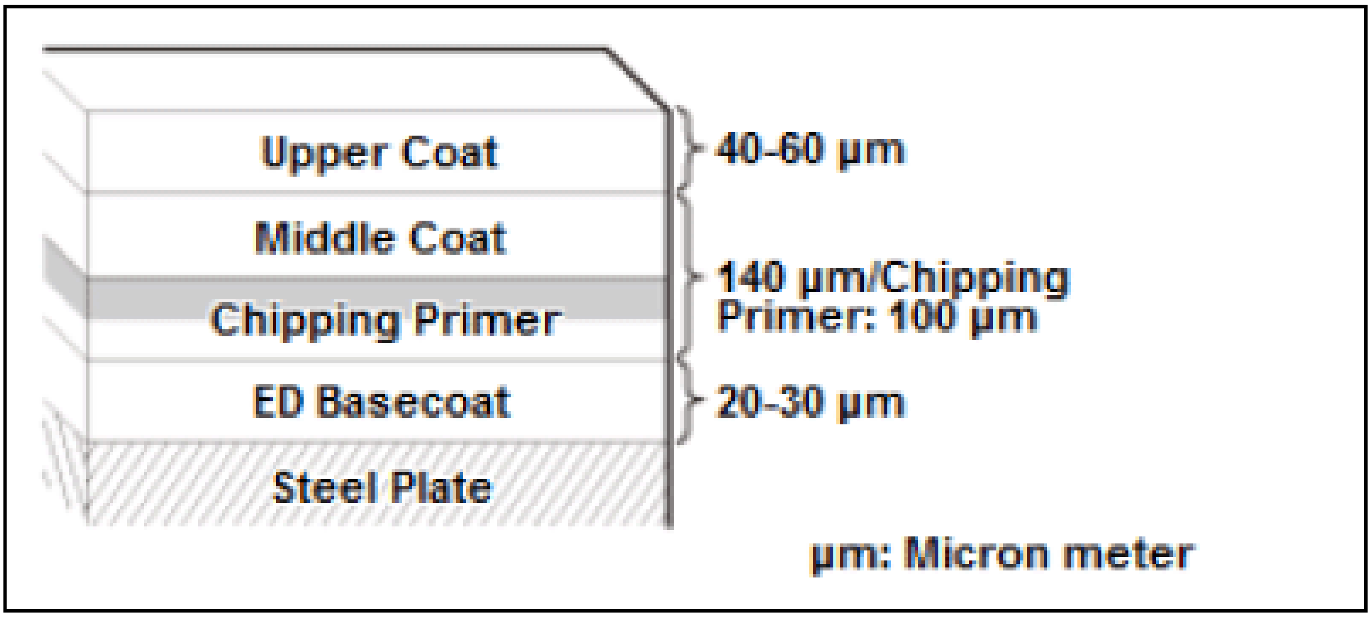
Upper Coat
Middle Coat
Chipping Primer
ED Basecoat
Steel Plate
40-60 µm
140 µm/Chipping Primer: 100 µm
20-30 µm
µm: Micron meter

Helps prevent chipping damage from flying stones while driving. Normally chip guard primer (chloride vinyl resin) is painted on the side sills etc. The painting surface is granular with a layer thickness of 100 to 200 µm.

NOTE: **Check for the paint manufacturer's spec information before use.**

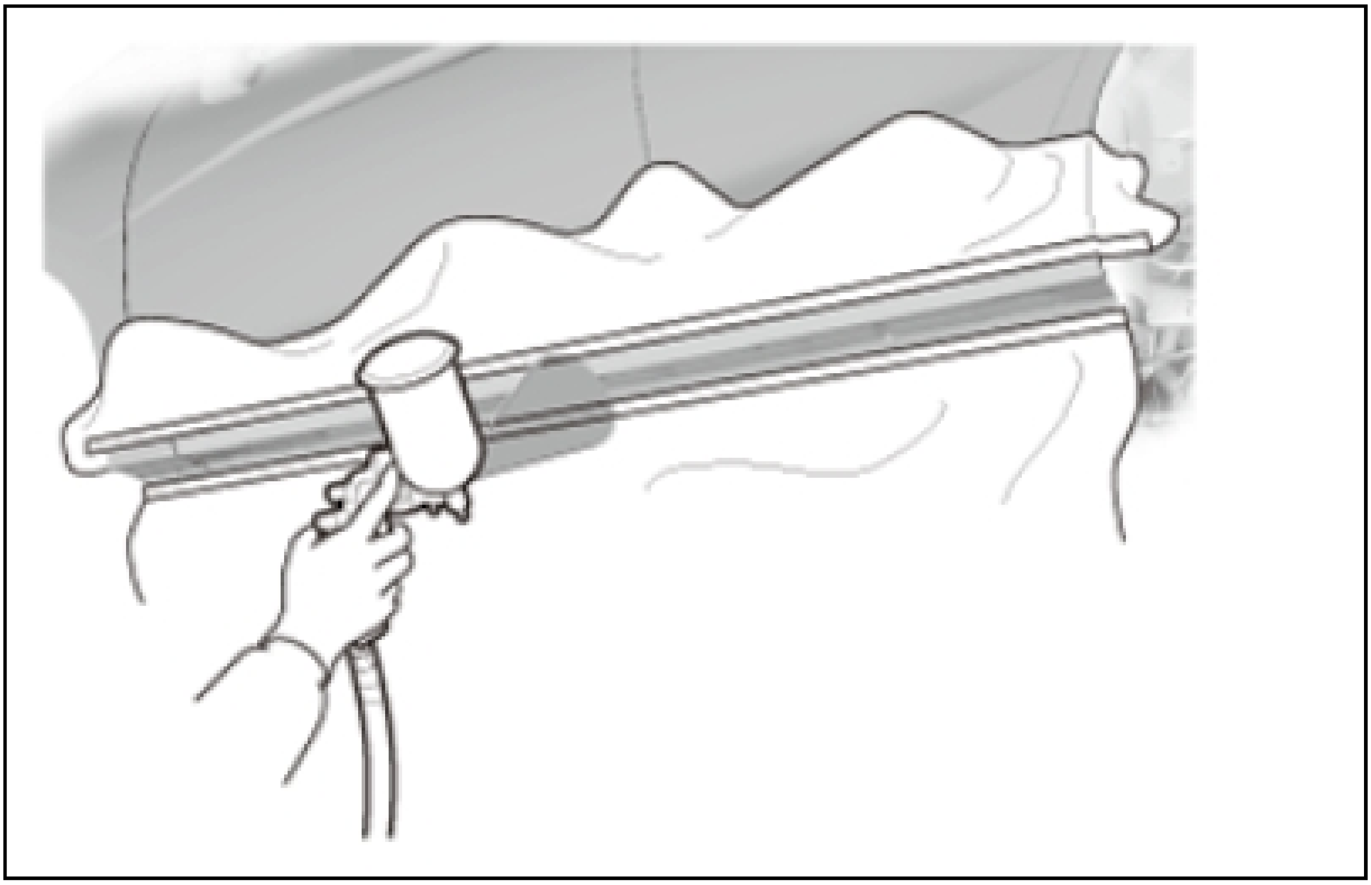

Coating Processes

1. Scuffing:

   Sand the base coat layer using a scuffing pad. (P240 to P400)

   NOTE: **Be careful not to sand excessively down to the base material.**

2. Clean with air blow gun then degrease.
3. Mask.
4. Apply Chip Guard Primer:
   - Apply the first pass lightly but enough to wet the surface, then allow 5 minutes flash time.
   - Match the surface quality of the paint layer with the surrounding surfaces during the second pass to have consistent granular texture.
   - Complete this process with two coats if possible. Do not over-apply.

   NOTE: **Refer to the paint manufacturer's instructions for the specific coating method.**

5. Dry:

   Allow a 15-minute set-up time and force dry the surface for 30 to 40 minutes at a temperature of 86Â°F (30Â°C). For thicker paint layers, allow a longer set-up time.

   NOTE: **Always refer to the paint manufacturer's instructions for the appropriate drying time.**

6. Apply urethane primer-surfacer.

Soft Chip Guard Primer Coat

NOTE: **Depending on the destination, a soft chip guard primer coat is applied. If this chip guard primer coating is applied, read following precautions and follow coating procedures.**

Sectional view of paint coats

Top Coat
Intermediate Coat **+**

Chipping Guard Primer
Electrode position
Base Metal

General Safety Precautions

The removal of paint and undercoating by stone chips immediately exposes metal to the atmosphere, causing it to oxidize. The thickness of this oxidation increases if the process continues unchecked. Soft chip guard primer protects against damage due to the impact of such objects:

- The soft chip guard primer coat is applied over the E.D. (electrostatically deposited) primer. It is followed by the guide coat and the topcoat.
- Soft chip guard primer produces a smooth surface when dry It should be sprayed so the thickness of the protective film is 20 microns.
- Soft chip guard primer coat is then applied to the most susceptible areas.
- Spray the primer-surfacer (dual-component urethane primer-surfacer) on the soft chip guard primer coating areas when you replace parts using soft chip guard primer coat.

Coating Processes

WARNING:

- **Wear goggles or safety glasses to prevent eye injury.**
- **Ventilate when spraying undercoat.**

1. Sanding the replacement part.

   Use a double action sander and P400 sandpaper.

   NOTE:

   - **Do not over sand the edges or corners of the part.**
   - **Do not expose base metal.**

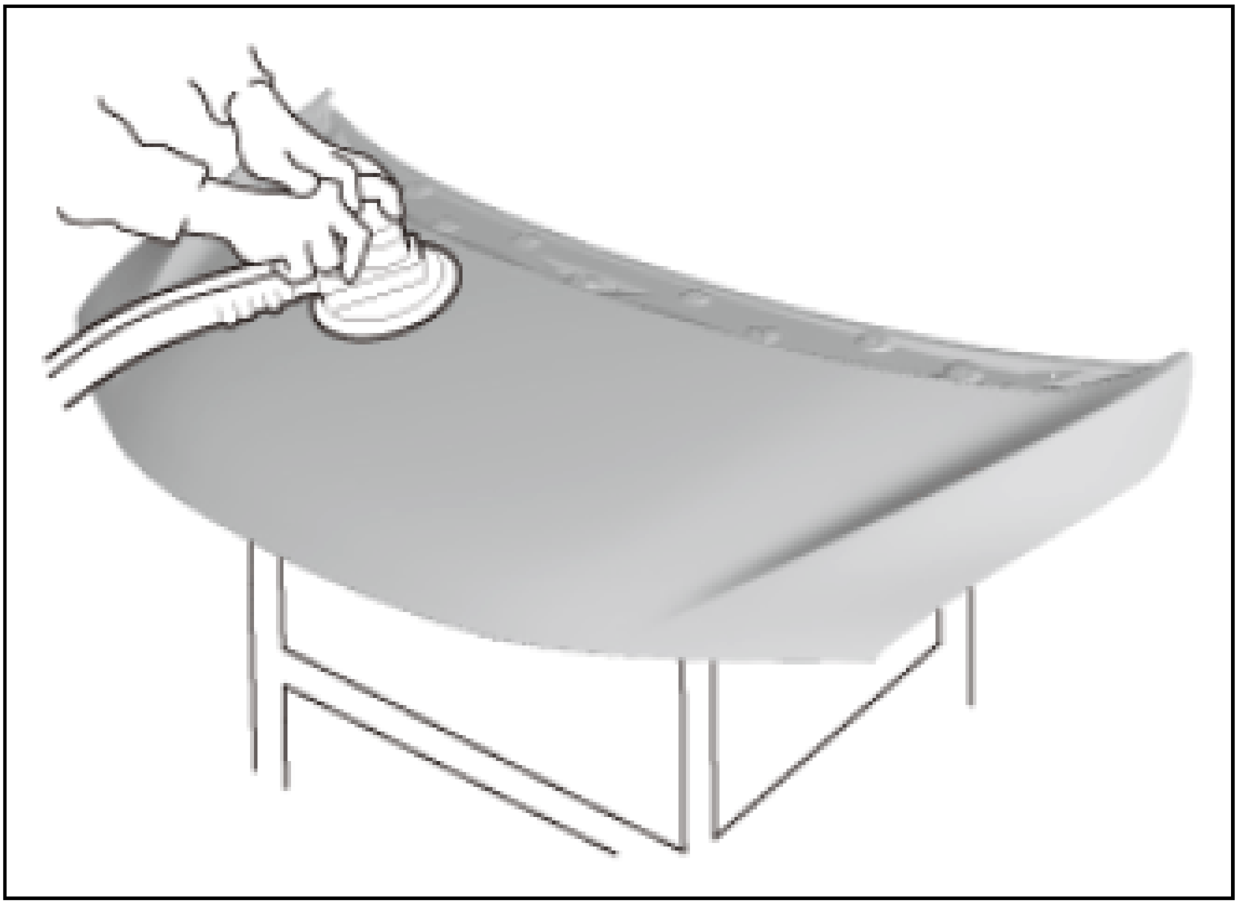

2. Air blowing/degreasing.

   Use alcohol, and wax and grease remover.

3. Protect from overspray.

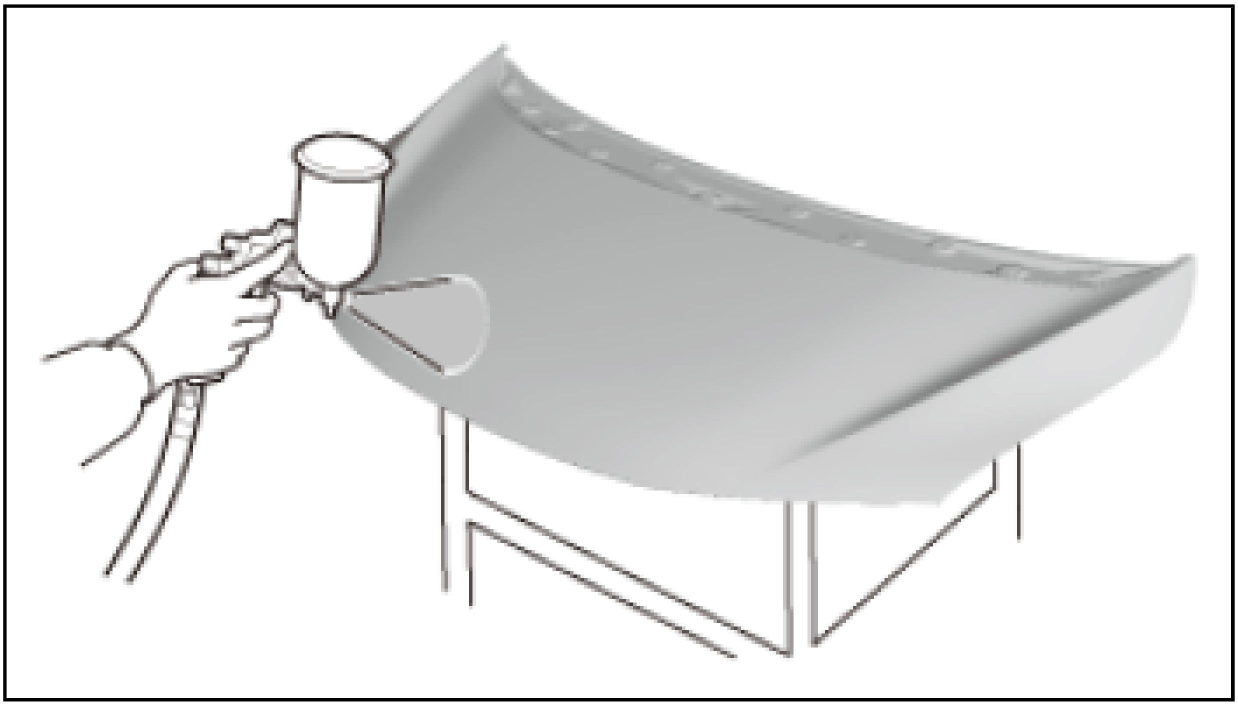

Use masking tape and protect the related areas from overspray.

4. Spraying primer-surfacer:
    - Spray about four to five coats to get 20 microns of thickness. One coat deposits about 5 to 7 microns.
    - Do not try to cover the surface with one heavy coat. Applying several thin coats is recommended.
    - Use a dual-component urethane primer surfacer and a spray gun.
    - Mix the primer-surfacer with the correct ratio of hardener and solvent.
    - Follow the primer-surfacer manufacturer's instructions.
5. Drying.

    After spraying primer surfacer, allow 7 to 10 minutes of set-up time, then force dry it with infrared lamps or an industrial dryer.

6. Fine sanding:
    - Check that the primer-surfacer has dried thoroughly then sand the primer-surfacer.
    - Use a double action sander and P400-P600 sandpaper.
7. Apply intermediate coating and topcoat.

Top Clearcoat Painting

Features Of Paint Layer

Coating Processes

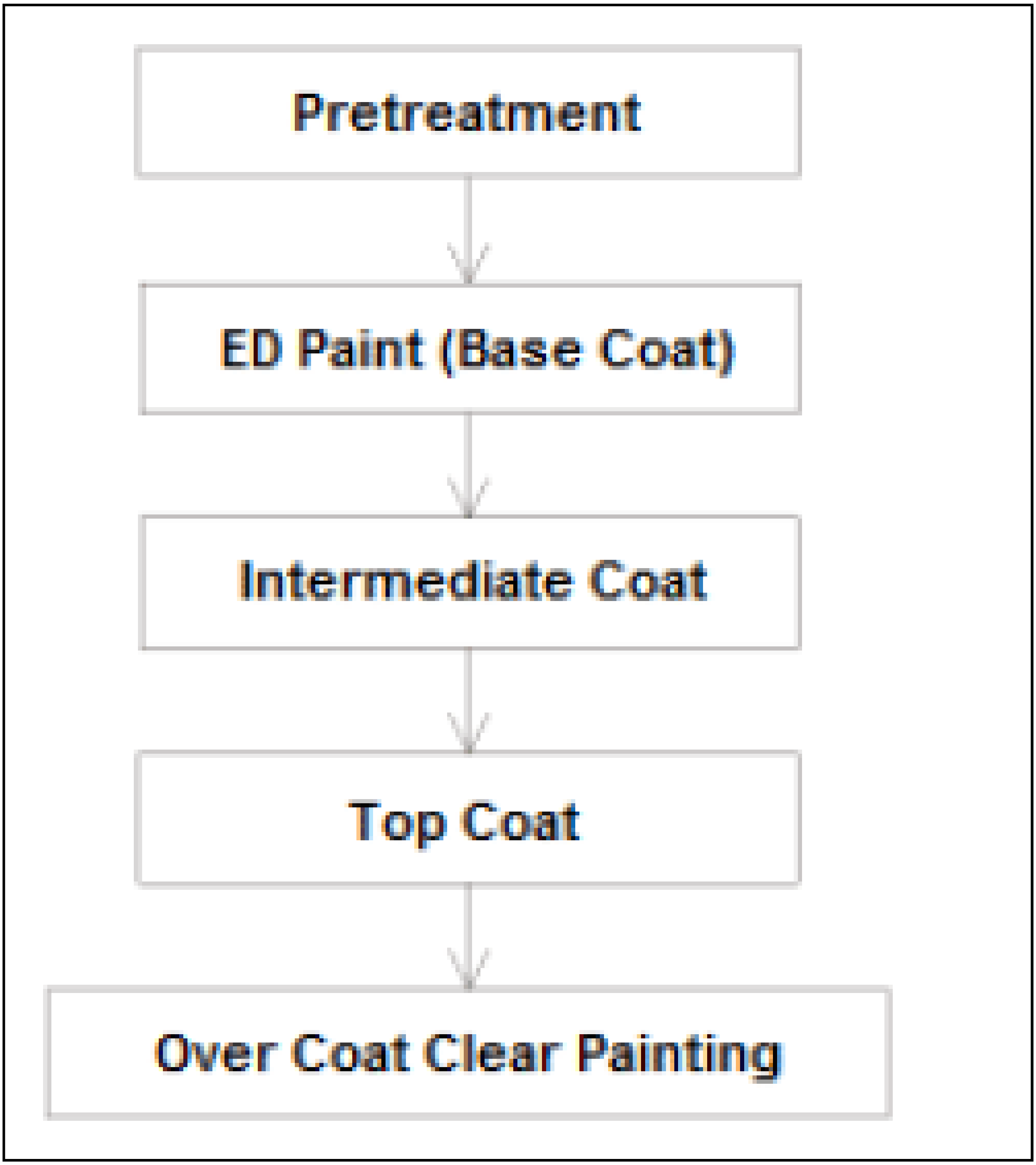
Pretreatment
ED Paint (Base Coat)
Intermediate Coat
Top Coat
Over Coat Clear Painting

Pretreatment and Paint Layer Composition

Apply cathode electrodeposition paint to the high density conversion coating to enhance the thickness of the paint film and corrosion resistance.

Intermediate Coating

To improve the finishing quality of the topcoating and chip resistance.

Topcoating

To offer a high quality paint by applying a high-solid premium topcoat with polyester acrylic resin type paint along with a base enamel paint.

Over Coat Clear Painting (Abrasion-Resistant Clear)

Maintains smoothness, flatness, freshness, of the luster. Also the deepness and high apparent thickness of the paint layer.

NOTE: **In particular to the three-coat pearl paint, repeat the intermediate coating to improve the finish quality of the topcoating and expand the color range.**

Composition Of Paint Layer

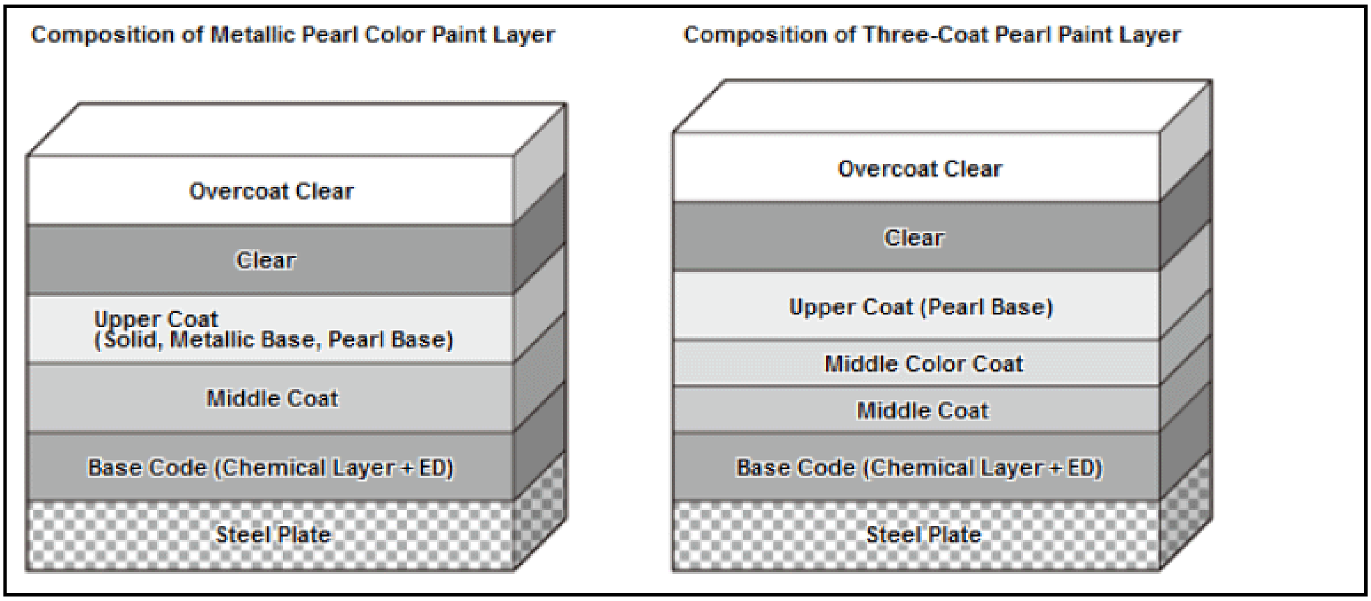
Composition of Metallic Pearl Color Paint Layer
Overcoat Clear
Clear
Upper Coat (Solid, Metallic Base, Pearl Base)
Middle Coat
Base Code (Chemical Layer + ED)
Steel Plate
Composition of Three-Coat Pearl Paint Layer
Overcoat Clear
Clear
Upper Coat (Pearl Base)
Middle Color Coat
Middle Coat
Base Code (Chemical Layer + ED)
Steel Plate

Work Steps After Clear Coating

1. Allow Sufficient Set-up Time:

   After painting, leave the surface as is for about 10 to 20 minutes, in order to let the solvent evaporate and prevent defects from occurring during forced drying.

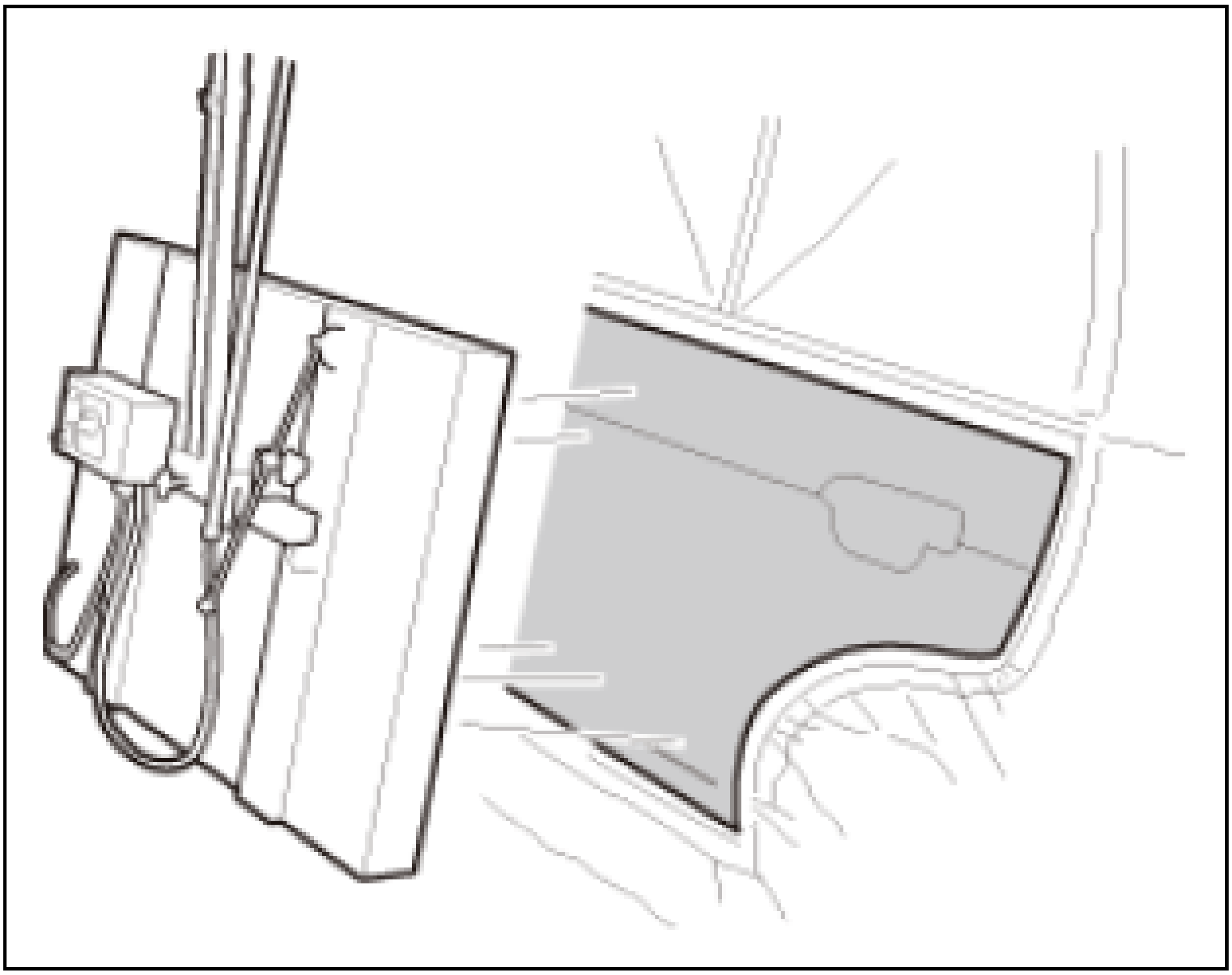

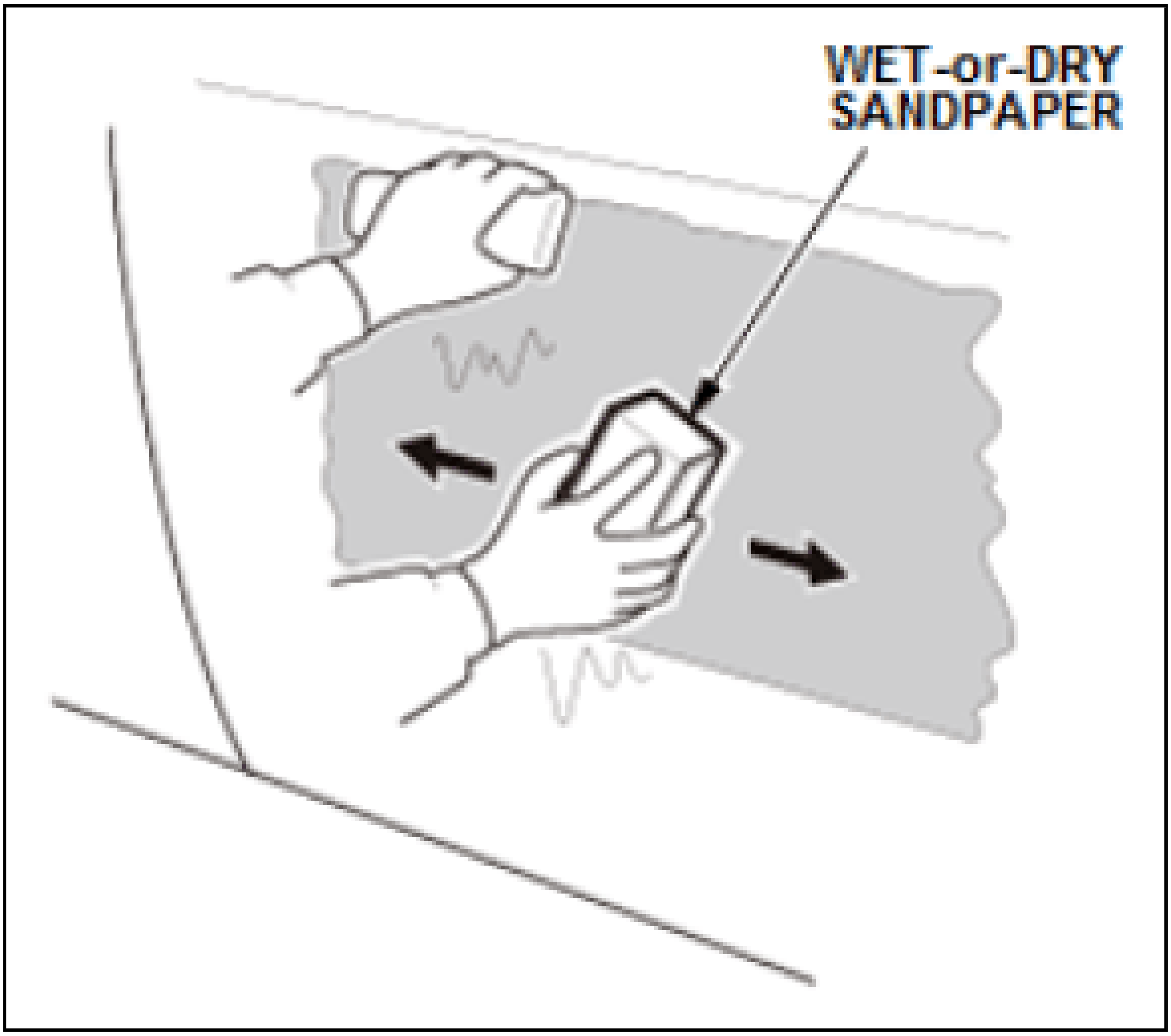
WET-or-DRY
SANDPAPER

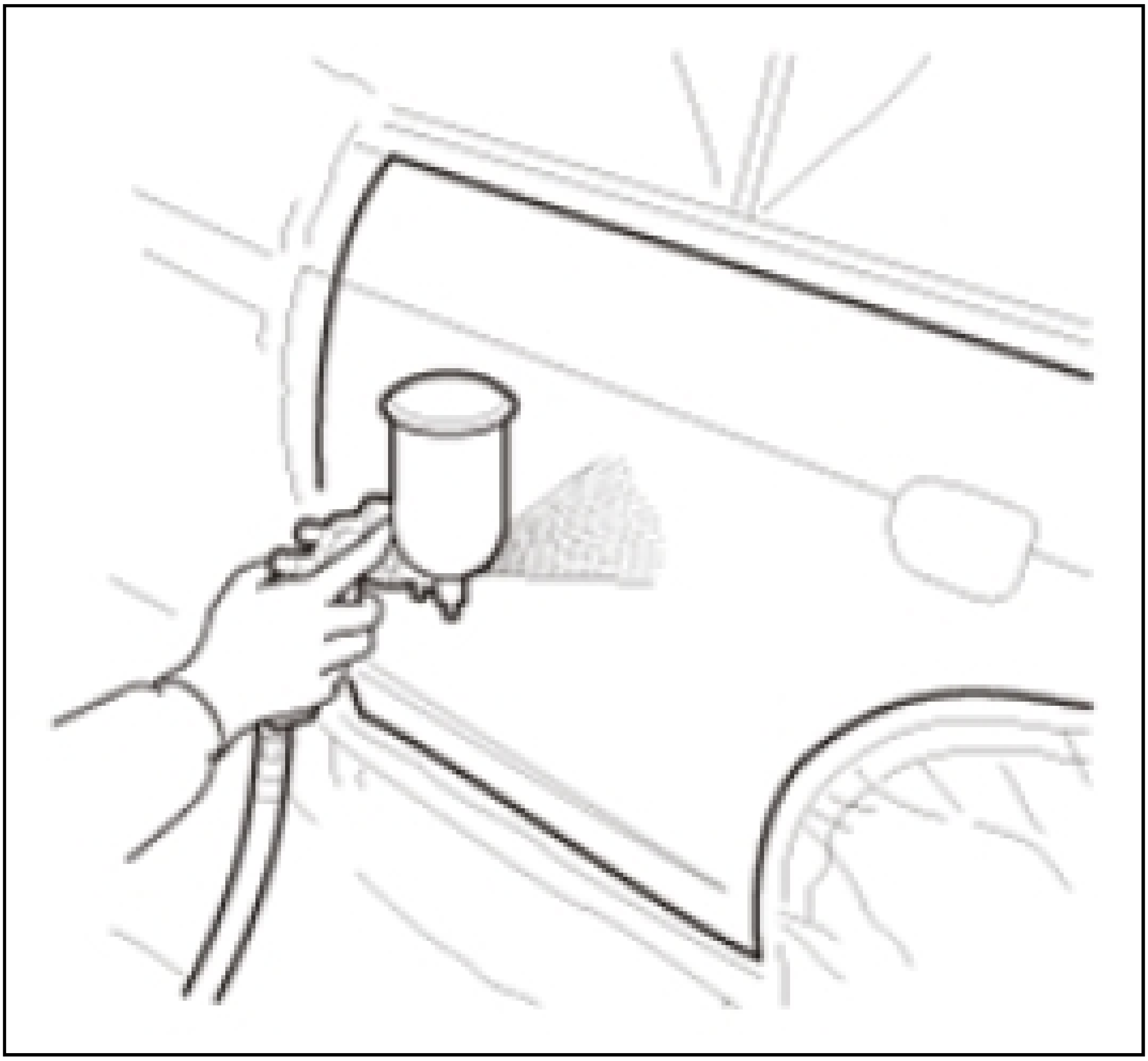

NOTE: **Set-up time changes according to ambient temperature or paint layer thickness. Check the paint manufacturer's instructions.**

2. Force Dry Clearcoating:

   Force dry the surface for approximately 30 to 40 minutes at a temperature of 140Â°F (60Â°C).

   NOTE: **Check the paint manufacturer's instructions for the appropriate drying time.**

3. Scuff:

   Wet sand the coated surface using P1200 to P2000 wet-or-dry sand paper. Clean with air blow gun then degrease.

4. Apply Over Coat Clear:

   To allow sufficient set-up time, leave the coated surface as is for about 10 to 20 minutes, in order to let the solvent evaporate and prevent defects from occurring during forced drying.

   NOTE: **Set-up time changes according to ambient temperature or paint layer thickness. Check the paint manufacturer's instructions.**

5. Dry:
   - Force dry the surface for approximately 30 to 40 minutes at a temperature of 140Â°F (60Â°C).
   - If polished before completely dried, the surface may be de-glossed turn a whitish color. At the same time, if dries too much, it will make the paint layer very hard, increasing polishing time.

   NOTE: **Always refer to the paint manufacturer's instructions for the appropriate drying time.**

6. Polishing.

Undercoating

- Front floor, rear floor and inside the front and rear wheel houses of mass produced vehicles are undercoated (mineral-based vinyl chloride) in order to protect those parts from chipping damage caused by flying stones etc. Though the thickness of the paint layer differs depending upon the parts, it is usually 0.5-1.5 mm (0.020-0.060 in).
- When those parts are repaired or replaced with a new one, use a commercially available undercoating (Nox-rust 409-20s, Solton 1000s Hard wax etc.).

  NOTE: **Check the paint manufacturer's instructions for their product specifications when using undercoat agent.**

- Refer to the model specific body repair information for details about undercoating locations.

Coating Processes

1. Mask interface surfaces of the assembly parts including dampers, sub frame, etc. Also all power train and exhaust related parts to avoid overspray when necessary.
2. Clean up the area to apply undercoating and wipe off oily residue with degreaser.
3. Apply undercoating paint to the under floor and inside the wheel houses.

   Make sure the paint layer to be 1 mm (0.039 in) or thicker on the welded joints and each floor joint areas as well as the wheel houses.

4. Dry the undercoat.

   NOTE: **Always refer to the paint manufacturer's instructions for the appropriate drying time.**

5. Give a top coat.

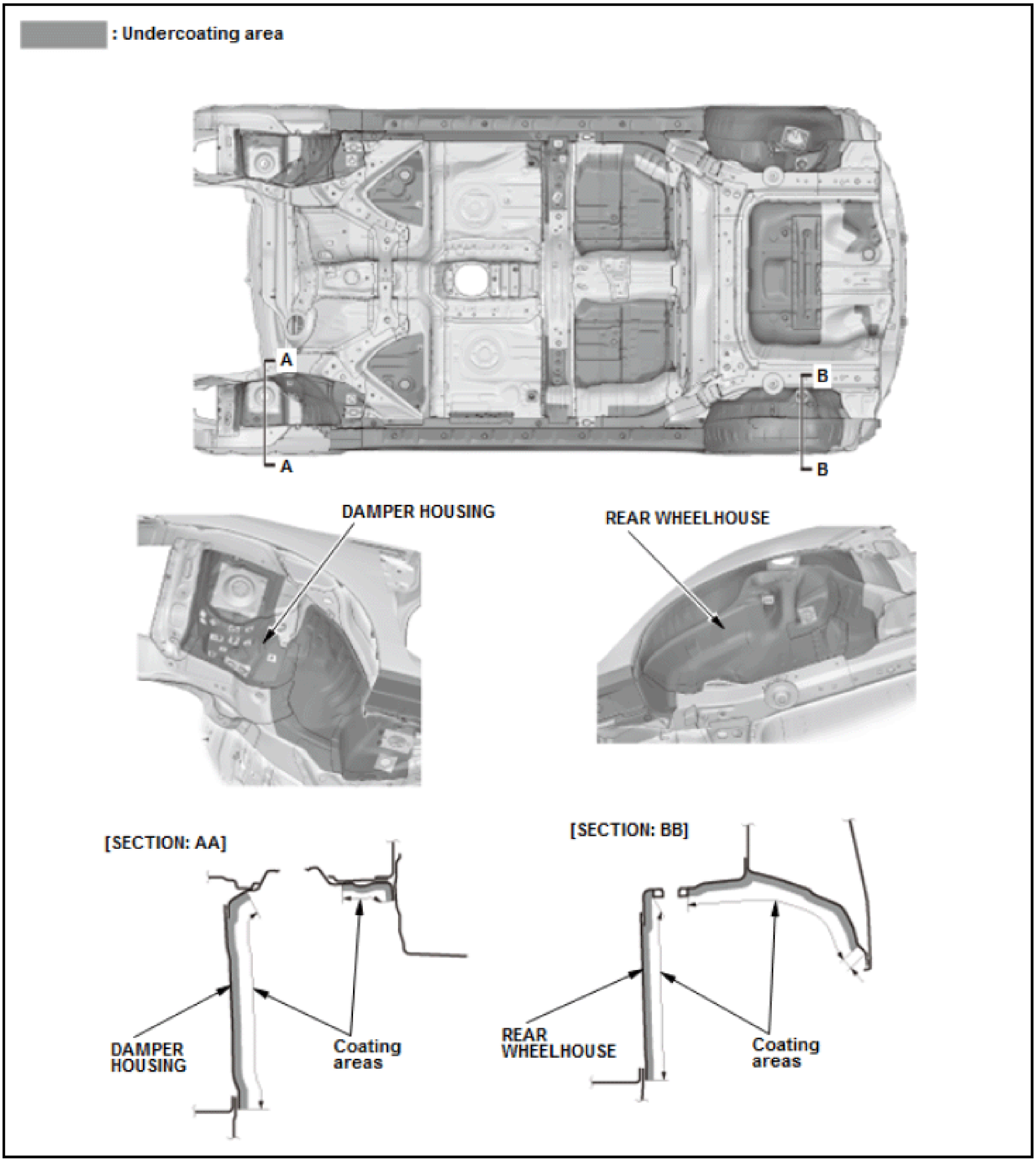
▨ : Undercoating area
A
A
B
B
DAMPER HOUSING
REAR WHEELHOUSE
[SECTION: AA]
DAMPER HOUSING
Coating areas
[SECTION: BB]
REAR WHEELHOUSE
Coating areas

Actions For Environmental Concerns

By eliminating the use of PVC (polyvinyl chloride) for interior plastic parts and body undercoating, the chloride concentration ratio in the shredder dust at recycling is reduced to 1% or less. Recently, the traditional undercoat (mineral-based vinyl chloride) for mass produced vehicles has been replaced with a foam type undercoat. For some models, insulation undercoating is applied to the side sills and rear wheel houses to enhance the noise insulation performance and reduce the number of parts.

NOTE: **As the foam type is very soft, be careful not to damage the paint layer while removing and installing the surrounding parts. The paint layer of foam type is thick, thus apply thicker undercoat when repairing with a commercially available undercoating.**

Foam Type Undercoat and Insulation Undercoat (Example)

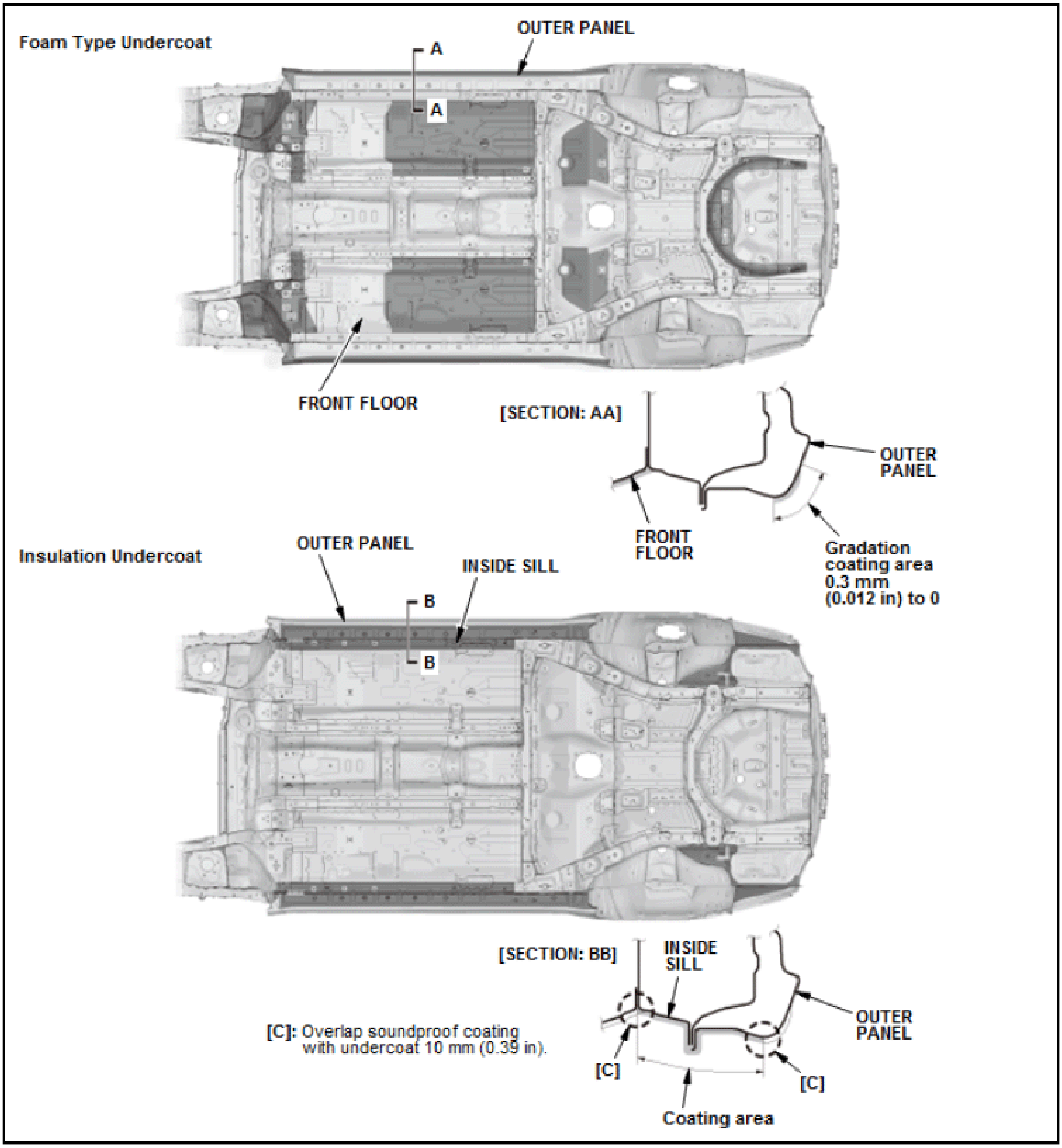
Foam Type Undercoat
OUTER PANEL
A
A
FRONT FLOOR
[SECTION: AA]
OUTER PANEL
FRONT FLOOR
Gradation coating area 0.3 mm (0.012 in) to 0
Insulation Undercoat
OUTER PANEL
INSIDE SILL
B
B
[SECTION: BB]
INSIDE SILL
OUTER PANEL
[C]: Overlap soundproof coating with undercoat 10 mm (0.39 in).
[C]
[C]
Coating area

PAINT FINISH DEFECTS AND PREVENTION

PAINT APPLICATION PROBLEMS

Lifting (Shrinkage)

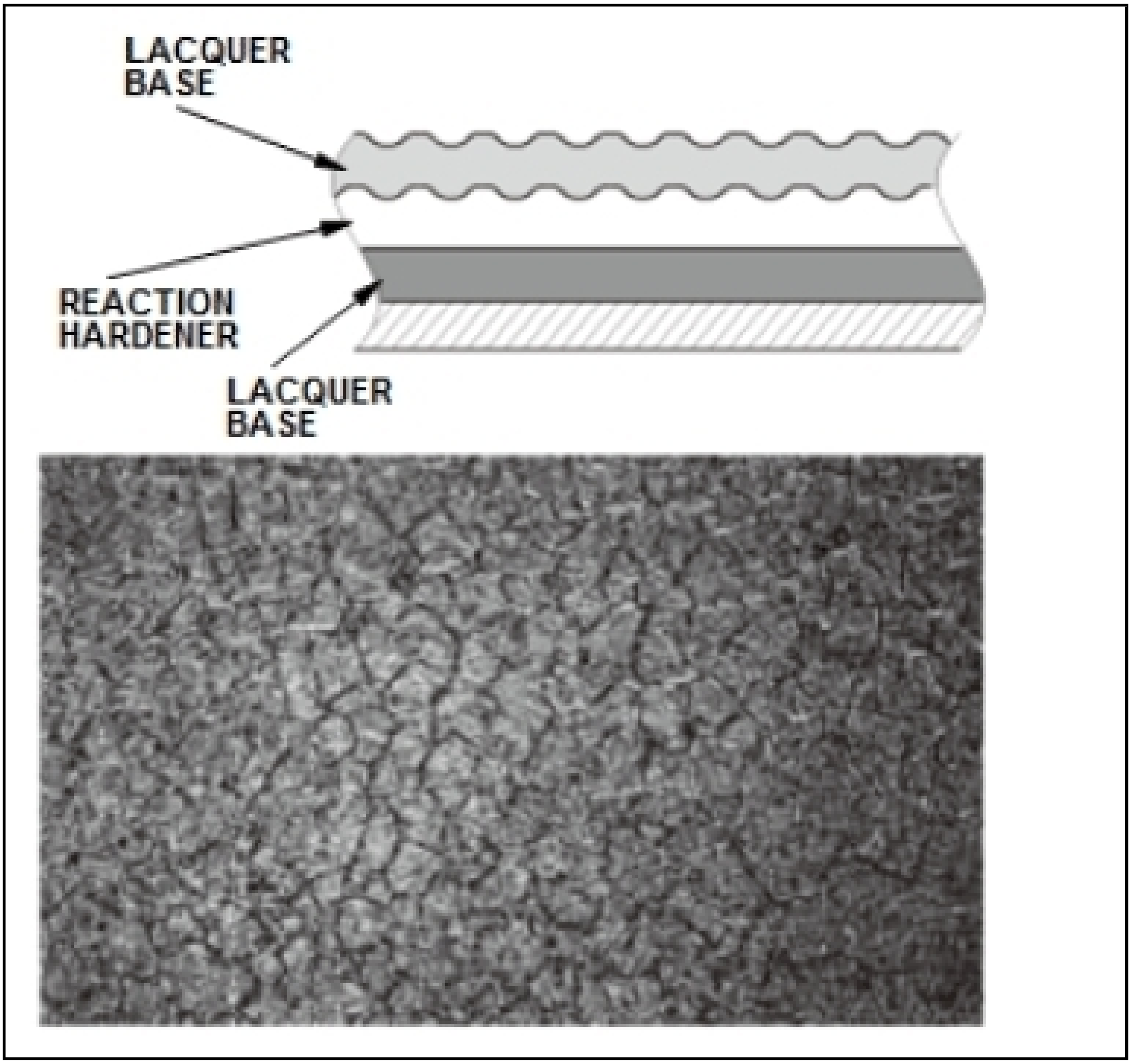

Old paint film or base coat is affected by the solvent contained in the new upper coat. Paint surface warps or shrinks, resulting in finish wrinkles.

CAUSES

- Painting over the existing paint that is in poor condition, or that has poor solvent resistance (oxidation-dry enamel, deteriorated denatured acrylic lacquer or poorly dried paint film).
- Basecoat with poor solvent resistance was covered with polyester body filler and painted over.
- Painting in sandwich layers (lacquer, reaction harder, lacquer).
- Applied additional paint before a previously applied dual-component paint was completely dry.

PREVENTION

- Remove the deteriorated old paint film with a sandpaper or remover.
- Apply sealer then urethane-based primer surfacer to the seal and cover the old paint film with poor solvent resistance.
- Do not apply polyester body filler over the old paint film with poor solvent resistance.
- Do not apply additional paint before a dual-component paint is completely dry. Force dry if needed.

CORRECTIVE ACTIONS

- If the symptom is not severe, apply a thin coat of paint to the surface in several steps preventing the solvent from penetrating through the topcoat.
- If the symptom is severe, remove the paint thoroughly and repaint.

Orange Peel (Granular Texture)

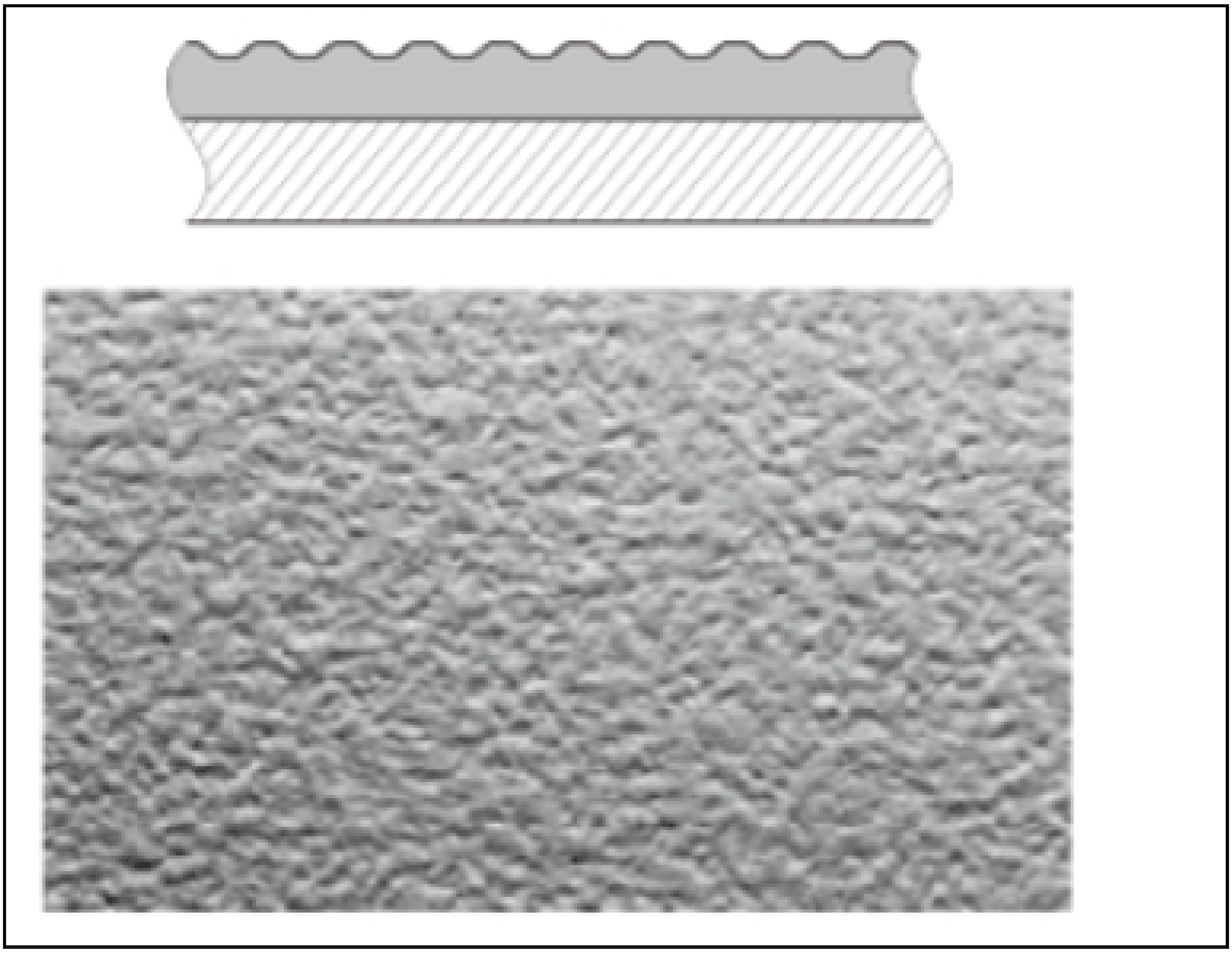

Paint surface is rough with a textured appearance that looks like an orange skin.

CAUSES

- Wrong reducer/thinner used for ambient conditions (solvent evaporation too fast).
- Paint diluted improperly (insufficient reducer/thinner).
- Excessive shop or work surface temperatures.
- Moving spray gun too fast or from too far away.

PREVENTION

- Use the appropriate paint reducer/thinner for ambient conditions and dilute with slightly more reducer/thinner.
- Properly adjust the spray gun pattern.

CORRECTIVE ACTIONS

- For light orange peel, wet sand to smooth the surface, then polish with compound.
- For heavy orange peel, sand and repaint surface.

Runs

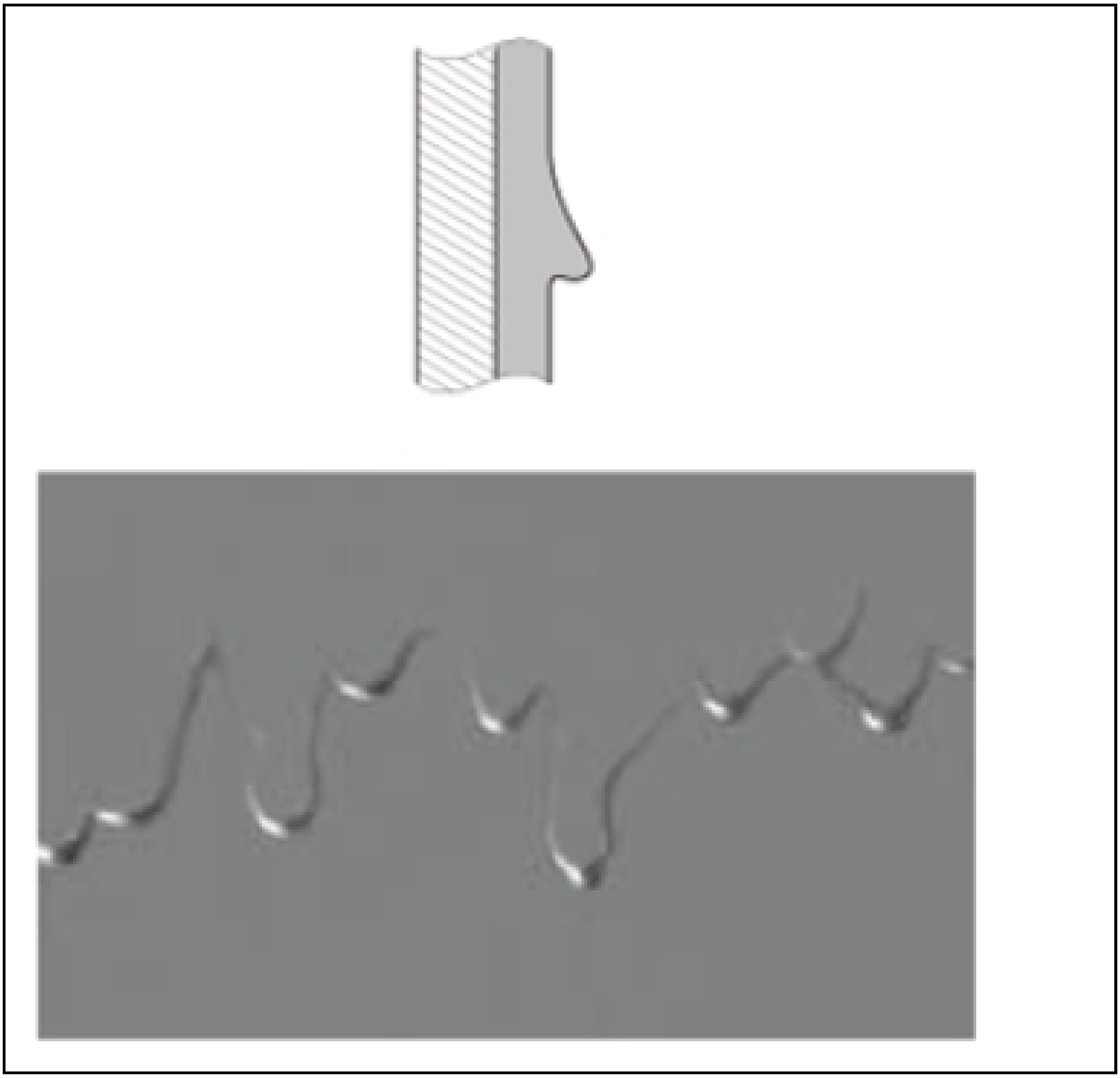

Paint film is not even and it is partly very thick and running down.

CAUSES

- Wrong reducer/thinner used for ambient conditions (solvent evaporation too slow).
- Paint mixed improperly or coats being applied too thick.
- Spray pattern improperly adjusted or incorrect spaying technique.
- Low temperature slowed drying process.

PREVENTION

- Use an appropriate paint reducer/thinner.
- Adjust the paint mixing proportions and/or spray viscosity.
- Avoid applying paint in single thick coats. Apply several thin coats, allowing sufficient "flash" time between each.
- Adjust the spray pattern before application. Test-spray the pattern and operate the spray gun with correctly and consistently.

CORRECTIVE ACTIONS

Force dry the affected paint area carefully to prevent pin holes (bubbles). Wet sand to remove the run, then touch up the surface with compound or repaint.

PAINT DEGRADATION

Blistering

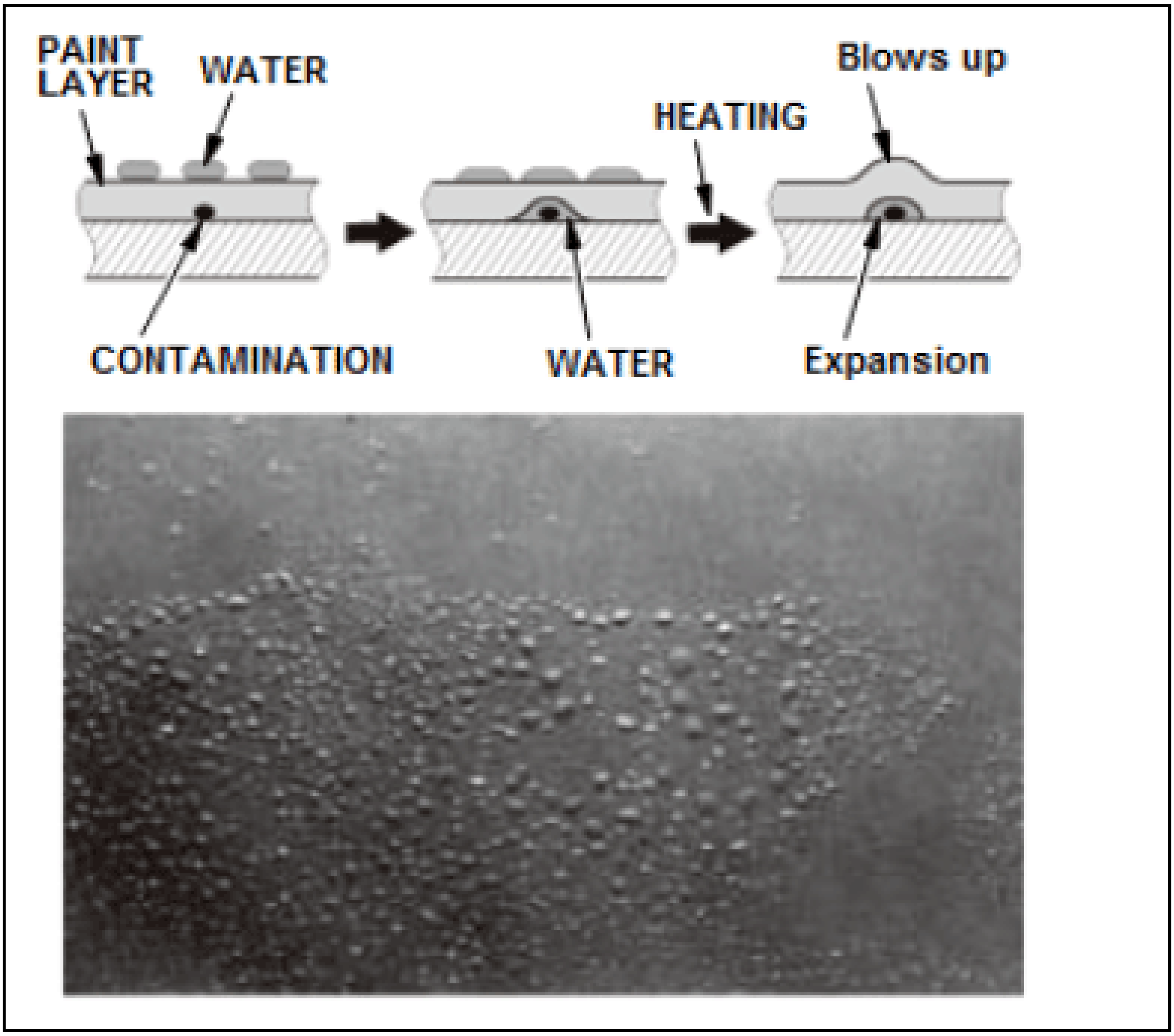

Blistering symptom caused by the moisture trapped inside the paint film being expanded by heat, lifting the paint film.

CAUSES

- Paint applied without removing oil/grease, silicone, wax, sweat, finger print, etc. from the surface being painted.
- Sanding dust remained on surface being painted due to poor washing after wet sanding.
- Oil or moisture being mixed in the compressed air supply for the paint gun.

PREVENTION

- Avoid natural drying after wet sanding. Force dry instead. Pay extra attention when sanding body filler.
- Check air compressor and pressure regulator oil and water. Install and maintain oil and water separators on the air line.
- Do not touch the area being painted before paint application.

CORRECTIVE ACTIONS

- If the symptom is severe, strip the base coat or all the way down to the metal surface and repaint.
- If the symptom is light, remove the blisters by sanding, then repaint.

Discoloration, Yellowing

Paint surface partly or entirely disclosed or faded out comparing to the initial state.

CAUSES

- Use of a paint pigment with poor weather resistance.
- Spilled gasoline allowed to stand on some light colors, such as white.

PREVENTION

- Use the good weather resistant paint pigment (characteristics of primary colors shown on the color card).
- Quickly clean off any spilled gasoline in the fuel filler area after refueling.

ACTIONS

If the symptom is light, polish with compound. If the symptom is severe, repaint.

Peeling, Poor Adhesion

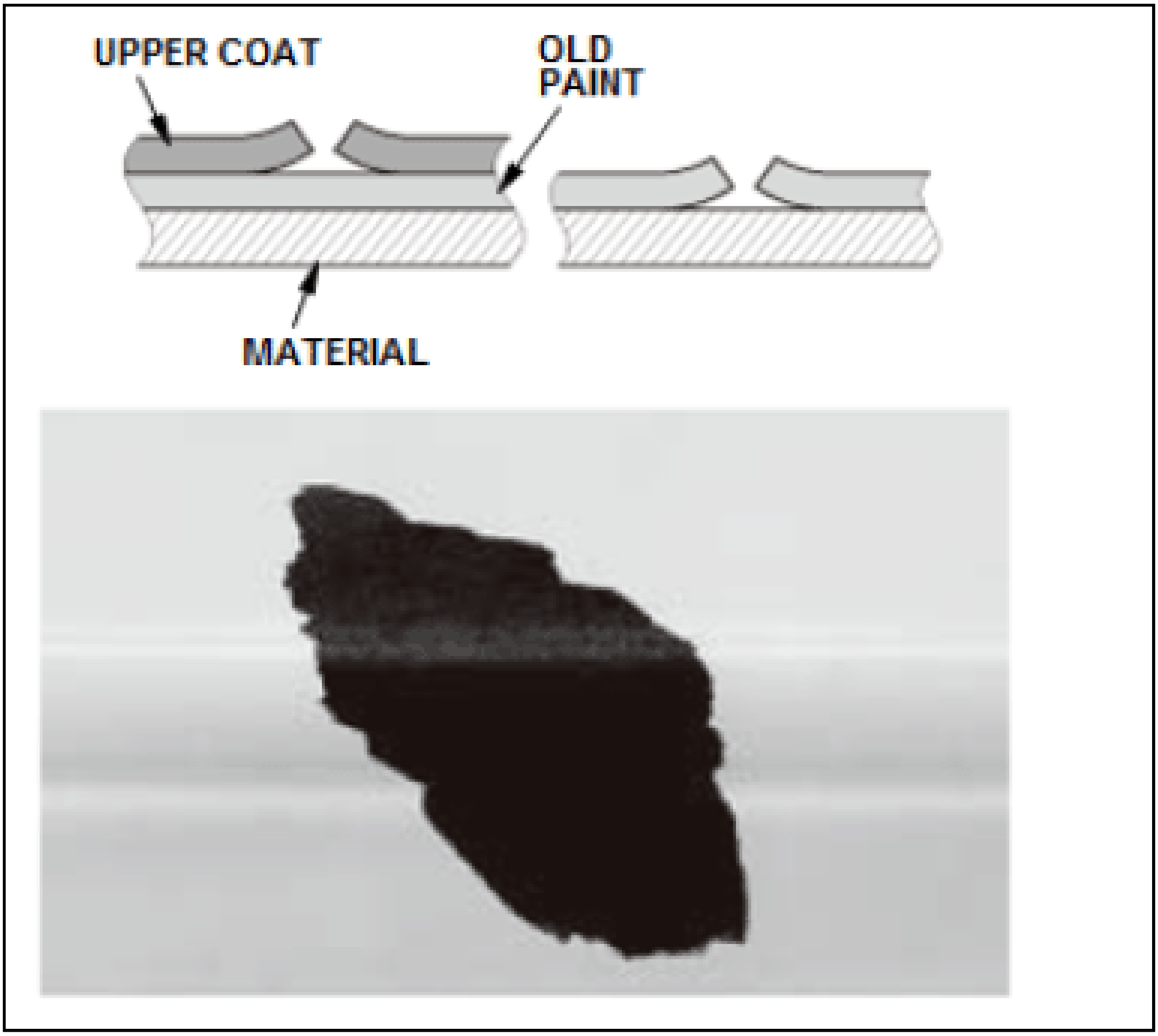

Paint peeling off from the old paint film, steel sheet, plastic part or undercoat.

CAUSES

- Inadequate base material preparation applied according to material type (bumper, aluminum alloy etc.).
- Poor sanding of old paint film or coating surface.
- Poor adhesion between basecoat and topcoat layers or between old paint film and topcoat.

PREVENTION

- Adequately prepare the base material before painting.
- Thoroughly sand the old paint film.
- Clean and degrease the area to be painted.

CORRECTIVE ACTIONS

Sand down the peeling area thoroughly and repaint.

Water Spots Or Stains

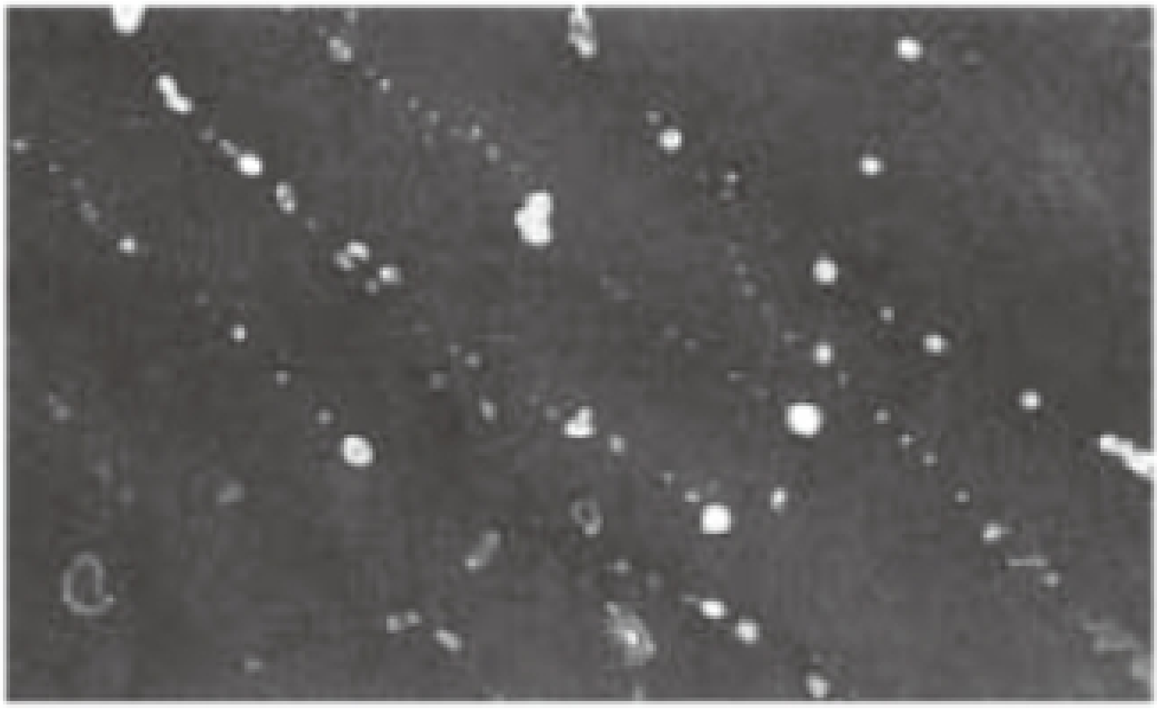

Paint surface that has stained or discolored spots.

CAUSES

- Rain drops or dew drops fell on the new paint surface before fully dry.
- Bird droppings, tree resin, gasoline, cement dust, etc. allowed to remain on the paint surface for a long time.

PREVENTION

- Protect the paint surface from rain, dew or water until fully dry.
- If any foreign material or water drops fall on the paint surface, wash it down or wipe it up immediately.

CORRECTIVE ACTIONS

- If the symptom is light, polish with a compound to remove the water spot or stain.
- If the symptom is severe, wet sand lightly and repaint.

PAINT FINISH PROBLEMS

Bleeding

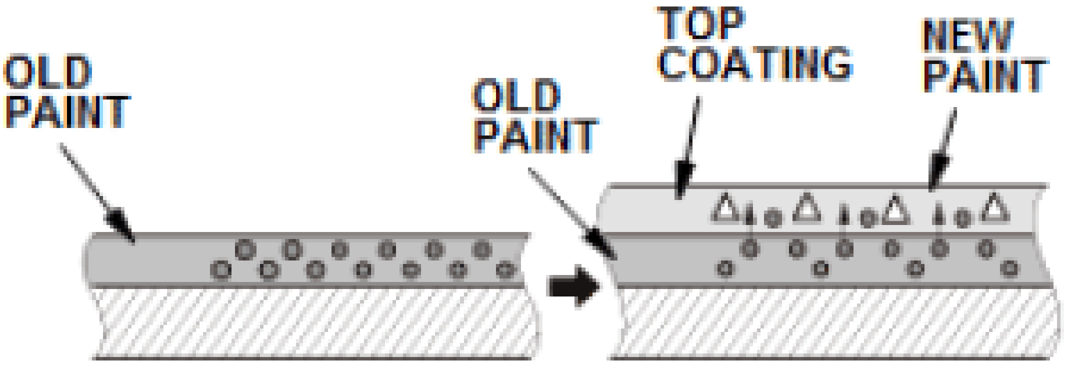

Color of the old paint film or basecoat penetrates through the top coat.

CAUSES

- The old paint payer was a primary color (red, yellow, blue), which have a tendency to penetrate or bleed through the topcoat.
- Body filler not allowed to dry sufficiently.
- Tar, etc. adhered to basecoat.

PREVENTION

- Paint a small spot to test for penetration or "bleed".
- Allow body filler to dry thoroughly
- Completely remove tar, etc. from the surface being painted.

CORRECTIVE ACTIONS

- If the symptom is not severe, apply sealer or urethane type primer surfacer and force dry. Then repaint.
- If the symptom is severe, strip off the paint, then repaint.

Chalking (Whitening)

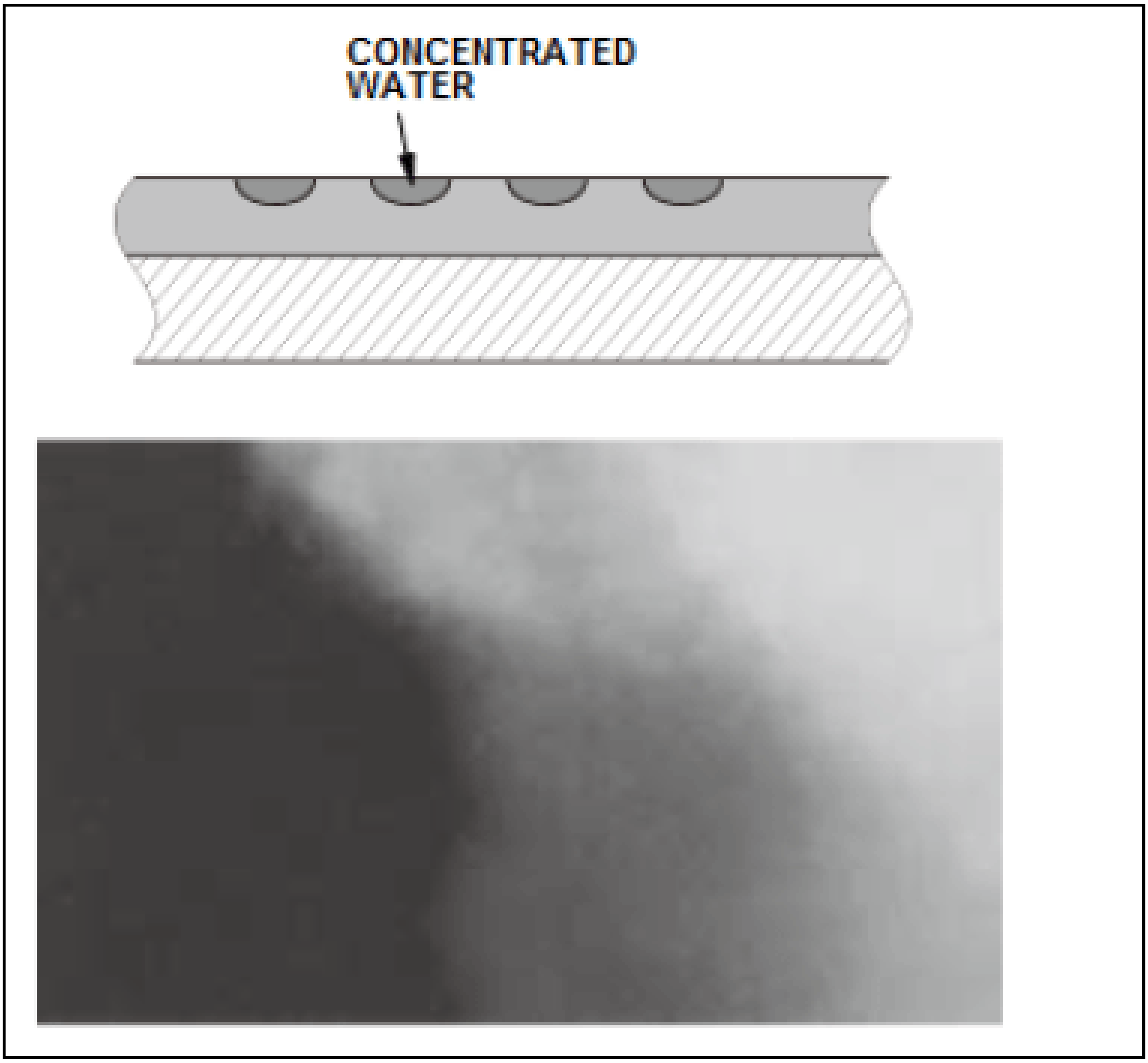

Moisture in the air is concentrated in the paint film making the surface whitish, dulling the desired gloss.

CAUSES

- Using fast evaporating paint reducer/thinner during high temperature and humidity ambient conditions.
- Spray gun air pressure too high.
- Extremely cold paint surface.

PREVENTION

- Use high quality reducer/thinner with the correct evaporation rate (addition of an evaporation retarder can also help).
- Properly set the spray gun's air pressure.

CORRECTIVE ACTIONS

- If the symptom is not severe, add the retarder to the diluted paint and repaint. Or polish the paint surface with compound.
- If the symptom is severe, sand down the paint surface after drying it thoroughly Then repaint.

Fish Eyes (Cratering)

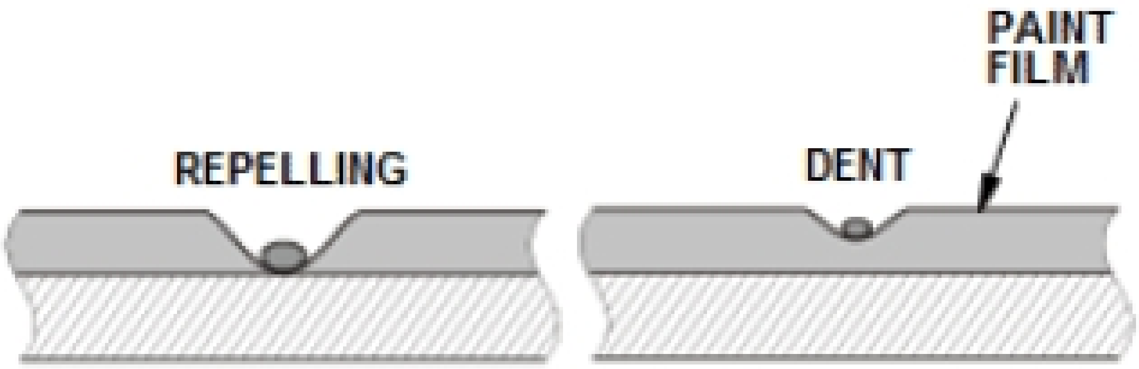

Dents or crater-like holes appear sporadically on the paint film surface.

CAUSES

- Paint was applied to a surface contaminated with silicone, wax, grease, oil, etc.
- Dust in the air from polishing compound, wax, etc. adhered to the wet paint surface.
- Water or oil contamination in the air supply lines.
- Overspray from an incompatible paint type adhered to the paint surface.

PREVENTION

- Check and service the compressed air supply and lines thoroughly.
- Sand the old paint film only after cleaning the area with degreaser such as pre-solvent or equivalent material.
- Thoroughly remove all sanding dust.
- Do not reuse shop cloths or tack rags.
- Wipe the area with pre-solvent and/or a tack cloth before painting.

CORRECTIVE ACTIONS

- If the fish eye is shallow, level the paint film by spraying dry paint mist.
- After drying, recondition the area by wet sanding and repainting.
- Use a commercially available "fish-eye eliminator", but test it before application.

Metallic Mottling

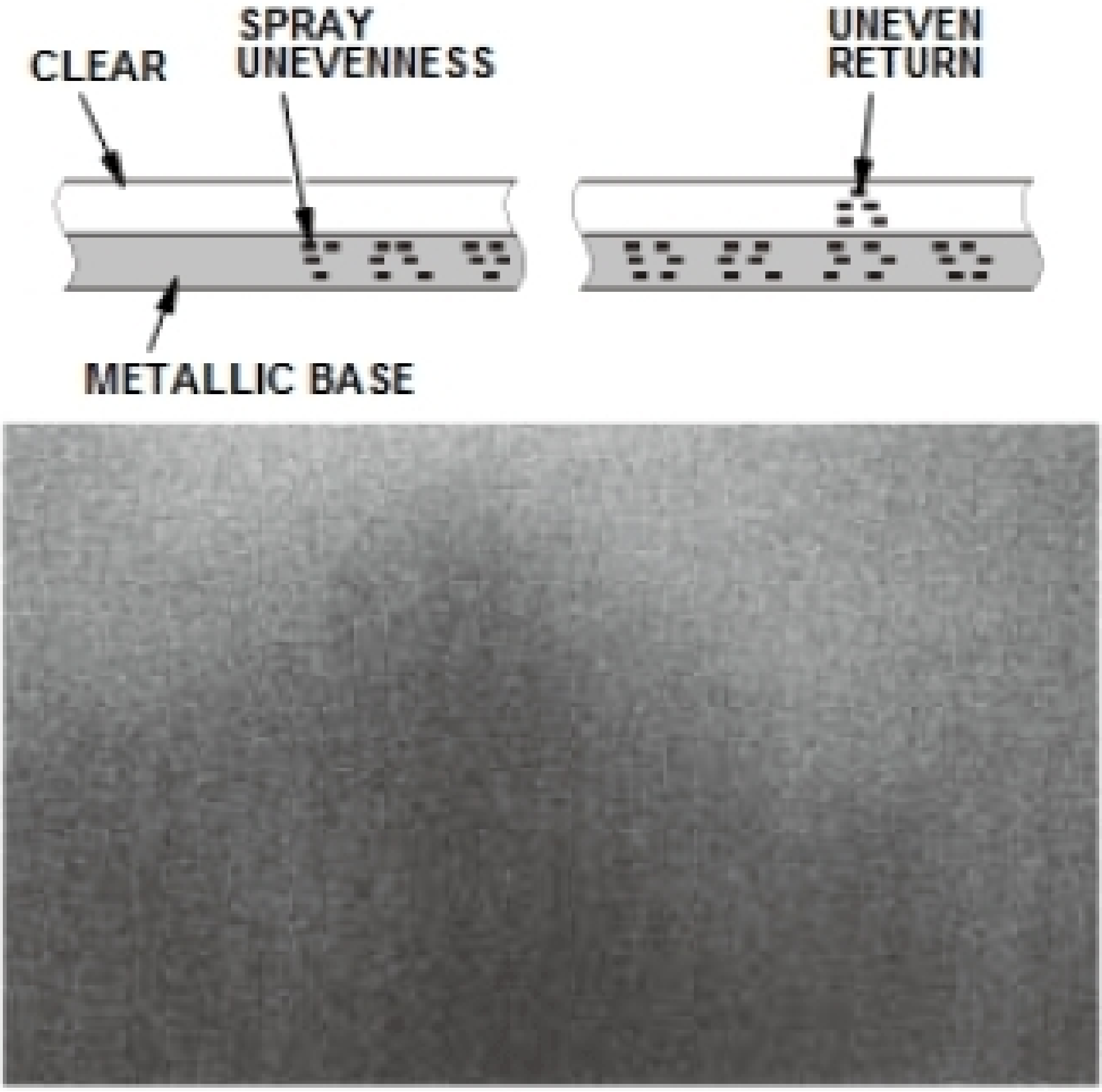

- Metallic particles in the base coat are dispersed unevenly, partially changing the color's appearance.
- Metallic particles are moved to irregular arrangement during clearcoat application.

CAUSES

- Improper painting conditions (paint reducer/thinner type, paint volume, air pressure, discharge volume, use of spray gun) and painting technique (spray pattern).
- Paint reducer/thinner evaporation rate extremely slow.
- Clearcoat excessively diluted with paint reducer/thinner.
- Insufficient drying time between application of metallic color coat and clearcoat.

PREVENTION

- Paint under the optimum conditions.
- Inspect and clean the spray gun.
- Properly dilute clearcoat with the paint reducer/thinner.
- Allow sufficient drying time before clearcoat application.
- Apply clearcoat in several thin coats.

CORRECTIVE ACTIONS

- If the clearcoat has not been applied, take enough setting time to and repeat the metallic color coat application steps to remove unevenness.
- If the clear coat had already been applied, dry the surface completely Then sand and repaint.

Paint Contamination (Debris)

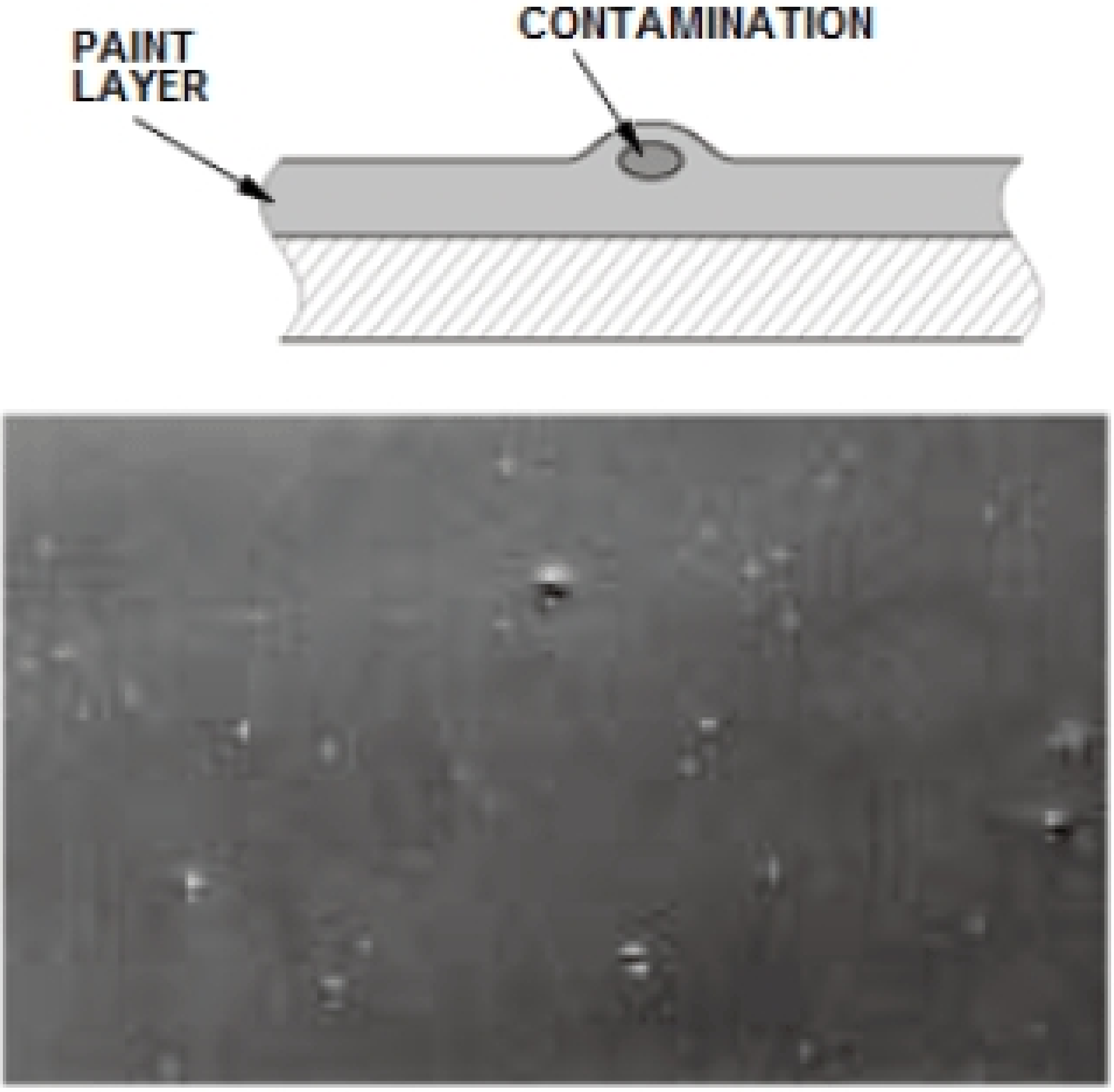

Foreign particles are trapped in the finish surface, causing the swelled paint surface. This is caused by the foreign particles entering the paint during storage or application.

CAUSES

- Dust and dirt in the air adheres to the wet paint film.
- Dust and dirt coming out around the fenders, doors and plastic strips during painting.
- Paint applied without being thoroughly stirred.
- Spray gun not cleaned thoroughly after prior use.
- Use of the paint that has skinned inside the container.
- Improper paint straining and/or air filtration.

PREVENTION

- Keep the paint workshop clean. Use dust prevention methods.
- Remove the dust and dirt thoroughly from the surface being painted.
- Pay special attention to ventilation to draw the fresh air into the workshop.
- Clean the spray gun used thoroughly after each use.
- Stir the mixed paint thoroughly before use.
- Use the recommended paint reducer/thinner and strain mixed paint before use.

CORRECTIVE ACTIONS

- Remove foreign particles from the paint surface using a sharp stick or equivalent tool, if paint is still wet.
- Small foreign particles on the surface of the paint film can be removed with compound or by polishing.

- If the foreign particles are large and deep in the paint film, wet sand the area using P400 or finer sandpaper, then repaint.

Pinholes

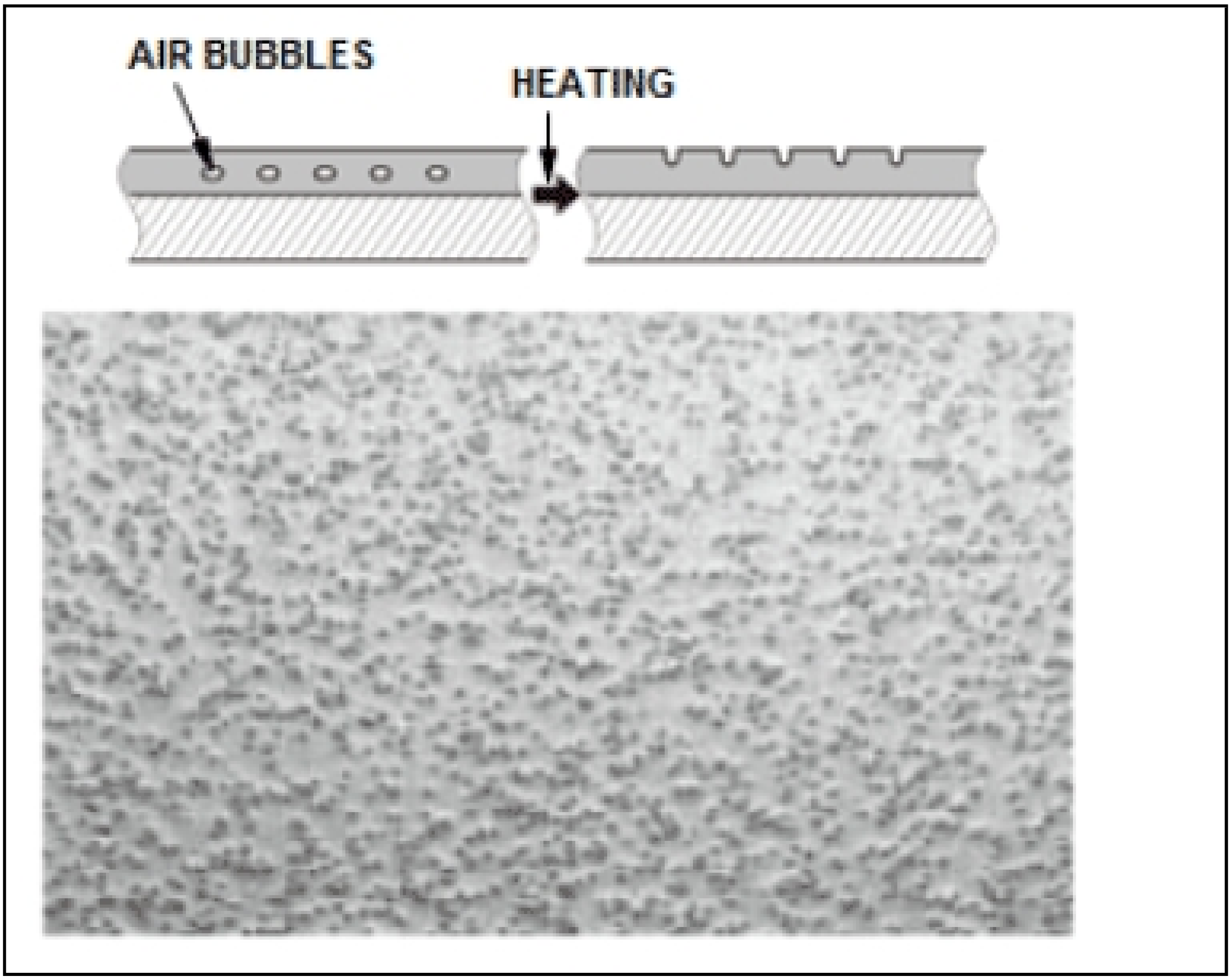

Fine perforations like pin holes appear in the paint surface.

CAUSES

- Paint applied too thick or flash time was insufficient.
- Paint spraying viscosity was too high.
- Painted surface was heated quickly soon after painting.
- Existing air bubble holes in the body filler.
- High ambient humidity.

PREVENTION

- Apply paint in several thin coats with sufficient flash time between each.
- Accurately dilute the paint with reducer/thinner.
- Allow sufficient setting time before force-drying paint.
- Correct any air bubble holes in body filler before painting.
- Spray basecoat with care to avoid dry spray.

CORRECTIVE ACTIONS

- If the symptom is light, remove the pin holes by sanding, then apply topcoat again.
- If the pin holes appear in the entire surface or if the pin holes are deep, strip off the paint and repaint.

Sanding Scratches

Paper trace or hairline scratches in the old paint film or basecoat develop and appear magnified by the solvent contained in the topcoat.

CAUSES

- Sandpaper used for sanding too coarse.
- Basecoat was sanded before it completely dried.
- Applied excessively diluted paint in coats that were too thick.
- Paint topcoat film too thin.

PREVENTION

- Use correct grade of sandpaper according to the type of topcoat.
- Apply basecoat and allow sufficient drying time before sanding.
- Apply topcoat mixed with the proper amount of paint reducer/thinner allowing proper flash time between coats. Apply topcoat in several steps.

CORRECTIVE ACTIONS

- If the symptom is not severe, polish the surface with compound after drying completely.
- If the symptom is noticeable, wet sand the area and repaint.

Swelling

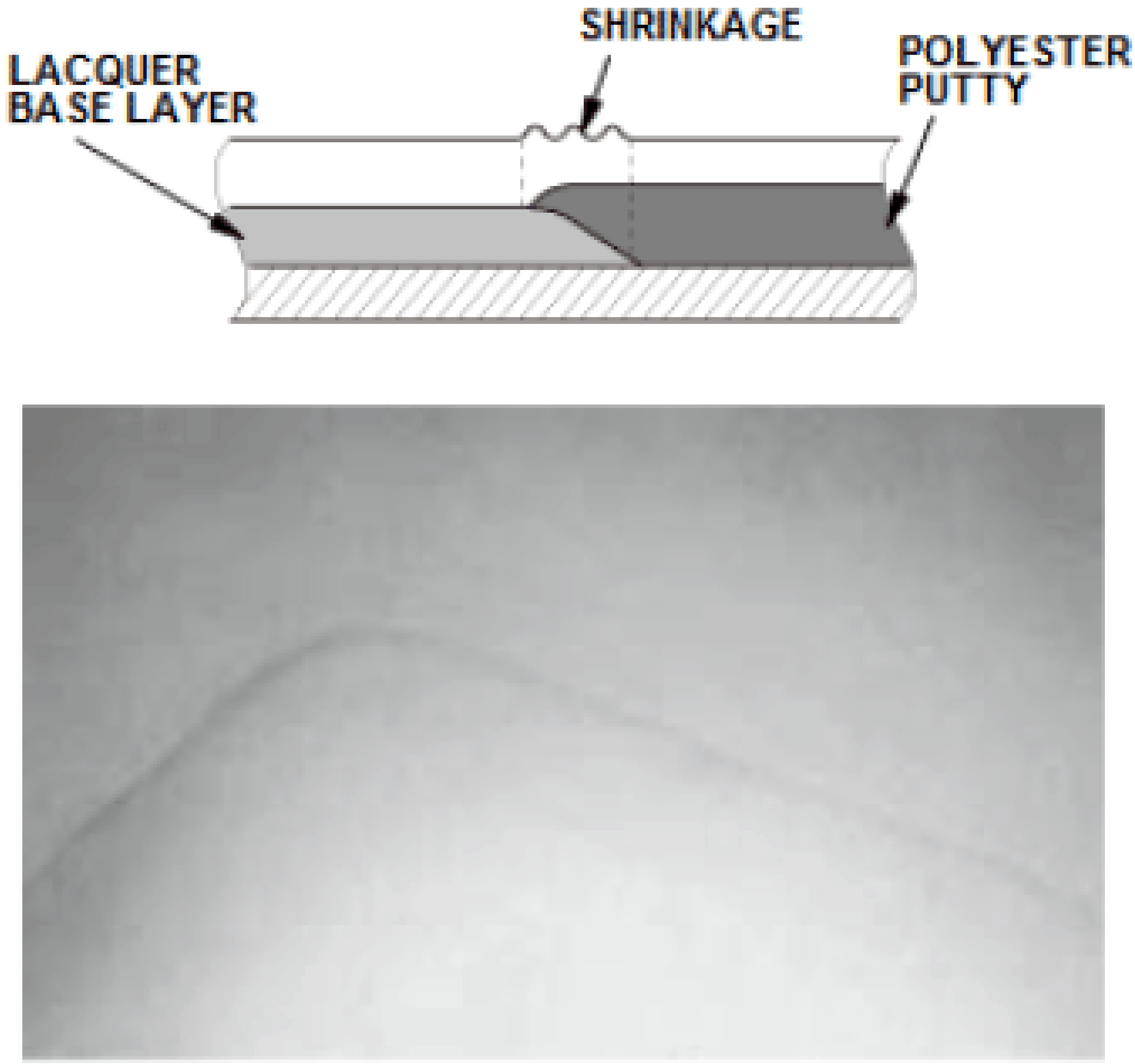

Extension or shrinkage along edge of body filler application.

CAUSES

- Putty was softened when it is coated with the topcoat before fully hardened, producing a "putty trace".
- Basecoat with poor solvent resistance was covered with polyester body filler, then topcoated.
- Insufficient sanding of body filler.
- Paint coat dried too quickly

PREVENTION

- Allow basecoat to dry completely before applying the topcoat.
- Mix the body filler with specified amount of hardener and allow filler to dry thoroughly after application.
- Do not apply body filler over the old paint with poor solvent resistance.
- Avoid excessively thick paint coat application.

CORRECTIVE ACTIONS

After thorough drying, remove the putty trace by sanding and refinishing affected surface.

PAINT STORAGE PROBLEMS

Paint Gelling (Increased Viscosity)

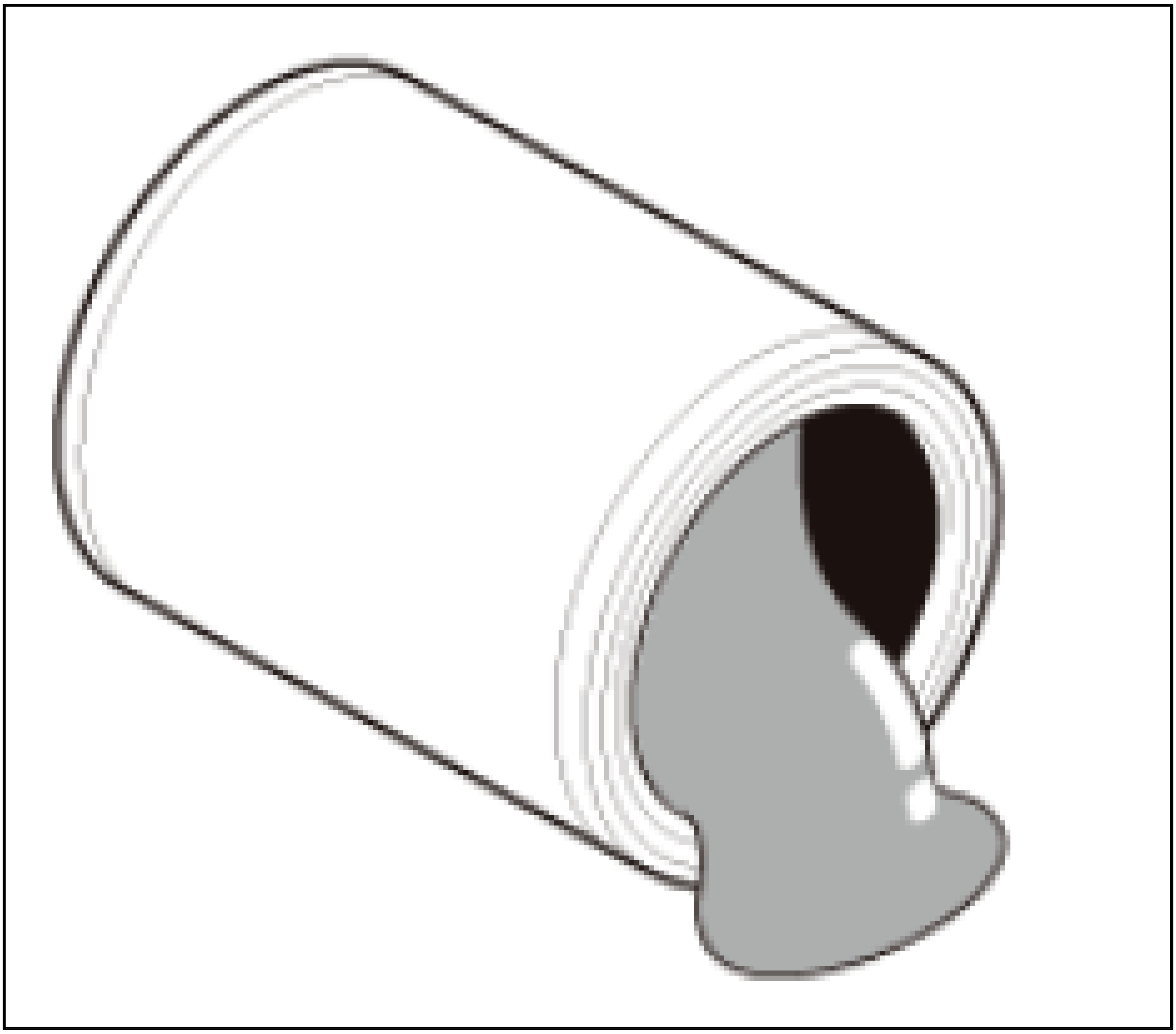

- Paint loses fluidity causing gelled consistency (increased viscosity).
- Paint partially or entirely reacts and hardens, leading to gelled consistency.

CAUSES

- Prolonged storage in excessive temperatures.
- Paint can (container) not sealed securely, allowing the paint solvent to evaporate and humidity to enter the can.
- Paint accidentally mixed with a different paint type, or hardener, before storage.
- Paint diluted with improper paint reducer/thinner.

PREVENTION

- Securely seal the paint can (container) with the lid, and store it in a dark, cool place, 68Â°F (20Â°C) or below.
- Avoid mixing the paint with different types of paint, hardener and improper paint reducer/thinner.

CORRECTIVE ACTIONS

Dispose of the paint according to local regulations.

Paint Separation

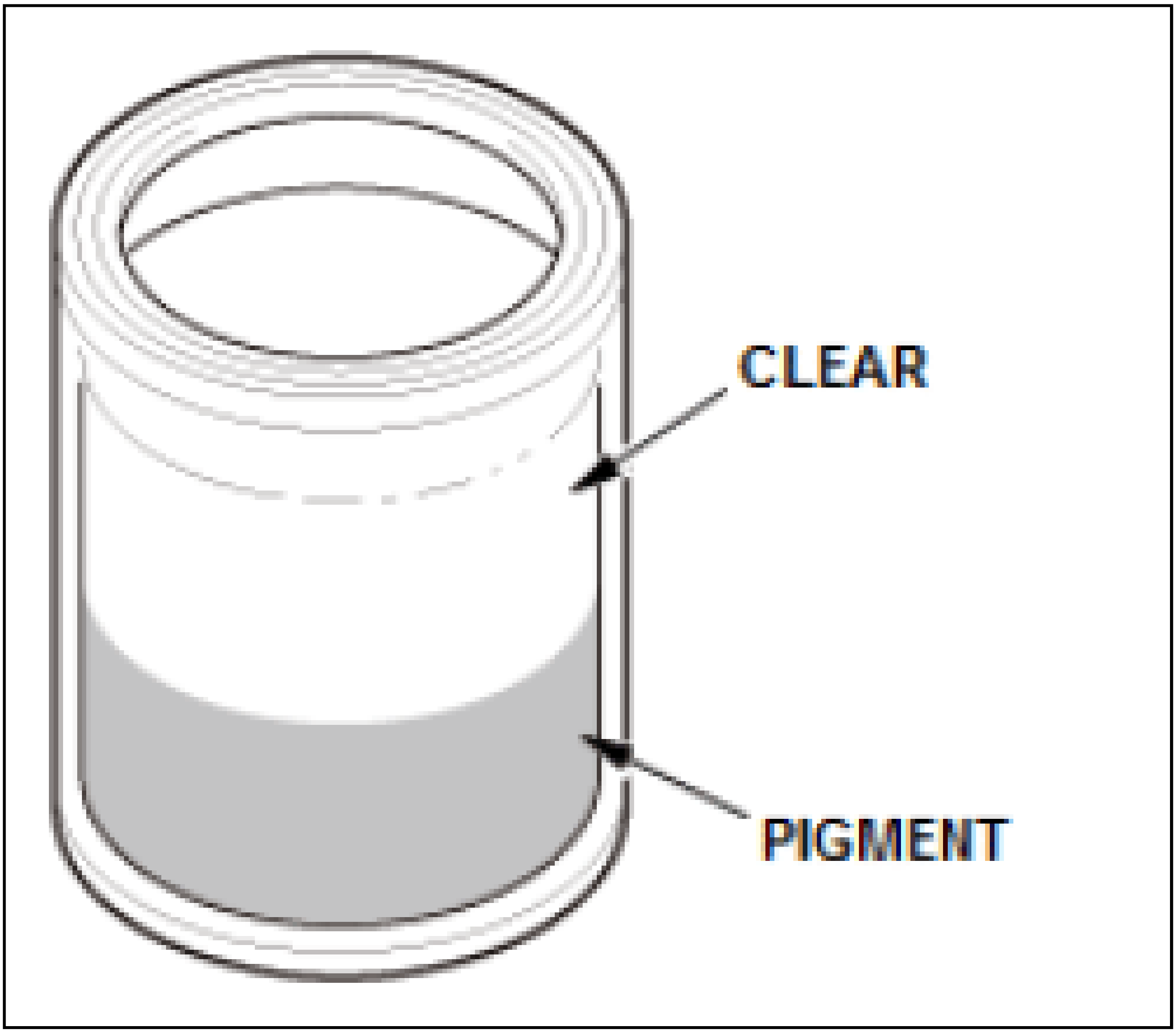

Paint and pigment separate into two parts during storage, resulting in a clear portion of paint in the upper part of the can.

CAUSES

- Prolonged storage in excessive temperatures.
- Low paint viscosity.
- Paint accidentally mixed with a different paint type.

PREVENTION

- Store the paint in a dark, cool place, 68Â°F (20Â°C) or below. If it is stored for a prolonged period, invert the can occasionally.
- Do not return paint diluted with reducer/thinner to the original can.

CORRECTIVE ACTIONS

Stir up the paint thoroughly before reuse.

Paint Skinning

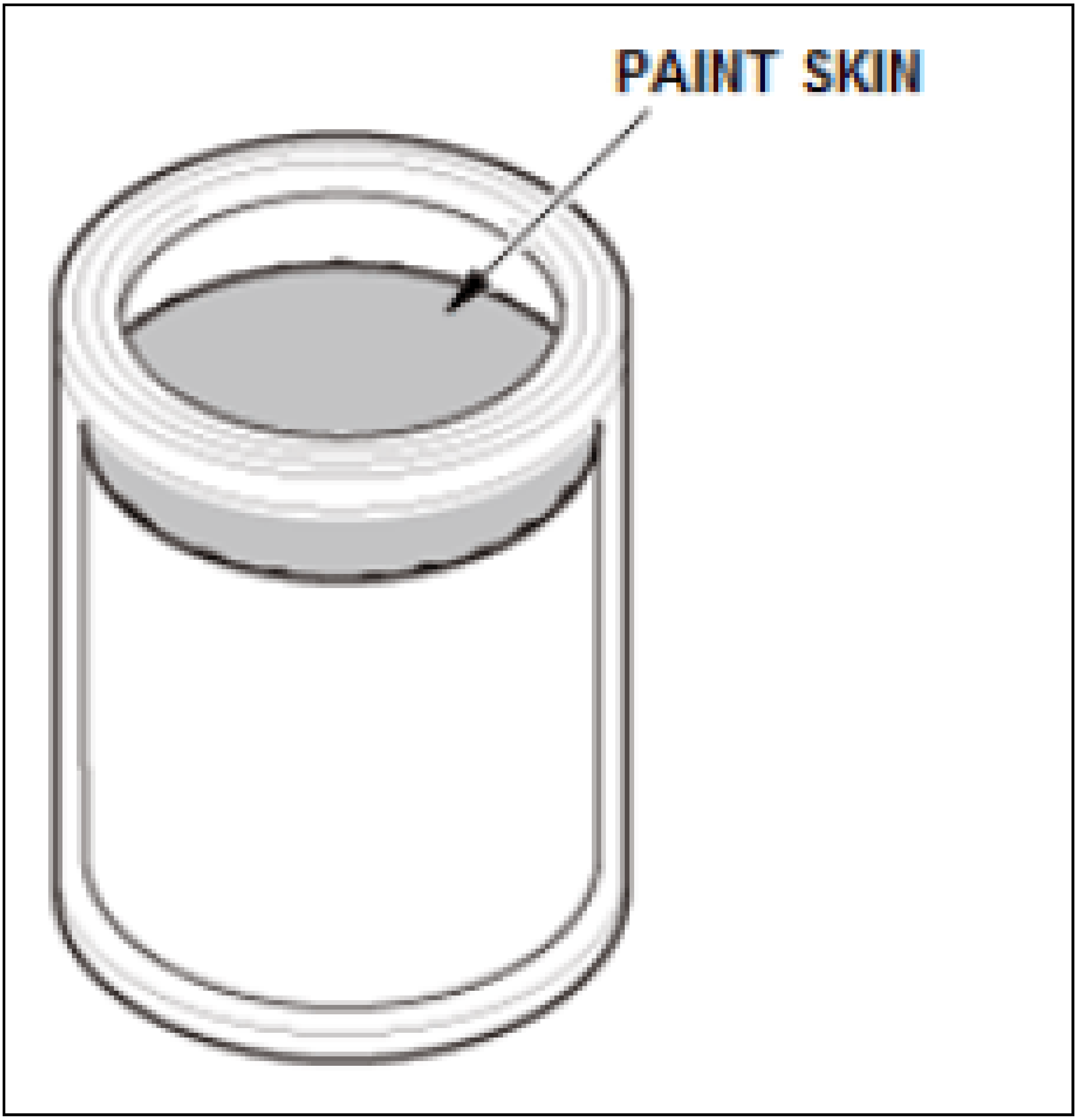

- A "skin" layer appears on top of the paint in a container.
- Most common on air-dry type paints. Paint surface hardens with exposure to oxygen in the air.

CAUSES

- Paint can (container) not sealed with the lid securely
- Prolonged storage in excessive temperatures.
- Paint volume in the can decreased, allowing more space for trapped air (air-dry type).

PREVENTION

Securely seal the paint can (container) with the lid and store it in a dark, cool place, 68Â°F (20Â°C) or below.

CORRECTIVE ACTIONS

Dispose of the paint according to local regulations.

Sedimentation (Caking)

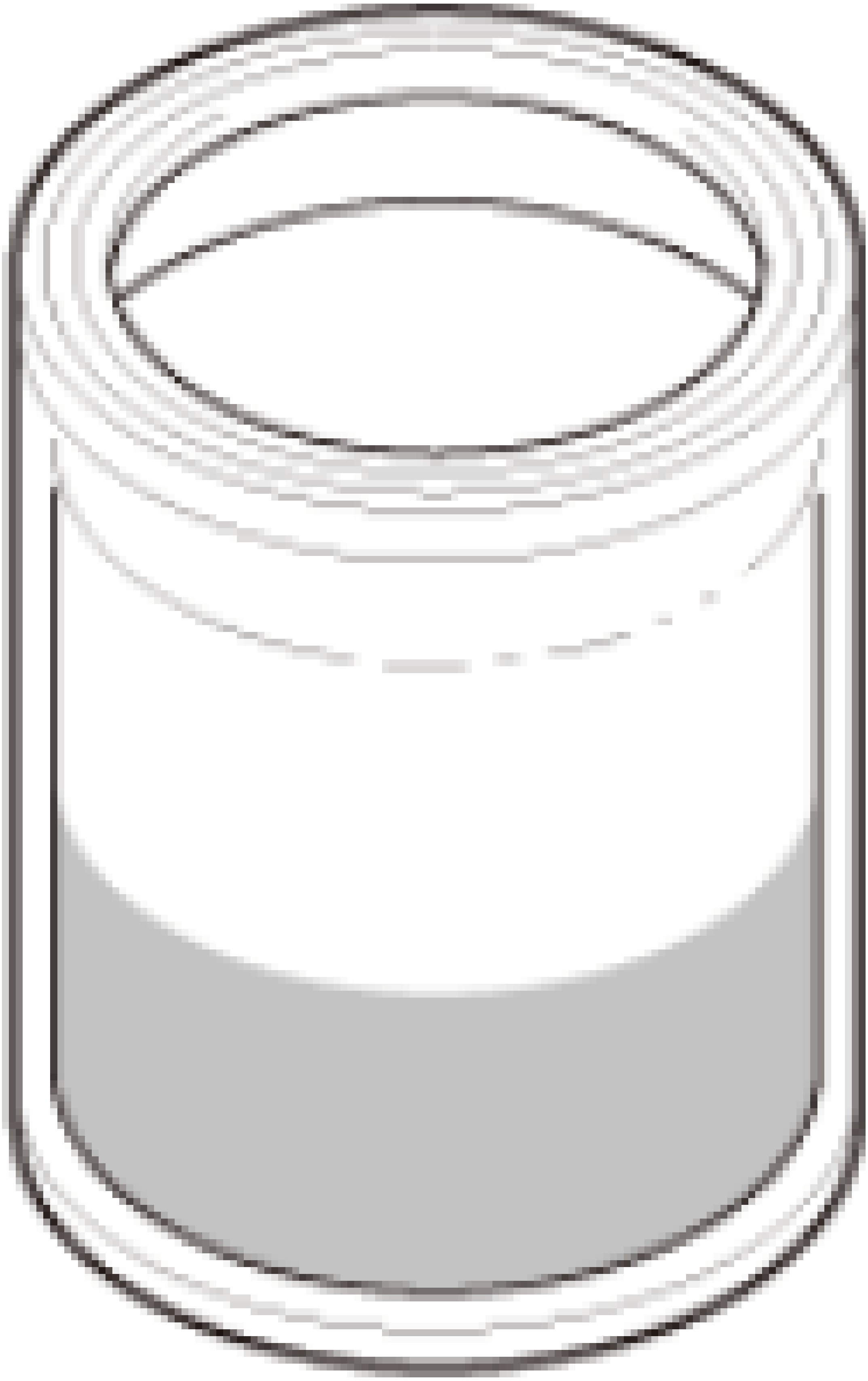

Paint pigment is settled in the bottom of the can.

Hard deposit: Hard caking.

Soft deposit: Soft caking.

CAUSES

- Excessive storage temperatures.
- Pigment's specific gravity too high.
- Excessive paint pigment in proportion to other components.
- Low paint viscosity.

PREVENTION

- Store the paint in a dark, cool place, 68Â°F (20Â°C) or below. If it is stored for a prolonged period, invert the can occasionally.
- Do not store the reducer/thinner-diluted paint for a prolonged period. Stir it thoroughly to remix before reuse.

CORRECTIVE ACTIONS

Dispose the hard deposit (hard caking). If the deposit is soft (soft caking), stir it up thoroughly to restore a consistent viscosity before reuse.

SPRAY GUN BASICS

SPRAY GUN CLEANING AND MAINTENANCE

If the spray gun is not cleaned after use, the paint residue hardens clogs the gun. The spray gun may not be able to be used again, depending on the severity of the clogging. Wash the paint gun following the below steps after use.

1. Place a scrap rag in front of the air cap and pull the trigger. The air will blow from the nozzle tip, and pushes paint out. This will remove the remaining paint from the paint path.
2. Properly dispose of the remaining paint in the cup, then pour in some paint reducer/thinner for cleaning.

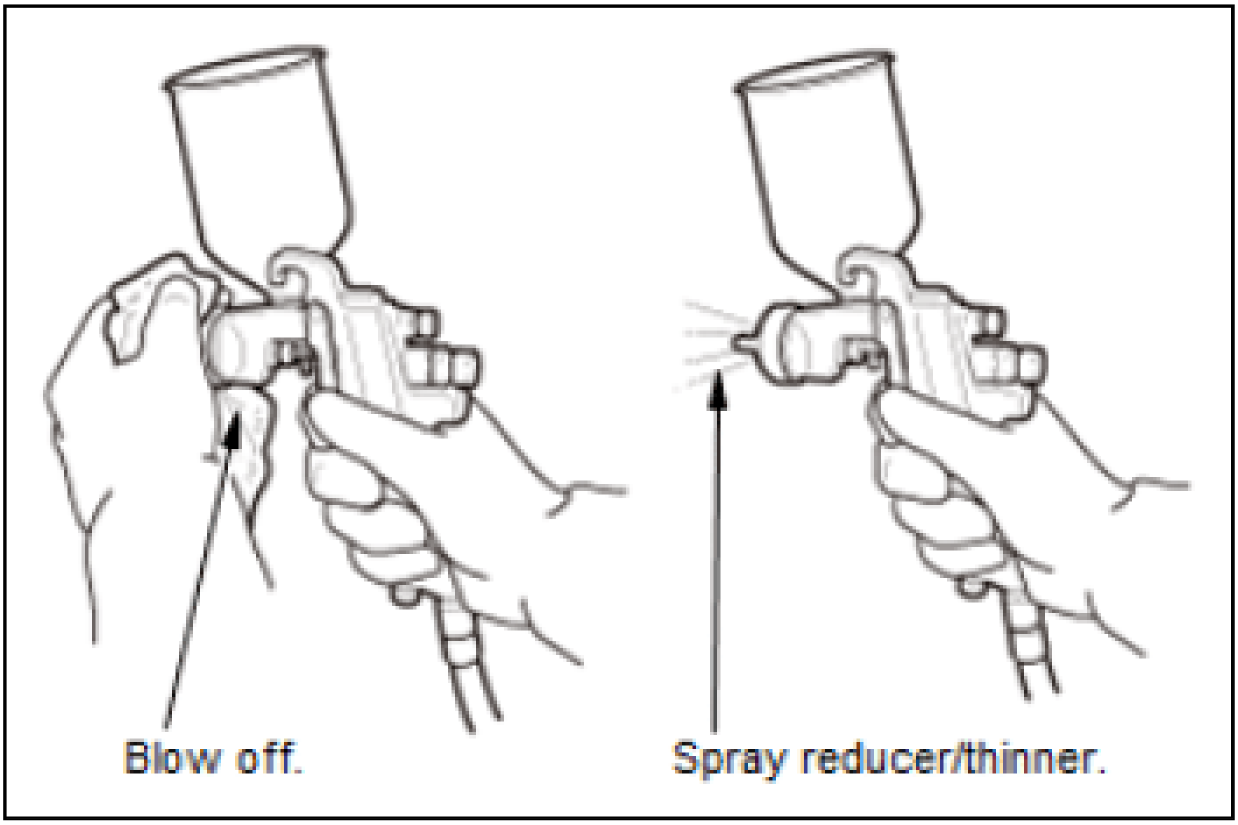
Blow off.
Spray reducer/thinner.

3. Clean the inside and outside of the spray gun itself using the specially designed spray gun cleaning brushes.

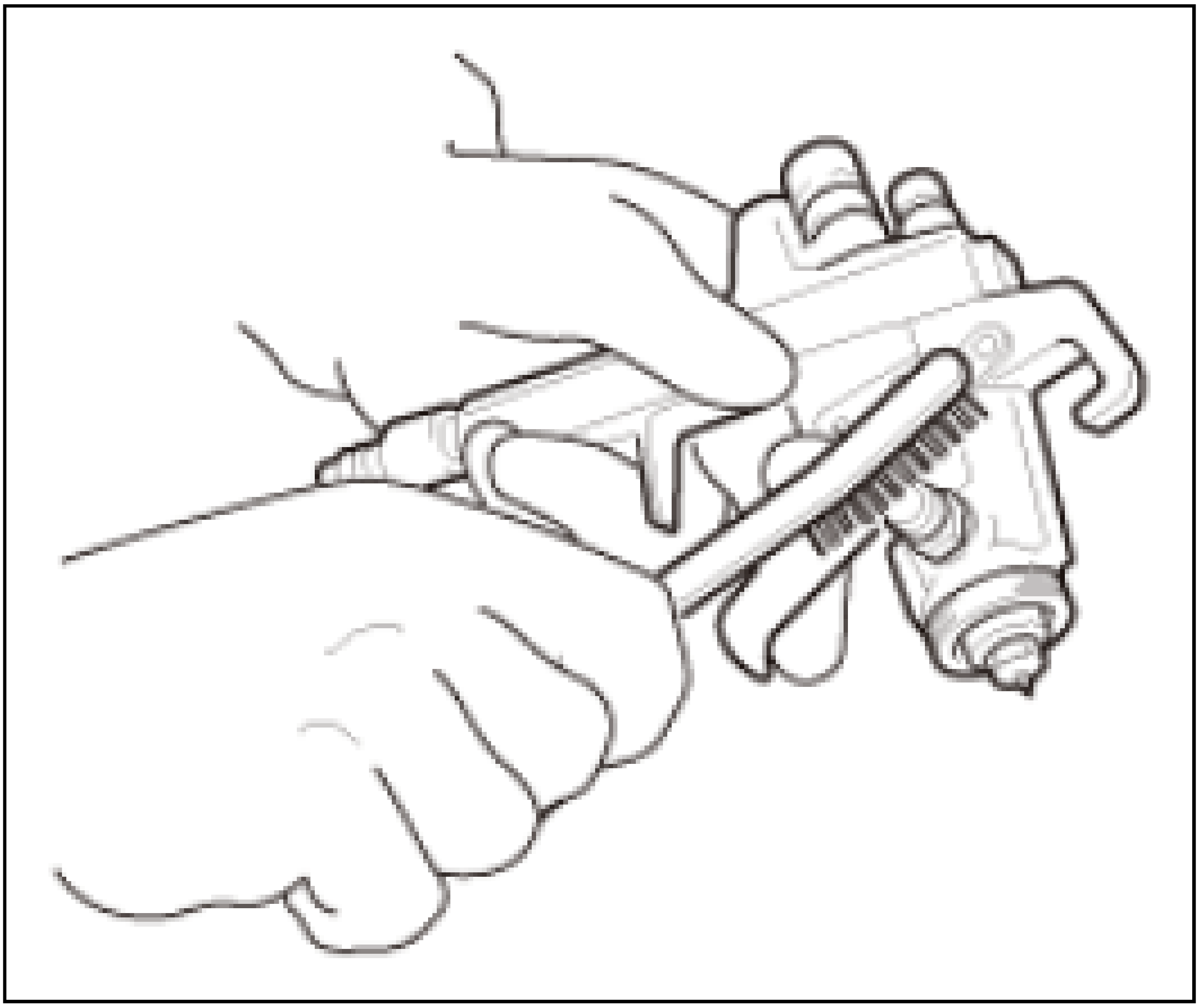

4. Clean the inside of the paint cup.

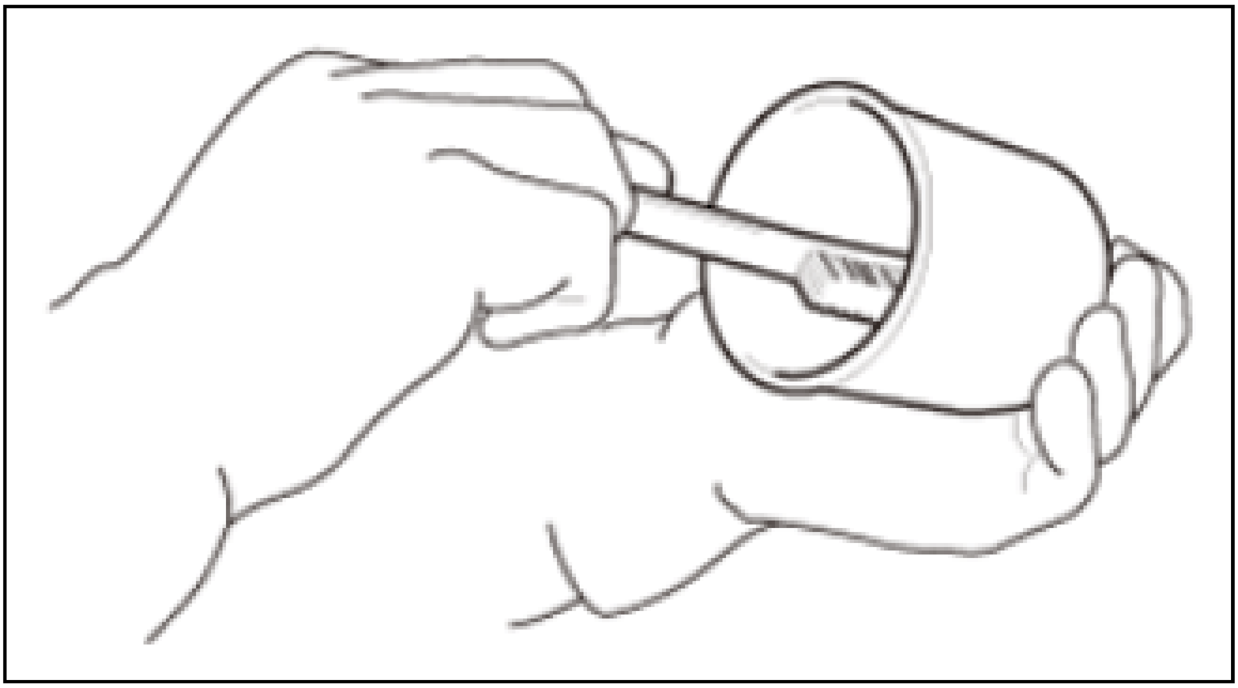

5. Remove the air cap and clean it up with a brush soaked in paint reducer/thinner.

NOTE: **Pay extra attention not to damage the precision air holes of the air cap! Any damage will have a great impact on spray pattern. Also, do not use a wire or wire brush to clean the air cap. If the air hole is clogged, use a specialized tool for this purpose. If the adhered paint does not easily come off, soak it in lacquer thinner then try cleaning again.**

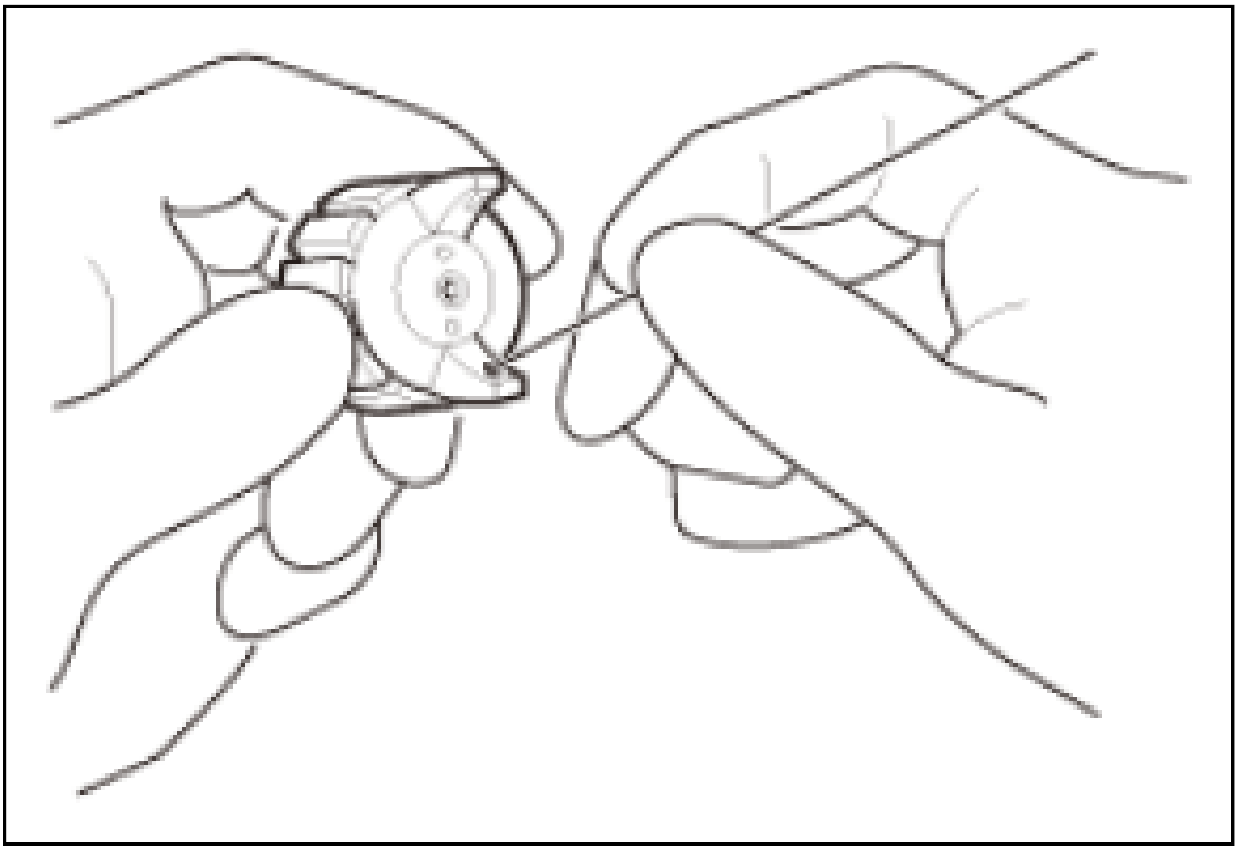

SPRAY GUN CONNECTION AND ADJUSTMENT

Spray Gun Pressure Settings

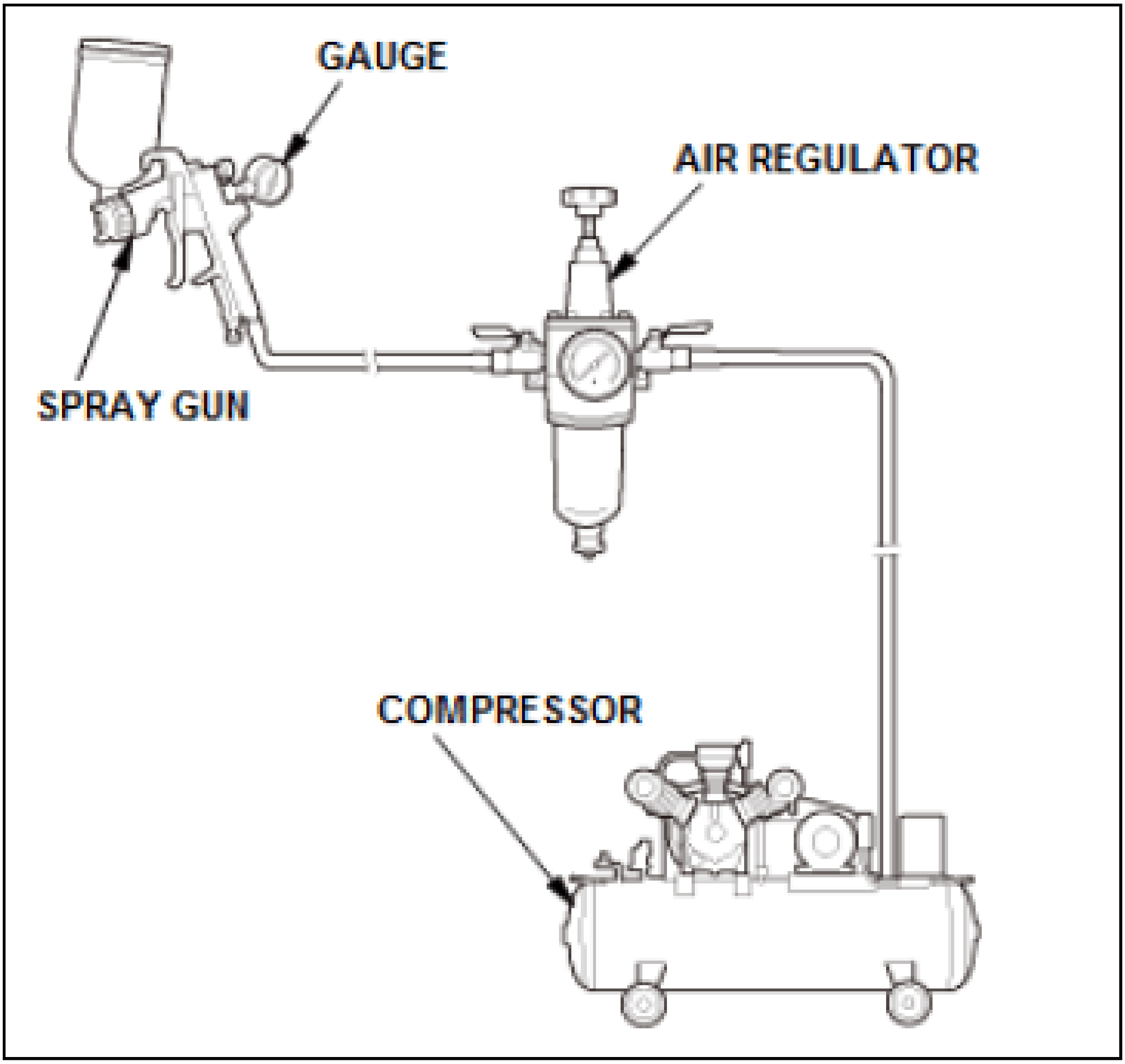

- Set the spray pressure to appropriate level according to the paint used and the size of area to be painted.
- The air pressure is usually initially adjusted at the regulator, which may be some distance from the spray gun. Because of pressure drop caused by the length and diameter of the air hose, the gun pressure may differ significantly from the remote regulator. Therefore, best practice requires a second small air pressure gauge mounted to the spray gun. Use this second gauge to set the correct spraying pressure.

Air Hose	Regulator	Length of Air Hose, m (ft)		
Inside Diameter (ID)	Pressure	4.5 m (15 ft)	7.5 m (25 ft)	15 m (50 ft)
mm (in)	kPa (kgf/cm^2 , psi)	Pressure at End of Air Hose kPa (kgf/cm^2 , psi)		
6 (0.24)	340 (3.5, 50)	260 (2.7, 38)	210 (2.1, 30)	150 (1.5, 22)
	410 (4.2, 60)	310 (3.2, 45)	270 (3.2, 40)	190 (1.9, 28)
	480 (4.9, 70)	360 (3.7, 52)	320 (3.3, 46)	250 (2.5, 36)
8 (0.31)	340 (3.5, 50)	310 (3.2, 45)	310 (3.2, 45)	270 (2.8, 40)
	410 (4.2, 60)	380 (3.9, 55)	370 (3.8, 54)	330 (3.4, 48)
	480 (4.9, 70)	440 (4.5, 64)	430 (4.4, 62)	400 (4.1, 58)

Spray Distance

As the distance of the paint gun from the surface being painted increases, the spray pattern size increases. The paint film gets thinner and more paint is lost as overspray If the paint gun is too close to the surface being painted, the paint will be applied too heavily causing runs. Generally the recommended distance for lacquer type paint is approximately 20 cm (8 in), and approximately 25 cm (10 in) for acrylic urethane type paint.

In general, the optimum distance between the paint gun and surface being painted is 15-25 cm (6-10 in).

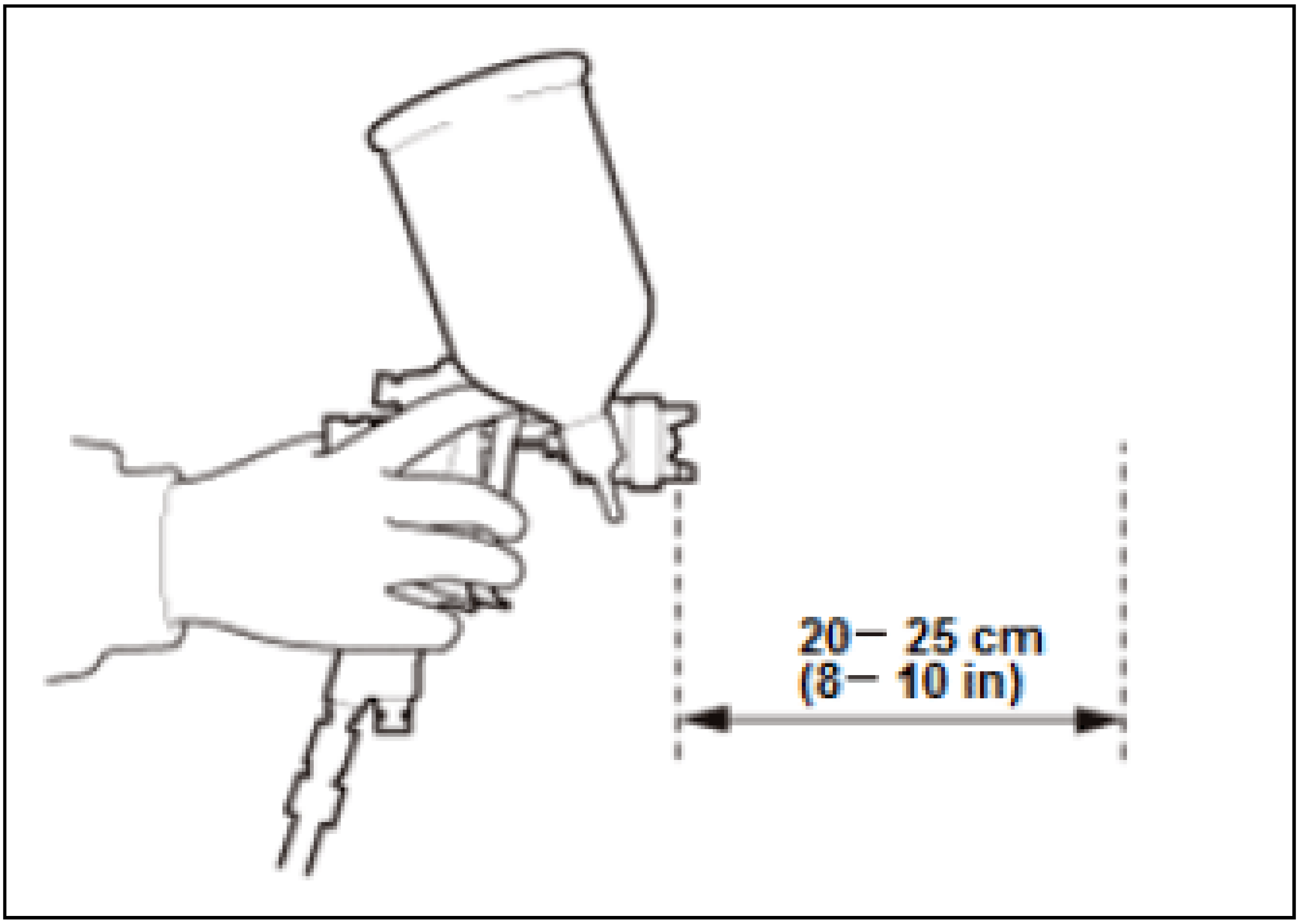

Spray Pattern Adjustment

- The spray pattern can be adjusted using the pattern and fluid adjustment screws on the spray gun.
- If the spray pattern has a rough surface or edge, Regulate the fluid flow using the fluid adjustment screw, or reduce the air volume by adjusting the air volume adjustment screw.
- If the paint runs, reduce the fluid flow rate. Also check the paint's viscosity and the paint reducer/thinner's evaporation rate.

NOTE: **Be sure to check the product specifications issued by the paint manufacturers as each spray gun has different settings for the paint patterns and distance.**

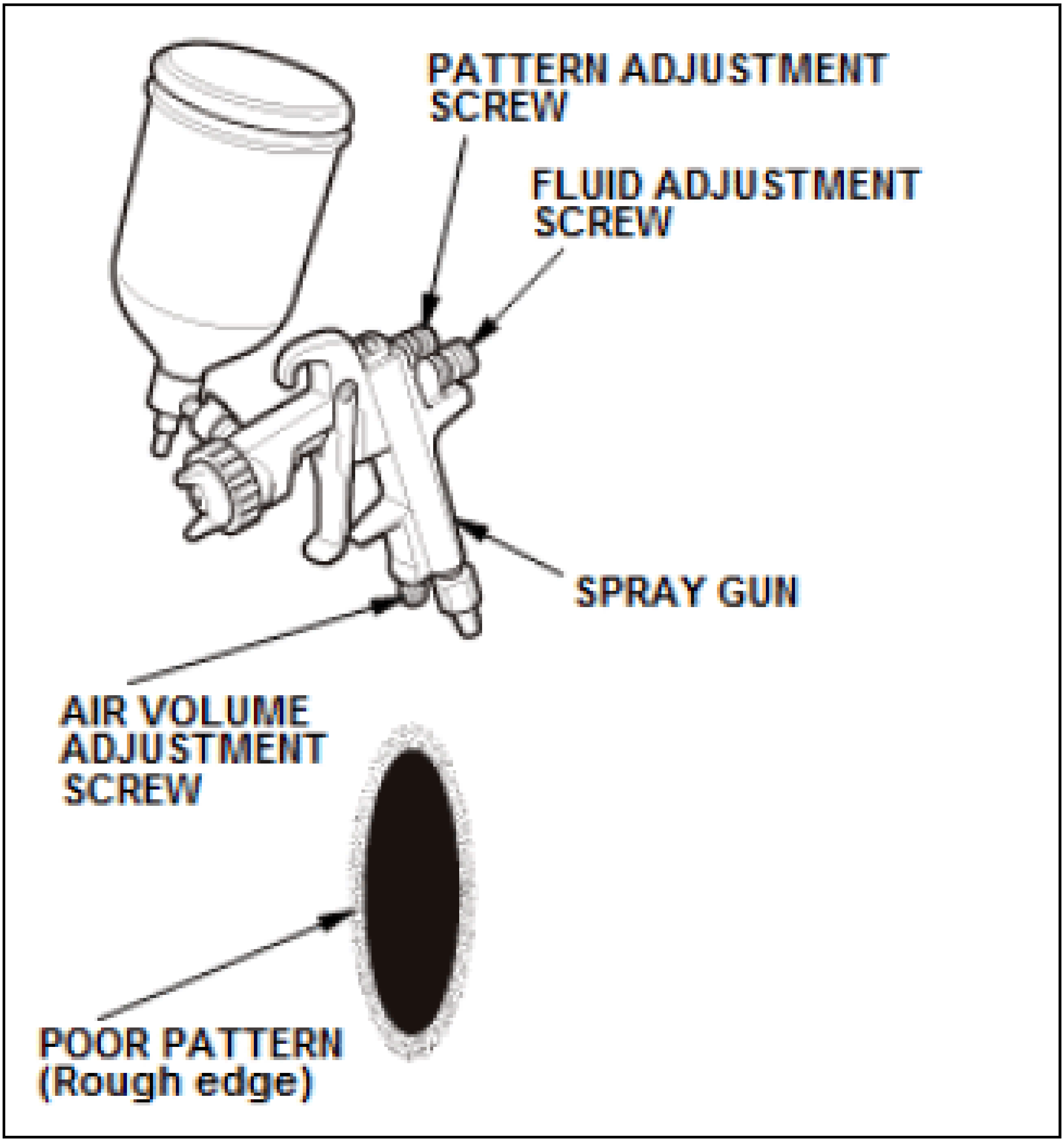
PATTERN ADJUSTMENT SCREW
FLUID ADJUSTMENT SCREW
SPRAY GUN
AIR VOLUME ADJUSTMENT SCREW
POOR PATTERN (Rough edge)

General Recommended Patterns

Spot Painting Pattern

Adjust the pattern and fluid flow rate adjustment screws to create a pattern diameter of 12-13 cm (4.75-5 in) at a distance of 15-20 cm (6-8 in) away from the surface.

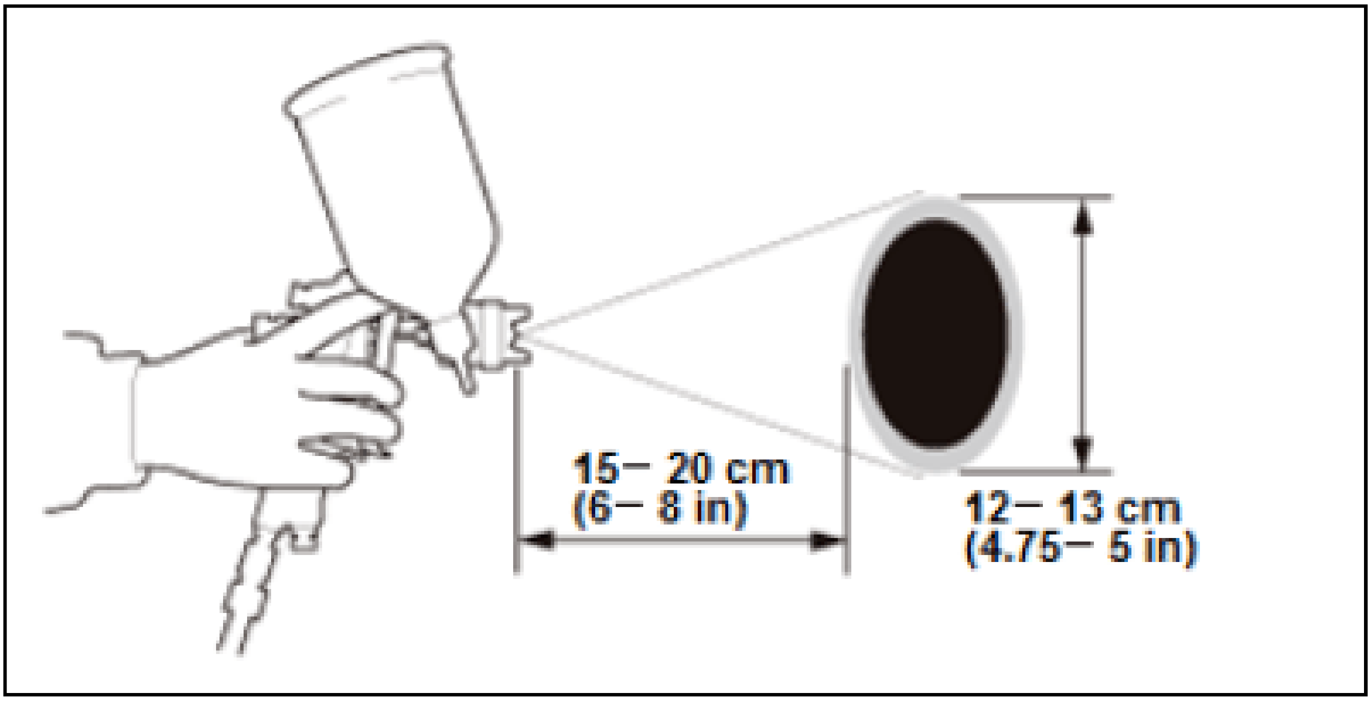
15– 20 cm
(6– 8 in)
12– 13 cm
(4.75– 5 in)

Overall Painting Pattern

Adjust the pattern and fluid flow rate adjustment screws to create a pattern diameter of 22-23 cm (8.75-9 in) at a distance of 15-20 cm (6-8 in) away from the surface.

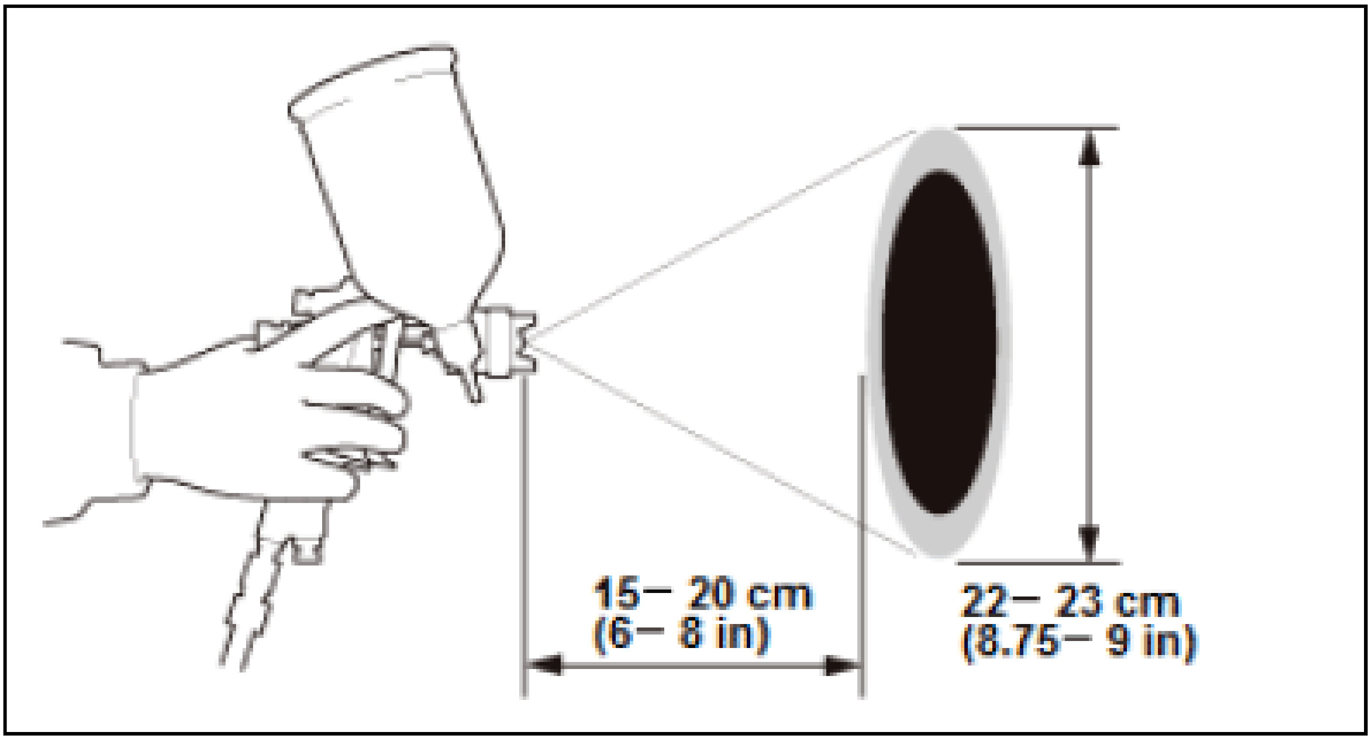
15– 20 cm
(6– 8 in)
22– 23 cm
(8.75– 9 in)

SPRAY GUN INSPECTION AND TROUBLESHOOTING

Inspection And Troubleshooting

Defects	Cause	Countermeasure
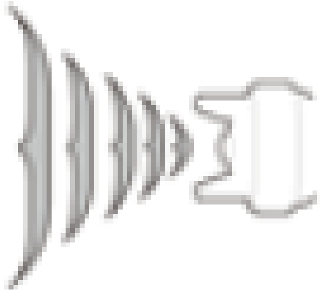 Out of air	1. Not enough paint in the paint cup. 2. The paint cup is tilted too much. 3. The paint flow path is clogged. 4. The paint nozzle deformed or damaged.	1. Add paint. 2. Correct the position. 3. Clean with solvent. 4. Close or replace.
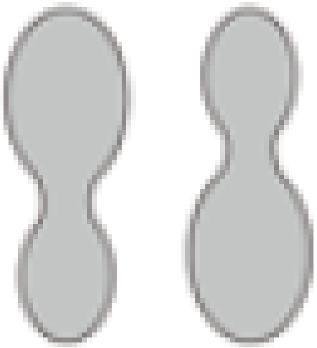 Imbalance	1. The air cap angle holes are partially clogged or damaged. 2. Paint or contaminants deposited or damages on the tapered joint area of air cap and paint nozzle. 3. Paint or contaminants deposited on the tip of the nozzle.	1. Clean or replace. 2. Clean or replace. 3. Clean.
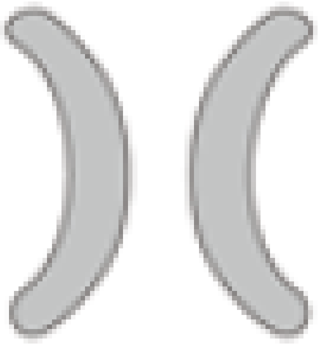 Crescent	1. The air cap angle holes are clogged or damaged, or there are paint deposits or other damage inside the center hole. 2. Paint or contaminants deposited or other damage to outside of the nozzle tip.	1. Clean or replace. 2. Clean or replace.
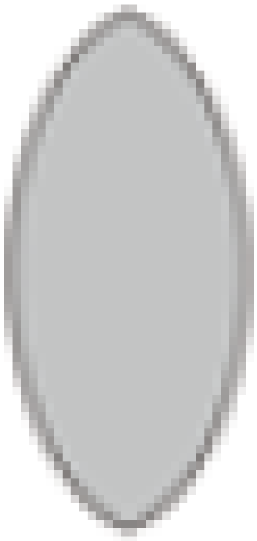 Oval	1. The bore of the paint nozzle is too large or has become worn. 2. Too much space between the air cap's center hole and the outside of the nozzle tip became bigger. 3. Low air flow and pressure to the air cap. 4. Paint viscosity too high.	1. Replace. 2. Replace. 3. Increase air flow and pressure. 4. Reduce viscosity

Defects	Cause	Countermeasure
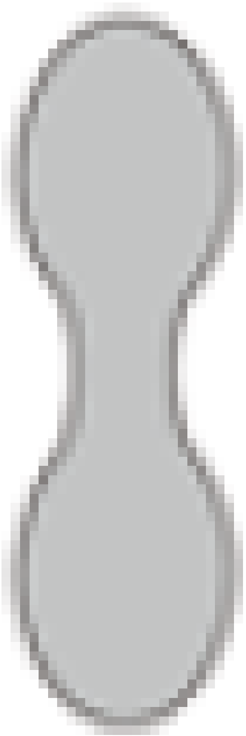 Constriction	1. Air flow and pressure to the air cap's angle holes too high. 2. Paint or contaminants deposited or other damage to outside of the nozzle tip.	1. Reduce air flow and pressure. 2. Clean.

Judging Defect Type Of Spray Pattern

Check the spray pattern. Then loosen the air cap and turn it 180Â° and spray again. If both of the spray patterns appear identical, the problem is contamination on the paint nozzle or a damaged paint nozzle.

If the spray patterns appear reversed, the problem is contamination on the air cap or a damaged air cap.

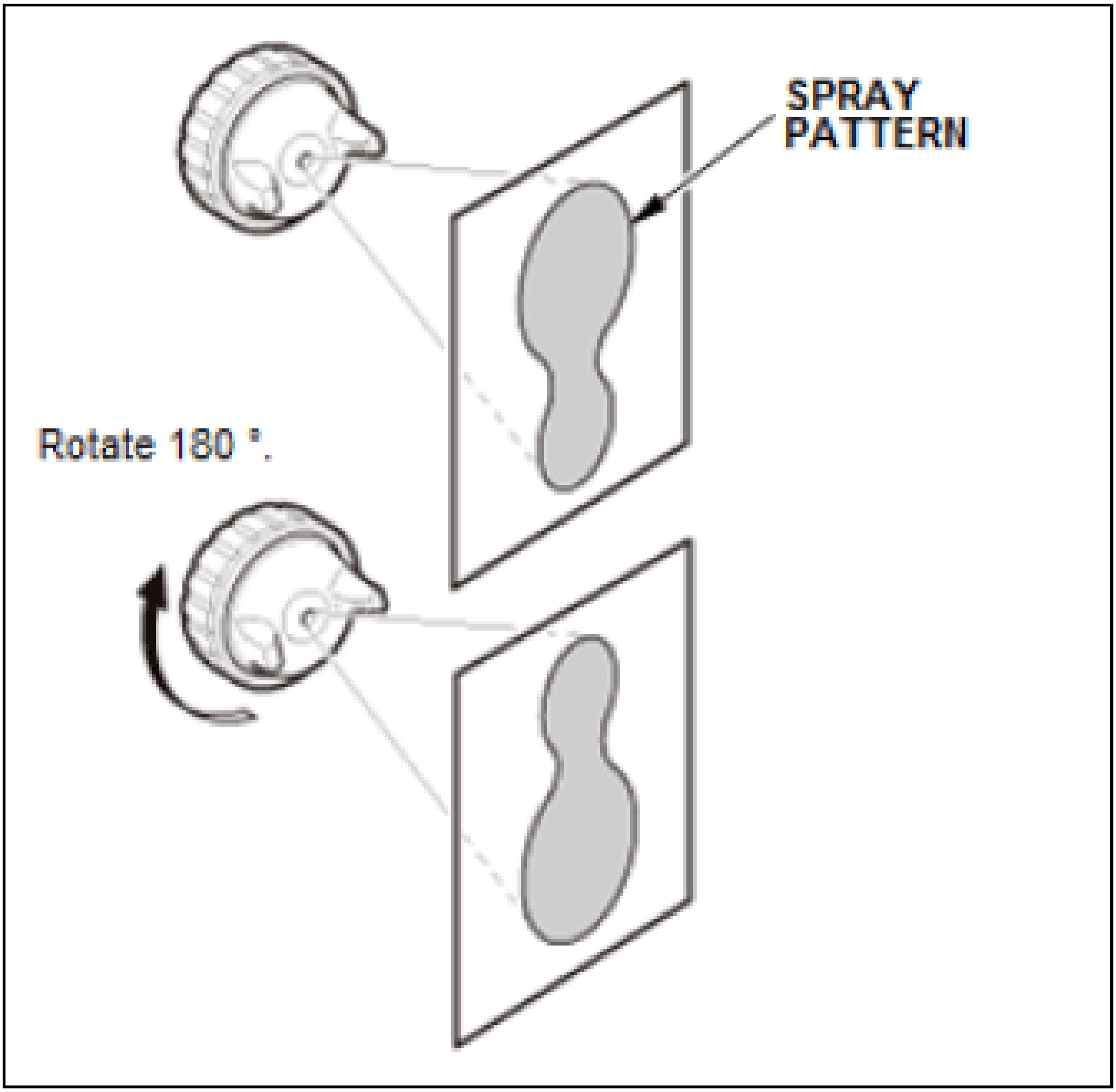

SPRAY GUN OPERATION

Spray Angle

- Hold the spray gun so that the nozzle is perpendicular to the painting surface and move the gun in a parallel direction.
- The spray gun is must be perfectly level with the surface being painted, so that the spray distances from the top and bottom of the nozzle tip are the same. If these distances are uneven, an uneven paint film thickness will result.

Correct Operation

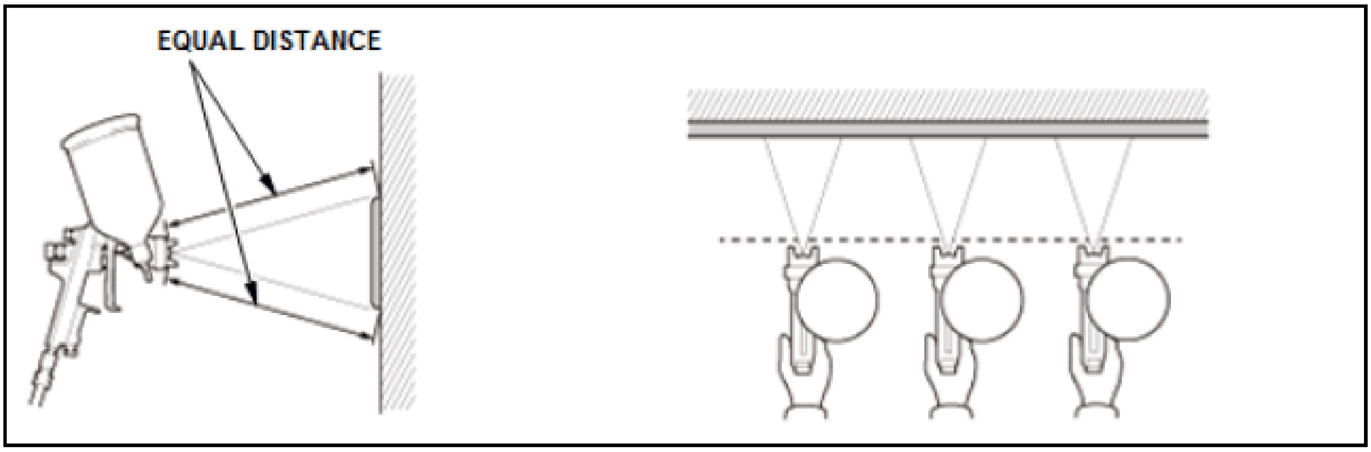
EQUAL DISTANCE

Incorrect Operation

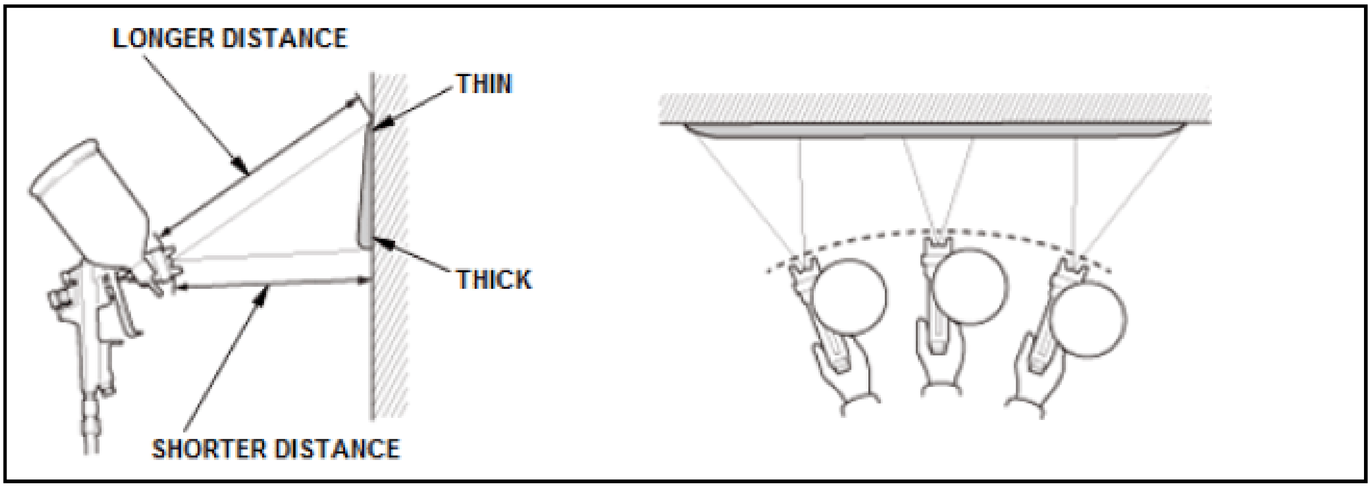
LONGER DISTANCE
THIN
THICK
SHORTER DISTANCE

Operation Speed of Spray Gun

Move the spray gun at a constant speed to avoid paint film unevenness (thick and thin areas).

Trigger Operation

The travel distance of spray gun (stroke) should be approximately 5-10 cm (2-4 in) longer than the actual painting target. At the end of each pass, release the trigger for a moment and pull again before starting the reversed direction of travel.

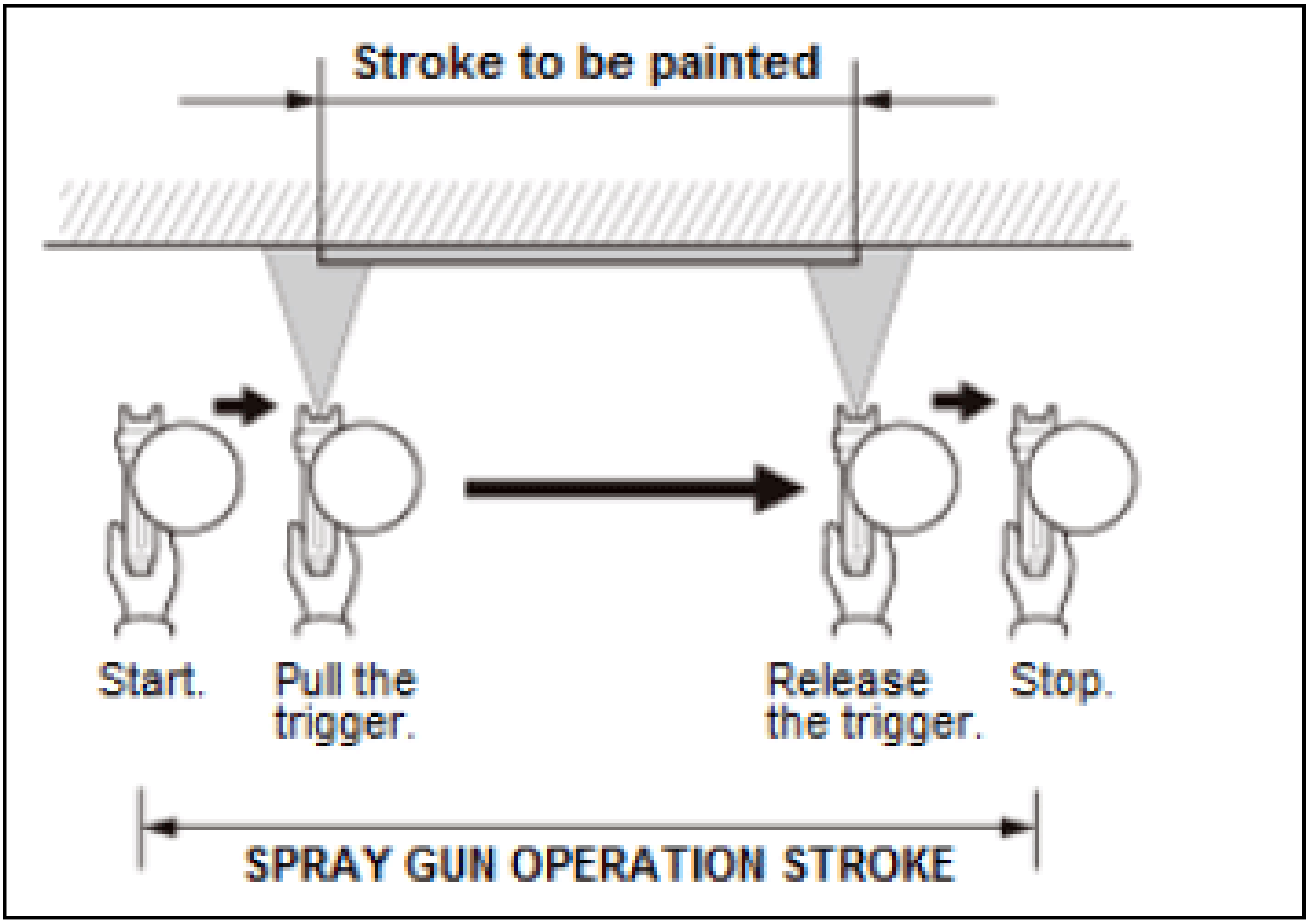
Stroke to be painted
Start.
Pull the trigger.
Release the trigger.
Stop.
SPRAY GUN OPERATION STROKE

Overlapping Passes

Spray patterns will have an effective coating area. Outside the effective coating area, less paint will be applied, causing a thinner paint film. Maintain an even paint thickness by overlapping the spray gun passes.

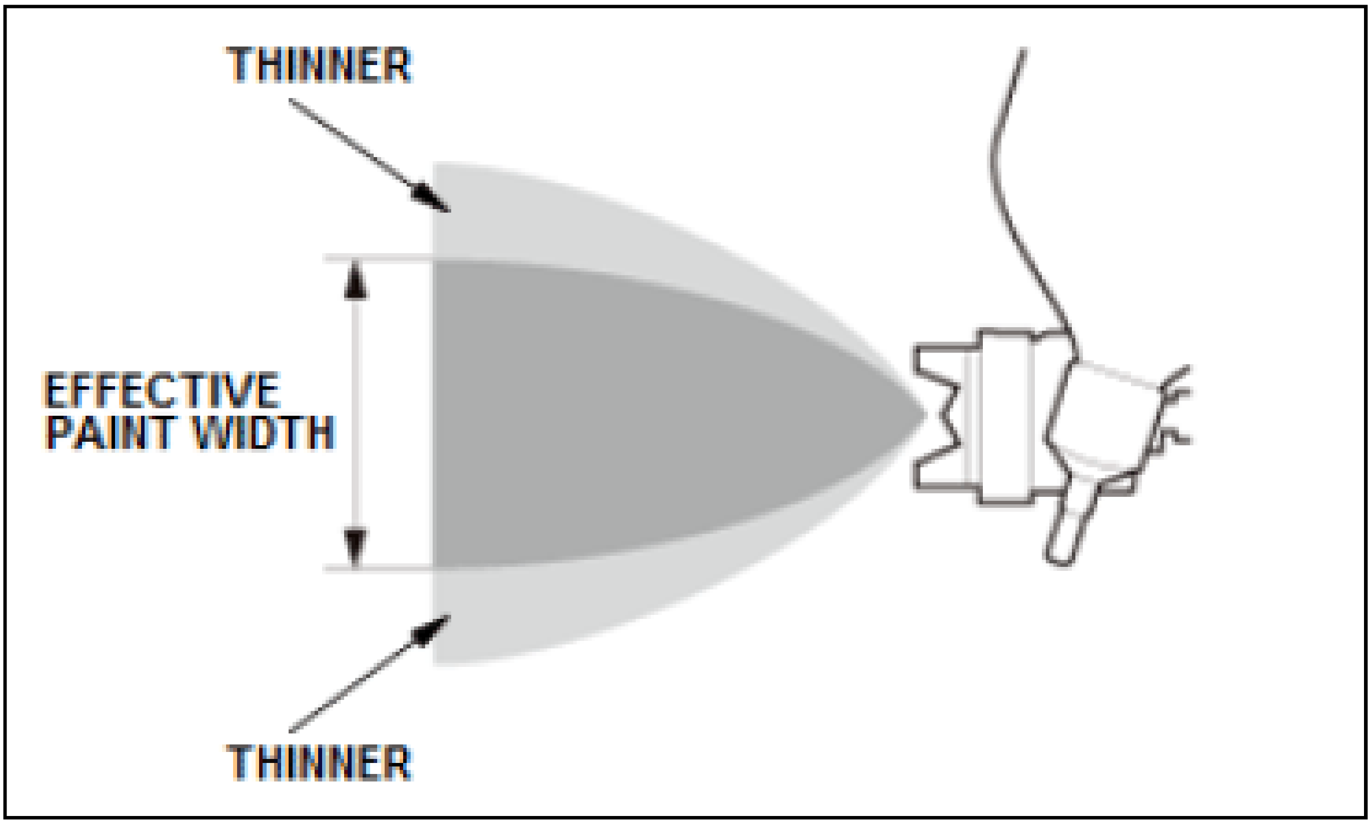
THINNER
EFFECTIVE PAINT WIDTH
THINNER

Single And Double Coating

1. Hold the spray gun at the left side of the surface being painted. Set the starting point of your spray pass outside the surface by a distance of 1/3 to 1/2 of the pattern diameter. Then spray horizontally towards the right side of the surface all the way to the

edge.

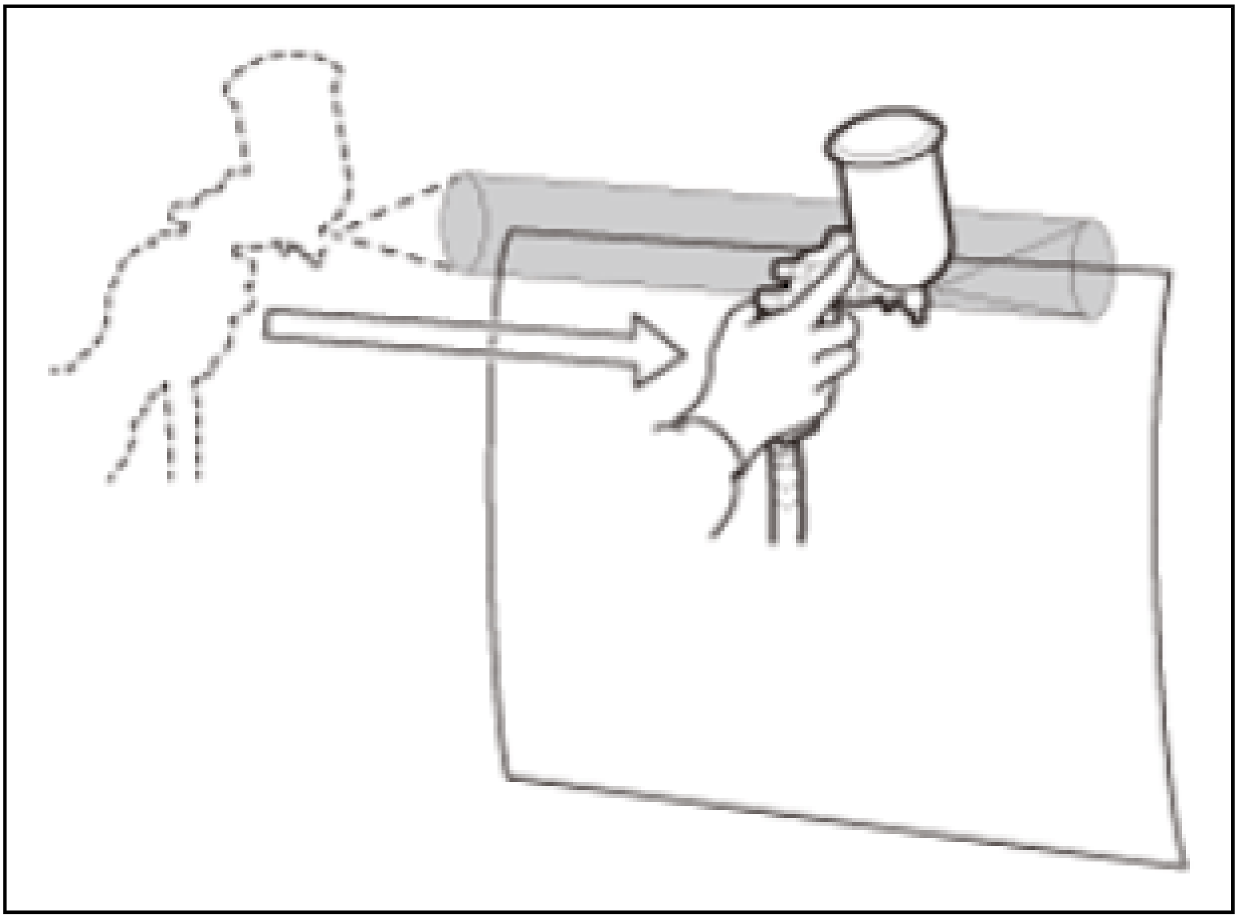

2. After step 1, move the paint gun lower to the area where the effective area of the pattern will overlap (1/3 to 1/2 of the pattern diameter). Then spray horizontally from the right to the left. This painting method is known as single coating.

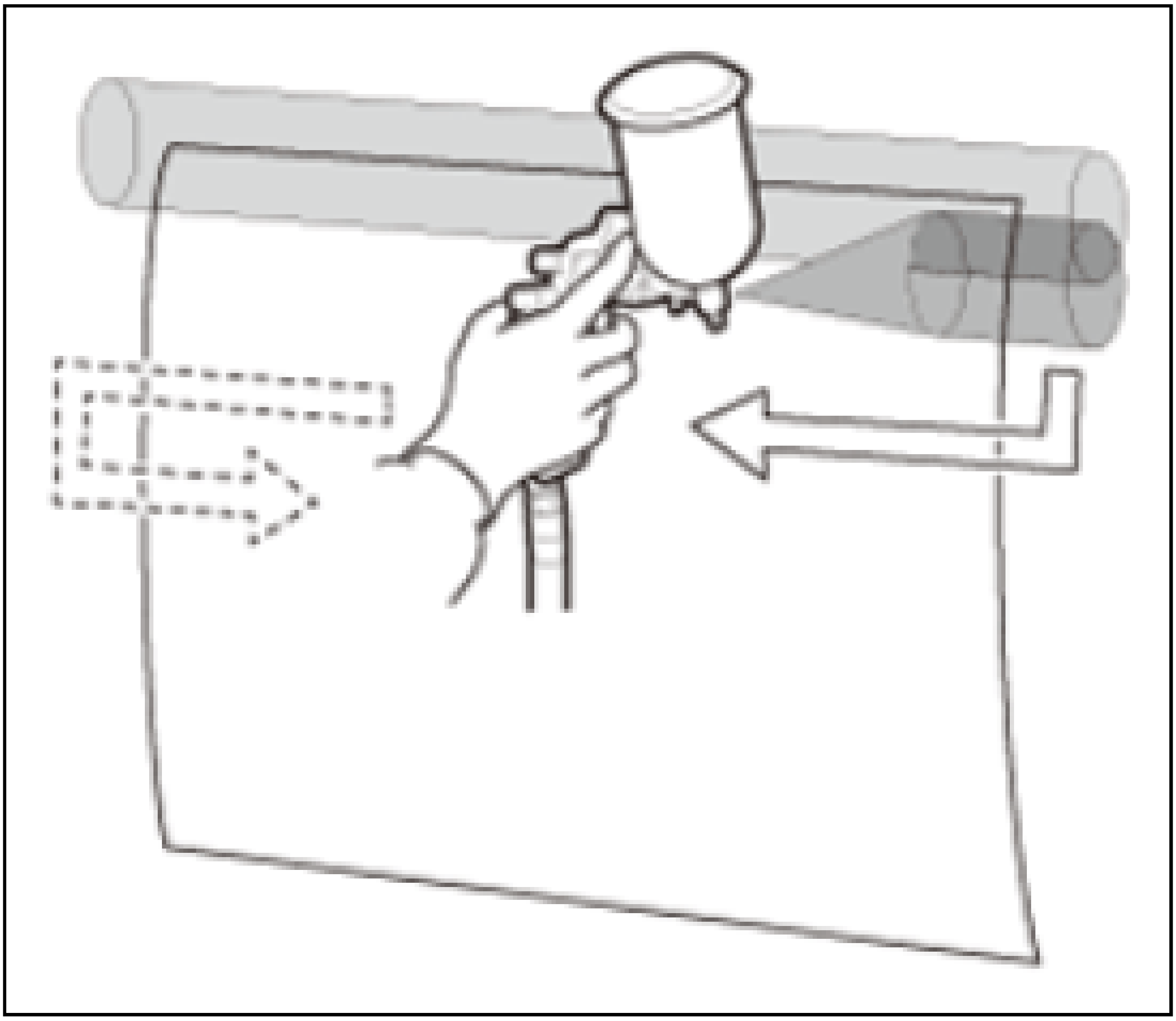

3. In comparison, if the same area is overlapped with multiple paint coats, it is called double coating.

Gradation

To apply thinner paint coats towards the outside of the repair center by creating a radial motion with your wrist.

Patch Paint

When painting a large multi-panel surface, follow the gradation coating method to avoid making the overlapped area of paint too thick.

SPRAY GUN OVERVIEW

Structure And Function

One of the most important tools used in collision and paint repair is the spray gun. Their precision construction and proper care have a great impact on the results of paint application and finish quality This chapter includes details about spray gun controls, types, and operation.

Pattern Adjustment Screw

When this screw is rotated fully clockwise, air flows only from the center of cap (T) and the spray pattern would be circular. As the pattern adjustment screw is turned counter clockwise, air flows through the angle hole (R) and support hole (S). The spray pattern will gradually become more oval.

Fluid Adjustment Screw

Turning the fluid adjustment screw fully clockwise shuts off paint flow to the gun. Turn the screw counter clockwise to gradually increase to amount of paint that mixes with the air supply.

Air Valve and Needle Valve

As the trigger is gradually pulled, the air valve begins to open and allows only air to flow through the spray gun. Pulling the trigger further operates the needle valve, allowing paint to begin flowing with the air. This two-stage trigger operation improves paint atomization any time the gun is being used.

Spray Gun Air Cap

The air cap has precision-drilled holes that direct high velocity compressed air. These create a suction that draws paint into the gun and discharges it from the paint nozzle (N). The paint is then atomized and discharged through the area (C) by the force of the air and placement of the holes.

Types

Categorized by the paint supply method:

Paint Supply Method	Pro and Cons
Gravity Feed System (Cup on Top) The paint cup is located above the paint gun nozzle. The paint is supplied by gravity acting on the paint and suction at the nozzle tip.	- Suitable for detailed and precise paint work because cup angle can be readily adjusted. - The cup's capacity is generally 500 mL (16.90 fl oz) or less, so the cup requires frequent refilling. Because of the small cup, gravity fed guns are better suited to spot painting rather than large surfaces. - Paint viscosity has little impact on fluid (paint) flow rate. - Gun must be hung by its hook when not in use because the cup on top makes it unstable.
Suction Feed System (Cup on Bottom) The paint cup is located beneath the paint gun nozzle. The paint is supplied by suction at the nozzle tip alone.	- Larger paint cups generally require fewer refills, so the gun is more suitable for painting large areas. - Larger paint cup capacity makes the gun heavier. - Paint viscosity does impact fluid (paint) flow rate.

Categorized by the nozzle diameter:

Diameter	Use	Characteristics
1.0-1.6 mm (0.040-0.063 in)	Topcoat	High atomization performance, relatively thin and homogeneous paint film suitable for topcoats.
1.5-2.0 mm (0.060-0.080 in)	Basecoat	High discharge rate, suitable for basecoats, such as primer surfacer, which tend to have relatively higher viscosities.

Categorized by the spray pattern:

There are several different spray patterns based on the nozzle diameter and air cap hole etc.

Spray Pattern	Atomization	Paint Film Thickness	Characteristics and Applicable Paint
Tulip Type			- High atomization ensures even application of paint coats. - Suitable for dual component paints such as polyurethane paint, which dries relatively slowly and metallic paint which can easily be applied unevenly.
Semi-Tulip Type			- For general purpose applications. - Applies a greater film thickness than the tulip type. - Suitable for dual component solid and clearcoat polyurethane paint.
Straight Type			Suitable for slower drying lacquer type paints and metallic paint which can easily be applied unevenly

GENERAL INFORMATION

EXTERIOR PARTS REMOVAL/INSTALLATION

NOTE:

- If the bumper reinforcement beam or the door beam is damaged, such as being bent or cracked, it cannot be repaired and must be replaced.
- To adjust the doors, refer to BODY DIMENSIONS (HYBRID) for the door position adjustment procedure.
- The mounting bolts for aluminum alloy panels and parts are special corrosion-resistant bolts and must be replaced prior to installation.
- Apply spot sealer to the mating surfaces of the front fenders, hood, hood hinges, door hinges, fuel fill door hinge, and tailgate hinges.
- When installing the rivnuts, apply sealer to prevent rust.
- Check the hood, the front fenders, the doors, and the tailgate positions; refer to the EXTERNAL PARTS FITTING POSITIONS .
- Apply sealant around the tailgate hinges .
- ▭ Torque: N.m (lbf.ft)

Exterior Parts - Exploded View

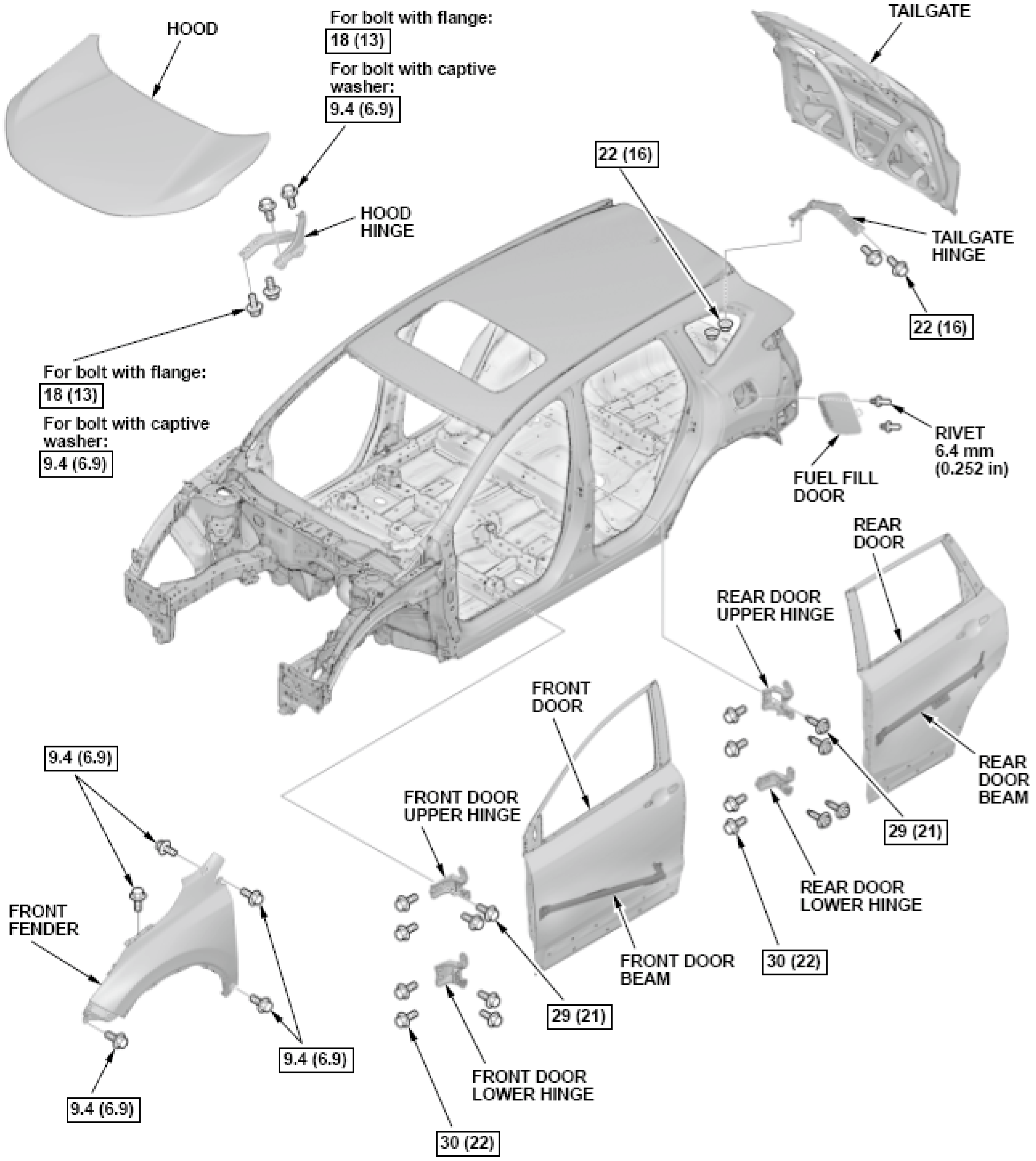
HOOD
For bolt with flange:
18 (13)
For bolt with captive washer:
9.4 (6.9)
TAILGATE
HOOD HINGE
22 (16)
TAILGATE HINGE
22 (16)
For bolt with flange:
18 (13)
For bolt with captive washer:
9.4 (6.9)
RIVET 6.4 mm (0.252 in)
FUEL FILL DOOR
REAR DOOR
REAR DOOR UPPER HINGE
FRONT DOOR
REAR DOOR BEAM
9.4 (6.9)
FRONT DOOR UPPER HINGE
29 (21)
FRONT FENDER
REAR DOOR LOWER HINGE
FRONT DOOR BEAM
30 (22)
29 (21)
9.4 (6.9)
FRONT DOOR LOWER HINGE
9.4 (6.9)
30 (22)

Fig. 1: Exterior Body Panels, Components And Hardware With Torque Specifications (1 Of 2)

Courtesy of AMERICAN HONDA MOTOR CO., INC.

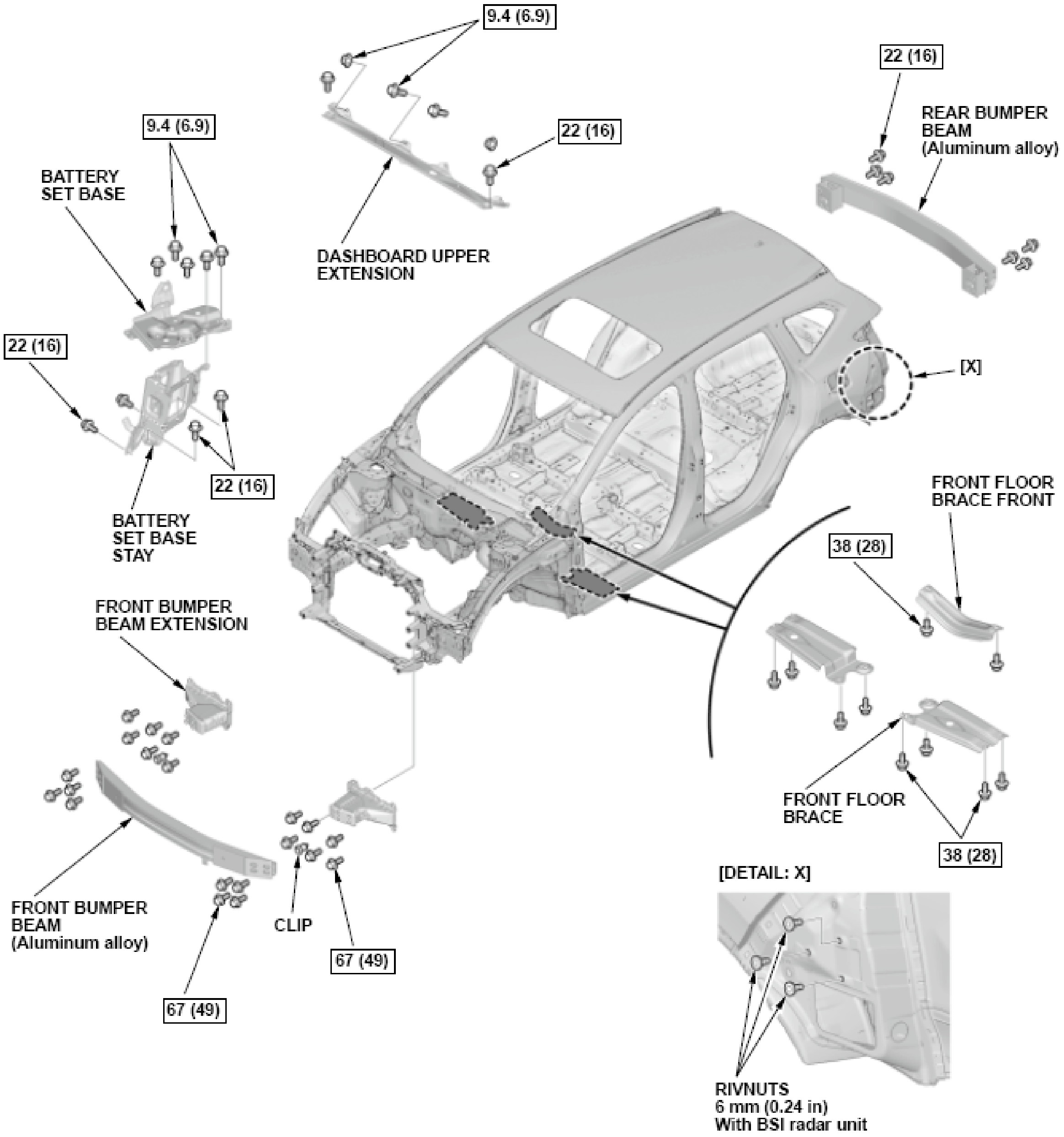
9.4 (6.9)
22 (16)
DASHBOARD UPPER EXTENSION
22 (16)
REAR BUMPER BEAM (Aluminum alloy)
9.4 (6.9)
BATTERY SET BASE
22 (16)
22 (16)
BATTERY SET BASE STAY
[X]
FRONT FLOOR BRACE FRONT
38 (28)
FRONT BUMPER BEAM EXTENSION
FRONT FLOOR BRACE
38 (28)
[DETAIL: X]
FRONT BUMPER BEAM (Aluminum alloy)
CLIP
67 (49)
67 (49)
RIVNUTS
6 mm (0.24 in)
With BSI radar unit

Fig. 2: Exterior Body Panels, Components And Hardware With Torque Specifications (2 Of 2)
Courtesy of AMERICAN HONDA MOTOR CO., INC.

SOFT CHIPPING GUARD PRIMER COATING AREAS

NOTE:

- **The removal of paint and undercoating by stone chips immediately exposes metal to the atmosphere , causing it to oxidize .**
- **For repair in these areas, please apply an additional coat of primer-surfacer in the shaded areas to provide additional stone chip protection.**

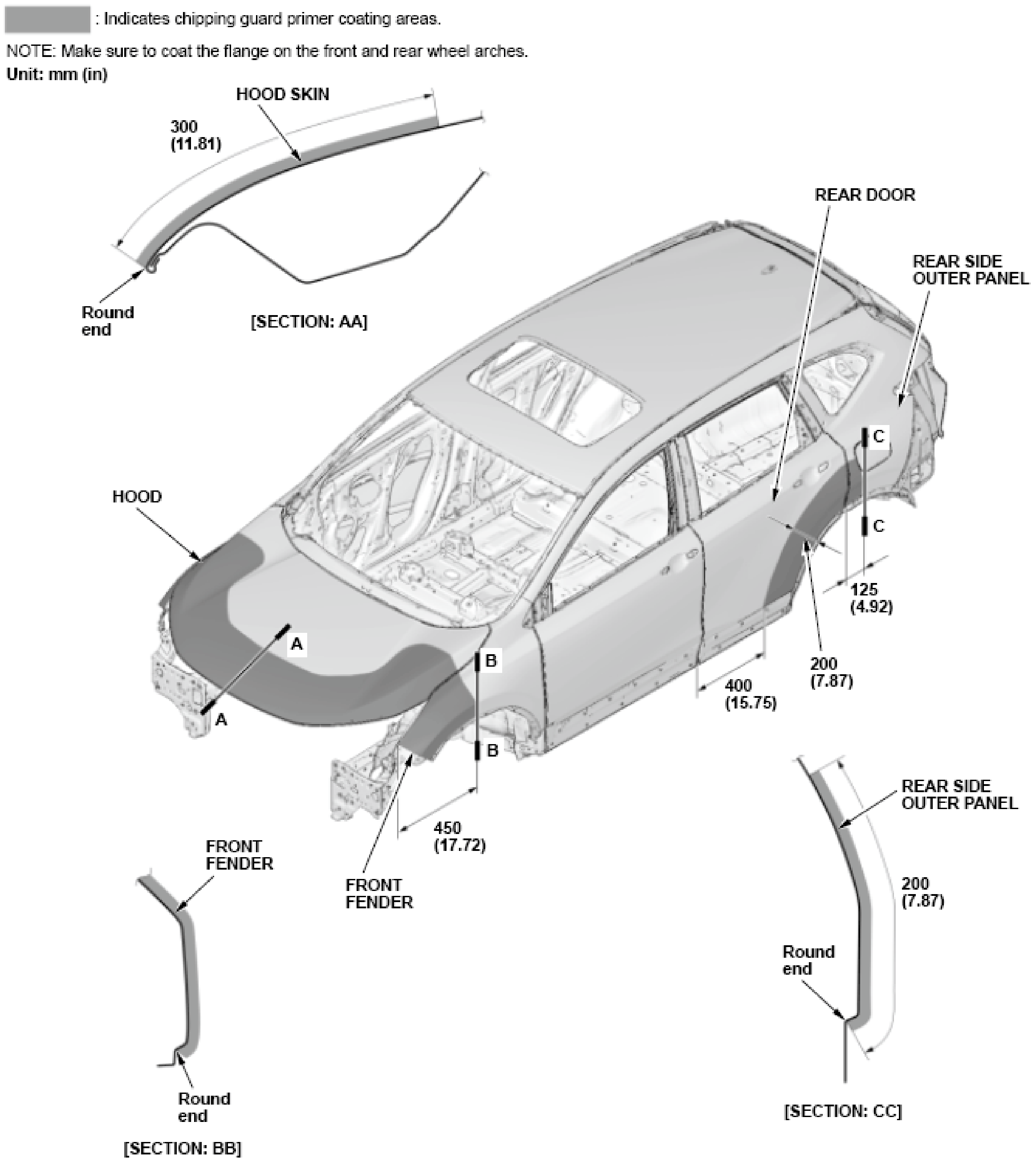
▨ : Indicates chipping guard primer coating areas.
NOTE: Make sure to coat the flange on the front and rear wheel arches.
Unit: mm (in)
HOOD SKIN
300
(11.81)
Round
end
[SECTION: AA]
REAR DOOR
REAR SIDE
OUTER PANEL
HOOD
C
C
125
(4.92)
A
A
B
B
200
(7.87)
400
(15.75)
450
(17.72)
FRONT
FENDER
FRONT
FENDER
REAR SIDE
OUTER PANEL
200
(7.87)
Round
end
Round
end
[SECTION: BB]
[SECTION: CC]

Fig. 3: Soft Chipping Guard Primer Locations And Specifications
Courtesy of AMERICAN HONDA MOTOR CO., INC.

GENERAL INFORMATION

NOTE: **Before performing any collision repairs and body work, carefully read the following precautions and notes.**

Supplemental Restraint System (SRS) Service Precautions - Information

- **Component Location Index**
- **Precautions And Procedures**

Precautions For Body Repair

- Avoid any strong impact with a hammer or other tools when doing repair work around the locations of the SRS components (SRS unit and impact sensors). Do not apply heat to these areas with a torch, etc.
- Do not apply heat of more than 212B°F (100B°C) when drying painted surfaces anywhere around the SRS components locations.

SRS Component Replacement/Inspection After Deployment - Information

-

Electric Powertrain - Information

- **Component Location Index**
- **Service Precautions**

Precautions For Body Repair

High temperatures may damage the battery module. When drying paint in a heated paint booth, make sure the temperature does not exceed 149B°F (65B°C).

12 Volt Battery Terminal Disconnection And Reconnection - Process

-

Identification Number Locations - Information

-

Lift And Support Points - Information

-

Wheel Alignment - Information

-

WELDING CONDITIONS FOR ADHESIVE APPLICATION AREAS

In order to increase the stiffness in certain areas of the body (as indicated with a bold line), the adhesive used are applied to the sheet metal surface and jointed by spot welding.

Take note of the following items when you weld in areas that apply adhesives to replaced parts:

- Use the 3M 07333 adhesive or a commercially available equivalent.
- When the adhesive is applied continuously, apply a bead with a diameter of more than φ 3 mm (0.12 in).
- Apply the same number of spot welds as the mass production body.

NOTE: **See the adhesive manufacturers instructions for details.**

- If you cannot spot weld, MAG or MIG braze welding is acceptable.
- Do not apply adhesives on or near areas where MAG or MIG braze welding is being applied as the adhesive may ignite and burn.

Adhesive Application Areas For Roof Panel And Rear Pillar Gutter

▬ / ▨ : Indicates adhesive applying areas.

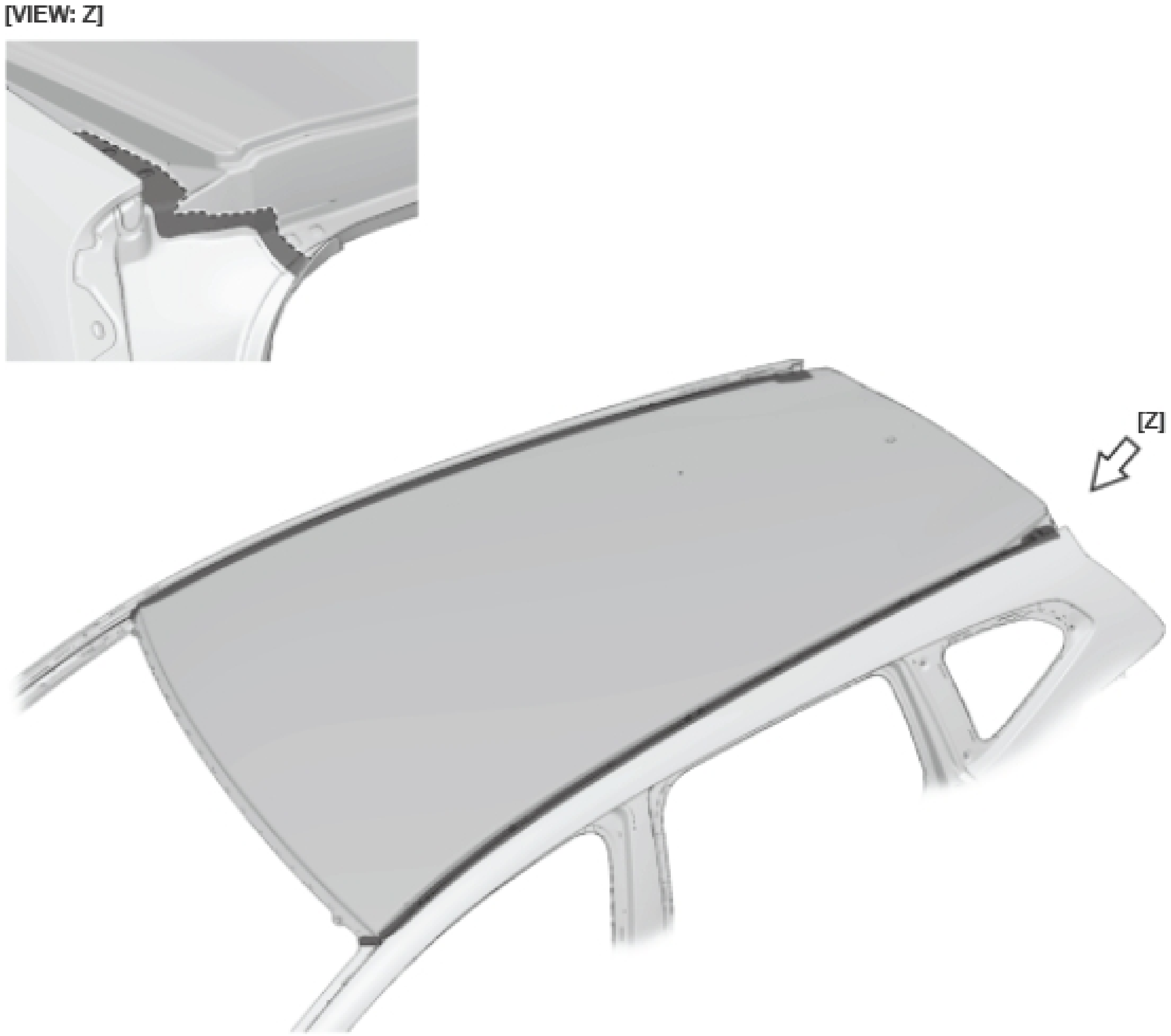

General Information (Collision) - CR-V

GENERAL INFORMATION

Important features for Body Repair.

NOTE: **Before servicing and repairing the vehicles body work, read carefully these important feature about Body Repair listed below.**

1. Supplemental Restraint System (SRS) Service Precautions - Information
    - Refer to Component Location Index .
    - Refer to Precautions And Procedures .

   Precautions for Body Repair

   Do not apply heat of more than 212B°F (100B°C) when drying painted surfaces anywhere around the SRS components locations.
2. Refer to SRS Component Replacement/Inspection After Deployment .
3. Refer to 12 Volt Battery Terminal Disconnection and Reconnection .
4. **Identification Number Locations - Information**
5. Refer to Lift And Support Points .
6. **Wheel Alignment - Information**

OVERVIEW OF BODY FEATURES

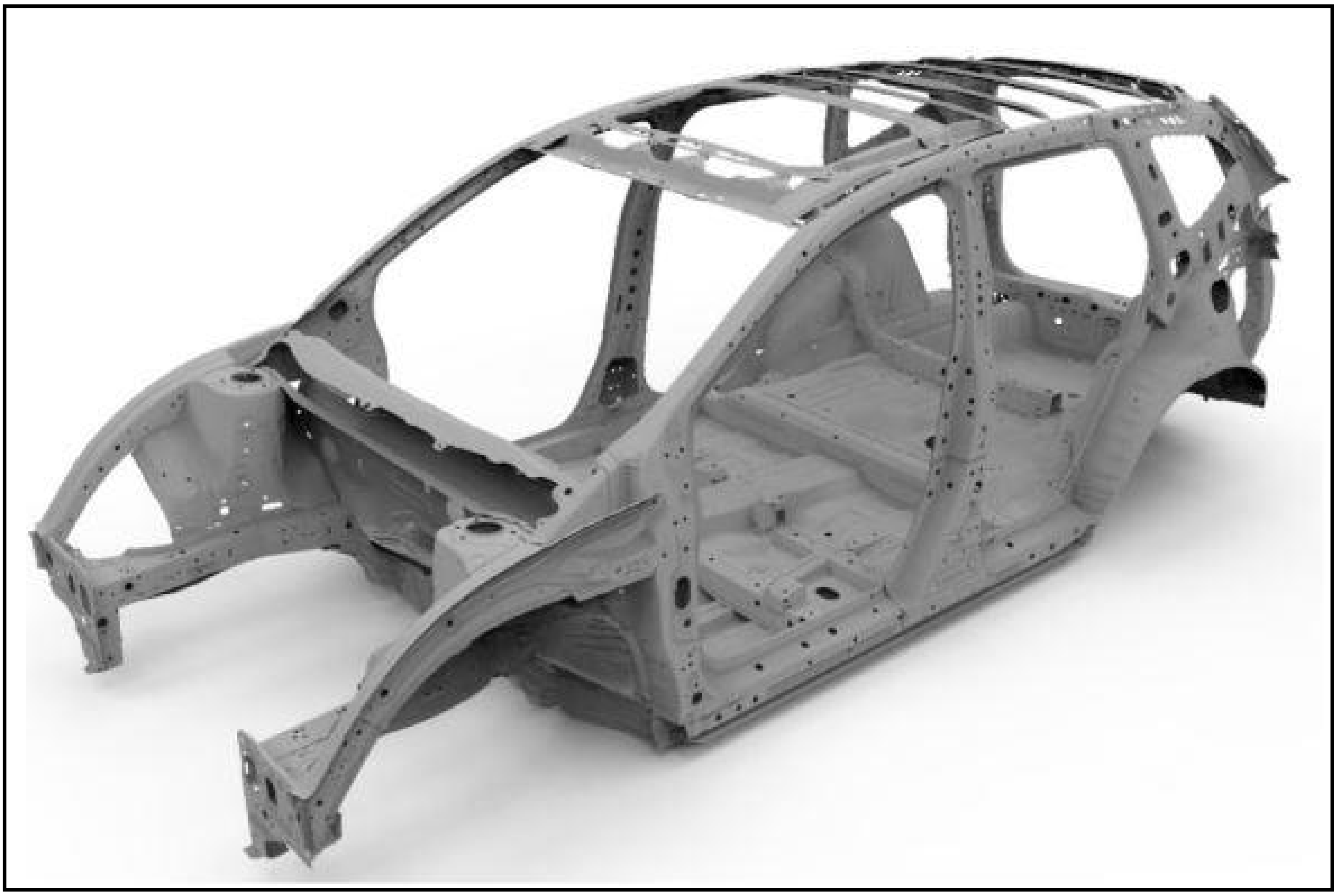

- Next-Generation Advanced Compatibility Engineering™ (ACE™) body structure

- Body construction using extensive amounts of high-tensile-strength steel (HSS), including 26% ultra-high-strength steel (UHSS - 980 MPa and higher)
- Weight-saving 1500 MPa rear frame rails with soft zones for crash performance that may be sectioned in specified areas during collision repairs.
- Bolt-on resin composite front bulkhead assembly

BODY TECHNOLOGY

BODY CONSTRUCTION AND HIGH-STRENGTH STEEL CONTENT

- Steel parts are color coded based on their tensile strength in megapascals (MPa).
- High-strength steel (HSS) is defined as any steel with a tensile strength of 340 MPa or higher.
- Ultra-high-strength steel (UHSS) is defined as any steel with a tensile strength of 980 MPa or higher.
- Steel repair and welding procedures vary depending on the tensile strength of the parts involved.

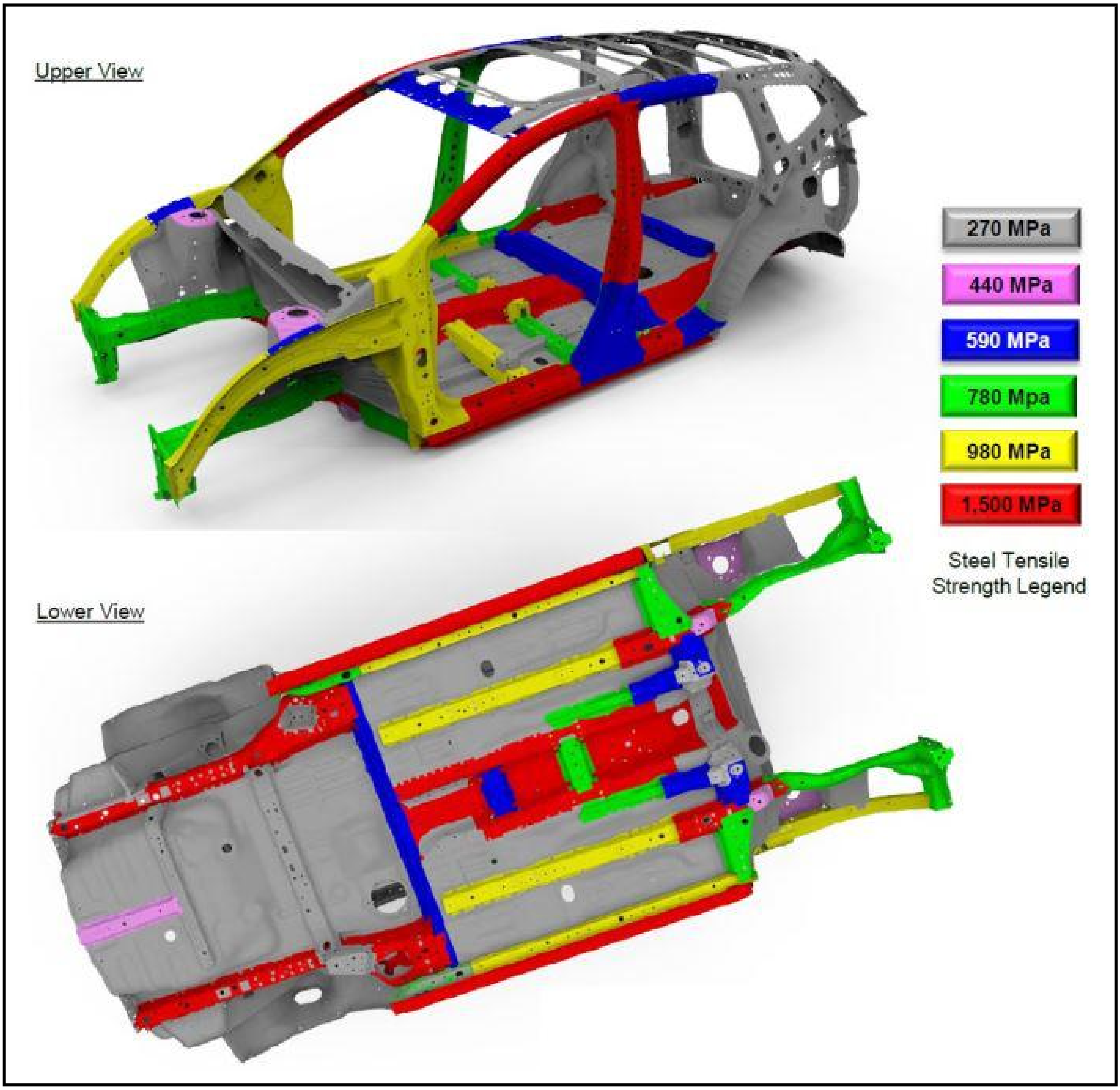

NOTE: **These illustrations are for general reference only. Some body parts are constructed from multiple layers of different tensile strength steels. Always refer**

to the appropriate structural information for specific steel tensile strength information.

1500 MPa (HOT STAMP) STEEL LOCATIONS

1500 MPa steel is stronger than ordinary steel, so it can help protect vehicle occupants while reducing overall vehicle weight to improve fuel efficiency.

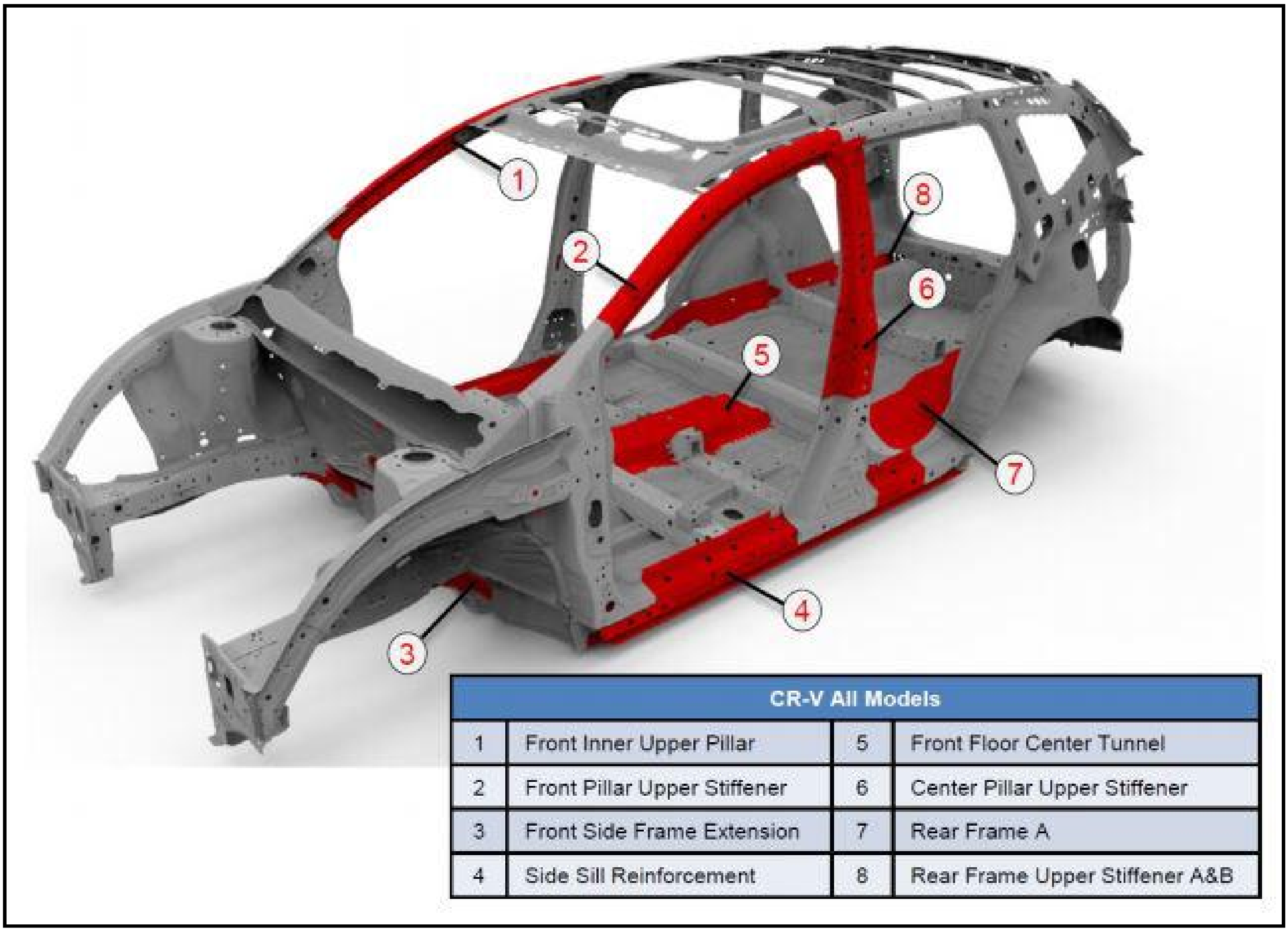

CR-V All Models			
1	Front Inner Upper Pillar	5	Front Floor Center Tunnel
2	Front Pillar Upper Stiffener	6	Center Pillar Upper Stiffener
3	Front Side Frame Extension	7	Rear Frame A
4	Side Sill Reinforcement	8	Rear Frame Upper Stiffener A&B

SECTIONABLE 1500 MPa STEEL REAR FRAME

All models use weight-saving 1500 MPa steel rear frame rails with soft zones for impact crush control.

- If rear frame damage is suspected, measure the entire vehicle using a three-dimensional measuring system.
- If the rear frame is damaged, replace the affected rear frame(s) as necessary depending on the damage.
- Because of a design change to the rear frame soft zones, the rear portion of the rear frame may be sectioned and replaced as specified in the BRM Rear Floor/Rear Frame Replacement procedure.
- For further repair information, refer to the appropriate service information.

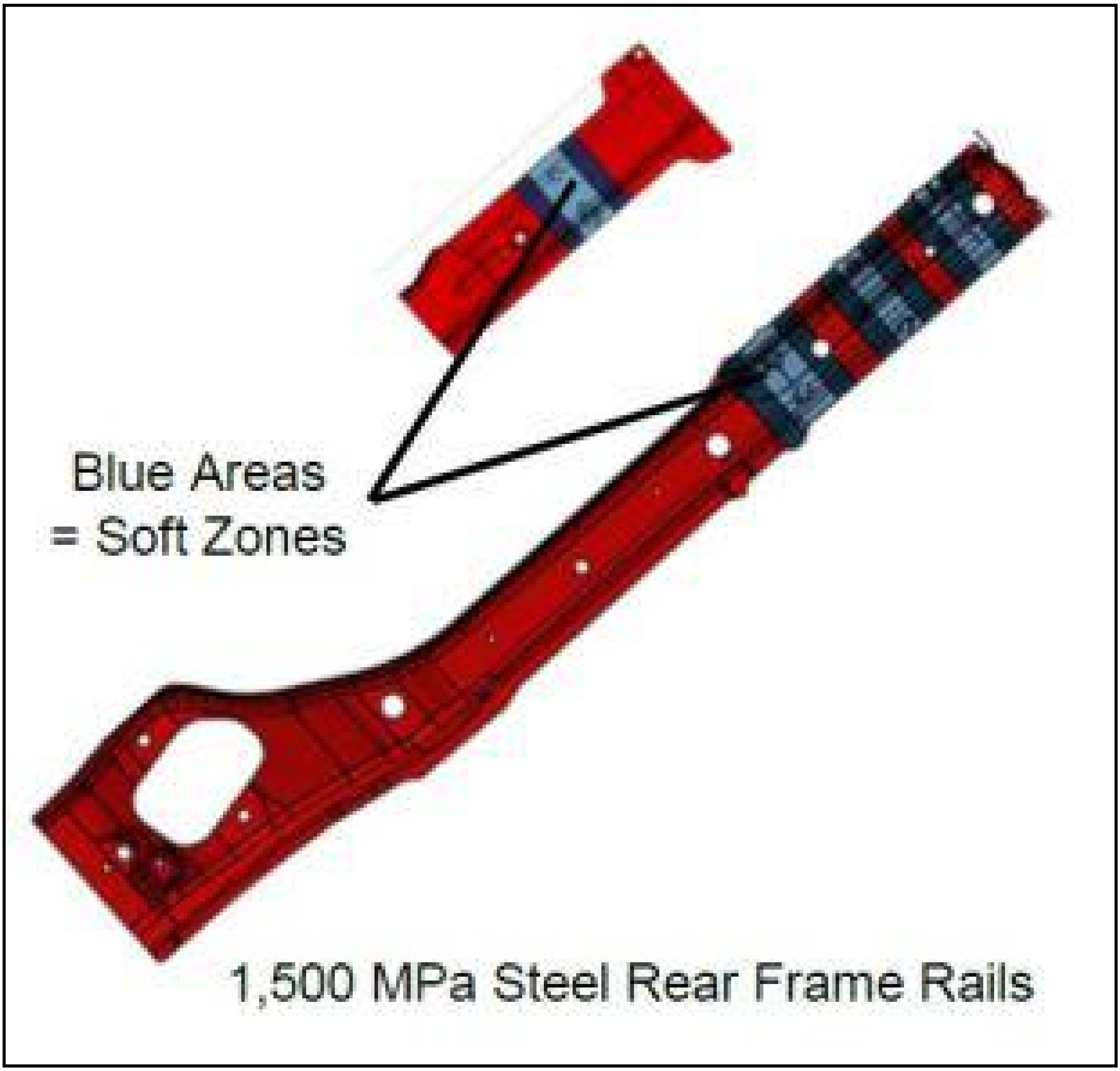
Blue Areas
= Soft Zones
1,500 MPa Steel Rear Frame Rails

ALUMINUM PARTS & REPAIRABILITY

The front and rear bumper beams are constructed from aluminum alloy.

Front and Rear Bumper Beams

Repairability Issues

- Do not repair bumper beams if they are damaged.
- To prevent galvanic corrosion, some fasteners for aluminum parts are considered one-time use and must be replaced if removed.

RESIN COMPOSITE FRONT BULKHEAD

This vehicle has a lower bulkhead assembly constructed of resin composite material.

- The bulkhead design improves engine compartment access during factory assembly and service.
- The front bulkhead is attached with multiple bolts and is sold and replaced only as a complete assembly.
- The cooling fans, radiator, A/C condenser, hood lock, outside air temperature sensor, and related piping/ components are attached to the front bulkhead using molded-in M6/M8 threaded inserts.
- Over-torquing or using power tools may break these inserts loose, requiring front bulkhead replacement.
- A damaged bulkhead must be replaced, not repaired.
- For more information, refer to **Exterior Parts Removal/Installation**.

Resin Composite Front Bulkhead

DOUBLE-SIDED ADHESIVE TAPE EXTERIOR PARTS ATTACHMENT

For better appearance/function, the following exterior parts are attached using double-sided adhesive tape instead of the traditional plastic clips:

- Front door sash outer trim
- Rear door sash outer trim
- Rear door wheel arch protector

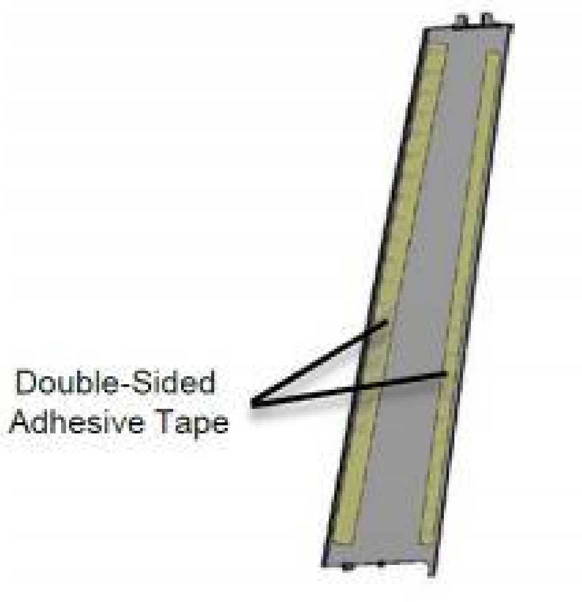

Front Door Sash Outer Trim

Rear Door Wheel Arch Protector

If these parts are removed, they **must** be replaced with new parts to ensure proper retention.

ACOUSTIC SEPARATOR LOCATIONS

A combination of molded, extruded, and tape acoustic separators are applied in various body locations.

- These are applied within the body pillars.
- Locations are shown in the diagram below.
- They are designed to block the noise paths into the cabin from hollow body cavities.
- Repairs are similar to previous models using commercially-available products.
- Refer to the appropriate service information for specific procedures.

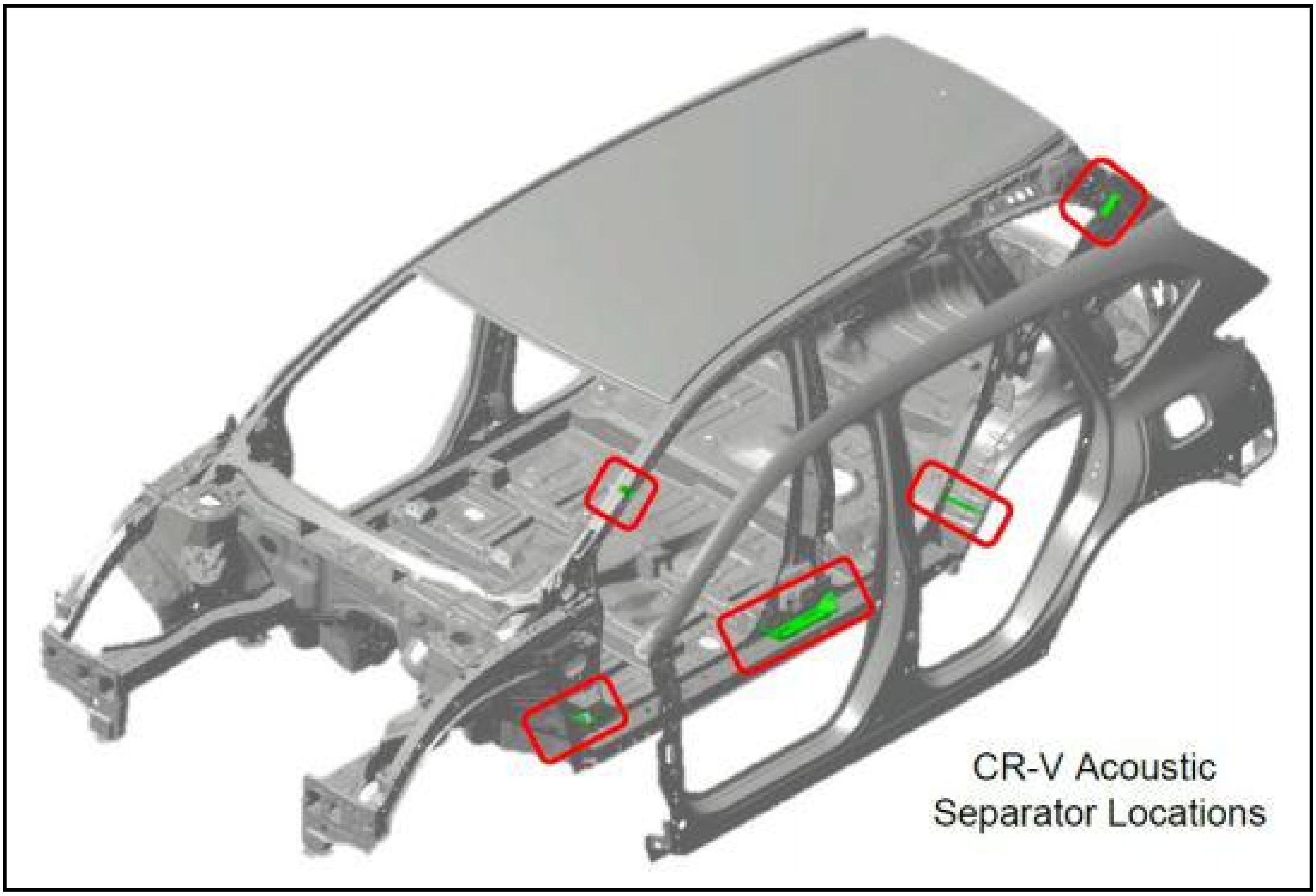

POWER TAILGATE INFORMATION

EX-L and Touring trim levels include a spindle-type power tailgate.

- The motor and actuator are integrated into the drivers side tailgate support strut for weight reduction.
- The Touring trim level also includes a hands-free feature that is activated using a kicking motion under the rear bumper.
- Until it is reset, the power tailgate will not open or close automatically under the following conditions:
    - The battery is disconnected, or the No. 18 BACKUP (10 A) fuse in the under-hood fuse/relay box is removed while the tailgate is operating.
    - Certain power tailgate components have been replaced.
- Refer to Resetting the Power Tailgate Control Unit in the service information.

EXTERIOR PARTS REMOVAL/INSTALLATION

NOTE:

- To adjust the doors in or out, replace the mounting bolts (A) with adjusting bolts; refer to the appropriate parts information for the necessary adjusting bolts.
- Apply spot sealer to the mating surfaces, then install the front fenders, the hood, the doors, the fuel fill door, the tailgate, and the hinges.
- When tightening the battery set base stay mounting bolts, tighten in order of the number shown in the illustration.
- Check the hood, the front fenders, the doors, and the tailgate positions; refer to the External Parts Fitting Positions .
- Apply sealant around the tailgate hinges ; refer to Roof Panel/Rear Pillar Gutter And Rear Panel .

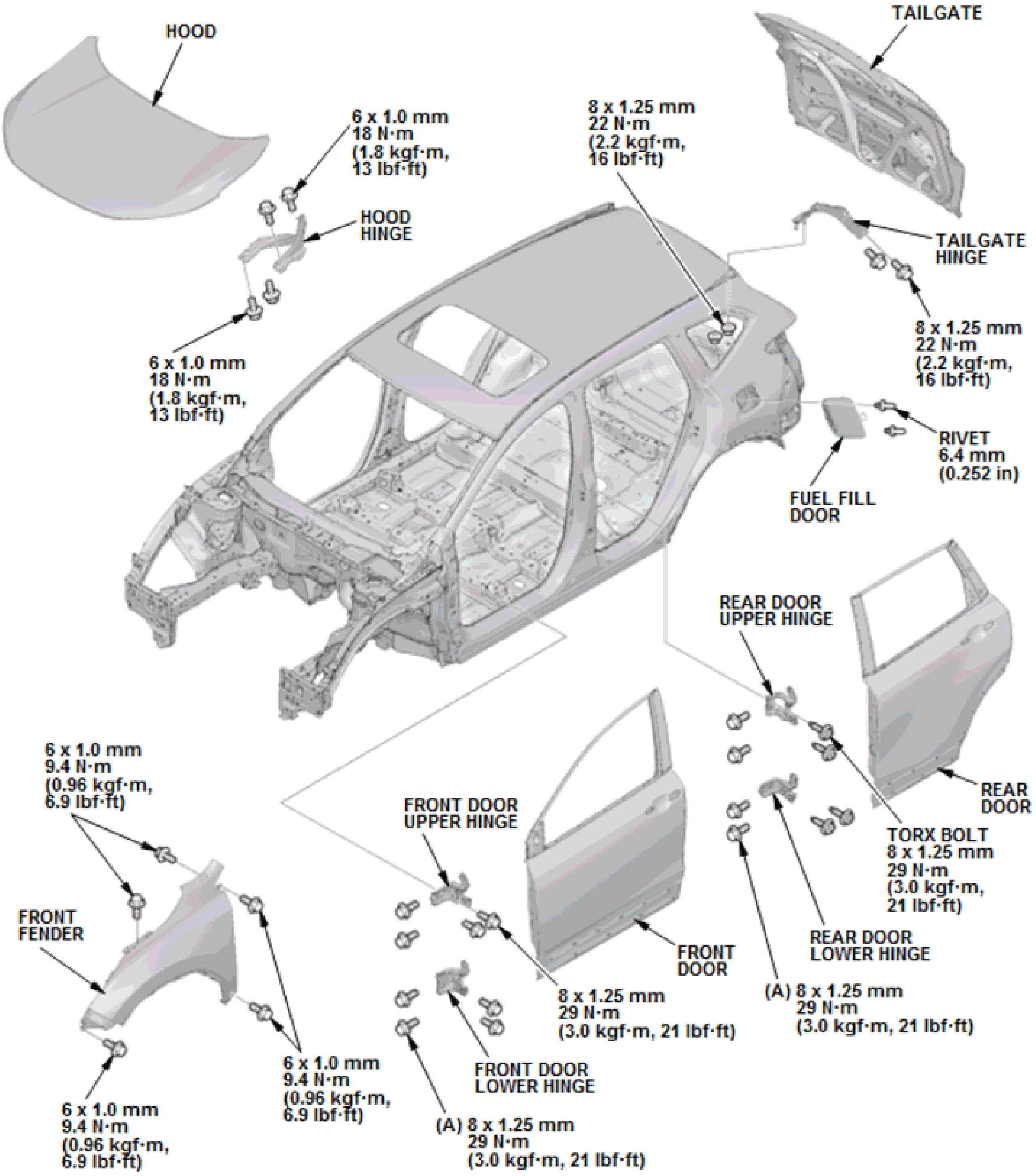
HOOD
6 x 1.0 mm 18 N·m (1.8 kgf·m, 13 lbf·ft)
HOOD HINGE
6 x 1.0 mm 18 N·m (1.8 kgf·m, 13 lbf·ft)
8 x 1.25 mm 22 N·m (2.2 kgf·m, 16 lbf·ft)
TAILGATE
TAILGATE HINGE
8 x 1.25 mm 22 N·m (2.2 kgf·m, 16 lbf·ft)
RIVET 6.4 mm (0.252 in)
FUEL FILL DOOR
REAR DOOR UPPER HINGE
REAR DOOR
TORX BOLT 8 x 1.25 mm 29 N·m (3.0 kgf·m, 21 lbf·ft)
REAR DOOR LOWER HINGE
(A) 8 x 1.25 mm 29 N·m (3.0 kgf·m, 21 lbf·ft)
FRONT DOOR
8 x 1.25 mm 29 N·m (3.0 kgf·m, 21 lbf·ft)
FRONT DOOR UPPER HINGE
FRONT DOOR LOWER HINGE
(A) 8 x 1.25 mm 29 N·m (3.0 kgf·m, 21 lbf·ft)
6 x 1.0 mm 9.4 N·m (0.96 kgf·m, 6.9 lbf·ft)
FRONT FENDER
6 x 1.0 mm 9.4 N·m (0.96 kgf·m, 6.9 lbf·ft)
6 x 1.0 mm 9.4 N·m (0.96 kgf·m, 6.9 lbf·ft)

Fig. 1: Exterior Replacement Panels, Hardware And Locations With Torque Specifications (1 Of 2)
Courtesy of AMERICAN HONDA MOTOR CO., INC.

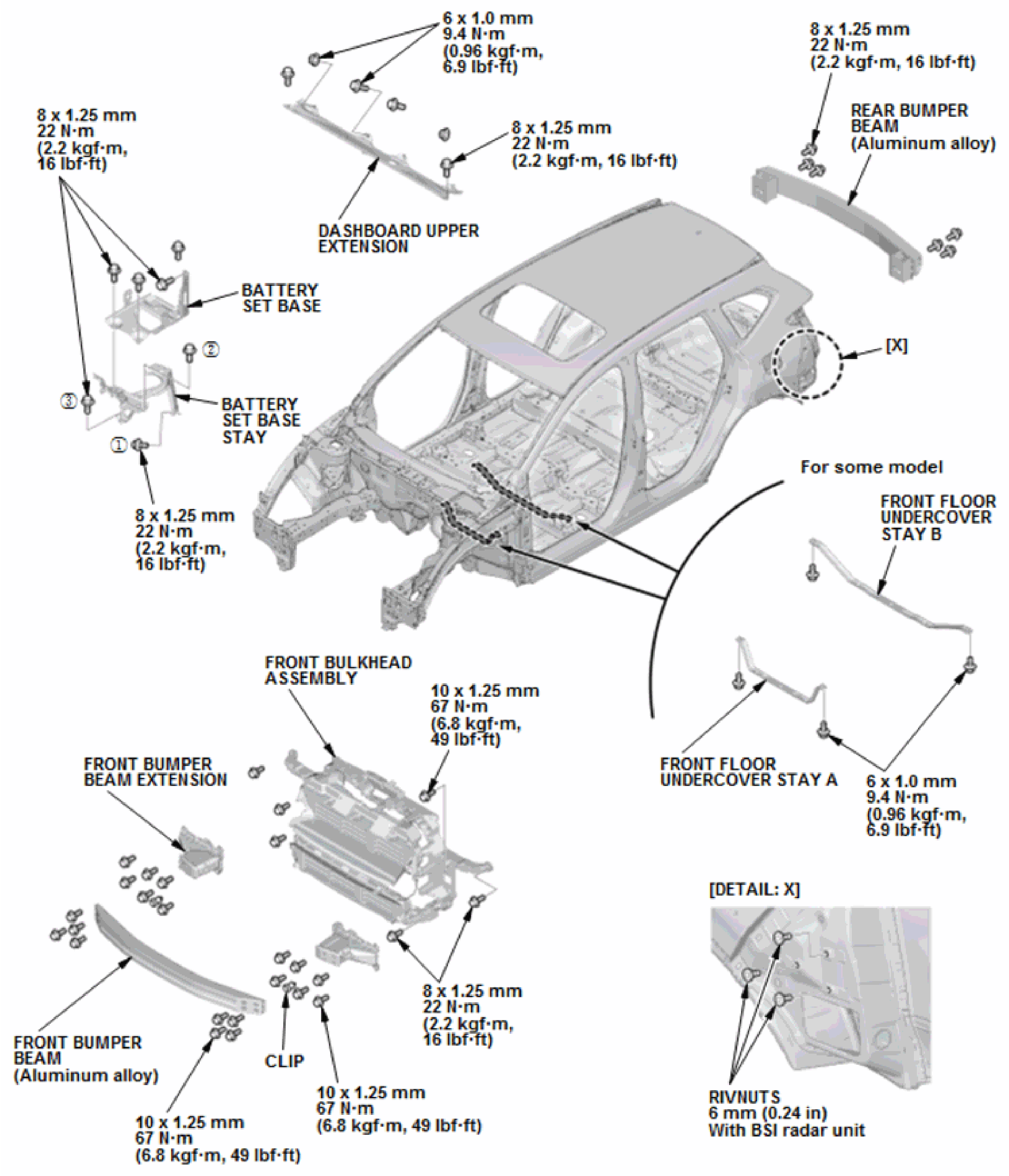
6 x 1.0 mm
9.4 N·m
(0.96 kgf·m,
6.9 lbf·ft)
8 x 1.25 mm
22 N·m
(2.2 kgf·m, 16 lbf·ft)
REAR BUMPER
BEAM
(Aluminum alloy)
8 x 1.25 mm
22 N·m
(2.2 kgf·m,
16 lbf·ft)
8 x 1.25 mm
22 N·m
(2.2 kgf·m, 16 lbf·ft)
DASHBOARD UPPER
EXTENSION
BATTERY
SET BASE
②
[X]
③
BATTERY
SET BASE
STAY
①
For some model
FRONT FLOOR
UNDERCOVER
STAY B
8 x 1.25 mm
22 N·m
(2.2 kgf·m,
16 lbf·ft)
FRONT BULKHEAD
ASSEMBLY
10 x 1.25 mm
67 N·m
(6.8 kgf·m,
49 lbf·ft)
FRONT BUMPER
BEAM EXTENSION
FRONT FLOOR
UNDERCOVER STAY A
6 x 1.0 mm
9.4 N·m
(0.96 kgf·m,
6.9 lbf·ft)
[DETAIL: X]
8 x 1.25 mm
22 N·m
(2.2 kgf·m,
16 lbf·ft)
FRONT BUMPER
BEAM
(Aluminum alloy)
CLIP
10 x 1.25 mm
67 N·m
(6.8 kgf·m, 49 lbf·ft)
10 x 1.25 mm
67 N·m
(6.8 kgf·m, 49 lbf·ft)
RIVNUTS
6 mm (0.24 in)
With BSI radar unit

Fig. 2: Exterior Replacement Panels, Hardware And Locations With Torque Specifications (2 Of 2)
Courtesy of AMERICAN HONDA MOTOR CO., INC.

PLASTIC PANEL INFORMATION AND REPAIR

TYPES AND MATERIALS OF EXTERIOR PLASTIC PARTS

Types and Materials of Exterior Plastic Parts

NOTE:

- **For a complete list of plastic names, refer to RESIN .**
- **A standard symbol is stamped on the underside of each plastic part to show the type of material used**

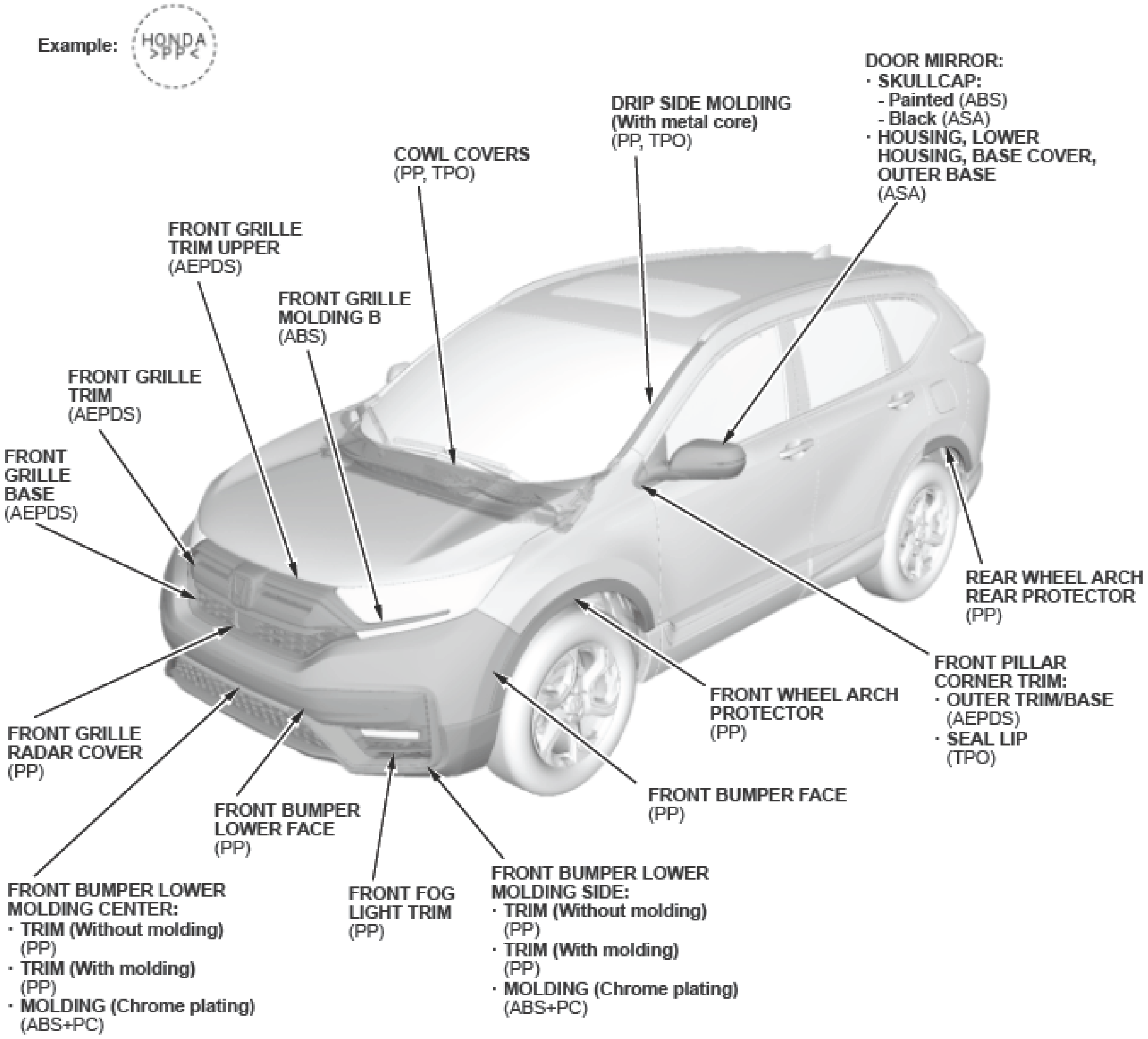
Example:
HONDA
>PP<
DOOR MIRROR:
· SKULLCAP:
- Painted (ABS)
- Black (ASA)
· HOUSING, LOWER HOUSING, BASE COVER, OUTER BASE
(ASA)
DRIP SIDE MOLDING
(With metal core)
(PP, TPO)
COWL COVERS
(PP, TPO)
FRONT GRILLE TRIM UPPER
(AEPDS)
FRONT GRILLE MOLDING B
(ABS)
FRONT GRILLE TRIM
(AEPDS)
FRONT GRILLE BASE
(AEPDS)
REAR WHEEL ARCH REAR PROTECTOR
(PP)
FRONT PILLAR CORNER TRIM:
· OUTER TRIM/BASE
(AEPDS)
· SEAL LIP
(TPO)
FRONT WHEEL ARCH PROTECTOR
(PP)
FRONT BUMPER FACE
(PP)
FRONT GRILLE RADAR COVER
(PP)
FRONT BUMPER LOWER FACE
(PP)
FRONT BUMPER LOWER MOLDING CENTER:
· TRIM (Without molding)
(PP)
· TRIM (With molding)
(PP)
· MOLDING (Chrome plating)
(ABS+PC)
FRONT FOG LIGHT TRIM
(PP)
FRONT BUMPER LOWER MOLDING SIDE:
· TRIM (Without molding)
(PP)
· TRIM (With molding)
(PP)
· MOLDING (Chrome plating)
(ABS+PC)

Fig. 1: Exterior Plastic Parts And Materials Locations (1 Of 2)
Courtesy of AMERICAN HONDA MOTOR CO., INC.

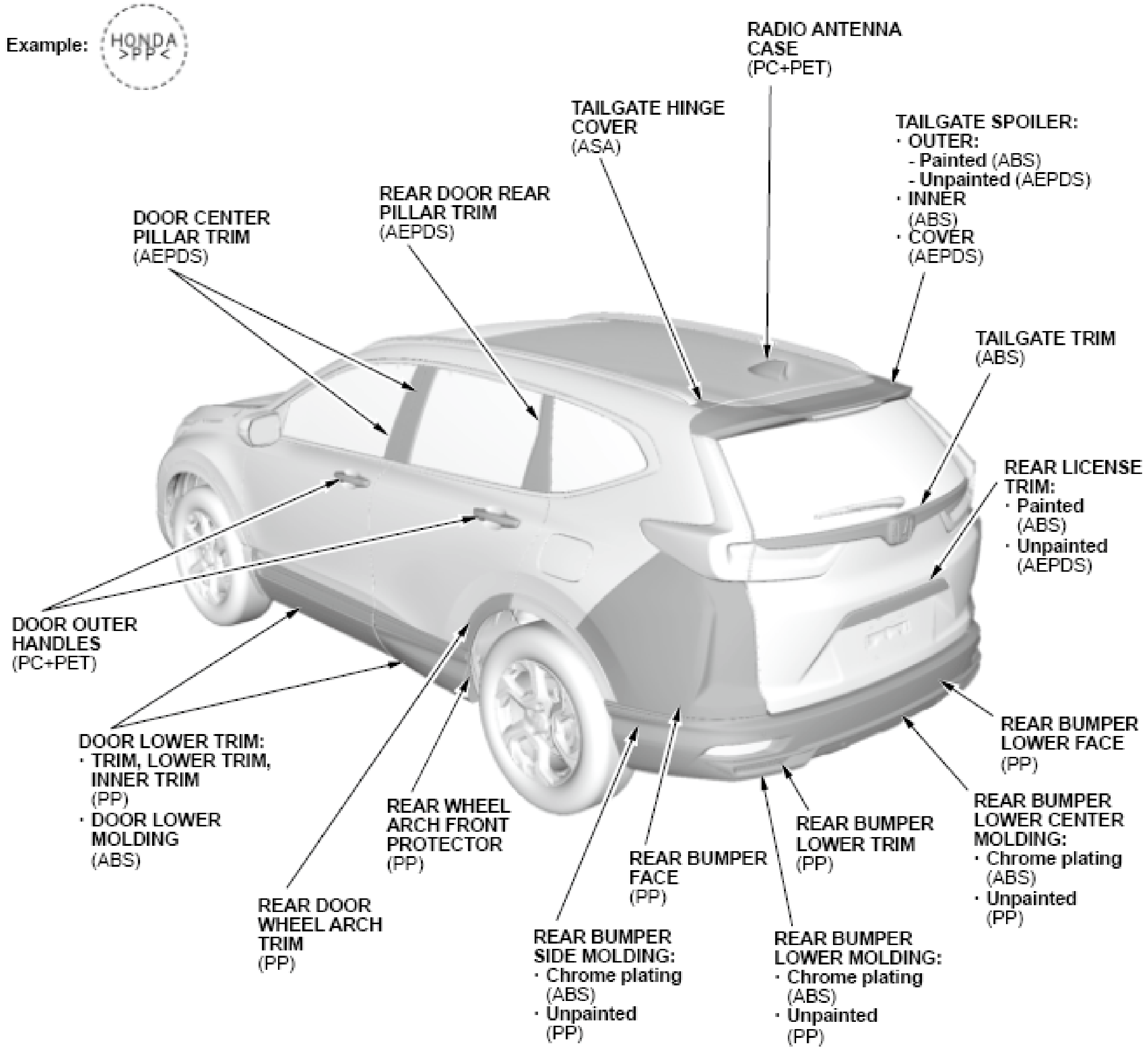
Example:
HONDA
>PP<
RADIO ANTENNA CASE
(PC+PET)
TAILGATE HINGE COVER
(ASA)
TAILGATE SPOILER:
· OUTER:
- Painted (ABS)
- Unpainted (AEPDS)
· INNER
(ABS)
· COVER
(AEPDS)
REAR DOOR REAR PILLAR TRIM
(AEPDS)
DOOR CENTER PILLAR TRIM
(AEPDS)
TAILGATE TRIM
(ABS)
REAR LICENSE TRIM:
· Painted
(ABS)
· Unpainted
(AEPDS)
DOOR OUTER HANDLES
(PC+PET)
DOOR LOWER TRIM:
· TRIM, LOWER TRIM, INNER TRIM
(PP)
· DOOR LOWER MOLDING
(ABS)
REAR BUMPER LOWER FACE
(PP)
REAR WHEEL ARCH FRONT PROTECTOR
(PP)
REAR BUMPER LOWER TRIM
(PP)
REAR BUMPER LOWER CENTER MOLDING:
· Chrome plating
(ABS)
· Unpainted
(PP)
REAR BUMPER FACE
(PP)
REAR DOOR WHEEL ARCH TRIM
(PP)
REAR BUMPER SIDE MOLDING:
· Chrome plating
(ABS)
· Unpainted
(PP)
REAR BUMPER LOWER MOLDING:
· Chrome plating
(ABS)
· Unpainted
(PP)

Fig. 2: Exterior Plastic Parts And Materials Locations (2 Of 2)
Courtesy of AMERICAN HONDA MOTOR CO., INC.

TYPES AND MATERIALS OF EXTERIOR PLASTIC PARTS

NOTE:

- For the full plastic name, refer to Plastic Part Types And Characteristics .
- A standard symbol is stamped on the underside of each plastic part to show the type of material used ; refer to Identification Of Resin Type .

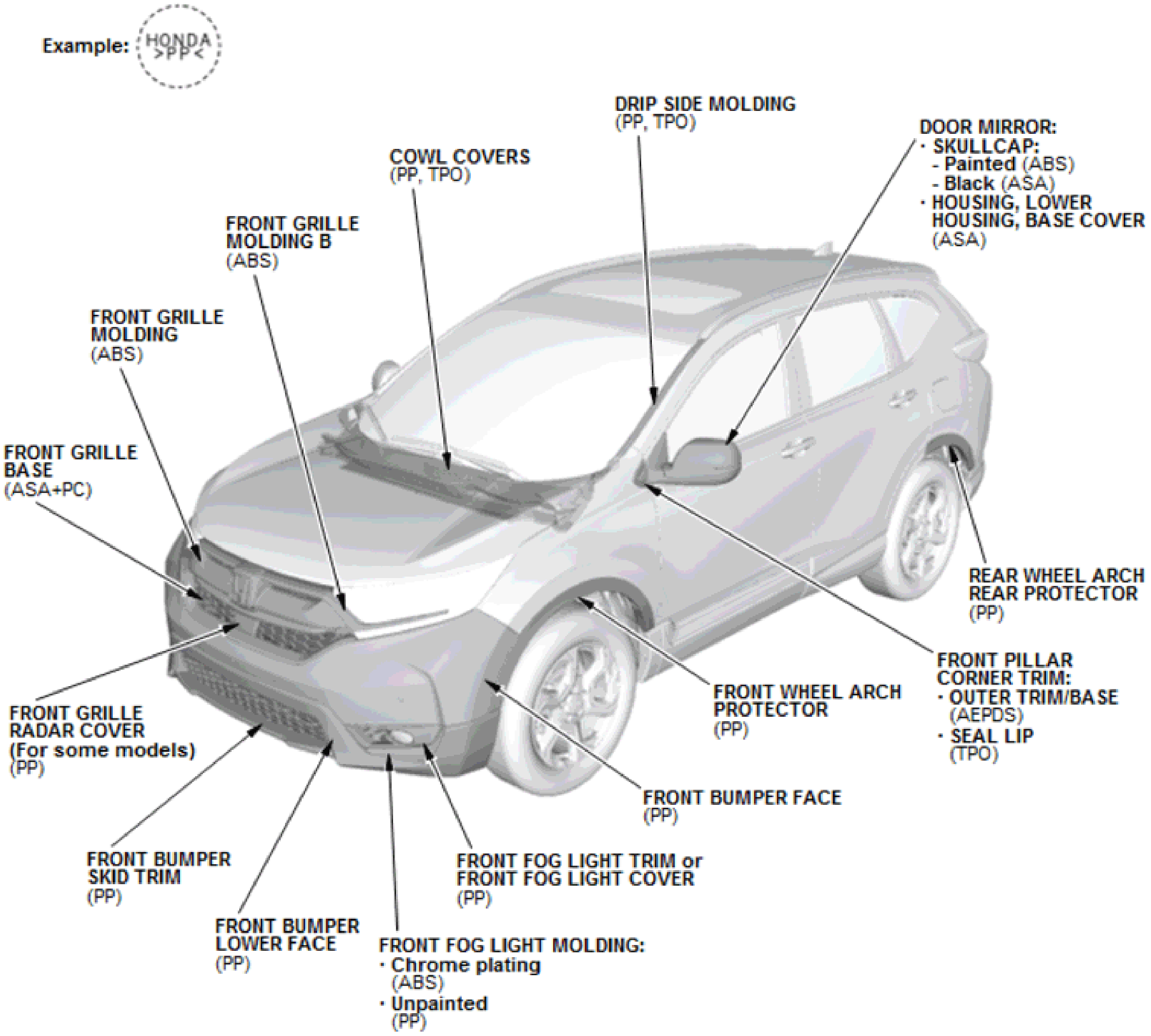
Example:
HONDA
>PP<
DRIP SIDE MOLDING
(PP, TPO)
DOOR MIRROR:
· SKULLCAP:
- Painted (ABS)
- Black (ASA)
· HOUSING, LOWER HOUSING, BASE COVER
(ASA)
COWL COVERS
(PP, TPO)
FRONT GRILLE MOLDING B
(ABS)
FRONT GRILLE MOLDING
(ABS)
FRONT GRILLE BASE
(ASA+PC)
REAR WHEEL ARCH REAR PROTECTOR
(PP)
FRONT PILLAR CORNER TRIM:
· OUTER TRIM/BASE
(AEPDS)
· SEAL LIP
(TPO)
FRONT WHEEL ARCH PROTECTOR
(PP)
FRONT GRILLE RADAR COVER
(For some models)
(PP)
FRONT BUMPER FACE
(PP)
FRONT BUMPER SKID TRIM
(PP)
FRONT FOG LIGHT TRIM or FRONT FOG LIGHT COVER
(PP)
FRONT BUMPER LOWER FACE
(PP)
FRONT FOG LIGHT MOLDING:
· Chrome plating
(ABS)
· Unpainted
(PP)

Fig. 1: Exterior Plastic Body Parts, Materials And Locations (1 Of 2)
Courtesy of AMERICAN HONDA MOTOR CO., INC.

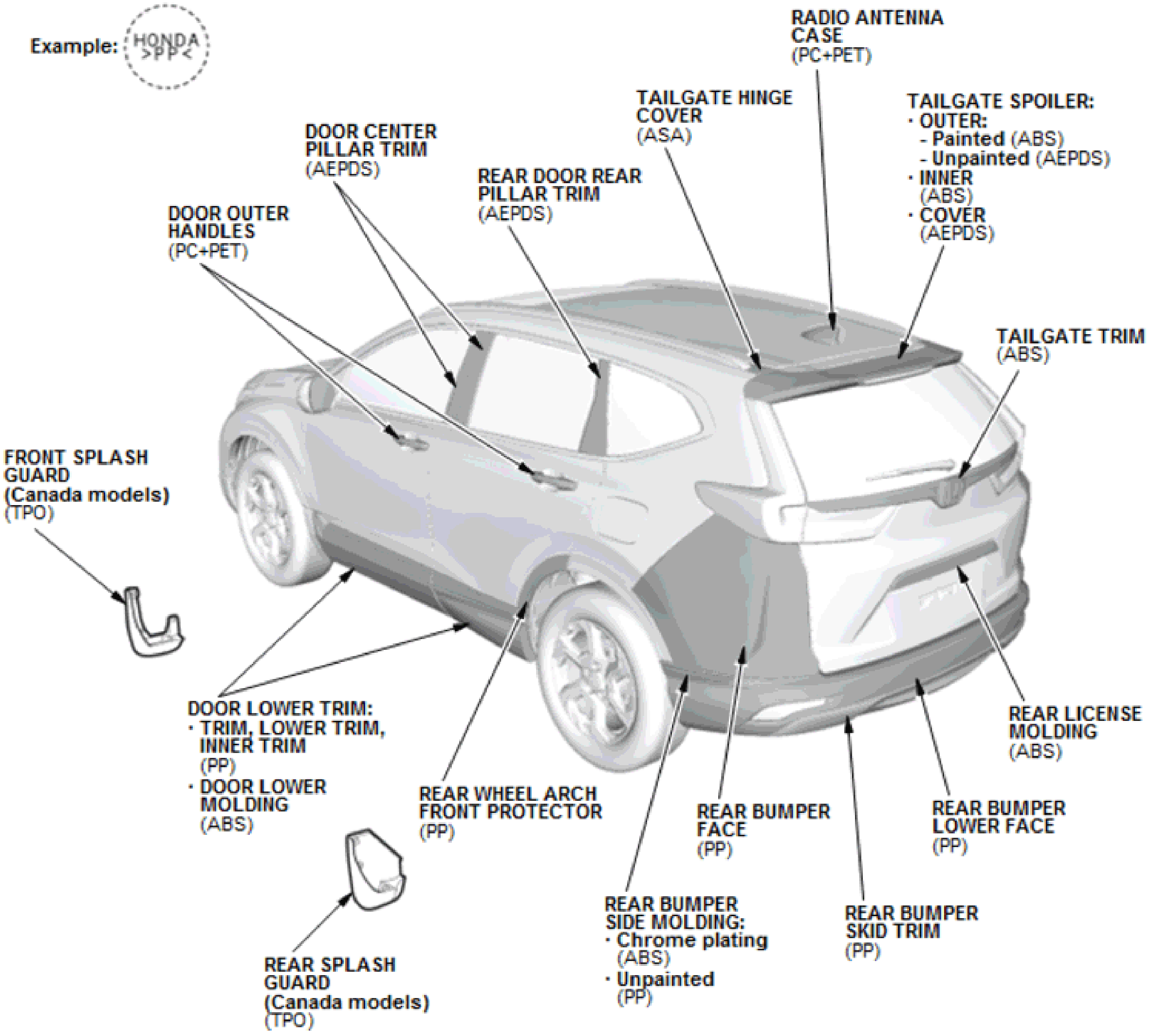
Example: HONDA >PP<
RADIO ANTENNA CASE (PC+PET)
TAILGATE HINGE COVER (ASA)
TAILGATE SPOILER:
· OUTER:
- Painted (ABS)
- Unpainted (AEPDS)
· INNER (ABS)
· COVER (AEPDS)
DOOR CENTER PILLAR TRIM (AEPDS)
REAR DOOR REAR PILLAR TRIM (AEPDS)
DOOR OUTER HANDLES (PC+PET)
TAILGATE TRIM (ABS)
FRONT SPLASH GUARD (Canada models) (TPO)
DOOR LOWER TRIM:
· TRIM, LOWER TRIM, INNER TRIM (PP)
· DOOR LOWER MOLDING (ABS)
REAR WHEEL ARCH FRONT PROTECTOR (PP)
REAR BUMPER FACE (PP)
REAR LICENSE MOLDING (ABS)
REAR BUMPER LOWER FACE (PP)
REAR BUMPER SIDE MOLDING:
· Chrome plating (ABS)
· Unpainted (PP)
REAR BUMPER SKID TRIM (PP)
REAR SPLASH GUARD (Canada models) (TPO)

Fig. 2: Exterior Plastic Body Parts, Materials And Locations (2 Of 2)
Courtesy of AMERICAN HONDA MOTOR CO., INC.

RUST PREVENTION

SEALING AREAS - FRONT COMPARTMENT AREA

NOTE: To prevent water and dust entry, as well as to prevent rust, apply sealer where at body panel joints .

Engine Compartment

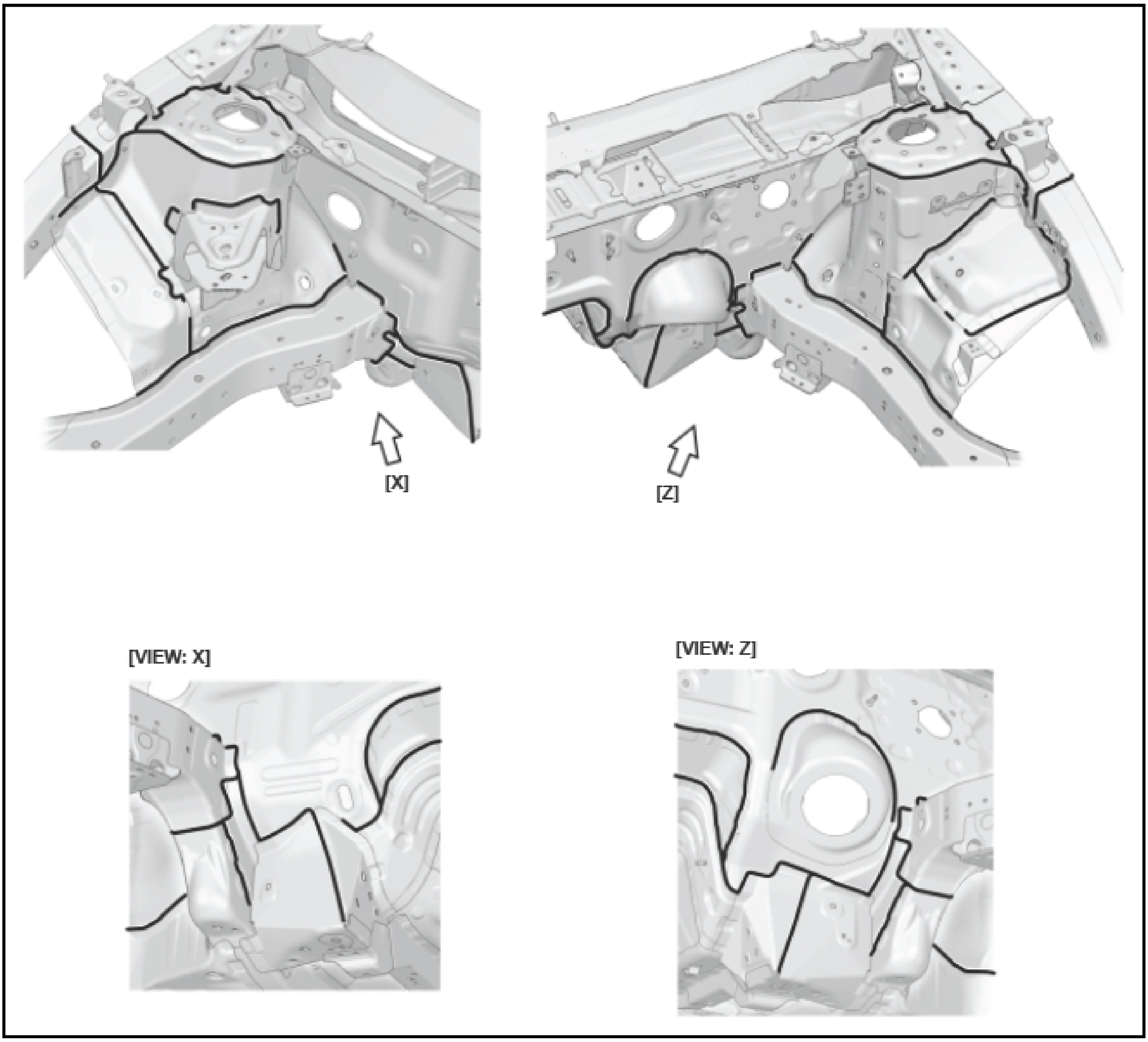

Front Wheelhouse, Damper Housing, And Outrigger

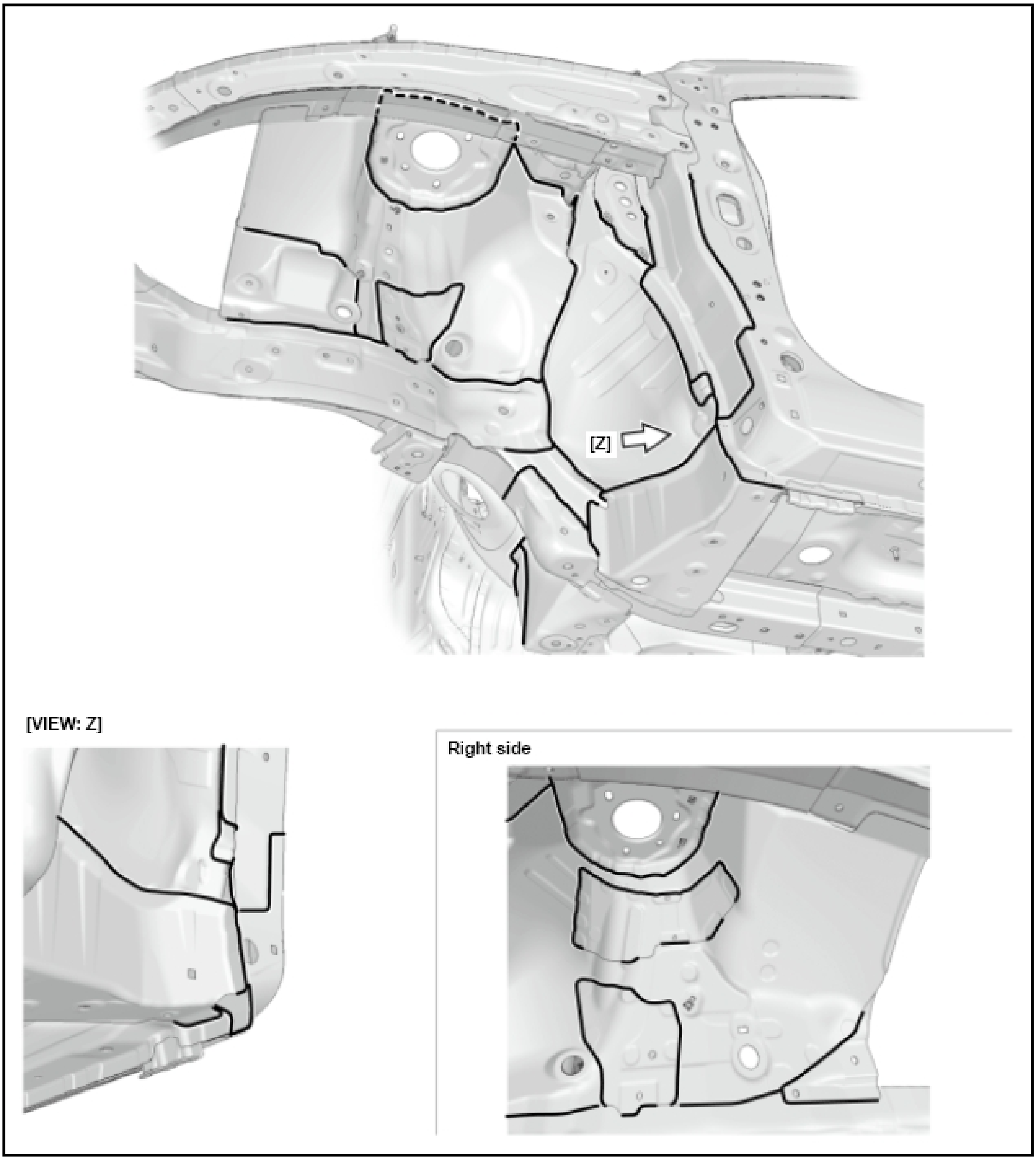

SEALING AREAS - PASSENGERS COMPARTMENT AREA

NOTE: To prevent water and dust entry, as well as to prevent rust, apply sealer where at body panel joints .

Dashboard Upper, Dashboard Lower, and Front Floor

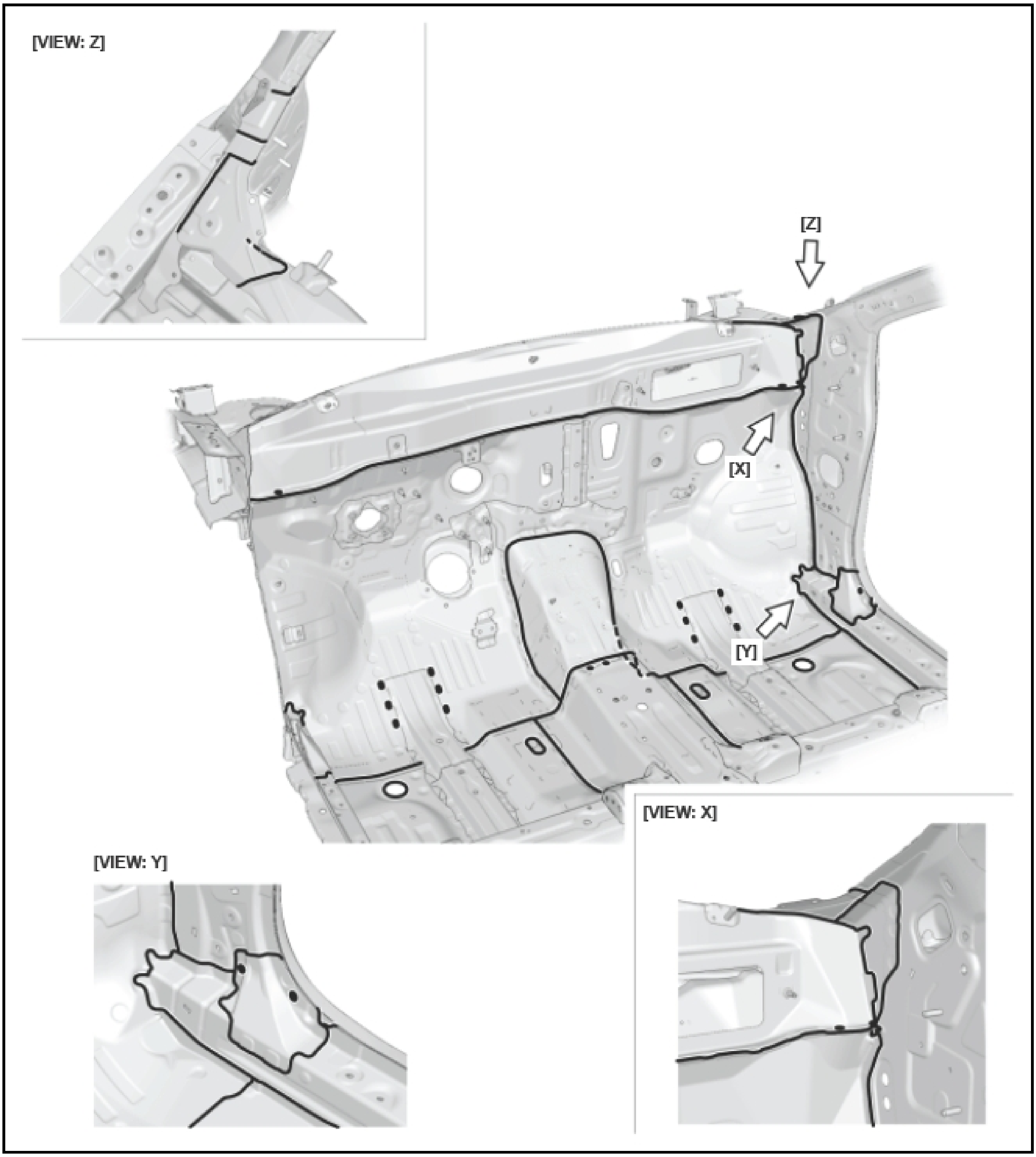
[VIEW: Z]
[Z]
[X]
[Y]
[VIEW: Y]
[VIEW: X]

Front Floor, Middle Floor Crossmember Stiffener, And Rear Floor Panel

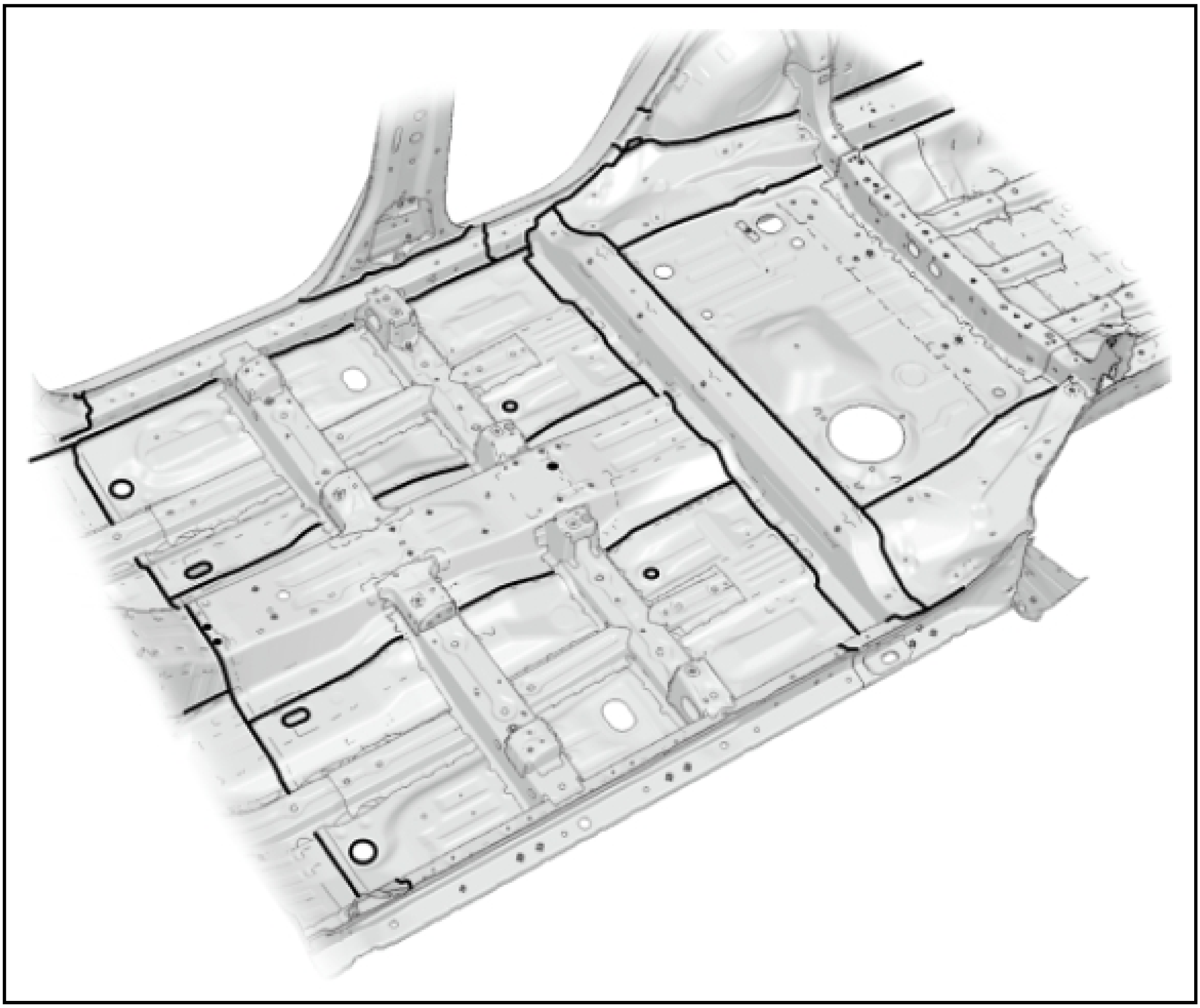

Rear Floor Panel, Spare Tire Pan, Rear Frame Upper Stiffener, Rear Floor Side Panel, And Rear Panel

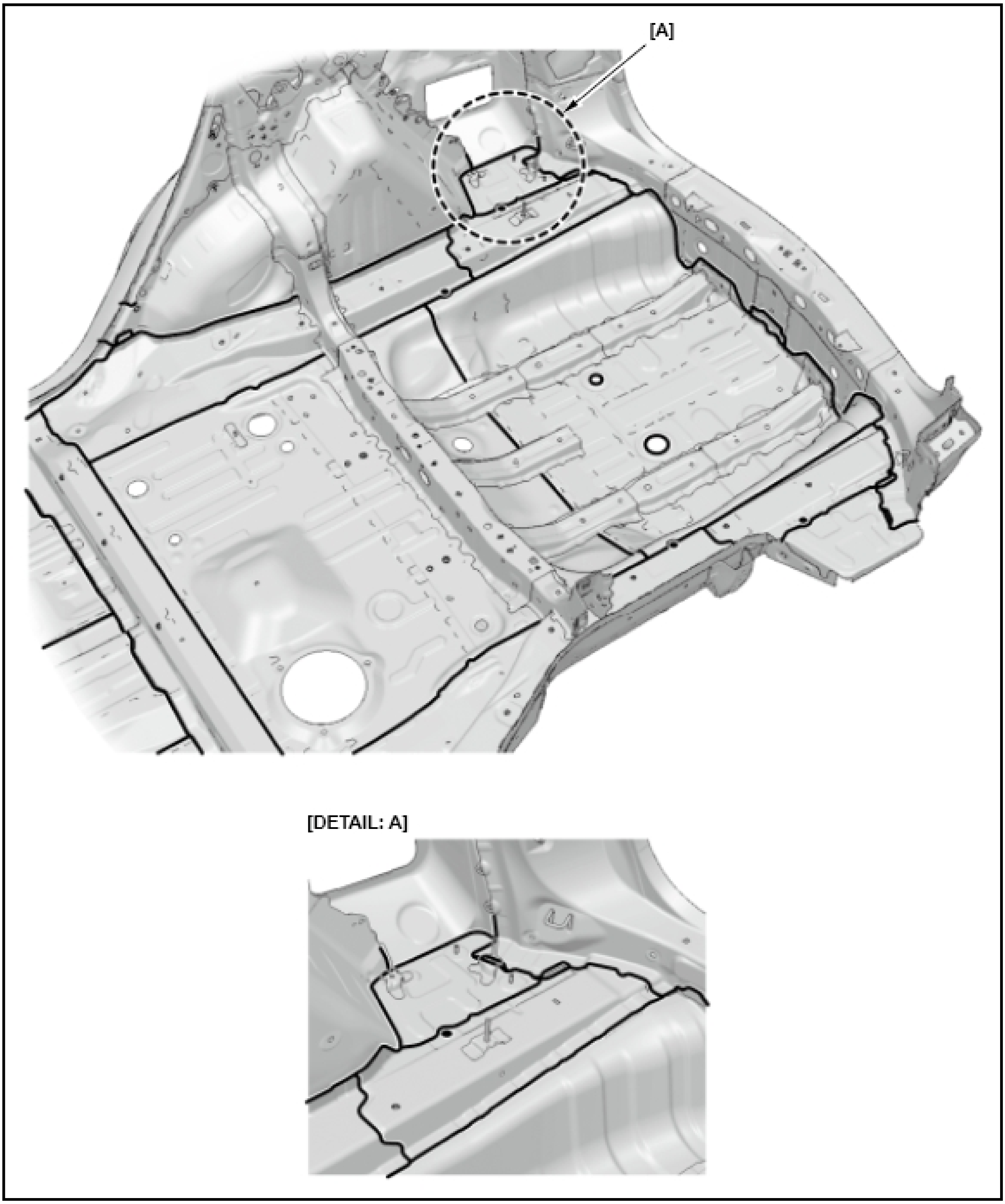

SEALING AREAS - ROOF AND SIDE AREAS

NOTE: To prevent water and dust entry, as well as to prevent rust, apply sealer where at body panel joints .

Roof Panel And Rear Pillar Gutter

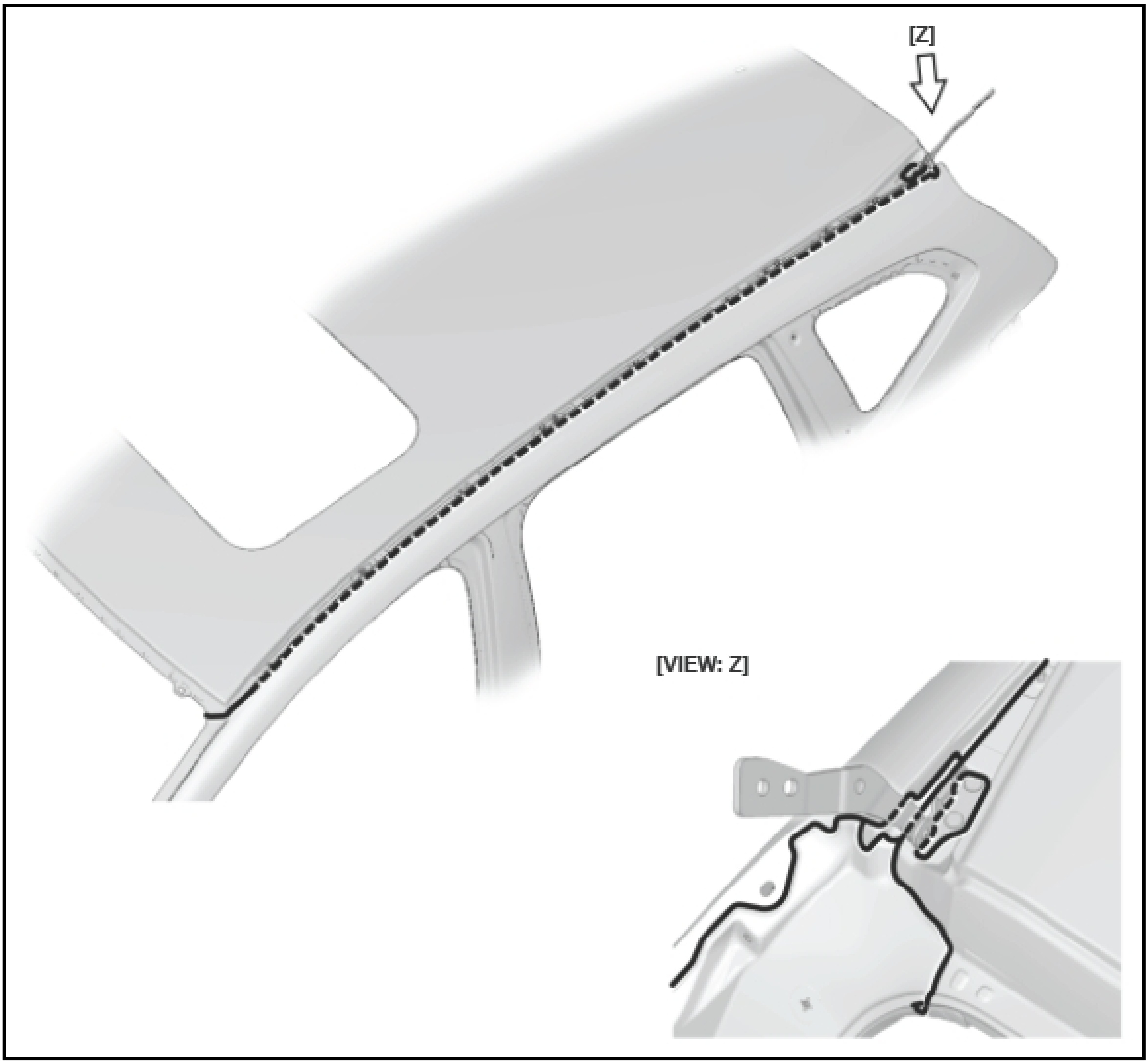

SEALING AREAS - REAR SIDE AND REAR AREAS

NOTE: To prevent water and dust entry, as well as to prevent rust, apply sealer where at body panel joints .

Rear Side Outer Panel, Rear Pillar Gutter, And Rear Panel

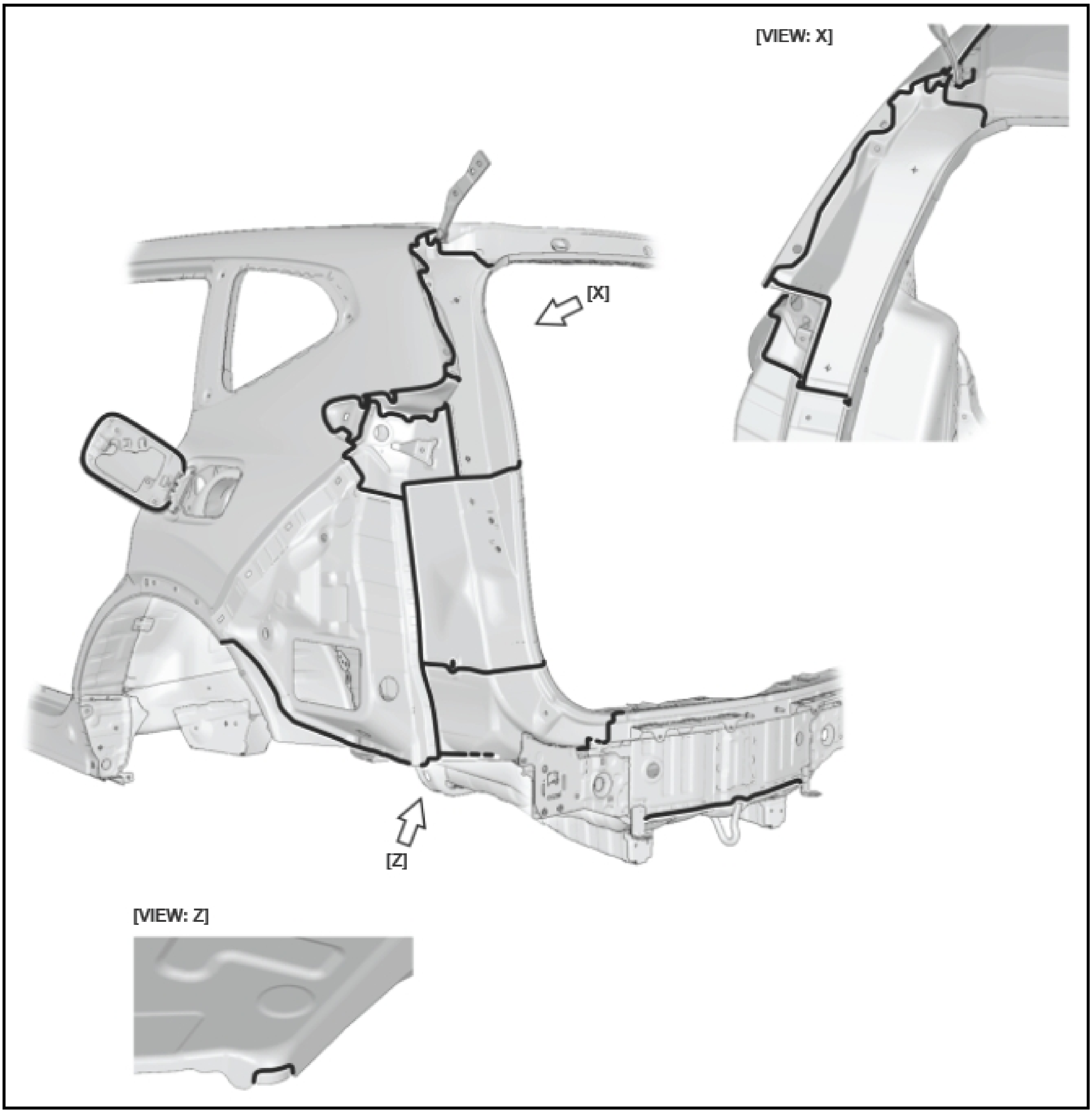
[VIEW: X]
[X]
[Z]
[VIEW: Z]

Rear Wheelhouse

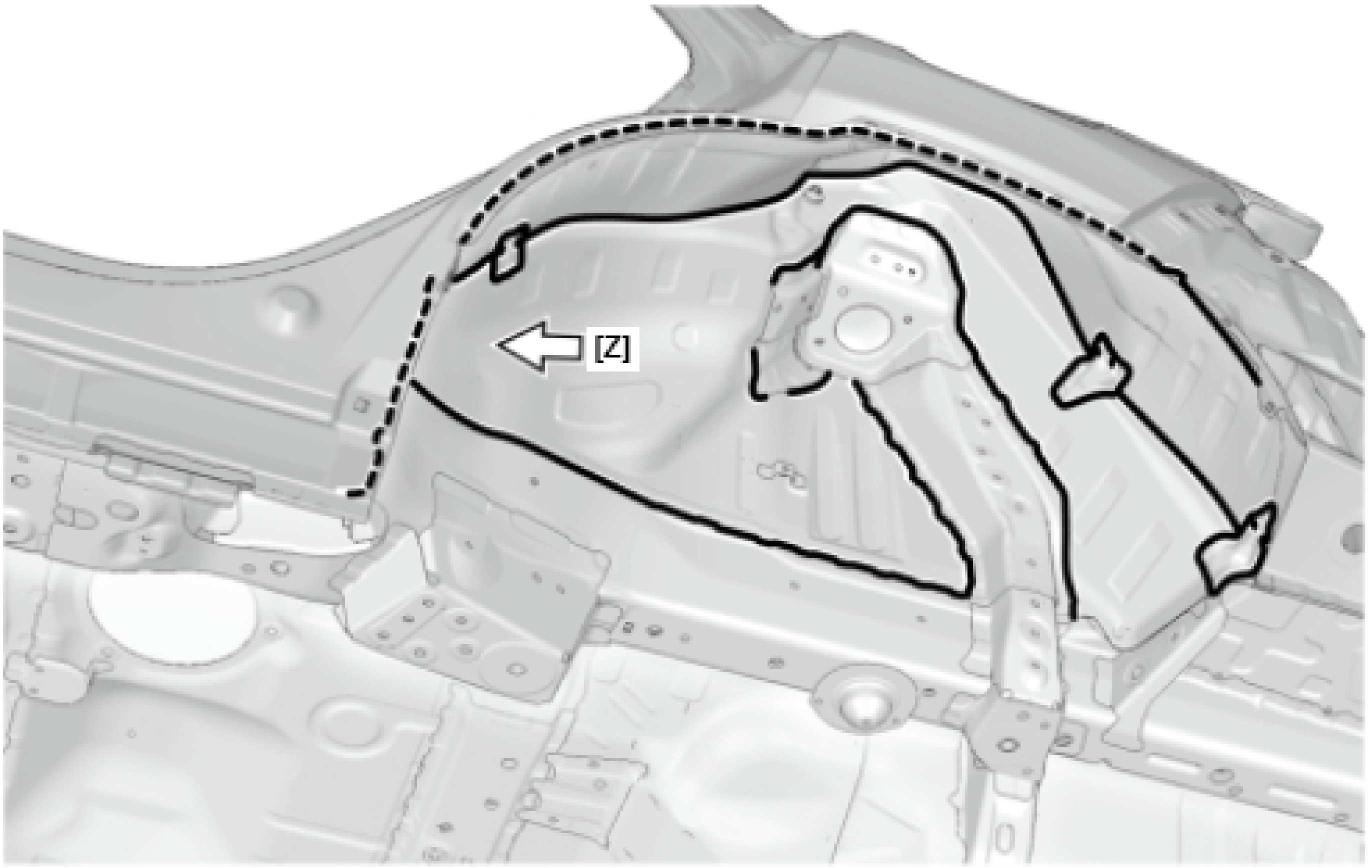

[VIEW:Z]

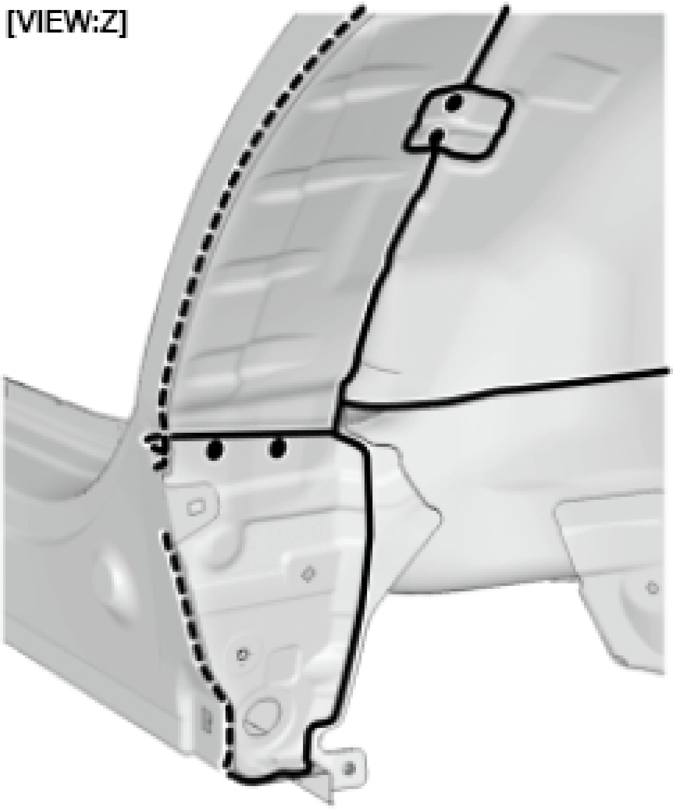

SEALING AREAS - UNDER FLOOR AREA

NOTE: To prevent water and dust entry, as well as to prevent rust, apply sealer where at body panel joints .

Under Floor, Front

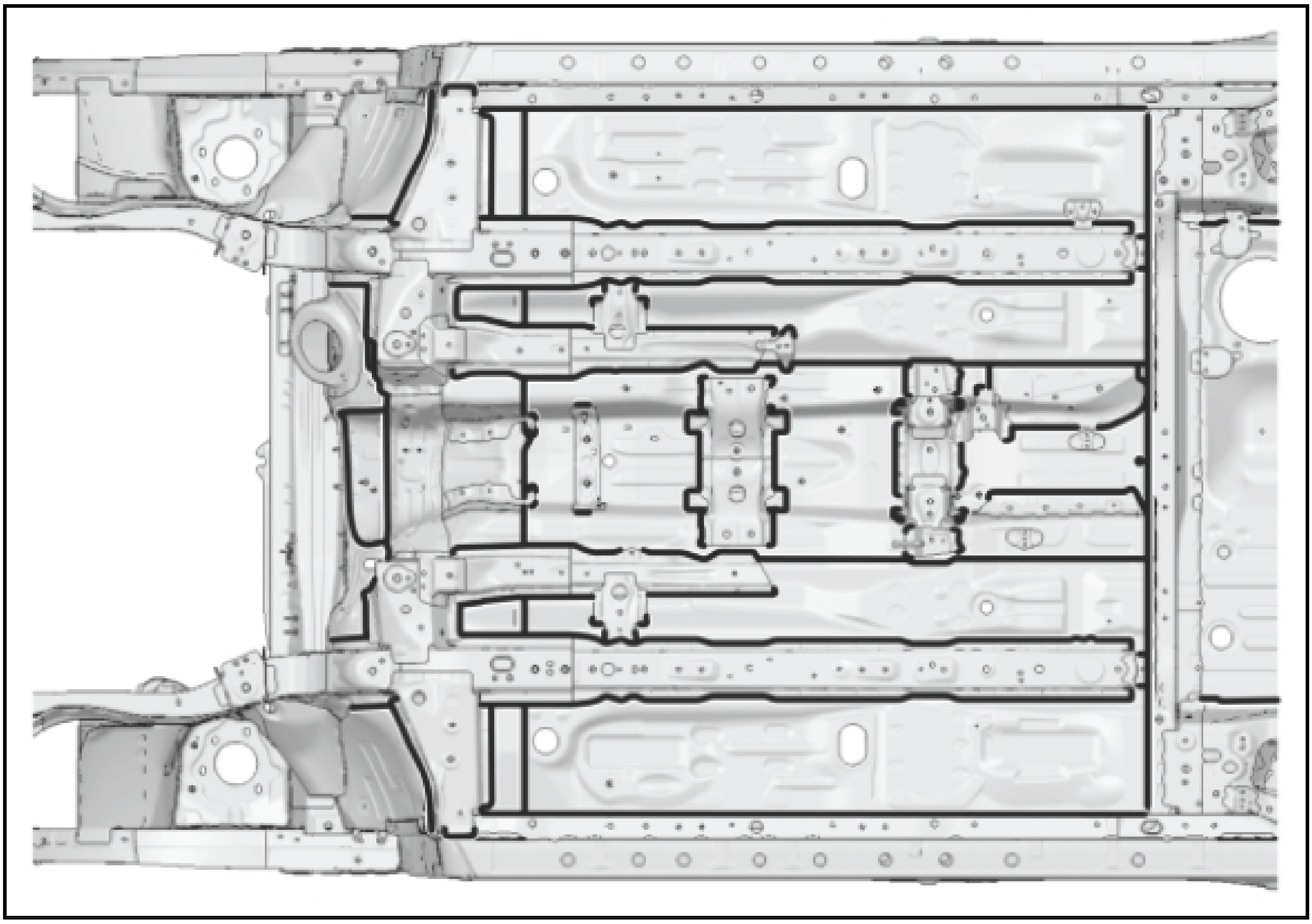

Under Floor, Rear

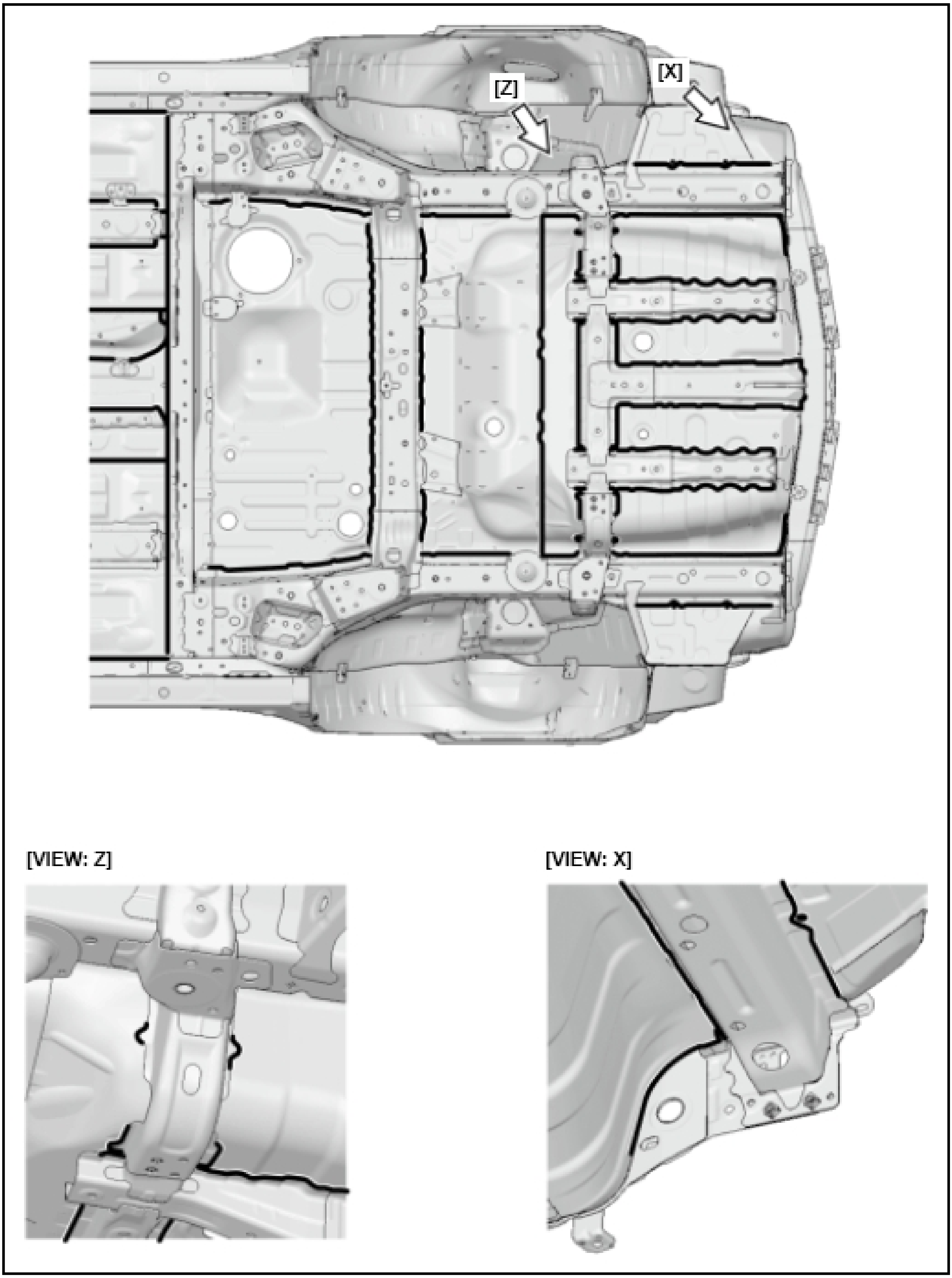
[Z]
[X]
[VIEW: Z]
[VIEW: X]

UNDERCOATING AREAS

NOTE: **To prevent chipping damage caused by flying stones, apply undercoat over the underbody and wheelhouse surfaces .**

Apply undercoat to the areas shown.

NOTE: **Apply undercoat 10 mm (0.39 in) from the edge of the welded flanges.**

▨ : Indicates undercoating areas.

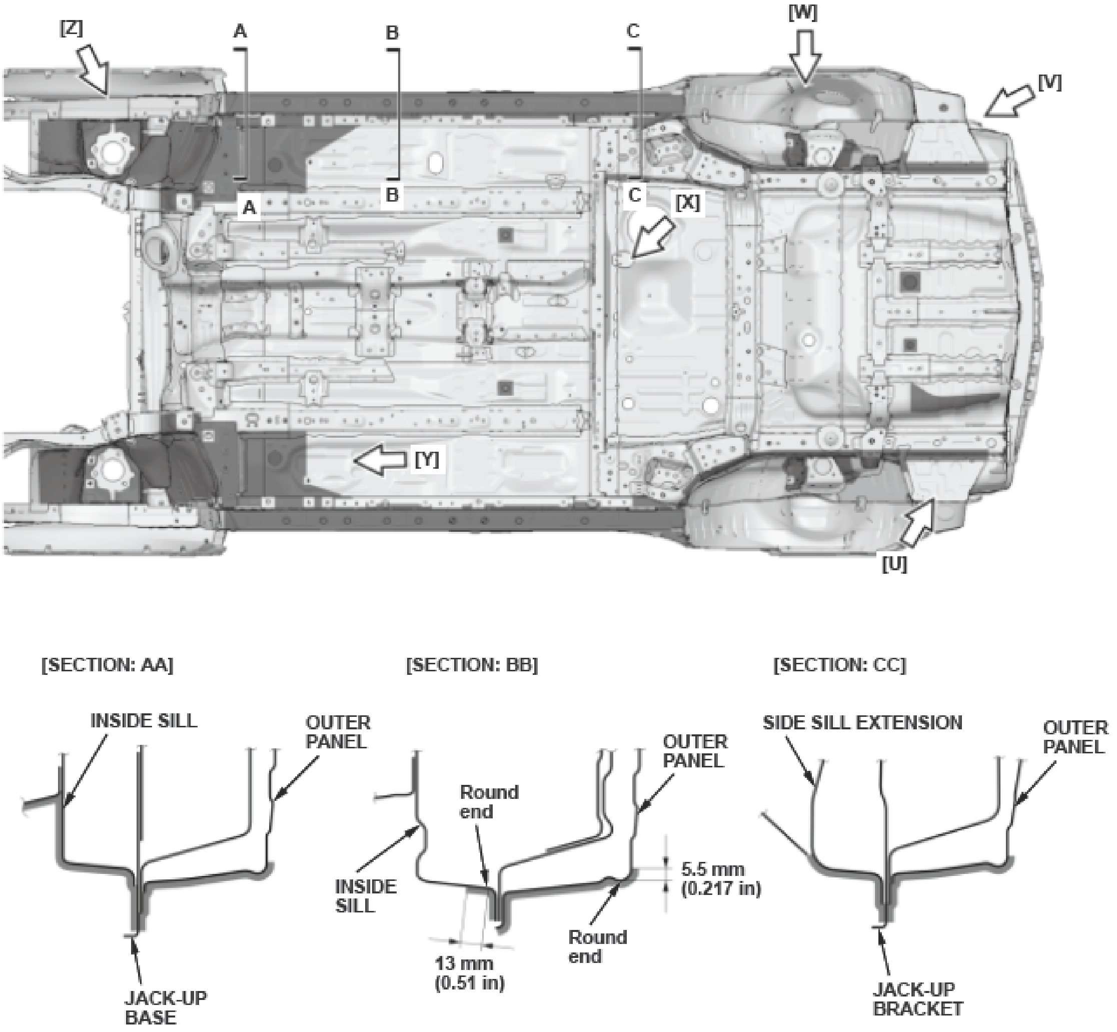
[Z]
A
B
C
[W]
[V]
A
B
C
[X]
[Y]
[U]
[SECTION: AA]
INSIDE SILL
OUTER PANEL
JACK-UP BASE
[SECTION: BB]
Round end
OUTER PANEL
INSIDE SILL
5.5 mm (0.217 in)
Round end
13 mm (0.51 in)
[SECTION: CC]
SIDE SILL EXTENSION
OUTER PANEL
JACK-UP BRACKET

Fig. 1: Under Body Undercoating Locations And Specifications

Courtesy of AMERICAN HONDA MOTOR CO., INC.

▨ : Indicates undercoating areas.

[VIEW: Z]

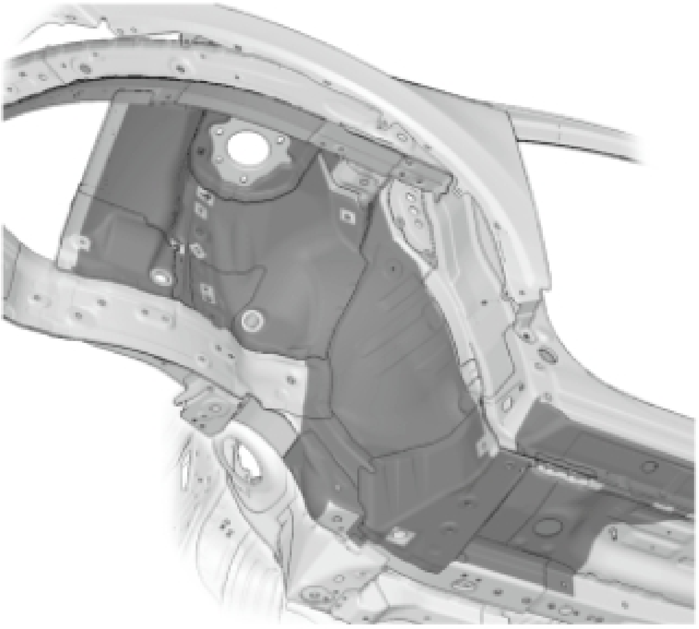

[VIEW: Y]

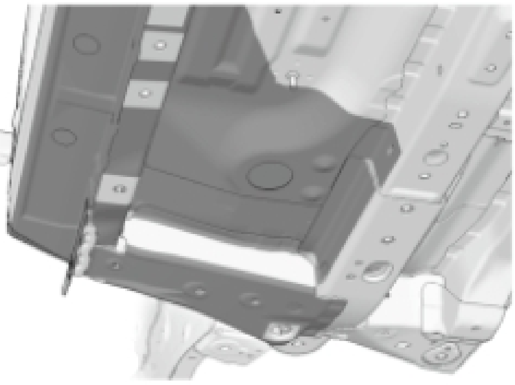

[VIEW: X]

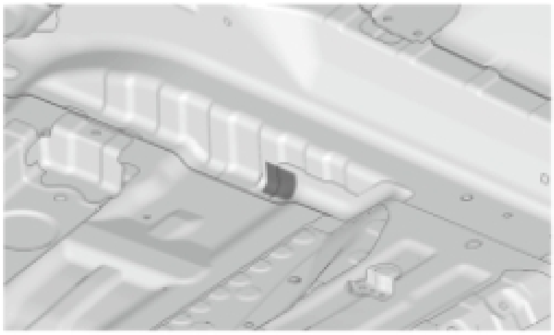

▨ : Indicates undercoating areas.

[VIEW: W]

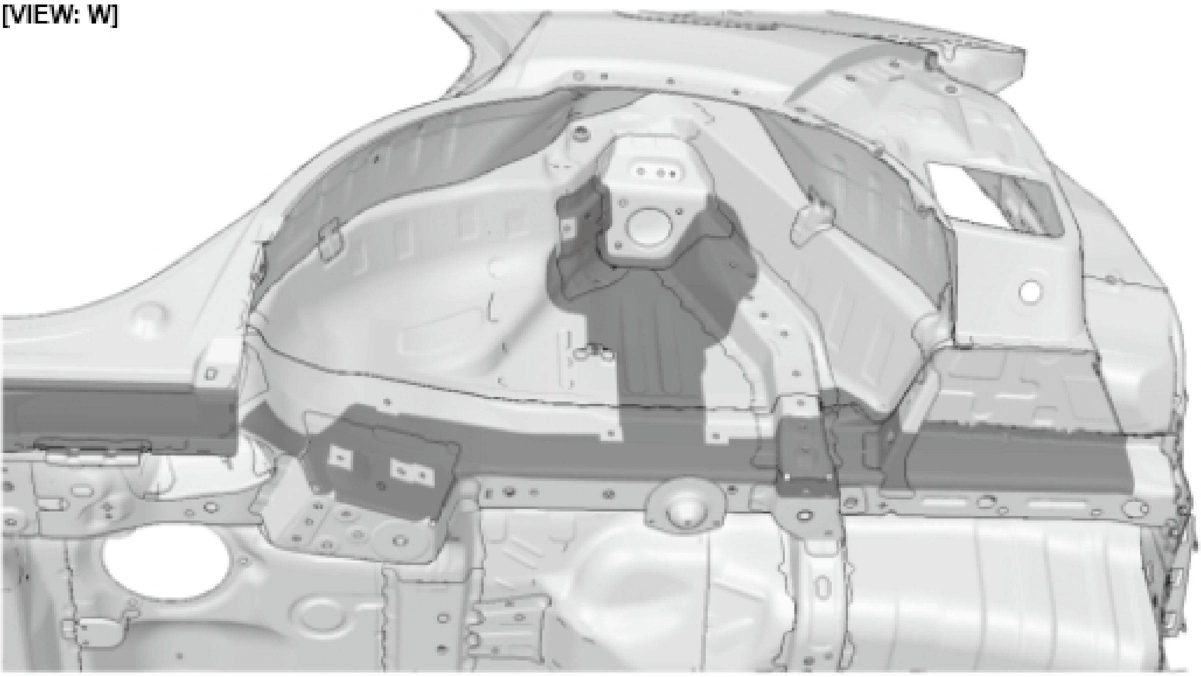

[VIEW: V]

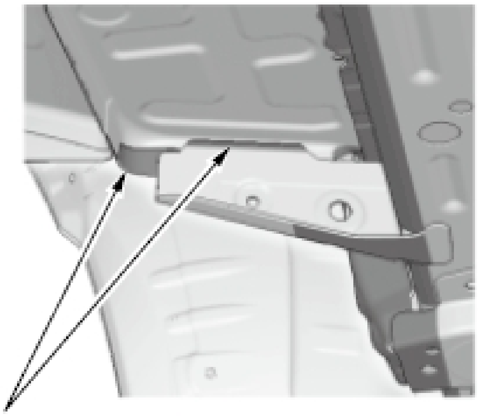

[VIEW: U]

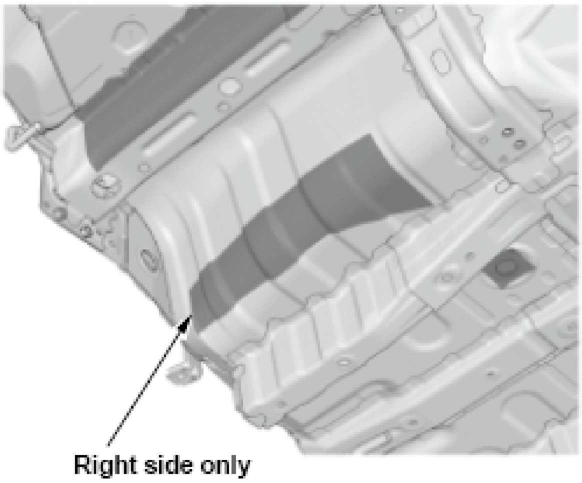

AREAS TO BE COVERED BY INTERNAL ANTI-RUST AGENTS

NOTE: **During collision repairs, body pulling and welding destroy the e-coat film on inner panels. This will quickly allow rust to form on those panels. Thoroughly apply anti-rust agent on inner surfaces in the repaired areas prevent corrosion .**

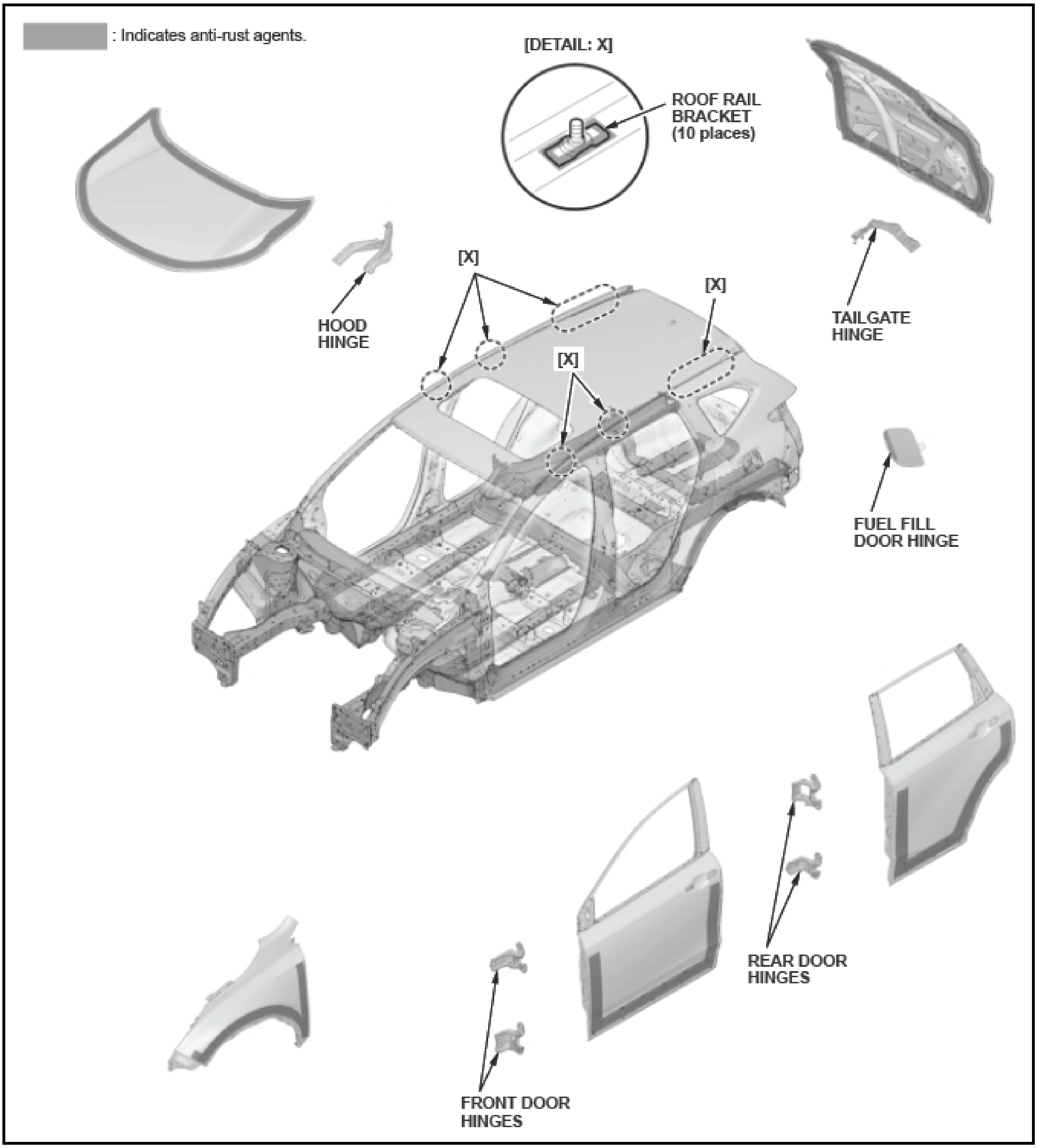
▨ : Indicates anti-rust agents.
[DETAIL: X]
ROOF RAIL BRACKET (10 places)
HOOD HINGE
[X]
[X]
[X]
TAILGATE HINGE
FUEL FILL DOOR HINGE
REAR DOOR HINGES
FRONT DOOR HINGES

FLOOR INSULATOR

Insulator Locations And Sizes (Sheet Type)

Cut the new insulators which has soundproof and vibration-proof properties, and apply them in the areas shown in this illustrations.

NOTE: **Before applying, clean and degrease the floor.**

Unit: mm (in)

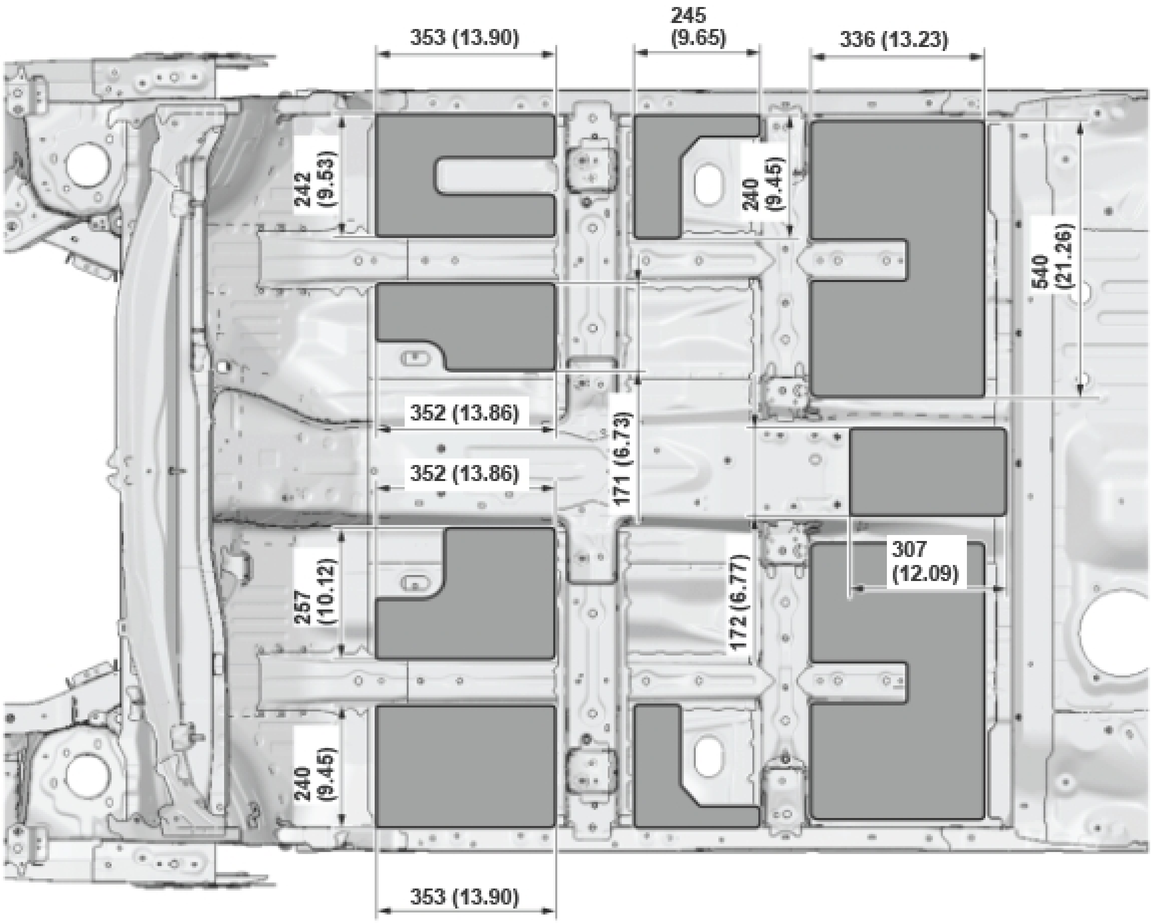
353 (13.90)
245 (9.65)
336 (13.23)
242 (9.53)
240 (9.45)
540 (21.26)
352 (13.86)
352 (13.86)
171 (6.73)
257 (10.12)
307 (12.09)
172 (6.77)
240 (9.45)
353 (13.90)

Fig. 2: Floor Insulator Locations And Specifications (1 Of 2)
Courtesy of AMERICAN HONDA MOTOR CO., INC.

Unit: mm (in)

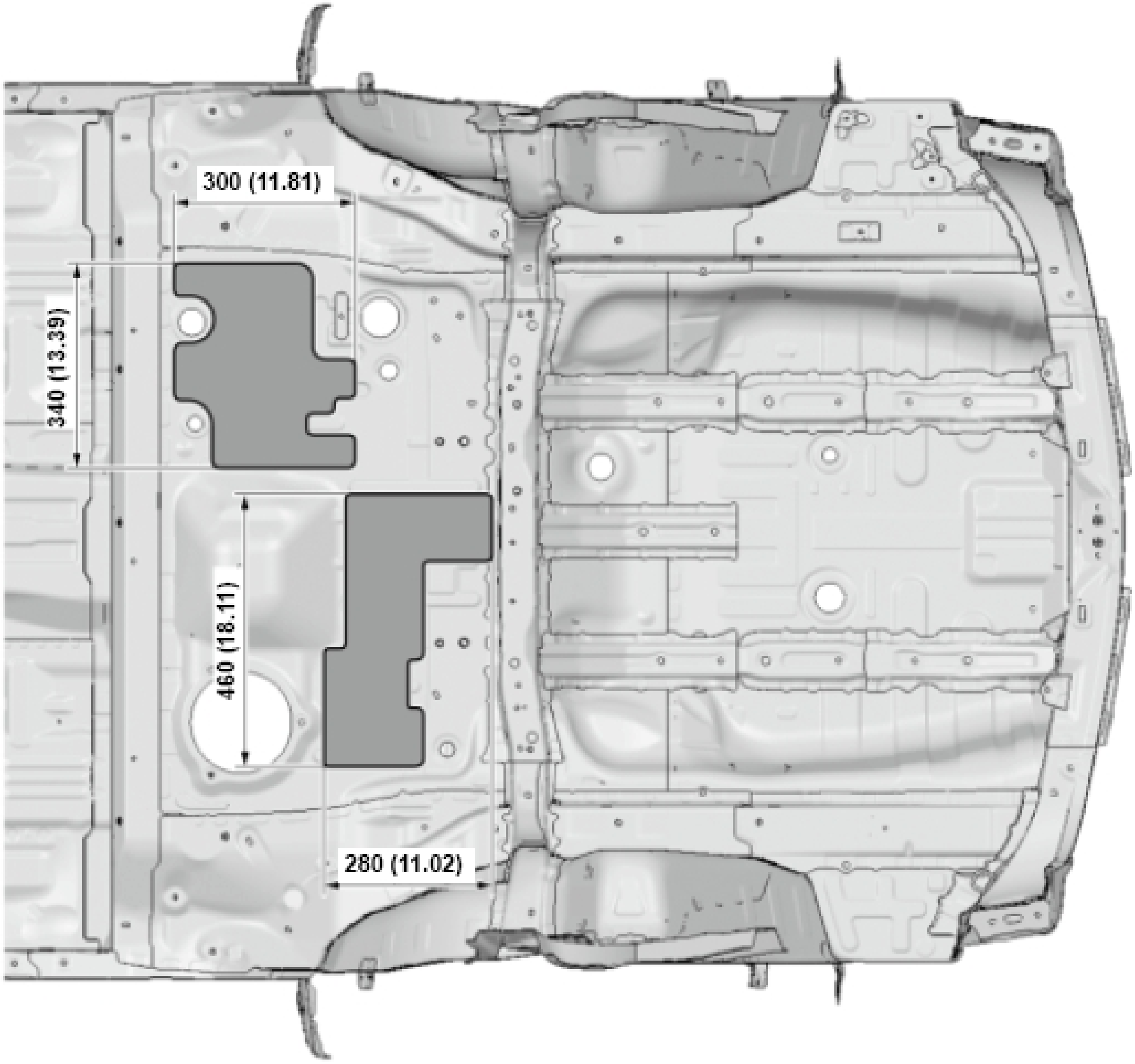
300 (11.81)
340 (13.39)
460 (18.11)
280 (11.02)

Fig. 3: Floor Insulator Locations And Specifications (2 Of 2)
Courtesy of AMERICAN HONDA MOTOR CO., INC.

FLOOR INSULATOR

INSULATOR LOCATIONS AND SIZES (SHEET TYPE)

Cut new insulators, and apply as indicated.

NOTE: **Before applying, clean and degrease the floor.**

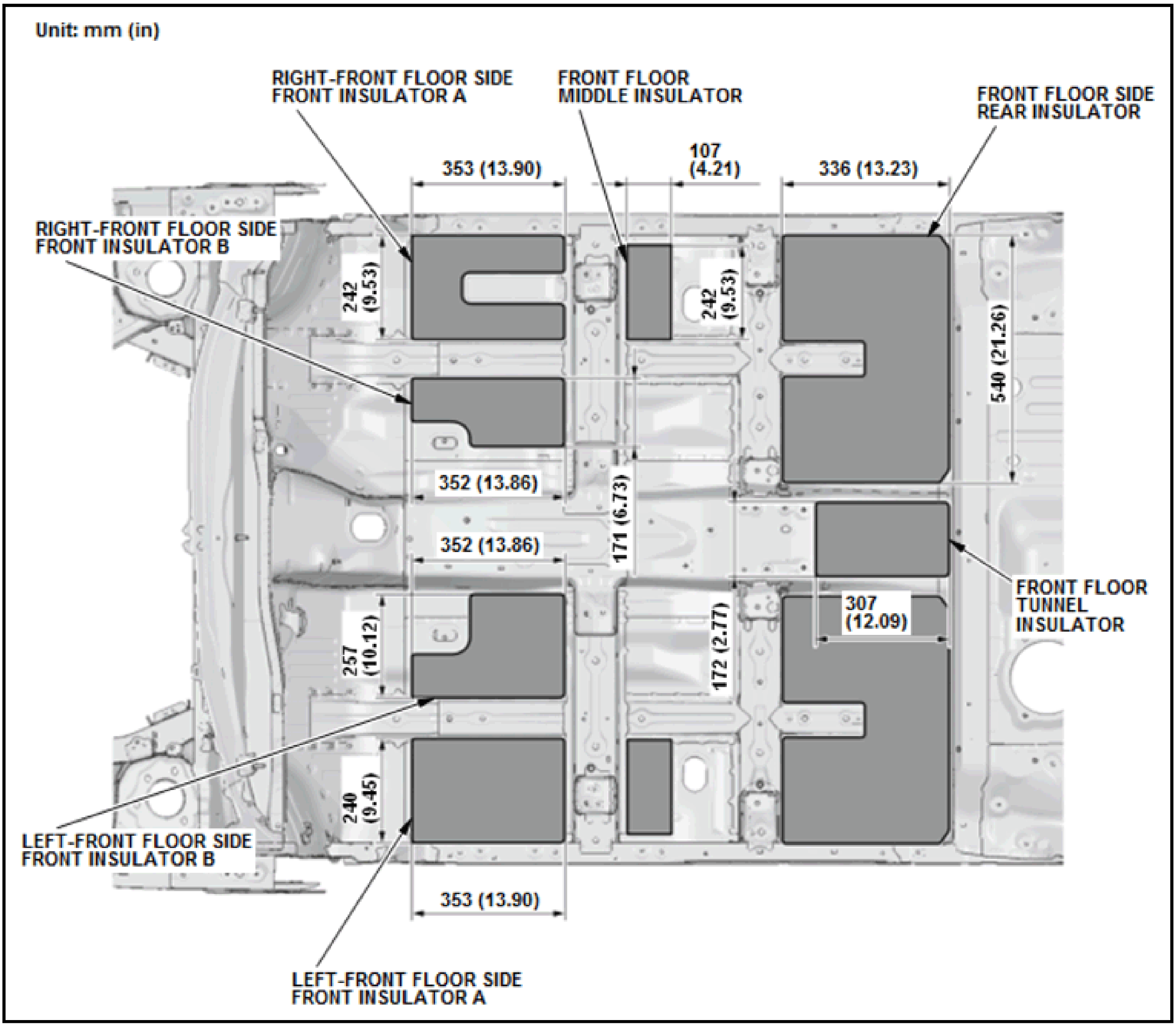
Unit: mm (in)
RIGHT-FRONT FLOOR SIDE FRONT INSULATOR A
FRONT FLOOR MIDDLE INSULATOR
FRONT FLOOR SIDE REAR INSULATOR
RIGHT-FRONT FLOOR SIDE FRONT INSULATOR B
353 (13.90)
107 (4.21)
336 (13.23)
242 (9.53)
242 (9.53)
540 (21.26)
352 (13.86)
352 (13.86)
171 (6.73)
FRONT FLOOR TUNNEL INSULATOR
307 (12.09)
257 (10.12)
172 (2.77)
240 (9.45)
LEFT-FRONT FLOOR SIDE FRONT INSULATOR B
353 (13.90)
LEFT-FRONT FLOOR SIDE FRONT INSULATOR A

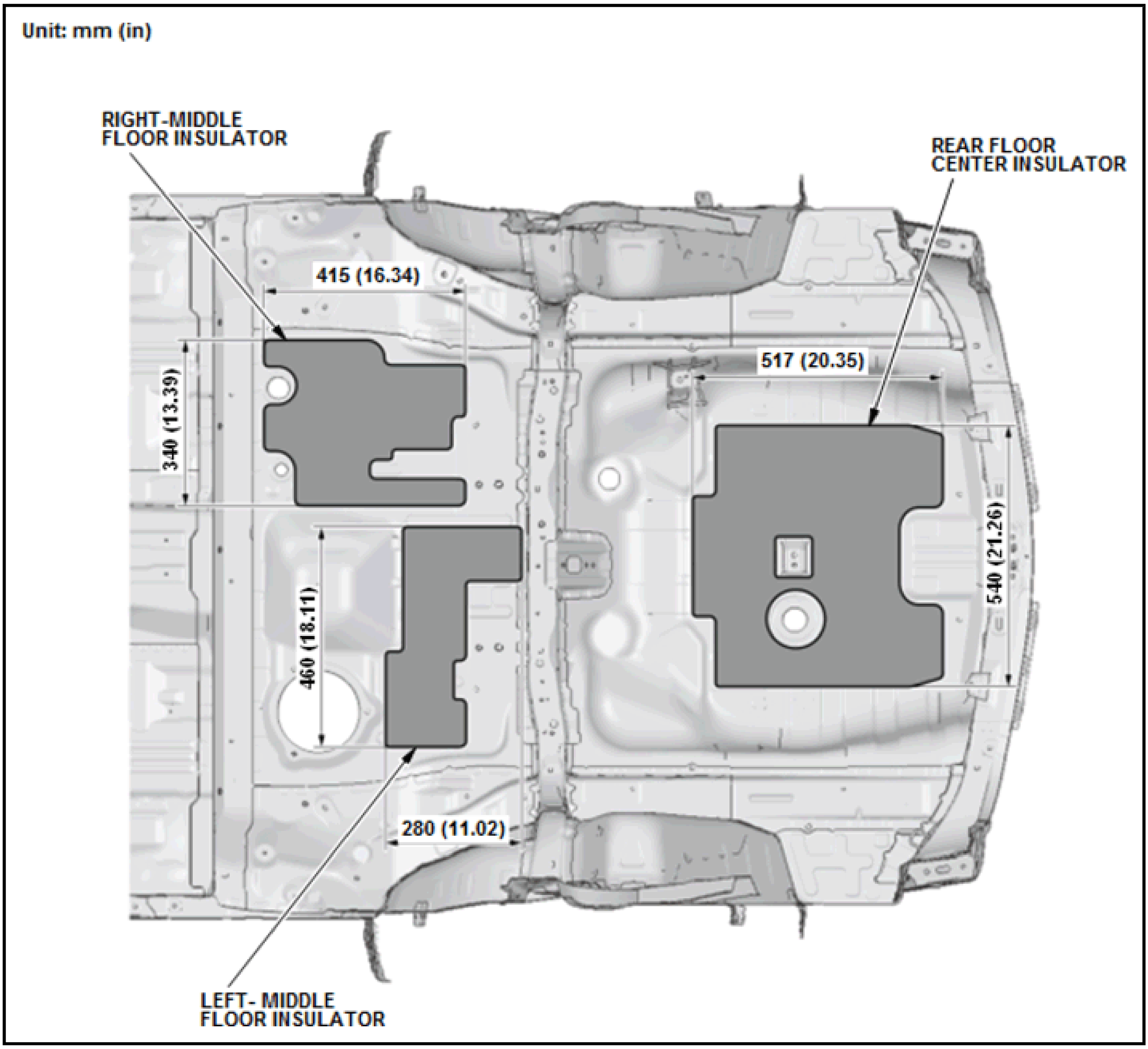
Unit: mm (in)
RIGHT-MIDDLE FLOOR INSULATOR
REAR FLOOR CENTER INSULATOR
415 (16.34)
517 (20.35)
340 (13.39)
540 (21.26)
460 (18.11)
280 (11.02)
LEFT- MIDDLE FLOOR INSULATOR

INSULATOR LOCATIONS (COATING TYPE)

Apply sealer which has soundproof and vibration-proof properties in areas shown in this illustration.

NOTE: **Before applying, clean and degrease the floor.**

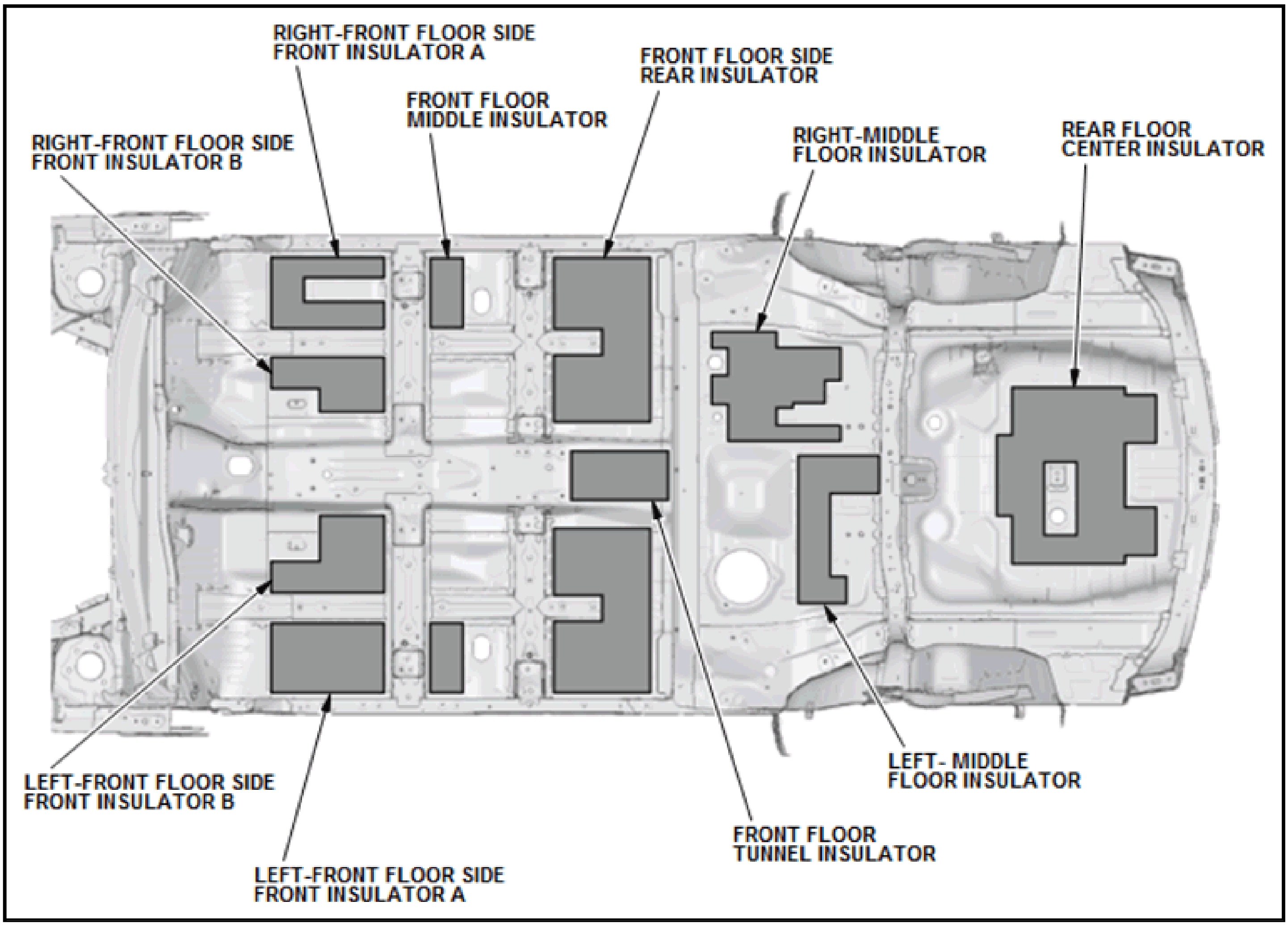
RIGHT-FRONT FLOOR SIDE FRONT INSULATOR A
FRONT FLOOR SIDE REAR INSULATOR
FRONT FLOOR MIDDLE INSULATOR
RIGHT-FRONT FLOOR SIDE FRONT INSULATOR B
RIGHT-MIDDLE FLOOR INSULATOR
REAR FLOOR CENTER INSULATOR
LEFT-FRONT FLOOR SIDE FRONT INSULATOR B
LEFT- MIDDLE FLOOR INSULATOR
FRONT FLOOR TUNNEL INSULATOR
LEFT-FRONT FLOOR SIDE FRONT INSULATOR A

RUST-PREVENTIVE TREATMENTS

NOTE: During collision repairs, body pulling and welding destroy the e-coat film on inner panels. This will quickly allow rust to form on those panels. Thoroughly apply anti-rust agent on inner surfaces in the repaired areas prevent corrosion. Refer to Internal Anti-Rust Treatment (After Paint) .

AREAS TO BE COVERED BY INTERNAL ANTI-RUST AGENTS

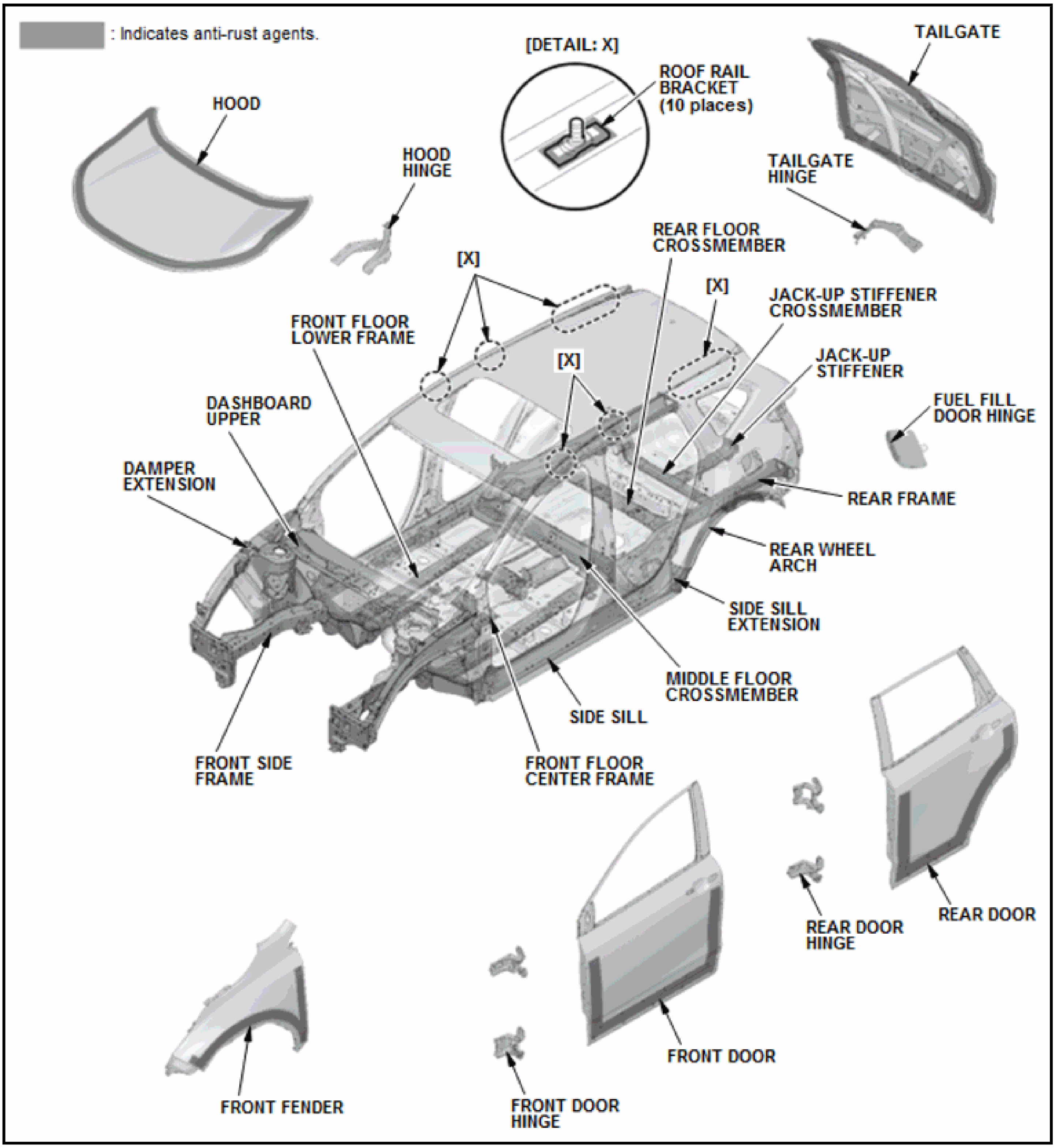
▨ : Indicates anti-rust agents.
[DETAIL: X]
ROOF RAIL BRACKET (10 places)
TAILGATE
HOOD
HOOD HINGE
TAILGATE HINGE
REAR FLOOR CROSSMEMBER
[X]
[X]
JACK-UP STIFFENER CROSSMEMBER
FRONT FLOOR LOWER FRAME
[X]
JACK-UP STIFFENER
DASHBOARD UPPER
FUEL FILL DOOR HINGE
DAMPER EXTENSION
REAR FRAME
REAR WHEEL ARCH
SIDE SILL EXTENSION
MIDDLE FLOOR CROSSMEMBER
SIDE SILL
FRONT SIDE FRAME
FRONT FLOOR CENTER FRAME
REAR DOOR
REAR DOOR HINGE
FRONT DOOR
FRONT FENDER
FRONT DOOR HINGE

UNDERCOATING AREAS

NOTE: **To prevent chipping damage caused by flying stones, apply undercoat over the underbody and wheelhouse surfaces**

Undercoating Areas

Apply the undercoat to the areas shown.

NOTE:

- **Coating thickness: 0.4 mm (0.016 in) min.**
- **Front wheelhouse, dashboard lower, rear wheelhouse, and rear frame coating thickness: 0.5 mm (0.020 in).**
- **Apply the undercoat 10 mm (0.39 in) from the edge of the welded flanges.**

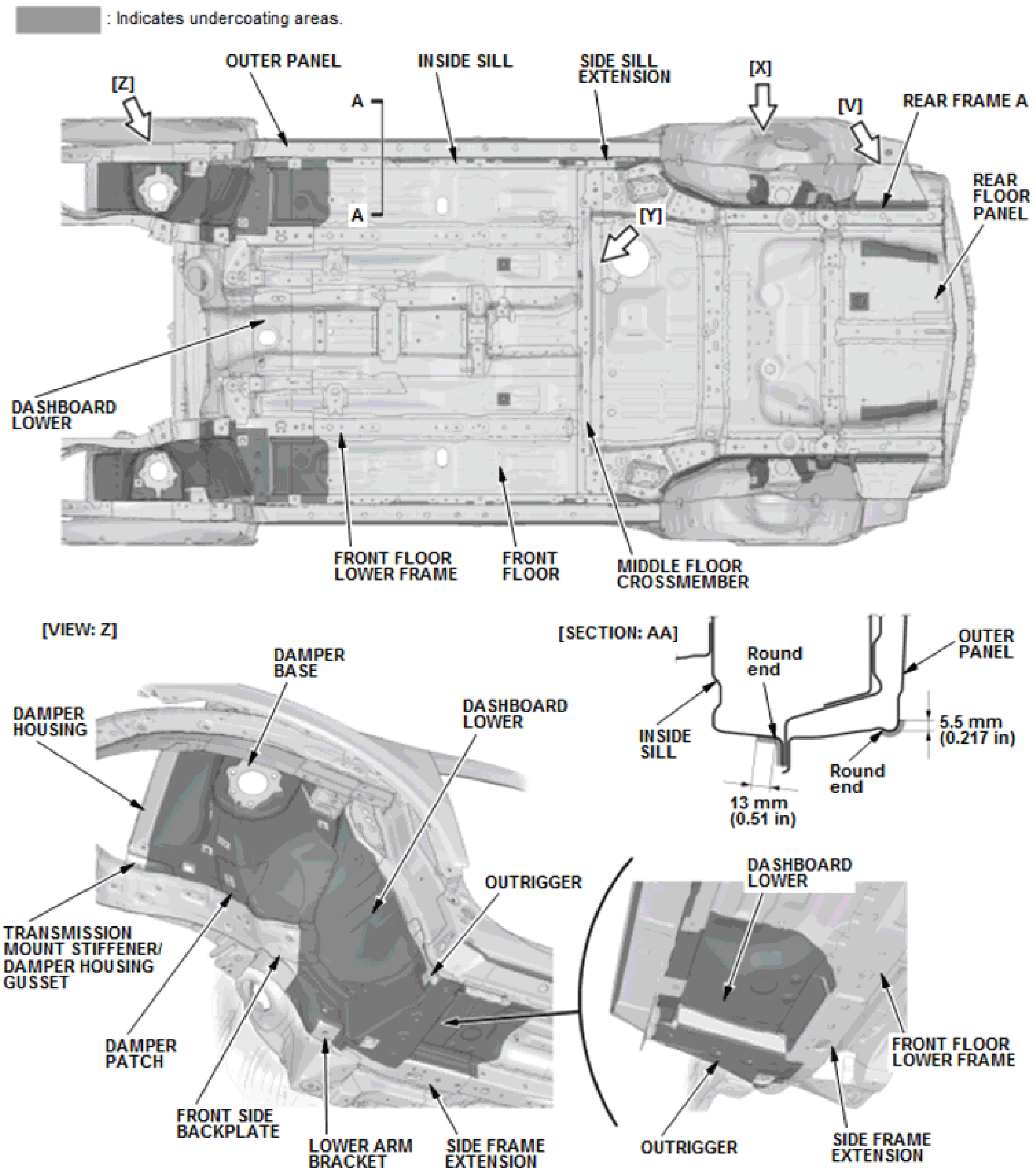

▨ : Indicates undercoating areas.
[Z]
OUTER PANEL
INSIDE SILL
SIDE SILL EXTENSION
[X]
[V]
REAR FRAME A
A
A
REAR FLOOR PANEL
[Y]
DASHBOARD LOWER
FRONT FLOOR LOWER FRAME
FRONT FLOOR
MIDDLE FLOOR CROSSMEMBER
[VIEW: Z]
DAMPER BASE
DAMPER HOUSING
DASHBOARD LOWER
OUTRIGGER
TRANSMISSION MOUNT STIFFENER/ DAMPER HOUSING GUSSET
DAMPER PATCH
FRONT SIDE BACKPLATE
LOWER ARM BRACKET
SIDE FRAME EXTENSION
[SECTION: AA]
Round end
OUTER PANEL
INSIDE SILL
5.5 mm (0.217 in)
Round end
13 mm (0.51 in)
DASHBOARD LOWER
FRONT FLOOR LOWER FRAME
OUTRIGGER
SIDE FRAME EXTENSION

[Fig. 1: Floor Undercoating Areas And Specifications (1 Of 2)](#)

Courtesy of AMERICAN HONDA MOTOR CO., INC.

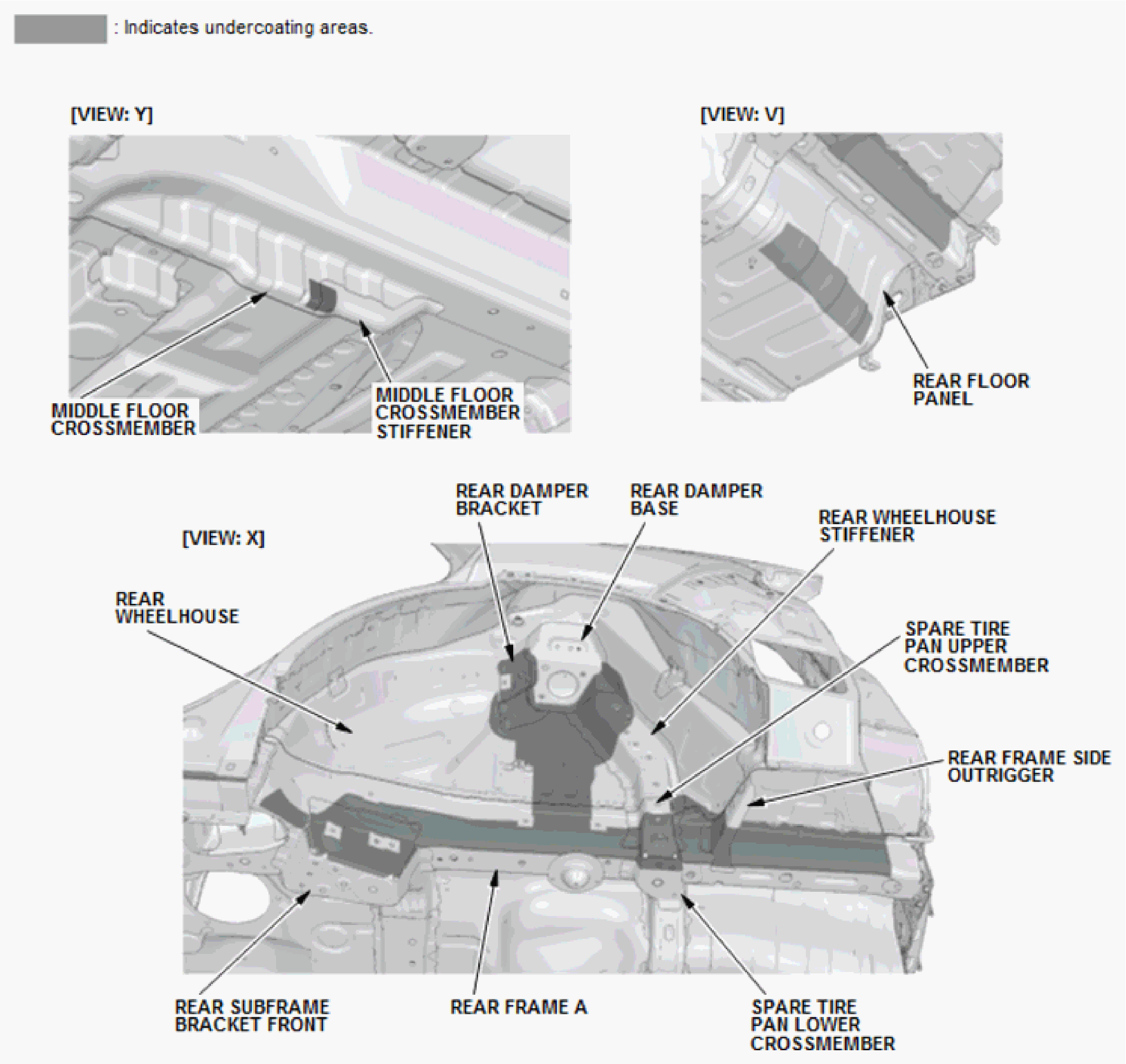
▨ : Indicates undercoating areas.
[VIEW: Y]
MIDDLE FLOOR CROSSMEMBER
MIDDLE FLOOR CROSSMEMBER STIFFENER
[VIEW: V]
REAR FLOOR PANEL
[VIEW: X]
REAR DAMPER BRACKET
REAR DAMPER BASE
REAR WHEELHOUSE STIFFENER
REAR WHEELHOUSE
SPARE TIRE PAN UPPER CROSSMEMBER
REAR FRAME SIDE OUTRIGGER
REAR SUBFRAME BRACKET FRONT
REAR FRAME A
SPARE TIRE PAN LOWER CROSSMEMBER

Fig. 2: Floor Undercoating Areas (2 Of 2)

Courtesy of AMERICAN HONDA MOTOR CO., INC.

For Single muffler

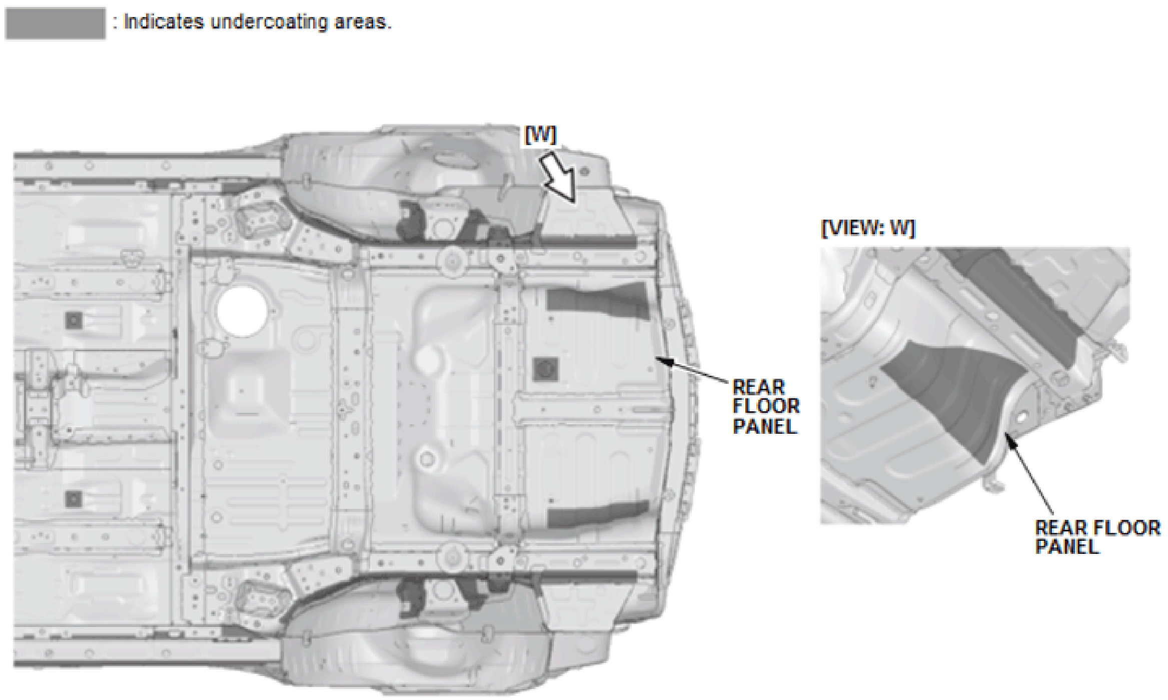
▨ : Indicates undercoating areas.
[W]
REAR FLOOR PANEL
[VIEW: W]
REAR FLOOR PANEL

Fig. 3: Floor Undercoating Specifications And Areas (Single Muffler)
Courtesy of AMERICAN HONDA MOTOR CO., INC.

Soundproof Coat Coating Areas

Apply the soundproof coat to the areas shown.

NOTE: **Coating thickness: Wet 1.3 mm (0.051 in) min.**

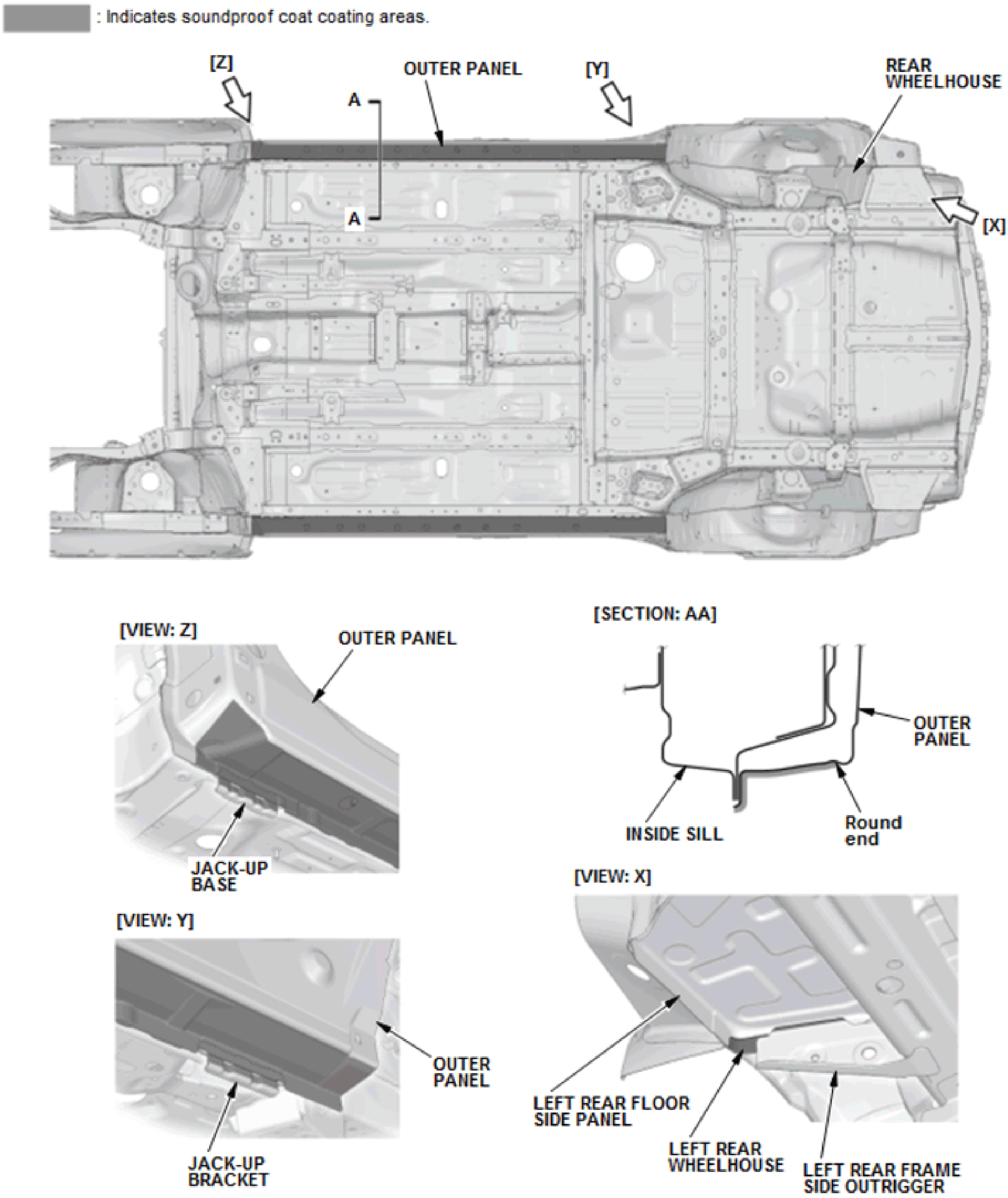
▨ : Indicates soundproof coat coating areas.
[Z]
A
OUTER PANEL
[Y]
REAR WHEELHOUSE
A
[X]
[VIEW: Z]
OUTER PANEL
JACK-UP BASE
[SECTION: AA]
OUTER PANEL
INSIDE SILL
Round end
[VIEW: Y]
OUTER PANEL
JACK-UP BRACKET
[VIEW: X]
LEFT REAR FLOOR SIDE PANEL
LEFT REAR WHEELHOUSE
LEFT REAR FRAME SIDE OUTRIGGER

Fig. 4: Soundproof Coat Areas
Courtesy of AMERICAN HONDA MOTOR CO., INC.

For Single muffler

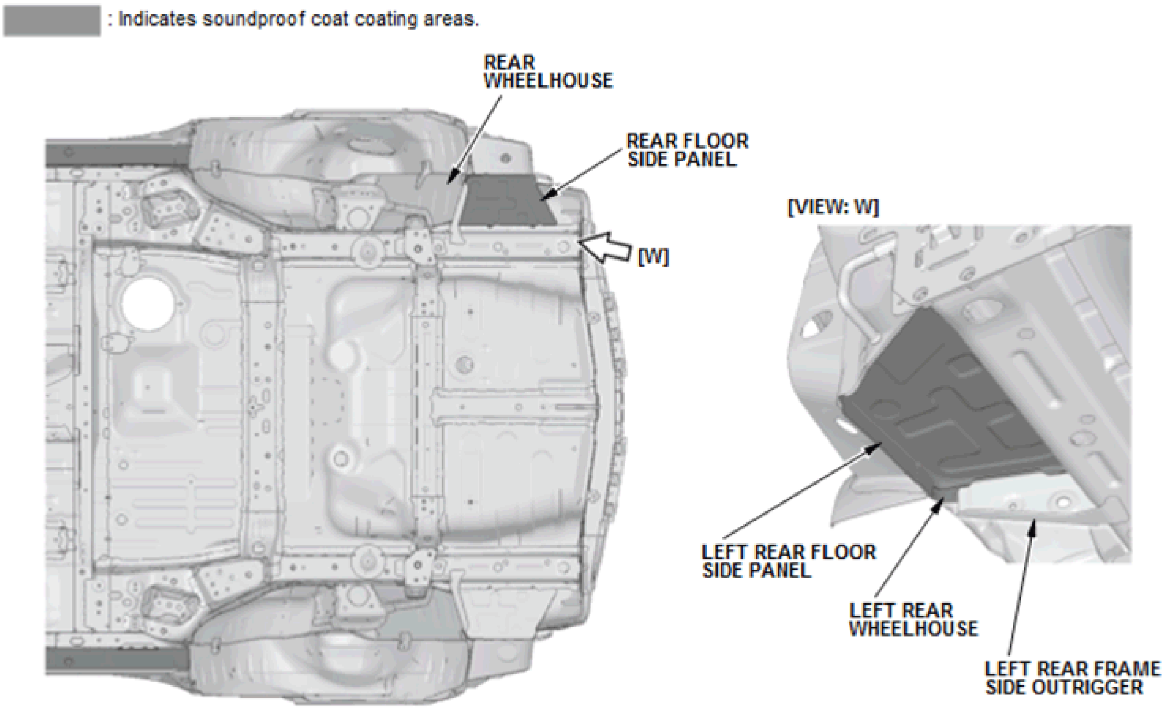
▨ : Indicates soundproof coat coating areas.
REAR WHEELHOUSE
REAR FLOOR SIDE PANEL
[W]
[VIEW: W]
LEFT REAR FLOOR SIDE PANEL
LEFT REAR WHEELHOUSE
LEFT REAR FRAME SIDE OUTRIGGER

Fig. 5: Soundproof Coat Areas (Single Muffler)
Courtesy of AMERICAN HONDA MOTOR CO., INC.

SOFT CHIPPING GUARD PRIMER COATING AREAS

NOTE:

- **The removal of paint and undercoating by stone chips immediately exposes metal to the atmosphere, causing it to oxidize ; refer to Soft Chip Guard Primer Coat .**
- **For repair in these areas, please apply an additional coat of primer-surfacer in the shaded areas to provide additional stone chip protection.**

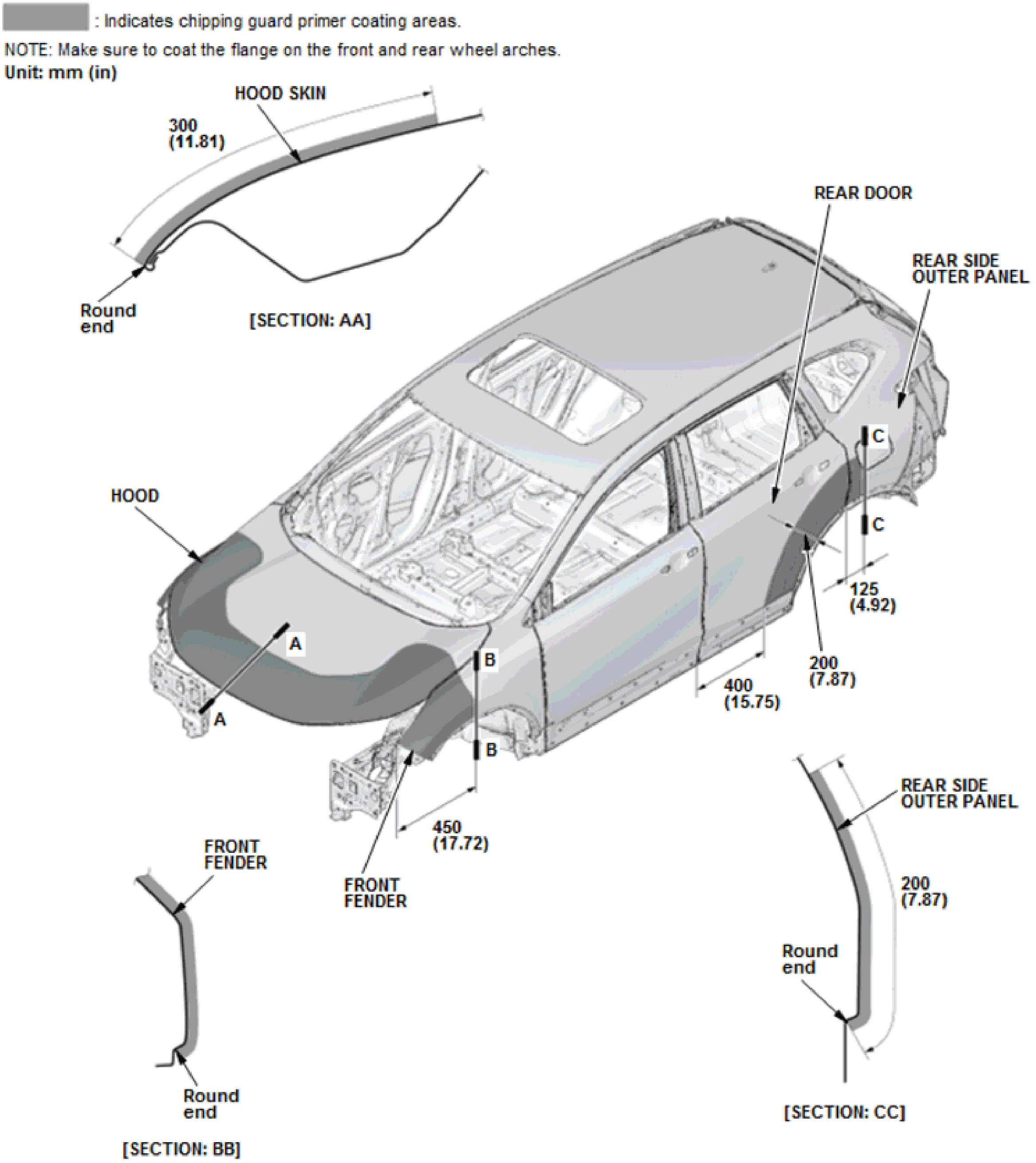
▨ : Indicates chipping guard primer coating areas.
NOTE: Make sure to coat the flange on the front and rear wheel arches.
Unit: mm (in)
HOOD SKIN
300
(11.81)
Round end
[SECTION: AA]
REAR DOOR
REAR SIDE OUTER PANEL
HOOD
C
C
125
(4.92)
A
B
A
400
(15.75)
200
(7.87)
B
450
(17.72)
REAR SIDE OUTER PANEL
FRONT FENDER
FRONT FENDER
200
(7.87)
Round end
Round end
[SECTION: CC]
[SECTION: BB]

Fig. 6: Soft Chipping Guard Primer Locations And Specifications
Courtesy of AMERICAN HONDA MOTOR CO., INC.

SEALING AREAS

NOTE: To prevent water and dust entry, as well as to prevent rust, apply sealer at body panel joints. Refer to Sealing .

DASHBOARD UPPER AND DASHBOARD LOWER

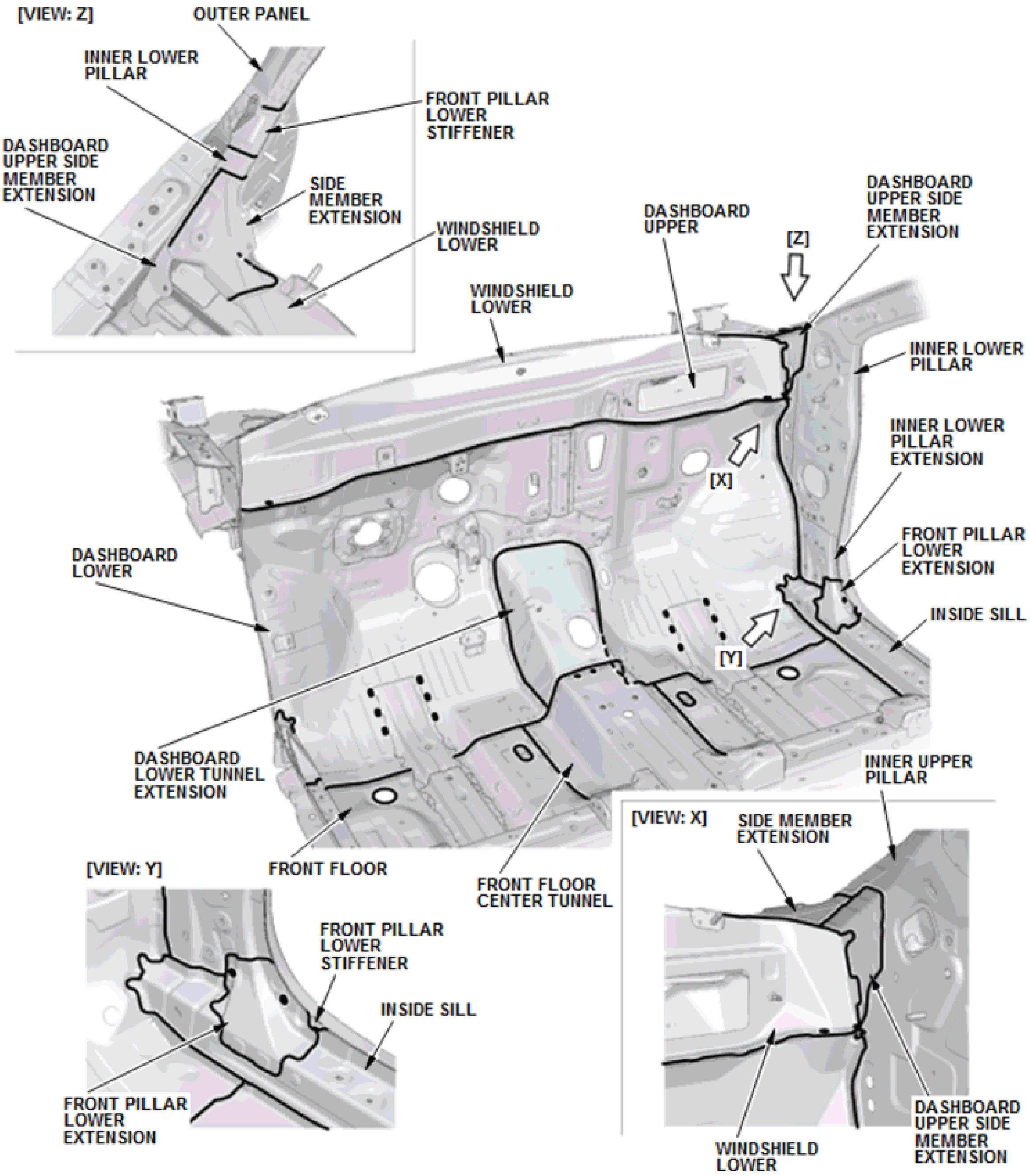
[VIEW: Z]
OUTER PANEL
INNER LOWER PILLAR
FRONT PILLAR LOWER STIFFENER
DASHBOARD UPPER SIDE MEMBER EXTENSION
SIDE MEMBER EXTENSION
WINDSHIELD LOWER
DASHBOARD UPPER
[Z]
DASHBOARD UPPER SIDE MEMBER EXTENSION
WINDSHIELD LOWER
INNER LOWER PILLAR
INNER LOWER PILLAR EXTENSION
[X]
FRONT PILLAR LOWER EXTENSION
DASHBOARD LOWER
INSIDE SILL
[Y]
DASHBOARD LOWER TUNNEL EXTENSION
INNER UPPER PILLAR
[VIEW: X]
SIDE MEMBER EXTENSION
[VIEW: Y]
FRONT FLOOR
FRONT FLOOR CENTER TUNNEL
FRONT PILLAR LOWER STIFFENER
INSIDE SILL
FRONT PILLAR LOWER EXTENSION
WINDSHIELD LOWER
DASHBOARD UPPER SIDE MEMBER EXTENSION

Fig. 7: Dashboard Upper And Lower Sealing Areas
Courtesy of AMERICAN HONDA MOTOR CO., INC.

ENGINE COMPARTMENT AND DAMPER HOUSING

NOTE: To prevent water and dust entry, as well as to prevent rust, apply sealer at body panel joints. Refer to Sealing .

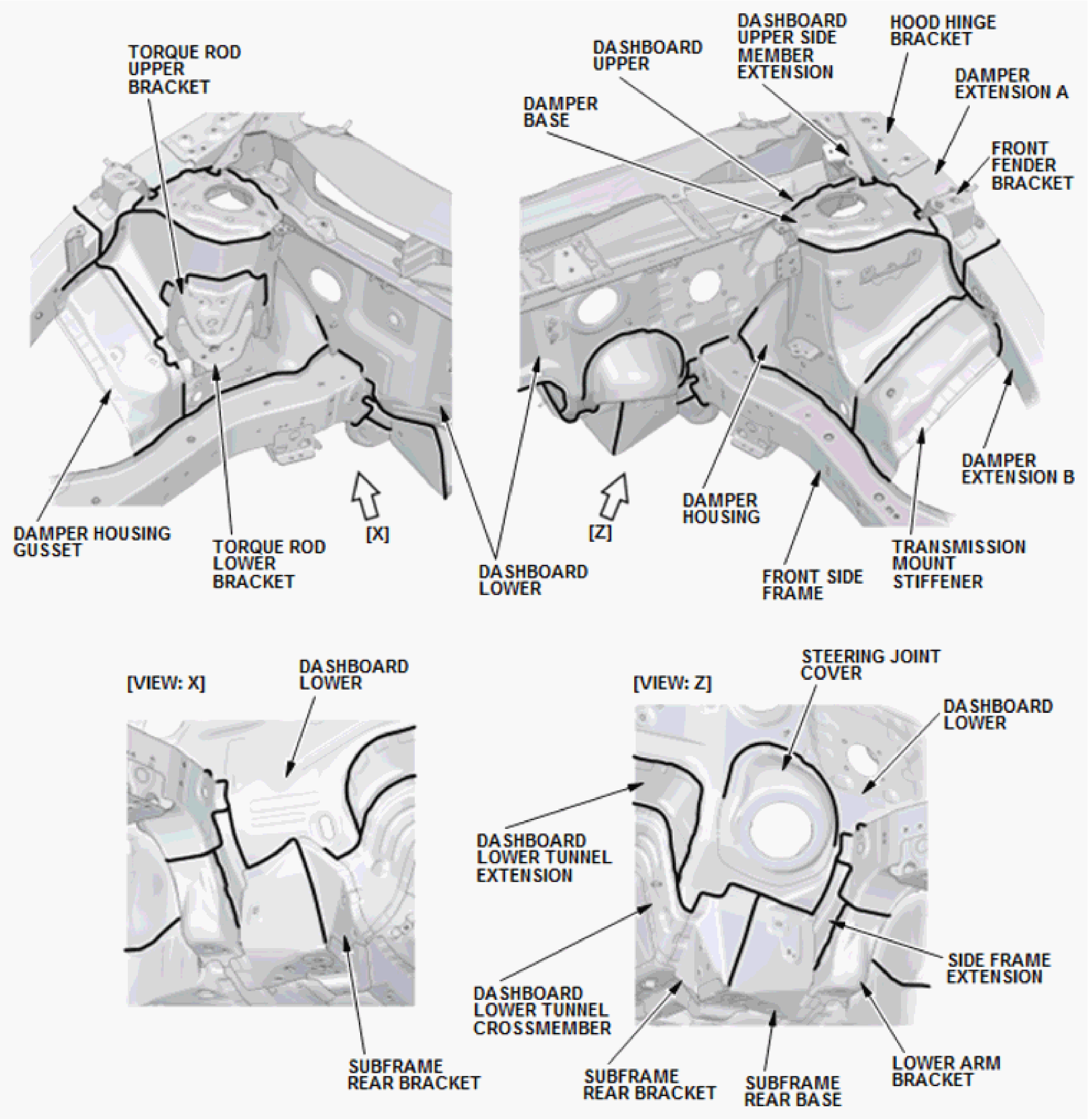
TORQUE ROD UPPER BRACKET
DAMPER HOUSING GUSSET
TORQUE ROD LOWER BRACKET
[X]
DASHBOARD LOWER
DAMPER BASE
DASHBOARD UPPER
DASHBOARD UPPER SIDE MEMBER EXTENSION
HOOD HINGE BRACKET
DAMPER EXTENSION A
FRONT FENDER BRACKET
DAMPER EXTENSION B
[Z]
DAMPER HOUSING
FRONT SIDE FRAME
TRANSMISSION MOUNT STIFFENER
[VIEW: X]
DASHBOARD LOWER
SUBFRAME REAR BRACKET
[VIEW: Z]
STEERING JOINT COVER
DASHBOARD LOWER
DASHBOARD LOWER TUNNEL EXTENSION
DASHBOARD LOWER TUNNEL CROSSMEMBER
SIDE FRAME EXTENSION
SUBFRAME REAR BRACKET
SUBFRAME REAR BASE
LOWER ARM BRACKET

Fig. 8: Engine Compartment And Damper Housing Sealing Areas (1 Of 2)
Courtesy of AMERICAN HONDA MOTOR CO., INC.

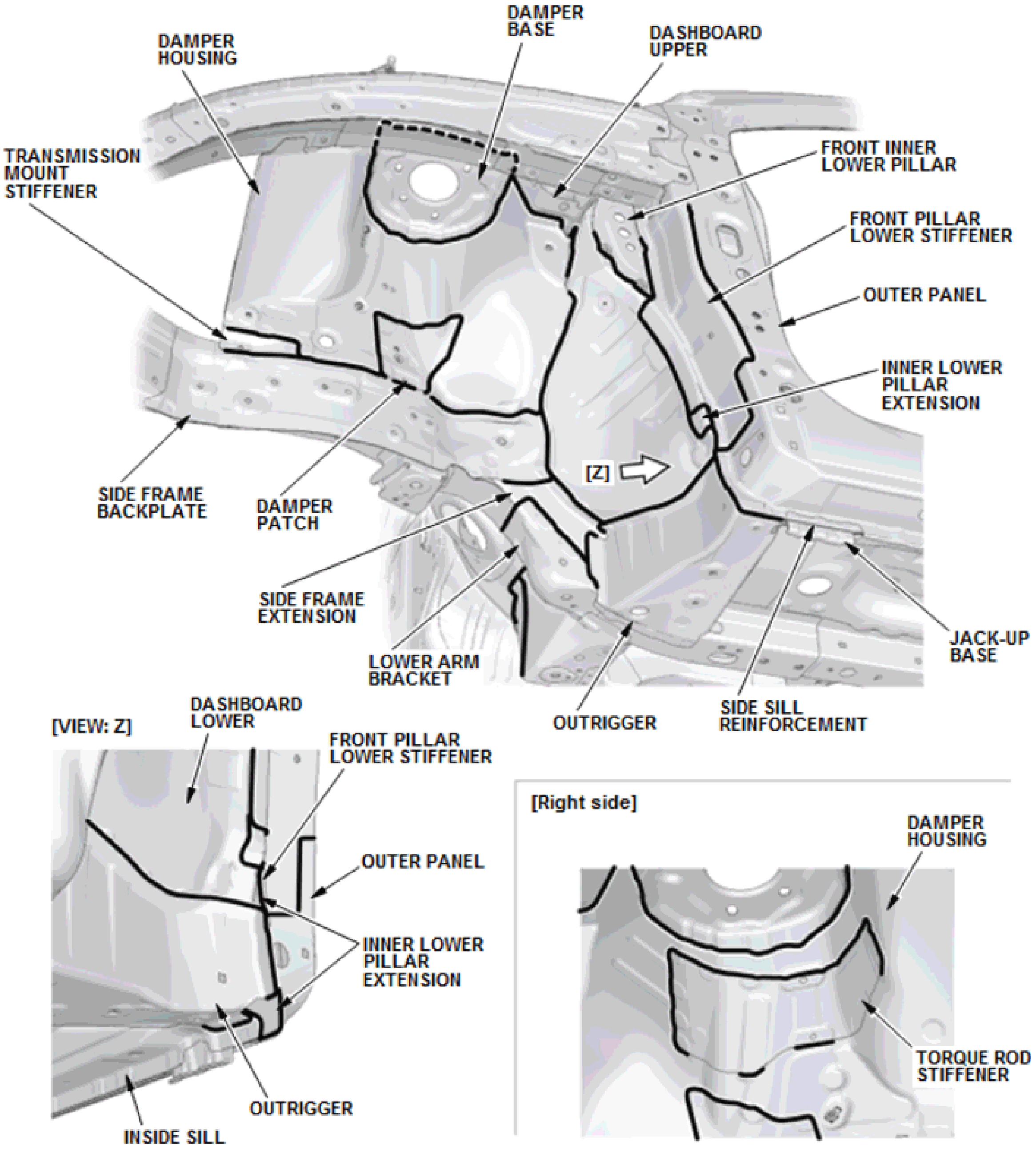
DAMPER BASE
DAMPER HOUSING
DASHBOARD UPPER
TRANSMISSION MOUNT STIFFENER
FRONT INNER LOWER PILLAR
FRONT PILLAR LOWER STIFFENER
OUTER PANEL
INNER LOWER PILLAR EXTENSION
[Z]
SIDE FRAME BACKPLATE
DAMPER PATCH
SIDE FRAME EXTENSION
LOWER ARM BRACKET
JACK-UP BASE
OUTRIGGER
SIDE SILL REINFORCEMENT
[VIEW: Z]
DASHBOARD LOWER
FRONT PILLAR LOWER STIFFENER
OUTER PANEL
INNER LOWER PILLAR EXTENSION
OUTRIGGER
INSIDE SILL
[Right side]
DAMPER HOUSING
TORQUE ROD STIFFENER

Fig. 9: Engine Compartment And Damper Housing Sealing Areas (2 Of 2)
Courtesy of AMERICAN HONDA MOTOR CO., INC.

FRONT FLOOR AND REAR FLOOR

NOTE: To prevent water and dust entry, as well as to prevent rust, apply sealer at body panel joints. Refer to Sealing .

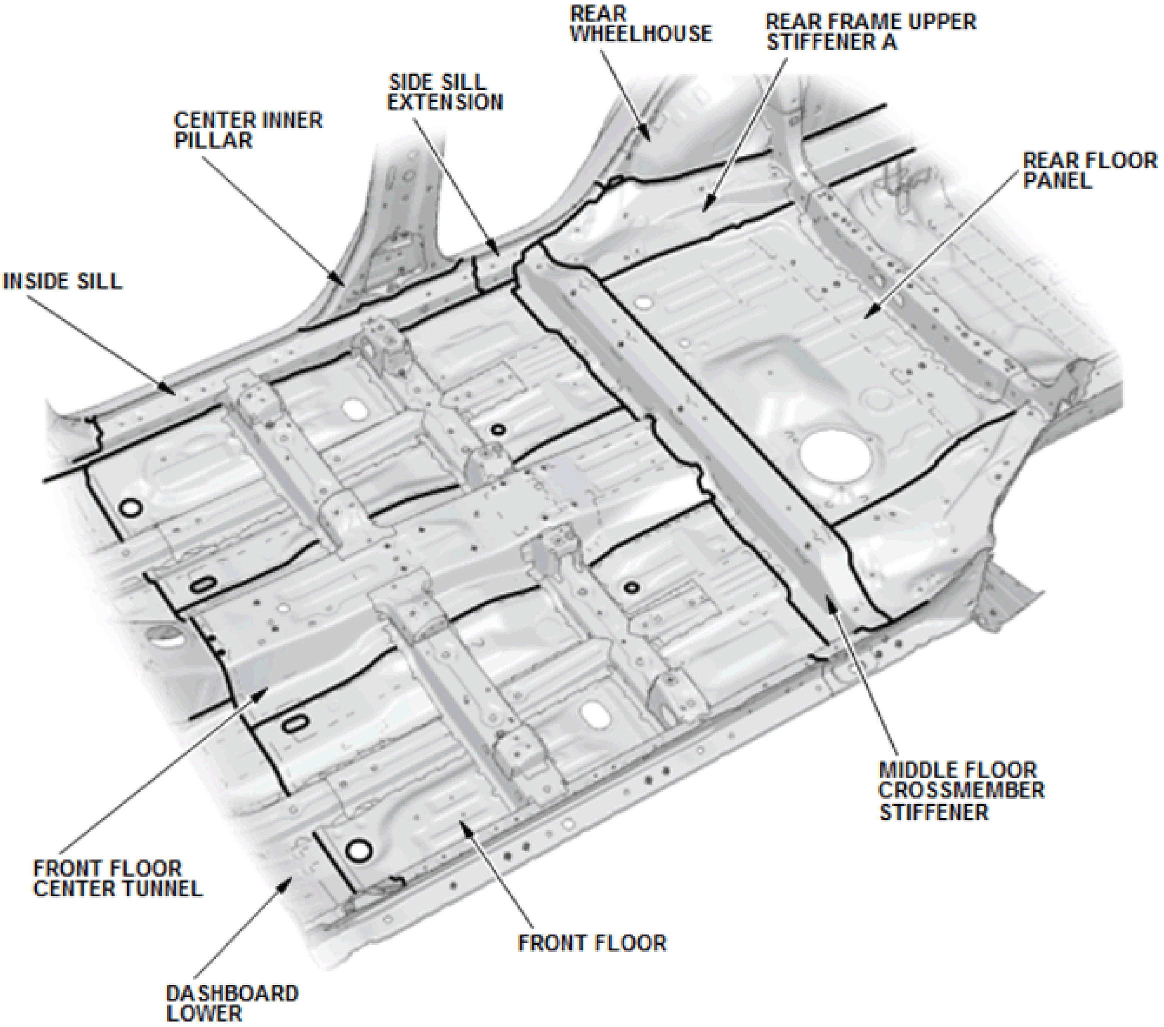
REAR WHEELHOUSE
REAR FRAME UPPER STIFFENER A
SIDE SILL EXTENSION
CENTER INNER PILLAR
REAR FLOOR PANEL
INSIDE SILL
MIDDLE FLOOR CROSSMEMBER STIFFENER
FRONT FLOOR CENTER TUNNEL
FRONT FLOOR
DASHBOARD LOWER

Fig. 10: Front Floor And Rear Floor Sealing Areas (1 Of 2)
Courtesy of AMERICAN HONDA MOTOR CO., INC.

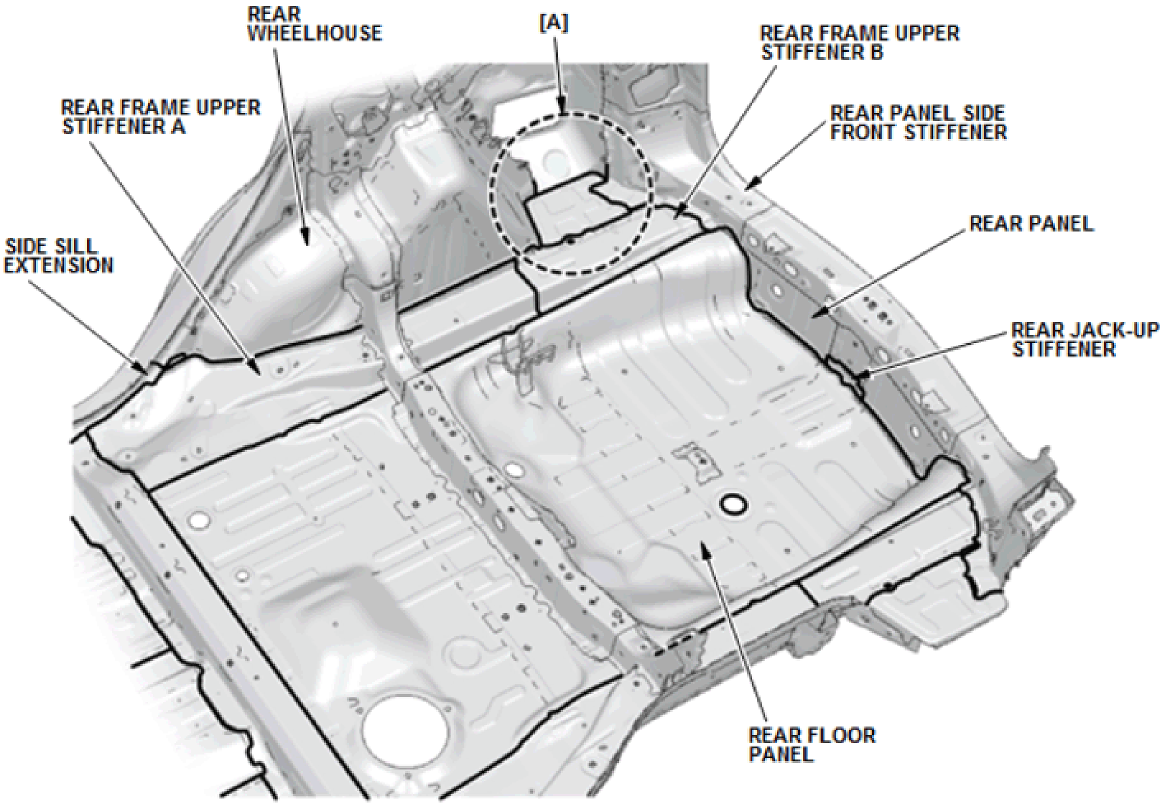
REAR WHEELHOUSE
[A]
REAR FRAME UPPER STIFFENER B
REAR FRAME UPPER STIFFENER A
REAR PANEL SIDE FRONT STIFFENER
SIDE SILL EXTENSION
REAR PANEL
REAR JACK-UP STIFFENER
REAR FLOOR PANEL

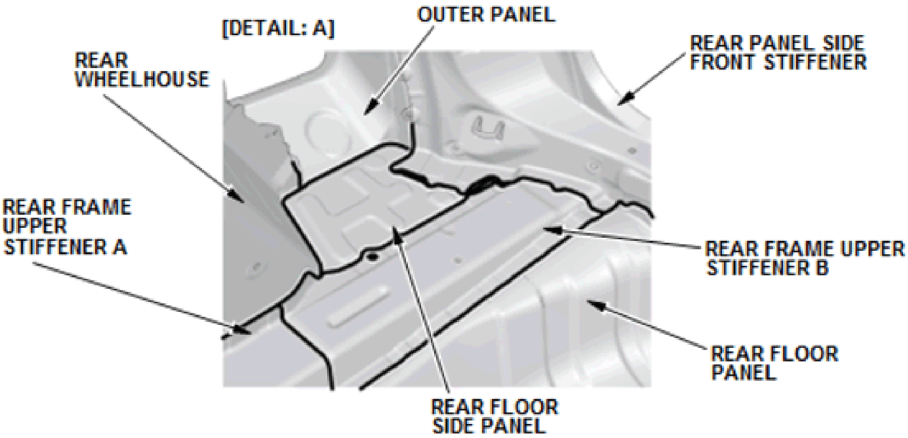
[DETAIL: A]
OUTER PANEL
REAR WHEELHOUSE
REAR PANEL SIDE FRONT STIFFENER
REAR FRAME UPPER STIFFENER A
REAR FRAME UPPER STIFFENER B
REAR FLOOR PANEL
REAR FLOOR SIDE PANEL

Fig. 11: Front Floor And Rear Floor Sealing Areas (2 Of 2)
Courtesy of AMERICAN HONDA MOTOR CO., INC.

REAR WHEELHOUSE

NOTE: To prevent water and dust entry, as well as to prevent rust, apply sealer at body panel joints. Refer to Sealing .

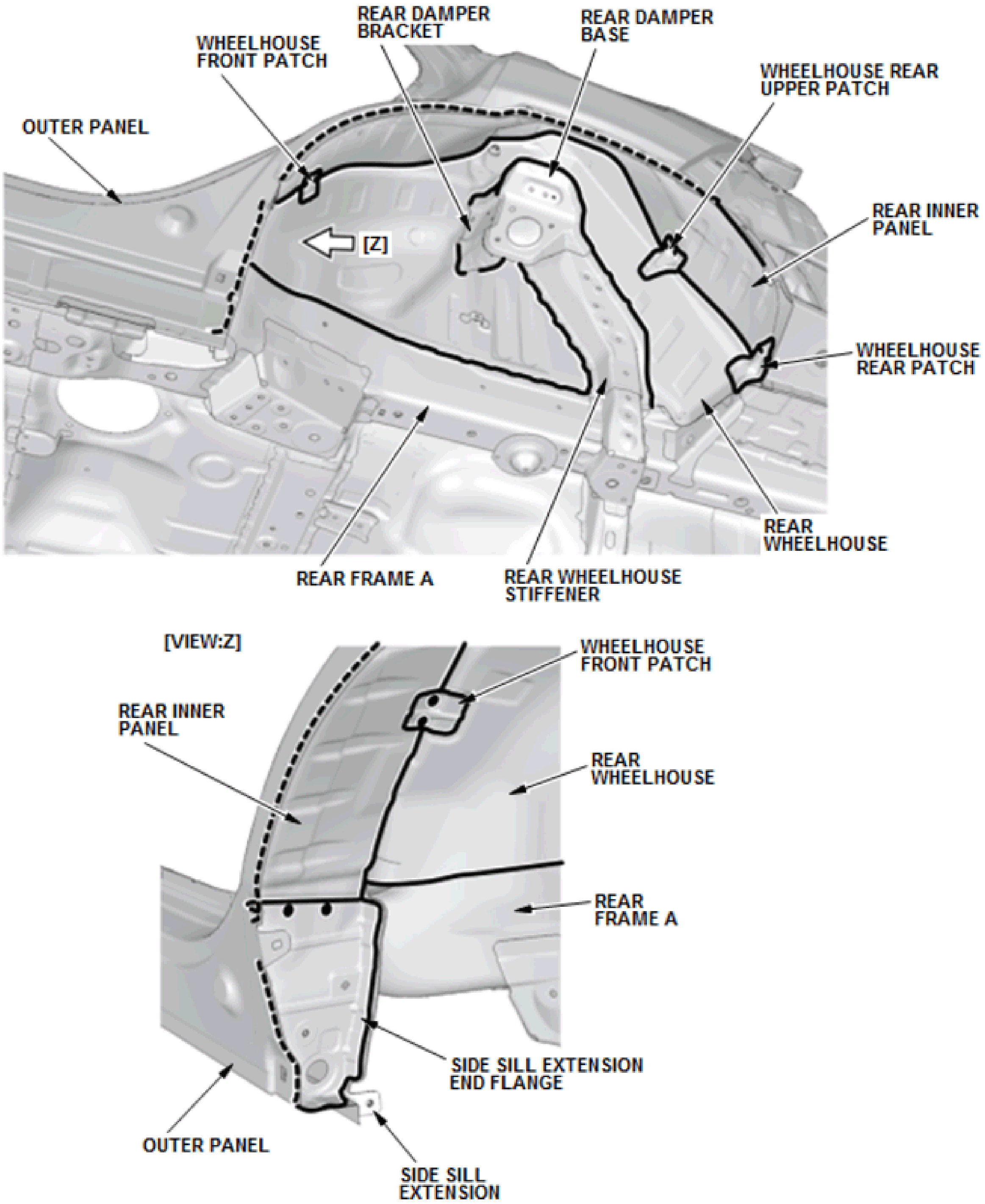
REAR DAMPER BRACKET
REAR DAMPER BASE
WHEELHOUSE FRONT PATCH
WHEELHOUSE REAR UPPER PATCH
OUTER PANEL
REAR INNER PANEL
[Z]
WHEELHOUSE REAR PATCH
REAR WHEELHOUSE
REAR FRAME A
REAR WHEELHOUSE STIFFENER
[VIEW:Z]
WHEELHOUSE FRONT PATCH
REAR INNER PANEL
REAR WHEELHOUSE
REAR FRAME A
SIDE SILL EXTENSION END FLANGE
OUTER PANEL
SIDE SILL EXTENSION

Fig. 12: Rear Wheelhouse Sealing Areas
Courtesy of AMERICAN HONDA MOTOR CO., INC.

ROOF PANEL/REAR PILLAR GUTTER AND REAR PANEL

NOTE: To prevent water and dust entry, as well as to prevent rust, apply sealer at body panel joints. Refer to Sealing .

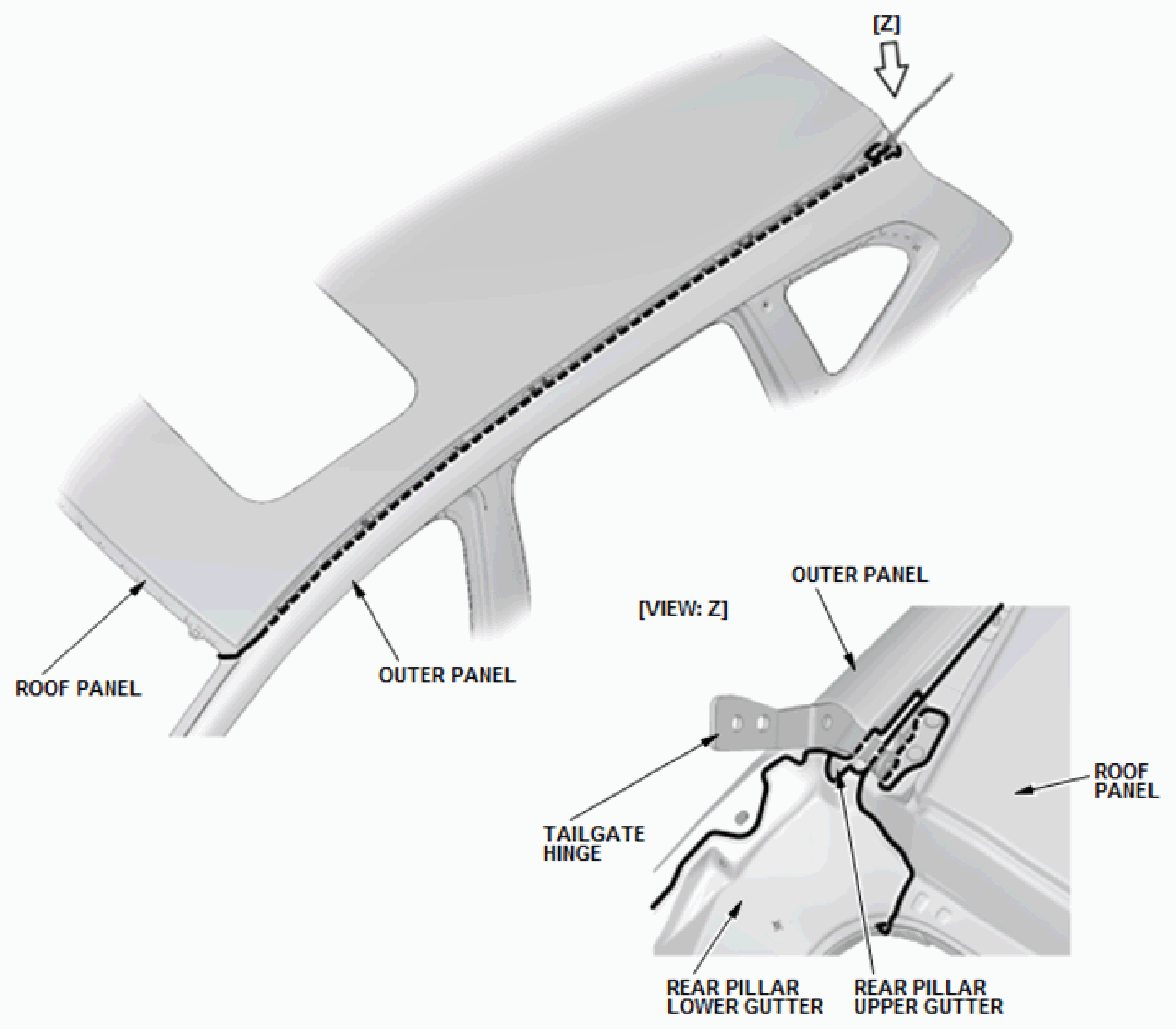
[Z]
ROOF PANEL
OUTER PANEL
[VIEW: Z]
OUTER PANEL
TAILGATE HINGE
ROOF PANEL
REAR PILLAR LOWER GUTTER
REAR PILLAR UPPER GUTTER

Fig. 13: Roof Panel/Rear Pillar Gutter And Rear Panel Sealing Areas (1 Of 2)
Courtesy of AMERICAN HONDA MOTOR CO., INC.

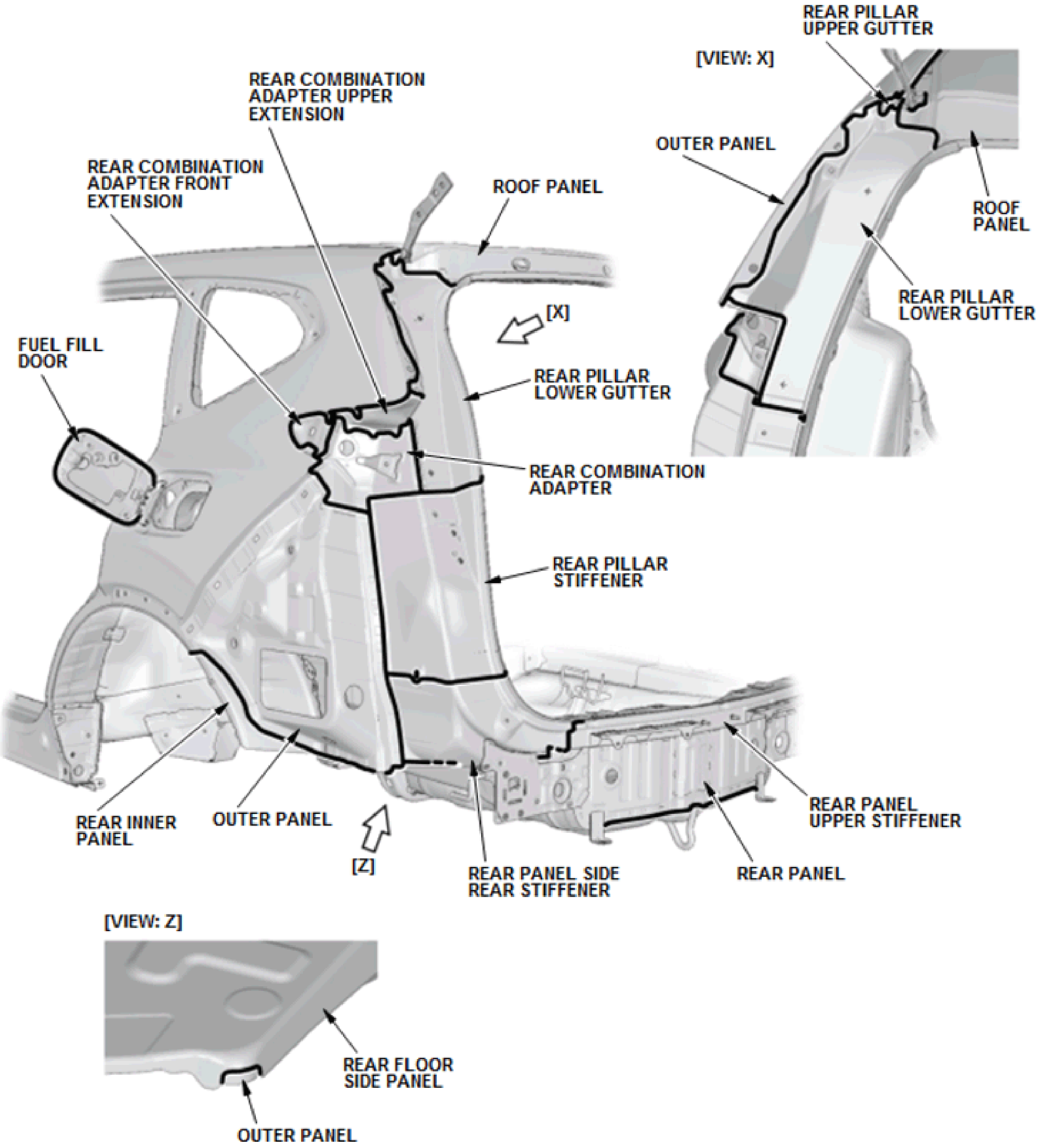
REAR PILLAR UPPER GUTTER
[VIEW: X]
REAR COMBINATION ADAPTER UPPER EXTENSION
OUTER PANEL
REAR COMBINATION ADAPTER FRONT EXTENSION
ROOF PANEL
ROOF PANEL
REAR PILLAR LOWER GUTTER
[X]
FUEL FILL DOOR
REAR PILLAR LOWER GUTTER
REAR COMBINATION ADAPTER
REAR PILLAR STIFFENER
REAR PANEL UPPER STIFFENER
REAR INNER PANEL
OUTER PANEL
[Z]
REAR PANEL SIDE REAR STIFFENER
REAR PANEL
[VIEW: Z]
REAR FLOOR SIDE PANEL
OUTER PANEL

Fig. 14: Roof Panel/Rear Pillar Gutter And Rear Panel Sealing Areas (2 Of 2)
Courtesy of AMERICAN HONDA MOTOR CO., INC.

UNDER FLOOR, FRONT

NOTE: **To prevent water and dust entry, as well as to prevent rust, apply sealer at body panel joints. Refer to Sealing .**

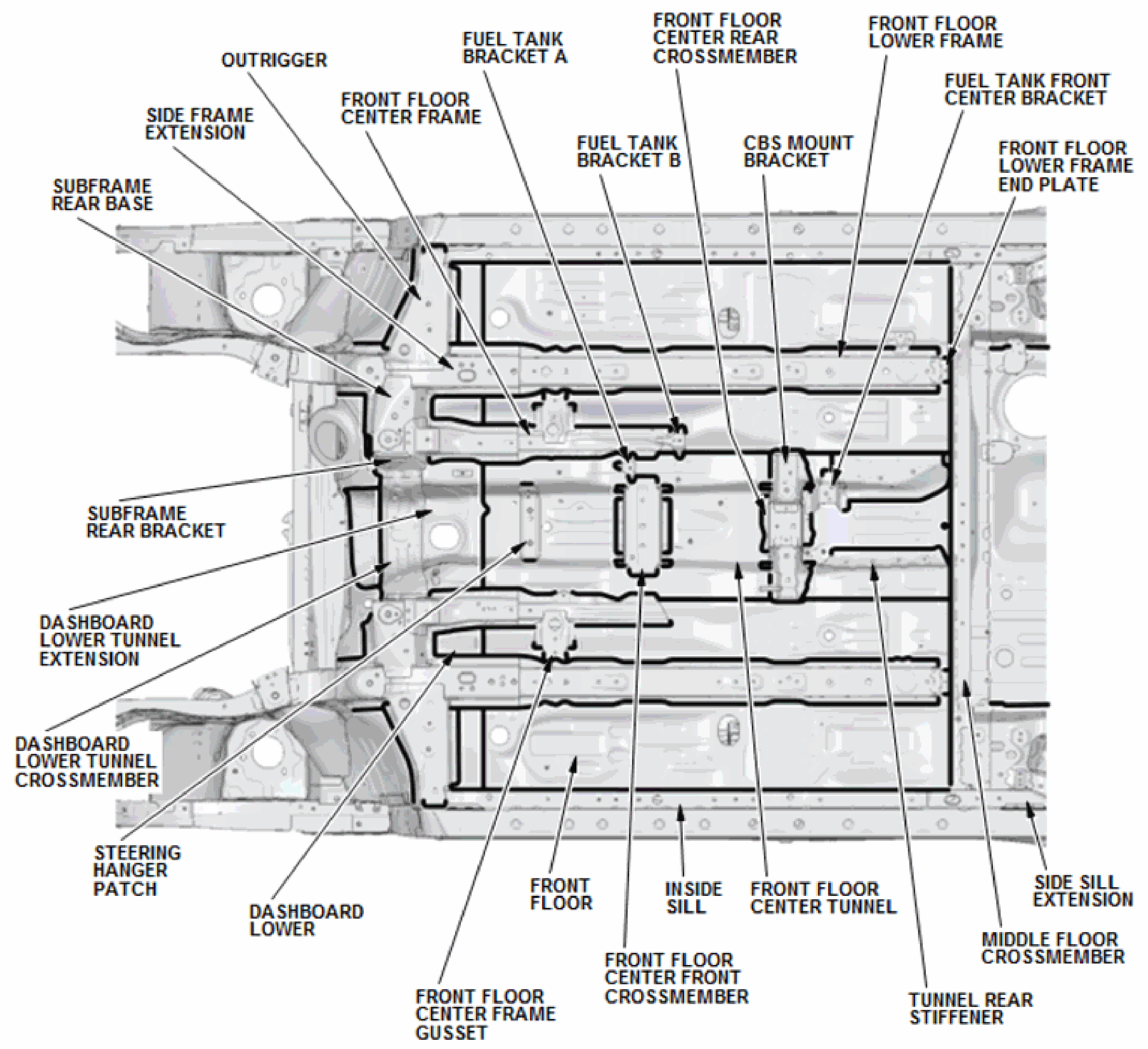
OUTRIGGER
FUEL TANK BRACKET A
FRONT FLOOR CENTER REAR CROSSMEMBER
FRONT FLOOR LOWER FRAME
FUEL TANK FRONT CENTER BRACKET
SIDE FRAME EXTENSION
FRONT FLOOR CENTER FRAME
FUEL TANK BRACKET B
CBS MOUNT BRACKET
FRONT FLOOR LOWER FRAME END PLATE
SUBFRAME REAR BASE
SUBFRAME REAR BRACKET
DASHBOARD LOWER TUNNEL EXTENSION
DASHBOARD LOWER TUNNEL CROSSMEMBER
STEERING HANGER PATCH
DASHBOARD LOWER
FRONT FLOOR
INSIDE SILL
FRONT FLOOR CENTER TUNNEL
SIDE SILL EXTENSION
MIDDLE FLOOR CROSSMEMBER
FRONT FLOOR CENTER FRONT CROSSMEMBER
TUNNEL REAR STIFFENER
FRONT FLOOR CENTER FRAME GUSSET

Fig. 15: Under Floor Front Sealing Areas
Courtesy of AMERICAN HONDA MOTOR CO., INC.

UNDER FLOOR, REAR

NOTE: To prevent water and dust entry, as well as to prevent rust, apply sealer at body panel joints. Refer to Sealing .

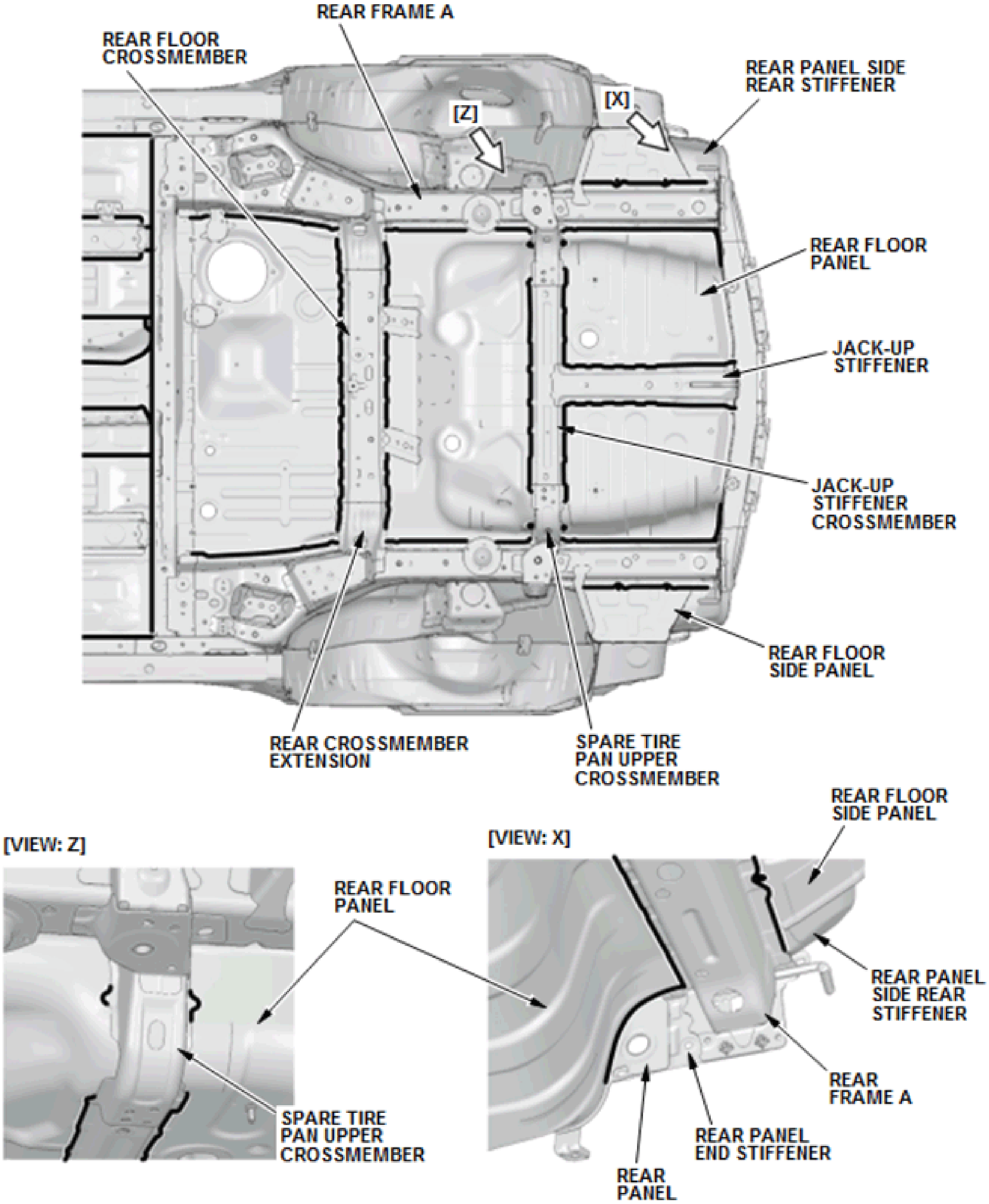
REAR FRAME A
REAR FLOOR CROSSMEMBER
REAR PANEL SIDE REAR STIFFENER
[X]
[Z]
REAR FLOOR PANEL
JACK-UP STIFFENER
JACK-UP STIFFENER CROSSMEMBER
REAR FLOOR SIDE PANEL
REAR CROSSMEMBER EXTENSION
SPARE TIRE PAN UPPER CROSSMEMBER
[VIEW: Z]
REAR FLOOR PANEL
SPARE TIRE PAN UPPER CROSSMEMBER
[VIEW: X]
REAR FLOOR SIDE PANEL
REAR PANEL SIDE REAR STIFFENER
REAR FRAME A
REAR PANEL END STIFFENER
REAR PANEL

Fig. 16: Under Floor Rear Sealing Areas
Courtesy of AMERICAN HONDA MOTOR CO., INC.

2017-22 COMMON SPECS & PROCEDURES

CR-V (Except Hybrid)

SPECIFICATIONS INDEX

COMMON SPECS & PROCEDURES INDEX

System	Specification/Procedure	
Air Conditioning		
Service	**HVAC SERVICE SPECIFICATIONS (EXCEPT HYBRID)**	
Torque	**TORQUE SPECIFICATIONS**	
Axle Nut/Hub Nut		
	Front 328 N.m (242 lbf.ft) Rear 181 N.m (133 lbf.ft)	
Battery	**12 VOLT BATTERY REMOVAL, INSTALLATION, AND TEST**	
Brakes		
Bleeding Sequence	**CONVENTIONAL BRAKE SYSTEM BLEEDING**	
Disc Brakes	**BRAKE SYSTEM SERVICE SPECIFICATIONS (EXCEPT HYBRID)**	
Torque	**TORQUE SPECIFICATIONS**	
Charging		
Service Specifications	**ENGINE ELECTRICAL SERVICE SPECIFICATIONS (EXCEPT HYBRID)**	
Torque	**TORQUE SPECIFICATIONS**	
Drive Belts		
Belt Routing & Adjustment	1.5L NA, **DRIVE BELT REMOVAL, INSTALLATION, AND INSPECTION (2.4)** , B	
Engine Cooling		
General Service Specifications	**ENGINE COOLING SERVICE SPECIFICATIONS (EXCEPT HYBRID)**	
Radiator Cap Pressure	93-123 kPa (0.95-1.25 kgf/cm2, 13.5-17.8 psi)	
Thermostat R & I	**THERMOSTAT HOUSING REMOVAL AND INSTALLATION (1.5 L ENGINE)** , **THERMOSTAT HOUSING REMOVAL AND INSTALLATION (2.4 L ENGINE)**	
Water Pump R & I	**WATER PASSAGE REMOVAL AND INSTALLATION (1.5 L ENGINE)** , **WATER PASSAGE REMOVAL AND INSTALLATION (2.4 L ENGINE)**	
Engine Mechanical		
Compression	1.5L 980 kPa (9.99 kgf/cm^2 , 142.1 psi) Minimum	2.4L 930 kPa (9.48

System	**Specification/Procedure**	
	200 kPa (2.04 kgf/cm^2 , 29.0 psi) Maximum variation	kgf/cm^2 , 134.8 psi) Minimum 200 kPa (2.04 kgf/cm^2 , 29.0 psi) Maximum variation
Oil Pressure (176B°F (80B°C)	1.5L 90 kPa (0.92 kgf/cm^2 , 13.1 psi) min. @ idle 280 kPa (2.86 kgf/cm^2 , 40.6 psi) min. @ 3000 RPM	2.4L 70 kPa (0.71 kgf/cm^2 , 10.1 psi) min. @ idle 300 kPa (3.06 kgf/cm^2 , 43.5 psi) min. @ 3000 RPM
Overhaul	See applicable specifications tables in **ENGINE MECHANICAL SERVICE SPECIFICATIONS (EXCEPT HYBRID)**	
Torque	**TORQUE SPECIFICATIONS**	
Fluid Specifications	See FLUIDS under MAINTENANCE tab.	
Flywheel/Flex Plate Torque	74 N.m (55 ft. lbs.)	
Fuel System		
Pressure Specification	390 - 440 kPa (3.98 - 4.49 kgf/cm 2, 56.6 - 63.8 psi)	
Fuel Pressure Test Procedure	**FUEL PRESSURE TEST (1.5 L ENGINE)** , **FUEL PRESSURE TEST (2.4 L ENGINE)**	
Ignition		
Firing Order & Cylinder Identification	**FIRING ORDER & CYLINDER IDENTIFICATION**	
Spark Plug NGK: 7751		
Gap	0.70-0.75 mm (0.0276-0.0295 in)	
Torque	22 N.m (16 ft. lbs.)	
Starting		
Starter	**ENGINE ELECTRICAL SERVICE SPECIFICATIONS (EXCEPT HYBRID)**	
Torque	**TORQUE SPECIFICATIONS**	
Wheel Alignment		
Adjustment Specifications	**SUSPENSION SERVICE SPECIFICATIONS (EXCEPT HYBRID)**	
Torque	**TORQUE SPECIFICATIONS**	
Wheel & Tire		

System	Specification/Procedure	
Wheel Lug Nut Torque	108 N.m (80 ft. lbs.)	

2020-22 COMMON SPECS & PROCEDURES

CR-V (Hybrid)

SPECIFICATIONS INDEX

COMMON SPECS & PROCEDURES INDEX

System	**Specification/Procedure**
Air Conditioning	
Service	HVAC SERVICE SPECIFICATIONS (HYBRID)
Torque	TORQUE SPECIFICATIONS (HYBRID)
Axle Nut/Hub Nut	
	Front 328 N.m (242 lbf.ft) Rear 181 N.m (133 lbf.ft)
Battery	BATTERY PACK REMOVAL AND INSTALLATION
Brakes	
Bleeding Sequence	ELECTRIC SERVO BRAKE SYSTEM BLEEDING
Disc Brakes	BRAKE SYSTEM SERVICE SPECIFICATIONS (HYBRID)
Torque	TORQUE SPECIFICATIONS (HYBRID)
Charging	
Service Specifications	ENGINE ELECTRICAL SERVICE SPECIFICATIONS (HYBRID)
Torque	TORQUE SPECIFICATIONS (HYBRID)
Drive Belts	
Belt Routing & Adjustment	NA B
Engine Cooling	
General Service Specifications	ENGINE COOLING SERVICE SPECIFICATIONS (HYBRID)
Radiator Cap Pressure	93-123 kPa (0.95-1.25 kgf/cm 2, 13.5-17.8 psi)
Thermostat R & I	THERMOSTAT REMOVAL, INSTALLATION, AND TEST
Water Pump R & I	ELECTRIC ENGINE COOLANT PUMP REMOVAL AND INSTALLATION
Engine Mechanical	
Compression	880 kPa (8.97 kgf/cm^2 , 127.6 psi) Minimum 200 kPa (2.04 kgf/cm^2 , 29.0 psi) Maximum variation
Oil Pressure (176B°F (80B°C)	168.7 kPa (1.72 kgf/cm^2 , 24.5 psi) min. @ idle (1200 RPM) 217.7 kPa (2.22 kgf/cm^2 , 31.6 psi) min. @ 2000 RPM
Overhaul	See applicable specifications tables in ENGINE MECHANICAL SERVICE SPECIFICATIONS

System	**Specification/Procedure**
	(HYBRID)
Torque	TORQUE SPECIFICATIONS (HYBRID)
Fluid Specifications	See FLUIDS under MAINTENANCE tab.
Flywheel/Flex Plate Torque	74 N.m (55 ft. lbs.)
Fuel System	
Pressure Specification	380 - 430 kPa (3.87 - 4.38 kgf/cm 2, 55.1 - 62.4 psi)
Fuel Pressure Test Procedure	FUEL PRESSURE TEST
Ignition	
Firing Order & Cylinder Identification	FIRING ORDER & CYLINDER IDENTIFICATION
Spark Plug NGK: 7751	
Gap	1.0-1.1 mm (0.039-0.043 in)
Torque	22 N.m (16 ft. lbs.)
Starting	
Starter	ENGINE ELECTRICAL SERVICE SPECIFICATIONS (HYBRID)
Torque	TORQUE SPECIFICATIONS (HYBRID)
Wheel Alignment	
Adjustment Specifications	SUSPENSION SERVICE SPECIFICATIONS (HYBRID)
Torque	TORQUE SPECIFICATIONS (HYBRID)
Wheel & Tire	
Wheel Lug Nut Torque	108 N.m (80 ft. lbs.)

Differential Service Specifications - CR-V

STANDARDS AND SERVICE LIMITS (2020-21)

REAR DIFFERENTIAL

Item	Measurement	Qualification	Standard or New	Service Limit
Rear differential fluid	Capacity	Fluid change	1.2 L (1.3 US qt)	-
		Overhaul	1.5 L (1.6 US qt)	-
	Fluid type	B	Use genuine Honda DPSF-II.	

Gear & Differential Service Specifications - CR-V (Hybrid)

GEAR & DIFFERENTIAL

Item	Measurement	Qualification	Standard or New	Service Limit
Transmission fluid	Capacity	Fluid change	2.4 L (2.5 US qt)	-
		Overhaul	3.5 L (3.7 US qt)	-
	Fluid type	B	Honda ATF DW-1	

Item	Measurement	Qualification	Standard or New	Service Limit
Hydraulic pressure	Line pressure	At 1, 500 rpm in D	750-850 kPa (7.65-8.67 kgf/cm 2, 108.8-123.3 psi)	700 kPa (7.14 kgf/cm 2, 101.5 psi)
		At 3, 000 rpm in D	250-310 kPa (2.55-3.16 kgf/cm 2, 36.3-44.9 psi)	-
	Over drive clutch pressure	At 1, 500 rpm in D	756-844 kPa (7.71-8.61 kgf/cm 2, 109.7-122.5 psi)	700 kPa (7.14 kgf/cm 2, 101.5 psi)
Over drive clutch	Clearance between clutch end-plate and top disc	B	1.2-1.4 mm (0.047-0.055 in)	-
Differential pinion gear	Backlash	B	0.05-0.15 mm (0.0020-0.0059 in)	-
Transfer assembly	Transfer gear backlash	B	0.06-0.16 mm (0.0024-0.0063 in)	-
	Total starting torque	B	2.85-7.40 N.m (29.1-75.5 kgf.cm, 25.2-65.5 lbf.in)	-

Rear Differential Service Specifications - CR-V (Hybrid)

REAR DIFFERENTIAL

Item	Measurement	Qualification	Standard or New	Service Limit
Rear differential fluid	Capacity	Fluid change	1.2 L (1.3 US qt)	-
		Overhaul	1.5 L (1.6 US qt)	-
	Fluid type	B	Honda DPSF-II	

DISASSEMBLY AND REASSEMBLY

REAR DIFFERENTIAL DISASSEMBLY AND REASSEMBLY (AWD) (2017)

Image	Description/Tool Number
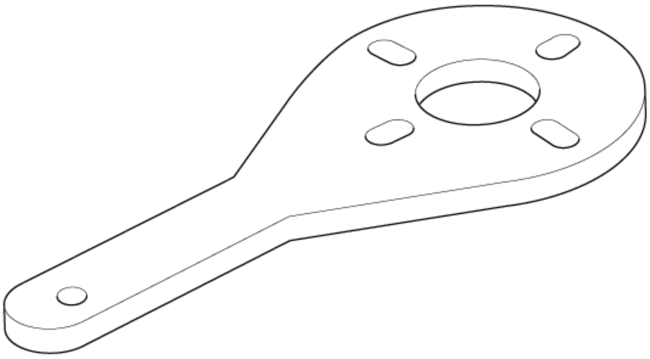	Companion Flange Holder 07RAB-TB4010B

Special Tools Required

Image	Description/Tool Number
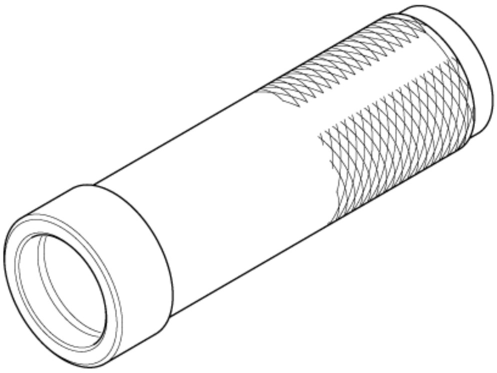	Driver Handle, 40 mm I.D. 07746-0030100
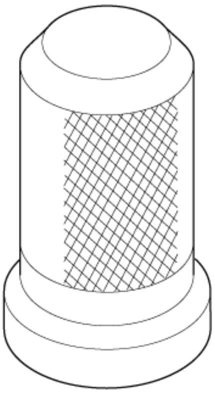	Oil Seal Driver, 41.8 mm 07947-6890100

Image	Description/Tool Number
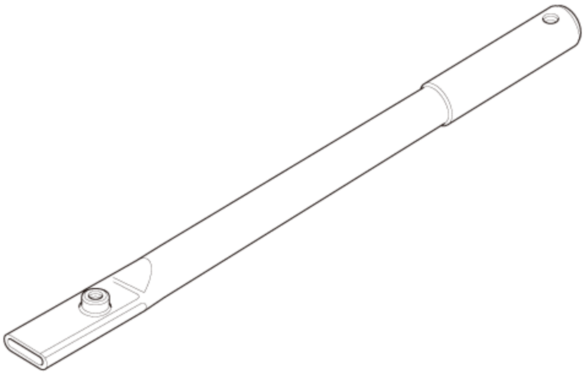	Holder Handle 07JAB-001020B
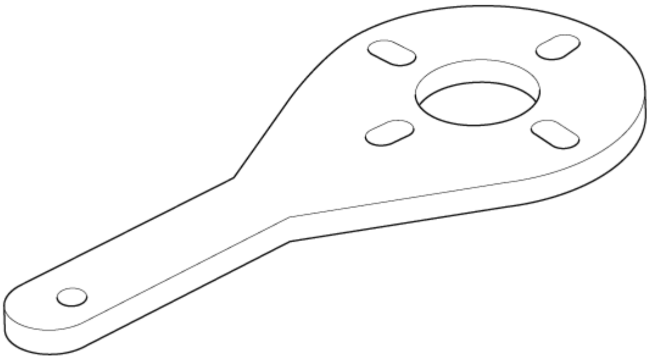	Companion Flange Holder 07RAB-TB4010B

Disassembly

NOTE: 🛈 Where icon is shown, see below for further information.

1

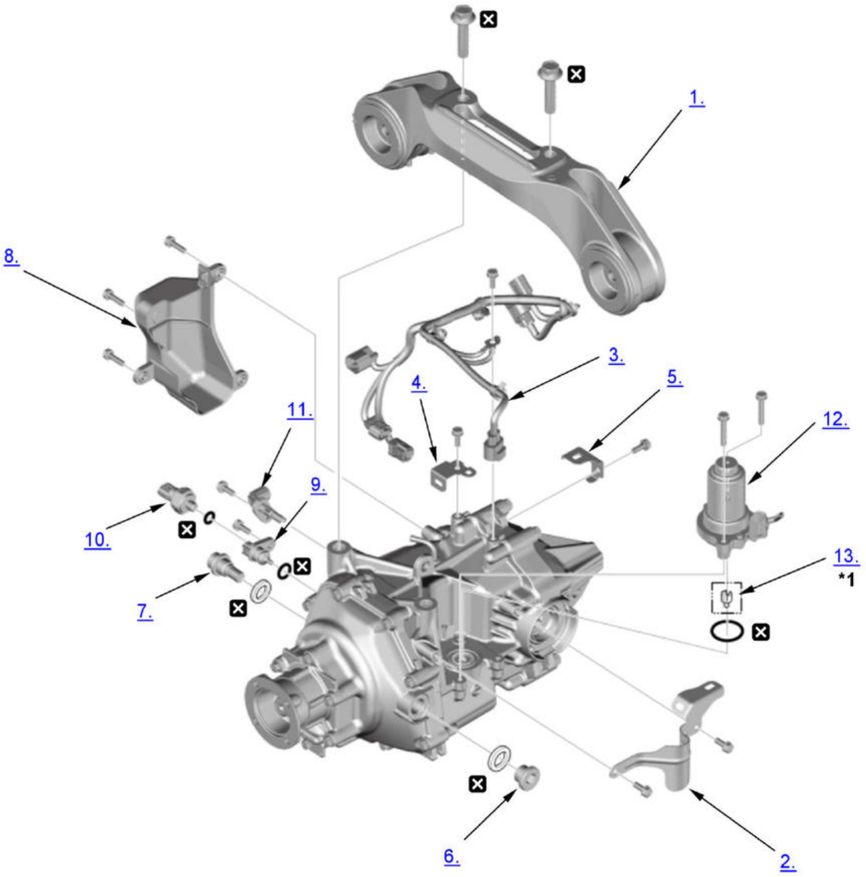
1.
8.
3.
4.
5.
11.
12.
9.
10.
13.
*1
7.
2.
6.

☒	Replace
*1	For some models

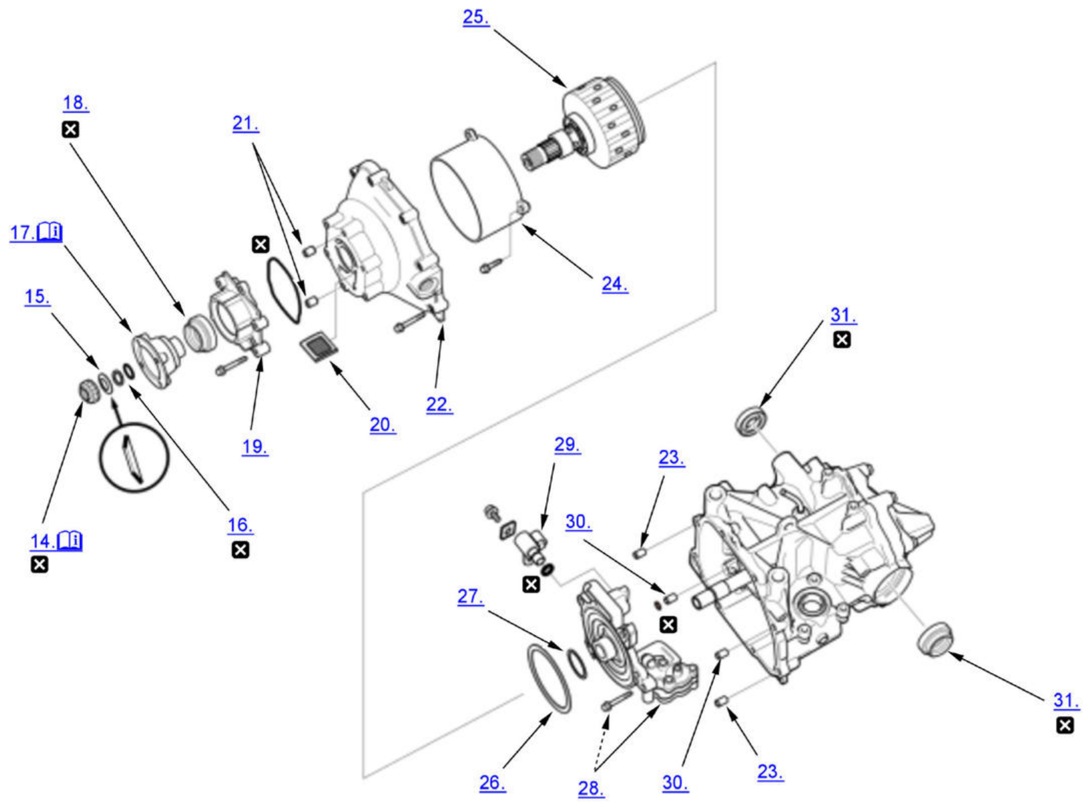

ℹ	Detailed information, notes, and precautions
☒	Replace

1. Rear Differential Front Mount - Remove
2. Harness Bracket A - Remove
3. Rear Differential Harness - Remove
4. Harness Bracket B - Remove
5. Harness Bracket D - Remove
6. Filler Plug - Remove
7. Drain Plug - Remove
8. Sensor Cover - Remove
9. Rear Differential Fluid Temperature Sensor - Remove
10. Rear Differential Fluid Pressure Sensor - Remove
11. Rear Differential Solenoid Valve Connector Assembly - Remove
12. Rear Differential Pump Motor - Remove
13. Pump Drive Joint - Remove (For Some Models)
14. Locknut - Remove

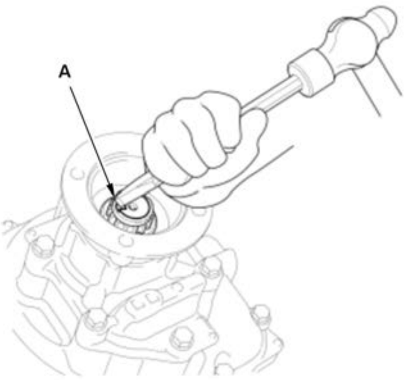

1. Pry up the stake on the locknut (A) from the groove of the clutch guide shaft, making sure the tab completely clears the groove to prevent damaging the clutch guide shaft.

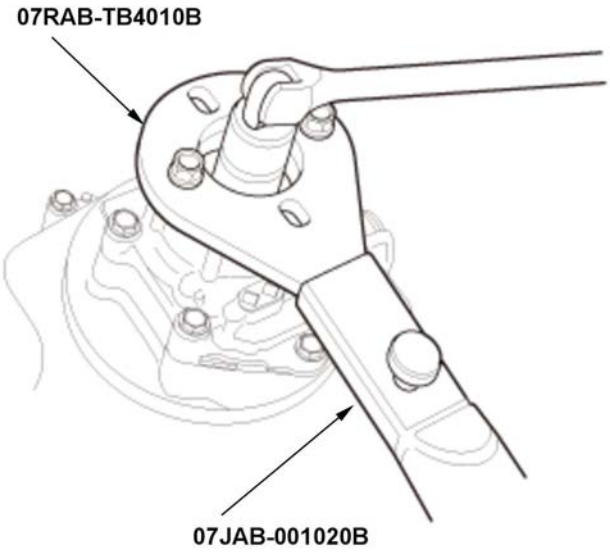

2. Install the companion flange holder and the holder handle on the companion flange.

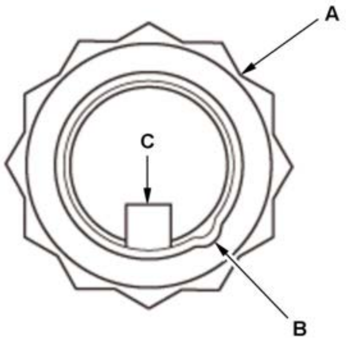

3. Loosen the locknut (A) counterclockwise so its tab (B) comes out from the groove (C) in the clutch guide shaft.

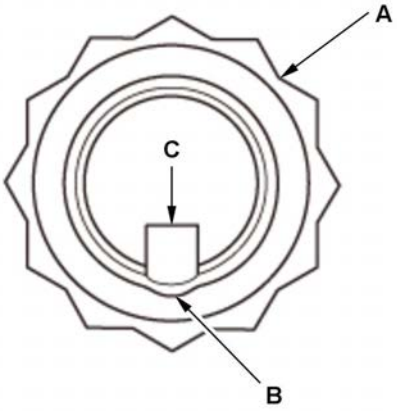	4. Tighten the locknut (A) until its tab (B) aligns with the groove (C). 5. Clean any dirt from inside the groove in the clutch guide shaft, then loosen the locknut.

15. Spring Washer - Remove
16. Back-Up Ring - Remove
17. Companion Flange - Remove

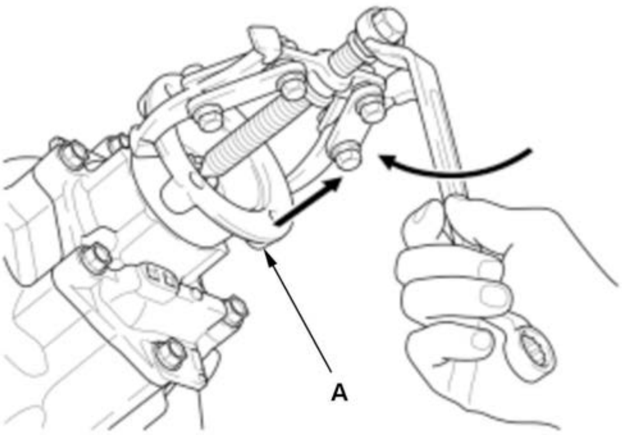	1. Remove the companion flange (A) with a commercially available puller.

18. Oil Seal - Remove
19. Oil Pump Cover - Remove
20. Fluid Strainer - Remove
21. 8 x 10 mm Dowel Pins - Remove
22. Oil Pump Case - Remove
23. 8 x 10 mm Dowel Pins - Remove
24. Baffle Cover - Remove
25. Differential Clutch Assembly - Remove
26. 94.6 mm Shim - Remove
27. 32.3 mm Shim - Remove
28. Oil Pump Body Assembly - Remove
29. Rear Differential Solenoid Valve - Remove
30. 8 x 10 mm Dowel Pins - Remove
31. Oil Seals - Remove

Reassembly

NOTE:

- 📖 Where icon is shown, see below for further information.
- Apply a light coat of clean rear differential fluid on all O-rings before installation.

1

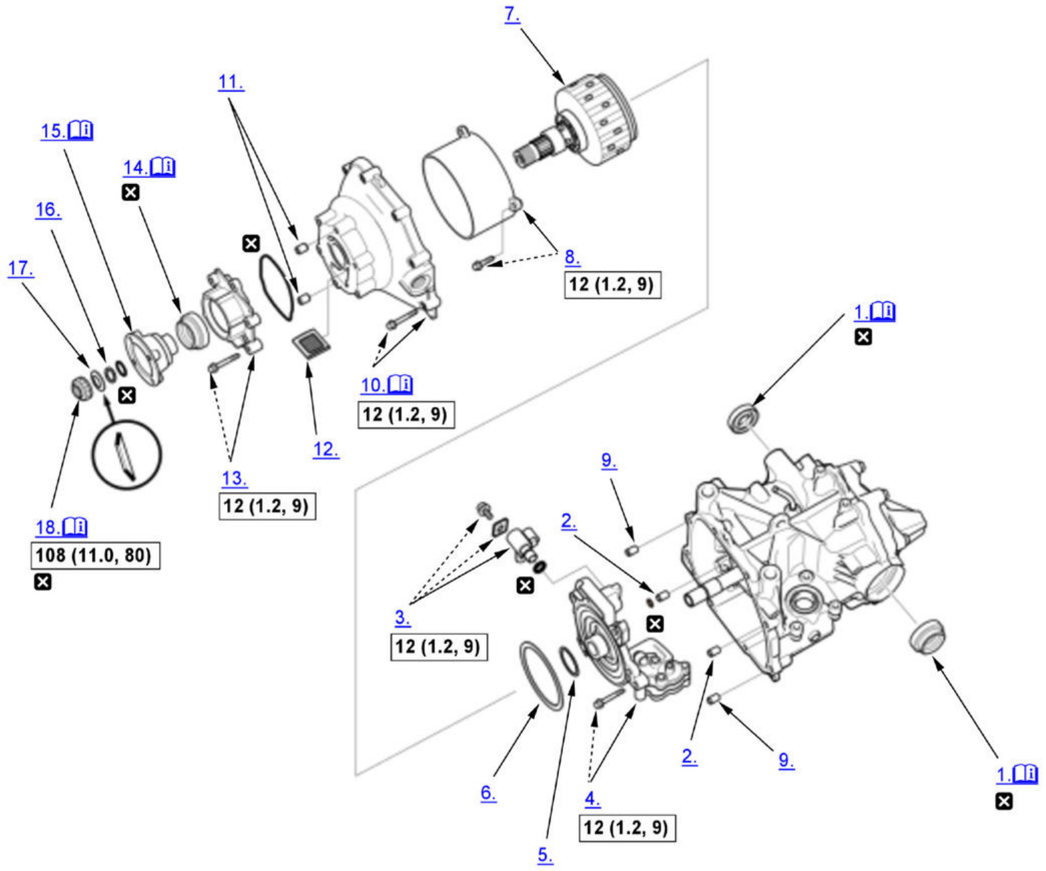

7.
11.
15.
14.
16.
17.
8.
12 (1.2, 9)
1.
10.
12 (1.2, 9)
12.
13.
12 (1.2, 9)
18.
108 (11.0, 80)
9.
2.
3.
12 (1.2, 9)
2.
9.
1.
6.
4.
12 (1.2, 9)
5.

Fig. 1: Rear Differential Torque Specifications
Courtesy of HONDA, U.S.A., INC.

📖	Detailed information, notes, and precautions
☐	Torque: N.m (kgf.m, lbf.ft)
☒	Replace

2

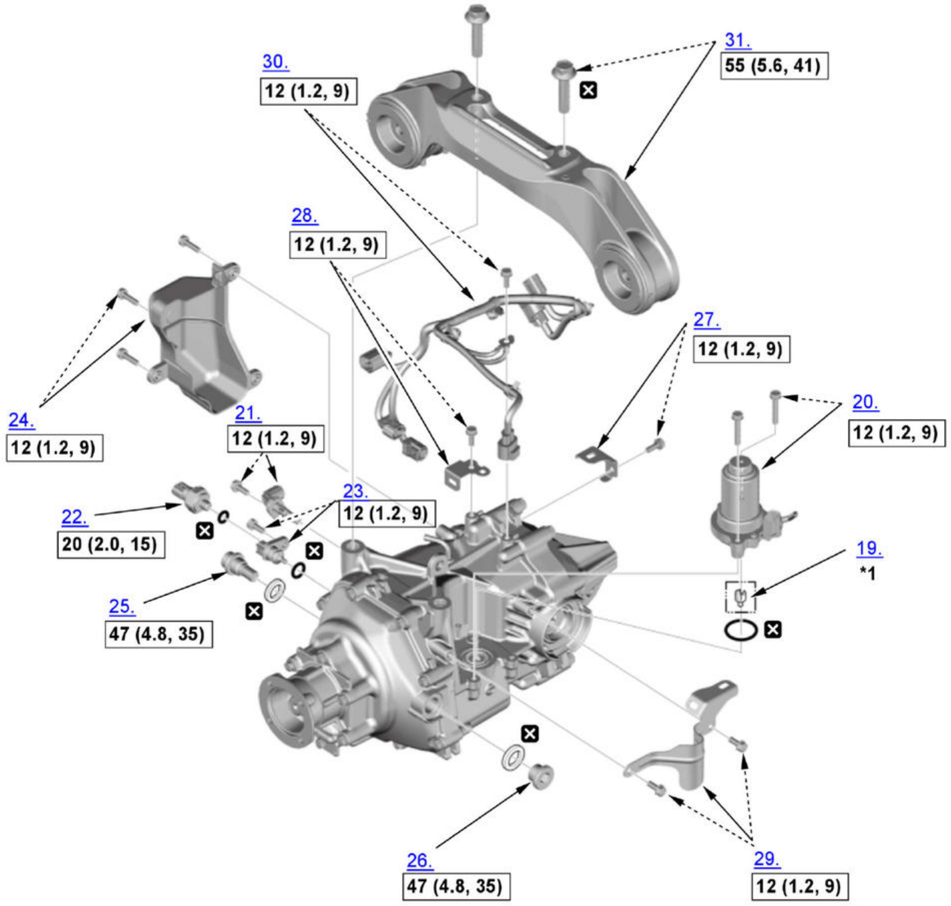
30.
12 (1.2, 9)
31.
55 (5.6, 41)
28.
12 (1.2, 9)
27.
12 (1.2, 9)
20.
12 (1.2, 9)
24.
12 (1.2, 9)
21.
12 (1.2, 9)
23.
12 (1.2, 9)
22.
20 (2.0, 15)
19.
*1
25.
47 (4.8, 35)
26.
47 (4.8, 35)
29.
12 (1.2, 9)

Fig. 2: Rear Differential External Components Torque Specifications
Courtesy of HONDA, U.S.A., INC.

☐	Torque: N.m (kgf.m, lbf.ft)
☒	Replace
*1	For some models

1. Oil Seals - Install

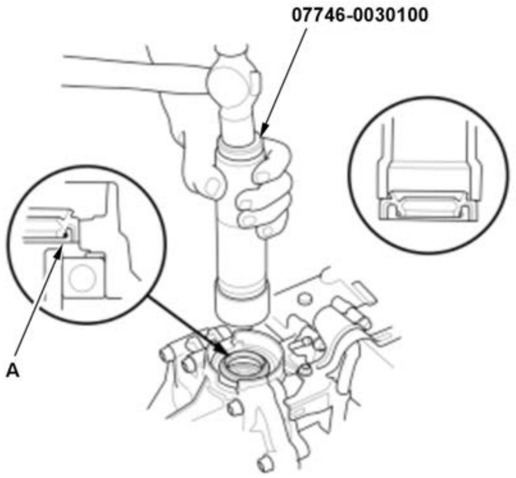	1. Install a new oil seal (A) even and flush with the machined edge of the differential carrier assembly using the 40 mm I.D. driver handle.

2. 8 x 10 mm Dowel Pins - Install
3. Rear Differential Solenoid Valve - Install
4. Oil Pump Body Assembly - Install
5. 32.3 mm Shim - Install
6. 94.6 mm Shim - Install
7. Differential Clutch Assembly - Install
8. Baffle Cover - Install
9. 8 x 10 mm Dowel Pins - Install
10. Oil Pump Case - Install

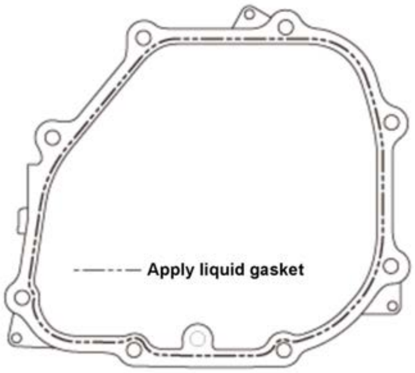	1. Remove the dirt and oil from the sealing surfaces. 2. Apply liquid gasket (P/N 08718-0004 or 08718-0009) evenly to the sealing surface. 3. Install the component within 5 minutes of applying the liquid gasket. Make sure you seal the entire circumference of the bolt holes to prevent fluid leakage. **NOTE:** • If too much time has passed after applying the liquid gasket, remove the old liquid gasket and residue, then reapply the new liquid gasket. • Allow it to cure at least 30 minutes after assembly before filling the differential with recommended fluid.

11. 8 x 10 mm Dowel Pins - Install
12. Fluid Strainer - Install
13. Oil Pump Cover - Install
14. Oil Seal - Install

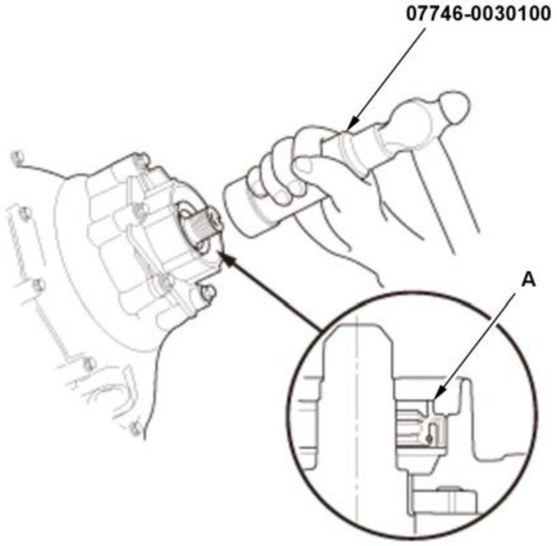 07746-0030100 A	1. Install a new oil seal (A) even and flush with the rear differential oil pump cover using the 40 mm I.D. driver handle.

15. Companion Flange - Install

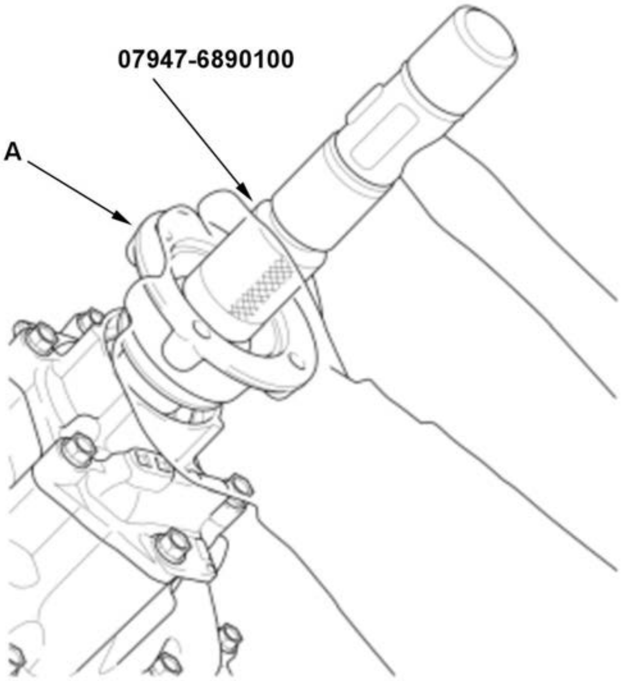 07947-6890100 A	1. Set the companion flange (A) to the clutch guide shaft. 2. Drive on the companion flange using the 41.8 mm oil seal driver.

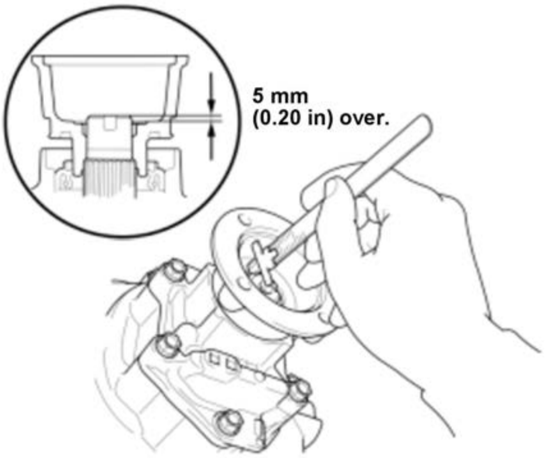

3. Check the length of clutch guide shaft as shown.

NOTE: Make sure to drive on the companion flange until 2 to 3 thread pitches of the clutch guide shaft appears.

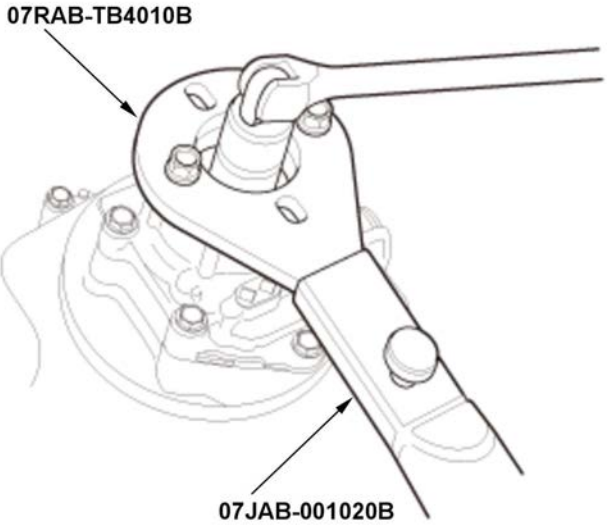

4. Apply rear differential fluid to the used locknut.

5. Set the used locknut to the clutch guide shaft.

6. Install the companion flange holder and the holder handle on the companion flange.

7. Tighten the used locknut.

8. Remove the used locknut, the companion flange holder, and the holder handle.

9. Check the companion flange has been set to the bottom.

16. Back-Up Ring - Install
17. Spring Washer - Install
18. Locknut - Install

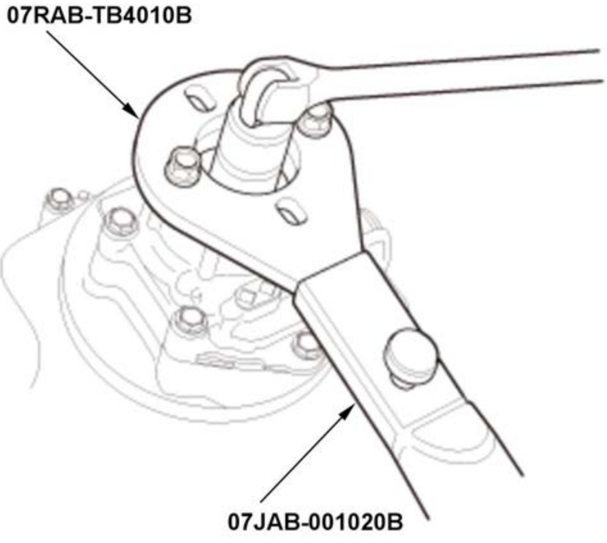

1. Install the companion flange holder and the holder handle on the companion flange.

2. Tighten the locknut to the specified torque.

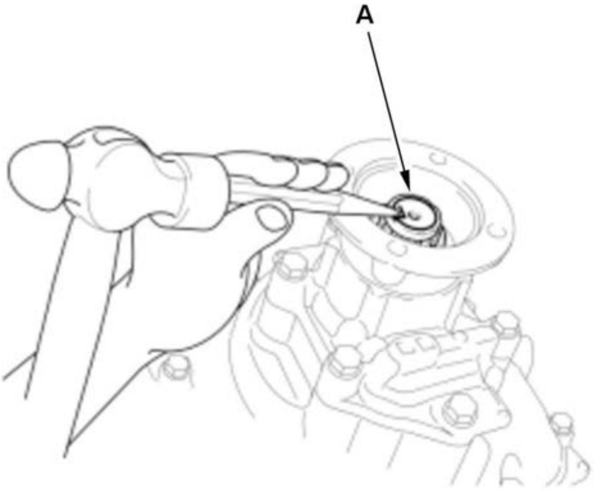	3. Stake the locknut tab (A) into the groove in the clutch guide shaft.

19. Pump Drive Joint - Install (For Some Models)
20. Rear Differential Pump Motor - Install
21. Rear Differential Solenoid Valve Connector Assembly - Install
22. Rear Differential Fluid Pressure Sensor - Install
23. Rear Differential Fluid Temperature Sensor - Install
24. Sensor Cover - Install
25. Drain Plug - Install
26. Filler Plug - Install
27. Harness Bracket D - Install
28. Harness Bracket B - Install
29. Harness Bracket A - Install
30. Rear Differential Harness - Install
31. Rear Differential Front Mount - Install

REAR DIFFERENTIAL DISASSEMBLY AND REASSEMBLY (AWD) (2018 2019 2020 2021)

Image	Description/Tool Number
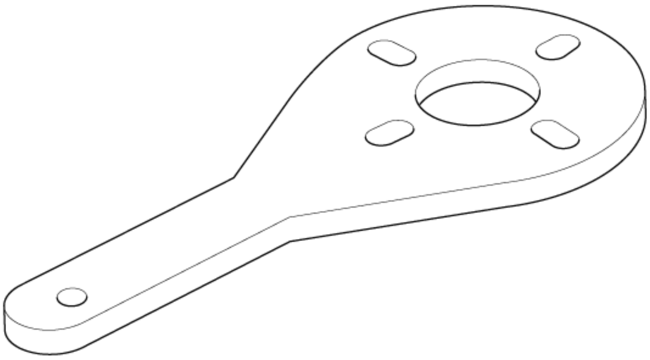	Companion Flange Holder 07RAB-TB4010B

Special Tools Required

Image	Description/Tool Number
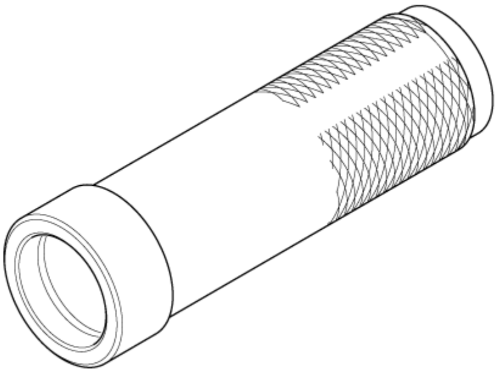	Driver Handle, 40 mm I.D. 07746-0030100
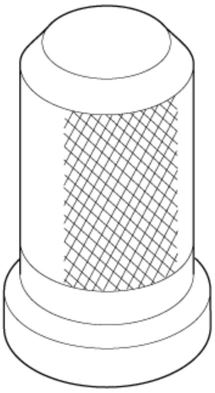	Oil Seal Driver, 41.8 mm 07947-6890100
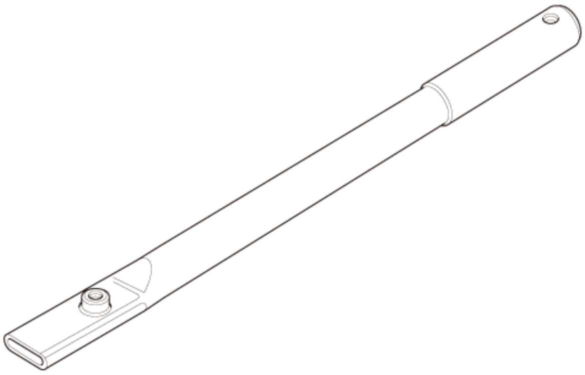	Holder Handle 07JAB-001020B
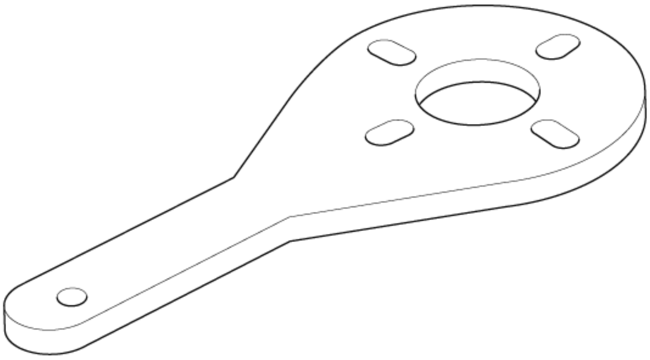	Companion Flange Holder 07RAB-TB4010B

Disassembly

NOTE: Where icon is shown, see below for further information.

1

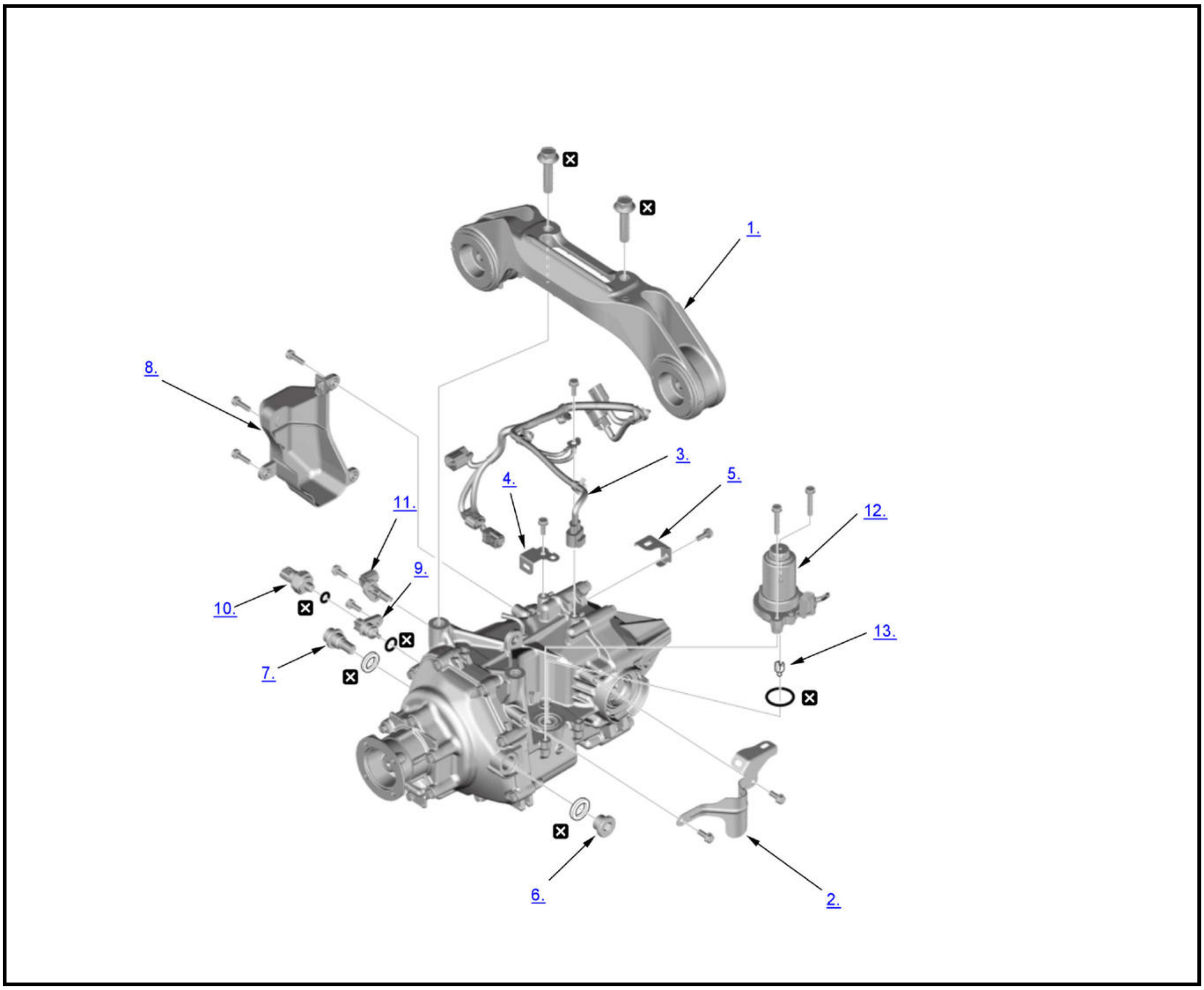
1.
8.
3.
4.
5.
11.
12.
9.
10.
13.
7.
6.
2.

☒	Replace

2

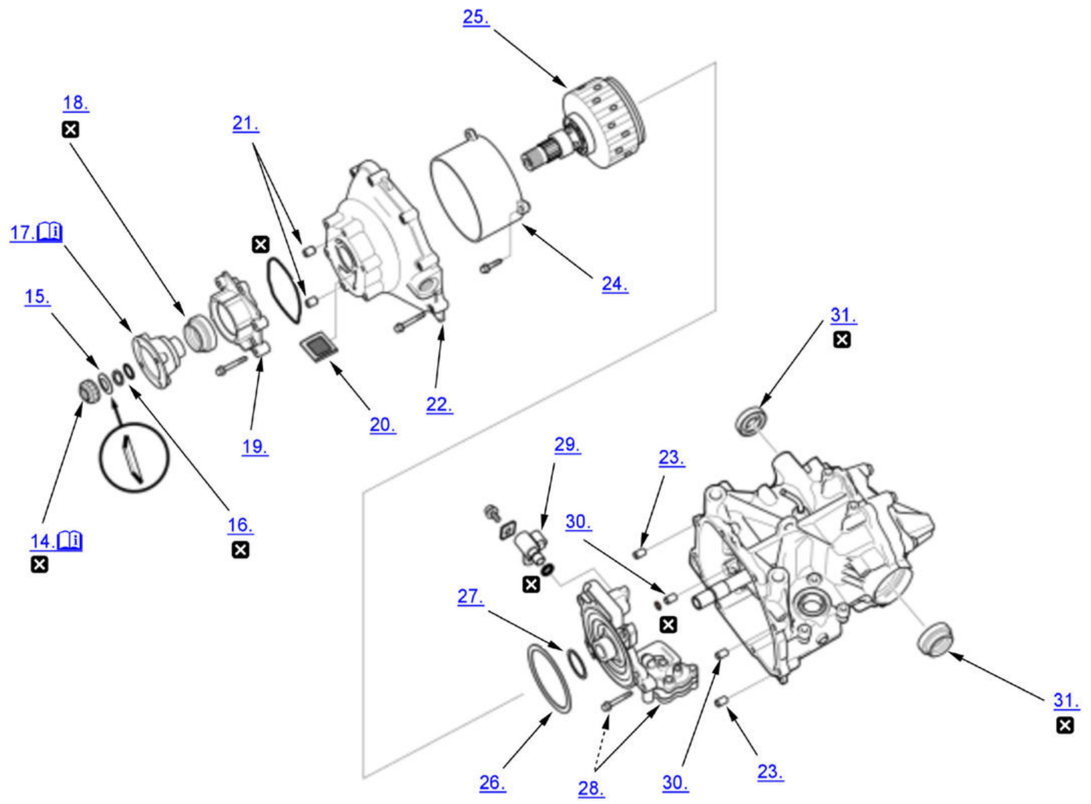

ℹ	Detailed information, notes, and precautions
☒	Replace

1. Rear Differential Front Mount - Remove
2. Harness Bracket A - Remove
3. Rear Differential Harness - Remove
4. Harness Bracket B - Remove
5. Harness Bracket D - Remove
6. Filler Plug - Remove
7. Drain Plug - Remove
8. Sensor Cover - Remove
9. Rear Differential Fluid Temperature Sensor - Remove
10. Rear Differential Fluid Pressure Sensor - Remove
11. Rear Differential Solenoid Valve Connector Assembly - Remove
12. Rear Differential Pump Motor - Remove
13. Pump Drive Joint - Remove
14. Locknut - Remove

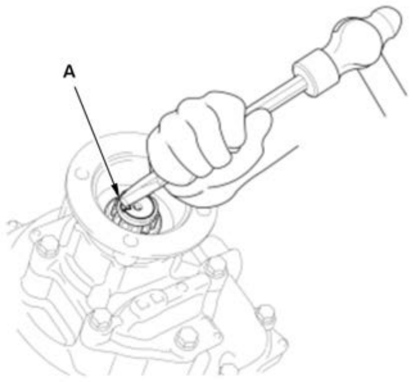

1. Pry up the stake on the locknut (A) from the groove of the clutch guide shaft, making sure the tab completely clears the groove to prevent damaging the clutch guide shaft.

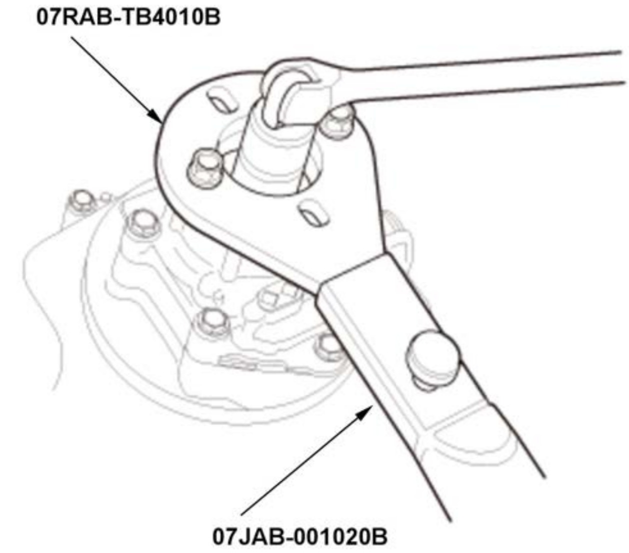

2. Install the companion flange holder and the holder handle on the companion flange.

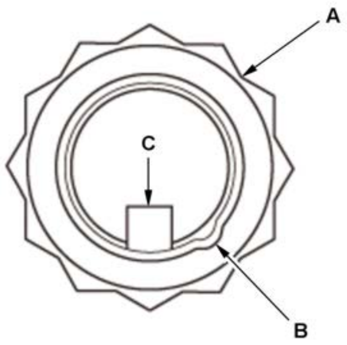

3. Loosen the locknut (A) counterclockwise so its tab (B) comes out from the groove (C) in the clutch guide shaft.

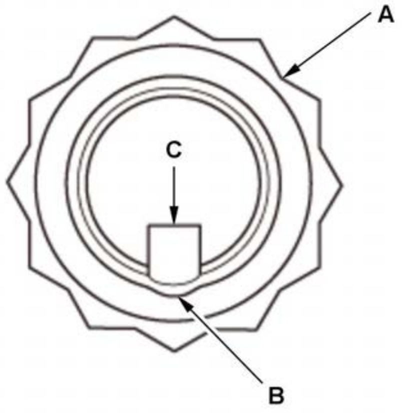	4. Tighten the locknut (A) until its tab (B) aligns with the groove (C). 5. Clean any dirt from inside the groove in the clutch guide shaft, then loosen the locknut.

15. Spring Washer - Remove
16. Back-Up Ring - Remove
17. Companion Flange - Remove

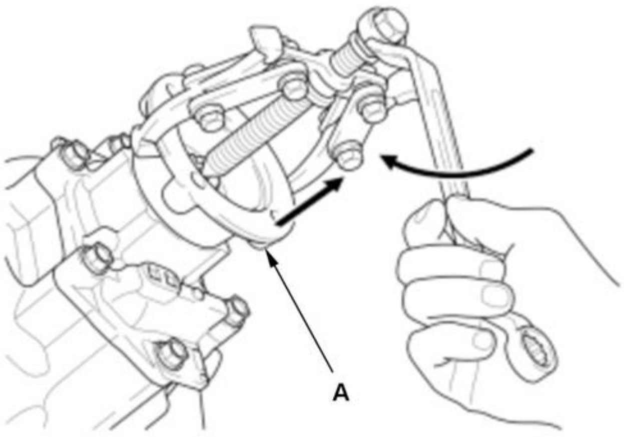	1. Remove the companion flange (A) with a commercially available puller.

18. Oil Seal - Remove
19. Oil Pump Cover - Remove
20. Fluid Strainer - Remove
21. 8 x 10 mm Dowel Pins - Remove
22. Oil Pump Case - Remove
23. 8 x 10 mm Dowel Pins - Remove
24. Baffle Cover - Remove
25. Differential Clutch Assembly - Remove
26. 94.6 mm Shim - Remove
27. 32.3 mm Shim - Remove
28. Oil Pump Body Assembly - Remove
29. Rear Differential Solenoid Valve - Remove
30. 8 x 10 mm Dowel Pins - Remove
31. Oil Seals - Remove

Reassembly

NOTE:

- 📖 Where icon is shown, see below for further information.
- Apply a light coat of clean rear differential fluid on all O-rings before installation.

1

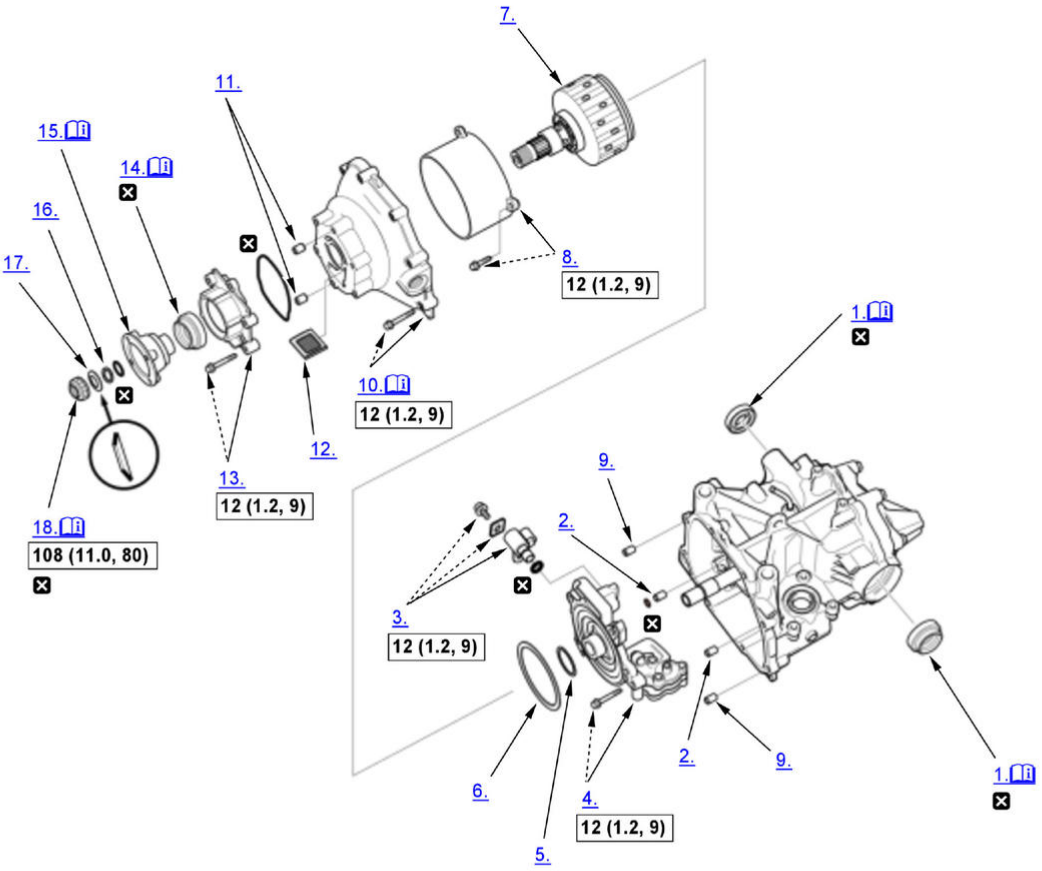
7.
11.
15. 📖
14. 📖
☒
16.
17.
☒
8.
12 (1.2, 9)
1. 📖
☒
☒
10. 📖
12 (1.2, 9)
12.
13.
12 (1.2, 9)
18. 📖
108 (11.0, 80)
☒
9.
2.
☒
3.
12 (1.2, 9)
☒
2.
9.
1. 📖
☒
6.
4.
12 (1.2, 9)
5.

Fig. 3: Oil Pump Body Assembly Torque Specifications
Courtesy of HONDA, U.S.A., INC.

📖	Detailed information, notes, and precautions
☐	Torque: N.m (kgf.m, lbf.ft)
☒	Replace

2

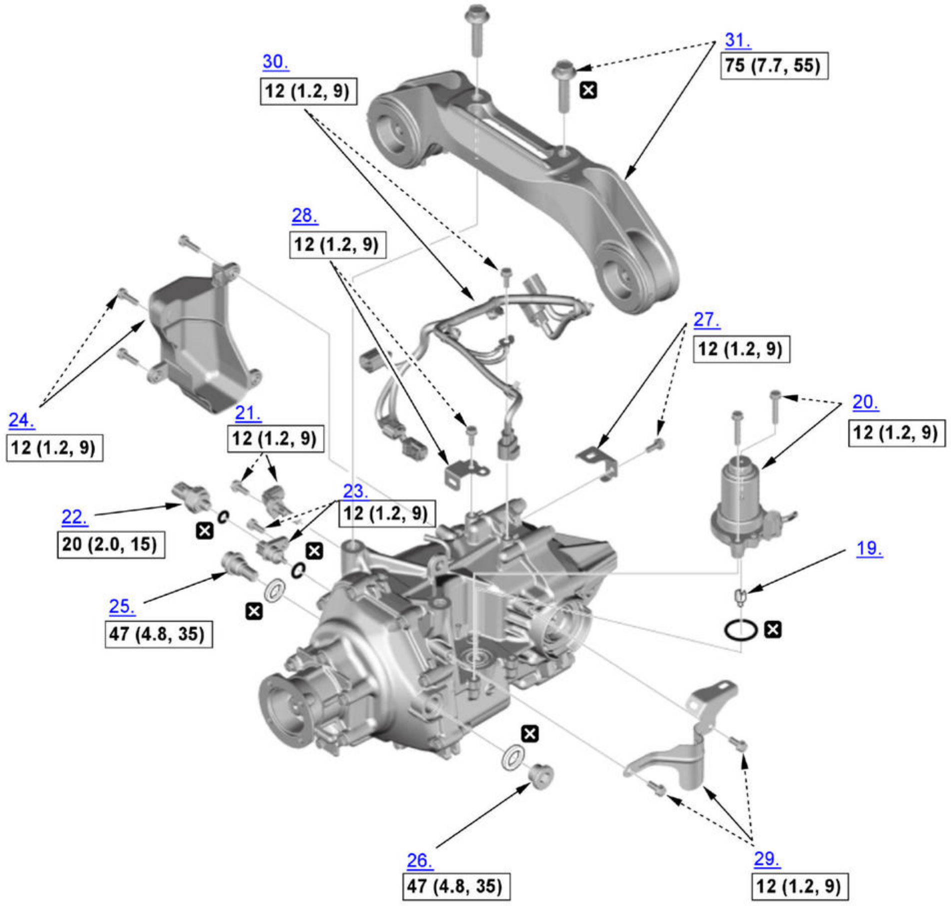
30.
12 (1.2, 9)
31.
75 (7.7, 55)
28.
12 (1.2, 9)
27.
12 (1.2, 9)
24.
12 (1.2, 9)
21.
12 (1.2, 9)
20.
12 (1.2, 9)
22.
20 (2.0, 15)
23.
12 (1.2, 9)
19.
25.
47 (4.8, 35)
26.
47 (4.8, 35)
29.
12 (1.2, 9)

Fig. 4: Rear Differential External Componentss Torque Specifications
Courtesy of HONDA, U.S.A., INC.

☐	Torque: N.m (kgf.m, lbf.ft)
☒	Replace

1. Oil Seals - Install

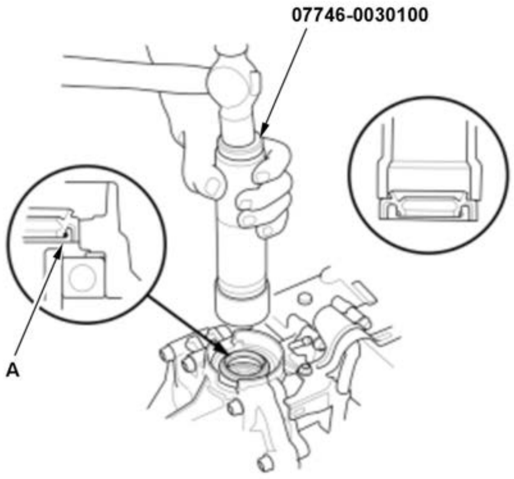 07746-0030100 A	1. Install a new oil seal (A) even and flush with the machined edge of the differential carrier assembly using the 40 mm I.D. driver handle.

2. 8 x 10 mm Dowel Pins - Install
3. Rear Differential Solenoid Valve - Install
4. Oil Pump Body Assembly - Install
5. 32.3 mm Shim - Install
6. 94.6 mm Shim - Install
7. Differential Clutch Assembly - Install
8. Baffle Cover - Install
9. 8 x 10 mm Dowel Pins - Install
10. Oil Pump Case - Install

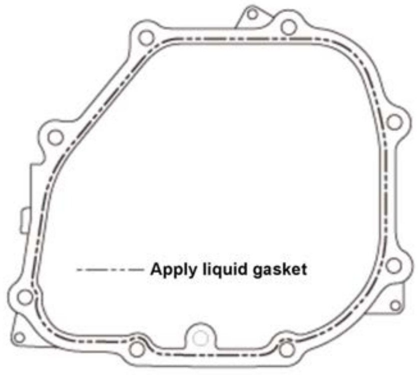	1. Remove the dirt and oil from the sealing surfaces. 2. Apply liquid gasket (P/N 08718-0004 or 08718-0009) evenly to the sealing surface. 3. Install the component within 5 minutes of applying the liquid gasket. Make sure you seal the entire circumference of the bolt holes to prevent fluid leakage. **NOTE:** • If too much time has passed after applying the liquid gasket, remove the old liquid gasket and residue, then reapply the new liquid gasket. • Allow it to cure at least 30 minutes after assembly before filling the differential with recommended fluid.

11. 8 x 10 mm Dowel Pins - Install
12. Fluid Strainer - Install
13. Oil Pump Cover - Install
14. Oil Seal - Install

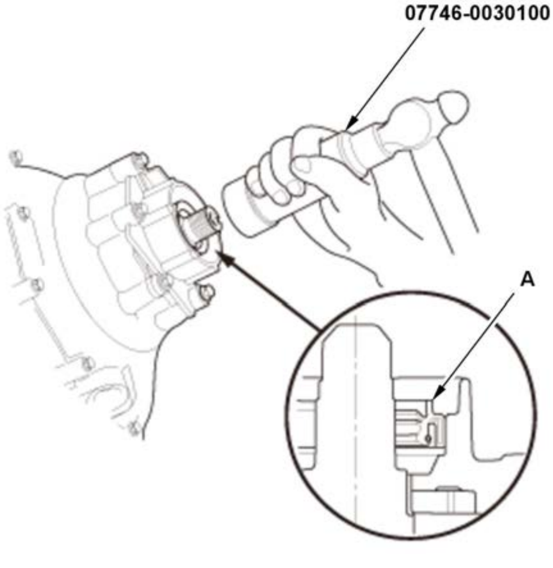	1. Install a new oil seal (A) even and flush with the rear differential oil pump cover using the 40 mm I.D. driver handle.

15. Companion Flange - Install

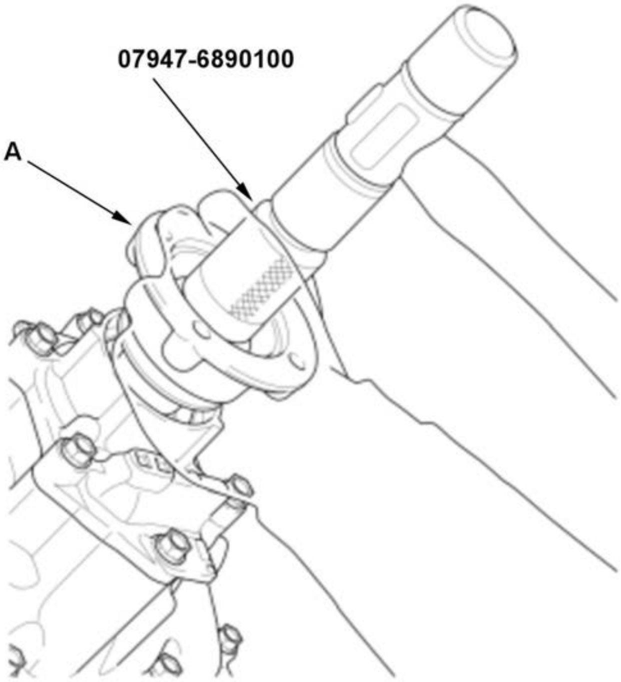	1. Set the companion flange (A) to the clutch guide shaft. 2. Drive on the companion flange using the 41.8 mm oil seal driver.

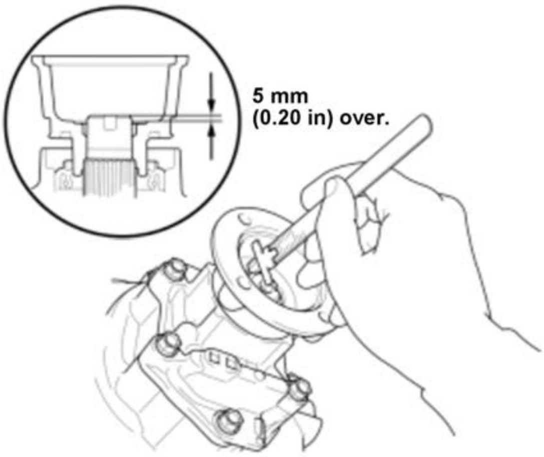	3. Check the length of clutch guide shaft as shown. **NOTE:** Make sure to drive on the companion flange until 2 to 3 thread pitches of the clutch guide shaft appears.

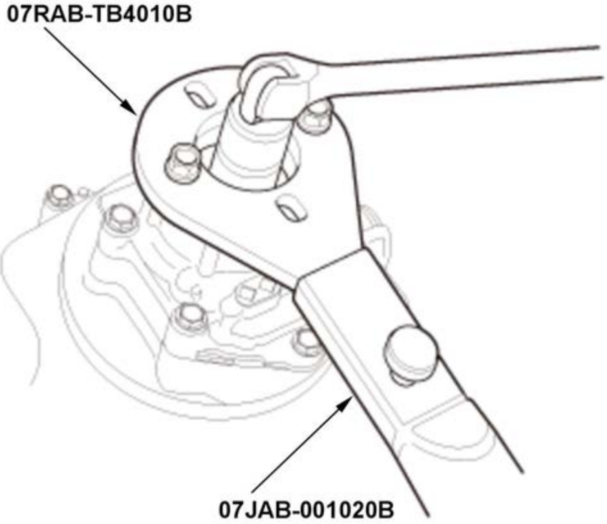	4. Apply rear differential fluid to the used locknut. 5. Set the used locknut to the clutch guide shaft. 6. Install the companion flange holder and the holder handle on the companion flange. 7. Tighten the used locknut. 8. Remove the used locknut, the companion flange holder, and the holder handle. 9. Check the companion flange has been set to the bottom.

16. Back-Up Ring - Install
17. Spring Washer - Install
18. Locknut - Install

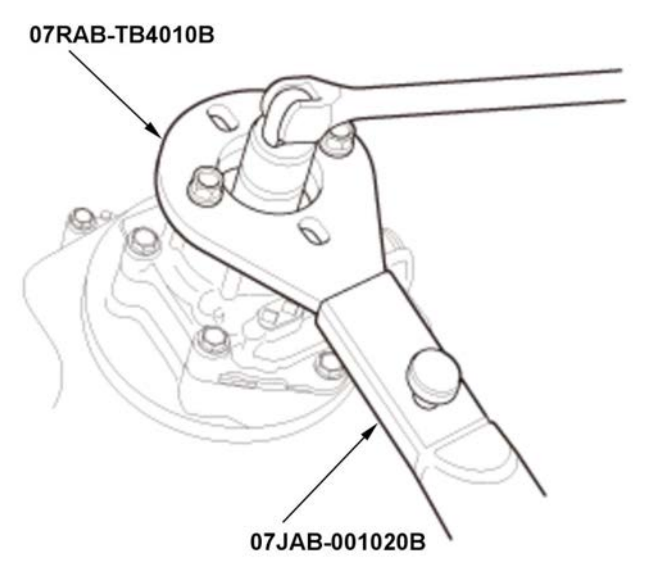	1. Install the companion flange holder and the holder handle on the companion flange. 2. Tighten the locknut to the specified torque.

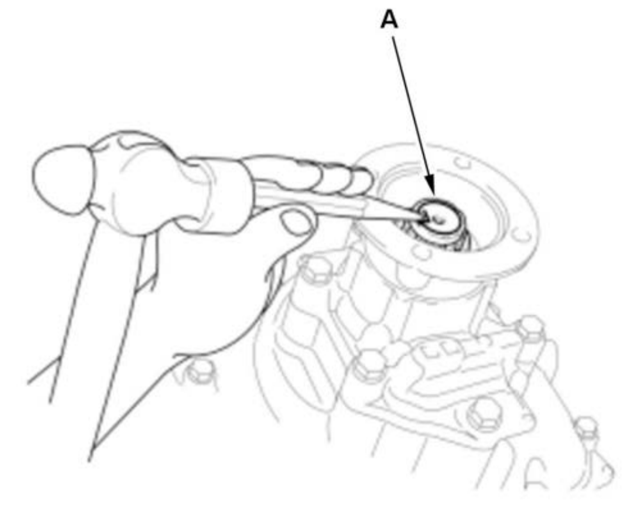	3. Stake the locknut tab (A) into the groove in the clutch guide shaft.

19. Pump Drive Joint - Install
20. Rear Differential Pump Motor - Install
21. Rear Differential Solenoid Valve Connector Assembly - Install
22. Rear Differential Fluid Pressure Sensor - Install
23. Rear Differential Fluid Temperature Sensor - Install
24. Sensor Cover - Install
25. Drain Plug - Install
26. Filler Plug - Install
27. Harness Bracket D - Install
28. Harness Bracket B - Install
29. Harness Bracket A - Install
30. Rear Differential Harness - Install
31. Rear Differential Front Mount - Install

REMOVAL AND INSTALLATION

AWD CONTROL UNIT REMOVAL AND INSTALLATION (AWD)

Removal

1. Rear Left Side Trim Panel - Remove
2. AWD Control Unit - Remove

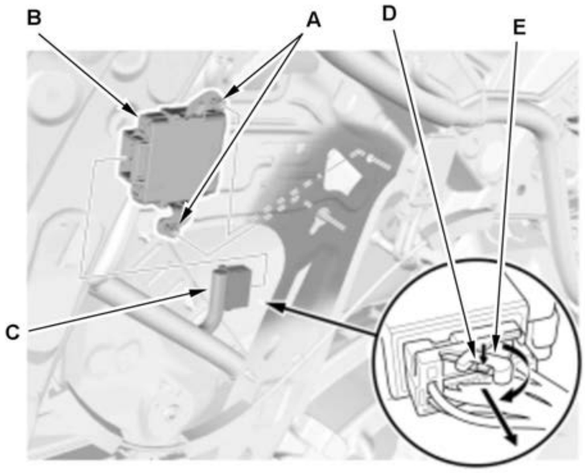	1. Turn the vehicle to the OFF (LOCK) mode. 2. Loosen the AWD control unit mounting bolts (A) and remove the AWD control unit (B). 3. Disconnect connector (C) by pushing the lock (D) and pulling up the lever (E); the connector disconnects itself.

Installation

NOTE:

- How to read the torque specifications .
- The AWD control unit must be initialized after replacement, otherwise the AWD with intelligent control system will not function.

1. AWD Control Unit - Install

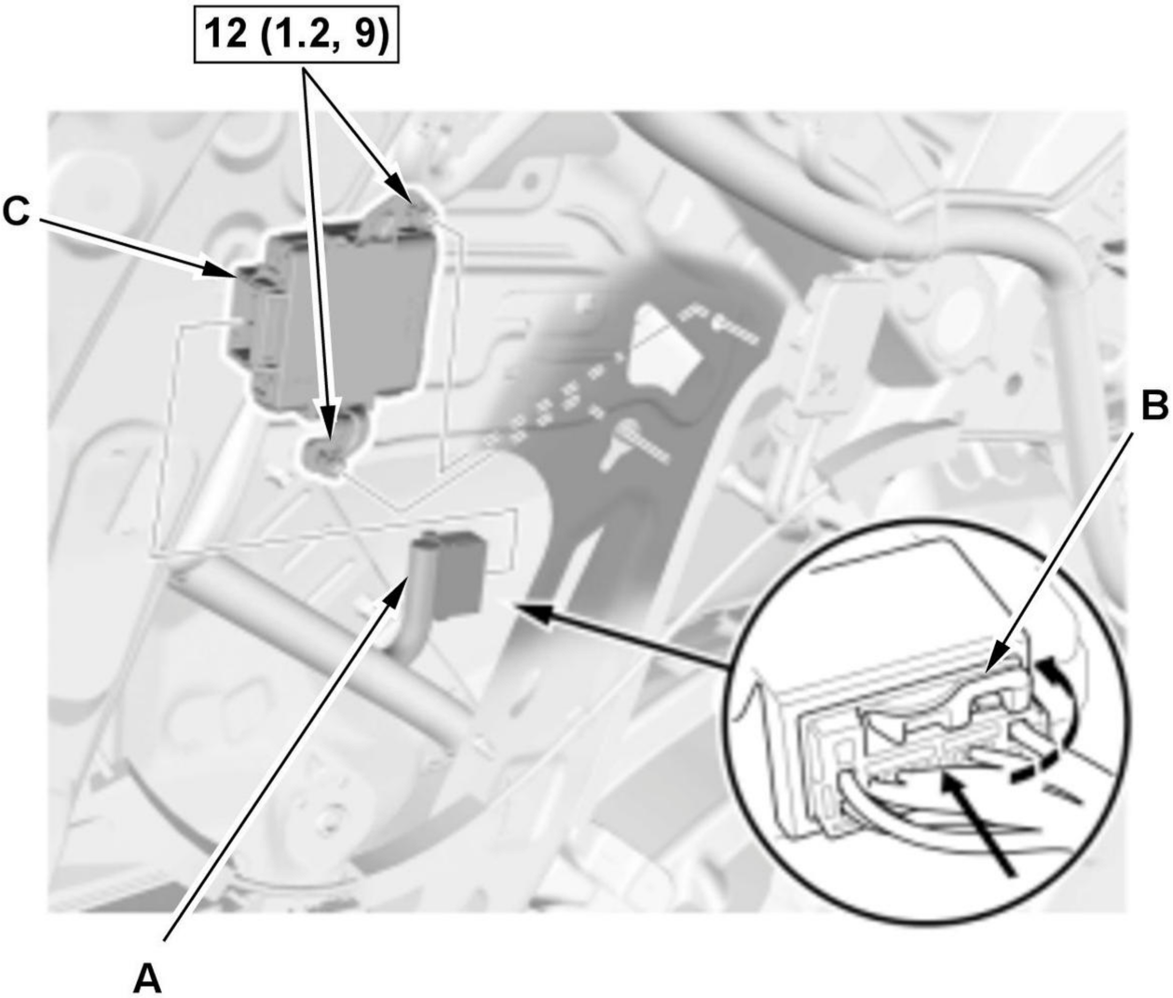

Fig. 5: AWD Control Unit (C) Torque Specifications
Courtesy of HONDA, U.S.A., INC.

1. Align the connecting surface of the connector (A).
2. Pull down the lever (B) of the connector, then confirm the connector is fully seated.
3. Install the AWD control unit (C).

2. **Rear Left Side Trim Panel - Install**
3. **AWD Control Unit - Initialization**

REAR DIFFERENTIAL BREATHER BOX AND HOSE REMOVAL AND INSTALLATION (AWD)

Exploded View

1. Rear Differential Breather Hose

1

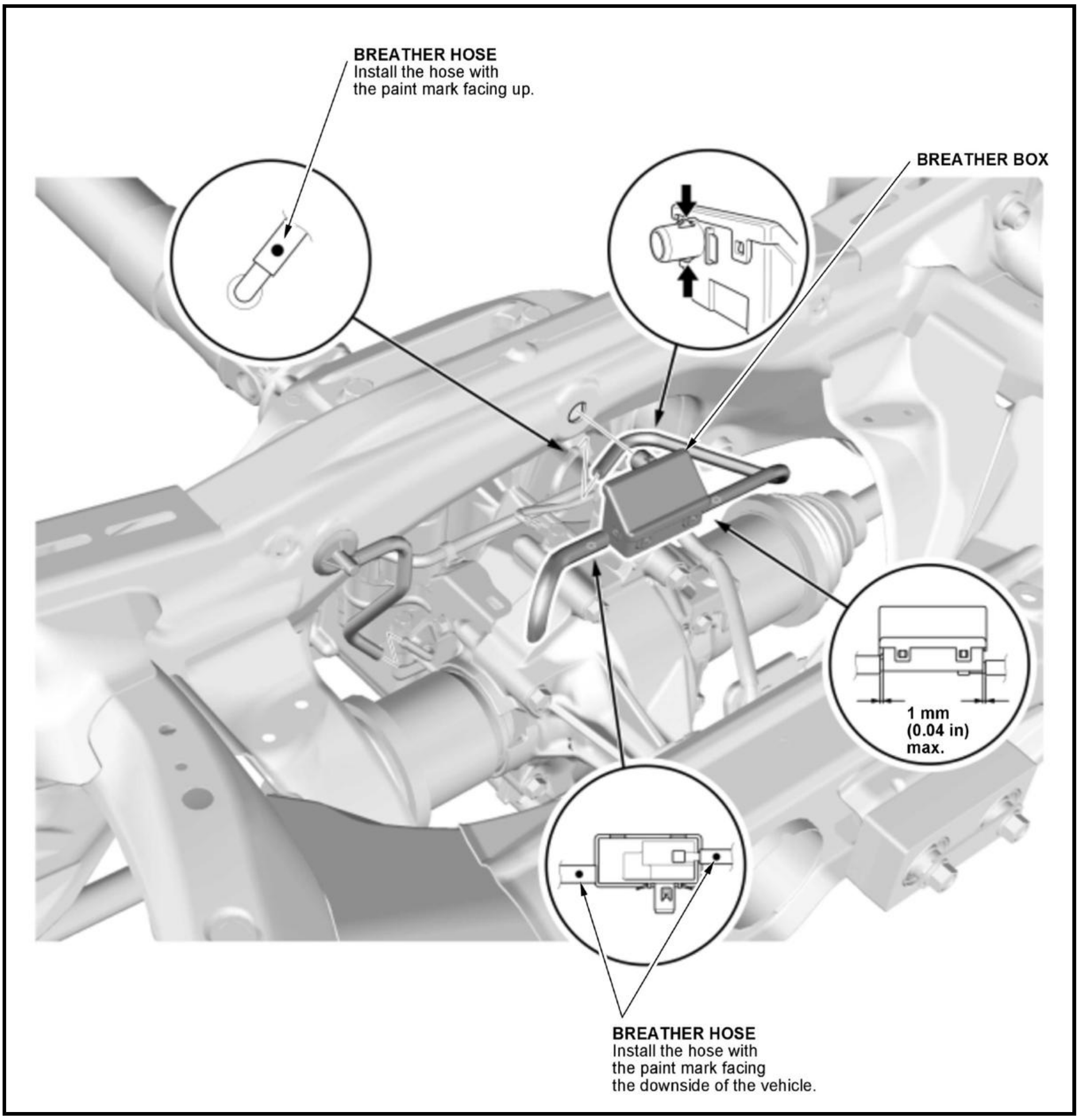
BREATHER HOSE
Install the hose with
the paint mark facing up.
BREATHER BOX
1 mm
(0.04 in)
max.
BREATHER HOSE
Install the hose with
the paint mark facing
the downside of the vehicle.

REAR DIFFERENTIAL FLUID PRESSURE SENSOR REMOVAL AND INSTALLATION (AWD)

Removal and Installation

1

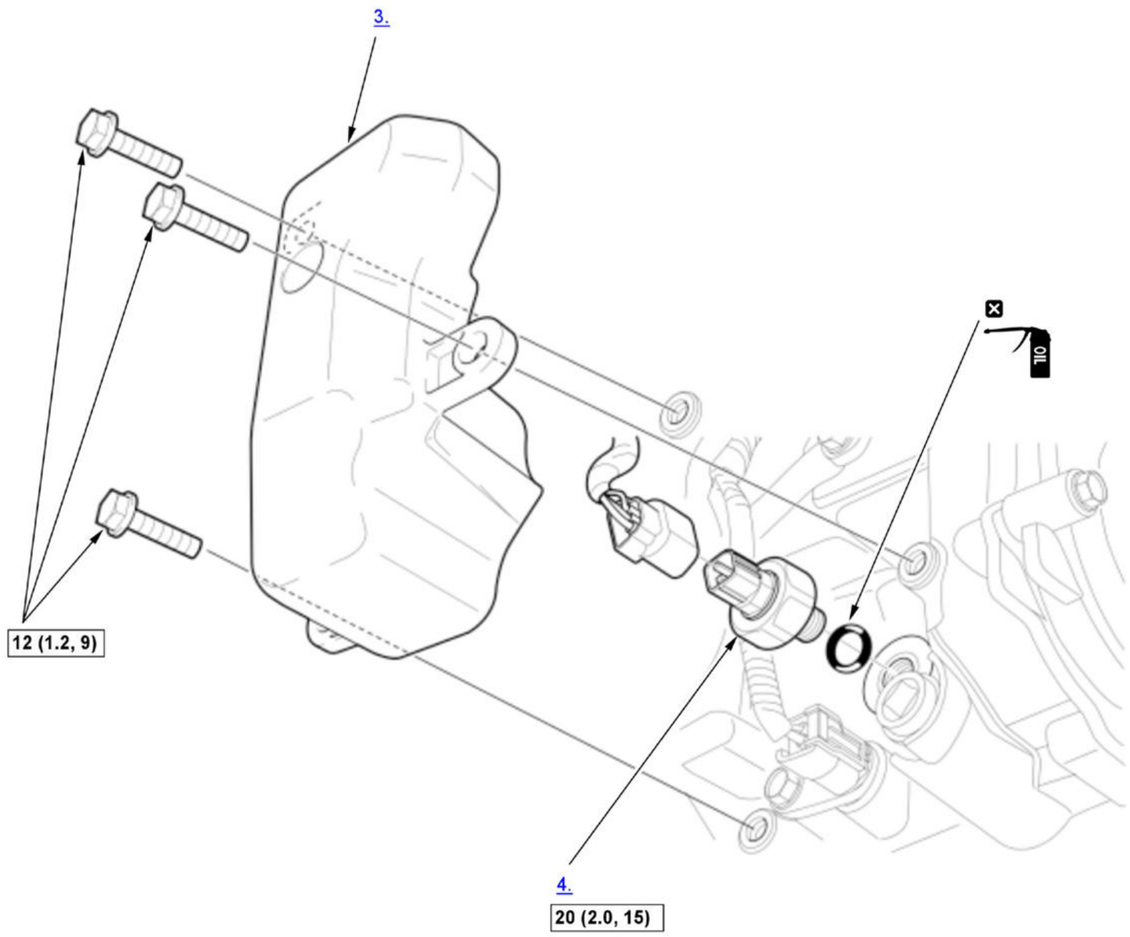

Fig. 6: Rear Differential Fluid Pressure Sensor And Cover Torque Specifications
Courtesy of HONDA, U.S.A., INC.

☐	Torque: N.m (kgf.m, lbf.ft)
☒	Replace
OIL	Rear differential fluid

1. **Vehicle - Lift**
2. **Rear Differential Fluid - Drain**
3. Sensor Cover - Remove
4. Rear Differential Fluid Pressure Sensor - Remove
5. All Removed Parts - Install

   1. Install the parts in the reverse order of removal.

6. **Rear Differential Fluid - Refill**

REAR DIFFERENTIAL FLUID TEMPERATURE SENSOR REMOVAL AND INSTALLATION (AWD)

Removal and Installation

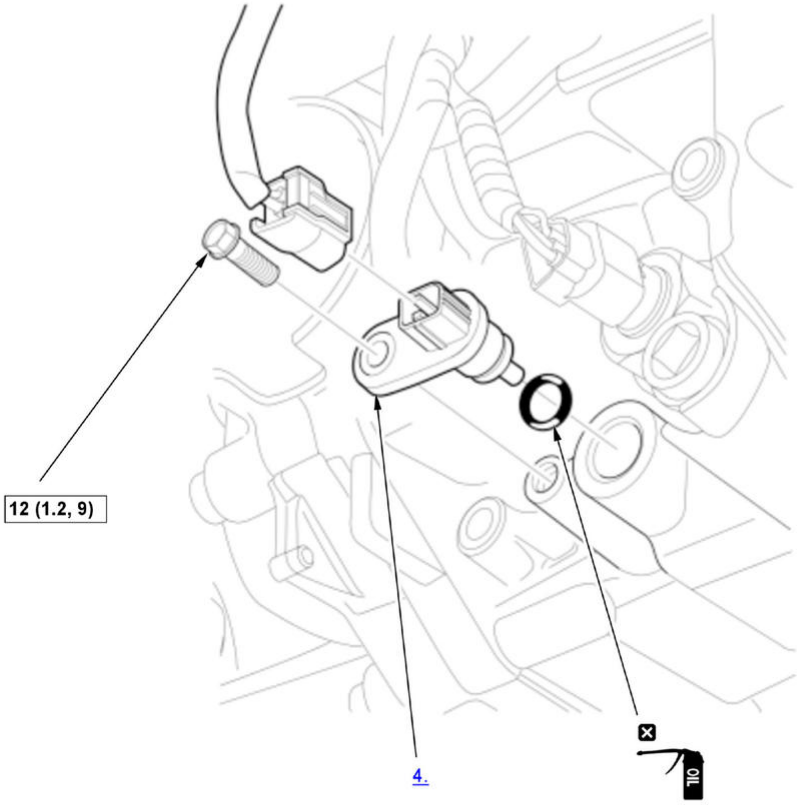

Fig. 7: Rear Differential Fluid Temperature Sensor Torque Specifications
Courtesy of HONDA, U.S.A., INC.

☐	Torque: N.m (kgf.m, lbf.ft)
☒	Replace
OIL	Rear differential fluid

1. **Vehicle - Lift**
2. **Rear Differential Fluid - Drain**
3. **Sensor Cover - Remove**
4. Rear Differential Fluid Temperature Sensor - Remove
5. All Removed Parts - Install

    1. Install the parts in the reverse order of removal.

6. **Rear Differential Fluid - Refill**

REAR DIFFERENTIAL MOUNT REMOVAL AND INSTALLATION (AWD) (2017)

Exploded View

NOTE: Tighten the rear differential mount bolts in the numbered sequence shown.

1. Rear Differential Mount

1

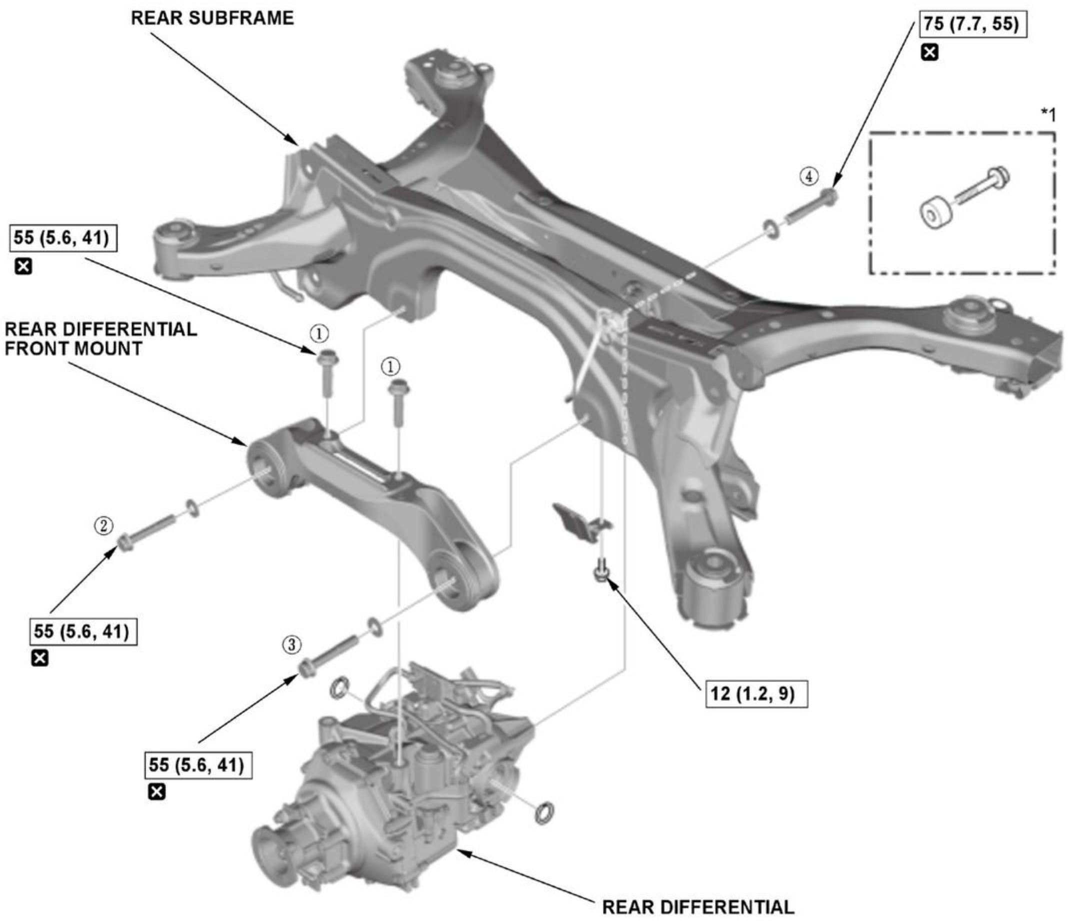
REAR SUBFRAME
75 (7.7, 55)
☒
*1
④
55 (5.6, 41)
☒
REAR DIFFERENTIAL FRONT MOUNT
①
①
②
55 (5.6, 41)
☒
③
55 (5.6, 41)
☒
12 (1.2, 9)
REAR DIFFERENTIAL

Fig. 8: Rear Differential Mount Torque Specifications & Bolt Tightening Sequence(AWD)
Courtesy of HONDA, U.S.A., INC.

☐	Torque: N.m (kgf.m, lbf.ft)
☒	Replace
*1	For some models

REAR DIFFERENTIAL MOUNT REMOVAL AND INSTALLATION (AWD) (2018 2019 2020 2021)

Exploded View

NOTE: Tighten the rear differential mount bolts in the numbered sequence shown.

1. Rear Differential Mount

1

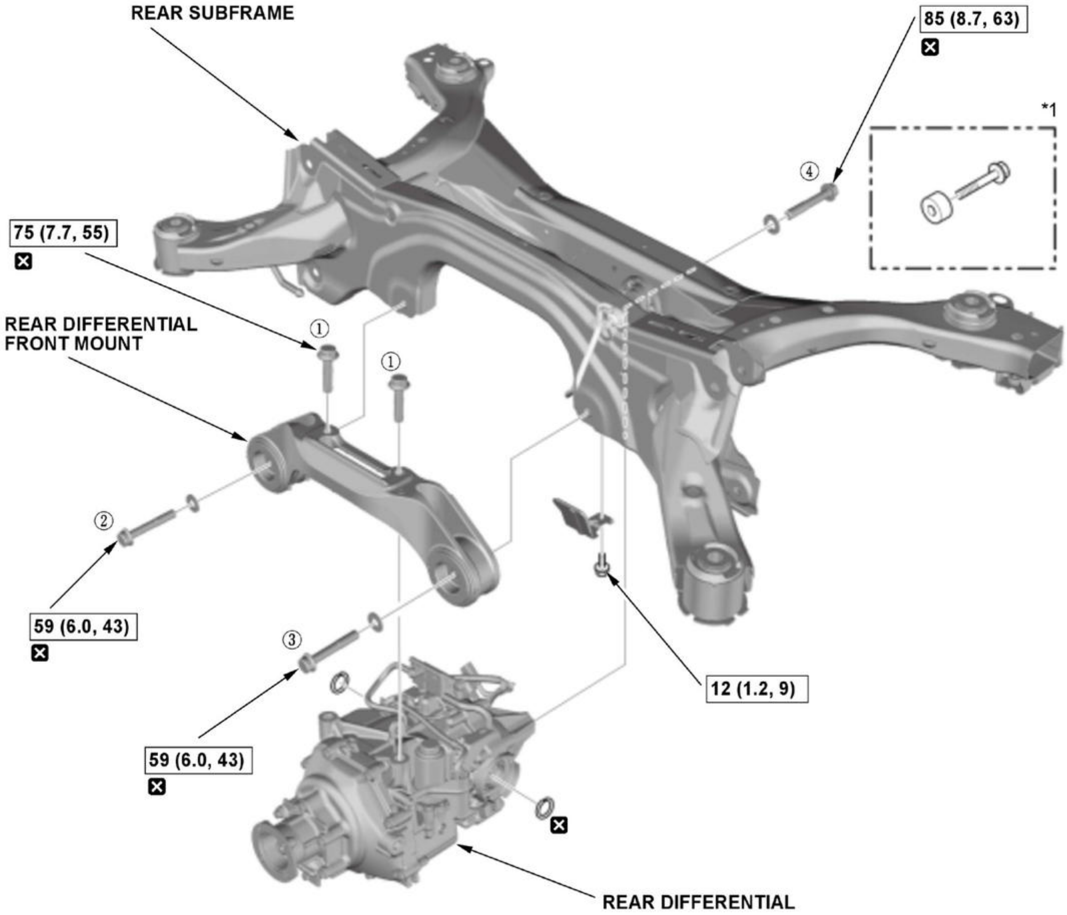
REAR SUBFRAME
85 (8.7, 63)
☒
*1
④
75 (7.7, 55)
☒
REAR DIFFERENTIAL FRONT MOUNT
①
①
②
59 (6.0, 43)
☒
③
12 (1.2, 9)
59 (6.0, 43)
☒
☒
REAR DIFFERENTIAL

Fig. 9: Rear Differential Mount Torque Specifications & Tightening Sequence (AWD)
Courtesy of HONDA, U.S.A., INC.

☐	Torque: N.m (kgf.m, lbf.ft)
☒	Replace
*1	For some models

REAR DIFFERENTIAL PUMP MOTOR REMOVAL AND INSTALLATION (AWD)

Removal and Installation

1

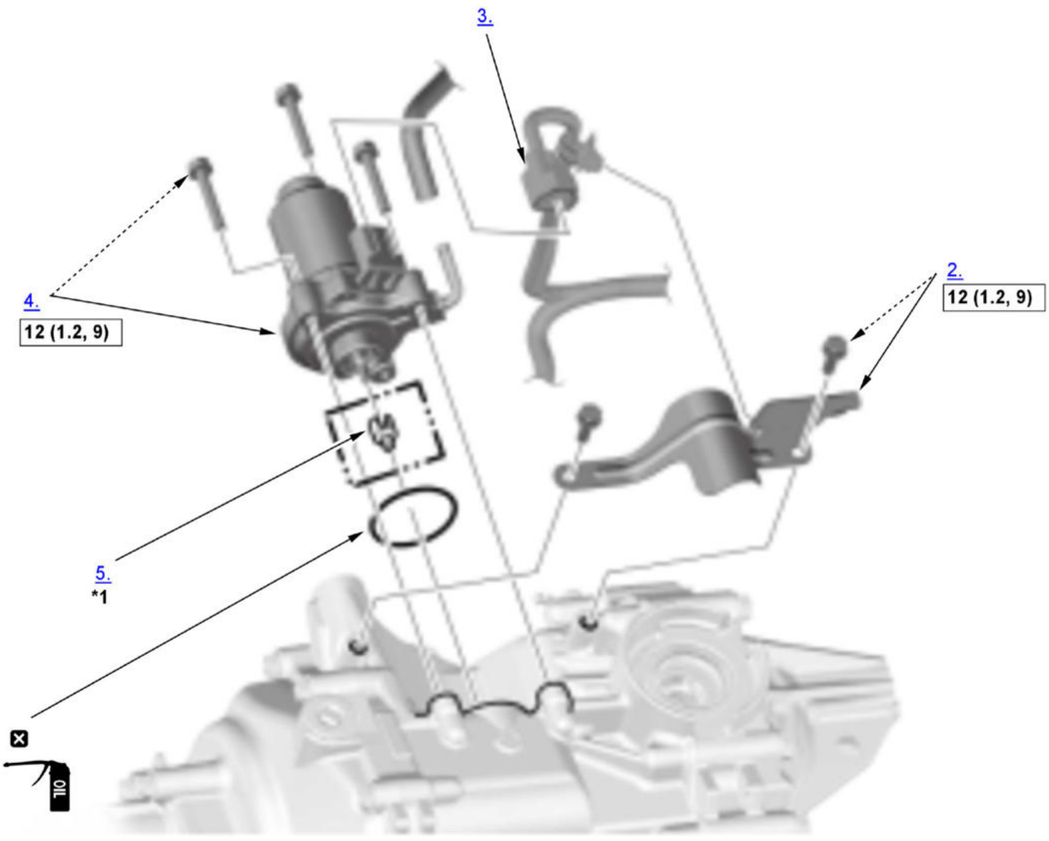

Fig. 10: Rear Differential Pump Motor Torque Specifications (AWD)
Courtesy of HONDA, U.S.A., INC.

☐	Torque: N.m (kgf.m, lbf.ft)
☒	Replace
OIL	Rear differential fluid
*1	For some models

1. **Rear Differential Assembly - Remove**
2. Harness Bracket - Remove
3. Connector - Disconnect
4. Rear Differential Pump Motor - Remove
5. Pump Drive joint - Remove (For Some Models)
6. All Removed Parts - Install

    1. Install the parts in the reverse order of removal.

REAR DIFFERENTIAL REMOVAL AND INSTALLATION (AWD) (2017)

Removal

NOTE: ℹ Where icon is shown, see below for further information.

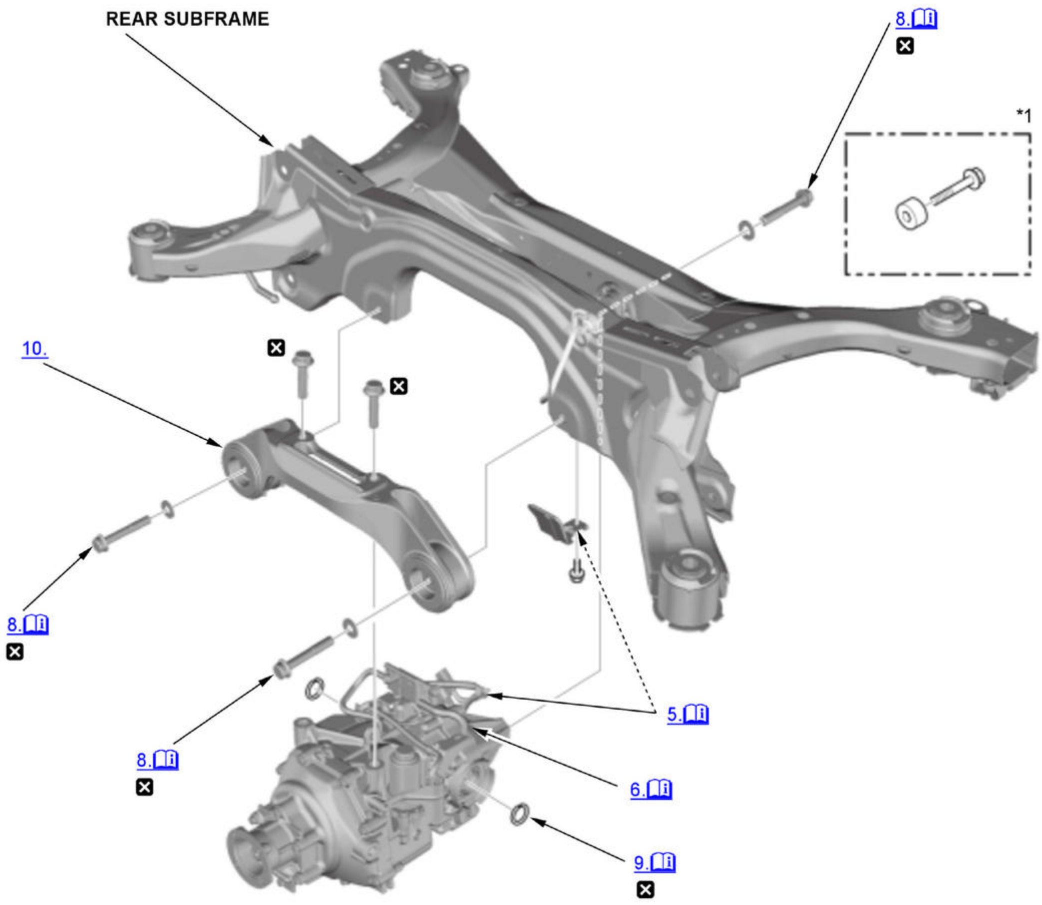
REAR SUBFRAME
8.
*1
10.
8.
5.
8.
6.
9.

📖	Detailed information, notes, and precautions
☒	Replace
*1	For some models

1. **Vehicle - Lift**
2. **Rear Differential Fluid - Drain**
3. **Muffler - Remove**
4. **No. 2 Propeller Shaft - Disconnect**
5. Connectors (Rear Differential Subharness) - Disconnect

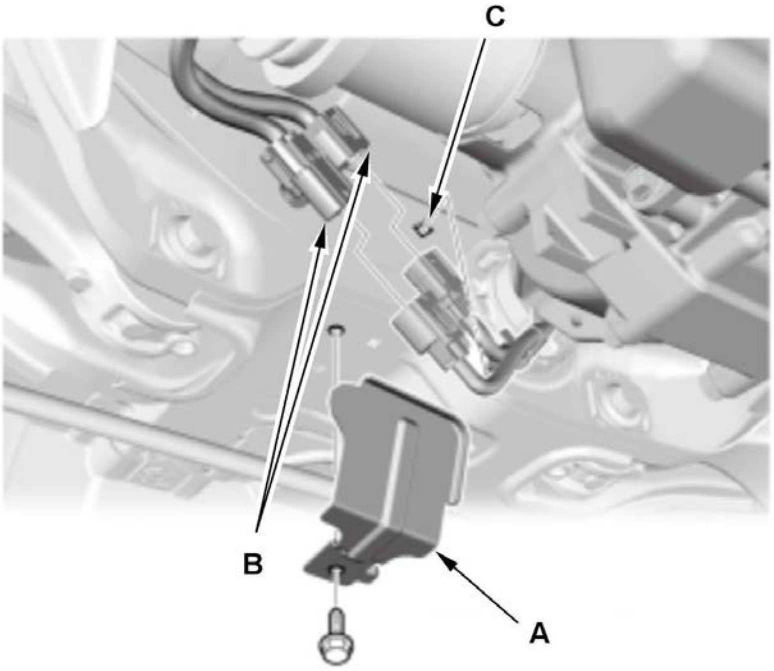	1. Remove the cover (A). 2. Disconnect the connectors (B). 3. Remove the harness clip (C).

6. Breather Hose - Disconnect

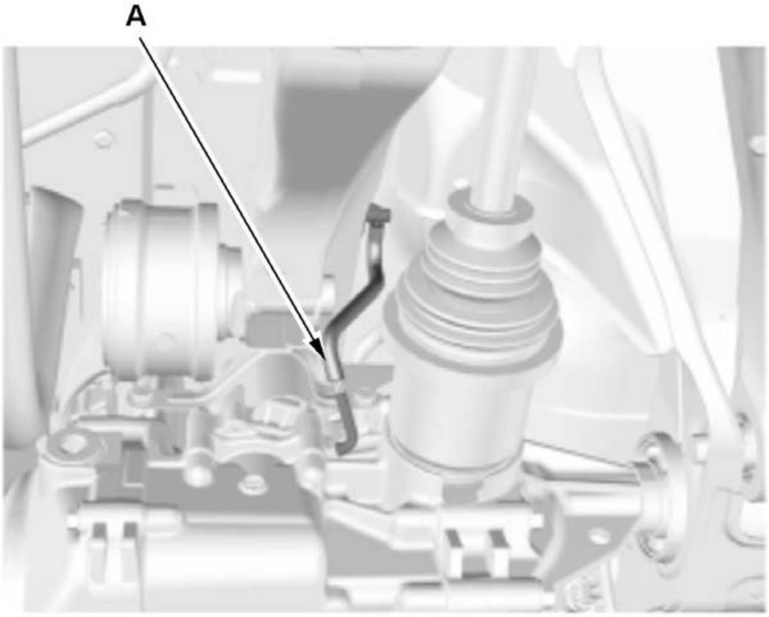 **Left side** **Right side**	1. Disconnect the breather hoses (A).

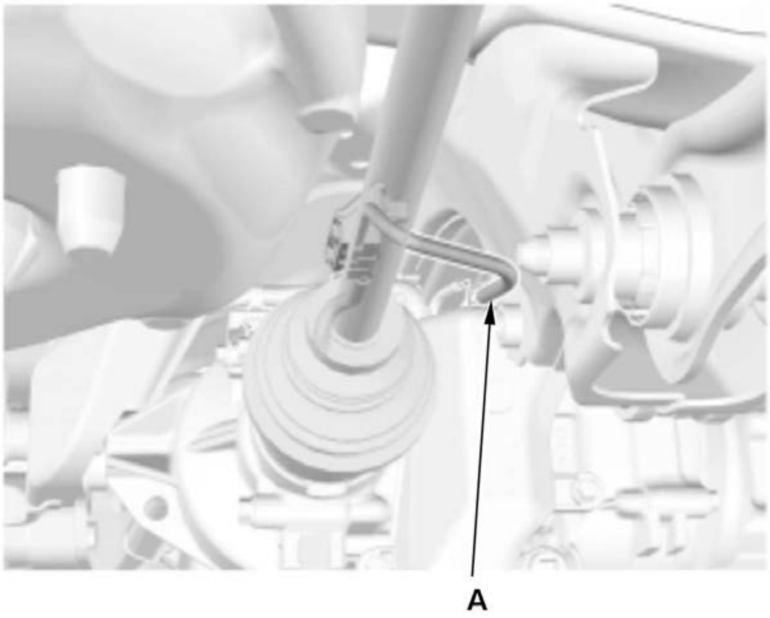	

7. Rear Differential - Support

   NOTE: Support the Rear Differential with a transmission jack.

8. Rear Differential Mounting Bolt - Remove

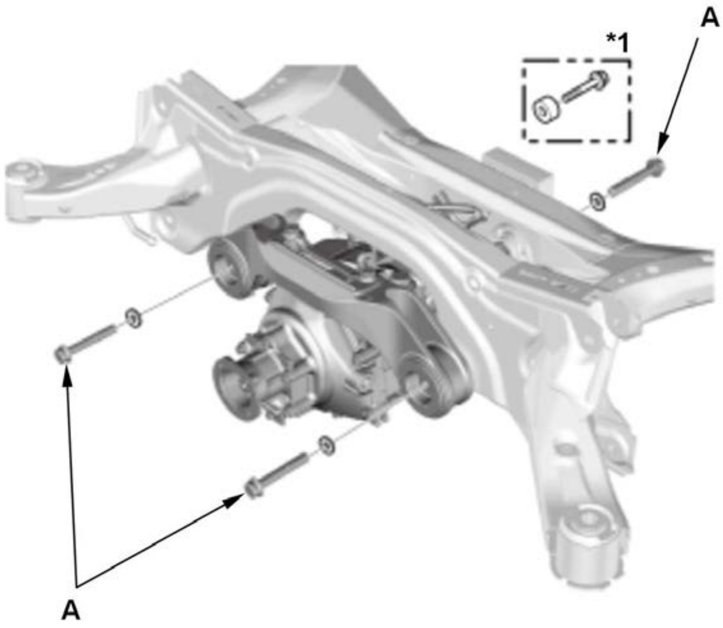 *1: For Some Models	1. Remove the rear differential mounting bolts (A).

9. Rear Driveshaft Inboard Side - Disconnect

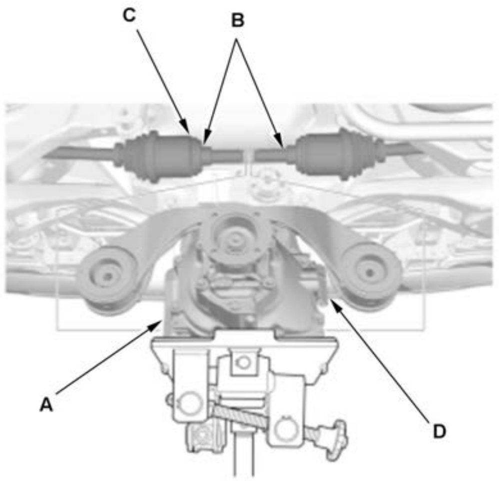	1. Lower the rear differential assembly (A) while pulling both rear driveshaft inboard joints (B) out of the rear differential assembly. **NOTE:** • Be careful not to damage the driveshaft rings (C) when prying out the driveshaft inboard joints. • Be careful not to damage the oil seals (D).

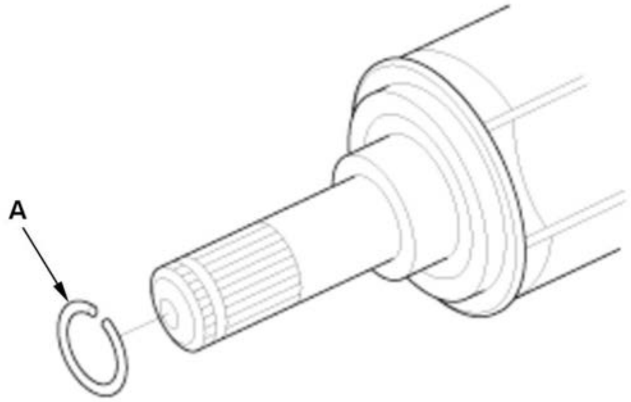	2. Remove the driveshaft inboard joint set ring (A) on both sides.

10. Rear Differential Front Mount - Remove

Installation

NOTE: 📖 Where icon is shown, see below for further information.

1

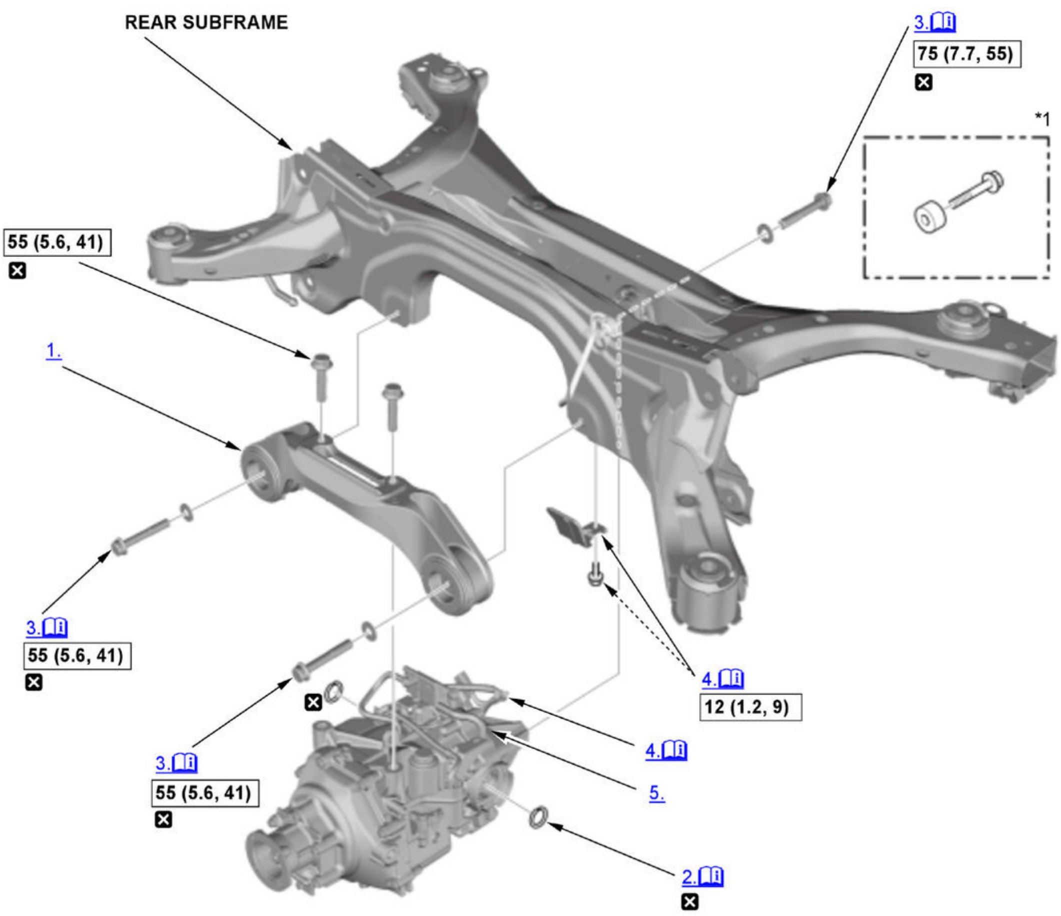
REAR SUBFRAME
3.
75 (7.7, 55)
*1
55 (5.6, 41)
1.
3.
55 (5.6, 41)
4.
12 (1.2, 9)
3.
55 (5.6, 41)
4.
5.
2.

Fig. 11: Rear Differential Mount Torque Specificvations
Courtesy of HONDA, U.S.A., INC.

📖	Detailed information, notes, and precautions
☐	Torque: N.m (kgf.m, lbf.ft)
☒	Replace
*1	For some models

1. Rear Differential Front Mount - Install
2. Rear Driveshaft Inboard Side - Connect

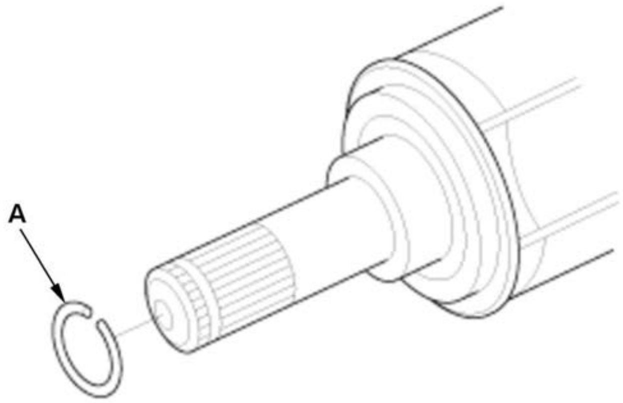

1. Install a new driveshaft inboard joint set ring (A) on both sides.

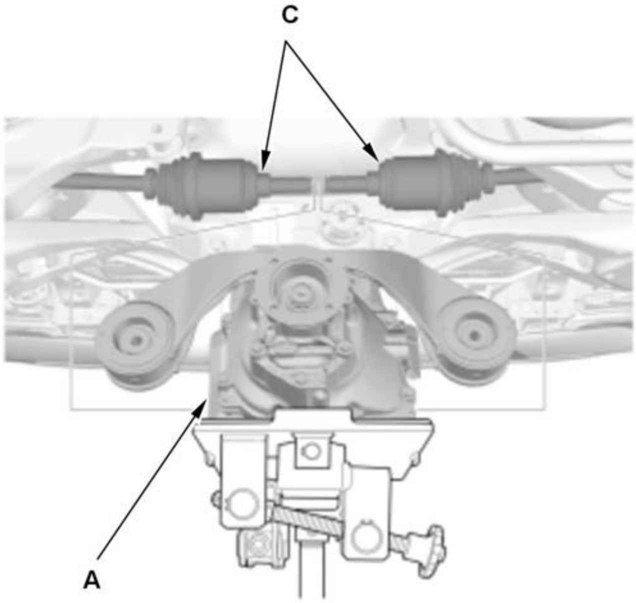

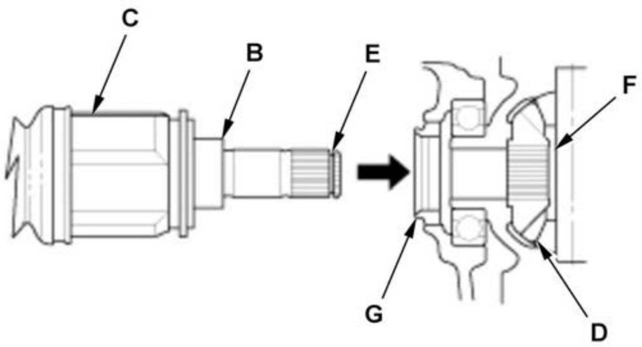

2. Lift the rear differential assembly (A) up into position.

3. Insert the inboard joint (B) of the rear driveshafts (C) into the rear differential (D) until the set ring (E) locks in the groove (F).

NOTE: Insert the driveshaft horizontally to prevent damaging the oil seals (G).

3. Rear Differential Mounting Bolt - Install

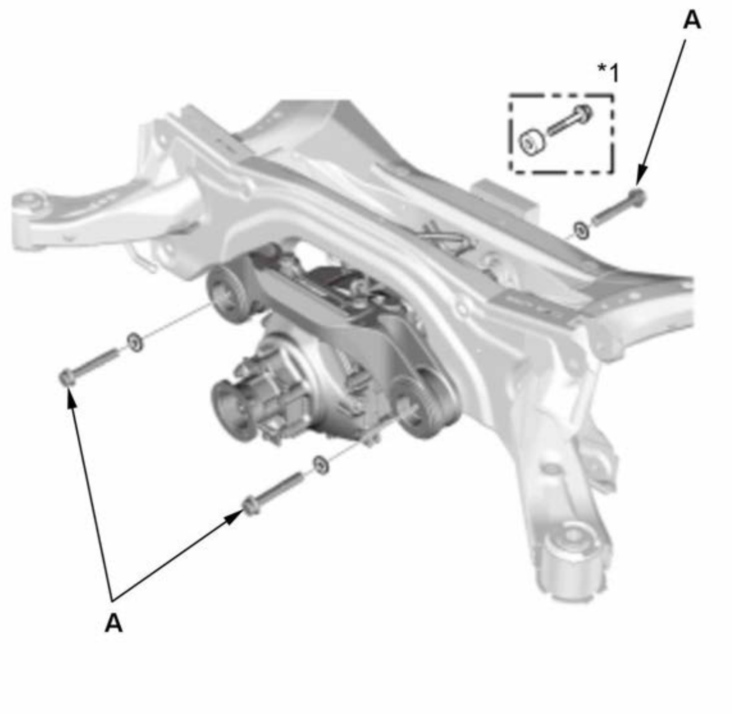

***1: For Some Models**

1. Loosely install the rear differential mounting bolts (A).

2. Remove the transmission jack.

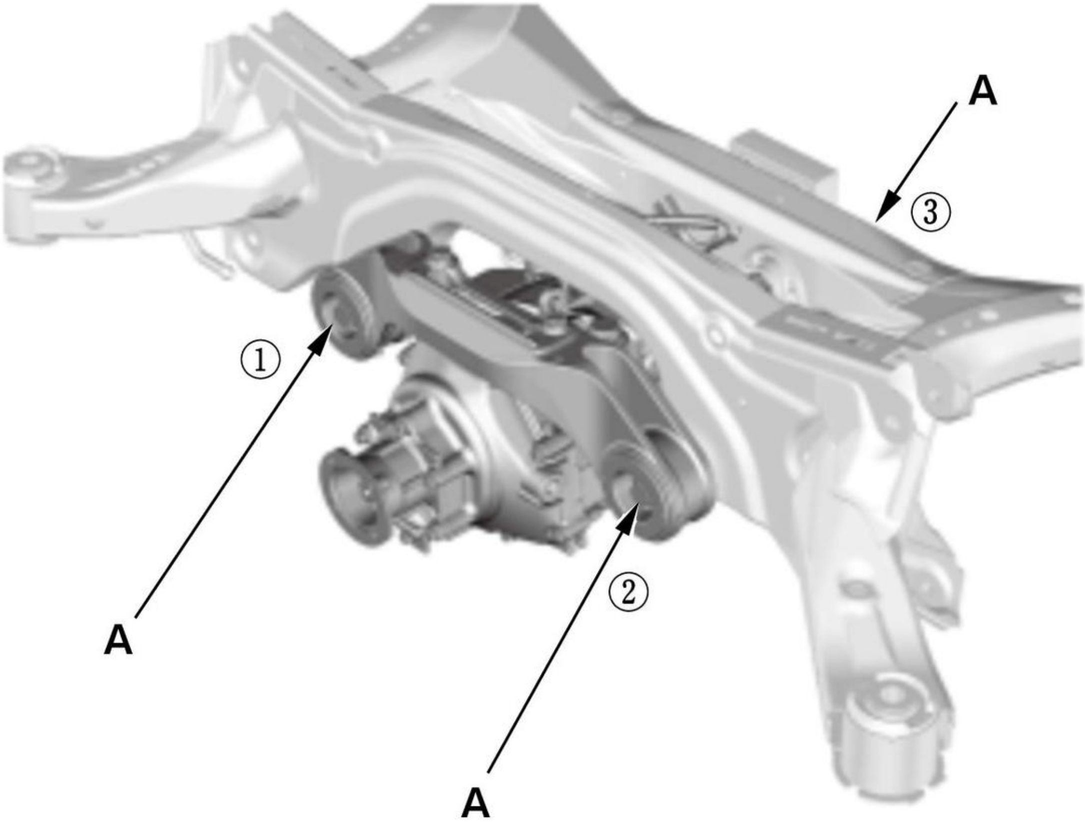

Fig. 12: Rear Differential Mounting Bolts Tightening Sequence
Courtesy of HONDA, U.S.A., INC.

3. Tighten the rear differential mounting bolts (A) in the numbered Sequence shown.
4. Connectors (Rear Differential Subharness) - Connect

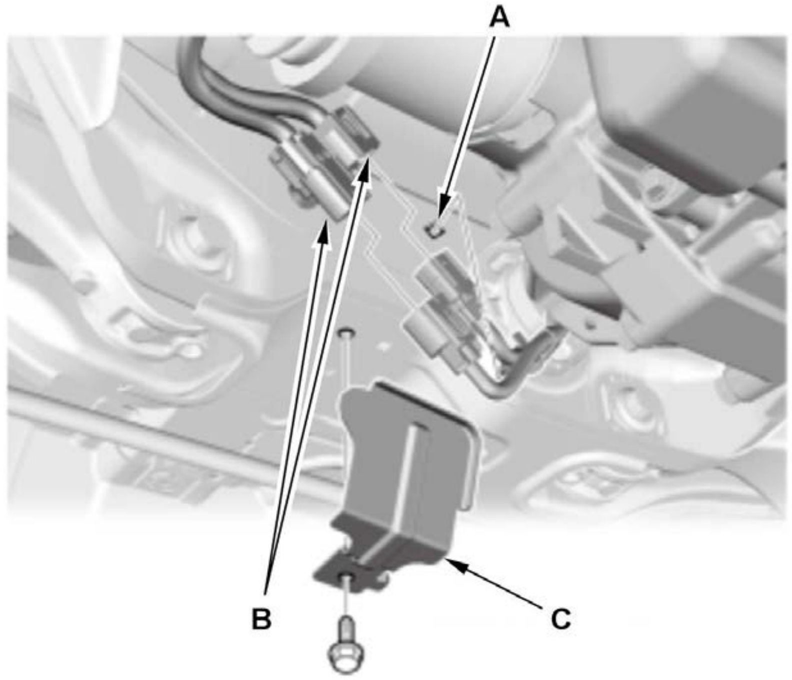	1. Install the harness clip (A). 2. Connect the connectors (B). 3. Install the cover (C).

5. **Breather Hose - Connect**
6. **No. 2 Propeller Shaft - Connect**
7. **Muffler - Install**
8. **Rear Differential Fluid - Refill**
9. **AWD System - Air Bleed**
10. Test Drive - Check

REAR DIFFERENTIAL REMOVAL AND INSTALLATION (AWD) (2018 2019 2020 2021)

Removal

NOTE: 🕮 Where icon is shown, see below for further information.

1

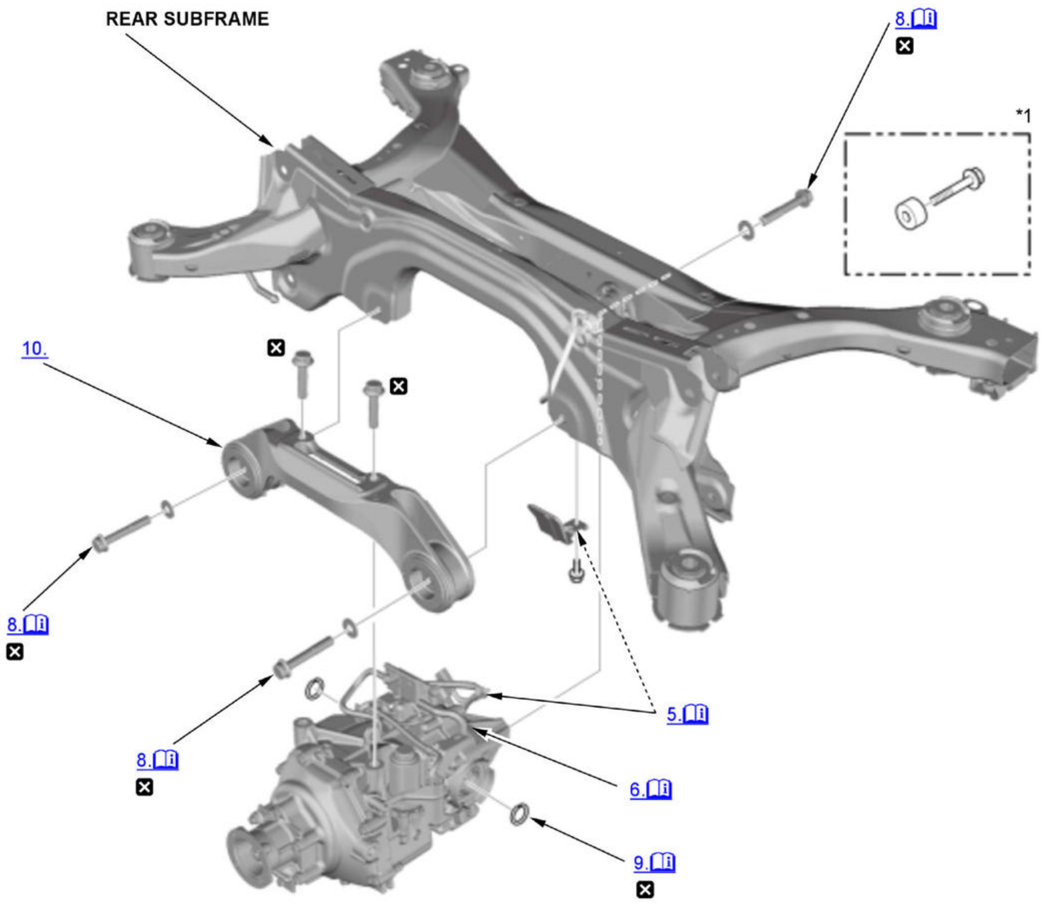
REAR SUBFRAME
8.
*1
10.
8.
5.
8.
6.
9.

📖	Detailed information, notes, and precautions
☒	Replace
*1	For some models

1. **Vehicle - Lift**
2. **Rear Differential Fluid - Drain**
3. **Muffler - Remove**
4. **No. 2 Propeller Shaft - Disconnect**
5. Connectors (Rear Differential Subharness) - Disconnect

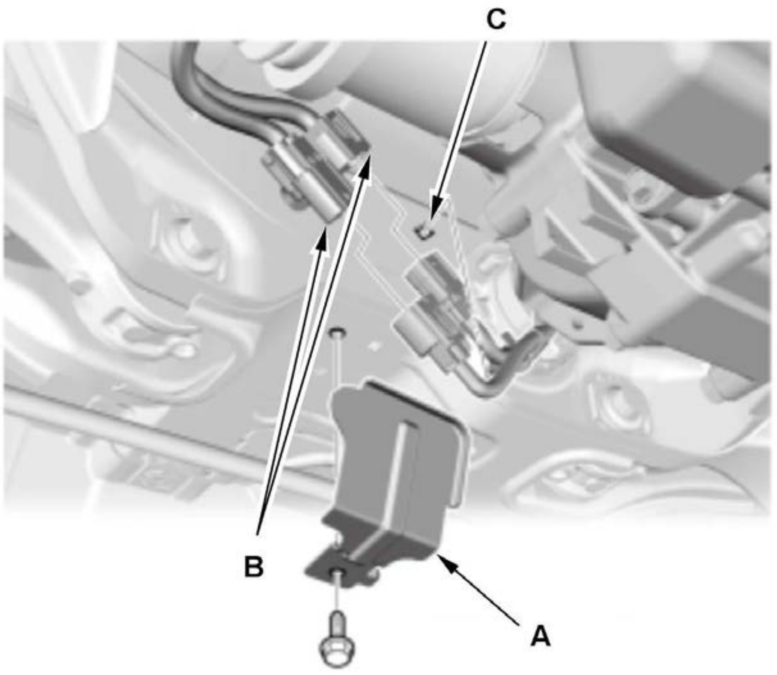	1. Remove the cover (A). 2. Disconnect the connectors (B). 3. Remove the harness clip (C).

6. Breather Hose - Disconnect

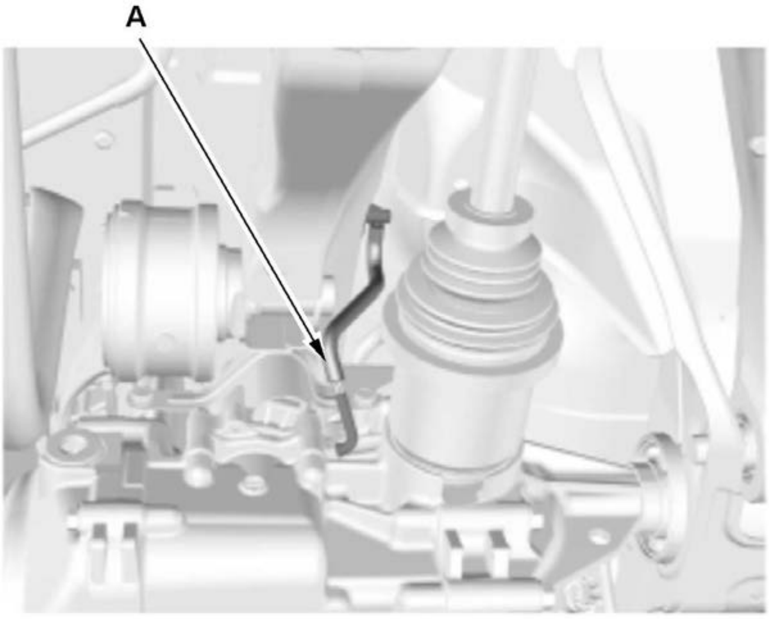 **Left side** **Right side**	1. Disconnect the breather hoses (A).

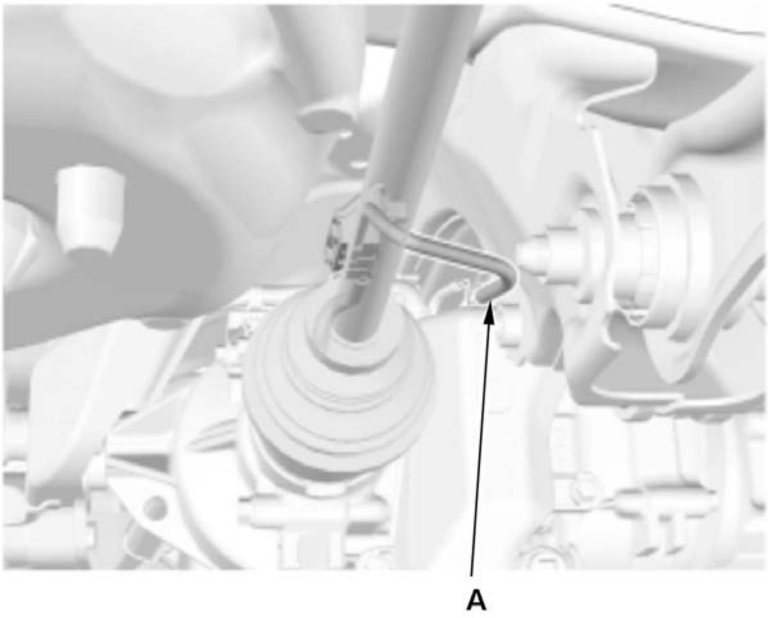 	

7. Rear Differential - Support

   NOTE: Support the Rear Differential with a transmission jack.

8. Rear Differential Mounting Bolt - Remove

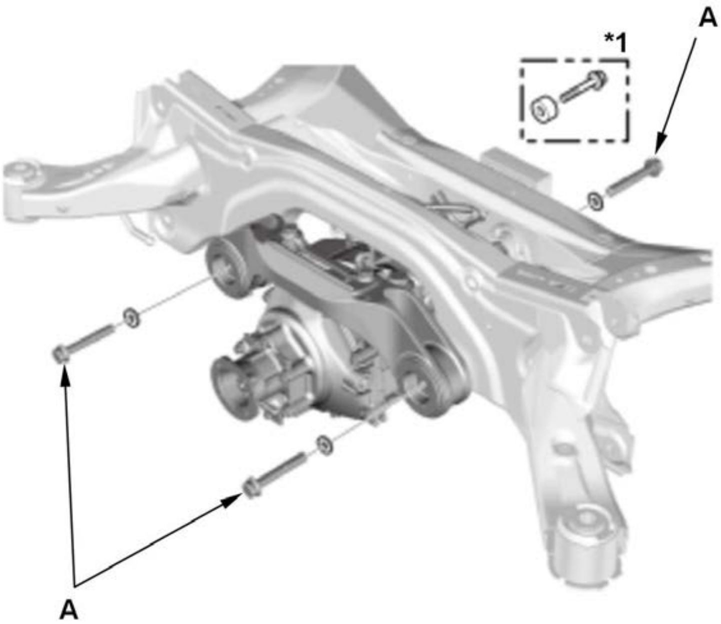 *1: For Some Models	1. Remove the rear differential mounting bolts (A).

9. Rear Driveshaft Inboard Side - Disconnect

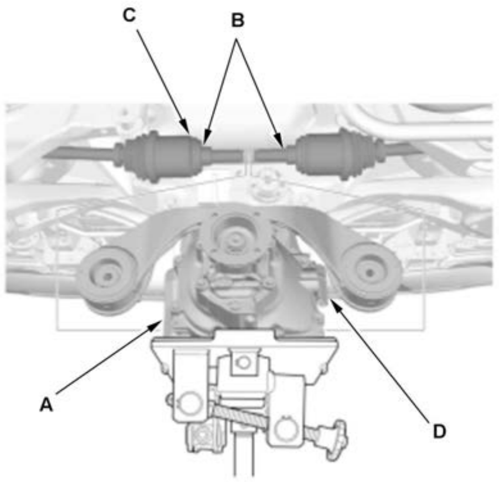	1. Lower the rear differential assembly (A) while pulling both rear driveshaft inboard joints (B) out of the rear differential assembly. **NOTE:** - Be careful not to damage the driveshaft rings (C) when prying out the driveshaft inboard joints. - Be careful not to damage the oil seals (D).

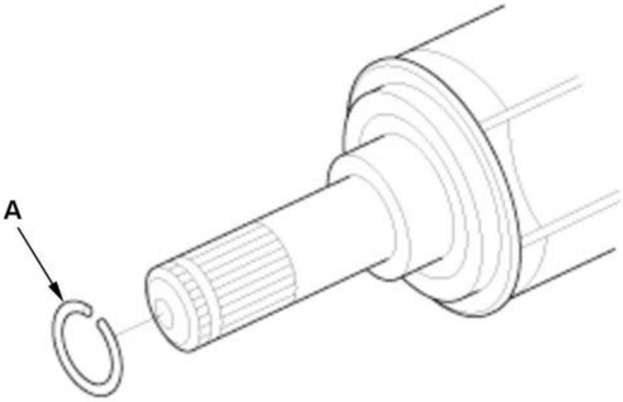	2. Remove the driveshaft inboard joint set ring (A) on both sides.

10. **Rear Differential Front Mount - Remove**

Installation

NOTE: Where icon is shown, see below for further information.

1

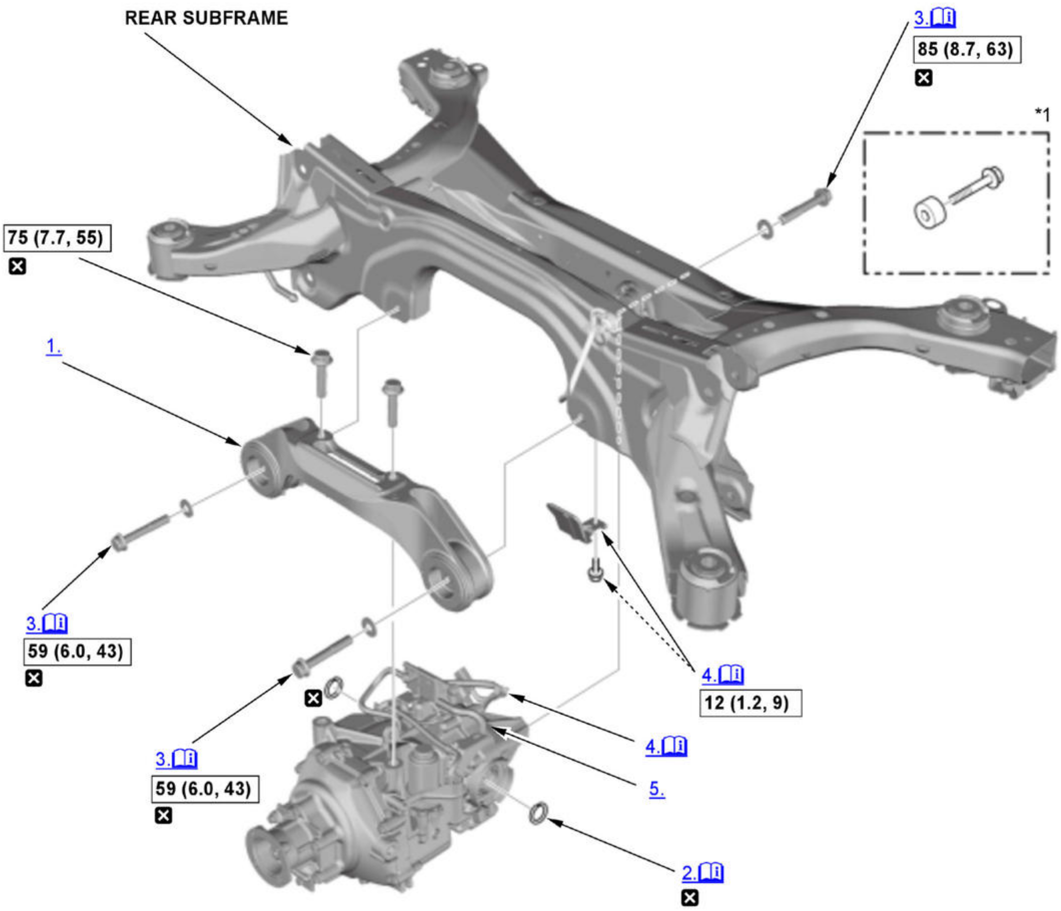
REAR SUBFRAME
3.
85 (8.7, 63)
*1
75 (7.7, 55)
1.
3.
59 (6.0, 43)
4.
12 (1.2, 9)
4.
5.
3.
59 (6.0, 43)
2.

Fig. 13: Rear Differential Mount Torque Specifications
Courtesy of HONDA, U.S.A., INC.

ℹ	Detailed information, notes, and precautions
▭	Torque: N.m (kgf.m, lbf.ft)
☒	Replace
*1	For some models

1. **Rear Differential Front Mount - Install**
2. Rear Driveshaft Inboard Side - Connect

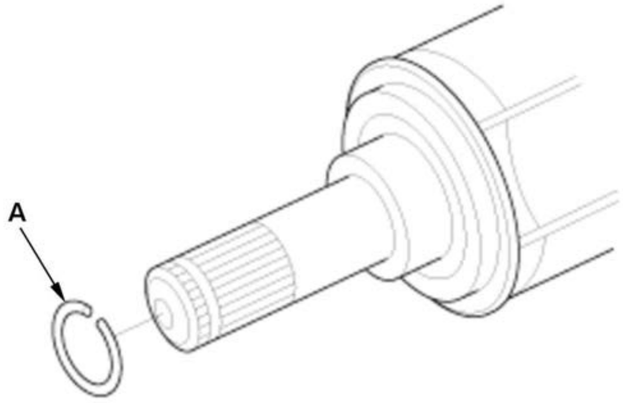

1. Install a new driveshaft inboard joint set ring (A) on both sides.

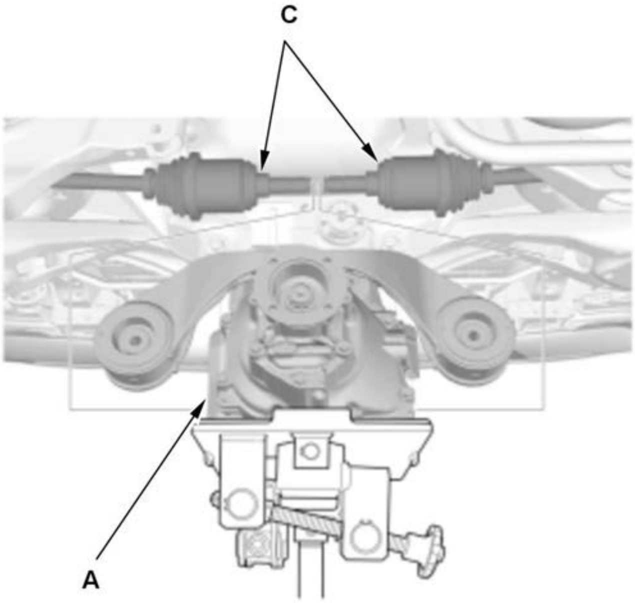

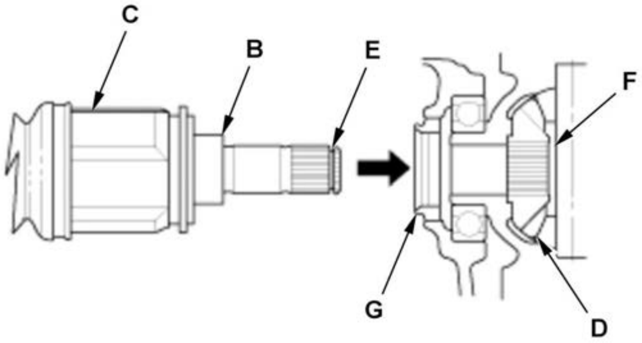

2. Lift the rear differential assembly (A) up into position.

3. Insert the inboard joint (B) of the rear driveshafts (C) into the rear differential (D) until the set ring (E) locks in the groove (F).

NOTE: Insert the driveshaft horizontally to prevent damaging the oil seals (G).

3. Rear Differential Mounting Bolt - Install

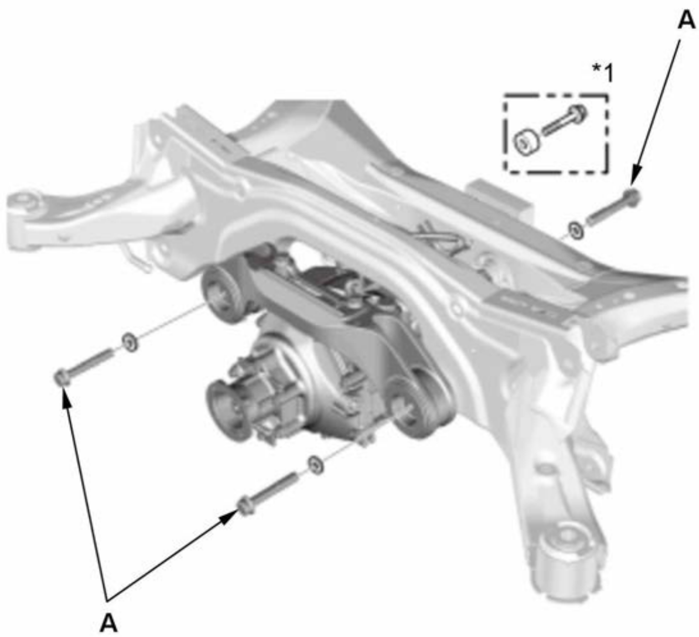 *1: For Some Models	1. Loosely install the rear differential mounting bolts (A). 2. Remove the transmission jack.

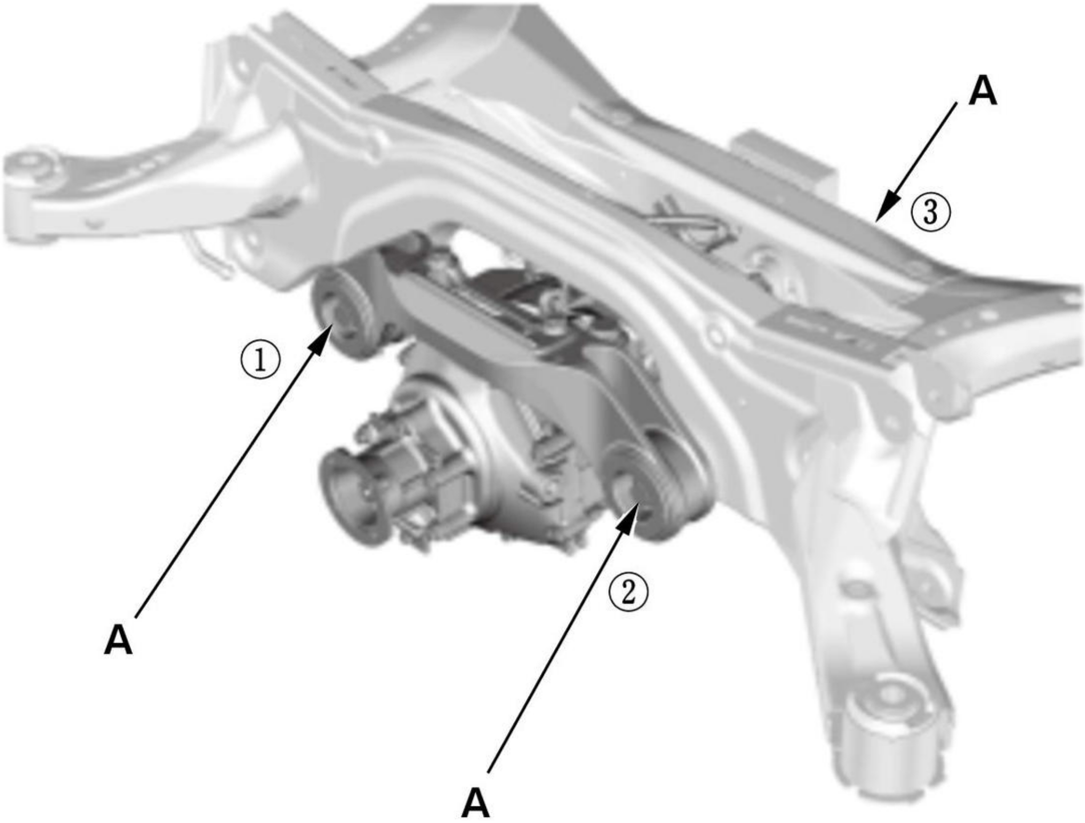

Fig. 14: Rear Differential Mounting Bolts Tightening Sequence
Courtesy of HONDA, U.S.A., INC.

3. Tighten the rear differential mounting bolts (A) in the numbered sequence shown.

4. Connectors (Rear Differential Subharness) - Connect

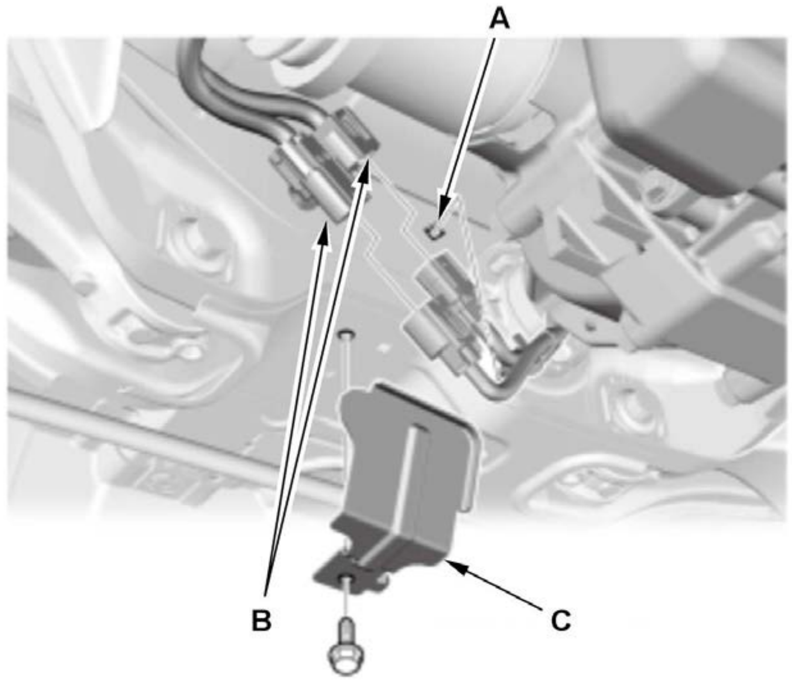	1. Install the harness clip (A). 2. Connect the connectors (B). 3. Install the cover (C).

5. **Breather Hose - Connect**
6. **No. 2 Propeller Shaft - Connect**
7. **Muffler - Install**
8. **Rear Differential Fluid - Refill**
9. **AWD System - Air Bleed**
10. Test Drive - Check

DISASSEMBLY AND REASSEMBLY

REAR DIFFERENTIAL DISASSEMBLY AND REASSEMBLY

Special Tools Required

Image	Description/Tool Number
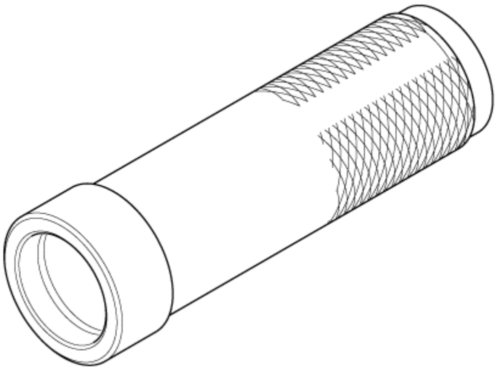	Driver Handle, 40 mm I.D. 07746-0030100
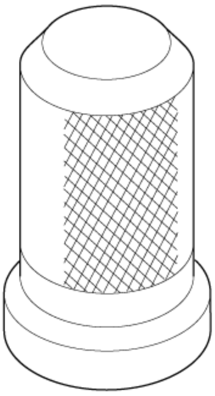	Oil Seal Driver, 41.8 mm 07947-6890100
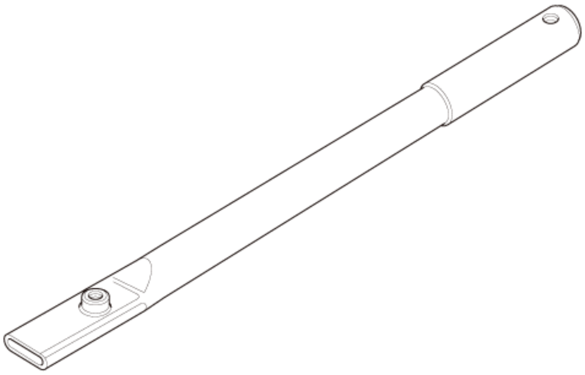	Holder Handle 07JAB-001020B

Image	Description/Tool Number
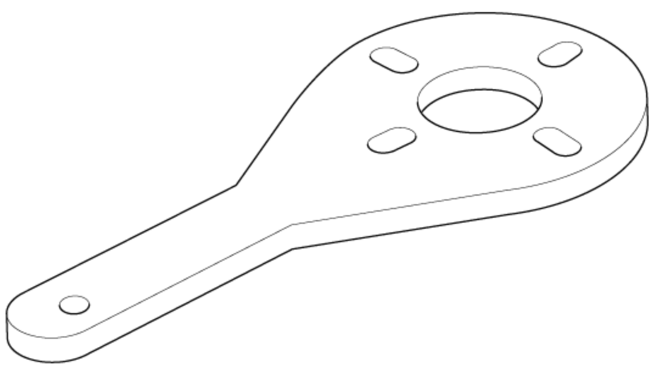	Companion Flange Holder 07RAB-TB4010B

Disassembly

NOTE: ℹ Where icon is shown, for further information see below.

Procedure

NOTE: **Numbered call-outs in figure pertain to list numbers in following procedure.**

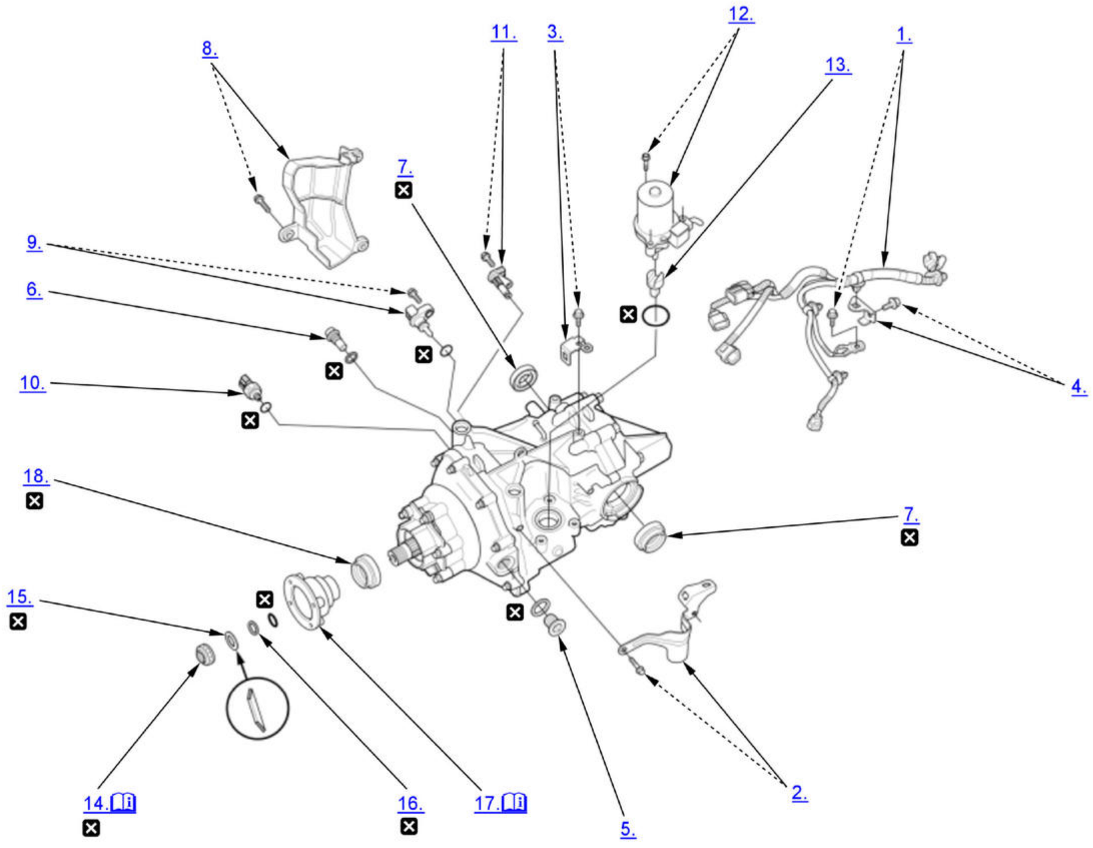

Fig. 1: Exploded View Of Rear Differential Components For Disassembly (1 Of 3)
Courtesy of HONDA, U.S.A., INC.

☒	Replace

NOTE: Numbered call-outs in figure pertain to list numbers in following procedure.

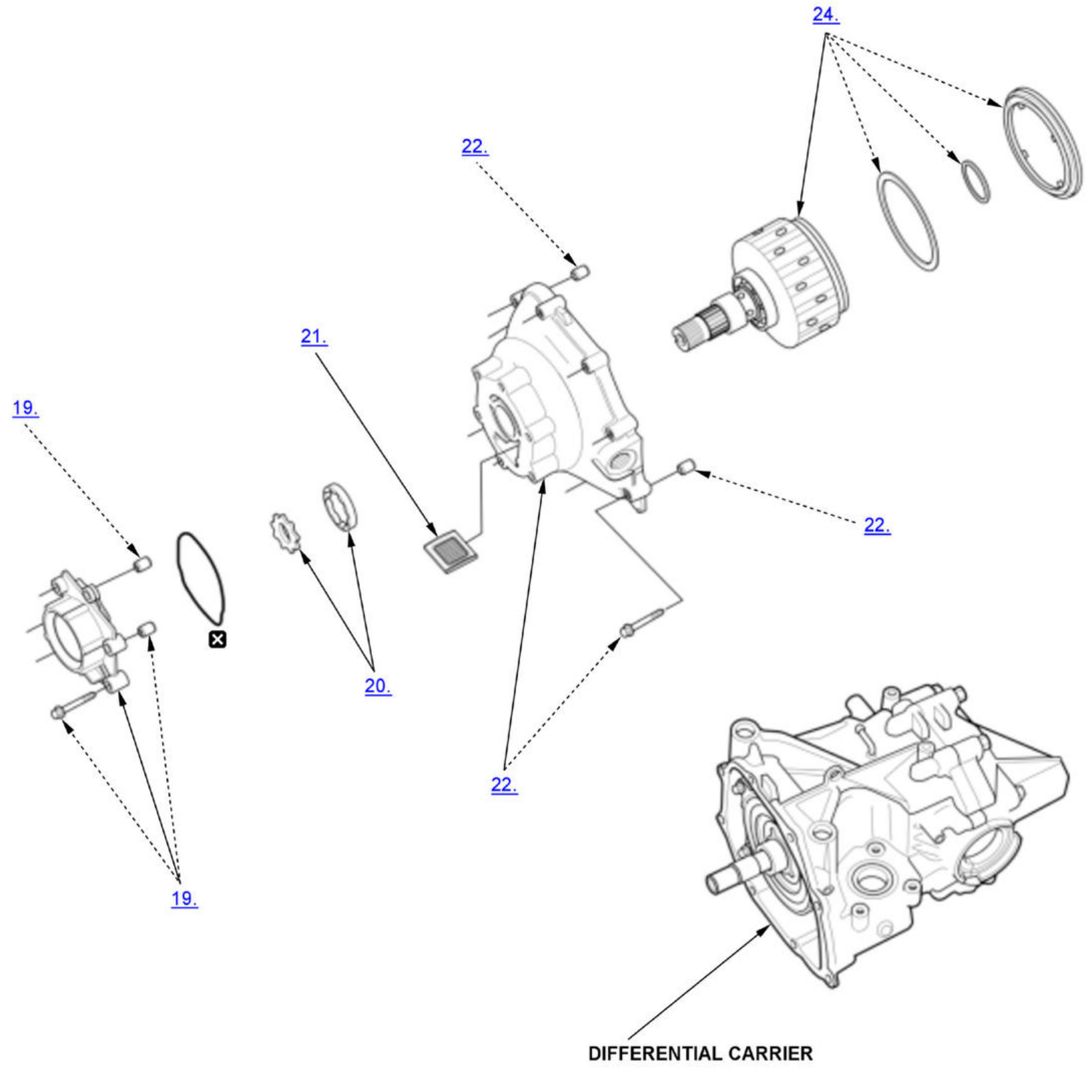
24.
22.
21.
19.
22.
☒
20.
22.
19.
DIFFERENTIAL CARRIER

Fig. 2: Exploded View Of Rear Differential Components For Disassembly (2 Of 3)
Courtesy of HONDA, U.S.A., INC.

☒	Replace

NOTE: Numbered call-outs in figure pertain to list numbers in following procedure.

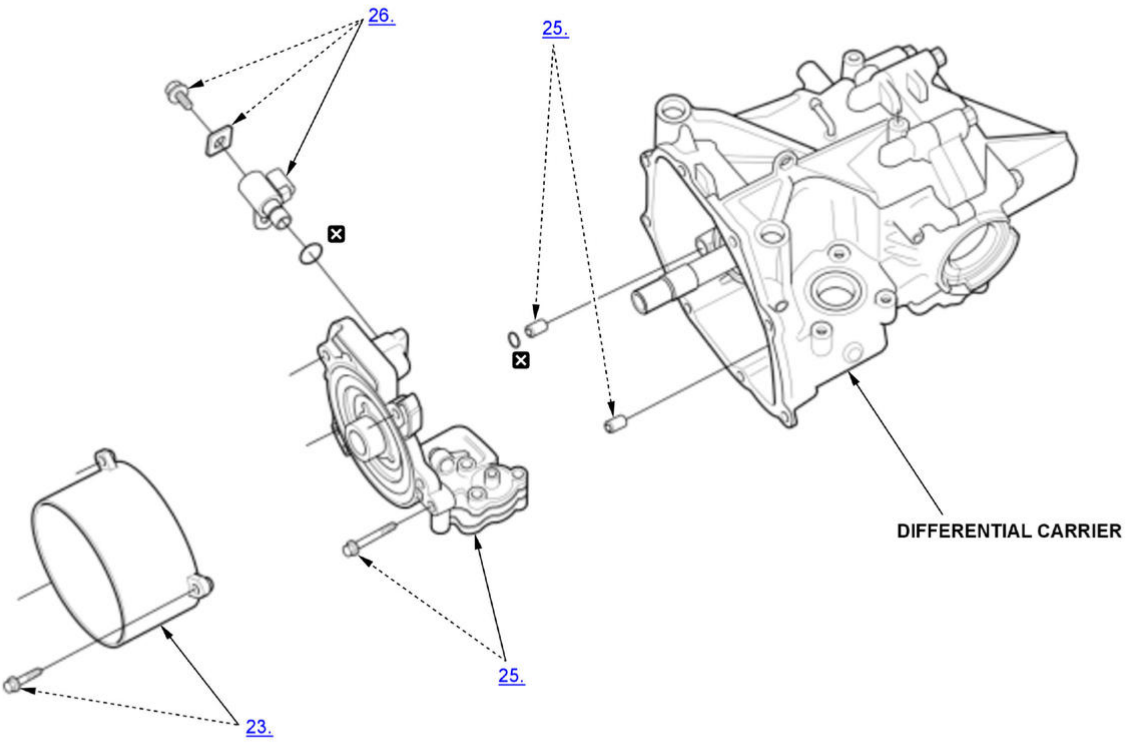

Fig. 3: Exploded View Of Rear Differential Components For Disassembly (3 Of 3)
Courtesy of HONDA, U.S.A., INC.

☒	Replace

1. Rear Differential Subharness - Remove
2. Harness Bracket A - Remove
3. Harness Bracket B - Remove
4. Harness Bracket D - Remove
5. Filler Plug - Remove
6. Drain Plug - Remove
7. Oil Seal (Driveshaft Side) - Remove
8. Sensor Cover - Remove
9. Rear Differential Fluid Temperature Sensor - Remove
10. Rear Differential Fluid Pressure Sensor - Remove
11. Rear Differential Solenoid Valve Connector Assembly - Remove
12. Rear Differential Pump Motor - Remove
13. Pump Drive Joint - Remove
14. Locknut - Remove

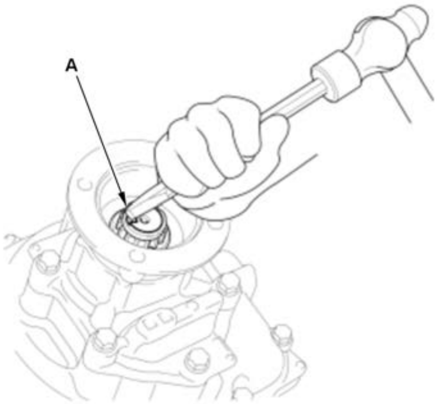

1. Pry up the stake on the locknut (A) from the groove of the clutch guide shaft, making sure the tab completely clears the groove to prevent damaging the clutch guide shaft.

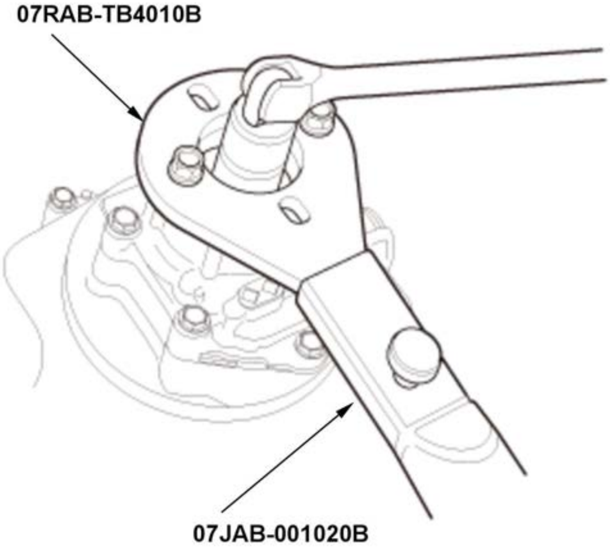

2. Install the companion flange holder and the holder handle on the companion flange.

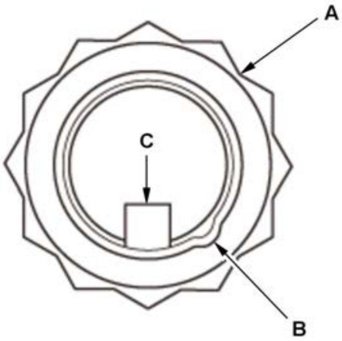

3. Loosen the locknut (A) counterclockwise so its tab (B) comes out from the groove (C) in the clutch guide shaft.

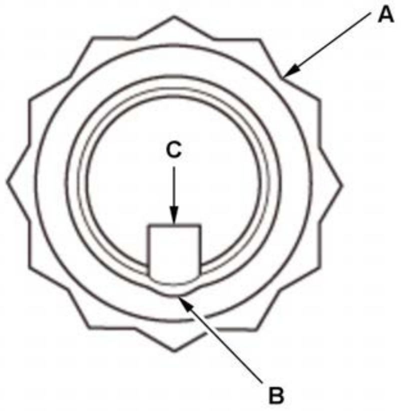	4. Tighten the locknut (A) until its tab (B) aligns with the groove (C). 5. Clean any dirt from inside the groove in the clutch guide shaft, then loosen the locknut.

15. Spring Washer - Remove
16. Back-Up Ring - Remove
17. Companion Flange - Remove

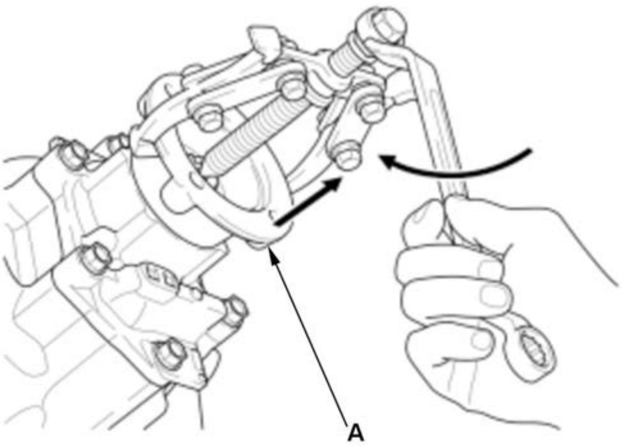	1. Remove the companion flange (A) with a commercially available puller.

18. Oil Seal (Propeller Shaft Side) - Remove
19. Oil Pump Cover - Remove
20. Inner Rotor/Outer Rotor - Remove
21. Fluid Strainer - Remove
22. Oil Pump Case - Remove
23. Baffle Cover - Remove
24. Differential Clutch Assembly - Remove
25. Oil Pump Body Assembly - Remove
26. Rear Differential Solenoid Valve - Remove

Reassembly

NOTE:

- Where icon is shown, for further information see below.

- Apply a light coat of clean rear differential fluid on all O-rings, the clutch, and the bearings before installation.

Procedure

NOTE: **Numbered call-outs in figure pertain to list numbers in following procedure.**

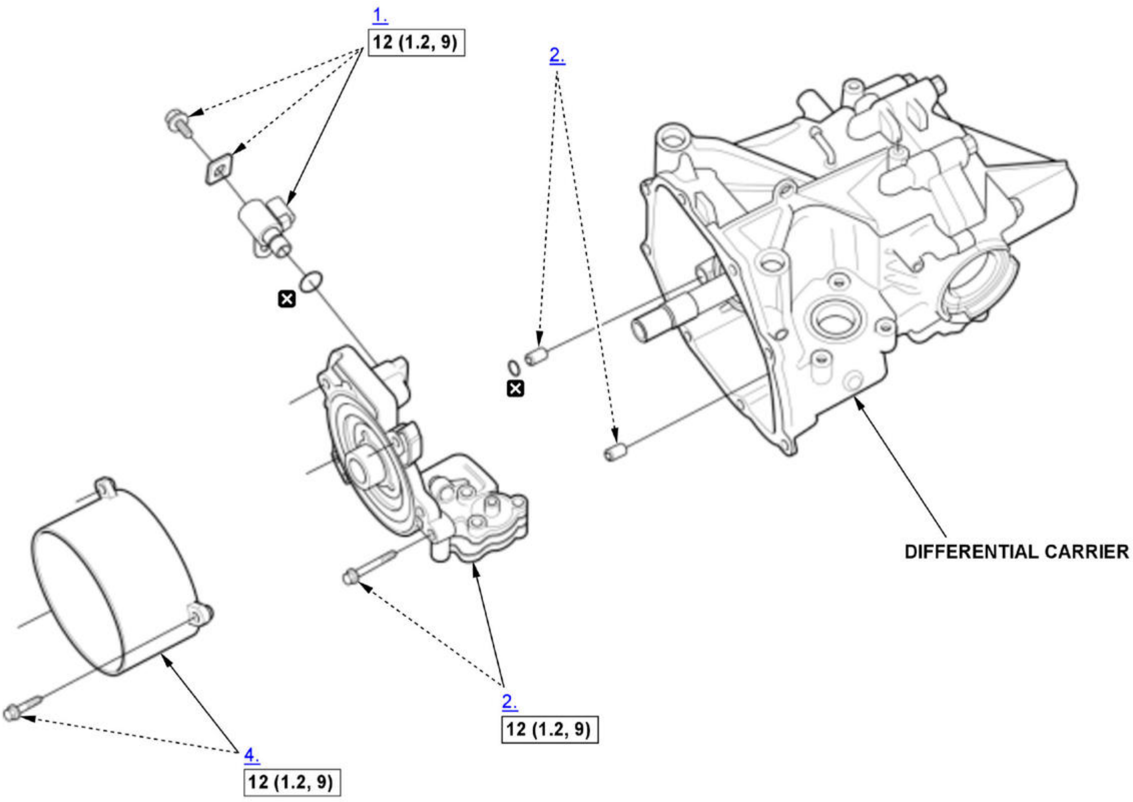

Fig. 4: Exploded View Of Rear Differential Components With Torque Specifications For Reassembly (1 Of 3)

Courtesy of HONDA, U.S.A., INC.

☐	Torque: N.m (kgf.m, lbf.ft)
☒	Replace

NOTE: **Numbered call-outs in figure pertain to list numbers in following procedure.**

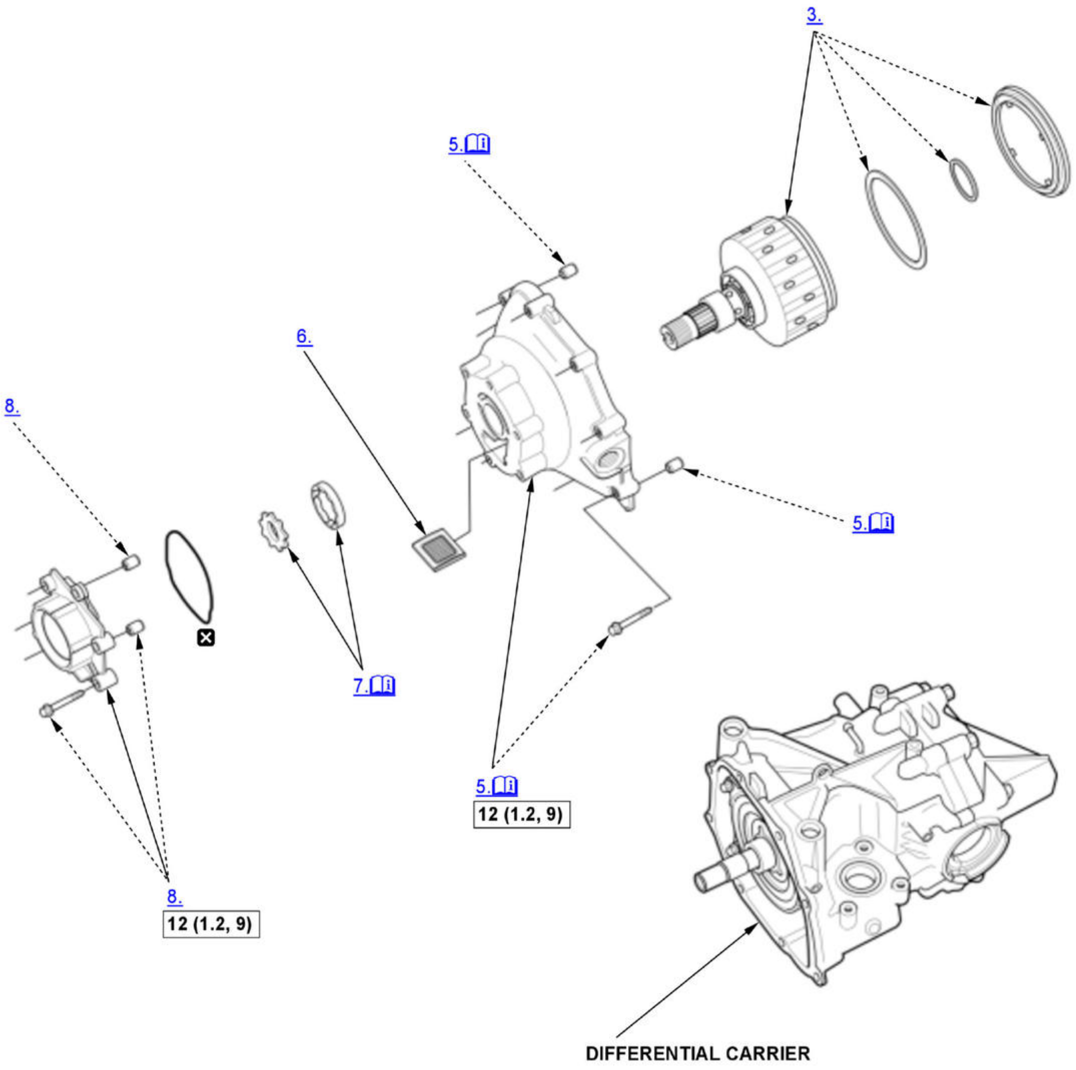
3.
5.
6.
8.
5.
7.
5.
12 (1.2, 9)
8.
12 (1.2, 9)
DIFFERENTIAL CARRIER

Fig. 5: Exploded View Of Rear Differential Components With Torque Specifications For Reassembly (2 Of 3)

Courtesy of HONDA, U.S.A., INC.

☐	Torque: N.m (kgf.m, lbf.ft)
☒	Replace

NOTE: **Numbered call-outs in figure pertain to list numbers in following procedure.**

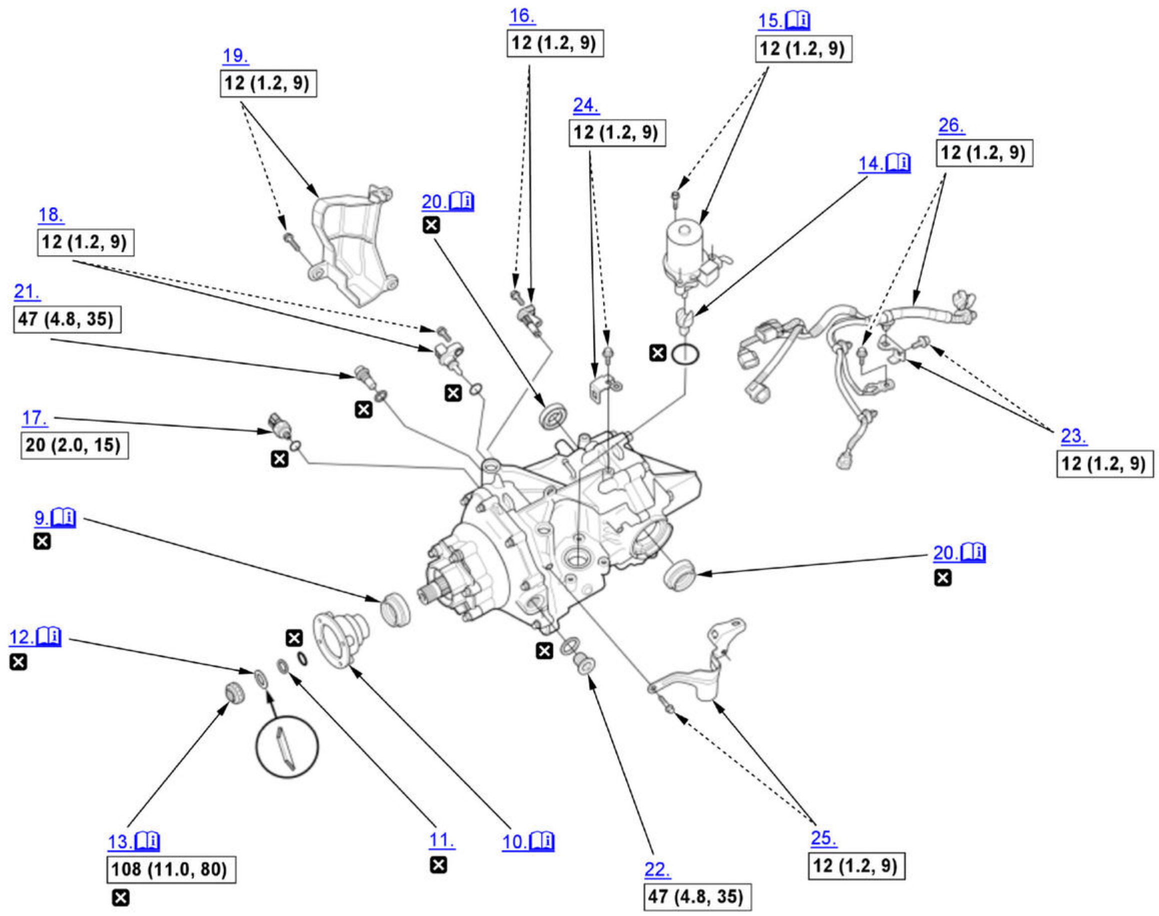
16.
12 (1.2, 9)
15.
12 (1.2, 9)
19.
12 (1.2, 9)
24.
12 (1.2, 9)
26.
12 (1.2, 9)
14.
20.
18.
12 (1.2, 9)
21.
47 (4.8, 35)
17.
20 (2.0, 15)
23.
12 (1.2, 9)
9.
20.
12.
13.
108 (11.0, 80)
11.
10.
22.
47 (4.8, 35)
25.
12 (1.2, 9)

Fig. 6: Exploded View Of Rear Differential Components With Torque Specifications For Reassembly (3 Of 3)

Courtesy of HONDA, U.S.A., INC.

☐	Torque: N.m (kgf.m, lbf.ft)
☒	Replace

1. Rear Differential Solenoid Valve - Install
2. Oil Pump Body Assembly - Install
3. Differential Clutch Assembly - Install
4. Baffle Cover - Install
5. Oil Pump Case - Install

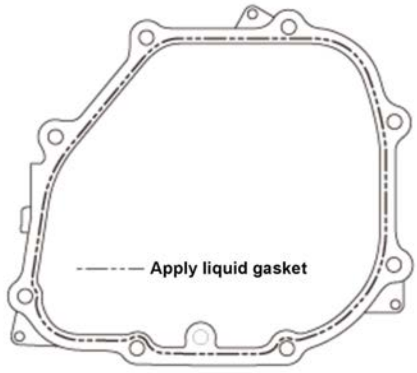 Apply liquid gasket	1. Remove the dirt and oil from the sealing surfaces. 2. Apply liquid gasket (P/N 08718-0004 or 08718-0009) evenly to the sealing surface. 3. Install the component within 5 minutes of applying the liquid gasket. Make sure you seal the entire circumference of the bolt holes to prevent fluid leakage. **NOTE:** - If too much time has passed after applying the liquid gasket, remove the old liquid gasket and

	residue, then reapply the new liquid gasket. • Allow it to cure at least 30 minutes after assembly before filling the differential with recommended fluid.

6. Fluid Strainer - Install
7. Inner Rotor/Outer Rotor - Install

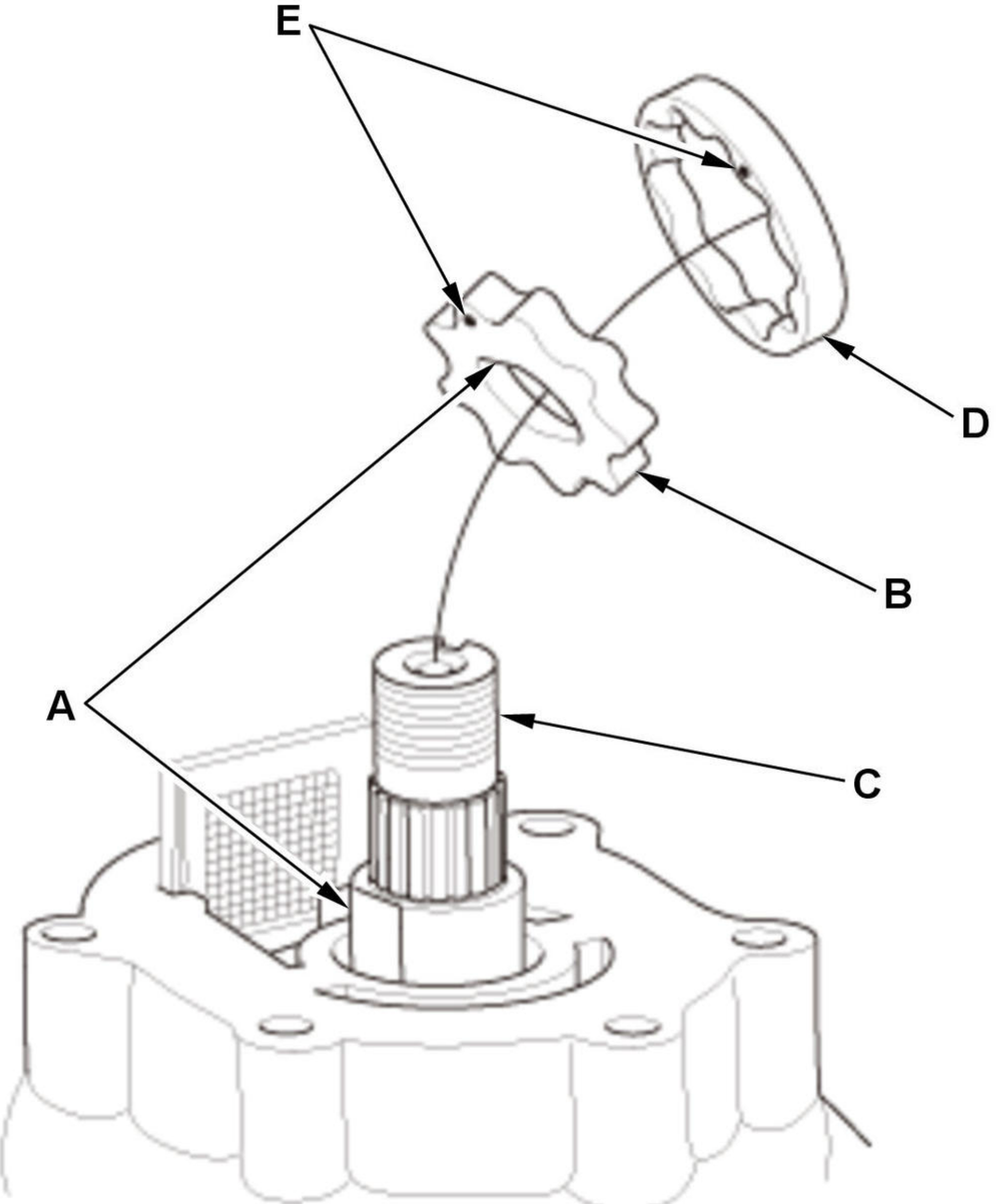

NOTE:

- While aligning the notch-cut (A) of the inner rotor (B) with the notch-cut of the clutch guide shaft (C), install the inner rotor and the outer rotor (D).
- Install the inner rotor and the outer rotor with the marks (E) facing the oil pump case side.

8. Oil Pump Cover - Install
9. Oil Seal (Propeller Shaft Side) - Install

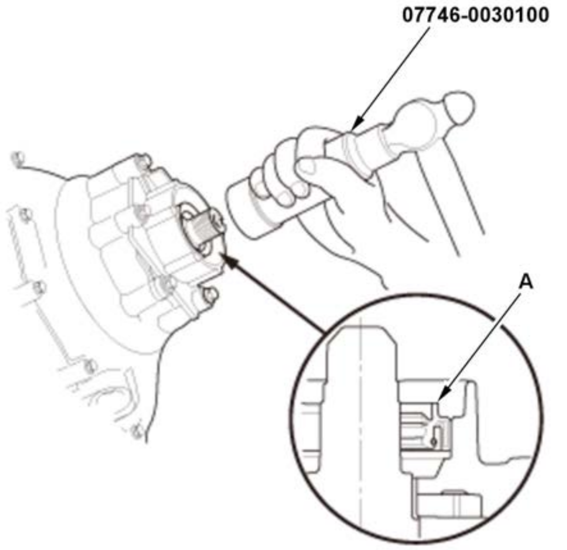 07746-0030100 A	1. Install the oil seal (A) even and flush with the rear differential oil pump cover using the 40 mm I.D. driver handle.

10. Companion Flange - Install

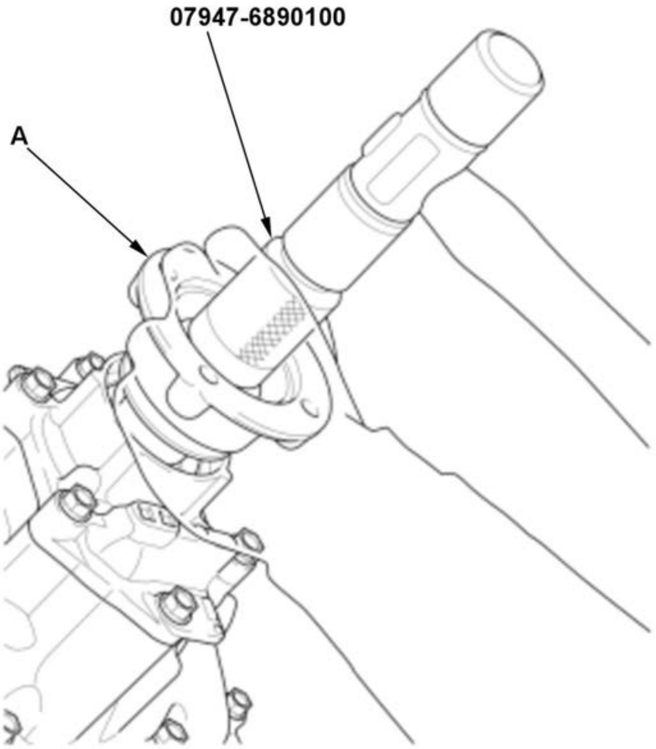 07947-6890100 A	1. Set the companion flange (A) to the clutch guide shaft. 2. Drive on the companion flange using the 41.8 mm oil seal driver.

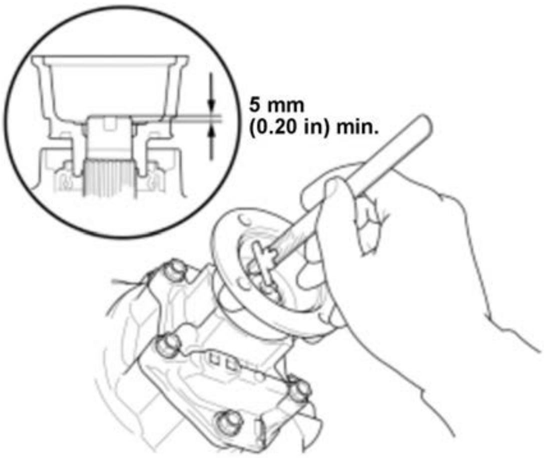	3. Check the length of clutch guide shaft as shown. **NOTE:** Make sure to drive on the companion flange until 2 to 3 thread pitches of the clutch guide shaft appears.

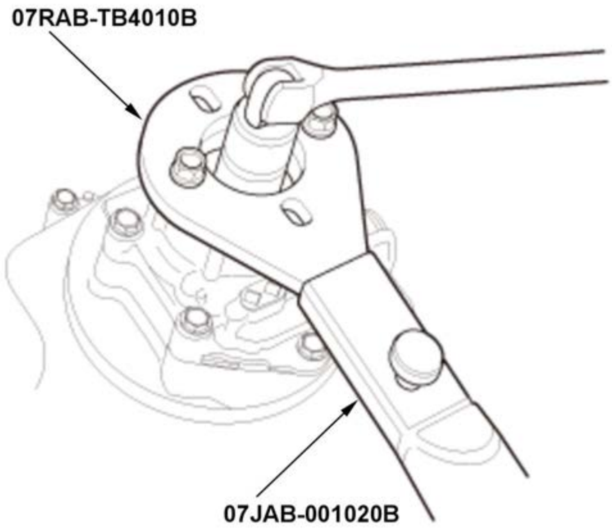	4. Apply rear differential fluid to the used locknut. 5. Set the used locknut to the clutch guide shaft. 6. Install the companion flange holder and the holder handle on the companion flange. 7. Tighten the used locknut. 8. Remove the used locknut, the companion flange holder, and the holder handle. 9. Check the companion flange has been set to the bottom.

11. Back-Up Ring - Install
12. Spring Washer - Install

    NOTE: Make sure the spring washer is installed in the correct direction.

13. Locknut - Install

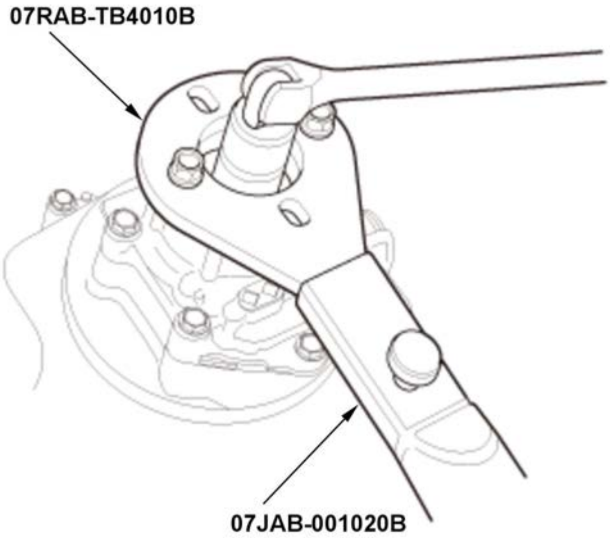

1. Install the companion flange holder and the holder handle on the companion flange.

2. Tighten the locknut to the specified torque.

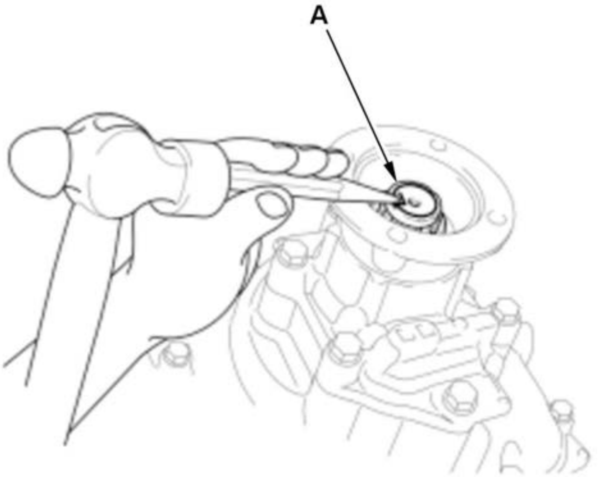

3. Stake the locknut tab (A) into the groove in the clutch guide shaft.

14. Pump Drive Joint - Install

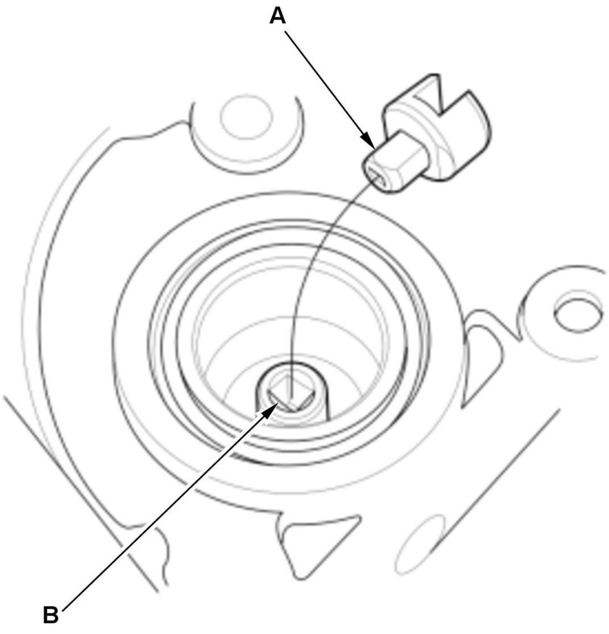

1. Align the bulge (A) of pump drive joint with the groove (B) of the rear differential.

15. Rear Differential Pump Motor - Install

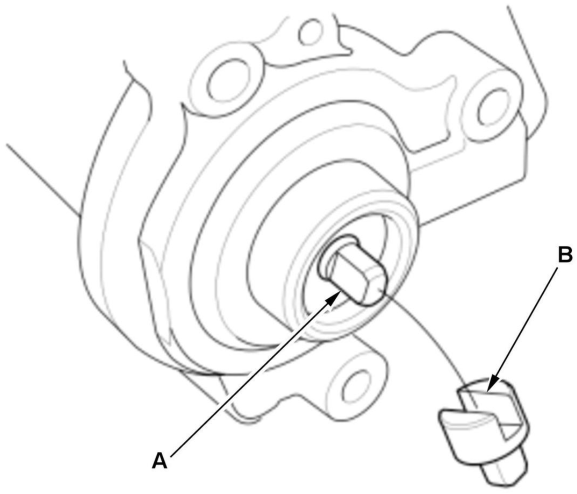	1. Align the shaft (A) of the rear differential pump motor with the groove (B) of the pump drive joint.

16. Rear Differential Solenoid Valve Connector Assembly - Install
17. Rear Differential Fluid Pressure Sensor - Install
18. Rear Differential Fluid Temperature Sensor - Install
19. Sensor Cover - Install
20. Oil Seals (Driveshaft Side) - Install

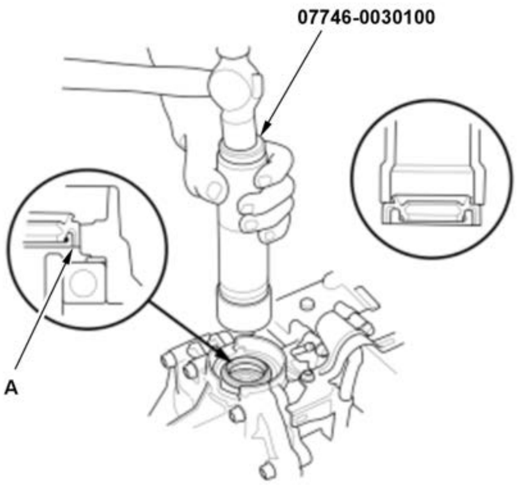	1. Install the oil seal (A) even and flush with the machined edge of the differential carrier assembly using the 40 mm I.D. driver handle.

21. Drain Plug - Install
22. Filler Plug - Install
23. Harness Bracket D - Install
24. Harness Bracket B - Install
25. Harness Bracket A - Install
26. Rear Differential Subharness - Install

REMOVAL AND INSTALLATION

AWD CONTROL UNIT REMOVAL AND INSTALLATION

Removal and Installation

Procedure

NOTE: **Numbered call-outs in figure pertain to list numbers in following procedure.**

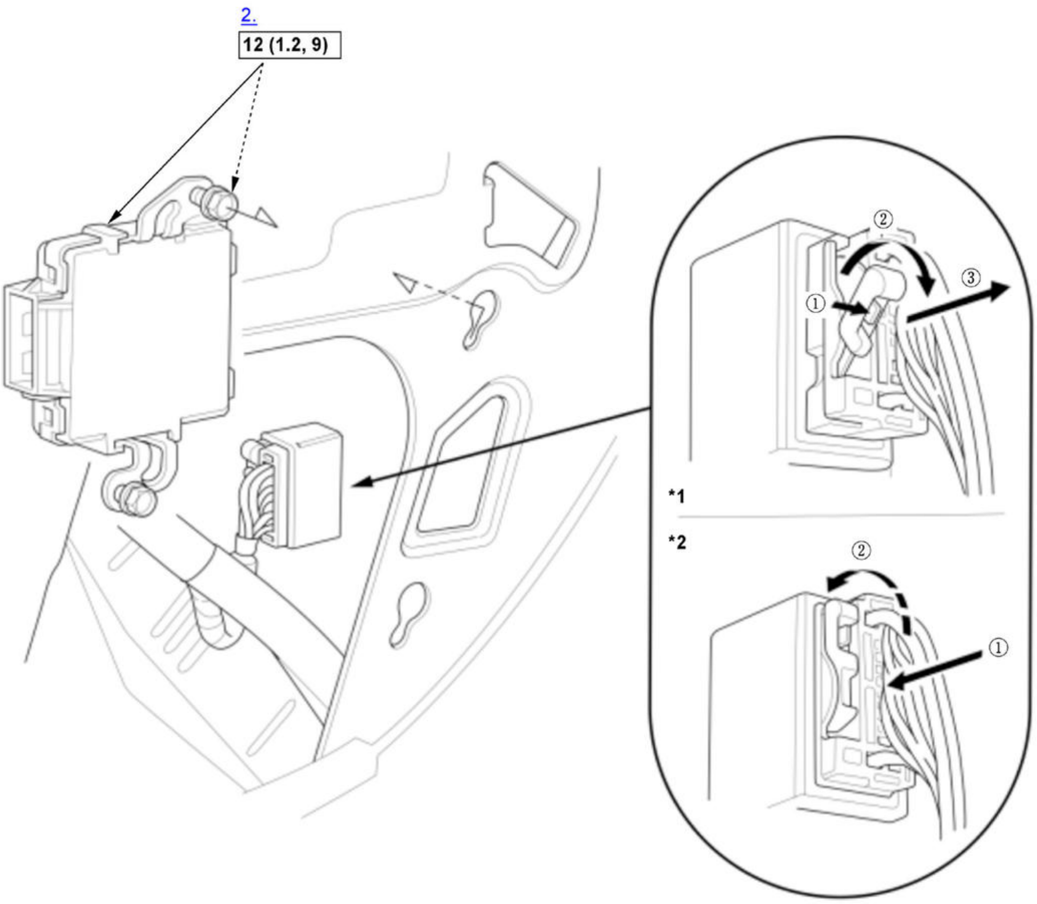

Fig. 7: AWD Control Unit Replacement Components With Torque Specifications
Courtesy of HONDA, U.S.A., INC.

☐	Torque: N.m (kgf.m, lbf.ft)
*1	Removal
*2	Installation

1. **Rear Left Side Trim Panel - Remove**
2. AWD Control Unit - Remove
3. All Removed Parts - Install

   1. Install the parts in the reverse order of removal.

   Procedure After Replacing AWD Control Unit

4. **AWD Control Unit - Initialization**
5. **AWD Control Unit - Update**

REAR DIFFERENTIAL BREATHER BOX AND HOSE REMOVAL AND INSTALLATION

Exploded View

1. Rear Differential Breather Hose

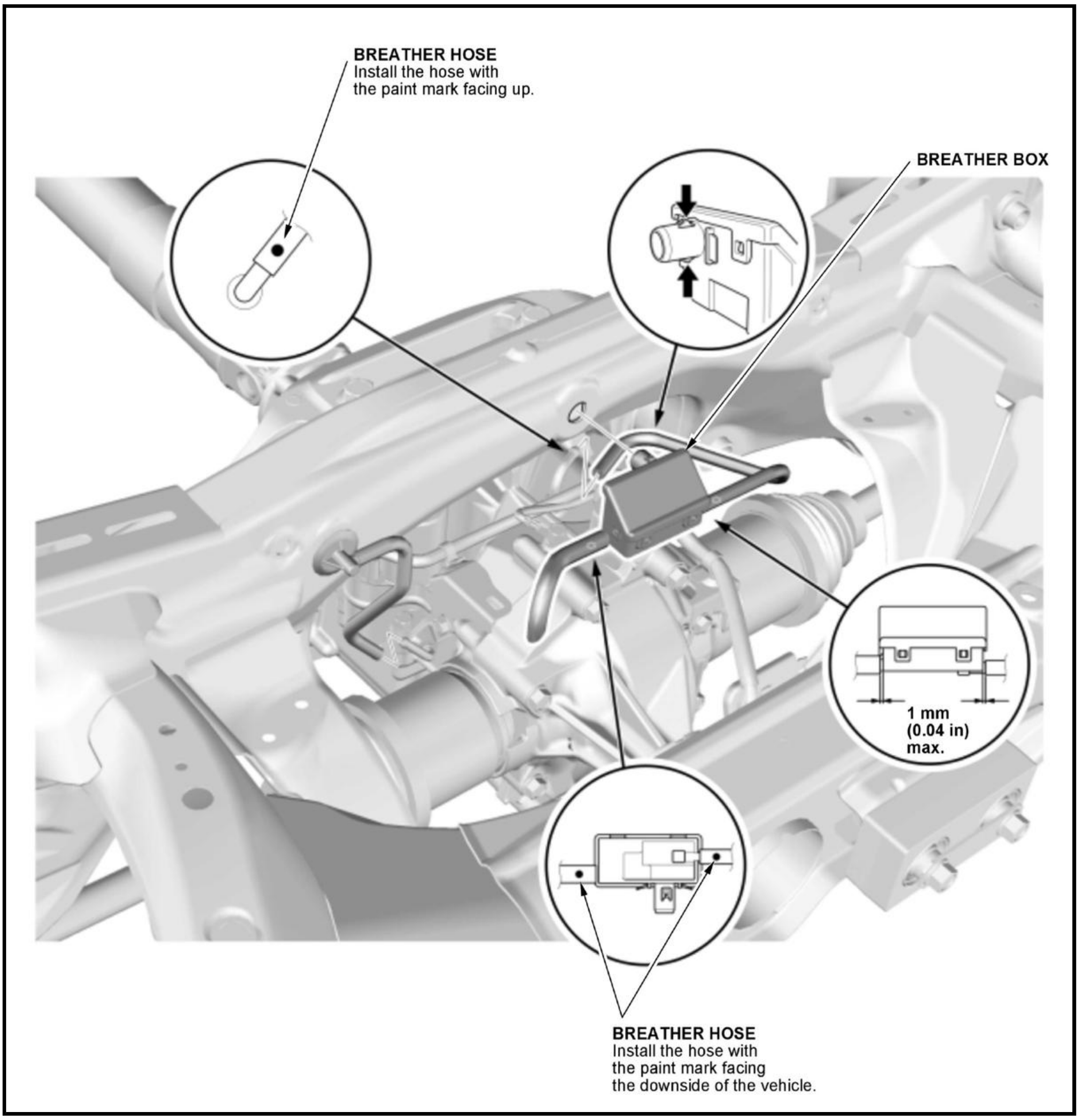
BREATHER HOSE
Install the hose with the paint mark facing up.
BREATHER BOX
1 mm (0.04 in) max.
BREATHER HOSE
Install the hose with the paint mark facing the downside of the vehicle.

REAR DIFFERENTIAL FLUID PRESSURE SENSOR REMOVAL AND INSTALLATION

Removal and Installation

Procedure

NOTE: **Numbered call-outs in figure pertain to list numbers in following procedure.**

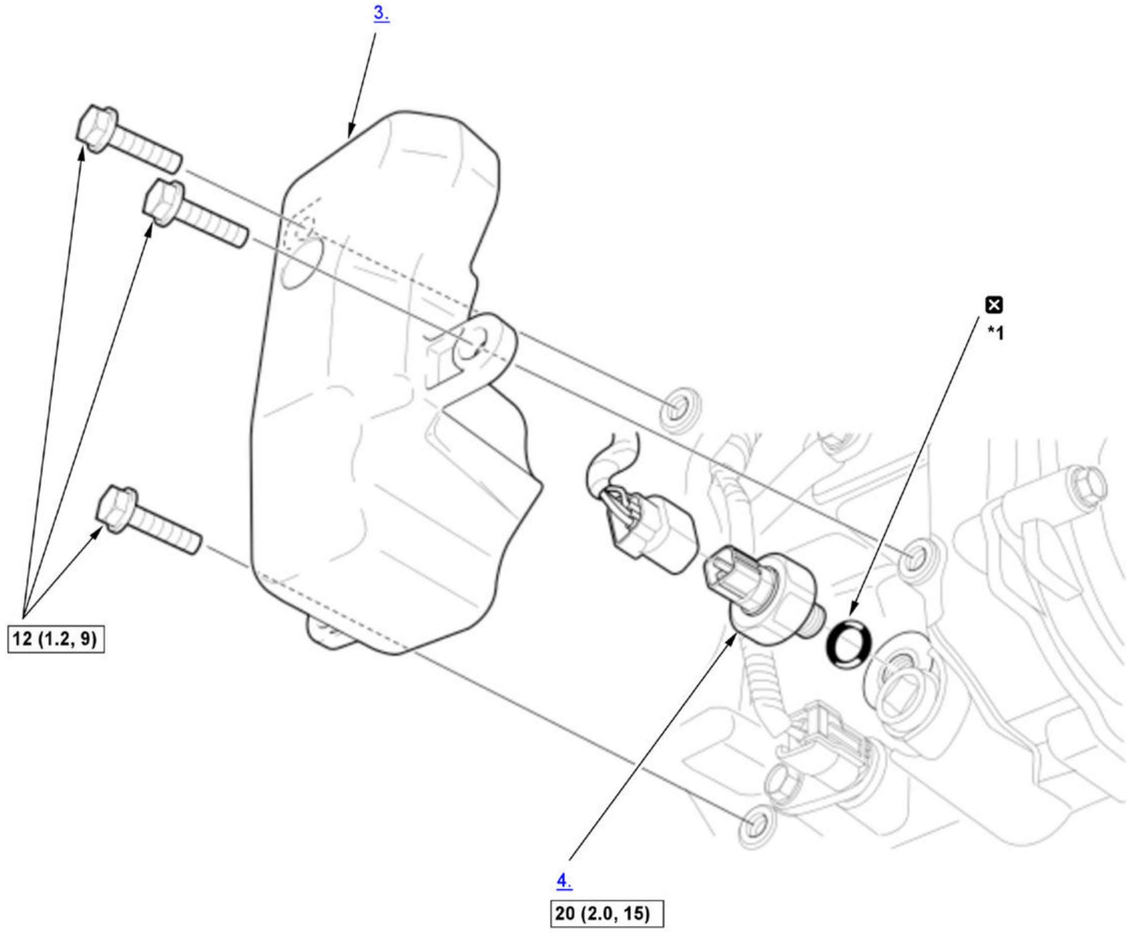

Fig. 8: Exploded View Of Rear Differential Fluid Pressure Sensor Replacement Components With Torque Specifications
Courtesy of HONDA, U.S.A., INC.

☐	Torque: N.m (kgf.m, lbf.ft)
☒	Replace
*1	Apply rear differential fluid.

1. **Vehicle - Lift**
2. **Rear Differential Fluid - Drain**
3. Sensor Cover - Remove
4. Rear Differential Fluid Pressure Sensor - Remove
5. All Removed Parts - Install

    1. Install the parts in the reverse order of removal.

6. **Rear Differential Fluid - Refill**

REAR DIFFERENTIAL FLUID TEMPERATURE SENSOR REMOVAL AND INSTALLATION

Removal and Installation

Procedure

NOTE: Numbered call-outs in figure pertain to list numbers in following procedure.

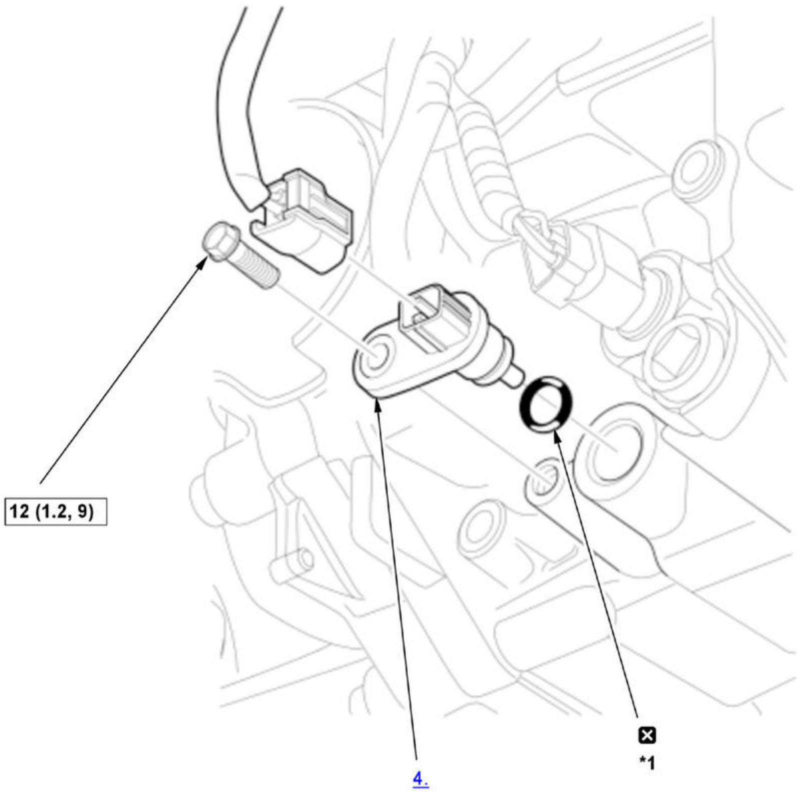

Fig. 9: Exploded View Of Rear Differential Fluid Temperature Sensor Replacement Components With Torque Specifications
Courtesy of HONDA, U.S.A., INC.

☐	Torque: N.m (kgf.m, lbf.ft)
☒	Replace
*1	Apply rear differential fluid.

1. Vehicle - Lift
2. Rear Differential Fluid - Drain
3. Sensor Cover - Remove
4. Rear Differential Fluid Temperature Sensor - Remove
5. All Removed Parts - Install

    1. Install the parts in the reverse order of removal.

6. Rear Differential Fluid - Refill

REAR DIFFERENTIAL MOUNT REMOVAL AND INSTALLATION

Exploded View

NOTE: Tighten the rear differential mount bolts in the numbered sequence shown.

1. Rear Differential Mount

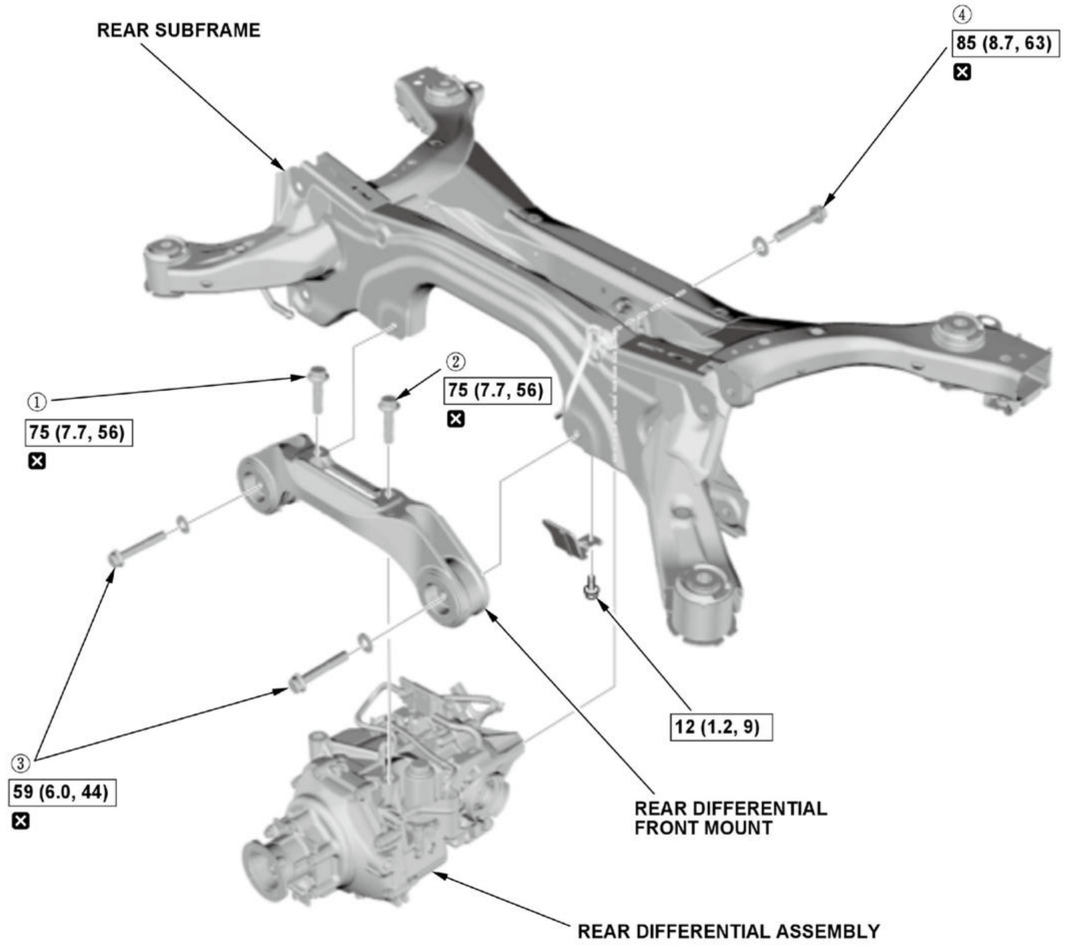
REAR SUBFRAME
④
85 (8.7, 63)
☒
①
75 (7.7, 56)
☒
②
75 (7.7, 56)
☒
③
59 (6.0, 44)
☒
12 (1.2, 9)
REAR DIFFERENTIAL FRONT MOUNT
REAR DIFFERENTIAL ASSEMBLY

Fig. 10: Exploded View Of Rear Differential Mount Replacement Components With Tightening Sequence And Torque Specifications
Courtesy of HONDA, U.S.A., INC.

▭	Torque: N.m (kgf.m, lbf.ft)
☒	Replace

REAR DIFFERENTIAL PUMP MOTOR REMOVAL AND INSTALLATION

Removal and Installation

NOTE: 📖 Where icon is shown, for further information see below.

Procedure

NOTE: **Numbered call-outs in figure pertain to list numbers in following procedure.**

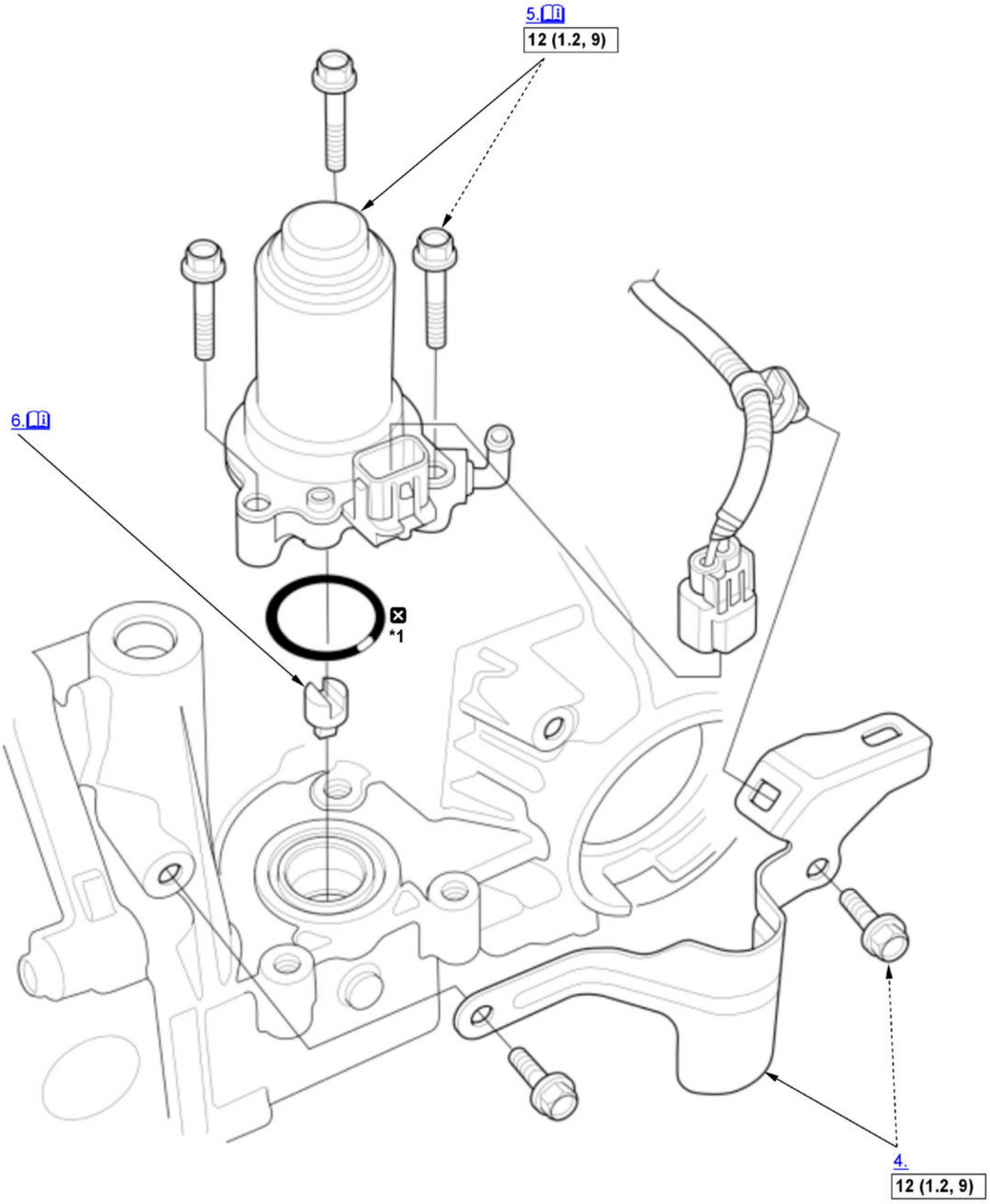

Fig. 11: Exploded View Of Rear Differential Pump Motor Replacement Components With Torque Specifications
Courtesy of HONDA, U.S.A., INC.

☐	Torque: N.m (kgf.m, lbf.ft)
☒	Replace
*1	Apply rear differential fluid.

1. **Vehicle - Lift**
2. **Rear Differential Assembly - Remove**
3. **Rear Differential Front Mount - Remove**
4. Harness Bracket A - Remove
5. Rear Differential Pump Motor - Remove

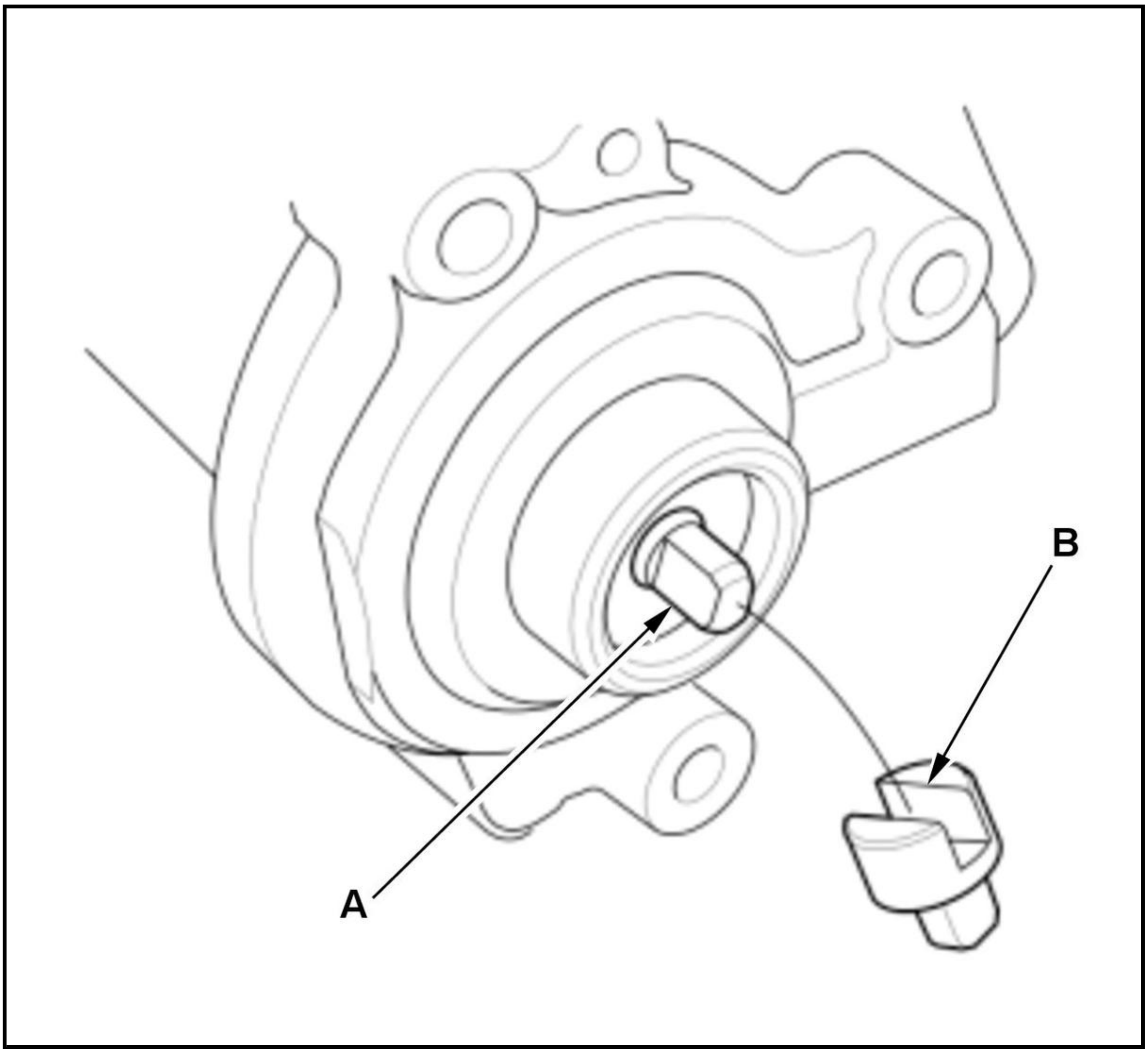

Note for installation

Align the shaft (A) of the rear differential pump motor with the groove (B) of the pump drive joint.

6. Pump Drive Joint - Remove

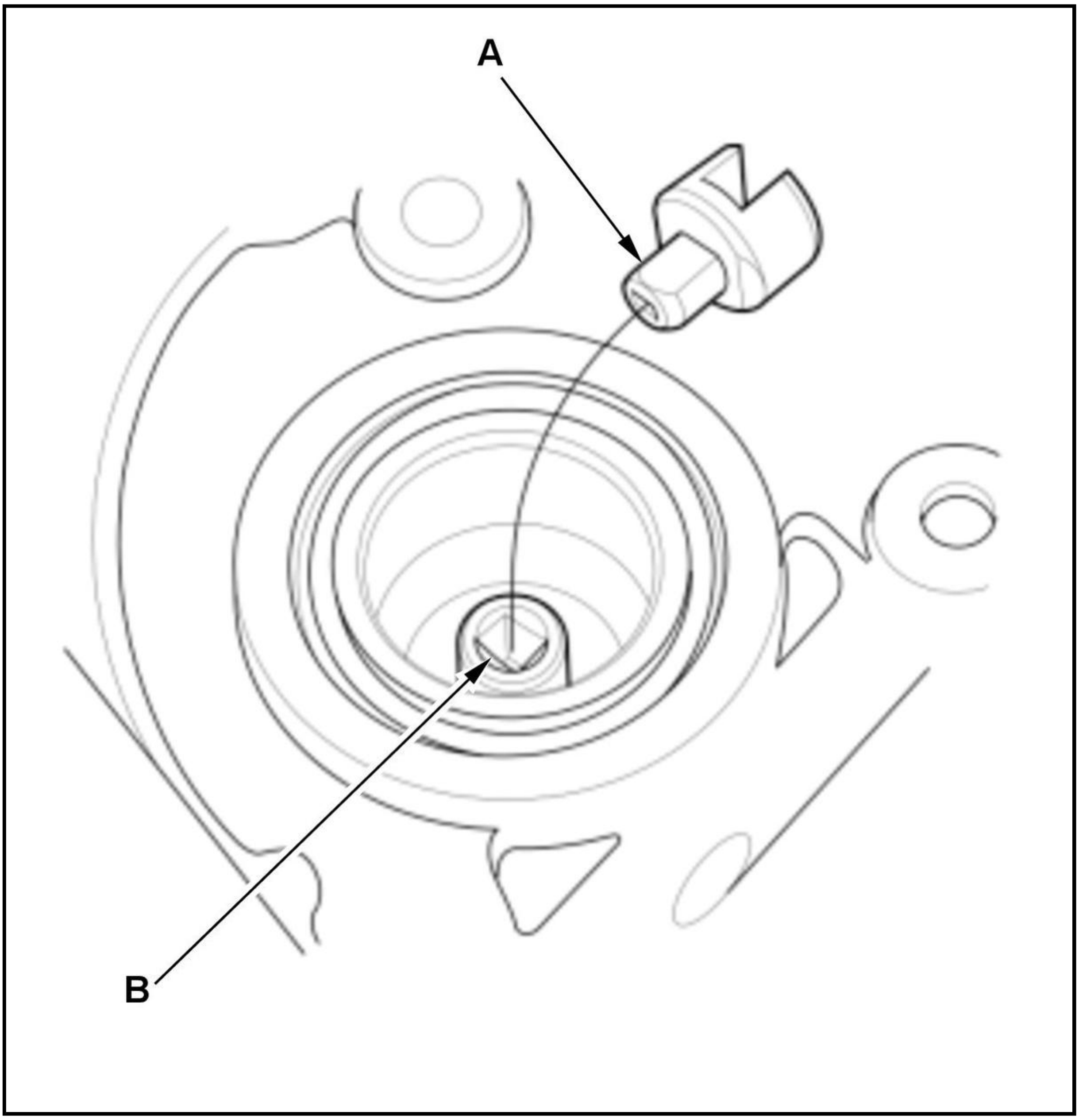

Note for installation

Align the bulge (A) of pump drive joint with the groove (B) of the rear differential.

7. All Removed Parts - Install

1. Install the parts in the reverse order of removal.

8. **Rear Differential Fluid - Refill**
9. **AWD System - Air Bleed**

REAR DIFFERENTIAL REMOVAL AND INSTALLATION

Removal

NOTE: Where icon is shown, for further information see below.

Procedure

NOTE: **Numbered call-outs in figure pertain to list numbers in following procedure.**

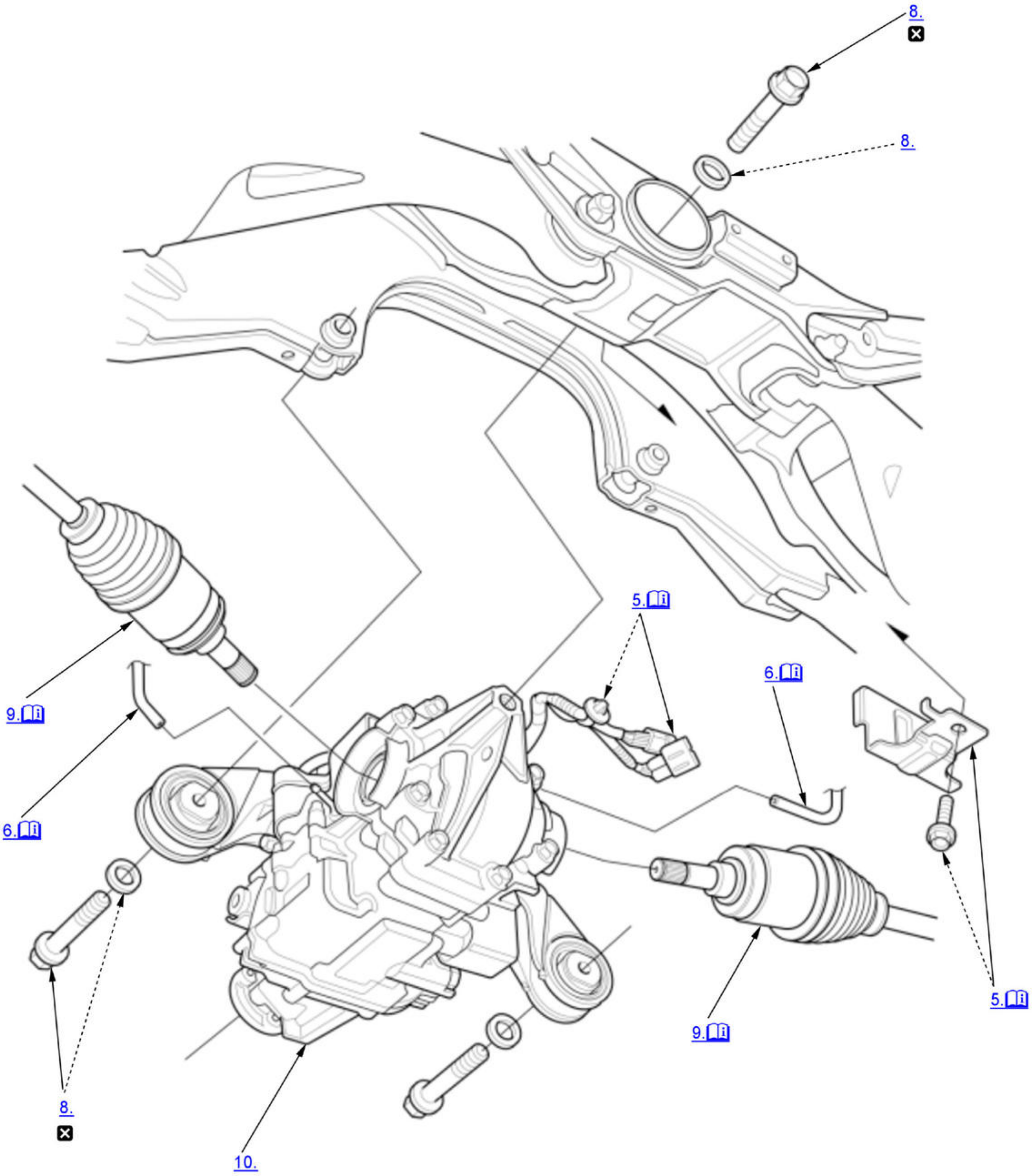

Fig. 12: Exploded View Of Rear Differential Components For Removal
Courtesy of HONDA, U.S.A., INC.

☒	Replace

1. **Vehicle - Lift**
2. **Rear Differential Fluid - Drain**
3. **Muffler - Remove**
4. **No. 2 Propeller Shaft - Disconnect**
5. Connectors (Rear Differential Subharness) - Disconnect

<table>
<tr><td>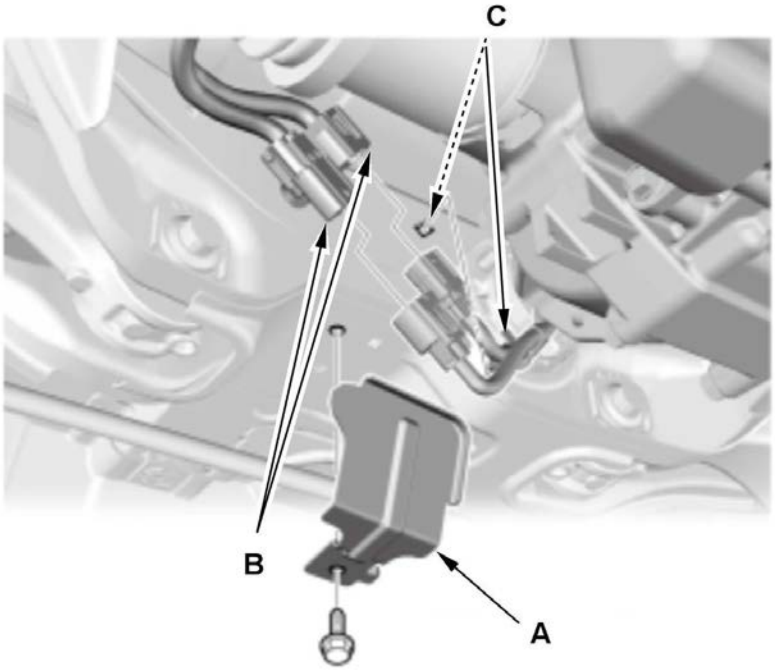
</td><td>1. Remove the cover (A).
2. Disconnect the connectors (B).
3. Remove the harness clip (C).</td></tr>
</table>

6. Breather Hose - Disconnect

<table>
<tr><td>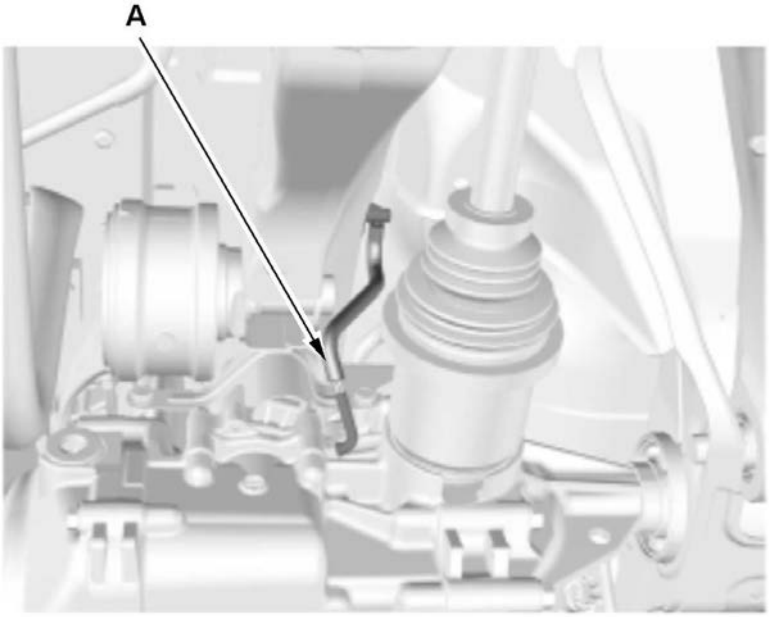

Left side
Right side</td><td>1. Disconnect the breather hoses (A).</td></tr>
</table>

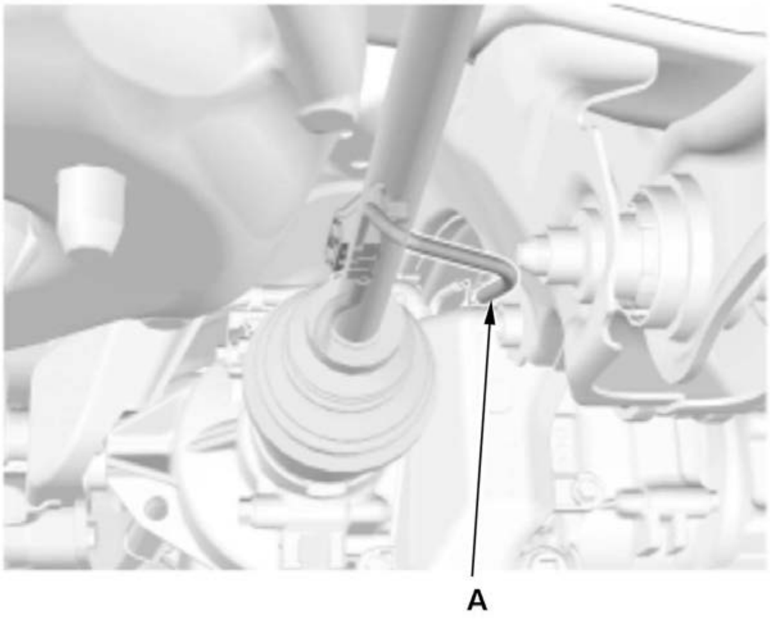	

7. Rear Differential - Support

   NOTE: Support the Rear Differential with a transmission jack.

8. Rear Differential Mounting Bolt - Remove
9. Rear Driveshaft Inboard Side - Disconnect

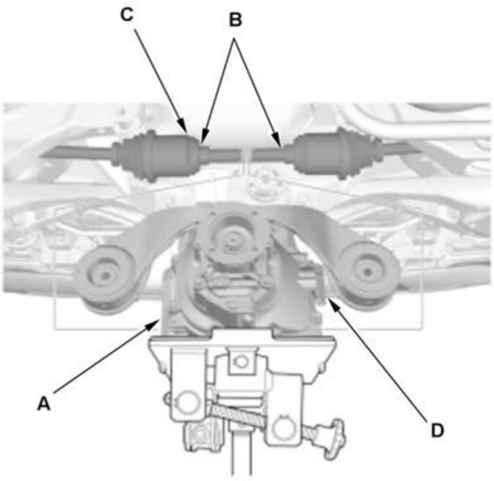	1. Lower the rear differential assembly (A) while pulling both rear driveshaft inboard joints (B) out of the rear differential assembly. **NOTE:** • Be careful not to damage the driveshaft rings (C) when prying out the driveshaft inboard joints. • Be careful not to damage the oil seals (D).

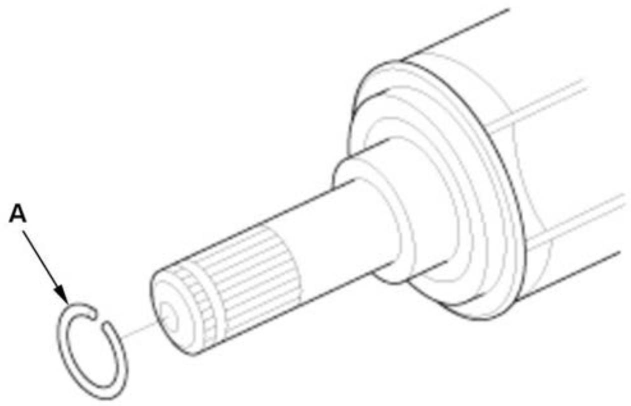	2. Remove the driveshaft inboard joint set ring (A) on both sides.

10. Rear Differential Assembly - Remove
11. **Rear Differential Front Mount - Remove**

Installation

NOTE: 🛈 Where icon is shown, for further information see below.

Procedure

NOTE: **Numbered call-outs in figure pertain to list numbers in following procedure.**

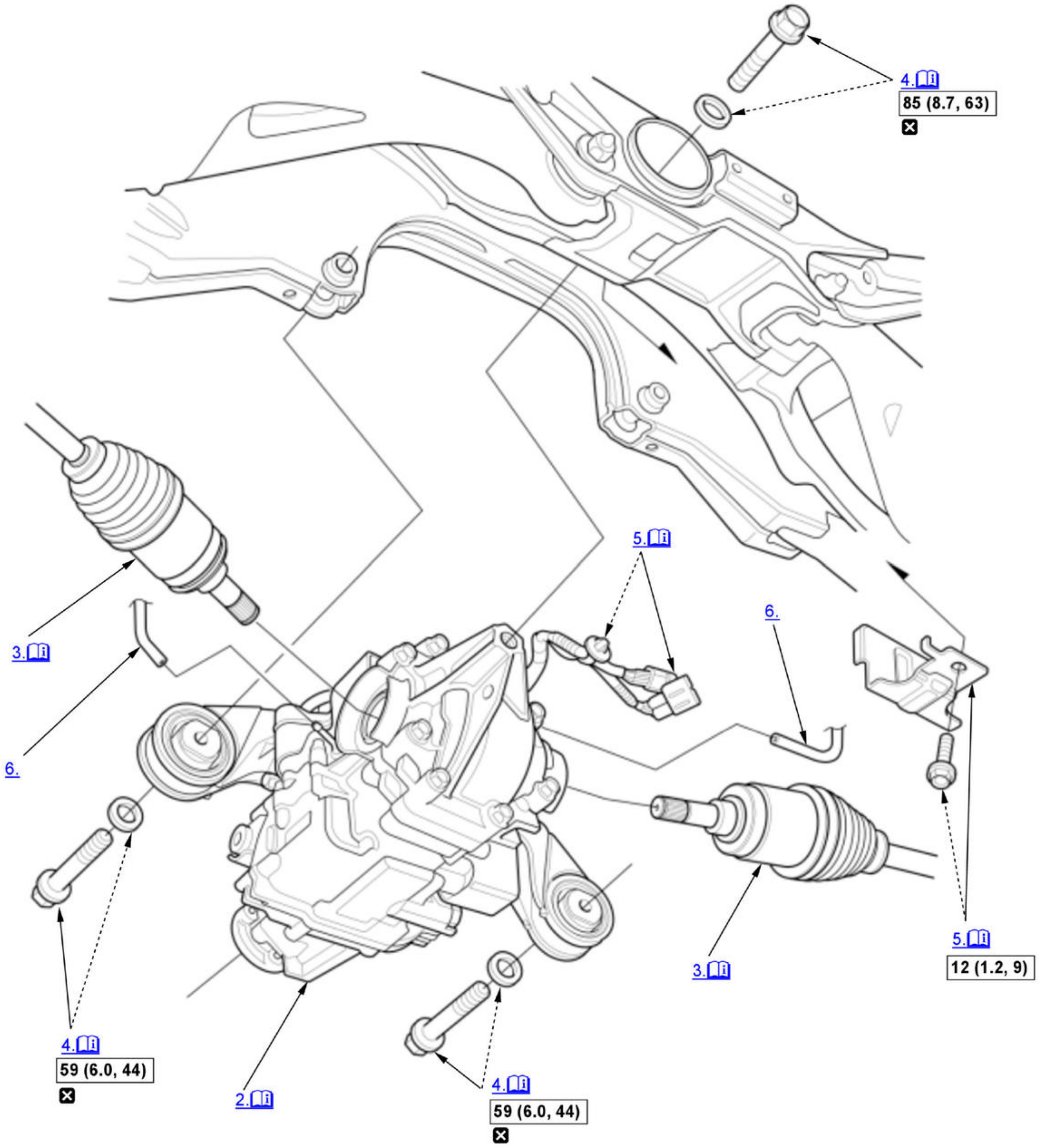

Fig. 13: Exploded View Of Rear Differential Components With Torque Specifications For Installation
Courtesy of HONDA, U.S.A., INC.

☐	Torque: N.m (kgf.m, lbf.ft)
☒	Replace

1. **Rear Differential Front Mount - Install**
2. Rear Differential Assembly - Install

   NOTE: Place the rear differential assembly on a transmission jack, and raise it to the inboard joints installation position.

3. Rear Driveshaft Inboard Side - Connect

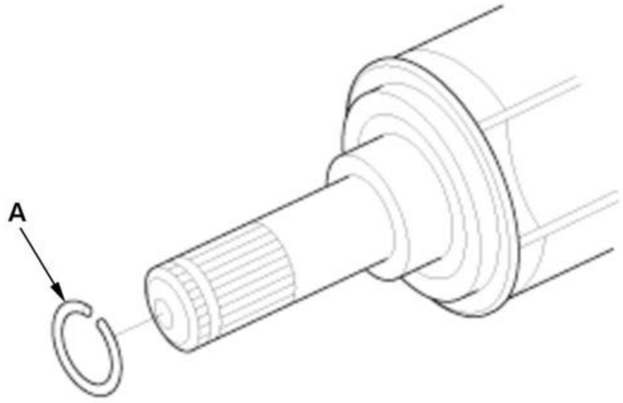

1. Install a new driveshaft inboard joint set ring (A) on both sides.

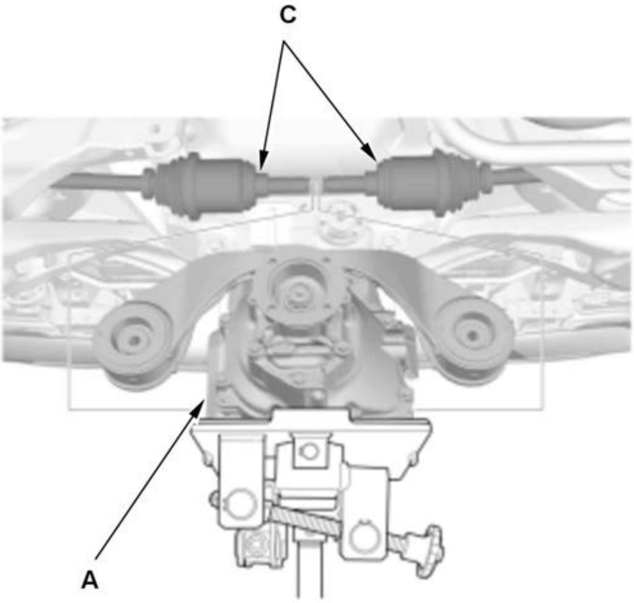

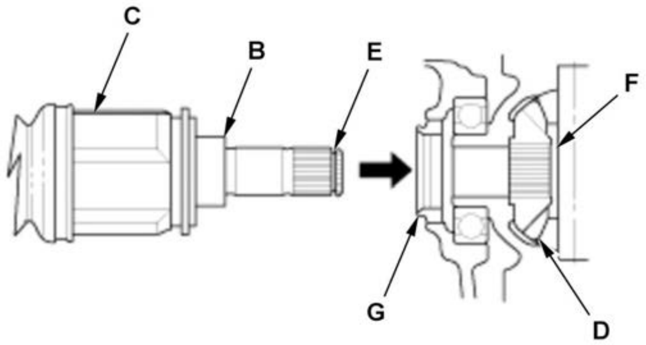

2. Lift the rear differential assembly (A) up into position.

3. Insert the inboard joint (B) of the rear driveshafts (C) into the rear differential (D) until the set ring (E) locks in the groove (F).

NOTE: Insert the driveshaft horizontally to prevent damaging the oil seals (G).

4. Rear Differential Mounting Bolt - Install

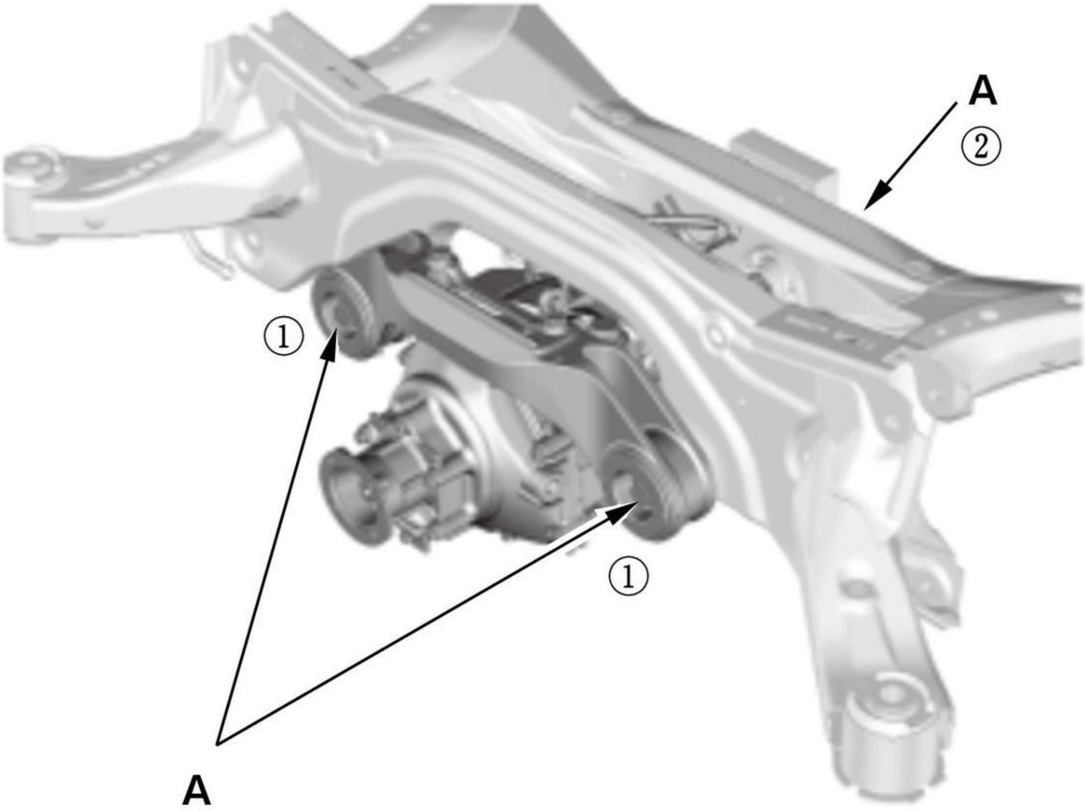

Fig. 14: Rear Differential Mounting Bolts With Tightening Sequence
Courtesy of HONDA, U.S.A., INC.

1. Loosely install the rear differential mounting bolts (A).

2. Remove the transmission jack.

3. Tighten the rear differential mounting bolts in the numbered sequence shown.

5. Connectors (Rear Differential Subharness) - Connect

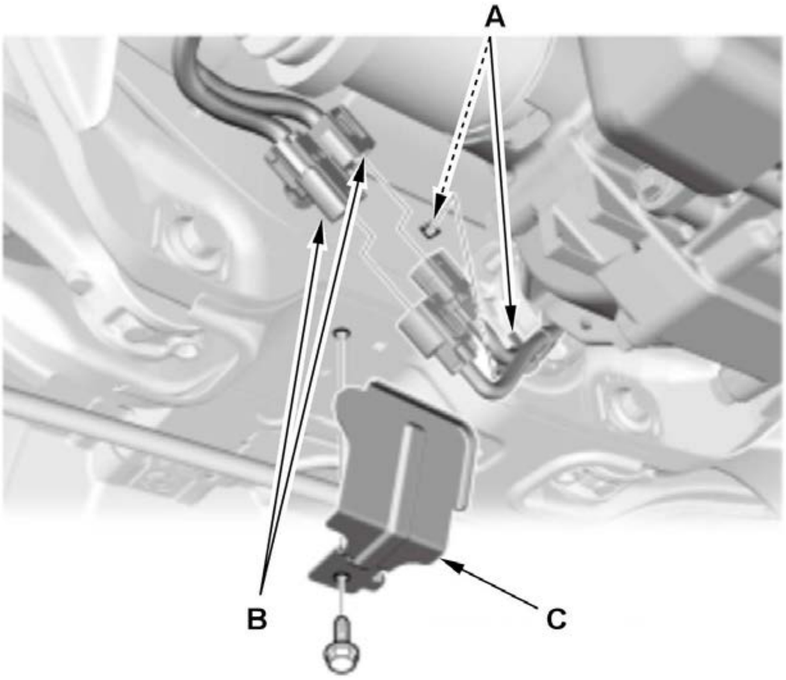	1. Install the harness clip (A). 2. Connect the connectors (B). 3. Install the cover (C).

6. **Breather Hose - Connect**
7. **No. 2 Propeller Shaft - Connect**
8. **Muffler - Install**
9. **Rear Differential Fluid - Refill**
10. **AWD System - Air Bleed**
11. Test Drive - Check

1. Test drive and check that there are no abnormal noise and vibration.

2020-22 DRIVELINE/AXLES

Differential - Testing & Troubleshooting - CR-V (Hybrid)

SYMPTOM TROUBLESHOOTING INDEX FOR VIEWER

AWD SYSTEM INDICATOR DOES NOT COME ON

Remedy

Do the symptom troubleshooting for AWD system indicator does not come on

AWD SYSTEM INDICATOR DOES NOT GO OFF, AND NO DTCS ARE STORED

Remedy

Do the symptom troubleshooting for AWD system indicator does not go off, and no DTCs are stored

ABNORMAL NOISE (AT ACCELERATE)

Probable Cause

- Gear noise
-
  - -

    Poor gear mesh between ring gear and drive pinion
  - -

    Hypoid gear (wear or damage)
  - -

    Poor pre-road (drive pinion)
  - -

    Debris in hypoid gear area
  - -

    Fluid level too low
  - -

    Distortion of the differential carrier case
  - -

    Excessive backlash (hypoid gear)
  - -

    Excessive backlash (differential gear)
  - -

    Differential side gear spline (wear)

- Bearing noise
-
  - -

    Bearing (wear or damage)

  - -

    Drive pinion taper bearing (wear)

  - -

    Debris in bearing

- Pump noise (at lubrication)
-
  - -

    Debris in pump

  - -

    Rotor (wear or damage)

- Rear differential pump motor noise
-
  - -

    Bearing (wear or damage)

  - -

    Debris in rear differential pump motor

- Pump noise (at control)
-
  - -

    Debris in pump

  - -

    Rotor (wear or damage)

- Rear differential solenoid valve noise
-
  - -

    Debris in rear differential solenoid valve

  - -

    Plunger area or shaft area (wear)

  - -

    Rear differential solenoid valve (wear or damage)

- Clutch chatter
-
    - -

      Fluid deterioration
    - -

      Clutch facing (burnt or deterioration)
    - -

      Clutch plate (deterioration)
- Loose or missed torqued parts

ABNORMAL NOISE (AT NORMAL CONDITION)

Probable Cause

- Gear noise
-
    - -

      Poor gear mesh between ring gear and drive pinion
    - -

      Hypoid gear (wear or damage)
    - -

      Poor pre-road (drive pinion)
    - -

      Debris in hypoid gear area
    - -

      Fluid level too low
    - -

      Distortion of the differential carrier case
- Bearing noise
-
    - -

      Bearing (wear or damage)
    - -

      Drive pinion taper bearing (wear)
    - -

      Debris in bearing

- Pump noise (at lubrication)
-
  - -

    Debris in pump

  - -

    Rotor (wear or damage)

- Loose or missed torqued parts

Remedy

Do the symptom troubleshooting for abnormal noise

ABNORMAL NOISE (AT START)

Probable Cause

- Gear noise
-
  - -

    Poor gear mesh between ring gear and drive pinion

  - -

    Hypoid gear (wear or damage)

  - -

    Poor pre-road (drive pinion)

  - -

    Debris in hypoid gear area

  - -

    Fluid level too low

  - -

    Distortion of the differential carrier case

  - -

    Excessive backlash (hypoid gear)

  - -

    Excessive backlash (differential gear)

  - -

    Differential side gear spline (wear)

- Bearing noise

-
    - -

      Bearing (wear or damage)

    - -

      Drive pinion taper bearing (wear)

    - -

      Debris in bearing
- Pump noise (at lubrication)
-
    - -

      Debris in pump

    - -

      Rotor (wear or damage)
- Rear differential pump motor noise
-
    - -

      Bearing (wear or damage)

    - -

      Debris in rear differential pump motor
- Pump noise (at control)
-
    - -

      Debris in pump

    - -

      Rotor (wear or damage)
- Rear differential solenoid valve noise
-
    - -

      Debris in rear differential solenoid valve

    - -

      Plunger area or shaft area (wear)

    - -

      Rear differential solenoid valve (wear or damage)
- Clutch chatter

-
    - -

      Fluid deterioration

    - -

      Clutch facing (burnt or deterioration)

    - -

      Clutch plate (deterioration)

- Loose or missed torqued parts

ABNORMAL NOISE (AT TURNING AND ACCELERATE)

Probable Cause

- Gear noise
-
    - -

      Poor gear mesh between ring gear and drive pinion

    - -

      Hypoid gear (wear or damage)

    - -

      Poor pre-road (drive pinion)

    - -

      Debris in hypoid gear area

    - -

      Fluid level too low

    - -

      Distortion of the differential carrier case

    - -

      Excessive backlash (hypoid gear)

    - -

      Excessive backlash (differential gear)

    - -

      Differential side gear spline (wear)

- Bearing noise
-

    - -

      Bearing (wear or damage)

    - -

      Drive pinion taper bearing (wear)

    - -

      Debris in bearing

- Differential gear noise
-
    - -

      Side gear and pinion gear (wear or damage)

    - -

      Pinion shaft (damage)

    - -

      Debris in differential gear area

- Pump noise (at lubrication)
-
    - -

      Debris in pump

    - -

      Rotor (wear or damage)

- Rear differential pump motor noise
-
    - -

      Bearing (wear or damage)

    - -

      Debris in rear differential pump motor

- Pump noise (at control)
-
    - -

      Debris in pump

    - -

      Rotor (wear or damage)

- Rear differential solenoid valve noise
-

  - -

    Debris in rear differential solenoid valve

  - -

    Plunger area or shaft area (wear)

  - -

    Rear differential solenoid valve (wear or damage)

- Clutch chatter
-
  - -

    Fluid deterioration

  - -

    Clutch facing (burnt or deterioration)

  - -

    Clutch plate (deterioration)

- Loose or missed torqued parts

ABNORMAL NOISE (AT TURNING)

Probable Cause

- Gear noise
-
  - -

    Poor gear mesh between ring gear and drive pinion

  - -

    Hypoid gear (wear or damage)

  - -

    Poor pre-road (drive pinion)

  - -

    Debris in hypoid gear area

  - -

    Fluid level too low

  - -

    Distortion of the differential carrier case

- Bearing noise

-
  - -

    Bearing (wear or damage)
  - -

    Drive pinion taper bearing (wear)
  - -

    Debris in bearing
- Differential gear noise
-
  - -

    Side gear and pinion gear (wear or damage)
  - -

    Pinion shaft (damage)
  - -

    Debris in differential gear area
- Clutch chatter
-
  - -

    Fluid deterioration
  - -

    Clutch facing (burnt or deterioration)
  - -

    Clutch plate (deterioration)
- Loose or missed torqued parts

HDS DOES NOT COMMUNICATE WITH AWD CONTROL UNIT

Remedy

Do the symptom troubleshooting for HDS does not communicate

HDS DOES NOT COMMUNICATE WITH VEHICLE

Remedy

Troubleshoot the DLC circuit

REAL TIME AWD SYSTEM IS STUCK IN 4WD MODE

Remedy

Do the symptom troubleshooting for real time AWD system is stuck in 4WD mode

REAR DIFFERENTIAL LEAKS FLUID

Probable Cause

- Fluid level too high
- Clogged breather hose
- Worn or damaged oil seal
- Damaged sealing washer
- Loose mounting bolts or inadequate sealing

Remedy

- Lower to proper level
- Clean or replace
- Replace the oil seal
- Replace the sealing washer
- Recheck torque or apply sealant

REAR DIFFERENTIAL OVERHEATS

Probable Cause

- Fluid level too low
- Incorrect fluid type

Remedy

- Add recommended fluid
- Drain and fill the differential with the recommended fluid

WILL NOT GO INTO 4WD MODE, POOR TRACTION, POOR ACCELERATION (AT START), POOR CLIMBING ABILITY

Remedy

Do the symptom troubleshooting for will not go into 4WD mode, Poor traction, Poor acceleration (at start), Poor climbing ability

DESCRIPTION & OPERATION

REAR DIFFERENTIAL SYSTEM DESCRIPTION

Overview

The All Wheel Drive (AWD) system is adopted into the rear differential. The AWD features a built-in real-time controlling mechanism that distributes the proper torque to the rear wheels as needed depending on the rotating difference between front and rear wheels or the engine power. The hydraulic circuit of the AWD is equipped with a motor-driven oil pump and an electronically-controlled valves, resulting in a wide range of torque controls, improvements in responsiveness, reduction of excessive torque, and compact size/lightening.

Construction

The AWD Differential Assembly consists of a wet-disc clutch assembly, differential, and a hydraulic system.The main components of the wet-disc clutch assembly are as follow:

Components	Purpose
Clutch Disc A	Clutch discs A are splined to the clutch guide.
Clutch Disc B	Clutch discs B are splined to the clutch hub.
Clutch Guide	Clutch guide is connected to the propeller shaft.
Clutch Hub	Clutch hub is connected to the hypoid pinion shaft.
Hydraulic Pressure Piston	The end plate is pressed by an oil pressure, and the clutch plates A and B are engaged.

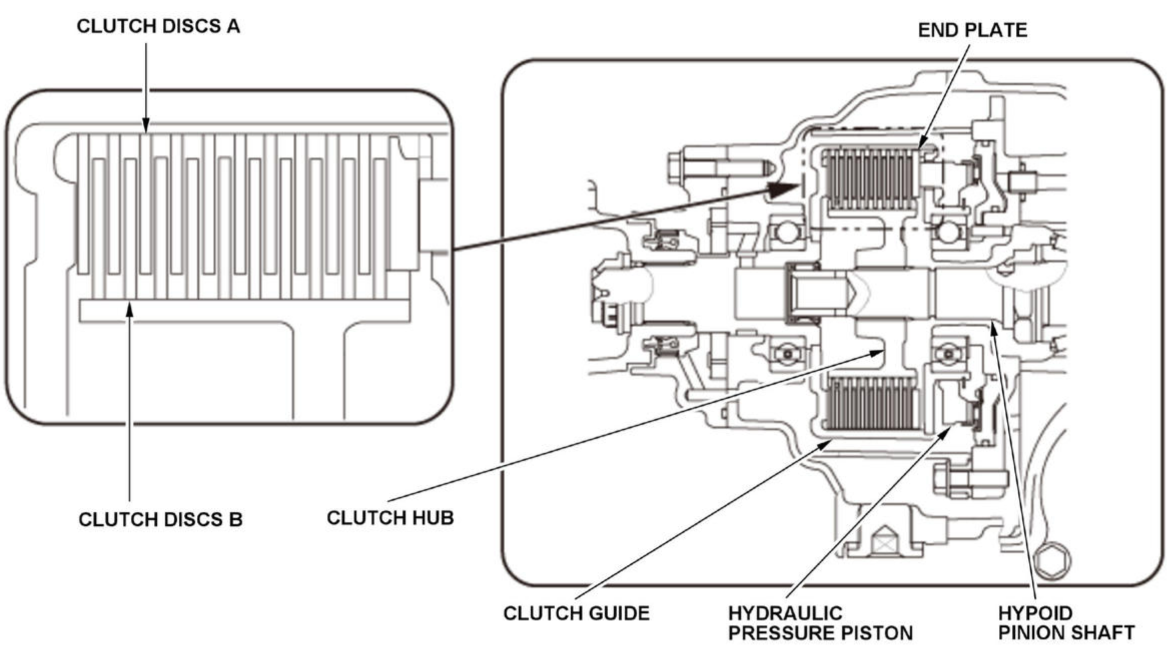

Hydraulic Circuit

The main components in the hydraulic circuit are as follows:

COMPONENT	FUNCTION
Oil Pump	Operated by the rear differential pump motor, the oil pump receives the oil from the strainer and sends it to the hydraulic circuit. The rear differential pump motor is controlled by the AWD control unit.
1-Way Valve	Retains the oil pressure in the hydraulic circuit.
Pressure Relief Valve	Operates when the oil pressure failed, and release the oil pressure into the strainer.
Rear Differential Solenoid Valve	Turns ON/OFF to adjust the oil pressure in the hydraulic circuit.
Rear Differential Fluid Pressure Sensor	The fluid pressure sensor monitors the pressure in the hydraulic circuit and reports this to the AWD control unit.
Rear Differential Fluid Temperature Sensor	The fluid temperature sensor monitors the fluid temperature and reports this to the AWD control unit.

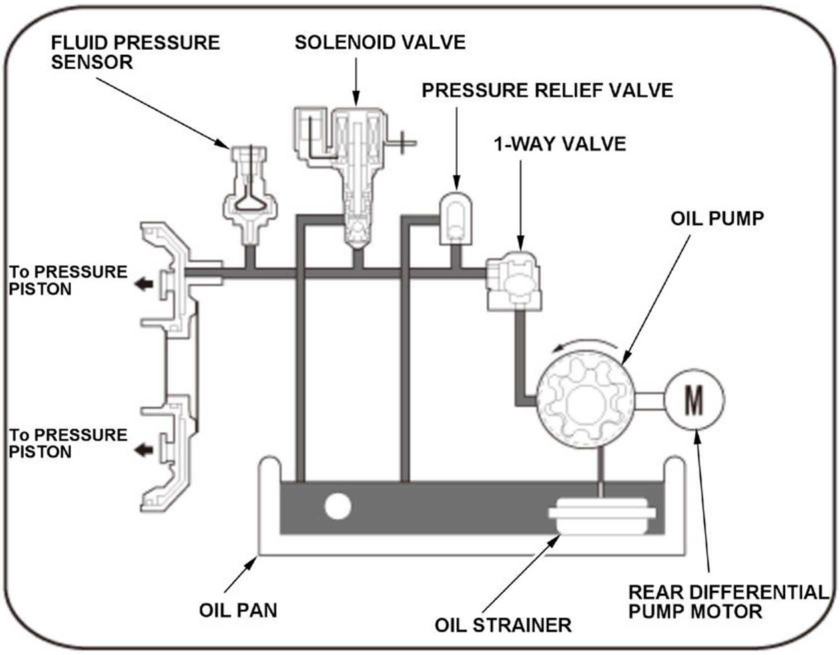
FLUID PRESSURE SENSOR
SOLENOID VALVE
PRESSURE RELIEF VALVE
1-WAY VALVE
OIL PUMP
To PRESSURE PISTON
To PRESSURE PISTON
M
OIL PAN
OIL STRAINER
REAR DIFFERENTIAL PUMP MOTOR

The AWD control unit receives signals from the PCM, VSA Modulator-Control Unit, Gauge Control Module, EPS Control Unit and SRS Unit. These signals are used to calculate the amount of torque to be provided to the rear wheels. The AWD control unit actuates controls on the differential that generates variable hydraulic pressure in the hydraulic circuits. This pressure causes a clutch assembly inside the housing to be applied, delivering variable amounts of power to the rear wheels.

Hydraulic Control System Diagram

For locations of each component on vehicle, refer to Component Location Index:

- **PCM**
- **VSA Modulator-Control Unit**
- **Gauge Control Module**
- **EPS Control Unit**
- **SRS Unit**

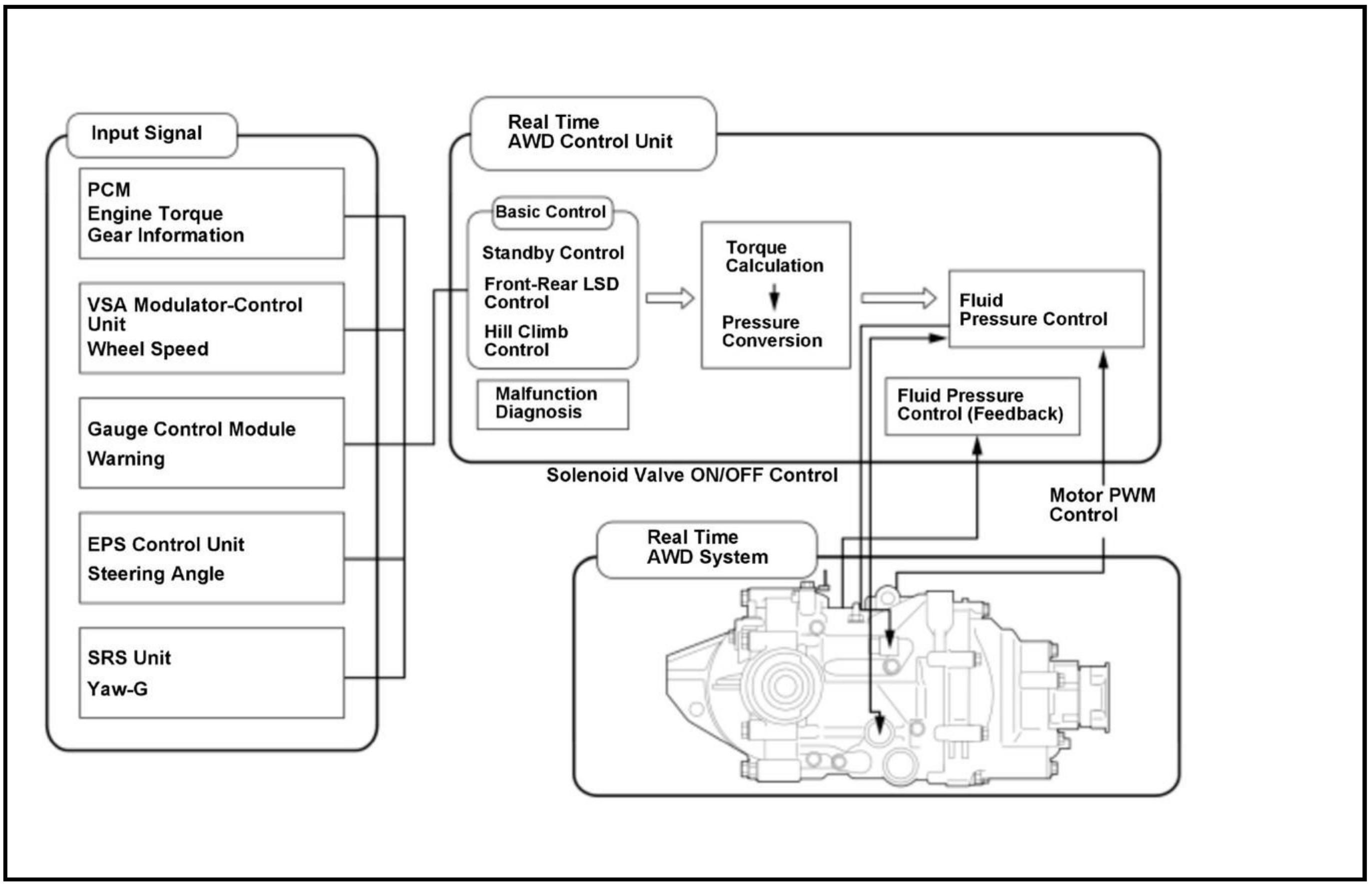
Input Signal
PCM
Engine Torque
Gear Information
VSA Modulator-Control Unit
Wheel Speed
Gauge Control Module
Warning
EPS Control Unit
Steering Angle
SRS Unit
Yaw-G
Real Time AWD Control Unit
Basic Control
Standby Control
Front-Rear LSD Control
Hill Climb Control
Malfunction Diagnosis
Torque Calculation
Pressure Conversion
Fluid Pressure Control
Fluid Pressure Control (Feedback)
Solenoid Valve ON/OFF Control
Motor PWM Control
Real Time AWD System

Operation

Driving Power Delivery

The driving power delivered from the propeller shaft is transmitted to the clutch guide and clutch discs. Since the clutch is not engaged when the oil pressure is not generated, the pinion gear is not driven by the propeller shaft. In this case, the driving power is not transmitted to the rear wheels, but it is only rotated by the vehicle movement. The generated hydraulic pressure presses the pressure piston against the end plate, compressing the clutch discs. This compression reduces the slippage between clutch discs A and B, thus rotating the clutch drum together with the clutch hub.

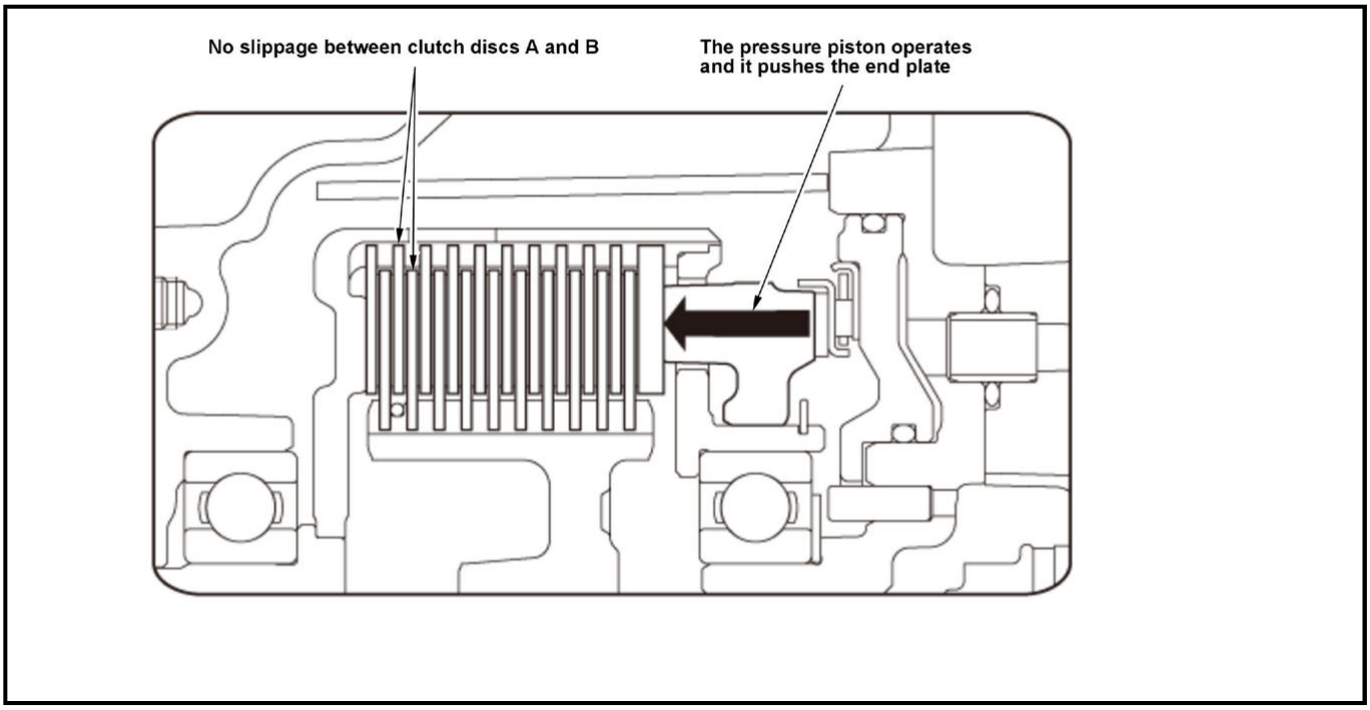
No slippage between clutch discs A and B
The pressure piston operates and it pushes the end plate

The drive power delivered to the propeller shaft is outputted from the clutch hub to the drive pinion gear, ring gear, differential and rear drive shafts when the clutch is applied. In this situation, the drive power is transmitted to the rear wheels.

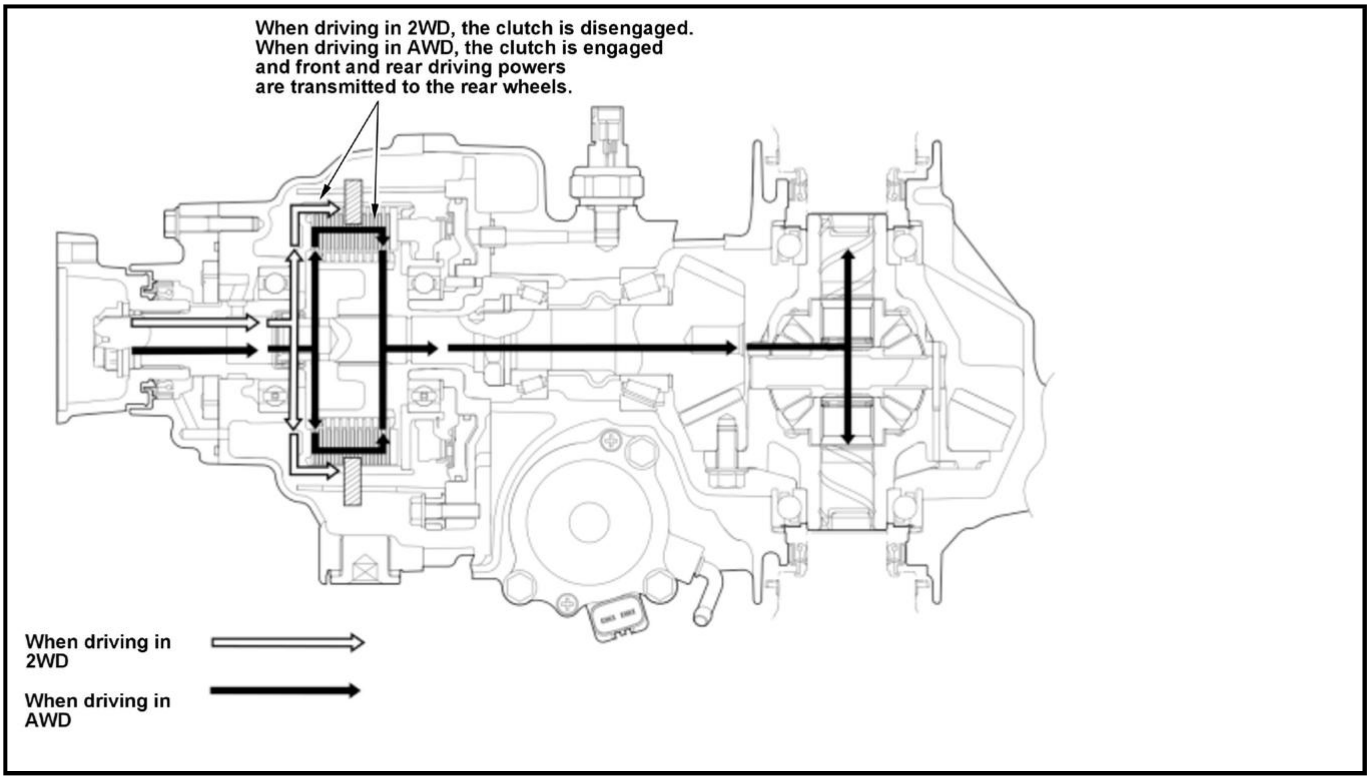
When driving in 2WD, the clutch is disengaged.
When driving in AWD, the clutch is engaged and front and rear driving powers are transmitted to the rear wheels.
When driving in 2WD
When driving in AWD

In addition, the clutch drum and the clutch hub are not in complete contact but linked to each other with a maximum of 80% contact rate. This slippage reduces the friction caused by the rotational difference between the front and rear.

Hydraulic Control

Torque is distributed to the front and rear wheels by controlling the amount of clutch application in the differential. Clutch application force is controlled through oil pressure created by the oil pump drive motor and a solenoid valve.

By applying pressure and depressurization control, the AWD control unit sets the optimum level of pressure in stages to suit the driving conditions and road conditions. The basic control method involves the hydraulic circuit being pressurized by the motor to a level close to, but generally exceeding, the target pressure calculated from the vehicle conditions and road conditions received by the AWD control unit.

The hydraulic controls in a normal driving condition are as follows:

- In the pressurization mode, the oil pump driving motor generates a target oil pressure in the hydraulic circuit during a period of time calculated by the AWD control unit. The 1-way valve is opened by the oil pressure and the AWD control unit closes the solenoid valve (energized), thus, the pressure piston squeezes the clutch discs.
- In the retention mode, if the oil pressure reaches the pressure level set by the AWD control unit, the motor stops pressurizing. The 1-way valve closes and the solenoid valve keeps closed (energized), and the oil pressure generated in the hydraulic circuit is kept as-is. Thus, the pressure piston is fixed in a place and maintains the pressure on the clutch discs.
- In the depressurization mode, if the AWD control unit determines that it is not necessary to distribute a torque to the rear wheels, it turns on electricity to open the solenoid valve (de-energized), and releases the oil pressure from the hydraulic circuit. Thus, the pressure piston returns back and releases the clutch disc.

Basic Operation

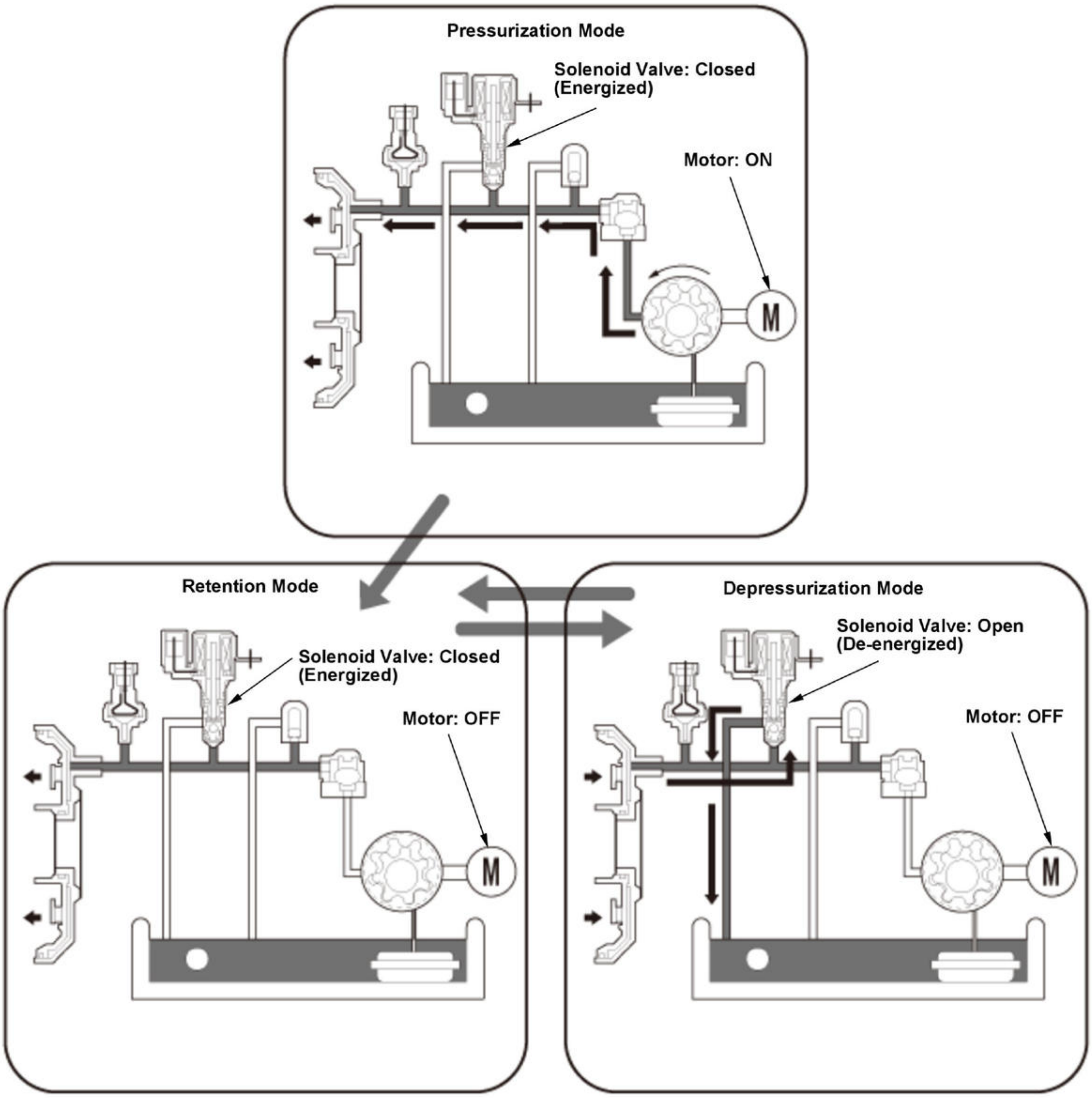
Pressurization Mode
Solenoid Valve: Closed (Energized)
Motor: ON
M
Retention Mode
Solenoid Valve: Closed (Energized)
Motor: OFF
M
Depressurization Mode
Solenoid Valve: Open (De-energized)
Motor: OFF
M

Operating Modes

The operations of AWD are performed appropriately to meet the driving conditions. The following examples show the AWD performance against several driving conditions.

Accelerating From a Stop on Dry Pavement

When the vehicle is stopped on a dry level surface, the AWD control unit puts the system in Standby Mode. This mode pressurizes the hydraulic system and applies the clutch pressure, and distributes a maximum of 20% of torque to the rear wheels for an initial acceleration. To achieve this, the AWD control unit receives information from the VSA system to determine the longitudinal angle of the vehicle. Upon determining the vehicle is on level ground, the AWD control unit activates the oil pump drive motor to pressurize the hydraulic system, then cycles the oil pressure solenoid on and off until the target pressure is met. Two levels of system pressurization can be created, depending on conditions. When the target pressure is achieved, the oil pressure solenoid remains closed to maintain the pressure in the hydraulic circuit until the vehicle begins to accelerate.

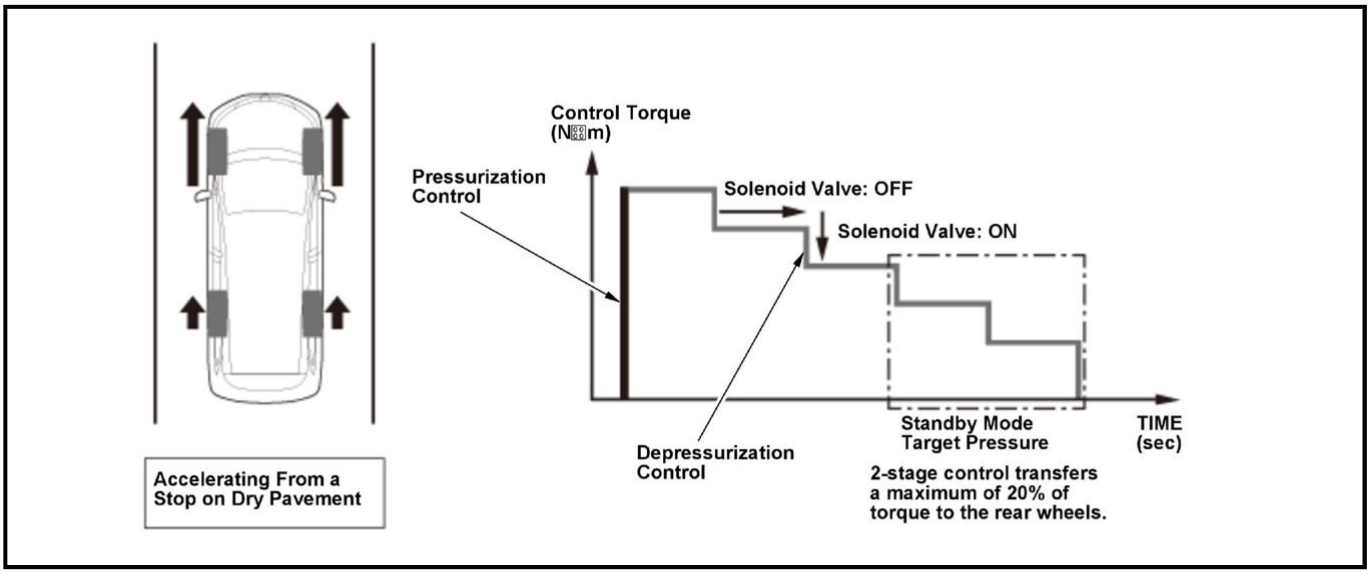
Control Torque
(N·m)
Pressurization Control
Solenoid Valve: OFF
Solenoid Valve: ON
Depressurization Control
Standby Mode Target Pressure
TIME (sec)
2-stage control transfers a maximum of 20% of torque to the rear wheels.
Accelerating From a Stop on Dry Pavement

Cruising at Steady Speed on Dry Pavement

When the vehicle is cruising at a steady speed on dry pavement, the AWD control unit deactivates the All Wheel Drive system. The vehicle operates in 2WD mode, helping to increase fuel efficiency. To achieve this, the AWD control unit receives information from the PCM, VSA, EPS and SRS to determine the stability of the vehicle. When it determines that the vehicle is traveling at a steady speed and no wheel slippage is occurring, all pressure is released from the hydraulic circuit, enabling 2WD-only operation. This mode continues until the AWD control unit determines that torque needs to be transferred to the rear wheels.

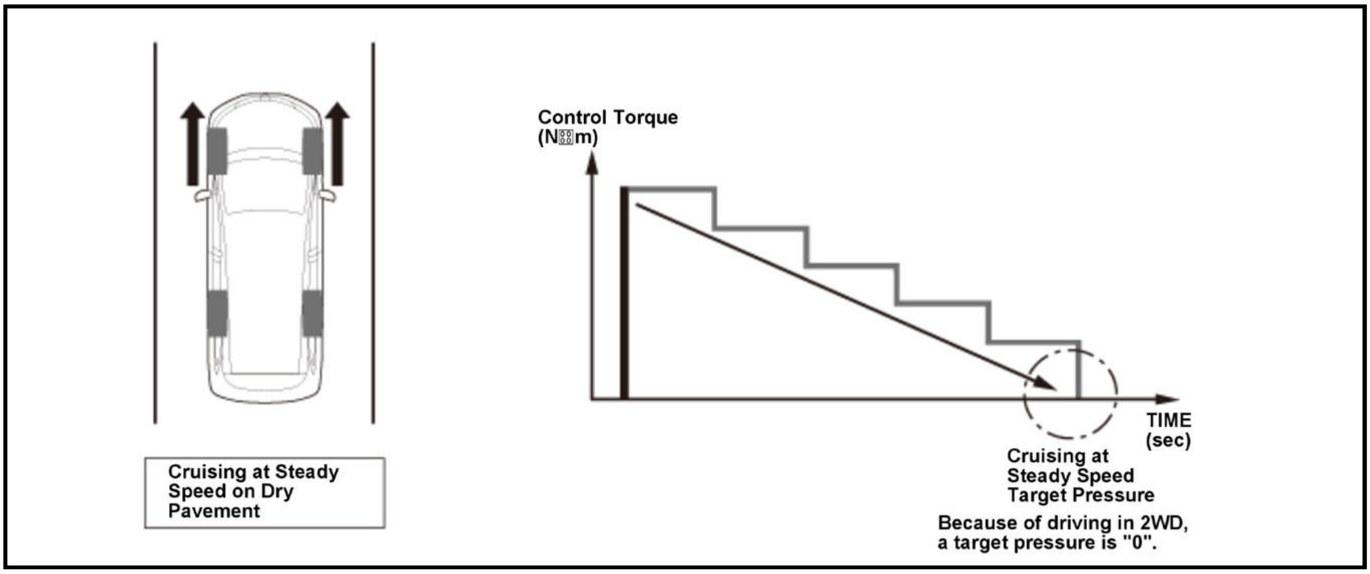
Control Torque
(N·m)
TIME (sec)
Cruising at Steady Speed Target Pressure
Because of driving in 2WD, a target pressure is "0".
Cruising at Steady Speed on Dry Pavement

Front Wheel Slipping on Slick Surface

When the front wheels are slipping, for example on a low friction surface such as wet or icy roads, the AWD control unit receives information from the VSA, EPS and SRS that the front wheels are slipping. When the slipping of the front wheels occur, 80% of torque will be transferred to the rear wheels to reduce the load on the front wheels, and to regain vehicle stability. This mode continues until the AWD control unit determines that the front wheels are no longer slipping.

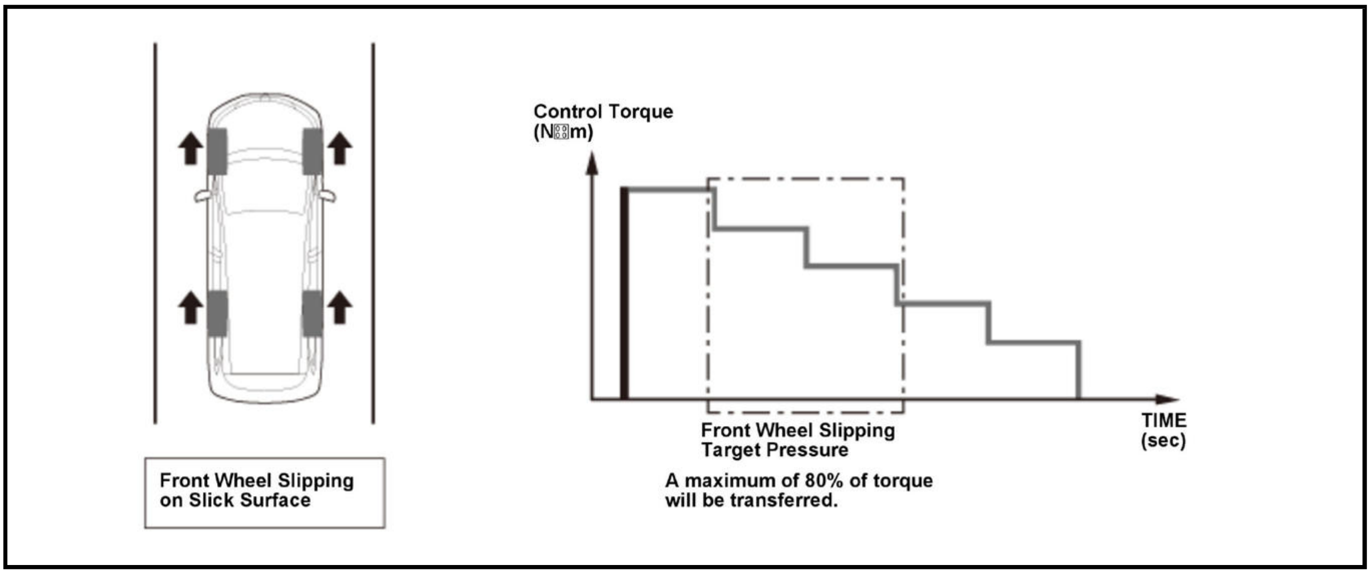
Front Wheel Slipping on Slick Surface
Control Torque (N·m)
TIME (sec)
Front Wheel Slipping Target Pressure
A maximum of 80% of torque will be transferred.

Accelerating Uphill From a Stop on Dry Pavement

To stabilize the vehicle while driving uphill, the AWD control unit transfers more of the available torque to the rear wheels than when driving on a flat road. To achieve this, the AWD control unit receives information from the VSA system to determine the slope where the vehicle is driving. Upon determining this, the AWD control unit activates the oil pump drive motor to pressurize the hydraulic system, then cycles the oil pressure solenoid on and off until the target pressure is reached. The level of pressurization varies depending on the calculated slope the vehicle is driving on. The torque transfer to the rear wheels will be controlled at a maximum of 80% depending on driving force. This mode continues until the AWD control unit determines that the vehicle is no longer accelerating uphill.

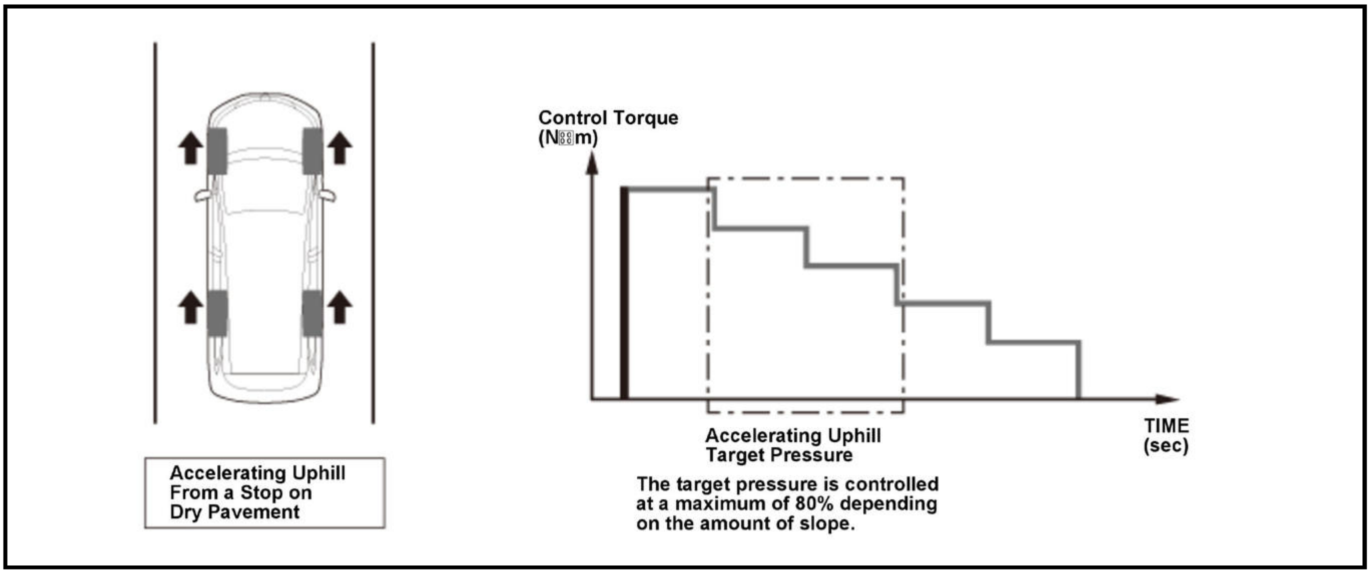
Accelerating Uphill From a Stop on Dry Pavement
Control Torque (N·m)
TIME (sec)
Accelerating Uphill Target Pressure
The target pressure is controlled at a maximum of 80% depending on the amount of slope.

SYMPTOM TROUBLESHOOTING INDEX

REAL TIME AWD SYSTEM SYMPTOM TROUBLESHOOTING INDEX

Symptom	Probable Cause	Remedy
Rear differential overheats	• Fluid level too low • Incorrect fluid type	• Add recommended fluid • Drain and fill the differential with the recommended fluid
Rear differential leaks fluid	• Fluid level too high • Clogged breather hose	• Lower to proper level • Clean or replace

Symptom	Probable Cause	Remedy
	- Worn or damaged oil seal - Damaged sealing washer - Loose mounting bolts or inadequate sealing	- Replace the oil seal - Replace the sealing washer - Recheck torque or apply sealant
HDS does not communicate with vehicle	B	Troubleshoot the DLC circuit
HDS does not communicate with AWD control unit	B	Do the symptom troubleshooting for HDS does not communicate
AWD system indicator does not come on	B	Do the symptom troubleshooting for AWD system indicator does not come on
AWD system indicator does not go off, and no DTCs are stored	B	Do the symptom troubleshooting for AWD system indicator does not go off, and no DTCs are stored
Will not go into 4WD mode, Poor traction, Poor acceleration (at start), Poor climbing ability	B	Do the symptom troubleshooting for will not go into 4WD mode, Poor traction, Poor acceleration (at start), Poor climbing ability
Real time AWD system is stuck in 4WD mode	B	Do the symptom troubleshooting for real time AWD system is stuck in 4WD mode

Abnormal noise (at normal condition)	- Gear noise
	-
	  - - Poor gear mesh between ring gear and drive pinion
	  - - Hypoid gear (wear or damage)
	  - - Poor pre-road (drive pinion)
	  - - Debris in hypoid gear area
	  - - Fluid level too low
	  - - Distortion of the differential carrier case
	- Bearing noise
	-
		Do the symptom troubleshooting for abnormal noise

Symptom	Probable Cause	Remedy
	- - Bearing (wear or damage) - - Drive pinion taper bearing (wear) - - Debris in bearing - Pump noise (at lubrication) - - - Debris in pump - - Rotor (wear or damage) - Loose or missed torqued parts	

Symptom	Probable Cause	Remedy
Abnormal noise (at start)	- Gear noise - - - Poor gear mesh between ring gear and drive pinion - - Hypoid gear (wear or damage) - - Poor pre-road (drive pinion) - - Debris in hypoid gear area - - Fluid level too low - - Distortion of the differential carrier case - -	B

Symptom	Probable Cause	Remedy
	Excessive backlash (hypoid gear) • - Excessive backlash (differential gear) • - Differential side gear spline (wear) • Bearing noise • • - Bearing (wear or damage) • - Drive pinion taper bearing (wear) • - Debris in bearing • Pump noise (at lubrication) • • - Debris in pump • - Rotor (wear or damage) • Rear differential pump motor noise • • - Bearing (wear or damage) • - Debris in rear differential pump motor • Pump noise (at control) • • - Debris in pump • - Rotor (wear or damage) • Rear differential solenoid valve noise	

Symptom	Probable Cause	Remedy
	• • - Debris in rear differential solenoid valve • - Plunger area or shaft area (wear) • - Rear differential solenoid valve (wear or damage) • Clutch chatter • • - Fluid deterioration • - Clutch facing (burnt or deterioration) • - Clutch plate (deterioration) • Loose or missed torqued parts	

Symptom	Probable Cause	Remedy
Abnormal noise (at accelerate)	• Gear noise • • - Poor gear mesh between ring gear and drive pinion • - Hypoid gear (wear or damage) • - Poor pre-road (drive pinion) • - Debris in hypoid gear area • - Fluid level too low	B

Symptom	Probable Cause	Remedy
	• - Distortion of the differential carrier case • - Excessive backlash (hypoid gear) • - Excessive backlash (differential gear) • - Differential side gear spline (wear) • Bearing noise • • - Bearing (wear or damage) • - Drive pinion taper bearing (wear) • - Debris in bearing • Pump noise (at lubrication) • • - Debris in pump • - Rotor (wear or damage) • Rear differential pump motor noise • • - Bearing (wear or damage) • - Debris in rear differential pump motor • Pump noise (at control) • • -	

Symptom	Probable Cause	Remedy
	Debris in pump - - Rotor (wear or damage) - Rear differential solenoid valve noise - - - Debris in rear differential solenoid valve - - Plunger area or shaft area (wear) - - Rear differential solenoid valve (wear or damage) - Clutch chatter - - - Fluid deterioration - - Clutch facing (burnt or deterioration) - - Clutch plate (deterioration) - Loose or missed torqued parts	

Symptom	Probable Cause	Remedy
Abnormal noise (at turning)	- Gear noise - - - Poor gear mesh between ring gear and drive pinion - - Hypoid gear (wear or damage) - - Poor pre-road (drive pinion) - -	B

Symptom	Probable Cause	Remedy
	Debris in hypoid gear area • - Fluid level too low • - Distortion of the differential carrier case • Bearing noise • • - Bearing (wear or damage) • - Drive pinion taper bearing (wear) • - Debris in bearing • Differential gear noise • • - Side gear and pinion gear (wear or damage) • - Pinion shaft (damage) • - Debris in differential gear area • Clutch chatter • • - Fluid deterioration • - Clutch facing (burnt or deterioration) • - Clutch plate (deterioration) • Loose or missed torqued parts	

Symptom	Probable Cause	Remedy
Abnormal noise (at turning and accelerate)	• Gear noise • • - Poor gear mesh between ring gear and drive pinion • - Hypoid gear (wear or damage) • - Poor pre-road (drive pinion) • - Debris in hypoid gear area • - Fluid level too low • - Distortion of the differential carrier case • - Excessive backlash (hypoid gear) • - Excessive backlash (differential gear) • - Differential side gear spline (wear) • Bearing noise • • - Bearing (wear or damage) • - Drive pinion taper bearing (wear) • - Debris in bearing • Differential gear noise •	B

Symptom	Probable Cause	Remedy
	• - Side gear and pinion gear (wear or damage) • - Pinion shaft (damage) • - Debris in differential gear area • Pump noise (at lubrication) • • - Debris in pump • - Rotor (wear or damage) • Rear differential pump motor noise • • - Bearing (wear or damage) • - Debris in rear differential pump motor • Pump noise (at control) • • - Debris in pump • - Rotor (wear or damage) • Rear differential solenoid valve noise • • - Debris in rear differential solenoid valve • - Plunger area or shaft area (wear) • -	

Symptom	Probable Cause	Remedy

	Rear differential solenoid valve (wear or damage)
	- Clutch chatter
	-
	  - - Fluid deterioration
	  - - Clutch facing (burnt or deterioration)
	  - - Clutch plate (deterioration)
	- Loose or missed torqued parts	

REWRITE

AWD CONTROL UNIT UPDATE

Procedure

1. AWD Control Unit - Update

   NOTE: When updating control units, use the most current version of the HDS software and interface device. Check any official service information website for more information about updating control units.

INSPECTION REPLACEMENT

REAR DIFFERENTIAL FLUID INSPECTION AND REPLACEMENT

Inspection

NOTE: How to read the torque specifications .

1. Vehicle - Lift
2. Rear Differential Fluid - Check

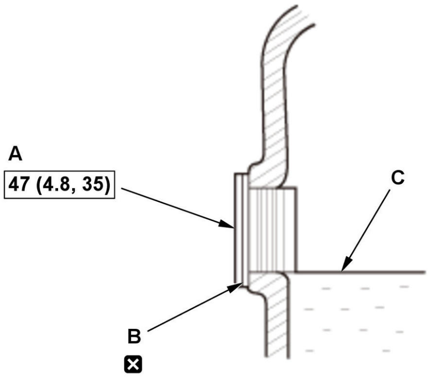	1. Use solvent and a brush to wash any oil and dirt off the oil filler plug and dry them with compressed air. 2. Remove the oil filler plug (A) and the sealing washer (B). 3. Check the condition of the rear differential fluid, if the fluid is dirty or burnt, replace it. 4. Make sure the rear differential fluid is at the proper level (C). **NOTE:**

	- The fluid level must reach up to the bottom of the oil filler plug hole. - If the level is below the proper level, check for rear differential fluid leaks at the differential. - If a problem is found, fix it before filling the differential with fluid. 5. If necessary, add rear differential fluid until it runs out, then reinstall the oil filler plug with a new sealing washer.

Replacement

NOTE:

- **How to read the torque specifications** .
- Check that the AWD system indicator does not come on. If it does, **check for AWD with intelligent control system DTCs.**

1. **Vehicle - Lift**
2. Rear Differential Fluid - Replace

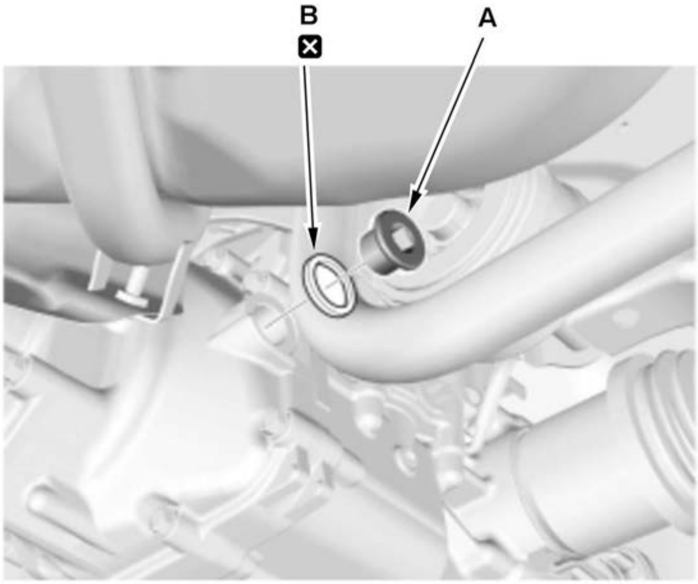	1. Remove the oil filler plug (A) and the sealing washer (B).

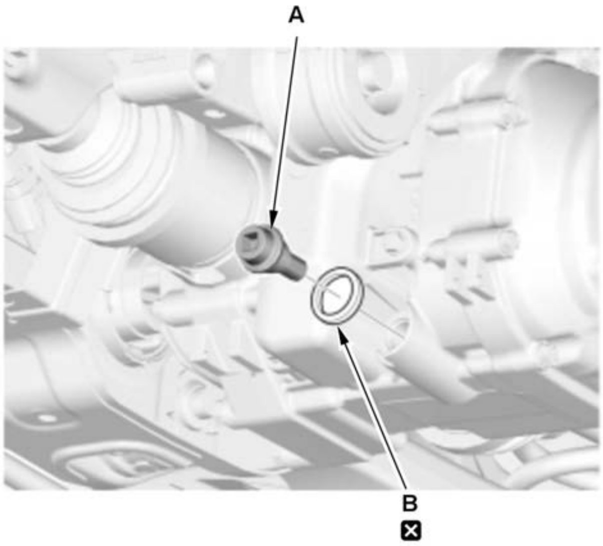	2. Remove the drain plug (A) and the sealing washer (B), then drain the rear differential fluid.

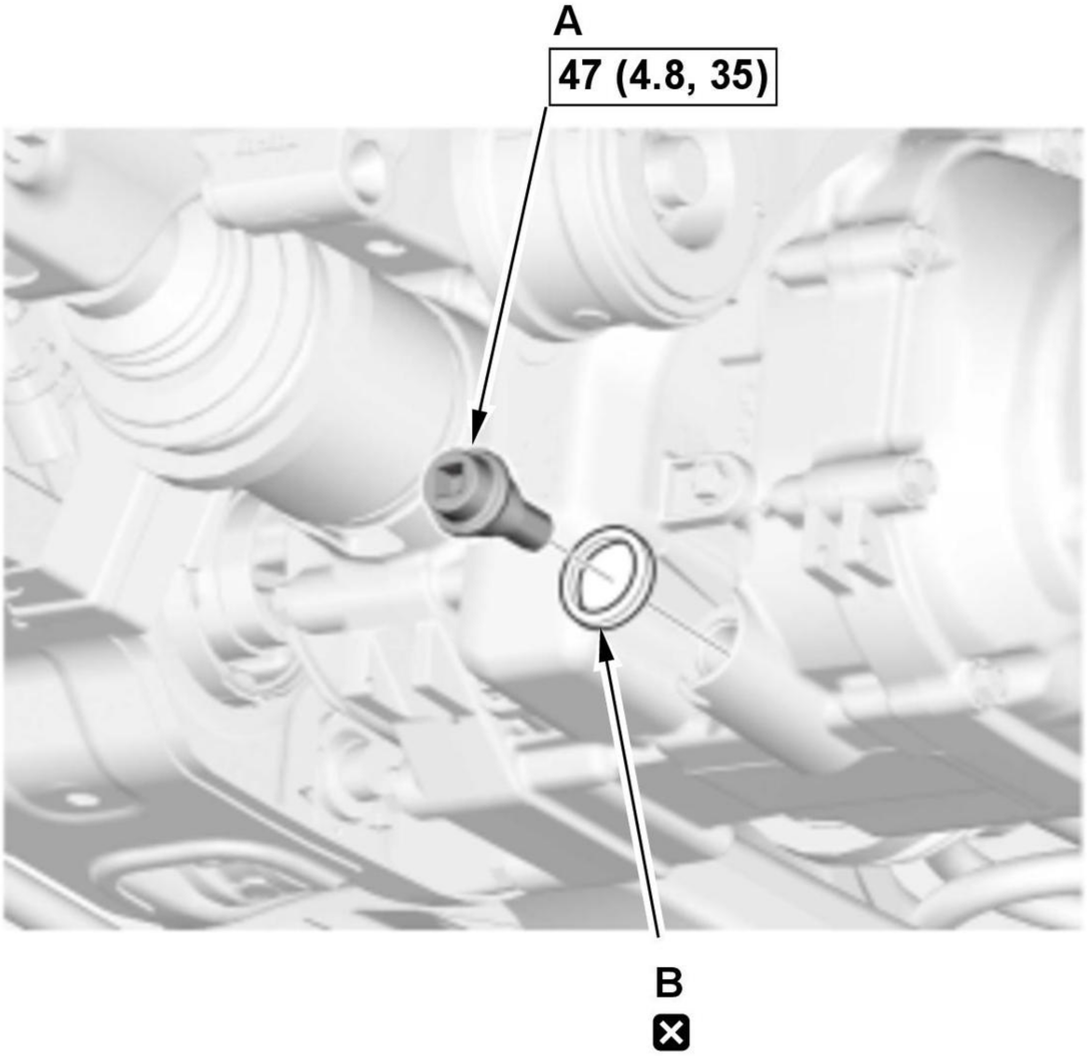

Fig. 1: Drain Plug And Washer With Torque Specifications
Courtesy of HONDA, U.S.A., INC.

3. Remove metal particles from the magnetic surface of the drain plug (A). 4. Install the drain plug with a new sealing washer (B). 5. Refill the rear differential with rear differential fluid to the proper level.

NOTE: If you disassemble the differential, check the rear differential fluid level again after the AWD with intelligent control system check is finished. Add fluid if necessary.

Recommended fluid:	
B	**Honda DPSF-II**

Fluid Capacity:	
B	**1.2 L (1.3 US qt) at fluid change**
B	**1.5 L (1.6 US qt) at overhaul**

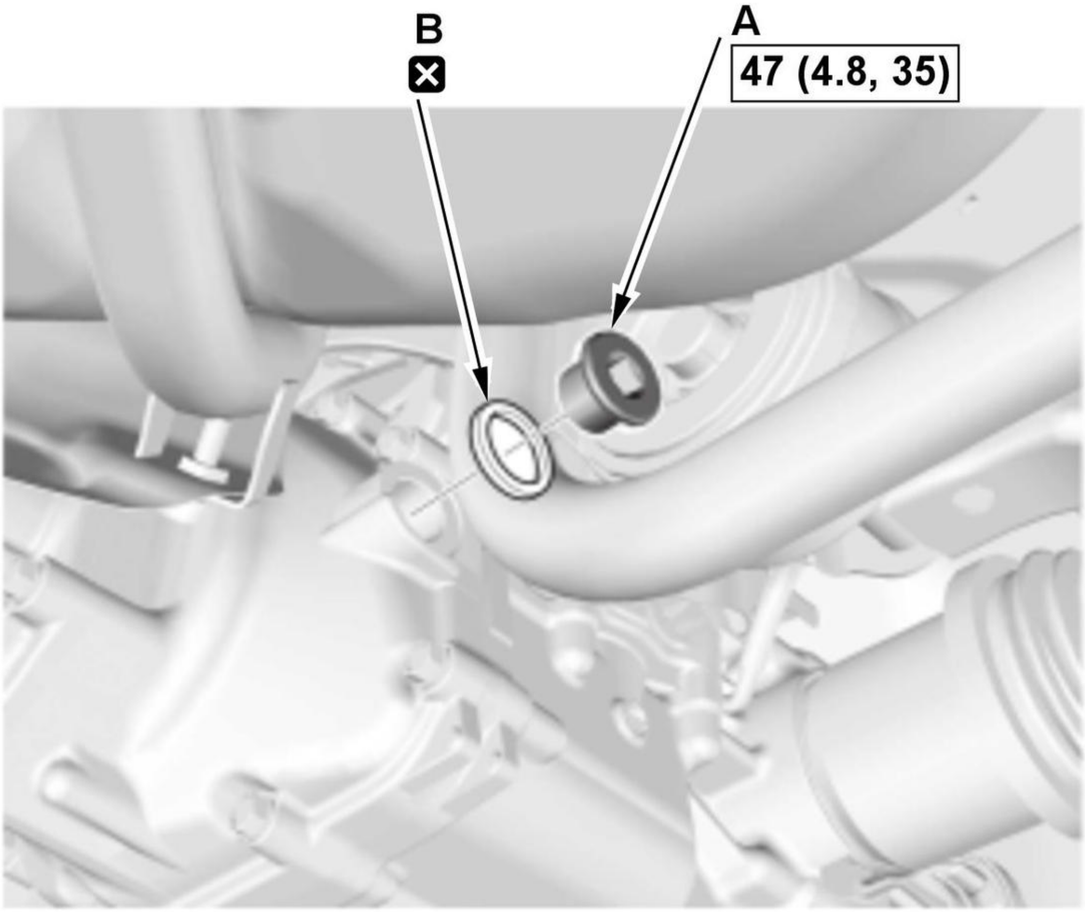

Fig. 2: Oil Filler Plug And Washer With Torque Specifications
Courtesy of HONDA, U.S.A., INC.

6. Install the oil filler plug (A) with a new sealing washer (B).

3. Rear Differential Fluid After Replacement - Check

1. Apply the parking brake and block all wheels.

2. **Enter the maintenance mode and start the engine**

Let it idle more than 6 seconds, then turn the engine off. Repeat this step three more times.

3. Shift the transmission to D position/mode while pressing the brake pedal firmly. Press the accelerator pedal for 2 seconds, then let it idle. Repeat this step three more times.

4. Check that the AWD system indicator does not come on. If it does, check for AWD with intelligent control system DTCs

.

4. AWD System - Air Bleed
5. Rear Differential Fluid - Check
6. Maintenance Minder - Reset

1. If the Maintenance Minder required to replace the rear differential fluid, reset the Maintenance Minder with the gauge .
If the Maintenance Minder did not require to replace the rear differential fluid, reset the Maintenance Minder with the HDS .

INITIALIZATION

AWD CONTROL UNIT INITIALIZATION

Procedure

NOTE:

- Whenever the AWD control unit is replaced, it must be initialized.
- Park the vehicle on a flat and level surface.

1. HDS - Connect
2. AWD Control Unit - Initialization

1. Select the ADJUSTMENT in the AWD WITH INTELLIGENT CONTROL with the HDS.

2. Select the E-DPS CONTROL MODULE REPLACEMENT in the ADJUSTMENT with the HDS.

NOTE: See the HDS Help menu for specific instructions.

REPLACEMENT

REAR DIFFERENTIAL OIL SEAL REPLACEMENT

Special Tools Required

Image	Description/Tool Number
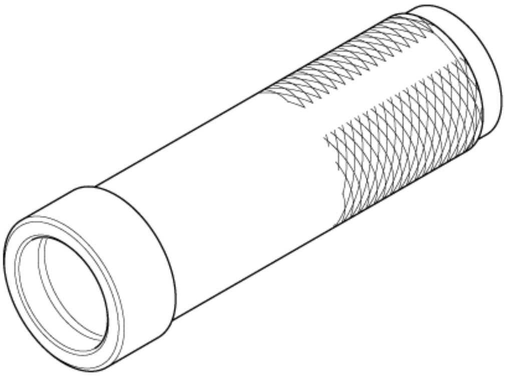	Driver Handle, 40 mm I.D. 07746-0030100

Replacement

NOTE: ℹ Where icon is shown, for further information see below.

Procedure

Driveshaft Side

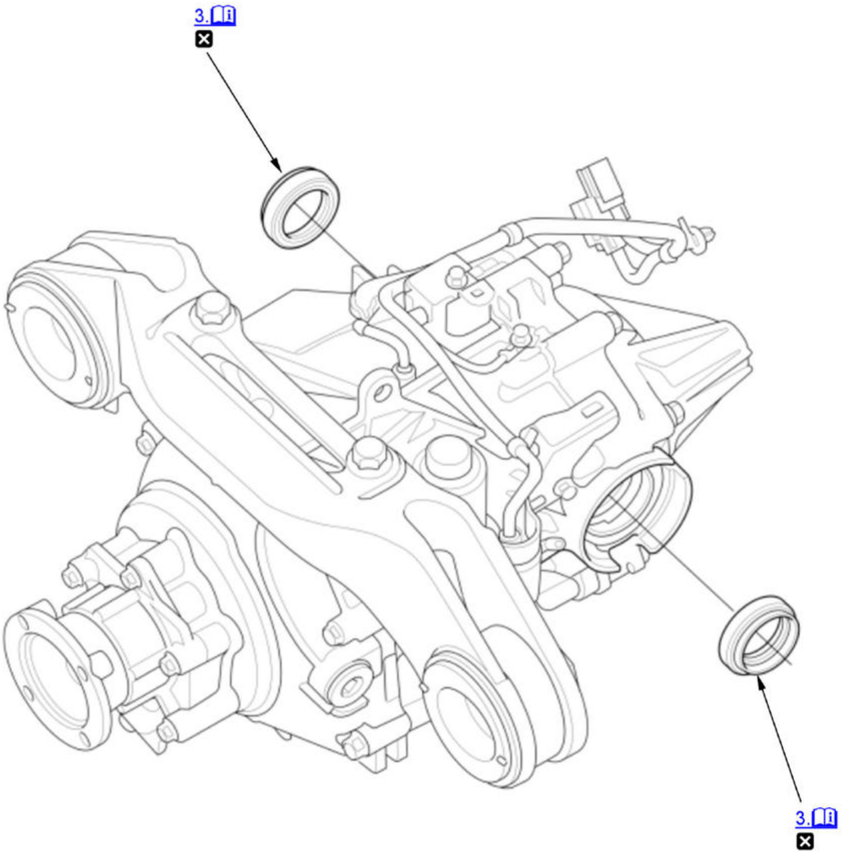

ℹ	Detailed information, notes, and precautions
☒	Replace

Propeller Shaft Side

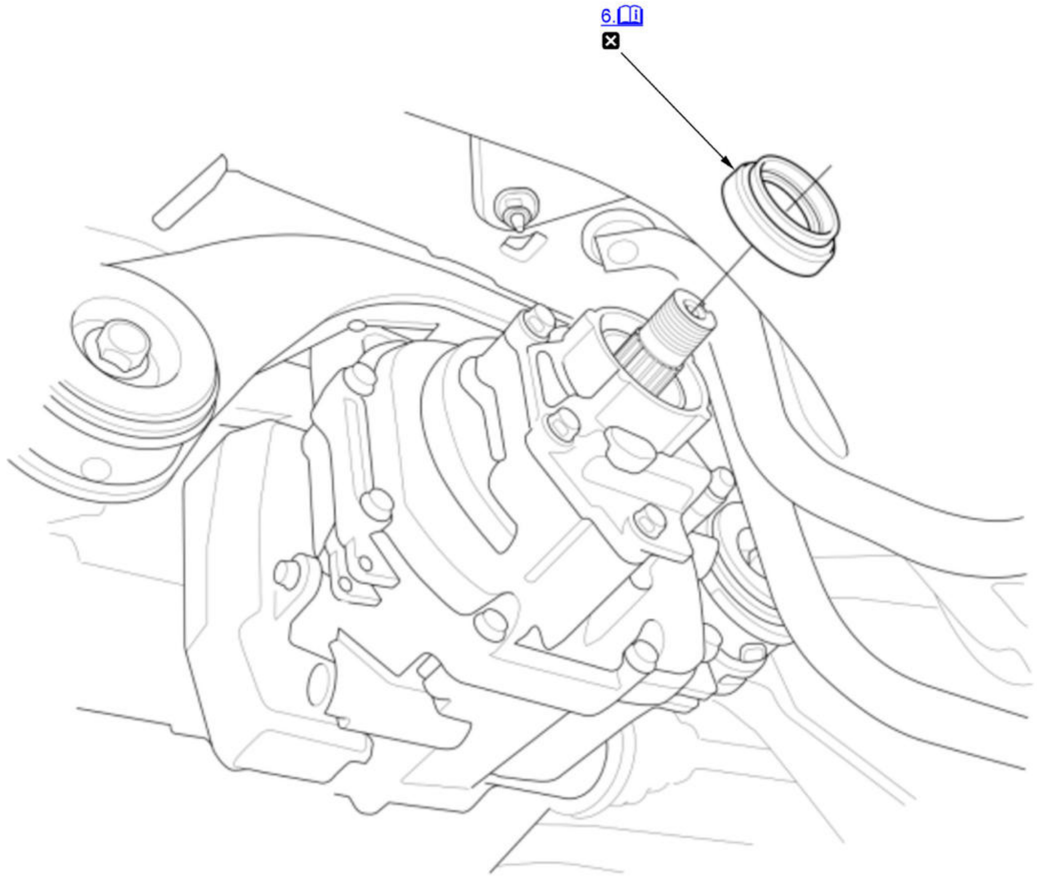

ℹ	Detailed information, notes, and precautions
☒	Replace

Driveshaft Side

1. Vehicle - Lift
2. Rear Differential Assembly - Remove
3. Oil Seal - Remove

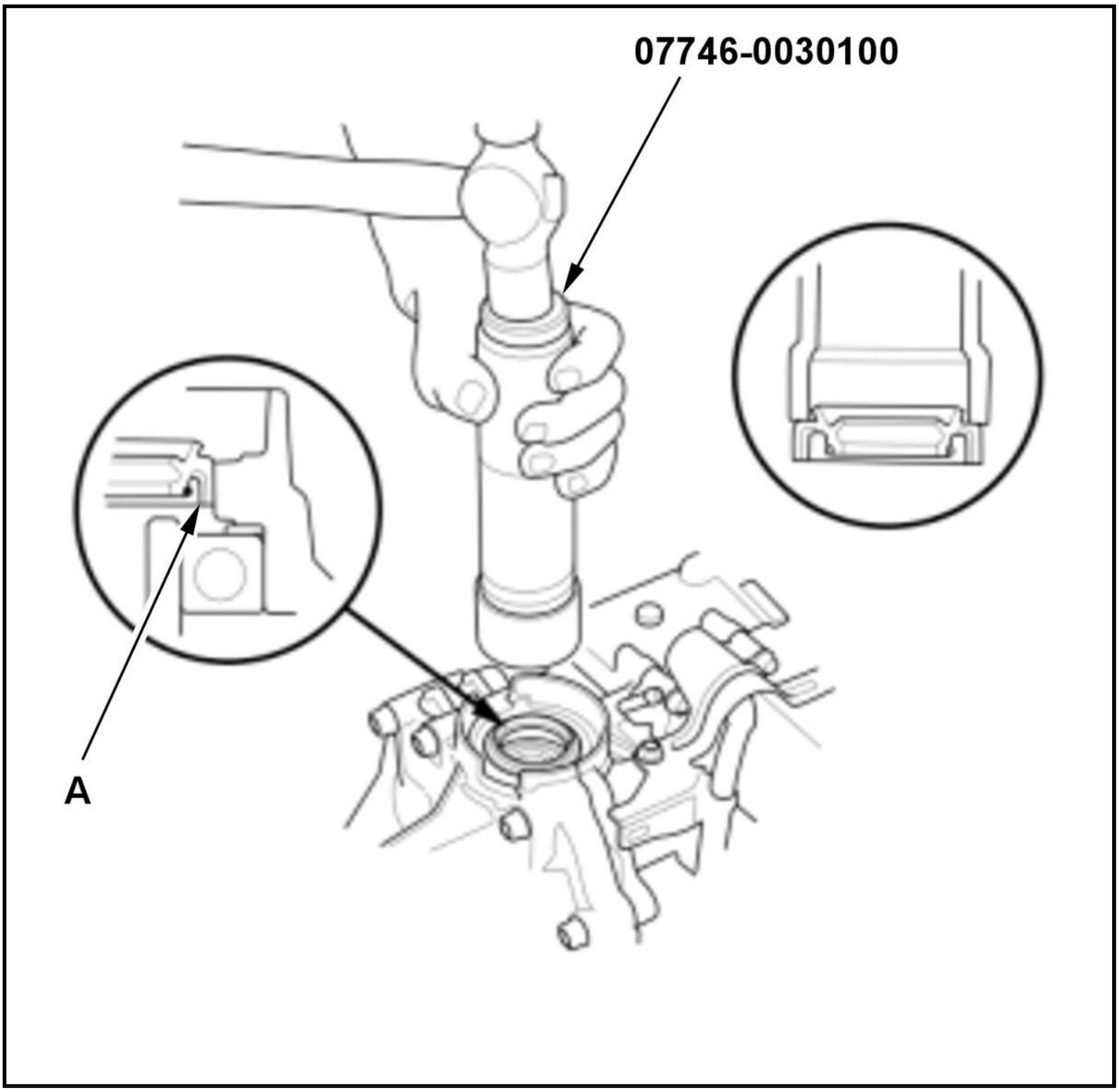

Note for installation

Install the oil seal (A) even and flush with the machined edge of the differential carrier assembly using the 40 mm I.D. driver handle.

4. All Removed Parts - Install

1. Install the parts in the reverse order of removal.

Propeller Shaft Side (In Car)

5. **Vehicle - Lift**
6. **Rear Differential Fluid - Drain**
7. **Propeller Shaft - Remove**
8. **Fuel Tank Protector (Rear Side) - Remove**
9. **Companion Flange - Remove**
10. Oil Seal - Remove

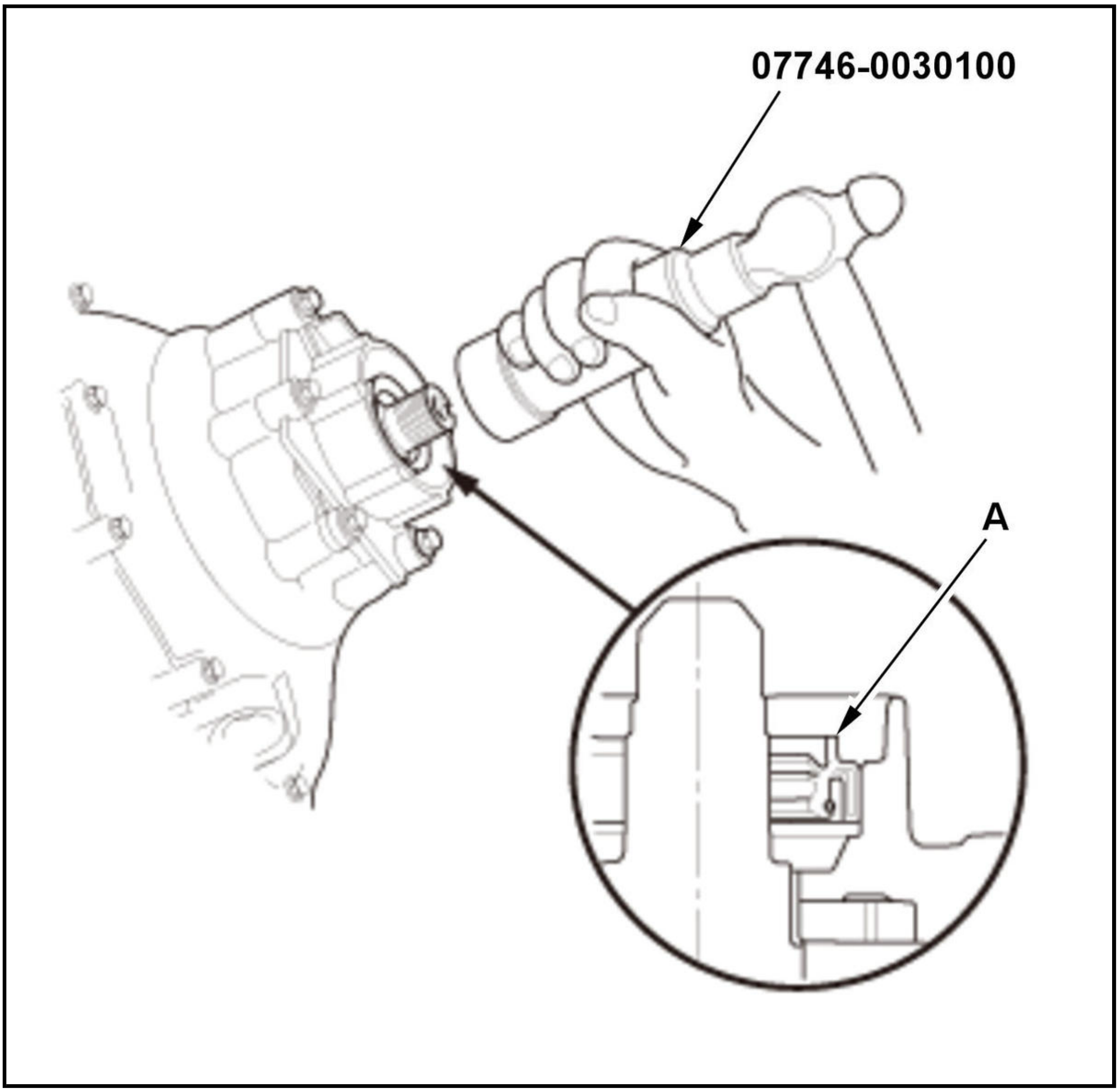

Note for installation

Install the oil seal (A) even and flush with the rear differential oil pump cover using the 40 mm I.D. driver handle.

11. All Removed Parts - Install

1. Install the parts in the reverse order of removal.

12. Rear Differential Fluid - Refill
13. AWD System - Air Bleed

SYMPTOM TROUBLESHOOTING

REAL TIME AWD SYSTEM SYMPTOM TROUBLESHOOTING - ABNORMAL NOISE

NOTE: If necessary, compare the noise with a known-good vehicle of the same type, if the noise is remarkably abnormal, do the following troubleshooting.

1. Problem verification (abnormal noise check) 1

-1. Test-drive the vehicle and check for the abnormal noise.

Did abnormal noise reappear?

YES

The failure is duplicated. Go to step 2.

NO

Check the following items.

- **Check the rear differential fluid level and the fluid condition**.
- Check for rear differential fluid leaks.
- Check for interference with items such as the harness.
- Rotate either rear wheel by hand, and check that the other wheel rotates.
- **Do the OIL PRESSURE CONTROL TEST in the FUNCTIONAL TEST with the HDS**.
- **Do the rear differential fluid pressure sensor test**.

2. Rear differential visual check:

Check the following items.

- **Check the rear differential fluid level and the fluid condition**.
- Check for rear differential fluid leaks.
- Check for interference with items such as the harness.

Are the check results OK?

YES

The rear differential visual is OK. Go to step 3.

NO

Replace the rear differential fluid or add recommended fluid.

3. Problem verification (rear differential companion flange rotate check)

-1. **Raise the vehicle on a lift** .

-2. Release the parking brake.

-3. Shift the transmission to N position/mode, then **enter the neutral position holding mode** .

-4. **Do the 12 volt battery terminal disconnection procedure** .

-5. **Disconnect the No. 2 propeller shaft from the rear differential companion flange** .

-6. Rotate the companion flange by hand.

Can the rear differential companion flange be rotated smoothly by hand?

YES

The companion flange rotate is OK. Go to step 4.

NO

The failure is duplicated. **Replace the torque control differential (TCD) assembly or the differential carrier assembly** .

4. Rear differential operation check

-1. **Connect the No. 2 propeller shaft** .

-2. **Do the 12 volt battery terminal reconnection procedure** .

-3. Rotate either rear wheel by hand, and check that the other wheel rotates.

Does the other wheel rotate?

YES

The rear differential operation is OK. Go to step 5.

NO

Replace the differential carrier assembly .

5. Torque control differential (TCD) assembly check

-1. Remove the following fuse.

Fuse	**No. A4-3**
B	**No. B7**

-2. Test-drive the vehicle on the lift.

Is the abnormal noise still present?

YES

Replace the torque control differential (TCD) assembly .

NO

The torque control differential (TCD) assembly is OK. Reinstall the fuse, then go to step 6.

6. Rear differential solenoid valve check

-1. Turn the vehicle to the ON mode.

-2. Select the FUNCTIONAL TEST in the REAL TIME AWD with the HDS.

-3. Select the SOLENOID TEST in the FUNCTIONAL TEST with the HDS.

-4. Do LEVEL 7 of the SOLENOID TEST with the HDS.

Solenoid Test

Do LEVEL 1 of the SOLENOID TEST with the HDS.

Solenoid Test

Did the abnormal noise happen when changing from LEVEL 7 to LEVEL 1?

YES

Replace the rear differential solenoid valve .

NO

The rear differential solenoid valve is OK. Go to step 7.

7. Rear differential pump motor check

   -1. Select the ADJUSTMENT in the REAL TIME AWD with the HDS.

   -2. **Do the AIR BLEEDING in the ADJUSTMENT with the HDS**.

   Air Bleeding

   Listen for any abnormal noise coming from the rear differential pump motor.

   Did abnormal noise happen while doing air bleeding?

   YES

   Replace the rear differential pump motor .

   NO

   The rear differential pump motor is OK. Go to step 8.

8. Problem verification (abnormal noise check) 2

   -1. Turn the vehicle to the OFF (LOCK) mode.

   -2. **Replace the rear differential fluid**.

   -3. Turn the vehicle to the ON mode.

   -4. Select the ADJUSTMENT in the REAL TIME AWD with the HDS.

   -5. **Do the AIR BLEEDING in the ADJUSTMENT with the HDS**.

   Air Bleeding

   Test-drive the vehicle on the lift.

   Did abnormal noise reappear?

   YES

   The failure is duplicated. **Replace the torque control differential (TCD) assembly or the differential carrier assembly** .

   NO

   Intermittent failure, the system is OK at this time.

REAL TIME AWD SYSTEM SYMPTOM TROUBLESHOOTING - HDS DOES NOT COMMUNICATE

1. HDS communication check

   -1. Turn the vehicle to the ON mode.

   -2. Check that the HDS communicates with the vehicle.

   Does the HDS communicate with the vehicle?

   YES

   The HDS communication is OK. Go to step 2.

NO

Go to the DLC circuit troubleshooting .

2. Real time AWD system communication check

-1. Check the Main Menu of the REAL TIME AWD with the HDS.

Does the HDS show the Main Menu of the REAL TIME AWD?

YES

The real time AWD system communication is OK. Intermittent failure, the system is OK at this time.

NO

Go to step 3.

3. Fuse check

-1. Turn the vehicle to the OFF (LOCK) mode.

-2. Check the following fuses.

Fuse	**No. A4-3**
B	**No. B7**

Are the fuses OK?

YES

The fuses are OK. Reinstall the fuses, then go to step 4.

NO

Replace the fuse(s). If the fuse(s) blows again, repair a short to ground in the No. A4-3 and/or the No. B7 fuse circuit, then recheck.

4. CAN gateway system DTC check

-1. Turn the vehicle to the ON mode.

-2. Check for CAN gateway system DTCs with the HDS.

DTC Description	DTC
B	B

Are any DTCs indicated?

YES

Go to the indicated DTC's troubleshooting .

NO

Go to step 5.

5. F-CAN circuit communication check (Receiving control unit)

-1. Select the FUNCTION TEST in the CAN gateway with the HDS, then select the F-CAN Bus Connected Unit Check.

F-CAN Bus Connected Unit Check

Which result is indicated?

AWD CONTROL UNIT is Detected

Check for any authorized service information related to the DTCs or symptoms you are troubleshooting or **substitute a known-good AWD control unit** , then recheck. If this DTC goes away and the AWD control unit was substituted, **replace the original AWD control unit** .

AWD CONTROL UNIT is Not Available

Go to step 6.

6. Rear differential fluid pressure sensor check

-1. Turn the vehicle to the OFF (LOCK) mode.

-2. Disconnect the following connector.

Rear differential fluid pressure sensor 3P connector

-3. Turn the vehicle to the ON mode.

-4. Check the Main Menu of the REAL TIME AWD with the HDS.

Does the HDS show the Main Menu of the REAL TIME AWD?

YES

Replace the rear differential fluid pressure sensor .

NO

The rear differential fluid pressure sensor is OK. Go to step 7.

7. Open wire check (IG1_METER line)

-1. Turn the vehicle to the OFF (LOCK) mode.

-2. Disconnect the following connector.

Real time AWD control unit 24P connector

-3. **Enter the maintenance mode and start the engine** .

-4. Measure the voltage between test points 1 and 2.

Test condition	Vehicle ON mode (idling)
B	Rear differential fluid pressure sensor 3P connector: disconnected
B	Real time AWD control unit 24P connector: disconnected
Test point 1	**Real time AWD control unit 24P connector No. 12**
Test point 2	Body ground

Is there battery voltage?

YES

The IG1_METER wire is OK. Go to step 8.

NO

Repair an open in the IG1_METER wire between the real time AWD control unit and the **No. B7** fuse.

8. Open wire check (+B_E-DPS line)

-1. Measure the voltage between test points 1 and 2.

Test condition	Vehicle ON mode (idling)
B	Rear differential fluid pressure sensor 3P connector: disconnected
B	AWD control unit 24P connector: disconnected
Test point 1	**AWD control unit 24P connector No. 2**
Test point 2	Body ground

Is there battery voltage?

YES

The +B_E-DPS wire is OK. Go to step 9.

NO

Repair an open in the +B_E-DPS wire between the real time AWD control unit and the **No. A4-3** fuse.

9. Open wire check (GND line)

-1. Turn the vehicle to the OFF (LOCK) mode.

-2. Measure the resistance between test points 1 and 2.

Test condition	Vehicle OFF (LOCK) mode
B	Rear differential fluid pressure sensor 3P connector: disconnected
B	AWD control unit 24P connector: disconnected
Test point 1	**AWD control unit 24P connector No. 8**
Test point 2	Body ground

Is there 1.0 Ω or less?

YES

The GND wire is OK. Go to step 10.

NO

Repair an open in the GND wire between the AWD control unit and ground (G503).

10. Shorted wire check (SVCC line)

-1. Measure the resistance between test points 1 and 2.

Test condition	Vehicle OFF (LOCK) mode
B	Rear differential fluid pressure sensor 3P connector: disconnected
B	AWD control unit 24P connector: disconnected
Test point 1	**AWD control unit 24P connector No. 20**

Test point 2	Body ground

1.0 MΩ or more?

YES

The SVCC wire is OK. Go to step 11.

NO

Repair a short to ground in the SVCC wire between the AWD control unit and the rear differential fluid pressure sensor.

11. Open wire check (F-CAN D_H line, F-CAN D_L line)

-1. Disconnect the following connector.

CAN gateway 16P connector

-2. Measure the resistance between test points 1 and 2 individually.

F-CAN D_H wire

Test condition	Vehicle OFF (LOCK) mode
B	Rear differential fluid pressure sensor 3P connector: disconnected
B	AWD control unit 24P connector: disconnected
B	CAN gateway 16P connector: disconnected
Test point 1	**AWD control unit 24P connector No. 14**
Test point 2	CAN gateway 16P connector (female terminals) No. 7: ①

F-CAN D_L wire

Test condition	Vehicle OFF (LOCK) mode
	Rear differential fluid pressure sensor 3P connector: disconnected
	AWD control unit 24P connector: disconnected
	CAN gateway 16P connector: disconnected

Test point 1	**AWD control unit 24P connector No. 24**
Test point 2	CAN gateway 16P connector (female terminals) No. 15: ①

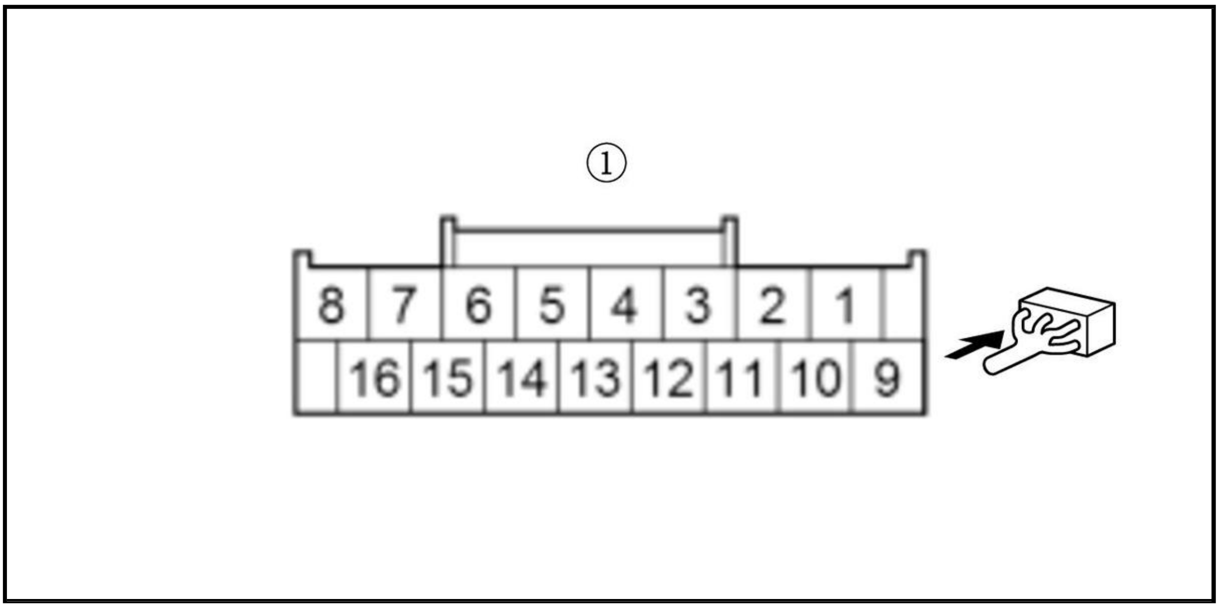

Is there 1.0 Ω or less?

YES

The F-CAN D_H wire and the F-CAN D_L wire are OK. Go to step 12.

NO

Repair an open in the F-CAN D_H wire and/or the F-CAN D_L wire between the AWD control unit and the CAN gateway.

12. Open wire check (DIAG-CAN_H line, DIAG-CAN_L line)

-1. Measure the resistance between test points 1 and 2 individually.

DIAG-CAN_H wire

Test condition	Vehicle OFF (LOCK) mode
B	Rear differential fluid pressure sensor 3P connector: disconnected
B	AWD control unit 24P connector: disconnected
B	CAN gateway 16P connector: disconnected
Test point 1	CAN gateway 16P connector (female terminals) No. 2: ①
Test point 2	DLC (16P) (female terminals) No. 6: ②

DIAG-CAN_L wire

Test condition	Vehicle OFF (LOCK) mode
	Rear differential fluid pressure sensor 3P connector: disconnected
	AWD control unit 24P connector: disconnected
	CAN gateway 16P connector: disconnected
Test point 1	CAN gateway 16P connector (female terminals) No. 10: ①
Test point 2	DLC (16P) (female terminals) No. 14: ②

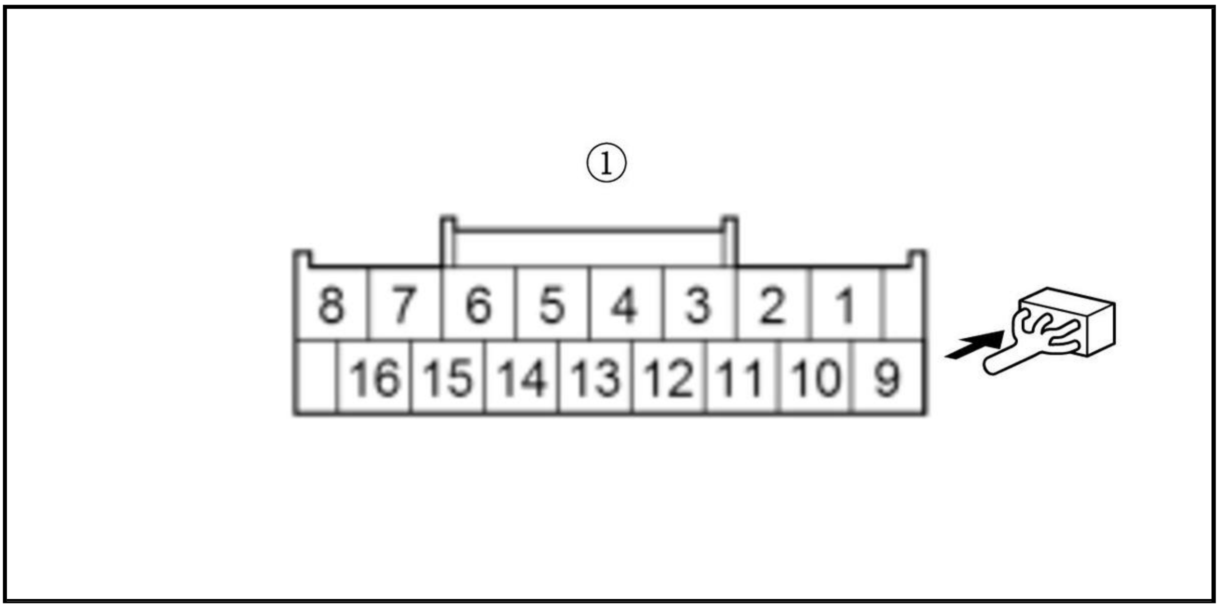

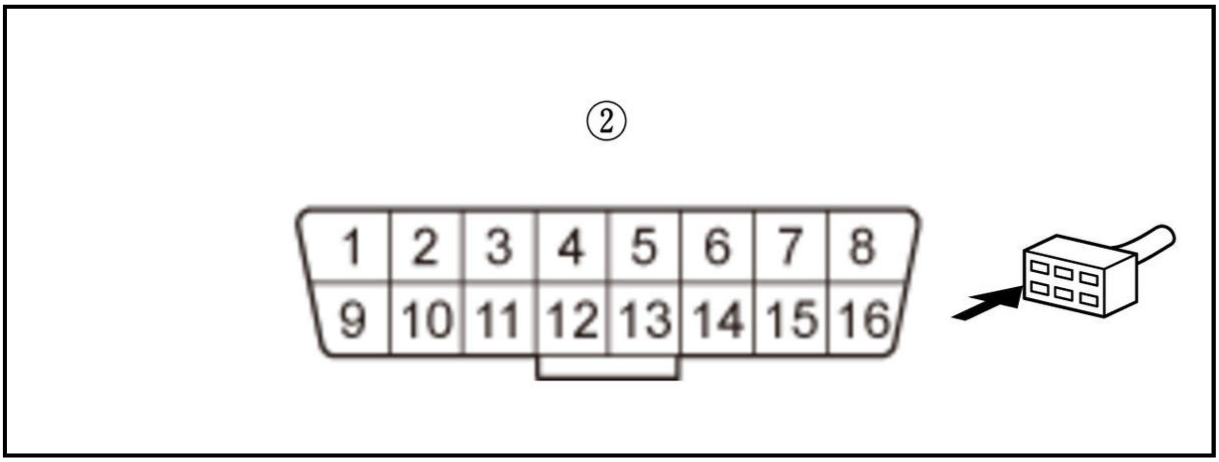

Is there 1.0 Ω or less?

YES

The DIAG-CAN_H wire and the DIAG-CAN_L wire are OK. Check for any authorized service information related to the DTCs or symptoms you are troubleshooting or **substitute a known-good AWD control unit** , then recheck. If this DTC goes away and the AWD control unit was substituted, **replace the original AWD control unit** .

NO

Repair an open in the DIAG-CAN_H wire and/or the DIAG-CAN_L wire between the CAN gateway and the DLC.

REAL TIME AWD SYSTEM SYMPTOM TROUBLESHOOTING - REAL TIME AWD SYSTEM INDICATOR DOES NOT COME ON

1. Problem verification

-1. Turn the vehicle to the ON mode.

Does the AWD system indicator come on?

YES

Intermittent failure, the system is OK at this time.

NO

The failure is duplicated. Go to step 2.

2. Gauge control module operation check

-1. **Do the gauge control module self-diagnostic function** .

Does the AWD system indicator blinkΩ

YES

Go to step 3.

NO

Replace the gauge control module .

3. AWD control unit check

-1. Turn the vehicle to the OFF (LOCK) mode.

-2. Remove the following fuse.

Fuse	**No. A4-3**
B	**B7**

-3. Turn the vehicle to the ON mode.

Does the AWD system indicator come on?

YES

The gauge control module is OK. Check for any authorized service information related to the DTCs or symptoms you are troubleshooting or **substitute a known-good AWD control unit** .

NO

Replace the gauge control module .

REAL TIME AWD SYSTEM SYMPTOM TROUBLESHOOTING - REAL TIME AWD SYSTEM INDICATOR DOES NOT GO OFF, AND NO DTCS ARE STORED

NOTE: Do not jump the SCS line.

1. Problem verification

-1. **Test the 12 volt battery** . Charge or replace the 12 volt battery if necessary.

-2. Turn the vehicle to the ON mode.

Does the AWD system indicator come on?

YES

The failure is duplicated. Go to step 2.

NO

Intermittent failure, the system is OK at this time.

2. HDS communication check

-1. Check that the HDS communicates with the vehicle.

Does the HDS communicate with the vehicle?

YES

The HDS communication is OK. Go to step 3.

NO

Go to the DLC circuit troubleshooting .

3. Real time AWD system communication check

-1. Check the Main Menu of the REAL TIME AWD with the HDS.

Does the HDS show the Main Menu of the REAL TIME AWD?

YES

The real time AWD system communication is OK. Go to step 4.

NO

Go to the real time AWD system symptom troubleshooting for HDS does not communicate.

4. AWD control unit status check 1

-1. Check the parameter(s) below with the HDS.

Signal	Threshold		Current conditions	
	Values	Unit	Values	Unit
Longitudinal G sensor learning	Complete	B	B	B
Air purge for rear differential	Complete	B	B	B
AWD operation check	Complete	B	B	B

Do the current condition(s) match the threshold?

YES

Go to step 5.

NO

Go to step 7.

5. Gauge control module operation check

-1. **Do the gauge control module self-diagnostic function** .

Does the AWD system indicator blinkΩ

YES

The gauge control module is OK. Go to step 6.

NO

Replace the gauge control module .

6. Gauge control module DTC check

-1. Check for DTCs in the METER system with the HDS.

DTC Description	DTC
B	B

Is DTC indicated?

YES

Go to the indicated DTC's troubleshooting in the gauge control module.

NO

Check for any authorized service information related to the DTCs or symptoms you are troubleshooting or **substitute a known-good AWD control unit** , and recheck. If the symptom/indication goes away with a known-good AWD control unit, **replace the original AWD control unit** .

7. AWD control unit status check 2

-1. Check the parameter(s) below with the HDS.

Signal	Threshold		Current conditions	
	Values	Unit	Values	Unit
Longitudinal G sensor learning	Incomplete	B	B	B
Air purge for rear differential	Incomplete	B	B	B
AWD operation check	Incomplete	B	B	B

Do the current condition(s) match the threshold?

Longitudinal G sensor learning is incomplete

Do the G SENSOR LEARNING in the ADJUSTMENT with the HDS.

Air purge for rear differential is incomplete

Do the ECU REPLACEMENT in the ADJUSTMENT with the HDS.

AWD operation check is incomplete

Do the ECU REPLACEMENT in the ADJUSTMENT with the HDS.

REAL TIME AWD SYSTEM SYMPTOM TROUBLESHOOTING - REAL TIME AWD SYSTEM IS STUCK IN 4WD MODE

1. Problem verification (rear differential clutch test)

-1. **Do the rear differential clutch test**.

Is the test result OK?

YES

Go to step 2.

NO

The failure is duplicated. **Do the repair depending on the test result**.

2. Oil pressure control check

   -1. Turn the vehicle to the ON mode.

   -2. Select the FUNCTIONAL TEST in the REAL TIME AWD with the HDS.

   -3. **Do the OIL PRESSURE CONTROL TEST in the FUNCTIONAL TEST with the HDS**.

   Oil Pressure Control Test

   Is the test result OK?

   1. **YES**

      Check the following items.

      - **Check the rear differential fluid level and the fluid condition**.
      - Check for rear differential fluid leaks.
      - **Do the rear differential fluid pressure sensor test**.

      NO

      Follow the instructions indicated on the HDS according to the test result.

REAL TIME AWD SYSTEM SYMPTOM TROUBLESHOOTING - WILL NOT GO INTO 4WD MODE, POOR TRACTION, POOR ACCELERATION (AT START), POOR CLIMBING ABILITY

1. Rear differential clutch check

   -1. **Do the rear differential clutch test**.

   Is the test result OK?

   1. **YES**

      Check the following items.

      - **Check the rear differential fluid level and the fluid condition**.
      - Check for rear differential fluid leaks.
      - **Do the OIL PRESSURE CONTROL TEST in the FUNCTIONAL TEST with the HDS**.
      - **Do the rear differential fluid pressure sensor test**.

      NO

      Do the repair depending on the test result.

SERVICE PROCEDURE

AWD SYSTEM BLEEDING

Procedure

NOTE: Whenever the rear differential assembly is disassembled or fluid replaced, air bleed must be needed.

1. **HDS - Connect**
2. AWD System - Air Bleed

1. Select the ADJUSTMENT in the AWD WITH INTELLIGENT CONTROL with the HDS.

2. Select the AIR BLEEDING in the ADJUSTMENT with the HDS.

NOTE: See the HDS Help menu for specific instructions.

3. Rear Differential Fluid - Check

TEST

REAR DIFFERENTIAL CLUTCH TEST

Test

1. HDS - Connect
2. Rear Differential Clutch - Test

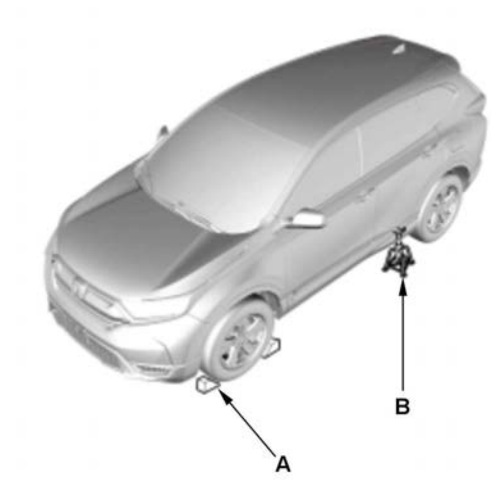	1. Block the front wheels (A), raise the left rear wheel and support the vehicle with a safety stand (B) as shown. 2. Release the parking brake.

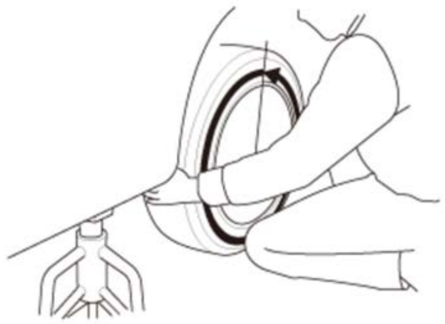	3. Hold the left rear tire and turn it counterclockwise continuously for more than one rotation. • If the wheel rotates, go to step 4. • If the wheel does not rotate, replace the rear differential fluid and retest. If the result is the same, replace the rear differential assembly.

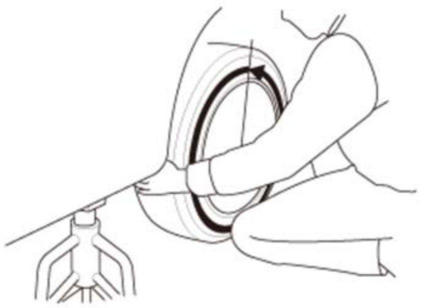	4. Select the FUNCTIONAL TEST in the AWD WITH INTELLIGENT CONTROL with the HDS. 5. Select the SOLENOID TEST in the FUNCTIONAL TEST with the HDS. 6. Do LEVEL 7 of the SOLENOID TEST with the HDS. 7. Hold the left rear tire and turn it counterclockwise continuously for more than one rotation. • If the wheel rotates, go to step 8. • If the wheel does not rotate, the system is OK at this time and the test is complete.

8. **Check the condition of the rear differential fluid**.

- If the fluid is dirty or burnt, **replace the rear differential fluid**.
- If the fluid is normal, go to step 9.

9. **Make sure the rear differential fluid is at the proper level**.

- If the level is below the proper level, check for rear differential fluid leaks at the differential assembly and retest.
- If the level is normal, go to step 10.

10. Visually check the rear differential for damage.

- If any damage is found on the rear differential, replace the defective part as needed.
- If the rear differential is normal, go to step 11.

11. **Do the rear differential pressure test with the HDS** If Normal is displayed, go to step 12.

12. **Do the rear differential fluid pressure sensor test**

If the rear differential fluid pressure sensor is OK, **replace the rear differential fluid** and retest. If the result is the same, **replace the rear differential assembly** .

REAR DIFFERENTIAL FLUID PRESSURE SENSOR TEST

Special Tools Required

Image	Description/Tool Number
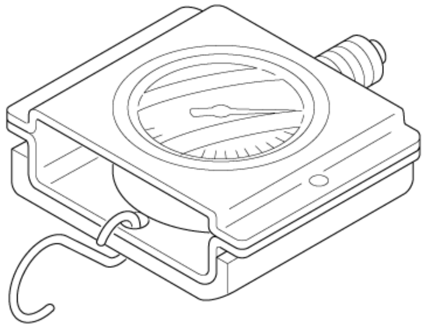	A/T Low Pressure Gauge w/Panel 07406-0070301

Image	Description/Tool Number
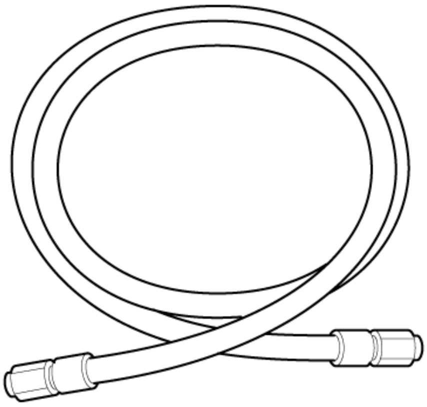	A/T Pressure Test Hose 07AAJ-PY4A100
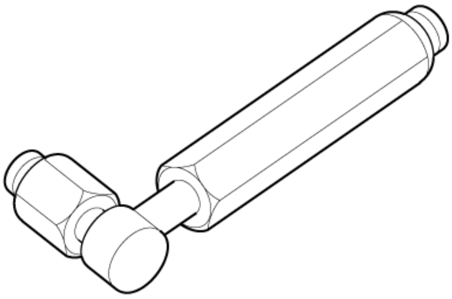	A/T Pressure Adapter 07MAJ-PY40120
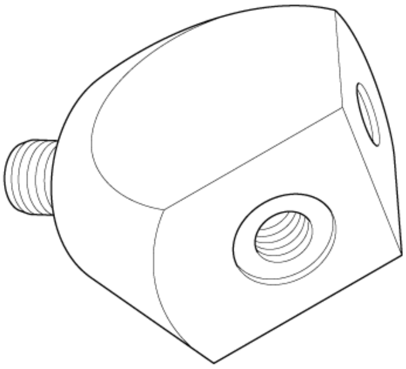	Pressure Gauge Adapter 07NAJ-P07010A
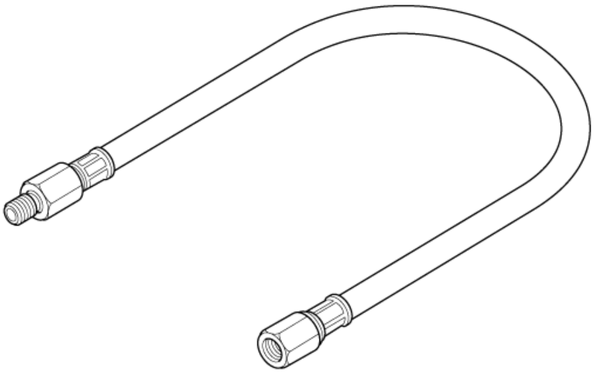	Oil Pressure Hose 07ZAJ-S5AA200

Test

NOTE: How to read the torque specifications .

1. Rear Differential Fluid Pressure Sensor - Remove

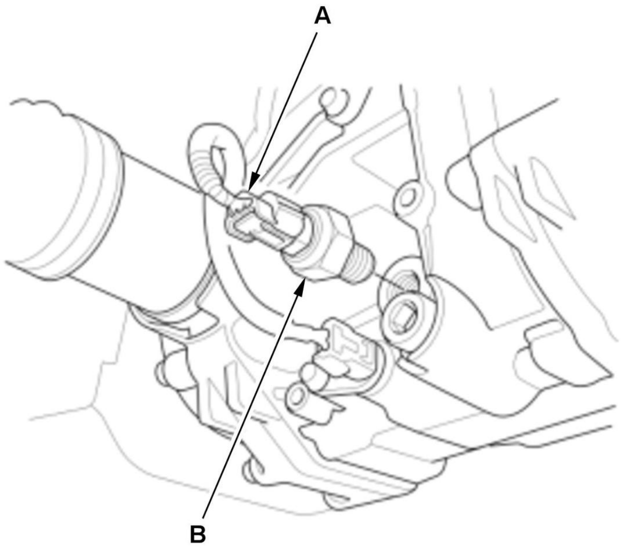	1. **Remove the rear differential fluid pressure sensor** . 2. Reconnect the connector (A) to the rear differential fluid pressure sensor (B).

2. **HDS - Connect**

3. Rear Differential Fluid Pressure Sensor - Test

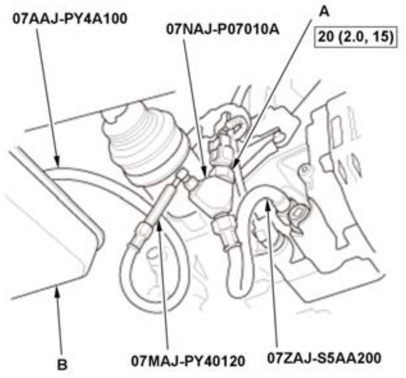 07AAJ-PY4A100 07NAJ-P07010A A 20 (2.0, 15) B 07MAJ-PY40120 07ZAJ-S5AA200	**NOTE:** Check that the AWD system indicator does not come on. If it does, **check for AWD with intelligent control system DTCs** . 1. Turn the vehicle to the OFF (LOCK) mode. 2. Turn the vehicle to the ON mode. 3. Select the DATA LIST in the AWD WITH INTELLIGENT CONTROL with the HDS. 4. Check the ACTUAL OIL PRESSURE OF THE OIL PRESSURE SENSOR FOR REAR DIFFERENTIAL in the DATA LIST with the HDS. • If the fluid pressure is not within -50-50 kPa (-0.51-0.51 kgf/cm 2, -7.3-7.3 psi), **replace the rear differential fluid pressure sensor** . • If the fluid pressure is within the range of -50-50 kPa (-0.51-0.51 kgf/cm 2, -7.3-7.3 psi), go to step 5. 5. Turn the vehicle to the OFF (LOCK) mode. 6. Remove the oil pressure gauge from the A/T low pressure gauge set. 7. Attach the A/T pressure test hose, the A/T pressure adapter, the pressure gauge adapter, and the oil pressure hose as shown, then Install the rear differential fluid pressure sensor (A) to the pressure gauge adapter. 8. Place the end for the A/T pressure test hose into a drain pan (B). 9. Start the engine, the AWD pump will do a brief low pressure purge of the system, this will cause air and fluid to flow out of the A/T pressure test hose.

10. Turn the vehicle to the OFF (LOCK) mode.

11. Repeat step 9 again to assure the A/T pressure test hose is full of fluid without air bubbles.

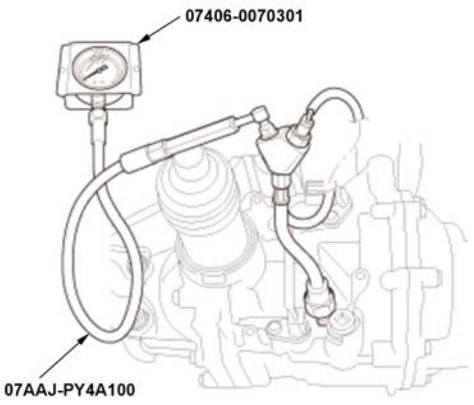

12. Attach the A/T low pressure gauge w/panel onto the end of the A/T pressure test hose.

13. Turn the vehicle to the ON mode.

14. Select the ADJUSTMENT in the AWD WITH INTELLIGENT CONTROL with the HDS.

15. Select the AIR BLEEDING in the ADJUSTMENT with the HDS.

NOTE: See the HDS Help menu for specific instructions.

16. Select the FUNCTION TEST in the AWD WITH INTELLIGENT CONTROL with the HDS.

17. Select the SOLENOID TEST in the FUNCTION TEST with the HDS.

18. Do LEVEL 7 of the SOLENOID TEST with the HDS.

19. Check the differential fluid pressure value of the oil pressure gauge.

- If the fluid pressure is not within the range of 350-500 kPa (3.57-5.10 kgf/cm 2, 50.8-72.5 psi), **replace the rear differential pump motor** .
- If the fluid pressure is within the range of 350-500 kPa (3.57-5.10 kgf/cm 2, 50.8-72.5 psi), go to step 20.

20. Check the ACTUAL OIL PRESSURE OF THE OIL PRESSURE SENSOR FOR REAR DIFFERENTIAL in the DATA LIST with the HDS.

- If the fluid pressure is not within the range of 350-500 kPa (3.57-5.10 kgf/cm 2, 50.8-72.5 psi), **replace the rear differential fluid pressure sensor** .
- If the fluid pressure is within the range of 350-500 kPa (3.57-5.10 kgf/cm 2, 50.8-72.5 psi), rear differential fluid pressure sensor is OK and the test is complete.

4. **Rear Differential Fluid Pressure Sensor - Install**
5. **Rear Differential Fluid - Check**
6. **AWD System - Air Bleed**

REAR DIFFERENTIAL PRESSURE TEST

Test

NOTE: Before doing the pressure test, check the following conditions.

- Check that the AWD system indicator does not come on. If it does, **check for AWD with intelligent control system DTCs** .
- **Check the rear differential fluid level**.
- Check for rear differential fluid leaks at the rear differential assembly.

1. **HDS - Connect**
2. Rear Differential Fluid Pressure - Test

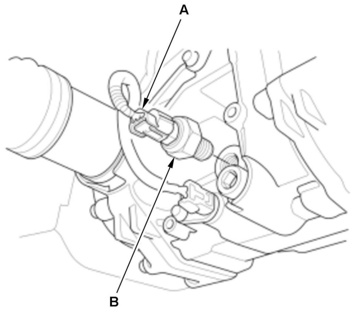

1. Select DATA LIST in the AWD WITH INTELLIGENT CONTROL with the HDS.

2. Select OIL TEMPERATURE FOR REAR DIFFERENTIAL in the DATA LIST with the HDS.

   - If the temperature is above 68 deg.F (20 deg.C), go to step 3.
   - If the temperature is below 68 deg.F (20 deg.C), drive the vehicle to warm up the rear differential until fluid temperature reaches at least 68 deg.F (20 deg.C), then go to step 3.

3. **Enter the maintenance mode and start the engine**

4. Select FUNCTION TEST in the AWD WITH INTELLIGENT CONTROL with the HDS.

5. Select OIL PRESSURE CONTROL TEST in the FUNCTION TEST with the HDS.

6. Check the results displayed on the HDS.

   - If Normal is displayed, the test is completed.
   - If 1-1 is displayed, go to steps 7 through 21.
   - If 2-1 and 5-1 are displayed: go to steps 22 through 36.
   - If 3-1 is displayed: go to steps 37 through 50.
   - If 4-1 and 6-1 are displayed: go to steps 51 through 58.

7. Turn the vehicle to the OFF (LOCK) mode.

8. Disconnect the connector (A).

9. Remove the rear differential fluid pressure sensor (B).

10. Reconnect the connector (A) to the rear differential fluid pressure sensor (B).

11. Turn the vehicle to the ON mode.

12. Select the DATA LIST in the AWD WITH INTELLIGENT CONTROL with the HDS.

13. Check the ACTUAL OIL PRESSURE OF THE OIL PRESSURE SENSOR FOR REAR DIFFERENTIAL in the DATA LIST with the HDS.

- If the fluid pressure is not within -50-50 kPa (-0.51-0.51 kgf/cm 2, -7.3-7.3 psi), replace the rear differential fluid pressure sensor .
- If the fluid pressure is within the range of -50-50 kPa (-0.51-0.51 kgf/cm 2, -7.3-7.3 psi), go to step 14.

14. Replace the rear differential fluid.

15. Install the rear differential fluid pressure sensor
16. Do the AWD system bleeding with the HDS.
17. Enter the maintenance mode and start the engine

18. Select FUNCTION TEST in the AWD WITH INTELLIGENT CONTROL with the HDS.

19. Select OIL PRESSURE CONTROL TEST in the FUNCTION TEST with the HDS.

20. Check the results displayed on the HDS.

- If Normal is displayed, the test is completed.
- If 1-1 is displayed: go to step 21.

21. Do the rear differential fluid pressure sensor test with the HDS. If the rear differential fluid pressure sensor test is OK, replace the rear differential assembly

22. Turn the vehicle to the OFF (LOCK) mode.

23. Turn the vehicle to the ON mode.

24. Do the AWD system bleeding with the HDS

26. Select FUNCTION TEST in the AWD WITH INTELLIGENT CONTROL with the HDS.

27. Select OIL PRESSURE CONTROL TEST in the FUNCTION TEST with the HDS.

28. Check the results displayed on the HDS.

25. Enter the maintenance mode and start the engine

- If Normal is displayed, intermittent failure, the system is OK at this time, the test is completed.
- If 2-1 and 5-1 are displayed: go to step 29.

29. Replace the rear differential fluid.

30. Do the AWD system bleeding with the HDS.

31. Enter the maintenance mode and start the engine

32. Select FUNCTION TEST in the AWD WITH INTELLIGENT CONTROL with the HDS.

33. Select OIL PRESSURE CONTROL TEST in the FUNCTION TEST with the HDS.

34. Check the results displayed on the HDS.

- If Normal is displayed, the test is completed.
- If 2-1 and 5-1 are displayed: go to step 35.

35. Replace the rear differential fluid.

36. Do the rear differential fluid pressure sensor test and the rear differential solenoid valve test with the HDS. If the rear differential fluid pressure sensor test and the rear differential solenoid valve test is OK, replace the rear differential assembly

37. Turn the vehicle to the OFF (LOCK) mode.

38. Turn the vehicle to the ON mode.

39. Do the AWD system bleeding with the HDS

41. Select FUNCTION TEST in the AWD WITH INTELLIGENT CONTROL with the HDS.

42. Select OIL PRESSURE CONTROL TEST in the FUNCTION TEST with the HDS.

43. Check the results displayed on the HDS.

40. Enter the maintenance mode and start the engine

- If Normal is displayed, intermittent failure, the system is OK at this time, the test is completed.
- If 3-1 is displayed: go to step 44.

44. Replace the rear differential fluid.

45. Do the AWD system bleeding with the HDS.

46. Enter the maintenance mode and start the engine

47. Select FUNCTION TEST in the AWD WITH INTELLIGENT CONTROL with the HDS.

48. Select OIL PRESSURE CONTROL TEST in the FUNCTION TEST with the HDS.

49. Check the results displayed on the HDS.

- If Normal is displayed, the test is completed.
- If 3-1 is displayed: go to step 50.

50. Do the rear differential solenoid valve test with the HDS. If the rear differential solenoid valve test is OK, replace the rear differential assembly

51. Turn the vehicle to the OFF (LOCK) mode.

52. Replace the rear differential fluid

53. Do the AWD system bleeding with the HDS.

54. **Enter the maintenance mode and start the engine**

55. Select FUNCTION TEST in the AWD WITH INTELLIGENT CONTROL with the HDS.

56. Select OIL PRESSURE CONTROL TEST in the FUNCTIONAL TEST with the HDS.

57. Check the results displayed on the HDS.

- If Normal is displayed, the test is completed.
- If 4-1 and 6-1 are displayed: go to step 58.

58. **Do the rear differential solenoid valve test with the HDS**.
If the rear differential solenoid valve test is OK, **replace the rear differential assembly** .

REAR DIFFERENTIAL SOLENOID VALVE TEST

Test

1. **HDS - Connect**
2. Rear Differential Solenoid Valve - Test (With HDS)

1. **Enter the maintenance mode and start the engine**

2. Select the FUNCTION TEST in the AWD WITH INTELLIGENT CONTROL with the HDS.

3. Select the SOLENOID TEST in the FUNCTION TEST with the HDS.

4. Do LEVEL 1, then do LEVEL 7 of the SOLENOID TEST in that order with the HDS.

5. Check the rear differential solenoid valve for operation with the HDS. A clicking sound should be heard.

- If no clicking sound is heard, **replace the rear differential solenoid valve** .
- If a clicking sound is heard, go to the next procedure.

3. **Vehicle - Lift**
4. **Rear Differential Solenoid Valve - Remove**
5. Rear Differential Solenoid Valve - Test

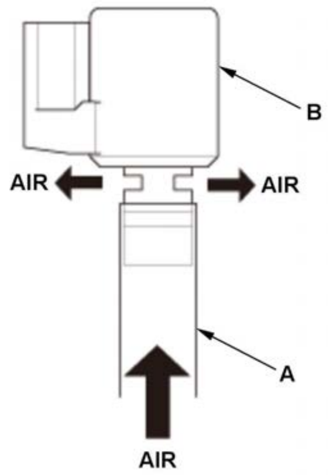

1. Connect a tube (A) to the rear differential solenoid valve (B).

2. Blow the air to the tube.

- If the air flows out of the port, go to step 3.
- If the air does not flow out of the port, **replace the rear differential solenoid valve** .

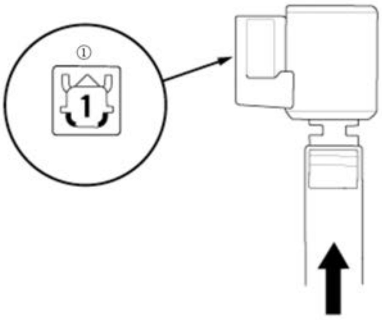

3. Connect a jumper wire from the negative battery terminal to the rear differential solenoid valve body and connect another jumper wire from the positive battery terminal to connector (male terminal) terminal No. 1. : ①

4. Blow the air to the tube.

- If the air flows out of the port, **replace the rear differential solenoid valve** .
- If the air does not flow out of the port, the rear differential solenoid valve is OK and the test is complete.

6. **Rear Differential Solenoid Valve - Install**
7. **Rear Differential Fluid - Refill**
8. **AWD System - Air Bleed**
9. Test Drive - Check

CONNECTOR VIEW

REAL TIME AWD CONTROL UNIT CONNECTOR FOR INPUTS AND OUTPUTS

Real Time AWD Control Unit Inputs and Outputs for 24P Connector (female terminals)

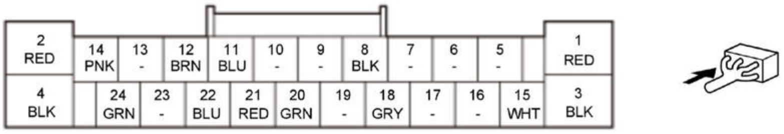

Terminal number	Terminal sign	Description
1	MH	Power supply for the rear differential pump motor
2	+B_E-DPS	Power supply for the actuator
3	ML	Ground for the rear differential pump motor
4	GND	Ground for the actuator
5	Not used	---
6	Not used	
7	Not used	
8	GND	Ground for the real time AWD control unit
9	Not used	---
10	Not used	
11	SG	Ground for the rear differential fluid pressure sensor
12	IG1_METER	Power supply for the real time AWD control unit
13	Not used	---
14	F-CAN D_H	F-CAN communication circuit
15	DTYH1	Power supply for the rear differential solenoid valve
16	Not used	---
17	Not used	
18	TOH	Detects rear differential fluid temperature sensor signal (positive)
19	Not used	---
20	SVCC	Power supply for the rear differential fluid pressure sensor
21	PS1	Detects rear differential fluid pressure sensor signal (positive)
22	TOL	Detects rear differential fluid temperature sensor signal (negative)
23	Not used	---
24	F-CAN D_L	F-CAN communication circuit

CIRCUIT DIAGRAM

REAR DIFFERENTIAL CIRCUIT DIAGRAM

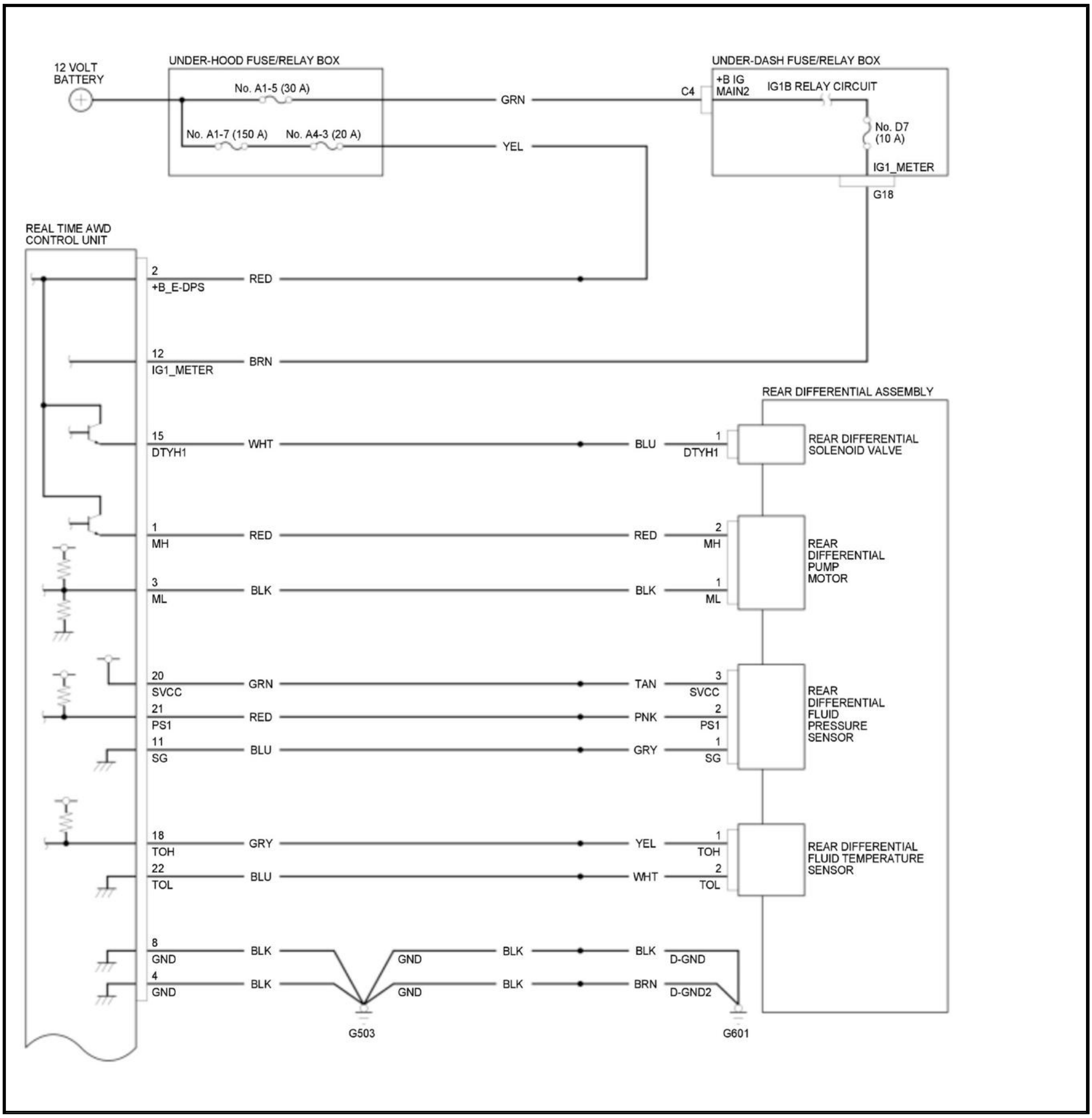
12 VOLT BATTERY
UNDER-HOOD FUSE/RELAY BOX
No. A1-5 (30 A)
No. A1-7 (150 A)
No. A4-3 (20 A)
GRN
YEL
UNDER-DASH FUSE/RELAY BOX
C4
+B IG MAIN2
IG1B RELAY CIRCUIT
No. D7 (10 A)
IG1_METER
G18
REAL TIME AWD CONTROL UNIT
2 +B_E-DPS
RED
12 IG1_METER
BRN
REAR DIFFERENTIAL ASSEMBLY
15 DTYH1
WHT
BLU
1 DTYH1
REAR DIFFERENTIAL SOLENOID VALVE
1 MH
RED
RED
2 MH
3 ML
BLK
BLK
1 ML
REAR DIFFERENTIAL PUMP MOTOR
20 SVCC
GRN
TAN
3 SVCC
21 PS1
RED
PNK
2 PS1
11 SG
BLU
GRY
1 SG
REAR DIFFERENTIAL FLUID PRESSURE SENSOR
18 TOH
GRY
YEL
1 TOH
22 TOL
BLU
WHT
2 TOL
REAR DIFFERENTIAL FLUID TEMPERATURE SENSOR
8 GND
BLK
GND
BLK
BLK
D-GND
4 GND
BLK
GND
BLK
BRN
D-GND2
G503
G601

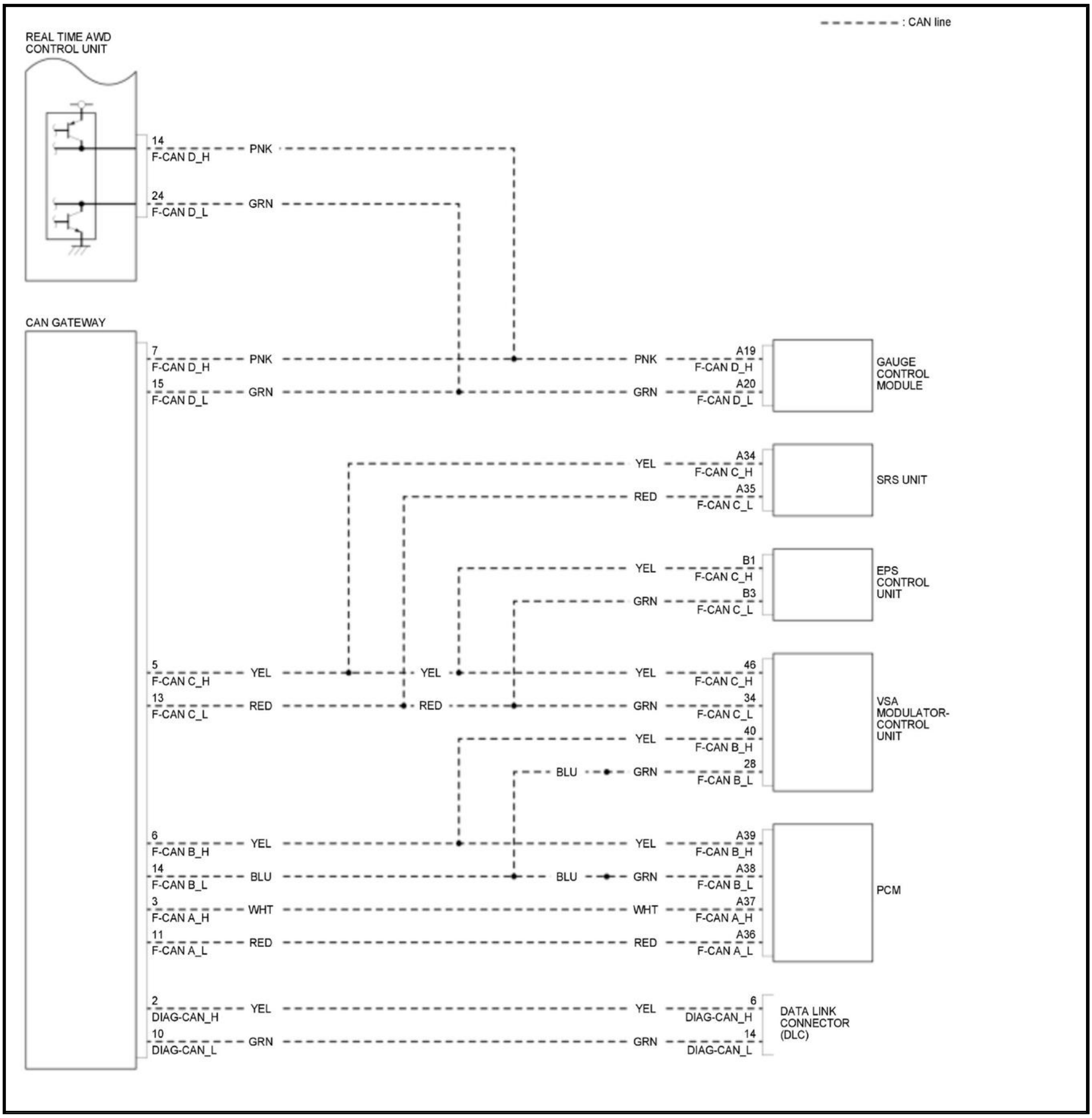
: CAN line
REAL TIME AWD CONTROL UNIT
14
F-CAN D_H
PNK
24
F-CAN D_L
GRN
CAN GATEWAY
7
F-CAN D_H
PNK
15
F-CAN D_L
GRN
PNK
A19
F-CAN D_H
GRN
A20
F-CAN D_L
GAUGE CONTROL MODULE
YEL
A34
F-CAN C_H
RED
A35
F-CAN C_L
SRS UNIT
YEL
B1
F-CAN C_H
GRN
B3
F-CAN C_L
EPS CONTROL UNIT
5
F-CAN C_H
YEL
YEL
YEL
46
F-CAN C_H
13
F-CAN C_L
RED
RED
GRN
34
F-CAN C_L
YEL
40
F-CAN B_H
BLU
GRN
28
F-CAN B_L
VSA MODULATOR-CONTROL UNIT
6
F-CAN B_H
YEL
YEL
A39
F-CAN B_H
14
F-CAN B_L
BLU
BLU
GRN
A38
F-CAN B_L
3
F-CAN A_H
WHT
WHT
A37
F-CAN A_H
11
F-CAN A_L
RED
RED
A36
F-CAN A_L
PCM
2
DIAG-CAN_H
YEL
YEL
6
DIAG-CAN_H
10
DIAG-CAN_L
GRN
GRN
14
DIAG-CAN_L
DATA LINK CONNECTOR (DLC)

COMPONENT LOCATION INDEX

REAR DIFFERENTIAL COMPONENT LOCATION INDEX

For relationships between signals in a system, refer to System Description.

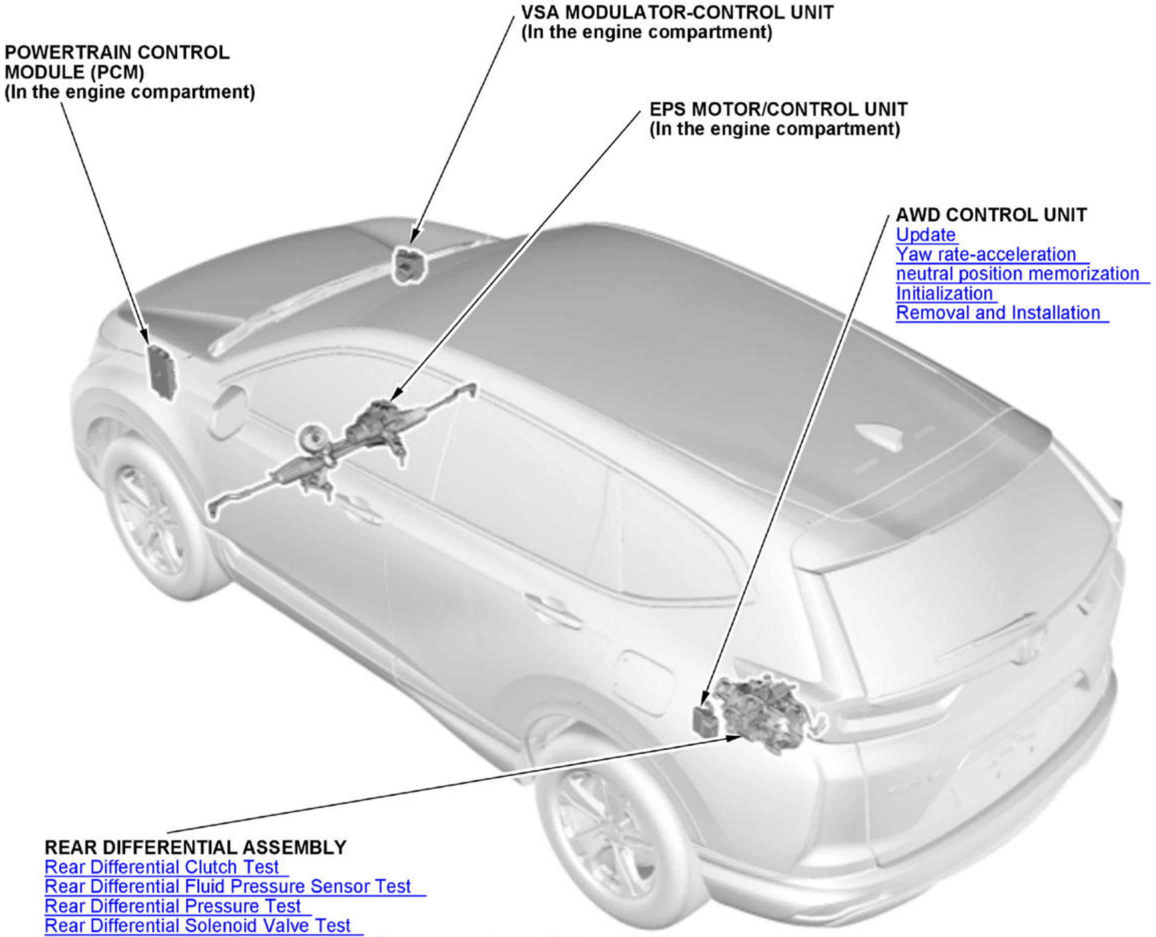

VSA MODULATOR-CONTROL UNIT
(In the engine compartment)

POWERTRAIN CONTROL MODULE (PCM)
(In the engine compartment)

EPS MOTOR/CONTROL UNIT
(In the engine compartment)

AWD CONTROL UNIT
Update
Yaw rate-acceleration
neutral position memorization
Initialization
Removal and Installation

REAR DIFFERENTIAL ASSEMBLY
Rear Differential Clutch Test
Rear Differential Fluid Pressure Sensor Test
Rear Differential Pressure Test
Rear Differential Solenoid Valve Test
Rear Differential Fluid Pressure Sensor Removal and Installation
Rear Differential Fluid Temperature Sensor Removal and Installation
Rear Differential Pump Motor Removal and Installation
Removal and Installation
Disassembly and Reassembly

REAR DIFFERENTIAL FLUID
AWD with Intelligent Control
System Bleeding
Inspection and Replacement

REAR DIFFERENTIAL MOUNT
Removal and Installation

REAR DIFFERENTIAL BREATHER BOX and HOSE
Removal and Installation

REAR DIFFERENTIAL OIL SEAL
Replacement

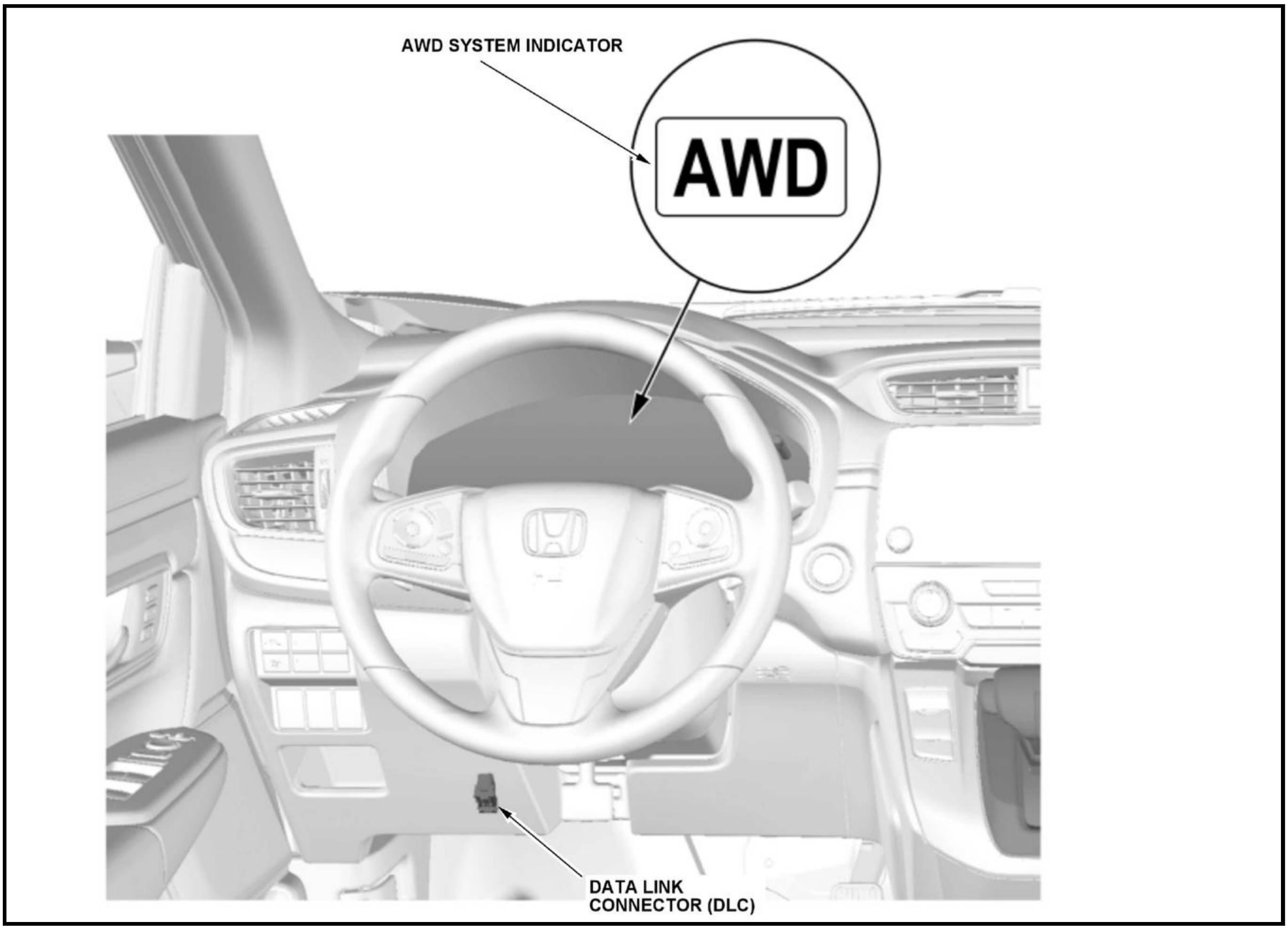
AWD SYSTEM INDICATOR
AWD
DATA LINK CONNECTOR (DLC)

LEARNING RESET CLEAR

LONGITUDINAL ACCELERATION SENSOR LEARN

Procedure

1. HDS - Connect
2. Longitudinal Acceleration Sensor - Learn

> 1. Select the ADJUSTMENT in the AWD WITH INTELLIGENT CONTROL with the HDS.
>
> 2. Select the LONGITUDINAL G SENSOR LEARNING in the ADJUSTMENT with the HDS.
>
> **NOTE:** See the HDS Help menu for specific instructions.

REPLACEMENT

REAR DIFFERENTIAL OIL SEAL REPLACEMENT (AWD)

Special Tools Required

Image	Description/Tool Number
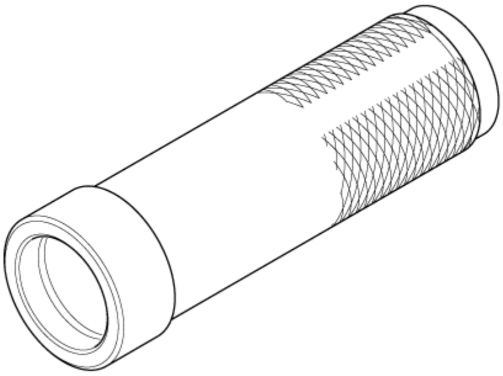	Driver Handle, 40 mm I. D. 07746-0030100

Replacement

Driveshaft Side

1. Vehicle - Lift
2. Rear Differential Assembly - Remove
3. Oil Seal - Remove

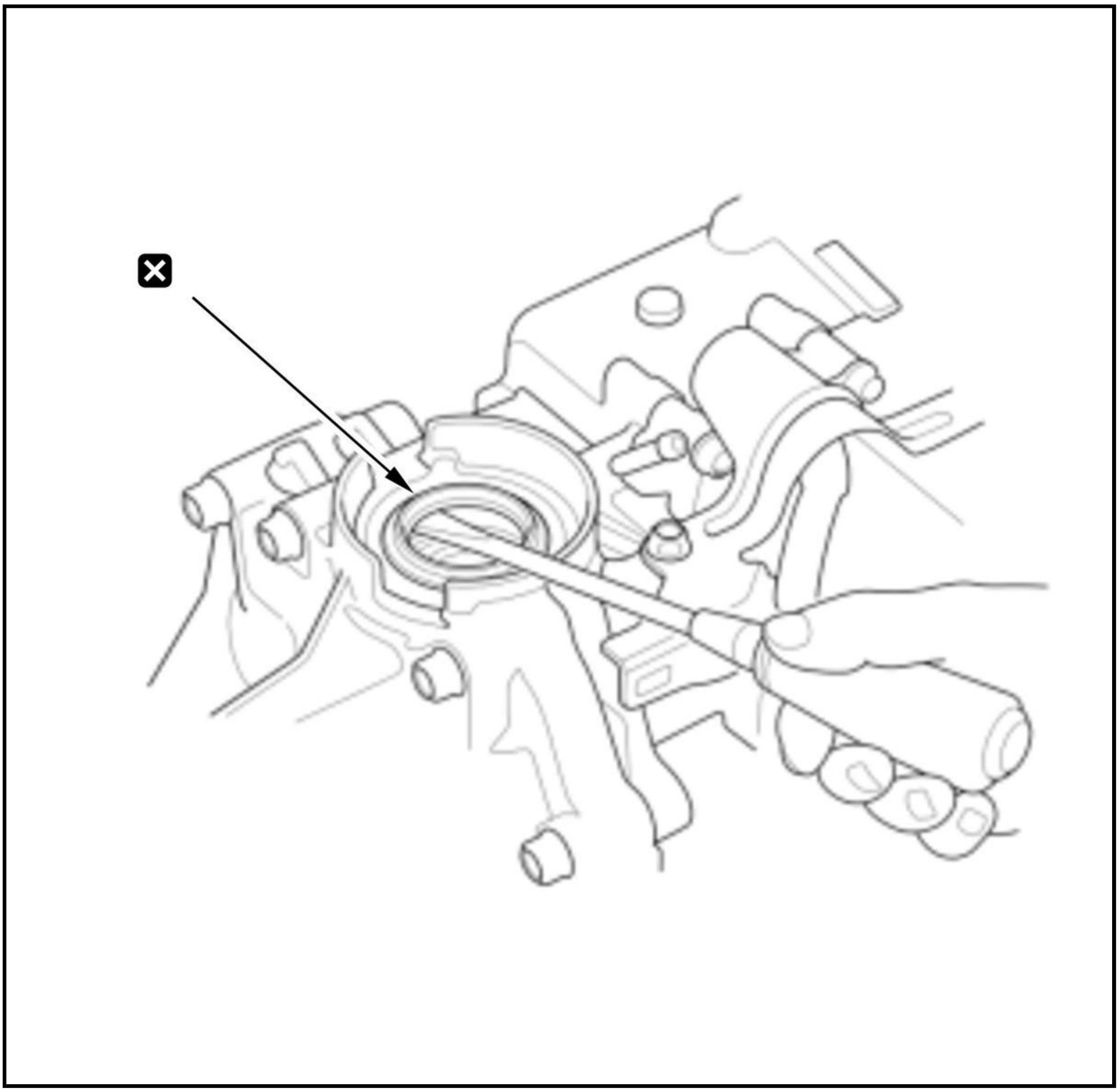

4. Oil Seal - Install

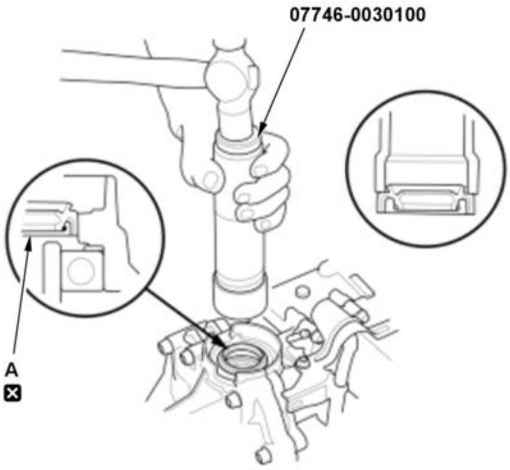	1. Install a new oil seal (A) even and flush with the machined edge of the differential carrier assembly using the 40 mm I. D. driver handle.

5. **Rear Differential Assembly - Install**

Propeller Shaft Side

6. **Vehicle - Lift**
7. **Rear Differential Fluid - Drain**

8. **No. 2 Propeller Shaft - Disconnect**
9. **Companion Flange - Remove**
10. Oil Seal - Remove

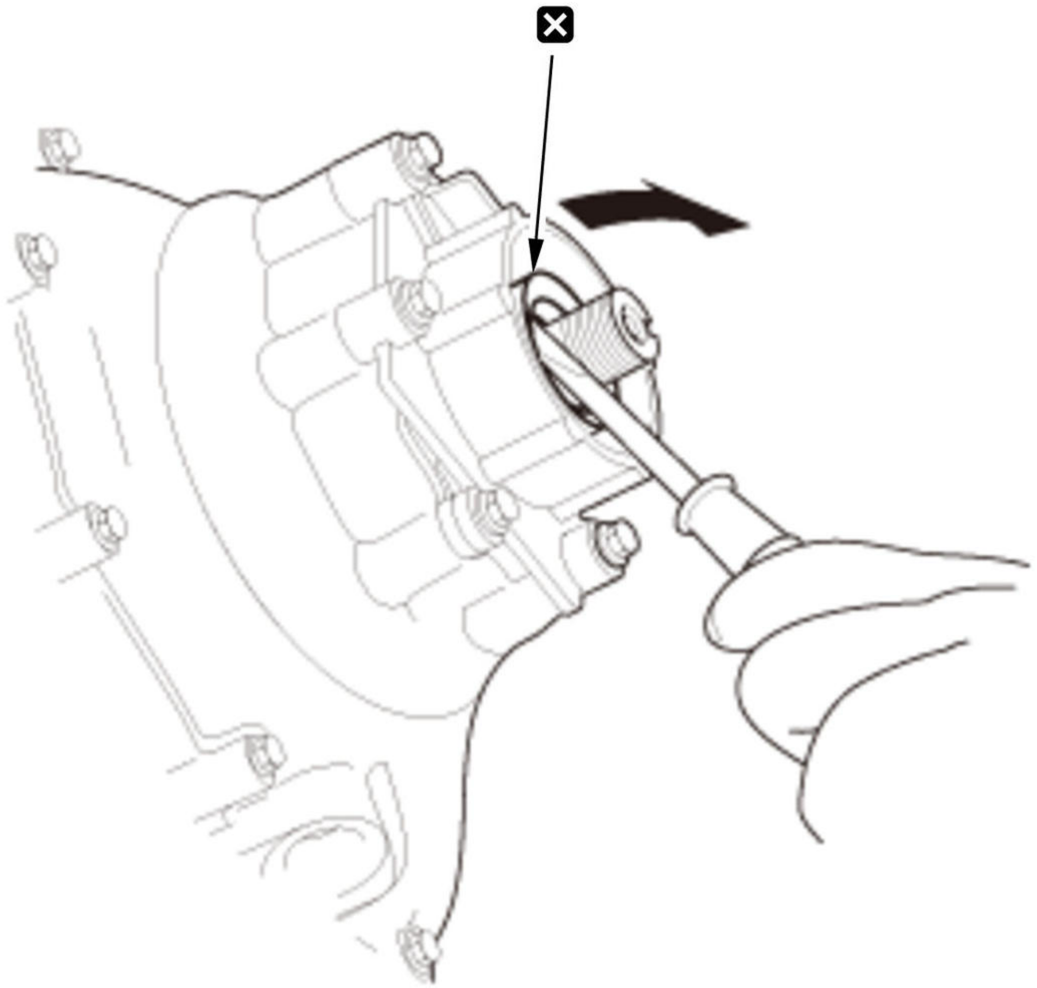

11. Oil Seal - Install

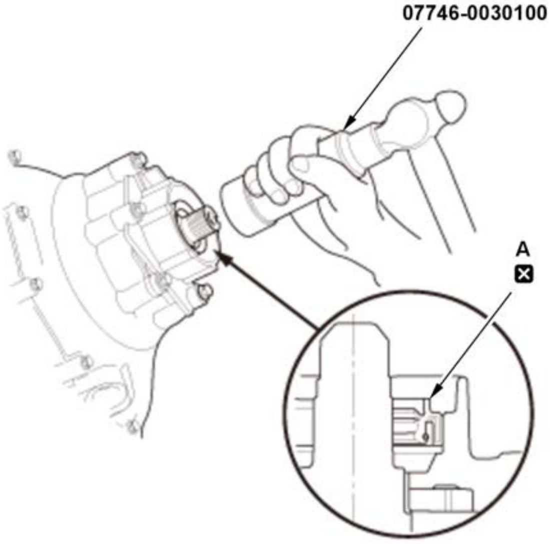	1. Install a new oil seal (A) even and flush with the rear differential oil pump cover using the 40 mm I. D. driver handle.

12. Companion Flange - Install
13. No. 2 Propeller Shaft - Connect
14. Rear Differential Fluid - Refill

DESCRIPTION & OPERATION

REAR DIFFERENTIAL SYSTEM DESCRIPTION (AWD)

Overview

The All Wheel Drive (AWD) system is adopted into the rear differential. The AWD features a built-in real-time controlling mechanism that distributes the proper torque to the rear wheels as needed depending on the rotating difference between front and rear wheels or the engine power. The hydraulic circuit of the AWD is equipped with a motor-driven oil pump and an electronically-controlled valves, resulting in a wide range of torque controls, improvements in responsiveness, reduction of excessive torque, and compact size/lightening.

Construction

The AWD Differential Assembly consists of a wet-disc clutch assembly, differential, and a hydraulic system. The main components of the wet-disc clutch assembly are as follow:

Components	Purpose
Clutch Disc A	Clutch discs A are splined to the clutch guide.
Clutch Disc B	Clutch discs B are splined to the clutch hub.
Clutch Guide	Clutch guide is connected to the propeller shaft.
Clutch Hub	Clutch hub is connected to the hypoid pinion shaft.
Hydraulic Pressure Piston	The end plate is pressed by an oil pressure, and the clutch plates A and B are engaged.

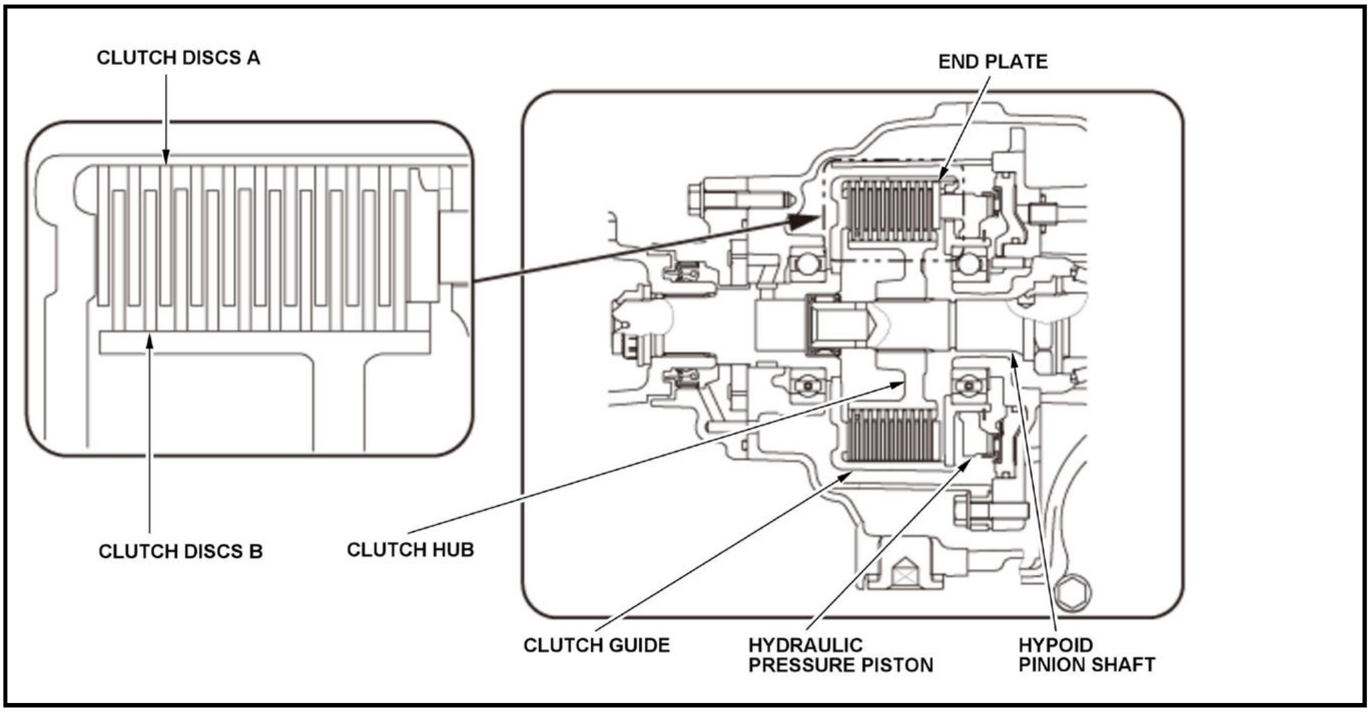

Hydraulic Circuit

The main components in the hydraulic circuit are as follows:

COMPONENT	FUNCTION
Oil Pump	Operated by the rear differential pump motor, the oil pump receives the oil from the strainer and sends it to the

COMPONENT	FUNCTION
	hydraulic circuit. The rear differential pump motor is controlled by the AWD control unit.
1-Way Valve	Retains the oil pressure in the hydraulic circuit.
Pressure Relief Valve	Operates when the oil pressure failed, and release the oil pressure into the strainer.
Rear Differential Solenoid Valve	Turns ON/OFF to adjust the oil pressure in the hydraulic circuit.
Rear Differential Fluid Pressure Sensor	The fluid pressure sensor monitors the pressure in the hydraulic circuit and reports this to the AWD control unit.
Rear Differential Fluid Temperature Sensor	The fluid temperature sensor monitors the fluid temperature and reports this to the AWD control unit.

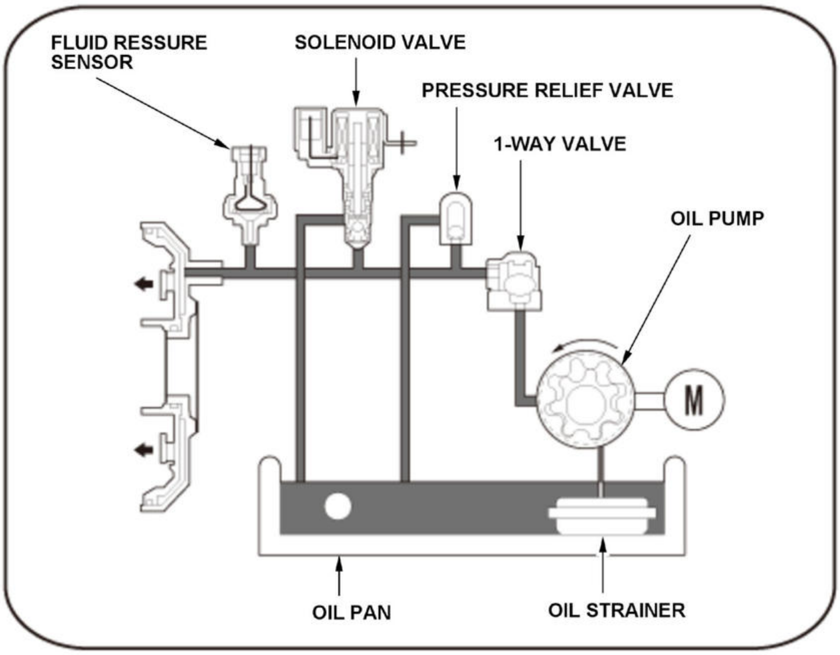

The AWD control unit receives signals from the PCM, VSA Control Module, Gauge Control Module, EPS Control Unit and SRS Unit. These signals are used to calculate the amount of torque to be provided to the rear wheels. The AWD control unit actuates controls on the differential that generates variable hydraulic pressure in the hydraulic circuits. This pressure causes a clutch assembly inside the housing to be applied, delivering variable amounts of power to the rear wheels.

Hydraulic Control System Diagram

For locations of each component on vehicle, refer to Component Location Index:

- PCM
- TCM (1.5 L engine)
- VSA Modulator-Control Unit
- Gauge Control Module
- EPS Control Unit
- SRS Unit

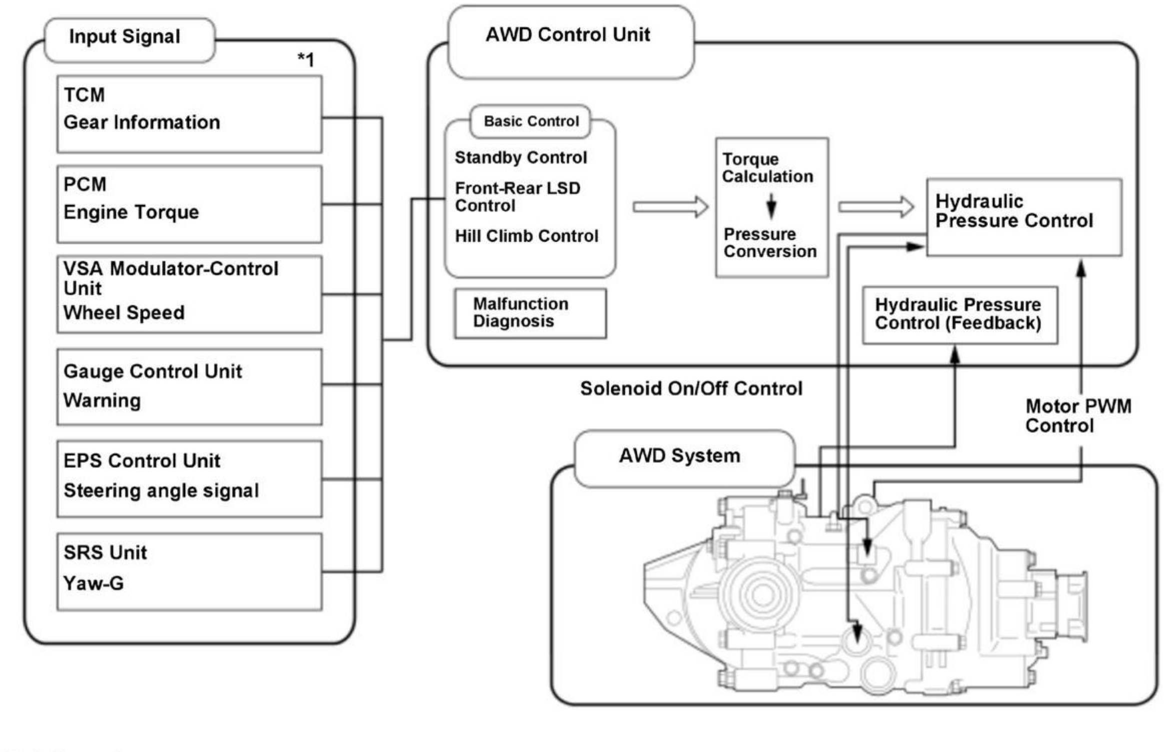
Input Signal
*1
TCM
Gear Information
PCM
Engine Torque
VSA Modulator-Control Unit
Wheel Speed
Gauge Control Unit
Warning
EPS Control Unit
Steering angle signal
SRS Unit
Yaw-G
AWD Control Unit
Basic Control
Standby Control
Front-Rear LSD Control
Hill Climb Control
Malfunction Diagnosis
Torque Calculation
Pressure Conversion
Hydraulic Pressure Control
Hydraulic Pressure Control (Feedback)
Solenoid On/Off Control
Motor PWM Control
AWD System

*1: 1.5L engine

Operation

Driving Power Delivery

The driving power delivered from the propeller shaft is transmitted to the clutch guide and clutch plate. Since the clutch is not engaged when the oil pressure is not generated, the pinion gear is not driven by the propeller shaft. In this case, the driving power is not transmitted to the rear wheels, but it is only rotated by the vehicle movement. The generated hydraulic pressure presses the pressure piston against the end plate, compressing the clutch discs. This compression reduces the slippage between clutch discs A and B, thus rotating the clutch drum together with the clutch hub.

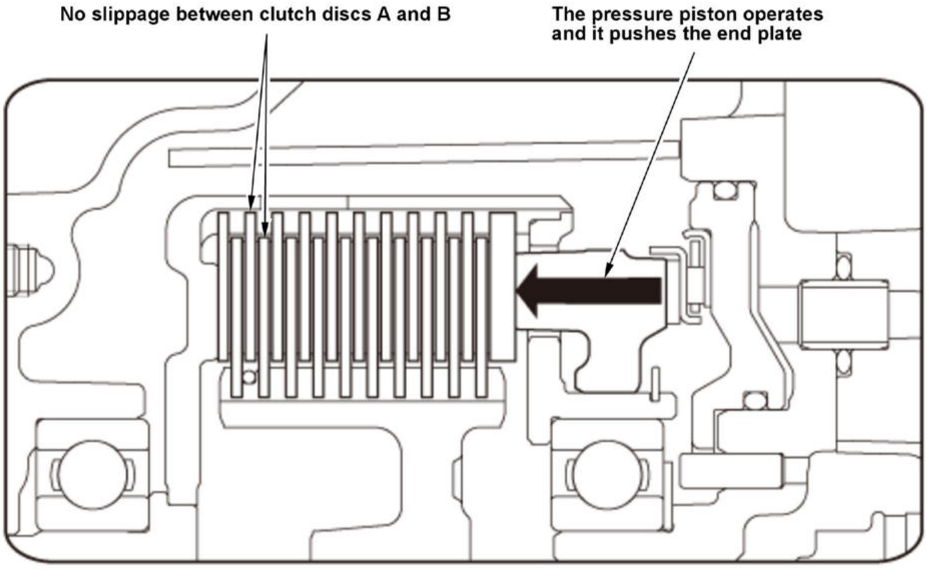
No slippage between clutch discs A and B
The pressure piston operates and it pushes the end plate

The drive power delivered to the propeller shaft is outputted from the clutch hub to the drive pinion gear, ring gear, differential and rear drive shafts when the clutch is applied. In this situation, the drive power is transmitted to the rear wheels.

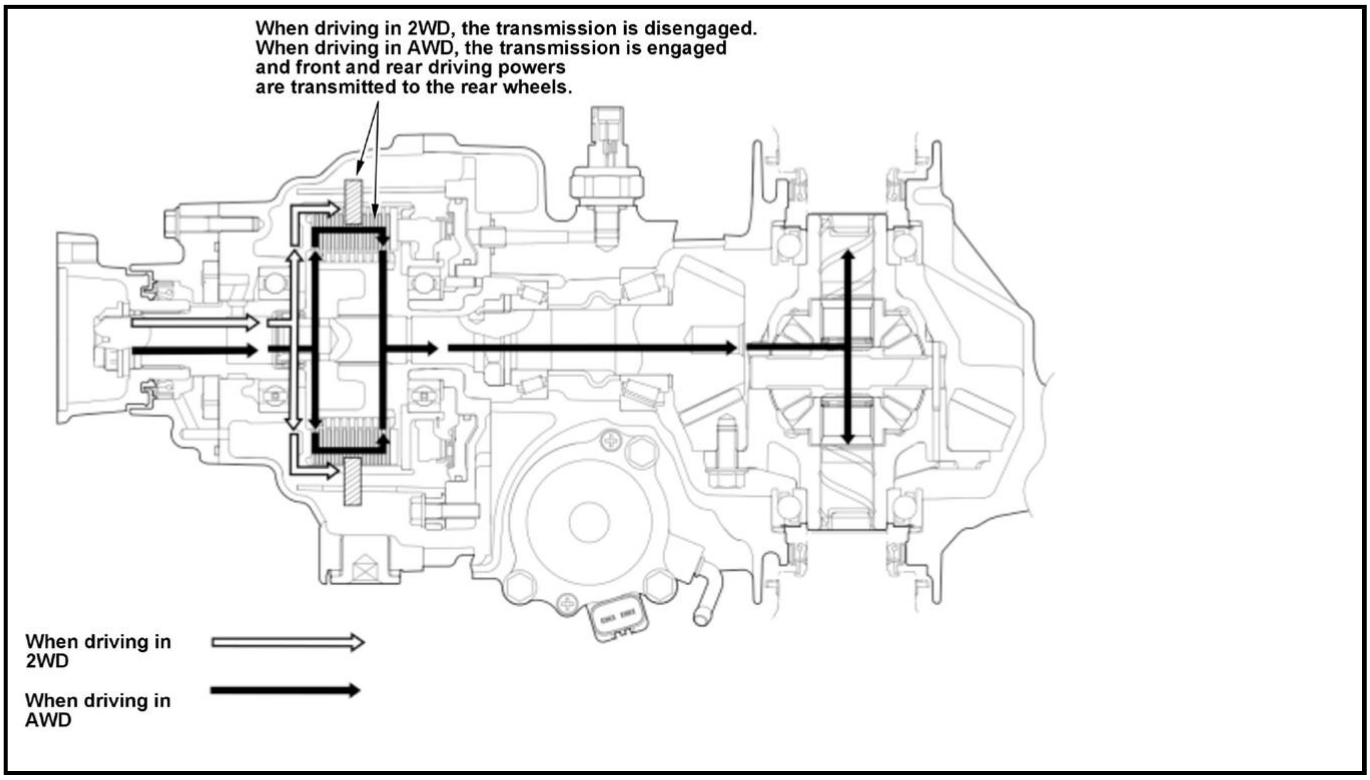
When driving in 2WD, the transmission is disengaged.
When driving in AWD, the transmission is engaged and front and rear driving powers are transmitted to the rear wheels.
When driving in 2WD
When driving in AWD

In addition, the clutch drum and the clutch hub are not in complete contact but linked to each other with a maximum of 80% contact rate. This slippage reduces the friction caused by the rotational difference between the front and rear.

Hydraulic Control

Torque is distributed to the front and rear wheels by controlling the amount of clutch application in the differential. Clutch application force is controlled through oil pressure created by the oil pump drive motor and a solenoid valve.

By applying pressure and depressurization control, the AWD control unit sets the optimum level of pressure in stages to suit the driving conditions and road conditions. The basic control method involves the hydraulic circuit being pressurized by the motor to a level close to, but generally exceeding, the target pressure calculated from the vehicle conditions and road conditions received by the AWD control unit.

The hydraulic controls in a normal driving condition are as follows:

- In the pressurization mode, the oil pump driving motor generates a target oil pressure in the hydraulic circuit during a period of time calculated by the AWD control unit. The 1-way valve is opened by the oil pressure and the AWD control unit closes the solenoid valve (energized), thus, the pressure piston squeezes the clutch discs.
- In the retention mode, if the oil pressure reaches the pressure level set by the AWD control unit, the motor stops pressurizing. The 1-way valve closes and the solenoid valve keeps closed (energized), and the oil pressure generated in the hydraulic circuit is kept as-is. Thus, the pressure piston is fixed in a place and maintains the pressure on the clutch discs.
- In the depressurization mode, if the AWD control unit determines that it is not necessary to distribute a torque to the rear wheels, it turns on electricity to open the solenoid valve (de-energized), and releases the oil pressure from the hydraulic circuit. Thus, the pressure piston returns back and releases the clutch disc.

Basic Operation

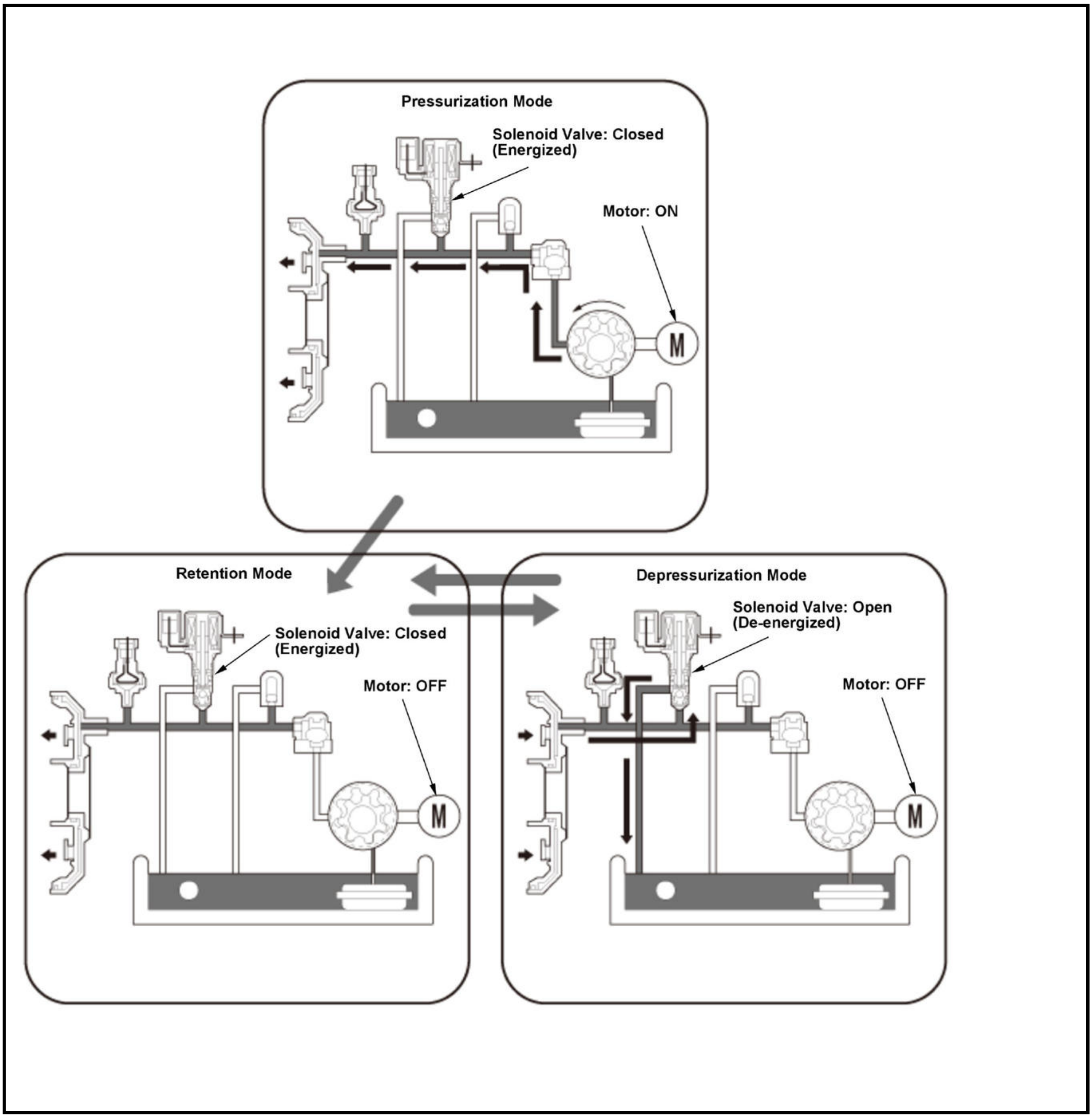
Pressurization Mode
Solenoid Valve: Closed (Energized)
Motor: ON
M
Retention Mode
Solenoid Valve: Closed (Energized)
Motor: OFF
M
Depressurization Mode
Solenoid Valve: Open (De-energized)
Motor: OFF
M

Operating Modes

The operations of AWD are performed appropriately to meet the driving conditions. The following examples show the AWD performance against several driving conditions.

Accelerating From a Stop on Dry Pavement

When the vehicle is stopped on a dry level surface, the AWD control unit puts the system in Standby Mode. This mode pressurizes the hydraulic system and applies the clutch pressure, and distributes a maximum of 20% of torque to the rear wheels for an initial acceleration. To achieve this, the All Wheel Drive control unit receives information from the VSA system to determine the longitudinal angle of the vehicle. Upon determining the vehicle is on level ground, the AWD control unit activates the oil pump drive motor to pressurize the hydraulic system, then cycles the oil pressure solenoid on and off until the target pressure is met. Two levels of system pressurization can be created, depending on conditions. When the target pressure is achieved, the oil pressure solenoid remains closed to maintain the pressure in the hydraulic circuit until the vehicle begins to accelerate.

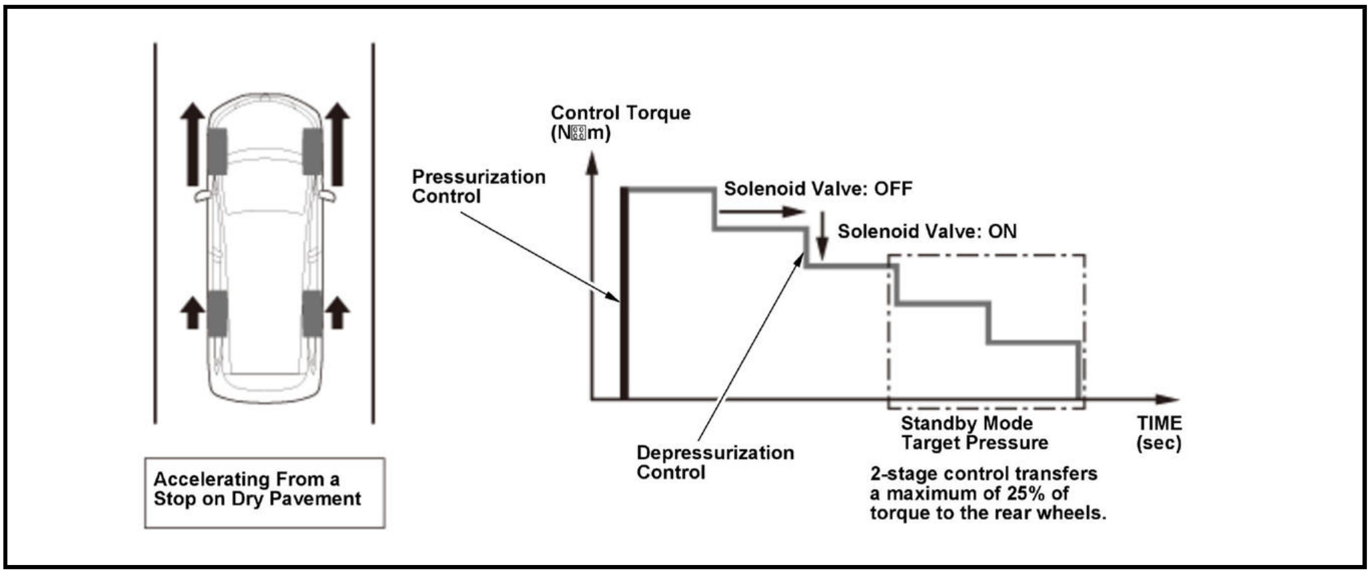
Accelerating From a Stop on Dry Pavement
Control Torque (N·m)
Pressurization Control
Solenoid Valve: OFF
Solenoid Valve: ON
Depressurization Control
Standby Mode Target Pressure
TIME (sec)
2-stage control transfers a maximum of 25% of torque to the rear wheels.

Cruising at Steady Speed on Dry Pavement

When the vehicle is cruising at a steady speed on dry pavement, the AWD control unit deactivates the All Wheel Drive system. The vehicle operates in 2WD mode, helping to increase fuel efficiency. To achieve this, the AWD control unit receives information from the PCM, VSA, EPS and SRS to determine the stability of the vehicle. When it determines that the vehicle is traveling at a steady speed and no wheel slippage is occurring, all pressure is released from the hydraulic circuit, enabling 2WD-only operation. This mode continues until the AWD control unit determines that torque needs to be transferred to the rear wheels.

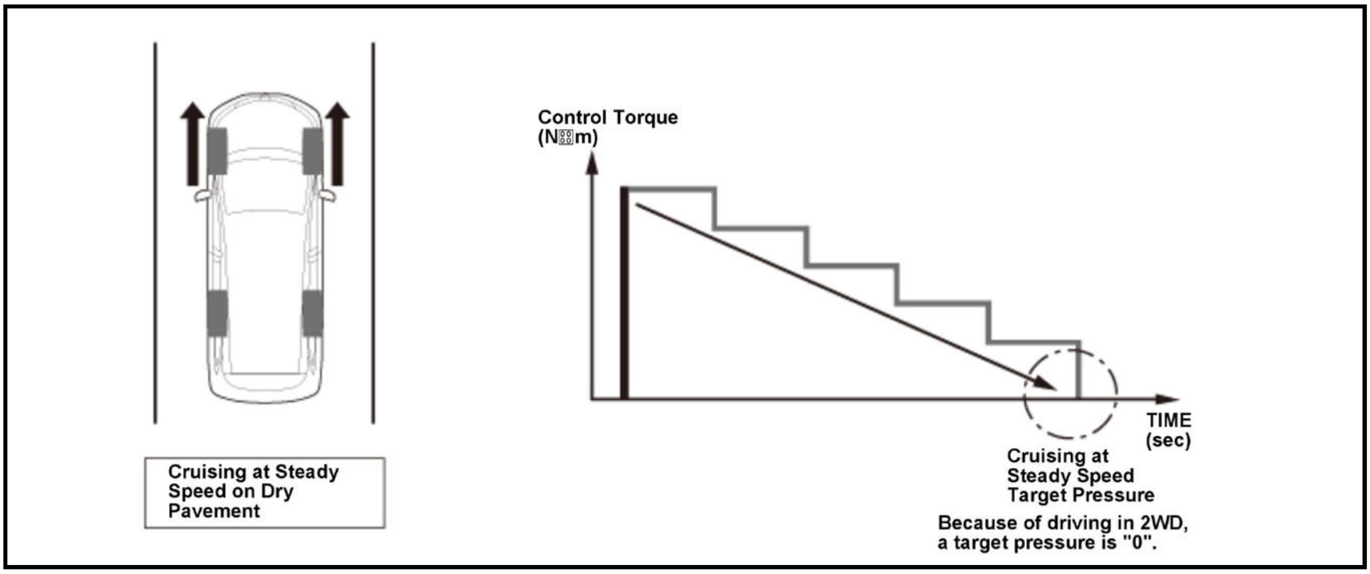
Cruising at Steady Speed on Dry Pavement
Control Torque (N·m)
TIME (sec)
Cruising at Steady Speed Target Pressure
Because of driving in 2WD, a target pressure is "0".

Front Wheel Slipping on Slick Surface

When the front wheels are slipping, for example on a low friction surface such as wet or icy roads, the AWD control unit receives information from the VSA, EPS and SRS that the front wheels are slipping. When the slipping of the front wheels occur, 80% of torque will be transferred to the rear wheels to reduce the load on the front wheels, and to regain vehicle stability. This mode continues until the All Wheel Drive control unit determines that the front wheels are no longer slipping.

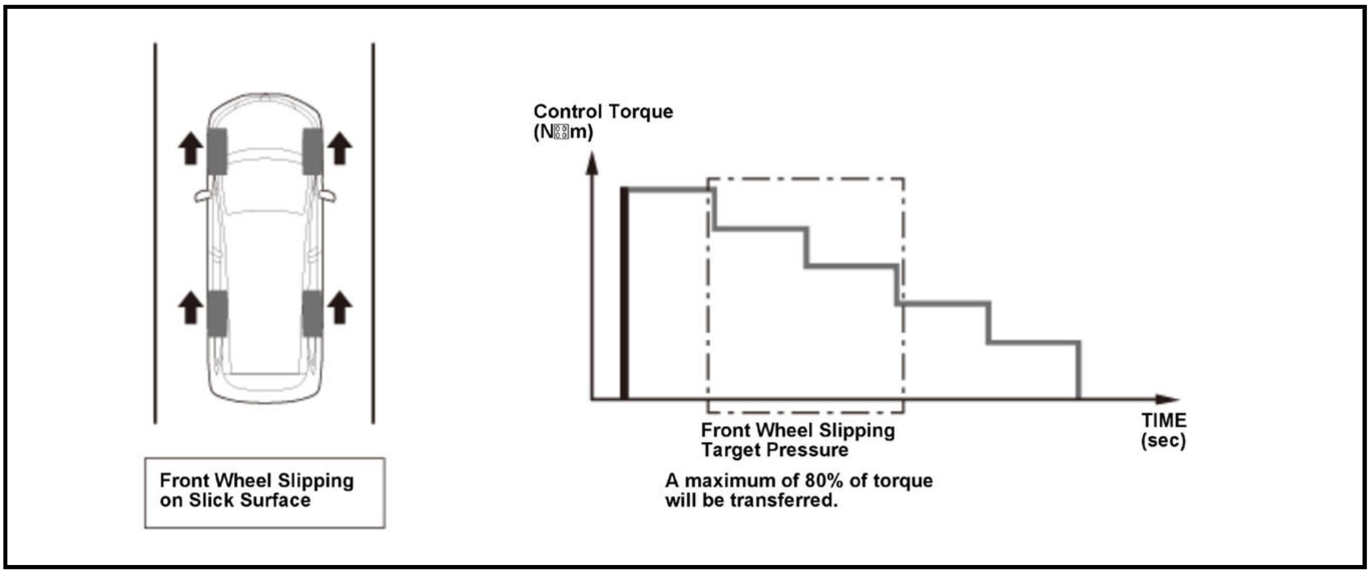
Front Wheel Slipping on Slick Surface
Control Torque (N m)
TIME (sec)
Front Wheel Slipping Target Pressure
A maximum of 80% of torque will be transferred.

Accelerating Uphill From a Stop on Dry Pavement

To stabilize the vehicle while driving uphill, the AWD control unit transfers more of the available torque to the rear wheels than when driving on a flat road. To achieve this, the AWD control unit receives information from the VSA system to determine the slope where the vehicle is driving. Upon determining this, the AWD control unit activates the oil pump drive motor to pressurize the hydraulic system, then cycles the oil pressure solenoid on and off until the target pressure is reached. The level of pressurization varies depending on the calculated slope the vehicle is driving on. The torque transfer to the rear wheels will be controlled at a maximum of 80% depending on driving force. This mode continues until the AWD control unit determines that the vehicle is no longer accelerating uphill.

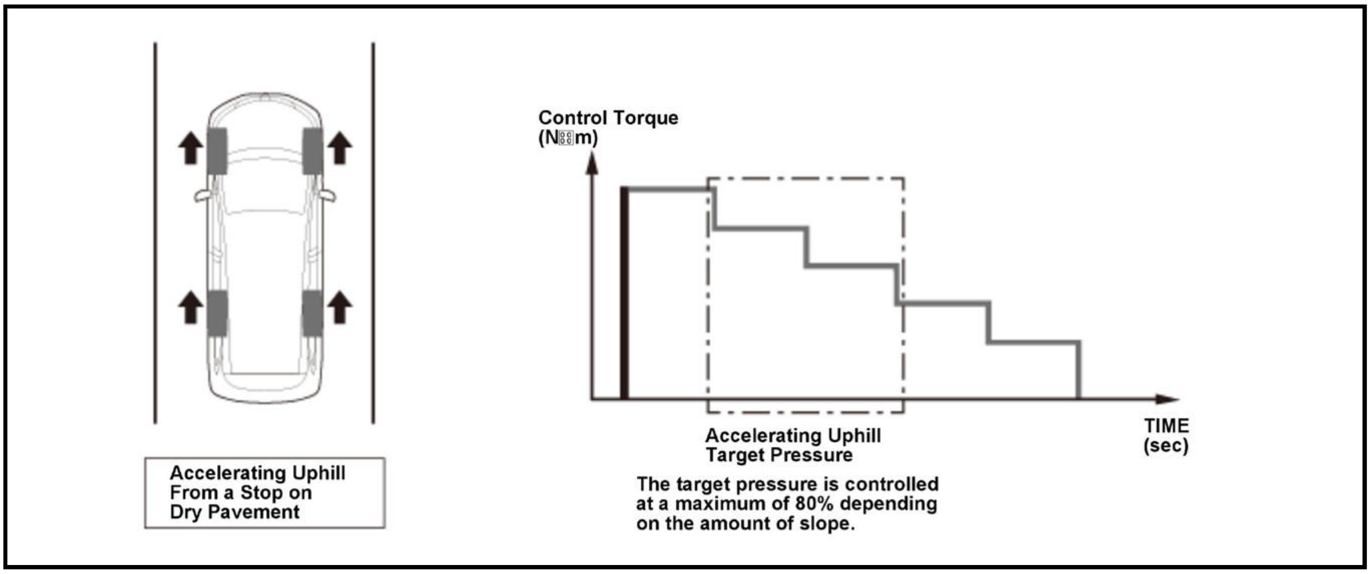
Accelerating Uphill From a Stop on Dry Pavement
Control Torque (N m)
TIME (sec)
Accelerating Uphill Target Pressure
The target pressure is controlled at a maximum of 80% depending on the amount of slope.

CONNECTOR VIEW

REAL TIME AWD CONTROL UNIT CONNECTOR FOR INPUTS AND OUTPUTS (AWD)

Real Time AWD Control Unit Inputs and Outputs for 24P Connector (female terminals)

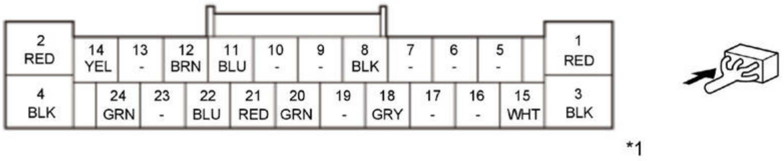
2 RED
14 YEL
13 -
12 BRN
11 BLU
10 -
9 -
8 BLK
7 -
6 -
5 -
1 RED
4 BLK
24 GRN
23 -
22 BLU
21 RED
20 GRN
19 -
18 GRY
17 -
16 -
15 WHT
3 BLK
*1

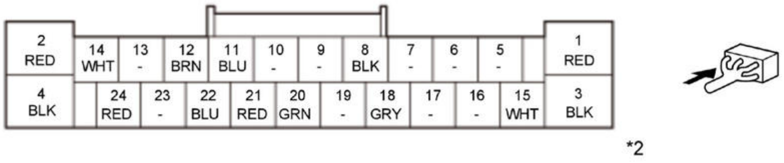

Terminal number	Terminal sign	Description
1	MH	Power supply for the rear differential pump motor
2	+B E-DPS	Power supply for the actuator
3	ML	Ground for the rear differential pump motor
4	GND	Ground for the actuator
5	Not used	---
6	Not used	
7	Not used	
8	GND	Ground for the real time AWD control unit
9	Not used	---
10	Not used	
11	SG	Ground for the rear differential fluid pressure sensor
12	IG1 METER	Power supply for the real time AWD control unit
13	Not used	---
14	F-CAN B H *1F-CAN H *2	F-CAN communication circuit
15	DTYH1	Power supply for the rear differential solenoid valve
16	Not used	---
17	Not used	
18	TOH	Detects rear differential fluid temperature sensor signal (positive)
19	Not used	---
20	SVCC	Power supply for the rear differential fluid pressure sensor
21	PS1	Detects rear differential fluid pressure sensor signal (positive)
22	TOL	Detects rear differential fluid temperature sensor signal (negative)
23	Not used	---
24	F-CAN B L *1F-CAN L *2	F-CAN communication circuit

*1: With CAN Gateway

*2: Without CAN Gateway

INSPECTION REPLACEMENT

REAR DIFFERENTIAL FLUID INSPECTION AND REPLACEMENT (AWD)

Inspection

NOTE: How to read the torque specifications .

1. Vehicle - Lift
2. Rear Differential Fluid - Check

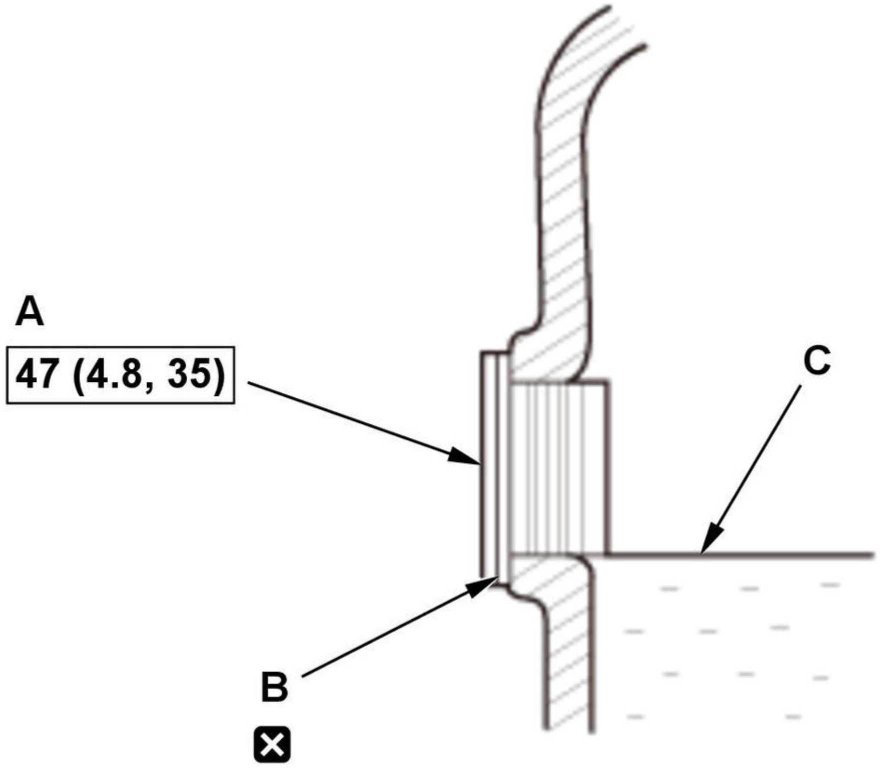

Fig. 1: Oil Filler Plug With Torque Specifications
Courtesy of HONDA, U.S.A., INC.

1. Use solvent and a brush to wash any oil and dirt off the oil filler plug and dry them with compressed air.

2. Remove the oil filler plug (A) and the sealing washer (B).

3. Check the condition of the rear differential fluid, if the fluid is dirty or burnt, replace it.

4. Make sure the rear differential fluid is at the proper level (C).

   - The fluid level must reach up to the bottom of the oil filler plug hole.
   - If the level is below the proper level, check for rear differential fluid leaks at the differential.
   - If a problem is found, fix it before filling the differential with fluid.

5. If necessary, add rear differential fluid until it runs out, then reinstall the oil filler plug with a new sealing washer.

Replacement

NOTE:

- **How to read the torque specifications** .
- Check that the AWD system indicator does not come on. If it does, **check for AWD with intelligent control system DTCs.**

1. **Vehicle - Lift**
2. Rear Differential Fluid - Replace

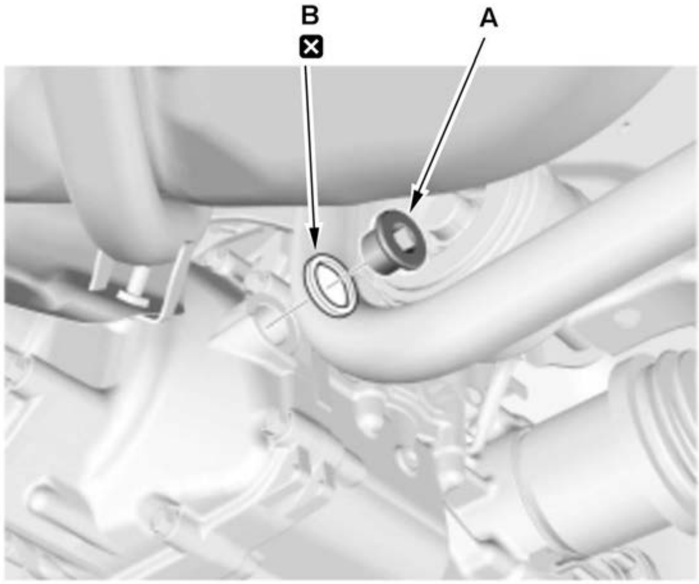	1. Remove the oil filler plug (A) and the sealing washer (B).
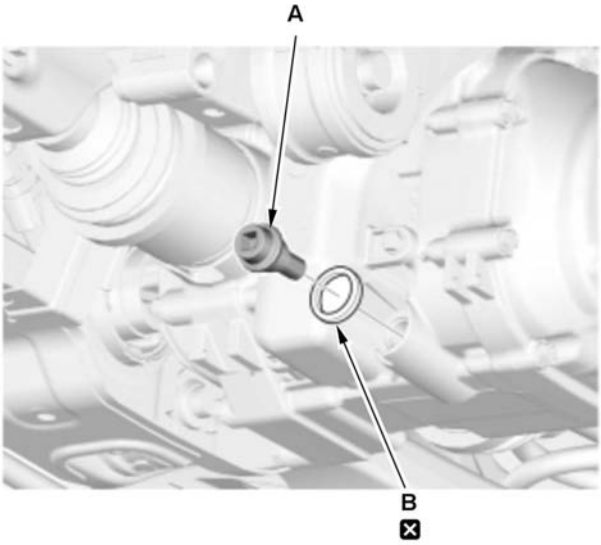	2. Remove the drain plug (A) and the sealing washer (B), then drain the rear differential fluid.

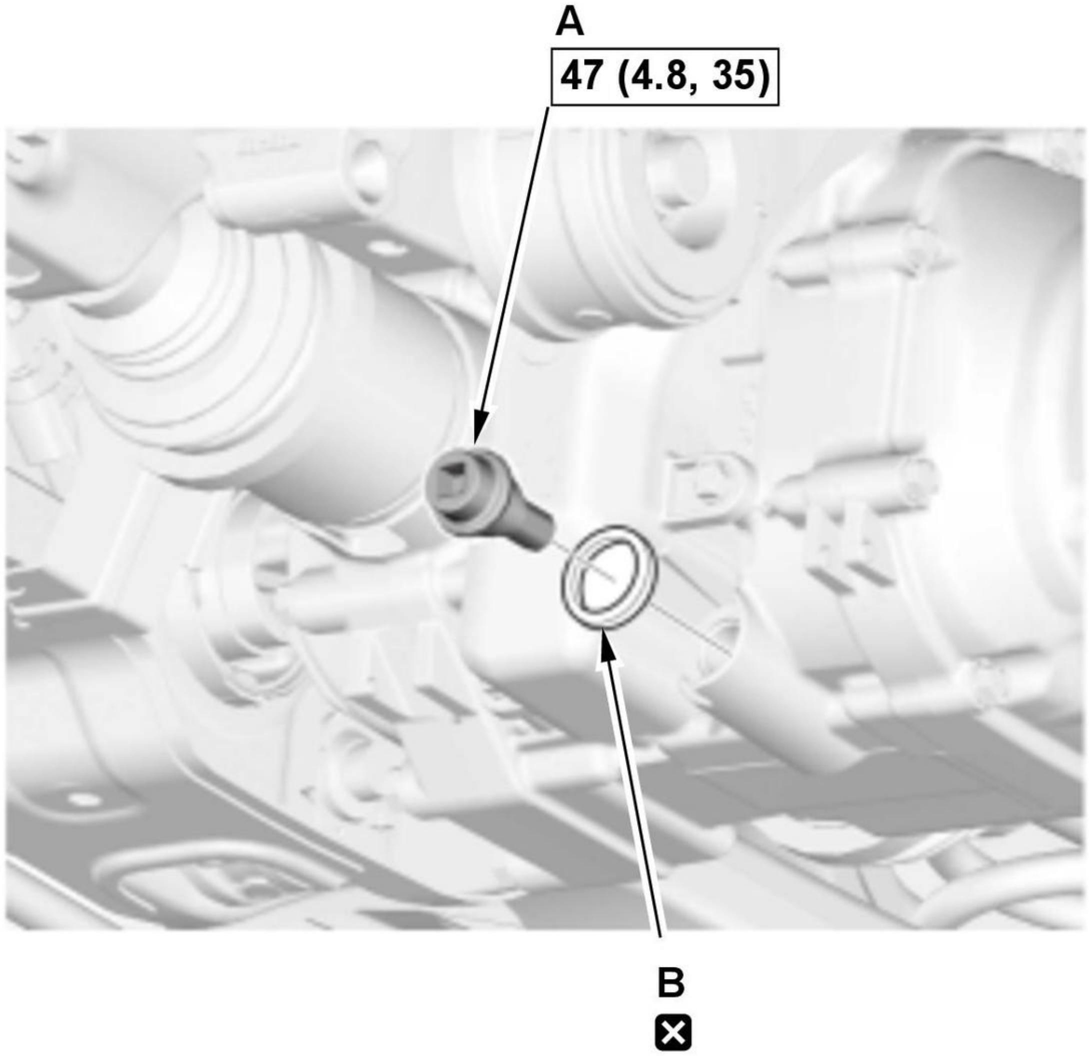

[Fig. 2: Drain Plug With Torque Specifications](#)
Courtesy of HONDA, U.S.A., INC.

3. Remove metal particles from the magnetic surface of the drain plug (A).

4. Install the drain plug with a new sealing washer (B).

5. Refill the rear differential with rear differential fluid to the proper level.

NOTE: If you disassemble the differential, check the rear differential fluid level again after the AWD with intelligent control system check is finished. Add fluid if necessary.

Recommended fluid:	
B	**Honda DPSF-II**

Fluid Capacity:	
B	**1.2 L (1.3 US qt) at fluid change**
B	**1.5 L (1.6 US qt) at overhaul**

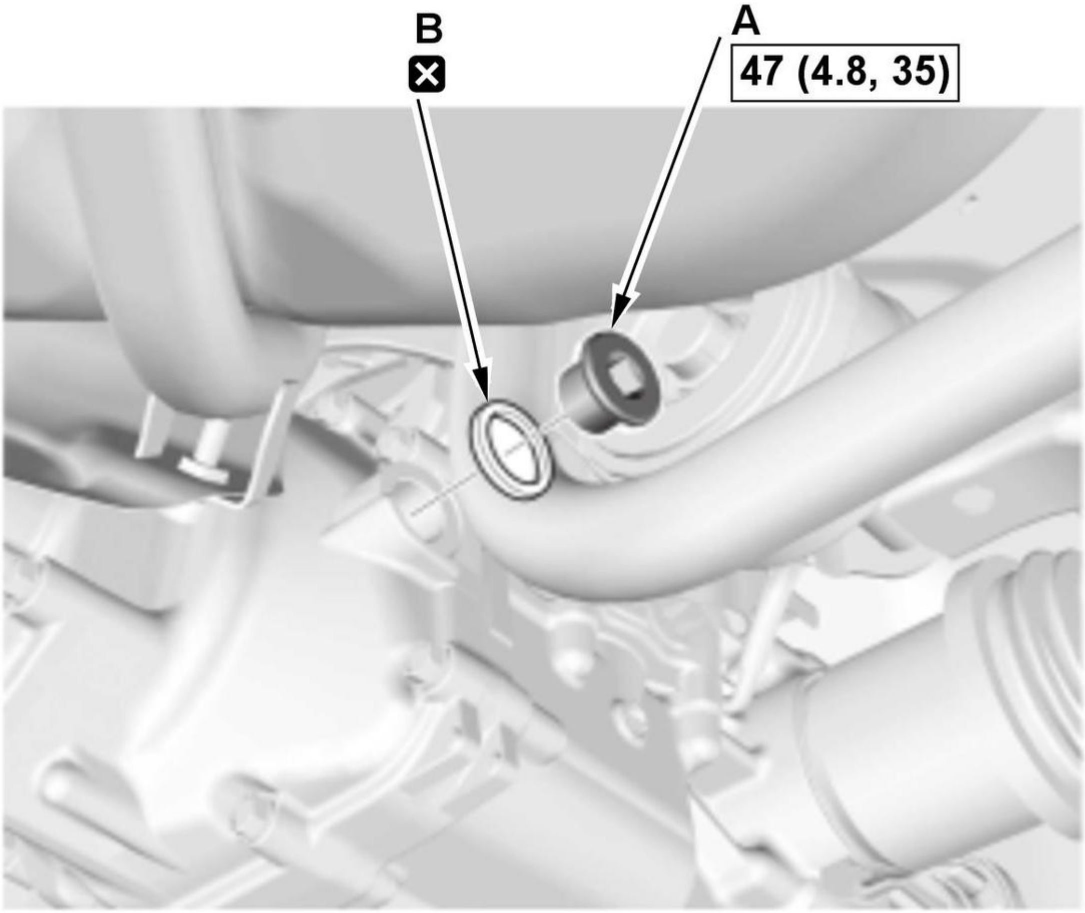

Fig. 3: Oil Filler Plug With Torque Specifications
Courtesy of HONDA, U.S.A., INC.

6. Install the oil filler plug (A) with a new sealing washer (B).

3. Rear Differential Fluid After Replacement - Check

1. Apply the parking brake and block all wheels.

2. Start the engine and let it idle more than 6 seconds, then turn the engine off. Repeat this step three more times.

3. Shift the transmission to D position/mode while pressing the brake pedal firmly. Press the accelerator pedal for 2 seconds, then let it idle. Repeat this step three more times.

4. Check that the AWD system indicator does not come on. If it does, check for AWD with intelligent control system DTCs

.

4. Maintenance Minder - Reset

1. If the Maintenance Minder required to replace the rear differential fluid, reset the Maintenance Minder with the gauge . If the Maintenance Minder did not require to replace the rear differential fluid, reset the Maintenance Minder with the HDS .

SERVICE INFORMATION

AWD SYSTEM BLEEDING (AWD)

Procedure

NOTE: Whenever the rear differential assembly is disassembled, the AWD with intelligent control system must be bled.

1. **HDS - Connect**
2. AWD System - Air Bleed

1. Select the ADJUSTMENT in the AWD WITH INTELLIGENT CONTROL with the HDS. 2. Select the AIR BLEEDING in the ADJUSTMENT with the HDS. **NOTE:** See the HDS Help menu for specific instructions.

3. **Rear Differential Fluid - Check**

TEST

REAR DIFFERENTIAL CLUTCH TEST (AWD)

Test

1. **HDS - Connect**
2. Rear Differential Clutch - Test

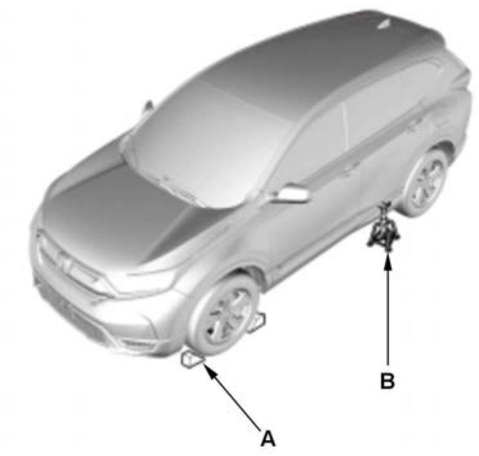	1. Block the front wheels (A), raise the left rear wheel and support the vehicle with a safety stand (B) as shown. 2. Release the parking brake.

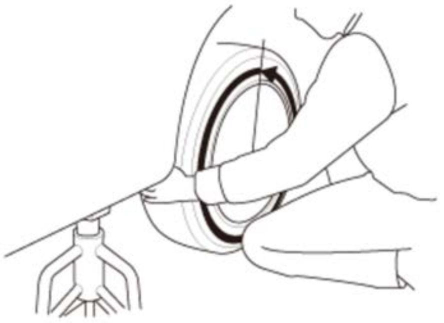	3. Hold the left rear tire and turn it counterclockwise continuously for more than one rotation. - If the wheel rotates, go to step 4. - If the wheel does not rotate, **replace the rear differential fluid** and retest. If the result is the same, **replace the rear differential assembly** .

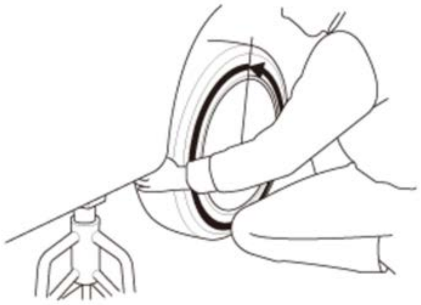

4. Select the FUNCTIONAL TEST in the AWD WITH INTELLIGENT CONTROL with the HDS.

5. Select the SOLENOID TEST in the FUNCTIONAL TEST with the HDS.

6. Do LEVEL 7 of the SOLENOID TEST with the HDS.

7. Hold the left rear tire and turn it counterclockwise continuously for more than one rotation.

- If the wheel rotates, go to step 8.
- If the wheel does not rotate, the system is OK at this time and the test is complete.

8. **Check the condition of the rear differential fluid**.

- If the fluid is dirty or burnt, **replace the rear differential fluid**.
- If the fluid is normal, go to step 9.

9. **Make sure the rear differential fluid is at the proper level**.

- If the level is below the proper level, check for rear differential fluid leaks at the differential assembly and retest.
- If the level is normal, go to step 10.

10. Visually check the rear differential for damage.

- If any damage is found on the rear differential, replace the defective part as needed.
- If the rear differential is normal, go to step 11.

11. **Do the rear differential pressure test with the HDS**

If Normal is displayed, go to step 12.

12. **Do the rear differential fluid pressure sensor test**

If the rear differential fluid pressure sensor is OK, **replace the rear differential fluid** and retest. If the result is the same, **replace the rear differential assembly** .

REAR DIFFERENTIAL FLUID PRESSURE SENSOR TEST (AWD)

Special Tools Required

Image	Description/Tool Number
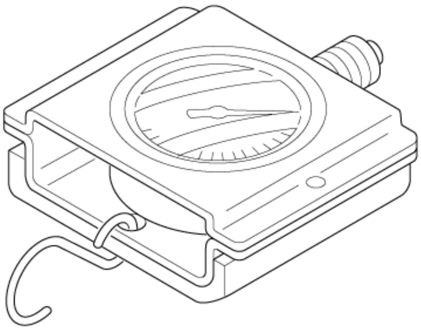	A/T Low Pressure Gauge w/Panel 07406-0070301
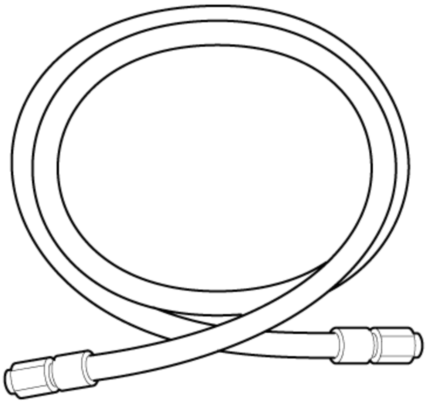	A/T Pressure Test Hose 07AAJ-PY4A100
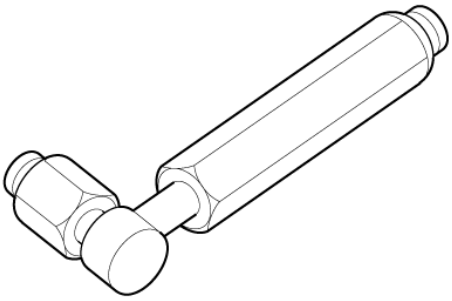	A/T Pressure Adapter 07MAJ-PY40120
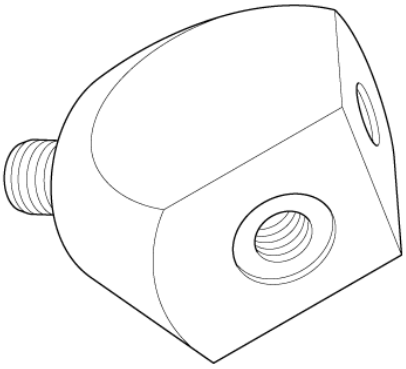	Pressure Gauge Adapter 07NAJ-P07010A

Image	Description/Tool Number
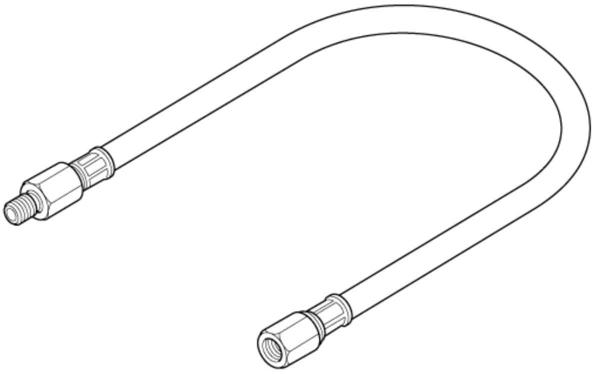	Oil Pressure Hose 07ZAJ-S5A0200

Test

NOTE: **How to read the torque specifications** .

1. Rear Differential Fluid Pressure Sensor - Remove

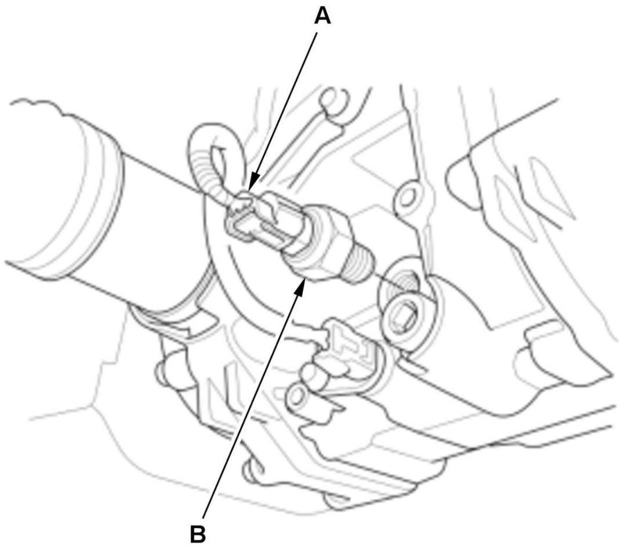	1. **Remove the rear differential fluid pressure sensor** . 2. Reconnect the connector (A) to the rear differential fluid pressure sensor (B).

2. **HDS - Connect**
3. Rear Differential Fluid Pressure Sensor - Test

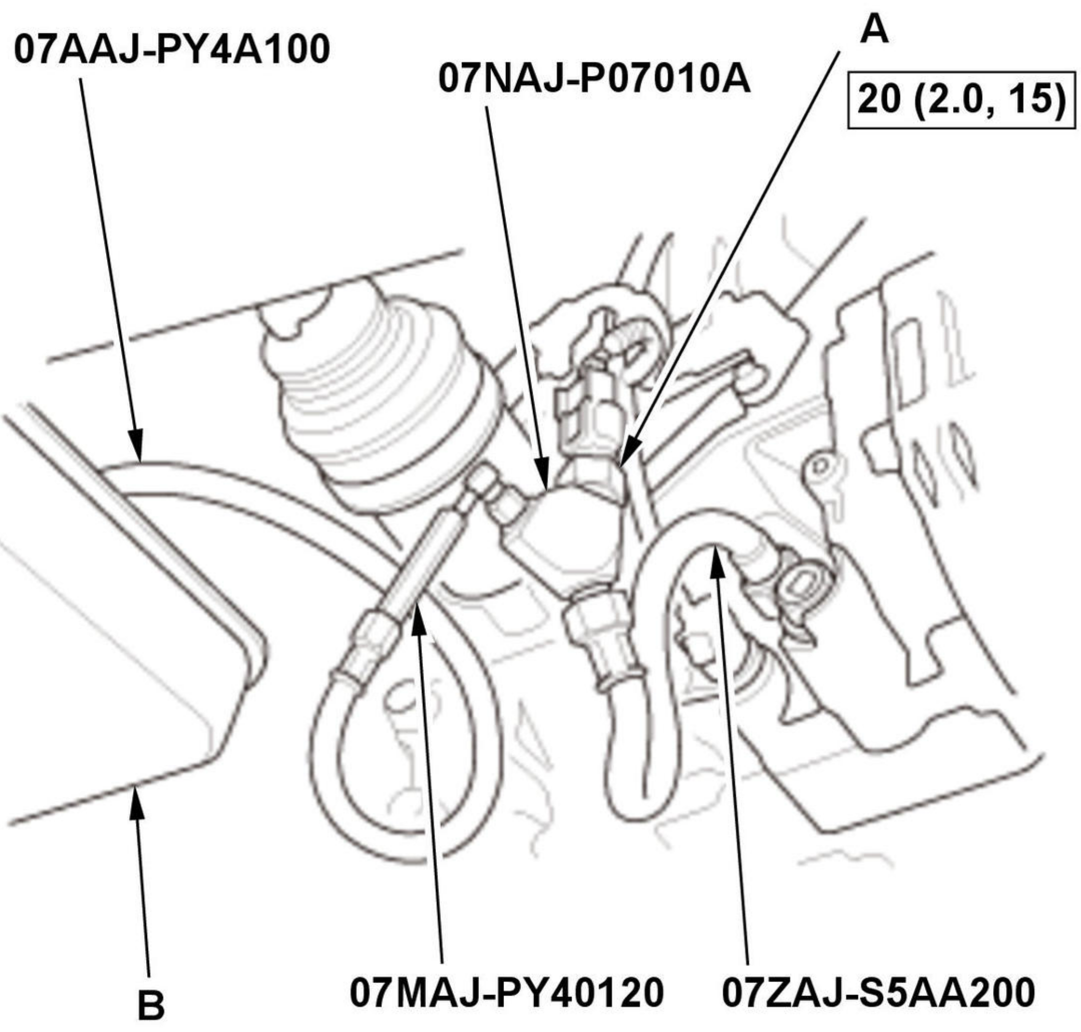

Fig. 4: Rear Differential Fluid Pressure Sensor With Torque Specifications
Courtesy of HONDA, U.S.A., INC.

NOTE: Check that the AWD system indicator does not come on. If it does, check for AWD with intelligent control system DTCs .

1. Turn the vehicle to the OFF (LOCK) mode.

2. Turn the vehicle to the ON mode.

3. Select the DATA LIST in the AWD WITH INTELLIGENT CONTROL with the HDS.

4. Check the ACTUAL OIL PRESSURE OF THE OIL PRESSURE SENSOR FOR REAR DIFFERENTIAL in the DATA LIST with the HDS.

   - If the fluid pressure is not within -30-30 kPa (-0.31-0.31 kgf/cm 2, -4.4-4.4 psi), replace the rear differential fluid pressure sensor .
   - If the fluid pressure is within the range of -30-30 kPa (-0.31-0.31 kgf/cm 2, -4.4-4.4 psi), go to step 5.

5. Turn the vehicle to the OFF (LOCK) mode.

6. Remove the oil pressure gauge from the A/T low pressure gauge set.

7. Attach the A/T pressure test hose, the A/T pressure adapter, the pressure gauge adapter, and the oil pressure hose as shown, then Install the rear differential fluid pressure sensor (A) to the pressure gauge adapter.

8. Place the end for the A/T pressure test hose into a drain pan (B).

9. Start the engine, the AWD pump will do a brief low pressure purge of the system, this will cause air and fluid to flow out of the A/T pressure test hose.

10. Turn the vehicle to the OFF (LOCK) mode.

11. Repeat step 9 again to assure the A/T pressure test hose is full of fluid without air bubbles.

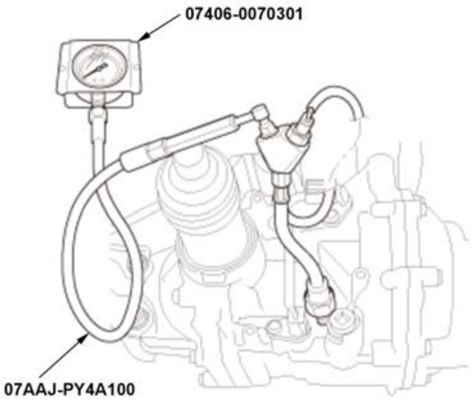

12. Attach the A/T low pressure gauge w/panel onto the end of the A/T pressure test hose.

13. Turn the vehicle to the ON mode.

14. Select the ADJUSTMENT in the AWD WITH INTELLIGENT CONTROL with the HDS.

15. Select the AIR BLEEDING in the ADJUSTMENT with the HDS.

NOTE: See the HDS Help menu for specific instructions.

16. Select the FUNCTIONAL TEST in the AWD WITH INTELLIGENT CONTROL with the HDS.

17. Select the SOLENOID TEST in the FUNCTIONAL TEST with the HDS.

18. Do LEVEL 7 of the SOLENOID TEST with the HDS.

19. Check the differential fluid pressure value of the oil pressure gauge.

- If the fluid pressure is not within the range of 434-599 kPa (4.43-6.11 kgf/cm 2, 62.9-86.9 psi), **replace the rear differential pump motor** .
- If the fluid pressure is within the range of 434-599 kPa (4.43-6.11 kgf/cm 2, 62.9-86.9 psi), go to step 20.

20. Check the ACTUAL OIL PRESSURE OF THE OIL PRESSURE SENSOR FOR REAR DIFFERENTIAL in the DATA LIST with the HDS.

- If the fluid pressure is not within the range of 434-599 kPa (4.43-6.11 kgf/cm 2, 62.9-86.9 psi), **replace the rear differential fluid pressure sensor** .
- If the fluid pressure is within the range of 434-599 kPa (4.43-6.11 kgf/cm 2, 62.9-86.9 psi), rear differential fluid pressure sensor is OK and the test is complete.

4. **Rear Differential Fluid Pressure Sensor - Install**
5. **Rear Differential Fluid - Check**

REAR DIFFERENTIAL PRESSURE TEST (AWD)

Test

NOTE: Before doing the pressure test, check the following conditions.

- Check that the AWD system indicator does not come on. If it does, **check for AWD with intelligent control system DTCs** .
- **Check the rear differential fluid level**.
- Check for rear differential fluid leaks at the rear differential assembly.

1. **HDS - Connect**
2. Rear Differential Fluid Pressure - Test

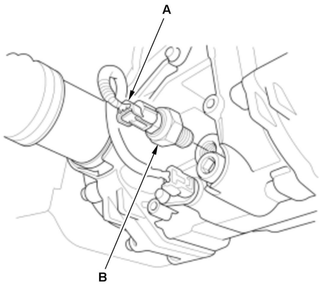

1. Select DATA LIST in the AWD WITH INTELLIGENT CONTROL with the HDS.

2. Select OIL TEMPERATURE FOR REAR DIFFERENTIAL in the DATA LIST with the HDS.

   - If the temperature is above 68 deg. F (20 deg. C), go to step 3.
   - If the temperature is below 68 deg. F (20 deg. C), drive the vehicle to warm up the rear differential until fluid temperature reaches at least 68 deg. F (20 deg. C), then go to step 3.

3. Start the engine.

4. Select FUNCTIONAL TEST in the AWD WITH INTELLIGENT CONTROL with the HDS.

5. Select OIL PRESSURE CONTROL TEST in the FUNCTIONAL TEST with the HDS.

6. Check the results displayed on the HDS.

   - If Normal is displayed, the test is completed.
   - If 1-1 is displayed, go to steps 7 through 21.
   - If 2-1 and 5-1 are displayed: go to steps 22 through 36.
   - If 3-1 is displayed: go to steps 37 through 50.
   - If 4-1 and 6-1 are displayed: go to steps 51 through 58.

7. Turn the vehicle to the OFF (LOCK) mode.

8. Disconnect the connector (A).

9. Remove the rear differential fluid pressure sensor (B).

10. Reconnect the connector (A) to the rear differential fluid pressure sensor (B).

11. Turn the vehicle to the ON mode.

12. Select the DATA LIST in the AWD WITH INTELLIGENT CONTROL with the HDS.

13. Check the ACTUAL OIL PRESSURE OF THE OIL PRESSURE SENSOR FOR REAR DIFFERENTIAL in the DATA LIST with the HDS.

- If the fluid pressure is not within -30-30 kPa (-0.31-0.31 kgf/cm 2, -4.4-4.4 psi), **replace the rear differential fluid pressure sensor** .
- If the fluid pressure is within the range of -30-30 kPa (-0.31-0.31 kgf/cm 2, -4.4-4.4 psi), go to step 14.

14. **Replace the rear differential fluid**.

15. **Install the rear differential fluid pressure sensor** .

16. **Do the AWD system bleeding with the HDS**

17. Start the engine.

18. Select FUNCTIONAL TEST in the AWD WITH INTELLIGENT CONTROL with the HDS.

19. Select OIL PRESSURE CONTROL TEST in the FUNCTIONAL TEST with the HDS.

20. Check the results displayed on the HDS.

- If Normal is displayed, the test is completed.
- If 1-1 is displayed: go to step 21.

21. **Do the rear differential fluid pressure sensor test with the HDS**. If the rear differential fluid pressure sensor test is OK, **replace the rear differential assembly**

22. Turn the vehicle to the OFF (LOCK) mode.

23. Turn the vehicle to the ON mode.

24. **Do the AWD system bleeding with the HDS**

25. Start the engine.

26. Select FUNCTIONAL TEST in the AWD WITH INTELLIGENT CONTROL with the HDS.

27. Select OIL PRESSURE CONTROL TEST in the FUNCTIONAL TEST with the HDS.

28. Check the results displayed on the HDS.

- If Normal is displayed, intermittent failure, the system is OK at this time, the test is completed.
- If 2-1 and 5-1 are displayed: go to step 29.

29. **Replace the rear differential fluid**.30. **Do the AWD system bleeding with the HDS**

31. Start the engine.

32. Select FUNCTIONAL TEST in the AWD WITH INTELLIGENT CONTROL with the HDS.

33. Select OIL PRESSURE CONTROL TEST in the FUNCTIONAL TEST with the HDS.

34. Check the results displayed on the HDS.

- If Normal is displayed, the test is completed.
- If 2-1 and 5-1 are displayed: go to step 35.

35. **Replace the rear differential fluid**.36. **Do the rear differential fluid pressure sensor test** and **the rear differential solenoid valve test** with the HDS. If the rear differential fluid pressure sensor test and the rear differential solenoid valve test is OK, **replace the rear differential assembly**

37. Turn the vehicle to the OFF (LOCK) mode.

38. Turn the vehicle to the ON mode.

39. **Do the AWD system bleeding with the HDS**

40. Start the engine.

41. Select FUNCTIONAL TEST in the AWD WITH INTELLIGENT CONTROL with the HDS.

42. Select OIL PRESSURE CONTROL TEST in the FUNCTIONAL TEST with the HDS.

43. Check the results displayed on the HDS.

- If Normal is displayed, intermittent failure, the system is OK at this time, the test is completed.
- If 3-1 is displayed: go to step 44.

44. **Replace the rear differential fluid**.45. **Do the AWD system bleeding with the HDS**

46. Start the engine.

47. Select FUNCTIONAL TEST in the AWD WITH INTELLIGENT CONTROL with the HDS.

48. Select OIL PRESSURE CONTROL TEST in the FUNCTIONAL TEST with the HDS.

49. Check the results displayed on the HDS.

- If Normal is displayed, the test is completed.
- If 3-1 is displayed: go to step 50.

50. **Do the rear differential solenoid valve test with the HDS**. If the rear differential solenoid valve test is OK, **replace the rear differential assembly**

51. Turn the vehicle to the OFF (LOCK) mode.

52. **Replace the rear differential fluid**

54. Start the engine.

55. Select FUNCTIONAL TEST in the AWD WITH INTELLIGENT CONTROL with the HDS.

56. Select OIL PRESSURE CONTROL TEST in the FUNCTIONAL TEST with the HDS.

57. Check the results displayed on the HDS.

.53. **Do the AWD system bleeding with the HDS**

- If Normal is displayed, the test is completed.
- If 4-1 and 6-1 are displayed: go to step 58.

58. **Do the rear differential solenoid valve test with the HDS**. If the rear differential solenoid valve test is OK, **replace the rear differential assembly** .

REAR DIFFERENTIAL SOLENOID VALVE TEST (AWD)

Test

1. **HDS - Connect**
2. Rear Differential Solenoid Valve - Test (With HDS)

1. Start the engine.

2. Select the FUNCTIONAL TEST in the AWD WITH INTELLIGENT CONTROL with the HDS.

3. Select the SOLENOID TEST in the FUNCTIONAL TEST with the HDS.

4. Do LEVEL 1, then do LEVEL 7 of the SOLENOID TEST in that order with the HDS.

5. Check the rear differential solenoid valve for operation with the HDS. A clicking sound should be heard.

- If no clicking sound is heard, **replace the rear differential solenoid valve** .
- If a clicking sound is heard, go to the next procedure.

3. **Vehicle - Lift**
4. **Rear Differential Solenoid Valve - Remove**
5. Rear Differential Solenoid Valve - Test

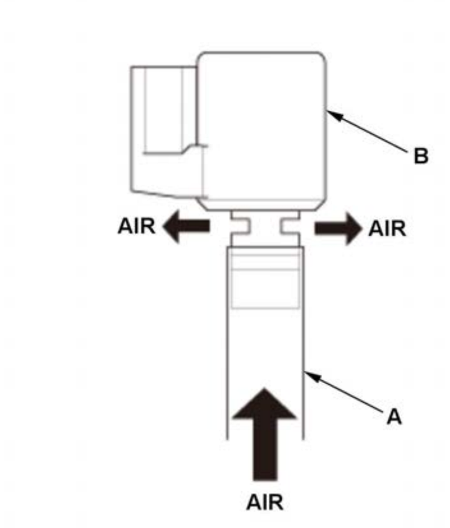

1. Connect a tube (A) to the rear differential solenoid valve (B).

2. Blow the air to the tube.

- If the air flows out of the port, go to step 3.
- If the air does not flow out of the port, **replace the rear differential solenoid valve** .

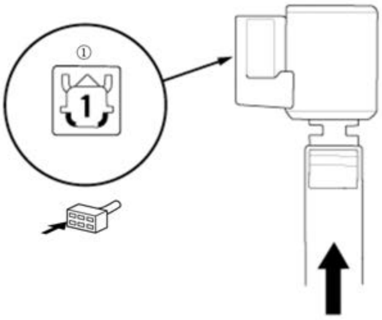	3. Connect a jumper wire from the negative battery terminal to the rear differential solenoid valve body and connect another jumper wire from the positive battery terminal to connector (male terminal) terminal No. 1. : ① 4. Blow the air to the tube. - If the air flows out of the port, **replace the rear differential solenoid valve** . - If the air does not flow out of the port, the rear differential solenoid valve is OK and the test is complete.

6. **Rear Differential Solenoid Valve - Install**
7. **Rear Differential Fluid - Refill**
8. **AWD System - Air Bleed**
9. Test Drive - Check

DTC TROUBLESHOOTING INDEX

REAL TIME AWD SYSTEM DTC TROUBLESHOOTING INDEX (AWD)

DTC	AWD System Indicator	Detection Item
C0051-00 (77)	ON	The Functional Abnormalities of Steering Angle Sensor
C0061-96 (77)	ON	The Functional Abnormalities of Lateral Acceleration Sensor
C0061-F0 (77)	ON	Lateral Acceleration Sensor Range/Performance Problem
C0062-96 (77)	ON	The Functional Abnormalities of Longitudinal Acceleration Sensor
C0062-F0 (77)	ON	Longitudinal Acceleration Sensor Range/Performance Problem
C0063-96 (77)	ON	The Functional Abnormalities of Yaw Rate Sensor
C0063-F0 (77)	ON	Yaw Rate Sensor Range/Performance Problem
C1840-12 (47)	ON	Differential Fluid Pressure Sensor Circuit High Voltage
C1840-14 (47)	ON	Differential Fluid Pressure Sensor Circuit Low Voltage

DTC	AWD System Indicator	Detection Item
C1841-11 (42)	ON	Differential Fluid Temperature Sensor Circuit Low Voltage
C1841-13 (42)	ON	Differential Fluid Temperature Sensor Circuit High Voltage
C1841-27 (43)	ON	Differential Fluid Temperature Sensor Circuit Range/Performance Problem
C1850-14 (44)	ON	Fail Safe Relay Stuck OFF
C1851-18 (63)	ON	Motor Circuit Low Current
C1851-19 (63)	ON	Control Module Internal Control Module Malfunction
C1851-1E (63)	ON	Motor Circuit High Current
C1852-18 (62)	ON	Solenoid Valve Circuit Low Current
C1852-19 (62)	ON	Solenoid Valve Circuit High Current
C1858-72 (71)	ON	Differential Fluid Pressure Deviation Low
C1858-73 (71)	ON	Differential Fluid Pressure Deviation High
C1860-98 (76)	ON	Differential Fluid Overheats
C1861-9A (76)	ON	Vehicle Spin Detected
C1870-00 (77)	ON	The Functional Abnormalities of Fuel and Emissions
C1871-00 (77) *1	ON	The Functional Abnormalities of Automatic Transmission
C1872-00 (77)	ON	The Functional Abnormalities of VSA Modulator-Control Unit
C1873-00 (16)	ON	Steering Angle Sensor Malfunction
U0100-00 (41)	ON	F-CAN Malfunction (Lost Communication with Powertrain Control Module (PCM))
U0101-00 (41)	ON	F-CAN Malfunction (Lost Communication with A/T Control System)
U0122-00 (41)	ON	F-CAN Malfunction (Lost Communication with VSA Modulator-Control Unit)
U0131-00 (41)	ON	F-CAN Malfunction (Lost Communication with EPS System)
U0151-00 (41)	ON	F-CAN Malfunction (Lost Communication with SRS unit)
U3000-49 (78)	ON	Control Module Internal Control Module Malfunction
U3000-51 (91)	ON	Control Module Programming Error

*1: Without 1.5 L engine

REWRITE

AWD CONTROL UNIT UPDATE (AWD)

Procedure

1. AWD Control Unit - Update

   NOTE: When updating control units, use the most current version of the HDS software and interface device. Check any official service information website for more information about updating control units.

CIRCUIT DIAGRAM

REAR DIFFERENTIAL CIRCUIT DIAGRAM (AWD (WITH CAN GATEWAY)) (2017 2018 2019)

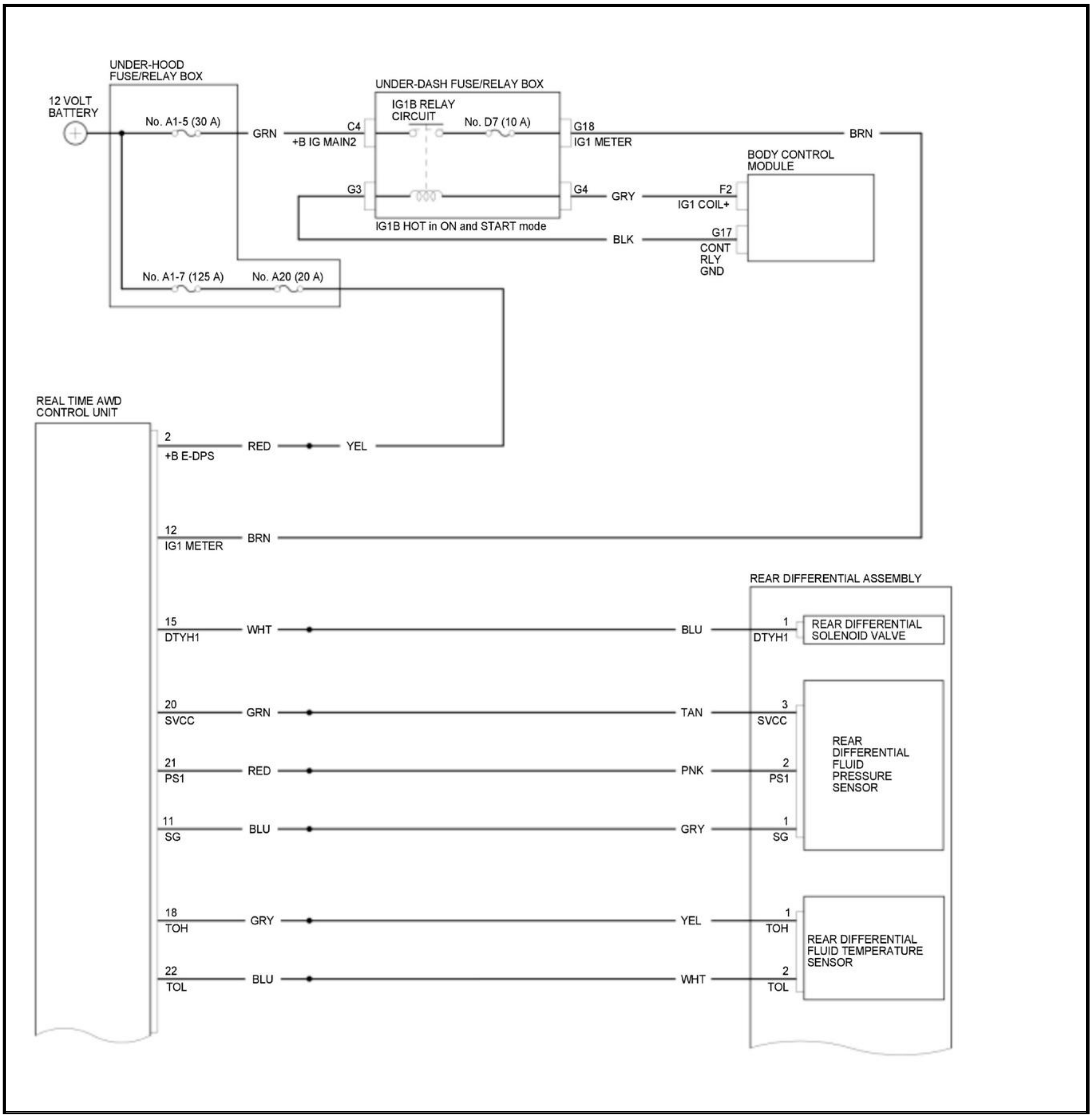
UNDER-HOOD FUSE/RELAY BOX
12 VOLT BATTERY
No. A1-5 (30 A)
GRN
C4
+B IG MAIN2
UNDER-DASH FUSE/RELAY BOX
IG1B RELAY CIRCUIT
No. D7 (10 A)
G18
IG1 METER
BRN
BODY CONTROL MODULE
G3
G4
GRY
F2
IG1 COIL+
IG1B HOT in ON and START mode
BLK
G17
CONT RLY GND
No. A1-7 (125 A)
No. A20 (20 A)
REAL TIME AWD CONTROL UNIT
2
+B E-DPS
RED
YEL
12
IG1 METER
BRN
REAR DIFFERENTIAL ASSEMBLY
15
DTYH1
WHT
BLU
1
DTYH1
REAR DIFFERENTIAL SOLENOID VALVE
20
SVCC
GRN
TAN
3
SVCC
REAR DIFFERENTIAL FLUID PRESSURE SENSOR
21
PS1
RED
PNK
2
PS1
11
SG
BLU
GRY
1
SG
18
TOH
GRY
YEL
1
TOH
REAR DIFFERENTIAL FLUID TEMPERATURE SENSOR
22
TOL
BLU
WHT
2
TOL

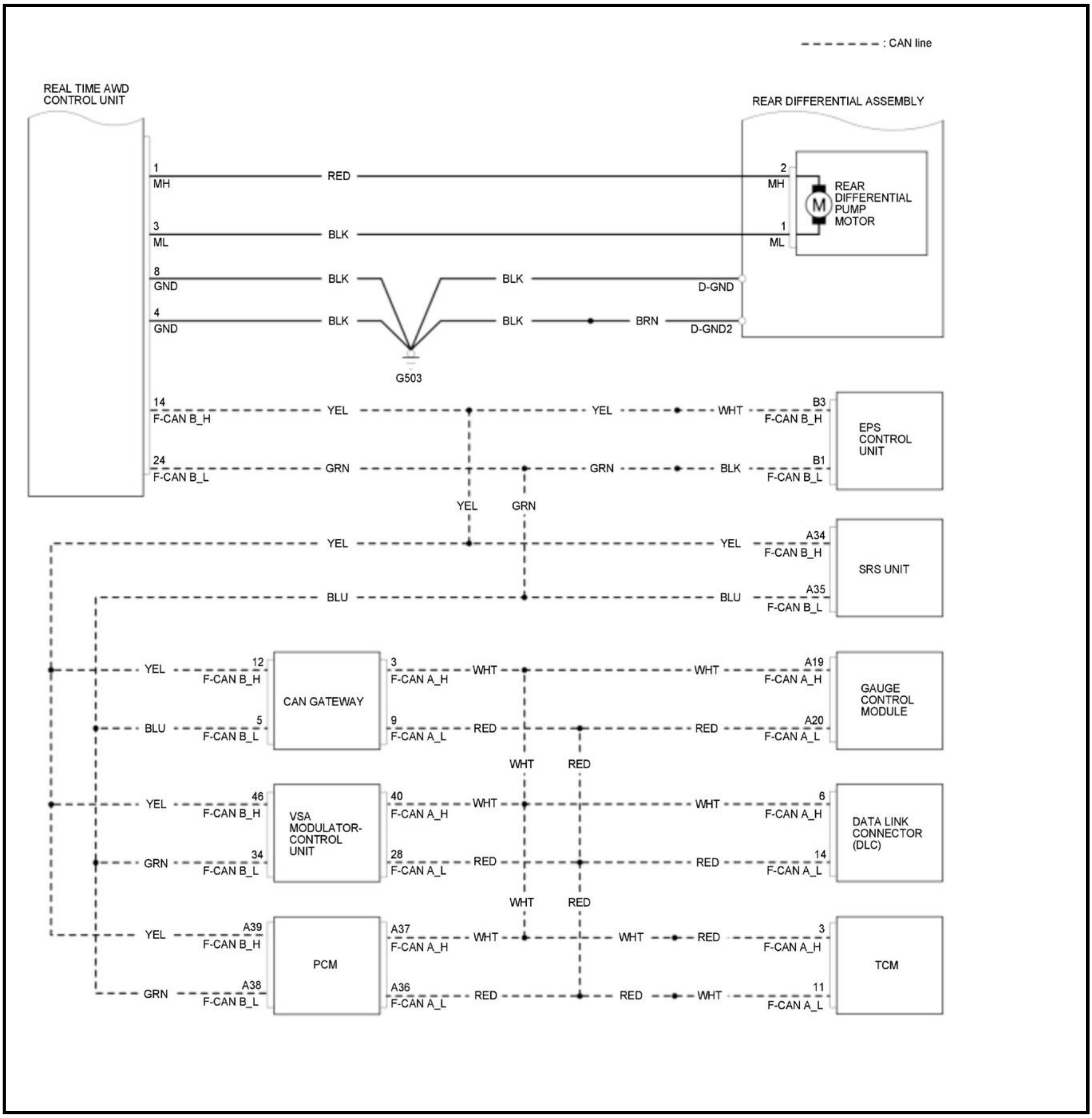
: CAN line
REAL TIME AWD CONTROL UNIT
REAR DIFFERENTIAL ASSEMBLY
1
MH
RED
2
MH
REAR DIFFERENTIAL PUMP MOTOR
M
3
ML
BLK
1
ML
8
GND
BLK
BLK
D-GND
4
GND
BLK
BLK
BRN
D-GND2
G503
14
F-CAN B_H
YEL
YEL
WHT
B3
F-CAN B_H
EPS CONTROL UNIT
24
F-CAN B_L
GRN
GRN
BLK
B1
F-CAN B_L
YEL
GRN
YEL
YEL
A34
F-CAN B_H
SRS UNIT
BLU
BLU
A35
F-CAN B_L
YEL
12
F-CAN B_H
CAN GATEWAY
3
F-CAN A_H
WHT
WHT
A19
F-CAN A_H
GAUGE CONTROL MODULE
BLU
5
F-CAN B_L
9
F-CAN A_L
RED
RED
A20
F-CAN A_L
WHT
RED
YEL
46
F-CAN B_H
VSA MODULATOR-CONTROL UNIT
40
F-CAN A_H
WHT
WHT
6
F-CAN A_H
DATA LINK CONNECTOR (DLC)
GRN
34
F-CAN B_L
28
F-CAN A_L
RED
RED
14
F-CAN A_L
WHT
RED
YEL
A39
F-CAN B_H
PCM
A37
F-CAN A_H
WHT
WHT
RED
3
F-CAN A_H
TCM
GRN
A38
F-CAN B_L
A36
F-CAN A_L
RED
RED
WHT
11
F-CAN A_L

REAR DIFFERENTIAL CIRCUIT DIAGRAM (AWD (WITH CAN GATEWAY)) (2020 2021)

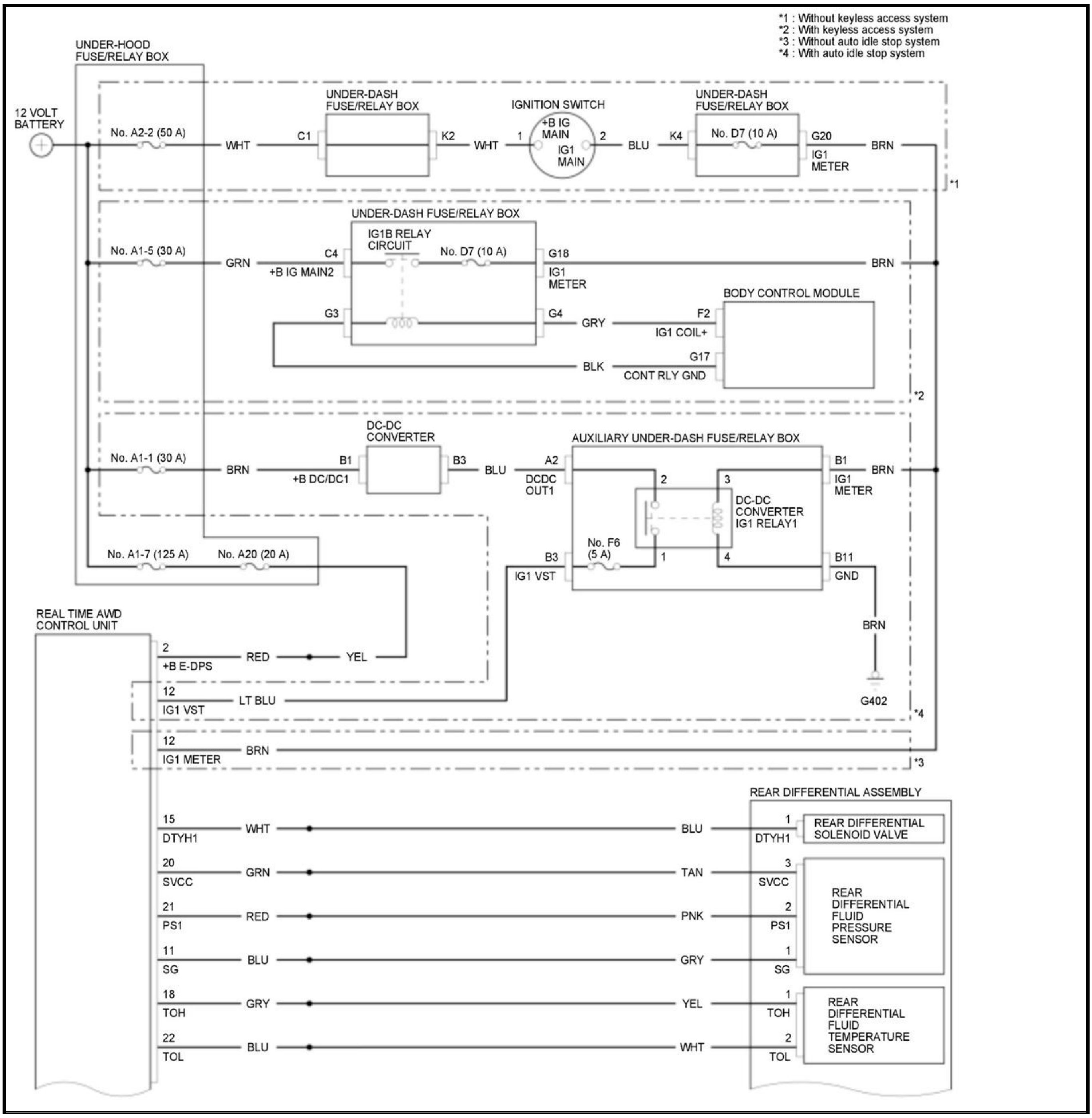
*1 : Without keyless access system
*2 : With keyless access system
*3 : Without auto idle stop system
*4 : With auto idle stop system
UNDER-HOOD FUSE/RELAY BOX
12 VOLT BATTERY
No. A2-2 (50 A)
WHT
C1
UNDER-DASH FUSE/RELAY BOX
K2
WHT
IGNITION SWITCH
1
+B IG MAIN
IG1 MAIN
2
BLU
K4
UNDER-DASH FUSE/RELAY BOX
No. D7 (10 A)
G20
IG1 METER
BRN
*1
UNDER-DASH FUSE/RELAY BOX
No. A1-5 (30 A)
GRN
C4
+B IG MAIN2
IG1B RELAY CIRCUIT
No. D7 (10 A)
G18
IG1 METER
BRN
G3
G4
GRY
BODY CONTROL MODULE
F2
IG1 COIL+
G17
BLK
CONT RLY GND
*2
DC-DC CONVERTER
No. A1-1 (30 A)
BRN
B1
+B DC/DC1
B3
BLU
AUXILIARY UNDER-DASH FUSE/RELAY BOX
A2
DCDC OUT1
2
3
B1
IG1 METER
BRN
DC-DC CONVERTER IG1 RELAY1
No. A1-7 (125 A)
No. A20 (20 A)
B3
IG1 VST
No. F6 (5 A)
1
4
B11
GND
BRN
G402
REAL TIME AWD CONTROL UNIT
2
+B E-DPS
RED
YEL
12
IG1 VST
LT BLU
*4
12
IG1 METER
BRN
*3
REAR DIFFERENTIAL ASSEMBLY
15
DTYH1
WHT
BLU
1
DTYH1
REAR DIFFERENTIAL SOLENOID VALVE
20
SVCC
GRN
TAN
3
SVCC
21
PS1
RED
PNK
2
PS1
REAR DIFFERENTIAL FLUID PRESSURE SENSOR
11
SG
BLU
GRY
1
SG
18
TOH
GRY
YEL
1
TOH
22
TOL
BLU
WHT
2
TOL
REAR DIFFERENTIAL FLUID TEMPERATURE SENSOR

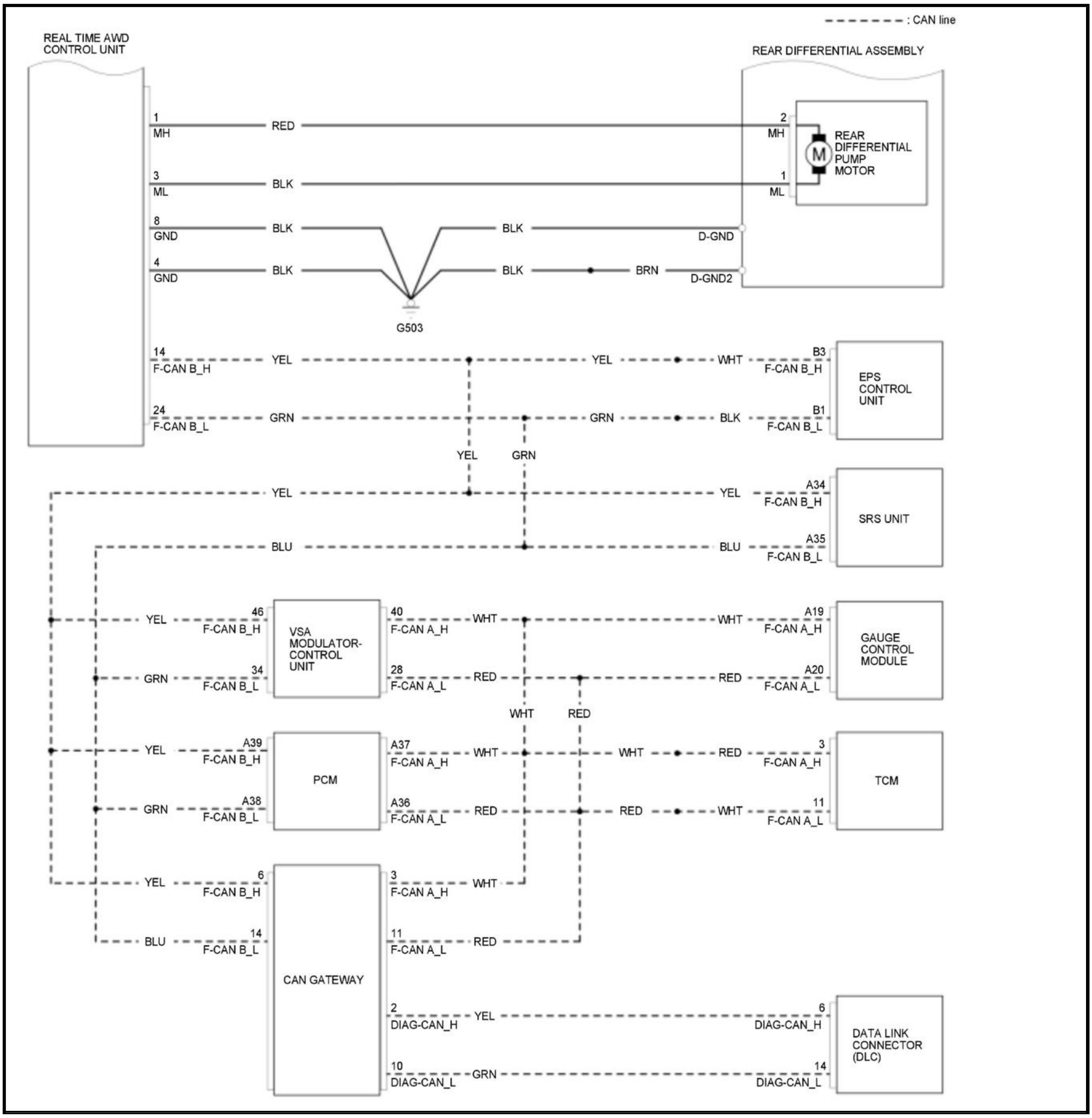
: CAN line
REAL TIME AWD CONTROL UNIT
REAR DIFFERENTIAL ASSEMBLY
1
MH
RED
2
MH
M
REAR DIFFERENTIAL PUMP MOTOR
3
ML
BLK
1
ML
8
GND
BLK
BLK
D-GND
4
GND
BLK
BLK
BRN
D-GND2
G503
14
F-CAN B_H
YEL
YEL
WHT
B3
F-CAN B_H
EPS CONTROL UNIT
24
F-CAN B_L
GRN
GRN
BLK
B1
F-CAN B_L
YEL
GRN
YEL
YEL
A34
F-CAN B_H
SRS UNIT
BLU
BLU
A35
F-CAN B_L
YEL
46
F-CAN B_H
VSA MODULATOR-CONTROL UNIT
40
F-CAN A_H
WHT
WHT
A19
F-CAN A_H
GAUGE CONTROL MODULE
GRN
34
F-CAN B_L
28
F-CAN A_L
RED
RED
A20
F-CAN A_L
WHT
RED
YEL
A39
F-CAN B_H
PCM
A37
F-CAN A_H
WHT
WHT
RED
3
F-CAN A_H
TCM
GRN
A38
F-CAN B_L
A36
F-CAN A_L
RED
RED
WHT
11
F-CAN A_L
YEL
6
F-CAN B_H
CAN GATEWAY
3
F-CAN A_H
WHT
BLU
14
F-CAN B_L
11
F-CAN A_L
RED
2
DIAG-CAN_H
YEL
6
DIAG-CAN_H
DATA LINK CONNECTOR (DLC)
10
DIAG-CAN_L
GRN
14
DIAG-CAN_L

REAR DIFFERENTIAL CIRCUIT DIAGRAM (AWD (WITHOUT CAN GATEWAY))

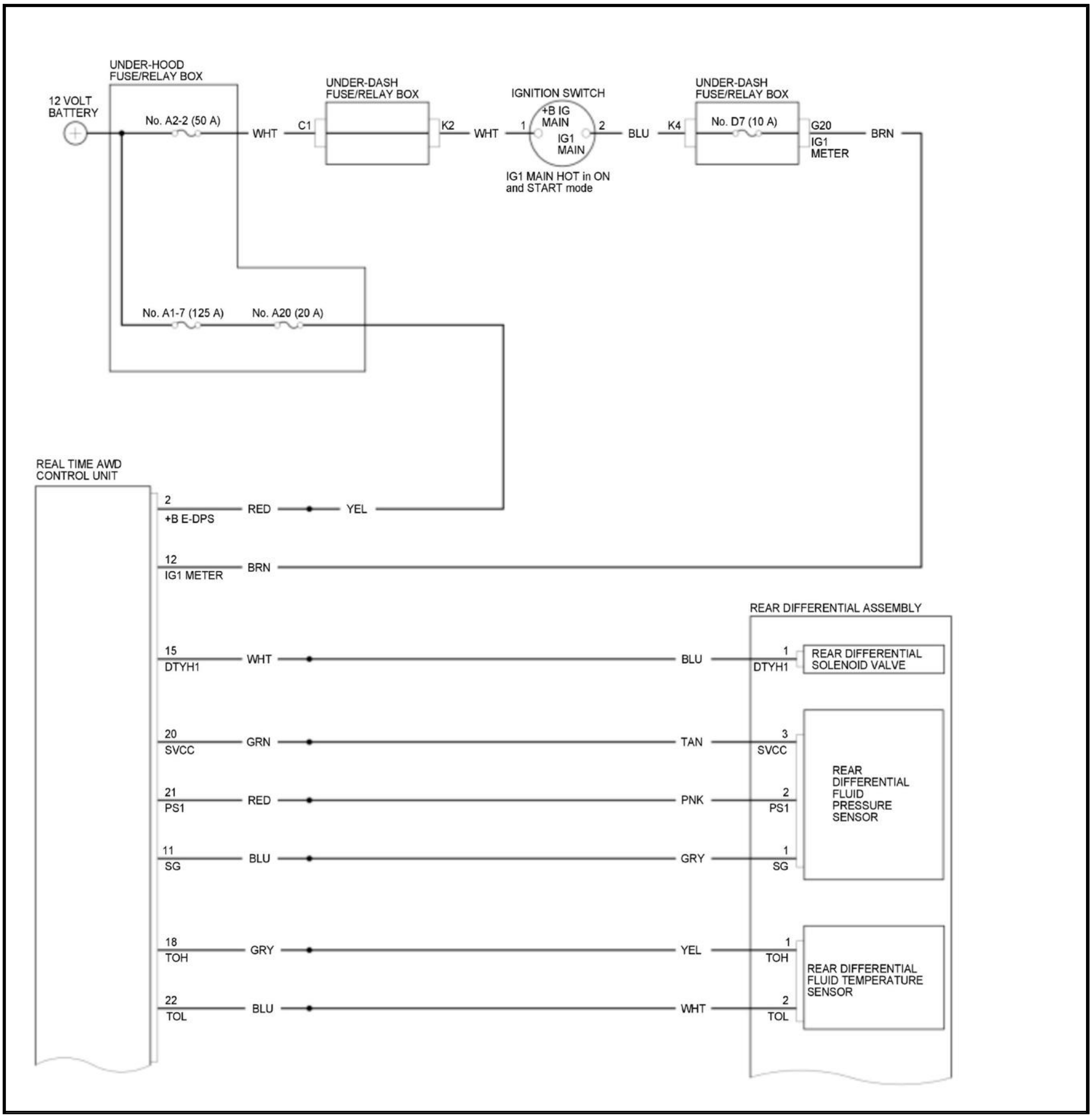
UNDER-HOOD FUSE/RELAY BOX
12 VOLT BATTERY
No. A2-2 (50 A)
WHT
C1
UNDER-DASH FUSE/RELAY BOX
K2
WHT
IGNITION SWITCH
+B IG MAIN
IG1 MAIN
1
2
IG1 MAIN HOT in ON and START mode
BLU
K4
UNDER-DASH FUSE/RELAY BOX
No. D7 (10 A)
G20
IG1 METER
BRN
No. A1-7 (125 A)
No. A20 (20 A)
REAL TIME AWD CONTROL UNIT
2
+B E-DPS
RED
YEL
12
IG1 METER
BRN
REAR DIFFERENTIAL ASSEMBLY
15
DTYH1
WHT
BLU
1
DTYH1
REAR DIFFERENTIAL SOLENOID VALVE
20
SVCC
GRN
TAN
3
SVCC
21
PS1
RED
PNK
2
PS1
11
SG
BLU
GRY
1
SG
REAR DIFFERENTIAL FLUID PRESSURE SENSOR
18
TOH
GRY
YEL
1
TOH
22
TOL
BLU
WHT
2
TOL
REAR DIFFERENTIAL FLUID TEMPERATURE SENSOR

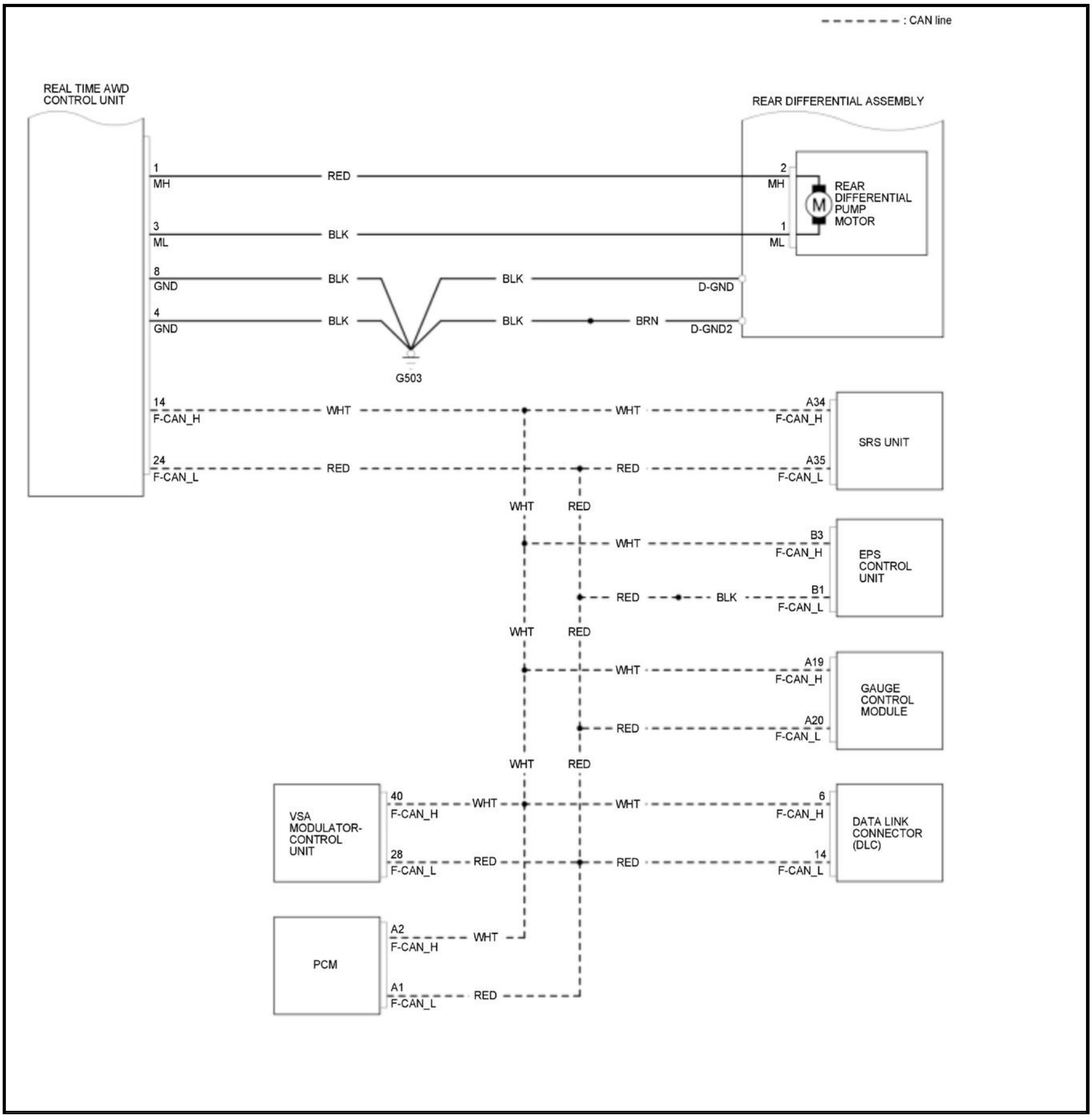
: CAN line
REAL TIME AWD CONTROL UNIT
REAR DIFFERENTIAL ASSEMBLY
1 MH
RED
2 MH
M
REAR DIFFERENTIAL PUMP MOTOR
3 ML
BLK
1 ML
8 GND
BLK
BLK
D-GND
4 GND
BLK
BLK
BRN
D-GND2
G503
14 F-CAN_H
WHT
WHT
A34 F-CAN_H
SRS UNIT
24 F-CAN_L
RED
RED
A35 F-CAN_L
WHT
RED
WHT
B3 F-CAN_H
EPS CONTROL UNIT
RED
BLK
B1 F-CAN_L
WHT
RED
WHT
A19 F-CAN_H
GAUGE CONTROL MODULE
RED
A20 F-CAN_L
WHT
RED
VSA MODULATOR-CONTROL UNIT
40 F-CAN_H
WHT
WHT
6 F-CAN_H
DATA LINK CONNECTOR (DLC)
28 F-CAN_L
RED
RED
14 F-CAN_L
PCM
A2 F-CAN_H
WHT
A1 F-CAN_L
RED

LEARNING RESET CLEAR

LONGITUDINAL ACCELERATION SENSOR LEARN (AWD)

Procedure

1. HDS - Connect
2. Longitudinal Acceleration Sensor - Learn

1. Select the ADJUSTMENT in the AWD WITH INTELLIGENT CONTROL with the HDS.

2. Select the LONGITUDINAL G SENSOR LEARNING in the ADJUSTMENT with the HDS.

NOTE: See the HDS Help menu for specific instructions.

COMPONENT LOCATION INDEX

REAR DIFFERENTIAL COMPONENT LOCATION INDEX (AWD)

For relationships between signals in a system, refer to System Description.

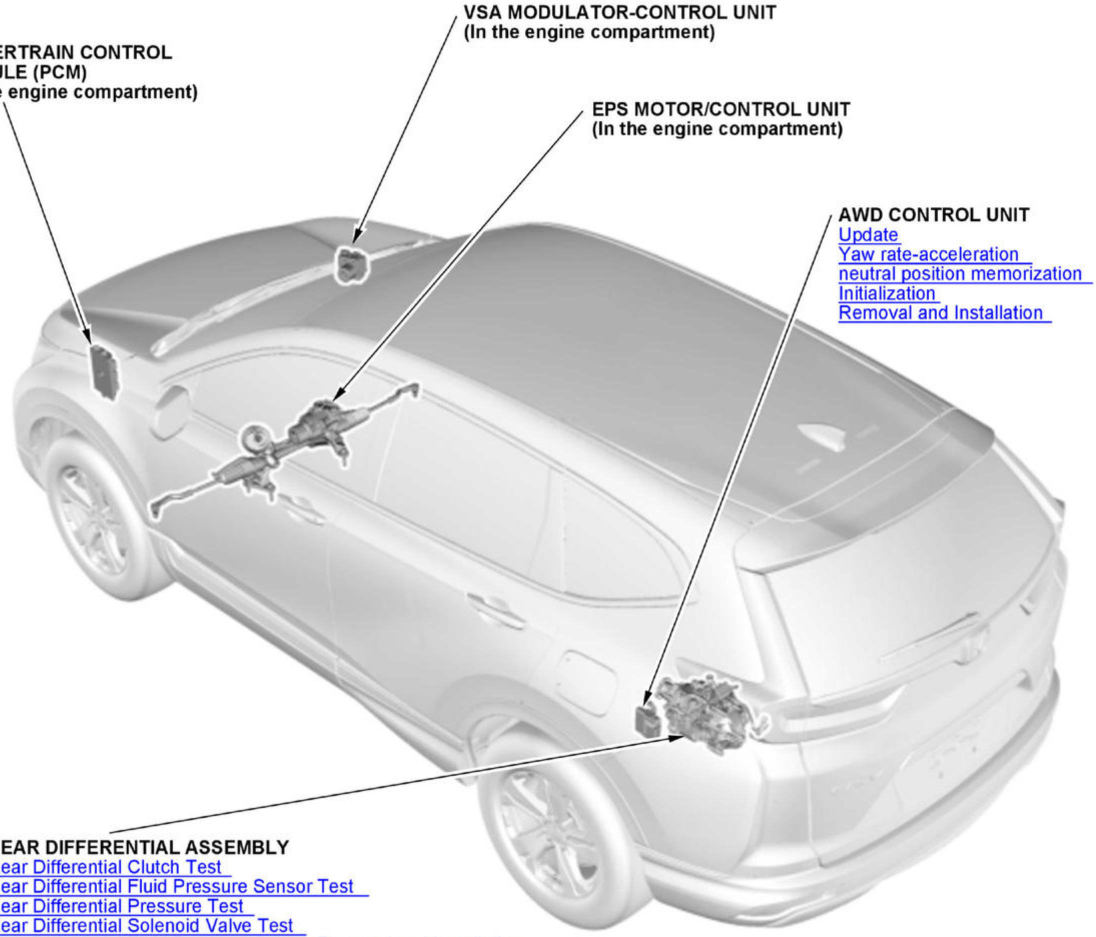

VSA MODULATOR-CONTROL UNIT
(In the engine compartment)

POWERTRAIN CONTROL MODULE (PCM)
(In the engine compartment)

EPS MOTOR/CONTROL UNIT
(In the engine compartment)

AWD CONTROL UNIT
Update
Yaw rate-acceleration neutral position memorization
Initialization
Removal and Installation

REAR DIFFERENTIAL ASSEMBLY
Rear Differential Clutch Test
Rear Differential Fluid Pressure Sensor Test
Rear Differential Pressure Test
Rear Differential Solenoid Valve Test
Rear Differential Fluid Pressure Sensor Removal and Installation
Rear Differential Fluid Temperature Sensor Removal and Installation
Rear Differential Pump Motor Removal and Installation
Removal and Installation
Disassembly and Reassembly

REAR DIFFERENTIAL FLUID
AWD with Intelligent Control
System Bleeding
Inspection and Replacement

REAR DIFFERENTIAL MOUNT
Removal and Installation

REAR DIFFERENTIAL BREATHER BOX and HOSE
Removal and Installation

REAR DIFFERENTIAL OIL SEAL
Replacement

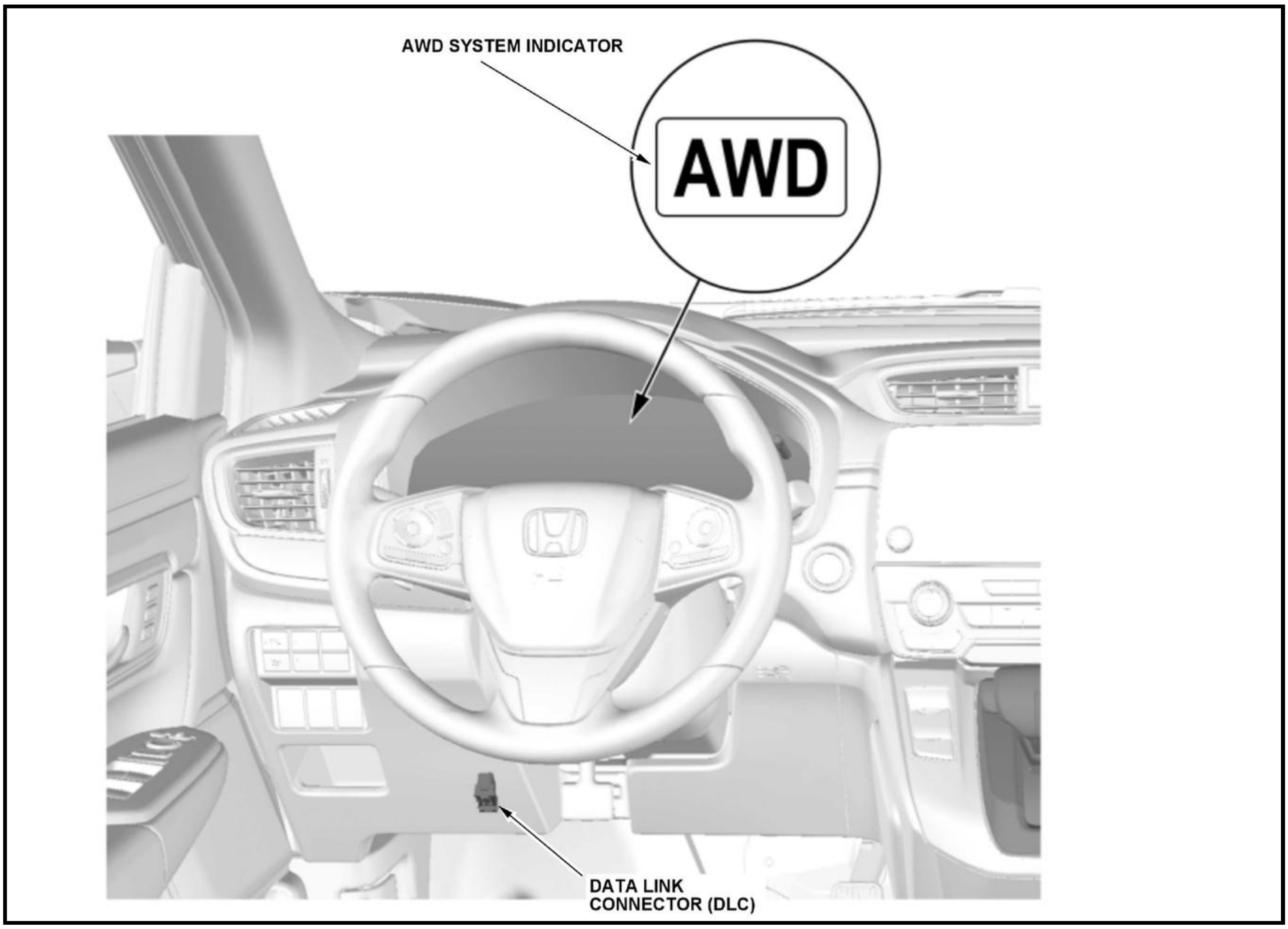

SYMPTOM TROUBLESHOOTING

REAL TIME AWD SYSTEM SYMPTOM TROUBLESHOOTING - AWD SYSTEM INDICATOR DOES NOT COME ON (AWD)

AWD system indicator does not come on

1. Problem verification

   -1. Turn the vehicle to the ON mode.

   Does the AWD system indicator come on?

   YES

   Intermittent failure, the system is OK at this time.

   NO

   The failure is duplicated. Go to step 2.

2. Gauge control module operation check

   -1. Do the gauge control module self-diagnostic function .

   Does the AWD system indicator blinkΩ

   YES

   Go to step 3.

NO

Replace the gauge control module .

3. AWD control unit check

   -1. Turn the vehicle to the OFF (LOCK) mode.

   -2. Remove the following fuse.

Fuse	No. A20 (20 A)
Location	Under-dash fuse/relay box

   -3. Turn the vehicle to the ON mode.

   Does the AWD system indicator come on?

   YES

   Check for any authorized service information related to the DTCs or symptoms you are troubleshooting or substitute a known-good AWD control unit .

   NO

   Replace the gauge control module .

REAL TIME AWD SYSTEM SYMPTOM TROUBLESHOOTING - AWD SYSTEM INDICATOR DOES NOT GO OFF, AND NO DTCS ARE STORED (AWD)

AWD system indicator does not go off, and no DTCs are stored

NOTE: Do not jump the SCS line.

1. Problem verification

   -1. Test the 12 volt battery . Charge or replace the 12 volt battery if necessary.

   -2. Turn the vehicle to the ON mode.

   Does the AWD system indicator come on?

   YES

   The failure is duplicated. Go to step 2.

   NO

   Intermittent failure, the system is OK at this time.

2. HDS communication check

   -1. Check that the HDS communicates with the vehicle.

   Does the HDS communicate with the vehicle?

   YES

   The HDS communication is OK. Go to step 3.

   NO

Go to the DLC circuit troubleshooting .

3. Real time AWD system communication check

   -1. Check the Main Menu of the REAL TIME AWD with the HDS.

   Does the HDS show the Main Menu of the REAL TIME AWD?

   YES

   The real time AWD system communication is OK. Go to step 4.

   NO

   Go to the real time AWD system symptom troubleshooting for HDS does not communicate.

4. AWD control unit status check 1

   -1. Check the parameter (s) below with the HDS.

Signal	Threshold		Current conditions	
	Values	Unit	Values	Unit
Longitudinal G sensor learning	Complete	B	B	B
Air purge for rear differential	Complete	B	B	B
AWD operation check	Complete	B	B	B

   Do the current condition (s) match the threshold?

   YES

   Go to step 5.

   NO

   Go to step 7.

5. Gauge control module operation check

   -1. **Do the gauge control module self-diagnostic function** .

   Does the AWD system indicator blinkΩ

   YES

   The gauge control module is OK. Go to step 6.

   NO

   Replace the gauge control module .

6. Gauge control module DTC check

   -1. Check for DTCs in the METER system with the HDS.

DTC Description	DTC
B	B

   Is DTC indicated?

   YES

Go to the indicated DTC's troubleshooting in the gauge control module.

NO

Check for any authorized service information related to the DTCs or symptoms you are troubleshooting or **substitute a known-good AWD control unit** , and recheck. If the symptom/indication goes away with a known-good AWD control unit, **replace the original AWD control unit** .

7. AWD control unit status check 2

-1. Check the parameter (s) below with the HDS.

Signal	Threshold		Current conditions	
	Values	Unit	Values	Unit
Longitudinal G sensor learning	Incomplete	B	B	B
Air purge for rear differential	Incomplete	B	B	B
AWD operation check	Incomplete	B	B	B

Do the current condition (s) match the threshold?

Longitudinal G sensor learning is incomplete

Do the G SENSOR LEARNING in the ADJUSTMENT with the HDS.

Air purge for rear differential is incomplete

Do the ECU REPLACEMENT in the ADJUSTMENT with the HDS.

AWD operation check is incomplete

Do the ECU REPLACEMENT in the ADJUSTMENT with the HDS.

REAL TIME AWD SYSTEM SYMPTOM TROUBLESHOOTING - ABNORMAL NOISE (AWD)

Abnormal noise

NOTE: If necessary, compare the noise with a known-good vehicle of the same type, if the noise is remarkably abnormal, do the following troubleshooting.

1. Problem verification (abnormal noise check) 1

-1. Test-drive the vehicle and check for the abnormal noise.

Did abnormal noise reappear?

YES

The failure is duplicated. Go to step 2.

NO

Check the following items.

- **Check the rear differential fluid level and the fluid condition**.
- Check for rear differential fluid leaks.
- Check for interference with items such as the harness.
- Rotate either rear wheel by hand, and check that the other wheel rotates.
- **Do the OIL PRESSURE CONTROL TEST in the FUNCTIONAL TEST with the HDS**.

- **Do the rear differential fluid pressure sensor test**.

2. Rear differential visual check:

   Check the following items.

   - **Check the rear differential fluid level and the fluid condition**.
   - Check for rear differential fluid leaks.
   - Check for interference with items such as the harness.

   Are the check results OK?

   YES

   The rear differential visual is OK. Go to step 3.

   NO

   Replace the rear differential fluid or add recommended fluid.

3. Problem verification (rear differential companion flange rotate check)

   -1. Release the parking brake.

   -2. Shift the transmission to N position/mode.

   -3. **Raise the vehicle on a lift** .

   -4. **Disconnect the No. 2 propeller shaft from the rear differential companion flange** .

   -5. Rotate the companion flange by hand.

   Can the rear differential companion flange be rotated smoothly by hand?

   YES

   Go to step 4.

   NO

   The failure is duplicated. **Replace the torque control differential (TCD) assembly or the differential carrier assembly** .

4. Rear differential operation check

   -1. Rotate either rear wheel by hand, and check that the other wheel rotates.

   Does the other wheel rotate?

   YES

   The rear differential operation is OK. Go to step 5.

   NO

   Replace the differential carrier assembly .

5. Torque control differential (TCD) assembly check

   -1. **Connect the No. 2 propeller shaft** .

-2. Remove the following fuse.

Fuse	No. A20 (20 A)

Location	Under-hood fuse/relay box

-3. Test-drive the vehicle on the lift.

Is the abnormal noise still present?

YES

Replace the torque control differential (TCD) assembly .

NO

The torque control differential (TCD) assembly is OK. Reinstall the fuse, then go to step 6.

6. Rear differential solenoid valve check

-1. Select the FUNCTIONAL TEST in the REAL TIME AWD with the HDS.

-2. Select the SOLENOID TEST in the FUNCTIONAL TEST with the HDS.

-3. Do LEVEL 7 of the SOLENOID TEST with the HDS.

Solenoid Test

Do LEVEL 1 of the SOLENOID TEST with the HDS.

Solenoid Test

Did the abnormal noise happen when changing from LEVEL 7 to LEVEL 1?

YES

Replace the rear differential solenoid valve .

NO

The rear differential solenoid valve is OK. Go to step 7.

7. Rear differential pump motor check

-1. Select the ADJUSTMENT in the REAL TIME AWD with the HDS.

-2. **Do the AIR BLEEDING in the ADJUSTMENT with the HDS**.

Air Bleeding

Listen for any abnormal noise coming from the rear differential pump motor.

Did abnormal noise happen while doing air bleeding?

YES

Replace the rear differential pump motor .

NO

The rear differential pump motor is OK. Go to step 8.

8. Problem verification (abnormal noise check) 2

   -1. Replace the rear differential fluid.

   -2. Select the ADJUSTMENT in the REAL TIME AWD with the HDS.

   -3. Do the AIR BLEEDING in the ADJUSTMENT with the HDS.

   Air Bleeding

   Test-drive the vehicle on the lift.

   Did abnormal noise reappear?

   YES

   The failure is duplicated. Replace the torque control differential (TCD) assembly or the differential carrier assembly .

   NO

   Intermittent failure, the system is OK at this time.

REAL TIME AWD SYSTEM SYMPTOM TROUBLESHOOTING - HDS DOES NOT COMMUNICATE (AWD (WITH CAN GATEWAY)) (2017 2018 2019)

HDS does not communicate

1. HDS communication check

   -1. Turn the vehicle to the ON mode.

   -2. Check that the HDS communicates with the vehicle.

   Does the HDS communicate with the vehicle?

   YES

   The HDS communication is OK. Go to step 2.

   NO

   Go to the DLC circuit troubleshooting .

2. AWD system communication check

   -1. Check the Main Menu of the REAL TIME AWD with the HDS.

   Does the HDS show the Main Menu of the REAL TIME AWD?

   YES

   The real time AWD system communication is OK. Intermittent failure, the system is OK at this time.

   NO

   Go to step 3.

3. Fuse check

   -1. Turn the vehicle to the OFF (LOCK) mode.

-2. Check the following fuse.

Fuse	No. A20 (20 A)
Location	Under-hood fuse/relay box

Fuse	No. D7 (10 A)
Location	Under-dash fuse/relay box

Is the fuse OK?

YES

The fuses is OK. Reinstall the fuses, then go to step 4.

NO

Replace the fuse (s). If the fuse (s) blows again, repair a short to ground in the No. A20 (20 A) fuse circuit and/or the No. D7 (10 A) fuse circuit, and recheck.

4. Rear differential pump motor operation check

-1. Turn the vehicle to the ON mode.

-2. Check the operation sound of the rear differential pump motor on the rear differential with a stethoscope or a flat-tipped screwdriver (at the rear differential pump motor) when the engine started.

NOTE: The rear differential pump motor operates within several seconds after the engine is started.

Rear differential pump motor operation sound heard?

YES

Go to step 9.

NO

Go to step 5.

5. Rear differential fluid pressure sensor check

-1. Turn the vehicle to the OFF (LOCK) mode.

-2. Disconnect the following connector.

Rear differential fluid pressure sensor 3P connector

-3. Turn the vehicle to the ON mode.

-4. Check the Main Menu of the REAL TIME AWD with the HDS.

Does the HDS show the Main Menu of the REAL TIME AWD?

YES

Replace the rear differential fluid pressure sensor .

NO

The rear differential fluid pressure sensor is OK. Go to step 6.

6. Open wire check (IG1 METER line)

-1. Turn the vehicle to the OFF (LOCK) mode.

-2. Disconnect the following connector.

AWD control unit 24P connector

-3. Start the engine.

-4. Measure the voltage between test points 1 and 2.

Test condition	Vehicle ON mode (idling)
B	Rear differential fluid pressure sensor 3P connector: disconnected
B	AWD control unit 24P connector: disconnected
Test point 1	**AWD control unit 24P connector No. 12**
Test point 2	Body ground

Is there battery voltage?

YES

The IG1 METER wire is OK. Go to step 7.

NO

Repair an open in the IG1 METER wire between the AWD control unit and the No, D7 (10 A) fuse in the under-dash fuse/relay box.

7. Open wire check (GND line)

-1. Turn the vehicle to the OFF (LOCK) mode.

-2. Check for continuity between test points 1 and 2.

Test condition	Vehicle OFF (LOCK) mode
B	Rear differential fluid pressure sensor 3P connector: disconnected
B	AWD control unit 24P connector: disconnected
Test point 1	**AWD control unit 24P connector No. 8**
Test point 2	Body ground

Is there continuity?

YES

The GND wire is OK. Go to step 8.

NO

Repair an open in the GND wire between the AWD control unit and ground (G503).

8. Shorted wire check (SVCC line)

-1. Check for continuity between test points 1 and 2.

Test condition	Vehicle OFF (LOCK) mode
B	Rear differential fluid pressure sensor 3P connector: disconnected

B	AWD control unit 24P connector: disconnected
Test point 1	**AWD control unit 24P connector No. 20**
Test point 2	Body ground

Is there continuity?

YES

Repair a short to ground in the SVCC wire between the AWD control unit and the rear differential fluid pressure sensor.

NO

The SVCC wire is OK. Go to step 9.

9. Open wire check (F-CAN B H, F-CAN B L lines)

-1. Disconnect the following connector.

CAN gateway 12P connector

-2. Check for continuity between test points 1 and 2 individually.

F-CAN B H wire

Test condition	Vehicle OFF (LOCK) mode
B	Rear differential fluid pressure sensor 3P connector: disconnected
B	AWD control unit 24P connector: disconnected
B	CAN gateway 12P connector: disconnected
Test point 1	**AWD control unit 24P connector No. 14**
Test point 2	CAN gateway 12P connector (female terminals) No. 12: ①

F-CAN B L wire

Test condition	Vehicle OFF (LOCK) mode Rear differential fluid pressure sensor 3P connector: disconnected AWD control unit 24P connector: disconnected CAN gateway 12P connector: disconnected
Test point 1	**AWD control unit 24P connector No. 24**
Test point 2	CAN gateway 12P connector (female terminals) No. 5: ①

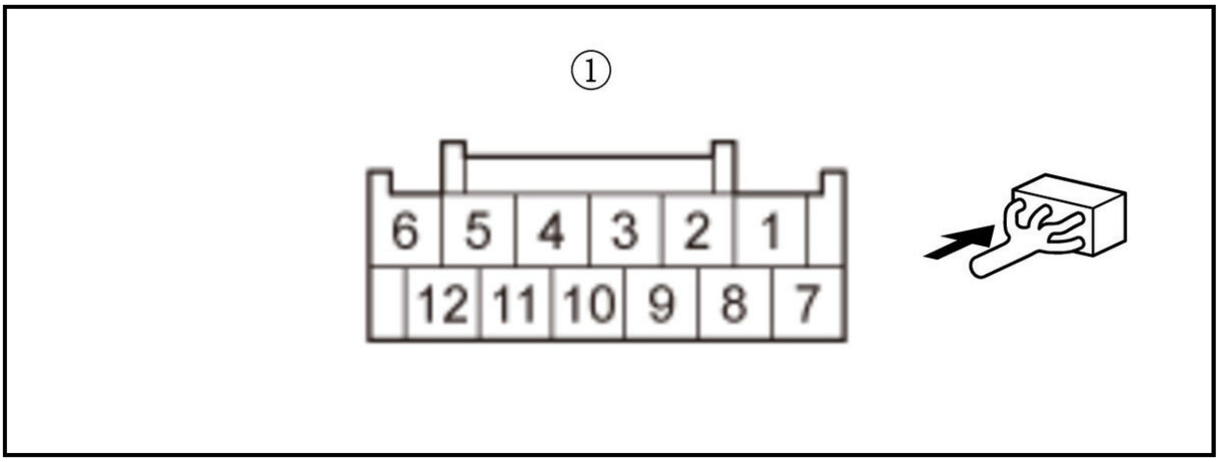

Is there continuity?

YES

The F-CAN B H and F-CAN B L wires is OK. Go to step 10.

NO

Repair an open in the F-CAN B H and/or F-CAN B L wires between the AWD control unit and the CAN gateway.

10. Open wire check (F-CAN A H, F-CAN A L lines)

-1. Check for continuity between test points 1 and 2 individually.

F-CAN A H wire

Test condition	Vehicle OFF (LOCK) mode
B	Rear differential fluid pressure sensor 3P connector: disconnected
B	AWD control unit 24P connector: disconnected
B	CAN gateway 12P connector: disconnected
Test point 1	CAN gateway 12P connector (female terminals) No. 3: ①
Test point 2	Data link connector (16P) (female terminals) No. 6: ②

F-CAN A L wire

Test condition	Vehicle OFF (LOCK) mode
	Rear differential fluid pressure sensor 3P connector: disconnected
	AWD control unit 24P connector: disconnected
	CAN gateway 12P connector: disconnected
Test point 1	CAN gateway 12P connector (female terminals) No. 9: ①
Test point 2	Data link connector (16P) (female terminals) No. 14: ②

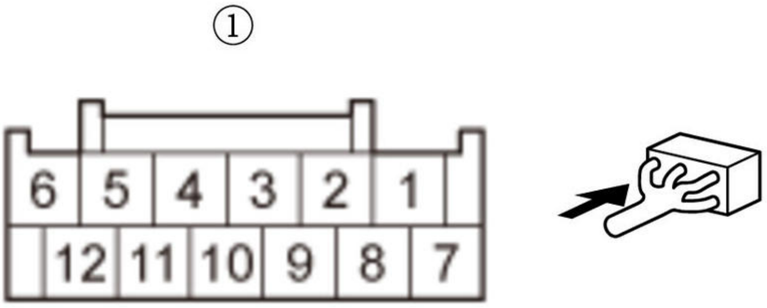

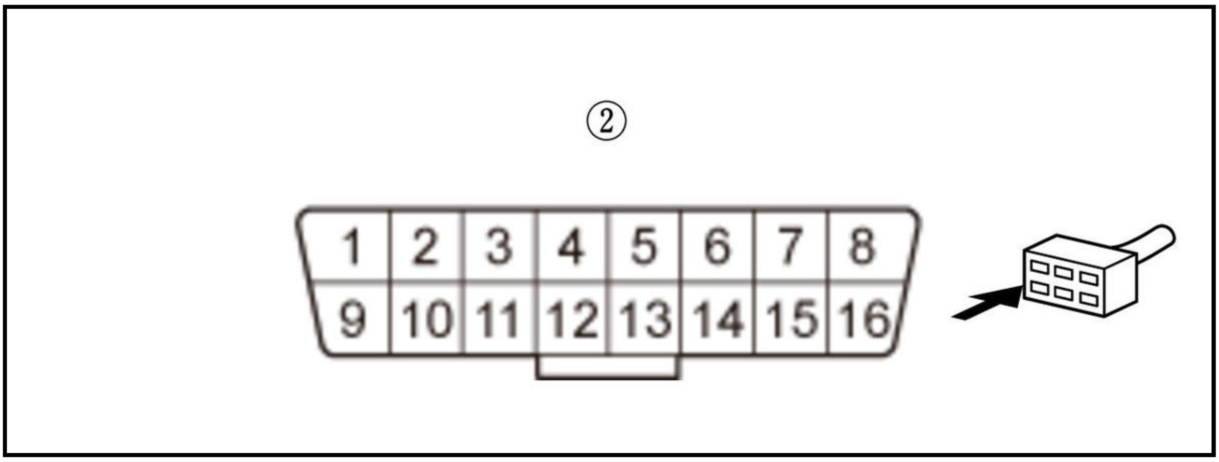

Is there continuity?

YES

Check for any authorized service information related to the DTCs or symptoms you are troubleshooting or **substitute a known-good AWD control unit** , and recheck. If the symptom/indication goes away with a known-good AWD control unit, **replace the original AWD control unit** .

NO

Repair an open in the F-CAN A H and/or F-CAN A L wires between the CAN gateway and the data link connector.

REAL TIME AWD SYSTEM SYMPTOM TROUBLESHOOTING - HDS DOES NOT COMMUNICATE (AWD (WITH CAN GATEWAY)) (2020 2021)

HDS does not communicate

NOTE: Information marked with an asterisk (*1) applies to the model not equipped with auto idle stop system, and an asterisk (*2) applies to the model equipped with auto idle stop system.

1. HDS communication check

-1. Turn the vehicle to the ON mode.

-2. Check that the HDS communicates with the vehicle.

Does the HDS communicate with the vehicle?

YES

The HDS communication is OK. Go to step 2.

NO

Go to the DLC circuit troubleshooting .

2. AWD system communication check

-1. Check the Main Menu of the REAL TIME AWD with the HDS.

Does the HDS show the Main Menu of the REAL TIME AWD?

YES

The real time AWD system communication is OK. Intermittent failure, the system is OK at this time.

NO

Go to step 3.

3. Fuse check

-1. Turn the vehicle to the OFF (LOCK) mode.

-2. Check the following fuse.

Fuse	**No. A20**

Fuse	**No. D7**

Fuse	**No. F6*2**

Is the fuse OK?

YES

The fuses is OK. Reinstall the fuses, then go to step 4.

NO

Replace the fuse (s). If the fuse (s) blows again, repair a short to ground in the fuse (s) circuit, and recheck.

4. Rear differential pump motor operation check

-1. Turn the vehicle to the ON mode.

-2. Check the operation sound of the rear differential pump motor on the rear differential with a stethoscope or a flat-tipped screwdriver (at the rear differential pump motor) when the engine started.

NOTE: The rear differential pump motor operates within several seconds after the engine is started.

Rear differential pump motor operation sound heard?

YES

Go to step 9.

NO

Go to step 5.

5. Rear differential fluid pressure sensor check

-1. Turn the vehicle to the OFF (LOCK) mode.

-2. Disconnect the following connector.

Rear differential fluid pressure sensor 3P connector

-3. Turn the vehicle to the ON mode.

-4. Check the Main Menu of the REAL TIME AWD with the HDS.

Does the HDS show the Main Menu of the REAL TIME AWD?

YES

Replace the rear differential fluid pressure sensor .

NO

The rear differential fluid pressure sensor is OK. Go to step 6.

6. Open wire check (IG1 METER line *1/IG1 VST line *2):

-1. Turn the vehicle to the OFF (LOCK) mode.

-2. Disconnect the following connector.

AWD control unit 24P connector

-3. Start the engine.

-4. Measure the voltage between test points 1 and 2.

Test condition	Vehicle ON mode (idling)
B	Rear differential fluid pressure sensor 3P connector: disconnected
B	AWD control unit 24P connector: disconnected
Test point 1	**AWD control unit 24P connector No. 12**
Test point 2	Body ground

Is there battery voltage?

YES

The IG1 METER wire *1/IG1 VST wire *2 is OK. Go to step 7.

NO

Repair an open in the IG1 METER wire *1/IG1 VST wire *2 between the real time AWD control unit and the under-dash fuse/relay box *1/auxiliary under-dash fuse/relay box *2.

7. Open wire check (GND line)

-1. Turn the vehicle to the OFF (LOCK) mode.

-2. Measure the resistance between test points 1 and 2.

Test condition	Vehicle OFF (LOCK) mode
B	Rear differential fluid pressure sensor 3P connector: disconnected
B	AWD control unit 24P connector: disconnected
Test point 1	**AWD control unit 24P connector No. 8**
Test point 2	Body ground

Is there 1.0 Ω or less?

YES

The GND wire is OK. Go to step 8.

NO

Repair an open in the GND wire between the AWD control unit and ground (G503).

8. Shorted wire check (SVCC line)

-1. Measure the resistance between test points 1 and 2.

Test condition	Vehicle OFF (LOCK) mode
B	Rear differential fluid pressure sensor 3P connector: disconnected
B	AWD control unit 24P connector: disconnected
Test point 1	**AWD control unit 24P connector No. 20**
Test point 2	Body ground

Is there 1 MΩ or more?

YES

The SVCC wire is OK. Go to step 9.

NO

Repair a short to ground in the SVCC wire between the AWD control unit and the rear differential fluid pressure sensor.

9. Open wire check (F-CAN B H, F-CAN B L lines)

-1. Disconnect the following connector.

CAN gateway 16P connector

-2. Measure the resistance between test points 1 and 2 individually.

F-CAN B H wire

Test condition	Vehicle OFF (LOCK) mode
B	Rear differential fluid pressure sensor 3P connector: disconnected
B	AWD control unit 24P connector: disconnected
B	CAN gateway 16P connector: disconnected
Test point 1	**AWD control unit 24P connector No. 14**
Test point 2	CAN gateway 16P connector (female terminals) No. 6: ①

F-CAN B L wire

Test condition	Vehicle OFF (LOCK) mode
	Rear differential fluid pressure sensor 3P connector: disconnected
	AWD control unit 24P connector: disconnected
	CAN gateway 16P connector: disconnected
Test point 1	**AWD control unit 24P connector No. 24**
Test point 2	CAN gateway 16P connector (female terminals) No. 14: ①

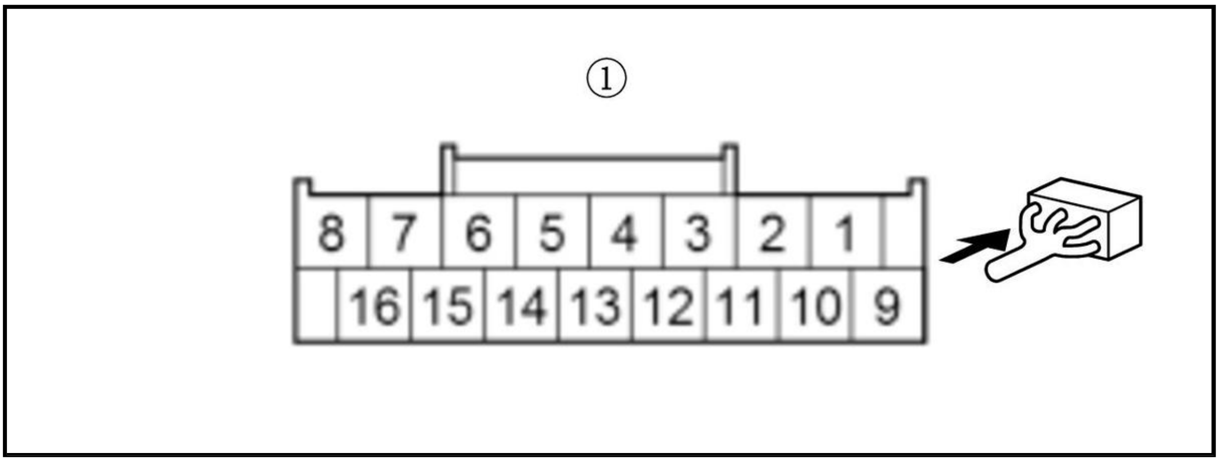

Is there 1.0 Ω or less?

YES

The F-CAN B H and F-CAN B L wires is OK. Go to step 10.

NO

Repair an open in the F-CAN B H and/or F-CAN B L wires between the AWD control unit and the CAN gateway.

10. Open wire check (DIAG-CAN H, DIAG-CAN L lines)

-1. Measure the resistance between test points 1 and 2 individually.

DIAG-CAN H wire

Test condition	Vehicle OFF (LOCK) mode
B	Rear differential fluid pressure sensor 3P connector: disconnected
B	AWD control unit 24P connector: disconnected
B	CAN gateway 16P connector: disconnected
Test point 1	CAN gateway 16P connector (female terminals) No. 2: ①
Test point 2	Data link connector (16P) (female terminals) No. 6: ②

DIAG-CAN L wire

Test condition	Vehicle OFF (LOCK) mode
	Rear differential fluid pressure sensor 3P connector: disconnected
	AWD control unit 24P connector: disconnected
	CAN gateway 16P connector: disconnected
Test point 1	CAN gateway 16P connector (female terminals) No. 10: ①
Test point 2	Data link connector (16P) (female terminals) No. 14: ②

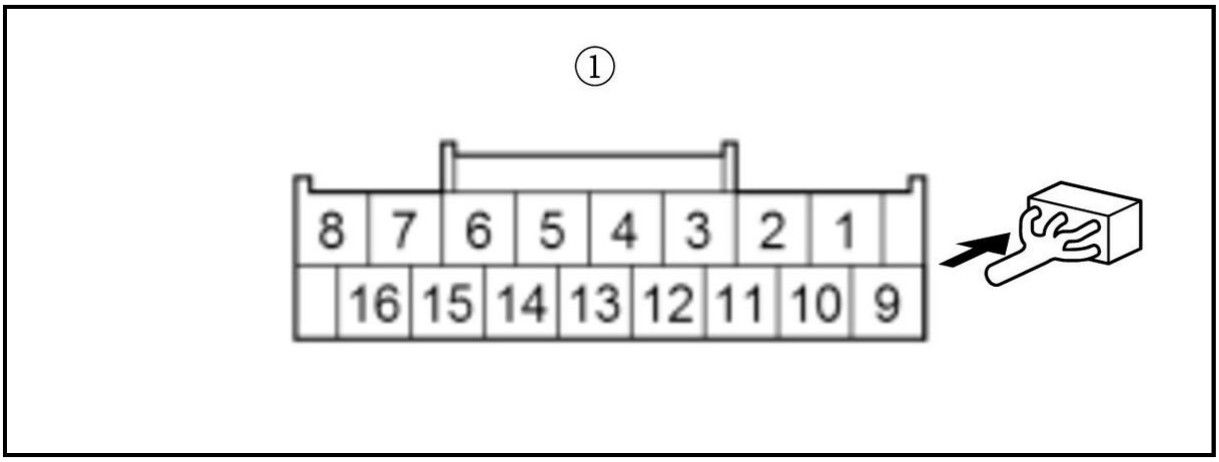

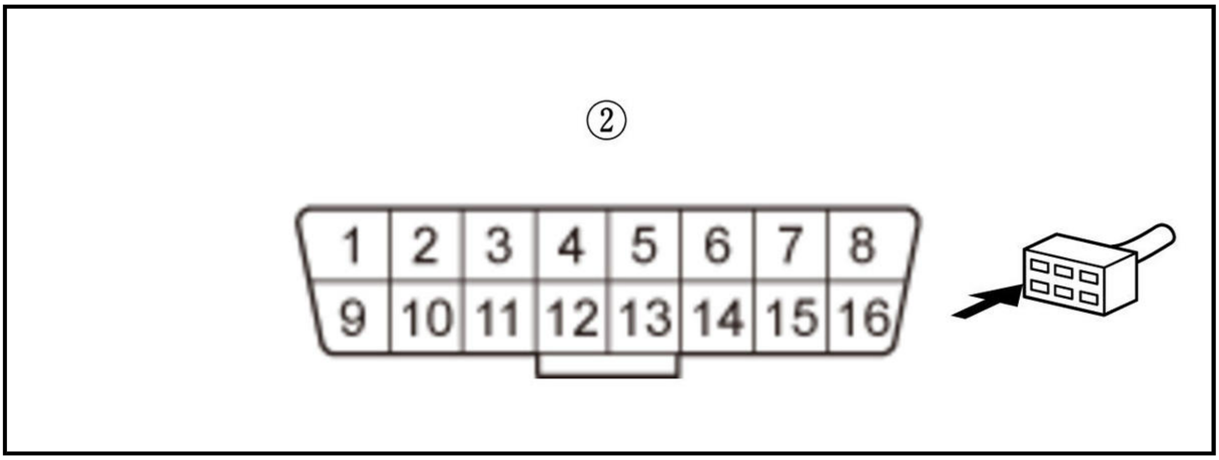

Is there 1.0 Ω or less?

YES

Check for any authorized service information related to the DTCs or symptoms you are troubleshooting or **substitute a known-good AWD control unit** , and recheck. If the symptom/indication goes away with a known-good AWD control unit, **replace the original AWD control unit** .

NO

Repair an open in the F-CAN A H and/or F-CAN A L wires between the CAN gateway and the data link connector.

REAL TIME AWD SYSTEM SYMPTOM TROUBLESHOOTING - HDS DOES NOT COMMUNICATE (AWD (WITHOUT CAN GATEWAY))

HDS does not communicate

1. HDS communication check

-1. Turn the vehicle to the ON mode.

-2. Check that the HDS communicates with the vehicle.

Does the HDS communicate with the vehicle?

YES

The HDS communication is OK. Go to step 2.

NO

Go to the DLC circuit troubleshooting .

2. AWD system communication check

   -1. Check the Main Menu of the REAL TIME AWD with the HDS.

   Does the HDS show the Main Menu of the REAL TIME AWD?

   YES

   The real time AWD system communication is OK. Intermittent failure, the system is OK at this time.

   NO

   Go to step 3.

3. Fuse check

   -1. Turn the vehicle to the OFF (LOCK) mode.

   -2. Check the following fuse.

Fuse	No. A20 (20 A)
Location	Under-hood fuse/relay box

Fuse	No. D7 (10 A)
Location	Under-dash fuse/relay box

   Is the fuse OK?

   YES

   The fuse is OK. Reinstall the fuse, then go to step 4.

   NO

   Replace the fuse. If the fuse blows again, repair a short to ground in the No. A20 (20 A) fuse circuit, and recheck.

4. Rear differential pump motor operation check

   -1. Turn the vehicle to the ON mode.

   -2. Check the operation sound of the rear differential pump motor on the rear differential with a stethoscope or a flat-tipped screwdriver (at the rear differential pump motor) when the engine started.

   NOTE: The rear differential pump motor operates within several seconds after the engine is started.

   Rear differential pump motor operation sound heard?

   YES

   Go to step 9.

   NO

   Go to step 5.

5. Rear differential fluid pressure sensor check

-1. Turn the vehicle to the OFF (LOCK) mode.

-2. Disconnect the following connector.

Rear differential fluid pressure sensor 3P connector

-3. Turn the vehicle to the ON mode.

-4. Check the Main Menu of the REAL TIME AWD with the HDS.

Does the HDS show the Main Menu of the REAL TIME AWD?

YES

Replace the rear differential fluid pressure sensor .

NO

The rear differential fluid pressure sensor is OK. Go to step 6.

6. Open wire check (IG1 METER line)

-1. Turn the vehicle to the OFF (LOCK) mode.

-2. Disconnect the following connector.

AWD control unit 24P connector

-3. Start the engine.

-4. Measure the voltage between test points 1 and 2.

Test condition	Vehicle ON mode (idling)
B	Rear differential fluid pressure sensor 3P connector: disconnected
B	AWD control unit 24P connector: disconnected
Test point 1	**AWD control unit 24P connector No. 12**
Test point 2	Body ground

Is there battery voltage?

YES

The IG1 METER wire is OK. Go to step 7.

NO

Repair an open in the IG1 METER wire between the AWD control unit and the No, D7 (10 A) fuse in the under-dash fuse/relay box.

7. Open wire check (GND line)

-1. Turn the vehicle to the OFF (LOCK) mode.

-2. Check for continuity between test points 1 and 2.

Test condition	Vehicle OFF (LOCK) mode
B	Rear differential fluid pressure sensor 3P connector: disconnected
B	AWD control unit 24P connector: disconnected
Test point 1	**AWD control unit 24P connector No. 8**

Test point 2	Body ground

Is there continuity?

YES

The GND wire is OK. Go to step 8.

NO

Repair an open in the GND wire between the AWD control unit and ground (G503).

8. Shorted wire check (SVCC line)

-1. Check for continuity between test points 1 and 2.

Test condition	Vehicle OFF (LOCK) mode
B	Rear differential fluid pressure sensor 3P connector: disconnected
B	AWD control unit 24P connector: disconnected
Test point 1	**AWD control unit 24P connector No. 20**
Test point 2	Body ground

Is there continuity?

YES

Repair a short to ground in the SVCC wire between the AWD control unit and the rear differential fluid pressure sensor.

NO

The SVCC wire is OK. Go to step 9.

9. Open wire check (F-CAN H, F-CAN L lines)

-1. Check for continuity between test points 1 and 2 individually.

F-CAN H wire

Test condition	Vehicle OFF (LOCK) mode
B	Rear differential fluid pressure sensor 3P connector: disconnected
B	AWD control unit 24P connector: disconnected
Test point 1	**AWD control unit 24P connector No. 14**
Test point 2	Data link connector (16P) (female terminals) No. 6: ①

F-CAN L wire

Test condition	Vehicle OFF (LOCK) mode
	Rear differential fluid pressure sensor 3P connector: disconnected
	AWD control unit 24P connector: disconnected
Test point 1	**AWD control unit 24P connector No. 24**
Test point 2	Data link connector (16P) (female terminals) No. 14: ①

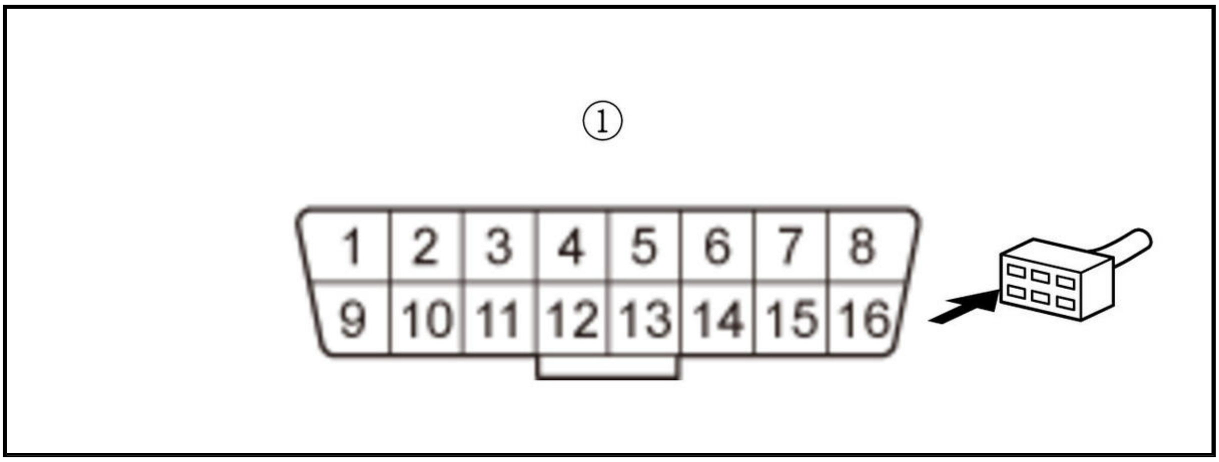

Is there continuity?

YES

Check for any authorized service information related to the DTCs or symptoms you are troubleshooting or **substitute a known-good AWD control unit** , and recheck. If the symptom/indication goes away with a known-good AWD control unit, **replace the original AWD control unit** .

NO

Repair an open in the F-CAN H and/or F-CAN L wires between the AWD control unit and the data link connector.

REAL TIME AWD SYSTEM SYMPTOM TROUBLESHOOTING - REAL TIME AWD SYSTEM IS STUCK IN 4WD MODE (AWD)

Real time AWD system is stuck in 4WD mode

1. Problem verification (rear differential clutch test)

   -1. **Do the rear differential clutch test**.

   Is the test result OK?

   YES

   Go to step 2.

   NO

   The failure is duplicated. **Do the repair depending on the test result**.

2. Oil pressure control check

   -1. Turn the vehicle to the ON mode.

   -2. Select the FUNCTIONAL TEST in the REAL TIME AWD with the HDS.

   -3. **Do the OIL PRESSURE CONTROL TEST in the FUNCTIONAL TEST with the HDS**.

   Oil Pressure Control Test

   Is the test result OK?

   1. **YES**

      Check the following items.

- **Check the rear differential fluid level and the fluid condition**.
- Check for rear differential fluid leaks.
- **Do the rear differential fluid pressure sensor test**.

NO

Follow the instructions indicated on the HDS according to the test result.

REAL TIME AWD SYSTEM SYMPTOM TROUBLESHOOTING - WILL NOT GO INTO 4WD MODE, POOR TRACTION, POOR ACCELERATION (AT START), POOR CLIMBING ABILITY (AWD)

Will not go into 4WD mode, Poor traction, Poor acceleration (at start), Poor climbing ability

1. Rear differential clutch check

-1. **Do the rear differential clutch test**.

Is the test result OK?

1. **YES**

Check the following items.

- **Check the rear differential fluid level and the fluid condition**.
- Check for rear differential fluid leaks.
- **Do the OIL PRESSURE CONTROL TEST in the FUNCTIONAL TEST with the HDS**.
- **Do the rear differential fluid pressure sensor test**.

NO

Do the repair depending on the test result.

SYMPTOM TROUBLESHOOTING INDEX

REAL TIME AWD SYSTEM SYMPTOM TROUBLESHOOTING INDEX (AWD)

Symptom	Probable Cause	Remedy
Rear differential overheats	Fluid level too low Incorrect fluid type	**Add recommended fluid** **Drain and fill the differential with the recommended fluid**
Rear differential leaks fluid	Fluid level too high Clogged breather hose Worn or damaged oil seal Damaged sealing washer Loose mounting bolts or inadequate sealing	**Lower to proper level** **Clean or replace** **Replace the oil seal** **Replace the sealing washer** **Recheck torque or apply sealant**
HDS does not communicate with vehicle	B	**Troubleshoot the DLC circuit**
HDS does not communicate with AWD	B	**Do the symptom troubleshooting for HDS does not communicate**

Symptom	Probable Cause	Remedy
control unit		
AWD system indicator does not come on	B	**Do the symptom troubleshooting for AWD system indicator does not come on**
AWD system indicator does not go off, and no DTCs are stored	B	**Do the symptom troubleshooting for AWD system indicator does not go off, and no DTCs are stored**
Will not go into 4WD mode, Poor traction, Poor acceleration (at start), Poor climbing ability	B	**Do the symptom troubleshooting for will not go into 4WD mode, Poor traction, Poor acceleration (at start), Poor climbing ability**
Real time AWD system is stuck in 4WD mode	B	**Do the symptom troubleshooting for real time AWD system is stuck in 4WD mode**
Abnormal noise (at normal condition)	• Gear noise • • - Poor gear mesh between ring gear and drive pinion • - Hypoid gear (wear or damage) • - Poor pre-road (drive pinion) • - Debris in hypoid gear area • - Fluid level too low • - Distortion of the differential carrier case • Bearing noise • • - Bearing (wear or damage) • - Drive pinion taper bearing (wear) • -	**Do the symptom troubleshooting for abnormal noise**

Symptom	Probable Cause	Remedy
	Debris in bearing • Pump noise (at lubrication) • • - Debris in pump • - Rotor (wear or damage) • Loose or missed torqued parts	

Symptom	Probable Cause	Remedy
Abnormal noise (at start)	• Gear noise • • - Poor gear mesh between ring gear and drive pinion • - Hypoid gear (wear or damage) • - Poor pre-road (drive pinion) • - Debris in hypoid gear area • - Fluid level too low • - Distortion of the differential carrier case • - Excessive backlash (hypoid gear) • - Excessive backlash (differential gear) • - Differential side gear spline (wear)	B

Symptom	Probable Cause	Remedy
	• Bearing noise • • - Bearing (wear or damage) • - Drive pinion taper bearing (wear) • - Debris in bearing • Pump noise (at lubrication) • • - Debris in pump • - Rotor (wear or damage) • Rear differential pump motor noise • • - Bearing (wear or damage) • - Debris in rear differential pump motor • Pump noise (at control) • • - Debris in pump • - Rotor (wear or damage) • Rear differential solenoid valve noise • • - Debris in rear differential solenoid valve • - Plunger area or shaft area (wear)	

Symptom	Probable Cause	Remedy
	• - Rear differential solenoid valve (wear or damage) • Clutch chatter • • - Fluid deterioration • - Clutch facing (burnt or deterioration) • - Clutch plate (deterioration) • Loose or missed torqued parts	

Symptom	Probable Cause	Remedy
Abnormal noise (at accelerate)	• Gear noise • • - Poor gear mesh between ring gear and drive pinion • - Hypoid gear (wear or damage) • - Poor pre-road (drive pinion) • - Debris in hypoid gear area • - Fluid level too low • - Distortion of the differential carrier case • - Excessive backlash (hypoid gear) • -	B

Symptom	Probable Cause	Remedy
	Excessive backlash (differential gear) • - Differential side gear spline (wear) • Bearing noise • • - Bearing (wear or damage) • - Drive pinion taper bearing (wear) • - Debris in bearing • Pump noise (at lubrication) • • - Debris in pump • - Rotor (wear or damage) • Rear differential pump motor noise • • - Bearing (wear or damage) • - Debris in rear differential pump motor • Pump noise (at control) • • - Debris in pump • - Rotor (wear or damage) • Rear differential solenoid valve noise • • -	

Symptom	Probable Cause	Remedy
	Debris in rear differential solenoid valve • - Plunger area or shaft area (wear) • - Rear differential solenoid valve (wear or damage) • Clutch chatter • • - Fluid deterioration • - Clutch facing (burnt or deterioration) • - Clutch plate (deterioration) • Loose or missed torqued parts	

Symptom	Probable Cause	Remedy
Abnormal noise (at turning)	• Gear noise • • - Poor gear mesh between ring gear and drive pinion • - Hypoid gear (wear or damage) • - Poor pre-road (drive pinion) • - Debris in hypoid gear area • - Fluid level too low • - Distortion of the differential carrier case	B

Symptom	Probable Cause	Remedy
	• Bearing noise • • - Bearing (wear or damage) • - Drive pinion taper bearing (wear) • - Debris in bearing • Differential gear noise • • - Side gear and pinion gear (wear or damage) • - Pinion shaft (damage) • - Debris in differential gear area • Clutch chatter • • - Fluid deterioration • - Clutch facing (burnt or deterioration) • - Clutch plate (deterioration) • Loose or missed torqued parts	
Abnormal noise (at turning and accelerate)	• Gear noise • • - Poor gear mesh between ring gear and drive pinion • - Hypoid gear (wear or damage)	B

Symptom	Probable Cause	Remedy
	• - Poor pre-road (drive pinion) • - Debris in hypoid gear area • - Fluid level too low • - Distortion of the differential carrier case • - Excessive backlash (hypoid gear) • - Excessive backlash (differential gear) • - Differential side gear spline (wear) • Bearing noise • • - Bearing (wear or damage) • - Drive pinion taper bearing (wear) • - Debris in bearing • Differential gear noise • • - Side gear and pinion gear (wear or damage) • - Pinion shaft (damage) • - Debris in differential gear area	

Symptom	Probable Cause	Remedy
	• Pump noise (at lubrication) • • - Debris in pump • - Rotor (wear or damage) • Rear differential pump motor noise • • - Bearing (wear or damage) • - Debris in rear differential pump motor • Pump noise (at control) • • - Debris in pump • - Rotor (wear or damage) • Rear differential solenoid valve noise • • - Debris in rear differential solenoid valve • - Plunger area or shaft area (wear) • - Rear differential solenoid valve (wear or damage) • Clutch chatter • • - Fluid deterioration • -	

Symptom	Probable Cause	Remedy
	Clutch facing (burnt or deterioration) • - Clutch plate (deterioration) • Loose or missed torqued parts	

INITIALIZATION

AWD CONTROL UNIT INITIALIZATION (AWD)

Procedure

NOTE:

- Whenever the AWD control unit is replaced, it must be initialized.
- Park the vehicle on a flat and level surface.

1. HDS - Connect
2. AWD Control Unit - Initialization

> 1. Select the E-DPS CONTROL MODULE REPLACEMENT with the HDS.**NOTE:** See the HDS Help menu for specific instructions.

SYMPTOM TROUBLESHOOTING INDEX FOR VIEWER

AWD SYSTEM INDICATOR DOES NOT COME ON (AWD)

Remedy

Do the symptom troubleshooting for AWD system indicator does not come on

AWD SYSTEM INDICATOR DOES NOT GO OFF, AND NO DTCS ARE STORED (AWD)

Remedy

Do the symptom troubleshooting for AWD system indicator does not go off, and no DTCs are stored

ABNORMAL NOISE (AT ACCELERATE) (AWD)

Probable Cause

- Gear noise
-
    - -

      Poor gear mesh between ring gear and drive pinion
    - -

      Hypoid gear (wear or damage)
    - -

      Poor pre-road (drive pinion)

    - -

      Debris in hypoid gear area

    - -

      Fluid level too low

    - -

      Distortion of the differential carrier case

    - -

      Excessive backlash (hypoid gear)

    - -

      Excessive backlash (differential gear)

    - -

      Differential side gear spline (wear)

- Bearing noise
-
    - -

      Bearing (wear or damage)

    - -

      Drive pinion taper bearing (wear)

    - -

      Debris in bearing

- Pump noise (at lubrication)
-
    - -

      Debris in pump

    - -

      Rotor (wear or damage)

- Rear differential pump motor noise
-
    - -

      Bearing (wear or damage)

    - -

      Debris in rear differential pump motor

- Pump noise (at control)

-
    - -

      Debris in pump

    - -

      Rotor (wear or damage)
- Rear differential solenoid valve noise
-
    - -

      Debris in rear differential solenoid valve

    - -

      Plunger area or shaft area (wear)

    - -

      Rear differential solenoid valve (wear or damage)
- Clutch chatter
-
    - -

      Fluid deterioration

    - -

      Clutch facing (burnt or deterioration)

    - -

      Clutch plate (deterioration)
- Loose or missed torqued parts

ABNORMAL NOISE (AT NORMAL CONDITION) (AWD)

Probable Cause

- Gear noise
-
    - -

      Poor gear mesh between ring gear and drive pinion

    - -

      Hypoid gear (wear or damage)

    - -

      Poor pre-road (drive pinion)

    - -

Debris in hypoid gear area

  - -

    Fluid level too low

  - -

    Distortion of the differential carrier case

- Bearing noise
-
  - -

    Bearing (wear or damage)

  - -

    Drive pinion taper bearing (wear)

  - -

    Debris in bearing

- Pump noise (at lubrication)
-
  - -

    Debris in pump

  - -

    Rotor (wear or damage)

- Loose or missed torqued parts

Remedy

Do the symptom troubleshooting for abnormal noise

ABNORMAL NOISE (AT START) (AWD)

Probable Cause

- Gear noise
-
  - -

    Poor gear mesh between ring gear and drive pinion

  - -

    Hypoid gear (wear or damage)

  - -

    Poor pre-road (drive pinion)

  - -

Debris in hypoid gear area

- -

Fluid level too low

- -

Distortion of the differential carrier case

- -

Excessive backlash (hypoid gear)

- -

Excessive backlash (differential gear)

- -

Differential side gear spline (wear)

- Bearing noise
-
  - -

  Bearing (wear or damage)

  - -

  Drive pinion taper bearing (wear)

  - -

  Debris in bearing

- Pump noise (at lubrication)
-
  - -

  Debris in pump

  - -

  Rotor (wear or damage)

- Rear differential pump motor noise
-
  - -

  Bearing (wear or damage)

  - -

  Debris in rear differential pump motor

- Pump noise (at control)
-
  - -

Debris in pump

  - -

    Rotor (wear or damage)

- Rear differential solenoid valve noise
-
  - -

    Debris in rear differential solenoid valve

  - -

    Plunger area or shaft area (wear)

  - -

    Rear differential solenoid valve (wear or damage)

- Clutch chatter
-
  - -

    Fluid deterioration

  - -

    Clutch facing (burnt or deterioration)

  - -

    Clutch plate (deterioration)

- Loose or missed torqued parts

ABNORMAL NOISE (AT TURNING AND ACCELERATE) (AWD)

Probable Cause

- Gear noise
-
  - -

    Poor gear mesh between ring gear and drive pinion

  - -

    Hypoid gear (wear or damage)

  - -

    Poor pre-road (drive pinion)

  - -

    Debris in hypoid gear area

  - -

Fluid level too low

  - -

    Distortion of the differential carrier case

  - -

    Excessive backlash (hypoid gear)

  - -

    Excessive backlash (differential gear)

  - -

    Differential side gear spline (wear)

- Bearing noise
-
  - -

    Bearing (wear or damage)

  - -

    Drive pinion taper bearing (wear)

  - -

    Debris in bearing

- Differential gear noise
-
  - -

    Side gear and pinion gear (wear or damage)

  - -

    Pinion shaft (damage)

  - -

    Debris in differential gear area

- Pump noise (at lubrication)
-
  - -

    Debris in pump

  - -

    Rotor (wear or damage)

- Rear differential pump motor noise
-
  - -

Bearing (wear or damage)

  - -

    Debris in rear differential pump motor

- Pump noise (at control)
-
  - -

    Debris in pump

  - -

    Rotor (wear or damage)

- Rear differential solenoid valve noise
-
  - -

    Debris in rear differential solenoid valve

  - -

    Plunger area or shaft area (wear)

  - -

    Rear differential solenoid valve (wear or damage)

- Clutch chatter
-
  - -

    Fluid deterioration

  - -

    Clutch facing (burnt or deterioration)

  - -

    Clutch plate (deterioration)

- Loose or missed torqued parts

ABNORMAL NOISE (AT TURNING) (AWD)

Probable Cause

- Gear noise
-
  - -

    Poor gear mesh between ring gear and drive pinion

  - -

    Hypoid gear (wear or damage)

  - -

    Poor pre-road (drive pinion)

  - -

    Debris in hypoid gear area

  - -

    Fluid level too low

  - -

    Distortion of the differential carrier case

- Bearing noise
-
  - -

    Bearing (wear or damage)

  - -

    Drive pinion taper bearing (wear)

  - -

    Debris in bearing

- Differential gear noise
-
  - -

    Side gear and pinion gear (wear or damage)

  - -

    Pinion shaft (damage)

  - -

    Debris in differential gear area

- Clutch chatter
-
  - -

    Fluid deterioration

  - -

    Clutch facing (burnt or deterioration)

  - -

    Clutch plate (deterioration)

- Loose or missed torqued parts

HDS DOES NOT COMMUNICATE WITH AWD CONTROL UNIT (AWD)

Remedy

Do the symptom troubleshooting for HDS does not communicate

HDS DOES NOT COMMUNICATE WITH VEHICLE (AWD)

Remedy

Troubleshoot the DLC circuit

REAL TIME AWD SYSTEM IS STUCK IN 4WD MODE (AWD)

Remedy

Do the symptom troubleshooting for real time AWD system is stuck in 4WD mode

REAR DIFFERENTIAL LEAKS FLUID (AWD)

Probable Cause

- Fluid level too high
- Clogged breather hose
- Worn or damaged oil seal
- Damaged sealing washer
- Loose mounting bolts or inadequate sealing

Remedy

- **Lower to proper level**
- **Clean or replace**
- **Replace the oil seal**
- **Replace the sealing washer**
- **Recheck torque or apply sealant**

REAR DIFFERENTIAL OVERHEATS (AWD)

Probable Cause

- Fluid level too low
- Incorrect fluid type

Remedy

- **Add recommended fluid**
- **Drain and fill the differential with the recommended fluid**

WILL NOT GO INTO 4WD MODE, POOR TRACTION, POOR ACCELERATION (AT START), POOR CLIMBING ABILITY (AWD)

Remedy

Do the symptom troubleshooting for will not go into 4WD mode, Poor traction, Poor acceleration (at start), Poor climbing ability

---

REMOVAL, INSTALLATION AND INSPECTION

PROPELLER SHAFT REMOVAL, INSTALLATION, AND INSPECTION

Removal and Installation

NOTE: Where icon is shown, for further information see below.

Procedure

NOTE: **Numbered call-outs in figure pertain to list numbers in following procedure.**

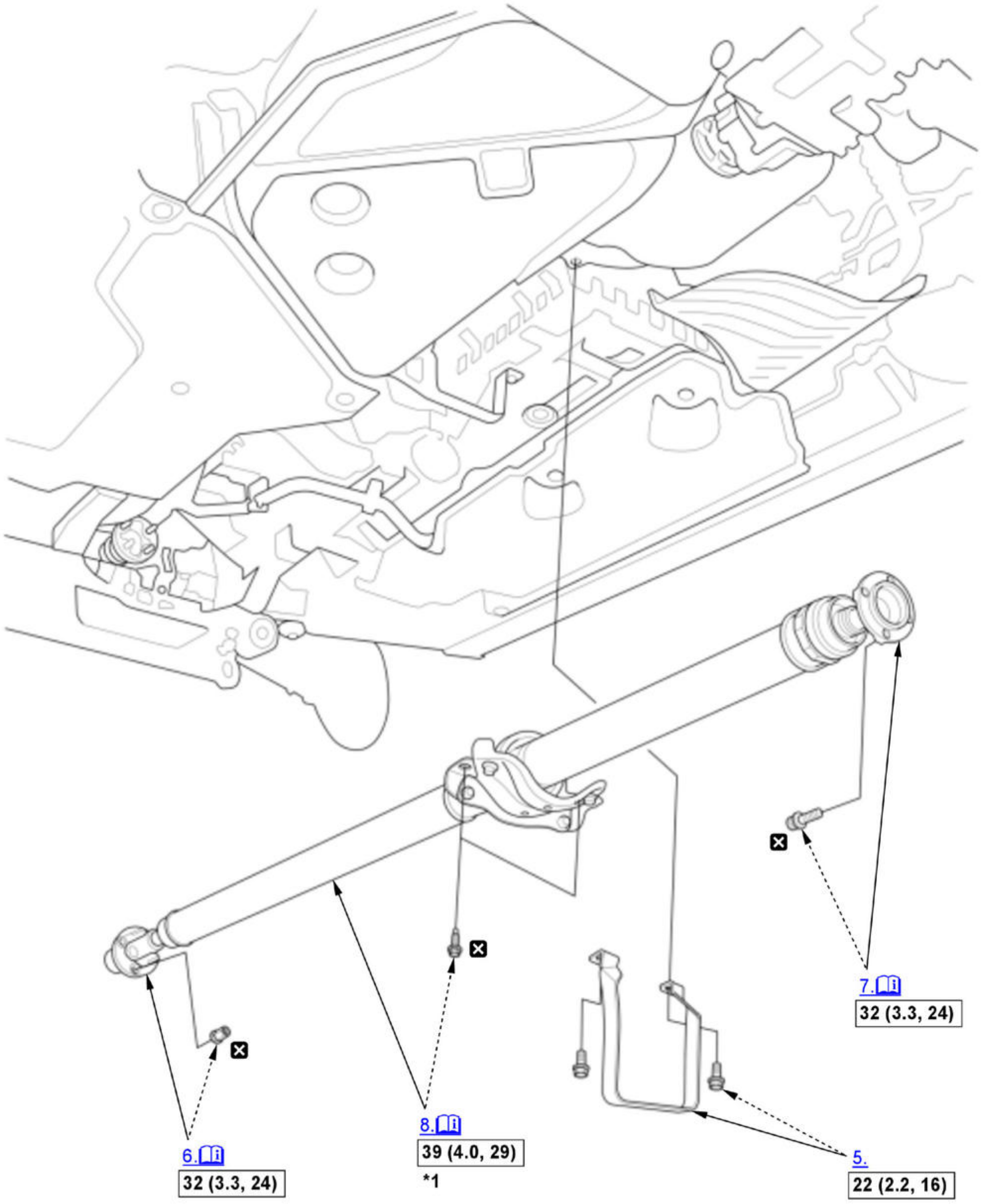

Fig. 1: Exploded View Of Propeller Shaft Replacement Components With Torque Specifications

Courtesy of HONDA, U.S.A., INC.

☐	Torque: N.m (kgf.m, lbf.ft)
☒	Replace
*1	These parts have inspection items.

1. **Vehicle - Lift**
2. **Neutral Position Holding Mode - Enter**
3. **12 Volt Battery Terminal - Disconnect**
4. **Front Floor Front Brace - Remove**
5. Propeller Shaft Protector - Remove
6. No. 1 Propeller Shaft - Disconnect

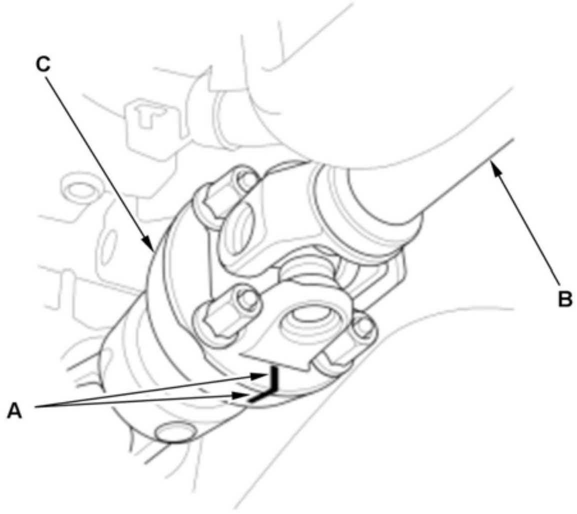	1. Make a reference marks (A) across the No. 1 propeller shaft (B) and the transfer companion flange (C).

7. No. 2 Propeller Shaft - Disconnect

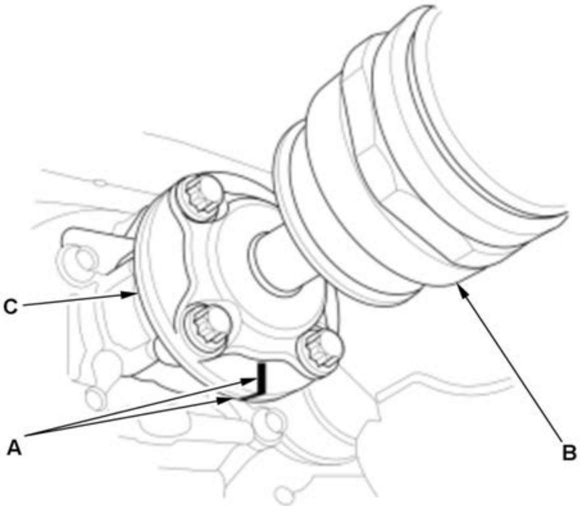	1. Make a reference marks (A) across the No. 2 propeller shaft (B) and the rear differential companion flange (C).

8. Propeller Shaft Assembly - Remove

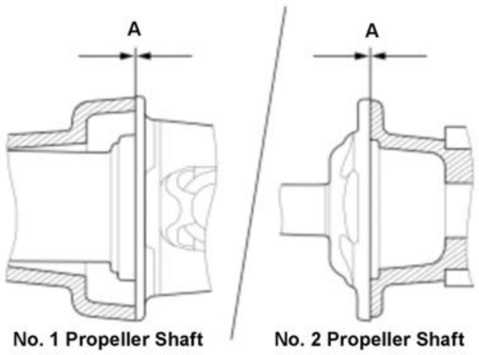	**NOTE:** Support the propeller shaft assembly with a transmission jack. 1. Remove the propeller shaft assembly to rear side of the vehicle while lowering the No. 2 propeller shaft. **Note for installation** Make sure that there are no clearance (A) between the propeller shaft assembly and the companion flanges as shown.

9. **Front Floor Rear Brace - Remove** (If Necessary)
10. All Removed Parts - Install

1. Install the parts in the reverse order of removal.

11. Test Drive - Check

1. Test drive and check that there are no abnormal noise and vibration.

Inspection

1. **Vehicle - Lift**
2. **Neutral Position Holding Mode - Enter**
3. **12 Volt Battery Terminal - Disconnect**
4. Propeller Shaft - Inspect

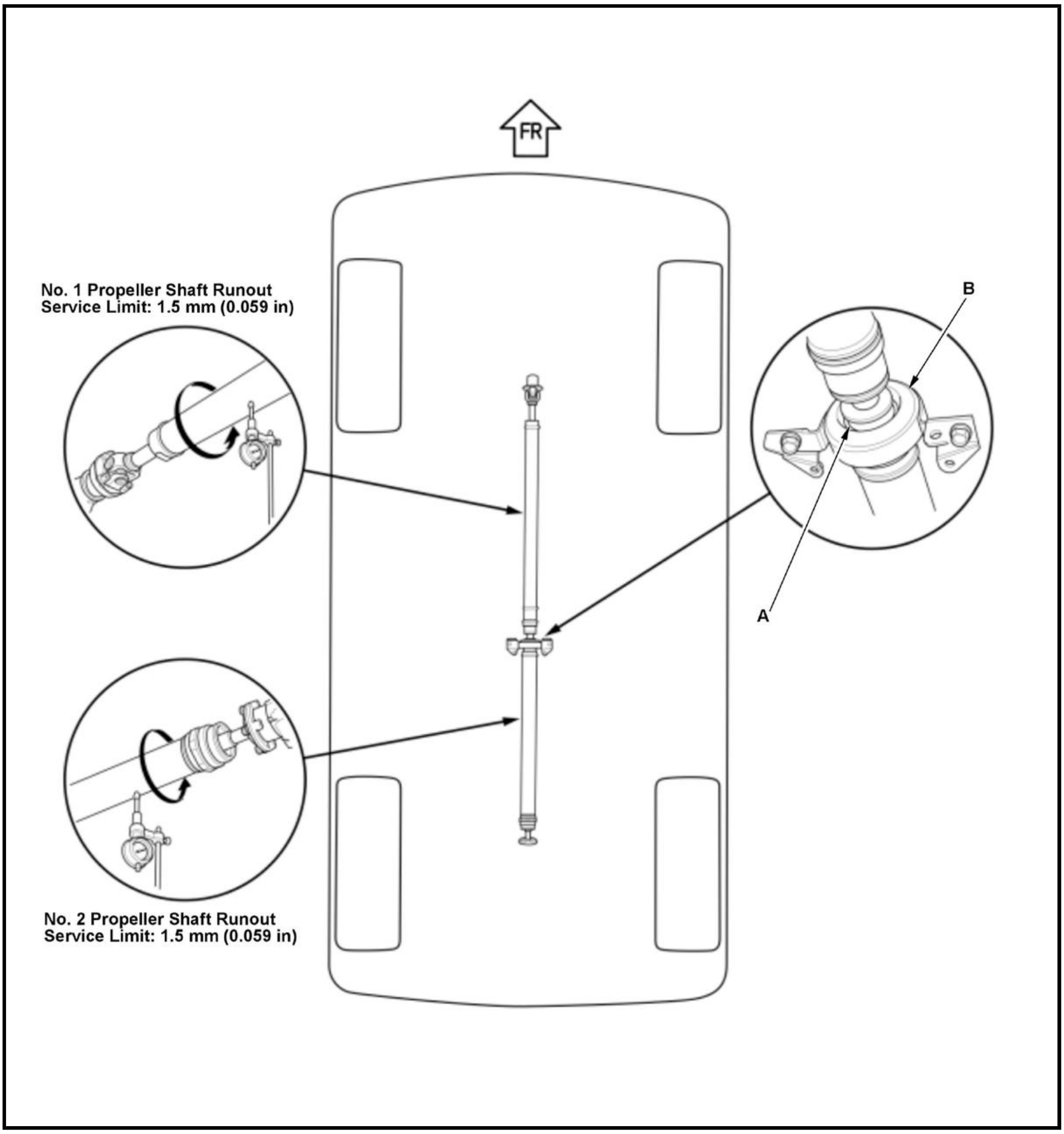
FR
No. 1 Propeller Shaft Runout
Service Limit: 1.5 mm (0.059 in)
B
A
No. 2 Propeller Shaft Runout
Service Limit: 1.5 mm (0.059 in)

Universal Joint and Boot

1. Check the center support bearing (A) for excessive play or noise. If the center support has excessive play or noise, replace the propeller shaft assembly.

2. Check the rubber portion (B) of the center support bearing for damage and deterioration. If the rubber portion is damaged or deteriorated, replace the propeller shaft assembly.

3. Check the universal joints for excessive play or noise. If the universal joints have excessive play or noise, replace the propeller shaft assembly.

Propeller Shaft Runout

4. Install a dial indicator with its needle on the center of the No. 1 and No. 2 propeller shafts.

5. Turn the other propeller shaft slowly and check the runout. Repeat this procedure for the other propeller shaft.

6. If the runout on either propeller shaft exceeds the service limit, replace the propeller shaft assembly.

INSPECTION

DRIVESHAFT INSPECTION

Inspection

1. Driveshaft - Inspect

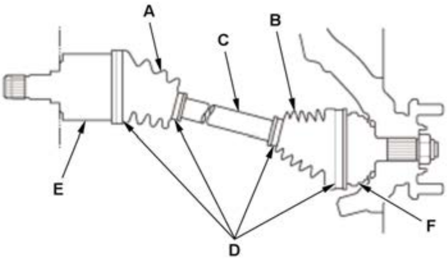	1. Check the inboard boot (A) and the outboard boot (B) on the driveshaft (C) for cracks, damage, leaking grease and loose boot bands (D). If any damage is found, replace the boot and the boot bands. 2. Check the driveshaft for cracks and damage. If any damage is found, replace the driveshaft. 3. Check the inboard joint (E) and the outboard joint (F) for cracks and damage. If any damage is found, replace the inboard joint or the outboard joint as an assembly. 4. Hold the inboard joint and turn the front wheel by hand, then make sure the joint is not excessively loose. If necessary, replace the inboard joint or the outboard joint as an assembly.

COMPONENT LOCATION INDEX

DRIVELINE/AXLE COMPONENT LOCATION INDEX

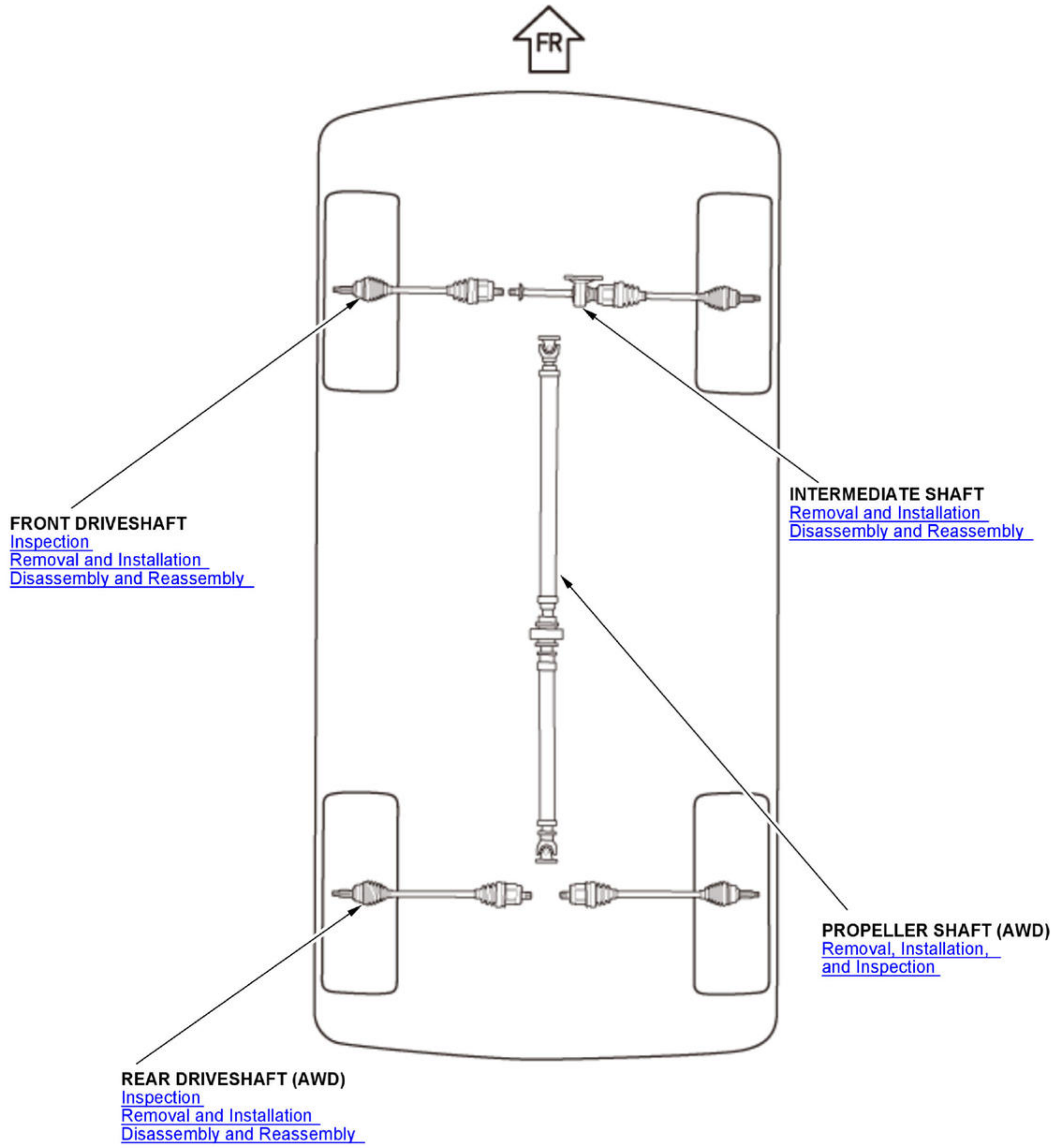

FRONT DRIVESHAFT
Inspection
Removal and Installation
Disassembly and Reassembly

INTERMEDIATE SHAFT
Removal and Installation
Disassembly and Reassembly

PROPELLER SHAFT (AWD)
Removal, Installation,
and Inspection

REAR DRIVESHAFT (AWD)
Inspection
Removal and Installation
Disassembly and Reassembly

Illustration shown is from above.

2020-22 DRIVELINE/AXLES

Driveshafts - Service Information - CR-V (Hybrid)

DISASSEMBLY AND REASSEMBLY

FRONT DRIVESHAFT DISASSEMBLY AND REASSEMBLY

Special Tools Required

Image	Description/Tool Number
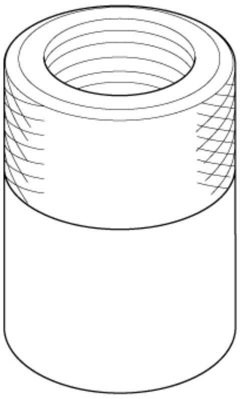	Threaded Adapter, 26 x 1.5 mm 07XAC-001030A

Disassembly

NOTE:

- ℹ Where icon is shown, for further information see below.
- Be careful not to damage the boot.
- Make marks on the disassembled parts to be able to reassemble them in their original positions.
- Use the bands included in the boot set.

Procedure

NOTE: **Numbered call-outs in figure pertain to list numbers in following procedure.**

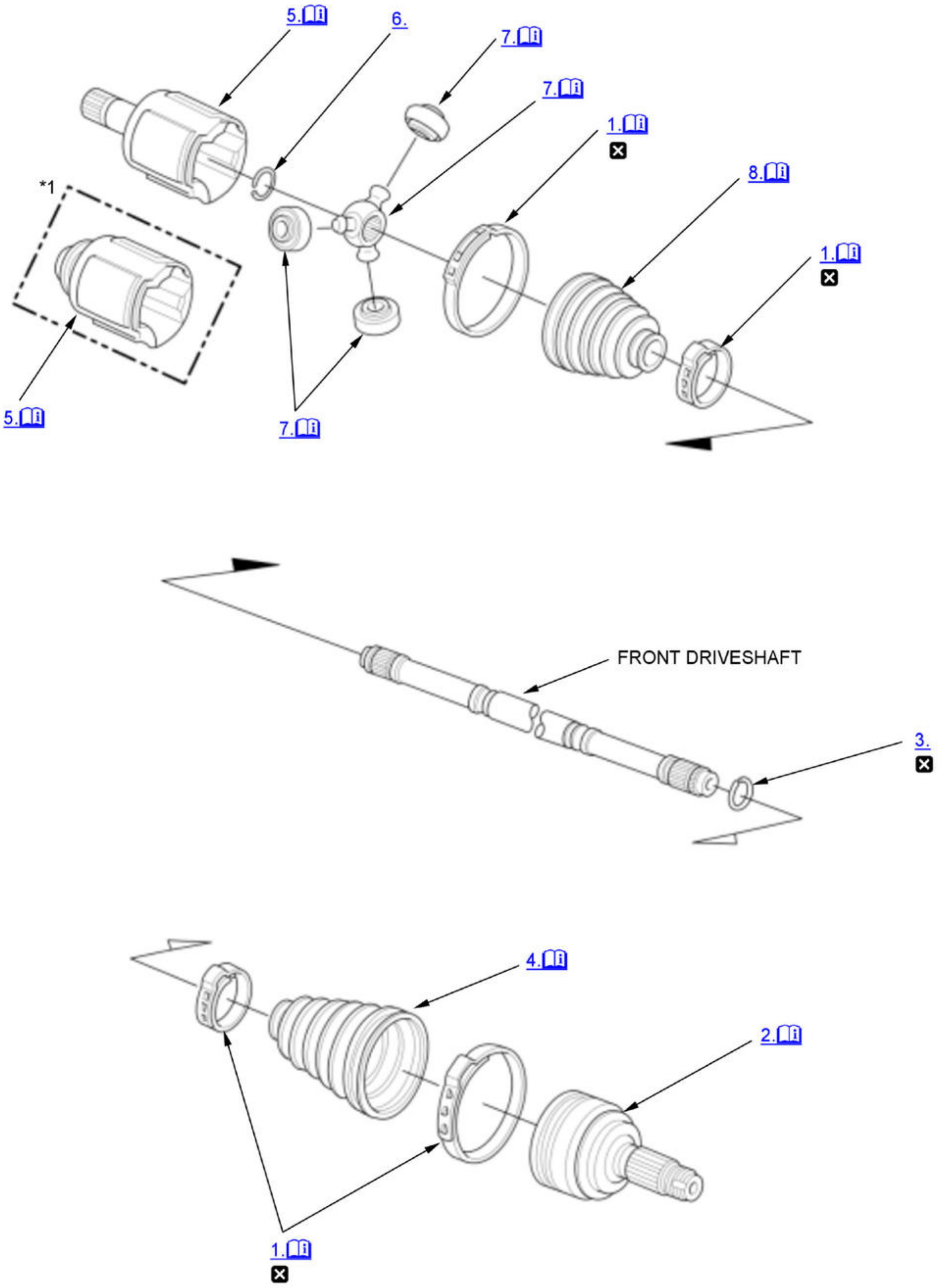
5.
6.
7.
7.
1.
8.
1.
*1
5.
7.
FRONT DRIVESHAFT
3.
4.
2.
1.

Fig. 1: Exploded View Of Front Driveshaft Components For Disassembly
Courtesy of HONDA, U.S.A., INC.

ℹ	Detailed information, notes, and precautions
☒	Replace
*1	Right driveshaft

1. Boot Bands - Remove

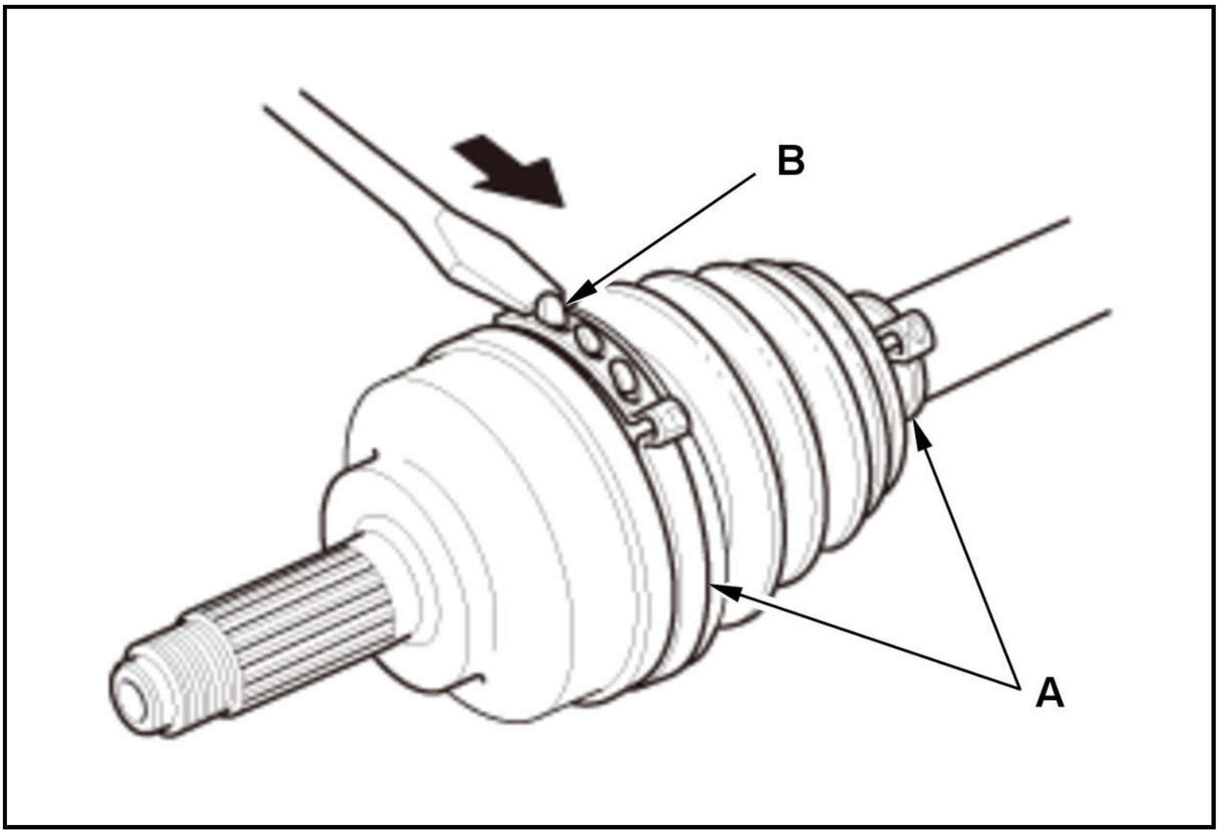

Ear clamp type

1. If the boot band is an ear clamp type (A), lift up the tabs (B) using a flat-tipped screwdriver.

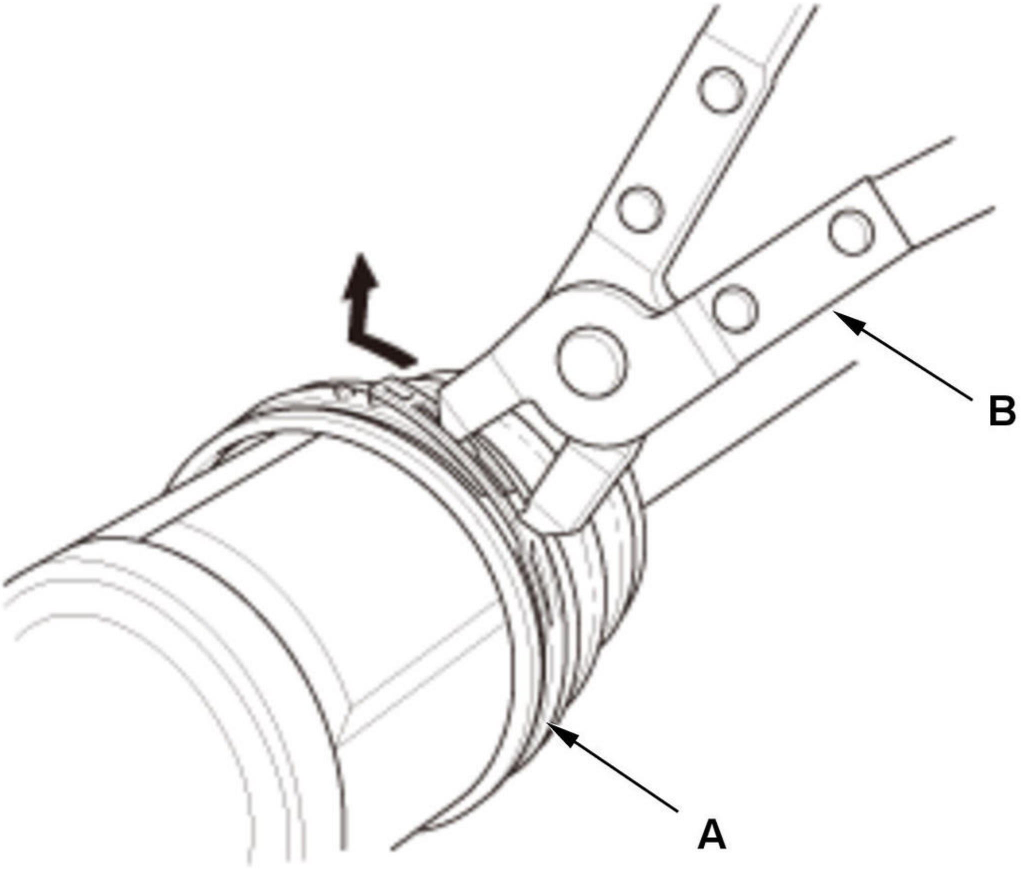

Low profile type

1. If the boot band is a low profile type (A), pinch the boot band using a commercially available CV boot clamp pincer pliers (B).

2. Outboard Joint - Remove

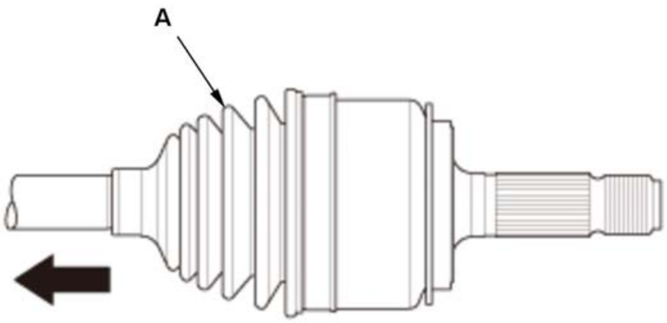	1. Slide the outboard boot (A) partially toward the inboard joint side. 2. Wipe off the grease to expose the driveshaft and the outboard joint inner race.

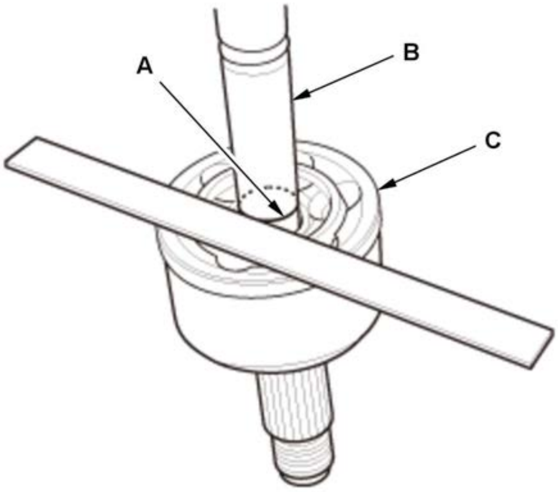

3. Make a mark (A) on the driveshaft (B) at the same level as the outboard joint end (C).

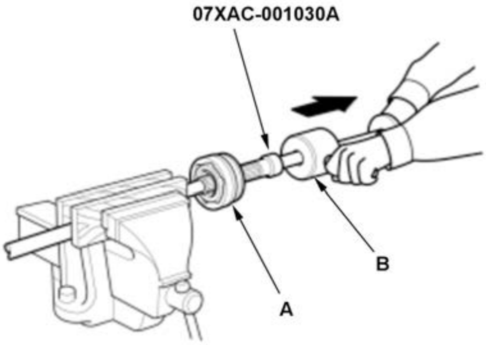

4. Securely clamp the driveshaft in a bench vise with the wood blocks.

5. Remove the outboard joint (A) using the 26 x 1.5 mm threaded adapter and a commercially available 5/8"-18 UNF slide hammer (B).

NOTE: Check inside of the outboard joint and on the serrations for wear and tear.

6. Remove the driveshaft from the bench vise.

3. Stop Ring - Remove
4. Outboard Boot - Remove

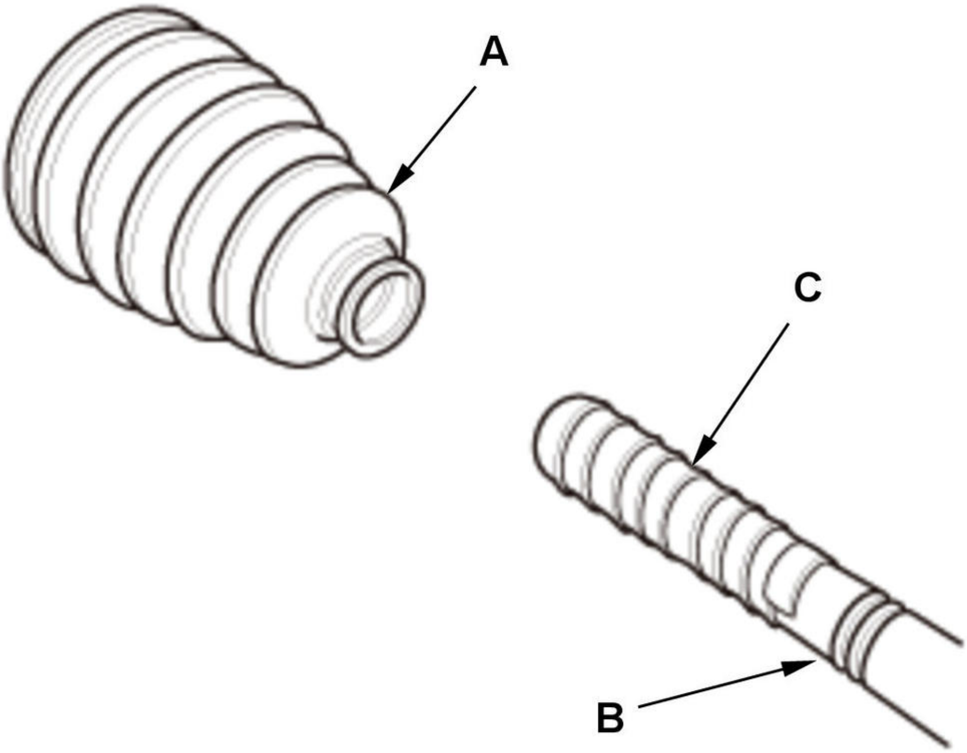

NOTE:

- Check the outboard boot (A) for cracks and damage. If any damage is found, replace the outboard boot.
- Wrap the splines on the driveshaft (B) with vinyl tape (C) to prevent damaging the outboard boot.

5. Inboard Joint - Remove

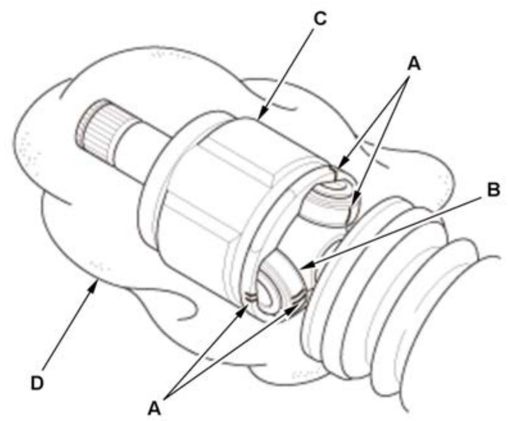	1. Make marks (A) on each roller (B) and the inboard joint (C) to identify the locations of the rollers to the grooves in the inboard joint. **NOTE:** Do not engrave or scribe any marks on the rolling surface. 2. Remove the inboard joint and place it on a clean shop towel (D). Be careful not to drop the rollers when separating them from the inboard joint. **NOTE:** Check inside of the inboard joint and on the serrations for wear and tear.

6. Circlip - Remove
7. Roller and Spider - Remove

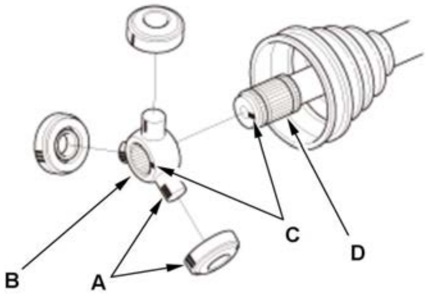	1. Make marks (A) on the spider (B) that match the marks on the rollers. **NOTE:** Do not engrave or scribe any marks on the rolling surfaces. 2. Remove the rollers. 3. Make marks (C) on the spider and the driveshaft (D) to identify the position of the spider on the shaft. 4. Remove the spider. **NOTE:** If necessary, use a commercially available bearing puller while being careful not to damage the spider.

8. Inboard Boot - Remove

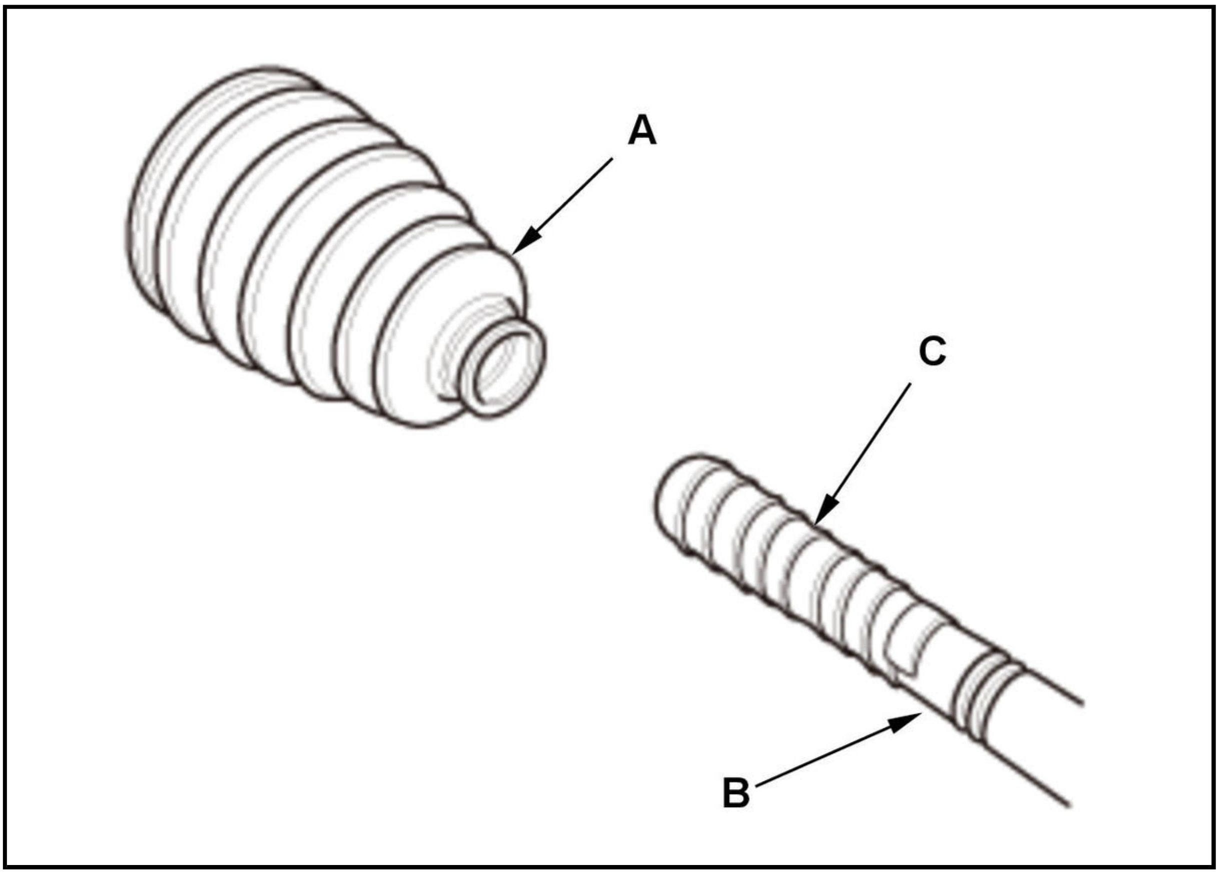

NOTE:

- Check the inboard boot (A) for cracks and damage. If any damage is found, replace the boot.
- Wrap the splines on the driveshaft (B) with vinyl tape (C) to prevent damaging the inboard boot.

Reassembly

NOTE:

- 🛈 Where icon is shown, for further information see below.
- Make marks on the disassembled parts to be able to reassemble them in their original positions.
- Be careful not to damage the boot.
- Use the bands included in the boot set.
- Be careful not to get grease on the boots attachment grooves.

Procedure

NOTE: **Numbered call-outs in figure pertain to list numbers in following procedure.**

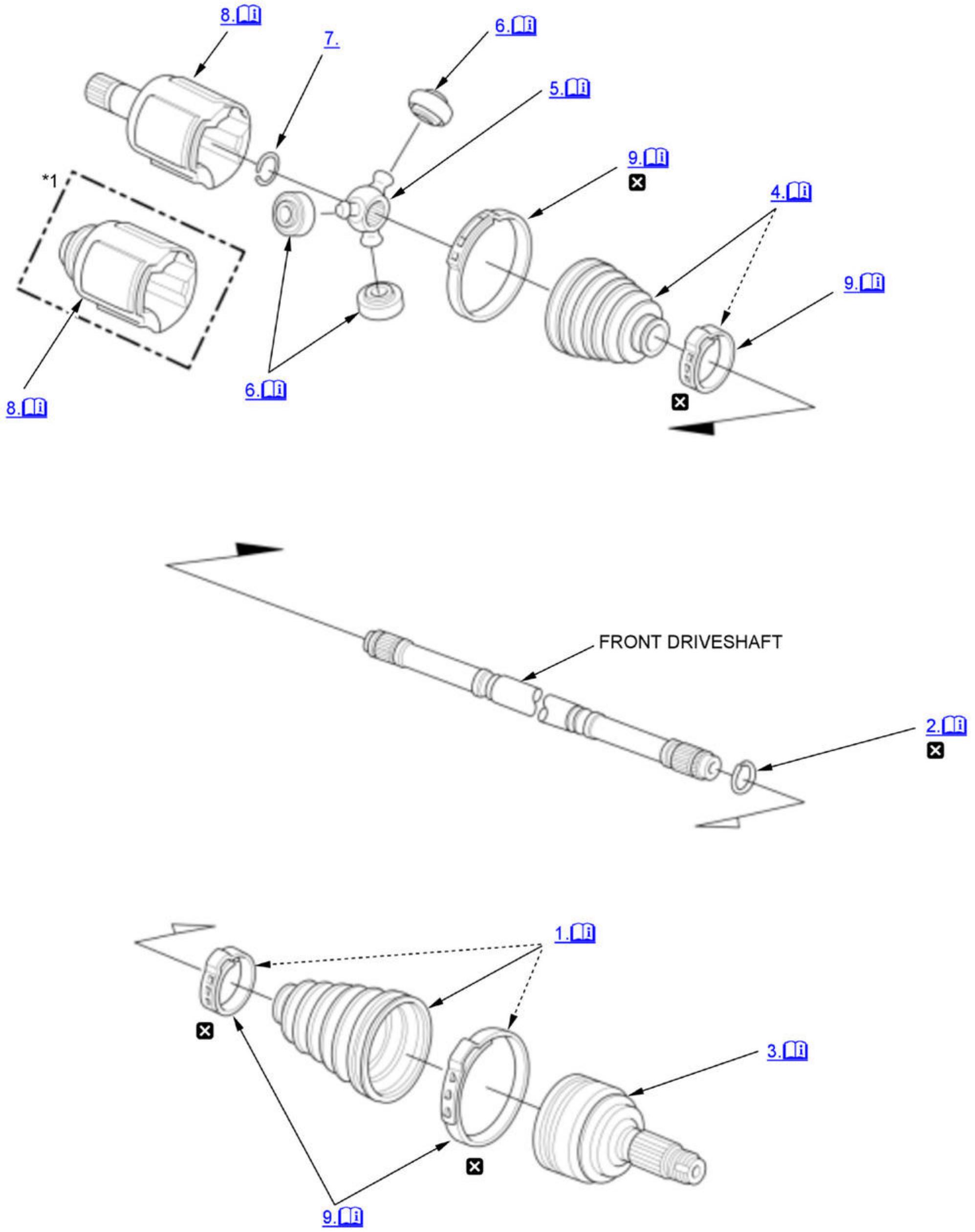
8.
7.
6.
5.
9.
4.
9.
*1
8.
6.
FRONT DRIVESHAFT
2.
1.
3.
9.

Fig. 2: Exploded View Of Front Driveshaft Components For Reassembly
Courtesy of HONDA, U.S.A., INC.

ℹ	Detailed information, notes, and precautions
☒	Replace
*1	Right driveshaft

1. Outboard Boot - Install

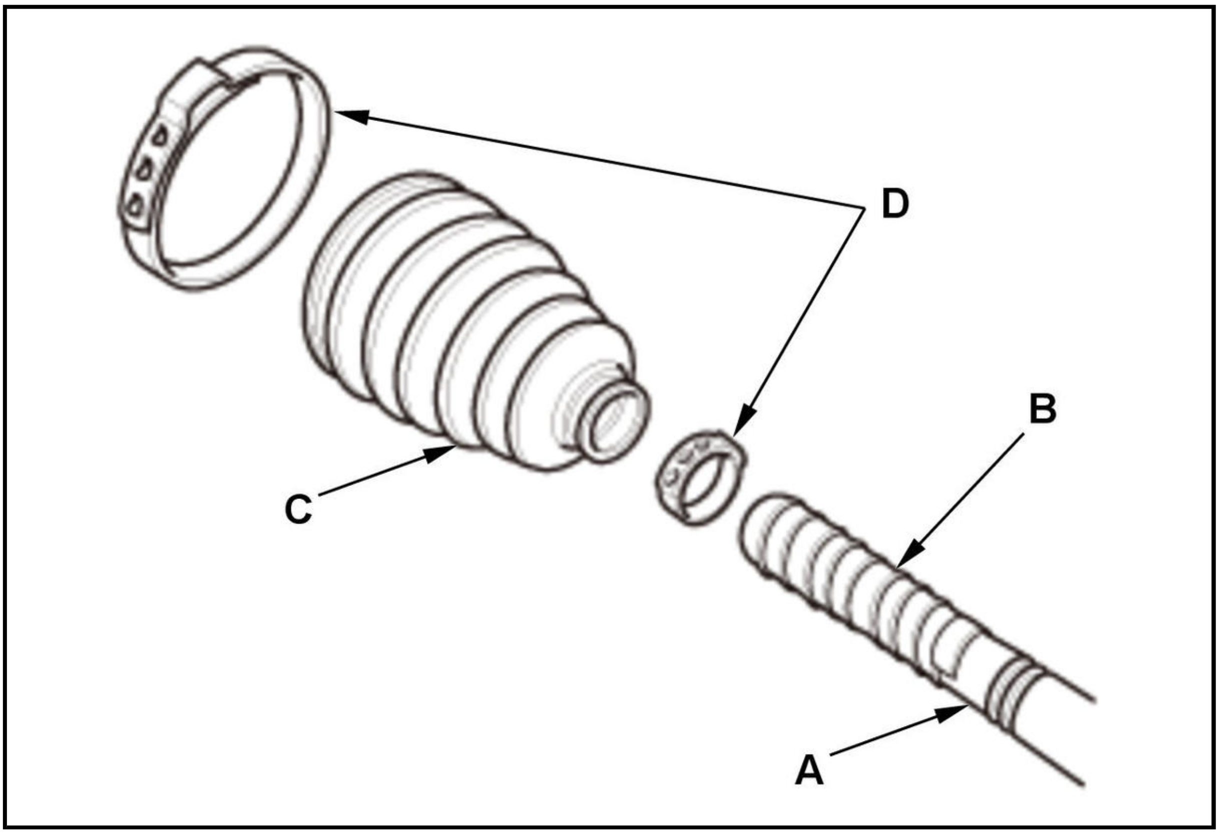

NOTE:

- Wrap the splines on the driveshaft (A) with vinyl tape (B) to prevent damaging the outboard boot (C).
- Install new ear clamp bands (D) with the boot to prevent damaging the bands.

2. Stop Ring - Install

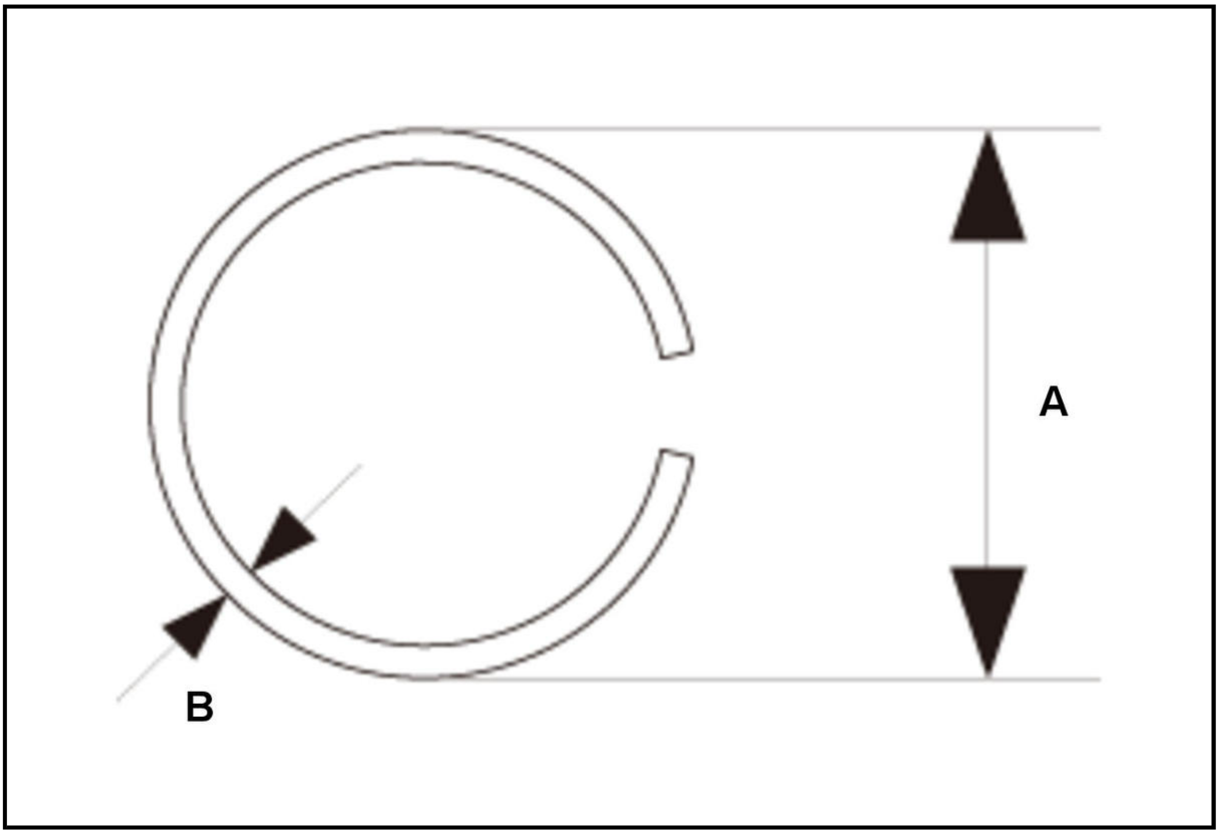

NOTICE:

To avoid driveshaft and vehicle damage, make sure you install the stop ring.

Stop ring specifications		
B	**Overall diameter (A):**	**31.2 mm (1.228 in)**
B	**Wire diameter (B):**	**2.0 mm (0.079 in)**

3. Outboard Joint - Install

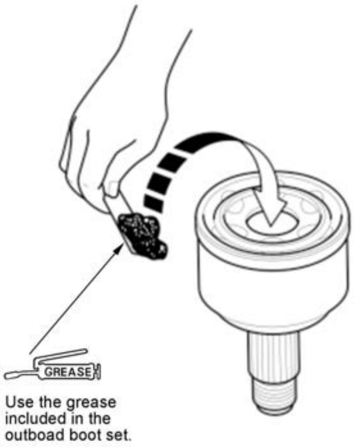 Use the grease included in the outboad boot set.	**NOTE:** Be careful not to damage the outboard boot. 1. Fill grease through the driveshaft hole in the outboard joint before installing the driveshaft. Inject enough grease so that it seeps out from the gap around the bearing when the driveshaft is inserted. **NOTE:** If you are installing a new outboard joint, the grease is already installed.
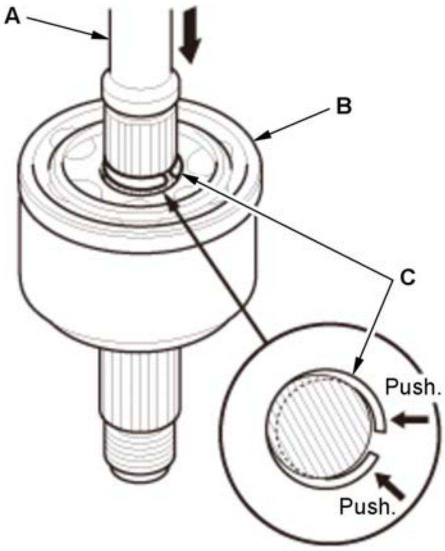	2. Insert the driveshaft (A) into the outboard joint (B) until the stop ring (C) is close to the joint.
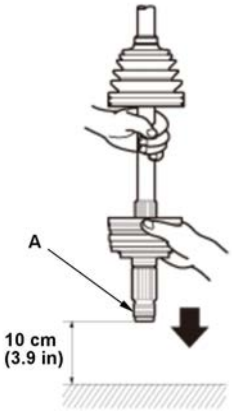	3. To completely seat the outboard joint, pick up the driveshaft and the joint and tap or hit the assembly onto a hard surface from a height of about 10 cm (3.9 in). **NOTE:** Do not use a hammer, as excessive force may damage the driveshaft. Be careful not to damage the threaded section (A) of the outboard joint.

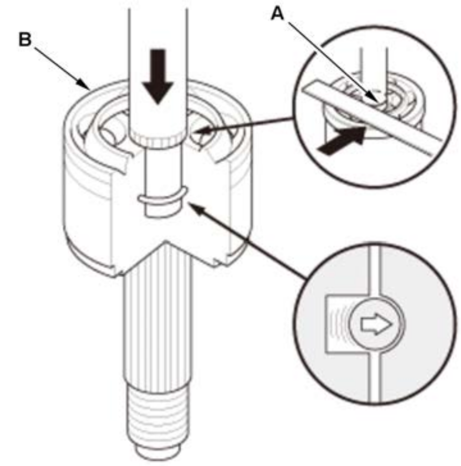	4. Check the alignment of the paint mark (A) you made with the outboard joint end (B). **NOTICE:** To avoid driveshaft and vehicle damage, the shaft must be all the way into the outboard joint to ensure the stop ring is properly seated.

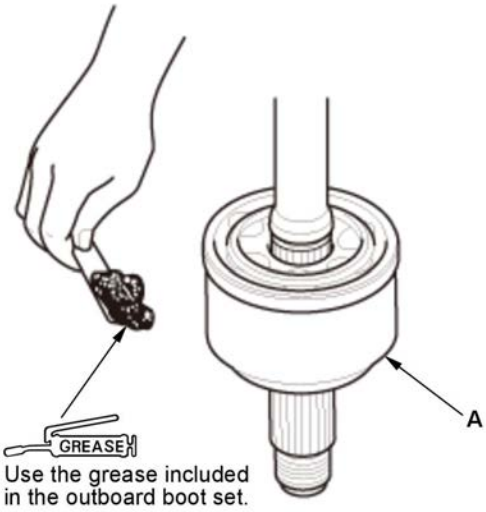 Use the grease included in the outboard boot set.	5. Pack the outboard joint (A) with the remaining joint grease included in the outboard boot set.

Total grease quantity	
B	**Outboard joint:**
B	**150-170 g (5.29-6.00 oz)**

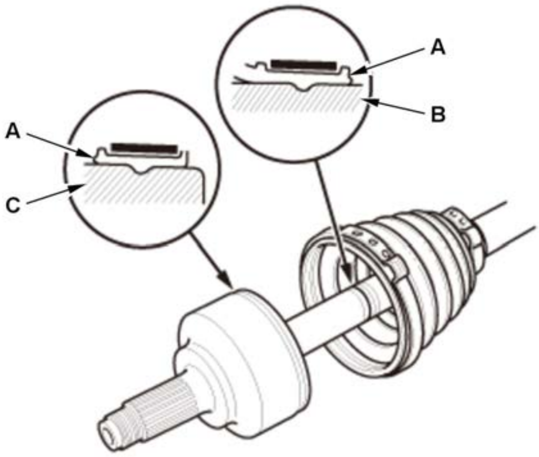	6. Fit the boot ends (A) onto the driveshaft (B) and the outboard joint (C). 7. Bleed any excess air from the boot by inserting a flat-tipped screwdriver between the boot and the joint.

4. Inboard Boot - Install

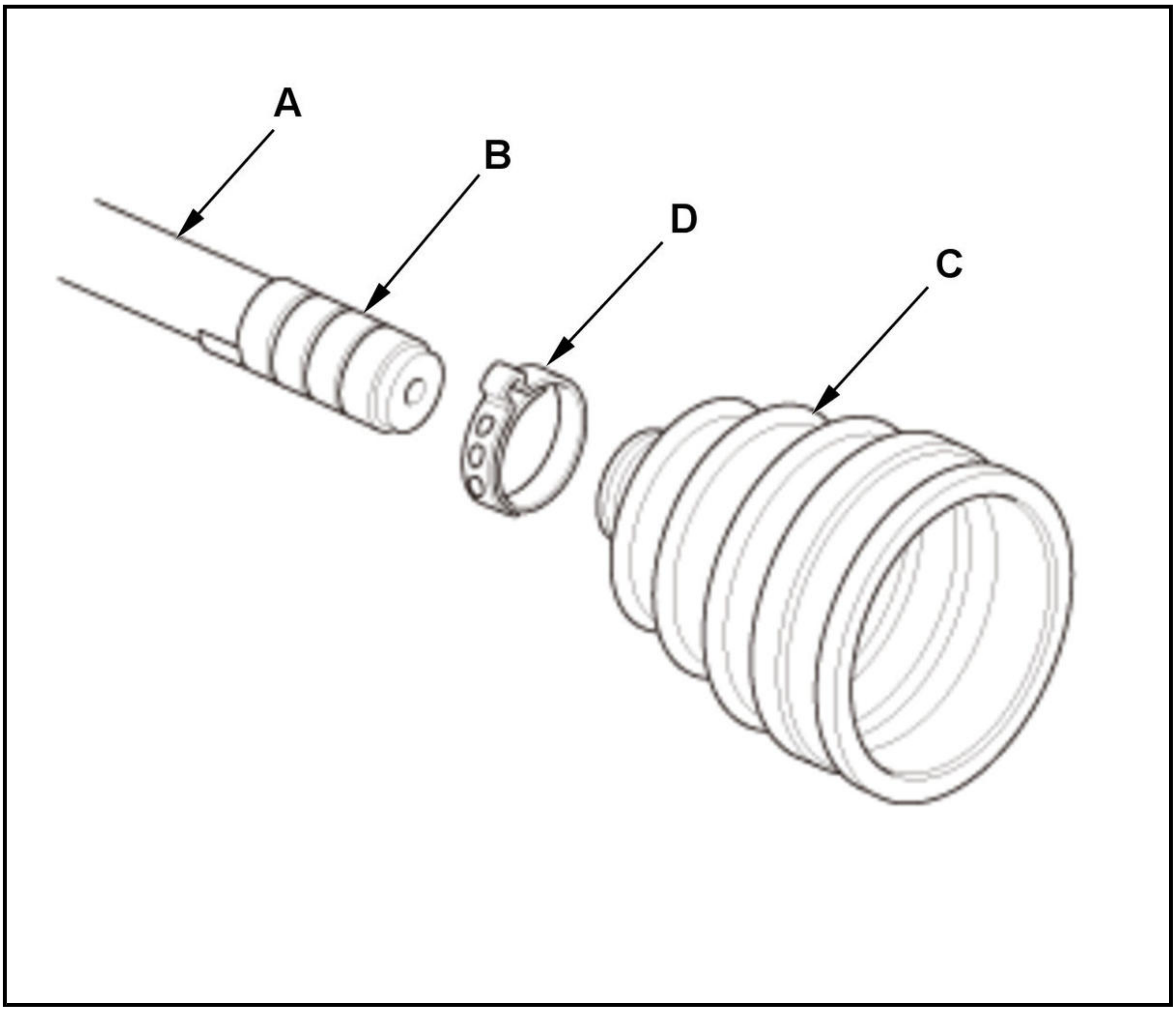

NOTE:

- Wrap the splines on the driveshaft (A) with vinyl tape (B) to prevent damaging the inboard boot (C).
- Install a new ear clamp band (D) with the boot to prevent damaging the band.

5. Spider - Install

<table>
<tr><td>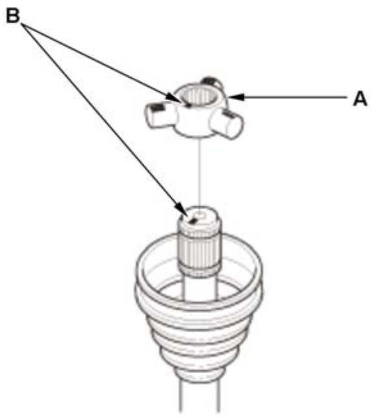
</td><td>1. Install the spider (A) onto the driveshaft by aligning the marks (B) you made on the spider and the end of the driveshaft.</td></tr>
</table>

6. Roller - Install

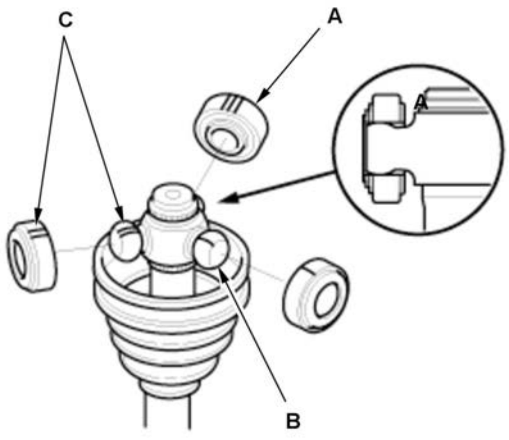	1. Fit the rollers (A) onto the spider (B) as shown and note these items: • Reinstall the rollers in their original positions on the spider by aligning the marks (C) you made. • Hold the driveshaft pointed up to prevent the rollers from falling off.

7. Circlip - Install

8. Inboard Joint - Install

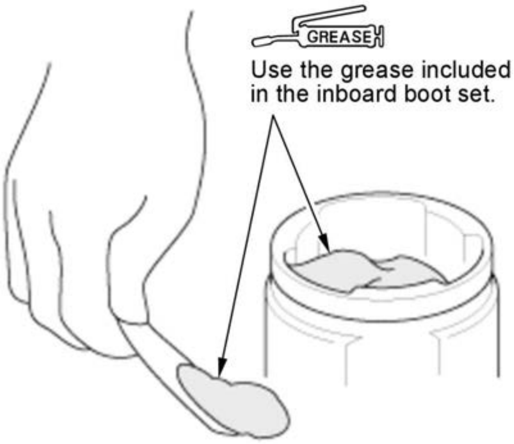	1. Pack the inboard joint with the joint grease included in the new inboard boot set.

Grease quantity	
B	**Inboard joint:**
B	**195-215 g (6.88-7.58 oz)**

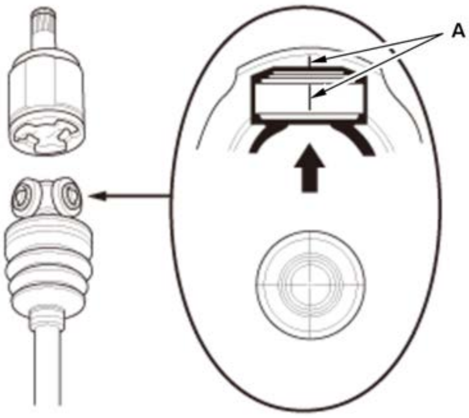	2. Fit the inboard joint onto the driveshaft and note these items: • Reinstall the inboard joint onto the driveshaft by aligning the marks (A) you made on the inboard joint and the rollers. • Hold the driveshaft so the inboard joint is pointing up to prevent it from falling off.

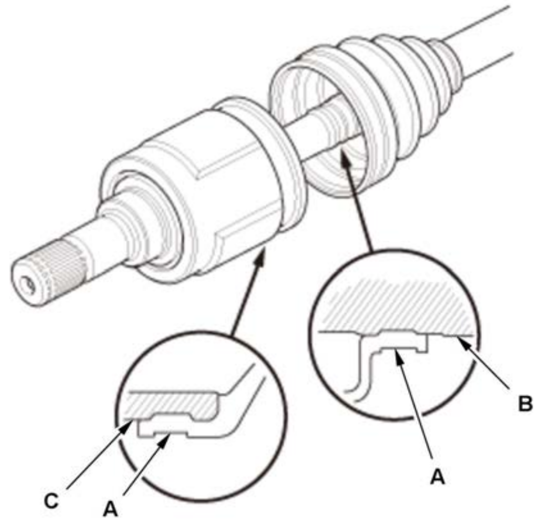

3. Fit the boot ends (A) onto the driveshaft (B) and the inboard joint (C).

4. Bleed any excess air from the boot by inserting a flat-tipped screwdriver between the boot and the joint.

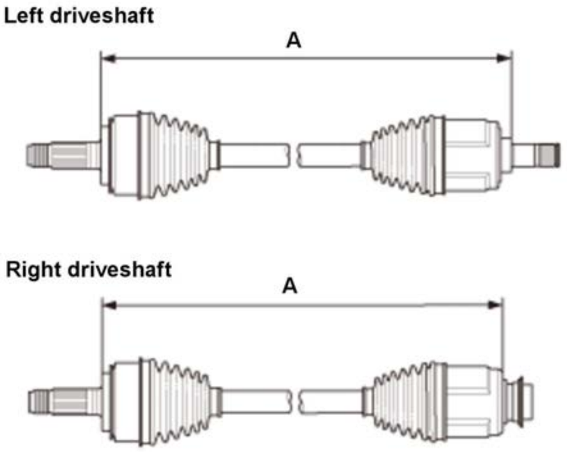

5. Adjust the length (A) of the driveshafts in the figure as shown.

6. Adjust the boots to halfway between full compression and full extension.

7. Bleed excess air from the boots by inserting a flat-tipped screwdriver between the boot and the joint.

NOTE: Install the joints at exactly the same length.

Left/Right driveshaft	Specified length (A)
Left	**528-533 mm (20.787-20.984 in)**
Right	**526-531 mm (20.709-20.905 in)**

9. Boot Bands - Install

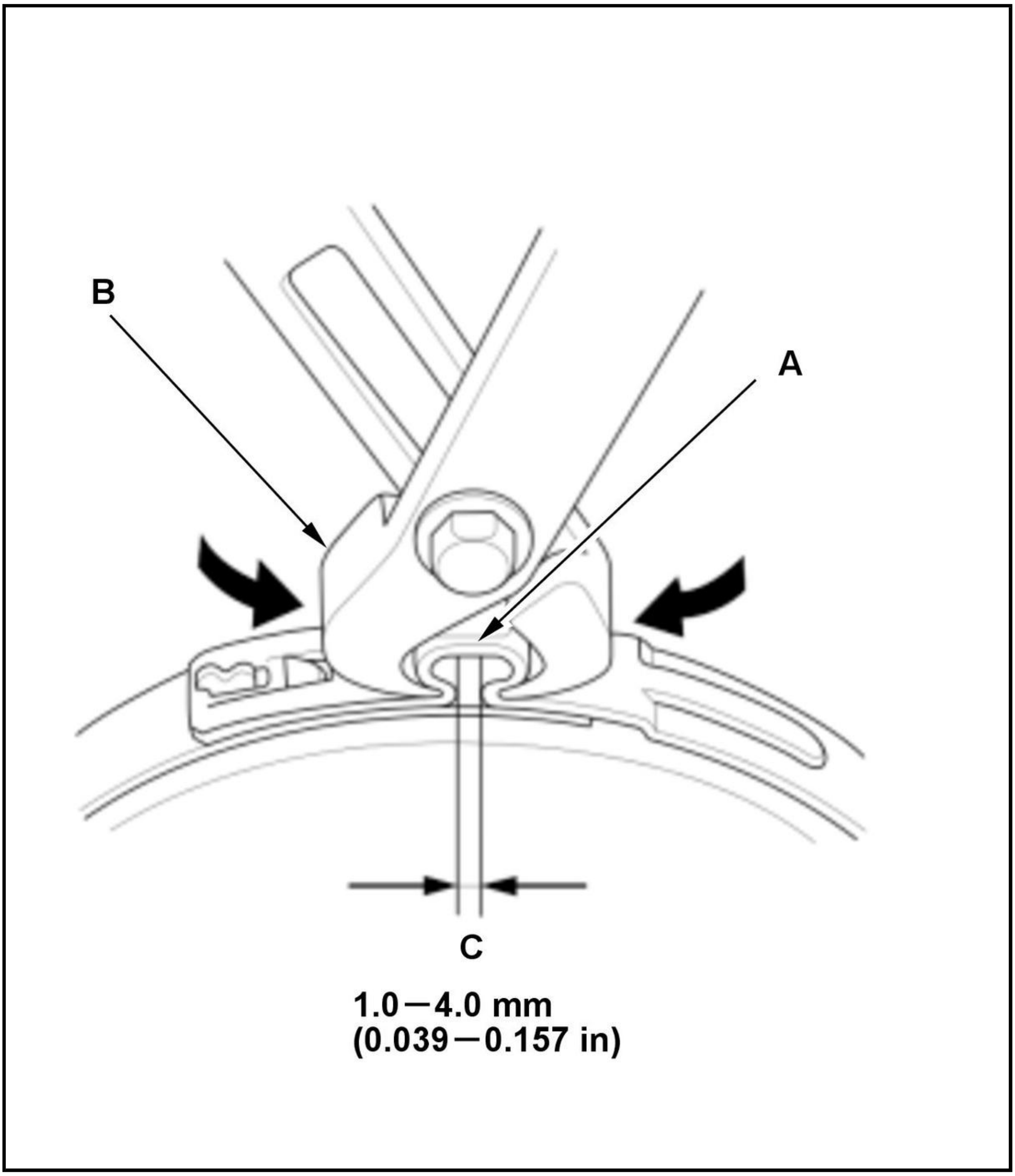

Ear clamp type

1. Close the ear portion (A) of the band using a commercially available boot band clamp tool (B).

2. Check the clearance of the closed ear portion of the band. If the clearance is not within specification, close the ear portion of the band tighter.

NOTE: Replace the ear clamp band with the one when the ear portion exceeds the specifications.

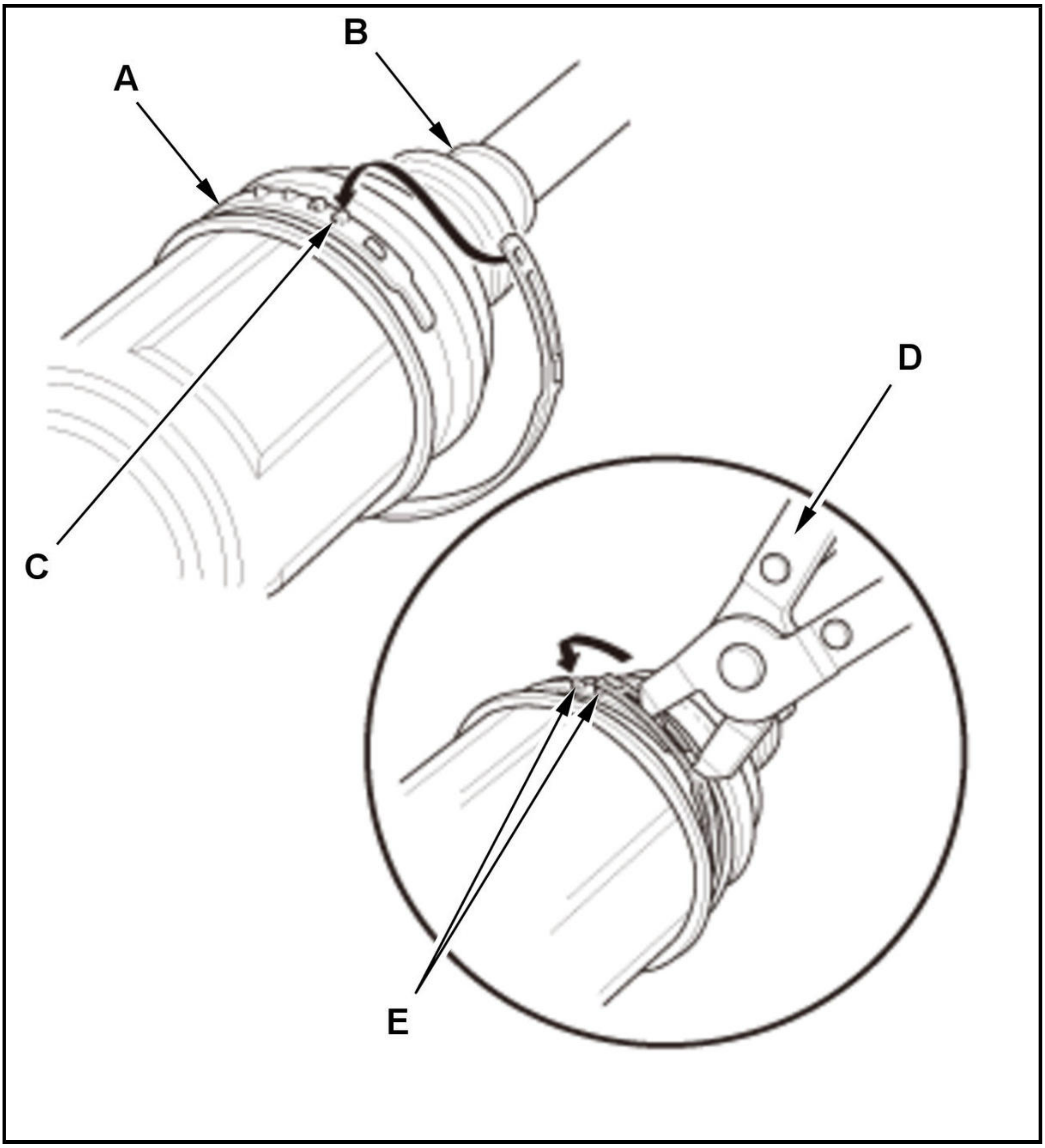

Low profile type

1. Fit the boot ends onto the driveshaft and the inboard joint, then install a new low profile band (A) onto the boot (B).

2. Hook the tab (C) of the band.

3. Close the hook portion of the band using a commercially available CV boot clamp pincer pliers (D), then hook the tabs (E) of the band.

INTERMEDIATE SHAFT DISASSEMBLY AND REASSEMBLY

Special Tools Required

Image	Description/Tool Number
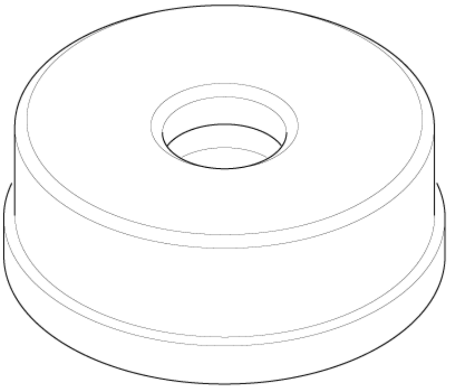	Bearing Driver Attachment, 52 x 55 mm 07746-0010400
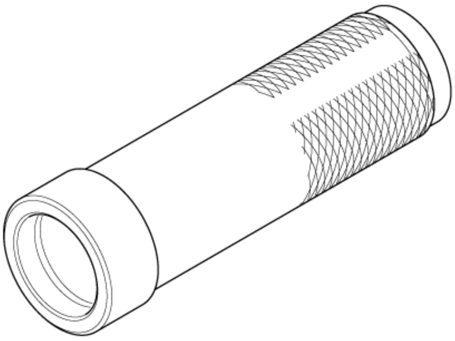	Driver Handle, 40 mm I.D. 07746-0030100
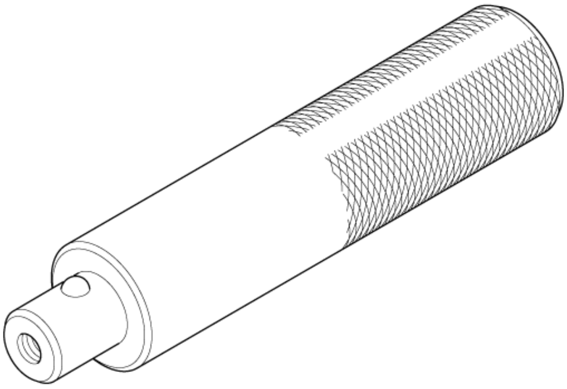	Driver Handle, 15 x 135L 07749-0010000
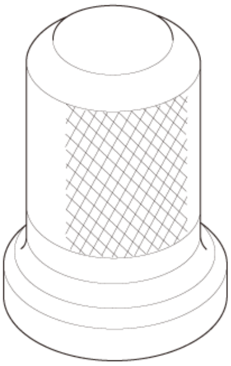	Oil Seal Driver, 44.5 mm 07947-SB0A100

Image	Description/Tool Number
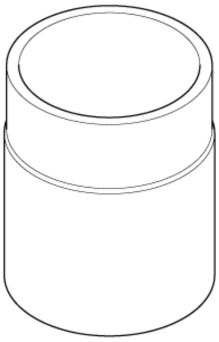	Support Base 07965-SD90100
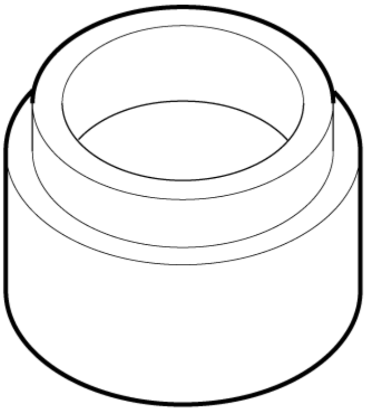	Installer Attachment 40 mm 07LAD-PW50601
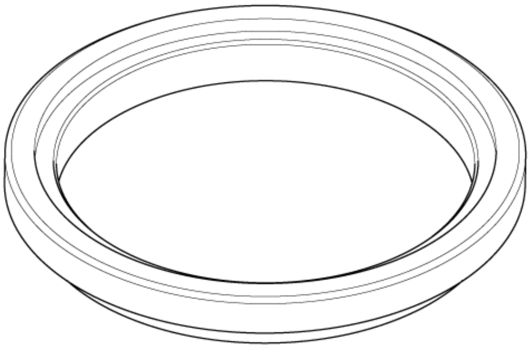	Support Base Attachment 07LAF-SM40300
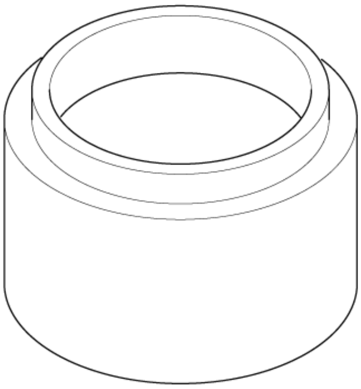	Installer Attachment, 45 x 55 mm 07MAD-PR90100

Disassembly

NOTE:

- ℹ Where icon is shown, for further information see below.
- Clean the disassembled parts with solvent, then dry the disassembled parts with compressed air. Do not wash the rubber parts with solvent.

Procedure

NOTE: **Numbered call-outs in figure pertain to list numbers in following procedure.**

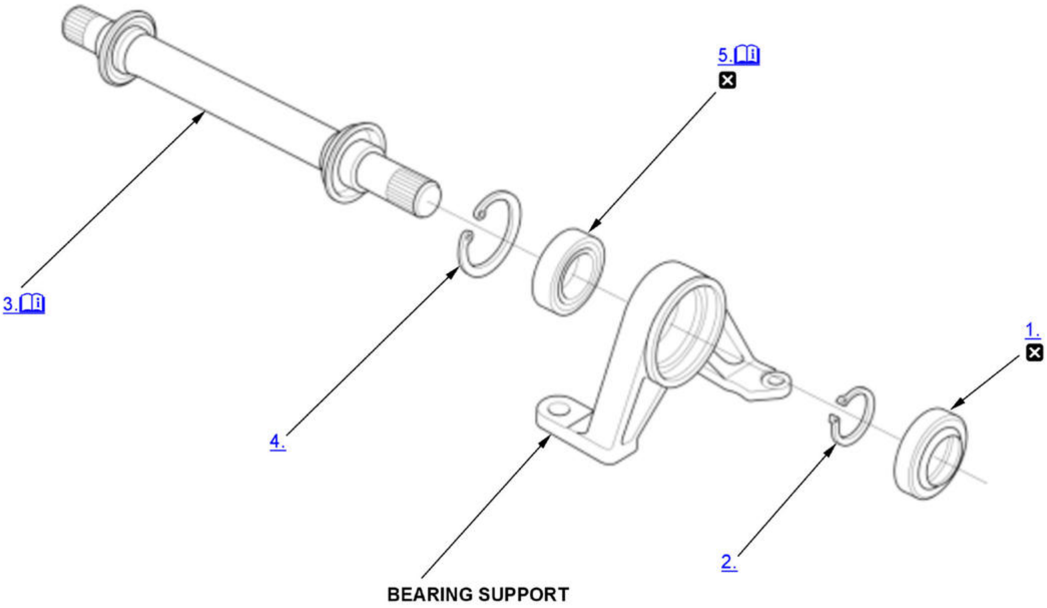

Fig. 3: Exploded View Of Intermediate Shaft Components For Disassembly
Courtesy of HONDA, U.S.A., INC.

ℹ	Detailed information, notes, and precautions
☒	Replace

1. Outer Seal - Remove
2. External Snap Ring - Remove
3. Intermediate Shaft - Remove

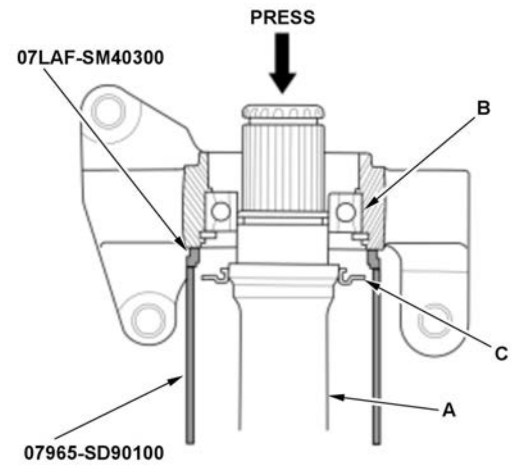	1. Press the intermediate shaft (A) out of the intermediate shaft bearing (B) using the support base attachment, the support base, and a press. **NOTE:** Be careful not to damage the bearing support ring (C) on the intermediate shaft during disassembly.

4. Internal Snap Ring - Remove
5. Intermediate Shaft Bearing - Remove

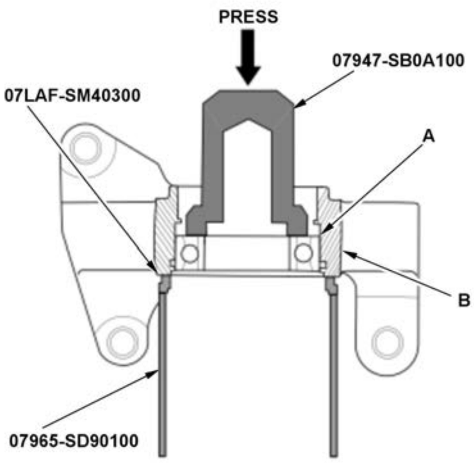 PRESS 07947-SB0A100 07LAF-SM40300 A B 07965-SD90100	1. Press the intermediate shaft bearing (A) out of the bearing support (B) using the 44.5 mm oil seal driver, the support base attachment, the support base, and a press.

Reassembly

NOTE:

- Where icon is shown, for further information see below.
- Clean the disassembled parts with solvent, then dry the disassembled parts with compressed air. Do not wash the rubber parts with solvent.

Procedure

NOTE: **Numbered call-outs in figure pertain to list numbers in following procedure.**

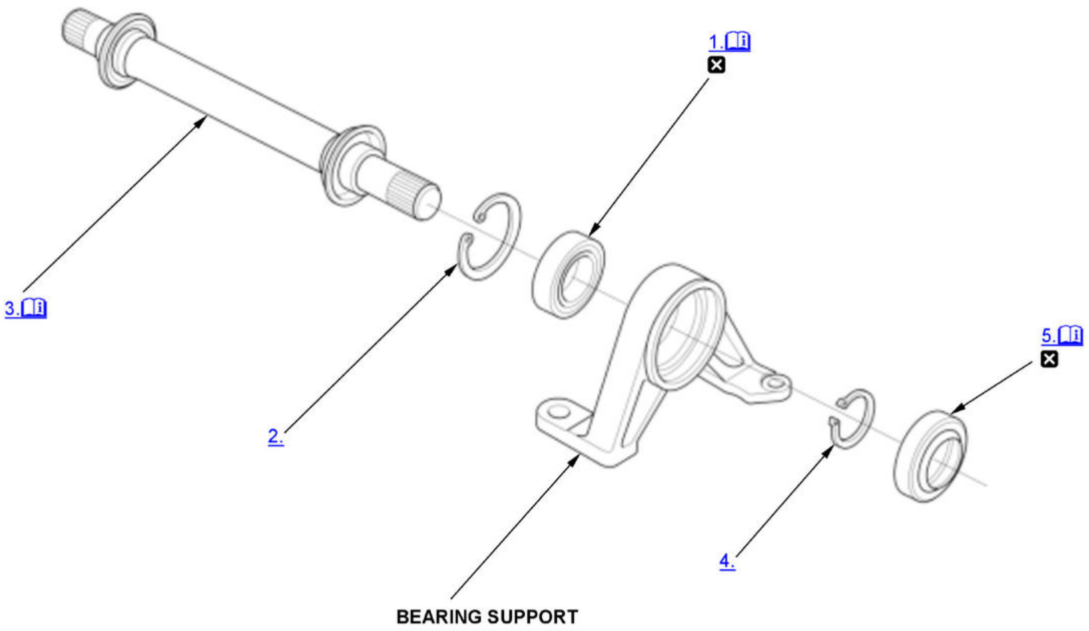
1.
3.
2.
5.
4.
BEARING SUPPORT

Fig. 4: Exploded View Of Intermediate Shaft Components For Reassembly

Courtesy of HONDA, U.S.A., INC.

ℹ	Detailed information, notes, and precautions
☒	Replace

1. Intermediate Shaft Bearing - Install

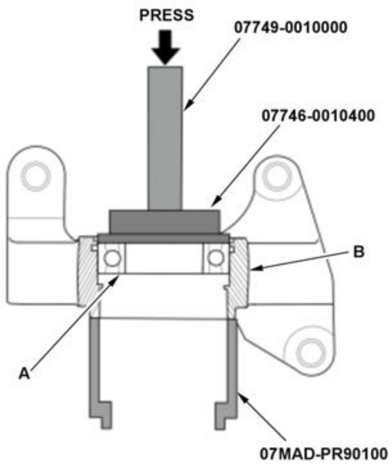 PRESS 07749-0010000 07746-0010400 B A 07MAD-PR90100	1. Press the intermediate shaft bearing (A) into the bearing support (B) using the 52 x 55 mm bearing driver attachment, the 15 x 135L driver handle, the 45 x 55 mm installer attachment, and a press.

2. Internal Snap Ring - Install
3. Intermediate Shaft - Install

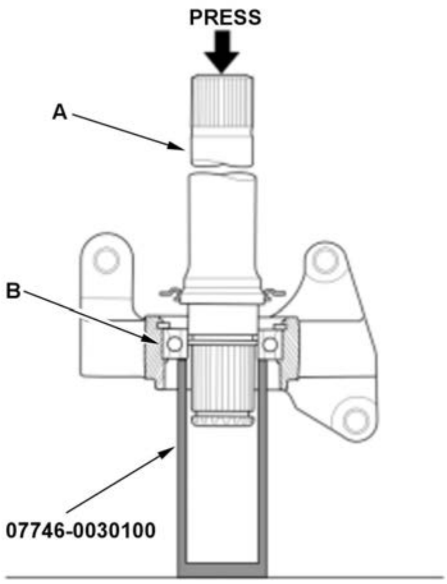 PRESS A B 07746-0030100	1. Press the intermediate shaft (A) into the shaft bearing (B) using the 40 mm I.D. driver handle and a press.

4. External Snap Ring - Install
5. Outer Seal - Install

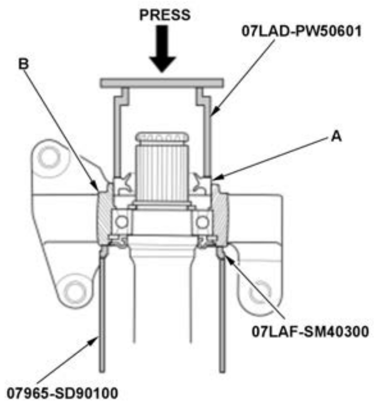 PRESS 07LAD-PW50601 B A 07LAF-SM40300 07965-SD90100	1. Install the outer seal (A) into the bearing support (B) using the 40 mm installer attachment, the support base attachment, the support base, and a press. Press in the seal until it is even with the surface of the bearing support.

REAR DRIVESHAFT DISASSEMBLY AND REASSEMBLY

Special Tools Required

Image	Description/Tool Number
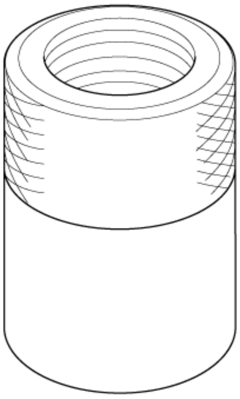	Threaded Adapter, 22 x 1.5 mm 07XAC-001010A

Disassembly

NOTE:

- Where icon is shown, for further information see below.
- Make marks on the disassembled parts to be able to reassemble them in their original positions.
- Be careful not to damage the boot.
- Use the bands included in the boot set.

Procedure

NOTE: **Numbered call-outs in figure pertain to list numbers in following procedure.**

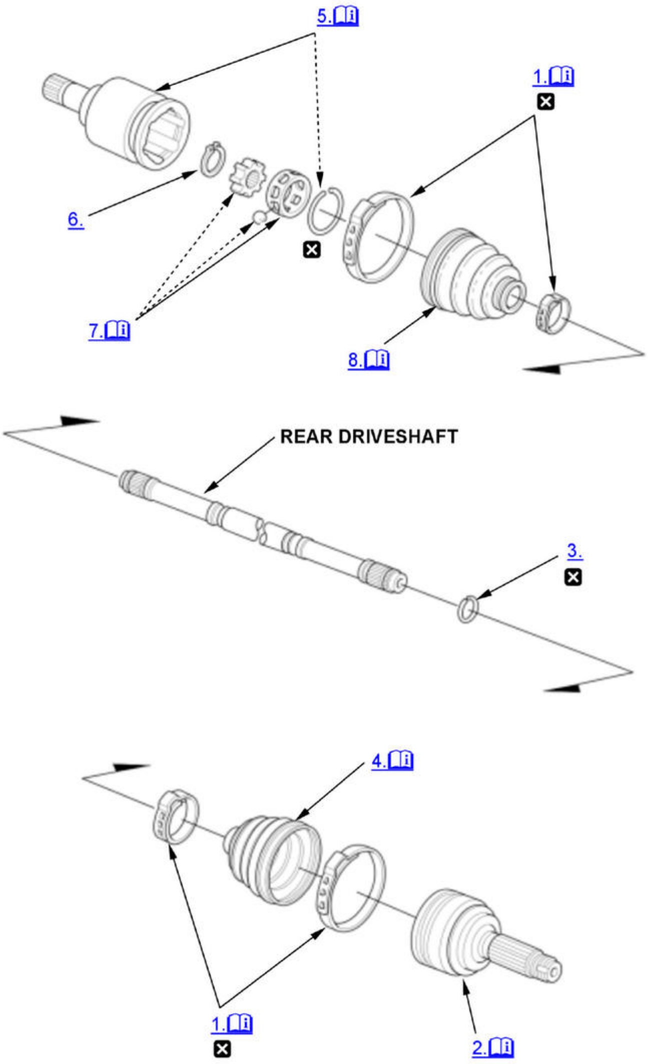
5.
1.
6.
7.
8.
REAR DRIVESHAFT
3.
4.
1.
2.

Fig. 5: Exploded View Of Rear Driveshaft Components For Disassembly
Courtesy of HONDA, U.S.A., INC.

📖	Detailed information, notes, and precautions
☒	Replace

1. Boot Bands - Remove

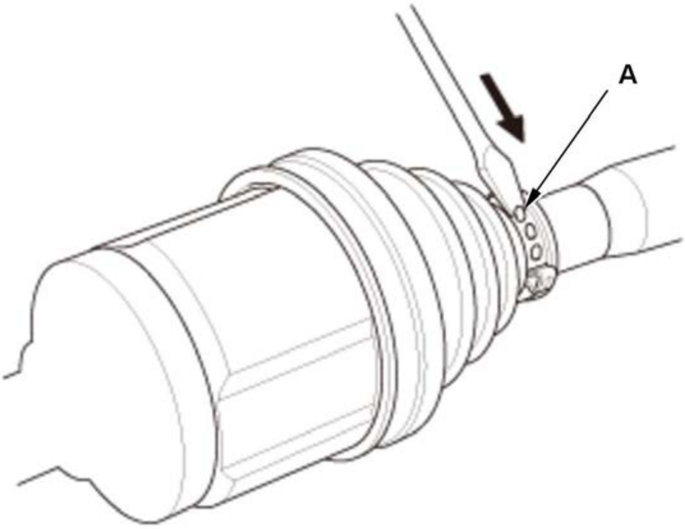	1. Lift up the tabs (A) using a flat-tipped screwdriver.

2. Outboard Joint - Remove

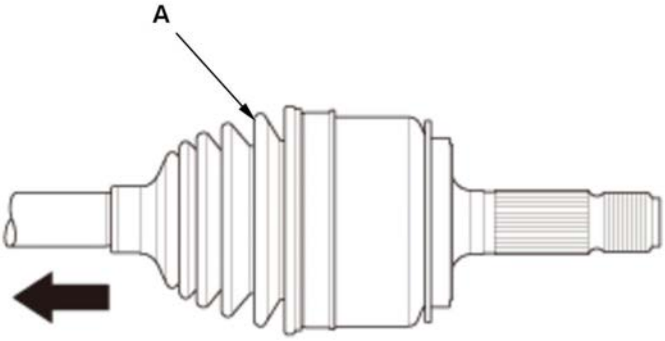	1. Slide the outboard boot (A) partially toward the inboard joint side. 2. Wipe off the grease to expose the driveshaft and the outboard joint inner race.

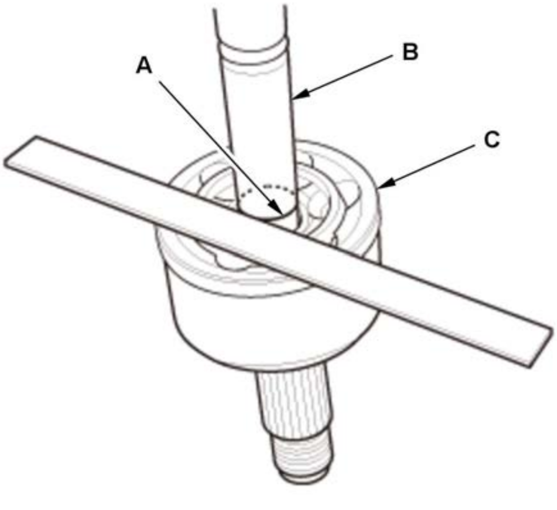	3. Make a mark (A) on the driveshaft (B) at the same level as the outboard joint end (C).

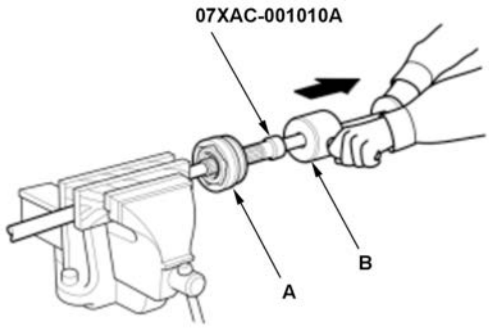	4. Securely clamp the driveshaft in a bench vise with the wood blocks. 5. Remove the outboard joint (A) using the 22 x 1.5 mm threaded adapter and a commercially available 5/8"-18 UNF slide hammer (B). **NOTE:** Check inside of the outboard joint and on the serrations for wear and tear. 6. Remove the driveshaft from the bench vise.

3. Stop Ring - Remove
4. Outboard Boot - Remove

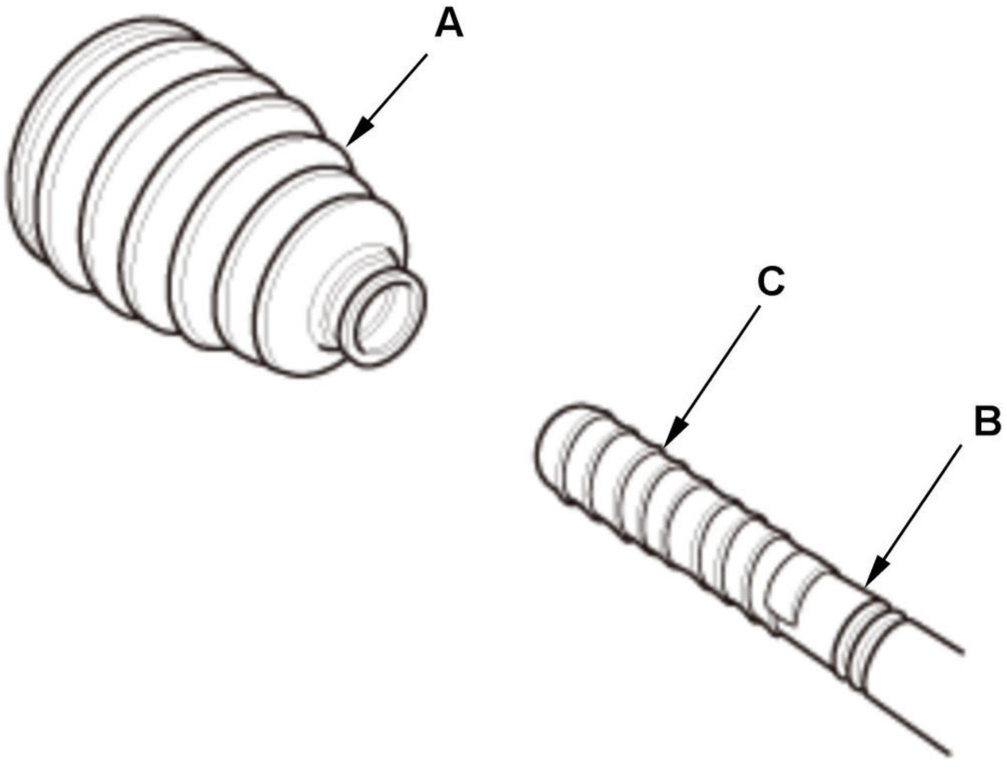

NOTE:

- Check the outboard boot (A) for cracks and damage. If any damage is found, replace the outboard boot.
- Wrap the splines on the driveshaft (B) with vinyl tape (C) to prevent damaging the outboard boot.

5. Inboard Joint - Remove

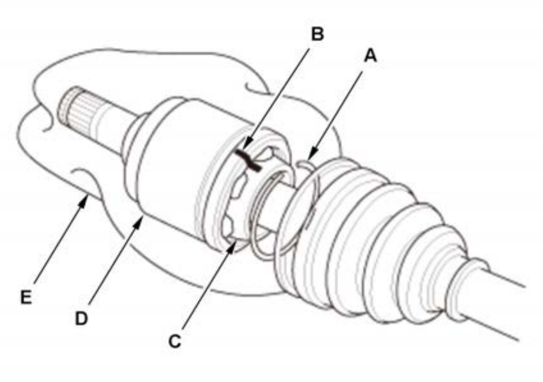 	1. Remove the snap ring (A). 2. Make marks (B) on the bearing retainer (C) and the inboard joint (D) to identify the locations of the bearing retainer to the grooves in the inboard joint. 3. Remove the inboard joint and place it on a clean shop towel (E). Be careful not to drop the steel balls when separating them from the inboard joint.

6. Circlip - Remove

7. Bearing Retainer and Bearing Race - Remove

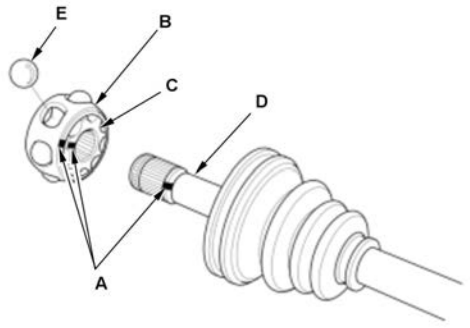 	1. Make marks (A) on the bearing retainer (B), the bearing race (C) and the driveshaft (D) to identify the position of the bearing retainer and the bearing race on the shaft. 2. Remove the bearing race and the steel balls (E). **NOTE:** If necessary, use a commercially available bearing puller.

8. Inboard Boot - Remove

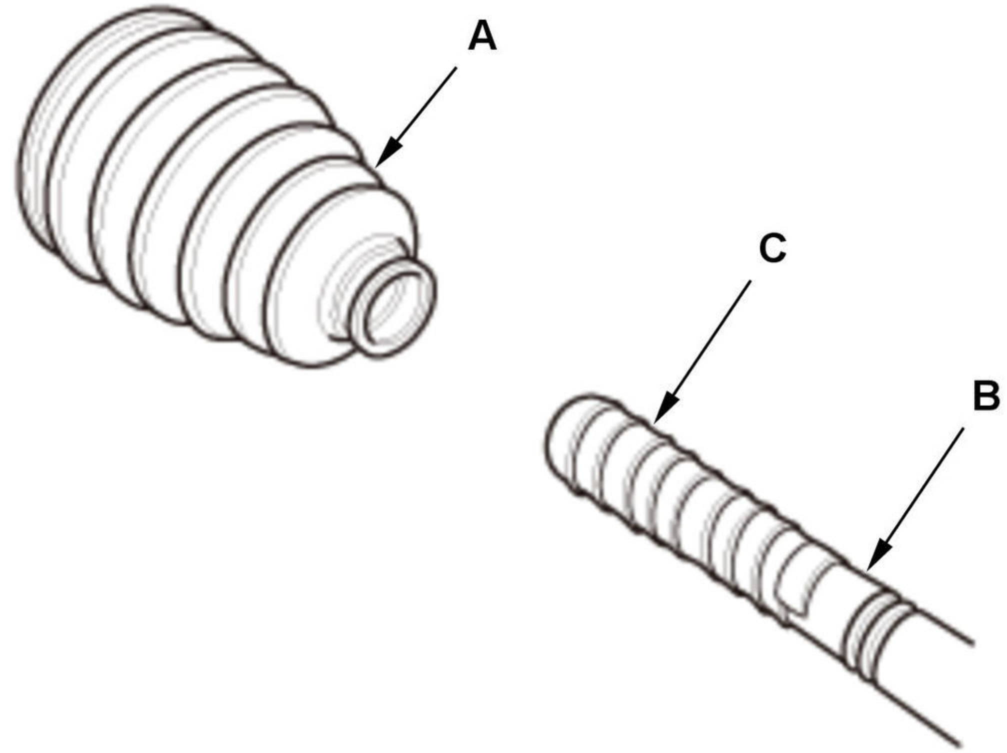

NOTE:

- Check the inboard boot (A) for cracks and damage. If any damage is found, replace the inboard boot.
- Wrap the splines on the driveshaft (B) with vinyl tape (C) to prevent damaging the inboard boot.

Reassembly

NOTE:

- 📖 Where icon is shown, for further information see below.
- Make marks on the disassembled parts to be able to reassemble them in their original positions.
- Be careful not to damage the boot.
- Be careful not to get grease on the boots attachment grooves.
- Use the bands included in the boot set.

Procedure

NOTE: **Numbered call-outs in figure pertain to list numbers in following procedure.**

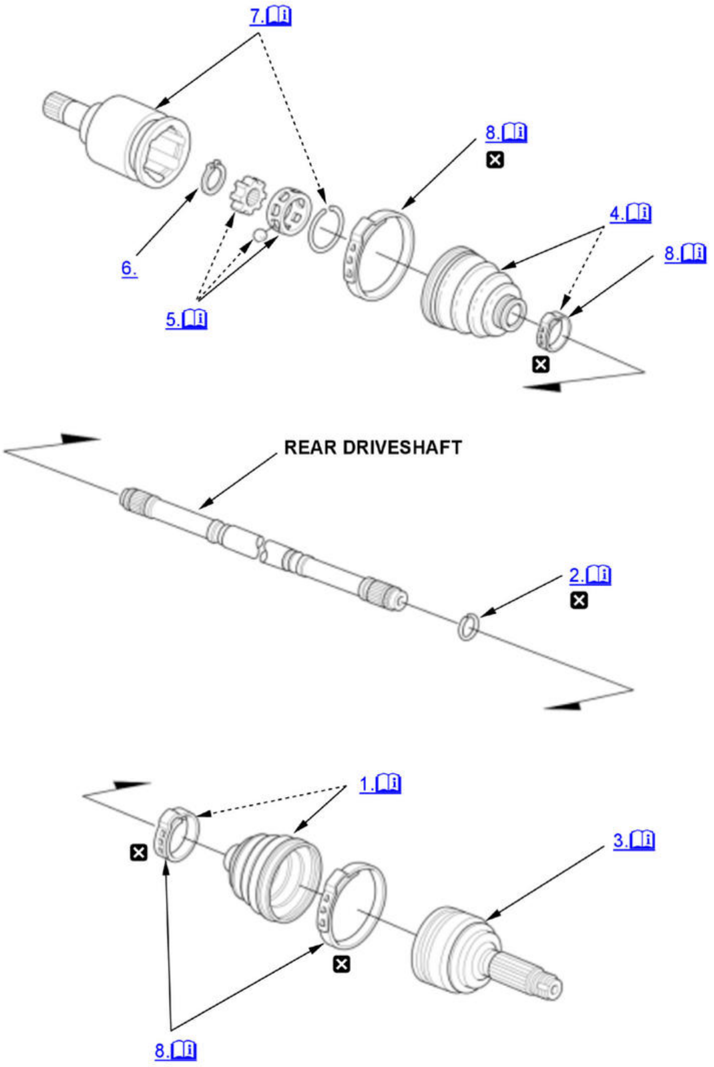

Fig. 6: Exploded View Of Rear Driveshaft Components For Reassembly
Courtesy of HONDA, U.S.A., INC.

📖	Detailed information, notes, and precautions

☒	Replace

1. Outboard Boot - Install

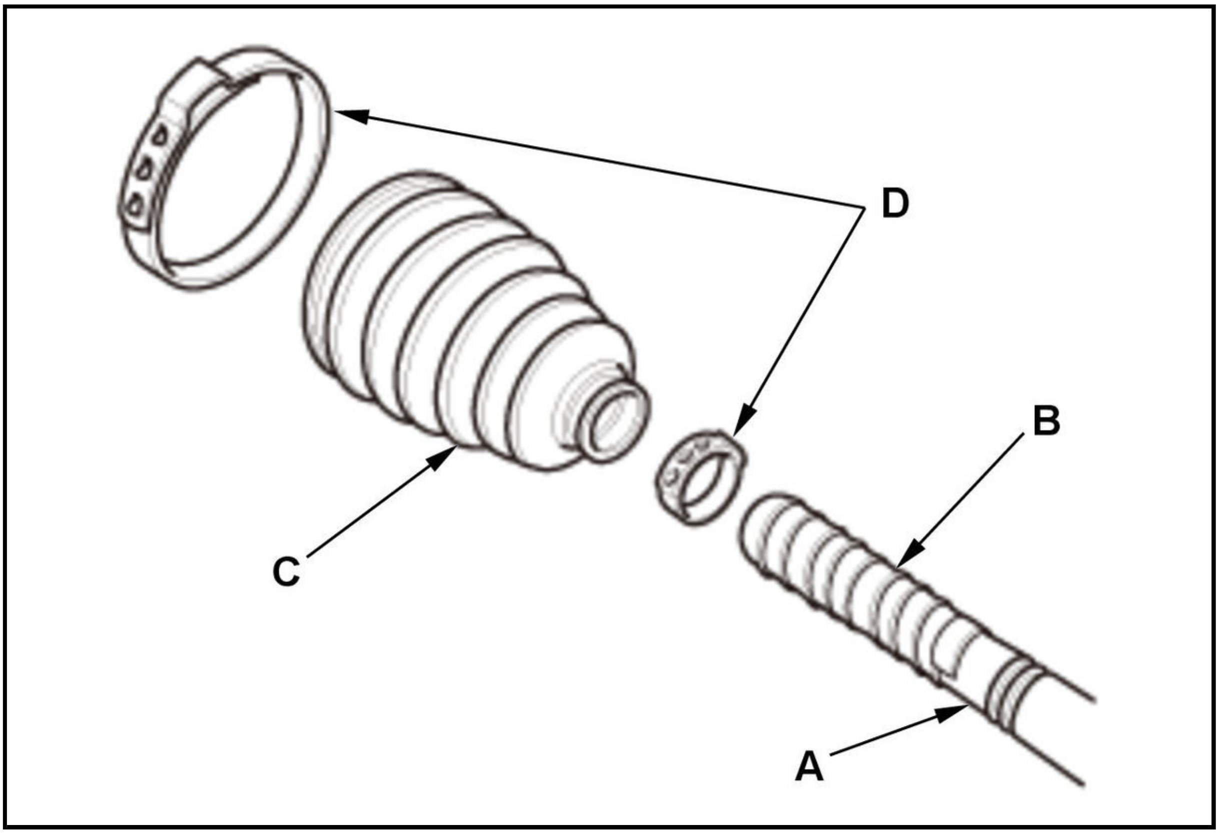

NOTE:

- Wrap the splines on the driveshaft (A) with vinyl tape (B) to prevent damaging the outboard boot (C).
- Install new ear clamp bands (D) with the boot to prevent damaging the band.

2. Stop Ring - Install

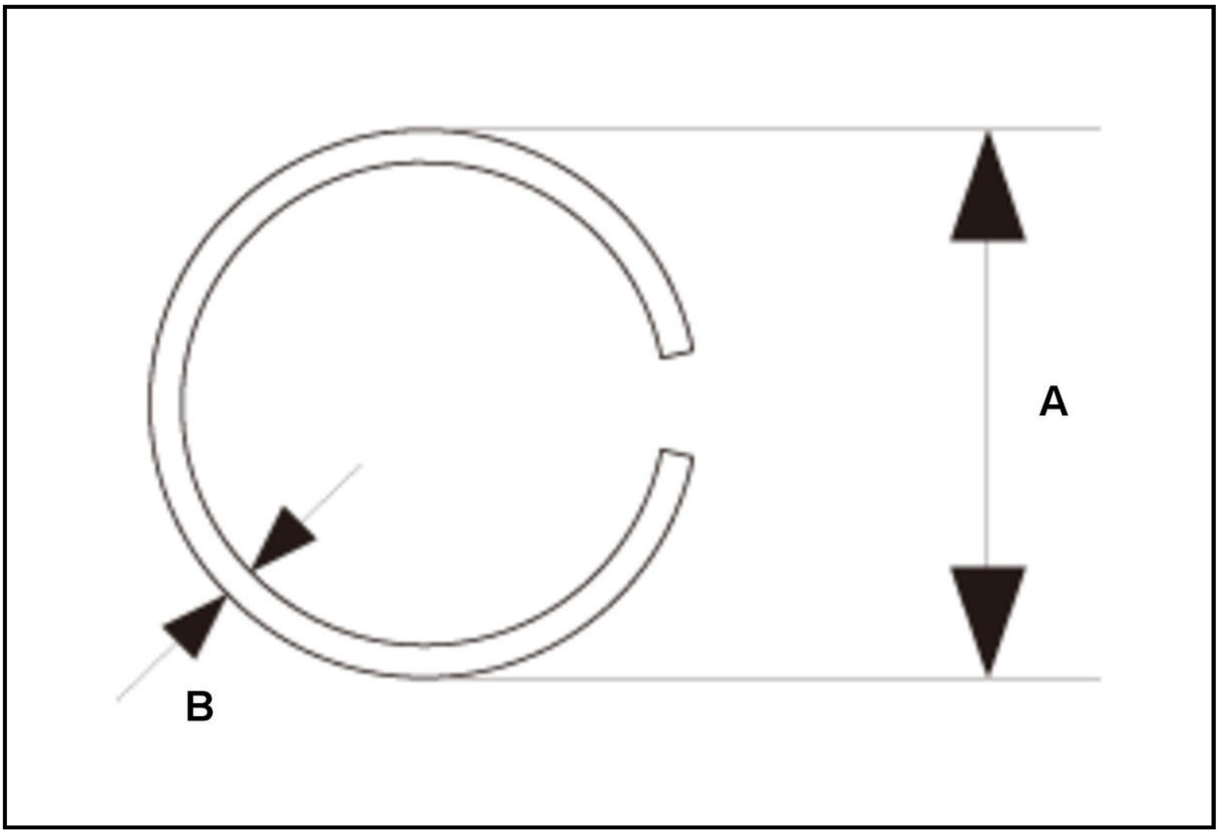

NOTICE:

To avoid driveshaft and vehicle damage, make sure you install the stop ring.

Stop ring specifications		
B	**Overall diameter (A):**	**21.97 mm (0.865 in)**
B	**Wire diameter (B):**	**1.44 mm (0.0567 in)**

3. Outboard Joint - Install

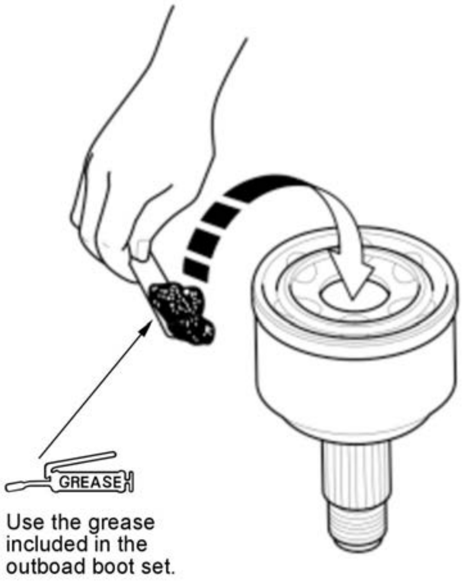 GREASE Use the grease included in the outboad boot set.	1. Fill grease through the driveshaft hole in the outboard joint before installing the driveshaft. Inject enough grease so that it seeps out from the gap around the bearing when the driveshaft is inserted. **NOTE:** If you are installing a new outboard joint, the grease is already installed.

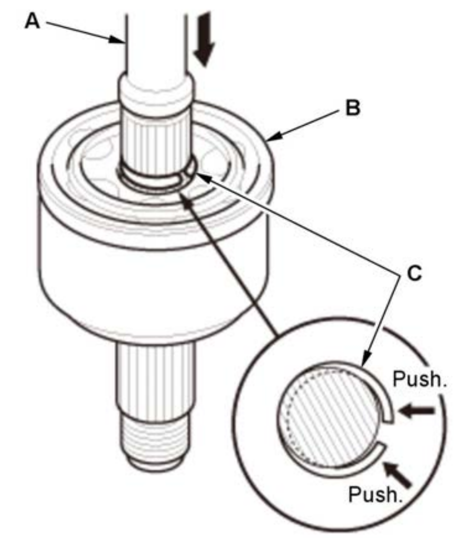

2. Insert the driveshaft (A) into the outboard joint (B) until the stop ring (C) is close to the outboard joint.

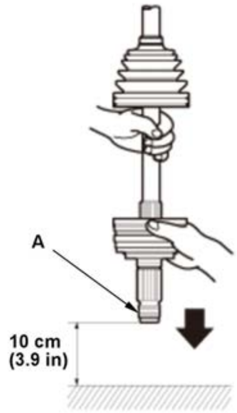

3. To completely seat the outboard joint, pick up the driveshaft and the joint and tap or hit the assembly onto a hard surface from a height of about 10 cm (3.9 in).

NOTE: Do not use a hammer, as excessive force may damage the driveshaft. Be careful not to damage the threaded section (A) of the outboard joint.

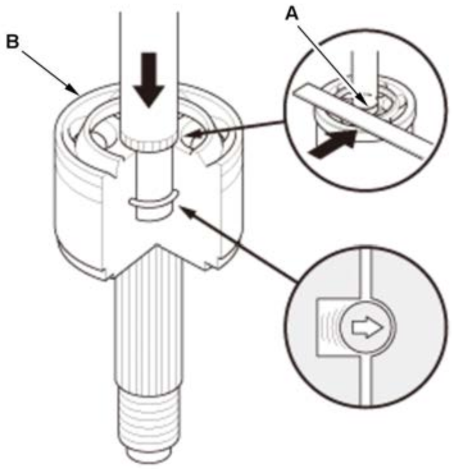

4. Check the alignment of the paint mark (A) you made with the outboard joint end (B).

NOTICE: To avoid driveshaft and vehicle damage, the shaft must be all the way into the outboard joint to ensure the stop ring is properly seated.

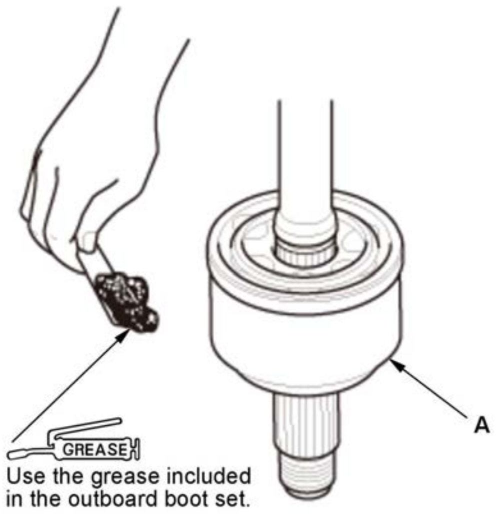 GREASE Use the grease included in the outboard boot set. A	5. Pack the outboard joint (A) with the remaining joint grease included in the outboard boot set.

Total grease quantity	
B	**Outboard joint:**
B	**82-102 g (2.89-3.60 oz)**

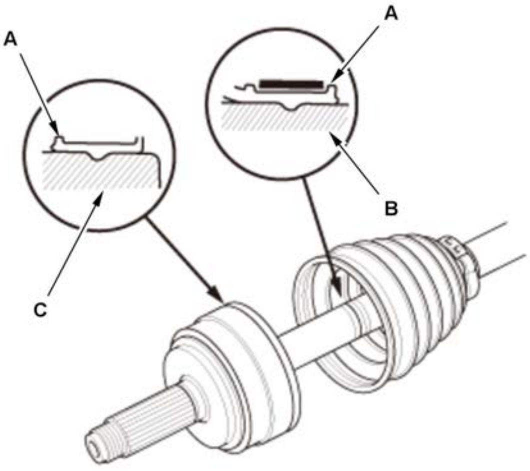	6. Fit the boot ends (A) onto the driveshaft (B) and the outboard joint (C). 7. Bleed any excess air from the outboard boot by inserting a flat-tipped screwdriver between the outboard boot and the outboard joint.

4. Inboard Boot - Install

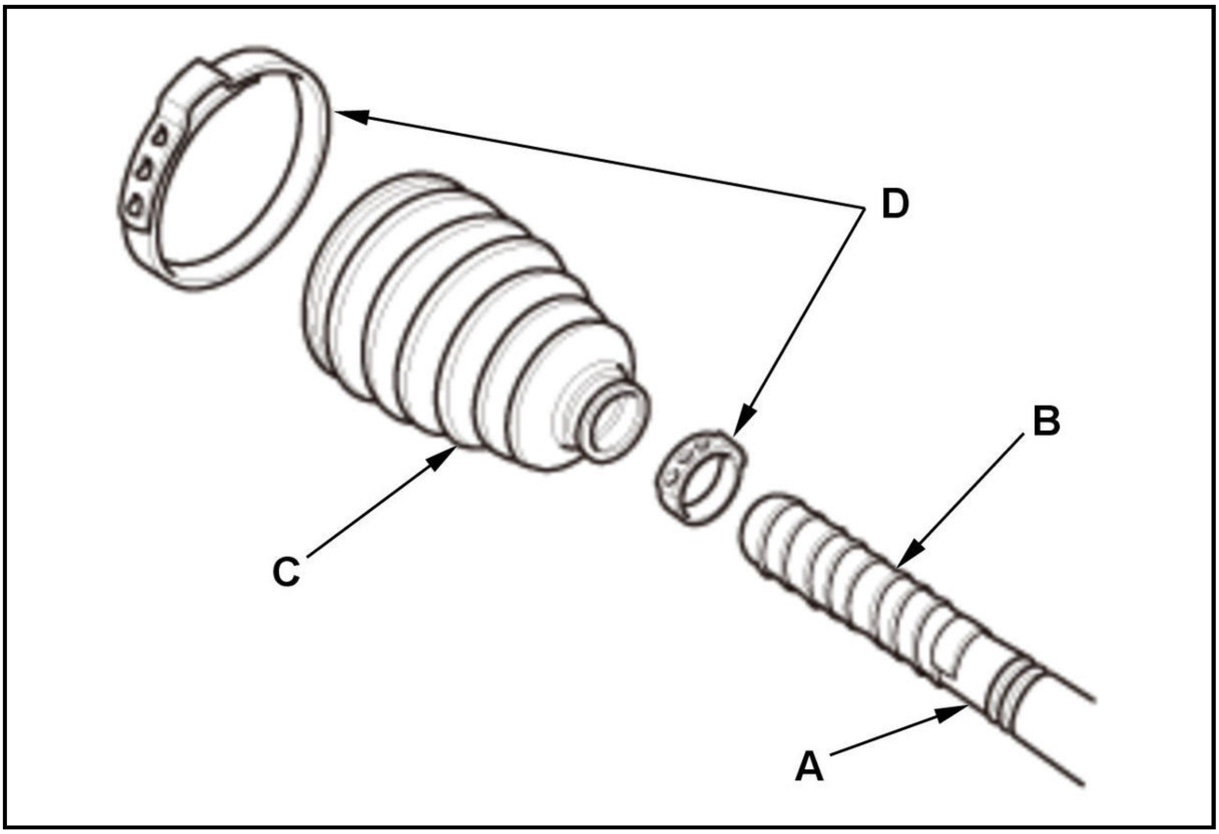

NOTE:

- Wrap the splines on the driveshaft (A) with vinyl tape (B) to prevent damaging the inboard boot (C).
- Install new ear clamp bands (D) with the boot to prevent damaging the band.

5. Bearing Retainer and Bearing Race - Install

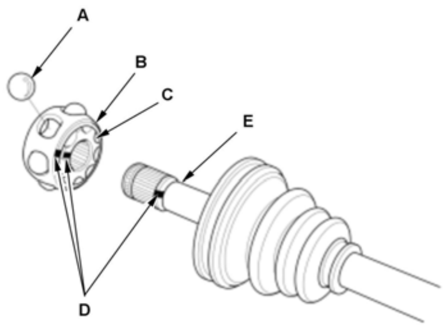	1. Assemble the steel balls (A), the bearing retainer (B) and the bearing race (C) by aligning the marks (D) you made on the bearing retainer and the bearing race. 2. Install the bearing onto the driveshaft (E) by aligning the marks you made on the bearing and the driveshaft. Be careful not to drop the steel balls when installing the bearing onto the driveshaft.

6. Circlip - Install
7. Inboard Joint - Install

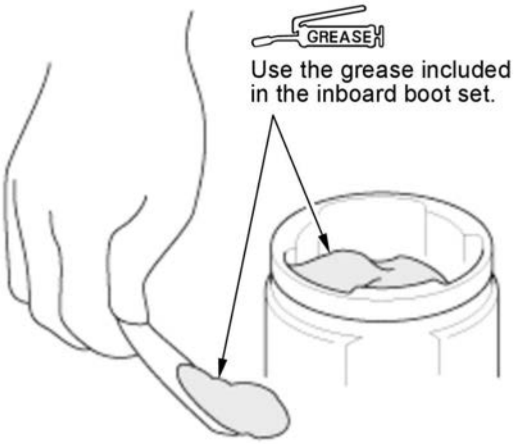
GREASE
Use the grease included in the inboard boot set.

1. Pack the inboard joint with the joint grease included in the new inboard boot set.

Grease quantity	
B	**Inboard joint:**
B	**87-103 g (3.07-3.63 oz)**

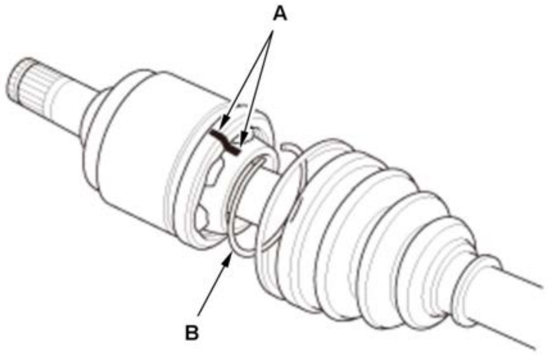

2. Install the inboard joint onto the driveshaft by aligning the marks (A) you made on the inboard joint and the bearing retainer.

3. Install the snap ring (B) into the inboard joint groove.

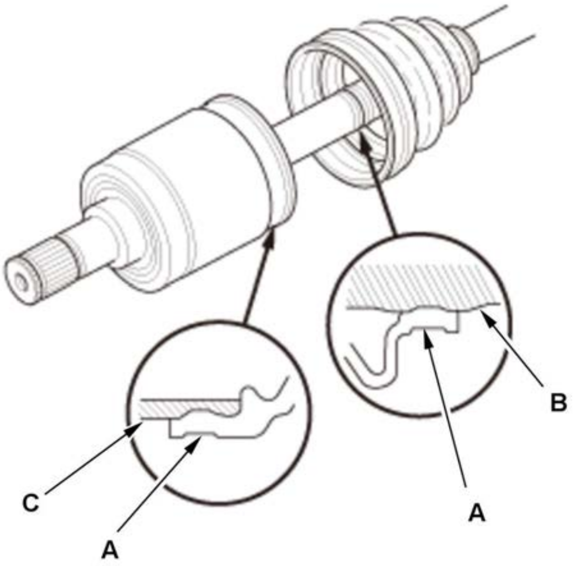

4. Fit the boot ends (A) onto the driveshaft (B) and the inboard joint (C).

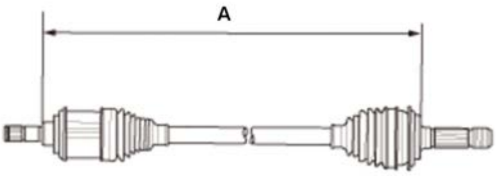 	5. Adjust the length (A) of the driveshafts in the figure as shown, then adjust the boots to halfway between full compression and full extension. **Driveshaft length:** 6. Bleed excess air from the boots by inserting a flat-tipped screwdriver between the boot and the joint. **NOTE:** Install the joints at exactly the same length.

Left/Right driveshaft	Specified length (A)
Left	**677.2-682.2 mm (26.661-26.855 in)**
Right	**722.2-727.2 mm (28.433-28.630 in)**

8. Boot Bands - Install

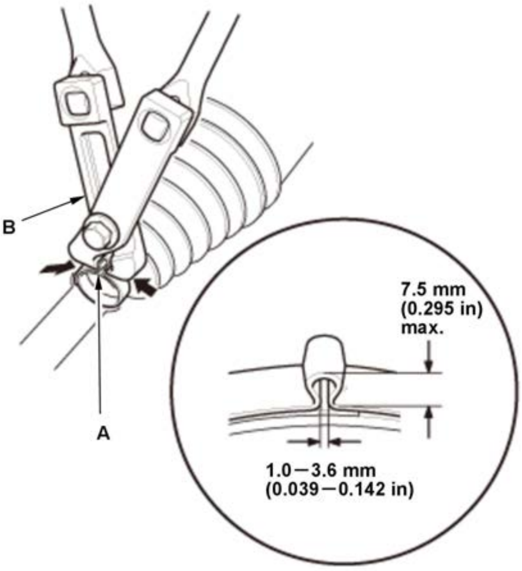 B A 7.5 mm (0.295 in) max. 1.0−3.6 mm (0.039−0.142 in)	1. Close the ear portion (A) of the band using a commercially available boot band clamp tool (Kent-Moore J-35910 or equivalent) (B). 2. Check the clearance of the closed ear portion of the band. If the clearance is not within the standard, close the ear portion of the band tighter. **NOTE:** Replace the ear clamp band with the one when the ear portion exceeds the prescribed length.

REMOVAL AND INSTALLATION

FRONT DRIVESHAFT REMOVAL AND INSTALLATION

Removal

NOTE: ℹ Where icon is shown, for further information see below.

Procedure

NOTE: **Numbered call-outs in figure pertain to list numbers in following procedure.**

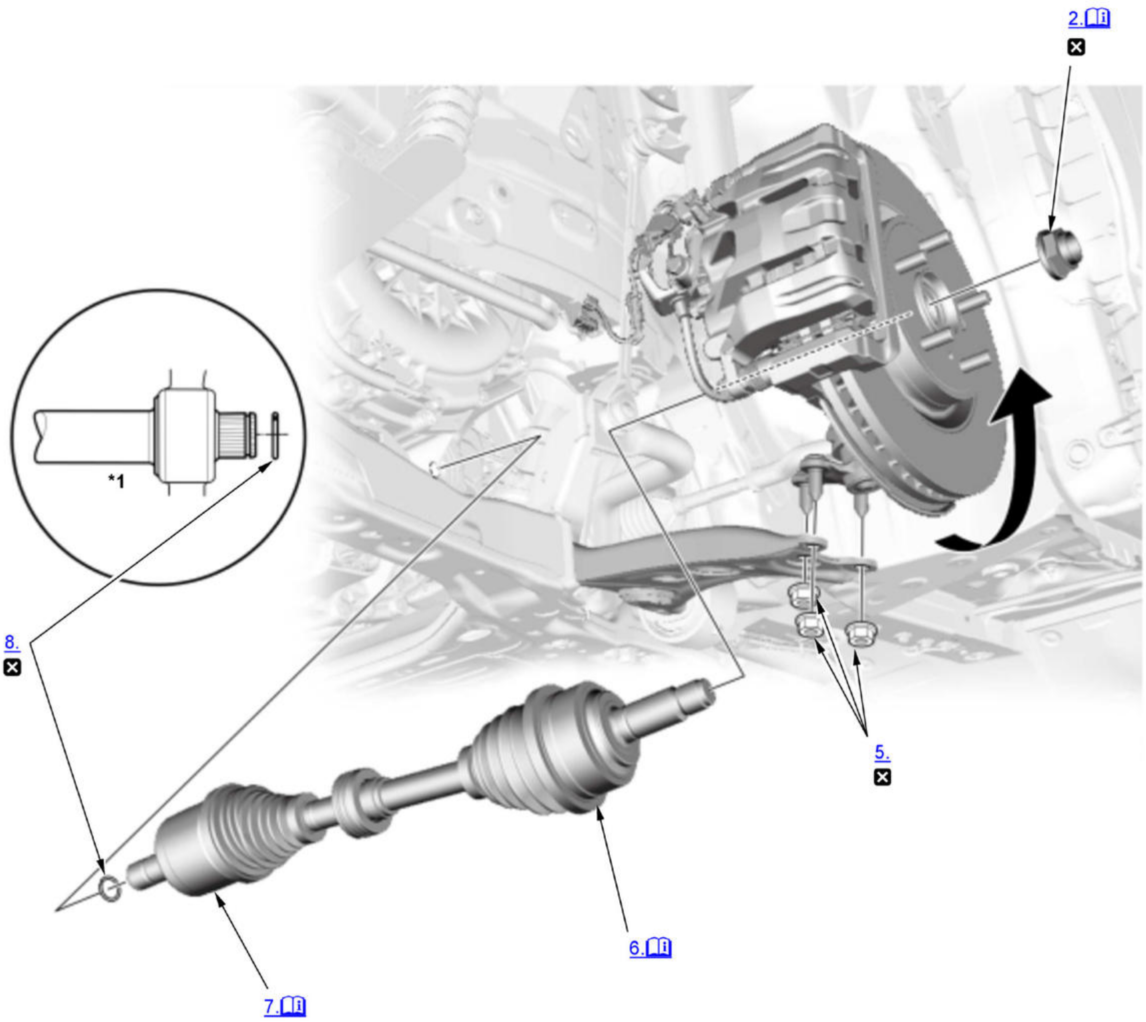

Fig. 7: Exploded View Of Front Driveshaft Components For Removal
Courtesy of HONDA, U.S.A., INC.

ℹ	Detailed information, notes, and precautions
☒	Replace
*1	Intermediate shaft

1. **Front Wheel - Remove**
2. Spindle Nut - Remove

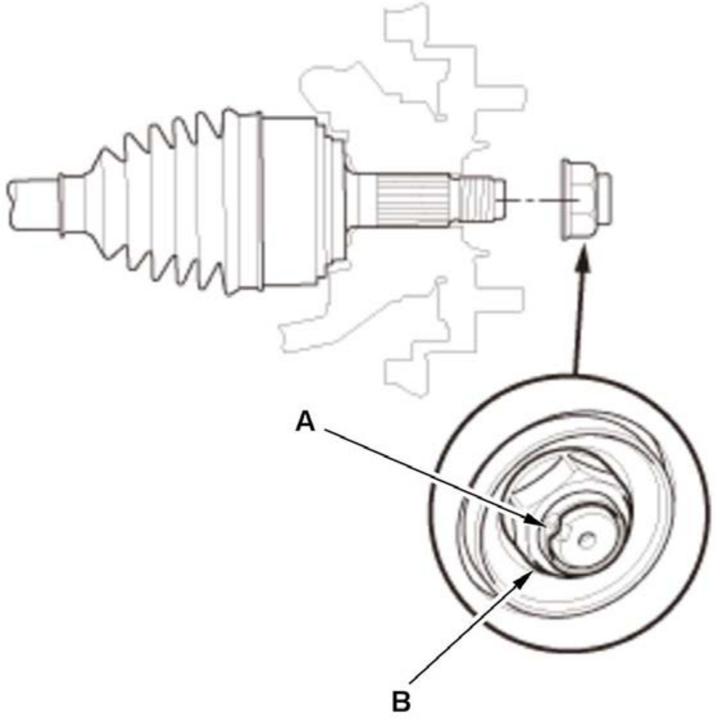	1. Pry up the stake (A) on the spindle nut (B). 2. Remove the spindle nut.

3. **Engine Undercover - Remove**
4. **Transmission Fluid - Drain**
5. **Lower Arm Ball Joint - Disconnect**
6. Outboard Joint - Disconnect

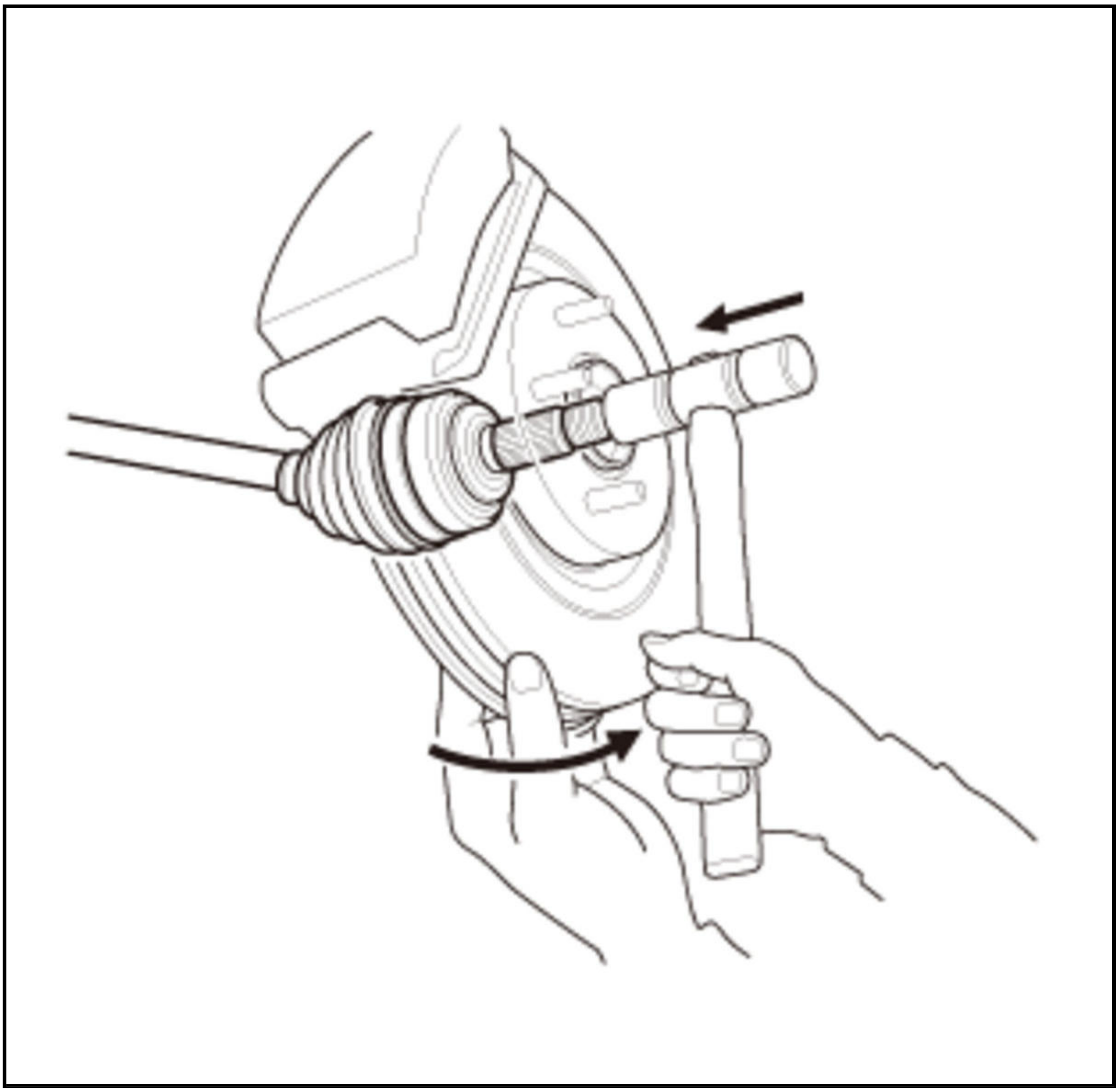

NOTE: Be careful not to damage the outboard joint threads and the wheel speed sensor.

7. Inboard Joint - Disconnect (Both Sides)

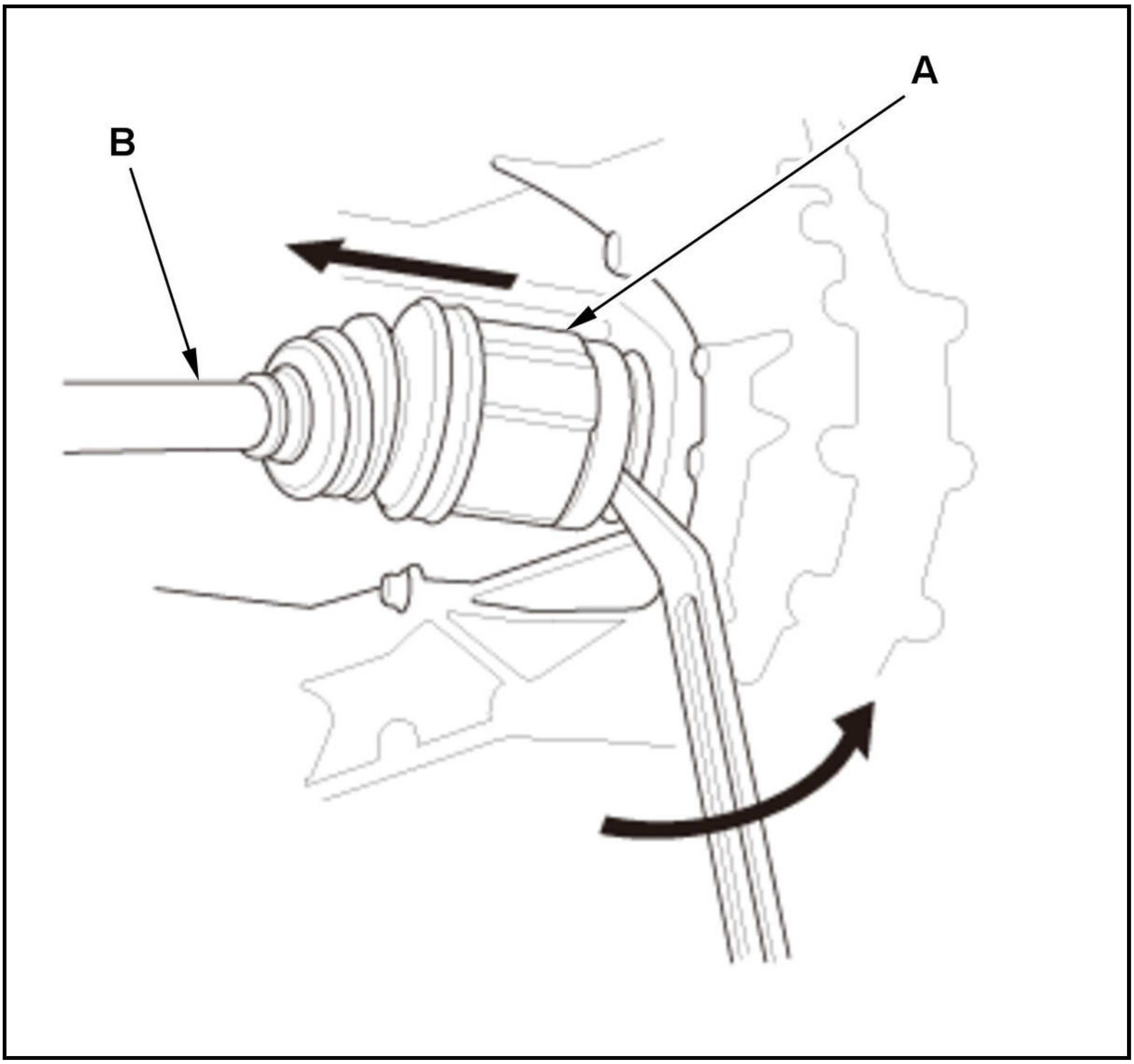

Left driveshaft

1. Pry the inboard joint (A) using a pry bar.

NOTE: Be careful not to damage the oil seal or the end of the inboard joint with the pry bar.

2. Remove the driveshaft as an assembly.

NOTE: Do not pull on the driveshaft (B), or the inboard joint may come apart. Pull the inboard joint straight out to avoid damaging the oil seal.

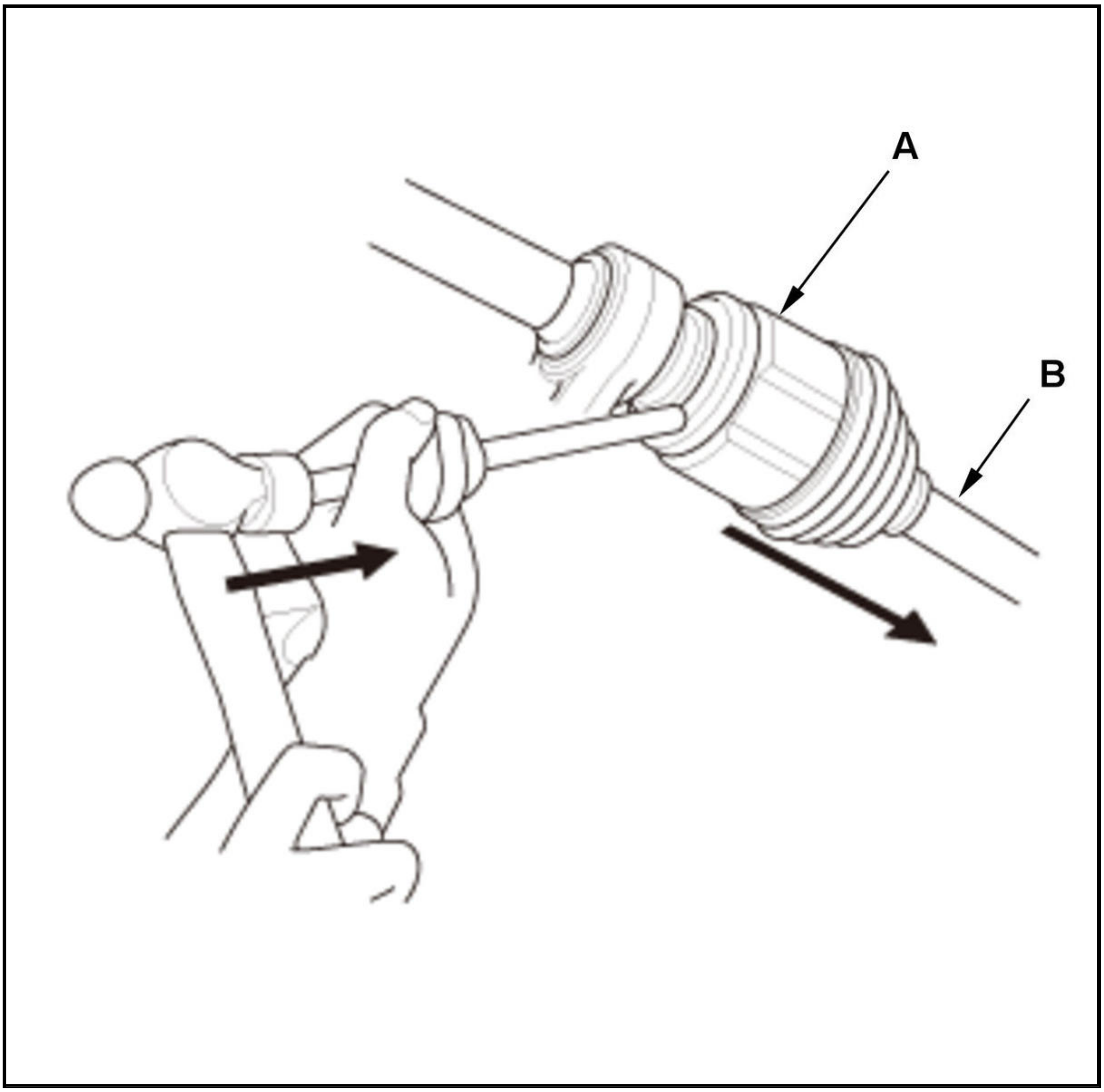

Right driveshaft

1. Drive the inboard joint (A) off of the intermediate shaft using a drift punch and a hammer.

2. Remove the driveshaft as an assembly.

NOTE: Do not pull on the driveshaft (B), or the inboard joint may come apart. Pull the inboard joint straight out.

8. Set Ring - Remove

Installation

NOTE: 📖 Where icon is shown, for further information see below.

Procedure

NOTE: **Numbered call-outs in figure pertain to list numbers in following procedure.**

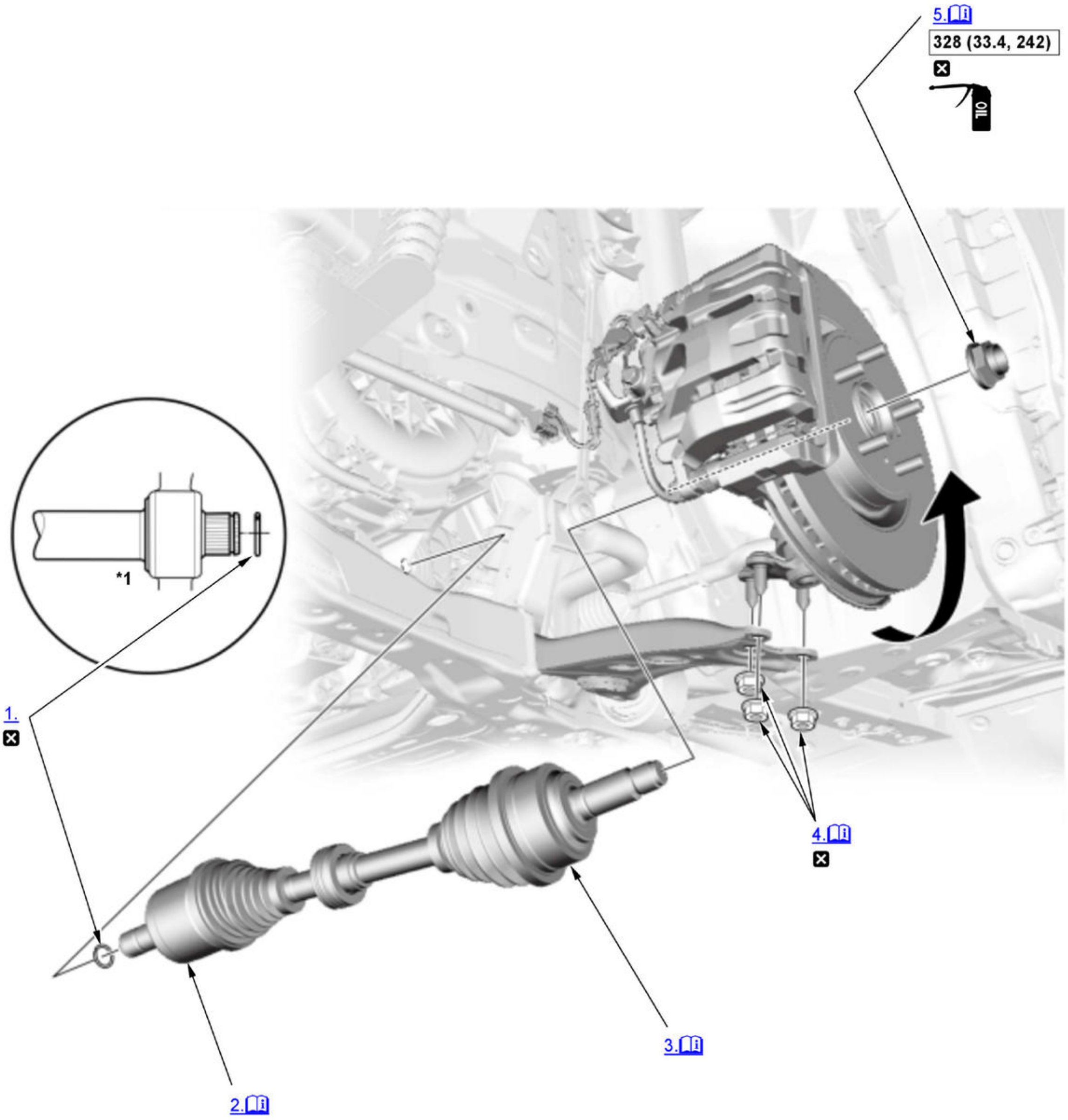

Fig. 8: Exploded View Of Front Driveshaft Components With Torque Specifications For Installation
Courtesy of HONDA, U.S.A., INC.

ⓘ	Detailed information, notes, and precautions
☐	Torque: N.m (kgf.m, lbf.ft)
☒	Replace
OIL	Apply a small amount of engine oil to the seating surface of a new spindle nut.
*1	Intermediate shaft

1. Set Ring - Install
2. Inboard Joint - Connect

Right driveshaft

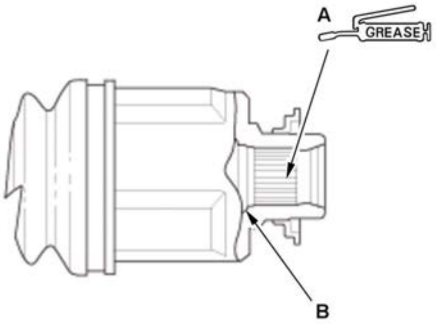

1. Apply 2.0-3.0 g (0.071-0.106 oz) of UM246 (P/N 41211-PY5-305) to the whole splined surface (A) of the right driveshaft.

2. After applying grease, remove the grease from the splined grooves at intervals of 2-3 splines and from the set ring groove (B) so that air can bleed from the intermediate shaft.

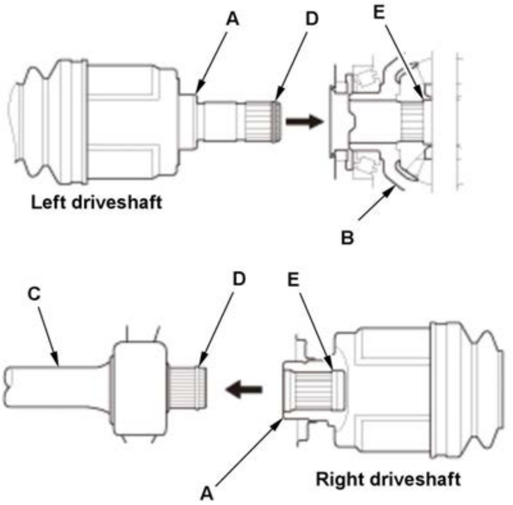

3. Left driveshaft: Clean the areas where the driveshaft contacts the differential thoroughly with solvent, then dry them with compressed air.

NOTE: Do not wash the rubber parts with solvent.

4. Insert the inboard end (A) of the driveshaft into the differential (B) or the intermediate shaft (C) until the set ring (D) locks in the groove (E).

NOTE: Insert the driveshaft horizontally to prevent damaging the oil seal.

3. Outboard Joint - Connect

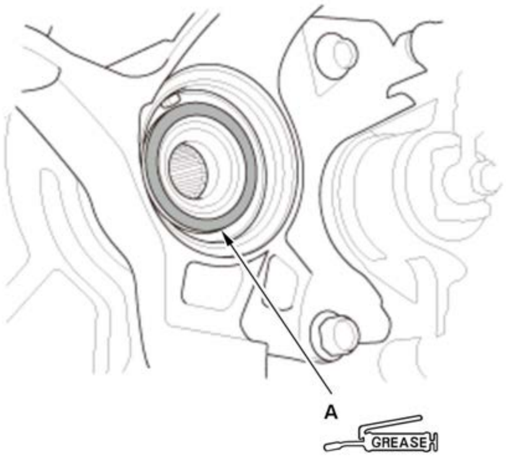

1. Apply about 3 g (0.11 oz) of Molykote M-77 grease or equivalent to the contact area (A) of the outboard joint and the front wheel bearing.
NOTE: The paste helps prevent noise and vibration.

4. Lower Arm Ball Joint - Connect

NOTE: During reassembly, loosely install new flange nuts, then tighten them to the specified torque.

5. Spindle Nut - Install

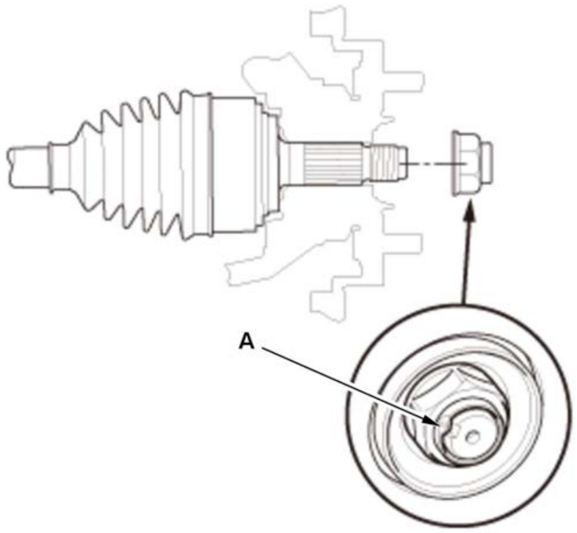

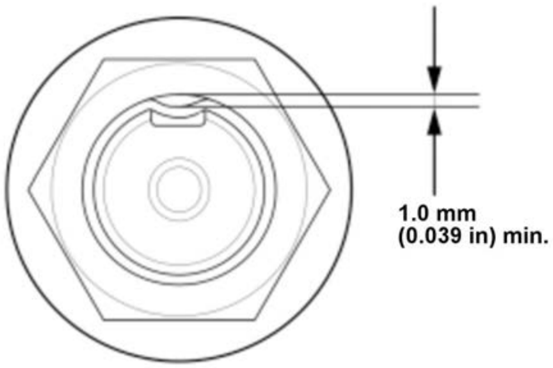

NOTE: Do not use a stake, punch or screwdriver in the brake rotor to keep it from moving. Have an assistant press on the brakes instead while you are tightening.

1. Use a drift to stake the spindle nut shoulder (A) against the driveshaft.

NOTE:

- Check spindle nut shoulder as shown.
- Be careful not to make a crack on the spindle nut when staking.

6. **Front Wheel - Install**
7. Front Driveshaft - After Install Check

1. Turn the wheel by hand and make sure there is no interference between the driveshaft and surrounding parts.

8. **Transmission Fluid - Refill**
9. **Engine Undercover - Install**
10. **Wheel Alignment - Check**
11. Test Drive - Check

INTERMEDIATE SHAFT REMOVAL AND INSTALLATION

Removal and Installation

Where icon is shown, for further information see below.

Procedure

NOTE: **Numbered call-outs in figure pertain to list numbers in following procedure.**

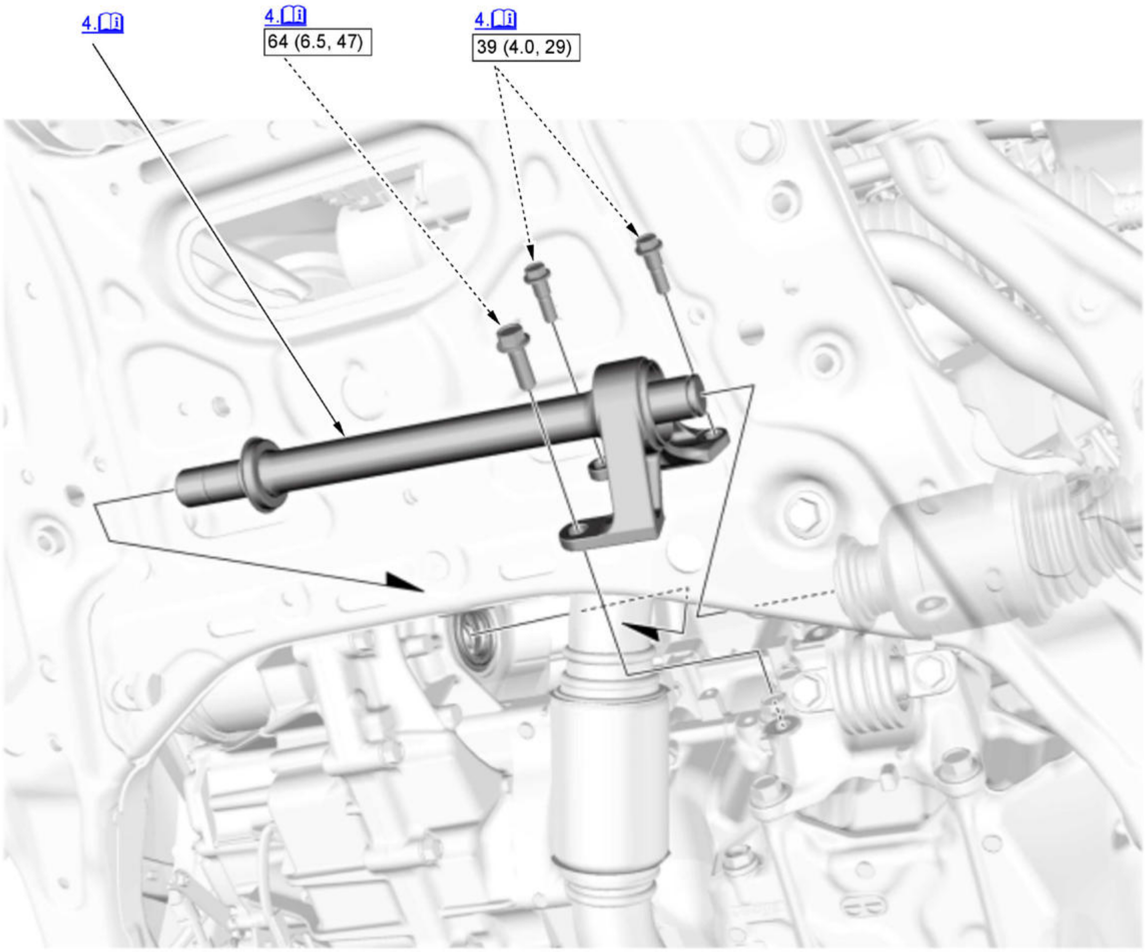

Fig. 9: Exploded View Of Intermediate Shaft Components With Torque Specifications
Courtesy of HONDA, U.S.A., INC.

🕮	Detailed information, notes, and precautions
▭	Torque: N.m (kgf.m, lbf.ft)

1. **Engine Undercover - Remove**
2. **Transmission Fluid - Drain**
3. **Right Driveshaft - Remove**
4. Intermediate Shaft Assembly - Remove

   NOTE: Hold the intermediate shaft horizontally until it is clear of the differential to prevent damaging the oil seal.

5. All Removed Parts - Install

   1. Install the parts in the reverse order of removal.

6. Intermediate Shaft - After Install Check

   1. Turn the wheel by hand and make sure there is no interference between the driveshaft and surrounding parts.

7. Wheel Alignment - Check
8. Test Drive - Check

REAR DRIVESHAFT REMOVAL AND INSTALLATION

Removal

NOTE: ℹ Where icon is shown, for further information see below.

Procedure

NOTE: **Numbered call-outs in figure pertain to list numbers in following procedure.**

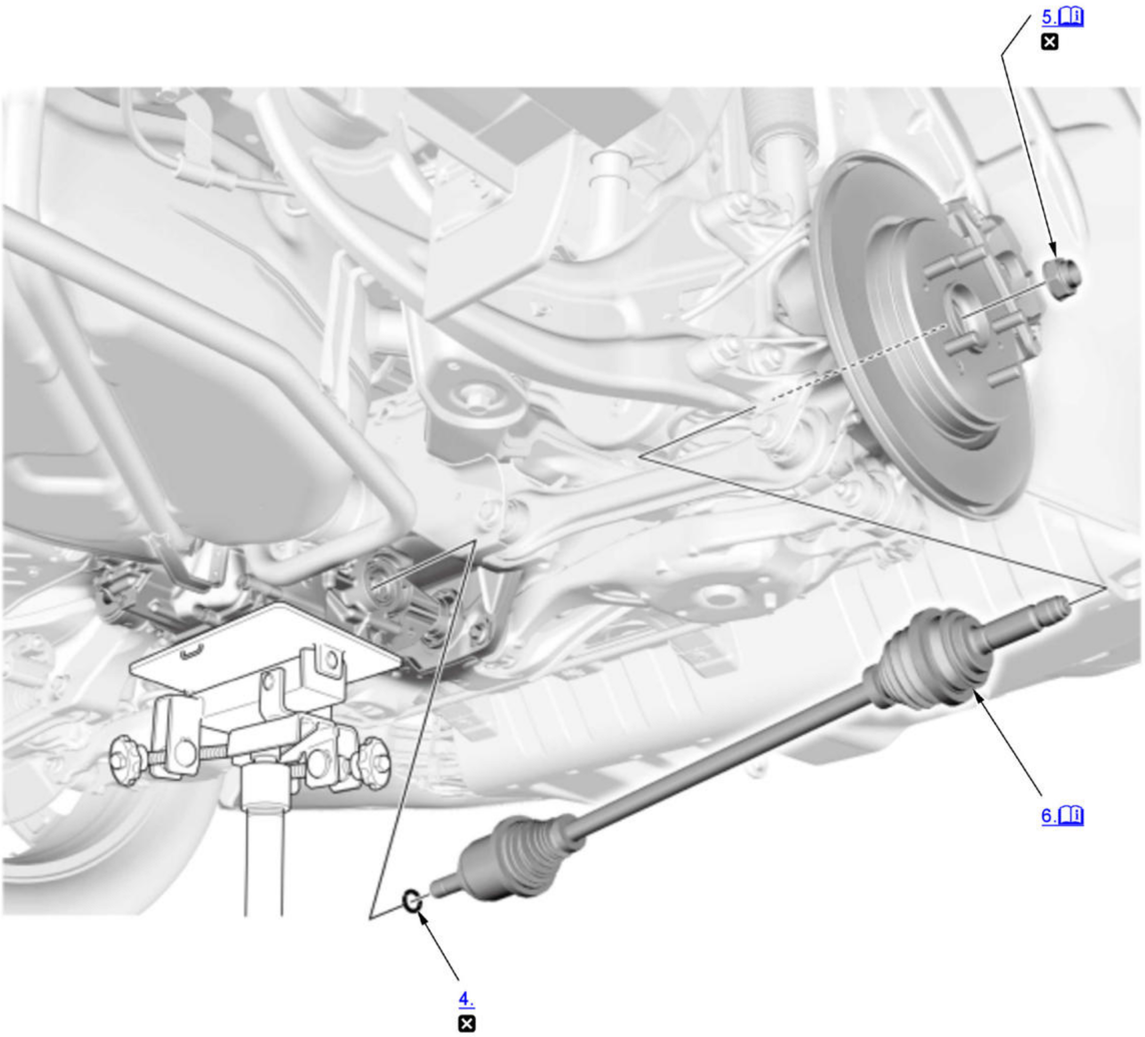

Fig. 10: Exploded View Of Rear Driveshaft Components For Removal
Courtesy of HONDA, U.S.A., INC.

ℹ	Detailed information, notes, and precautions
☒	Replace

1. Vehicle - Lift
2. Rear Wheel - Remove
3. Rear Differential - Remove
4. Set Ring - Remove

5. Spindle Nut - Remove

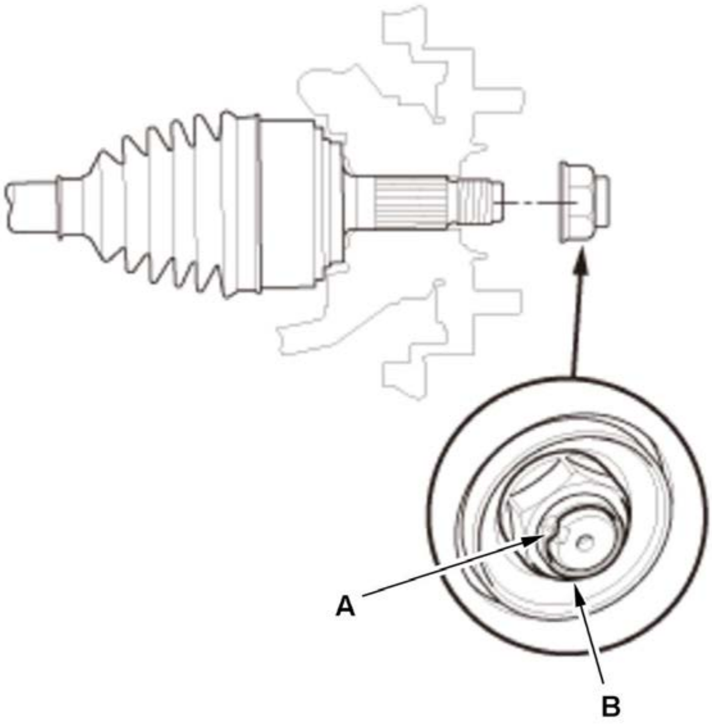	1. Pry up the stake (A) on the spindle nut (B). 2. Remove the spindle nut.

6. Outboard Joint - Disconnect

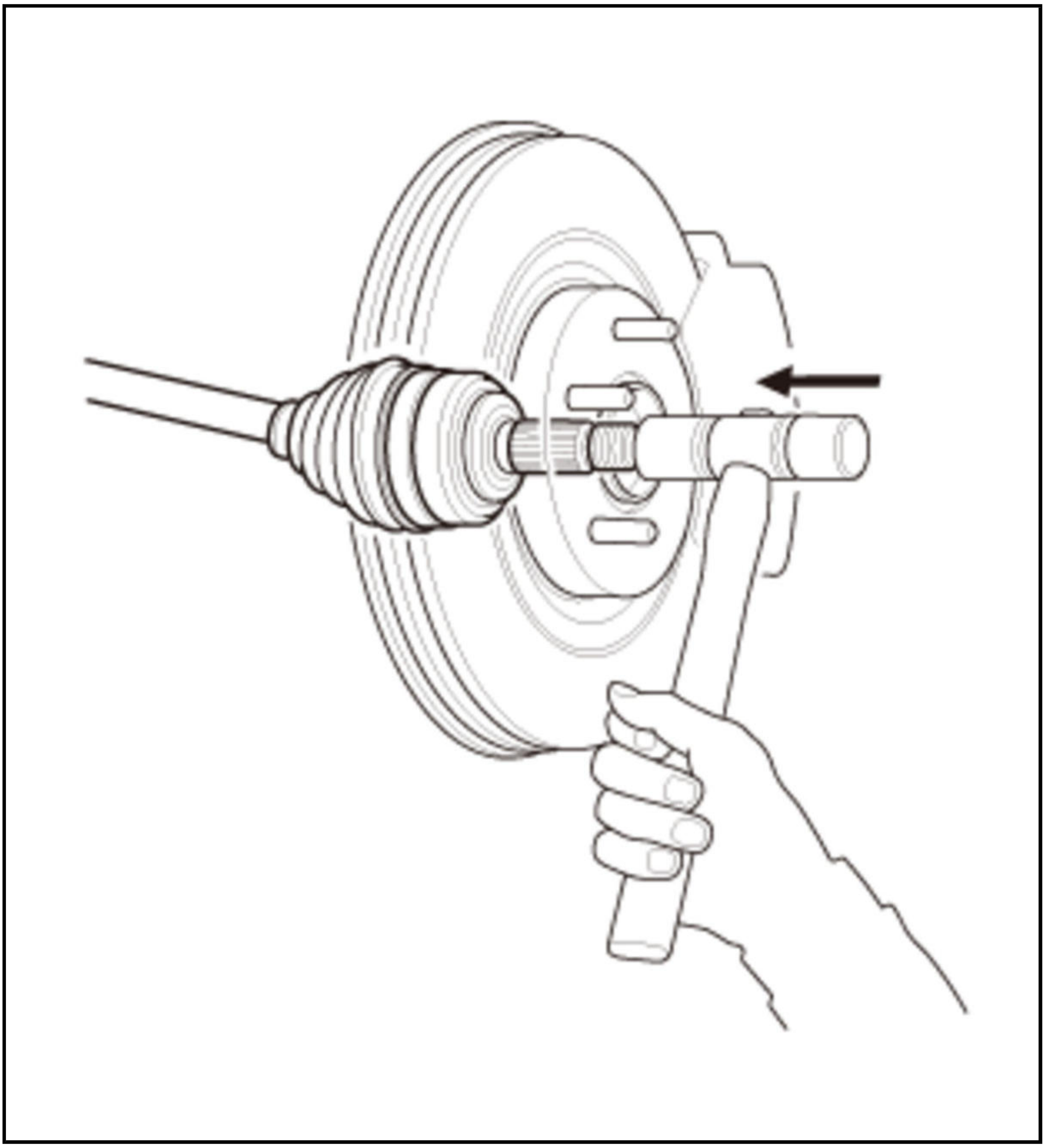

NOTE: Be careful not to damage the outboard joint threads and the wheel speed sensor.

Installation

NOTE: 🕮 Where icon is shown, for further information see below.

Procedure

NOTE: **Numbered call-outs in figure pertain to list numbers in following procedure.**

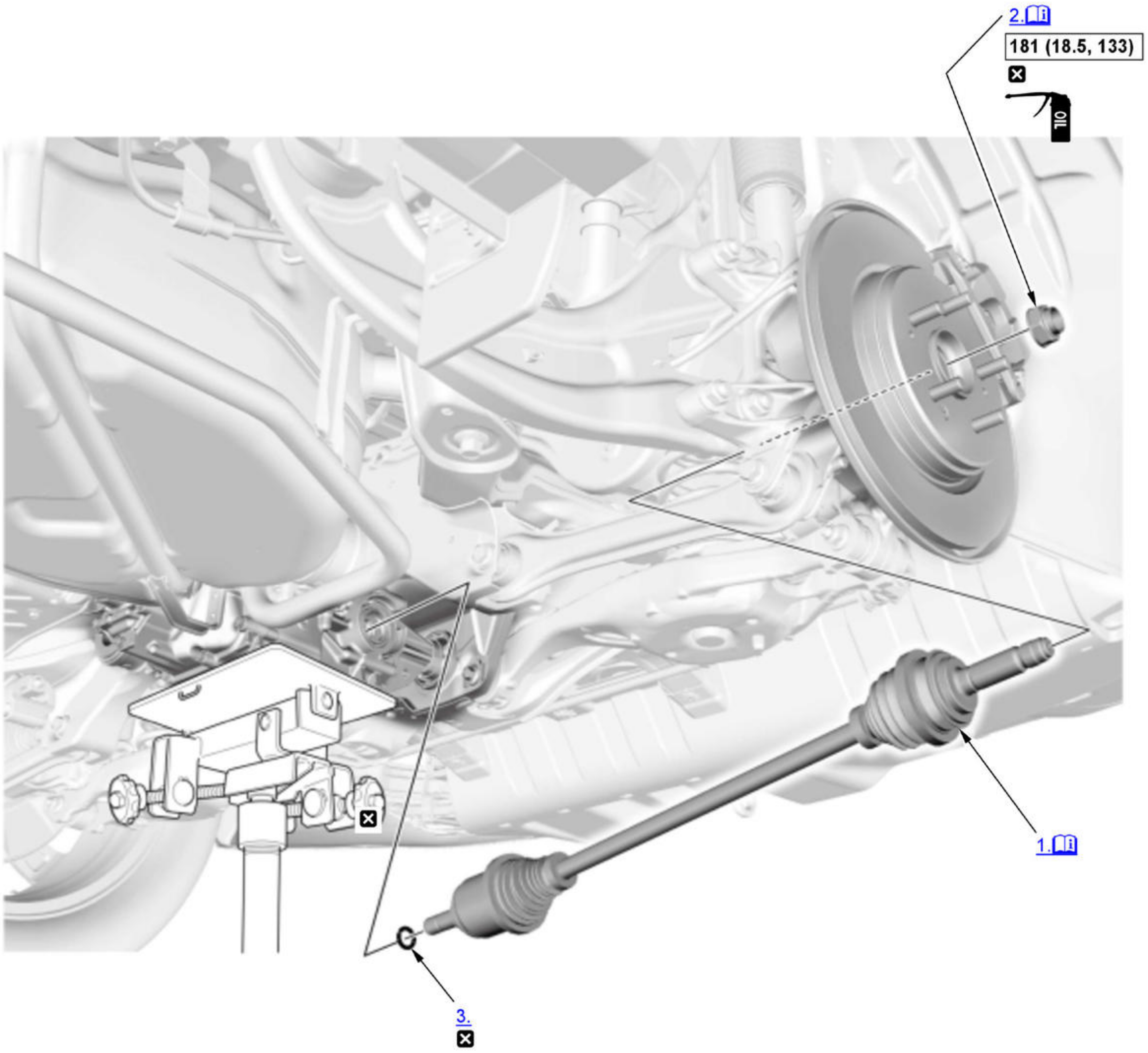

Fig. 11: Exploded View Of Rear Driveshaft Components With Torque Specifications For Installation
Courtesy of HONDA, U.S.A., INC.

ℹ	Detailed information, notes, and precautions
☐	Torque: N.m (kgf.m, lbf.ft)
☒	Replace
OIL	Apply a small amount of engine oil to the seating surface and the threads.

1. Outboard Joint - Connect

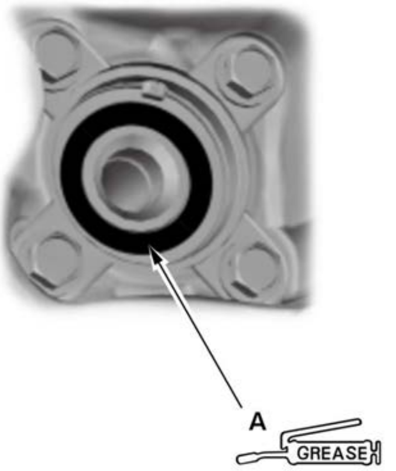

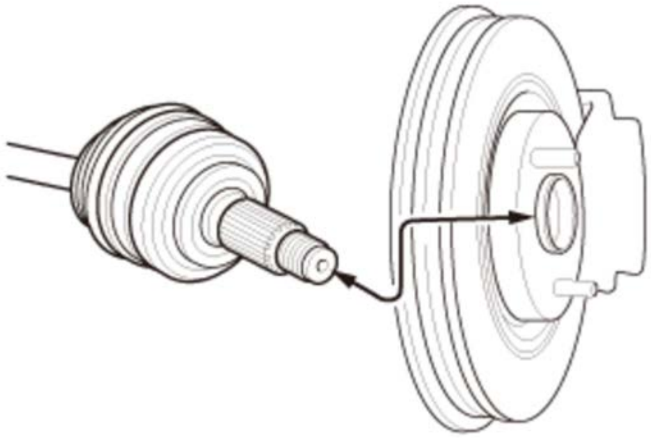

1. Apply about 3 g (0.11 oz) of molybdenum grease to the contact area (A) of the outboard joint and the rear wheel bearing.

NOTE: The paste helps prevent noise and vibration.

2. Spindle Nut - Install

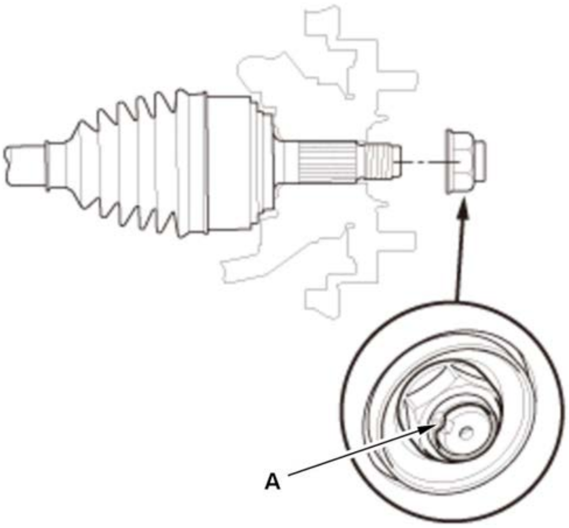 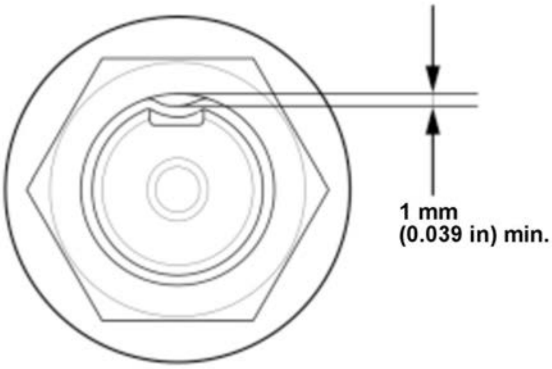	**NOTE:** Do not use a stake, punch or screwdriver in the brake rotor to keep it from moving. Have an assistant press on the brakes instead while you are tightening. 1. Use a drift to stake the spindle nut shoulder (A) against the driveshaft. **NOTE:** - Check spindle nut shoulder as shown. - Be careful not to make a crack on the spindle nut when staking.

3. Set Ring - Install
4. **Rear Differential - Install**
5. **Rear Wheel - Install**
6. Driveshaft - After Install Check

1. Turn the wheel by hand and make sure there is no interference between the driveshaft and surrounding parts.

7. Test Drive - Check

DISASSEMBLY AND REASSEMBLY

FRONT DRIVESHAFT DISASSEMBLY AND REASSEMBLY

Special Tools Required

Image	Description/Tool Number
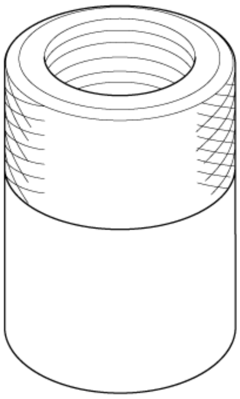	Threaded Adapter, 26 x 1.5 mm 07XAC-001030A

Disassembly

NOTE:

- 🛈 Where icon is shown, for further information continue to the information below.
- Be careful not to damage the boot.
- Make marks on the disassembled parts to be able to reassemble them in their original positions.
- Use the bands included in the boot set.

1

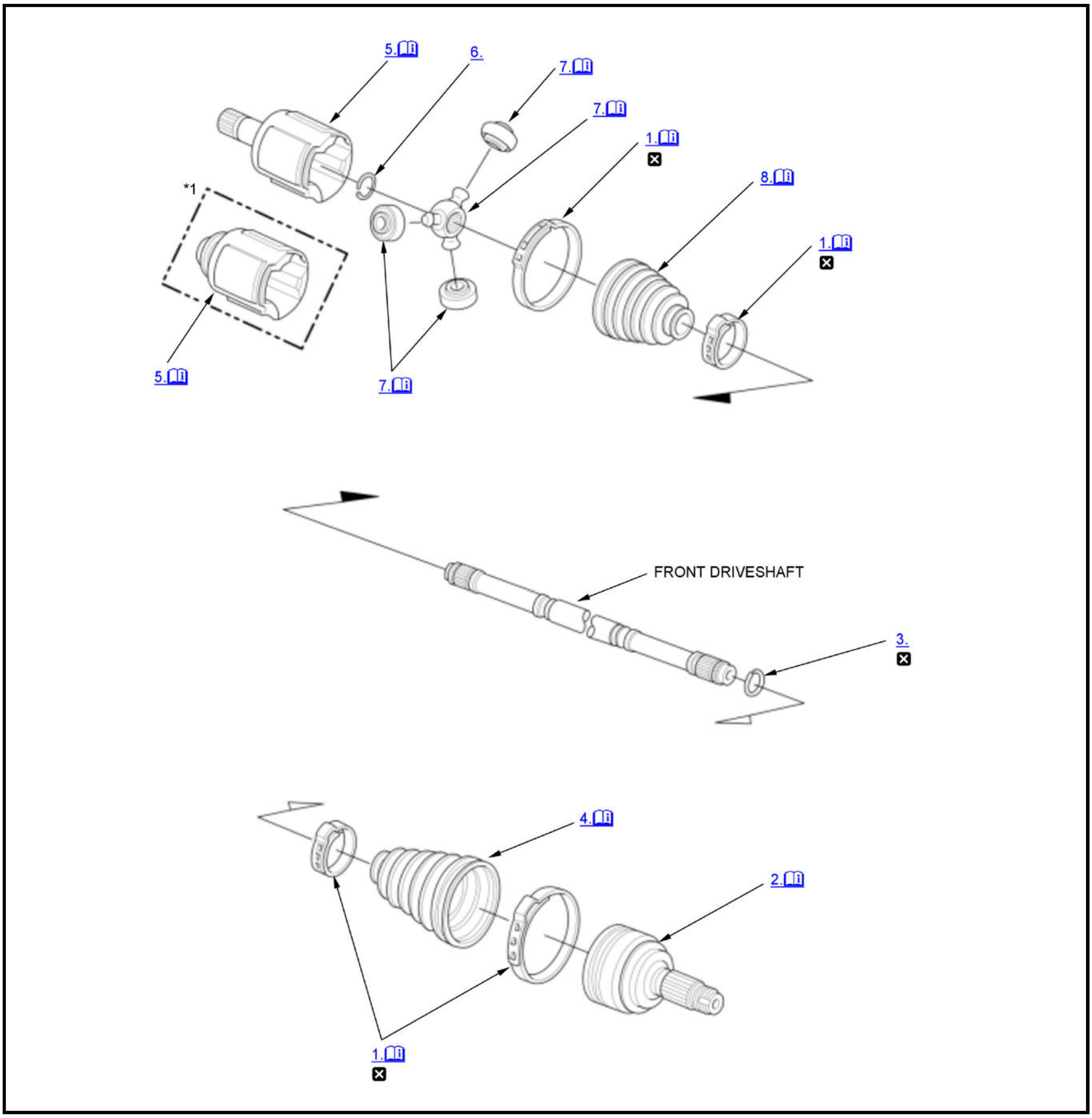
5.
6.
7.
7.
1.
8.
1.
*1
5.
7.
FRONT DRIVESHAFT
3.
4.
2.
1.

ⓘ	Detailed information, notes, and precautions
☒	Replace
*1	Right driveshaft

1. Boot Bands - Remove

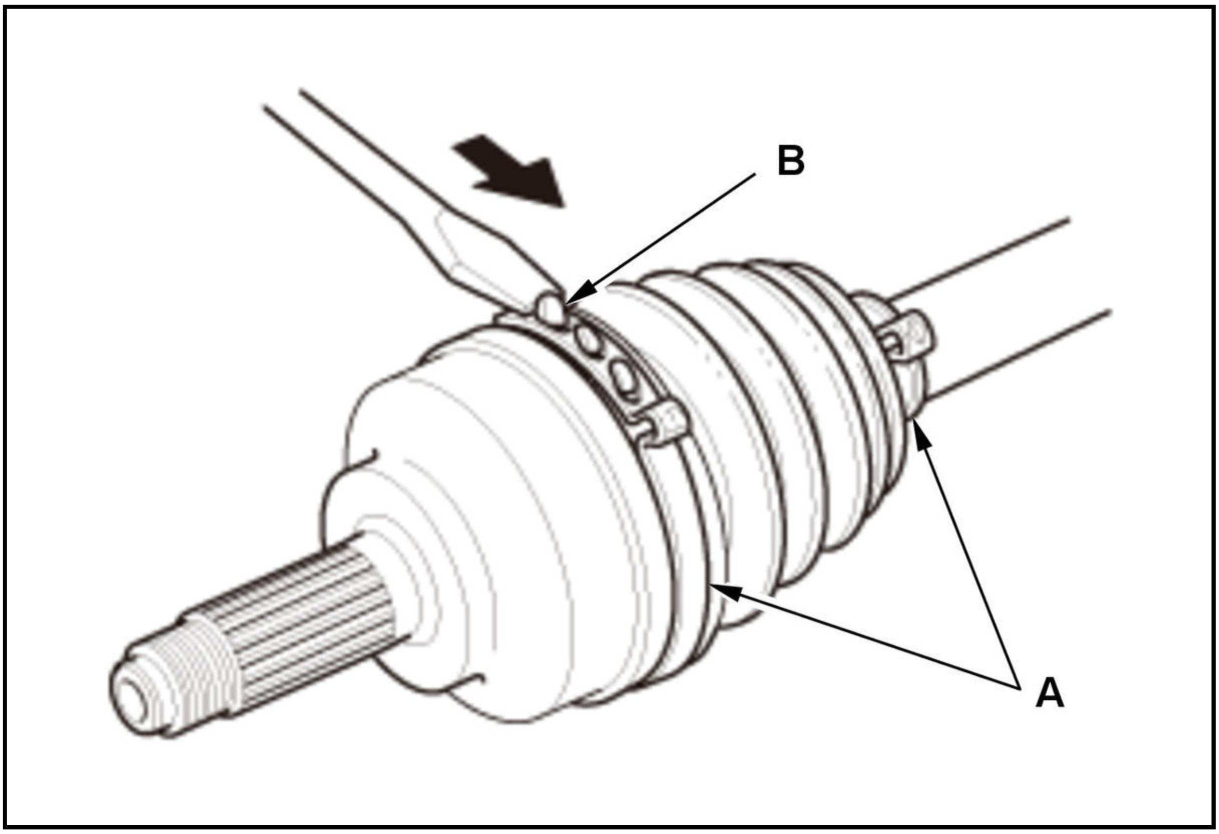

Ear clamp type

1. If the boot band is an ear clamp type (A), lift up the tabs (B) using a flat-tipped screwdriver.

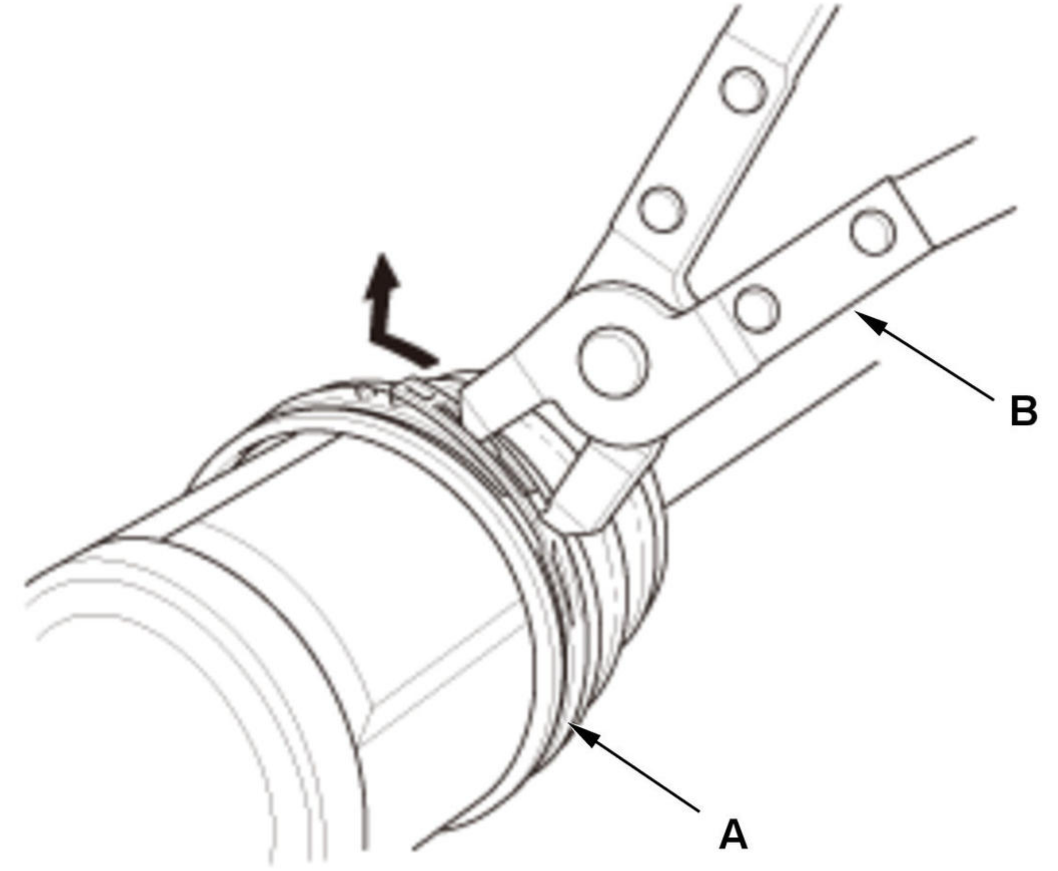

Low profile type

1. If the boot band is a low profile type (A), pinch the boot band using commercially available pincer CV Boot Clamp Pliers (30500) (B).

2. Outboard Joint - Remove

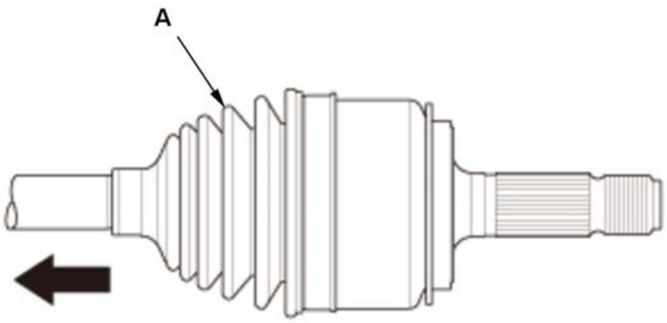	1. Slide the outboard boot (A) partially toward the inboard joint side. 2. Wipe off the grease to expose the driveshaft and the outboard joint inner race.

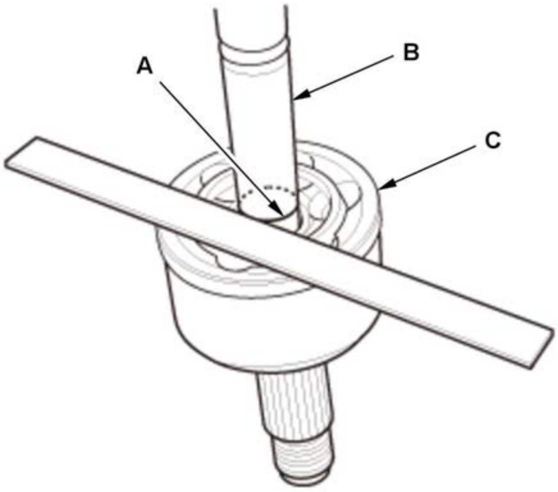	3. Make a mark (A) on the driveshaft (B) at the same level as the outboard joint end (C).

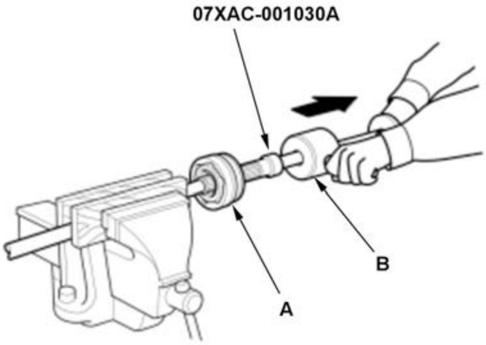	4. Securely clamp the driveshaft in a bench vise with the wood blocks. 5. Remove the outboard joint (A) using the 26 x 1.5 mm threaded adapter and a commercially available 5/8"-18 UNF slide hammer (B). **NOTE:** Check inside of the outboard joint and on the serrations for wear and tear. 6. Remove the driveshaft from the bench vise.

3. Stop Ring - Remove

4. Outboard Boot - Remove

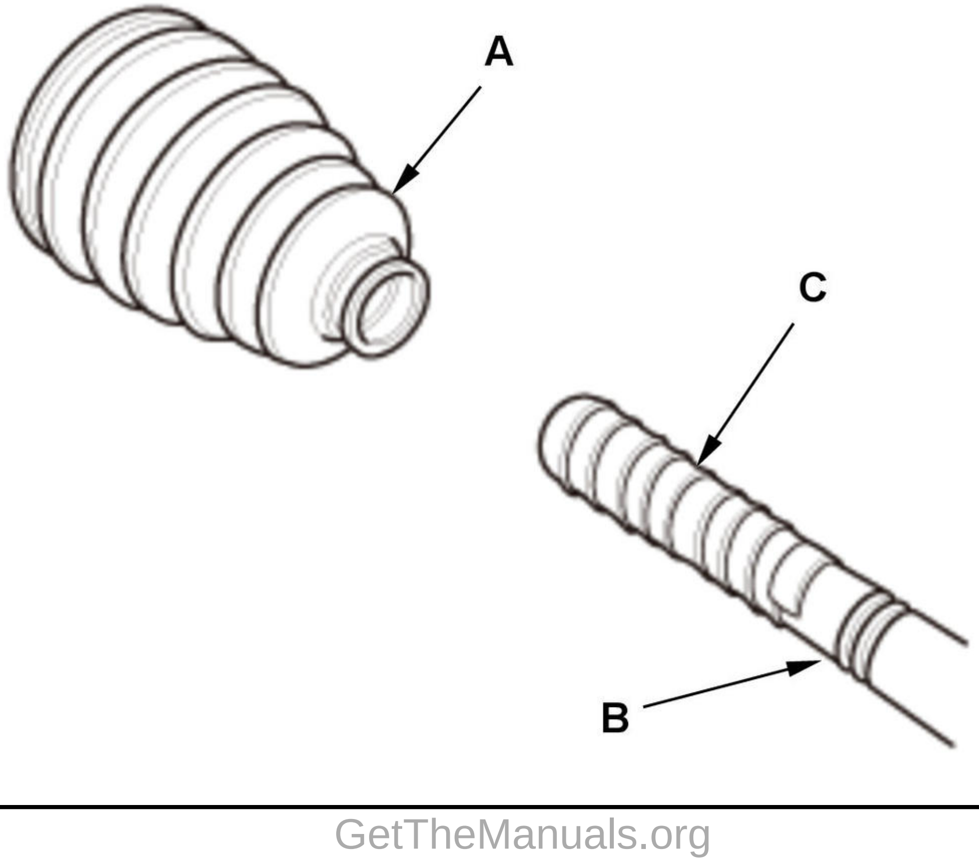

NOTE:

- Check the outboard boot (A) for cracks and damage. If any damage is found, replace the outboard boot.
- Wrap the splines on the driveshaft (B) with vinyl tape (C) to prevent damaging the outboard boot.

5. Inboard Joint - Remove

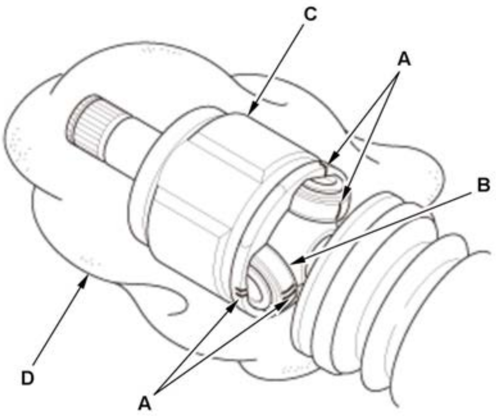	1. Make marks (A) on each roller (B) and the inboard joint (C) to identify the locations of the rollers to the grooves in the inboard joint. **NOTE:** Do not engrave or scribe any marks on the rolling surface. 2. Remove the inboard joint and place it on a clean shop towel (D). Be careful not to drop the rollers when separating them from the inboard joint. **NOTE:** Check inside of the inboard joint and on the serrations for wear and tear.

6. Circlip - Remove

7. Roller and Spider - Remove

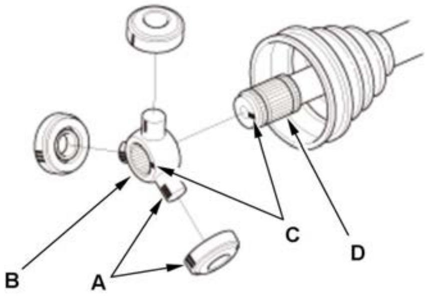	1. Make marks (A) on the spider (B) that match the marks on the rollers. **NOTE:** Do not engrave or scribe any marks on the rolling surfaces. 2. Remove the rollers. 3. Make marks (C) on the spider and the driveshaft (D) to identify the position of the spider on the shaft. 4. Remove the spider. **NOTE:** If necessary, use a commercially available bearing puller while being careful not to damage the spider.

8. Inboard Boot - Remove

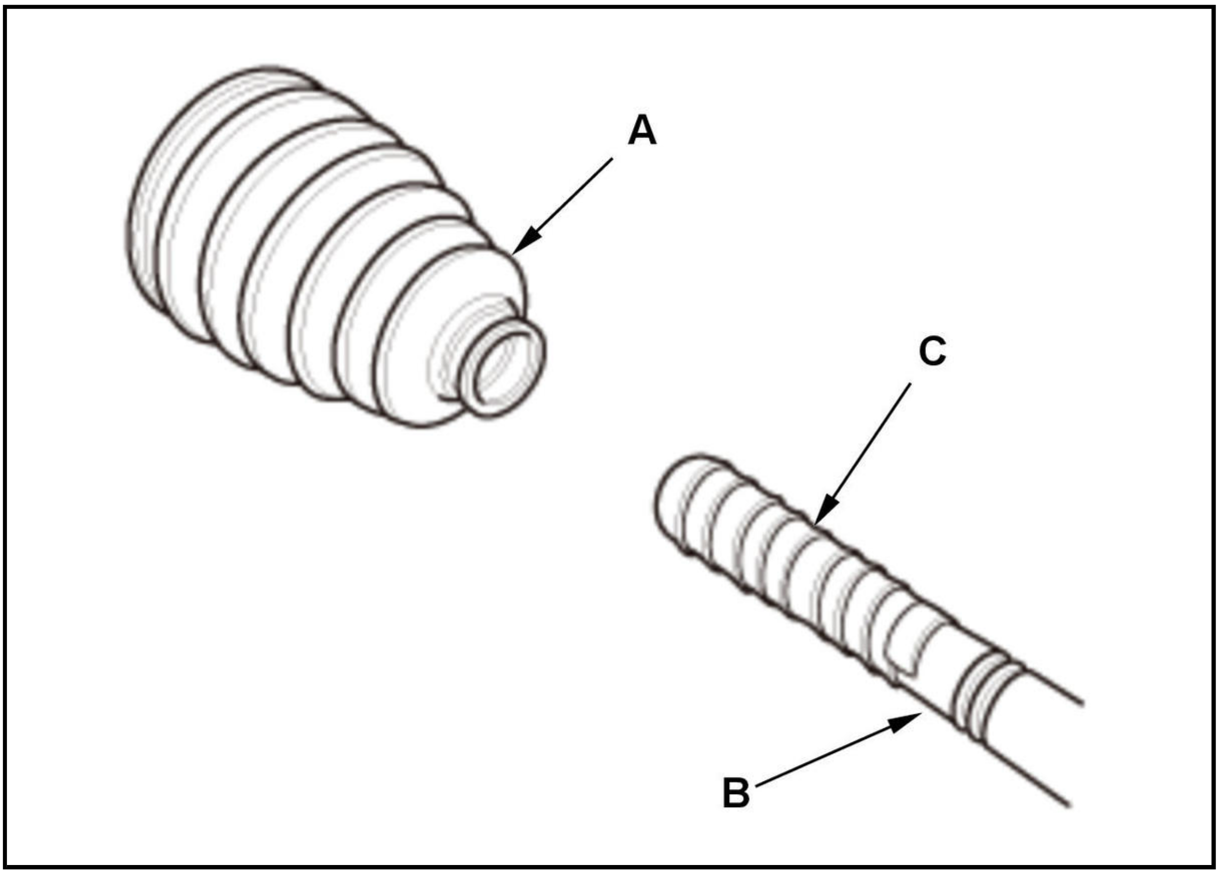

NOTE:

- Check the inboard boot (A) for cracks and damage. If any damage is found, replace the boot.
- Wrap the splines on the driveshaft (B) with vinyl tape (C) to prevent damaging the inboard boot.

Reassembly

NOTE:

- 📖 Where icon is shown, for further information continue to the information below.
- Make marks on the disassembled parts to be able to reassemble them in their original positions.
- Be careful not to damage the boot.
- Use the bands included in the boot set.
- Be careful not to get grease on the boots attachment grooves.

1

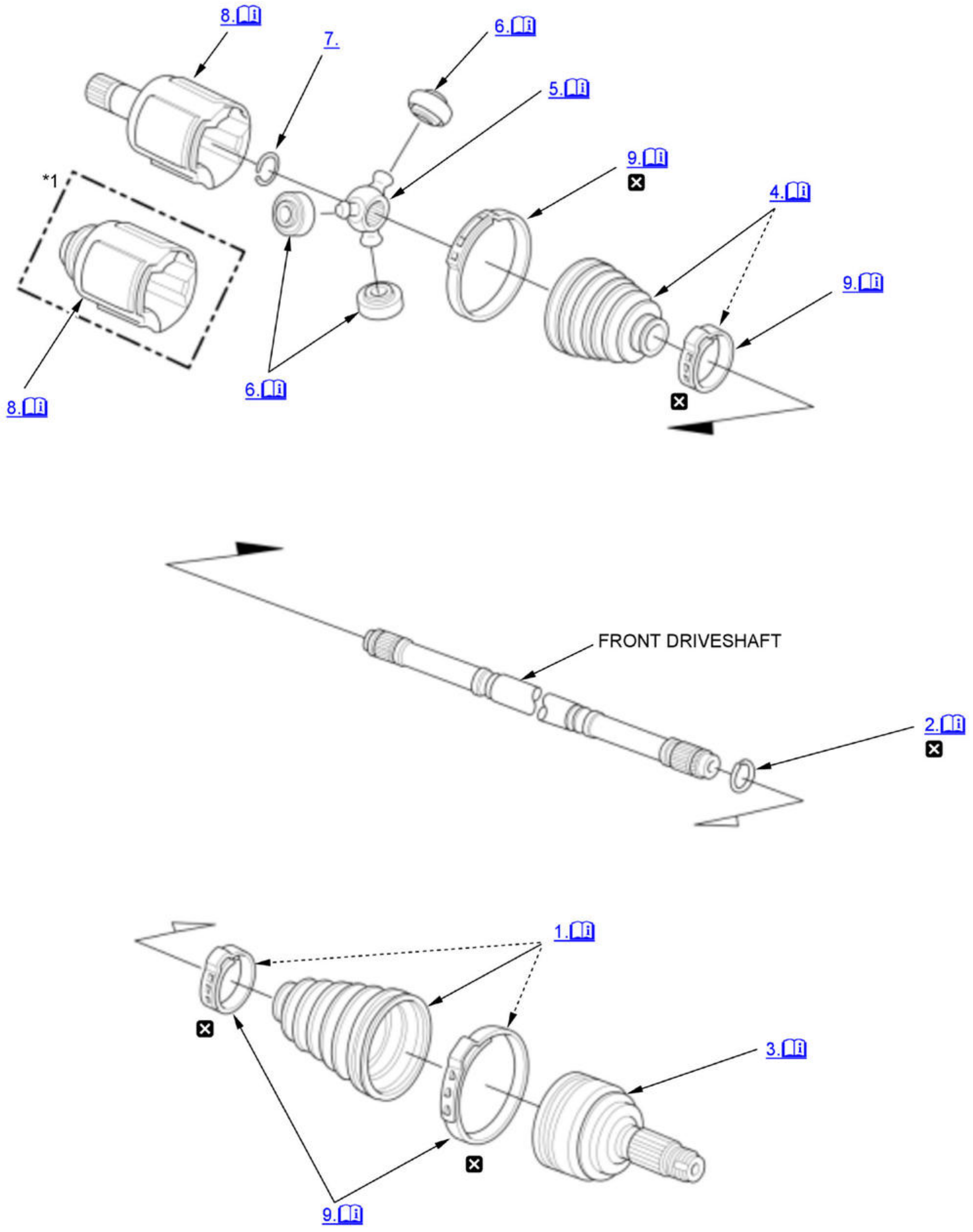
8.
7.
6.
5.
9.
4.
9.
*1
8.
6.
FRONT DRIVESHAFT
2.
1.
3.
9.

ℹ	Detailed information, notes, and precautions
☒	Replace
*1	Right driveshaft

1. Outboard Boot - Install

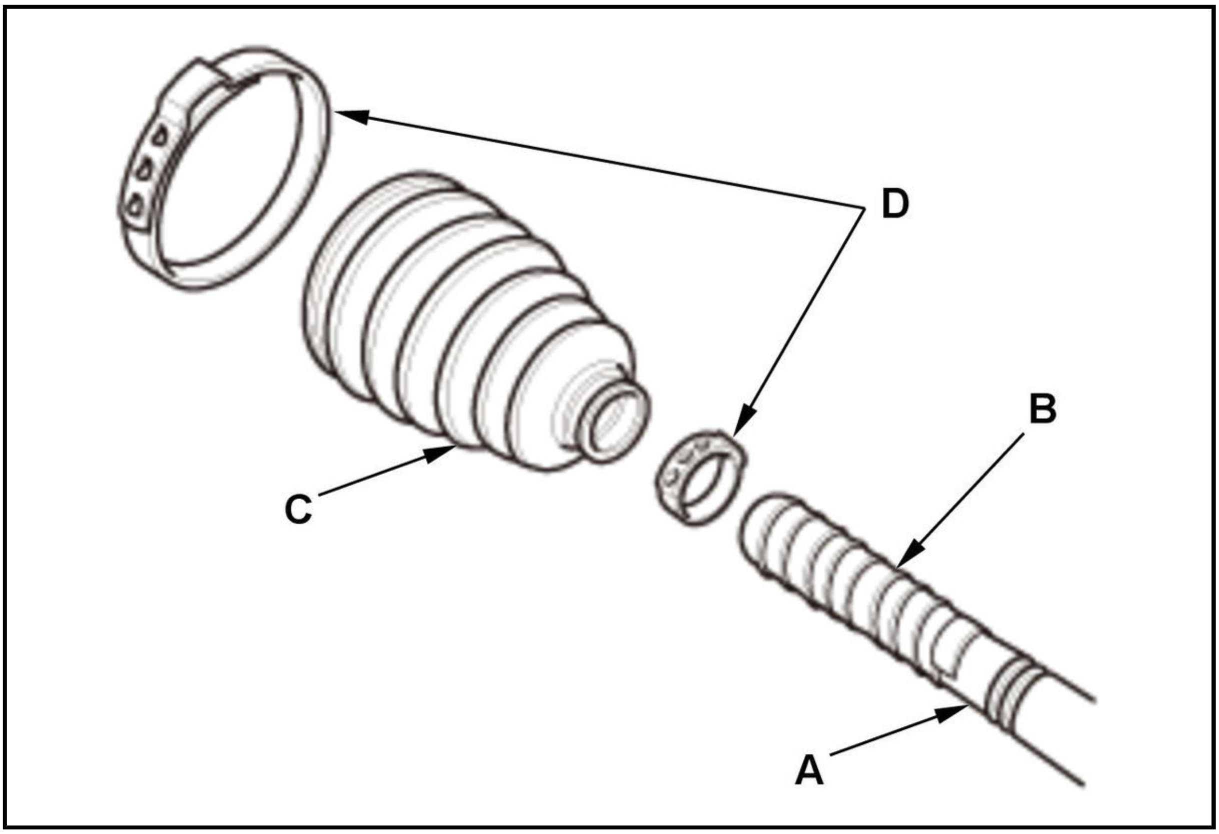

NOTE:

- Wrap the splines on the driveshaft (A) with vinyl tape (B) to prevent damaging the outboard boot (C).
- Install new ear clamp bands (D) with the boot to prevent damaging the bands.

2. Stop Ring - Install

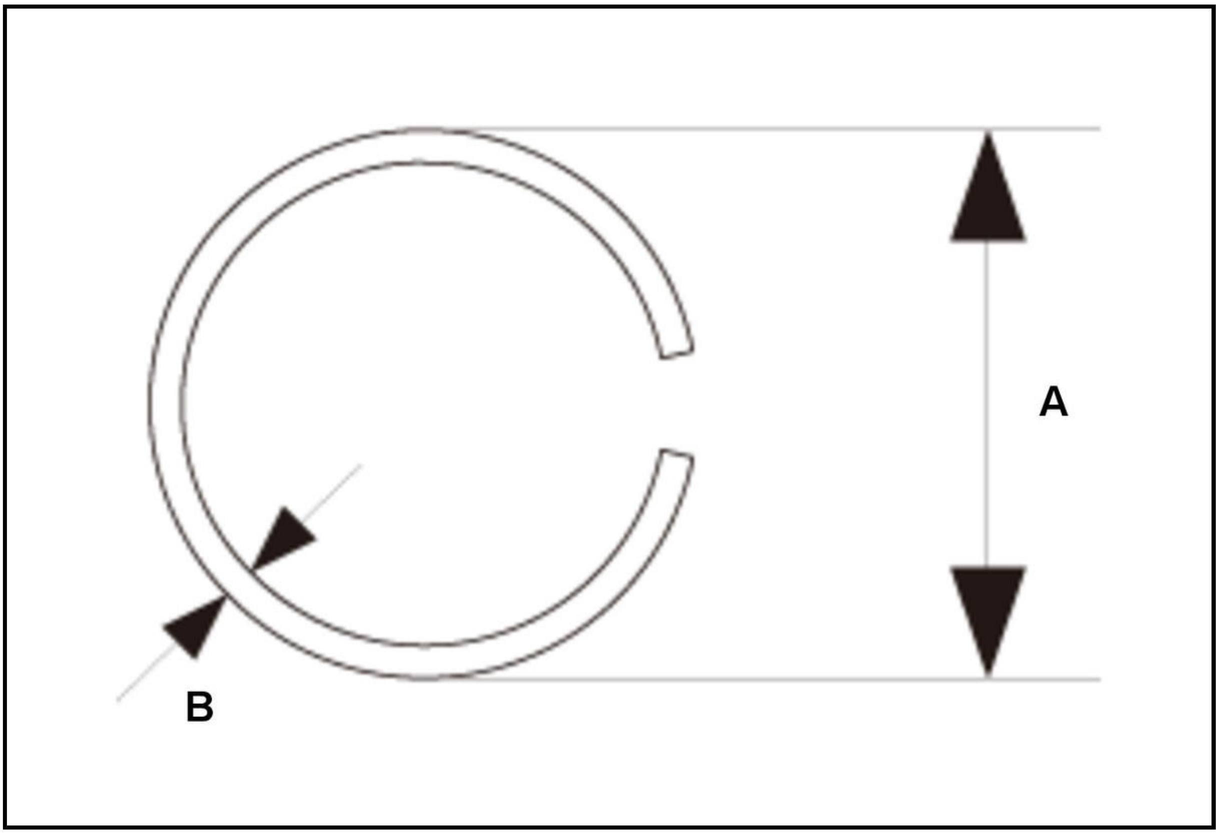

NOTICE:

To avoid driveshaft and vehicle damage, make sure you install the stop ring.

Stop ring specifications		
B	**Overall diameter (A):**	**28.5 mm (1.122 in)**
B	**Wire diameter (B):**	**1.8 mm (0.071 in)**

3. Outboard Joint - Install

<table>
<tr><td>

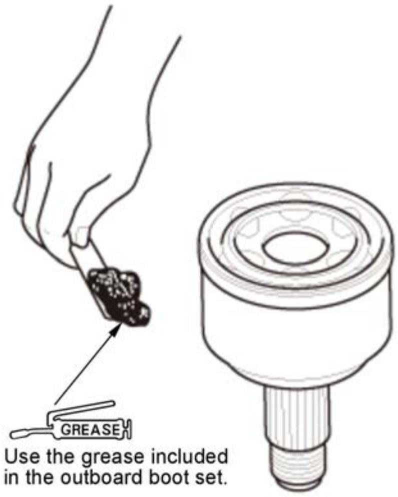

</td><td>

NOTE: Be careful not to damage the outboard boot.

1. Pack about 35 g (1.23 oz) of grease included in the new outboard boot set into the driveshaft hole in the outboard joint.

NOTE: If you are installing a new outboard joint, the grease is already installed.

</td></tr>
<tr><td>

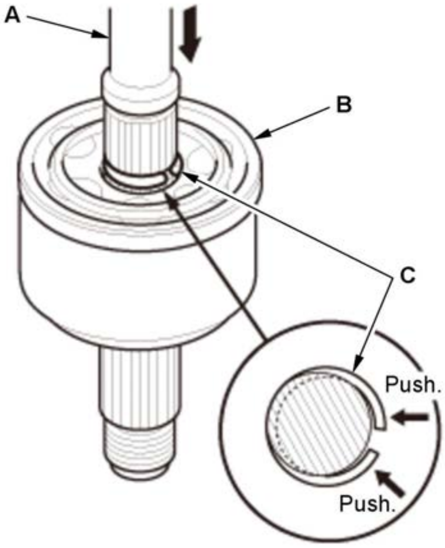

</td><td>

2. Insert the driveshaft (A) into the outboard joint (B) until the stop ring (C) is close to the joint.

</td></tr>
<tr><td>

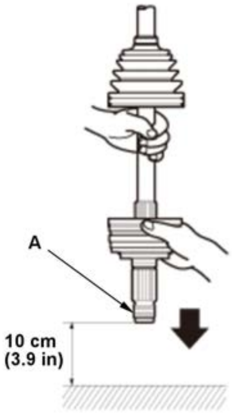

</td><td>

3. To completely seat the outboard joint, pick up the driveshaft and the joint and tap or hit the assembly onto a hard surface from a height of about 10 cm (3.9 in).
NOTE: Do not use a hammer, as excessive force may damage the driveshaft. Be careful not to damage the threaded section (A) of the outboard joint.

</td></tr>
</table>

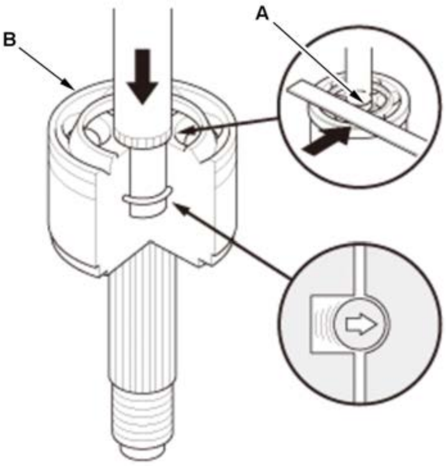 	4. Check the alignment of the paint mark (A) you made with the outboard joint end (B). **NOTICE:** To avoid driveshaft and vehicle damage, the shaft must be all the way into the outboard joint to ensure the stop ring is properly seated.

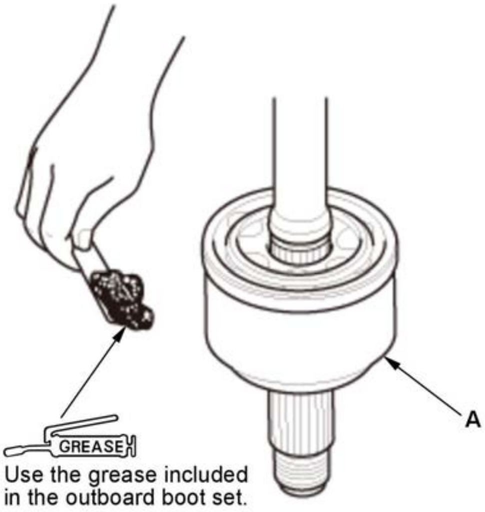 Use the grease included in the outboard boot set.	5. Pack the outboard joint (A) with the remaining joint grease included in the outboard boot set. **Total grease quantity Outboard joint:**

B	**110-130 g (3.88-4.59 oz)**

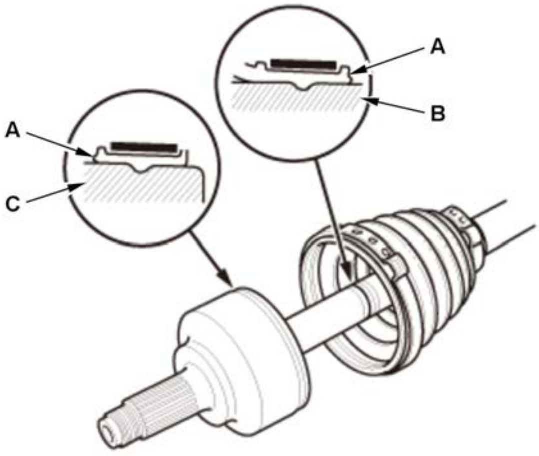 	6. Fit the boot ends (A) onto the driveshaft (B) and the outboard joint (C). 7. Bleed any excess air from the boot by inserting a flat-tipped screwdriver between the boot and the joint.

4. Inboard Boot - Install

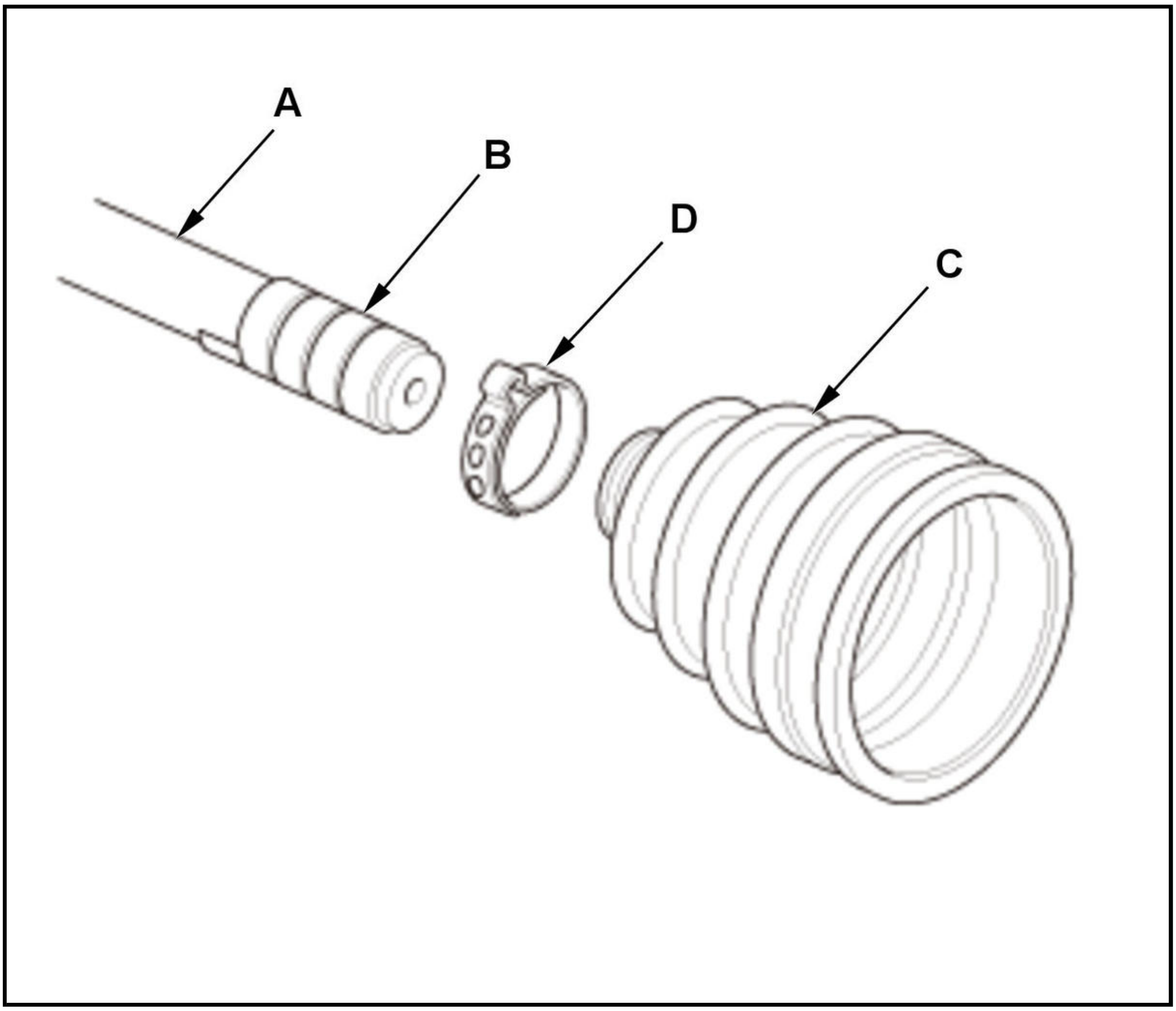

NOTE:

- Wrap the splines on the driveshaft (A) with vinyl tape (B) to prevent damaging the inboard boot (C).
- Install a new ear clamp band (D) with the boot to prevent damaging the band.

5. Spider - Install

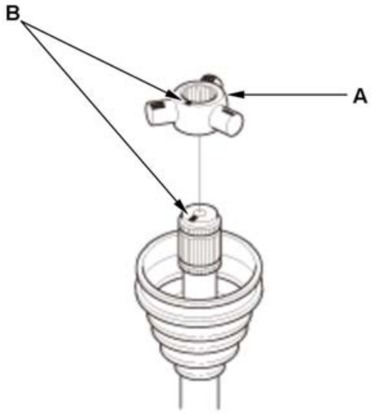	1. Install the spider (A) onto the driveshaft by aligning the marks (B) you made on the spider and the end of the driveshaft.

6. Roller - Install

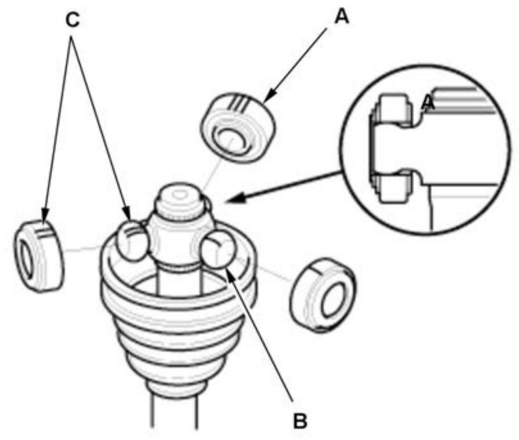	1. Fit the rollers (A) onto the spider (B) as shown and note these items: • Reinstall the rollers in their original positions on the spider by aligning the marks (C) you made. • Hold the driveshaft pointed up to prevent the rollers from falling off.

7. Circlip - Install

8. Inboard Joint - Install

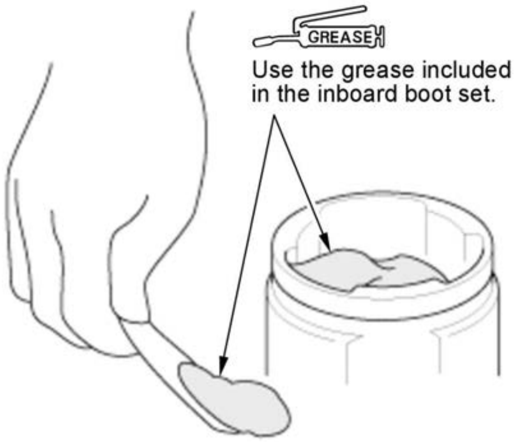	1. Pack the inboard joint with the joint grease included in the new inboard boot set. **Grease quantity Inboard joint:**

Left	**200-220 g (7.05-7.76 oz)**
Right	**205-225 g (7.23-7.94 oz)**

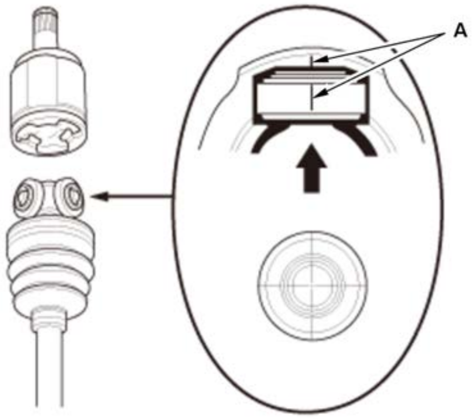	2. Fit the inboard joint onto the driveshaft and note these items: • Reinstall the inboard joint onto the driveshaft by aligning the marks (A) you made on the inboard joint and the rollers. • Hold the driveshaft so the inboard joint is pointing up to prevent it from falling off.

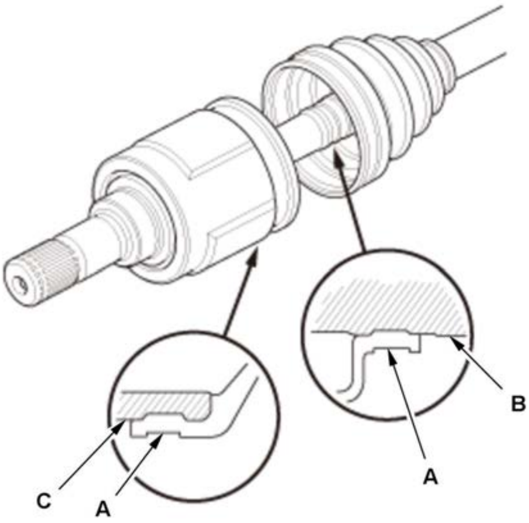

3. Fit the boot ends (A) onto the driveshaft (B) and the inboard joint (C).

4. Bleed any excess air from the boot by inserting a flat-tipped screwdriver between the boot and the joint.

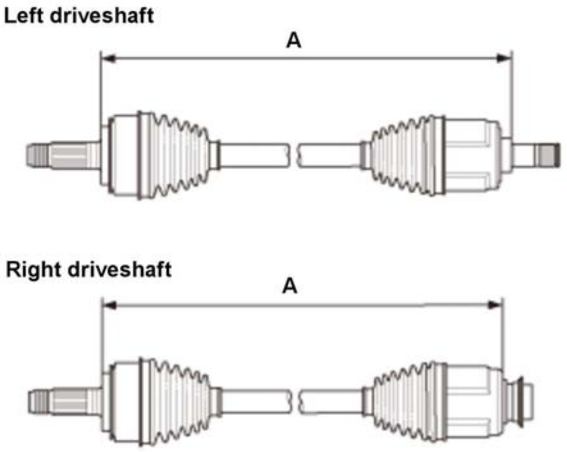

5. Adjust the length (A) of the driveshafts in the figure as shown.

Driveshaft length (1.5 L engine):

Driveshaft length (2.4 L engine):

6. Adjust the boots to halfway between full compression and full extension.

7. Bleed excess air from the boots by inserting a flat-tipped screwdriver between the boot and the joint.

NOTE: Install the joints at exactly the same length.

Left/Right driveshaft	**Specified length (A)**
Left	**550.7-555.7 mm (21.681-21.878 in)**
Right	**477.5-482.5 mm (18.799-18.996 in)**

Left/Right driveshaft	**Specified length (A)**
Left	**550.7-555.7 mm (21.681-21.878 in)**
Right	**567.1-572.1 mm (22.327-22.524 in)**

9. Boot Bands - Install

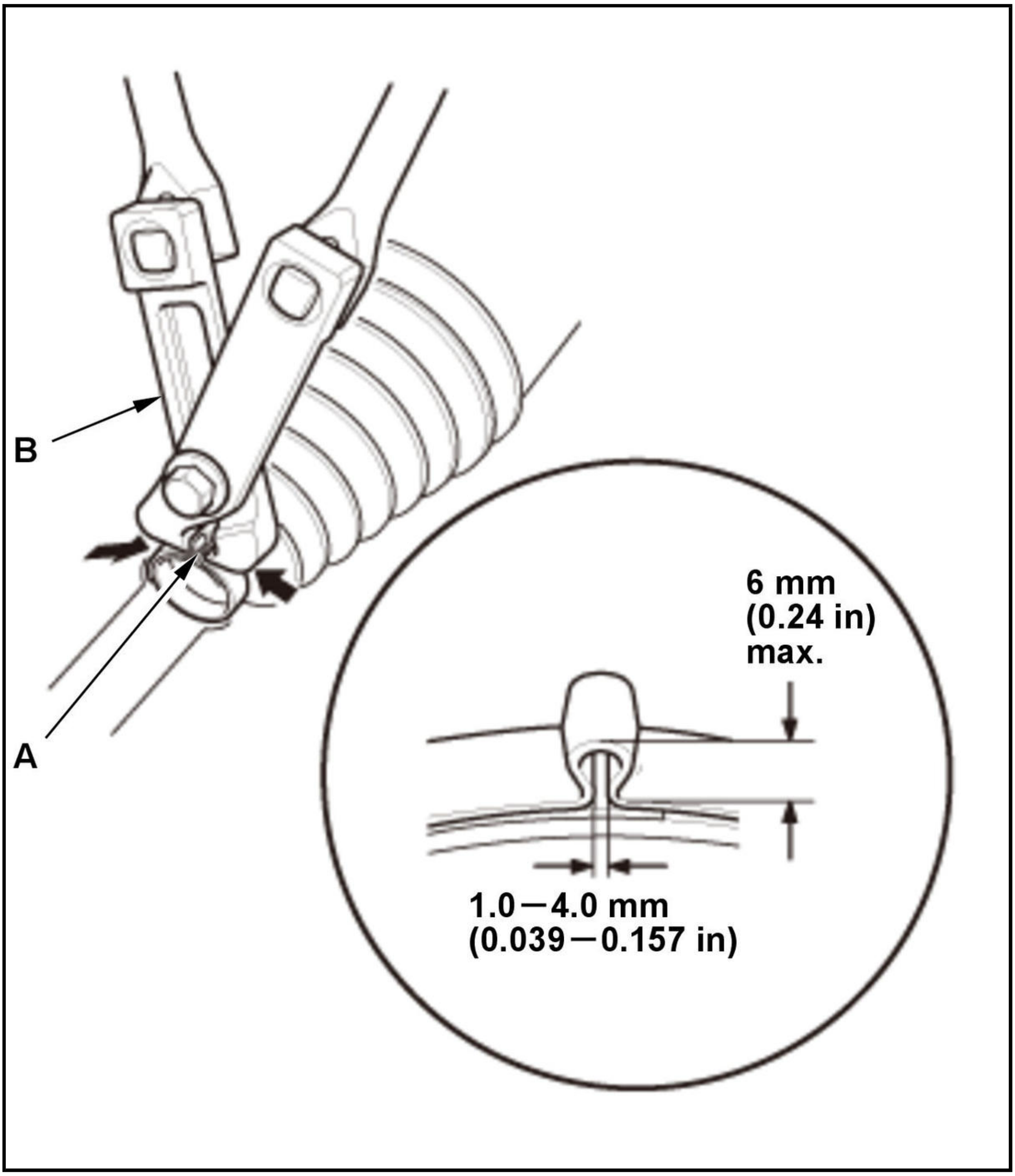

Ear clamp type

1. Close the ear portion (A) of the band using a commercially available boot band clamp tool (Kent-Moore J-35910 or equivalent) (B).

2. Check the clearance of the closed ear portion of the band. If the clearance is not within specification, close the ear portion of the band tighter.

NOTE: Replace the ear clamp band with the one when the ear portion exceeds the prescribed length.

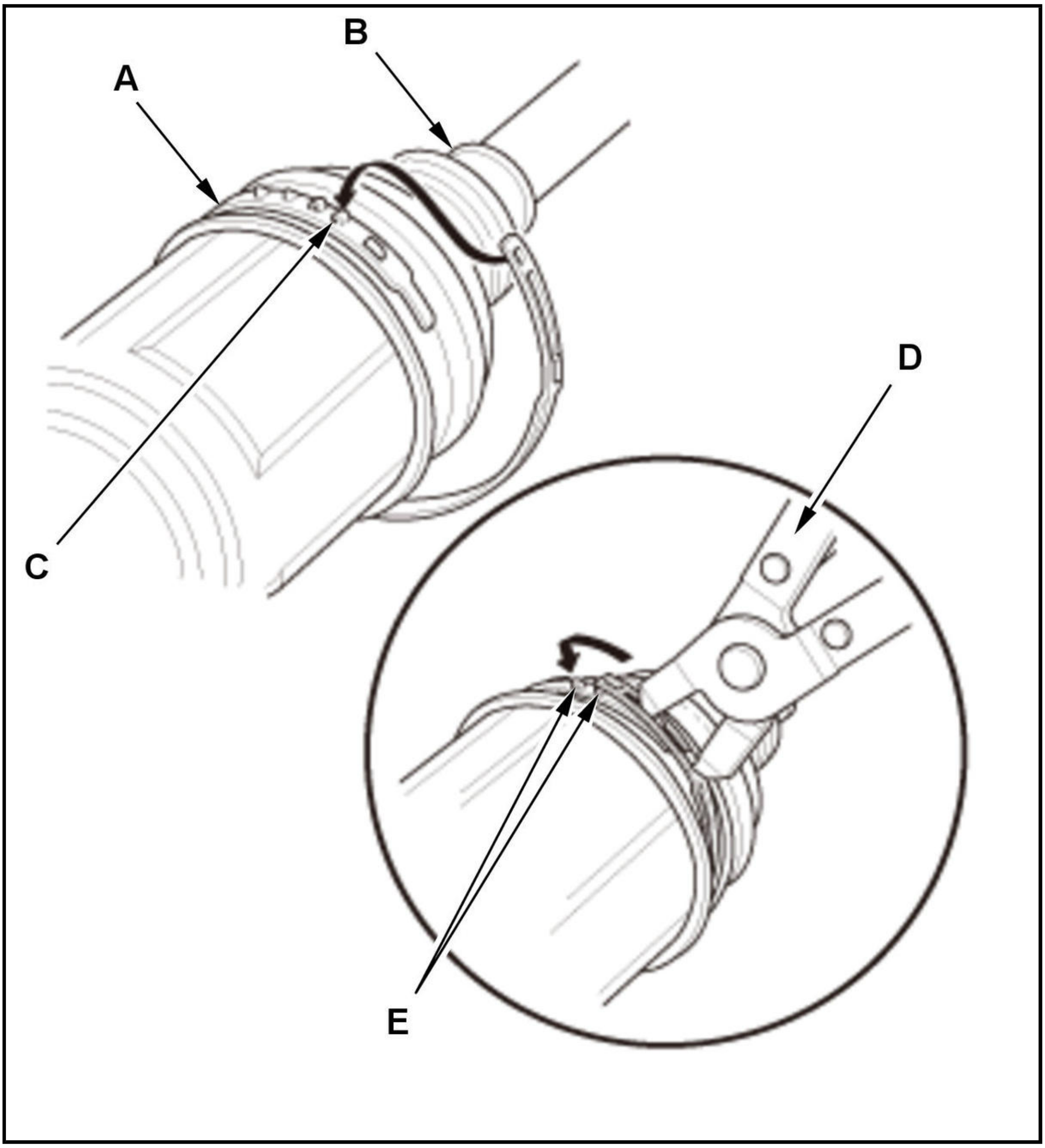

Low profile type

1. Fit the boot ends onto the driveshaft and the inboard joint, then install a new low profile band (A) onto the boot (B).

2. Hook the tab (C) of the band.

3. Close the hook portion of the band using commercially available CV Boot Clamp Pliers (30500) (D), then hook the tabs (E) of the band.

INTERMEDIATE SHAFT DISASSEMBLY AND REASSEMBLY

Special Tools Required

Image	Description/Tool Number
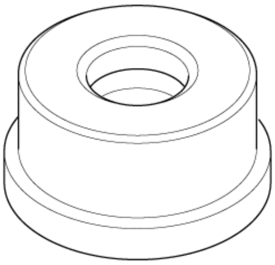	Bearing Driver Attachment, 37 x 40 mm 07746-0010200
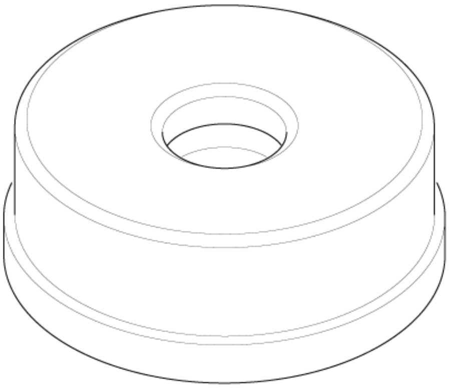	Bearing Driver Attachment, 52 x 55 mm 07746-0010400
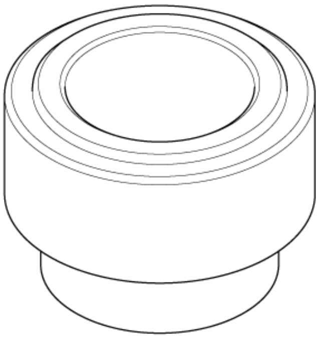	Bearing Driver Attachment, 35 mm I.D. 07746-0030400
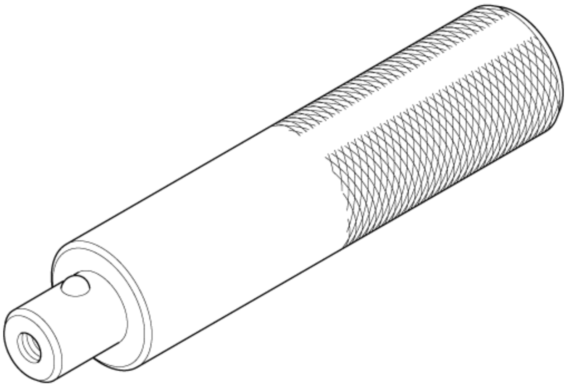	Driver Handle, 15 x 135L 07749-0010000

Image	Description/Tool Number
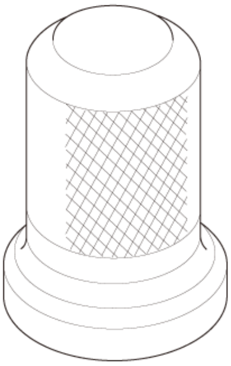	Oil Seal Driver, 44.5 mm 07947-SB0A100
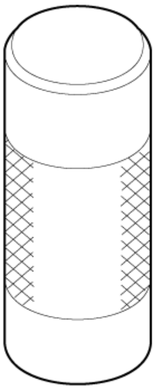	Driver, 32.5 mm 070AD-SAA0100
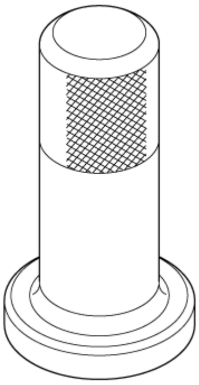	Oil Seal Driver, 65 mm 07JAD-PL9A100
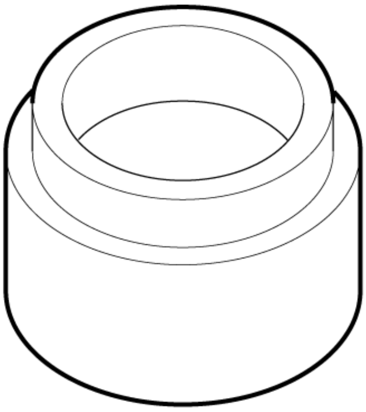	Installer Attachment 40 mm 07LAD-PW50601

Image	Description/Tool Number
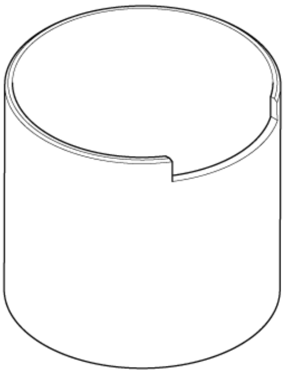	Half Shaft Base 07NAF-SR30101

Disassembly

- Where icon is shown, for further information continue to the information below.
- Clean the disassembled parts with solvent, then dry the disassembled parts with compressed air. Do not wash the rubber parts with solvent.

1

1.5 L engine

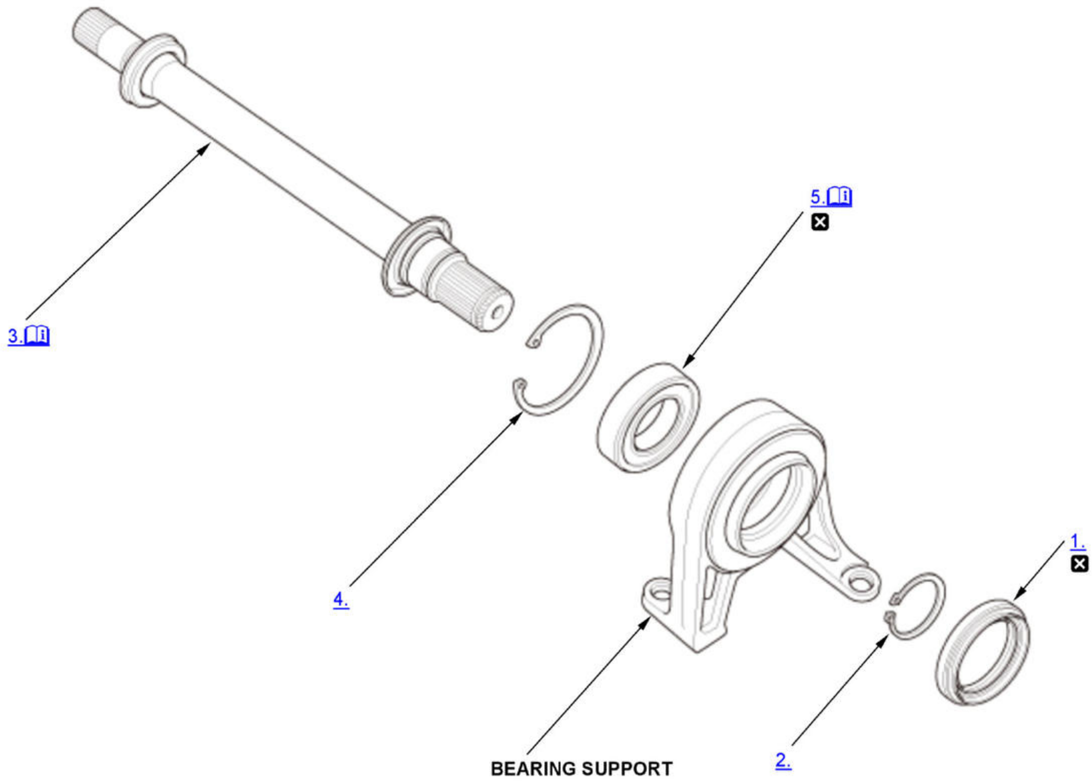

ℹ	Detailed information, notes, and precautions
☒	Replace

2

2.4 L engine

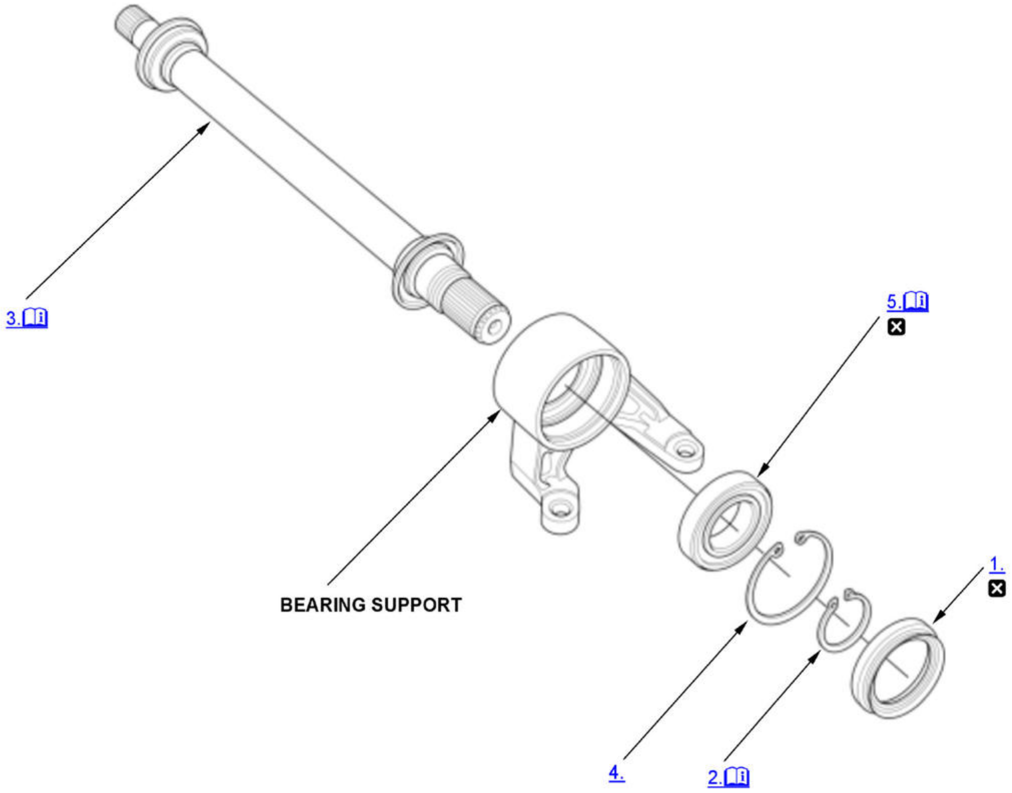
3. ℹ
5. ℹ
☒
1.
☒
BEARING SUPPORT
4.
2. ℹ

ℹ	Detailed information, notes, and precautions
☒	Replace

1.5 L engine

1. Outer Seal - Remove
2. External Snap Ring - Remove
3. Intermediate Shaft - Remove

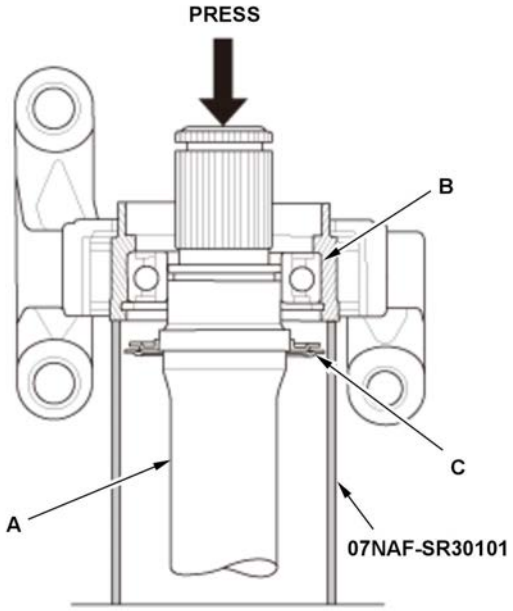 PRESS B C A 07NAF-SR30101	1. Press the intermediate shaft (A) out of the intermediate shaft bearing (B) using the half shaft base and a press. **NOTE:** Be careful not to damage the bearing support ring (C) on the intermediate shaft during disassembly.

4. Internal Snap Ring - Remove
5. Intermediate Shaft Bearing - Remove

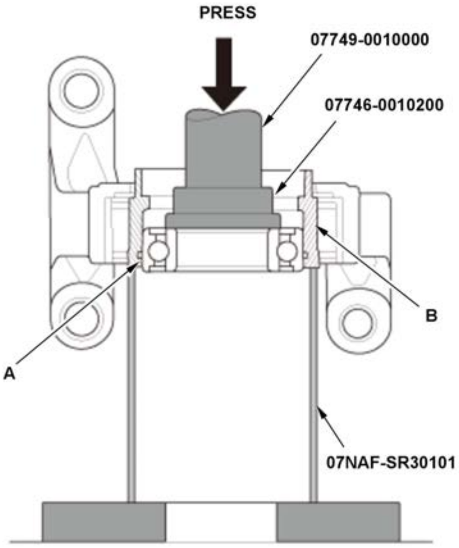 PRESS 07749-0010000 07746-0010200 B A 07NAF-SR30101	1. Press the intermediate shaft bearing (A) out of the bearing support (B) using the 15 x 135L driver handle, the half shaft base, the 37 x 40 mm bearing driver attachment and a press.

2.4 L engine

6. Outer Seal - Remove
7. External Snap Ring - Remove

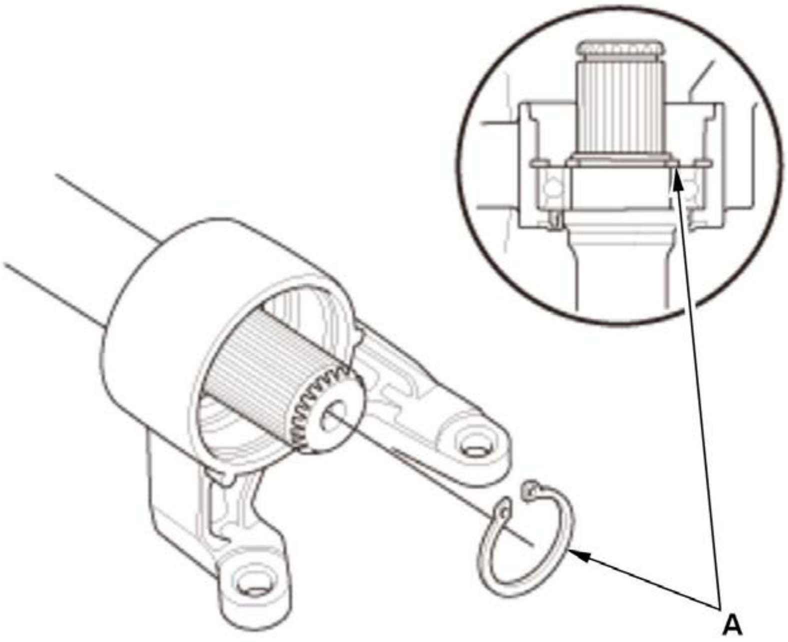

1. Remove the external snap ring (A).

8. Intermediate Shaft - Remove

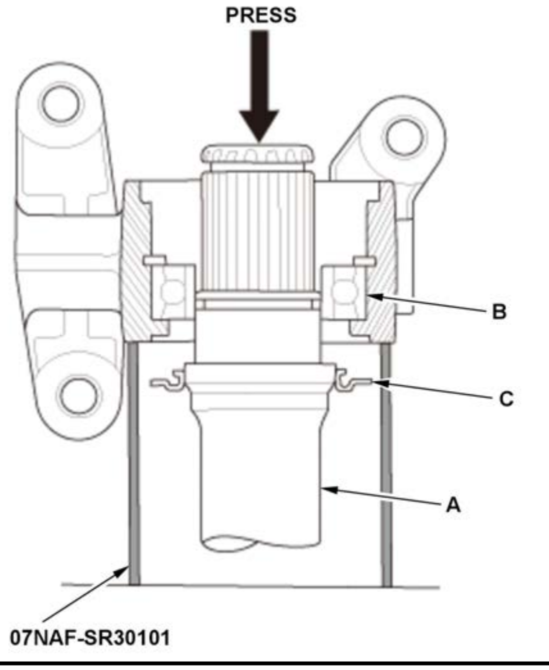

1. Press the intermediate shaft (A) out of the intermediate shaft bearing (B) using the half shaft base and a press.

NOTE: Be careful not to damage the bearing support ring (C) on the intermediate shaft during disassembly.

9. Internal Snap Ring - Remove
10. Intermediate Shaft Bearing - Remove

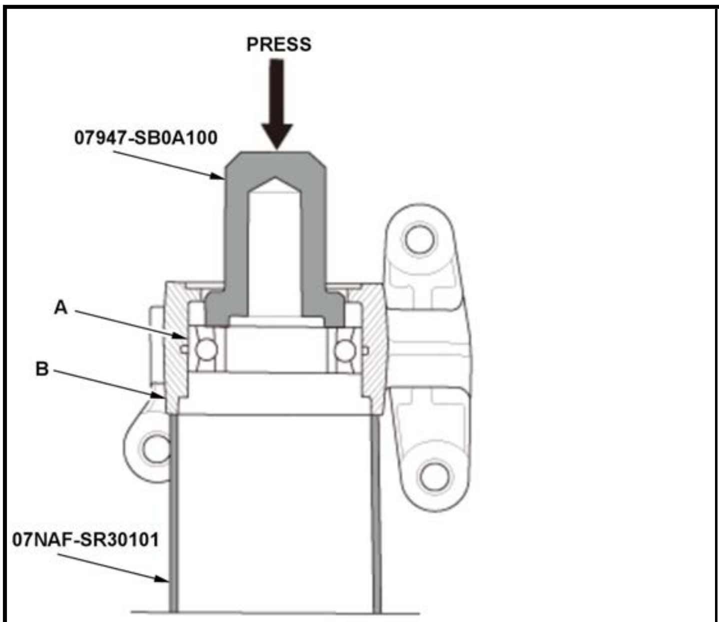	1. Press the intermediate shaft bearing (A) out of the bearing support (B) using the 44.5 mm oil seal driver, the half shaft base, and a press.

Reassembly

- ℹ Where icon is shown, for further information continue to the information below.
- Clean the disassembled parts with solvent, then dry the disassembled parts with compressed air. Do not wash the rubber parts with solvent.

1

1.5 L engine

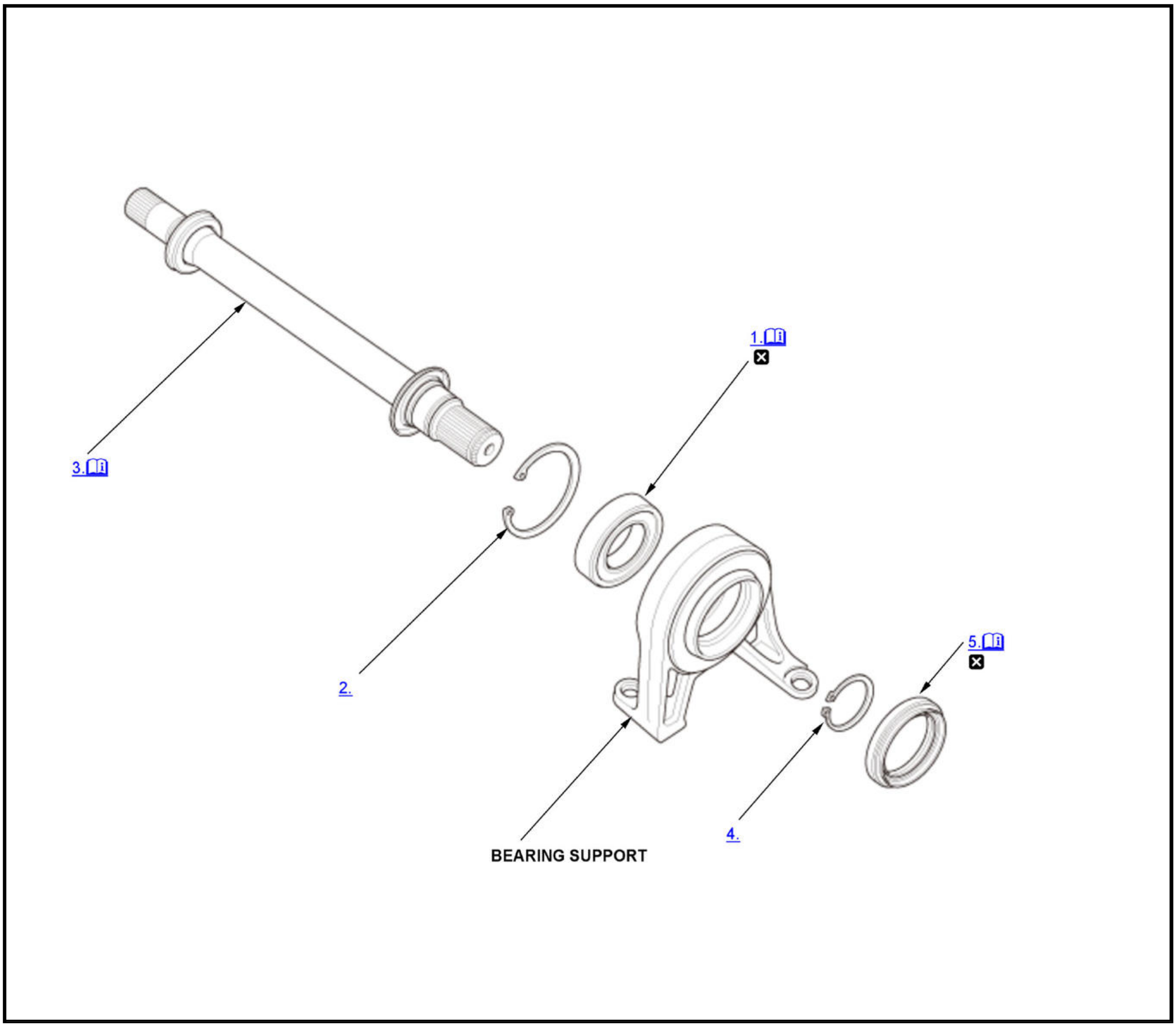
1.
2.
3.
4.
5.
BEARING SUPPORT

📖	Detailed information, notes, and precautions
☒	Replace

2

2.4 L engine

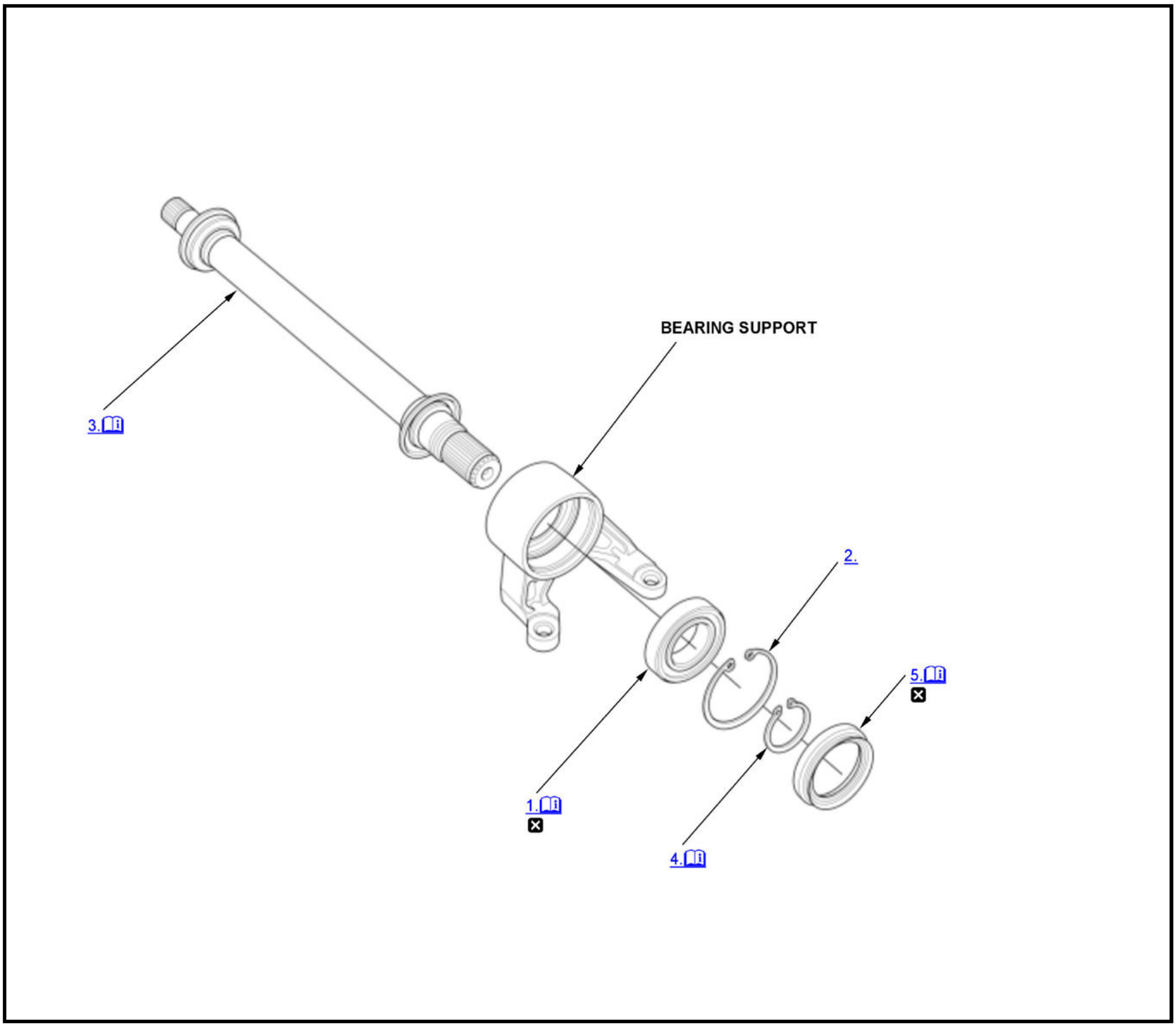
3.
BEARING SUPPORT
2.
5.
1.
4.

ℹ	Detailed information, notes, and precautions
☒	Replace

1.5 L engine

1. Intermediate Shaft Bearing - Install

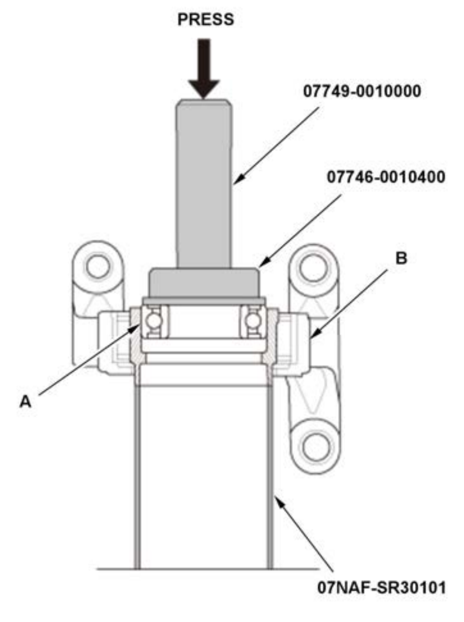 PRESS 07749-0010000 07746-0010400 B A 07NAF-SR30101	1. Press a new intermediate shaft bearing (A) into the bearing support (B) using the 52 x 55 mm bearing driver attachment, the 15 x 135L driver handle, the half shaft base and a press.

2. Internal Snap Ring - Install

3. Intermediate Shaft - Install

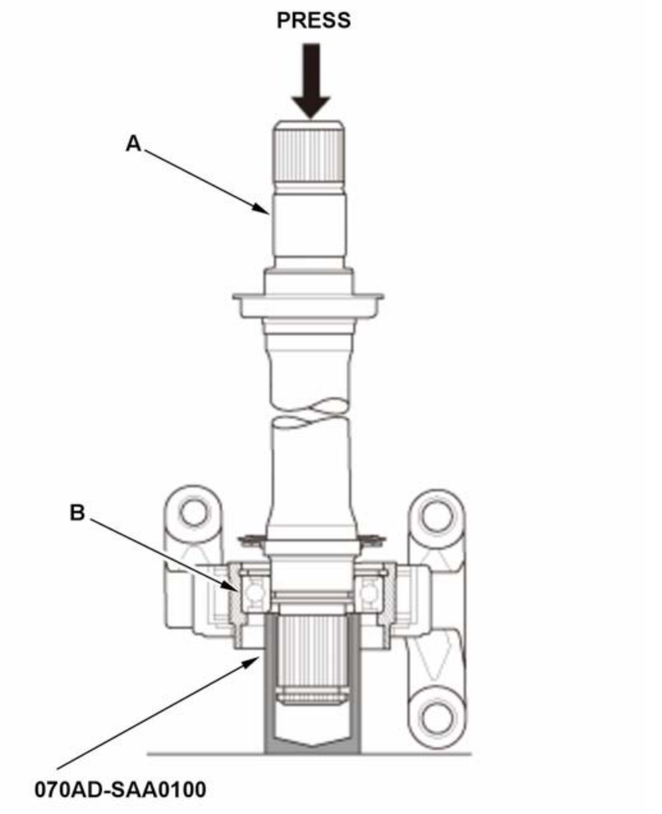 PRESS A B 070AD-SAA0100	1. Press the intermediate shaft (A) into the shaft bearing (B) using the 32.5 mm driver and a press.

4. External Snap Ring - Install

5. Outer Seal - Install

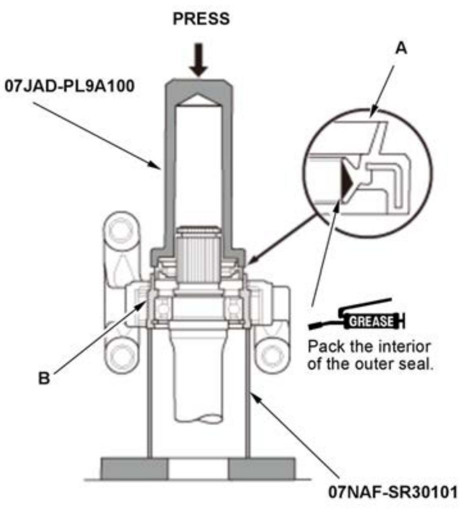
PRESS
A
07JAD-PL9A100
GREASE
Pack the interior of the outer seal.
B
07NAF-SR30101

1. Install a new outer seal (A) into the bearing support (B) using the 65 mm oil seal driver, the half shaft base and a press. Press in the seal until it is even with the surface of the bearing support.

2.4 L engine

6. Intermediate Shaft Bearing - Install

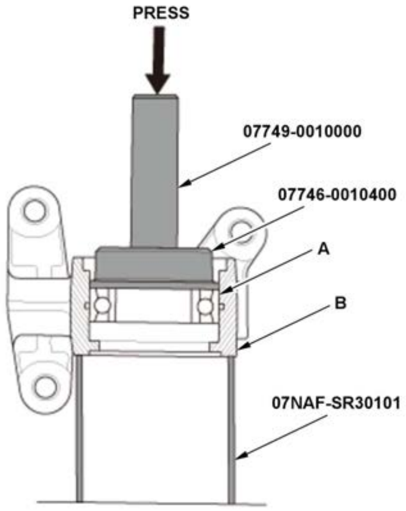
PRESS
07749-0010000
07746-0010400
A
B
07NAF-SR30101

1. Press a new intermediate shaft bearing (A) into the bearing support (B) using the 52 x 55 mm bearing driver attachment, the 15 x 135L driver handle, the half shaft base, and a press.

7. Internal Snap Ring - Install
8. Intermediate Shaft - Install

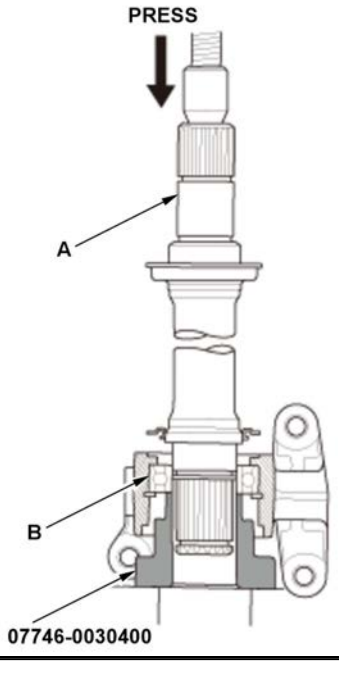
PRESS
A
B
07746-0030400

1. Press the intermediate shaft (A) into the shaft bearing (B) using the 35 mm I.D. bearing driver attachment and a press.

9. External Snap Ring - Install

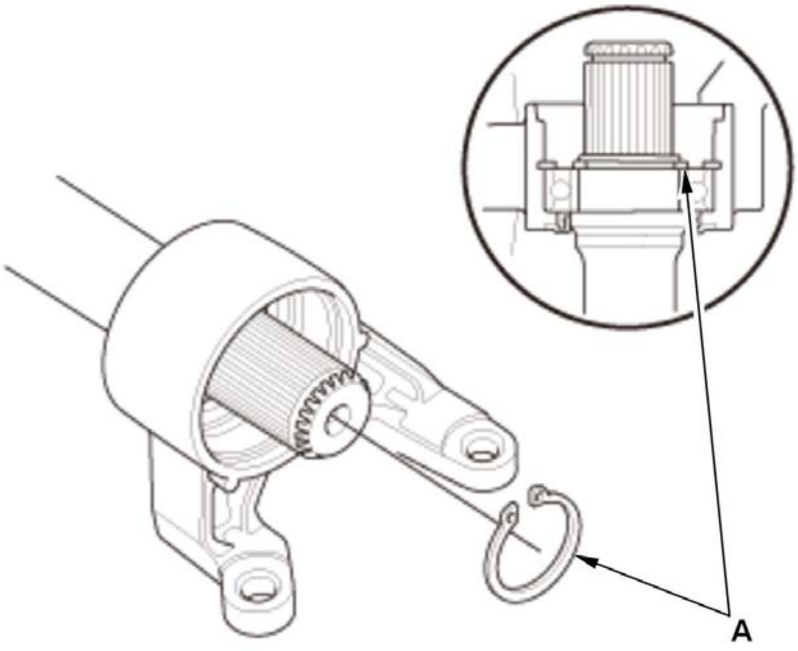	1. Install the external snap ring (A).

10. Outer Seal - Install

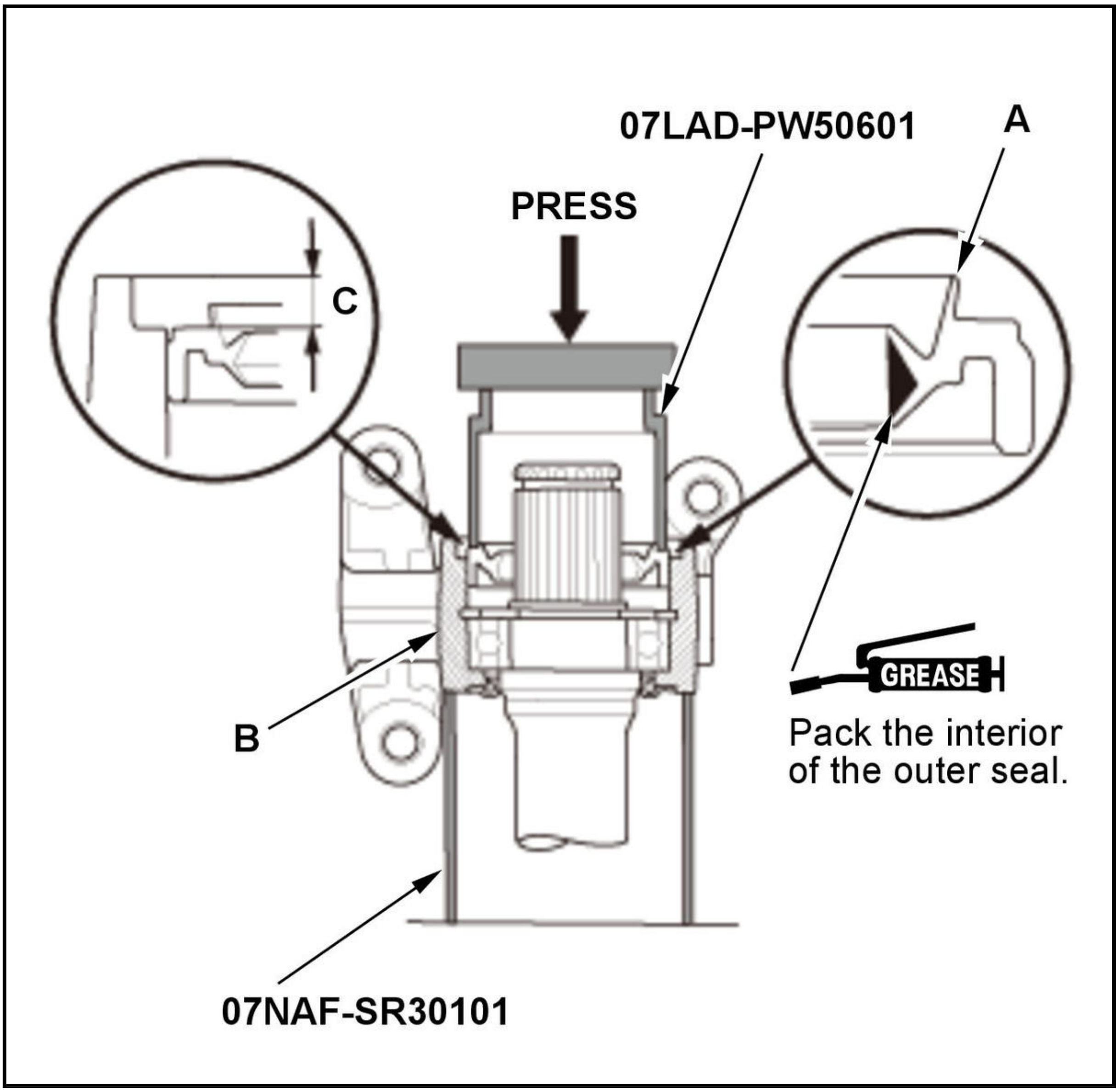
07LAD-PW50601
A
PRESS
C
B
GREASE
Pack the interior of the outer seal.
07NAF-SR30101

Install a new outer seal (A) into the bearing support (B) using the 40 mm installer attachment, the half shaft base, and a press. Press in the seal until it is 4 ± 0.2 mm (0.16 ± 0.008 in) (C) below the surface of the bearing support end.

REAR DRIVESHAFT DISASSEMBLY AND REASSEMBLY (AWD)

Special Tools Required

Image	Description/Tool Number
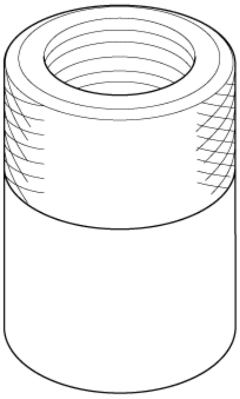	Threaded Adapter, 22 x 1.5 mm 07XAC-001010A

Disassembly

NOTE:

- ℹ Where icon is shown, for further information continue to the information below.
- Make marks on the disassembled parts to be able to reassemble them in their original positions.
- Be careful not to damage the boot.
- Use the bands included in the boot set.

1

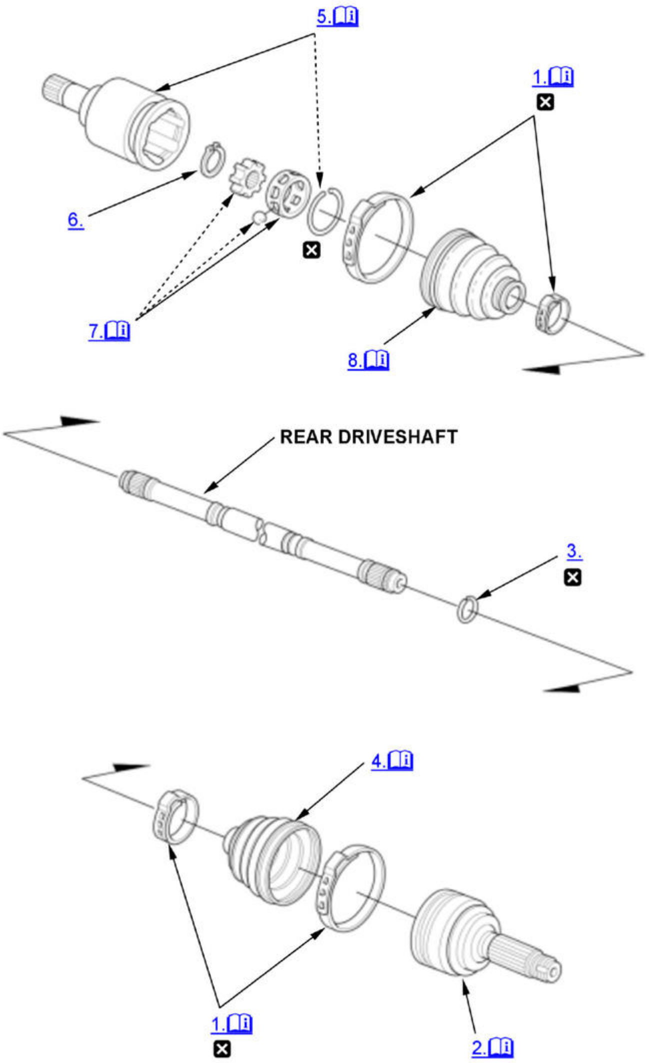

ℹ	Detailed information, notes, and precautions
☒	Replace

1. Boot Bands - Remove

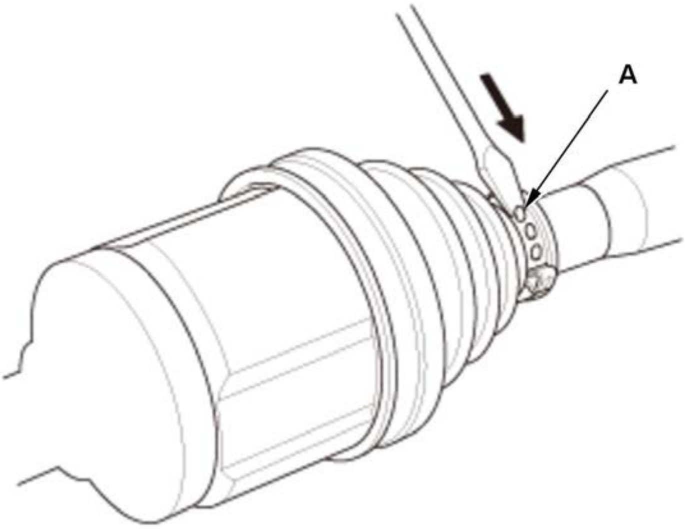	1. Lift up the tabs (A) using a flat-tipped screwdriver.

2. Outboard Joint - Remove

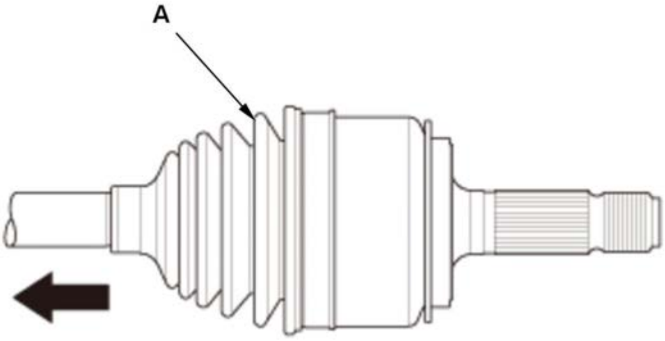	1. Slide the outboard boot (A) partially toward the inboard joint side. 2. Wipe off the grease to expose the driveshaft and the outboard joint inner race.

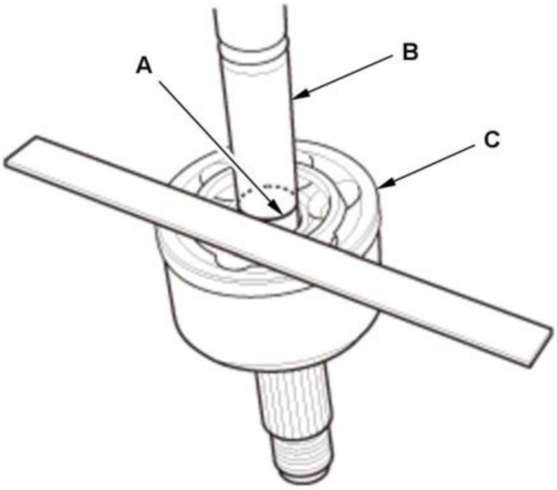	3. Make a mark (A) on the driveshaft (B) at the same level as the outboard joint end (C).

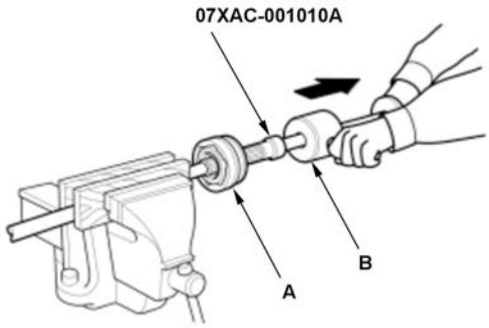	4. Securely clamp the driveshaft in a bench vise with the wood blocks. 5. Remove the outboard joint (A) using the 22 x 1.5 mm threaded adapter and a commercially available 5/8"-18 UNF slide hammer (B). **NOTE:** Check inside of the outboard joint and on the serrations for wear and tear. 6. Remove the driveshaft from the bench vise.

3. Stop Ring - Remove
4. Outboard Boot - Remove

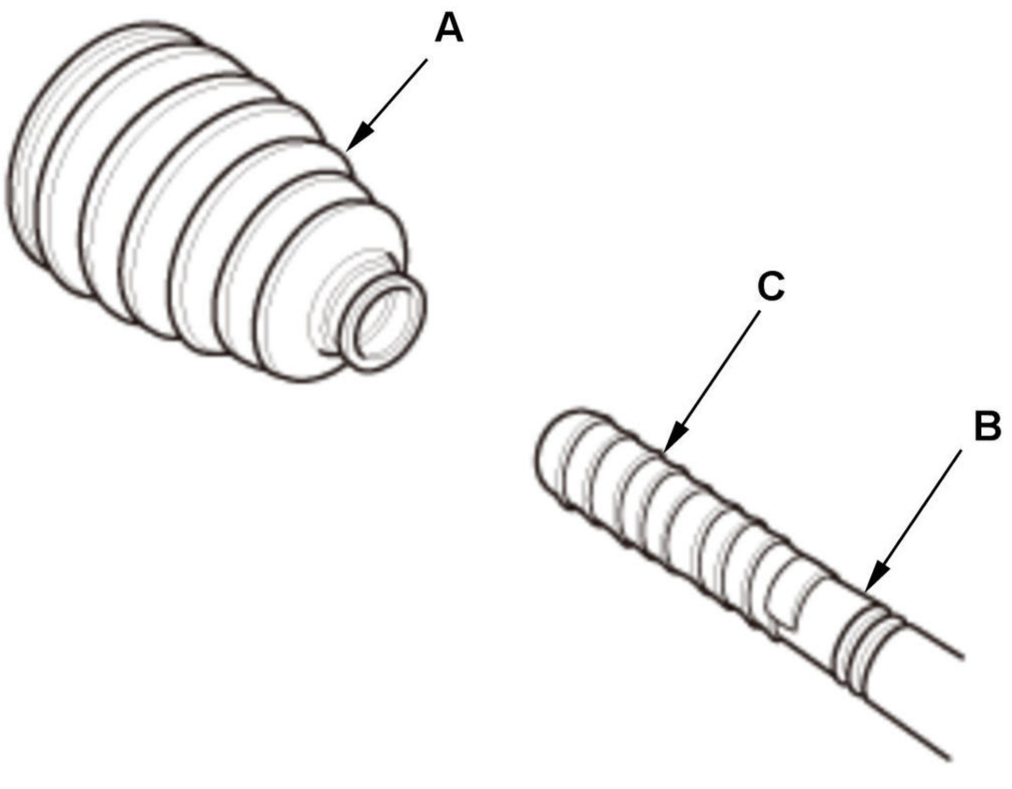

NOTE:

- Check the outboard boot (A) for cracks and damage. If any damage is found, replace the outboard boot.
- Wrap the splines on the driveshaft (B) with vinyl tape (C) to prevent damaging the outboard boot.

5. Inboard Joint - Remove

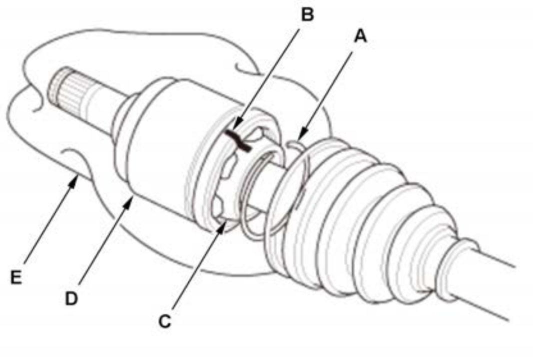	1. Remove the snap ring (A). 2. Make marks (B) on the bearing retainer (C) and the inboard joint (D) to identify the locations of the bearing retainer to the grooves in the inboard joint. 3. Remove the inboard joint and place it on a clean shop towel (E). Be careful not to drop the steel balls when separating them from the inboard joint.

6. Circlip - Remove

7. Bearing Retainer and Bearing Race - Remove

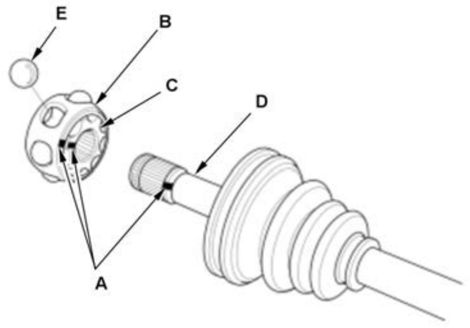	1. Make marks (A) on the bearing retainer (B), the bearing race (C) and the driveshaft (D) to identify the position of the bearing retainer and the bearing race on the shaft. 2. Remove the bearing race and the steel balls (E). **NOTE:** If necessary, use a commercially available bearing puller.

8. Inboard Boot - Remove

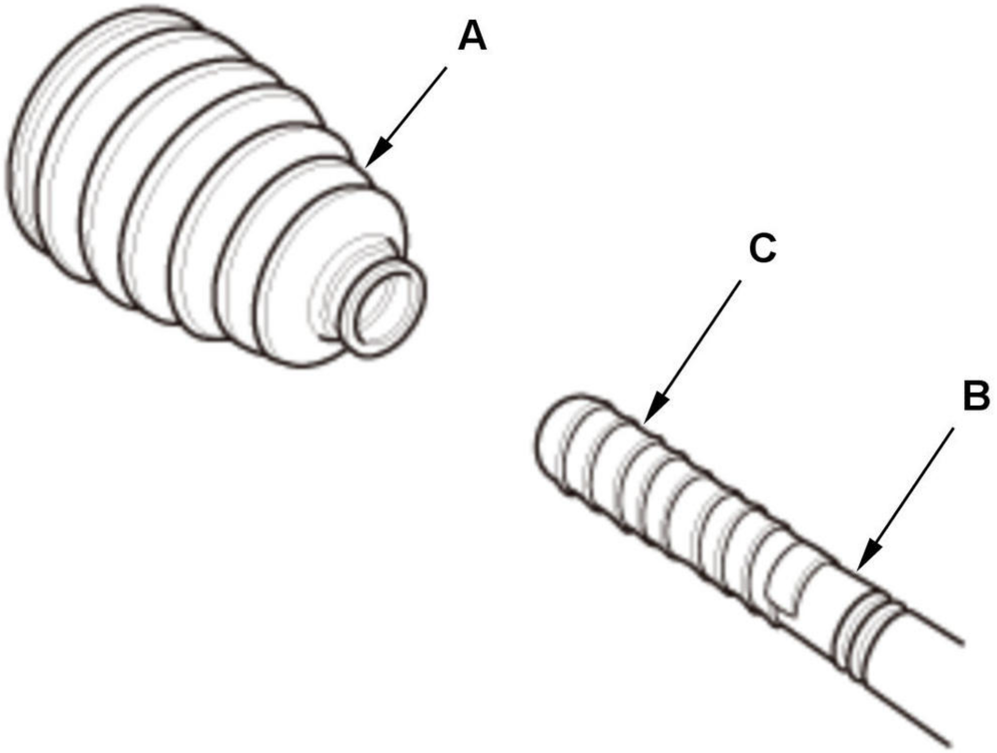

NOTE:

- Check the inboard boot (A) for cracks and damage. If any damage is found, replace the inboard boot.
- Wrap the splines on the driveshaft (B) with vinyl tape (C) to prevent damaging the inboard boot.

Reassembly

NOTE:

- ℹ Where icon is shown, for further information continue to the information below.
- Make marks on the disassembled parts to be able to reassemble them in their original positions.
- Be careful not to damage the boot.
- Be careful not to get grease on the boots attachment grooves.
- Use the bands included in the boot set.

1

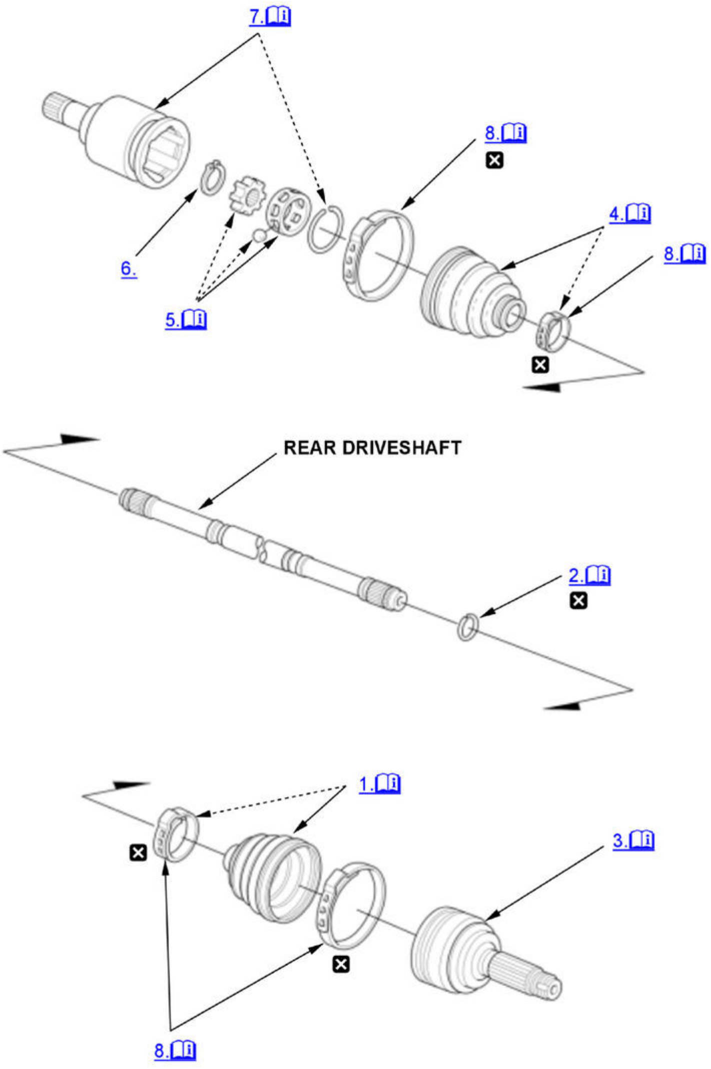

ℹ	Detailed information, notes, and precautions
☒	Replace

1. Outboard Boot - Install

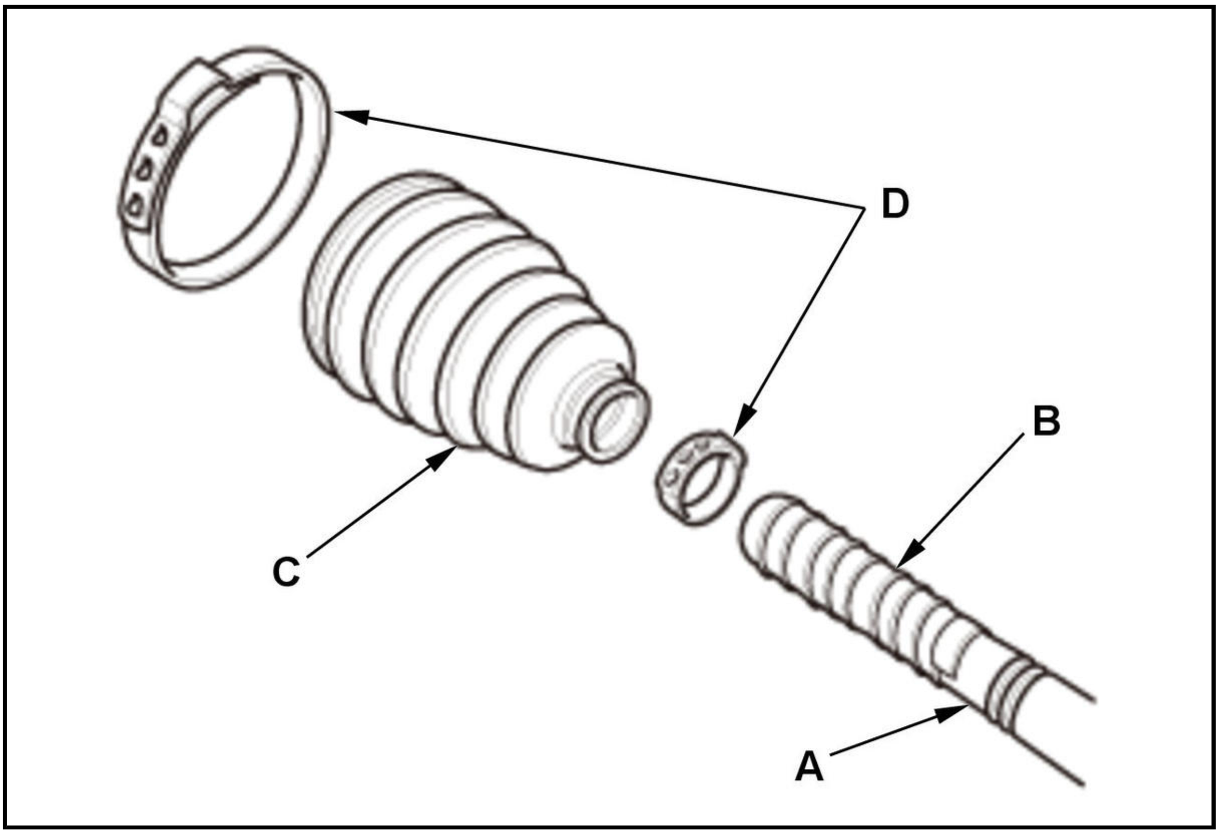

NOTE:

- Wrap the splines on the driveshaft (A) with vinyl tape (B) to prevent damaging the outboard boot (C).
- Install new ear clamp bands (D) with the boot to prevent damaging the band.

2. Stop Ring - Install

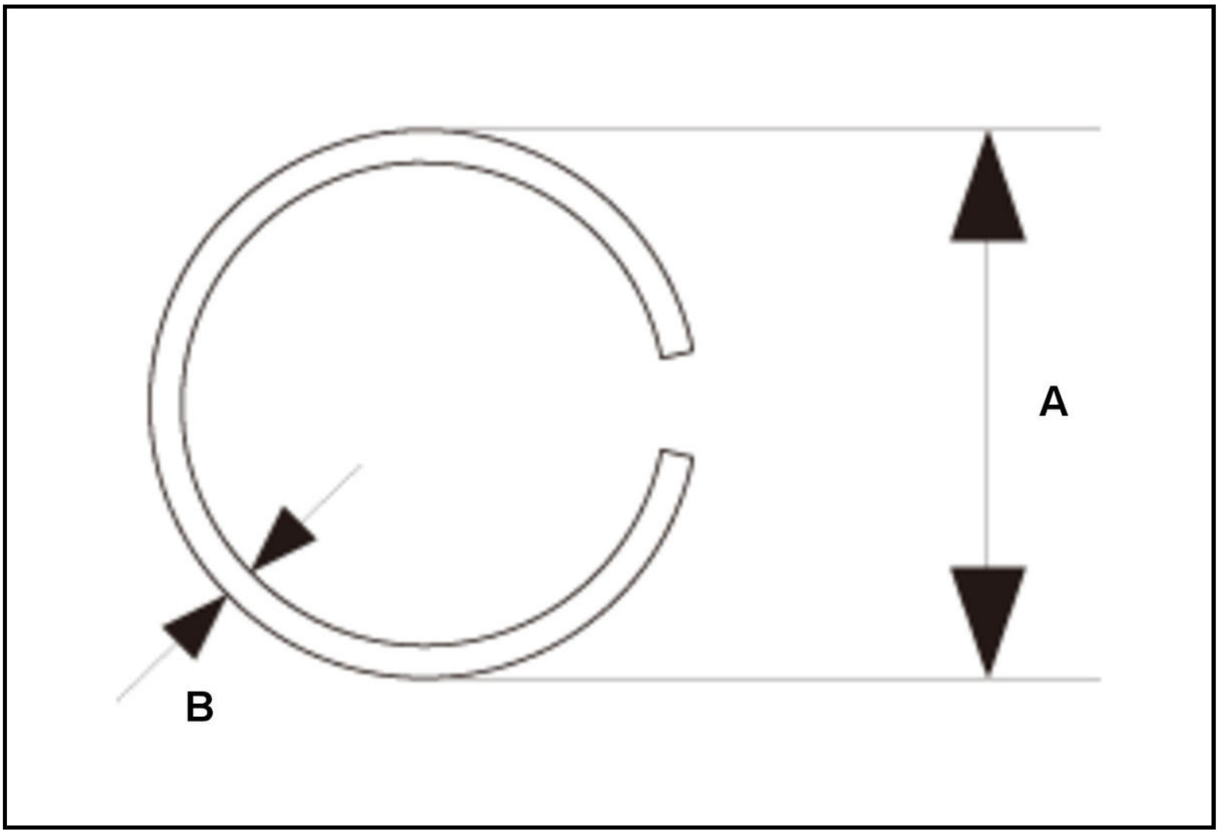

NOTICE:

To avoid driveshaft and vehicle damage, make sure you install the stop ring.

Stop ring specifications		
B	**Overall diameter (A):**	**21.97 mm (0.865 in)**
B	**Wire diameter (B):**	**1.44 mm (0.0567 in)**

3. Outboard Joint - Install

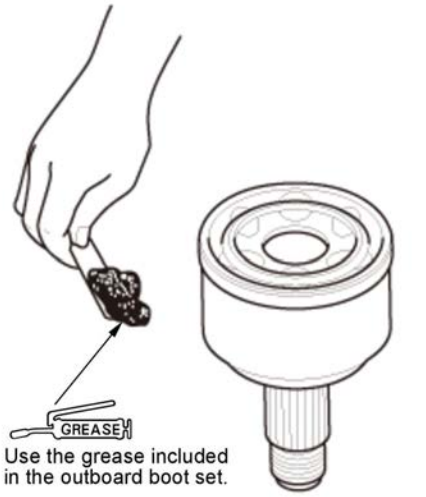 GREASE Use the grease included in the outboard boot set.	1. Pack about 30 g (1.06 oz) of grease included in the new outboard boot set into the driveshaft hole in the outboard joint. **NOTE:** If you are installing a new outboard joint, the grease is already installed.
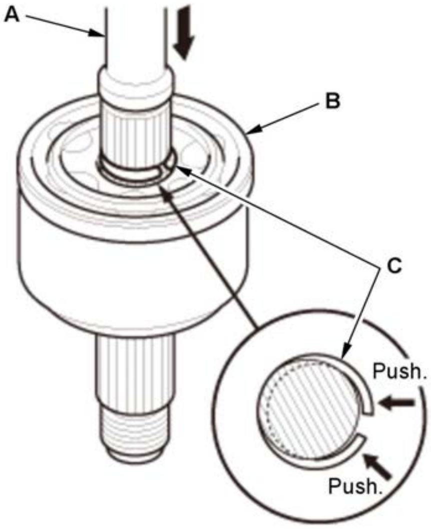 A B C Push. Push.	2. Insert the driveshaft (A) into the outboard joint (B) until the stop ring (C) is close to the outboard joint.
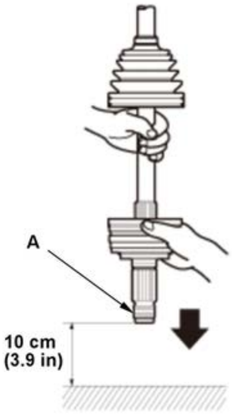	3. To completely seat the outboard joint, pick up the driveshaft and the joint and tap or hit the assembly onto a hard surface from a height of about 10 cm (3.9 in). **NOTE:** Do not use a hammer, as excessive force may damage the driveshaft. Be careful not to damage the threaded section (A) of the outboard joint.

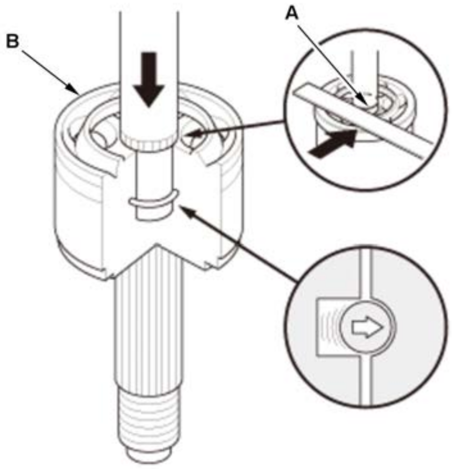 	4. Check the alignment of the paint mark (A) you made with the outboard joint end (B). **NOTICE:** To avoid driveshaft and vehicle damage, the shaft must be all the way into the outboard joint to ensure the stop ring is properly seated.

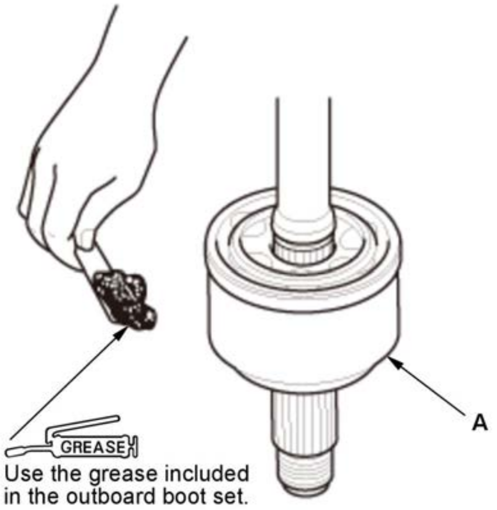 GREASE Use the grease included in the outboard boot set. A	5. Pack the outboard joint (A) with the remaining joint grease included in the outboard boot set. **Total grease quantity**

B	**Outboard joint:**
B	**82-102 g (2.89-3.60 oz)**

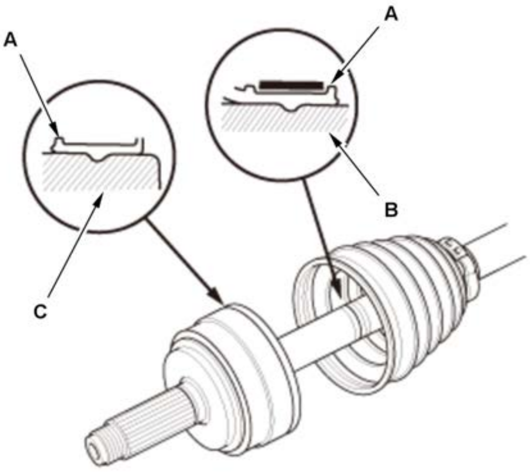 	6. Fit the boot ends (A) onto the driveshaft (B) and the outboard joint (C). 7. Bleed any excess air from the outboard boot by inserting a flat-tipped screwdriver between the outboard boot and the outboard joint.

4. Inboard Boot - Install

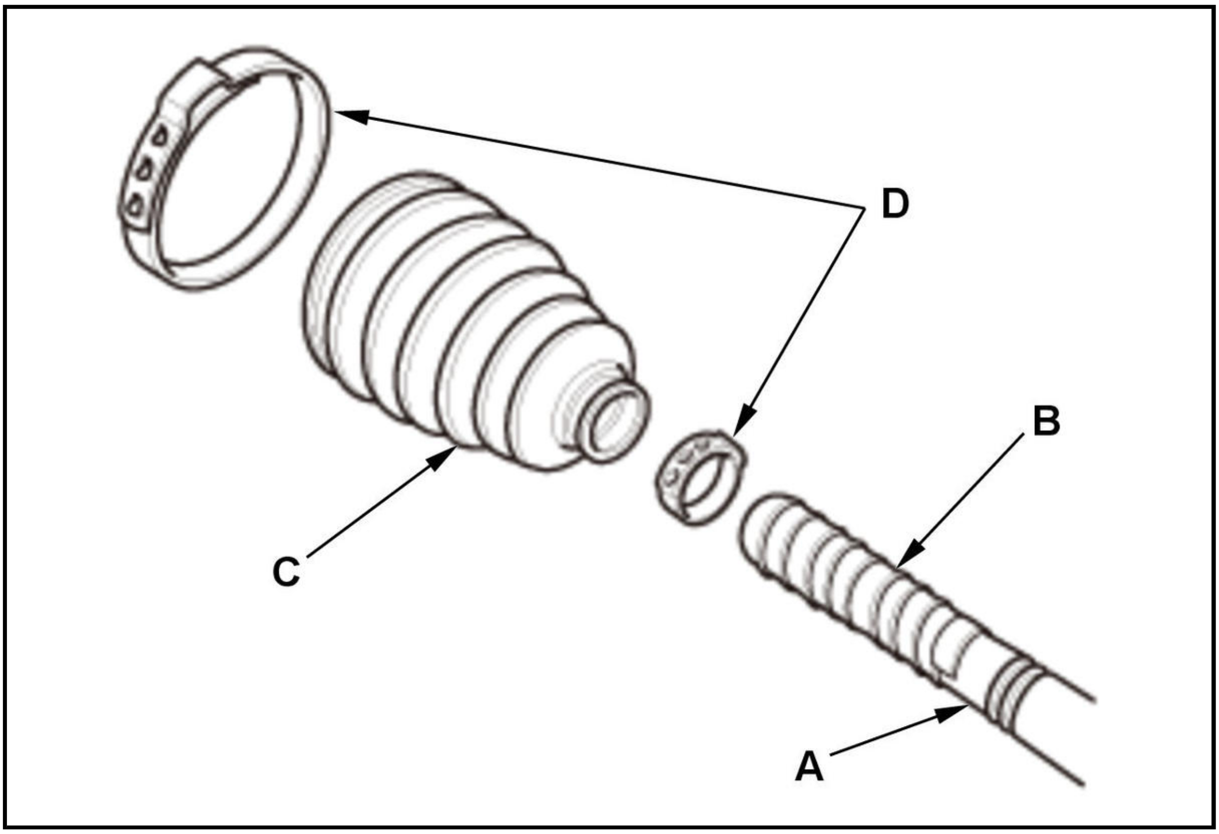

NOTE:

- Wrap the splines on the driveshaft (A) with vinyl tape (B) to prevent damaging the inboard boot (C).
- Install new ear clamp bands (D) with the boot to prevent damaging the band.

5. Bearing Retainer and Bearing Race - Install

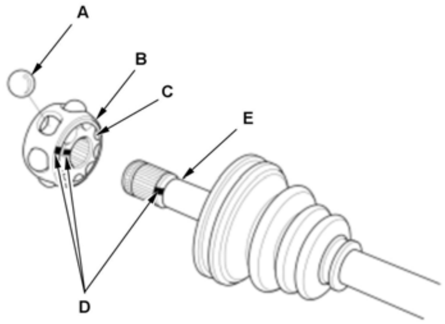	1. Assemble the steel balls (A), the bearing retainer (B) and the bearing race (C) by aligning the marks (D) you made on the bearing retainer and the bearing race. 2. Install the bearing onto the driveshaft (E) by aligning the marks you made on the bearing and the driveshaft. Be careful not to drop the steel balls when installing the bearing onto the driveshaft.

6. Circlip - Install
7. Inboard Joint - Install

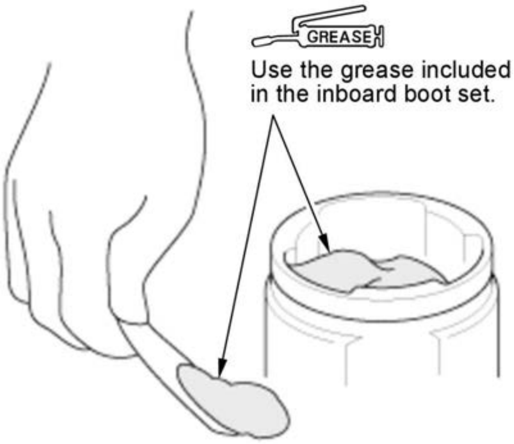 GREASE Use the grease included in the inboard boot set.	1. Pack the inboard joint with the joint grease included in the new inboard boot set.

Grease quantity	
B	**Inboard joint:**
B	**87-103 g (3.07-3.63 oz)**

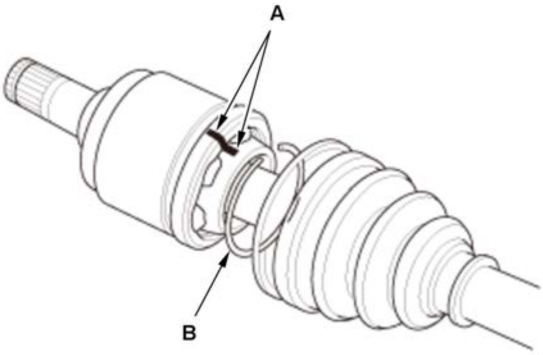	2. Install the inboard joint onto the driveshaft by aligning the marks (A) you made on the inboard joint and the bearing retainer. 3. Install the snap ring (B) into the inboard joint groove.

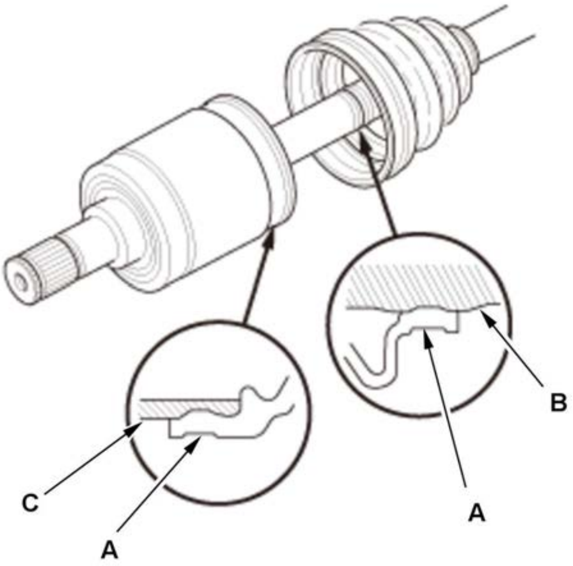	4. Fit the boot ends (A) onto the driveshaft (B) and the inboard joint (C).

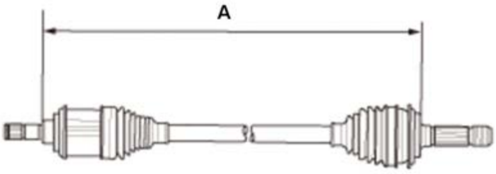	5. Adjust the length (A) of the driveshafts in the figure as shown, then adjust the boots to halfway between full compression and full extension. **Driveshaft length:** 6. Bleed excess air from the boots by inserting a flat-tipped screwdriver between the boot and the joint. **NOTE:** Install the joints at exactly the same length.

Left/Right driveshaft	Specified length (A)
Left	**677.2-682.2 mm (26.661-26.855 in)**
Right	**722.2-727.2 mm (28.433-28.630 in)**

8. Boot Bands - Install

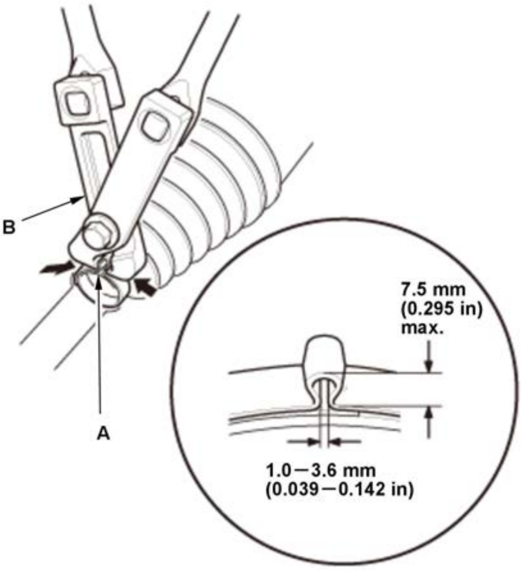 B A 7.5 mm (0.295 in) max. 1.0−3.6 mm (0.039−0.142 in)	1. Close the ear portion (A) of the band using a commercially available boot band clamp tool (Kent-Moore J-35910 or equivalent) (B). 2. Check the clearance of the closed ear portion of the band. If the clearance is not within the standard, close the ear portion of the band tighter. **NOTE:** Replace the ear clamp band with the one when the ear portion exceeds the prescribed length.

REMOVAL AND INSTALLATION

FRONT DRIVESHAFT REMOVAL AND INSTALLATION

Removal

NOTE: 🛈 Where icon is shown, for further information continue to the information below.

1

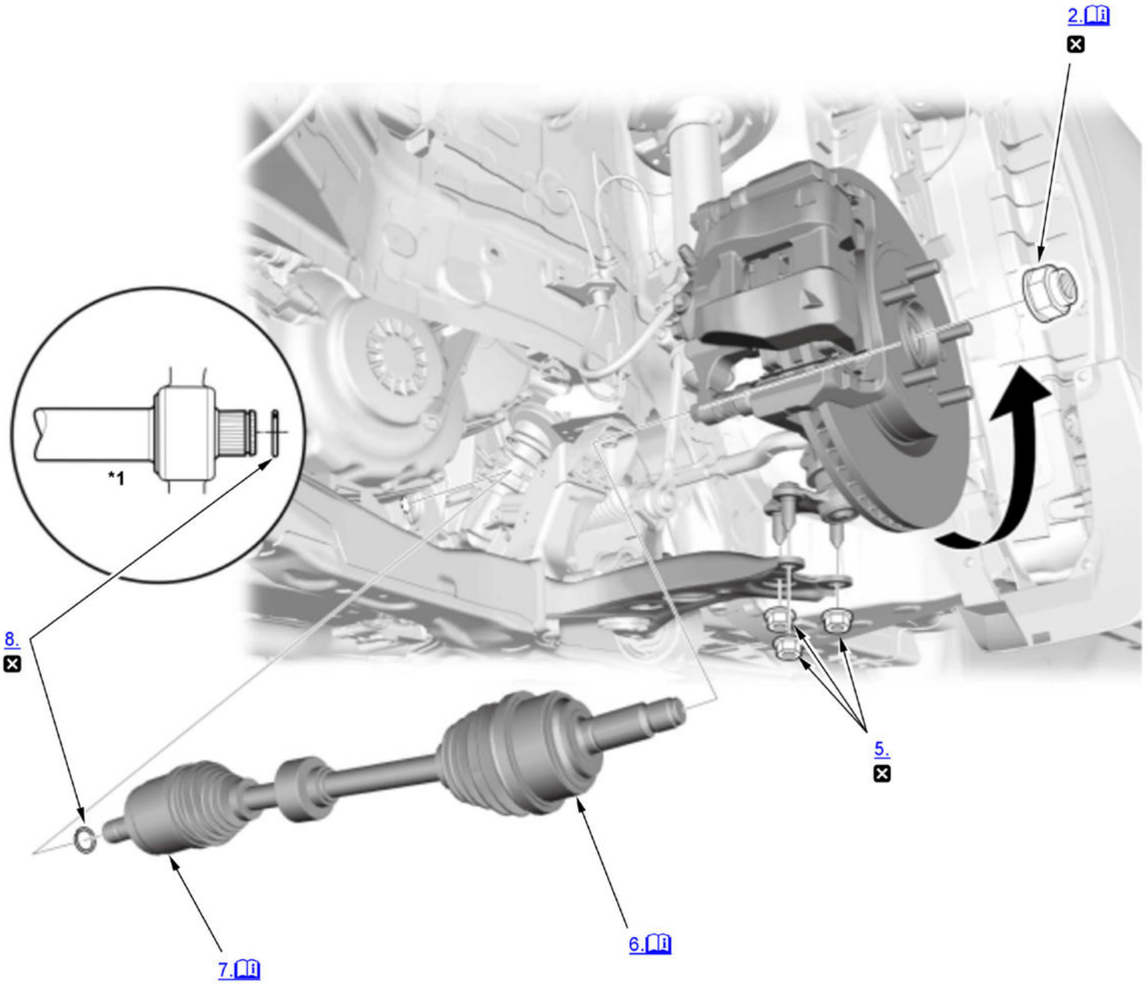

ℹ	Detailed information, notes, and precautions
☒	Replace
*1	Intermediate shaft

1. **Front Wheel - Remove**
2. Spindle Nut - Remove

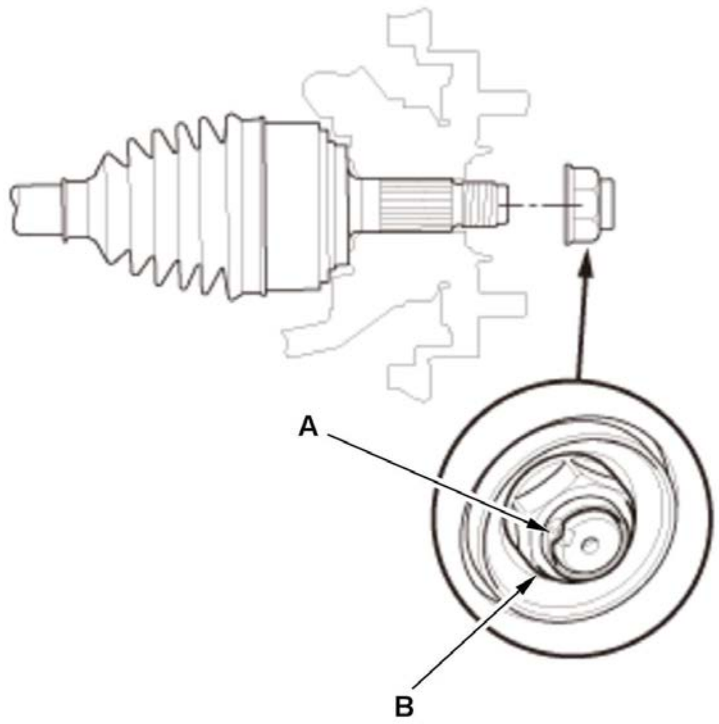	1. Pry up the stake (A) on the spindle nut (B). 2. Remove the spindle nut.

3. **Engine Undercover - Remove**
4. **Transmission Fluid - Drain**
5. **Lower Arm Ball Joint - Disconnect**
6. Outboard Joint - Disconnect

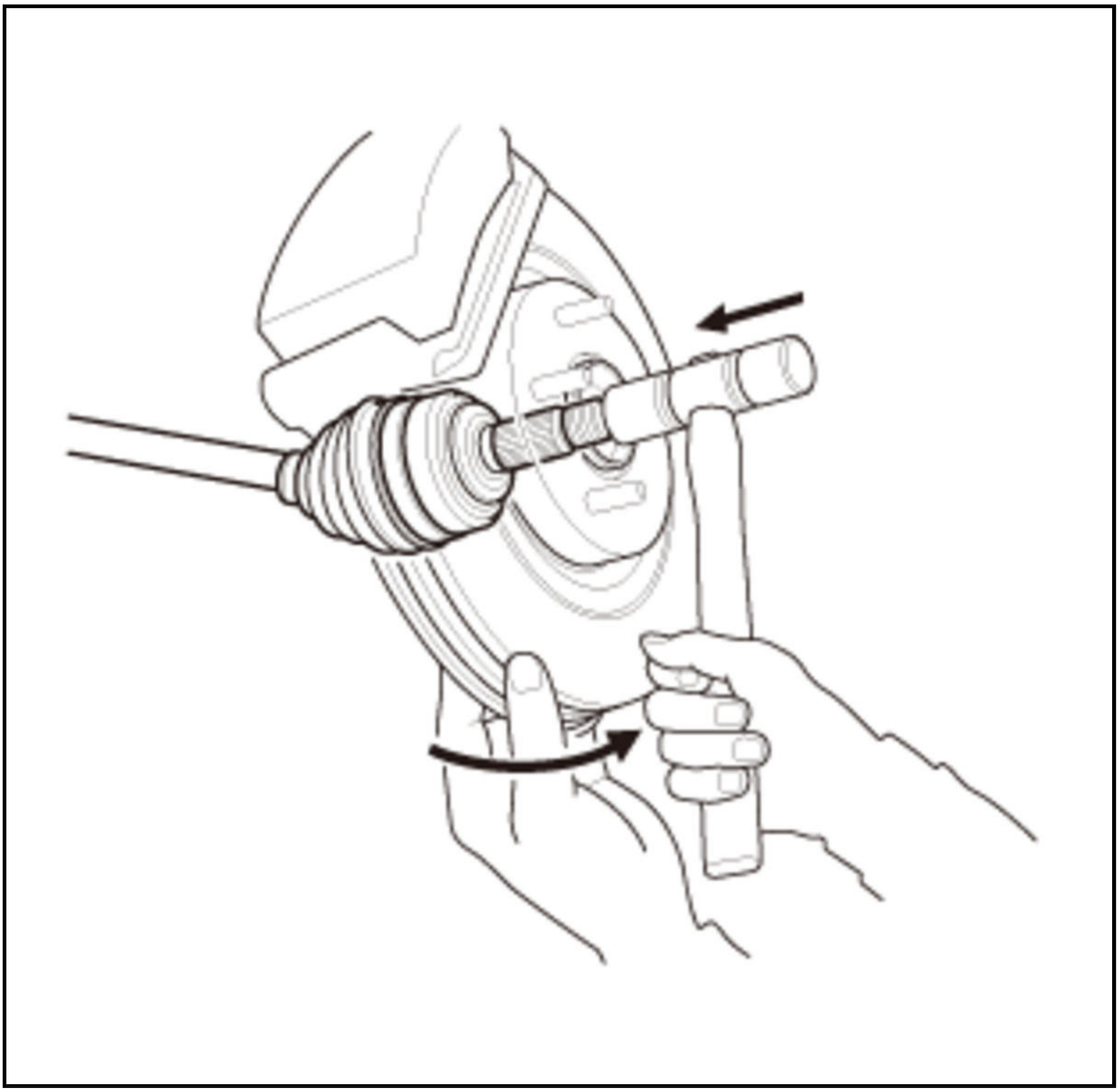

NOTE: Be careful not to damage the outboard joint threads and the wheel speed sensor.

7. Inboard Joint - Disconnect (Both Sides)

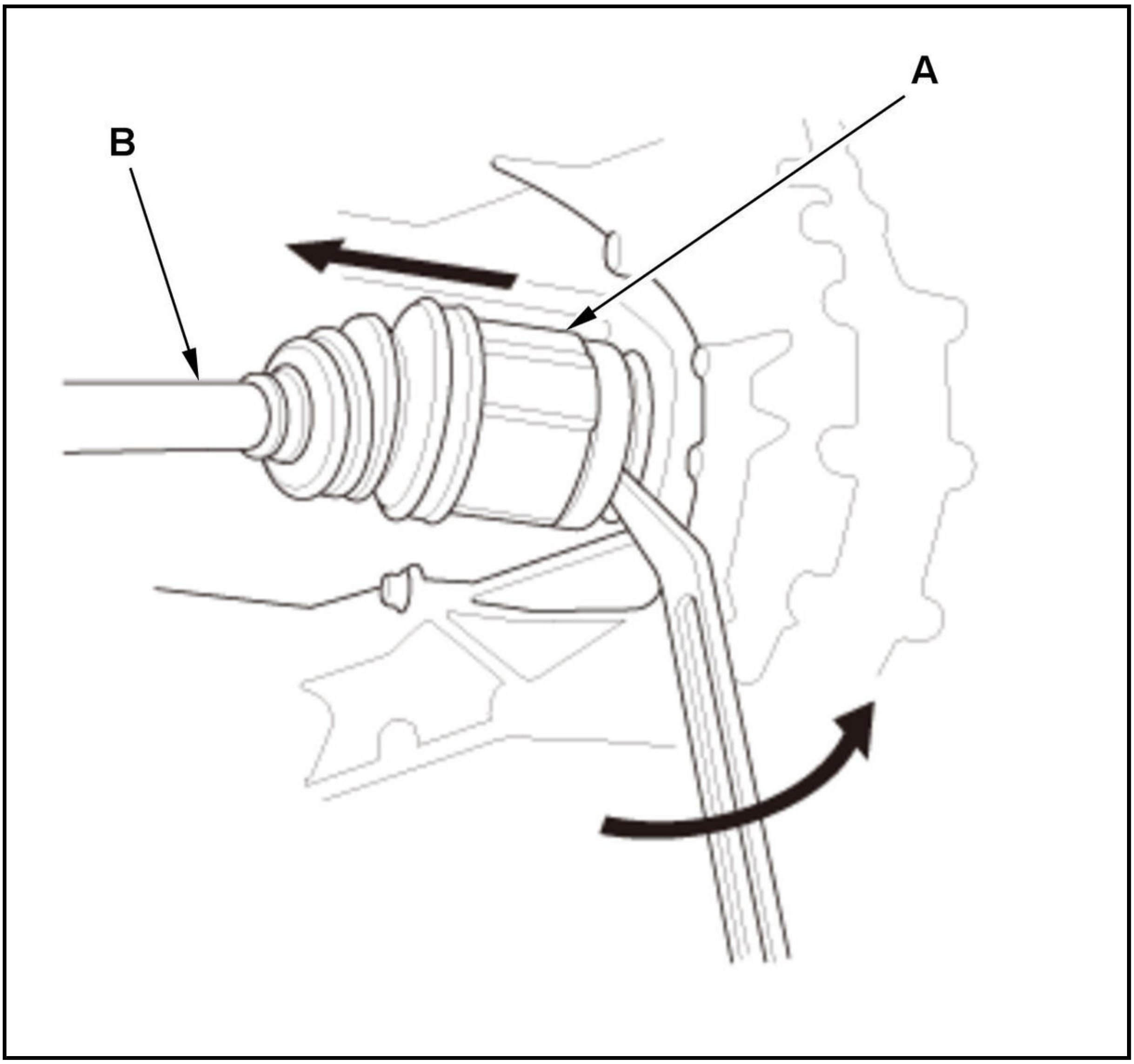

Left driveshaft

1. Pry the inboard joint (A) using a pry bar.

NOTE: Be careful not to damage the oil seal or the end of the inboard joint with the pry bar.

2. Remove the driveshaft as an assembly.

NOTE: Do not pull on the driveshaft (B), or the inboard joint may come apart. Pull the inboard joint straight out to avoid damaging the oil seal.

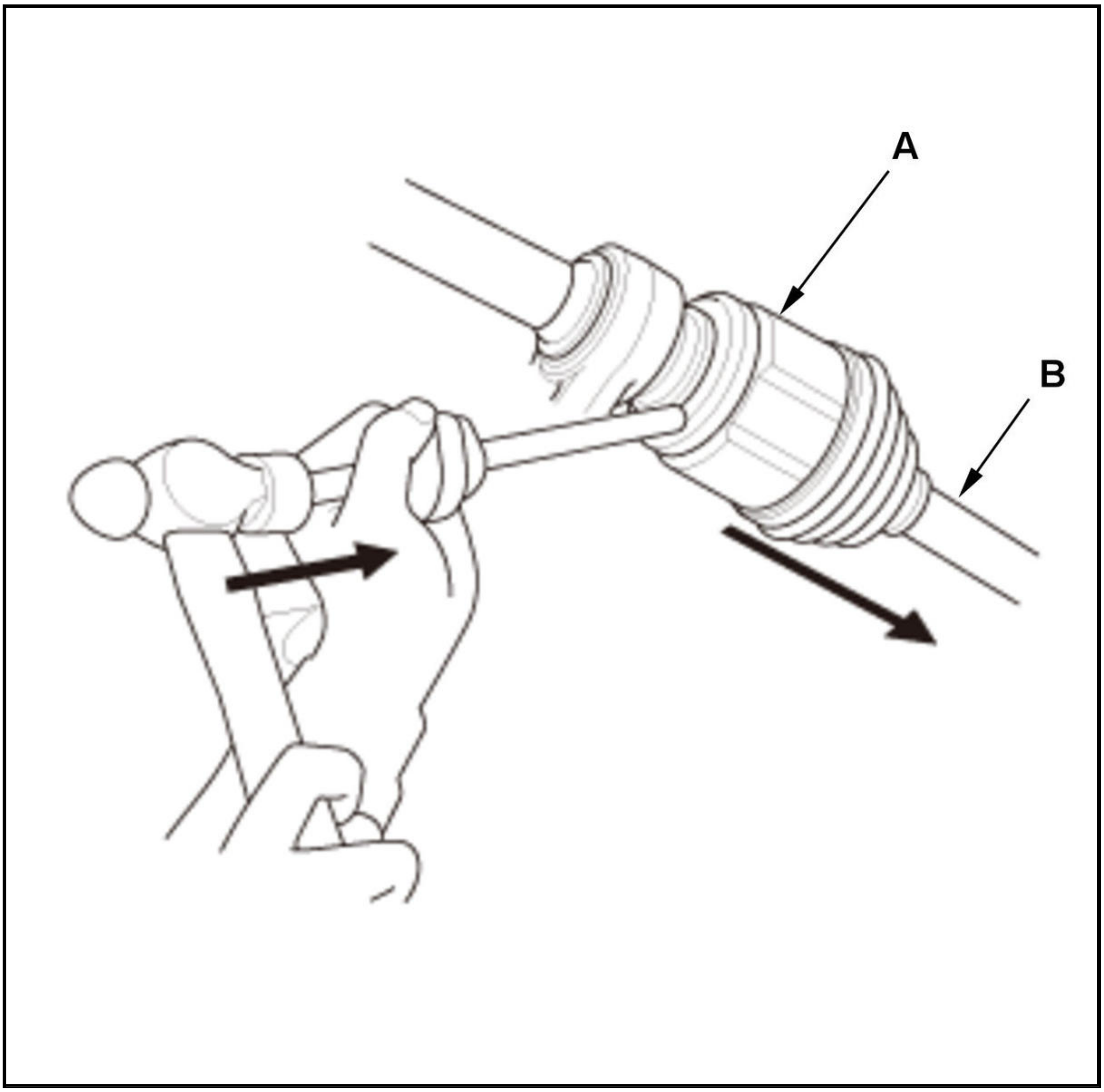

Right driveshaft

1. Drive the inboard joint (A) off of the intermediate shaft using a drift punch and a hammer.

2. Remove the driveshaft as an assembly.

NOTE: Do not pull on the driveshaft (B), or the inboard joint may come apart. Pull the inboard joint straight out.

8. Set Ring - Remove

Installation

NOTE: 🛈 Where icon is shown, for further information continue to the information below.

1

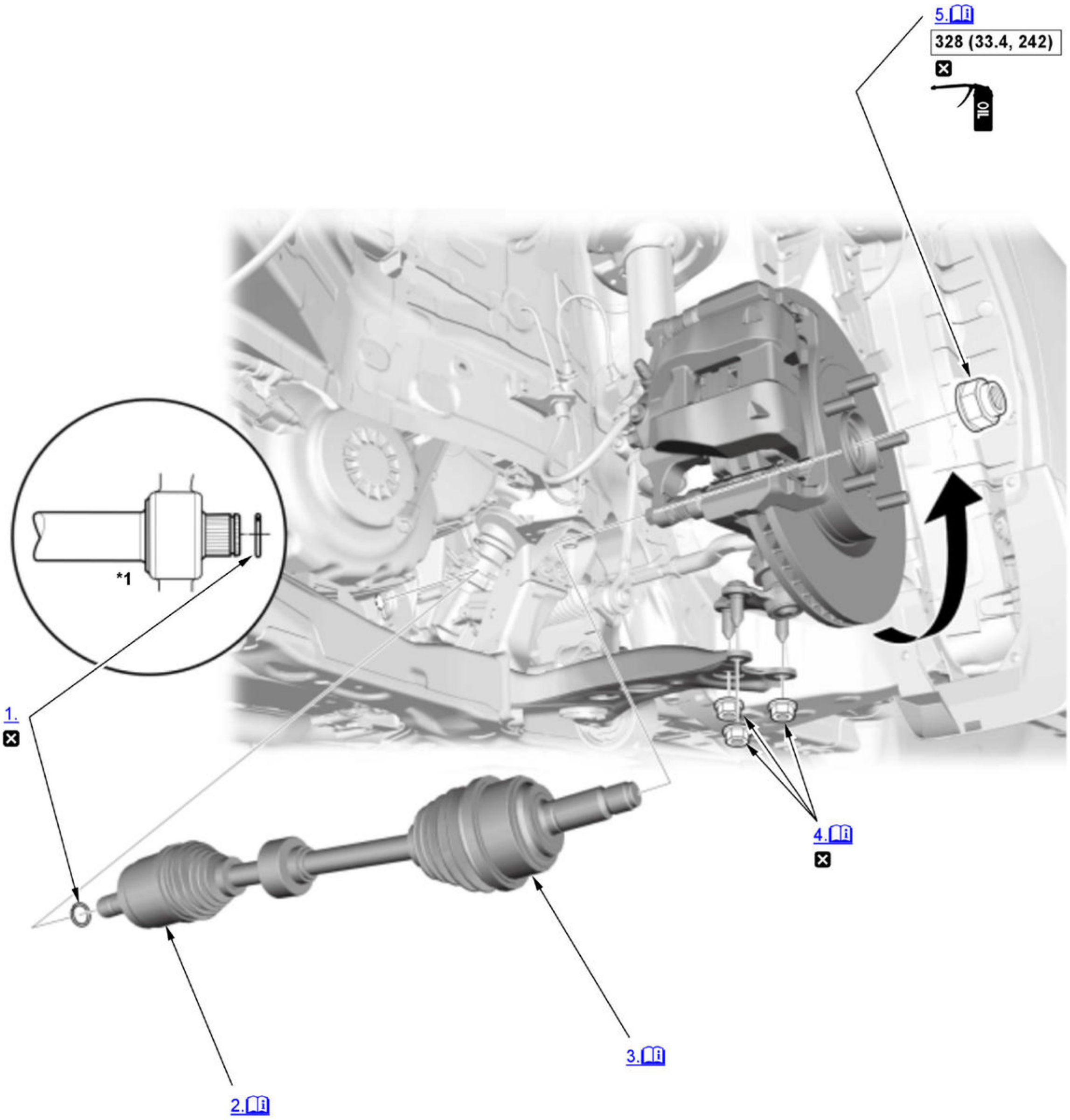

[Fig. 1: Front Drive Shaft Replacement Components With Torque Specifications](#)
Courtesy of HONDA, U.S.A., INC.

ℹ	Detailed information, notes, and precautions
☐	Torque: N.m (kgf.m, lbf.ft)
☒	Replace
🛢	Engine oil
*1	Intermediate shaft

1. Set Ring - Install
2. Inboard Joint - Connect (Both Sides)

Right driveshaft

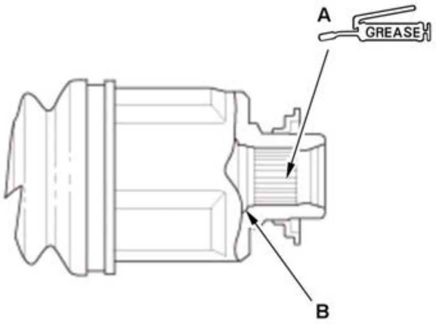

1. Apply 2.0-3.0 g (0.071-0.106 oz) of UM246 (P/N 41211-PY5-305) to the whole splined surface (A) of the right driveshaft.

2. After applying grease, remove the grease from the splined grooves at intervals of 2-3 splines and from the set ring groove (B) so that air can bleed from the intermediate shaft.

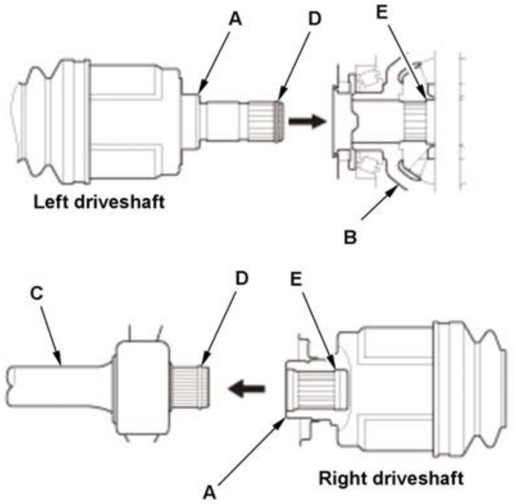

3. Left driveshaft: Clean the areas where the driveshaft contacts the differential thoroughly with solvent, then dry them with compressed air.

NOTE: Do not wash the rubber parts with solvent.

4. Insert the inboard end (A) of the driveshaft into the differential (B) or the intermediate shaft (C) until the set ring (D) locks in the groove (E).

NOTE: Insert the driveshaft horizontally to prevent damaging the oil seal.

3. Outboard Joint - Connect

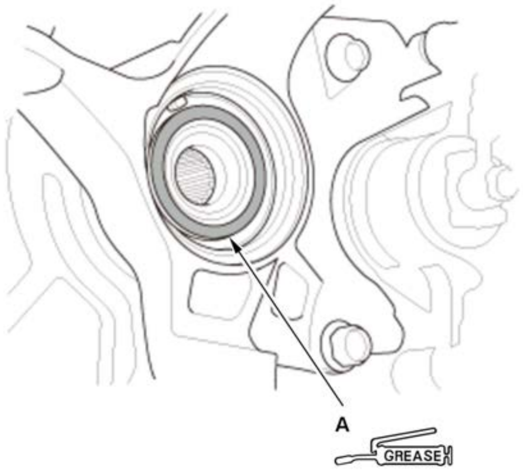

1. Apply about 3 g (0.11 oz) of molybdenum grease to the contact area (A) of the outboard joint and the front wheel bearing.
NOTE: The paste helps prevent noise and vibration.

4. **Lower Arm Ball Joint - Connect**

NOTE: During reassembly, loosely install new flange nuts, then tighten them to the specified torque.

5. Spindle Nut - Install

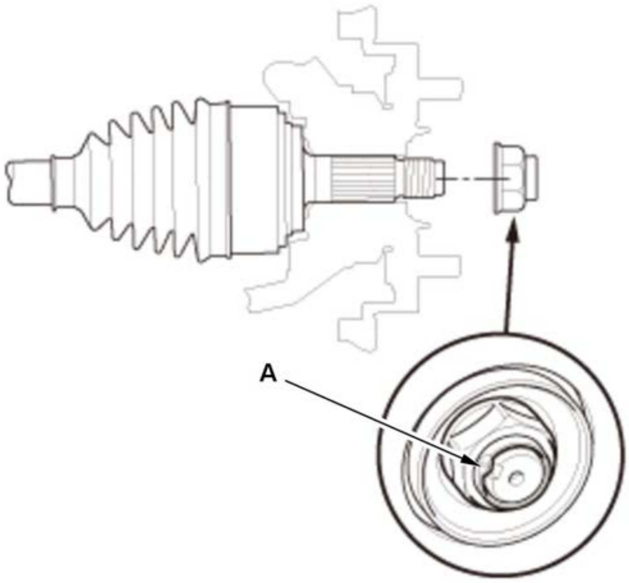	1. Use a drift to stake the spindle nut shoulder (A) against the driveshaft.

6. Front Wheel - Install
7. Front Driveshaft - After Install Check

1. Turn the wheel by hand and make sure there is no interference between the driveshaft and surrounding parts.

8. Transmission Fluid - Refill
9. Engine Undercover - Install
10. Wheel Alignment - Check
11. Test Drive - Check

INTERMEDIATE SHAFT REMOVAL AND INSTALLATION

Removal and Installation

Where icon is shown, for further information continue to the information below.

1

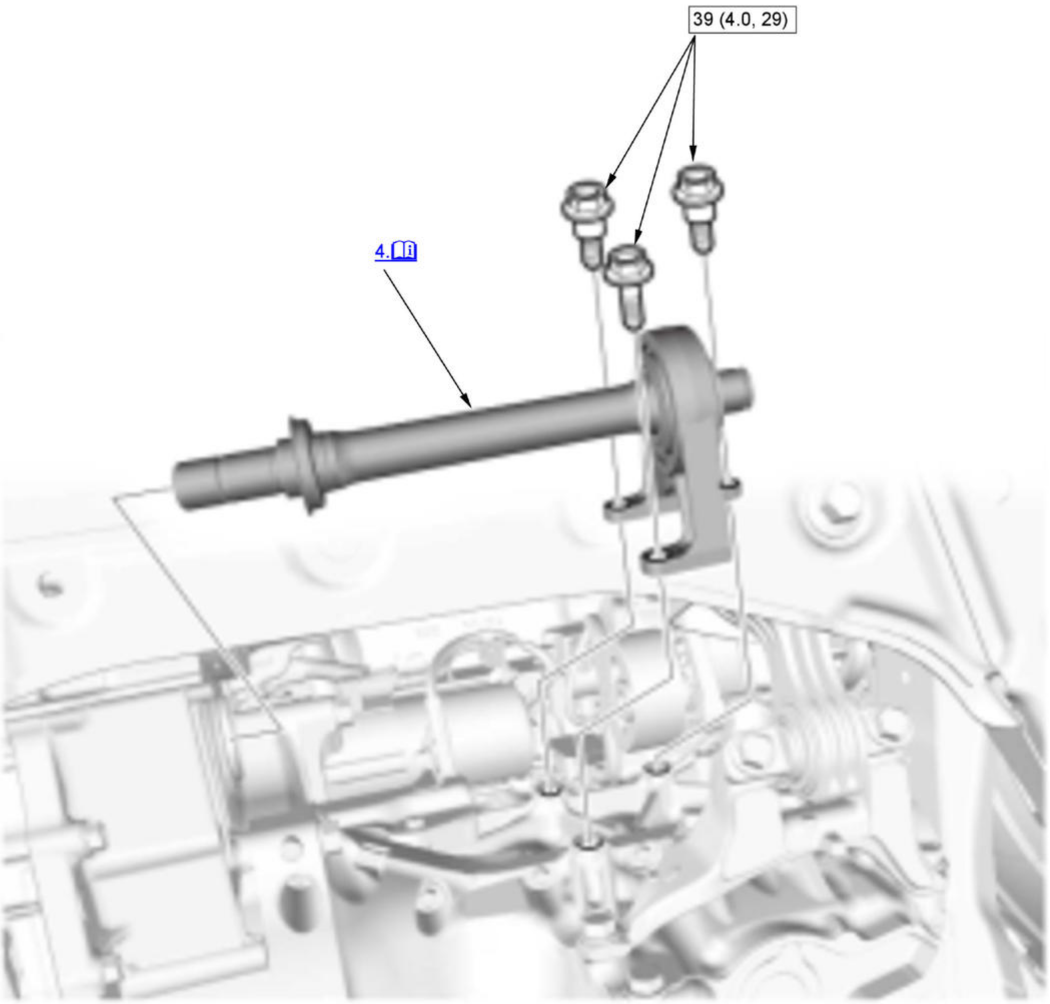

[Fig. 2: Intermediate Shaft Replacement Components With Torque Specifications](#)
Courtesy of HONDA, U.S.A., INC.

ℹ	Detailed information, notes, and precautions
▭	Torque: N.m (kgf.m, lbf.ft)

1. Engine Undercover - Remove
2. Transmission Fluid - Drain
3. Right Driveshaft - Remove
4. Intermediate Shaft Assembly - Remove

   NOTE: Hold the intermediate shaft horizontally until it is clear of the differential to prevent damaging the oil seal.

5. All Removed Parts - Install

1. Install the parts in the reverse order of removal.

6. Intermediate Shaft - After Install Check

1. Turn the wheel by hand and make sure there is no interference between the driveshaft and surrounding parts.

7. **Wheel Alignment - Check**
8. Test Drive - Check

REAR DRIVESHAFT REMOVAL AND INSTALLATION (AWD)

Removal

NOTE: ℹ Where icon is shown, for further information continue to the information below.

1

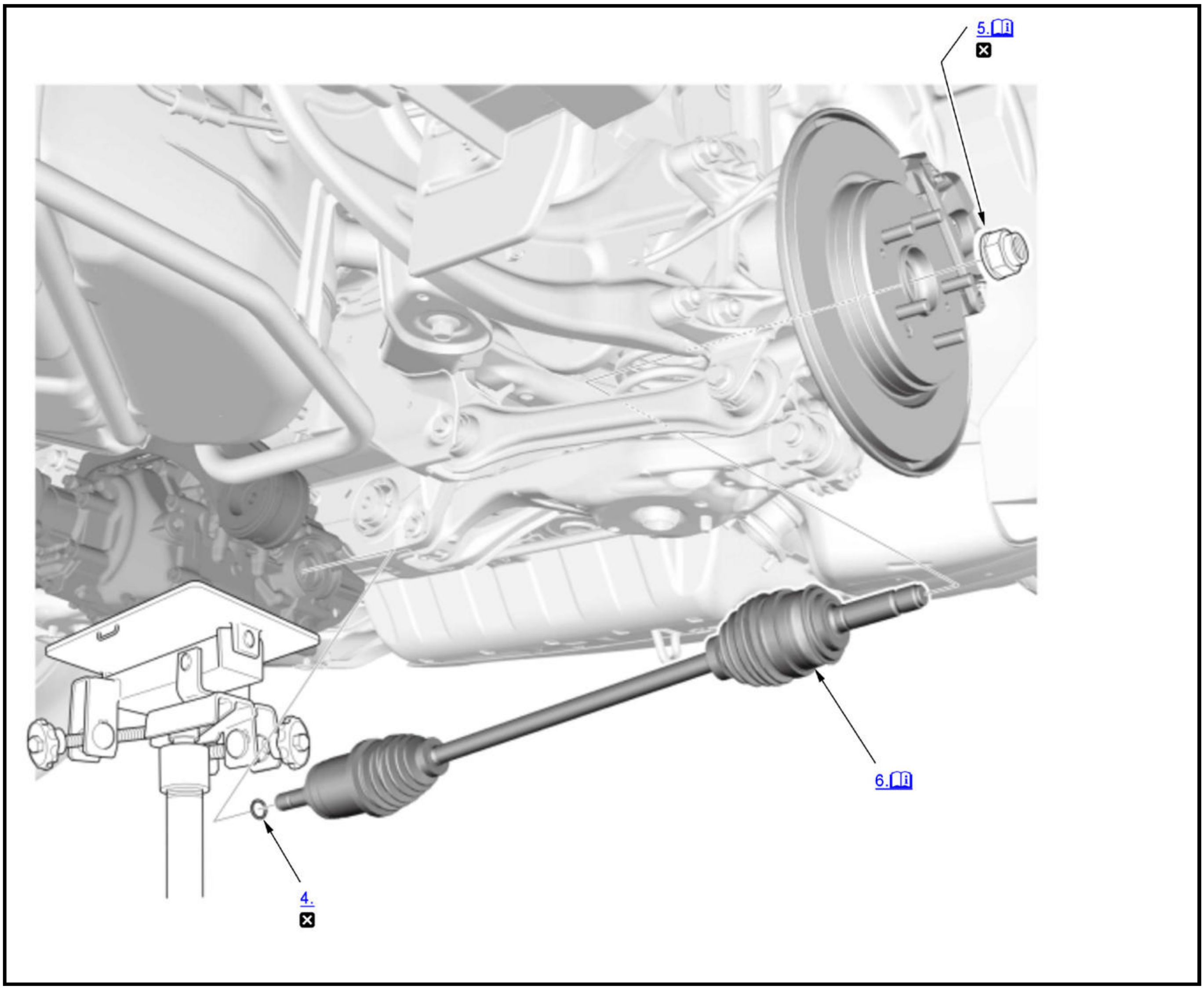

ℹ	Detailed information, notes, and precautions
☒	Replace

1. **Vehicle - Lift**
2. **Rear Wheel - Remove**
3. **Rear Differential - Remove**
4. Set Ring - Remove
5. Spindle Nut - Remove

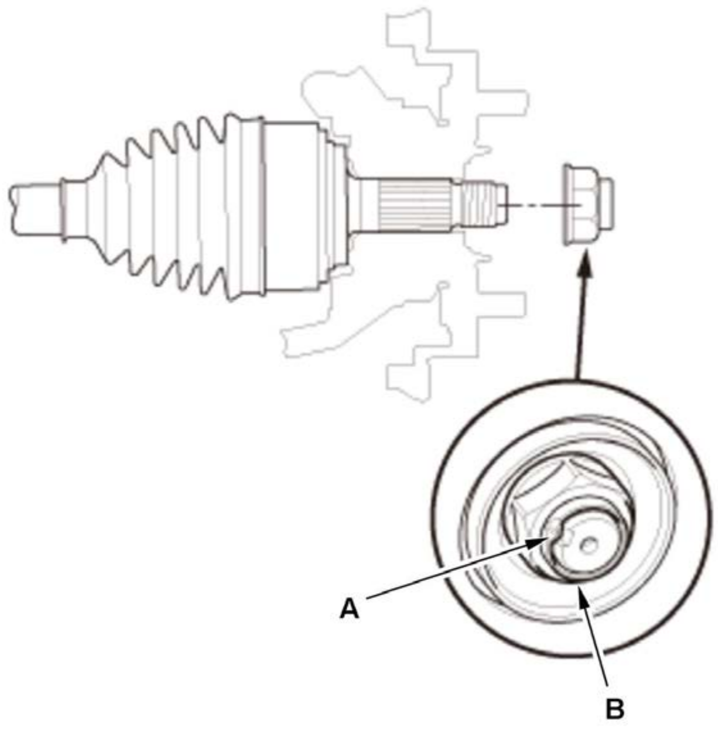	1. Pry up the stake (A) on the spindle nut (B). 2. Remove the spindle nut.

6. Outboard Joint - Disconnect

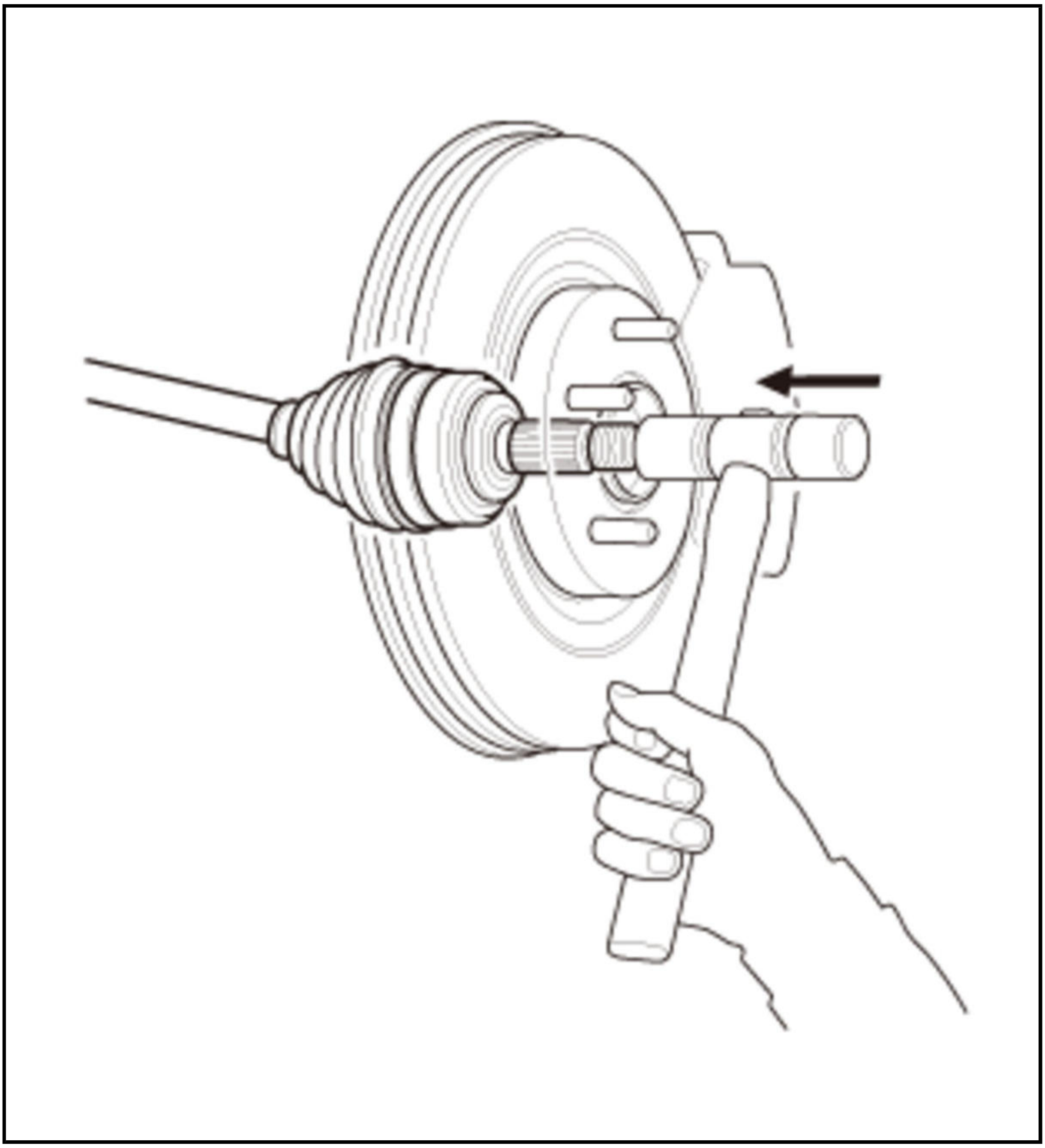

NOTE: Be careful not to damage the outboard joint threads and the wheel speed sensor.

Installation

NOTE: ℹ Where icon is shown, for further information continue to the information below.

1

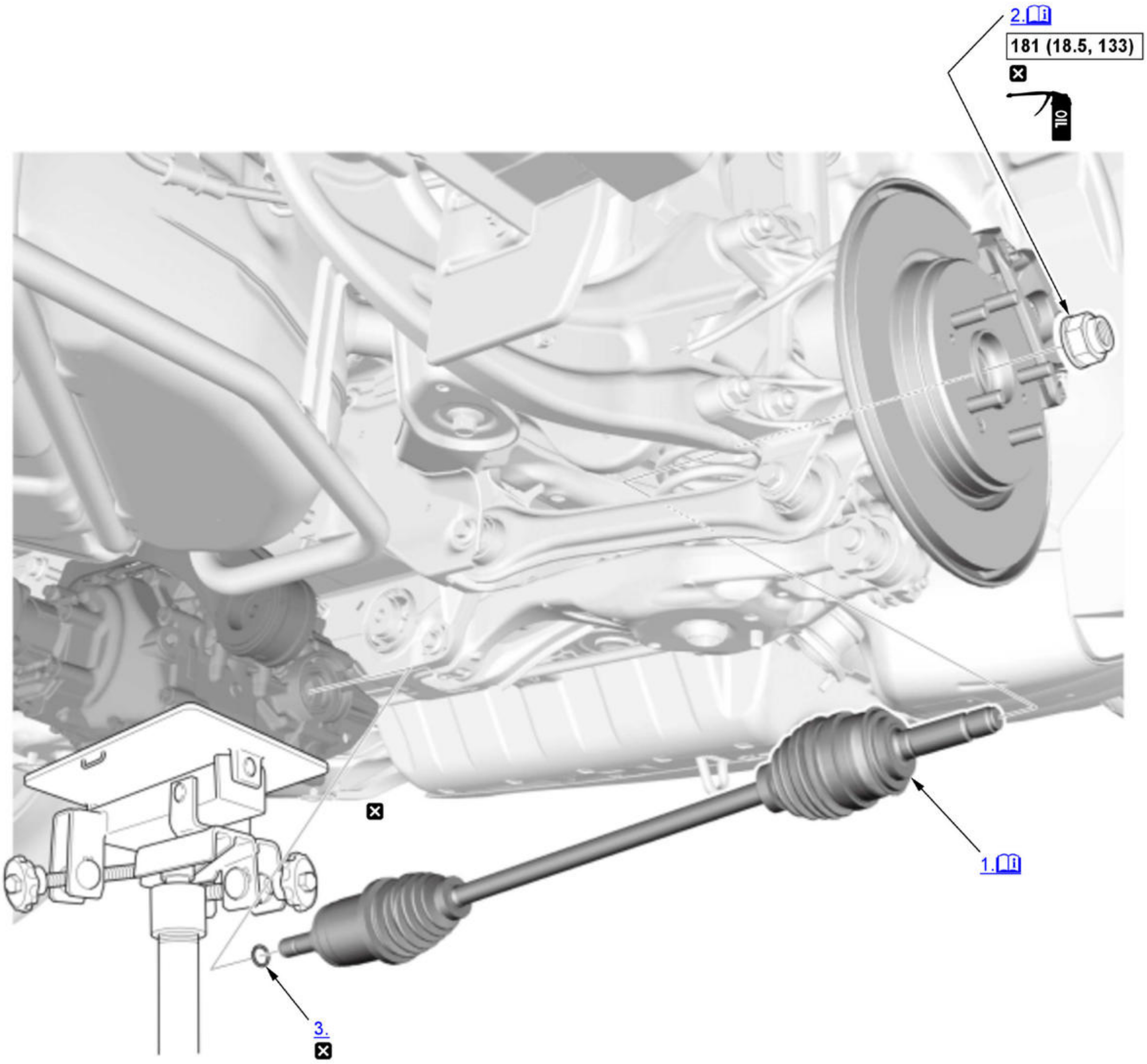

Fig. 3: Rear Driveshaft Replacement Components With Torque Specifications (AWD)
Courtesy of HONDA, U.S.A., INC.

ℹ	Detailed information, notes, and precautions
☐	Torque: N.m (kgf.m, lbf.ft)
☒	Replace
OIL	Engine oil

1. Outboard Joint - Connect

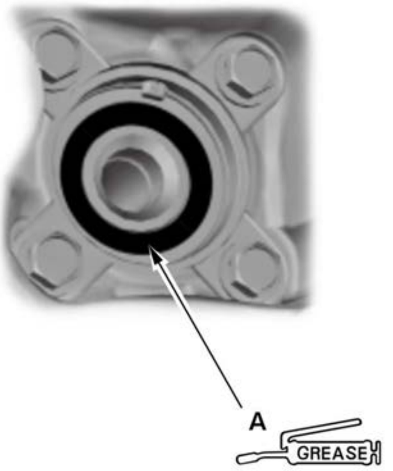 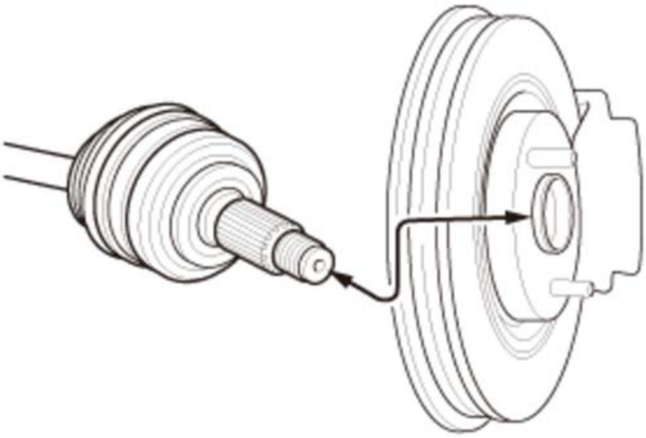	1. Apply about 3 g (0.11 oz) of molybdenum grease to the contact area (A) of the outboard joint and the rear wheel bearing. **NOTE:** The paste helps prevent noise and vibration.

2. Spindle Nut - Install

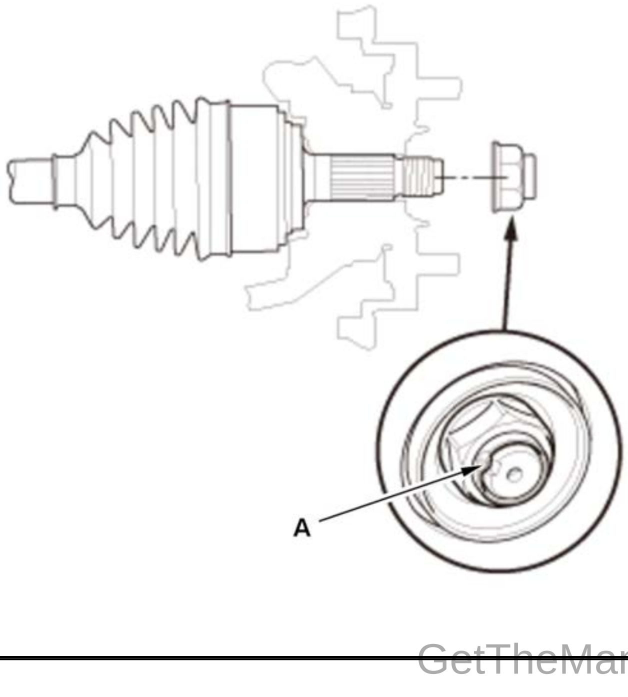	1. Use a drift to stake the spindle nut shoulder (A) against the driveshaft.

3. Set Ring - Install
4. **Rear Differential - Install**
5. **Rear Wheel - Install**
6. Driveshaft - After Install Check

    1. Turn the wheel by hand and make sure there is no interference between the driveshaft and surrounding parts.

7. Test Drive - Check

Driveshafts - Service Inspection - CR-V (Except Hybrid)

COMPONENT LOCATION INDEX

DRIVELINE/AXLE COMPONENT LOCATION INDEX (AWD)

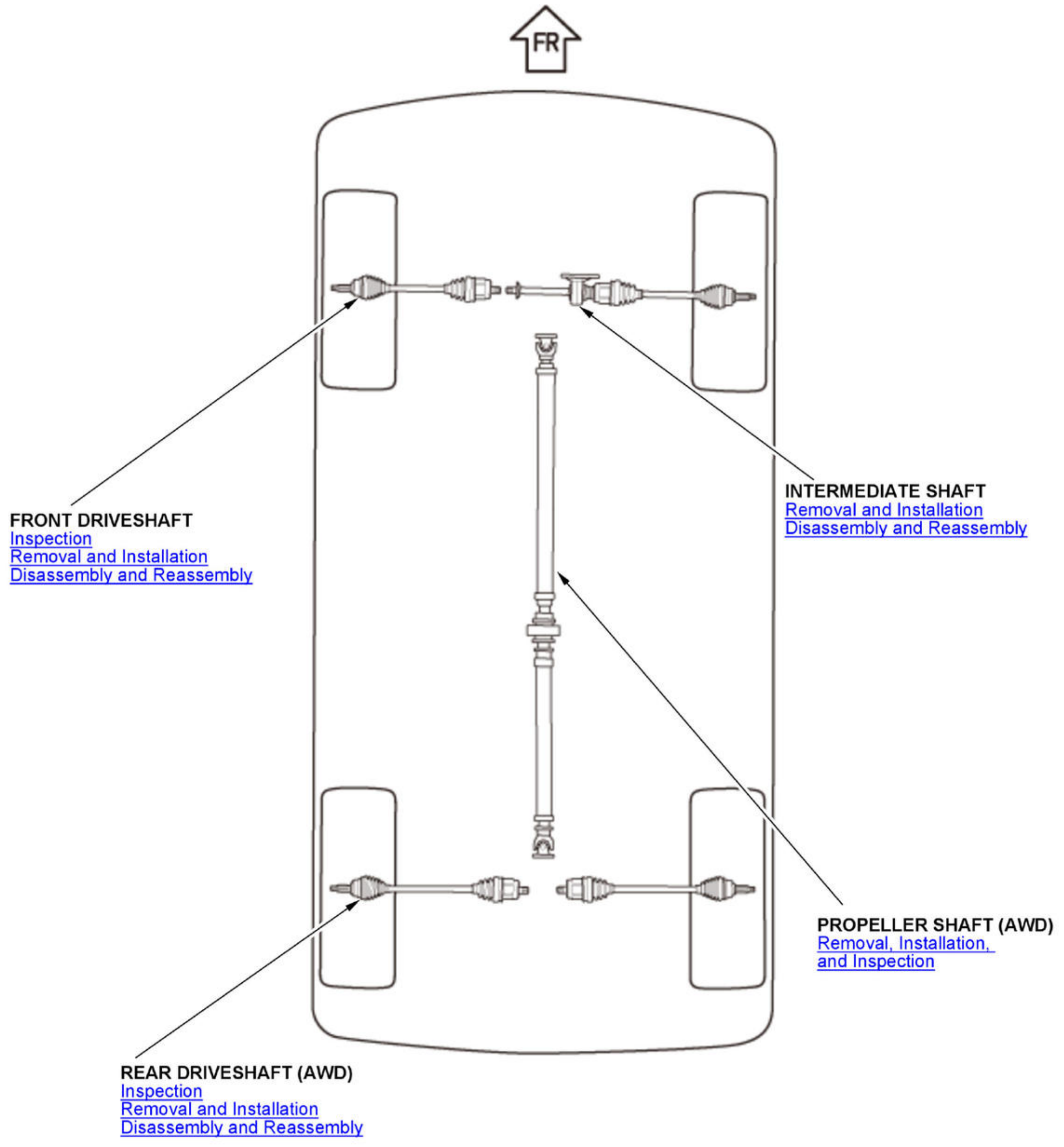
FR
FRONT DRIVESHAFT
Inspection
Removal and Installation
Disassembly and Reassembly
INTERMEDIATE SHAFT
Removal and Installation
Disassembly and Reassembly
PROPELLER SHAFT (AWD)
Removal, Installation, and Inspection
REAR DRIVESHAFT (AWD)
Inspection
Removal and Installation
Disassembly and Reassembly

The illustration seen from above is shown.

INSPECTION

DRIVESHAFT INSPECTION

Inspection

1. Driveshaft - Inspect

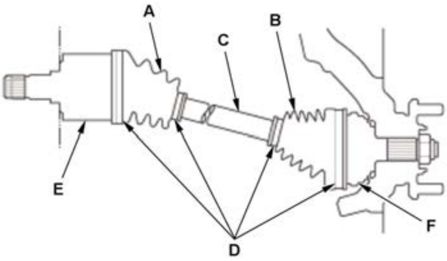	1. Check the inboard boot (A) and the outboard boot (B) on the driveshaft (C) for cracks, damage, leaking grease and loose boot bands (D). If any damage is found, replace the boot and the boot bands. 2. Check the driveshaft for cracks and damage. If any damage is found, replace the driveshaft. 3. Check the inboard joint (E) and the outboard joint (F) for cracks and damage. If any damage is found, replace the inboard joint or the outboard joint as an assembly. 4. Hold the inboard joint and turn the front wheel by hand, then make sure the joint is not excessively loose. If necessary, replace the inboard joint or the outboard joint as an assembly.

REMOVAL & INSTALLATION INSPECTION

PROPELLER SHAFT REMOVAL, INSTALLATION, AND INSPECTION (AWD)

Removal and Installation

NOTE: How to read the torque specifications .

1. Vehicle - Lift
2. Engine Undercover - Remove
3. Middle Floor Undercover - Remove
4. Propeller Shaft - Remove

    1. Remove the propeller shaft protector (A).

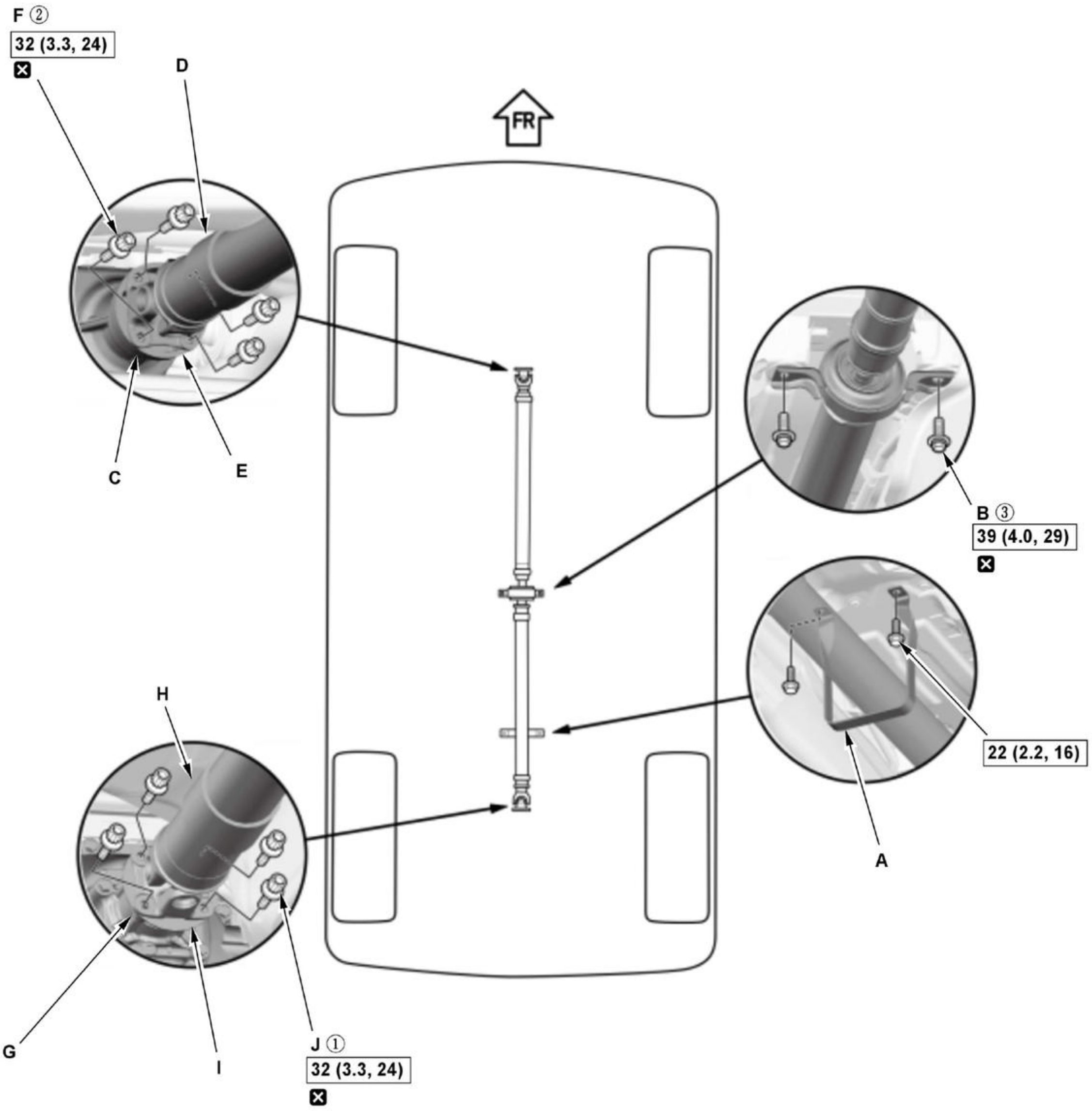

Fig. 1: Tightening Propeller Shaft In Sequence With Torque Specifications
Courtesy of HONDA, U.S.A., INC.

2. Remove the center support bearing mounting bolts (B).

3. Make a reference mark (C) across the No. 1 propeller shaft (D) and the transfer companion flange (E).

4. Remove the No. 1 propeller shaft flange bolts (F).

5. Make a reference mark (G) across the No. 2 propeller shaft (H) and the rear differential companion flange (I).

6. Remove the No. 2 propeller shaft flange bolts (J).

5. All Removed Parts - Install

1. Install the parts in the reverse order of removal.

NOTE:

Tighten the propeller shaft flange bolts, the

center support bearing mounting bolts in the numbered sequence shown in illustration.	

Inspection

1. Propeller Shaft - Inspect

Propeller Shaft - Inspect

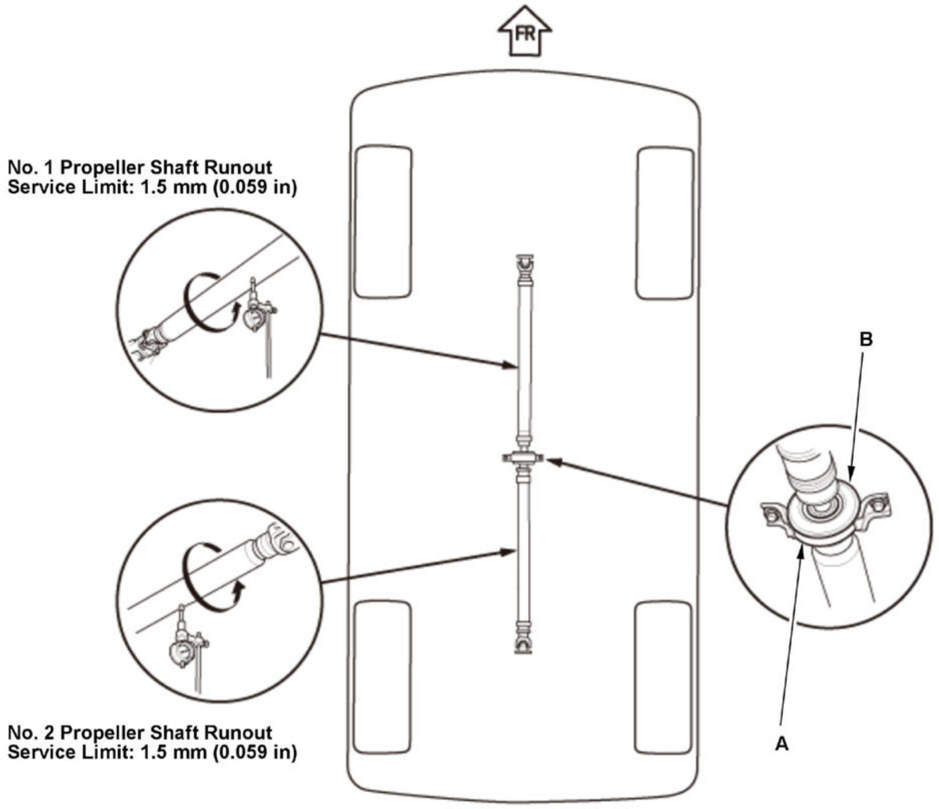
FR
No. 1 Propeller Shaft Runout
Service Limit: 1.5 mm (0.059 in)
B
No. 2 Propeller Shaft Runout
Service Limit: 1.5 mm (0.059 in)
A

Universal Joint and Boot

1. Shift the transmission to N position/mode.

2. Release the parking brake.

3. Check the center support bearing (A) for excessive play or noise. If the center support has excessive play or noise, replace the propeller shaft assembly.

4. Check the rubber portion (B) of the center support bearing for damage and deterioration. If the rubber portion is damaged or deteriorated, replace the propeller shaft assembly.

5. Check the universal joints for excessive play or noise. If the universal joints have excessive play or noise, replace the propeller shaft assembly.

Propeller Shaft Runout

6. Shift the transmission to N position/mode.

7. Install a dial indicator with its needle on the center of the No. 1 and No. 2 propeller shaft.

8. Turn the other propeller shaft slowly and check the runout. Repeat this procedure for the other propeller shaft.

9. If the runout on either propeller shaft exceeds the service limit, replace the propeller shaft assembly.

DTC TROUBLESHOOTING INDEX

REAL TIME AWD SYSTEM DTC TROUBLESHOOTING INDEX

DTC	Detection Item	Troubleshooting	AWD System Indicator	Note
C0051-00	The Functional Abnormalities of Steering Angle Sensor	TRS	ON	B
C0061-96	The Functional Abnormalities of Lateral Acceleration Sensor	TRS	ON	B
C0061-F0	Lateral Acceleration Sensor Range/Performance Problem	TRS	ON	B
C0062-96	The Functional Abnormalities of Longitudinal Acceleration Sensor	TRS	ON	B
C0062-F0	Longitudinal Acceleration Sensor Range/Performance Problem	TRS	ON	B
C0063-96	The Functional Abnormalities of Yaw Rate Sensor	TRS	ON	B
C0063-F0	Yaw Rate Sensor Range/Performance Problem	TRS	ON	B
C1840-12	Differential Fluid Pressure Sensor Circuit High Voltage	TRS	ON	B
C1840-14	Differential Fluid Pressure Sensor Circuit Low Voltage	TRS	ON	B
C1841-11	Differential Fluid Temperature Sensor Circuit Low Voltage	TRS	ON	B
C1841-13	Differential Fluid Temperature Sensor Circuit High Voltage	TRS	ON	B
C1841-27	Differential Fluid Temperature Sensor Circuit Range/Performance Problem	TRS	ON	B
C1850-14	Fail Safe Relay Stuck OFF	TRS	ON	B
C1851-18	Motor Circuit Low Current	TRS	ON	B
C1851-19	Control Module Internal Control Module Malfunction	TRS	ON	B
C1851-1E	Motor Circuit High Current	TRS	ON	B
C1852-18	Solenoid Valve Circuit Low Current	TRS	ON	B
C1852-19	Solenoid Valve Circuit High Current	TRS	ON	B
C1858-72	Differential Fluid Pressure Deviation Low	TRS	ON	B
C1858-73	Differential Fluid Pressure Deviation High	TRS	ON	B
C1860-98	Differential Fluid Overheats	TRS	ON	B
C1861-9A	Vehicle Spin Detected	TRS	ON	B
C1870-00	(The Functional Abnormalities of Fuel and Emissions)	TRS	ON	B
C1872-00	(The Functional Abnormalities of VSA Modulator-Control Unit)	TRS	ON	B
C1873-00	Steering Angle Sensor Malfunction	TRS	ON	B

DTC	Detection Item	Troubleshooting	AWD System Indicator	Note
U0100-00	F-CAN Malfunction (Lost Communication with Powertrain Control Module (PCM))	TRS	ON	B
U0101-00	F-CAN Malfunction (Lost Communication with A/T Control System)	TRS	ON	B
U0122-00	F-CAN Malfunction (Lost Communication with VSA Modulator-Control Unit)	TRS	ON	B
U0131-00	F-CAN Malfunction (Lost Communication with EPS System)	TRS	ON	B
U0151-00	F-CAN Malfunction (Lost Communication with SRS unit)	TRS	ON	B
U3000-49	Control Module Internal Control Module Malfunction	TRS	ON	B
U3000-51	Control Module Programming Error	TRS	ON	B

HOW TO INFORMATION

HOW TO TROUBLESHOOT THE REAL TIME AWD SYSTEM

System Indicator

The system has AWD system indicator comes on in the MID.

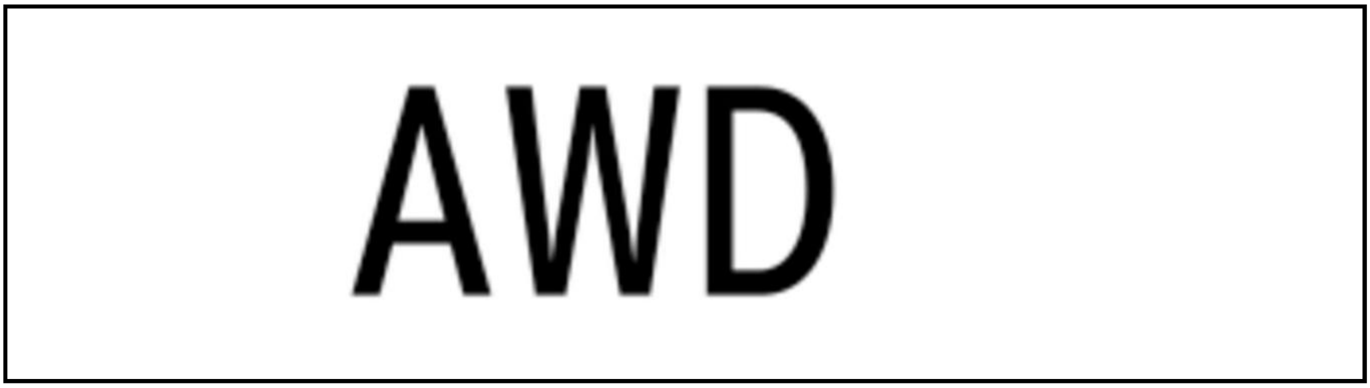

NOTE: For locations of each indicator, refer to gauge control module component location index .

AWD System Indicator

The AWD system indicator will come on under certain conditions even if the real time AWD system is working normally. Here are some examples:

- When you use high-powered wireless equipment such as a CB or Ham radio in the vehicle.
- When you keep spinning the rear wheels while the vehicle is stuck in sand, mud, snow, etc.
- When the 12 volt battery voltage suddenly drops below 8 volts.

After the AWD system indicator comes on, it stays on until you turn the vehicle to the OFF (LOCK) mode.

Diagnostic Trouble Code (DTC)

- The real time AWD control unit can memorize up to eight different DTCs. The system displays the DTCs by blinking the AWD system indicator. Multiple DTCs are displayed in the order they occurred, beginning with the most recent.

- If the same DTC is detected more than once, the most recent DTC is written over the earlier one. Therefore, when the same problem is detected more than once, it is memorized as a single DTC.
- The DTCs are memorized in the real time AWD control units EEPROM (non-volatile memory). Therefore, the memorized DTCs are not cleared when the 12 volt battery is disconnected or when the real time AWD control unit is disconnected.
- If there is a problem in the central processing unit (CPU) of the real time AWD control unit, the AWD system indicator comes on, but no DTC is memorized. Refer to the symptom troubleshooting.

Self-Diagnosis

When a problem is detected during self-diagnosis, the system does the following:

- Turns the AWD system indicator on.
- Memorizes the DTC if possible.
- Stops AWD control and returns the vehicle back to two-wheel drive mode (front wheel only).

How to Use the HDS (Honda Diagnostic System)

1. Turn the vehicle to the OFF (LOCK) mode, then connect the Honda Diagnostic System (HDS) to the DLC

2. Turn the vehicle to the ON mode.

3. Make sure the HDS communicates with the vehicle and the real time AWD control unit. If it does not communicate, go to the real time AWD system symptom troubleshooting for HDS does not communicate

Check the diagnostic trouble code (DTC) and the freeze data for all systems in the vehicle, troubleshoot the powertrain DTCs first and note them. Then refer to the indicated DTC's troubleshooting, and do the appropriate troubleshooting procedure.

NOTE:

- **The HDS can read the DTC, the freeze data, the current data, and other system data.**
- **For specific operations, refer to the help menu that came with the HDS.**
- **It is best do an ALL DTC CHECK to look for other systems DTCs that are related to the problem.**

How to Check for Diagnostic Trouble Codes (DTCs)

When the real time AWD control unit senses an abnormality in the input or output systems, the AWD system indicator in the gauge control module will usually come on, the MIL, the D indicator, the VSA indicator, and/or the ABS indicator may also come on.

NOTE: Make sure the 12 volt battery is in good condition and fully charged.

1. Turn the vehicle to the OFF (LOCK) mode, then connect the HDS to the DLC .

2. Turn the vehicle to the ON mode. Make sure the HDS communicates with the vehicle and the real time AWD control unit. If it does not communicate, go to the real time AWD system symptom troubleshooting for HDS does not communicate . Follow the prompts on the HDS to display the DTC(s) on the screen. Check the DTC and the freeze data for all systems. After determining the DTC(s), refer to the DTC Troubleshooting.

NOTE: See the HDS help menu for specific instructions.

3. If there are PGM-FI system DTCs and other system DTCs at the same time, troubleshoot the PGM-FI system DTCs first, otherwise the real time AWD DTC may return.

4. After recording the DTCs, clear all DTCs.

5. Test-drive the vehicle for several minutes in 4WD mode, and check for DTCs. If the DTC returns, refer to the DTC Troubleshooting. If the DTC does not return, there was an intermittent problem within the circuit. Make sure all connectors and terminals in the circuit are tight.

How to Clear DTCs

1. Turn the vehicle to the OFF (LOCK) mode, then connect the HDS to the DLC

2. Turn the vehicle to the ON mode.

3. Make sure the HDS communicates with the vehicle and the real time AWD control unit. If it does not communicate, go to the real time AWD system symptom troubleshooting for HDS does not communicate

4. Clear the DTC(s) by following the screen prompts on the HDS.

5. Turn the vehicle to the OFF (LOCK) mode.

NOTE: If the DTC that was cleared is related to another system, that system's DTC must be repaired, or the real time AWD DTC will return.

How to Troubleshoot Circuits at the AWD Control Unit

Special Tools Required

Backprobe Set 07SAZ-001000A (2)

1. Remove the rear left side trim panel .

2. Inspect the circuit on the AWD control unit according to the DTC Troubleshooting using the backprobe set and a digital multimeter or an analog circuit tester.

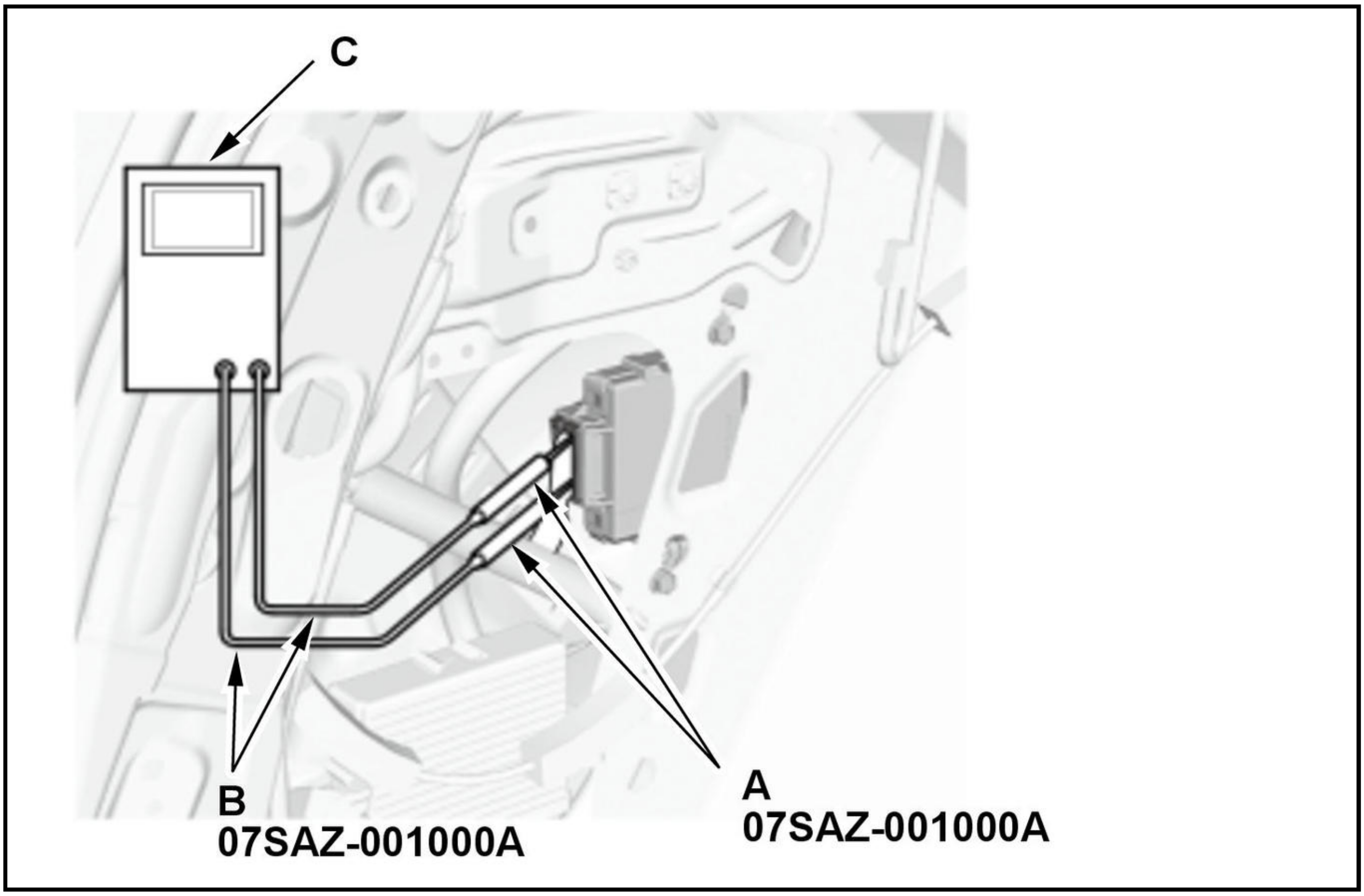

3. Connect the backprobe adapters (A) to the stacking patch cords (B), and connect the cords to a digital multimeter or an analog circuit tester (C). Using the wire insulator as a guide for the contoured-tip of the

backprobe adapter, gently slide the tip into the connector from the wire side until it comes in contact with the terminal end of the wires.

TROUBLESHOOTING

DTC C0051-00

DTC C0051-00 : The Functional Abnormalities of Steering Angle Sensor

NOTE: Before you troubleshoot, **review the General Troubleshooting Information**.

DTC Description	DTC	Freeze Frame
C0051-00 The Functional Abnormalities of Steering Angle Sensor	B	B

DTC (Real Time AWD)

1. Problem verification

   -1. Turn the vehicle to the ON mode.

   -2. Clear the DTC with the HDS.

   -3. Turn the vehicle to the OFF (LOCK) mode.

   -4. **Enter the maintenance mode and start the engine** .

   -5. Check for DTCs with the HDS.

DTC Description	DTC	Freeze Frame
C0051-00 The Functional Abnormalities of Steering Angle Sensor	B	B

   Is DTC C0051-00 indicated?

   YES

   Go to step 2.

   NO

   Intermittent failure, the system is OK at this time.

2. DTC check (VSA system)

   -1. Check for DTCs with the HDS.

DTC Description	DTC
C0051-62 Steering Angle Sensor Failure (Signal Compare Failure)	B

DTC Description	DTC
C0051-96 Steering Angle Sensor Failure (Sensor Detects Internal Failure)	B

   Is DTC C0051-62 or C0051-96 indicated?

   YES

   Go to the **indicated DTC's troubleshooting**.

NO

Check for any authorized service information related to the DTCs or symptoms you are troubleshooting or **substitute a known-good AWD control unit** , and recheck. If the symptom/indication goes away with a known-good AWD control unit, **replace the original AWD control unit** .

DTC C0061-96 (REAL TIME AWD CONTROL UNIT)

DTC C0061-96 : The Functional Abnormalities of Lateral Acceleration Sensor

NOTE: Before you troubleshoot, **review the General Troubleshooting Information**.

DTC Description	DTC	Freeze Frame
C0061-96 The Functional Abnormalities of Lateral Acceleration Sensor	B	B

DTC (Real Time AWD)

1. Problem verification

-1. Turn the vehicle to the ON mode.

-2. Clear the DTC with the HDS.

-3. Turn the vehicle to the OFF (LOCK) mode.

-4. **Enter the maintenance mode and start the engine** .

-5. Check for DTCs with the HDS.

DTC Description	DTC	Freeze Frame
C0061-96 The Functional Abnormalities of Lateral Acceleration Sensor	B	B

Is DTC C0061-96 indicated?

YES

The failure is duplicated. Go to step 2.

NO

Intermittent failure, the system is OK at this time. If the freeze data/on-board snapshot of this DTC is recorded, try to reproduce the failure under the same conditions with the freeze data/on-board snapshot.

2. DTC check (VSA system)

-1. Check for DTCs with the HDS.

DTC Description	DTC
C0061-49 Acceleration Sensor Failure (Internal Circuit Failure)	B

DTC Description	DTC
C0061-62 Lateral Acceleration Sensor Failure (Signal Compare Failure)	B

Is DTC C0061-49 or C0061-62 indicated?

YES

Go to the **indicated DTC's troubleshooting**.

NO

Check for any authorized service information related to the DTCs or symptoms you are troubleshooting or **substitute a known-good AWD control unit** , and recheck. If the symptom/indication goes away with a known-good AWD control unit, **replace the original AWD control unit** .

DTC C0061-F0, C0062-F0, C0063-F0 (REAL TIME AWD CONTROL UNIT)

DTC C0061-F0 : Lateral Acceleration Sensor Range/Performance Problem

DTC C0062-F0 : Longitudinal Acceleration Sensor Range/Performance Problem

DTC C0063-F0 : Yaw Rate Sensor Range/Performance Problem

NOTE: Before you troubleshoot, **review the General Troubleshooting Information**.

DTC Description	DTC	Freeze Frame
C0061-F0 Lateral Acceleration Sensor Range/Performance Problem	B	B
C0062-F0 Longitudinal Acceleration Sensor Range/Performance Problem	B	B
C0063-F0 Yaw Rate Sensor Range/Performance Problem	B	B

DTC (Real Time AWD)

1. Problem verification

   -1. Turn the vehicle to the ON mode.

   -2. Clear the DTC with the HDS.

   -3. Turn the vehicle to the OFF (LOCK) mode.

   -4. **Enter the maintenance mode and start the engine** .

   -5. Check for DTCs with the HDS.

DTC Description	DTC	Freeze Frame
C0061-F0 Lateral Acceleration Sensor Range/Performance Problem	B	B
C0062-F0 Longitudinal Acceleration Sensor Range/Performance Problem	B	B
C0063-F0 Yaw Rate Sensor Range/Performance Problem	B	B

   Is DTC C0061-F0, C0062-F0, or C0063-F0 indicated?

   YES

   The failure is duplicated. Go to step 2.

   NO

   Intermittent failure, the system is OK at this time If the freeze data/on-board snapshot of this DTC is recorded, try to reproduce the failure under the same conditions with the freeze data/on-board snapshot.

2. VSA system DTC check

-1. Check for DTCs in the VSA system with the HDS.

DTC Description	DTC
B	B

Are any DTCs indicated?

YES

Go to the indicated DTC's troubleshooting in the VSA system .

NO

Check for any authorized service information related to the DTCs or symptoms you are troubleshooting or **substitute a known-good AWD control unit** , and recheck. If the symptom/indication goes away with a known-good AWD control unit, **replace the original AWD control unit** .

DTC C0062-96 (REAL TIME AWD CONTROL UNIT)

DTC C0062-96 : The Functional Abnormalities of Longitudinal Acceleration Sensor

NOTE: Before you troubleshoot, **review the General Troubleshooting Information**.

DTC Description	DTC	Freeze Frame
C0062-96 The Functional Abnormalities of Longitudinal Acceleration Sensor	B	B

DTC (Real Time AWD)

1. Problem verification

-1. Turn the vehicle to the ON mode.

-2. Clear the DTC with the HDS.

-3. Turn the vehicle to the OFF (LOCK) mode.

-4. **Enter the maintenance mode and start the engine** .

-5. Check for DTCs with the HDS.

DTC Description	DTC	Freeze Frame
C0062-96 The Functional Abnormalities of Longitudinal Acceleration Sensor	B	B

Is DTC C0062-96 indicated?

YES

Go to step 2.

NO

Intermittent failure, the system is OK at this time.

2. DTC check (VSA system)

-1. Check for DTCs with the HDS.

DTC Description	DTC
C0062-62 Longitudinal Acceleration Sensor Failure (Signal Compare Failure)	B

Is DTC C0062-62 indicated?

YES

Go to the DTC C0062-62 troubleshooting .

NO

Check for any authorized service information related to the DTCs or symptoms you are troubleshooting or **substitute a known-good AWD control unit** , and recheck. If the symptom/indication goes away with a known-good AWD control unit, **replace the original AWD control unit** .

DTC C0063-96 (REAL TIME AWD CONTROL UNIT)

DTC C0063-96 : The Functional Abnormalities of Yaw Rate Sensor

NOTE: Before you troubleshoot, **review the General Troubleshooting Information**.

DTC Description	DTC	Freeze Frame
C0063-96 The Functional Abnormalities of Yaw Rate Sensor	B	B

DTC (Real Time AWD)

1. Problem verification

   -1. Turn the vehicle to the ON mode.

   -2. Clear the DTC with the HDS.

   -3. Turn the vehicle to the OFF (LOCK) mode.

   -4. **Enter the maintenance mode and start the engine** .

   -5. Check for DTCs with the HDS.

DTC Description	DTC	Freeze Frame
C0063-96 The Functional Abnormalities of Yaw Rate Sensor	B	B

   Is DTC C0063-96 indicated?

   YES

   The failure is duplicated. Go to step 2.

   NO

   Intermittent failure, the system is OK at this time. If the freeze data/on-board snapshot of this DTC is recorded, try to reproduce the failure under the same conditions with the freeze data/on-board snapshot.

2. DTC check (VSA system)

   -1. Check for DTCs with the HDS.

DTC Description	DTC
C0063-49 Yaw Rate Sensor Failure (Internal Circuit Failure)	B

DTC Description	DTC
C0063-62 Yaw Rate Sensor Failure (Signal Compare Failure)	B

Is DTC C0063-49 or C0063-62 indicated?

YES

Go to the indicated DTC's troubleshooting .

NO

Check for any authorized service information related to the DTCs or symptoms you are troubleshooting or **substitute a known-good AWD control unit** , and recheck. If the symptom/indication goes away with a known-good AWD control unit, **replace the original AWD control unit** .

DTC C1840-12

DTC C1840-12 : Differential Fluid Pressure Sensor Circuit High Voltage

NOTE: Before you troubleshoot, **review the General Troubleshooting Information**.

DTC Description	DTC	Freeze Frame
C1840-12 Differential Fluid Pressure Sensor Circuit High Voltage	B	B

DTC (Real Time AWD)

1. Determine possible failure area (electrical circuit problem, hydraulic circuit problem)

-1. **Enter the maintenance mode and start the engine** .

-2. Check the parameter(s) below with the HDS.

Signal	Threshold		Current conditions	
	Values	Unit	Values	Unit
Voltage of the oil pressure sensor for rear differential	More than 4.14	V	B	B

Do the current condition(s) match the threshold?

YES

Go to step 3.

NO

Go to step 2.

2. Problem verification

-1. Clear the DTC with the HDS.

-2. Turn the vehicle to the OFF (LOCK) mode.

-3. Turn the vehicle to the ON mode.

-4. Select the FUNCTIONAL TEST in the REAL TIME AWD with the HDS.

-5. **Do the OIL PRESSURE CONTROL TEST in the FUNCTIONAL TEST with the HDS** .

Oil Pressure Control Test

Is the test result OK?

YES

Intermittent failure, the system is OK at this time. If the freeze data/on-board snapshot of this DTC is recorded, try to reproduce the failure under the same conditions with the freeze data/on-board snapshot.

NO

The failure is duplicated. **Follow the instructions indicated on the HDS according to the test result** .

3. Determine possible failure area (short to power in PS1 line, others)

-1. Turn the vehicle to the OFF (LOCK) mode.

-2. Disconnect the following connector.

Rear differential fluid pressure sensor 3P connector

-3. Turn the vehicle to the ON mode.

-4. Measure the voltage between test points 1 and 2.

Test condition	Vehicle ON mode
B	Rear differential fluid pressure sensor 3P connector: disconnected
Test point 1	Rear differential fluid pressure sensor 3P connector (female terminals) No. 1: ①
Test point 2	Rear differential fluid pressure sensor 3P connector (female terminals) No. 2: ①

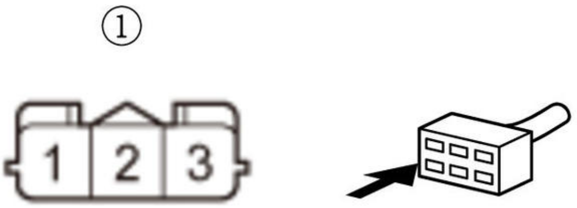

Is there about 4.14 V or more?

YES

Go to step 4.

NO

Go to step 7.

4. Shorted wire check (PS1 line to power)

-1. Turn the vehicle to the OFF (LOCK) mode.

-2. Disconnect the following connector.

AWD control unit 24P connector

-3. Turn the vehicle to the ON mode.

-4. Measure the voltage between test points 1 and 2.

Test condition	Vehicle ON mode
B	Rear differential fluid pressure sensor 3P connector: disconnected
B	AWD control unit 24P connector: disconnected
Test point 1	Rear differential fluid pressure sensor 3P connector (female terminals) No. 2: ①
Test point 2	Body ground

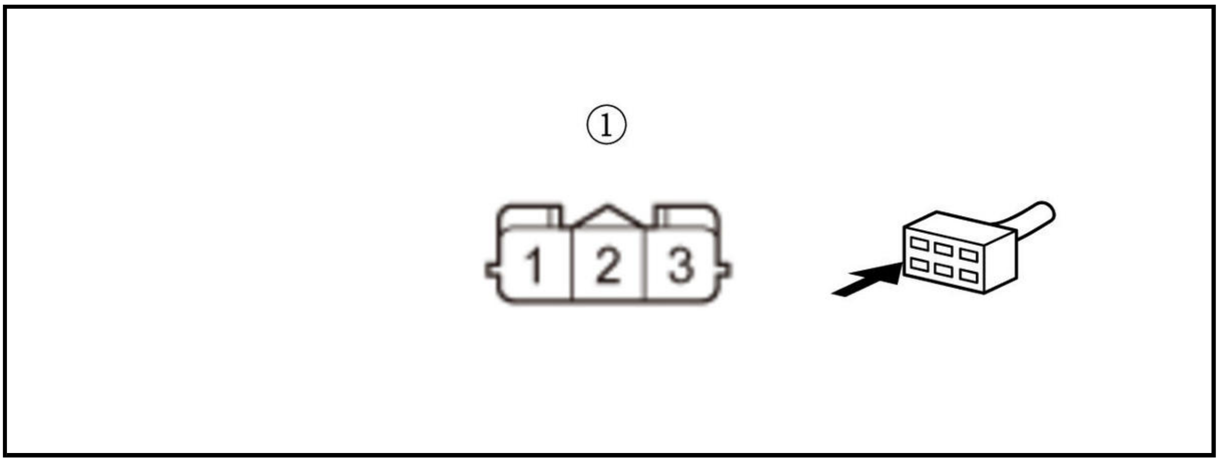

Is there about 0.5 V or more?

YES

Repair a short to power in the PS1 wire between the rear differential fluid pressure sensor and the AWD control unit.

NO

Go to the 5.

5. Shorted wire check (PS1 line to SVCC line)

-1. Turn the vehicle to the OFF (LOCK) mode.

-2. Measure the resistance between test points 1 and 2.

Test condition	Vehicle OFF (LOCK) mode
B	Rear differential fluid pressure sensor 3P connector: disconnected
B	AWD control unit 24P connector: disconnected

Test point 1	Rear differential fluid pressure sensor 3P connector (female terminals) No. 2: ①
Test point 2	Rear differential fluid pressure sensor 3P connector (female terminals) No. 3: ①

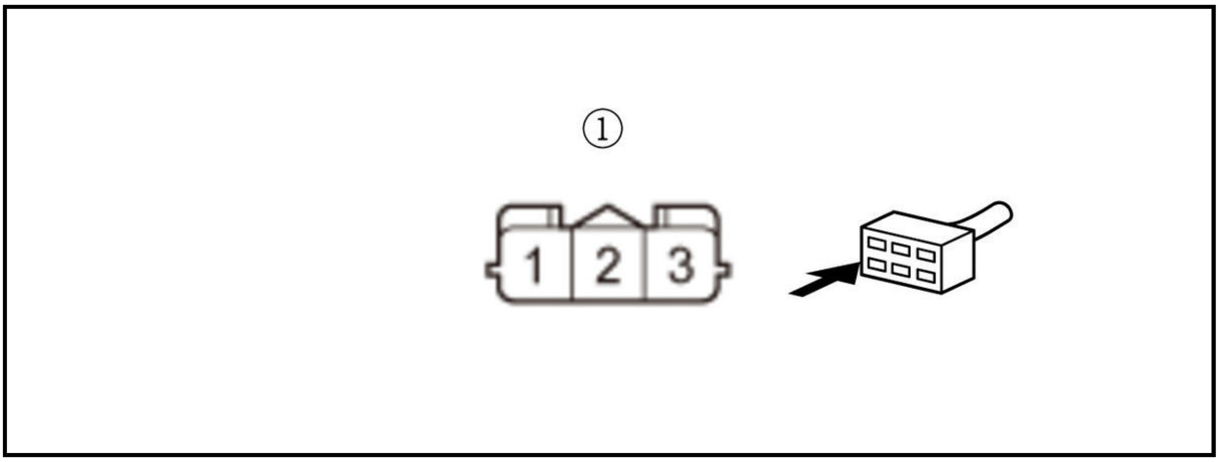

Is there 1.0 MΩ or more?

YES

Go to step 6.

NO

Repair a short in the PS1 wire to the SVCC wire between the rear differential fluid pressure sensor and the AWD control unit.

6. Rear differential fluid pressure sensor check

-1. Connect the following connector.

AWD control unit 24P connector

-2. Connect terminals A and B with a jumper wire.

Terminal A	Rear differential fluid pressure sensor 3P connector (female terminals) No. 1: ①
Terminal B	Rear differential fluid pressure sensor 3P connector (female terminals) No. 2: ①

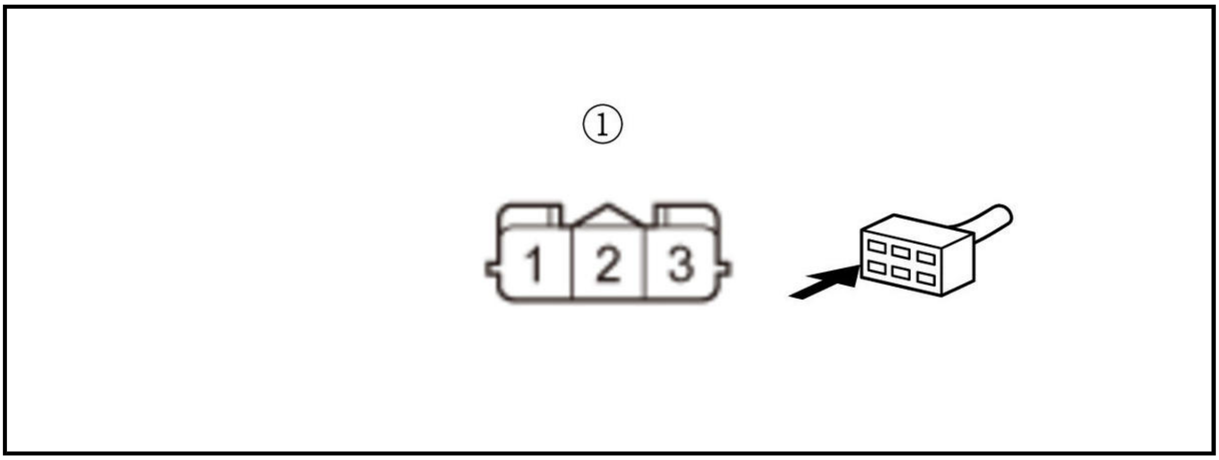

-3. Turn the vehicle to the ON mode.

-4. Check the parameter(s) below with the HDS.

Signal	Threshold		Current conditions	
	Values	Unit	Values	Unit
Voltage of the oil pressure sensor for rear differential	Less than 0.1	V	B	B

Do the current condition(s) match the threshold?

YES

Replace the rear differential fluid pressure sensor .

NO

Check for any authorized service information related to the DTCs or symptoms you are troubleshooting or **substitute a known-good AWD control unit** , and recheck. If the symptom/indication goes away with a known-good AWD control unit, **replace the original AWD control unit** .

7. Determine possible failure area (open in PS1 line, others)

-1. Turn the vehicle to the OFF (LOCK) mode.

-2. Connect terminals A and B with a jumper wire.

Terminal A	Rear differential fluid pressure sensor 3P connector (female terminals) No. 2: ①
Terminal B	Body ground

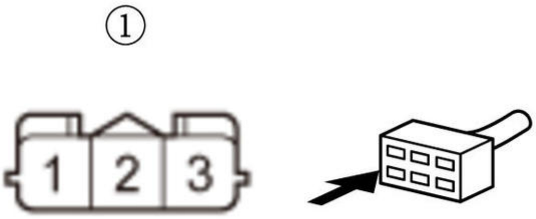

-3. Turn the vehicle to the ON mode.

-4. Check the parameter(s) below with the HDS.

Signal	Threshold		Current conditions	
	Values	Unit	Values	Unit
Voltage of the oil pressure sensor for rear differential	Less than 0.1	V	B	B

Do the current condition(s) match the threshold?

YES

Go to step 9.

NO

Go to step 8.

8. Open wire check (PS1 line)

-1. Turn the vehicle to the OFF (LOCK) mode.

-2. Remove the jumper wire.

-3. Disconnect the following connector.

AWD control unit 24P connector

-4. Measure the resistance between test points 1 and 2.

Test condition	Vehicle OFF (LOCK) mode
B	Rear differential fluid pressure sensor 3P connector: disconnected
B	AWD control unit 24P connector: disconnected
Test point 1	Rear differential fluid pressure sensor 3P connector (female terminals) No. 2: ①
Test point 2	**AWD control unit 24P connector No. 21**

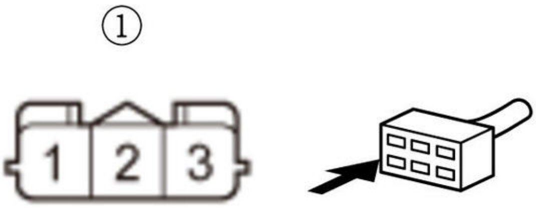

Is there 1.0 Ω or less?

YES

The PS1 wire is OK. Check for any authorized service information related to the DTCs or symptoms you are troubleshooting or **substitute a known-good AWD control unit** , and recheck. If the symptom/indication goes away with a known-good AWD control unit, **replace the original AWD control unit** .

NO

Repair an open in the PS1 wire between the rear differential fluid pressure sensor and the AWD control unit.

9. Open wire check (SG line)

-1. Turn the vehicle to the OFF (LOCK) mode.

-2. Remove the jumper wire.

-3. Disconnect the following connector.

AWD control unit 24P connector

-4. Measure the resistance between test points 1 and 2.

Test condition	Vehicle OFF (LOCK) mode
B	Rear differential fluid pressure sensor 3P connector: disconnected
B	AWD control unit 24P connector: disconnected
Test point 1	Rear differential fluid pressure sensor 3P connector (female terminals) No. 1: ①
Test point 2	**AWD control unit 24P connector No. 11**

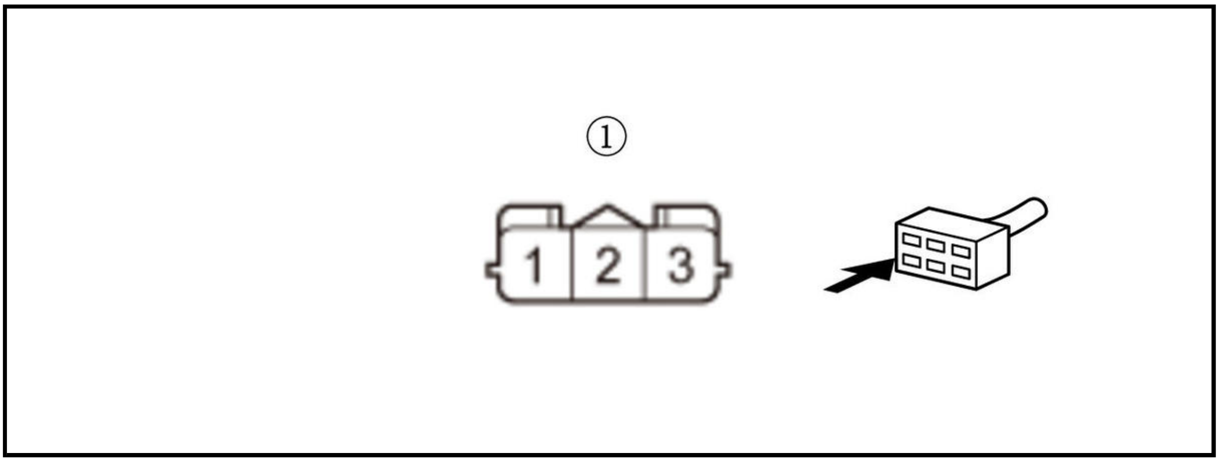

Is there 1.0 Ω or less?

YES

The SG wire is OK. Check for any authorized service information related to the DTCs or symptoms you are troubleshooting or **substitute a known-good AWD control unit** , and recheck. If the symptom/indication goes away with a known-good AWD control unit, **replace the original AWD control unit** .

NO

Repair an open in the SG wire between the rear differential fluid pressure sensor and the AWD control unit.

DTC C1840-14

DTC C1840-14 : Differential Fluid Pressure Sensor Circuit Low Voltage

NOTE: Before you troubleshoot, **review the General Troubleshooting Information**.

DTC Description	DTC	Freeze Frame
C1840-14 Differential Fluid Pressure Sensor Circuit Low Voltage	B	B

DTC (Real Time AWD)

1. Problem verification

-1. **Enter the maintenance mode and start the engine** .

-2. Check the parameter(s) below with the HDS.

Signal	Threshold		Current conditions	
	Values	Unit	Values	Unit
Voltage of the oil pressure sensor for rear differential	Less than 0.34	V	B	B

Do the current condition(s) match the threshold?

YES

The failure is duplicated. Go to step 2.

NO

Intermittent failure, the system is OK at this time. If the freeze data/on-board snapshot of this DTC is recorded, try to reproduce the failure under the same conditions with the freeze data/on-board snapshot.

2. Determine possible failure area (PS1 line, others)

-1. Turn the vehicle to the OFF (LOCK) mode.

-2. Disconnect the following connector.

Rear differential fluid pressure sensor 3P connector

-3. Turn the vehicle to the ON mode.

-4. Check the parameter(s) below with the HDS.

Signal	Threshold		Current conditions	
	Values	**Unit**	**Values**	**Unit**
Voltage of the oil pressure sensor for rear differential	About 5	V	B	B

Do the current condition(s) match the threshold?

YES

Go to step 4.

NO

Go to step 3.

3. Shorted wire check (PS1 line)

-1. Turn the vehicle to the OFF (LOCK) mode.

-2. Disconnect the following connector.

AWD control unit 24P connector

-3. Measure the resistance between test points 1 and 2.

Test condition	Vehicle OFF (LOCK) mode
B	Rear differential fluid pressure sensor 3P connector: disconnected
B	AWD control unit 24P connector: disconnected
Test point 1	Rear differential fluid pressure sensor 3P connector (female terminals) No. 2: ①
Test point 2	Body ground

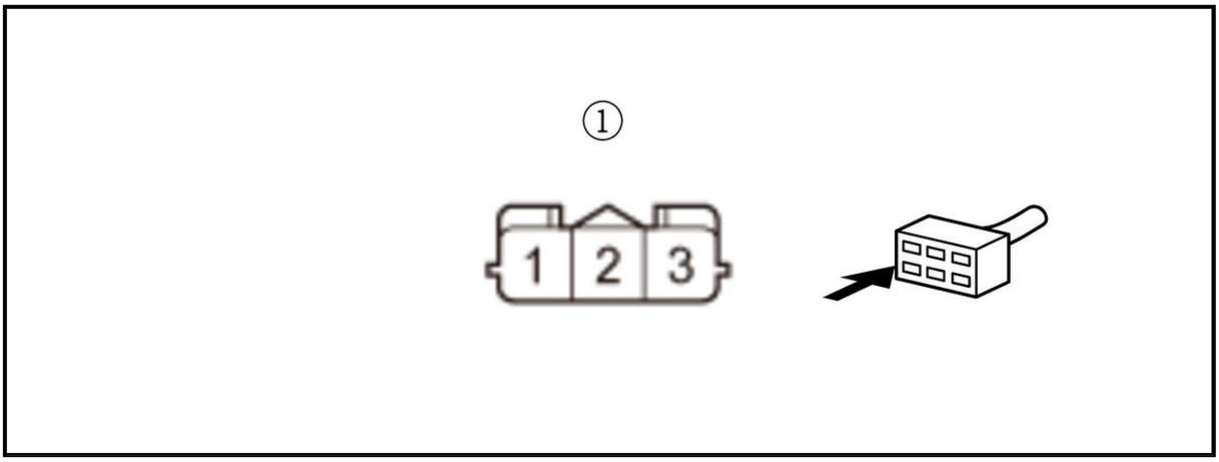

Is there 1.0 MΩ or more?

YES

Check for any authorized service information related to the DTCs or symptoms you are troubleshooting or **substitute a known-good AWD control unit** , and recheck. If the symptom/indication goes away with a known-good AWD control unit, **replace the original AWD control unit** .

NO

Repair a short to ground or the SG wire in the PS1 wire between the rear differential fluid pressure sensor and the AWD control unit.

4. Determine possible failure area (Rear differential fluid pressure sensor, SVCC line)

-1. Measure the voltage between test points 1 and 2.

Test condition	Vehicle ON mode
B	Rear differential fluid pressure sensor 3P connector: disconnected
Test point 1	Rear differential fluid pressure sensor 3P connector (female terminals) No. 1: ①
Test point 2	Rear differential fluid pressure sensor 3P connector (female terminals) No. 3: ①

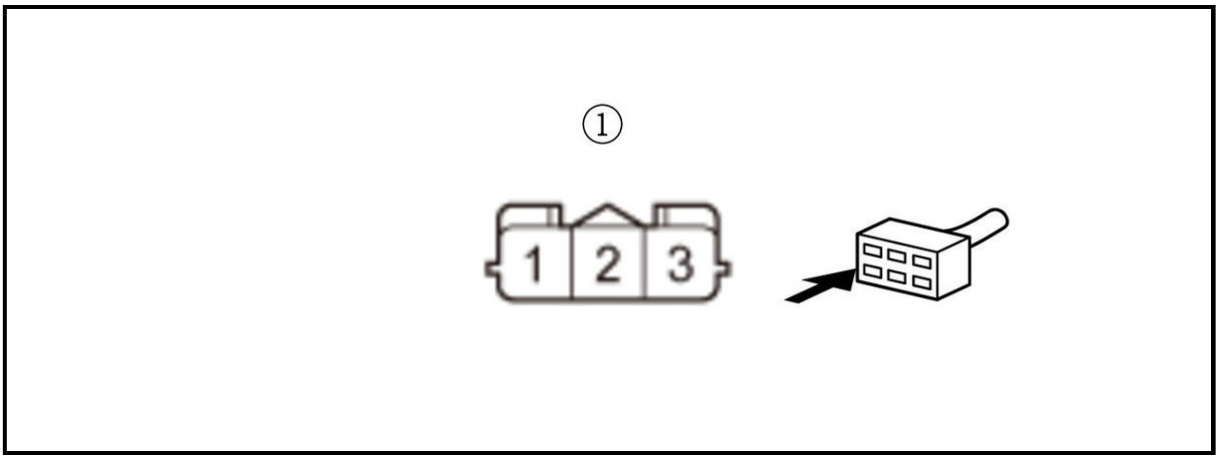

Is there about 5 V?

YES

Replace the rear differential fluid pressure sensor .

NO

Go to step 5.

5. Open wire check (SVCC line)

-1. Turn the vehicle to the OFF (LOCK) mode.

-2. Disconnect the following connector.

AWD control unit 24P connector

-3. Measure the resistance between test points 1 and 2.

Test condition	Vehicle OFF (LOCK) mode
B	Rear differential fluid pressure sensor 3P connector: disconnected
B	AWD control unit 24P connector: disconnected
Test point 1	Rear differential fluid pressure sensor 3P connector (female terminals) No. 3: ①
Test point 2	**AWD control unit 24P connector No. 20**

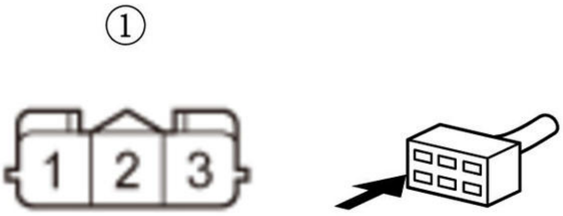

Is there 1.0 Ω or less?

YES

Check for any authorized service information related to the DTCs or symptoms you are troubleshooting or **substitute a known-good AWD control unit** , and recheck. If the symptom/indication goes away with a known-good AWD control unit, **replace the original AWD control unit** .

NO

Repair an open in the SVCC wire between the rear differential fluid pressure sensor and the AWD control unit.

DTC C1841-11

DTC C1841-11 : Differential Fluid Temperature Sensor Circuit Low Voltage

NOTE: Before you troubleshoot, **review the General Troubleshooting Information**.

DTC Description	DTC	Freeze Frame
C1841-11 Differential Fluid Temperature Sensor Circuit Low Voltage	B	B

DTC (Real Time AWD)

1. Problem verification

-1. Turn the vehicle to the ON mode.

-2. Check the parameter(s) below with the HDS.

Signal	Threshold		Current conditions	
	Values	Unit	Values	Unit
Voltage of the oil temperature sensor for rear differential	Less than 0.08	V	B	B

Do the current condition(s) match the threshold?

YES

The failure is duplicated. Go to step 2.

NO

Intermittent failure, the system is OK at this time. If the freeze data/on-board snapshot of this DTC is recorded, try to reproduce the failure under the same conditions with the Freeze data/on-board snapshot.

2. Rear differential fluid temperature sensor check

-1. Turn the vehicle to the OFF (LOCK) mode.

-2. Disconnect the following connector.

Rear differential fluid temperature sensor 2P connector

-3. Turn the vehicle to the ON mode.

-4. Check the parameter(s) below with the HDS.

Signal	Threshold		Current conditions	
	Values	Unit	Values	Unit
Voltage of the oil temperature sensor for rear differential	About 5	V	B	B

Do the current condition(s) match the threshold?

YES

Replace the rear differential fluid temperature sensor .

NO

The rear differential fluid temperature sensor is OK. Go to step 3.

3. Shorted wire check (TOH line)

-1. Turn the vehicle to the OFF (LOCK) mode.

-2. Disconnect the following connector.

AWD control unit 24P connector

-3. Measure the resistance between test points 1 and 2.

Test condition	Vehicle OFF (LOCK) mode
B	Rear differential fluid temperature sensor 2P connector: disconnected

B	AWD control unit 24P connector: disconnected
Test point 1	Rear differential fluid temperature sensor 2P connector (female terminals) No. 1: ①
Test point 2	Body ground

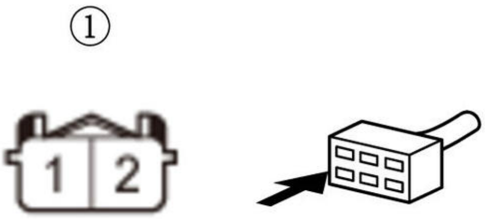

Is there 1.0 MΩ or more?

YES

Check for any authorized service information related to the DTCs or symptoms you are troubleshooting or **substitute a known-good AWD control unit** , and recheck. If the symptom/indication goes away with a known-good AWD control unit, **replace the original AWD control unit** .

NO

Repair a short to ground or the TOL wire in the TOH wire between the rear differential fluid temperature sensor and the AWD control unit.

DTC C1841-13

DTC C1841-13 : Differential Fluid Temperature Sensor Circuit High Voltage

NOTE: Before you troubleshoot, **review the General Troubleshooting Information**.

DTC Description	DTC	Freeze Frame
C1841-13 Differential Fluid Temperature Sensor Circuit High Voltage	B	B

DTC (Real Time AWD)

1. Problem verification

   -1. Turn the vehicle to the ON mode.

   -2. Check the parameter(s) below with the HDS.

Signal	Threshold		Current conditions	
	Values	Unit	Values	Unit
Voltage of the oil temperature sensor for rear differential	More than 4.9	V	B	B

Do the current condition(s) match the threshold?

YES

The failure is duplicated. Go to step 2.

NO

Intermittent failure, the system is OK at this time. If the freeze data/on-board snapshot of this DTC is recorded, try to reproduce the failure under the same conditions with the freeze data/on-board snapshot.

2. Determine possible failure area (short to power in TOH line, others)

-1. Turn the vehicle to the OFF (LOCK) mode.

-2. Disconnect the following connector.

Rear differential fluid temperature sensor 2P connector

-3. Turn the vehicle to the ON mode.

-4. Measure the voltage between test points 1 and 2.

Test condition	Vehicle ON mode
B	Rear differential fluid temperature sensor 2P connector: disconnected
Test point 1	Rear differential fluid temperature sensor 2P connector (female terminals) No. 1: ①
Test point 2	Body ground

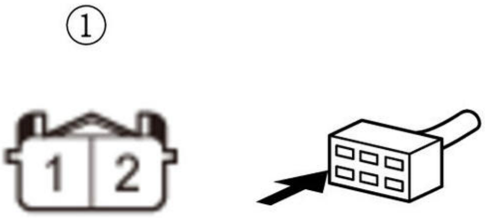

Is there about 4.9 V or more?

YES

Go to step 5.

NO

Go to step 3.

3. Open wire check (TOH line)

-1. Turn the vehicle to the OFF (LOCK) mode.

-2. Disconnect the following connector.

AWD control unit 24P connector

-3. Measure the resistance between test points 1 and 2.

Test condition	Vehicle OFF mode
B	Rear differential fluid temperature sensor 2P connector: disconnected
B	AWD control unit 24P connector: disconnected
Test point 1	**AWD control unit 24P connector No. 18**
Test point 2	Rear differential fluid temperature sensor 2P connector (female terminals) No. 1: ①

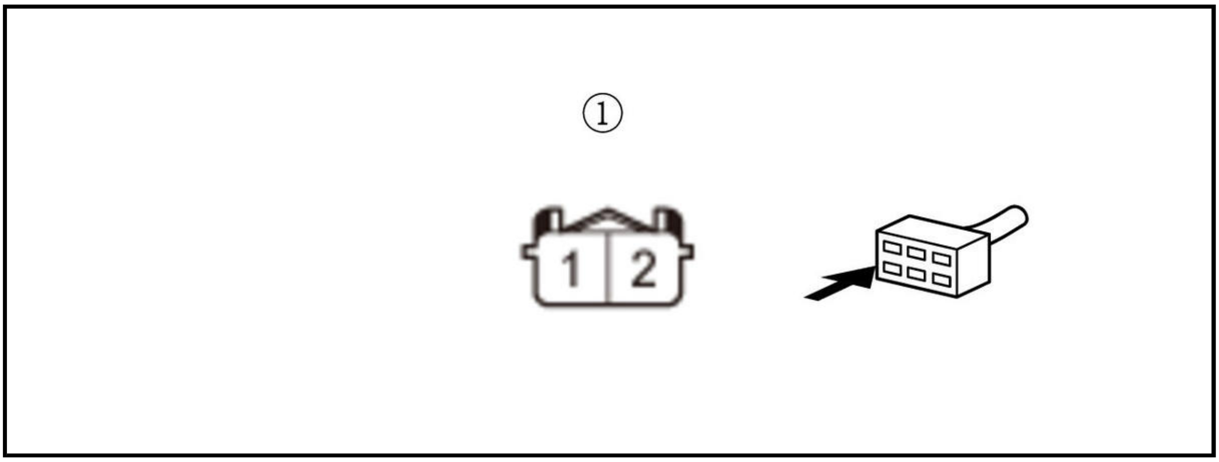

Is there 1.0 Ω or less?

YES

The TOH wire is OK. Check for any authorized service information related to the DTCs or symptoms you are troubleshooting or **substitute a known-good AWD control unit** , and recheck. If the symptom/indication goes away with a known-good AWD control unit, **replace the original AWD control unit** .

NO

Repair an open in the TOH wire between the rear differential fluid temperature sensor and the AWD control unit.

4. Open wire check (TOL line)

-1. Turn the vehicle to the OFF (LOCK) mode.

-2. Remove the jumper wire.

-3. Disconnect the following connector.

AWD control unit 24P connector

-4. Measure the resistance between test points 1 and 2.

Test condition	Vehicle OFF (LOCK) mode
B	Rear differential fluid temperature sensor 2P connector: disconnected
B	AWD control unit 24P connector: disconnected
Test point 1	**AWD control unit 24P connector No. 22**
Test point 2	Rear differential fluid temperature sensor 2P connector (female terminals) No. 2: ①

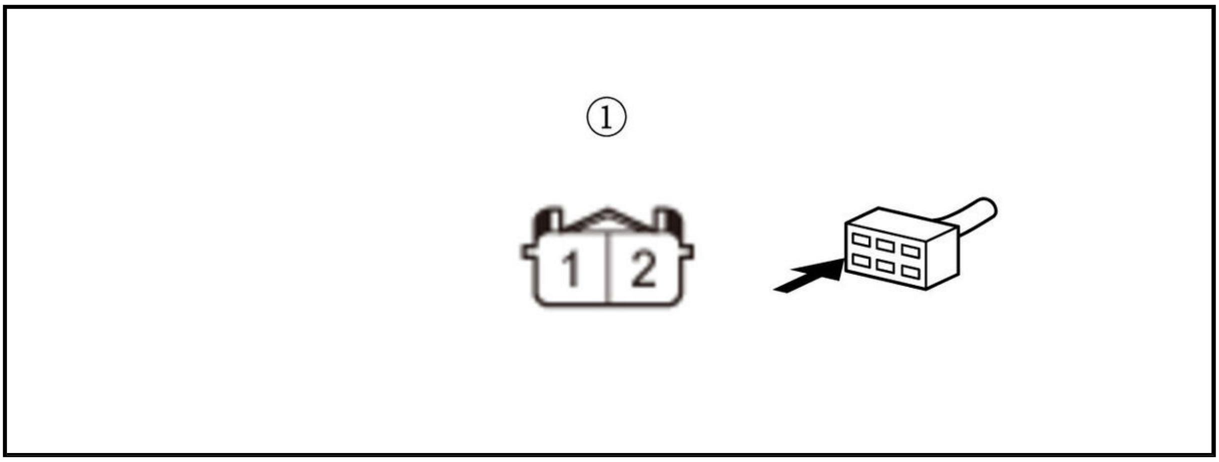

Is there 1.0 Ω or less?

YES

Check for any authorized service information related to the DTCs or symptoms you are troubleshooting or **substitute a known-good AWD control unit** , and recheck. If the symptom/indication goes away with a known-good AWD control unit, **replace the original AWD control unit** .

NO

Repair an open in the TOL wire between the rear differential fluid temperature sensor and the AWD control unit.

5. Shorted wire check (TOH line to power)

-1. Turn the vehicle to the OFF (LOCK) mode.

-2. Disconnect the following connector.

AWD control unit 24P connector

-3. Turn the vehicle to the ON mode.

-4. Measure the voltage between test points 1 and 2.

Test condition	Vehicle ON mode
B	Rear differential fluid temperature sensor 2P connector: disconnected
B	AWD control unit 24P connector: disconnected
Test point 1	Rear differential fluid temperature sensor 2P connector (female terminals) No. 1: ①
Test point 2	Body ground

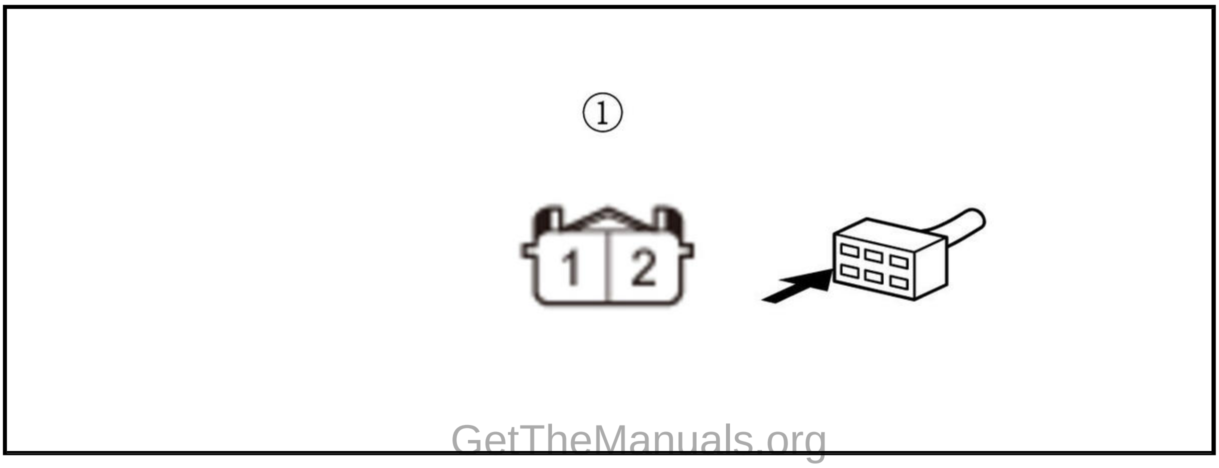

Is there about 0.5 V or more?

YES

Repair a short to power in the TOH wire between the rear differential fluid temperature sensor and the AWD control unit.

NO

Go to step 6.

6. Rear differential fluid temperature sensor check

-1. Turn the vehicle to the OFF (LOCK) mode.

-2. Connect the following connector.

AWD control unit 24P connector

-3. Connect terminals A and B with a jumper wire.

Terminal A	Rear differential fluid temperature sensor 2P connector (female terminals) No. 1: ①
Terminal B	Rear differential fluid temperature sensor 2P connector (female terminals) No. 2: ①

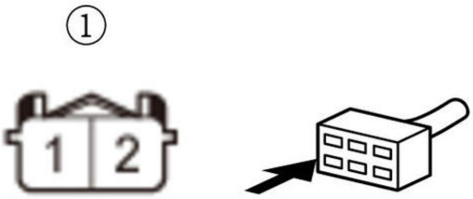

-4. Turn the vehicle to the ON mode.

-5. Check the parameter(s) below with the HDS.

Signal	Threshold		Current conditions	
	Values	Unit	Values	Unit
Voltage of the oil temperature sensor for rear differential	Less than 0.1	V	B	B

Do the current condition(s) match the threshold?

YES

Replace the rear differential fluid temperature sensor .

NO

Check for any authorized service information related to the DTCs or symptoms you are troubleshooting or **substitute a known-good AWD control unit** , and recheck. If the symptom/indication goes away with a known-good AWD control unit, **replace the original AWD control unit** .

DTC C1841-27

DTC C1841-27 : Differential Fluid Temperature Sensor Circuit Range/Performance Problem

NOTE: Before you troubleshoot, **review the General Troubleshooting Information**.

DTC Description	DTC	Freeze Frame
C1841-27 Differential Fluid Temperature Sensor Circuit Range/Performance Problem	B	B

DTC (Real Time AWD)

1. DTC check

-1. Turn the vehicle to the ON mode.

-2. Check for DTCs with the HDS.

DTC Description	DTC	Freeze Frame
C1841-11 Differential Fluid Temperature Sensor Circuit Low Voltage	B	B
C1841-13 Differential Fluid Temperature Sensor Circuit High Voltage	B	B
C1841-27 Differential Fluid Temperature Sensor Circuit Range/Performance Problem	B	B

Is DTC C1841-11, C1841-13, or C1841-27 indicated?

DTC C1841-11 is indicated

Go to the DTC C1841-11 troubleshooting.

DTC C1841-13 is indicated

Go to the DTC C1841-13 troubleshooting.

DTC C1841-27 is indicated

Go to step 2.

2. Problem verification

-1. Clear the DTC with the HDS.

-2. Turn the vehicle to the OFF (LOCK) mode.

-3. **Enter the maintenance mode and start the engine** , and let it idle for 1 minute.

-4. Check for DTCs with the HDS.

DTC Description	DTC	Freeze Frame
C1841-27 Differential Fluid Temperature Sensor Circuit Range/Performance Problem	B	B

Is DTC C1841-27 indicated?

YES

The failure is duplicated. Go to step 3.

NO

Intermittent failure, the system is OK at this time. If the freeze data/on-board snapshot of this DTC is recorded, try to reproduce the failure under the same conditions with the freeze data/on-board snapshot.

3. Rear differential fluid temperature sensor check

-1. Check the parameter(s) below with the HDS. Make note of this value as it will be needed in the following steps.

Signal	**Current conditions**	
	Values	**Unit**
Voltage of the oil temperature sensor for rear differential	B	B

-2. Turn the vehicle to the OFF (LOCK) mode.

-3. Turn the vehicle to the ON mode.

-4. Check the parameter(s) below with the HDS then compare with the value checked in step 3

Signal	**Current conditions**	
	Values	**Unit**
Voltage of the oil temperature sensor for rear differential	B	B

Did the sensor value change?

YES

The rear differential fluid temperature sensor is OK. Check for an intermittent open or short in the TOH and/or TOL wires between the rear differential fluid temperature sensor and the AWD control unit, and recheck.

NO

Replace the rear differential fluid temperature sensor .

DTC C1850-14

DTC C1850-14 : Fail Safe Relay Stuck OFF

NOTE: Before you troubleshoot, **review the General Troubleshooting Information**.

DTC Description	DTC	Freeze Frame
C1850-14 Fail Safe Relay Stuck OFF	B	B

DTC (Real Time AWD)

1. Problem verification (with engine idling)

-1. Turn the vehicle to the ON mode.

-2. Clear the DTC with the HDS.

-3. Turn the vehicle to the OFF (LOCK) mode.

-4. **Enter the maintenance mode and start the engine** .

-5. Check for DTCs with the HDS.

DTC Description	DTC	Freeze Frame
C1850-14 Fail Safe Relay Stuck OFF	B	B

Is DTC C1850-14 indicated?

YES

Go to step 2.

NO

Intermittent failure, the system is OK at this time. If the freeze data/on-board snapshot of this DTC is recorded, try to reproduce the failure under the same conditions with the freeze data/on-board snapshot.

2. Fuse check

-1. Turn the vehicle to the OFF (LOCK) mode.

-2. Check the following fuse.

Fuse	**No. A4-3**

Is the fuse OK?

YES

The fuse is OK. Reinstall the fuse, then go to step 3.

NO

Replace the fuse. If the fuse blows again, repair a short to ground in the No. A4-3 fuse circuit, then go to step 4

3. Open wire check (+B_E-DPS line)

-1. Disconnect the following connector.

AWD control unit 24P connector

-2. Turn the vehicle to the ON mode.

-3. Measure the voltage between test points 1 and 2.

Test condition	Vehicle ON mode
B	AWD control unit 24P connector: disconnected
Test point 1	**AWD control unit 24P connector No. 2**
Test point 2	Body ground

Is there battery voltage?

YES

The +B_E-DPS wire is OK. Check for any authorized service information related to the DTCs or symptoms you are troubleshooting or **substitute a known-good AWD control unit** , and recheck. If the symptom/indication goes away with a known-good AWD control unit, **replace the original AWD control unit** .

NO

Repair an open in the +B_E-DPS wire between the No. A4-3 fuse and the AWD control unit.

4. Determine possible failure area (MH line, others)

-1. Measure the resistance between test points 1 and 2.

Test condition	Vehicle OFF (LOCK) mode
B	AWD control unit 24P connector: disconnected
Test point 1	**AWD control unit 24P connector No. 1**
Test point 2	Body ground

Is there 1.0 Ω or less?

YES

Go to step 5.

NO

Go to step 6.

5. Rear differential pump motor internal shorted check

-1. Disconnect the following connector.

Rear differential pump motor 2P connector

-2. Measure the resistance between test points 1 and 2.

Test condition	Vehicle OFF (LOCK) mode
B	AWD control unit 24P connector: disconnected
B	Rear differential pump motor 2P connector: disconnected
Test point 1	Rear differential pump motor 2P connector (male terminals) No. 2: ①
Test point 2	Body ground

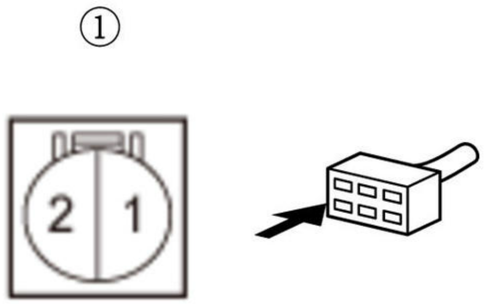

Is there 1.0 Ω or less?

YES

Replace the rear differential pump motor .

NO

The rear differential pump motor is OK. Repair a short to ground in the MH wires between the rear differential pump motor and the AWD control unit.

6. Rear differential pump motor internal shorted check

-1. Disconnect the following connector.

Rear differential pump motor 2P connector

-2. On the pump motor side, measure the resistance between test points 1 and 2.

Test condition	Vehicle OFF mode
B	AWD control unit 24P connector: disconnected
B	Rear differential pump motor 2P connector: disconnected
Test point 1	Rear differential pump motor 2P connector (male terminals) No. 1: ①
Test point 2	Rear differential pump motor 2P connector (male terminals) No. 2: ①

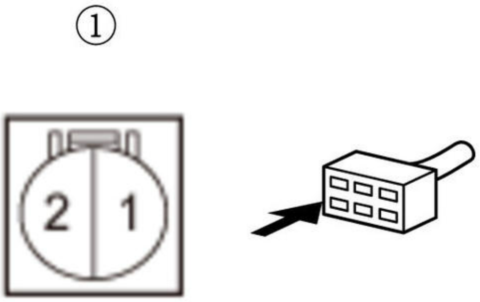

Is there 1.0 MΩ or more?

YES

The rear differential pump motor is OK. Check for any authorized service information related to the DTCs or symptoms you are troubleshooting or **substitute a known-good AWD control unit** , and recheck. If the symptom/indication goes away with a known-good AWD control unit, **replace the original AWD control unit** .

NO

Replace the rear differential pump motor .

DTC C1851-18

DTC C1851-18 : Motor Circuit Low Current

NOTE: Before you troubleshoot, **review the General Troubleshooting Information**.

DTC Description	DTC	Freeze Frame
C1851-18 Motor Circuit Low Current	B	B

DTC (Real Time AWD)

1. Problem verification (with engine idling)

   -1. Turn the vehicle to the ON mode.

   -2. Clear the DTC with the HDS.

   -3. Turn the vehicle to the OFF (LOCK) mode.

   -4. **Enter the maintenance mode and start the engine** .

   -5. Check for DTCs with the HDS.

DTC Description	DTC	Freeze Frame
C1851-18 Motor Circuit Low Current	B	B

   Is DTC C1851-18 indicated?

   YES

   The failure is duplicated. Go to step 3.

   NO

   Go to step 2.

2. Problem verification (with rear differential pump motor running)

   -1. Clear the DTC with the HDS.

   -2. Turn the vehicle to the OFF (LOCK) mode.

   -3. **Enter the maintenance mode and start the engine** .

   -4. Select the ADJUSTMENT in the REAL TIME AWD with the HDS.

   -5. With the engine running, **do the AIR BLEEDING in the ADJUSTMENT with the HDS** .

   Air Bleeding

   Check for DTCs with the HDS.

DTC Description	DTC	Freeze Frame
C1851-18 Motor Circuit Low Current	B	B

   Is DTC C1851-18 indicated?

   YES

   The failure is duplicated. Go to step 3.

   NO

   Intermittent failure, the system is OK at this time. If the freeze data/on-board snapshot of this DTC is recorded, try to reproduce the failure under the same conditions with the freeze data/on-board snapshot.

3. Open wire check (GND line)

-1. Turn the vehicle to the OFF (LOCK) mode.

-2. Disconnect the following connector.

AWD control unit 24P connector

-3. Measure the resistance between test points 1 and 2.

Test condition	Vehicle OFF (LOCK) mode
B	AWD control unit 24P connector: disconnected
Test point 1	**AWD control unit 24P connector No. 4**
Test point 2	Body ground

Is there 1.0 Ω or less?

YES

The GND wire is OK. Go to step 4.

NO

Check for poor connections or loose terminals between the AWD control unit and ground (G503). If the connections are OK, repair an open in the GND wire between the AWD control unit and ground (G503).

4. Determine possible failure area (short in MH, ML lines, open in MH, ML lines)

-1. Measure the resistance between test points 1 and 2.

Test condition	Vehicle OFF (LOCK) mode
B	AWD control unit 24P connector: disconnected
Test point 1	**AWD control unit 24P connector No. 1**
Test point 2	Body ground

Is there 1.0 Ω or less?

YES

Go to step 7.

NO

Go to step 5.

5. Determine possible failure area (MH, ML lines, AWD control unit)

-1. Measure the resistance between test points 1 and 2.

Test condition	Vehicle OFF (LOCK) mode, At normal air temperature
B	AWD control unit 24P connector: disconnected
Test point 1	**AWD control unit 24P connector No. 1**
Test point 2	**AWD control unit 24P connector No. 3**

Is there about 10 Ω or less?

YES

Check for any authorized service information related to the DTCs or symptoms you are troubleshooting or **substitute a known-good AWD control unit** , and recheck. If the symptom/indication goes away with a known-good AWD control unit, **replace the original AWD control unit** .

NO

Go to step 6.

6. Rear differential pump motor internal open check

-1. Disconnect the following connector.

Rear differential pump motor 2P connector

-2. On the rear differential pump motor side, measure the resistance between test points 1 and 2.

Test condition	Vehicle OFF (LOCK) mode
B	AWD control unit 24P connector: disconnected
B	Rear differential pump motor 2P connector: disconnected
Test point 1	Rear differential pump motor 2P connector (male terminals) No. 1: ①
Test point 2	Rear differential pump motor 2P connector (male terminals) No. 2: ①

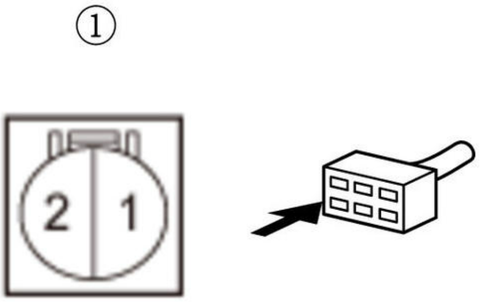

Is there about 10 Ω or less?

YES

Repair an open in the MH and/or ML wires between the rear differential pump motor and the AWD control unit.

NO

Replace the rear differential pump motor .

7. Rear differential pump motor internal shorted check

-1. Disconnect the following connector.

Rear differential pump motor 2P connector

-2. Measure the resistance between the following test points 1 and 2 individually (see table).

Test condition	Vehicle OFF (LOCK) mode
B	AWD control unit 24P connector: disconnected

B	Rear differential pump motor 2P connector: disconnected

Connector	Test point 1	Test point 2
Rear differential pump motor 2P connector (male terminals)	No. 1: ①	Rear differential pump motor body
	No. 2: ①	

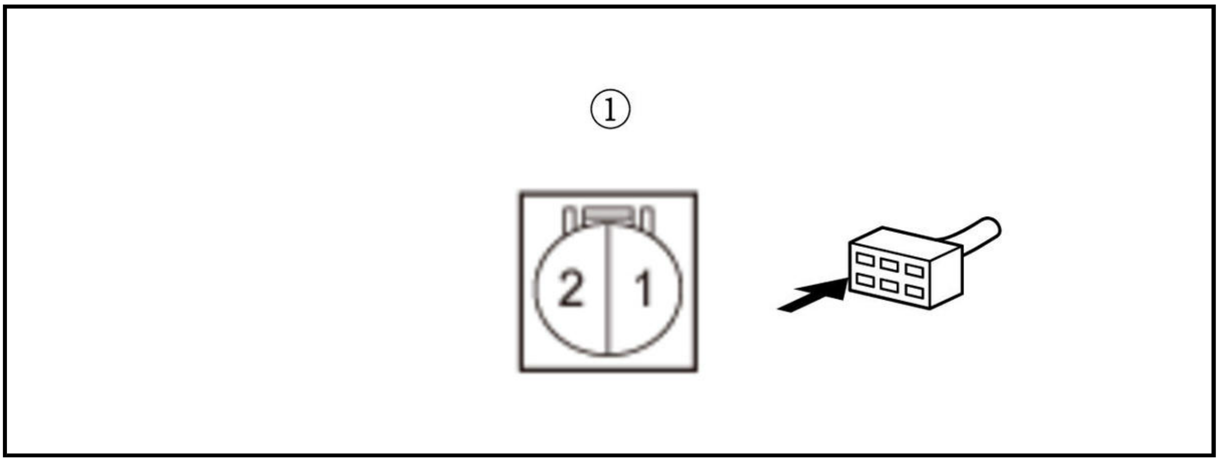

Are there 1.0 MΩ or more?

YES

The rear differential pump motor is OK. Repair a short to ground in the MH and/or ML wires between the rear differential pump motor and the AWD control unit.

NO

Replace the rear differential pump motor .

DTC C1851-19, C1851-1E

DTC C1851-19 : Control Module Internal Control Module Malfunction

DTC C1851-1E : Motor Circuit High Current

NOTE: Before you troubleshoot, **review the General Troubleshooting Information**.

DTC Description	DTC	Freeze Frame
C1851-19 Control Module Internal Control Module Malfunction	B	B
C1851-1E Motor Circuit High Current	B	B

DTC (Real Time AWD)

1. Problem verification (with engine idling)

   -1. Turn the vehicle to the ON mode.

   -2. Clear the DTC with the HDS.

   -3. Turn the vehicle to the OFF (LOCK) mode.

   -4. **Enter the maintenance mode and start the engine** .

   -5. Check for DTCs with the HDS.

DTC Description	DTC	Freeze Frame
C1851-19 Control Module Internal Control Module Malfunction	B	B
C1851-1E Motor Circuit High Current	B	B

Is DTC C1851-19 or C1851-1E indicated?

YES

The failure is duplicated. Go to step 3.

NO

Go to step 2.

2. Problem verification (with rear differential pump motor running)

-1. Clear the DTC with the HDS.

-2. Turn the vehicle to the OFF (LOCK) mode.

-3. **Enter the maintenance mode and start the engine** .

-4. Select the ADJUSTMENT in the REAL TIME AWD with the HDS.

-5. With the engine running, **do the AIR BLEEDING in the ADJUSTMENT with the HDS** .

Air Bleeding

Check for DTCs with the HDS.

DTC Description	DTC	Freeze Frame
C1851-19 Control Module Internal Control Module Malfunction	B	B

DTC Description	DTC	Freeze Frame
C1851-1E Motor Circuit High Current	B	B

Is DTC C1851-19 or C1851-1E indicated?

YES

The failure is duplicated. Go to step 3.

NO

Intermittent failure, the system is OK at this time. If the freeze data/on-board snapshot of this DTC is recorded, try to reproduce the failure under the same conditions with the freeze data/on-board snapshot.

3. Determine possible failure area (short to power in MH, ML lines, others)

-1. Turn the vehicle to the OFF (LOCK) mode.

-2. Disconnect the following connector.

Rear differential pump motor 2P connector

-3. Turn the vehicle to the ON mode.

-4. Wait for 10 seconds.

-5. Measure the voltage between the following test points 1 and 2 individually.

Test condition	Vehicle ON mode
B	Rear differential pump motor 2P connector: disconnected

Connector	Test point 1	Test point 2
Rear differential pump motor 2P connector (female terminals)	No. 1: ①	Body ground
	No. 2: ①	

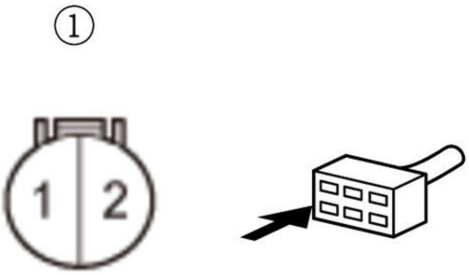

Is there about 0.1 V or less?

YES

Go to step 5.

NO

Go to step 4.

4. Shorted wire check (MH line to power, ML line to power)

-1. Disconnect the following connector.

AWD control unit 24P connector

-2. Turn the vehicle to the ON mode.

-3. Measure the voltage between the following test points 1 and 2 individually.

Test condition	Vehicle ON mode
B	Rear differential pump motor 2P connector: disconnected
B	AWD control unit 24P connector: disconnected

Connector	Test point 1	Test point 2
Rear differential pump motor 2P connector (female terminals)	No. 1: ①	Body ground
	No. 2: ①	

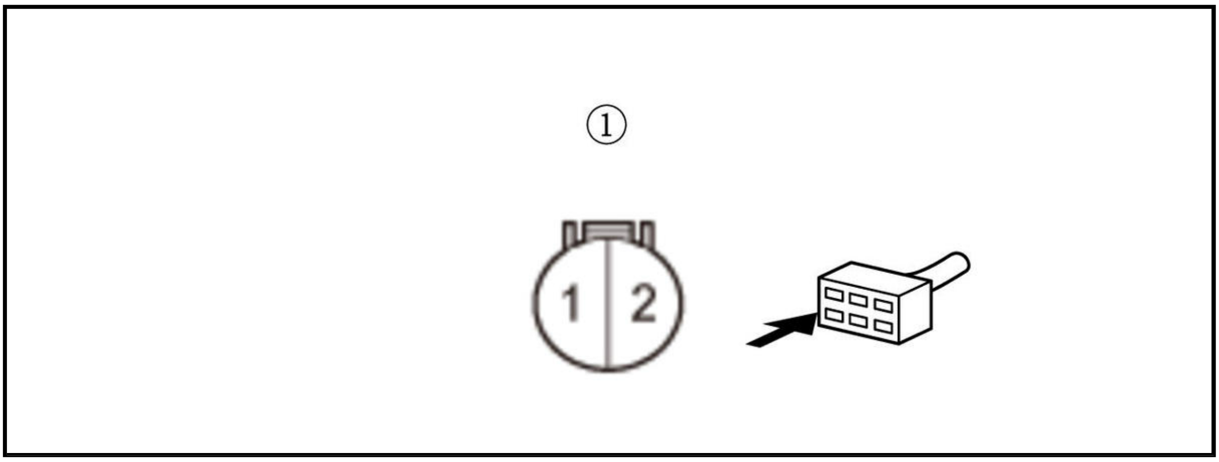

Is there about 0.1 V or less?

YES

Check for any authorized service information related to the DTCs or symptoms you are troubleshooting or **substitute a known-good AWD control unit** , and recheck. If the symptom/indication goes away with a known-good AWD control unit, **replace the original AWD control unit** .

NO

Repair short to power in the MH and/or ML wires between the rear differential pump motor and the AWD control unit.

5. Determine possible failure area (short to ground in MH line, others)

-1. Turn the vehicle to the OFF (LOCK) mode.

-2. Connect the following connector.

Rear differential pump motor 2P connector

-3. Disconnect the following connector.

AWD control unit 24P connector

-4. Measure the resistance between the following test points 1 and 2.

Test condition	Vehicle OFF (LOCK) mode
	AWD control unit 24P connector: disconnected
Test point 1	**AWD control unit 24P connector No. 1**
Test point 2	Body ground

Is there 1.0 MΩ or more?

YES

Go to step 7.

NO

Go to step 6.

6. Rear differential pump motor check

-1. Disconnect the following connector.

Rear differential pump motor 2P connector

-2. On the rear differential pump motor side, measure the resistance between test points 1 and 2.

Test condition	Vehicle OFF (LOCK) mode
	Rear differential pump motor 2P connector: disconnected
Test point 1	Rear differential pump motor 2P connector (male terminals) No. 1: ①
Test point 2	Rear differential pump motor 2P connector (male terminals) No. 2: ①

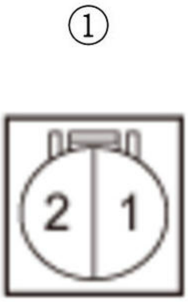

Is there about 0.6 Ω or more?

YES

The rear differential pump motor is OK. Go to step 7.

NO

Replace the rear differential pump motor .

7. Determine possible failure area (short in MH, ML line, others)

-1. Measure the resistance between test points 1 and 2.

Test condition	Vehicle OFF (LOCK) mode
B	AWD control unit 24P connector: disconnected
Test point 1	**AWD control unit 24P connector No. 1**
Test point 2	**AWD control unit 24P connector No. 3**

Is there 1.0 MΩ or more?

YES

Check for any authorized service information related to the DTCs or symptoms you are troubleshooting or **substitute a known-good AWD control unit** , and recheck. If the symptom/indication goes away with a known-good AWD control unit, **replace the original AWD control unit** .

NO

Go to step 8.

8. Shorted wire check (MH line to ML line)

-1. Disconnect the following connector.

Rear differential pump motor 2P connector

-2. Measure the resistance between test points 1 and 2.

Test condition	Vehicle OFF (LOCK) mode
B	Rear differential pump motor 2P connector: disconnected
B	AWD control unit 24P connector: disconnected
Test point 1	Rear differential pump motor 2P connector (female terminals) No. 1: ①
Test point 2	Rear differential pump motor 2P connector (female terminals) No. 2: ①

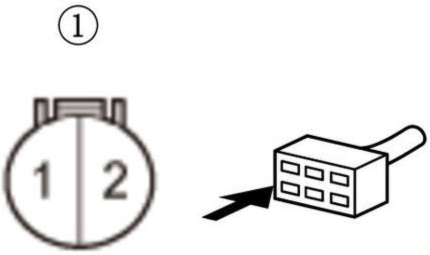

Is there 1.0 MΩ or more?

YES

The MH wire to the ML wire are OK. Check for any authorized service information related to the DTCs or symptoms you are troubleshooting or **substitute a known-good AWD control unit** , and recheck. If the symptom/indication goes away with a known-good AWD control unit, **replace the original AWD control unit** .

NO

Repair a short in the MH wire to the ML wire between the rear differential pump motor and the AWD control unit.

DTC C1852-18

DTC C1852-18 : Solenoid Valve Circuit Low Current

NOTE: Before you troubleshoot, **review the General Troubleshooting Information**.

DTC Description	DTC	Freeze Frame
C1852-18 Solenoid Valve Circuit Low Current	B	B

DTC (Real Time AWD)

1. Problem verification (with engine idling)

-1. Turn the vehicle to the ON mode.

-2. Clear the DTC with the HDS.

-3. Turn the vehicle to the OFF (LOCK) mode.

-4. **Enter the maintenance mode and start the engine** .

-5. Check for DTCs with the HDS.

DTC Description	DTC	Freeze Frame
C1852-18 Solenoid Valve Circuit Low Current	B	B

Is DTC C1852-18 indicated?

YES

The failure is duplicated. Go to step 5.

NO

Go to step 2.

2. Problem verification (with rear differential pump motor running)

-1. Clear the DTC with the HDS.

-2. Turn the vehicle to the OFF (LOCK) mode.

-3. **Enter the maintenance mode and start the engine** .

-4. Select the ADJUSTMENT in the REAL TIME AWD with the HDS.

-5. With the engine running, **do the AIR BLEEDING in the ADJUSTMENT with the HDS** .

Air Bleeding

Check for DTCs with the HDS.

DTC Description	DTC	Freeze Frame
C1852-18 Solenoid Valve Circuit Low Current	B	B

Is DTC C1852-18 indicated?

YES

The failure is duplicated. Go to step 3.

NO

Intermittent failure, the system is OK at this time. If the freeze data/on-board snapshot of this DTC is recorded, try to reproduce the failure under the same conditions with the freeze data/on-board snapshot.

3. Determine possible failure area (DTYH1 line)

-1. Turn the vehicle to the OFF (LOCK) mode

-2. Disconnect the following connector.

Rear differential solenoid valve 1P connector
AWD control unit 24P connector

-3. Measure the resistance between test points 1 and 2.

Test condition	Vehicle OFF (LOCK) mode

B	Rear differential solenoid valve 1P connector: disconnected
B	AWD control unit 24P connector: disconnected
Test point 1	Rear differential solenoid valve 1P connector (female terminals) No. 1: ①
Test point 2	**AWD control unit 24P connector No. 15**

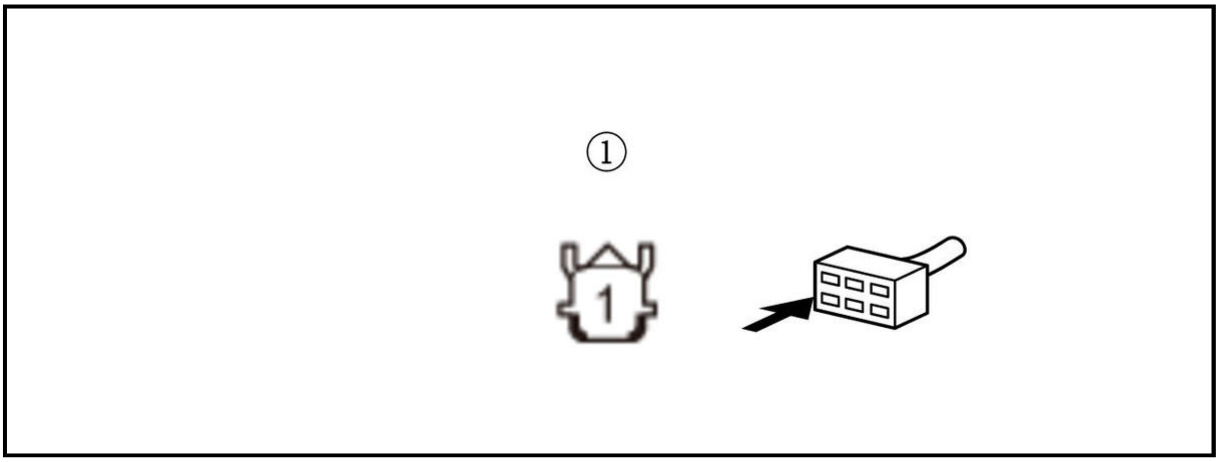

Is there 1.0 Ω or less?

YES

The DTYH1 wire is not open. Go to step 4.

NO

Repair an open in the DTYH1 wire between the rear differential solenoid valve and the AWD control unit.

4. Shorted wire check (DTYH1 line)

-1. Measure the resistance between test points 1 and 2.

Test condition	Vehicle OFF (LOCK) mode
B	Rear differential solenoid valve 1P connector: disconnected
B	AWD control unit 24P connector: disconnected
Test point 1	**AWD control unit 24P connector No. 15**
Test point 2	Body ground

Is there 1.0 MΩ or more?

YES

The DTYH1 wire is not shorted. Go to step 5.

NO

Repair a short to ground in the DTYH1 wire between the rear differential solenoid valve and the AWD control unit.

5. Determine possible failure area (D-GND/GND line, others)

-1. Turn the vehicle to the OFF (LOCK) mode.

-2. Disconnect the rear differential subharness D-GND/GND wire terminal from the rear differential assembly.

-3. Measure the resistance between the following test points 1 and 2.

Test condition	Vehicle OFF (LOCK) mode
	Rear differential subharness D-GND/GND wire terminal: disconnected
Test point 1	Rear differential subharness D-GND/GND wire terminal
Test point 2	Body ground

Is there 1.0 Ω or less?

YES

Go to step 6.

NO

Repair an open in the D-GND/GND wires between the AWD control unit and ground (G503).

6. Determine possible failure area (D-GND2/GND line, others)

-1. Turn the vehicle to the OFF (LOCK) mode.

-2. Disconnect the rear differential subharness D-GND2/GND wire terminal from the rear differential assembly.

-3. Measure the resistance between the following test points 1 and 2.

Test condition	Vehicle OFF (LOCK) mode
	Rear differential subharness D-GND2/GND wire terminal: disconnected
Test point 1	Rear differential subharness D-GND2/GND terminal
Test point 2	Body ground

Is there 1.0 Ω or less?

YES

Go to step 7.

NO

Repair an open in the D-GND2/GND wires between the AWD control unit and ground (G503).

7. Rear differential solenoid valve check

-1. Turn the vehicle to the OFF (LOCK) mode.

-2. On the solenoid valve side, measure the resistance between test points 1 and 2.

Test condition	Vehicle OFF (LOCK) mode
B	Rear differential solenoid valve 1P connector: disconnected
B	AWD control unit 24P connector: disconnected
B	Rear differential subharness D-GND/GND and D-GND2/GND wire terminal: disconnected
Test point 1	Rear differential solenoid valve 1P connector (male terminals) No. 1: ①
Test point 2	Rear differential solenoid valve body

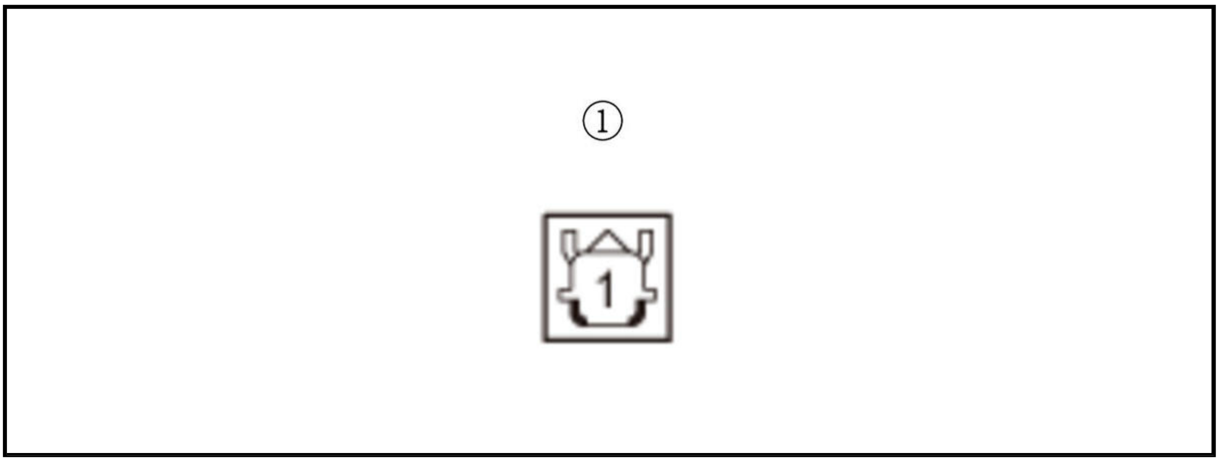

Is there about 100 Ω or less?

YES

The rear differential solenoid valve is OK. Check for any authorized service information related to the DTCs or symptoms you are troubleshooting or **substitute a known-good AWD control unit** , and recheck. If the symptom/indication goes away with a known-good AWD control unit, **replace the original AWD control unit** .

NO

Replace the rear differential solenoid valve .

DTC C1852-19

DTC C1852-19 : Solenoid Valve Circuit High Current

NOTE: Before you troubleshoot, **review the General Troubleshooting Information**.

DTC Description	DTC	Freeze Frame
C1852-19 Solenoid Valve Circuit High Current	B	B

DTC (Real Time AWD)

1. Problem verification (with engine idling)

    -1. Turn the vehicle to the ON mode.

    -2. Clear the DTC with the HDS.

    -3. Turn the vehicle to the OFF (LOCK) mode.

    -4. **Enter the maintenance mode and start the engine** .

    -5. Check for DTCs with the HDS.

DTC Description	DTC	Freeze Frame
C1852-19 Solenoid Valve Circuit High Current	B	B

Is DTC C1852-19 indicated?

YES

The failure is duplicated. Go to step 3.

NO

Go to step 2.

2. Problem verification (with rear differential pump motor running)

-1. Clear the DTC with the HDS.

-2. Turn the vehicle to the OFF (LOCK) mode.

-3. **Enter the maintenance mode and start the engine** .

-4. Select the ADJUSTMENT in the REAL TIME AWD with the HDS.

-5. With the engine running, **do the AIR BLEEDING in the ADJUSTMENT with the HDS** .

Air Bleeding

Check for DTCs with the HDS.

DTC Description	DTC	Freeze Frame
C1852-19 Solenoid Valve Circuit High Current	B	B

Is DTC C1852-19 indicated?

YES

The failure is duplicated. Go to step 3.

NO

Intermittent failure, the system is OK at this time. If the freeze data/on-board snapshot of this DTC is recorded, try to reproduce the failure under the same conditions with the freeze data/on-board snapshot.

3. Shorted wire check (DTYH1 line)

-1. Turn the vehicle to the OFF (LOCK) mode.

-2. Disconnect the following connectors.

Rear differential solenoid valve 1P connector
AWD control unit 24P connector

-3. Measure the resistance between test points 1 and 2.

Test condition	Vehicle OFF (LOCK) mode
B	Rear differential solenoid valve 1P connector: disconnected
B	AWD control unit 24P connector: disconnected
Test point 1	**AWD control unit 24P connector No. 15**
Test point 2	Body ground

Is there 1.0 MΩ or more?

YES

The DTYH1 wire is OK. Go to step 4.

NO

Repair a short to ground in the DTYH1 wire between the rear differential solenoid valve and the AWD control unit.

4. Rear differential solenoid valve check

-1. Turn the vehicle to the ON mode.

-2. Check the parameter(s) below with the HDS.

NOTE: The rear differential fluid temperature should be 50 deg.F (10 deg.C) - 86 deg.F (30 deg.C). If the value is not within the enable temperature, warm up the rear differential fluid temperature by raising the vehicle on a lift and run the vehicle at 13 mph (20 km/h) for 5 seconds then slow down, and stop the wheels.

Signal	**Current conditions**	
	Values	**Unit**
Oil temperature for rear differential	B	B

-3. Turn the vehicle to the OFF (LOCK) mode.

-4. On the solenoid valve side, measure the resistance between test points 1 and 2.

Test condition	Vehicle OFF (LOCK) mode
B	Rear differential solenoid valve 1P connector: disconnected
B	AWD control unit 24P connector: disconnected
Test point 1	Rear differential solenoid valve 1P connector (male terminals) No. 1: ①
Test point 2	Body ground

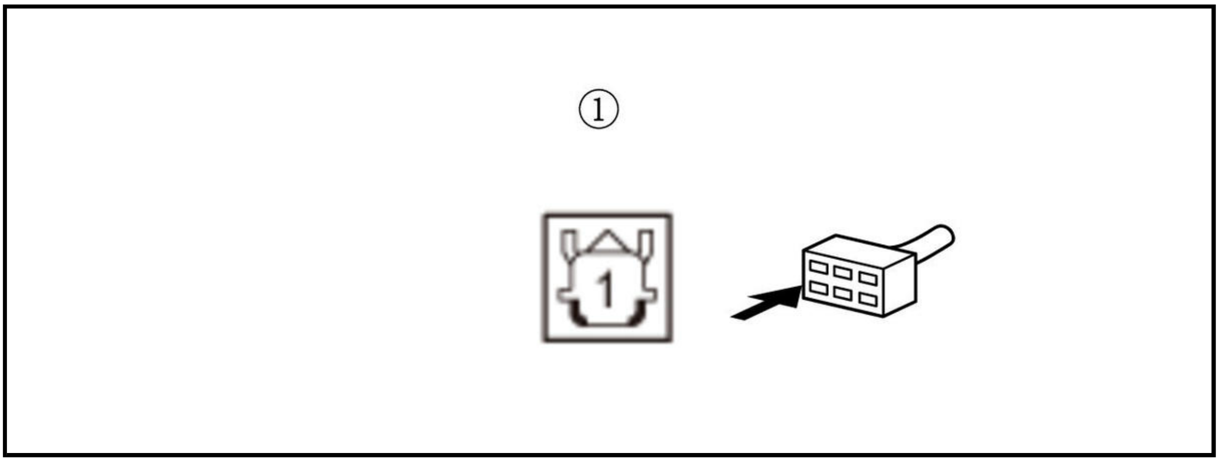

Is there about 10 Ω or more?

YES

The rear differential solenoid valve is OK. Check for any authorized service information related to the DTCs or symptoms you are troubleshooting or **substitute a known-good AWD control unit** , and recheck. If the symptom/indication goes away with a known-good AWD control unit, **replace the original AWD control unit** .

NO

Replace the rear differential solenoid valve .

DTC C1858-72

DTC C1858-72 : Differential Fluid Pressure Deviation Low

NOTE: Before you troubleshoot, **review the General Troubleshooting Information**.

DTC Description	DTC	Freeze Frame
C1858-72 Differential Fluid Pressure Deviation Low	B	B

DTC (Real Time AWD)

1. Rear differential fluid level check

   -1. **Check the rear differential fluid level** , and check for rear differential fluid leakage.

   Is the check result OK?

   YES

   The rear differential fluid level is OK. Go to step 2.

   NO

   Find and repair the source of the fluid leak then **add recommended fluid** .

2. Problem verification (function test with HDS)

   -1. Turn the vehicle to the ON mode.

   -2. Select the FUNCTIONAL TEST in the REAL TIME AWD with the HDS.

   -3. **Do the OIL PRESSURE CONTROL TEST in the FUNCTIONAL TEST with the HDS** .

   Oil Pressure Control Test

   Is fault code indicated?

   Fault code is not indicated

   Intermittent failure, the system is OK at this time. If the freeze data/on-board snapshot of this DTC is recorded, try to reproduce the failure under the same conditions with the freeze data/on-board snapshot.

   Fault code 2-1 or 5-1 is indicated

   Go to step 3.

   Fault code 3-1 is indicated

   Go to step 4.

   Fault code except 2-1, 3-1, and 5-1 is indicated

   Go to step 5.

3. Hydraulic system check

   -1. Select the ADJUSTMENT in the REAL TIME AWD with the HDS.

   -2. **Do the AIR BLEEDING in the ADJUSTMENT with the HDS** .

   Air Bleeding

   Select the FUNCTIONAL TEST in the REAL TIME AWD with the HDS.

-4. **Do the OIL PRESSURE CONTROL TEST in the FUNCTIONAL TEST with the HDS** .

Oil Pressure Control Test

Is the test result OK?

YES

Hydraulic system is OK at this time.

NO

Replace the rear differential fluid then **do the rear differential fluid pressure sensor test** and **do the rear differential solenoid valve test** . If they are OK, **replace the rear differential assembly** .

4. Hydraulic system check

-1. Select the ADJUSTMENT in the REAL TIME AWD with the HDS.

-2. **Do the AIR BLEEDING in the ADJUSTMENT with the HDS** .

Air Bleeding

Select the FUNCTIONAL TEST in the REAL TIME AWD with the HDS.

-4. **Do the OIL PRESSURE CONTROL TEST in the FUNCTIONAL TEST with the HDS** .

Oil Pressure Control Test

Is the test result OK?

YES

Hydraulic system is OK at this time.

NO

Replace the rear differential fluid , then **do the rear differential solenoid valve test** . If it is OK, **replace the rear differential assembly** .

5. DTC check

-1. Select the FUNCTIONAL TEST in the REAL TIME AWD with the HDS.

-2. **Do the OIL PRESSURE CONTROL TEST in the FUNCTIONAL TEST with the HDS** three times.

Oil Pressure Control Test

Check for DTCs with the HDS.

DTC Description	DTC	Freeze Frame
B	B	B

Are there any DTCs?

YES

Go to the indicated DTC's troubleshooting.

NO

The system is OK at this time.

DTC C1858-73

DTC C1858-73 : Differential Fluid Pressure Deviation High

NOTE: Before you troubleshoot, **review the General Troubleshooting Information**.

DTC Description	DTC	Freeze Frame
C1858-73 Differential Fluid Pressure Deviation High	B	B

DTC (Real Time AWD)

1. Problem verification (function test with HDS)

   -1. Turn the vehicle to the ON mode.

   -2. Select the FUNCTIONAL TEST in the REAL TIME AWD with the HDS.

   -3. **Do the OIL PRESSURE CONTROL TEST in the FUNCTIONAL TEST with the HDS** .

   Oil Pressure Control Test

   Are fault codes indicated?

   Fault code is not indicated

   Intermittent failure, the system is OK at this time. If the freeze data/on-board snapshot of this DTC is recorded, try to reproduce the failure under the same conditions with the freeze data/on-board snapshot.

   Fault code 4-1 or 6-1 is indicated

   Replace the rear differential fluid , then **do the rear differential solenoid valve test** . If it is OK, **replace the rear differential assembly** .

   Fault code except 4-1 and 6-1 is indicated

   The failure is duplicated. Go to step 2.

2. DTC check

   -1. Select the FUNCTIONAL TEST in the REAL TIME AWD with the HDS.

   -2. **Do the OIL PRESSURE CONTROL TEST in the FUNCTIONAL TEST with the HDS** three times.

   Oil Pressure Control Test

   Check for DTCs with the HDS.

DTC Description	DTC	Freeze Frame
B	B	B

   Are there any DTCs?

   YES

   Go to the indicated DTC's troubleshooting.

   NO

The system is OK at this time.

DTC C1860-98

DTC C1860-98 : Differential Fluid Overheats

NOTE:

- Before you troubleshoot, **review the General Troubleshooting Information**.
- When the clutch is presumed to be overheated, DTC C1860-98 is set and the system turns off the clutch engagement to protect the clutch. This DTC may also set under the following conditions.
-
    - -

      When spinning the rear wheels while the vehicle is stuck in sand, mud, snow, etc
    - -

      When the VSA system is OFF
- If other DTCs are stored at the same time as DTC C1860-98 and/or DTC C1861-9A, troubleshoot other DTCs first, then recheck for DTC C1860-98 and/or DTC C1861-9A.

DTC Description	DTC	Freeze Frame
C1860-98 Differential Fluid Overheats	B	B

DTC (Real Time AWD)

1. DTC check

   -1. Turn the vehicle to the ON mode.

   -2. Check for DTCs with the HDS.

DTC Description	DTC	Freeze Frame
B	B	B

   Is DTC C1860-98, C1861-9A, or other DTC indicated?

   DTC C1860-98 or C1861-9A is indicated

   Go to step 2.

   Other DTC is indicated

   Go to the indicated DTC's troubleshooting.

2. Tire size check

   -1. Check the tire size of the four wheels.

   Are all tire sizes same?

   YES

   The tire sizes are OK. Go to step 3.

   NO

Replace the tire with the standard size .

3. Brake drag check

   -1. Check for brake drag.

   Are the brakes OK?

   YES

   The brakes are OK. Go to step 4.

   NO

   Repair the front/rear hydraulic brake system or the parking brake system.

4. Rear differential fluid temperature sensor check

   -1. Check the parameter(s) below with the HDS.

Signal	Current conditions	
	Values	**Unit**
Oil temperature for rear differential	B	B

   -2. Measure the actual temperature of the rear differential fluid, then compare it with the HDS value checked in step 4

   Are the values almost the same?

   YES

   The rear differential fluid temperature sensor is OK. Go to step 5.

   NO

   Replace the rear differential fluid temperature sensor .

5. Rear differential fluid pressure sensor test

   -1. Do the rear differential fluid pressure sensor test .

   Is the test result OK?

   YES

   Intermittent failure, the system is OK at this time. If the freeze data/on-board snapshot of this DTC is recorded, try to reproduce the failure under the same conditions with the freeze data/on-board snapshot.

   NO

   Do the repair depending on the test result .

DTC C1861-9A

DTC C1861-9A : Vehicle Spin Detected

NOTE:

- Before you troubleshoot, review the General Troubleshooting Information.

- When a vehicle spin is detected, DTC C1861-9A is set for the purpose of protecting the real time AWD system. When this condition occurs, the system will temporarily stop the real time AWD function. This DTC may also set under these conditions.
-
    - -

      When spinning the rear wheels while stuck in sand, mud, snow, etc
    - -

      When the VSA system is OFF
- If other DTCs are stored at the same time as DTC C1860-98 and/or DTC C1861-9A, troubleshoot other DTCs first, then recheck for DTC C1860-98 and/or DTC C1861-9A.

DTC Description	DTC	Freeze Frame
C1861-9A Vehicle Spin Detected	B	B

DTC (Real Time AWD)

1. DTC check

   -1. Turn the vehicle to the ON mode.

   -2. Check for DTCs with the HDS.

DTC Description	DTC	Freeze Frame
B	B	B

   Is DTC C1860-98, C1861-9A, or other DTCs indicated?

   DTC C1860-98 or C1861-9A is indicated

   Go to step 2.

   Other DTC is indicated

   Go to the indicated DTC's troubleshooting.

2. Tire size check

   -1. Check the tire size of the four wheels.

   Are all tire sizes same?

   YES

   The tire sizes are OK. Go to step 3.

   NO

   Replace the tire with the standard size .

3. Brake drag check

   -1. Check for brakes drag.

   Are the brakes OK?

YES

Intermittent failure, the system is OK at this time. If the freeze data/on-board snapshot of this DTC is recorded, try to reproduce the failure under the same conditions with the freeze data/on-board snapshot.

NO

Repair the front/rear hydraulic brake system or the parking brake system .

DTC C1870-00, C1872-00

DTC C1870-00 : (The Functional Abnormalities of Fuel and Emissions)

DTC C1872-00 : (The Functional Abnormalities of VSA Modulator-Control Unit)

NOTE: Before you troubleshoot, **review the General Troubleshooting Information**.

DTC Description	DTC	Freeze Frame
C1870-00 (The Functional Abnormalities of Fuel and Emissions)	B	B
C1872-00 (The Functional Abnormalities of VSA Modulator-Control Unit)	B	B

DTC (Real Time AWD)

1. Problem verification (DTC check)

-1. Turn the vehicle to the ON mode.

-2. Clear the DTC with the HDS.

-3. Turn the vehicle to the OFF (LOCK) mode.

-4. **Enter the maintenance mode and start the engine** .

Check for DTCs with the HDS.

NOTE: These codes are stored whenever the following systems DTCs are detected.

- When DTC C1870-00 is indicated, check the PGM-FI system and CVT system DTC.
- When DTC C1872-00 is indicated, check the VSA system DTC.

DTC Description	DTC	Freeze Frame
C1870-00 (The Functional Abnormalities of Fuel and Emissions)	B	B
C1872-00 (The Functional Abnormalities of VSA Modulator-Control Unit)	B	B

Is DTC C1870-00 and/or C1872-00 indicated?

DTC C1870-00 is indicated

The failure is duplicated. Check the **PGM-FI system DTC** .

DTC C1872-00 is indicated

The failure is duplicated. **Check the VSA system DTC** .

DTC is not indicated

Intermittent failure, the system is OK at this time. If the freeze data/on-board snapshot of this DTC is recorded, try to reproduce the failure under the same conditions with the freeze data/on-board snapshot.

DTC C1873-00

DTC C1873-00 : Steering Angle Sensor Malfunction

NOTE: Before you troubleshoot, **review the General Troubleshooting Information**.

DTC Description	DTC	Freeze Frame
C1873-00 Steering Angle Sensor Malfunction	B	B

DTC (Real Time AWD)

1. Problem verification

   -1. Turn the vehicle to the ON mode.

   -2. Clear the DTC with the HDS.

   -3. Turn the vehicle to the OFF (LOCK) mode.

   -4. **Enter the maintenance mode and start the engine** .

   -5. Check for DTCs with the HDS.

DTC Description	DTC	Freeze Frame
C1873-00 Steering Angle Sensor Malfunction	B	B

   Is DTC C1873-00 indicated?

   YES

   The failure is duplicated. Go to step 2.

   NO

   Intermittent failure, the system is OK at this time.

2. VSA system DTC check

   -1. Check for DTCs in the VSA system with the HDS.

DTC Description	DTC
B	B

   Are any DTCs indicated?

   YES

   Go to the indicated DTC's troubleshooting .

   NO

   Intermittent failure, the system is OK at this time. If the freeze data/on-board snapshot of this DTC is recorded, try to reproduce the failure under the same conditions with the freeze data/on-board snapshot.

DTC U0100-00, U0101-00, U0122-00, U0131-00, U0151-00 (REAL TIME AWD CONTROL UNIT)

DTC U0100-00 : F-CAN Malfunction (Lost Communication with Powertrain Control Module (PCM))

DTC U0101-00 : F-CAN Malfunction (Lost Communication with A/T Control System)

DTC U0122-00 : F-CAN Malfunction (Lost Communication with VSA Modulator-Control Unit)

DTC U0131-00 : F-CAN Malfunction (Lost Communication with EPS System)

DTC U0151-00 : F-CAN Malfunction (Lost Communication with SRS unit)

NOTE:

- Before you troubleshoot, **review the general troubleshooting information**.
- According to the detected DTC(s), check for the power circuit and the ground circuit of the control unit which cannot communicate with the real time AWD control unit.
- Before disconnecting the SRS unit connector, **do the 12 volt battery terminal disconnection procedure** , and wait for at least 3 minutes.

DTC Description	DTC	Freeze Frame
U0100-00 F-CAN Malfunction (Lost Communication with Powertrain Control Module (PCM))	B	B
U0101-00 F-CAN Malfunction (Lost Communication with A/T Control System)	B	B
U0122-00 F-CAN Malfunction (Lost Communication with VSA Modulator-Control Unit)	B	B
U0131-00 F-CAN Malfunction (Lost Communication with EPS System)	B	B
U0151-00 F-CAN Malfunction (Lost Communication with SRS unit)	B	B

DTC (Real Time AWD)

1. CAN gateway system DTC check

   -1. Turn the vehicle to the ON mode.

   -2. Check for CAN gateway system DTCs with the HDS.

DTC Description	DTC
B	B

   Are any DTCs indicated?

   YES

   Go to the indicated DTC's troubleshooting .

   NO

   Go to step 2.

2. F-CAN circuit communication check (Receiving control unit)

   -1. Select the FUNCTION TEST in the CAN gateway with the HDS, then select the F-CAN Bus Connected Unit Check.

   F-CAN Bus Connected Unit Check

Which result is indicated?

Bus D is Not Available

Go to step 3.

Bus D is Available

Go to step 4.

3. Open wire check (F-CAN D_H line, F-CAN D_L line)

-1. Turn the vehicle to the OFF (LOCK) mode.

-2. Disconnect the following connectors.

CAN gateway 16P connector
AWD control unit 24P connector

-3. Measure the resistance between test points 1 and 2 individually.

F-CAN D_H wire

Test condition	Vehicle OFF (LOCK) mode
B	CAN gateway 16P connector: disconnected
B	AWD control unit 24P connector: disconnected
Test point 1	CAN gateway 16P connector (female terminals) No. 7: ①
Test point 2	AWD control unit 24P connector No. 14

F-CAN D_L wire

Test condition	Vehicle OFF (LOCK) mode
	CAN gateway 16P connector: disconnected
	AWD control unit 24P connector: disconnected
Test point 1	CAN gateway 16P connector (female terminals) No. 15: ①
Test point 2	AWD control unit 24P connector No. 24

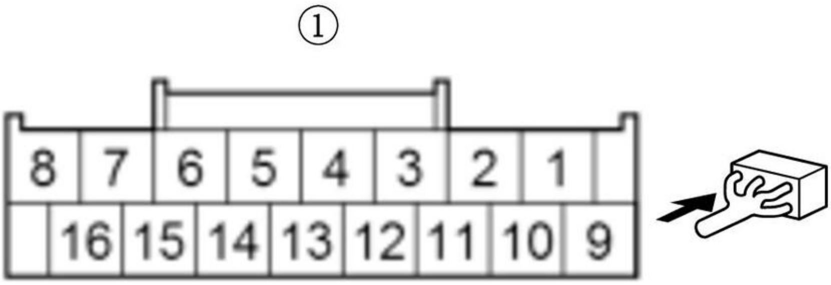

Is there 1.0 Ω or less?

YES

The F-CAN D_H wire and the F-CAN D_L wire are OK. Check for poor connections or loose terminals at the CAN gateway and the AWD control unit. Check for any authorized service information related to the DTCs or symptoms you are troubleshooting, or **substitute a known-good AWD control unit** , then recheck. If indicated DTC goes away and the AWD control unit was substituted, **replace the original AWD control unit** .

NO

Repair an open in the F-CAN D_H wire and/or the F-CAN D_L wire between the AWD control unit and the CAN gateway.

4. F-CAN circuit communication check (Transmitting control unit)

-1. Select the FUNCTION TEST in the CAN gateway with the HDS, then select the F-CAN Bus Connected Unit Check.

F-CAN Bus Connected Unit Check

According to the detected DTC on the following table, make sure that the transmitting control unit detects the CAN gateway Bus channel(s) normally.

DTC	Transmitting control unit	Detected CAN gateway Bus channel(s) at normal
U0100-00	PCM	A, B
U0101-00	PCM	A, B
U0122-00	VSA modulator-control unit	B, C
U0131-00	EPS control unit	C
U0151-00	SRS unit	C

Is it detected normally?

Detected normal

Intermittent failure, the system is OK at this time. Check for poor connections or loose terminals at the transmitting control unit and the CAN gateway.

U0100-00: PCM is Not Available for Bus A

Go to step 5.

U0100-00: PCM is Not Available for Bus B

Go to step 6.

U0101-00: PCM is Not Available for Bus A

Go to step 5.

U0101-00: PCM is Not Available for Bus B

Go to step 6.

U0122-00: VSA modulator-control unit is Not Available for Bus B

Go to step 6.

U0122-00: VSA modulator-control unit is Not Available for Bus C

Go to step 7.

U0131-00: EPS control unit is Not Available for Bus C

Go to step 7.

U0151-00: SRS unit is Not Available for Bus C

Go to step 7.

5. Open wire check (F-CAN A_H line, F-CAN A_L line)

-1. Turn the vehicle to the OFF (LOCK) mode.

-2. Jump the SCS line with the HDS, and wait more than 1 minute.

-3. According to the detected DTC on the following table, disconnect the transmitting control unit connector(s).

DTC	**Connector**
-	CAN gateway 16P connector
U0100-00	PCM connector A (50P)
U0101-00	PCM connector A (50P)

-4. Measure the resistance between test points 1 and 2.

Test condition	Vehicle OFF (LOCK) mode
B	CAN gateway 16P connector: disconnected
B	Transmitting control unit connector(s) for indicated DTCs: disconnected

DTC	**Circuit name**	**Test point 1 (Receiving control unit)**		**Test point 2 (Transmitting control unit)**	
		Connector	**Terminal**	**Connector**	**Terminal**
U0100-00	F-CAN A_H	CAN gateway 16P connector (female terminals): ①	No. 3	**PCM connector A (50P)**	No. 37
	F-CAN A_L		No. 11		No. 36
U0101-00	F-CAN A_H	CAN gateway 16P connector (female terminals): ①	No. 3	**PCM connector A (50P)**	No. 37
	F-CAN A_L		No. 11		No. 36

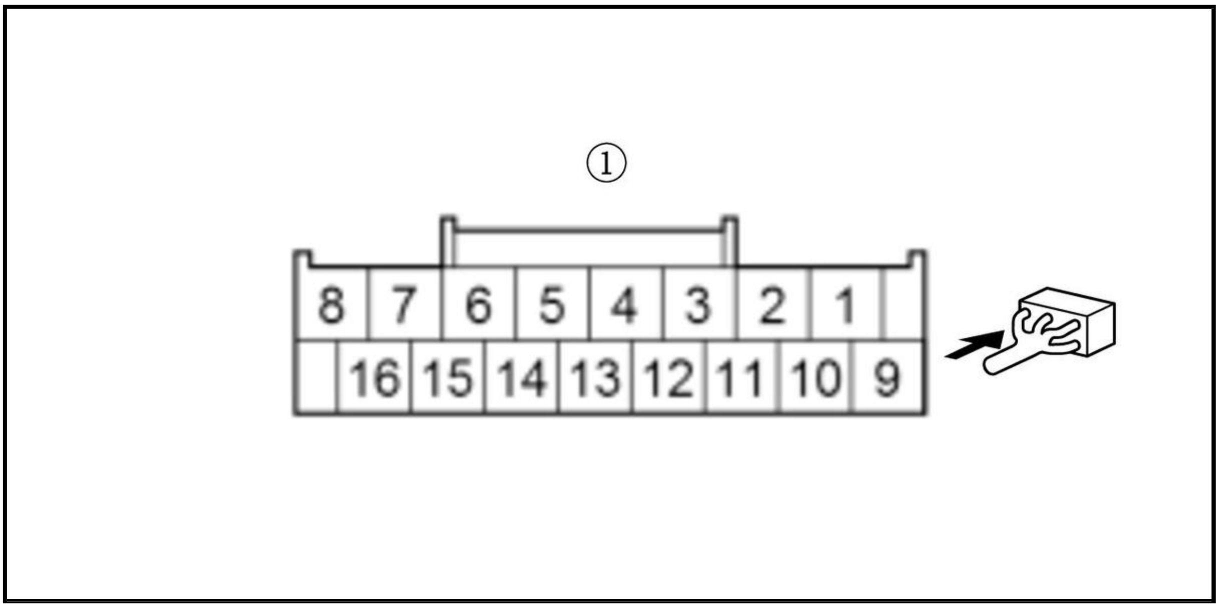

Is there 1.0 Ω or less?

YES

The F-CAN A_H wire and the F-CAN A_L wire are OK. According to the detected DTC on the following table, substitute or replace the correspond control unit.

DTC	Operation for transmitting control unit
U0100-00	Check for poor connections or loose terminals at the CAN gateway and the PCM. **Substitute a known-good PCM** , then recheck. If DTC U0100-00 goes away and the PCM was substituted, **replace the original PCM** .
U0101-00	Check for poor connections or loose terminals at the CAN gateway and the PCM. **Substitute a known-good PCM** , then recheck. If DTC U0101-00 goes away and the PCM was substituted, **replace the original PCM** .

NO

Repair an open in the F-CAN A_H wire and/or the F-CAN A_L wire between the transmitting control unit and the CAN gateway.

6. Open wire check (F-CAN B_H line, F-CAN B_L line)

-1. Turn the vehicle to the OFF (LOCK) mode.

-2. U0100-00 and/or U0101-00: Jump the SCS line with the HDS, and wait more than 1 minute.

-3. According to the detected DTC on the following table, disconnect the transmitting control unit connector(s).

DTC	Connector
-	CAN gateway 16P connector
U0100-00	PCM connector A (50P)
U0101-00	PCM connector A (50P)
U0122-00	VSA modulator-control unit 46P connector

-4. Measure the resistance between test points 1 and 2.

Test condition	Vehicle OFF (LOCK) mode
B	CAN gateway 16P connector: disconnected
B	Transmitting control unit connector(s) for indicated DTCs: disconnected

DTC	Circuit name	Test point 1 (Receiving control unit)		Test point 2 (Transmitting control unit)	
		Connector	Terminal	Connector	Terminal
U0100-00	F-CAN B_H	CAN gateway 16P connector (female terminals): ①	No. 6	**PCM connector A (50P)**	No. 39
	F-CAN B_L		No. 14		No. 38
U0101-00	F-CAN B_H	CAN gateway 16P connector (female terminals): ①	No. 6	**PCM connector A (50P)**	No. 39
	F-CAN B_L		No. 14		No. 38
U0122-00	F-CAN B_H	CAN gateway 16P connector (female terminals): ①	No. 6	**VSA modulator-control unit 46P connector**	No. 40
	F-CAN B_L		No. 14		No. 28

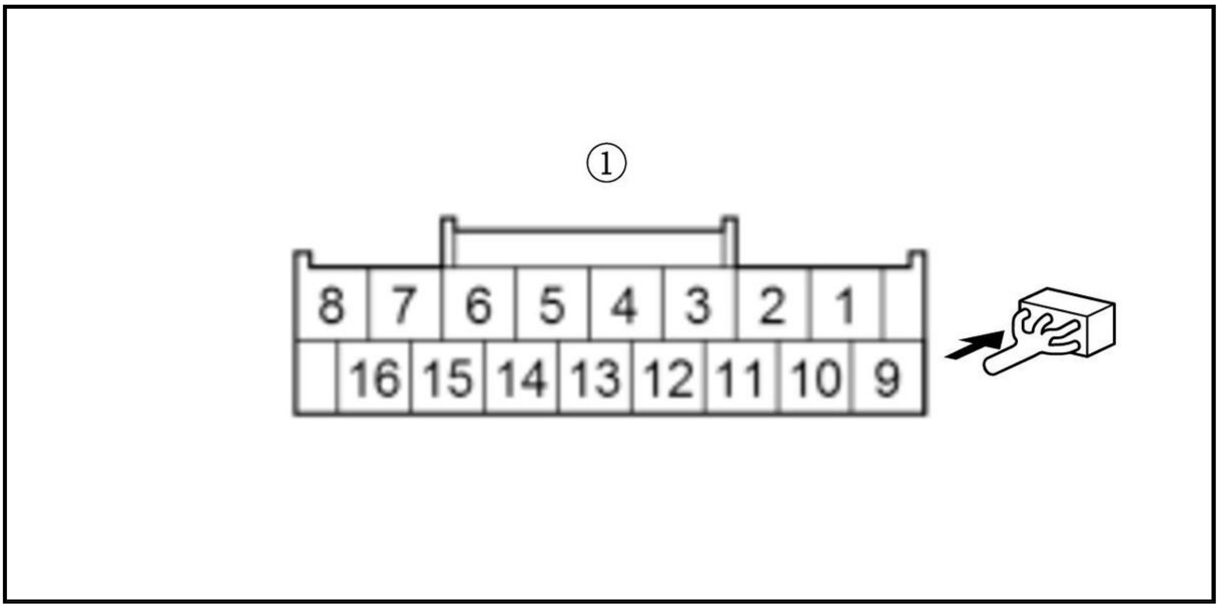

Is there 1.0 Ω or less?

YES

The F-CAN B_H wire and the F-CAN B_L wire are OK. According to the detected DTC on the following table, substitute or replace the correspond control unit.

DTC	Operation for transmitting control unit
U0100-00	Check for poor connections or loose terminals at the CAN gateway and the PCM. **Substitute a known-good PCM** , then recheck. If DTC U0100-00 goes away and the PCM was substituted, **replace the original PCM** .
U0101-00	Check for poor connections or loose terminals at the CAN gateway and the PCM. **Substitute a known-good PCM** , then recheck. If DTC U0101-00 goes away and the PCM was substituted, **replace the original PCM** .
U0122-00	Check for poor connections or loose terminals at the CAN gateway and the VSA modulator-control unit. **Replace the VSA modulator-control unit** .

NO

Repair an open in the F-CAN B_H wire and/or the F-CAN B_L wire between the transmitting control unit and the CAN gateway.

7. Open wire check (F-CAN C_H line, F-CAN C_L line)

-1. Turn the vehicle to the OFF (LOCK) mode.

-2. According to the detected DTC on the following table, disconnect the transmitting control unit connector(s).

NOTE: Before disconnecting the SRS unit connector, **do the 12 volt battery terminal disconnection procedure** , and wait for at least 3 minutes.

DTC	Connector
-	CAN gateway 16P connector
U0122-00	VSA modulator-control unit 46P connector
U0131-00	EPS control unit connector B (6P)
U0151-00	SRS unit connector A (39P)

-3. Measure the resistance between test points 1 and 2.

Test condition	Vehicle OFF (LOCK) mode
B	CAN gateway 16P connector: disconnected
B	Transmitting control unit connector(s) for indicated DTCs: disconnected

DTC	Circuit name	Test point 1 (Receiving control unit)		Test point 2 (Transmitting control unit)	
		Connector	Terminal	Connector	Terminal
U0122-00	F-CAN C_H	CAN gateway 16P connector (female terminals): ①	No. 5	**VSA modulator-control unit 46P connector**	No. 46
	F-CAN C_L		No. 13		No. 34
U0131-00	F-CAN C_H	CAN gateway 16P connector (female terminals): ①	No. 5	**EPS control unit connector B (6P)**	No. 1
	F-CAN C_L		No. 13		No. 3
U0151-00	F-CAN C_H	CAN gateway 16P connector (female terminals): ①	No. 5	**SRS unit connector A (39P)**	No. 34
	F-CAN C_L		No. 13		No. 35

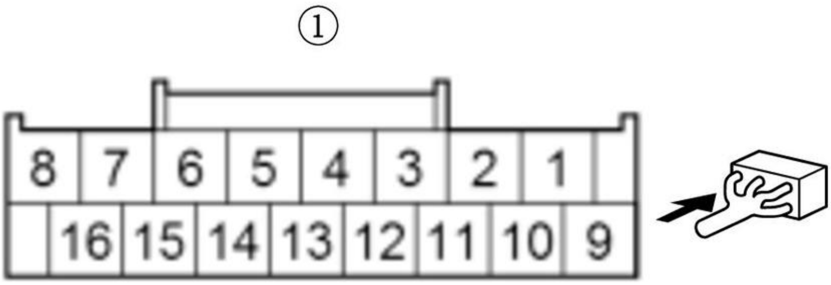

Is there 1.0 Ω or less?

YES

The F-CAN C_H wire and the F-CAN C_L wire are OK. According to the detected DTC on the following table, substitute or replace the correspond control unit.

DTC	Operation for transmitting control unit
U0122-00	Check for poor connections or loose terminals at the CAN gateway and the VSA modulator-control unit. **Replace the VSA modulator-control unit** .
U0131-00	Check for poor connections or loose terminals at the CAN gateway and the EPS control unit. **replace the EPS motor/control unit** .
U0151-00	Check for poor connections or loose terminals at the CAN gateway and the SRS unit. **Substitute the SRS unit** , then recheck. If DTC U0151-00 goes away and the SRS unit was substituted, **replace the original SRS unit** .

NO

Repair an open in the F-CAN C_H wire and/or the F-CAN C_L wire between the transmitting control unit and the CAN gateway.

DTC U3000-49 (REAL TIME AWD CONTROL UNIT)

DTC U3000-49 : Control Module Internal Control Module Malfunction

NOTE: Before you troubleshoot, **review the General Troubleshooting Information**.

DTC Description	DTC	Freeze Frame
U3000-49 Control Module Internal Control Module Malfunction	B	B

DTC (Real Time AWD)

1. Problem verification

-1. Turn the vehicle to the ON mode.

-2. Clear the DTC with the HDS.

-3. Turn the vehicle to the OFF (LOCK) mode.

-4. **Enter the maintenance mode and start the engine** .

-5. Check for DTCs with the HDS.

DTC Description	DTC	Freeze Frame
U3000-49 Control Module Internal Control Module Malfunction	B	B

Is DTC U3000-49 indicated?

YES

The failure is duplicated. Check for any authorized service information related to the DTCs or symptoms you are troubleshooting or **substitute a known-good AWD control unit** , and recheck. If the symptom/indication goes away with a known-good AWD control unit, **replace the original AWD control unit** .

NO

Intermittent failure, the system is OK at this time. If the freeze data/on-board snapshot of this DTC is recorded, try to reproduce the failure under the same conditions with the freeze data/on-board snapshot.

DTC U3000-51 (REAL TIME AWD CONTROL UNIT)

DTC U3000-51 : Control Module Programming Error

NOTE: Before you troubleshoot, **review the General Troubleshooting Information**.

DTC Description	DTC	Freeze Frame
U3000-51 Control Module Programming Error	B	B

DTC (Real Time AWD)

1. Problem verification

-1. Turn the vehicle to the ON mode.

-2. **Update the AWD control unit if it does not have the latest software** .

-3. Clear the DTC with the HDS.

-4. Turn the vehicle to the OFF (LOCK) mode.

-5. **Enter the maintenance mode and start the engine** .

-6. Check for DTCs with the HDS.

DTC Description	DTC	Freeze Frame
U3000-51 Control Module Programming Error	B	B

Is DTC U3000-51 indicated?

YES

The failure is duplicated. **Substitute a known-good AWD control unit** , and recheck. If the symptom/indication goes away with a known-good AWD control unit, **replace the original AWD control unit** .

NO

Intermittent failure, the system is OK at this time. If the freeze data/on-board snapshot of this DTC is recorded, try to reproduce the failure under the same conditions with the freeze data/on-board snapshot.

Real Time Awd Control Unit - Diagnostics (Except Hybrid) - CR-V

DTC TROUBLESHOOTING

DTC C0051-00 (77-06) (AWD)

DTC C0051-00 : The Functional Abnormalities of Steering Angle Sensor

NOTE: Before you troubleshoot, review the General Troubleshooting Information.

DTC Description	DTC	Freeze Frame
C0051-00 The Functional Abnormalities of Steering Angle Sensor	B	B

DTC (Real Time AWD)

1. Problem verification

   -1. Turn the vehicle to the ON mode.

   -2. Clear the DTC with the HDS.

   -3. Turn the vehicle to the OFF (LOCK) mode.

   -4. Start the engine.

   -5. Check for DTCs with the HDS.

DTC Description	DTC	Freeze Frame
C0051-00 The Functional Abnormalities of Steering Angle Sensor	B	B

   Is DTC C0051-00 indicated?

   YES

   Go to step 2.

   NO

   Intermittent failure, the system is OK at this time.

2. DTC check (VSA system)

   -1. Check for DTCs with the HDS.

DTC Description	DTC	Freeze Frame
C0051-62 Steering Angle Sensor Failure (Signal Compare Failure)	B	B

DTC Description	DTC	Freeze Frame
C0051-96 Steering Angle Sensor Failure (Sensor Detects Internal Failure)	B	B

   Is DTC C0051-62 or C0051-96 indicated?

YES

Go to the **DTC C0051-62 troubleshooting** or **DTC C0051-96 Troubleshooting** .

NO

Check for any authorized service information related to the DTCs or symptoms you are troubleshooting or **substitute a known-good AWD control unit** , and recheck. If the symptom/indication goes away with a known-good AWD control unit, **replace the original AWD control unit** .

DTC C0061-96 (77-09) (AWD)

DTC C0061-96 : The Functional Abnormalities of Lateral Acceleration Sensor

NOTE: Before you troubleshoot, **review the General Troubleshooting Information**.

DTC Description	DTC	Freeze Frame
C0061-96 The Functional Abnormalities of Lateral Acceleration Sensor	B	B

DTC (Real Time AWD)

1. Problem verification

   -1. Turn the vehicle to the ON mode.

   -2. Clear the DTC with the HDS.

   -3. Turn the vehicle to the OFF (LOCK) mode.

   -4. Start the engine.

   -5. Check for DTCs with the HDS.

DTC Description	DTC	Freeze Frame
C0061-96 The Functional Abnormalities of Lateral Acceleration Sensor	B	B

   Is DTC C0061-96 indicated?

   YES

   Go to step 2.

   NO

   Intermittent failure, the system is OK at this time.

2. DTC check (VSA system)

   -1. Check for DTCs with the HDS.

DTC Description	DTC	Freeze Frame
C0061-49 Acceleration Sensor Failure (Internal Circuit Failure)	B	B

DTC Description	DTC	Freeze Frame
C0061-62 Lateral Acceleration Sensor Failure (Signal Compare Failure)	B	B

Is DTC C0061-49 or C0061-62 indicated?

YES

Go to the DTC C0061-49 troubleshooting or DTC C0061-62 Troubleshooting .

NO

Check for any authorized service information related to the DTCs or symptoms you are troubleshooting or substitute a known-good AWD control unit , and recheck. If the symptom/indication goes away with a known-good AWD control unit, replace the original AWD control unit .

DTC C0061-F0 (77-12), C0062-F0 (77-13), C0063-F0 (77-14) (AWD)

DTC C0061-F0 : Lateral Acceleration Sensor Range/Performance Problem **DTC C0062-F0** : Longitudinal Acceleration Sensor Range/Performance Problem **DTC C0063-F0** : Yaw Rate Sensor Range/Performance Problem

NOTE: Before you troubleshoot, review the General Troubleshooting Information.

DTC Description	DTC	Freeze Frame
C0061-F0 Lateral Acceleration Sensor Range/Performance Problem	B	B
C0062-F0 Longitudinal Acceleration Sensor Range/Performance Problem	B	B
C0063-F0 Yaw Rate Sensor Range/Performance Problem	B	B

DTC (Real Time AWD)

1. Problem verification

-1. Turn the vehicle to the ON mode.

-2. Clear the DTC with the HDS.

-3. Turn the vehicle to the OFF (LOCK) mode.

-4. Start the engine.

-5. Check for DTCs with the HDS.

DTC Description	DTC	Freeze Frame
C0061-F0 Lateral Acceleration Sensor Range/Performance Problem	B	B
C0062-F0 Longitudinal Acceleration Sensor Range/Performance Problem	B	B
C0063-F0 Yaw Rate Sensor Range/Performance Problem	B	B

Is DTC C0061-F0, C0062-F0, or C0063-F0 indicated?

YES

Go to step 2.

NO

Intermittent failure, the system is OK at this time.

2. VSA system DTC check

-1. Check for DTCs in the VSA system with the HDS.

DTC Description	DTC	Freeze Frame
B	B	B

Are any DTCs indicated?

YES

Go to the indicated DTC's troubleshooting in the VSA system .

NO

Check for any authorized service information related to the DTCs or symptoms you are troubleshooting or **substitute a known-good AWD control unit** , and recheck. If the symptom/indication goes away with a known-good AWD control unit, **replace the original AWD control unit** .

DTC C0062-96 (77-10) (AWD)

DTC C0062-96 : The Functional Abnormalities of Longitudinal Acceleration Sensor

NOTE: Before you troubleshoot, **review the General Troubleshooting Information**.

DTC Description	DTC	Freeze Frame
C0062-96 The Functional Abnormalities of Longitudinal Acceleration Sensor	B	B

DTC (Real Time AWD)

1. Problem verification

-1. Turn the vehicle to the ON mode.

-2. Clear the DTC with the HDS.

-3. Turn the vehicle to the OFF (LOCK) mode.

-4. Start the engine.

-5. Check for DTCs with the HDS.

DTC Description	DTC	Freeze Frame
C0062-96 The Functional Abnormalities of Longitudinal Acceleration Sensor	B	B

Is DTC C0062-96 indicated?

YES

Go to step 2.

NO

Intermittent failure, the system is OK at this time.

2. DTC check (VSA system)

-1. Check for DTCs with the HDS.

DTC Description	DTC	Freeze Frame
C0062-62 Longitudinal Acceleration Sensor Failure (Signal Compare Failure)	B	B

Is DTC C0062-62 indicated?

YES

Go to the DTC C0062-62 troubleshooting .

NO

Check for any authorized service information related to the DTCs or symptoms you are troubleshooting or **substitute a known-good AWD control unit** , and recheck. If the symptom/indication goes away with a known-good AWD control unit, **replace the original AWD control unit** .

DTC C0063-96 (77-11) (AWD)

DTC C0063-96 : The Functional Abnormalities of Yaw Rate Sensor

NOTE: Before you troubleshoot, **review the General Troubleshooting Information**.

DTC Description	DTC	Freeze Frame
C0063-96 The Functional Abnormalities of Yaw Rate Sensor	B	B

DTC (Real Time AWD)

1. Problem verification

-1. Turn the vehicle to the ON mode.

-2. Clear the DTC with the HDS.

-3. Turn the vehicle to the OFF (LOCK) mode.

-4. Start the engine.

-5. Check for DTCs with the HDS.

DTC Description	DTC	Freeze Frame
C0063-96 The Functional Abnormalities of Yaw Rate Sensor	B	B

Is DTC C0063-96 indicated?

YES

Go to step 2.

NO

Intermittent failure, the system is OK at this time.

2. DTC check (VSA system)

-1. Check for DTCs with the HDS.

DTC Description	DTC	Freeze Frame
C0063-49 Yaw Rate Sensor Failure (Internal Circuit Failure)	B	B

DTC Description	DTC	Freeze Frame
C0063-62 Yaw Rate Sensor Failure (Signal Compare Failure)	B	B

Is DTC C0063-49 or C0063-62 indicated?

YES

Go to the **DTC C0063-49 troubleshooting** or **DTC C0063-62 Troubleshooting** .

NO

Check for any authorized service information related to the DTCs or symptoms you are troubleshooting or **substitute a known-good AWD control unit** , and recheck. If the symptom/indication goes away with a known-good AWD control unit, **replace the original AWD control unit** .

DTC C1840-12 (47-01) (AWD)

DTC C1840-12 : Differential Fluid Pressure Sensor Circuit High Voltage

NOTE: Before you troubleshoot, **review the General Troubleshooting Information**.

DTC Description	DTC	Freeze Frame
C1840-12 Differential Fluid Pressure Sensor Circuit High Voltage	B	B

DTC (Real Time AWD)

1. Determine possible failure area (electrical circuit problem, hydraulic circuit problem)

   -1. Start the engine.

   -2. Check the parameter (s) below with the HDS.

Signal	Threshold		Current conditions	
	Values	Unit	Values	Unit
Voltage of the oil pressure sensor for rear differential	More than 4.14	V	B	B

   Do the current condition (s) match the threshold?

   YES

   Go to step 3.

   NO

   Go to step 2.

2. Problem verification

   -1. Clear the DTC with the HDS.

   -2. Turn the vehicle to the OFF (LOCK) mode.

   -3. Turn the vehicle to the ON mode.

-4. Select the FUNCTIONAL TEST in the REAL TIME AWD with the HDS.

-5. **Do the OIL PRESSURE CONTROL TEST in the FUNCTIONAL TEST with the HDS** .

Oil Pressure Control Test

Is the test result OK?

YES

Intermittent failure, the system is OK at this time. If the freeze data/on-board snapshot of this DTC is recorded, try to reproduce the failure under the same conditions with the freeze data/on-board snapshot.

NO

The failure is duplicated. **Follow the instructions indicated on the HDS according to the test result** .

3. Determine possible failure area (short to power in PS1 line, others)

-1. Turn the vehicle to the OFF (LOCK) mode.

-2. Disconnect the following connector.

Rear differential fluid pressure sensor 3P connector

-3. Turn the vehicle to the ON mode.

-4. Measure the voltage between test points 1 and 2.

Test condition	Vehicle ON mode
B	Rear differential fluid pressure sensor 3P connector: disconnected
Test point 1	Rear differential fluid pressure sensor 3P connector (female terminals) No. 1: ①
Test point 2	Rear differential fluid pressure sensor 3P connector (female terminals) No. 2: ①

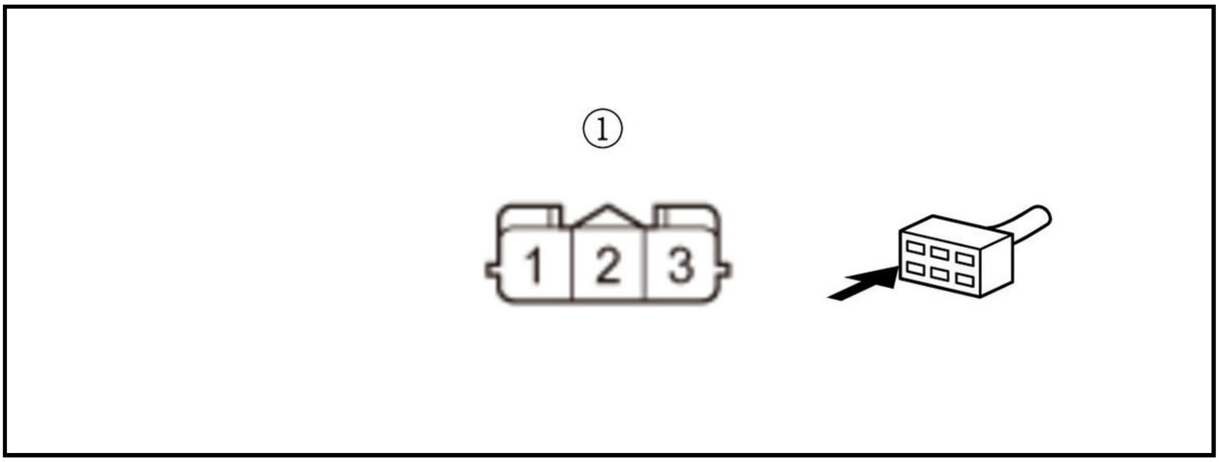

Is there about 4.14 V or more?

YES

Go to step 4.

NO

Go to step 7.

4. Shorted wire check (PS1 line to power)

-1. Turn the vehicle to the OFF (LOCK) mode.

-2. Disconnect the following connector.

AWD control unit 24P connector

-3. Turn the vehicle to the ON mode.

-4. Measure the voltage between test points 1 and 2.

Test condition	Vehicle ON mode
B	Rear differential fluid pressure sensor 3P connector: disconnected
B	AWD control unit 24P connector: disconnected
Test point 1	Rear differential fluid pressure sensor 3P connector (female terminals) No. 2: ①
Test point 2	Body ground

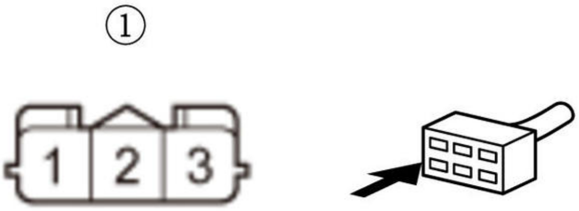

Is there about 0.5 V or more?

YES

Repair a short to power in the PS1 wire between the rear differential fluid pressure sensor and the AWD control unit.

NO

Go to the 5.

5. Shorted wire check (PS1 line to SVCC line)

-1. Turn the vehicle to the OFF (LOCK) mode.

-2. Check for continuity between test points 1 and 2.

Test condition	Vehicle OFF (LOCK) mode
B	Rear differential fluid pressure sensor 3P connector: disconnected
B	AWD control unit 24P connector: disconnected

Test point 1	Rear differential fluid pressure sensor 3P connector (female terminals) No. 2: ①

Test point 2	Rear differential fluid pressure sensor 3P connector (female terminals) No. 3: ①

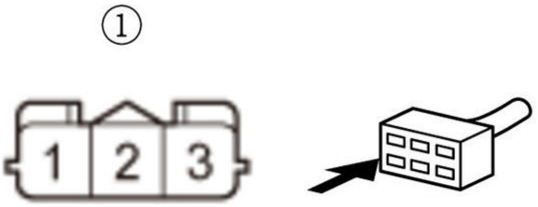

Is there continuity?

YES

Repair a short in the PS1 wire to the SVCC wire between the rear differential fluid pressure sensor and the AWD control unit.

NO

Go to step 6.

6. Rear differential fluid pressure sensor check

-1. Connect the following connector.

AWD control unit 24P connector

-2. Connect terminals A and B with a jumper wire.

Terminal A	Rear differential fluid pressure sensor 3P connector (female terminals) No. 1: ①
Terminal B	Rear differential fluid pressure sensor 3P connector (female terminals) No. 2: ①

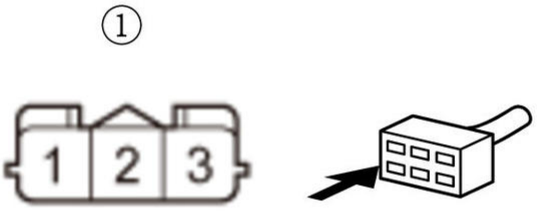

-3. Turn the vehicle to the ON mode.

-4. Check the parameter (s) below with the HDS.

Signal	Threshold		Current conditions	
	Values	Unit	Values	Unit
Voltage of the oil pressure sensor for rear differential	Less than 0.1	V	B	B

Do the current condition (s) match the threshold?

YES

Replace the rear differential fluid pressure sensor .

NO

Check for any authorized service information related to the DTCs or symptoms you are troubleshooting or **substitute a known-good AWD control unit** , and recheck. If the symptom/indication goes away with a known-good AWD control unit, **replace the original AWD control unit** .

7. Determine possible failure area (open in PS1 line, others)

-1. Turn the vehicle to the OFF (LOCK) mode.

-2. Connect terminals A and B with a jumper wire.

Terminal A	Rear differential fluid pressure sensor 3P connector (female terminals) No. 2: ①
Terminal B	Body ground

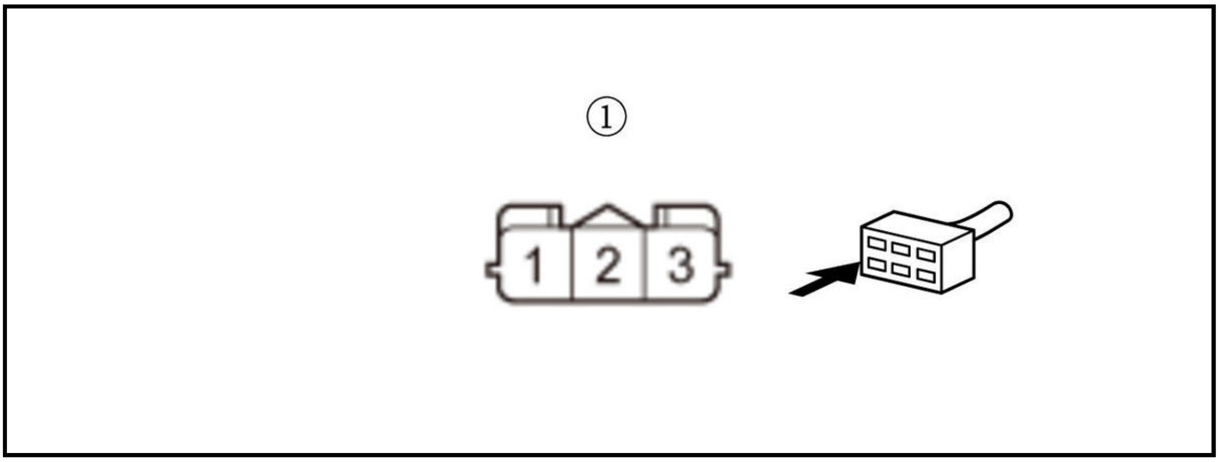

-3. Turn the vehicle to the ON mode.

-4. Check the parameter (s) below with the HDS.

Signal	Threshold		Current conditions	
	Values	Unit	Values	Unit
Voltage of the oil pressure sensor for rear differential	Less than 0.1	V	B	B

Do the current condition (s) match the threshold?

YES

Go to step 9.

NO

Go to step 8.

8. Open wire check (PS1 line)

-1. Turn the vehicle to the OFF (LOCK) mode.

-2. Remove the jumper wire.

-3. Disconnect the following connector.

AWD control unit 24P connector

-4. Check for continuity between test points 1 and 2.

Test condition	Vehicle OFF (LOCK) mode
B	Rear differential fluid pressure sensor 3P connector: disconnected
B	AWD control unit 24P connector: disconnected
Test point 1	Rear differential fluid pressure sensor 3P connector (female terminals) No. 2: ①
Test point 2	**AWD control unit 24P connector No. 21**

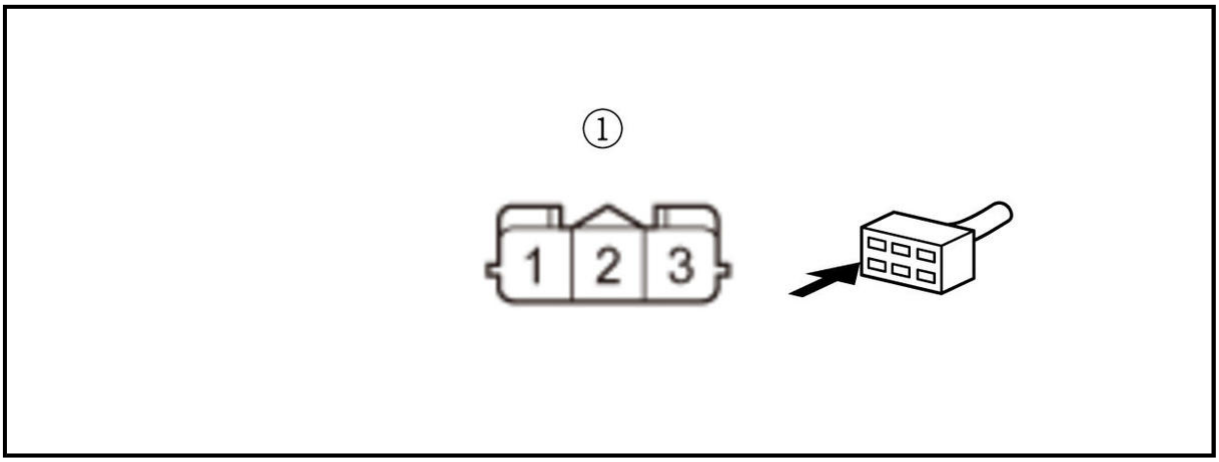

Is there continuity?

YES

Check for any authorized service information related to the DTCs or symptoms you are troubleshooting or **substitute a known-good AWD control unit** , and recheck. If the symptom/indication goes away with a known-good AWD control unit, **replace the original AWD control unit** .

NO

Repair an open in the PS1 wire between the rear differential fluid pressure sensor and the AWD control unit.

9. Open wire check (SG line)

-1. Turn the vehicle to the OFF (LOCK) mode.

-2. Remove the jumper wire.

-3. Disconnect the following connector.

AWD control unit 24P connector

-4. Check for continuity between test points 1 and 2.

Test condition	Vehicle OFF (LOCK) mode
B	Rear differential fluid pressure sensor 3P connector: disconnected
B	AWD control unit 24P connector: disconnected
Test point 1	Rear differential fluid pressure sensor 3P connector (female terminals) No. 1: ①
Test point 2	**Real time AWD control unit 24P connector No. 11**

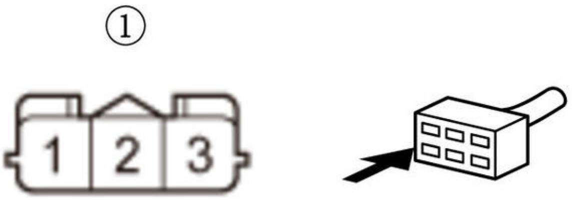

Is there continuity?

YES

Check for any authorized service information related to the DTCs or symptoms you are troubleshooting or **substitute a known-good AWD control unit** , and recheck. If the symptom/indication goes away with a known-good AWD control unit, **replace the original AWD control unit** .

NO

Repair an open in the SG wire between the rear differential fluid pressure sensor and the AWD control unit.

DTC C1840-14 (47-02) (AWD)

DTC C1840-14 : Differential Fluid Pressure Sensor Circuit Low Voltage

NOTE: Before you troubleshoot, **review the General Troubleshooting Information**.

DTC Description	DTC	Freeze Frame
C1840-14 Differential Fluid Pressure Sensor Circuit Low Voltage	B	B

DTC (Real Time AWD)

1. Problem verification

-1. Start the engine.

-2. Check the parameter (s) below with the HDS.

Signal	Threshold		Current conditions	
	Values	Unit	Values	Unit
Voltage of the oil pressure sensor for rear differential	Less than 0.34	V	B	B

Do the current condition (s) match the threshold?

YES

The failure is duplicated. Go to step 2.

NO

Intermittent failure, the system is OK at this time. If the freeze data/on-board snapshot of this DTC is recorded, try to reproduce the failure under the same conditions with the freeze data/on-board snapshot.

2. Determine possible failure area (PS1 line, others)

-1. Turn the vehicle to the OFF (LOCK) mode.

-2. Disconnect the following connector.

Rear differential fluid pressure sensor 3P connector

-3. Turn the vehicle to the ON mode.

-4. Check the parameter (s) below with the HDS.

Signal	Threshold		Current conditions	
	Values	Unit	Values	Unit
Voltage of the oil pressure sensor for rear differential	About 5	V	B	B

Do the current condition (s) match the threshold?

YES

Go to step 4.

NO

Go to step 3.

3. Shorted wire check (PS1 line)

-1. Turn the vehicle to the OFF (LOCK) mode.

-2. Disconnect the following connector.

AWD control unit 24P connector

-3. Check for continuity between test points 1 and 2.

Test condition	Vehicle OFF (LOCK) mode
B	Rear differential fluid pressure sensor 3P connector: disconnected
B	AWD control unit 24P connector: disconnected
Test point 1	Rear differential fluid pressure sensor 3P connector (female terminals) No. 2: ①
Test point 2	Body ground

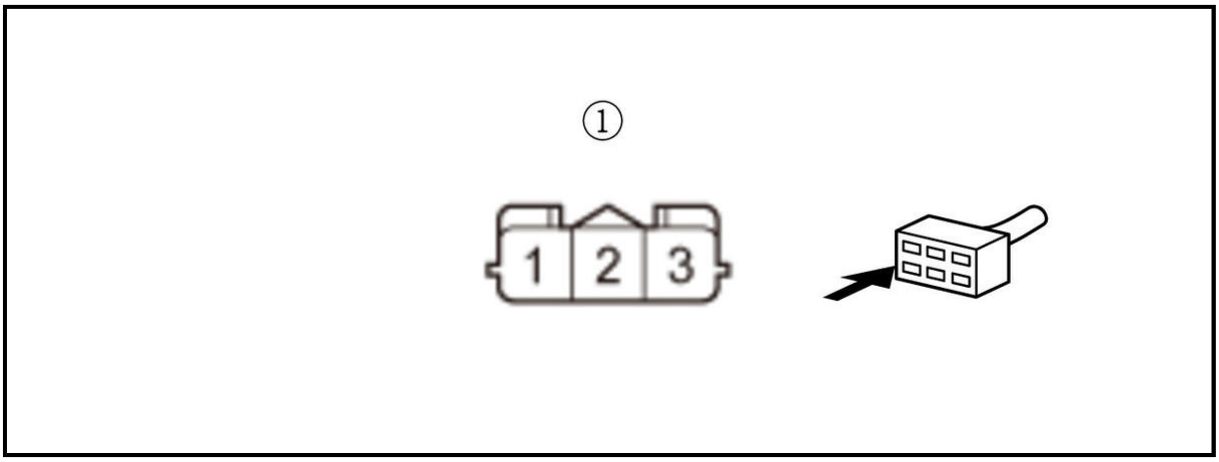

Is there continuity?

YES

Repair a short to ground or the SG wire in the PS1 wire between the rear differential fluid pressure sensor and the AWD control unit.

NO

Check for any authorized service information related to the DTCs or symptoms you are troubleshooting or **substitute a known-good AWD control unit** , and recheck. If the symptom/indication goes away with a known-good AWD control unit, **replace the original AWD control unit** .

4. Determine possible failure area (Rear differential fluid pressure sensor, SVCC line)

-1. Measure the voltage between test points 1 and 2.

Test condition	Vehicle ON mode
B	Rear differential fluid pressure sensor 3P connector: disconnected
Test point 1	Rear differential fluid pressure sensor 3P connector (female terminals) No. 1: ①
Test point 2	Rear differential fluid pressure sensor 3P connector (female terminals) No. 3: ①

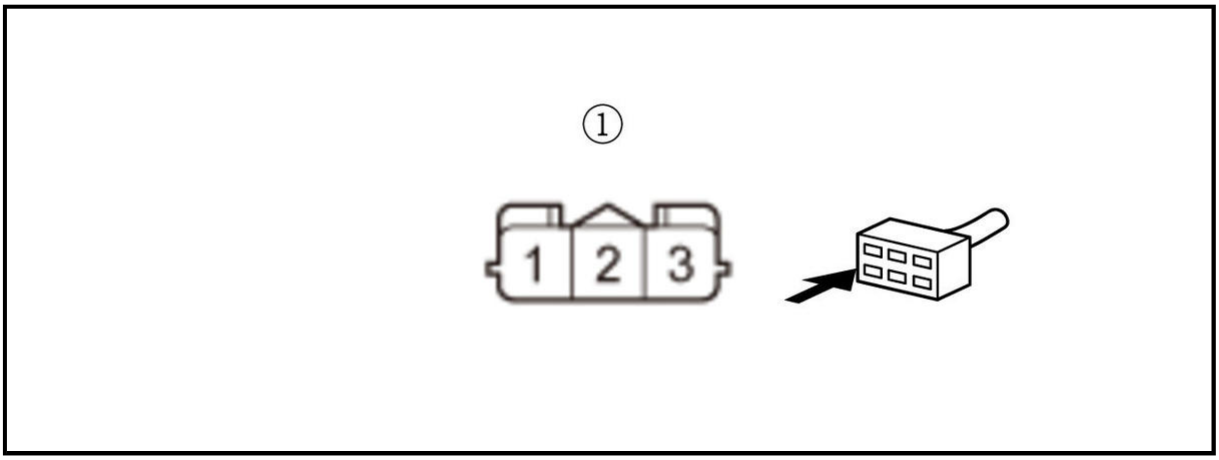

Is there about 5 V?

YES

Replace the rear differential fluid pressure sensor .

NO

Go to step 5.

5. Open wire check (SVCC line)

-1. Turn the vehicle to the OFF (LOCK) mode.

-2. Disconnect the following connector.

AWD control unit 24P connector

-3. Check for continuity between test points 1 and 2.

Test condition	Vehicle OFF (LOCK) mode
B	Rear differential fluid pressure sensor 3P connector: disconnected
B	AWD control unit 24P connector: disconnected
Test point 1	Rear differential fluid pressure sensor 3P connector (female terminals) No. 3: ①
Test point 2	**AWD control unit 24P connector No. 20**

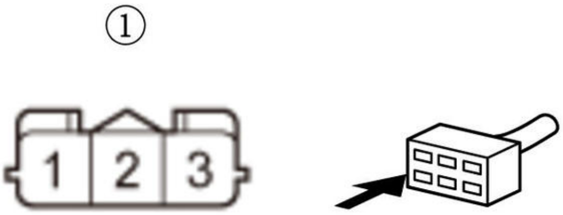

Is there continuity?

YES

Check for any authorized service information related to the DTCs or symptoms you are troubleshooting or **substitute a known-good AWD control unit** , and recheck. If the symptom/indication goes away with a known-good AWD control unit, **replace the original AWD control unit** .

NO

Repair an open in the SVCC wire between the rear differential fluid pressure sensor and the AWD control unit.

DTC C1841-11 (42-02) (AWD)

DTC C1841-11 : Differential Fluid Temperature Sensor Circuit Low Voltage

NOTE: Before you troubleshoot, **review the General Troubleshooting Information**.

DTC Description	DTC	Freeze Frame
C1841-11 Differential Fluid Temperature Sensor Circuit Low Voltage	B	B

DTC (Real Time AWD)

1. Problem verification

-1. Turn the vehicle to the ON mode.

-2. Check the parameter (s) below with the HDS.

Signal	Threshold		Current conditions	
	Values	Unit	Values	Unit
Voltage of the oil temperature sensor for rear differential	Less than 0.08	V	B	B

Do the current condition (s) match the threshold?

YES

The failure is duplicated. Go to step 2.

NO

Intermittent failure, the system is OK at this time. If the freeze data/on-board snapshot of this DTC is recorded, try to reproduce the failure under the same conditions with the Freeze data/on-board snapshot.

2. Rear differential fluid temperature sensor check

-1. Turn the vehicle to the OFF (LOCK) mode.

-2. Disconnect the following connector.

Rear differential fluid temperature sensor 2P connector

-3. Turn the vehicle to the ON mode.

-4. Check the parameter (s) below with the HDS.

Signal	Threshold		Current conditions	
	Values	Unit	Values	Unit
Voltage of the oil temperature sensor for rear differential	About 5	V	B	B

Do the current condition (s) match the threshold?

YES

Replace the rear differential fluid temperature sensor .

NO

The rear differential fluid temperature sensor is OK. Go to step 3.

3. Shorted wire check (TOH line)

-1. Turn the vehicle to the OFF (LOCK) mode.

-2. Disconnect the following connector.

AWD control unit 24P connector

-3. Check for continuity between test points 1 and 2.

Test condition	Vehicle OFF (LOCK) mode
B	Rear differential fluid temperature sensor 2P connector: disconnected

B	AWD control unit 24P connector: disconnected
Test point 1	Rear differential fluid temperature sensor 2P connector (female terminals) No. 1: ①
Test point 2	Body ground

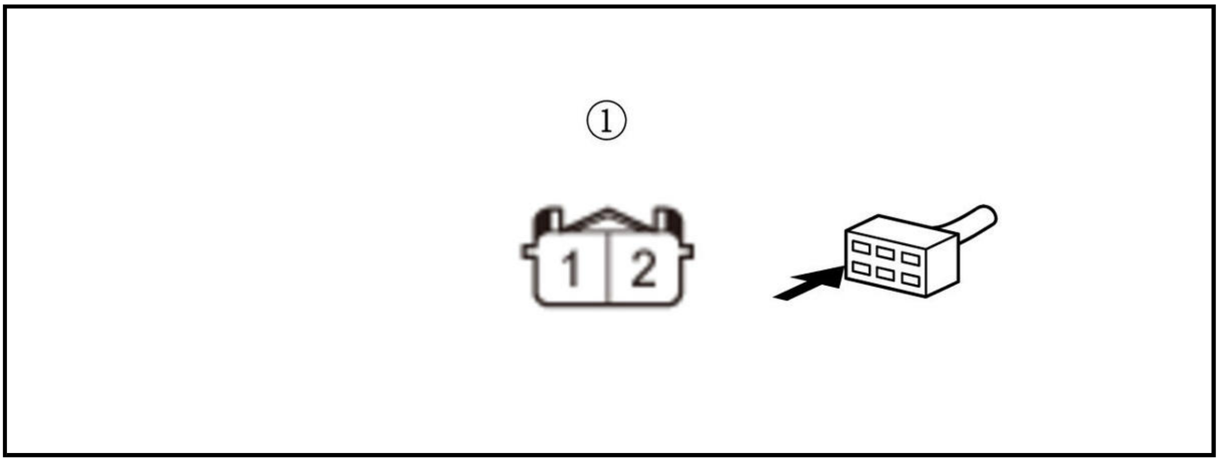

Is there continuity?

YES

Repair a short to ground or the TOL wire in the TOH wire between the rear differential fluid temperature sensor and the AWD control unit.

NO

Check for any authorized service information related to the DTCs or symptoms you are troubleshooting or **substitute a known-good AWD control unit** , and recheck. If the symptom/indication goes away with a known-good AWD control unit, **replace the original AWD control unit** .

DTC C1841-13 (42-01) (AWD)

DTC C1841-13 : Differential Fluid Temperature Sensor Circuit High Voltage

NOTE: Before you troubleshoot, **review the General Troubleshooting Information**.

DTC Description	DTC	Freeze Frame
C1841-13 Differential Fluid Temperature Sensor Circuit High Voltage	B	B

DTC (Real Time AWD)

1. Problem verification

-1. Turn the vehicle to the ON mode.

-2. Check the parameter (s) below with the HDS.

Signal	Threshold		Current conditions	
	Values	Unit	Values	Unit
Voltage of the oil temperature sensor for rear differential	More than 4.9	V	B	B

Do the current condition (s) match the threshold?

YES

The failure is duplicated. Go to step 2.

NO

Intermittent failure, the system is OK at this time. If the freeze data/on-board snapshot of this DTC is recorded, try to reproduce the failure under the same conditions with the freeze data/on-board snapshot.

2. Determine possible failure area (short to power in TOH line, others)

-1. Turn the vehicle to the OFF (LOCK) mode.

-2. Disconnect the following connector.

Rear differential fluid temperature sensor 2P connector

-3. Turn the vehicle to the ON mode.

-4. Measure the voltage between test points 1 and 2.

Test condition	Vehicle ON mode
B	Rear differential fluid temperature sensor 2P connector: disconnected
Test point 1	Rear differential fluid temperature sensor 2P connector (female terminals) No. 1: ①
Test point 2	Body ground

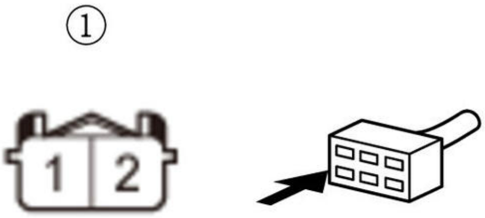

Is there about 4.9 V or more?

YES

Go to step 6.

NO

Go to step 3.

3. Determine possible failure area (open in TOH line, others)

-1. Turn the vehicle to the OFF (LOCK) mode.

-2. Connect terminals A and B with a jumper wire.

Terminal A	Rear differential fluid temperature sensor 2P connector (female terminals) No. 1: ①
Terminal B	Body ground

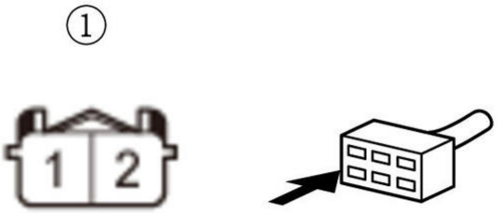

-3. Turn the vehicle to the ON mode.

-4. Check the parameter (s) below with the HDS.

Signal	**Threshold**		**Current conditions**	
	Values	**Unit**	**Values**	**Unit**
Voltage of the oil temperature sensor for rear differential	Less than 0.1	V	B	B

Do the current condition (s) match the threshold?

YES

Go to step 5.

NO

Go to step 4.

4. Open wire check (TOH line)

-1. Turn the vehicle to the OFF (LOCK) mode.

-2. Remove the jumper wire.

-3. Disconnect the following connector.

AWD control unit 24P connector

-4. Check for continuity between test points 1 and 2.

Test condition	Vehicle OFF mode
B	Rear differential fluid temperature sensor 2P connector: disconnected
B	AWD control unit 24P connector: disconnected
Test point 1	**AWD control unit 24P connector No. 18**
Test point 2	Rear differential fluid temperature sensor 2P connector (female terminals) No. 1: ①

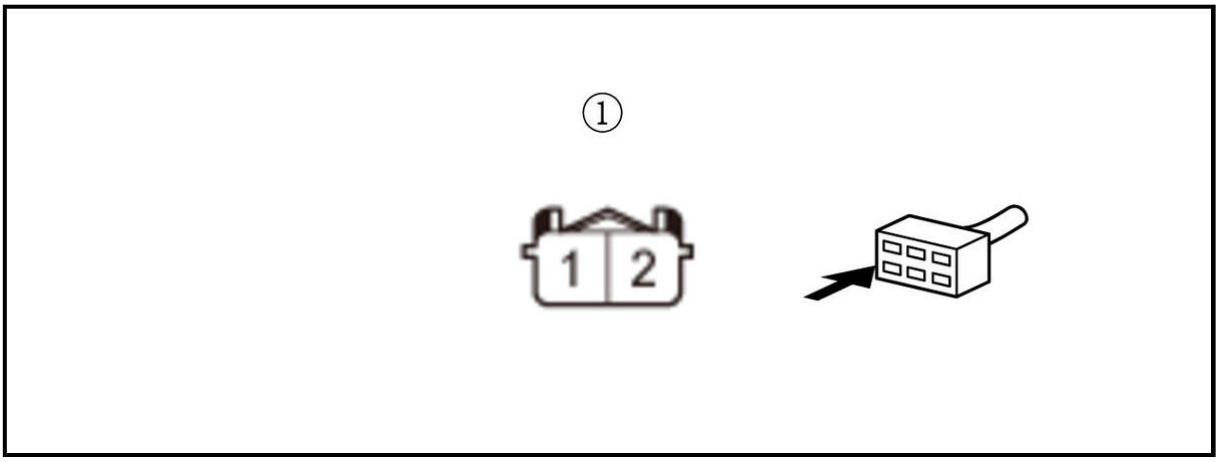

Is there continuity?

YES

Check for any authorized service information related to the DTCs or symptoms you are troubleshooting or **substitute a known-good AWD control unit** , and recheck. If the symptom/indication goes away with a known-good AWD control unit, **replace the original AWD control unit** .

NO

Repair an open in the TOH wire between the rear differential fluid temperature sensor and the AWD control unit.

5. Open wire check (TOL line)

-1. Turn the vehicle to the OFF (LOCK) mode.

-2. Remove the jumper wire.

-3. Disconnect the following connector.

AWD control unit 24P connector

-4. Check for continuity between test points 1 and 2.

Test condition	Vehicle OFF (LOCK) mode
B	Rear differential fluid temperature sensor 2P connector: disconnected
B	AWD control unit 24P connector: disconnected
Test point 1	**AWD control unit 24P connector No. 22**
Test point 2	Rear differential fluid temperature sensor 2P connector (female terminals) No. 2: ①

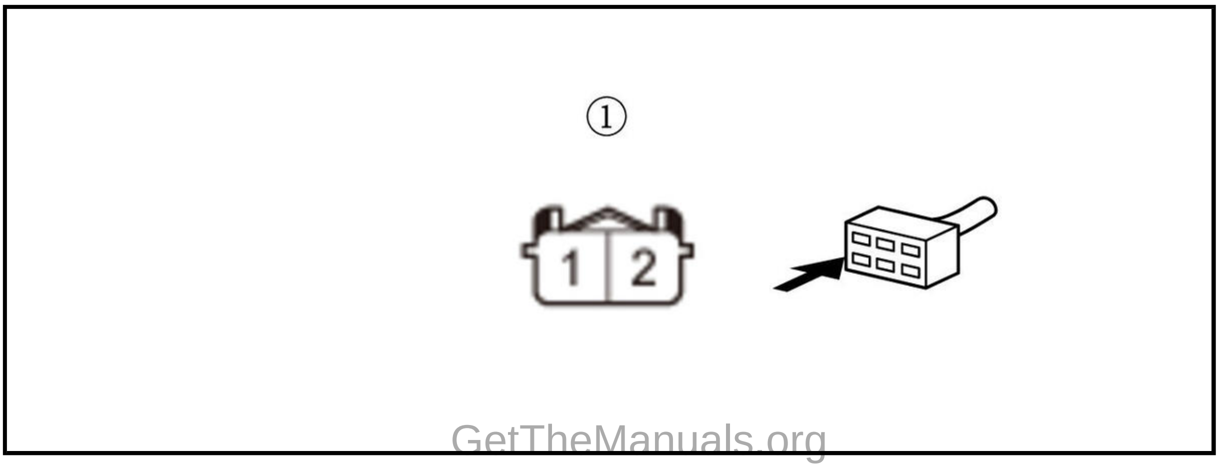

Is there continuity?

YES

Check for any authorized service information related to the DTCs or symptoms you are troubleshooting or **substitute a known-good AWD control unit** , and recheck. If the symptom/indication goes away with a known-good AWD control unit, **replace the original AWD control unit** .

NO

Repair an open in the TOL wire between the rear differential fluid temperature sensor and the AWD control unit.

6. Shorted wire check (TOH line to power)

   -1. Turn the vehicle to the OFF (LOCK) mode.

   -2. Disconnect the following connector.

AWD control unit 24P connector

   -3. Turn the vehicle to the ON mode.

   -4. Measure the voltage between test points 1 and 2.

Test condition	Vehicle ON mode
B	Rear differential fluid temperature sensor 2P connector: disconnected
B	AWD control unit 24P connector: disconnected
Test point 1	Rear differential fluid temperature sensor 2P connector (female terminals) No. 1: ①
Test point 2	Body ground

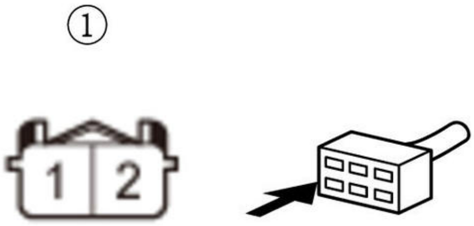

Is there about 0.5 V or more?

YES

Repair a short to power in the TOH wire between the rear differential fluid temperature sensor and the AWD control unit.

NO

Go to step 7.

7. Rear differential fluid temperature sensor check

-1. Turn the vehicle to the OFF (LOCK) mode.

-2. Connect the following connector.

AWD control unit 24P connector

-3. Connect terminals A and B with a jumper wire.

Terminal A	Rear differential fluid temperature sensor 2P connector (female terminals) No. 1: ①
Terminal B	Rear differential fluid temperature sensor 2P connector (female terminals) No. 2: ①

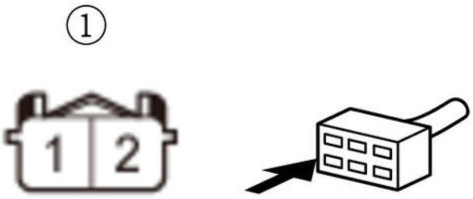

-4. Turn the vehicle to the ON mode.

-5. Check the parameter (s) below with the HDS.

Signal	**Threshold**		**Current conditions**	
	Values	**Unit**	**Values**	**Unit**
Voltage of the oil temperature sensor for rear differential	Less than 0.1	V	B	B

Do the current condition (s) match the threshold?

YES

Replace the rear differential fluid temperature sensor .

NO

Check for any authorized service information related to the DTCs or symptoms you are troubleshooting or **substitute a known-good AWD control unit** , and recheck. If the symptom/indication goes away with a known-good AWD control unit, **replace the original AWD control unit** .

DTC C1841-27 (43-01) (AWD)

DTC C1841-27 : Differential Fluid Temperature Sensor Circuit Range/Performance Problem

NOTE: Before you troubleshoot, **review the General Troubleshooting Information**.

DTC Description	**DTC**	**Freeze Frame**
C1841-27 Differential Fluid Temperature Sensor Circuit	B	B

DTC Description	DTC	Freeze Frame
Range/Performance Problem		

DTC (Real Time AWD)

1. DTC check

-1. Turn the vehicle to the ON mode.

-2. Check for DTCs with the HDS.

DTC Description	DTC	Freeze Frame
C1841-11 Differential Fluid Temperature Sensor Circuit Low Voltage	B	B
C1841-13 Differential Fluid Temperature Sensor Circuit High Voltage	B	B
C1841-27 Differential Fluid Temperature Sensor Circuit Range/Performance Problem	B	B

Is DTC C1841-11, C1841-13, or C1841-27 indicated?

DTC C1841-11 is indicated

Go to the DTC C1841-11 troubleshooting.

DTC C1841-13 is indicated

Go to the DTC C1841-13 troubleshooting.

DTC C1841-27 is indicated

Go to step 2.

2. Problem verification

-1. Clear the DTC with the HDS.

-2. Turn the vehicle to the OFF (LOCK) mode.

-3. Start the engine, and let it idle for 1 minute.

-4. Check for DTCs with the HDS.

DTC Description	DTC	Freeze Frame
C1841-27 Differential Fluid Temperature Sensor Circuit Range/Performance Problem	B	B

Is DTC C1841-27 indicated?

YES

The failure is duplicated. Go to step 3.

NO

Intermittent failure, the system is OK at this time. If the freeze data/on-board snapshot of this DTC is recorded, try to reproduce the failure under the same conditions with the freeze data/on-board snapshot.

3. Rear differential fluid temperature sensor check

-1. Check the parameter (s) below with the HDS. Make note of this value as it will be needed in the following steps.

Signal	Current conditions	
	Values	Unit
Voltage of the oil temperature sensor for rear differential	B	B

-2. Turn the vehicle to the OFF (LOCK) mode.

-3. Turn the vehicle to the ON mode.

-4. Check the parameter (s) below with the HDS then compare with the value checked in step 3

Signal	Current conditions	
	Values	Unit
Voltage of the oil temperature sensor for rear differential	B	B

Did the sensor value change?

YES

Check for an intermittent open or short in the TOH and/or TOL wires between the rear differential fluid temperature sensor and the AWD control unit, and recheck.

NO

Replace the rear differential fluid temperature sensor .

DTC C1850-14 (44-50) (AWD)

DTC C1850-14 : Fail Safe Relay Stuck OFF

NOTE: Before you troubleshoot, **review the General Troubleshooting Information**.

DTC Description	DTC	Freeze Frame
C1850-14 Fail Safe Relay Stuck OFF	B	B

DTC (Real Time AWD)

1. Problem verification (with engine idling)

-1. Turn the vehicle to the ON mode.

-2. Clear the DTC with the HDS.

-3. Turn the vehicle to the OFF (LOCK) mode.

-4. Start the engine.

-5. Check for DTCs with the HDS.

DTC Description	DTC	Freeze Frame
C1850-14 Fail Safe Relay Stuck OFF	B	B

Is DTC C1850-14 indicated?

YES

Go to step 2.

NO

Intermittent failure, the system is OK at this time. If the freeze data/on-board snapshot of this DTC is recorded, try to reproduce the failure under the same conditions with the freeze data/on-board snapshot.

2. Fuse check

-1. Turn the vehicle to the OFF (LOCK) mode.

-2. Check the following fuse.

Fuse	No. A20 (20 A)
Location	Under-hood fuse/relay box

Is the fuse OK?

YES

The fuse is OK. Reinstall the fuse, then go to step 3.

NO

Replace the fuse. If the fuse blows again, repair a short to ground in the No. A20 (20 A) fuse circuit, then go to step 4

3. Open wire check (+B E-DPS line)

-1. Disconnect the following connector.

AWD control unit 24P connector

-2. Turn the vehicle to the ON mode.

-3. Measure the voltage between test points 1 and 2.

Test condition	Vehicle ON mode
B	AWD control unit 24P connector: disconnected
Test point 1	**AWD control unit 24P connector No. 2**
Test point 2	Body ground

Is there battery voltage?

YES

Check for any authorized service information related to the DTCs or symptoms you are troubleshooting or **substitute a known-good AWD control unit** , and recheck. If the symptom/indication goes away with a known-good AWD control unit, **replace the original AWD control unit** .

NO

Repair an open in the +B E-DPS wire between the No. A20 (20 A) fuse and the AWD control unit.

4. Determine possible failure area (MH line, others)

-1. Check for continuity between test points 1 and 2.

Test condition	Vehicle OFF (LOCK) mode

B	AWD control unit 24P connector: disconnected
Test point 1	**AWD control unit 24P connector No. 1**
Test point 2	Body ground

Is there continuity?

YES

Go to step 5.

NO

Go to step 6.

5. Rear differential pump motor internal shorted check

-1. Disconnect the following connector.

Rear differential pump motor 2P connector

-2. Check for continuity between test points 1 and 2.

Test condition	Vehicle OFF (LOCK) mode
B	Real time AWD control unit 24P connector: disconnected
B	Rear differential pump motor 2P connector: disconnected
Test point 1	Rear differential pump motor 2P connector (male terminals) No. 2: ①
Test point 2	Body ground

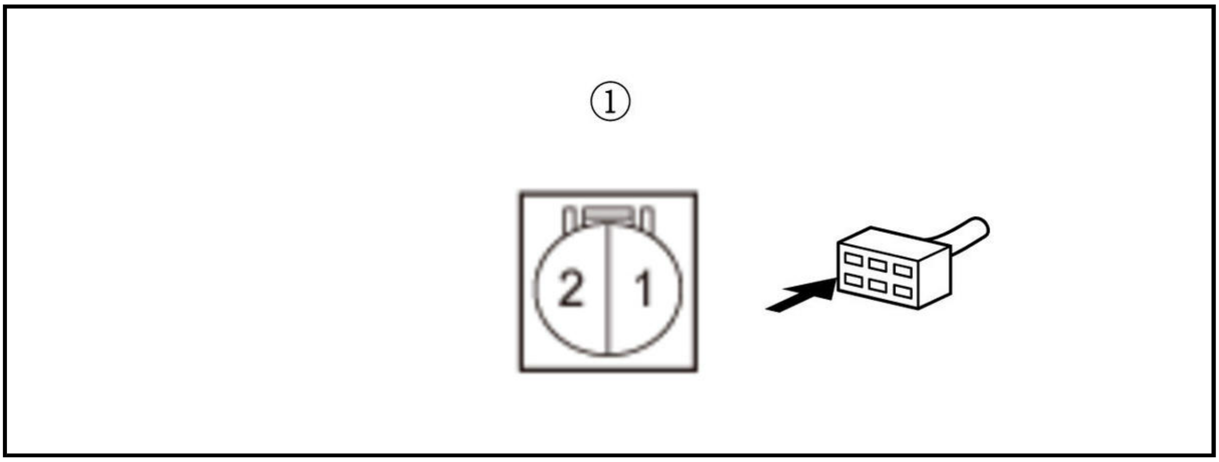

Is there continuity?

YES

Replace the rear differential pump motor .

NO

Repair a short to ground in the MH wires between the rear differential pump motor and the AWD control unit.

6. Rear differential pump motor internal shorted check

-1. Disconnect the following connector.

Rear differential pump motor 2P connector

-2. Check for continuity between test points 1 and 2.

Test condition	Vehicle OFF mode
B	AWD control unit 24P connector: disconnected
B	Rear differential pump motor 2P connector: disconnected
Test point 1	Rear differential pump motor 2P connector (male terminals) No. 1: ①
Test point 2	Rear differential pump motor 2P connector (male terminals) No. 2: ①

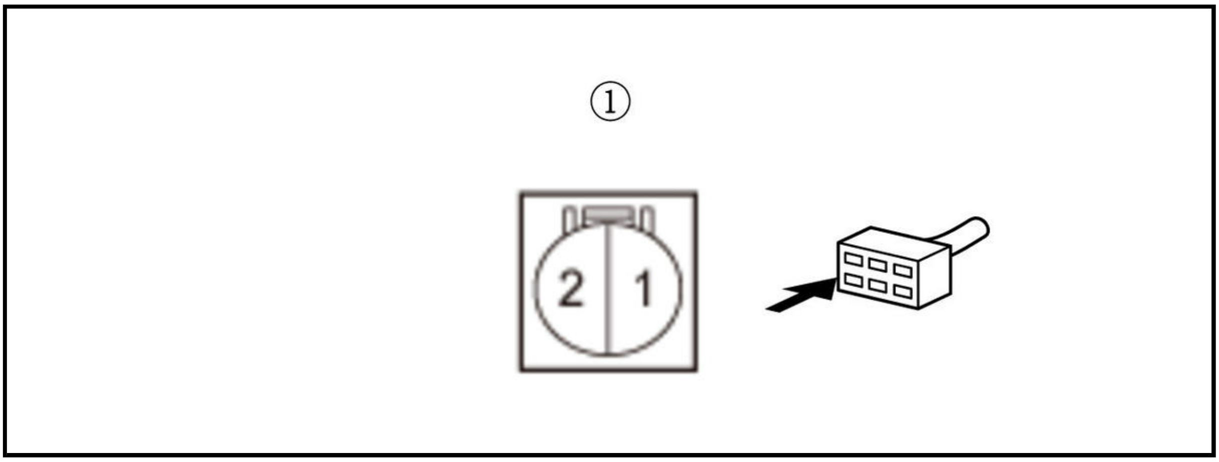

Is there continuity?

YES

Replace the rear differential pump motor .

NO

Go to step 7.

7. AWD control unit check

-1. On the AWD control unit side, check for continuity between test points 1 and 2.

Test condition	Vehicle OFF mode
B	AWD control unit 24P connector: disconnected
B	Rear differential pump motor 2P connector: disconnected
Test point 1	AWD control unit 24P connector No. 1
Test point 2	AWD control unit 24P connector No. 3

Is there continuity?

YES

Check for any authorized service information related to the DTCs or symptoms you are troubleshooting or substitute a known-good AWD control unit , and recheck. If the symptom/indication goes away with a known-good AWD control unit, replace the original AWD control unit .

NO

Replace the No. A20 (20 A) fuse.

DTC C1851-18 (63-01) (AWD)

DTC C1851-18 : Motor Circuit Low Current

NOTE: Before you troubleshoot, **review the General Troubleshooting Information**.

DTC Description	DTC	Freeze Frame
C1851-18 Motor Circuit Low Current	B	B

DTC (Real Time AWD)

1. Problem verification (with engine idling)

   -1. Turn the vehicle to the ON mode.

   -2. Clear the DTC with the HDS.

   -3. Turn the vehicle to the OFF (LOCK) mode.

   -4. Start the engine.

   -5. Check for DTCs with the HDS.

DTC Description	DTC	Freeze Frame
C1851-18 Motor Circuit Low Current	B	B

   Is DTC C1851-18 indicated?

   YES

   The failure is duplicated. Go to step 3.

   NO

   Go to step 2.

2. Problem verification (with rear differential pump motor running)

   -1. Clear the DTC with the HDS.

   -2. Turn the vehicle to the OFF (LOCK) mode.

   -3. Turn the vehicle to the ON mode.

   -4. Select the ADJUSTMENT in the REAL TIME AWD with the HDS.

   -5. With the engine running, **do the AIR BLEEDING in the ADJUSTMENT with the HDS** .

   Air Bleeding

   Check for DTCs with the HDS.

DTC Description	DTC	Freeze Frame
C1851-18 Motor Circuit Low Current	B	B

   Is DTC C1851-18 indicated?

   YES

   The failure is duplicated. Go to step 3.

   NO

Intermittent failure, the system is OK at this time. If the freeze data/on-board snapshot of this DTC is recorded, try to reproduce the failure under the same conditions with the freeze data/on-board snapshot.

3. Open wire check (GND line)

-1. Turn the vehicle to the OFF (LOCK) mode.

-2. Disconnect the following connector.

AWD control unit 24P connector

-3. Check for continuity between test points 1 and 2.

Test condition	Vehicle OFF (LOCK) mode
B	AWD control unit 24P connector: disconnected
Test point 1	**AWD control unit 24P connector No. 4**
Test point 2	Body ground

Is there continuity?

YES

The GND wire is OK. Go to step 4.

NO

Check for poor connections or loose terminals between the AWD control unit and ground (G503). If the connections are OK, repair an open in the GND wire between the AWD control unit and ground (G503).

4. Determine possible failure area (short in MH, ML lines, open in MH, ML lines)

-1. Check for continuity between test points 1 and 2.

Test condition	Vehicle OFF (LOCK) mode
B	AWD control unit 24P connector: disconnected
Test point 1	**AWD control unit 24P connector No. 1**
Test point 2	Body ground

Is there continuity?

YES

Go to step 7.

NO

Go to step 5.

5. Determine possible failure area (MH, ML lines, AWD control unit)

-1. Measure the resistance between test points 1 and 2.

Test condition	Vehicle OFF (LOCK) mode, At normal air temperature
B	AWD control unit 24P connector: disconnected
Test point 1	**AWD control unit 24P connector No. 1**
Test point 2	**AWD control unit 24P connector No. 3**

Is there about 10 Ω or less?

YES

Check for any authorized service information related to the DTCs or symptoms you are troubleshooting or **substitute a known-good AWD control unit** , and recheck. If the symptom/indication goes away with a known-good AWD control unit, **replace the original AWD control unit** .

NO

Go to step 6.

6. Rear differential pump motor internal open check

-1. Disconnect the following connector.

Rear differential pump motor 2P connector

-2. On the rear differential pump motor side, measure the resistance between test points 1 and 2.

Test condition	Vehicle OFF (LOCK) mode
B	AWD control unit 24P connector: disconnected
B	Rear differential pump motor 2P connector: disconnected
Test point 1	Rear differential pump motor 2P connector (male terminals) No. 1: ①
Test point 2	Rear differential pump motor 2P connector (male terminals) No. 2: ①

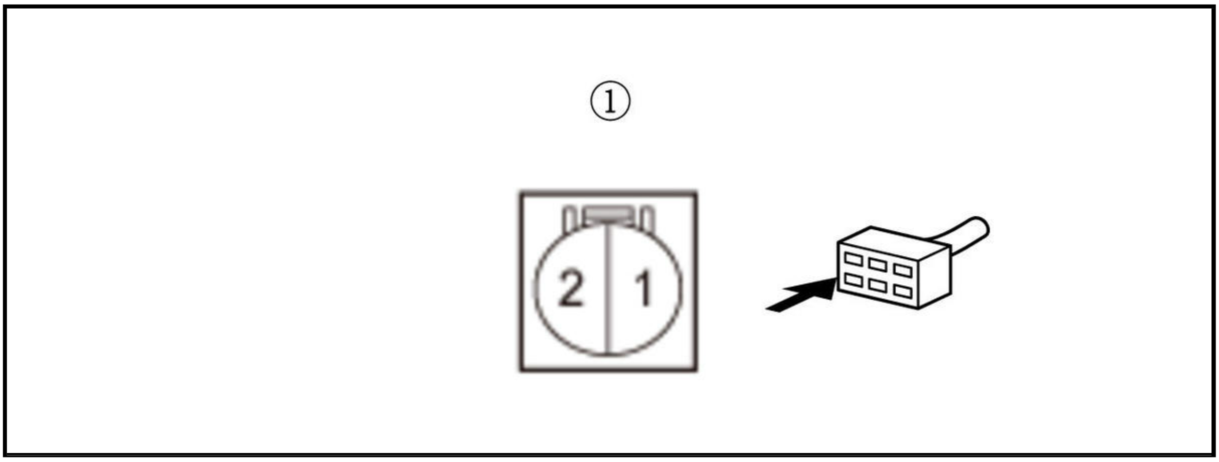

Is there about 10 Ω or less?

YES

Repair an open in the MH and/or ML wires between the rear differential pump motor and the AWD control unit.

NO

Replace the rear differential pump motor .

7. Rear differential pump motor internal shorted check

-1. Disconnect the following connector.

Rear differential pump motor 2P connector

-2. Check for continuity between the following test points 1 and 2 individually (see table).

Test condition	Vehicle OFF (LOCK) mode
B	AWD control unit 24P connector: disconnected
B	Rear differential pump motor 2P connector: disconnected

Connector	Test point 1	Test point 2
Rear differential pump motor 2P connector (male terminals)	No. 1: ①	Rear differential pump motor body
	No. 2: ①	

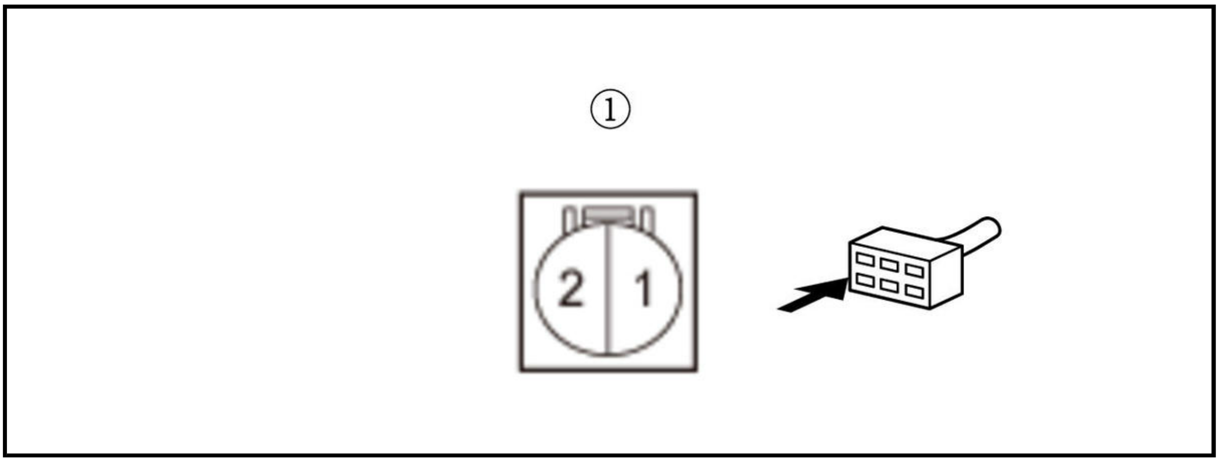

Are there continuity?

YES

Replace the rear differential pump motor .

NO

Repair a short to ground in the MH and/or ML wires between the rear differential pump motor and the AWD control unit.

DTC C1851-19 (63-02), C1851-1E (63-03), C1851-1E (63-04) (AWD)

DTC C1851-19 : Control Module Internal Control Module Malfunction **DTC C1851-1E** : Motor Circuit High Current

NOTE: Before you troubleshoot, **review the General Troubleshooting Information**.

DTC Description	DTC	Freeze Frame
C1851-19 Control Module Internal Control Module Malfunction	B	B
C1851-1E Motor Circuit High Current	B	B

DTC (Real Time AWD)

1. Problem verification (with engine idling)

   -1. Turn the vehicle to the ON mode.

   -2. Clear the DTC with the HDS.

   -3. Turn the vehicle to the OFF (LOCK) mode.

   -4. Start the engine.

-5. Check for DTCs with the HDS.

DTC Description	DTC	Freeze Frame
C1851-19 Control Module Internal Control Module Malfunction	B	B
C1851-1E Motor Circuit High Current	B	B

Is DTC C1851-19 or C1851-1E indicated?

YES

The failure is duplicated. Go to step 3.

NO

Go to step 2.

2. Problem verification (with rear differential pump motor running)

-1. Clear the DTC with the HDS.

-2. Turn the vehicle to the OFF (LOCK) mode.

-3. Turn the vehicle to the ON mode.

-4. Select the ADJUSTMENT in the REAL TIME AWD with the HDS.

-5. With the engine running, **do the AIR BLEEDING in the ADJUSTMENT with the HDS** .

Air Bleeding

Check for DTCs with the HDS.

DTC Description	DTC	Freeze Frame
C1851-19 Control Module Internal Control Module Malfunction	B	B

DTC Description	DTC	Freeze Frame
C1851-1E Motor Circuit High Current	B	B

Is DTC C1851-19 or C1851-1E indicated?

YES

The failure is duplicated. Go to step 3.

NO

Intermittent failure, the system is OK at this time. If the freeze data/on-board snapshot of this DTC is recorded, try to reproduce the failure under the same conditions with the freeze data/on-board snapshot.

3. Determine possible failure area (short to power in MH, ML lines, others)

-1. Turn the vehicle to the OFF (LOCK) mode.

-2. Disconnect the following connector.

Rear differential pump motor 2P connector

-3. Turn the vehicle to the ON mode.

-4. Wait for 10 seconds.

-5. Measure the voltage between the following test points 1 and 2 individually (see table).

Test condition	Vehicle ON mode
B	Rear differential pump motor 2P connector: disconnected

Connector	**Test point 1**	**Test point 2**
Rear differential pump motor 2P connector (female terminals)	No. 1: ①	Body ground
	No. 2: ①	

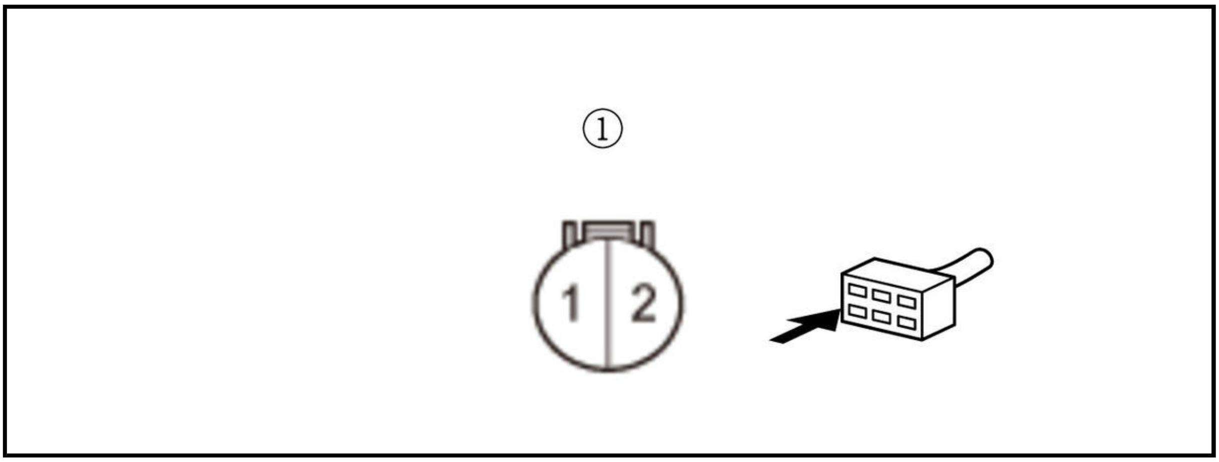

Is there about 0.1 V or less?

YES

Go to step 5.

NO

Go to step 4.

4. Shorted wire check (MH line to power, ML line to power)

-1. Disconnect the following connector.

AWD control unit 24P connector

-2. Turn the vehicle to the ON mode.

-3. Measure the voltage between the following test points 1 and 2 individually (see table).

Test condition	Vehicle ON mode
B	Rear differential pump motor 2P connector: disconnected
B	Real time AWD control unit 24P connector: disconnected

Connector	**Test point 1**	**Test point 2**
Rear differential pump motor 2P connector (female terminals)	No. 1: ①	Body ground
	No. 2: ①	

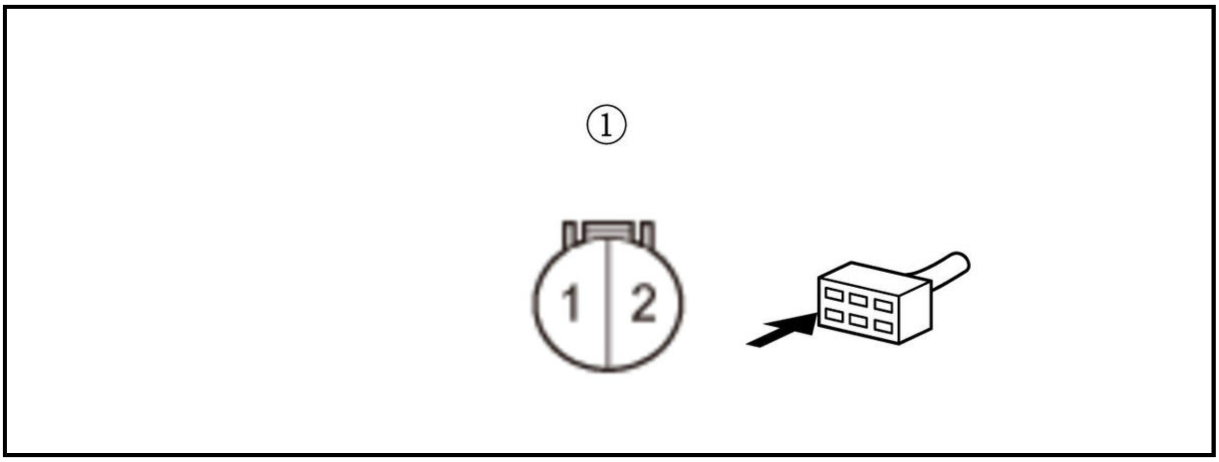

Is there about 0.1 V or less?

YES

Check for any authorized service information related to the DTCs or symptoms you are troubleshooting or **substitute a known-good AWD control unit** , and recheck. If the symptom/indication goes away with a known-good AWD control unit, **replace the original AWD control unit** .

NO

Repair short to power in the MH and/or ML wires between the rear differential pump motor and the AWD control unit.

5. Determine possible failure area (short to ground in MH line, others)

-1. Turn the vehicle to the OFF (LOCK) mode.

-2. Connect the following connector.

Rear differential pump motor 2P connector

-3. Disconnect the following connector.

AWD control unit 24P connector

-4. Check for continuity between the following test points 1 and 2.

Test condition	Vehicle OFF (LOCK) mode
	AWD control unit 24P connector: disconnected
Test point 1	**AWD control unit 24P connector No. 1**
Test point 2	Body ground

Is there continuity?

YES

Go to step 6.

NO

Go to step 7.

6. Rear differential pump motor internal shorted check

-1. Disconnect the following connector.

Rear differential pump motor 2P connector

-2. On the rear differential pump motor side, check for continuity between the test points 1 and 2.

Test condition	Vehicle OFF (LOCK) mode
	Rear differential pump motor 2P connector: disconnected
	AWD control unit 24P connector: disconnected
Test point 1	Rear differential pump motor 2P connector (male terminals) No. 2: ①
Test point 2	Body ground

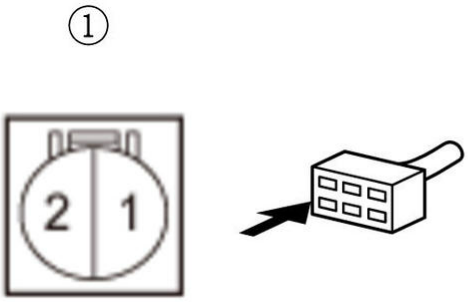

Is there continuity?

YES

Replace the rear differential pump motor .

NO

Repair short to ground in the MH wire between the rear differential pump motor and the AWD control unit.

7. Determine possible failure area (short in MH, ML line, others)

-1. Check for continuity between test points 1 and 2.

Test condition	Vehicle OFF (LOCK) mode
B	AWD control unit 24P connector: disconnected
Test point 1	**AWD control unit 24P connector No. 1**
Test point 2	**AWD control unit 24P connector No. 3**

Is there continuity?

YES

Go to step 8.

NO

Check for any authorized service information related to the DTCs or symptoms you are troubleshooting or **substitute a known-good AWD control unit** , and recheck. If the symptom/indication goes away with a known-good AWD control unit, **replace the original AWD control unit** .

8. Shorted wire check (MH line to ML line)

-1. Disconnect the following connector.

Rear differential pump motor 2P connector

-2. Check for continuity between test points 1 and 2.

Test condition	Vehicle OFF (LOCK) mode
B	Rear differential pump motor 2P connector: disconnected
B	AWD control unit 24P connector: disconnected
Test point 1	Rear differential pump motor 2P connector (female terminals) No. 1: ①
Test point 2	Rear differential pump motor 2P connector (female terminals) No. 2: ①

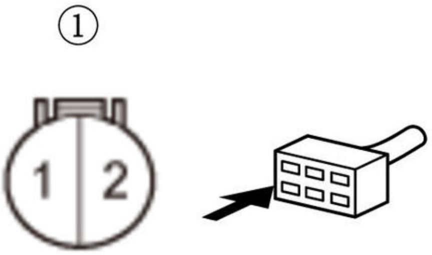

Is there continuity?

YES

Repair a short in the MH wire to the ML wire between the rear differential pump motor and the AWD control unit.

NO

Replace the rear differential pump motor .

DTC C1852-18 (62-01) (AWD)

DTC C1852-18 : Solenoid Valve Circuit Low Current

NOTE: Before you troubleshoot, **review the General Troubleshooting Information**.

DTC Description	DTC	Freeze Frame
C1852-18 Solenoid Valve Circuit Low Current	B	B

DTC (Real Time AWD)

1. Problem verification (with engine idling)

-1. Turn the vehicle to the ON mode.

-2. Clear the DTC with the HDS.

-3. Turn the vehicle to the OFF (LOCK) mode.

-4. Start the engine.

-5. Check for DTCs with the HDS.

DTC Description	DTC	Freeze Frame
C1852-18 Solenoid Valve Circuit Low Current	B	B

Is DTC C1852-18 indicated?

YES

The failure is duplicated. Go to step 3.

NO

Go to step 2.

2. Problem verification (with rear differential pump motor running)

-1. Clear the DTC with the HDS.

-2. Turn the vehicle to the OFF (LOCK) mode.

-3. Turn the vehicle to the ON mode.

-4. Select the ADJUSTMENT in the REAL TIME AWD with the HDS.

-5. With the engine running, **do the AIR BLEEDING in the ADJUSTMENT with the HDS** .

Air Bleeding

Check for DTCs with the HDS.

DTC Description	DTC	Freeze Frame
C1852-18 Solenoid Valve Circuit Low Current	B	B

Is DTC C1852-18 indicated?

YES

The failure is duplicated. Go to step 3.

NO

Intermittent failure, the system is OK at this time. If the freeze data/on-board snapshot of this DTC is recorded, try to reproduce the failure under the same conditions with the freeze data/on-board snapshot.

3. Determine possible failure area (D-GND line, others)

-1. Turn the vehicle to the OFF (LOCK) mode.

-2. Disconnect the rear differential subharness D-GND wire terminal from the rear differential assembly.

-3. Check for continuity between the following test points 1 and 2.

Test condition	Vehicle OFF (LOCK) mode
	Rear differential subharness D-GND wire terminal: disconnected
Test point 1	Rear differential subharness D-GND wire terminal
Test point 2	Body ground

Is there continuity?

YES

Go to step 4.

NO

Repair an open in the D-GND wires between the AWD control unit and ground (G503).

4. Determine possible failure area (D-GND2 line, others)

-1. Turn the vehicle to the OFF (LOCK) mode.

-2. Disconnect the rear differential subharness D-GND2 wire terminal from the rear differential assembly.

-3. Check for continuity between the following test points 1 and 2.

Test condition	Vehicle OFF (LOCK) mode
	Rear differential subharness D-GND2 wire terminal: disconnected
Test point 1	Rear differential subharness D-GND2 terminal
Test point 2	Body ground

Is there continuity?

YES

Go to step 5.

NO

Repair an open in the D-GND2 wires between the AWD control unit and ground (G503).

5. Determine possible failure area (DTYH1 line, others)

-1. Turn the vehicle to the OFF (LOCK) mode

-2. Disconnect the following connector.

Rear differential solenoid valve 1P connector

-3. Turn the vehicle to the ON mode.

-4. Wait for 10 seconds.

-5. Measure the voltage between test points 1 and 2.

Test condition	Vehicle ON mode
B	Rear differential solenoid valve 1P connector: disconnected

Test point 1	Rear differential solenoid valve 1P connector (female terminals) No. 1: ①
Test point 2	Body ground

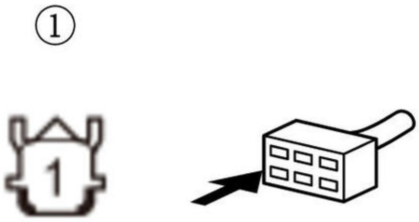

Is there about 0.1 V or less?

YES

Go to step 7.

NO

Go to step 6.

6. Shorted wire check (DTYH1 line to power)

-1. Turn the vehicle to the OFF (LOCK) mode.

-2. Disconnect the following connector.

AWD control unit 24P connector

-3. Turn the vehicle to the ON mode.

-4. Measure the voltage between test points 1 and 2.

Test condition	Vehicle ON mode
B	Rear differential solenoid valve 1P connector: disconnected
B	AWD control unit 24P connector: disconnected
Test point 1	Rear differential solenoid valve 1P connector (female terminals) No. 1: ①
Test point 2	Body ground

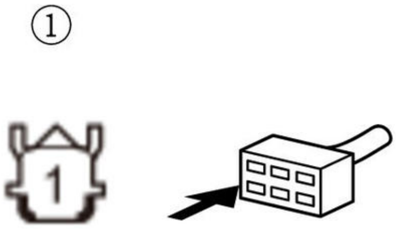

Is there about 0.1 V or less?

YES

Check for any authorized service information related to the DTCs or symptoms you are troubleshooting or **substitute a known-good real time AWD control unit** , and recheck. If the symptom/indication goes away with a known-good AWD control unit, **replace the original AWD control unit** .

NO

Repair a short to power in the DTYH1 wire between the rear differential solenoid valve and the AWD control unit.

7. Rear differential solenoid valve check

-1. Turn the vehicle to the OFF (LOCK) mode.

-2. On the solenoid valve side, measure the resistance between test points 1 and 2.

Test condition	Vehicle OFF (LOCK) mode
B	Rear differential solenoid valve 1P connector: disconnected
Test point 1	Rear differential solenoid valve 1P connector (male terminals) No. 1: ①
Test point 2	Rear differential solenoid valve body

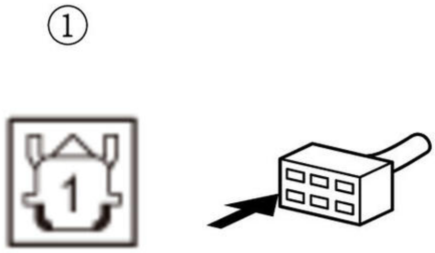

Is there about 100 Ω or less?

YES

The rear differential solenoid valve is OK. Go to step 8.

NO

Replace the rear differential solenoid valve .

8. Shorted wire check (DTYH1 line)

-1. Disconnect the following connector.

AWD control unit 24P connector

-2. Check for continuity between test points 1 and 2.

Test condition	Vehicle OFF (LOCK) mode
B	Rear differential solenoid valve 1P connector: disconnected
B	AWD control unit 24P connector: disconnected
Test point 1	**AWD control unit 24P connector No. 15**
Test point 2	Body ground

Is there continuity?

YES

Repair a short to ground in the DTYH1 wire between the rear differential solenoid valve and the AWD control unit.

NO

The DTYH1 wire is not shorted. Go to step 9.

9. Open wire check (DTYH1 line)

-1. Check for continuity between test points 1 and 2.

Test condition	Vehicle OFF (LOCK) mode
B	Rear differential solenoid valve 1P connector: disconnected
B	AWD control unit 24P connector: disconnected
Test point 1	Rear differential solenoid valve 1P connector (female terminals) No. 1: ①
Test point 2	AWD control unit 24P connector No. 15

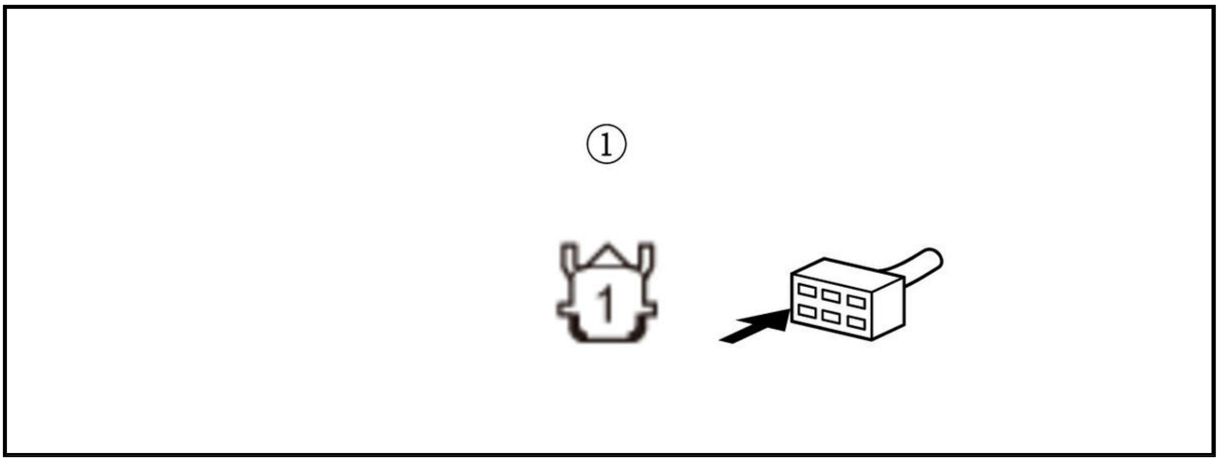

Is there continuity?

YES

Check for any authorized service information related to the DTCs or symptoms you are troubleshooting or substitute a known-good AWD control unit , and recheck. If the symptom/indication goes away with a known-good AWD control unit, replace the original AWD control unit .

NO

Repair an open in the DTYH1 wire between the rear differential solenoid valve and the AWD control unit.

DTC C1852-19 (62-04) (AWD)

DTC C1852-19 : Solenoid Valve Circuit High Current

NOTE: Before you troubleshoot, review the General Troubleshooting Information.

DTC Description	DTC	Freeze Frame
C1852-19 Solenoid Valve Circuit High Current	B	B

DTC (Real Time AWD)

1. Problem verification (with engine idling)

   -1. Turn the vehicle to the ON mode.

   -2. Clear the DTC with the HDS.

   -3. Turn the vehicle to the OFF (LOCK) mode.

   -4. Start the engine.

   -5. Check for DTCs with the HDS.

DTC Description	DTC	Freeze Frame
C1852-19 Solenoid Valve Circuit High Current	B	B

   Is DTC C1852-19 indicated?

   YES

   The failure is duplicated. Go to step 3.

   NO

   Go to step 2.

2. Problem verification (with rear differential pump motor running)

   -1. Clear the DTC with the HDS.

   -2. Turn the vehicle to the OFF (LOCK) mode.

   -3. Turn the vehicle to the ON mode.

   -4. Select the ADJUSTMENT in the REAL TIME AWD with the HDS.

   -5. With the engine running, **do the AIR BLEEDING in the ADJUSTMENT with the HDS** .

   Air Bleeding

   Check for DTCs with the HDS.

DTC Description	DTC	Freeze Frame
C1852-19 Solenoid Valve Circuit High Current	B	B

   Is DTC C1852-19 indicated?

   YES

   The failure is duplicated. Go to step 3.

   NO

   Intermittent failure, the system is OK at this time. If the freeze data/on-board snapshot of this DTC is recorded, try to reproduce the failure under the same conditions with the freeze data/on-board snapshot.

3. Shorted wire check (DTYH1 line)

   -1. Turn the vehicle to the OFF (LOCK) mode.

-2. Disconnect the following connectors.

Rear differential solenoid valve 1P connector
AWD control unit 24P connector

-3. Check for continuity between test points 1 and 2.

Test condition	Vehicle OFF (LOCK) mode
B	Rear differential solenoid valve 1P connector: disconnected
B	AWD control unit 24P connector: disconnected
Test point 1	**AWD control unit 24P connector No. 15**
Test point 2	Body ground

Is there continuity?

YES

Repair a short to ground in the DTYH1 wire between the rear differential solenoid valve and the AWD control unit.

NO

The DTYH1 wire is OK. Go to step 4.

4. Rear differential solenoid valve check

-1. Turn the vehicle to the ON mode.

-2. Check the parameter (s) below with the HDS.

NOTE: The rear differential fluid temperature should be 50 deg. F (10 deg. C) - 86 deg. F (30 deg. C). If the value is not within the enable temperature, warm up the rear differential fluid temperature by raising the vehicle on a lift and run the vehicle at 13 mph (20 km/h) for 5 seconds then slow down, and stop the wheels.

Signal	**Current conditions**	
	Values	**Unit**
Oil temperature for rear differential	B	B

-3. Turn the vehicle to the OFF (LOCK) mode.

-4. On the solenoid valve side, measure the resistance between test points 1 and 2.

Test condition	Vehicle OFF (LOCK) mode
B	Rear differential solenoid valve 1P connector: disconnected
B	AWD control unit 24P connector: disconnected
Test point 1	Rear differential solenoid valve 1P connector (male terminals) No. 1: ①
Test point 2	Body ground

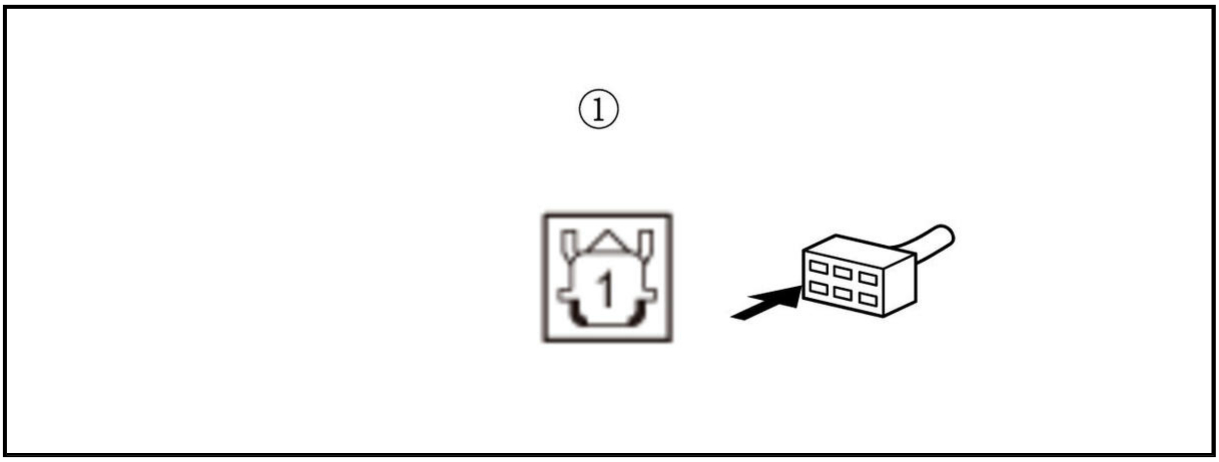

Is there about 10 Ω or more?

YES

Check for any authorized service information related to the DTCs or symptoms you are troubleshooting or **substitute a known-good AWD control unit** , and recheck. If the symptom/indication goes away with a known-good AWD control unit, **replace the original AWD control unit** .

NO

Replace the rear differential solenoid valve .

DTC C1858-72 (71-02) (AWD)

DTC C1858-72 : Differential Fluid Pressure Deviation Low

NOTE: Before you troubleshoot, **review the General Troubleshooting Information**.

DTC Description	DTC	Freeze Frame
C1858-72 Differential Fluid Pressure Deviation Low	B	B

DTC (Real Time AWD)

1. Rear differential fluid level check

   -1. **Check the rear differential fluid level** , and check for rear differential fluid leakage.

   Is the check result OK?

   YES

   The rear differential fluid level is OK. Go to step 2.

   NO

   Find and repair the source of the fluid leak then **add recommended fluid** .

2. Problem verification (function test with HDS)

   -1. Turn the vehicle to the ON mode.

   -2. Select the FUNCTIONAL TEST in the REAL TIME AWD with the HDS.

   -3. **Do the OIL PRESSURE CONTROL TEST in the FUNCTIONAL TEST with the HDS** .

   Oil Pressure Control Test

Is fault code indicated?

Fault code is not indicated

Intermittent failure, the system is OK at this time. If the freeze data/on-board snapshot of this DTC is recorded, try to reproduce the failure under the same conditions with the freeze data/on-board snapshot.

Fault code 2-1 or 5-1 is indicated

Go to step 3.

Fault code 3-1 is indicated

Go to step 4.

Fault code except 2-1, 3-1, and 5-1 is indicated

Go to step 5.

3. Hydraulic system check

   -1. Select the ADJUSTMENT in the REAL TIME AWD with the HDS.

   -2. **Do the AIR BLEEDING in the ADJUSTMENT with the HDS** .

   Air Bleeding

   -3. Select the FUNCTIONAL TEST in the REAL TIME AWD with the HDS.

   -4. **Do the OIL PRESSURE CONTROL TEST in the FUNCTIONAL TEST with the HDS** .

   Oil Pressure Control Test

   Is the test result OK?

   YES

   Hydraulic system is OK at this time.

   NO

   Replace the rear differential fluid then **do the rear differential fluid pressure sensor test** and **do the rear differential solenoid valve test** . If they are OK, **replace the rear differential assembly** .

4. Hydraulic system check

   -1. Select the ADJUSTMENT in the REAL TIME AWD with the HDS.

   -2. **Do the AIR BLEEDING in the ADJUSTMENT with the HDS** .

   Air Bleeding

   Select the FUNCTIONAL TEST in the REAL TIME AWD with the HDS.

   -4. **Do the OIL PRESSURE CONTROL TEST in the FUNCTIONAL TEST with the HDS** .

   Oil Pressure Control Test

   Is the test result OK?

   YES

Hydraulic system is OK at this time.

NO

Replace the rear differential fluid , then **do the rear differential solenoid valve test** . If it is OK, **replace the rear differential assembly** .

5. DTC check

   -1. Select the FUNCTIONAL TEST in the REAL TIME AWD with the HDS.

   -2. **Do the OIL PRESSURE CONTROL TEST in the FUNCTIONAL TEST with the HDS** three times.

   Oil Pressure Control Test

   Check for DTCs with the HDS.

DTC Description	DTC	Freeze Frame
B	B	B

   Are there any DTCs?

   YES

   Go to the indicated DTC's troubleshooting.

   NO

   The system is OK at this time.

DTC C1858-73 (71-01) (AWD)

DTC C1858-73 : Differential Fluid Pressure Deviation High

NOTE: Before you troubleshoot, **review the General Troubleshooting Information**.

DTC Description	DTC	Freeze Frame
C1858-73 Differential Fluid Pressure Deviation High	B	B

DTC (Real Time AWD)

1. Problem verification (function test with HDS)

   -1. Turn the vehicle to the ON mode.

   -2. Select the FUNCTIONAL TEST in the REAL TIME AWD with the HDS.

   -3. **Do the OIL PRESSURE CONTROL TEST in the FUNCTIONAL TEST with the HDS** .

   Oil Pressure Control Test

   Are fault codes indicated?

   Fault code is not indicated

   Intermittent failure, the system is OK at this time. If the freeze data/on-board snapshot of this DTC is recorded, try to reproduce the failure under the same conditions with the freeze data/on-board snapshot.

   Fault code 4-1 or 6-1 is indicated

Replace the rear differential fluid , then do the rear differential solenoid valve test . If it is OK, replace the rear differential assembly .

Fault code except 4-1 and 6-1 is indicated

The failure is duplicated. Go to step 2.

2. DTC check

   -1. Select the FUNCTIONAL TEST in the REAL TIME AWD with the HDS.

   -2. Do the OIL PRESSURE CONTROL TEST in the FUNCTIONAL TEST with the HDS three times.

   Oil Pressure Control Test

   Check for DTCs with the HDS.

DTC Description	DTC	Freeze Frame
B	B	B

   Are there any DTCs?

   YES

   Go to the indicated DTC's troubleshooting.

   NO

   The system is OK at this time.

DTC C1860-98 (76-01) (AWD)

DTC C1860-98 : Differential Fluid Overheats

NOTE:

- Before you troubleshoot, review the General Troubleshooting Information.
- When the clutch is presumed to be overheated, DTC C1860-98 is set and the system turns off the clutch engagement to protect the clutch. This DTC may also set under the following conditions.
-
  - -

    When spinning the rear wheels while the vehicle is stuck in sand, mud, snow, etc
  - -

    When the VSA system is OFF
- If other DTCs are stored at the same time as DTC C1860-98 and/or DTC C1861-9A, troubleshoot other DTCs first, then recheck for DTC C1860-98 and/or DTC C1861-9A.

DTC Description	DTC	Freeze Frame
C1860-98 Differential Fluid Overheats	B	B

DTC (Real Time AWD)

1. DTC check

-1. Turn the vehicle to the ON mode.

-2. Check for DTCs with the HDS.

DTC Description	DTC	Freeze Frame
B	B	B

Is DTC C1860-98, C1861-9A, or other DTC indicated?

DTC C1860-98 or C1861-9A is indicated

Go to step 2.

Other DTC is indicated

Go to the indicated DTC's troubleshooting.

2. Tire size check

-1. Check the tire size of the four wheels.

Are all tire sizes same?

YES

The tire sizes are OK. Go to step 3.

NO

Replace the tire with the standard size .

3. Brake drag check

-1. Check for brake drag.

Are the brakes OK?

YES

The brakes are OK. Go to step 4.

NO

Repair the front/rear hydraulic brake system or the parking brake system .

4. Rear differential fluid temperature sensor check

-1. Check the parameter (s) below with the HDS.

Signal	Current conditions	
	Values	Unit
Oil temperature for rear differential	B	B

-2. Measure the actual temperature of the rear differential fluid, then compare it with the HDS value checked in step 4

Are the values almost the same?

YES

The rear differential fluid temperature sensor is OK. Go to step 5.

NO

Replace the rear differential fluid temperature sensor .

5. Rear differential fluid pressure sensor test

-1. **Do the rear differential fluid pressure sensor test** .

Is the test result OK?

YES

Intermittent failure, the system is OK at this time. If the freeze data/on-board snapshot of this DTC is recorded, try to reproduce the failure under the same conditions with the freeze data/on-board snapshot.

NO

Do the repair depending on the test result .

DTC C1861-9A (76-02) (AWD)

DTC C1861-9A : Vehicle Spin Detected

NOTE:

- Before you troubleshoot, **review the General Troubleshooting Information**.
- When a vehicle spin is detected, DTC C1861-9A is set for the purpose of protecting the real time AWD system. When this condition occurs, the system will temporarily stop the real time AWD function. This DTC may also set under these conditions.
-
    - -

      When spinning the rear wheels while stuck in sand, mud, snow, etc
    - -

      When the VSA system is OFF
- If other DTCs are stored at the same time as DTC C1860-98 and/or DTC C1861-9A, troubleshoot other DTCs first, then recheck for DTC C1860-98 and/or DTC C1861-9A.

DTC Description	DTC	Freeze Frame
C1861-9A Vehicle Spin Detected	B	B

DTC (Real Time AWD)

1. DTC check

-1. Turn the vehicle to the ON mode.

-2. Check for DTCs with the HDS.

DTC Description	DTC	Freeze Frame
B	B	B

Is DTC C1860-98, C1861-9A, or other DTCs indicated?

DTC C1860-98 or C1861-9A is indicated

Go to step 2.

Other DTC is indicated

Go to the indicated DTC's troubleshooting.

2. Tire size check

   -1. Check the tire size of the four wheels.

   Are all tire sizes same?

   YES

   The tire sizes are OK. Go to step 3.

   NO

   Replace the tire with the standard size .

3. Brake drag check

   -1. Check for brake drag.

   Are the brakes OK?

   YES

   Intermittent failure, the system is OK at this time. If the freeze data/on-board snapshot of this DTC is recorded, try to reproduce the failure under the same conditions with the freeze data/on-board snapshot.

   NO

   Repair the front/rear hydraulic brake system or the parking brake system .

DTC C1870-00 (77-01), C1871-00 (77-04), C1872-00 (77-02) (AWD)

DTC C1870-00 : The Functional Abnormalities of Fuel and Emissions **DTC C1871-00** : The Functional Abnormalities of Automatic Transmission **DTC C1872-00** : The Functional Abnormalities of VSA Modulator-Control Unit

NOTE: Before you troubleshoot, **review the General Troubleshooting Information**.

DTC Description	DTC	Freeze Frame
C1870-00 The Functional Abnormalities of Fuel and Emissions	B	B
C1871-00 The Functional Abnormalities of Automatic Transmission	B	B
C1872-00 The Functional Abnormalities of VSA Modulator-Control Unit	B	B

DTC (Real Time AWD)

1. Problem verification (DTC check)

   -1. Turn the vehicle to the ON mode.

   -2. Clear the DTC with the HDS.

-3. Turn the vehicle to the OFF (LOCK) mode.

-4. Start the engine.

Check for DTCs with the HDS.

NOTE: These codes are stored whenever the following systems DTCs are detected.

- When DTC C1870-00 is indicated, check the PGM-FI system and CVT system DTC.
- When DTC C1871-00 is indicated, check the CVT system DTC.
- When DTC C1872-00 is indicated, check the VSA system DTC.

DTC Description	DTC	Freeze Frame
C1870-00 The Functional Abnormalities of Fuel and Emissions	B	B

DTC Description	DTC	Freeze Frame
C1871-00 The Functional Abnormalities of Automatic Transmission	B	B
C1872-00 The Functional Abnormalities of VSA Modulator-Control Unit	B	B

Is DTC C1870-00, C1871-00 and/or C1872-00 indicated?

DTC C1870-00 is indicated

The failure is duplicated. Check the **PGM-FI system DTC** and **CVT system DTC** .

DTC C1871-00 is indicated

The failure is duplicated. Check the **CVT system DTC** .

DTC C1872-00 is indicated

The failure is duplicated. **Check the VSA system DTC** .

DTC is not indicated

Intermittent failure, the system is OK at this time. If the freeze data/on-board snapshot of this DTC is recorded, try to reproduce the failure under the same conditions with the freeze data/on-board snapshot.

DTC C1873-00 (16-04) (AWD)

DTC C1873-00 : Steering Angle Sensor Malfunction

NOTE: Before you troubleshoot, **review the General Troubleshooting Information**.

DTC Description	DTC	Freeze Frame
C1873-00 Steering Angle Sensor Malfunction	B	B

DTC (Real Time AWD)

1. Problem verification

-1. Turn the vehicle to the ON mode.

-2. Clear the DTC with the HDS.

-3. Turn the vehicle to the OFF (LOCK) mode.

-4. Start the engine.

-5. Check for DTCs with the HDS.

DTC Description	DTC	Freeze Frame
C1873-00 Steering Angle Sensor Malfunction	B	B

Is DTC C1873-00 indicated?

YES

The failure is duplicated. Go to step 2.

NO

Intermittent failure, the system is OK at this time.

2. VSA system DTC check

-1. Check for DTCs in the VSA system with the HDS.

DTC Description	DTC	Freeze Frame
B	B	B

Are any DTCs indicated?

YES

Go to the indicated DTC's troubleshooting in the VSA system .

NO

Intermittent failure, the system is OK at this time. If the freeze data/on-board snapshot of this DTC is recorded, try to reproduce the failure under the same conditions with the freeze data/on-board snapshot.

DTC U0100-00 (41-01), U0101-00 (41-04), U0122-00 (41-02), U0131-00 (41-09), U0151-00 (41-08) (AWD (WITH CAN GATEWAY)) (2017 2018 2019)

DTC U0100-00 : F-CAN Malfunction (Lost Communication with Powertrain Control Module (PCM))**DTC U0101-00** : F-CAN Malfunction (Lost Communication with A/T Control System)**DTC U0122-00** : F-CAN Malfunction (Lost Communication with VSA Modulator-Control Unit)**DTC U0131-00** : F-CAN Malfunction (Lost Communication with EPS Control Unit)**DTC U0151-00** : F-CAN Malfunction (Lost Communication with SRS unit)

NOTE:

- Before you troubleshoot, **review the general troubleshooting information**.
- According to the detected DTC (s), check for the power circuit and the ground circuit of the control unit which cannot communicate with the AWD control unit.
- Before disconnecting the SRS unit connector, **do the 12 volt battery terminal disconnection procedure** , and wait for at least 3 minutes.

DTC Description	DTC	Freeze Frame
U0100-00 F-CAN Malfunction (Lost Communication with Powertrain Control Module (PCM))	B	B
U0101-00 F-CAN Malfunction (Lost Communication with	B	B

DTC Description	DTC	Freeze Frame
A/T Control System)		
U0122-00 F-CAN Malfunction (Lost Communication with VSA Modulator-Control Unit)	B	B
U0131-00 F-CAN Malfunction (Lost Communication with EPS control unit)	B	B
U0151-00 F-CAN Malfunction (Lost Communication with SRS unit)	B	B

DTC (Real Time AWD)

1. CAN gateway system DTC check

   -1. Turn the vehicle to the ON mode.

   -2. Check for CAN gateway system DTCs with the HDS.

DTC Description	DTC
U0029-00 CAN Gateway F-CAN ch A Bus Off	B
U0047-00 CAN Gateway F-CAN ch B Bus Off	B
U3000-49 CAN Gateway Internal Failure	B

   Is DTC U0029-00, U0047-00, and/or U3000-49 indicated?

   YES

   Go to the troubleshooting for CAN gateway system DTC (s) .

   NO

   Go to step 2.

2. F-CAN circuit communication check (Receiving control unit)

   -1. Select the FUNCTION TEST in the CAN gateway with the HDS, then select the F-CAN Bus Connected Unit Check.

   F-CAN Bus Connected Unit Check

   Which result is indicated?

   Bus B is Not Available

   Go to step 3.

   Bus B is Available

   Go to step 4.

3. Open wire check (F-CAN B H line, F-CAN B L line)

   -1. Turn the vehicle to the OFF (LOCK) mode.

   -2. Disconnect the following connectors.

CAN gateway 12P connector	
Real time AWD control unit 24P connector	

-3. Check for continuity between test points 1 and 2.

Test condition	Vehicle OFF (LOCK) mode
B	CAN gateway 12P connector: disconnected
B	Real time AWD control unit 24P connector: disconnected
Test point 1	CAN gateway 12P connector (female terminals) No. 12: ①
Test point 2	**AWD control unit 24P connector No. 14**

Test point 1	CAN gateway 12P connector (female terminals) No. 5: ①
Test point 2	**AWD control unit 24P connector No. 24**

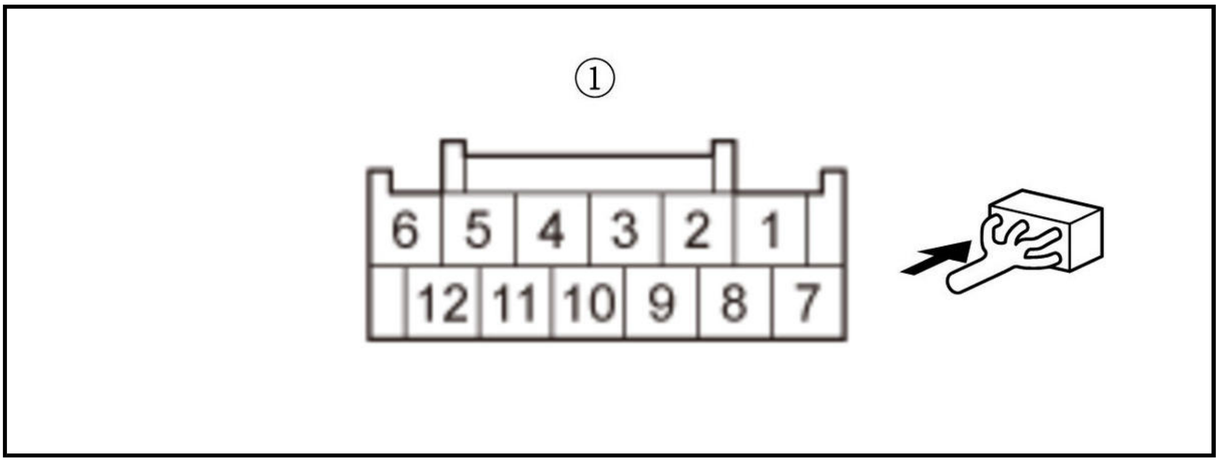

Is there continuity?

YES

The F-CAN B H wire and the F-CAN B L wire are OK. Check for poor connections or loose terminals at the CAN gateway and the AWD control unit. Check for any authorized service information related to the DTCs or symptoms you are troubleshooting, or **substitute a known-good real time AWD control unit** , then recheck. If indicated DTC goes away and the AWD control unit was substituted, **replace the original real time AWD control unit** .

NO

Repair an open in the F-CAN B H wire or the F-CAN B L wire between the AWD control unit and the CAN gateway.

4. F-CAN circuit communication check (Transmitting control unit)

-1. Select the FUNCTION TEST in the CAN gateway with the HDS, then select the F-CAN Bus Connected Unit Check.

-2. According to the detected DTC on the following table, make sure that the transmitting control unit detects the CAN gateway Bus channel (s) normally.

DTC	Transmitting control unit	Detected CAN getaway Bus channel (s) at normal
U0100-00	PCM	A, B
U0101-00	TCM	A
U0122-00	VSA modulator-control unit	A, B
U0131-00	EPS control unit	B
U0151-00	SRS unit	B

Is it detected normally?

Detected normal

Intermittent failure, the system is OK at this time. Check for poor connections or loose terminals at the transmitting control unit and the CAN gateway.

U0100-00: PCM is Not Available for Bus A

Go to step 5.

U0100-00: PCM is Not Available for Bus B

Go to step 6.

U0101-00: TCM is Not Available for Bus A

Go to step 5.

U0122-00: VSA modulator-control unit is Not Available for Bus A

Go to step 5.

U0122-00: VSA modulator-control unit is Not Available for Bus B

Go to step 6.

U0131-00: EPS control unit is Not Available for Bus B

Go to step 6.

U0151-00: SRS unit is Not Available for Bus B

Go to step 6.

5. Open wire check (F-CAN A H line, F-CAN A L line)

   -1. Turn the vehicle to the OFF (LOCK) mode.

   -2. According to the detected DTC on the following table, disconnect the transmitting control unit connector (s).

DTC	Connector
-	CAN gateway 12P connector
U0100-00	PCM connector A (50P)
U0101-00	TCM 50P connector
U0122-00	VSA modulator-control unit 46P connector

   NOTE: Before disconnecting the PCM and TCM connector, jump the SCS line with the HDS, and wait for more than 1 minute.

   -3. Check for continuity between test points 1 and 2.

Test condition	Vehicle OFF (LOCK) mode
B	CAN gateway 12P connector: disconnected
B	Transmitting control unit connector (s) for indicated DTCs: disconnected

DTC	Circuit name	Test point 1 (Receiving control unit)		Test point 2 (Transmitting control unit)	
		Connector	Terminal	Connector	Terminal
U0100-00	F-CAN A H	CAN gateway 12P connector (female terminals): ①	No. 3	**PCM connector A (50P)**	No. 37
	F-CAN A L		No. 9		No. 36
U0101-00	F-CAN A H	CAN gateway 12P connector (female terminals): ①	No. 3	**TCM 50P connector**	No. 3
	F-CAN A L		No. 9		No. 11
U0122-00	F-CAN A H	CAN gateway 12P connector (female terminals): ①	No. 3	**VSA modulator-control unit 46P connector**	No. 40
	F-CAN A L		No. 9		No. 28

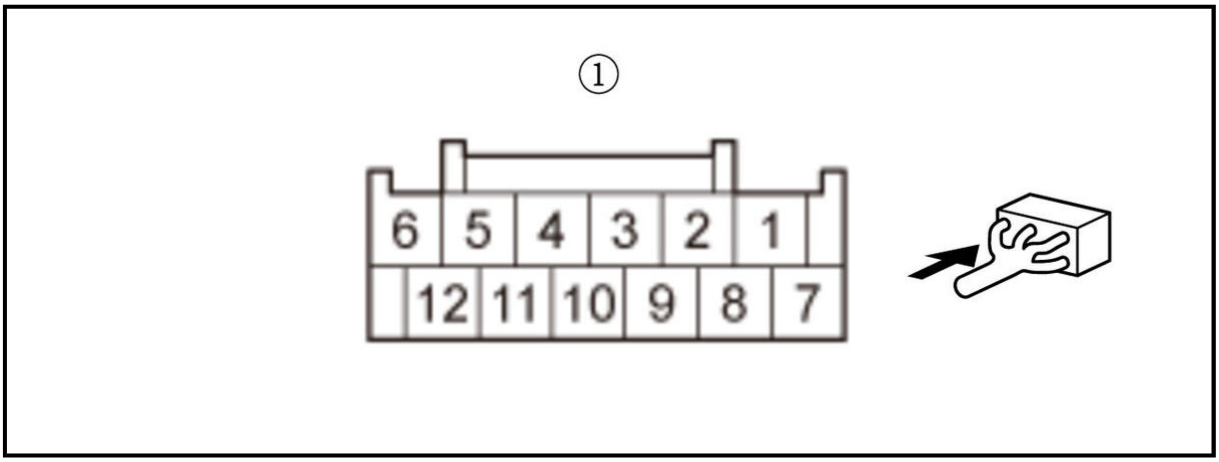

Is there continuity?

YES

The F-CAN A H wire and the F-CAN A L wire are OK. According to the detected DTC on the following table, substitute or replace the correspond control unit.

DTC	Operation for transmitting control unit
U0100-00	Check for poor connections or loose terminals at the CAN gateway and the PCM. **Substitute a known-good PCM** , then recheck. If DTC U0100-00 goes away and the PCM was substituted, **replace the original PCM** .
U0101-00	Check for poor connections or loose terminals at the CAN gateway and the TCM. **Substitute a known-good TCM** , then recheck. If DTC U0101-00 goes away and the TCM was substituted, **replace the original TCM** .
U0122-00	Check for poor connections or loose terminals at the CAN gateway and the VSA modulator-control unit. **Replace the VSA modulator-control unit** .

NO

Repair an open in the F-CAN A H wire or the F-CAN A L wire between the transmitting control unit and the CAN gateway.

6. Open wire check (F-CAN B H line, F-CAN B L line)

-1. Turn the vehicle to the OFF (LOCK) mode.

-2. According to the detected DTC on the following table, disconnect the transmitting control unit connector (s).

DTC	Connector
-	CAN gateway 12P connector
U0100-00	PCM connector A (50P)
U0122-00	VSA modulator-control unit 46P connector
U0131-00	EPS control unit connector B (6P)
U0151-00	SRS unit connector A (39P)

NOTE: Before disconnecting the PCM connector, jump the SCS line with the HDS, and wait for more than 1 minute.

-3. Check for continuity between test points 1 and 2.

Test condition	Vehicle OFF (LOCK) mode
B	CAN gateway 12P connector: disconnected
B	Transmitting control unit connector (s) for indicated DTCs: disconnected

DTC	Circuit name	Test point 1 (Receiving control unit)		Test point 2 (Transmitting control unit)	
		Connector	**Terminal**	**Connector**	**Terminal**
U0100-00	F-CAN B H	CAN gateway 12P connector (female terminals): ①	No. 12	PCM connector A (50P)	No. 39
	F-CAN B L		No. 5		No. 38
U0122-00	F-CAN B H	CAN gateway 12P connector (female terminals): ①	No. 12	VSA modulator-control unit 46P connector	No. 46
	F-CAN B L		No. 5		No. 34
U0131-00	F-CAN B H	CAN gateway 12P connector (female terminals): ①	No. 12	EPS control unit connector B (6P)	No. 3
	F-CAN B L		No. 5		No. 1

DTC	Circuit name	Test point 1 (Receiving control unit)		Test point 2 (Transmitting control unit)	
		Connector	**Terminal**	**Connector**	**Terminal**
U0151-00	F-CAN B H	CAN gateway 12P connector (female terminals): ①	No. 12	SRS unit connector A (39P)	No. 34
	F-CAN B L		No. 5		No. 35

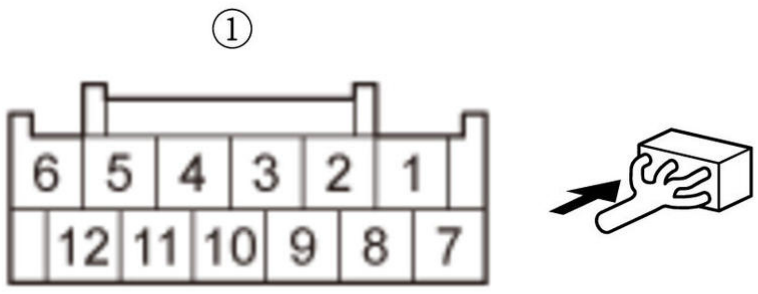

Is there continuity?

YES

The F-CAN B H wire and the F-CAN B L wire are OK. According to the detected DTC on the following table, substitute or replace the correspond control unit.

DTC	Operation for transmitting control unit
U0100-00	Check for poor connections or loose terminals at the CAN gateway and the PCM. **Substitute a known-good PCM** , then recheck. If DTC U0100-00 goes away and the multipurpose camera unit was substituted, **replace the original PCM** .
U0122-00	Check for poor connections or loose terminals at the CAN gateway and the VSA modulator-control unit. **Replace the VSA modulator-control unit** .
U0131-00	Check for poor connections or loose terminals at the CAN gateway and the EPS control unit. **Substitute the EPS control unit** , then recheck. If DTC U0131-00 goes away and the EPS control unit was substituted, **replace the original EPS control unit** .
U0151-00	Check for poor connections or loose terminals at the CAN gateway and the SRS unit. **Substitute the SRS unit** , then recheck. If DTC U0151-00 goes away and the SRS unit was substituted, **replace the original SRS unit** .

NO

Repair an open in the F-CAN B H wire or the F-CAN B L wire between the transmitting control unit and the CAN gateway.

DTC U0100-00 (41-01), U0101-00 (41-04), U0122-00 (41-02), U0131-00 (41-09), U0151-00 (41-08) (AWD (WITH CAN GATEWAY)) (2020 2021)

DTC U0100-00 : F-CAN Malfunction (Lost Communication with Powertrain Control Module (PCM))**DTC U0101-00** : F-CAN Malfunction (Lost Communication with A/T Control System)**DTC U0122-00** : F-CAN Malfunction (Lost Communication with VSA Modulator-Control Unit)**DTC U0131-00** : F-CAN Malfunction (Lost Communication with EPS Control Unit)**DTC U0151-00** : F-CAN Malfunction (Lost Communication with SRS unit)

NOTE:

- Before you troubleshoot, **review the general troubleshooting information**.
- According to the detected DTC (s), check for the power circuit and the ground circuit of the control unit which cannot communicate with the AWD control unit.
- Before disconnecting the SRS unit connector, **do the 12 volt battery terminal disconnection procedure** , and wait for at least 3 minutes.

DTC Description	DTC	Freeze Frame
U0100-00 F-CAN Malfunction (Lost Communication with Powertrain Control Module (PCM))	B	B
U0101-00 F-CAN Malfunction (Lost Communication with A/T Control System)	B	B
U0122-00 F-CAN Malfunction (Lost Communication with VSA Modulator-Control Unit)	B	B
U0131-00 F-CAN Malfunction (Lost Communication with EPS control unit)	B	B
U0151-00 F-CAN Malfunction (Lost Communication with SRS unit)	B	B

DTC (Real Time AWD)

1. CAN gateway system DTC check

-1. Turn the vehicle to the ON mode.

-2. Check for CAN gateway system DTCs with the HDS.

DTC Description	DTC
U0029-00 CAN Gateway F-CAN ch A Bus Off	B
U0047-00 CAN Gateway F-CAN ch B Bus Off	B
U3000-49 CAN Gateway Internal Failure	B

Is DTC U0029-00, U0047-00, and/or U3000-49 indicated?

YES

Go to the troubleshooting for CAN gateway system DTC (s) .

NO

Go to step 2.

2. F-CAN circuit communication check (Receiving control unit)

-1. Select the FUNCTION TEST in the CAN gateway with the HDS, then select the F-CAN Bus Connected Unit Check.

F-CAN Bus Connected Unit Check

Which result is indicated?

Bus B is Not Available

Go to step 3.

Bus B is Available

Go to step 4.

3. Open wire check (F-CAN B H line, F-CAN B L line)

-1. Turn the vehicle to the OFF (LOCK) mode.

-2. Disconnect the following connectors.

CAN gateway 16P connector
Real time AWD control unit 24P connector

-3. Measure the resistance between test points 1 and 2.

Test condition	Vehicle OFF (LOCK) mode
B	CAN gateway 16P connector: disconnected
B	Real time AWD control unit 24P connector: disconnected
Test point 1	CAN gateway 16P connector (female terminals) No. 6: ①
Test point 2	**AWD control unit 24P connector No. 14**

Test point 1	CAN gateway 16P connector (female terminals) No. 14: ①
Test point 2	**AWD control unit 24P connector No. 24**

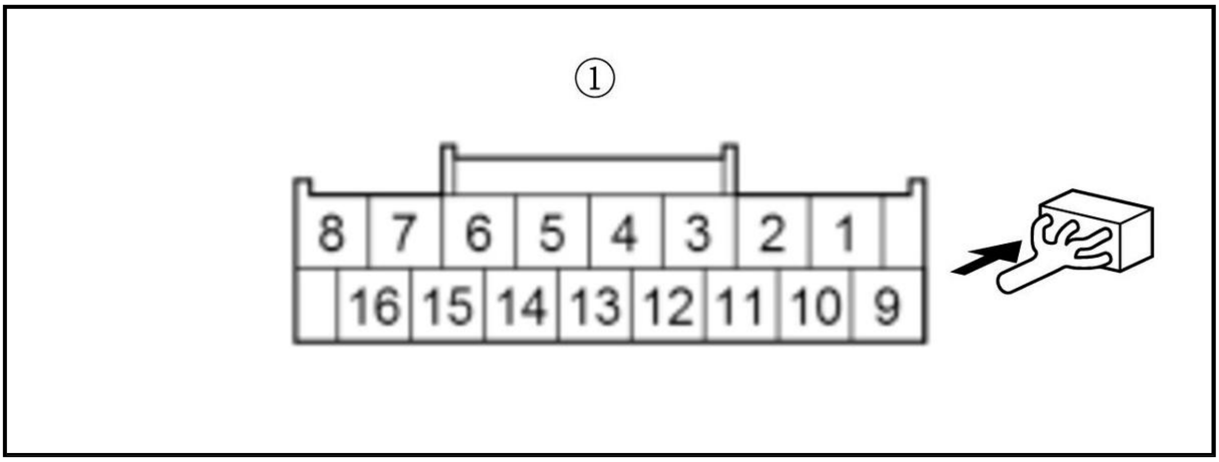

Is there 1.0 Ω or less?

YES

The F-CAN B H wire and the F-CAN B L wire are OK. Check for poor connections or loose terminals at the CAN gateway and the AWD control unit. Check for any authorized service information related to the DTCs or symptoms you are troubleshooting, or **substitute a known-good real time AWD control unit** , then recheck. If indicated DTC goes away and the AWD control unit was substituted, **replace the original real time AWD control unit** .

NO

Repair an open in the F-CAN B H wire or the F-CAN B L wire between the AWD control unit and the CAN gateway.

4. F-CAN circuit communication check (Transmitting control unit)

-1. Select the FUNCTION TEST in the CAN gateway with the HDS, then select the F-CAN Bus Connected Unit Check.

-2. According to the detected DTC on the following table, make sure that the transmitting control unit detects the CAN gateway Bus channel (s) normally.

DTC	Transmitting control unit	Detected CAN getaway Bus channel (s) at normal
U0100-00	PCM	A, B
U0101-00	TCM	A
U0122-00	VSA modulator-control unit	A, B
U0131-00	EPS control unit	B
U0151-00	SRS unit	B

Is it detected normally?

Detected normal

Intermittent failure, the system is OK at this time. Check for poor connections or loose terminals at the transmitting control unit and the CAN gateway.

U0100-00: PCM is Not Available for Bus A

Go to step 5.

U0100-00: PCM is Not Available for Bus B

Go to step 6.

U0101-00: TCM is Not Available for Bus A

Go to step 5.

U0122-00: VSA modulator-control unit is Not Available for Bus A

Go to step 5.

U0122-00: VSA modulator-control unit is Not Available for Bus B

Go to step 6.

U0131-00: EPS control unit is Not Available for Bus B

Go to step 6.

U0151-00: SRS unit is Not Available for Bus B

Go to step 6.

5. Open wire check (F-CAN A H line, F-CAN A L line)

-1. Turn the vehicle to the OFF (LOCK) mode.

-2. According to the detected DTC on the following table, disconnect the transmitting control unit connector (s).

DTC	Connector
-	CAN gateway 16P connector
U0100-00	PCM connector A (50P)
U0101-00	TCM 50P connector
U0122-00	VSA modulator-control unit 46P connector

NOTE: Before disconnecting the PCM and TCM connector, jump the SCS line with the HDS, and wait for more than 1 minute.

-3. Measure the resistance between test points 1 and 2.

Test condition	Vehicle OFF (LOCK) mode
B	CAN gateway 16P connector: disconnected
B	Transmitting control unit connector (s) for indicated DTCs: disconnected

DTC	Circuit name	Test point 1 (Receiving control unit)		Test point 2 (Transmitting control unit)	
		Connector	Terminal	Connector	Terminal
U0100-00	F-CAN A H	CAN gateway 16P connector (female terminals): ①	No. 3	**PCM connector A (50P)**	No. 37
	F-CAN A L		No. 11		No. 36
U0101-00	F-CAN A H	CAN gateway 16P connector (female terminals): ①	No. 3	**TCM 50P connector**	No. 3
	F-CAN A L		No. 11		No. 11
U0122-00	F-CAN A H	CAN gateway 16P connector (female terminals): ①	No. 3	**VSA modulator-control unit 46P connector**	No. 40
	F-CAN A L		No. 11		No. 28

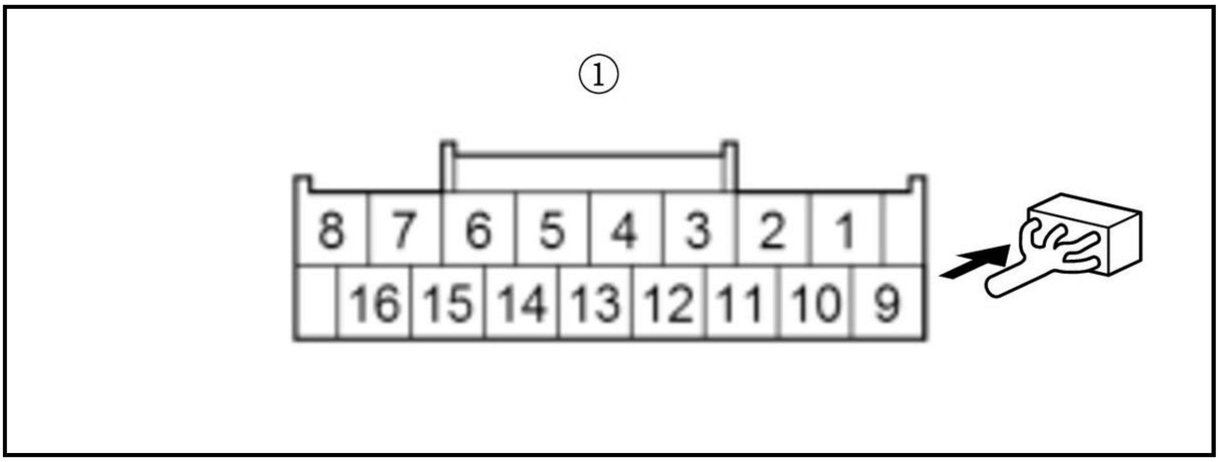

Is there 1.0 Ω or less?

YES

The F-CAN A H wire and the F-CAN A L wire are OK. According to the detected DTC on the following table, substitute or replace the correspond control unit.

DTC	Operation for transmitting control unit
U0100-00	Check for poor connections or loose terminals at the CAN gateway and the PCM. **Substitute a known-good PCM** , then recheck. If DTC U0100-00 goes away and the PCM was substituted, **replace the original PCM** .
U0101-00	Check for poor connections or loose terminals at the CAN gateway and the TCM. **Substitute a known-good TCM** , then recheck. If DTC U0101-00 goes away and the TCM was substituted, **replace the original TCM** .
U0122-00	Check for poor connections or loose terminals at the CAN gateway and the VSA modulator-control unit. **Replace the VSA modulator-control unit** .

NO

Repair an open in the F-CAN A H wire or the F-CAN A L wire between the transmitting control unit and the CAN gateway.

6. Open wire check (F-CAN B H line, F-CAN B L line)

-1. Turn the vehicle to the OFF (LOCK) mode.

-2. According to the detected DTC on the following table, disconnect the transmitting control unit connector (s).

DTC	Connector
-	CAN gateway 16P connector
U0100-00	PCM connector A (50P)
U0122-00	VSA modulator-control unit 46P connector
U0131-00	EPS control unit connector B (6P)
U0151-00	SRS unit connector A (39P)

NOTE: Before disconnecting the PCM connector, jump the SCS line with the HDS, and wait for more than 1 minute.

-3. Measure the resistance between test points 1 and 2.

Test condition	Vehicle OFF (LOCK) mode
B	CAN gateway 16P connector: disconnected

B	Transmitting control unit connector (s) for indicated DTCs: disconnected

DTC	Circuit name	Test point 1 (Receiving control unit)		Test point 2 (Transmitting control unit)	
		Connector	Terminal	Connector	Terminal
U0100-00	F-CAN B H	CAN gateway 16P connector (female terminals): ①	No. 6	**PCM connector A (50P)**	No. 39
	F-CAN B L		No. 14		No. 38
U0122-00	F-CAN B H	CAN gateway 16P connector (female terminals): ①	No. 6	**VSA modulator-control unit 46P connector**	No. 46
	F-CAN B L		No. 14		No. 34
U0131-00	F-CAN B H	CAN gateway 16P connector (female terminals): ①	No. 6	**EPS control unit connector B (6P)**	No. 3
	F-CAN B L		No. 14		No. 1

DTC	Circuit name	Test point 1 (Receiving control unit)		Test point 2 (Transmitting control unit)	
		Connector	Terminal	Connector	Terminal
U0151-00	F-CAN B H	CAN gateway 16P connector (female terminals): ①	No. 6	**SRS unit connector A (39P)**	No. 34
	F-CAN B L		No. 14		No. 35

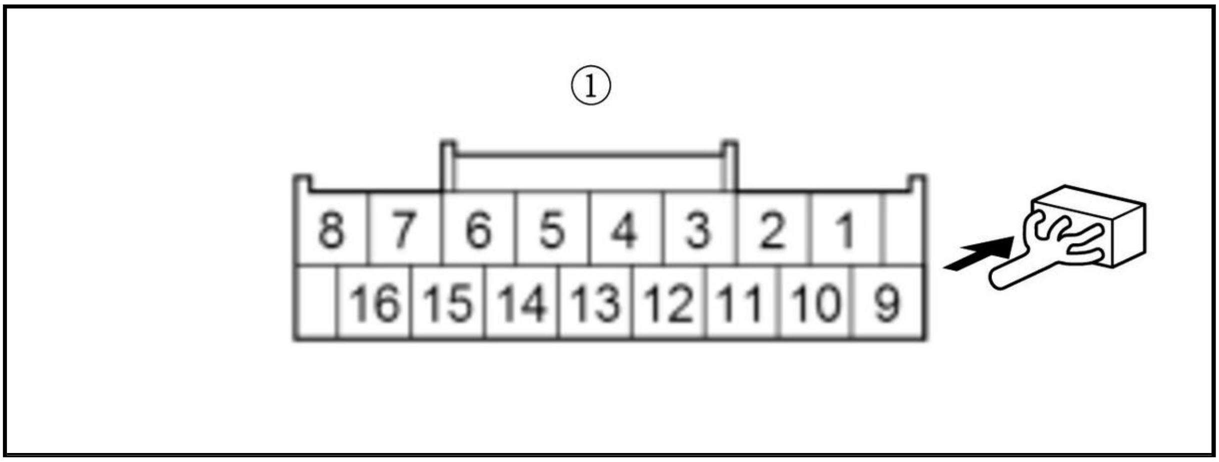

Is there 1.0 Ω or less?

YES

The F-CAN B H wire and the F-CAN B L wire are OK. According to the detected DTC on the following table, substitute or replace the correspond control unit.

DTC	Operation for transmitting control unit
U0100-00	Check for poor connections or loose terminals at the CAN gateway and the PCM. **Substitute a known-good PCM** , then recheck. If DTC U0100-00 goes away and the multipurpose camera unit was substituted, **replace the original PCM** .
U0122-00	Check for poor connections or loose terminals at the CAN gateway and the VSA modulator-control unit. **Replace the VSA modulator-control unit** .
U0131-00	Check for poor connections or loose terminals at the CAN gateway and the EPS control unit. **Substitute the EPS control unit** , then recheck. If DTC U0131-00 goes away and the EPS control unit was substituted, **replace the original EPS control unit** .

DTC	Operation for transmitting control unit
U0151-00	Check for poor connections or loose terminals at the CAN gateway and the SRS unit. **Substitute the SRS unit** , then recheck. If DTC U0151-00 goes away and the SRS unit was substituted, **replace the original SRS unit** .

NO

Repair an open in the F-CAN B H wire or the F-CAN B L wire between the transmitting control unit and the CAN gateway.

DTC U0100-00 (41-01), U0122-00 (41-02), U0131-00 (41-09), U0151-00 (41-08) (AWD (WITHOUT CAN GATEWAY))

DTC U0100-00 : F-CAN Malfunction (Lost Communication with Powertrain Control Module (PCM))**DTC U0101-00** : F-CAN Malfunction (Lost Communication with AT Control System)**DTC U0122-00** : F-CAN Malfunction (Lost Communication with VSA Modulator-Control Unit)**DTC U0131-00** : F-CAN Malfunction (Lost Communication with EPS System)**DTC U0151-00** : F-CAN Malfunction (Lost Communication with SRS unit)

NOTE: Before you troubleshoot, **review the General Troubleshooting Information for the AWD with intelligent control system**.

DTC Description	DTC	Freeze Frame
U0100-00 F-CAN Malfunction (Lost Communication with Powertrain Control Module (PCM))	B	B
U0101-00 F-CAN Malfunction (Lost Communication with A/T Control System)	B	B
U0122-00 F-CAN Malfunction (Lost Communication with VSA Modulator-Control Unit)	B	B
U0131-00 F-CAN Malfunction (Lost Communication with EPS control unit)	B	B
U0151-00 F-CAN Malfunction (Lost Communication with SRS unit)	B	B

1. Problem verification (DTC check)

   -1. Turn the vehicle to the ON mode.

   -2. Clear the DTC with the HDS.

   -3. Turn the vehicle to the OFF (LOCK) mode.

   -4. Start the engine.

   -5. Check for DTCs with the HDS.

DTC Description	DTC	Freeze Frame
U0100-00 F-CAN Malfunction (Lost Communication with Powertrain Control Module (PCM))	B	B
U0101-00 F-CAN Malfunction (Lost Communication with A/T Control System)	B	B
U0122-00 F-CAN Malfunction (Lost Communication with VSA Modulator-Control Unit)	B	B
U0131-00 F-CAN Malfunction (Lost Communication with EPS control unit)	B	B
U0151-00 F-CAN Malfunction (Lost Communication with	B	B

DTC Description	DTC	Freeze Frame
SRS unit)		

Is DTC U0100-00, U0101-00, U0122-00, U0131-00 or U0151-00 indicated?

DTC U0100-00 or U0101-00 is indicated

The failure is duplicated. Go to step 2.

DTC U0122-00 is indicate

The failure is duplicated. Go to step 3.

DTC U0131-00 is indicated

The failure is duplicated. Go to step 4.

DTC U0151-00 is indicated

The failure is duplicated. Go to step 4.

DTC is not indicated

Intermittent failure, the system is OK at this time. If the freeze data/on-board snapshot of this DTC is recorded, try to reproduce the failure under the same conditions with the freeze data/on-board snapshot.

2. Open wire check (F-CAN H, F-CAN L lines)1

-1. Turn the vehicle to the OFF (LOCK) mode, and wait 2 minutes.

-2. Jump the SCS line with the HDS, and wait more than 1 minute.

-3. Disconnect the following connectors.

AWD control unit 24P connector
PCM connector A 51P connector

-4. Check for continuity between test points 1 and 2.

Test condition	Vehicle OFF (LOCK) mode
B	AWD control unit 24P connector: disconnected
B	PCM connector A: disconnected
Test point 1	**AWD control unit 24P connector No. 14**
Test point 2	**PCM connector A (51P) No. 2**

Test point 1	**AWD control unit 24P connector No. 24**
Test point 2	**PCM connector A (51P) No. 1**

Is there continuity?

YES

Substitute a known-good PCM and recheck. If the symptom/indication goes away with the PCM, troubleshooting is complete. If the symptom/indication goes away with a known-good PCM, **replace the original PCM** .

NO

Repair an open in the F-CAN H and/or F-CAN L wires between the AWD control unit and the PCM.

3. Open wire check (F-CAN H, F-CAN L lines)2

-1. Turn the vehicle to the OFF (LOCK) mode.

-2. Disconnect the following connectors.

AWD control unit 24P connector
VSA modulator-control unit 46P connector

-3. Check for continuity between test points 1 and 2.

Test condition	Vehicle OFF (LOCK) mode
B	AWD control unit 24P connector: disconnected
B	VSA modulator-control unit 46P connector: disconnected
Test point 1	**AWD control unit 24P connector No. 14**
Test point 2	**VSA modulator-control unit 46P connector No. 40**

Test point 1	**AWD control unit 24P connector No. 24**

Test point 2	**VSA modulator-control unit 46P connector No. 28**

Is there continuity?

YES

Update the VSA modulator-control unit if it does not have the latest software , and recheck. If the symptom/indication goes away with the updated VSA modulator-control unit, troubleshooting is complete. If the symptom/indication does not goes away with the updated the VSA modulator-control unit, **replace the VSA modulator-control unit** .

NO

Repair an open in the F-CAN H and/or F-CAN L wires between the AWD control unit and the VSA modulator-control unit.

4. Open wire check (F-CAN H, F-CAN L lines)3

-1. Turn the vehicle to the OFF (LOCK) mode.

-2. Disconnect the following connectors.

AWD control unit 24P connector
EPS control unit B 6P connector

-3. Check for continuity between test points 1 and 2.

Test condition	Vehicle OFF (LOCK) mode
B	AWD control unit 24P connector: disconnected
B	EPS control unit B 6P connector
Test point 1	**AWD control unit 24P connector No. 14**
Test point 2	**EPS control unit B 6P connector No. 3**

Test point 1	**AWD control unit 24P connector No. 24**
Test point 2	**EPS control unit B 6P connector No. 1**

Is there continuity?

YES

Replace the EPS control unit .

NO

Repair an open in the F-CAN H and/or F-CAN L wires between the AWD control unit and the EPS control unit.

5. Open wire check (F-CAN H, F-CAN L lines)4

   -1. Turn the vehicle to the OFF (LOCK) mode.

   -2. Disconnect the following connectors.

AWD control unit 24P connector
SRS unit A 39P connector

   -3. Check for continuity between test points 1 and 2.

Test condition	Vehicle OFF (LOCK) mode
B	AWD control unit 24P connector: disconnected
B	SRS unit A 39P connector
Test point 1	AWD control unit 24P connector No. 14
Test point 2	SRS unit A 39P connector No. A34

Test point 1	AWD control unit 24P connector No. 24
Test point 2	SRS unit A 39P connector No. A35

Is there continuity?

YES

Replace the SRS unit .

NO

Repair an open in the F-CAN H and/or F-CAN L wires between the AWD control unit and the SRS unit.

DTC U3000-49 (78-XX) (AWD)

DTC U3000-49 : Control Module Internal Control Module Malfunction

NOTE: Before you troubleshoot, review the General Troubleshooting Information.

DTC Description	DTC	Freeze Frame
U3000-49 Control Module Internal Control Module Malfunction	B	B

DTC (Real Time AWD)

1. Problem verification

   -1. Turn the vehicle to the ON mode.

   -2. Clear the DTC with the HDS.

   -3. Turn the vehicle to the OFF (LOCK) mode.

-4. Start the engine.

-5. Check for DTCs with the HDS.

DTC Description	DTC	Freeze Frame
U3000-49 Control Module Internal Control Module Malfunction	B	B

Is DTC U3000-49 indicated?

YES

The failure is duplicated. Check for any authorized service information related to the DTCs or symptoms you are troubleshooting or **substitute a known-good AWD control unit** , and recheck. If the symptom/indication goes away with a known-good AWD control unit, **replace the original AWD control unit** .

NO

Intermittent failure, the system is OK at this time. If the freeze data/on-board snapshot of this DTC is recorded, try to reproduce the failure under the same conditions with the freeze data/on-board snapshot.

DTC U3000-51 (91-01) (AWD)

DTC U3000-51 : Control Module Programming Error

NOTE: Before you troubleshoot, **review the General Troubleshooting Information**.

DTC Description	DTC	Freeze Frame
U3000-51 Control Module Programming Error	B	B

DTC (Real Time AWD)

1. Problem verification

-1. Turn the vehicle to the ON mode.

-2. **Update the AWD control unit if it does not have the latest software** .

-3. Clear the DTC with the HDS.

-4. Turn the vehicle to the OFF (LOCK) mode.

-5. Start the engine.

-6. Check for DTCs with the HDS.

DTC Description	DTC	Freeze Frame
U3000-51 Control Module Programming Error	B	B

Is DTC U3000-51 indicated?

YES

The failure is duplicated. **Substitute a known-good AWD control unit** , and recheck. If the symptom/indication goes away with a known-good AWD control unit, **replace the original AWD control unit** .

NO

Intermittent failure, the system is OK at this time. If the freeze data/on-board snapshot of this DTC is recorded, try to reproduce the failure under the same conditions with the freeze data/on-board snapshot.

HOW TO INFORMATION

HOW TO TROUBLESHOOT THE REAL TIME AWD SYSTEM (AWD)

System Indicator

The system has AWD system indicator comes on in the MID.

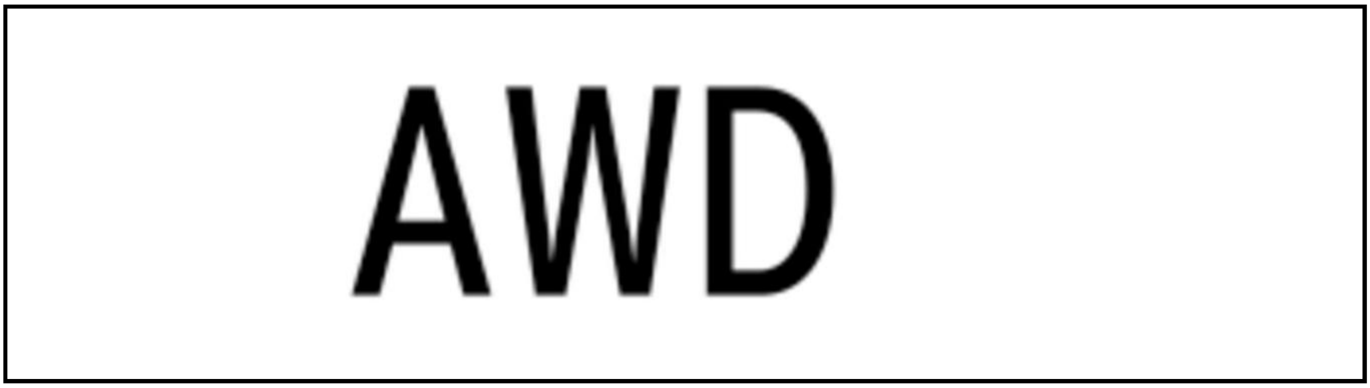

NOTE: For locations of each indicator, refer to gauge control module component location index .

AWD System Indicator

The AWD system indicator will come on under certain conditions even if the real time AWD system is working normally. Here are some examples:

- When you use high-powered wireless equipment such as a CB or Ham radio in the vehicle.
- When you keep spinning the rear wheels while the vehicle is stuck in sand, mud, snow, etc.
- When the 12 volt battery voltage suddenly drops below 8 volts.

After the AWD system indicator comes on, it stays on until you turn the vehicle to the OFF (LOCK) mode.

Diagnostic Trouble Code (DTC)

- The real time AWD control unit can memorize up to eight different DTCs. The system displays the DTCs by blinking the AWD system indicator. Multiple DTCs are displayed in the order they occurred, beginning with the most recent.
- If the same DTC is detected more than once, the most recent DTC is written over the earlier one. Therefore, when the same problem is detected more than once, it is memorized as a single DTC.
- The DTCs are memorized in the real time AWD control units EEPROM (non-volatile memory). Therefore, the memorized DTCs are not cleared when the 12 volt battery is disconnected or when the real time AWD control unit is disconnected.
- If there is a problem in the central processing unit (CPU) of the real time AWD control unit, the AWD system indicator comes on, but no DTC is memorized. Refer to the symptom troubleshooting.

Self-Diagnosis

When a problem is detected during self-diagnosis, the system does the following:

- Turns the AWD system indicator on.
- Memorizes the DTC if possible.
- Stops AWD control and returns the vehicle back to two-wheel drive mode (front wheel only).

How to Use the HDS (Honda Diagnostic System)

1. Turn the vehicle to the OFF (LOCK) mode, then connect the Honda Diagnostic System (HDS) to the DLC

2. Turn the vehicle to the ON mode.

3. Make sure the HDS communicates with the vehicle and the real time AWD control unit. If it does not communicate, go to the real time AWD system symptom troubleshooting for HDS does not communicate

4. Check the diagnostic trouble code (DTC) and the freeze data for all systems in the vehicle, troubleshoot the powertrain DTCs first and note them. Then refer to the indicated DTC's troubleshooting, and do the appropriate troubleshooting procedure.

NOTE:

- The HDS can read the DTC, the freeze data, the current data, and other system data.
- For specific operations, refer to the help menu that came with the HDS.
- It is best do an ALL DTC CHECK to look for other systems DTCs that are related to the problem.

How to Check for Diagnostic Trouble Codes (DTCs)

When the real time AWD control unit senses an abnormality in the input or output systems, the AWD system indicator in the gauge control module will usually come on, the MIL, the D indicator, the VSA indicator, and/or the ABS indicator may also come on.

NOTE: Make sure the 12 volt battery is in good condition and fully charged.

1. Turn the vehicle to the OFF (LOCK) mode, then connect the HDS to the DLC .

2. Turn the vehicle to the ON mode. Make sure the HDS communicates with the vehicle and the real time AWD control unit. If it does not communicate, go to the real time AWD system symptom troubleshooting for HDS does not communicate . Follow the prompts on the HDS to display the DTC (s) on the screen. Check the DTC and the freeze data for all systems. After determining the DTC (s), refer to the DTC Troubleshooting.

NOTE: See the HDS help menu for specific instructions.

3. If there are PGM-FI system DTCs and other system DTCs at the same time, troubleshoot the PGM-FI system DTCs first, otherwise the real time AWD DTC may return.

4. After recording the DTCs, clear all DTCs.

5. Test-drive the vehicle for several minutes in 4WD mode, and check for DTCs. If the DTC returns, refer to the DTC Troubleshooting. If the DTC does not return, there was an intermittent problem within the circuit. Make sure all connectors and terminals in the circuit are tight.

How to Clear DTCs

1. Turn the vehicle to the OFF (LOCK) mode, then connect the HDS to the DLC

2. Turn the vehicle to the ON mode.

3. Make sure the HDS communicates with the vehicle and the real time AWD control unit. If it does not communicate, go to the real time AWD system symptom troubleshooting for HDS does not communicate

4. Clear the DTC (s) by following the screen prompts on the HDS in the REAL TIME AWD DATA LIST.

5. Turn the vehicle to the OFF (LOCK) mode.

NOTE: If the DTC that was cleared is related to another system, that system's DTC must be repaired, or the real time AWD DTC will return.

How to Troubleshoot Circuits at the Real Time AWD Control Unit

Special Tools Required

Backprobe Set 07SAZ-001000A (2)

1. **Remove the rear left side trim panel** .

2. Inspect the circuit on the real time AWD control unit according to the DTC Troubleshooting using the backprobe set and a digital multimeter or an analog circuit tester.

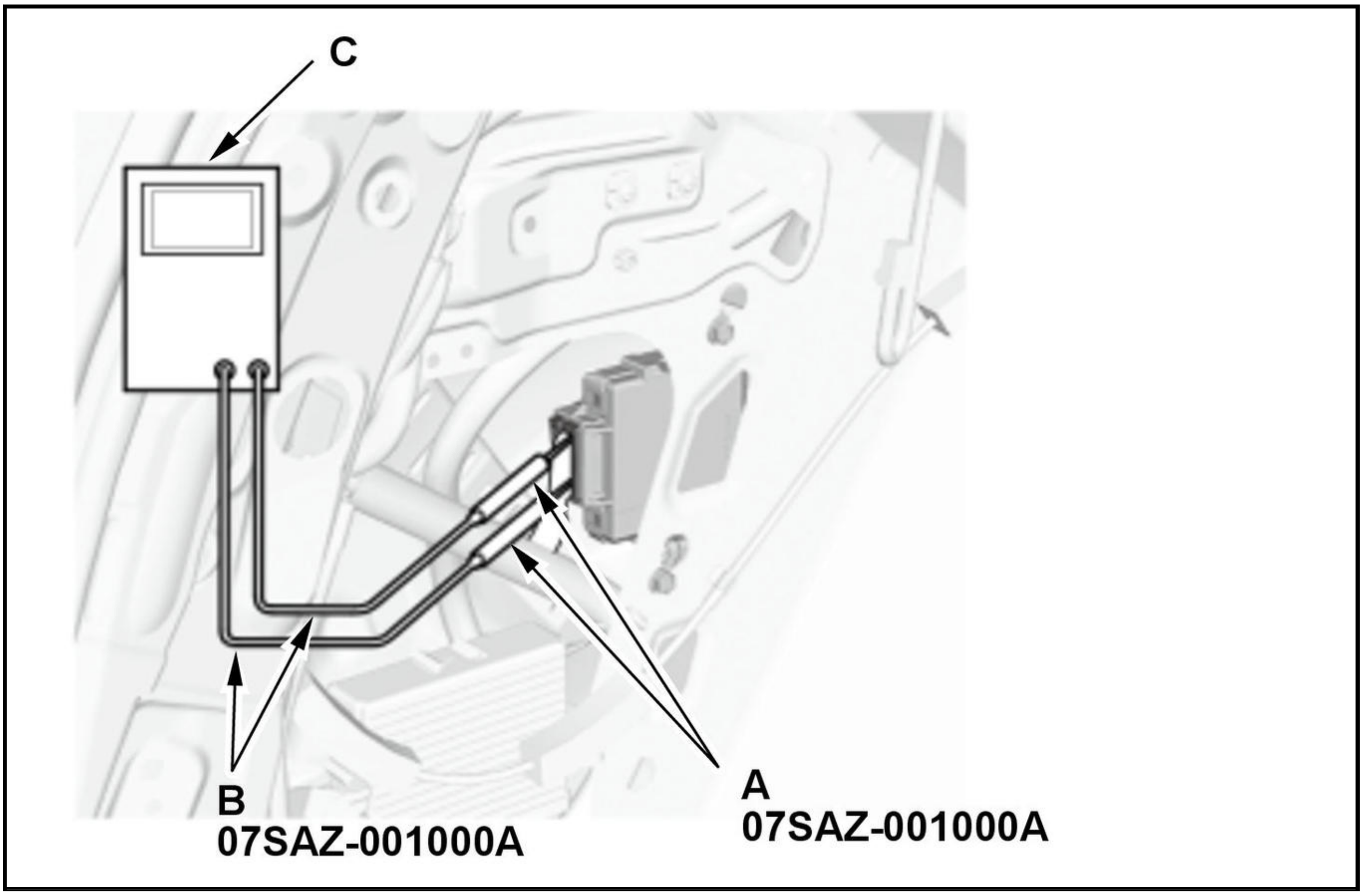

3. Connect the backprobe adapters (A) to the stacking patch cords (B), and connect the cords to a digital multimeter or an analog circuit tester (C). Using the wire insulator as a guide for the contoured-tip of the backprobe adapter, gently slide the tip into the connector from the wire side until it comes in contact with the terminal end of the wires.

2017-22 DTC INDEX

CR-V (Except Hybrid)

AUDIO-NAVIGATION SYSTEM DTCS

DTC	Description	Circuit
1102	USB Diag	USB
1301	GPS Antenna Error	GPS antenna
1302	GPS Receiver Error 1	GPS receiver
1306	Vehicle Speed Pulse	PCM or TCM
1702	XM Antenna Error	XM antenna
2608	R-Camera Diag	Rearview camera
2610	DRAM Diag	Audio unit DRAM
2618	LaneWatch Diag	LaneWatch camera
2701	GPS Diag: Antenna	GPS antenna
2703	Aircon Diag	Climate control unit

AUTOMATIC LIGHTING SYSTEM DTCS

DTC	Description	DTC type
B1575	Auto light sensor error	Internal error
U1280	BUS OFF state is detected by CAN controller	Loss of communication
U1281	Auto light control unit lost communication with MICU	Loss of communication
U128D	Auto light control unit lost communication with gauge control module	Loss of communication

BLIND SPOT INFORMATION DTCS

Left Side BSI Radar Unit DTC

DTC	Detection Item
B18A1	Left Side BSI Radar Unit Internal Circuit Error
B18A5	Left Side BSI Radar Unit Temperature High
B18B4	Left Side BSI Radar Unit Dirty
B18B8	Left Side BSI Radar Unit Azimuth Off Alignment
B18BA	Different Version in the Left and Right Side BSI Radar Unit
B18C5	Short to GND in the Left Side BSI Radar Unit Indicator Circuit
B18C6	Short to Power in the Left Side BSI Radar Unit Indicator Circuit
B18C7	Open in the Left Side BSI Radar Unit Indicator Circuit
B18DB	Left Side BSI Radar Unit Received The Audio/Navigation Unit Failure Information
B18EA	Left Side BSI Radar Unit received PCM (A/T System) Failure Information
U1280	Communication Bus Line Error (Bus-Off)
U1281	Left Side BSI Radar Unit Lost Communication With MICU or BCM
U128D	Left Side BSI Radar Unit Lost Communication With Gauge Control Module
U1297	Left Side BSI Radar Unit Lost Communication With Right Side BSI Radar Unit

Right Side BSI Radar Unit DTC

DTC	Detection Item
B1E51	Right Side BSI Radar Unit Internal Circuit Error

DTC	Detection Item
B1E55	Right Side BSI Radar Unit Temperature High
B1E64	Right Side BSI Radar Unit Dirty
B1E68	Right Side BSI Radar Unit Azimuth Off Alignment
B1E6A	Different Version in the Left and Right Side BSI Radar Unit
B1E75	Short to GND in the Right Side BSI Radar Unit Indicator Circuit
B1E76	Short to Power in the Right Side BSI Radar Unit Indicator Circuit
B1E77	Open in the Right Side BSI Radar Unit Indicator Circuit
B1E9A	Right Side BSI Radar Unit received PCM (A/T System) Failure Information
U1280	Communication Bus Line Error (Bus-Off)
U1281	Right Side BSI Radar Unit Lost Communication With MICU or BCM
U128D	Right Side BSI Radar Unit Lost Communication With Gauge Control Module
U128F	Right Side BSI Radar Unit Lost Communication With Left Side BSI Radar Unit

BODY CONTROL MODULE DTCS

DTC	Description	DTC type
B1002	MICU internal error (EEPROM error)	Internal error
B1003	MICU Update Error	Internal error
B1028	Rear wiper motor(Park) signal error	Signal error
B1032	MICU lost communication with SRS unit (CDS message)	Signal error
B1036	IG1 Power Supply Circuit Malfunction	Signal error
B1038	IMMOBILIZER F-CAN Authentication ID Not Received	Signal error
B1039	IMMOBILIZER F-CAN Authentication ID Unmatch	Signal error
B1040	BCM lost communication with Front wiper	Loss of communication
B1041	Front Wiper motor malfunction	Signal error
B1042	Front Wiper security line error	Signal error
B1043	Front Wiper unit internal error (EEPROM error)	Internal error
B1077	Windshield wiper motor (Park) signal error	Signal error
B1275	Head light OFF position Circuit Malfunction	Signal error
B1276	Head light switch parking (small) position Circuit Malfunction	Signal error
B1277	Head light AUTO position Circuit Malfunction	Signal error
B1278	Head light ON position Circuit Malfunction	Signal error
B1279	Dimmer switch Circuit Malfunction	Signal error
B1280	Turn signal switch Circuit Malfunction	Signal error
B1281	Front wiper MIST position Circuit Malfunction	Signal error
B1282	Front wiper INT(AUTO) position Circuit Malfunction	Signal error
B1283	Front wiper LOW position Circuit Malfunction	Signal error
B1284	Front wiper HIGH position Circuit Malfunction	Signal error
B2352	Rain Light Sensor Unit Internal error (EEPROM error)	Signal error
B2375	Rain Sensing malfunction	Signal error
B2376	Light sensing malfunction	Signal error
U0073	F-CAN communication bus line error	Loss of communication
U0100	BCM lost communication with ECM/PCM	Loss of communication
U0122	BCM lost communication with VSA/ABS	Loss of communication
U1280	B-CAN communication bus line error (BUS-OFF)	Loss of communication
U128D	MICU lost communication with gauge control module	Loss of communication

DTC	Description	DTC type
U1291	MICU lost communication with relay control module	Loss of communication

CVT SYSTEM DTCS

1.5L

DTC *(1)	Shift Position Indicator	MIL	Detection Item
P0501 (36) *(2)	Blinks	ON	CVT Speed Sensor Circuit Range/Performance
P0502 (36) *(2)	Blinks	ON	CVT Speed Sensor Circuit Open/Short
P0600 (94) *(2)	Blinks	ON	Serial Communication
P0602 (0)	OFF	ON	Boot Mode(Programming Error)
P062F (0) *(2)	Blinks	ON	TCM Internal Control Module Error
P0641 (183) *(2)	Blinks	ON	Sensor Reference Voltage 1 Circuit Malfunction
P0651 (184) *(2)	Blinks	ON	Sensor Reference Voltage 2 Circuit Malfunc
P06A8 (0) *(2)	Blinks	ON	Internal VCC Power Malfunction
P0705 (5) *(2)	Blinks	ON	Transmission Range Switch Multiple Shift Position Input
P0706 (6) *(2)	OFF	ON	Transmission Range Switch Open
P0710 (28) *(2)	Blinks	ON	CVT Fluid Temperature Sensor (Out of Range)
P0711 (28) *(2)	Blinks	ON	CVT Fluid Temperature Sensor (Range/Performance)
P0712 (28) *(2)	Blinks	ON	CVT Fluid Temperature Sensor (Short)
P0713 (28) *(2)	Blinks	ON	CVT Fluid Temperature Sensor (Open)
P0714 (28) *(2)	Blinks	ON	CVT Fluid Temperature Sensor (Intermittent Failure)
P0716 (52) *(2)	Blinks	ON	CVT Input Shaft (Drive Pulley) Speed Sensor A Circuit Range/Performance / Input/Turbine Speed Sensor A Circuit Range/Performance
P0717 (52) *(2)	Blinks	ON	CVT Input Shaft (Drive Pulley) Speed Sensor A Circuit No Signal / Input/Turbine Speed Sensor A Circuit No Signal
P0741 (40)	Blinks	ON	Torque Converter Clutch Circuit Performance or Stuck OFF
P0746 (104)	Blinks	ON	CVT Drive Pulley Pressure Control Solenoid Valve Stuck OFF
P0777 (105)	Blinks	ON	CVT Driven Pulley Pressure Control Solenoid Valve Stuck ON
P0780 (100) *(3)	Blinks	ON	Shift Error
P0792 (34) *(2)	Blinks	ON	Intermediate Shaft Speed Sensor A Circuit Range/Performance
P0793 (34) *(2)	Blinks	ON	Intermediate Shaft Speed Sensor A Circuit No Signal
P0796 (106)	Blinks	ON	Pressure Control Solenoid Valve C Performance or Stuck OFF
P0797 (106)	Blinks	ON	Pressure Control Solenoid Valve C Stuck ON
P0842 (56) *(2)	Blinks	OFF	Transmission Fluid Pressure Sensor/Switch A Circuit Low
P0843 (56) *(2)	Blinks	OFF	Transmission Fluid Pressure Sensor/Switch A Circuit High
P0962 (38) *(2)	Blinks	ON	CVT Drive Pulley Pressure Control Valve Circuit Low
P0963 (38) *(2)	Blinks	ON	CVT Drive Pulley Pressure Control Valve Circuit High

DTC *(1)	Shift Position Indicator	MIL	Detection Item
P0966 (39) *(2)	Blinks	ON	CVT Driven Pulley Pressure Control Valve Circuit Low
P0967 (39) *(2)	Blinks	ON	CVT Driven Pulley Pressure Control Valve Circuit High
P0970 (50) *(2)	Blinks	ON	Pressure Control Solenoid C Control Circuit Low
P0971 (50) *(2)	Blinks	ON	Pressure Control Solenoid C Control Circuit High

DTC *(1)	Shift Position Indicator	MIL	Detection Item
P0976 (8) *(2)	Blinks	ON	Shift Solenoid Valve B Circuit Low
P0977 (8) *(2)	Blinks	ON	Shift Solenoid Valve B Circuit High
P1717 (62) *(2)	Blinks	OFF	Transmission Range Switch ATP RVS Switch (Open or Short)
P1840 (36)	Blinks	OFF	CVT Speed Sensor Circuit Forward Rotation Range/Performance
P1841 (36)	Blinks	OFF	CVT Speed Sensor Circuit Reverse Rotation Range/Performance
P1844 (34)	Blinks	OFF	CVT Input Shaft Speed Sensor Circuit Forward Rotation Range/Performance
P1845 (34)	Blinks	OFF	CVT Input Shaft Speed Sensor Circuit Reverse Rotation Range/Performance
P1855 (58)	OFF	OFF	Inclination Sensor Circuit Range/Performance
P1890 (42)	Blinks	OFF	CVT Speed Control System
P1898 (100)	Blinks	ON	CVT Drive Pulley Pressure Control Valve Stuck ON or CVT Driven Pulley Pressure Control Valve Stuck OFF
P1899 (100)	Blinks	ON	CVT Drive Pulley Pressure Control Valve Stuck OFF or CVT Driven Pulley Pressure Control Valve Stuck ON
P1900 (115)	Blinks	OFF	EOP-RELAY High Input
P2715 (102)	Blinks	ON	Pressure Control Solenoid D Stuck On
P2720 (51) *(2)	Blinks	ON	Pressure Control Solenoid D Control Circuit Low
P2721 (51) *(2)	Blinks	ON	Pressure Control Solenoid D Control Circuit High
P2797 (114)	Blinks	OFF	Auxiliary Transmission Fluid Pump Performance
P2817 (108)	Blinks	OFF	Shift Solenoid Valve O/P (Pressure Control Solenoid H) Stuck Off
P2818 (108)	Blinks	OFF	Shift Solenoid Valve O/P (Pressure Control Solenoid H) Stuck On
P281D (57) *(2)	Blinks	OFF	Shift Solenoid Valve O/P (Pressure Control Solenoid H) Control Circuit Low
P281E (57) *(2)	Blinks	OFF	Shift Solenoid Valve O/P (Pressure Control Solenoid H) Control Circuit High
U0029 (107) *(2)	Blinks	ON	F-CAN Malfunction (F-CAN Bus OFF)
U0038 (121) *(2)	Blinks	ON	TM-CAN Malfunction (TCM-PCM)
U0100 (107) *(2)	Blinks	ON	F-CAN Malfunction (TCM - FI Control Module)
U0122 (107) *(2)	Blinks	OFF	Lost Communication With Vehicle Dynamics Control Module
U0129 (107) *(2)	Blinks	OFF	Lost Communication With Brake System Control Module
U0151 (107) *(2)	Blinks	OFF	Lost Communication With SRS Unit

DTC *(1)	Shift Position Indicator	MIL	Detection Item
U0155 (107) *(2)	Blinks	OFF	Lost Communication With Gauge Control Module
U0302 (129)	Blinks	ON	PGM-FI System and A/T System Program Version Mismatch
U1260 (116)	Blinks	OFF	Lost Communication With Auxiliary Transmission Fluid Pump

NOTE:

*(1): The DTC in parentheses is the flash code the shift position indicator indicates when the data link connector (DLC) is connected to the HDS, and in the SCS mode.

*(2): This code is caused by an electrical circuit problem and cannot be caused by a mechanical problem in the transmission.

*(3): This code is stored whenever DTCs P1898 and P1899 are detected.

2.4L

KA models

DTC * (1)	Shift Position Indicator	MIL	Detection Item
P0501 (36) * (2)	Blinks	ON	CVT Speed Sensor Circuit Range/Performance
P0502 (36) * (2)	Blinks	ON	CVT Speed Sensor Circuit Open/Short
P0705 (5) * (2)	Blinks	ON	Transmission Range Switch Multiple Shift Position Input
P0706 (6) * (2)	OFF	ON	Transmission Range Switch Open
P0710 (28) * (2)	Blinks	ON	CVT Fluid Temperature Sensor (Out of Range)
P0712 (28) * (2)	Blinks	ON	CVT Fluid Temperature Sensor (Short)
P0713 (28) * (2)	Blinks	ON	CVT Fluid Temperature Sensor (Open)
P0716 (52) * (2)	Blinks	ON	CVT Input Shaft (Drive Pulley) Speed Sensor A Circuit Range/Performance / Input/Turbine Speed Sensor A Circuit Range/Performance
P0717 (52) * (2)	Blinks	ON	CVT Input Shaft (Drive Pulley) Speed Sensor A Circuit No Signal / Input/Turbine Speed Sensor A Circuit No Signal
P0741 (40)	Blinks	ON	Torque Converter Clutch Circuit Performance or Stuck OFF
P0746 (104)	Blinks	ON	CVT Drive Pulley Pressure Control Solenoid Valve Stuck OFF
P0777 (105)	Blinks	ON	CVT Driven Pulley Pressure Control Solenoid Valve Stuck ON
P0780 (100) * (3)	Blinks	ON	Shift Error
P0792 (34) * (2)	Blinks	ON	Intermediate Shaft Speed Sensor A Circuit Range/Performance
P0793 (34) * (2)	Blinks	ON	Intermediate Shaft Speed Sensor A Circuit No Signal
P0796 (106)	Blinks	ON	Pressure Control Solenoid Valve C Performance or Stuck OFF
P0797 (106)	Blinks	ON	Pressure Control Solenoid Valve C Stuck ON
P0842 (56) * (2)	Blinks	OFF	Transmission Fluid Pressure Sensor/Switch A Circuit Low

DTC * (1)	Shift Position Indicator	MIL	Detection Item
P0843 (56) * (2)	Blinks	OFF	Transmission Fluid Pressure Sensor/Switch A Circuit High
P0962 (38) * (2)	Blinks	ON	CVT Drive Pulley Pressure Control Valve Circuit Low
P0963 (38) * (2)	Blinks	ON	CVT Drive Pulley Pressure Control Valve Circuit High
P0966 (39) * (2)	Blinks	ON	CVT Driven Pulley Pressure Control Valve Circuit Low
P0967 (39) * (2)	Blinks	ON	CVT Driven Pulley Pressure Control Valve Circuit High
P0970 (50) * (2)	Blinks	ON	Pressure Control Solenoid C Control Circuit Low
P0971 (50) * (2)	Blinks	ON	Pressure Control Solenoid C Control Circuit High
P0976 (8) * (2)	Blinks	ON	Shift Solenoid Valve B Circuit Low
P0977 (8) * (2)	Blinks	ON	Shift Solenoid Valve B Circuit High
P1717 (62) * (2)	Blinks	OFF	Transmission Range Switch ATP RVS Switch (Open or Short)
P1840 (36) * (2)	Blinks	OFF	CVT Speed Sensor Circuit Forward Rotation Range/Performance
P1841 (36) * (2)	Blinks	OFF	CVT Speed Sensor Circuit Reverse Rotation Range/Performance

DTC * (1)	Shift Position Indicator	MIL	Detection Item
P1844 (34) * (2)	Blinks	OFF	CVT Input Shaft Speed Sensor Circuit Forward Rotation Range/Performance
P1845 (34) * (2)	Blinks	OFF	CVT Input Shaft Speed Sensor Circuit Reverse Rotation Range/Performance
P1890 (42)	Blinks	OFF	CVT Speed Control System
P1898 (100)	Blinks	ON	CVT Drive Pulley Pressure Control Valve Stuck ON or CVT Driven Pulley Pressure Control Valve Stuck OFF
P1899 (100)	Blinks	ON	CVT Drive Pulley Pressure Control Valve Stuck OFF or CVT Driven Pulley Pressure Control Valve Stuck ON
P2715 (102)	Blinks	ON	Pressure Control Solenoid D Stuck On
P2720 (51) * (2)	Blinks	ON	Pressure Control Solenoid D Control Circuit Low
P2721 (51) * (2)	Blinks	ON	Pressure Control Solenoid D Control Circuit High
P2817 (108)	Blinks	OFF	Shift Solenoid Valve O/P (Pressure Control Solenoid H) Stuck Off
P2818 (108)	Blinks	OFF	Shift Solenoid Valve O/P (Pressure Control Solenoid H) Stuck On
P281D (57)	Blinks	OFF	Shift Solenoid Valve O/P (Pressure Control Solenoid H) Control Circuit Low
P281E (57)	Blinks	OFF	Shift Solenoid Valve O/P (Pressure Control Solenoid H) Control Circuit High

NOTE: * (1): The DTC in parentheses is the flash code the shift position indicator indicates when the data link connector (DLC) is connected to the HDS, and in the SCS mode.

* (2): This code is caused by an electrical circuit problem and cannot be caused by a mechanical problem in the transmission.

* (3): This code is stored whenever DTCs P1898 and P1899 are detected.

Except KA models

DTC * (1)	Shift Position Indicator	MIL	Detection Item
P0501 (36) * (2)	Blinks	ON	CVT Speed Sensor Circuit Range/Performance
P0502 (36) * (2)	Blinks	ON	CVT Speed Sensor Circuit Open/Short
P0705 (5) * (2)	Blinks	ON	Transmission Range Switch Multiple Shift Position Input
P0706 (6) * (2)	OFF	ON	Transmission Range Switch Open
P0712 (28) * (2)	Blinks	OFF	CVT Fluid Temperature Sensor (Short)
P0713 (28) * (2)	Blinks	OFF	CVT Fluid Temperature Sensor (Open)
P0716 (52) * (2)	Blinks	ON	CVT Input Shaft (Drive Pulley) Speed Sensor A Circuit Range/Performance / Input/Turbine Speed Sensor A Circuit Range/Performance
P0717 (52) * (2)	Blinks	ON	CVT Input Shaft (Drive Pulley) Speed Sensor A Circuit No Signal / Input/Turbine Speed Sensor A Circuit No Signal
P0741 (40)	Blinks	OFF	Torque Converter Clutch Circuit Performance or Stuck OFF
P0746 (104)	Blinks	ON	CVT Drive Pulley Pressure Control Solenoid Valve Stuck OFF
P0777 (105)	Blinks	ON	CVT Driven Pulley Pressure Control Solenoid Valve Stuck ON
P0780 (100) * (3)	Blinks	ON	Shift Error
P0792 (34) * (2)	Blinks	ON	Intermediate Shaft Speed Sensor A Circuit Range/Performance

DTC * (1)	Shift Position Indicator	MIL	Detection Item
P0793 (34) * (2)	Blinks	ON	Intermediate Shaft Speed Sensor A Circuit No Signal
P0796 (106)	Blinks	ON	Pressure Control Solenoid Valve C Performance or Stuck OFF
P0797 (106)	Blinks	OFF	Pressure Control Solenoid Valve C Stuck ON
P0842 (56) * (2)	Blinks	OFF	Transmission Fluid Pressure Sensor/Switch A Circuit Low
P0843 (56) * (2)	Blinks	OFF	Transmission Fluid Pressure Sensor/Switch A Circuit High
P0962 (38) * (2)	Blinks	ON	CVT Drive Pulley Pressure Control Valve Circuit Low
P0963 (38) * (2)	Blinks	ON	CVT Drive Pulley Pressure Control Valve Circuit High
P0966 (39) * (2)	Blinks	ON	CVT Driven Pulley Pressure Control Valve Circuit Low
P0967 (39) * (2)	Blinks	ON	CVT Driven Pulley Pressure Control Valve Circuit High
P0970 (50) * (2)	Blinks	ON	Pressure Control Solenoid C Control Circuit Low
P0971 (50) * (2)	Blinks	ON	Pressure Control Solenoid C Control Circuit High
P0976 (8) * (2)	Blinks	OFF	Shift Solenoid Valve B Circuit Low
P0977 (8) * (2)	Blinks	OFF	Shift Solenoid Valve B Circuit High
P1717 (62) * (2)	Blinks	OFF	Transmission Range Switch ATP RVS Switch (Open or Short)
P1840 (36) * (2)	Blinks	OFF	CVT Speed Sensor Circuit Forward Rotation Range/Performance

DTC * (1)	Shift Position Indicator	MIL	Detection Item
P1841 (36) * (2)	Blinks	OFF	CVT Speed Sensor Circuit Reverse Rotation Range/Performance
P1844 (34) * (2)	Blinks	OFF	CVT Input Shaft Speed Sensor Circuit Forward Rotation Range/Performance
P1845 (34) * (2)	Blinks	OFF	CVT Input Shaft Speed Sensor Circuit Reverse Rotation Range/Performance
P1890 (42)	Blinks	OFF	CVT Speed Control System
P1898 (100)	Blinks	ON	CVT Drive Pulley Pressure Control Valve Stuck ON or CVT Driven Pulley Pressure Control Valve Stuck OFF
P1899 (100)	Blinks	ON	CVT Drive Pulley Pressure Control Valve Stuck OFF or CVT Driven Pulley Pressure Control Valve Stuck ON
P2715 (102)	Blinks	OFF	Pressure Control Solenoid D Stuck On
P2720 (51) * (2)	Blinks	OFF	Pressure Control Solenoid D Control Circuit Low
P2721 (51) * (2)	Blinks	OFF	Pressure Control Solenoid D Control Circuit High
P2817 (108)	Blinks	OFF	Shift Solenoid Valve O/P (Pressure Control Solenoid H) Stuck Off
P2818 (108)	Blinks	OFF	Shift Solenoid Valve O/P (Pressure Control Solenoid H) Stuck On
P281D (57)	Blinks	OFF	Shift Solenoid Valve O/P (Pressure Control Solenoid H) Control Circuit Low
P281E (57)	Blinks	OFF	Shift Solenoid Valve O/P (Pressure Control Solenoid H) Control Circuit High

NOTE: * (1): The DTC in parentheses is the flash code the shift position indicator indicates when the data link connector (DLC) is connected to the HDS, and in the SCS mode.

* (2): This code is caused by an electrical circuit problem and cannot be caused by a mechanical problem in the transmission.

* (3): This code is stored whenever DTCs P1898 and P1899 are detected.

ENGINE CONTROL SYSTEM DTCS

FUEL AND EMISSIONS SYSTEMS DTCS (1.5 L) (2017)

DTC (MIL indication *1)	Two DriveCycle Detection	Detection Item	MIL
P0010 (56)	---	Variable Valve Timing Control (VTC) Oil Control Solenoid Valve A Malfunction	ON
P0011 (56)	o	Variable Valve Timing Control (VTC) A System Malfunction	ON
P0013 (141)	---	Variable Valve Timing Control (VTC) Oil Control Solenoid Valve B Malfunction	ON
P0014 (141)	o	Variable Valve Timing Control (VTC) B System Malfunction	ON
P0034 (194)	o	Turbocharger Bypass Control Solenoid Valve Circuit Low Voltage	ON
P0035 (194)	o	Turbocharger Bypass Control Solenoid Valve Circuit High Voltage	ON

DTC (MIL indication *1)	Two DriveCycle Detection	Detection Item	MIL
P003A (190)	---	Turbocharger Wastegate Control Actuator Position Exceeded Learning Limit	ON
P0045 (190)	---	Turbocharger Wastegate Control Actuator Circuit Malfunction	ON
P0046 (190)	---	Turbocharger Wastegate Control Actuator Circuit Range/Performance Problem	ON
P0069 (13) *2	o	Barometric Pressure (BARO) Sensor Circuit Range/Performance Problem	ON
P006A (50) *2	o	Mass Air Flow (MAF) Sensor Circuit Range/Performance Problem	ON
P006E (190)	---	Turbocharger Power Supply Circuit Malfunction	ON
P0087 (197)	---	Fuel Rail Pressure Too Low	ON
P0088 (197)	---	Fuel Rail Pressure Too High	ON
P0096 (10)	o	Intake Air Temperature (IAT) Sensor 2 Circuit Range/Performance Problem	ON
P0097 (10)	o	Intake Air Temperature (IAT) Sensor 2 Circuit Low Voltage	ON
P0098 (10)	o	Intake Air Temperature (IAT) Sensor 2 Circuit High Voltage	ON
P00CF (171) *2	o	Turbocharger Boost Sensor/Barometric Pressure (BARO) Sensor Incorrect Correlation	ON
P0100 (50)	---	Mass Air Flow (MAF) Sensor Circuit Malfunction	ON
P0101 (50)	---	Mass Air Flow (MAF) Sensor Circuit Range/Performance Problem (Out of Range)	ON
P0107 (3)	---	Manifold Absolute Pressure (MAP) Sensor Circuit Low Voltage	ON
P0108 (3)	---	Manifold Absolute Pressure (MAP) Sensor Circuit High Voltage	ON
P0111 (10)	o	Intake Air Temperature (IAT) Sensor 1 Circuit Range/Performance Problem	ON
P0112 (10)	o	Intake Air Temperature (IAT) Sensor 1 Circuit Low Voltage	ON
P0113 (10)	o	Intake Air Temperature (IAT) Sensor 1 Circuit High Voltage	ON
P0116 (86)	o	Engine Coolant Temperature (ECT) Sensor 1 Circuit Range/Performance Problem	ON
P0117 (6)	---	Engine Coolant Temperature (ECT) Sensor 1 Circuit Low Voltage	ON
P0118 (6)	---	Engine Coolant Temperature (ECT) Sensor 1 Circuit High Voltage	ON
P011A (86) *2	o	Engine Coolant Temperature (ECT) Sensor 1 Circuit Range/Performance Problem	ON

NOTE: The above DTCs are indicated when the PGM-FI system is selected with the HDS. Some automatic transmission DTCs cause the MIL to come on. If the MIL is on and no DTCs are indicated in the PGM-FI system, select the A/T system, and check for automatic transmission DTCs.

*1: These DTCs are indicated by a blinking MIL when the SCS line is jumped with the HDS. Some DTCs do not cause the MIL to blink when the SCS line is jumped; these DTCs are shown in the gauge display.

*2: USA and Canada models

*3: AWD

*4: With multipurpose camera unit

DTC (MIL indication *1)	Two DriveCycle Detection	Detection Item	MIL
P011B (10) *2	o	Intake Air Temperature (IAT) Sensor 1 Circuit Range/Performance Problem	ON
P0122 (7)	---	Throttle Position (TP) Sensor A Circuit Low Voltage	ON
P0123 (7)	---	Throttle Position (TP) Sensor A Circuit High Voltage	ON
P0125 (86)	o	Engine Coolant Temperature (ECT) Sensor 1 Malfunction/Slow Response	ON
P0128 (87) *2	o	Cooling System Malfunction	ON
P0133 (61)	o	Air/Fuel Ratio (A/F) Sensor (Sensor 1) Malfunction/Slow Response	ON
P0134 (41)	o	Air/Fuel Ratio (A/F) Sensor (Sensor 1) Heater System Malfunction	ON
P0135 (41)	o	Air/Fuel Ratio (A/F) Sensor (Sensor 1) Heater Circuit Malfunction	ON
P0137 (63)	o	Secondary Heated Oxygen Sensor (Secondary HO2S (Sensor 2)) Circuit Low Voltage	ON
P0138 (63)	o	Secondary Heated Oxygen Sensor (Secondary HO2S (Sensor 2)) Circuit High Voltage	ON
P0139 (63)	o	Secondary Heated Oxygen Sensor (Secondary HO2S (Sensor 2)) Slow Response	ON
P0141 (65)	o	Secondary Heated Oxygen Sensor (Secondary HO2S (Sensor 2)) Heater Circuit Malfunction	ON
P0171 (45)	o	Fuel System Too Lean	ON
P0172 (45)	o	Fuel System Too Rich	ON
P0192 (95)	---	Fuel Rail Pressure Sensor Circuit Low Voltage	ON
P0193 (95)	---	Fuel Rail Pressure Sensor Circuit High Voltage	ON
P0201 (16)	---	No. 1 Cylinder Injector Circuit Malfunction	ON
P0202 (16)	---	No. 2 Cylinder Injector Circuit Malfunction	ON
P0203 (16)	---	No. 3 Cylinder Injector Circuit Malfunction	ON
P0204 (16)	---	No. 4 Cylinder Injector Circuit Malfunction	ON
P0222 (7)	---	Throttle Position (TP) Sensor B Circuit Low Voltage	ON
P0223 (7)	---	Throttle Position (TP) Sensor B Circuit High Voltage	ON
P0234 (26)	---	Turbocharger Overboost Problem	ON
P0236 (171) *2	o	Turbocharger Boost Sensor Circuit Range/Performance Problem	ON
P0237 (171)	---	Turbocharger Boost Sensor Circuit Low Voltage	ON
P0238 (171)	---	Turbocharger Boost Sensor Circuit High Voltage	ON
P023D (171) *2	o	Turbocharger Boost Sensor/Manifold Absolute Pressure (MAP) Sensor Incorrect Correlation	ON
P0299 (26)	---	Turbocharger Underboost Problem	ON
P0300 (211) and any combination of the following: P0301 (71) P0302 (72) P0303 (73) P0304 (74)	o	Random Misfire Detected	ON
P0301 (71)	o	No. 1 Cylinder Misfire Detected	ON

DTC (MIL indication *1)	Two DriveCycle Detection	Detection Item	MIL
P0302 (72)	o	No. 2 Cylinder Misfire Detected	ON
P0303 (73)	o	No. 3 Cylinder Misfire Detected	ON
P0304 (74)	o	No. 4 Cylinder Misfire Detected	ON

NOTE: The above DTCs are indicated when the PGM-FI system is selected with the HDS. Some automatic transmission DTCs cause the MIL to come on. If the MIL is on and no DTCs are indicated in the PGM-FI system, select the A/T system, and check for automatic transmission DTCs.

*1: These DTCs are indicated by a blinking MIL when the SCS line is jumped with the HDS. Some DTCs do not cause the MIL to blink when the SCS line is jumped; these DTCs are shown in the gauge display.

*2: USA and Canada models

*3: AWD

*4: With multipurpose camera unit

DTC (MIL indication *1)	Two DriveCycle Detection	Detection Item	MIL
P0326 (23)	o	Knock Sensor Malfunction	ON
P0327 (23)	o	Knock Sensor Circuit Low Voltage	ON
P0328 (23)	o	Knock Sensor Circuit High Voltage	ON
P0335 (4)	---	Crankshaft Position (CKP) Sensor No Signal	ON
P0339 (4)	---	Crankshaft Position (CKP) Sensor Circuit Intermittent Interruption	ON
P0340 (8)	---	Camshaft Position (CMP) Sensor A No Signal	ON
P0341 (57)	o	Camshaft Position (CMP) Sensor A and Crankshaft Position (CKP) Sensor Incorrect Phase Detected	ON
P0344 (8)	---	Camshaft Position (CMP) Sensor A Circuit Intermittent Interruption	ON
P0351 (71)	---	No. 1 Cylinder Ignition Coil Circuit Malfunction	ON
P0352 (72)	---	No. 2 Cylinder Ignition Coil Circuit Malfunction	ON
P0353 (73)	---	No. 3 Cylinder Ignition Coil Circuit Malfunction	ON
P0354 (74)	---	No. 4 Cylinder Ignition Coil Circuit Malfunction	ON
P0365 (142)	---	Camshaft Position (CMP) Sensor B Circuit No Signal	ON
P0366 (142)	o	Camshaft Position (CMP) Sensor B and Crankshaft Position (CKP) Sensor Incorrect Phase Detected	ON
P0369 (142)	---	Camshaft Position (CMP) Sensor B Circuit Intermittent Interruption	ON
P0420 (67)	o	Catalyst System Efficiency Below Threshold	ON
P043E (94) *2	o	Evaporative Emission (EVAP) Leak Check Module Standard Pressure Low	ON
P043F (94) *2	o	Evaporative Emission (EVAP) Leak Check Module Standard Pressure High	ON
P0441 (90) *2	o	Evaporative Emission (EVAP) System Purge Flow Malfunction	ON
P0443 (92)	o	Evaporative Emission (EVAP) Canister Purge Valve Circuit Malfunction	ON
P0451 (94) *2	o	Evaporative Emission (EVAP) Leak Check Module Pressure Sensor Range/Performance	ON
P0456 (90) *2	o	Evaporative Emission (EVAP) System Very Small Leak Detected	ON

DTC (MIL indication *1)	Two DriveCycle Detection	Detection Item	MIL
P0461 *2	---	Fuel Level Sensor (Fuel Gauge Sending Unit) Circuit Range/Performance Problem	OFF
P0462 *2	o	Fuel Level Sensor (Fuel Gauge Sending Unit) Circuit Low Voltage	OFF
P0463 *2	o	Fuel Level Sensor (Fuel Gauge Sending Unit) Circuit High Voltage	OFF
P04DF (92) *2	o	Evaporative Emission (EVAP) System High Purge Flow Detected	ON
P04F0 (90) *2	o	Evaporative Emission (EVAP) System Incorrect Purge Flow Detected	ON
P04F1 (90) *2	o	Evaporative Emission (EVAP) System Low Purge Flow Detected	ON
P0506 (14) *2	o	Idle Control System RPM Lower than Expected	ON
P0507 (14) *2	o	Idle Control System RPM Higher than Expected	ON
P050A (167) *2	o	Cold Start Idle Air Control System Performance Problem	ON
P050D (167) *2	o	Cold Start Idle Speed Problem	ON
P0532	o	A/C Pressure Sensor Circuit Low Voltage	OFF

NOTE: The above DTCs are indicated when the PGM-FI system is selected with the HDS. Some automatic transmission DTCs cause the MIL to come on. If the MIL is on and no DTCs are indicated in the PGM-FI system, select the A/T system, and check for automatic transmission DTCs.

*1: These DTCs are indicated by a blinking MIL when the SCS line is jumped with the HDS. Some DTCs do not cause the MIL to blink when the SCS line is jumped; these DTCs are shown in the gauge display.

*2: USA and Canada models

*3: AWD

*4: With multipurpose camera unit

DTC (MIL indication *1)	Two DriveCycle Detection	Detection Item	MIL
P0533	o	A/C Pressure Sensor Circuit High Voltage	OFF
P0562	---	Charging System Low Voltage	OFF
P0563	o	Powertrain Control Module (PCM) Power Source Circuit Unexpected Voltage	OFF
P0571	o	Brake Pedal Position Switch Circuit Malfunction	OFF
P059F	---	Shutter Grille Assembly (Upper) Malfunction	OFF
P05A0	---	Shutter Grille Assembly (Upper) Malfunction	OFF
P05A3	---	Shutter Grille Actuator (Upper) Malfunction	OFF
P05A8	---	Shutter Grille Actuator (Upper) Malfunction	OFF
P05AE	---	Shutter Grille Assembly (Lower) Malfunction	OFF
P05AF	---	Shutter Grille Assembly (Lower) Malfunction	OFF
P05B2	---	Shutter Grille Actuator (Lower) Malfunction	OFF
P05B7	---	Shutter Grille Actuator (Lower) Malfunction	OFF
P05C0	---	Shutter Grille Actuator (Upper) Temperature Malfunction	OFF
P05C1	---	Shutter Grille Actuator (Lower) Temperature Malfunction	OFF

DTC (MIL indication *1)	Two DriveCycle Detection	Detection Item	MIL
P0600 (131)	---	Powertrain Control Module (PCM) Serial Communication Failure	ON
P0602 (196)	---	Powertrain Control Module (PCM) Programming Error	ON
P060A (131)	---	Powertrain Control Module (PCM) Internal Control Module Malfunction	ON
P0615	o	Starter Cut Relay Diagnosis Circuit Malfunction	OFF
P0616	---	Starter Cut Relay Diagnosis Circuit Low Voltage	OFF
P0617	---	Starter Cut Relay Diagnosis Circuit High Voltage	OFF
P061B (131)	---	Powertrain Control Module (PCM) Internal Malfunction (Torque Calculation)	ON
P062B (131)	---	Powertrain Control Module (PCM) Internal Circuit Malfunction	ON
P062F (131)	---	Powertrain Control Module (PCM) Internal Control Module Keep Alive Memory (KAM) Error	ON
P0630 (139)	---	VIN Not Programmed or Mismatch	ON
P0641 (133)	---	Sensor Reference Voltage A Malfunction	ON
P0651 (134)	---	Sensor Reference Voltage B Malfunction	ON
P0657 (131)	---	Powertrain Control Module (PCM) Power Supply Circuit Malfunction	ON
P065A	---	ACG No Charging Malfunction	OFF
P06A8 (131)	---	Internal VCC Power Malfunction	ON
P0703	o	Brake Pedal Position Switch (NC) Malfunction	OFF
P0864 (126)	---	PT-CAN Malfunction (Powertrain Control Module (PCM)-Transmission Control Module (TCM))	ON
P1009 (56)	---	Variable Valve Timing Control (VTC) A Advance Malfunction	ON
P101A (141)	---	Variable Valve Timing Control (VTC) B Advance Malfunction	ON
P1172 (61) *2	o	Air Fuel Ratio (A/F) Sensor (Sensor 1) Circuit Out of Range High	ON
P1320	---	Super Knock	OFF
P145D (90) *2	o	Evaporative Emission (EVAP) System Purge Flow Malfunction at turbocharging	ON
P145F (94) *2	o	Evaporative Emission (EVAP) Leak Check Module Pressure Sensor Range/Performance Problem	ON

NOTE: The above DTCs are indicated when the PGM-FI system is selected with the HDS. Some automatic transmission DTCs cause the MIL to come on. If the MIL is on and no DTCs are indicated in the PGM-FI system, select the A/T system, and check for automatic transmission DTCs.

*1: These DTCs are indicated by a blinking MIL when the SCS line is jumped with the HDS. Some DTCs do not cause the MIL to blink when the SCS line is jumped; these DTCs are shown in the gauge display.

*2: USA and Canada models

*3: AWD

*4: With multipurpose camera unit

DTC (MIL indication *1)	Two DriveCycle Detection	Detection Item	MIL
P1461 (94) *2	o	Evaporative Emission (EVAP) Leak Check Module Pressure Sensor Shifts	ON
P1462 (94) *2	o	Evaporative Emission (EVAP) Leak Check Module Pressure Decompression Defect	ON
P1549	---	Charging System High Voltage	OFF
P154A	---	Battery Sensor Internal Failure	OFF
P1658 (40)	---	Electronic Throttle Control System (ETCS) Control Relay ON Malfunction	ON
P1659 (40)	---	Electronic Throttle Control System (ETCS) Control Relay OFF Malfunction	ON
P1683 (40)	---	Throttle Valve Default Position Spring Performance Problem	ON
P1684 (40)	---	Throttle Valve Return Spring Performance Problem	ON
P16BB	---	Alternator B Terminal Circuit Low Voltage	OFF
P16E2	---	PGM-FI-ACG LIN Communication Error	OFF
P16E3	---	PGM-FI-Battery Sensor LIN Communication Error	OFF
P16E4	---	ACG High-temperature	OFF
P16E6	---	Transmission Range Switch START Switch Circuit Malfunction	OFF
P16E8	---	PGM-FI-Shutter Grille LIN Communication Error	OFF
P16F3	---	Starter Cut Relay 1 Control Circuit Low Voltage	OFF
P16F4	---	Starter Cut Relay 2 Control Circuit Low Voltage	OFF
P16F5	---	Starter Cut Relay 1 Control Circuit High Voltage	OFF
P16F6	---	Starter Cut Relay 2 Control Circuit High Voltage	OFF
P2073 (5) *2	o	Manifold Absolute Pressure (MAP) Sensor Signal Higher Than Expected	ON
P2074 (5) *2	o	Manifold Absolute Pressure (MAP) Sensor Signal Lower Than Expected	ON
P2096 (45) *2	o	Post Catalyst Fuel Trim System Too Lean	ON
P2097 (45) *2	o	Post Catalyst Fuel Trim System Too Rich	ON
P2101 (40)	---	Electronic Throttle Control System (ETCS) Malfunction	ON
P2108 (40)	---	Throttle Actuator Control Module Performance	ON
P2118 (40)	---	Throttle Actuator Current Range/Performance Problem	ON
P2119 (40)	---	Throttle Actuator Control Throttle Body Range/Performance	ON
P2122 (37)	---	Accelerator Pedal Position (APP) Sensor A (Throttle Position (TP) Sensor D) Circuit Low Voltage	ON
P2123 (37)	---	Accelerator Pedal Position (APP) Sensor A (Throttle Position (TP) Sensor D) Circuit High Voltage	ON
P2127 (37)	---	Accelerator Pedal Position (APP) Sensor B (Throttle Position (TP) Sensor E) Circuit Low Voltage	ON
P2128 (37)	---	Accelerator Pedal Position (APP) Sensor B (Throttle Position (TP) Sensor E) Circuit High Voltage	ON
P2135 (7)	---	Throttle Position (TP) Sensor A/B Incorrect Voltage Correlation	ON
P2138 (37)	---	Accelerator Pedal Position (APP) Sensor A/B (Throttle Position (TP) Sensor D/E) Incorrect Voltage Correlation	ON
P2148 (131)	o	Injector Power Supply Circuit Malfunction	ON

DTC (MIL indication *1)	Two DriveCycle Detection	Detection Item	MIL
P2176 (40)	---	Throttle Actuator Control System Idle Position Not Learned	ON
P2183 (192) *2	o	Engine Coolant Temperature (ECT) Sensor 2 Circuit Range/Performance Problem	ON

NOTE: The above DTCs are indicated when the PGM-FI system is selected with the HDS. Some automatic transmission DTCs cause the MIL to come on. If the MIL is on and no DTCs are indicated in the PGM-FI system, select the A/T system, and check for automatic transmission DTCs.

*1: These DTCs are indicated by a blinking MIL when the SCS line is jumped with the HDS. Some DTCs do not cause the MIL to blink when the SCS line is jumped; these DTCs are shown in the gauge display.

*2: USA and Canada models

*3: AWD

*4: With multipurpose camera unit

DTC (MIL indication *1)	Two DriveCycle Detection	Detection Item	MIL
P2184 (192)	o	Engine Coolant Temperature (ECT) Sensor 2 Circuit Low Voltage	ON
P2185 (192)	o	Engine Coolant Temperature (ECT) Sensor 2 Circuit High Voltage	ON
P2187 (45) *2	o	Fuel System Too Lean at Idle	ON
P2195 (48) *2	o	Air Fuel Ratio (A/F) Sensor (Sensor 1) Signal Stuck Lean	ON
P2199 (10) *2	o	Intake Air Temperature (IAT) Sensor 1-2 Incorrect Correlation	ON
P219C (45) *2	o	No. 1 Cylinder Air-Fuel Ratio Variation	ON
P219D (45) *2	o	No. 2 Cylinder Air-Fuel Ratio Variation	ON
P219E (45) *2	o	No. 3 Cylinder Air-Fuel Ratio Variation	ON
P219F (45) *2	o	No. 4 Cylinder Air-Fuel Ratio Variation	ON
P2226 (13)	o	Barometric Pressure (BARO) Sensor Circuit Malfunction	ON
P2228 (13)	o	Barometric Pressure (BARO) Sensor Circuit Low Voltage	ON
P2229 (13)	o	Barometric Pressure (BARO) Sensor Circuit High Voltage	ON
P2237 (155)	o	Air/Fuel Ratio (A/F) Sensor (Sensor 1) IP Circuit High Voltage	ON
P2238 (155)	o	Air/Fuel Ratio (A/F) Sensor (Sensor 1) IP Circuit Low Voltage	ON
P2243 (155)	o	Air/Fuel Ratio (A/F) Sensor (Sensor 1) VCENT Circuit High Voltage	ON
P2245 (155)	o	Air/Fuel Ratio (A/F) Sensor (Sensor 1) VCENT Circuit Low Voltage	ON
P2251 (155)	o	Air/Fuel Ratio (A/F) Sensor (Sensor 1) VS Circuit High Voltage	ON
P2252 (155)	o	Air/Fuel Ratio (A/F) Sensor (Sensor 1) VS Circuit Low Voltage	ON

DTC (MIL indication *1)	Two DriveCycle Detection	Detection Item	MIL
P2270 (63)	o	Secondary Heated Oxygen Sensor (Secondary HO2S (Sensor 2)) Circuit Signal Stuck Lean	ON
P2279 (109) *2	o	Intake Air System Leak	ON
P2401 (94) *2	o	Evaporative Emission (EVAP) Leak Check Pump Control Circuit Low Voltage	ON
P2402 (94) *2	o	Evaporative Emission (EVAP) Leak Check Pump Control Circuit High Voltage	ON
P2450 (90) *2	o	Evaporative Emission (EVAP) System Purge Line Non-return Valve A Stuck Open	ON
P24B9 (94) *2	o	Evaporative Emission (EVAP) Leak Check Module Absolute Pressure Sensor Range/Performance Problem	ON
P24BA (94) *2	o	Evaporative Emission (EVAP) Leak Check Module Absolute Pressure Sensor Circuit Low Voltage	ON
P24BB (94) *2	o	Evaporative Emission (EVAP) Leak Check Module Absolute Pressure Sensor Circuit High Voltage	ON
P24BE (94) *2	o	Canister Change Over Valve Control Circuit Low Voltage	ON
P24BF (94) *2	o	Canister Change Over Valve Control Circuit High Voltage	ON
P24C0 (94) *2	o	Canister Change Over Valve Close Malfunction	ON
P24C1 (94) *2	o	Canister Change Over Valve Stuck Close	ON
P2564 (190)	---	Turbocharger Wastegate Control Actuator Position Sensor Circuit Low Voltage	ON

NOTE: The above DTCs are indicated when the PGM-FI system is selected with the HDS. Some automatic transmission DTCs cause the MIL to come on. If the MIL is on and no DTCs are indicated in the PGM-FI system, select the A/T system, and check for automatic transmission DTCs.

*1: These DTCs are indicated by a blinking MIL when the SCS line is jumped with the HDS. Some DTCs do not cause the MIL to blink when the SCS line is jumped; these DTCs are shown in the gauge display.

*2: USA and Canada models

*3: AWD

*4: With multipurpose camera unit

DTC (MIL indication *1)	Two DriveCycle Detection	Detection Item	MIL
P2565 (190)	---	Turbocharger Wastegate Control Actuator Position Sensor Circuit High Voltage	ON
P2610 (132)	o	Powertrain Control Module (PCM) Ignition Off Internal Timer Malfunction	ON
P2623 (197)	---	High Pressure Fuel Pump Spill Valve Malfunction	ON
P2A00 (61)	o	Air/Fuel Ratio (A/F) Sensor (Sensor 1) Circuit Range/Performance Problem	ON
U0029 (126)	---	F-CAN Malfunction (BUS-OFF (Powertrain Control Module (PCM)))	ON
U0038 (126)	---	PT-CAN Malfunction (TCM ECU BUS-OFF)	ON
U0047	---	F-CAN Malfunction For The Second Channel (BUS-OFF (Powertrain Control Module (PCM))	OFF

DTC (MIL indication *1)	Two DriveCycle Detection	Detection Item	MIL
U0101 (126)	---	F-CAN Malfunction (Powertrain Control Module (PCM)-Transmission Control Module (TCM))	ON
U0104 *4	---	F-CAN Malfunction (Powertrain Control Module (PCM)-Driving Support System Control Unit)	OFF
U0114 *3	---	F-CAN Malfunction (Powertrain Control Module (PCM)-AWD Control Unit)	OFF
U0122	---	F-CAN Malfunction (Powertrain Control Module (PCM)-VSA Modulator-Control Unit)	OFF
U0128	---	F-CAN Malfunction (Powertrain Control Module (PCM)-Electric Parking Brake Control Unit)	OFF
U0129	---	F-CAN Malfunction (Powertrain Control Module (PCM)-Electric Brake Booster)	OFF
U0131	---	F-CAN Malfunction (Powertrain Control Module (PCM)-EPS Control Unit)	OFF
U0151	---	F-CAN Malfunction (Powertrain Control Module (PCM)-SRS Unit)	OFF
U0155 (126)	---	F-CAN Malfunction (Powertrain Control Module (PCM)-Gauge Control Module)	ON
U0301 (131)	---	PGM-FI System and Transmission System Program Version Mismatch	ON
U129E	---	F-CAN Malfunction (Powertrain Control Module (PCM)-Power Control Unit (PCU))	OFF

NOTE: The above DTCs are indicated when the PGM-FI system is selected with the HDS. Some automatic transmission DTCs cause the MIL to come on. If the MIL is on and no DTCs are indicated in the PGM-FI system, select the A/T system, and check for automatic transmission DTCs.

*1: These DTCs are indicated by a blinking MIL when the SCS line is jumped with the HDS. Some DTCs do not cause the MIL to blink when the SCS line is jumped; these DTCs are shown in the gauge display.

*2: USA and Canada models

*3: AWD

*4: With multipurpose camera unit

FUEL AND EMISSIONS SYSTEMS DTCS (1.5 L) (2018 2019 2020 2021)

DTC (MIL indication *1)	Two DriveCycle Detection	Detection Item	MIL
P0010 (56)	---	Variable Valve Timing Control (VTC) Oil Control Solenoid Valve A Malfunction	ON
P0011 (56)	o	Variable Valve Timing Control (VTC) A System Malfunction	ON
P0013 (141)	---	Variable Valve Timing Control (VTC) Oil Control Solenoid Valve B Malfunction	ON
P0014 (141)	o	Variable Valve Timing Control (VTC) B System Malfunction	ON
P0034 (194) *4	o	Turbocharger Bypass Control Solenoid Valve Circuit Low Voltage	ON
P0034 *5	o	Turbocharger Bypass Control Solenoid Valve Circuit Low Voltage	OFF

DTC (MIL indication *1)	Two DriveCycle Detection	Detection Item	MIL
P0035 (194) *4	o	Turbocharger Bypass Control Solenoid Valve Circuit High Voltage	ON
P0035 *5	o	Turbocharger Bypass Control Solenoid Valve Circuit High Voltage	OFF
P003A (190)	---	Turbocharger Wastegate Control Actuator Position Exceeded Learning Limit	ON
P0045 (190)	---	Turbocharger Wastegate Control Actuator Circuit Malfunction	ON
P0046 (190)	---	Turbocharger Wastegate Control Actuator Circuit Range/Performance Problem	ON
P0069 (13)	o	Barometric Pressure (BARO) Sensor Circuit Range/Performance Problem	ON
P006A (50)	o	Mass Air Flow (MAF) Sensor Circuit Range/Performance Problem	ON
P006E (190)	---	Turbocharger Power Supply Circuit Malfunction	ON
P0087 (197)	---	Fuel Rail Pressure Too Low	ON
P0088 (197)	---	Fuel Rail Pressure Too High	ON
P0096 (10)	o	Intake Air Temperature (IAT) Sensor 2 Circuit Range/Performance Problem	ON
P0097 (10)	o	Intake Air Temperature (IAT) Sensor 2 Circuit Low Voltage	ON
P0098 (10)	o	Intake Air Temperature (IAT) Sensor 2 Circuit High Voltage	ON
P00CF (171)	o	Turbocharger Boost Sensor/Barometric Pressure (BARO) Sensor Incorrect Correlation	ON
P00FE (90) *5	o	Evaporative Emission (EVAP) Vent Line Blockage	ON
P0100 (50)	---	Mass Air Flow (MAF) Sensor Circuit Malfunction	ON
P0101 (50)	o	Mass Air Flow (MAF) Sensor Circuit Range/Performance Problem (Out of Range)	ON
P0107 (3)	---	Manifold Absolute Pressure (MAP) Sensor Circuit Low Voltage	ON
P0108 (3)	---	Manifold Absolute Pressure (MAP) Sensor Circuit High Voltage	ON
P0111 (10)	o	Intake Air Temperature (IAT) Sensor 1 Circuit Range/Performance Problem	ON
P0112 (10)	o	Intake Air Temperature (IAT) Sensor 1 Circuit Low Voltage	ON
P0113 (10)	o	Intake Air Temperature (IAT) Sensor 1 Circuit High Voltage	ON
P0115 (6)	o	Engine Coolant Temperature (ECT) Sensor 1 Out of Range	ON

NOTE: The above DTCs are indicated when the PGM-FI system is selected with the HDS. Some automatic transmission DTCs cause the MIL to come on. If the MIL is on and no DTCs are indicated in the PGM-FI system, select the A/T system, and check for automatic transmission DTCs.

*1: These DTCs are indicated by a blinking MIL when the SCS line is jumped with the HDS. Some DTCs do not cause the MIL to blink when the SCS line is jumped; these DTCs are shown in the gauge display.

*2: With multipurpose camera unit

*3: AWD

*4:'18-19

*5:'20-21

*6: With auto idle stop system

*7: With keyless access system

*8:'17-20

*9:'21

DTC (MIL indication *1)	Two DriveCycle Detection	Detection Item	MIL
P0116 (86)	o	Engine Coolant Temperature (ECT) Sensor 1 Circuit Range/Performance Problem	ON
P0117 (6)	---	Engine Coolant Temperature (ECT) Sensor 1 Circuit Low Voltage	ON
P0118 (6)	---	Engine Coolant Temperature (ECT) Sensor 1 Circuit High Voltage	ON
P011A (86)	o	Engine Coolant Temperature (ECT) Sensor 1 Circuit Range/Performance Problem	ON
P011B (10)	o	Intake Air Temperature (IAT) Sensor 1 Circuit Range/Performance Problem	ON
P0121 (7)	o	Throttle Position (TP) Sensor A Out of Range	ON
P0122 (7)	---	Throttle Position (TP) Sensor A Circuit Low Voltage	ON
P0123 (7)	---	Throttle Position (TP) Sensor A Circuit High Voltage	ON
P0125 (86)	o	Engine Coolant Temperature (ECT) Sensor 1 Malfunction/Slow Response	ON
P0128 (87)	o	Cooling System Malfunction	ON
P0130 (61)	o	Air Fuel Ratio (A/F) Sensor (Sensor 1) Out of Range	ON
P0133 (61)	o	Air/Fuel Ratio (A/F) Sensor (Sensor 1) Malfunction/Slow Response	ON
P0134 (41)	o	Air/Fuel Ratio (A/F) Sensor (Sensor 1) Heater System Malfunction	ON
P0135 (41)	o	Air/Fuel Ratio (A/F) Sensor (Sensor 1) Heater Circuit Malfunction	ON
P0137 (63)	o	Secondary Heated Oxygen Sensor (Secondary HO2S (Sensor 2)) Circuit Low Voltage	ON
P0138 (63)	o	Secondary Heated Oxygen Sensor (Secondary HO2S (Sensor 2)) Circuit High Voltage	ON
P0139 (63)	o	Secondary Heated Oxygen Sensor (Secondary HO2S (Sensor 2)) Slow Response	ON
P0141 (65)	o	Secondary Heated Oxygen Sensor (Secondary HO2S (Sensor 2)) Heater Circuit Malfunction	ON
P0171 (45)	o	Fuel System Too Lean	ON
P0172 (45)	o	Fuel System Too Rich	ON
P0192 (95)	---	Fuel Rail Pressure Sensor Circuit Low Voltage	ON
P0193 (95)	---	Fuel Rail Pressure Sensor Circuit High Voltage	ON
P0201 (16)	---	No. 1 Cylinder Injector Circuit Malfunction	ON
P0202 (16)	---	No. 2 Cylinder Injector Circuit Malfunction	ON
P0203 (16)	---	No. 3 Cylinder Injector Circuit Malfunction	ON
P0204 (16)	---	No. 4 Cylinder Injector Circuit Malfunction	ON
P0221 (7)	o	Throttle Position (TP) Sensor B Out of Range	ON

DTC (MIL indication *1)	Two DriveCycle Detection	Detection Item	MIL
P0222 (7)	---	Throttle Position (TP) Sensor B Circuit Low Voltage	ON
P0223 (7)	---	Throttle Position (TP) Sensor B Circuit High Voltage	ON
P0234 (26)	---	Turbocharger Overboost Problem	ON
P0235 (171)	o	Turbocharger Boost Sensor Out of Range	ON
P0236 (171)	o	Turbocharger Boost Sensor Circuit Range/Performance Problem	ON
P0237 (171)	---	Turbocharger Boost Sensor Circuit Low Voltage	ON
P0238 (171)	---	Turbocharger Boost Sensor Circuit High Voltage	ON
P023D (171)	o	Turbocharger Boost Sensor/Manifold Absolute Pressure (MAP) Sensor Incorrect Correlation	ON

NOTE: The above DTCs are indicated when the PGM-FI system is selected with the HDS. Some automatic transmission DTCs cause the MIL to come on. If the MIL is on and no DTCs are indicated in the PGM-FI system, select the A/T system, and check for automatic transmission DTCs.

*1: These DTCs are indicated by a blinking MIL when the SCS line is jumped with the HDS. Some DTCs do not cause the MIL to blink when the SCS line is jumped; these DTCs are shown in the gauge display.

*2: With multipurpose camera unit

*3: AWD

*4:'18-19

*5:'20-21

*6: With auto idle stop system

*7: With keyless access system

*8:'17-20

*9:'21

DTC (MIL indication *1)	Two DriveCycle Detection	Detection Item	MIL
P027E (167) *5	o	Cold Start Air Fuel Ratio Control System Command Lean	ON
P027F (167) *5	o	Cold Start Air Fuel Ratio Control System Command Rich	ON
P0299 (26)	---	Turbocharger Underboost Problem	ON
P0300 (211) and any combination of the following: P0301 (71) P0302 (72) P0303 (73) P0304 (74)	o	Random Misfire Detected	ON
P0301 (71)	o	No. 1 Cylinder Misfire Detected	ON
P0302 (72)	o	No. 2 Cylinder Misfire Detected	ON
P0303 (73)	o	No. 3 Cylinder Misfire Detected	ON
P0304 (74)	o	No. 4 Cylinder Misfire Detected	ON
P0326 (23)	o	Knock Sensor Malfunction	ON
P0327 (23)	o	Knock Sensor Circuit Low Voltage	ON

DTC (MIL indication *1)	Two DriveCycle Detection	Detection Item	MIL
P0328 (23)	o	Knock Sensor Circuit High Voltage	ON
P0335 (4)	---	Crankshaft Position (CKP) Sensor No Signal	ON
P0339 (4)	---	Crankshaft Position (CKP) Sensor Circuit Intermittent Interruption	ON
P0340 (8)	---	Camshaft Position (CMP) Sensor A No Signal	ON
P0341 (57)	o	Camshaft Position (CMP) Sensor A and Crankshaft Position (CKP) Sensor Incorrect Phase Detected	ON
P0344 (8)	---	Camshaft Position (CMP) Sensor A Circuit Intermittent Interruption	ON
P0351 (71)	---	No. 1 Cylinder Ignition Coil Circuit Malfunction	ON
P0352 (72)	---	No. 2 Cylinder Ignition Coil Circuit Malfunction	ON
P0353 (73)	---	No. 3 Cylinder Ignition Coil Circuit Malfunction	ON
P0354 (74)	---	No. 4 Cylinder Ignition Coil Circuit Malfunction	ON
P0365 (142)	---	Camshaft Position (CMP) Sensor B Circuit No Signal	ON
P0366 (142)	o	Camshaft Position (CMP) Sensor B and Crankshaft Position (CKP) Sensor Incorrect Phase Detected	ON
P0369 (142)	---	Camshaft Position (CMP) Sensor B Circuit Intermittent Interruption	ON
P0420 (67)	o	Catalyst System Efficiency Below Threshold	ON
P043E (94)	o	Evaporative Emission (EVAP) Leak Check Module Standard Pressure Low	ON
P043F (94)	o	Evaporative Emission (EVAP) Leak Check Module Standard Pressure High	ON
P0441 (90)	o	Evaporative Emission (EVAP) System Purge Flow Malfunction	ON
P0443 (92)	o	Evaporative Emission (EVAP) Canister Purge Valve Circuit Malfunction	ON
P0451 (94)	o	Evaporative Emission (EVAP) Leak Check Module Pressure Sensor Range/Performance	ON
P0456 (90)	o	Evaporative Emission (EVAP) System Very Small Leak Detected	ON
P0460 (121) *5	o	Fuel Level Sensor (Fuel Gauge Sending Unit) Out of Range	ON
P0461 *8	---	Fuel Level Sensor (Fuel Gauge Sending Unit) Circuit Range/Performance Problem	OFF

NOTE: The above DTCs are indicated when the PGM-FI system is selected with the HDS. Some automatic transmission DTCs cause the MIL to come on. If the MIL is on and no DTCs are indicated in the PGM-FI system, select the A/T system, and check for automatic transmission DTCs.

*1: These DTCs are indicated by a blinking MIL when the SCS line is jumped with the HDS. Some DTCs do not cause the MIL to blink when the SCS line is jumped; these DTCs are shown in the gauge display.

*2: With multipurpose camera unit

*3: AWD

*4:'18-19

*5:'20-21

*6: With auto idle stop system

*7: With keyless access system

*8:'17-20

*9:'21

DTC (MIL indication *1)	Two DriveCycle Detection	Detection Item	MIL
P0461 (121) *9	o	Fuel Level Sensor (Fuel Gauge Sending Unit) Circuit Range/Performance Problem	ON
P0462 *4	o	Fuel Level Sensor (Fuel Gauge Sending Unit) Circuit Low Voltage	OFF
P0462 (121) *5	o	Fuel Level Sensor (Fuel Gauge Sending Unit) Circuit Low Voltage	ON
P0463 *4	o	Fuel Level Sensor (Fuel Gauge Sending Unit) Circuit High Voltage	OFF
P0463 (121) *5	o	Fuel Level Sensor (Fuel Gauge Sending Unit) Circuit High Voltage	ON
P04DF (92)	o	Evaporative Emission (EVAP) System High Purge Flow Detected	ON
P04F0 (90)	o	Evaporative Emission (EVAP) System Incorrect Purge Flow Detected	ON
P04F1 (90)	o	Evaporative Emission (EVAP) System Low Purge Flow Detected	ON
P0506 (14)	o	Idle Control System RPM Lower than Expected	ON
P0507 (14)	o	Idle Control System RPM Higher than Expected	ON
P050A (167)	o	Cold Start Idle Air Control System Performance Problem	ON
P050B (167) *5	o	Cold Start Ignition Timing Control System Performance Problem	ON
P050D (167)	o	Cold Start Idle Speed Problem	ON
P0532	o	A/C Pressure Sensor Circuit Low Voltage	OFF
P0533	o	A/C Pressure Sensor Circuit High Voltage	OFF
P0562	---	Charging System Low Voltage	OFF
P0563	o	Powertrain Control Module (PCM) Power Source Circuit Unexpected Voltage	OFF
P0571	o	Brake Pedal Position Switch Circuit Malfunction	OFF
P059F	---	Shutter Grille Assembly (Upper) Malfunction	OFF
P05A0	---	Shutter Grille Assembly (Upper) Malfunction	OFF
P05A3	---	Shutter Grille Actuator (Upper) Malfunction	OFF
P05A8	---	Shutter Grille Actuator (Upper) Malfunction	OFF
P05AE	---	Shutter Grille Assembly (Lower) Malfunction	OFF
P05AF	---	Shutter Grille Assembly (Lower) Malfunction	OFF
P05B2	---	Shutter Grille Actuator (Lower) Malfunction	OFF
P05B7	---	Shutter Grille Actuator (Lower) Malfunction	OFF
P05C0	---	Shutter Grille Actuator (Upper) Temperature Malfunction	OFF
P05C1	---	Shutter Grille Actuator (Lower) Temperature Malfunction	OFF
P0600 (131)	---	Powertrain Control Module (PCM) Serial Communication Failure	ON
P0602 (196)	---	Powertrain Control Module (PCM) Programming Error	ON

DTC (MIL indication *1)	Two DriveCycle Detection	Detection Item	MIL
P060A (131)	---	Powertrain Control Module (PCM) Internal Control Module Malfunction	ON
P0615	o	Starter Cut Relay Diagnosis Circuit Malfunction	OFF
P0616	---	Starter Cut Relay Diagnosis Circuit Low Voltage	OFF
P0617	---	Starter Cut Relay Diagnosis Circuit High Voltage	OFF
P061B (131)	---	Powertrain Control Module (PCM) Internal Malfunction (Torque Calculation)	ON
P062B (131)	---	Powertrain Control Module (PCM) Internal Circuit Malfunction	ON

NOTE: The above DTCs are indicated when the PGM-FI system is selected with the HDS. Some automatic transmission DTCs cause the MIL to come on. If the MIL is on and no DTCs are indicated in the PGM-FI system, select the A/T system, and check for automatic transmission DTCs.

*1: These DTCs are indicated by a blinking MIL when the SCS line is jumped with the HDS. Some DTCs do not cause the MIL to blink when the SCS line is jumped; these DTCs are shown in the gauge display.

*2: With multipurpose camera unit

*3: AWD

*4:'18-19

*5:'20-21

*6: With auto idle stop system

*7: With keyless access system

*8:'17-20

*9:'21

DTC (MIL indication *1)	Two DriveCycle Detection	Detection Item	MIL
P062F (131)	---	Powertrain Control Module (PCM) Internal Control Module Keep Alive Memory (KAM) Error	ON
P0630 (139)	---	VIN Not Programmed or Mismatch	ON
P0641 (133)	---	Sensor Reference Voltage A Malfunction	ON
P0651 (134)	---	Sensor Reference Voltage B Malfunction	ON
P0657 (131)	---	Powertrain Control Module (PCM) Power Supply Circuit Malfunction	ON
P065A	---	ACG No Charging Malfunction	OFF
P06A8 (131)	---	Internal VCC Power Malfunction	ON
P0703	o	Brake Pedal Position Switch (NC) Malfunction	OFF
P0864 (126)	---	PT-CAN Malfunction (Powertrain Control Module (PCM)-Transmission Control Module (TCM))	ON
P0A11 *6	o	DC-DC Converter Activation Circuit Malfunction	OFF
P0A94 *6	o	DC-DC Converter Performance Problem	OFF
P1009 (56)	---	Variable Valve Timing Control (VTC) A Advance Malfunction	ON
P101A (141)	---	Variable Valve Timing Control (VTC) B Advance Malfunction	ON

DTC (MIL indication *1)	Two DriveCycle Detection	Detection Item	MIL
P145D (90)	o	Evaporative Emission (EVAP) System Purge Flow Malfunction at turbocharging	ON
P145F (94)	o	Evaporative Emission (EVAP) Leak Check Module Pressure Sensor Range/Performance Problem	ON
P1461 (94)	o	Evaporative Emission (EVAP) Leak Check Module Pressure Sensor Shifts	ON
P1462 (94)	o	Evaporative Emission (EVAP) Leak Check Module Pressure Decompression Defect	ON
P1549	---	Charging System High Voltage	OFF
P154A	---	Battery Sensor Internal Failure	OFF
P154B *6	o	Battery Sensor Characteristic Abnormal	OFF
P1658 (40)	---	Electronic Throttle Control System (ETCS) Control Relay ON Malfunction	ON
P1659 (40)	---	Electronic Throttle Control System (ETCS) Control Relay OFF Malfunction	ON
P1683 (40)	---	Throttle Valve Default Position Spring Performance Problem	ON
P1684 (40)	---	Throttle Valve Return Spring Performance Problem	ON
P16BB	---	Alternator B Terminal Circuit Low Voltage	OFF
P16E2	---	PGM-FI-ACG LIN Communication Error	OFF
P16E3	---	PGM-FI-Battery Sensor LIN Communication Error	OFF
P16E4	---	ACG High-temperature	OFF
P16E5 *6	---	LIN Communication Error (PCM-DC-DC Converter)	OFF
P16E6	---	Transmission Range Switch START Switch Circuit Malfunction	OFF
P16E8	---	PGM-FI-Shutter Grille LIN Communication Error	OFF
P16F3	---	Starter Cut Relay 1 Control Circuit Low Voltage	OFF
P16F4	---	Starter Cut Relay 2 Control Circuit Low Voltage	OFF
P16F5	---	Starter Cut Relay 1 Control Circuit High Voltage	OFF
P16F6	---	Starter Cut Relay 2 Control Circuit High Voltage	OFF
P2073 (5)	o	Manifold Absolute Pressure (MAP) Sensor Signal Higher Than Expected	ON

NOTE: The above DTCs are indicated when the PGM-FI system is selected with the HDS. Some automatic transmission DTCs cause the MIL to come on. If the MIL is on and no DTCs are indicated in the PGM-FI system, select the A/T system, and check for automatic transmission DTCs.

*1: These DTCs are indicated by a blinking MIL when the SCS line is jumped with the HDS. Some DTCs do not cause the MIL to blink when the SCS line is jumped; these DTCs are shown in the gauge display.

*2: With multipurpose camera unit

*3: AWD

*4:'18-19

*5:'20-21

*6: With auto idle stop system

*7: With keyless access system

*8:'17-20

DTC (MIL indication *1)	Two DriveCycle Detection	Detection Item	MIL
P2074 (5)	o	Manifold Absolute Pressure (MAP) Sensor Signal Lower Than Expected	ON
P2096 (45)	o	Post Catalyst Fuel Trim System Too Lean	ON
P2097 (45)	o	Post Catalyst Fuel Trim System Too Rich	ON
P2101 (40)	---	Electronic Throttle Control System (ETCS) Malfunction	ON
P2108 (40)	---	Throttle Actuator Control Module Performance	ON
P2118 (40)	---	Throttle Actuator Current Range/Performance Problem	ON
P2119 (40)	---	Throttle Actuator Control Throttle Body Range/Performance	ON
P2121 (37) *4	o	Accelerator Pedal Position (APP) Sensor A (Throttle Position (TP) Sensor D) Out of Range	ON
P2122 (37)	---	Accelerator Pedal Position (APP) Sensor A (Throttle Position (TP) Sensor D) Circuit Low Voltage	ON
P2123 (37)	---	Accelerator Pedal Position (APP) Sensor A (Throttle Position (TP) Sensor D) Circuit High Voltage	ON
P2126 (37)	o	Accelerator Pedal Position (APP) Sensor B (Throttle Position (TP) Sensor E) Out of Range	ON
P2127 (37)	---	Accelerator Pedal Position (APP) Sensor B (Throttle Position (TP) Sensor E) Circuit Low Voltage	ON
P2128 (37)	---	Accelerator Pedal Position (APP) Sensor B (Throttle Position (TP) Sensor E) Circuit High Voltage	ON
P2135 (7)	---	Throttle Position (TP) Sensor A/B Incorrect Voltage Correlation	ON
P2138 (37)	---	Accelerator Pedal Position (APP) Sensor A/B (Throttle Position (TP) Sensor D/E) Incorrect Voltage Correlation	ON
P2148 (131)	o	Injector Power Supply Circuit Malfunction	ON
P2175 (40) *5	o	Throttle Actuator Control System Low Air Flow Detected	ON
P2176 (40)	---	Throttle Actuator Control System Idle Position Not Learned	ON
P2182 (192)	o	Engine Coolant Temperature (ECT) Sensor 2 Out of Range	ON
P2183 (192)	o	Engine Coolant Temperature (ECT) Sensor 2 Circuit Range/Performance Problem	ON
P2184 (192)	o	Engine Coolant Temperature (ECT) Sensor 2 Circuit Low Voltage	ON
P2185 (192)	o	Engine Coolant Temperature (ECT) Sensor 2 Circuit High Voltage	ON
P2187 (45)	o	Fuel System Too Lean at Idle	ON
P2195 (48)	o	Air Fuel Ratio (A/F) Sensor (Sensor 1) Signal Stuck Lean	ON
P2199 (10)	o	Intake Air Temperature (IAT) Sensor 1-2 Incorrect Correlation	ON
P219C (45)	o	No. 1 Cylinder Air-Fuel Ratio Variation	ON
P219D (45)	o	No. 2 Cylinder Air-Fuel Ratio Variation	ON
P219E (45)	o	No. 3 Cylinder Air-Fuel Ratio Variation	ON
P219F (45)	o	No. 4 Cylinder Air-Fuel Ratio Variation	ON

DTC (MIL indication *1)	Two DriveCycle Detection	Detection Item	MIL
P2226 (13)	o	Barometric Pressure (BARO) Sensor Circuit Malfunction	ON
P2228 (13)	o	Barometric Pressure (BARO) Sensor Circuit Low Voltage	ON
P2229 (13)	o	Barometric Pressure (BARO) Sensor Circuit High Voltage	ON
P2237 (155)	o	Air/Fuel Ratio (A/F) Sensor (Sensor 1) IP Circuit High Voltage	ON
P2238 (155)	o	Air/Fuel Ratio (A/F) Sensor (Sensor 1) IP Circuit Low Voltage	ON

NOTE: The above DTCs are indicated when the PGM-FI system is selected with the HDS. Some automatic transmission DTCs cause the MIL to come on. If the MIL is on and no DTCs are indicated in the PGM-FI system, select the A/T system, and check for automatic transmission DTCs.

*1: These DTCs are indicated by a blinking MIL when the SCS line is jumped with the HDS. Some DTCs do not cause the MIL to blink when the SCS line is jumped; these DTCs are shown in the gauge display.

*2: With multipurpose camera unit

*3: AWD

*4:'18-19

*5:'20-21

*6: With auto idle stop system

*7: With keyless access system

*8:'17-20

*9:'21

DTC (MIL indication *1)	Two DriveCycle Detection	Detection Item	MIL
P2243 (155)	o	Air/Fuel Ratio (A/F) Sensor (Sensor 1) VCENT Circuit High Voltage	ON
P2245 (155)	o	Air/Fuel Ratio (A/F) Sensor (Sensor 1) VCENT Circuit Low Voltage	ON
P2251 (155)	o	Air/Fuel Ratio (A/F) Sensor (Sensor 1) VS Circuit High Voltage	ON
P2252 (155)	o	Air/Fuel Ratio (A/F) Sensor (Sensor 1) VS Circuit Low Voltage	ON
P2270 (63)	o	Secondary Heated Oxygen Sensor (Secondary HO2S (Sensor 2)) Circuit Signal Stuck Lean	ON
P2279 (109)	o	Intake Air System Leak	ON
P2401 (94)	o	Evaporative Emission (EVAP) Leak Check Pump Control Circuit Low Voltage	ON
P2402 (94)	o	Evaporative Emission (EVAP) Leak Check Pump Control Circuit High Voltage	ON
P2450 (90)	o	Evaporative Emission (EVAP) System Purge Line Non-return Valve A Stuck Open	ON

DTC (MIL indication *1)	Two DriveCycle Detection	Detection Item	MIL
P24B8 (94) *5	o	Evaporative Emission (EVAP) Leak Check Module Absolute Pressure Sensor Out of Range	ON
P24B9 (94)	o	Evaporative Emission (EVAP) Leak Check Module Absolute Pressure Sensor Range/Performance Problem	ON
P24BA (94)	o	Evaporative Emission (EVAP) Leak Check Module Absolute Pressure Sensor Circuit Low Voltage	ON
P24BB (94)	o	Evaporative Emission (EVAP) Leak Check Module Absolute Pressure Sensor Circuit High Voltage	ON
P24BE (94)	o	Canister Change Over Valve Control Circuit Low Voltage	ON
P24BF (94)	o	Canister Change Over Valve Control Circuit High Voltage	ON
P24C0 (94)	o	Canister Change Over Valve Close Malfunction	ON
P24C1 (94)	o	Canister Change Over Valve Stuck Close	ON
P2563 (190)	o	Turbocharger Wastegate Control Actuator Position Sensor Out of Range	ON
P2564 (190)	---	Turbocharger Wastegate Control Actuator Position Sensor Circuit Low Voltage	ON
P2565 (190)	---	Turbocharger Wastegate Control Actuator Position Sensor Circuit High Voltage	ON
P2610 (132)	o	Powertrain Control Module (PCM) Ignition Off Internal Timer Malfunction	ON
P2623 (197)	---	High Pressure Fuel Pump Spill Valve Malfunction	ON
P2A00 (61)	o	Air/Fuel Ratio (A/F) Sensor (Sensor 1) Circuit Range/Performance Problem	ON
P2A01 (63)	o	Secondary Heated Oxygen Sensor (Secondary HO2S) (Sensor 2) Circuit Range/Performance Problem	ON
P2DE0 (167) *5	o	Cold Start Air Fuel Ratio Control System Lean	ON
P2DE1 (167) *5	o	Cold Start Air Fuel Ratio Control System Rich	ON
U0029 (126)	---	F-CAN Malfunction (BUS-OFF (Powertrain Control Module (PCM)))	ON
U0038 (126)	---	PT-CAN Malfunction (TCM ECU BUS-OFF)	ON
U0047	---	F-CAN Malfunction For The Second Channel (BUS-OFF (Powertrain Control Module (PCM))	OFF
U0101 (126)	---	F-CAN Malfunction (Powertrain Control Module (PCM)-Transmission Control Module (TCM))	ON

NOTE: The above DTCs are indicated when the PGM-FI system is selected with the HDS. Some automatic transmission DTCs cause the MIL to come on. If the MIL is on and no DTCs are indicated in the PGM-FI system, select the A/T system, and check for automatic transmission DTCs.

*1: These DTCs are indicated by a blinking MIL when the SCS line is jumped with the HDS. Some DTCs do not cause the MIL to blink when the SCS line is jumped; these DTCs are shown in the gauge display.

*2: With multipurpose camera unit

*3: AWD

*4:'18-19

*5:'20-21

*6: With auto idle stop system

*7: With keyless access system

*8:'17-20

*9:'21

DTC (MIL indication *1)	Two DriveCycle Detection	Detection Item	MIL
U0104 *2	---	F-CAN Malfunction (Powertrain Control Module (PCM)-Driving Support System Control Unit)	OFF
U0114 *3	---	F-CAN Malfunction (Powertrain Control Module (PCM)-AWD Control Unit)	OFF
U0122	---	F-CAN Malfunction (Powertrain Control Module (PCM)-VSA Modulator-Control Unit)	OFF
U0128	---	F-CAN Malfunction (Powertrain Control Module (PCM)-Electric Parking Brake Control Unit)	OFF
U0129	---	F-CAN Malfunction (Powertrain Control Module (PCM)-Electric Brake Booster)	OFF
U0131	---	F-CAN Malfunction (Powertrain Control Module (PCM)-EPS Control Unit)	OFF
U0146 (126) *5	---	F-CAN Malfunction (Powertrain Control Module (PCM)-CAN Gateway)	ON
U0151	---	F-CAN Malfunction (Powertrain Control Module (PCM)-SRS Unit)	OFF
U0155 (126)	---	F-CAN Malfunction (Powertrain Control Module (PCM)-Gauge Control Module)	ON
U0301 (131)	---	PGM-FI System and Transmission System Program Version Mismatch	ON
U129E *7	---	F-CAN Malfunction (Powertrain Control Module (PCM)-Power Control Unit (PCU))	OFF

NOTE: The above DTCs are indicated when the PGM-FI system is selected with the HDS. Some automatic transmission DTCs cause the MIL to come on. If the MIL is on and no DTCs are indicated in the PGM-FI system, select the A/T system, and check for automatic transmission DTCs.

*1: These DTCs are indicated by a blinking MIL when the SCS line is jumped with the HDS. Some DTCs do not cause the MIL to blink when the SCS line is jumped; these DTCs are shown in the gauge display.

*2: With multipurpose camera unit

*3: AWD

*4:'18-19

*5:'20-21

*6: With auto idle stop system

*7: With keyless access system

*8:'17-20

*9:'21

FUEL AND EMISSIONS SYSTEMS DTCS (2.4L) (2017)

DTC(MIL indication *1)	Two Driver Cycle Detection	Detection Item	MIL
P0010 (56)	---	Variable Valve Timing Control (VTC) Oil Control Solenoid Valve Malfunction	ON
P0011 (56)	o	Variable Valve Timing Control (VTC) System Malfunction	ON
P0069 (13) *2	o	Barometric Pressure (BARO) Sensor Circuit Range/Performance Problem	ON
P006A (50) *2	o	Mass Air Flow (MAF) Sensor Circuit Range/Performance Problem	ON
P0087 (197)	---	Fuel Rail Pressure Too Low	ON
P0088 (197)	---	Fuel Rail Pressure Too High	ON
P0102 (50)	---	Mass Air Flow (MAF) Sensor Circuit Low Voltage	ON
P0103 (50)	---	Mass Air Flow (MAF) Sensor Circuit High Voltage	ON
P0107 (3)	---	Manifold Absolute Pressure (MAP) Sensor Circuit Low Voltage	ON
P0108 (3)	---	Manifold Absolute Pressure (MAP) Sensor Circuit High Voltage	ON
P0111 (10)	o	Intake Air Temperature (IAT) Sensor Circuit Range/Performance Problem	ON
P0112 (10)	o	Intake Air Temperature (IAT) Sensor Circuit Low Voltage	ON
P0113 (10)	o	Intake Air Temperature (IAT) Sensor Circuit High Voltage	ON
P0116 (86)	o	Engine Coolant Temperature (ECT) Sensor 1 Circuit Range/Performance Problem	ON
P0117 (6)	---	Engine Coolant Temperature (ECT) Sensor 1 Circuit Low Voltage	ON
P0118 (6)	---	Engine Coolant Temperature (ECT) Sensor 1 Circuit High Voltage	ON
P011A (86) *2	o	Engine Coolant Temperature (ECT) Sensor 1 Circuit Range/Performance Problem	ON
P011B (102) *2	o	Intake Air Temperature (IAT) Sensor 1 Circuit Range/Performance Problem	ON
P0122 (7)	---	Throttle Position (TP) Sensor A Circuit Low Voltage	ON
P0123 (7)	---	Throttle Position (TP) Sensor A Circuit High Voltage	ON
P0125 (86)	o	Engine Coolant Temperature (ECT) Sensor 1 Malfunction/Slow Response	ON
P0128 (87) *2	o	Cooling System Malfunction	ON
P0133 (61)	o	Air Fuel Ratio (A/F) Sensor (Sensor 1) Malfunction/Slow Response	ON
P0134 (41)	o	Air Fuel Ratio (A/F) Sensor (Sensor 1) Heater System Malfunction	ON
P0135 (41)	o	Air Fuel Ratio (A/F) Sensor (Sensor 1) Heater Circuit Malfunction	ON
P0137 (63)	o	Secondary Heated Oxygen Sensor (Secondary HO2S (Sensor 2)) Circuit Low Voltage	ON
P0138 (63)	o	Secondary Heated Oxygen Sensor (Secondary HO2S (Sensor 2)) Circuit High Voltage	ON
P0139 (63)	o	Secondary Heated Oxygen Sensor (Secondary HO2S (Sensor 2)) Slow Response	ON

DTC(MIL indication *1)	Two Driver Cycle Detection	Detection Item	MIL
P0141 (65)	o	Secondary Heated Oxygen Sensor (Secondary HO2S (Sensor 2)) Heater Circuit Malfunction	ON

NOTE: The above DTCs are indicated when the PGM-FI system is selected with the HDS. Some automatic transmission DTCs cause the MIL to come on. If the MIL is on and no DTCs are indicated in the PGM-FI system, select the A/T system, and check for automatic transmission DTCs.*1: These DTCs are indicated by a blinking MIL when the SCS line is jumped with the HDS. Some DTCs do not cause the MIL to blink when the SCS line is jumped; these DTCs are shown in the gauge display.

*2: USA models

*3: AWD

DTC(MIL indication *1)	Two Driver Cycle Detection	Detection Item	MIL
P0171 (45)	o	Fuel System Too Lean	ON
P0172 (45)	o	Fuel System Too Rich	ON
P0192 (95)	---	Fuel Rail Pressure Sensor Circuit Low Voltage	ON
P0193 (95)	---	Fuel Rail Pressure Sensor Circuit High Voltage	ON
P0201 (16)	---	No. 1 Cylinder Injector Circuit Malfunction	ON
P0202 (16)	---	No. 2 Cylinder Injector Circuit Malfunction	ON
P0203 (16)	---	No. 3 Cylinder Injector Circuit Malfunction	ON
P0204 (16)	---	No. 4 Cylinder Injector Circuit Malfunction	ON
P0222 (7)	---	Throttle Position (TP) Sensor B Circuit Low Voltage	ON
P0223 (7)	---	Throttle Position (TP) Sensor B Circuit High Voltage	ON
P0300 (211) and any combination of the following: P0301 (71) P0302 (72) P0303 (73) P0304 (74)	o	Random Misfire Detected	ON
P0301 (71)	o	No. 1 Cylinder Misfire Detected	ON
P0302 (72)	o	No. 2 Cylinder Misfire Detected	ON
P0303 (73)	o	No. 3 Cylinder Misfire Detected	ON
P0304 (74)	o	No. 4 Cylinder Misfire Detected	ON
P0326 (23)	o	Knock Sensor Malfunction	ON
P0327 (23)	o	Knock Sensor Circuit Low Voltage	ON
P0328 (23)	o	Knock Sensor Circuit High Voltage	ON
P0335 (4)	---	Crankshaft Position (CKP) Sensor No Signal	ON
P0339 (4)	---	Crankshaft Position (CKP) Sensor Circuit Intermittent Interruption	ON
P0340 (57)	o	Camshaft Position (CMP) Sensor A No Signal	ON
P0341 (57)	o	Camshaft Position (CMP) Sensor A and Crankshaft Position (CKP) Sensor Incorrect Phase Detected	ON
P0344 (57)	o	Camshaft Position (CMP) Sensor A Circuit Intermittent Interruption	ON
P0351 (71)	---	No. 1 Cylinder Ignition Coil Circuit Malfunction	ON
P0352 (72)	---	No. 2 Cylinder Ignition Coil Circuit Malfunction	ON
P0353 (73)	---	No. 3 Cylinder Ignition Coil Circuit Malfunction	ON
P0354 (74)	---	No. 4 Cylinder Ignition Coil Circuit Malfunction	ON
P0365 (8)	---	Camshaft Position (CMP) Sensor B No Signal	ON

DTC(MIL indication *1)	Two Driver Cycle Detection	Detection Item	MIL
P0369 (8)	---	Camshaft Position (CMP) Sensor B Circuit Intermittent Interruption	ON
P0420 (67)	o	Catalyst System Efficiency Below Threshold	ON
P0441 (90) *2	o	Evaporative Emission (EVAP) System Purge Flow Malfunction	ON
P0443 (92)	o	Evaporative Emission (EVAP) Canister Purge Valve Circuit Malfunction	ON
P0451 (91) *2	o	Fuel Tank Pressure (FTP) Sensor Circuit Range/Performance Problem	ON
P0452 (91) *2	o	Fuel Tank Pressure (FTP) Sensor Circuit Low Voltage	ON
P0453 (91) *2	o	Fuel Tank Pressure (FTP) Sensor Circuit High Voltage	ON

NOTE: The above DTCs are indicated when the PGM-FI system is selected with the HDS. Some automatic transmission DTCs cause the MIL to come on. If the MIL is on and no DTCs are indicated in the PGM-FI system, select the A/T system, and check for automatic transmission DTCs.*1: These DTCs are indicated by a blinking MIL when the SCS line is jumped with the HDS. Some DTCs do not cause the MIL to blink when the SCS line is jumped; these DTCs are shown in the gauge display.

*2: USA models

*3: AWD

DTC(MIL indication *1)	Two Drive Cycle Detection	Detection Item	MIL
P0455 (90) *2	o	Evaporative Emission (EVAP) System Large Leak Detected	ON
P0456 (90) *2	o	Evaporative Emission (EVAP) System Very Small Leak Detected	ON
P0461 *2	---	Fuel Level Sensor (Fuel Gauge Sending Unit) Circuit Range/Performance Problem	OFF
P0462 *2	o	Fuel Level Sensor (Fuel Gauge Sending Unit) Circuit Low Voltage	OFF
P0463 *2	o	Fuel Level Sensor (Fuel Gauge Sending Unit) Circuit High Voltage	OFF
P0498 (117) *2	o	Evaporative Emission (EVAP) Canister Vent Shut Valve Circuit Low Voltage	ON
P0499 (117) *2	o	Evaporative Emission (EVAP) Canister Vent Shut Valve Circuit High Voltage	ON
P04DF (92) *2	o	Evaporative Emission (EVAP) System High Purge Flow Detected	ON
P04F1 (90) *2	o	Evaporative Emission (EVAP) System Low Purge Flow Detected	ON
P0506 (14) *2	o	Idle Control System RPM Lower than Expected	ON
P0507 (14) *2	o	Idle Control System RPM Higher than Expected	ON
P050A (167) *2	o	Cold Start Idle Air Control System Performance Problem	ON
P050D (167) *2	o	Cold Start Idle Speed Problem	ON
P0532	o	A/C Pressure Sensor Circuit Low Voltage	OFF
P0533	o	A/C Pressure Sensor Circuit High Voltage	OFF
P0562	---	Charging System Low Voltage	OFF

DTC(MIL indication *1)	Two Drive Cycle Detection	Detection Item	MIL
P0563	o	Powertrain Control Module (PCM) Power Source Circuit Unexpected Voltage	OFF
P0571	o	Brake Pedal Position Switch Circuit Malfunction	OFF
P059F	---	Shutter Grille Assembly (Upper) Malfunction	OFF
P05A0	---	Shutter Grille Assembly (Upper) Malfunction	OFF
P05A3	---	Shutter Grille Actuator (Upper) Malfunction	OFF
P05A8	---	Shutter Grille Actuator (Upper) Malfunction	OFF
P05AE	---	Shutter Grille Assembly (Lower) Malfunction	OFF
P05AF	---	Shutter Grille Assembly (Lower) Malfunction	OFF
P05B2	---	Shutter Grille Actuator (Lower) Malfunction	OFF
P05B7	---	Shutter Grille Actuator (Lower) Malfunction	OFF
P05C0	---	Shutter Grille Actuator (Upper) Temperature Malfunction	OFF
P05C1	---	Shutter Grille Actuator (Lower) Temperature Malfunction	OFF
P0602 (196)	---	Powertrain Control Module (PCM) Programming Error	ON
P0607 (131)	---	Powertrain Control Module (PCM) Internal Circuit Malfunction	ON
P060A (131)	---	Powertrain Control Module (PCM) Internal Control Module Malfunction	ON
P0615	o	Starter Cut Relay Diagnosis Circuit Malfunction	OFF
P0616	---	Starter Cut Relay Diagnosis Circuit Low Voltage	OFF
P0617	---	Starter Cut Relay Diagnosis Circuit High Voltage	OFF
P062B (131)	---	Powertrain Control Module (PCM) Internal Circuit Malfunction	ON
P062F (131)	---	Powertrain Control Module (PCM) Internal Control Module Keep Alive Memory (KAM) Error	ON

NOTE: The above DTCs are indicated when the PGM-FI system is selected with the HDS. Some automatic transmission DTCs cause the MIL to come on. If the MIL is on and no DTCs are indicated in the PGM-FI system, select the A/T system, and check for automatic transmission DTCs.*1: These DTCs are indicated by a blinking MIL when the SCS line is jumped with the HDS. Some DTCs do not cause the MIL to blink when the SCS line is jumped; these DTCs are shown in the gauge display.

*2: USA models

*3: AWD

DTC(MIL indication *1)	Two Driver Cycle Detection	Detection Item	MIL
P0630 (139)	---	VIN Not Programmed or Mismatch	ON
P0641 (133)	---	Sensor Reference Voltage A Malfunction	ON
P0651 (134)	---	Sensor Reference Voltage B Malfunction	ON
P065A	---	ACG No Charging Malfunction	OFF
P0685 (135)	o	Powertrain Control Module (PCM) Power Control Circuit/Internal Circuit Malfunction	ON
P06A8 (131)	---	Internal VCC Power Malfunction	ON
P0703	o	Brake Pedal Position Switch (NC) Malfunction	OFF
P1009 (56)	---	Variable Valve Timing Control (VTC) Advance Malfunction	ON

DTC(MIL indication *1)	**Two Driver Cycle Detection**	**Detection Item**	**MIL**
P1172 (61) *2	o	Air Fuel Ratio (A/F) Sensor (Sensor 1) Circuit Out of Range High	ON
P1454 (91) *2	o	Fuel Tank Pressure (FTP) Sensor Circuit Range/Performance Problem	ON
P1458 (91) *2	o	Fuel Tank Pressure (FTP) Sensor Circuit Range/Performance Problem	ON
P1549	---	Charging System High Voltage	OFF
P154A	---	Battery Sensor Internal Failure	OFF
P1658 (40)	---	Electronic Throttle Control System (ETCS) Control Relay ON Malfunction	ON
P1659 (40)	---	Electronic Throttle Control System (ETCS) Control Relay OFF Malfunction	ON
P1683 (40)	---	Throttle Valve Default Position Spring Performance Problem	ON
P1684 (40)	---	Throttle Valve Return Spring Performance Problem	ON
P16BB	---	Alternator B Terminal Circuit Low Voltage	OFF
P16E2	---	PGM-FI-ACG LIN Communication Error	OFF
P16E3	---	PGM-FI-Battery Sensor LIN Communication Error	OFF
P16E4	---	ACG High-temperature	OFF
P16E8	---	PGM-FI-Shutter Grille LIN Communication Error	OFF
P16F0 (131)	---	Powertrain Control Module (PCM) Internal Circuit Malfunction (Starter Control Circuit Malfunction)	ON
P16F2 (131)	---	Powertrain Control Module (PCM) Internal Circuit Malfunction (Starter Control Circuit Malfunction)	ON
P16F3	---	Starter Cut Relay 1 Control Circuit Low Voltage	OFF
P16F4	---	Starter Cut Relay 2 Control Circuit Low Voltage	OFF
P16F5	---	Starter Cut Relay 1 Control Circuit High Voltage	OFF
P16F6	---	Starter Cut Relay 2 Control Circuit High Voltage	OFF
P16F9 (131)	---	Powertrain Control Module (PCM) Internal Circuit Malfunction (Starter Control Circuit Malfunction)	ON
P16FA (131)	---	Powertrain Control Module (PCM) Internal Circuit Malfunction (Starter Control Circuit Malfunction)	ON
P2073 (5) *2	o	Manifold Absolute Pressure (MAP) Sensor Signal Higher Than Expected	ON
P2074 (5) *2	o	Manifold Absolute Pressure (MAP) Sensor Signal Lower Than Expected	ON
P2096 (45) *2	o	Post Catalyst Fuel Trim System Too Lean	ON
P2097 (45) *2	o	Post Catalyst Fuel Trim System Too Rich	ON
P2101 (40)	---	Electronic Throttle Control System (ETCS) Malfunction	ON
P2108 (40)	---	Throttle Actuator Control Module Performance	ON

NOTE: The above DTCs are indicated when the PGM-FI system is selected with the HDS. Some automatic transmission DTCs cause the MIL to come on. If the MIL is on and no DTCs are indicated in the PGM-FI system, select the A/T system, and check for automatic transmission DTCs.*1: These DTCs are indicated by a blinking MIL when the SCS line is jumped with the HDS. Some DTCs do not cause the MIL to blink when the SCS line is jumped; these DTCs are shown in the gauge display.

*2: USA models

*3: AWD

DTC(MIL indication *1)	Two Driver Cycle Detection	Detection Item	MIL
P2118 (40)	---	Throttle Actuator Current Range/Performance Problem	ON
P2119 (40)	---	Throttle Actuator Control Throttle Body Range/Performance	ON
P2122 (37)	---	Accelerator Pedal Position (APP) Sensor A (Throttle Position (TP) Sensor D) Circuit Low Voltage	ON
P2123 (37)	---	Accelerator Pedal Position (APP) Sensor A (Throttle Position (TP) Sensor D) Circuit High Voltage	ON
P2127 (37)	---	Accelerator Pedal Position (APP) Sensor B (Throttle Position (TP) Sensor E) Circuit Low Voltage	ON
P2128 (37)	---	Accelerator Pedal Position (APP) Sensor B (Throttle Position (TP) Sensor E) Circuit High Voltage	ON
P2135 (7)	---	Throttle Position (TP) Sensor A/B Incorrect Voltage Correlation	ON
P2138 (37)	---	Accelerator Pedal Position (APP) Sensor A/B (Throttle Position (TP) Sensor D/E) Incorrect Voltage Correlation	ON
P2176 (40)	---	Throttle Actuator Control System Idle Position Not Learned	ON
P2183 (192) *2	o	Engine Coolant Temperature (ECT) Sensor 2 Circuit Range/Performance Problem	ON
P2184 (192)	o	Engine Coolant Temperature (ECT) Sensor 2 Circuit Low Voltage	ON
P2185 (192)	o	Engine Coolant Temperature (ECT) Sensor 2 Circuit High Voltage	ON
P2195 (48) *2	o	Air Fuel Ratio (A/F) Sensor (Sensor 1) Signal Stuck Lean	ON
P219A (45) *2	o	Air-Fuel Ratio Variation of Cylinder	ON
P2227 (13)	o	Barometric Pressure (BARO) Sensor Circuit Out of Range High	ON
P2228 (13)	o	Barometric Pressure (BARO) Sensor Circuit Low Voltage	ON
P2229 (13)	o	Barometric Pressure (BARO) Sensor Circuit High Voltage	ON
P2237 (48)	o	Air Fuel Ratio (A/F) Sensor (Sensor 1) AFS Circuit High Voltage	ON
P2238 (48)	o	Air Fuel Ratio (A/F) Sensor (Sensor 1) AFS+ Circuit Low Voltage	ON
P2252 (48)	o	Air Fuel Ratio (A/F) Sensor (Sensor 1) AFS- Circuit Low Voltage	ON
P2270 (63)	o	Secondary Heated Oxygen Sensor (Secondary HO2S (Sensor 2)) Circuit Signal Stuck Lean	ON
P2422 (117) *2	o	Evaporative Emission (EVAP) Canister Vent Shut Valve Stuck Closed Malfunction	ON
P2610 (132)	o	Powertrain Control Module (PCM) Ignition Off Internal Timer Malfunction	ON
P2623 (197)	---	High Pressure Fuel Pump Spill Valve Malfunction	ON
P2646 (22) *2	o	Rocker Arm Oil Pressure Switch Circuit Low Voltage	ON
P2647 (22) *2	o	Rocker Arm Oil Pressure Switch Circuit High Voltage	ON
P2648 (21)	---	Rocker Arm Oil Control Solenoid A Circuit Low Voltage	ON

DTC(MIL indication *1)	Two Driver Cycle Detection	Detection Item	MIL
P2649 (21)	---	Rocker Arm Oil Control Solenoid A Circuit High Voltage	ON
P2A00 (61)	o	Air Fuel Ratio (A/F) Sensor (Sensor 1) Circuit Range/Performance Problem	ON
U0029 (126)	---	F-CAN Malfunction (BUS-OFF (Powertrain Control Module (PCM)))	ON
U0114 *3	---	F-CAN Malfunction (Powertrain Control Module (PCM)-AWD Control Unit)	OFF

NOTE: The above DTCs are indicated when the PGM-FI system is selected with the HDS. Some automatic transmission DTCs cause the MIL to come on. If the MIL is on and no DTCs are indicated in the PGM-FI system, select the A/T system, and check for automatic transmission DTCs.*1: These DTCs are indicated by a blinking MIL when the SCS line is jumped with the HDS. Some DTCs do not cause the MIL to blink when the SCS line is jumped; these DTCs are shown in the gauge display.

*2: USA models

*3: AWD

DTC(MIL indication *1)	Two Driver Cycle Detection	Detection Item	MIL
U0122	---	F-CAN Malfunction (Powertrain Control Module (PCM)-VSA Modulator-Control Unit)	OFF
U0128	---	F-CAN Malfunction (Powertrain Control Module (PCM)-Electric Parking Brake Control Unit)	OFF
U0129	---	F-CAN Malfunction (Powertrain Control Module (PCM)-Electric Brake Booster)	OFF
U0131	---	F-CAN Malfunction (Powertrain Control Module (PCM)-EPS Control Unit)	OFF
U0155 (126)	---	F-CAN Malfunction (Powertrain Control Module (PCM)-Gauge Control Module)	ON

NOTE: The above DTCs are indicated when the PGM-FI system is selected with the HDS. Some automatic transmission DTCs cause the MIL to come on. If the MIL is on and no DTCs are indicated in the PGM-FI system, select the A/T system, and check for automatic transmission DTCs.*1: These DTCs are indicated by a blinking MIL when the SCS line is jumped with the HDS. Some DTCs do not cause the MIL to blink when the SCS line is jumped; these DTCs are shown in the gauge display.

*2: USA models

*3: AWD

FUEL AND EMISSIONS SYSTEMS DTCS (2.4L) (2018 2019)

DTC (MIL indication *1)	Two DriveCycle Detection	Detection Item	MIL
P0010 (56)	---	Variable Valve Timing Control (VTC) Oil Control Solenoid Valve Malfunction	ON
P0011 (56)	o	Variable Valve Timing Control (VTC) System Malfunction	ON
P0069 (13)	o	Barometric Pressure (BARO) Sensor Circuit Range/Performance Problem	ON
P006A (50)	o	Mass Air Flow (MAF) Sensor Circuit Range/Performance Problem	ON

DTC (MIL indication *1)	Two DriveCycle Detection	Detection Item	MIL
P0087 (197)	---	Fuel Rail Pressure Too Low	ON
P0088 (197)	---	Fuel Rail Pressure Too High	ON
P0101 (50)	o	Mass Air Flow (MAF) Sensor Circuit Range/Performance Problem	ON
P0102 (50)	---	Mass Air Flow (MAF) Sensor Circuit Low Voltage	ON
P0103 (50)	---	Mass Air Flow (MAF) Sensor Circuit High Voltage	ON
P0105 (3)	o	Manifold Absolute Pressure (MAP) Sensor Out of Range	ON
P0107 (3)	---	Manifold Absolute Pressure (MAP) Sensor Circuit Low Voltage	ON
P0108 (3)	---	Manifold Absolute Pressure (MAP) Sensor Circuit High Voltage	ON
P0111 (10)	o	Intake Air Temperature (IAT) Sensor Circuit Range/Performance Problem	ON
P0112 (10)	o	Intake Air Temperature (IAT) Sensor Circuit Low Voltage	ON
P0113 (10)	o	Intake Air Temperature (IAT) Sensor Circuit High Voltage	ON
P0115 (6)	o	Engine Coolant Temperature (ECT) Sensor 1 Out of Range	ON
P0116 (86)	o	Engine Coolant Temperature (ECT) Sensor 1 Circuit Range/Performance Problem	ON
P0117 (6)	---	Engine Coolant Temperature (ECT) Sensor 1 Circuit Low Voltage	ON
P0118 (6)	---	Engine Coolant Temperature (ECT) Sensor 1 Circuit High Voltage	ON
P011A (86)	o	Engine Coolant Temperature (ECT) Sensor 1 Circuit Range/Performance Problem	ON
P011B (10)	o	Intake Air Temperature (IAT) Sensor 1 Circuit Range/Performance Problem	ON
P0121 (7)	o	Throttle Position (TP) Sensor A Out of Range	ON
P0122 (7)	---	Throttle Position (TP) Sensor A Circuit Low Voltage	ON
P0123 (7)	---	Throttle Position (TP) Sensor A Circuit High Voltage	ON
P0125 (86)	o	Engine Coolant Temperature (ECT) Sensor 1 Malfunction/Slow Response	ON
P0128 (87)	o	Cooling System Malfunction	ON
P0130 (61)	o	Air Fuel Ratio (A/F) Sensor (Sensor 1) Out of Range	ON
P0133 (61)	o	Air Fuel Ratio (A/F) Sensor (Sensor 1) Malfunction/Slow Response	ON
P0134 (41)	o	Air Fuel Ratio (A/F) Sensor (Sensor 1) Heater System Malfunction	ON
P0135 (41)	o	Air Fuel Ratio (A/F) Sensor (Sensor 1) Heater Circuit Malfunction	ON

NOTE: The above DTCs are indicated when the PGM-FI system is selected with the HDS. Some automatic transmission DTCs cause the MIL to come on. If the MIL is on and no DTCs are indicated in the PGM-FI system, select the A/T system, and check for automatic transmission DTCs.

*1: These DTCs are indicated by a blinking MIL when the SCS line is jumped with the HDS. Some DTCs do not cause the MIL to blink when the SCS line is jumped; these DTCs are shown in the gauge display.

*2: AWD

DTC (MIL indication *1)	Two DriveCycle Detection	Detection Item	MIL
P0137 (63)	o	Secondary Heated Oxygen Sensor (Secondary HO2S (Sensor 2)) Circuit Low Voltage	ON
P0138 (63)	o	Secondary Heated Oxygen Sensor (Secondary HO2S (Sensor 2)) Circuit High Voltage	ON
P0139 (63)	o	Secondary Heated Oxygen Sensor (Secondary HO2S (Sensor 2)) Slow Response	ON
P0141 (65)	o	Secondary Heated Oxygen Sensor (Secondary HO2S (Sensor 2)) Heater Circuit Malfunction	ON
P0171 (45)	o	Fuel System Too Lean	ON
P0172 (45)	o	Fuel System Too Rich	ON
P0191 (95)	o	Fuel Rail Pressure Sensor Out of Range	ON
P0192 (95)	---	Fuel Rail Pressure Sensor Circuit Low Voltage	ON
P0193 (95)	---	Fuel Rail Pressure Sensor Circuit High Voltage	ON
P0201 (16)	---	No. 1 Cylinder Injector Circuit Malfunction	ON
P0202 (16)	---	No. 2 Cylinder Injector Circuit Malfunction	ON
P0203 (16)	---	No. 3 Cylinder Injector Circuit Malfunction	ON
P0204 (16)	---	No. 4 Cylinder Injector Circuit Malfunction	ON
P0221 (7)	o	Throttle Position (TP) Sensor B Out of Range	ON
P0222 (7)	---	Throttle Position (TP) Sensor B Circuit Low Voltage	ON
P0223 (7)	---	Throttle Position (TP) Sensor B Circuit High Voltage	ON
P0300 (211) and any combination of the following: P0301 (71) P0302 (72) P0303 (73) P0304 (74)	o	Random Misfire Detected	ON
P0301 (71)	o	No. 1 Cylinder Misfire Detected	ON
P0302 (72)	o	No. 2 Cylinder Misfire Detected	ON
P0303 (73)	o	No. 3 Cylinder Misfire Detected	ON
P0304 (74)	o	No. 4 Cylinder Misfire Detected	ON
P0326 (23)	o	Knock Sensor Malfunction	ON
P0327 (23)	o	Knock Sensor Circuit Low Voltage	ON
P0328 (23)	o	Knock Sensor Circuit High Voltage	ON
P0335 (4)	---	Crankshaft Position (CKP) Sensor No Signal	ON
P0339 (4)	---	Crankshaft Position (CKP) Sensor Circuit Intermittent Interruption	ON
P0340 (57)	o	Camshaft Position (CMP) Sensor A No Signal	ON
P0341 (57)	o	Camshaft Position (CMP) Sensor A and Crankshaft Position (CKP) Sensor Incorrect Phase Detected	ON
P0344 (57)	o	Camshaft Position (CMP) Sensor A Circuit Intermittent Interruption	ON
P0351 (71)	---	No. 1 Cylinder Ignition Coil Circuit Malfunction	ON
P0352 (72)	---	No. 2 Cylinder Ignition Coil Circuit Malfunction	ON
P0353 (73)	---	No. 3 Cylinder Ignition Coil Circuit Malfunction	ON
P0354 (74)	---	No. 4 Cylinder Ignition Coil Circuit Malfunction	ON
P0365 (8)	---	Camshaft Position (CMP) Sensor B No Signal	ON
P0369 (8)	---	Camshaft Position (CMP) Sensor B Circuit Intermittent Interruption	ON

NOTE: The above DTCs are indicated when the PGM-FI system is selected with the HDS. Some automatic transmission DTCs cause the MIL to come on. If the MIL is on and no DTCs are indicated in the PGM-FI system, select the A/T system, and check for automatic transmission DTCs.

*1: These DTCs are indicated by a blinking MIL when the SCS line is jumped with the HDS. Some DTCs do not cause the MIL to blink when the SCS line is jumped; these DTCs are shown in the gauge display.

*2: AWD

DTC (MIL indication *1)	Two DriveCycle Detection	Detection Item	MIL
P0420 (67)	o	Catalyst System Efficiency Below Threshold	ON
P0441 (90)	o	Evaporative Emission (EVAP) System Purge Flow Malfunction	ON
P0443 (92)	o	Evaporative Emission (EVAP) Canister Purge Valve Circuit Malfunction	ON
P0451 (91)	o	Fuel Tank Pressure (FTP) Sensor Circuit Range/Performance Problem	ON
P0452 (91)	o	Fuel Tank Pressure (FTP) Sensor Circuit Low Voltage	ON
P0453 (91)	o	Fuel Tank Pressure (FTP) Sensor Circuit High Voltage	ON
P0455 (90)	o	Evaporative Emission (EVAP) System Large Leak Detected	ON
P0456 (90)	o	Evaporative Emission (EVAP) System Very Small Leak Detected	ON
P0461	---	Fuel Level Sensor (Fuel Gauge Sending Unit) Circuit Range/Performance Problem	OFF
P0462	o	Fuel Level Sensor (Fuel Gauge Sending Unit) Circuit Low Voltage	OFF
P0463	o	Fuel Level Sensor (Fuel Gauge Sending Unit) Circuit High Voltage	OFF
P0498 (117)	o	Evaporative Emission (EVAP) Canister Vent Shut Valve Circuit Low Voltage	ON
P0499 (117)	o	Evaporative Emission (EVAP) Canister Vent Shut Valve Circuit High Voltage	ON
P04DF (92)	o	Evaporative Emission (EVAP) System High Purge Flow Detected	ON
P04F1 (90)	o	Evaporative Emission (EVAP) System Low Purge Flow Detected	ON
P0506 (14)	o	Idle Control System RPM Lower than Expected	ON
P0507 (14)	o	Idle Control System RPM Higher than Expected	ON
P050A (167)	o	Cold Start Idle Air Control System Performance Problem	ON
P050D (167)	o	Cold Start Idle Speed Problem	ON
P0532	o	A/C Pressure Sensor Circuit Low Voltage	OFF
P0533	o	A/C Pressure Sensor Circuit High Voltage	OFF
P0562	---	Charging System Low Voltage	OFF
P0563	o	Powertrain Control Module (PCM) Power Source Circuit Unexpected Voltage	OFF
P0571	o	Brake Pedal Position Switch Circuit Malfunction	OFF
P059F	---	Shutter Grille Assembly (Upper) Malfunction	OFF
P05A0	---	Shutter Grille Assembly (Upper) Malfunction	OFF
P05A3	---	Shutter Grille Actuator (Upper) Malfunction	OFF
P05A8	---	Shutter Grille Actuator (Upper) Malfunction	OFF

DTC (MIL indication *1)	Two DriveCycle Detection	Detection Item	MIL
P05AE	---	Shutter Grille Assembly (Lower) Malfunction	OFF
P05AF	---	Shutter Grille Assembly (Lower) Malfunction	OFF
P05B2	---	Shutter Grille Actuator (Lower) Malfunction	OFF
P05B7	---	Shutter Grille Actuator (Lower) Malfunction	OFF
P05C0	---	Shutter Grille Actuator (Upper) Temperature Malfunction	OFF
P05C1	---	Shutter Grille Actuator (Lower) Temperature Malfunction	OFF
P0602 (196)	---	Powertrain Control Module (PCM) Programming Error	ON
P0607 (131)	---	Powertrain Control Module (PCM) Internal Circuit Malfunction	ON

NOTE: The above DTCs are indicated when the PGM-FI system is selected with the HDS. Some automatic transmission DTCs cause the MIL to come on. If the MIL is on and no DTCs are indicated in the PGM-FI system, select the A/T system, and check for automatic transmission DTCs.

*1: These DTCs are indicated by a blinking MIL when the SCS line is jumped with the HDS. Some DTCs do not cause the MIL to blink when the SCS line is jumped; these DTCs are shown in the gauge display.

*2: AWD

DTC (MIL indication *1)	Two DriveCycle Detection	Detection Item	MIL
P060A (131)	---	Powertrain Control Module (PCM) Internal Control Module Malfunction	ON
P0615	o	Starter Cut Relay Diagnosis Circuit Malfunction	OFF
P0616	---	Starter Cut Relay Diagnosis Circuit Low Voltage	OFF
P0617	---	Starter Cut Relay Diagnosis Circuit High Voltage	OFF
P062B (131)	---	Powertrain Control Module (PCM) Internal Circuit Malfunction	ON
P062F (131)	---	Powertrain Control Module (PCM) Internal Control Module Keep Alive Memory (KAM) Error	ON
P0630 (139)	---	VIN Not Programmed or Mismatch	ON
P0641 (133)	---	Sensor Reference Voltage A Malfunction	ON
P0651 (134)	---	Sensor Reference Voltage B Malfunction	ON
P065A	---	ACG No Charging Malfunction	OFF
P0685 (135)	o	Powertrain Control Module (PCM) Power Control Circuit/Internal Circuit Malfunction	ON
P06A8 (131)	---	Internal VCC Power Malfunction	ON
P0703	o	Brake Pedal Position Switch (NC) Malfunction	OFF
P1009 (56)	---	Variable Valve Timing Control (VTC) Advance Malfunction	ON
P1454 (91)	o	Fuel Tank Pressure (FTP) Sensor Circuit Range/Performance Problem	ON
P1458 (91)	o	Fuel Tank Pressure (FTP) Sensor Circuit Range/Performance Problem	ON
P1549	---	Charging System High Voltage	OFF
P154A	---	Battery Sensor Internal Failure	OFF
P1658 (40)	---	Electronic Throttle Control System (ETCS) Control Relay ON Malfunction	ON

DTC (MIL indication *1)	Two DriveCycle Detection	Detection Item	MIL
P1659 (40)	---	Electronic Throttle Control System (ETCS) Control Relay OFF Malfunction	ON
P1683 (40)	---	Throttle Valve Default Position Spring Performance Problem	ON
P1684 (40)	---	Throttle Valve Return Spring Performance Problem	ON
P16BB	---	Alternator B Terminal Circuit Low Voltage	OFF
P16E2	---	PGM-FI-ACG LIN Communication Error	OFF
P16E3	---	PGM-FI-Battery Sensor LIN Communication Error	OFF
P16E4	---	ACG High-temperature	OFF
P16E8	---	PGM-FI-Shutter Grille LIN Communication Error	OFF
P16F0 (131)	---	Powertrain Control Module (PCM) Internal Circuit Malfunction (Starter Control Circuit Malfunction)	ON
P16F2 (131)	---	Powertrain Control Module (PCM) Internal Circuit Malfunction (Starter Control Circuit Malfunction)	ON
P16F3	---	Starter Cut Relay 1 Control Circuit Low Voltage	OFF
P16F4	---	Starter Cut Relay 2 Control Circuit Low Voltage	OFF
P16F5	---	Starter Cut Relay 1 Control Circuit High Voltage	OFF
P16F6	---	Starter Cut Relay 2 Control Circuit High Voltage	OFF
P16F9 (131)	---	Powertrain Control Module (PCM) Internal Circuit Malfunction (Starter Control Circuit Malfunction)	ON
P16FA (131)	---	Powertrain Control Module (PCM) Internal Circuit Malfunction (Starter Control Circuit Malfunction)	ON
P2073 (5)	o	Manifold Absolute Pressure (MAP) Sensor Signal Higher Than Expected	ON

NOTE: The above DTCs are indicated when the PGM-FI system is selected with the HDS. Some automatic transmission DTCs cause the MIL to come on. If the MIL is on and no DTCs are indicated in the PGM-FI system, select the A/T system, and check for automatic transmission DTCs.

*1: These DTCs are indicated by a blinking MIL when the SCS line is jumped with the HDS. Some DTCs do not cause the MIL to blink when the SCS line is jumped; these DTCs are shown in the gauge display.

*2: AWD

DTC (MIL indication *1)	Two DriveCycle Detection	Detection Item	MIL
P2074 (5)	o	Manifold Absolute Pressure (MAP) Sensor Signal Lower Than Expected	ON
P2096 (45)	o	Post Catalyst Fuel Trim System Too Lean	ON
P2097 (45)	o	Post Catalyst Fuel Trim System Too Rich	ON
P2101 (40)	---	Electronic Throttle Control System (ETCS) Malfunction	ON
P2108 (40)	---	Throttle Actuator Control Module Performance	ON
P2118 (40)	---	Throttle Actuator Current Range/Performance Problem	ON
P2119 (40)	---	Throttle Actuator Control Throttle Body Range/Performance	ON
P2121 (37)	o	Accelerator Pedal Position (APP) Sensor A (Throttle Position (TP) Sensor D) Out of Range	ON
P2122 (37)	---	Accelerator Pedal Position (APP) Sensor A (Throttle Position (TP) Sensor D) Circuit Low Voltage	ON

DTC (MIL indication *1)	Two DriveCycle Detection	Detection Item	MIL
P2123 (37)	---	Accelerator Pedal Position (APP) Sensor A (Throttle Position (TP) Sensor D) Circuit High Voltage	ON
P2126 (37)	o	Accelerator Pedal Position (APP) Sensor B (Throttle Position (TP) Sensor E) Out of Range	ON
P2127 (37)	---	Accelerator Pedal Position (APP) Sensor B (Throttle Position (TP) Sensor E) Circuit Low Voltage	ON
P2128 (37)	---	Accelerator Pedal Position (APP) Sensor B (Throttle Position (TP) Sensor E) Circuit High Voltage	ON
P2135 (7)	---	Throttle Position (TP) Sensor A/B Incorrect Voltage Correlation	ON
P2138 (37)	---	Accelerator Pedal Position (APP) Sensor A/B (Throttle Position (TP) Sensor D/E) Incorrect Voltage Correlation	ON
P2176 (40)	---	Throttle Actuator Control System Idle Position Not Learned	ON
P2182 (192)	o	Engine Coolant Temperature (ECT) Sensor 2 Out of Range	ON
P2183 (192)	o	Engine Coolant Temperature (ECT) Sensor 2 Circuit Range/Performance Problem	ON
P2184 (192)	o	Engine Coolant Temperature (ECT) Sensor 2 Circuit Low Voltage	ON
P2185 (192)	o	Engine Coolant Temperature (ECT) Sensor 2 Circuit High Voltage	ON
P2195 (48)	o	Air Fuel Ratio (A/F) Sensor (Sensor 1) Signal Stuck Lean	ON
P219A (45)	o	Air-Fuel Ratio Variation of Cylinder	ON
P2227 (13)	o	Barometric Pressure (BARO) Sensor Circuit Out of Range High	ON
P2228 (13)	o	Barometric Pressure (BARO) Sensor Circuit Low Voltage	ON
P2229 (13)	o	Barometric Pressure (BARO) Sensor Circuit High Voltage	ON
P2237 (48)	o	Air Fuel Ratio (A/F) Sensor (Sensor 1) AFS Circuit High Voltage	ON
P2238 (48)	o	Air Fuel Ratio (A/F) Sensor (Sensor 1) AFS+ Circuit Low Voltage	ON
P2252 (48)	o	Air Fuel Ratio (A/F) Sensor (Sensor 1) AFS- Circuit Low Voltage	ON
P2270 (63)	o	Secondary Heated Oxygen Sensor (Secondary HO2S (Sensor 2)) Circuit Signal Stuck Lean	ON
P2422 (117)	o	Evaporative Emission (EVAP) Canister Vent Shut Valve Stuck Closed Malfunction	ON
P2610 (132)	o	Powertrain Control Module (PCM) Ignition Off Internal Timer Malfunction	ON
P2623 (197)	---	High Pressure Fuel Pump Spill Valve Malfunction	ON

NOTE: The above DTCs are indicated when the PGM-FI system is selected with the HDS. Some automatic transmission DTCs cause the MIL to come on. If the MIL is on and no DTCs are indicated in the PGM-FI system, select the A/T system, and check for automatic transmission DTCs.

*1: These DTCs are indicated by a blinking MIL when the SCS line is jumped with the HDS. Some DTCs do not cause the MIL to blink when the SCS line is jumped; these DTCs are shown in the gauge display.

*2: AWD

DTC (MIL indication *1)	Two DriveCycle Detection	Detection Item	MIL
P2646 (22)	o	Rocker Arm Oil Pressure Switch Circuit Low Voltage	ON
P2647 (22)	o	Rocker Arm Oil Pressure Switch Circuit High Voltage	ON
P2648 (21)	---	Rocker Arm Oil Control Solenoid A Circuit Low Voltage	ON
P2649 (21)	---	Rocker Arm Oil Control Solenoid A Circuit High Voltage	ON
P2A00 (61)	o	Air Fuel Ratio (A/F) Sensor (Sensor 1) Circuit Range/Performance Problem	ON
U0029 (126)	---	F-CAN Malfunction (BUS-OFF (Powertrain Control Module (PCM)))	ON
U0114 *2	---	F-CAN Malfunction (Powertrain Control Module (PCM)-AWD Control Unit)	OFF
U0122	---	F-CAN Malfunction (Powertrain Control Module (PCM)-VSA Modulator-Control Unit)	OFF
U0128	---	F-CAN Malfunction (Powertrain Control Module (PCM)-Electric Parking Brake Control Unit)	OFF
U0129	---	F-CAN Malfunction (Powertrain Control Module (PCM)-Electric Brake Booster)	OFF
U0131	---	F-CAN Malfunction (Powertrain Control Module (PCM)-EPS Control Unit)	OFF
U0155 (126)	---	F-CAN Malfunction (Powertrain Control Module (PCM)-Gauge Control Module)	ON

NOTE: The above DTCs are indicated when the PGM-FI system is selected with the HDS. Some automatic transmission DTCs cause the MIL to come on. If the MIL is on and no DTCs are indicated in the PGM-FI system, select the A/T system, and check for automatic transmission DTCs.

*1: These DTCs are indicated by a blinking MIL when the SCS line is jumped with the HDS. Some DTCs do not cause the MIL to blink when the SCS line is jumped; these DTCs are shown in the gauge display.

*2: AWD

ELECTRONIC POWER STEERING DTCS

DTC		Detection Item
C0037	-F0	(Left Rear Wheel Speed Sensor Malfunction)
C003A	-F0	(Right Rear Wheel Speed Sensor Malfunction)
C0062	-96	Longitudinal Acceleration Sensor Malfunction
C0063	-96	Yaw-Rate Sensor Malfunction
C1400	-11	Motor Current Malfunction
	-13	EPS Motor Circuit Open
	-14	Motor Voltage Malfunction
C1403	-14	Motor Angle Sensor (SIN/COS) Signals Incorrect
	-29	Motor Angle Sensor (SIN/COS) Signals Incorrect Correlation
C1404	-13	EPS Motor U Phase Circuit High Voltage
C1405	-13	EPS Motor V Phase Circuit High Voltage
C1406	-13	EPS Motor W Phase Circuit High Voltage
C1420	-29	Main Torque Sensor and Sub Torque Sensor Incorrect Correlation
C1421	-14	Main Torque Sensor Malfunction

DTC		Detection Item
C1422	**-14**	Sub Torque Sensor Malfunction
C1423	**-14**	Torque Sensor Power Source Circuit Malfunction
C1432	**-62**	Vehicle Speed and the Engine Speed Incorrect Correlation
U0029	**-00**	F-CAN Malfunction (Bus-Off)
U0100	**-00**	F-CAN Malfunction (EPS Control Unit-PCM/TCM)
U0122	**-00**	F-CAN Malfunction (EPS Control Unit-VSA/ABS Modulator-Control Unit)
U0151	**-00**	F-CAN Malfunction (EPS Control Unit-SRS Unit)
U0416	**-68**	(VSA System Malfunction)
U129C	**-00**	F-CAN Malfunction (EPS Control Unit-Driving Support System Control Unit)
U1483	**-68**	(LKAS Malfunction (Indicator value check))
	-94	(LKAS Malfunction)
U3000	**-13**	EPS Motor Circuit Open
	-49	EPS Control Unit Internal Circuit Malfunction
	-51	ECU Software Update Failure
	-55	EPS Control Unit Internal Malfunction
U3003	**-16**	Battery Voltage Low
	-17	Battery Voltage High

GAUGE CONTROL MODULE DTCS

DTC	Description	DTC type
B1175	Fuel level sensor (Fuel gauge sending unit) circuit malfunction	Signal error
B1176	Fuel level sensor (Fuel gauge sending unit) circuit short	Signal error
B1195	Gauge control module lost communication with Audio Remote Switch(LIN bus connected)	Loss of communication
U0029	F-CAN communication line error	Loss of communication
U0100	Gauge control module lost communication with ENG/AT	Loss of communication
U0101	Gauge control module lost communication with AT	Loss of communication
U0104	Gauge Control Module Lost Communication With Driving Support System Control Unit	Loss of communication
U0114	Gauge control module lost communication with All Wheel Drive Control Module	Loss of communication
U0122	Gauge control module lost communication with VSA modulator-control unit	Loss of communication
U0128	Gauge control module lost communication with EPB	Loss of communication
U0131	Gauge control module lost communication with EPS Unit	Loss of communication
U0151	Gauge control module lost communication with SRS unit	Loss of communication
U1280	Communication bus line error (BUS-OFF)	Loss of communication
U1281	Gauge control module lost communication with MICU (MICU frame)	Loss of communication
U1288	Gauge control module lost communication with PARKSR	Loss of communication
U128F	Gauge control module lost communication with BSI unit	Loss of communication
U129C	Gauge control module lost communication with multi purpose camera unit	Loss of communication
U3000-49	ECU internal circuit malfunction	Internal error

DTC	Description	DTC type
U3000-51	Reprogramming error	Internal error

HVAC SYSTEM DTCS

2017 2018 2019

DTC	Detection Item or Symptom	ECU	DTC Type
B120A	Climate Control Unit LIN Communication Bus Line Error	Climate control unit	Loss of communication
B121A	An open in the mode control motor circuit	Climate control unit	Signal error
B121B	A short in the mode control motor circuit	Climate control unit	Signal error
B1220	A short in the recirculation control motor circuit	Climate control unit	Signal error
B1225	An open in the in-car temperature sensor circuit	Climate control unit	Signal error
B1226	A short in the in-car temperature sensor circuit	Climate control unit	Signal error
B1227	An open in the outside air temperature sensor circuit	Climate control unit	Signal error
B1228	A short in the outside air temperature sensor circuit	Climate control unit	Signal error
B1231	An open in the evaporator temperature sensor circuit	Climate control unit	Signal error
B1232	A short in the evaporator temperature sensor circuit	Climate control unit	Signal error
B1233	An open in the air mix control motor circuit (driver's)	Climate control unit	Signal error
B1234	A short in the air mix control motor circuit (driver's)	Climate control unit	Signal error
B1235	A problem in the air mix control motor circuit, linkage, door, or motor (driver's)	Climate control unit	Signal error
B1236	An open in the passenger's air mix control motor circuit	Climate control unit	Signal error
B1237	A short in the passenger's air mix control motor circuit	Climate control unit	Signal error
B1238	A problem in the passenger's air mix control motor circuit, linkage, door, or motor	Climate control unit	Signal error
B123F	Automatic lighting control unit/sunlight sensor error	Climate control unit	Signal error
B1240	A problem in the mode control motor circuit, linkage, door, or motor	Climate control unit	Signal error
B1241	A problem in the blower motor circuit	Climate control unit	Signal error
B2964	Climate control unit lost communication with front panel (climate control panel)	Climate control unit	Loss of communication
B2983	A problem in the recirculation control motor circuit, linkage, door, or motor	Climate control unit	Signal error
B2986	An open in the recirculation control motor circuit	Climate control unit	Signal error

DTC	Detection Item or Symptom	ECU	DTC Type
B2988	A problem in the A/C compressor variable capacity control solenoid circuit	Climate control unit	Signal error
U1280	Communication bus line error (BUS-OFF)	Climate control unit	Loss of communication
U1281	Climate control unit lost communication with MICU (body control module)	Climate control unit	Loss of communication
U128D	Climate control unit lost communication with gauge control module	Climate control unit	Loss of communication
U1290	Climate control unit lost communication with seat heater control unit (front)	Climate control unit	Loss of communication

2020 2021

DTC	Detection Item or Symptom	ECU	DTC Type
B120A	Climate Control Unit LIN Communication Bus Line Error	Climate control unit	Loss of communication
B121A	An open in the mode control motor circuit	Climate control unit	Signal error
B121B	A short in the mode control motor circuit	Climate control unit	Signal error
B121D*1	Humidity/In-Car Temperature Sensor Communication Error	Climate control unit	Signal error
B1220	A short in the recirculation control motor circuit	Climate control unit	Signal error
B1225*2	An open in the in-car temperature sensor circuit	Climate control unit	Signal error
B1226*2	A short in the in-car temperature sensor circuit	Climate control unit	Signal error
B1227	An open in the outside air temperature sensor circuit	Climate control unit	Signal error
B1228	A short in the outside air temperature sensor circuit	Climate control unit	Signal error
B1231	An open in the evaporator temperature sensor circuit	Climate control unit	Signal error
B1232	A short in the evaporator temperature sensor circuit	Climate control unit	Signal error
B1233	An open in the air mix control motor circuit (driver's)	Climate control unit	Signal error
B1234	A short in the air mix control motor circuit (driver's)	Climate control unit	Signal error
B1235	A problem in the air mix control motor circuit, linkage, door, or motor (driver's)	Climate control unit	Signal error
B1236	An open in the passenger's air mix control motor circuit	Climate control unit	Signal error
B1237	A short in the passenger's air mix control motor circuit	Climate control unit	Signal error
B1238	A problem in the passenger's air mix control motor circuit, linkage, door, or motor	Climate control unit	Signal error
B123F	Automatic lighting control unit/sunlight sensor error	Climate control unit	Signal error
B1240	A problem in the mode control motor circuit, linkage, door, or motor	Climate control unit	Signal error

DTC	Detection Item or Symptom	ECU	DTC Type
B1241	A problem in the blower motor circuit	Climate control unit	Signal error
B2964	Climate control unit lost communication with front panel (climate control panel)	Climate control unit	Loss of communication
B2983	A problem in the recirculation control motor circuit, linkage, door, or motor	Climate control unit	Signal error
B2986	An open in the recirculation control motor circuit	Climate control unit	Signal error
B2988	A problem in the A/C compressor variable capacity control solenoid circuit	Climate control unit	Signal error
U1280	Communication bus line error (BUS-OFF)	Climate control unit	Loss of communication
U1281	Climate control unit lost communication with MICU (body control module)	Climate control unit	Loss of communication

*1: With auto idle stop system

*2: Without auto idle stop system

DTC	Detection Item or Symptom	ECU	DTC Type
U128D	Climate control unit lost communication with gauge control module	Climate control unit	Loss of communication
U1290	Climate control unit lost communication with seat heater control unit (front)	Climate control unit	Loss of communication

*1: With auto idle stop system

*2: Without auto idle stop system

IMMOBILIZER / KEYLESS ENTRY CONTROL UNIT DTCS

DTC	Description	DTC type
B1901	Immobilizer Unit Internal error (CPU error)	Internal error
B1902	Immobilizer Unit Internal error (EEPROM error)	Internal error
U1280	Communication bus line error (BUS-OFF)	Loss of communication

DTC	Description	DTC type
U0155	Immobilizer-keyless control unit lost communication with gauge control module	Loss of communication
U0199	Immobilizer-keyless control unit lost communication with door multiplex control unit	Loss of communication
U1281	Lost communication with MICU (MICU frame)	Loss of communication
U128D	Lost communication with METER	Loss of communication

KEYLESS ACCESS / BACKUP CONTROL UNIT DTCS

DTC	Description	DTC type
B1926	Backup Control Antenna Open or Short	Internal error
U1280	B-CAN communication bus line error (BUS-OFF)	Loss of communication
U128D	Backup Control Unit Lost Communication with Gauge Control Module	Loss of communication

KEYLESS ACCESS CONTROL UNIT DTCS

DTC	Description	DTC type
B1601	Keyless access control unit internal (CPU) error	Internal error
B1602	Keyless access control unit internal (EEPROM) error	Internal error
B1632	MTR CONT Signal Error	Signal error
B1640	RF1 antenna not connected or malfunction	Signal error
B1645	Driver's Door LF Antenna Circuit Short	Signal error
B1646	Driver's Door LF Antenna Circuit Open	Signal error
B1647	Passenger's Door LF Antenna Circuit Short	Signal error
B1648	Passenger's Door LF Antenna Circuit Open	Signal error
B1657	Rear Bumper LF Antenna Circuit Short	Signal error
B1658	Rear Bumper LF Antenna Circuit Open	Signal error
B1659	Front Interior LF Antenna Circuit Short	Signal error
B1660	Front Interior LF Antenna Circuit Open	Signal error
B1661	Middle Interior Antenna Circuit Shorted	Signal error
B1662	Middle Interior Antenna Circuit Opened	Signal error
B1663	Rear Interior LF Antenna Circuit Short	Signal error
B1664	Rear Interior LF Antenna Circuit Open	Signal error
B1667	Rear Shelf (Middle Interior) LF Antenna Circuit Short	Signal error
B1668	Rear Shelf (Middle Interior) LF Antenna Circuit Open	Signal error
U1280	Keyless access control unit communication bus line error (BUS-OFF)	Loss of communication
U1281	Keyless Access Control Unit Lost Communication with MICU	Loss of communication
U128D	Keyless Access Control Unit Lost Communication with Gauge Control Module	Loss of communication

KEYLESS ACCCESS POWER CONTROL UNIT DTCS

DTC	Description	DTC type
B12C5	Engine Start/Stop Switch Failure	Signal error
B12C6	Electric Steering Lock Switch C/D Monitor Circuit Failure	Signal error
B12C7	Electric Steering Lock Motor Circuit Failure	Signal error
B12D0	Power Control Unit IG1A Circuit Error	Internal error
B12D1	Power Control Unit IG1B Circuit Error	Internal error
B12D2	Power Control Unit IG2 Circuit Error	Internal error
B12D3	Power Control Unit IG Latch Circuit Error	Internal error
B12E0	Electric Steering Lock Switch Internal Error	Internal error

DTC	Description	DTC type
B12E1	Electric Steering Lock Motor Internal Error	Internal error
B12E2	Electric Steering Lock Low Level Failure of MTRCUT1	Signal error
B12E3	Electric Steering Lock High Level Failure of MTRCUT1	Signal error
B12E4	Electric Steering Lock High Level Failure of MTRCUT2	Signal error
B12E5	Incorrect assembly of control unit for electric steering lock equipped vehicle	Signal error
B12F0	Power Control Unit Lost Communication with Electric Steering Lock	Loss of communication

DTC	Description	DTC type
U0073	F-CAN Communication Bus Line Error	Loss of communication
U0100	Power Control Unit Lost Communication with PCM	Loss of communication
U0122	Power Control Unit Lost Communication with ABS/VSA Modulator-Control Unit	Loss of communication
U1280	B-CAN communication bus line error (BUS-OFF)	Loss of communication
U1281	Power Control Unit Lost Communication with MICU	Loss of communication
U128D	Power Control Unit Lost Communication with Gauge Control Module	Loss of communication

PARKING AND BACK-UP SENSOR CONTROL UNIT DTCS

DTC	Description	DTC type
B2601	Parking Sensor CPU Error	Internal error
B2602	Parking Sensor EEPROM Error	Internal error
B2610	Front 1st sensor failure	Signal error
B2611	Front 2nd sensor failure	Signal error
B2612	Front 3rd sensor failure	Signal error
B2613	Front 4th sensor failure	Signal error
B2614	Rear 1st sensor failure	Signal error
B2615	Rear 2nd sensor failure	Signal error
B2616	Rear 3rd sensor failure	Signal error
B2617	Rear 4th sensor failure	Signal error

DTC	Description	DTC type
B2618	Front 1st sensor data failure	Signal error
B2619	Front 2nd sensor data failure	Signal error
B261A	Front 3rd sensor data failure	Signal error
B261B	Front 4th sensor data failure	Signal error
B261C	Rear 1st sensor data failure	Signal error
B261D	Rear 2nd sensor data failure	Signal error
B261E	Rear 3rd sensor data failure	Signal error
B261F	Rear 4th sensor data failure	Signal error
B2646	Front sensor power failure	Signal error
B2647	Rear sensor power failure	Signal error
B2648	Front sensor signal short to ground	Signal error
B2649	Rear sensor signal short to ground	Signal error
B264A	Indicator circuit short to power	Signal error
B264B	Indicator circuit short to ground	Signal error
B264D	Front sensor combination error	Signal error
U0155	Lost communication with Gauge Control Module	Loss of communication
U1280	B-CAN communication bus line error (BUS-OFF)	Loss of communication
U1281	Lost communication with MICU	Loss of communication

POWER SEAT CONTROL DTCS

DTC	Description	DTC type
B1802	Power seat control unit internal (EEPROM) error	Internal error
B1825	Slide pulse error(no change in pulse for 1 second)	Signal error
B1826	Front height pulse error(no change in pulse for 1 second)	Signal error

DTC	Description	DTC type
B1827	Rear height pulse error(no change in pulse for 1 second)	Signal error
B1828	Recline pulse error(no change in pulse for 1 second)	Signal error
B1829	AT-P signal and VSP signal mismatch	Signal error
B1836	Power Seat Position Sensor circuit short	Signal error
B1837	Memory position calling timeout	Signal error
B1844	Power Seat Slide switch circuit malfunction	Signal error
B1845	Power Seat Recline switch circuit malfunction	Signal error
B1846	Power Seat Front Up-Down switch circuit malfunction	Signal error
B1847	Power Seat Rear Up-Down switch circuit malfunction	Signal error
U0199	Power seat control unit lost communication with door multiplex control unit (DRLockSW frame)	Loss of communication
U1280	B-CAN communication bus line error (BUS-OFF)	Loss of communication
U1281	Power seat control unit lost communication with MICU (MICU frame)	Loss of communication
U128D	Lost Communication With Gauge Control Module (VSP/NE frame)	Loss of communication

POWER WINDOW MASTER SWITCH DTCS

DTC	Description	DTC type
B1125	Driver's power window motor A pulse malfunction	Signal error
B1126	Driver's power window motor B pulse malfunction	Signal error
B1127	Driver's door lock key cylinder switch malfunction	Signal error
B1128	Driver's door lock switch malfunction	Signal error
B1129	Driver's door lock knob switch malfunction	Signal error
B1130	Front passenger's power window motor A pulse malfunction	Signal error
B1131	Front passenger's power window motor B pulse malfunction	Signal error
B1140	Driver's power window position detect circuit malfunction	Signal error
B1142	Door Multiplex Control Unit lost communication with front passenger's power window switch (UART line open)	Loss of communication
B1145	Front passenger's power window position detect circuit malfunction	Signal error
U1280	Communication bus line error (BUS-OFF)	Loss of communication
U1281	Door multiplex control unit lost communication with MICU	Loss of communication
U128D	Door multiplex control unit lost communication with gauge control module	Loss of communication
U1299	Door multiplex control unit lost communication with climate control unit	Loss of communication

POWER TAILGATE CONTROL UNIT DTCS

DTC	Description	DTC type
B1352	Power Tailgate Control Unit Internal error (EEPROM error)	Internal error
B1375	Driver's side PTG switch circuit malfunction	Signal error
B1376	Tailgate Outer Handle switch circuit malfunction	Signal error

DTC	Description	DTC type
B1377	Power Tailgate Inner switch circuit malfunction	Signal error
B1378	Power Tailgate Right Touch/Pinch sensor circuit malfunction	Signal error
B1379	Power Tailgate Left Touch/Pinch sensor circuit malfunction	Signal error
B1380	Tailgate Closer Unit Neutral switch circuit malfunction	Signal error

DTC	Description	DTC type
B1382	Tailgate Closer Unit Full Latch switch circuit malfunction	Signal error
B1383	Tailgate Closer Unit Ratchet switch circuit malfunction	Signal error
B1384	Tailgate Closer Unit Half Latch switch circuit malfunction	Signal error
B1385	Power Tailgate temperature sensor malfunction	Signal error
B1386	Power Tailgate sensor Pulse A circuit malfunction	Signal error
B1387	Power Tailgate sensor Pulse B circuit malfunction	Signal error
B1388	Power Tailgate Drive Motor circuit malfunction	Signal error
B1390	Power Tailgate Closer Motor function error	Signal error
U0199	Lost communication with P/W (DRLOCKSW, KLDRLOCK frame)	Loss of communication
U1280	Communication Bus line Error(a bus OFF state is detected by Power Tail Gate ECU)	Loss of communication
U1281	Lost communication with MICU (MICU frame)	Loss of communication
U128D	Power Tailgate Control Unit lost communication with GAUGE Control Module	Loss of communication

REAL TIME 4WD SYSTEM DTCS

DTC	AWD System Indicator	Detection Item
C0051-00 (77)	ON	The Functional Abnormalities of Steering Angle Sensor
C0061-96 (77)	ON	The Functional Abnormalities of Lateral Acceleration Sensor
C0061-F0 (77)	ON	Lateral Acceleration Sensor Range/Performance Problem
C0062-96 (77)	ON	The Functional Abnormalities of Longitudinal Acceleration Sensor
C0062-F0 (77)	ON	Longitudinal Acceleration Sensor Range/Performance Problem
C0063-96 (77)	ON	The Functional Abnormalities of Yaw Rate Sensor
C0063-F0 (77)	ON	Yaw Rate Sensor Range/Performance Problem
C1840-12 (47)	ON	Differential Fluid Pressure Sensor Circuit High Voltage
C1840-14 (47)	ON	Differential Fluid Pressure Sensor Circuit Low Voltage
C1841-11 (42)	ON	Differential Fluid Temperature Sensor Circuit Low Voltage
C1841-13 (42)	ON	Differential Fluid Temperature Sensor Circuit High Voltage
C1841-27 (43)	ON	Differential Fluid Temperature Sensor Circuit Range/Performance Problem
C1850-14 (44)	ON	Fail Safe Relay Stuck OFF
C1851-18 (63)	ON	Motor Circuit Low Current
C1851-19 (63)	ON	Control Module Internal Control Module Malfunction
C1851-1E (63)	ON	Motor Circuit High Current
C1852-18 (62)	ON	Solenoid Valve Circuit Low Current
C1852-19 (62)	ON	Solenoid Valve Circuit High Current

DTC	AWD System Indicator	Detection Item
C1858-72 (71)	ON	Differential Fluid Pressure Deviation Low
C1858-73 (71)	ON	Differential Fluid Pressure Deviation High
C1860-98 (76)	ON	Differential Fluid Overheats
C1861-9A (76)	ON	Vehicle Spin Detected
C1870-00 (77)	ON	The Functional Abnormalities of Fuel and Emissions
C1871-00 (77) *1	ON	The Functional Abnormalities of Automatic Transmission
C1872-00 (77)	ON	The Functional Abnormalities of VSA Modulator-Control Unit
C1873-00 (16)	ON	Steering Angle Sensor Malfunction
U0100-00 (41)	ON	F-CAN Malfunction (Lost Communication with Powertrain Control Module (PCM))
U0101-00 (41)	ON	F-CAN Malfunction (Lost Communication with A/T Control System)
U0122-00 (41)	ON	F-CAN Malfunction (Lost Communication with VSA Modulator-Control Unit)
U0131-00 (41)	ON	F-CAN Malfunction (Lost Communication with EPS System)
U0151-00 (41)	ON	F-CAN Malfunction (Lost Communication with SRS unit)
U3000-49 (78)	ON	Control Module Internal Control Module Malfunction
U3000-51 (91)	ON	Control Module Programming Error

*1: Without 1.5 L engine

RELAY CONTROL MODULE DTCS

DTC	Description	DTC type
B1051	Relay control module internal (CPU) error	Internal error
B1052	Relay control module internal (EEPROM) error	Internal error
B1075	Headlight switch malfunction	Signal error
B1080	Power supply circuit (IG1 line) input error for Relay Control Module and MICU	Signal error
B1085	Head Light Low Beam Power Source Abnormality	Signal error
B108A	Right Side Parking Light Circuit Shorted	Signal error
B108B	Left Side Parking Light Circuit Shorted	Signal error
B108C	Right Side Head Light Low Beam Circuit Shorted	Signal error
B108D	Left Side Head Light Low Beam Circuit Shorted	Signal error
B108E	Right Side Head Light High Beam Circuit Shorted	Signal error
B108F	Left Side Head Light High Beam Circuit Shorted	Signal error
B1090	Illumination Circuit Shorted	Signal error
B1091	DRL Circuit Shorted	Signal error
B1092	Interior Light Cut Circuit Shorted	Signal error
U1280	B-CAN communication bus line error (BUS-OFF)	Loss of communication
U1281	Relay control module lost communication with MICU(MICU frame)	Loss of communication
U128D	Relay control module lost communication with gauge control module(VSP/NE frame)	Loss of communication

SEAT HEATER CONTROL UNIT DTCS

DTC	Description	DTC type
B1C55	Driver's heater thermistor circuit open	Signal error

DTC	Description	DTC type
B1C56	Driver's heater thermistor circuit short	Signal error
B1C57	Passenger's heater thermistor circuit open	Signal error
B1C58	Passenger's heater thermistor circuit short	Signal error
B1C60	Driver's heater current abnormal high	Signal error
B1C61	Driver's heater current abnormal low	Signal error
B1C62	Passenger's heater current abnormal high	Signal error
B1C63	Passenger's heater current abnormal low	Signal error
B1C68	Driver's heater not heating	Signal error
B1C69	Passenger's heater not heating	Signal error
B1C70	Driver's main heater switch failure	Signal error
B1C71	Passenger's main heater switch failure	Signal error
U1064	Seat heater control unit lost communication with climate control unit	Loss of communication
U1280	Seat heater control unit communication bus line error (BUS-OFF)	Loss of communication

SUPPLEMENTAL RESTRAINT SYSTEM (SRS) DTCS

DTC	Detection Item
B0001-11	Short to ground in the driver's airbag first inflator
B0001-12	Short to power in the driver's airbag first inflator
B0001-13	Open or increased resistance in the driver's airbag first inflator
B0001-1A	Decreased resistance in the driver's airbag first inflator
B0001-2B	Short to another wire harness in the driver's airbag first inflator
B0002-11	Short to ground in the driver's airbag second inflator
B0002-12	Short to power in the driver's airbag second inflator
B0002-13	Open or increased resistance in the driver's airbag second inflator
B0002-1A	Decreased resistance in the driver's airbag second inflator
B0002-2B	Short to another wire harness in the driver's airbag second inflator
B0010-11	Short to ground in the front passenger's airbag first inflator
B0010-12	Short to power in the front passenger's airbag first inflator
B0010-13	Open or increased resistance in the front passenger's airbag first inflator
B0010-1A	Decreased resistance in the front passenger's airbag first inflator
B0010-2B	Short to another wire harness in the front passenger's airbag first inflator
B0011-11	Short to ground in the front passenger's airbag second inflator
B0011-12	Short to power in the front passenger's airbag second inflator
B0011-13	Open or increased resistance in the front passenger's airbag second inflator
B0011-1A	Decreased resistance in the front passenger's airbag second inflator
B0011-2B	Short to another wire harness in the front passenger's airbag second inflator
B0020-11	Short to ground in the driver's side airbag inflator
B0020-12	Short to power in the driver's side airbag inflator
B0020-13	Open or increased resistance in the driver's side airbag inflator
B0020-1A	Decreased resistance in the driver's side airbag inflator
B0020-2B	Short to another wire harness in the driver's side airbag first inflator
B0021-11	Short to ground in the left side curtain airbag first inflator
B0021-12	Short to power in the left side curtain airbag first inflator
B0021-13	Open or increased resistance in the left side curtain airbag first inflator
B0021-1A	Decreased resistance in the left side curtain airbag first inflator
B0021-2B	Short to another wire harness in the left side curtain airbag first inflator

DTC	Detection Item
B0028-11	Short to ground in the front passenger's side airbag inflator
B0028-12	Short to power in the front passenger's side airbag inflator
B0028-13	Open or increased resistance in the front passenger's side airbag inflator
B0028-1A	Decreased resistance in the front passenger's side airbag inflator
B0028-2B	Short to another wire harness in the front passenger's side airbag inflator
B0029-11	Short to ground in the right side curtain airbag first inflator
B0029-12	Short to power in the right side curtain airbag first inflator
B0029-13	Open or increased resistance in the right side curtain airbag first inflator
B0029-1A	Decreased resistance in the right side curtain airbag first inflator
B0029-2B	Short to another wire harness in the right side curtain airbag first inflator
B0050-11	Short or decreased resistance in the driver's seat belt buckle switch
B0050-13	Open or increased resistance in the driver's seat belt buckle switch
B0050-2B	Short to another wire harness in the driver's seat belt buckle switch
B0052-11	Short or decreased resistance in the front passenger's seat belt buckle switch
B0052-13	Open or increased resistance in the front passenger's seat belt buckle switch
B0052-2B	Short to another wire harness in the front passenger's seat belt buckle switch
B0070-11	Short to ground in the driver's seat belt tensioner

DTC	Detection Item
B0070-12	Short to power in the driver's seat belt tensioner
B0070-13	Open or increased resistance in the driver's seat belt tensioner
B0070-1A	Decreased resistance in the driver's seat belt tensioner
B0070-2B	Short to another wire harness in the driver's seat belt tensioner
B0072-11	Short to ground in the front passenger's seat belt tensioner
B0072-12	Short to power in the front passenger's seat belt tensioner
B0072-13	Open or increased resistance in the front passenger's seat belt tensioner
B0072-1A	Decreased resistance in the front passenger's seat belt tensioner
B0072-2B	Short to another wire harness in the front passenger's seat belt tensioner
B0079-11	Short to ground in the driver's seat belt outer lap tensioner
B0079-12	Short to power in the driver's seat belt outer lap tensioner
B0079-13	Open or increased resistance in the driver's seat belt outer lap tensioner
B0079-1A	Decreased resistance in the driver's seat belt outer lap tensioner
B0079-2B	Short to another wire harness in the driver's seat belt outer lap tensioner
B007A-11	Short to ground in the front passenger's seat belt outer lap tensioner
B007A-12	Short to power in the front passenger's seat belt outer lap tensioner
B007A-13	Open or increased resistance in the front passenger's seat belt outer lap tensioner
B007A-1A	Decreased resistance in the front passenger's seat belt outer lap tensioner
B007A-2B	Short to another wire harness in the front passenger's seat belt outer lap tensioner
B0082-11	Short to Ground in the Selectable Energy Absorption Device of the Front Passenger's Seat Belt Tensioner
B0082-12	Short to Power in the Selectable Energy Absorption Device of the Front Passenger's Seat Belt Tensioner
B0082-13	Open or Increased Resistance in the Selectable Energy Absorption Device of the Front Passenger's Seat Belt Tensioner
B0082-1A	Decreased Resistance in the Selectable Energy Absorption Device of the Front Passenger's Seat Belt Tensioner
B0082-2B	Short to Another Wire Harness in the Selectable Energy Absorption Device of the Front Passenger's Seat Belt Tensioner
B0090-4A	Internal failure of the left front impact sensor

DTC	Detection Item
B0090-87	No signal from the left front impact sensor
B0090-92	Internal failure of the left front impact sensor
B0091-4A	Internal failure of the left side impact sensor (first)
B0091-87	No signal from the left side impact sensor (first)
B0091-92	Internal failure of the left side impact sensor (first)
B0092-4A	Internal failure of the left side impact sensor (second)
B0092-87	No signal from the left side impact sensor (second)
B0092-92	Internal failure of the left side impact sensor (second)
B0095-4A	Internal failure of the right front impact sensor
B0095-87	No signal from the right front impact sensor
B0095-92	Internal failure of the right front impact sensor
B0096-4A	Internal failure of the right side impact sensor (first)
B0096-87	No signal from the right side impact sensor (first)
B0096-92	Internal failure of the right side impact sensor (first)
B0097-4A	Internal failure of the right side impact sensor (second)
B0097-87	No signal from the right side impact sensor (second)
B0097-92	Internal failure of the right side impact sensor (second)
B00A0-54	Front passenger's weight sensor not calibrated
B00B5-11	Short or decreased resistance in the driver's seat position sensor

DTC	Detection Item
B00B5-13	Open or increased resistance in the driver's seat position sensor
B00B5-2B	Short to another wire harness in the driver's seat position sensor
B00C0-16	Internal failure of the front passenger's weight sensor (front inner side)
B00C0-4A	Different supplier ID/function ID of the front passenger's weight sensor (front inner side)
B00C0-54	Different serial ID of the front passenger's weight sensor (front inner side)
B00C0-87	No signal from the front passenger's weight sensor (front inner side)
B00C0-96	Internal failure of the front passenger's weight sensor (front inner side)
B00C2-16	Internal failure of the front passenger's weight sensor (rear inner side)
B00C2-4A	Different supplier ID/function ID of the front passenger's weight sensor (rear inner side)
B00C2-54	Different Serial ID of the front passenger's weight sensor (rear inner side)
B00C2-87	No signal from the front passenger's weight sensor (rear inner side)
B00C2-96	Internal failure of the front passenger's weight sensor (rear inner side)
B00D5-14	Open or short to ground in the front passenger's airbag cutoff indicator
B00D5-17	Short to power in the front passenger's airbag cutoff indicator
B2800-49	Internal failure of the SRS unit
B2801-49	Internal failure of the SRS unit
B2802-49	Internal failure of the SRS unit
B2840-13	SRS unit connector A not properly installed
B2841-13	SRS unit connector B not properly installed
C0061-96	Internal failure of the SRS unit
C0063-96	Internal failure of the SRS unit
U0122-00	Lost communication with the VSA modulator-control unit (wheel speed sensor signal error)
U3000-49	Internal failure of the SRS unit
U3000-51	SRS unit programming error

VSA SYSTEM DTCS

DTC		Detection Item
B0050	-F0	(Driver's Seat Belt Buckle Switch Malfunction)
C0010	-49	Inlet Solenoid (Left Front) Circuit Failure
C0011	-49	Outlet Solenoid (Left Front) Circuit Failure
C0014	-49	Inlet Solenoid (Right Front) Circuit Failure
C0015	-49	Outlet Solenoid (Right Front) Circuit Failure
C0018	-49	Inlet Solenoid (Left Rear) Circuit Failure
C0019	-49	Outlet Solenoid (Left Rear) Circuit Failure
C001C	-49	Inlet Solenoid (Right Rear) Circuit Failure
C001D	-49	Outlet Solenoid (Right Rear) Circuit Failure
C0020	-12	Pump Motor Circuit Failure (Stuck ON)
	-14	Pump Motor Circuit Failure (Stuck OFF)
C0023	-12	Brake Diag Circuit ON Failure
	-14	Brake Diag Circuit OFF Failure
C0031	-14	Left Front Wheel Speed Sensor Circuit Failure (Circuit Short To Ground or Open)
	-3A	Wheel Speed Sensor (Left Front) Signal Failure (Signal Frequency is Too High)
	-62	Left Front Wheel Speed Sensor Signal Compare Failure
C0034	-14	Right Front Wheel Speed Sensor Circuit Failure (Circuit Short To Ground or Open)
	-3A	Wheel Speed Sensor (Right Front) Signal Failure (Signal Frequency is Too High)
	-62	Right Front Wheel Speed Sensor Signal Compare Failure
C0037	-14	Left Rear Wheel Speed Sensor Circuit Failure (Circuit Short To Ground or Open)
	-3A	Wheel Speed Sensor (Left Rear) Signal Failure (Signal Frequency is Too High)
	-62	Left Rear Wheel Speed Sensor Signal Compare Failure
C003A	-14	Right Rear Wheel Speed Sensor Circuit Failure (Circuit Short To Ground or Open)
	-3A	Wheel Speed Sensor (Right Rear) Signal Failure (Signal Frequency is Too High)
	-62	Right Rear Wheel Speed Sensor Signal Compare Failure
C0040	-12	Brake Light Switch Failure (Stuck ON)/Brake Pedal Stroke Sensor Stuck (EBB)
	-16	Plausibility BLS vs. Pressure Sensor
C0044	-49	Master Cylinder Pressure Sensor Failure (Internal Circuit Failure)
	-62	Master Cylinder Pressure Sensor Failure (Signal Stuck)
C0049	-7B	Brake Fluid Level Too Low
C0051	-54	Steering Angle Neutral Position Learning Incomplete
	-62	Steering Angle Sensor Failure (Signal Compare Failure)
	-96	Steering Angle Sensor Failure (Sensor Detects Internal Failure)
C0061	-49	Acceleration Sensor Malfunction
	-54	Lateral Acceleration Sensor Calibration Incomplete
	-62	Lateral Acceleration Sensor Failure (Signal Compare Failure)
C0062	-49	Longitudinal Acceleration Sensor Malfunction
	-54	Longitudinal Acceleration Sensor Neutral Position Not Learned/Calibration Incomplete
	-62	Longitudinal Acceleration Sensor Failure (Signal Compare Failure)
C0063	-49	Yaw Rate Sensor Malfunction
	-54	Yaw Rate Sensor Calibration Incomplete
	-62	Yaw Rate Sensor Failure (Signal Compare Failure)
C1000	-94	ABS/VSA Activation Time Too Long
C1020	-49	VSA Master Cut Valve Failure (Unexpected Operation)
C1021	-49	VSA Suction Valve Failure (Unexpected Operation)
C1022	-14	Power Source Failure for Pump Motor
C1040	-00	Different Diameter Tire is Detected

DTC		Detection Item
C1041	**-00**	Right Front Wheel Abnormal Slip Detection
C1042	**-00**	Left Front Wheel Abnormal Slip Detection
C1043	**-00**	Right Rear Wheel Abnormal Slip Detection
C1044	**-00**	Left Rear Wheel Abnormal Slip Detection
C1100	**-48**	Electric Parking Brake Abnormal Operation Monitoring
	-54	Piston Position Not Learned
	-94	Electric Parking Brake Actuator Malfunction
	-98	Electric Parking Brake Continuous Operations Detected
C1110	**-11**	Left Rear Electric Parking Brake Actuator Circuit Short to Ground
	-13	Left Rear Electric Parking Brake Actuator Circuit Open
	-79	Left Side Electric Parking Brake Doesn't Work Correctly
	-94	Left Side Electric Parking Brake Actuator Unexpected Operation
	-96	Left Side Electric Parking Brake Actuator Malfunction
C1111	**-11**	Right Rear Electric Parking Brake Actuator Circuit Short to Ground
	-13	Right Rear Electric Parking Brake Actuator Circuit Open
	-79	Right Side Electric Parking Brake Doesn't Work Correctly
	-94	Right Side Electric Parking Brake Actuator Unexpected Operation
	-96	Right Side Electric Parking Brake Actuator Malfunction
C1120	**-14**	Electric Parking Brake Switch Circuit Malfunction
	-96	Electric Parking Brake Switch Malfunction
C1270	**-11**	Automatic Brake Hold Switch Signal Circuit Short
	-15	Automatic Brake Hold Switch Signal Circuit Open
U0029	**-00**	CAN Communication Failure (Bus OFF Ch 1)
U0047	**-00**	CAN Communication Failure (Bus OFF Ch 2)
U0100	**-00**	CAN Communication Failure with ECM/ISU
U0101	**-00**	CAN Communication Failure with PCM/TCM
U0104	**-00**	CAN Communication Failure with Driving Support System Control Unit
U0126	**-00**	CAN Communication Failure with Absolute Steering Wheel Angle Sensor
U0129	**-00**	CAN Communication Failure with AHB/ESB/EBB
U0151	**-00**	CAN Communication Failure with SRS
U0155	**-00**	CAN Communication Failure with Meter
U0401	**-68**	(ECM Failure)
U0402	**-68**	(TCM Failure)
U0418	**-68**	(ESB/EBB Failure)
	-F8	Plausibility Brake Pedal Signal (EBB) vs. Pressure Sensor
U3000	**-49**	ECU Internal Circuit Failure
	-51	ECU Software Update Failure
U3003	**-16**	Electric Parking Brake Control Unit Power Source Circuit (+B) Low Voltage
	-17	Electric Parking Brake Control Unit Power Source Circuit (+B) High Voltage
U3006	**-16**	Power Source Failure for ECU (Low Voltage)
	-17	Power Source Failure for ECU (High Voltage)

WIRELESS CHARGER DTCS

DTC	Description	DTC Type
B22A0	Wireless charger unit failure	Internal error
B22A1	Wireless charger unit ACC input circuit failure	Signal error
U1280	Communication bus line Error (BUS-OFF)	Loss of communication

DTC	Description	DTC Type
U1281	Wireless charger unit lost communication with MICU	Loss of communication
U1286	Wireless charger unit lost communication with Keyless Access Control Unit	Loss of communication
U128D	Wireless charger unit lost communication with Gauge control module	Loss of communication
U128E	Wireless charger unit lost communication with Audio-Navigation Unit	Loss of communication

2020-22 DTC INDEX

CR-V (Hybrid)

AUDIO-NAVIGATION SYSTEM DTCS

DTC	Description	Circuit
1102	USB Diag	USB
1301	GPS Antenna Error	GPS antenna
1302	GPS Receiver Error 1	GPS receiver
1306	Vehicle Speed Pulse	PCM or TCM
1702	XM Antenna Error	XM antenna
2608	R-Camera Diag	Rearview camera
2610	DRAM Diag	Audio unit DRAM
2701	GPS Diag: Antenna	GPS antenna
2703	Aircon Diag	Climate control unit

AUTOMATIC LIGHTING SYSTEM DTCS

DTC	Description	DTC type
B1575	Auto light sensor error	Internal error
U1280	B-CAN communication bus line error (BUS-OFF)	Loss of communication
U1281	Auto Light Control Unit lost communication with MICU (body control module)	Loss of communication
U128D	Auto light control unit lost communication with gauge control module	Loss of communication

BLIND SPOT INFORMATION DTCS

Left Side BSI Radar Unit DTC

DTC	Detection Item
B18A1	Left Side BSI Radar Unit Internal Circuit Error
B18A5	Left Side BSI Radar Unit Temperature High
B18B4	Left Side BSI Radar Unit Dirty
B18B8	Left Side BSI Radar Unit Azimuth Off Alignment
B18BA	Different Version in the Left and Right Side BSI Radar Unit
B18C5	Short to GND in the Left Side BSI Radar Unit Indicator Circuit
B18C6	Short to Power in the Left Side BSI Radar Unit Indicator Circuit
B18C7	Open in the Left Side BSI Radar Unit Indicator Circuit
B18DB	Left Side BSI Radar Unit Received The Audio/Navigation Unit Failure Information
B18EA	(Left Side BSI Radar Unit Received PCM (A/T System) Failure Information)
U1280	Communication Bus Line Error (Bus-Off)
U1281	Left Side BSI Radar Unit Lost Communication With MICU or BCM
U128D	Left Side BSI Radar Unit Lost Communication With Gauge Control Module
U1297	Left Side BSI Radar Unit Lost Communication With Right Side BSI Radar Unit

Right Side BSI Radar Unit DTC

DTC	Detection Item
B1E51	Right Side BSI Radar Unit Internal Circuit Error

DTC	Detection Item
B1E55	Right Side BSI Radar Unit Temperature High
B1E64	Right Side BSI Radar Unit Dirty
B1E68	Right Side BSI Radar Unit Azimuth Off Alignment
B1E6A	Different Version in the Left and Right Side BSI Radar Unit
B1E75	Short to GND in the Right Side BSI Radar Unit Indicator Circuit
B1E76	Short to Power in the Right Side BSI Radar Unit Indicator Circuit
B1E77	Open in the Right Side BSI Radar Unit Indicator Circuit
B1E9A	(Right Side BSI Radar Unit Received PCM (A/T System) Failure Information)
U1280	Communication Bus Line Error (Bus-Off)
U1281	Right Side BSI Radar Unit Lost Communication With MICU or BCM
U128D	Right Side BSI Radar Unit Lost Communication With Gauge Control Module
U128F	Right Side BSI Radar Unit Lost Communication With Left Side BSI Radar Unit

BODY CONTROL MODULE DTCS

DTC	Description	DTC type
B1002	BCM internal error (EEPROM error)	Internal error
B1003	BCM Update error	Internal error
B1028	Rear wiper motor (park) signal error	Signal error
B1032	CDS (Collision detection signal) signal error	Signal error
B1036	IG1 Power supply Circuit Malfunction	Signal error
B1038	IMMOBILIZER F-CAN Authentication ID Not Received	Signal error
B1039	IMMOBILIZER F-CAN Authentication ID Unmatch	Signal error
B1040	BCM lost communication with Front wiper	Loss of communication
B1041	Front Wiper motor malfunction	Signal error
B1042	Front Wiper security line error	Signal error
B1043	Front Wiper unit internal error (EEPROM error)	Internal error
B1077	Front wiper auto stop switch signal error	Signal error
B1275	Head light OFF position Circuit Malfunction	Signal error
B1276	Headlight Switch Parking (Small) Position Circuit Malfunction	Signal error
B1277	Head light AUTO position Circuit Malfunction	Signal error
B1278	Head light ON position Circuit Malfunction	Signal error
B1279	Dimmer switch Circuit Malfunction	Signal error
B1280	Turn signal switch Circuit Malfunction	Signal error

DTC	Description	DTC type
B1281	Front wiper MIST position Circuit Malfunction	Signal error
B1282	Front wiper INT(AUTO) position Circuit Malfunction	Signal error
B1283	Front wiper LOW position Circuit Malfunction	Signal error
B1284	Front wiper HIGH position Circuit Malfunction	Signal error
B2352	Rain Light Sensor Unit Internal error (EEPROM error)	Signal error
B2375	Rain Sensing malfunction in Rain/Light sensor	Signal error
B2376	Light sensing malfunction in Rain/Light sensor	Signal error
U0073	F-CAN communication bus line error (BUS-OFF)	Loss of communication
U0100	BCM lost communication with ECM/PCM	Loss of communication
U0122	BCM lost communication with VSA/ABS	Loss of communication
U1280	B-CAN communication bus line error (BUS-OFF)	Loss of communication

DTC	Description	DTC type
U128D	BCM lost communication with gauge control module	Loss of communication
U1291	BCM lost communication with relay control module	Loss of communication

DRIVING SUPPORT DTCS

DTC	Detection Item	Indicator Illumination/Operation in Case of a Failure					
		ACC System	CMBS	LKAS	RDM System	Brake System (Amber)	Auto High-Beam
B0050-F0	(Driver's Seat Belt Buckle Switch (Subfault) Fault Detection By SRS Unit)	x	-	-	-	x	-
B2A00-92	Temporary stop of Integrated Driver Support System (Detected Abnormal Signals)	x	x	-	x	x	-
B2A60-49	Multipurpose Camera Unit Internal Electronic Failure	x	x	x	x	x	o
B2A60-54	Static Camera Aiming Incomplete	Δ	Δ	Δ	Δ	-	o
B2A60-57	Multipurpose Camera Unit Software Failure	x	x	x	x	x	o
B2A60-96	Multipurpose Camera Unit Hardware Malfunction	x	x	x	x	x	o
B2A60-97	Dust or Dirt On The Camera	o	x	o	x	-	o
B2A60-98	Multipurpose Camera Unit Temperature Too High	o	x	o	x	-	o
B2A60-99	Out of automatic correction range for Misalignment of Multipurpose Camera Unit image	o	x	x	x	-	o
B2A60-A2	Power Supply Voltage Too Low (Multipurpose Camera Unit)	o	x	x	x	-	o
B2A60-A3	Power Supply Voltage Too High (Multipurpose Camera Unit)	o	x	x	x	-	o
B2A70-12	LDW/RDM Switch Signal Circuit Short	-	-	-	x	x	-
B2A70-14	LDW/RDM Switch Signal Circuit Short to Power	-	-	-	x	x	-

*1: When the system detects the ACC failure while operating.

*2: When the system detects the CMBS failure while operating.

*3: When the millimeter wave radar receives gauge control module failure information.

*4: When related B-CAN system or switch failure information (judged by the gauge control module) is received.

*5: After the DTC is stored, the message (Radar Obstructed) is displayed on the MID at the initial stage, and then the indicators come on.

DTC	Detection Item	Indicator Illumination/Operation in Case of a Failure					
		ACC System	CMBS	LKAS	RDM System	Brake System (Amber)	Auto High-Beam
C0023-F0	Brake Light Drive Relay Circuit Malfunction	x	x	-	x	x	-
C0031-62	(Left Front Wheel Speed Sensor Signal Error)	x	x	x	x	x	-
C0034-62	(Right Front Wheel Speed Sensor Signal Error)	x	x	x	x	x	-
C0037-62	(Left Rear Wheel Speed Sensor Signal Error)	x	x	x	x	x	o
C003A-62	(Right Rear Wheel Speed Sensor Signal Error)	x	x	x	x	x	o
C0041-14	Brake Switch Signal Circuit Error	x	x	-	x	x	-
C0044-F0	(Master Cylinder Pressure Sensor Failure)	x	x	o	x	x	-
C0051-54	Steering Angle Neutral Position Learning Incomplete	x	x	o	x	-	o
C0051-96	Steering Angle Sensor Malfunction	x	x	o	x	x	o
C0061-9A	Temporary stop of Integrated Driver Support System (Unstable Lateral Acceleration Sensor Signal)	-	-	-	-	-	o
C0061-F0	Lateral Acceleration Sensor (Subfault) Fault Detection By Source Module	-	-	-	-	-	o
C0062-9A	Temporary stop of Integrated Driver Support System (Unstable Longitudinal Acceleration Sensor Signal)	o	x	-	x	-	-
C0062-F0	Longitudinal Acceleration Sensor (Subfault) Fault Detection By Source Module	x	x	-	x	x	-
C0063-9A	Temporary stop of Integrated Driver Support System (Unstable Yaw Rate Sensor Signal)	o	x	o	x	-	o
C0063-F0	Yaw Rate Sensor (Subfault) Fault Detection By Source Module	x	x	o	x	x	o
C1040-00	Wheel Speed Signal Error	x	x	-	x	x	-
C1C00-F0	(APP Sensor Signal Failure)	-	-	-	x	x	-
P0564-11	ACC/LKAS Switch Signal Circuit Short	x	-	x	-	x	-
P0564-15	ACC/LKAS Switch Signal Circuit Open	x	-	x	-	x	-
P0589-11	Main Switch Signal Circuit Short	x	-	x	-	x	-
P0589-15	Main Switch Signal Circuit Open	x	-	x	-	x	-
P2583-49	Millimeter Wave Radar Internal Electronic Failure	x	x	x	x	x	-
P2583-54	Millimeter Wave Radar Aiming Incomplete	Δ	Δ	Δ	Δ	-	-

*1: When the system detects the ACC failure while operating.

*2: When the system detects the CMBS failure while operating.

*3: When the millimeter wave radar receives gauge control module failure information.

*4: When related B-CAN system or switch failure information (judged by the gauge control module) is received.

*5: After the DTC is stored, the message (Radar Obstructed) is displayed on the MID at the initial stage, and then the indicators come on.

DTC	Detection Item	Indicator Illumination/Operation in Case of a Failure					
		ACC System	CMBS	LKAS	RDM System	Brake System (Amber)	Auto High-Beam
P2583-76 *5	Temporary stop of Integrated Driver Support System (Misalignment Millimeter Wave Radar)	x	x	-	x	x	-
P2583-92	CMBS or FCW Over Working	-	x	-	-	x	-
P2583-97	Dust or Dirt On The Millimeter Wave Radar	o	x	-	x	-	-
P2583-98	Millimeter Wave Radar Temperature Too High	x	x	x	x	-	-
P2583-9A	Temporary stop of Integrated Driver Support System (Jammed Millimeter Wave Radar)	x	x	x	x	x	-
U0029-00	F-CAN Malfunction (BUS-OFF)	x	x	x	x	x	o
U0029-F1	F-CAN Malfunction (BUS-OFF) (Multipurpose Camera Unit)	x	x	x	x	x	o
U0047-00	Millimeter Wave Radar Local-CAN Malfunction (BUS-OFF)	x	x	x	x	x	o
U0047-F1	Multipurpose Camera Unit Local-CAN Malfunction	x	x	x	x	x	o
U0100-00	Lost Communication With The PCM (PGM-FI System)	x	x	-	x	x	-
U0100-F1	Lost Communication With The PCM (PGM-FI System) (Multipurpose Camera Unit)	x	x	x	x	x	o
U0101-00	Lost Communication With The PCM/TCM	x	x	-	x	x	-
U0101-F1	Lost Communication With The PCM/TCM (Multipurpose Camera Unit)	x	x	x	x	x	o
U0122-00	Lost Communication With The VSA Modulator-Control Unit	x	x	-	x	x	-
U0122-F1	Lost Communication With The VSA Modulator-Control Unit (Multipurpose Camera Unit)	x	x	x	x	x	o
U0128-00	Lost Communication With The Electric Parking Brake Control Unit	x	-	-	-	x	-
U0129-00	Lost Communication With The Electric Servo Brake Control Unit	x	x	-	x	x	-

DTC	Detection Item	Indicator Illumination/Operation in Case of a Failure					
		ACC System	CMBS	LKAS	RDM System	Brake System (Amber)	Auto High-Beam
U0129-F1	Lost Communication With The Electric Servo Brake Control Unit (Multipurpose Camera Unit)	x	x	x	x	x	-
U0131-00	Lost Communication With The EPS Control Unit	x	x	-	x	x	-
U0131-F1	Lost Communication With The EPS Control Unit (Multipurpose Camera Unit)	x	x	x	x	x	o
U0151-00	Lost Communication With The SRS Unit	x	x	-	x	x	-

*1: When the system detects the ACC failure while operating.

*2: When the system detects the CMBS failure while operating.

*3: When the millimeter wave radar receives gauge control module failure information.

*4: When related B-CAN system or switch failure information (judged by the gauge control module) is received.

*5: After the DTC is stored, the message (Radar Obstructed) is displayed on the MID at the initial stage, and then the indicators come on.

DTC	Detection Item	Indicator Illumination/Operation in Case of a Failure					
		ACC System	CMBS	LKAS	RDM System	Brake System (Amber)	Auto High-Beam
U0151-F1	Lost Communication With The SRS Unit (Multipurpose Camera Unit)	x	x	x	x	x	o
U0155-00	Lost Communication With The Gauge Control Module	x	x	-	x	x	-
U0155-F1	Lost Communication With The Gauge Control Module (Multipurpose Camera Unit)	x	x	x	x	x	o
U0401-53	Temporary stop of Integrated Driver Support System (Received stop request by PGM-FI System)	-	x	-	o	-	-
U0401-68	(PCM (PGM-FI System) Malfunction)	x	x	o	x	x	o
U0401-92	Temporary stop of Integrated Driver Support System (Rejected control request by PGM-FI System)	o	x	o	-	-	-
U0415-68	(ABS Brake Actuator Malfunction)	x	x	o	x	x	-
U0416-68	(VSA Brake Actuator Malfunction)	x	x	o	x	x	-
U0416-9A	Temporary stop of Integrated Driver Support System (Unstable Wheel Speed Sensor Signal)	o	x	o	x	-	o
U0417-68	(Electric Parking Brake Control Unit Malfunction)	x	-	-	-	x	-

DTC	Detection Item	Indicator Illumination/Operation in Case of a Failure					
		ACC System	CMBS	LKAS	RDM System	Brake System (Amber)	Auto High-Beam
U0418-68	(Electric Servo Brake System Malfunction)	x	x	-	x	x	-
U0418-92 *1	Temporary stop of Integrated Driver Support System (Rejected control request by ESB/EBB System)	o	-	-	-	-	-
U0418-92 *2	Temporary stop of Integrated Driver Support System (Rejected control request by ESB/EBB System)	-	x	-	-	-	-
U0418-9A	Temporary stop of Integrated Driver Support System (Not Start-Up ESB/EBB Control Unit)	o	x	-	-	-	-
U0420-68	(EPS Control Unit Malfunction)	-	x	x	x	x	-
U0423-68 *3	Gauge Control Module Malfunction/B-CAN Malfunction (BUS-OFF) Detection By Source Module	x	x	x	x	x	-
U0423-68 *4	Gauge Control Module Malfunction/B-CAN Malfunction (BUS-OFF) Detection By Source Module	x	x	x	x	x	o
U1280-00	Lost Communication With The B-CAN Systems	-	-	x	x	x	o
U1281-00	Lost Communication with The MICU (Body Control Module)	-	-	-	-	-	o
U128C-00	Lost Communication with The Wiper Control Unit	-	-	x	x	x	o

*1: When the system detects the ACC failure while operating.

*2: When the system detects the CMBS failure while operating.

*3: When the millimeter wave radar receives gauge control module failure information.

*4: When related B-CAN system or switch failure information (judged by the gauge control module) is received.

*5: After the DTC is stored, the message (Radar Obstructed) is displayed on the MID at the initial stage, and then the indicators come on.

DTC	Detection Item	Indicator Illumination/Operation in Case of a Failure					
		ACC System	CMBS	LKAS	RDM System	Brake System (Amber)	Auto High-Beam
U12B7-00	Millimeter Wave Radar Local-CAN Malfunction	x	x	x	x	x	-
U1387-4A	Unmatch Combination of Millimeter Wave Radar-	x	x	x	x	x	o

DTC	Detection Item	Indicator Illumination/Operation in Case of a Failure					
		ACC System	CMBS	LKAS	RDM System	Brake System (Amber)	Auto High-Beam
	Multipurpose Camera Unit						
U1387-55	Multipurpose Camera Unit Variant Incomplete	x	x	x	x	-	o
U3000-49	Millimeter Wave Radar Internal Electronic Failure	x	x	x	x	x	-
U3000-51	Millimeter Wave Radar Update Incomplete	x	x	x	x	x	-
U3000-55	Millimeter Wave Radar Variant Incomplete	x	x	x	x	-	o
U3000-57	Millimeter Wave Radar Software Failure	x	x	x	x	B	-
U3006-16	Power Supply Voltage Too Low (Millimeter Wave Radar)	o	x	x	x	-	-
U3006-17	Power Supply Voltage Too High (Millimeter Wave Radar)	o	x	x	x	-	-

*1: When the system detects the ACC failure while operating.

*2: When the system detects the CMBS failure while operating.

*3: When the millimeter wave radar receives gauge control module failure information.

*4: When related B-CAN system or switch failure information (judged by the gauge control module) is received.

*5: After the DTC is stored, the message (Radar Obstructed) is displayed on the MID at the initial stage, and then the indicators come on.

ELECTRIC POWERTRAIN DTCS

Motor Control Module

DTC	Detection Item	Troubleshooting	Advanced Diagnostics	Note
P0562	Traction Motor Control Module System Voltage Low	TRS	AD	B
P0602	Traction Motor Control Module Programming Error	TRS	AD	B
P0602	Generator Motor Control Module Programming Error	TRS	AD	B
P061B	Traction Motor Control Module Torque Calculation Performance	TRS	AD	*2
P062F	Traction Motor Control Module EEPROM Error	TRS	AD	B
P062F	Generator Motor Control Module EEPROM Error	TRS	AD	B
P0634	PCU Internal Temperature Too High	TRS	AD	B
P06B1	Traction Motor Phase Current Sensor Power Supply Circuit Low (Phase U)	TRS	AD	B

DTC	Detection Item	Troubleshooting	Advanced Diagnostics	Note
P06B1	Generator Motor Phase Current Sensor Power Supply Circuit Low (Phase U)	TRS	AD	B
P06B4	Traction Motor Phase Current Sensor Power Supply Circuit Low (Phase V)	TRS	AD	*1
P06B4	Generator Motor Phase Current Sensor Power Supply Circuit Low (Phase V)	TRS	AD	*1
P06E7	Traction Motor Phase Current Sensor Power Supply Circuit Low (Phase W)	TRS	AD	*1
P06E7	Generator Motor Phase Current Sensor Power Supply Circuit Low (Phase W)	TRS	AD	*1
P0710	Transmission Fluid Temperature Sensor Circuit Range/Performance	TRS	AD	B
P0711	Transmission Fluid Temperature Sensor Circuit	TRS	AD	*1
P0712	Transmission Fluid Temperature Sensor Circuit Low	TRS	AD	B
P0713	Transmission Fluid Temperature Sensor Circuit High	TRS	AD	B
P0A1A	Generator Motor Control Module (Traction Motor Control Module Detected)	TRS	AD	B
P0A1A	Generator Motor Control Module	TRS	AD	B
P0A1B	Traction Motor Control Module	TRS	AD	B
P0A2A	Traction Motor Temperature Sensor Circuit	TRS	AD	*2
P0A2B	Traction Motor Temperature Sensor Circuit Range/Performance	TRS	AD	*1
P0A2C	Traction Motor Temperature Sensor Circuit Low	TRS	AD	B
P0A2D	Traction Motor Temperature Sensor Circuit High	TRS	AD	B
P0A2F	Traction Motor Over Temperature	TRS	AD	B
P0A3C	Traction Motor Inverter Over Temperature	TRS	AD	B
P0A3E	Generator Motor Inverter Over Temperature	TRS	AD	B
P0A3F	Traction Motor Rotor Position Sensor Circuit	TRS	AD	B
P0A40	Traction Motor Rotor Position Sensor Circuit Range/Performance	TRS	AD	B
P0A41	Traction Motor Rotor Position Sensor Circuit Low	TRS	AD	B
P0A4B	Generator Motor Rotor Position Sensor Circuit	TRS	AD	B
P0A4C	Generator Motor Rotor Position Sensor Circuit Range/Performance	TRS	AD	B
P0A4D	Generator Motor Rotor Position Sensor Circuit Low	TRS	AD	B
P0A5E	Traction Motor Phase U Current Low	TRS	AD	*1
P0A5F	Traction Motor Phase U Current High	TRS	AD	*1
P0A61	Traction Motor Phase V Current Low	TRS	AD	*1
P0A62	Traction Motor Phase V Current High	TRS	AD	*1

DTC	Detection Item	Troubleshooting	Advanced Diagnostics	Note
P0A64	Traction Motor Phase W Current Low	TRS	AD	*1

*1: Two drive cycle detection

*2: This DTC code does not store individually. Details depend on other DTC codes stored at the same time.

DTC	Detection Item	Troubleshooting	Advanced Diagnostics	Note
P0A65	Traction Motor Phase W Current High	TRS	AD	*1
P0A70	Generator Motor Phase U Current Low	TRS	AD	*1
P0A71	Generator Motor Phase U Current High	TRS	AD	*1
P0A73	Generator Motor Phase V Current Low	TRS	AD	*1
P0A74	Generator Motor Phase V Current High	TRS	AD	*1
P0A76	Generator Motor Phase W Current Low	TRS	AD	*1
P0A77	Generator Motor Phase W Current High	TRS	AD	*1
P0A78	Traction Motor Inverter Performance	TRS	AD	*2
P0A7A	Generator Motor Inverter Performance (Traction Motor Control Module Detected)	TRS	AD	*2
P0A7A	Generator Motor Inverter Performance	TRS	AD	*2
P0A90	Traction Motor Performance	TRS	AD	B
P0A92	Generator Motor Performance	TRS	AD	B
P0AED	Traction Motor Inverter Temperature Sensor 1 Circuit	TRS	AD	B
P0AEE	Traction Motor Inverter Temperature Sensor 1 Circuit Range/Performance	TRS	AD	*1
P0AEF	Traction Motor Inverter Temperature Sensor 1 Circuit Low	TRS	AD	B
P0AF0	Traction Motor Inverter Temperature Sensor 1 Circuit High	TRS	AD	B
P0AF2	Traction Motor Inverter Temperature Sensor 2 Circuit	TRS	AD	*1
P0AF3	Traction Motor Inverter Temperature Sensor 2 Circuit Range/Performance	TRS	AD	*1
P0AF4	Traction Motor Inverter Temperature Sensor 2 Circuit Low	TRS	AD	B
P0AF5	Traction Motor Inverter Temperature Sensor 2 Circuit High	TRS	AD	B
P0BCC	Generator Motor Inverter Temperature Sensor Circuit	TRS	AD	B
P0BCD	Generator Motor Inverter Temperature Sensor Circuit Range/Performance	TRS	AD	B
P0BCE	Generator Motor Inverter Temperature Sensor Circuit Low	TRS	AD	B
P0BCF	Generator Motor Inverter Temperature Sensor Circuit High	TRS	AD	B
P0BE6	Traction Motor Phase U Current Sensor Circuit Range/Performance	TRS	AD	*1
P0BEA	Traction Motor Phase V Current Sensor Circuit Range/Performance	TRS	AD	*1

DTC	Detection Item	Troubleshooting	Advanced Diagnostics	Note
P0BEE	Traction Motor Phase W Current Sensor Circuit Range/Performance	TRS	AD	*1
P0BFD	Traction Motor Phase U-V-W Current Sensor Correlation	TRS	AD	*2
P0C0C	Traction Motor Inverter Power Supply Circuit Low	TRS	AD	B
P0C39	DC-DC Converter Temperature Sensor Range/Performance	TRS	AD	*1
P0C3A	DC-DC Converter Temperature Sensor Low	TRS	AD	*1
P0C3B	DC-DC Converter Temperature Sensor High	TRS	AD	*1
P0C4E	Traction Motor Rotor Position Exceeded Learning Limit	TRS	AD	B
P0CE9	PCU Electric Coolant Pump Control Circuit Open	TRS	AD	*2
P0CEA	PCU Electric Coolant Pump Performance	TRS	AD	*2
P0CED	PCU Electric Coolant Pump Enable Circuit	TRS	AD	*1
P0CEE	PCU Coolant Temperature Sensor Circuit	TRS	AD	*1
P0CEF	PCU Coolant Temperature Sensor Circuit Range/Performance	TRS	AD	*1
P0CF0	PCU Coolant Temperature Sensor Circuit Low	TRS	AD	*1
P0CF1	PCU Coolant Temperature Sensor Circuit High	TRS	AD	*1
P0D32	DC-DC Converter Over Temperature (Traction Motor Control Module Detected)	TRS	AD	*1
P0DFA	Generator Motor Phase U-V-W Current Sensor Correlation	TRS	AD	*2
P0DFB	Generator Motor Rotor Position Sensor Exceeding Learn Limit	TRS	AD	B

*1: Two drive cycle detection

*2: This DTC code does not store individually. Details depend on other DTC codes stored at the same time.

DTC	Detection Item	Troubleshooting	Advanced Diagnostics	Note
P0E01	Generator Motor Phase U Current Sensor Circuit Range/Performance	TRS	AD	*1
P0E05	Generator Motor Phase V Current Sensor Circuit Range/Performance	TRS	AD	*1
P0E09	Generator Motor Phase W Current Sensor Circuit Range/Performance	TRS	AD	*1
P0E56	DC-DC Converter Voltage Sensor Circuit Low	TRS	AD	*1
P0E57	DC-DC Converter Voltage Sensor Circuit High	TRS	AD	*1
P1437	Traction Motor Inverter Short	TRS	AD	B

DTC	Detection Item	Troubleshooting	Advanced Diagnostics	Note
P1440	Traction Motor Inverter Gate Line Open	TRS	AD	B
P15A5	Traction Motor Inverter Current Too High	TRS	AD	B
P1A54	Traction Motor Control Module Torque Control Performance	TRS	AD	B
P1A55	Traction Motor Control Module Torque Adjustment Performance	TRS	AD	B
P1A56	Traction Motor Current Too High	TRS	AD	B
P1A57	Traction Motor Phase Current Sensor	TRS	AD	B
P1A63	VCU V2 Voltage Sensor Circuit Range/Performance	TRS	AD	B
P1A64	PCU Internal Failure (Communication Error)	TRS	AD	B
P1A65	Motor Inverter Internal Failure	TRS	AD	B
P1A87	VCU V0 Voltage Sensor Circuit Range/Performance (Over Voltage Range)	TRS	AD	B
P1A88	VCU V1 Voltage Sensor Circuit Range/Performance (Under Voltage Range)	TRS	AD	B
P1A89	VCU V1 Voltage Sensor Circuit Range/Performance (Over Voltage Range)	TRS	AD	B
P1D05	Traction Motor Control Module Internal Communication Failure	TRS	AD	B
P1D11	Traction Motor Phase Current Sensor Circuit Range/Performance	TRS	AD	*1
P1D13	Generator Motor Phase Current Sensor Range/Performance	TRS	AD	*1
P1D18	Traction Motor Temperature Sense Failure	TRS	AD	B
P1D1B	VCU V2S Voltage Sensor Circuit High	TRS	AD	B
P1D1C	VCU V2S Voltage Sensor Circuit	TRS	AD	*1
P1D1D	VCU V0 Voltage Sensor Circuit Low	TRS	AD	B
P1D6E	Traction Motor Temperature Sensor Circuit Performance	TRS	AD	B
P1D70	Traction Motor Phase Current Sensor Multiple Performance	TRS	AD	B
P1D72	Traction Motor Temperature Sensor Circuit Range/Performance (Lo Side)	TRS	AD	B
P1D77	VCU I1 Current Sensor Circuit Range/Performance	TRS	AD	B
P1D78	VCU I1 Current Sensor Circuit Low	TRS	AD	B
P1D79	VCU I1 Current Sensor Circuit High	TRS	AD	B
P1D7A	Reactor Temperature Sensor Circuit Range/Performance Problem	TRS	AD	B
P1D7B	Reactor Over Temperature (Traction Motor Control Module Detected)	TRS	AD	B
P1D7D	Reactor Temperature Sensor 1 Circuit Low	TRS	AD	B
P1D7E	Reactor Temperature Sensor 1 Circuit High	TRS	AD	B
P1D7F	Generator Motor Inverter Malfunction Signal Low (Generator Motor Control Module Detected)	TRS	AD	B

DTC	Detection Item	Troubleshooting	Advanced Diagnostics	Note
P1D81	VCU Malfunction Signal Low (Traction Motor Control Module Detected)	TRS	AD	B
P1D85	Traction Motor Inverter Malfunction Signal Low (Traction Motor Control Module Detected)	TRS	AD	B
P1D8A	Generator Motor Inverter Gate Line Open	TRS	AD	B
P1D8C	Generator Motor Inverter Over Current	TRS	AD	B
P1D8D	Generator Motor Inverter Short	TRS	AD	B
P1D92	PCU Electric Coolant Pump Control Circuit	TRS	AD	*1
P1D93	PCU Coolant Over Temperature	TRS	AD	*1

*1: Two drive cycle detection

*2: This DTC code does not store individually. Details depend on other DTC codes stored at the same time.

DTC	Detection Item	Troubleshooting	Advanced Diagnostics	Note
P1D97	Generator Motor Phase Current Sensors Multiple Failure	TRS	AD	B
P1D99	PCU Electric Coolant Pump	TRS	AD	*1
P1D9A	PCU Electric Coolant Pump Circuit	TRS	AD	*1
P1D9D	VCU Temperature Sensor Circuit Range/Performance	TRS	AD	B
P1DA0	VCU Inverter Temperature Sensor Circuit Low	TRS	AD	B
P1DA1	VCU Inverter Temperature Sensor Circuit High	TRS	AD	B
P1DA4	VCU Inverter Short	TRS	AD	B
P1DA6	VCU V1 Voltage Sensor Circuit Range/Performance	TRS	AD	B
P1DA8	VCU V2M Voltage Sensor Circuit Range/Performance	TRS	AD	B
P1DAA	VCU V2S Voltage Sensor Circuit Range/Performance	TRS	AD	B
P1DD8	VCU Inverter Temperature Sensor Circuit	TRS	AD	*1
P1DD9	VCU I1 Current Sensor Circuit	TRS	AD	B
P1DDB	Reactor Temperature Sensor Circuit	TRS	AD	B
P1DE3	VCU V1 Voltage Sensor Circuit High	TRS	AD	B
P1DE4	VCU V1 Voltage Sensor Circuit	TRS	AD	*1
P1DE5	VCU V2M Voltage Sensor Circuit High	TRS	AD	B
P1DE6	VCU V2M Voltage Sensor Circuit	TRS	AD	*1
P1DE7	VCU V0 Voltage Sensor Circuit High	TRS	AD	B
P1DE8	VCU V0 Voltage Sensor Circuit	TRS	AD	*1
P1DE9	VCU V0 Voltage Sensor Circuit Range/Performance	TRS	AD	B
P1DEA	VCU V0 Voltage Control Failure	TRS	AD	B
P1F3C	VCU Over Temperature	TRS	AD	B
U0029	F-CAN Malfunction (Traction Motor Control Module Bus-Off)	TRS	AD	*1

DTC	Detection Item	Troubleshooting	Advanced Diagnostics	Note
U0038	EP-CAN Malfunction (Traction Motor Control Module Bus-Off)	TRS	AD	B
U0100	CAN Malfunction (Traction Motor Control Module - PCM)	TRS	AD	*2
U0111	CAN Malfunction (Traction Motor Control Module - Battery Condition Monitor Module)	TRS	AD	*2
U0146	F-CAN Malfunction (Traction Motor Control Module - CAN Gateway)	TRS	AD	*1
U0311	Traction Motor Control Module Programming Error (Version Mismatch)	TRS	AD	B
U1204	EP-CAN Malfunction (Traction Motor Control Module - PCM)	TRS	AD	B
U1206	EP-CAN Malfunction (Traction Motor Control Module - Battery Condition Monitor Module)	TRS	AD	B
U1600	F-CAN Malfunction (Traction Motor Control Module - PCM)	TRS	AD	*1
U1603	F-CAN Malfunction (Traction Motor Control Module - Battery Condition Monitor Module)	TRS	AD	*1

*1: Two drive cycle detection.

*2: This DTC code does not store individually. Details depend on other DTC codes stored at the same time.

Battery Condition Monitor Module

DTC	Detection Item	Troubleshooting	Advanced Diagnostics	Note
P0562	Battery Condition Monitor Module System Voltage Low	TRS	AD	B
P0602	Battery Condition Monitor Module Programming Error	TRS	AD	B
P062F	Battery Condition Monitor Module EEPROM Error	TRS	AD	*2
P06B1	HV Battery Current Sensor Power Supply Circuit Low	TRS	AD	*1
P0A1F	Battery Condition Monitor Module	TRS	AD	B
P0A7E	HV Battery Pack Over Temperature	TRS	AD	B
P0A7F	HV Battery Pack Deterioration	TRS	AD	*2
P0A80	Replace HV Battery Pack	TRS	AD	B
P0A82	HV Battery Pack Cooling Fan Performance/Stuck Off	TRS	AD	*1

*1: Two drive cycle detection

*2: This DTC code does not store individually. Details depend on other DTC codes stored at the same time.

DTC	Detection Item	Troubleshooting	Advanced Diagnostics	Note
P0A94	DC-DC Converter Performance	TRS	AD	B

DTC	Detection Item	Troubleshooting	Advanced Diagnostics	Note
P0A9B	HV Battery Temperature Sensor 1 Circuit	TRS	AD	*1
P0A9C	HV Battery Temperature Sensor 1 Circuit Range/Performance	TRS	AD	*1
P0A9D	HV Battery Temperature Sensor 1 Circuit Low	TRS	AD	*1
P0A9E	HV Battery Temperature Sensor 1 Circuit High	TRS	AD	*1
P0AA1	HV Battery Main Contactor Circuit Stuck Closed	TRS	AD	B
P0AA3	HV Battery Sub Contactor Circuit	TRS	AD	B
P0AA6	HV Battery Voltage System Isolation Fault	TRS	AD	B
P0AA7	HV Battery Voltage Isolation Sensor Circuit	TRS	AD	B
P0ABF	HV Battery Pack Current Sensor Circuit	TRS	AD	*2
P0AC0	HV Battery Pack Current Sensor Circuit Range/Performance	TRS	AD	*2
P0AC1	HV Battery Pack Current Sensor Circuit Low	TRS	AD	*2
P0AC2	HV Battery Pack Current Sensor Circuit High	TRS	AD	*2
P0AC3	HV Battery Pack Current Sensor Circuit Intermittent/Erratic	TRS	AD	*2
P0AC5	HV Battery Temperature Sensor 2 Circuit	TRS	AD	*1
P0AC6	HV Battery Temperature Sensor 2 Circuit Range/Performance	TRS	AD	*1
P0AC7	HV Battery Temperature Sensor 2 Circuit Low	TRS	AD	*1
P0AC8	HV Battery Temperature Sensor 2 Circuit High	TRS	AD	*1
P0ACA	HV Battery Temperature Sensor 3 Circuit	TRS	AD	*1
P0ACB	HV Battery Temperature Sensor 3 Circuit Range/Performance	TRS	AD	*1
P0ACC	HV Battery Temperature Sensor 3 Circuit Low	TRS	AD	*1
P0ACD	HV Battery Temperature Sensor 3 Circuit High	TRS	AD	*1
P0AE1	HV Battery Precharge Contactor Circuit	TRS	AD	B
P0AE8	HV Battery Temperature Sensor 4 Circuit	TRS	AD	*1
P0AE9	HV Battery Temperature Sensor 4 Circuit Range/Performance	TRS	AD	*1
P0AEA	HV Battery Temperature Sensor 4 Circuit Low	TRS	AD	*1
P0AEB	HV Battery Temperature Sensor 4 Circuit High	TRS	AD	*1
P0AFA	HV Battery System Voltage Low	TRS	AD	B
P0B3B	HV Battery Cell Voltage Sense Circuit 1	TRS	AD	B
P0B40	HV Battery Cell Voltage Sense Circuit 2	TRS	AD	B
P0B45	HV Battery Cell Voltage Sense Circuit 3	TRS	AD	B
P0B4A	HV Battery Cell Voltage Sense Circuit 4	TRS	AD	B
P0B4F	HV Battery Cell Voltage Sense Circuit 5	TRS	AD	B

DTC	Detection Item	Troubleshooting	Advanced Diagnostics	Note
P0B54	HV Battery Cell Voltage Sense Circuit 6	TRS	AD	B
P0D32	DC-DC Converter Over Temperature (Battery Condition Monitor Module Detected)	TRS	AD	B
P0DA8	HV Battery Voltage/Motor Inverter Voltage Correlation	TRS	AD	B
P0DE6	HV Battery Pack Voltage Low	TRS	AD	*1
P0DE7	HV Battery Pack Voltage High	TRS	AD	B
P0E2D	HV Battery Cell Voltage Sense Circuit	TRS	AD	B
P1447	HV Battery Pack Deterioration (Middle Severity)	TRS	AD	*1
P144A	HV Battery Pack Deterioration (High Severity)	TRS	AD	*1
P1586	HV Battery Current Sensor	TRS	AD	B
P158A	HV Battery Current Sensor Correlation	TRS	AD	*1
P158B	HV Battery Current Sensor 1 Circuit	TRS	AD	*1
P158D	HV Battery Current Sensor 1 Circuit Low	TRS	AD	*1
P158E	HV Battery Current Sensor 2 Circuit Low	TRS	AD	*1

*1: Two drive cycle detection

*2: This DTC code does not store individually. Details depend on other DTC codes stored at the same time.

DTC	Detection Item	Troubleshooting	Advanced Diagnostics	Note
P158F	HV Battery Current Sensor 1 Circuit High	TRS	AD	*1
P1596	HV Battery Current Sensor 2 Circuit High	TRS	AD	*1
P1597	HV Battery Current Sensor 1 Circuit Range/Performance	TRS	AD	*1
P1598	HV Battery Current Sensor 2 Circuit Range/Performance	TRS	AD	*1
P1673	IGHLD Relay Circuit	TRS	AD	B
P16C3	DC-DC Converter Temperature Sensor Circuit	TRS	AD	*1
P1D3A	Battery Condition Monitor Module EEPROM Error (FSA Operated)	TRS	AD	B
P1D3B	Battery Condition Monitor Module EEPROM Error (FSA Not-Operated)	TRS	AD	B
P1D64	Collision Detection Signal Circuit	TRS	AD	B
P1D65	HV System Shutdown (Collision Detection Signal Detected)	TRS	AD	B
P1DC7	HV Battery Pack Deterioration of Power	TRS	AD	*1
P1DCB	HV Battery Identification Circuit (System Running)	TRS	AD	B
P1DFD	Power System Indicator Lighting Request From PCM	TRS	AD	B
P1DFF	IGHLDB Relay Circuit	TRS	AD	B
P262B	Battery Condition Monitor Module Timer	TRS	AD	B
U0029	F-CAN Malfunction (Battery Condition Monitor Module Bus-Off)	TRS	AD	B

DTC	Detection Item	Troubleshooting	Advanced Diagnostics	Note
U0038	EP-CAN Malfunction (Battery Condition Monitor Module Bus-Off)	TRS	AD	*1
U0100	CAN Malfunction (Battery Condition Monitor Module - PCM)	TRS	AD	*2
U0110	F-CAN Malfunction (Battery Condition Monitor Module - Traction Motor Control Module)	TRS	AD	*2
U012D	F-CAN Malfunction (Battery Condition Monitor Module - Generator Motor Control Module)	TRS	AD	*2
U0146	F-CAN Malfunction (Battery Condition Monitor Module - CAN Gateway)	TRS	AD	*1
U0155	F-CAN Malfunction (Battery Condition Monitor Module - Gauge Control Module)	TRS	AD	*1
U0298	DC-DC Converter Communication Error	TRS	AD	*2
U0312	Battery Condition Monitor Module Programming Error (Version Mismatch)	TRS	AD	B
U0599	DC-DC Converter Serial Communication Receive Error	TRS	AD	*1
U1204	EP-CAN Malfunction (Battery Condition Monitor Module - PCM)	TRS	AD	B
U1205	EP-CAN Malfunction (Battery Condition Monitor Module - Traction Motor Control Module)	TRS	AD	B
U1207	F-CAN Malfunction (Battery Condition Monitor Module - Electric A/C Compressor)	TRS	AD	B
U1220	DC-DC Converter Serial Communication Transmit Error	TRS	AD	*1
U12A5	EP-CAN Malfunction (Battery Condition Monitor Module - Generator Motor Control Module)	TRS	AD	B
U1600	F-CAN Malfunction (Battery Condition Monitor Module - PCM)	TRS	AD	*1
U1604	F-CAN Malfunction (Battery Condition Monitor Module - Traction Motor Control Module)	TRS	AD	*1
U1605	F-CAN Malfunction (Battery Condition Monitor Module - Generator Motor Control Module)	TRS	AD	*1

*1: Two drive cycle detection

*2: This DTC code does not store individually. Details depend on other DTC codes stored at the same time.

ELECTRIC SERVO BRAKE SYSTEM DTCS

DTC		Detection Item
B0050	-F0	(Driver's Seat Belt Buckle Switch Malfunction)
C0023	-12	Brake Diag Circuit ON Failure
	-14	Brake Diag Circuit OFF Failure
C0049	-7A	Brake Fluid Leak or Seal Failure

DTC		Detection Item
C0062	-F0	Longitudinal Acceleration Sensor Malfunction
C0063	-F0	Yaw Rate Sensor Malfunction
C1260	-7A	Brake Fluid Leak or Seal Failure in Pedal Feel Simulator
C1270	-11	Automatic Brake Hold Switch Signal Circuit Short
	-15	Automatic Brake Hold Switch Signal Circuit Open
P057B	-00	Brake Pedal Stroke Sensor Circuit Range/Performance Problem
P057C	-00	Brake Pedal Stroke Sensor Circuit Low Voltage
P057D	-00	Brake Pedal Stroke Sensor Circuit High Voltage
P0602	-00	Electric Servo Brake Control Unit Programming Error
P0606	-00	Electric Servo Brake Control Unit Internal Circuit Malfunction
P062F	-00	Electric Servo Brake Control Unit Internal Circuit EEPROM Error
P0642	-00	Sensor Power Source Circuit Low Voltage
P0643	-00	Sensor Power Source Circuit High Voltage
P1E20	-00	Brake Fluid Pressure Sensor PL/PLR Incorrect Correlation
P1E24	-00	Brake Pedal Stroke Redundant Sensor Circuit High Voltage
P1E25	-00	Brake Pedal Stroke Redundant Sensor Circuit Low Voltage
P1E26	-00	Brake Pedal Stroke Sensor/Brake Pedal Stroke Redundant Sensor Incorrect Correlation
P1E27	-00	Brake Fluid Pressure Sensor PU Circuit High Voltage
P1E28	-00	Brake Fluid Pressure Sensor PU Circuit Low Voltage
P1E29	-00	Brake Fluid Pressure Sensor PUR Circuit High Voltage
P1E2A	-00	Brake Fluid Pressure Sensor PUR Circuit Low Voltage
P1E2B	-00	Brake Fluid Pressure Sensor PU/PUR Incorrect Correlation
P1E2C	-00	Brake Fluid Pressure Sensor PL Circuit High Voltage
P1E2D	-00	Brake Fluid Pressure Sensor PL Circuit Low Voltage
P1E2E	-00	Brake Fluid Pressure Sensor PLR Circuit High Voltage
P1E2F	-00	Brake Fluid Pressure Sensor PLR Circuit Low Voltage
P1E32	-00	Master Cylinder Cut Valve Stuck OFF (Stuck Open)
P1E33	-00	Master Cylinder Cut Valve Incorrect Operation
P1E34	-00	Master Cylinder Cut Valve Stuck ON (Stuck Close)
P1E35	-00	Brake Pedal Feel Simulator Cut Valve Incorrect Operation
P1E36	-00	Brake Pedal Feel Simulator Cut Valve No Operation
P1E37	-00	Brake Pedal Feel Simulator Cut Valve Stuck OFF (Stuck Close)
P1E38	-00	Brake Pedal Feel Simulator Cut Valve Stuck ON (Stuck Open)
P1E41	-00	Electric Servo Brake System Fail-Safe Relay Stuck ON
P1E42	-00	Electric Servo Brake System Fail-Safe Relay Stuck OFF
P1E44	-00	Electric Servo Brake Control Unit Internal Circuit Malfunction (Charge Pump Circuit)
P1E46	-00	Electric Servo Brake Control Unit Internal Circuit Malfunction (FET Stuck ON)
P1E47	-00	Electric Servo Brake Control Unit Internal Circuit Malfunction (FET Stuck OFF)
P1E48	-00	Slave Cylinder Drive Motor Current Malfunction (Offset)
P1E49	-00	Slave Cylinder Drive Motor Current Malfunction (Stuck)
P1E4A	-00	Slave Cylinder Drive Motor Current Malfunction (Over Current)
P1E4B	-00	Slave Cylinder Drive Motor Circuit Open
P1E4C	-00	Slave Cylinder Drive Motor Power Source Circuit High Voltage
P1E4D	-00	Motor Angle Signal Malfunction
P1E51	-00	Tandem Motor Cylinder Gearbox Mechanical Linkage Failure

DTC		Detection Item
P1E52	-00	Tandem Motor Cylinder Gearbox Stuck
P1E63	-00	Brake Pedal Stroke Sensor Signal Stuck
P1E68	-00	Brake Master Cylinder Cut Valve Self Lock
P2531	-00	Electric Servo Brake Control Unit Power Source Circuit (IG1) Low Voltage
P2532	-00	Electric Servo Brake Control Unit Power Source Circuit (IG1) High Voltage
U0029	-00	F-CAN Malfunction (BUS-OFF)
U0047	-00	F-CAN Malfunction (Ch2 Bus-OFF)/Vehicle Communication Bus C Performance
U0100	-00	F-CAN Malfunction (Electric Servo Brake Control Unit Lost Communication With Management ECU)
U0101	-00	F-CAN Malfunction (Electric Servo Brake Control Unit Lost Communication With TCM/PCM (Gear System))
U0104	-00	F-CAN Malfunction (Electric Servo Brake Control Unit Lost Communication With Driving Support System Control Unit)
U0111	-00	Lost communication With Battery Energy Control Module A
U0122	-00	F-CAN Malfunction (Electric Servo Brake Control Unit Lost Communication With VSA Modulator-Control Unit)
U0128	-00	F-CAN Malfunction (Electric Servo Brake Control Unit Lost Communication With Electric Parking Brake Control Unit)
U0151	-00	F-CAN Malfunction (Electric Servo Brake Control Unit Lost Communication With SRS Unit)
U0155	-00	F-CAN Malfunction (Electric Servo Brake Control Unit Lost Communication With Gauge Control Module)
U0401	-68	(PGM-FI/ECM/PCM System Malfunction)
U0415	-68	(ABS System Malfunction)
U0416	-68	(VSA System Malfunction)
U0417	-68	(Electric Parking Brake System Malfunction)
U3000	-49	Driver's Door Switch Signal Stuck On (ECU Internal Malfunction)
U3003	-16	Electric Servo Brake Control Unit Power Source Circuit (+B) Low Voltage
	-17	Electric Servo Brake Control Unit Power Source Circuit (+B) High Voltage
	-92	System Voltage Low (Long Term)

ELECTRONIC POWER STEERING DTCS

DTC		Detection Item
C0037	-F0	(Left Rear Wheel Speed Sensor Malfunction)
C003A	-F0	(Right Rear Wheel Speed Sensor Malfunction)
C0062	-96	Longitudinal Acceleration Sensor Malfunction
C0063	-96	Yaw-Rate Sensor Malfunction
C1400	-11	Motor Current Malfunction
	-13	EPS Motor Circuit Open
	-14	Motor Voltage Malfunction
C1403	-14	Motor Angle Sensor (SIN/COS) Signals Incorrect
	-29	Motor Angle Sensor (SIN/COS) Signals Incorrect Correlation
C1404	-13	EPS Motor U Phase Circuit High Voltage
C1405	-13	EPS Motor V Phase Circuit High Voltage
C1406	-13	EPS Motor W Phase Circuit High Voltage
C1420	-29	Main Torque Sensor and Sub Torque Sensor Incorrect Correlation
C1421	-14	Main Torque Sensor Malfunction
C1422	-14	Sub Torque Sensor Malfunction

DTC		Detection Item
C1423	-14	Torque Sensor Power Source Circuit Malfunction
C1432	-62	Vehicle Speed and the Engine Speed Incorrect Correlation
U0029	-00	F-CAN Malfunction (Bus-Off)
U0100	-00	F-CAN Malfunction (EPS Control Unit-PCM/TCM)
U0122	-00	F-CAN Malfunction (EPS Control Unit-VSA/ABS Modulator-Control Unit)
U0151	-00	F-CAN Malfunction (EPS Control Unit-SRS Unit)
U0416	-68	(VSA System Malfunction)
U129C	-00	F-CAN Malfunction (EPS Control Unit-Driving Support System Control Unit)
U1483	-68	(LKAS Malfunction (Indicator value check))
	-94	(LKAS Malfunction)
U3000	-49	EPS Control Unit Internal Circuit Malfunction
	-51	ECU Software Update Failure
	-55	EPS Control Unit Internal Malfunction
U3003	-16	Battery Voltage Low
	-17	Battery Voltage High

ENGINE CONTROL SYSTEM DTCS

FUEL AND EMISSIONS SYSTEMS DTCS

DTC	Detection Item	Troubleshooting	Advanced Diagnostics	Note
P0010	Variable Valve Timing Control (VTC) Malfunction	TRS	AD	B
P0011	Variable Valve Timing Control (VTC) System Malfunction	TRS	AD	B
P0069	Barometric Pressure (BARO) Sensor Circuit Range/Performance Problem	TRS	AD	B
P006A	Mass Air Flow (MAF) Sensor Circuit Range/Performance Problem	TRS	AD	B
P0096	Intake Air Temperature (IAT) Sensor 2 Circuit Range/Performance Problem	TRS	AD	B
P0097	Intake Air Temperature (IAT) Sensor 2 Circuit Low Voltage	TRS	AD	B
P0098	Intake Air Temperature (IAT) Sensor 2 Circuit High Voltage	TRS	AD	B
P00FE	Evaporative Emission (EVAP) Vent Line Blockage	TRS	AD	B
P0101	Mass Air Flow (MAF) Sensor Circuit Range/Performance Problem (Out of Range)	TRS	AD	B
P0102	Mass Air Flow (MAF) Sensor Circuit Low Voltage	TRS	AD	B
P0103	Mass Air Flow (MAF) Sensor Circuit High Voltage	TRS	AD	B
P0105	Manifold Absolute Pressure (MAP) Sensor Out of Range	TRS	AD	B
P0106	Manifold Absolute Pressure (MAP) Sensor Range/Performance Problem	TRS	AD	B
P0107	Manifold Absolute Pressure (MAP) Sensor Circuit Low Voltage	TRS	AD	B

DTC	Detection Item	Troubleshooting	Advanced Diagnostics	Note
P0108	Manifold Absolute Pressure (MAP) Sensor Circuit High Voltage	TRS	AD	B
P0111	Intake Air Temperature (IAT) Sensor 1 Circuit Range/Performance Problem	TRS	AD	B
P0112	Intake Air Temperature (IAT) Sensor 1 Circuit Low Voltage	TRS	AD	B
P0113	Intake Air Temperature (IAT) Sensor 1 Circuit High Voltage	TRS	AD	B
P0115	Engine Coolant Temperature (ECT) Sensor 1 Out of Range	TRS	AD	B
P0116	Engine Coolant Temperature (ECT) Sensor 1 Circuit Range/Performance Problem	TRS	AD	B
P0117	Engine Coolant Temperature (ECT) Sensor 1 Circuit Low Voltage	TRS	AD	B
P0118	Engine Coolant Temperature (ECT) Sensor 1 Circuit High Voltage	TRS	AD	B
P011A	Engine Coolant Temperature (ECT) Sensor 1 Circuit Range/Performance Problem	TRS	AD	B
P011B	Intake Air Temperature (IAT) Sensor 1 Circuit Range/Performance Problem	TRS	AD	B
P0121	Throttle Position (TP) Sensor A Out of Range	TRS	AD	B
P0122	Throttle Position (TP) Sensor A Circuit Low Voltage	TRS	AD	B
P0123	Throttle Position (TP) Sensor A Circuit High Voltage	TRS	AD	B
P0125	Engine Coolant Temperature (ECT) Sensor 1 Malfunction/Slow Response	TRS	AD	B
P0128	Cooling System Malfunction	TRS	AD	B
P0130	Air Fuel Ratio (A/F) Sensor (Sensor 1) Out of Range	TRS	AD	B
P0133	Air Fuel Ratio (A/F) Sensor (Sensor 1) Malfunction/Slow Response	TRS	AD	B
P0134	Air Fuel Ratio (A/F) Sensor (Sensor 1) Heater System Malfunction	TRS	AD	B
P0135	Air Fuel Ratio (A/F) Sensor (Sensor 1) Heater Circuit Malfunction	TRS	AD	B
P0137	Secondary Heated Oxygen Sensor (Secondary HO2S (Sensor 2)) Circuit Low Voltage	TRS	AD	B
P0138	Secondary Heated Oxygen Sensor (Secondary HO2S (Sensor 2)) Circuit High Voltage	TRS	AD	B
P0139	Secondary Heated Oxygen Sensor (Secondary HO2S (Sensor 2)) Slow Response	TRS	AD	B
P0141	Secondary Heated Oxygen Sensor (Secondary HO2S (Sensor 2)) Heater Circuit Malfunction	TRS	AD	B

NOTE: The above DTCs are indicated when the PGM-FI system is selected with the HDS.*1:'20 *2:'21

DTC	Detection Item	Troubleshooting	Advanced Diagnostics	Note
P0171	Fuel System Too Lean	TRS	AD	B
P0172	Fuel System Too Rich	TRS	AD	B
P0201	No. 1 Cylinder Injector Circuit Malfunction	TRS	AD	B
P0202	No. 2 Cylinder Injector Circuit Malfunction	TRS	AD	B
P0203	No. 3 Cylinder Injector Circuit Malfunction	TRS	AD	B
P0204	No. 4 Cylinder Injector Circuit Malfunction	TRS	AD	B
P0221	Throttle Position (TP) Sensor B Out of Range	TRS	AD	B
P0222	Throttle Position (TP) Sensor B Circuit Low Voltage	TRS	AD	B
P0223	Throttle Position (TP) Sensor B Circuit High Voltage	TRS	AD	B
P027E	Cold Start Air Fuel Ratio Control System Command Lean	TRS	AD	*2
P027F	Cold Start Air Fuel Ratio Control System Command Rich	TRS	AD	*2
P0300	Random Misfire Detected	TRS	AD	B
P0301	No. 1 Cylinder Misfire Detected	TRS	AD	B
P0302	No. 2 Cylinder Misfire Detected	TRS	AD	B
P0303	No. 3 Cylinder Misfire Detected	TRS	AD	B
P0304	No. 4 Cylinder Misfire Detected	TRS	AD	B
P0326	Knock Sensor Malfunction	TRS	AD	B
P0327	Knock Sensor Circuit Low Voltage	TRS	AD	B
P0328	Knock Sensor Circuit High Voltage	TRS	AD	B
P032F	Engine Stall	TRS	AD	*2
P0335	Crankshaft Position (CKP) Sensor No Signal	TRS	AD	B
P0339	Crankshaft Position (CKP) Sensor Circuit Intermittent Interruption	TRS	AD	B
P0340	Camshaft Position (CMP) Sensor A No Signal	TRS	AD	B
P0341	Camshaft Position (CMP) Sensor A and Crankshaft Position (CKP) Sensor Incorrect Phase Detected	TRS	AD	B
P0344	Camshaft Position (CMP) Sensor A Circuit Intermittent Interruption	TRS	AD	B
P0351	No. 1 Cylinder Ignition Coil Circuit Malfunction	TRS	AD	B
P0352	No. 2 Cylinder Ignition Coil Circuit Malfunction	TRS	AD	B
P0353	No. 3 Cylinder Ignition Coil Circuit Malfunction	TRS	AD	B
P0354	No. 4 Cylinder Ignition Coil Circuit Malfunction	TRS	AD	B

DTC	Detection Item	Troubleshooting	Advanced Diagnostics	Note
P0365	Camshaft Position (CMP) Sensor B Circuit No Signal	TRS	AD	B
P0369	Camshaft Position (CMP) Sensor B Circuit Intermittent Interruption	TRS	AD	B
P0400	Exhaust Gas Recirculation (EGR) System Leak Detected	TRS	AD	B
P0401	Exhaust Gas Recirculation (EGR) Insufficient Flow	TRS	AD	B
P0404	Exhaust Gas Recirculation (EGR) Valve Circuit Range/Performance Problem	TRS	AD	B
P0405	Exhaust Gas Recirculation (EGR) Valve Position Sensor Circuit Low Voltage	TRS	AD	B
P0406	Exhaust Gas Recirculation (EGR) Valve Position Sensor Circuit High Voltage	TRS	AD	B
P0420	Catalyst System Efficiency Below Threshold	TRS	AD	B
P043E	Evaporative Emission (EVAP) Leak Check Module Standard Pressure Low	TRS	AD	B
P043F	Evaporative Emission (EVAP) Leak Check Module Standard Pressure High	TRS	AD	B
P0441	Evaporative Emission (EVAP) System Purge Flow Malfunction	TRS	AD	B
P0443	Evaporative Emission (EVAP) Canister Purge Valve Circuit Malfunction	TRS	AD	B
P0451	Evaporative Emission (EVAP) Leak Check Module Pressure Sensor Range/Performance	TRS	AD	B
P0456	Evaporative Emission (EVAP) System Very Small Leak Detected	TRS	AD	B

NOTE: The above DTCs are indicated when the PGM-FI system is selected with the HDS.*1:'20 *2:'21

DTC	Detection Item	Troubleshooting	Advanced Diagnostics	Note
P0460	Fuel Level Sensor (Fuel Gauge Sending Unit) Out of Range	TRS	AD	B
P0461	Fuel Level Sensor (Fuel Gauge Sending Unit) Circuit Range/Performance Problem	TRS	AD	B
P0462	Fuel Level Sensor (Fuel Gauge Sending Unit) Circuit Low Voltage	TRS	AD	B
P0463	Fuel Level Sensor (Fuel Gauge Sending Unit) Circuit High Voltage	TRS	AD	B
P046C	Exhaust Gas Recirculation (EGR) Valve Position Sensor Out of Range	TRS	AD	B
P0480	Radiator Fan Control (RFC) System Malfunction	TRS	AD	B
P049D	Exhaust Gas Recirculation (EGR) Control Position Exceeded Learning Limit	TRS	AD	B
P04AB	Evaporative Emission (EVAP) Canister Purge Valve Circuit Malfunction 2	TRS	AD	B

DTC	Detection Item	Troubleshooting	Advanced Diagnostics	Note
P04AE	Evaporative Emission (EVAP) System High Purge Flow Detected 2	TRS	AD	B
P04DF	Evaporative Emission (EVAP) System High Purge Flow Detected	TRS	AD	B
P04E0	Evaporative Emission (EVAP) Canister Purge Valve Stuck Closed	TRS	AD	B
P04F1	Evaporative Emission (EVAP) System Low Purge Flow Detected	TRS	AD	B
P050A	Cold Start Idle Air Control System Performance Problem	TRS	AD	B
P050B	Cold Start Ignition Timing Control System Performance Problem	TRS	AD	*1
P050D	Cold Start Idle Speed Problem	TRS	AD	B
P0522	Engine Oil Pressure Sensor Circuit Low Voltage	TRS	AD	B
P0523	Engine Oil Pressure Sensor Circuit High Voltage	TRS	AD	B
P0532	A/C Pressure Sensor Circuit Low Voltage	TRS	AD	B
P0533	A/C Pressure Sensor Circuit High Voltage	TRS	AD	B
P055B	Rocker Arm Oil Pressure Sensor Out of Range	TRS	AD	B
P055C	Rocker Arm Oil Pressure Sensor Circuit Low Voltage	TRS	AD	B
P055D	Rocker Arm Oil Pressure Sensor Circuit High Voltage	TRS	AD	B
P0560	Powertrain Control Module (PCM) Power Source Circuit Unexpected Voltage	TRS	AD	B
P0563	Powertrain Control Module (PCM) Power Source Circuit Unexpected Voltage	TRS	AD	B
P0571	Brake Pedal Position Switch Circuit Malfunction	TRS	AD	B
P059F	Shutter Grille Assembly (Upper) Malfunction	TRS	AD	B
P05A0	Shutter Grille Assembly (Upper) Malfunction	TRS	AD	B
P05A3	Shutter Grille Actuator (Upper) Malfunction	TRS	AD	B
P05A8	Shutter Grille Actuator (Upper) Malfunction	TRS	AD	B
P05C0	Shutter Grille Actuator (Upper) Temperature Malfunction	TRS	AD	B
P05CC	Cold Start VTC System Malfunction	TRS	AD	*2
P0600	Powertrain Control Module (PCM) Serial Communication Failure	TRS	AD	B
P0602	Powertrain Control Module (PCM) Programming Error	TRS	AD	B
P0606	Powertrain Control Module (PCM) Processor Malfunction	TRS	AD	B

DTC	Detection Item	Troubleshooting	Advanced Diagnostics	Note
P060A	Powertrain Control Module (PCM) Internal Control Module Malfunction	TRS	AD	B
P061B	Powertrain Control Module (PCM) Internal Malfunction (Torque Calculation)	TRS	AD	B
P062F	Powertrain Control Module (PCM) Internal Control Module Keep Alive Memory (KAM) Error	TRS	AD	B
P0630	VIN Not Programmed or Mismatch	TRS	AD	B
P0641	Sensor Reference Voltage A Malfunction	TRS	AD	B
P0651	Sensor Reference Voltage B Malfunction	TRS	AD	B
P0657	Powertrain Control Module (PCM) Power Supply Circuit Malfunction	TRS	AD	B
P06A8	Internal VCC Power Malfunction	TRS	AD	B
P06AF	Engine Stall	TRS	AD	*1

NOTE: The above DTCs are indicated when the PGM-FI system is selected with the HDS.*1:'20 *2:'21

DTC	Detection Item	Troubleshooting	Advanced Diagnostics	Note
P0700	Transmission Control System (MIL Reqest)	TRS	AD	*2
P0703	Brake Pedal Position Switch (NC) Malfunction	TRS	AD	B
P0C2F	GEN-ENG Angular Speed Correlation Malfunction	TRS	AD	B
P100A	Electric VTC Motor Circuit Malfunction	TRS	AD	B
P100B	Electric VTC Motor Control Module Malfunction	TRS	AD	B
P100C	Electric VTC Motor Speed Signal Circuit Malfunction	TRS	AD	B
P100D	Electric VTC Motor Power Relay Circuit Stuck On	TRS	AD	B
P145E	Evaporative Emission (EVAP) System Purge Flow Malfunction 2	TRS	AD	B
P145F	Evaporative Emission (EVAP) Leak Check Module Pressure Sensor Range/Performance Problem	TRS	AD	B
P1461	Evaporative Emission (EVAP) Leak Check Module Pressure Sensor Shifts	TRS	AD	B
P1462	Evaporative Emission (EVAP) Leak Check Module Pressure Decompression Defect	TRS	AD	B
P14A0	Engine Abnormal Vibration	TRS	AD	*1
P154A	Battery Sensor Internal Failure	TRS	AD	B
P1658	Electronic Throttle Control System (ETCS) Control Relay ON Malfunction	TRS	AD	B
P1659	Electronic Throttle Control System (ETCS) Control Relay OFF Malfunction	TRS	AD	B
P1683	Throttle Valve Default Position Spring Performance Problem	TRS	AD	B

DTC	Detection Item	Troubleshooting	Advanced Diagnostics	Note
P1684	Throttle Valve Return Spring Performance Problem	TRS	AD	B
P16E3	PGM-FI-Battery Sensor LIN Communication Error	TRS	AD	B
P16E8	PGM-FI-Shutter Grille LIN Communication Error	TRS	AD	B
P16EA	Electric Engine Coolant Pump Relay Stuck On	TRS	AD	B
P1A48	Powertrain Control Module (PCM) Internal Malfunction (SBW Different Run)	TRS	AD	B
P1A49	Powertrain Control Module (PCM) Internal Malfunction (SBW Parking Position)	TRS	AD	B
P1A4A	Powertrain Control Module (PCM) Internal Malfunction (SBW Display Position)	TRS	AD	B
P1A51	Powertrain Control Module (PCM) Internal Malfunction (Torque Calculation Acceleration)	TRS	AD	B
P1A52	Powertrain Control Module (PCM) Internal Malfunction (Torque Calculation Deceleration)	TRS	AD	B
P1A53	Powertrain Control Module (PCM) Internal Malfunction (Torque Calculation Different Run)	TRS	AD	B
P2096	Post Catalyst Fuel Trim System Too Lean	TRS	AD	B
P2097	Post Catalyst Fuel Trim System Too Rich	TRS	AD	B
P2101	Electronic Throttle Control System (ETCS) Malfunction	TRS	AD	B
P2108	Throttle Actuator Control Module Performance	TRS	AD	B
P2118	Throttle Actuator Current Range/Performance Problem	TRS	AD	B
P2119	Throttle Actuator Control Throttle Body Range/Performance	TRS	AD	B
P2121	Accelerator Pedal Position (APP) Sensor A (Throttle Position (TP) Sensor D) Out of Range	TRS	AD	B
P2122	Accelerator Pedal Position (APP) Sensor A (Throttle Position (TP) Sensor D) Circuit Low Voltage	TRS	AD	B
P2123	Accelerator Pedal Position (APP) Sensor A (Throttle Position (TP) Sensor D) Circuit High Voltage	TRS	AD	B
P2126	Accelerator Pedal Position (APP) Sensor B (Throttle Position (TP) Sensor E) Out of Range	TRS	AD	B
P2127	Accelerator Pedal Position (APP) Sensor B (Throttle Position (TP) Sensor E) Circuit Low Voltage	TRS	AD	B

NOTE: The above DTCs are indicated when the PGM-FI system is selected with the HDS.*1:'20 *2:'21

DTC	Detection Item	Troubleshooting	Advanced Diagnostics	Note
P2128	Accelerator Pedal Position (APP) Sensor B (Throttle Position (TP) Sensor E) Circuit High Voltage	TRS	AD	B
P2135	Throttle Position (TP) Sensor A/B Incorrect Voltage Correlation	TRS	AD	B
P2138	Accelerator Pedal Position (APP) Sensor A/B (Throttle Position (TP) Sensor D/E) Incorrect Voltage Correlation	TRS	AD	B
P2175	Throttle Actuator Control System Low Air Flow Detected	TRS	AD	*2
P2176	Throttle Actuator Control System Idle Position Not Learned	TRS	AD	B
P2182	Engine Coolant Temperature (ECT) Sensor 2 Out of Range	TRS	AD	B
P2183	Engine Coolant Temperature (ECT) Sensor 2 Circuit Range/Performance Problem	TRS	AD	B
P2184	Engine Coolant Temperature (ECT) Sensor 2 Circuit Low Voltage	TRS	AD	B
P2185	Engine Coolant Temperature (ECT) Sensor 2 Circuit High Voltage	TRS	AD	B
P2195	Air Fuel Ratio (A/F) Sensor (Sensor 1) Signal Stuck Lean	TRS	AD	B
P2199	Intake Air Temperature (IAT) Sensor 1-2 Incorrect Correlation	TRS	AD	B
P219C	No. 1 Cylinder Air-Fuel Ratio Variation	TRS	AD	B
P219D	No. 2 Cylinder Air-Fuel Ratio Variation	TRS	AD	B
P219E	No. 3 Cylinder Air-Fuel Ratio Variation	TRS	AD	B
P219F	No. 4 Cylinder Air-Fuel Ratio Variation	TRS	AD	B
P2226	Barometric Pressure (BARO) Sensor Circuit Malfunction	TRS	AD	B
P2228	Barometric Pressure (BARO) Sensor Circuit Low Voltage	TRS	AD	B
P2229	Barometric Pressure (BARO) Sensor Circuit High Voltage	TRS	AD	B
P2237	Air Fuel Ratio (A/F) Sensor (Sensor 1) IP Circuit High Voltage	TRS	AD	B
P2238	Air Fuel Ratio (A/F) Sensor (Sensor 1) IP Circuit Low Voltage	TRS	AD	B
P2243	Air Fuel Ratio (A/F) Sensor (Sensor 1) VCENT Circuit High Voltage	TRS	AD	B
P2245	Air Fuel Ratio (A/F) Sensor (Sensor 1) VCENT Circuit Low Voltage	TRS	AD	B
P2251	Air Fuel Ratio (A/F) Sensor (Sensor 1) VS Circuit High Voltage	TRS	AD	B
P2252	Air Fuel Ratio (A/F) Sensor (Sensor 1) VS Circuit Low Voltage	TRS	AD	B
P2270	Secondary Heated Oxygen Sensor (Secondary HO2S (Sensor 2)) Circuit	TRS	AD	B

DTC	Detection Item	Troubleshooting	Advanced Diagnostics	Note
	Signal Stuck Lean			
P2279	Intake Air System Leak	TRS	AD	B
P2401	Evaporative Emission (EVAP) Leak Check Pump Control Circuit Low Voltage	TRS	AD	B
P2402	Evaporative Emission (EVAP) Leak Check Pump Control Circuit High Voltage	TRS	AD	B
P2413	Exhaust Gas Recirculation (EGR) System Malfunction	TRS	AD	B
P24B8	Evaporative Emission (EVAP) Leak Check Module Absolute Pressure Sensor Out of Range	TRS	AD	B
P24B9	Evaporative Emission (EVAP) Leak Check Module Pressure Sensor Range/Performance Problem	TRS	AD	B
P24BA	Evaporative Emission (EVAP) Leak Check Module Pressure Sensor Circuit Low Voltage	TRS	AD	B
P24BB	Evaporative Emission (EVAP) Leak Check Module Pressure Sensor Circuit High Voltage	TRS	AD	B
P24BE	Canister Change Over Valve Control Circuit Low Voltage	TRS	AD	B
P24BF	Canister Change Over Valve Control Circuit High Voltage	TRS	AD	B
P24C0	Canister Change Over Valve Close Malfunction	TRS	AD	B
P24C1	Canister Change Over Valve Stuck Close	TRS	AD	B
P2601	Electric Engine Coolant Pump Range/Performance Problem	TRS	AD	B
P2602	Electric Engine Coolant Pump Circuit Low Voltage	TRS	AD	B
P2603	Electric Engine Coolant Pump Circuit High Voltage	TRS	AD	B

NOTE: The above DTCs are indicated when the PGM-FI system is selected with the HDS.*1:'20 *2:'21

DTC	Detection Item	Troubleshooting	Advanced Diagnostics	Note
P2610	Powertrain Control Module (PCM) Ignition Off Internal Timer Malfunction	TRS	AD	B
P2646	Rocker Arm Oil Pressure Stuck Off	TRS	AD	B
P2647	Rocker Arm Oil Pressure Stuck On	TRS	AD	B
P2648	Rocker Arm Oil Control Solenoid Circuit Low Voltage	TRS	AD	B
P2649	Rocker Arm Oil Control Solenoid Circuit High Voltage	TRS	AD	B
P2A00	Air Fuel Ratio (A/F) Sensor (Sensor 1) Circuit Range/Performance Problem	TRS	AD	B
P2A01	Secondary Heated Oxygen Sensor (Secondary HO2S) (Sensor 2) Circuit	TRS	AD	B

DTC	Detection Item	Troubleshooting	Advanced Diagnostics	Note
	Range/Performance Problem			
P2DE0	Cold Start Air Fuel Ratio Control System Lean	TRS	AD	*2
P2DE1	Cold Start Air Fuel Ratio Control System Rich	TRS	AD	*2
P2EA4	Cold Start Ignition Timing Problem	TRS	AD	*2
P2EC7	Cold Start Rocker Arm Oil Control System Problem	TRS	AD	*2
U0029	F-CAN Malfunction (BUS-OFF (Powertrain Control Module (PCM)))	TRS	AD	B
U0038	EP-CAN Malfunction (BUS-OFF (Powertrain Control Module (PCM)))	TRS	AD	B
U0047	F-CAN Malfunction For The Second Channel (BUS-OFF (Powertrain Control Module (PCM)))	TRS	AD	B
U0103	F-CAN Malfunction (Powertrain Control Module (PCM) -SBW Shifter)	TRS	AD	B
U0104	F-CAN Malfunction (Powertrain Control Module (PCM) -Driving Support System Control Unit)	TRS	AD	B
U0110	EP-CAN Malfunction (Powertrain Control Module (PCM) -Motor Control Module)	TRS	AD	B
U0111	EP-CAN Malfunction (Powertrain Control Module (PCM) -Battery Condition Monitor Module)	TRS	AD	B
U0114	F-CAN Malfunction (Powertrain Control Module (PCM) -AWD Control Unit)	TRS	AD	B
U0122	F-CAN Malfunction (Powertrain Control Module (PCM) -VSA Modulator-Control Unit)	TRS	AD	B
U0129	F-CAN Malfunction (Powertrain Control Module (PCM) -Electric Servo Brake Control Unit)	TRS	AD	B
U012D	EP-CAN Malfunction (Powertrain Control Module (PCM) -Motor Control Module)	TRS	AD	B
U0146	F-CAN Malfunction (Powertrain Control Module (PCM) -CAN Gateway)	TRS	AD	B
U0151	F-CAN Malfunction (Powertrain Control Module (PCM) -SRS Unit)	TRS	AD	B
U0155	F-CAN Malfunction (Powertrain Control Module (PCM) -Gauge Control Module)	TRS	AD	B
U0301	PGM-FI System and Transmission System Program Version Mismatch	TRS	AD	B
U1205	EP-CAN Malfunction (Powertrain Control Module (PCM) -Motor Control Module)	TRS	AD	B
U1206	EP-CAN Malfunction (Powertrain Control Module (PCM) -Battery Condition Monitor Module)	TRS	AD	B

DTC	Detection Item	Troubleshooting	Advanced Diagnostics	Note
U1207	F-CAN Malfunction (Powertrain Control Module (PCM) -A/C Compressor Driver)	TRS	AD	B
U129E	F-CAN Malfunction (Powertrain Control Module (PCM) -Power Control Unit (PCU))	TRS	AD	B
U12A5	EP-CAN Malfunction (Powertrain Control Module (PCM) -Motor Control Module)	TRS	AD	B
U12AA	EP-CAN Malfunction (Powertrain Control Module (PCM) -SBW Shifter)	TRS	AD	B
U12B4	EP-CAN Malfunction (Powertrain Control Module (PCM) -Park Pawl Actuator Driver Unit)	TRS	AD	B
U1603	F-CAN Malfunction (Powertrain Control Module (PCM) -Battery Condition Monitor Module)	TRS	AD	B

NOTE: The above DTCs are indicated when the PGM-FI system is selected with the HDS.*1:'20 *2:'21

DTC	Detection Item	Troubleshooting	Advanced Diagnostics	Note
U1604	F-CAN Malfunction (Powertrain Control Module (PCM) -Motor Control Module)	TRS	AD	B
U1605	F-CAN Malfunction (Powertrain Control Module (PCM) -Motor Control Module)	TRS	AD	B

NOTE: The above DTCs are indicated when the PGM-FI system is selected with the HDS.*1:'20 *2:'21

GEAR UNIT CONTROL SYSTEM DTCS

DTC	Detection Item	Troubleshooting	Note
P0751	Shift Solenoid Valve A Stuck OFF	TRS	B
P0752	Shift Solenoid Valve A Stuck ON	TRS	B
P0756	Shift Solenoid Valve B Stuck OFF	TRS	B
P0757	Shift Solenoid Valve B Stuck ON	TRS	B
P07B3	Transmission Park Position Sensor/Switch A Circuit Low	TRS	*1
P07B4	Transmission Park Position Sensor/Switch A Circuit High	TRS	*1
P07B9	Transmission Park Position Sensor/Switch B Circuit Low	TRS	*1
P07BA	Transmission Park Position Sensor/Switch B Circuit High	TRS	*1
P07BE	Transmission Park Position Sensor/Switch A/B Incorrect Voltage Correlation	TRS	*1
P0811	Excessive Clutch A Slippage	TRS	B
P0840	Transmission Fluid Pressure Sensor Malfunction	TRS	B
P0842	Transmission Fluid Pressure Switch A (2nd Clutch) Circuit Low/Transmission Fluid Pressure	TRS	*1

DTC	Detection Item	Troubleshooting	Note
	Sensor Circuit Low Input		
P0843	Transmission Fluid Pressure Switch A (2nd Clutch) Circuit High/Transmission Fluid Pressure Sensor Circuit High Input	**TRS**	*1
P084F	Park/Neutral Switch Output Circuit	**TRS**	*1
P0973	Shift Solenoid Valve A Control Circuit Low (Short)	**TRS**	*1
P0974	Shift Solenoid Valve A Control Circuit High (Open)	**TRS**	*1
P0976	Shift Solenoid Valve B Control Circuit Low (Short)	**TRS**	*1
P0977	Shift Solenoid Valve B Control Circuit High (Open)	**TRS**	*1
P161B	Park Pawl Control Module Programming Error	**TRS**	B
P170E	Park Pawl Motor Power Relay Circuit High	**TRS**	*1
P170F	Park Pawl Unit Communication Circuit (PWM)	**TRS**	*1
P1711	Park Pawl Unit Malfunction	**TRS**	B
P1719	Park Pawl System Stuck Malfunction	**TRS**	B
P171A	Park Pawl System Position Control Error	**TRS**	B
P171C	Park Pawl System Multiple Sensor Correlation	**TRS**	B
P171E	Park Pawl System Malfunction of learning mode	**TRS**	B
P171F	Park Pawl System Stuck Malfunction After learning mode/Time-out	**TRS**	B
P1720	Park Pawl Motor Current Range/Performance	**TRS**	*1
P1721	Park Pawl Unit IG1 SW No Signal	**TRS**	*1
P1722	Park Pawl Motor Torque Malfunction of learning mode	**TRS**	B
P1723	Park Pawl System Initial Check Error	**TRS**	B
P172A	KEY-Release Wake-up Output Circuit Malfunction	**TRS**	*1
P172B	KEY-Release Switch Input Circuit Malfunction	**TRS**	*1
P173A	Transmission Fluid Pressure Sensor Performance High	**TRS**	B
P173B	Transmission Fluid Pressure Sensor Performance Low	**TRS**	B
P26C3	Internal Control Module Transmission Range Sensor Performance	**TRS**	B
P271A	Park Pawl Position Sensor A Circuit Low	**TRS**	*1
P272C	Park Pawl Motor Control Circuit	**TRS**	*1
P272D	Park Pawl Motor Control Circuit Current Too High	**TRS**	*1

*1: This code is caused by an electrical circuit problem and cannot be caused by a mechanical problem in the transmission (e-CVT).

GAUGE CONTROL MODULE DTCS

DTC	Description	DTC type
B1175	Fuel level sensor (Fuel gauge sending unit) circuit malfunction	Signal error
B1176	Fuel level sensor (Fuel gauge sending unit) circuit short	Signal error

DTC	Description	DTC type
B1195	Gauge control module lost communication with Audio Remote Switch (LIN bus connected)	Loss of communication
U0029	F-CAN communication line error	Loss of communication
U0100	Gauge control module lost communication with ENG/AT	Loss of communication
U0101	Gauge control module lost communication with AT	Loss of communication
U0104	Gauge Control Module Lost Communication With Driving Support System Control Unit	Loss of communication
U0111	Gauge control module lost communication with Battery Condition Monitor Module	Loss of communication
U0114	Gauge control module lost communication with All Wheel Drive Control Module	Loss of communication
U0122	Gauge control module lost communication with VSA modulator-control unit	Loss of communication
U0128	Gauge control module lost communication with EPB	Loss of communication

DTC	Description	DTC type
U0131	Gauge control module lost communication with EPS Unit	Loss of communication
U0151	Gauge control module lost communication with SRS unit	Loss of communication
U1280	Communication bus line error (BUS-OFF)	Loss of communication
U1281	Gauge control module lost communication with MICU (body control module) (MICU frame)	Loss of communication
U1288	Gauge control module lost communication with PARKSR	Loss of communication
U128F	Gauge control module lost communication with BSI unit	Loss of communication
U129C	Gauge control module lost communication with multi purpose camera unit	Loss of communication
U12A0	Gauge control module lost communication with Acoustic Vehicle Alert System (AVAS)	Loss of communication
U3000-49	ECU internal circuit malfunction	Internal error
U3000-51	Reprogramming error	Internal error

HVAC SYSTEM DTCS

DTC	Detection Item or Symptom	ECU	DTC Type
B120A	Climate Control Unit LIN Communication Bus Line Error	Climate control unit	Loss of communication
B121A	An open in the mode control motor circuit	Climate control unit	Signal error
B121B	A short in the mode control motor circuit	Climate control unit	Signal error
B121D	Humidity/in-car temperature sensor communication error	Climate control unit	Loss of communication
B1220	A Short in the recirculation control motor circuit	Climate control unit	Signal error
B1227	An open in the outside air temperature sensor circuit	Climate control unit	Signal error
B1228	A short in the outside air temperature sensor circuit	Climate control unit	Signal error

DTC	Detection Item or Symptom	ECU	DTC Type
B1231	An open in the evaporator temperature sensor circuit	Climate control unit	Signal error
B1232	A short in the evaporator temperature sensor circuit	Climate control unit	Signal error
B1233	An open in the air mix control motor circuit (driver's)	Climate control unit	Signal error
B1234	A short in the air mix control motor circuit (driver's)	Climate control unit	Signal error
B1235	A problem in the air mix control motor circuit, linkage, door, or motor (driver's)	Climate control unit	Signal error
B1236*1	An open in the passenger's air mix control motor circuit	Climate control unit	Signal error
B1237*1	A short in the passenger's air mix control motor circuit	Climate control unit	Signal error
B1238*1	A problem in the passenger's air mix control motor circuit, linkage, door, or motor	Climate control unit	Signal error
B123F	Automatic lighting control unit/sunlight sensor error	Climate control unit	Signal error
B1240	A problem in the mode control motor circuit, linkage, door, or motor	Climate control unit	Signal error
B1241	A problem in the blower motor circuit	Climate control unit	Signal error
B2964	Climate control unit lost communication with Front PANEL (Climate Control Panel)	Climate control unit	Loss of communication
B296D	Electric heater coolant Pump Communication Fail	Climate control unit	Loss of communication
B296E	Electric heater coolant Pump Fail	Climate control unit	Signal error
B2983	A problem in the recirculation control motor circuit, linkage, door, or motor	Climate control unit	Signal error
B2986	An open in the recirculation control motor circuit	Climate control unit	Signal error
B2990	A problem in the A/C compressor driving circuit (A Problem in the Electric A/C Compressor Driving Circuit)	Climate control unit	Signal error
B2998	A problem in the A/C compressor driver (A Problem in the Electric A/C Compressor Driver)	Climate control unit	Signal error
U1280	Communication bus line error (BUS-OFF)	Climate control unit	Loss of communication
U1281	Climate Control Unit Lost Communication with MICU (body control module)	Climate control unit	Loss of communication
U128D	Climate Control Unit Lost communication with gauge control module	Climate control unit	Loss of communication
U1290*2	Climate Control Unit Lost Communication With Seat Heater Control Unit (Front)	Climate control unit	Loss of communication

*1: With dual zone climate control

*2: With seat heater

KEYLESS ACCESS / BACKUP CONTROL UNIT DTCS

DTC	Description	DTC type
B1926	Backup Control Antenna Open or Short	Internal error
U1280	B-CAN communication bus line error (BUS-OFF)	Loss of communication
U128D	Backup Control Unit Lost Communication with Gauge Control Module	Loss of communication

KEYLESS ACCESS CONTROL UNIT DTCS

DTC	Description	DTC type
B1601	Keyless access control unit internal (CPU) error	Internal error
B1602	Keyless access control unit internal (EEPROM) error	Internal error
B1640	RF1 antenna not connected or malfunction	Signal error
B1645	Driver's Door LF Antenna Circuit Short	Signal error
B1646	Driver's Door LF Antenna Circuit Open	Signal error
B1647	Passenger's Door LF Antenna Circuit Short	Signal error
B1648	Passenger's Door LF Antenna Circuit Open	Signal error
B1657	Rear Bumper LF Antenna Circuit Short	Signal error
B1658	Rear Bumper LF Antenna Circuit Open	Signal error
B1659	Front Interior LF Antenna Circuit Short	Signal error
B1660	Front Interior LF Antenna Circuit Open	Signal error
B1661	Middle Interior Antenna Circuit Shorted	Signal error
B1662	Middle Interior Antenna Circuit Opened	Signal error
B1663	Rear Interior LF Antenna Circuit Short	Signal error
B1664	Rear Interior LF Antenna Circuit Open	Signal error
B1667	Rear Shelf (Middle Interior) LF Antenna Circuit Short	Signal error
B1668	Rear Shelf (Middle Interior) LF Antenna Circuit Open	Signal error
U1280	Keyless access control unit communication bus line error (BUS-OFF)	Loss of communication
U1281	Keyless Access Control Unit Lost Communication with MICU	Loss of communication
U128D	Keyless Access Control Unit Lost Communication with Gauge Control Module	Loss of communication

KEYLESS ACCCESS POWER CONTROL UNIT DTCS

DTC	Description	DTC type
B12C5	Engine Start/Stop Switch (Power Switch) Failure	Signal error
B12D0	Power Control Unit IG1A Circuit Error	Internal error

DTC	Description	DTC type
B12D1	Power Control Unit IG1B Circuit Error	Internal error
B12D2	Power Control Unit IG2 Circuit Error	Internal error
B12D3	Power Control Unit IG Latch Circuit Error	Internal error
B12E5	Incorrect assembly of control unit for electric steering lock equipped vehicle	Signal error
B12F3	Power Control Unit Lost Communication with Transmission Control Unit	Loss of communication
U0073	F-CAN Communication Bus Line Error	Loss of communication
U0100	Power Control Unit Lost Communication with PCM	Loss of communication
U0122	Power Control Unit Lost Communication with ABS/VSA Modulator-Control Unit	Loss of communication

DTC	Description	DTC type
U1280	B-CAN communication bus line error (BUS-OFF)	Loss of communication
U1281	Power Control Unit Lost Communication with MICU	Loss of communication
U128D	Power Control Unit Lost Communication with Gauge Control Module	Loss of communication

PARKING AND BACK-UP SENSOR CONTROL UNIT DTCS

DTC	Description	DTC type
B2601	Parking Sensor CPU Error	Internal error
B2602	Parking Sensor EEPROM Error	Internal error
B2610	Front 1st sensor failure	Signal error
B2611	Front 2nd sensor failure	Signal error
B2612	Front 3rd sensor failure	Signal error
B2613	Front 4th sensor failure	Signal error
B2614	Rear 1st sensor failure	Signal error
B2615	Rear 2nd sensor failure	Signal error
B2616	Rear 3rd sensor failure	Signal error
B2617	Rear 4th sensor failure	Signal error

DTC	Description	DTC type
B2618	Front 1st sensor data failure	Signal error
B2619	Front 2nd sensor data failure	Signal error
B261A	Front 3rd sensor data failure	Signal error
B261B	Front 4th sensor data failure	Signal error
B261C	Rear 1st sensor data failure	Signal error
B261D	Rear 2nd sensor data failure	Signal error
B261E	Rear 3rd sensor data failure	Signal error
B261F	Rear 4th sensor data failure	Signal error
B2646	Front sensor power failure	Signal error
B2647	Rear sensor power failure	Signal error
B2648	Front sensor signal short to ground	Signal error
B2649	Rear sensor signal short to ground	Signal error
B264A	Indicator circuit short to power	Signal error
B264B	Indicator circuit short to ground	Signal error
B264D	Front sensor combination error	Signal error
U0155	Lost communication with Gauge Control Module	Loss of communication
U1280	B-CAN communication bus line error (BUS-OFF)	Loss of communication
U1281	Lost communication with MICU	Loss of communication

POWER SEAT CONTROL DTCS

DTC	Description	DTC type
B1802	Power seat control unit internal (EEPROM) error	Internal error
B1825	Slide pulse error (no change in pulse for 1 second)	Signal error
B1826	Front height pulse error (no change in pulse for 1 second)	Signal error
B1827	Rear height pulse error (no change in pulse for 1 second)	Signal error
B1828	Driver seat recline motor pulse error	Signal error
B1829	AT-P signal and VSP or ESL_WHEEL signal mismatch	Signal error

DTC	Description	DTC type
B1836	Power Seat Position Sensor circuit short	Signal error
B1837	Memory position calling timeout	Signal error
B1844	Power Seat Slide switch circuit malfunction	Signal error
B1845	Power Seat Recline switch circuit malfunction	Signal error
B1846	Power Seat Front Up-Down switch circuit malfunction	Signal error
B1847	Power Seat Rear Up-Down switch circuit malfunction	Signal error
U0199	Power seat control unit lost communication with PW master SW	Loss of communication
U1280	B-CAN communication bus line error (BUS-OFF)	Loss of communication
U1281	Power seat control unit lost communication with MICU (body control module) (MICU frame)	Loss of communication
U128D	Lost Communication With Gauge Control Module (VSP/NE or ESL_WHEEL frame)	Loss of communication

POWER WINDOW MASTER SWITCH DTCS

DTC	Description	DTC type
B1125	Driver's power window motor A pulse malfunction	Signal error
B1126	Driver's power window motor B pulse malfunction	Signal error
B1127	Driver's door lock key cylinder switch malfunction	Signal error
B1128	Driver's door lock switch malfunction	Signal error
B1129	Driver's door lock knob switch malfunction	Signal error
B1130	Front Passenger's power window motor A-phase pulse signal input error	Signal error
B1131	Front Passenger's power window motor B-phase pulse signal input error	Signal error
B1140	Driver's power window position detect circuit malfunction	Signal error
B1142	Power window master switch lost communication with the other units (UART communication Error)	Loss of communication
B1145	Front passenger's window position detect circuit malfunction	Signal error
U1280	Communication bus line error (BUS-OFF)	Loss of communication
U1281	Power Window Master Switch lost communication with MICU (body control module)	Loss of communication
U128D	Power Window Master Switch lost communication with gauge control module	Loss of communication
U1299	Power Window Master Switch lost communication with climate control unit	Loss of communication

POWER TAILGATE CONTROL UNIT DTCS

DTC	Description	DTC type
B1352	Power Tailgate Control Unit Internal error (EEPROM error)	Internal error
B1375	Driver's side PTG switch circuit malfunction	Signal error
B1376	Tailgate Outer Handle switch circuit malfunction	Signal error
B1377	Power Tailgate Inner switch circuit malfunction	Signal error
B1378	Power Tailgate Right Touch/Pinch sensor circuit malfunction	Signal error

DTC	Description	DTC type
B1379	Power Tailgate Left Touch/Pinch sensor circuit malfunction	Signal error
B1380	Tailgate Closer Unit Neutral switch circuit malfunction	Signal error

DTC	Description	DTC type
B1382	Tailgate Closer Unit Full Latch switch circuit malfunction	Signal error
B1383	Tailgate Closer Unit Ratchet switch circuit malfunction	Signal error
B1384	Tailgate Closer Unit Half Latch switch circuit malfunction	Signal error
B1385	Power Tailgate temperature sensor malfunction	Signal error
B1386	Power Tailgate sensor Pulse A circuit malfunction	Signal error
B1387	Power Tailgate sensor Pulse B circuit malfunction	Signal error
B1388	Power Tailgate Drive Motor circuit malfunction	Signal error
B1390	Power Tailgate Closer Motor circuit malfunction	Signal error
U0199	Lost communication with P/W (DRLOCKSW, KLDRLOCK frame)	Loss of communication
U1280	Communication Bus line Error (a bus OFF state is detected by Power Tail Gate ECU)	Loss of communication
U1281	Lost communication with MICU (MICU frame)	Loss of communication
U128D	Power Tailgate Control Unit lost communication with GAUGE Control Module	Loss of communication

REAL TIME 4WD SYSTEM DTCS

DTC	Detection Item	Troubleshooting	AWD System Indicator	Note
C0051-00	The Functional Abnormalities of Steering Angle Sensor	TRS	ON	B
C0061-96	The Functional Abnormalities of Lateral Acceleration Sensor	TRS	ON	B
C0061-F0	Lateral Acceleration Sensor Range/Performance Problem	TRS	ON	B
C0062-96	The Functional Abnormalities of Longitudinal Acceleration Sensor	TRS	ON	B
C0062-F0	Longitudinal Acceleration Sensor Range/Performance Problem	TRS	ON	B
C0063-96	The Functional Abnormalities of Yaw Rate Sensor	TRS	ON	B
C0063-F0	Yaw Rate Sensor Range/Performance Problem	TRS	ON	B
C1840-12	Differential Fluid Pressure Sensor Circuit High Voltage	TRS	ON	B
C1840-14	Differential Fluid Pressure Sensor Circuit Low Voltage	TRS	ON	B
C1841-11	Differential Fluid Temperature Sensor Circuit Low Voltage	TRS	ON	B
C1841-13	Differential Fluid Temperature Sensor Circuit High Voltage	TRS	ON	B
C1841-27	Differential Fluid Temperature Sensor Circuit Range/Performance Problem	TRS	ON	B

DTC	Detection Item	Troubleshooting	AWD System Indicator	Note
C1850-14	Fail Safe Relay Stuck OFF	TRS	ON	B
C1851-18	Motor Circuit Low Current	TRS	ON	B
C1851-19	Control Module Internal Control Module Malfunction	TRS	ON	B
C1851-1E	Motor Circuit High Current	TRS	ON	B
C1852-18	Solenoid Valve Circuit Low Current	TRS	ON	B
C1852-19	Solenoid Valve Circuit High Current	TRS	ON	B
C1858-72	Differential Fluid Pressure Deviation Low	TRS	ON	B
C1858-73	Differential Fluid Pressure Deviation High	TRS	ON	B
C1860-98	Differential Fluid Overheats	TRS	ON	B
C1861-9A	Vehicle Spin Detected	TRS	ON	B
C1870-00	(The Functional Abnormalities of Fuel and Emissions)	TRS	ON	B
C1872-00	(The Functional Abnormalities of VSA Modulator-Control Unit)	TRS	ON	B
C1873-00	Steering Angle Sensor Malfunction	TRS	ON	B
U0100-00	F-CAN Malfunction (Lost Communication with Powertrain Control Module (PCM))	TRS	ON	B
U0101-00	F-CAN Malfunction (Lost Communication with A/T Control System)	TRS	ON	B
U0122-00	F-CAN Malfunction (Lost Communication with VSA Modulator-Control Unit)	TRS	ON	B
U0131-00	F-CAN Malfunction (Lost Communication with EPS System)	TRS	ON	B
U0151-00	F-CAN Malfunction (Lost Communication with SRS unit)	TRS	ON	B
U3000-49	Control Module Internal Control Module Malfunction	TRS	ON	B
U3000-51	Control Module Programming Error	TRS	ON	B

RELAY CONTROL MODULE DTCS

DTC	Description	DTC type
B1051	Relay control module internal (CPU) error	Internal error
B1052	Relay control module internal (EEPROM) error	Internal error
B1075	Headlight switch malfunction	Signal error
B1080	Power supply circuit (IG1 line) input error for Relay Control Module and MICU	Signal error
B1085	Head Light Low Beam Power Source Abnormality	Signal error
B108A	Right Side Parking Light Circuit Shorted	Signal error
B108B	Left Side Parking Light Circuit Shorted	Signal error
B108C	Right Side Head Light Low Beam Circuit Shorted	Signal error
B108D	Left Side Head Light Low Beam Circuit Shorted	Signal error
B108E	Right Side Head Light High Beam Circuit Shorted	Signal error
B108F	Left Side Head Light High Beam Circuit Shorted	Signal error

DTC	Description	DTC type
B1090	Illumination Circuit Shorted	Signal error
B1091	DRL Circuit Shorted	Signal error
B1092	Interior Light Cut Circuit Shorted	Signal error
U1280	B-CAN communication bus line error (BUS-OFF)	Loss of communication
U1281	Relay control module lost communication with MICU (MICU frame)	Loss of communication
U128D	Relay control module lost communication with gauge control module (VSP/NE frame)	Loss of communication

SEAT HEATER CONTROL UNIT DTCS

DTC	Description	DTC type
B1C55	Driver's heater thermistor circuit open	Signal error
B1C56	Driver's heater thermistor circuit short	Signal error
B1C57	Passenger's heater thermistor circuit open	Signal error
B1C58	Passenger's heater thermistor circuit short	Signal error
B1C60	Driver's heater current abnormal high	Signal error
B1C61	Driver's heater current abnormal low	Signal error
B1C62	Passenger's heater current abnormal high	Signal error
B1C63	Passenger's heater current abnormal low	Signal error
B1C68	Driver's heater not heating	Signal error
B1C69	Passenger's heater not heating	Signal error
B1C70	Driver's main heater switch failure	Signal error
B1C71	Passenger's main heater switch failure	Signal error
U1064	Seat heater control unit lost communication with climate control unit	Loss of communication
U1280	Seat heater control unit communication bus line error (BUS-OFF)	Loss of communication

SUPPLEMENTAL RESTRAINT SYSTEM (SRS) DTCS

DTC	Detection Item
B0001-11	Short to ground in the driver's airbag first inflator
B0001-12	Short to power in the driver's airbag first inflator
B0001-13	Open or increased resistance in the driver's airbag first inflator
B0001-1A	Decreased resistance in the driver's airbag first inflator
B0001-2B	Short to another wire harness in the driver's airbag first inflator
B0002-11	Short to ground in the driver's airbag second inflator
B0002-12	Short to power in the driver's airbag second inflator
B0002-13	Open or increased resistance in the driver's airbag second inflator
B0002-1A	Decreased resistance in the driver's airbag second inflator
B0002-2B	Short to another wire harness in the driver's airbag second inflator
B0010-11	Short to ground in the front passenger's airbag first inflator
B0010-12	Short to power in the front passenger's airbag first inflator
B0010-13	Open or increased resistance in the front passenger's airbag first inflator
B0010-1A	Decreased resistance in the front passenger's airbag first inflator
B0010-2B	Short to another wire harness in the front passenger's airbag first inflator
B0011-11	Short to ground in the front passenger's airbag second inflator
B0011-12	Short to power in the front passenger's airbag second inflator

DTC	Detection Item
B0011-13	Open or increased resistance in the front passenger's airbag second inflator
B0011-1A	Decreased resistance in the front passenger's airbag second inflator
B0011-2B	Short to another wire harness in the front passenger's airbag second inflator
B0020-11	Short to ground in the driver's side airbag inflator
B0020-12	Short to power in the driver's side airbag inflator
B0020-13	Open or increased resistance in the driver's side airbag inflator
B0020-1A	Decreased resistance in the driver's side airbag inflator
B0020-2B	Short to another wire harness in the driver's side airbag inflator
B0021-11	Short to ground in the left side curtain airbag first inflator
B0021-12	Short to power in the left side curtain airbag first inflator
B0021-13	Open or increased resistance in the left side curtain airbag first inflator
B0021-1A	Decreased resistance in the left side curtain airbag first inflator
B0021-2B	Short to another wire harness in the left side curtain airbag first inflator
B0028-11	Short to ground in the front passenger's side airbag inflator
B0028-12	Short to power in the front passenger's side airbag inflator
B0028-13	Open or increased resistance in the front passenger's side airbag inflator
B0028-1A	Decreased resistance in the front passenger's side airbag inflator
B0028-2B	Short to another wire harness in the front passenger's side airbag inflator
B0029-11	Short to ground in the right side curtain airbag first inflator
B0029-12	Short to power in the right side curtain airbag first inflator
B0029-13	Open or increased resistance in the right side curtain airbag first inflator
B0029-1A	Decreased resistance in the right side curtain airbag first inflator
B0029-2B	Short to another wire harness in the right side curtain airbag first inflator
B0050-11	Short or decreased resistance in the driver's seat belt buckle switch
B0050-13	Open or increased resistance in the driver's seat belt buckle switch
B0050-2B	Short to another wire harness in the driver's seat belt buckle switch
B0052-11	Short or decreased resistance in the front passenger's seat belt buckle switch
B0052-13	Open or increased resistance in the front passenger's seat belt buckle switch
B0052-2B	Short to another wire harness in the front passenger's seat belt buckle switch
B0070-11	Short to ground in the driver's seat belt tensioner

DTC	Detection Item
B0070-12	Short to power in the driver's seat belt tensioner
B0070-13	Open or increased resistance in the driver's seat belt tensioner
B0070-1A	Decreased resistance in the driver's seat belt tensioner
B0070-2B	Short to another wire harness in the driver's seat belt tensioner
B0072-11	Short to ground in the front passenger's seat belt tensioner
B0072-12	Short to power in the front passenger's seat belt tensioner
B0072-13	Open or increased resistance in the front passenger's seat belt tensioner
B0072-1A	Decreased resistance in the front passenger's seat belt tensioner
B0072-2B	Short to another wire harness in the front passenger's seat belt tensioner
B0079-11	Short to ground in the driver's seat belt outer lap tensioner
B0079-12	Short to power in the driver's seat belt outer lap tensioner
B0079-13	Open or increased resistance in the driver's seat belt outer lap tensioner
B0079-1A	Decreased resistance in the driver's seat belt outer lap tensioner
B0079-2B	Short to another wire harness in the driver's seat belt outer lap tensioner
B007A-11	Short to ground in the front passenger's seat belt outer lap tensioner
B007A-12	Short to power in the front passenger's seat belt outer lap tensioner

DTC	Detection Item
B007A-13	Open or increased resistance in the front passenger's seat belt outer lap tensioner
B007A-1A	Decreased resistance in the front passenger's seat belt outer lap tensioner
B007A-2B	Short to another wire harness in the front passenger's seat belt outer lap tensioner
B0082-11	Short to ground in the selectable energy absorption device of the front passenger's seat belt tensioner
B0082-12	Short to power in the selectable energy absorption device of the front passenger's seat belt tensioner
B0082-13	Open or increased resistance in the selectable energy absorption device of the front passenger's seat belt tensioner
B0082-1A	Decreased resistance in the selectable energy absorption device of the front passenger's seat belt tensioner
B0082-2B	Short to another wire harness in the selectable energy absorption device of the front passenger's seat belt tensioner
B0090-4A	Internal failure of the left front impact sensor
B0090-87	No signal from the left front impact sensor
B0090-92	Internal failure of the left front impact sensor
B0091-4A	Internal failure of the left side impact sensor (first)
B0091-87	No signal from the left side impact sensor (first)
B0091-92	Internal failure of the left side impact sensor (first)
B0092-4A	Internal failure of the left side impact sensor (second)
B0092-87	No signal from the left side impact sensor (second)
B0092-92	Internal failure of the left side impact sensor (second)
B0095-4A	Internal failure of the right front impact sensor
B0095-87	No signal from the right front impact sensor
B0095-92	Internal failure of the right front impact sensor
B0096-4A	Internal failure of the right side impact sensor (first)
B0096-87	No signal from the right side impact sensor (first)
B0096-92	Internal failure of the right side impact sensor (first)
B0097-4A	Internal failure of the right side impact sensor (second)
B0097-87	No signal from the right side impact sensor (second)
B0097-92	Internal failure of the right side impact sensor (second)
B00A0-54	Front passenger's weight sensor not calibrated
B00B5-11	Short or decreased resistance in the driver's seat position sensor

DTC	Detection Item
B00B5-13	Open or increased resistance in the driver's seat position sensor
B00B5-2B	Short to another wire harness in the driver's seat position sensor
B00C0-16	Internal failure of the front passenger's weight sensor (front inner side)
B00C0-4A	Different supplier ID/function ID of the front passenger's weight sensor (front inner side)
B00C0-54	Different serial ID of the front passenger's weight sensor (front inner side)
B00C0-87	No signal from the front passenger's weight sensor (front inner side)
B00C0-96	Internal failure of the front passenger's weight sensor (front inner side)
B00C2-16	Internal failure of the front passenger's weight sensor (rear inner side)
B00C2-4A	Different supplier ID/function ID of the front passenger's weight sensor (rear inner side)
B00C2-54	Different Serial ID of the front passenger's weight sensor (rear inner side)
B00C2-87	No signal from the front passenger's weight sensor (rear inner side)
B00C2-96	Internal failure of the front passenger's weight sensor (rear inner side)
B00D5-14	Open or short to ground in the front passenger's airbag cutoff indicator
B00D5-17	Short to power in the front passenger's airbag cutoff indicator

DTC	Detection Item
B2800-49	Internal failure of the SRS unit
B2801-49	Internal failure of the SRS unit
B2802-49	Internal failure of the SRS unit
B2840-13	SRS unit connector A not properly installed
B2841-13	SRS unit connector B not properly installed
C0061-96	Internal failure of the SRS unit
C0063-96	Internal failure of the SRS unit
U0122-00	Lost communication with the VSA modulator-control unit (wheel speed sensor signal error)
U3000-49	Internal failure of the SRS unit
U3000-51	SRS unit programming error

VSA SYSTEM DTCS

DTC		Detection Item
B0050	-F0	(Driver's Seat Belt Buckle Switch Malfunction)
C0010	-49	Inlet Solenoid (Left Front) Circuit Failure
C0011	-49	Outlet Solenoid (Left Front) Circuit Failure
C0014	-49	Inlet Solenoid (Right Front) Circuit Failure
C0015	-49	Outlet Solenoid (Right Front) Circuit Failure
C0018	-49	Inlet Solenoid (Left Rear) Circuit Failure
C0019	-49	Outlet Solenoid (Left Rear) Circuit Failure
C001C	-49	Inlet Solenoid (Right Rear) Circuit Failure
C001D	-49	Outlet Solenoid (Right Rear) Circuit Failure
C0020	-12	Pump Motor Circuit Failure (Stuck ON)
	-14	Pump Motor Circuit Failure (Stuck OFF)
C0031	-14	Left Front Wheel Speed Sensor Circuit Failure (Circuit Short To Ground or Open)
	-3A	Wheel Speed Sensor (Left Front) Signal Failure (Signal Frequency is Too High)
	-62	Left Front Wheel Speed Sensor Signal Compare Failure
C0034	-14	Right Front Wheel Speed Sensor Circuit Failure (Circuit Short To Ground or Open)
	-3A	Wheel Speed Sensor (Right Front) Signal Failure (Signal Frequency is Too High)
	-62	Right Front Wheel Speed Sensor Signal Compare Failure
C0037	-14	Left Rear Wheel Speed Sensor Circuit Failure (Circuit Short To Ground or Open)
	-3A	Wheel Speed Sensor (Left Rear) Signal Failure (Signal Frequency is Too High)
	-62	Left Rear Wheel Speed Sensor Signal Compare Failure
C003A	-14	Right Rear Wheel Speed Sensor Circuit Failure (Circuit Short To Ground or Open)
	-3A	Wheel Speed Sensor (Right Rear) Signal Failure (Signal Frequency is Too High)
	-62	Right Rear Wheel Speed Sensor Signal Compare Failure
C0040	-12	Brake Light Switch Failure (Stuck ON)/Brake Pedal Stroke Sensor Stuck (EBB)
	-16	Plausibility BLS vs. Pressure Sensor
C0044	-49	Master Cylinder Pressure Sensor Failure (Internal Circuit Failure)
	-62	Master Cylinder Pressure Sensor Failure (Signal Stuck)
C0049	-7B	Brake Fluid Level Too Low
C0051	-54	Steering Angle Neutral Position Learning Incomplete
	-62	Steering Angle Sensor Failure (Signal Compare Failure)
	-96	Steering Angle Sensor Failure (Sensor Detects Internal Failure)
C0061	-49	Acceleration Sensor Malfunction
	-54	Lateral Acceleration Sensor Calibration Incomplete
	-62	Lateral Acceleration Sensor Failure (Signal Compare Failure)

DTC		Detection Item
C0062	-49	Longitudinal Acceleration Sensor Malfunction
	-54	Longitudinal Acceleration Sensor Neutral Position Not Learned/Calibration Incomplete
	-62	Longitudinal Acceleration Sensor Failure (Signal Compare Failure)
C0063	-49	Yaw Rate Sensor Malfunction
	-54	Yaw Rate Sensor Calibration Incomplete
	-62	Yaw Rate Sensor Failure (Signal Compare Failure)
C1000	-94	ABS/VSA Activation Time Too Long
C1020	-49	VSA Master Cut Valve Failure (Unexpected Operation)
C1021	-49	VSA Suction Valve Failure (Unexpected Operation)
C1022	-14	Power Source Failure for Pump Motor
C1040	-00	Different Diameter Tire is Detected
C1041	-00	Right Front Wheel Abnormal Slip Detection
C1042	-00	Left Front Wheel Abnormal Slip Detection

DTC		Detection Item
C1043	-00	Right Rear Wheel Abnormal Slip Detection
C1044	-00	Left Rear Wheel Abnormal Slip Detection
C1100	-48	Electric Parking Brake Abnormal Operation Monitoring
	-54	Piston Position Not Learned
	-94	Electric Parking Brake Actuator Malfunction
	-98	Electric Parking Brake Continuous Operations Detected
C1110	-11	Left Rear Electric Parking Brake Actuator Circuit Short to Ground
	-13	Left Rear Electric Parking Brake Actuator Circuit Open
	-79	Left Side Electric Parking Brake Doesn't Work Correctly
	-94	Left Side Electric Parking Brake Actuator Unexpected Operation
	-96	Left Side Electric Parking Brake Actuator Malfunction
C1111	-11	Right Rear Electric Parking Brake Actuator Circuit Short to Ground
	-13	Right Rear Electric Parking Brake Actuator Circuit Open
	-79	Right Side Electric Parking Brake Doesn't Work Correctly
	-94	Right Side Electric Parking Brake Actuator Unexpected Operation
	-96	Right Side Electric Parking Brake Actuator Malfunction
C1120	-14	Electric Parking Brake Switch Circuit Malfunction
	-96	Electric Parking Brake Switch Malfunction
U0029	-00	CAN Communication Failure (Bus OFF Ch 1)
U0047	-00	CAN Communication Failure (Bus OFF Ch 2)
U0100	-00	CAN Communication Failure with ECM/ISU
U0101	-00	CAN Communication Failure with PCM/TCM
U0126	-00	CAN Communication Failure with Absolute Steering Wheel Angle Sensor
U0129	-00	CAN Communication Failure with AHB/ESB/EBB
U0151	-00	CAN Communication Failure with SRS
U0155	-00	CAN Communication Failure with Meter
U0401	-68	(ECM Failure)
U0402	-68	(TCM Failure)
U0418	-68	(ESB/EBB Failure)
U3000	-49	ECU Internal Circuit Failure
	-51	ECU Software Update Failure
U3003	-16	Electric Parking Brake Control Unit Power Source Circuit (+B) Low Voltage
	-17	Electric Parking Brake Control Unit Power Source Circuit (+B) High Voltage

DTC		Detection Item
U3006	-16	Power Source Failure for ECU (Low Voltage)
	-17	Power Source Failure for ECU (High Voltage)

WIRELESS CHARGER DTCS

DTC	Description	DTC Type
B22A0	Wireless charger unit failure	Internal error
B22A1	Wireless charger unit ACC input circuit failure	Signal error
U1280	Communication bus line Error (BUS-OFF)	Loss of communication
U1281	Wireless charger unit lost communication with MICU	Loss of communication
U1286	Wireless charger unit lost communication with Keyless Access Control Unit	Loss of communication
U128D	Wireless charger unit lost communication with Gauge control module	Loss of communication
U128E	Wireless charger unit lost communication with Audio-Navigation Unit	Loss of communication

---

ADVANCED DIAGNOSTICS

DTC P0562 (BATTERY CONDITION MONITOR MODULE)

DTC P0562: Battery Condition Monitor Module System Voltage Low

General Description

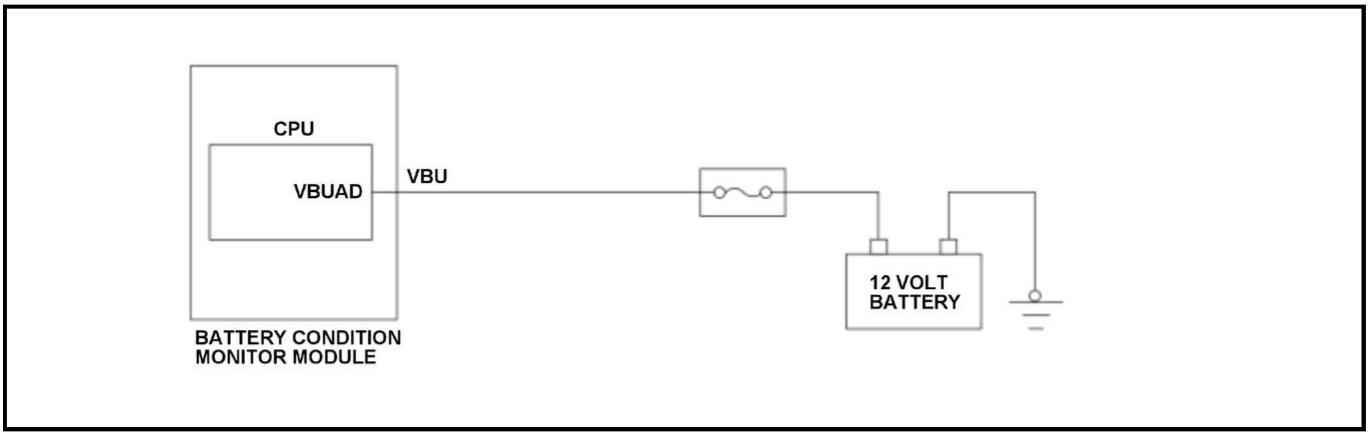

The battery condition monitor module monitors the voltage of back-up power supply. When the back-up power supply voltage is a specified voltage for a set time, a malfunction is detected and a DTC.

Monitor Execution, Sequence, Duration, DTC Type

Execution	Continuous
Sequence	None
Duration	2.0 seconds or more
DTC Type	One drive cycle, MIL on, POWER SYSTEM indicator on, 12 VOLT CHARGING SYSTEM indicator off

Enable Conditions

Condition	Minimum	Maximum
12 volt battery voltage	7.7 V	-

Malfunction Threshold

The back-up power supply voltage is 2.0 V or less for at least 2.0 seconds.

Possible Cause

NOTE: The causes shown may not be a complete list of all potential problems, and it is possible that there may be other causes.

- Battery condition monitor module VBU line open (includes fuse blown)
- Battery condition monitor module internal circuit failure

Diagnosis Details

Conditions for setting the DTC

When a malfunction is detected, the MIL comes on and a Pending DTC, a Confirmed DTC, and the freeze data are stored in the battery condition monitor module memory.

Conditions for clearing the DTC

The MIL is cleared if the malfunction does not return in three consecutive trips in which the diagnostic runs. The MIL, the Pending DTC, the Confirmed DTC, and the freeze data can be cleared with the scan tool clear command.

DTC P0602 (BATTERY CONDITION MONITOR MODULE)

DTC P0602: Battery Condition Monitor Module Programming Error

General Description

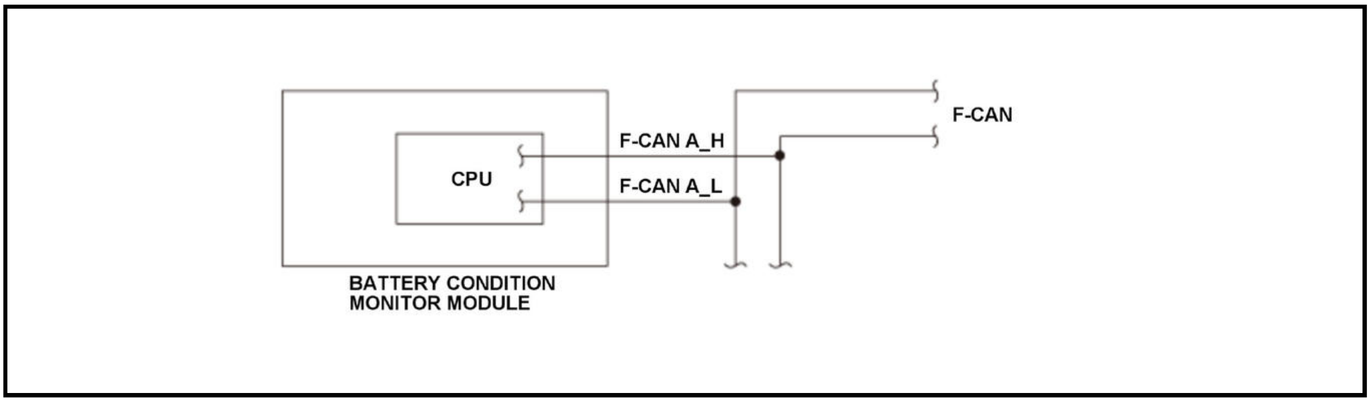

The CPU in the battery condition monitor module can be reprogrammed with updated software. The CPU confirms if the control program update is completed normally. When the power is interrupted during reprogramming, the CPU detects a malfunction and stores a DTC.

Monitor Execution, Sequence, Duration, DTC Type

Execution	When the power is turned on after updating is executed and it failed
Sequence	None
Duration	-
DTC Type	One drive cycle, MIL on, POWER SYSTEM indicator on, 12 VOLT CHARGING SYSTEM indicator on

Enable Conditions

Condition	B
Vehicle	ON mode

Malfunction Threshold

The power is interrupted during reprogramming, and the CPU is not updated and programmed normally.

Possible Cause

NOTE: The causes shown may not be a complete list of all potential problems, and it is possible that there may be other causes.

- CPU program unwritten

Diagnosis Details

Conditions for setting the DTC

When a malfunction is detected, the MIL comes on and a Pending DTC, a Confirmed DTC, and the freeze data are stored in the battery condition monitor module memory.

Conditions for clearing the DTC

The MIL is cleared if the malfunction does not return in three consecutive trips in which the diagnostic runs. The MIL, the Pending DTC, the Confirmed DTC, and the freeze data can be cleared with the scan tool clear command.

DTC P062F (BATTERY CONDITION MONITOR MODULE)

DTC P062F: Battery Condition Monitor Module EEPROM Error

General Description

This fault code is a general (specified by SAE) DTC that is stored at the time the following DTC codes (P1D3A, P1D3B) are detected.

DTC P06B1 (BATTERY CONDITION MONITOR MODULE)

DTC P06B1: HV Battery Current Sensor Power Supply Circuit Low

General Description

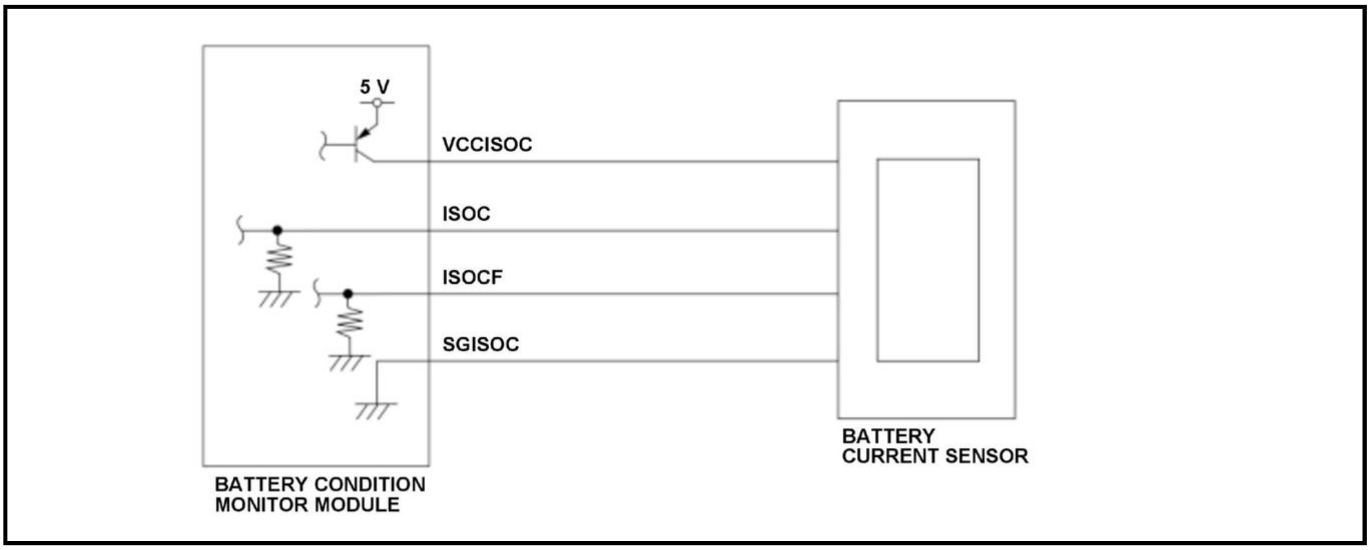

The battery condition monitor module applies 5 V to the battery current sensor and monitors the voltage. When the battery current sensor voltage is a specified voltage for a set time, a malfunction is detected and a DTC is stored.

Monitor Execution, Sequence, Duration, DTC Type

Execution	Continuous
Sequence	None
Duration	2 seconds or more
DTC Type	Two drive cycles, MIL on, POWER SYSTEM indicator on, 12 VOLT CHARGING SYSTEM indicator off

Enable Conditions

Condition	Minimum	Maximum
Elapsed time since the 12 volt battery voltage reaches to a specified value after the	50 milliseconds	-

Condition	Minimum	Maximum
vehicle condition is turned to the ON mode		
12 volt battery voltage	7.7 V	-

Malfunction Threshold

The battery current sensor voltage is 4.75 V or less for at least 2 seconds.

Possible Cause

NOTE: The causes shown may not be a complete list of all potential problems, and it is possible that there may be other causes.

- Battery current sensor VCCISOC line short to ground
- Battery current sensor failure
- Battery condition monitor module internal circuit failure

Diagnosis Details

Conditions for setting the DTC

When a malfunction is detected during the first drive cycle, a Pending DTC is stored in the battery condition monitor module memory. If the malfunction returns in the next (second) drive cycle, the MIL comes on and a Confirmed DTC and the freeze data are stored.

Conditions for clearing the DTC

The MIL is cleared if the malfunction does not return in three consecutive trips in which the diagnostic runs. The MIL, the Pending DTC, the Confirmed DTC, and the freeze data can be cleared with the scan tool clear command.

DTC P0A1F

DTC P0A1F: Battery Condition Monitor Module

General Description

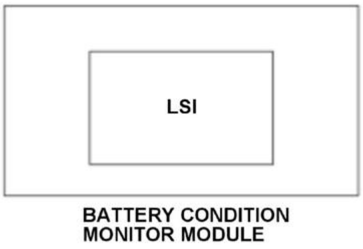

The large-scale integration (LSI) is built into the battery condition monitor module. If the battery condition monitor module detects an abnormal in the LSI, a malfunction is detected and stores a DTC.

Monitor Execution, Sequence, Duration, DTC Type

Execution	Continuous
Sequence	None
Duration	-

DTC Type	One drive cycle, MIL on, POWER SYSTEM indicator on, 12 VOLT CHARGING SYSTEM indicator on

Enable Conditions

Condition	B
Vehicle	ON mode

Malfunction Threshold

The battery condition monitor module detects an abnormal in the LSI.

Possible Cause

NOTE: The causes shown may not be a complete list of all potential problems, and it is possible that there may be other causes.

- Battery condition monitor module internal circuit failure

Diagnosis Details

Conditions for setting the DTC

When a malfunction is detected, the MIL comes on and a Pending DTC, a Confirmed DTC, and the freeze data are stored in the battery condition monitor module memory.

Conditions for clearing the DTC

The MIL is cleared if the malfunction does not return in three consecutive trips in which the diagnostic runs. The MIL, the Pending DTC, the Confirmed DTC, and the freeze data can be cleared with the scan tool clear command.

DTC P0A7E

DTC P0A7E: HV Battery Pack Over Temperature

General Description

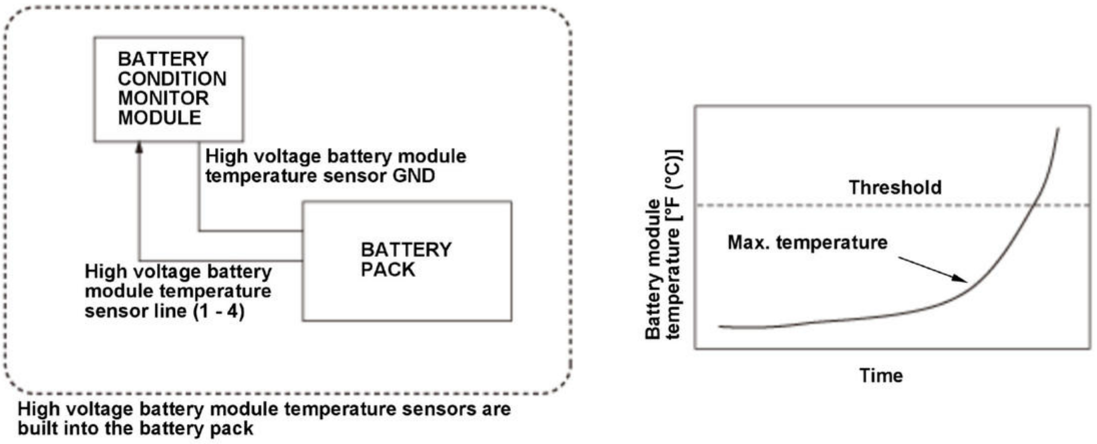
BATTERY CONDITION MONITOR MODULE
High voltage battery module temperature sensor GND
BATTERY PACK
High voltage battery module temperature sensor line (1 - 4)
High voltage battery module temperature sensors are built into the battery pack
Battery module temperature [°F (°C)]
Threshold
Max. temperature
Time

High voltage battery module temperature sensors are built into the battery module in the battery pack to detect a battery module temperature. If the battery module temperature is a specified temperature for a set time, the battery condition monitor module detects a malfunction in the battery module and stores a DTC.

Monitor Execution, Sequence, Duration, DTC Type

Execution	Continuous
Sequence	None
Duration	5 seconds or more
DTC Type	One drive cycle, MIL on, POWER SYSTEM indicator on, 12 VOLT CHARGING SYSTEM indicator on

Enable Conditions

Condition	B
Vehicle	ON mode

Malfunction Threshold

The battery module temperature is 167 deg.F (75 deg.C) or more for at least 5 seconds.

Possible Cause

NOTE: The causes shown may not be a complete list of all potential problems, and it is possible that there may be other causes.

- Battery pack internal failure

Diagnosis Details

Conditions for setting the DTC

When a malfunction is detected, the MIL comes on and a Pending DTC, a Confirmed DTC, and the freeze data are stored in the battery condition monitor module memory.

Conditions for clearing the DTC

The MIL is cleared if the malfunction does not return in three consecutive trips in which the diagnostic runs. The MIL, the pending DTC, the Confirmed DTC, and the freeze data can be cleared with the scan tool clear command or the battery condition monitor module reset.

DTC P0A7F

DTC P0A7F: HV Battery Pack Deterioration

General Description

This fault code is a general (specified by SAE) DTC that is stored at the time the following DTC codes (P144A, P1DC7) are detected.

DTC P0A80

DTC P0A80: Replace HV Battery Pack

General Description

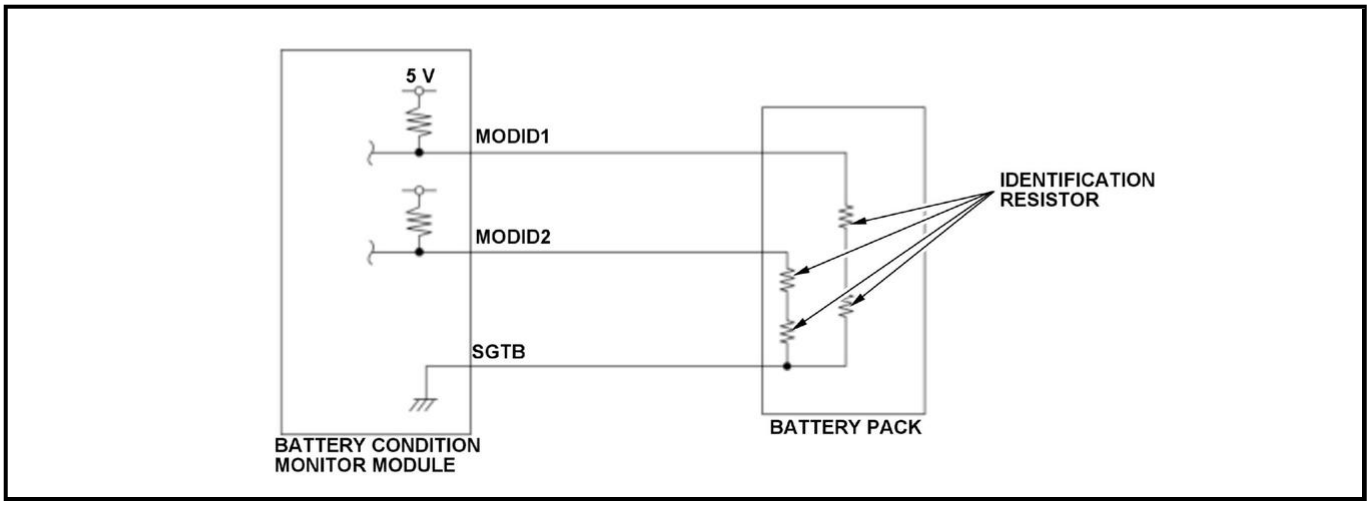

The battery pack built in resistance for battery module identifications are used for the battery condition monitor module to monitor whether an appropriate battery module is connected. If the battery pack resistance voltage for battery module identifications are out of specified value for a set time, the battery condition monitor module detects a malfunction and stores a DTC.

Monitor Execution, Sequence, Duration, DTC Type

Execution	Continuous
Sequence	None
Duration	2.0 seconds or more
DTC Type	One drive cycle, MIL on, POWER SYSTEM indicator on, 12 VOLT CHARGING SYSTEM indicator on

Enable Conditions

Condition	Minimum	Maximum
12 volt battery voltage	8.0 V	-
Other	During initial start-up of the battery condition monitor module, after disconnecting the 12 volt battery	

Malfunction Threshold

One of these conditions is met:

- The resistance voltage is 4.98 V or more for at least 2.0 seconds.
- The resistance voltage is 0.03 V or less for at least 2.0 seconds.
- The average voltage of resistance voltage acquired for 19 times is 2.61 V or less, or 3.84 V or more.

Possible Cause

NOTE: The causes shown may not be a complete list of all potential problems, and it is possible that there may be other causes.

- Battery pack MODID1 line open
- Battery pack MODID1 line short to ground
- Battery pack MODID2 line open
- Battery pack MODID2 line short to ground
- Battery pack internal circuit failure
- Battery condition monitor module internal circuit failure

Diagnosis Details

Conditions for setting the DTC

When a malfunction is detected, the MIL comes on and a Pending DTC, a Confirmed DTC, and the freeze data are stored in the battery condition monitor module memory.

Conditions for clearing the DTC

The MIL is cleared if the malfunction does not return in three consecutive trips in which the diagnostic runs. The MIL, the Pending DTC, the Confirmed DTC, and the freeze data can be cleared with the scan tool clear command.

DTC P0A82

DTC P0A82: HV Battery Pack Cooling Fan Performance/Stuck Off

General Description

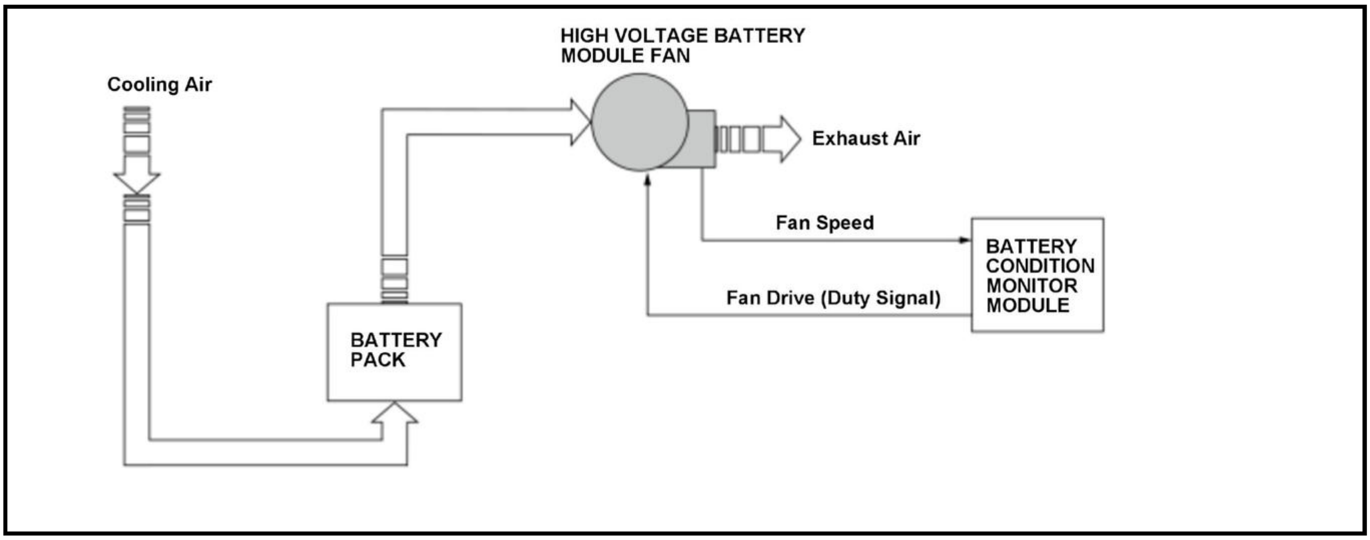

To manage the temperature of the battery pack, the electric powertrain system is equipped with a high voltage battery module fan. When a malfunction occurs in the high voltage battery module fan, charging and power supplying to the 12 volt battery is disabled due to temperature increase. A malfunction in the high voltage battery module fan is detected to avoid problems caused by overheating. If the high voltage battery module fan is functioning normally, when the battery condition monitor module operates the high voltage battery module fan, it should be operated within a specified speed range. The battery condition monitor module compares the actual high voltage battery module fan speed to the high voltage battery module fan duty cycle, and if the difference exceeds a specified value, the battery condition monitor module detects a malfunction and stores a DTC.

Monitor Execution, Sequence, Duration, DTC Type

Execution	Continuous
Sequence	None
Duration	19 seconds or more
DTC Type	Two drive cycles, MIL on, POWER SYSTEM indicator on, 12 VOLT CHARGING SYSTEM indicator off

Enable Conditions

Condition	Minimum	Maximum
Target high voltage battery module fan speed	880 rpm	-
Battery condition monitor module power-supply voltage	11.4 V	-

Condition	Minimum	Maximum
Vehicle	ON mode	

Malfunction Threshold

The difference between the target high voltage battery module fan speed and actual speed is equal to or more than the value in the table below continuously for 19 seconds.

Target high voltage battery module fan speed (rpm)	1, 649	1, 650	2, 000	2, 700	3, 400	4, 100	4, 520	4, 800	5, 500
Actual high voltage battery module fan speed (rpm)	0	550	900	1, 600	2, 300	3, 000	3, 000	3, 000	3, 000

Possible Cause

NOTE: The causes shown may not be a complete list of all potential problems, and it is possible that there may be other causes.

- High voltage battery module fan line failure
- High voltage battery module fan failure
- Battery condition monitor module failure

Confirmation Procedure

Operating Condition

Turn the vehicle to the ON mode.

With the HDS

Select the BATTERY FAN TEST in the FUNCTION TEST with the HDS, then select START.

Diagnosis Details

Conditions for setting the DTC

When a malfunction is detected during the first drive cycle, a Pending DTC is stored in the battery condition monitor module memory. If the malfunction returns in the next (second) drive cycle, the MIL comes on and a Confirmed DTC and the freeze data are stored.

Conditions for clearing the DTC

The MIL is cleared if the malfunction does not return in three consecutive trips in which the diagnostic runs. The MIL, the Pending DTC, the Confirmed DTC, and the freeze data can be cleared with the scan tool clear command or the battery condition monitor module reset.

DTC P0A94

DTC P0A94: DC-DC Converter Performance

General Description

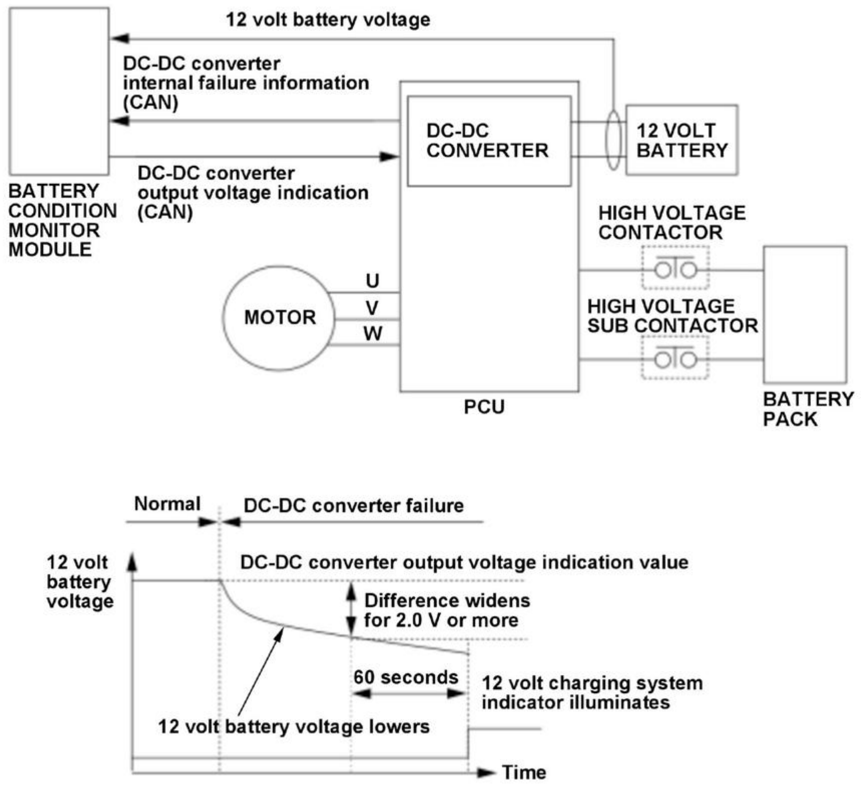
12 volt battery voltage
DC-DC converter internal failure information (CAN)
DC-DC converter output voltage indication (CAN)
BATTERY CONDITION MONITOR MODULE
DC-DC CONVERTER
12 VOLT BATTERY
HIGH VOLTAGE CONTACTOR
HIGH VOLTAGE SUB CONTACTOR
BATTERY PACK
MOTOR
U
V
W
PCU
Normal
DC-DC converter failure
12 volt battery voltage
DC-DC converter output voltage indication value
Difference widens for 2.0 V or more
60 seconds
12 volt charging system indicator illuminates
12 volt battery voltage lowers
Time

The 12 volt battery voltage and the output voltage measured by the battery condition monitor module become within a prescribed value if the DC-DC converter is normally operating. In the event of malfunction of the DC-DC converter or if the DC-DC converter protection is activated (output is stopped) due to overheating, the 12 volt battery voltage is decreased. Malfunction of the DC-DC converter is detected and a DTC is stored when any one of the following conditions is met:

- Malfunction judgment 1

  The value of the DC-DC converter output power instructed by the battery condition monitor module and the 12 volt battery voltage measured by the battery condition monitor module are compared and when the difference in the voltage is equal to or more than the prescribed value continuously for the prescribed time or more or when the battery condition monitor module has received internal failure information similarly determined within the DC-DC converter.

- Malfunction judgment 2

  When the DC-DC converter output voltage is equal to or less than the voltage instructed by the battery condition monitor module continuously for the prescribed time or more.

- Malfunction judgment 3

  When the 12 volt battery voltage is equal to or less than the prescribed value continuously for the prescribed time.

Monitor Execution, Sequence, Duration, DTC Type

Execution	Continuous
Sequence	None

*: Malfunction judgment 1

**: Malfunction judgment 2

***: Malfunction judgment 3

Duration	60 seconds or more*, ***2 seconds or more**
DTC Type	One drive cycle, MIL off, POWER SYSTEM indicator off, 12 VOLT CHARGING SYSTEM indicator on

*: Malfunction judgment 1

**: Malfunction judgment 2

***: Malfunction judgment 3

Enable Conditions

Condition	Minimum	Maximum
Battery condition monitor module power-supply voltage	10.2 V	-
Motor power inverter (MPI) module voltage	187.6 V	300.75 V
Vehicle	ON mode	

Malfunction Threshold

- Malfunction judgment 1

  The difference between the commanded DC-DC converter voltage and the battery condition monitor module voltage is 2.0 V or more for at least 60 seconds.

- Malfunction judgment 2

  The battery condition monitor module receives the internal malfunction information from the DC-DC converter for at least 2 seconds.

- Malfunction judgment 3

  When the 12 volt battery voltage detected by the battery condition monitor module is less than 11 V continuously for 60 seconds or more.

Possible Cause

NOTE: The causes shown may not be a complete list of all potential problems, and it is possible that there may be other causes.

- DC-DC converter output line open
- DC-DC converter internal circuit failure
- Battery condition monitor module internal circuit failure

Confirmation Procedure

Operating Condition

Turn the vehicle to the READY TO DRIVE mode, and wait 100 seconds.

Diagnosis Details

Conditions for setting the DTC

When a malfunction is detected, a Pending DTC, a Confirmed DTC, and the freeze data are stored in the battery condition monitor module memory. The MIL does not come on.

Conditions for clearing the DTC

The Pending DTC, the Confirmed DTC, and the freeze data can be cleared with the scan tool clear command or the battery condition monitor module reset.

DTC P0A9B

DTC P0A9B: HV Battery Temperature Sensor 1 Circuit

General Description

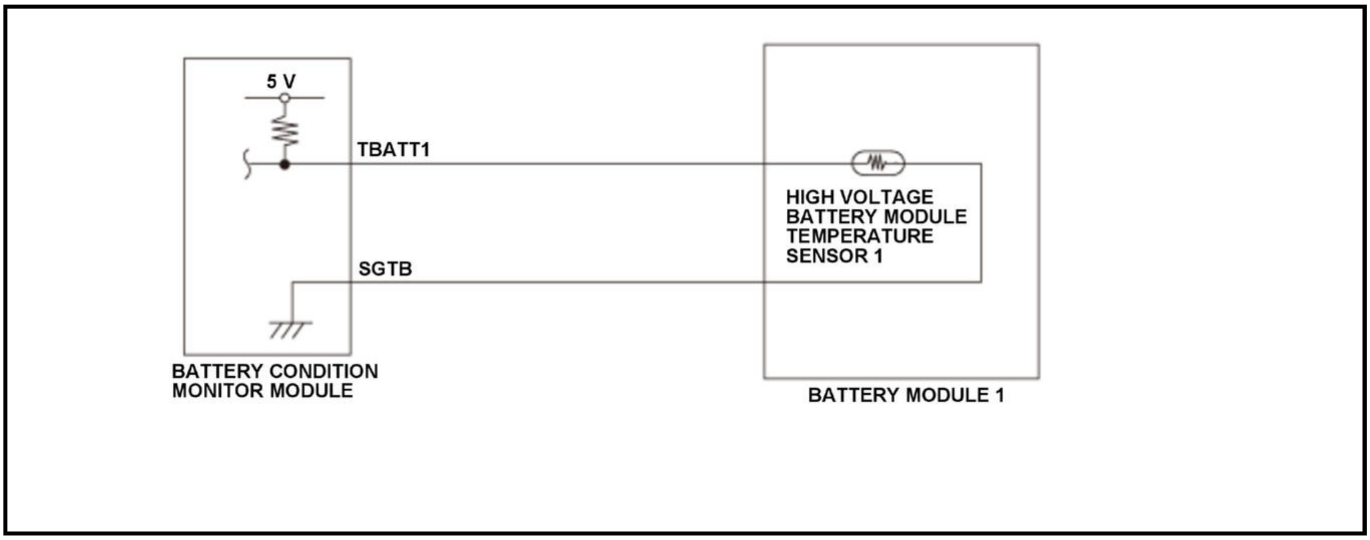
5 V
TBATT1
SGTB
HIGH VOLTAGE BATTERY MODULE TEMPERATURE SENSOR 1
BATTERY CONDITION MONITOR MODULE
BATTERY MODULE 1

Four high voltage battery module temperature sensors are attached to the battery module in the battery pack, and the battery condition monitor module continuously monitors the battery module temperature. If the battery condition monitor module input voltage from high voltage battery module temperature sensor 1 is out of the specified voltage for a set time, a malfunction is detected and a DTC is stored.

Monitor Execution, Sequence, Duration, DTC Type

Execution	Continuous
Sequence	None
Duration	3.0 seconds or more
DTC Type	Two drive cycles, MIL on, POWER SYSTEM indicator on, 12 VOLT CHARGING SYSTEM indicator off

Enable Conditions

Condition	Minimum	Maximum
Elapsed time since the 12 volt battery voltage reaches to a specified value after the vehicle condition is turned to the ON mode	50 milliseconds	-
12 volt battery voltage	8.0 V	-

Malfunction Threshold

The high voltage battery module temperature sensor 1 output voltage [HV Battery Module Temperature Sensor 1 Voltage] is 0.72 V or less, or 4.83 V or more for at least 3.0 seconds.

[ ]: HDS Parameter

Possible Cause

NOTE: The causes shown may not be a complete list of all potential problems, and it is possible that there may be other causes.

- High voltage battery module temperature sensor 1 failure
- Battery condition monitor module failure

Diagnosis Details

Conditions for setting the DTC

When a malfunction is detected during the first drive cycle, a Pending DTC is stored in the battery condition monitor module memory. If the malfunction returns in the next (second) drive cycle, the MIL comes on and a Confirmed DTC and the freeze data are stored.

Conditions for clearing the DTC

The MIL is cleared if the malfunction does not return in three consecutive trips in which the diagnostic runs. The MIL, the Pending DTC, the Confirmed DTC, and the freeze data can be cleared with the scan tool clear command.

DTC P0A9C

DTC P0A9C: HV Battery Temperature Sensor 1 Circuit Range/Performance

General Description

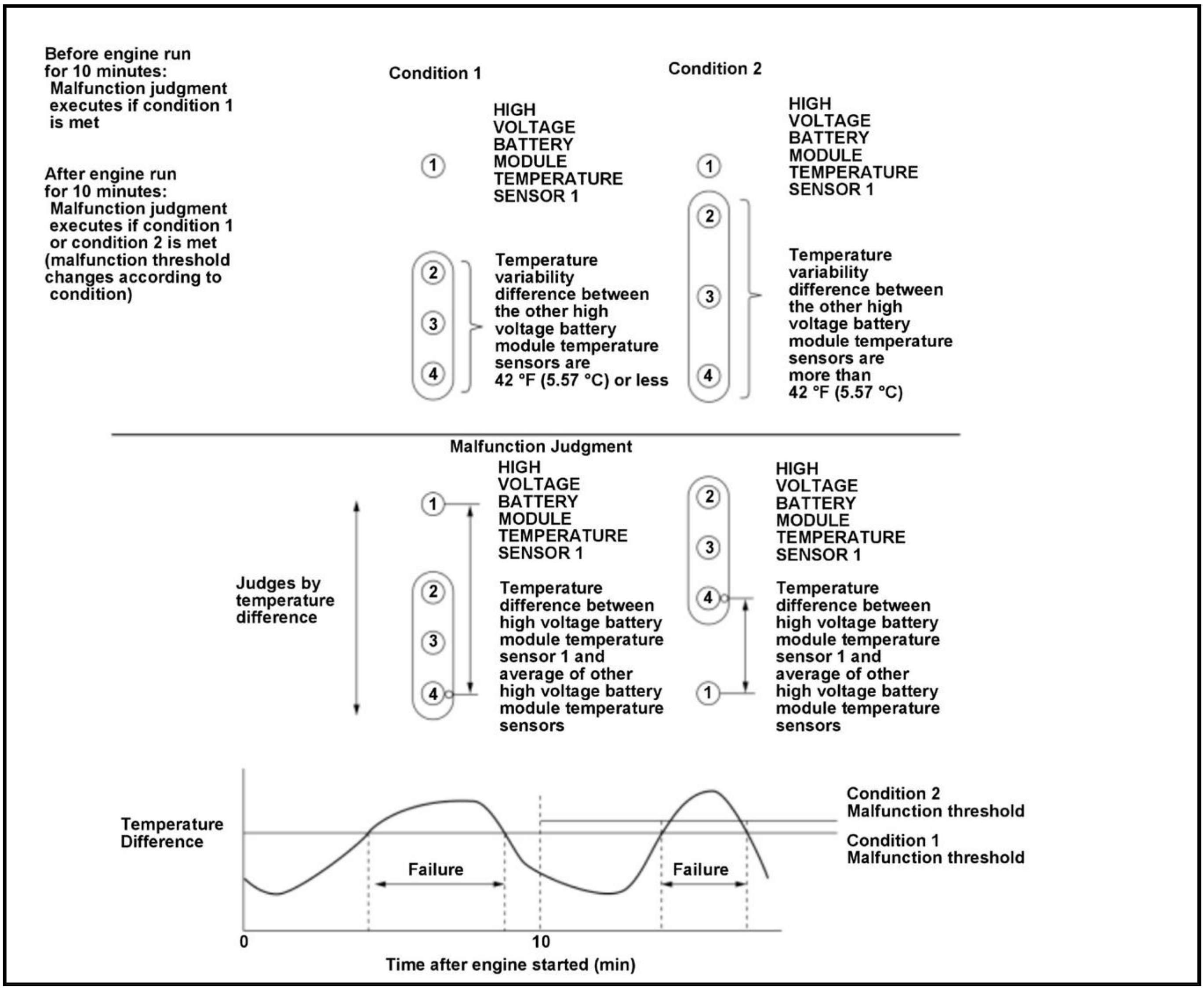
Before engine run for 10 minutes: Malfunction judgment executes if condition 1 is met
After engine run for 10 minutes: Malfunction judgment executes if condition 1 or condition 2 is met (malfunction threshold changes according to condition)
Condition 1
1
HIGH VOLTAGE BATTERY MODULE TEMPERATURE SENSOR 1
2
3
4
Temperature variability difference between the other high voltage battery module temperature sensors are 42 °F (5.57 °C) or less
Condition 2
1
HIGH VOLTAGE BATTERY MODULE TEMPERATURE SENSOR 1
2
3
4
Temperature variability difference between the other high voltage battery module temperature sensors are more than 42 °F (5.57 °C)
Malfunction Judgment
Judges by temperature difference
1
HIGH VOLTAGE BATTERY MODULE TEMPERATURE SENSOR 1
2
3
4
Temperature difference between high voltage battery module temperature sensor 1 and average of other high voltage battery module temperature sensors
2
3
4
1
HIGH VOLTAGE BATTERY MODULE TEMPERATURE SENSOR 1
Temperature difference between high voltage battery module temperature sensor 1 and average of other high voltage battery module temperature sensors
Temperature Difference
Failure
Failure
Condition 2 Malfunction threshold
Condition 1 Malfunction threshold
0
10
Time after engine started (min)

The temperatures between the battery modules are kept approximately equal if the high voltage battery module fan, the high voltage battery module temperature sensors, the battery pack, and the inverter, etc. are operating normal. The high voltage battery module temperature sensors are compared to detect characteristic abnormality of themselves. If the temperature difference between high voltage battery module temperature sensor 1 and the average of other high voltage battery module temperature sensors is a specified value, the battery condition monitor module detects a malfunction and stores a DTC.

Monitor Execution, Sequence, Duration, DTC Type

Execution	Continuous
Sequence	None
Duration	-
DTC Type	Two drive cycles, MIL on, POWER SYSTEM indicator on, 12 VOLT CHARGING SYSTEM indicator off

Enable Conditions

Condition	Minimum	Maximum
Elapsed time after the vehicle condition is turned to the ON mode**	10 minutes	-
Temperature variability between the battery module temperature (high voltage	-	42 deg.F (5.57 deg.C)

Condition	Minimum	Maximum
battery module temperature sensor 2, 3, 4)*		
Temperature variability between the battery module temperature (high voltage battery module temperature sensor 2, 3, 4)**	42 deg.F (5.57 deg.C)	-
Vehicle	ON mode	
Other	High voltage battery module fan must be operating normal	

*: Condition 1

**: Condition 2

Malfunction Threshold

- If the vehicle is in Condition 1

  The temperature difference between high voltage battery module temperature sensor 1 and the average of other high voltage battery module temperature sensors is 61 deg.F (16 deg.C) or more.

- If the vehicle is in Condition 2

  The temperature difference between high voltage battery module temperature sensor 1 and the average of other high voltage battery module temperature sensors is 65 deg.F (18 deg.C) or more.

Possible Cause

NOTE: The causes shown may not be a complete list of all potential problems, and it is possible that there may be other causes.

- Cooling fan air duct blocked or fell off
- Battery pack internal circuit failure

Diagnosis Details

Conditions for setting the DTC

When a malfunction is detected during the first drive cycle, a Pending DTC is stored in the battery condition monitor module memory. If the malfunction returns in the next (second) drive cycle, the MIL comes on and a Confirmed DTC and the freeze data are stored.

Conditions for clearing the DTC

The MIL is cleared if the malfunction does not return in three consecutive trips in which the diagnostic runs. The MIL, the Pending DTC, the Confirmed DTC, and the freeze data can be cleared with the scan tool clear command or the battery condition monitor module reset.

DTC P0A9D

DTC P0A9D: HV Battery Temperature Sensor 1 Circuit Low

General Description

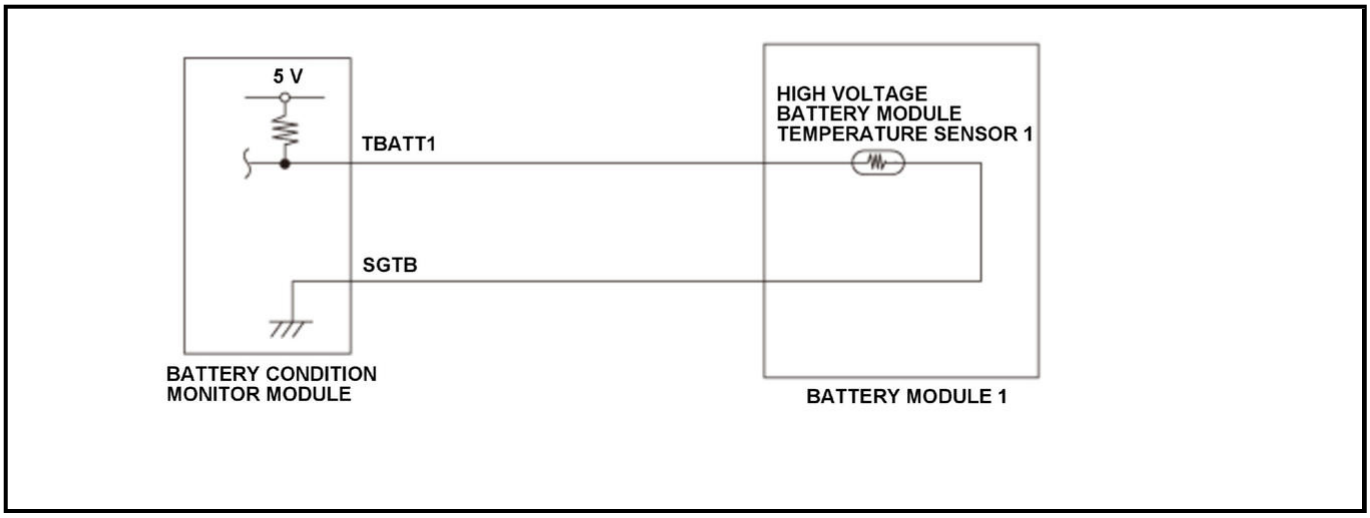
5 V
TBATT1
SGTB
BATTERY CONDITION MONITOR MODULE
HIGH VOLTAGE BATTERY MODULE TEMPERATURE SENSOR 1
BATTERY MODULE 1

Four high voltage battery module temperature sensors are attached to the battery module in the battery pack, and the battery condition monitor module continuously monitors the battery module temperature. If the battery condition monitor module input voltage from high voltage battery module temperature sensor 1 is a specified voltage for a set time, a malfunction is detected and a DTC is stored.

Monitor Execution, Sequence, Duration, DTC Type

Execution	Continuous
Sequence	None
Duration	2.0 seconds or more
DTC Type	Two drive cycles, MIL on, POWER SYSTEM indicator on, 12 VOLT CHARGING SYSTEM indicator off

Enable Conditions

Condition	B
Vehicle	ON mode

Malfunction Threshold

The high voltage battery module temperature sensor 1 output voltage [HV Battery Module Temperature Sensor 1 Voltage] is 0.07 V or less for at least 2.0 seconds.

[ ]: HDS Parameter

Possible Cause

NOTE: The causes shown may not be a complete list of all potential problems, and it is possible that there may be other causes.

- High voltage battery module temperature sensor 1 TBATT1 line short to ground
- Battery condition monitor module internal circuit failure

Diagnosis Details

Conditions for setting the DTC

When a malfunction is detected during the first drive cycle, a Pending DTC is stored in the battery condition monitor module memory. If the malfunction returns in the next (second) drive cycle, the MIL comes on and a Confirmed DTC and the freeze data are stored.

Conditions for clearing the DTC

The MIL is cleared if the malfunction does not return in three consecutive trips in which the diagnostic runs. The MIL, the Pending DTC, the Confirmed DTC, and the freeze data can be cleared with the scan tool clear command.

DTC P0A9E

DTC P0A9E: HV Battery Temperature Sensor 1 Circuit High

General Description

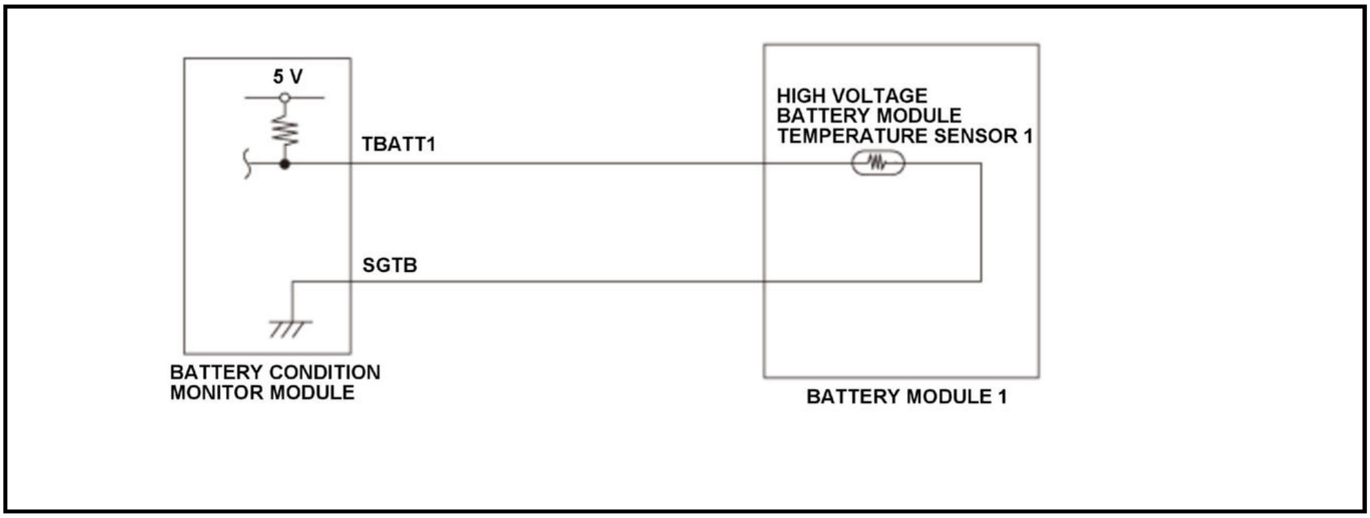
5 V
TBATT1
SGTB
BATTERY CONDITION MONITOR MODULE
HIGH VOLTAGE BATTERY MODULE TEMPERATURE SENSOR 1
BATTERY MODULE 1

Four high voltage battery module temperature sensors are attached to the battery module in the battery pack, and the battery condition monitor module continuously monitors the battery module temperature. If the battery condition monitor module input voltage from high voltage battery module temperature sensor 1 is a specified voltage for a set time, a malfunction is detected and a DTC is stored.

Monitor Execution, Sequence, Duration, DTC Type

Execution	Continuous
Sequence	None
Duration	2.0 seconds or more
DTC Type	Two drive cycles, MIL on, POWER SYSTEM indicator on, 12 VOLT CHARGING SYSTEM indicator off

Enable Conditions

Condition	B
Vehicle	ON mode

Malfunction Threshold

The high voltage battery module temperature sensor 1 output voltage [HV Battery Module Temperature Sensor 1 Voltage] is 4.93 V or more for at least 2.0 seconds.

[ ]: HDS Parameter

Possible Cause

NOTE: The causes shown may not be a complete list of all potential problems, and it is possible that there may be other causes.

- High voltage battery module temperature sensor 1 TBATT1 line open
- High voltage battery module temperature sensor 1 SGTB line open

- Battery condition monitor module internal circuit failure

Diagnosis Details

Conditions for setting the DTC

When a malfunction is detected during the first drive cycle, a Pending DTC is stored in the battery condition monitor module memory. If the malfunction returns in the next (second) drive cycle, the MIL comes on and a Confirmed DTC and the freeze data are stored.

Conditions for clearing the DTC

The MIL is cleared if the malfunction does not return in three consecutive trips in which the diagnostic runs. The MIL, the Pending DTC, the Confirmed DTC, and the freeze data can be cleared with the scan tool clear command.

DTC P0AA1

DTC P0AA1: HV Battery Main Contactor Circuit Stuck Closed

General Description

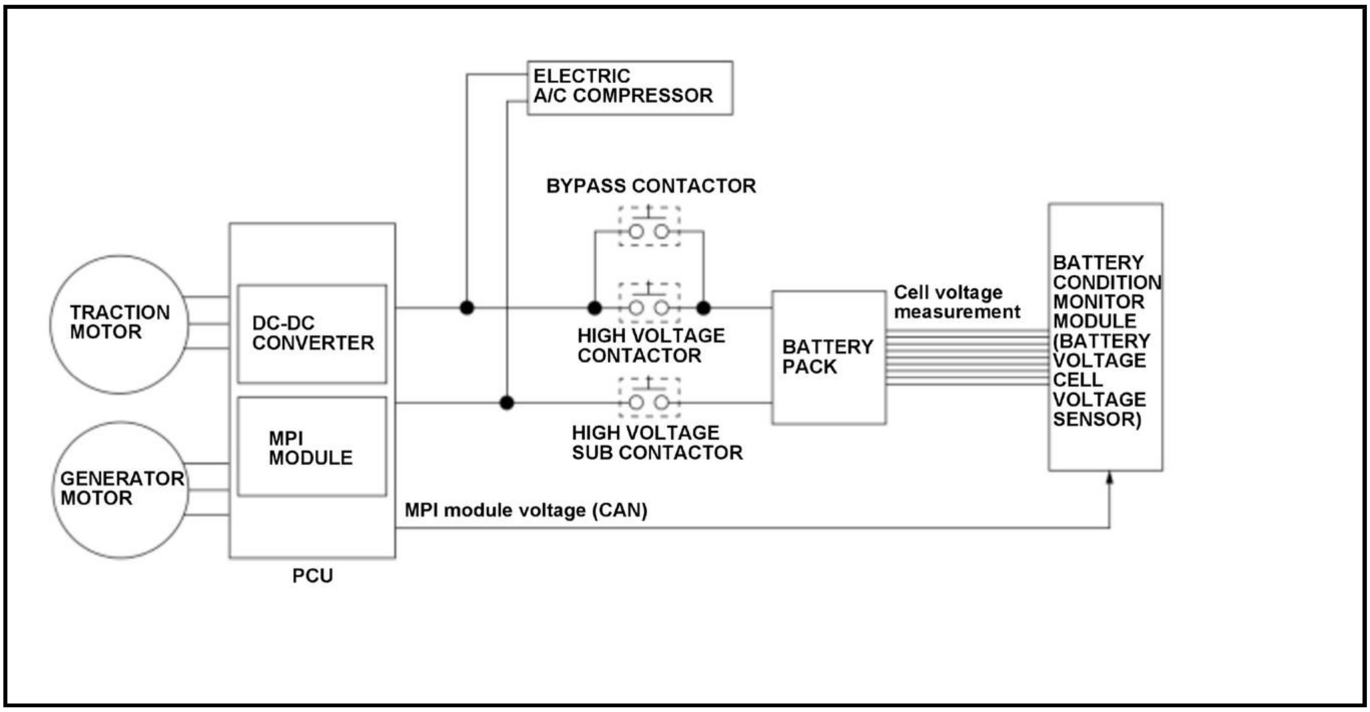
ELECTRIC
A/C COMPRESSOR
BYPASS CONTACTOR
TRACTION
MOTOR
DC-DC
CONVERTER
HIGH VOLTAGE
CONTACTOR
Cell voltage
measurement
BATTERY
PACK
BATTERY
CONDITION
MONITOR
MODULE
(BATTERY
VOLTAGE
CELL
VOLTAGE
SENSOR)
MPI
MODULE
HIGH VOLTAGE
SUB CONTACTOR
GENERATOR
MOTOR
MPI module voltage (CAN)
PCU

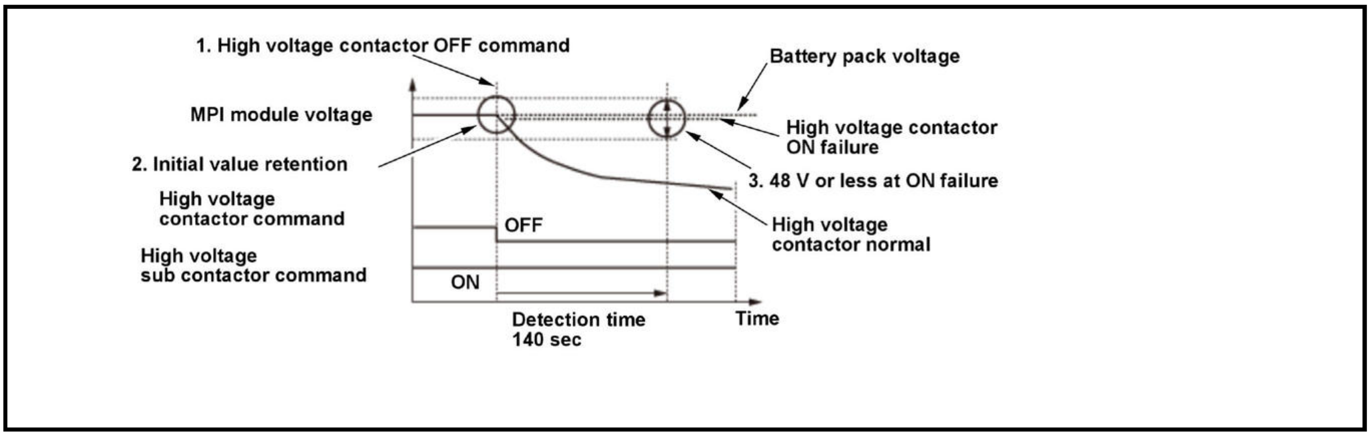

In electric powertrain system, if the vehicle condition is turned to the OFF (LOCK) mode when the vehicle is in a stationary condition, or when electric powertrain system is stopped due to a fail safe action, the high voltage contactor turns OFF which was ON during the electric powertrain system was activated. If either the high voltage contactor or the high voltage sub contactor is turned OFF, the electric charge charged in the power drive unit (PDU) capacitor of the inverter is discharged by the DC-DC converter and the bypass resistor, and the inverter voltage drops. In case of an ON malfunction of the high voltage contactor, the voltage is not discharged so the inverter voltage does not drop. The battery condition monitor module monitors the voltage of the inverter voltage when vehicle condition is turned to the OFF (LOCK) mode, and if the voltage difference between the inverter voltage and the high voltage contactor voltage before and after turning OFF continues to be within a specified value for a certain period of time, the battery condition monitor module detects a malfunction and stores a DTC.

Monitor Execution, Sequence, Duration, DTC Type

Execution	After the vehicle condition is turned to the OFF (LOCK) mode
Sequence	None
Duration	140 seconds or more

DTC Type	One drive cycle, MIL on, POWER SYSTEM indicator on, 12 VOLT CHARGING SYSTEM indicator on

Enable Conditions

Condition	Minimum	Maximum
Battery condition monitor module power-supply voltage	10.2 V	-
MPI module voltage	84.9 V	323.1 V
Inverter voltage variability	-	23.0 V
Vehicle	OFF (LOCK) mode	

Malfunction Threshold

The voltage difference between the inverter voltage before and after turning the high voltage contactor OFF is 48 V or less for at least 140 seconds.

Possible Cause

NOTE: The causes shown may not be a complete list of all potential problems, and it is possible that there may be other causes.

- High voltage contactor CNTP line short
- High voltage contactor stuck on
- Bypass contactor stuck on
- Battery condition monitor module internal circuit failure

Diagnosis Details

Conditions for setting the DTC

When a malfunction is detected, the MIL comes on and a Pending DTC, a Confirmed DTC, and the freeze data are stored in the battery condition monitor module memory.

Conditions for clearing the DTC

The MIL is cleared if the malfunction does not return in three consecutive trips in which the diagnostic runs. The MIL, the Pending DTC, the Confirmed DTC, and the freeze data can be cleared with the scan tool clear command or the battery condition monitor module reset.

DTC P0AA3

DTC P0AA3: HV Battery Sub Contactor Circuit

General Description

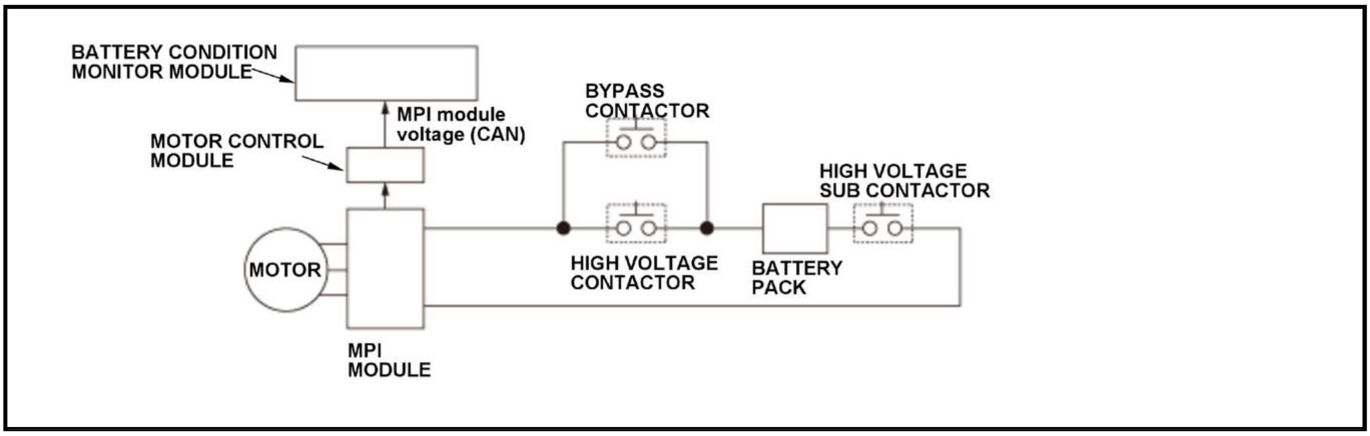
BATTERY CONDITION MONITOR MODULE
MPI module voltage (CAN)
MOTOR CONTROL MODULE
BYPASS CONTACTOR
HIGH VOLTAGE SUB CONTACTOR
MOTOR
HIGH VOLTAGE CONTACTOR
BATTERY PACK
MPI MODULE

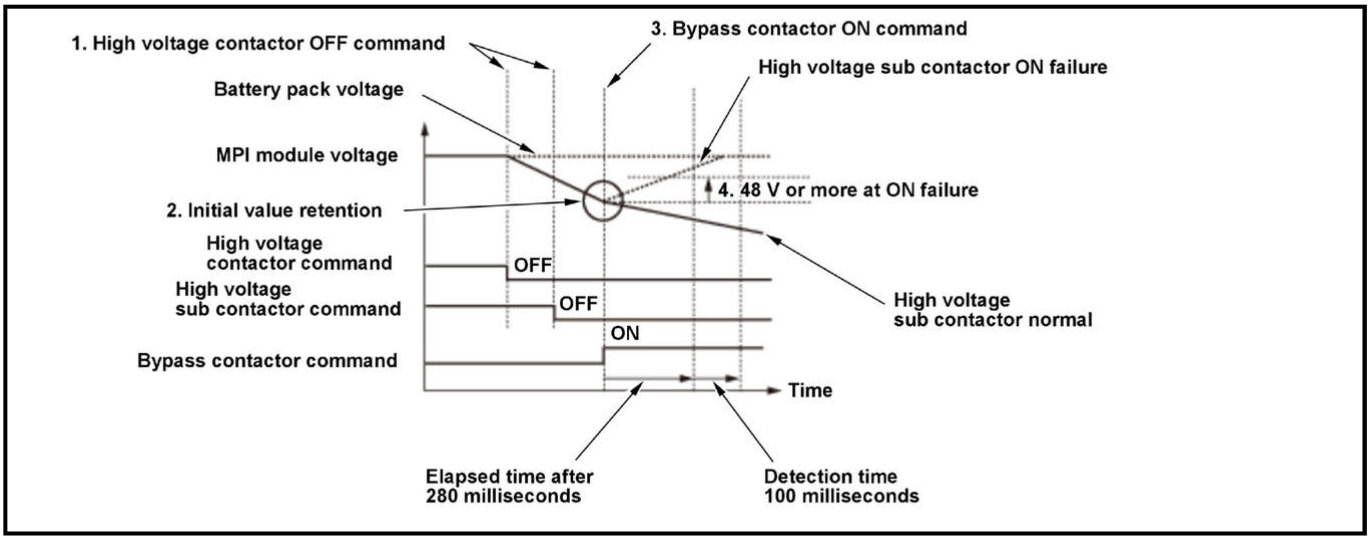

In electric powertrain system, if the vehicle condition is turned to the OFF (LOCK) mode when the vehicle is in a stationary condition, or when electric powertrain system is stopped due to a fail safe action, the high voltage sub contactor turns OFF which was ON during the electric powertrain system was activated. Under an ON malfunction condition of the high voltage sub contactor, the power drive unit (PDU) capacitor is gradually charged by the battery pack, and the inverter voltage rises if the battery condition monitor module sends an ON command of the bypass contactor. The battery condition monitor module monitors the voltage value through the inverter voltage sensor. If the voltage difference of the inverter voltage before and after turning the bypass contactor ON continues to be at a specified value for a certain period of time, the battery condition monitor module detects a malfunction and stores a DTC.

Monitor Execution, Sequence, Duration, DTC Type

Execution	After the vehicle condition is turned to the OFF (LOCK) mode
Sequence	None
Duration	380 milliseconds or more
DTC Type	One drive cycle, MIL off, POWER SYSTEM indicator on, 12 VOLT CHARGING SYSTEM indicator off

Enable Conditions

Condition	Minimum	Maximum
Elapsed time after the bypass contactor is ON	280 milliseconds	-

[ ]: HDS Parameter

Condition	Minimum	Maximum
Bypass contactor power-supply voltage	8.7 V	-
Traction motor speed	-	441 rpm
Generator motor speed [Motor Speed (GEN)]	-	740 rpm
Vehicle	OFF (LOCK) mode	

[ ]: HDS Parameter

Malfunction Threshold

The voltage difference between the MPI module voltage before and after turning the bypass contactor ON is more than 48 V and continues for 100 milliseconds or more.

Possible Cause

NOTE: The causes shown may not be a complete list of all potential problems, and it is possible that there may be other causes.

- High voltage sub contactor CNTN line short
- High voltage sub contactor stuck on
- Battery condition monitor module internal circuit failure

Confirmation Procedure

Operating Condition

- Turn the vehicle to the ON mode.
- Turn the vehicle to the OFF (LOCK) mode, and wait 120 seconds.

Diagnosis Details

Conditions for setting the DTC

When a malfunction is detected, a Pending DTC, a Confirmed DTC, and the freeze data are stored in the battery condition monitor module memory. The MIL does not come on.

Conditions for clearing the DTC

The Pending DTC, the Confirmed DTC, and the freeze data can be cleared with the scan tool clear command or the battery condition monitor module reset.

DTC P0AA6

DTC P0AA6: HV Battery Voltage System Isolation Fault

General Description

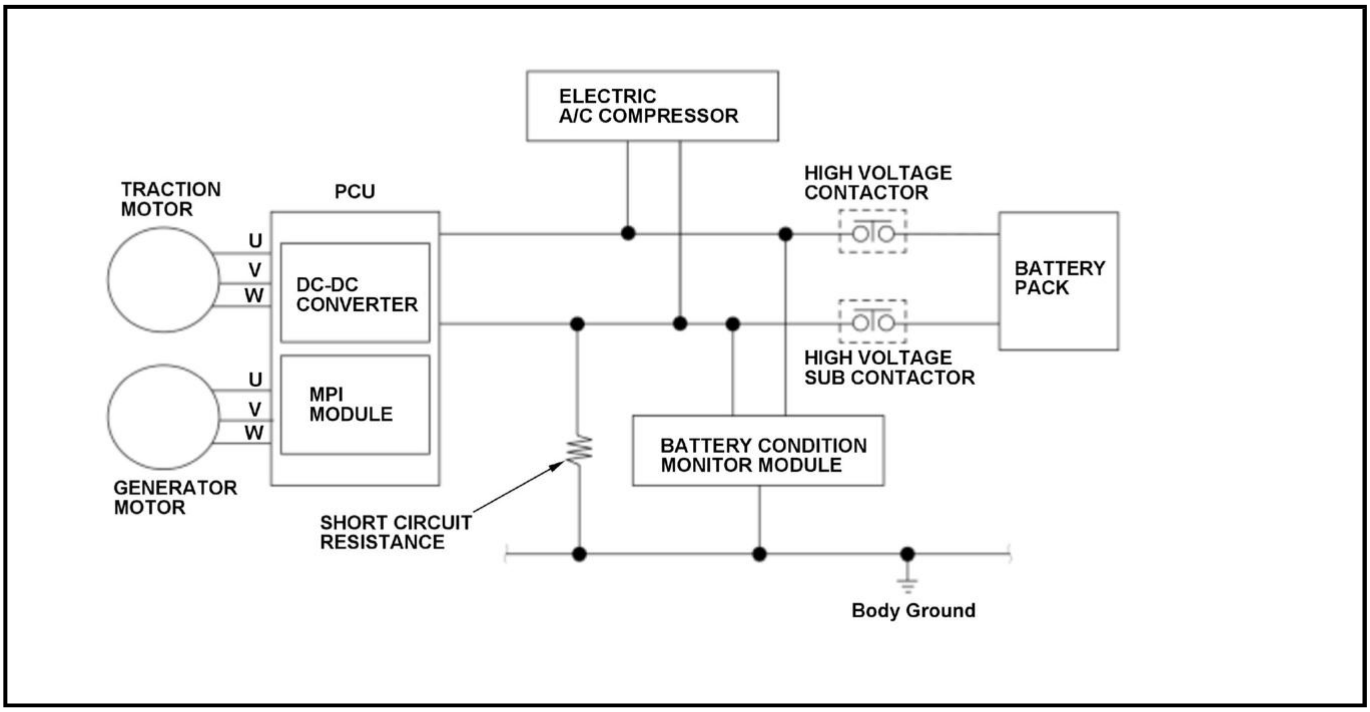
ELECTRIC A/C COMPRESSOR
TRACTION MOTOR
PCU
HIGH VOLTAGE CONTACTOR
U
V
W
DC-DC CONVERTER
BATTERY PACK
U
V
W
MPI MODULE
HIGH VOLTAGE SUB CONTACTOR
BATTERY CONDITION MONITOR MODULE
GENERATOR MOTOR
SHORT CIRCUIT RESISTANCE
Body Ground

There are high voltage parts including the battery pack in the electric powertrain system. The high voltage parts are insulated from the body on both positive and negative circuits. The battery condition monitor module detects decreases in the insulation resistance (short circuit resistance), and if the resistance drops to a specified resistance, a malfunction is detected and a DTC is stored.

Monitor Execution, Sequence, Duration, DTC Type

Execution	Continuous
Sequence	None
Duration	-
DTC Type	One drive cycle, MIL off, POWER SYSTEM indicator on, 12 VOLT CHARGING SYSTEM indicator off

Enable Conditions

Condition	B
High voltage contactor	ON
Vehicle	ON mode

Malfunction Threshold

The short circuit resistance value is 592 kΩ or less.

Possible Cause

NOTE: The causes shown may not be a complete list of all potential problems, and it is possible that there may be other causes.

- Electric A/C compressor internal failure
- Power control unit (PCU) internal circuit failure
- DC-DC converter internal failure
- Battery pack internal failure
- Battery power cable failure
- Traction motor failure
- Generator motor failure

- Subjunction board internal failure
- Junction board internal failure
- Battery condition monitor module internal circuit failure

Confirmation Procedure

Operating Condition

Turn the vehicle to the READY TO DRIVE mode, and wait for at least 60 seconds.

Be sure to operate the following:

- Generator motor
- Traction motor
- Electric A/C compressor

Diagnosis Details

Conditions for setting the DTC

When a malfunction is detected, a Pending DTC, a Confirmed DTC, and the freeze data are stored in the battery condition monitor module memory. The MIL does not come on.

Conditions for clearing the DTC

The Pending DTC, the Confirmed DTC, and the freeze data can be cleared with the scan tool clear command or the battery condition monitor module reset.

DTC P0AA7

DTC P0AA7: HV Battery Voltage Isolation Sensor Circuit

General Description

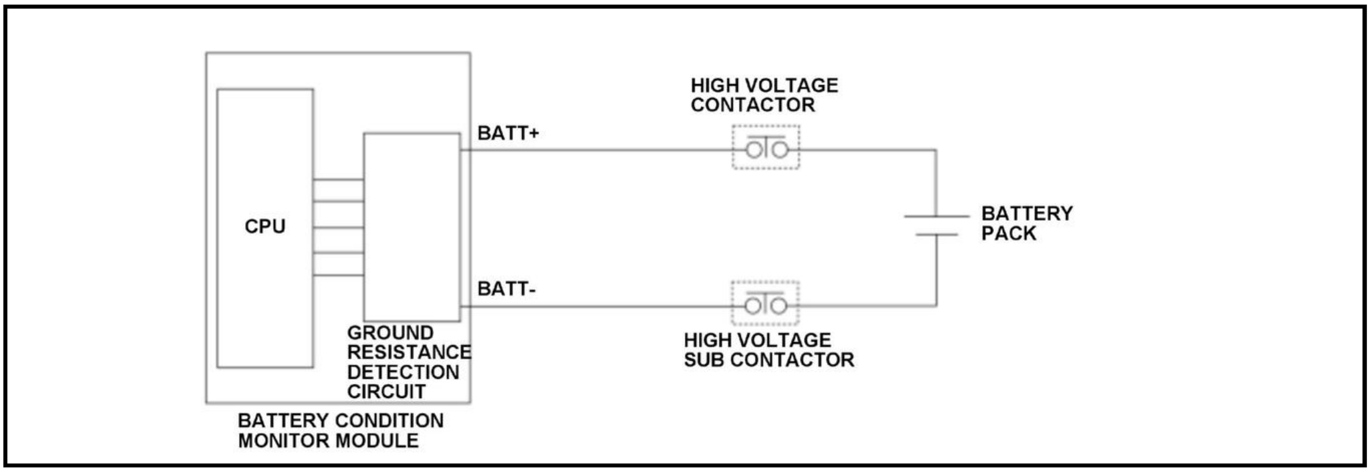
HIGH VOLTAGE CONTACTOR
BATT+
CPU
BATTERY PACK
BATT-
GROUND RESISTANCE DETECTION CIRCUIT
HIGH VOLTAGE SUB CONTACTOR
BATTERY CONDITION MONITOR MODULE

The battery condition monitor module monitors the ground resistance value of the high voltage circuit by the BATT+ line and the BATT- line. When an abnormality is detected on the ground resistance detection circuit, the BATT lines, or the contactors for a specified time, a malfunction is detected and a DTC is stored.

Monitor Execution, Sequence, Duration, DTC Type

Execution	Once per driving cycle (After the vehicle condition is turned to the ON mode) or during the vehicle condition is turned to the ON mode
Sequence	None
Duration	12 seconds or more

DTC Type	One drive cycle, MIL off, POWER SYSTEM indicator on, 12 VOLT CHARGING SYSTEM indicator off

Enable Conditions

Condition	B
Vehicle	ON mode

Malfunction Threshold

The ground resistance detection circuit, the BATT lines, or the contactors is abnormal for at least 12 seconds.

Possible Cause

NOTE: The causes shown may not be a complete list of all potential problems, and it is possible that there may be other causes.

- Battery pack BATT+ line open
- Battery pack BATT- line open
- High voltage contactor internal failure
- High voltage sub contactor internal failure
- Battery condition monitor module internal circuit failure

Diagnosis Details

Conditions for setting the DTC

When a malfunction is detected, the POWER SYSTEM indicator comes on and a Pending DTC, a Confirmed DTC, and the freeze data are stored in the battery condition monitor module memory. The MIL does not come on.

Conditions for clearing the DTC

The POWER SYSTEM indicator is cleared if the malfunction does not return in the next trip in which the diagnostic runs. The POWER SYSTEM indicator, the Pending DTC, the Confirmed DTC, and the freeze data can be cleared with the scan tool clear command.

DTC P0ABF

DTC P0ABF: HV Battery Pack Current Sensor Circuit

General Description

This fault code is a general (specified by SAE) DTC that is stored at the time the following DTC codes (P1586, P158A) are detected.

DTC P0AC0

DTC P0AC0: HV Battery Pack Current Sensor Circuit Range/Performance

General Description

This fault code is a general (specified by SAE) DTC that is stored at the time the DTC code P158B is detected.

DTC P0AC1

DTC P0AC1: HV Battery Pack Current Sensor Circuit Low

General Description

This fault code is a general (specified by SAE) DTC that is stored at the time the following DTC codes (P158D, P158E) are detected.

DTC P0AC2

DTC P0AC2: HV Battery Pack Current Sensor Circuit High

General Description

This fault code is a general (specified by SAE) DTC that is stored at the time the following DTC codes (P158F, P1596) are detected.

DTC P0AC3

DTC P0AC3: HV Battery Pack Current Sensor Circuit Intermittent/Erratic

General Description

This fault code is a general (specified by SAE) DTC that is stored at the time the following DTC codes (P1597, P1598) are detected.

DTC P0AC5

DTC P0AC5: HV Battery Temperature Sensor 2 Circuit

General Description

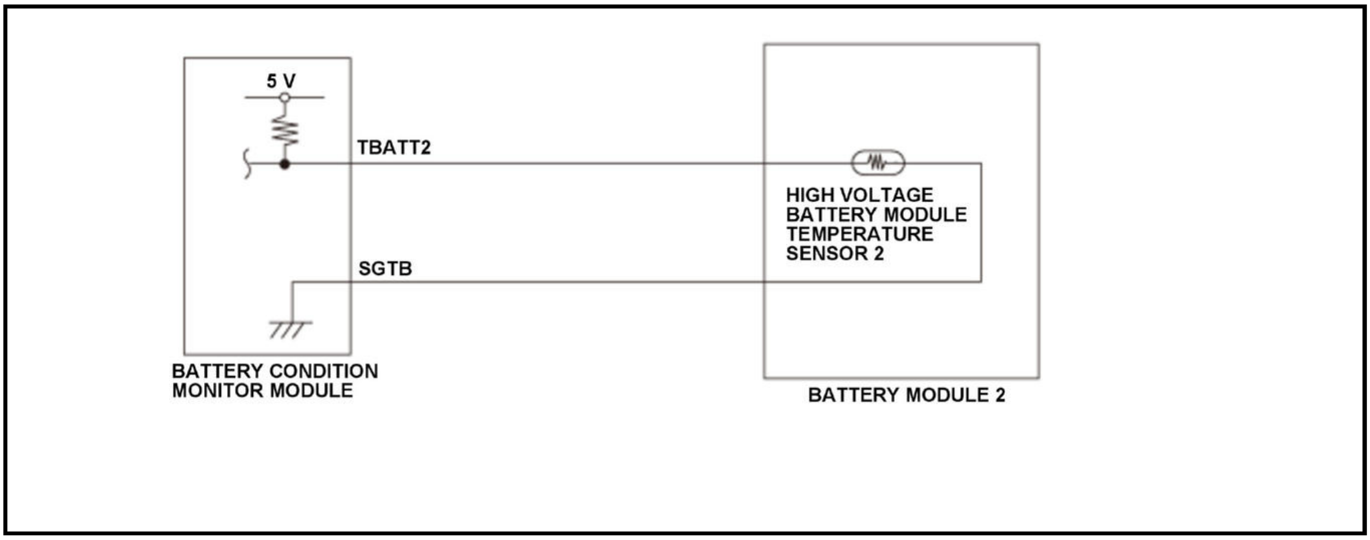
5 V
TBATT2
SGTB
HIGH VOLTAGE BATTERY MODULE TEMPERATURE SENSOR 2
BATTERY CONDITION MONITOR MODULE
BATTERY MODULE 2

Four high voltage battery module temperature sensors are attached to the battery module in the battery pack, and the battery condition monitor module continuously monitors the battery module temperature. If the battery condition monitor module input voltage from high voltage battery module temperature sensor 2 is out of the specified voltage for a set time, a malfunction is detected and a DTC is stored.

Monitor Execution, Sequence, Duration, DTC Type

Execution	Continuous
Sequence	None
Duration	3.0 seconds or more
DTC Type	Two drive cycles, MIL on, POWER SYSTEM indicator on, 12 VOLT CHARGING SYSTEM indicator off

Enable Conditions

Condition	Minimum	Maximum
Elapsed time since the 12 volt battery voltage reaches to a specified value after the vehicle condition is turned to the ON mode	50 milliseconds	-
12 volt battery voltage	8.0 V	-

Malfunction Threshold

The high voltage battery module temperature sensor 2 output voltage [HV Battery Module Temperature Sensor 2 Voltage] is 0.72 V or less, or 4.83 V or more for at least 3.0 seconds.

[ ]: HDS Parameter

Possible Cause

NOTE: The causes shown may not be a complete list of all potential problems, and it is possible that there may be other causes.

- High voltage battery module temperature sensor 2 failure
- Battery condition monitor module failure

Diagnosis Details

Conditions for setting the DTC

When a malfunction is detected during the first drive cycle, a Pending DTC is stored in the battery condition monitor module memory. If the malfunction returns in the next (second) drive cycle, the MIL comes on and a Confirmed DTC and the freeze data are stored.

Conditions for clearing the DTC

The MIL is cleared if the malfunction does not return in three consecutive trips in which the diagnostic runs. The MIL, the Pending DTC, the Confirmed DTC, and the freeze data can be cleared with the scan tool clear command.

DTC P0AC6

DTC P0AC6: HV Battery Temperature Sensor 2 Circuit Range/Performance

General Description

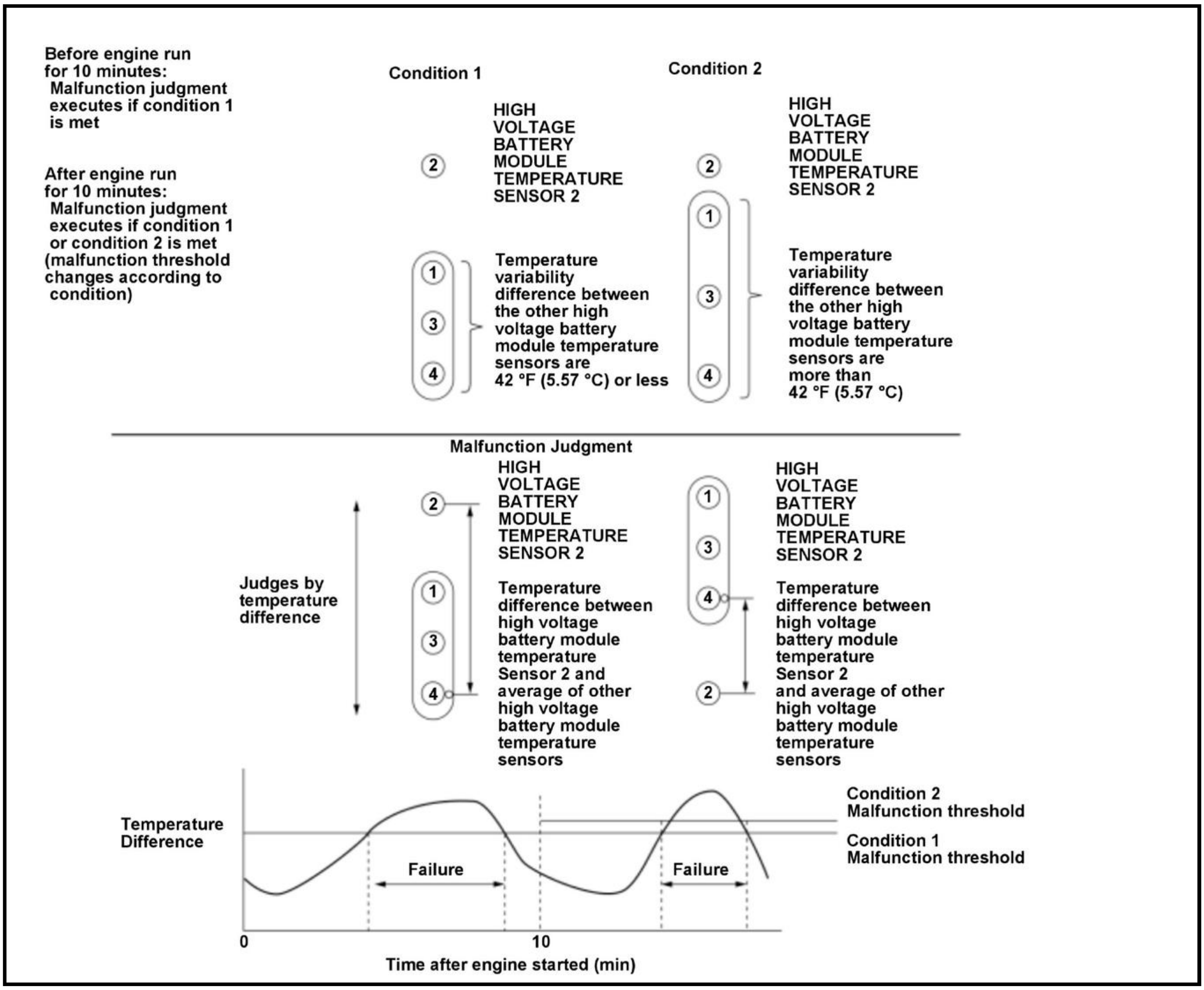
Before engine run for 10 minutes: Malfunction judgment executes if condition 1 is met
After engine run for 10 minutes: Malfunction judgment executes if condition 1 or condition 2 is met (malfunction threshold changes according to condition)
Condition 1
②
HIGH VOLTAGE BATTERY MODULE TEMPERATURE SENSOR 2
①
③
④
Temperature variability difference between the other high voltage battery module temperature sensors are 42 °F (5.57 °C) or less
Condition 2
②
HIGH VOLTAGE BATTERY MODULE TEMPERATURE SENSOR 2
①
③
④
Temperature variability difference between the other high voltage battery module temperature sensors are more than 42 °F (5.57 °C)
Malfunction Judgment
Judges by temperature difference
②
HIGH VOLTAGE BATTERY MODULE TEMPERATURE SENSOR 2
①
③
④
Temperature difference between high voltage battery module temperature Sensor 2 and average of other high voltage battery module temperature sensors
①
③
④
HIGH VOLTAGE BATTERY MODULE TEMPERATURE SENSOR 2
②
Temperature difference between high voltage battery module temperature Sensor 2 and average of other high voltage battery module temperature sensors
Temperature Difference
Failure
Failure
Condition 2 Malfunction threshold
Condition 1 Malfunction threshold
0
10
Time after engine started (min)

The temperatures between the battery modules are kept approximately equal if the high voltage battery module fan, the high voltage battery module temperature sensors, the battery pack, and the inverter, etc. are operating normal. The high voltage battery module temperature sensors are compared to detect characteristic abnormality of themselves. If the temperature difference between high voltage battery module temperature sensor 2 and the average of other high voltage battery module temperature sensors is a specified value, the battery condition monitor module detects a malfunction and stores a DTC.

Monitor Execution, Sequence, Duration, DTC Type

Execution	Continuous
Sequence	None
Duration	-
DTC Type	Two drive cycles, MIL on, POWER SYSTEM indicator on, 12 VOLT CHARGING SYSTEM indicator off

Enable Conditions

Condition	Minimum	Maximum
Elapsed time after the vehicle condition is turned to the ON mode**	10 minutes	-
Temperature variability between the battery module temperature (high voltage	-	42 deg.F (5.57 deg.C)

Condition	Minimum	Maximum
battery module temperature sensor 1, 3, 4)*		
Temperature variability between the battery module temperature (high voltage battery module temperature sensor 1, 3, 4)**	42 deg.F (5.57 deg.C)	-
Vehicle	ON mode	
Other	High voltage battery module fan must be operating normal	

*: Condition 1

**: Condition 2

Malfunction Threshold

- If the vehicle is in Condition 1

  The temperature difference between high voltage battery module temperature sensor 2 and the average of other high voltage battery module temperature sensors is 61 deg.F (16 deg.C) or more.

- If the vehicle is in Condition 2

  The temperature difference between high voltage battery module temperature sensor 2 and the average of other high voltage battery module temperature sensors is 65 deg.F (18 deg.C) or more.

Possible Cause

NOTE: The causes shown may not be a complete list of all potential problems, and it is possible that there may be other causes.

- Cooling fan air duct blocked or fell off
- Battery pack internal circuit failure

Diagnosis Details

Conditions for setting the DTC

When a malfunction is detected during the first drive cycle, a Pending DTC is stored in the battery condition monitor module memory. If the malfunction returns in the next (second) drive cycle, the MIL comes on and a Confirmed DTC and the freeze data are stored.

Conditions for clearing the DTC

The MIL is cleared if the malfunction does not return in three consecutive trips in which the diagnostic runs. The MIL, the Pending DTC, the Confirmed DTC, and the freeze data can be cleared with the scan tool clear command or the battery condition monitor module reset.

DTC P0AC7

DTC P0AC7: HV Battery Temperature Sensor 2 Circuit Low

General Description

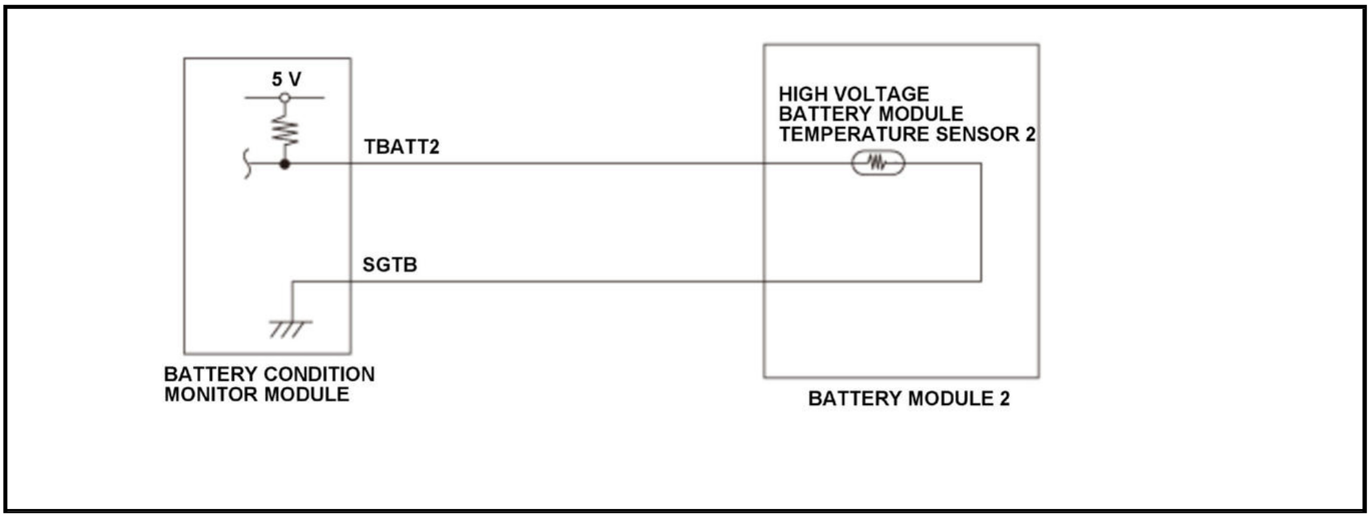
5 V
TBATT2
SGTB
BATTERY CONDITION MONITOR MODULE
HIGH VOLTAGE BATTERY MODULE TEMPERATURE SENSOR 2
BATTERY MODULE 2

Four high voltage battery module temperature sensors are attached to the battery module in the battery pack, and the battery condition monitor module continuously monitors the battery module temperature. If the battery condition monitor module input voltage from high voltage battery module temperature sensor 2 is a specified voltage for a set time, a malfunction is detected and a DTC is stored.

Monitor Execution, Sequence, Duration, DTC Type

Execution	Continuous
Sequence	None
Duration	2.0 seconds or more
DTC Type	Two drive cycles, MIL on, POWER SYSTEM indicator on, 12 VOLT CHARGING SYSTEM indicator off

Enable Conditions

Condition	B
Vehicle	ON mode

Malfunction Threshold

The high voltage battery module temperature sensor 2 output voltage [HV Battery Module Temperature Sensor 2 Voltage] is 0.07 V or less for at least 2.0 seconds.

[ ]: HDS Parameter

Possible Cause

NOTE: The causes shown may not be a complete list of all potential problems, and it is possible that there may be other causes.

- High voltage battery module temperature sensor 2 TBATT2 line short to ground
- Battery condition monitor module internal circuit failure

Diagnosis Details

Conditions for setting the DTC

When a malfunction is detected during the first drive cycle, a Pending DTC is stored in the battery condition monitor module memory. If the malfunction returns in the next (second) drive cycle, the MIL comes on and a Confirmed DTC and the freeze data are stored.

Conditions for clearing the DTC

The MIL is cleared if the malfunction does not return in three consecutive trips in which the diagnostic runs. The MIL, the Pending DTC, the Confirmed DTC, and the freeze data can be cleared with the scan tool clear command.

DTC P0AC8

DTC P0AC8: HV Battery Temperature Sensor 2 Circuit High

General Description

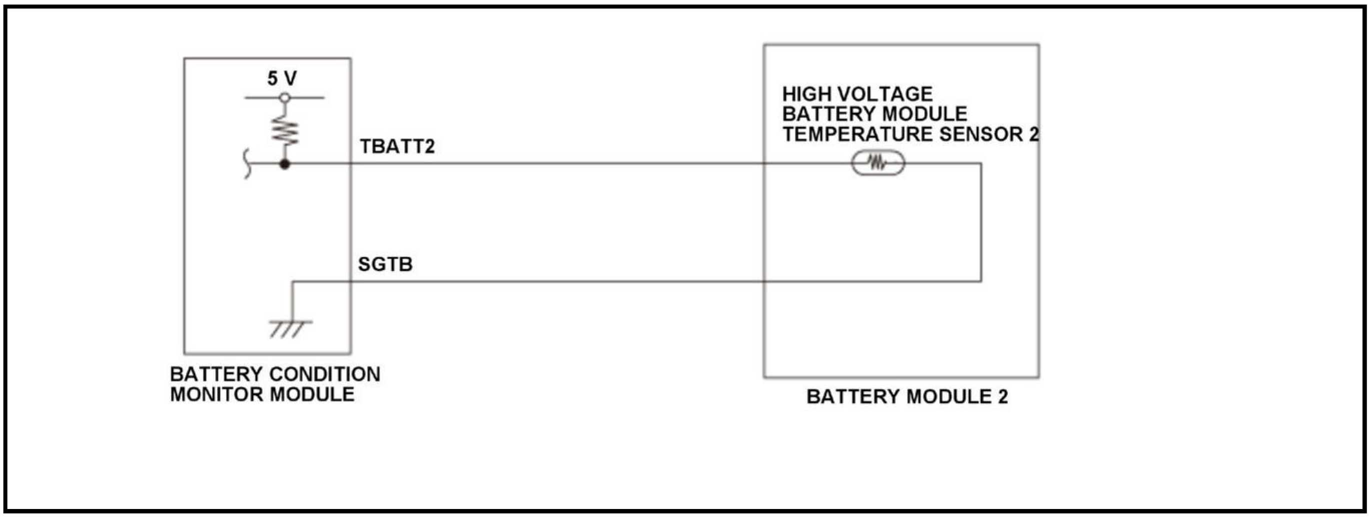
5 V
TBATT2
SGTB
BATTERY CONDITION MONITOR MODULE
HIGH VOLTAGE BATTERY MODULE TEMPERATURE SENSOR 2
BATTERY MODULE 2

Four high voltage battery module temperature sensors are attached to the battery module in the battery pack, and the battery condition monitor module continuously monitors the battery module temperature. If the battery condition monitor module input voltage from high voltage battery module temperature sensor 2 is a specified voltage for a set time, a malfunction is detected and a DTC is stored.

Monitor Execution, Sequence, Duration, DTC Type

Execution	Continuous
Sequence	None
Duration	2.0 seconds or more
DTC Type	Two drive cycles, MIL on, POWER SYSTEM indicator on, 12 VOLT CHARGING SYSTEM indicator off

Enable Conditions

Condition	B
Vehicle	ON mode

Malfunction Threshold

The high voltage battery module temperature sensor 2 output voltage [HV Battery Module Temperature Sensor 2 Voltage] is 4.93 V or more for at least 2.0 seconds.

[ ]: HDS Parameter

Possible Cause

NOTE: The causes shown may not be a complete list of all potential problems, and it is possible that there may be other causes.

- High voltage battery module temperature sensor 2 TBATT2 line open
- High voltage battery module temperature sensor 2 SGTB line open

- Battery condition monitor module internal circuit failure

Diagnosis Details

Conditions for setting the DTC

When a malfunction is detected during the first drive cycle, a Pending DTC is stored in the battery condition monitor module memory. If the malfunction returns in the next (second) drive cycle, the MIL comes on and a Confirmed DTC and the freeze data are stored.

Conditions for clearing the DTC

The MIL is cleared if the malfunction does not return in three consecutive trips in which the diagnostic runs. The MIL, the Pending DTC, the Confirmed DTC, and the freeze data can be cleared with the scan tool clear command.

DTC P0ACA

DTC P0ACA: HV Battery Temperature Sensor 3 Circuit

General Description

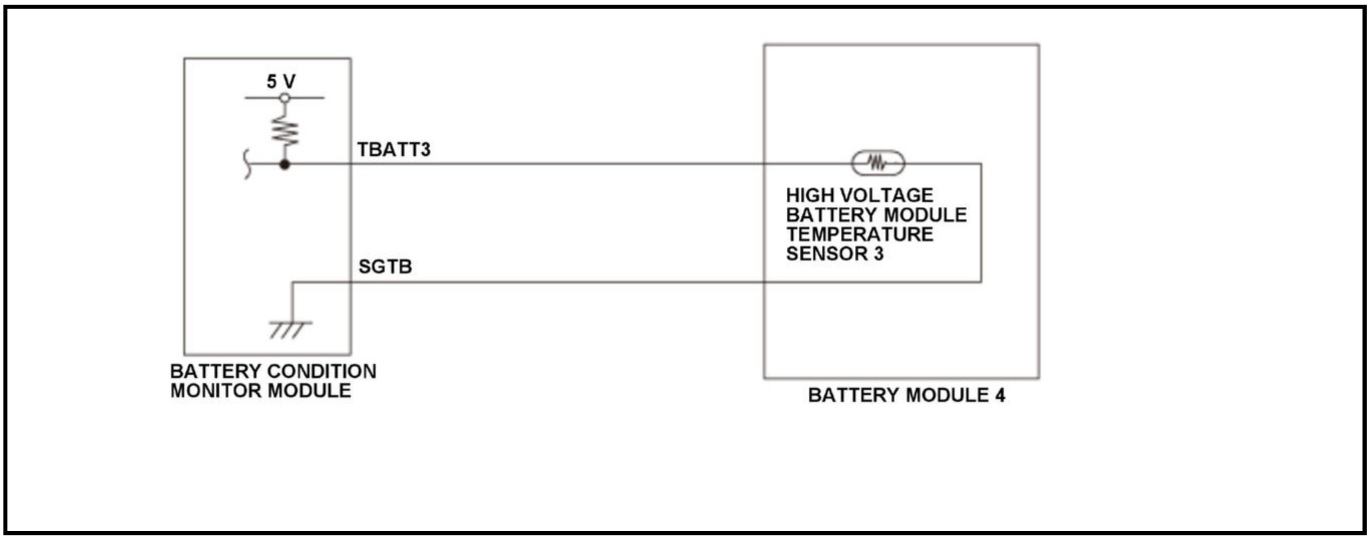
5 V
TBATT3
SGTB
HIGH VOLTAGE BATTERY MODULE TEMPERATURE SENSOR 3
BATTERY CONDITION MONITOR MODULE
BATTERY MODULE 4

Four high voltage battery module temperature sensors are attached to the battery module in the battery pack, and the battery condition monitor module continuously monitors the battery module temperature. If the battery condition monitor module input voltage from high voltage battery module temperature sensor 3 is out of the specified voltage for a set time, a malfunction is detected and a DTC is stored.

Monitor Execution, Sequence, Duration, DTC Type

Execution	Continuous
Sequence	None
Duration	3.0 seconds or more
DTC Type	Two drive cycles, MIL on, POWER SYSTEM indicator on, 12 VOLT CHARGING SYSTEM indicator off

Enable Conditions

Condition	Minimum	Maximum
Elapsed time since the 12 volt battery voltage reaches to a specified value after the	50 milliseconds	-

Condition	Minimum	Maximum
vehicle condition is turned to the ON mode		
12 volt battery voltage	8.0 V	-

Malfunction Threshold

The high voltage battery module temperature sensor 3 output voltage [HV Battery Module Temperature Sensor 3 Voltage] is 0.72 V or less, or 4.83 V or more for at least 3.0 seconds.

[ ]: HDS Parameter

Possible Cause

NOTE: The causes shown may not be a complete list of all potential problems, and it is possible that there may be other causes.

- High voltage battery module temperature sensor 3 failure
- Battery condition monitor module failure

Diagnosis Details

Conditions for setting the DTC

When a malfunction is detected during the first drive cycle, a Pending DTC is stored in the battery condition monitor module memory. If the malfunction returns in the next (second) drive cycle, the MIL comes on and a Confirmed DTC and the freeze data are stored.

Conditions for clearing the DTC

The MIL is cleared if the malfunction does not return in three consecutive trips in which the diagnostic runs. The MIL, the Pending DTC, the Confirmed DTC, and the freeze data can be cleared with the scan tool clear command.

DTC P0ACB

DTC P0ACB: HV Battery Temperature Sensor 3 Circuit Range/Performance

General Description

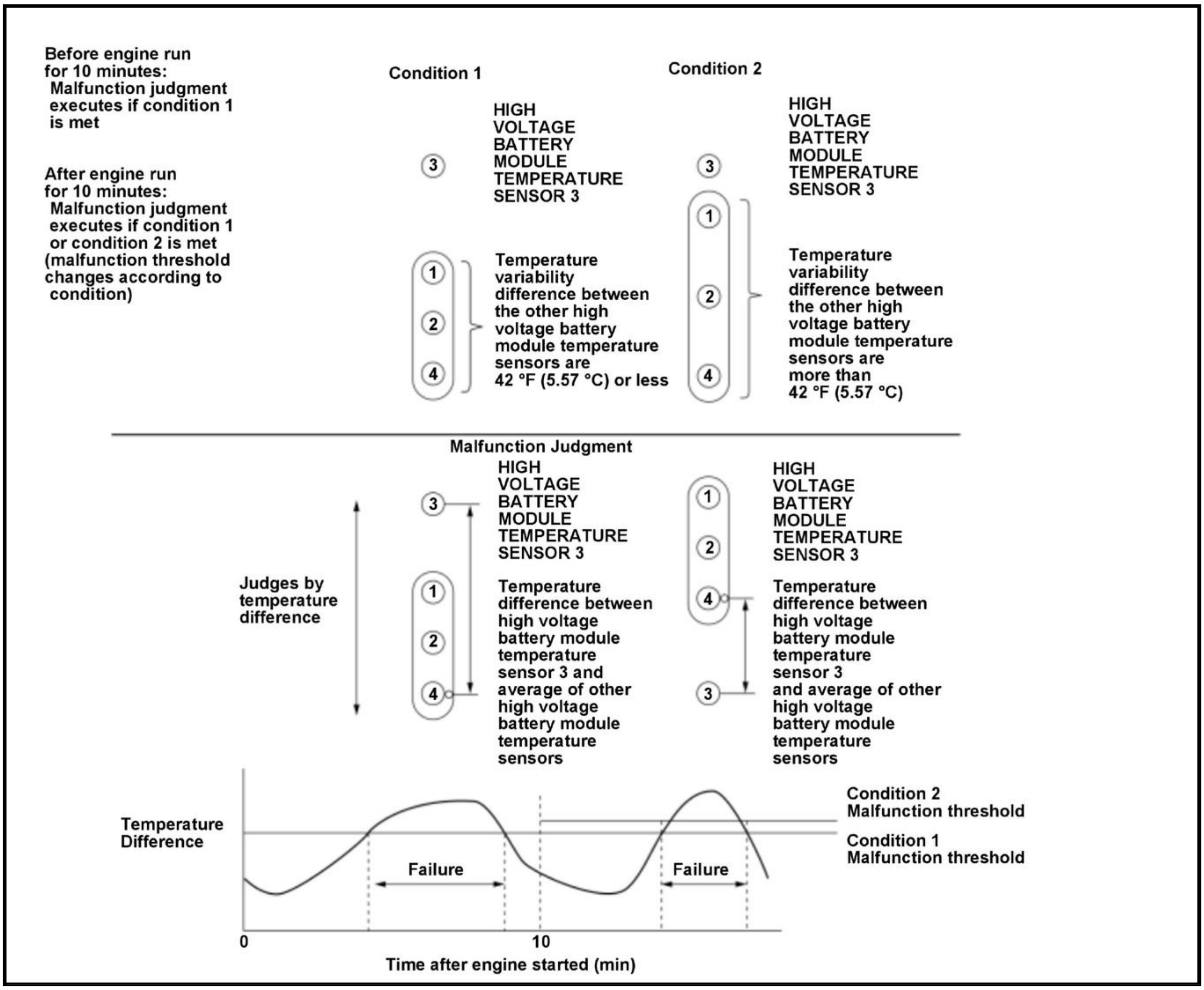
Before engine run for 10 minutes: Malfunction judgment executes if condition 1 is met
After engine run for 10 minutes: Malfunction judgment executes if condition 1 or condition 2 is met (malfunction threshold changes according to condition)
Condition 1
HIGH VOLTAGE BATTERY MODULE TEMPERATURE SENSOR 3
Temperature variability difference between the other high voltage battery module temperature sensors are 42 °F (5.57 °C) or less
Condition 2
HIGH VOLTAGE BATTERY MODULE TEMPERATURE SENSOR 3
Temperature variability difference between the other high voltage battery module temperature sensors are more than 42 °F (5.57 °C)
Malfunction Judgment
Judges by temperature difference
HIGH VOLTAGE BATTERY MODULE TEMPERATURE SENSOR 3
Temperature difference between high voltage battery module temperature sensor 3 and average of other high voltage battery module temperature sensors
Temperature Difference
Failure
Condition 2 Malfunction threshold
Condition 1 Malfunction threshold
0
10
Time after engine started (min)
1
2
3
4

The temperatures between the battery modules are kept approximately equal if the high voltage battery module fan, the high voltage battery module temperature sensors, the battery pack, and the inverter, etc. are operating normal. The high voltage battery module temperature sensors are compared to detect characteristic abnormality of themselves. If the temperature difference between high voltage battery module temperature sensor 3 and the average of other high voltage battery module temperature sensors is a specified value, the battery condition monitor module detects a malfunction and stores a DTC.

Monitor Execution, Sequence, Duration, DTC Type

Execution	Continuous
Sequence	None
Duration	-
DTC Type	Two drive cycles, MIL on, POWER SYSTEM indicator on, 12 VOLT CHARGING SYSTEM indicator off

Enable Conditions

Condition	Minimum	Maximum
Elapsed time after the vehicle condition is turned to the ON mode**	10 minutes	-
Temperature variability between the battery module temperature (high voltage	-	42 deg.F (5.57 deg.C)

Condition	Minimum	Maximum
battery module temperature sensor 1, 2, 4)*		
Temperature variability between the battery module temperature (high voltage battery module temperature sensor 1, 2, 4)**	42 deg.F (5.57 deg.C)	-
Vehicle	ON mode	
Other	High voltage battery module fan must be operating normal	

*: Condition 1

**: Condition 2

Malfunction Threshold

- If the vehicle is in Condition 1

  The temperature difference between high voltage battery module temperature sensor 3 and the average of other high voltage battery module temperature sensors is 61 deg.F (16 deg.C) or more.

- If the vehicle is in Condition 2

  The temperature difference between high voltage battery module temperature sensor 3 and the average of other high voltage battery module temperature sensors is 65 deg.F (18 deg.C) or more.

Possible Cause

NOTE: The causes shown may not be a complete list of all potential problems, and it is possible that there may be other causes.

- Cooling fan air duct blocked or fell off
- Battery pack internal circuit failure

Diagnosis Details

Conditions for setting the DTC

When a malfunction is detected during the first drive cycle, a Pending DTC is stored in the battery condition monitor module memory. If the malfunction returns in the next (second) drive cycle, the MIL comes on and a Confirmed DTC and the freeze data are stored.

Conditions for clearing the DTC

The MIL is cleared if the malfunction does not return in three consecutive trips in which the diagnostic runs. The MIL, the Pending DTC, the Confirmed DTC, and the freeze data can be cleared with the scan tool clear command or the battery condition monitor module reset.

DTC P0ACC

DTC P0ACC: HV Battery Temperature Sensor 3 Circuit Low

General Description

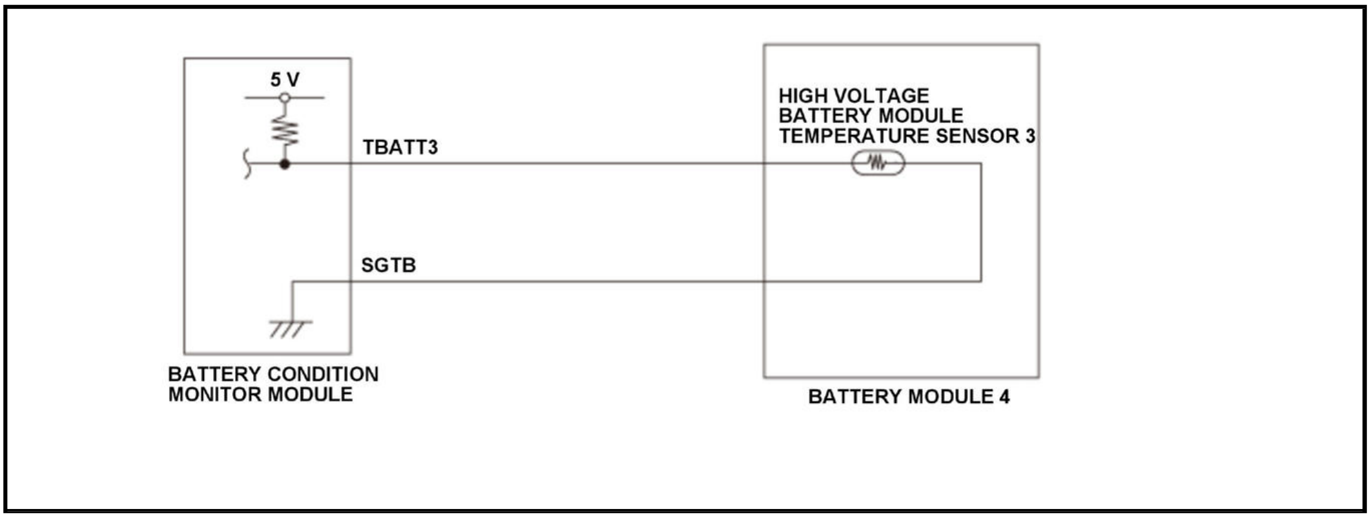
5 V
TBATT3
SGTB
BATTERY CONDITION MONITOR MODULE
HIGH VOLTAGE BATTERY MODULE TEMPERATURE SENSOR 3
BATTERY MODULE 4

Four high voltage battery module temperature sensors are attached to the battery module in the battery pack, and the battery condition monitor module continuously monitors the battery module temperature. If the battery condition monitor module input voltage from high voltage battery module temperature sensor 3 is a specified voltage for a set time, a malfunction is detected and a DTC is stored.

Monitor Execution, Sequence, Duration, DTC Type

Execution	Continuous
Sequence	None
Duration	2.0 seconds or more
DTC Type	Two drive cycles, MIL on, POWER SYSTEM indicator on, 12 VOLT CHARGING SYSTEM indicator off

Enable Conditions

Condition	B
Vehicle	ON mode

Malfunction Threshold

The high voltage battery module temperature sensor 3 output voltage [HV Battery Module Temperature Sensor 3 Voltage] is 0.07 V or less for at least 2.0 seconds.

[ ]: HDS Parameter

Possible Cause

NOTE: The causes shown may not be a complete list of all potential problems, and it is possible that there may be other causes.

- High voltage battery module temperature sensor 3 TBATT3 line short to ground
- Battery condition monitor module internal circuit failure

Diagnosis Details

Conditions for setting the DTC

When a malfunction is detected during the first drive cycle, a Pending DTC is stored in the battery condition monitor module memory. If the malfunction returns in the next (second) drive cycle, the MIL comes on and a Confirmed DTC and the freeze data are stored.

Conditions for clearing the DTC

The MIL is cleared if the malfunction does not return in three consecutive trips in which the diagnostic runs. The MIL, the Pending DTC, the Confirmed DTC, and the freeze data can be cleared with the scan tool clear command.

DTC P0ACD

DTC P0ACD: HV Battery Temperature Sensor 3 Circuit High

General Description

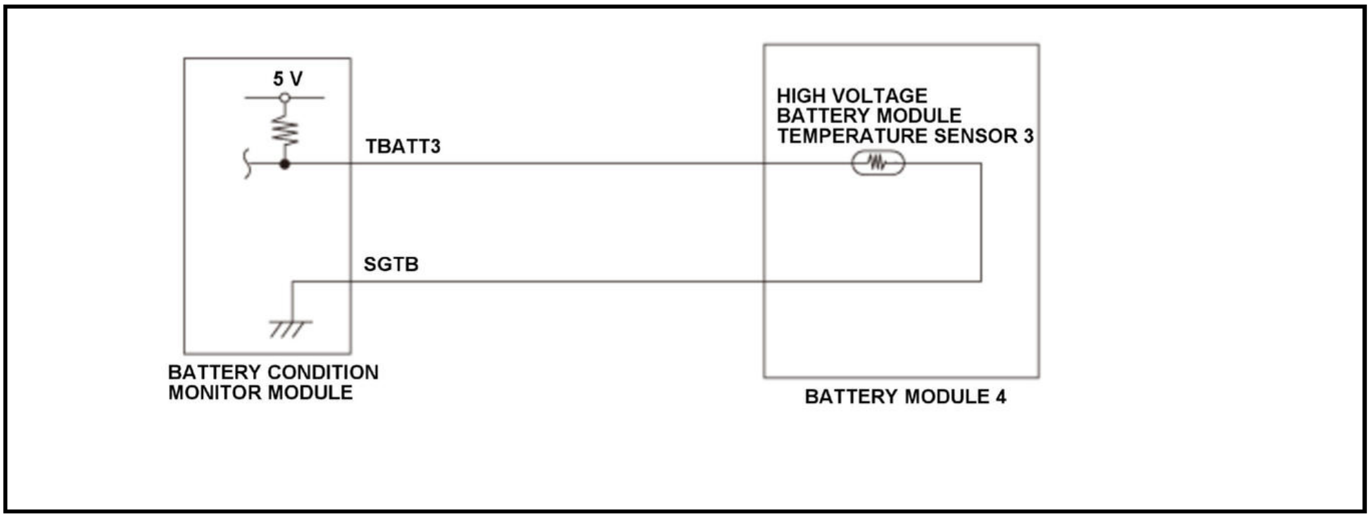
5 V
TBATT3
SGTB
BATTERY CONDITION MONITOR MODULE
HIGH VOLTAGE BATTERY MODULE TEMPERATURE SENSOR 3
BATTERY MODULE 4

Four high voltage battery module temperature sensors are attached to the battery module in the battery pack, and the battery condition monitor module continuously monitors the battery module temperature. If the battery condition monitor module input voltage from high voltage battery module temperature sensor 3 is a specified voltage for a set time, a malfunction is detected and a DTC is stored.

Monitor Execution, Sequence, Duration, DTC Type

Execution	Continuous
Sequence	None
Duration	2.0 seconds or more
DTC Type	Two drive cycles, MIL on, POWER SYSTEM indicator on, 12 VOLT CHARGING SYSTEM indicator off

Enable Conditions

Condition	B
Vehicle	ON mode

Malfunction Threshold

The high voltage battery module temperature sensor 3 output voltage [HV Battery Module Temperature Sensor 3 Voltage] is 4.93 V or more for at least 2.0 seconds.

[ ]: HDS Parameter

Possible Cause

NOTE: The causes shown may not be a complete list of all potential problems, and it is possible that there may be other causes.

- High voltage battery module temperature sensor 3 TBATT3 line open
- High voltage battery module temperature sensor 3 SGTB line open

- Battery condition monitor module internal circuit failure

Diagnosis Details

Conditions for setting the DTC

When a malfunction is detected during the first drive cycle, a Pending DTC is stored in the battery condition monitor module memory. If the malfunction returns in the next (second) drive cycle, the MIL comes on and a Confirmed DTC and the freeze data are stored.

Conditions for clearing the DTC

The MIL is cleared if the malfunction does not return in three consecutive trips in which the diagnostic runs. The MIL, the Pending DTC, the Confirmed DTC, and the freeze data can be cleared with the scan tool clear command.

DTC P0AE1

DTC P0AE1: HV Battery Precharge Contactor Circuit

General Description

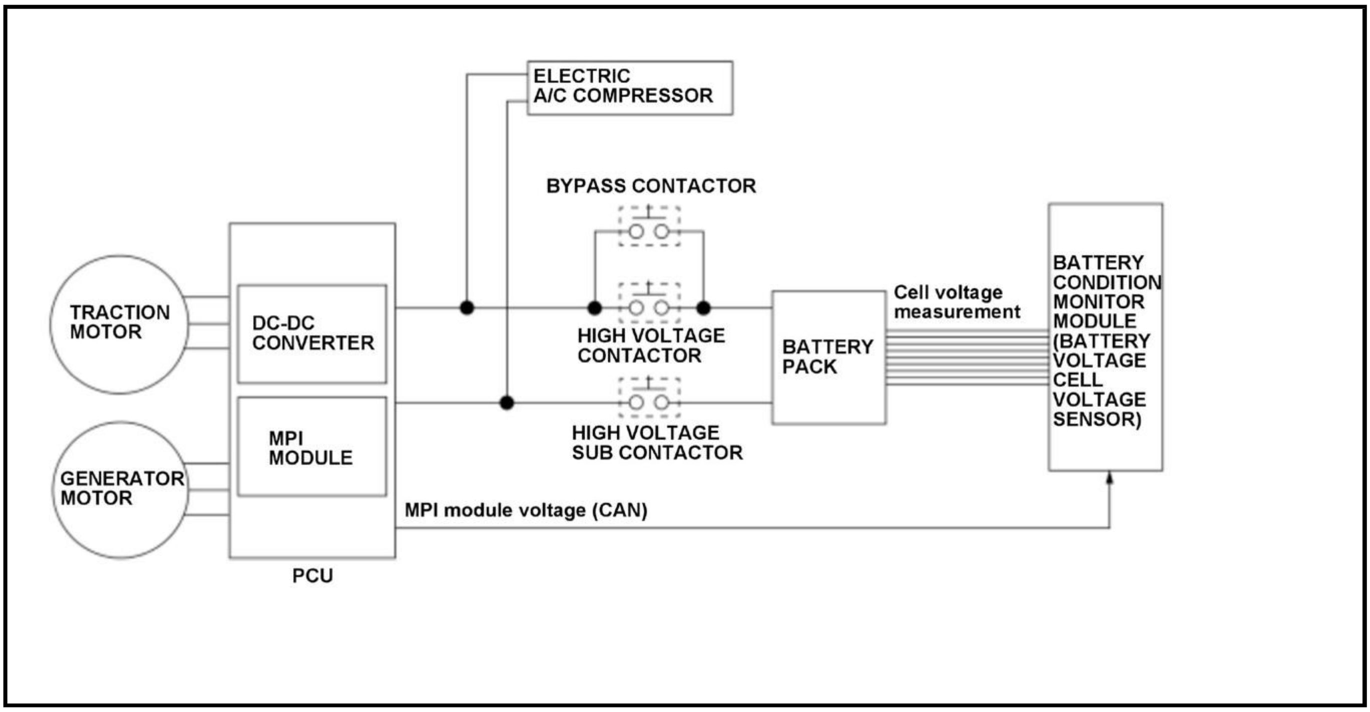
ELECTRIC A/C COMPRESSOR
BYPASS CONTACTOR
TRACTION MOTOR
DC-DC CONVERTER
HIGH VOLTAGE CONTACTOR
BATTERY PACK
Cell voltage measurement
BATTERY CONDITION MONITOR MODULE (BATTERY VOLTAGE CELL VOLTAGE SENSOR)
MPI MODULE
HIGH VOLTAGE SUB CONTACTOR
GENERATOR MOTOR
MPI module voltage (CAN)
PCU

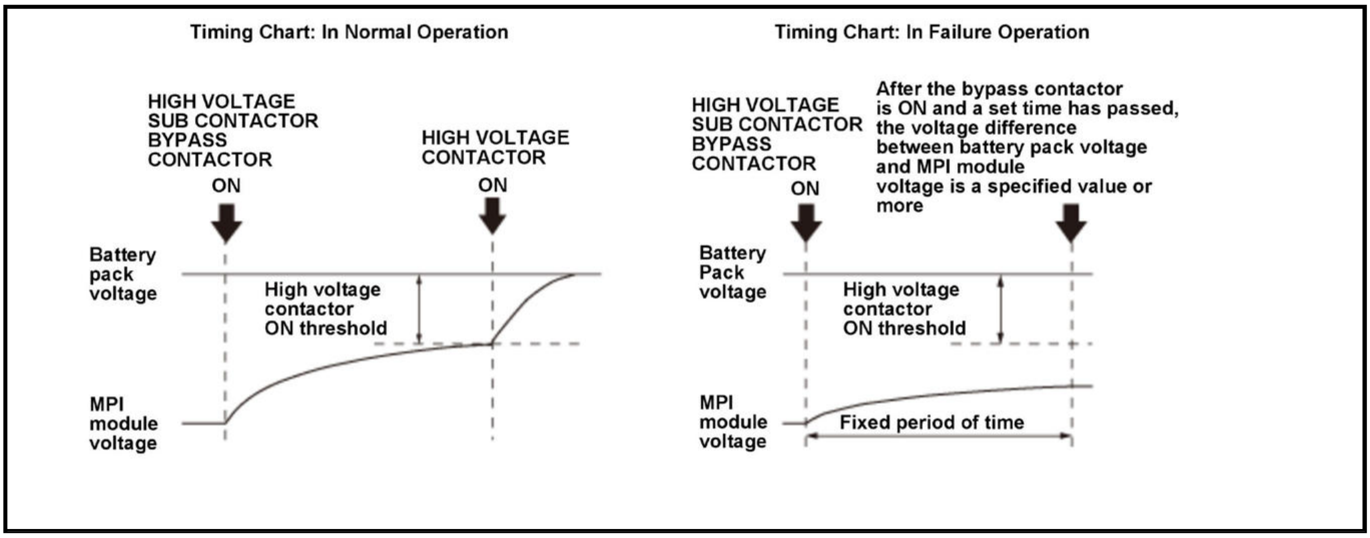

In electric powertrain system, the high voltage contactor between the battery pack and the inverter is turned ON to operate the electric powertrain system after vehicle condition is turned to the ON mode. At this time, the high voltage sub contactor and the bypass contactor are turned ON before the high voltage contactor is turned ON, and the power drive unit (PDU) capacitor is gradually charged by the controlled current of the bypass resistor. When the difference of the voltage between the inverter and the battery pack is within the specified value, the high voltage contactor is turned ON and the bypass contactor is turned OFF. If the difference of the voltage between the inverter and the battery pack does not become a specified value for a set time after the bypass contactor is turned ON, the battery condition monitor module detects a malfunction and stores a DTC.

Monitor Execution, Sequence, Duration, DTC Type

Execution	Once per driving cycle
Sequence	None

Duration	660 milliseconds or more
DTC Type	One drive cycle, MIL off, POWER SYSTEM indicator on, 12 VOLT CHARGING SYSTEM indicator on

Enable Conditions

Condition	Minimum	Maximum
Elapsed time after the bypass contactor on	340 milliseconds	-
Battery condition monitor module power-supply voltage	10.2 V	-
Vehicle	ON mode	
Other	MPI module voltage must be lower than battery pack voltage	

Malfunction Threshold

The difference between the MPI module voltage and the battery pack voltage is more than 9.3 V after 660 milliseconds past from the bypass contactor is turned ON.

Possible Cause

NOTE: The causes shown may not be a complete list of all potential problems, and it is possible that there may be other causes.

- High voltage sub contactor CNTN line open
- Bypass contactor PRE line open
- High voltage contactor CNTP line open
- High voltage contactor/High voltage sub contactor/Bypass contactor CNTPSIN line open
- Busbar poor connection
- Busbar failure
- Service plug poor connection
- Service plug failure
- Main fuse failure
- Bypass contactor stuck off
- High voltage contactor stuck off
- High voltage sub contactor stuck off
- Battery pack internal circuit failure
- Bypass resistor poor connection
- Bypass resistor failure

- Junction board poor connection
- Power control unit (PCU) internal circuit failure
- Battery condition monitor module internal circuit failure

Confirmation Procedure

Operating condition

Turn the vehicle to the ON mode, and wait for at least 2 seconds.

Diagnosis Details

Conditions for setting the DTC

When a malfunction is detected, a Pending DTC, a Confirmed DTC, and the freeze data are stored in the battery condition monitor module memory. The MIL does not come on.

Conditions for clearing the DTC

The Pending DTC, the Confirmed DTC, and the freeze data can be cleared with the scan tool clear command or the battery condition monitor module reset.

DTC P0AE8

DTC P0AE8: HV Battery Temperature Sensor 4 Circuit

General Description

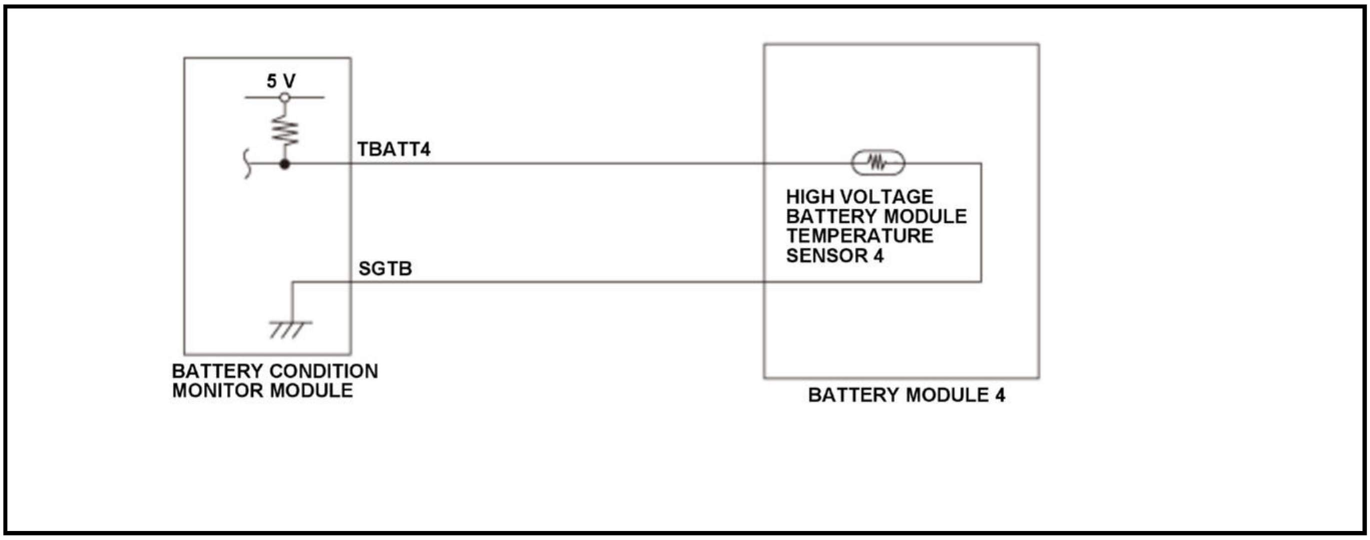
5 V
TBATT4
SGTB
HIGH VOLTAGE BATTERY MODULE TEMPERATURE SENSOR 4
BATTERY CONDITION MONITOR MODULE
BATTERY MODULE 4

Four high voltage battery module temperature sensors are attached to the battery module in the battery pack, and the battery condition monitor module continuously monitors the battery module temperature. If the battery condition monitor module input voltage from high voltage battery module temperature sensor 4 is a specified voltage for a set time, a malfunction is detected and a DTC is stored.

Monitor Execution, Sequence, Duration, DTC Type

Execution	Continuous
Sequence	None
Duration	3.0 seconds or more
DTC Type	Two drive cycles, MIL on, POWER SYSTEM indicator on, 12 VOLT CHARGING SYSTEM indicator off

Enable Conditions

Condition	Minimum	Maximum
Elapsed time since the 12 volt battery voltage reaches to a specified value after the vehicle condition is turned to the ON mode	50 milliseconds	-
12 volt battery voltage	8.0 V	-

Malfunction Threshold

The high voltage battery module temperature sensor 4 output voltage [HV Battery Module Temperature Sensor 4 Voltage] is 0.72 V or less, or 4.83 V or more for at least 3.0 seconds.

[ ]: HDS Parameter

Possible Cause

NOTE: The causes shown may not be a complete list of all potential problems, and it is possible that there may be other causes.

- High voltage battery module temperature sensor 4 failure
- Battery condition monitor module failure

Diagnosis Details

Conditions for setting the DTC

When a malfunction is detected during the first drive cycle, a Pending DTC is stored in the battery condition monitor module memory. If the malfunction returns in the next (second) drive cycle, the MIL comes on and a Confirmed DTC and the freeze data are stored.

Conditions for clearing the DTC

The MIL is cleared if the malfunction does not return in three consecutive trips in which the diagnostic runs. The MIL, the Pending DTC, the Confirmed DTC, and the freeze data can be cleared with the scan tool Clear command or by disconnecting the 12 volt battery.

DTC P0AE9

DTC P0AE9: HV Battery Temperature Sensor 4 Circuit Range/Performance

General Description

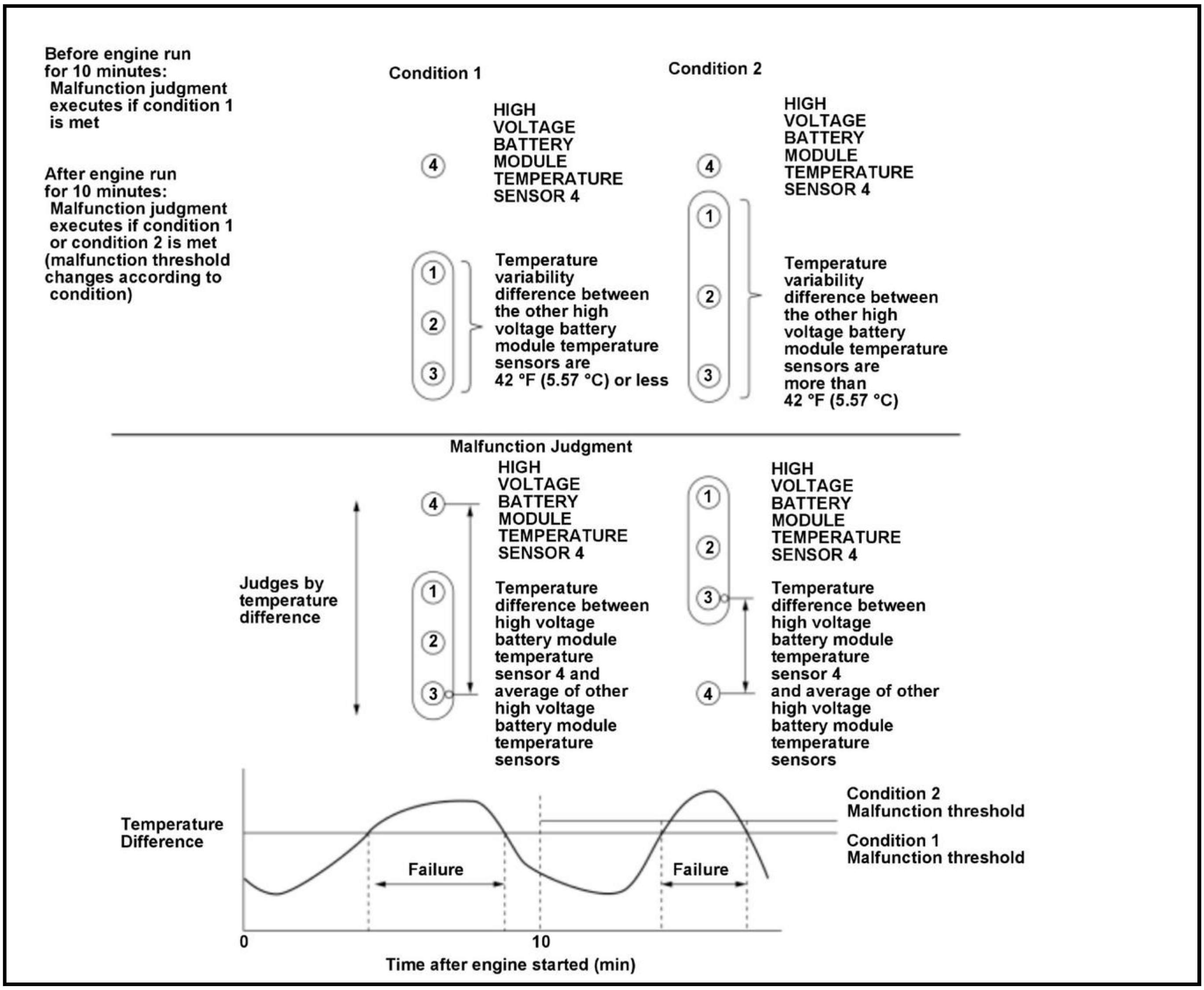
Before engine run for 10 minutes: Malfunction judgment executes if condition 1 is met
After engine run for 10 minutes: Malfunction judgment executes if condition 1 or condition 2 is met (malfunction threshold changes according to condition)
Condition 1
④
HIGH VOLTAGE BATTERY MODULE TEMPERATURE SENSOR 4
①
②
③
Temperature variability difference between the other high voltage battery module temperature sensors are 42 °F (5.57 °C) or less
Condition 2
HIGH VOLTAGE BATTERY MODULE TEMPERATURE SENSOR 4
Temperature variability difference between the other high voltage battery module temperature sensors are more than 42 °F (5.57 °C)
Malfunction Judgment
Judges by temperature difference
HIGH VOLTAGE BATTERY MODULE TEMPERATURE SENSOR 4
Temperature difference between high voltage battery module temperature sensor 4 and average of other high voltage battery module temperature sensors
Temperature Difference
Failure
Failure
Condition 2 Malfunction threshold
Condition 1 Malfunction threshold
0
10
Time after engine started (min)

The temperatures between the battery modules are kept approximately equal if the high voltage battery module fan, the high voltage battery module temperature sensors, the battery pack, and the inverter, etc. are operating normal. The high voltage battery module temperature sensors are compared to detect characteristic abnormality of themselves. If the temperature difference between high voltage battery module temperature sensor 4 and the average of other high voltage battery module temperature sensors is a specified value, the battery condition monitor module detects a malfunction and stores a DTC.

Monitor Execution, Sequence, Duration, DTC Type

Execution	Continuous
Sequence	None
Duration	-
DTC Type	Two drive cycles, MIL on, POWER SYSTEM indicator on, 12 VOLT CHARGING SYSTEM indicator off

Enable Conditions

Condition	Minimum	Maximum
Elapsed time after the vehicle condition is turned to the ON mode**	10 minutes	-
Temperature variability between the battery module temperature (high voltage	-	42 deg.F (5.57 deg.C)

Condition	Minimum	Maximum
battery module temperature sensor 1, 2, 3)*		
Temperature variability between the battery module temperature (high voltage battery module temperature sensor 1, 2, 3)**	42 deg.F (5.57 deg.C)	-
Vehicle	ON mode	
Other	High voltage battery module fan must be operating normal	

*: Condition 1

**: Condition 2

Malfunction Threshold

- If the vehicle is in Condition 1

  The temperature difference between high voltage battery module temperature sensor 4 and the average of other high voltage battery module temperature sensors is 61 deg.F (16 deg.C) or more.

- If the vehicle is in Condition 2

  The temperature difference between high voltage battery module temperature sensor 4 and the average of other high voltage battery module temperature sensors is 65 deg.F (18 deg.C) or more.

Possible Cause

NOTE: The causes shown may not be a complete list of all potential problems, and it is possible that there may be other causes.

- Cooling fan air duct blocked or fell off
- Battery pack internal circuit failure

Diagnosis Details

Conditions for setting the DTC

When a malfunction is detected during the first drive cycle, a Pending DTC is stored in the battery condition monitor module memory. If the malfunction returns in the next (second) drive cycle, the MIL comes on and a Confirmed DTC and the freeze data are stored.

Conditions for clearing the DTC

The MIL is cleared if the malfunction does not return in three consecutive trips in which the diagnostic runs. The MIL, the Pending DTC, the Confirmed DTC, and the freeze data can be cleared with the scan tool clear command or the battery condition monitor module reset.

DTC P0AEA

DTC P0AEA: HV Battery Temperature Sensor 4 Circuit Low

General Description

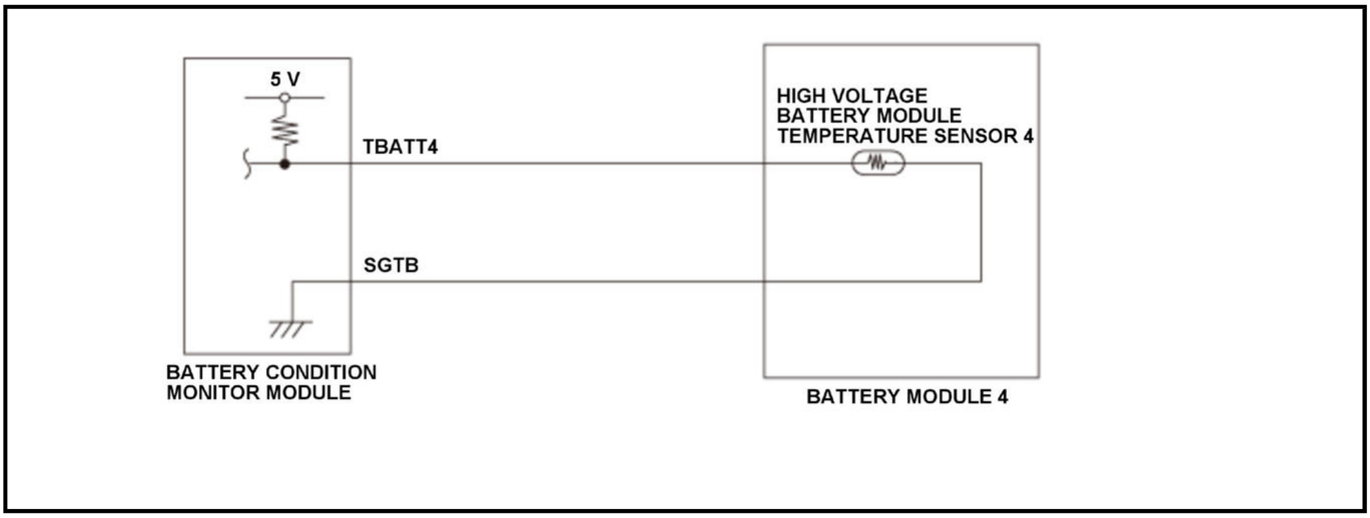
5 V
TBATT4
SGTB
BATTERY CONDITION MONITOR MODULE
HIGH VOLTAGE BATTERY MODULE TEMPERATURE SENSOR 4
BATTERY MODULE 4

Four high voltage battery module temperature sensors are attached to the battery module in the battery pack, and the battery condition monitor module continuously monitors the battery module temperature. If the battery condition monitor module input voltage from high voltage battery module temperature sensor 4 is a specified voltage for a set time, a malfunction is detected and a DTC is stored.

Monitor Execution, Sequence, Duration, DTC Type

Execution	Continuous
Sequence	None
Duration	2.0 seconds or more
DTC Type	Two drive cycles, MIL on, POWER SYSTEM indicator on, 12 VOLT CHARGING SYSTEM indicator off

Enable Conditions

Condition	B
Vehicle	ON mode

Malfunction Threshold

The high voltage battery module temperature sensor 4 output voltage [HV Battery Module Temperature Sensor 4 Voltage] is 0.07 V or less for at least 2.0 seconds.

[ ]: HDS Parameter

Possible Cause

NOTE: The causes shown may not be a complete list of all potential problems, and it is possible that there may be other causes.

- High voltage battery module temperature sensor 4 TBATT4 line short to ground
- Battery condition monitor module internal circuit failure

Diagnosis Details

Conditions for setting the DTC

When a malfunction is detected during the first drive cycle, a Pending DTC is stored in the battery condition monitor module memory. If the malfunction returns in the next (second) drive cycle, the MIL comes on and a Confirmed DTC and the freeze data are stored.

Conditions for clearing the DTC

The MIL is cleared if the malfunction does not return in three consecutive trips in which the diagnostic runs. The MIL, the Pending DTC, the Confirmed DTC, and the freeze data can be cleared with the scan tool clear command.

DTC P0AEB

DTC P0AEB: HV Battery Temperature Sensor 4 Circuit High

General Description

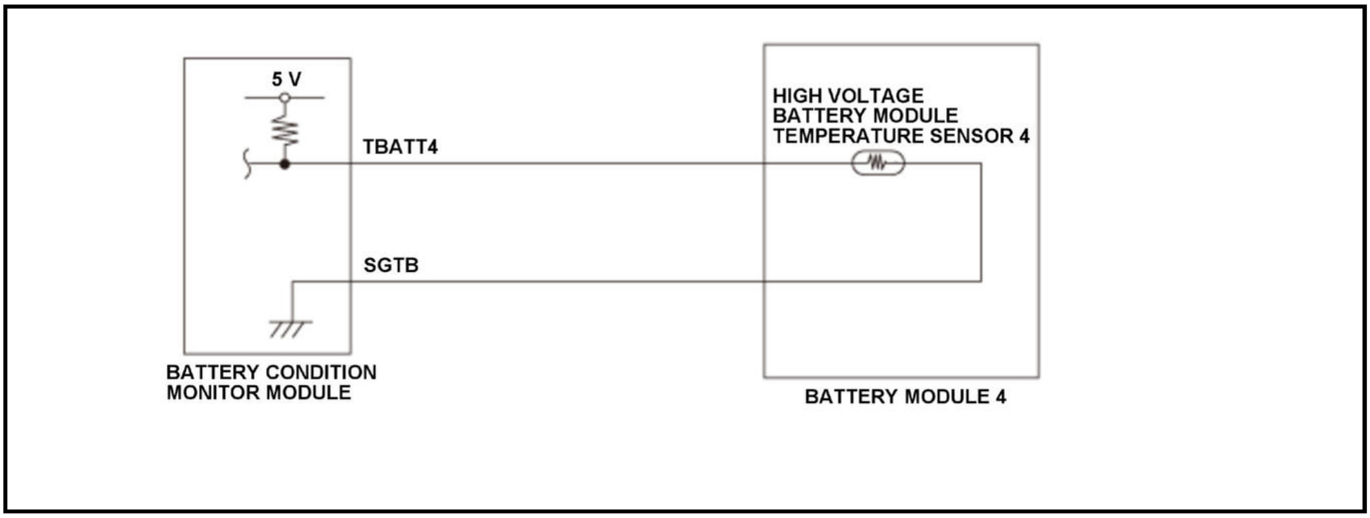
5 V
TBATT4
SGTB
BATTERY CONDITION MONITOR MODULE
HIGH VOLTAGE BATTERY MODULE TEMPERATURE SENSOR 4
BATTERY MODULE 4

Four high voltage battery module temperature sensors are attached to the battery module in the battery pack, and the battery condition monitor module continuously monitors the battery module temperature. If the battery condition monitor module input voltage from high voltage battery module temperature sensor 4 is a specified voltage for a set time, a malfunction is detected and a DTC is stored.

Monitor Execution, Sequence, Duration, DTC Type

Execution	Continuous
Sequence	None
Duration	2.0 seconds or more
DTC Type	Two drive cycles, MIL on, POWER SYSTEM indicator on, 12 VOLT CHARGING SYSTEM indicator off

Enable Conditions

Condition	B
Vehicle	ON mode

Malfunction Threshold

The high voltage battery module temperature sensor 4 output voltage [HV Battery Module Temperature Sensor 4 Voltage] is 4.93 V or more for at least 2.0 seconds.

[ ]: HDS Parameter

Possible Cause

NOTE: The causes shown may not be a complete list of all potential problems, and it is possible that there may be other causes.

- High voltage battery module temperature sensor 4 TBATT4 line open
- High voltage battery module temperature sensor 4 SGTB line open

- Battery condition monitor module internal circuit failure

Diagnosis Details

Conditions for setting the DTC

When a malfunction is detected during the first drive cycle, a Pending DTC is stored in the battery condition monitor module memory. If the malfunction returns in the next (second) drive cycle, the MIL comes on and a Confirmed DTC and the freeze data are stored.

Conditions for clearing the DTC

The MIL is cleared if the malfunction does not return in three consecutive trips in which the diagnostic runs. The MIL, the Pending DTC, the Confirmed DTC, and the freeze data can be cleared with the scan tool clear command.

DTC P0AFA

DTC P0AFA: HV Battery System Voltage Low

General Description

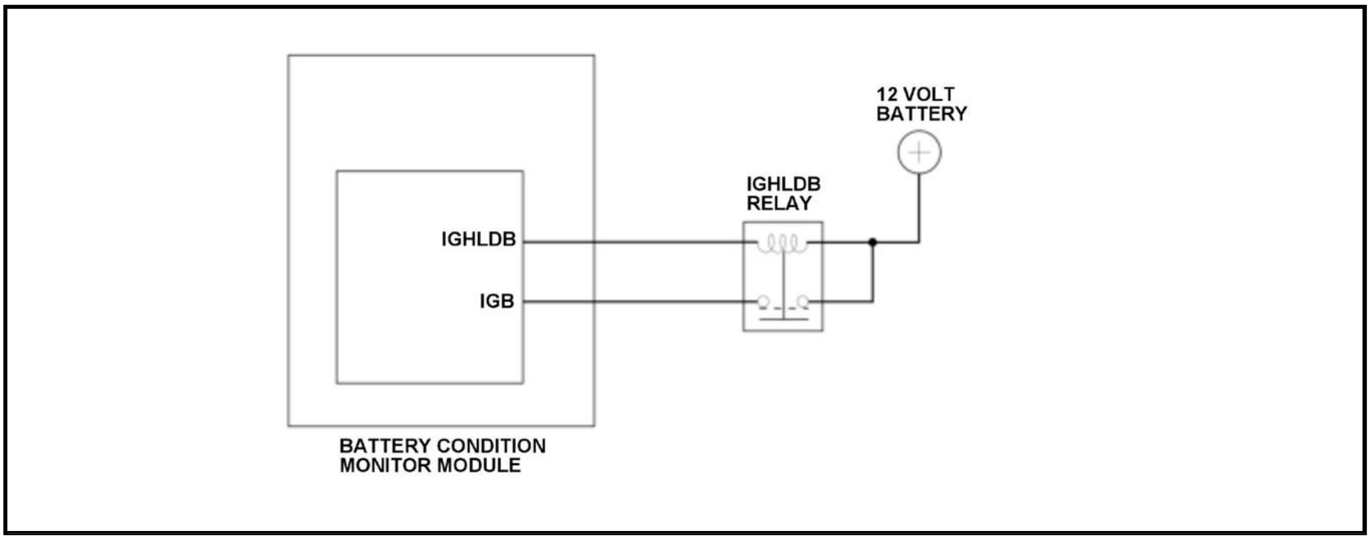

The battery condition monitor module drives the IGHLDB relay and monitors output voltage. If the IGB voltage decreases even though there is a certain voltage to the IG1MONI, the battery condition monitor module detects a malfunction and stores a DTC.

Monitor Execution, Sequence, Duration, DTC Type

Execution	Continuous
Sequence	None
Duration	2.0 seconds or more
DTC Type	One drive cycle, MIL on, POWER SYSTEM indicator on, 12 VOLT CHARGING SYSTEM indicator on

Enable Conditions

Condition	B
Vehicle	ON mode

Malfunction Threshold

The IGB voltage is 1.0 V or less for at least 0.5 seconds when the IG1 voltage is 9.2 V or more.

Possible Cause

NOTE: The causes shown may not be a complete list of all potential problems, and it is possible that there may be other causes.

- IGHLDB relay IGHLDB line failure
- IGHLDB relay IGB line failure
- IGHLDB relay failure
- Battery condition monitor module internal circuit failure

Diagnosis Details

Conditions for setting the DTC

When a malfunction is detected, the MIL comes on and a Pending DTC, a Confirmed DTC, and the freeze data are stored in the battery condition monitor module memory.

Conditions for clearing the DTC

The MIL is cleared if the malfunction does not return in three consecutive trips in which the diagnostic runs. The MIL, the Pending DTC, the Confirmed DTC, and the freeze data can be cleared with the scan tool clear command.

DTC P0B3B

DTC P0B3B: HV Battery Cell Voltage Sense Circuit 1

General Description

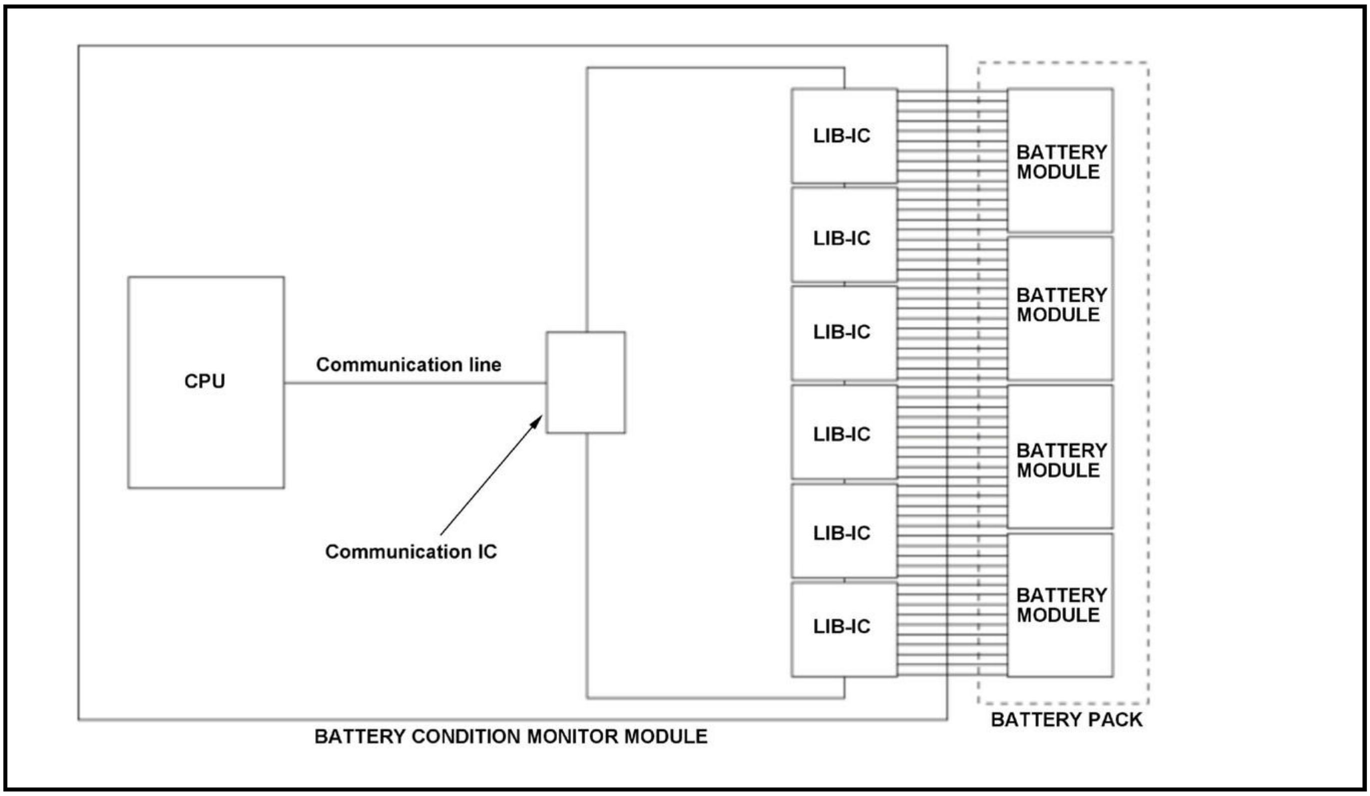
LIB-IC
LIB-IC
LIB-IC
LIB-IC
LIB-IC
LIB-IC
BATTERY MODULE
BATTERY MODULE
BATTERY MODULE
BATTERY MODULE
CPU
Communication line
Communication IC
BATTERY CONDITION MONITOR MODULE
BATTERY PACK

The CPU and a LIB-IC are built into the battery condition monitor module and the CPU detects various malfunctions. The CPU transmits/receives information to/from the LIB-IC by using communication line. When the CPU detects the failures of the LIB-IC or the battery pack for a set time, a malfunction is detected and stores a DTC.

Monitor Execution, Sequence, Duration, DTC Type

Execution	Continuous
Sequence	None
Duration	8 seconds or more
DTC Type	One drive cycle, MIL on, POWER SYSTEM indicator on, 12 VOLT CHARGING SYSTEM indicator off

Enable Conditions

Condition	B
Vehicle	ON mode

Malfunction Threshold

Any of the condition is met for at least 8 seconds:

- Clock monitor of CPU in the battery condition monitor module failure
- CRC monitor of CPU in the battery condition monitor module failure
- Timer monitor of CPU in the battery condition monitor module failure
- Battery pack voltage monitor failure

Possible Cause

NOTE: The causes shown may not be a complete list of all potential problems, and it is possible that there may be other causes.

- Battery pack line failure
- Battery pack internal failure
- Battery condition monitor module internal circuit failure

Diagnosis Details

Conditions for setting the DTC

When a malfunction is detected, the MIL comes on and a Pending DTC, a Confirmed DTC, and the freeze data are stored in the battery condition monitor module memory.

Conditions for clearing the DTC

The MIL is cleared if the malfunction does not return in three consecutive trips in which the diagnostic runs. The MIL, the Pending DTC, the Confirmed DTC, and the freeze data can be cleared with the scan tool clear command.

DTC P0B40

DTC P0B40: HV Battery Cell Voltage Sense Circuit 2

General Description

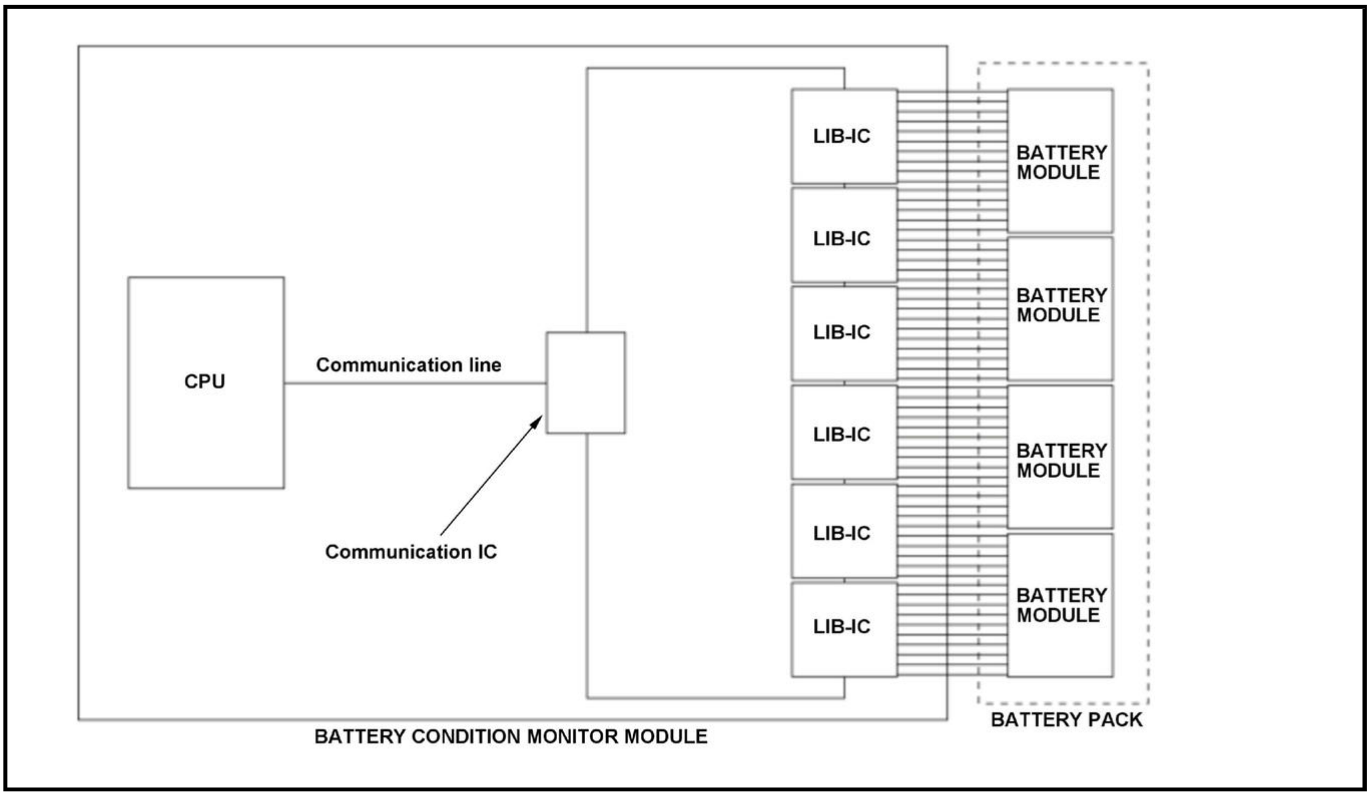
CPU
Communication line
Communication IC
LIB-IC
LIB-IC
LIB-IC
LIB-IC
LIB-IC
LIB-IC
BATTERY MODULE
BATTERY MODULE
BATTERY MODULE
BATTERY MODULE
BATTERY CONDITION MONITOR MODULE
BATTERY PACK

The CPU and a LIB-IC are built into the battery condition monitor module and the CPU detects various malfunctions. The CPU transmits/receives information to/from the LIB-IC by using communication line. When the CPU detects the failures of the LIB-IC or the battery pack for a set time, a malfunction is detected and stores a DTC.

Monitor Execution, Sequence, Duration, DTC Type

Execution	Continuous
Sequence	None
Duration	8 seconds or more
DTC Type	One drive cycle, MIL on, POWER SYSTEM indicator on, 12 VOLT CHARGING SYSTEM indicator off

Enable Conditions

Condition	B
Vehicle	ON mode

Malfunction Threshold

Any of the condition is met for at least 8 seconds:

- Clock monitor of CPU in the battery condition monitor module failure
- CRC monitor of CPU in the battery condition monitor module failure
- Timer monitor of CPU in the battery condition monitor module failure
- Battery pack voltage monitor failure

Possible Cause

NOTE: The causes shown may not be a complete list of all potential problems, and it is possible that there may be other causes.

- Battery pack line failure
- Battery pack internal failure

- Battery condition monitor module internal circuit failure

Diagnosis Details

Conditions for setting the DTC

When a malfunction is detected, the MIL comes on and a Pending DTC, a Confirmed DTC, and the freeze data are stored in the battery condition monitor module memory.

Conditions for clearing the DTC

The MIL is cleared if the malfunction does not return in three consecutive trips in which the diagnostic runs. The MIL, the Pending DTC, the Confirmed DTC, and the freeze data can be cleared with the scan tool clear command.

DTC P0B45

DTC P0B45: HV Battery Cell Voltage Sense Circuit 3

General Description

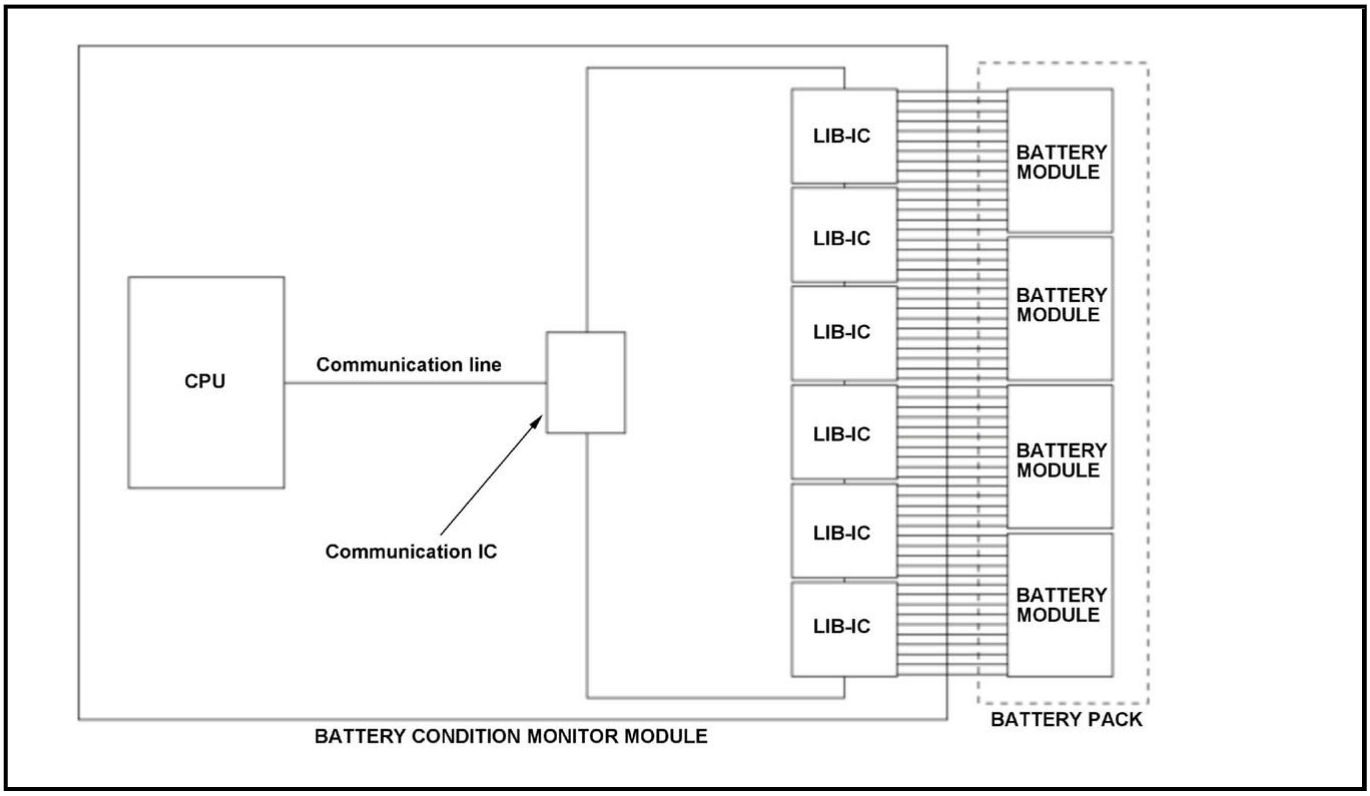
LIB-IC
LIB-IC
LIB-IC
LIB-IC
LIB-IC
LIB-IC
BATTERY MODULE
BATTERY MODULE
BATTERY MODULE
BATTERY MODULE
CPU
Communication line
Communication IC
BATTERY CONDITION MONITOR MODULE
BATTERY PACK

The CPU and a LIB-IC are built into the battery condition monitor module and the CPU detects various malfunctions. The CPU transmits/receives information to/from the LIB-IC by using communication line. When the CPU detects the failures of the LIB-IC or the battery pack for a set time, a malfunction is detected and stores a DTC.

Monitor Execution, Sequence, Duration, DTC Type

Execution	Continuous
Sequence	None
Duration	8 seconds or more
DTC Type	One drive cycle, MIL on, POWER SYSTEM indicator on, 12 VOLT CHARGING SYSTEM indicator off

Enable Conditions

Condition	B
Vehicle	ON mode

Malfunction Threshold

Any of the condition is met for at least 8 seconds:

- Clock monitor of CPU in the battery condition monitor module failure
- CRC monitor of CPU in the battery condition monitor module failure
- Timer monitor of CPU in the battery condition monitor module failure
- Battery pack voltage monitor failure

Possible Cause

NOTE: The causes shown may not be a complete list of all potential problems, and it is possible that there may be other causes.

- Battery pack line failure
- Battery pack internal failure
- Battery condition monitor module internal circuit failure

Diagnosis Details

Conditions for setting the DTC

When a malfunction is detected, the MIL comes on and a Pending DTC, a Confirmed DTC, and the freeze data are stored in the battery condition monitor module memory.

Conditions for clearing the DTC

The MIL is cleared if the malfunction does not return in three consecutive trips in which the diagnostic runs. The MIL, the Pending DTC, the Confirmed DTC, and the freeze data can be cleared with the scan tool clear command.

DTC P0B4A

DTC P0B4A: HV Battery Cell Voltage Sense Circuit 4

General Description

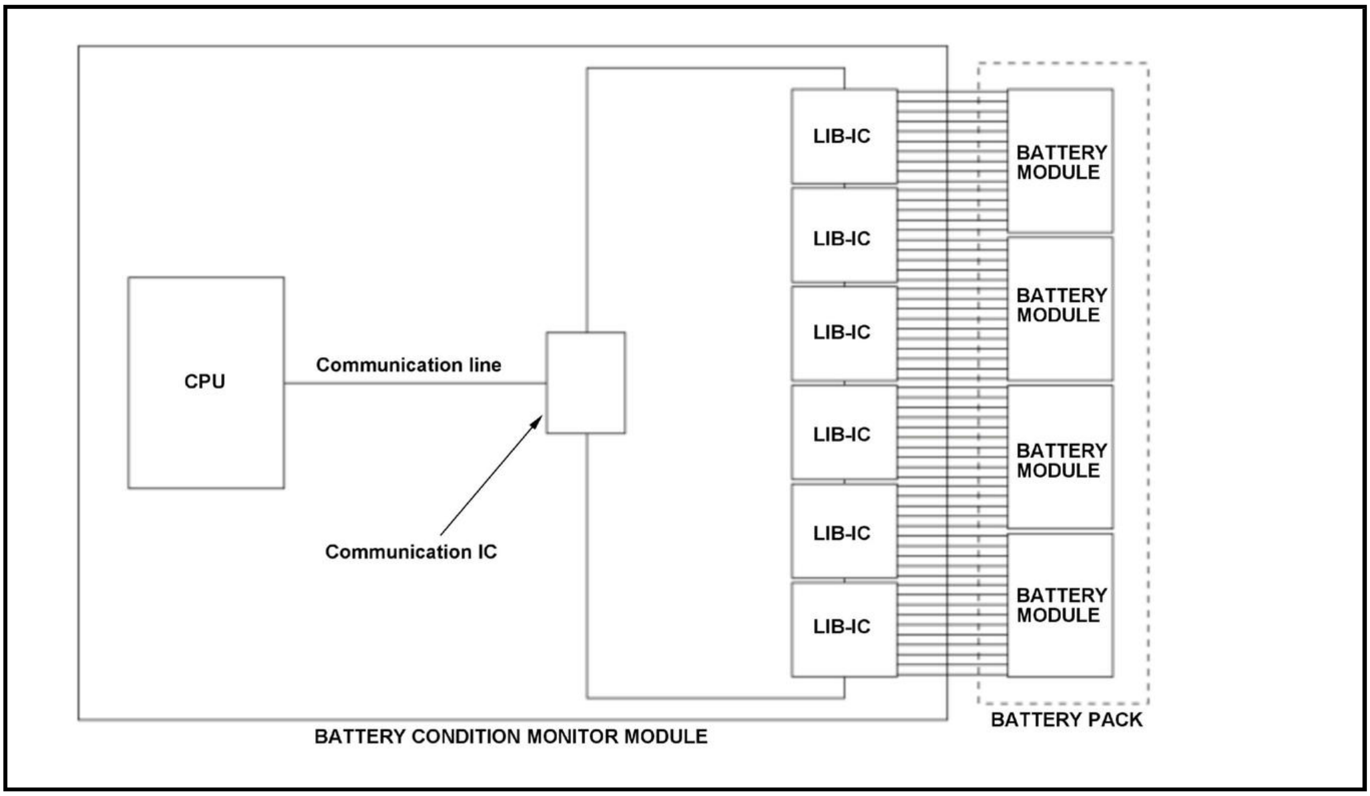
LIB-IC
LIB-IC
LIB-IC
LIB-IC
LIB-IC
LIB-IC
BATTERY MODULE
BATTERY MODULE
BATTERY MODULE
BATTERY MODULE
CPU
Communication line
Communication IC
BATTERY CONDITION MONITOR MODULE
BATTERY PACK

The CPU and a LIB-IC are built into the battery condition monitor module and the CPU detects various malfunctions. The CPU transmits/receives information to/from the LIB-IC by using communication line. When the CPU detects the failures of the LIB-IC or the battery pack for a set time, a malfunction is detected and stores a DTC.

Monitor Execution, Sequence, Duration, DTC Type

Execution	Continuous
Sequence	None
Duration	8 seconds or more
DTC Type	One drive cycle, MIL on, POWER SYSTEM indicator on, 12 VOLT CHARGING SYSTEM indicator off

Enable Conditions

Condition	B
Vehicle	ON mode

Malfunction Threshold

Any of the condition is met for at least 8 seconds:

- Clock monitor of CPU in the battery condition monitor module failure
- CRC monitor of CPU in the battery condition monitor module failure
- Timer monitor of CPU in the battery condition monitor module failure
- Battery pack voltage monitor failure

Possible Cause

NOTE: The causes shown may not be a complete list of all potential problems, and it is possible that there may be other causes.

- Battery pack line failure
- Battery pack internal failure

- Battery condition monitor module internal circuit failure

Diagnosis Details

Conditions for setting the DTC

When a malfunction is detected, the MIL comes on and a Pending DTC, a Confirmed DTC, and the freeze data are stored in the battery condition monitor module memory.

Conditions for clearing the DTC

The MIL is cleared if the malfunction does not return in three consecutive trips in which the diagnostic runs. The MIL, the Pending DTC, the Confirmed DTC, and the freeze data can be cleared with the scan tool clear command.

DTC P0B4F

DTC P0B4F: HV Battery Cell Voltage Sense Circuit 5

General Description

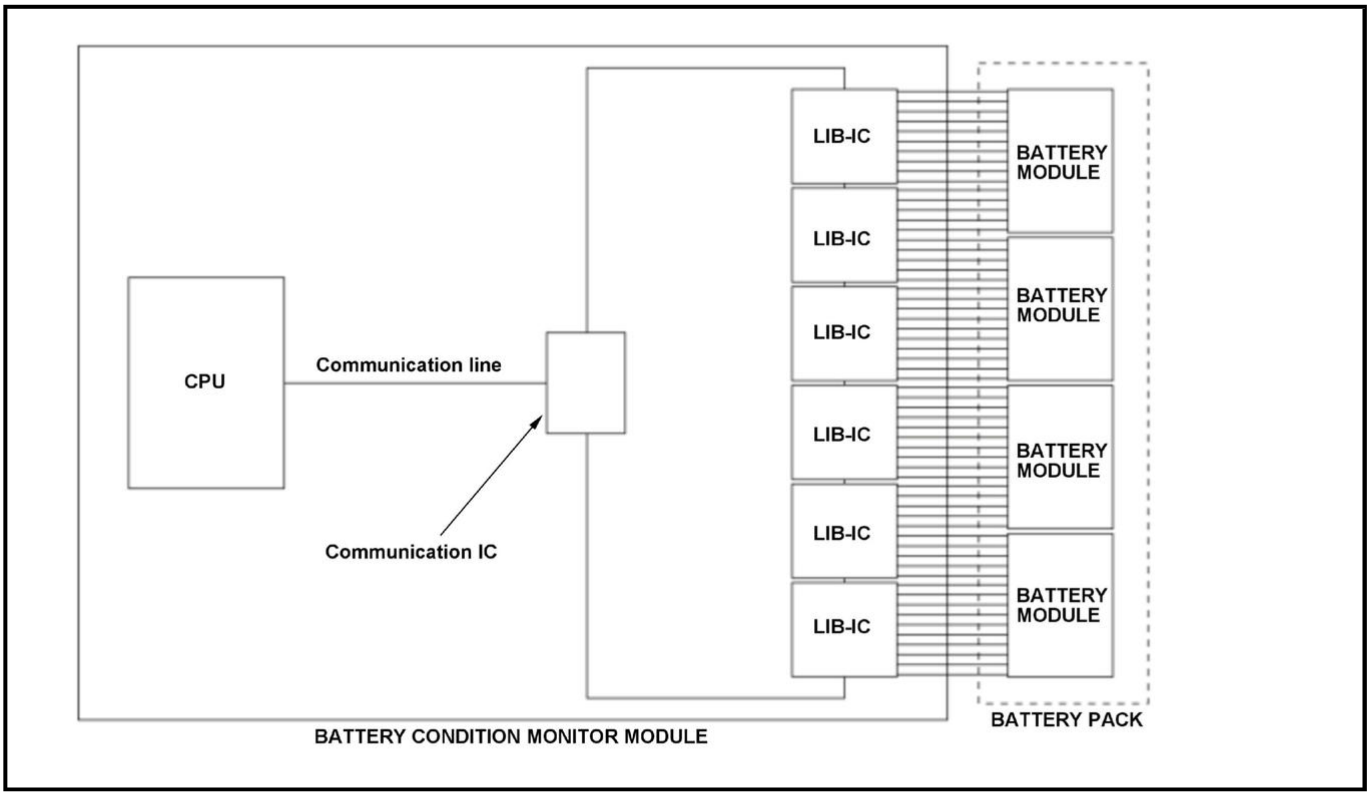
LIB-IC
LIB-IC
LIB-IC
LIB-IC
LIB-IC
LIB-IC
BATTERY MODULE
BATTERY MODULE
BATTERY MODULE
BATTERY MODULE
CPU
Communication line
Communication IC
BATTERY CONDITION MONITOR MODULE
BATTERY PACK

The CPU and a LIB-IC are built into the battery condition monitor module and the CPU detects various malfunctions. The CPU transmits/receives information to/from the LIB-IC by using communication line. When the CPU detects the failures of the LIB-IC or the battery pack for a set time, a malfunction is detected and stores a DTC.

Monitor Execution, Sequence, Duration, DTC Type

Execution	Continuous
Sequence	None
Duration	8 seconds or more
DTC Type	One drive cycle, MIL on, POWER SYSTEM indicator on, 12 VOLT CHARGING SYSTEM indicator off

Enable Conditions

Condition	B
Vehicle	ON mode

Malfunction Threshold

Any of the condition is met for at least 8 seconds:

- Clock monitor of CPU in the battery condition monitor module failure
- CRC monitor of CPU in the battery condition monitor module failure
- Timer monitor of CPU in the battery condition monitor module failure
- Battery pack voltage monitor failure

Possible Cause

NOTE: The causes shown may not be a complete list of all potential problems, and it is possible that there may be other causes.

- Battery pack line failure
- Battery pack internal failure
- Battery condition monitor module internal circuit failure

Diagnosis Details

Conditions for setting the DTC

When a malfunction is detected, the MIL comes on and a Pending DTC, a Confirmed DTC, and the freeze data are stored in the battery condition monitor module memory.

Conditions for clearing the DTC

The MIL is cleared if the malfunction does not return in three consecutive trips in which the diagnostic runs. The MIL, the Pending DTC, the Confirmed DTC, and the freeze data can be cleared with the scan tool clear command.

DTC P0B54

DTC P0B54: HV Battery Cell Voltage Sense Circuit 6

General Description

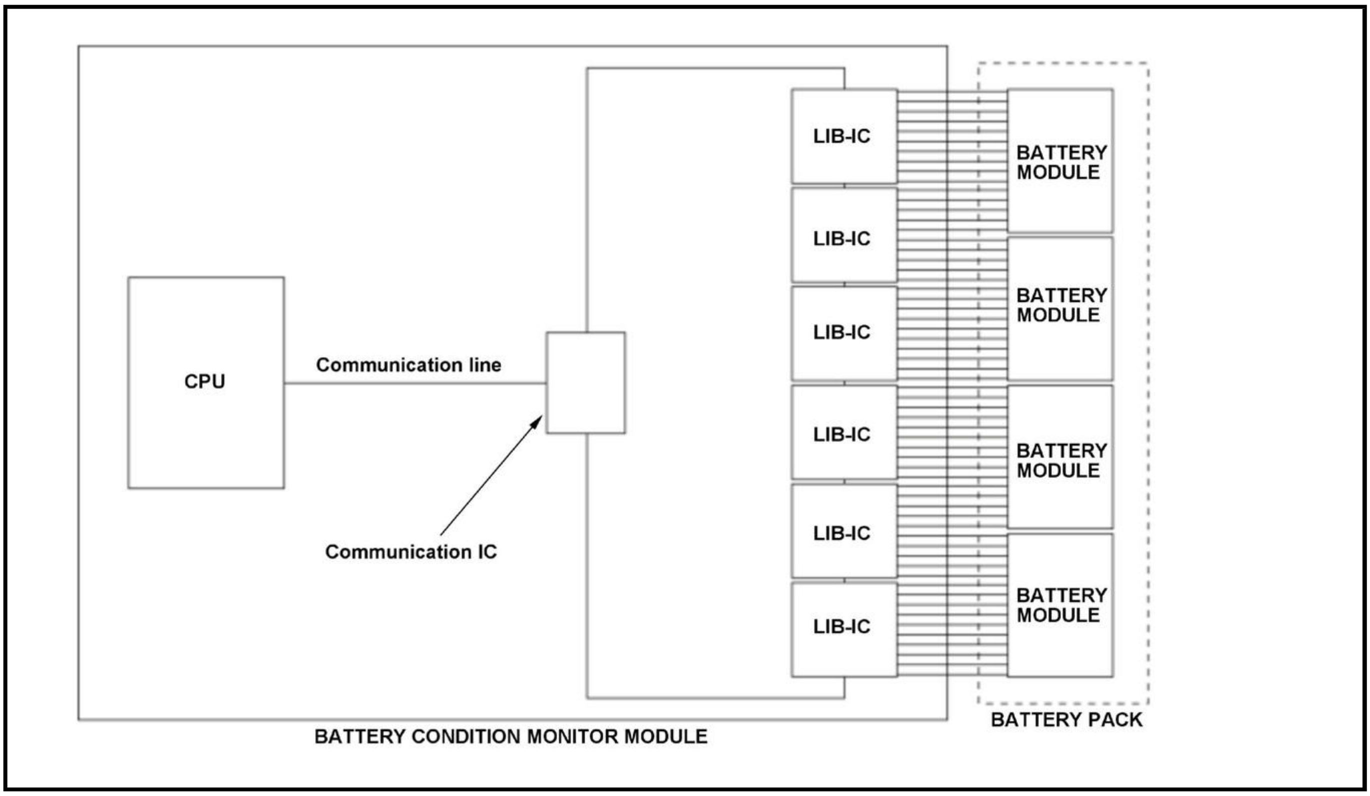
CPU
Communication line
Communication IC
LIB-IC
LIB-IC
LIB-IC
LIB-IC
LIB-IC
LIB-IC
BATTERY MODULE
BATTERY MODULE
BATTERY MODULE
BATTERY MODULE
BATTERY CONDITION MONITOR MODULE
BATTERY PACK

The CPU and a LIB-IC are built into the battery condition monitor module and the CPU detects various malfunctions. The CPU transmits/receives information to/from the LIB-IC by using communication line. When the CPU detects the failures of the LIB-IC or the battery pack for a set time, a malfunction is detected and stores a DTC.

Monitor Execution, Sequence, Duration, DTC Type

Execution	Continuous
Sequence	None
Duration	8 seconds or more
DTC Type	One drive cycle, MIL on, POWER SYSTEM indicator on, 12 VOLT CHARGING SYSTEM indicator off

Enable Conditions

Condition	B
Vehicle	ON mode

Malfunction Threshold

Any of the condition is met for at least 8 seconds:

- Clock monitor of CPU in the battery condition monitor module failure
- CRC monitor of CPU in the battery condition monitor module failure
- Timer monitor of CPU in the battery condition monitor module failure
- Battery pack voltage monitor failure

Possible Cause

NOTE: The causes shown may not be a complete list of all potential problems, and it is possible that there may be other causes.

- Battery pack line failure
- Battery pack internal failure

- Battery condition monitor module internal circuit failure

Diagnosis Details

Conditions for setting the DTC

When a malfunction is detected, the MIL comes on and a Pending DTC, a Confirmed DTC, and the freeze data are stored in the battery condition monitor module memory.

Conditions for clearing the DTC

The MIL is cleared if the malfunction does not return in three consecutive trips in which the diagnostic runs. The MIL, the Pending DTC, the Confirmed DTC, and the freeze data can be cleared with the scan tool clear command.

DTC P0D32 (BATTERY CONDITION MONITOR MODULE)

DTC P0D32: DC-DC Converter Over Temperature (Battery Condition Monitor Module Detected)

General Description

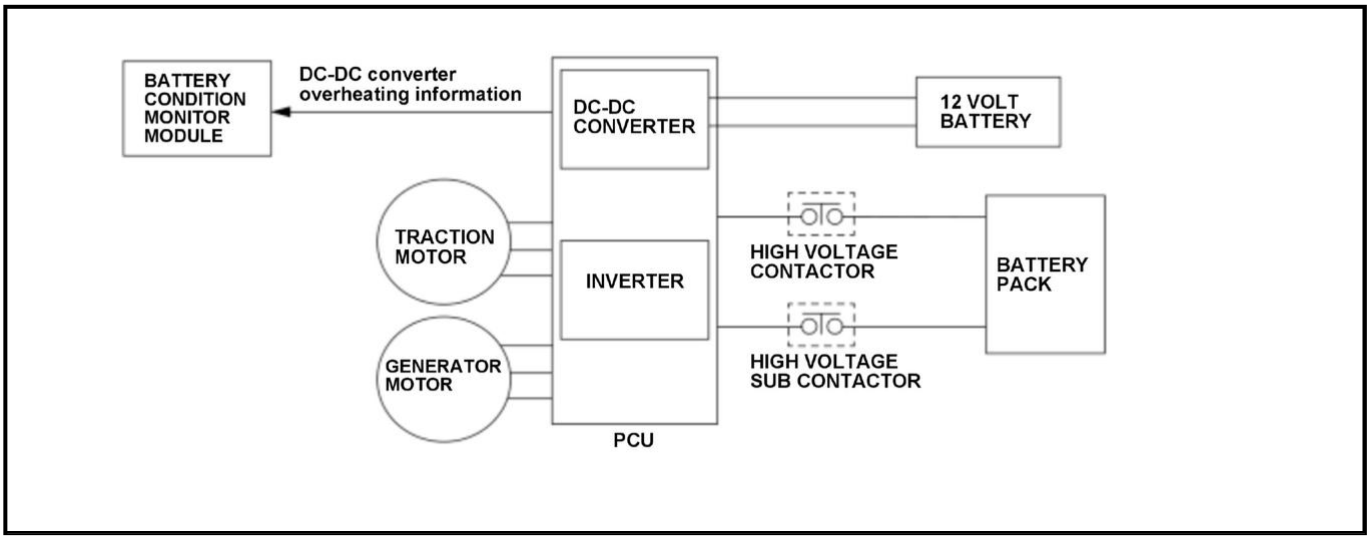
BATTERY CONDITION MONITOR MODULE
DC-DC converter overheating information
DC-DC CONVERTER
12 VOLT BATTERY
TRACTION MOTOR
INVERTER
HIGH VOLTAGE CONTACTOR
BATTERY PACK
GENERATOR MOTOR
HIGH VOLTAGE SUB CONTACTOR
PCU

The DC-DC converter stops output if the DC-DC converter temperature exceeds a specified temperature for overheat protection. When the battery condition monitor module receives information of DC-DC converter stop due to overheat from the DC-DC converter for a specified duration, the battery condition monitor module detects a malfunction and stores a DTC.

Monitor Execution, Sequence, Duration, DTC Type

Execution	Continuous
Sequence	None
Duration	2 seconds or more
DTC Type	One drive cycle, MIL off, POWER SYSTEM indicator off, 12 VOLT CHARGING SYSTEM indicator on

Enable Conditions

Condition	Minimum	Maximum
Battery condition monitor module power-supply voltage	10.2 V	-
Vehicle	ON mode	

Malfunction Threshold

The battery condition monitor module receives information of DC-DC converter stop due to overheat from the DC-DC converter for at least 2 seconds.

Possible Cause

NOTE: The causes shown may not be a complete list of all potential problems, and it is possible that there may be other causes.

- Electric motor control module coolant pump line open
- Radiator fan control (RFC) unit line open
- Water pipe leak
- Water pipe clogged
- Electric motor control module coolant pump failure
- Power control unit (PCU) internal circuit failure
- RFC unit failure
- Battery condition monitor module internal circuit failure

Confirmation Procedure

Operating condition

Turn the vehicle to READY TO DRIVE mode, and wait 750 seconds under these conditions.

- Headlights on high beam
- Hazard warning lights on
- Blower fan at maximum speed
- Rear window defogger on
- Seat heater on, max hot
- A/C switch ON, heater on, max hot

Diagnosis Details

Conditions for setting the DTC

When a malfunction is detected, a Pending DTC, a Confirmed DTC, and the freeze data are stored in the battery condition monitor module memory. The MIL does not come on.

Conditions for clearing the DTC

The Pending DTC, the Confirmed DTC, and the freeze data can be cleared with the scan tool clear command or the battery condition monitor module reset.

DTC P0DA8

DTC P0DA8: HV Battery Voltage/Motor Inverter Voltage Correlation

General Description

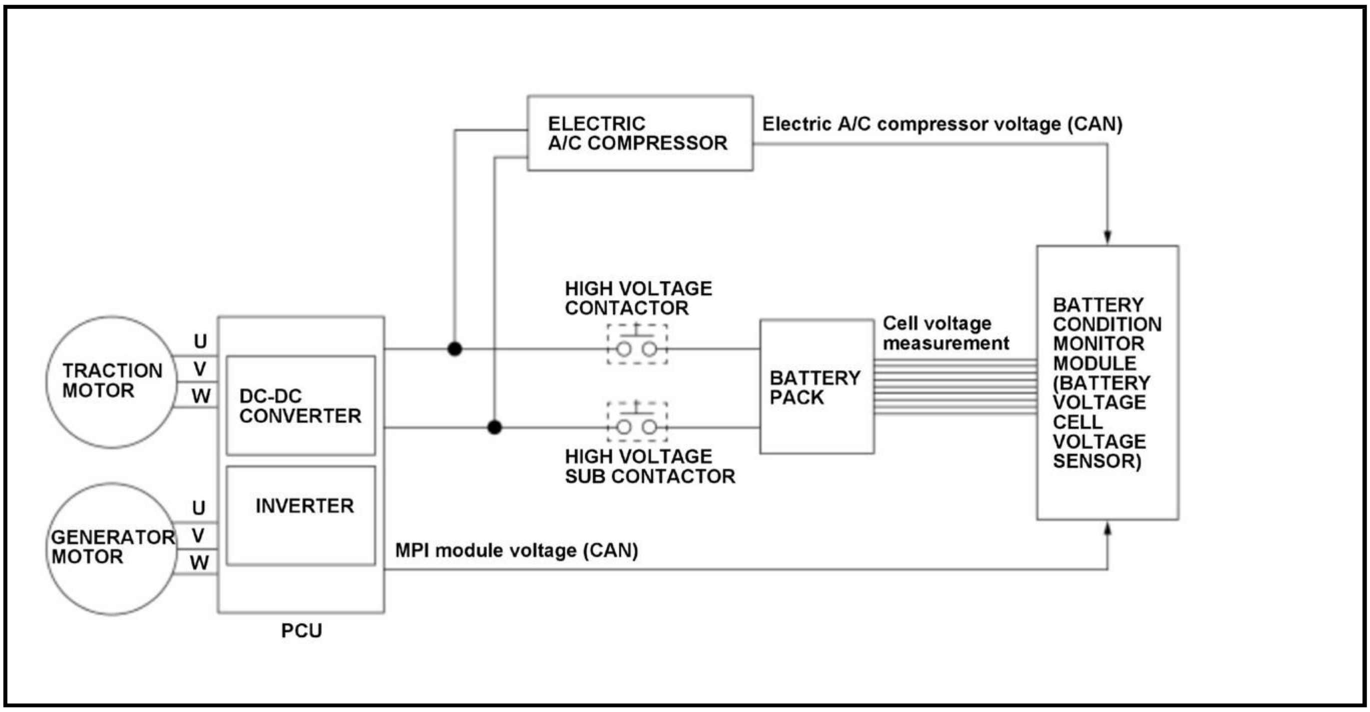
ELECTRIC A/C COMPRESSOR
Electric A/C compressor voltage (CAN)
HIGH VOLTAGE CONTACTOR
Cell voltage measurement
BATTERY CONDITION MONITOR MODULE (BATTERY VOLTAGE CELL VOLTAGE SENSOR)
TRACTION MOTOR
U
V
W
DC-DC CONVERTER
BATTERY PACK
HIGH VOLTAGE SUB CONTACTOR
GENERATOR MOTOR
U
V
W
INVERTER
MPI module voltage (CAN)
PCU

The battery condition monitor module compares inverter voltage information and battery pack voltage information obtained from the battery voltage cell voltage sensor. If the difference between the battery pack voltage and the inverter voltage is a specified value and continues for a specified duration, the battery condition monitor module detects a malfunction and stores a DTC.

Monitor Execution, Sequence, Duration, DTC Type

Execution	Continuous
Sequence	None
Duration	2 seconds or more
DTC Type	One drive cycle, MIL off, POWER SYSTEM indicator on, 12 VOLT CHARGING SYSTEM indicator on

Enable Conditions

Condition	Minimum	Maximum
Battery condition monitor module power-supply voltage	10.2 V	-
Difference between inverter voltage and electric A/C compressor voltage	26 V	-
Vehicle	ON mode	

Malfunction Threshold

The difference between the battery pack voltage and the MPI module voltage is more than 50 V and continues for at least 2 seconds.

Possible Cause

NOTE: The causes shown may not be a complete list of all potential problems, and it is possible that there may be other causes.

- High voltage contactor CNTP line open
- High voltage contactor CNTPSIN line open
- High voltage contactor CNTP line short

- High voltage contactor CNTPSIN line short
- Battery power cable open
- Electric A/C compressor internal circuit failure
- High voltage contactor stuck off
- Power control unit (PCU) internal circuit failure
- Battery condition monitor module internal circuit failure

Diagnosis Details

Conditions for setting the DTC

When a malfunction is detected, a Pending DTC, a Confirmed DTC, and the freeze data are stored in the battery condition monitor module memory. The MIL does not come on.

Conditions for clearing the DTC

The Pending DTC, the Confirmed DTC, and the freeze data can be cleared with the scan tool clear command or the battery condition monitor module reset.

DTC P0DE6

DTC P0DE6: HV Battery Pack Voltage Low

General Description

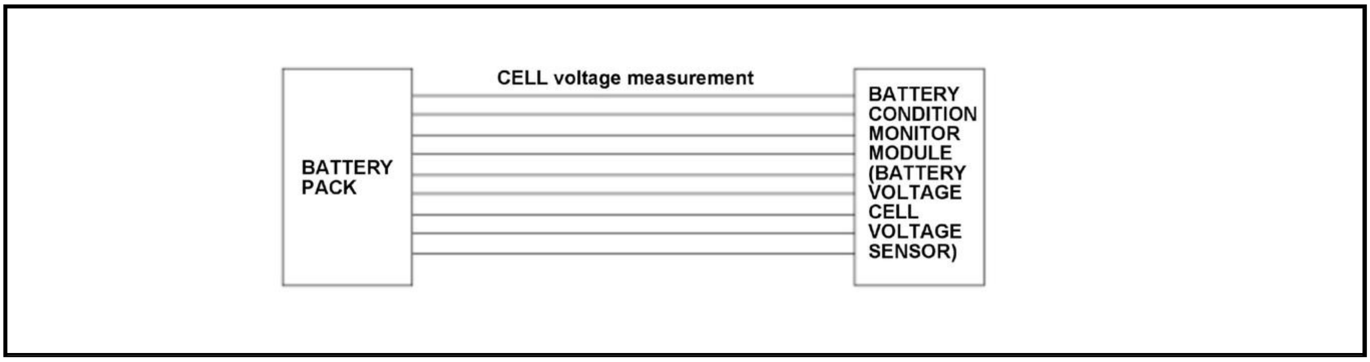
CELL voltage measurement
BATTERY PACK
BATTERY CONDITION MONITOR MODULE (BATTERY VOLTAGE CELL VOLTAGE SENSOR)

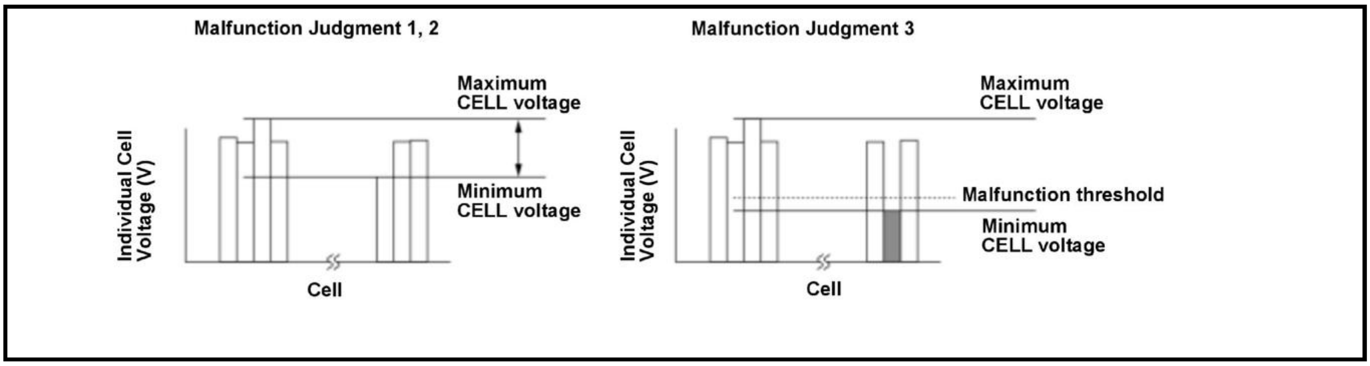

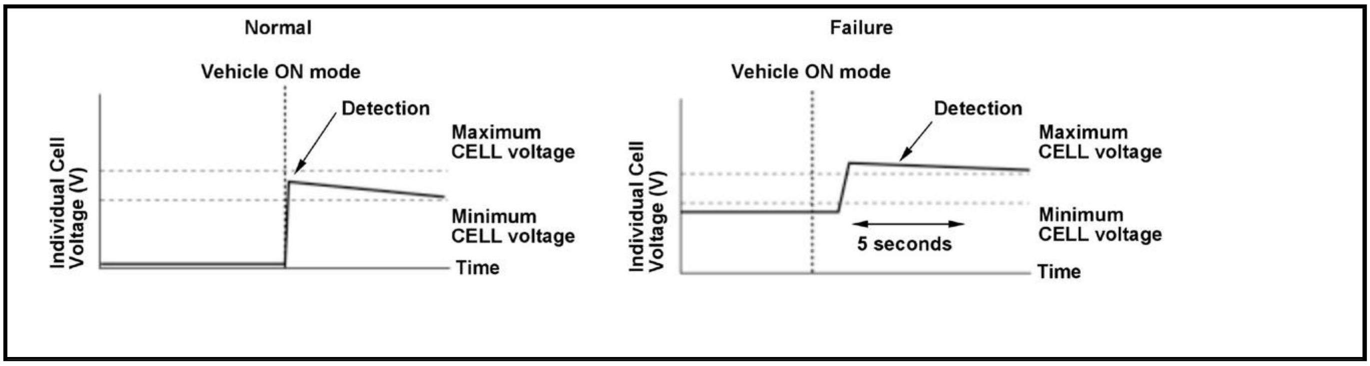

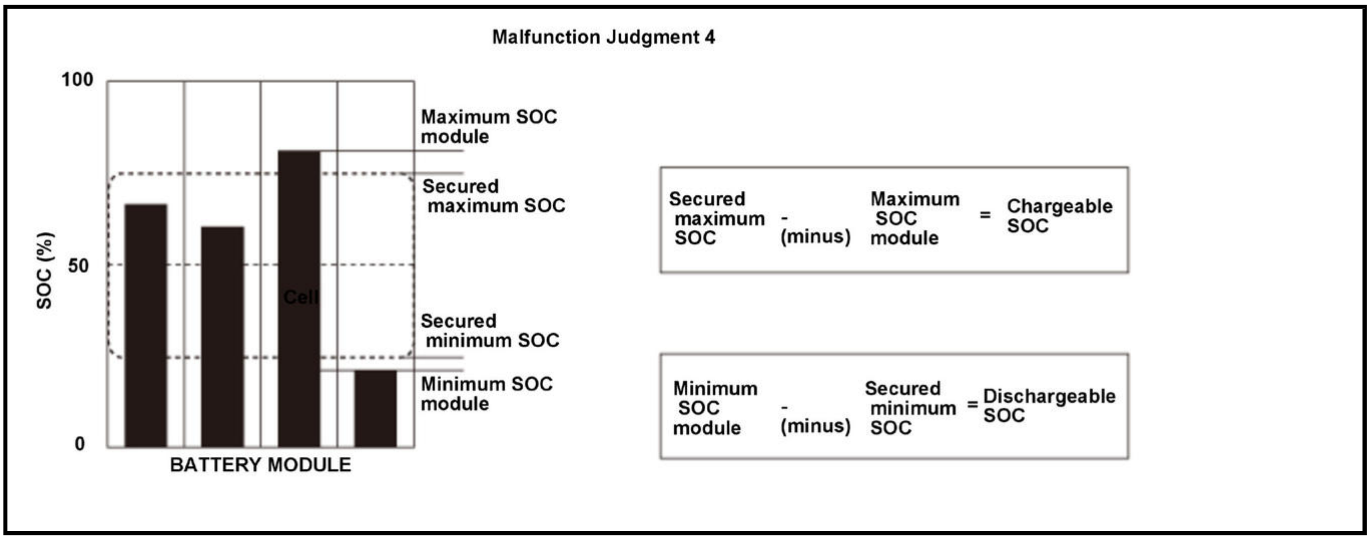
Malfunction Judgment 4
100
50
0
SOC (%)
Cell
BATTERY MODULE
Maximum SOC module
Secured maximum SOC
Secured minimum SOC
Minimum SOC module
Secured maximum SOC - (minus) Maximum SOC module = Chargeable SOC
Minimum SOC module - (minus) Secured minimum SOC = Dischargeable SOC

If one of the following conditions occurs, the battery condition monitor module detects a malfunction and stores a DTC:

- Malfunction judgment 1

  The voltage difference between the maximum cell voltage and the minimum cell voltage exceeds a specified voltage immediately after the vehicle condition is turned to the ON mode.

- Malfunction judgment 2

  The voltage difference between the maximum cell voltage and the minimum cell voltage exceeds a specified voltage for a specified duration.

- Malfunction judgment 3

  The individual cell voltage falls below a minimum voltage for a set duration.

- Malfunction judgment 4

  The SOC variability occurs between the battery modules of the battery pack for a specified duration.

Monitor Execution, Sequence, Duration, DTC Type

Execution	Continuous
Sequence	None
Duration	-* 5 seconds or more**, **** 10 seconds or more***
DTC Type	Two drive cycles, MIL on, POWER SYSTEM indicator on, 12 VOLT CHARGING SYSTEM indicator off

*: Malfunction judgment 1

**: Malfunction judgment 2

***: Malfunction judgment 3

****: Malfunction judgment 4

Enable Conditions

Condition	Minimum	Maximum
Battery pack temperature	50 deg.F (10 deg.C)	-
Battery pack current	-3 A	3 A

Condition	Minimum	Maximum
Vehicle	ON mode	

Malfunction Threshold

One of the conditions is met:

- Malfunction judgment 1

  The voltage difference between the maximum cell voltage and the minimum cell voltage is more than 0.45 V immediately after the vehicle condition is turned to the ON mode.

- Malfunction judgment 2

  The voltage difference between the maximum cell voltage and the minimum cell voltage is more than 0.75 V for at least 5 seconds.

- Malfunction judgment 3

  The individual cell voltage is 1.5 V or less for at least 10 seconds.

- Malfunction judgment 4

  There is a battery module that the chargeable SOC is less than 0 %, and a battery module that the dischargeable SOC is less than 0 %. These conditions continue for at least 5 seconds.

Possible Cause

NOTE: The causes shown may not be a complete list of all potential problems, and it is possible that there may be other causes.

- Battery pack internal circuit failure

Diagnosis Details

Conditions for setting the DTC

When a malfunction is detected during the first drive cycle, a Pending DTC is stored in the battery condition monitor module memory. If the malfunction returns in the next (second) drive cycle, the MIL comes on and a Confirmed DTC and the freeze data are stored.

Conditions for clearing the DTC

The MIL is cleared if the malfunction does not return in three consecutive trips in which the diagnostic runs. The MIL, the Pending DTC, the Confirmed DTC, and the freeze data can be cleared with the scan tool clear command or the battery condition monitor module reset.

DTC P0DE7

DTC P0DE7: HV Battery Pack Voltage High

General Description

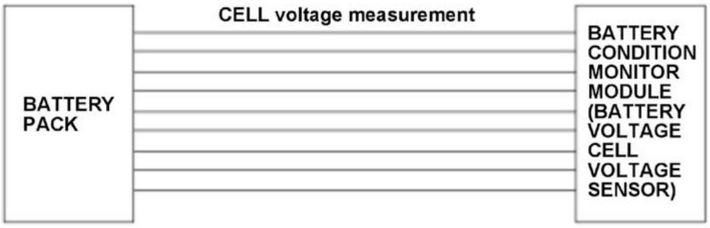
BATTERY PACK
CELL voltage measurement
BATTERY CONDITION MONITOR MODULE (BATTERY VOLTAGE CELL VOLTAGE SENSOR)

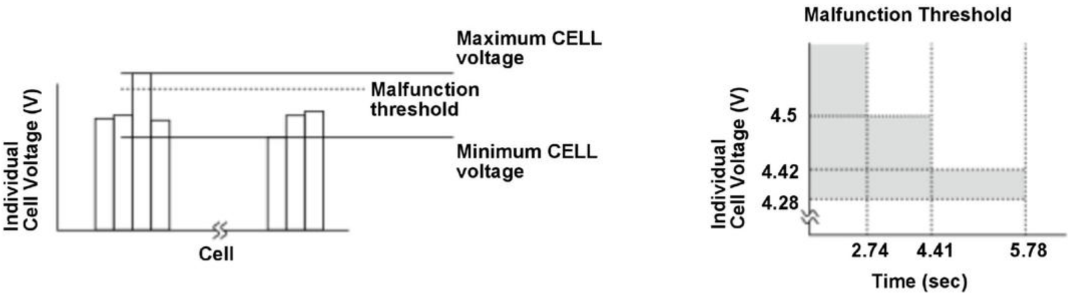

If the individual cell maximum voltage received from the battery voltage cell voltage sensor exceeds a specified value for a specified duration, the battery condition monitor module detects a malfunction and stores a DTC.

Monitor Execution, Sequence, Duration, DTC Type

Execution	Continuous
Sequence	None
Duration	Depending on the cell voltage
DTC Type	One drive cycle, MIL on, POWER SYSTEM indicator on, 12 VOLT CHARGING SYSTEM indicator on

Enable Conditions

Condition	B
Vehicle	ON mode

Malfunction Threshold

One of the following conditions is occurs:

- Maximum cell voltage is 4.5 V or more for at least 2.74 seconds.
- Maximum cell voltage is 4.42 V or more for at least 4.41 seconds.
- Maximum cell voltage is 4.28 V or more for at least 5.78 seconds.

Possible Cause

NOTE: The causes shown may not be a complete list of all potential problems, and it is possible that there may be other causes.

- Battery pack internal failure
- Powertrain control module (PCM) internal circuit failure
- Power control unit (PCU) internal circuit failure
- Battery condition monitor module internal circuit failure

Confirmation Procedure

Operating Condition

Turn the vehicle to the ON mode, and wait for at least 10 seconds.

With the HDS

None.

Diagnosis Details

Conditions for setting the DTC

When a malfunction is detected, the MIL comes on and a Pending DTC, a Confirmed DTC, and the freeze data are stored in the battery condition monitor module memory.

Conditions for clearing the DTC

The MIL is cleared if the malfunction does not return in three consecutive trips in which the diagnostic runs. The MIL, the pending DTC, the Confirmed DTC, and the freeze data can be cleared with the scan tool clear command or the battery condition monitor module reset.

DTC P0E2D

DTC P0E2D: HV Battery Cell Voltage Sense Circuit

General Description

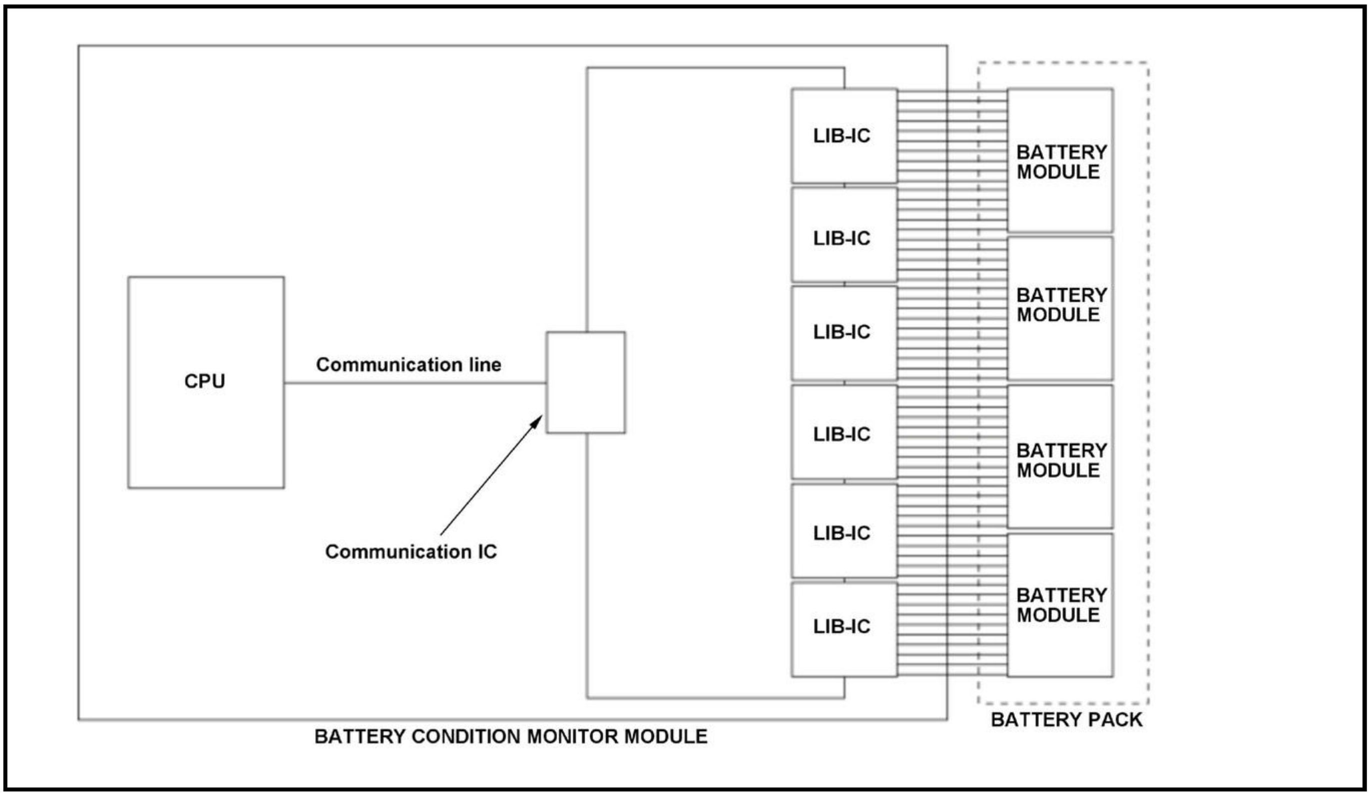
LIB-IC
LIB-IC
LIB-IC
LIB-IC
LIB-IC
LIB-IC
BATTERY MODULE
BATTERY MODULE
BATTERY MODULE
BATTERY MODULE
CPU
Communication line
Communication IC
BATTERY CONDITION MONITOR MODULE
BATTERY PACK

The CPU and LIB-ICs are built into the battery condition monitor module and the CPU detects various malfunctions. The CPU transmits/receives information to/from the LIB-IC by using communication line. When the CPU detects the failures of communication line, the LIB-IC, or the battery pack for a set time, a malfunction is detected and stores a DTC.

Monitor Execution, Sequence, Duration, DTC Type

Execution	Continuous
Sequence	None
Duration	2 seconds or more
DTC Type	One drive cycle, MIL on, POWER SYSTEM indicator on, 12 VOLT CHARGING SYSTEM indicator off

Enable Conditions

Condition	B
Vehicle	ON mode

Malfunction Threshold

One of these conditions is met for at least 2 seconds:

- Clock monitor of CPU in the battery condition monitor module failure
- CRC monitor of CPU in the battery condition monitor module failure
- Timer monitor of CPU in the battery condition monitor module failure
- Battery pack voltage monitor failure

Possible Cause

NOTE: The causes shown may not be a complete list of all potential problems, and it is possible that there may be other causes.

- Battery condition monitor module internal circuit failure

Diagnosis Details

Conditions for setting the DTC

When a malfunction is detected, the MIL comes on and a Pending DTC, a Confirmed DTC, and the freeze data are stored in the battery condition monitor module memory.

Conditions for clearing the DTC

The MIL is cleared if the malfunction does not return in three consecutive trips in which the diagnostic runs. The MIL, the Pending DTC, the Confirmed DTC, and the freeze data can be cleared with the scan tool clear command.

DTC P1447

DTC P1447: HV Battery Pack Deterioration (Middle Severity)

General Description

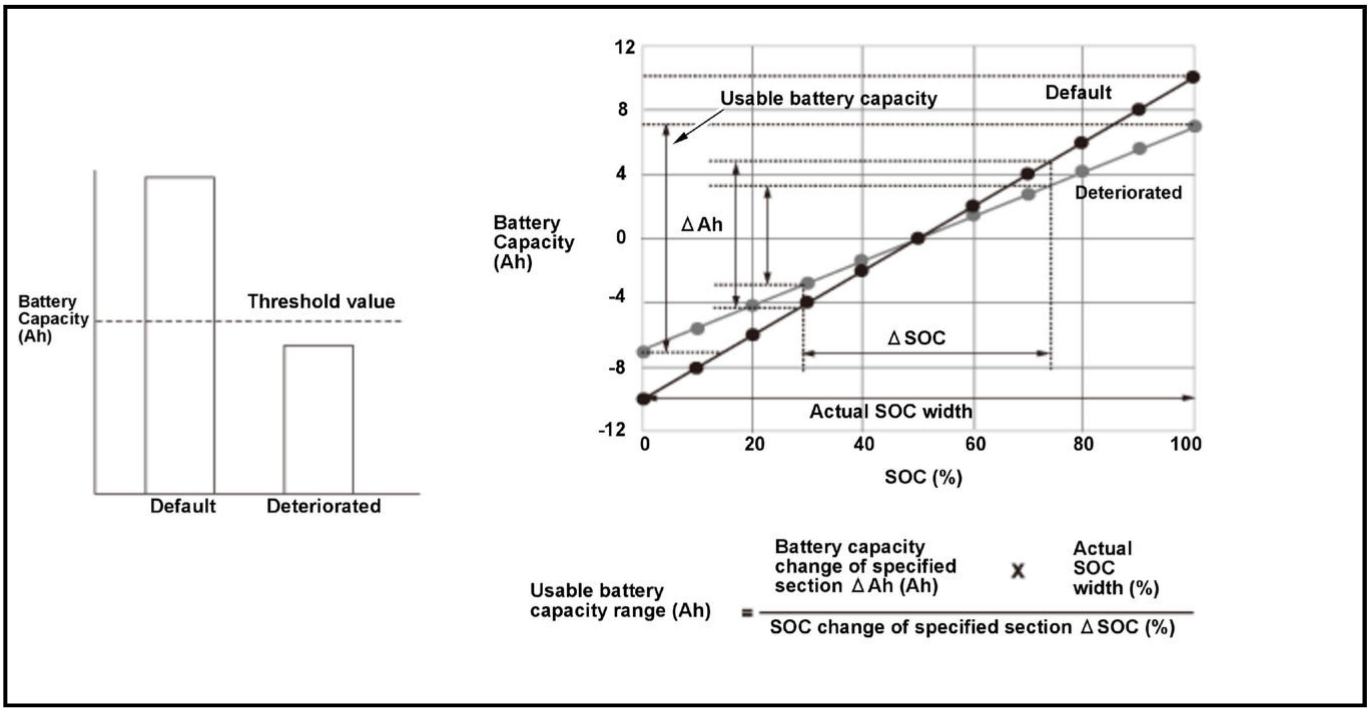

Usable battery capacity range of the battery pack is calculated from the battery capacity (ΔAh) and SOC (state of charge) change width (ΔSOC) of a specified section. If the usable battery capacity lowers to a specified value, the battery condition monitor module detects a malfunction and stores a DTC.

Monitor Execution, Sequence, Duration, DTC Type

Execution	Continuous
Sequence	None
Duration	-
DTC Type	Two drive cycles, MIL off, POWER SYSTEM indicator on, 12 VOLT CHARGING SYSTEM indicator off

Enable Conditions

Condition	Minimum	Maximum
Battery pack temperature	56 deg.F (13 deg.C)	130 deg.F (54.5 deg.C)
Vehicle	ON mode	

Malfunction Threshold

The battery pack capacity is 18.34 % or less.

Possible Cause

NOTE: The causes shown may not be a complete list of all potential problems, and it is possible that there may be other causes.

- Battery pack failure

Confirmation Procedure

Operating Condition

- Turn the vehicle to the READY TO DRIVE mode.
- Test-drive the vehicle; accelerate to 31 mph (50 km/h) and decelerate to 0 mph (0 km/h), repeat that for 10 minutes.

- Drive the vehicle in this manner only if the traffic regulations and ambient condition allow.

Diagnosis Details

Conditions for setting the DTC

When a malfunction is detected during the first drive cycle, a Pending DTC is stored in the battery condition monitor module memory. If the malfunction returns in the next (second) drive cycle, a Confirmed DTC and the freeze data are stored. The MIL does not come on.

Conditions for clearing the DTC

The Pending DTC, the Confirmed DTC, and the freeze data can be cleared with the scan tool clear command or the battery condition monitor module reset.

DTC P144A

DTC P144A: HV Battery Pack Deterioration (High Severity)

General Description

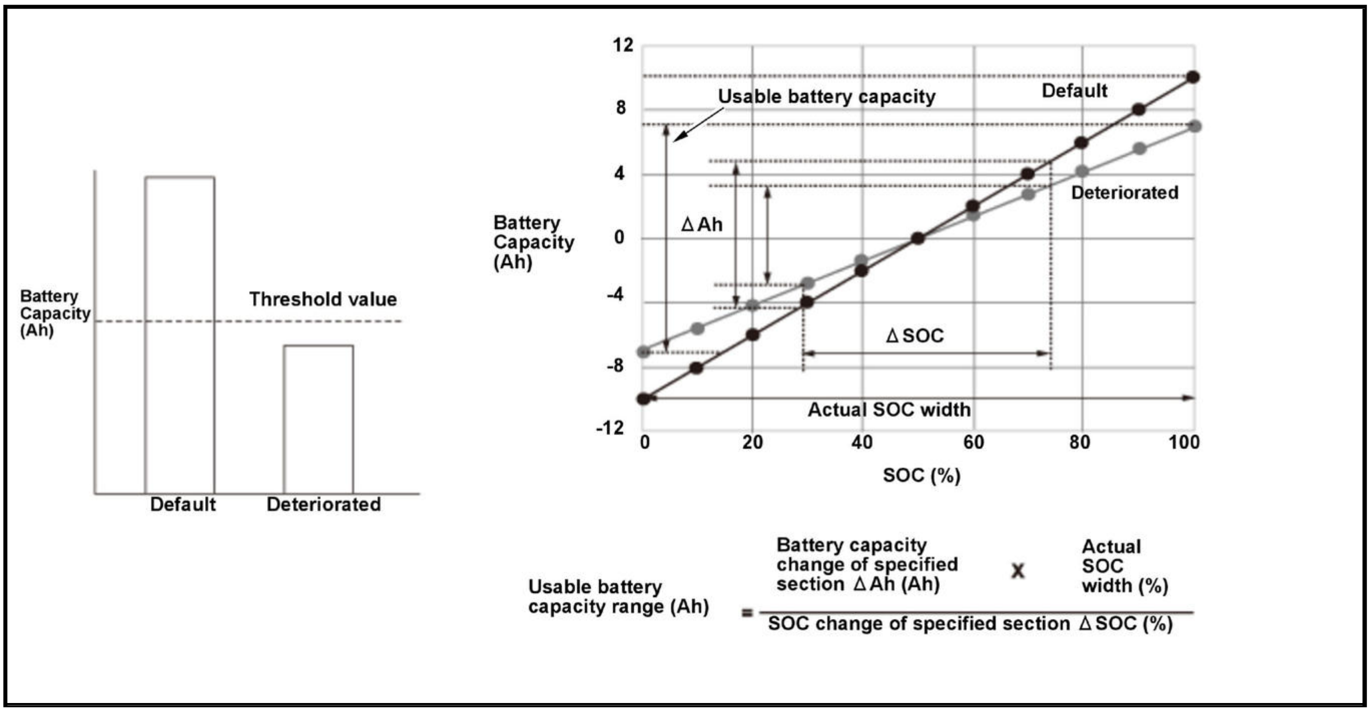

Usable battery capacity range of the battery pack is calculated from the battery capacity (ΔAh) and SOC (state of charge) change width (ΔSOC) of a specified section. If the usable battery capacity lowers to a specified value, the battery condition monitor module detects a malfunction and stores a DTC.

Monitor Execution, Sequence, Duration, DTC Type

Execution	Continuous
Sequence	None
Duration	-
DTC Type	Two drive cycles, MIL on, POWER SYSTEM indicator on, 12 VOLT CHARGING SYSTEM indicator off

Enable Conditions

Condition	Minimum	Maximum
Battery pack temperature	56 deg.F (13 deg.C)	130 deg.F (54.5 deg.C)

Condition	Minimum	Maximum
Vehicle	ON mode	

Malfunction Threshold

The battery pack capacity is 13.33 % or less.

Possible Cause

NOTE: The causes shown may not be a complete list of all potential problems, and it is possible that there may be other causes.

- Battery pack failure

Confirmation Procedure

Operating Condition

- Turn the vehicle to the READY TO DRIVE mode.
- Test-drive the vehicle; accelerate to 31 mph (50 km/h) and decelerate to 0 mph (0 km/h), repeat that for 10 minutes.

- Drive the vehicle in this manner only if the traffic regulations and ambient condition allow.

Diagnosis Details

Conditions for setting the DTC

When a malfunction is detected during the first drive cycle, a Pending DTC is stored in the battery condition monitor module memory. If the malfunction returns in the next (second) drive cycle, the MIL comes on and a Confirmed DTC and the freeze data are stored.

Conditions for clearing the DTC

The MIL is cleared if the malfunction does not return in three consecutive trips in which the diagnostic runs. The MIL, the Pending DTC, the Confirmed DTC, and the freeze data can be cleared with the scan tool clear command or the battery condition monitor module reset.

DTC P1586

DTC P1586: HV Battery Current Sensor

General Description

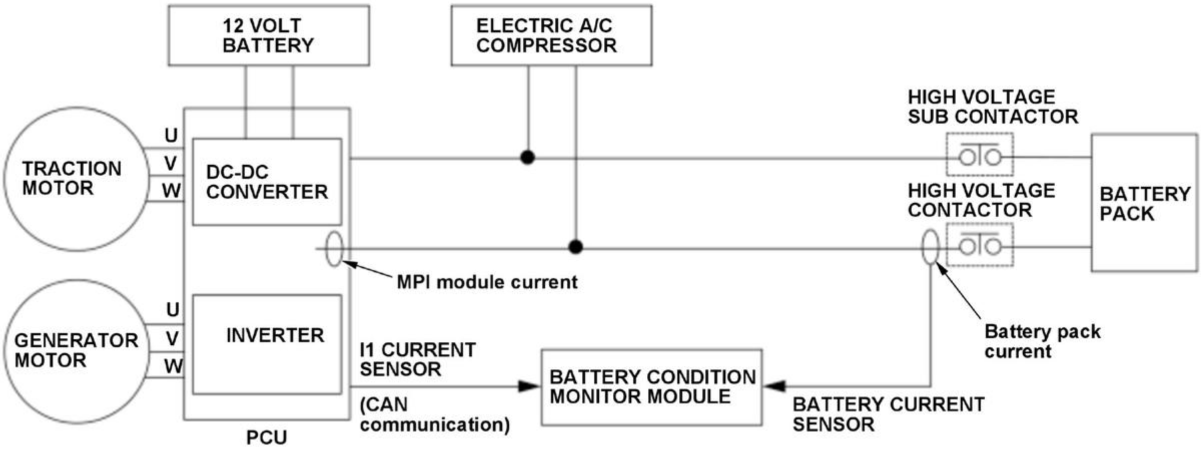
12 VOLT BATTERY
ELECTRIC A/C COMPRESSOR
HIGH VOLTAGE SUB CONTACTOR
TRACTION MOTOR
U
V
W
DC-DC CONVERTER
HIGH VOLTAGE CONTACTOR
BATTERY PACK
MPI module current
GENERATOR MOTOR
U
V
W
INVERTER
I1 CURRENT SENSOR
(CAN communication)
BATTERY CONDITION MONITOR MODULE
Battery pack current
BATTERY CURRENT SENSOR
PCU

When the high voltage contactor is on, the inverter current and the battery pack current is monitored on the same line across the electric A/C compressor by the battery condition monitor module. Therefore, the estimated inverter current (estimate current is calculated by the battery condition monitor module from the motor phase current information) and the battery pack current values are compared and if the difference exceeds of a specified valued for a specified time, the battery condition monitor module detects a malfunction and stores a DTC.

Monitor Execution, Sequence, Duration, DTC Type

Execution	Continuous
Sequence	None
Duration	1 second or more
DTC Type	One drive cycle, MIL on, POWER SYSTEM indicator on, 12 VOLT CHARGING SYSTEM indicator off

Enable Conditions

Condition	Minimum	Maximum
Battery condition monitor module power-supply voltage	10.2 V	-
Vehicle	ON mode	

Malfunction Threshold

The difference between the estimated MPI module current and the battery pack current is more than 94.76 A, or less than -36.33 A for at least 1 second.

Possible Cause

NOTE: The causes shown may not be a complete list of all potential problems, and it is possible that there may be other causes.

- Battery current sensor internal circuit failure
- Power control unit (PCU) internal circuit failure
- Battery condition monitor module internal circuit failure

Confirmation Procedure

Operating Condition

- Turn the vehicle to the READY TO DRIVE mode, and drive the vehicle at vehicle speed 31 mph (50 km/h) or more.
- Keep the vehicle speed 31 mph (50 km/h) or more with the brake pedal pressed to switch ON the brake pedal position switch for at least 2 seconds.

- Drive the vehicle in this manner only if the traffic regulations and ambient conditions allow.

Diagnosis Details

Conditions for setting the DTC

When a malfunction is detected, the MIL comes on and a Pending DTC, a Confirmed DTC, and the freeze data are stored in the battery condition monitor module memory.

Conditions for clearing the DTC

The MIL is cleared if the malfunction does not return in three consecutive trips in which the diagnostic runs. The MIL, the pending DTC, the Confirmed DTC, and the freeze data can be cleared with the scan tool clear command or the battery condition monitor module reset.

DTC P158A

DTC P158A: HV Battery Current Sensor Correlation

General Description

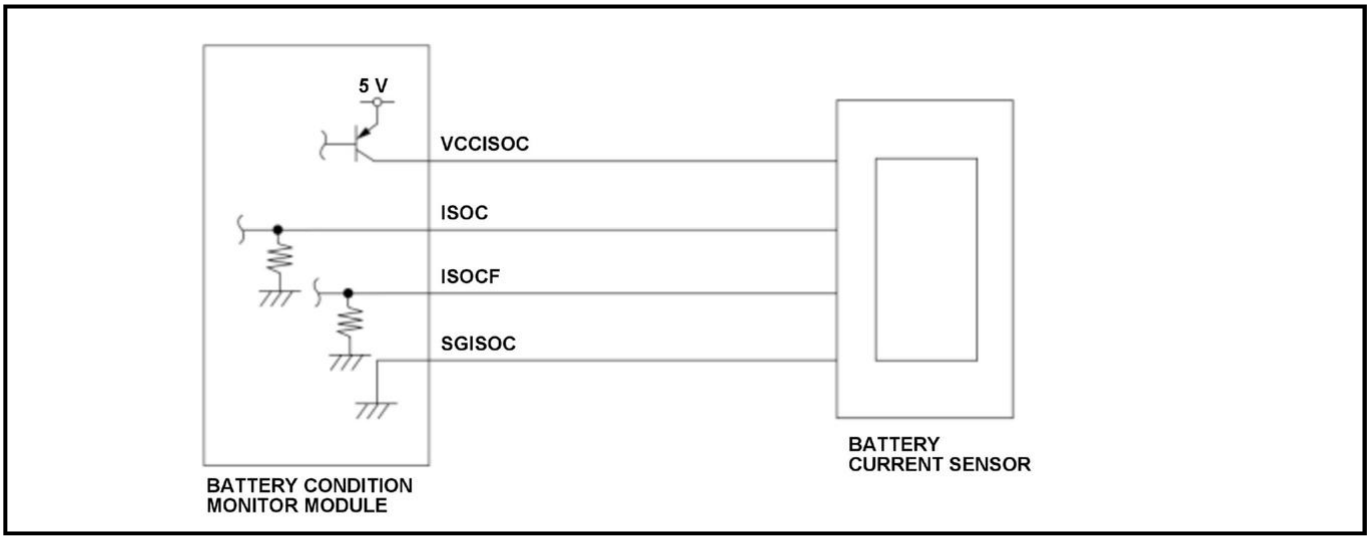

If the difference between the current value calculated from the ISOC signal and that from the ISOCF signal compared by battery condition monitor module is out of a specified range, a malfunction is detected and a DTC is stored.

Monitor Execution, Sequence, Duration, DTC Type

Execution	Continuous
Sequence	None
Duration	2.0 seconds or more
DTC Type	Two drive cycles, MIL on, POWER SYSTEM indicator on, 12 VOLT CHARGING SYSTEM indicator off

Enable Conditions

Condition	Minimum	Maximum
Elapsed time since the 12 volt battery voltage reaches to a specified value after the vehicle condition is turned to the ON mode	50 milliseconds	-
12 volt battery voltage	7.7 V	-

Malfunction Threshold

The absolute current value difference between the ISOC signal and the ISOCF signal is 10 A or more for at least 2.0 seconds when the ISOC value is in the range of -30 A to 30 A.

Possible Cause

NOTE: The causes shown may not be a complete list of all potential problems, and it is possible that there may be other causes.

- Battery current sensor SGISOC line open
- Battery current sensor failure
- Battery condition monitor module internal circuit failure

Diagnosis Details

Conditions for setting the DTC

When a malfunction is detected during the first drive cycle, a Pending DTC is stored in the battery condition monitor module memory. If the malfunction returns in the next (second) drive cycle, the MIL comes on and a Confirmed DTC and the freeze data are stored.

Conditions for clearing the DTC

The MIL is cleared if the malfunction does not return in three consecutive trips in which the diagnostic runs. The MIL, the Pending DTC, the Confirmed DTC, and the freeze data can be cleared with the scan tool clear command.

DTC P158B

DTC P158B: HV Battery Current Sensor 1 Circuit

General Description

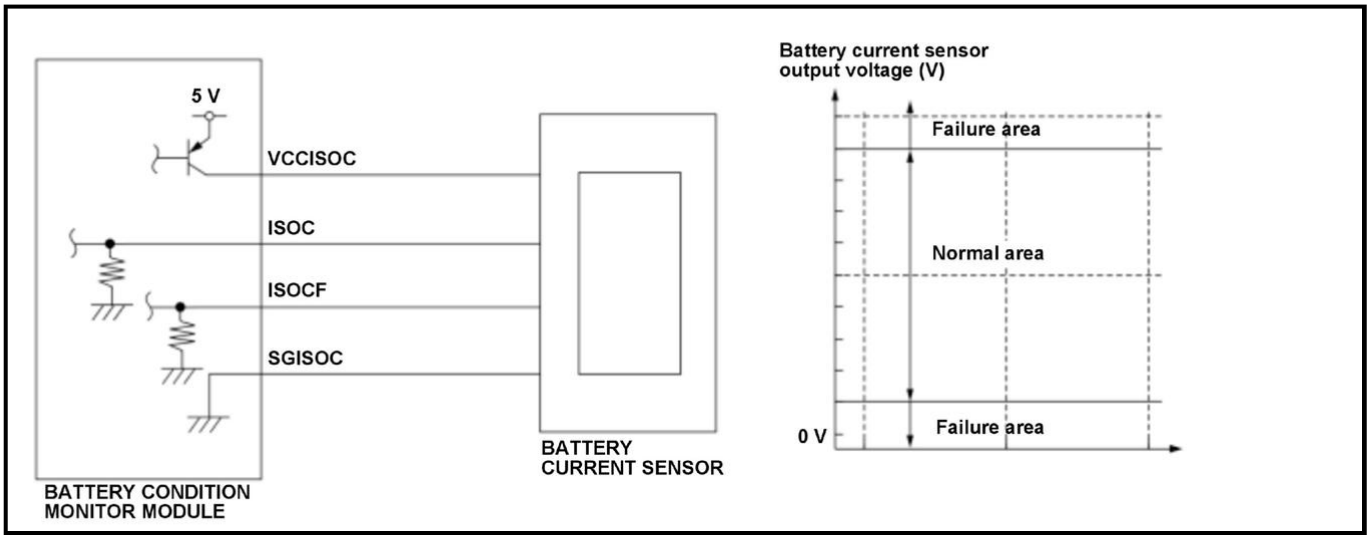
5 V
VCCISOC
ISOC
ISOCF
SGISOC
BATTERY CONDITION MONITOR MODULE
BATTERY CURRENT SENSOR
Battery current sensor output voltage (V)
Failure area
Normal area
Failure area
0 V

Battery condition monitor module controls the charging/discharging of the high-voltage battery, based on the signal of battery current sensor. If the ISOC signal voltage output by battery current sensor deviates from the normal range and does not reach the failure level triggered by the upper and lower limits for the specified amount of time or longer, it is judged that battery condition monitor module has failed and the DTC is stored.

Monitor Execution, Sequence, Duration, DTC Type

Execution	Continuous
Sequence	None
Duration	1.0 second or more
DTC Type	Two drive cycles, MIL on, POWER SYSTEM indicator on, 12 VOLT CHARGING SYSTEM indicator off

Enable Conditions

Condition	Minimum	Maximum
Elapsed time since the 12 volt battery voltage reaches to a specified value after the vehicle condition is turned to the ON mode	50 milliseconds	-
12 volt battery voltage	7.7 V	-

Malfunction Threshold

The battery current sensor ISOC signal voltage is 1.27 V or less, or 4.30 V or more for at least 1.0 second.

Possible Cause

NOTE: The causes shown may not be a complete list of all potential problems, and it is possible that there may be other causes.

- Battery current sensor failure
- Battery condition monitor module internal circuit failure

Diagnosis Details

Conditions for setting the DTC

When a malfunction is detected during the first drive cycle, a Pending DTC is stored in the battery condition monitor module memory. If the malfunction returns in the next (second) drive cycle, the MIL comes on and a Confirmed DTC and the freeze data are stored.

Conditions for clearing the DTC

The MIL is cleared if the malfunction does not return in three consecutive trips in which the diagnostic runs. The MIL, the Pending DTC, the Confirmed DTC, and the freeze data can be cleared with the scan tool clear command.

DTC P158D

DTC P158D: HV Battery Current Sensor 1 Circuit Low

General Description

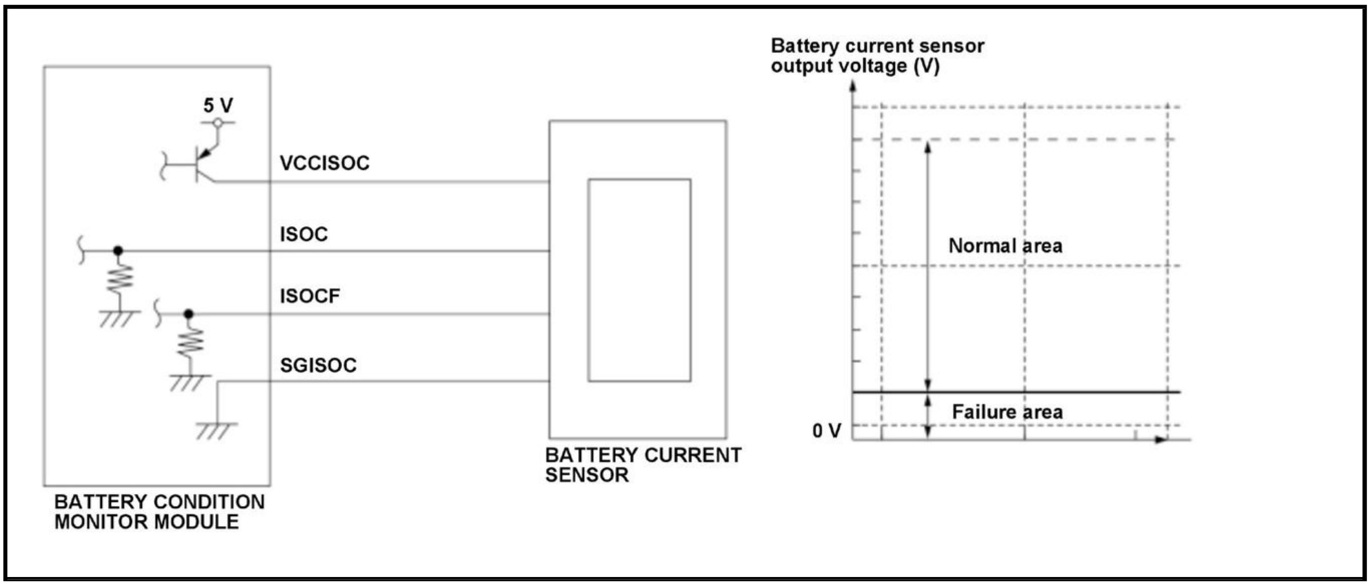
Battery current sensor output voltage (V)
5 V
VCCISOC
ISOC
ISOCF
SGISOC
Normal area
Failure area
0 V
BATTERY CURRENT SENSOR
BATTERY CONDITION MONITOR MODULE

The battery condition monitor module controls charge/discharge of the battery pack based on the battery current sensor signal. When the battery current sensor ISOC signal voltage is a specified voltage for a set time, the battery condition monitor module detects a malfunction and stores a DTC.

Monitor Execution, Sequence, Duration, DTC Type

Execution	Continuous
Sequence	None
Duration	500 milliseconds or more
DTC Type	Two drive cycles, MIL on, POWER SYSTEM indicator on, 12 VOLT CHARGING SYSTEM indicator off

Enable Conditions

Condition	Minimum	Maximum
Elapsed time since the 12 volt battery voltage reaches to a specified value after the vehicle condition is turned to the ON mode	50 milliseconds	-
12 volt battery voltage	7.7 V	-

Malfunction Threshold

The battery current sensor ISOC signal voltage is less than 0.16 V for at least 500 milliseconds.

Possible Cause

NOTE: The causes shown may not be a complete list of all potential problems, and it is possible that there may be other causes.

- Battery current sensor VCCISOC line open
- Battery current sensor ISOC line short to ground
- Battery current sensor failure
- Battery condition monitor module internal circuit failure

Diagnosis Details

Conditions for setting the DTC

When a malfunction is detected during the first drive cycle, a Pending DTC is stored in the battery condition monitor module memory. If the malfunction returns in the next (second) drive cycle, the MIL comes on and a Confirmed DTC and the freeze data are stored.

Conditions for clearing the DTC

The MIL is cleared if the malfunction does not return in three consecutive trips in which the diagnostic runs. The MIL, the Pending DTC, the Confirmed DTC, and the freeze data can be cleared with the scan tool clear command.

DTC P158E

DTC P158E: HV Battery Current Sensor 2 Circuit Low

General Description

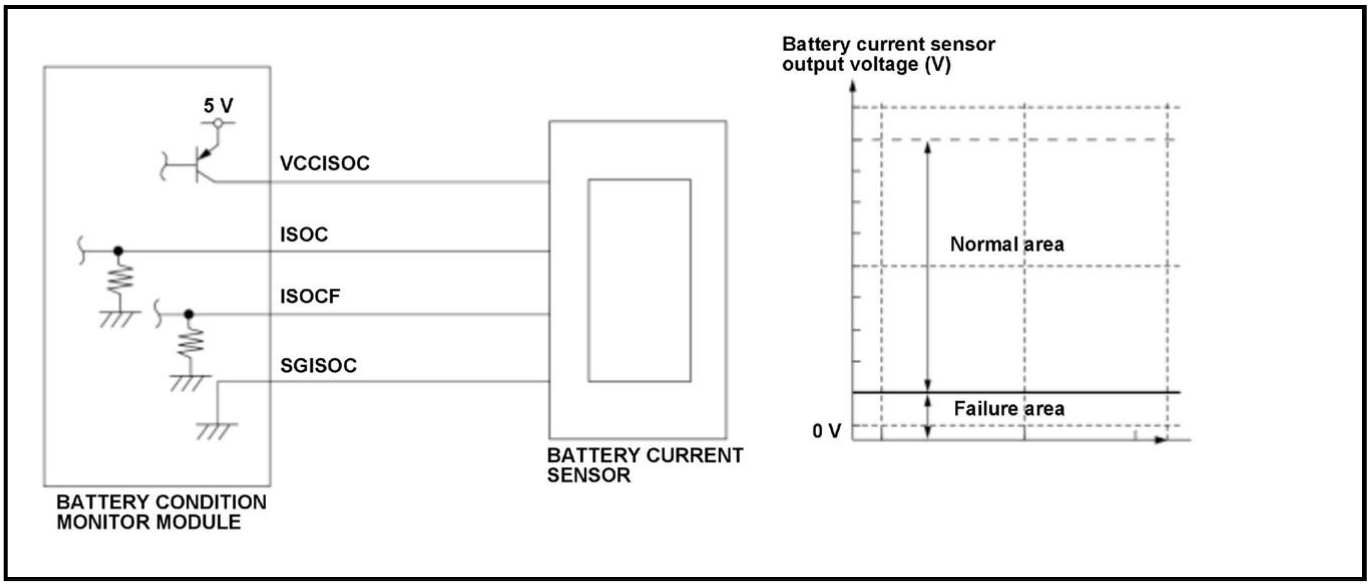
5 V
VCCISOC
ISOC
ISOCF
SGISOC
BATTERY CONDITION MONITOR MODULE
BATTERY CURRENT SENSOR
Battery current sensor output voltage (V)
Normal area
Failure area
0 V

The battery condition monitor module controls charge/discharge of the battery pack based on the battery current sensor signal. When the battery current sensor ISOCF signal voltage is a specified voltage for a set time, the battery condition monitor module detects a malfunction and stores a DTC.

Monitor Execution, Sequence, Duration, DTC Type

Execution	Continuous
Sequence	None
Duration	500 milliseconds or more
DTC Type	Two drive cycles, MIL on, POWER SYSTEM indicator on, 12 VOLT CHARGING SYSTEM indicator off

Enable Conditions

Condition	Minimum	Maximum
Elapsed time since the 12 volt battery voltage reaches to a specified value after the vehicle condition is turned to the ON mode	50 milliseconds	-
12 volt battery voltage	7.7 V	-

Malfunction Threshold

The ISOCF signal voltage from battery current sensor is less than 0.22 V for at least 500 milliseconds.

Possible Cause

NOTE: The causes shown may not be a complete list of all potential problems, and it is possible that there may be other causes.

- Battery current sensor VCCISOC line open
- Battery current sensor ISOCF line short to ground
- Battery current sensor failure
- Battery condition monitor module internal circuit failure

Diagnosis Details

Conditions for setting the DTC

When a malfunction is detected during the first drive cycle, a Pending DTC is stored in the battery condition monitor module memory. If the malfunction returns in the next (second) drive cycle, the MIL comes on and a Confirmed DTC and the freeze data are stored.

Conditions for clearing the DTC

The MIL is cleared if the malfunction does not return in three consecutive trips in which the diagnostic runs. The MIL, the Pending DTC, the Confirmed DTC, and the freeze data can be cleared with the scan tool clear command.

DTC P158F

DTC P158F: HV Battery Current Sensor 1 Circuit High

General Description

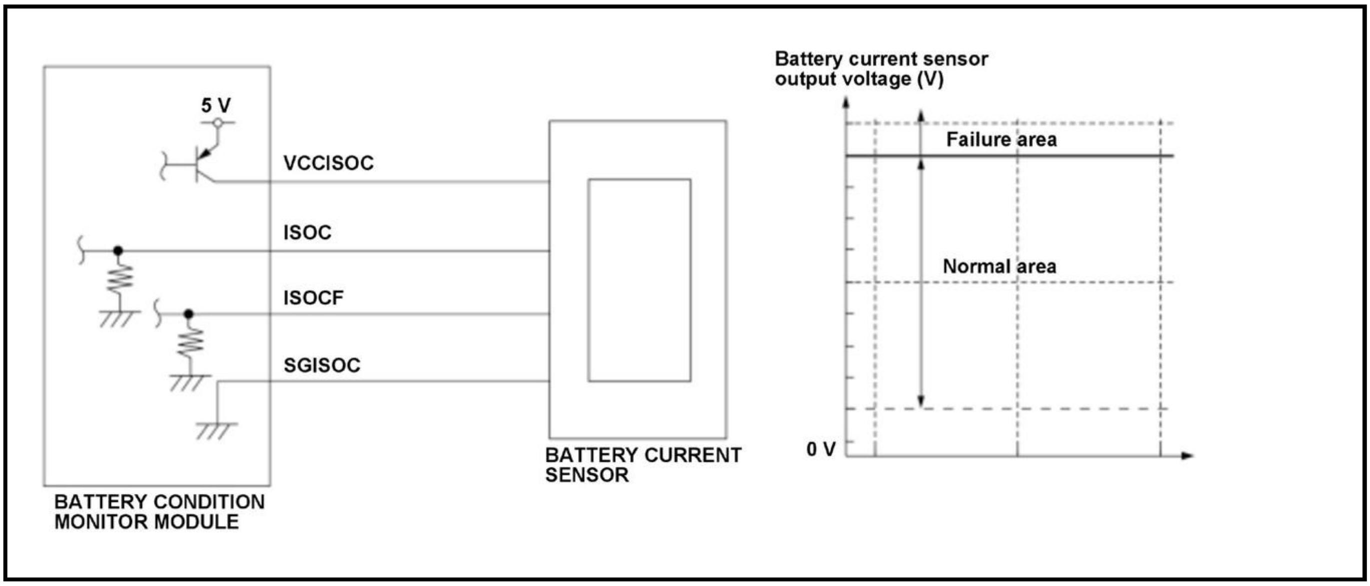
5 V
VCCISOC
ISOC
ISOCF
SGISOC
BATTERY CONDITION MONITOR MODULE
BATTERY CURRENT SENSOR
Battery current sensor output voltage (V)
Failure area
Normal area
0 V

The battery condition monitor module controls charge/discharge of the battery pack based on the battery current sensor signal. When the battery current sensor ISOC signal voltage is a specified voltage for a set time, the battery condition monitor module detects a malfunction and stores a DTC.

Monitor Execution, Sequence, Duration, DTC Type

Execution	Continuous
Sequence	None
Duration	500 milliseconds or more
DTC Type	Two drive cycles, MIL on, POWER SYSTEM indicator on, 12 VOLT CHARGING SYSTEM indicator off

Enable Conditions

Condition	Minimum	Maximum
Elapsed time since the 12 volt battery voltage reaches to a specified value after the vehicle condition is turned to the ON mode	50 milliseconds	-
12 volt battery voltage	7.7 V	-

Malfunction Threshold

The battery current sensor ISOC signal voltage is more than 4.74 V for at least 500 milliseconds.

Possible Cause

NOTE: The causes shown may not be a complete list of all potential problems, and it is possible that there may be other causes.

- Battery current sensor SGISOC line open
- Battery current sensor failure
- Battery condition monitor module internal circuit failure

Diagnosis Details

Conditions for setting the DTC

When a malfunction is detected during the first drive cycle, a Pending DTC is stored in the battery condition monitor module memory. If the malfunction returns in the next (second) drive cycle, the MIL comes on and a Confirmed DTC and the freeze data are stored.

Conditions for clearing the DTC

The MIL is cleared if the malfunction does not return in three consecutive trips in which the diagnostic runs. The MIL, the Pending DTC, the Confirmed DTC, and the freeze data can be cleared with the scan tool clear command.

DTC P1596

DTC P1596: HV Battery Current Sensor 2 Circuit High

General Description

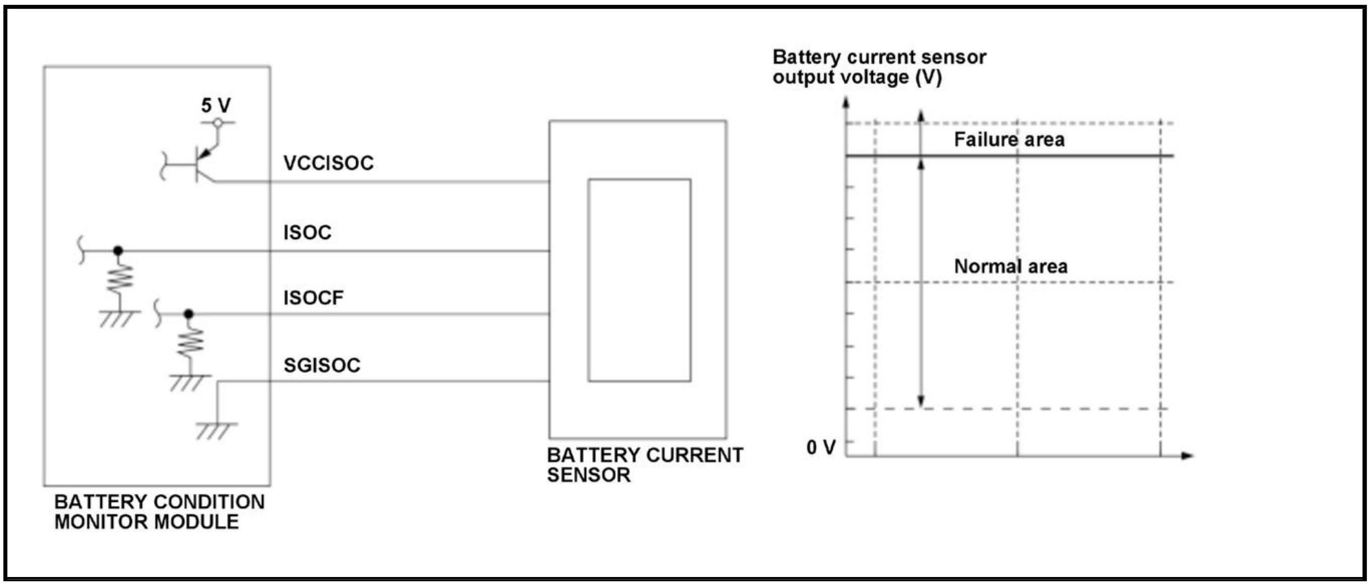
5 V
VCCISOC
ISOC
ISOCF
SGISOC
BATTERY CONDITION MONITOR MODULE
BATTERY CURRENT SENSOR
Battery current sensor output voltage (V)
Failure area
Normal area
0 V

The battery condition monitor module controls charge/discharge of the battery pack based on the battery current sensor signal. When the battery current sensor ISOCF signal voltage is a specified voltage for a set time, the battery condition monitor module detects a malfunction and stores a DTC.

Monitor Execution, Sequence, Duration, DTC Type

Execution	Continuous
Sequence	None
Duration	500 milliseconds or more
DTC Type	Two drive cycles, MIL on, POWER SYSTEM indicator on, 12 VOLT CHARGING SYSTEM indicator off

Enable Conditions

Condition	Minimum	Maximum
Elapsed time since the 12 volt battery voltage reaches to a specified value after the vehicle condition is turned to the ON mode	50 milliseconds	-
12 volt battery voltage	7.7 V	-

Malfunction Threshold

The battery current sensor ISOCF signal voltage is more than 4.74 V for at least 500 milliseconds.

Possible Cause

NOTE: The causes shown may not be a complete list of all potential problems, and it is possible that there may be other causes.

- Battery current sensor SGISOC line open
- Battery current sensor failure
- Battery condition monitor module internal circuit failure

Diagnosis Details

Conditions for setting the DTC

When a malfunction is detected during the first drive cycle, a Pending DTC is stored in the battery condition monitor module memory. If the malfunction returns in the next (second) drive cycle, the MIL comes on and a Confirmed DTC and the freeze data are stored.

Conditions for clearing the DTC

The MIL is cleared if the malfunction does not return in three consecutive trips in which the diagnostic runs. The MIL, the Pending DTC, the Confirmed DTC, and the freeze data can be cleared with the scan tool clear command.

DTC P1597

DTC P1597: HV Battery Current Sensor 1 Circuit Range/Performance

General Description

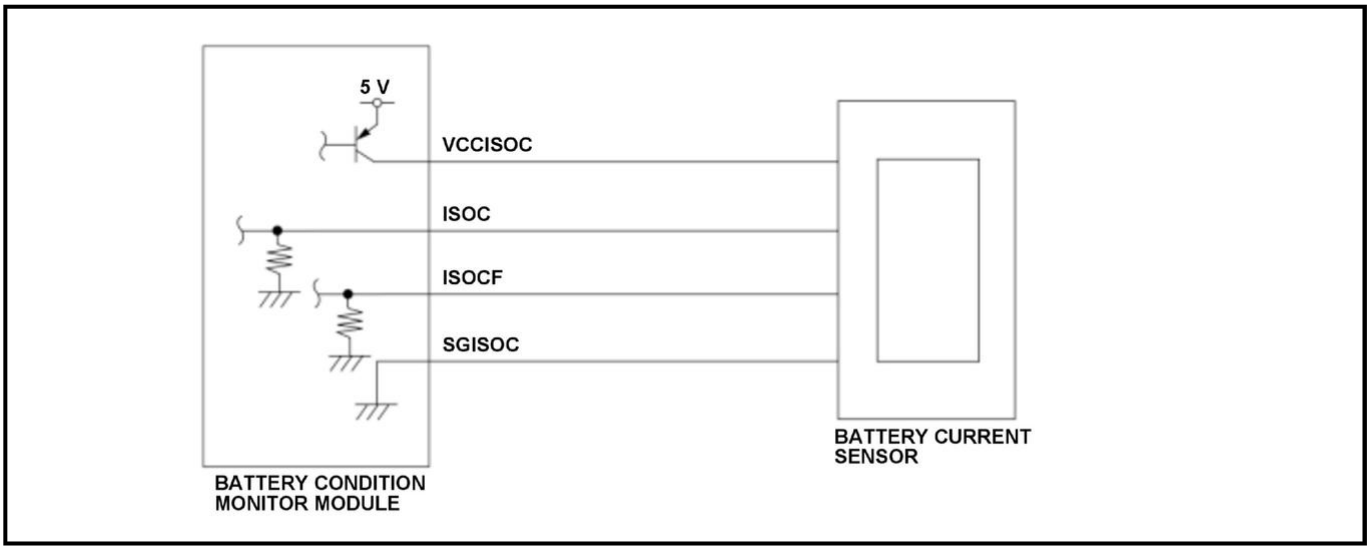

The battery condition monitor module calculates the offset value of the battery current sensor during no voltage condition of the battery pack immediately after the vehicle condition is turned to the ON mode. The battery condition monitor module converts (A/D conversion) the ISOC signal input voltage and when the difference between the maximum value and the minimum value of eight continuous inputs are within 0.04 V, the average value of eight battery current sensor inputs are calculated. When the battery current sensor average value is out of a specified range, a malfunction is detected and a DTC is stored.

Monitor Execution, Sequence, Duration, DTC Type

Execution	Immediately after the vehicle condition is turned to the ON mode
Sequence	None
Duration	200 milliseconds or more
DTC Type	Two drive cycles, MIL on, POWER SYSTEM indicator on, 12 VOLT CHARGING SYSTEM indicator off

Enable Conditions

Condition	Minimum	Maximum
Elapsed time since the 12 volt battery voltage reaches to a specified value after the vehicle condition is turned to the ON mode	50 milliseconds	-
12 volt battery voltage	7.7 V	-

Malfunction Threshold

The average signal voltage of 8 time acquired are within 0.04 V and the average value of the battery current sensor input deviates from the range of 2.24 V to 2.76 V.

Possible Cause

NOTE: The causes shown may not be a complete list of all potential problems, and it is possible that there may be other causes.

- Battery current sensor failure
- Battery condition monitor module internal circuit failure

Diagnosis Details

Conditions for setting the DTC

When a malfunction is detected during the first drive cycle, a Pending DTC is stored in the battery condition monitor module memory. If the malfunction returns in the next (second) drive cycle, the MIL comes on and a Confirmed DTC and the freeze data are stored.

Conditions for clearing the DTC

The MIL is cleared if the malfunction does not return in three consecutive trips in which the diagnostic runs. The MIL, the Pending DTC, the Confirmed DTC, and the freeze data can be cleared with the scan tool clear command.

DTC P1598

DTC P1598: HV Battery Current Sensor 2 Circuit Range/Performance

General Description

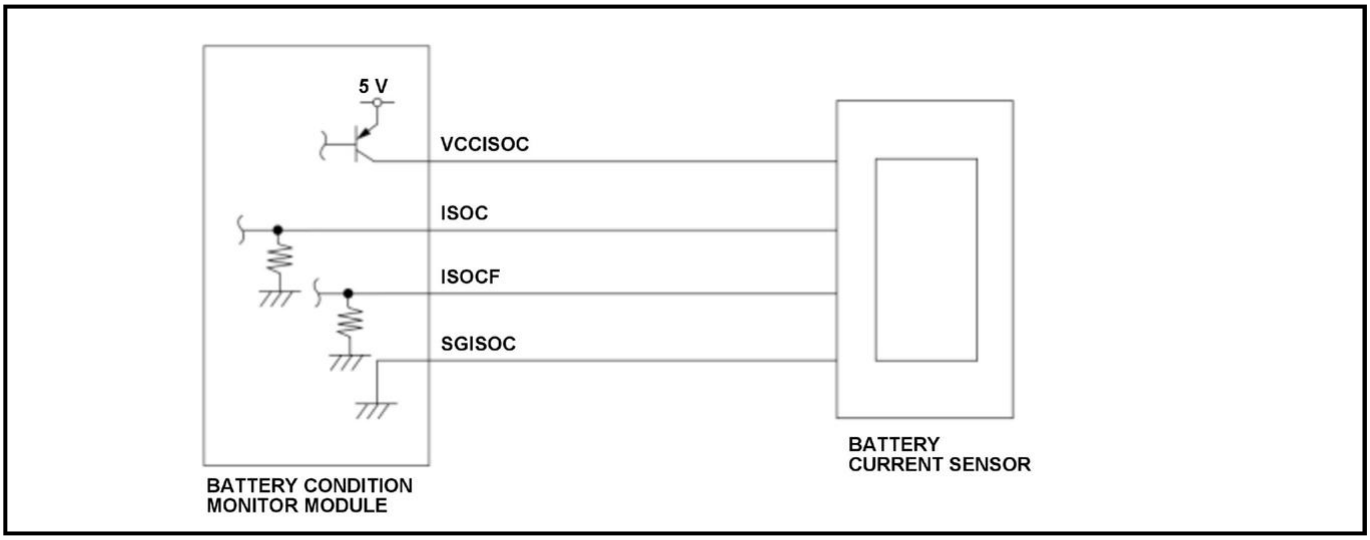

The battery condition monitor module calculates the offset value of the battery current sensor during no voltage condition of the battery pack immediately after the vehicle condition is turned to the ON mode. The battery condition monitor module converts (A/D conversion) the ISOCF signal input voltage and when the difference between the maximum value and the minimum value of eight continuous inputs are within 0.04 V, the average value of eight battery current sensor inputs are calculated. When the battery current sensor average value is out of a specified range or the calculated current difference between ISOC signal and ISOCF signal deviates from a specified range for a set time, a malfunction is detected and a DTC is stored.

Monitor Execution, Sequence, Duration, DTC Type

Execution	Immediately after the vehicle condition is turned to the ON mode
Sequence	None
Duration	-
DTC Type	Two drive cycles, MIL on, POWER SYSTEM indicator on, 12 VOLT CHARGING SYSTEM indicator off

Enable Conditions

Condition	Minimum	Maximum
Elapsed time since the 12 volt battery voltage reaches to a specified value after the vehicle condition is turned to the ON mode	50 milliseconds	-
12 volt battery voltage	7.7 V	-

Malfunction Threshold

The average signal voltage of 8 time acquired are within 0.04 V and the average value of the battery current sensor input deviates from the range of 2.24 V to 2.76 V.

Possible Cause

NOTE: The causes shown may not be a complete list of all potential problems, and it is possible that there may be other causes.

- Battery current sensor SGISOC line open
- Battery current sensor failure
- Battery condition monitor module internal circuit failure

Diagnosis Details

Conditions for setting the DTC

When a malfunction is detected during the first drive cycle, a Pending DTC is stored in the battery condition monitor module memory. If the malfunction returns in the next (second) drive cycle, the MIL comes on and a Confirmed DTC and the freeze data are stored.

Conditions for clearing the DTC

The MIL is cleared if the malfunction does not return in three consecutive trips in which the diagnostic runs. The MIL, the Pending DTC, the Confirmed DTC, and the freeze data can be cleared with the scan tool clear command.

DTC P1673

DTC P1673: IGHLD Relay Circuit

General Description

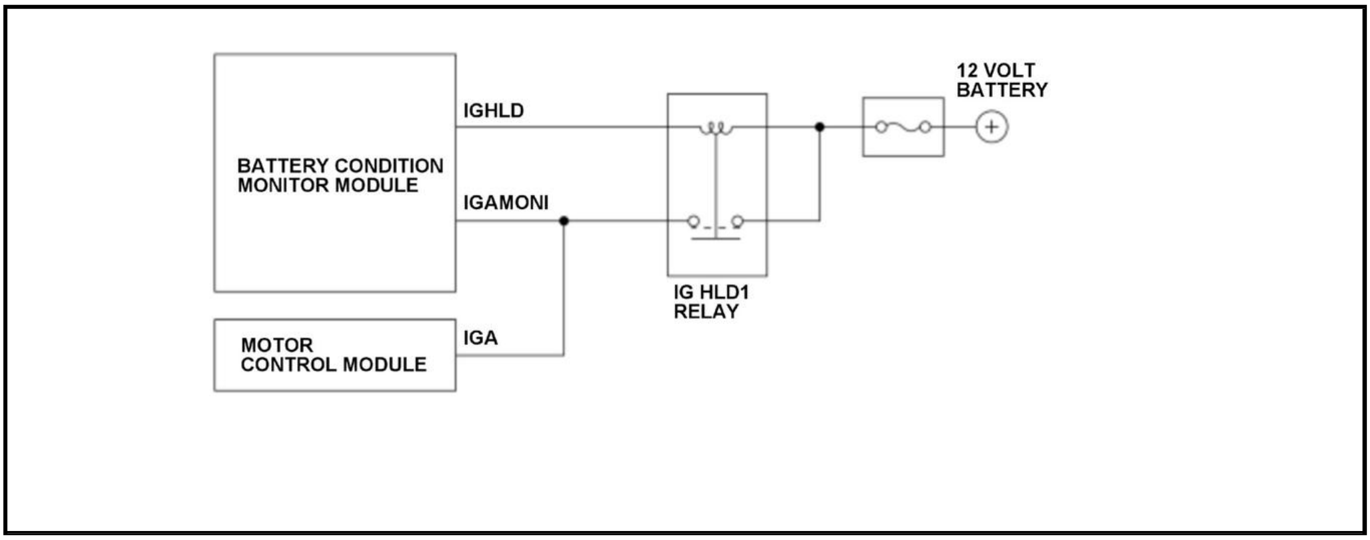

The battery condition monitor module commands IGHLD1 relay to turn ON or permit it to turn OFF to the motor control module. The battery condition monitor module monitors IGHLD1 relay voltage at all times. When the IGHLD1 relay output and the voltage does not match a specified time, a malfunction is detected and a DTC is stored.

Monitor Execution, Sequence, Duration, DTC Type

Execution	Continuous
Sequence	None
Duration	5.0 seconds or more
DTC Type	One drive cycle, MIL off, POWER SYSTEM indicator on, 12 VOLT CHARGING SYSTEM indicator off

Enable Conditions

Condition	Minimum	Maximum
12 volt battery voltage	8.2 V	-

Malfunction Threshold

One of these conditions is met for at least 5.0 seconds:

- The IGA voltage is 2.0 V or less when the IG HLD1 relay ON request is issued.
- The IGA voltage is 2.0 V or more when the IG HLD1 relay OFF request is issued.

Possible Cause

NOTE: The causes shown may not be a complete list of all potential problems, and it is possible that there may be other causes.

- IG HLD1 relay IGHLD line short to ground
- IG HLD1 relay failure
- Battery condition monitor module internal circuit failure

Diagnosis Details

Conditions for setting the DTC

When a malfunction is detected, the POWER SYSTEM indicator comes on and a Pending DTC, a Confirmed DTC, and the freeze data are stored in the battery condition monitor module memory. The MIL does not come on.

Conditions for clearing the DTC

The POWER SYSTEM indicator is cleared if the malfunction does not return in the next trip in which the diagnostic runs. The POWER SYSTEM indicator, the Pending DTC, the Confirmed DTC, and the freeze data can be cleared with the scan tool clear command.

DTC P16C3

DTC P16C3: DC-DC Converter Temperature Sensor Circuit

General Description

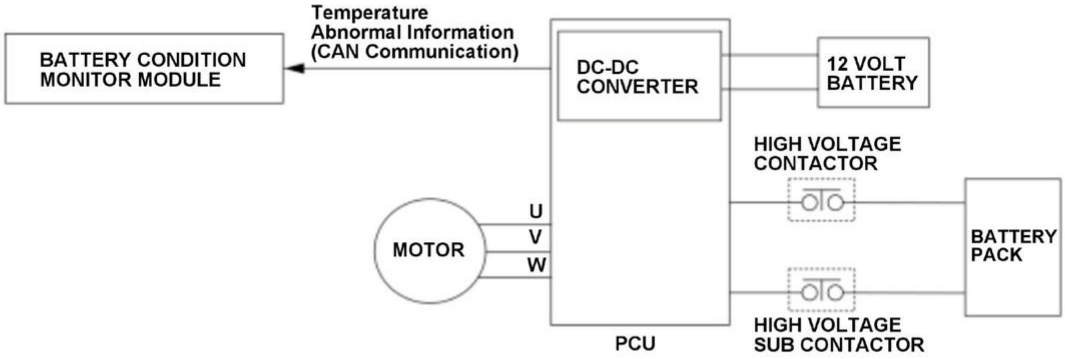
Temperature
Abnormal Information
(CAN Communication)
BATTERY CONDITION
MONITOR MODULE
DC-DC
CONVERTER
12 VOLT
BATTERY
HIGH VOLTAGE
CONTACTOR
U
V
W
MOTOR
BATTERY
PACK
PCU
HIGH VOLTAGE
SUB CONTACTOR

Temperature abnormalities are detected by the CPU in the DC-DC converter, and this information is sent to the battery condition monitor module via CAN communication. When the DC-DC converter temperature sensor abnormal information continues for a set time, the battery condition monitor module detects a malfunction and stores a DTC.

Monitor Execution, Sequence, Duration, DTC Type

Execution	Continuous
Sequence	None
Duration	2 seconds or more
DTC Type	Two drive cycles, MIL off, POWER SYSTEM indicator on, 12 VOLT CHARGING SYSTEM indicator off

Enable Conditions

Condition	Minimum	Maximum
Battery condition monitor module power-supply voltage	10.2 V	-
Vehicle	ON mode	

Malfunction Threshold

The DC-DC converter temperature sensor abnormal information continues for at least 2 seconds.

Possible Cause

NOTE: The causes shown may not be a complete list of all potential problems, and it is possible that there may be other causes.

- Power control unit (PCU) internal circuit failure

Confirmation Procedure

Operating Condition

Turn the vehicle to the ON mode, and wait for at least 10 seconds.

Diagnosis Details

Conditions for setting the DTC

When a malfunction is detected during the first drive cycle, a Pending DTC is stored in the battery condition monitor module memory. If the malfunction returns in the next (second) drive cycle, a Confirmed DTC and the freeze data are stored. The MIL does not come on.

Conditions for clearing the DTC

The Pending DTC, the Confirmed DTC, and the freeze data can be cleared with the scan tool clear command or the battery condition monitor module reset.

DTC P1D3A

DTC P1D3A: Battery Condition Monitor Module EEPROM Error (FSA Operated)

General Description

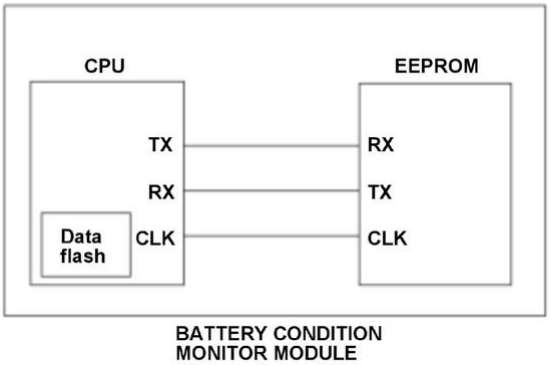

The CPU in the battery condition monitor module stores control data to the electrically erasable programmable read-only memory (EEPROM) or the data flash in the CPU. The CPU compares input and read data of the EEPROM or the data flash. When the data does not match, a malfunction is detected and stores a DTC.

Monitor Execution, Sequence, Duration, DTC Type

Execution	Continuous
Sequence	None
Duration	-
DTC Type	One drive cycle, MIL on, POWER SYSTEM indicator on, 12 VOLT CHARGING SYSTEM indicator off

Enable Conditions

Condition	B
Vehicle	ON mode

Malfunction Threshold

The battery condition monitor module fails to input to or read out from the EEPROM or the data flash.

Possible Cause

NOTE: The causes shown may not be a complete list of all potential problems, and it is possible that there may be other causes.

- Battery condition monitor module internal circuit failure

Diagnosis Details

Conditions for setting the DTC

When a malfunction is detected, the MIL comes on and a Pending DTC, a Confirmed DTC, and the freeze data are stored in the battery condition monitor module memory.

Conditions for clearing the DTC

The MIL is cleared if the malfunction does not return in three consecutive trips in which the diagnostic runs. The MIL, the Pending DTC, the Confirmed DTC, and the freeze data can be cleared with the scan tool clear command.

DTC P1D3B

DTC P1D3B: Battery Condition Monitor Module EEPROM Error (FSA Not-Operated)

General Description

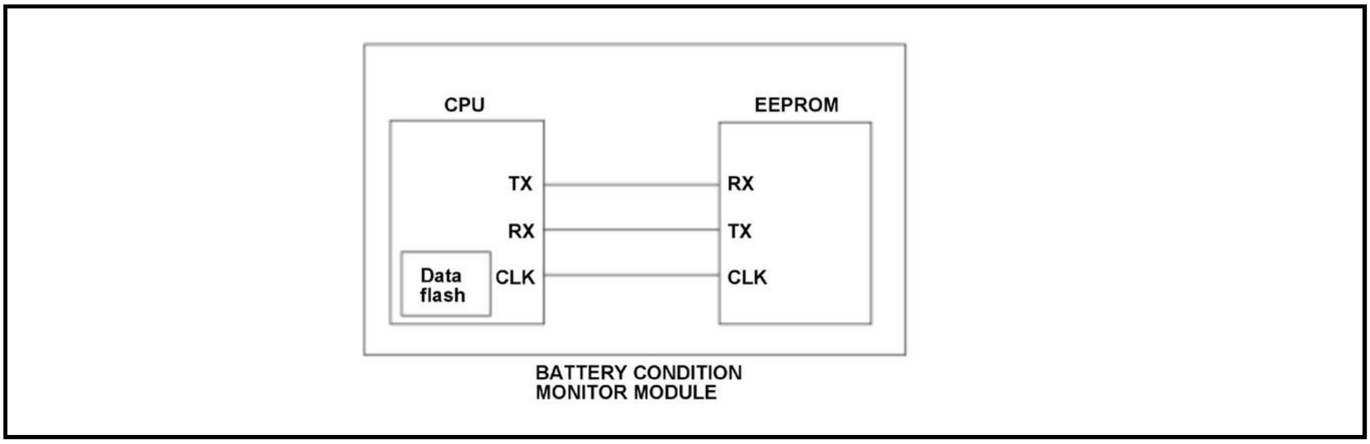

The CPU in the battery condition monitor module stores control data to the electrically erasable programmable read-only memory (EEPROM) or the data flash in the CPU. The CPU compares input and read data of the EEPROM or the data flash. When the data does not match, a malfunction is detected and stores a DTC.

Monitor Execution, Sequence, Duration, DTC Type

Execution	Continuous
Sequence	None
Duration	-
DTC Type	One drive cycle, MIL on, POWER SYSTEM indicator on, 12 VOLT CHARGING SYSTEM indicator off

Enable Conditions

Condition	B
Vehicle	ON mode

Malfunction Threshold

The battery condition monitor module fails to input to or read out from the EEPROM or the data flash.

Possible Cause

NOTE: The causes shown may not be a complete list of all potential problems, and it is possible that there may be other causes.

- Battery condition monitor module internal circuit failure

Diagnosis Details

Conditions for setting the DTC

When a malfunction is detected, the MIL comes on and a Pending DTC, a Confirmed DTC, and the freeze data are stored in the battery condition monitor module memory.

Conditions for clearing the DTC

The MIL is cleared if the malfunction does not return in three consecutive trips in which the diagnostic runs. The MIL, the Pending DTC, the Confirmed DTC, and the freeze data can be cleared with the scan tool clear command.

DTC P1D64

DTC P1D64: Collision Detection Signal Circuit

General Description

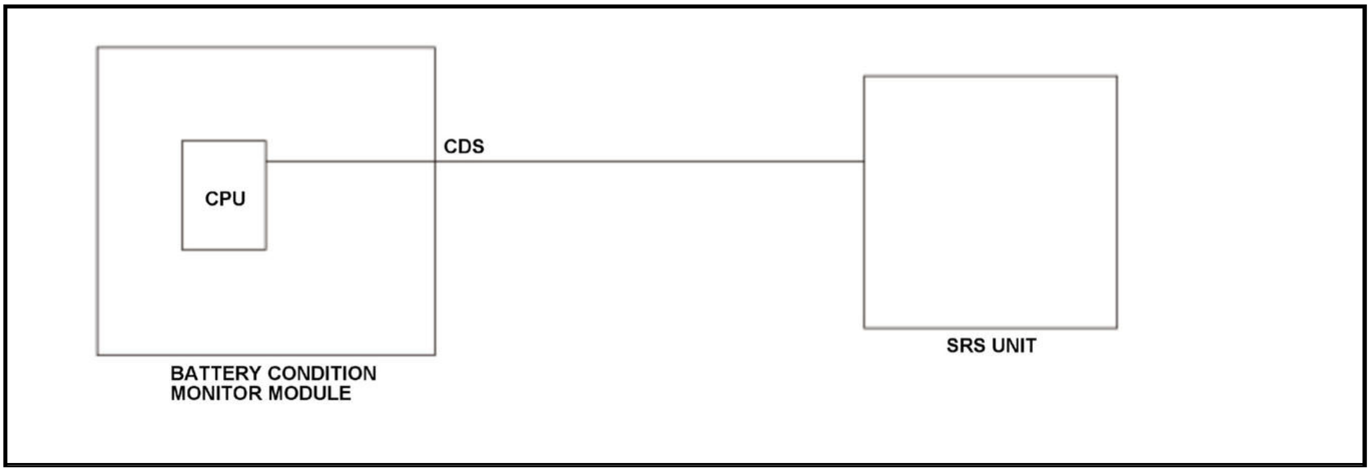

The battery condition monitor module receives pulse signals of crash cutoff information from the SRS unit. If the battery condition monitor module does not receive pulse signals from the SRS unit, the battery condition monitor module detects a malfunction and stores a DTC.

Monitor Execution, Sequence, Duration, DTC Type

Execution	Continuous
Sequence	None
Duration	5.5 seconds or more
DTC Type	One drive cycle, MIL off, POWER SYSTEM indicator on, 12 VOLT CHARGING SYSTEM indicator off

Enable Conditions

Condition	Minimum	Maximum
Elapsed time since the 12 volt battery voltage reaches to a	50 milliseconds	-

Condition	Minimum	Maximum
specified value after the vehicle condition is turned to the ON mode		
12 volt battery voltage	9.7 V	-

Malfunction Threshold

The battery condition monitor module does not receive pulse signals from the SRS unit for at least 5.5 seconds.

Possible Cause

NOTE: The causes shown may not be a complete list of all potential problems, and it is possible that there may be other causes.

- SRS unit CDS line open
- SRS unit CDS line short
- SRS unit failure
- Battery condition monitor module internal circuit failure

Diagnosis Details

Conditions for setting the DTC

When a malfunction is detected, the POWER SYSTEM indicator comes on and a Pending DTC, a Confirmed DTC, and the freeze data are stored in the battery condition monitor module memory. The MIL does not come on.

Conditions for clearing the DTC

The POWER SYSTEM indicator is cleared if the malfunction does not return in the next trip in which the diagnostic runs. The POWER SYSTEM indicator, the Pending DTC, the Confirmed DTC, and the freeze data can be cleared with the scan tool clear command.

DTC P1D65

DTC P1D65: HV System Shutdown (Collision Detection Signal Detected)

General Description

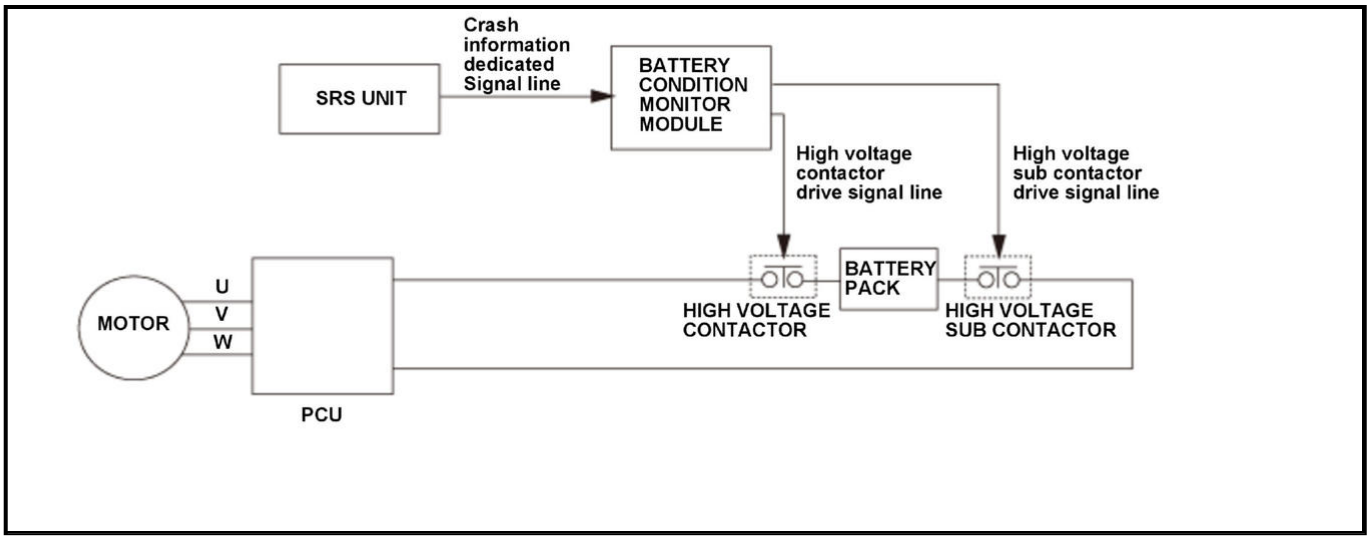
Crash information dedicated Signal line
SRS UNIT
BATTERY CONDITION MONITOR MODULE
High voltage contactor drive signal line
High voltage sub contactor drive signal line
MOTOR
U
V
W
PCU
HIGH VOLTAGE CONTACTOR
BATTERY PACK
HIGH VOLTAGE SUB CONTACTOR

The electric powertrain system contains a system that shuts down the high voltage line when the vehicle crashes. The SRS unit sends vehicle crash information to the battery condition monitor module via a dedicated signal line when the SRS unit detects that the vehicle has crashed. When the battery condition monitor module keeps receiving vehicle crash information from the SRS unit for a set time, the battery condition monitor module judges that the crash shut down condition has been met, and shuts down the high voltage contactor and the high voltage sub contactor.

Monitor Execution, Sequence, Duration, DTC Type

Execution	Continuous
Sequence	None
Duration	240 milliseconds or more
DTC Type	One drive cycle, MIL off, POWER SYSTEM indicator on, 12 VOLT CHARGING SYSTEM indicator on

Enable Conditions

Condition	Minimum	Maximum
Battery condition monitor module power-supply voltage	10.2 V	-
Vehicle	ON mode	

Malfunction Threshold

The battery condition monitor module receives the vehicle crash information for at least 240 milliseconds.

Possible Cause

NOTE: The causes shown may not be a complete list of all potential problems, and it is possible that there may be other causes.

- Failure of the vehicle by the collision
- SRS unit internal circuit failure

Diagnosis Details

Conditions for setting the DTC

When a malfunction is detected, a Pending DTC, a Confirmed DTC, and the freeze data are stored in the battery condition monitor module memory. The MIL does not come on.

Conditions for clearing the DTC

The Pending DTC, the Confirmed DTC, and the freeze data can be cleared with the scan tool clear command or the battery condition monitor module reset.

DTC P1DC7

DTC P1DC7: HV Battery Pack Deterioration of Power

General Description

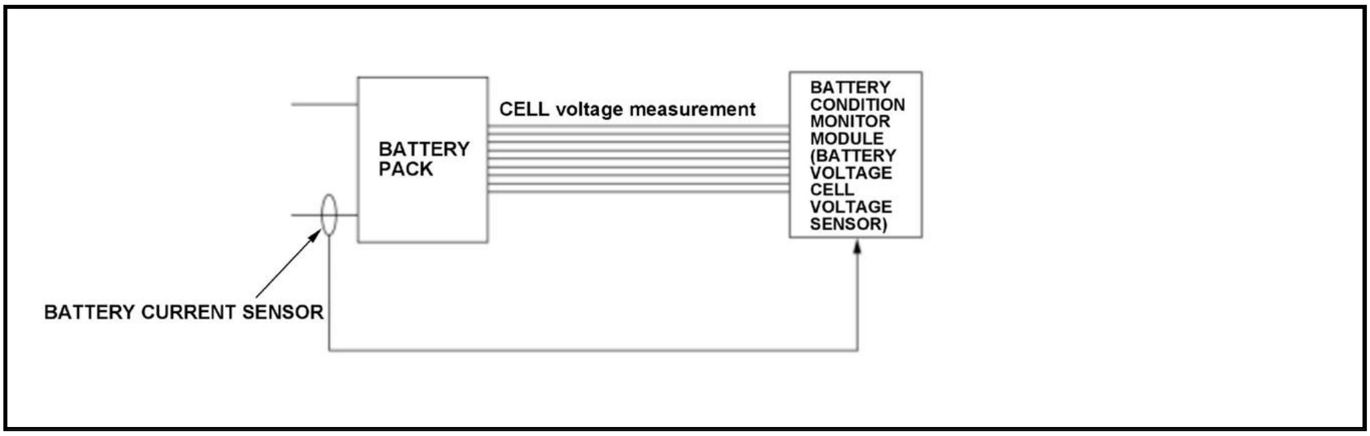
CELL voltage measurement
BATTERY PACK
BATTERY CONDITION MONITOR MODULE (BATTERY VOLTAGE CELL VOLTAGE SENSOR)
BATTERY CURRENT SENSOR

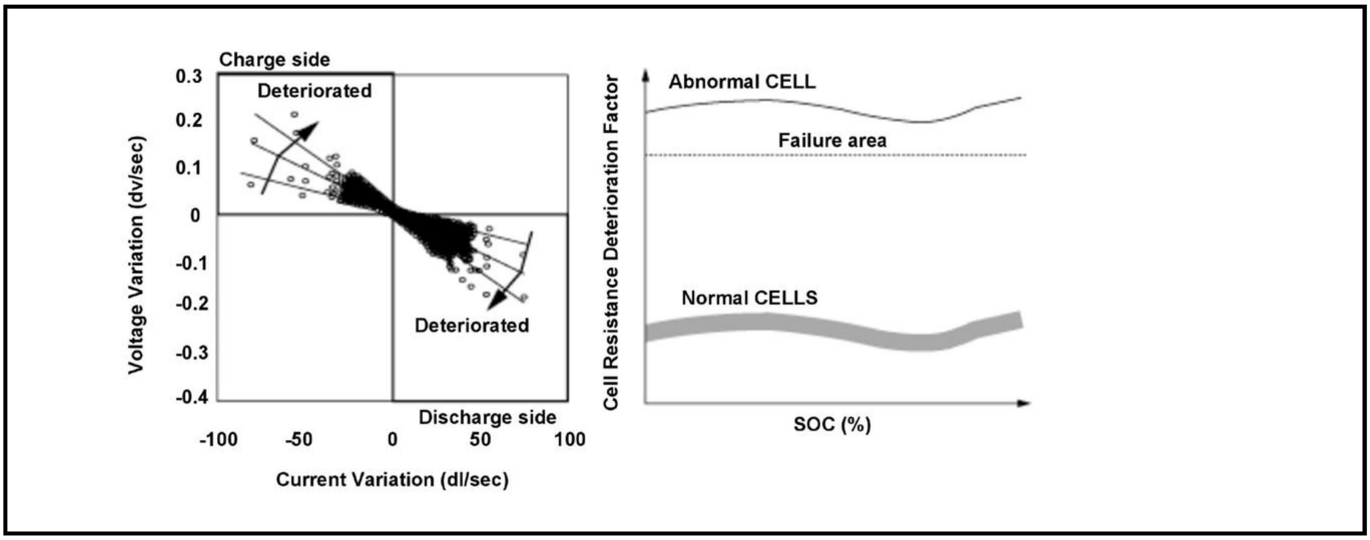

Cell resistance deterioration factor in the discharged state is calculated based on the individual cell voltage from the battery voltage cell voltage sensor connected to the battery pack and the differentiated current and voltage when inputting and outputting electric power from the battery current sensor and the battery condition monitor module. If the cell resistance deterioration factor exceeds a specified value for a specified duration, the battery condition monitor module detects a malfunction and stores a DTC.

Monitor Execution, Sequence, Duration, DTC Type

Execution	Continuous
Sequence	None
Duration	-
DTC Type	Two drive cycles, MIL on, POWER SYSTEM indicator on, 12 VOLT CHARGING SYSTEM indicator off

Enable Conditions

Condition	Minimum	Maximum
Battery pack temperature	56 deg.F (13 deg.C)	130 deg.F (54.5 deg.C)
Vehicle	ON mode	

Malfunction Threshold

The cell resistance deterioration factor ratio when discharging is 2.75 times or more.

Possible Cause

NOTE: The causes shown may not be a complete list of all potential problems, and it is possible that there may be other causes.

- Battery pack internal failure

Confirmation Procedure

Operating Condition

- Turn the vehicle to the READY TO DRIVE mode.
- Test-drive the vehicle; accelerate to 31 mph (50 km/h) and decelerate to 0 mph (0 km/h), repeat that for 10 minutes.

- Drive the vehicle in this manner only if the traffic regulations and ambient conditions allow.

Diagnosis Details

Conditions for setting the DTC

When a malfunction is detected during the first drive cycle, a Pending DTC is stored in the battery condition monitor module memory. If the malfunction returns in the next (second) drive cycle, the MIL comes on and a Confirmed DTC and the freeze data are stored.

Conditions for clearing the DTC

The MIL is cleared if the malfunction does not return in three consecutive trips in which the diagnostic runs. The MIL, the Pending DTC, the Confirmed DTC, and the freeze data can be cleared with the scan tool clear command or the battery condition monitor module reset.

DTC P1DCB

DTC P1DCB: HV Battery Identification Circuit (System Running)

General Description

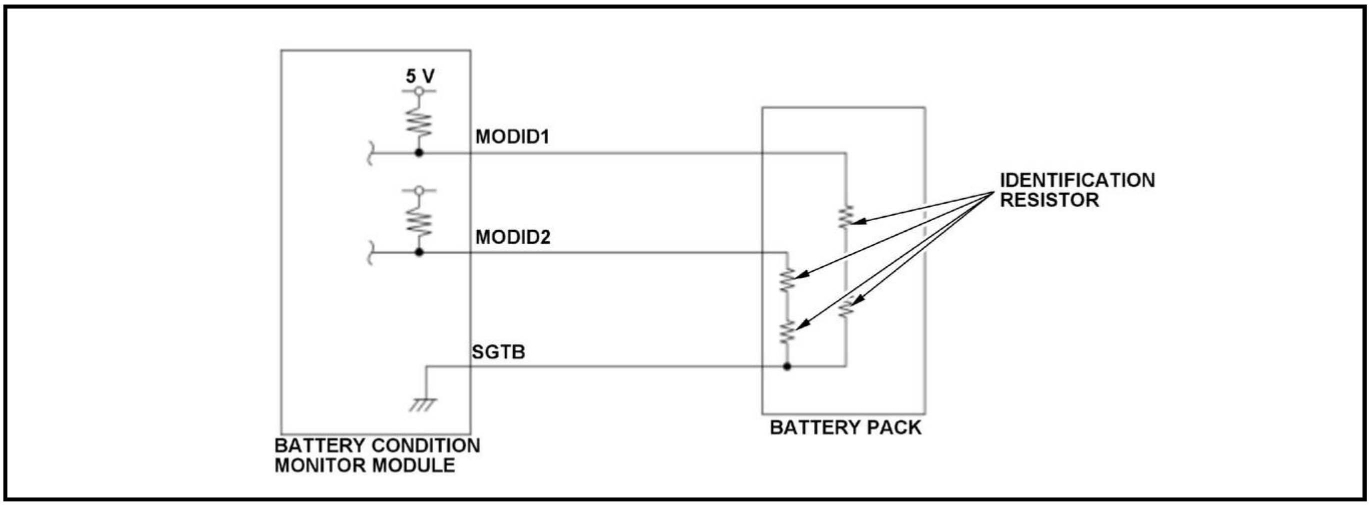

The battery pack built in resistance for battery module identifications are used for the battery condition monitor module to monitor whether an appropriate battery module is connected. If the battery pack resistance voltage for battery module identifications are out of specified value for a set time, the battery condition monitor module detects a malfunction and stores a DTC.

Monitor Execution, Sequence, Duration, DTC Type

Execution	Continuous
Sequence	None
Duration	2.0 seconds or more

DTC Type	One drive cycle, MIL off, POWER SYSTEM indicator on, 12 VOLT CHARGING SYSTEM indicator off

Enable Conditions

Condition	Minimum	Maximum
12 volt battery voltage	8.0 V	-
Other	After the electric powertrain system operated	

Malfunction Threshold

One of the conditions is met:

- The resistance voltage is 4.98 V or more for at least 2.0 seconds.
- The resistance voltage is 0.03 V or less for at least 2.0 seconds.

Possible Cause

NOTE: The causes shown may not be a complete list of all potential problems, and it is possible that there may be other causes.

- Battery pack MODID1 line open
- Battery pack MODID1 line short to ground
- Battery pack MODID2 line open
- Battery pack MODID2 line short to ground
- Battery pack internal circuit failure
- Battery condition monitor module internal circuit failure

Diagnosis Details

Conditions for setting the DTC

When a malfunction is detected, a Pending DTC, a Confirmed DTC, and the freeze data are stored in the battery condition monitor module memory. The MIL does not come on.

Conditions for clearing the DTC

The Pending DTC, the Confirmed DTC, and the freeze data can be cleared with the scan tool clear command.

DTC P1DFD

DTC P1DFD: Power System Indicator Lighting Request From PCM

General Description

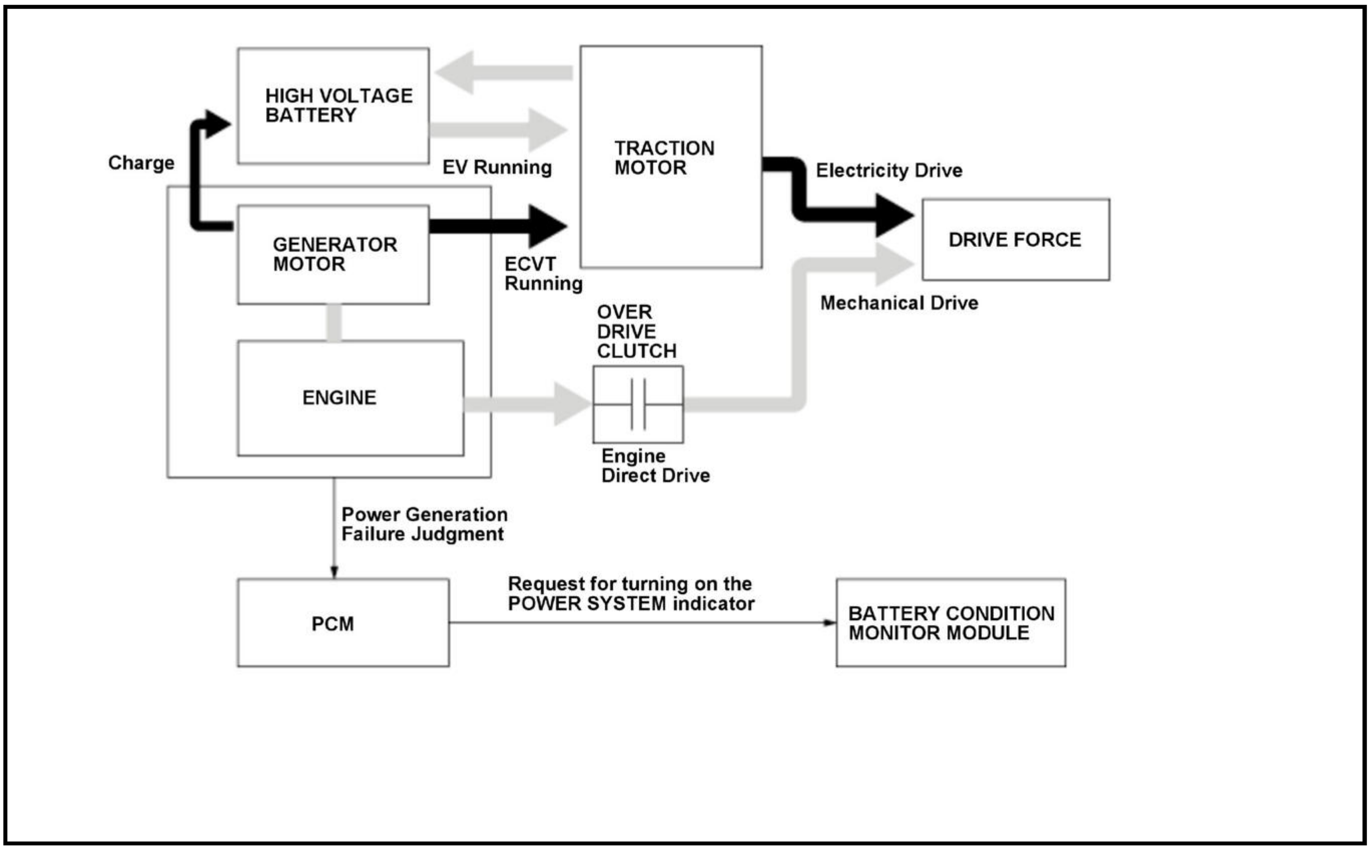
HIGH VOLTAGE BATTERY
Charge
EV Running
TRACTION MOTOR
Electricity Drive
DRIVE FORCE
GENERATOR MOTOR
ECVT Running
Mechanical Drive
OVER DRIVE CLUTCH
ENGINE
Engine Direct Drive
Power Generation Failure Judgment
PCM
Request for turning on the POWER SYSTEM indicator
BATTERY CONDITION MONITOR MODULE

The powertrain control module (PCM) monitors the power generation state of the generator motor and requests the battery condition monitor module to illuminate the POWER SYSTEM indicator when there is an abnormality.

Monitor Execution, Sequence, Duration, DTC Type

Execution	Continuous
Sequence	None
Duration	3 seconds or more
DTC Type	One drive cycle, MIL off, POWER SYSTEM indicator on, 12 VOLT CHARGING SYSTEM indicator off

Enable Conditions

Condition	Minimum	Maximum
Motor control module power-supply voltage	10.2 V	-
Vehicle	ON mode	

Malfunction Threshold

When abnormality information is received from the generator motor for 3 seconds or more.

Possible Cause

NOTE: The causes shown may not be a complete list of all potential problems, and it is possible that there may be other causes.

- Out of fuel
- Poor fuel
- Misfire

Confirmation Procedure

Operating Condition

Enter the maintenance mode and wait for 3 seconds.

Diagnosis Details

Conditions for setting the DTC

When a malfunction is detected, a Pending DTC, a Confirmed DTC, and the freeze data are stored in the battery condition monitor module memory. The MIL does not come on.

Conditions for clearing the DTC

The Pending DTC, the Confirmed DTC, and the freeze data can be cleared with the scan tool clear command or the battery condition monitor module reset.

DTC P1DFF

DTC P1DFF: IGHLDB Relay Circuit

General Description

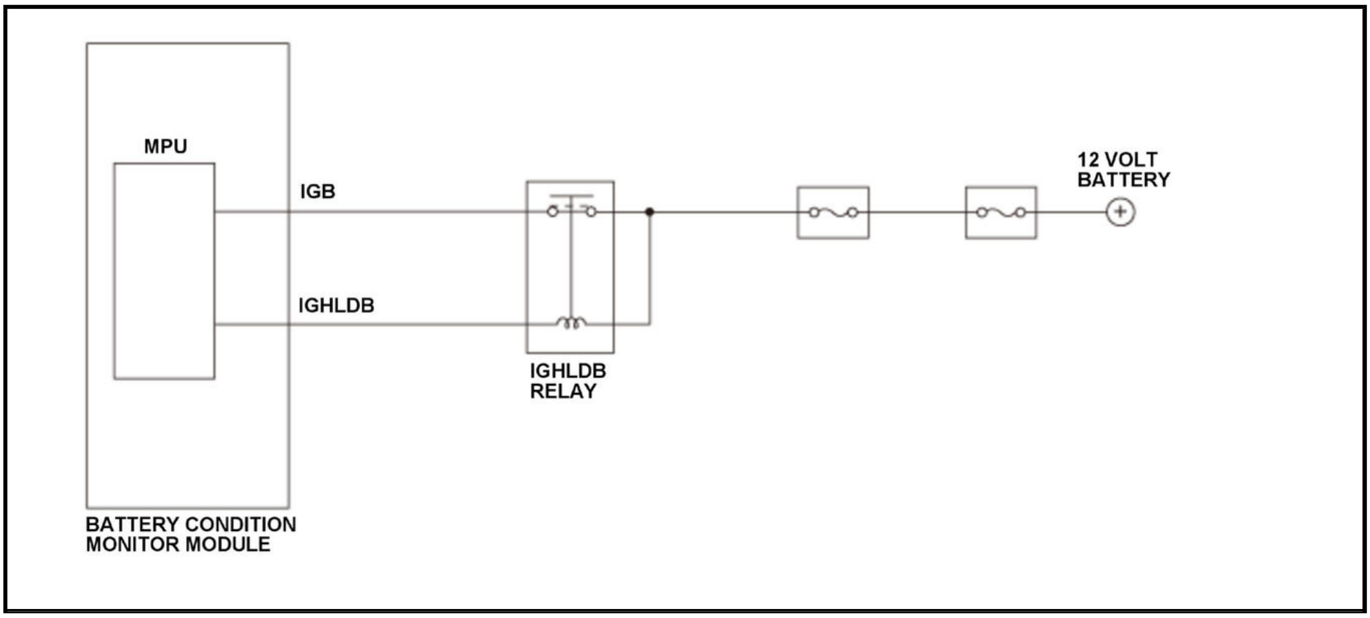

The battery condition monitor module commands IGHLDB relay to turn ON or permit it to turn OFF. Normally, when the IGHLDB relay is OFF, the MPU in the battery condition monitor module is in sleep mode. The MPU counts elapsed time since the battery condition monitor module commanded IGHLDB relay to turn OFF. When the MPU remain powered even when the battery condition monitor module commands IGHLDB relay to turn OFF for a specified duration, a malfunction is detected and a DTC is stored.

Monitor Execution, Sequence, Duration, DTC Type

Execution	After the vehicle is turned to the OFF (LOCK) mode for at least 150 seconds
Sequence	None
Duration	5.0 seconds or more
DTC Type	One drive cycle, MIL off, POWER SYSTEM indicator on, 12 VOLT CHARGING SYSTEM indicator off

Enable Conditions

Condition	B
Vehicle	OFF (LOCK) mode

Malfunction Threshold

The battery condition monitor module is not in sleep mode for at least 5.0 seconds after the battery condition monitor module sent the IGHLDB relay off signal for at least 135 seconds.

Possible Cause

NOTE: The causes shown may not be a complete list of all potential problems, and it is possible that there may be other causes.

- IGHLDB relay IGHLDB line short to ground
- IGHLDB relay failure
- Battery condition monitor module internal circuit failure

Confirmation Procedure

Operating Condition

- Turn the vehicle to the ON mode.
- Turn the vehicle to the OFF (LOCK) mode, and leave the vehicle for at least 150 seconds.
- Turn the vehicle to the ON mode.

With the HDS

None.

Diagnosis Details

Conditions for setting the DTC

When a malfunction is detected, the POWER SYSTEM indicator comes on and a Pending DTC, a Confirmed DTC, and the freeze data are stored in the battery condition monitor module memory. The MIL does not come on.

Conditions for clearing the DTC

The POWER SYSTEM indicator is cleared if the malfunction does not return in the next trip in which the diagnostic runs. The POWER SYSTEM indicator, the Pending DTC, the Confirmed DTC, and the freeze data can be cleared with the scan tool clear command.

DTC P262B

DTC P262B: Battery Condition Monitor Module Timer

General Description

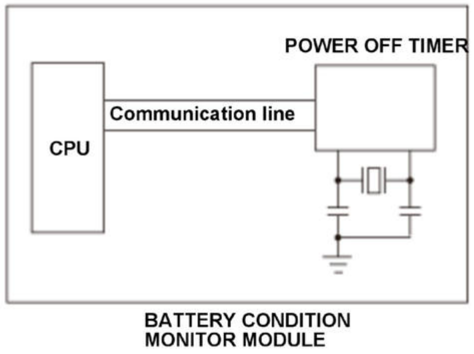

The CPU in the battery condition monitor module has built in power off timer that measures the duration from electric powertrain system off to the next vehicle ON mode. The CPU accesses to the power off timer when reading the measured duration. If the access process fails or an abnormality is found in the read data, the battery condition monitor module detects a malfunction and stores a DTC. Even if the access is normally performed, the battery condition monitor module stores a DTC when the measured duration accuracy of the power off timer is out of normal range.

Monitor Execution, Sequence, Duration, DTC Type

Execution	Continuous
Sequence	None
Duration	3 minutes or more
DTC Type	One drive cycle, MIL on, POWER SYSTEM indicator on, 12 VOLT CHARGING SYSTEM indicator off

Enable Conditions

Condition	B
Vehicle*	ON mode

*: Excludes after the 12 volt battery is reconnected

Malfunction Threshold

One of these conditions is occurs:

- The access process to the power off timer fails.
- The malfunction is found in the read data.
- When the difference between the CPU and the power off timer measurement time is 50 % or more continuously for three times.*

*: Power off timer measurement updates once per minute.

Possible Cause

NOTE: The causes shown may not be a complete list of all potential problems, and it is possible that there may be other causes.

- Battery condition monitor module internal circuit failure

Diagnosis Details

Conditions for setting the DTC

When a malfunction is detected, the MIL comes on and a Pending DTC, a Confirmed DTC, and the freeze data are stored in the battery condition monitor module memory.

Conditions for clearing the DTC

The MIL is cleared if the malfunction does not return in three consecutive trips in which the diagnostic runs. The MIL, the Pending DTC, the Confirmed DTC, and the freeze data can be cleared with the scan tool clear command.

DTC U0029 (BATTERY CONDITION MONITOR MODULE)

DTC U0029: F-CAN Malfunction (Battery Condition Monitor Module Bus-Off)

General Description

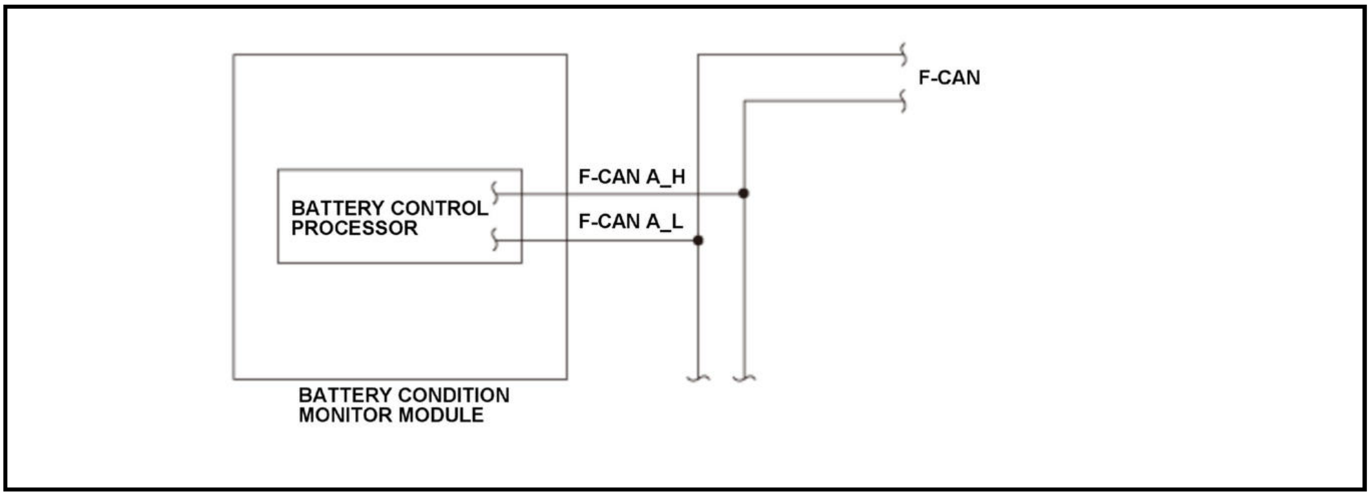

The controller area network (CAN) transmits/receives pulsing signals to/from the control modules simultaneously by using two signal lines (H line and L line). If the bus-off occurs due to an open or a short circuit in the F-CAN line is detected for a prescribed time, the battery control processor in the battery condition monitor module detects a malfunction and a DTC is stored.

Monitor Execution, Sequence, Duration, DTC Type

Execution	Continuous
Sequence	None
Duration	500 milliseconds or more
DTC Type	One drive cycle, MIL on, POWER SYSTEM indicator on, 12 VOLT CHARGING SYSTEM indicator on

Enable Conditions

Condition	Minimum	Maximum
Elapsed time since the 12 volt battery voltage reaches to a specified value after the vehicle condition is turned to the ON mode	50 milliseconds	-
12 volt battery voltage	10.2 V	-

Malfunction Threshold

The F-CAN line bus-off continues for at least 500 milliseconds.

Possible Cause

NOTE: The causes shown may not be a complete list of all potential problems, and it is possible that there may be other causes.

- F-CAN circuit F-CAN A_H line open
- F-CAN circuit F-CAN A_L line open
- F-CAN circuit F-CAN A_H line short
- F-CAN circuit F-CAN A_L line short
- Unit communicating on F-CAN internal circuit failure
- Battery condition monitor module failure

Diagnosis Details

Conditions for setting the DTC

When a malfunction is detected, the MIL comes on and a Pending DTC, a Confirmed DTC, and the freeze data are stored in the battery condition monitor module memory.

Conditions for clearing the DTC

The MIL is cleared if the malfunction does not return in three consecutive trips in which the diagnostic runs. The MIL, the Pending DTC, the Confirmed DTC, and the freeze data can be cleared with the scan tool clear command.

DTC U0038 (BATTERY CONDITION MONITOR MODULE)

DTC U0038: EP-CAN Malfunction (Battery Condition Monitor Module Bus-Off)

General Description

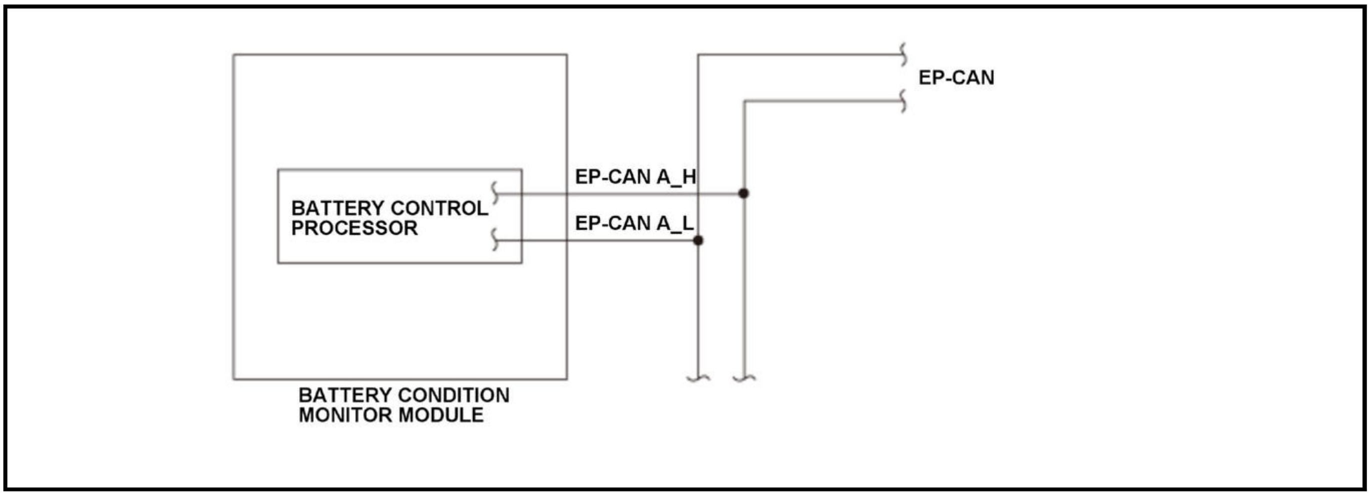

The controller area network (CAN) transmits/receives pulsing signals to/from the control modules simultaneously by using two signal lines (H line and L line). If the bus-off occurs due to an open or a short circuit in the EP-CAN line is detected for a prescribed time, the battery control processor in the battery condition monitor module detects a malfunction and a DTC is stored.

Monitor Execution, Sequence, Duration, DTC Type

Execution	Continuous
Sequence	None
Duration	500 milliseconds or more
DTC Type	Two drive cycles, MIL on, POWER SYSTEM indicator on, 12 VOLT CHARGING SYSTEM indicator on

Enable Conditions

Condition	Minimum	Maximum
Elapsed time since the 12 volt battery voltage reaches to a specified value after the vehicle condition is turned to the ON mode	50 milliseconds	-
12 volt battery voltage	10.2 V	-

Malfunction Threshold

The EP-CAN line bus-off continues for at least 500 milliseconds.

Possible Cause

NOTE: The causes shown may not be a complete list of all potential problems, and it is possible that there may be other causes.

- EP-CAN circuit EP-CAN A_H line open
- EP-CAN circuit EP-CAN A_L line open
- EP-CAN circuit EP-CAN A_H line short
- EP-CAN circuit EP-CAN A_L line short
- Unit communicating on EP-CAN internal circuit failure
- Battery condition monitor module failure

Diagnosis Details

Conditions for setting the DTC

When a malfunction is detected during the first drive cycle, a Pending DTC is stored in the battery condition monitor module memory. If the malfunction returns in the next (second) drive cycle, the MIL comes on and a Confirmed DTC and the freeze data are stored.

Conditions for clearing the DTC

The MIL is cleared if the malfunction does not return in three consecutive trips in which the diagnostic runs. The MIL, the Pending DTC, the Confirmed DTC, and the freeze data can be cleared with the scan tool clear command.

DTC U0100 (BATTERY CONDITION MONITOR MODULE)

DTC U0100: CAN Malfunction (Battery Condition Monitor Module - PCM)

General Description

This fault code is a general (specified by SAE) DTC that is stored at the time the following DTC codes (U1204, U1600) are detected.

DTC U0110 (BATTERY CONDITION MONITOR MODULE)

DTC U0110: F-CAN Malfunction (Battery Condition Monitor Module - Traction Motor Control Module)

General Description

This fault code is a general (specified by SAE) DTC that is stored at the time the DTC code U1205 is detected.

DTC U012D (BATTERY CONDITION MONITOR MODULE)

DTC U012D: F-CAN Malfunction (Battery Condition Monitor Module - Generator Motor Control Module)

General Description

This fault code is a general (specified by SAE) DTC that is stored at the time the DTC code U12A5 is detected.

DTC U0146 (BATTERY CONDITION MONITOR MODULE)

DTC U0146: F-CAN Malfunction (Battery Condition Monitor Module - CAN Gateway)

General Description

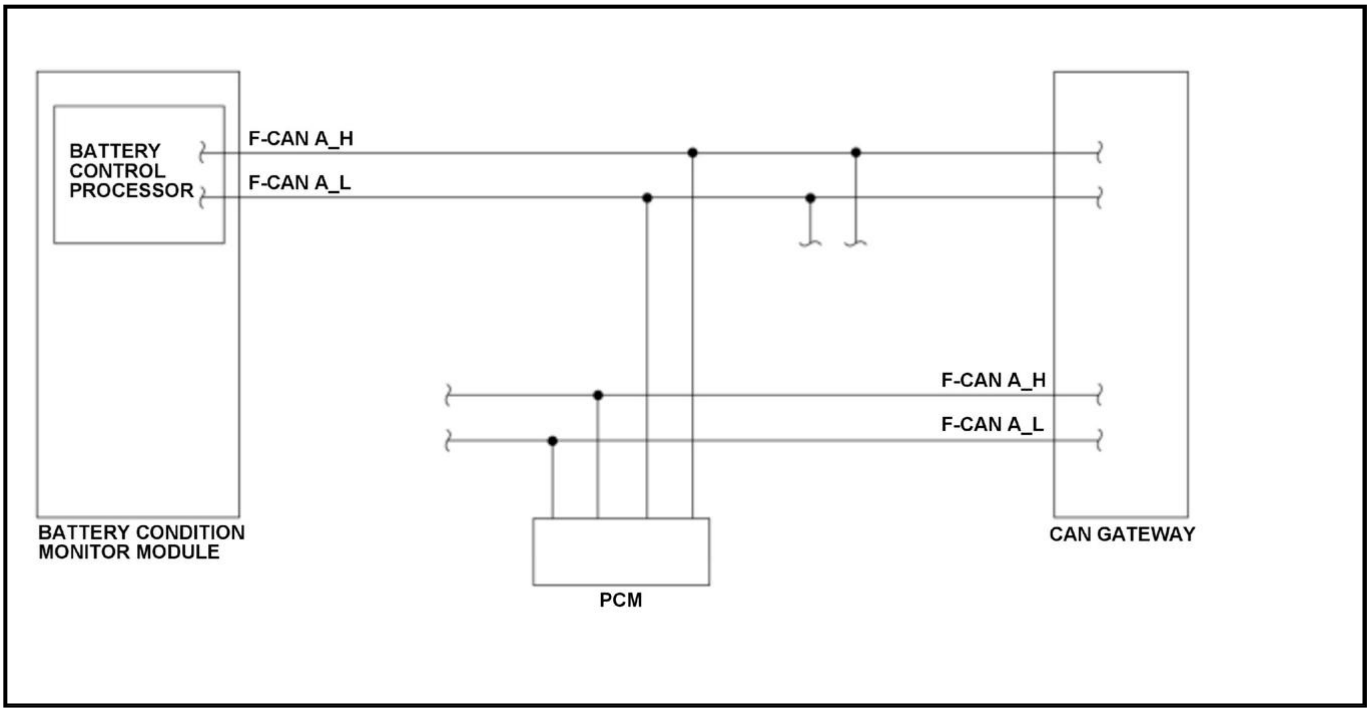

The controller area network (CAN) transmits/receives pulsing signals to/from the control modules simultaneously by using two signal lines (H line and L line). When the battery condition monitor module cannot receive the signals from the CAN gateway via the F-CAN lines or the received data is abnormal for a specified time, a malfunction is detected and a DTC is stored.

Monitor Execution, Sequence, Duration, DTC Type

Execution	Continuous
Sequence	None
Duration	10 seconds or more
DTC Type	Two drive cycles, MIL on, POWER SYSTEM indicator on, 12 VOLT CHARGING SYSTEM indicator off

Enable Conditions

Condition	Minimum	Maximum
Elapsed time since the 12 volt battery voltage reaches to a specified value after the vehicle condition is turned to the ON mode	3 seconds	-
12 volt battery voltage	10.2 V	-

Malfunction Threshold

One of these conditions is met:

- The battery condition monitor module cannot receive any signals from the CAN gateway via the F-CAN lines for at least 2.0 seconds.
- The information sent from the CAN gateway is abnormal for at least 10 seconds.

Possible Cause

NOTE: The causes shown may not be a complete list of all potential problems, and it is possible that there may be other causes.

- F-CAN circuit F-CAN A_H line open
- F-CAN circuit F-CAN A_L line open
- F-CAN circuit F-CAN A_H line short
- F-CAN circuit F-CAN A_L line short
- F-CAN circuit F-CAN B_H line open
- F-CAN circuit F-CAN B_L line open
- F-CAN circuit F-CAN B_H line short
- F-CAN circuit F-CAN B_L line short
- CAN gateway failure
- Powertrain control module (PCM) failure
- Battery condition monitor module failure

Diagnosis Details

Conditions for setting the DTC

When a malfunction is detected during the first drive cycle, a Pending DTC is stored in the battery condition monitor module memory. If the malfunction returns in the next (second) drive cycle, the MIL comes on and a Confirmed DTC and the freeze data are stored.

Conditions for clearing the DTC

The MIL is cleared if the malfunction does not return in three consecutive trips in which the diagnostic runs. The MIL, the Pending DTC, the Confirmed DTC, and the freeze data can be cleared with the scan tool clear command.

DTC U0155 (BATTERY CONDITION MONITOR MODULE)

DTC U0155: F-CAN Malfunction (Battery Condition Monitor Module - Gauge Control Module)

General Description

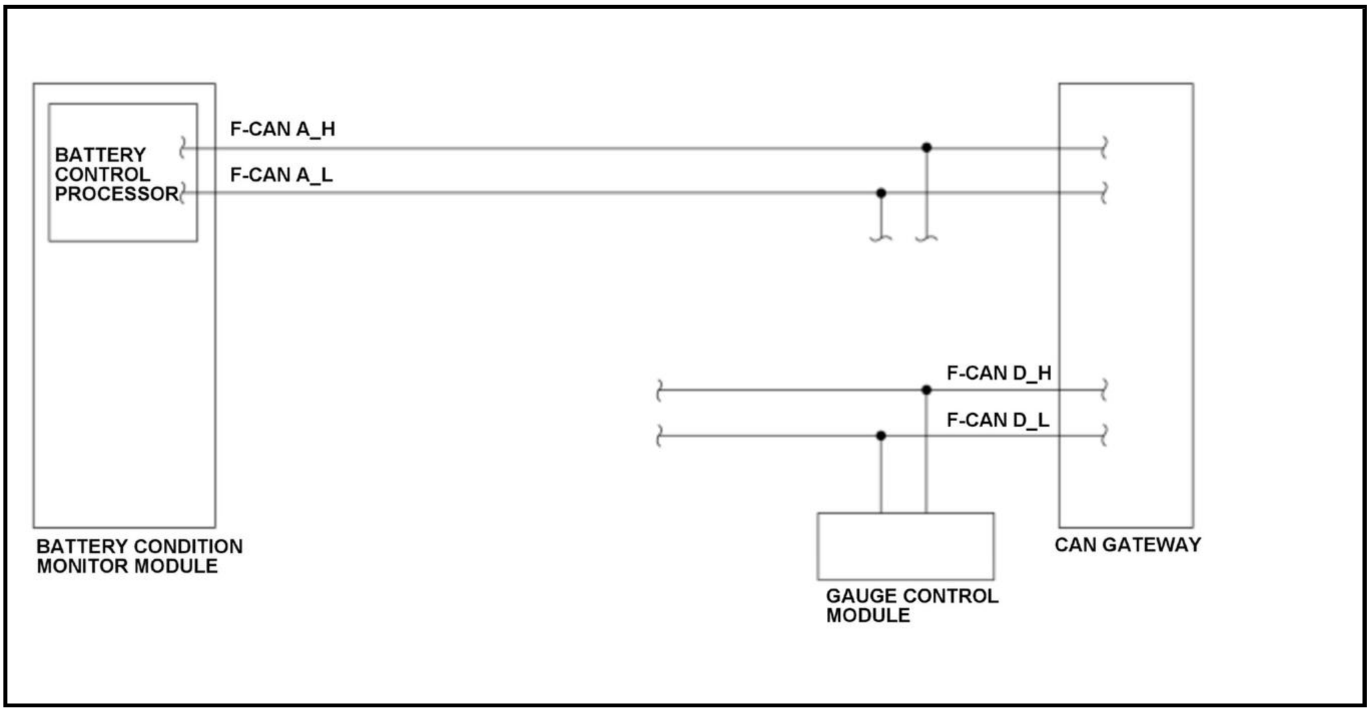

The controller area network (CAN) transmits/receives pulsing signals to/from the control modules simultaneously by using two signal lines (H line and L line). When the battery condition monitor module cannot receive the signals from the gauge control module via the F-CAN lines or the received data is abnormal for a specified time, a malfunction is detected and a DTC is stored.

Monitor Execution, Sequence, Duration, DTC Type

Execution	Continuous
Sequence	None
Duration	25 seconds or more
DTC Type	Two drive cycles, MIL off, POWER SYSTEM indicator on, 12 VOLT CHARGING SYSTEM indicator off

Enable Conditions

Condition	Minimum	Maximum
Elapsed time since the 12 volt battery voltage reaches to a specified value after the vehicle condition is turned to the ON mode	3 seconds	-
12 volt battery voltage	10.2 V	-

Malfunction Threshold

One of these conditions is met:

- The battery condition monitor module cannot receive any signals from the gauge control module via the F-CAN lines for at least 2.0 seconds.
- The information sent from the gauge control module is abnormal for at least 25 seconds.

Possible Cause

NOTE: The causes shown may not be a complete list of all potential problems, and it is possible that there may be other causes.

- F-CAN circuit F-CAN A_H line open

- F-CAN circuit F-CAN A_L line open
- F-CAN circuit F-CAN A_H line short
- F-CAN circuit F-CAN A_L line short
- F-CAN circuit F-CAN D_H line open
- F-CAN circuit F-CAN D_L line open
- F-CAN circuit F-CAN D_H line short
- F-CAN circuit F-CAN A_L line short
- Gauge control module failure
- Battery condition monitor module failure

Diagnosis Details

Conditions for setting the DTC

When a malfunction is detected during the first drive cycle, a Pending DTC is stored in the battery condition monitor module memory. If the malfunction returns in the next (second) drive cycle, the POWER SYSTEM indicator comes on and a Confirmed DTC and the freeze data are stored. The MIL does not come on.

Conditions for clearing the DTC

The POWER SYSTEM indicator is cleared if the malfunction does not return in the next trip in which the diagnostic runs. The POWER SYSTEM indicator, the Pending DTC, the Confirmed DTC, and the freeze data can be cleared with the scan tool clear command.

DTC U0298 (BATTERY CONDITION MONITOR MODULE)

DTC U0298: DC-DC Converter Communication Error

General Description

This fault code is a general (specified by SAE) DTC that is stored at the time the DTC code U1220 is detected.

DTC U0312 (BATTERY CONDITION MONITOR MODULE)

DTC U0312: Battery Condition Monitor Module Programming Error (Version Mismatch)

General Description

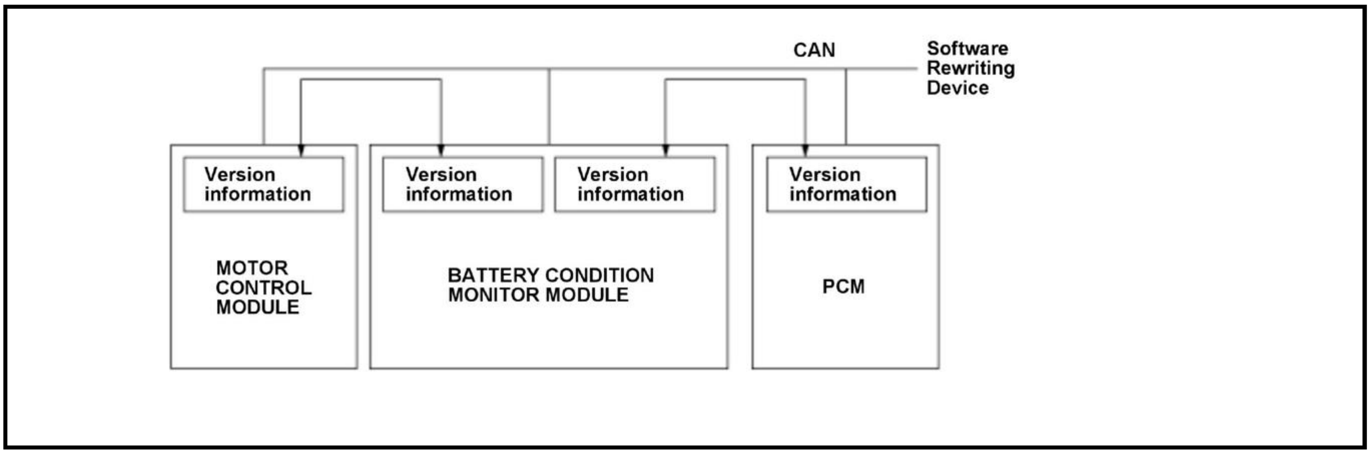

The motor control module, battery condition monitor module, and the powertrain control module (PCM) can be updated by software rewriting device communicated via the CAN lines. When the motor control module, battery condition monitor module, or the PCM needs to be updated but either CPU fails rewriting, the indicator comes on and stores a DTC. Each CPU stores software version information, and compare their versions each other by transmitting/receiving via the CAN lines. If the battery condition monitor module judges that its own software version is old, a malfunction is detected and a DTC is stored.

Monitor Execution, Sequence, Duration, DTC Type

Execution	Continuous
Sequence	None
Duration	1.0 second or more
DTC Type	One drive cycle, MIL on, POWER SYSTEM indicator on, 12 VOLT CHARGING SYSTEM indicator on

Enable Conditions

Condition	B
Other	The normal status of communication by CAN line between the PCM or the motor control module and the battery condition monitor module

Malfunction Threshold

The battery condition monitor module judges that its own software version is old for at least 1.0 second.

Possible Cause

NOTE: The causes shown may not be a complete list of all potential problems, and it is possible that there may be other causes.

- Software version mismatch between the battery condition monitor module and the motor control module
- Software version mismatch between the battery condition monitor module and the PCM

Diagnosis Details

Conditions for setting the DTC

When a malfunction is detected, the MIL comes on and a Pending DTC, a Confirmed DTC, and the freeze data are stored in the battery condition monitor module memory.

Conditions for clearing the DTC

The MIL is cleared if the malfunction does not return in three consecutive trips in which the diagnostic runs. The MIL, the Pending DTC, the Confirmed DTC, and the freeze data can be cleared with the scan tool clear command.

DTC U0599 (BATTERY CONDITION MONITOR MODULE)

DTC U0599: DC-DC Converter Serial Communication Receive Error

General Description

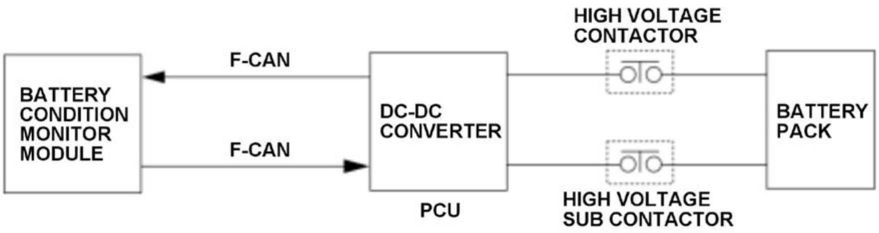

The controller area network (CAN) transmits/receives pulsing signals to/from the control modules simultaneously by using two signal lines (H line and L line). When the battery condition monitor module does not receive the signal from the DC-DC converter via the F-CAN line for a set time, a malfunction is detected and a DTC is stored.

Monitor Execution, Sequence, Duration, DTC Type

Execution	Continuous
Sequence	None
Duration	2.0 seconds or more
DTC Type	Two drive cycles, MIL off, POWER SYSTEM indicator on

Enable Conditions

Condition	Minimum	Maximum
Elapsed time since the 12 volt battery voltage reaches to a specified value after the vehicle condition is turned to the ON mode	3 seconds	-
12 volt battery voltage	10.2 V	-

Malfunction Threshold

One of these conditions is met for at least 2.0 seconds:

- The battery condition monitor module does not receive any signals via the F-CAN lines.
- The information sent from the DC-DC converter is abnormal.

Possible Cause

NOTE: The causes shown may not be a complete list of all potential problems, and it is possible that there may be other causes.

- F-CAN circuit F-CAN D_H line open
- F-CAN circuit F-CAN D_L line open
- F-CAN circuit F-CAN D_H line short
- F-CAN circuit F-CAN D_L line short
- DC-DC converter failure
- DC-DC converter does not work
- Battery condition monitor module failure

Diagnosis Details

Conditions for setting the DTC

When a malfunction is detected during the first drive cycle, a Pending DTC is stored is the battery condition monitor module memory. If the malfunction returns in the next (second) drive cycle, the POWER SYSTEM indicator comes on and a Confirmed DTC and the freeze data are stored. The MIL does not come on.

Conditions for clearing the DTC

The POWER SYSTEM indicator is cleared if the malfunction does not return in the next trip in which the diagnostic runs. The POWER SYSTEM indicator, the Pending DTC, the Confirmed DTC, and the freeze data can be cleared with the scan tool Clear command or by disconnecting the 12 volt battery.

DTC U1204 (BATTERY CONDITION MONITOR MODULE)

DTC U1204: EP-CAN Malfunction (Battery Condition Monitor Module - PCM)

General Description

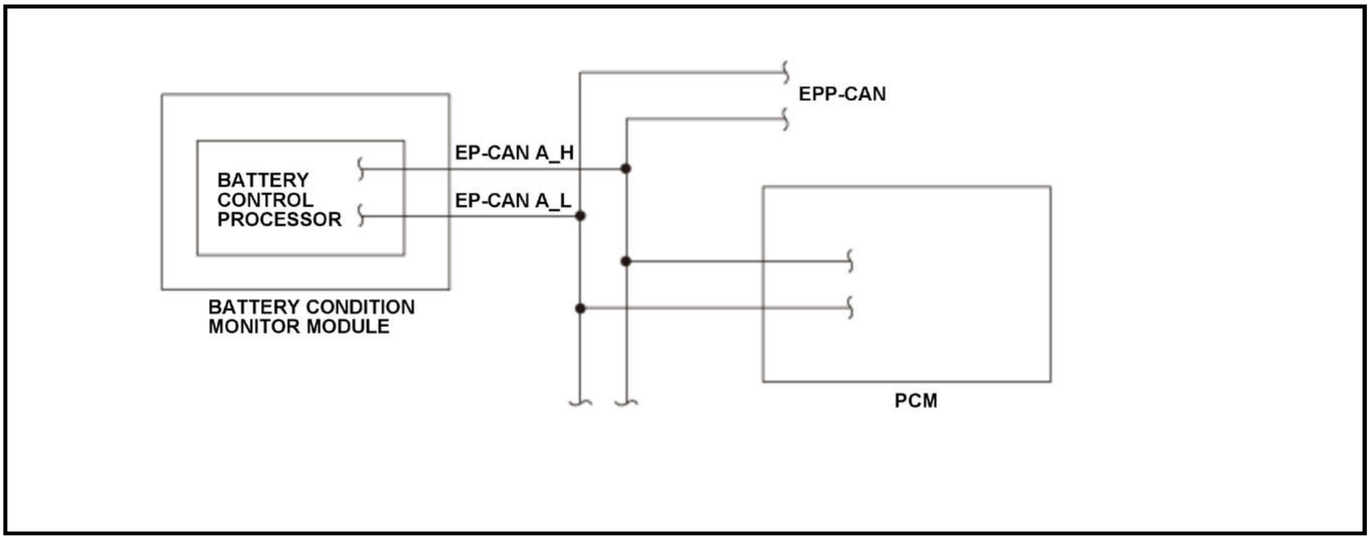

The controller area network (CAN) transmits/receives pulsing signals to/from the control modules simultaneously by using two signal lines (H line and L line). When the battery condition monitor module cannot receive the signals from the powertrain control module (PCM) via the EP-CAN lines or the received data is abnormal for a specified time, a malfunction is detected and a DTC is stored.

Monitor Execution, Sequence, Duration, DTC Type

Execution	Continuous
Sequence	None
Duration	25 seconds or more
DTC Type	One drive cycle, MIL on, POWER SYSTEM indicator on, 12 VOLT CHARGING SYSTEM indicator off

Enable Conditions

Condition	Minimum	Maximum
Elapsed time since the 12 volt battery voltage reaches to a specified value after the vehicle condition is turned to the ON mode	3 seconds	-
12 volt battery voltage	10.2 V	-

Malfunction Threshold

One of these conditions is met:

- The battery condition monitor module cannot receive any signals from the PCM via the EP-CAN lines for at least 2.0 seconds.
- The information sent from the PCM is abnormal for at least 25 seconds.

Possible Cause

NOTE: The causes shown may not be a complete list of all potential problems, and it is possible that there may be other causes.

- EP-CAN circuit EP-CAN A_H line open
- EP-CAN circuit EP-CAN A_L line open
- EP-CAN circuit EP-CAN A_H line short
- EP-CAN circuit EP-CAN A_L line short
- PCM failure
- Battery condition monitor module failure

Diagnosis Details

Conditions for setting the DTC

When a malfunction is detected, the MIL comes on and a Pending DTC, a Confirmed DTC, and the freeze data are stored in the battery condition monitor module memory.

Conditions for clearing the DTC

The MIL is cleared if the malfunction does not return in three consecutive trips in which the diagnostic runs. The MIL, the Pending DTC, the Confirmed DTC, and the freeze data can be cleared with the scan tool clear command.

DTC U1205 (BATTERY CONDITION MONITOR MODULE)

DTC U1205: EP-CAN Malfunction (Battery Condition Monitor Module - Traction Motor Control Module)

General Description

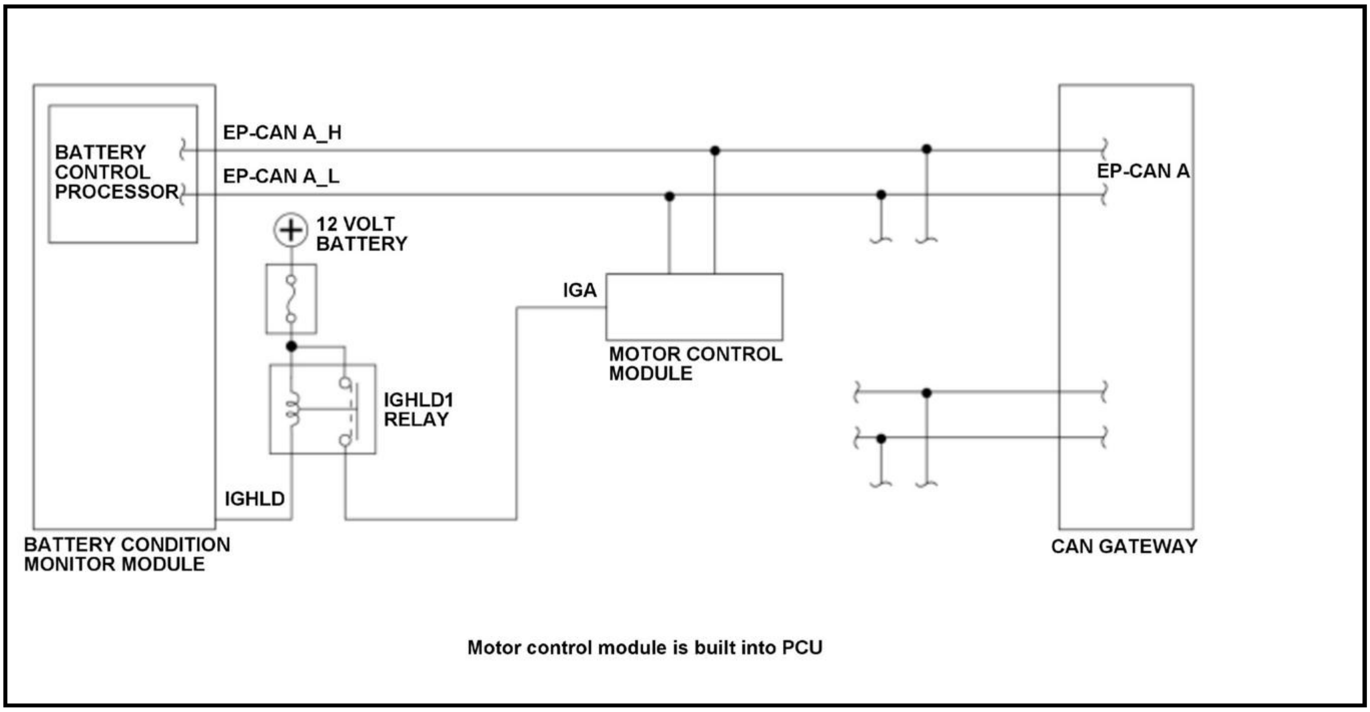
BATTERY CONTROL PROCESSOR
EP-CAN A_H
EP-CAN A_L
12 VOLT BATTERY
IGA
MOTOR CONTROL MODULE
IGHLD1 RELAY
IGHLD
BATTERY CONDITION MONITOR MODULE
EP-CAN A
CAN GATEWAY
Motor control module is built into PCU

The controller area network (CAN) transmits/receives pulsing signals to/from the control modules simultaneously by using two signal lines (H line and L line). When the battery condition monitor module cannot receive the signals from the motor control module via the EP-CAN lines or the received data is abnormal for a specified time, a malfunction is detected and a DTC is stored.

Monitor Execution, Sequence, Duration, DTC Type

Execution	Continuous
Sequence	None
Duration	25 seconds or more

DTC Type	One drive cycle, MIL on, POWER SYSTEM indicator on, 12 VOLT CHARGING SYSTEM indicator off

Enable Conditions

Condition	Minimum	Maximum
Elapsed time since the 12 volt battery voltage reaches to a specified value after the vehicle condition is turned to the ON mode	3 seconds	-
12 volt battery voltage	10.2 V	-

Malfunction Threshold

One of these conditions is met:

- The battery condition monitor module cannot receive any signals from the motor control module via the EP-CAN lines for at least 2.0 seconds.
- The information sent from the motor control module is abnormal for at least 25 seconds.

Possible Cause

NOTE: The causes shown may not be a complete list of all potential problems, and it is possible that there may be other causes.

- EP-CAN circuit EP-CAN A_H line open
- EP-CAN circuit EP-CAN A_L line open
- EP-CAN circuit EP-CAN A_H line short
- EP-CAN circuit EP-CAN A_L line short
- IGHLD1 relay IGHLD line open
- IGHLD1 relay stuck off
- Power control unit (PCU) internal circuit failure
- Battery condition monitor module failure

Diagnosis Details

Conditions for setting the DTC

When a malfunction is detected, the MIL comes on and a Pending DTC, a Confirmed DTC, and the freeze data are stored in the battery condition monitor module memory.

Conditions for clearing the DTC

The MIL is cleared if the malfunction does not return in three consecutive trips in which the diagnostic runs. The MIL, the Pending DTC, the Confirmed DTC, and the freeze data can be cleared with the scan tool clear command.

DTC U1207 (BATTERY CONDITION MONITOR MODULE)

DTC U1207: F-CAN Malfunction (Battery Condition Monitor Module - Electric A/C Compressor)

General Description

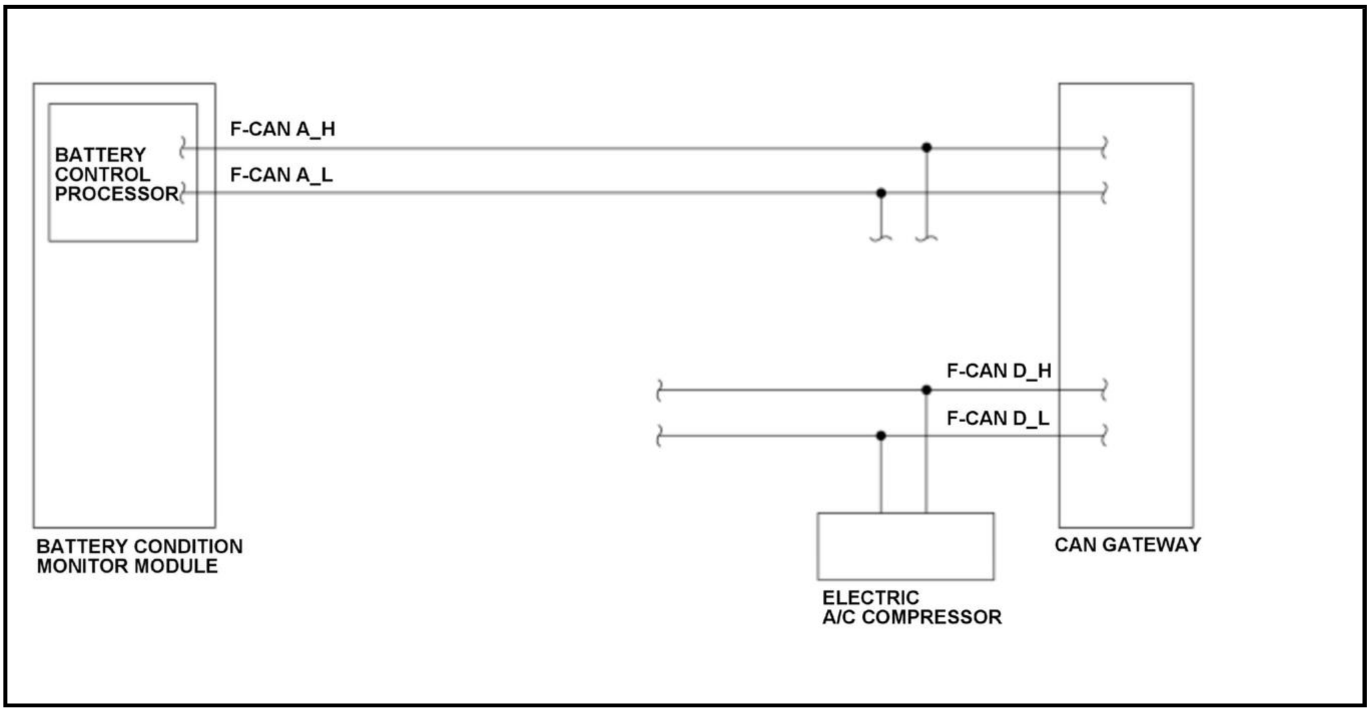

The controller area network (CAN) transmits/receives pulsing signals to/from the control modules simultaneously by using two signal lines (H line and L line). When the battery condition monitor module cannot receive the signals from the electric A/C compressor via the F-CAN lines or the received data is abnormal for a specified time, a malfunction is detected and a DTC is stored.

Monitor Execution, Sequence, Duration, DTC Type

Execution	Continuous
Sequence	None
Duration	10 seconds or more
DTC Type	One drive cycle, MIL off, POWER SYSTEM indicator on, 12 VOLT CHARGING SYSTEM indicator off

Enable Conditions

Condition	Minimum	Maximum
Elapsed time since the 12 volt battery voltage reaches to a specified value after the vehicle condition is turned to the ON mode	3 seconds	-
12 volt battery voltage	10.2 V	-

Malfunction Threshold

One of these conditions is met:

- The battery condition monitor module cannot receive any signals from the electric A/C compressor via the F-CAN lines for at least 2.0 seconds.
- The information sent from the electric A/C compressor is abnormal for at least 10 seconds.

Possible Cause

NOTE: The causes shown may not be a complete list of all potential problems, and it is possible that there may be other causes.

- F-CAN circuit F-CAN A_H line open

- F-CAN circuit F-CAN A_L line open
- F-CAN circuit F-CAN A_H line short
- F-CAN circuit F-CAN A_L line short
- F-CAN circuit F-CAN D_H line open
- F-CAN circuit F-CAN D_L line open
- F-CAN circuit F-CAN D_H line short
- F-CAN circuit F-CAN D_L line short
- Electric A/C compressor failure
- Battery condition monitor module failure

Diagnosis Details

Conditions for setting the DTC

When a malfunction is detected, the POWER SYSTEM indicator comes on and a Pending DTC, a Confirmed DTC, and the freeze data are stored in the battery condition monitor module memory. The MIL does not come on.

Conditions for clearing the DTC

The POWER SYSTEM indicator is cleared if the malfunction does not return in the next trip in which the diagnostic runs. The POWER SYSTEM indicator, the Pending DTC, the Confirmed DTC, and the freeze data can be cleared with the scan tool clear command.

DTC U1220 (BATTERY CONDITION MONITOR MODULE)

DTC U1220: DC-DC Converter Serial Communication Transmit Error

General Description

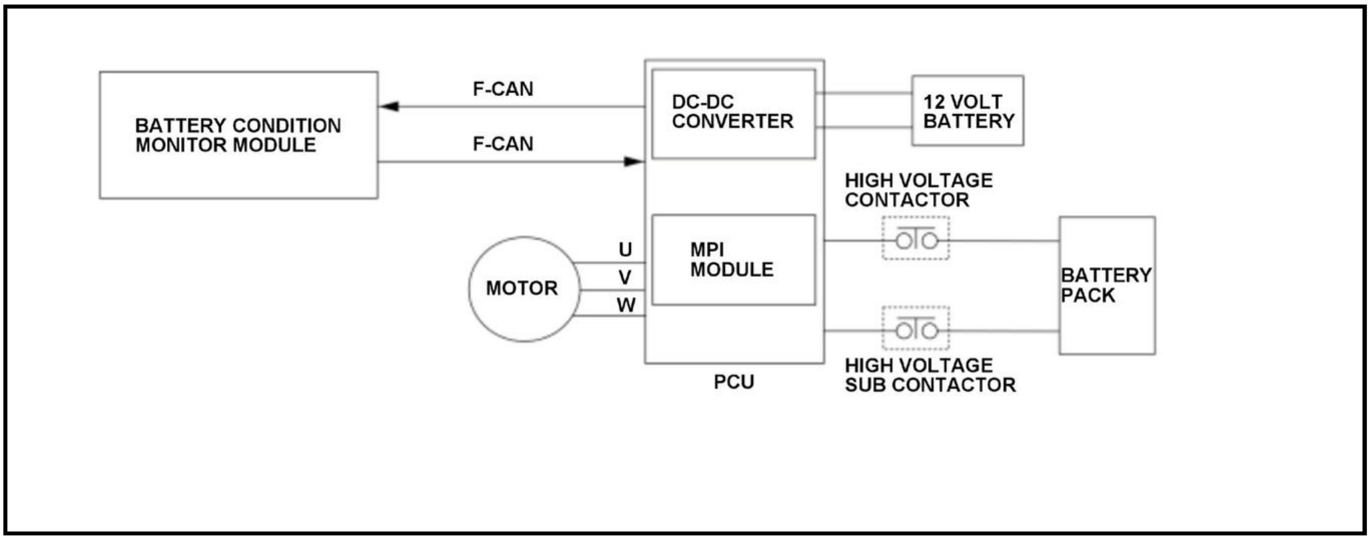

BATTERY CONDITION MONITOR MODULE
F-CAN
F-CAN
DC-DC CONVERTER
12 VOLT BATTERY
HIGH VOLTAGE CONTACTOR
MOTOR
U
V
W
MPI MODULE
BATTERY PACK
PCU
HIGH VOLTAGE SUB CONTACTOR

The DC-DC converter uses an internal timer to measure the intervals between CAN communication data updates. When an update is not received for a specified time, the battery condition monitor module detects a CAN communication reception malfunction and stores a DTC.

Monitor Execution, Sequence, Duration, DTC Type

Execution	Continuous
Sequence	None
Duration	2 seconds or more

DTC Type	Two drive cycles, MIL off, POWER SYSTEM indicator on, 12 VOLT CHARGING SYSTEM indicator off

Enable Conditions

Condition	Minimum	Maximum
Battery condition monitor module power-supply voltage	10.2 V	-
Vehicle	ON mode	

Malfunction Threshold

The CAN communication data is not updated for at least 2 seconds.

Possible Cause

NOTE: The causes shown may not be a complete list of all potential problems, and it is possible that there may be other causes.

- F-CAN circuit F-CAN A_H line open
- F-CAN circuit F-CAN A_L line open
- F-CAN circuit F-CAN A_H line short
- F-CAN circuit F-CAN A_L line short
- Power control unit (PCU) internal circuit failure
- Battery condition monitor module internal circuit failure

Confirmation Procedure

Operating Condition

Turn the vehicle to the ON mode, and wait for at least 10 seconds.

With the HDS

None.

Diagnosis Details

Conditions for setting the DTC

When a malfunction is detected during the first drive cycle, a Pending DTC is stored in the battery condition monitor module memory. If the malfunction returns in the next (second) drive cycle, a Confirmed DTC and the freeze data are stored. The MIL does not come on.

Conditions for clearing the DTC

The Pending DTC, the Confirmed DTC, and the freeze data can be cleared with the scan tool clear command or the battery condition monitor module reset.

DTC U12A5 (BATTERY CONDITION MONITOR MODULE)

DTC U12A5: EP-CAN Malfunction (Battery Condition Monitor Module - Generator Motor Control Module)

General Description

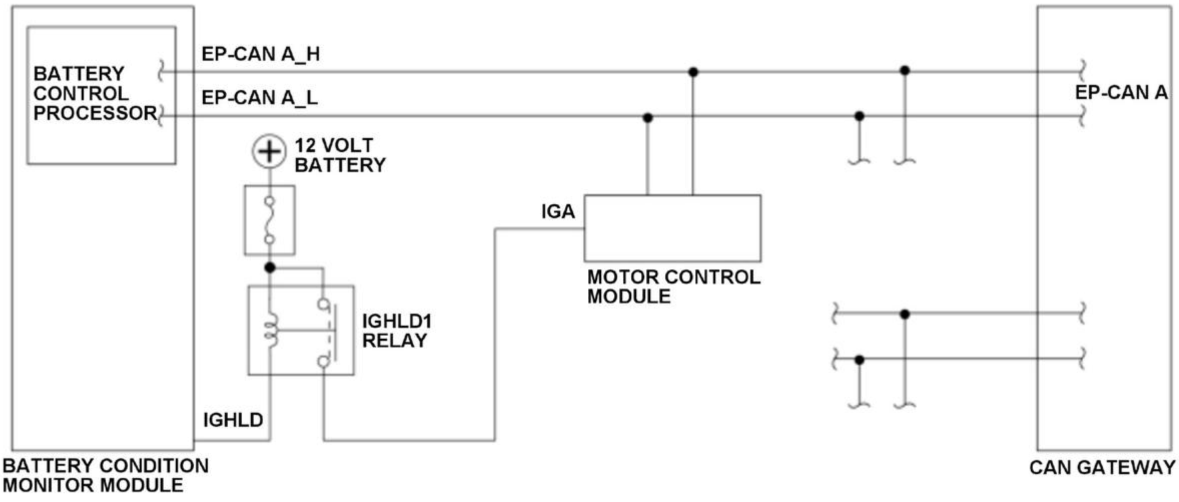
BATTERY CONTROL PROCESSOR
EP-CAN A_H
EP-CAN A_L
12 VOLT BATTERY
IGA
MOTOR CONTROL MODULE
IGHLD1 RELAY
IGHLD
EP-CAN A
BATTERY CONDITION MONITOR MODULE
CAN GATEWAY

Motor control module is built into PCU

The controller area network (CAN) transmits/receives pulsing signals to/from the control modules simultaneously by using two signal lines (H line and L line). When the battery condition monitor module cannot receive the signals from the motor control module via the EP-CAN lines or the received data is abnormal for a specified time, a malfunction is detected and a DTC is stored.

Monitor Execution, Sequence, Duration, DTC Type

Execution	Continuous
Sequence	None
Duration	25 seconds or more
DTC Type	One drive cycle, MIL on, POWER SYSTEM indicator on, 12 VOLT CHARGING SYSTEM indicator off

Enable Conditions

Condition	Minimum	Maximum
Elapsed time since the 12 volt battery voltage reaches to a specified value after the vehicle condition is turned to the ON mode	3 seconds	-
12 volt battery voltage	10.2 V	-

Malfunction Threshold

One of these conditions is met:

- The battery condition monitor module cannot receive any signals from the motor control module via the EP-CAN lines for at least 2.0 seconds.
- The information sent from the motor control module is abnormal at least 25 seconds.

Possible Cause

NOTE: The causes shown may not be a complete list of all potential problems, and it is possible that there may be other causes.

- EP-CAN circuit EP-CAN A_H line open

- EP-CAN circuit EP-CAN A_L line open
- EP-CAN circuit EP-CAN A_H line short
- EP-CAN circuit EP-CAN A_L line short
- IGHLD1 relay IGHLD line open
- IGHLD1 relay stuck off
- Power control unit (PCU) internal circuit failure
- Battery condition monitor module failure

Diagnosis Details

Conditions for setting the DTC

When a malfunction is detected, the MIL comes on and a Pending DTC, a Confirmed DTC, and the freeze data are stored in the battery condition monitor module memory.

Conditions for clearing the DTC

The MIL is cleared if the malfunction does not return in three consecutive trips in which the diagnostic runs. The MIL, the Pending DTC, the Confirmed DTC, and the freeze data can be cleared with the scan tool clear command.

DTC U1600 (BATTERY CONDITION MONITOR MODULE)

DTC U1600: F-CAN Malfunction (Battery Condition Monitor Module - PCM)

General Description

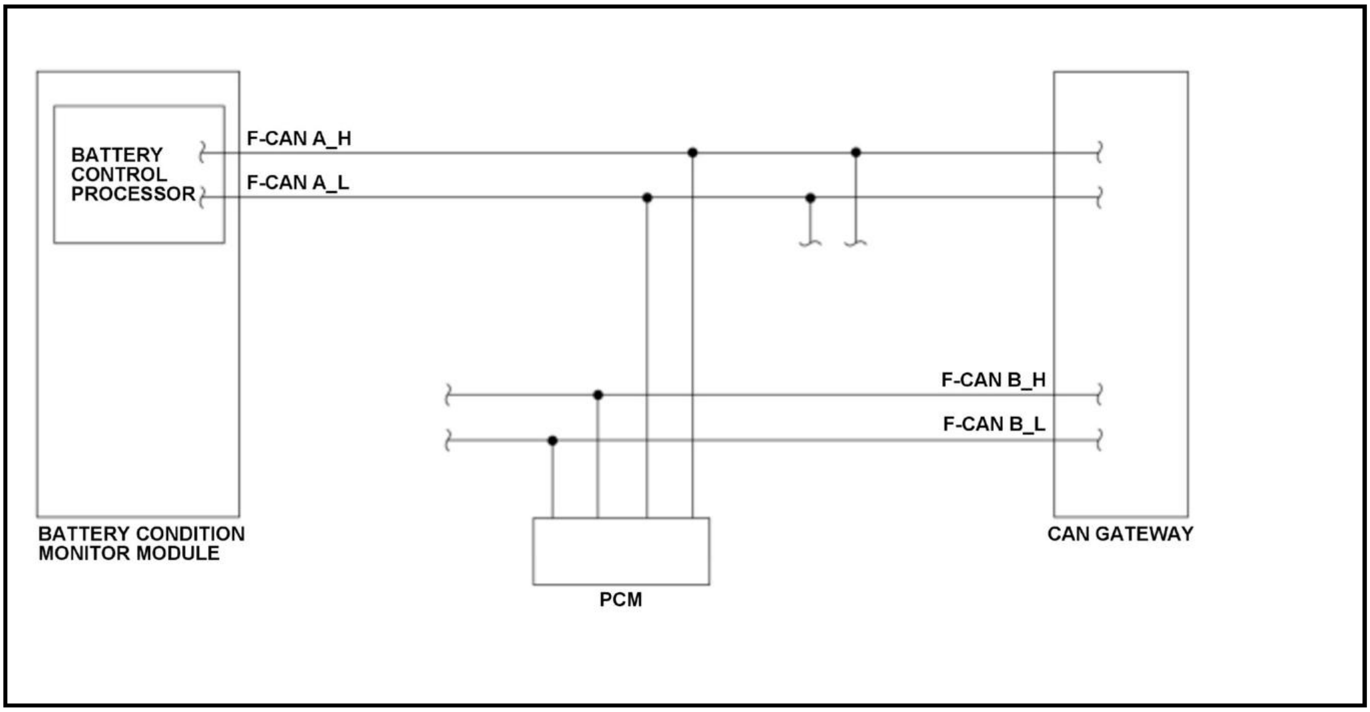

The controller area network (CAN) transmits/receives pulsing signals to/from the control modules simultaneously by using two signal lines (H line and L line). When the battery condition monitor module cannot receive the signals from the powertrain control module (PCM) via the F-CAN lines or the received data is abnormal for a specified time, a malfunction is detected and a DTC is stored.

Monitor Execution, Sequence, Duration, DTC Type

Execution	Continuous
Sequence	None

Duration	25 seconds or more
DTC Type	Two drive cycles, MIL on, POWER SYSTEM indicator on, 12 VOLT CHARGING SYSTEM indicator off

Enable Conditions

Condition	Minimum	Maximum
Elapsed time since the 12 volt battery voltage reaches to a specified value after the vehicle condition is turned to the ON mode	5 seconds	-
12 volt battery voltage	10.2 V	-

Malfunction Threshold

One of these conditions is met:

- The battery condition monitor module cannot receive any signals from the PCM via the F-CAN lines for at least 2.0 seconds.
- The information sent from the PCM is abnormal for at least 25 seconds.

Possible Cause

NOTE: The causes shown may not be a complete list of all potential problems, and it is possible that there may be other causes.

- F-CAN circuit F-CAN A_H line open
- F-CAN circuit F-CAN A_L line open
- F-CAN circuit F-CAN A_H line short
- F-CAN circuit F-CAN A_L line short
- F-CAN circuit F-CAN B_H line open
- F-CAN circuit F-CAN B_L line open
- F-CAN circuit F-CAN B_H line short
- F-CAN circuit F-CAN B_L line short
- PCM failure
- Battery condition monitor module failure

Diagnosis Details

Conditions for setting the DTC

When a malfunction is detected during the first drive cycle, a Pending DTC is stored in the battery condition monitor module memory. If the malfunction returns in the next (second) drive cycle, the MIL comes on and a Confirmed DTC and the freeze data are stored.

Conditions for clearing the DTC

The MIL is cleared if the malfunction does not return in three consecutive trips in which the diagnostic runs. The MIL, the Pending DTC, the Confirmed DTC, and the freeze data can be cleared with the scan tool clear command.

DTC U1604 (BATTERY CONDITION MONITOR MODULE)

DTC U1604: F-CAN Malfunction (Battery Condition Monitor Module - Traction Motor Control Module)

General Description

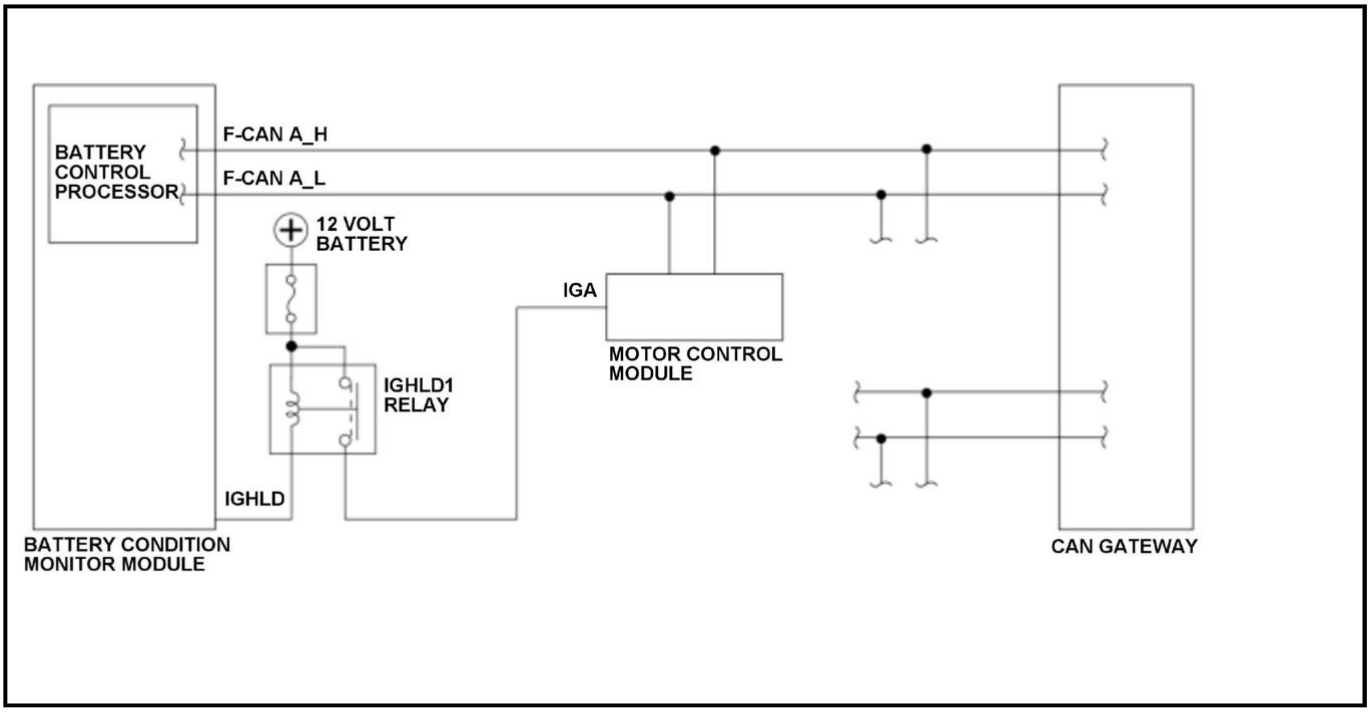
BATTERY CONTROL PROCESSOR
F-CAN A_H
F-CAN A_L
12 VOLT BATTERY
IGA
MOTOR CONTROL MODULE
IGHLD1 RELAY
IGHLD
BATTERY CONDITION MONITOR MODULE
CAN GATEWAY

The controller area network (CAN) transmits/receives pulsing signals to/from the control modules simultaneously by using two signal lines (H line and L line). When the battery condition monitor module cannot receive the signals from the motor control module via the F-CAN lines or the received data is abnormal for a specified time, a malfunction is detected and a DTC is stored.

Monitor Execution, Sequence, Duration, DTC Type

Execution	Continuous
Sequence	None
Duration	25 seconds or more
DTC Type	Two drive cycles, MIL off, POWER SYSTEM indicator on, 12 VOLT CHARGING SYSTEM indicator off

Enable Conditions

Condition	Minimum	Maximum
Elapsed time since the 12 volt battery voltage reaches to a specified value after the vehicle condition is turned to the ON mode	3 seconds	-
12 volt battery voltage	10.2 V	-

Malfunction Threshold

One of these conditions is met:

- The battery condition monitor module cannot receive any signals from the motor control module via the F-CAN lines for at least 2.0 seconds.
- The information sent from the motor control module is abnormal for at least 25 seconds.

Possible Cause

NOTE: The causes shown may not be a complete list of all potential problems, and it is possible that there may be other causes.

- F-CAN circuit F-CAN A_H line open
- F-CAN circuit F-CAN A_L line open
- F-CAN circuit F-CAN A_H line short
- F-CAN circuit F-CAN A_L line short
- IGHLD1 relay IGHLD line open
- IGHLD1 relay stuck off
- Power control unit (PCU) internal circuit failure
- Battery condition monitor module failure

Diagnosis Details

Conditions for setting the DTC

When a malfunction is detected during the first drive cycle, a Pending DTC is stored in the battery condition monitor module memory. If the malfunction returns in the next (second) drive cycle, the POWER SYSTEM indicator comes on and a Confirmed DTC and the freeze data are stored.

Conditions for clearing the DTC

The POWER SYSTEM indicator is cleared if the malfunction does not return in the next trip in which the diagnostic runs. The POWER SYSTEM indicator, the Pending DTC, the Confirmed DTC, and the freeze data can be cleared with the scan tool clear command.

DTC U1605 (BATTERY CONDITION MONITOR MODULE)

DTC U1605: F-CAN Malfunction (Battery Condition Monitor Module - Generator Motor Control Module)

General Description

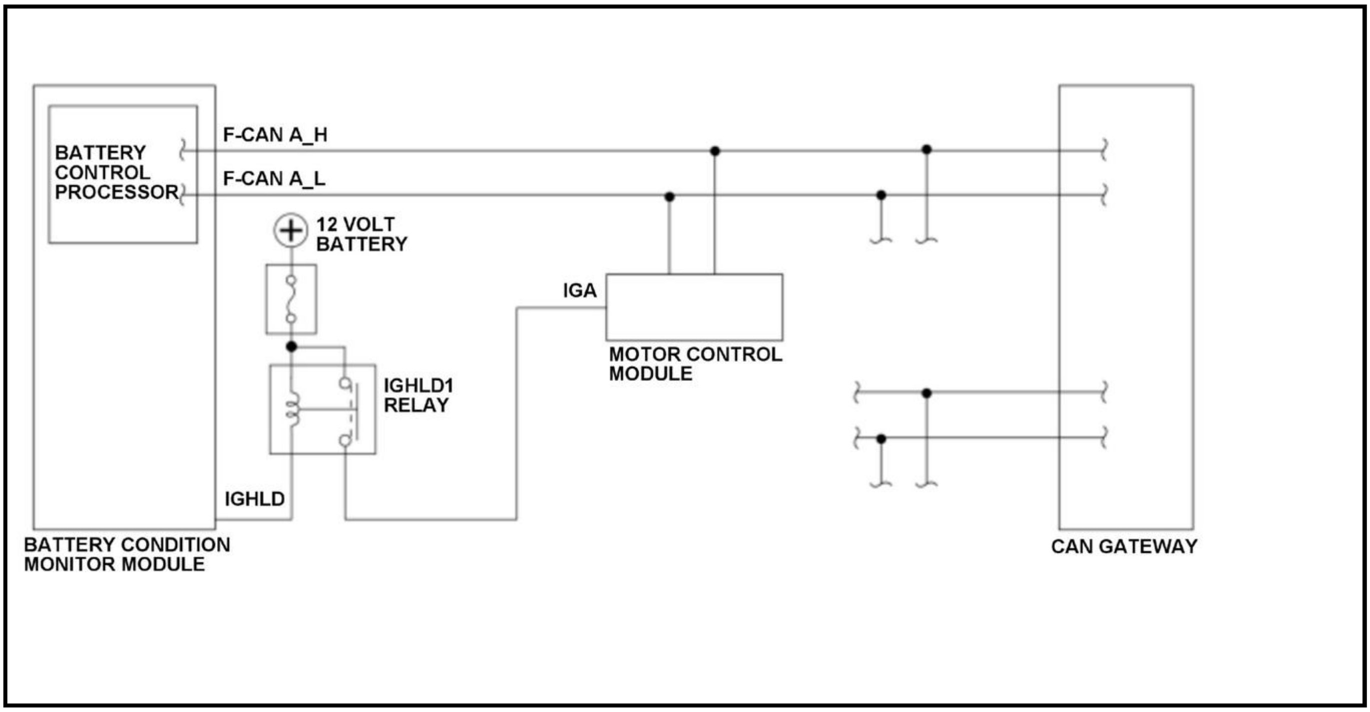

The controller area network (CAN) transmits/receives pulsing signals to/from the control modules simultaneously by using two signal lines (H line and L line). When the battery condition monitor module cannot receive the signals from the motor control module via the F-CAN lines or the received data is abnormal for a specified time, a malfunction is detected and a DTC is stored.

Monitor Execution, Sequence, Duration, DTC Type

Execution	Continuous
Sequence	None
Duration	25 seconds or more
DTC Type	Two drive cycles, MIL off, POWER SYSTEM indicator on, 12 VOLT CHARGING SYSTEM indicator off

Enable Conditions

Condition	Minimum	Maximum
Elapsed time since the 12 volt battery voltage reaches to a specified value after the vehicle condition is turned to the ON mode	3 seconds	-
12 volt battery voltage	10.2 V	-

Malfunction Threshold

One of these conditions is met:

- The battery condition monitor module cannot receive any signals from the motor control module via the F-CAN lines for at least 2.0 seconds.
- The information sent from the motor control module is abnormal for at least 25 seconds.

Possible Cause

NOTE: The causes shown may not be a complete list of all potential problems, and it is possible that there may be other causes.

- F-CAN circuit F-CAN A_H line open
- F-CAN circuit F-CAN A_L line open
- F-CAN circuit F-CAN A_H line short
- F-CAN circuit F-CAN A_L line short
- IGHLD1 relay IGHLD line open
- IGHLD1 relay stuck off
- Power control unit (PCU) internal circuit failure
- Battery condition monitor module failure

Diagnosis Details

Conditions for setting the DTC

When a malfunction is detected during the first drive cycle, a Pending DTC is stored in the battery condition monitor module memory. If the malfunction returns in the next (second) drive cycle, the POWER SYSTEM indicator comes on and a Confirmed DTC and the freeze data are stored.

Conditions for clearing the DTC

The POWER SYSTEM indicator is cleared if the malfunction does not return in the next trip in which the diagnostic runs. The POWER SYSTEM indicator, the Pending DTC, the Confirmed DTC, and the freeze data can be cleared with the scan tool clear command.

DTC TROUBLESHOOTING INDEX

ELECTRIC POWERTRAIN DTC TROUBLESHOOTING INDEX

Motor Control Module

DTC	Detection Item	Troubleshooting	Advanced Diagnostics	Note
P0562	Traction Motor Control Module System Voltage Low	TRS	AD	B
P0602	Traction Motor Control Module Programming Error	TRS	AD	B
P0602	Generator Motor Control Module Programming Error	TRS	AD	B
P061B	Traction Motor Control Module Torque Calculation Performance	TRS	AD	*2
P062F	Traction Motor Control Module EEPROM Error	TRS	AD	B
P062F	Generator Motor Control Module EEPROM Error	TRS	AD	B
P0634	PCU Internal Temperature Too High	TRS	AD	B
P06B1	Traction Motor Phase Current Sensor Power Supply Circuit Low (Phase U)	TRS	AD	B
P06B1	Generator Motor Phase Current Sensor Power Supply Circuit Low (Phase U)	TRS	AD	B
P06B4	Traction Motor Phase Current Sensor Power Supply Circuit Low (Phase V)	TRS	AD	*1
P06B4	Generator Motor Phase Current Sensor Power Supply Circuit Low (Phase V)	TRS	AD	*1
P06E7	Traction Motor Phase Current Sensor Power Supply Circuit Low (Phase W)	TRS	AD	*1
P06E7	Generator Motor Phase Current Sensor Power Supply Circuit Low (Phase W)	TRS	AD	*1
P0710	Transmission Fluid Temperature Sensor Circuit Range/Performance	TRS	AD	B
P0711	Transmission Fluid Temperature Sensor Circuit	TRS	AD	*1
P0712	Transmission Fluid Temperature Sensor Circuit Low	TRS	AD	B
P0713	Transmission Fluid Temperature Sensor Circuit High	TRS	AD	B
P0A1A	Generator Motor Control Module (Traction Motor Control Module Detected)	TRS	AD	B
P0A1A	Generator Motor Control Module	TRS	AD	B
P0A1B	Traction Motor Control Module	TRS	AD	B
P0A2A	Traction Motor Temperature Sensor Circuit	TRS	AD	*2
P0A2B	Traction Motor Temperature Sensor Circuit Range/Performance	TRS	AD	*1
P0A2C	Traction Motor Temperature Sensor Circuit Low	TRS	AD	B
P0A2D	Traction Motor Temperature Sensor Circuit High	TRS	AD	B
P0A2F	Traction Motor Over Temperature	TRS	AD	B

DTC	Detection Item	Troubleshooting	Advanced Diagnostics	Note
P0A3C	Traction Motor Inverter Over Temperature	TRS	AD	B
P0A3E	Generator Motor Inverter Over Temperature	TRS	AD	B
P0A3F	Traction Motor Rotor Position Sensor Circuit	TRS	AD	B
P0A40	Traction Motor Rotor Position Sensor Circuit Range/Performance	TRS	AD	B
P0A41	Traction Motor Rotor Position Sensor Circuit Low	TRS	AD	B
P0A4B	Generator Motor Rotor Position Sensor Circuit	TRS	AD	B
P0A4C	Generator Motor Rotor Position Sensor Circuit Range/Performance	TRS	AD	B
P0A4D	Generator Motor Rotor Position Sensor Circuit Low	TRS	AD	B
P0A5E	Traction Motor Phase U Current Low	TRS	AD	*1
P0A5F	Traction Motor Phase U Current High	TRS	AD	*1
P0A61	Traction Motor Phase V Current Low	TRS	AD	*1
P0A62	Traction Motor Phase V Current High	TRS	AD	*1
P0A64	Traction Motor Phase W Current Low	TRS	AD	*1

*1: Two drive cycle detection

*2: This DTC code does not store individually. Details depend on other DTC codes stored at the same time.

DTC	Detection Item	Troubleshooting	Advanced Diagnostics	Note
P0A65	Traction Motor Phase W Current High	TRS	AD	*1
P0A70	Generator Motor Phase U Current Low	TRS	AD	*1
P0A71	Generator Motor Phase U Current High	TRS	AD	*1
P0A73	Generator Motor Phase V Current Low	TRS	AD	*1
P0A74	Generator Motor Phase V Current High	TRS	AD	*1
P0A76	Generator Motor Phase W Current Low	TRS	AD	*1
P0A77	Generator Motor Phase W Current High	TRS	AD	*1
P0A78	Traction Motor Inverter Performance	TRS	AD	*2
P0A7A	Generator Motor Inverter Performance (Traction Motor Control Module Detected)	TRS	AD	*2
P0A7A	Generator Motor Inverter Performance	TRS	AD	*2
P0A90	Traction Motor Performance	TRS	AD	B
P0A92	Generator Motor Performance	TRS	AD	B
P0AED	Traction Motor Inverter Temperature Sensor 1 Circuit	TRS	AD	B
P0AEE	Traction Motor Inverter Temperature Sensor 1 Circuit Range/Performance	TRS	AD	*1
P0AEF	Traction Motor Inverter Temperature Sensor 1 Circuit Low	TRS	AD	B
P0AF0	Traction Motor Inverter Temperature Sensor 1 Circuit High	TRS	AD	B
P0AF2	Traction Motor Inverter Temperature	TRS	AD	*1

DTC	Detection Item	Troubleshooting	Advanced Diagnostics	Note
	Sensor 2 Circuit			
P0AF3	Traction Motor Inverter Temperature Sensor 2 Circuit Range/Performance	TRS	AD	*1
P0AF4	Traction Motor Inverter Temperature Sensor 2 Circuit Low	TRS	AD	B
P0AF5	Traction Motor Inverter Temperature Sensor 2 Circuit High	TRS	AD	B
P0BCC	Generator Motor Inverter Temperature Sensor Circuit	TRS	AD	B
P0BCD	Generator Motor Inverter Temperature Sensor Circuit Range/Performance	TRS	AD	B
P0BCE	Generator Motor Inverter Temperature Sensor Circuit Low	TRS	AD	B
P0BCF	Generator Motor Inverter Temperature Sensor Circuit High	TRS	AD	B
P0BE6	Traction Motor Phase U Current Sensor Circuit Range/Performance	TRS	AD	*1
P0BEA	Traction Motor Phase V Current Sensor Circuit Range/Performance	TRS	AD	*1
P0BEE	Traction Motor Phase W Current Sensor Circuit Range/Performance	TRS	AD	*1
P0BFD	Traction Motor Phase U-V-W Current Sensor Correlation	TRS	AD	*2
P0C0C	Traction Motor Inverter Power Supply Circuit Low	TRS	AD	B
P0C39	DC-DC Converter Temperature Sensor Range/Performance	TRS	AD	*1
P0C3A	DC-DC Converter Temperature Sensor Low	TRS	AD	*1
P0C3B	DC-DC Converter Temperature Sensor High	TRS	AD	*1
P0C4E	Traction Motor Rotor Position Exceeded Learning Limit	TRS	AD	B
P0CE9	PCU Electric Coolant Pump Control Circuit Open	TRS	AD	*2
P0CEA	PCU Electric Coolant Pump Performance	TRS	AD	*2
P0CED	PCU Electric Coolant Pump Enable Circuit	TRS	AD	*1
P0CEE	PCU Coolant Temperature Sensor Circuit	TRS	AD	*1
P0CEF	PCU Coolant Temperature Sensor Circuit Range/Performance	TRS	AD	*1
P0CF0	PCU Coolant Temperature Sensor Circuit Low	TRS	AD	*1
P0CF1	PCU Coolant Temperature Sensor Circuit High	TRS	AD	*1
P0D32	DC-DC Converter Over Temperature (Traction Motor Control Module Detected)	TRS	AD	*1
P0DFA	Generator Motor Phase U-V-W Current Sensor Correlation	TRS	AD	*2

DTC	Detection Item	Troubleshooting	Advanced Diagnostics	Note
P0DFB	Generator Motor Rotor Position Sensor Exceeding Learn Limit	TRS	AD	B

*1: Two drive cycle detection

*2: This DTC code does not store individually. Details depend on other DTC codes stored at the same time.

DTC	Detection Item	Troubleshooting	Advanced Diagnostics	Note
P0E01	Generator Motor Phase U Current Sensor Circuit Range/Performance	TRS	AD	*1
P0E05	Generator Motor Phase V Current Sensor Circuit Range/Performance	TRS	AD	*1
P0E09	Generator Motor Phase W Current Sensor Circuit Range/Performance	TRS	AD	*1
P0E56	DC-DC Converter Voltage Sensor Circuit Low	TRS	AD	*1
P0E57	DC-DC Converter Voltage Sensor Circuit High	TRS	AD	*1
P1437	Traction Motor Inverter Short	TRS	AD	B
P1440	Traction Motor Inverter Gate Line Open	TRS	AD	B
P15A5	Traction Motor Inverter Current Too High	TRS	AD	B
P1A54	Traction Motor Control Module Torque Control Performance	TRS	AD	B
P1A55	Traction Motor Control Module Torque Adjustment Performance	TRS	AD	B
P1A56	Traction Motor Current Too High	TRS	AD	B
P1A57	Traction Motor Phase Current Sensor	TRS	AD	B
P1A63	VCU V2 Voltage Sensor Circuit Range/Performance	TRS	AD	B
P1A64	PCU Internal Failure (Communication Error)	TRS	AD	B
P1A65	Motor Inverter Internal Failure	TRS	AD	B
P1A87	VCU V0 Voltage Sensor Circuit Range/Performance (Over Voltage Range)	TRS	AD	B
P1A88	VCU V1 Voltage Sensor Circuit Range/Performance (Under Voltage Range)	TRS	AD	B
P1A89	VCU V1 Voltage Sensor Circuit Range/Performance (Over Voltage Range)	TRS	AD	B
P1D05	Traction Motor Control Module Internal Communication Failure	TRS	AD	B
P1D11	Traction Motor Phase Current Sensor Circuit Range/Performance	TRS	AD	*1
P1D13	Generator Motor Phase Current Sensor Range/Performance	TRS	AD	*1
P1D18	Traction Motor Temperature Sense Failure	TRS	AD	B
P1D1B	VCU V2S Voltage Sensor Circuit High	TRS	AD	B
P1D1C	VCU V2S Voltage Sensor Circuit	TRS	AD	*1
P1D1D	VCU V0 Voltage Sensor Circuit Low	TRS	AD	B

DTC	Detection Item	Troubleshooting	Advanced Diagnostics	Note
P1D6E	Traction Motor Temperature Sensor Circuit Performance	TRS	AD	B
P1D70	Traction Motor Phase Current Sensor Multiple Performance	TRS	AD	B
P1D72	Traction Motor Temperature Sensor Circuit Range/Performance (Lo Side)	TRS	AD	B
P1D77	VCU I1 Current Sensor Circuit Range/Performance	TRS	AD	B
P1D78	VCU I1 Current Sensor Circuit Low	TRS	AD	B
P1D79	VCU I1 Current Sensor Circuit High	TRS	AD	B
P1D7A	Reactor Temperature Sensor Circuit Range/Performance Problem	TRS	AD	B
P1D7B	Reactor Over Temperature (Traction Motor Control Module Detected)	TRS	AD	B
P1D7D	Reactor Temperature Sensor 1 Circuit Low	TRS	AD	B
P1D7E	Reactor Temperature Sensor 1 Circuit High	TRS	AD	B
P1D7F	Generator Motor Inverter Malfunction Signal Low (Generator Motor Control Module Detected)	TRS	AD	B
P1D81	VCU Malfunction Signal Low (Traction Motor Control Module Detected)	TRS	AD	B
P1D85	Traction Motor Inverter Malfunction Signal Low (Traction Motor Control Module Detected)	TRS	AD	B
P1D8A	Generator Motor Inverter Gate Line Open	TRS	AD	B
P1D8C	Generator Motor Inverter Over Current	TRS	AD	B
P1D8D	Generator Motor Inverter Short	TRS	AD	B
P1D92	PCU Electric Coolant Pump Control Circuit	TRS	AD	*1
P1D93	PCU Coolant Over Temperature	TRS	AD	*1

*1: Two drive cycle detection

*2: This DTC code does not store individually. Details depend on other DTC codes stored at the same time.

DTC	Detection Item	Troubleshooting	Advanced Diagnostics	Note
P1D97	Generator Motor Phase Current Sensors Multiple Failure	TRS	AD	B
P1D99	PCU Electric Coolant Pump	TRS	AD	*1
P1D9A	PCU Electric Coolant Pump Circuit	TRS	AD	*1
P1D9D	VCU Temperature Sensor Circuit Range/Performance	TRS	AD	B
P1DA0	VCU Inverter Temperature Sensor Circuit Low	TRS	AD	B
P1DA1	VCU Inverter Temperature Sensor Circuit High	TRS	AD	B
P1DA4	VCU Inverter Short	TRS	AD	B
P1DA6	VCU V1 Voltage Sensor Circuit Range/Performance	TRS	AD	B

DTC	Detection Item	Troubleshooting	Advanced Diagnostics	Note
P1DA8	VCU V2M Voltage Sensor Circuit Range/Performance	TRS	AD	B
P1DAA	VCU V2S Voltage Sensor Circuit Range/Performance	TRS	AD	B
P1DD8	VCU Inverter Temperature Sensor Circuit	TRS	AD	*1
P1DD9	VCU I1 Current Sensor Circuit	TRS	AD	B
P1DDB	Reactor Temperature Sensor Circuit	TRS	AD	B
P1DE3	VCU V1 Voltage Sensor Circuit High	TRS	AD	B
P1DE4	VCU V1 Voltage Sensor Circuit	TRS	AD	*1
P1DE5	VCU V2M Voltage Sensor Circuit High	TRS	AD	B
P1DE6	VCU V2M Voltage Sensor Circuit	TRS	AD	*1
P1DE7	VCU V0 Voltage Sensor Circuit High	TRS	AD	B
P1DE8	VCU V0 Voltage Sensor Circuit	TRS	AD	*1
P1DE9	VCU V0 Voltage Sensor Circuit Range/Performance	TRS	AD	B
P1DEA	VCU V0 Voltage Control Failure	TRS	AD	B
P1F3C	VCU Over Temperature	TRS	AD	B
U0029	F-CAN Malfunction (Traction Motor Control Module Bus-Off)	TRS	AD	*1
U0038	EP-CAN Malfunction (Traction Motor Control Module Bus-Off)	TRS	AD	B
U0100	CAN Malfunction (Traction Motor Control Module - PCM)	TRS	AD	*2
U0111	CAN Malfunction (Traction Motor Control Module - Battery Condition Monitor Module)	TRS	AD	*2
U0146	F-CAN Malfunction (Traction Motor Control Module - CAN Gateway)	TRS	AD	*1
U0311	Traction Motor Control Module Programming Error (Version Mismatch)	TRS	AD	B
U1204	EP-CAN Malfunction (Traction Motor Control Module - PCM)	TRS	AD	B
U1206	EP-CAN Malfunction (Traction Motor Control Module - Battery Condition Monitor Module)	TRS	AD	B
U1600	F-CAN Malfunction (Traction Motor Control Module - PCM)	TRS	AD	*1
U1603	F-CAN Malfunction (Traction Motor Control Module - Battery Condition Monitor Module)	TRS	AD	*1

*1: Two drive cycle detection.

*2: This DTC code does not store individually. Details depend on other DTC codes stored at the same time.

Battery Condition Monitor Module

DTC	Detection Item	Troubleshooting	Advanced Diagnostics	Note
P0562	Battery Condition Monitor Module System Voltage Low	TRS	AD	B

DTC	Detection Item	Troubleshooting	Advanced Diagnostics	Note
P0602	Battery Condition Monitor Module Programming Error	TRS	AD	B
P062F	Battery Condition Monitor Module EEPROM Error	TRS	AD	*2
P06B1	HV Battery Current Sensor Power Supply Circuit Low	TRS	AD	*1
P0A1F	Battery Condition Monitor Module	TRS	AD	B
P0A7E	HV Battery Pack Over Temperature	TRS	AD	B
P0A7F	HV Battery Pack Deterioration	TRS	AD	*2
P0A80	Replace HV Battery Pack	TRS	AD	B
P0A82	HV Battery Pack Cooling Fan Performance/Stuck Off	TRS	AD	*1

*1: Two drive cycle detection

*2: This DTC code does not store individually. Details depend on other DTC codes stored at the same time.

DTC	Detection Item	Troubleshooting	Advanced Diagnostics	Note
P0A94	DC-DC Converter Performance	TRS	AD	B
P0A9B	HV Battery Temperature Sensor 1 Circuit	TRS	AD	*1
P0A9C	HV Battery Temperature Sensor 1 Circuit Range/Performance	TRS	AD	*1
P0A9D	HV Battery Temperature Sensor 1 Circuit Low	TRS	AD	*1
P0A9E	HV Battery Temperature Sensor 1 Circuit High	TRS	AD	*1
P0AA1	HV Battery Main Contactor Circuit Stuck Closed	TRS	AD	B
P0AA3	HV Battery Sub Contactor Circuit	TRS	AD	B
P0AA6	HV Battery Voltage System Isolation Fault	TRS	AD	B
P0AA7	HV Battery Voltage Isolation Sensor Circuit	TRS	AD	B
P0ABF	HV Battery Pack Current Sensor Circuit	TRS	AD	*2
P0AC0	HV Battery Pack Current Sensor Circuit Range/Performance	TRS	AD	*2
P0AC1	HV Battery Pack Current Sensor Circuit Low	TRS	AD	*2
P0AC2	HV Battery Pack Current Sensor Circuit High	TRS	AD	*2
P0AC3	HV Battery Pack Current Sensor Circuit Intermittent/Erratic	TRS	AD	*2
P0AC5	HV Battery Temperature Sensor 2 Circuit	TRS	AD	*1
P0AC6	HV Battery Temperature Sensor 2 Circuit Range/Performance	TRS	AD	*1
P0AC7	HV Battery Temperature Sensor 2 Circuit Low	TRS	AD	*1
P0AC8	HV Battery Temperature Sensor 2 Circuit High	TRS	AD	*1
P0ACA	HV Battery Temperature Sensor 3 Circuit	TRS	AD	*1

DTC	Detection Item	Troubleshooting	Advanced Diagnostics	Note
P0ACB	HV Battery Temperature Sensor 3 Circuit Range/Performance	TRS	AD	*1
P0ACC	HV Battery Temperature Sensor 3 Circuit Low	TRS	AD	*1
P0ACD	HV Battery Temperature Sensor 3 Circuit High	TRS	AD	*1
P0AE1	HV Battery Precharge Contactor Circuit	TRS	AD	B
P0AE8	HV Battery Temperature Sensor 4 Circuit	TRS	AD	*1
P0AE9	HV Battery Temperature Sensor 4 Circuit Range/Performance	TRS	AD	*1
P0AEA	HV Battery Temperature Sensor 4 Circuit Low	TRS	AD	*1
P0AEB	HV Battery Temperature Sensor 4 Circuit High	TRS	AD	*1
P0AFA	HV Battery System Voltage Low	TRS	AD	B
P0B3B	HV Battery Cell Voltage Sense Circuit 1	TRS	AD	B
P0B40	HV Battery Cell Voltage Sense Circuit 2	TRS	AD	B
P0B45	HV Battery Cell Voltage Sense Circuit 3	TRS	AD	B
P0B4A	HV Battery Cell Voltage Sense Circuit 4	TRS	AD	B
P0B4F	HV Battery Cell Voltage Sense Circuit 5	TRS	AD	B
P0B54	HV Battery Cell Voltage Sense Circuit 6	TRS	AD	B
P0D32	DC-DC Converter Over Temperature (Battery Condition Monitor Module Detected)	TRS	AD	B
P0DA8	HV Battery Voltage/Motor Inverter Voltage Correlation	TRS	AD	B
P0DE6	HV Battery Pack Voltage Low	TRS	AD	*1
P0DE7	HV Battery Pack Voltage High	TRS	AD	B
P0E2D	HV Battery Cell Voltage Sense Circuit	TRS	AD	B
P1447	HV Battery Pack Deterioration (Middle Severity)	TRS	AD	*1
P144A	HV Battery Pack Deterioration (High Severity)	TRS	AD	*1
P1586	HV Battery Current Sensor	TRS	AD	B
P158A	HV Battery Current Sensor Correlation	TRS	AD	*1
P158B	HV Battery Current Sensor 1 Circuit	TRS	AD	*1
P158D	HV Battery Current Sensor 1 Circuit Low	TRS	AD	*1
P158E	HV Battery Current Sensor 2 Circuit Low	TRS	AD	*1

*1: Two drive cycle detection

*2: This DTC code does not store individually. Details depend on other DTC codes stored at the same time.

DTC	Detection Item	Troubleshooting	Advanced Diagnostics	Note
P158F	HV Battery Current Sensor 1 Circuit High	TRS	AD	*1
P1596	HV Battery Current Sensor 2 Circuit High	TRS	AD	*1
P1597	HV Battery Current Sensor 1 Circuit Range/Performance	TRS	AD	*1

DTC	Detection Item	Troubleshooting	Advanced Diagnostics	Note
P1598	HV Battery Current Sensor 2 Circuit Range/Performance	TRS	AD	*1
P1673	IGHLD Relay Circuit	TRS	AD	B
P16C3	DC-DC Converter Temperature Sensor Circuit	TRS	AD	*1
P1D3A	Battery Condition Monitor Module EEPROM Error (FSA Operated)	TRS	AD	B
P1D3B	Battery Condition Monitor Module EEPROM Error (FSA Not-Operated)	TRS	AD	B
P1D64	Collision Detection Signal Circuit	TRS	AD	B
P1D65	HV System Shutdown (Collision Detection Signal Detected)	TRS	AD	B
P1DC7	HV Battery Pack Deterioration of Power	TRS	AD	*1
P1DCB	HV Battery Identification Circuit (System Running)	TRS	AD	B
P1DFD	Power System Indicator Lighting Request From PCM	TRS	AD	B
P1DFF	IGHLDB Relay Circuit	TRS	AD	B
P262B	Battery Condition Monitor Module Timer	TRS	AD	B
U0029	F-CAN Malfunction (Battery Condition Monitor Module Bus-Off)	TRS	AD	B
U0038	EP-CAN Malfunction (Battery Condition Monitor Module Bus-Off)	TRS	AD	*1
U0100	CAN Malfunction (Battery Condition Monitor Module - PCM)	TRS	AD	*2
U0110	F-CAN Malfunction (Battery Condition Monitor Module - Traction Motor Control Module)	TRS	AD	*2
U012D	F-CAN Malfunction (Battery Condition Monitor Module - Generator Motor Control Module)	TRS	AD	*2
U0146	F-CAN Malfunction (Battery Condition Monitor Module - CAN Gateway)	TRS	AD	*1
U0155	F-CAN Malfunction (Battery Condition Monitor Module - Gauge Control Module)	TRS	AD	*1
U0298	DC-DC Converter Communication Error	TRS	AD	*2
U0312	Battery Condition Monitor Module Programming Error (Version Mismatch)	TRS	AD	B
U0599	DC-DC Converter Serial Communication Receive Error	TRS	AD	*1
U1204	EP-CAN Malfunction (Battery Condition Monitor Module - PCM)	TRS	AD	B
U1205	EP-CAN Malfunction (Battery Condition Monitor Module - Traction Motor Control Module)	TRS	AD	B
U1207	F-CAN Malfunction (Battery Condition Monitor Module - Electric A/C Compressor)	TRS	AD	B
U1220	DC-DC Converter Serial Communication Transmit Error	TRS	AD	*1

DTC	Detection Item	Troubleshooting	Advanced Diagnostics	Note
U12A5	EP-CAN Malfunction (Battery Condition Monitor Module - Generator Motor Control Module)	TRS	AD	B
U1600	F-CAN Malfunction (Battery Condition Monitor Module - PCM)	TRS	AD	*1
U1604	F-CAN Malfunction (Battery Condition Monitor Module - Traction Motor Control Module)	TRS	AD	*1
U1605	F-CAN Malfunction (Battery Condition Monitor Module - Generator Motor Control Module)	TRS	AD	*1

*1: Two drive cycle detection

*2: This DTC code does not store individually. Details depend on other DTC codes stored at the same time.

HOW TO INFORMATION

HOW TO TROUBLESHOOT THE ELECTRIC POWERTRAIN

Intermittent Failures

The term intermittent failure means a system may have had a failure, but it checks OK now. If the POWER SYSTEM indicator on the dash does not come on, check for poor connections or loose terminals at all connectors related to the circuit that you are troubleshooting. If the POWER SYSTEM indicator was on but then went off, the original problem may have been intermittent.

Service Information

Periodically new software or new service procedures may become available for the motor control module and/or battery condition module. Always check online for the latest software or service information related to the DTCs or symptoms you are troubleshooting.

Opens and Shorts

Open and shorts are common electrical terms. An open is a break in a wire or at a connection. A short is an accidental connection of a wire to ground or to another wire. In simple electronics, this usually means something won't work at all. With complex electronics (such as motor control modules or battery condition monitor modules) this can sometimes mean something works, but not the way it's supposed to.

POWER SYSTEM Indicator

1. If the POWER SYSTEM indicator in the gauge comes on, go to How to Use the HDS (Honda Diagnostic System) to check for DTCs.

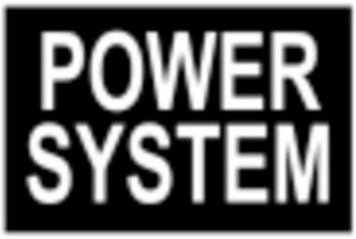

12 Volt Charging System Indicator

1. If the 12 volt charging system indicator in the gauge comes on, go to How to Use the HDS (Honda Diagnostic System) to check for DTCs.

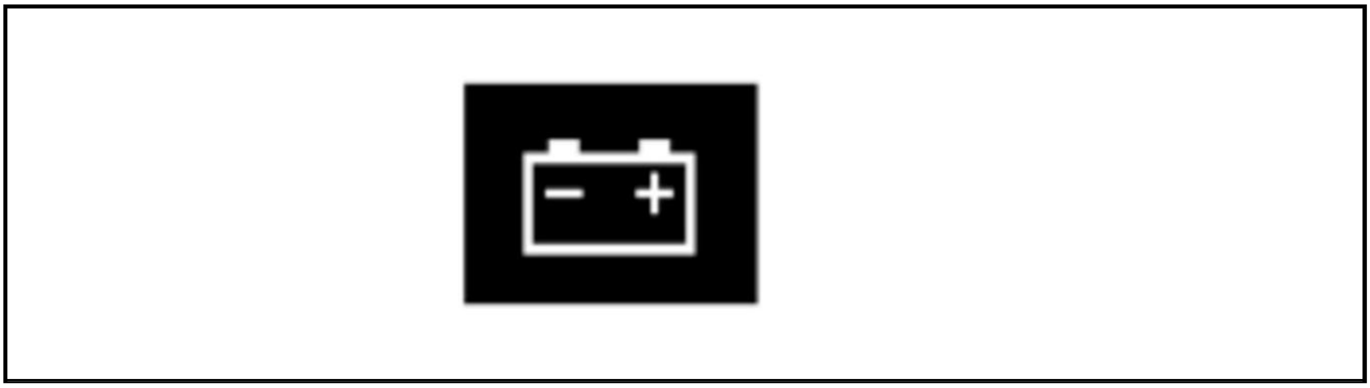

How to Use the HDS (Honda Diagnostic System) to Check for DTCs

1. Turn the vehicle to the READY TO DRIVE mode, and check the POWER SYSTEM indicator in the gauge control module.

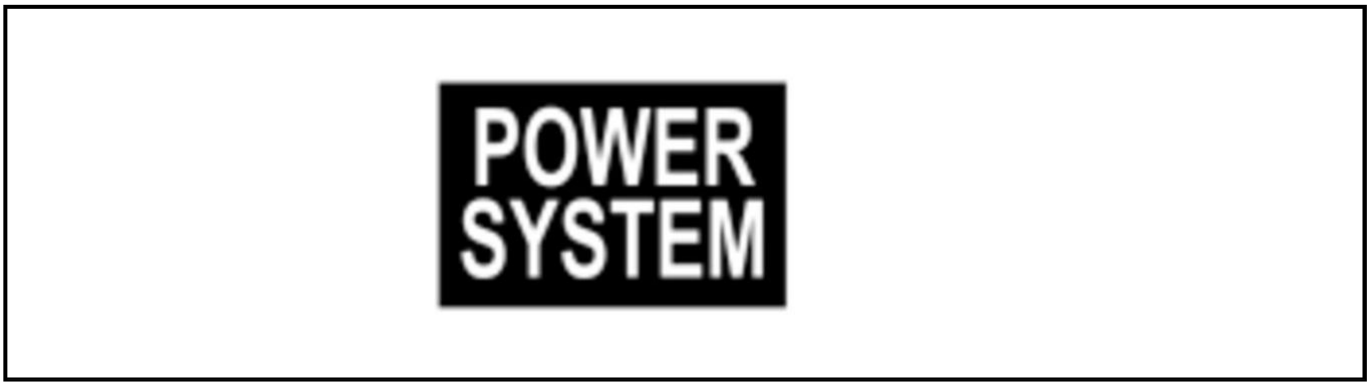

2. **Connect the HDS to the data link connector (DLC)** .

3. Check the diagnostic trouble code (DTC) and note it. Also check the freeze data and/or on-board snapshot data, and download any data found. Then refer to the indicated DTC's troubleshooting, and begin the appropriate troubleshooting procedure.

NOTE: For specific operations, refer to the user's manual that came with the HDS.

4. If no DTCs are found, **go to the POWER SYSTEM indicator circuit troubleshooting**

.

If you cannot duplicate the DTC

Some of the troubleshooting requires you to clear the DTC and try to duplicate the DTC. If the problem is intermittent and you can't duplicate the DTC, do not continue through the DTC troubleshooting procedure. The troubleshooting procedure is to be used only when the DTC can be duplicated. Using them otherwise will only result in confusion and possibly, needlessly replaced parts.

On-Board Snapshot

When a DTC troubleshooting results in intermittent failure, try to reproduce the failure under the same conditions with the on-board snapshot if the on-board snapshot has been recorded.

DTC Clear

1. **Connect the HDS to the data link connector (DLC)**

2. Turn the vehicle to the ON mode.

3. Clear the DTC with the HDS.

4. Turn the vehicle to the OFF (LOCK) mode, and disconnect the HDS from the DLC.

NOTE: For specific operations, refer to the user's manual that comes with the HDS.

How to End a Troubleshooting Session (required after any troubleshooting)

1. **Connect the HDS to the data link connector (DLC)**

2. Turn the vehicle to the READY TO DRIVE mode.

3. Clear the DTC with the HDS.

4. Turn the vehicle to the OFF (LOCK) mode.

5. Wait for 60 seconds.

6. Turn the vehicle to the READY TO DRIVE mode.

7. Check for DTCs with the HDS.

NOTE: Test-drive the vehicle if necessary.

8. Make sure there is no DTC found and no warning indication on the gauge.

9. Turn the vehicle to the OFF (LOCK) mode, and disconnect the HDS.

How to Troubleshoot Circuits at the Power Control Unit (PCU) Connector

1. Turn the vehicle to the OFF (LOCK) mode

2. **Do the 12 volt battery terminal disconnection procedure** .

3. **Disconnect the PCU connector** .

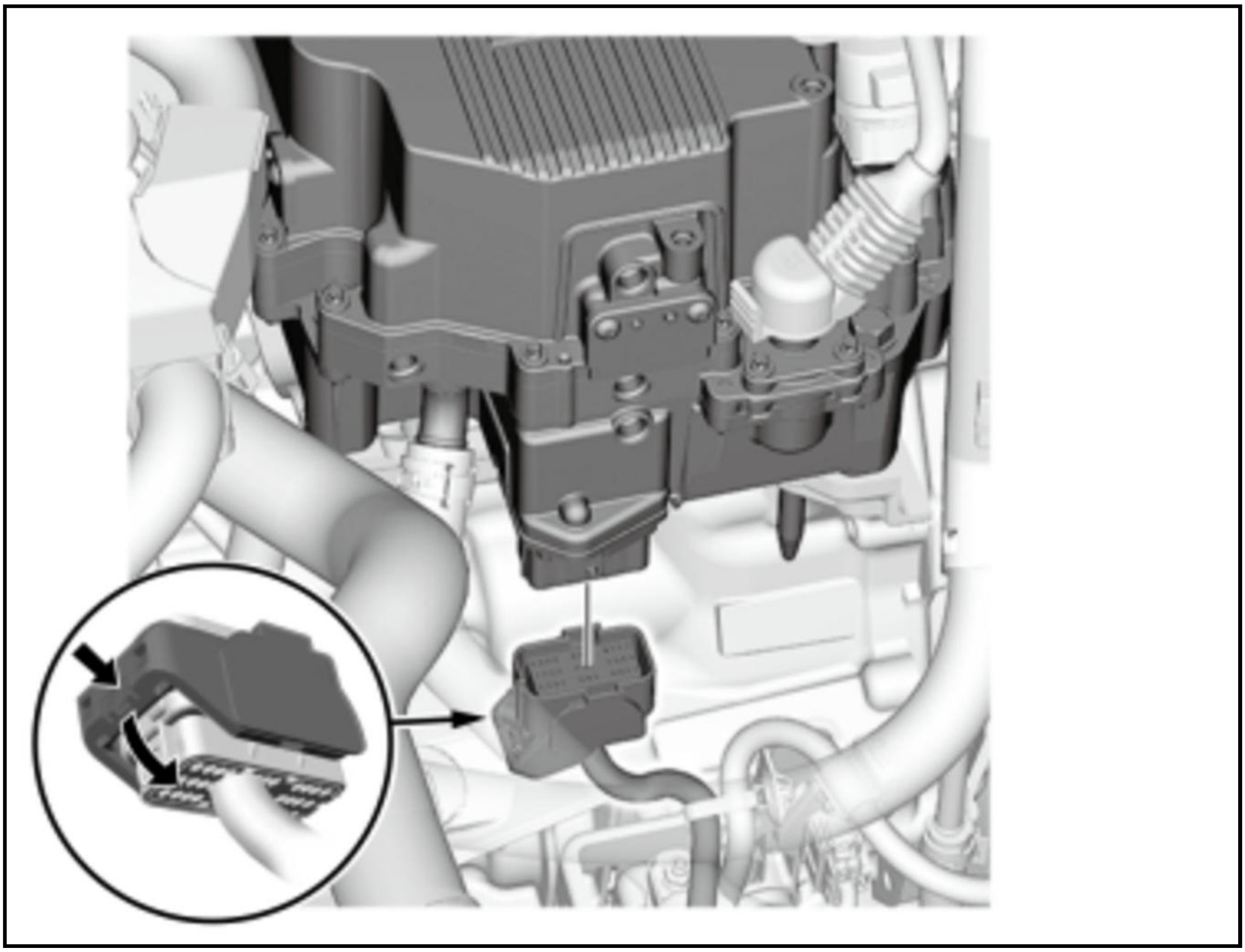

4. Connect one side of the patch cord terminals (A) to a commercially available digital multimeter (B), and connect the other side of the terminal (C) to a commercially available banana jack (Pomona Electronics Tool No. 3563 or equivalent) (D).

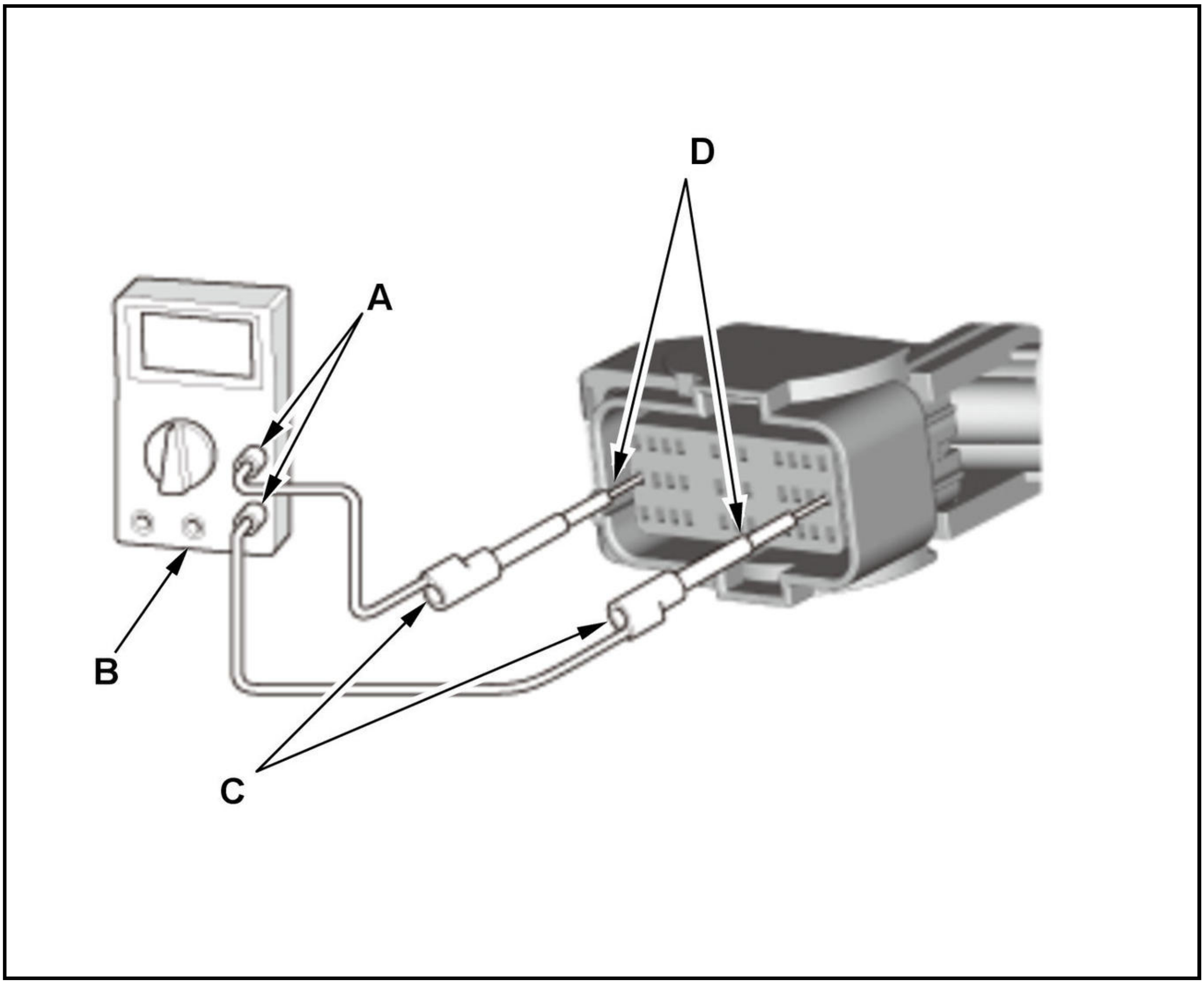

Gently insert the pin probe (male) at the terminal test port from the terminal side. Do not force the tips into the terminals.

WARNING:

- **For accurate results, always use the pin probe (male).**
- **To prevent damage to the connector terminals, do not insert test equipment probes, paper clips, or other substitutes as they can damage the terminals. Damaged terminals cause a poor connection and an incorrect measurement.**
- **Do not puncture the insulation on a wire. Punctures can cause or eventually lead to poor or intermittent electrical connections.**

Troubleshooting Circuits at the Battery Condition Monitor Module Connectors

1. Turn the vehicle to the OFF (LOCK) mode.

2. Remove the service plug .

3. Remove the IPU cover .

NOTE: When you troubleshoot the IPU on the vehicle, check for the ground cable (E) connection. If the cable was removed, you need to install it.

4. Connect one side of the patch cord terminals (A) to a commercially available digital multimeter (B), and connect the other side of the terminal (C) to a commercially available banana jack (Pomona Electronics Tool No. 3563 or equivalent) (D).

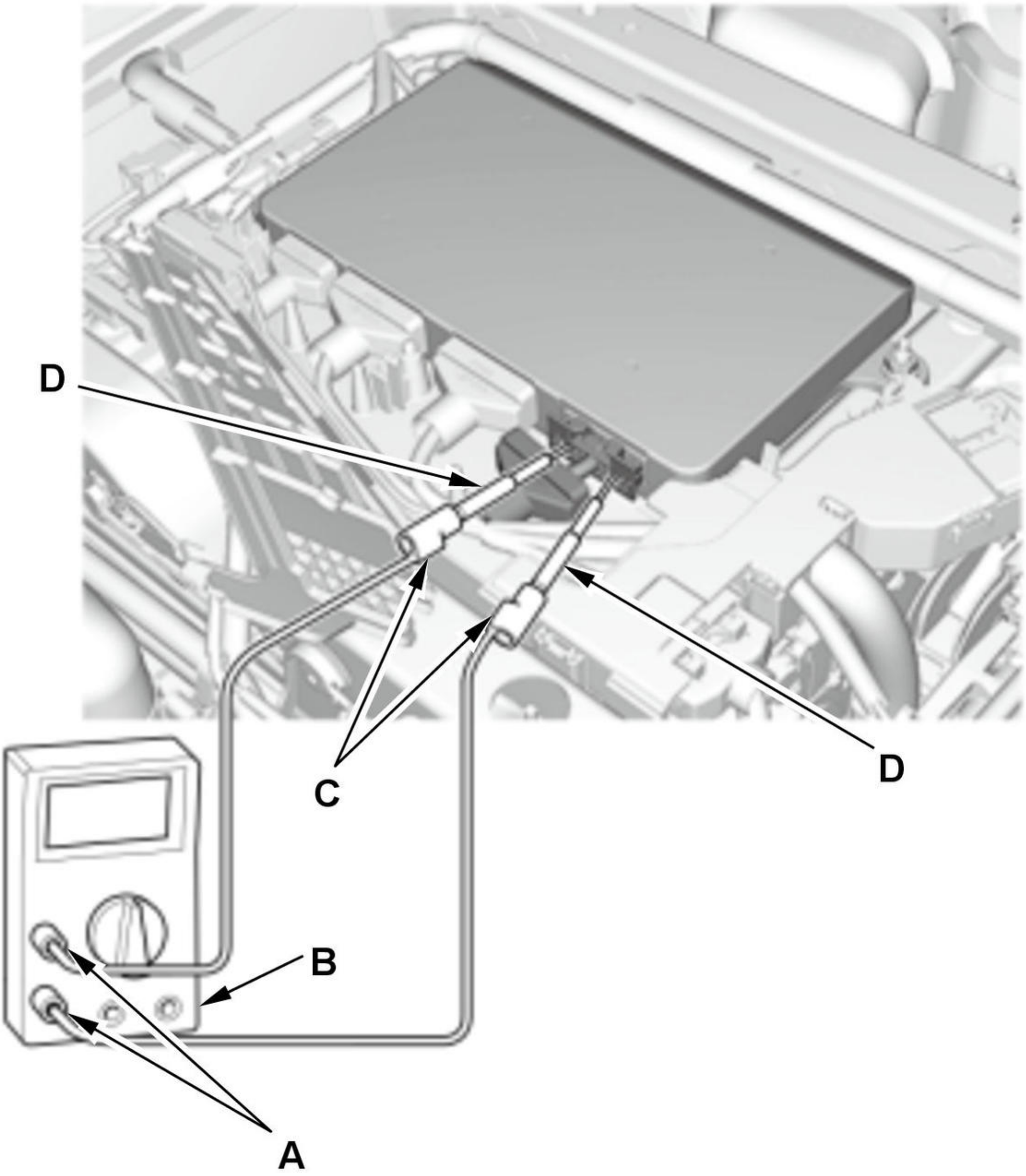
D
C
D
B
A

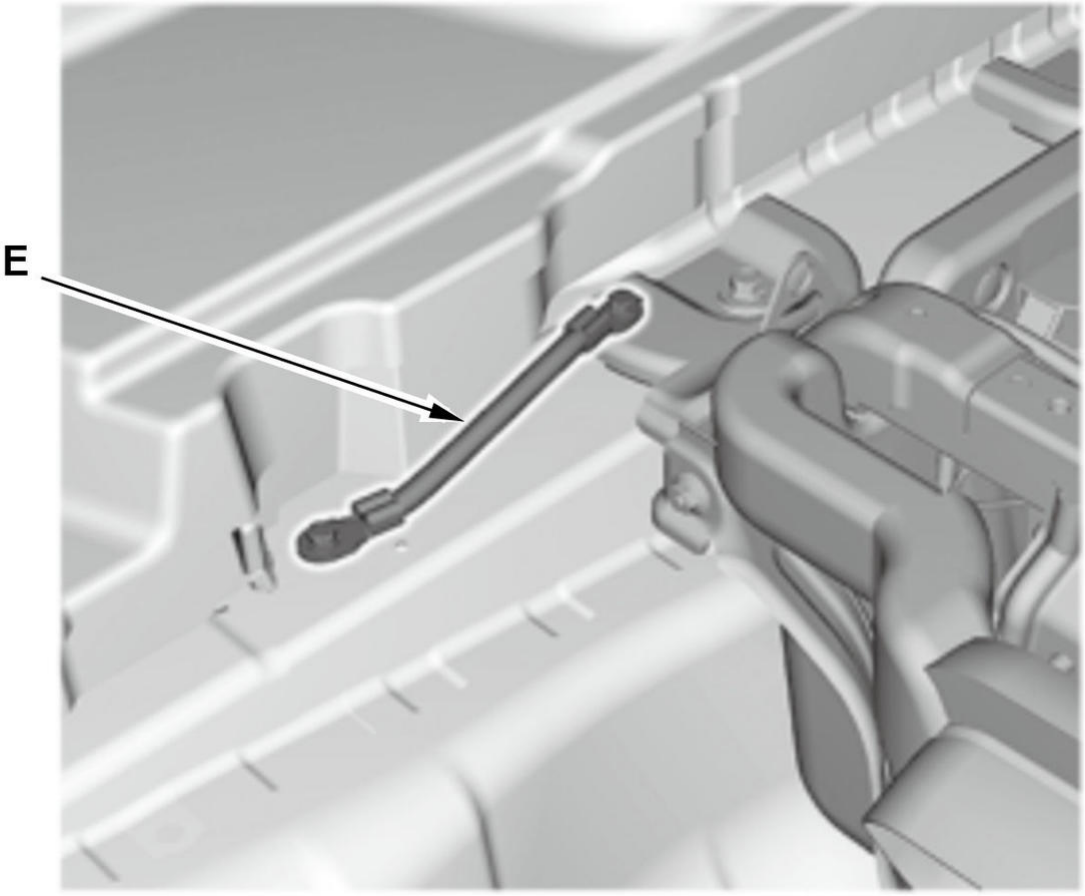

OBD Status

The OBD status shows the current system status of each DTC and all of the parameters. This function is used to see if the repair was successfully finished. The results of diagnostic tests for the DTC are displayed as:

- PASSED: The on-board diagnosis is successfully finished.
- FAILED: The on-board diagnosis has finished but failed.
- NOT COMPLETED: The on-board diagnosis was running, but it is out of the enable conditions of the DTC.

DTC TROUBLESHOOTING

DTC P0562 (15) (BATTERY CONDITION MONITOR MODULE)

DTC P0562 : Battery Condition Monitor Module System Voltage Low

NOTE: Before you troubleshoot, review the general troubleshooting information.

DTC Description	Confirmed DTC	Pending DTC	Freeze Frame
P0562 Battery Condition Monitor Module System Voltage Low	B	B	B

DTC (Electric Powertrain)

1. Fuse check

   -1. Turn the vehicle to the OFF (LOCK) mode.

-2. Check the following fuse.

Fuse	**No. E5**

Is the fuse OK?

YES

Go to step 2.

NO

Go to step 4.

2. Problem verification

-1. Turn the vehicle to the ON mode.

-2. Clear the DTC with the HDS.

-3. Turn the vehicle to the OFF (LOCK) mode.

-4. Turn the vehicle to the ON mode.

-5. Check for Pending or Confirmed DTCs with the HDS.

DTC Description	Confirmed DTC	Pending DTC	Freeze Frame
P0562 Battery Condition Monitor Module System Voltage Low	B	B	B

Is DTC P0562 indicated?

YES

The failure is duplicated. Go to step 3.

NO

Intermittent failure, the system is OK at this time. Check for poor connections or loose terminals at the **No. E5** fuse and the battery condition monitor module.

3. Open wire check (VBU/+B_IMA1 line)

-1. Turn the vehicle to the OFF (LOCK) mode.

-2. Remove the **service plug** and the **IPU cover** .

-3. Disconnect the following connector.

Battery condition monitor module connector E (32P)

-4. **Do the 12 volt battery terminal reconnection procedure** .

-5. Measure the voltage between test points 1 and 2.

Test condition	Vehicle OFF (LOCK) mode
B	Battery condition monitor module connector E (32P): disconnected
Test point 1	**Battery condition monitor module connector E (32P) No. 1**
Test point 2	Body ground

Is there battery voltage?

YES

Replace the battery condition monitor module .

NO

Repair an open in the VBU/+B_IMA1 wire between the **No. E5** fuse and the battery condition monitor module (E1).

4. Shorted wire check (VBU/+B_IMA1 line)

-1. Remove the **service plug** and the **IPU cover** .

-2. Disconnect the following connector.

Battery condition monitor module connector E (32P)

-3. Measure the resistance between test points 1 and 2.

Test condition	Vehicle OFF (LOCK) mode
B	Battery condition monitor module connector E (32P): disconnected
Test point 1	**Battery condition monitor module connector E (32P) No. 1**
Test point 2	Body ground

Is there 1 MΩ or more?

YES

Replace the battery condition monitor module .

NO

Repair a short in the VBU/+B_IMA1 wire between the battery condition monitor module (E1) and the **No. E5** fuse. Also replace the No. E5 fuse.

DTC P0602 (92) (BATTERY CONDITION MONITOR MODULE)

DTC P0602 : Battery Condition Monitor Module Programming Error

NOTE: Before you troubleshoot, **review the general troubleshooting information**.

DTC Description	Confirmed DTC	Pending DTC	Freeze Frame
P0602 Battery Condition Monitor Module Programming Error	B	B	B

DTC (Electric Powertrain)

1. Problem verification (update)

-1. Turn the vehicle to the ON mode.

-2. Clear the DTC with the HDS.

-3. Turn the vehicle to the OFF (LOCK) mode.

-4. Turn the vehicle to the ON mode.

-5. **Do the battery condition monitor module update procedure** .

-6. Check for Pending or Confirmed DTCs with the HDS.

DTC Description	Confirmed DTC	Pending DTC	Freeze Frame
P0602 Battery Condition Monitor Module Programming Error	B	B	B

Is DTC P0602 indicated?

YES

Replace the battery condition monitor module .

NO

The update is complete. If any other Pending or Confirmed DTCs are indicated, go to the indicated DTC's troubleshooting.

DTC P062F (BATTERY CONDITION MONITOR MODULE)

DTC P062F : Battery Condition Monitor Module EEPROM Error

NOTE:

- Before you troubleshoot, **review the general troubleshooting information**.
- If any of the DTCs listed below are indicated at the same time as DTC P062F, troubleshoot those DTCs first, then recheck for P062F.
-
    - -

      P1D3A, P1D3B

DTC Description	Confirmed DTC	Pending DTC	Freeze Frame
P062F Battery Condition Monitor Module EEPROM Error	B	B	B

DTC (Electric Powertrain)

1. DTC check

-1. Turn the vehicle to the ON mode.

-2. Check for Pending or Confirmed DTCs with the HDS.

DTC Description	Confirmed DTC	Pending DTC	Freeze Frame
B	B	B	B

DTC (Electric Powertrain)

Are DTC P062F and any other DTCs indicated at the same time?

YES

Go to the indicated DTC's troubleshooting.

NO

Update the battery condition monitor module if it does not have the latest software .

DTC P06B1 (79) (BATTERY CONDITION MONITOR MODULE)

DTC P06B1 : HV Battery Current Sensor Power Supply Circuit Low

NOTE: Before you troubleshoot, review the general troubleshooting information.

DTC Description	Confirmed DTC	Pending DTC	Freeze Frame
P06B1 HV Battery Current Sensor Power Supply Circuit Low	B	B	B

DTC (Electric Powertrain)

1. Problem verification

   -1. Turn the vehicle to the ON mode.

   -2. Clear the DTC with the HDS.

   -3. Turn the vehicle to the OFF (LOCK) mode.

   -4. Turn the vehicle to the ON mode.

   -5. Check for Pending or Confirmed DTCs with the HDS.

DTC Description	Confirmed DTC	Pending DTC	Freeze Frame
P06B1 HV Battery Current Sensor Power Supply Circuit Low	B	B	B

   Is DTC P06B1 indicated?

   YES

   The failure is duplicated. Go to step 2.

   NO

   Intermittent failure, the system is OK at this time. If the freeze data/on-board snapshot of this DTC is recorded, try to reproduce the failure under the same conditions with the freeze data/on-board snapshot.

2. Determine possible failure area (battery current sensor, others)

   -1. Turn the vehicle to the OFF (LOCK) mode.

   -2. Remove the service plug and the IPU cover .

   -3. Remove the IPU and the IPU case .

   -4. Disconnect the following connector.

Battery current sensor 4P connector

   -5. Reinstall the IPU .

   -6. Do the 12 volt battery terminal reconnection procedure .

   -7. Turn the vehicle to the ON mode.

-8. Clear the DTC with the HDS.

-9. Check for Pending or Confirmed DTCs with the HDS.

DTC Description	Confirmed DTC	Pending DTC	Freeze Frame
P06B1 HV Battery Current Sensor Power Supply Circuit Low	B	B	B

Is DTC P06B1 indicated?

YES

Go to step 3.

NO

Replace the battery current sensor .

3. Shorted wire check (VCCISOC line)

-1. Turn the vehicle to the OFF (LOCK) mode.

-2. **Do the 12 volt battery terminal disconnection procedure** .

-3. Disconnect the following connector.

Battery condition monitor module connector E (32P)

-4. Measure the resistance between test points 1 and 2.

Test condition	Vehicle OFF (LOCK) mode
B	Battery current sensor 4P connector: disconnected
B	Battery condition monitor module connector E (32P): disconnected
Test point 1	**Battery condition monitor module connector E (32P) No. 28**
Test point 2	Body ground

Is there 1 MΩ or more?

YES

Replace the battery condition monitor module .

NO

Repair a short in the VCCISOC wire between the battery current sensor and the battery condition monitor module (E28).

DTC P0A1F (112)

DTC P0A1F : Battery Condition Monitor Module

NOTE: Before you troubleshoot, **review the general troubleshooting information**.

DTC Description	Confirmed DTC	Pending DTC	Freeze Frame
P0A1F Battery Condition Monitor Module	B	B	B

DTC (Electric Powertrain)

1. Problem verification

-1. Turn the vehicle to the ON mode.

-2. Clear the DTC with the HDS.

-3. Turn the vehicle to the OFF (LOCK) mode.

-4. Turn the vehicle to the ON mode.

-5. Check for Pending or Confirmed DTCs with the HDS.

DTC Description	Confirmed DTC	Pending DTC	Freeze Frame
P0A1F Battery Condition Monitor Module	B	B	B

Is DTC P0A1F indicated?

YES

Replace the battery condition monitor module .

NO

Intermittent failure, the system is OK at this time. If the freeze data/on-board snapshot of this DTC is recorded, try to reproduce the failure under the same conditions with the freeze data/on-board snapshot.

DTC P0A7E (72)

DTC P0A7E : HV Battery Pack Over Temperature

NOTE:

- Before you troubleshoot, **review the general troubleshooting information**.
- If the battery condition monitor module detects this DTC, the battery cannot be reused because it is damaged by overheating. Even if this failure does not duplicate, the battery must be replaced.

DTC Description	Confirmed DTC	Pending DTC	Freeze Frame
P0A7E HV Battery Pack Over Temperature	B	B	B

DTC (Electric Powertrain)

1. Battery cooling system visual check

   -1. Check the cause of overheating (the IPU air duct and the high voltage battery module fan for disconnections, damage, or obstructions).

   Is there any abnormality?

   YES

   After solving the problem, **replace the battery pack** .

   NO

   The battery cooling system is OK, **replace the battery pack** .

DTC P0A7F

DTC P0A7F : HV Battery Pack Deterioration

NOTE:

- Before you troubleshoot, review the general troubleshooting information.
- If any of the DTCs listed below are indicated at the same time as DTC P0A7F, troubleshoot those DTCs first, then recheck for P0A7F.
-
    - -

      P144A, P1DC7

DTC Description	Confirmed DTC	Pending DTC	Freeze Frame
P0A7F HV Battery Pack Deterioration	B	B	B

DTC (Electric Powertrain)

1. DTC check

   -1. Turn the vehicle to the ON mode.

   -2. Check for Pending or Confirmed DTCs with the HDS.

DTC Description	Confirmed DTC	Pending DTC	Freeze Frame
B	B	B	B

   DTC (Electric Powertrain)

   Are DTC P0A7F and any other DTCs indicated at the same time?

   YES

   Go to the indicated DTC's troubleshooting.

   NO

   Update the battery condition monitor module if it does not have the latest software .

DTC P0A80 (566), P1DCB (567)

DTC P0A80 : Replace HV Battery Pack

DTC P1DCB : HV Battery Identification Circuit (System Running)

NOTE: Before you troubleshoot, review the general troubleshooting information.

DTC Description	Confirmed DTC	Pending DTC	Freeze Frame
P0A80 Replace HV Battery Pack	B	B	B
P1DCB HV Battery Identification Circuit (System Running)	B	B	B

DTC (Electric Powertrain)

1. Problem verification

   -1. Turn the vehicle to the ON mode.

   -2. Clear the DTC with the HDS.

   -3. Turn the vehicle to the OFF (LOCK) mode, and wait 30 seconds.

   -4. Turn the vehicle to the ON mode.

-5. Check for Pending or Confirmed DTCs with the HDS.

DTC Description	Confirmed DTC	Pending DTC	Freeze Frame
P0A80 Replace HV Battery Pack	B	B	B
P1DCB HV Battery Identification Circuit (System Running)	B	B	B

Is DTC P0A80 and/or DTC P1DCB indicated?

YES

The failure is duplicated. Go to step 2.

NO

Intermittent failure, the system is OK at this time. If the freeze data/on-board snapshot of this DTC is recorded, try to reproduce the failure under the same conditions with the freeze data/on-board snapshot.

2. Identification resistance check 1

-1. Turn the vehicle to the OFF (LOCK) mode.

-2. Remove the **service plug** and the **IPU cover** .

-3. Disconnect the following connector.

Battery condition monitor module connector F (12P)

-4. Measure the resistance between test points 1 and 2.

Test condition	Vehicle OFF (LOCK) mode
B	Battery condition monitor module connector F (12P): disconnected
Test point 1	**Battery condition monitor module connector F (12P) No. 5**
Test point 2	**Battery condition monitor module connector F (12P) No. 6**

Is there about 24 kΩ?

YES

Go to step 3.

NO

Go to step 4.

3. Identification resistance check 2

-1. Measure the resistance between test points 1 and 2.

Test condition	Vehicle OFF (LOCK) mode
B	Battery condition monitor module connector F (12P): disconnected
Test point 1	**Battery condition monitor module connector F (12P) No. 11**
Test point 2	**Battery condition monitor module connector F (12P) No. 6**

Is there about 24 kΩ?

YES

Replace the battery condition monitor module .

NO

Go to step 8.

4. Open wire check (MODID1 line)

-1. Disconnect the following connector.

Battery module 1 28P connector

-2. Measure the resistance between test points 1 and 2.

Test condition	Vehicle OFF (LOCK) mode
B	Battery condition monitor module connector F (12P): disconnected
B	Battery module 1 28P connector: disconnected
Test point 1	Battery condition monitor module connector F (12P) No. 5
Test point 2	Battery module 1 28P connector (male terminals) No. 2: ①

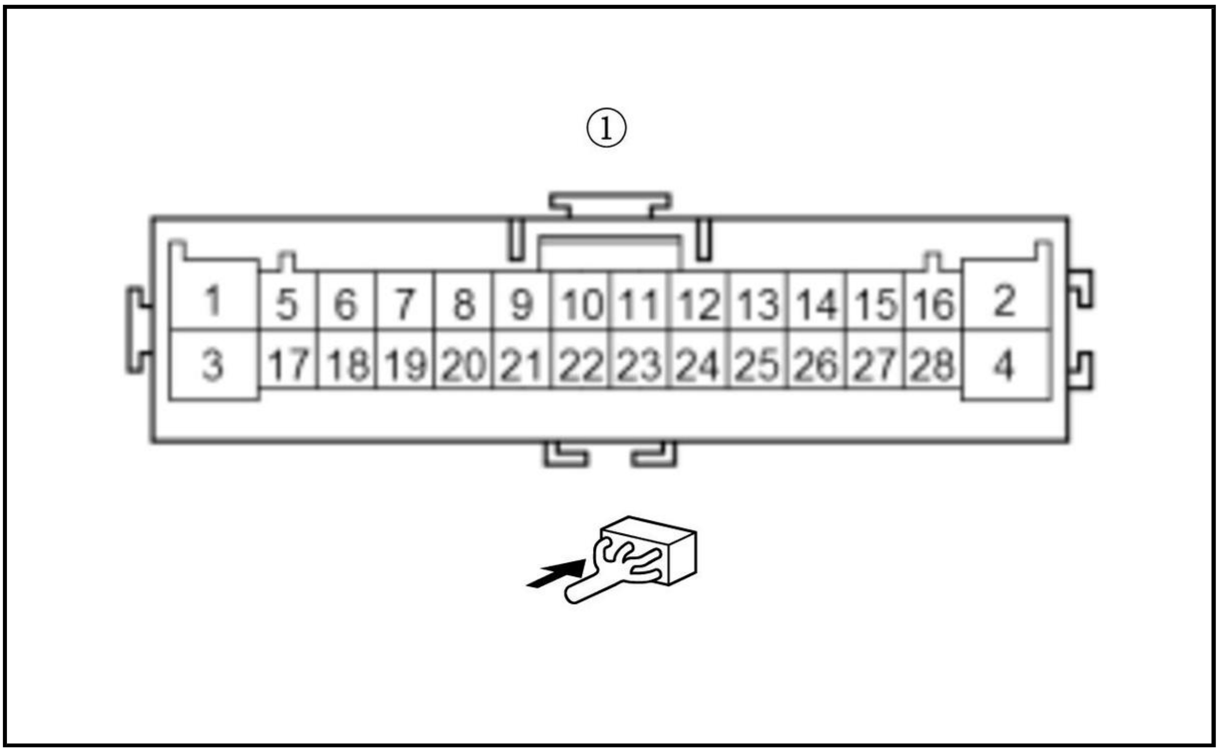

Is there 1.0 Ω or less?

YES

Go to step 5.

NO

Repair an open in the MODID1 wire between the battery condition monitor module (F5) and battery module 1.

5. Open wire check (MODID1-M line)

-1. Disconnect the following connector.

Battery module 2 28P connector

-2. Measure the resistance between test points 1 and 2.

Test condition	Vehicle OFF (LOCK) mode
B	Battery condition monitor module connector F (12P): disconnected
B	Battery module 1 28P connector: disconnected
B	Battery module 2 28P connector: disconnected

Test point 1	Battery module 1 28P connector (male terminals) No. 4: ①
Test point 2	Battery module 2 28P connector (male terminals) No. 2: ②

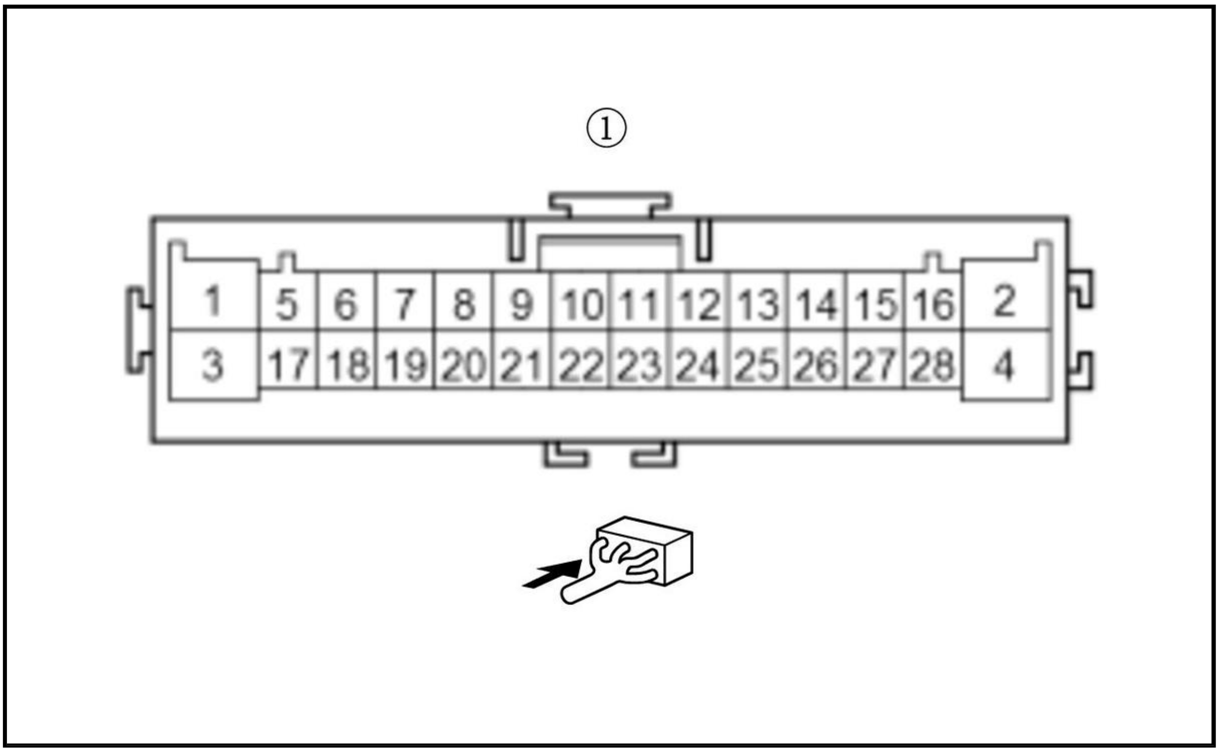
①
1
5
6
7
8
9
10
11
12
13
14
15
16
2
3
17
18
19
20
21
22
23
24
25
26
27
28
4

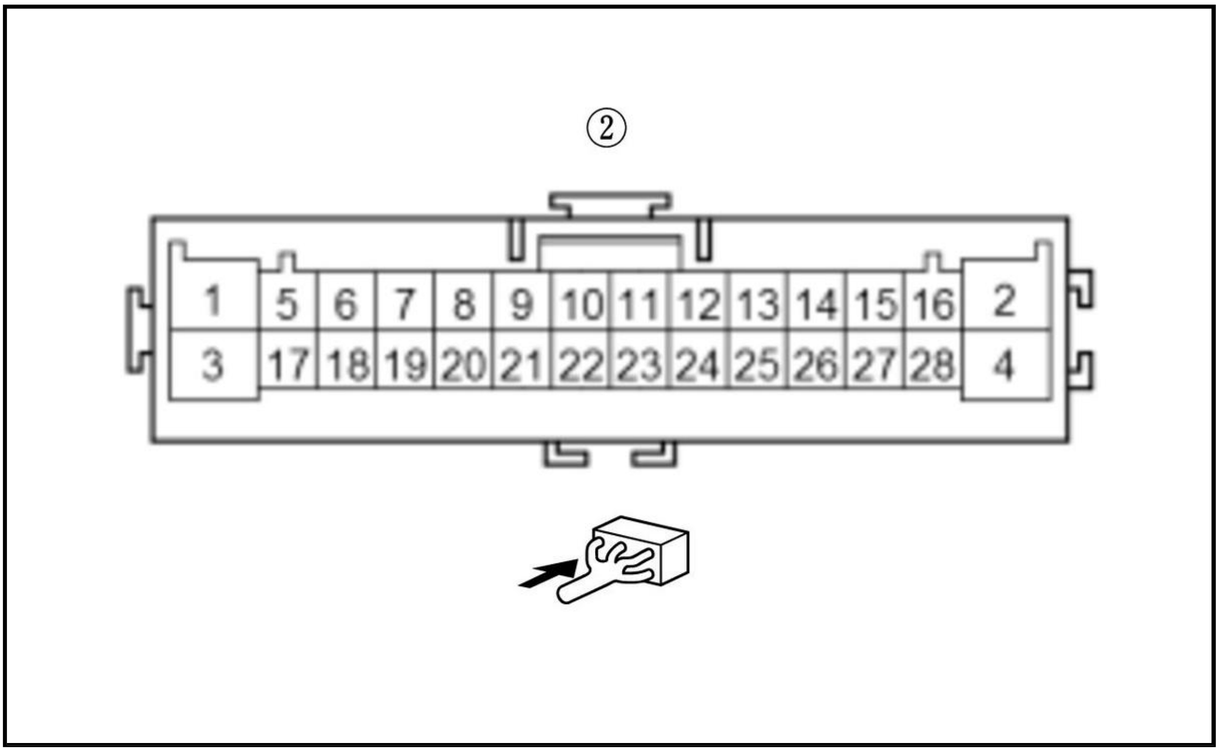
②
1
5
6
7
8
9
10
11
12
13
14
15
16
2
3
17
18
19
20
21
22
23
24
25
26
27
28
4

Is there 1.0 Ω or less?

YES

Go to step 6.

NO

Repair an open in the MODID1-M wire between battery module 1 and battery module 2.

6. Shorted wire check (MODID1 line)

-1. Measure the resistance between test points 1 and 2.

Test condition	Vehicle OFF (LOCK) mode
B	Battery condition monitor module connector F (12P): disconnected
B	Battery module 1 28P connector: disconnected
B	Battery module 2 28P connector: disconnected
Test point 1	**Battery condition monitor module connector F (12P) No. 5**
Test point 2	Body ground (G701)

Is there 1 MΩ or more?

YES

Go to step 7.

NO

Repair a short in the MODID1 wire between the battery condition monitor module (F5) and battery module 1.

7. Open wire check (SGTB/MODID1-SG line)

-1. Measure the resistance between test points 1 and 2.

Test condition	Vehicle OFF (LOCK) mode
B	Battery condition monitor module connector F (12P): disconnected
B	Battery module 1 28P connector: disconnected
B	Battery module 2 28P connector: disconnected
Test point 1	**Battery condition monitor module connector F (12P) No. 6**
Test point 2	Battery module 2 28P connector (male terminals) No. 4: ①

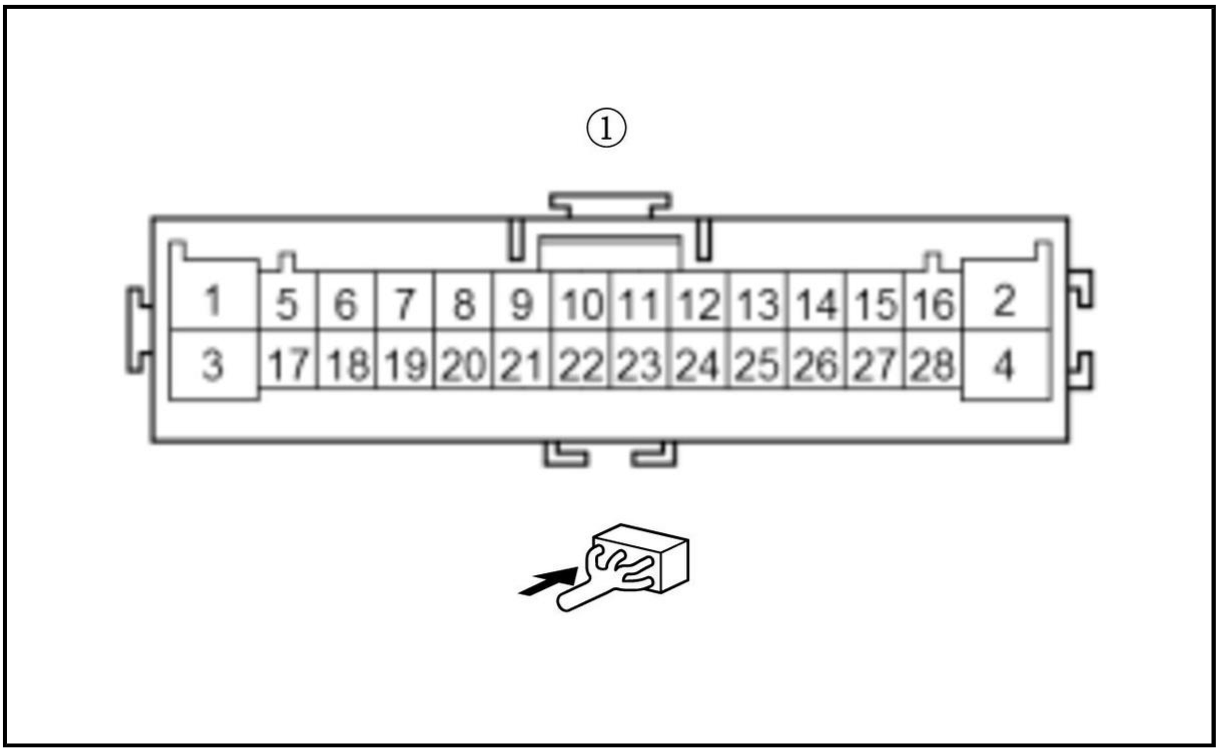

Is there 1.0 Ω or less?

YES

There is a failure in the battery module identification resistor. **Replace the battery pack** .

NO

Repair an open in the SGTB/MODID1-SG wire between the battery condition monitor module (F6) and battery module 2.

8. Open wire check (MODID2 line)

-1. **Remove the IPU and the IPU case** .

-2. Disconnect the following connector.

Battery module 3 28P connector

-3. Measure the resistance between test points 1 and 2.

Test condition	Vehicle OFF (LOCK) mode
B	Battery condition monitor module connector F (12P): disconnected
B	Battery module 3 28P connector: disconnected
Test point 1	**Battery condition monitor module connector F (12P) No. 11**
Test point 2	Battery module 3 28P connector (male terminals) No. 2: ①

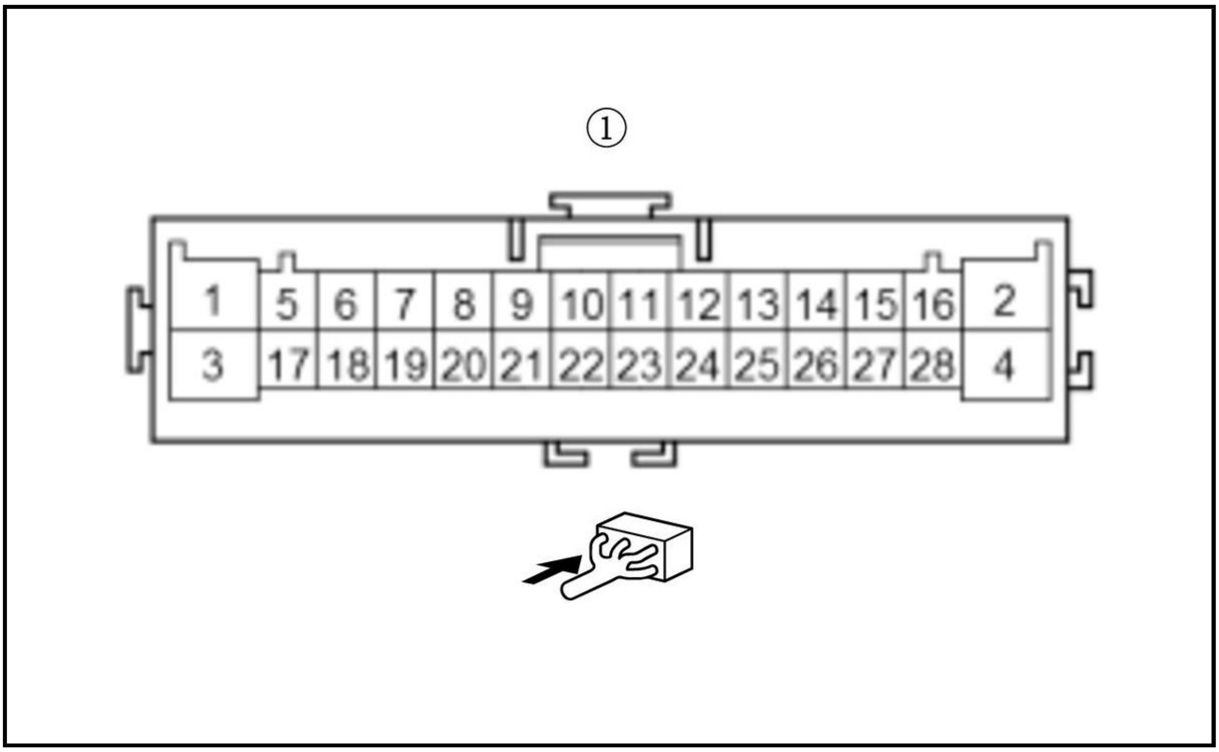

Is there 1.0 Ω or less?

YES

Go to step 9.

NO

Repair an open in the MODID2 wire between the battery condition monitor module (F11) and battery module 3.

9. Open wire check (MODID2-M line)

-1. Disconnect the following connector.

Battery module 4 28P connector

-2. Measure the resistance between test points 1 and 2.

Test condition	Vehicle OFF (LOCK) mode
B	Battery condition monitor module connector F (12P): disconnected
B	Battery module 3 28P connector: disconnected
B	Battery module 4 28P connector: disconnected
Test point 1	Battery module 3 28P connector (male terminals) No. 4: ①
Test point 2	Battery module 4 28P connector (male terminals) No. 2: ②

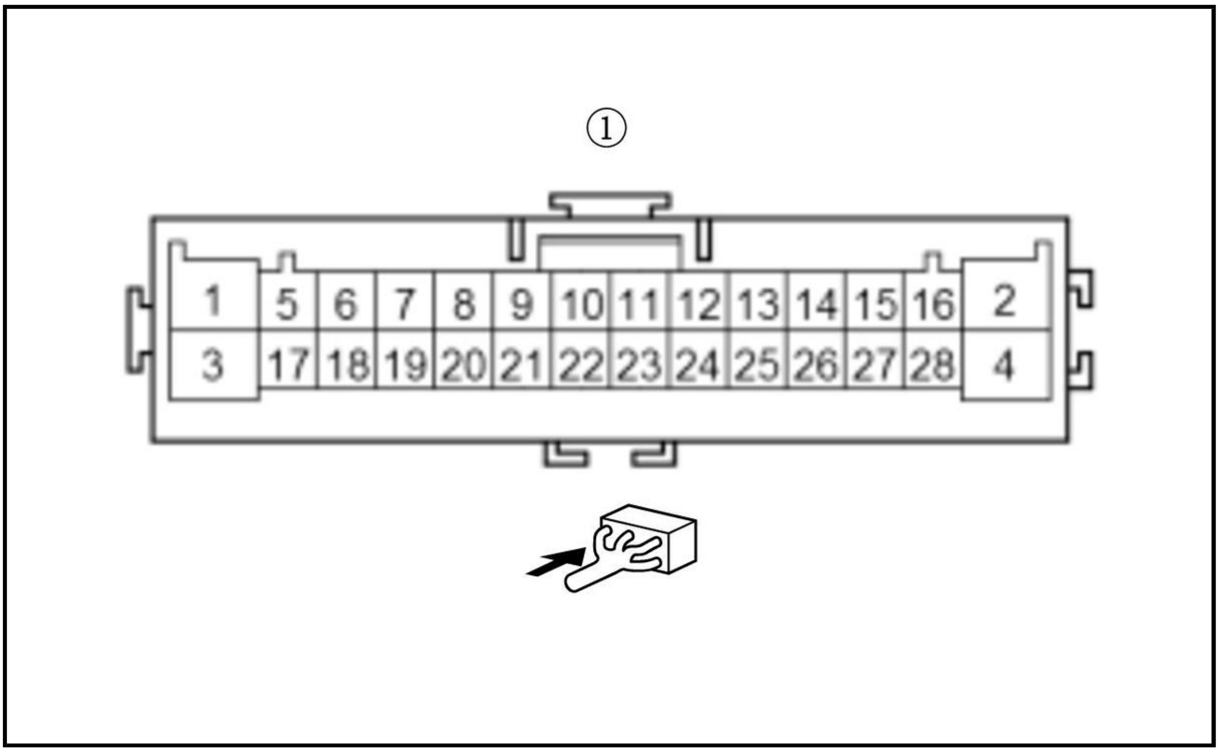
①
1
5
6
7
8
9
10
11
12
13
14
15
16
2
3
17
18
19
20
21
22
23
24
25
26
27
28
4

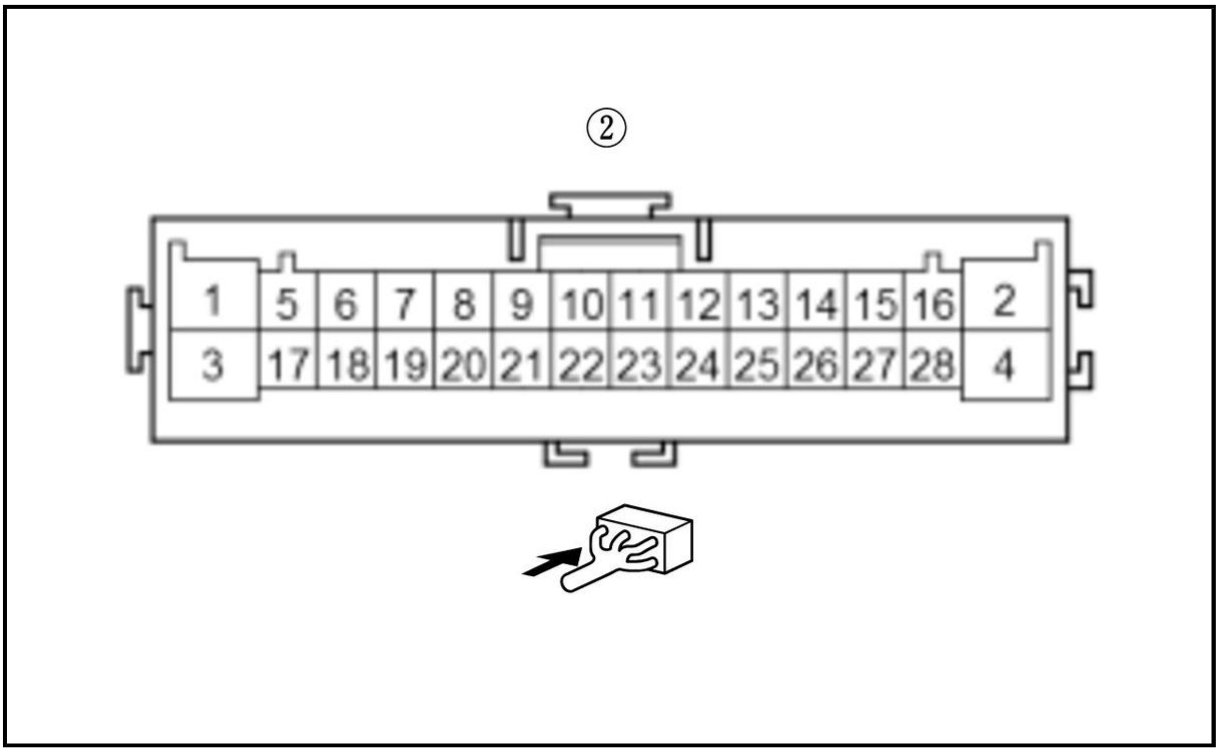
②
1
5
6
7
8
9
10
11
12
13
14
15
16
2
3
17
18
19
20
21
22
23
24
25
26
27
28
4

Is there 1.0 Ω or less?

YES

Go to step 10.

NO

Repair an open in the MODID2-M wire between battery module 3 and battery module 4.

10. Shorted wire check (MODID2 line)

-1. Measure the resistance between test points 1 and 2.

Test condition	Vehicle OFF (LOCK) mode
B	Battery condition monitor module connector F (12P): disconnected

B	Battery module 3 28P connector: disconnected
B	Battery module 4 28P connector: disconnected
Test point 1	**Battery condition monitor module connector F (12P) No. 11**
Test point 2	Body ground (G701)

Is there 1 MΩ or more?

YES

Go to step 11.

NO

Repair a short in the MODID2 wire between the battery condition monitor module (F11) and battery module 3.

11. Open wire check (SGTB/MODID2-SG line)

    -1. Measure the resistance between test points 1 and 2.

Test condition	Vehicle OFF (LOCK) mode
B	Battery condition monitor module connector F (12P): disconnected
B	Battery module 3 28P connector: disconnected
B	Battery module 4 28P connector: disconnected
Test point 1	**Battery condition monitor module connector F (12P) No. 6**
Test point 2	Battery module 4 28P connector (male terminals) No. 4: ①

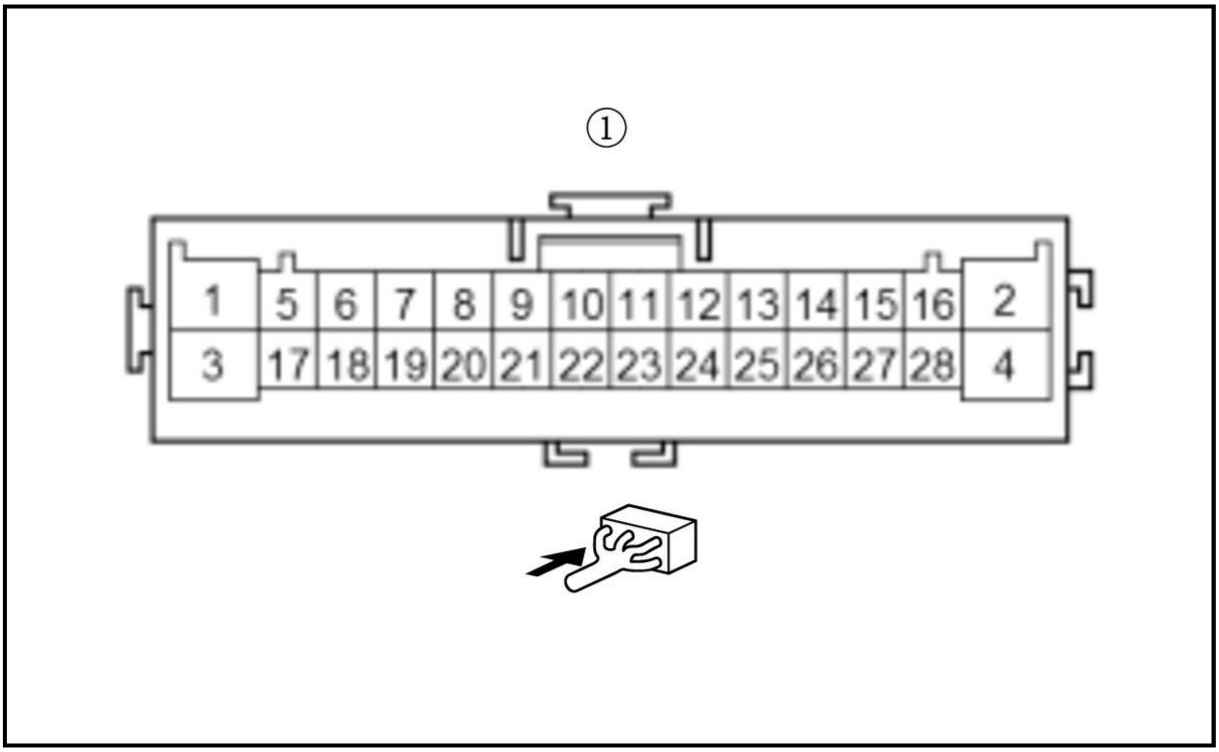

Is there 1.0 Ω or less?

YES

There is a failure in the battery module identification resistor. **Replace the battery pack** .

NO

Repair an open in the SGTB/MODID2-SG wire between the battery condition monitor module (F6) and battery module 4.

DTC TROUBLESHOOTING

DTC P0A82 (63)

DTC P0A82 : HV Battery Pack Cooling Fan Performance/Stuck Off

NOTE: Before you troubleshoot, review the general troubleshooting information .

DTC Description	Confirmed DTC	Pending DTC	Freeze Frame
P0A82 HV Battery Pack Cooling Fan Performance/Stuck Off	B	B	B

DTC (Electric Powertrain)

1. Problem verification

   -1. Turn the vehicle to the ON mode.

   -2. Clear the DTC with the HDS.

   -3. Turn the vehicle to the OFF (LOCK) mode.

   -4. Turn the vehicle to the ON mode.

   -5. Select the BATTERY FAN TEST in the Electric Powertrain FUNCTION TEST with the HDS, then select START.

   Battery Fan Test

   Is the high voltage battery module fan OK?

   YES

   Intermittent failure. The system is OK at this time. If the freeze data/on-board snapshot of this DTC is recorded, try to reproduce the failure under the same conditions with the freeze data/on-board snapshot.

   NO

   Go to step 2.

2. Fuse check

   -1. Turn the vehicle to the OFF (LOCK) mode.

   -2. Check the following fuse.

Fuse	No. A4-4

   Is the fuse OK?

   YES

   Go to step 3.

   NO

Replace the No. A4-4 fuse. Also check for a short to ground on the No. A4-4 fuse circuit if needed.

3. Relay check

-1. Remove the **service plug** and the **IPU cover** .

-2. **Remove the battery fan relay** .

-3. **Test the battery fan relay** .

Is the relay OK?

YES

Go to step 4.

NO

Replace the battery fan relay.

4. Open wire check (+B_IGA2 line)

-1. **Do the 12 volt battery terminal reconnection procedure** .

-2. Measure the voltage between test points 1 and 2.

Test condition	Vehicle OFF (LOCK) mode
B	Battery fan relay: disconnected
Test point 1	Battery fan relay 4P socket (female terminals) No. 2: ①
Test point 2	Body ground

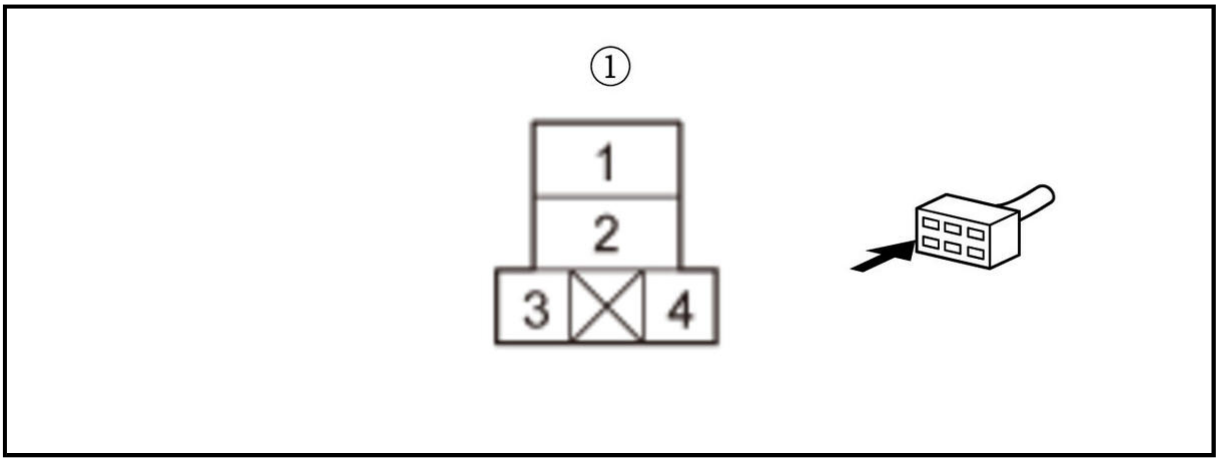

Is there battery voltage?

YES

Go to step 5

NO

Repair an open in the +B_IGA2 wire between the **No. A4-4** fuse and the battery fan relay.

5. Open wire check (IGB line)

-1. Turn the vehicle to the ON mode.

-2. Measure the voltage between test points 1 and 2.

Test condition	Vehicle ON mode
B	Battery fan relay: disconnected
Test point 1	Battery fan relay 4P socket (female terminal) No. 3: ①
Test point 2	Body ground

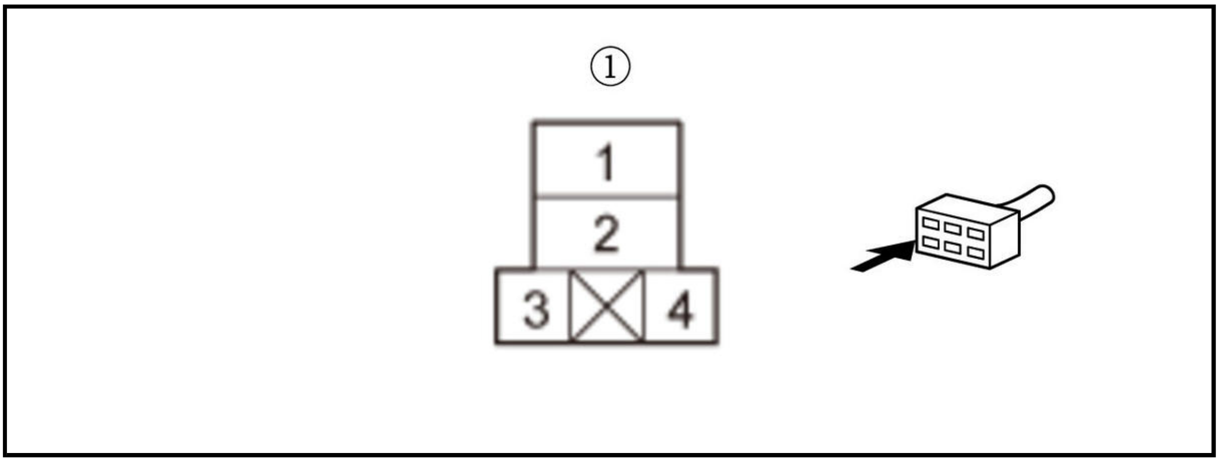

Is there battery voltage?

YES

Go to step 6.

NO

Repair an open in the IGB wire between the IGHLDB relay and the battery fan relay.

6. Open wire check (NFAN line)

-1. Turn the vehicle to the OFF (LOCK) mode.

-2. **Do the 12 volt battery terminal disconnection procedure** .

-3. Disconnect the following connectors.

High voltage battery module fan 4P connector	
Battery condition monitor module connector E (32P)	

-4. Measure the resistance between test points 1 and 2.

Test condition	Vehicle OFF (LOCK) mode
B	Battery condition monitor module connector E (32P): disconnected
B	Battery fan relay: disconnected
B	High voltage battery module fan 4P connector: disconnected
Test point 1	High voltage battery module fan 4P connector (female terminals) No. 3: ①
Test point 2	**Battery condition monitor module connector E (32P) No. 14**

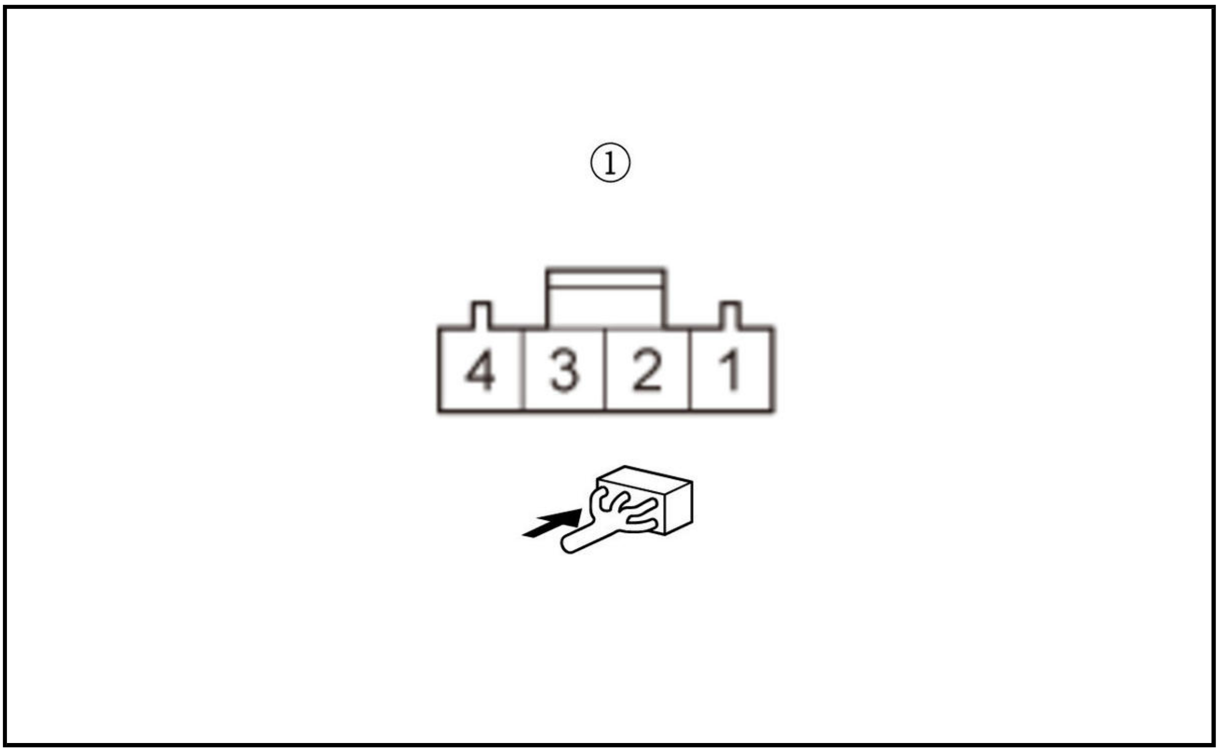

Is there 1.0 Ω or less?

YES

Go to step 7.

NO

Repair an open in the NFAN wire between the high voltage battery module fan and the battery condition monitor module (E14).

7. Shorted wire check (NFAN line)

-1. Measure the resistance between test points 1 and 2.

Test condition	Vehicle OFF (LOCK) mode
B	Battery condition monitor module connector E (32P): disconnected
B	Battery fan relay: disconnected
B	High voltage battery module fan 4P connector: disconnected
Test point 1	High voltage battery module fan 4P connector (female terminals) No. 3: ①
Test point 2	Body ground

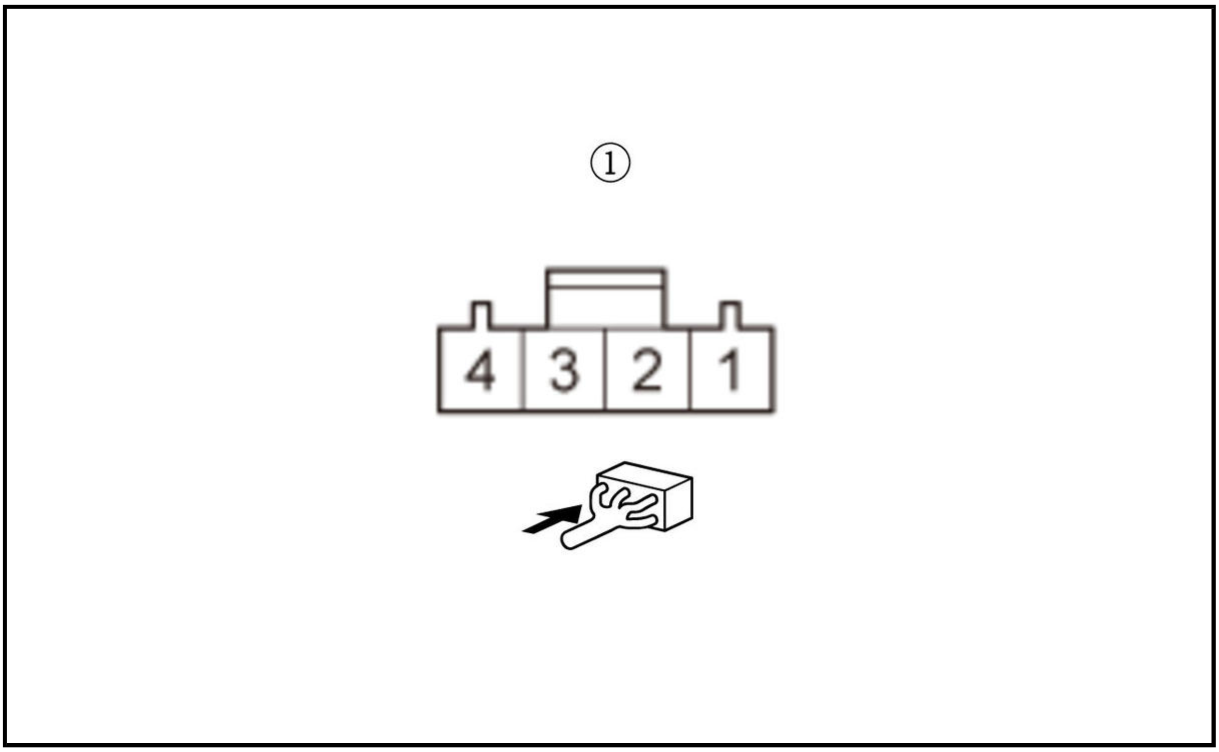

Is there 1 MΩ or more?

YES

Go to step 8.

NO

Repair a short in the NFAN wire between the high voltage battery module fan and the battery condition monitor module (E14).

8. Open wire check (FANCTL line)

-1. Measure the resistance between test points 1 and 2.

Test condition	Vehicle OFF (LOCK) mode
B	Battery condition monitor module connector E (32P): disconnected
B	Battery fan relay: disconnected
B	High voltage battery module fan 4P connector: disconnected
Test point 1	High voltage battery module fan 4P connector (female terminals) No. 2: ①
Test point 2	**Battery condition monitor module connector E (32P) No. 24**

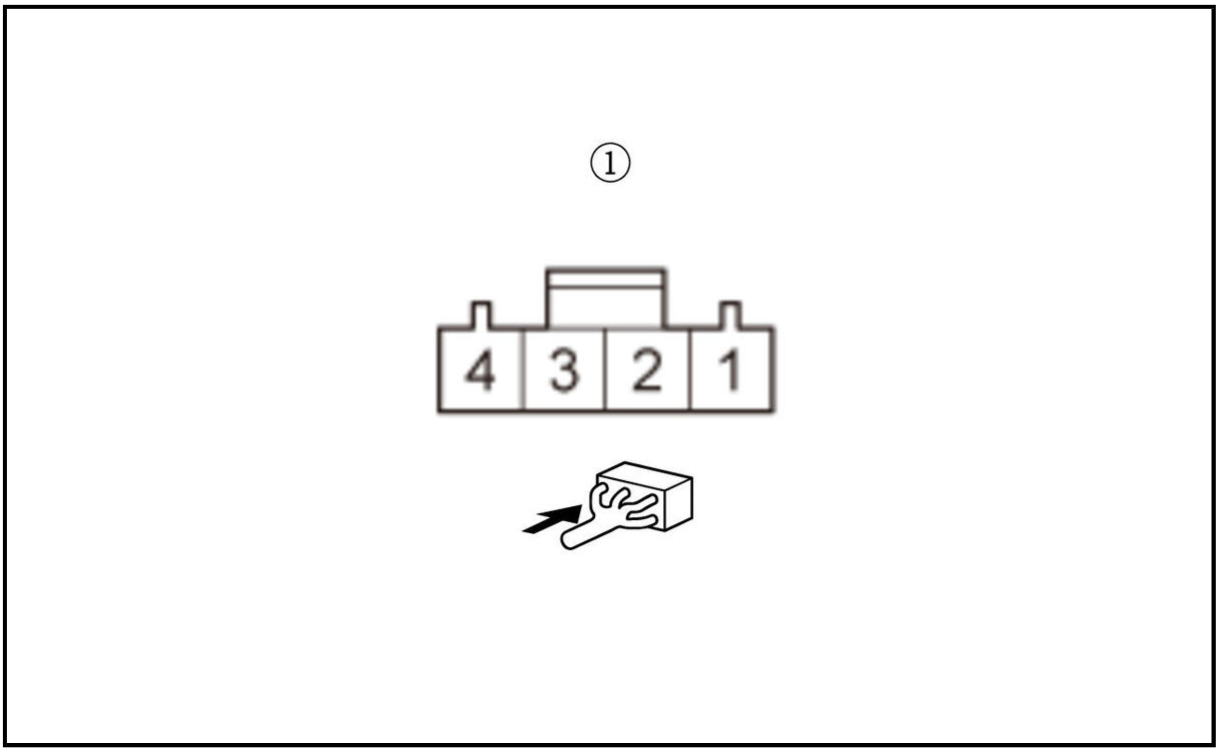

Is there 1.0 Ω or less?

YES

Go to step 9.

NO

Repair an open in the FANCTL wire between the high voltage battery module fan and the battery condition monitor module (E24).

9. Shorted wire check (FANCTL line)

-1. Measure the resistance between test points 1 and 2.

Test condition	Vehicle OFF (LOCK) mode
B	Battery condition monitor module connector E (32P): disconnected
B	Battery fan relay: disconnected
B	High voltage battery module fan 4P connector: disconnected
Test point 1	High voltage battery module fan 4P connector (female terminals) No. 2: ①
Test point 2	Body ground

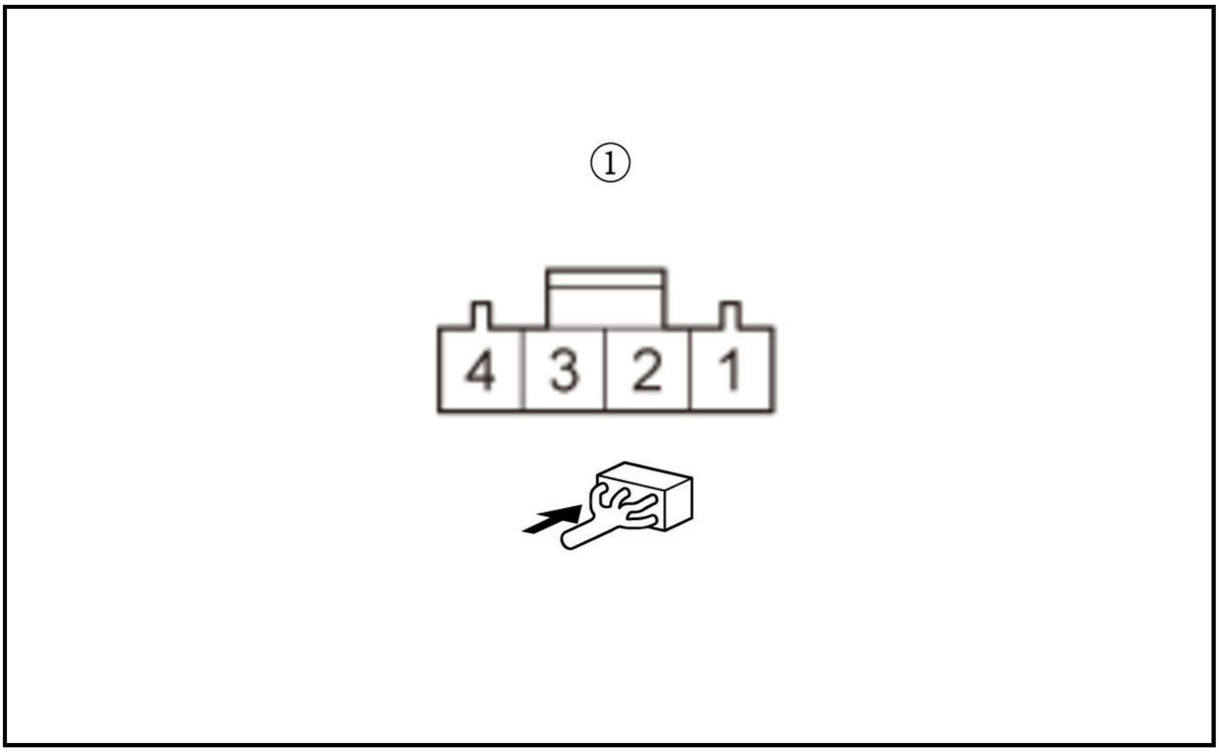

Is there 1 MΩ or more?

YES

Go to step 10.

NO

Repair a short in the FANCTL wire between the high voltage battery module fan and the battery condition monitor module (E24).

10. Open wire check (FAN_GND line)

-1. Measure the resistance between test points 1 and 2.

Test condition	Vehicle OFF (LOCK) mode
B	Battery condition monitor module connector E (32P): disconnected
B	Battery fan relay: disconnected
B	High voltage battery module fan 4P connector: disconnected
Test point 1	High voltage battery module fan 4P connector (female terminals) No. 1: ①
Test point 2	Body ground (G701)

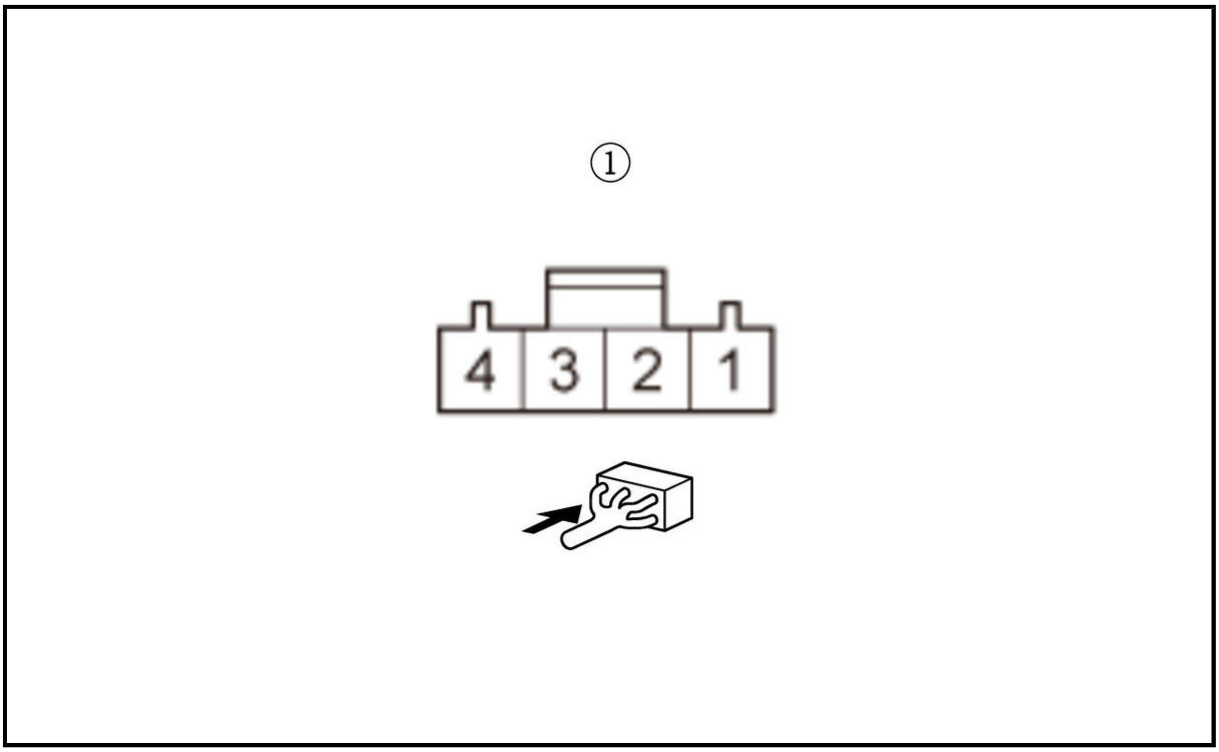

Is there 1.0 Ω or less?

YES

Go to step 11

NO

Repair an open in the FAN_GND wire between the high voltage battery module fan and G701.

11. Open wire check (IGA2 line)

-1. Measure the resistance between test points 1 and 2.

Test condition	Vehicle OFF (LOCK) mode
B	Battery condition monitor module connector E (32P): disconnected
B	Battery fan relay: disconnected
B	High voltage battery module fan 4P connector: disconnected
Test point 1	High voltage battery module fan 4P connector (female terminals) No. 4: ①
Test point 2	Battery fan relay 4P socket (female terminal) No. 1: ②

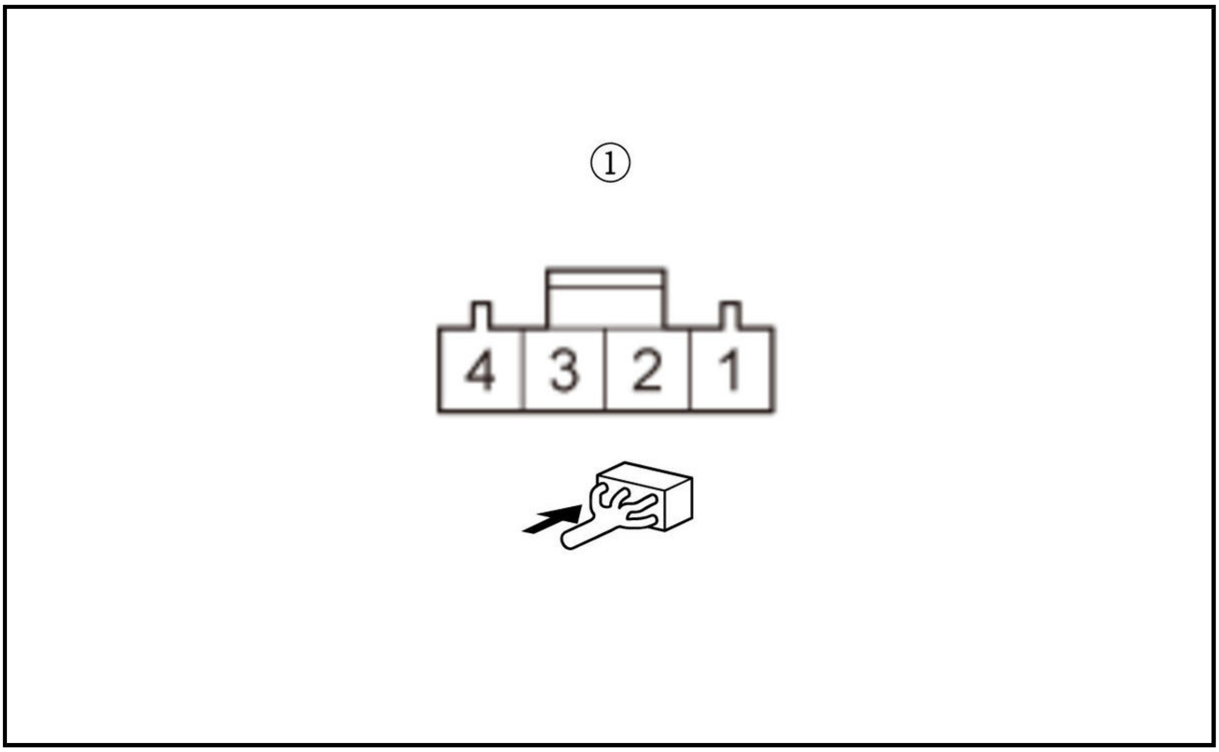

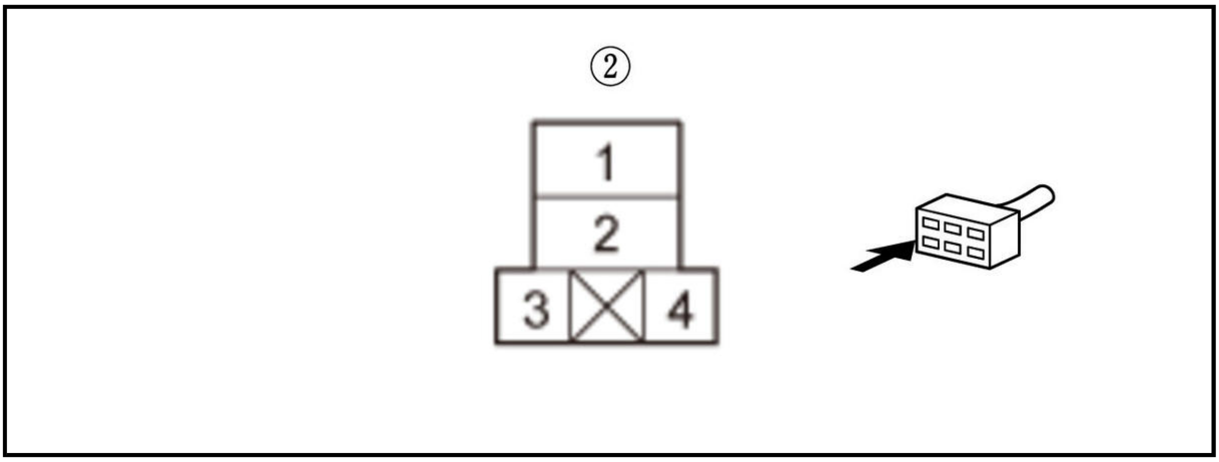

Is there 1.0 Ω or less?

YES

Go to step 12

NO

Repair an open in the IGA2 wire between the high voltage battery module fan and the battery fan relay.

12. Open wire check (IGHLD2 line)

-1. Measure the resistance between test points 1 and 2.

Test condition	Vehicle OFF (LOCK) mode
B	Battery condition monitor module connector E (32P): disconnected
B	Battery fan relay: disconnected
B	High voltage battery module fan 4P connector: disconnected
Test point 1	**Battery condition monitor module connector E (32P) No. 21**
Test point 2	Battery fan relay 4P socket (female terminal) No. 4: ①

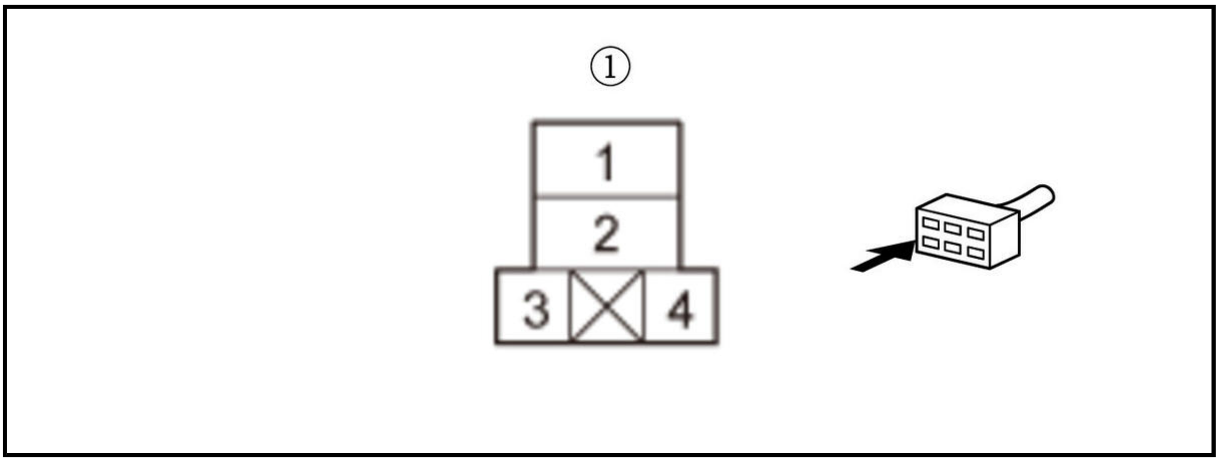

Is there 1.0 Ω or less?

YES

Go to step 13

NO

Repair an open in the IGHLD2 wire between the battery fan relay and the battery condition monitor module (E21).

13. Shorted wire check (IGHLD2 line)

-1. Measure the resistance between test points 1 and 2.

Test condition	Vehicle OFF (LOCK) mode
B	Battery condition monitor module connector E (32P): disconnected
B	Battery fan relay: disconnected
B	High voltage battery module fan 4P connector: disconnected

Test point 1	Battery condition monitor module connector E (32P) No. 21
Test point 2	Body ground

Is there 1 MΩ or more?

YES

Replace the high voltage module fan .

NO

Repair a short in the IGHLD2 wire between the battery condition monitor module (E21) and the battery fan relay. If the wire is OK, replace the battery condition monitor module .

DTC P0A94 (48)

DTC P0A94 : DC-DC Converter Performance

NOTE: Before you troubleshoot, review the general troubleshooting information .

DTC Description	Confirmed DTC	Pending DTC	Freeze Frame
P0A94 DC-DC Converter Performance	B	B	B

DTC (Electric Powertrain)

1. Problem verification

-1. Turn the vehicle to the ON mode.

-2. Clear the DTC with the HDS.

-3. Turn the vehicle to READY TO DRIVE mode, and wait 100 seconds.

-4. Monitor the OBD STATUS for DTC P0A94 in the DTCs MENU with the HDS.

DTC Description	OBD STATUS
P0A94 DC-DC Converter Performance	B

Does the HDS indicate FAILED?

YES

The failure is duplicated. Go to step 2.

NO

If the HDS indicates PASSED, intermittent failure the system is OK at this time. If the HDS indicates NOT COMPLETED, keep the vehicle in READY TO DRIVE mode until a result comes on. If the freeze data/on-board snapshot of this DTC is recorded, try to reproduce the failure under the same conditions with the freeze data/on-board snapshot.

2. DTC check

-1. Check for Pending or Confirmed DTCs with the HDS.

DTC Description	Confirmed DTC	Pending DTC	Freeze Frame
P0562 Battery Condition Monitor Module System Voltage Low	B	B	B
U0599 DC-DC Converter Serial Communication Receive Error	B	B	B

Is DTC P0562 or U0599 indicated?

YES

Go to the indicated DTC's troubleshooting.

NO

Go to step 3.

3. DC-DC converter operation check

-1. Check the parameter(s) below with the HDS.

Signal	Threshold		Current conditions	
	Values	Unit	Values	Unit
DC-DC Converter Information	Normal	B	B	B

Do the current condition(s) match the threshold?

YES

Go to step 4.

NO

Check for poor connections or loose terminals at the PCU. If the connections and the terminals are OK, replace the PCU .

4. +B terminals visual check

-1. Check the connections of the +B terminal (A) on the PCU and the under-hood fuse/relay box +B terminal (B).

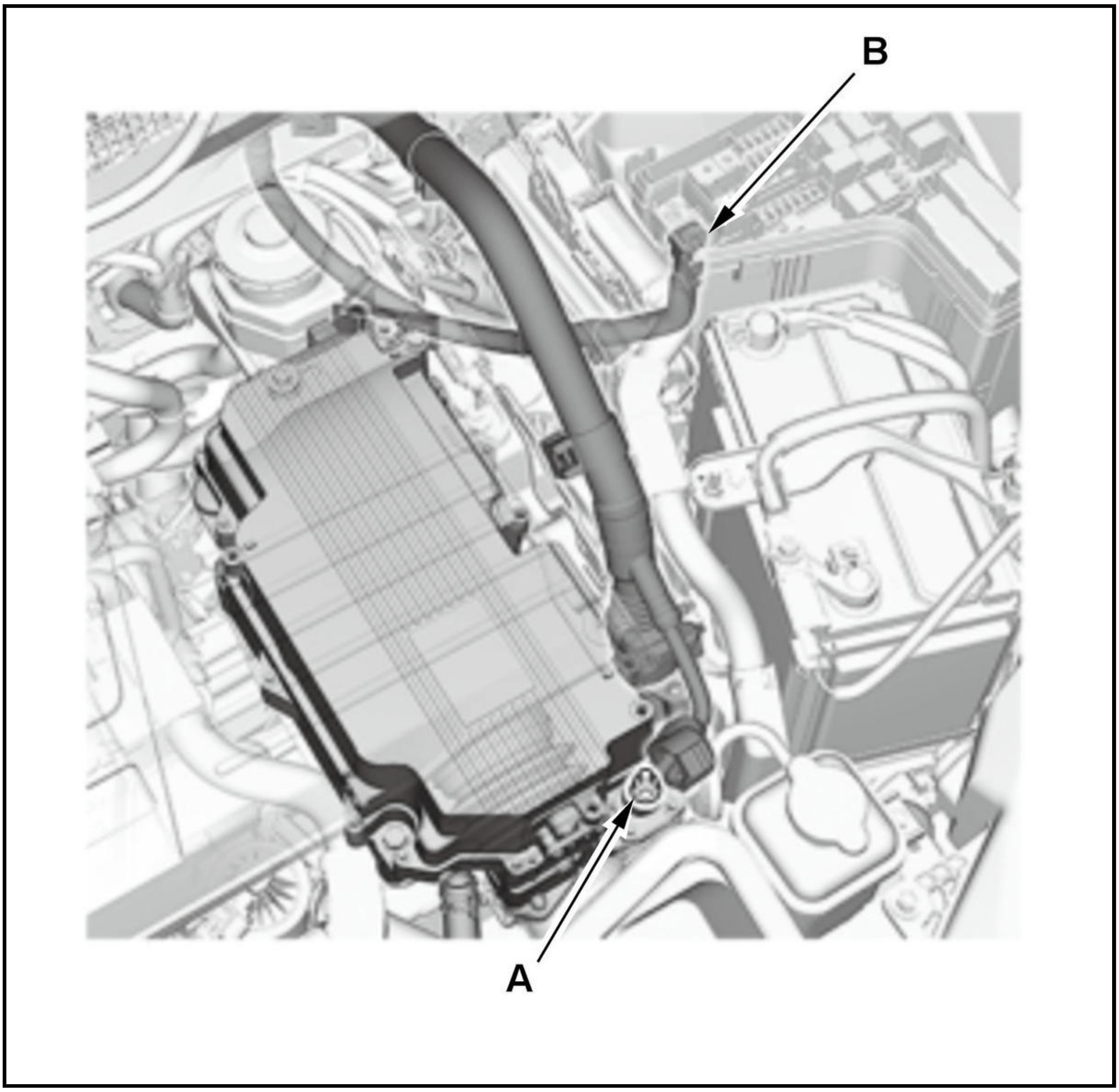

Are the connection OK?

YES

Replace the PCU .

NO

Repair the +B terminal connection.

DTC P0A9B (972), P0AC5 (973), P0ACA (974), P0AE8 (975)

DTC P0A9B : HV Battery Temperature Sensor 1 Circuit

DTC P0AC5 : HV Battery Temperature Sensor 2 Circuit

DTC P0ACA : HV Battery Temperature Sensor 3 Circuit

DTC P0AE8 : HV Battery Temperature Sensor 4 Circuit

NOTE: Before you troubleshoot, **review the general troubleshooting information** .

DTC Description	Confirmed DTC	Pending DTC	Freeze Frame
P0A9B HV Battery Temperature Sensor 1 Circuit	B	B	B
P0AC5 HV Battery Temperature Sensor 2 Circuit	B	B	B
P0ACA HV Battery Temperature Sensor 3 Circuit	B	B	B
P0AE8 HV Battery Temperature Sensor 4 Circuit	B	B	B

DTC (Electric Powertrain)

1. Problem verification

-1. Turn the vehicle to the ON mode.

-2. Clear the DTC with the HDS.

-3. Test-drive the vehicle in the range of recorded freeze data parameters.

Freeze Data

NOTE: This DTC may take 10 minutes or more for detection.

-4. Check for Pending or Confirmed DTCs with the HDS.

DTC Description	Confirmed DTC	Pending DTC	Freeze Frame
P0A9B HV Battery Temperature Sensor 1 Circuit	B	B	B
P0AC5 HV Battery Temperature Sensor 2 Circuit	B	B	B
P0ACA HV Battery Temperature Sensor 3 Circuit	B	B	B
P0AE8 HV Battery Temperature Sensor 4 Circuit	B	B	B

Is DTC P0A9B, P0AC5, P0ACA, or P0AE8 indicated?

P0A9B is indicated

Go to step 2.

P0AC5 is indicated

Go to step 3.

P0ACA is indicated

Go to step 4.

P0AE8 is indicated

Go to step 5.

DTC is not indicated

Intermittent failure. The system is OK at this time. If the freeze data/on-board snapshot of this DTC is recorded, try to reproduce the failure under the same conditions with the freeze data/on-board snapshot.

2. DTC check (High voltage battery module temperature sensor 1)

   -1. Check for Pending or Confirmed DTCs with the HDS.

DTC Description	Confirmed DTC	Pending DTC	Freeze Frame
P0A9C HV Battery Temperature Sensor 1 Circuit Range/Performance	B	B	B
P0A9D HV Battery Temperature Sensor 1 Circuit Low	B	B	B
P0A9E HV Battery Temperature Sensor 1 Circuit High	B	B	B

   Is DTC P0A9C, P0A9D, and/or P0A9E indicated?

   YES

   Go to the indicated DTC's troubleshooting.

   NO

   Replace the high voltage battery module temperature sensor 1 .

3. DTC check (High voltage battery module temperature sensor 2)

   -1. Check for Pending or Confirmed DTCs with the HDS.

DTC Description	Confirmed DTC	Pending DTC	Freeze Frame
P0AC6 HV Battery Temperature Sensor 2 Circuit Range/Performance	B	B	B
P0AC7 HV Battery Temperature Sensor 2 Circuit Low	B	B	B
P0AC8 HV Battery Temperature Sensor 2 Circuit High	B	B	B

   Is DTC P0AC6, P0AC7 and/or P0AC8 indicated?

   YES

   Go to the indicated DTC's troubleshooting.

   NO

   Replace the high voltage battery module temperature sensor 2 .

4. DTC check (High voltage battery module temperature sensor 3)

   -1. Check for Pending or Confirmed DTCs with the HDS.

DTC Description	Confirmed DTC	Pending DTC	Freeze Frame
P0ACB HV Battery Temperature Sensor 3 Circuit Range/Performance	B	B	B
P0ACC HV Battery Temperature Sensor 3 Circuit Low	B	B	B
P0ACD HV Battery Temperature Sensor 3 Circuit High	B	B	B

Is DTC P0ACB, P0ACC and/or P0ACD indicated?

YES

Go to the indicated DTC's troubleshooting.

NO

Replace the high voltage battery module temperature sensor 3 .

5. DTC check (High voltage battery module temperature sensor 4)

-1. Check for Pending or Confirmed DTCs with the HDS.

DTC Description	Confirmed DTC	Pending DTC	Freeze Frame
P0AE9 HV Battery Temperature Sensor 4 Circuit Range/Performance	B	B	B
P0AEA HV Battery Temperature Sensor 4 Circuit Low	B	B	B
P0AEB HV Battery Temperature Sensor 4 Circuit High	B	B	B

Is DTC P0AE9, P0AEA and/or P0AEB indicated?

YES

Go to the indicated DTC's troubleshooting.

NO

Replace the high voltage battery module temperature sensor 4 .

DTC P0A9C (67), P0AC6 (68), P0ACB (69), P0AE9 (71)

DTC P0A9C : HV Battery Temperature Sensor 1 Circuit Range/Performance

DTC P0AC6 : HV Battery Temperature Sensor 2 Circuit Range/Performance

DTC P0ACB : HV Battery Temperature Sensor 3 Circuit Range/Performance

DTC P0AE9 : HV Battery Temperature Sensor 4 Circuit Range/Performance

NOTE: Before you troubleshoot, **review the general troubleshooting information** .

DTC Description	Confirmed DTC	Pending DTC	Freeze Frame
P0A9C HV Battery Temperature Sensor 1 Circuit Range/Performance	B	B	B
P0AC6 HV Battery Temperature Sensor 2 Circuit Range/Performance	B	B	B

DTC Description	Confirmed DTC	Pending DTC	Freeze Frame
P0ACB HV Battery Temperature Sensor 3 Circuit Range/Performance	B	B	B
P0AE9 HV Battery Temperature Sensor 4 Circuit Range/Performance	B	B	B

DTC (Electric Powertrain)

1. Problem verification

   -1. Turn the vehicle to the ON mode.

   -2. Check for Pending or Confirmed DTCs with the HDS.

DTC Description	Confirmed DTC	Pending DTC	Freeze Frame
B	B	B	B

   DTC (Electric Powertrain)

   Are any DTCs indicated?

   YES

   Go to the indicated DTC's troubleshooting.

   NO

   Go to step 2.

2. Battery cooling system visual check

   -1. Turn the vehicle to the OFF (LOCK) mode.

   -2. Check the IPU air duct and the high voltage battery module fan for damages, obstructions or any disconnected connectors or ducts.

   Are the IPU air duct and the high voltage battery module fan OK?

   1. **YES**

      Replace the following high voltage battery module temperature sensor .

      - DTC P0A9C: High voltage battery module temperature sensor 1
      - DTC P0AC6: High voltage battery module temperature sensor 2
      - DTC P0ACB: High voltage battery module temperature sensor 3
      - DTC P0AE9: High voltage battery module temperature sensor 4

      NO

      Replace the IPU air duct as necessary and the high voltage battery module fan as needed.

DTC P0A9D (49), P0AC7 (51), P0ACC (53), P0AEA (121)

DTC P0A9D : HV Battery Temperature Sensor 1 Circuit Low

DTC P0AC7 : HV Battery Temperature Sensor 2 Circuit Low

DTC P0AEA : HV Battery Temperature Sensor 4 Circuit Low

NOTE: Before you troubleshoot, **review the general troubleshooting information** .

DTC Description	Confirmed DTC	Pending DTC	Freeze Frame
P0A9D HV Battery Temperature Sensor 1 Circuit Low	B	B	B
P0AC7 HV Battery Temperature Sensor 2 Circuit Low	B	B	B
P0ACC HV Battery Temperature Sensor 3 Circuit Low	B	B	B
P0AEA HV Battery Temperature Sensor 4 Circuit Low	B	B	B

DTC (Electric Powertrain)

1. Problem verification

   -1. Turn the vehicle to the ON mode.

   -2. Clear the DTC with the HDS.

   -3. Check the parameter(s) of the corresponding DTC below with the HDS.

Signal	Threshold		Current conditions	
	Values	Unit	Values	Unit
HV Battery Module Temperature Sensor1 Voltage	Less than 0.07 V	V	B	B

Signal	Threshold		Current conditions	
	Values	Unit	Values	Unit
HV Battery Module Temperature Sensor2 Voltage	Less than 0.07 V	V	B	B
HV Battery Module Temperature Sensor3 Voltage	Less than 0.07 V	V	B	B
HV Battery Module Temperature Sensor4 Voltage	Less than 0.07 V	V	B	B

   Do the current condition(s) match the threshold?

   YES

   The failure is duplicated. Go to step 2.

   NO

   Intermittent failure, the system is OK at this time. If the freeze data/on-board snapshot of this DTC is recorded, try to reproduce the failure under the same conditions with the freeze data/on-board snapshot.

2. Determine possible failure area (short in TBATT circuit, others)

   -1. Turn the vehicle to the OFF (LOCK) mode.

   -2. Remove the **service plug** and the **IPU cover** .

   -3. Disconnect the following connector.

Battery condition monitor module connector F (12P)

-4. Measure the resistance between appropriate DTC's test points 1 and 2.

Test condition	Vehicle OFF (LOCK) mode
B	Battery condition monitor module connector F (12P): disconnected

DTC	Test point 1	Test point 2
P0A9D (TBATT1)	**Battery condition monitor module connector F (12P) No. 1**	Body ground
P0AC7 (TBATT2)	**Battery condition monitor module connector F (12P) No. 7**	
P0ACC (TBATT3)	**Battery condition monitor module connector F (12P) No. 2**	
P0AEA (TBATT4)	**Battery condition monitor module connector F (12P) No. 8**	

Is there continuity?

YES

Go to step 3.

NO

Replace the battery condition monitor module .

3. Shorted wire check (TBATT line)

-1. Disconnect the following connector.

DTC P0A9D: High voltage battery module temperature sensor connector A (2P)
DTC P0AC7: High voltage battery module temperature sensor connector B (2P)
DTC P0ACC, P0AEA: High voltage battery module temperature sensor connector C (4P)

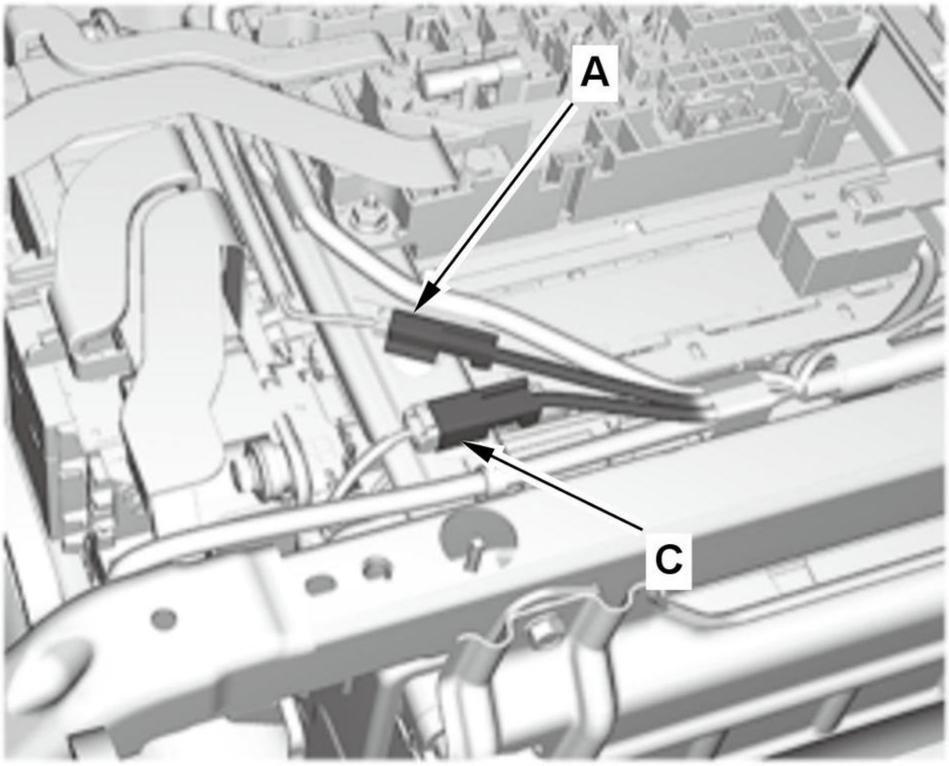

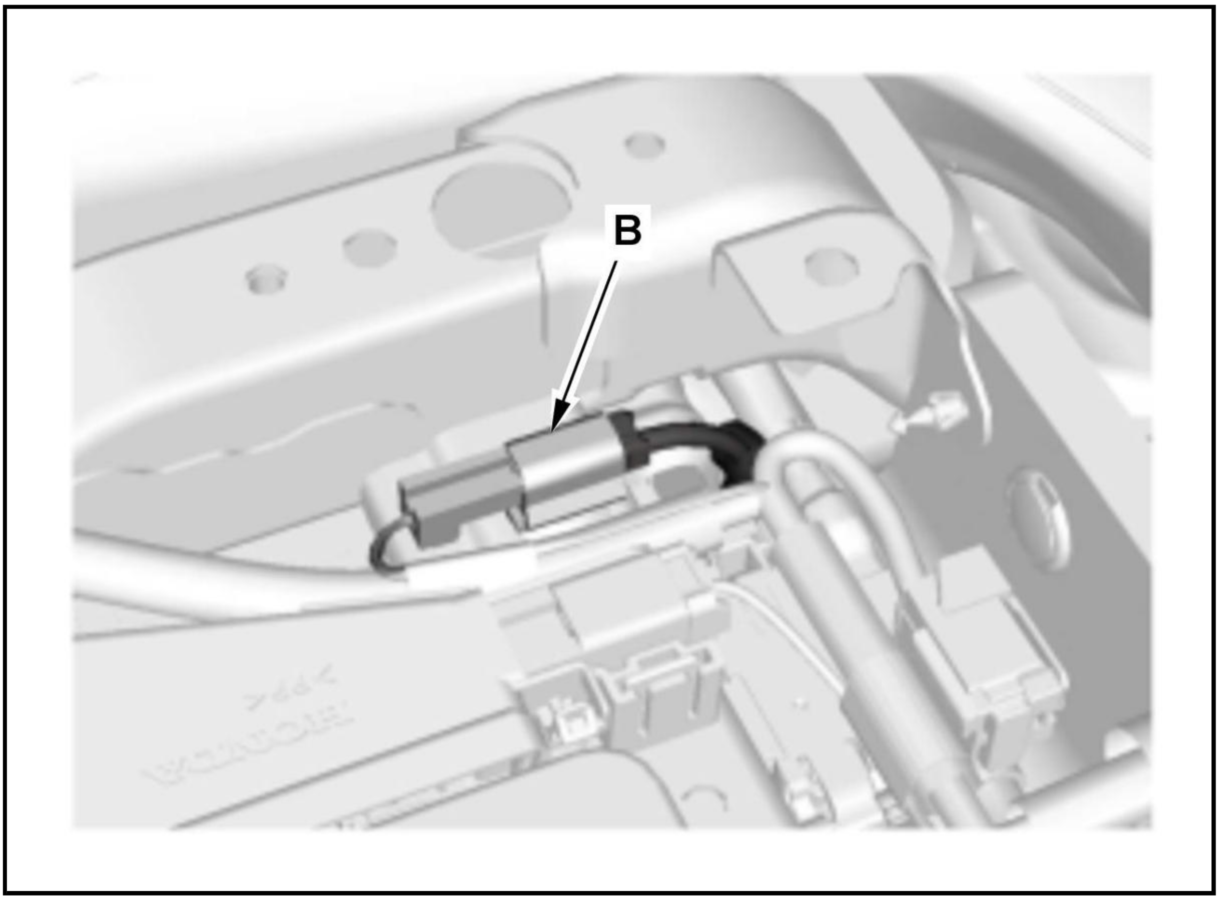

-2. Measure the resistance between appropriate DTC's test points 1 and 2.

Test condition	Vehicle OFF (LOCK) mode
B	DTC P0A9D: High voltage battery module temperature sensor connector A (2P) : disconnected
B	DTC P0AC7: High voltage battery module temperature sensor connector B (2P) : disconnected
B	DTC P0ACC, P0AEA: High voltage battery module temperature sensor connector C (4P) : disconnected
B	Battery condition monitor module connector F (12P): disconnected

DTC	Test point 1	Test point 2
P0A9D (TBATT1)	Battery condition monitor module connector F (12P) No. 1	Body ground
P0AC7 (TBATT2)	Battery condition monitor module connector F (12P) No. 7	
P0ACC (TBATT3)	Battery condition monitor module connector F (12P) No. 2	
P0AEA (TBATT4)	Battery condition monitor module connector F (12P) No. 8	

Is there 1 MΩ or more?

1. **YES**

   Replace the following high voltage battery module temperature sensor .

   - DTC P0A9D: High voltage battery module temperature sensor 1
   - DTC P0AC7: High voltage battery module temperature sensor 2
   - DTC P0ACC: High voltage battery module temperature sensor 3

- DTC P0AEA: High voltage battery module temperature sensor 4

NO

Repair a short in the TBATT wire between the battery condition monitor module and the high voltage battery module temperature sensor.

DTC P0A9E (50), P0AC8 (52), P0ACD (54), P0AEB (120)

DTC P0A9E : HV Battery Temperature Sensor 1 Circuit High

DTC P0AC8 : HV Battery Temperature Sensor 2 Circuit High

DTC P0ACD : HV Battery Temperature Sensor 3 Circuit High

DTC P0AEB : HV Battery Temperature Sensor 4 Circuit High

NOTE: Before you troubleshoot, **review the general troubleshooting information** .

DTC Description	Confirmed DTC	Pending DTC	Freeze Frame
P0A9E HV Battery Temperature Sensor 1 Circuit High	B	B	B
P0AC8 HV Battery Temperature Sensor 2 Circuit High	B	B	B
P0ACD HV Battery Temperature Sensor 3 Circuit High	B	B	B
P0AEB HV Battery Temperature Sensor 4 Circuit High	B	B	B

DTC (Electric Powertrain)

1. Problem verification

-1. Turn the vehicle to the ON mode.

-2. Clear the DTC with the HDS.

-3. Check the parameter(s) of the corresponding DTC below with the HDS.

Signal	Threshold		Current conditions	
	Values	Unit	Values	Unit
HV Battery Module Temperature Sensor1 Voltage	More than 4.93	V	B	B
HV Battery Module Temperature Sensor2 Voltage	More than 4.93	V	B	B
HV Battery Module Temperature Sensor3 Voltage	More than 4.93	V	B	B
HV Battery Module Temperature Sensor4 Voltage	More than 4.93	V	B	B

Do the current condition(s) match the threshold?

YES

The failure is duplicated. Go to step 2.

NO

Intermittent failure, the system is OK at this time. If the freeze data/on-board snapshot of this DTC is recorded, try to reproduce the failure under the same conditions with the freeze data/on-board snapshot.

2. Determine possible failure area (TBATT line, SGTB line)

-1. Check for Pending or Confirmed DTCs with the HDS.

DTC Description	Confirmed DTC	Pending DTC	Freeze Frame
P0A9E HV Battery Temperature Sensor 1 Circuit High	B	B	B
P0AC8 HV Battery Temperature Sensor 2 Circuit High	B	B	B
P0ACD HV Battery Temperature Sensor 3 Circuit High	B	B	B
P0AEB HV Battery Temperature Sensor 4 Circuit High	B	B	B

Are DTC P0A9E, P0AC8, P0ACD, P0AEB, and P0BC5 indicated at the same time?

YES

Go to step 4.

NO

Go to step 3.

3. Open wire check (TBATT line)

-1. Turn the vehicle to the OFF (LOCK) mode.

-2. Remove the **service plug** and the **IPU cover** .

-3. Disconnect the following connectors.

Battery condition monitor module connector F (12P)
DTC P0A9E: High voltage battery module temperature sensor connector A (2P)
DTC P0AC8: High voltage battery module temperature sensor connector B (2P)
DTC P0ACD, P0AEB: High voltage battery module temperature sensor connector C (4P)

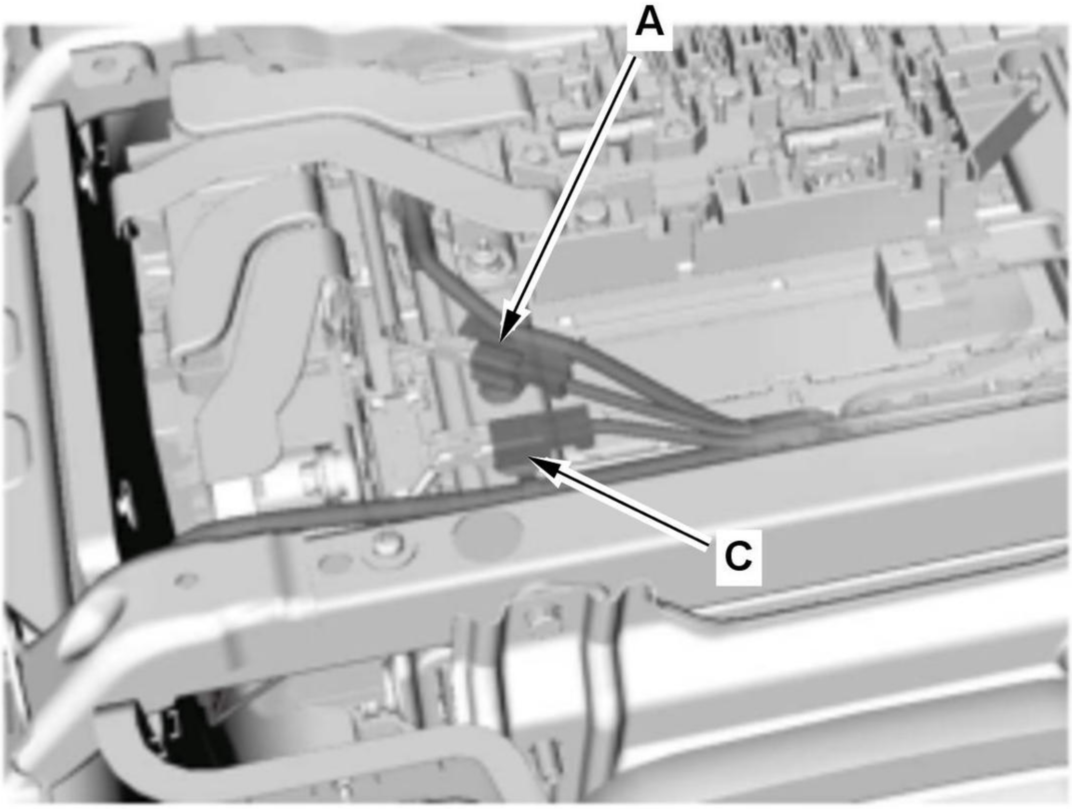

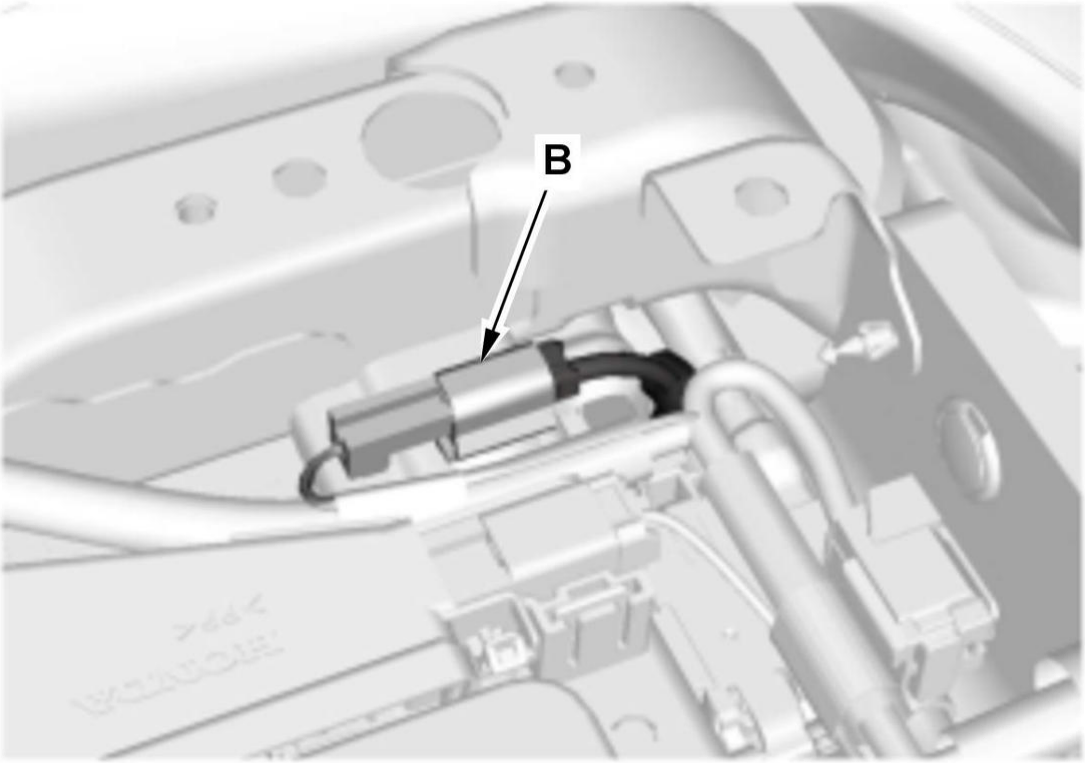

-4. Check for continuity between appropriate DTC's test points 1 and 2.

Test condition	Vehicle OFF (LOCK) mode
B	DTC P0A9E: High voltage battery module temperature sensor connector A (2P) : disconnected

B	DTC P0AC8: High voltage battery module temperature sensor connector B (2P): disconnected
B	DTC P0ACD, P0AEB: High voltage battery module temperature sensor connector C (4P)
B	Battery condition monitor module connector F (12P): disconnected

DTC	Test point 1	Test point 2
P0A9E (TBATT1)	Battery condition monitor module connector F (12P) No. 1	High voltage battery module temperature sensor connector A (2P) (male terminals) No. 1: ①
P0AC8 (TBATT2)	Battery condition monitor module connector F (12P) No. 7	High voltage battery module temperature sensor connector B (2P) (male terminals) No. 1: ②
P0ACD (TBATT3)	Battery condition monitor module connector F (12P) No. 2	High voltage battery module temperature sensor connector C (4P) (male terminals) No. 1: ③
P0AEB (TBATT4)	Battery condition monitor module connector F (12P) No. 8	High voltage battery module temperature sensor connector C (4P) (male terminals) No. 3: ③

①

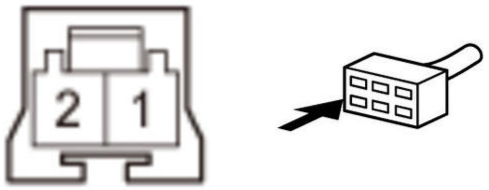

②

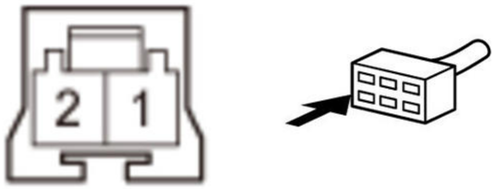

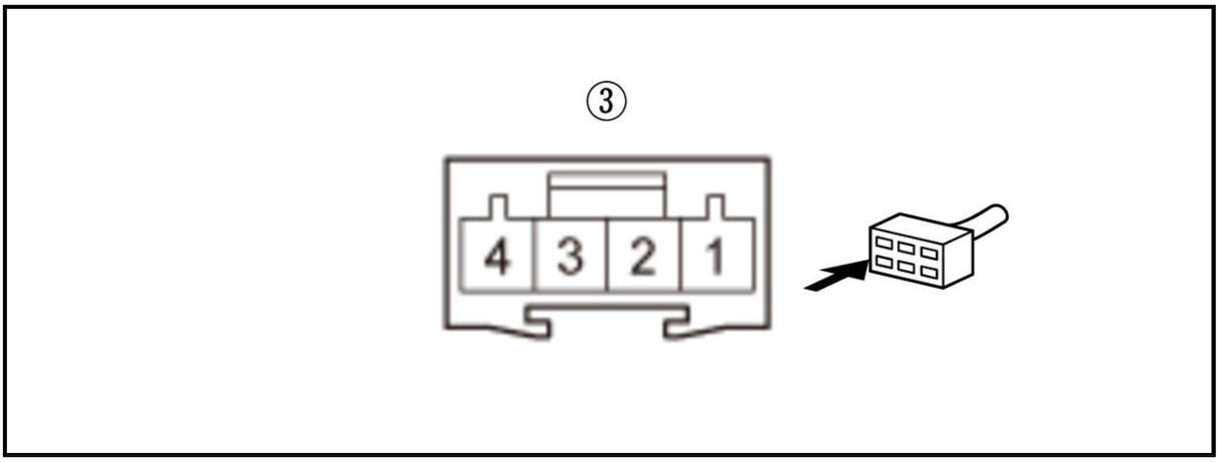

Is there continuity?

YES

Go to step 5.

NO

Repair an open in the TBATT wire between the battery condition monitor module and the high voltage battery module temperature sensor.

4. Open wire check (SGTB line)

   -1. Turn the vehicle to the OFF (LOCK) mode.

   -2. Remove the **service plug** and the **IPU cover** .

   -3. Disconnect the following connectors.

Battery condition monitor module connector F (12P)
DTC P0A9E: High voltage battery module temperature sensor connector A (2P)
DTC P0AC8: High voltage battery module temperature sensor connector B (2P)
DTC P0ACD, P0AEB: High voltage battery module temperature sensor connector C (4P)

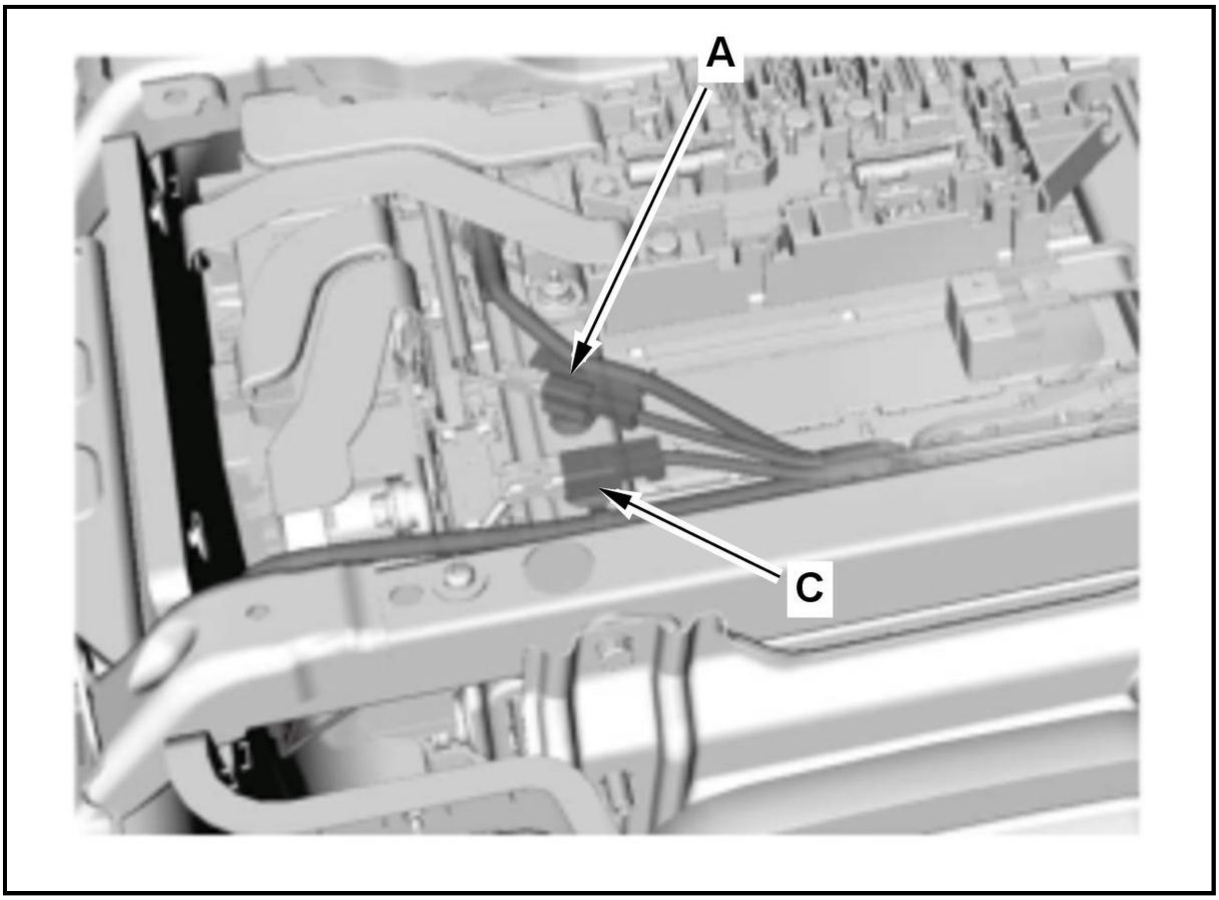

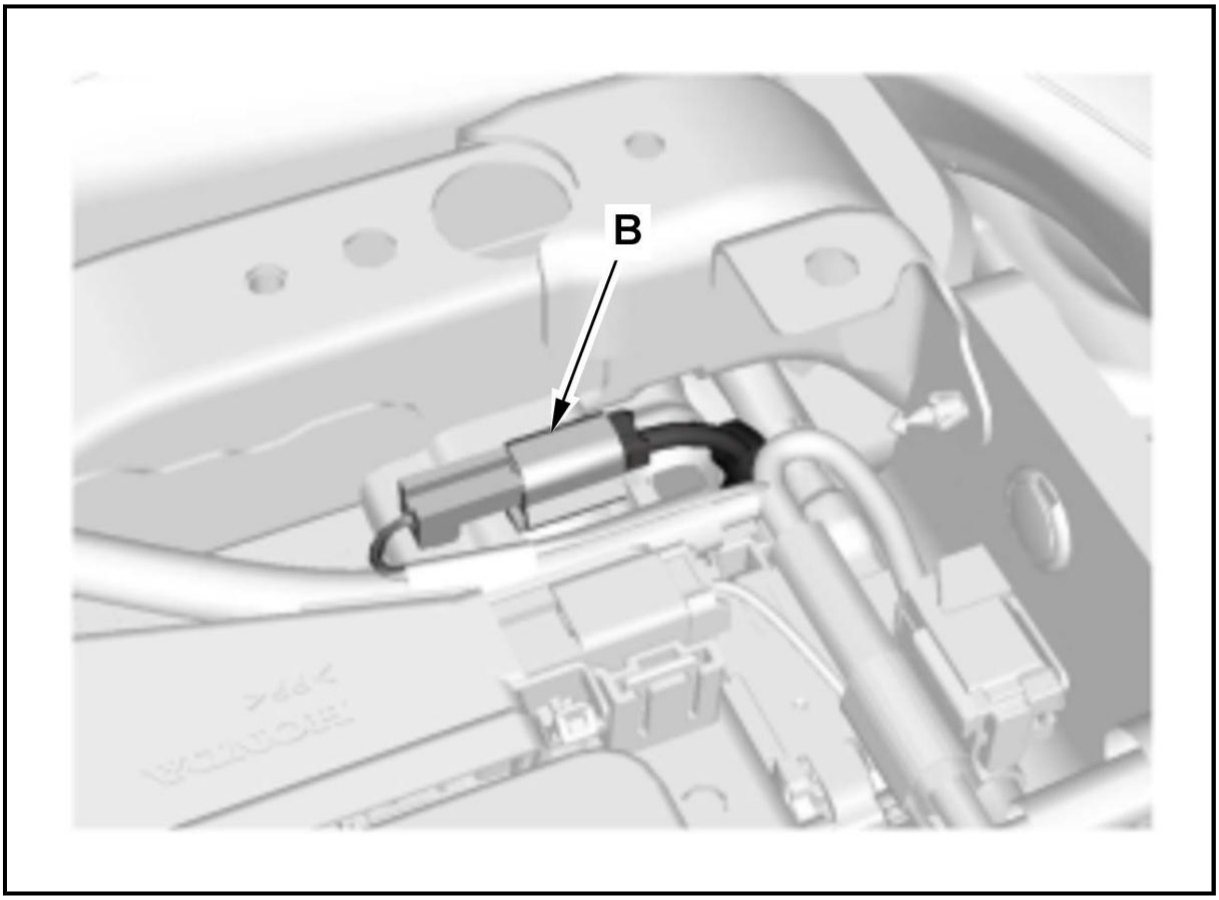

-4. Check for continuity between appropriate DTC's test points 1 and 2.

Test condition	Vehicle OFF (LOCK) mode
B	DTC P0A9E: High voltage battery module temperature sensor connector A (2P): disconnected

B	DTC P0AC8: High voltage battery module temperature sensor connector B (2P): disconnected
B	DTC P0ACD, P0AEB: High voltage battery module temperature sensor connector C (4P): disconnected
B	Battery condition monitor module connector F (12P): disconnected

DTC	Test point 1	Test point 2
P0A9E	Battery condition monitor module connector F (12P) No. 6	High voltage battery module temperature sensor connector A (2P) (male terminals) No. 2: ①
P0AC8		High voltage battery module temperature sensor connector B (2P) (male terminals) No. 2: ②
P0ACD		High voltage battery module temperature sensor connector C (4P) (male terminals) No. 2: ③
P0AEB		High voltage battery module temperature sensor connector C (4P) (male terminals) No. 4: ③

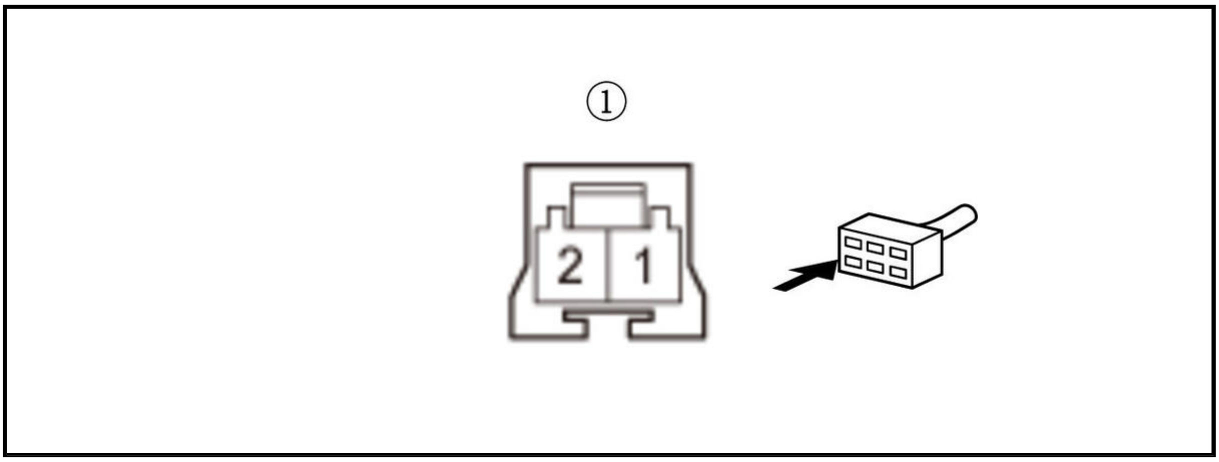

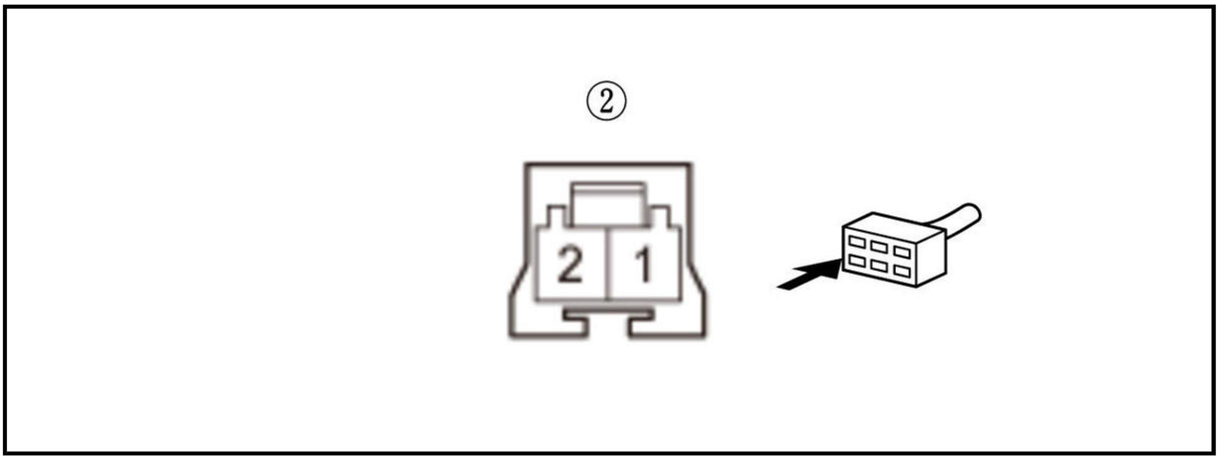

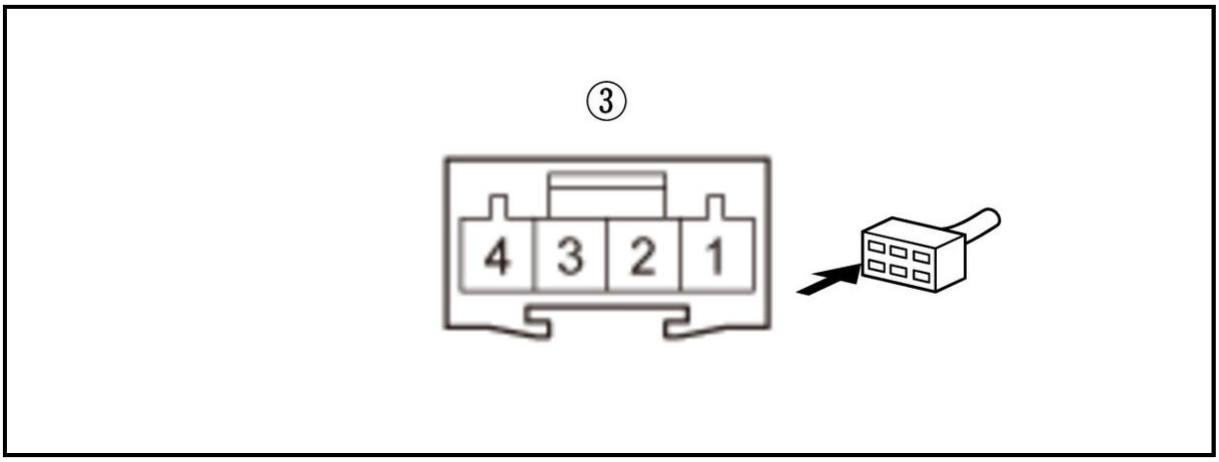

Is there continuity?

YES

Go to step 5.

NO

Repair an open in SGTB wire between the battery condition monitor module and the high voltage battery module temperature sensor.

5. High voltage battery module temperature sensor check

-1. At the sensor side, measure the resistance between appropriate DTC's test points 1 and 2.

Test condition	Vehicle OFF (LOCK) mode
B	DTC P0A9E: High voltage battery module temperature sensor connector A (2P): disconnected
B	DTC P0AC8: High voltage battery module temperature sensor connector B (2P): disconnected
B	DTC P0ACD, P0AEB: High voltage battery module temperature sensor connector C (4P): disconnected
B	Battery condition monitor module connector F (12P): disconnected

DTC	High voltage battery module temperature sensor connector	Test point 1	Test point 2
P0A9E	A (2P) (female terminals)	No. 1: ①	No. 2: ①
P0AC8	B (2P) (female terminals)	No. 1: ②	No. 2: ②
P0ACD	C (4P) (female terminals)	No. 1: ③	No. 2: ③
P0AEB	C (4P) (female terminals)	No. 3: ③	No. 4: ③

①

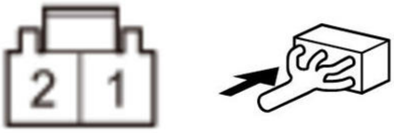

②

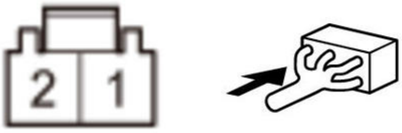

③

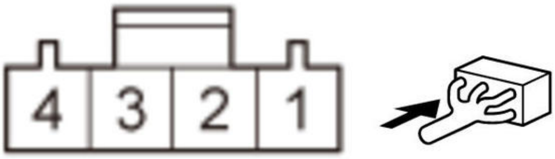

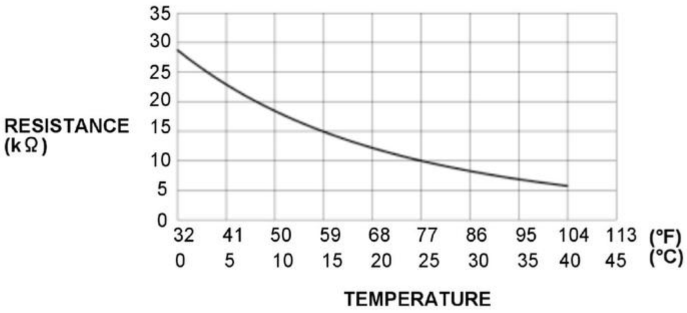

Is resistance value within the range?

YES

The high voltage battery module temperature sensor is OK. **Replace the battery condition monitor module** .

NO

Replace the following high voltage battery module temperature sensor .

- DTC P0A9E: High voltage battery module temperature sensor A
- DTC P0AC8: High voltage battery module temperature sensor B
- DTC P0ACD, P0AEB: High voltage battery module temperature sensor C

DTC P0AA1 (46)

DTC P0AA1 : HV Battery Main Contactor Circuit Stuck Closed

NOTE:

- Before you troubleshoot, **review the general troubleshooting information** .
- Do not clear the DTC until the diagnosis has been completed. Otherwise, there is a possibility that the high-voltage sub contactor can get damaged if the DTC is cleared and the vehicle turned to the ON mode.

DTC Description	Confirmed DTC	Pending DTC	Freeze Frame
P0AA1 HV Battery Main Contactor Circuit Stuck Closed	B	B	B

DTC (Electric Powertrain)

1. Determine possible failure area (short in PRE line, others)

-1. Remove the **service plug** and the **IPU cover** .

-2. Disconnect the following connector.

Battery condition monitor module connector E (32P)

-3. Check for continuity between test points 1 and 2.

Test condition	Vehicle OFF (LOCK) mode
B	Battery condition monitor module connector E (32P): disconnected
Test point 1	**Battery condition monitor module connector E (32P) No. 6**

Test point 2	Body ground

Is there continuity?

YES

Go to step 2.

NO

Go to step 3.

2. Shorted wire check (PRE line)

-1. **Remove the IPU and the IPU case** .

-2. Disconnect the following connector.

Junction board 4P connector

-3. Measure the resistance between test points 1 and 2.

Test condition	Vehicle OFF (LOCK) mode
B	Battery condition monitor module connector E (32P): disconnected
B	Junction board 4P connector: disconnected
Test point 1	**Battery condition monitor module connector E (32P) No. 6**
Test point 2	Body ground

Is there 1 MΩ or more?

YES

The PRE wire is OK. **Replace the junction board** .

NO

Repair a short in the PRE wire between the battery condition monitor module (E6) and the junction board.

3. Determine possible failure area (short in CNTP line, others)

-1. Check for continuity between test points 1 and 2.

Test condition	Vehicle OFF (LOCK) mode
B	Battery condition monitor module connector E (32P): disconnected
Test point 1	**Battery condition monitor module connector E (32P) No. 4**
Test point 2	Body ground

Is there continuity?

YES

Go to step 4.

NO

Go to step 5.

4. Shorted wire check (CNTP line)

-1. Disconnect the following connector.

Junction board 4P connector

-2. Measure the resistance between test points 1 and 2.

Test condition	Vehicle OFF (LOCK) mode
B	Battery condition monitor module connector E (32P): disconnected
B	Junction board 4P connector: disconnected
Test point 1	**Battery condition monitor module connector E (32P) No. 4**

Test point 2	Body ground

Is there 1 MΩ or more?

YES

The CNTP wire is OK. **Replace the junction board** .

NO

Repair a short in the CNTP wire between the battery condition monitor module (E4) and the junction board.

5. Junction board check

-1. **Remove the junction board** .

-2. Measure the resistance between test points 1 and 2.

Test condition	Vehicle OFF (LOCK) mode
Test point 1	Junction board terminal (A)
Test point 2	Junction board terminal (B)

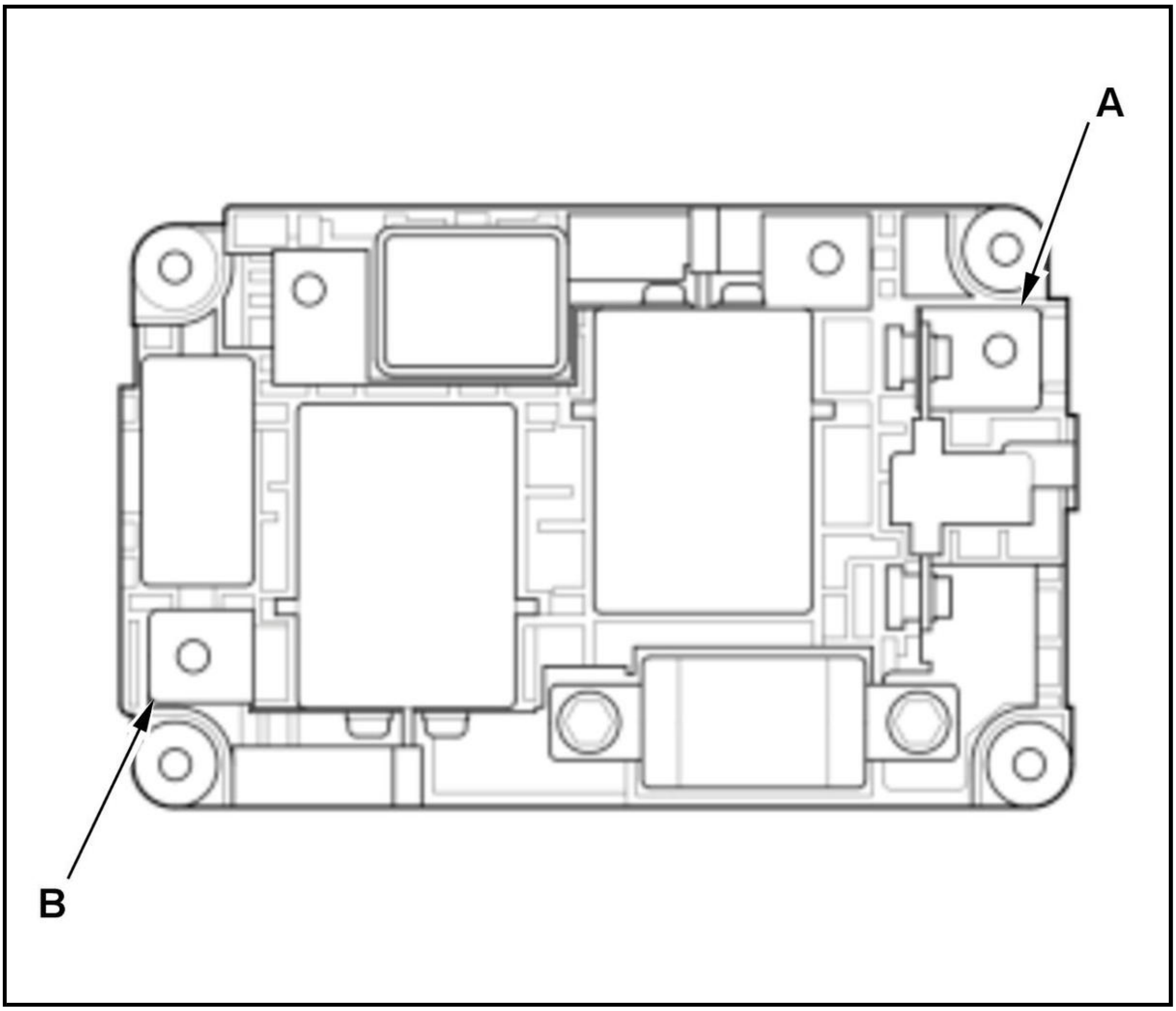

Is there 45 Ω or less?

YES

There is a failure in the high voltage contactor or the bypass contactor. **Replace the junction board** .

NO

Replace the battery condition monitor module .

DTC P0AA3 (128)

DTC P0AA3 : HV Battery Sub Contactor Circuit

NOTE: Before you troubleshoot, **review the general troubleshooting information** .

DTC Description	Confirmed DTC	Pending DTC	Freeze Frame
P0AA3 HV Battery Sub Contactor Circuit	B	B	B

DTC (Electric Powertrain)

1. Problem verification

-1. Turn the vehicle to the ON mode.

-2. Clear the DTC with the HDS.

-3. Turn the vehicle to the OFF (LOCK) mode, and wait 120 seconds.

-4. Turn the vehicle to the ON mode.

-5. Check for Pending or Confirmed DTCs with the HDS.

DTC Description	Confirmed DTC	Pending DTC	Freeze Frame
P0AA3 HV Battery Sub Contactor Circuit	B	B	B

Is DTC P0AA3 indicated?

YES

The failure is duplicated. Go to step 2.

NO

Intermittent failure. The system is OK at this time. If the freeze data/on-board snapshot of this DTC is recorded, try to reproduce the failure under the same conditions with the freeze data/on-board snapshot.

2. Determine possible failure area (short in CNTN line, others)

-1. Turn the vehicle to the OFF (LOCK) mode.

-2. Remove the **service plug** and the **IPU cover** .

-3. Disconnect the following connector.

Battery condition monitor module connector E (32P)

-4. Check for continuity between test points 1 and 2.

Test condition	Vehicle OFF (LOCK) mode
B	Battery condition monitor module connector E (32P): disconnected
Test point 1	**Battery condition monitor module connector E (32P) No. 5**
Test point 2	Body ground

Is there continuity?

YES

Go to step 3.

NO

Go to step 4.

3. Shorted wire check (CNTN line)

-1. Disconnect the following connector.

Junction board 4P connector

-2. Measure the resistance between test points 1 and 2.

Test condition	Vehicle OFF (LOCK) mode
B	Battery condition monitor module connector E (32P): disconnected
B	Junction board 4P connector: disconnected
Test point 1	**Battery condition monitor module connector E (32P) No. 5**
Test point 2	Body ground

Is there 1 MΩ or more?

YES

The CNTN wire is OK. **Replace the junction board** .

NO

Repair a short in the CNTN wire between the junction board and the battery condition monitor module (E5).

4. Junction board check

-1. **Remove the junction board** .

-2. Check for continuity between test points 1 and 2.

Test condition	Vehicle OFF (LOCK) mode
Test point 1	Junction board terminal (A)
Test point 2	Junction board terminal (B)

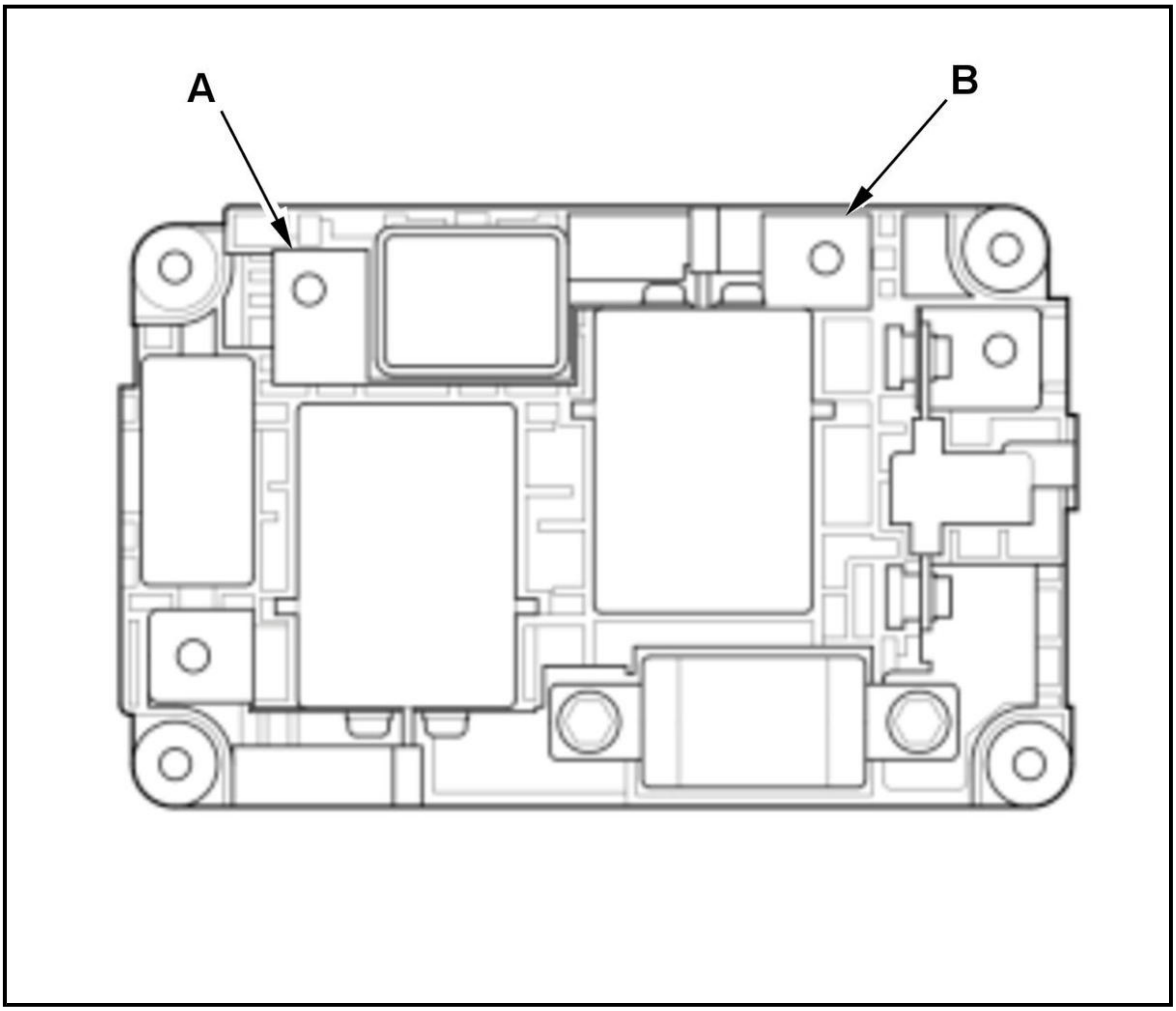

Is there continuity?

YES

There is a failure in the high voltage sub contactor. **Replace the junction board** .

NO

Replace the battery condition monitor module .

DTC P0AA6 (59)

DTC P0AA6 : HV Battery Voltage System Isolation Fault

WARNING: **This procedure includes high voltage measurements with the electric powertrain system turned on. To avoid serious injury from electrical shocks while testing the high voltage cable, use insulated gloves, select a DC range of 500 V or more on your digital multimeter, and be careful not to contact each tester probes and not to contact any metal parts while you measure the high voltage cable.**

NOTE:

- Before you troubleshoot, review the general troubleshooting information .
- Put on insulated gloves and use insulated tools to protect you from electrical shock.
- When you measure the insulation resistance, use a DC range of 500 V or more on your digital multimeter.
- When disassembling and assembling the battery pack, check for leaking electrolyte and take necessary precautions to handle it .

DTC Description	Confirmed DTC	Pending DTC	Freeze Frame
P0AA6 HV Battery Voltage System Isolation Fault	B	B	B

DTC (Electric Powertrain)

1. DTC check

-1. Turn the vehicle to the ON mode.

-2. Check for Pending or Confirmed DTCs with the HDS.

DTC Description	Confirmed DTC	Pending DTC	Freeze Frame
P0B3B HV Battery Cell Voltage Sense Circuit 1	B	B	B
P0B40 HV Battery Cell Voltage Sense Circuit 2	B	B	B
P0B45 HV Battery Cell Voltage Sense Circuit 3	B	B	B
P0B4A HV Battery Cell Voltage Sense Circuit 4	B	B	B
P0B4F HV Battery Cell Voltage Sense Circuit 5	B	B	B
P0B54 HV Battery Cell Voltage Sense Circuit 6	B	B	B

Are DTC P0B3B, P0B40, P0B45, P0B4A, P0B4F, and/or P0B54 indicated?

YES

Go to the indicated DTC's troubleshooting.

NO

Go to step 2.

2. Problem verification 1:

   Check these items:

   - Transmission in P
   - A/C switch and heater fan switch OFF

   -2. Turn the vehicle to the ON mode.

   -3. Clear the DTC with the HDS.

   -4. Turn the vehicle to the OFF (LOCK) mode.

   -5. Turn the vehicle to the ON mode.

   -6. Check for Pending or Confirmed DTCs with the HDS.

DTC Description	Confirmed DTC	Pending DTC	Freeze Frame
P0AA6 HV Battery Voltage System Isolation Fault	B	B	B

Is DTC P0AA6 indicated?

YES

Go to step 7.

NO

Go to step 3.

3. Problem verification 2

   -1. Turn the vehicle to the OFF (LOCK) mode.

   -2. **Raise the vehicle on a lift** .

   -3. Turn the vehicle to the READY TO DRIVE mode.

   -4. Select the EV driving mode by EV switch.

   NOTE: If the vehicle cannot enter the EV driving mode because the high voltage battery SOC is low, charge the high voltage battery by the **No-Load Charging Procedure** .

   Test-drive the vehicle for 1 minute.

NOTE:

- **Do not apply the brake hard when working on a running vehicle on a lift. It may cause some damage to the drive-line.**
- **A/C switch and heater fan switch OFF**

-6. Check for Pending or Confirmed DTCs with the HDS.

DTC Description	Confirmed DTC	Pending DTC	Freeze Frame
P0AA6 HV Battery Voltage System Isolation Fault	B	B	B

Is DTC P0AA6 indicated?

YES

Go to step 6.

NO

Go to step 4.

4. Problem verification 3

-1. Turn the A/C switch to ON.

NOTE: Temperature set to MAX COOL.

-2. Wait for 1 minute.

-3. Check for Pending or Confirmed DTCs with the HDS.

DTC Description	Confirmed DTC	Pending DTC	Freeze Frame
P0AA6 HV Battery Voltage System Isolation Fault	B	B	B

Is DTC P0AA6 indicated?

YES

Replace the electric A/C compressor .

NO

Go to step 5.

5. Problem verification 4

-1. Turn the vehicle to the OFF (LOCK) mode.

-2. Turn the vehicle to the ON mode.

NOTE: A/C switch and heater fan switch is OFF

-3. **Enter the maintenance mode to start the engine** . Hold the engine speed between 2, 500 rpm and 3, 000 rpm for 1 minute.

-4. Check for Pending or Confirmed DTCs with the HDS.

DTC Description	Confirmed DTC	Pending DTC	Freeze Frame
P0AA6 HV Battery Voltage System Isolation Fault	B	B	B

Is DTC P0AA6 indicated?

YES

Go to step 6.

NO

Intermittent failure. The system is OK at this time. Check for poor connections, loose terminals. If the freeze data/on-board snapshot of this DTC is recorded, try to reproduce the failure under the same conditions with the freeze data/on-board snapshot.

6. Motor check

   -1. Turn the vehicle to the OFF (LOCK) mode.

   -2. **Remove the service plug** .

   -3. **Remove the PCU** .

   -4. Measure the resistance between body ground and traction motor and generator motor 3-phase terminals U, V, and W individually.

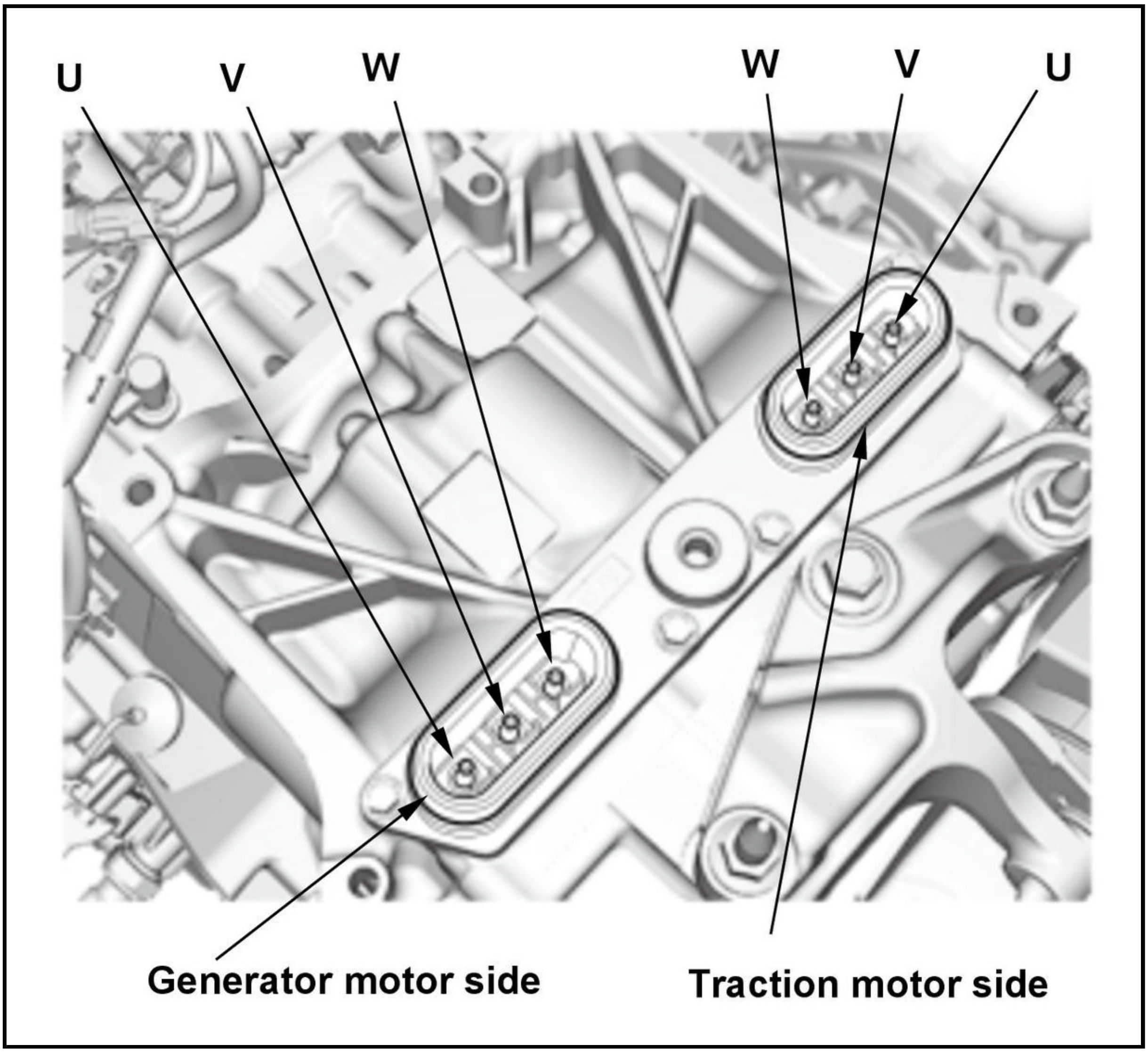

   Is there 305 kΩ or less?

   YES

   Faulty traction motor or generator motor, **replace the transmission (e-CVT) assembly** .

   NO

   Replace the PCU .

7. Battery module electrolyte leak check

   -1. Remove the **service plug** and the **IPU cover** .

   -2. Check the electrolyte leaks from each battery module.

Is there electrolyte leakage?

YES

Go to step 16.

NO

Go to step 8.

8. Determine possible failure area (electric A/C compressor, others)

-1. Turn the vehicle to the OFF (LOCK) mode.

-2. Disconnect the electric A/C compressor high voltage cable 2P connector (A) from the subjunction board.

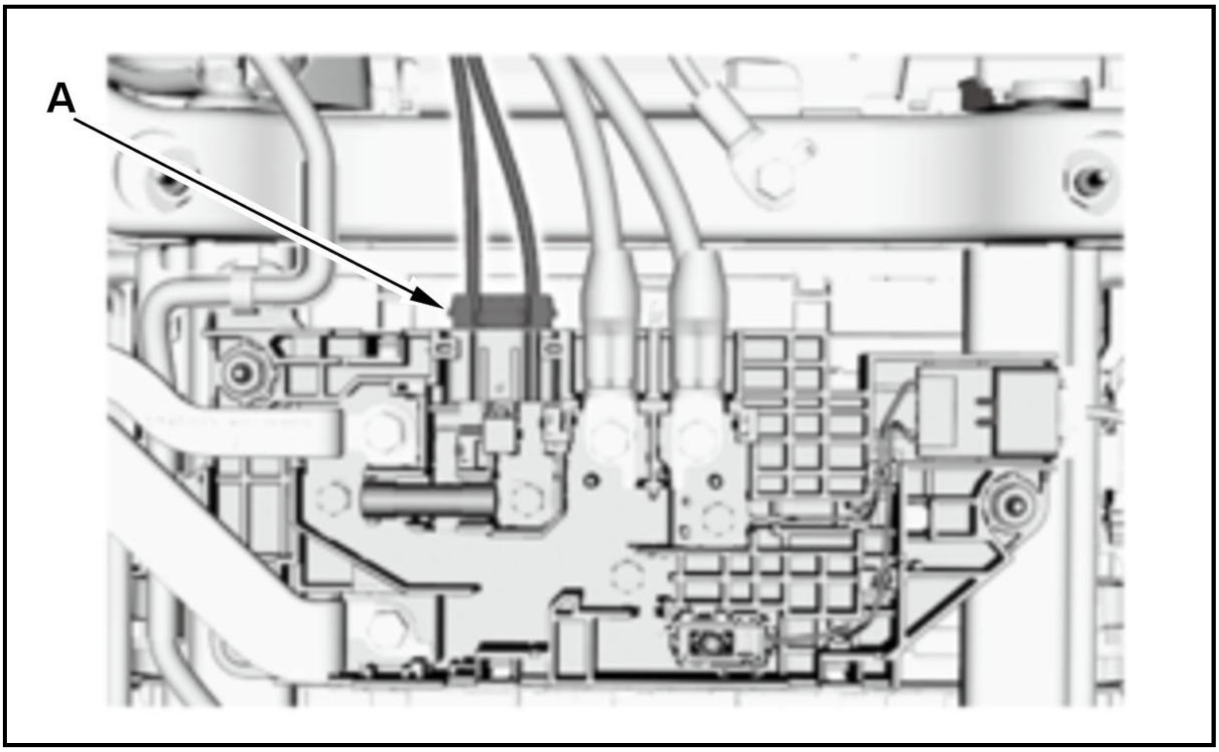

-3. Measure the resistance between test points 1 and 2.

Test condition	Vehicle OFF (LOCK) mode

B	Electric A/C compressor high voltage cable 2P connector (subjunction board side): disconnected
Test point 1	Electric A/C compressor high voltage cable 2P connector (subjunction board side) (female terminals) No. 1: ①
Test point 2	Body ground

Test point 1	Electric A/C compressor high voltage cable 2P connector (subjunction board side) (female terminals) No. 2: ①
Test point 2	Body ground

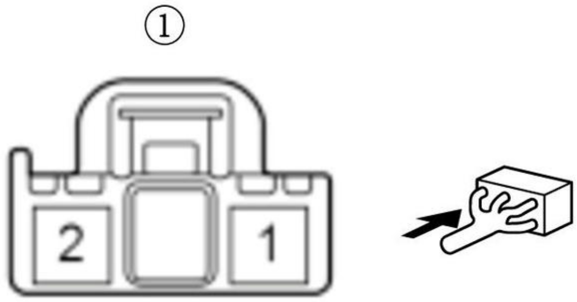

Is there 305 kΩ or less?

YES

Go to step 9.

NO

Go to step 10.

9. Electric A/C compressor high voltage cable check

-1. **Disconnect the electric A/C compressor connector A (2P) from the electric A/C compressor** .

-2. Measure the resistance between test points 1 and 2.

Test condition	Vehicle OFF (LOCK) mode
B	Electric A/C compressor high voltage cable 2P connector (subjunction board side): disconnected
B	Electric A/C compressor connector A (2P): disconnected
Test point 1	Electric A/C compressor high voltage cable 2P connector (subjunction board side) (female terminals) No. 1: ①
Test point 2	Body ground

Test point 1	Electric A/C compressor high voltage cable 2P connector (subjunction board side) (female terminals) No. 2: ①
Test point 2	Body ground

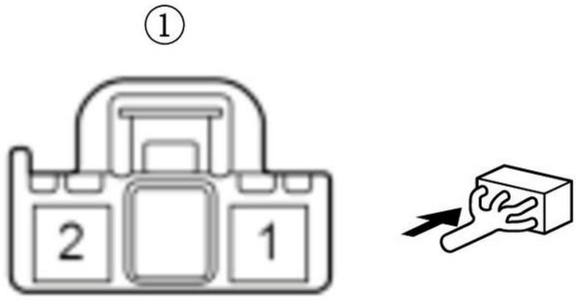

Is there 305 kΩ or less?

YES

Failure in the electric A/C compressor high voltage cable. **Replace the battery power cable** .

NO

Replace the electric A/C compressor .

10. Determine possible failure area (PCU or battery power cable, others)

-1. **Disconnect the battery power cable terminals (A) from the subjunction board** .

NOTE: Wrap the subjunction board terminals with insulating tape.

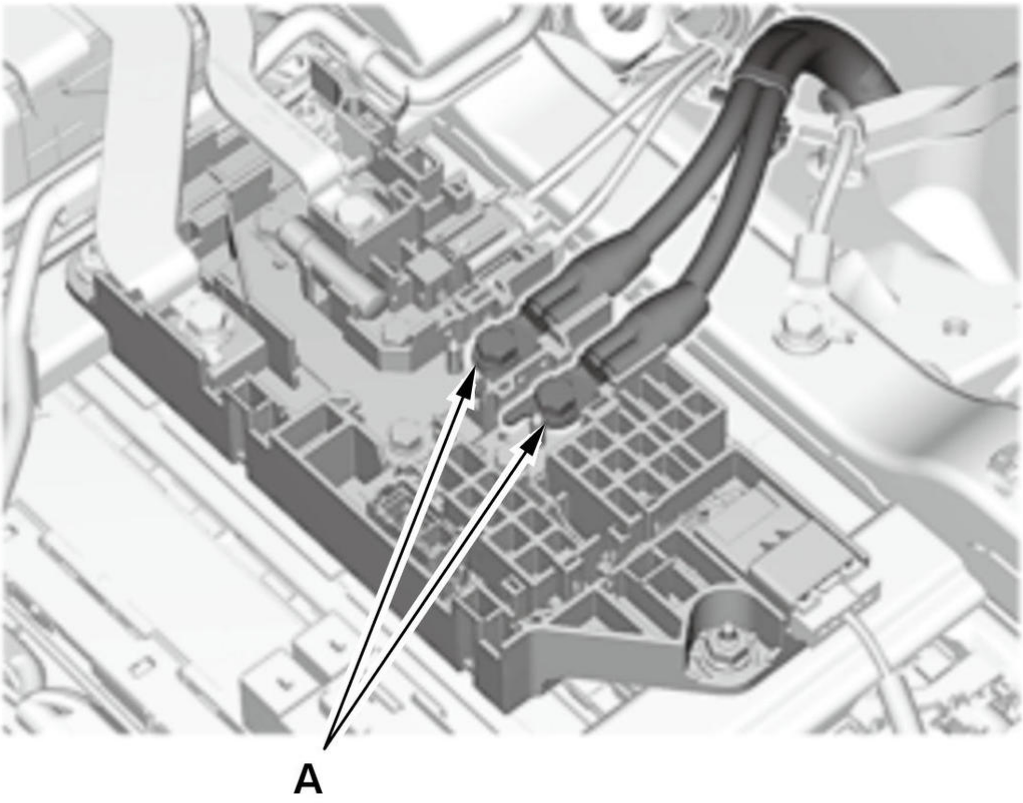

-2. Measure the resistance between test points 1 and 2.

Test condition	Vehicle OFF (LOCK) mode
B	Battery power cable terminals (subjunction board side): disconnected
Test point 1	Battery power cable terminal (subjunction board side) (+) (A)
Test point 2	Body ground

Test point 1	Battery power cable terminal (subjunction board side) (-) (B)
Test point 2	Body ground

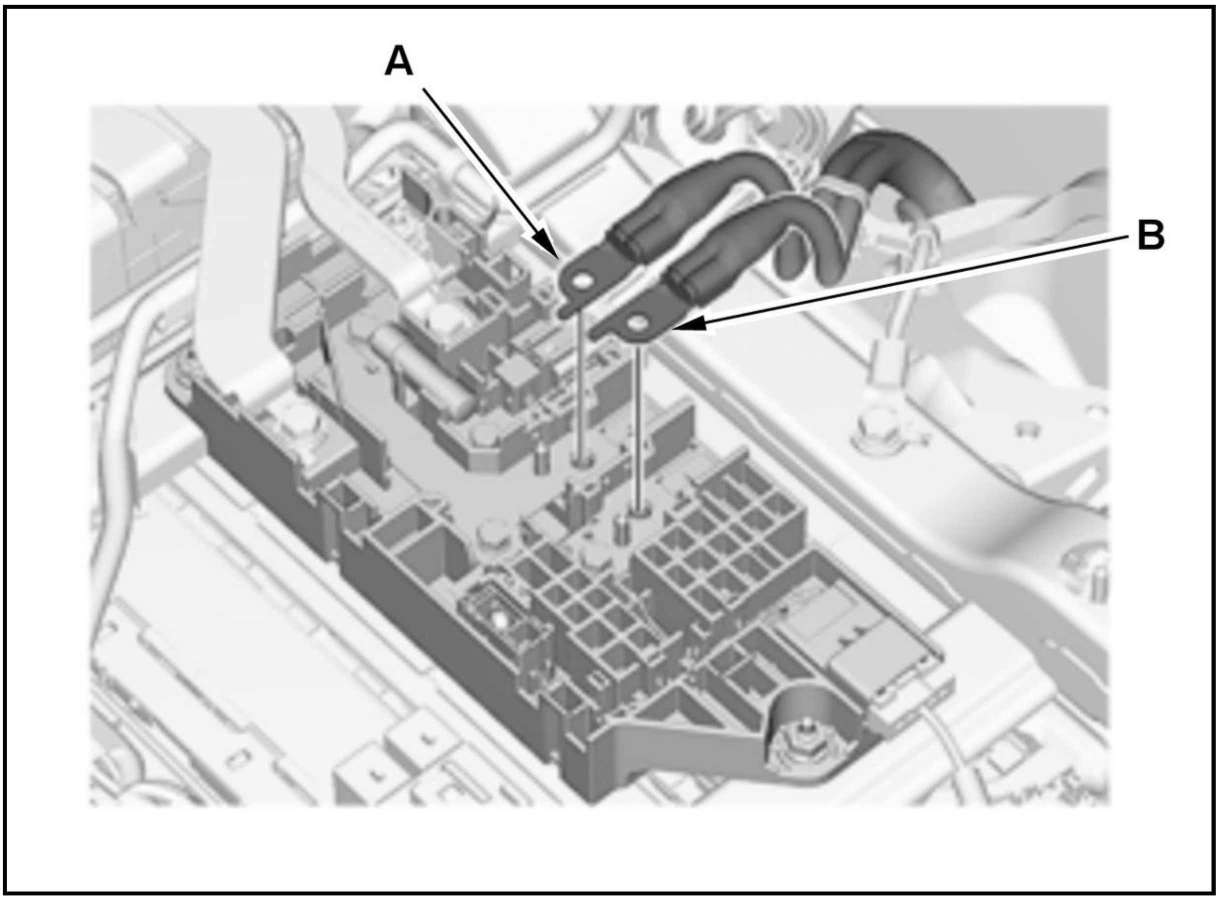

Is there 305 kΩ or less?

YES

Go to step 11.

NO

Go to step 12.

11. Battery power cable check

-1. **Disconnect the battery power cable connector from the PCU** .

-2. Measure the resistance between test points 1 and 2.

Test condition	Vehicle OFF (LOCK) mode
B	Battery power cable (PCU side): disconnected
B	Battery power cable terminals (subjunction board side): disconnected
Test point 1	Battery power cable terminal (subjunction board side) (+) (A)
Test point 2	Body ground

Test point 1	Battery power cable terminal (subjunction board side) (-) (B)
Test point 2	Body ground

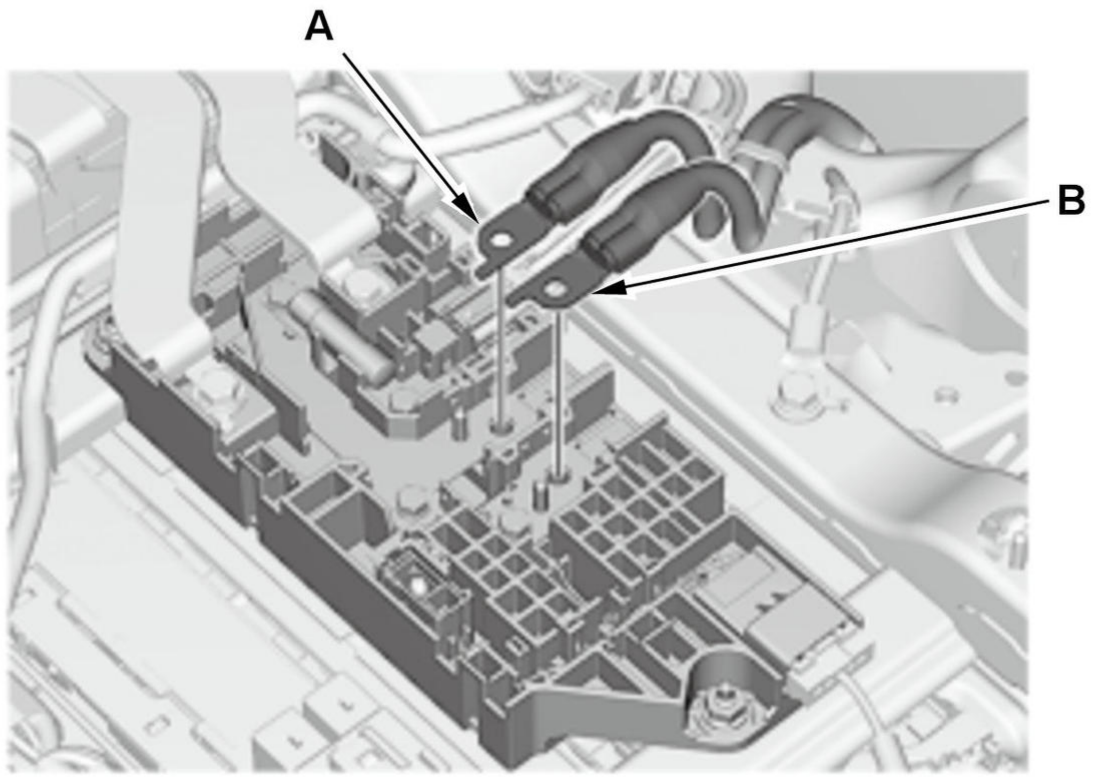

Is there 305 kΩ or less?

YES

Replace the battery power cable .

NO

Replace the PCU .

12. Determine possible failure area (leak sensor circuit, others)

-1. Disconnect the following connector.

Subjunction board connector A (5P)

-2. Measure the resistance between test points 1 and 2.

Test condition	Vehicle OFF (LOCK) mode
B	Subjunction board connector A (5P): disconnected
Test point 1	Subjunction board connector A (5P) (female terminals) No. 1: ①
Test point 2	Body ground (G701)

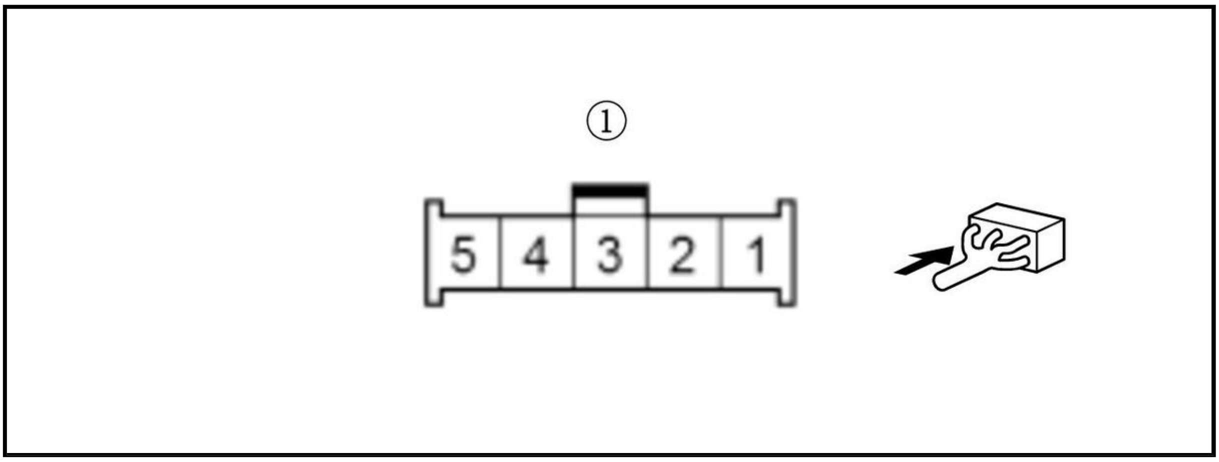

Test point 1	Subjunction board connector A (5P) (female terminals) No. 5: ②
Test point 2	Body ground (G701)

NOTE: When you measure the insulation resistance on the subjunction board connector A (5P) terminal No. 1, connect the positive pole side of the tester (A) to body ground (G701), and connect the negative pole side of the tester (B) to the subjunction board connector A (5P) terminal No. 1.

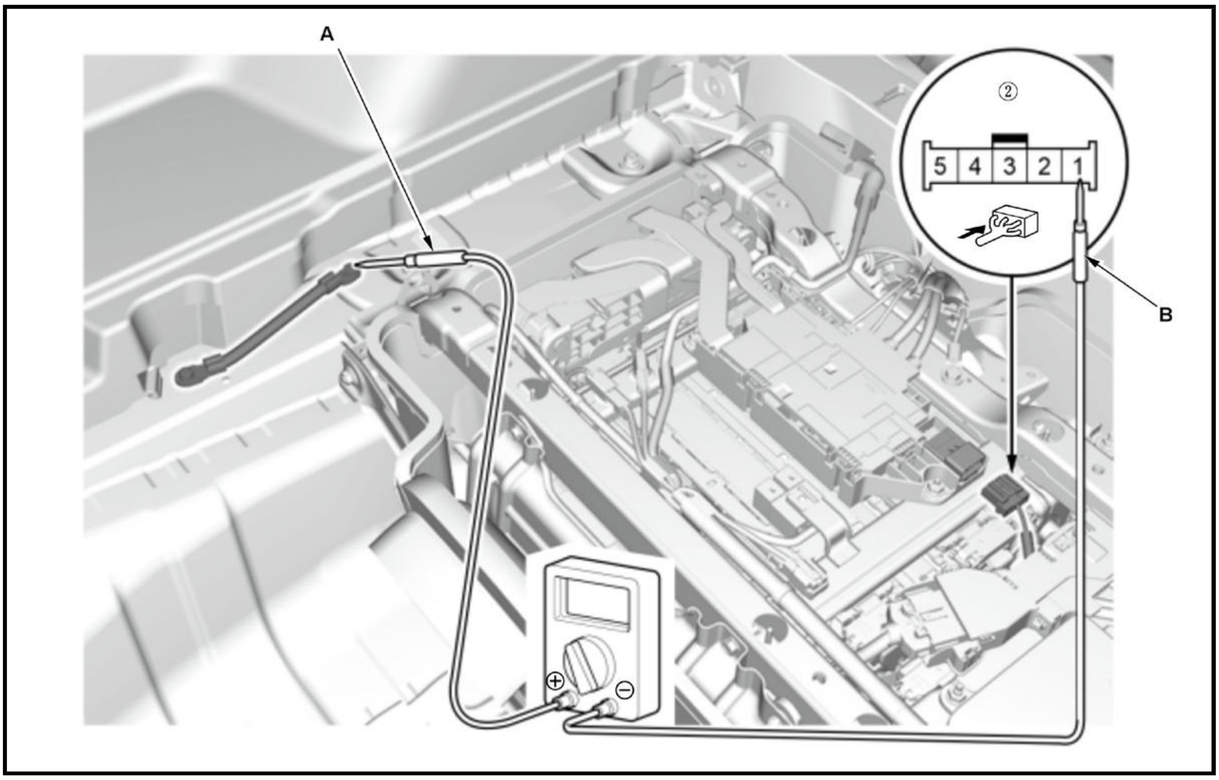

Is there 305 kΩ or less?

YES

Go to step 13.

NO

Go to step 14.

13. Shorted wire check (BATT+ line, BATT- line)

-1. Disconnect the following connector.

Battery condition monitor module connector A (28P)

-2. Measure the resistance between test points 1 and 2.

Test condition	Vehicle OFF (LOCK) mode
B	Subjunction board connector A (5P): disconnected
B	Battery condition monitor module connector A (28P): disconnected
Test point 1	Subjunction board connector A (5P) (female terminals) No. 1: ①
Test point 2	Body ground (G701)

Test point 1	Subjunction board connector A (5P) (female terminals) No. 5: ①
Test point 2	Body ground (G701)

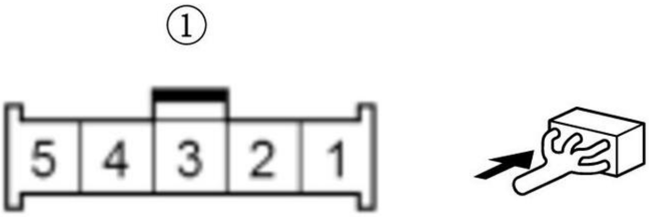

Is there 305 kΩ or less?

YES

Repair a short in the BATT+ wire or the BATT- wire between the battery condition monitor module (A15, A4) and the subjunction board.

NO

Replace the battery condition monitor module .

14. Subjunction board check

-1. Remove the IPU and the IPU case .

-2. Remove the busbars (A) from the subjunction board .

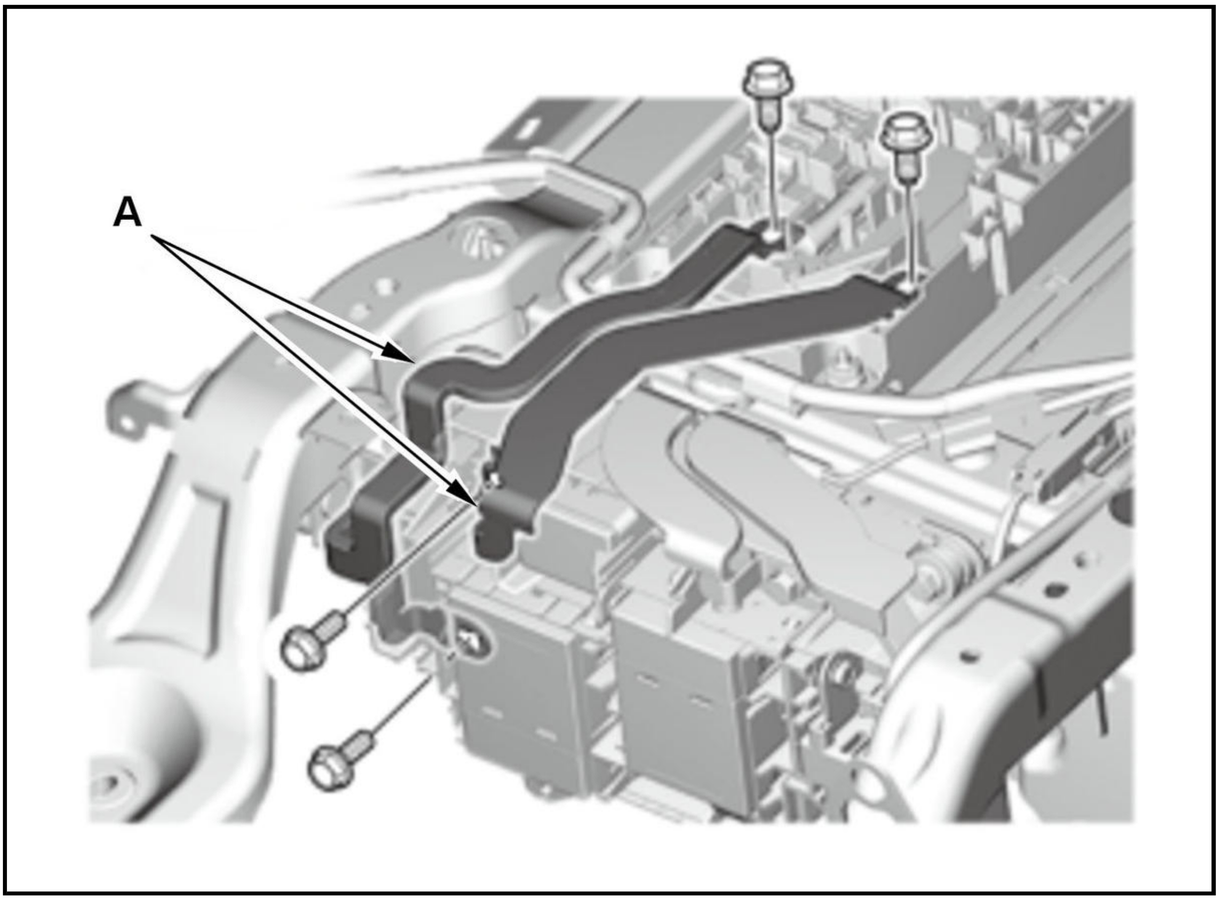

-3. Measure the resistance between test points 1 and 2.

Test condition	Vehicle OFF (LOCK) mode
Test point 1	Subjunction board high voltage terminal (A)
Test point 2	Body ground

Test point 1	Subjunction board high voltage terminal (B)
Test point 2	Body ground

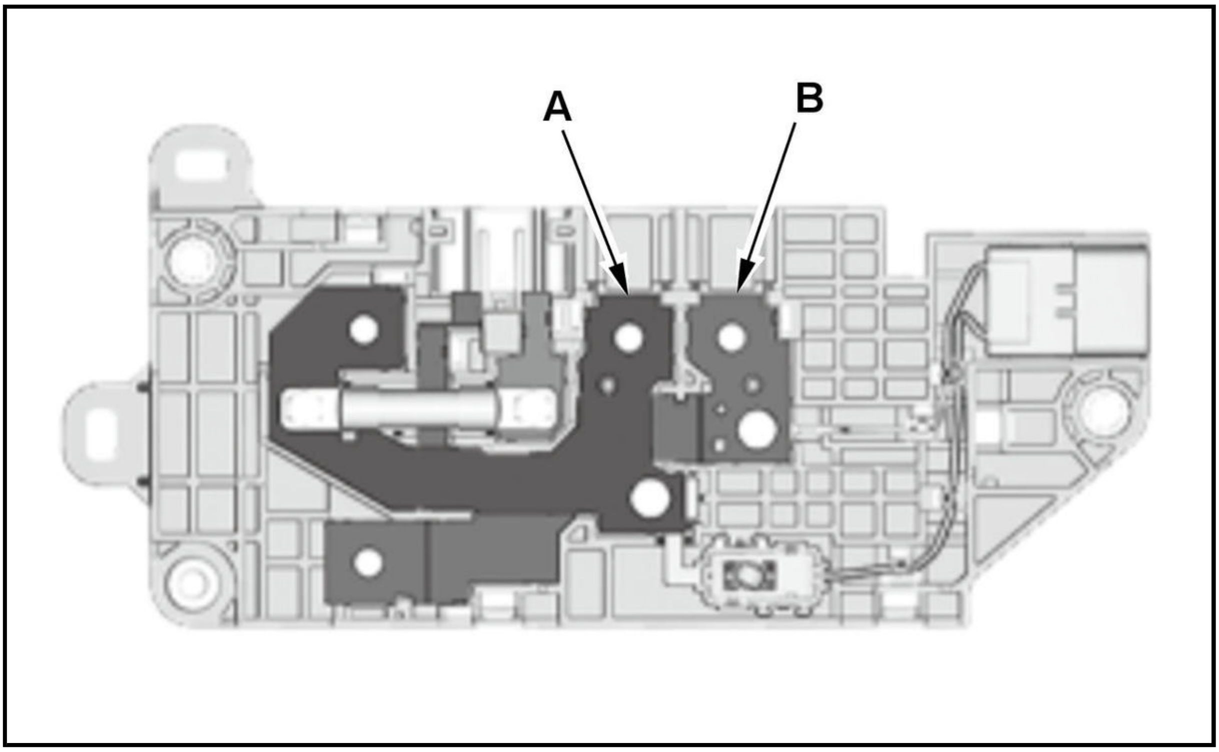

Is there 305 kΩ or less?

YES

Replace the subjunction board .

NO

Go to step 15.

15. Junction board check

    -1. **Remove the busbars (A) and (B) from the junction board** .

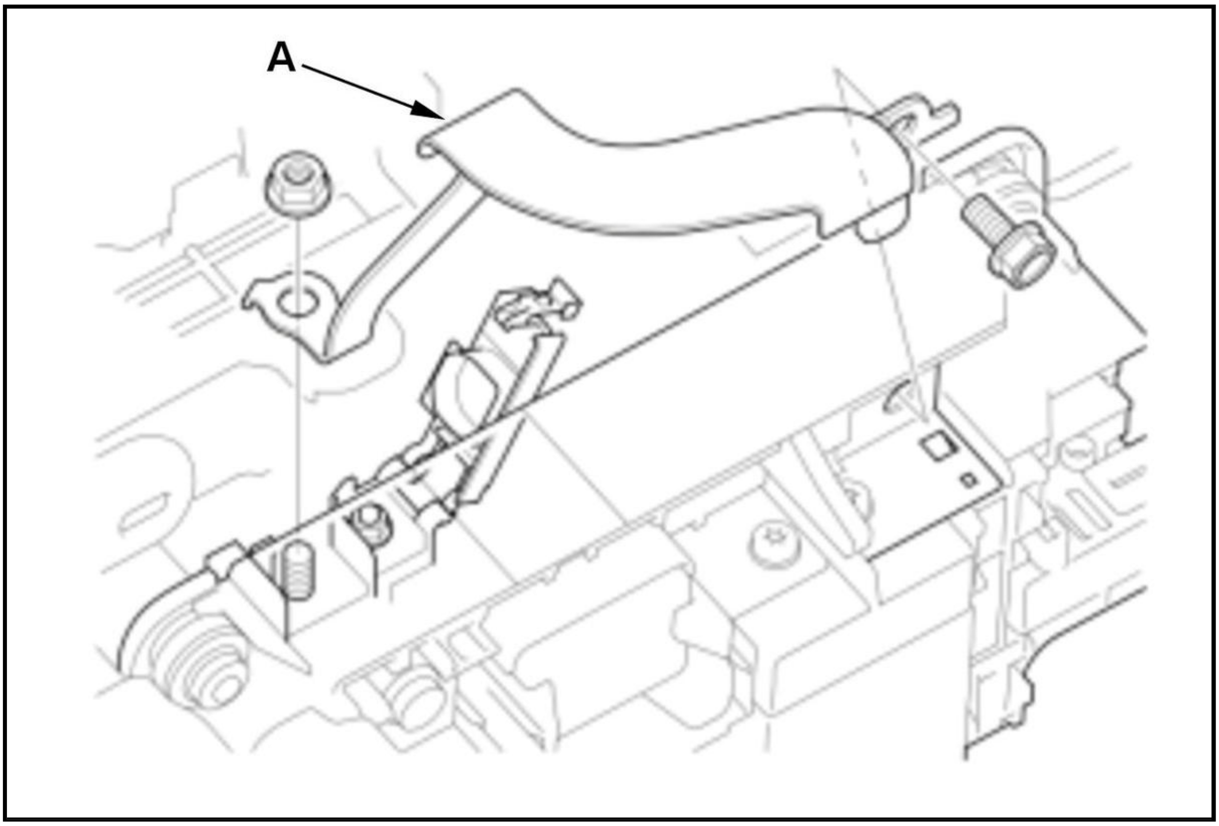

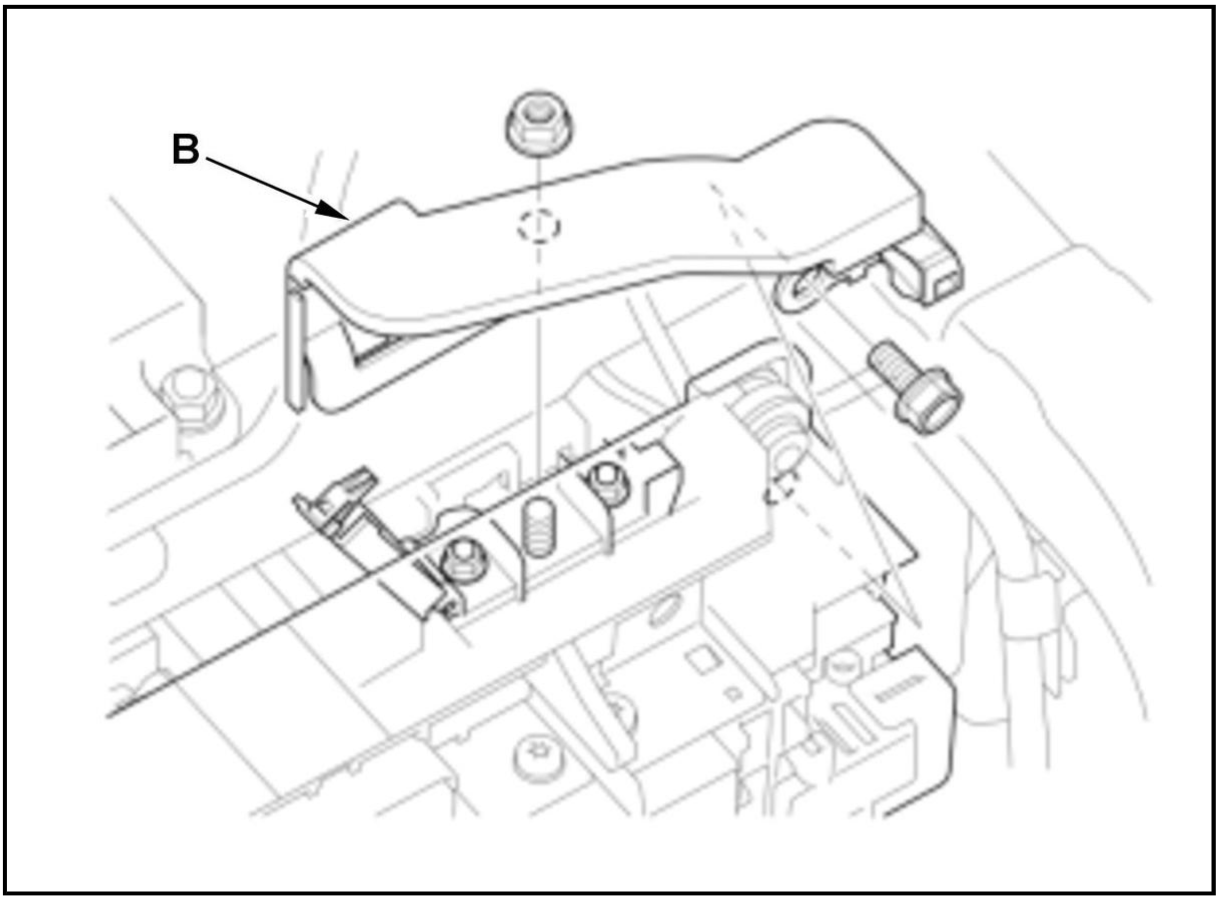

-2. Measure the resistance between test points 1 and 2.

Test condition	Vehicle OFF (LOCK) mode
Test point 1	Junction board high voltage terminal (A)
Test point 2	Body ground

Test point 1	Junction board high voltage terminal (B)
Test point 2	Body ground

Test point 1	Junction board high voltage terminal (C)
Test point 2	Body ground

Test point 1	Junction board high voltage terminal (D)
Test point 2	Body ground

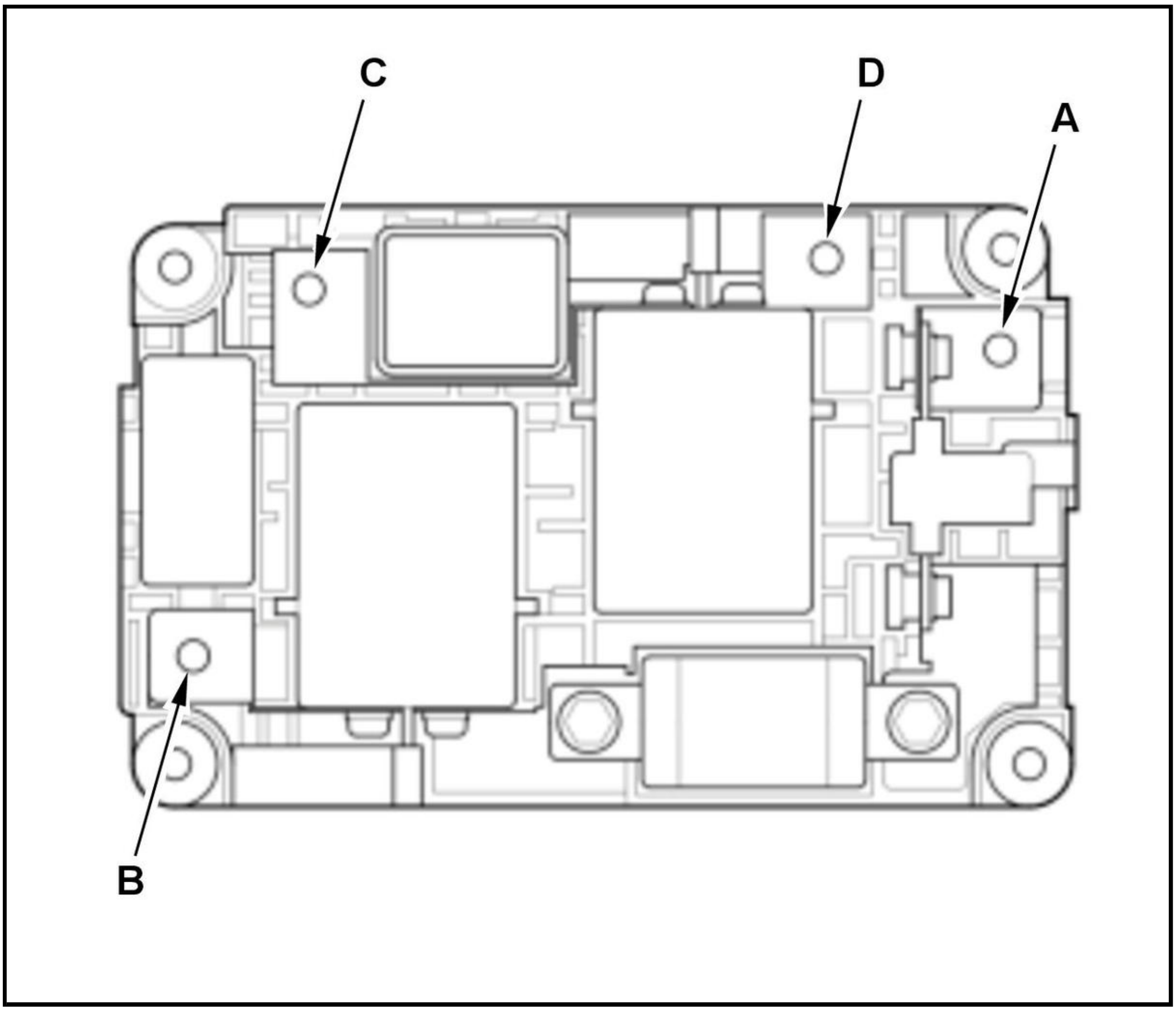

Is there 305 kΩ or less?

YES

Replace the junction board .

NO

Go to step 16.

16. Battery pack check 1

    -1. **Remove the junction board** .

    -2. Measure the voltage between test points 1 and 2.

Test condition	Vehicle OFF (LOCK) mode
Test point 1	Battery pack high voltage terminal (A)
Test point 2	Body ground

Test point 1	Battery pack high voltage terminal (B)
Test point 2	Body ground

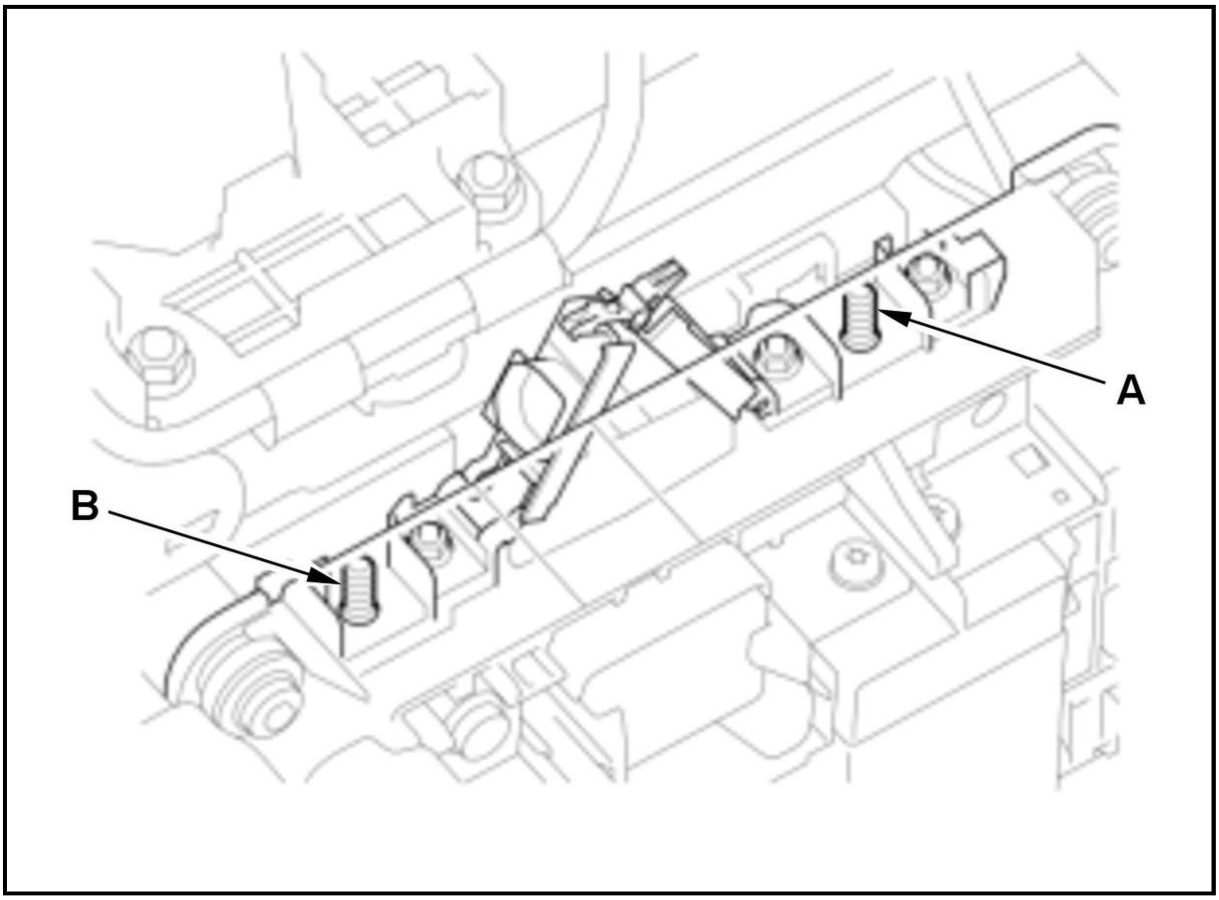

Is there 0V or less?

YES

Replace the junction board .

NO

Go to step 17.

17. Battery pack check 2

-1. Disconnect the following connectors.

Battery condition monitor module connector A (28P)
Battery condition monitor module connector B (28P)
Battery condition monitor module connector C (28P)
Battery condition monitor module connector D (16P)
Battery condition monitor module connector E (32P)
Battery condition monitor module connector F (12P)

-2. Measure the voltage between test points 1 and 2.

Test condition	Vehicle OFF (LOCK) mode
B	Battery condition monitor module connector A (28P): disconnected
B	Battery condition monitor module connector B (28P): disconnected
B	Battery condition monitor module connector C (28P): disconnected
B	Battery condition monitor module connector D (16P): disconnected
B	Battery condition monitor module connector E (32P): disconnected
B	Battery condition monitor module connector F (12P): disconnected
Test point 1	Battery pack high voltage terminal (A)

Test point 2	Body ground

Test point 1	Battery pack high voltage terminal (B)
Test point 2	Body ground

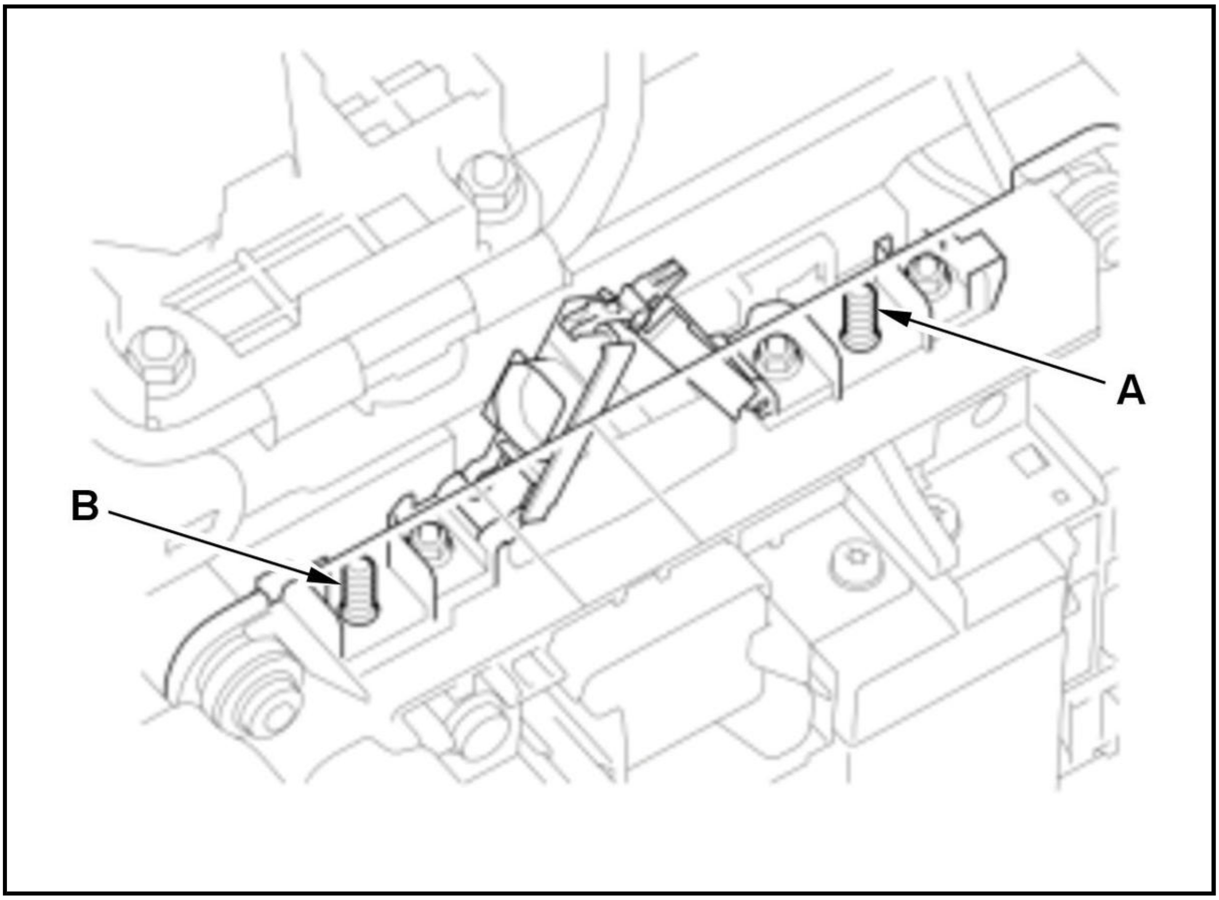

Is there 0V or less?

YES

Replace the battery condition monitor module .

NO

Go to step 18.

18. Battery pack check 3

-1. Disconnect the following connectors.

Battery module 1 28P connector
Battery module 2 28P connector
Battery module 3 28P connector
Battery module 4 28P connector

-2. Measure the voltage between test points 1 and 2.

Test condition	Vehicle OFF (LOCK) mode
B	Battery condition monitor module connector A (28P): disconnected
B	Battery condition monitor module connector B (28P): disconnected
B	Battery condition monitor module connector C (28P): disconnected
B	Battery condition monitor module connector D (16P): disconnected

B	Battery condition monitor module connector E (32P): disconnected
B	Battery condition monitor module connector F (12P): disconnected
B	Battery module 1 28P connector: disconnected
B	Battery module 2 28P connector: disconnected
B	Battery module 3 28P connector: disconnected
B	Battery module 4 28P connector: disconnected
Test point 1	Battery pack high voltage terminal (A)
Test point 2	Body ground

Test point 1	Battery pack high voltage terminal (B)
Test point 2	Body ground

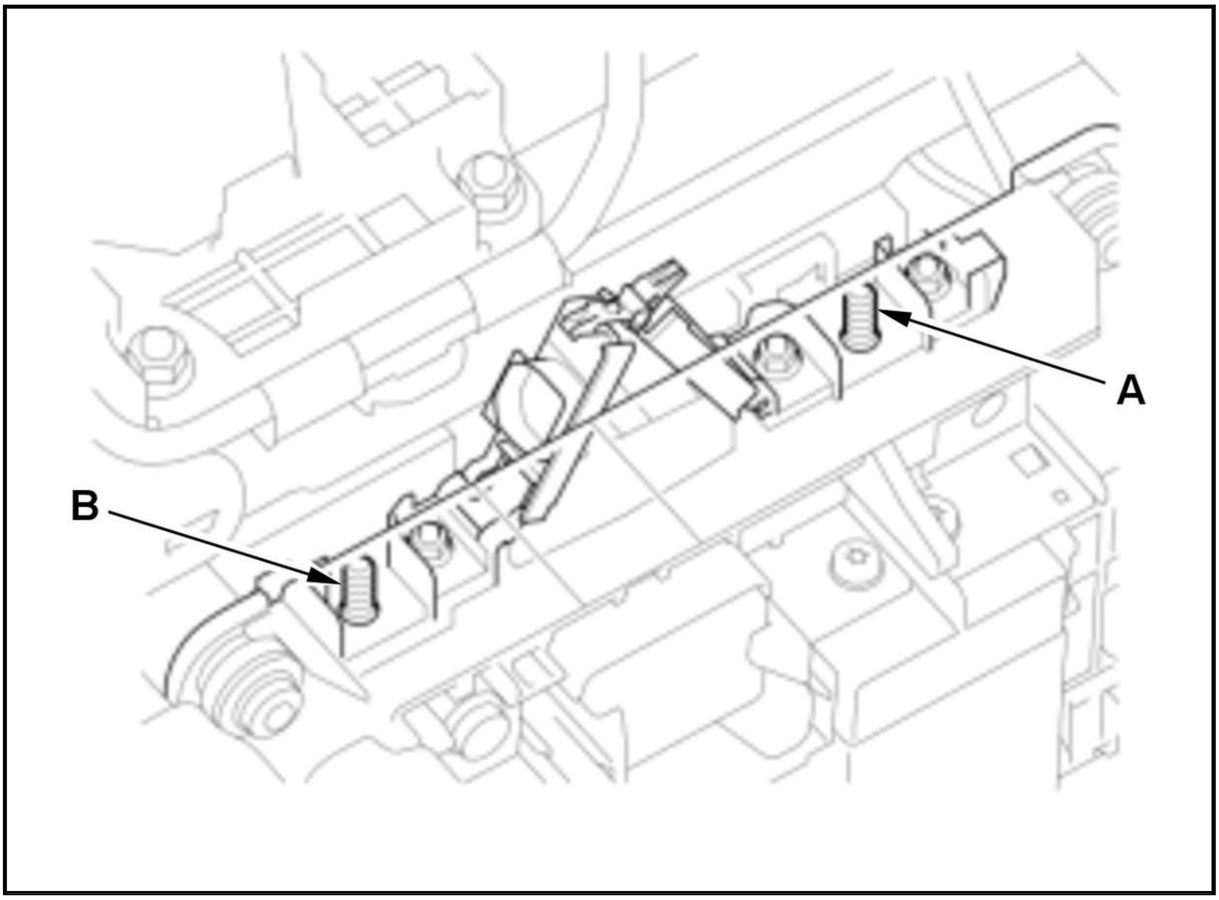

Is there 0V or less?

YES

Replace the IPU harness .

NO

Replace the battery pack .

DTC P0AA7 (76)

DTC P0AA7 : HV Battery Voltage Isolation Sensor Circuit

NOTE: Before you troubleshoot, review the general troubleshooting information .

DTC Description	Confirmed DTC	Pending DTC	Freeze Frame
P0AA7 HV Battery Voltage Isolation Sensor Circuit	B	B	B

1. Problem verification

   -1. Turn the vehicle to the OFF (LOCK) mode.

   -2. Turn the vehicle to the ON mode, and wait 12 seconds.

   -3. Monitor the OBD STATUS for DTC P0AA7 in the DTCs MENU with the HDS.

DTC Description	OBD Status
P0AA7 HV Battery Voltage Isolation Sensor Circuit	B

   Does the HDS indicate FAILED?

   YES

   Go to step 2.

   NO

   If the HDS indicates PASSED, the system is OK at this time but has an intermittent failure. If the HDS indicates NOT COMPLETED, keep the vehicle in the ON mode until an indication comes on. If the freeze data/on-board snapshot of this DTC is recorded, try to reproduce the failure under the same conditions with the freeze data/on-board snapshot.

2. Open wire check (BATT+ line)

   -1. Turn the vehicle to the OFF (LOCK) mode.

   -2. Remove the **service plug** and the **IPU cover** .

   -3. Disconnect the following connectors.

   Battery condition monitor module connector A (28P)

   Subjunction board connector A (5P)

   -4. Measure the resistance between test points 1 and 2.

Test condition	Vehicle OFF (LOCK) mode
B	Battery condition monitor module connector A (28P): disconnected
B	Subjunction board connector A (5P): disconnected
Test point 1	**Battery condition monitor module connector A (28P) No. 15**
Test point 2	Subjunction board connector A (5P) (female terminals) No. 5: ①

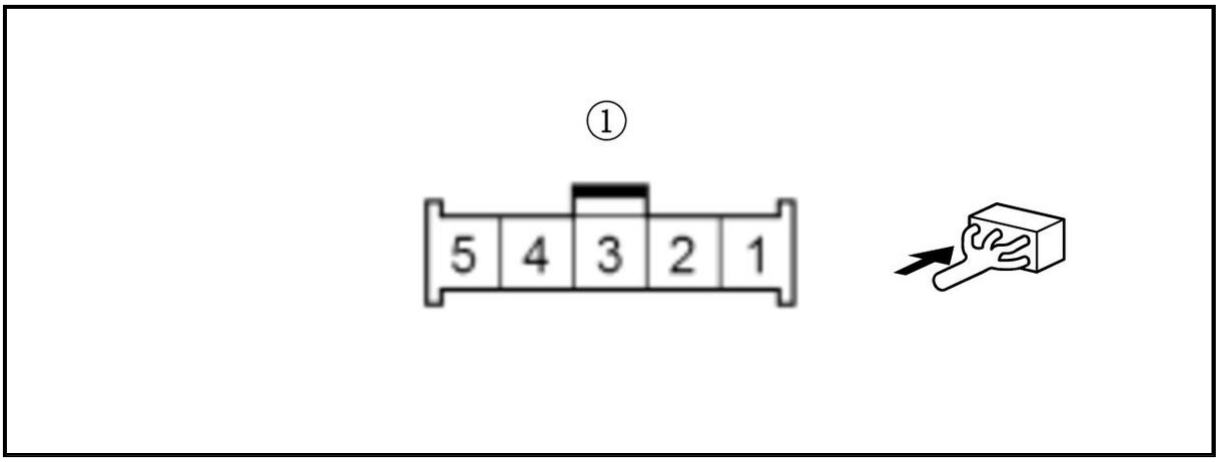

Is there 1.0 Ω or less?

YES

Go to step 3.

NO

Repair an open in the BATT+ wire between the battery condition monitor module (A15) and the subjunction board.

3. Open wire check (BATT- line)

-1. Measure the resistance between test points 1 and 2.

Test condition	Vehicle OFF (LOCK) mode
B	Battery condition monitor module connector A (28P): disconnected
B	Subjunction board connector A (5P): disconnected
Test point 1	**Battery condition monitor module connector A (28P) No. 4**
Test point 2	Subjunction board connector A (5P) (female terminals) No. 1: ①

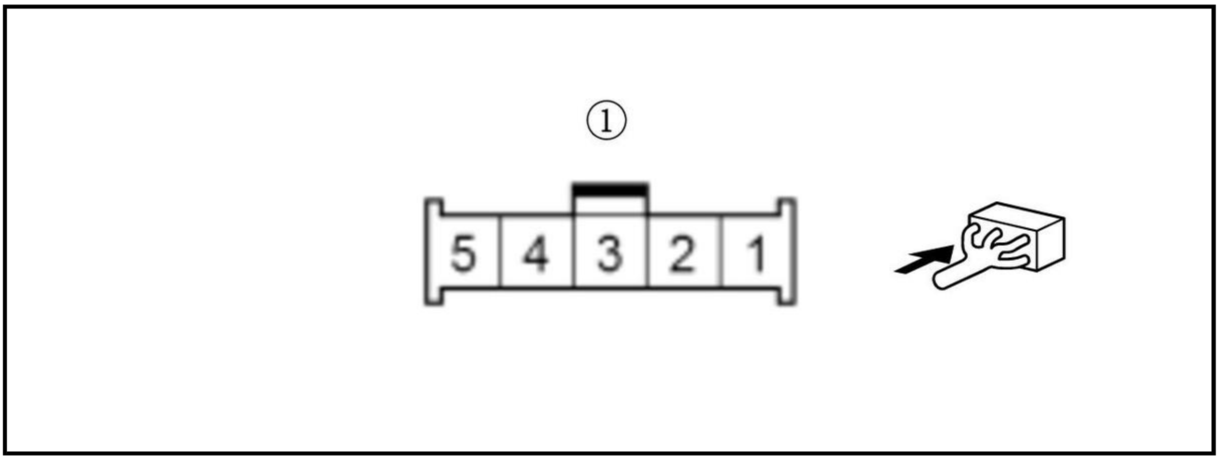

Is there 1.0 Ω or less?

YES

The BATT- wire is OK. **Replace the subjunction board** , then recheck. If DTC P0AA7 is still indicated, **replace the battery condition monitor module** .

NO

Repair an open in the BATT- wire between the battery condition monitor module (A4) and the subjunction board.

DTC P0ABF

DTC P0ABF : HV Battery Pack Current Sensor Circuit

NOTE:

- Before you troubleshoot, **review the general troubleshooting information** .
- If any of the DTCs listed below are indicated at the same time as DTC P0ABF, troubleshoot those DTCs first, then recheck for P0ABF.
-
  - -

    P1586, P158A

DTC Description	Confirmed DTC	Pending DTC	Freeze Frame
P0ABF HV Battery Pack Current Sensor Circuit	B	B	B

DTC (Electric Powertrain)

1. DTC check

   -1. Turn the vehicle to the ON mode.

   -2. Check for Pending or Confirmed DTCs with the HDS.

DTC Description	Confirmed DTC	Pending DTC	Freeze Frame
B	B	B	B

   DTC (Electric Powertrain)

   Are DTC P0ABF and any other DTCs indicated at the same time?

   YES

   Go to the indicated DTC's troubleshooting.

   NO

   Update the battery condition monitor module if it does not have the latest software .

DTC P0AC0

DTC P0AC0 : HV Battery Pack Current Sensor Circuit Range/Performance

NOTE:

- Before you troubleshoot, **review the general troubleshooting information** .
- If any of the DTCs listed below are indicated at the same time as DTC P0AC0, troubleshoot those DTCs first, then recheck for P0AC0.
-
  - -

    P158B

DTC Description	Confirmed DTC	Pending DTC	Freeze Frame
P0AC0 HV Battery Pack Current Sensor Circuit Range/Performance	B	B	B

DTC (Electric Powertrain)

1. DTC check

   -1. Turn the vehicle to the ON mode.

   -2. Check for Pending or Confirmed DTCs with the HDS.

DTC Description	Confirmed DTC	Pending DTC	Freeze Frame
B	B	B	B

   DTC (Electric Powertrain)

   Are DTC P0AC0 and any other DTCs indicated at the same time?

   YES

   Go to the indicated DTC's troubleshooting.

   NO

   Update the battery condition monitor module if it does not have the latest software .

DTC P0AC1

DTC P0AC1 : HV Battery Pack Current Sensor Circuit Low

NOTE:

- Before you troubleshoot, **review the general troubleshooting information** .
- If any of the DTCs listed below are indicated at the same time as DTC P0AC1, troubleshoot those DTCs first, then recheck for P0AC1.
-
  - -

    P158D, P158E

DTC Description	Confirmed DTC	Pending DTC	Freeze Frame
P0AC1 HV Battery Pack Current Sensor Circuit Low	B	B	B

DTC (Electric Powertrain)

1. DTC check

   -1. Turn the vehicle to the ON mode.

   -2. Check for Pending or Confirmed DTCs with the HDS.

DTC Description	Confirmed DTC	Pending DTC	Freeze Frame
B	B	B	B

   DTC (Electric Powertrain)

Are DTC P0AC1 and any other DTCs indicated at the same time?

YES

Go to the indicated DTC's troubleshooting.

NO

Update the battery condition monitor module if it does not have the latest software .

DTC P0AC2

DTC P0AC2 : HV Battery Pack Current Sensor Circuit High

NOTE:

- Before you troubleshoot, **review the general troubleshooting information** .
- If any of the DTCs listed below are indicated at the same time as DTC P0AC2, troubleshoot those DTCs first, then recheck for P0AC2.
-
  - -

    P158F, P1596

DTC Description	Confirmed DTC	Pending DTC	Freeze Frame
P0AC2 HV Battery Pack Current Sensor Circuit High	B	B	B

DTC (Electric Powertrain)

1. DTC check

   -1. Turn the vehicle to the ON mode.

   -2. Check for Pending or Confirmed DTCs with the HDS.

DTC Description	Confirmed DTC	Pending DTC	Freeze Frame
B	B	B	B

   DTC (Electric Powertrain)

   Are DTC P0AC2 and any other DTCs indicated at the same time?

   YES

   Go to the indicated DTC's troubleshooting.

   NO

   Update the battery condition monitor module if it does not have the latest software .

DTC P0AC3

DTC P0AC3 : HV Battery Pack Current Sensor Circuit Intermittent/Erratic

NOTE:

- Before you troubleshoot, **review the general troubleshooting information** .

- If any of the DTCs listed below are indicated at the same time as DTC P0AC3, troubleshoot those DTCs first, then recheck for P0AC3.
-
    - -

      P1597, P1598

DTC Description	Confirmed DTC	Pending DTC	Freeze Frame
P0AC3 HV Battery Pack Current Sensor Circuit Intermittent/Erratic	B	B	B

DTC (Electric Powertrain)

1. DTC check

   -1. Turn the vehicle to the ON mode.

   -2. Check for Pending or Confirmed DTCs with the HDS.

DTC Description	Confirmed DTC	Pending DTC	Freeze Frame
B	B	B	B

   DTC (Electric Powertrain)

   Are DTC P0AC3 and any other DTCs indicated at the same time?

   YES

   Go to the indicated DTC's troubleshooting.

   NO

   Update the battery condition monitor module if it does not have the latest software .

DTC P0AE1 (62)

DTC P0AE1 : HV Battery Precharge Contactor Circuit

NOTE: Before you troubleshoot, **review the general troubleshooting information** .

DTC Description	Confirmed DTC	Pending DTC	Freeze Frame
P0AE1 HV Battery Precharge Contactor Circuit	B	B	B

DTC (Electric Powertrain)

1. DTC (OBD STATUS) check

   -1. Turn the vehicle to the ON mode.

   -2. Monitor the OBD STATUS for DTC P0AFA, P0B3B, P0B40, P0B45, P0B4A, P0B4F, P0B54, U0110, U012D, U1205, U1220, U12A5, U1604 and U1605 in the DTCs MENU with the HDS.

DTC Description	OBD STATUS
P0AFA HV Battery System Voltage Low	B
P0B3B HV Battery Cell Voltage Sense Circuit 1	B
P0B40 HV Battery Cell Voltage Sense Circuit 2	B

DTC Description	OBD STATUS
P0B45 HV Battery Cell Voltage Sense Circuit 3	B
P0B4A HV Battery Cell Voltage Sense Circuit 4	B
P0B4F HV Battery Cell Voltage Sense Circuit 5	B
P0B54 HV Battery Cell Voltage Sense Circuit 6	B
U0110 F-CAN Malfunction (Battery Condition Monitor Module - Traction Motor Control Module)	B
U012D F-CAN Malfunction (Battery Condition Monitor Module - Generator Motor Control Module)	B
U1205 EP-CAN Malfunction (Battery Condition Monitor Module - Traction Motor Control Module)	B
U1220 DC-DC Converter Serial Communication Transmit Error	B
U12A5 EP-CAN Malfunction (Battery Condition Monitor Module - Generator Motor Control Module)	B
U1604 F-CAN Malfunction (Battery Condition Monitor Module - Traction Motor Control Module)	B
U1605 F-CAN Malfunction (Battery Condition Monitor Module - Generator Motor Control Module)	B

Does the HDS indicate FAILED?

YES

Go to the indicated DTC's troubleshooting.

NO

Go to step 2.

2. Motor control system check

-1. Check for Pending or Confirmed DTCs with the HDS.

Traction motor control module

DTC Description	Confirmed DTC	Pending DTC	Freeze Frame
B	B	B	B

Generator motor control module

DTC Description	Confirmed DTC	Pending DTC	Freeze Frame
B	B	B	B

DTC (Electric Powertrain)

Are any motor control module DTC indicated?

YES

Go to the indicated DTC's troubleshooting.

NO

Go to step 3.

3. Problem verification

-1. Clear the DTC with the HDS.

-2. Turn the vehicle to the OFF (LOCK) mode.

-3. Turn the vehicle to the ON mode.

-4. Check for Pending or Confirmed DTCs with the HDS.

DTC Description	Confirmed DTC	Pending DTC	Freeze Frame
P0AE1 HV Battery Precharge Contactor Circuit	B	B	B

Is DTC P0AE1 indicated?

YES

The failure is duplicated. Go to step 4.

NO

Intermittent failure, the system is OK at this time. If the freeze data/on-board snapshot of this DTC is recorded, try to reproduce the failure under the same conditions with the freeze data/on-board snapshot.

4. Service plug check (high voltage circuit)

-1. Turn the vehicle to the OFF (LOCK) mode.

-2. **Remove the service plug** .

-3. Check the service plug terminal (A) for damage or corrosion.

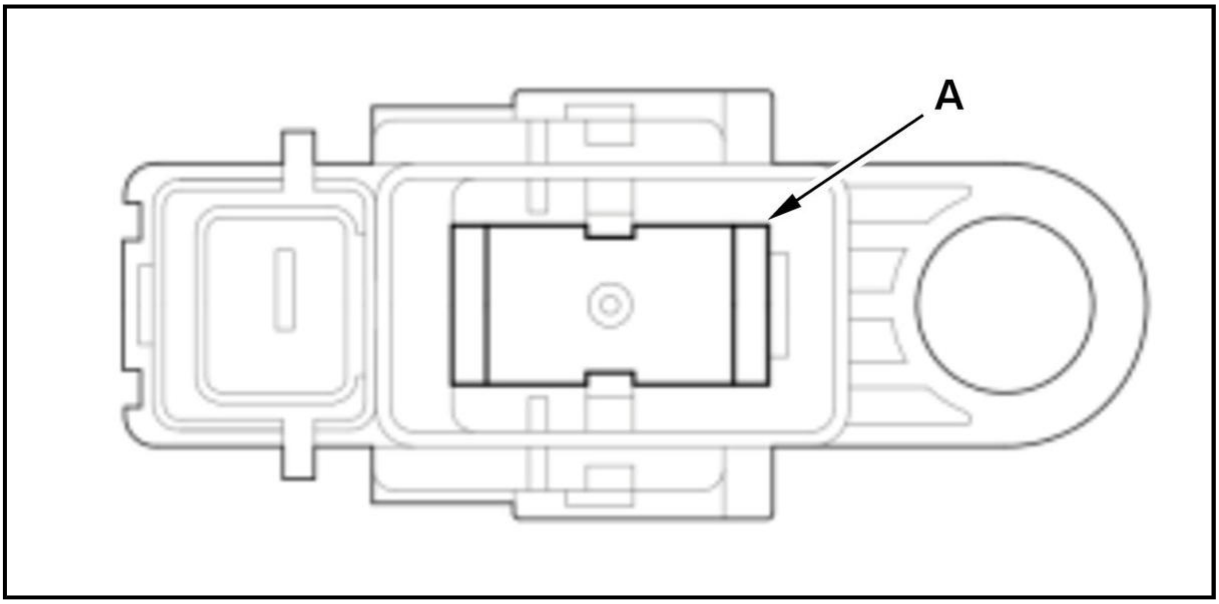

Is the terminal OK?

YES

Go to step 5.

NO

Replace the service plug.

5. Electric A/C compressor check

-1. **Disconnect the electric A/C compressor connector A (2P) from the electric A/C compressor** .

-2. **Reinstall the service plug** .

-3. **Do the 12 volt battery terminal reconnection procedure** .

-4. Turn the vehicle to the ON mode.

-5. Clear the DTC with the HDS.

-6. Check for Pending or Confirmed DTCs with the HDS.

DTC Description	Confirmed DTC	Pending DTC	Freeze Frame
P0AE1 HV Battery Precharge Contactor Circuit	B	B	B

Is DTC P0AE1 indicated?

YES

Go to step 6.

NO

Replace the electric A/C compressor .

6. Electric A/C compressor power cable check

-1. Turn the vehicle to the OFF (LOCK) mode.

-2. **Remove the service plug** .

-3. Disconnect the electric A/C compressor high voltage cable 2P connector (A) from the subjunction board.

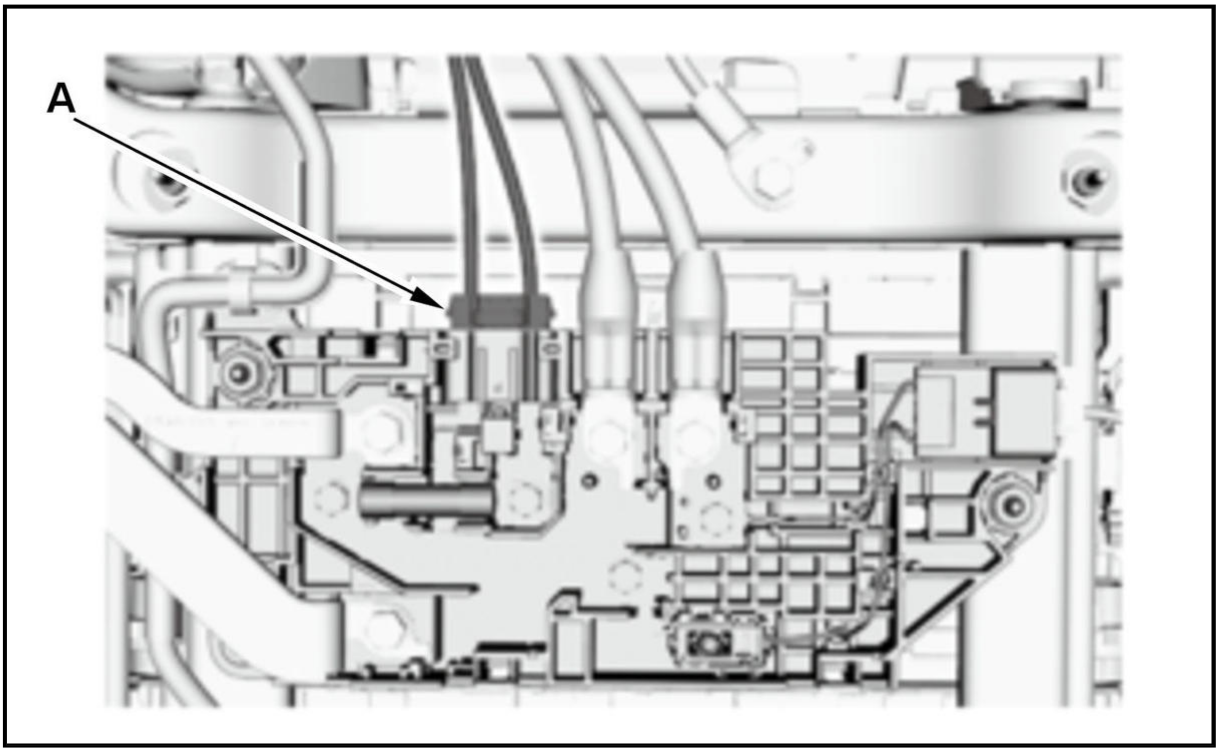

-4. **Reinstall the service plug** .

-5. **Do the 12 volt battery terminal reconnection procedure** .

-6. Turn the vehicle to the ON mode.

-7. Clear the DTC with the HDS.

-8. Check for Pending or Confirmed DTCs with the HDS.

DTC Description	Confirmed DTC	Pending DTC	Freeze Frame
P0AE1 HV Battery Precharge Contactor Circuit	B	B	B

Is DTC P0AE1 indicated?

YES

Go to step 7.

NO

There is a failure in the electric A/C compressor power cable. **Replace the battery power cable** .

7. Battery power cable check

-1. Turn the vehicle to the OFF (LOCK) mode.

-2. **Do the 12 volt battery terminal disconnection procedure** .

-3. **Remove the service plug** .

-4. **Disconnect the battery power cable connector from the PCU** .

-5. **Disconnect the battery power cable terminals (A) from the subjunction board** .

NOTE: Wrap the subjunction board terminals with insulating tape.

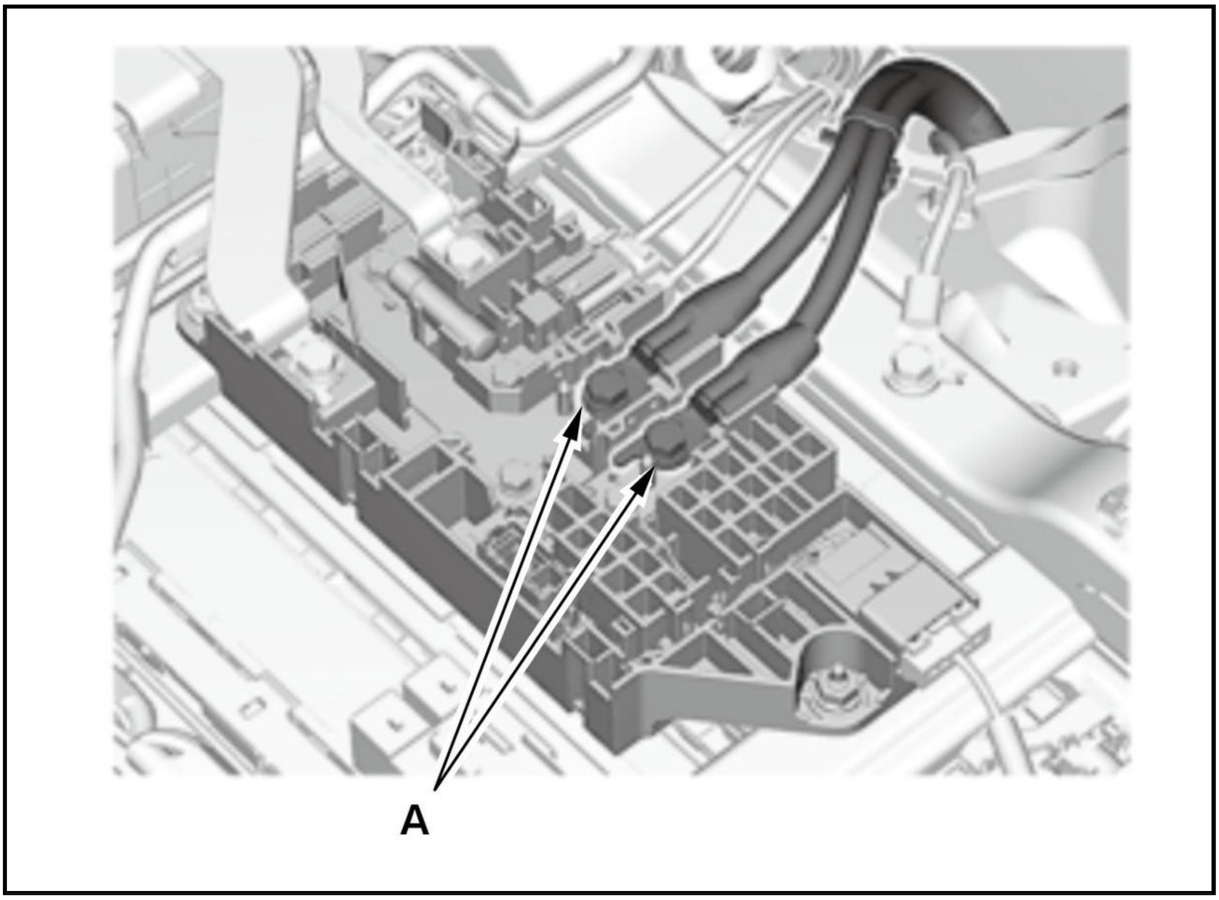

-6. Check for continuity between test points 1 and 2.

Test condition	Vehicle OFF (LOCK) mode
B	Battery power cable (PCU side): disconnected
B	Battery power cable (subjunction board side): disconnected
Test point 1	Battery power cable (subjunction board side) (+) (A)
Test point 2	Battery power cable (subjunction board side) (-) (B)

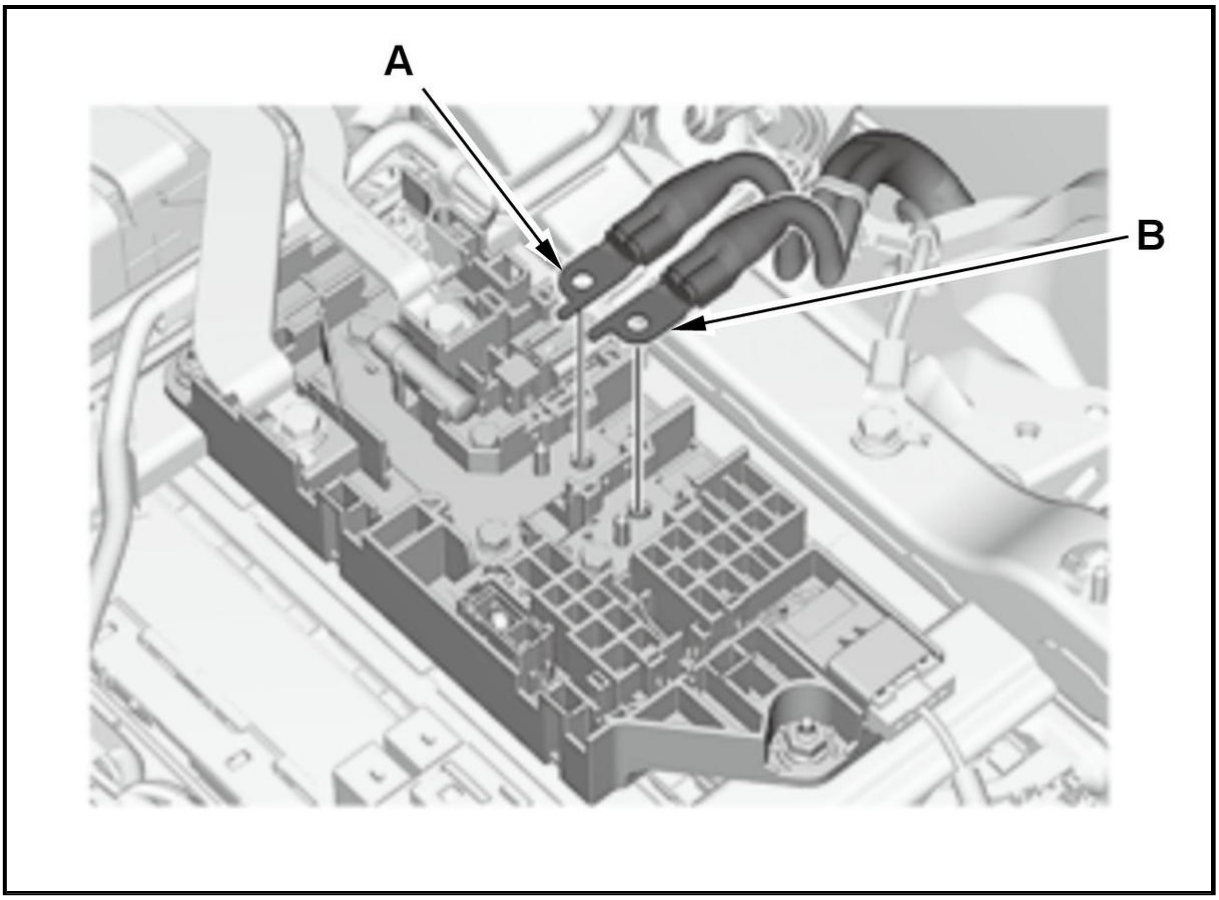

Is there continuity?

YES

Replace the battery power cable .

NO

Go to step 8.

8. Main fuse check

-1. **Remove the IPU and the IPU case** .

-2. Check for continuity between test points 1 and 2.

Test condition	Vehicle OFF (LOCK) mode
Test point 1	Main fuse terminal (A)
Test point 2	Main fuse terminal (B)

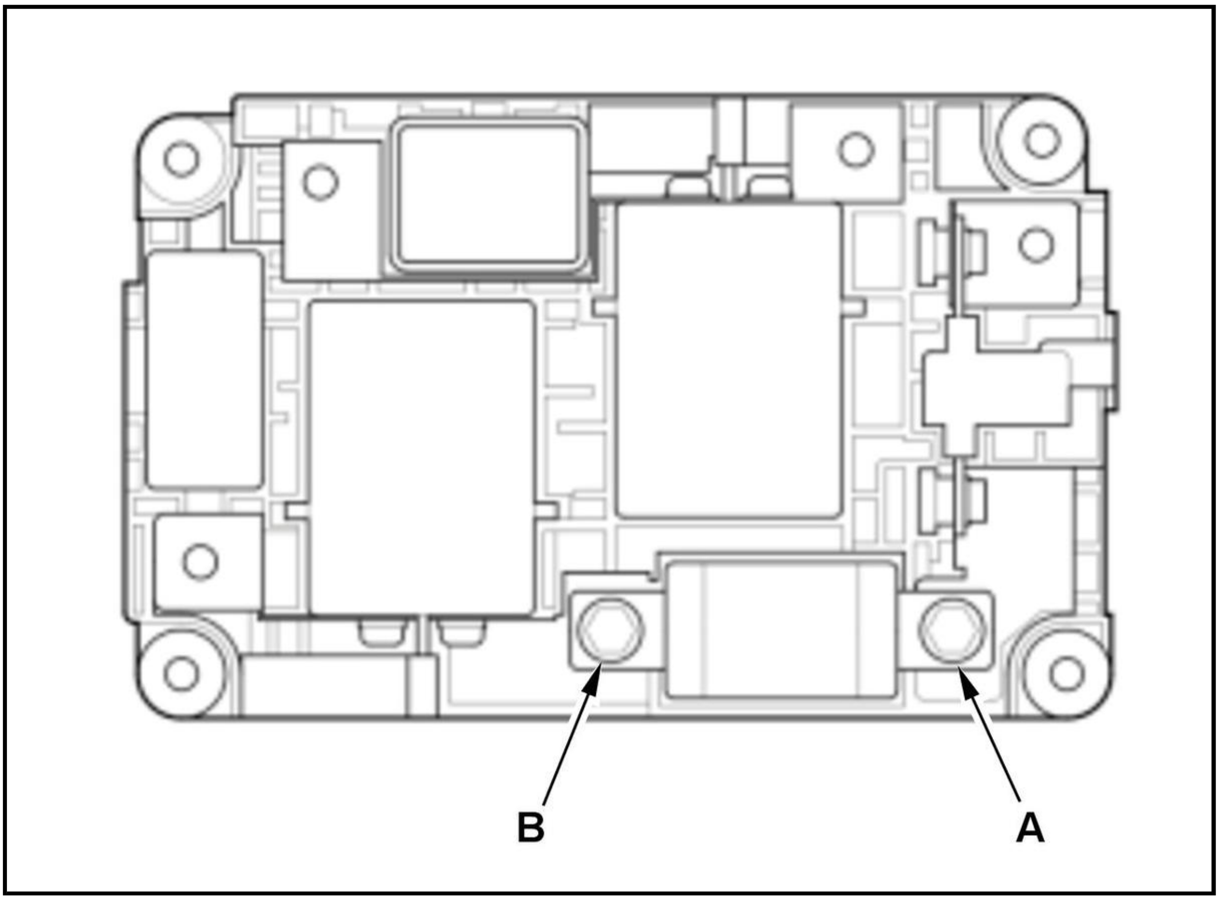

Is there continuity?

YES

Go to step 9.

NO

Faulty the main fuse. **Replace the junction board** .

9. High voltage contactor check (coil side)

-1. **Remove the junction board** .

-2. Disconnect the following connector.

Junction board 4P connector

-3. At the junction board side, measure the resistance between test points 1 and 2.

Test condition	Vehicle OFF (LOCK) mode
B	Junction board 4P connector: disconnected
Test point 1	Junction board 4P connector (male terminals) No. 3: ①
Test point 2	Junction board 4P connector (male terminals) No. 4: ①

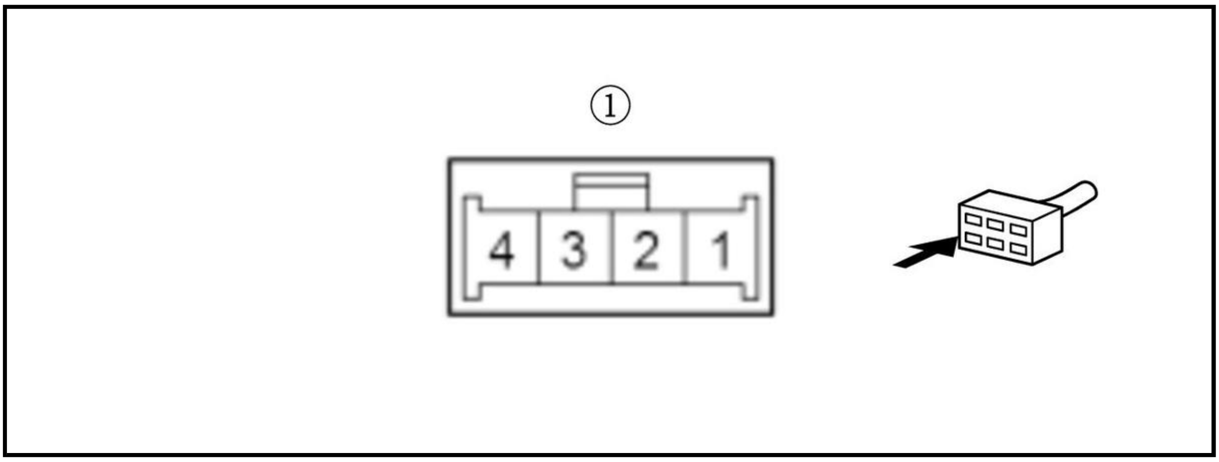

Is there 31.1 - 38.0 Ω ?

YES

Go to step 10.

NO

Faulty high voltage contactor. **Replace the junction board** .

10. High voltage contactor check (switch side)

-1. At the junction board side, connect terminals A and B to the 12 volt battery with jumper wires.

Terminal A	Junction board 4P connector (male terminals) No. 3: ①
Terminal B	12 volt battery positive terminal: ②

Terminal A	Junction board 4P connector (male terminals) No. 4: ①
Terminal B	12 volt battery negative terminal: ②

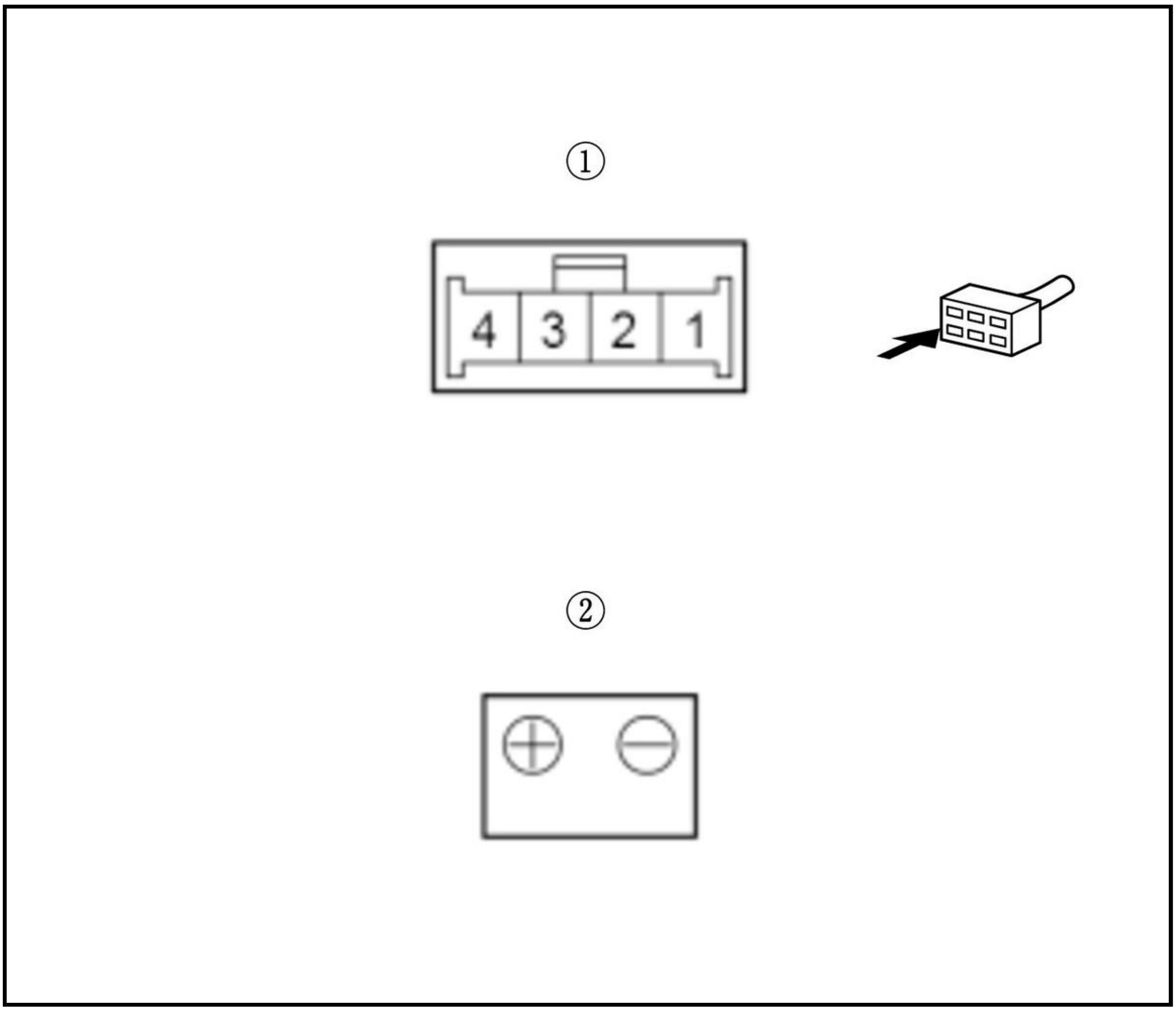

-2. Check for continuity between test points 1 and 2.

Test condition	Vehicle OFF (LOCK) mode
B	Junction board 4P connector: disconnected
B	Junction board 4P connector terminals No. 3 and No. 4 (junction board side): jumped to 12 volt battery
Test point 1	High voltage contactor terminal (A)
Test point 2	High voltage contactor terminal (B)

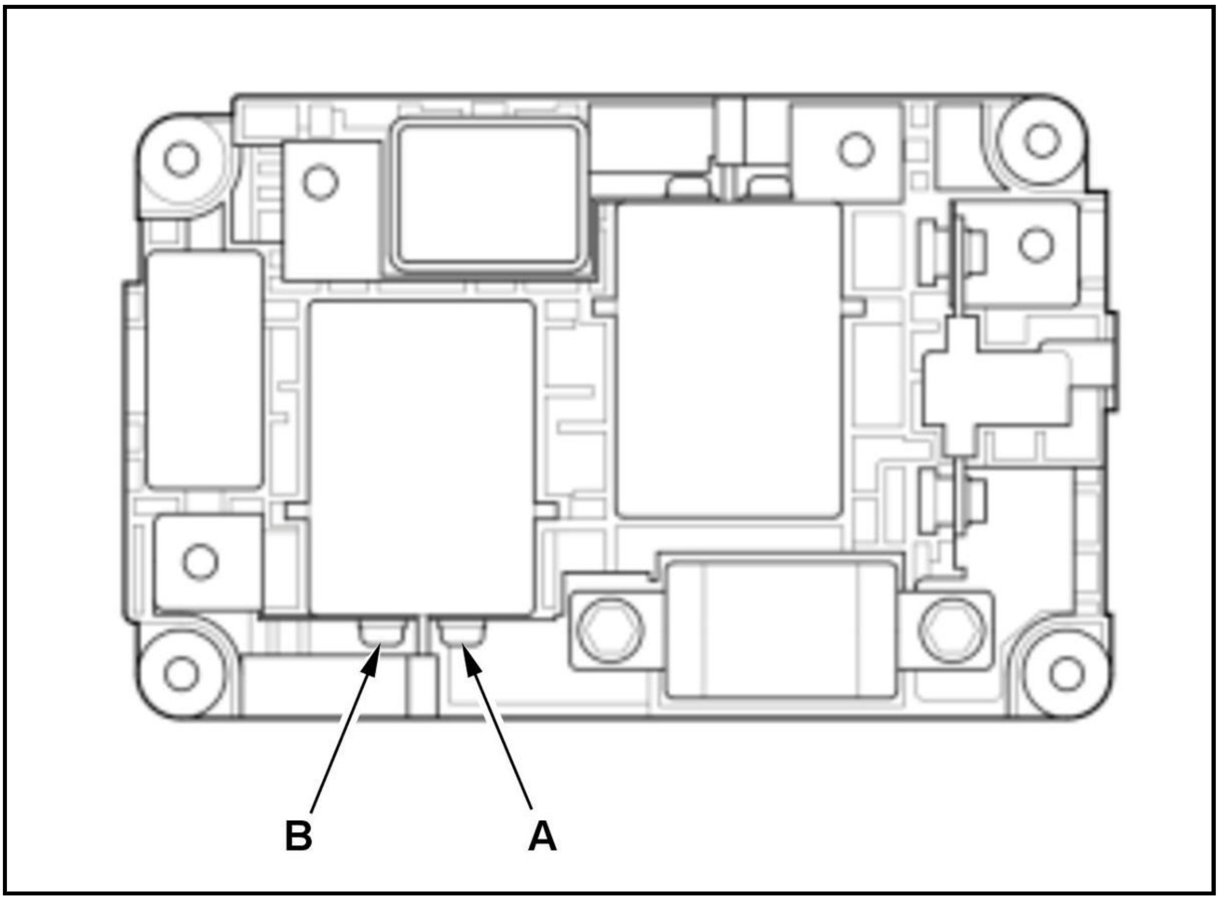

Is there continuity?

YES

Go to step 11.

NO

Faulty high voltage contactor. Replace the junction board .

11. Open wire check (CNTP line)

-1. Remove the jumper wire from the junction board.

-2. Disconnect the following connector.

Battery condition monitor module connector E (32P)

-3. Measure the resistance between test points 1 and 2.

Test condition	Vehicle OFF (LOCK) mode
B	Junction board 4P connector: disconnected
B	Battery condition monitor module connector E (32P): disconnected
Test point 1	Junction board 4P connector (female terminals) No. 4: ①

Test point 2	Battery condition monitor module connector E (32P) No. 4

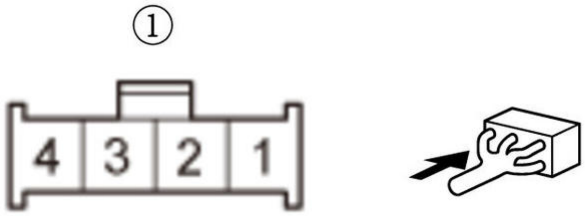

Is there 1.0 Ω or less?

YES

Go to step 12.

NO

Repair an open in the CNTP wire between the junction board and the battery condition monitor module (E4).

12. Bypass contactor check (coil side)

-1. At the junction board side, measure the resistance between test points 1 and 2.

Test condition	Vehicle OFF (LOCK) mode
B	Junction board 4P connector: disconnected
Test point 1	Junction board 4P connector (male terminals) No. 2: ①
Test point 2	Junction board 4P connector (male terminals) No. 3: ①

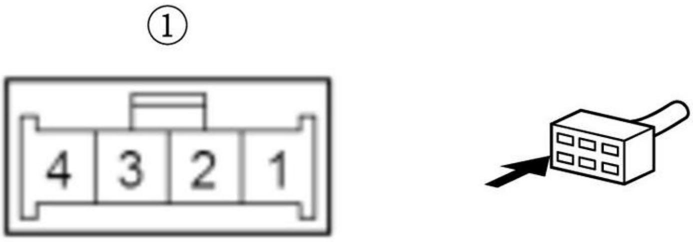

Is there 92.7 - 113.3 Ω ?

YES

Go to step 13.

NO

Faulty bypass contactor. **Replace the junction board** .

13. Open wire check (PRE line)

-1. Measure the resistance between test points 1 and 2.

Test condition	Vehicle OFF (LOCK) mode
B	Junction board 4P connector: disconnected
B	Battery condition monitor module connector E (32P): disconnected
Test point 1	Junction board 4P connector (female terminals) No. 2: ①
Test point 2	**Battery condition monitor module connector E (32P) No. 6**

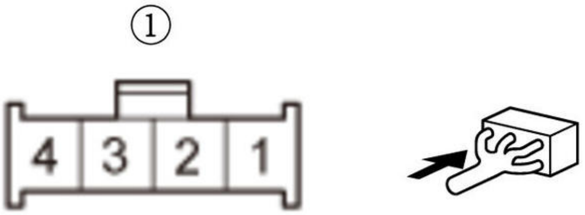

Is there 1.0 Ω or less?

YES

Go to step 14.

NO

Repair an open in the PRE wire between the junction board and the battery condition monitor module (E6).

14. Bypass contactor check (switch side)

-1. At the junction board side, connect terminals A and B to the 12 volt battery with jumper wires.

Terminal A	Junction board 4P connector (male terminals) No. 3: ①
Terminal B	12 volt battery positive terminal: ②

Terminal A	Junction board 4P connector (male terminals) No. 2: ①
Terminal B	12 volt battery negative terminal: ②

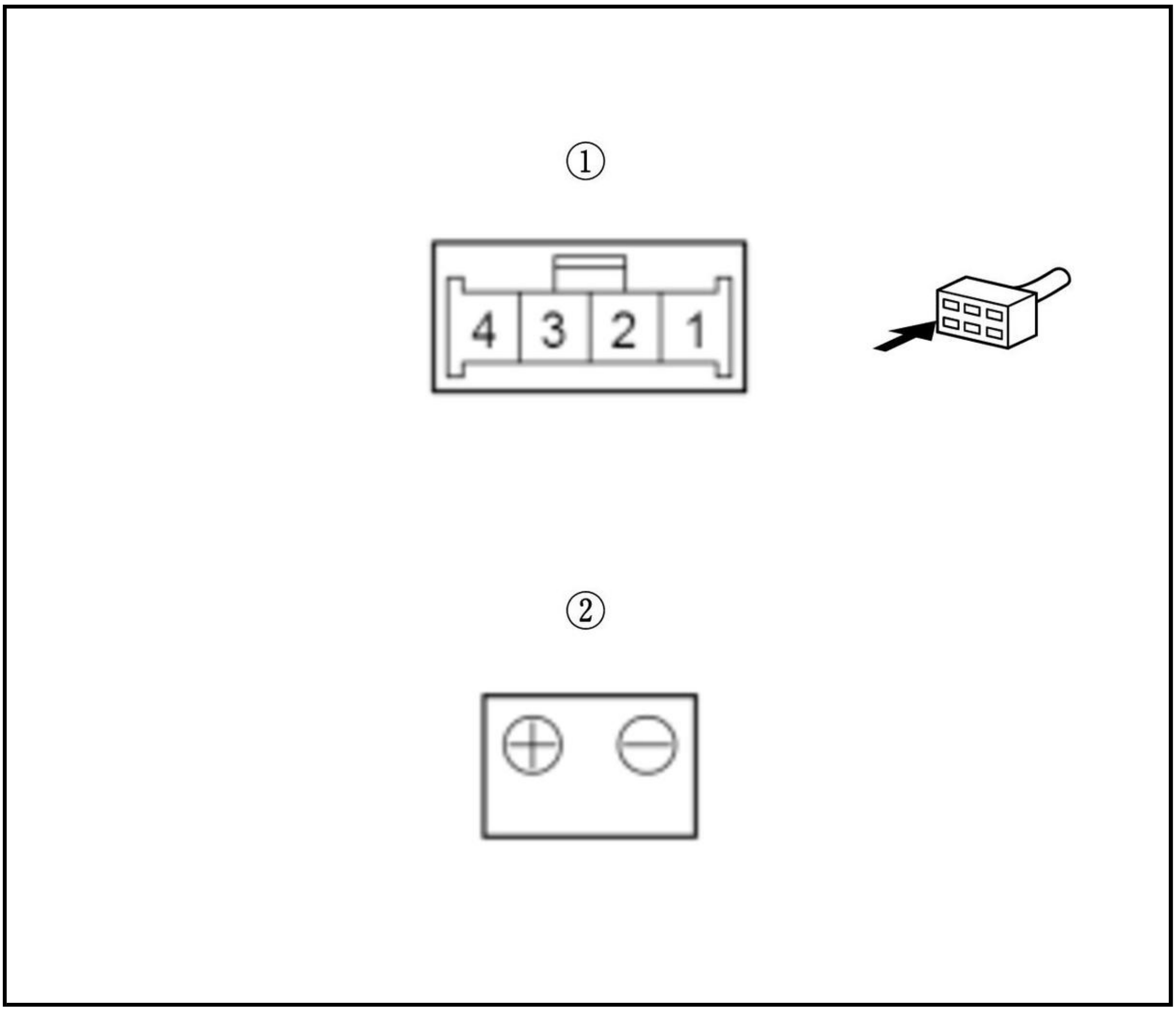

-2. Check for continuity between test points 1 and 2.

Test condition	Vehicle OFF (LOCK) mode
B	Junction board 4P connector: disconnected
B	Junction board 4P connector terminals No. 3 and No. 2 (junction board side): jumped to 12 volt battery
Test point 1	High voltage contactor terminal (A)
Test point 2	High voltage contactor terminal (B)

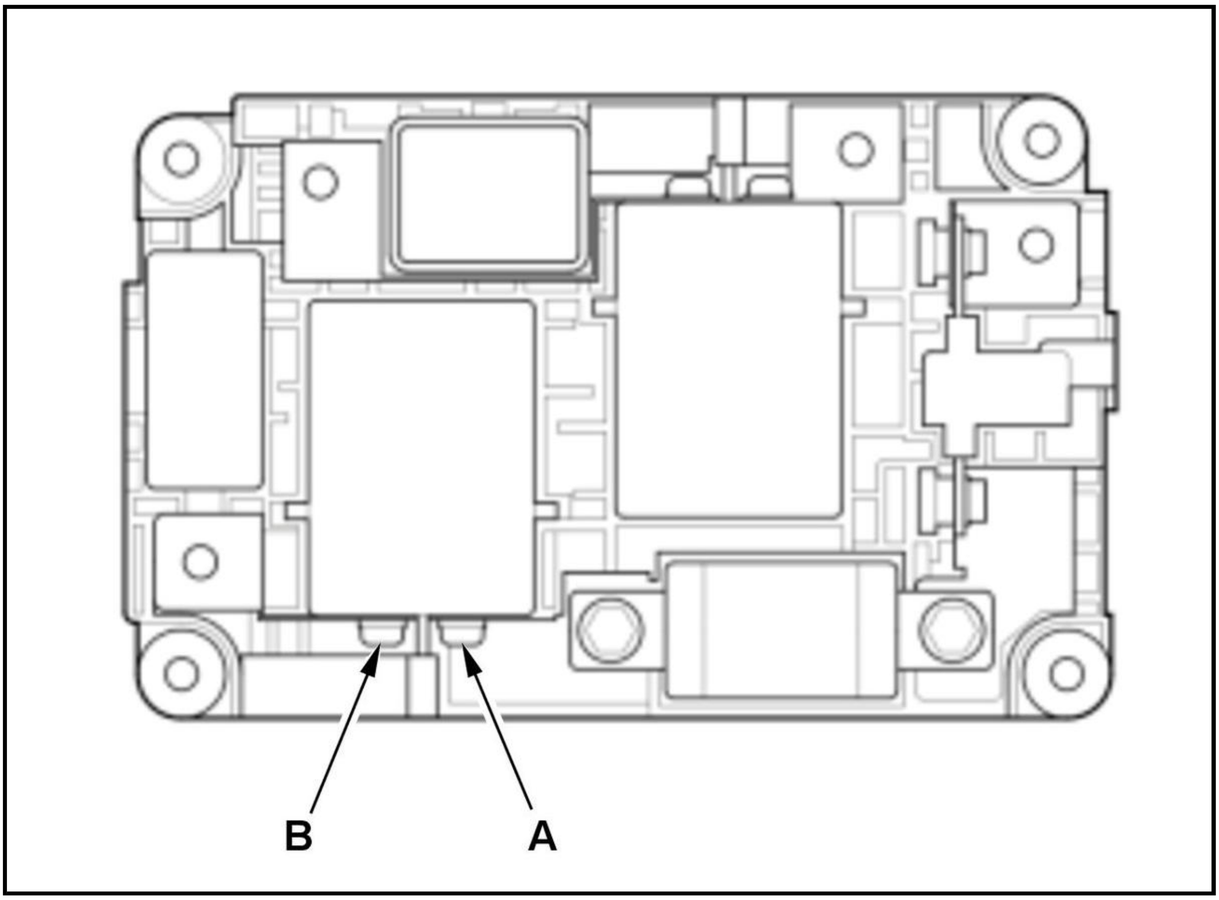

Is there continuity?

YES

Go to step 15

NO

Faulty bypass contactor. **Replace the junction board** .

15. High voltage sub contactor check (coil side)

    -1. Remove the jumper wire from the junction board.

    -2. At the junction board side, measure the resistance between test points 1 and 2.

Test condition	Vehicle OFF (LOCK) mode
B	Junction board 4P connector: disconnected
Test point 1	Junction board 4P connector (male terminals) No. 1: ①
Test point 2	Junction board 4P connector (male terminals) No. 3: ①

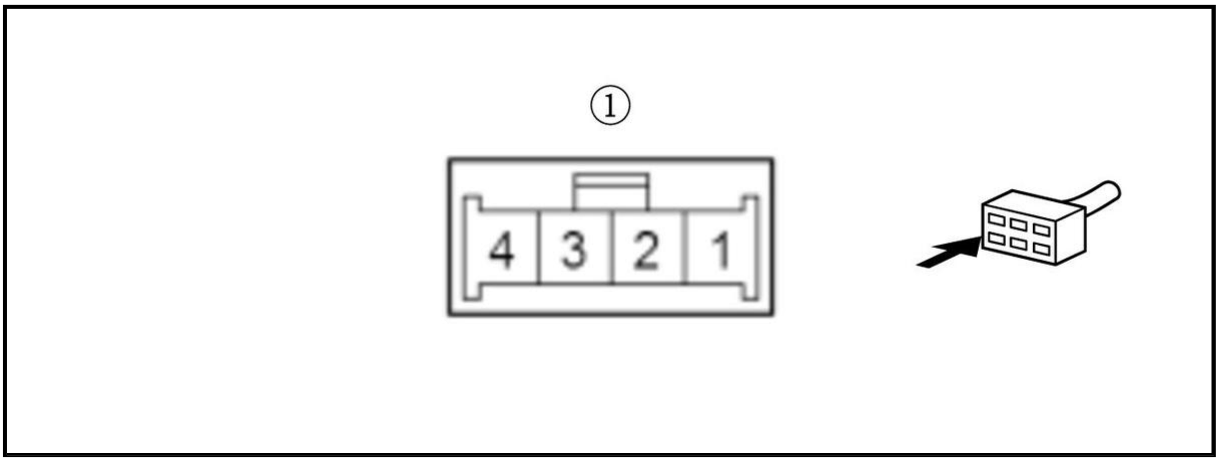

Is there 31.1 - 38.0 Ω ?

YES

Go to step 16.

NO

Faulty high voltage sub contactor. **Replace the junction board** .

16. High voltage sub contactor check (switch side)

-1. At the junction board side, connect terminals A and B to the 12 volt battery with jumper wires

Terminal A	Junction board 4P connector (male terminals) No. 3: ①
Terminal B	12 volt battery positive terminal: ②

Terminal A	Junction board 4P connector (male terminals) No. 1: ①
Terminal B	12 volt battery negative terminal: ②

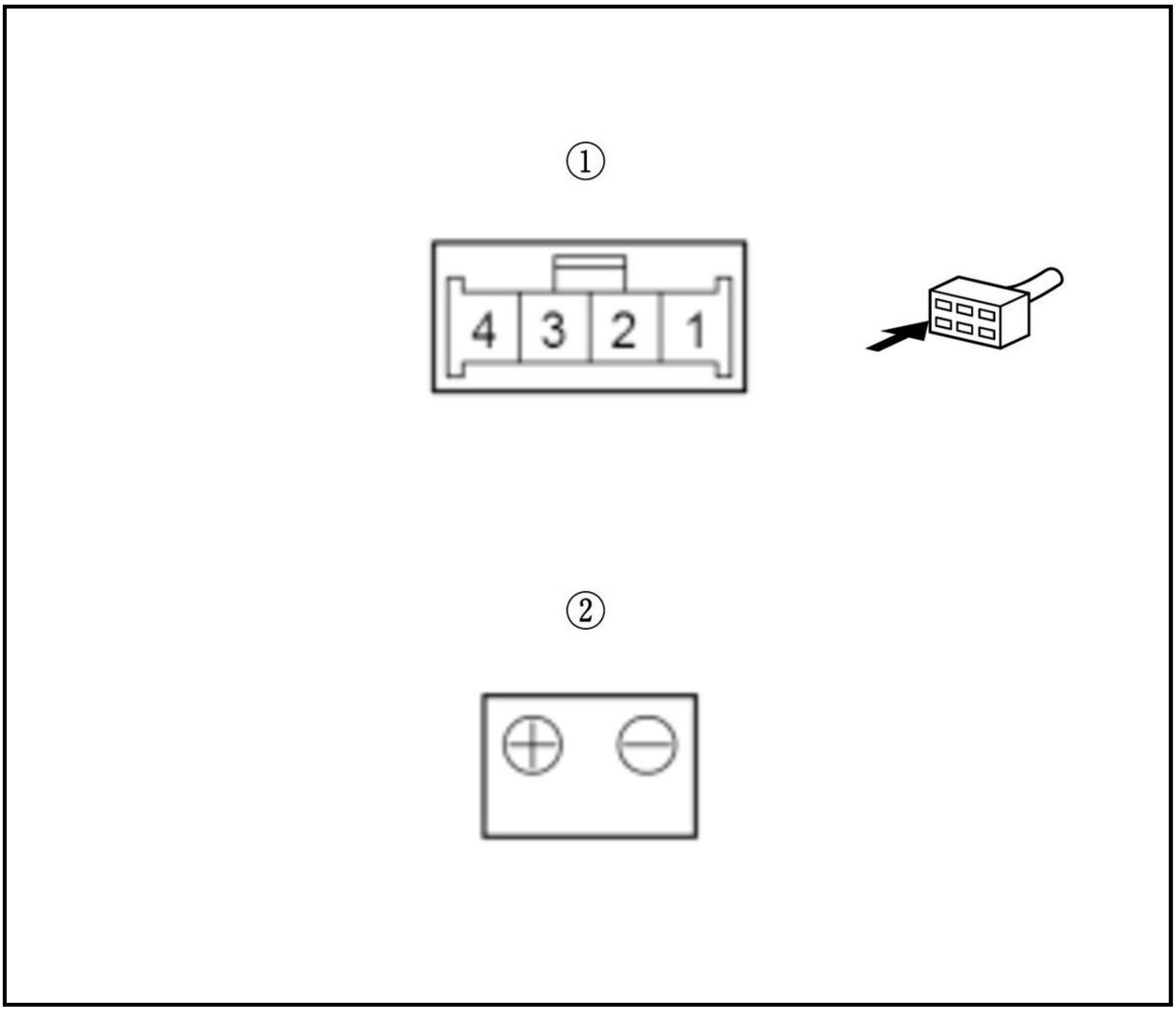

-2. Check for continuity between test points 1 and 2.

Test condition	Vehicle OFF (LOCK) mode
B	Junction board 4P connector: disconnected
B	Junction board 4P connector terminals No. 3 and No. 1 (junction board side): jumped to 12 volt battery
Test point 1	High voltage sub contactor terminal (A)
Test point 2	High voltage sub contactor terminal (B)

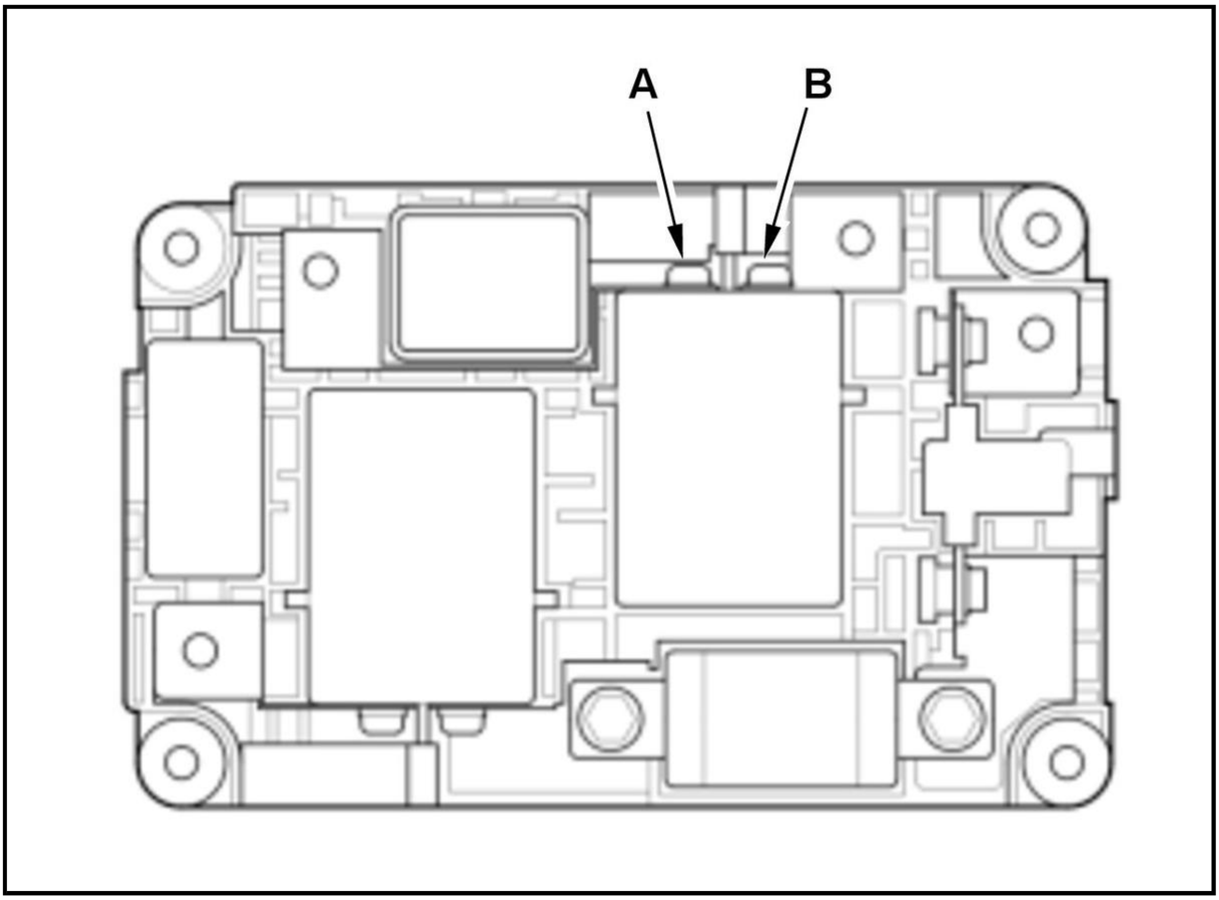

Is there continuity?

YES

Go to step 17.

NO

Faulty high voltage sub contactor. **Replace the junction board** .

17. Open wire check (CNTN line)

    -1. Remove the jumper wire from the junction board.

    -2. Measure the resistance between test points 1 and 2.

Test condition	Vehicle OFF (LOCK) mode
B	Junction board 4P connector: disconnected
B	Battery condition monitor module connector E (32P): disconnected
Test point 1	Junction board 4P connector (female terminals) No. 1: ①
Test point 2	**Battery condition monitor module connector E (32P) No. 5**

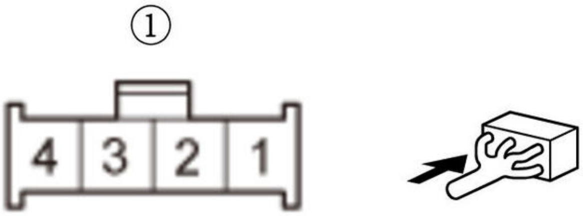

Is there 1.0 Ω or less?

YES

Go to step 18.

NO

Repair an open in the CNTN wire between the junction board and the battery condition monitor module (E5).

18. Open wire check (CNTPS line)

-1. Disconnect the following connector.

Service plug 3P connector

-2. Measure the resistance between test points 1 and 2.

Test condition	Vehicle OFF (LCCK) mode
B	Junction board 4P connector: disconnected
B	Battery condition monitor module connector E (32P): disconnected
B	Service plug 3P connector: disconnected
Test point 1	Junction board 4P connector (female terminals) No. 3: ①
Test point 2	Service plug 3P connector (female terminals) No. 1: ②

Test point 1	**Battery condition monitor module connector E (32P) No. 3**
Test point 2	Service plug 3P connector (female terminals) No. 2: ②

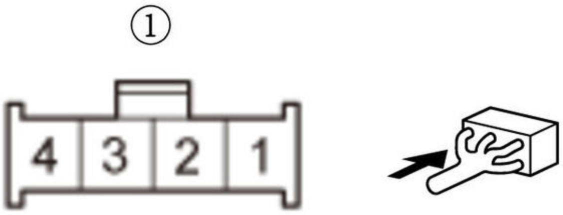

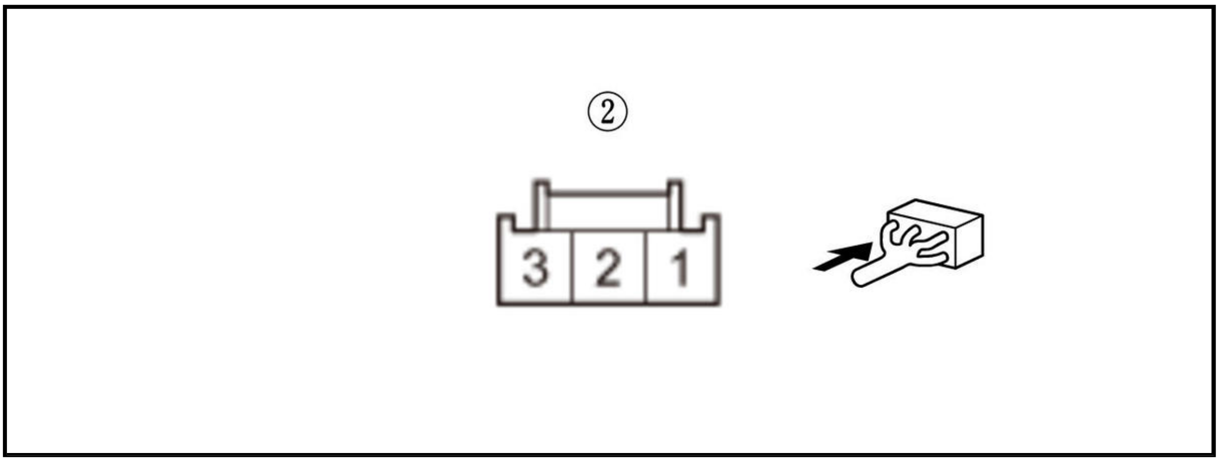

Is there 1.0 Ω or less?

YES

Go to step 19.

NO

Repair an open in the CNTPS wire between the junction board and the service plug, and/or the battery condition monitor module (E3) and the service plug.

19. Service plug check (contactor control circuit)

-1. **Install the service plug** .

-2. Reconnect the service plug 3P connector.

-3. Measure the resistance between test points 1 and 2.

Test condition	Vehicle OFF (LCCK) mode
B	Junction board 4P connector: disconnected
B	Battery condition monitor module connector E (32P): disconnected
Test point 1	**Battery condition monitor module connector E (32P) No. 3**
Test point 2	Junction board 4P connector (female terminals) No. 3: ①

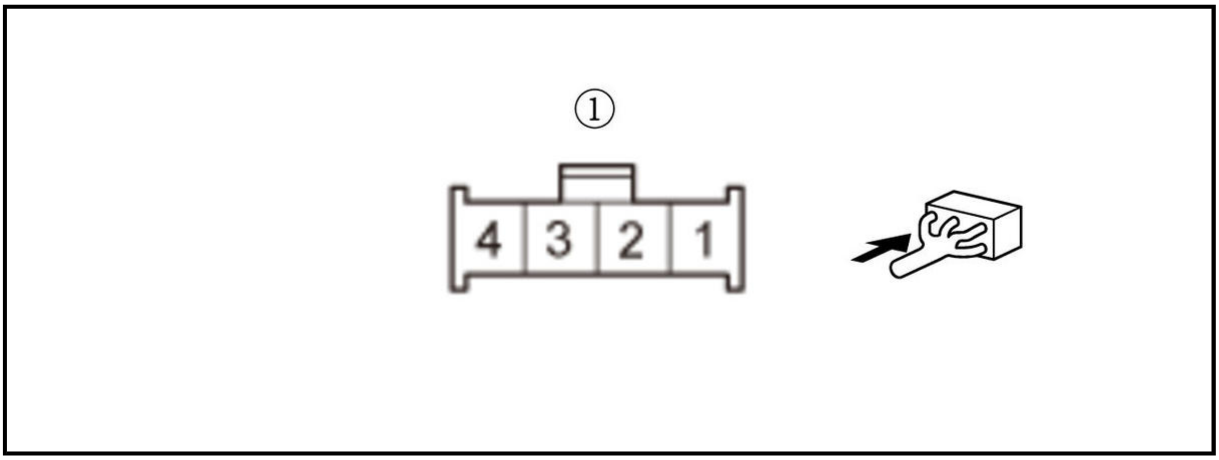

Is there 1.0 Ω or less?

YES

Replace the battery condition monitor module .

NO

Replace the service plug.

DTC P0AFA (492)

DTC P0AFA : HV Battery System Voltage Low

NOTE: Before you troubleshoot, **review the general troubleshooting information** .

DTC Description	Confirmed DTC	Pending DTC	Freeze Frame
P0AFA HV Battery System Voltage Low	B	B	B

DTC (Electric Powertrain)

1. Problem verification

   -1. Turn the vehicle to the ON mode.

   -2. Clear the DTC with the HDS.

   -3. Turn the vehicle to the OFF (LOCK) mode.

   -4. Turn the vehicle to the ON mode.

   -5. Check for Pending or Confirmed DTCs with the HDS.

DTC Description	Confirmed DTC	Pending DTC	Freeze Frame
P0AFA HV Battery System Voltage Low	B	B	B

   Is DTC P0AFA indicated?

   YES

   Go to step 2.

   NO

   Intermittent failure, the system is OK at this time. If the freeze data/on-board snapshot of this DTC is recorded, try to reproduce the failure under the same conditions with the freeze data/on-board snapshot.

2. Fuse check

   -1. Turn the vehicle to the OFF (LOCK) mode.

   -2. Check the following fuse.

Fuse	**No. E5**

   Is the fuse OK?

   YES

   Go to step 3.

   NO

   Replace the No. E5 fuse. Also check for a short to ground on the No. E5 fuse circuit if needed.

3. Relay check

-1. Remove the **service plug** and the **IPU cover** .

-2. **Remove the IGHLDB relay** .

-3. **Test the IGHLDB relay** .

Is the relay OK?

YES

Go to step 4.

NO

Replace the IGHLDB relay.

4. Open wire check (+B_IMA1/+B_IGB line)

-1. **Do the 12 volt battery terminal reconnection procedure** .

-2. Measure the voltage between test points 1 and 2.

Test condition	Vehicle OFF (LOCK) mode
B	IGHLDB relay: disconnected
Test point 1	IGHLDB relay 4P socket (female terminal) No. 2, No. 3: ①
Test point 2	Body ground

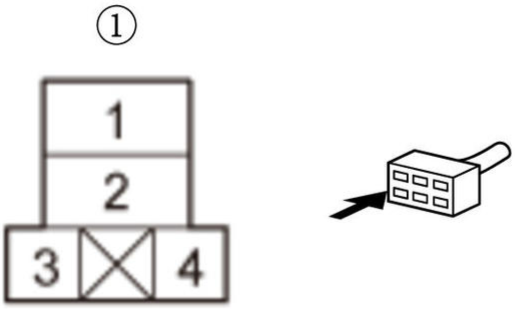

Is there battery voltage?

YES

Go to step 5.

NO

Repair an open in the +B_IMA1/+B_IGB wire between the **No. E5** fuse and IGHLDB relay.

5. Open wire check (IGHLDB line)

-1. Disconnect the following connector.

Battery condition monitor module connector E (32P)

-2. Measure the resistance between test points 1 and 2.

Test condition	Vehicle OFF (LOCK) mode
B	Battery condition monitor module connector E (32P): disconnected
B	IGHLDB relay: disconnected
Test point 1	IGHLDB relay 4P socket (female terminal) No. 4: ①
Test point 2	**Battery condition monitor module connector E (32P) No. 19**

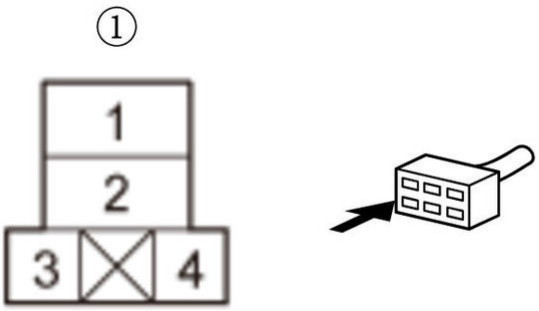

Is there 1.0 Ω or less?

YES

Go to step 6.

NO

Repair an open in the IGHLDB wire between IGHLDB relay and the battery condition monitor module (E19).

6. Open wire check (IGB line)

-1. Measure the resistance between test points 1 and 2.

Test condition	Vehicle OFF (LOCK) mode
B	Battery condition monitor module connector E (32P): disconnected
B	IGHLDB relay: disconnected
Test point 1	IGHLDB relay 4P socket (female terminal) No. 1: ①
Test point 2	**Battery condition monitor module connector E (32P) No. 2**

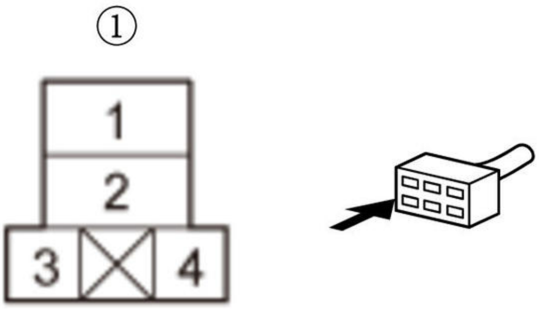

Is there 1.0 Ω or less?

YES

The IGB wire is OK. Replace the battery condition monitor module .

NO

Repair an open in the IGB wire between IGHLDB relay and the battery condition monitor module (E2).

DTC P0B3B (122)

DTC P0B3B : HV Battery Cell Voltage Sense Circuit 1

NOTE: Before you troubleshoot, review the general troubleshooting information .

DTC Description	Confirmed DTC	Pending DTC	Freeze Frame
P0B3B HV Battery Cell Voltage Sense Circuit 1	B	B	B

DTC (Electric Powertrain)

1. Problem verification (DTC check)

   -1. Turn the vehicle to the ON mode.

   -2. Clear the DTC with the HDS.

   -3. Turn the vehicle to the OFF (LOCK) mode.

   -4. Turn the vehicle to the ON mode.

   -5. Check for Pending or Confirmed DTCs with the HDS.

DTC Description	Confirmed DTC	Pending DTC	Freeze Frame
P0B3B HV Battery Cell Voltage Sense Circuit 1	B	B	B

   Is DTC P0B3B indicated?

   YES

   Go to step 2.

   NO

   Intermittent failure, the system is OK at this time. Check for poor connections or loose terminals at the battery module the battery condition monitor module. If the freeze data/on-board snapshot of this DTC is recorded, try to reproduce the failure under the same conditions with the freeze data/on-board snapshot.

2. Problem verification (update)

   -1. Clear the DTC with the HDS.

   -2. Do the battery condition monitor module update procedure .

   -3. Turn the vehicle to the OFF (LOCK) mode.

   -4. Turn the vehicle to the ON mode.

-5. Check for Pending or Confirmed DTCs with the HDS.

DTC Description	Confirmed DTC	Pending DTC	Freeze Frame
P0B3B HV Battery Cell Voltage Sense Circuit 1	B	B	B

Is DTC P0B3B indicated?

YES

Go to step 3.

NO

The update is complete. If any other Pending or Confirmed DTCs are indicated, go to the indicated DTC's troubleshooting.

3. Open wire check (VHB subharness)

-1. Turn the vehicle to the OFF (LOCK) mode.

-2. Remove the **service plug** and the **IPU cover** .

-3. **Remove the IPU and the IPU case** .

-4. Disconnect the following connectors.

Battery condition monitor module connector A (28P)
Battery condition monitor module connector B (28P)
Battery module 1 28P connector

-5. Measure the resistance between test points 1 and 2.

Test condition	Vehicle OFF (LOCK) mode
B	Battery condition monitor module connector A (28P): disconnected
B	Battery condition monitor module connector B (28P): disconnected
B	Battery module 1 28P connector: disconnected

Circuit name	Test point 1 (**Battery condition monitor module connector A (28P)**)	Test point 2 (Battery module 1 28P connector (male terminals)): ①
VH0	No. 8	No. 1
VH1	No. 23	No. 3
VH2	No. 9	No. 5
VH3	No. 24	No. 17
VH4	No. 10	No. 6
VH5	No. 25	No. 18
VH6	No. 11	No. 7
VH7	No. 26	No. 19
VH8	No. 12	No. 8

Circuit name	Test point 1 (**Battery condition monitor module connector A (28P)**)	Test point 2 (Battery module 1 28P connector (male terminals)): ①
VH9	No. 27	No. 20
VH10	No. 13	No. 9

Circuit name	Test point 1 (Battery condition monitor module connector A (28P))	Test point 2 (Battery module 1 28P connector (male terminals)): ①
VH11	No. 28	No. 21

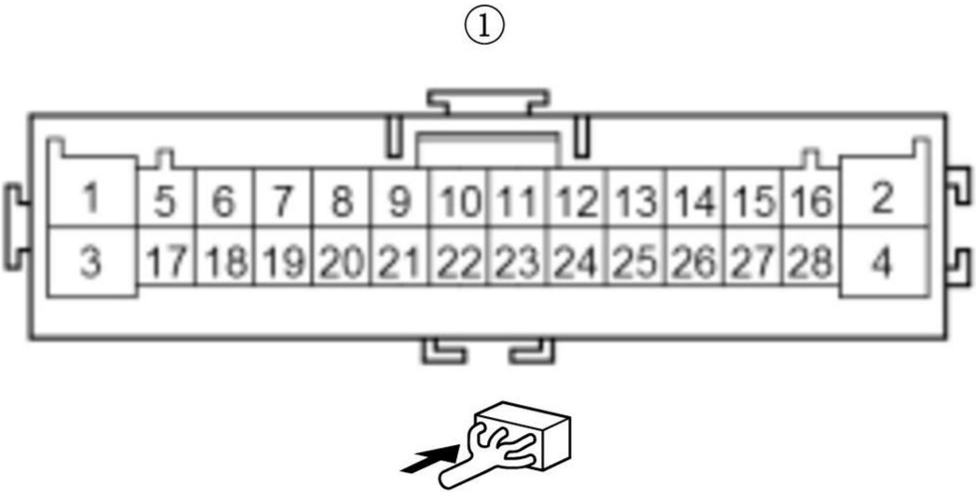
①
1
5
6
7
8
9
10
11
12
13
14
15
16
2
3
17
18
19
20
21
22
23
24
25
26
27
28
4

Circuit name	Test point 1 (Battery condition monitor module connector B (28P))	Test point 2 (Battery module 1 28P connector (male terminals)): ①
VH12	No. 15	No. 10

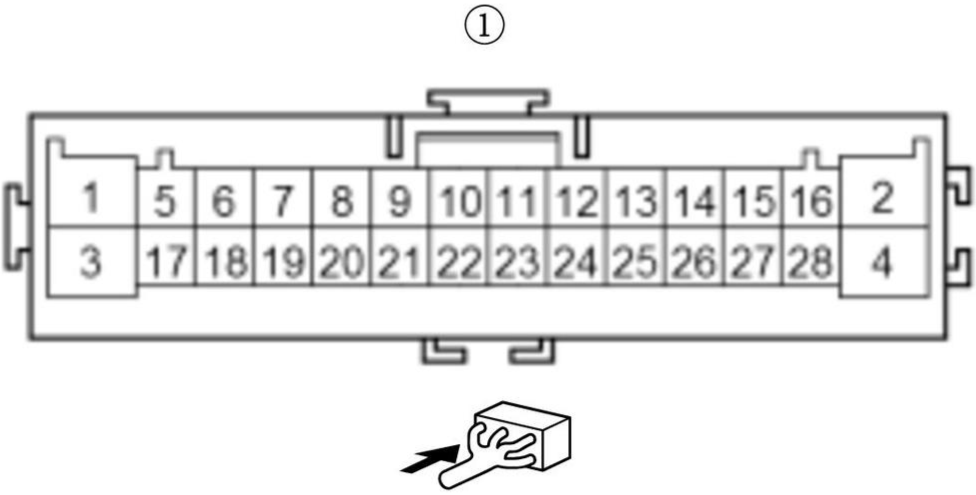
①
1
5
6
7
8
9
10
11
12
13
14
15
16
2
3
17
18
19
20
21
22
23
24
25
26
27
28
4

Is there 1.0 Ω or less?

YES

The VHB subharness is OK. Replace the battery condition monitor module and the battery pack .

NO

Repair an open in the VHB subharness between the battery condition monitor module and the battery module.

DTC P0B40 (1048)

DTC P0B40 : HV Battery Cell Voltage Sense Circuit 2

NOTE: Before you troubleshoot, review the general troubleshooting information .

DTC Description	Confirmed DTC	Pending DTC	Freeze Frame
P0B40 HV Battery Cell Voltage Sense Circuit 2	B	B	B

DTC (Electric Powertrain)

1. Problem verification (DTC check)

   -1. Turn the vehicle to the ON mode.

   -2. Clear the DTC with the HDS.

   -3. Turn the vehicle to the OFF (LOCK) mode.

   -4. Turn the vehicle to the ON mode.

   -5. Check for Pending or Confirmed DTCs with the HDS.

DTC Description	Confirmed DTC	Pending DTC	Freeze Frame
P0B40 HV Battery Cell Voltage Sense Circuit 2	B	B	B

   Is DTC P0B40 indicated?

   YES

   Go to step 2.

   NO

   Intermittent failure, the system is OK at this time. Check for poor connections or loose terminals at the battery module the battery condition monitor module. If the freeze data/on-board snapshot of this DTC is recorded, try to reproduce the failure under the same conditions with the freeze data/on-board snapshot.

2. Problem verification (update)

   -1. Clear the DTC with the HDS.

   -2. Do the battery condition monitor module update procedure .

   -3. Turn the vehicle to the OFF (LOCK) mode.

   -4. Turn the vehicle to the ON mode.

   -5. Check for Pending or Confirmed DTCs with the HDS.

DTC Description	Confirmed DTC	Pending DTC	Freeze Frame
P0B40 HV Battery Cell Voltage Sense Circuit 2	B	B	B

Is DTC P0B40 indicated?

YES

Go to step 3.

NO

The update is complete. If any other Pending or Confirmed DTCs are indicated, go to the indicated DTC's troubleshooting.

3. Open wire check (VHB subharness)

-1. Turn the vehicle to the OFF (LOCK) mode.

-2. Remove the **service plug** and the **IPU cover** .

-3. **Remove the IPU and the IPU case** .

-4. Disconnect the following connectors.

Battery condition monitor module connector B (28P)
Battery module 1 28P connector
Battery module 2 28P connector

-5. Measure the resistance between test points 1 and 2.

Test condition	Vehicle OFF (LOCK) mode
B	Battery condition monitor module connector B (28P): disconnected
B	Battery module 1 28P connector: disconnected
B	Battery module 2 28P connector: disconnected

Circuit name	Test point 1 (Battery condition monitor module connector B (28P))	Test point 2 (Battery module 1 28P connector (male terminals)): ①
VH12	No. 15	No. 10
VH13	No. 1	No. 22
VH14	No. 16	No. 11
VH15	No. 2	No. 23
VH16	No. 17	No. 12
VH17	No. 3	No. 24
VH18-0	No. 18	No. 13

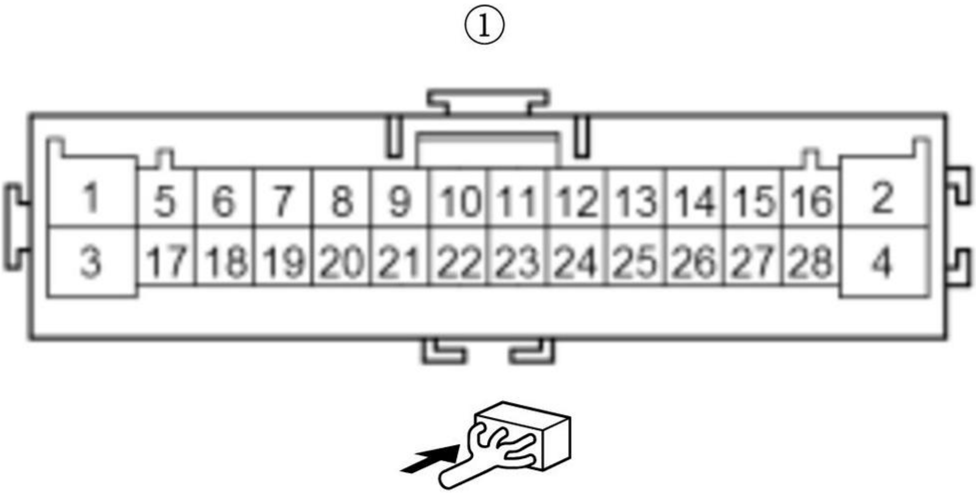
①
1
5
6
7
8
9
10
11
12
13
14
15
16
2
3
17
18
19
20
21
22
23
24
25
26
27
28
4

Circuit name	Test point 1 (Battery condition monitor module connector B (28P))	Test point 2 (Battery module 2 28P connector (male terminals)): ①
VH19	No. 4	No. 3
VH20	No. 19	No. 5
VH21	No. 5	No. 17
VH22	No. 20	No. 6
VH23	No. 6	No. 18
VH24	No. 7	No. 7

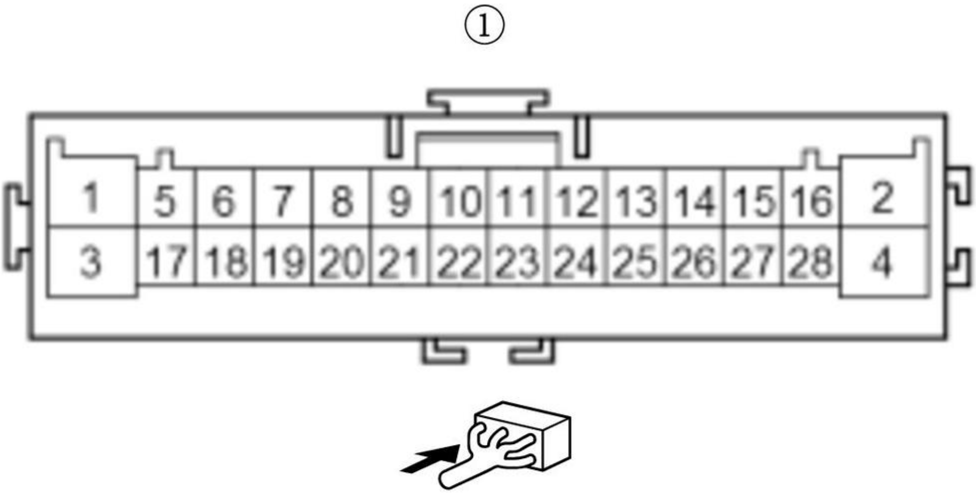
①
1
5
6
7
8
9
10
11
12
13
14
15
16
2
3
17
18
19
20
21
22
23
24
25
26
27
28
4

Is there 1.0 Ω or less?

YES

The VHB subharness is OK. **Replace the battery condition monitor module** and **the battery pack** .

NO

Repair an open in the VHB subharness between the battery condition monitor module and the battery module.

DTC P0B45 (1049)

DTC P0B45 : HV Battery Cell Voltage Sense Circuit 3

NOTE: Before you troubleshoot, **review the general troubleshooting information** .

DTC Description	Confirmed DTC	Pending DTC	Freeze Frame
P0B45 HV Battery Cell Voltage Sense Circuit 3	B	B	B

DTC (Electric Powertrain)

1. Problem verification (DTC check)

   -1. Turn the vehicle to the ON mode.

   -2. Clear the DTC with the HDS.

   -3. Turn the vehicle to the OFF (LOCK) mode.

   -4. Turn the vehicle to the ON mode.

   -5. Check for Pending or Confirmed DTCs with the HDS.

DTC Description	Confirmed DTC	Pending DTC	Freeze Frame
P0B45 HV Battery Cell Voltage Sense Circuit 3	B	B	B

   Is DTC P0B45 indicated?

   YES

   Go to step 2.

   NO

   Intermittent failure, the system is OK at this time. Check for poor connections or loose terminals at the battery module the battery condition monitor module. If the freeze data/on-board snapshot of this DTC is recorded, try to reproduce the failure under the same conditions with the freeze data/on-board snapshot.

2. Problem verification (update)

   -1. Clear the DTC with the HDS.

   -2. **Do the battery condition monitor module update procedure** .

   -3. Turn the vehicle to the OFF (LOCK) mode.

   -4. Turn the vehicle to the ON mode.

   -5. Check for Pending or Confirmed DTCs with the HDS.

DTC Description	Confirmed DTC	Pending DTC	Freeze Frame
P0B45 HV Battery Cell Voltage Sense Circuit 3	B	B	B

Is DTC P0B45 indicated?

YES

Go to step 3.

NO

The update is complete. If any other Pending or Confirmed DTCs are indicated, go to the indicated DTC's troubleshooting.

3. Open wire check (VHB subharness)

-1. Turn the vehicle to the OFF (LOCK) mode.

-2. Remove the **service plug** and the **IPU cover** .

-3. **Remove the IPU and the IPU case** .

-4. Disconnect the following connectors.

Battery condition monitor module connector B (28P)
Battery condition monitor module connector C (28P)
Battery module 2 28P connector
Battery module 3 28P connector

-5. Measure the resistance between test points 1 and 2.

Test condition	Vehicle OFF (LOCK) mode
B	Battery condition monitor module connector B (28P): disconnected
B	Battery condition monitor module connector C (28P): disconnected
B	Battery module 2 28P connector: disconnected
B	Battery module 3 28P connector: disconnected

Circuit name	Test point 1 (**Battery condition monitor module connector B (28P)**)	Test point 2 (Battery module 2 28P connector (male terminals)): ①
VH24	No. 7	No. 7
VH25	No. 22	No. 19
VH26	No. 8	No. 8
VH27	No. 23	No. 20
VH28	No. 9	No. 9
VH29	No. 24	No. 21
VH30	No. 10	No. 10
VH31	No. 25	No. 22

Circuit name	Test point 1 (**Battery condition monitor module connector B (28P)**)	Test point 2 (Battery module 2 28P connector (male terminals)): ①
VH32	No. 11	No. 11
VH33	No. 26	No. 23

Circuit name	Test point 1 (Battery condition monitor module connector B (28P))	Test point 2 (Battery module 2 28P connector (male terminals)): ①
VH34	No. 12	No. 12
VH35	No. 27	No. 24
VH36-0	No. 13	No. 13

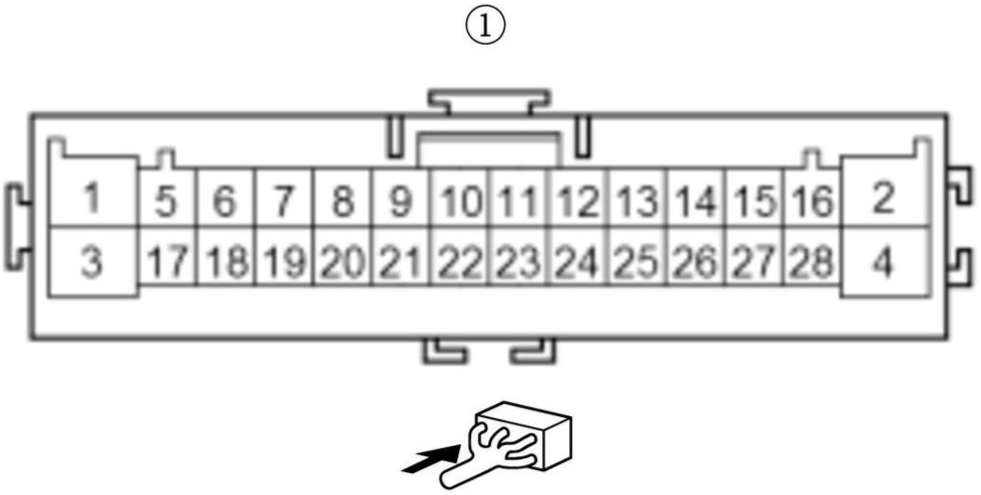
①
1
5
6
7
8
9
10
11
12
13
14
15
16
2
3
17
18
19
20
21
22
23
24
25
26
27
28
4

Circuit name	Test point 1 (Battery condition monitor module connector C (28P))	Test point 2 (Battery module 3 28P connector (male terminals)): ①
VH36-1	No. 15	No. 1

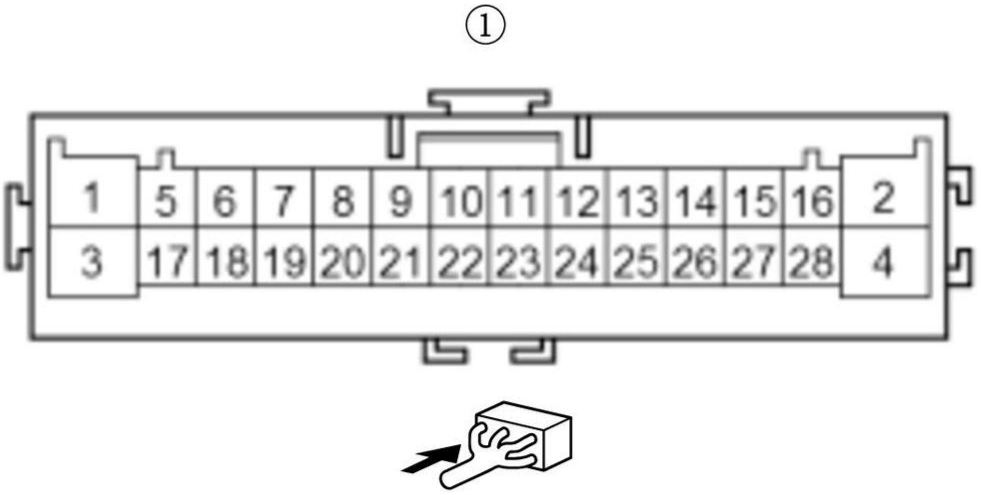
①
1
5
6
7
8
9
10
11
12
13
14
15
16
2
3
17
18
19
20
21
22
23
24
25
26
27
28
4

Is there 1.0 Ω or less?

YES

The VHB subharness is OK. **Replace the battery condition monitor module** and **the battery pack** .

NO

Repair an open in the VHB subharness between the battery condition monitor module and the battery module.

DTC P0B4A (1050)

DTC P0B4A : HV Battery Cell Voltage Sense Circuit 4

NOTE: Before you troubleshoot, **review the general troubleshooting information** .

DTC Description	Confirmed DTC	Pending DTC	Freeze Frame
P0B4A HV Battery Cell Voltage Sense Circuit 4	B	B	B

DTC (Electric Powertrain)

1. Problem verification (DTC check)

   -1. Turn the vehicle to the ON mode.

   -2. Clear the DTC with the HDS.

   -3. Turn the vehicle to the OFF (LOCK) mode.

   -4. Turn the vehicle to the ON mode.

   -5. Check for Pending or Confirmed DTCs with the HDS.

DTC Description	Confirmed DTC	Pending DTC	Freeze Frame
P0B4A HV Battery Cell Voltage Sense Circuit 4	B	B	B

   Is DTC P0B4A indicated?

   YES

   Go to step 2.

   NO

   Intermittent failure, the system is OK at this time. Check for poor connections or loose terminals at the battery module the battery condition monitor module. If the freeze data/on-board snapshot of this DTC is recorded, try to reproduce the failure under the same conditions with the freeze data/on-board snapshot.

2. Problem verification (update)

   -1. Clear the DTC with the HDS.

   -2. **Do the battery condition monitor module update procedure** .

   -3. Turn the vehicle to the OFF (LOCK) mode.

   -4. Turn the vehicle to the ON mode.

   -5. Check for Pending or Confirmed DTCs with the HDS.

DTC Description	Confirmed DTC	Pending DTC	Freeze Frame
P0B4A HV Battery Cell Voltage Sense Circuit 4	B	B	B

Is DTC P0B4A indicated?

YES

Go to step 3.

NO

The update is complete. If any other Pending or Confirmed DTCs are indicated, go to the indicated DTC's troubleshooting.

3. Open wire check (VHB subharness)

-1. Turn the vehicle to the OFF (LOCK) mode.

-2. Remove the **service plug** and the **IPU cover** .

-3. **Remove the IPU and the IPU case** .

-4. Disconnect the following connectors.

Battery condition monitor module connector B (28P)
Battery condition monitor module connector C (28P)
Battery module 2 28P connector
Battery module 3 28P connector

-5. Measure the resistance between test points 1 and 2.

Test condition	Vehicle OFF (LOCK) mode
B	Battery condition monitor module connector B (28P): disconnected
B	Battery condition monitor module connector C (28P): disconnected
B	Battery module 2 28P connector: disconnected
B	Battery module 3 28P connector: disconnected

Circuit name	Test point 1 (**Battery condition monitor module connector B (28P)**)	Test point 2 (Battery module 2 28P connector (male terminals)): ①
VH36-0	No. 13	No. 13

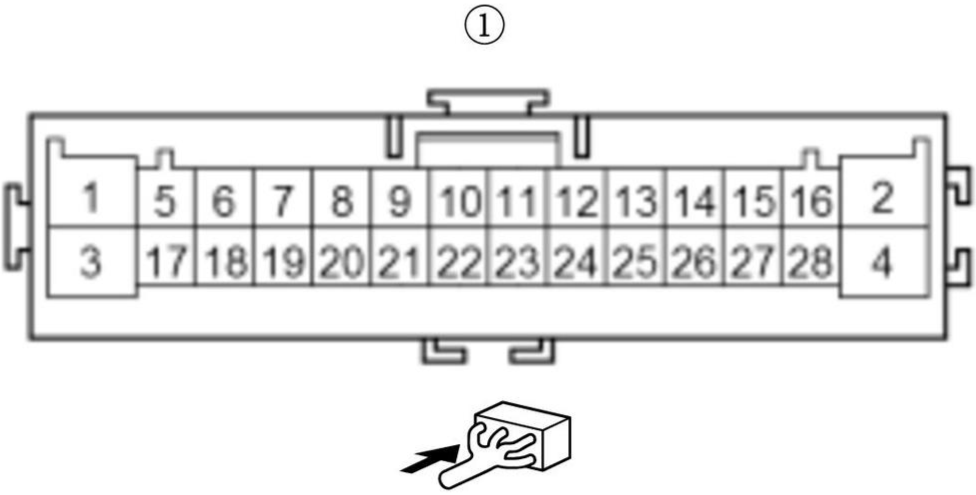
①
1
5
6
7
8
9
10
11
12
13
14
15
16
2
3
17
18
19
20
21
22
23
24
25
26
27
28
4

Circuit name	**Test point 1 (Battery condition monitor module connector C (28P))**	**Test point 2 (Battery module 3 28P connector (male terminals)): ①**
VH36-1	No. 15	No. 1
VH37	No. 1	No. 3
VH38	No. 16	No. 5
VH39	No. 2	No. 17
VH40	No. 17	No. 6
VH41	No. 3	No. 18
VH42	No. 18	No. 7
VH43	No. 4	No. 19
VH44	No. 19	No. 8
VH45	No. 5	No. 20
VH46	No. 20	No. 9
VH47	No. 6	No. 21
VH48	No. 7	No. 10

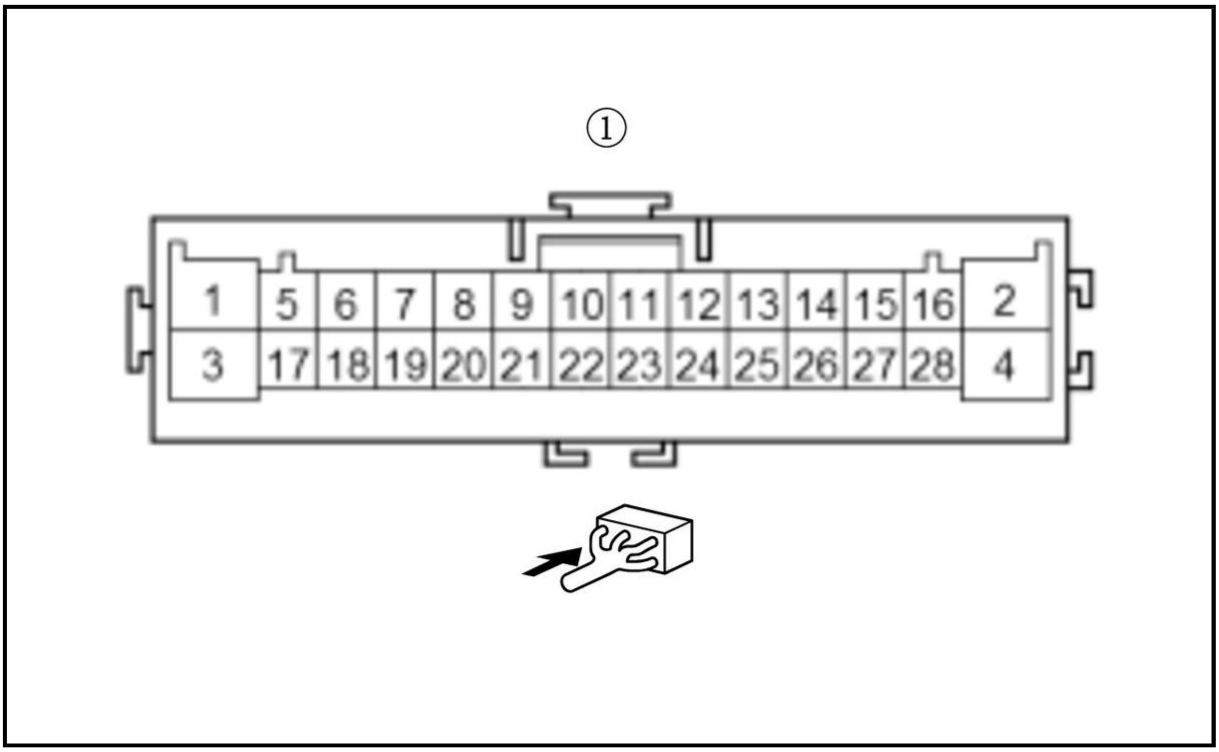

Is there 1.0 Ω or less?

YES

The VHB subharness is OK. **Replace the battery condition monitor module** and **the battery pack** .

NO

Repair an open in the VHB subharness between the battery condition monitor module and the battery module.

DTC P0B4F (1051)

DTC P0B4F : HV Battery Cell Voltage Sense Circuit 5

NOTE: Before you troubleshoot, **review the general troubleshooting information** .

DTC Description	Confirmed DTC	Pending DTC	Freeze Frame
P0B4F HV Battery Cell Voltage Sense Circuit 5	B	B	B

DTC (Electric Powertrain)

1. Problem verification (DTC check)

   -1. Turn the vehicle to the ON mode.

   -2. Clear the DTC with the HDS.

   -3. Turn the vehicle to the OFF (LOCK) mode.

   -4. Turn the vehicle to the ON mode.

   -5. Check for Pending or Confirmed DTCs with the HDS.

DTC Description	Confirmed DTC	Pending DTC	Freeze Frame
P0B4F HV Battery Cell Voltage Sense Circuit 5	B	B	B

Is DTC P0B4F indicated?

YES

Go to step 2.

NO

Intermittent failure, the system is OK at this time. Check for poor connections or loose terminals at the battery module the battery condition monitor module. If the freeze data/on-board snapshot of this DTC is recorded, try to reproduce the failure under the same conditions with the freeze data/on-board snapshot.

2. Problem verification (update)

-1. Clear the DTC with the HDS.

-2. **Do the battery condition monitor module update procedure** .

-3. Turn the vehicle to the OFF (LOCK) mode.

-4. Turn the vehicle to the ON mode.

-5. Check for Pending or Confirmed DTCs with the HDS.

DTC Description	Confirmed DTC	Pending DTC	Freeze Frame
P0B4F HV Battery Cell Voltage Sense Circuit 5	B	B	B

Is DTC P0B4F indicated?

YES

Go to step 3.

NO

The update is complete. If any other Pending or Confirmed DTCs are indicated, go to the indicated DTC's troubleshooting.

3. Open wire check (VHB subharness)

-1. Turn the vehicle to the OFF (LOCK) mode.

-2. Remove the **service plug** and the **IPU cover** .

-3. **Remove the IPU and the IPU case** .

-4. Disconnect the following connectors.

Battery condition monitor module connector C (28P)
Battery condition monitor module connector D (16P)
Battery module 3 28P connector
Battery module 4 28P connector

-5. Measure the resistance between test points 1 and 2.

Test condition	Vehicle OFF (LOCK) mode
B	Battery condition monitor module connector C (28P): disconnected
B	Battery condition monitor module connector D (16P): disconnected

B	Battery module 3 28P connector: disconnected
B	Battery module 4 28P connector: disconnected

Circuit name	**Test point 1 (Battery condition monitor module connector C (28P))**	**Test point 2 (Battery module 3 28 connector (male terminals)): ①**
VH48	No. 7	No. 10
VH49	No. 22	No. 22
VH50	No. 8	No. 11
VH51	No. 23	No. 23
VH52	No. 9	No. 12
VH53	No. 24	No. 24
VH54-0	No. 10	No. 13

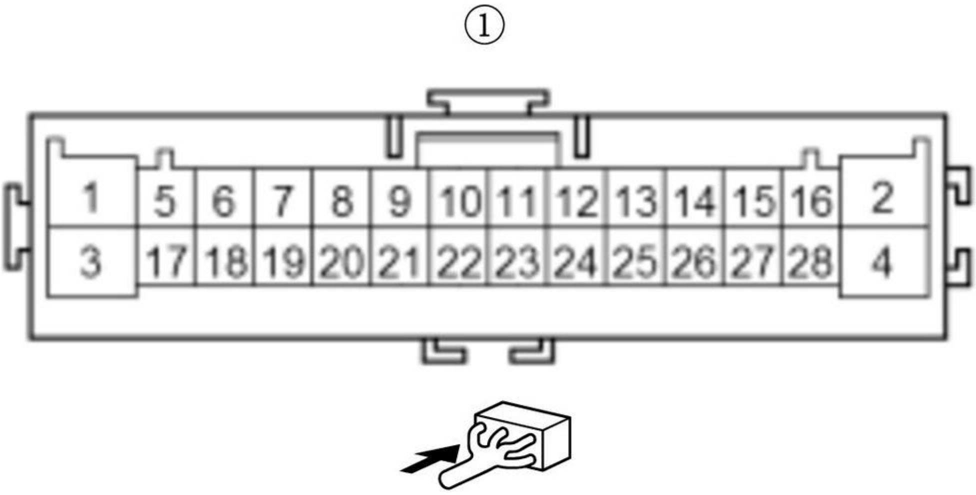

Circuit name	**Test point 1 (Battery condition monitor module connector C (28P))**	**Test point 2 (Battery module 4 28P connector (male terminals)): ①**
VH55	No. 25	No. 3
VH56	No. 11	No. 5
VH57	No. 26	No. 17
VH58	No. 12	No. 6
VH59	No. 27	No. 18

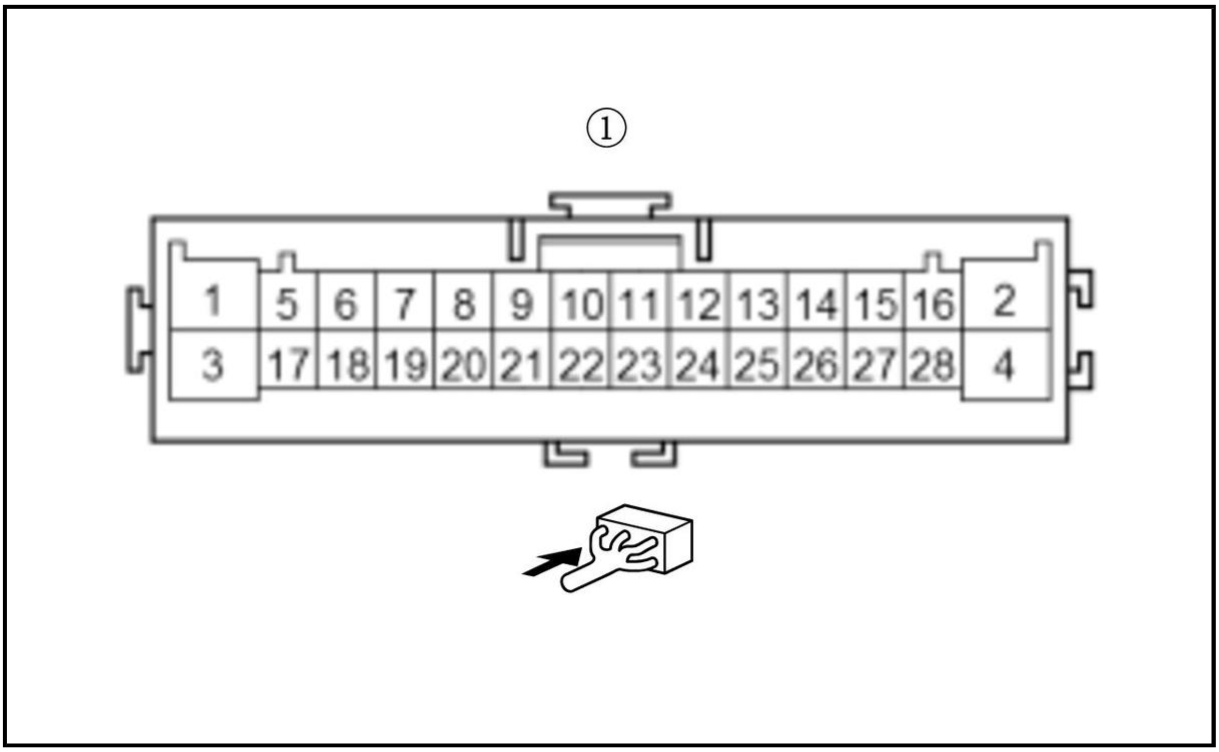
①
1
5
6
7
8
9
10
11
12
13
14
15
16
2
3
17
18
19
20
21
22
23
24
25
26
27
28
4

Circuit name	**Test point 1 (Battery condition monitor module connector D (16P))**	**Test point 2 (Battery module 4 28P connector (male terminals)): ①**
VH60	No. 9	No. 7

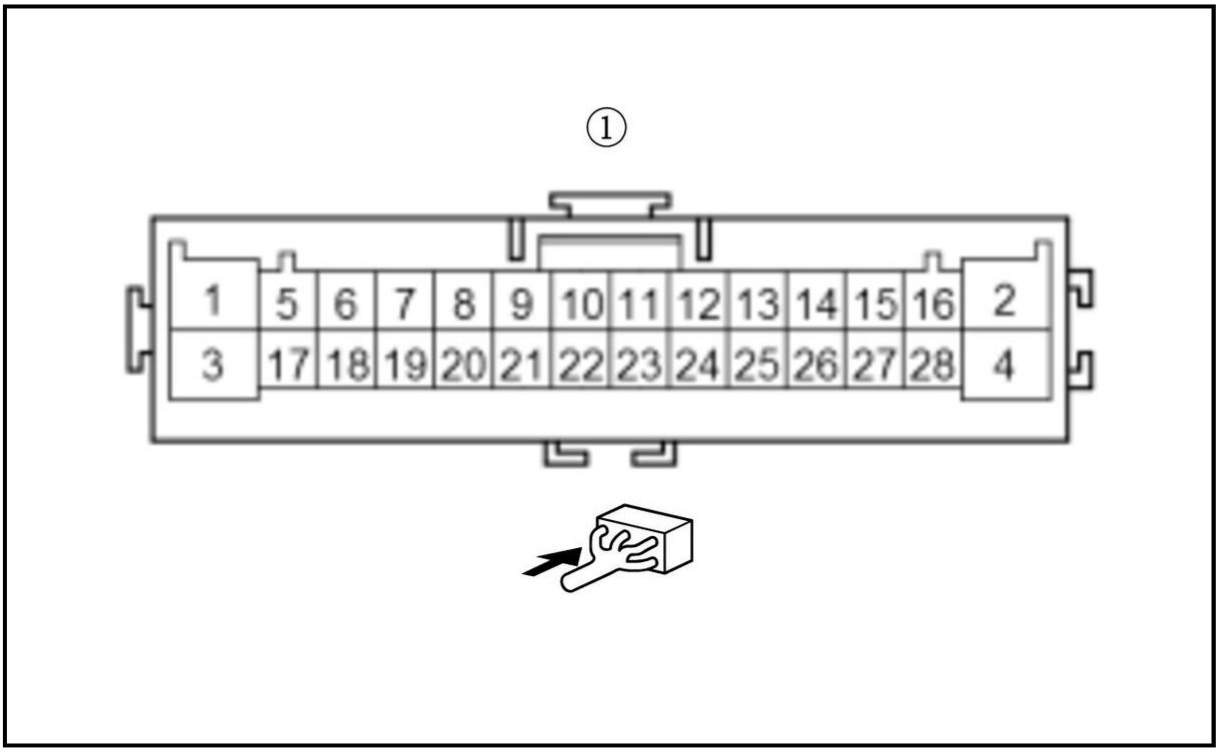
①
1
5
6
7
8
9
10
11
12
13
14
15
16
2
3
17
18
19
20
21
22
23
24
25
26
27
28
4

Is there 1.0 Ω or less?

YES

The VHB subharness is OK. **Replace the battery condition monitor module** and **the battery pack** .

NO

Repair an open in the VHB subharness between the battery condition monitor module and the battery module.

DTC P0B54 (1052)

DTC P0B54 : HV Battery Cell Voltage Sense Circuit 6

NOTE: Before you troubleshoot, **review the general troubleshooting information** .

DTC Description	Confirmed DTC	Pending DTC	Freeze Frame
P0B54 HV Battery Cell Voltage Sense Circuit 6	B	B	B

DTC (Electric Powertrain)

1. Problem verification (DTC check)

   -1. Turn the vehicle to the ON mode.

   -2. Clear the DTC with the HDS.

   -3. Turn the vehicle to the OFF (LOCK) mode.

   -4. Turn the vehicle to the ON mode.

   -5. Check for Pending or Confirmed DTCs with the HDS.

DTC Description	Confirmed DTC	Pending DTC	Freeze Frame
P0B54 HV Battery Cell Voltage Sense Circuit 6	B	B	B

   Is DTC P0B54 indicated?

   YES

   Go to step 2.

   NO

   Intermittent failure, the system is OK at this time. Check for poor connections or loose terminals at the battery module the battery condition monitor module. If the freeze data/on-board snapshot of this DTC is recorded, try to reproduce the failure under the same conditions with the freeze data/on-board snapshot.

2. Problem verification (update)

   -1. Clear the DTC with the HDS.

   -2. **Do the battery condition monitor module update procedure** .

   -3. Turn the vehicle to the OFF (LOCK) mode.

   -4. Turn the vehicle to the ON mode.

   -5. Check for Pending or Confirmed DTCs with the HDS.

DTC Description	Confirmed DTC	Pending DTC	Freeze Frame
P0B54 HV Battery Cell Voltage Sense Circuit 6	B	B	B

   Is DTC P0B54 indicated?

   YES

Go to step 3.

NO

The update is complete. If any other Pending or Confirmed DTCs are indicated, go to the indicated DTC's troubleshooting.

3. Open wire check (VHB subharness)

-1. Turn the vehicle to the OFF (LOCK) mode.

-2. Remove the **service plug** and the **IPU cover** .

-3. **Remove the IPU and the IPU case** .

-4. Disconnect the following connectors.

Battery condition monitor module connector D (16P)
Battery module 4 28P connector

-5. Measure the resistance between test points 1 and 2.

Test condition	Vehicle OFF (LOCK) mode
B	Battery condition monitor module connector D (16P): disconnected
B	Battery module 4 28P connector: disconnected

Circuit name	Test point 1 (**Battery condition monitor module connector D (16P)**)	Test point 2 (Battery module 4 28 connector (male terminals)): ①
VH60	No. 9	No. 7
VH61	No. 1	No. 19
VH62	No. 10	No. 8
VH63	No. 2	No. 20
VH64	No. 11	No. 9
VH65	No. 3	No. 21
VH66	No. 12	No. 10
VH67	No. 4	No. 22
VH68	No. 13	No. 11
VH69	No. 5	No. 23
VH70	No. 14	No. 12

Circuit name	Test point 1 (**Battery condition monitor module connector D (16P)**)	Test point 2 (Battery module 4 28 connector (male terminals)): ①
VH71	No. 6	No. 24
VH72	No. 15	No. 13

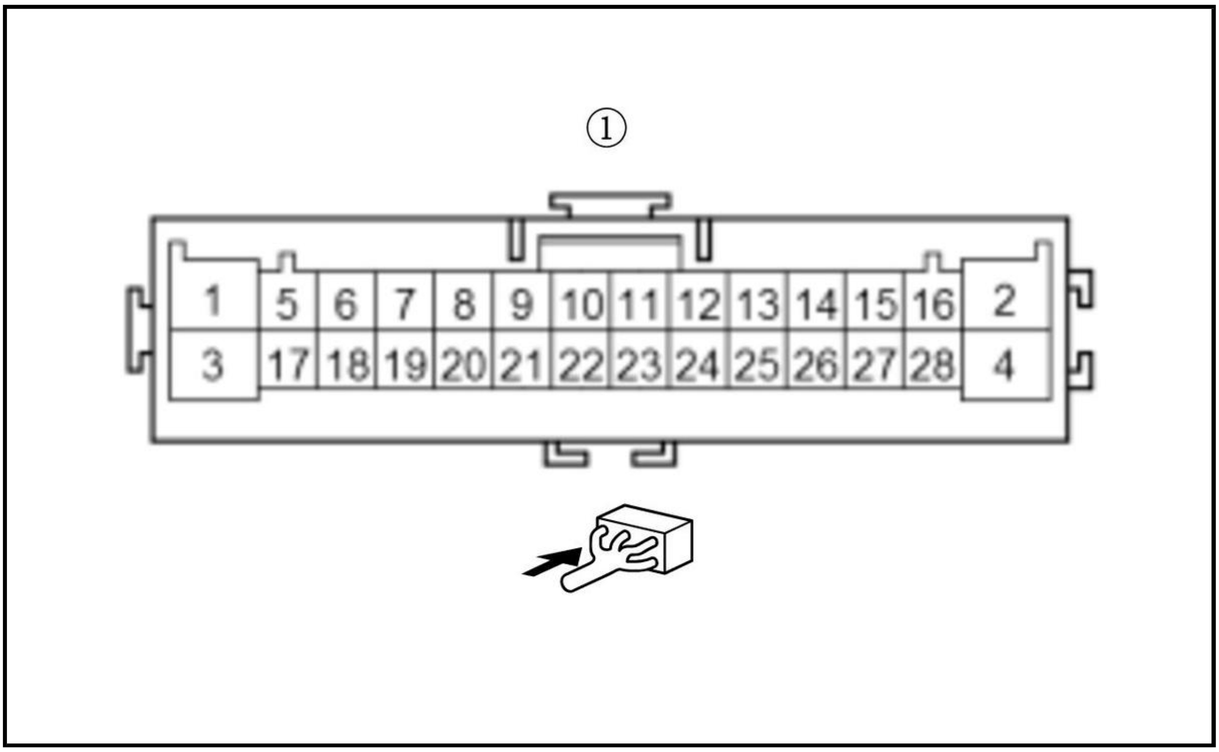

Is there 1.0 Ω or less?

YES

The VHB subharness is OK. **Replace the battery condition monitor module** and **the battery pack** .

NO

Repair an open in the VHB subharness between the battery condition monitor module and the battery module.

DTC P0D32 (417) (BATTERY CONDITION MONITOR MODULE)

DTC P0D32 : DC-DC Converter Over Temperature (Battery Condition Monitor Module Detected)

NOTE: Before you troubleshoot, **review the general troubleshooting information** .

DTC Description	Confirmed DTC	Pending DTC	Freeze Frame
P0D32 DC-DC Converter Over Temperature (Battery Condition Monitor Module Detected)	B	B	B

DTC (Electric Powertrain)

1. Problem verification

-1. Turn the vehicle to the ON mode.

-2. Clear the DTC with the HDS.

Turn the vehicle to READY TO DRIVE mode, and wait 750 seconds under these conditions.

- Headlights on high beam
- Hazard warning lights on
- Blower fan at maximum speed
- Rear window defogger on
- Seat heater on, max hot

- A/C switch ON, heater on, max hot

-4. Check for Pending or Confirmed DTCs with the HDS.

DTC Description	Confirmed DTC	Pending DTC	Freeze Frame
P0D32 DC-DC Converter Over Temperature (Battery Condition Monitor Module Detected)	B	B	B

Is DTC P0D32 indicated?

YES

The failure is duplicated. Go to step 2.

NO

Intermittent failure, the system is OK at this time. If the freeze data/on-board snapshot of this DTC is recorded, try to reproduce the failure under the same conditions with the freeze data/on-board snapshot.

2. PCU coolant circuit check

-1. **Do the PCU coolant circuit inspection** .

Is it OK?

YES

Check the cooling fan operation. If it is OK, **replace the PCU** .

NO

Repair or replace parts as needed.

DTC P0DA8 (12)

DTC P0DA8 : HV Battery Voltage/Motor Inverter Voltage Correlation

NOTE: Before you troubleshoot, **review the general troubleshooting information** .

DTC Description	Confirmed DTC	Pending DTC	Freeze Frame
P0DA8 HV Battery Voltage/Motor Inverter Voltage Correlation	B	B	B

DTC (Electric Powertrain)

1. DTC check

-1. Turn the vehicle to the ON mode.

-2. Clear the DTC with the HDS.

-3. Turn the vehicle to the OFF (LOCK) mode.

-4. Turn the vehicle to the ON mode.

-5. Check for Pending or Confirmed DTCs with the HDS.

DTC Description	Confirmed DTC	Pending DTC	Freeze Frame
P0AE1 HV Battery Precharge Contactor Circuit	B	B	B

Is DTC P0AE1 indicated?

YES

Go to the DTC P0AE1 troubleshooting.

NO

Intermittent failure, the system is OK at this time. If the freeze data/on-board snapshot of this DTC is recorded, try to reproduce the failure under the same conditions with the freeze data/on-board snapshot.

DTC P0DE6 (74)

DTC P0DE6 : HV Battery Pack Voltage Low

NOTE:

- Before you troubleshoot, review the general troubleshooting information .
- If the DTC cannot be cleared, replace the battery pack .

DTC Description	Confirmed DTC	Pending DTC	Freeze Frame
P0DE6 HV Battery Pack Voltage Low	B	B	B

DTC (Electric Powertrain)

1. Problem verification

-1. Turn the vehicle to the ON mode.

-2. Clear the DTC with the HDS.

-3. Turn the vehicle to the OFF (LOCK) mode.

-4. Turn the vehicle to the ON mode, and wait for 10 seconds.

NOTE: Do not turn the vehicle to the READY TO DRIVE mode.

-5. Check for Pending or Confirmed DTCs with the HDS.

DTC Description	Confirmed DTC	Pending DTC	Freeze Frame
P0DE6 HV Battery Pack Voltage Low	B	B	B

Is DTC P0DE6 indicated?

YES

Go to step 2.

NO

Intermittent failure. The system is OK at this time. If the freeze data/on-board snapshot of this DTC is recorded, try to reproduce the failure under the same conditions with the freeze data/on-board snapshot.

2. Check battery module replacing history

-1. Check the sticker (A) on the left front door jamb area. If the vehicle has been replaced the battery module once already, the sticker is attached.

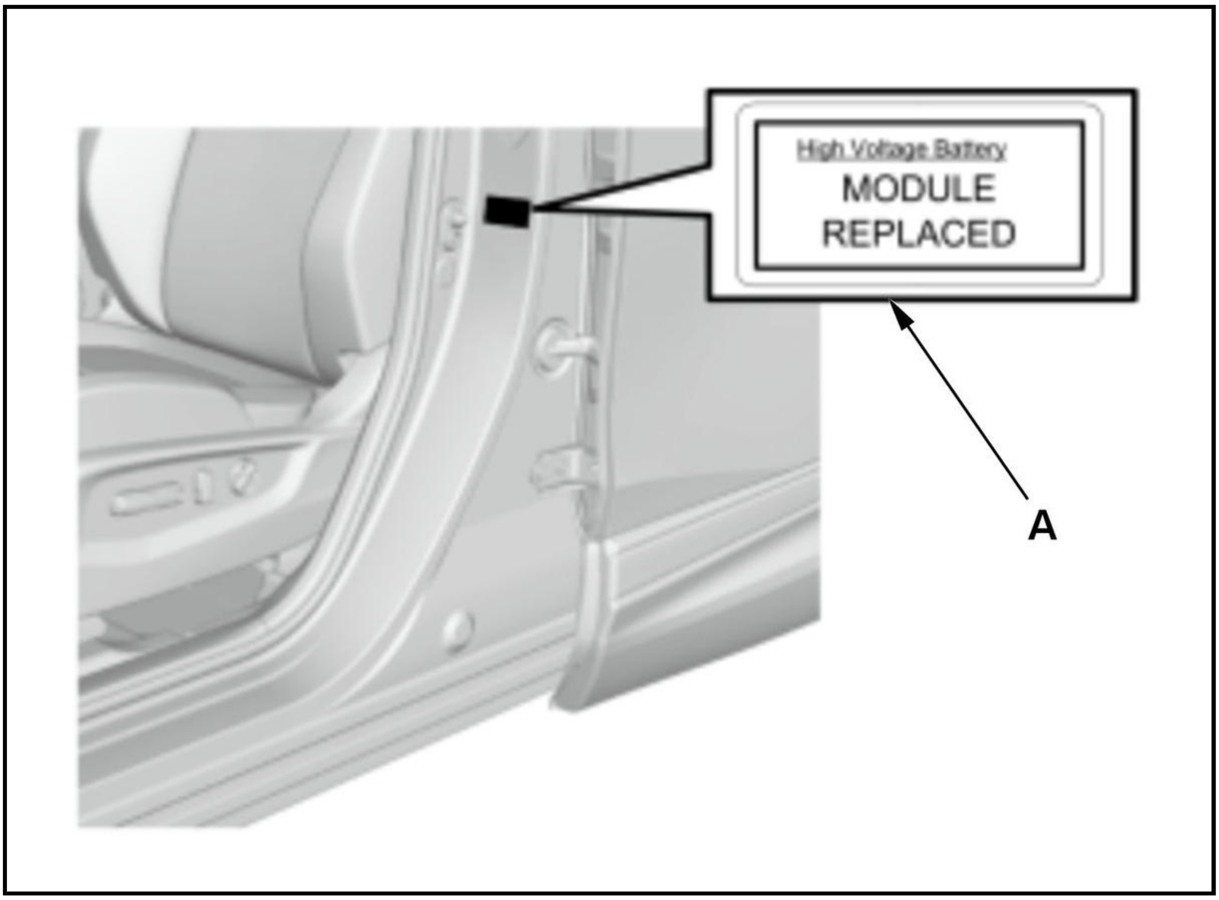

Is the sticker attached?

YES

Replace the battery pack .

NO

Go to step 3.

3. Identify failure battery module:

NOTE:

- **This step is the procedure for ordering a new replacement battery module.**
- **It is very important to install the new replacement module as soon as possible after it arrives at the dealership. When the module arrived, replace it at once.**

-1. Turn the vehicle to the ON mode.

-2. Select the HV Battery Diagnosis in the System Selection Menu of ELECTRIC POWERTRAIN with the HDS, then select the Current Battery Data, and follow the screen prompts.

NOTE: Select the Battery Type 2. (18Cell - 18Cell - 18Cell - 18Cell)

-3. Identify abnormal battery modules with the HDS.

NOTE: Print the results of the function test.

Is there only one abnormal battery module?

YES

Replace the abnormally determined battery module and battery condition monitor module . Do the following procedures and keep the vehicle until the battery module arrives at the dealership. To prevent changing the high-voltage battery, do not set to READY TO DRIVE during keeping the vehicle.

- Enter the neutral position holding mode .
- Do the 12 volt battery terminal disconnection procedure and continue the neutral position holding mode.
- Remove the service plug .

NO

Replace the battery pack .

DTC P0DE7 (125)

DTC P0DE7 : HV Battery Pack Voltage High

NOTE: Before you troubleshoot, review the general troubleshooting information .

DTC Description	Confirmed DTC	Pending DTC	Freeze Frame
P0DE7 HV Battery Pack Voltage High	B	B	B

DTC (Electric Powertrain)

1. DTC check

-1. Turn the vehicle to the ON mode.

-2. Clear the DTC with the HDS.

-3. Turn the vehicle to the OFF (LOCK) mode.

-4. Turn the vehicle to the ON mode, and wait for 10 seconds.

-5. Check for Pending or Confirmed DTCs with the HDS.

DTC Description	Confirmed DTC	Pending DTC	Freeze Frame
B	B	B	B

DTC (Electric Powertrain)

Are DTC P0DE7 and any other DTCs indicated at the same time?

YES

Go to the indicated DTC's troubleshooting.

NO

Go to step 2.

2. Problem verification

-1. Check for Pending or Confirmed DTCs with the HDS.

DTC Description	Confirmed DTC	Pending DTC	Freeze Frame
P0DE7 HV Battery Pack Voltage High	B	B	B

Is DTC P0DE7 indicated?

YES

Replace the battery pack , **the battery condition monitor module** , **the PCU** , and **the PCM** .

NO

Intermittent failure, the system is OK at this time. If the freeze data/on-board snapshot of this DTC is recorded, try to reproduce the failure under the same conditions with the freeze data/on-board snapshot.

DTC P0E2D (1055)

DTC P0E2D : HV Battery Cell Voltage Sense Circuit

NOTE: Before you troubleshoot, **review the general troubleshooting information** .

DTC Description	Confirmed DTC	Pending DTC	Freeze Frame
P0E2D HV Battery Cell Voltage Sense Circuit	B	B	B

DTC (Electric Powertrain)

1. Problem verification

   -1. Turn the vehicle to the ON mode.

   -2. Clear the DTC with the HDS.

   -3. Turn the vehicle to the OFF (LOCK) mode.

   -4. Turn the vehicle to the ON mode.

   -5. Check for Pending or Confirmed DTCs with the HDS.

DTC Description	Confirmed DTC	Pending DTC	Freeze Frame
P0E2D HV Battery Cell Voltage Sense Circuit	B	B	B

Is DTC P0E2D indicated?

YES

Replace the battery condition monitor module .

NO

Intermittent failure, the system is OK at this time. If the freeze data/on-board snapshot of this DTC is recorded, try to reproduce the failure under the same conditions with the freeze data/on-board snapshot.

DTC P1447 (77)

DTC P1447 : HV Battery Pack Deterioration (Middle Severity)

NOTE: Before you troubleshoot, **review the general troubleshooting information** .

DTC Description	Confirmed DTC	Pending DTC	Freeze Frame
P1447 HV Battery Pack Deterioration (Middle Severity)	B	B	B

DTC (Electric Powertrain)

1. Problem verification

   -1. Turn the vehicle to the ON mode.

   -2. Clear the DTC with the HDS.

   -3. Turn the vehicle to the OFF (LOCK) mode.

   -4. Turn the vehicle to the READY TO DRIVE mode.

   -5. Test-drive the vehicle; accelerate to 31 mph (50 km/h) and decelerate to 0 mph (0 km/h), repeat that for 10 minutes.

   NOTE: Do not turn the vehicle to OFF (LOCK) mode during test-drive.

   -6. Monitor the OBD STATUS for DTC P1447 in the DTCs MENU with the HDS.

DTC Description	OBD STATUS
P1447 HV Battery Pack Deterioration (Middle Severity)	B

Does the HDS indicate PASSED?

YES

Intermittent failure, the system is OK at this time. If the freeze data/on-board snapshot of this DTC is recorded, try to reproduce the failure under the same conditions with the freeze data/on-board snapshot.

NO

If the HDS indicates FAILED, **replace the battery pack** . If the HDS indicates NOT COMPLETED, keep the test-driving until a result comes on.

DTC P144A (78)

DTC P144A : HV Battery Pack Deterioration (High Severity)

NOTE: Before you troubleshoot, **review the general troubleshooting information** .

DTC Description	Confirmed DTC	Pending DTC	Freeze Frame
P144A HV Battery Pack Deterioration (High Severity)	B	B	B

DTC (Electric Powertrain)

1. Problem verification

   -1. Turn the vehicle to the ON mode.

   -2. Clear the DTC with the HDS.

   -3. Turn the vehicle to the OFF (LOCK) mode.

   -4. Turn the vehicle to the READY TO DRIVE mode.

   -5. Test-drive the vehicle; accelerate to 31 mph (50 km/h) and decelerate to 0 mph (0 km/h), repeat that for 10 minutes.

   NOTE: Do not turn the vehicle to OFF (LOCK) mode during test-drive.

-6. Monitor the OBD STATUS for DTC P144A in the DTCs MENU with the HDS.

DTC Description	OBD STATUS
P144A HV Battery Pack Deterioration (High Severity)	B

Does the HDS indicate PASSED?

YES

Intermittent failure, the system is OK at this time. If the freeze data/on-board snapshot of this DTC is recorded, try to reproduce the failure under the same conditions with the freeze data/on-board snapshot.

NO

If the HDS indicates FAILED, **replace the battery pack** . If the HDS indicates NOT COMPLETED, keep the test-driving until a result comes on.

DTC P1586 (23)

DTC P1586 : HV Battery Current Sensor

NOTE:

- Before you troubleshoot, review the **How to Troubleshoot the Electric Powertrain** and **Electric Powertrain Service Precaution** .
- If any of the DTCs listed below are indicated at the same time as DTC P1586, troubleshoot those DTCs first, then recheck for P1586.
-
    - -

      Traction motor control module: P1D77
    - -

      Battery condition monitor module: P158A, P1597, P1598

DTC Description	Confirmed DTC	Pending DTC	Freeze Frame
P1586 HV Battery Current Sensor	B	B	B

DTC (Electric Powertrain)

1. Problem verification

-1. Turn the vehicle to the ON mode.

-2. Clear the DTC with the HDS.

-3. Turn the vehicle to the OFF (LOCK) mode.

-4. Turn the vehicle to the READY TO DRIVE mode.

Test-drive the vehicle under these conditions:

- Vehicle speed above 31 mph (50 km/h)
- Maintain the vehicle speed for 2 seconds with brake pedal pressed (brake pedal position switch is ON).

-6. Check for Pending or Confirmed DTCs with the HDS.

DTC Description	Confirmed DTC	Pending DTC	Freeze Frame
P1586 HV Battery Current Sensor	B	B	B

Is DTC P1586 indicated?

YES

Go to step 2.

NO

Intermittent failure, the system is OK at this time. If the freeze data/on-board snapshot of this DTC is recorded, try to reproduce the failure under the same conditions with the freeze data/on-board snapshot.

2. Determine possible failure area (SGISOC circuit, others)

-1. Keep the test-drive condition of the problem verification, and check the parameter(s) below.

Signal	Current conditions	
	Values	Unit
HV Battery Resolution Current Sensor1 Sensing Current	B	B
HV Battery Resolution Current Sensor2 Sensing Current	B	B

-2. Compare the value of HV Battery Resolution Current Sensor1 Sensing Current and HV Battery Resolution Current Sensor2 Sensing Current.

Does the value about same?

YES

Go to step 5.

NO

Go to step 3.

3. Open wire check (SGISOC line)

-1. Turn the vehicle to the OFF (LOCK) mode.

-2. Remove the **service plug** and the **IPU cover** .

-3. **Remove the IPU and the IPU case** .

-4. Disconnect the following connectors.

Battery condition monitor module connector E (32P)
Battery current sensor 4P connector

-5. Measure the resistance between test points 1 and 2.

Test condition	Vehicle OFF (LOCK) mode
B	Battery condition monitor module connector E (32P): disconnected
B	Battery current sensor 4P connector: disconnected
Test point 1	**Battery condition monitor module connector E (32P) No. 29**

Test point 2	Battery current sensor 4P connector (female terminals) No. 4: ①

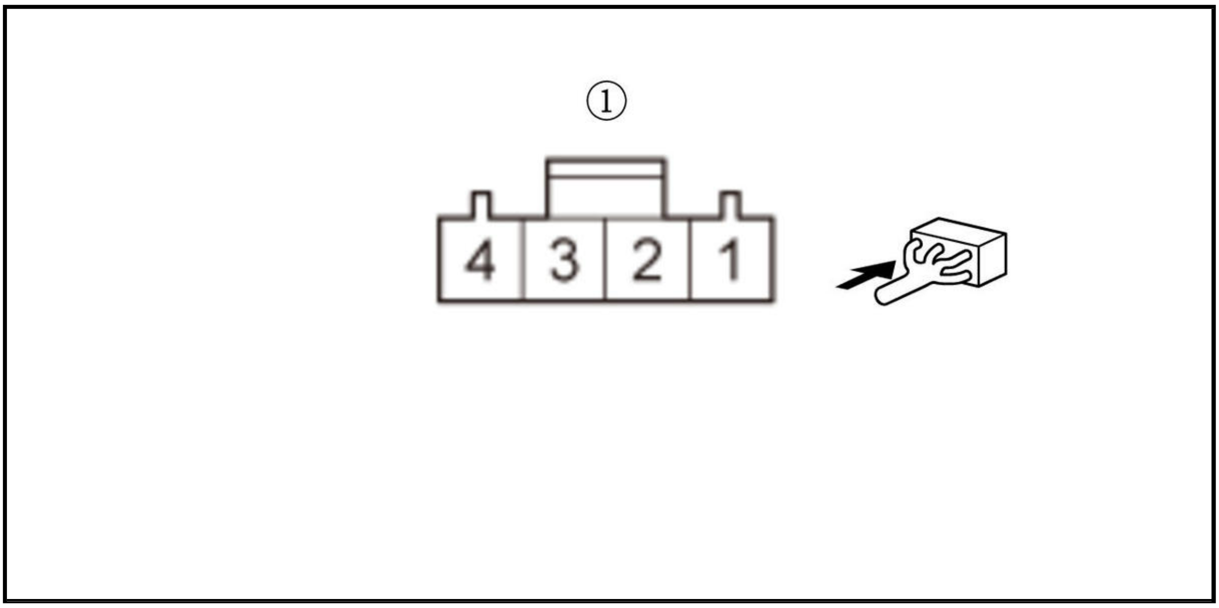

Is there 1.0 Ω or less?

YES

Go to step 4

NO

Repair an open in the SGISOC wire between the battery current sensor and the battery condition monitor module (E29).

4. Battery current sensor check

-1. **Substitute a known-good battery current sensor** .

-2. Install all removed parts to the IPU, then **install the IPU** .

-3. Clear the DTC with the HDS.

-4. Turn the vehicle to the OFF (LOCK) mode.

-5. Turn the vehicle to the READY TO DRIVE mode.

Test-drive the vehicle under these conditions:

- Vehicle speed above 31 mph (50 km/h)
- Maintain the vehicle speed for 2 seconds with brake pedal pressed (brake pedal position switch is ON).

-7. Check for Pending or Confirmed DTCs with the HDS.

DTC Description	Confirmed DTC	Pending DTC	Freeze Frame
P1586 HV Battery Current Sensor	B	B	B

Is DTC P1586 indicated?

YES

Replace the battery condition monitor module .

NO

Replace the original battery current sensor .

5. PCU check

-1. Keep the test-drive condition of the problem verification, and check the parameter(s) below.

Signal	Current conditions	
	Values	Unit
HV Battery Resolution Current Sensor1 Sensing Current	B	B
Motor Inverter Current (BAT)	B	B

-2. Compare the value of HV Battery Resolution Current Sensor1 Sensing Current and Motor Inverter Current (BAT).

Does the value about same?

YES

Replace the battery condition monitor module .

NO

Replace the PCU .

DTC P158A (1095)

DTC P158A : HV Battery Current Sensor Correlation

NOTE: Before you troubleshoot, review the general troubleshooting information .

DTC Description	Confirmed DTC	Pending DTC	Freeze Frame
P158A HV Battery Current Sensor Correlation	B	B	B

DTC (Electric Powertrain)

1. Problem verification

-1. Turn the vehicle to the ON mode.

-2. Clear the DTC with the HDS.

-3. Turn the vehicle to the OFF (LOCK) mode.

-4. Turn the vehicle to the READY TO DRIVE mode.

-5. Check for Pending or Confirmed DTCs with the HDS.

DTC Description	Confirmed DTC	Pending DTC	Freeze Frame
P158A HV Battery Current Sensor Correlation	B	B	B

Is DTC P158A indicated?

YES

Go to step 2.

NO

Intermittent failure, the system is OK at this time. If the freeze data/on-board snapshot of this DTC is recorded, try to reproduce the failure under the same conditions with the freeze data/on-board snapshot.

2. Open wire check (SGISOC line)

-1. Turn the vehicle to the OFF (LOCK) mode.

-2. Remove the **service plug** and the **IPU cover** .

-3. **Remove the IPU and the IPU case** .

-4. Disconnect the following connectors.

Battery condition monitor module connector E (32P)
Battery current sensor 4P connector

-5. Measure the resistance between test points 1 and 2.

Test condition	Vehicle OFF (LOCK) mode
B	Battery condition monitor module connector E (32P): disconnected
B	Battery current sensor 4P connector: disconnected
Test point 1	**Battery condition monitor module connector E (32P) No. 29**
Test point 2	Battery current sensor 4P connector (female terminals) No. 4: ①

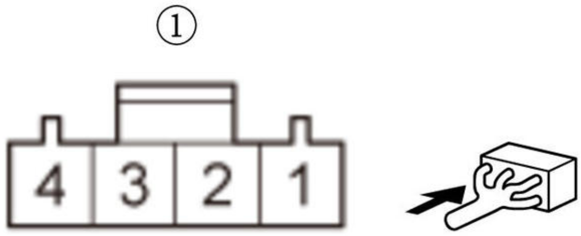

Is there 1.0 Ω or less?

YES

Go to step 3

NO

Repair an open in the SGISOC wire between the battery current sensor and the battery condition monitor module (E29).

3. Battery current sensor check

-1. **Substitute a known-good battery current sensor** .

-2. All removed parts install to the IPU, then **install the IPU** .

-3. Clear the DTC with the HDS.

-4. Turn the vehicle to the OFF (LOCK) mode.

-5. Turn the vehicle to the READY TO DRIVE mode.

-6. Check for Pending or Confirmed DTCs with the HDS.

DTC Description	Confirmed DTC	Pending DTC	Freeze Frame
P158A HV Battery Current Sensor Correlation	B	B	B

Is DTC P158A indicated?

YES

Replace the battery condition monitor module .

NO

Replace the original battery current sensor .

DTC P158B (980)

DTC P158B : HV Battery Current Sensor 1 Circuit

NOTE: Before you troubleshoot, review the general troubleshooting information .

DTC Description	Confirmed DTC	Pending DTC	Freeze Frame
P158B HV Battery Current Sensor 1 Circuit	B	B	B

DTC (Electric Powertrain)

1. Problem verification

-1. Turn the vehicle to the ON mode.

-2. Clear the DTC with the HDS.

-3. Turn the vehicle to the OFF (LOCK) mode.

-4. Turn the vehicle to the READY TO DRIVE mode.

-5. Check for Pending or Confirmed DTCs with the HDS.

DTC Description	Confirmed DTC	Pending DTC	Freeze Frame
P158B HV Battery Current Sensor 1 Circuit	B	B	B

Is DTC P158B indicated?

YES

Go to step 2.

NO

Intermittent failure, the system is OK at this time. If the freeze data/on-board snapshot of this DTC is recorded, try to reproduce the failure under the same conditions with the freeze data/on-board snapshot.

2. Open wire check (SGISOC line)

-1. Turn the vehicle to the OFF (LOCK) mode.

-2. Remove the **service plug** and the **IPU cover** .

-3. **Remove the IPU and the IPU case** .

-4. Disconnect the following connectors.

Battery condition monitor module connector E (32P)
Battery current sensor 4P connector

-5. Measure the resistance between test points 1 and 2.

Test condition	Vehicle OFF (LOCK) mode
B	Battery condition monitor module connector E (32P): disconnected
B	Battery current sensor 4P connector: disconnected
Test point 1	**Battery condition monitor module connector E (32P) No. 29**
Test point 2	Battery current sensor 4P connector (female terminals) No. 4: ①

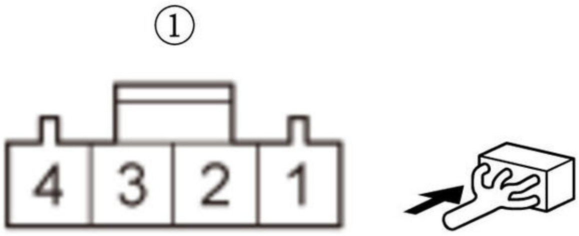

Is there 1.0 Ω or less?

YES

Go to step 3

NO

Repair an open in the SGISOC wire between the battery current sensor and the battery condition monitor module (E29).

3. Battery current sensor check

-1. **Substitute a known-good battery current sensor** .

-2. All removed parts install to the IPU, then **install the IPU** .

-3. Clear the DTC with the HDS.

-4. Turn the vehicle to the OFF (LOCK) mode.

-5. Turn the vehicle to the READY TO DRIVE mode.

-6. Check for Pending or Confirmed DTCs with the HDS.

DTC Description	Confirmed DTC	Pending DTC	Freeze Frame
P158B HV Battery Current Sensor 1 Circuit	B	B	B

Is DTC P158B indicated?

YES

Replace the battery condition monitor module .

NO

Replace the original battery current sensor .

DTC P158D (115)

DTC P158D : HV Battery Current Sensor 1 Circuit Low

NOTE: Before you troubleshoot, **review the general troubleshooting information** .

DTC Description	Confirmed DTC	Pending DTC	Freeze Frame
P158D HV Battery Current Sensor 1 Circuit Low	B	B	B

DTC (Electric Powertrain)

1. Problem verification

-1. Turn the vehicle to the ON mode.

-2. Clear the DTC with the HDS.

-3. Check for Pending or Confirmed DTCs with the HDS.

DTC Description	Confirmed DTC	Pending DTC	Freeze Frame
P158D HV Battery Current Sensor 1 Circuit Low	B	B	B

Is DTC P158D indicated?

YES

The failure is duplicated. Go to step 2.

NO

Intermittent failure, the system is OK at this time. If the freeze data/on-board snapshot of this DTC is recorded, try to reproduce the failure under the same conditions with the freeze data/on-board snapshot.

2. DTC check

-1. Check for Pending or Confirmed DTCs with the HDS.

DTC Description	Confirmed DTC	Pending DTC	Freeze Frame
P06B1 HV Battery Current Sensor Power	B	B	B

DTC Description	Confirmed DTC	Pending DTC	Freeze Frame
Supply Circuit Low			

Is DTC P06B1 indicated?

YES

Go to the DTC P06B1 troubleshooting .

NO

Go to step 3.

3. Determine possible failure area (VCCISOC line, others)

-1. Check for Pending or Confirmed DTCs with the HDS.

DTC Description	Confirmed DTC	Pending DTC	Freeze Frame
P158D HV Battery Current Sensor 1 Circuit Low	B	B	B
P158E HV Battery Current Sensor 2 Circuit Low	B	B	B

Are DTC P158D and P158E indicated at the same time?

YES

Go to step 4.

NO

Go to step 5.

4. Open wire check (VCCISOC line)

-1. Turn the vehicle to the OFF (LOCK) mode.

-2. Remove the **service plug** and the **IPU cover** .

-3. **Remove the IPU and the IPU case** .

-4. Disconnect the following connectors.

Battery condition monitor module connector E (32P)
Battery current sensor 4P connector

-5. Measure the resistance between test points 1 and 2.

Test condition	Vehicle OFF (LOCK) mode
B	Battery condition monitor module connector E (32P): disconnected
B	Battery current sensor 4P connector: disconnected
Test point 1	**Battery condition monitor module connector E (32P) No. 28**
Test point 2	Battery current sensor 4P connector (female terminals) No. 1: ①

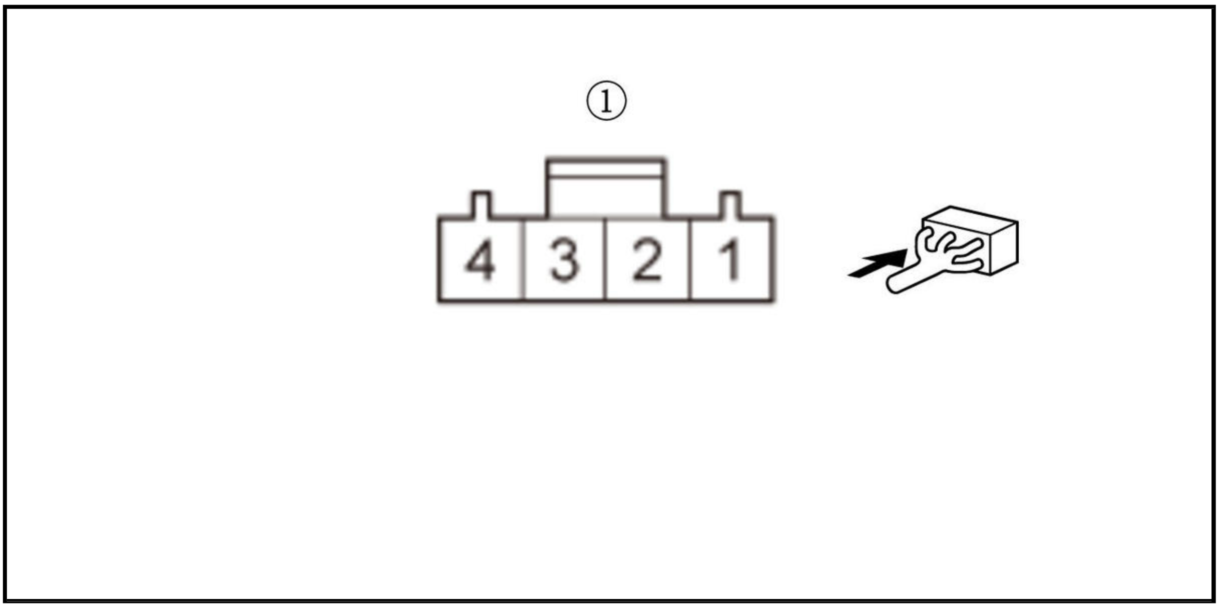

Is there 1.0 Ω or less?

YES

Substitute a known-good battery current sensor , then recheck. If DTC P158D is still indicated, **replace the battery condition monitor module** .

NO

Repair an open in the VCCISOC wire between the battery current sensor and the battery condition monitor module (E28).

5. Determine possible failure area (short in ISOC circuit, others)

-1. Turn the vehicle to the OFF (LOCK) mode.

-2. Remove the **service plug** and the **IPU cover** .

-3. Disconnect the following connector.

Battery condition monitor module connector E (32P)

-4. Check for continuity between test points 1 and 2.

Test condition	Vehicle OFF (LOCK) mode
B	Battery condition monitor module connector E (32P): disconnected
Test point 1	**Battery condition monitor module connector E (32P) No. 26**
Test point 2	Body ground

Is there continuity?

YES

Go to step 6.

NO

Go to step 7.

6. Shorted wire check (ISOC line)

-1. **Remove the IPU and the IPU case** .

-2. Disconnect the following connector.

Battery current sensor 4P connector

-3. Measure the resistance between test points 1 and 2.

Test condition	Vehicle OFF (LOCK) mode
B	Battery condition monitor module connector E (32P): disconnected
B	Battery current sensor 4P connector: disconnected
Test point 1	**Battery condition monitor module connector E (32P) No. 26**
Test point 2	Body ground

Is there 1 MΩ or more?

YES

The ISOC wire is OK. **Substitute a known-good battery current sensor** , then recheck. If DTC P158D is still indicated, **replace the battery condition monitor module** .

NO

Repair a short in the ISOC wire between the battery current sensor and the battery condition monitor module (E26).

7. Battery condition monitor module internal circuit (ISOC) check

-1. Reconnect the following connector.

Battery condition monitor module connector E (32P)

-2. Connect terminals A and B with a jumper wire.

Terminal A	**Battery condition monitor module connector E (32P) No. 28**
Terminal B	**Battery condition monitor module connector E (32P) No. 26**

-3. **Do the 12 volt battery terminal reconnection procedure** .

-4. Turn the vehicle to the ON mode.

-5. Clear the DTC with the HDS.

-6. Check for Pending or Confirmed DTCs with the HDS.

DTC Description	Confirmed DTC	Pending DTC	Freeze Frame
P158F HV Battery Current Sensor 1 Circuit High	B	B	B

Is DTC P158F indicated?

YES

Go to step 8.

NO

Replace the battery condition monitor module .

8. Open wire check (ISOC line)

-1. Turn the vehicle to the OFF (LOCK) mode.

-2. **Do the 12 volt battery terminal disconnection procedure** .

-3. **Remove the IPU and the IPU case** .

-4. Disconnect the following connectors.

Battery condition monitor module connector E (32P)
Battery current sensor 4P connector

-5. Measure the resistance between test points 1 and 2.

Test condition	Vehicle OFF (LOCK) mode
B	Battery condition monitor module connector E (32P): disconnected
B	Battery current sensor 4P connector: disconnected
Test point 1	**Battery condition monitor module connector E (32P) No. 26**
Test point 2	Battery current sensor 4P connector (female terminals) No. 2: ①

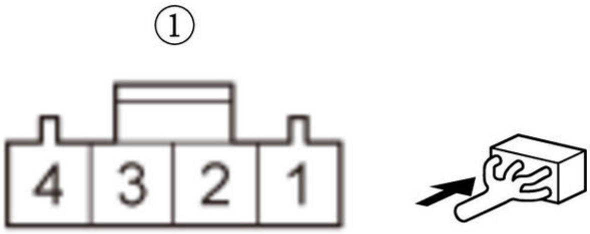

Is there 1.0 Ω or less?

YES

Replace the battery current sensor .

NO

Repair an open in the ISOC wire between the battery current sensor and the battery condition monitor module (E26).

DTC P158E (117)

DTC P158E : HV Battery Current Sensor 2 Circuit Low

NOTE: Before you troubleshoot, **review the general troubleshooting information** .

DTC Description	Confirmed DTC	Pending DTC	Freeze Frame
P158E HV Battery Current Sensor 2 Circuit Low	B	B	B

DTC (Electric Powertrain)

1. Problem verification

   -1. Turn the vehicle to the ON mode.

   -2. Clear the DTC with the HDS.

   -3. Turn the vehicle to the OFF (LOCK) mode.

   -4. Turn the vehicle to the ON mode.

   -5. Check for Pending or Confirmed DTCs with the HDS.

DTC Description	Confirmed DTC	Pending DTC	Freeze Frame
P158E HV Battery Current Sensor 2 Circuit Low	B	B	B

   Is DTC P158E indicated?

   YES

   The failure is duplicated. Go to step 2.

   NO

   Intermittent failure, the system is OK at this time. If the freeze data/on-board snapshot of this DTC is recorded, try to reproduce the failure under the same conditions with the freeze data/on-board snapshot.

2. DTC check

   -1. Check for Pending or Confirmed DTCs with the HDS.

DTC Description	Confirmed DTC	Pending DTC	Freeze Frame
P06B1 HV Battery Current Sensor Power Supply Circuit Low	B	B	B

   Is DTC P06B1 indicated?

   YES

   Go to the DTC P06B1 troubleshooting .

   NO

   Go to step 3.

3. Determine possible failure area (VCCISOC line, others)

   -1. Check for Pending or Confirmed DTCs with the HDS.

DTC Description	Confirmed DTC	Pending DTC	Freeze Frame
P158D HV Battery Current Sensor 1 Circuit Low	B	B	B
P158E HV Battery Current Sensor 2 Circuit Low	B	B	B

   Are DTC P158D and P158E indicated at the same time?

YES

Go to step 4.

NO

Go to step 5.

4. Open wire check (VCCISOC line)

   -1. Turn the vehicle to the OFF (LOCK) mode.

   -2. Remove the **service plug** and the **IPU cover** .

   -3. Disconnect the following connectors.

Battery condition monitor module connector E (32P)
Battery current sensor 4P connector

   -4. Measure the resistance between test points 1 and 2.

Test condition	Vehicle OFF (LOCK) mode
B	Battery condition monitor module connector E (32P): disconnected
B	Battery current sensor 4P connector: disconnected
Test point 1	**Battery condition monitor module connector E (32P) No. 28**
Test point 2	Battery current sensor 4P connector (female terminals) No. 1: ①

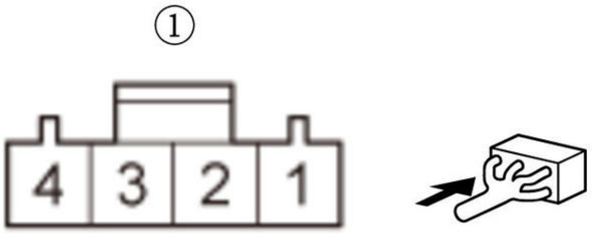

Is there 1.0 Ω or less?

YES

Substitute a known-good battery current sensor , then recheck. If DTC P158E is still indicated, **replace the battery condition monitor module** .

NO

Repair an open in the VCCISOC wire between the battery current sensor and the battery condition monitor module (E28).

5. Determine possible failure area (short in ISOCF circuit, others)

-1. Turn the vehicle to the OFF (LOCK) mode.

-2. Remove the **service plug** and the **IPU cover** .

-3. Disconnect the following connector.

Battery condition monitor module connector E (32P)

-4. Check for continuity between test points 1 and 2.

Test condition	Vehicle OFF (LOCK) mode
B	Battery condition monitor module connector E (32P): disconnected
Test point 1	**Battery condition monitor module connector E (32P) No. 27**
Test point 2	Body ground

Is there continuity?

YES

Go to step 6.

NO

Go to step 7.

6. Shorted wire check (ISOCF line)

-1. Disconnect the following connector.

Battery current sensor 4P connector

-2. Measure the resistance between test points 1 and 2.

Test condition	Vehicle OFF (LOCK) mode
B	Battery condition monitor module connector E (32P): disconnected
B	Battery current sensor 4P connector: disconnected
Test point 1	**Battery condition monitor module connector E (32P) No. 27**
Test point 2	Body ground

Is there 1 MΩ or more?

YES

The ISOCF wire is OK. **Substitute a known-good battery current sensor** , then recheck. If DTC P158E is still indicated, **replace the battery condition monitor module** .

NO

Repair a short in the ISOCF wire between the battery current sensor and the battery condition monitor module (E27).

7. Battery condition monitor module internal circuit (ISOCF) check

-1. Reconnect the following connector.

Battery condition monitor module connector E (32P)

-2. Connect terminals A and B with a jumper wire.

Terminal A	Battery condition monitor module connector E (32P) No. 28
Terminal B	Battery condition monitor module connector E (32P) No. 27

-3. Do the 12 volt battery terminal reconnection procedure .

-4. Turn the vehicle to the ON mode.

-5. Clear the DTC with the HDS.

-6. Check for Pending or Confirmed DTCs with the HDS.

DTC Description	Confirmed DTC	Pending DTC	Freeze Frame
P1596 HV Battery Current Sensor 2 Circuit High	B	B	B

Is DTC P1596 indicated?

YES

Go to step 8.

NO

Replace the battery condition monitor module .

8. Open wire check (ISOCF line)

-1. Turn the vehicle to the OFF (LOCK) mode.

-2. Do the 12 volt battery terminal disconnection procedure .

-3. Remove the IPU and the IPU case .

-4. Disconnect the following connectors.

Battery condition monitor module connector E (32P)
Battery current sensor 4P connector

-5. Measure the resistance between test points 1 and 2.

Test condition	Vehicle OFF (LOCK) mode
B	Battery condition monitor module connector E (32P): disconnected
B	Battery current sensor 4P connector: disconnected
Test point 1	Battery condition monitor module connector E (32P) No. 27
Test point 2	Battery current sensor 4P connector (female terminals) No. 3: ①

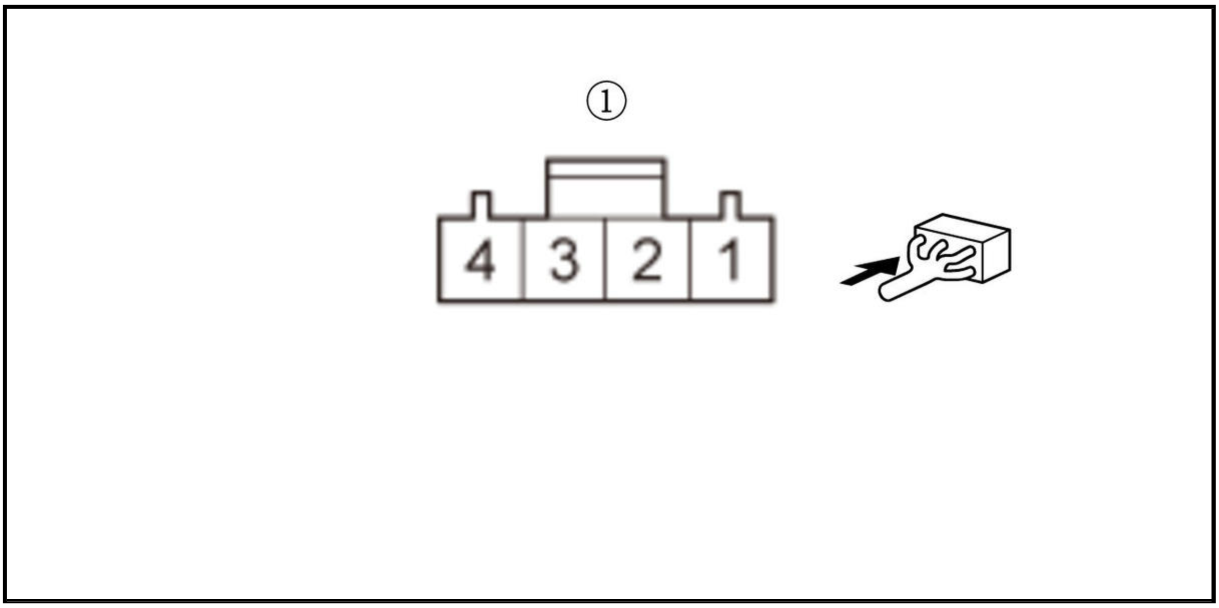

Is there 1.0 Ω or less?

YES

Replace the battery current sensor .

NO

Repair an open in the ISOCF wire between the battery current sensor and the battery condition monitor module (E27).

DTC P158F (114)

DTC P158F : HV Battery Current Sensor 1 Circuit High

NOTE: Before you troubleshoot, review the general troubleshooting information .

DTC Description	Confirmed DTC	Pending DTC	Freeze Frame
P158F HV Battery Current Sensor 1 Circuit High	B	B	B

DTC (Electric Powertrain)

1. Problem verification

   -1. Turn the vehicle to the ON mode.

   -2. Clear the DTC with the HDS.

   -3. Check for Pending or Confirmed DTCs with the HDS.

DTC Description	Confirmed DTC	Pending DTC	Freeze Frame
P158F HV Battery Current Sensor 1 Circuit High	B	B	B

Is DTC P158F indicated?

YES

The failure is duplicated. Go to step 2.

NO

Intermittent failure, the system is OK at this time. If the freeze data/on-board snapshot of this DTC is recorded, try to reproduce the failure under the same conditions with the freeze data/on-board snapshot.

2. Battery condition monitor module internal circuit (SGISOC) check

-1. Turn the vehicle to the OFF (LOCK) mode.

-2. Remove the **service plug** and the **IPU cover** .

-3. Check for continuity between test points 1 and 2.

Test condition	Vehicle OFF (LOCK) mode
Test point 1	**Battery condition monitor module connector E (32P) No. 29**
Test point 2	Body ground

Is there continuity?

YES

Go to step 3.

NO

Replace the battery condition monitor module .

3. Open wire check (SGISOC line)

-1. Disconnect the following connectors.

Battery condition monitor module connector E (32P)
Battery current sensor 4P connector

-2. Measure the resistance between test points 1 and 2.

Test condition	Vehicle OFF (LOCK) mode
B	Battery condition monitor module connector E (32P): disconnected
B	Battery current sensor 4P connector: disconnected
Test point 1	**Battery condition monitor module connector E (32P) No. 29**
Test point 2	Battery current sensor 4P connector (female terminals) No. 4: ①

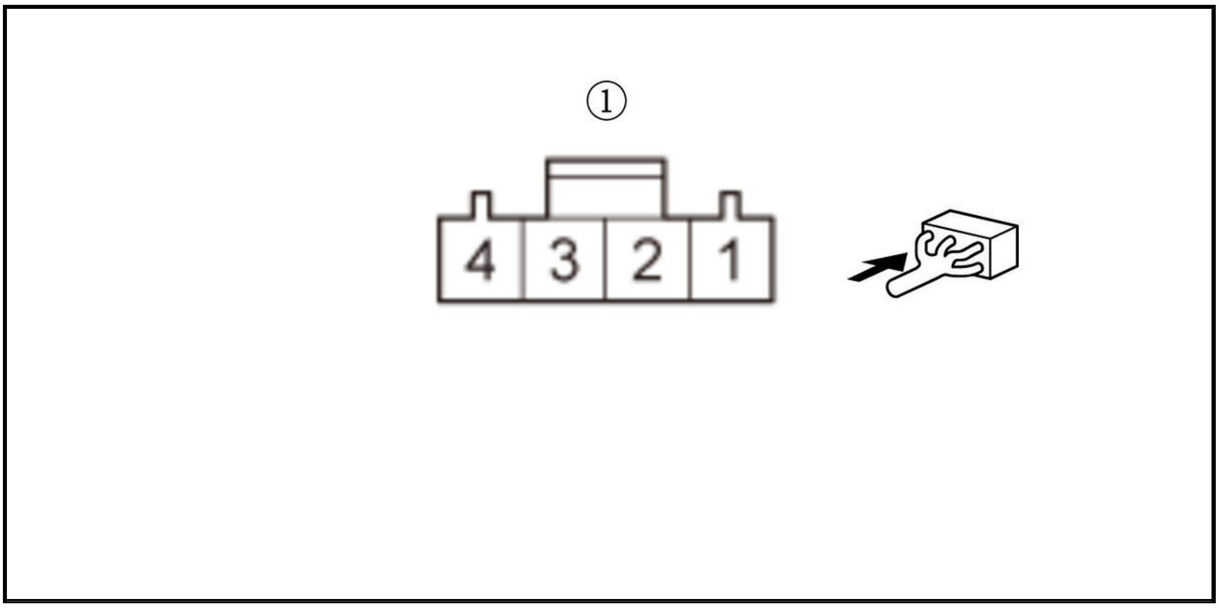

Is there 1.0 Ω or less?

YES

The SGISOC wire is OK. **Replace the battery current sensor** .

NO

Repair an open in the SGISOC wire between the battery current sensor and the battery condition monitor module (E29).

DTC P1596 (116)

DTC P1596 : HV Battery Current Sensor 2 Circuit High

NOTE: Before you troubleshoot, **review the general troubleshooting information** .

DTC Description	Confirmed DTC	Pending DTC	Freeze Frame
P1596 HV Battery Current Sensor 2 Circuit High	B	B	B

DTC (Electric Powertrain)

1. Problem verification

-1. Turn the vehicle to the ON mode.

-2. Clear the DTC with the HDS.

-3. Check for Pending or Confirmed DTCs with the HDS.

DTC Description	Confirmed DTC	Pending DTC	Freeze Frame
P1596 HV Battery Current Sensor 2 Circuit High	B	B	B

Is DTC P1596 indicated?

YES

The failure is duplicated. Go to step 2.

NO

Intermittent failure, the system is OK at this time. If the freeze data/on-board snapshot of this DTC is recorded, try to reproduce the failure under the same conditions with the freeze data/on-board snapshot.

2. Battery condition monitor module internal circuit (SGISOC) check

-1. Turn the vehicle to the OFF (LOCK) mode.

-2. Remove the **service plug** and the **IPU cover** .

-3. Check for continuity between test points 1 and 2.

Test condition	Vehicle OFF (LOCK) mode
Test point 1	**Battery condition monitor module connector E (32P) No. 29**
Test point 2	Body ground

Is there continuity?

YES

Go to step 3.

NO

Replace the battery condition monitor module .

3. Open wire check (SGISOC line)

-1. Disconnect the following connectors.

Battery condition monitor module connector E (32P)
Battery current sensor 4P connector

-2. Measure the resistance between test points 1 and 2.

Test condition	Vehicle OFF (LOCK) mode
B	Battery condition monitor module connector E (32P): disconnected
B	Battery current sensor 4P connector: disconnected
Test point 1	**Battery condition monitor module connector E (32P) No. 29**
Test point 2	Battery current sensor 4P connector (female terminals) No. 4: ①

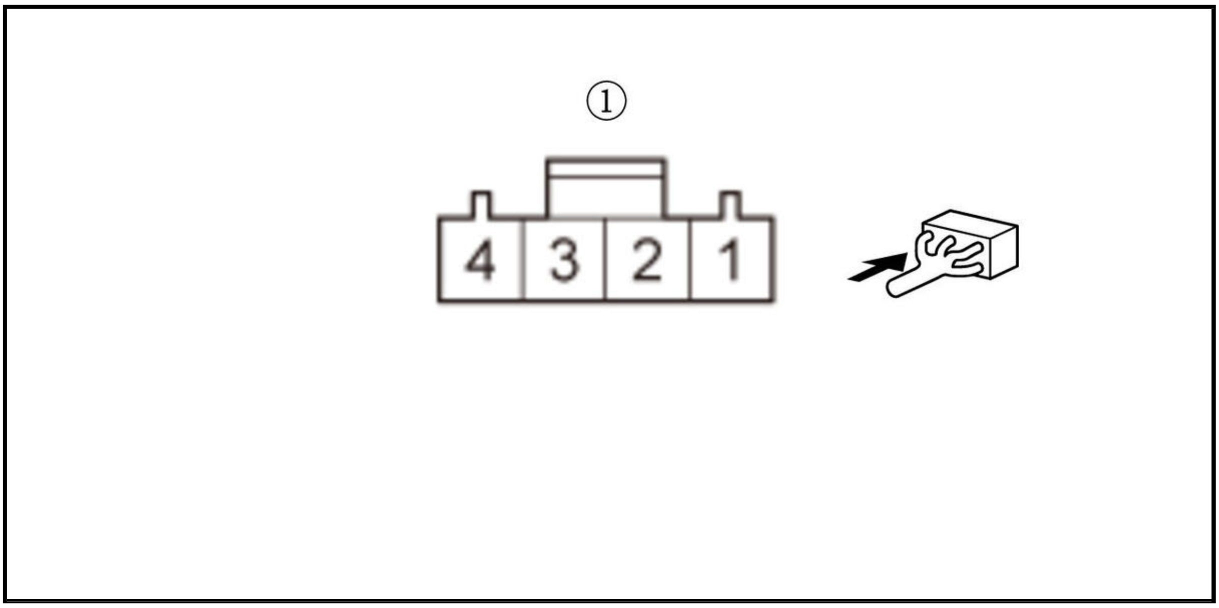

Is there 1.0 Ω or less?

YES

The SGISOC wire is OK. **Replace the battery current sensor** .

NO

Repair an open in the SGISOC wire between the battery current sensor and the battery condition monitor module (E29).

DTC P1597 (65)

DTC P1597 : HV Battery Current Sensor 1 Circuit Range/Performance

NOTE: Before you troubleshoot, **review the general troubleshooting information** .

DTC Description	Confirmed DTC	Pending DTC	Freeze Frame
P1597 HV Battery Current Sensor 1 Circuit Range/Performance	B	B	B

DTC (Electric Powertrain)

1. Problem verification

-1. Turn the vehicle to the ON mode.

-2. Clear the DTC with the HDS.

-3. Turn the vehicle to the OFF (LOCK) mode.

-4. Turn the vehicle to the READY TO DRIVE mode.

-5. Check for Pending or Confirmed DTCs with the HDS.

DTC Description	Confirmed DTC	Pending DTC	Freeze Frame
P1597 HV Battery Current Sensor 1 Circuit Range/Performance	B	B	B

Is DTC P1597 indicated?

YES

Go to step 2.

NO

Intermittent failure, the system is OK at this time. If the freeze data/on-board snapshot of this DTC is recorded, try to reproduce the failure under the same conditions with the freeze data/on-board snapshot.

2. Open wire check (SGISOC line)

-1. Turn the vehicle to the OFF (LOCK) mode.

-2. Remove the **service plug** and the **IPU cover** .

-3. Disconnect the following connectors.

Battery condition monitor module connector E (32P)
Battery current sensor 4P connector

-4. Measure the resistance between test points 1 and 2.

Test condition	Vehicle OFF (LOCK) mode
B	Battery condition monitor module connector E (32P): disconnected
B	Battery current sensor 4P connector: disconnected
Test point 1	**Battery condition monitor module connector E (32P) No. 29**
Test point 2	Battery current sensor 4P connector (female terminals) No. 4: ①

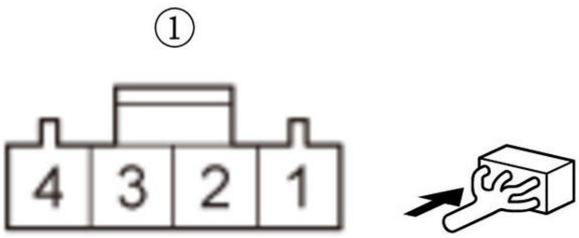

Is there 1.0 Ω or less?

YES

Go to step 3

NO

Repair an open in the SGISOC wire between the battery current sensor and the battery condition monitor module (E29).

3. Battery current sensor check

-1. **Substitute a known-good battery current sensor** .

-2. All removed parts install to the IPU, then **install the IPU** .

-3. Clear the DTC with the HDS.

-4. Turn the vehicle to the OFF (LOCK) mode.

-5. Turn the vehicle to the READY TO DRIVE mode.

-6. Check for Pending or Confirmed DTCs with the HDS.

DTC Description	Confirmed DTC	Pending DTC	Freeze Frame
P1597 HV Battery Current Sensor 1 Circuit Range/Performance	B	B	B

Is DTC P1597 indicated?

YES

Replace the battery condition monitor module .

NO

Replace the original battery current sensor .

DTC P1598 (113)

DTC P1598 : HV Battery Current Sensor 2 Circuit Range/Performance

NOTE: Before you troubleshoot, **review the general troubleshooting information** .

DTC Description	Confirmed DTC	Pending DTC	Freeze Frame
P1598 HV Battery Current Sensor 2 Circuit Range/Performance	B	B	B

DTC (Electric Powertrain)

1. Problem verification

-1. Turn the vehicle to the ON mode.

-2. Clear the DTC with the HDS.

-3. Turn the vehicle to the OFF (LOCK) mode.

-4. Turn the vehicle to the ON mode.

-5. Check for Pending or Confirmed DTCs with the HDS.

DTC Description	Confirmed DTC	Pending DTC	Freeze Frame
P1598 HV Battery Current Sensor 2 Circuit Range/Performance	B	B	B

Is DTC P1598 indicated?

YES

Go to step 2.

NO

Intermittent failure, the system is OK at this time. If the freeze data/on-board snapshot of this DTC is recorded, try to reproduce the failure under the same conditions with the freeze data/on-board snapshot.

2. Open wire check (SGISOC line)

-1. Turn the vehicle to the OFF (LOCK) mode.

-2. Remove the **service plug** and the **IPU cover** .

-3. Disconnect the following connectors.

Battery condition monitor module connector E (32P)

Battery current sensor 4P connector

-4. Measure the resistance between test points 1 and 2.

Test condition	Vehicle OFF (LOCK) mode
B	Battery condition monitor module connector E (32P): disconnected
B	Battery current sensor 4P connector: disconnected
Test point 1	**Battery condition monitor module connector E (32P) No. 29**
Test point 2	Battery current sensor 4P connector (female terminals) No. 4: ①

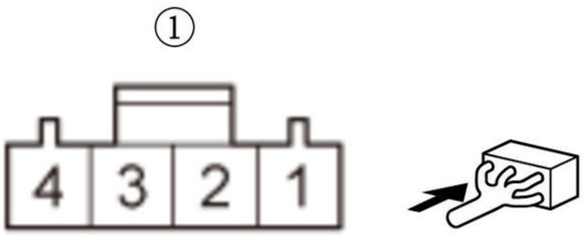

Is there 1.0 Ω or less?

YES

The SGISOC wire is OK. **Replace the battery current sensor** .

NO

Repair an open in the SGISOC wire between the battery current sensor and the battery condition monitor module (E29).

DTC P1673 (22)

DTC P1673 : IGHLD Relay Circuit

NOTE: Before you troubleshoot, **review the general troubleshooting information** .

DTC Description	Confirmed DTC	Pending DTC	Freeze Frame
P1673 IGHLD Relay Circuit	B	B	B

DTC (Electric Powertrain)

1. Problem verification

   -1. Turn the vehicle to the ON mode.

   -2. Clear the DTC with the HDS.

   -3. Turn the vehicle to the OFF (LOCK) mode, and wait 10 seconds.

   -4. Turn the vehicle to the ON mode, and wait 10 seconds.

   -5. Check for Pending or Confirmed DTCs with the HDS.

DTC Description	Confirmed DTC	Pending DTC	Freeze Frame
P1673 IGHLD Relay Circuit	B	B	B

   Is DTC P1673 indicated?

   YES

   The failure is duplicated. Go to step 2.

   NO

   Intermittent failure, the system is OK at this time. If the freeze data/on-board snapshot of this DTC is recorded, try to reproduce the failure under the same conditions with the freeze data/on-board snapshot.

2. Fuse check

   -1. Turn the vehicle to the OFF (LOCK) mode.

   -2. Check the following fuse.

Fuse	**No. A10**

   Is the fuse OK?

   YES

   Go to step 3.

   NO

   Replace the No. A10 fuse. Also check for a short to ground on the No. A10 fuse circuit if needed.

3. IGHLD relay circuit check

   -1. Remove the **service plug** and the **IPU cover** .

   -2. **Remove the IGHLD1 relay** .

   -3. **Test the IGHLD1 relay** .

Is the relay OK?

YES

Go to step 4.

NO

Replace the IGHLD1 relay.

4. Shorted wire check (IGHLD/IG_HOLD1_RLY_CL- line)

-1. Remove the **service plug** and the **IPU cover** .

-2. Disconnect the following connector.

Battery condition monitor module connector E (32P)

-3. Measure the resistance between test points 1 and 2.

Test condition	Vehicle OFF (LOCK) mode
B	IGHLD1 relay: disconnected
B	Battery condition monitor module connector E (32P): disconnected
Test point 1	**Battery condition monitor module connector E (32P) No. 20**
Test point 2	Body ground

Is there 1 MΩ or more?

YES

Go to step 5.

NO

Repair a short in the IGHLD/IG_HOLD1_RLY_CL- wire between the battery condition monitor module (E20) and the IGHLD1 relay.

5. Open wire check (IGHLD/IG_HOLD1_RLY_CL- line)

-1. Measure the resistance between test points 1 and 2.

Test condition	Vehicle OFF (LOCK) mode
B	IGHLD1 relay: disconnected
B	Battery condition monitor module connector E (32P): disconnected
Test point 1	**Battery condition monitor module connector E (32P) No. 20**
Test point 2	IGHLD1 relay 4P socket (female terminals) No. 4: ①

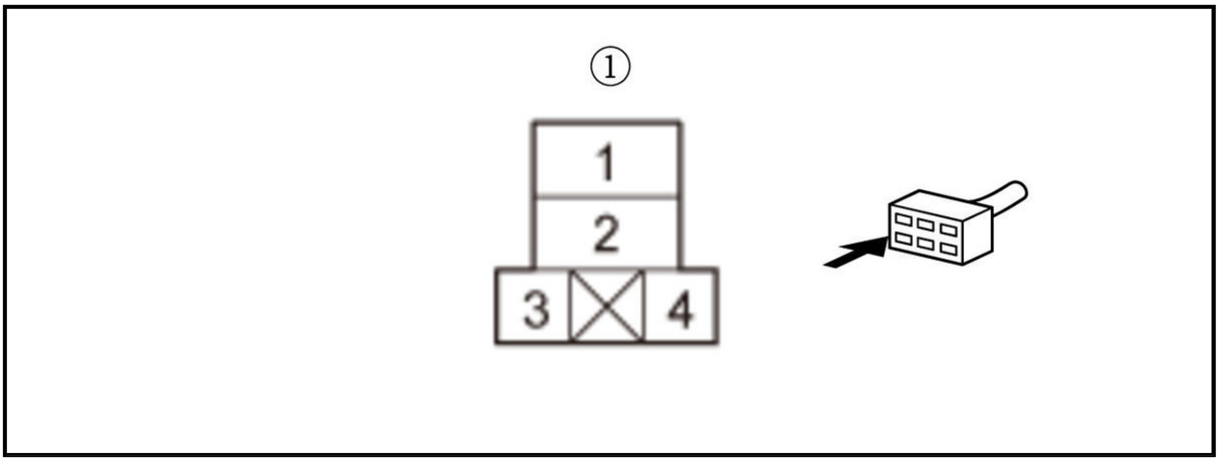

Is there 1.0 Ω or less?

YES

Go to step 6.

NO

Repair an open in the IGHLD/IG_HOLD1_RLY_CL- wire between the battery condition monitor module (E20) and the IGHLD relay.

6. Open wire check (IGAMONI/IGA line)

-1. Measure the resistance between test points 1 and 2.

Test condition	Vehicle OFF (LOCK) mode
B	IGHLD1 relay: disconnected
B	Battery condition monitor module connector E (32P): disconnected
Test point 1	**Battery condition monitor module connector E (32P) No. 23**
Test point 2	IGHLD1 relay 4P socket (female terminals) No. 2: ①

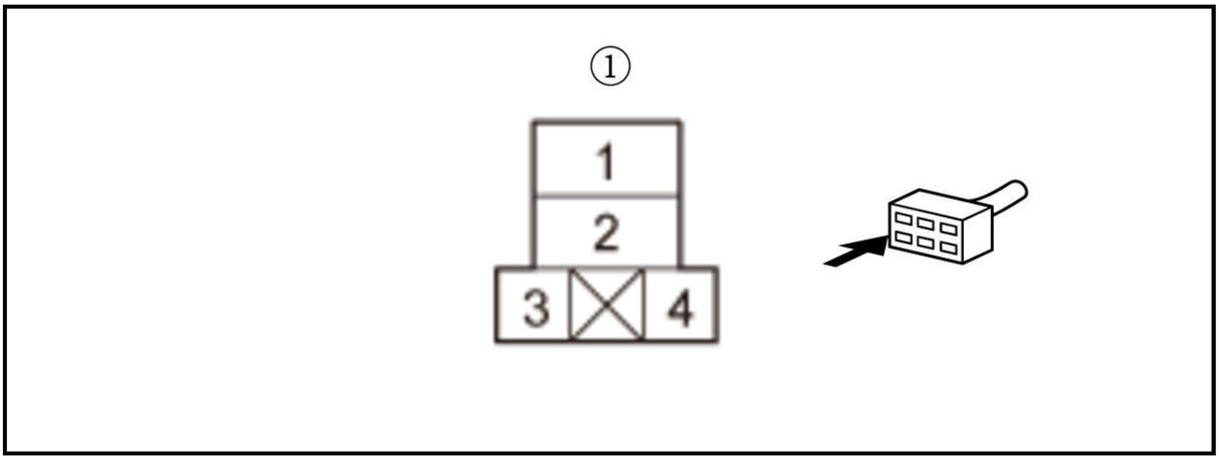

Is there 1.0 Ω or less?

YES

The IGAMONI/IGA wire is OK. **Replace the battery condition monitor module** .

NO

Repair an open in the IGAMONI/IGA wire between the battery condition monitor module (E23) and the IGHLD relay.

DTC P16C3 (31)

DTC P16C3 : DC-DC Converter Temperature Sensor Circuit

NOTE: Before you troubleshoot, **review the general troubleshooting information** .

DTC Description	Confirmed DTC	Pending DTC	Freeze Frame
P16C3 DC-DC Converter Temperature Sensor Circuit	B	B	B

DTC (Electric Powertrain)

1. Problem verification

   -1. Turn the vehicle to the ON mode.

   -2. Clear the DTC with the HDS.

   -3. Turn the vehicle to the OFF (LOCK) mode.

   -4. Turn the vehicle to the ON mode, and wait for 10 seconds.

   -5. Check for Pending or Confirmed DTCs with the HDS.

DTC Description	Confirmed DTC	Pending DTC	Freeze Frame
P16C3 DC-DC Converter Temperature Sensor Circuit	B	B	B

   Is DTC P16C3 indicated?

   YES

   Replace the PCU .

   NO

   Intermittent failure, the system is OK at this time. If the freeze data/on-board snapshot of this DTC is recorded, try to reproduce the failure under the same conditions with the freeze data/on-board snapshot.

DTC P1D3A (1085), P1D3B (1086)

DTC P1D3A : Battery Condition Monitor Module EEPROM Error (FSA Operated)

DTC P1D3B : Battery Condition Monitor Module EEPROM Error (FSA Not-Operated)

NOTE: Before you troubleshoot, **review the general troubleshooting information** .

DTC Description	Confirmed DTC	Pending DTC	Freeze Frame
P1D3A Battery Condition Monitor Module EEPROM Error (FSA Operated)	B	B	B
P1D3B Battery Condition Monitor Module EEPROM Error (FSA Not-Operated)	B	B	B

DTC (Electric Powertrain)

1. Problem verification

   -1. Turn the vehicle to the ON mode.

-2. Clear the DTC with the HDS.

-3. Turn the vehicle to the OFF (LOCK) mode.

-4. Turn the vehicle to the ON mode.

-5. Check for Pending or Confirmed DTCs with the HDS.

DTC Description	Confirmed DTC	Pending DTC	Freeze Frame
P1D3A Battery Condition Monitor Module EEPROM Error (FSA Operated)	B	B	B
P1D3B Battery Condition Monitor Module EEPROM Error (FSA Not-Operated)	B	B	B

Is DTC P1D3A or P1D3B indicated?

YES

Replace the battery condition monitor module .

NO

Intermittent failure. The system is OK at this time. If the freeze data/on-board snapshot of this DTC is recorded, try to reproduce the failure under the same conditions with the freeze data/on-board snapshot.

DTC P1D64 (143)

DTC P1D64 : Collision Detection Signal Circuit

NOTE: Before you troubleshoot, **review the general troubleshooting information** .

DTC Description	Confirmed DTC	Pending DTC	Freeze Frame
P1D64 Collision Detection Signal Circuit	B	B	B

DTC (Electric Powertrain)

1. Problem verification

-1. Turn the vehicle to the ON mode.

-2. Clear the DTC with the HDS.

-3. Turn the vehicle to the OFF (LOCK) mode.

-4. Turn the vehicle to the ON mode.

-5. Check for Pending or Confirmed DTCs with the HDS.

DTC Description	Confirmed DTC	Pending DTC	Freeze Frame
P1D64 Collision Detection Signal Circuit	B	B	B

Is DTC P1D64 indicated?

YES

The failure is duplicated. Go to step 2.

NO

Intermittent failure, the system is OK at this time. If the freeze data/on-board snapshot of this DTC is recorded, try to reproduce the failure under the same conditions with the freeze data/on-board snapshot.

2. SRS indicator check

   -1. Turn the vehicle to the OFF (LOCK) mode, then wait for 10 seconds.

   -2. Turn the vehicle to the ON mode, and check that the SRS indicator comes on.

   Does the SRS indicator come on?

   YES

   Go to SRS troubleshooting .

   NO

   Go to step 3.

3. Determine possible failure area (SRS unit, CDS line)

   -1. Turn the vehicle to the OFF (LOCK) mode.

   -2. **Do the 12 volt battery terminal disconnection procedure** .

   -3. Wait at least 3 minutes.

   -4. Disconnect the following connector.

SRS unit connector A (39P)

   -5. **Do the 12 volt battery terminal reconnection procedure** .

   -6. Turn the vehicle to the ON mode.

   -7. Measure the voltage between test points 1 and 2.

Test condition	Vehicle ON mode
	SRS unit connector A (39P): disconnected
Test point 1	**SRS unit connector A (39P) No. 1**
Test point 2	Body ground

   Is there about 5.0 V?

   YES

   The CDS wire is OK. Faulty SRS unit or poor connection at SRS unit connector A (39P) and the SRS unit; check the connection. If the connection is OK, **replace the SRS unit** .

   NO

   Go to step 4.

4. Shorted wire check (CDS line)

   -1. Turn the vehicle to the OFF (LOCK) mode.

   -2. Remove the **service plug** and the **IPU cover** .

   -3. Measure the resistance between test points 1 and 2.

Test condition	Vehicle OFF (LOCK) mode
B	Battery condition monitor module connector E (32P): disconnected
B	SRS unit connector A (39P): disconnected
Test point 1	**Battery condition monitor module connector E (32P) No. 30**

Test point 2	Body ground

Is there 1 MΩ or more?

YES

Go to step 5.

NO

Repair a short in the CDS wire between the battery condition monitor module (E30) and the SRS unit.

5. Open wire check (CDS line)

-1. Connect terminals A and B with a jumper wire.

Terminal A	**SRS unit connector A (39P) No. 1**
Terminal B	Body ground

-2. Measure the resistance between test points 1 and 2.

Test condition	Vehicle OFF (LOCK) mode
B	Battery condition monitor module connector E (32P): disconnected
B	SRS unit connector A (39P): disconnected
B	SRS unit connector A (39P) No. 1: jumped to body ground
Test point 1	**Battery condition monitor module connector E (32P) No. 30**
Test point 2	Body ground

Is there 1.0 Ω or less?

YES

The CDS wire is OK. **Replace the battery condition monitor module** .

NO

Repair an open in the CDS wire between the battery condition monitor module (E30) and the SRS unit.

DTC P1D65 (144)

DTC P1D65 : HV System Shutdown (Collision Detection Signal Detected)

NOTE:

- When the SRS airbag has deployed, this DTC is stored and the motor stops.
- If the SRS airbag has deployed, do the troubleshooting after replacing the SRS airbag. **Refer to Component Replacement/Inspection After Deployment** .
- Before you troubleshoot, **review the general troubleshooting information** .

DTC Description	Confirmed DTC	Pending DTC	Freeze Frame
P1D65 HV System Shutdown (Collision Detection Signal Detected)	B	B	B

DTC (Electric Powertrain)

1. SRS DTC check

   -1. Turn the vehicle to the ON mode.

   -2. Check for DTCs in the SRS with the HDS.

DTC Description	DTC
B	B

Are any DTCs indicated?

YES

Go to the troubleshooting for SRS system DTC(s) .

NO

Intermittent failure, the system is OK at this time. If the freeze data/on-board snapshot of this DTC is recorded, try to reproduce the failure under the same conditions with the freeze data/on-board snapshot.

DTC P1DC7 (349)

DTC P1DC7 : HV Battery Pack Deterioration of Power

NOTE: Before you troubleshoot, **review the general troubleshooting information** .

DTC Description	Confirmed DTC	Pending DTC	Freeze Frame
P1DC7 HV Battery Pack Deterioration of Power	B	B	B

DTC (Electric Powertrain)

1. Problem verification

   -1. Turn the vehicle to the ON mode.

   -2. Clear the DTC with the HDS.

   -3. Turn the vehicle to the OFF (LOCK) mode.

   -4. Turn the vehicle to the READY TO DRIVE mode.

   -5. Test-drive the vehicle; accelerate to 31 mph (50 km/h) and decelerate to 0 mph (0 km/h), repeat that for 10 minutes.

   -6. Monitor the OBD STATUS for DTC P1DC7 in the DTCs MENU with the HDS.

DTC Description	OBD STATUS
P1DC7 HV Battery Pack Deterioration of Power	B

Does the HDS indicate FAILED?

YES

The failure is duplicated. **Replace the battery pack** .

NO

If the HDS indicates PASSED, intermittent failure, the system is OK at this time. If the HDS indicates NOT COMPLETED, keep the test-driving until a result comes on. If the freeze data/on-board snapshot of this DTC is recorded, try to reproduce the failure under the same conditions with the freeze data/on-board snapshot.

DTC P1DFD (272)

DTC P1DFD : Power System Indicator Lighting Request From PCM

NOTE:

- Before you troubleshoot, **review the general troubleshooting information** .
- If the engine will not start, DTC P1DFD will be stored. To assist in your diagnosis, ask the customer if the vehicle fuel level was low when the issue occurred. Lack of fuel will prevent the engine from starting and cause DTC P1DFD to be recorded.

DTC Description	Confirmed DTC	Pending DTC	Freeze Frame
P1DFD Power System Indicator Lighting Request From PCM	B	B	B

DTC (Electric Powertrain)

1. PGM-FI system DTC check

-1. Turn the vehicle to the ON mode.

-2. Check for Pending or Confirmed DTCs in the PGM-FI system with the HDS.

DTC Description	Confirmed DTC	Pending DTC
B	B	B

Are any DTCs indicated?

YES

Go to the troubleshooting for PGM-FI system DTC(s) .

NO

Go to step 2.

2. Problem verification

-1. Turn the vehicle to the OFF (LOCK) mode.

-2. Turn the vehicle to the ON mode.

-3. Clear the DTC with the HDS.

-4. Check for Pending or Confirmed DTCs with the HDS.

DTC Description	Confirmed DTC	Pending DTC	Freeze Frame
P1DFD Power System Indicator Lighting Request From PCM	B	B	B

Is DTC P1DFD indicated?

YES

Replace the battery condition monitor module .

NO

Intermittent failure. The system is OK at this time. If the freeze data/on-board snapshot of this DTC is recorded, try to reproduce the failure under the same conditions with the freeze data/on-board snapshot.

DTC P1DFF (127)

DTC P1DFF : IGHLDB Relay Circuit

NOTE: Before you troubleshoot, **review the general troubleshooting information** .

DTC Description	Confirmed DTC	Pending DTC	Freeze Frame
P1DFF IGHLDB Relay Circuit	B	B	B

DTC (Electric Powertrain)

1. Problem verification

   -1. Turn the vehicle to the ON mode.

   -2. Clear the DTC with the HDS.

   -3. Turn the vehicle to the OFF (LOCK) mode, and wait 3 minutes.

   -4. Turn the vehicle to the ON mode.

   -5. Check for Pending or Confirmed DTCs with the HDS.

DTC Description	Confirmed DTC	Pending DTC	Freeze Frame
P1DFF IGHLDB Relay Circuit	B	B	B

   Is DTC P1DFF indicated?

   YES

   The failure is duplicated. Go to step 2.

   NO

   Intermittent failure, the system is OK at this time. If the freeze data/on-board snapshot of this DTC is recorded, try to reproduce the failure under the same conditions with the freeze data/on-board snapshot.

2. Relay check

   -1. Turn the vehicle to the OFF (LOCK) mode.

   -2. Remove the **service plug** and the **IPU cover** .

   -3. **Remove the IGHLDB relay** .

   -4. **Test the IGHLDB relay** .

   Is the relay OK?

   YES

   Go to step 3.

NO

Replace the IGHLDB relay.

3. Shorted wire check (IGHLDB line)

-1. Disconnect the following connector.

Battery condition monitor module connector E (32P)

-2. Measure the resistance between test points 1 and 2.

Test condition	Vehicle OFF (LOCK) mode
B	IGHLDB relay: disconnected
B	Battery condition monitor module connector E (32P): disconnected
Test point 1	**Battery condition monitor module connector E (32P) No. 19**
Test point 2	Body ground

Is there 1 MΩ or more?

YES

Check for a short to power in the IGB wire between the battery condition module (E2) and IGHLDB relay. If the wire is OK, **replace the battery condition monitor module** .

NO

Repair a short in the IGHLDB wire between the battery condition monitor module (E19) and the IGHLDB relay.

DTC P262B (590)

DTC P262B : Battery Condition Monitor Module Timer

NOTE: Before you troubleshoot, **review the general troubleshooting information** .

DTC Description	Confirmed DTC	Pending DTC	Freeze Frame
P262B Battery Condition Monitor Module Timer	B	B	B

DTC (Electric Powertrain)

1. Problem verification

-1. Turn the vehicle to the ON mode.

-2. Clear the DTC with the HDS.

-3. Turn the vehicle to the OFF (LOCK) mode, and wait 5 minutes.

-4. Turn the vehicle to the ON mode.

-5. Check for Pending or Confirmed DTCs with the HDS.

DTC Description	Confirmed DTC	Pending DTC	Freeze Frame
P262B Battery Condition Monitor Module Timer	B	B	B

Is DTC P262B indicated?

YES

Replace the battery condition monitor module .

NO

Intermittent failure, the system is OK at this time. If the freeze data/on-board snapshot of this DTC is recorded, try to reproduce the failure under the same conditions with the freeze data/on-board snapshot.

DTC U0029 (108) (BATTERY CONDITION MONITOR MODULE)

DTC U0029 : F-CAN Malfunction (Battery Condition Monitor Module Bus-Off)

NOTE: Before you troubleshoot, review the general troubleshooting information .

DTC Description	Confirmed DTC	Pending DTC	Freeze Frame
U0029 F-CAN Malfunction (Battery Condition Monitor Module Bus-Off)	B	B	B

DTC (Electric Powertrain)

1. Problem verification

-1. Turn the vehicle to the ON mode.

-2. Clear the DTC with the HDS.

-3. Turn the vehicle to the OFF (LOCK) mode.

-4. Turn the vehicle to the ON mode.

-5. Check for CAN gateway system DTCs with the HDS.

DTC Description	DTC
B	B

DTC (CAN GATEWAY)

Are any DTCs indicated?

YES

The failure is duplicated. Go to the troubleshooting for CAN gateway system DTC(s) .

NO

Intermittent failure, the system is OK at this time. If the freeze data/on-board snapshot of this DTC is recorded, try to reproduce the failure under the same conditions with the freeze data/on-board snapshot.

DTC U0038 (99) (BATTERY CONDITION MONITOR MODULE)

DTC U0038 : EP-CAN Malfunction (Battery Condition Monitor Module Bus-Off)

NOTE: Before you troubleshoot, review the general troubleshooting information .

DTC Description	Confirmed DTC	Pending DTC	Freeze Frame
U0038 EP-CAN Malfunction (Battery Condition Monitor Module Bus-Off)	B	B	B

DTC (Electric Powertrain)

1. Problem verification

   -1. Turn the vehicle to the ON mode.

   -2. Clear the DTC with the HDS.

   -3. Turn the vehicle to the OFF (LOCK) mode.

   -4. Turn the vehicle to the ON mode, and wait 6 seconds.

   -5. Check for Pending or Confirmed DTCs with the HDS.

DTC Description	Confirmed DTC	Pending DTC	Freeze Frame
U0038 EP-CAN Malfunction (Battery Condition Monitor Module Bus-Off)	B	B	B

   Is DTC U0038 indicated?

   YES

   The failure is duplicated. Go to step 2.

   NO

   Intermittent failure. The system is OK at this time. If the freeze data/on-board snapshot of this DTC is recorded, try to reproduce the failure under the same conditions with the freeze data/on-board snapshot.

2. Shorted unit check (PCM)

   -1. Turn the vehicle to the OFF (LOCK) mode.

   -2. Jump the SCS line with the HDS, and wait more than 1 minute.

   -3. Disconnect the following connector.

PCM connector A (50P)

   -4. Turn the vehicle to the ON mode.

   -5. Clear the DTC with the HDS.

   -6. Turn the vehicle to the OFF (LOCK) mode.

   -7. Turn the vehicle to the ON mode, and wait 6 seconds.

   -8. Check for Pending or Confirmed DTCs with the HDS.

DTC Description	Confirmed DTC	Pending DTC	Freeze Frame
U0038 EP-CAN Malfunction (Battery Condition Monitor Module Bus-Off)	B	B	B

   Is DTC U0038 indicated?

   YES

   Go to step 3.

NO

Check for any authorized service information related to the DTCs or symptoms you are troubleshooting, or **substitute a known-good PCM** .

3. Shorted unit check (PCU)

-1. Turn the vehicle to the OFF (LOCK) mode.

-2. **Do the 12 volt battery terminal disconnection procedure** .

-3. Disconnect the following connector.

PCU 33P connector

-4. Turn the vehicle to the ON mode.

-5. Clear the DTC with the HDS.

-6. Turn the vehicle to the OFF (LOCK) mode.

-7. Turn the vehicle to the ON mode, and wait 6 seconds.

-8. Check for Pending or Confirmed DTCs with the HDS.

DTC Description	Confirmed DTC	Pending DTC	Freeze Frame
U0038 EP-CAN Malfunction (Battery Condition Monitor Module Bus-Off)	B	B	B

Is DTC U0038 indicated?

YES

Go to step 4.

NO

Replace the PCU .

4. Shorted unit check (SBW shifter control module)

-1. Turn the vehicle to the OFF (LOCK) mode.

-2. Disconnect the following connector.

SBW shifter control module 20P connector

-3. Turn the vehicle to the ON mode.

-4. Clear the DTC with the HDS.

-5. Turn the vehicle to the OFF (LOCK) mode.

-6. Turn the vehicle to the ON mode, and wait 6 seconds.

-7. Check for Pending or Confirmed DTCs with the HDS.

DTC Description	Confirmed DTC	Pending DTC	Freeze Frame
U0038 EP-CAN Malfunction (Battery Condition Monitor Module Bus-Off)	B	B	B

Is DTC U0038 indicated?

YES

Go to step 5.

NO

Check for any authorized service information related to the DTCs or symptoms you are troubleshooting, or **substitute a known-good SBW shifter assembly** .

5. Shorted unit check (park pawl actuator driver unit)

-1. Turn the vehicle to the OFF (LOCK) mode.

-2. Disconnect the following connector.

Park pawl actuator driver unit 26P connector

-3. Turn the vehicle to the ON mode.

-4. Clear the DTC with the HDS.

-5. Turn the vehicle to the OFF (LOCK) mode.

-6. Turn the vehicle to the ON mode, and wait 6 seconds.

-7. Check for Pending or Confirmed DTCs with the HDS.

DTC Description	Confirmed DTC	Pending DTC	Freeze Frame
U0038 EP-CAN Malfunction (Battery Condition Monitor Module Bus-Off)	B	B	B

Is DTC U0038 indicated?

YES

Go to step 6.

NO

Check for any authorized service information related to the DTCs or symptoms you are troubleshooting, or **substitute a known-good park pawl actuator driver unit** .

6. Shorted wire check (EP-CAN A_H line)

-1. Turn the vehicle to the OFF (LOCK) mode.

-2. Remove the **service plug** and the **IPU cover** .

-3. Disconnect the following connector.

Battery condition monitor module connector E (32P)

-4. Measure the resistance between test points 1 and 2.

Test condition	Vehicle OFF (LOCK) mode
B	PCM connector A (50P): disconnected
B	PCU 33P connector: disconnected

B	Battery condition monitor module connector E (32P): disconnected
B	SBW shifter control module 20P connector: disconnected
B	Park pawl actuator driver unit 26P connector: disconnected
Test point 1	**Battery condition monitor module connector E (32P) No. 11**
Test point 2	Body ground

Is there 1 MΩ or more?

YES

Go to step 7.

NO

Repair a short to ground in the EP-CAN A_H wire between the PCM, the PCU, the SBW shifter control module, the park pawl actuator driver unit, and the battery condition monitor module.

7. Shorted wire check (EP-CAN A_L line)

-1. Measure the resistance between test points 1 and 2.

Test condition	Vehicle OFF (LOCK) mode
B	PCM connector A (50P): disconnected
B	PCU 33P connector: disconnected
B	Battery condition monitor module connector E (32P): disconnected
B	SBW shifter control module 20P connector: disconnected
B	Park pawl actuator driver unit 26P connector: disconnected
Test point 1	**Battery condition monitor module connector E (32P) No. 10**
Test point 2	Body ground

Is there 1 MΩ or more?

YES

Go to step 8.

NO

Repair a short to ground in the EP-CAN A_L wire between the PCM, the PCU, the SBW shifter control module, the park pawl actuator driver unit, and the battery condition monitor module.

8. Shorted wire check (EP-CAN A_H wire to EP-CAN A_L wire)

-1. Measure the resistance between test points 1 and 2.

Test condition	Vehicle OFF (LOCK) mode
B	PCM connector A (50P): disconnected
B	PCU 33P connector: disconnected
B	Battery condition monitor module connector E (32P): disconnected
B	SBW shifter control module 20P connector: disconnected
B	Park pawl actuator driver unit 26P connector: disconnected
Test point 1	**Battery condition monitor module connector E (32P) No. 11**
Test point 2	**Battery condition monitor module connector E (32P) No. 10**

Is there 1 MΩ or more?

YES

The EP-CAN A_H wire and the EP-CAN A_L wire are OK. **Replace the battery condition monitor module** .

NO

Repair a short in the EP-CAN A_H wire to the EP-CAN A_L wire between the PCM, the SBW shifter control module, the park pawl actuator driver unit, the PCU, and the battery condition monitor module.

DTC U0100 (BATTERY CONDITION MONITOR MODULE)

DTC U0100 : CAN Malfunction (Battery Condition Monitor Module - PCM)

NOTE:

- Before you troubleshoot, **review the general troubleshooting information** .
- If any of the DTCs listed below are indicated at the same time as DTC U0100, troubleshoot those DTCs first, then recheck for U0100.
-
    - -

      U1204, U1600

DTC Description	Confirmed DTC	Pending DTC	Freeze Frame
U0100 CAN Malfunction (Battery Condition Monitor Module - PCM)	B	B	B

DTC (Electric Powertrain)

1. DTC check

   -1. Turn the vehicle to the ON mode.

   -2. Check for Pending or Confirmed DTCs with the HDS.

DTC Description	Confirmed DTC	Pending DTC	Freeze Frame
B	B	B	B

   DTC (Electric Powertrain)

   Are DTC U0100 and any other DTCs indicated at the same time?

   YES

   Go to the indicated DTC's troubleshooting.

   NO

   Update the battery condition monitor module if it does not have the latest software .

DTC U0110 (BATTERY CONDITION MONITOR MODULE)

DTC U0110 : F-CAN Malfunction (Battery Condition Monitor Module - Traction Motor Control Module)

NOTE:

- Before you troubleshoot, **review the general troubleshooting information** .

- If any of the DTCs listed below are indicated at the same time as DTC U0110, troubleshoot those DTCs first, then recheck for U0110.
-
    - -

      U1205

DTC Description	Confirmed DTC	Pending DTC	Freeze Frame
U0110 F-CAN Malfunction (Battery Condition Monitor Module - Traction Motor Control Module)	B	B	B

DTC (Electric Powertrain)

1. DTC check

   -1. Turn the vehicle to the ON mode.

   -2. Check for Pending or Confirmed DTCs with the HDS.

DTC Description	Confirmed DTC	Pending DTC	Freeze Frame
U1205 EP-CAN Malfunction (Battery Condition Monitor Module - Traction Motor Control Module)	B	B	B

   DTC (Electric Powertrain)

   Is DTC U1205 indicated at the same time?

   YES

   Go to the DTC U1205 troubleshooting.

   NO

   Update the battery condition monitor module if it does not have the latest software .

DTC U012D (BATTERY CONDITION MONITOR MODULE)

DTC U012D : F-CAN Malfunction (Battery Condition Monitor Module - Generator Motor Control Module)

NOTE:

- Before you troubleshoot, review the general troubleshooting information .
- If any of the DTCs listed below are indicated at the same time as DTC U012D, troubleshoot those DTCs first, then recheck for U012D.
-
    - -

      U12A5

DTC Description	Confirmed DTC	Pending DTC	Freeze Frame
U012D F-CAN Malfunction (Battery Condition Monitor Module - Generator Motor Control Module)	B	B	B

DTC (Electric Powertrain)

1. DTC check

   -1. Turn the vehicle to the ON mode.

   -2. Check for Pending or Confirmed DTCs with the HDS.

DTC Description	Confirmed DTC	Pending DTC	Freeze Frame
U12A5 EP-CAN Malfunction (Battery Condition Monitor Module - Generator Motor Control Module)	B	B	B

DTC (Electric Powertrain)

Is DTC U12A5 indicated at the same time?

YES

Go to the DTC U12A5 troubleshooting.

NO

Update the battery condition monitor module if it does not have the latest software .

DTC U0146 (306) (BATTERY CONDITION MONITOR MODULE)

DTC U0146 : F-CAN Malfunction (Battery Condition Monitor Module - CAN Gateway)

NOTE: Before you troubleshoot, **review the general troubleshooting information** .

DTC Description	Confirmed DTC	Pending DTC	Freeze Frame
U0146 F-CAN Malfunction (Battery Condition Monitor Module - CAN Gateway)	B	B	B

DTC (Electric Powertrain)

1. Problem verification

   -1. Turn the vehicle to the ON mode.

   -2. Clear the DTC with the HDS.

   -3. Turn the vehicle to the OFF (LOCK) mode.

   -4. Turn the vehicle to the ON mode.

   -5. Check for Pending or Confirmed DTCs with the HDS.

DTC Description	Confirmed DTC	Pending DTC	Freeze Frame
U0146 F-CAN Malfunction (Battery Condition Monitor Module - CAN Gateway)	B	B	B

Is DTC U0146 indicated?

YES

The failure is duplicated. Go to step 2.

NO

Intermittent failure, the system is OK at this time. If the freeze data/on-board snapshot of this DTC is recorded, try to reproduce the failure under the same conditions with the freeze data/on-board snapshot.

2. CAN gateway system DTCs check

-1. Check for CAN gateway system DTCs with the HDS.

DTC Description	DTC
B	B

DTC (CAN GATEWAY)

Are any Pending or Confirmed DTCs indicated?

YES

Go to the CAN gateway system troubleshooting .

NO

Go to step 3.

3. Open wire check (F-CAN A_H line)

-1. Turn the vehicle to the OFF (LOCK) mode.

-2. Remove the **service plug** and the **IPU cover** .

-3. Disconnect the following connectors.

Battery condition monitor module connector E (32P)
CAN gateway 16P connector

-4. Measure the resistance between test points 1 and 2.

Test condition	Vehicle OFF (LOCK) mode
B	CAN gateway 16P connector: disconnected
B	Battery condition monitor module connector E (32P): disconnected
Test point 1	CAN gateway 16P connector (female terminals) No. 3: ①
Test point 2	**Battery condition monitor module connector E (32P) No. 9**

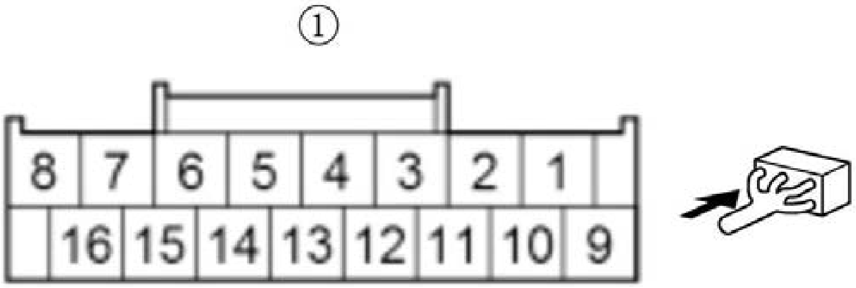

Is there 1.0 Ω or less?

YES

Go to step 4.

NO

Repair an open in the F-CAN A_H wire between the CAN gateway and the battery condition monitor module (E9).

4. Open wire check (F-CAN A_L line)

-1. Measure the resistance between test points 1 and 2.

Test condition	Vehicle OFF (LOCK) mode
B	CAN gateway 16P connector: disconnected
B	Battery condition monitor module connector E (32P): disconnected
Test point 1	CAN gateway 16P connector (female terminals) No. 11: ①

Test point 2	**Battery condition monitor module connector E (32P) No. 8**

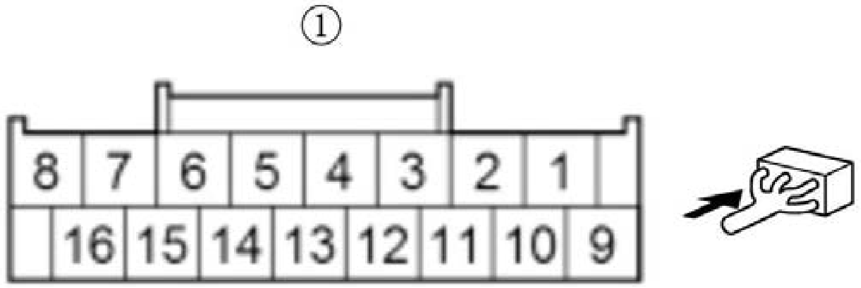

Is there 1.0 Ω or less?

YES

The F-CAN A_L wire is OK. **Replace the battery condition monitor module** .

NO

Repair an open in the F-CAN A_L wire between the CAN gateway and the battery condition monitor module (E8).

DTC U0155 (106), U1207 (207), U1600 (103) (BATTERY CONDITION MONITOR MODULE)

DTC U0155 : F-CAN Malfunction (Battery Condition Monitor Module - Gauge Control Module)

DTC U1207 : F-CAN Malfunction (Battery Condition Monitor Module - Electric A/C Compressor)

DTC U1600 : F-CAN Malfunction (Battery Condition Monitor Module - PCM)

NOTE:

- Before you troubleshoot, **review the general troubleshooting information** .
- According to the detected DTC(s), check for the power circuit and the ground circuit of the control unit which cannot communicate with the battery condition monitor module.

DTC Description	Confirmed DTC	Pending DTC	Freeze Frame
U0155 F-CAN Malfunction (Battery Condition Monitor Module - Gauge Control Module)	B	B	B
U1207 F-CAN Malfunction (Battery Condition Monitor Module - Electric A/C Compressor)	B	B	B
U1600 F-CAN Malfunction (Battery Condition Monitor Module - PCM)	B	B	B

DTC (Electric Powertrain)

1. CAN gateway system DTC check

   -1. Turn the vehicle to the ON mode.

   -2. Check for CAN gateway system DTCs with the HDS.

DTC Description	DTC
B	B

   DTC (CAN GATEWAY)

   Are any DTCs indicated?

   YES

   Go to the troubleshooting for CAN gateway system DTC(s) .

   NO

   Go to step 2.

2. F-CAN circuit communication check (Receiving control unit)

   -1. Select the FUNCTION TEST in the CAN gateway with the HDS, then select the F-CAN Bus Connected Unit Check.

   F-CAN Bus Connected Unit Check

   Does the battery condition monitor module detect the CAN gateway Bus channel A?

   Bus A is Not Available

   Go to step 3.

   Bus A is Available

   Go to step 4.

3. Open wire check (F-CAN A_H line, F-CAN A_L line)

   -1. Turn the vehicle to the OFF (LOCK) mode.

   -2. Remove the **service plug** and the **IPU cover** .

   -3. Disconnect the following connectors.

Battery condition monitor module connector E (32P)	
CAN gateway 16P connector	

-4. Measure the resistance between test points 1 and 2.

Test condition	Vehicle OFF (LOCK) mode
	Battery condition monitor module connector E (32P): disconnected
	CAN gateway 16P connector: disconnected
Test point 1	**Battery condition monitor module connector E (32P) No. 9**
Test point 2	CAN gateway 16P connector (female terminals) No. 3: ①

Test point 1	**Battery condition monitor module connector E (32P) No. 8**
Test point 2	CAN gateway 16P connector (female terminals) No. 11: ①

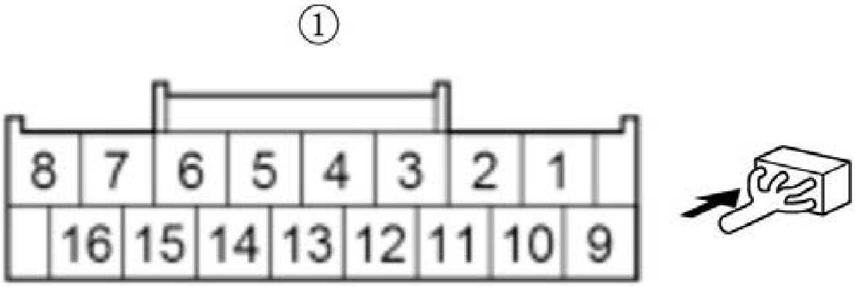

Is there 1.0 Ω or less?

YES

The F-CAN A_H wire and the F-CAN A_L wire are OK. **Replace the battery condition monitor module** .

NO

Repair an open in the F-CAN A_H wire or the F-CAN A_L wire between the battery condition monitor module and the CAN gateway.

4. F-CAN circuit communication check (Transmitting control unit)

-1. Select the FUNCTION TEST in the CAN gateway with the HDS, then select the F-CAN Bus Connected Unit Check.

F-CAN Bus Connected Unit Check

According to the detected DTC on the following table, make sure that the transmitting control unit detects the CAN gateway Bus channel(s) normally.

DTC	Transmitting control unit	Detected CAN gateway Bus channel(s) at normal
U0155	Gauge control module	D
U1207	Electric A/C compressor	D
U1600	PCM	A, B

Is it detected normally?

U0155: Gauge control module is Not Available for Bus D

Go to step 7.

U1207: Electric A/C compressor is Not Available for Bus D

Go to step 7.

U1600: PCM is Not Available for Bus A

Go to step 5.

U1600: PCM is Not Available for Bus B

Go to step 6.

Detected normal

Intermittent failure. The system is OK at this time. Check for poor connections or loose terminals at the transmitting control unit, the battery condition monitor module, and the CAN gateway.

5. Open wire check (F-CAN A_H line, F-CAN A_L line)

-1. Turn the vehicle to the OFF (LOCK) mode.

-2. DTC U1600: Jump the SCS line with the HDS, and wait more than 1 minute.

-3. According to the detected DTC on the following table, disconnect the transmitting control unit connector(s).

DTC	Connector
-	CAN gateway 16P connector
U1600	PCM connector A (50P)

-4. Measure the resistance between test points 1 and 2.

Test condition	Vehicle OFF (LOCK) mode
B	CAN gateway 16P connector: disconnected
B	Transmitting control unit connector(s) for indicated DTCs: disconnected

DTC	Circuit name	Test point 1 (Receiving control unit)		Test point 2 (Transmitting control unit)	
		Connector	Terminal	Connector	Terminal
U1600	F-CAN A_H	CAN gateway 16P connector (female terminals): ①	No. 3	PCM connector A (50P)	No. 37
	F-CAN A_L		No. 11		No. 36

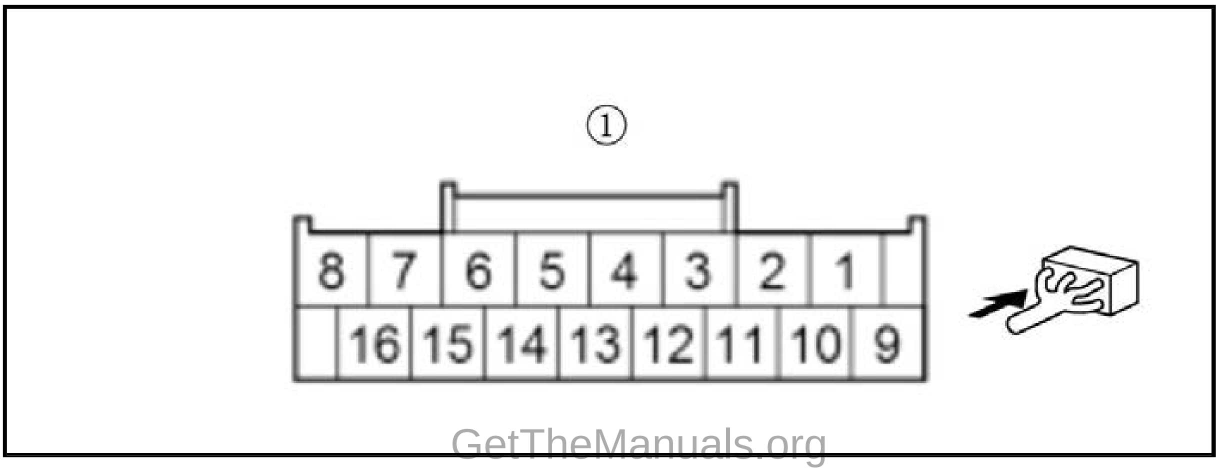

Is there 1.0 Ω or less?

YES

The F-CAN A_H wire and the F-CAN A_L wire are OK.According to the detected DTC on the following table, update, substitute, or replace the correspond control unit.

DTC	Operation for transmitting control unit
U1600	**Replace the PCM** .

NO

Repair an open in the F-CAN A_H wire or the F-CAN A_L wire between the transmitting control unit and the CAN gateway.

6. Open wire check (F-CAN B_H line, F-CAN B_L line)

-1. Turn the vehicle to the OFF (LOCK) mode.

-2. DTC U1600: Jump the SCS line with the HDS, and wait more than 1 minute.

-3. According to the detected DTC on the following table, disconnect the transmitting control unit connector(s).

DTC	Connector
-	CAN gateway 16P connector
U1600	PCM connector A (50P)

-4. Measure the resistance between test points 1 and 2.

Test condition	Vehicle OFF (LOCK) mode
B	CAN gateway 16P connector: disconnected
B	Transmitting control unit connector(s) for indicated DTCs: disconnected

DTC	Circuit name	Test point 1 (Receiving control unit)		Test point 2 (Transmitting control unit)	
		Connector	Terminal	Connector	Terminal
U1600	F-CAN B_H	CAN gateway 16P connector (female terminals): ①	No. 6	**PCM connector A (50P)**	No. 39
	F-CAN B_L		No. 14		No. 38

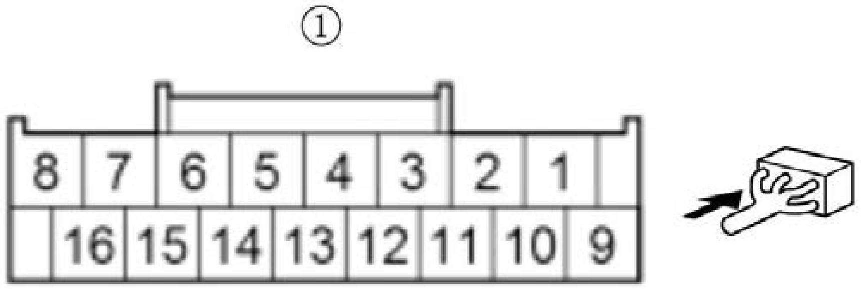

Is there 1.0 Ω or less?

YES

The F-CAN B_H wire and the F-CAN B_L wire are OK. According to the detected DTC on the following table, update, substitute, or replace the correspond control unit.

DTC	Operation for transmitting control unit
U1600	Replace the PCM .

NO

Repair an open in the F-CAN B_H wire or the F-CAN B_L wire between the transmitting control unit and the CAN gateway.

7. Open wire check (F-CAN D_H line, F-CAN D_L line)

-1. Turn the vehicle to the OFF (LOCK) mode.

-2. According to the detected DTC on the following table, disconnect the transmitting control unit connector(s).

DTC	Connector
-	CAN gateway 16P connector
U0155	Gauge control module connector A (32P)
U1207	Electric A/C compressor 4P connector

-3. Measure the resistance between test points 1 and 2.

Test condition	Vehicle OFF (LOCK) mode
B	CAN gateway 16P connector: disconnected
B	Transmitting control unit connector(s) for indicated DTCs: disconnected

DTC	Circuit name	Test point 1 (Receiving control unit)		Test point 2 (Transmitting control unit)	
		Connector	Terminal	Connector	Terminal
U0155	F-CAN D_H	CAN gateway 16P connector (female terminals): ①	No. 7	Gauge control module connector A (32P)	No. 19
	F-CAN D_L		No. 15		No. 20
U1207	F-CAN D_H	CAN gateway 16P connector (female terminals): ①	No. 7	Electric A/C compressor 4P connector (female terminals): ②	No. 4
	F-CAN D_L		No. 15		No. 3

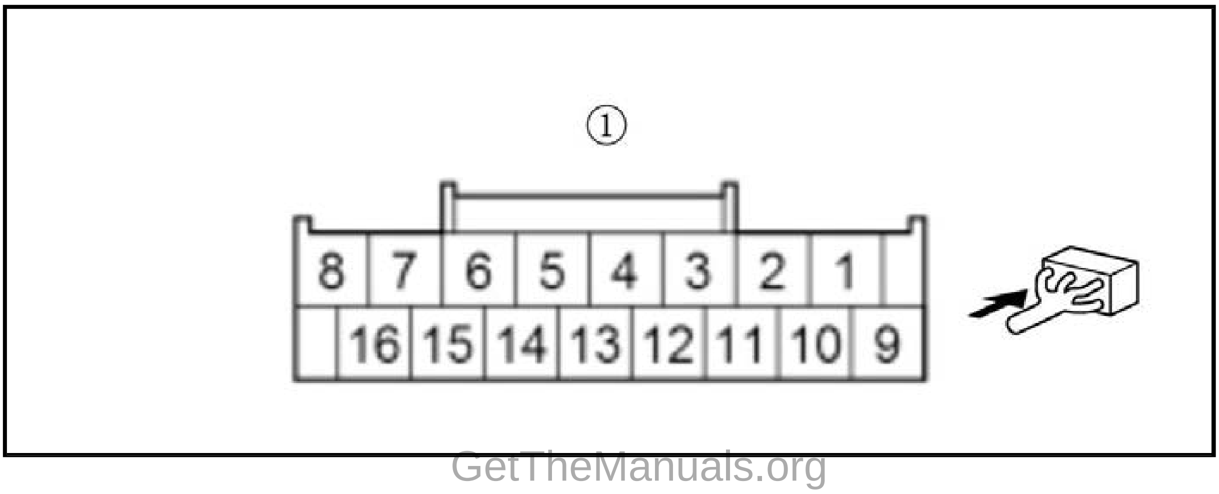

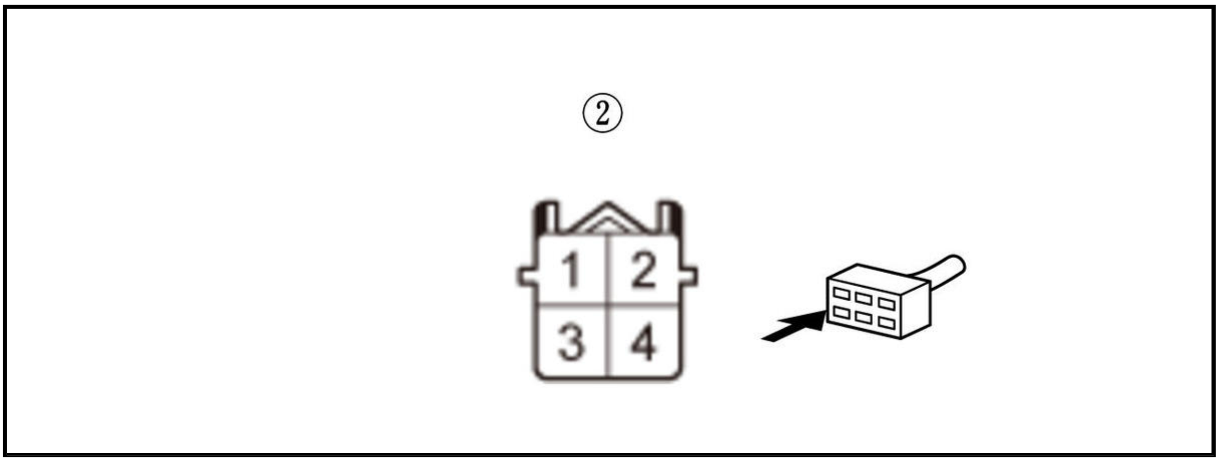

Is there 1.0 Ω or less?

YES

The F-CAN D_H wire and the F-CAN D_L wire are OK.According to the detected DTC on the following table, update, substitute, or replace the correspond control unit.

DTC	Operation for transmitting control unit
U0155	**Replace the gauge control module** .
U1207	**Replace the electric A/C compressor** .

NO

Repair an open in the F-CAN D_H wire or the F-CAN D_L wire between the transmitting control unit and the CAN gateway.

DTC U0298 (BATTERY CONDITION MONITOR MODULE)

DTC U0298 : DC-DC Converter Communication Error

NOTE:

- Before you troubleshoot, **review the general troubleshooting information** .
- If any of the DTCs listed below are indicated at the same time as DTC U0298, troubleshoot those DTCs first, then recheck for U0298.
-
    - -

      U1220

DTC Description	Confirmed DTC	Pending DTC	Freeze Frame
U0298 DC-DC Converter Communication Error	B	B	B

DTC (Electric Powertrain)

1. DTC check

   -1. Turn the vehicle to the ON mode.

   -2. Check for Pending or Confirmed DTCs with the HDS.

DTC Description	Confirmed DTC	Pending DTC	Freeze Frame
B	B	B	B

DTC (Electric Powertrain)

Are DTC U0298 and any other DTCs indicated at the same time?

YES

Go to the indicated DTC's troubleshooting.

NO

Update the battery condition monitor module , then recheck. If DTC U0298 is still indicated, replace the battery condition monitor module.

DTC U0312 (124) (BATTERY CONDITION MONITOR MODULE)

DTC U0312 : Battery Condition Monitor Module Programming Error (Version Mismatch)

NOTE: Before you troubleshoot, **review the general troubleshooting information** .

DTC Description	Confirmed DTC	Pending DTC	Freeze Frame
U0312 Battery Condition Monitor Module Programming Error (Version Mismatch)	B	B	B

DTC (Electric Powertrain)

1. Problem verification (update)

   -1. Turn the vehicle to the ON mode.

   -2. Clear the DTC with the HDS.

   -3. Turn the vehicle to the OFF (LOCK) mode, and wait 30 seconds.

   -4. Turn the vehicle to the ON mode.

   -5. **Update the battery condition monitor module** .

   -6. Check for Pending or Confirmed DTCs with the HDS.

DTC Description	Confirmed DTC	Pending DTC	Freeze Frame
U0312 Battery Condition Monitor Module Programming Error (Version Mismatch)	B	B	B

Is DTC U0312 indicated?

YES

Replace the battery condition monitor module .

NO

Update is complete.

DTC U0599 (35), U1220 (34) (BATTERY CONDITION MONITOR MODULE)

DTC U0599 : DC-DC Converter Serial Communication Receive Error

DTC U1220 : DC-DC Converter Serial Communication Transmit Error

NOTE: Before you troubleshoot, **review the general troubleshooting information** .

DTC Description	Confirmed DTC	Pending DTC	Freeze Frame
U0599 DC-DC Converter Serial Communication Receive Error	B	B	B
U1220 DC-DC Converter Serial Communication Transmit Error	B	B	B

DTC (Electric Powertrain)

1. Problem verification

   -1. Turn the vehicle to the ON mode.

   -2. Clear the DTC with the HDS.

   -3. Turn the vehicle to the OFF (LOCK) mode.

   -4. Turn the vehicle to the ON mode, and wait for 10 seconds.

   -5. Check for Pending or Confirmed DTCs with the HDS.

DTC Description	Confirmed DTC	Pending DTC	Freeze Frame
U0599 DC-DC Converter Serial Communication Receive Error	B	B	B
U1220 DC-DC Converter Serial Communication Transmit Error	B	B	B

   Is DTC U0599 and/or U1220 indicated?

   YES

   Go to step 2.

   NO

   Intermittent failure. The system is OK at this time. If the freeze data/on-board snapshot of this DTC is recorded, try to reproduce the failure under the same conditions with the freeze data/on-board snapshot.

2. DTC check

   -1. Check for Pending or Confirmed DTCs with the HDS.

   Traction motor control module

DTC Description	Confirmed DTC	Pending DTC	Freeze Frame
B	B	B	B

   Generator motor control module

DTC Description	Confirmed DTC	Pending DTC	Freeze Frame
B	B	B	B

   DTC (Electric Powertrain)

   Are DTC U0599 or U1220, and any other DTCs indicated at the same time?

   YES

   Go to the indicated DTC's troubleshooting.

NO

Go to step 3.

3. CAN gateway system DTCs check

-1. Check for CAN gateway system DTCs with the HDS.

DTC Description	DTC
B	B

DTC (CAN GATEWAY)

Are any DTCs indicated?

YES

Go to the CAN gateway system troubleshooting .

NO

Go to step 4.

4. Open wire check (F-CAN A_H line)

-1. Remove the **service plug** and the **IPU cover** .

-2. Disconnect the following connectors.

Battery condition monitor module connector E (32P)
PCU 33P connector

-3. Measure the resistance between test points 1 and 2.

Test condition	Vehicle OFF (LOCK) mode
B	Battery condition monitor module connector E (32P): disconnected
B	PCU 33P connector: disconnected
Test point 1	**Battery condition monitor module connector E (32P) No. 9**
Test point 2	**PCU 33P connector No. 5**

Is there 1.0 Ω or less?

YES

The F-CAN A_H wire is OK. Go to step 5.

NO

Repair an open in the F-CAN A_H wire between the PCU and the battery condition monitor module (E9).

5. Open wire check (F-CAN A_L line)

-1. Measure the resistance between test points 1 and 2.

Test condition	Vehicle OFF (LOCK) mode
B	Battery condition monitor module connector E (32P): disconnected
B	PCU 33P connector: disconnected

Test point 1	**Battery condition monitor module connector E (32P) No. 8**
Test point 2	**PCU 33P connector No. 6**

Is there 1.0 Ω or less?

YES

The F-CAN A_L wire is OK. **Replace the PCU** .

NO

Repair an open in the F-CAN A_L wire between the PCU and the battery condition monitor module (E8).

DTC U1204 (55), U1205 (83), U12A5 (316) (BATTERY CONDITION MONITOR MODULE)

DTC U1204 : EP-CAN Malfunction (Battery Condition Monitor Module - PCM)

DTC U1205 : EP-CAN Malfunction (Battery Condition Monitor Module - Traction Motor Control Module)

DTC U12A5 : EP-CAN Malfunction (Battery Condition Monitor Module - Generator Motor Control Module)

NOTE:

- Before you troubleshoot, **review the general troubleshooting information** .
- According to the detected DTC(s), check for the power circuit and the ground circuit of the control unit which cannot communicate with the battery condition monitor module.

DTC Description	Confirmed DTC	Pending DTC	Freeze Frame
U1204 EP-CAN Malfunction (Battery Condition Monitor Module - PCM)	B	B	B
U1205 EP-CAN Malfunction (Battery Condition Monitor Module - Traction Motor Control Module)	B	B	B
U12A5 EP-CAN Malfunction (Battery Condition Monitor Module - Generator Motor Control Module)	B	B	B

DTC (Electric Powertrain)

1. Problem verification

-1. Turn the vehicle to the ON mode.

-2. Clear the DTC with the HDS.

-3. Turn the vehicle to the OFF (LOCK) mode.

-4. Turn the vehicle to the ON mode.

-5. Check for Pending or Confirmed DTCs with the HDS.

DTC Description	Confirmed DTC	Pending DTC	Freeze Frame
U1204 EP-CAN Malfunction (Battery Condition Monitor Module - PCM)	B	B	B
U1205 EP-CAN Malfunction (Battery Condition Monitor Module - Traction Motor Control Module)	B	B	B

DTC Description	Confirmed DTC	Pending DTC	Freeze Frame
U12A5 EP-CAN Malfunction (Battery Condition Monitor Module - Generator Motor Control Module)	B	B	B

Are any DTCs indicated?

YES

The failure is duplicated. Go to step 2.

NO

Intermittent failure, the system is OK at this time. If the freeze data/on-board snapshot of this DTC is recorded, try to reproduce the failure under the same conditions with the freeze data/on-board snapshot.

2. Open wire check (EP-CAN A_H line, EP-CAN A_L line)

-1. Turn the vehicle to the OFF (LOCK) mode.

-2. Remove the **service plug** and the **IPU cover** .

-3. U1204: Jump the SCS line with the HDS, and wait more than 1 minute.

-4. According to the detected DTC on the following table, disconnect the transmitting control unit connector(s).

DTC	Connector
-	Battery condition monitor module connector E (32P)
U1204	PCM connector A (50P)
U1205	PCU 33P connector
U12A5	PCU 33P connector

-5. Measure the resistance between test points 1 and 2.

Test condition	Vehicle OFF (LOCK) mode
B	Battery condition monitor module connector E (32P): disconnected
B	Transmitting control unit connector(s) for indicated DTCs: disconnected

DTC	Circuit name	Test point 1 (Receiving control unit)		Test point 2 (Transmitting control unit)	
		Connector	Terminal	Connector	Terminal
U1204	EP-CAN A_H	**Battery condition monitor module connector E (32P)**	No. 11	**PCM connector A (50P)**	No. 21
	EP-CAN A_L		No. 10		No. 20
U1205	EP-CAN A_H	**Battery condition monitor module connector E (32P)**	No. 11	**PCU 33P connector**	No. 27
	EP-CAN A_L		No. 10		No. 28
U12A5	EP-CAN A_H	**Battery condition monitor module connector E (32P)**	No. 11	**PCU 33P connector**	No. 27
	EP-CAN A_L		No. 10		No. 28

Is there 1.0 Ω or less?

YES

The EP-CAN A_H wire and the EP-CAN A_L wire are OK.According to the detected DTC on the following table, substitute, or replace the corresponding unit.

DTC	Operation for transmitting control unit
U1204	Replace the PCM .
U1205	Replace the PCU .
U12A5	Replace the PCU .

NO

Repair an open in the EP-CAN A_H wire or the EP-CAN A_L wire between the transmitting control unit and the battery condition monitor module.

DTC U1604 (101) (BATTERY CONDITION MONITOR MODULE)

DTC U1604 : F-CAN Malfunction (Battery Condition Monitor Module - Traction Motor Control Module)

NOTE:

- Before you troubleshoot, review the general troubleshooting information .
- According to the detected DTC(s), check for the power circuit and the ground circuit of the control unit which cannot communicate with the battery condition monitor module.

DTC Description	Confirmed DTC	Pending DTC	Freeze Frame
U1604 F-CAN Malfunction (Battery Condition Monitor Module - Traction Motor Control Module)	B	B	B

DTC (Electric Powertrain)

1. Problem verification

-1. Turn the vehicle to the ON mode.

-2. Clear the DTC with the HDS.

-3. Turn the vehicle to the OFF (LOCK) mode.

-4. Turn the vehicle to the ON mode.

-5. Check for Pending or Confirmed DTCs with the HDS.

DTC Description	Confirmed DTC	Pending DTC	Freeze Frame
U1604 F-CAN Malfunction (Battery Condition Monitor Module - Traction Motor Control Module)	B	B	B

Is DTC U1604 indicated?

YES

Go to step 2.

NO

Intermittent failure, the system is OK at this time. If the freeze data/on-board snapshot of this DTC is recorded, try to reproduce the failure under the same conditions with the freeze data/on-board snapshot.

2. CAN gateway system DTC check

-1. Check for CAN gateway system DTCs with the HDS.

DTC Description	DTC
B	B

DTC (CAN GATEWAY)

Are any DTCs indicated?

YES

Go to the troubleshooting for CAN gateway system DTC(s) .

NO

Go to step 3.

3. F-CAN circuit communication check (receiving control unit)

-1. Select the FUNCTION TEST in the CAN gateway with the HDS, then select the F-CAN Bus Connected Unit Check.

F-CAN Bus Connected Unit Check

Does the battery condition monitor module detect the CAN gateway Bus channel A?

Bus A is Detected

Go to step 5.

Bus A is Not Available

Go to step 4.

4. Open wire check (F-CAN A_H line, F-CAN A_L line)

-1. Turn the vehicle to the OFF (LOCK) mode.

-2. Remove the **service plug** and the **IPU cover** .

-3. Disconnect the following connectors.

Battery condition monitor module connector E (32P)
CAN gateway 16P connector

-4. Measure the resistance between test points 1 and 2.

Test condition	Vehicle OFF (LOCK) mode
	Battery condition monitor module connector E (32P): disconnected
	CAN gateway 16P connector: disconnected
Test point 1	**Battery condition monitor module connector E (32P) No. 9**
Test point 2	CAN gateway 16P connector (female terminals) No. 3: ①

Test point 1	**Battery condition monitor module connector E (32P) No. 8**

Test point 2	CAN gateway 16P connector (female terminals) No. 11: ①

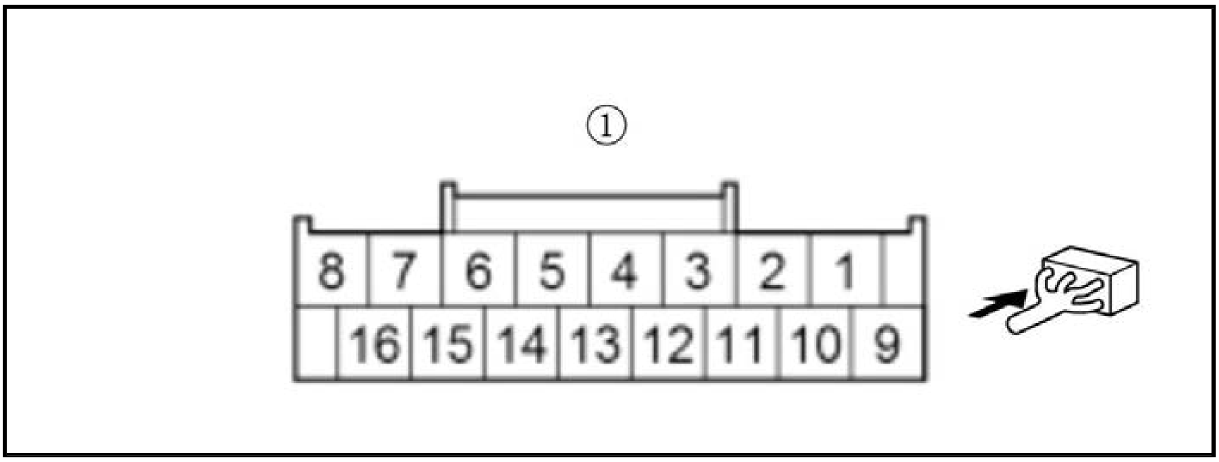

Is there 1.0 Ω or less?

YES

The F-CAN A_H wire and the F-CAN A_L wire are OK. **Replace the battery condition monitor module** .

NO

Repair an open in the F-CAN A_H wire or the F-CAN A_L wire between the battery condition monitor module and the CAN gateway.

5. F-CAN circuit communication check (transmitting control unit)

-1. Select the FUNCTION TEST in the CAN gateway with the HDS, then select the F-CAN Bus Connected Unit Check.

F-CAN Connection Check

Does the PCU detect the CAN gateway Bus channel A?

Bus A is Detected

Intermittent failure. The system is OK at this time. Check for poor connections or loose terminals at the transmitting control unit and the CAN gateway.

Bus A is Not Available

Go to step 6.

6. Open wire check (F-CAN A_H line, F-CAN A_L line)

-1. Turn the vehicle to the OFF (LOCK) mode.

-2. **Do the 12 volt battery terminal disconnection procedure** .

-3. Disconnect the following connectors.

PCU 33P connector
CAN gateway 16P connector

-4. Measure the resistance between test points 1 and 2.

Test condition	Vehicle OFF (LOCK) mode
	PCU 33P connector: disconnected
	CAN gateway 16P connector: disconnected
Test point 1	**PCU 33P connector No. 5**

Test point 2	CAN gateway 16P connector (female terminals) No. 3: ①

Test point 1	**PCU 33P connector No. 6**
Test point 2	CAN gateway 16P connector (female terminals) No. 11: ①

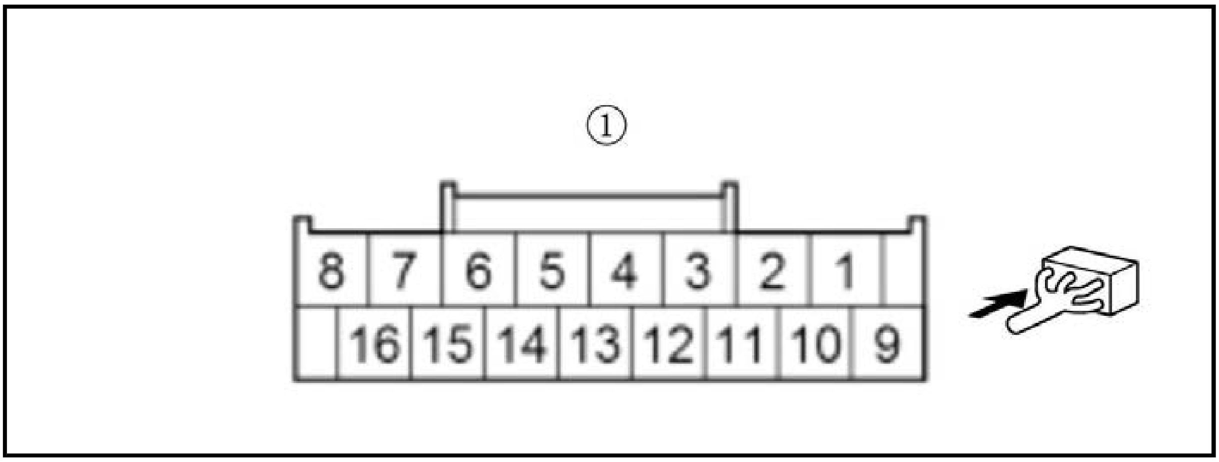

Is there 1.0 Ω or less?

YES

The F-CAN A_H wire and the F-CAN A_L wire are OK. **Replace the PCU** .

NO

Repair an open in the F-CAN A_H wire or the F-CAN A_L wire between the PCU and the CAN gateway.

DTC U1605 (315) (BATTERY CONDITION MONITOR MODULE)

DTC U1605 : F-CAN Malfunction (Battery Condition Monitor Module - Generator Motor Control Module)

NOTE:

- Before you troubleshoot, **review the general troubleshooting information** .
- According to the detected DTC(s), check for the power circuit and the ground circuit of the control unit which cannot communicate with the battery condition monitor module.

DTC Description	Confirmed DTC	Pending DTC	Freeze Frame
U1605 F-CAN Malfunction (Battery Condition Monitor Module - Generator Motor Control Module)	B	B	B

DTC (Electric Powertrain)

1. Problem verification

-1. Turn the vehicle to the ON mode.

-2. Clear the DTC with the HDS.

-3. Turn the vehicle to the OFF (LOCK) mode.

-4. Turn the vehicle to the ON mode.

-5. Check for Pending or Confirmed DTCs with the HDS.

DTC Description	Confirmed DTC	Pending DTC	Freeze Frame
U1605 F-CAN Malfunction (Battery Condition Monitor Module - Generator Motor Control Module)	B	B	B

Is DTC U012D indicated?

YES

Go to step 2.

NO

Intermittent failure, the system is OK at this time. If the freeze data/on-board snapshot of this DTC is recorded, try to reproduce the failure under the same conditions with the freeze data/on-board snapshot.

2. CAN gateway system DTC check

-1. Check for CAN gateway system DTCs with the HDS.

DTC Description	DTC
B	B

DTC (CAN GATEWAY)

Are any DTCs indicated?

YES

Go to the troubleshooting for CAN gateway system DTC(s) .

NO

Go to step 3.

3. F-CAN circuit communication check (receiving control unit)

-1. Select the FUNCTION TEST in the CAN gateway with the HDS, then select the F-CAN Bus Connected Unit Check.

F-CAN Bus Connected Unit Check

Does the battery condition monitor module detect the CAN gateway Bus channel A?

Bus A is Detected

Go to step 5.

Bus A is Not Available

Go to step 4.

4. Open wire check (F-CAN A_H line, F-CAN A_L line)

-1. Turn the vehicle to the OFF (LOCK) mode.

-2. Remove the **service plug** and the **IPU cover** .

-3. Disconnect the following connectors.

Battery condition monitor module connector E (32P)
CAN gateway 16P connector

-4. Measure the resistance between test points 1 and 2.

Test condition	Vehicle OFF (LOCK) mode
	Battery condition monitor module connector E (32P): disconnected
	CAN gateway 16P connector: disconnected
Test point 1	**Battery condition monitor module connector E (32P) No. 9**
Test point 2	CAN gateway 16P connector (female terminals) No. 3: ①

Test point 1	**Battery condition monitor module connector E (32P) No. 8**
Test point 2	CAN gateway 16P connector (female terminals) No. 11: ①

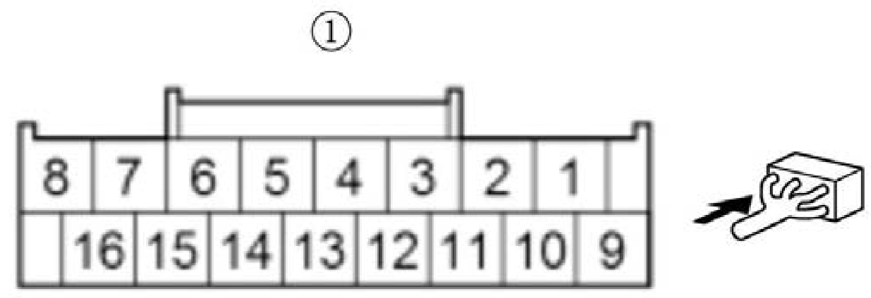

Is there 1.0 Ω or less?

YES

The F-CAN A_H wire and the F-CAN A_L wire are OK. **Replace the battery condition monitor module** .

NO

Repair an open in the F-CAN A_H wire or the F-CAN A_L wire between the battery condition monitor module and the CAN gateway.

5. F-CAN circuit communication check (transmitting control unit)

-1. Select the FUNCTION TEST in the CAN gateway with the HDS, then select the F-CAN Bus Connected Unit Check.

F-CAN Connection Check

Does the PCU detect the CAN gateway Bus channel A?

Bus A is Detected

Intermittent failure. The system is OK at this time. Check for poor connections or loose terminals at the transmitting control unit and the CAN gateway.

Bus A is Not Available

Go to step 6.

6. Open wire check (F-CAN A_H line, F-CAN A_L line)

-1. Turn the vehicle to the OFF (LOCK) mode.

-2. **Do the 12 volt battery terminal disconnection procedure** .

-3. Disconnect the following connectors.

PCU 33P connector
CAN gateway 16P connector

-4. Measure the resistance between test points 1 and 2.

Test condition	Vehicle OFF (LOCK) mode
	PCU 33P connector: disconnected
	CAN gateway 16P connector: disconnected
Test point 1	**PCU 33P connector No. 5**

Test point 2	CAN gateway 16P connector (female terminals) No. 3: ①

Test point 1	**PCU 33P connector No. 6**
Test point 2	CAN gateway 16P connector (female terminals) No. 11: ①

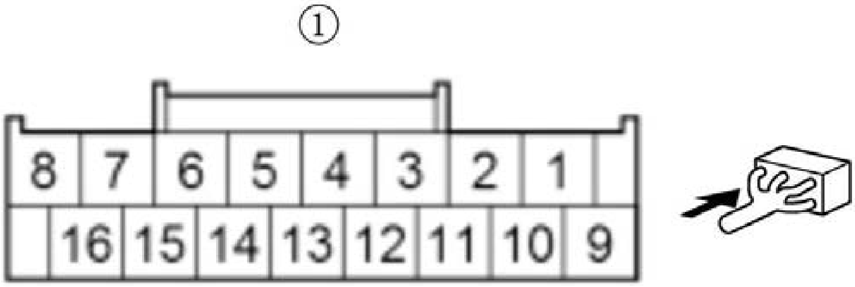

Is there 1.0 Ω or less?

YES

The F-CAN A_H wire and the F-CAN A_L wire are OK. **Replace the PCU** .

NO

Repair an open in the F-CAN A_H wire or the F-CAN A_L wire between the PCU and the CAN gateway.

REMOVAL AND INSTALLATION

ALTERNATOR REMOVAL AND INSTALLATION (1.5 L ENGINE)

Removal and Installation

1

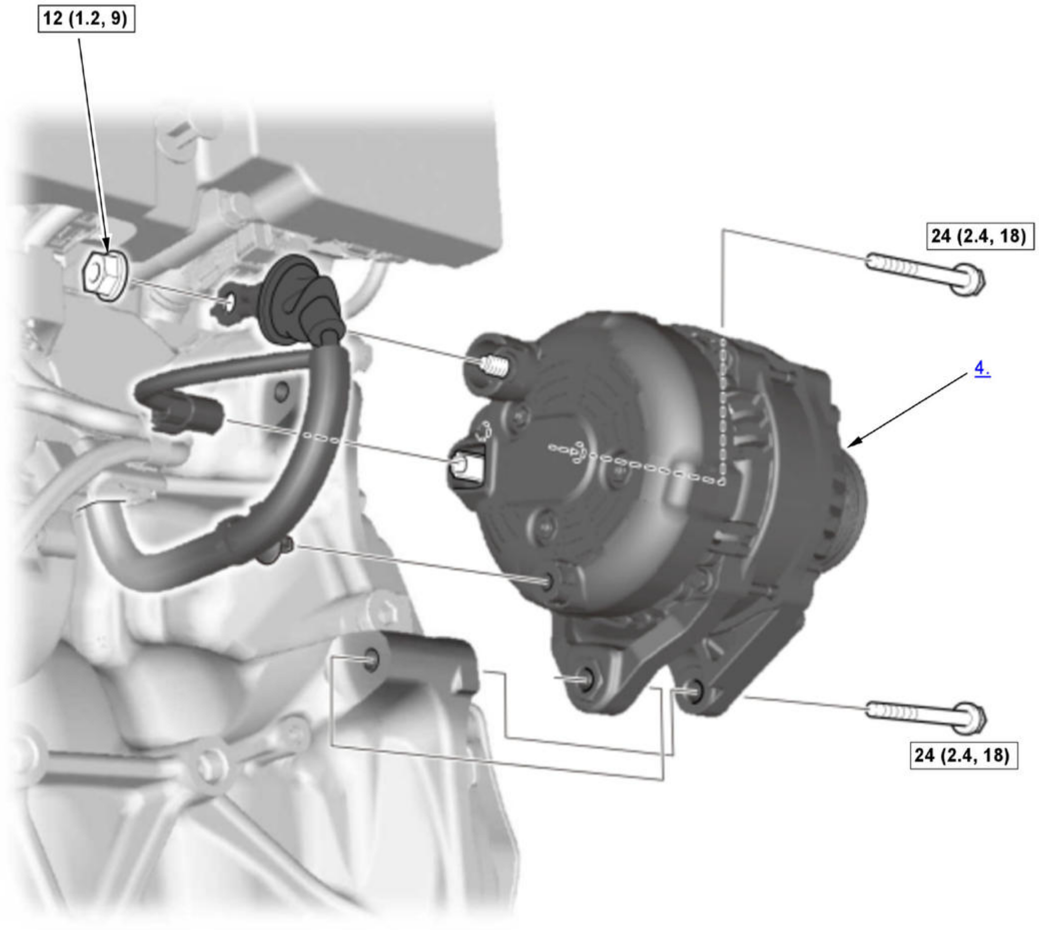

Fig. 1: Alternator Fastener Torque Specifications
Courtesy of HONDA, U.S.A., INC.

☐	Torque: N.m (kgf.m, lbf.ft)

1. 12 Volt Battery Terminal - Disconnect
2. Engine Undercover - Remove
3. Drive Belt - Remove
4. Alternator - Remove
5. All Removed Parts - Install

1. Install the parts in the reverse order of removal.

NOTE: Make sure the crimped side of the ring terminal faces away from the alternator when you connect the positive alternator cable.

ALTERNATOR REMOVAL AND INSTALLATION (2.4 L ENGINE) (2017 2018 2019)

Removal and Installation

1

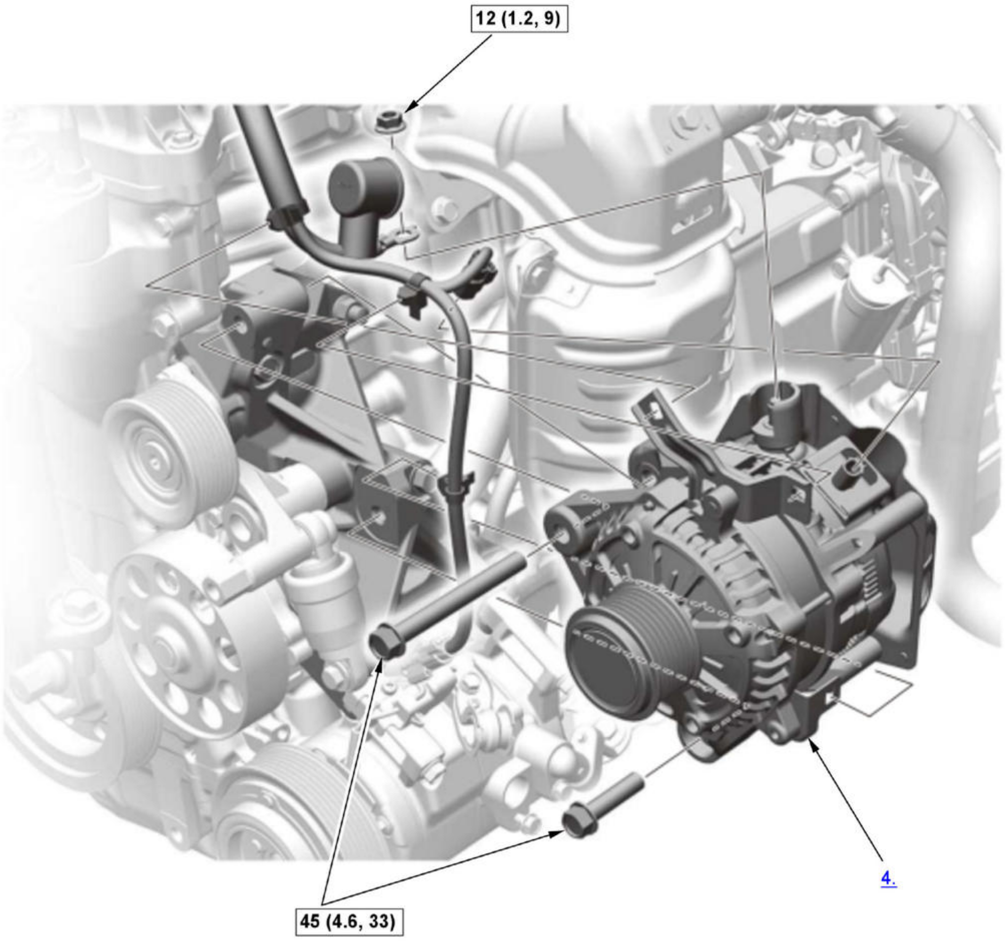

Fig. 2: Alternator Fastener Torque Specifications
Courtesy of HONDA, U.S.A., INC.

☐	Torque: N.m (kgf.m, lbf.ft)

1. 12 Volt Battery Terminal - Disconnect
2. Drive Belt - Remove
3. Drive Belt Auto-Tensioner - Remove
4. Alternator - Remove
5. All Removed Parts - Install

1. Install the parts in the reverse order of removal.

NOTE: Make sure the crimped side of the ring terminal faces away from the alternator when you connect the positive alternator cable.

OVERHAUL

ALTERNATOR OVERHAUL (1.5 L ENGINE)

Special Tools Required

Image	Description/Tool Number
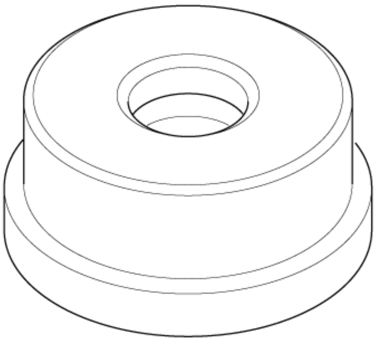	Bearing Driver Attachment, 42 x 47 mm 07746-0010300
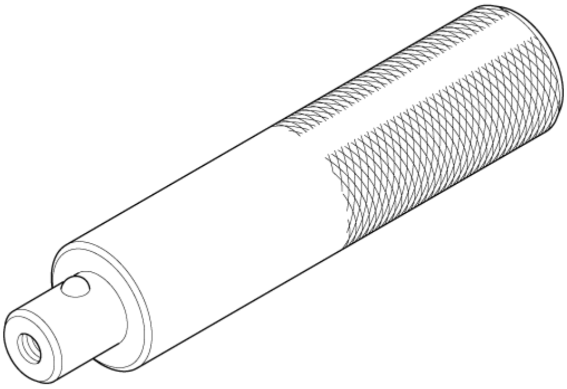	Driver Handle, 15 x 135L 07749-0010000

Disassembly

NOTE: ℹ Where icon is shown, see below for further information.

1

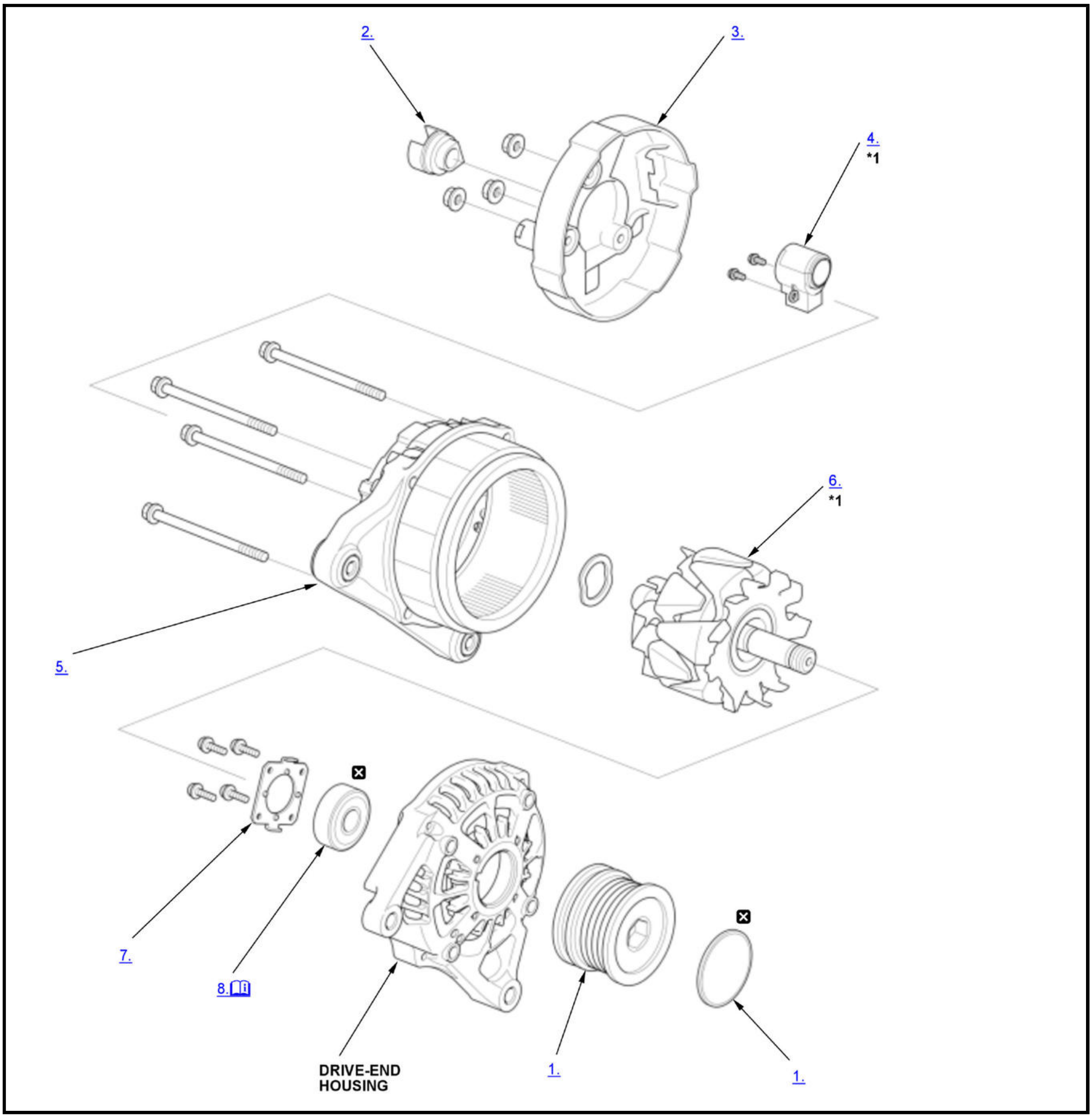
2.
3.
4.
*1
6.
*1
5.
☒
☒
7.
8.
DRIVE-END HOUSING
1.
1.

ℹ	Detailed information, notes, and precautions
☒	Replace
*1	These parts have inspection items.

1. **OAD Pulley - Remove**
2. Terminal Insulator - Remove
3. End Cover - Remove
4. Brush Holder - Remove
5. Stator Assembly - Remove
6. Rotor - Remove
7. Front Bearing Retainer - Remove
8. Front Bearing - Remove

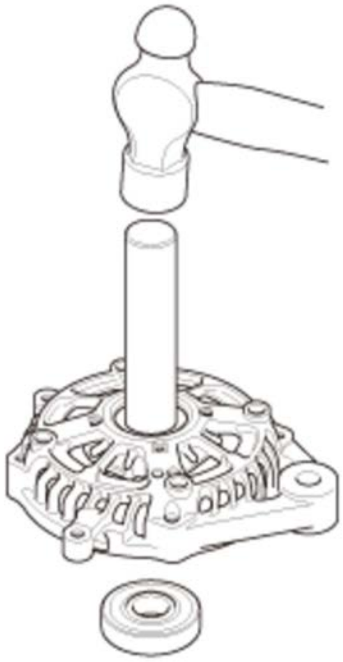	1. Drive out the front bearing with a brass drift and a hammer.

Reassembly

NOTE: 🕮 Where icon is shown, see below for further information.

1

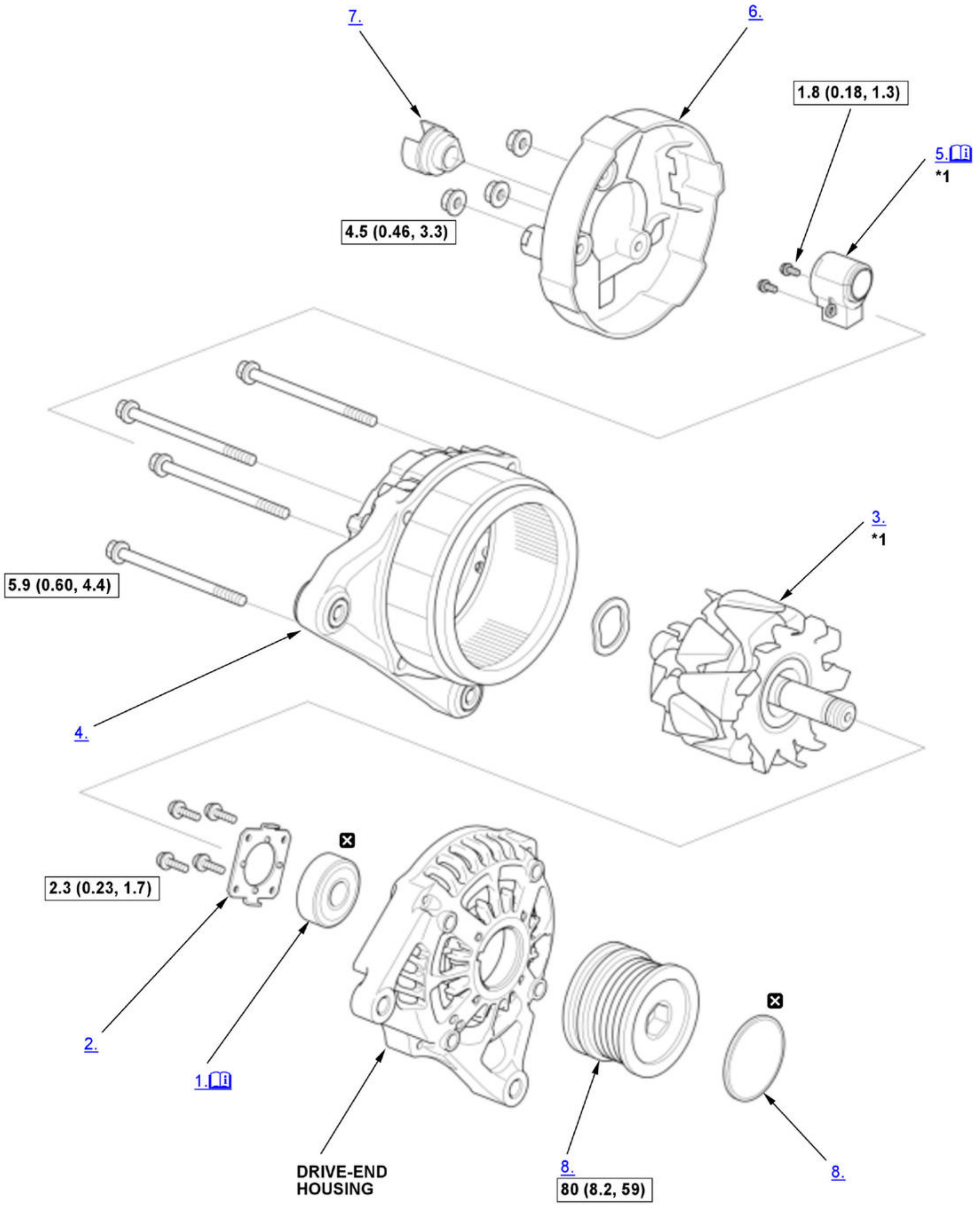
7.
6.
1.8 (0.18, 1.3)
5.
*1
4.5 (0.46, 3.3)
3.
*1
5.9 (0.60, 4.4)
4.
2.3 (0.23, 1.7)
2.
1.
DRIVE-END HOUSING
8.
80 (8.2, 59)
8.

Fig. 3: Alternator Exploded View With Torque Specifications
Courtesy of HONDA, U.S.A., INC.

ℹ	Detailed information, notes, and precautions
☐	Torque: N.m (kgf.m, lbf.ft)
☒	Replace
*1	These parts have inspection items.

1. Front Bearing - Install

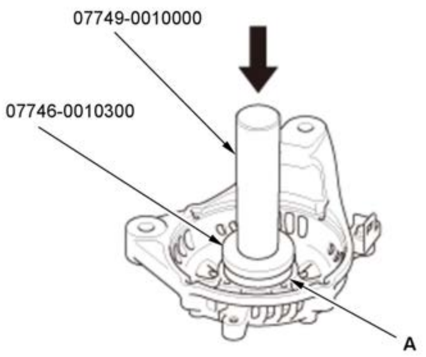	1. Use a hand press to install the front bearing (A) in the drive-end housing, with the driver handle, 15 x 135L and the bearing driver attachment, 42 x 47 mm.

2. Front Bearing Retainer - Install
3. Rotor - Install
4. Stator Assembly - Install
5. Brush Holder - Install

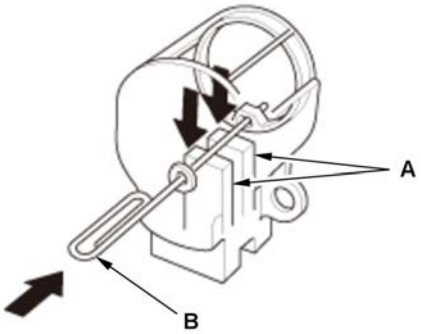	1. Push the brushes (A) in, then insert a pin or drill bit (B) (about 1.6 mm (1/16 in) diameter) to hold them there. 2. Install the brush holder. 3. Pull out the pin or drill bit.

6. End Cover - Install
7. Terminal Insulator - Install
8. **OAD Pulley - Install**

Inspection

Brush Holder

1. Brush - Inspect

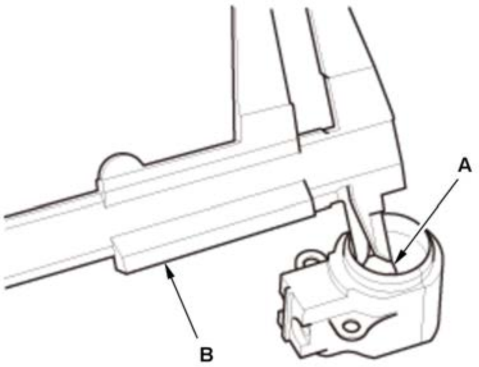	1. Measure the length of both brushes (A) with a vernier caliper (B). If either brush is shorter than the service limit, replace the brush holder.

Alternator Brush Length	
Standard (New):	**10.5 mm (0.413 in)**
Service Limit:	**1.5 mm (0.059 in)**

Rotor

2. Rotor Slip Ring - Test

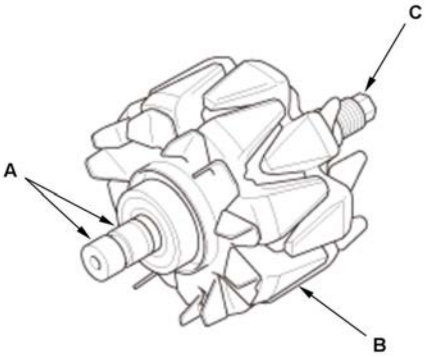	1. Check for continuity between the slip rings (A): • If there is continuity, go to step 2. • If there is no continuity, replace the rotor assembly. 2. Check for continuity between each slip ring and the rotor (B) and the rotor shaft (C). If there is continuity, replace the rotor assembly.

ALTERNATOR OVERHAUL (2.4 L ENGINE) (2017 2018 2019)

Special Tools Required

Image	Description/Tool Number
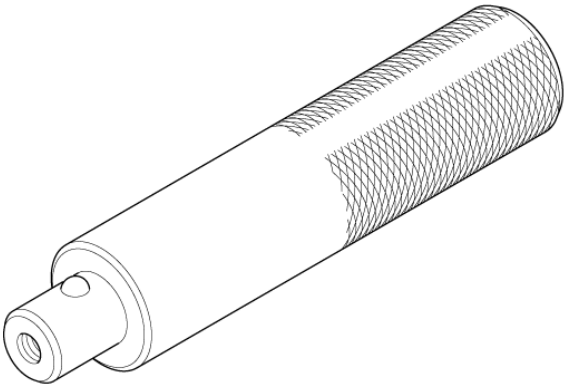	Driver Handle, 15 x 135L 07749-0010000
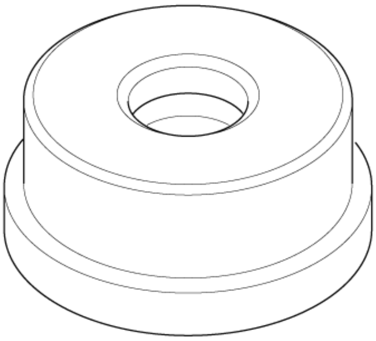	Bearing Driver Attachment, 42 x 47 mm 07746-0010300

Disassembly

NOTE: 📖 Where icon is shown, see below for further information.

1

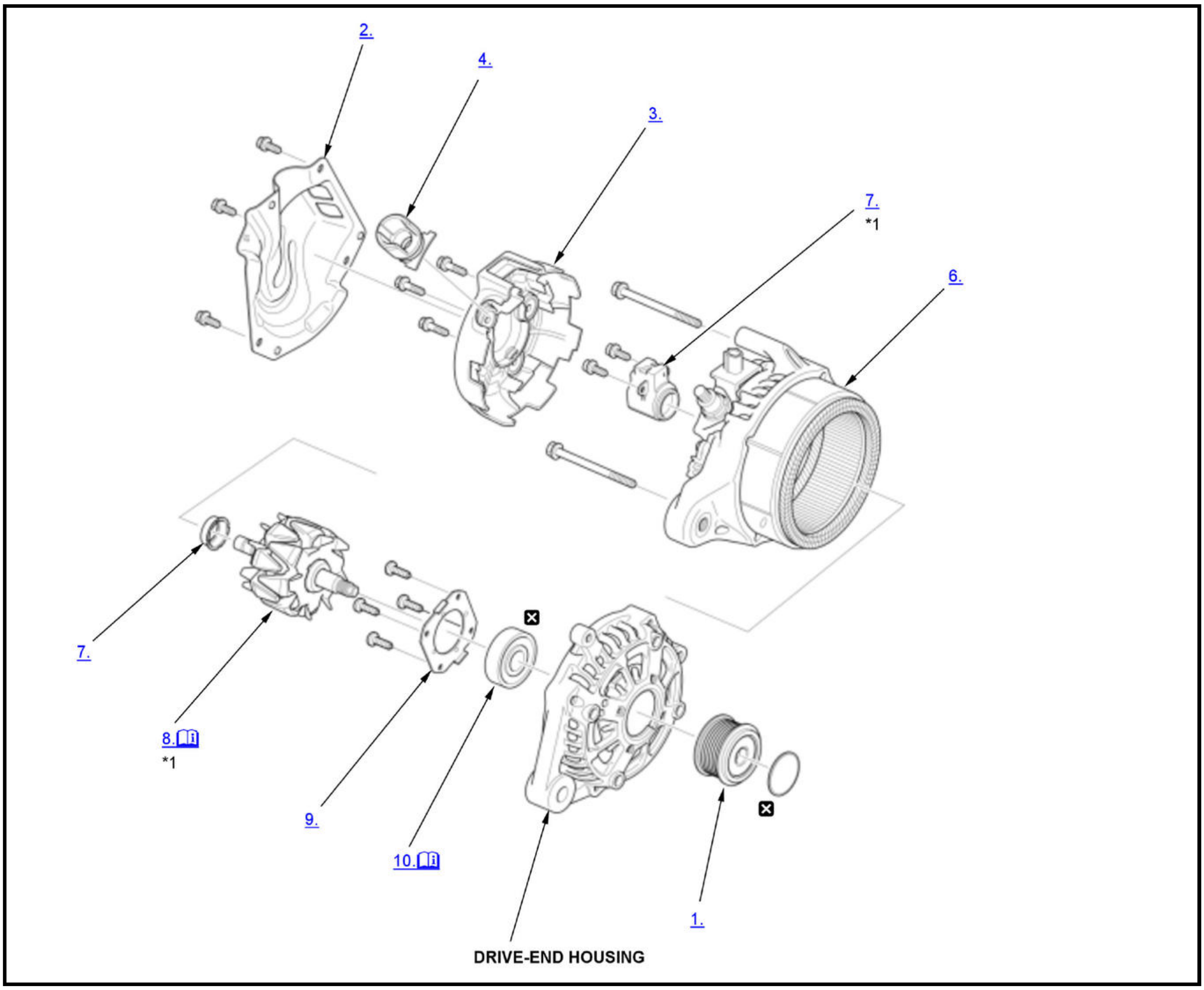

ℹ	Detailed information, notes, and precautions
☒	Replace
*1	These parts have inspection items.

1. **OAD Pulley - Remove**
2. Heat Shield - Remove
3. End Cover - Remove
4. Terminal Insulator - Remove
5. Brush Holder - Remove
6. Stator Assembly - Remove
7. Bearing Holder - Remove
8. Rotor - Remove

   NOTE: Inspect the rotor shaft for scoring, and inspect the bearing journal surface in the drive-end housing for seizure marks. If the rotor is damaged, replace the rotor assembly.

9. Front Bearing Retainer - Remove
10. Front Bearing - Remove

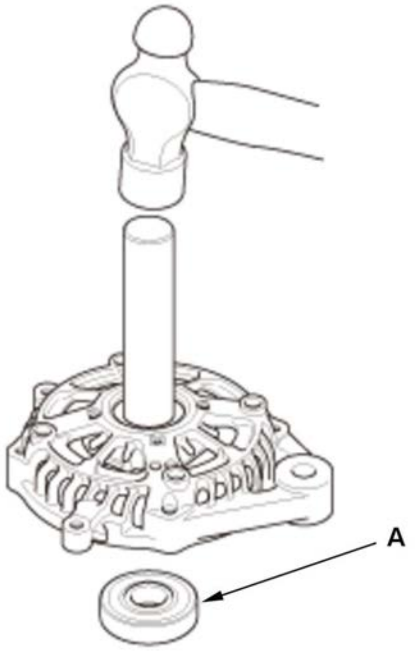	1. Drive out the front bearing (A) with a brass drift and a hammer.

Reassembly

NOTE: ℹ Where icon is shown, see below for further information.

1

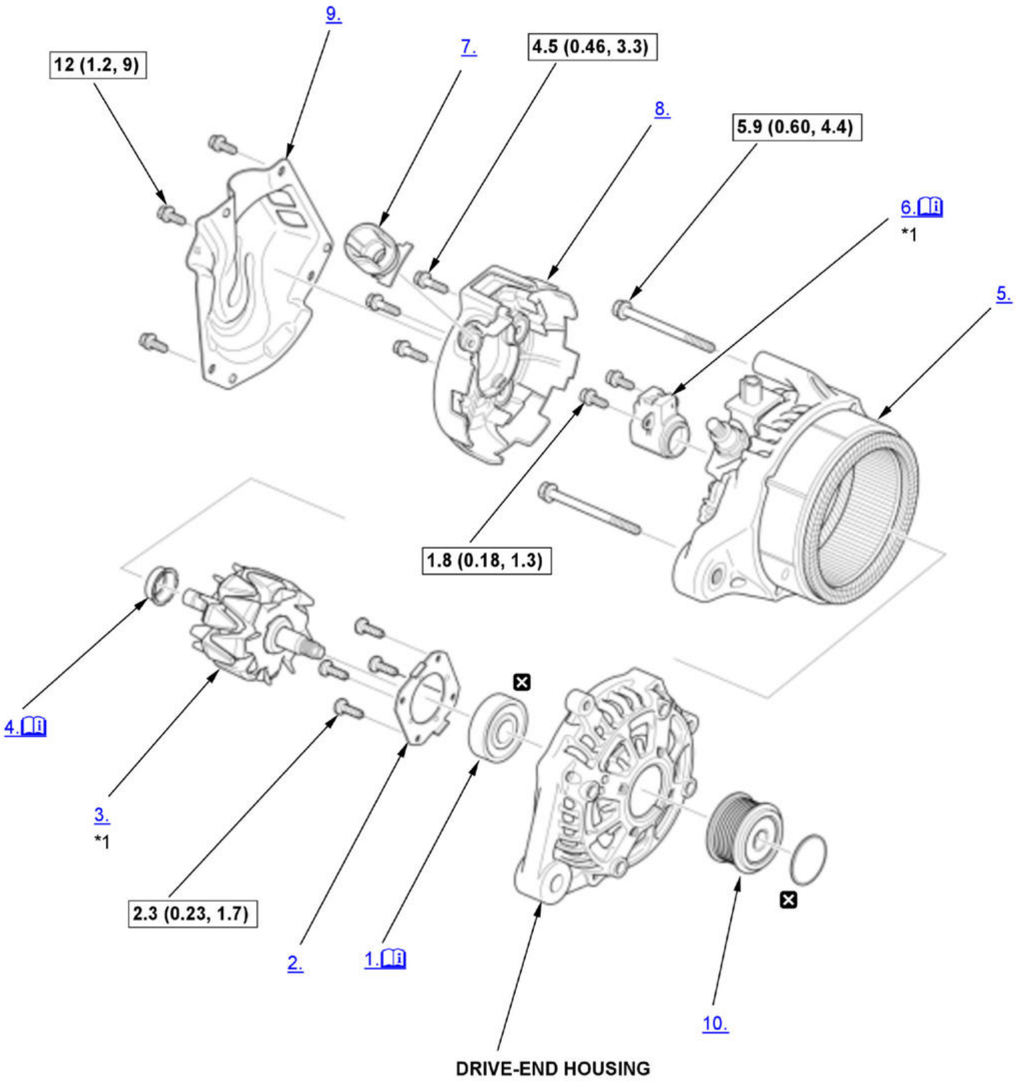
9.
7.
4.5 (0.46, 3.3)
12 (1.2, 9)
8.
5.9 (0.60, 4.4)
6.
*1
5.
1.8 (0.18, 1.3)
4.
3.
*1
2.3 (0.23, 1.7)
2.
1.
10.
DRIVE-END HOUSING

Fig. 4: Alternator Exploded View With Torque Specifications

Courtesy of HONDA, U.S.A., INC.

ℹ	Detailed information, notes, and precautions
▭	Torque: N.m (kgf.m, lbf.ft)
☒	Replace
*1	These parts have inspection items.

1. Front Bearing - Install

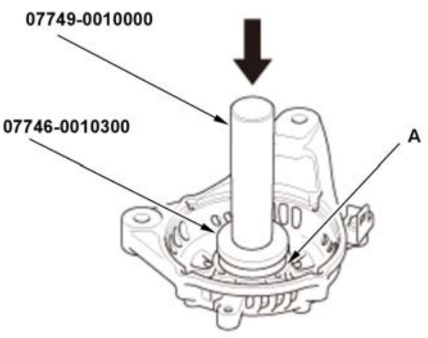	1. Use a hand press to install a new front bearing (A) in the drive-end housing, with the driver handle, 15 x 135L, and the bearing driver attachment, 42 x 47 mm.

2. Front Bearing Retainer - Install
3. Rotor - Install
4. Bearing Holder - Install

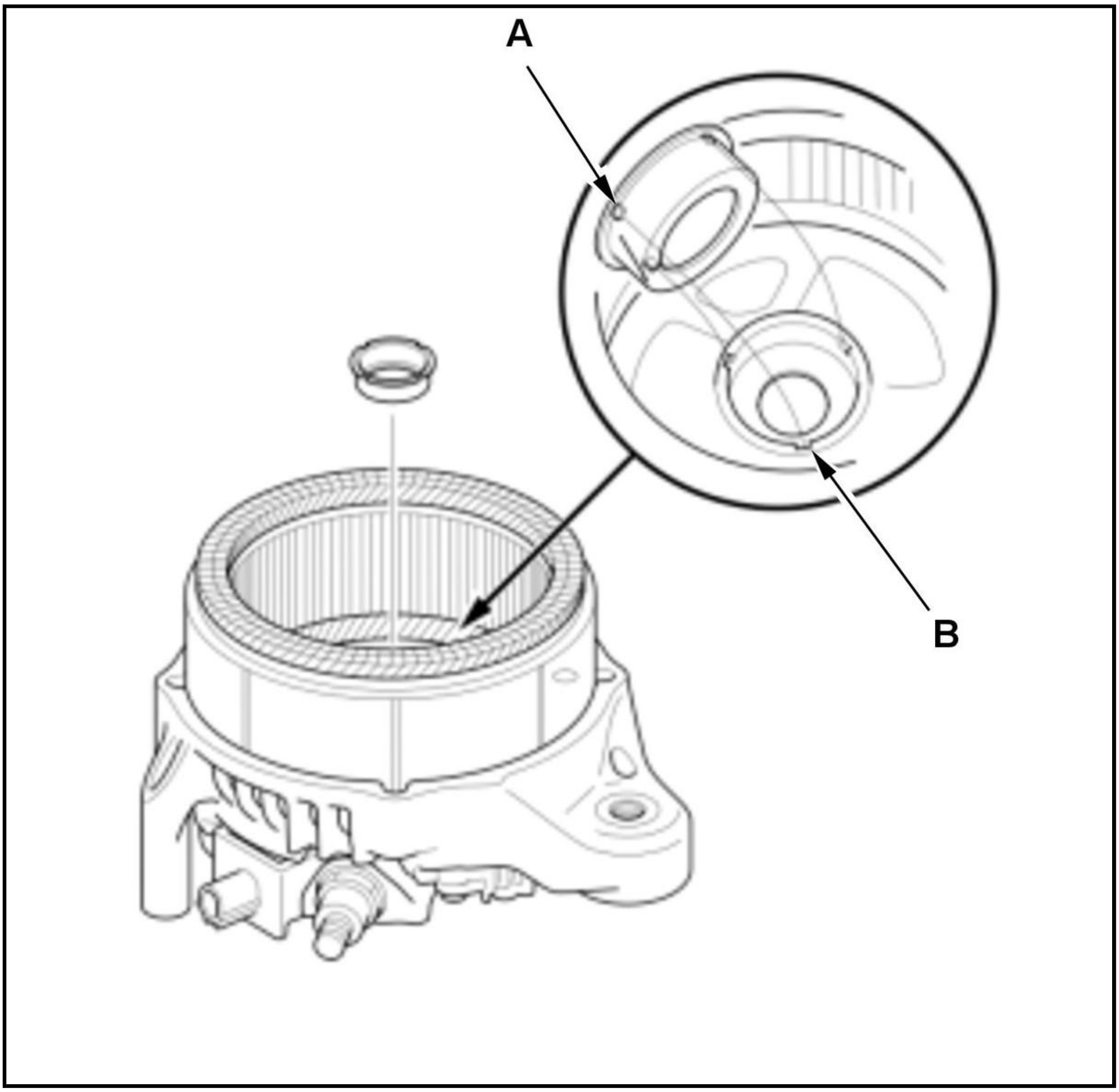

NOTE: Align the protrusions (A) of the bearing holder with the grooves (B) of the stator assembly.

5. Stator Assembly - Install
6. Brush Holder - Install

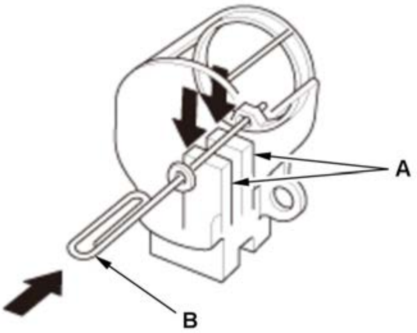	1. Push the brushes (A) in, then insert a pin or drill bit (B) (about 1.6 mm (1/16 in) diameter) to hold them there.

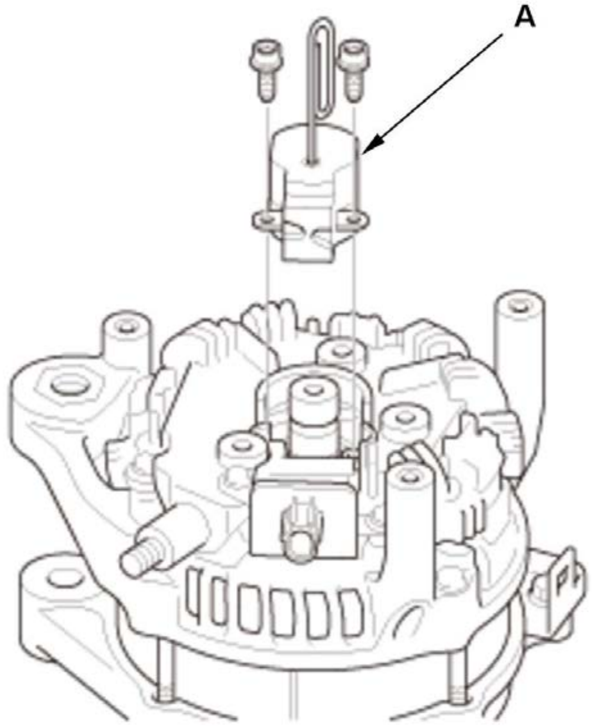	2. Install the brush holder (A).
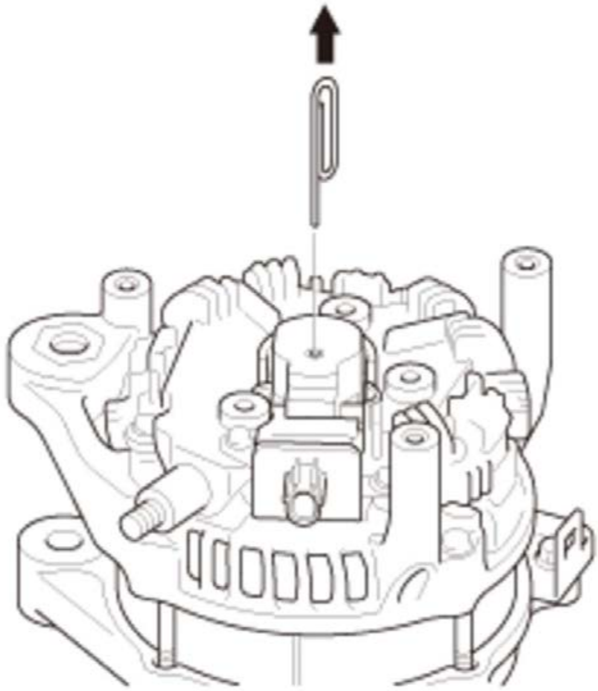	3. Pull out the pin or drill bit.

7. Terminal Insulator - Install
8. End Cover - Install
9. Heat Shield - Install
10. **OAD Pulley - Install**

Inspection

Brush Holder

1. Brush - Inspect

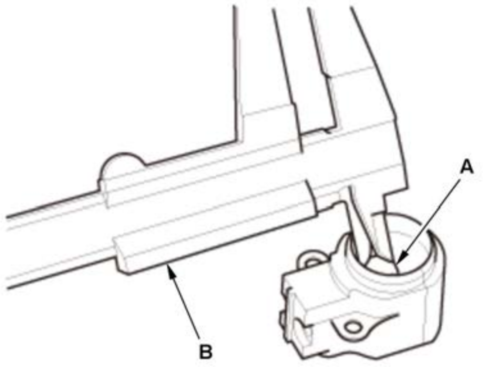

1. Measure the length of both brushes (A) with a vernier caliper (B). If either brush is shorter than the service limit, replace the brush holder.

Alternator Brush Length	
Standard (New):	**10.5 mm (0.413 in)**
Service Limit:	**1.5 mm (0.059 in)**

Rotor

2. Rotor Slip Ring - Test

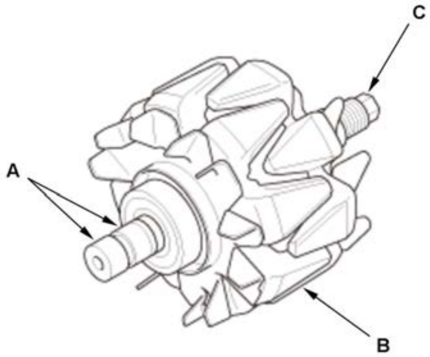

1. Check for continuity between the slip rings (A):
   - If there is continuity, go to step 2.
   - If there is no continuity, replace the rotor assembly.

2. Check for continuity between each slip ring and the rotor (B) and the rotor shaft (C).If there is continuity, replace the rotor assembly.

DESCRIPTION & OPERATION

CHARGING SYSTEM DESCRIPTION

Overview

The PCM gathers vehicle operating system data and determines the required charging rate. Based on that data, the PCM commands the alternator to provide a specific charging rate (voltage) between 12.5 and 14.5 volts, using 0.1 volt steps. In some operating conditions, the alternator may bypass PCM control and use a default value.

Depending on the vehicle condition, the variable control is not activated.

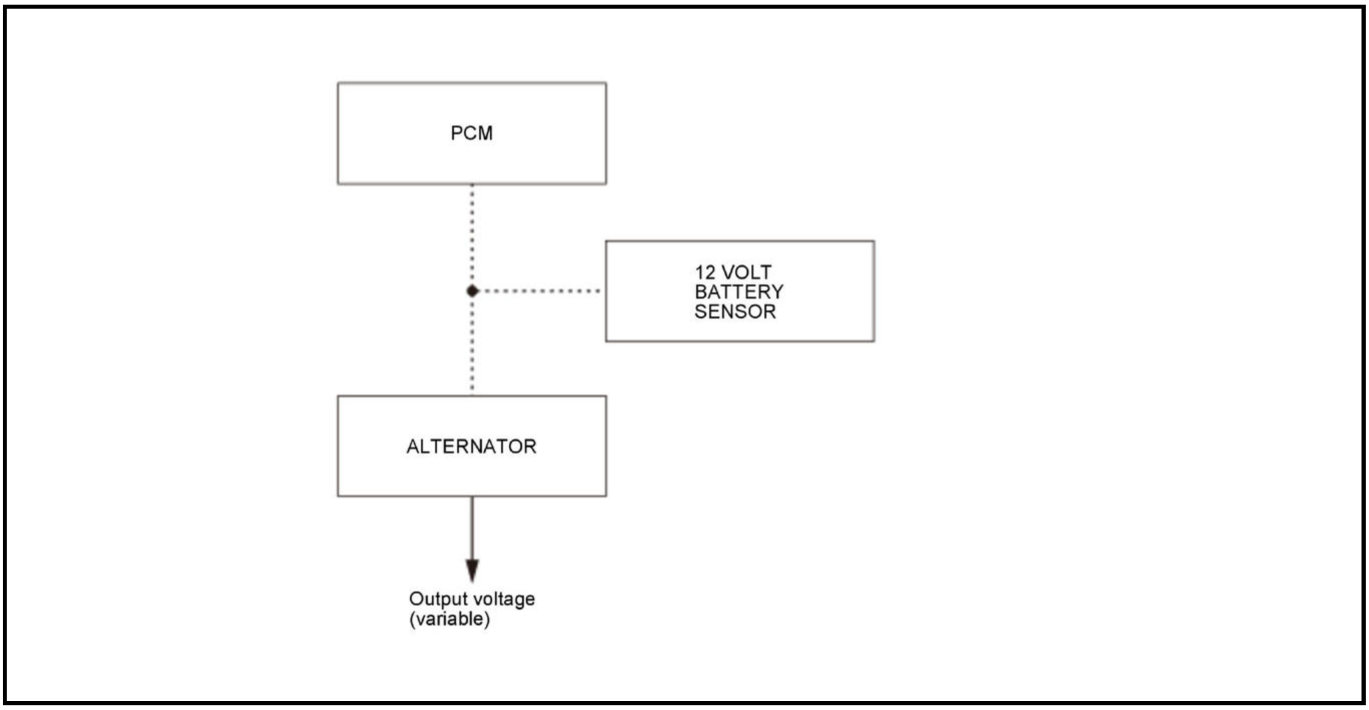

When the alternator is at fault, one or more of the following DTC is stored. Refer to the corresponding troubleshooting.

DTC	Detection Item
P0562	Charging System Low Voltage
P065A	ACG No Charging Malfunction
P1549	Charging System High Voltage
P16BB	Alternator B Terminal Circuit Low Voltage
P16E2	PGM-FI-ACG LIN Communication Error
P16E4	ACG High-temperature

CIRCUIT DIAGRAM

CHARGING SYSTEM CIRCUIT DIAGRAM (1.5 L ENGINE (WITH AUTO IDLE STOP SYSTEM)) (2020 2021)

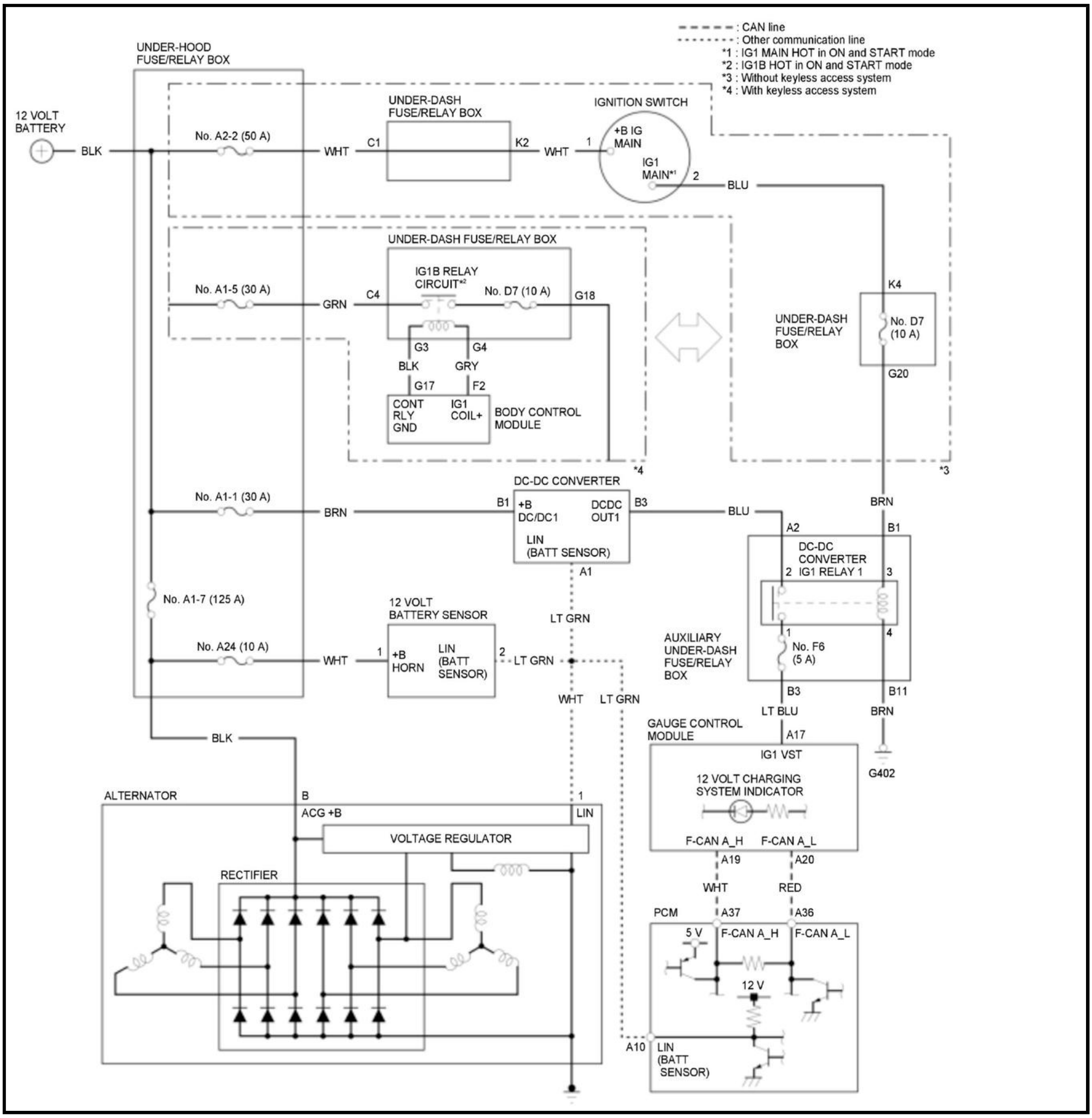

: CAN line
: Other communication line
*1 : IG1 MAIN HOT in ON and START mode
*2 : IG1B HOT in ON and START mode
*3 : Without keyless access system
*4 : With keyless access system
UNDER-HOOD FUSE/RELAY BOX
12 VOLT BATTERY
BLK
No. A2-2 (50 A)
WHT
C1
UNDER-DASH FUSE/RELAY BOX
K2
WHT
IGNITION SWITCH
1
+B IG MAIN
IG1 MAIN*1
2
BLU
UNDER-DASH FUSE/RELAY BOX
No. A1-5 (30 A)
GRN
C4
IG1B RELAY CIRCUIT*2
No. D7 (10 A)
G18
G3
G4
BLK
GRY
G17
F2
CONT RLY GND
IG1 COIL+
BODY CONTROL MODULE
*4
K4
UNDER-DASH FUSE/RELAY BOX
No. D7 (10 A)
G20
*3
DC-DC CONVERTER
No. A1-1 (30 A)
BRN
B1
+B DC/DC1
DCDC OUT1
B3
BLU
LIN (BATT SENSOR)
A1
BRN
A2
B1
DC-DC CONVERTER IG1 RELAY 1
2
3
1
4
No. F6 (5 A)
AUXILIARY UNDER-DASH FUSE/RELAY BOX
No. A1-7 (125 A)
12 VOLT BATTERY SENSOR
LT GRN
No. A24 (10 A)
WHT
1
+B HORN
LIN (BATT SENSOR)
2
LT GRN
WHT
LT GRN
B3
B11
LT BLU
BRN
GAUGE CONTROL MODULE
A17
IG1 VST
G402
12 VOLT CHARGING SYSTEM INDICATOR
F-CAN A_H
F-CAN A_L
A19
A20
WHT
RED
BLK
ALTERNATOR
B
ACG +B
1
LIN
VOLTAGE REGULATOR
RECTIFIER
PCM
A37
A36
5 V
F-CAN A_H
F-CAN A_L
12 V
A10
LIN (BATT SENSOR)

CHARGING SYSTEM CIRCUIT DIAGRAM (1.5 L ENGINE (WITHOUT AUTO IDLE STOP SYSTEM)) (2020 2021)

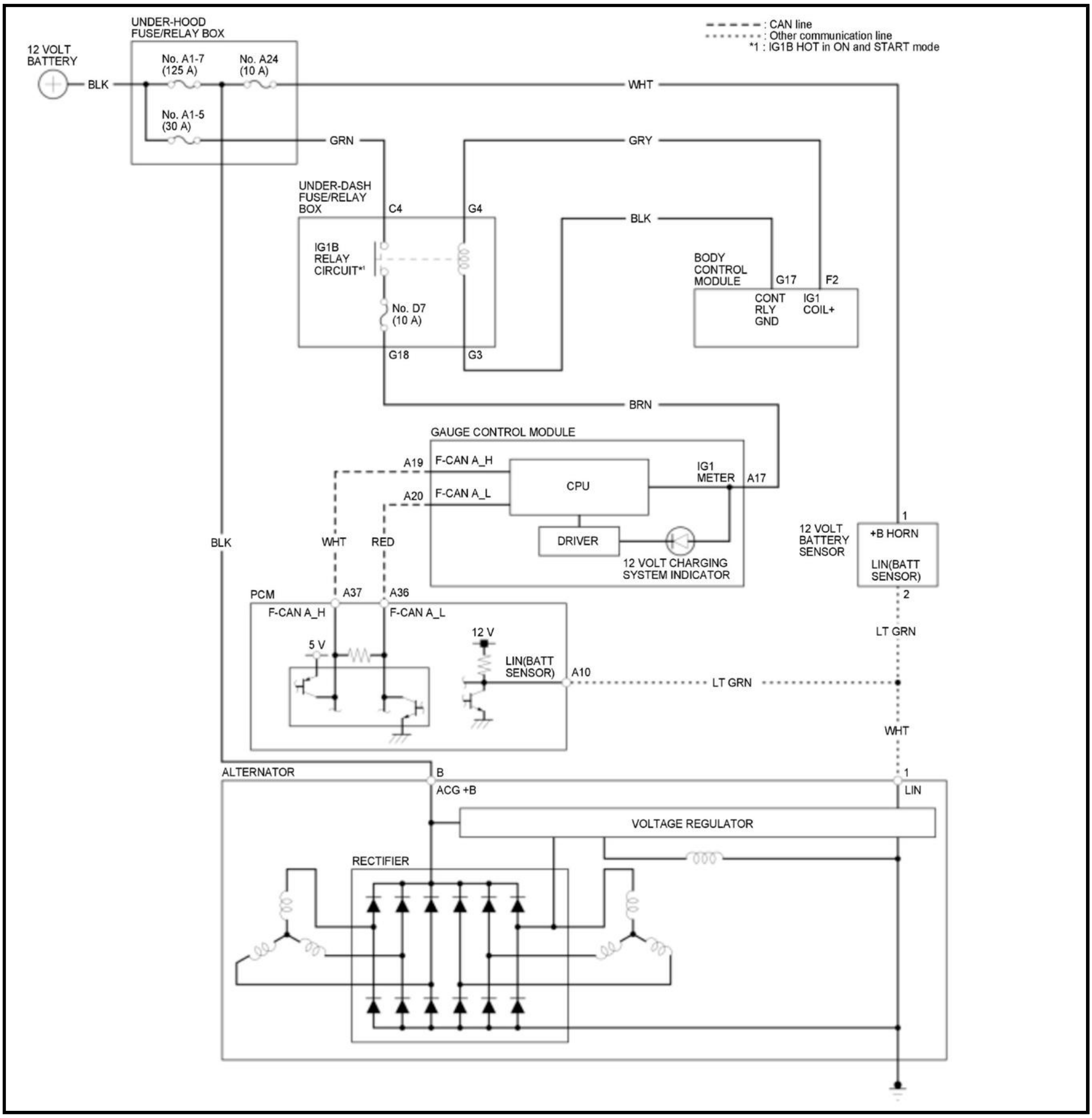
UNDER-HOOD FUSE/RELAY BOX
12 VOLT BATTERY
BLK
No. A1-7 (125 A)
No. A24 (10 A)
No. A1-5 (30 A)
WHT
GRN
GRY
: CAN line
: Other communication line
*1 : IG1B HOT in ON and START mode
UNDER-DASH FUSE/RELAY BOX
C4
G4
IG1B RELAY CIRCUIT*1
No. D7 (10 A)
G18
G3
BLK
BODY CONTROL MODULE
G17
F2
CONT RLY GND
IG1 COIL+
BRN
GAUGE CONTROL MODULE
A19
F-CAN A_H
A20
F-CAN A_L
CPU
IG1 METER
A17
DRIVER
12 VOLT CHARGING SYSTEM INDICATOR
BLK
WHT
RED
12 VOLT BATTERY SENSOR
1
+B HORN
LIN(BATT SENSOR)
2
LT GRN
PCM
A37
A36
F-CAN A_H
F-CAN A_L
5 V
12 V
LIN(BATT SENSOR)
A10
LT GRN
WHT
ALTERNATOR
B
ACG +B
1
LIN
VOLTAGE REGULATOR
RECTIFIER

CHARGING SYSTEM CIRCUIT DIAGRAM (1.5 L ENGINE)

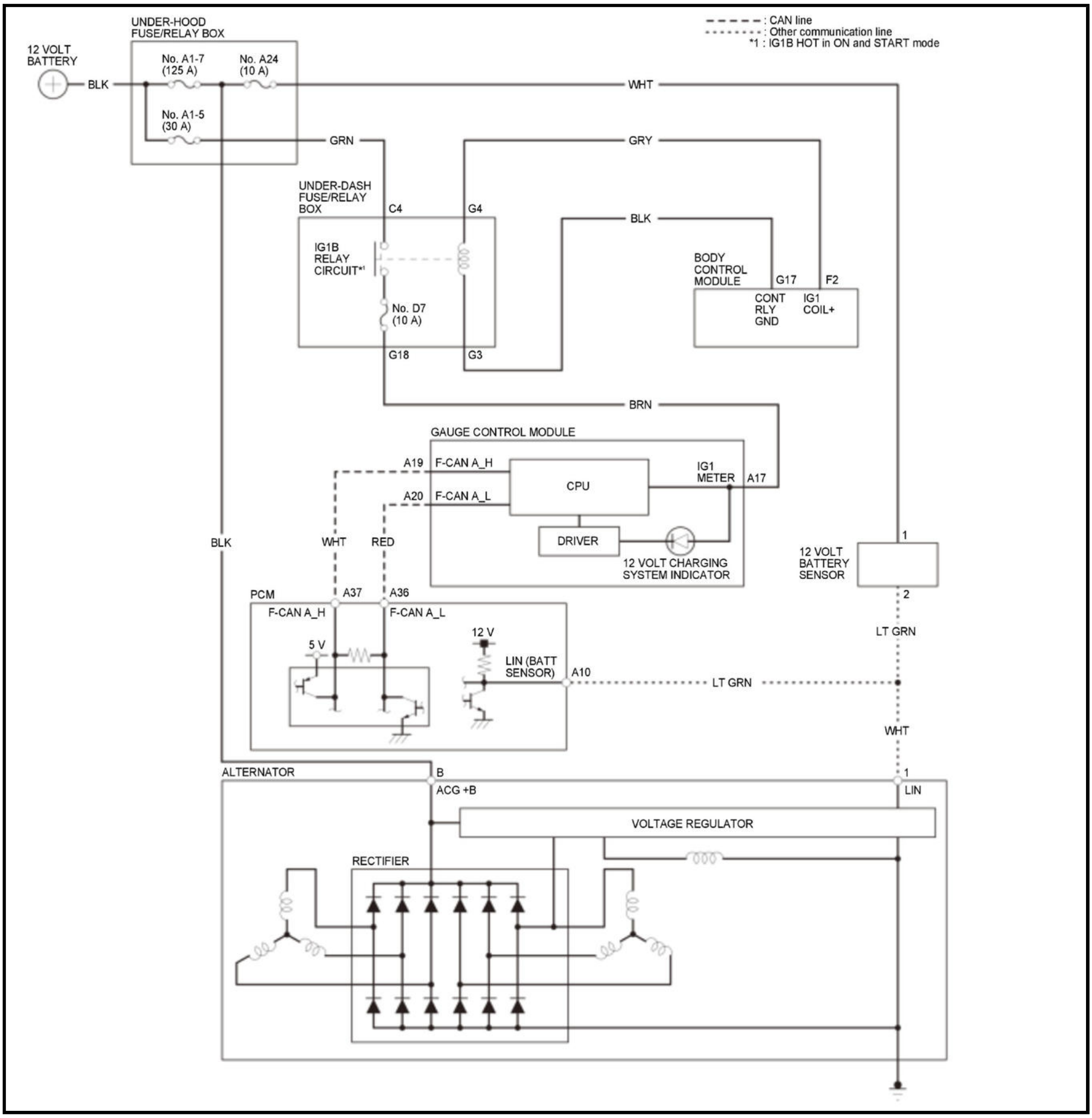
UNDER-HOOD FUSE/RELAY BOX
12 VOLT BATTERY
BLK
No. A1-7 (125 A)
No. A24 (10 A)
No. A1-5 (30 A)
- - - - - : CAN line
· · · · · · · · : Other communication line
*1 : IG1B HOT in ON and START mode
WHT
GRN
GRY
UNDER-DASH FUSE/RELAY BOX
C4
G4
IG1B RELAY CIRCUIT*1
No. D7 (10 A)
G18
G3
BLK
BODY CONTROL MODULE
G17
F2
CONT RLY GND
IG1 COIL+
BRN
GAUGE CONTROL MODULE
A19
F-CAN A_H
A20
F-CAN A_L
CPU
IG1 METER
A17
DRIVER
12 VOLT CHARGING SYSTEM INDICATOR
BLK
WHT
RED
1
12 VOLT BATTERY SENSOR
2
PCM
A37
A36
F-CAN A_H
F-CAN A_L
5 V
12 V
LIN (BATT SENSOR)
A10
LT GRN
LT GRN
WHT
ALTERNATOR
B
ACG +B
1
LIN
VOLTAGE REGULATOR
RECTIFIER

CHARGING SYSTEM CIRCUIT DIAGRAM (2.4 L ENGINE) (2017 2018 2019)

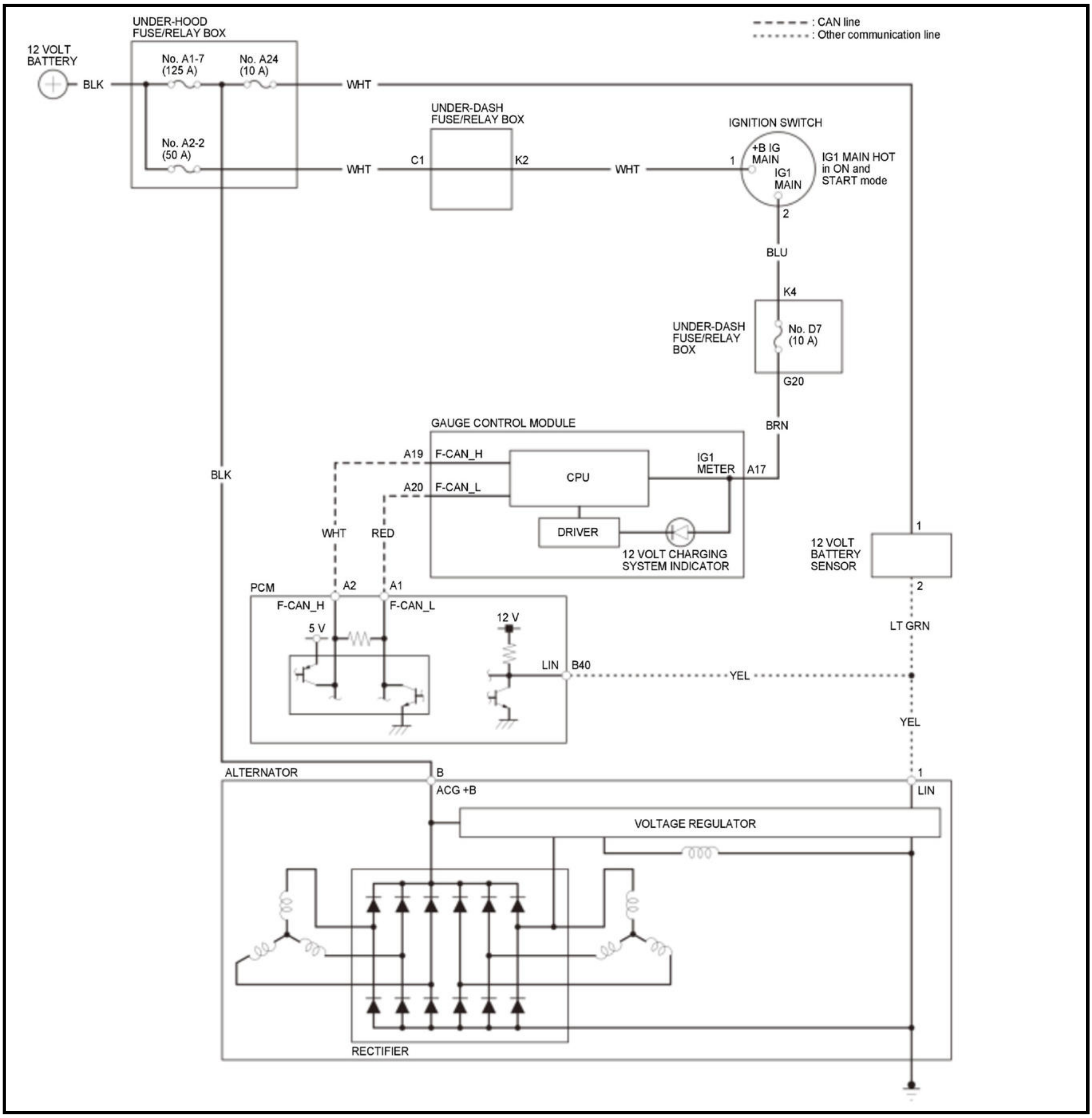
: CAN line
: Other communication line
12 VOLT BATTERY
BLK
UNDER-HOOD FUSE/RELAY BOX
No. A1-7 (125 A)
No. A24 (10 A)
No. A2-2 (50 A)
WHT
WHT
UNDER-DASH FUSE/RELAY BOX
C1
K2
WHT
IGNITION SWITCH
1
+B IG MAIN
IG1 MAIN
IG1 MAIN HOT in ON and START mode
2
BLU
K4
UNDER-DASH FUSE/RELAY BOX
No. D7 (10 A)
G20
BRN
GAUGE CONTROL MODULE
A19
F-CAN_H
A20
F-CAN_L
CPU
IG1 METER
A17
DRIVER
12 VOLT CHARGING SYSTEM INDICATOR
BLK
WHT
RED
PCM
A2
A1
F-CAN_H
F-CAN_L
5 V
12 V
LIN
B40
YEL
1
12 VOLT BATTERY SENSOR
2
LT GRN
YEL
ALTERNATOR
B
ACG +B
1
LIN
VOLTAGE REGULATOR
RECTIFIER

COMPONENT LOCATION INDEX

CHARGING SYSTEM COMPONENT LOCATION INDEX (1.5 L ENGINE)

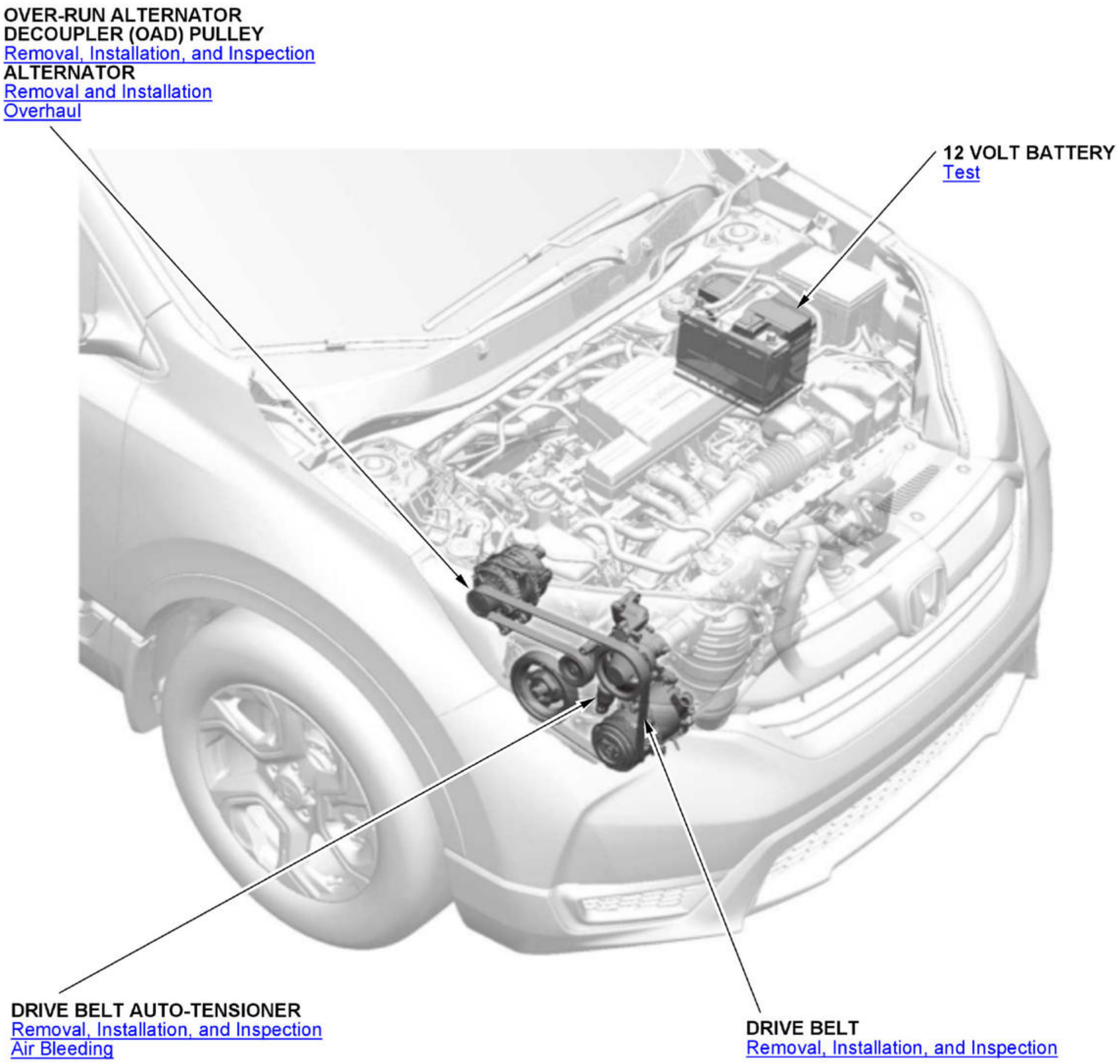
OVER-RUN ALTERNATOR DECOUPLER (OAD) PULLEY
Removal, Installation, and Inspection
ALTERNATOR
Removal and Installation
Overhaul
12 VOLT BATTERY
Test
DRIVE BELT AUTO-TENSIONER
Removal, Installation, and Inspection
Air Bleeding
DRIVE BELT
Removal, Installation, and Inspection

Fig. 1: Charging System Component Locations (1.5 L Engine)
Courtesy of HONDA, U.S.A., INC.

CHARGING SYSTEM COMPONENT LOCATION INDEX (2.4 L ENGINE) (2017 2018 2019)

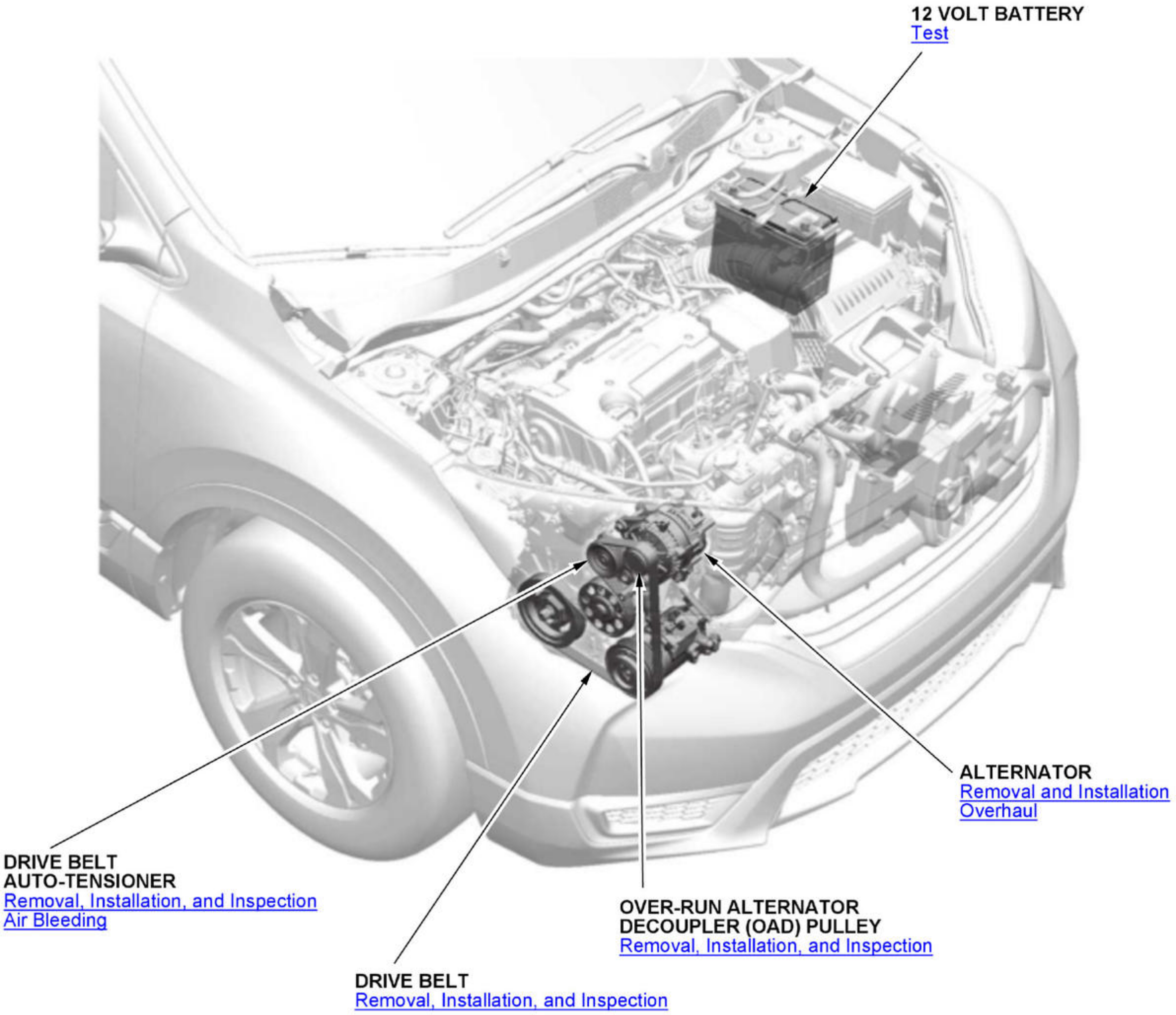
12 VOLT BATTERY
Test
ALTERNATOR
Removal and Installation
Overhaul
DRIVE BELT
AUTO-TENSIONER
Removal, Installation, and Inspection
Air Bleeding
OVER-RUN ALTERNATOR
DECOUPLER (OAD) PULLEY
Removal, Installation, and Inspection
DRIVE BELT
Removal, Installation, and Inspection

Fig. 2: Charging System Component Locations (2.4 L Engine)
Courtesy of HONDA, U.S.A., INC.

SYMPTOM TROUBLESHOOTING INDEX

CHARGING SYSTEM SYMPTOM TROUBLESHOOTING INDEX

NOTE: If no DTCs are indicated when confirming them with the HDS, the alternator is normal because of multistage control one.

Symptom	Diagnostic procedure	Also check for
12 volt charging system indicator stays on	Do the gauge control module self-diagnostic function procedure .	B
With OAD pulley: Over-run alternator decoupler (OAD) pulley is making an abnormal noise	Check for a broken over-run alternator decoupler (OAD) pulley.	B

REMOVAL, INSTALLATION & INSPECTION

DRIVE BELT AUTO-TENSIONER REMOVAL, INSTALLATION, AND INSPECTION (2.4 L ENGINE) (2017 2018 2019)

Removal and Installation

1

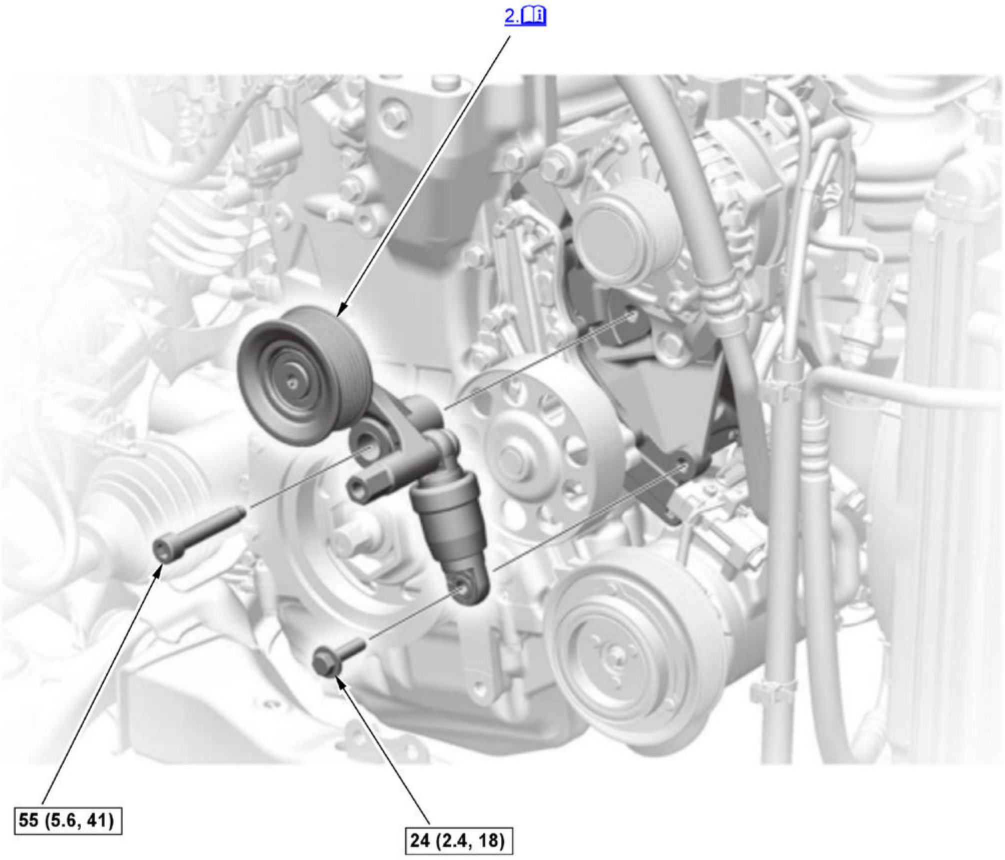
2.
55 (5.6, 41)
24 (2.4, 18)

Fig. 3: Drive Belt Auto-Tensioner Torque Specifications
Courtesy of HONDA, U.S.A., INC.

□	Torque: N.m (kgf.m, lbf.ft)

2

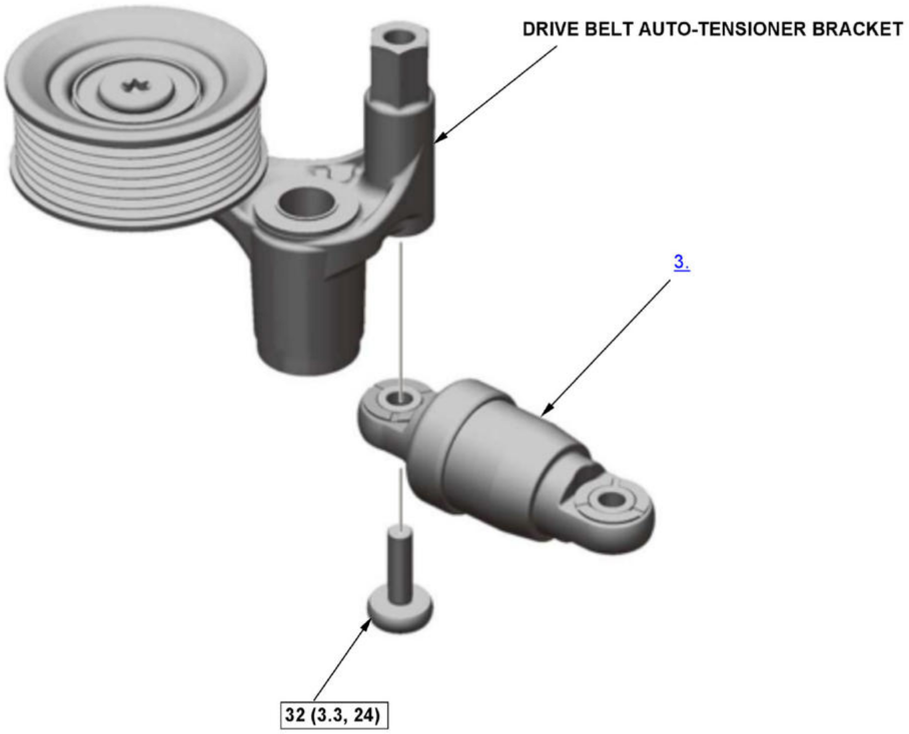

Fig. 4: Drive Belt Auto-Tensioner Torque Specifications
Courtesy of HONDA, U.S.A., INC.

▭	Torque: N.m (kgf.m, lbf.ft)

1. **Drive Belt - Remove**
2. Drive Belt Auto-Tensioner - Remove

   NOTE: Check for oil leaks from the drive belt auto-tensioner damper and check for damage to the damper rubber.

3. Drive Belt Auto-Tensioner Damper - Remove
4. All Removed Parts - Install

   1. Install the parts in the reverse order of removal.
   NOTE: **Do the drive belt auto-tensioner air bleeding** .

Inspection

1. Drive Belt Auto-Tensioner - Position Check

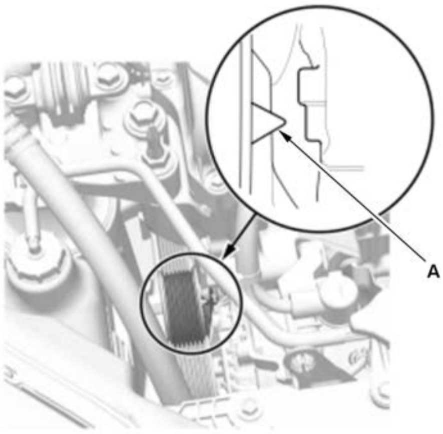	1. Turn the vehicle to the ON mode, and make sure to turn the A/C switch OFF, then turn the vehicle to the OFF (LOCK) mode. 2. Check the position of the drive belt auto-tensioner indicator pointer (A). 3. Start the engine, then check the position again with the engine idling. If the position of the indicator moves or fluctuates a lot, replace the drive belt auto-tensioner. 4. Check for abnormal noise from the tensioner pulley. If you hear any abnormal noise, replace the drive belt auto-tensioner.

2. Drive Belt - Remove
3. Drive Belt Auto-Tensioner - Inspect

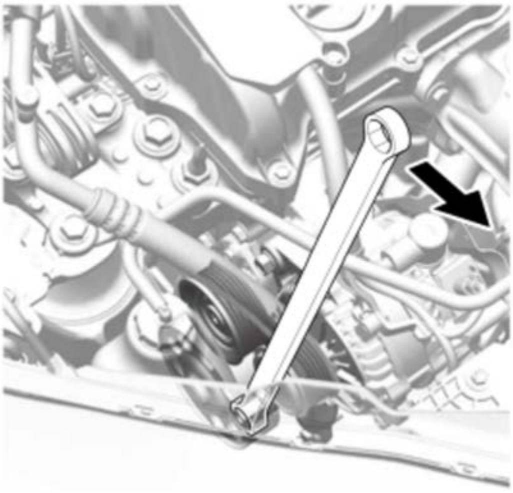	1. Set a wrench on the drive belt auto-tensioner, and slowly turn the wrench in the direction of the arrow. **NOTE:** • This is a hydraulic type auto-tensioner, so you must turn the wrench slowly for at least 3 seconds. • Check the belt for cracks or damage. • Check for oil leakage from the damper rubber bellows. • If the tensioner does not move smoothly, or you hear abnormal noise, replace the drive belt auto-tensioner.

4. All Removed Parts - Install

1. Install the parts in the reverse order of removal.

DRIVE BELT REMOVAL, INSTALLATION, AND INSPECTION (2.4 L ENGINE) (2017 2018 2019)

Removal and Installation

NOTE: Where icon is shown, see below for further information.

1

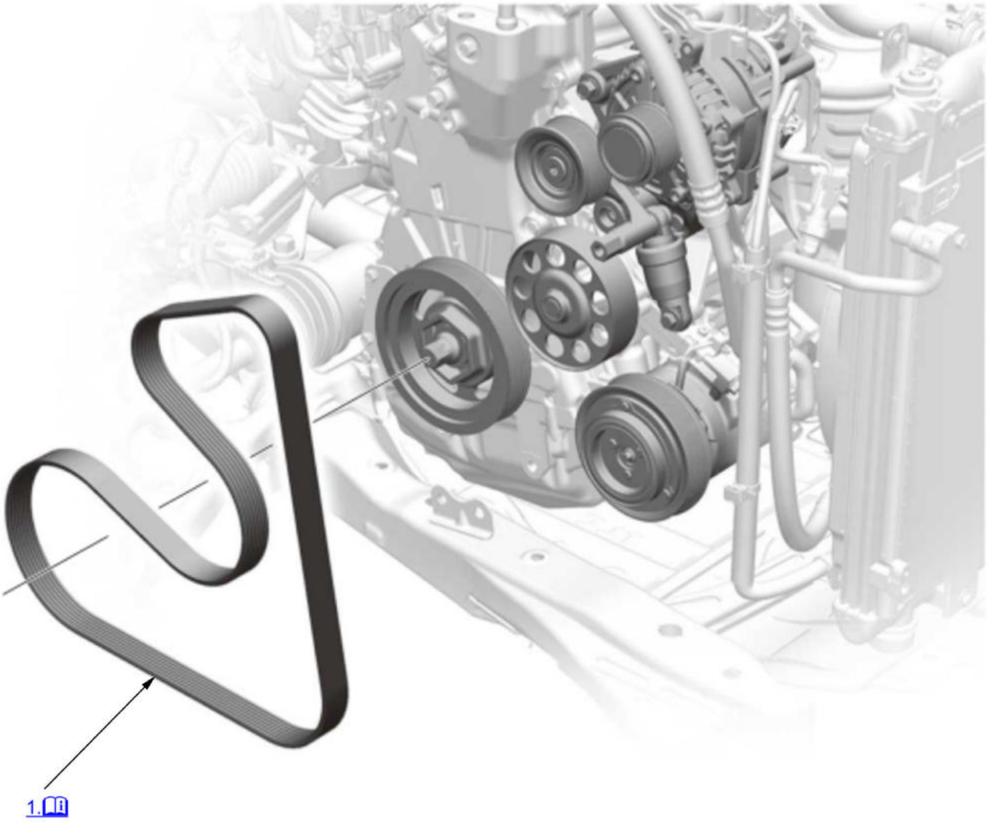

Fig. 5: Drive Belt Routing (2.4L)
Courtesy of HONDA, U.S.A., INC.

ℹ	Detailed information, notes, and precautions

1. Drive Belt - Remove

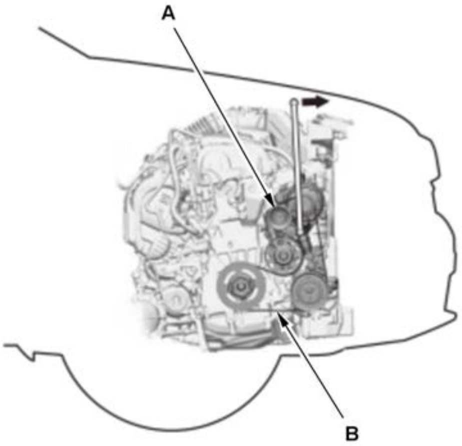	1. Set a wrench on the drive belt auto-tensioner (A), and slowly turn the wrench in the direction of the arrow, then remove the drive belt (B). **NOTE:** This is a hydraulic type auto-tensioner, so you must turn the wrench slowly for at least 3 seconds.

2. All Removed Parts - Install

1. Install the parts in the reverse order of removal.

Inspection

1. Drive Belt - Inspect

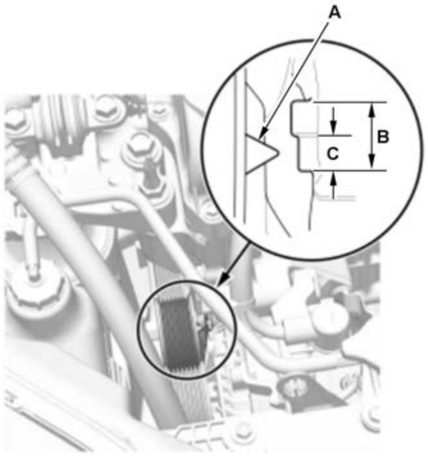	1. Inspect the belt for cracks or damage. If the belt is cracked or damaged, replace it. 2. Check the position of the drive belt auto-tensioner indicator's pointer (A) is within the standard range (B) as shown. If it is out of the standard range, replace the drive belt. **NOTE:** When replaced a new drive belt, check the position of the drive belt auto-tensioner indicator's pointer is within the standard range (C) as shown.

2. Maintenance Minder - Reset (With Maintenance Minder System)

1. If the Maintenance Minder required to replace the drive belt, **reset the Maintenance Minder with the gauge** (see "Resetting the Maintenance Minder").

OVER-RUN ALTERNATOR DECOUPLER (OAD) PULLEY REMOVAL, INSTALLATION, AND INSPECTION (1.5 L ENGINE)

Special Tools Required

Image	Description/Tool Number
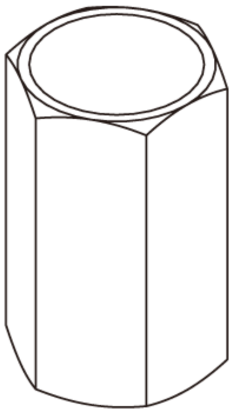	Alternator OAD Pulley Holder 07AAB-TK8A100

Removal and Installation

NOTE: ℹ Where icon is shown, see below for further information.

1

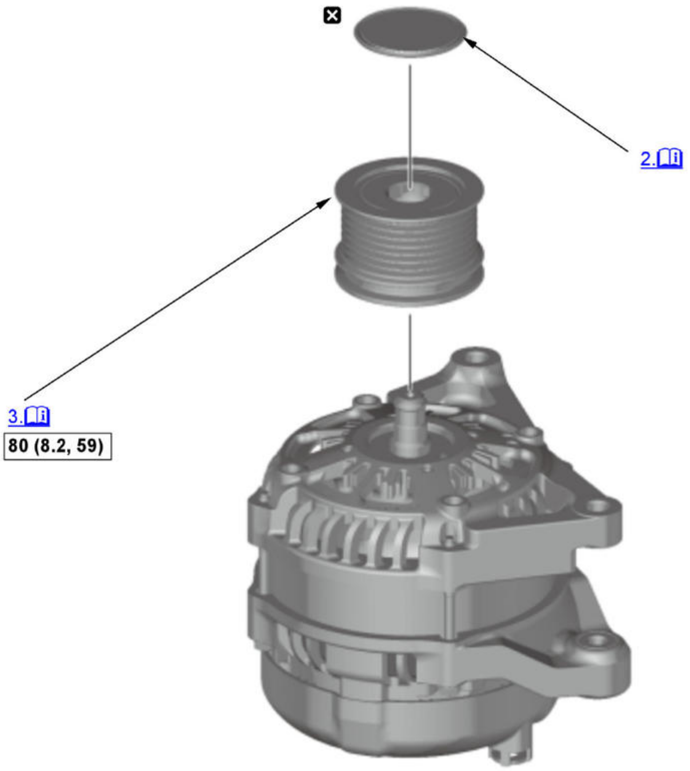

Fig. 6: Over-Run Alternator Decoupler (OAD) Pulley Torque Specifications
Courtesy of HONDA, U.S.A., INC.

ℹ	Detailed information, notes, and precautions
▭	Torque: N.m (kgf.m, lbf.ft)
☒	Replace

1. **Alternator - Remove**
2. OAD Pulley Seal Cap - Remove

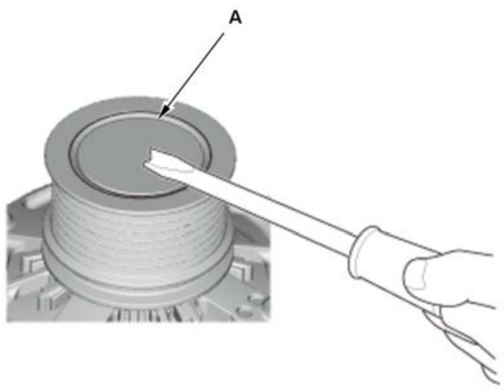	1. Remove the OAD pulley seal cap (A) by piercing the center of the rubber cap with a flat screwdriver and prying it loose. **NOTE:** While the cap is off, the grease inside the OAD pulley is exposed. Do not wipe the grease off, and make sure it does not become contaminated.

3. OAD Pulley - Remove

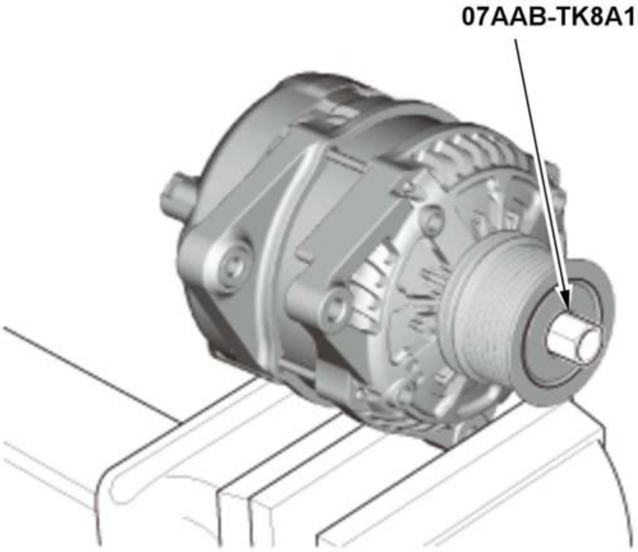	1. Clamp the alternator firmly in a vise. 2. Insert the alternator OAD pulley holder into the OAD pulley.

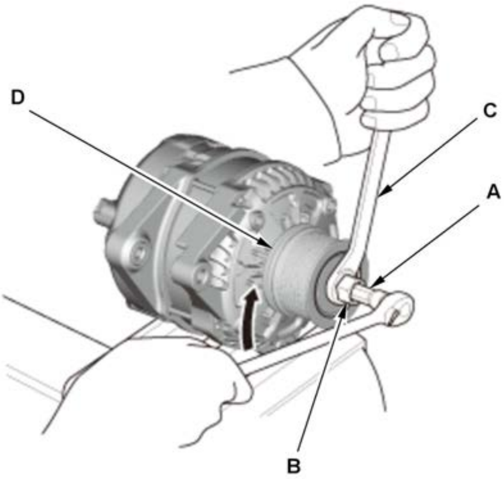	3. Place a 10 mm socket (A) through center of the alternator OAD pulley holder (B), onto the nut on the end of the alternator shaft. 4. Hold the alternator OAD pulley holder with a 17 mm wrench (C), then turn the alternator shaft clockwise. 5. Remove the OAD pulley (D).

4. All Removed Parts - Install

1. Install the parts in the reverse order of removal. **NOTE:** • When installing do not distort the OAD pulley seal cap. • Make sure to check that the cap is installed securely.

Inspection

1. OAD Pulley - Inspect

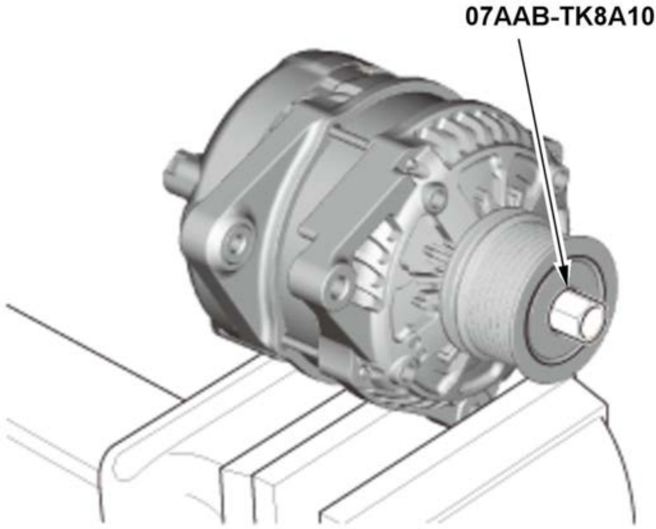

1. Clamp the alternator firmly in a vise.

2. Insert the alternator OAD pulley holder into the OAD pulley.

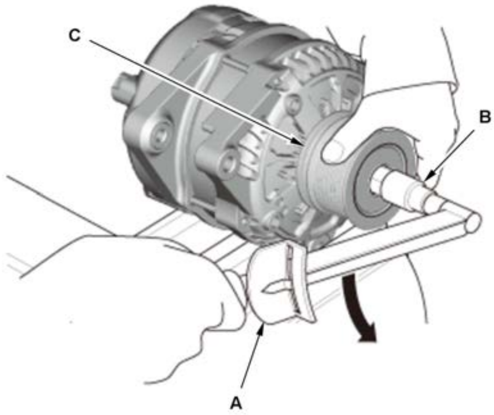

3. Place a beam type torque wrench (A) with a 17 mm socket wrench (B) on the alternator OAD pulley holder.

4. While holding the OAD pulley (C), rotate the alternator shaft counterclockwise. Make sure the alternator shaft is locked when applying the specified torque.

- If the alternator shaft locks, go to step 3.
- If it does not lock, replace the OAD pulley.

Specified Torque:
11 N.m (1.1 kgf.m, 8 lbf.ft)

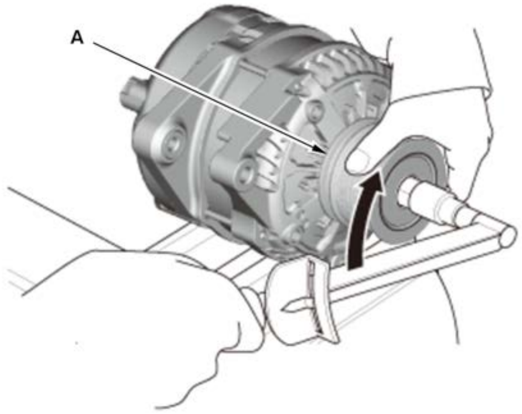

5. While holding the OAD pulley (A), rotate the alternator shaft clockwise. Check that the alternator shaft rotates at the specified torque or less.

- If the alternator shaft rotates at the specified torque or less, it is normal. Install a new OAD pulley seal cap.
- If it does not rotate at the specified torque or less, replace the OAD pulley.

Specified Torque:
0.8 N.m (0.08 kgf.m, 0.6 lbf.ft) max

Special Tools Required

Image	Description/Tool Number
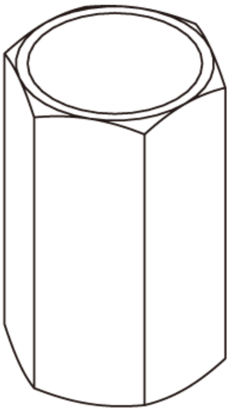	Alternator OAD Pulley Holder 07AAB-TK8A100

Removal and Installation

NOTE: ℹ Where icon is shown, see below for further information.

1

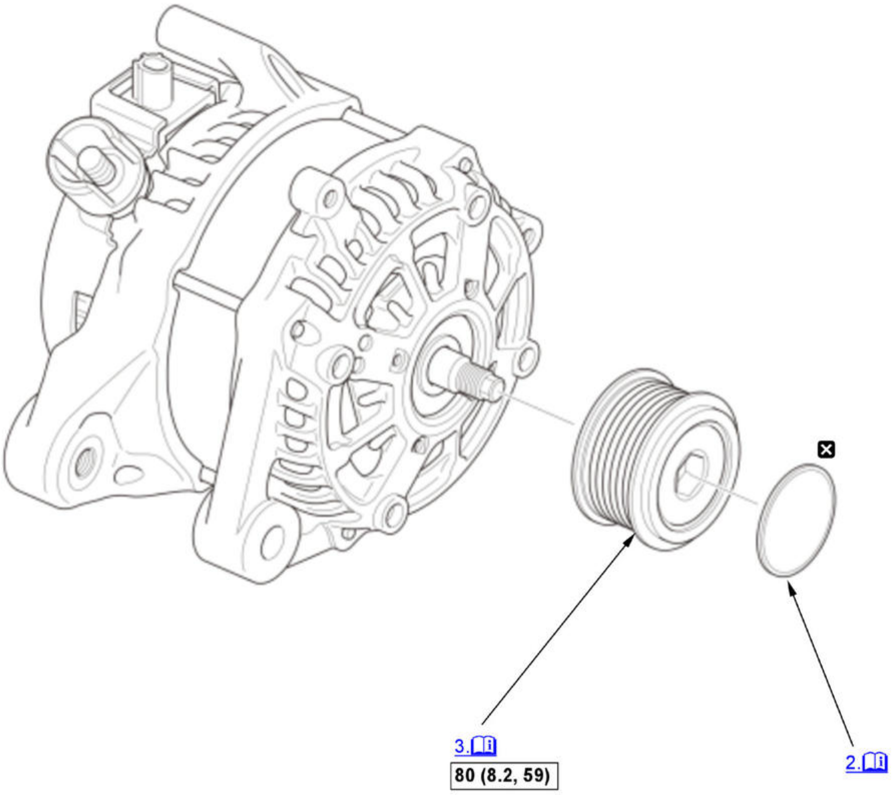

[Fig. 7: Over-Run Alternator Decoupler (OAD) Pulley Torque Specifications](#)
Courtesy of HONDA, U.S.A., INC.

ℹ	Detailed information, notes, and precautions
▭	Torque: N.m (kgf.m, lbf.ft)

Replace

1. **Alternator - Remove**
2. OAD Pulley Seal Cap - Remove

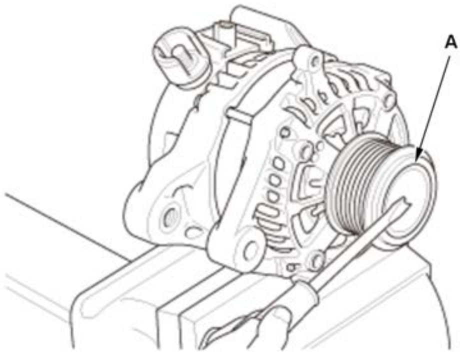	1. Clamp the alternator firmly in a vise. 2. Remove the OAD pulley seal cap (A) by piercing the center of the rubber cap with a flat screwdriver and prying it loose. **NOTE:** While the cap is off, the grease inside the OAD pulley is exposed. Do not wipe the grease off, and make sure it does not become contaminated.

3. OAD Pulley - Remove

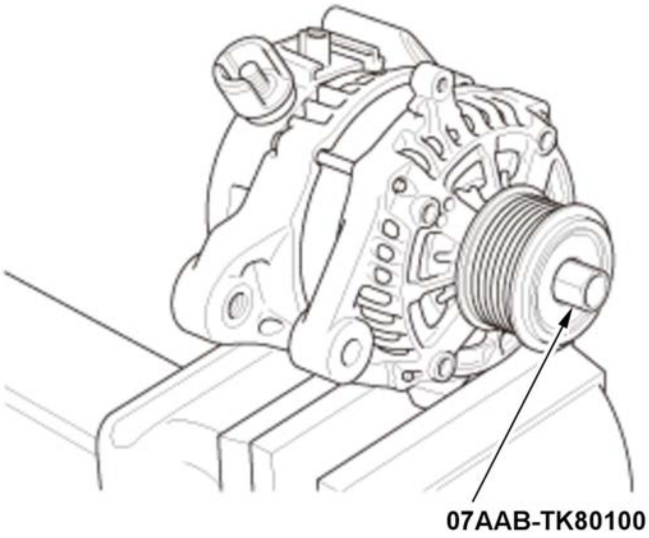	1. Insert the alternator OAD pulley holder into the OAD pulley.

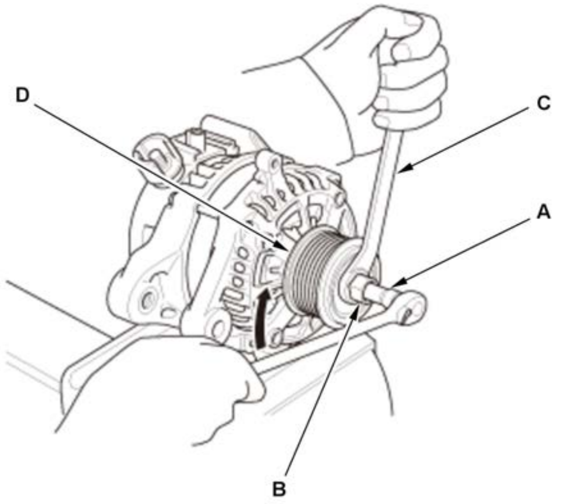	2. Place a 10 mm hex wrench (A) through center of the alternator OAD pulley holder (B), into hex in the end of the alternator shaft. 3. Hold the alternator OAD pulley holder with a 17 mm wrench (C), then turn the alternator shaft clockwise. 4. Remove the OAD pulley (D).

4. All Removed Parts - Install

1. Install the parts in the reverse order of removal. **NOTE:** • When installing do not distort the OAD pulley seal cap. • Make sure to check that the cap is installed securely.

Inspection

1. OAD Pulley - Inspect

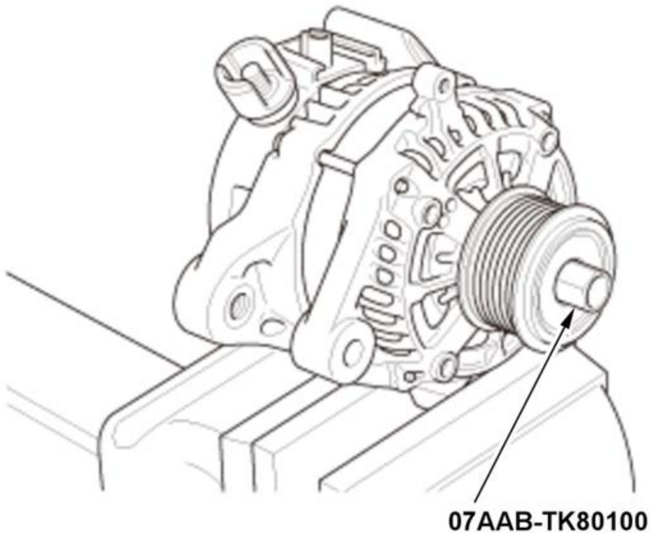	1. Insert the alternator OAD pulley holder into the OAD pulley.

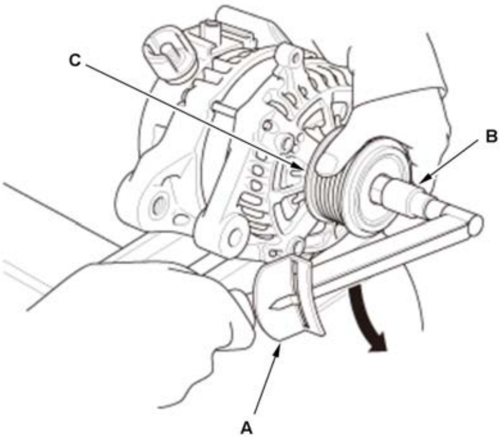	2. Place a beam type torque wrench (A) with a 17 mm socket wrench (B) on the alternator OAD pulley holder. 3. While holding the OAD pulley (C), rotate the alternator shaft counterclockwise. Make sure the alternator shaft is locked when applying the specified torque. • If the alternator shaft locks, go to step 4. • If it does not lock, replace the OAD pulley.

Specified Torque:
13 N.m (1.3 kgf.m, 10 lbf.ft)

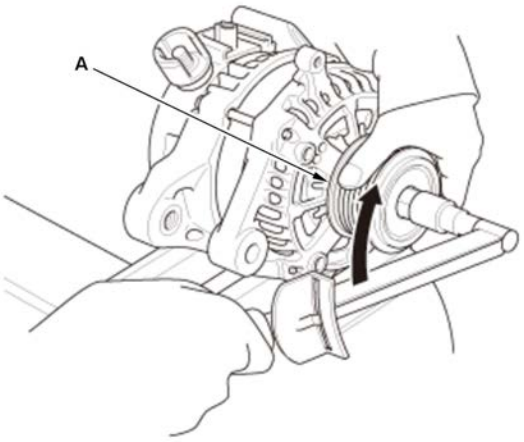	4. While holding the OAD pulley (A), rotate the alternator shaft clockwise. Check that the alternator shaft rotates at the specified torque or less. • If the alternator shaft rotates at the specified torque or less, it is normal. Install the OAD pulley seal cap. • If it does not rotate at the specified torque or less, replace the OAD pulley.

Specified Torque:
0.8 N.m (0.08 kgf.m, 0.6 lbf.ft) max.

SYMPTOM TROUBLESHOOTING INDEX FOR VIEWER

12 VOLT CHARGING SYSTEM INDICATOR STAYS ON

Diagnostic procedure

- Do the gauge control module self-diagnostic function procedure .

WITH OAD PULLEY: OVER-RUN ALTERNATOR DECOUPLER (OAD) PULLEY IS MAKING AN ABNORMAL NOISE

Diagnostic procedure

- Check for a broken over-run alternator decoupler (OAD) pulley.

DISASSEMBLY AND REASSEMBLY

BATTERY PACK DISASSEMBLY AND REASSEMBLY

Disassembly

WARNING:

- The power cables carry high voltage when the electric powertrain system is energized. To avoid serious injury from electrical shock, do not turn on the system with the power cables disconnected.
- Wear insulated gloves and use insulated tools to protect you from electrical shock. When removing or installing high voltage items, always use them. Wrap the high voltage items with insulating tape after removing. Please be careful when you see ⚠ on the illustration.

NOTE:

- ℹ Where icon is shown, for further information see below.
- Wear insulated gloves and use insulated tools to protect you from electrical shock.
- To avoid damaging the wiring and terminals, unplug the wiring connectors carefully while holding the connector portion.
- Mark all wiring and hoses to avoid misconnection. Also, be sure that they do not contact other wiring or hoses, or interfere with other parts.
- Strong impact (i.e., dropping the high voltage battery, collision damage) may cause electrolyte leaks, internal short circuits and heat increase resulting in fire. Avoid impact to the high voltage battery.
- Organic electrolyte is poisonous. If ingested, get medical attention immediately.
- High voltage battery damage may cause flammable gas or electrolyte leaks and may result in fire. Do not damage the high voltage battery and keep sparks, flame and cigarettes away.

The electric powertrain components are located in this area. The electric powertrain is a high-voltage system. You must be familiar with the electric powertrain system before working on or around it. Make sure you have read the electric powertrain **service precautions** before doing repairs or service.

Procedure

NOTE: **Numbered call-outs in figure pertain to list numbers in following procedure.**

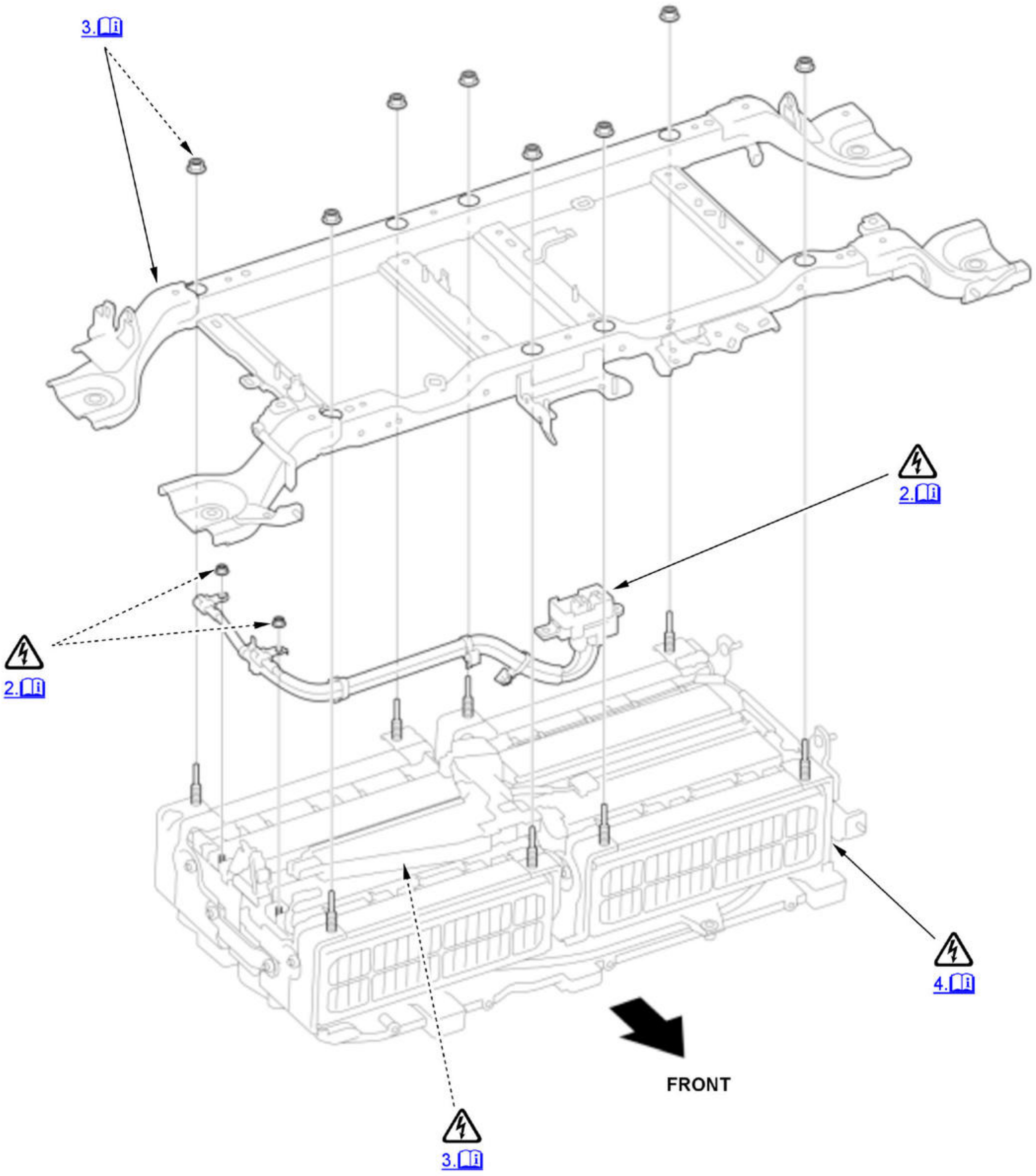

Fig. 1: Exploded View Of Battery Pack Components For Disassembly (1 Of 4)
Courtesy of HONDA, U.S.A., INC.

NOTE: **Numbered call-outs in figure pertain to list numbers in following procedure.**

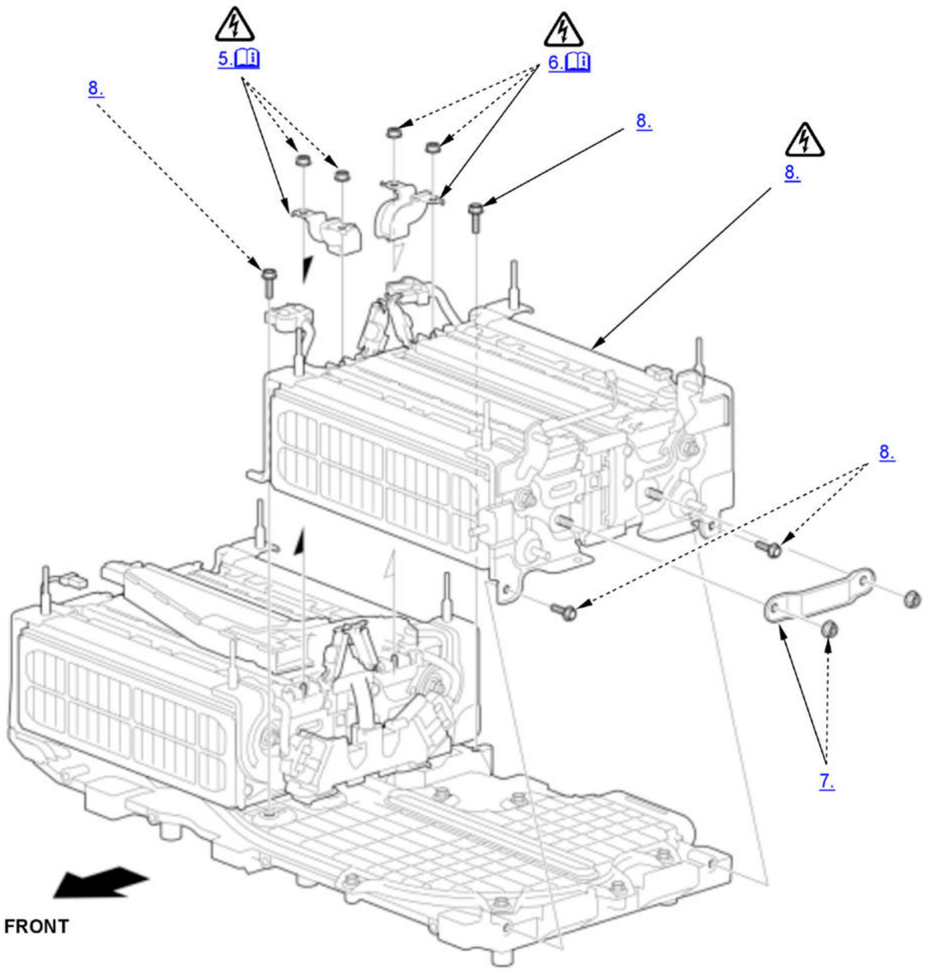

Fig. 2: Exploded View Of Battery Pack Components For Disassembly (2 Of 4)
Courtesy of HONDA, U.S.A., INC.

NOTE: **Numbered call-outs in figure pertain to list numbers in following procedure.**

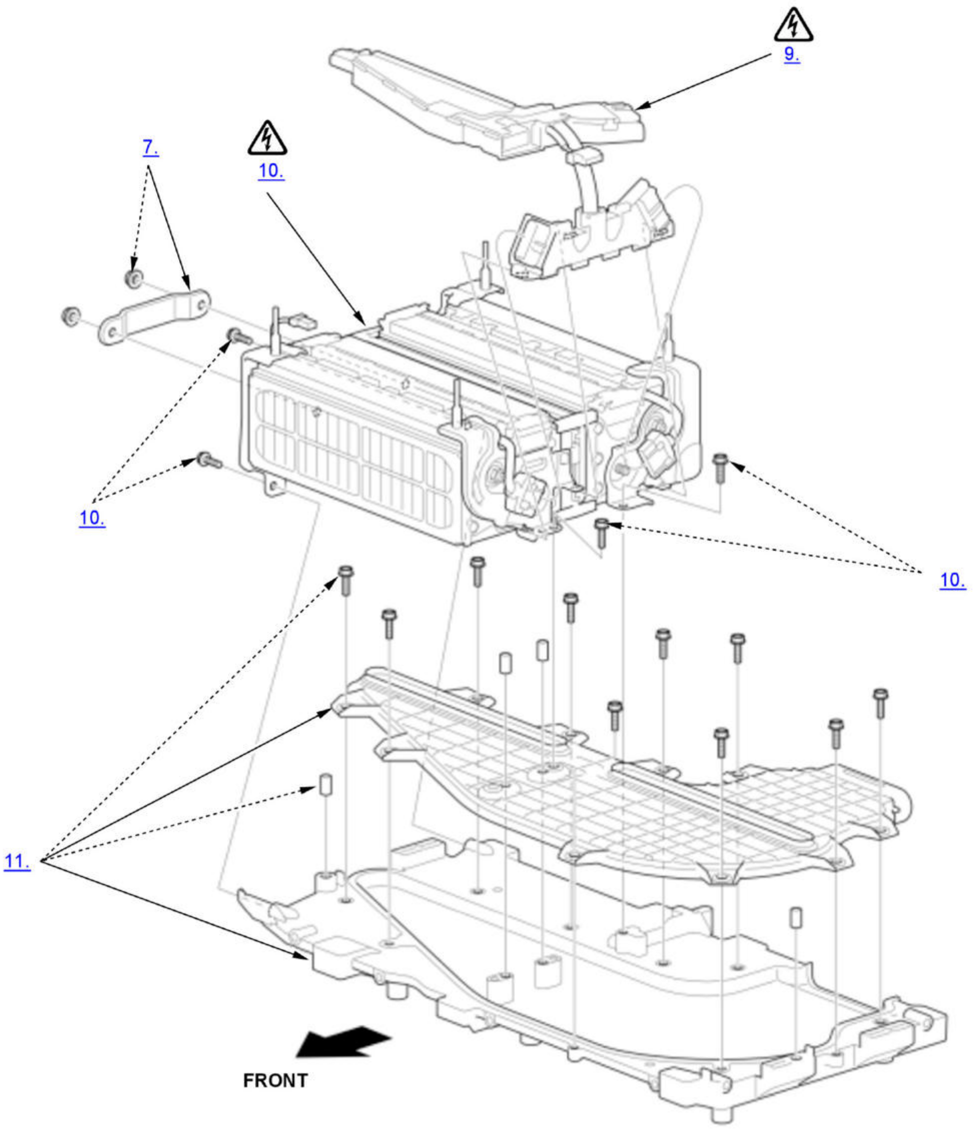

[Fig. 3: Exploded View Of Battery Pack Components For Disassembly (3 Of 4)]
Courtesy of HONDA, U.S.A., INC.

NOTE: **Numbered call-outs in figure pertain to list numbers in following procedure.**

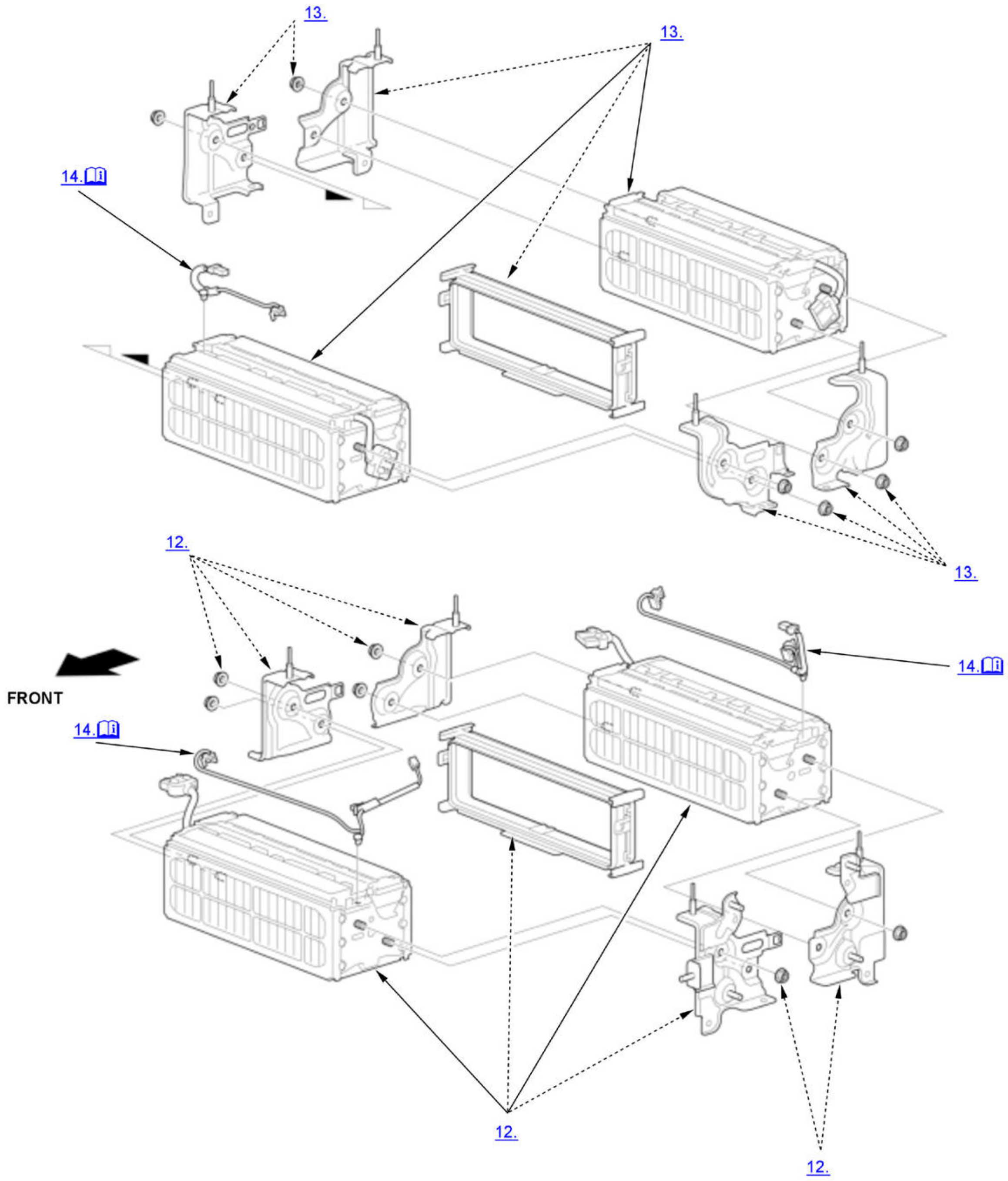

Fig. 4: Exploded View Of Battery Pack Components For Disassembly (4 Of 4)
Courtesy of HONDA, U.S.A., INC.

1. Battery Pack Assy - Remove
2. Service Plug Base - Remove

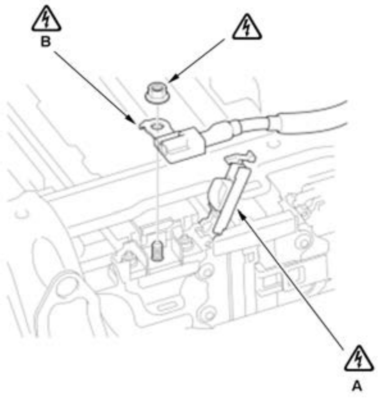	**NOTICE:** - High voltage electricity flows in the battery terminal and busbar after disconnecting the service plug. Do all procedures one by one and keep the terminal covers closed when you are not working on them. - Keep the terminal covers closed when you are not working on them. 1. Open the terminal cover (A). 2. Remove the negative terminal (B) then close the terminal cover.

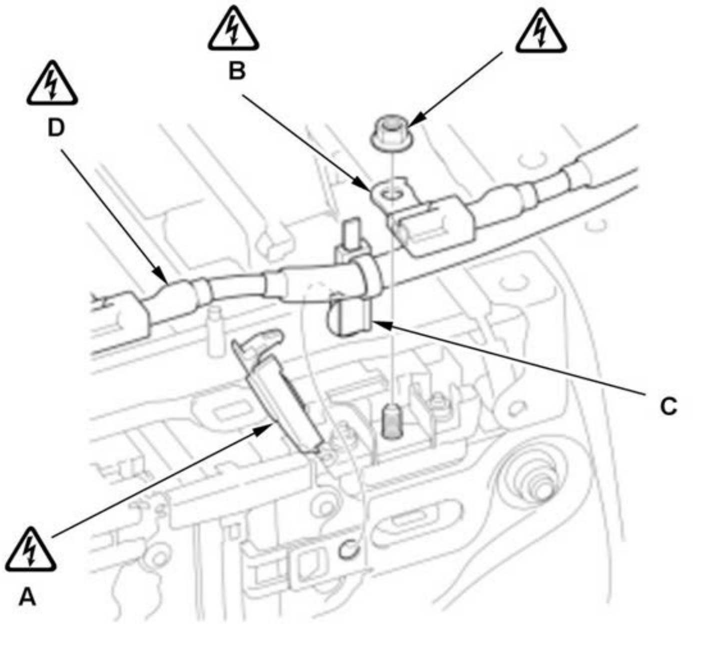	3. Open the positive terminal cover (A). 4. Remove the positive terminal (B) then close the terminal cover. 5. Disconnect the clip (C) then remove the service plug base (D).

3. IPU Upper Frame - Remove

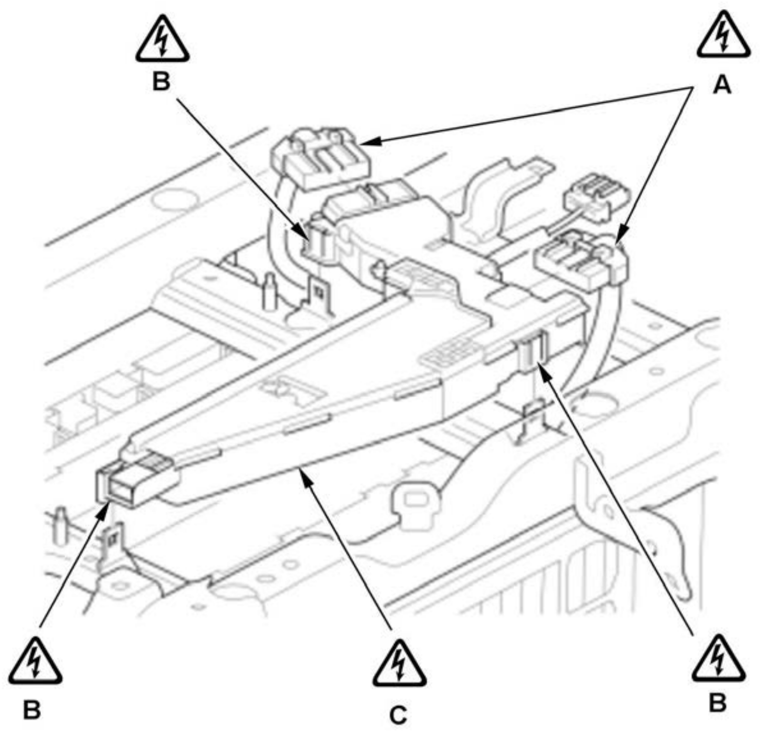	1. Disconnect the connectors (A). 2. Release the tabs (B). 3. Move the harness (C) and remove the upper frame.

4. Battery Module, High Voltage Battery Module Temperature Sensor - Position check

NOTE: Record the battery temperature sensor mounting position (A).

1. Mark the battery module with a number as shown.

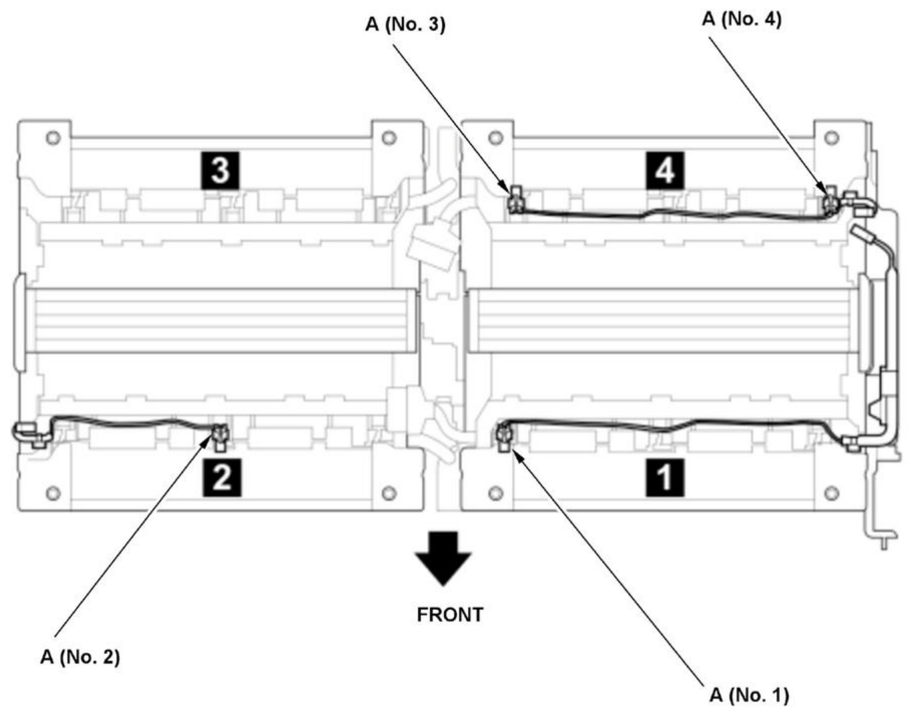

5. Busbar (Battery Module 1-2) - Remove

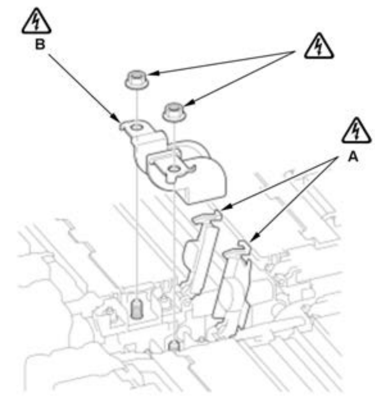

NOTICE:

- High voltage electricity flows in the battery terminal and busbar after disconnecting the service plug. Do all procedures one by one and keep the terminal covers closed when you are not working on them.
- Never reuse a bent or damaged busbar.

1. Open the terminal covers (A).

2. Remove the busbar (B), then close the terminal covers.

6. Busbar (Battery Module 3-4) - Remove

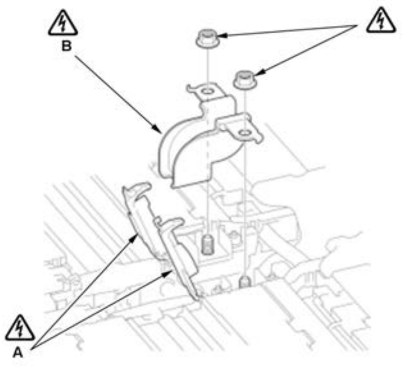

NOTICE:

- High voltage electricity flows in the battery terminal and busbar after disconnecting the service plug. Do all procedures one by one and keep the terminal covers closed when you are not working on them.
- Never reuse a bent or damaged busbar.

1. Open the terminal covers (A).

2. Remove the busbar (B), then close the terminal covers.

7. Side Plate End Bindbar - Remove

8. Left Battery Module Assy. (Battery Module 1 and Battery Module 4) - Remove
9. IPU Sub Harness - Remove
10. Right Battery Module Assy. (Battery Module 2 and Battery Module 3) - Remove
11. Battery Lower Duct, IPU Lower Frame - Remove
12. Battery Module 1 and Battery Module 4 - Remove
13. Battery Module 2 and Battery Module 3 - Remove
14. High Voltage Battery Module Temperature Sensor - Remove

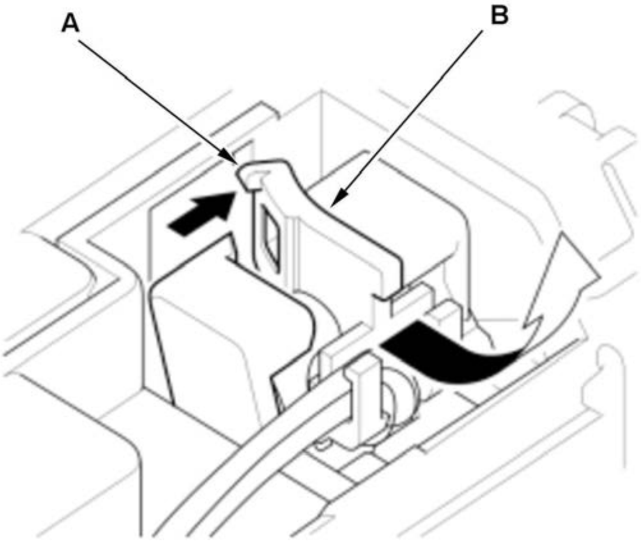 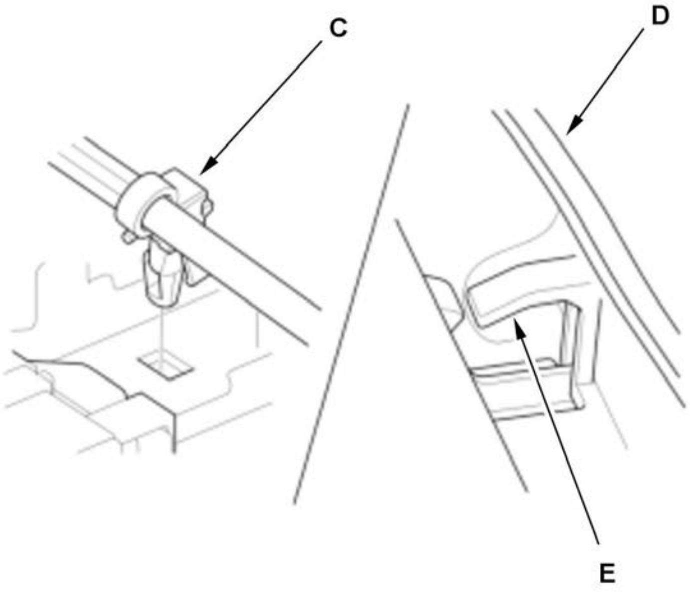	**NOTE:** Be sure to record the mounting position before removing the battery temperature sensor. 1. Press tab (A) in the direction of the arrow. 2. Lift the high voltage battery module temperature sensor (B) in the direction of the arrow. 3. Remove the harness clamp (C). 4. Remove the battery temperature sensor harness (D) from the harness holder (E).

Reassembly

WARNING:

- The power cables carry high voltage when the electric powertrain system is energized. To avoid serious injury from electrical shock, do not turn on the system with the power cables disconnected.

- Wear insulated gloves and use insulated tools to protect you from electrical shock. When removing or installing high voltage items, always use them. Wrap the high voltage items with insulating tape after removing. Please be careful when you see ⚠ on the illustration.

NOTE:

- ℹ Where icon is shown, for further information see below.
- Wear insulated gloves and use insulated tools to protect you from electrical shock.
- To avoid damaging the wiring and terminals, connect the wiring connectors carefully while holding the connector portion.
- Mark all wiring and hoses to avoid misconnection. Also, be sure that they do not contact other wiring or hoses, or interfere with other parts.
- Strong impact (i.e., dropping the high voltage battery, collision damage) may cause electrolyte leaks, internal short circuits and heat increase resulting in fire. Avoid impact to the high voltage battery.
- Organic electrolyte is poisonous. If ingested, get medical attention immediately.
- High voltage battery damage may cause flammable gas or electrolyte leaks and may result in fire. Do not damage the high voltage battery and keep sparks, flame and cigarettes away.

The electric powertrain components are located in this area. The electric powertrain is a high-voltage system. You must be familiar with the electric powertrain system before working on or around it. Make sure you have read the electric powertrain **service precautions** before doing repairs or service.

Procedure

NOTE: **Numbered call-outs in figure pertain to list numbers in following procedure.**

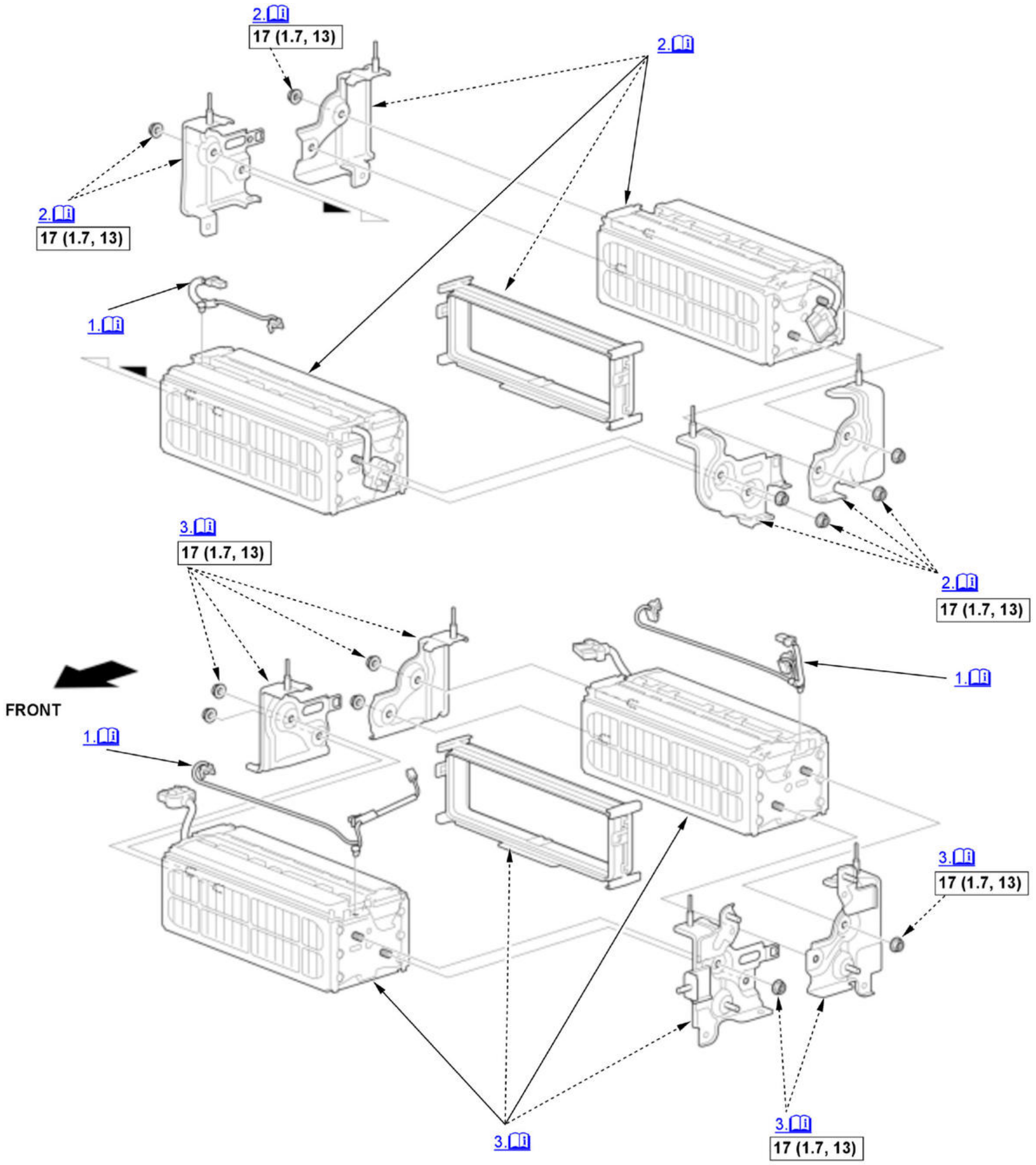
2.
17 (1.7, 13)
2.
2.
17 (1.7, 13)
1.
3.
17 (1.7, 13)
2.
17 (1.7, 13)
FRONT
1.
1.
3.
17 (1.7, 13)
3.
17 (1.7, 13)
3.

Fig. 5: Exploded View Of Battery Pack Components With Torque Specifications For Reassembly (1 Of 4)
Courtesy of HONDA, U.S.A., INC.

▭	Torque: N.m (kgf.m, lbf.ft)

NOTE: **Numbered call-outs in figure pertain to list numbers in following procedure.**

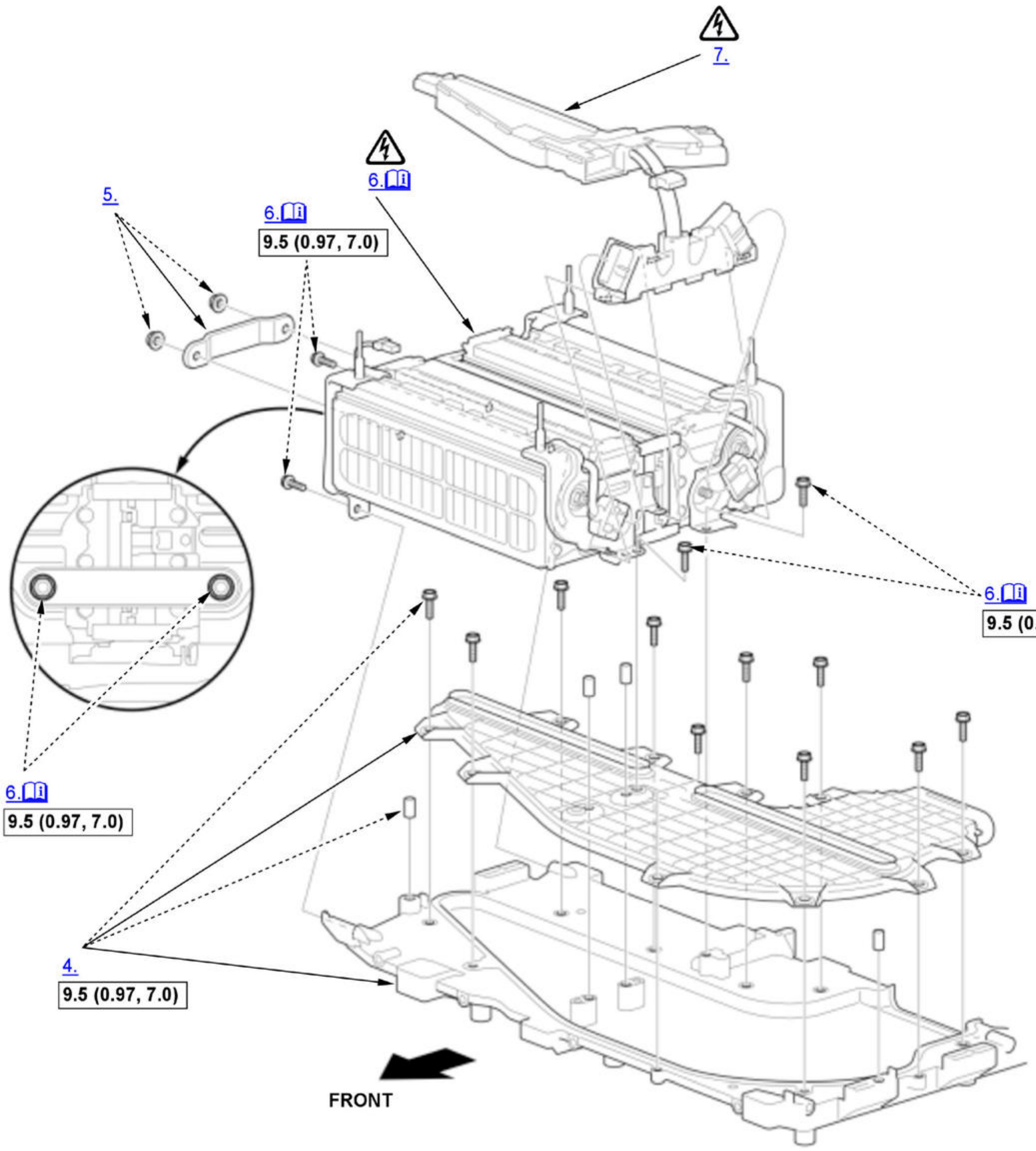
7.
6.
5.
6.
9.5 (0.97, 7.0)
6.
9.5 (0.97, 7.0)
6.
9.5 (0.97, 7.0)
4.
9.5 (0.97, 7.0)
FRONT

Fig. 6: Exploded View Of Battery Pack Components With Torque Specifications For Reassembly (2 Of 4)
Courtesy of HONDA, U.S.A., INC.

▭	Torque: N.m (kgf.m, lbf.ft)

NOTE: **Numbered call-outs in figure pertain to list numbers in following procedure.**

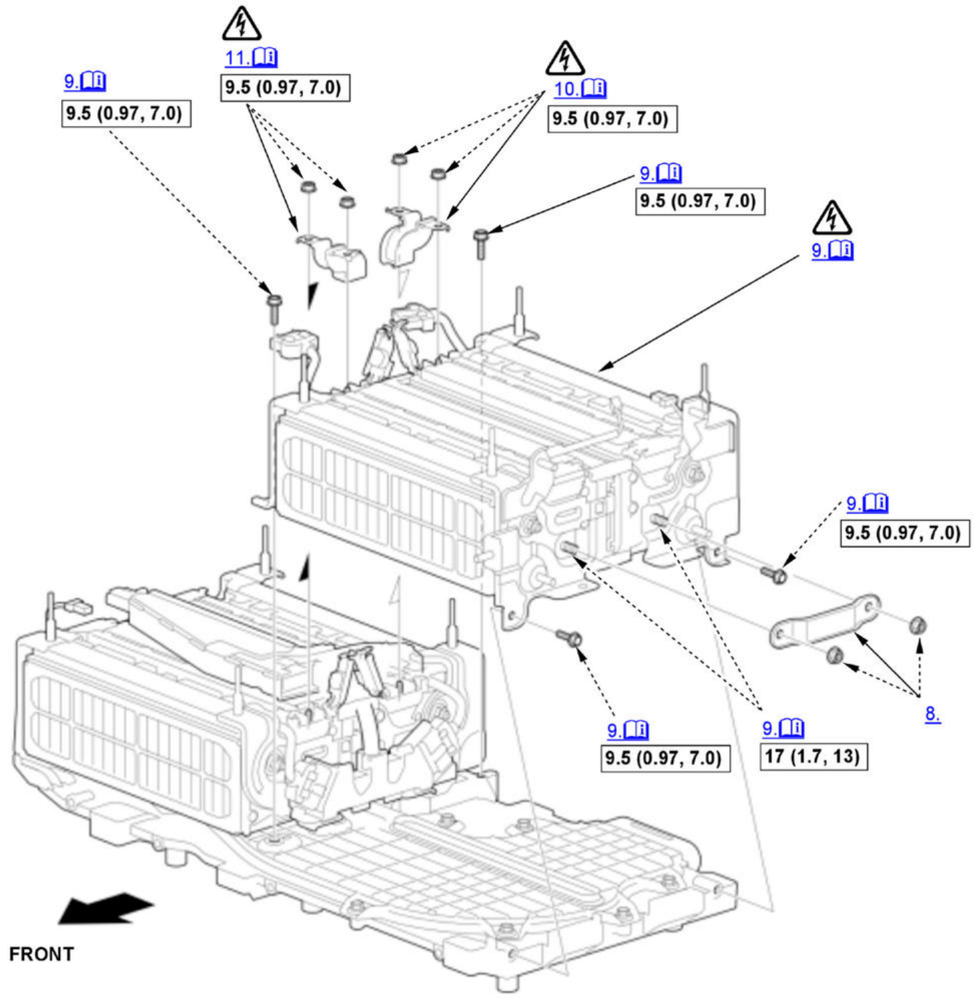
9.
9.5 (0.97, 7.0)
11.
9.5 (0.97, 7.0)
10.
9.5 (0.97, 7.0)
9.
9.5 (0.97, 7.0)
9.
9.
9.5 (0.97, 7.0)
8.
9.
9.5 (0.97, 7.0)
9.
17 (1.7, 13)
FRONT

Fig. 7: Exploded View Of Battery Pack Components With Torque Specifications For Reassembly (3 Of 4)
Courtesy of HONDA, U.S.A., INC.

☐	Torque: N.m (kgf.m, lbf.ft)

NOTE: **Numbered call-outs in figure pertain to list numbers in following procedure.**

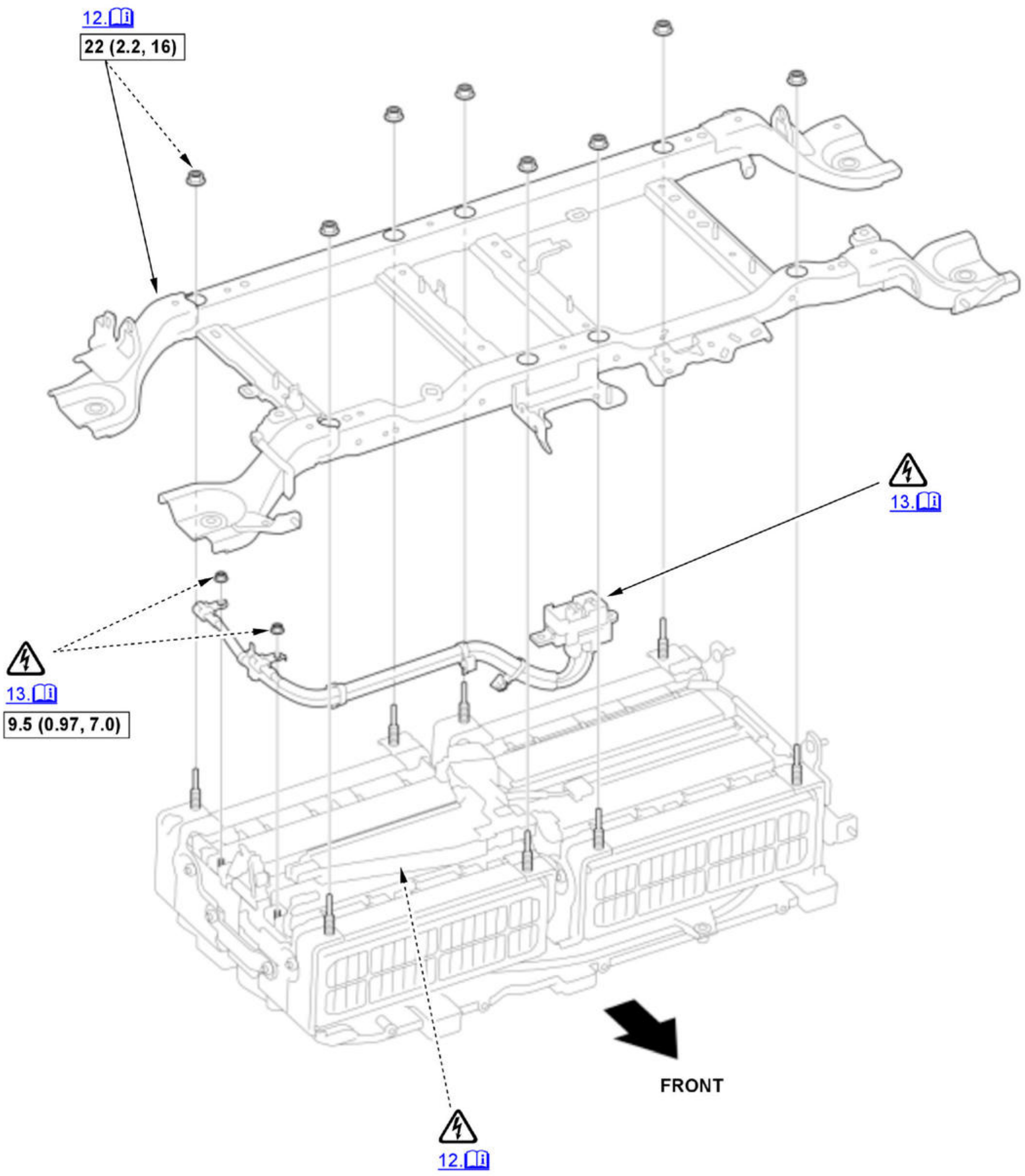
12.
22 (2.2, 16)
13.
13.
9.5 (0.97, 7.0)
FRONT
12.

Fig. 8: Exploded View Of Battery Pack Components With Torque Specifications For Reassembly (4 Of 4)
Courtesy of HONDA, U.S.A., INC.

☐	Torque: N.m (kgf.m, lbf.ft)

1. High Voltage Battery Module Temperature Sensor - Install

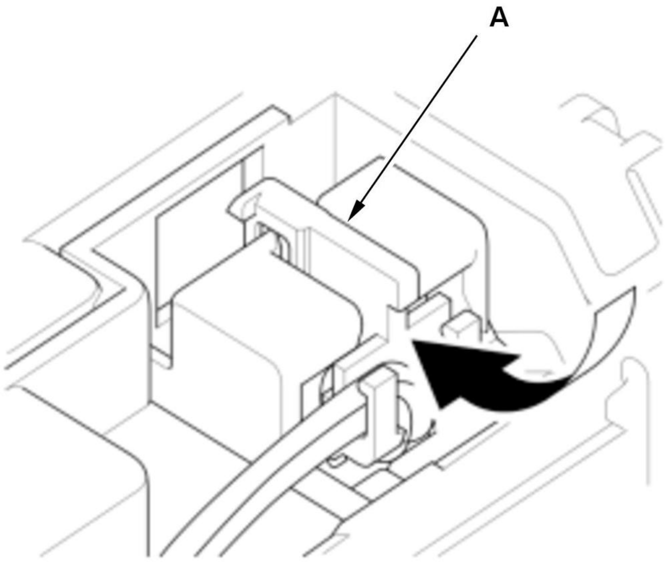

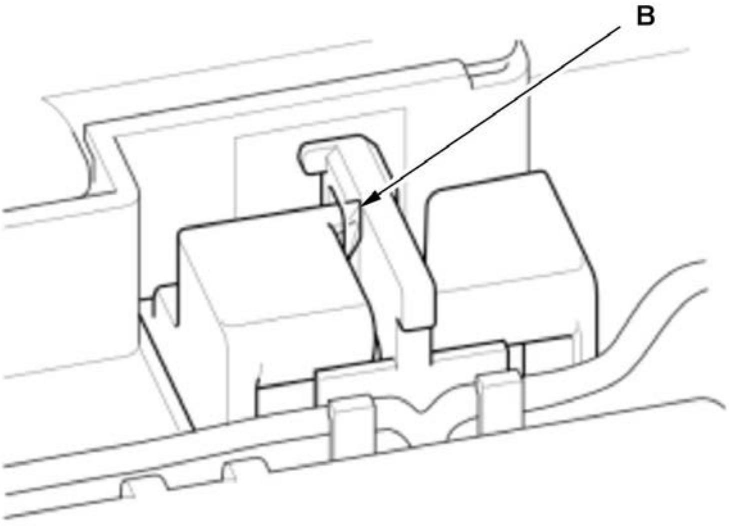

NOTE: Always install the high voltage battery module temperature sensor in the same position as before removal.

1. Install the high voltage battery module temperature sensor (A) as shown by the arrow.

2. Make sure the locking tab (B) locks the high voltage battery module temperature sensor as shown.

3. Install the harness clamp (C).

4. Attach the high voltage battery module temperature sensor harness (D) to the harness holder (E).

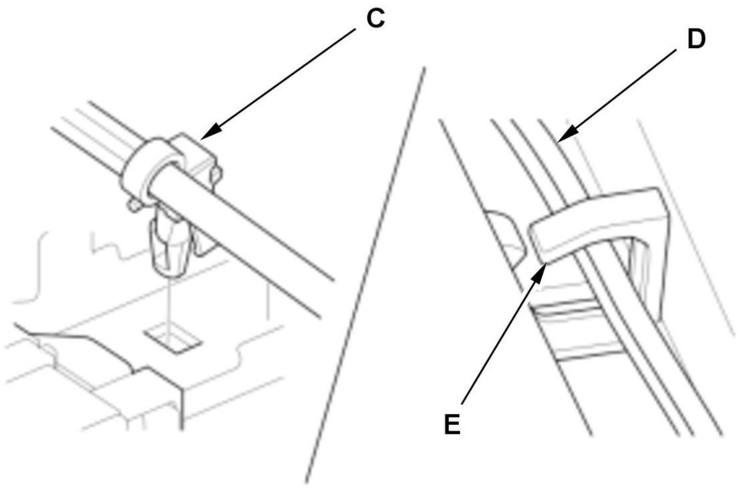

2. Battery Module 2 and Battery Module 3 - Install

1. Install battery module 2, battery module 3, battery middle duct (A), and each plate according to the following table and figure.

NOTICE:

- Check the marking on each plate before starting work.
- Be careful not to pinch the seal part of the battery middle duct.
- Install the battery middle duct with the cooling air outlet (B) facing downward.

Battery module No.	Plate name	Punch mark
Battery module 2	R. end front plate (C)	10
	L. middle front plate (D)	60
Battery module 3	R. end rear plate (E)	30
	L. middle rear plate (F)	80

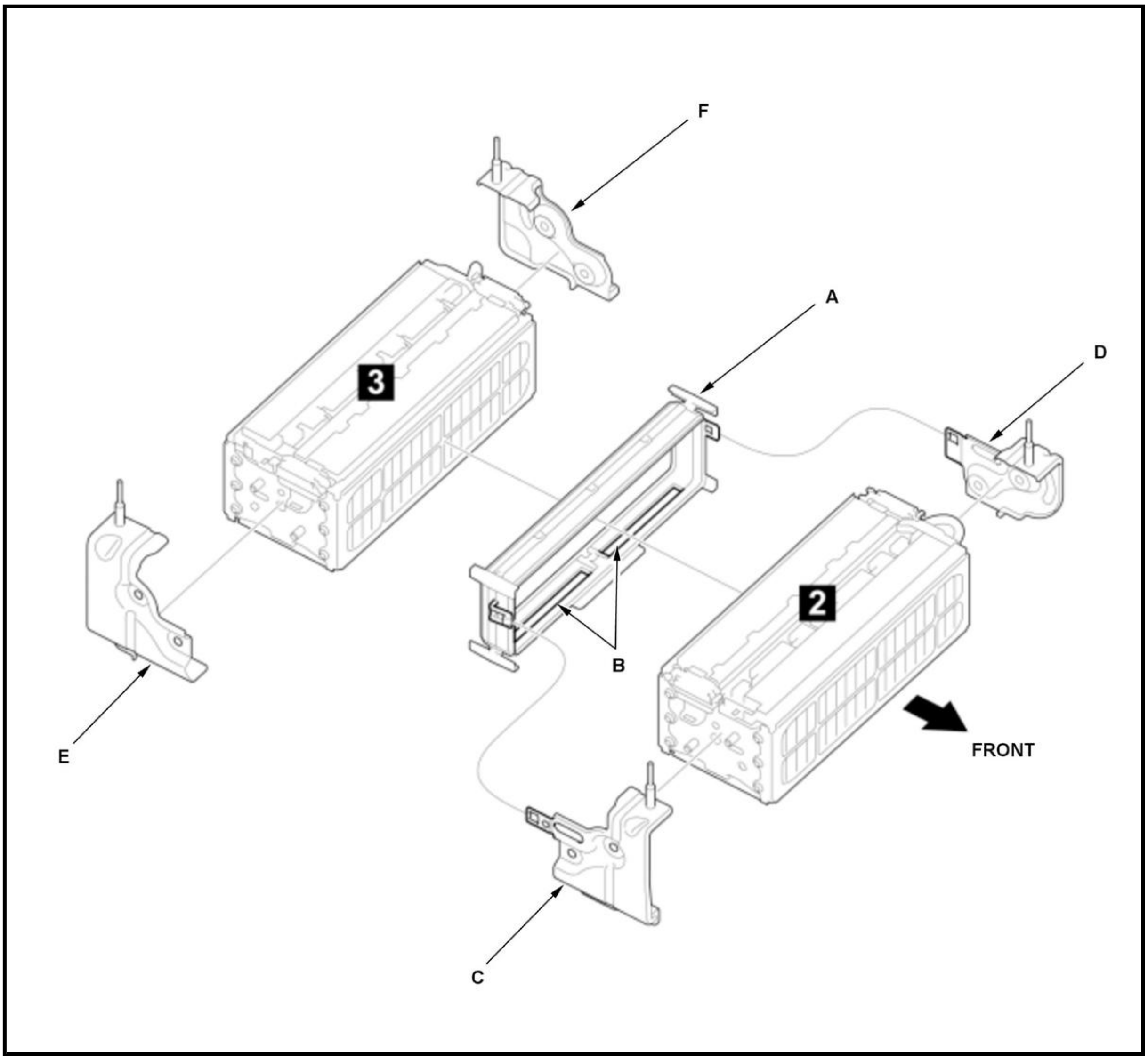

3. Battery Module 1 and Battery Module 4 - Install

1. Install battery module 1, battery module 4, battery middle duct (A), and each plate according to the following table and figure.

NOTICE:

- Check the marking on each plate before starting work.
- Be careful not to bite the seal part of the battery middle duct.
- Install the battery middle duct with the cooling air outlet (B) facing downward.

Battery module No.	Plate name	Punch mark
Battery module 1	L. end front plate (C)	50
	R. middle front plate (D)	20
Battery module 4	L. end rear plate (E)	70
	R. middle rear plate (F)	40

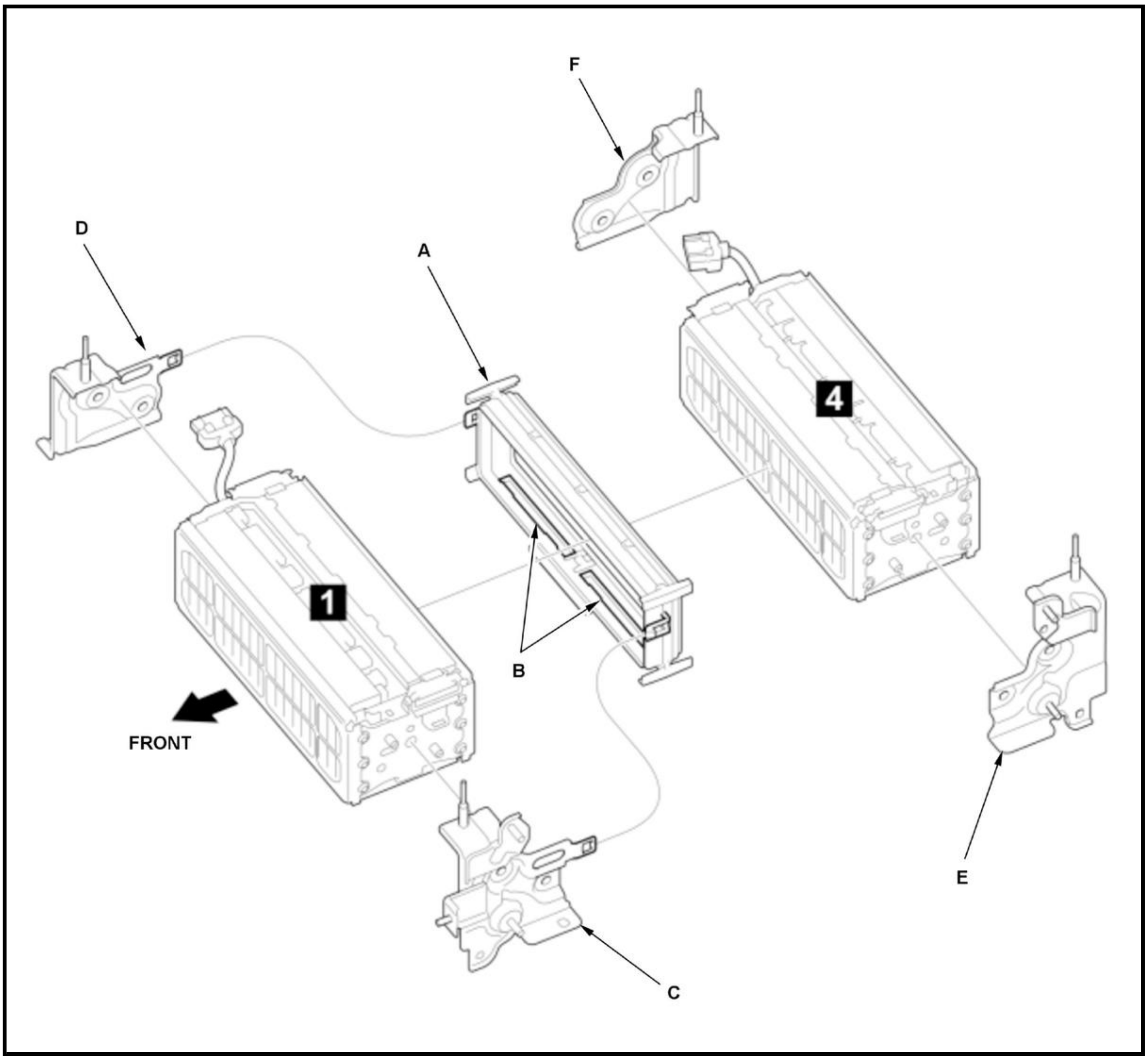

4. Battery Lower Duct, IPU Lower Frame - Install
5. Side Plate End Bindbar (Battery Module 2 - Battery Module 3) - Loosely Install
6. Right Battery Module Assy. (Battery Module 2 and Battery Module 3) - Install

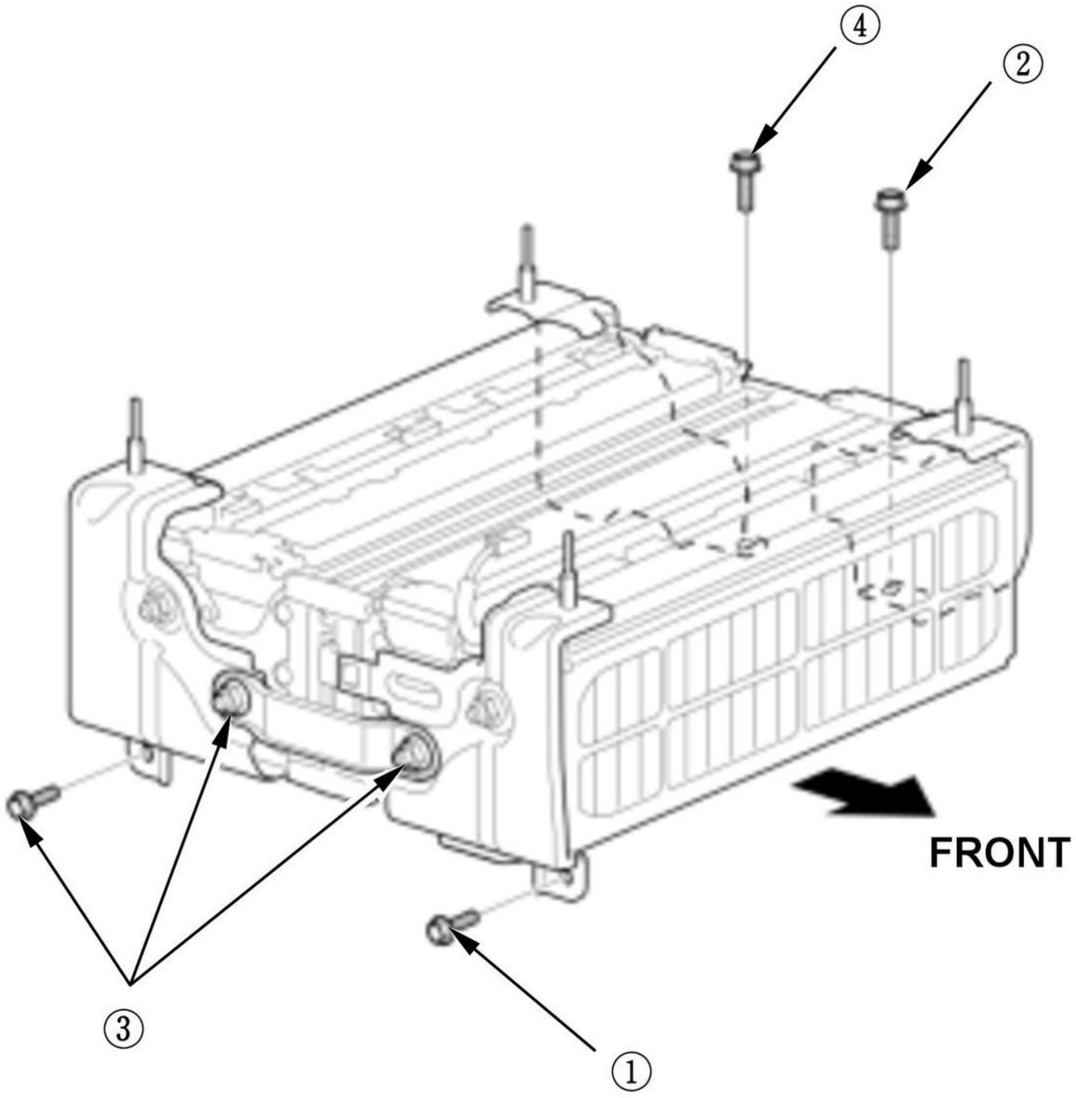

Fig. 9: Right Battery Module Assembly Bolts With Tightening Sequence
Courtesy of HONDA, U.S.A., INC.

NOTICE:

- Tighten with the specified torque in the order shown in the figure.
- Make sure that the battery middle duct and battery lower duct seals do not get caught or lifted.
- Align the dowel pins and install them.

7. IPU Sub Harness - Install
8. Side Plate End Bindbar (Battery Module 1 - Battery Module 4) - Loosely Install
9. Left Battery Module Assy. (Battery Module 1 and Battery Module 4) - Install

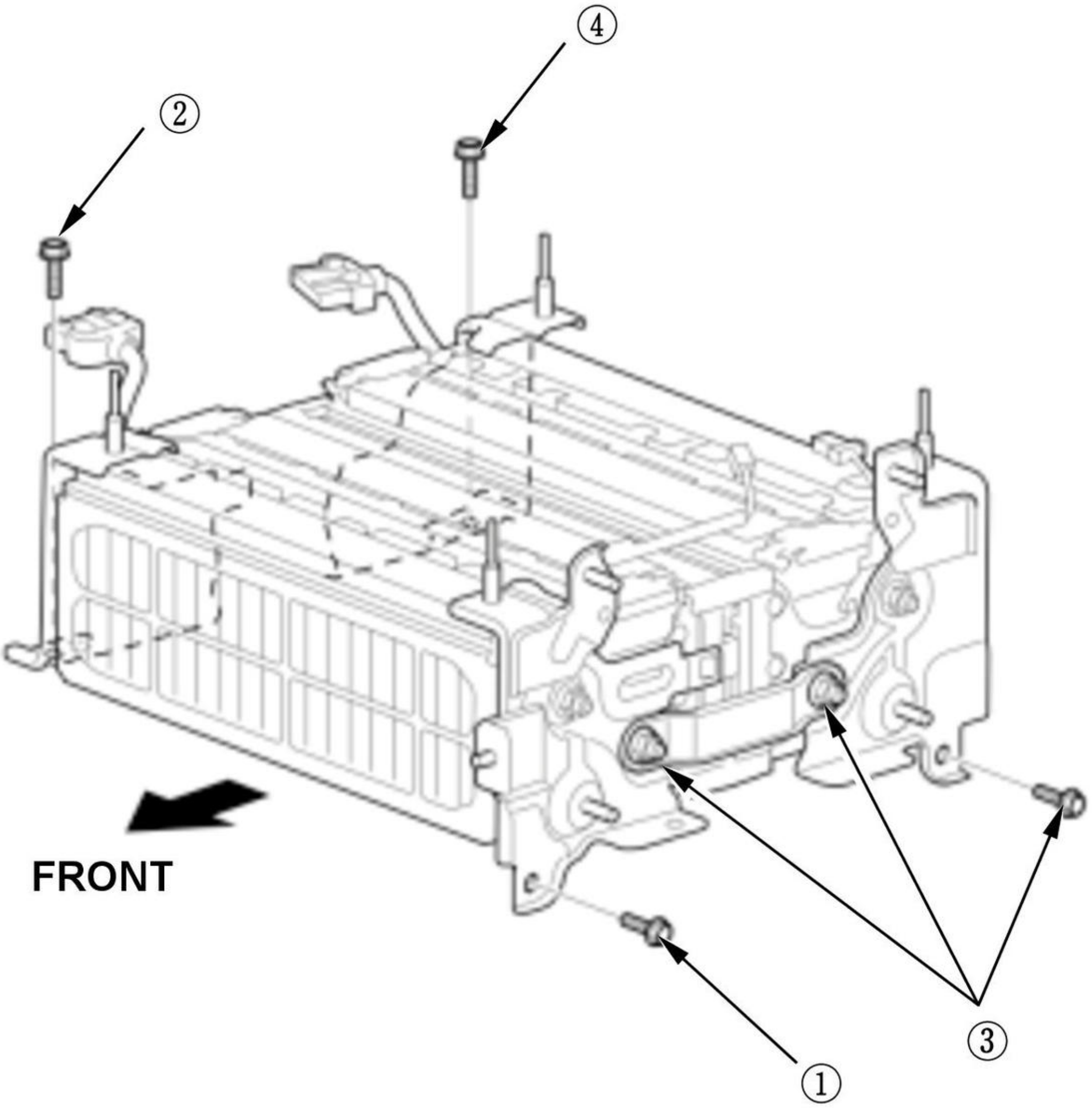

Fig. 10: Left Battery Module Assembly Bolts With Tightening Sequence
Courtesy of HONDA, U.S.A., INC.

NOTICE:

- Tighten with the specified torque in the order shown in the figure.
- Make sure that the battery middle duct and battery lower duct seals do not get caught or lifted.
- Align the dowel pins and install them.

10. Busbar (Battery Module 3-4) - Install

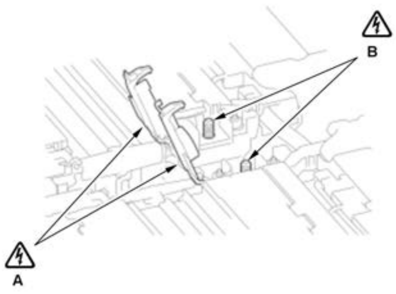	**NOTICE:** • High voltage electricity flows in the battery terminal and busbar after disconnecting the service plug. Do all procedures one by one and keep the terminal covers closed when you are not working on them. • When installing the busbar, measure the voltage according to the following procedure and confirm that it is normal. 1. Open the battery module terminal cover (A). 2. Measure the voltage between the terminals (B).

	• If the measured value is outside the normal value, go back to step 2-1, and reassemble the battery module. • If the measured value is normal, proceed to the next step.

Standard:	**1 V or less**

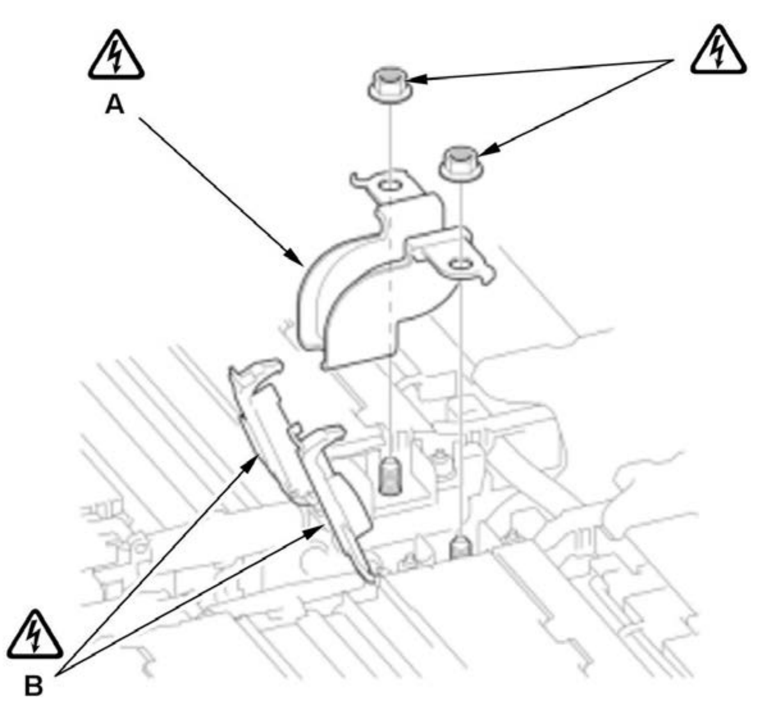	3. Install the busbar (A). 4. Close the terminal covers (B). **NOTE:** Never reuse a bent or damaged busbar.

11. Busbar (Battery Module 1-2) - Install

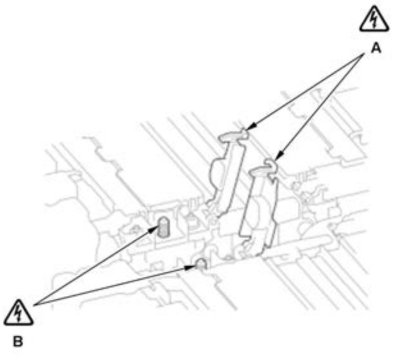	**NOTICE:** • High voltage electricity flows in the battery terminal and busbar after disconnecting the service plug. Do all procedures one by one and keep the terminal covers closed when you are not working on them. • When installing the busbar, measure the voltage according to the following procedure and confirm that it is normal. 1. Open the battery module terminal cover (A). 2. Measure the voltage between the terminals (B). • If the measured value is outside the normal value, go back to step 2-1, and reassemble the battery module. • If the measured value is normal, proceed to the next step.

Standard:	**1 V or less**

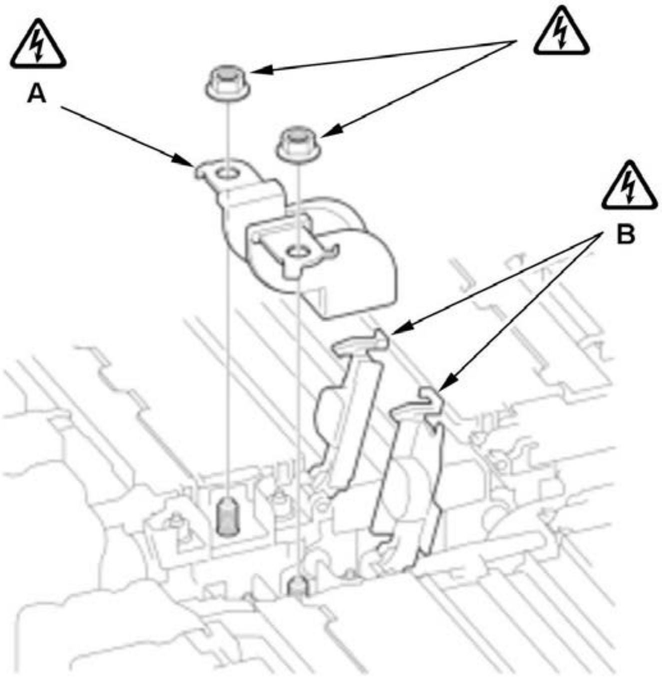	3. Install the busbar (A). 4. Close the terminal covers (B). **NOTE:** Never reuse a bent or damaged busbar.

12. IPU Upper Frame - Install

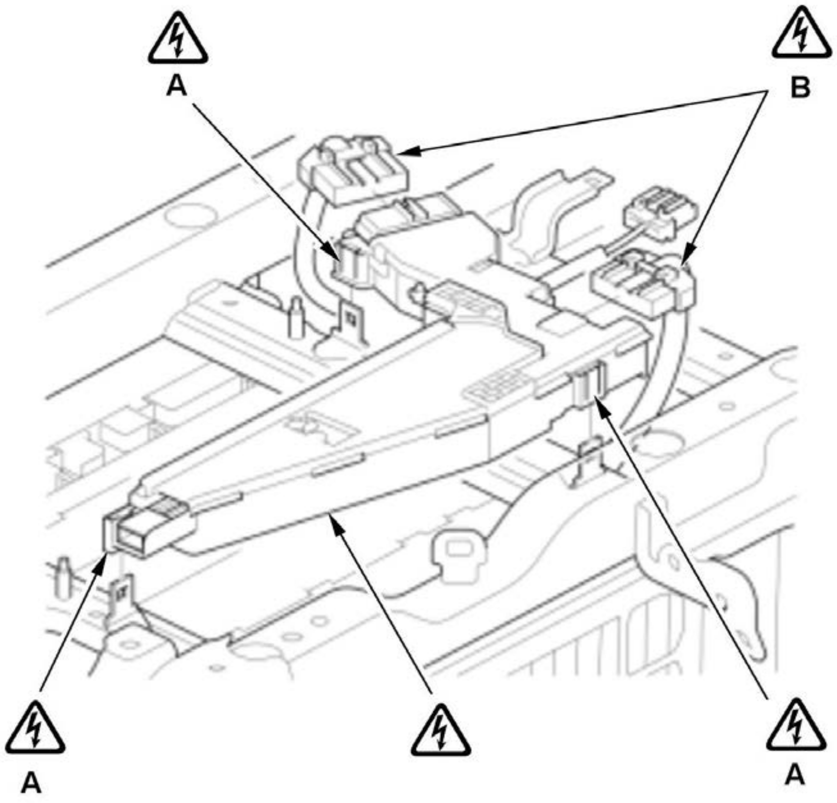	1. Install the upper frame. 2. Install the tabs (A). 3. Connect the connectors (B).

13. Service Plug Base - Install

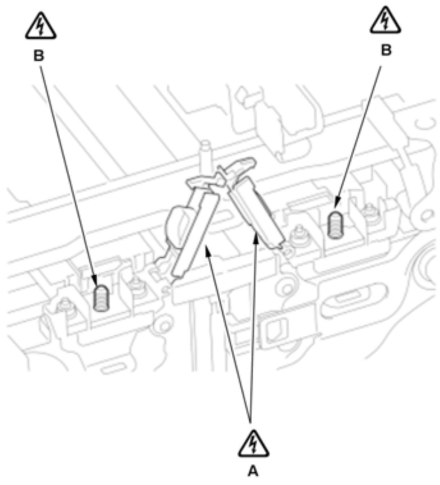	**NOTICE:** High voltage electricity flows in the battery terminal and busbar after disconnecting the service plug. Do all procedures one by one and keep the terminal covers closed when you are not working on them. 1. Open the battery module terminal covers (A). 2. Measure the voltage between the terminals (B). • If the measured value is outside the normal value, go back to step 2-1, and reassemble the battery module. • If the measured value is normal, proceed to the next step.

Standard:	**1 V or less**

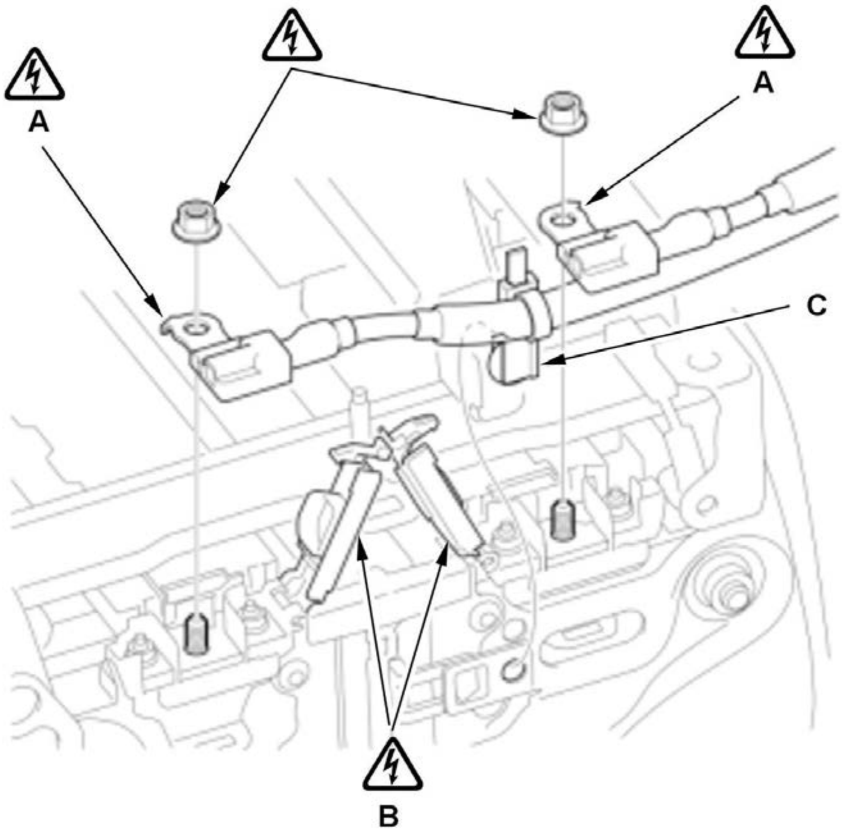	3. Install the terminals (A). 4. Close the terminal covers (B). 5. Install the harness clamp (C).

14. **Battery Pack Assy - Install**

JUNCTION BOARD DISASSEMBLY AND REASSEMBLY

Disassembly and Reassembly

NOTE: **How to read the torque specifications** .

1. **Junction Board - Remove**
2. Junction Board Disassemble and Reassemble

   NOTE: If necessary, replace the battery current sensor.

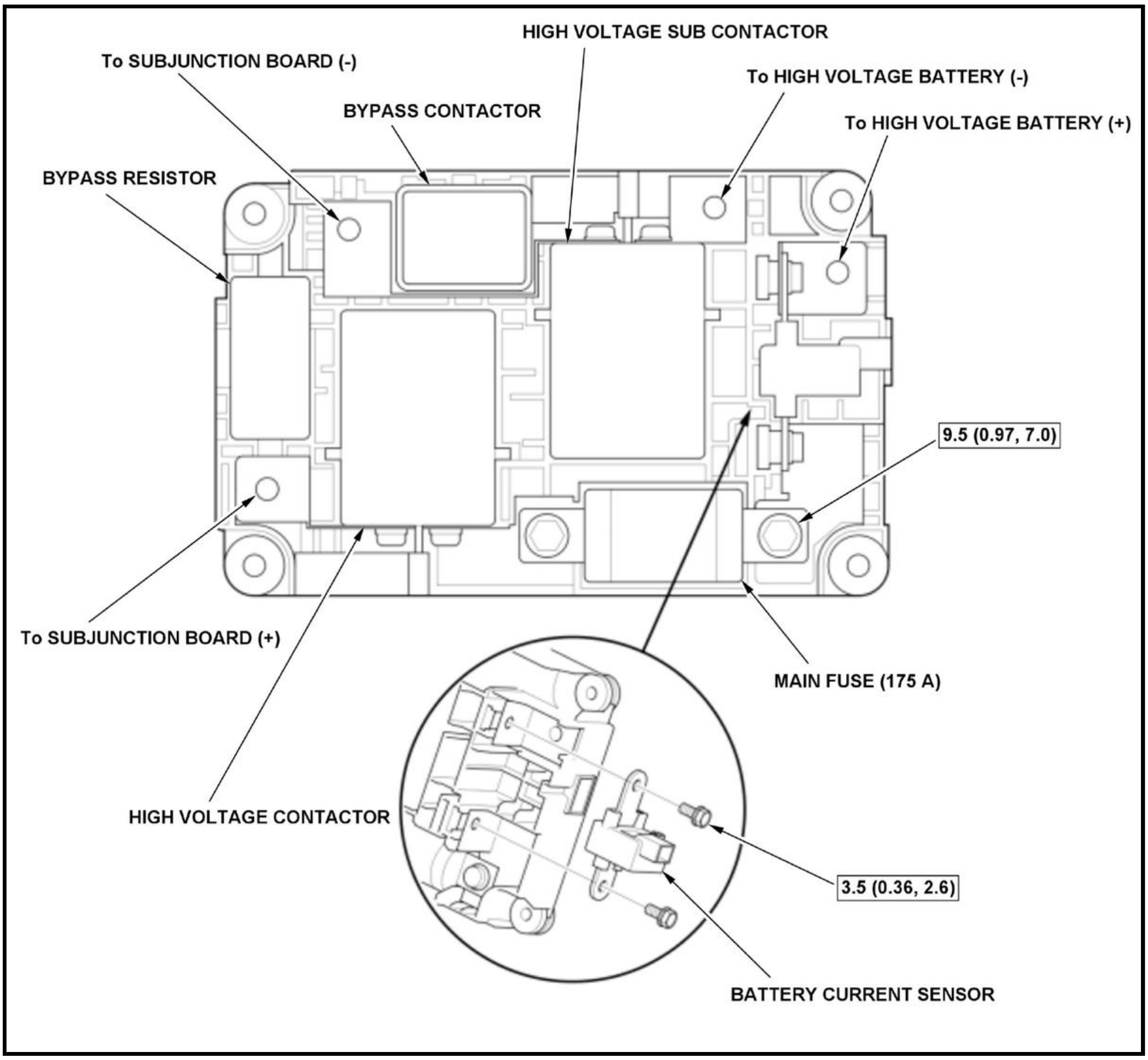
HIGH VOLTAGE SUB CONTACTOR
To SUBJUNCTION BOARD (-)
To HIGH VOLTAGE BATTERY (-)
BYPASS CONTACTOR
To HIGH VOLTAGE BATTERY (+)
BYPASS RESISTOR
9.5 (0.97, 7.0)
To SUBJUNCTION BOARD (+)
MAIN FUSE (175 A)
HIGH VOLTAGE CONTACTOR
3.5 (0.36, 2.6)
BATTERY CURRENT SENSOR

3. Junction Board - Install

SUBJUNCTION BOARD DISASSEMBLY AND REASSEMBLY

Disassembly and Reassembly

NOTE: How to read the torque specifications .

1. Subjunction Board - Remove
2. Subjunction Board Disassemble and Reassemble

   NOTE: If necessary, replace the fuse(s).

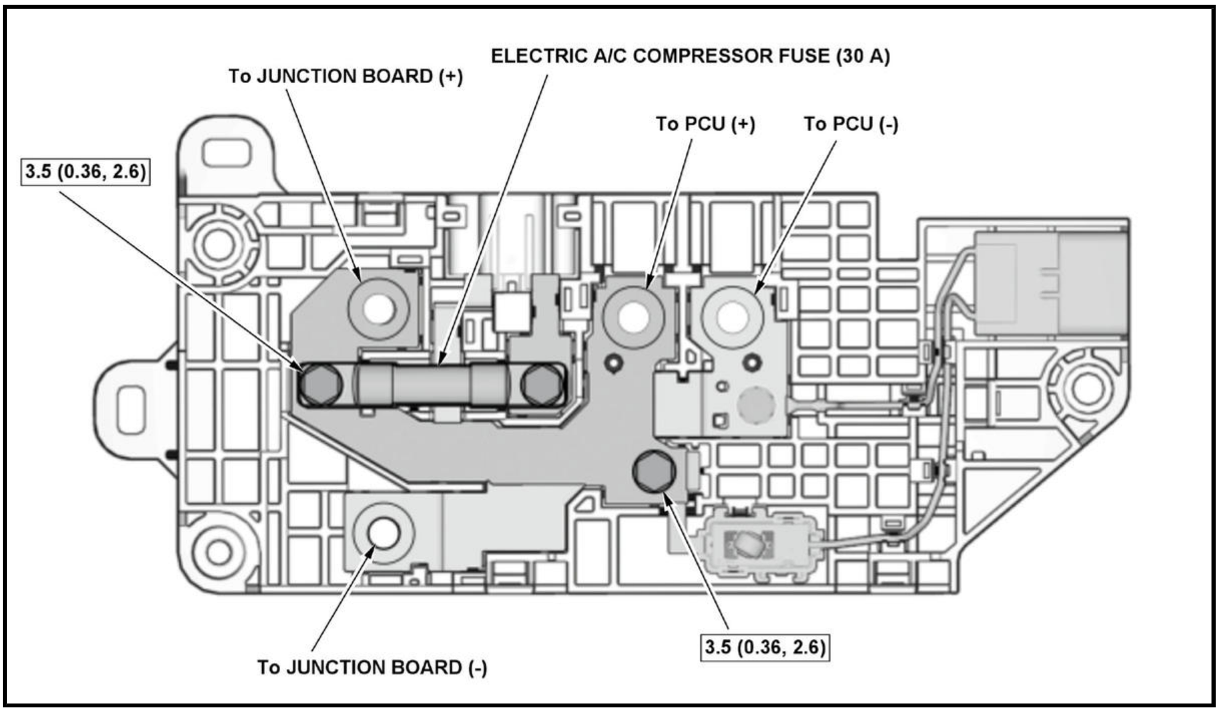

3. All Removed Parts - Install

1. Install the parts in the reverse order of removal.

REMOVAL AND INSTALLATION

BATTERY CONDITION MONITOR MODULE REMOVAL AND INSTALLATION

Removal and Installation

WARNING:

- The power cables carry high voltage when the electric powertrain system is energized. To avoid serious injury from electrical shock, do not turn on the system with the power cables disconnected.
- Wear insulated gloves and use insulated tools to protect you from electrical shock. When removing or installing high voltage items, always use them. Wrap the high voltage items with insulating tape after removing. Please be careful when you see ⚠ on the illustration.

NOTE:

- Use covers to avoid damaging painted surfaces.
- To avoid damaging the wiring and terminals, unplug the wiring connectors carefully while holding the connector portion.
- Mark all wiring and hoses to avoid misconnection. Also, be sure that they do not contact other wiring or hoses, or interfere with other parts.
- Make sure the HDS has the latest HDS software version.
- If you are replacing the battery condition monitor module, do the all procedures.
- If you are removing the battery condition monitor module, do procedure 3 (Service Plug - Turn Off) through procedure 8 (All Removed Parts - Install).

The electric powertrain components are located in this area. The electric powertrain is a high-voltage system. You must be familiar with the electric powertrain system before working on or around it. Make sure you have read the electric powertrain service precautions before doing repairs or service.

Procedure

NOTE: **Numbered call-outs in figure pertain to list numbers in following procedure.**

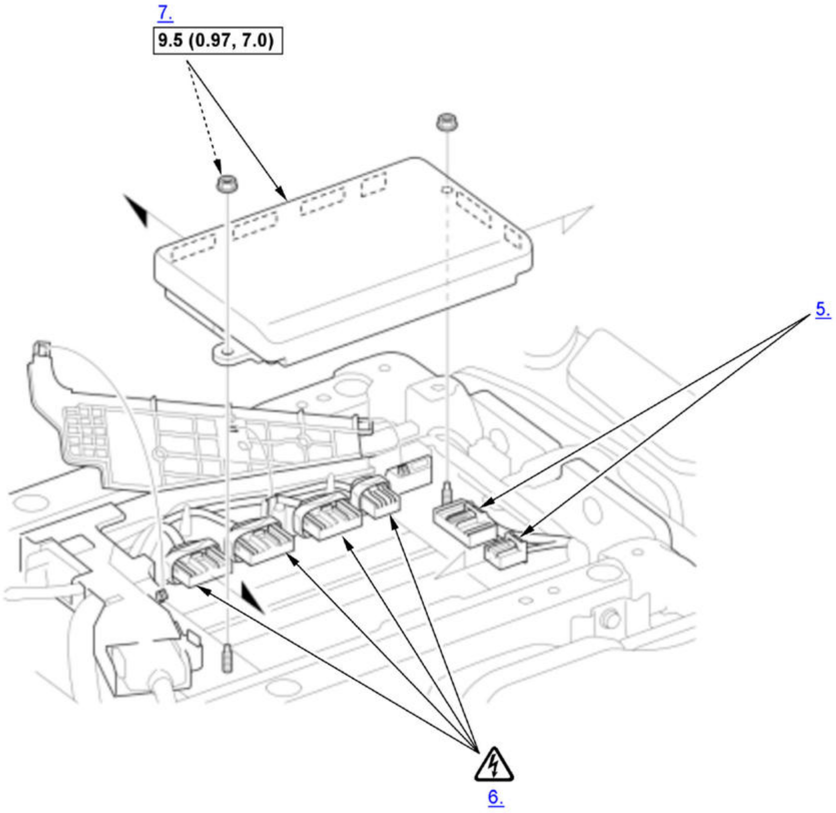

Fig. 11: Exploded View Of Battery Condition Monitor Module Components
Courtesy of HONDA, U.S.A., INC.

▭	Torque: N.m (kgf.m, lbf.ft)

1. HDS - Connect
2. Read Data (Battery Condition Monitor Module Data) - Select

> 1. Select the Electric Powertrain system with the HDS.
>
> 2. Select the HV Battery / HV Battery ECU Replacement, then follow the screen prompts.
>
> 3. Select the HV Battery ECU Replacement, then select Read Data, and follow the screen prompts.
>
> **NOTE:**
>
> - Doing this step copies (Read) the battery condition monitor module data from the original battery condition monitor module so you can later download (Write) it into the new battery condition monitor module.
> - If the Read Data procedure is failed, go to the next procedure.

3. Service Plug - Turn Off
4. IPU Cover - Remove
5. Connector (Battery Condition Monitor Module) - Disconnect
6. Connector (IPU Subharness) - Disconnect
7. Battery Condition Monitor Module - Remove
8. All Removed Parts - Install

> 1. Install the parts in the reverse order of removal.

9. **HDS - Connect**
10. Write Data (Battery Condition Monitor Module Data) - Select

> 1. Select the Electric Powertrain system with the HDS.
>
> 2. Select the HV Battery / HV Battery ECU Replacement, then follow the screen prompts.
>
> 3. Select the HV Battery ECU Replacement, then select Write Data, and follow the screen prompts.
>
> **NOTE:** If the Write Data procedure is failed, this procedure is complete.

11. **Battery Condition Monitor Module - Update** (When Replacing)

BATTERY PACK REMOVAL AND INSTALLATION

Removal and Installation

WARNING:

- The power cables carry high voltage when the electric powertrain system is energized. To avoid serious injury from electrical shock, do not turn on the system with the power cables disconnected.
- Wear insulated gloves and use insulated tools to protect you from electrical shock. When removing or installing high voltage items, always use them. Wrap the high voltage items with insulating tape after removing. Please be careful when you see ⚠ on the illustration.

NOTE:

- Use covers to avoid damaging painted surfaces.
- To avoid damaging the wiring and terminals, unplug the wiring connectors carefully while holding the connector portion.
- Mark all wiring and hoses to avoid misconnection. Also, be sure that they do not contact other wiring or hoses, or interfere with other parts.
- Strong impact (i.e., dropping the high voltage battery, collision damage) may cause electrolyte leaks, internal short circuits and heat increase resulting in fire. Avoid impact to the high voltage battery.
- Organic electrolyte is poisonous. If ingested, get medical attention immediately.
- High voltage battery damage may cause flammable gas or electrolyte leaks and may result in fire. Do not damage the high voltage battery and keep sparks, flame and cigarettes away.

The electric powertrain components are located in this area. The electric powertrain is a high-voltage system. You must be familiar with the electric powertrain system before working on or around it. Make sure you have read the electric powertrain **service precautions** before doing repairs or service.

Procedure

NOTE: **Numbered call-outs in figure pertain to list numbers in following procedure.**

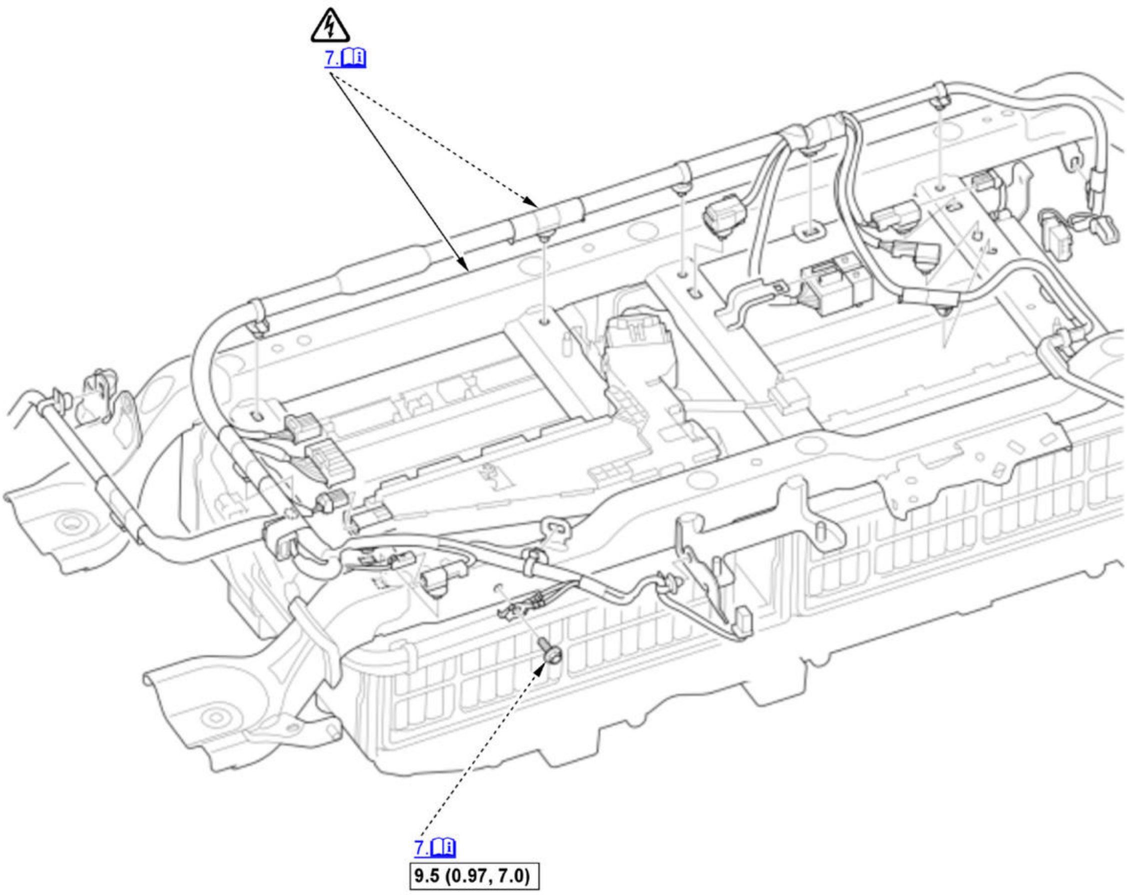

Fig. 12: Battery Pack Components
Courtesy of HONDA, U.S.A., INC.

▭	Torque: N.m (kgf.m, lbf.ft)

1. Service Plug - Turn Off
2. IPU Assembly, and IPU Case - Remove
3. IPU Air Inlet Front Duct and IPU Air Inlet Rear Duct - Remove
4. Battery Condition Monitor Module - Remove
5. Subjunction Board - Remove
6. Junction Board - Remove
7. Battery Pack Assembly - Remove

   1. If necessary, remove the IPU harness.

8. All Removed Parts - Install

   1. Install the parts in the reverse order of removal.

9. Battery Condition Monitor Module - Reset (When Replacing)

   NOTE: When replacing the battery pack, do the following procedure.

1. Connect the HDS to the data link connector (DLC) .

2. Make sure the HDS communicates with the vehicle and the Electric Powertrain system. If it doesn't, go to the DLC circuit troubleshooting

3. Select the Electric Powertrain system with the HDS.

4. Select the HV Battery / HV Battery ECU Replacement, then follow the screen prompts.

5. Select the HV Battery Replacement, then follow the screen prompts.

COOLANT TEMPERATURE SENSOR REMOVAL AND INSTALLATION

Removal and Installation

NOTE: Do not spill the PCU coolant on the surrounding parts. If you spill the PCU coolant, wipe the PCU coolant off immediately.

Procedure

NOTE: **Numbered call-outs in figure pertain to list numbers in following procedure.**

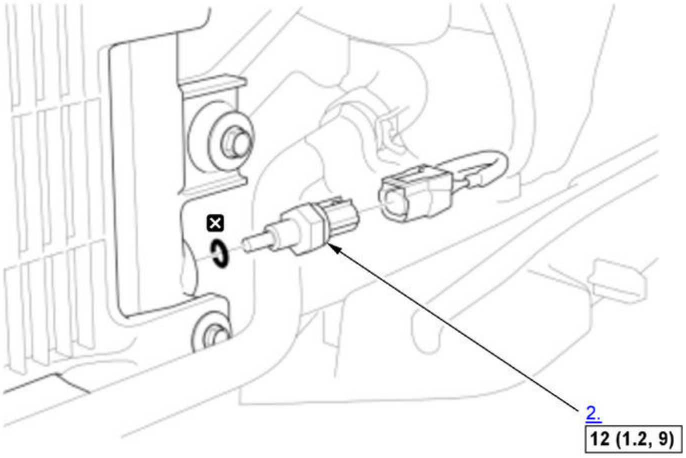

Fig. 13: Coolant Temperature Sensor Replacement Components With Torque Specifications
Courtesy of HONDA, U.S.A., INC.

☐	Torque: N.m (kgf.m, lbf.ft)
☒	Replace

1. PCU Coolant - Drain
2. PCU Coolant Temperature Sensor - Remove
3. All Removed Parts - Install

1. Install the parts in the reverse order of removal.

4. PCU Coolant - Refill and Air Bleed

COOLING PIPE REMOVAL AND INSTALLATION (ELECTRIC POWERTRAIN)

Removal and Installation

NOTE:

- ℹ Where icon is shown, for further information see below.
- If the cooling hose clamps and/or the cooling pipes were damaged, replace it.
- Do not spill the PCU coolant on the surrounding parts. If you spill the PCU coolant, wipe the PCU coolant off immediately.

Radiator Inlet Pipe A

NOTE: **Numbered call-outs in figure pertain to list numbers in following procedure.**

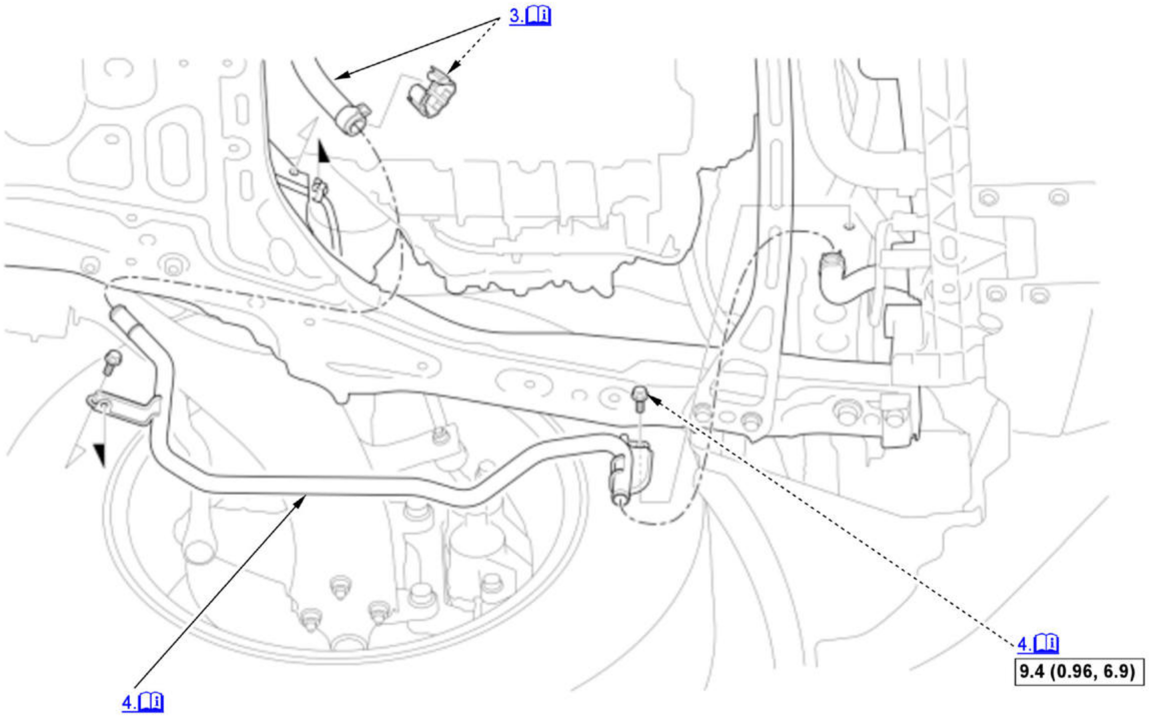

Fig. 14: Exploded View Of Radiator Inlet Pipe A Replacement Components (Electric Powertrain)
Courtesy of HONDA, U.S.A., INC.

☐	Torque: N.m (kgf.m, lbf.ft)

1. PCU Coolant - Drain
2. Engine Undercover - Remove
3. Cooling Hose - Disconnect

   NOTE: The hose band clip is no need to install when connecting the cooling hose.

4. Radiator Inlet Pipe A - Remove

   Note for installation

   Make sure the hose clamps are properly positioned and tightened, and make sure that they do not interfere with the surrounding parts.

5. All Removed Parts - Install

   1. Install the parts in the reverse order of removal.

6. PCU Coolant - Refill and Air Bleed

Radiator Inlet Pipe B

NOTE: **Numbered call-outs in figure pertain to list numbers in following procedure.**

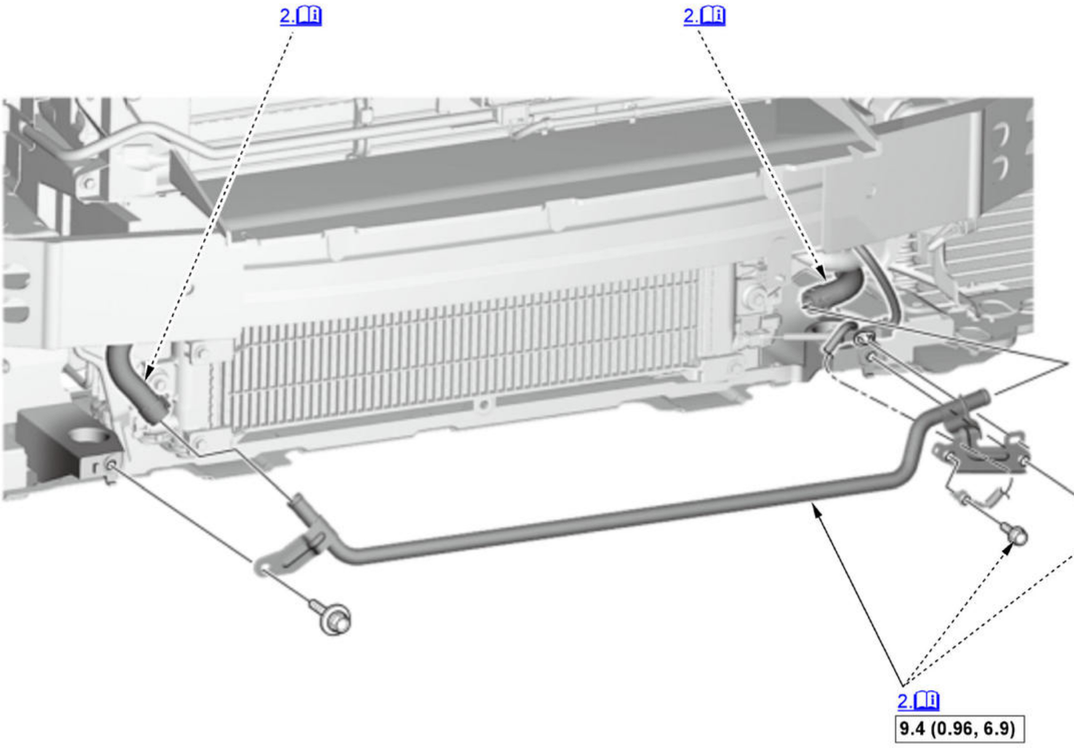

Fig. 15: Exploded View Of Radiator Inlet Pipe B Replacement Components (Electric Powertrain)
Courtesy of HONDA, U.S.A., INC.

▭	Torque: N.m (kgf.m, lbf.ft)

1. PCU Coolant - Drain
2. Radiator Inlet Pipe B - Remove

   Note for installation

   Make sure the hose clamps are properly positioned and tightened, and make sure that they do not interfere with the surrounding parts.

3. All Removed Parts - Install

   1. Install the parts in the reverse order of removal.

4. PCU Coolant - Refill and Air Bleed

ELECTRIC COOLANT PUMP REMOVAL AND INSTALLATION

Removal and Installation

NOTE:

- ℹ Where icon is shown, for further information see below.
- Do not spill the PCU coolant on the surrounding parts. If you spill the PCU coolant, wipe the PCU coolant off immediately.

Procedure

NOTE: **Numbered call-outs in figure pertain to list numbers in following procedure.**

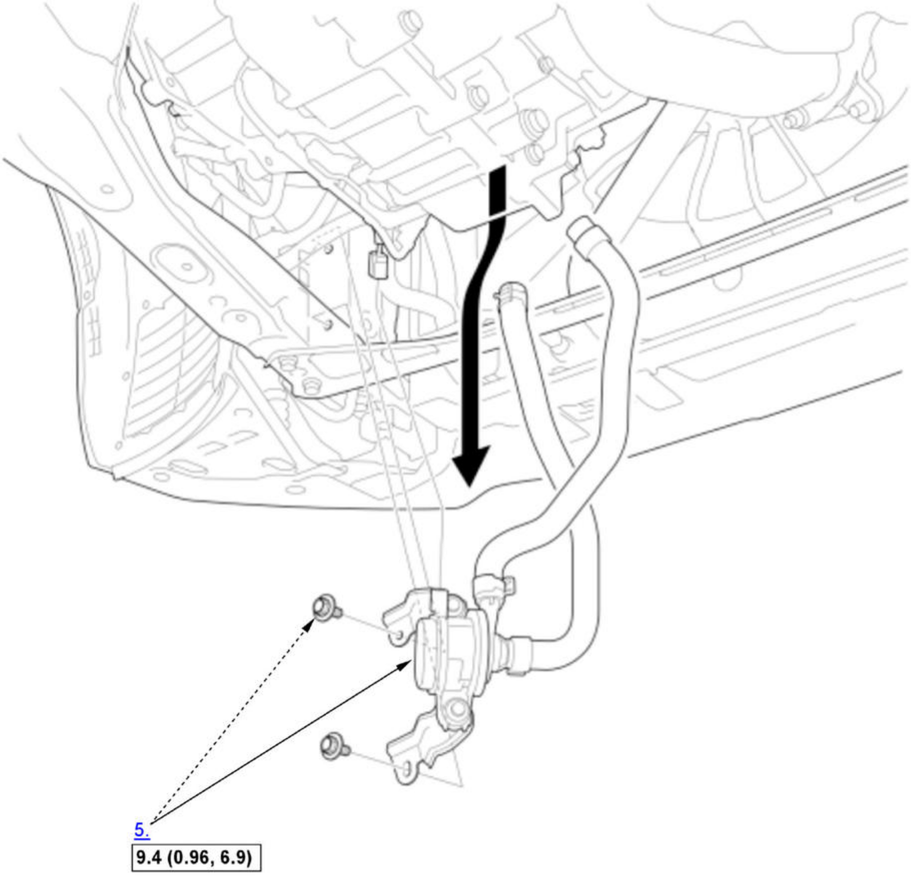

Fig. 16: Exploded View Of Electric Coolant Pump Replacement Components (1 Of 2)
Courtesy of HONDA, U.S.A., INC.

☐	Torque: N.m (kgf.m, lbf.ft)

NOTE: **Numbered call-outs in figure pertain to list numbers in following procedure.**

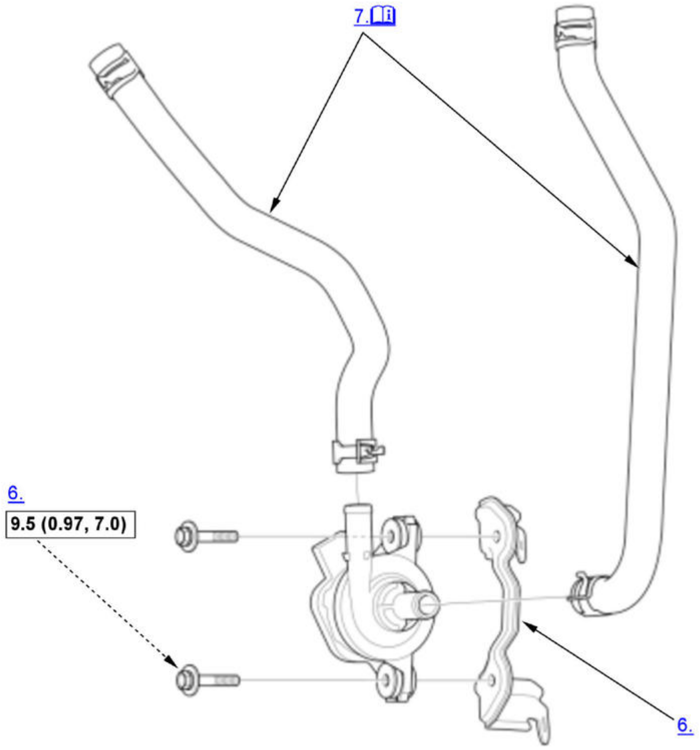

Fig. 17: Exploded View Of Electric Coolant Pump Replacement Components (2 Of 2)
Courtesy of HONDA, U.S.A., INC.

☐	Torque: N.m (kgf.m, lbf.ft)

1. PCU Coolant - Drain
2. Intake Air Duct A and Intake Air Duct C - Remove
3. Cooling Hose - Disconnect
4. Engine Undercover - Remove
5. PCU Electric Coolant Pump - Remove
6. PCU Electric Coolant Pump Bracket - Remove (If Necessary)
7. Cooling Hose - Remove (If Necessary)

   Note for installation

   Make sure the hose clamps are properly positioned and tightened, and make sure that they do not interfere with the surrounding parts.

8. All Removed Parts - Install

   1. Install the parts in the reverse order of removal.

9. PCU Coolant - Refill and Air Bleed

EXPANSION TANK REMOVAL AND INSTALLATION (ELECTRIC POWERTRAIN)

Removal and Installation

NOTE:

- 📖 Where icon is shown, for further information see below.

- Do not spill the PCU coolant on the surrounding parts. If you spill the PCU coolant, wipe the PCU coolant off immediately.

Procedure

NOTE: **Numbered call-outs in figure pertain to list numbers in following procedure.**

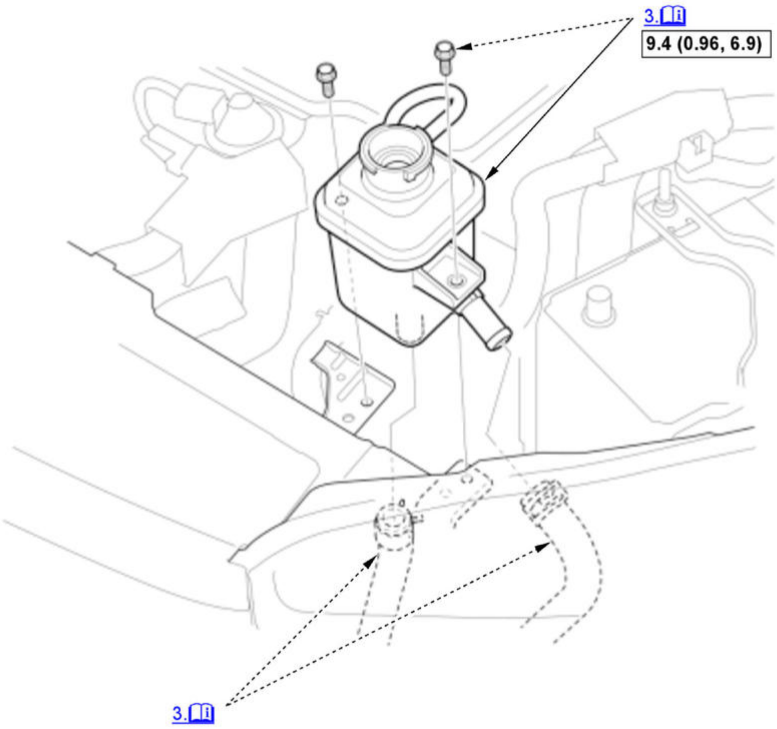

Fig. 18: Exploded View Of Expansion Tank Replacement Components (Electric Powertrain)
Courtesy of HONDA, U.S.A., INC.

☐	Torque: N.m (kgf.m, lbf.ft)

1. Expansion Tank Cap - Remove

   NOTE: Wait until the PCU coolant is cool, then carefully remove the radiator cap.

2. Intake Air Duct A and Intake Air Duct C - Remove
3. Expansion Tank - Remove

   NOTE: Drain the PCU coolant from the expansion tank.

   Note for installation

   Make sure the hose clamps are properly positioned and tightened, and make sure that they do not interfere with the surrounding parts.

4. All Removed Parts - Install

   1. Install the parts in the reverse order of removal.

5. PCU Coolant - Refill and Air Bleed

HIGH VOLTAGE BATTERY MODULE FAN REMOVAL AND INSTALLATION

Removal and Installation

Procedure

NOTE: **Numbered call-outs in figure pertain to list numbers in following procedure.**

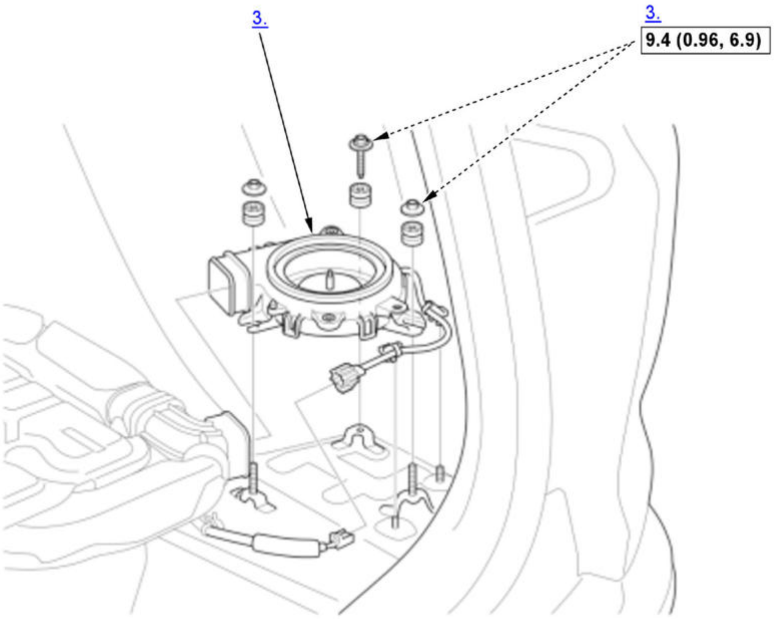

Fig. 19: Exploded View Of High Voltage Battery Module Fan Components
Courtesy of HONDA, U.S.A., INC.

▭	Torque: N.m (kgf.m, lbf.ft)

1. Rear Side Trim Panel (Right Side of The Vehicle) - Remove
2. Intake Duct Joint and Inlet Lower Duct - Remove
3. High Voltage Battery Module Fan - Remove
4. All Removed Parts - Install

    1. Install the parts in the reverse order of removal.

HIGH VOLTAGE MOTOR POWER INVERTER MODULE CABLE REMOVAL AND INSTALLATION

Replacement

WARNING:

The power cables carry high voltage when the electric powertrain system is energized. To avoid serious injury from electrical shock, do not turn on the system with the power cables disconnected.

NOTE:

- How to read the torque specifications .
- Wear insulated gloves and use insulated tools to protect you from electrical shock.
- When removing or installing items marked with ⚠ , always use insulated tools, and wrap the items with insulating tape.
- Use covers to avoid damaging painted surfaces.

- To avoid damaging the wiring and terminals, unplug the wiring connectors carefully while holding the connector portion.
- Mark all wiring and hoses to avoid misconnection. Also, be sure that they do not contact other wiring or hoses, or interfere with other parts.

The electric powertrain components are located in this area. The electric powertrain is a high-voltage system. You must be familiar with the electric powertrain system before working on or around it. Make sure you have read the electric powertrain **service precautions** before doing repairs or service.

1. High Voltage Motor Power Inverter Module Cable - Replace

    1. **Turn the service plug OFF** , then disconnect the high voltage motor power inverter module cable terminals and connectors, and remove the high voltage motor power inverter module cable as shown.

    NOTE: If the high voltage motor power inverter module cable clamp was damaged, replace it.

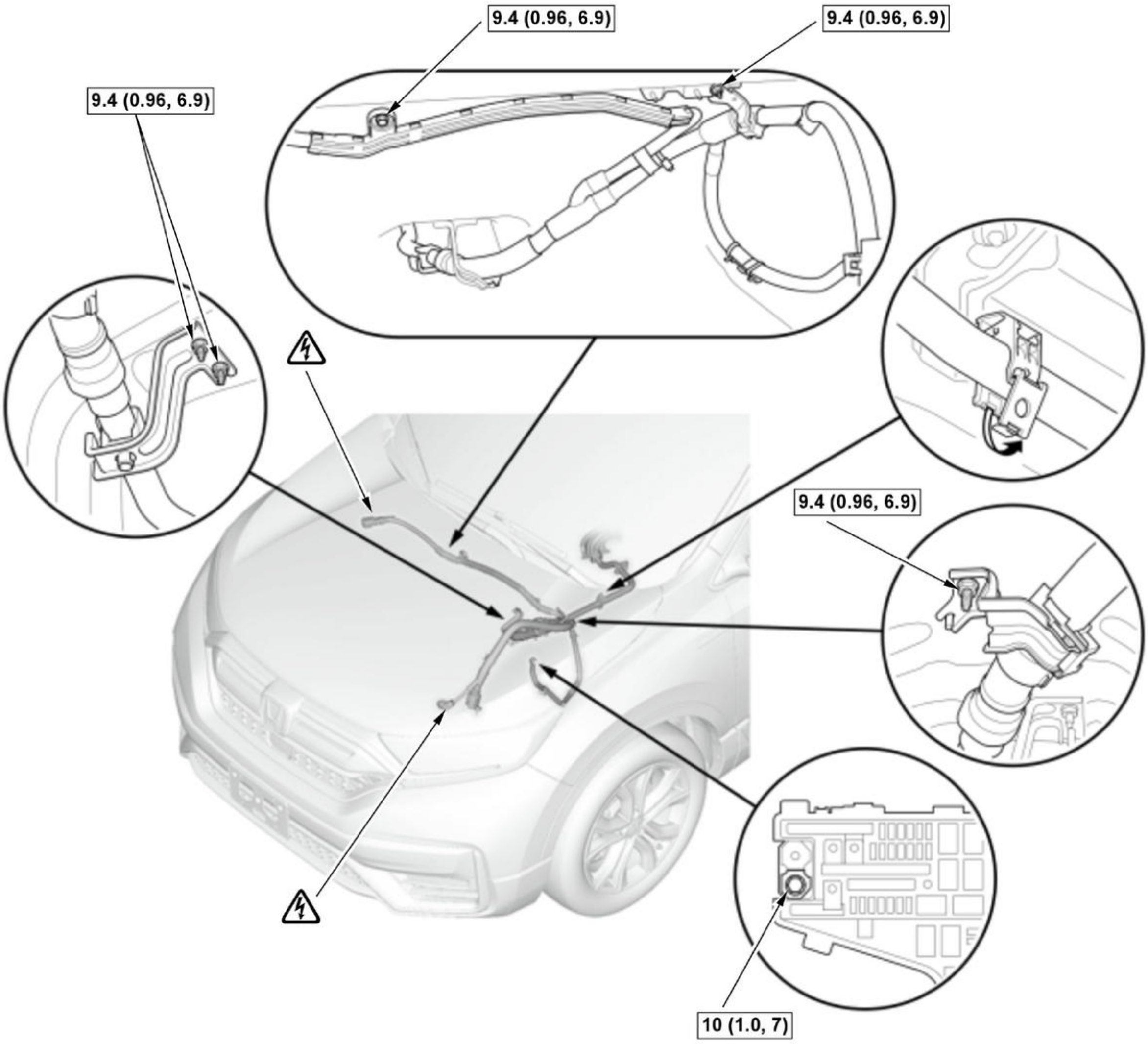

Fig. 20: Exploded View Of High Voltage Motor Power Inverter Module Cable Replacement Components (1 Of 2)
Courtesy of HONDA, U.S.A., INC.

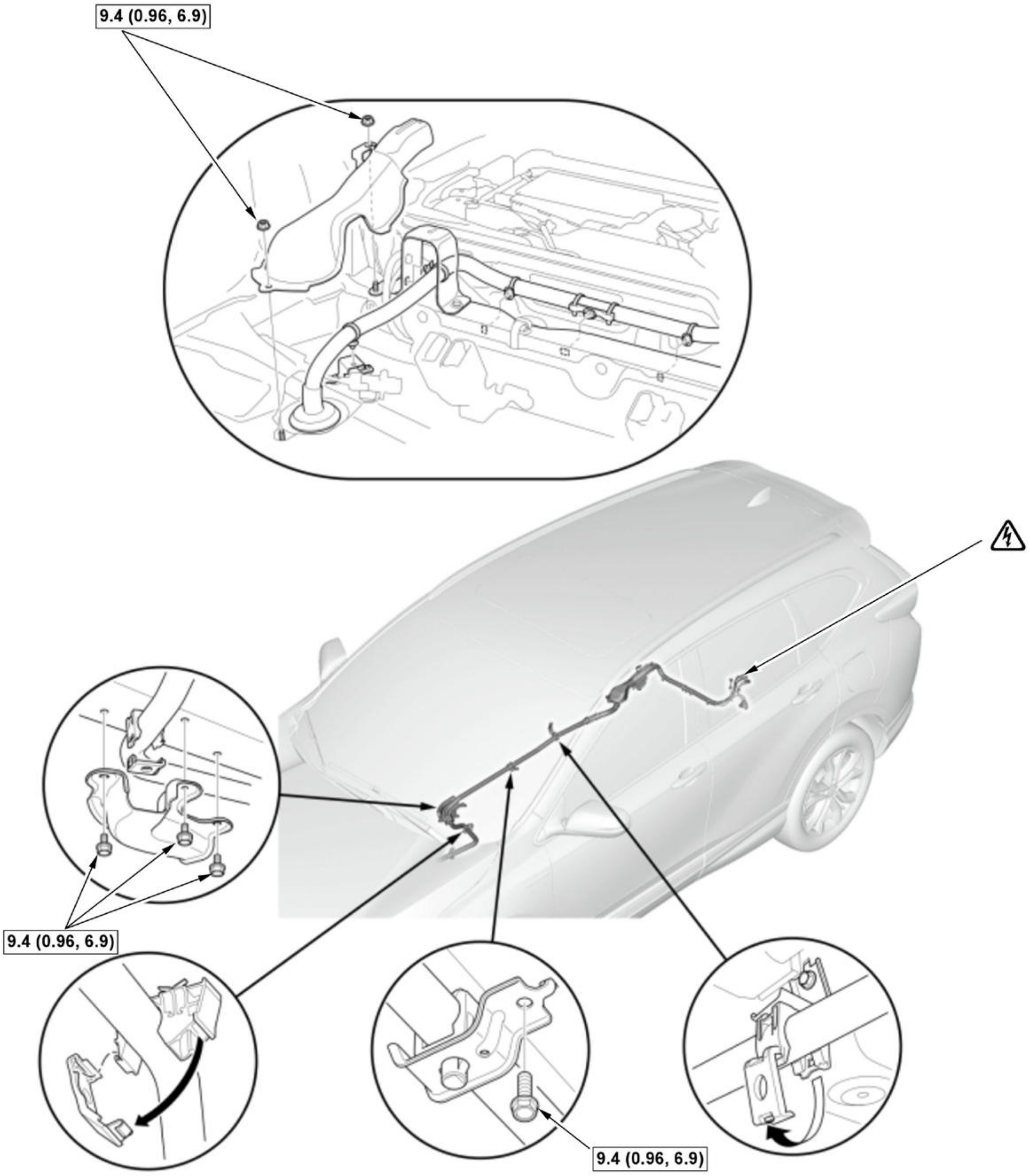

Fig. 21: Exploded View Of High Voltage Motor Power Inverter Module Cable Replacement Components (2 Of 2)
Courtesy of HONDA, U.S.A., INC.

IPU AIR DUCT REMOVAL AND INSTALLATION

Removal and Installation

WARNING:

- The power cables carry high voltage when the electric powertrain system is energized. To avoid serious injury from electrical shock, do not turn on the system with the power cables disconnected.
- Wear insulated gloves and use insulated tools to protect you from electrical shock. When removing or installing high voltage items, always use them. Wrap the high voltage items with insulating tape after removing. Please be careful when you see ⚠ on the illustration.

NOTE:

- Use covers to avoid damaging painted surfaces.
- To avoid damaging the wiring and terminals, unplug the wiring connectors carefully while holding the connector portion.
- Mark all wiring and hoses to avoid misconnection. Also, be sure that they do not contact other wiring or hoses, or interfere with other parts.
- When installing the rubber joint parts, do not use any oil or lubricants.

The electric powertrain components are located in this area. The electric powertrain is a high-voltage system. You must be familiar with the electric powertrain system before working on or around it. Make sure you have read the electric powertrain service precautions before doing repairs or service.

Inlet Upper Duct, Intake Duct Joint, Inlet Lower Duct

NOTE: Numbered call-outs in figure pertain to list numbers in following procedure.

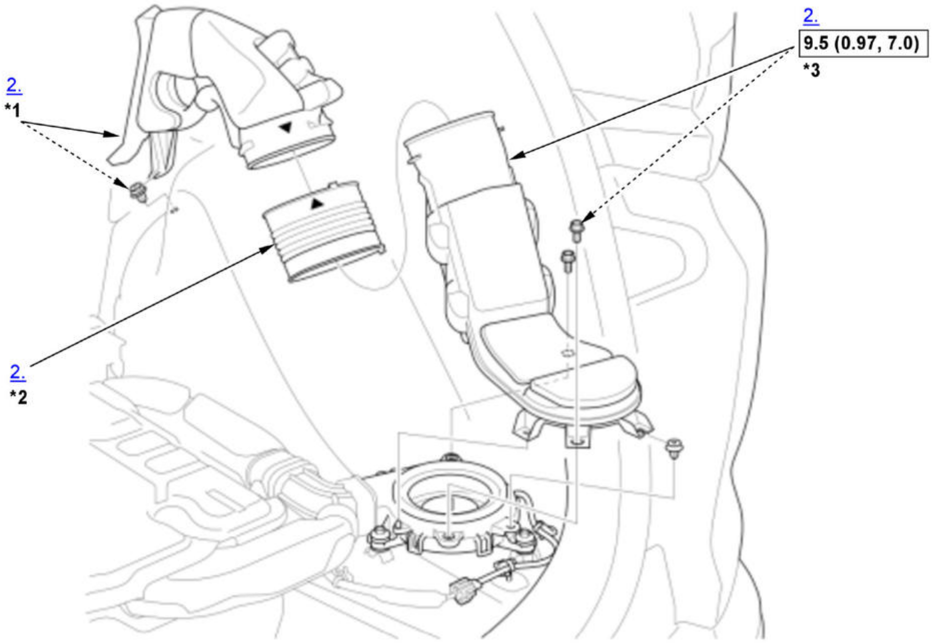

Fig. 22: Exploded View Of Inlet Upper Duct, Intake Duct Joint, Inlet Lower Duct Components
Courtesy of HONDA, U.S.A., INC.

▭	Torque: N.m (kgf.m, lbf.ft)
*1	Inlet upper duct
*2	Intake duct joint
*3	Inlet lower duct

IPU Inlet Front Duct, IPU Inlet Duct Joint, IPU Inlet Rear Duct

NOTE: Numbered call-outs in figure pertain to list numbers in following procedure.

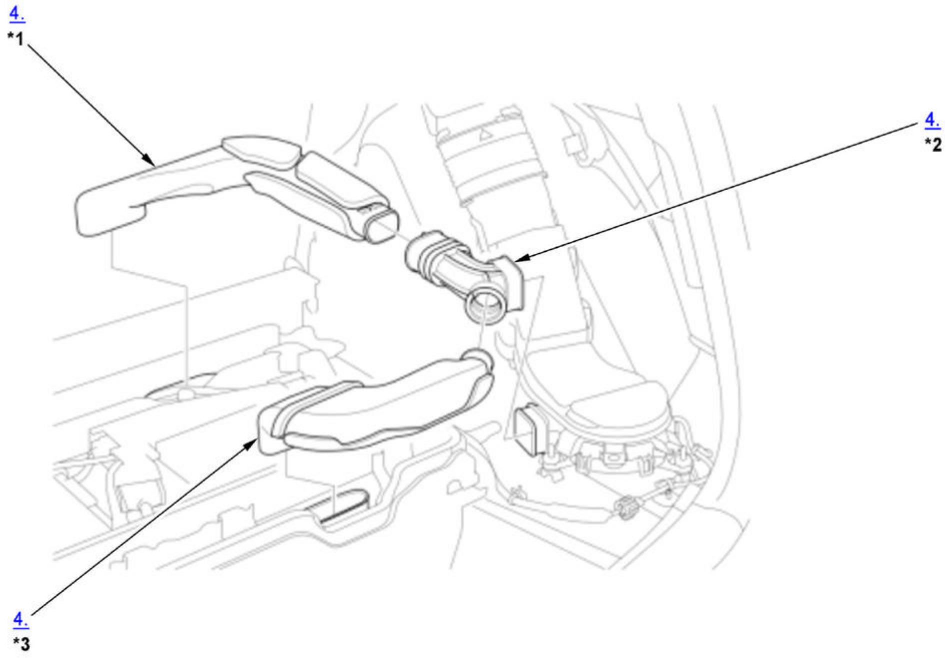

Fig. 23: Exploded View Of IPU Inlet Front Duct, IPU Inlet Duct Joint, IPU Inlet Rear Duct Components
Courtesy of HONDA, U.S.A., INC.

*1	IPU inlet front duct
*2	IPU inlet duct joint
*3	IPU inlet rear duct

IPU Air Outlet Duct

NOTE: **Numbered call-outs in figure pertain to list numbers in following procedure.**

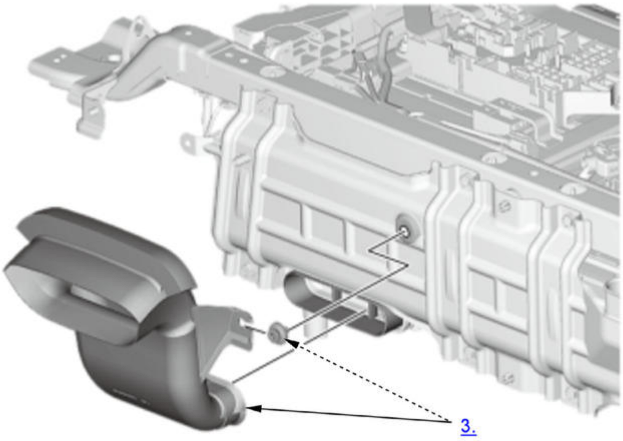

Fig. 24: Exploded View Of IPU Air Outlet Duct Components
Courtesy of HONDA, U.S.A., INC.

IPU Air Inlet Rear Duct

NOTE: **Numbered call-outs in figure pertain to list numbers in following procedure.**

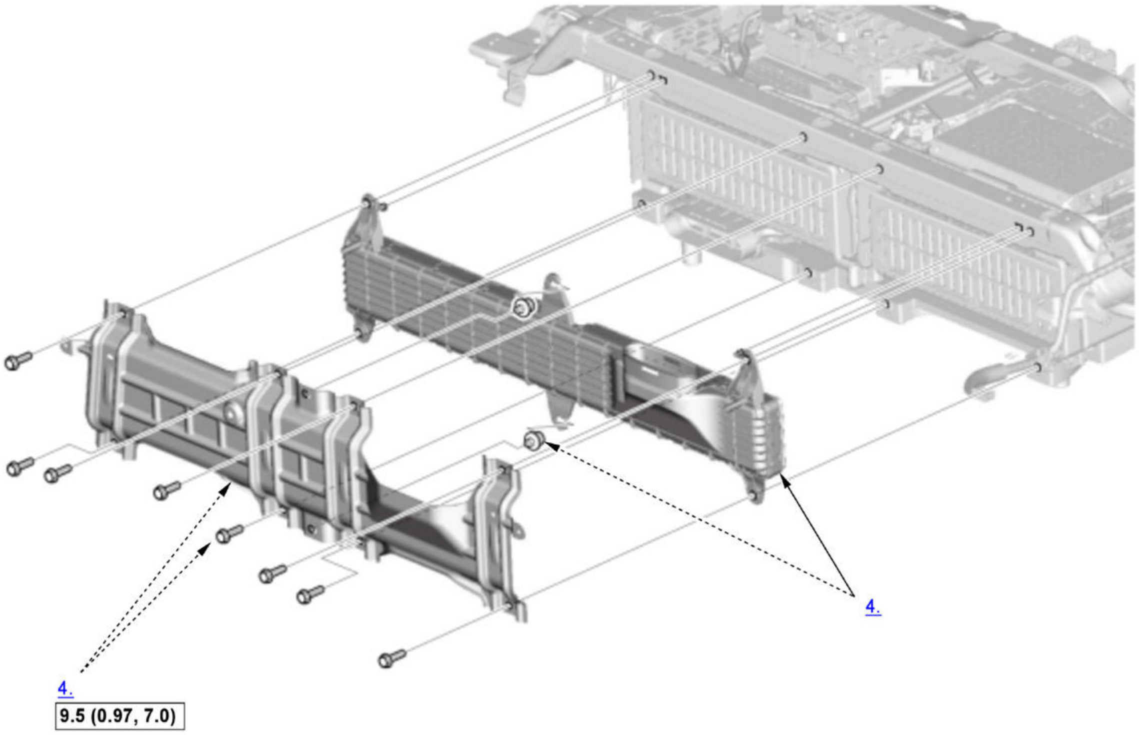

Fig. 25: Exploded View Of IPU Air Inlet Rear Duct Components
Courtesy of HONDA, U.S.A., INC.

▭	Torque: N.m (kgf.m, lbf.ft)

IPU Air Inlet Front Duct

NOTE: **Numbered call-outs in figure pertain to list numbers in following procedure.**

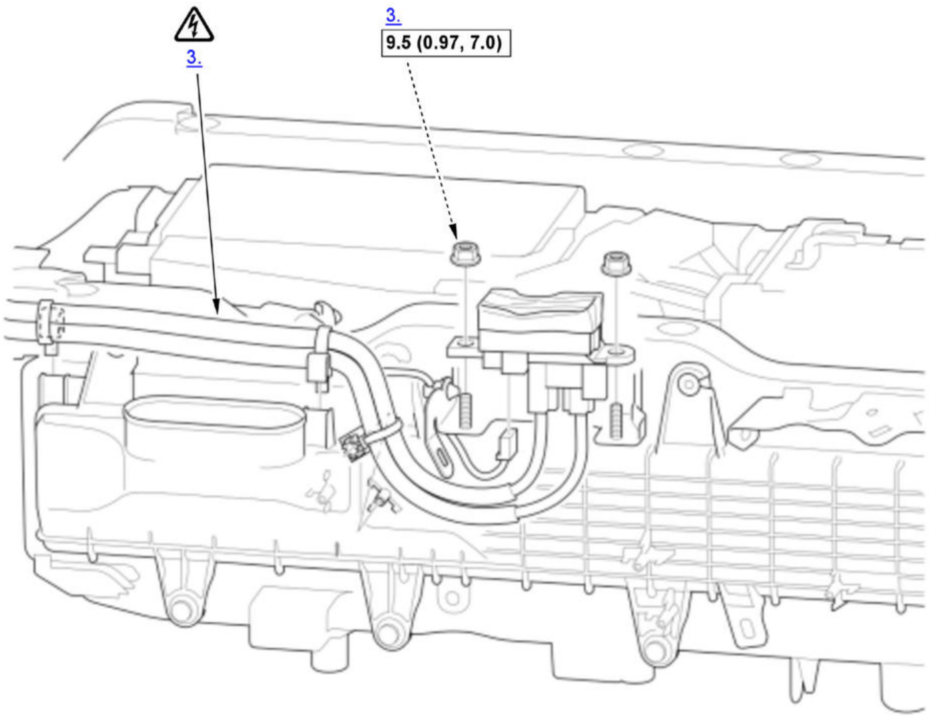

Fig. 26: Exploded View Of IPU Air Inlet Front Duct Components
Courtesy of HONDA, U.S.A., INC.

▭	Torque: N.m (kgf.m, lbf.ft)

IPU Air Inlet Front Duct

NOTE: **Numbered call-outs in figure pertain to list numbers in following procedure.**

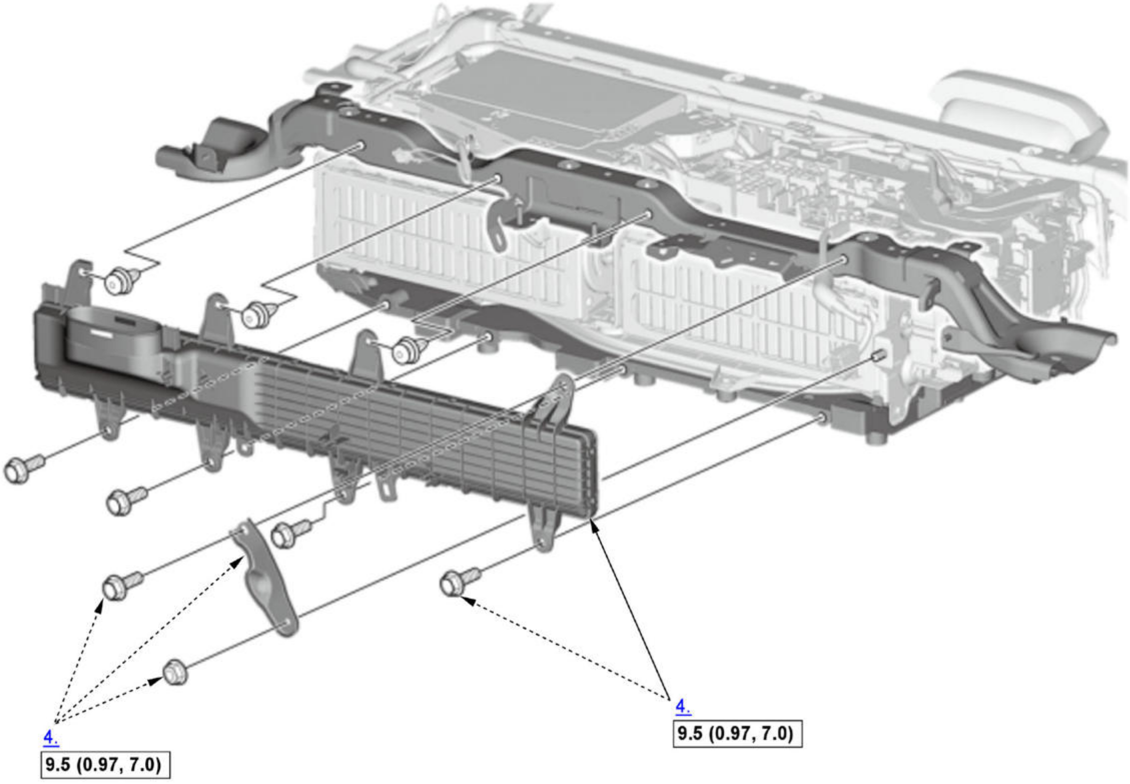

Fig. 27: Exploded View Of IPU Air Inlet Front Duct Components
Courtesy of HONDA, U.S.A., INC.

▭	Torque: N.m (kgf.m, lbf.ft)

IPU Fan Inlet Upper Duct, IPU Fan Inlet Duct Joint, IPU Fan Inlet Lower Duct

1. Rear Side Trim Panel (Right Side of The Vehicle) - Remove
2. IPU Fan Inlet Upper Duct, IPU Fan Inlet Duct Joint, and IPU Fan Inlet Lower Duct - Remove
3. All Removed Parts - Install

1. Install the parts in the reverse order of removal.

IPU Fan Outlet Front Duct, IPU Fan Outlet Duct Joint, IPU Fan Outlet Rear Duct

1. Rear Side Trim Panel (Right Side of The Vehicle) - Remove
2. Service Plug - Turn Off
3. IPU Cover - Remove
4. IPU Fan Outlet Front Duct, IPU Fan Outlet Duct Joint, and IPU Fan Outlet Rear Duct - Remove
5. All Removed Parts - Install

1. Install the parts in the reverse order of removal.

IPU Air Outlet Duct

1. Service Plug - Turn Off
2. IPU Case - Remove
3. IPU Air Outlet Duct - Remove
4. All Removed Parts - Install

1. Install the parts in the reverse order of removal.

IPU Air Inlet Rear Duct

1. Service Plug - Turn Off
2. IPU Case - Remove
3. IPU Air Outlet Duct - Remove
4. IPU Air Inlet Rear Duct - Remove
5. All Removed Parts - Install

1. Install the parts in the reverse order of removal.

IPU Air Inlet Front Duct

1. Service Plug - Turn Off
2. IPU Case - Remove
3. Service Plug Base - Move
4. IPU Air Inlet Front Duct - Remove
5. All Removed Parts - Install

1. Install the parts in the reverse order of removal.

IPU COVER REMOVAL AND INSTALLATION

Removal and Installation

WARNING:

- The power cables carry high voltage when the electric powertrain system is energized. To avoid serious injury from electrical shock, do not turn on the system with the power cables disconnected.
- Wear insulated gloves and use insulated tools to protect you from electrical shock. When removing or installing high voltage items, always use them. Wrap the high voltage items with insulating tape after removing. Please be careful when you see ⚠ on the illustration.

NOTE:

- Use covers to avoid damaging painted surfaces.
- To avoid damaging the wiring and terminals, unplug the wiring connectors carefully while holding the connector portion.
- Mark all wiring and hoses to avoid misconnection. Also, be sure that they do not contact other wiring or hoses, or interfere with other parts.

The electric powertrain components are located in this area. The electric powertrain is a high-voltage system. You must be familiar with the electric powertrain system before working on or around it. Make sure you have read the electric powertrain service precautions before doing repairs or service.

IPU Cover

NOTE: **Numbered call-outs in figure pertain to list numbers in following procedure.**

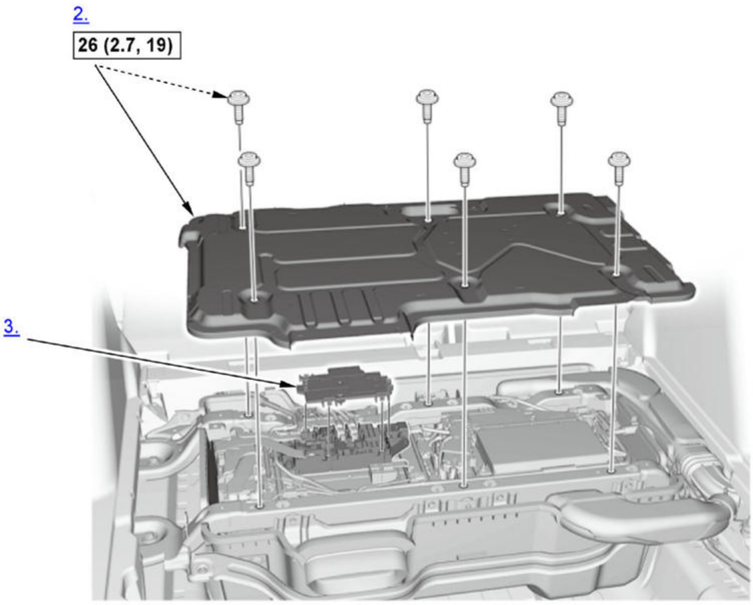

Fig. 28: Exploded View Of IPU Cover Replacement Components With Torque Specifications
Courtesy of HONDA, U.S.A., INC.

▭	Torque: N.m (kgf.m, lbf.ft)

1. Service Plug - Turn Off
2. IPU Cover - Remove
3. Subjunction Board Cover - Remove
4. All Removed Parts - Install

    1. Install the parts in the reverse order of removal.

IPU Case Rear Cover

NOTE: **Numbered call-outs in figure pertain to list numbers in following procedure.**

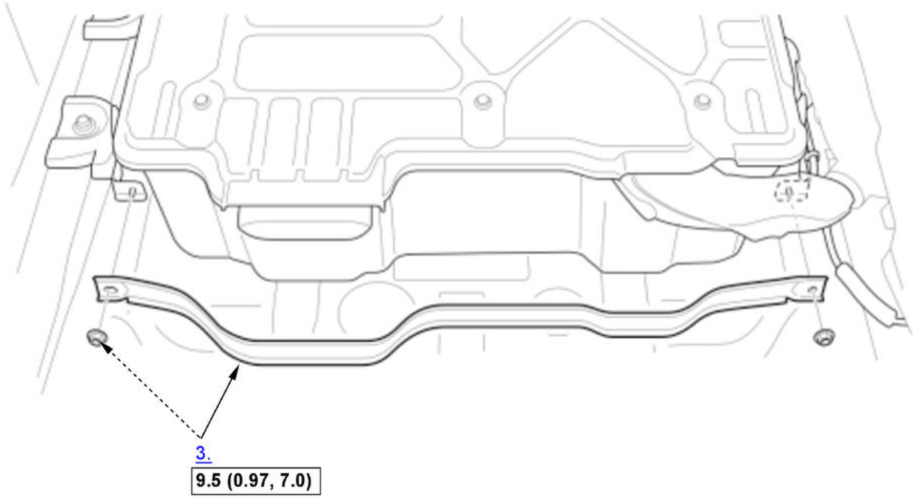

Fig. 29: IPU Case Rear Cover Components
Courtesy of HONDA, U.S.A., INC.

	Torque: N.m (kgf.m, lbf.ft)

1. Cargo Floor Cover - Remove
2. Tool Box - Remove
3. IPU Case Rear Cover - Remove
4. All Removed Parts - Install

    1. Install the parts in the reverse order of removal.

IPU Case Front Cover

NOTE: **Numbered call-outs in figure pertain to list numbers in following procedure.**

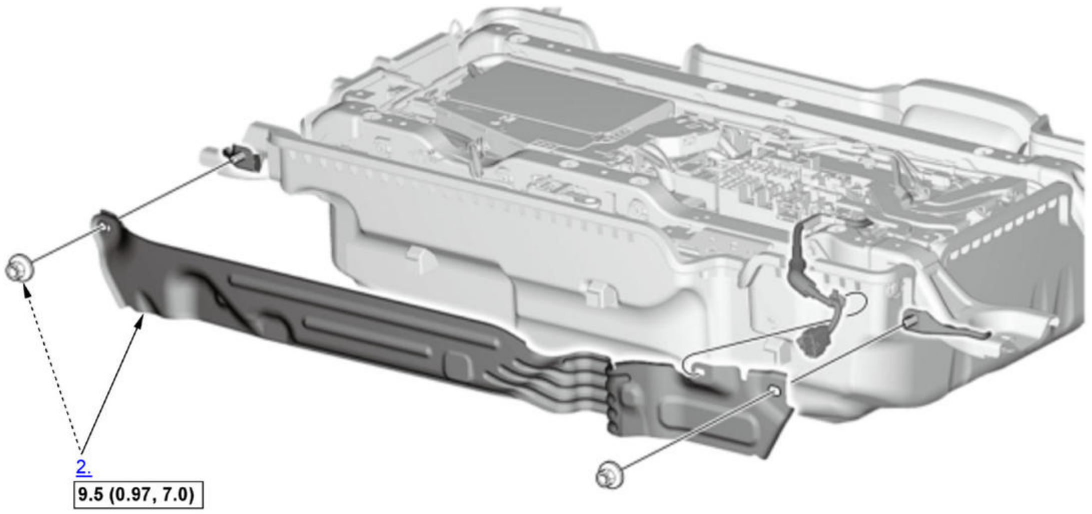

Fig. 30: IPU Case Front Cover Components
Courtesy of HONDA, U.S.A., INC.

	Torque: N.m (kgf.m, lbf.ft)

1. **IPU Case - Remove**
2. IPU Case Front Cover - Remove
3. All Removed Parts - Install

1. Install the parts in the reverse order of removal.

IPU Rear Cover

NOTE: **Numbered call-outs in figure pertain to list numbers in following procedure.**

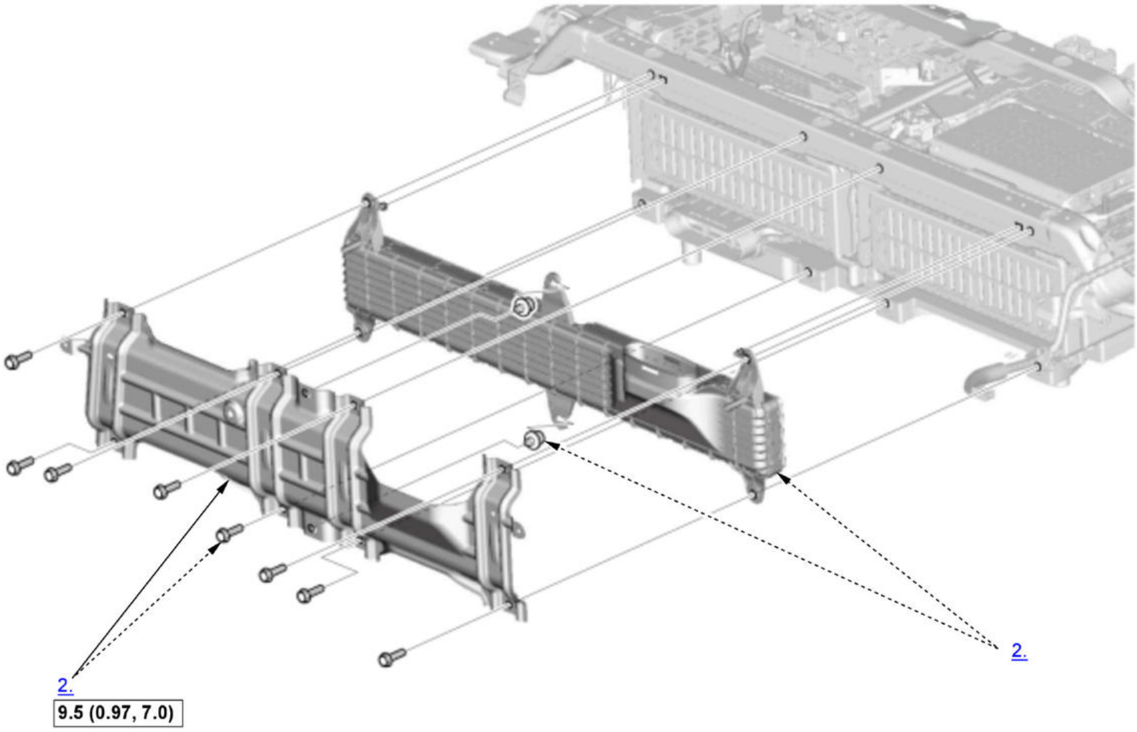

Fig. 31: Exploded View Of IPU Rear Cover Components
Courtesy of HONDA, U.S.A., INC.

▭	Torque: N.m (kgf.m, lbf.ft)

1. **IPU Case - Remove**
2. IPU Rear Cover - Remove
3. All Removed Parts - Install

1. Install the parts in the reverse order of removal.

IPU REMOVAL AND INSTALLATION

Removal and Installation

WARNING:

- The power cables carry high voltage when the electric powertrain system is energized. To avoid serious injury from electrical shock, do not turn on the system with the power cables disconnected.
- Wear insulated gloves and use insulated tools to protect you from electrical shock. When removing or installing high voltage items, always use them. Wrap the high voltage items with insulating tape after

removing. Please be careful when you see ⚠ on the illustration.

NOTE:

- ℹ Where icon is shown, for further information see below.
- Use covers to avoid damaging painted surfaces.
- To avoid damaging the wiring and terminals, unplug the wiring connectors carefully while holding the connector portion.
- Mark all wiring and hoses to avoid misconnection. Also, be sure that they do not contact other wiring or hoses, or interfere with other parts.
- Strong impact (i.e., dropping the high voltage battery, collision damage) may cause electrolyte leaks, internal short circuits and heat increase resulting in fire. Avoid impact to the high voltage battery.
- Organic electrolyte is poisonous. If ingested, get medical attention immediately.
- High voltage battery damage may cause flammable gas or electrolyte leaks and may result in fire. Do not damage the high voltage battery and keep sparks, flame and cigarettes away.

The electric powertrain components are located in this area. The electric powertrain is a high-voltage system. You must be familiar with the electric powertrain system before working on or around it. Make sure you have read the electric powertrain **service precautions** before doing repairs or service.

Procedure

NOTE: **Numbered call-outs in figure pertain to list numbers in following procedure.**

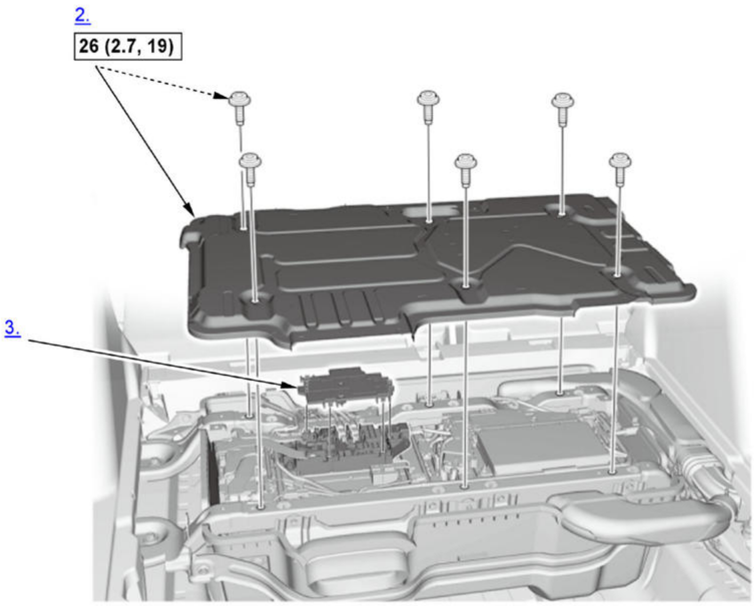

Fig. 32: Exploded View Of IPU Replacement Components With Torque Specifications (1 Of 5)
Courtesy of HONDA, U.S.A., INC.

☐	Torque: N.m (kgf.m, lbf.ft)

NOTE: **Numbered call-outs in figure pertain to list numbers in following procedure.**

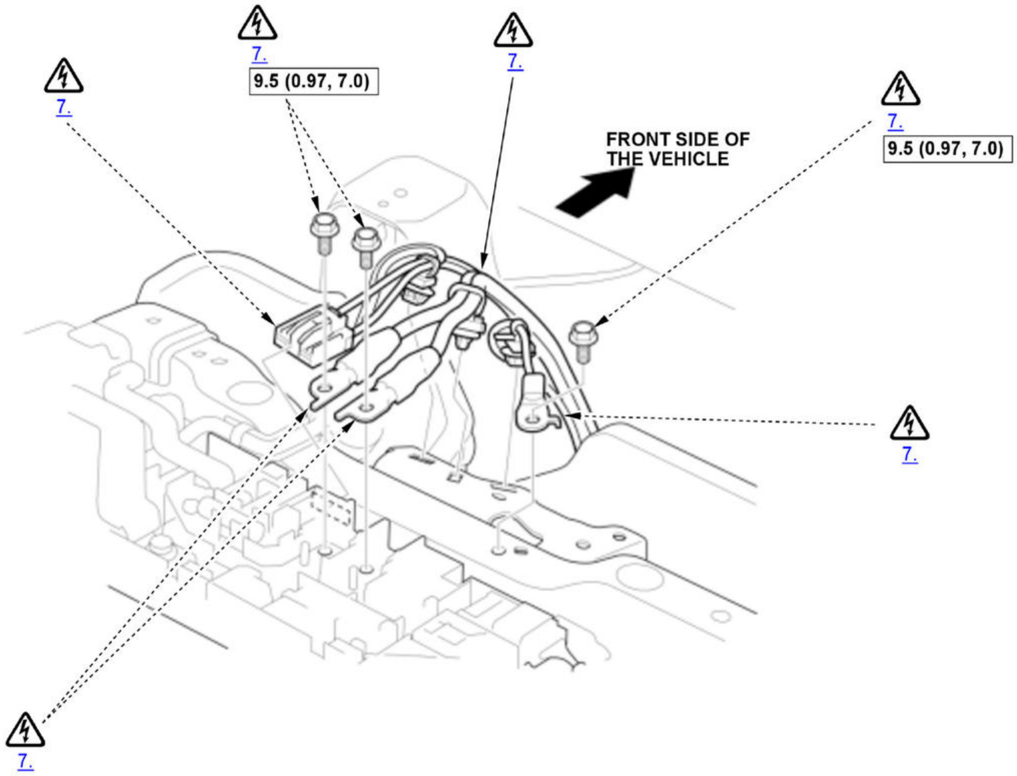
7.
7.
9.5 (0.97, 7.0)
7.
FRONT SIDE OF THE VEHICLE
7.
9.5 (0.97, 7.0)
7.
7.

Fig. 33: Exploded View Of IPU Replacement Components With Torque Specifications (2 Of 5)
Courtesy of HONDA, U.S.A., INC.

□	Torque: N.m (kgf.m, lbf.ft)

NOTE: **Numbered call-outs in figure pertain to list numbers in following procedure.**

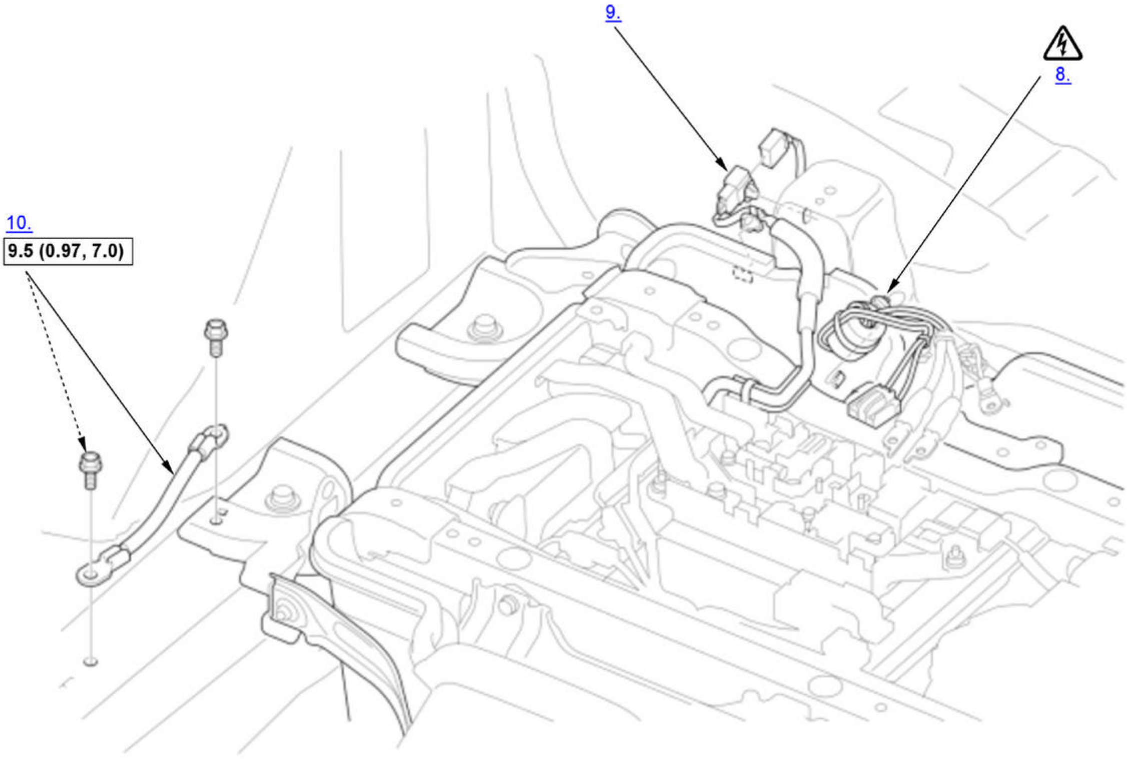
9.
8.
10.
9.5 (0.97, 7.0)

Fig. 34: Exploded View Of IPU Replacement Components With Torque Specifications (3 Of 5)
Courtesy of HONDA, U.S.A., INC.

▭	Torque: N.m (kgf.m, lbf.ft)

NOTE: **Numbered call-outs in figure pertain to list numbers in following procedure.**

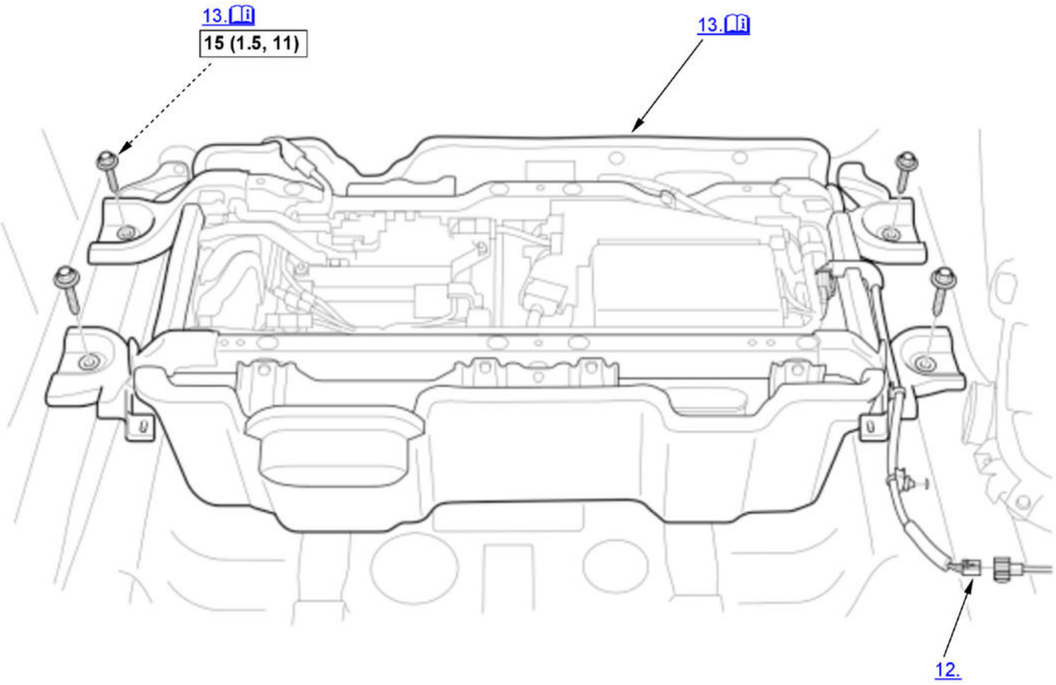

Fig. 35: Exploded View Of IPU Replacement Components With Torque Specifications (4 Of 5)
Courtesy of HONDA, U.S.A., INC.

▭	Torque: N.m (kgf.m, lbf.ft)

NOTE: **Numbered call-outs in figure pertain to list numbers in following procedure.**

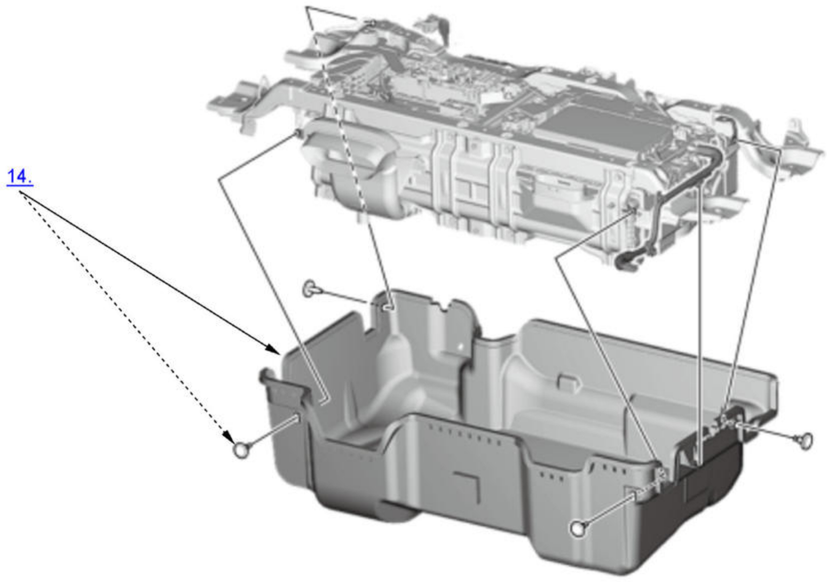

Fig. 36: Exploded View Of IPU Replacement Components (5 Of 5)
Courtesy of HONDA, U.S.A., INC.

1. Service Plug - Turn Off

2. IPU cover - Remove
3. Subjunction Board Cover - Remove
4. Rear Carpet Trim - Remove
5. Rear Side Trim Panel (Right Side of The Vehicle) - Remove
6. IPU Inlet Front Duct, IPU Inlet Duct Joint, and IPU Inlet Rear Duct - Remove
7. Battery Power Cable (Cargo Areas) - Disconnect
8. Battery Power Cable Clamp - Remove
9. Connector (IPU Harness) - Disconnect
10. Ground Cable - Remove
11. IPU Case Rear Cover - Remove
12. Connector (IPU Harness) - Disconnect
13. IPU Assembly - Remove

Note for installation

Make sure that these areas (A) are not painted or have any corrosions.

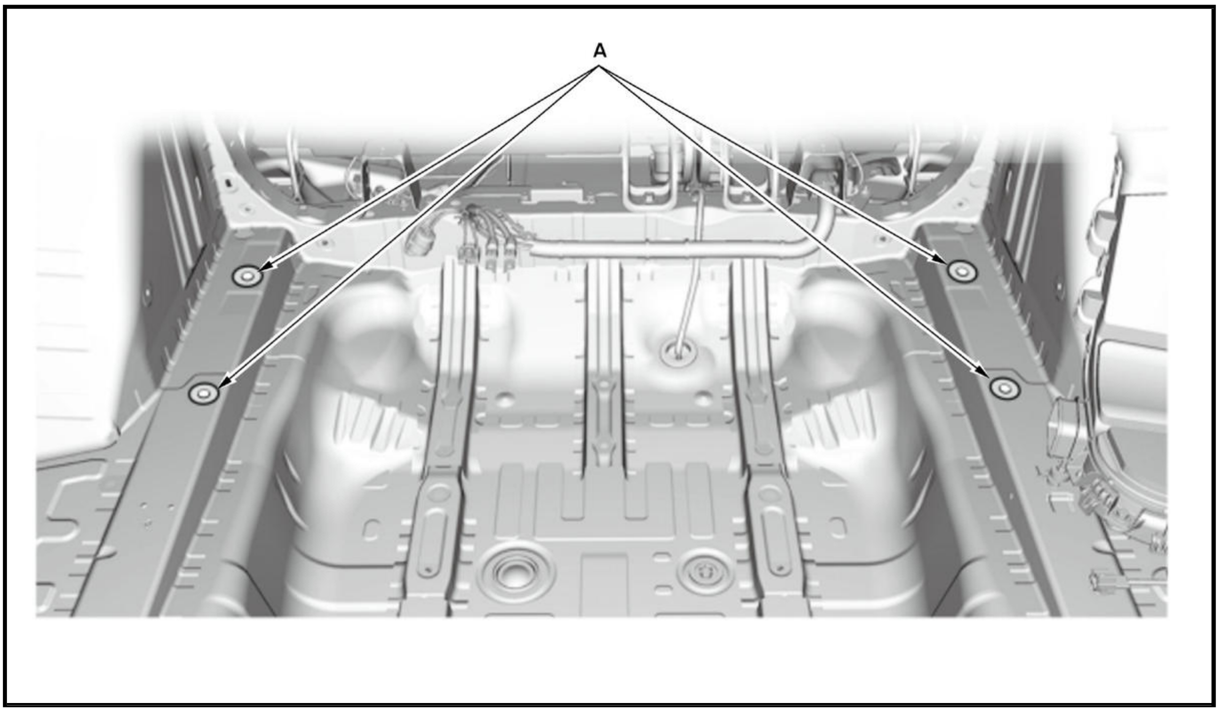

14. IPU Case - Remove (If Necessary)
15. All Removed Parts - Install

1. Install the parts in the reverse order of removal.

JUNCTION BOARD REMOVAL AND INSTALLATION

Removal and Installation

WARNING:

- The power cables carry high voltage when the electric powertrain system is energized. To avoid serious injury from electrical shock, do not turn on the system with the power cables disconnected.
- Wear insulated gloves and use insulated tools to protect you from electrical shock. When removing or installing high voltage items, always use them. Wrap the high voltage items with insulating tape after removing. Please be careful when you see ⚠ on the illustration.

NOTE:

- ℹ Where icon is shown, for further information see below.
- Use covers to avoid damaging painted surfaces.
- To avoid damaging the wiring and terminals, unplug the wiring connectors carefully while holding the connector portion.
- Mark all wiring and hoses to avoid misconnection. Also, be sure that they do not contact other wiring or hoses, or interfere with other parts.

The electric powertrain components are located in this area. The electric powertrain is a high-voltage system. You must be familiar with the electric powertrain system before working on or around it. Make sure you have read the electric powertrain service precautions before doing repairs or service.

Procedure

NOTE: **Numbered call-outs in figure pertain to list numbers in following procedure.**

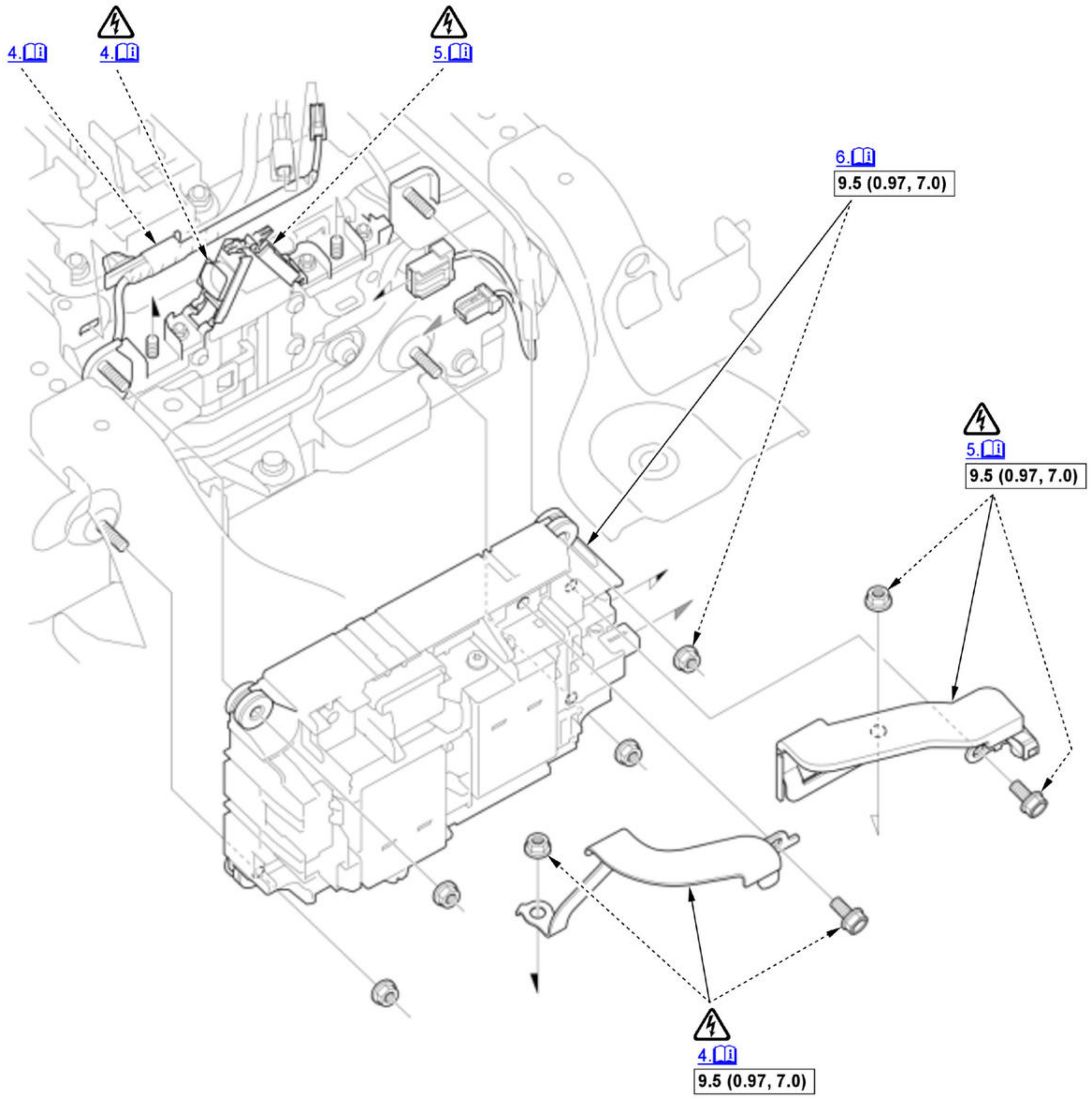

Fig. 37: Exploded View Of Junction Board Components
Courtesy of HONDA, U.S.A., INC.

☐	Torque: N.m (kgf.m, lbf.ft)

1. **Service Plug - Turn Off**
2. **IPU Case - Remove**
3. **Junction Board Negative Busbar and Junction Board Positive Busbar - Remove**
4. Battery Negative Busbar - Remove

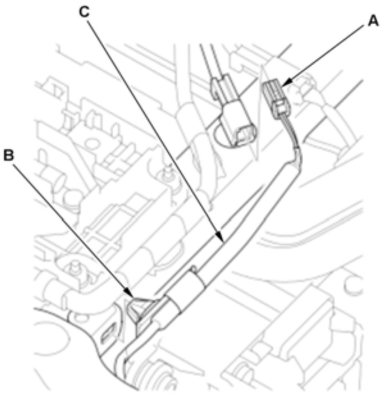

NOTE: High voltage electricity flows in the battery terminal and busbar after disconnecting the service plug. Do all procedures one by one and keep the terminal covers closed when you are not working on them.

1. Disconnect the connector (A) and remove the harness clamp (B).

2. Move the harness (C).

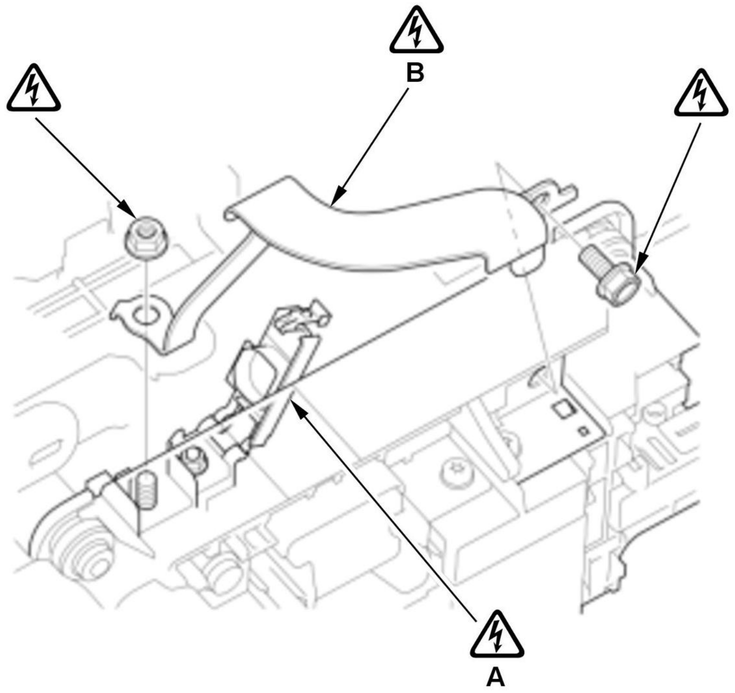

3. Open the battery module negative terminal cover (A).

4. Remove the battery negative busbar (B).

NOTE: Never reuse a bent or damaged busbar.

5. Close the battery module negative terminal cover.

5. Battery Positive Busbar - Remove

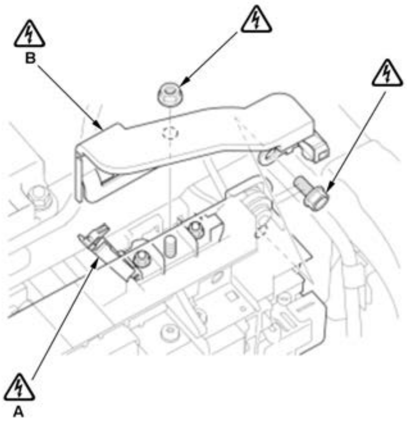

NOTE: High voltage electricity flows in the battery terminal and busbar after disconnecting the service plug. Do all procedures one by one and keep the terminal covers closed when you are not working on them.

1. Open the battery module positive terminal cover (A).

2. Remove the battery positive busbar (B).

NOTE: Never reuse a bent or damaged busbar.

3. Close the battery module positive terminal cover.

6. Junction Board - Remove

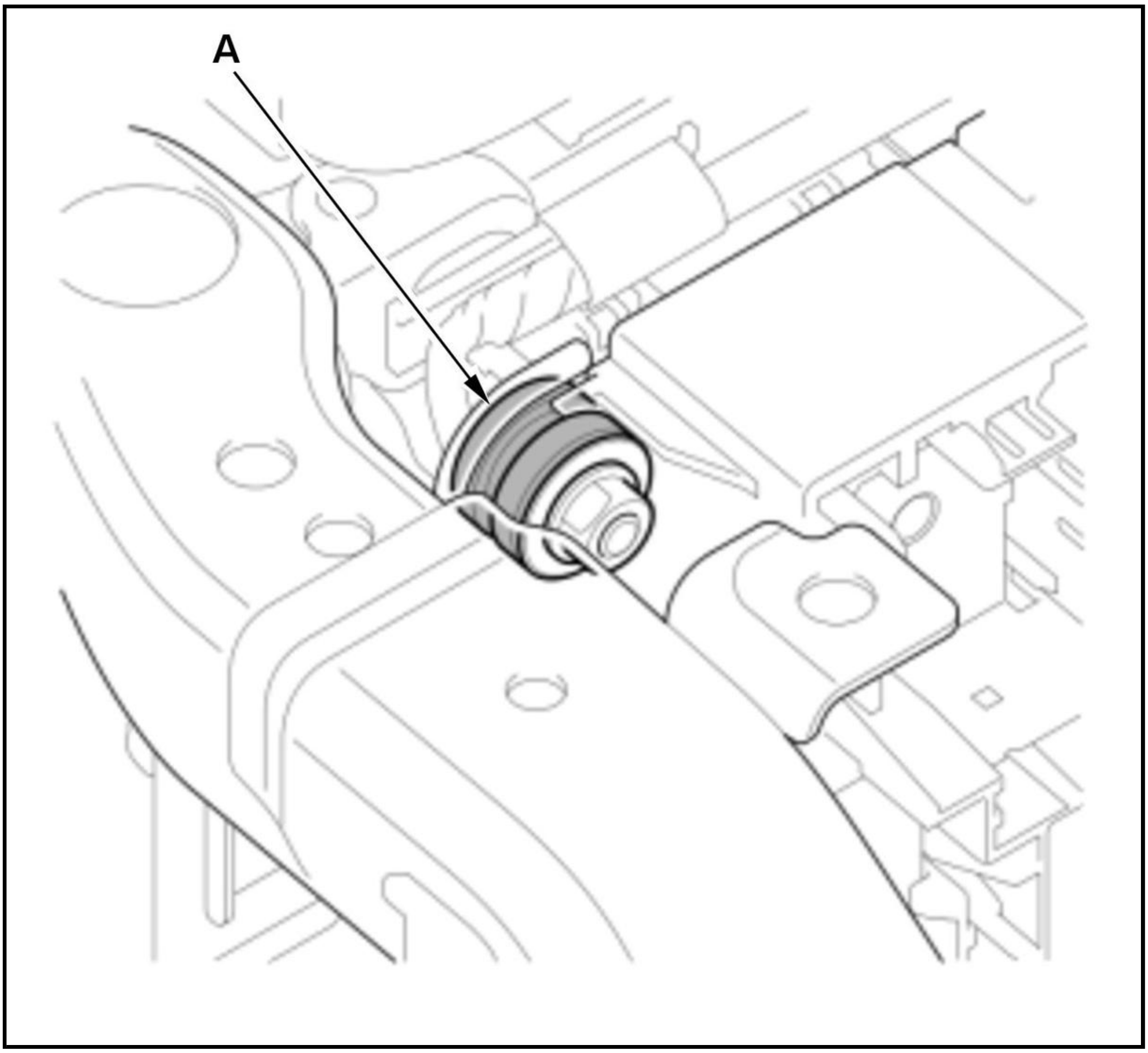

NOTE: If the mounting rubbers (A) are stuck on the bracket, pry only on the mounting rubbers. Do not pry on the junction board.

7. All Removed Parts - Install

1. Install the parts in the reverse order of removal.

PCU REMOVAL AND INSTALLATION

Removal and Installation

WARNING:

- The power cables carry high voltage when the electric powertrain system is energized. To avoid serious injury from electrical shock, do not turn on the system with the power cables disconnected.
- Wear insulated gloves and use insulated tools to protect you from electrical shock. When removing or installing high voltage items, always use them. Wrap the high voltage items with insulating tape after removing. Please be careful when you see ⚠ on the illustration.

NOTE:

- ℹ Where icon is shown, for further information see below.
- Use fender covers to avoid damaging painted surfaces.
- To avoid damaging the wiring and terminals, unplug the wiring connectors carefully while holding the connector portion.

- Mark all wiring and hoses to avoid misconnection. Also, be sure that they do not contact other wiring or hoses, or interfere with other parts.
- Do not spill the PCU coolant on the surrounding parts. If you spill the PCU coolant, wipe the PCU coolant off immediately.

The electric powertrain components are located in this area. The electric powertrain is a high-voltage system. You must be familiar with the electric powertrain system before working on or around it. Make sure you have read the electric powertrain service precautions before doing repairs or service.

Procedure

NOTE: **Numbered call-outs in figure pertain to list numbers in following procedure.**

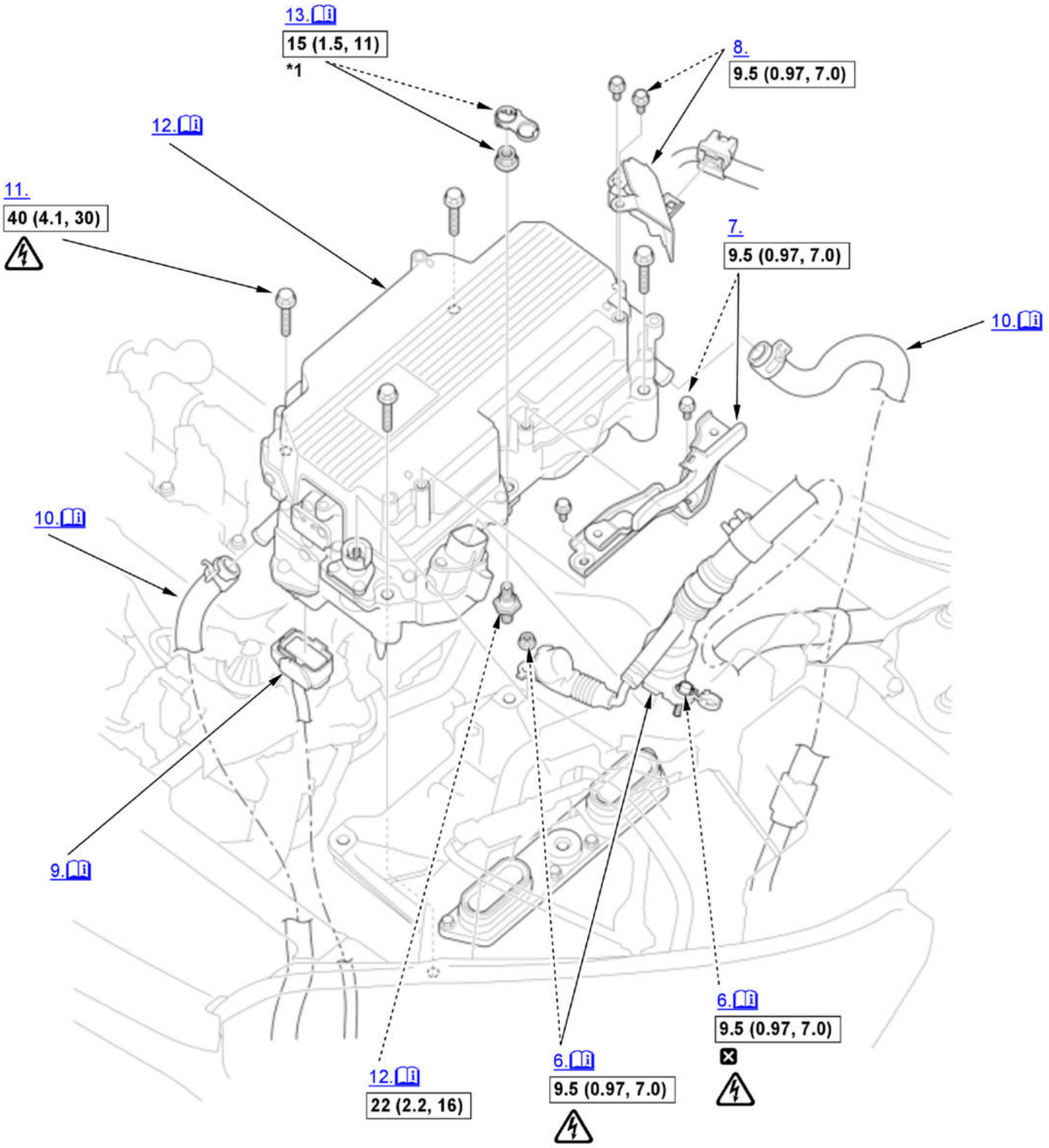

Fig. 38: Exploded View Of PCU Replacement Components With Torque Specifications
Courtesy of HONDA, U.S.A., INC.

▭	Torque: N.m (kgf.m, lbf.ft)
☒	Replace
*1	Left-hand thread

1. Service Plug - Turn Off
2. PCU Coolant - Drain
3. Air Intake Tube A, Air Intake Tube C, and Intake Air Resonator - Remove
4. PCM - Remove
5. Reservoir Bracket - Remove

   NOTE: It is not necessary to remove the brake fluid from the reservoir. Make sure the cap is tight and move it out of the way. If necessary, use a bungee cord to secure it.

6. High Voltage Motor Power Inverter Module Cable - Disconnect

   NOTE: Refer to the "Power Cable Connector and How to Cable Connector Bolt Replacement Removal procedure" on the Service Precautions .

   Note for installation

   NOTE: Refer to the "Installation procedure" on the Service Precautions .

7. Resonator Bracket - Remove
8. PCU Guard Bracket - Remove
9. Connector (PCU) - Disconnect

   NOTE: Refer to the "Lever-Locked Connector" on the Service Precautions .

10. Cooling Hose - Disconnect

    Note for installation

    Make sure the hose clamps are properly positioned and tightened, and make sure that they do not interfere with the surrounding parts.

11. PCU mounting bolts - Remove
12. PCU - Remove

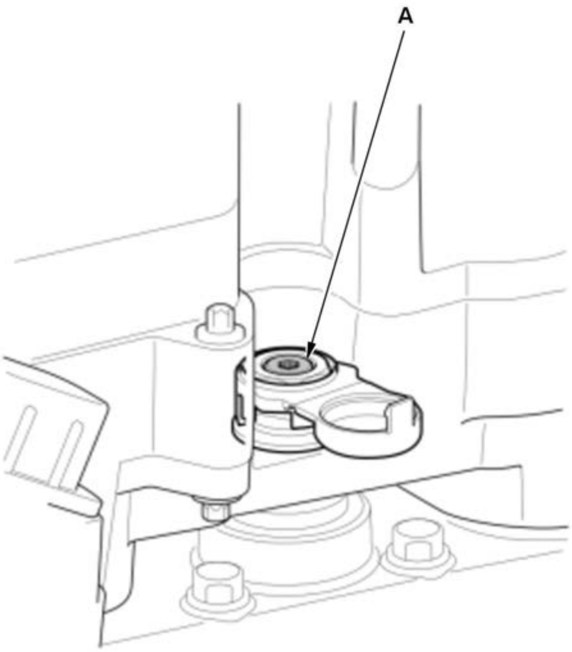	1. Loosen the three phase bolt (A), and remove the PCU. **NOTE:** - By loosening the three phase bolt, the PCU gradually lifts. - Raise the PCU in right above. **Note for installation** Tighten the three phase bolt first, then tighten the PCU mounting bolts.

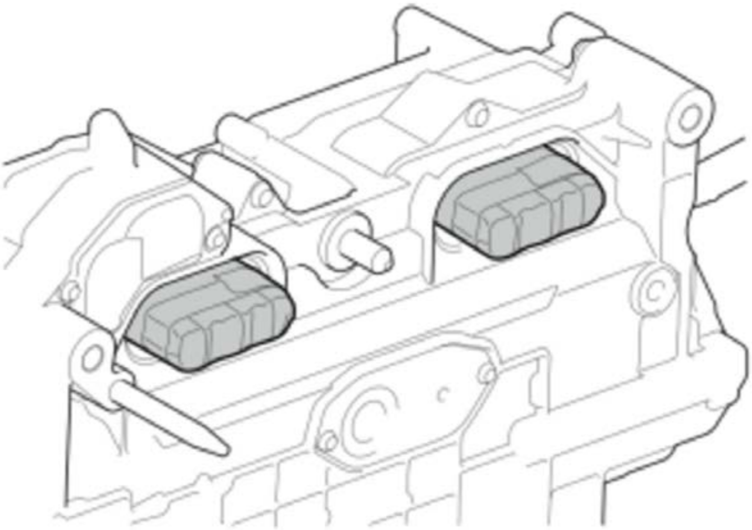 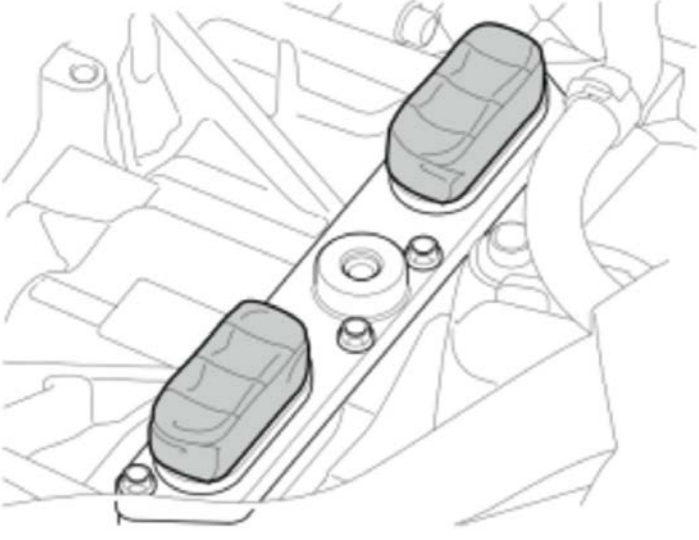	2. After removing the PCU, wrap the items with insulating tape as shown.

13. Three Phase Nut - Remove (If Necessary)

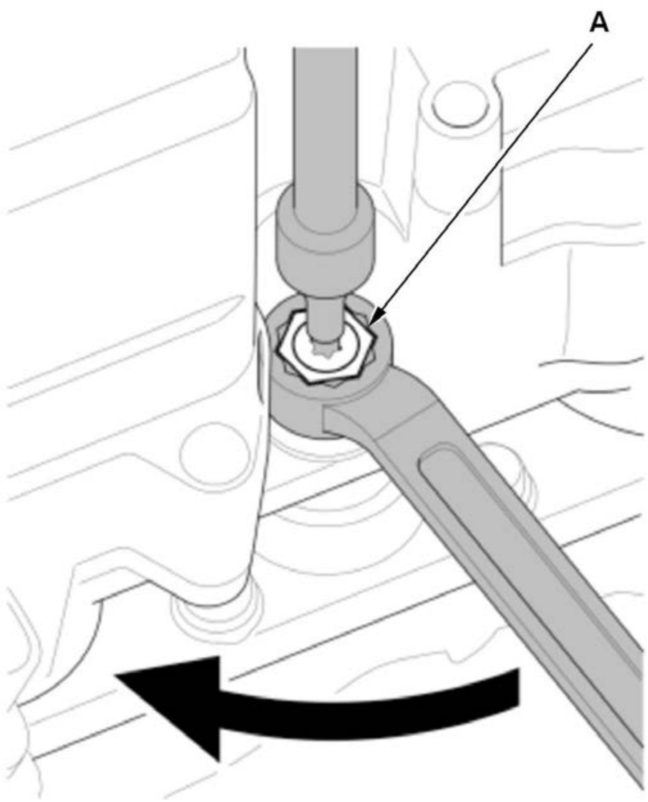	1. Remove the three phase nut (A). **NOTE:** The three phase nut is a left hand thread.

14. All Removed Parts - Install

1. Install the parts in the reverse order of removal.

15. PCU Coolant - Refill and Air Bleed
16. Motor Control Module - Update (When Replacing)
17. Motor Rotor Position - Calibrate

RADIATOR REMOVAL AND INSTALLATION (ELECTRIC POWERTRAIN)

Removal and Installation

NOTE:

- ℹ Where icon is shown, for further information see below.
- Do not spill the PCU coolant on the surrounding parts. If you spill the PCU coolant, wipe the PCU coolant off immediately.

Procedure

NOTE: **Numbered call-outs in figure pertain to list numbers in following procedure.**

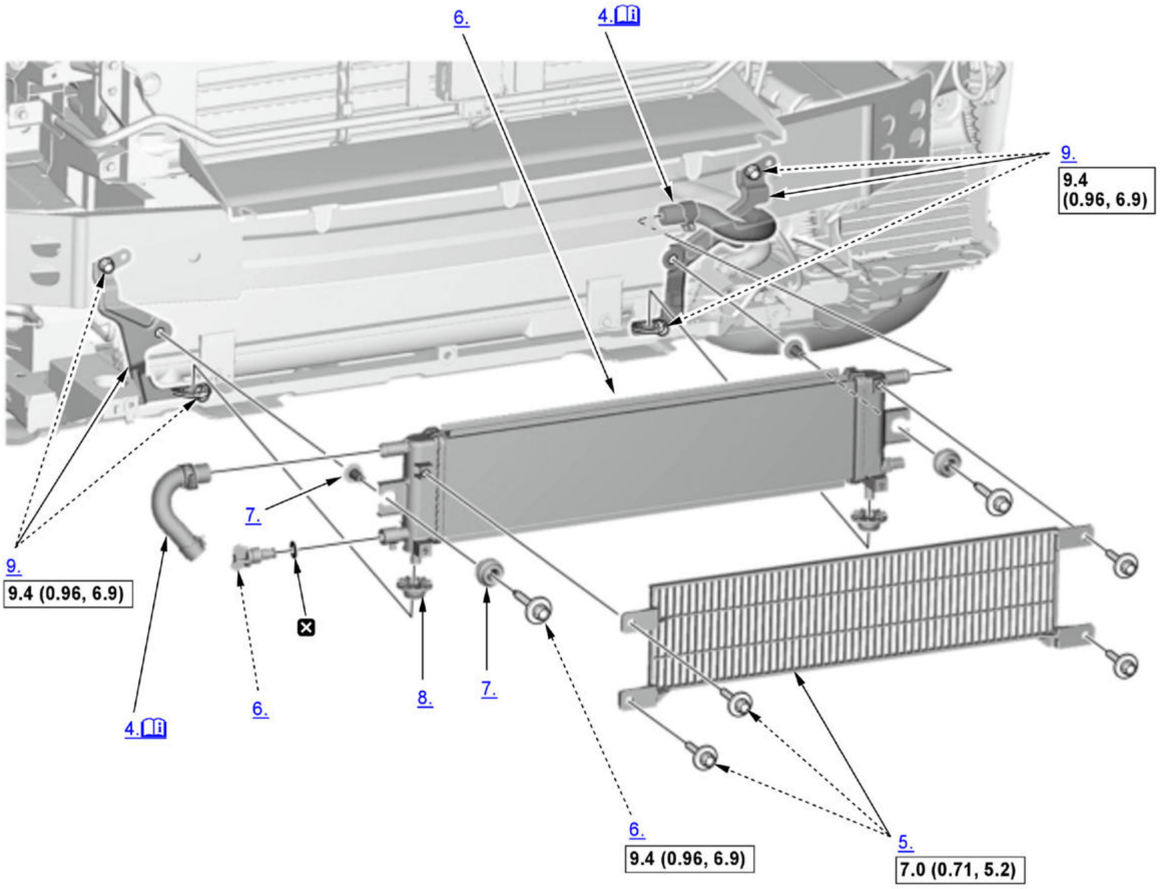

Fig. 39: Exploded View Of Radiator Replacement Components (Electric Powertrain)
Courtesy of HONDA, U.S.A., INC.

☐	Torque: N.m (kgf.m, lbf.ft)
☒	Replace

1. PCU Coolant - Drain
2. PCU Coolant Temperature Sensor - Remove (If Necessary)
3. Radiator Inlet Pipe B - Remove
4. Cooling Hose - Remove and Disconnect

   Note for installation

   Make sure the hose clamps are properly positioned and tightened, and make sure that they do not interfere with the surrounding parts.

5. Radiator Guard - Remove
6. Radiator - Remove
7. Radiator Upper Mounting Rubber and Collar - Remove (If Necessary)
8. Radiator Mounting Lower Cushion - Remove (If Necessary)
9. Radiator Bracket - Remove (If Necessary)
10. All Removed Parts - Install

    1. Install the parts in the reverse order of removal.

11. PCU Coolant - Refill and Air Bleed

SUBJUNCTION BOARD REMOVAL AND INSTALLATION

Removal and Installation

WARNING:

- The power cables carry high voltage when the electric powertrain system is energized. To avoid serious injury from electrical shock, do not turn on the system with the power cables disconnected.
- Wear insulated gloves and use insulated tools to protect you from electrical shock. When removing or installing high voltage items, always use them. Wrap the high voltage items with insulating tape after removing. Please be careful when you see ⚠ on the illustration.

NOTE:

- ℹ Where icon is shown, for further information see below.
- Use covers to avoid damaging painted surfaces.
- To avoid damaging the wiring and terminals, unplug the wiring connectors carefully while holding the connector portion.
- Mark all wiring and hoses to avoid misconnection. Also, be sure that they do not contact other wiring or hoses, or interfere with other parts.

The electric powertrain components are located in this area. The electric powertrain is a high-voltage system. You must be familiar with the electric powertrain system before working on or around it. Make sure you have read the electric powertrain **service precautions** before doing repairs or service.

Procedure

NOTE: **Numbered call-outs in figure pertain to list numbers in following procedure.**

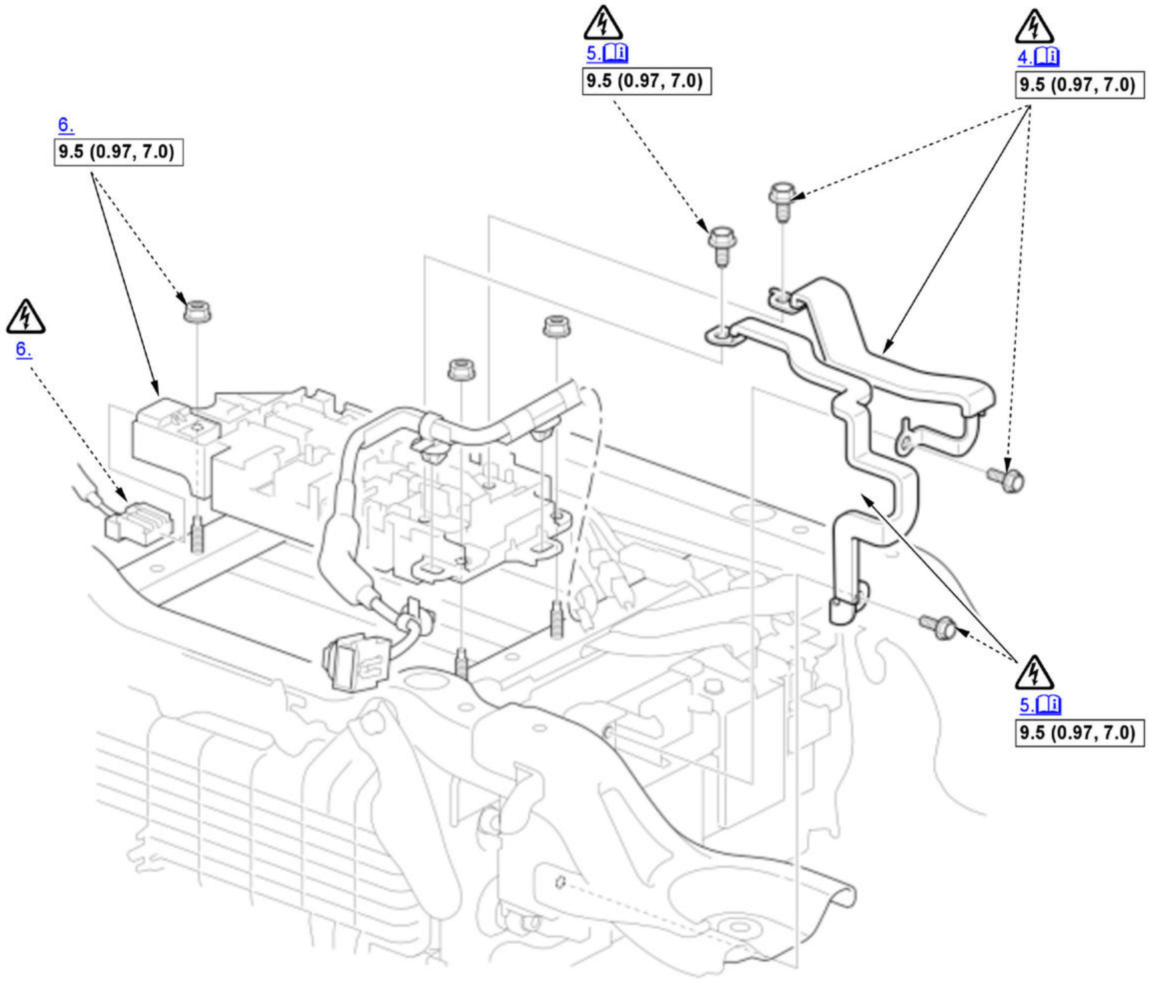

Fig. 40: Exploded View Of Subjunction Board Replacement Components
Courtesy of HONDA, U.S.A., INC.

☐	Torque: N.m (kgf.m, lbf.ft)

1. **Service Plug - Turn Off**
2. **Subjunction Board Cover - Remove**
3. **IPU Case - Remove**
4. Junction Board Negative Busbar - Remove

   NOTE: High voltage electricity flows in the battery terminal and busbar after disconnecting the service plug.

5. Junction Board Positive Busbar - Remove

   NOTE: High voltage electricity flows in the battery terminal and busbar after disconnecting the service plug.

6. Subjunction Board - Remove
7. All Removed Parts - Install

   1. Install the parts in the reverse order of removal.

TRANSMISSION FLUID TEMPERATURE SENSOR REMOVAL AND INSTALLATION

Removal and Installation

NOTE: Apply a light coat of clean ATF on the O-ring before installation.

Procedure

NOTE: **Numbered call-outs in figure pertain to list numbers in following procedure.**

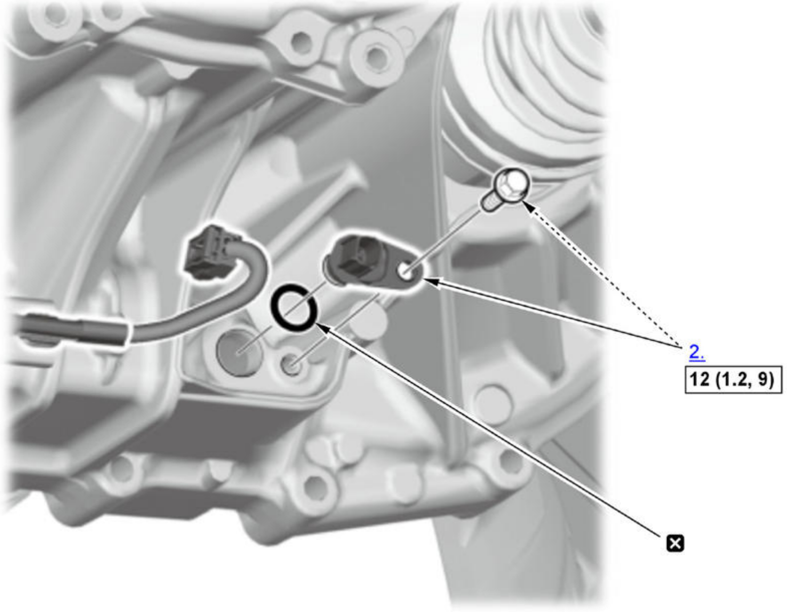

Fig. 41: Exploded View Of Transmission Fluid Temperature Sensor Replacement Components With Torque Specifications
Courtesy of HONDA, U.S.A., INC.

☐	Torque: N.m (kgf.m, lbf.ft)
☒	Replace

1. ATF - Drain
2. Transmission Fluid Temperature Sensor - Remove
3. All Removed Parts - Install

   1. Install the parts in the reverse order of removal.

4. ATF - Refill

REMOVAL, INSTALLATION & TEST

EV SWITCH REMOVAL, INSTALLATION, AND TEST

Removal and Installation

1. Escutcheon Panel - Remove
2. EV Switch - Remove

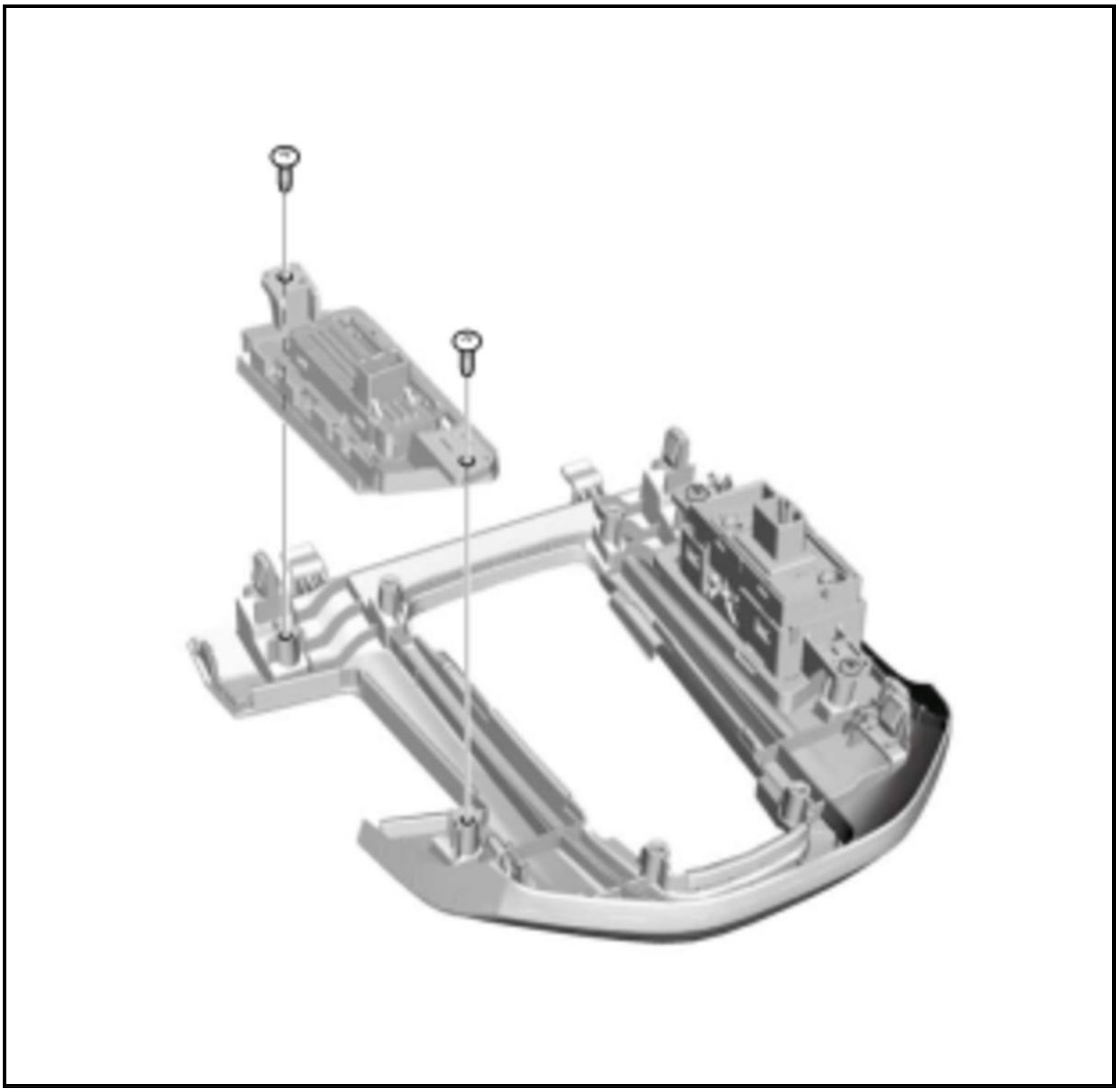

3. All Removed Parts - Install

1. Install the parts in the reverse order of removal.

Test

1. EV Switch - Test

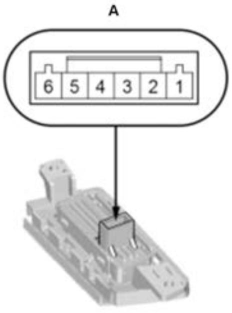

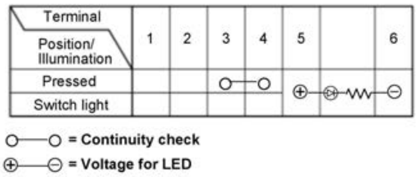

Terminal / Position/ Illumination	1	2	3	4	5		6
Pressed			○—	—○			
Switch light					⊕—	—▷|—WW—	—⊖

○—○ = Continuity check

⊕—⊖ = Voltage for LED

1. Check for continuity between the EV switch 6P connector (male terminals) (A) terminals No. 3 and No. 4 while operating the switch through all positions.

2. Connect battery power and ground to terminals No. 5 and No. 6 to test the LED for illumination.

NOTE: The following information is an important operating characteristic; the diode bias causes the diode to conduct electricity in one direction (forward), while not allowing the flow of electricity in the opposite direction (reverse).

3. If the switch does not operate as specified, replace the EV switch.

DESCRIPTION & OPERATION

BATTERY SYSTEM DESCRIPTION

For locations of each component on vehicle, refer to Component Location Index.

The high voltage battery uses a Li-ion (lithium ion) battery. A Li-ion battery is lightweight, compact in size and has a long lifespan. The high voltage battery charging is provided by the electric power from the generator motor or the traction motor via inverter in the PCU.

Control

The high voltage battery is equipped with multiple sensors that send information to the battery condition monitor module.

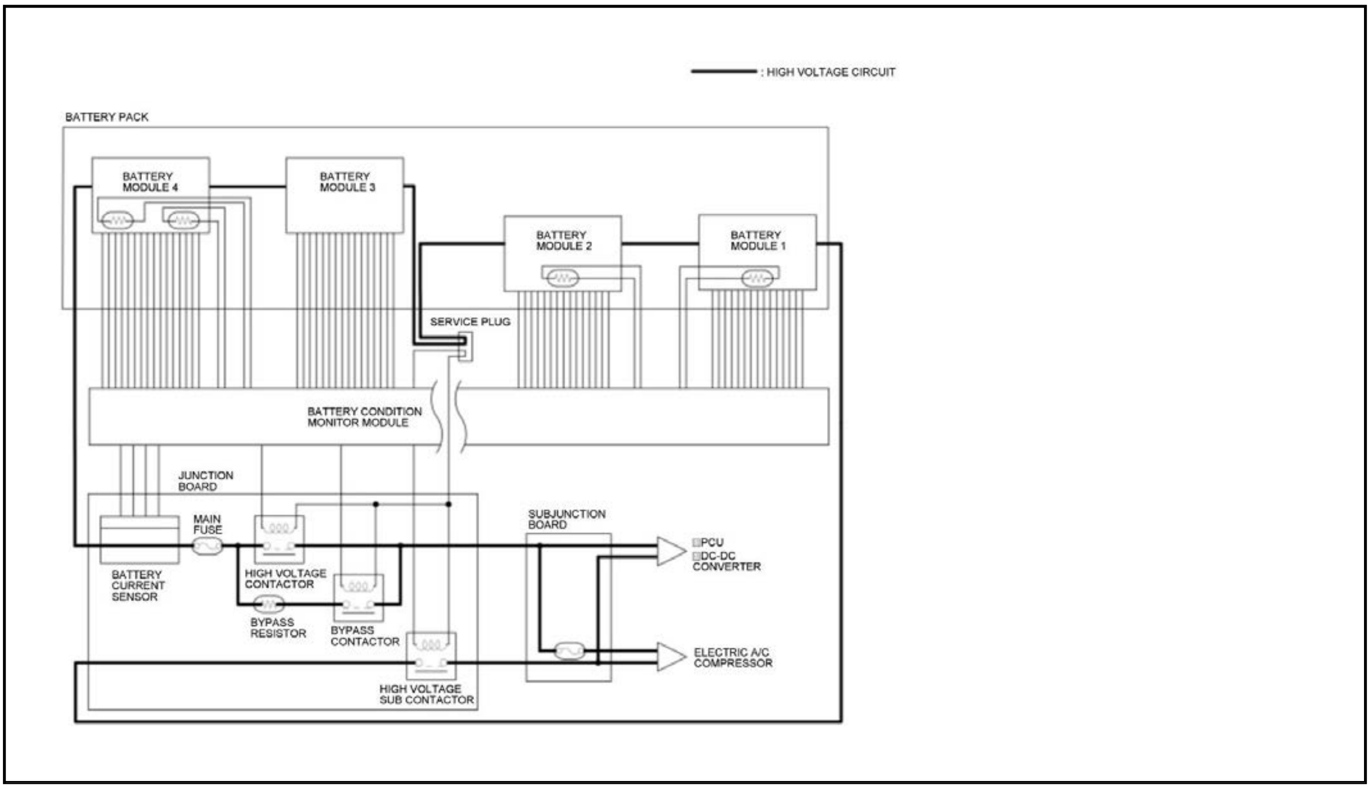
: HIGH VOLTAGE CIRCUIT
BATTERY PACK
BATTERY MODULE 4
BATTERY MODULE 3
BATTERY MODULE 2
BATTERY MODULE 1
SERVICE PLUG
BATTERY CONDITION MONITOR MODULE
JUNCTION BOARD
MAIN FUSE
BATTERY CURRENT SENSOR
HIGH VOLTAGE CONTACTOR
BYPASS RESISTOR
BYPASS CONTACTOR
HIGH VOLTAGE SUB CONTACTOR
SUBJUNCTION BOARD
PCU
DC-DC CONVERTER
ELECTRIC A/C COMPRESSOR

Battery Output Control

The amount of power that can be removed from or put into a battery will vary depending on various conditions such as the temperature of the battery and the health of the battery. If more power is moved into or out of the battery than the battery can safely handle, the battery life will be shortened or in a worse case situation, the battery could be damaged severely (thermal runaway, fluid leakage, etc.). To prevent damage and maximize the battery capacity over the life of the battery, the battery charging and discharging is controlled by the battery condition monitor module. The battery condition monitor module uses inputs from the battery module temperature sensors, the battery current sensor, and the state of charge (SOC) calculated by the battery condition monitor module to control the power into and out of the battery. The battery condition monitor module uses the above information as well as the demand for power to determine the optimum power of the battery at all times.

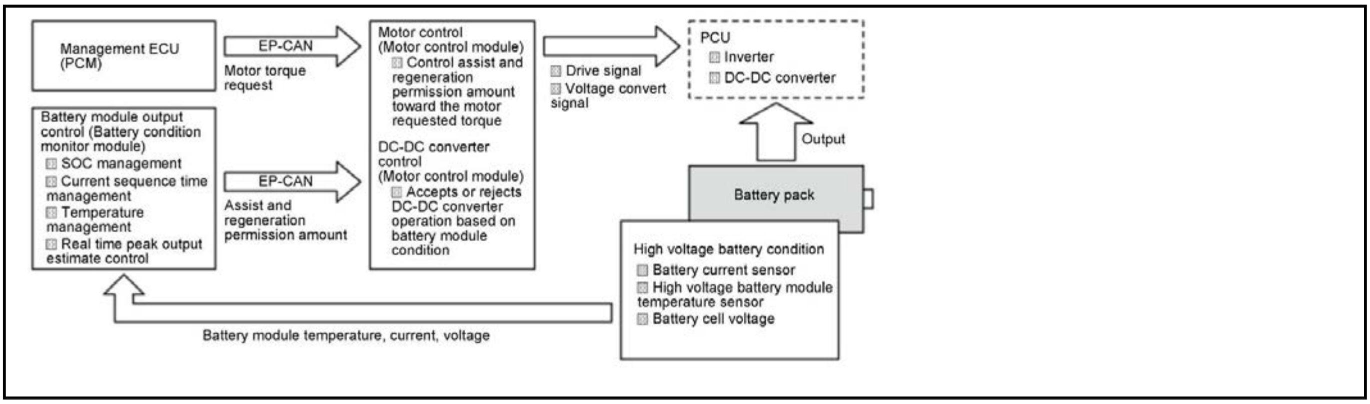
Management ECU (PCM)
EP-CAN
Motor torque request
Battery module output control (Battery condition monitor module)
▨ SOC management
▨ Current sequence time management
▨ Temperature management
▨ Real time peak output estimate control
EP-CAN
Assist and regeneration permission amount
Motor control (Motor control module)
▨ Control assist and regeneration permission amount toward the motor requested torque
DC-DC converter control (Motor control module)
▨ Accepts or rejects DC-DC converter operation based on battery module condition
▨ Drive signal
▨ Voltage convert signal
PCU
▨ Inverter
▨ DC-DC converter
Output
Battery pack
High voltage battery condition
▨ Battery current sensor
▨ High voltage battery module temperature sensor
▨ Battery cell voltage
Battery module temperature, current, voltage

SOC Management Control

To prevent deterioration of the battery, the SOC is controlled by the battery condition monitor module. If necessary, the battery condition monitor module will limit the power output if the SOC should reach unacceptable levels.

HDS Parameter	Normal Control Area
SOC	0 - 100 %
Motor Power Save (Affected by HV Battery SOC)	No/Restricted

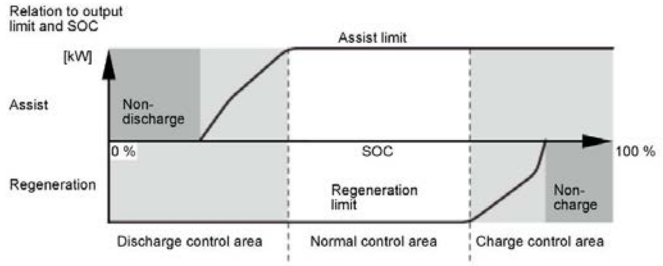

Temperature Management Control

To prevent damage to the battery in extreme high or low temperatures, the battery condition monitor module may limit the battery power. The battery condition monitor module also controls the operation of the high voltage battery module fan.

HDS Parameter	Normal Control Area
HV Battery Module Temperature Sensor 1	Depending on battery temperature
HV Battery Module Temperature Sensor 2	Depending on battery temperature
HV Battery Module Temperature Sensor 3	Depending on battery temperature
HV Battery Module Temperature Sensor 4	Depending on battery temperature

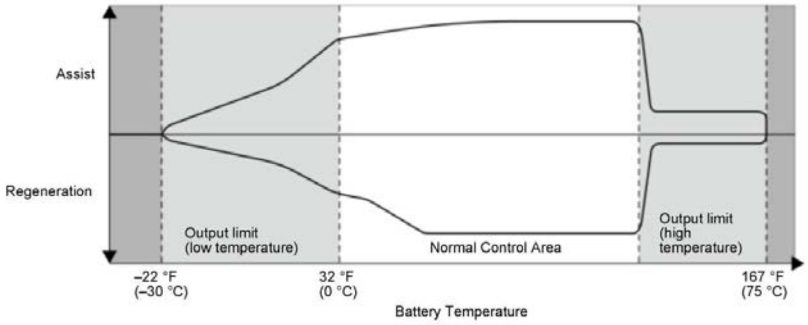

High Voltage Circuit Shut-Off Control at the time of Collision Detection

When the SRS unit detects a collision signal (front collision, side collision, rear collision), the battery condition monitor module stores the DTC according to a signal from the SRS unit, and the high voltage circuit is cut off by switching the contactors to OFF. At this time, the POWER SYSTEM indicator, the 12 volt charging system indicator, and the SRS indicator come on, and the READY indicator goes out. The collision shut-off control is cancelled by using the HDS to clear the DTC in the battery condition monitor module.

Components

Junction Board/Subjunction Board

The junction board and the subjunction board isolate the high voltage battery, and distribute power to other high voltage systems. The junction board and subjunction board are installed in the IPU. The main fuse, the contactors, and the battery current sensor are located on the junction board.

Contactor

The high voltage contactor and the bypass contactor are arranged on the positive pole side of the battery pack, while the high voltage sub contactor is arranged on the negative pole side. These contactors are controlled by the battery condition monitor module and perform connection and disconnection of the high voltage circuit. When the contactor connects to the positive pole side, the bypass contactor switches to ON before the high voltage contactor is turned on connecting the high voltage circuit via a pre-charge resistance limits the rush current until the capacitor is charged; this serves to protect the system. Several large capacitors are located in the PCU. When the system starts up, these capacitors are discharged and if the battery were connected by the high voltage contactor a very large and damaging current would flow. This is referred to as inrush current. This current could damage various components but would cause arcing on the high voltage contactor. To prevent a large inrush current, a bypass contactor is switches to ON first at start up. This connects the high voltage battery to the various capacitors thru a resistor limiting the current and allowing the capacitors to charge. In a very short time the capacitors are charged, then the high voltage contactor switches to ON and the bypass contactor switches to OFF.

Battery Current Sensor

The battery current sensor detects the input and output current of the high voltage battery. The input/output current detected by the sensor is sent to the battery condition monitor module; it is used for calculating the remaining capacity of the state of charge (SOC).

Service Plug

The service plug is installed in the high voltage circuit of the high voltage battery and in the contactor control circuit. By removing this plug, the high voltage circuit and the contactor control circuit can be interrupted when the electric powertrain system or the parts around it have to be inspected or serviced. This ensures that safe inspection and servicing work can be done. **When removing the service plug, make sure you have read the electric powertrain service precautions**.

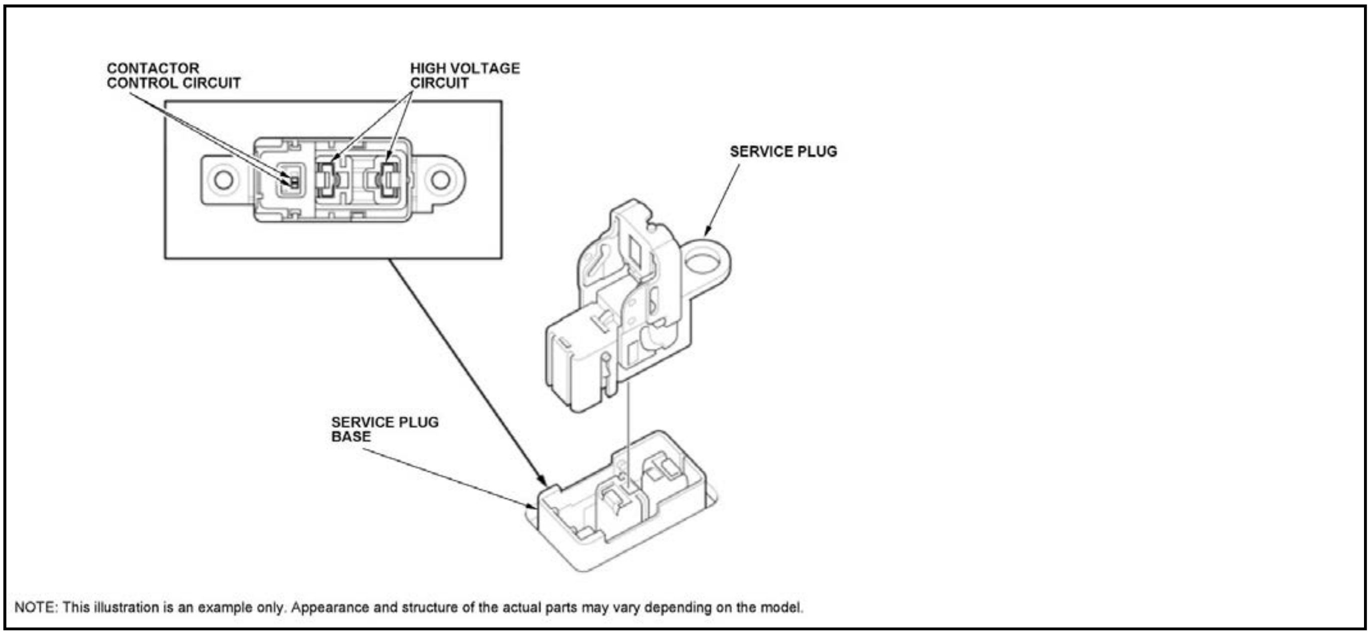

NOTE: This illustration is an example only. Appearance and structure of the actual parts may vary depending on the model.

Special Bolt

A high tension, truss head type special bolt is used on high voltage circuit connection points to properly secure the connection and reduce the possibility of becoming loose. Do not replace these bolts with any other type.

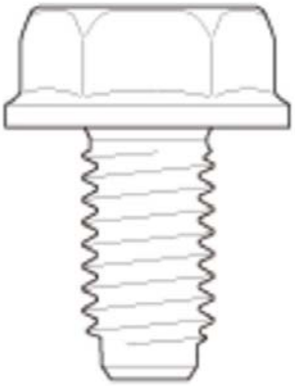

High Voltage Battery Module Fan

When the electric powertrain system repeats the charging and discharging cycles, the battery pack become hot. To dissipate this heat - and to maintain the high voltage battery performance and protection of the system - a high voltage battery module fan is installed in the IPU. The high voltage battery module fan uses a fan motor control circuit and a speed sensor built in, and the battery condition monitor module controls the high voltage battery module fan so that the high voltage battery temperature is kept at a suitable level. The cooling air intake is located at right side of the rear seat, and it passes through the battery pack, then discharged to the luggage compartment.

Battery Power Cable

The battery power cable located between the IPU and the PCU is protected by a corrugated tube and an orange aluminum pipe against external damages, and is secured with a clamp under the floor. Inside the pipe are the high voltage cable, the 12 volt power supply cable from the DC-DC convertor, and the electric A/C compressor cable.

ELECTRIC POWERTRAIN SYSTEM DESCRIPTION

For locations of each component on vehicle, **refer to Component Location Index**.

The electric powertrain system is powered by high voltage motors and the engine. The system switches the driving power depending on driving conditions or by the manual operation of the EV switch and enables driving with the use of optimal available power. Major components are the engine, the two high voltage motors, the power control unit (PCU), the high voltage battery, and the battery power cable.

Control

The electric powertrain system operates during EV driving mode and hybrid driving mode. When EV driving mode is selected, the PCU sends power from the high voltage battery to the traction motor located within the transmission (e-CVT), and the vehicle is propelled by the traction motor. The engine drives the generator motor to generate electrical power. The generated electric power is supplied to the traction motor and charging of the high voltage battery depends on current driving conditions. While driving with the electric powertrain system, the high voltage battery is recharged depending on driving conditions. When recharging, the inverter sends the power that was generated from the high voltage motor in the transmission (e-CVT) to the high voltage battery.

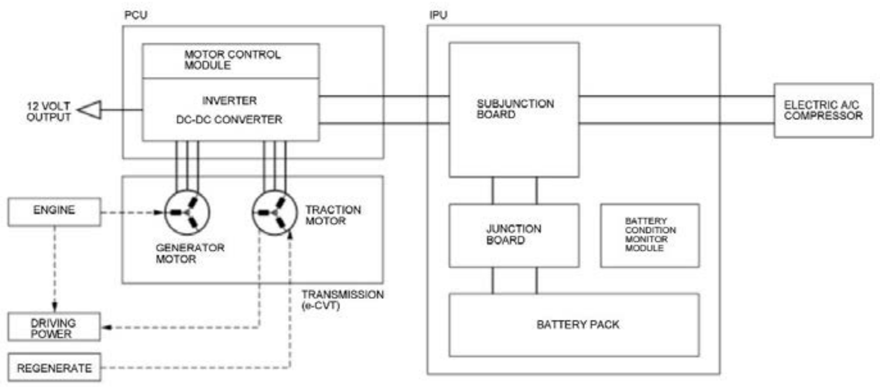
PCU
MOTOR CONTROL MODULE
INVERTER
DC-DC CONVERTER
12 VOLT OUTPUT
ENGINE
GENERATOR MOTOR
TRACTION MOTOR
TRANSMISSION (e-CVT)
DRIVING POWER
REGENERATE
IPU
SUBJUNCTION BOARD
JUNCTION BOARD
BATTERY CONDITION MONITOR MODULE
BATTERY PACK
ELECTRIC A/C COMPRESSOR

EV Switch

The EV switch allows the driver to select EV driving mode when vehicle conditions allow for the use of EV driving mode. When the EV switch is pressed, the PCM determines if the current vehicle condition is capable of driving in EV driving mode. If EV driving mode drive is possible, the driving mode changes to EV driving mode, and the EV mode indicator on the gauge control module illuminates. If EV driving mode is not possible, the vehicle is kept in current hybrid driving mode, and the reason is displayed in the gauge control module.

Driving Modes

The electric powertrain system has the following driving modes: EV driving mode, HV driving mode, and engine driving mode. The available driving modes are determined and selected by the PCM depending on the vehicle's current condition. EV driving mode can be manually selected by the driver and is available based on current vehicle condition. When the vehicle is driven at low speeds, and during regenerative braking, the electric powertrain system operates in the EV driving mode. During high-load conditions such as acceleration, the system switches to an HV driving mode that uses both the electric motor and the internal combustion engine. At high speeds, the system enters the engine driving mode, using the gasoline engine to propel the vehicle.

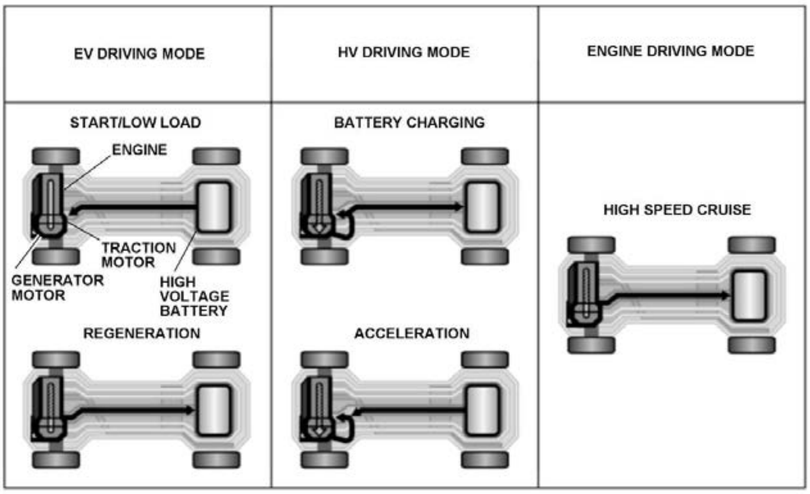
EV DRIVING MODE
HV DRIVING MODE
ENGINE DRIVING MODE
START/LOW LOAD
ENGINE
TRACTION MOTOR
GENERATOR MOTOR
HIGH VOLTAGE BATTERY
REGENERATION
BATTERY CHARGING
ACCELERATION
HIGH SPEED CRUISE

EV Driving Mode

When EV driving mode has been selected, the vehicle's drive propulsion and regenerative braking is performed by the traction motor only. The EV driving mode operates at a specific vehicle speed range and during low load conditions. The EV driving mode maximum speed is 81 mph (130 km/h), depending on the battery state of charge.

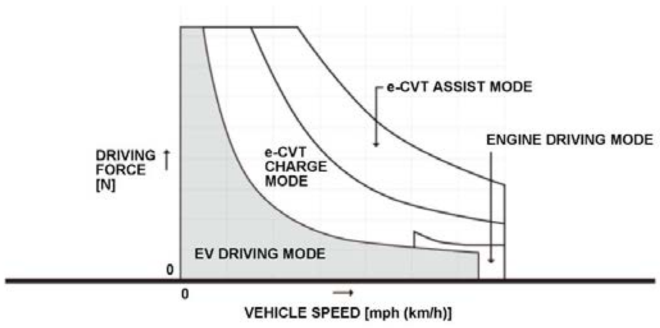

EV Idle Stop Mode

During EV idle stop mode, the traction motor, generator motor, and engine are all stopped. At this time, the high voltage battery supplies power to various devices of the vehicle.

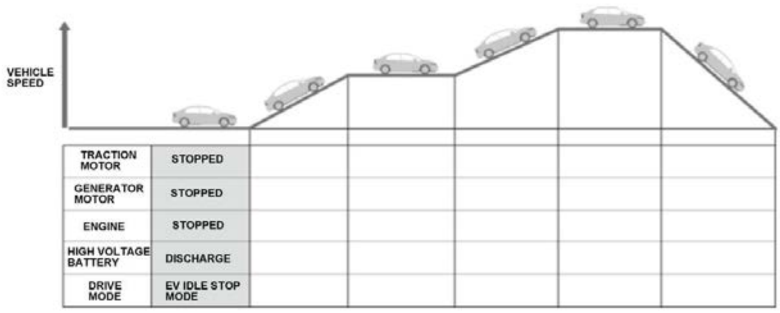

TRACTION MOTOR	STOPPED					
GENERATOR MOTOR	STOPPED					
ENGINE	STOPPED					
HIGH VOLTAGE BATTERY	DISCHARGE					
DRIVE MODE	EV IDLE STOP MODE					

EV Drive Mode

During EV drive mode, the traction motor supplies driving force. The generator motor and the engine do not operate. At this time, the high voltage battery energizes the traction motor.

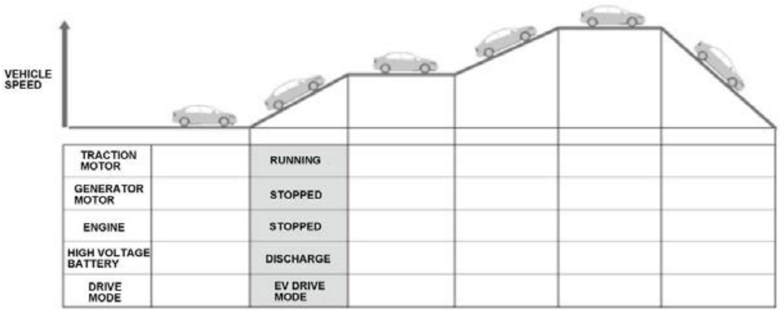

TRACTION MOTOR		RUNNING				
GENERATOR MOTOR		STOPPED				
ENGINE		STOPPED				
HIGH VOLTAGE BATTERY		DISCHARGE				
DRIVE MODE		EV DRIVE MODE				

Regeneration Mode

The regeneration mode is used during deceleration. The engine and generator motor are in a stopped condition, and the traction motor generates power that is supplied to the high voltage battery.

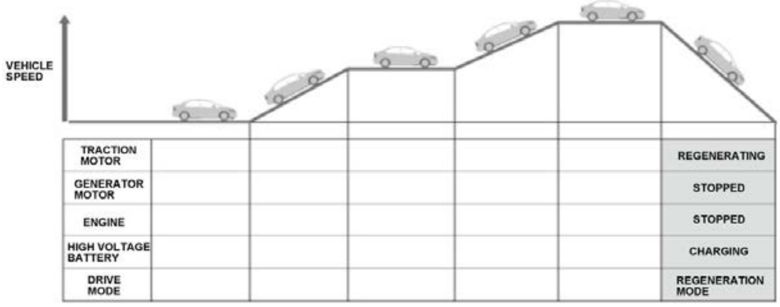

TRACTION MOTOR						REGENERATING
GENERATOR MOTOR						STOPPED
ENGINE						STOPPED
HIGH VOLTAGE BATTERY						CHARGING
DRIVE MODE						REGENERATION MODE

HV Driving Mode

While driving in the HV driving mode during acceleration, the engine powers the vehicle by activating the generator motor to generate power. The generated power is used to activate the traction motor to drive the vehicle. Depending on the battery's state of charge and the load condition of the traction motor, the high voltage battery is recharged while driving.

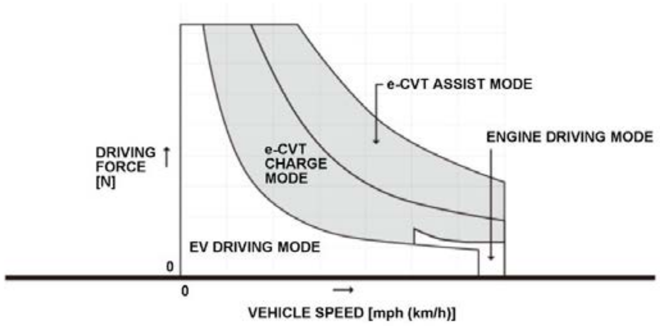

e-CVT Charge Mode

The e-CVT charge mode is used at vehicle speed ranges suitable for charging, and its activation range varies depending on the state of charge of the high voltage battery. During e-CVT charge mode, the engine energizes the generator motor to send electric power to the high voltage battery. The traction motor provides driving power to the drive wheel, using the electric power from generator motor. The engine is actively controlled to operate at optimum RPM ranges according to driving conditions. The generator motor generates more power than what is required by the traction motor to drive the vehicle. Generated power not used by the traction motor is used to recharge the high voltage battery.

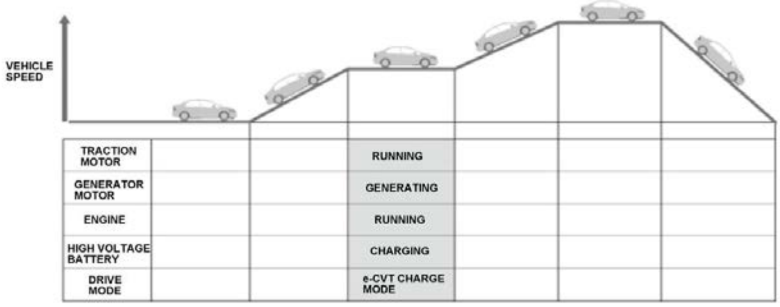

TRACTION MOTOR			RUNNING			
GENERATOR MOTOR			GENERATING			
ENGINE			RUNNING			
HIGH VOLTAGE BATTERY			CHARGING			
DRIVE MODE			e-CVT CHARGE MODE			

e-CVT Assist Mode

The e-CVT assist mode is primarily used during acceleration, and its activation range varies depending on the high voltage battery state of charge. The driving power during e-CVT assist mode is similar to that of the e-CVT drive mode. The engine energizes the generator motor, and the traction motor provides the driving power to the drive wheel. During e-CVT assist mode, the traction motor sends a large amount of torque to the drive wheel, therefore requiring more electric power as compared with other modes. The engine activates the generator at optimum RPM ranges, and available electric power is used directly by the traction motor. If the generator motor generates insufficient power to accommodate the needs of the traction motor, additional power is supplied from the high voltage battery.

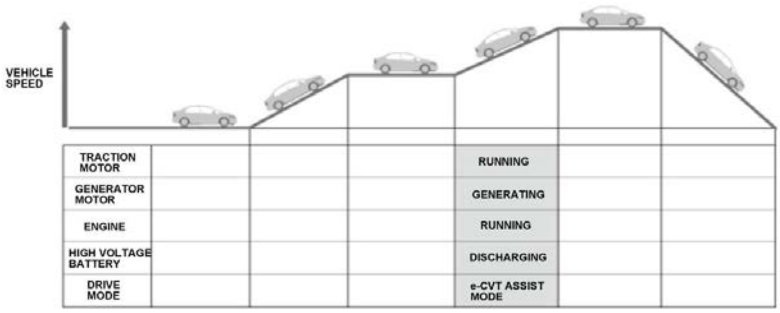

TRACTION MOTOR				RUNNING		
GENERATOR MOTOR				GENERATING		
ENGINE				RUNNING		
HIGH VOLTAGE BATTERY				DISCHARGING		
DRIVE MODE				e-CVT ASSIST MODE		

Engine Driving Mode

The engine driving mode uses the power of the engine only at high speeds and low loads. The engine driving mode is primarily used during high-speed cruising. The operating range of the engine driving mode varies depending on the high voltage battery state of charge, driving force conditions and current speed of the vehicle.

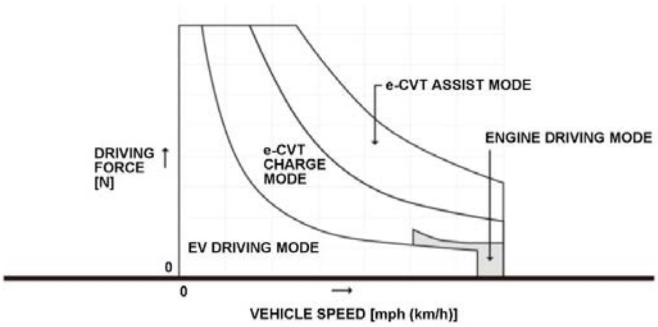

Engine Drive Mode

During engine drive mode, the engine output is supplied to the drive wheel and the traction motor. This allows the vehicle to be mechanically driven by the engine, while the high voltage battery is charged with power created by the traction motor. The generator motor is not operated during engine drive mode.

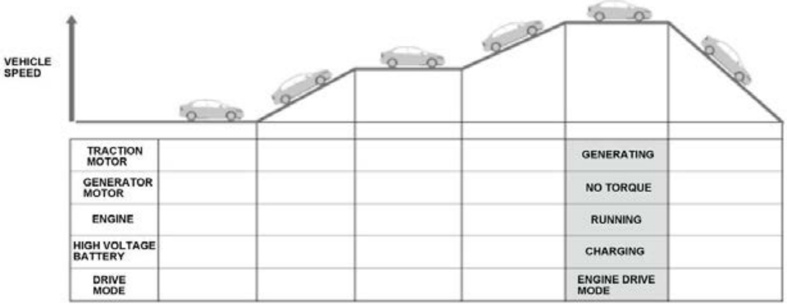

MOTOR CONTROL SYSTEM DESCRIPTION

For locations of each component on vehicle, **refer to Component Location Index**.

The motor control system includes the traction motor, the generator motor, the gear unit, and the phase current sensors in the transmission (e-CVT), the motor control module in the power control unit (PCU) that controls the high voltage motors, the cooling system for cooling the PCU interior, the inverter that transforms the motor voltage into an appropriate voltage, and the direct connector pin that connect the high voltage motors to the PCU.

Control

The traction motor is located in the transmission (e-CVT). It produces driving force and generates power for the high voltage battery. The generator motor is located in the transmission (e-CVT). It charges the high voltage battery and generates power for engine startup.

The motor control module receives each information from the following units/sensors and control the traction motor and generator motor. In addition, the motor control module coordinates it so that the voltage from the traction motor and generator motor accords to the voltage of the high voltage battery.

Units/Sensors	Information
Motor rotor position sensors	Rotary speed of the motor
	Rotatory direction of the motor
Phase current sensors	Current value of the motor
Battery condition monitor module	Current value of the high voltage battery

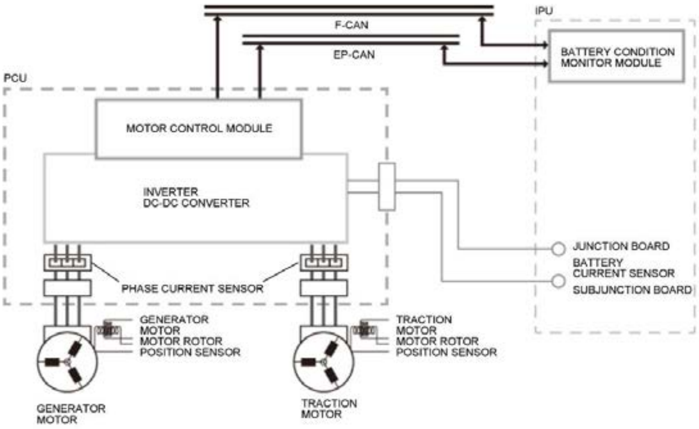
F-CAN
EP-CAN
IPU
BATTERY CONDITION MONITOR MODULE
PCU
MOTOR CONTROL MODULE
INVERTER
DC-DC CONVERTER
JUNCTION BOARD
BATTERY CURRENT SENSOR
SUBJUNCTION BOARD
PHASE CURRENT SENSOR
GENERATOR MOTOR MOTOR ROTOR POSITION SENSOR
TRACTION MOTOR MOTOR ROTOR POSITION SENSOR
GENERATOR MOTOR
TRACTION MOTOR

Components

PCU

The inverter, the DC-DC converter, and the motor control module are located in the power control unit (PCU). It contains a cooling system composed of a dedicated radiator, PCU electric coolant pump, and expansion tank. This cooling system enables temperature adjustment inside the PCU. The motor control module controls the traction motor and the generator motor, and communicates with the PCM to coordinate with the engine and transmission operation. The motor control module contains a rewritable ROM and uses an updating tool to enable latest program updates.

Traction Motor/Generator Motor

The traction motor is located in the transmission (e-CVT). It produces driving force and generates power for the high voltage battery. The generator motor is also located in the transmission (e-CVT). It recharges the high voltage battery and generates power for engine startup. Each motor is a lightweight, compact, and highly efficient three phase synchronous motor. It is positioned together with the gear unit in the transmission (e-CVT). The motor consists of a three coil stator secured in the housing, and a rotor with permanent magnets in its outer circumference. A motor rotor position sensor is also located in the transmission (e-CVT). It detects the position of the press-fitted motor rotor position rotor, to determine the rotor's rotation position (phase). The stator coil utilizes distributed winding to reduce vibration and enable stable torque during high speed operation.

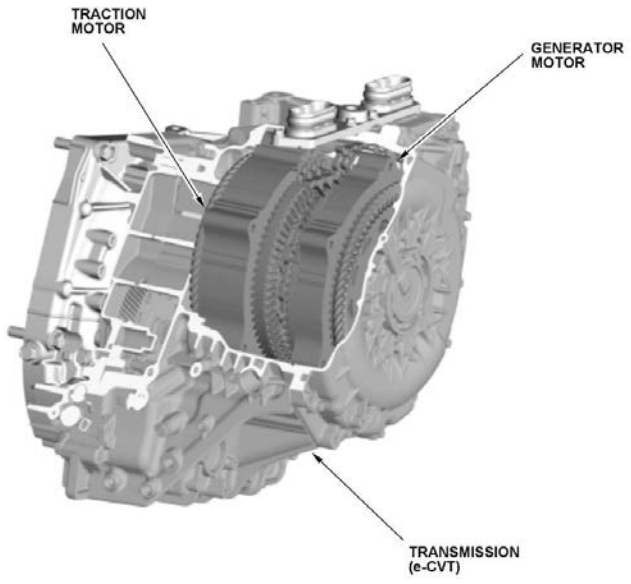

DC-DC Converter

To maintain the 12 volt system voltage, the system uses a DC-DC converter. The DC-DC converter converts high voltage direct current into low voltage direct current with little energy loss.

The temperature of the DC-DC converter is monitored by the motor control module built into the PCU, and in case of an abnormal rise of the temperature, the motor control module stops the operation of the DC-DC converter, which causes the 12 volt charging system indicator to come on. The operation of the DC-DC converter also stops when an abnormality with the input voltage or output voltage is detected; this causes the 12 volt charging system indicator to come on, and a warning is displayed on the multi-information display.

When the DC-DC converter stops operation because of an abnormality, there will be an insufficiency of 12 volt power, which restricts the output of the electric powertrain system, according to the output drop of the 12 volt battery.

Cooling System

The PCU cooling system is a water cooling system consisting of a dedicated PCU electric coolant pump, radiator, expansion tank, coolant hose/pipe, and PCU. PCU coolant absorbs heat from the water jacket inside the PCU, passes through the radiator interior and releases heat to the atmosphere. The PCU electric coolant pump adopts a 12 volt DC brushless water pump, and has a built in motor and ECU.

PCU Coolant Flow

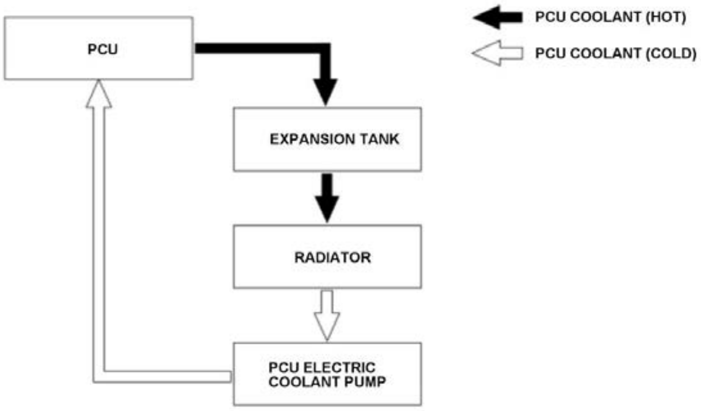

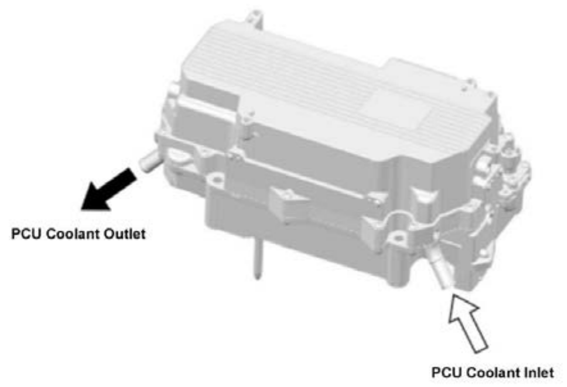
PCU Coolant Outlet
PCU Coolant Inlet

CIRCUIT DIAGRAM

ELECTRIC POWERTRAIN CIRCUIT DIAGRAM

For CAN circuit, refer to the Communication Systems Circuit Diagram for Fuel and Emissions

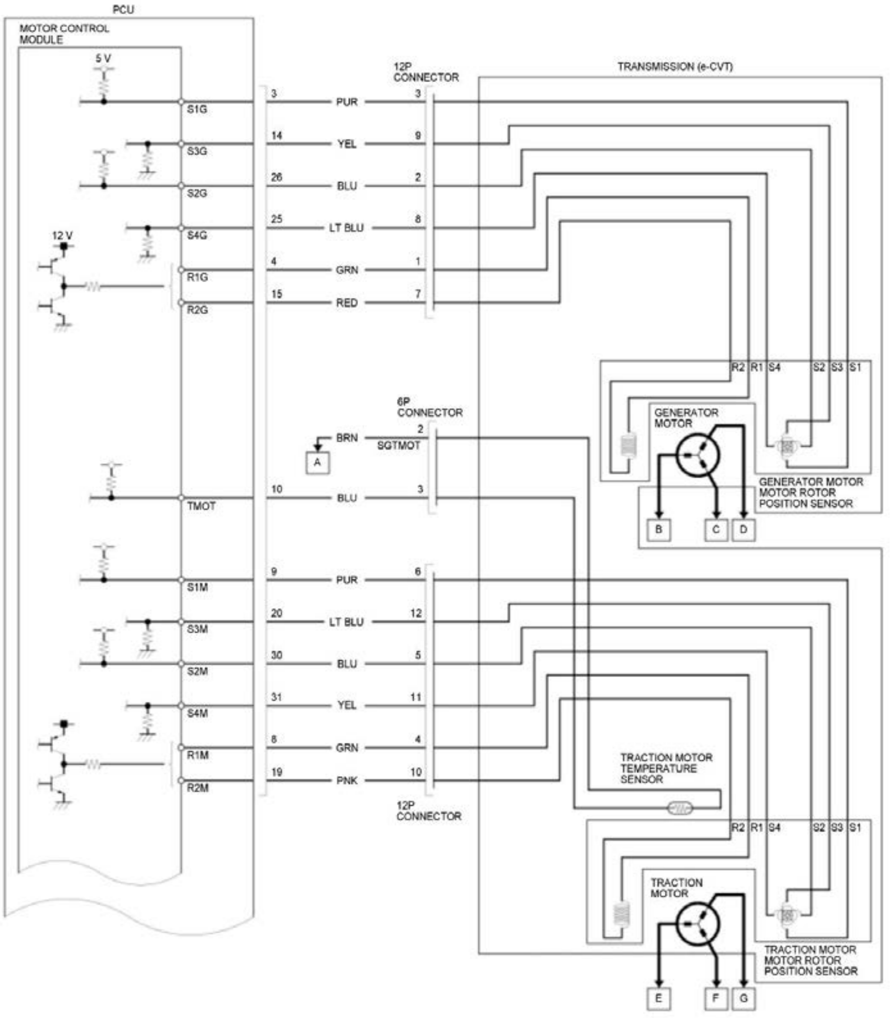
PCU
MOTOR CONTROL MODULE
5 V
S1G
S3G
S2G
S4G
12 V
R1G
R2G
3
PUR
3
14
YEL
9
26
BLU
2
25
LT BLU
8
4
GRN
1
15
RED
7
12P CONNECTOR
TRANSMISSION (e-CVT)
R2
R1
S4
S2
S3
S1
GENERATOR MOTOR
GENERATOR MOTOR MOTOR ROTOR POSITION SENSOR
B
C
D
6P CONNECTOR
2
BRN
SGTMOT
A
TMOT
10
BLU
3
9
PUR
6
S1M
20
LT BLU
12
S3M
30
BLU
5
S2M
31
YEL
11
S4M
8
GRN
4
R1M
19
PNK
10
R2M
12P CONNECTOR
TRACTION MOTOR TEMPERATURE SENSOR
R2
R1
S4
S2
S3
S1
TRACTION MOTOR
TRACTION MOTOR MOTOR ROTOR POSITION SENSOR
E
F
G

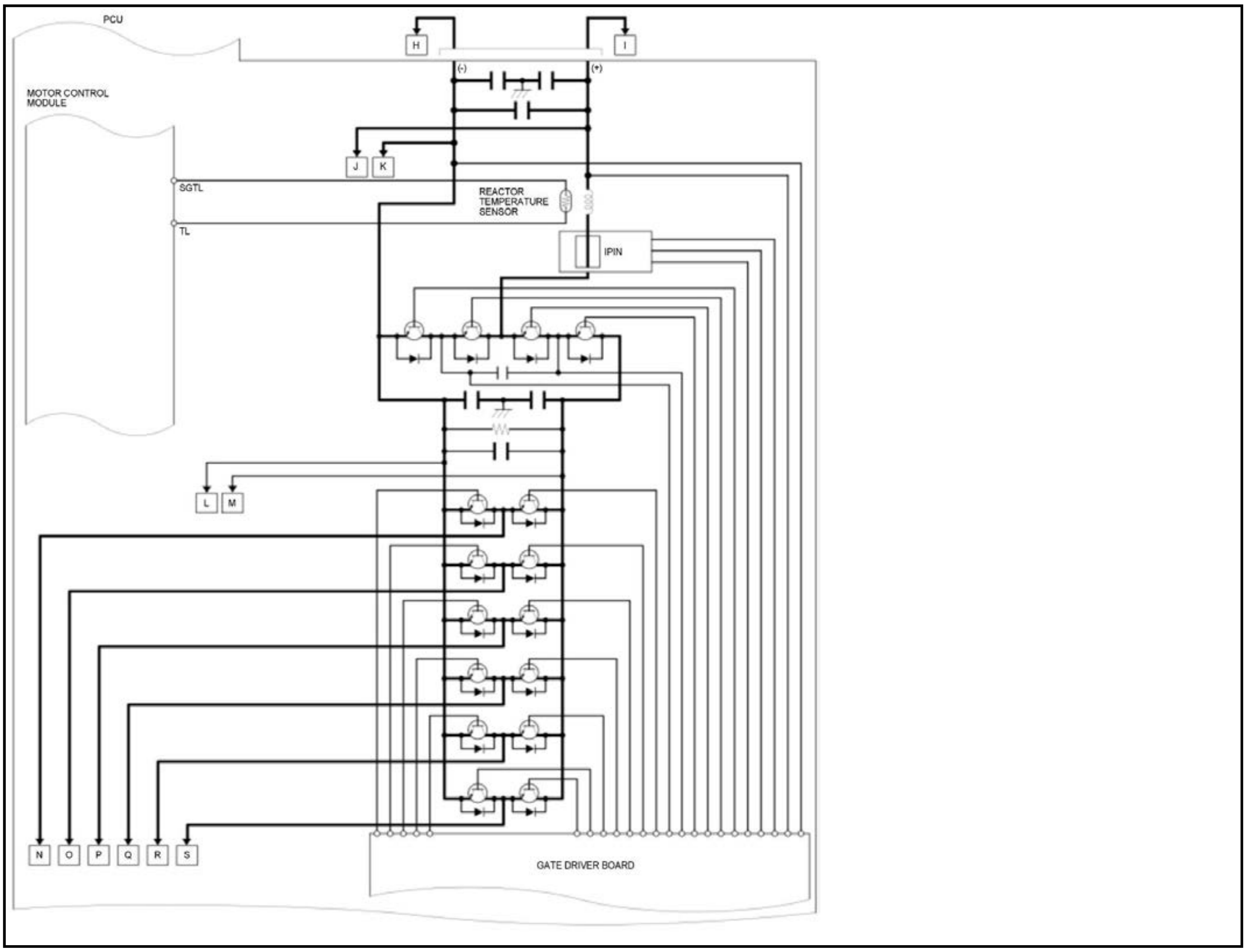
PCU
MOTOR CONTROL MODULE
H
I
(-)
(+)
J
K
SGTL
TL
REACTOR TEMPERATURE SENSOR
IPIN
L
M
N
O
P
Q
R
S
GATE DRIVER BOARD

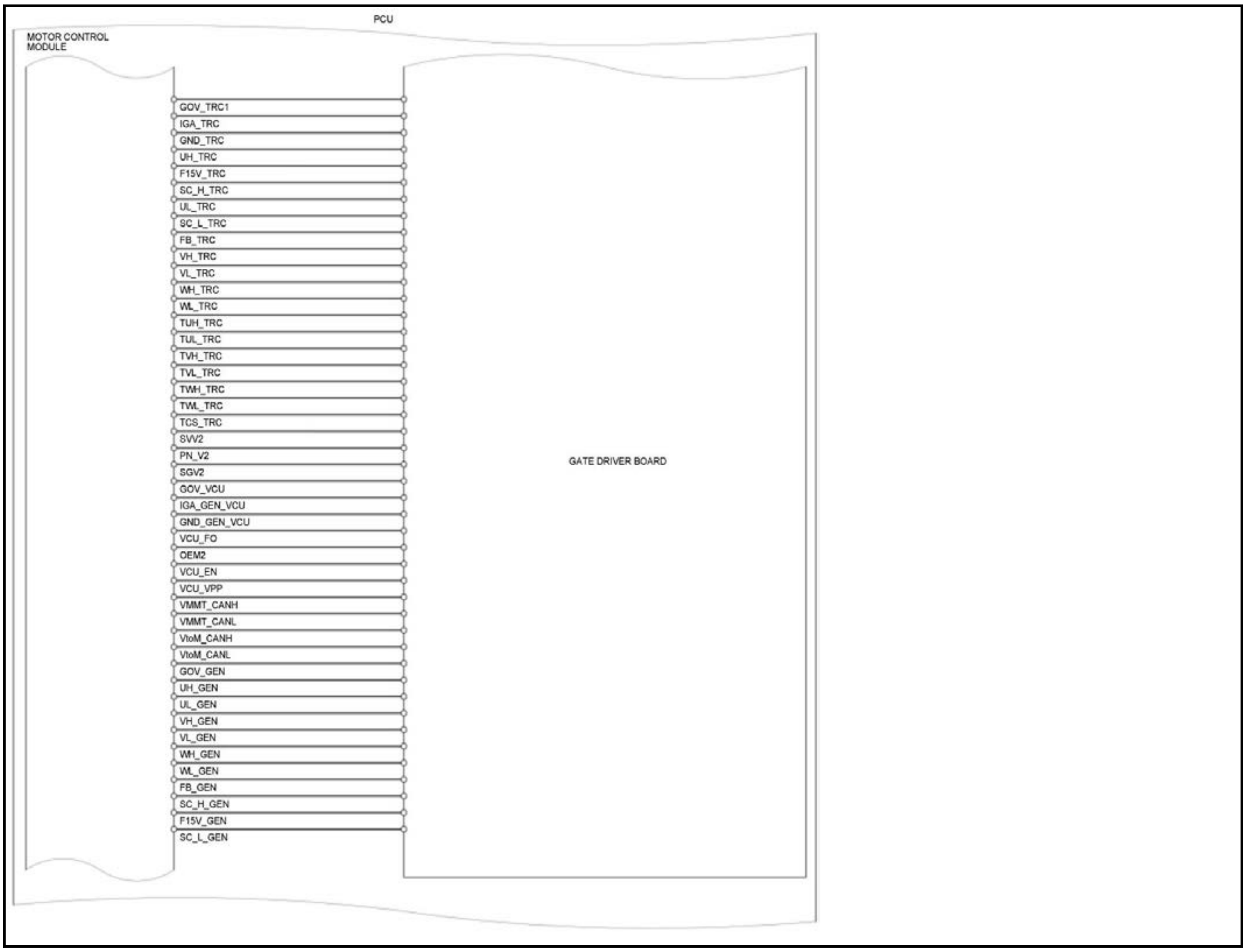
PCU
MOTOR CONTROL MODULE
GOV_TRC1
IGA_TRC
GND_TRC
UH_TRC
F15V_TRC
SC_H_TRC
UL_TRC
SC_L_TRC
FB_TRC
VH_TRC
VL_TRC
WH_TRC
WL_TRC
TUH_TRC
TUL_TRC
TVH_TRC
TVL_TRC
TWH_TRC
TWL_TRC
TCS_TRC
SVV2
PN_V2
SGV2
GOV_VCU
IGA_GEN_VCU
GND_GEN_VCU
VCU_FO
OEM2
VCU_EN
VCU_VPP
VMMT_CANH
VMMT_CANL
VtoM_CANH
VtoM_CANL
GOV_GEN
UH_GEN
UL_GEN
VH_GEN
VL_GEN
WH_GEN
WL_GEN
FB_GEN
SC_H_GEN
F15V_GEN
SC_L_GEN
GATE DRIVER BOARD

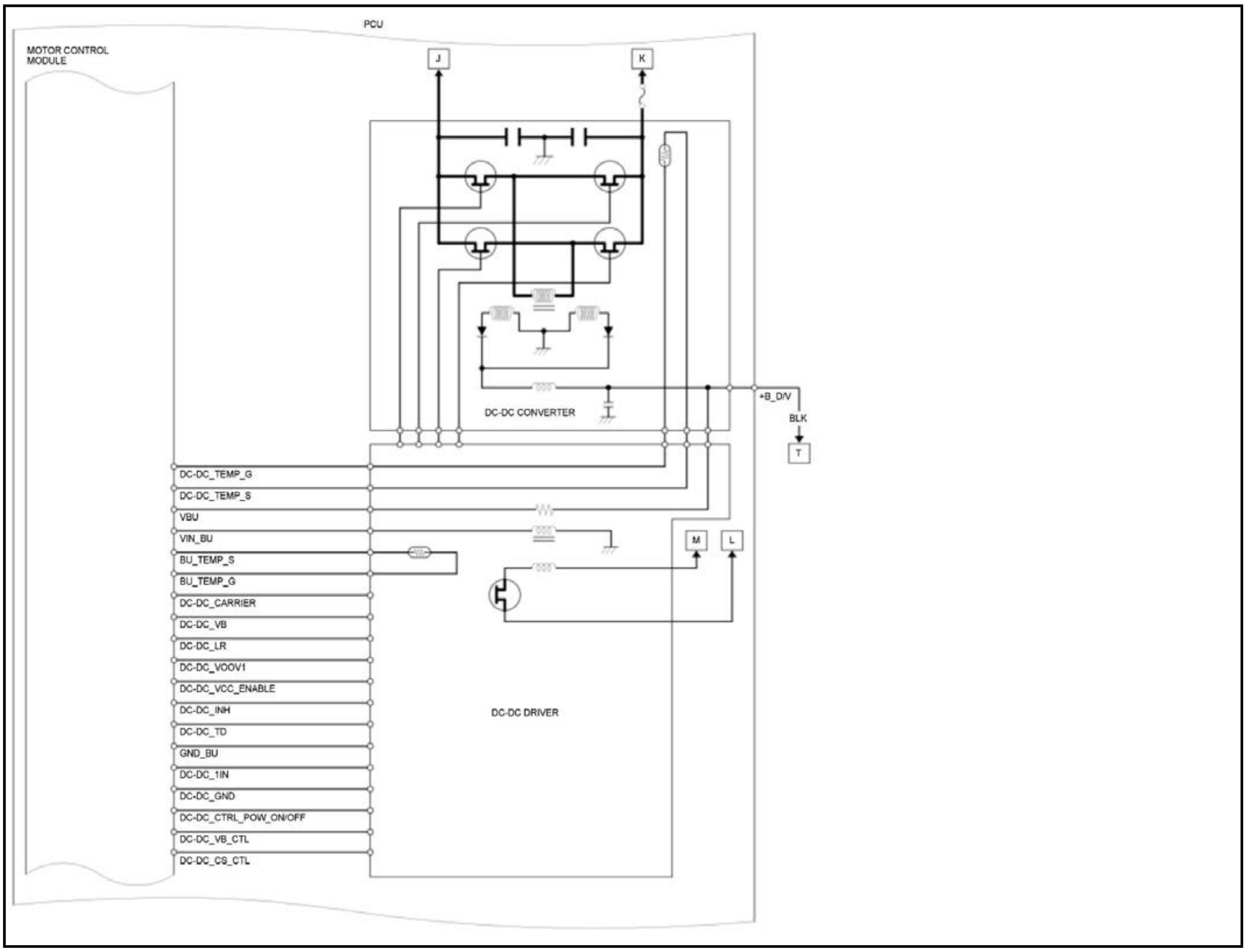
PCU
MOTOR CONTROL MODULE
J
K
+B_D/V
BLK
T
DC-DC CONVERTER
M
L
DC-DC_TEMP_G
DC-DC_TEMP_S
VBU
VIN_BU
BU_TEMP_S
BU_TEMP_G
DC-DC_CARRIER
DC-DC_VB
DC-DC_LR
DC-DC_VOOV1
DC-DC_VCC_ENABLE
DC-DC_INH
DC-DC_TD
GND_BU
DC-DC_1IN
DC-DC_GND
DC-DC_CTRL_POW_ON/OFF
DC-DC_VB_CTL
DC-DC_CS_CTL
DC-DC DRIVER

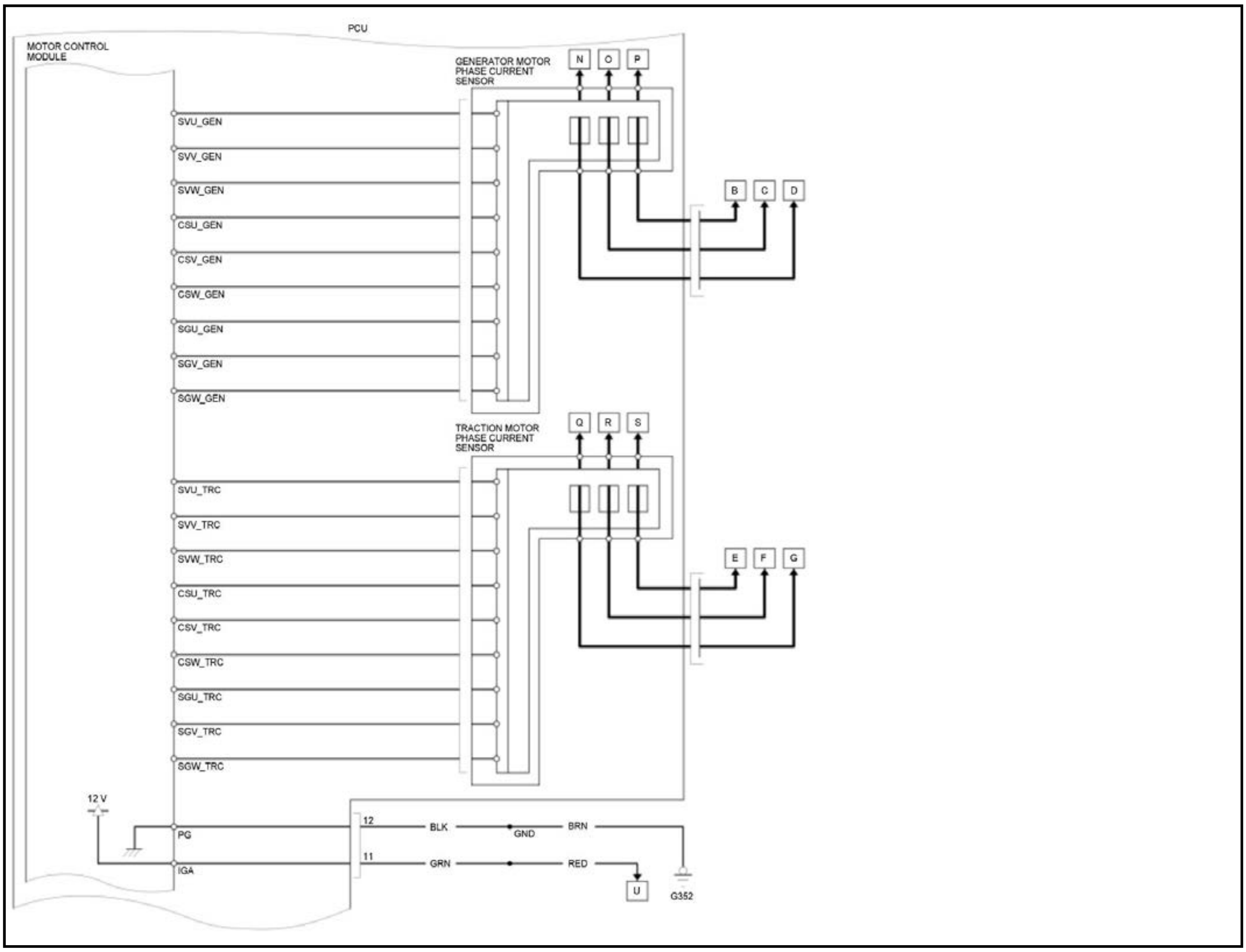
PCU
MOTOR CONTROL MODULE
GENERATOR MOTOR PHASE CURRENT SENSOR
N
O
P
SVU_GEN
SVV_GEN
SVW_GEN
CSU_GEN
CSV_GEN
CSW_GEN
SGU_GEN
SGV_GEN
SGW_GEN
B
C
D
TRACTION MOTOR PHASE CURRENT SENSOR
Q
R
S
SVU_TRC
SVV_TRC
SVW_TRC
CSU_TRC
CSV_TRC
CSW_TRC
SGU_TRC
SGV_TRC
SGW_TRC
E
F
G
12 V
PG
IGA
12
11
BLK
GND
BRN
GRN
RED
U
G352

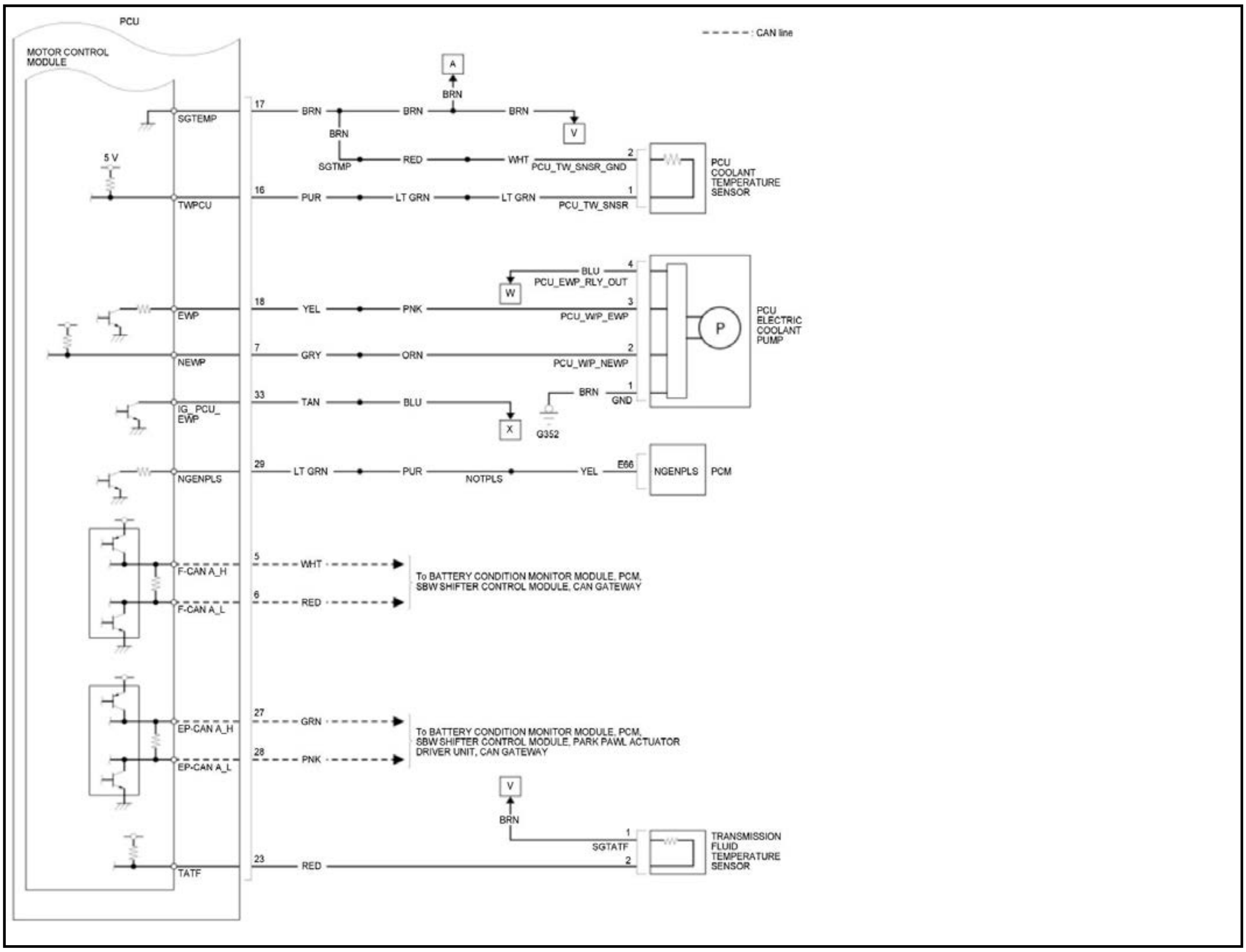
PCU
MOTOR CONTROL MODULE
CAN line
A
BRN
17
BRN
BRN
BRN
V
SGTEMP
BRN
5 V
SGTMP
RED
WHT
2
PCU_TW_SNSR_GND
PCU COOLANT TEMPERATURE SENSOR
16
PUR
LT GRN
LT GRN
1
PCU_TW_SNSR
TWPCU
BLU
4
W
PCU_EWP_RLY_OUT
18
YEL
PNK
3
PCU_W/P_EWP
EWP
PCU ELECTRIC COOLANT PUMP
P
7
GRY
ORN
2
PCU_W/P_NEWP
NEWP
33
TAN
BLU
BRN
1
GND
IG_PCU_EWP
X
G352
29
LT GRN
PUR
NOTPLS
YEL
E66
NGENPLS
PCM
NGENPLS
5
WHT
F-CAN A_H
6
RED
F-CAN A_L
To BATTERY CONDITION MONITOR MODULE, PCM, SBW SHIFTER CONTROL MODULE, CAN GATEWAY
27
GRN
EP-CAN A_H
28
PNK
EP-CAN A_L
To BATTERY CONDITION MONITOR MODULE, PCM, SBW SHIFTER CONTROL MODULE, PARK PAWL ACTUATOR DRIVER UNIT, CAN GATEWAY
V
BRN
1
SGTATF
TRANSMISSION FLUID TEMPERATURE SENSOR
23
RED
2
TATF

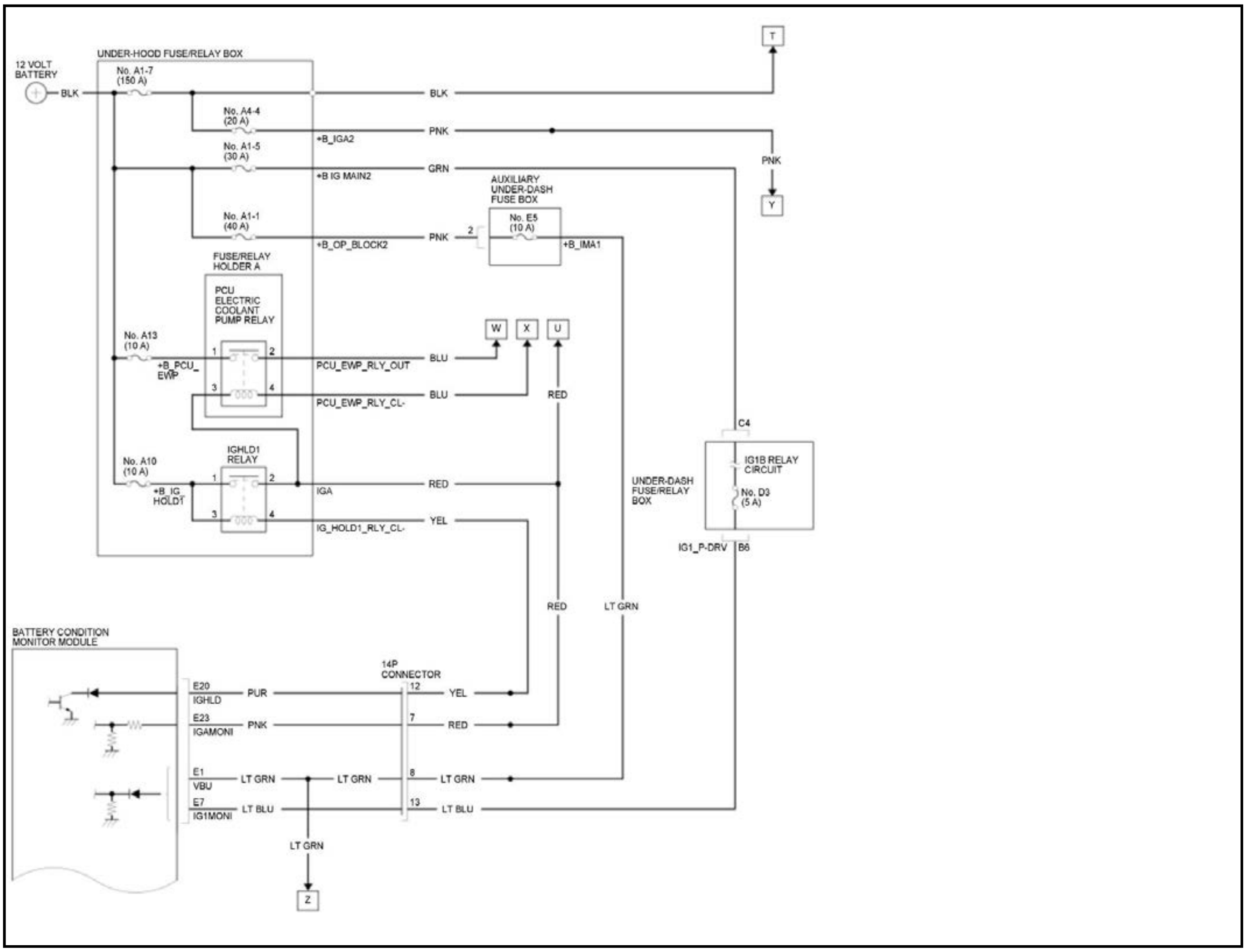
UNDER-HOOD FUSE/RELAY BOX
12 VOLT BATTERY
BLK
No. A1-7 (150 A)
BLK
T
No. A4-4 (20 A)
+B_IGA2
PNK
PNK
Y
No. A1-5 (30 A)
+B IG MAIN2
GRN
AUXILIARY UNDER-DASH FUSE BOX
No. A1-1 (40 A)
+B_OP_BLOCK2
PNK
2
No. E5 (10 A)
+B_IMA1
FUSE/RELAY HOLDER A
PCU ELECTRIC COOLANT PUMP RELAY
W
X
U
No. A13 (10 A)
+B_PCU_EWP
1
2
PCU_EWP_RLY_OUT
BLU
3
4
PCU_EWP_RLY_CL-
BLU
RED
C4
IGHLD1 RELAY
No. A10 (10 A)
+B_IG HOLD1
1
2
IGA
RED
UNDER-DASH FUSE/RELAY BOX
IG1B RELAY CIRCUIT
No. D3 (5 A)
3
4
IG_HOLD1_RLY_CL-
YEL
IG1_P-DRV
B6
RED
LT GRN
BATTERY CONDITION MONITOR MODULE
14P CONNECTOR
E20
IGHLD
PUR
12
YEL
E23
IGAMONI
PNK
7
RED
E1
VBU
LT GRN
LT GRN
8
LT GRN
E7
IG1MONI
LT BLU
13
LT BLU
LT GRN
Z

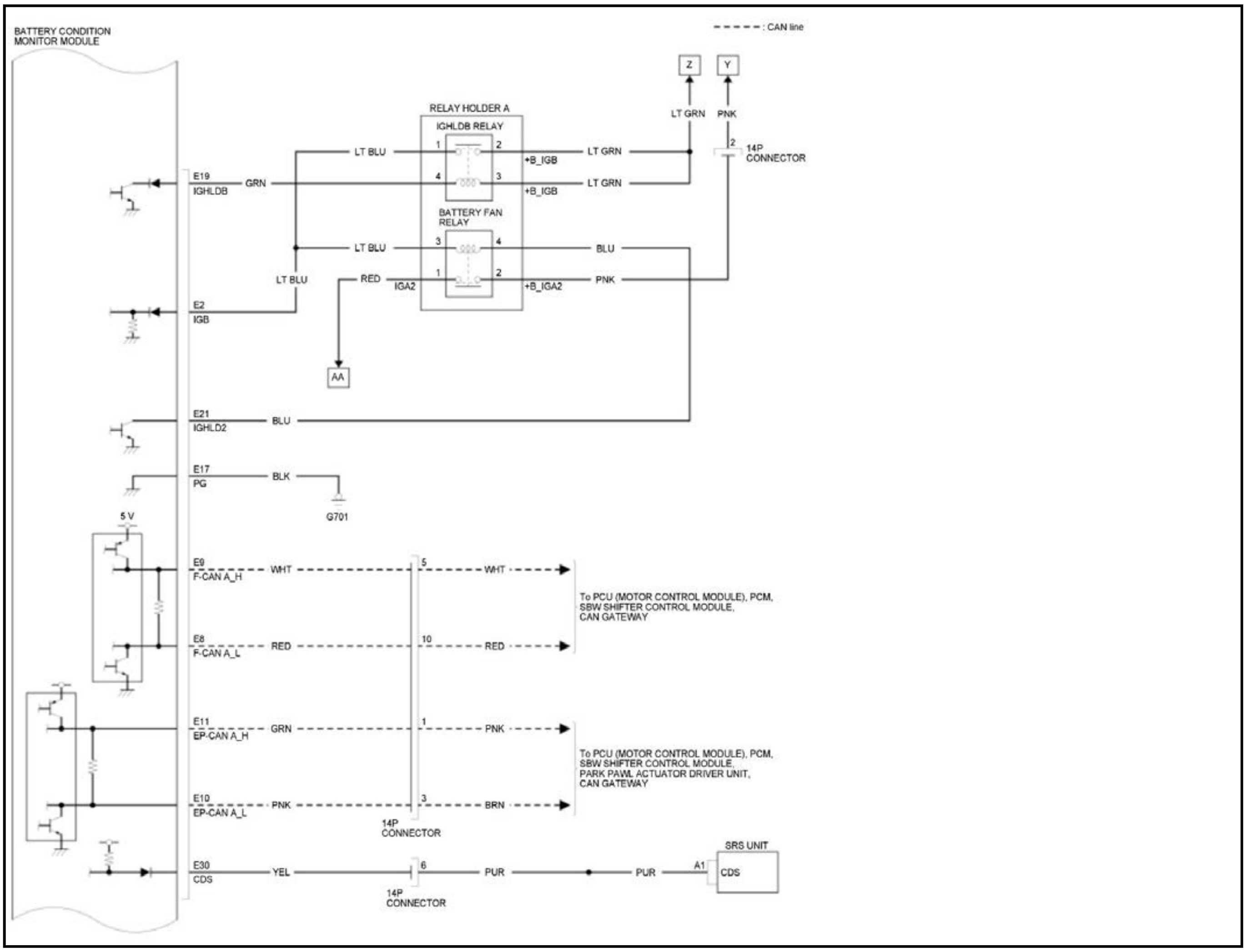
BATTERY CONDITION MONITOR MODULE
- - - - - : CAN line
Z
Y
LT GRN
PNK
RELAY HOLDER A
IGHLDB RELAY
1
2
LT BLU
LT GRN
+B_IGB
4
3
E19
IGHLDB
GRN
LT GRN
+B_IGB
2
14P CONNECTOR
BATTERY FAN RELAY
3
4
LT BLU
BLU
1
2
LT BLU
RED
IGA2
PNK
+B_IGA2
E2
IGB
AA
E21
IGHLD2
BLU
E17
PG
BLK
G701
5 V
E9
F-CAN A_H
WHT
5
WHT
To PCU (MOTOR CONTROL MODULE), PCM, SBW SHIFTER CONTROL MODULE, CAN GATEWAY
E8
F-CAN A_L
RED
10
RED
E11
EP-CAN A_H
GRN
1
PNK
To PCU (MOTOR CONTROL MODULE), PCM, SBW SHIFTER CONTROL MODULE, PARK PAWL ACTUATOR DRIVER UNIT, CAN GATEWAY
E10
EP-CAN A_L
PNK
3
BRN
14P CONNECTOR
SRS UNIT
E30
CDS
YEL
6
PUR
PUR
A1
CDS
14P CONNECTOR

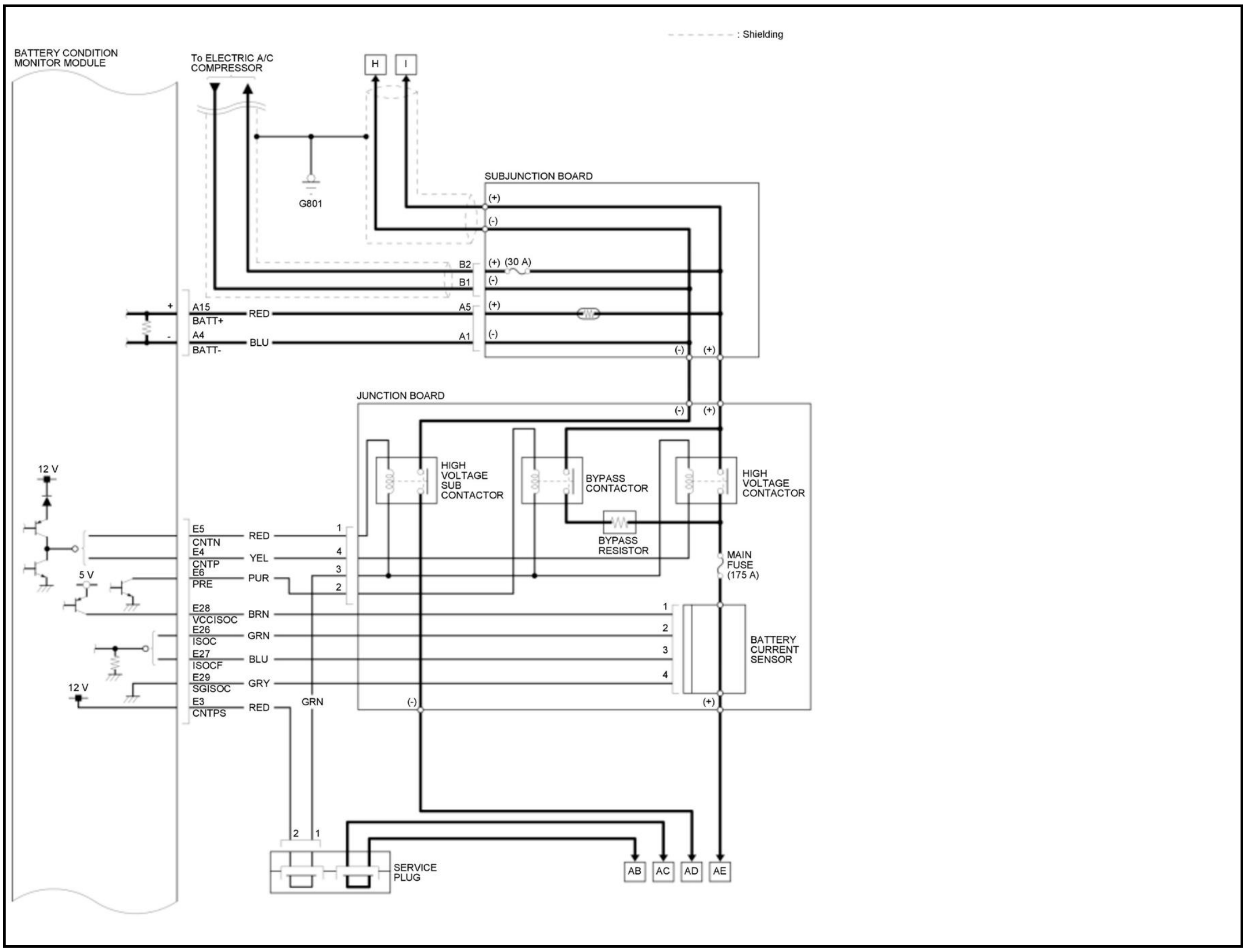
: Shielding
BATTERY CONDITION MONITOR MODULE
To ELECTRIC A/C COMPRESSOR
H
I
G801
SUBJUNCTION BOARD
(+)
(-)
B2
B1
(+) (30 A)
A5
A1
+
A15
BATT+
RED
-
A4
BATT-
BLU
JUNCTION BOARD
HIGH VOLTAGE SUB CONTACTOR
BYPASS CONTACTOR
HIGH VOLTAGE CONTACTOR
BYPASS RESISTOR
MAIN FUSE (175 A)
12 V
5 V
E5
CNTN
RED
E4
CNTP
YEL
E6
PRE
PUR
E28
VCCISOC
BRN
E26
ISOC
GRN
E27
ISOCF
BLU
E29
SGISOC
GRY
E3
CNTPS
RED
GRN
1
4
3
2
BATTERY CURRENT SENSOR
SERVICE PLUG
AB
AC
AD
AE

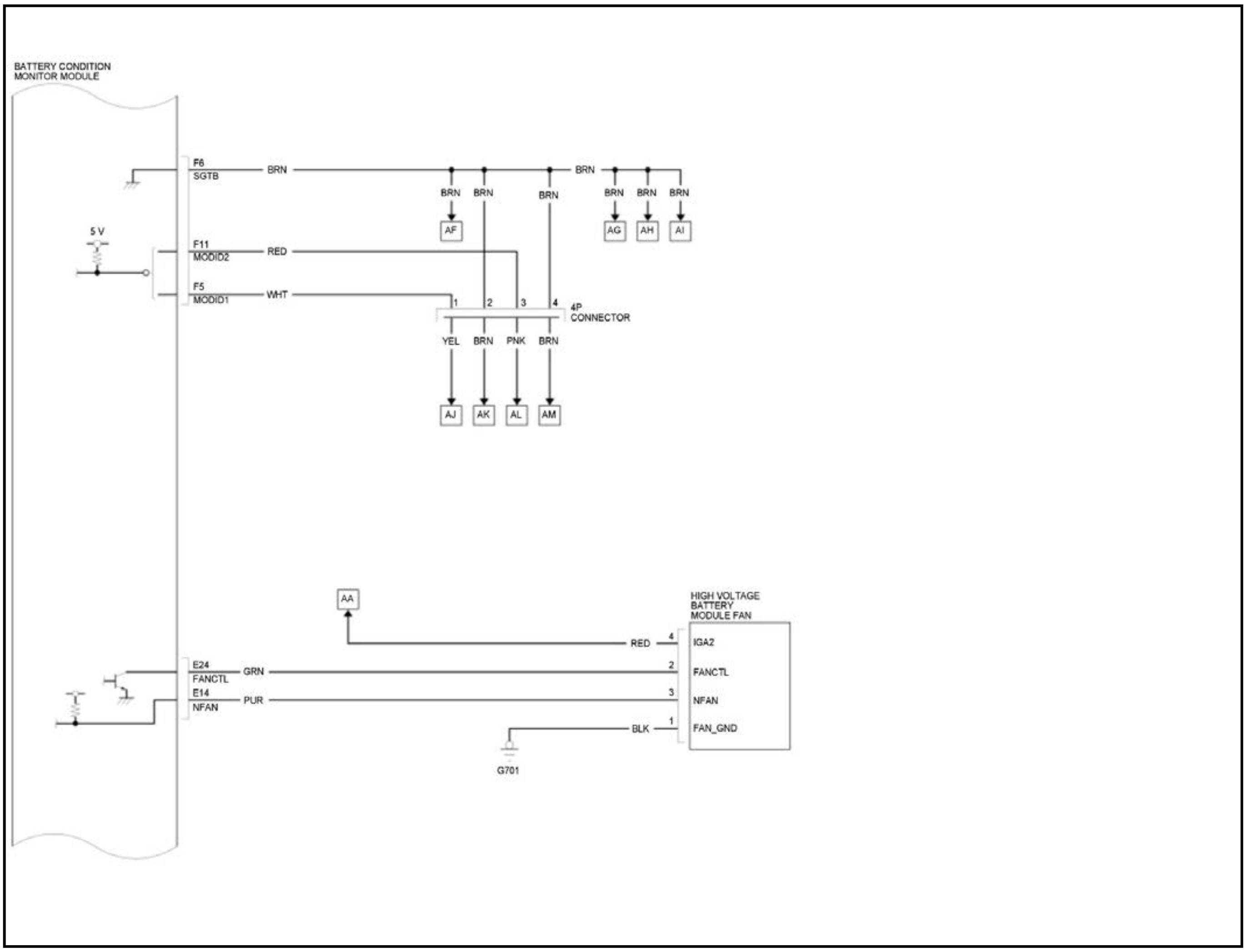
BATTERY CONDITION MONITOR MODULE
F6
SGTB
BRN
BRN
BRN
BRN
BRN
BRN
BRN
BRN
AF
AG
AH
AI
5 V
F11
MODID2
RED
F5
MODID1
WHT
1
2
3
4
4P CONNECTOR
YEL
BRN
PNK
BRN
AJ
AK
AL
AM
AA
HIGH VOLTAGE BATTERY MODULE FAN
RED
4
IGA2
E24
FANCTL
GRN
2
FANCTL
E14
NFAN
PUR
3
NFAN
BLK
1
FAN_GND
G701

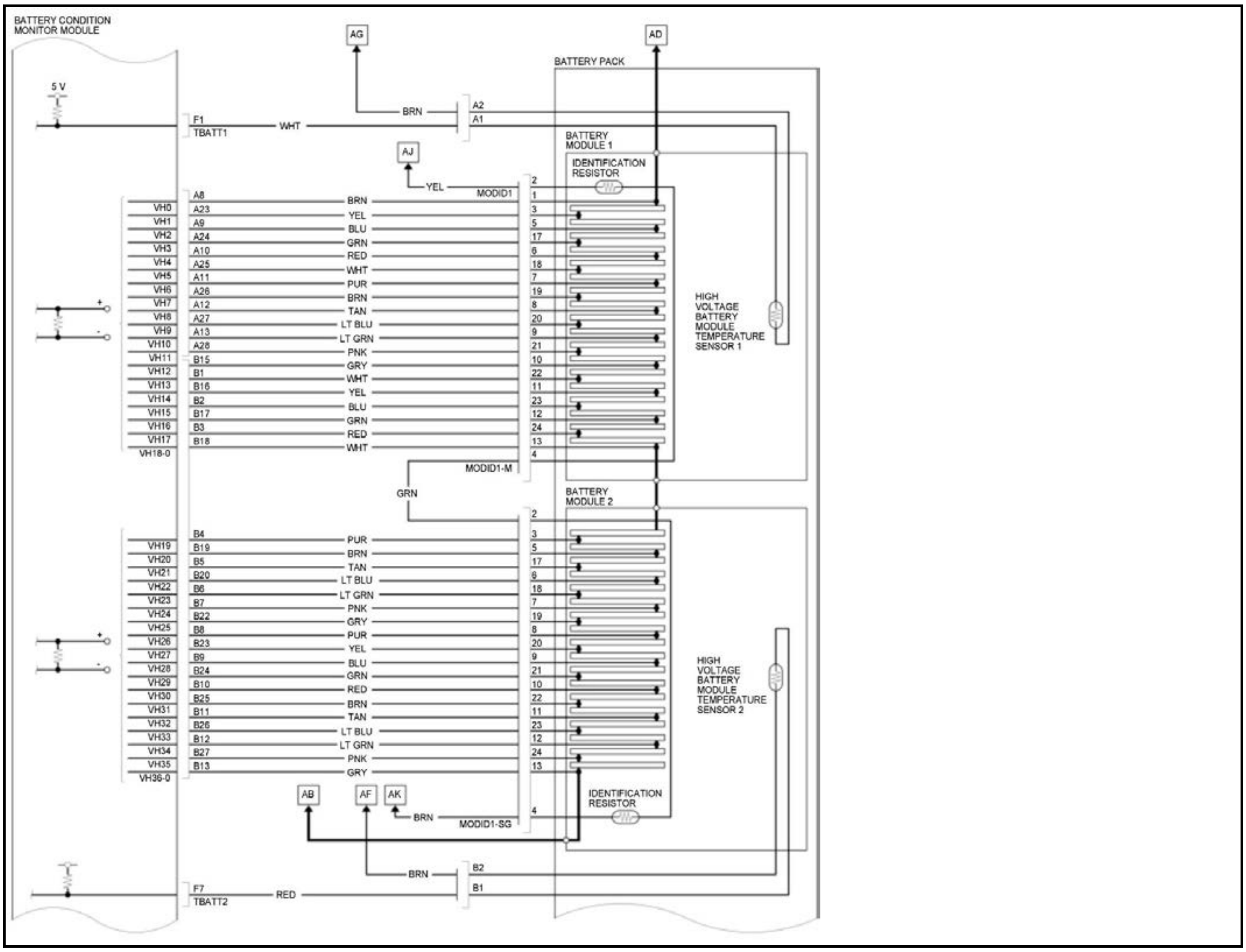
BATTERY CONDITION MONITOR MODULE
5 V
F1
TBATT1
WHT
BRN
A2
A1
AG
AD
AJ
YEL
MODID1
BATTERY PACK
BATTERY MODULE 1
IDENTIFICATION RESISTOR
HIGH VOLTAGE BATTERY MODULE TEMPERATURE SENSOR 1
VH0
VH1
VH2
VH3
VH4
VH5
VH6
VH7
VH8
VH9
VH10
VH11
VH12
VH13
VH14
VH15
VH16
VH17
VH18-0
A8
A23
A9
A24
A10
A25
A11
A26
A12
A27
A13
A28
B15
B1
B16
B2
B17
B3
B18
BRN
YEL
BLU
GRN
RED
WHT
PUR
BRN
TAN
LT BLU
LT GRN
PNK
GRY
WHT
YEL
BLU
GRN
RED
WHT
2
1
3
5
17
6
18
7
19
8
20
9
21
10
22
11
23
12
24
13
4
MODID1-M
GRN
BATTERY MODULE 2
VH19
VH20
VH21
VH22
VH23
VH24
VH25
VH26
VH27
VH28
VH29
VH30
VH31
VH32
VH33
VH34
VH35
VH36-0
B4
B19
B5
B20
B6
B7
B22
B8
B23
B9
B24
B10
B25
B11
B26
B12
B27
B13
PUR
BRN
TAN
LT BLU
LT GRN
PNK
GRY
PUR
YEL
BLU
GRN
RED
BRN
TAN
LT BLU
LT GRN
PNK
GRY
2
3
5
17
6
18
7
19
8
20
9
21
10
22
11
23
12
24
13
4
HIGH VOLTAGE BATTERY MODULE TEMPERATURE SENSOR 2
IDENTIFICATION RESISTOR
AB
AF
AK
BRN
MODID1-SG
BRN
B2
B1
F7
TBATT2
RED
+
-

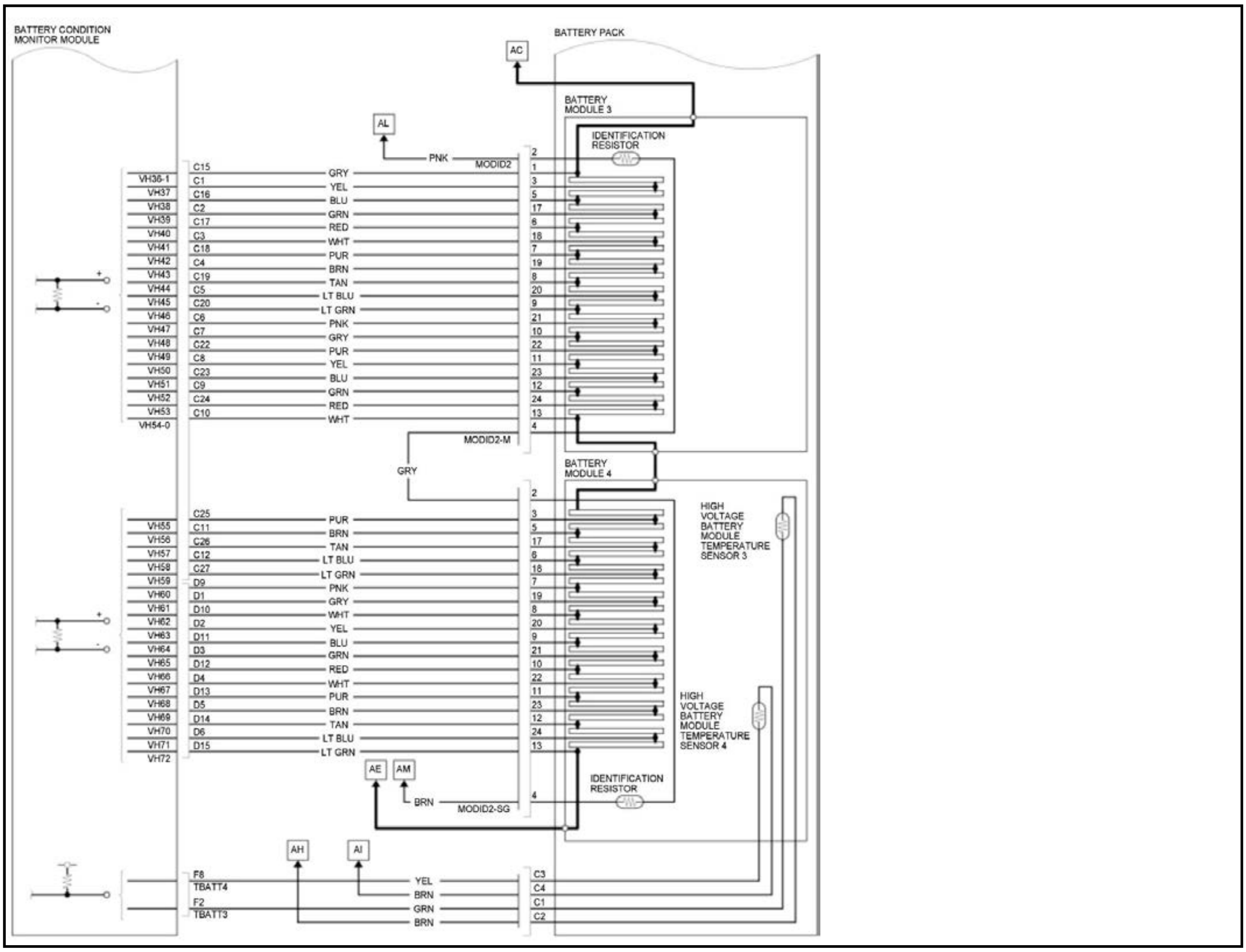
BATTERY CONDITION MONITOR MODULE
BATTERY PACK
AC
BATTERY MODULE 3
IDENTIFICATION RESISTOR
AL
PNK
MODID2
2
1
3
5
17
6
18
7
19
8
20
9
21
10
22
11
23
12
24
13
4
C15
VH36-1
C1
VH37
C16
VH38
C2
VH39
C17
VH40
C3
VH41
C18
VH42
C4
VH43
C19
VH44
C5
VH45
C20
VH46
C6
VH47
C7
VH48
C22
VH49
C8
VH50
C23
VH51
C9
VH52
C24
VH53
C10
VH54-0
GRY
YEL
BLU
GRN
RED
WHT
PUR
BRN
TAN
LT BLU
LT GRN
PNK
GRY
PUR
YEL
BLU
GRN
RED
WHT
+
-
MODID2-M
GRY
BATTERY MODULE 4
HIGH VOLTAGE BATTERY MODULE TEMPERATURE SENSOR 3
C25
VH55
C11
VH56
C26
VH57
C12
VH58
C27
VH59
D9
VH60
D1
VH61
D10
VH62
D2
VH63
D11
VH64
D3
VH65
D12
VH66
D4
VH67
D13
VH68
D5
VH69
D14
VH70
D6
VH71
D15
VH72
PUR
BRN
TAN
LT BLU
LT GRN
PNK
GRY
WHT
YEL
BLU
GRN
RED
WHT
PUR
BRN
TAN
LT BLU
LT GRN
+
-
2
3
5
17
6
18
7
19
8
20
9
21
10
22
11
23
12
24
13
4
HIGH VOLTAGE BATTERY MODULE TEMPERATURE SENSOR 4
AE
AM
BRN
MODID2-SG
IDENTIFICATION RESISTOR
AH
AI
F8
TBATT4
F2
TBATT3
YEL
BRN
GRN
BRN
C3
C4
C1
C2

COMPONENT LOCATION INDEX

ELECTRIC POWERTRAIN COMPONENT LOCATION INDEX

For relationships between signals in a system, refer to System Diagram.

Electric Powertrain System
Motor Control System
Battery System

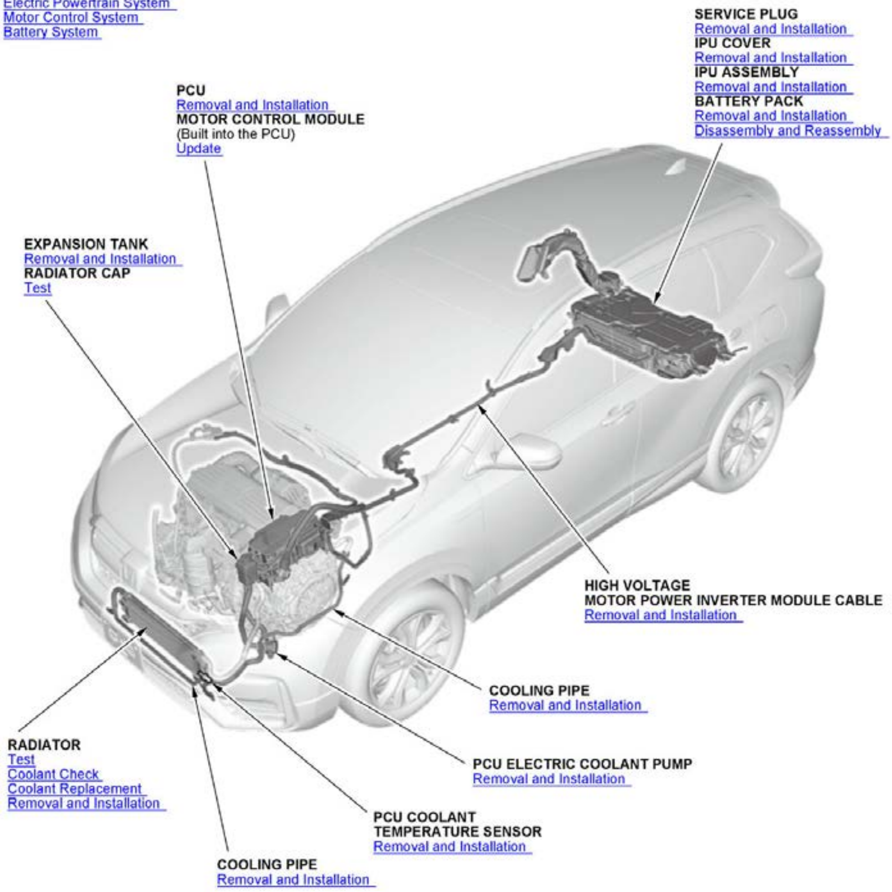

SERVICE PLUG
Removal and Installation
IPU COVER
Removal and Installation
IPU ASSEMBLY
Removal and Installation
BATTERY PACK
Removal and Installation
Disassembly and Reassembly
PCU
Removal and Installation
MOTOR CONTROL MODULE
(Built into the PCU)
Update
EXPANSION TANK
Removal and Installation
RADIATOR CAP
Test
HIGH VOLTAGE
MOTOR POWER INVERTER MODULE CABLE
Removal and Installation
COOLING PIPE
Removal and Installation
RADIATOR
Test
Coolant Check
Coolant Replacement
Removal and Installation
PCU ELECTRIC COOLANT PUMP
Removal and Installation
PCU COOLANT
TEMPERATURE SENSOR
Removal and Installation
COOLING PIPE
Removal and Installation

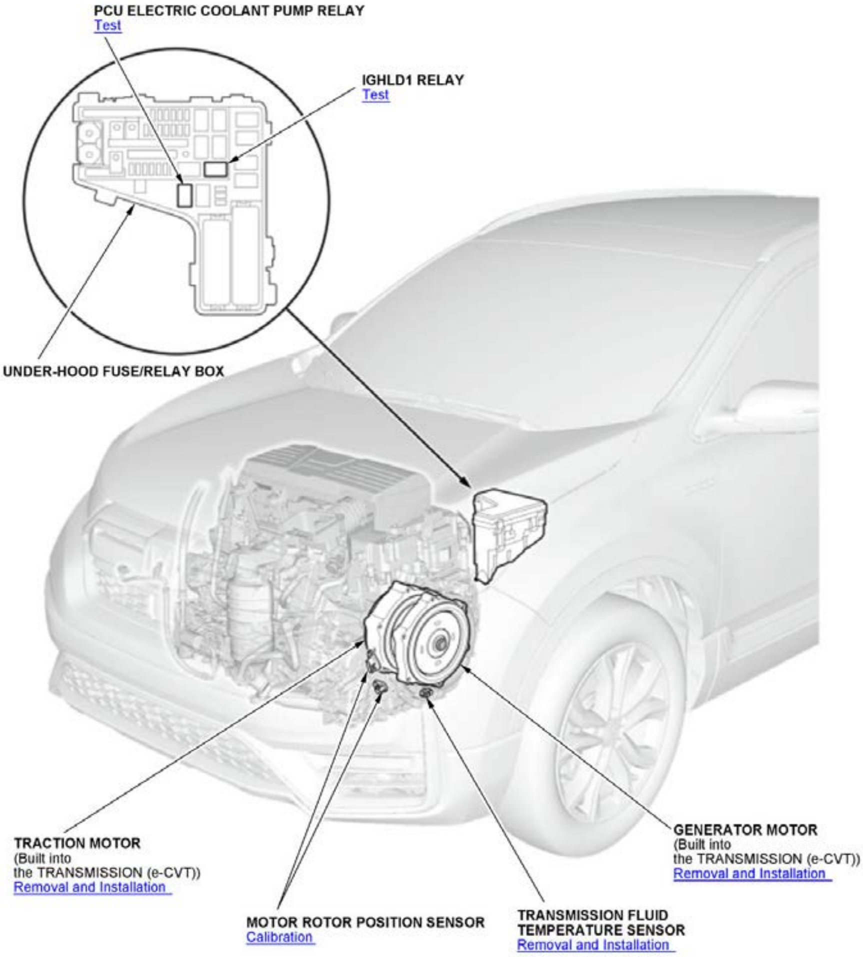

PCU ELECTRIC COOLANT PUMP RELAY
Test
IGHLD1 RELAY
Test
UNDER-HOOD FUSE/RELAY BOX
TRACTION MOTOR
(Built into
the TRANSMISSION (e-CVT))
Removal and Installation
GENERATOR MOTOR
(Built into
the TRANSMISSION (e-CVT))
Removal and Installation
MOTOR ROTOR POSITION SENSOR
Calibration
TRANSMISSION FLUID
TEMPERATURE SENSOR
Removal and Installation

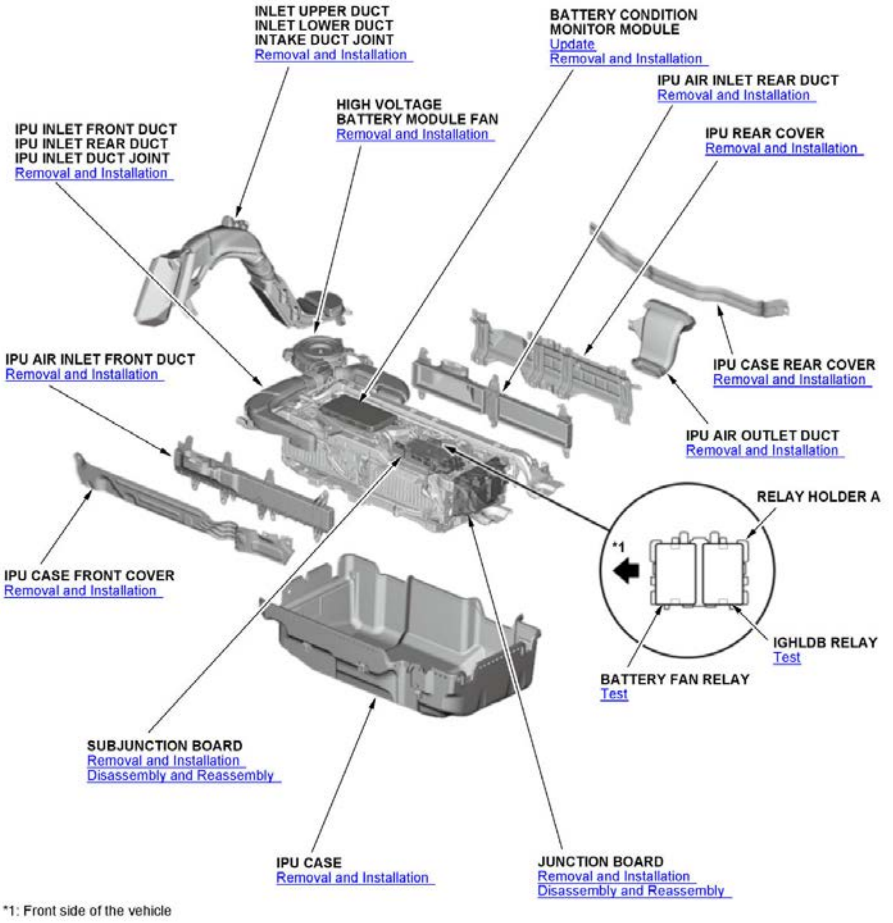
INLET UPPER DUCT
INLET LOWER DUCT
INTAKE DUCT JOINT
Removal and Installation
BATTERY CONDITION MONITOR MODULE
Update
Removal and Installation
IPU AIR INLET REAR DUCT
Removal and Installation
HIGH VOLTAGE BATTERY MODULE FAN
Removal and Installation
IPU REAR COVER
Removal and Installation
IPU INLET FRONT DUCT
IPU INLET REAR DUCT
IPU INLET DUCT JOINT
Removal and Installation
IPU AIR INLET FRONT DUCT
Removal and Installation
IPU CASE REAR COVER
Removal and Installation
IPU AIR OUTLET DUCT
Removal and Installation
RELAY HOLDER A
*1
IPU CASE FRONT COVER
Removal and Installation
IGHLDB RELAY
Test
BATTERY FAN RELAY
Test
SUBJUNCTION BOARD
Removal and Installation
Disassembly and Reassembly
IPU CASE
Removal and Installation
JUNCTION BOARD
Removal and Installation
Disassembly and Reassembly

*1: Front side of the vehicle

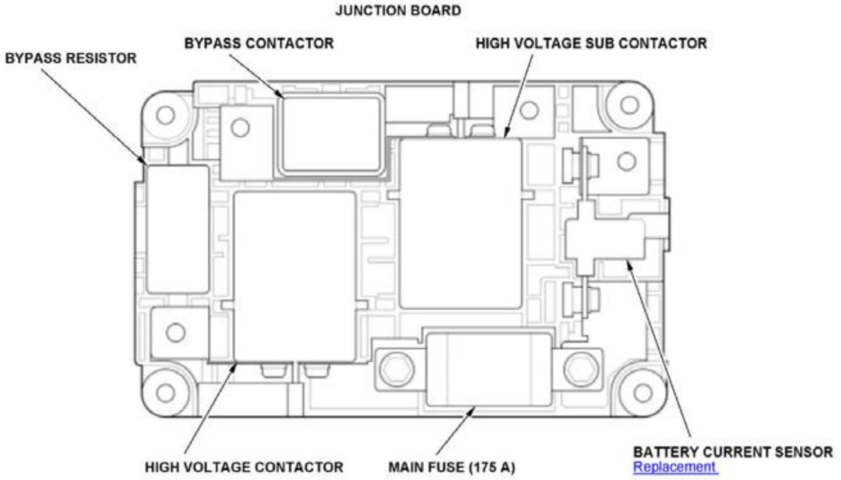
JUNCTION BOARD
BYPASS RESISTOR
BYPASS CONTACTOR
HIGH VOLTAGE SUB CONTACTOR
HIGH VOLTAGE CONTACTOR
MAIN FUSE (175 A)
BATTERY CURRENT SENSOR
Replacement

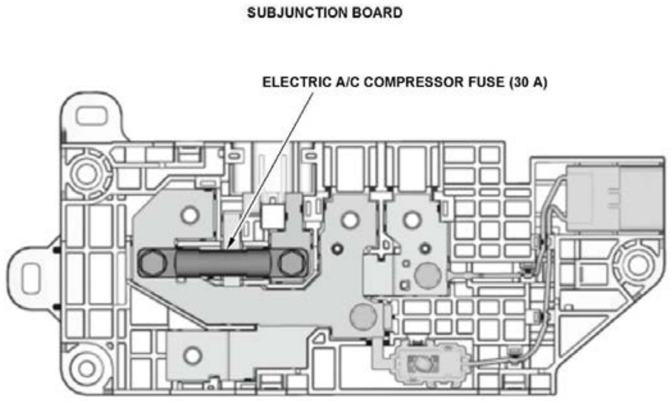
SUBJUNCTION BOARD
ELECTRIC A/C COMPRESSOR FUSE (30 A)

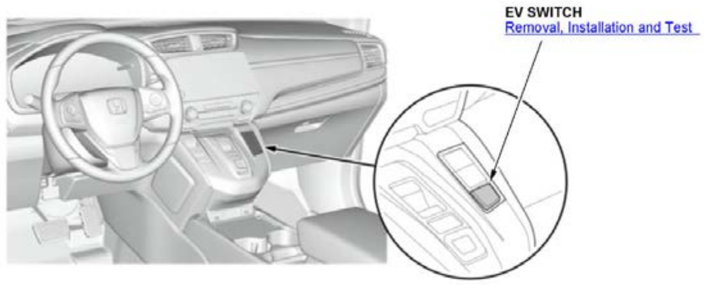
EV SWITCH
Removal, Installation and Test

CONNECTOR VIEW

BATTERY CONDITION MONITOR MODULE CONNECTOR FOR INPUTS AND OUTPUTS

Battery Condition Monitor Module Connector for Inputs and Outputs

Connector Index
Battery Condition Monitor Module Connector A (28P)
Battery Condition Monitor Module Connector B (28P)
Battery Condition Monitor Module Connector C (28P)
Battery Condition Monitor Module Connector D (16P)
Battery Condition Monitor Module Connector E (32P)
Battery Condition Monitor Module Connector F (12P)

Battery Condition Monitor Module Connector A (28P) (female terminals)

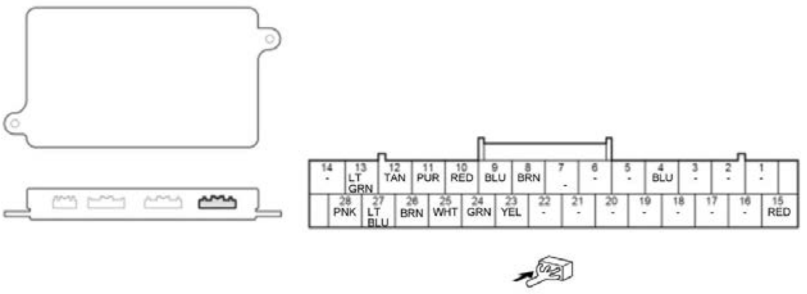
14
-
13
LT GRN
12
TAN
11
PUR
10
RED
9
BLU
8
BRN
7
-
6
-
5
-
4
BLU
3
-
2
-
1
-
28
PNK
27
LT BLU
26
BRN
25
WHT
24
GRN
23
YEL
22
-
21
-
20
-
19
-
18
-
17
-
16
-
15
RED

Terminal number	Terminal name	Description
1	Not used	B
2	Not used	B
3	Not used	B
4	BATT-	Detects high voltage battery negative (-) pole terminal signal
5	Not used	B
6	Not used	B
7	Not used	B
8	VH0	Detects battery cell voltage signal
9	VH2	Detects battery cell voltage signal
10	VH4	Detects battery cell voltage signal
11	VH6	Detects battery cell voltage signal
12	VH8	Detects battery cell voltage signal
13	VH10	Detects battery cell voltage signal
14	Not used	B
15	BATT+	Detects high voltage battery positive (+) pole terminal signal
16	Not used	B
17	Not used	B
18	Not used	B
19	Not used	B
20	Not used	B
21	Not used	B
22	Not used	B

Terminal number	Terminal name	Description
23	VH1	Detects battery cell voltage signal
24	VH3	Detects battery cell voltage signal
25	VH5	Detects battery cell voltage signal
26	VH7	Detects battery cell voltage signal
27	VH9	Detects battery cell voltage signal
28	VH11	Detects battery cell voltage signal

Battery Condition Monitor Module Connector B (28P) (female terminals)

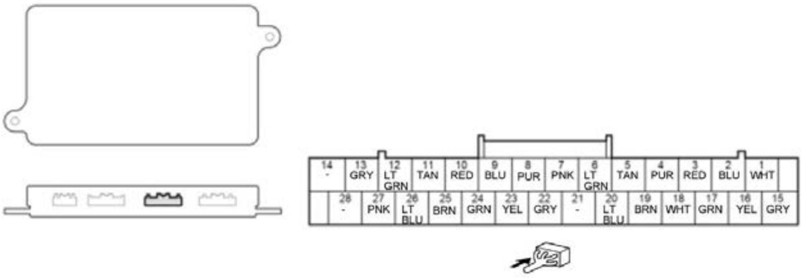

Terminal number	Terminal name	Description
1	VH13	Detects battery cell voltage signal
2	VH15	Detects battery cell voltage signal
3	VH17	Detects battery cell voltage signal
4	VH19	Detects battery cell voltage signal
5	VH21	Detects battery cell voltage signal
6	VH23	Detects battery cell voltage signal
7	VH24	Detects battery cell voltage signal
8	VH26	Detects battery cell voltage signal
9	VH28	Detects battery cell voltage signal
10	VH30	Detects battery cell voltage signal
11	VH32	Detects battery cell voltage signal
12	VH34	Detects battery cell voltage signal
13	VH36-0	Detects battery cell voltage signal
14	Not used	B
15	VH12	Detects battery cell voltage signal
16	VH14	Detects battery cell voltage signal
17	VH16	Detects battery cell voltage signal
18	VH18-0	Detects battery cell voltage signal
19	VH20	Detects battery cell voltage signal
20	VH22	Detects battery cell voltage signal
21	Not used	B
22	VH25	Detects battery cell voltage signal
23	VH27	Detects battery cell voltage signal
24	VH29	Detects battery cell voltage signal
25	VH31	Detects battery cell voltage signal
26	VH33	Detects battery cell voltage signal
27	VH35	Detects battery cell voltage signal
28	Not used	B

Battery Condition Monitor Module Connector C (28P) (female terminals)

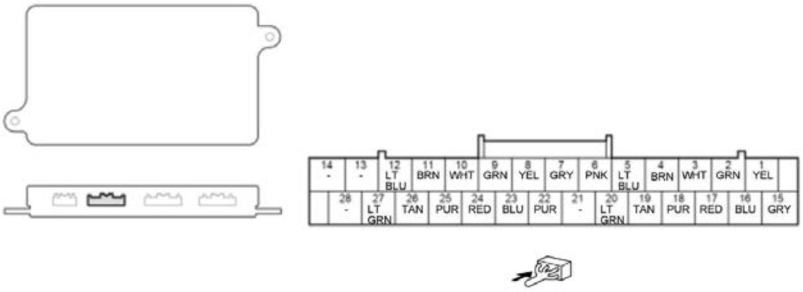
14
-
13
-
12
LT BLU
11
BRN
10
WHT
9
GRN
8
YEL
7
GRY
6
PNK
5
LT BLU
4
BRN
3
WHT
2
GRN
1
YEL
28
-
27
LT GRN
26
TAN
25
PUR
24
RED
23
BLU
22
PUR
21
-
20
LT GRN
19
TAN
18
PUR
17
RED
16
BLU
15
GRY

Terminal number	Terminal name	Description
1	VH37	Detects battery cell voltage signal
2	VH39	Detects battery cell voltage signal
3	VH41	Detects battery cell voltage signal
4	VH43	Detects battery cell voltage signal
5	VH45	Detects battery cell voltage signal
6	VH47	Detects battery cell voltage signal
7	VH48	Detects battery cell voltage signal
8	VH50	Detects battery cell voltage signal
9	VH52	Detects battery cell voltage signal
10	VH54-0	Detects battery cell voltage signal
11	VH56	Detects battery cell voltage signal
12	VH58	Detects battery cell voltage signal
13	Not used	B
14	Not used	B
15	VH36-1	Detects battery cell voltage signal
16	VH38	Detects battery cell voltage signal
17	VH40	Detects battery cell voltage signal
18	VH42	Detects battery cell voltage signal
19	VH44	Detects battery cell voltage signal
20	VH46	Detects battery cell voltage signal
21	Not used	B
22	VH49	Detects battery cell voltage signal
23	VH51	Detects battery cell voltage signal
24	VH53	Detects battery cell voltage signal
25	VH55	Detects battery cell voltage signal
26	VH57	Detects battery cell voltage signal
27	VH59	Detects battery cell voltage signal
28	Not used	B

Battery Condition Monitor Module Connector D (16P) (female terminals)

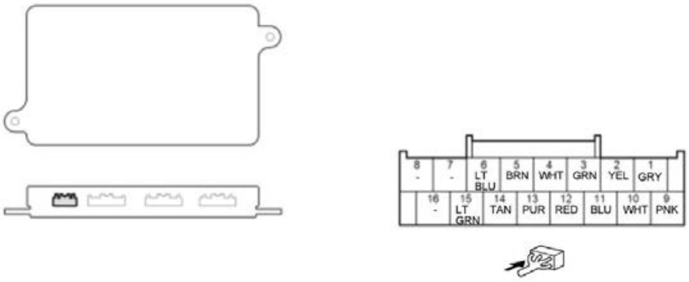
8
-
7
-
6
LT BLU
5
BRN
4
WHT
3
GRN
2
YEL
1
GRY
16
-
15
LT GRN
14
TAN
13
PUR
12
RED
11
BLU
10
WHT
9
PNK

Terminal number	Terminal name	Description
1	VH61	Detects battery cell voltage signal
2	VH63	Detects battery cell voltage signal
3	VH65	Detects battery cell voltage signal
4	VH67	Detects battery cell voltage signal

Terminal number	Terminal name	Description
5	VH69	Detects battery cell voltage signal
6	VH71	Detects battery cell voltage signal
7	Not used	B
8	Not used	B
9	VH60	Detects battery cell voltage signal
10	VH62	Detects battery cell voltage signal
11	VH64	Detects battery cell voltage signal
12	VH66	Detects battery cell voltage signal
13	VH68	Detects battery cell voltage signal
14	VH70	Detects battery cell voltage signal
15	VH72	Detects battery cell voltage signal
16	Not used	B

Battery Condition Monitor Module Connector E (32P) (female terminals)

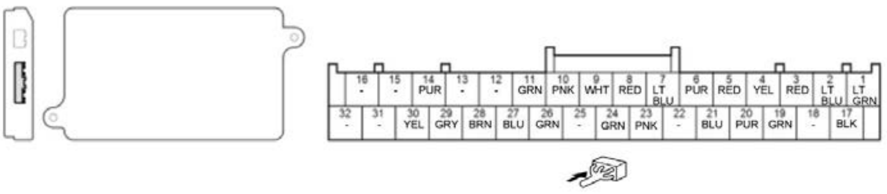

Terminal number	Terminal name	Description
1	VBU	Power source for battery condition monitor module (backup)
2	IGB	Power source for battery condition monitor module
3	CNTPS	Power source for contactors
4	CNTP	Drives high voltage contactor
5	CNTN	Drives high voltage sub contactor
6	PRE	Drives bypass contactor
7	IG1MONI	Detects IG1 signal
8	F-CAN A_L	Sends and receives F-CAN A communication signal (LOW)
9	F-CAN A_H	Sends and receives F-CAN A communication signal (HIGH)
10	EP-CAN A_L	Sends and receives EP-CAN communication signal (LOW)
11	EP-CAN A_H	Sends and receives EP-CAN communication signal (HIGH)
12	Not used	B
13	Not used	B
14	NFAN	Detects high voltage battery module fan revolution speed signal
15	Not used	B
16	Not used	B
17	PG	Ground for battery condition monitor module
18	Not used	B
19	IGHLDB	Drives IGHLDB relay
20	IGHLD	Drives IGHLD relay
21	IGHLD2	Drives IGHLD2 relay
22	Not used	B
23	IGAMONI	Detects IGA signal
24	FANCTL	Drives high voltage battery module fan
25	Not used	B
26	ISOC	Detects battery current sensor signal (normal range)
27	ISOCF	Detects battery current sensor signal (fine range)
28	VCCISOC	Provides battery current sensor reference voltage
29	SGISOC	Sensor ground for battery current sensor
30	CDS	Detects collision detection signal from SRS unit
31	Not used	B
32	Not used	B

Battery Condition Monitor Module Connector F (12P) (female terminals)

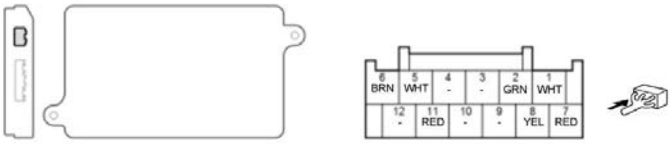

Terminal number	Terminal name	Description
1	TBATT1	Detects high voltage battery module temperature sensor 1 signal
2	TBATT3	Detects high voltage battery module temperature sensor 3 signal
3	Not used	B
4	Not used	B
5	MODID1	Detects high voltage battery module identification resistor signal
6	SGTB	Sensor ground for high voltage battery module
7	TBATT2	Detects high voltage battery module temperature sensor 2 signal
8	TBATT4	Detects high voltage battery module temperature sensor 4 signal
9	Not used	B
10	Not used	B
11	MODID2	Detects high voltage battery module identification resistor signal
12	Not used	B

MOTOR CONTROL MODULE CONNECTOR FOR INPUTS AND OUTPUTS

Motor Control Module 33P connector (female terminals)

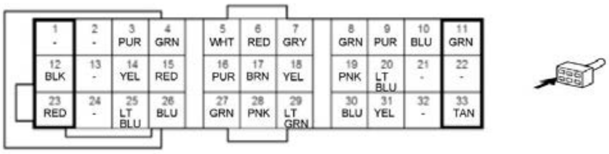

Terminal number	Terminal name	Description
1	Not used	B
2	Not used	B
3	S1G	Inputs generator motor motor rotor position sensor (SIN) signal
4	R1G	Outputs generator motor motor rotor position sensor excitation signal
5	F-CAN A_H	Sends and receives F-CAN A communication signal (HIGH)
6	F-CAN A_L	Sends and receives F-CAN A communication signal (LOW)
7	NEWP	Detects PCU electric coolant pump revolution speed signal
8	R1M	Outputs traction motor motor rotor position sensor excitation signal
9	S1M	Inputs traction motor motor rotor position sensor (SIN) signal
10	TMOT	Detects traction motor temperature sensor signal
11	IGA	Power source for motor control module
12	PG	Ground for motor control module
13	Not used	B
14	S3G	Inputs generator motor motor rotor position sensor (SIN) signal
15	R2G	Outputs generator motor motor rotor position sensor excitation signal
16	TWPCU	Detects PCU coolant temperature sensor signal
17	SGTEMP	Sensor ground for PCU coolant temperature sensor and transmission fluid temperature sensor
18	EWP	Drives PCU electric coolant pump
19	R2M	Outputs traction motor motor rotor position sensor excitation signal
20	S3M	Inputs traction motor motor rotor position sensor (SIN) signal
21	Not used	B
22	Not used	B
23	TATF	Detects transmission fluid temperature sensor signal
24	Not used	B
25	S4G	Inputs generator motor motor rotor position sensor (COS) signal
26	S2G	Inputs generator motor motor rotor position sensor (COS) signal
27	EP-CAN A_H	Sends and receives EP-CAN communication signal (HIGH)
28	EP-CAN A_L	Sends and receives EP-CAN communication signal (LOW)
29	NGENPLS	Outputs generator motor revolution speed signal
30	S2M	Inputs traction motor motor rotor position sensor (COS) signal
31	S4M	Inputs traction motor motor rotor position sensor (COS) signal

Terminal number	Terminal name	Description
32	Not used	B
33	IG_PCU_EWP	Drives PCU electric coolant pump relay

CALIBRATION CORRECTION

MOTOR ROTOR POSITION CALIBRATION

Rewriting

NOTE: Do the motor rotor position calibration whenever any of these actions are done.

- The PCU (integrated with the motor control module) is replaced.
- The transmission (e-CVT) (integrated with the motors) is replaced or disassembled.

1. HDS - Connect
2. Motor Rotor Position - Calibrate

1. Select the Electric Powertrain system with the HDS.

2. Select the Adjustment MENU, then select the Motor Rotor Position Sensor Learning, and follow the screen prompts.

INSPECTION

MOTOR ROTOR POSITION SENSOR CIRCUIT INSPECTION (GENERATOR MOTOR CONTROL MODULE)

NOTE: Before testing, check for DTCs. If any DTCs are indicated, troubleshoot the indicated DTCs first.

Shorted wire check (generator motor motor rotor position sensor circuit)

Turn the vehicle to the OFF (LOCK) mode.

-2. Do the 12 volt battery terminal disconnection procedure .

-3. Disconnect the following connector.

PCU 33P connector

Check for continuity between the following test points and body ground individually.

Test condition	Vehicle OFF (LOCK) mode
B	PCU 33P connector: disconnected

Connector	Test circuit	Terminal
PCU 33P connector	S1G	No. 3
	S2G	No. 26
	S3G	No. 14
	S4G	No. 25
	R1G	No. 4
	R2G	No. 15

- If there is no continuity, the generator motor motor rotor position sensor circuit is not shorted. Go to step 2 (Open wire check).
- If there is continuity, go to the next step.

-5. Disconnect the following connector.

Motor rotor position sensor 12P connector

Check for continuity between the following test points and body ground individually.

Test condition	Vehicle OFF (LOCK) mode
B	Motor rotor position sensor 12P connector: disconnected
B	PCU 33P connector: disconnected

Connector	Test circuit	Terminal
PCU 33P connector	S1G	No. 3
	S2G	No. 26
	S3G	No. 14
	S4G	No. 25
	R1G	No. 4
	R2G	No. 15

- If there is no continuity, faulty generator motor motor rotor position sensor. Replace the transmission (e-CVT) assembly .

- If there is continuity, repair a short in the generator motor motor rotor position sensor circuit between the PCU and the generator motor motor rotor position sensor.

Open wire check (generator motor motor rotor position sensor circuit)

Disconnect the following connector.

Motor rotor position sensor 12P connector

Check for continuity between the following terminals respectively.

Test condition	Vehicle OFF (LOCK) mode
B	PCU 33P connector: disconnected
B	Motor rotor position sensor 12P connector: disconnected

S1G line

Test point 1	**PCU 33P connector No. 3**
Test point 2	Motor rotor position sensor 12P connector (female terminals) No. 3: ①

S2G line

Test point 1	**PCU 33P connector No. 26**
Test point 2	Motor rotor position sensor 12P connector (female terminals) No. 2: ①

S3G line

Test point 1	**PCU 33P connector No. 14**
Test point 2	Motor rotor position sensor 12P connector (female terminals) No. 9: ①

S4G line

Test point 1	**PCU 33P connector No. 25**
Test point 2	Motor rotor position sensor 12P connector (female terminals) No. 8: ①

R1G line

Test point 1	**PCU 33P connector No. 4**
Test point 2	Motor rotor position sensor 12P connector (female terminals) No. 1: ①

R2G line

Test point 1	**PCU 33P connector No. 15**
Test point 2	Motor rotor position sensor 12P connector (female terminals) No. 7: ①

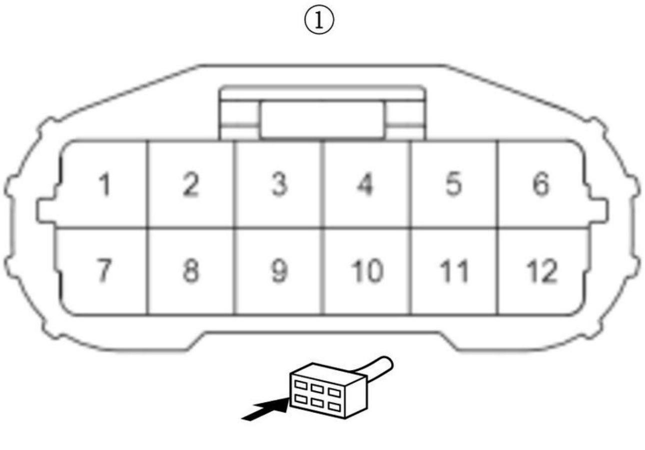

- If there is continuity, the generator motor motor rotor position sensor circuit is OK.
- If there is no continuity, repair an open in the generator motor motor rotor position sensor circuit between the PCU and the generator motor motor rotor position sensor.

MOTOR ROTOR POSITION SENSOR CIRCUIT INSPECTION (TRACTION MOTOR CONTROL MODULE)

NOTE: Before testing, check for DTCs. If any DTCs are indicated, troubleshoot the indicated DTCs first.

Shorted wire check (traction motor motor rotor position sensor circuit)

Turn the vehicle to the OFF (LOCK) mode.

-2. **Do the 12 volt battery terminal disconnection procedure** .

-3. Disconnect the following connector.

PCU 33P connector

Check for continuity between the following test points and body ground individually.

Test condition	Vehicle OFF (LOCK) mode
B	PCU 33P connector: disconnected

Connector	Test circuit	Terminal
PCU 33P connector	S1M	No. 9
	S2M	No. 30
	S3M	No. 20
	S4M	No. 31
	R1M	No. 8
	R2M	No. 19

- If there is no continuity, the traction motor motor rotor position sensor circuit is not shorted. Go to step 2 (Open wire check).
- If there is continuity, go to the next step.

-5. Disconnect the following connector.

Motor rotor position sensor 12P connector

Check for continuity between the following test points and body ground individually.

Test condition	Vehicle OFF (LOCK) mode
B	Motor rotor position sensor 12P connector: disconnected
B	PCU 33P connector: disconnected

Connector	Test circuit	Terminal
PCU 33P connector	S1M	No. 9
	S2M	No. 30
	S3M	No. 20
	S4M	No. 31
	R1M	No. 8
	R2M	No. 19

- If there is no continuity, faulty traction motor motor rotor position sensor. **Replace the transmission (e-CVT) assembly** .
- If there is continuity, repair a short in the traction motor motor rotor position sensor circuit between the PCU and the traction motor motor rotor position sensor.

Open wire check (traction motor motor rotor position sensor circuit)

Disconnect the following connector.

Motor rotor position sensor 12P connector

Check for continuity between the following terminals respectively.

Test condition	Vehicle OFF (LOCK) mode
B	PCU 33P connector: disconnected
B	Motor rotor position sensor 12P connector: disconnected

S1M line

Test point 1	**PCU 33P connector No. 9**
Test point 2	Motor rotor position sensor 12P connector (female terminals) No. 6: ①

S2M line

Test point 1	PCU 33P connector No. 30
Test point 2	Motor rotor position sensor 12P connector (female terminals) No. 5: ①

S3M line

Test point 1	PCU 33P connector No. 20
Test point 2	Motor rotor position sensor 12P connector (female terminals) No. 12: ①

S4M line

Test point 1	PCU 33P connector No. 31
Test point 2	Motor rotor position sensor 12P connector (female terminals) No. 11: ①

R1M line

Test point 1	PCU 33P connector No. 8
Test point 2	Motor rotor position sensor 12P connector (female terminals) No. 4: ①

R2M line

Test point 1	PCU 33P connector No. 19
Test point 2	Motor rotor position sensor 12P connector (female terminals) No. 10: ①

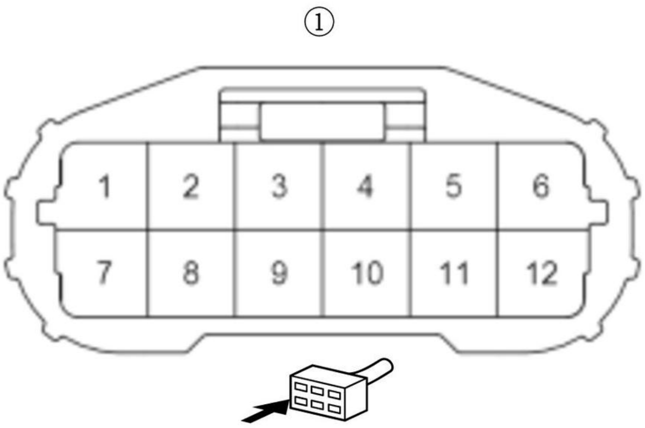

- If there is continuity, the traction motor motor rotor position sensor circuit is OK.
- If there is no continuity, repair an open in the traction motor motor rotor position sensor circuit between the PCU and the traction motor motor rotor position sensor.

PCU COOLANT CIRCUIT INSPECTION

NOTE: Before testing, check for DTCs. If any DTCs are indicated, troubleshoot the indicated DTCs first.

Visual check

Check that the opening of the front bumper is not blocked with dust, and clean it if needed.

Check the radiator, the A/C condenser, and the fan shroud assembly for the following conditions, and repair them if needed:

- Broken or deformed radiator
- Fins of radiator and A/C condenser are blocked with dust
- Broken or deformed radiator fan, or broken or deformed fan shroud
- Radiator fun contacting with a fan shroud
- Corrosion of radiator fan motor
- Debris in the fans

Cooling circuit check:

Check for these conditions at the cooling line, and repair if needed:

- Coolant level
- Coolant leakage from cooling circuit
- Air mixing into cooling circuit

3. Expansion tank cap check

Test the expansion tank cap, and replace it if needed.

DTC check (PCU electric coolant pump)

Connect the HDS to the DLC .

-2. Turn the vehicle to the ON mode.

-3. Select the Electric Powertrain in the System Selection Menu.

-4. Clear any stored DTCs.

-5. Turn the vehicle to the OFF (LOCK) mode.

-6. Turn the vehicle to the ON mode.

-7. Select the ELECTRIC WATER PUMP TEST in the Electric Powertrain FUNCTION TEST with the HDS, then select START.

Check for Pending or Confirmed DTCs with the HDS.

- DTC is indicated: Do the indicated DTC(s) troubleshooting.

REWRITE

BATTERY CONDITION MONITOR MODULE UPDATE

Procedure

1. Battery Condition Monitor Module - Update

   NOTE: When updating control units, use the most current version of the HDS software and interface device. Check any official service information website for more information about updating control units.

MOTOR CONTROL MODULE UPDATE

Procedure

1. Motor Control Module - Update

   NOTE: When updating control units, use the most current version of the HDS software and interface device. Check any official service information website for more information about updating control units.

SERVICE PROCEDURE

COOLANT REPLACEMENT AND CHECK (ELECTRIC POWERTRAIN)

Special Tools Required

Image	Description/Tool Number
	Honda GR8 Battery Diagnostic Station with AST Module (12 Volt) MTRGR811ASTH*

*Available through the Honda Tool and Equipment Program 888-424-6857

Replacement

NOTE:

- How to read the replacement symbols .

- Running the PCU electric coolant pump without coolant may cause damage to the pump. The pump may get activated when the vehicle is turned to the ON mode.
- PCU coolant is poisonous. If ingested, get medical attention immediately.
- Use covers to avoid damaging painted surfaces.
- Do not spill the PCU coolant on the surrounding parts. If you spill the PCU coolant, wipe the PCU coolant off immediately.

1. Expansion Tank Cap - Remove

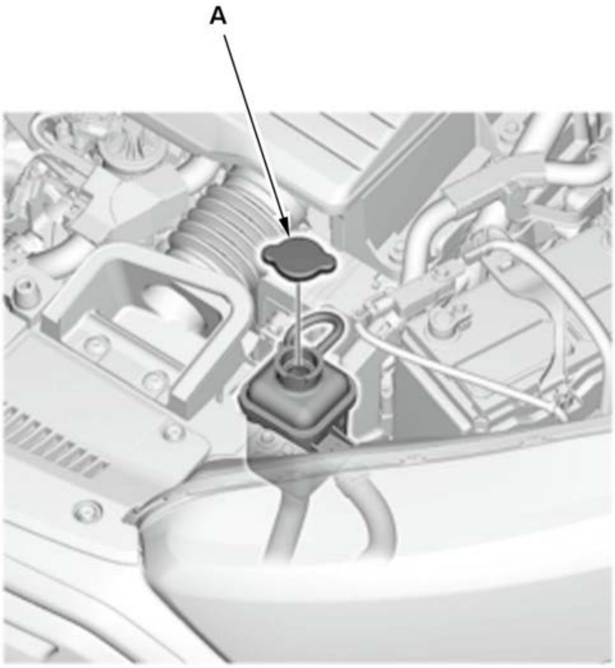	1. Wait until the PCU coolant is cool, then carefully remove the expansion tank cap (A).

2. Front Bumper - Remove
3. PCU Coolant - Drain

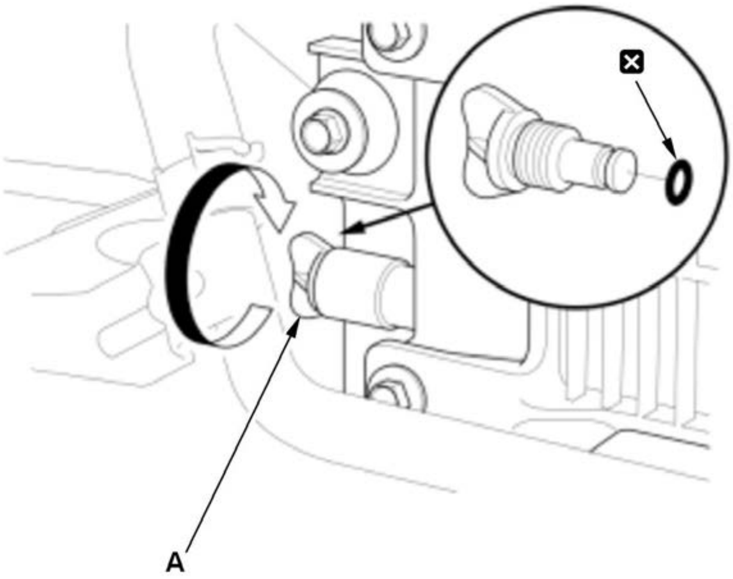	1. Loosen the radiator drain plug (A), and drain the PCU coolant. 2. Tighten the radiator drain plug securely with a new O-ring.

4. PCU Coolant - Refill

1. Install the coolant charger (A), then pour Honda Long Life Antifreeze/Coolant Type 2 until the expansion tank is filled to the MAX mark (B).

NOTE:

- **Always use Honda Long Life Antifreeze/Coolant Type 2, and if necessary add Honda Extreme Cold Weather Antifreeze/Coolant Type 2. Using a non-Honda coolant can result in corrosion, causing the cooling system to malfunction or fail.**

- **Honda Long Life Antifreeze/Coolant Type 2 is a mixture of 50 % antifreeze and 50 % water. Honda Extreme Cold Weather Antifreeze/Coolant Type 2 is a 100 % concentration coolant. Do not add water to either coolant.**
- **If the vehicle is regularly driven in very low temperatures (lower than - 22 deg. F (- 30 deg. C)), a 60 % concentration of coolant should be used.**

Operation	**Vehicle Usage (Desired Mixture)**	**Current Mixture**	**Coolant Drain**	**Add Amount of Honda Extreme Cold Weather Antifreeze/Coolant Type 2 (100 % concentrate)**	**Then add Acura Long Life Antifreeze/Coolant Type 2 (50/50)**
PCU Coolant Change	Normal Area (50/50)	50/5060/40 unknown	Drain radiator and expansion tank	None	Top off the cooling system
	Very Cold Area (60/40)	50/50 unknown	Drain radiator and expansion tank	About 0. 3 L (10 fl oz)	
		60/40		About 0. 2 L (7 fl oz)	
PCU Removal	Normal Area (50/50)	-	-	None	
	Very Cold Area (60/40)	-	-	About 0. 3 L (10 fl oz)	
PCU Coolant Winterizing	Very Cold Area (60/40)	50/50	Drain about 0. 3 L (10 fl oz) from radiator	About 0. 3 L (10 fl oz)	
		unknown*	Drain radiator and expansion tank	About 0. 3 L (10 fl oz)	

*: When you want to winterize the coolant with the minimum amount of coolant change but the current coolant concentration in the vehicle is unknown, you must drain all coolant from the cooling system.

PCU Coolant Refill Capacities (Including the expansion tank capacity of 0. 31 L (0. 082 US gal))	
At PCU Coolant Change	**0. 93 L (0. 246 US gal)**
At PCU removal	**1. 60 L (0. 423 US gal)**

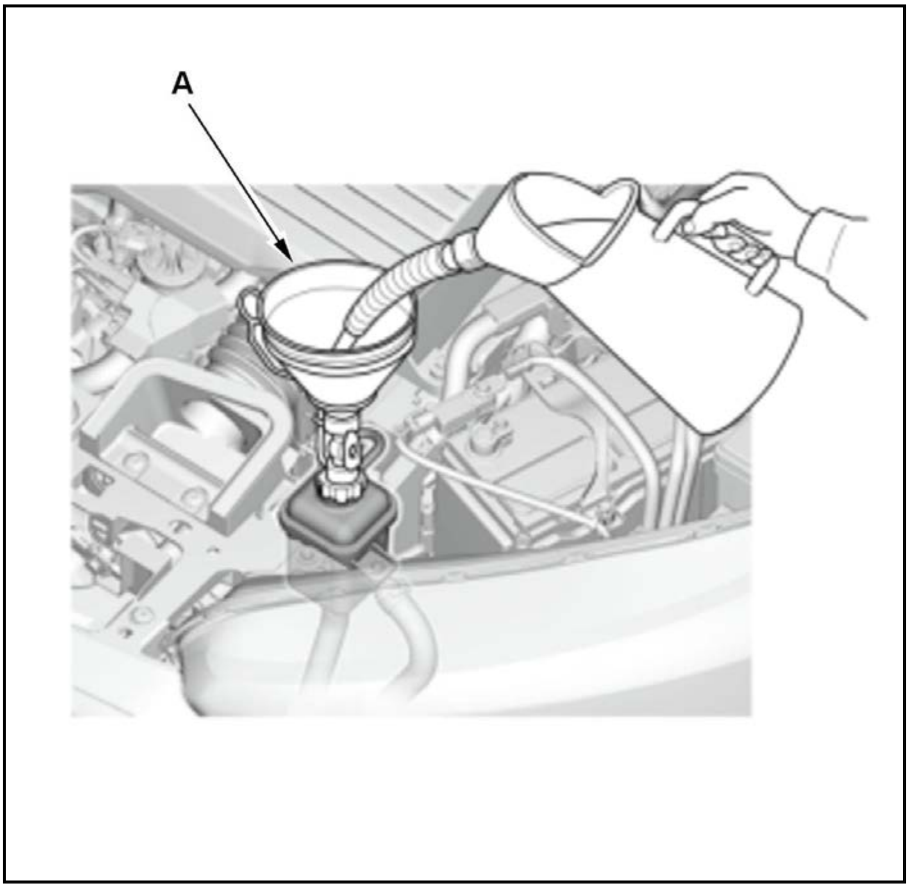

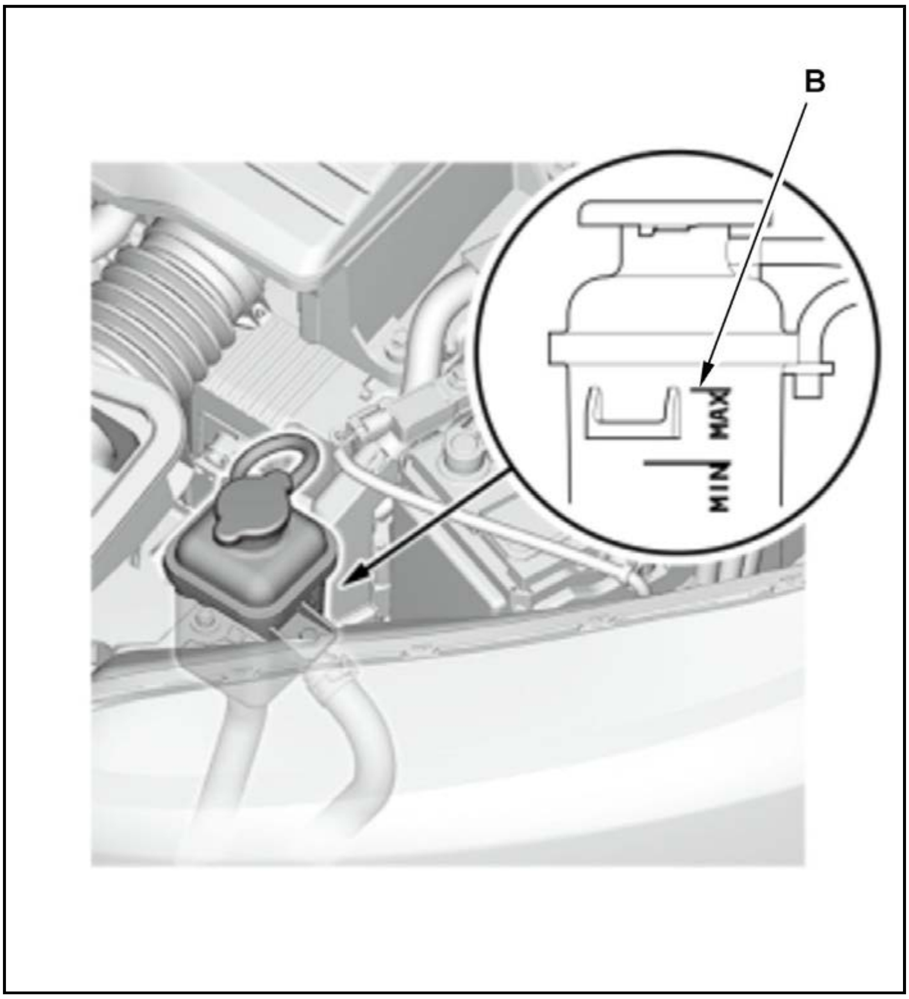

5. PCU Coolant - Air Bleed

1. Connect the Honda GR8 battery diagnostic station and set it to the power supply mode.

2. Connect the HDS to the data link connector (DLC)

3. Select the Adjustment MENU in the Electric Powertrain system with the HDS.

4. Select the Coolant Air Bleeding.

5. Press the START to drive the PCU electric coolant pump (EWP), then wait more than 10 minutes.

NOTE:

- **Pour coolant as needed when the coolant level drops. If the coolant level keeps changing or bubbles are seen even after 10 minutes, continue to drive the EWP until the coolant level stabilizes and there**

are no more bubbles.

- **When the POWER SYSTEM indicator comes on, clear the DTC with the HDS, then return to step 2.**

6. Press the STOP to finish driving the EWP forcibly.

7. Check the coolant level and add coolant as necessary until it is at the MAX mark.

8. Install the expansion tank cap.

6. Front Bumper - Install

Check

NOTE: Do not spill the PCU coolant on the surrounding parts. If you spill the PCU coolant, wipe the PCU coolant off immediately.

1. PCU Coolant - Check

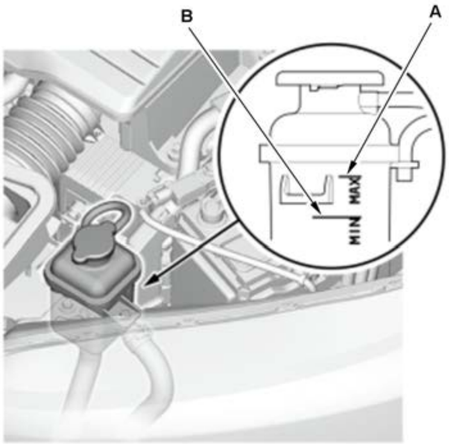

1. Check the coolant level in the coolant expansion tank. Make sure it is between the MAX mark (A) and the MIN mark (B).

2. If the coolant level in the coolant expansion tank is at or below the MIN mark, add coolant to bring it on the MAX mark, then inspect the cooling system for leaks.

NOTE:

- **Always use Honda All Season Antifreeze/Coolant Type 2. Using a non-Honda coolant can result in corrosion, causing the cooling system to malfunction or fail.**
- **Honda All Season Antifreeze/Coolant Type 2 is a mixture of 50 % antifreeze and 50 % water. Do not add water.**

ELECTRIC POWERTRAIN SERVICE PRECAUTIONS

General Information

The electric powertrain system uses high voltage circuits and an organic solution (lithium-ion) contained battery module. Improper handling may cause serious injury such as electrocution. When working on or around the electric powertrain system, pay attention to the following precautions.

Preparation items

- Protective items (insulated gloves or rubber gloves, protective goggles, protective shoes)
- ABC fire extinguisher (available for both oil fires and electric fires)
- Shop towels (for wiping off the electrolyte)
- Insulating tape

Precautions when Working on High Voltage Areas

CAUTION: **Be careful not to let the electrolyte get into your eyes or contact your skin. Doing so may cause loss of your eyesight or skin damage. If electrolyte gets into your eyes or comes into contact with your skin, immediately flush with a large amount of water and seek medical attention.**

Be careful not to let the electrolyte get into your eyes or contact your skin. Doing so may cause loss of your eyesight or skin damage. If electrolyte gets into your eyes or comes into contact with your skin, immediately flush with a large amount of water and seek medical attention.

- Wear insulated gloves and use insulated tools to protect you from electrical shock. When removing or installing high voltage items, always use them. Wrap the high voltage items with insulating tape after removing. Please be careful when you see ⚡ on the illustration.
- Always inspect protective equipment for holes, tears, or other damage.
- Keep uniform pockets free of items, especially tools and metallic objects. Items may fall out and fall on to exposed high-voltage parts, creating a hazard.
- As a safety warning, attach a sign saying, WORKING ON HIGH-VOLTAGE PARTS. DO NOT TOUCH! to the steering wheel.
- Be sure to shut off the electrical circuits and isolate the electric powertrain system and related parts before servicing the electric powertrain system. (Refer to "Turning Off and ON Power to the High Voltage Circuit" below)
- The high voltage cables and their covers are identified by orange coloring. The caution labels are attached to high voltage and other related parts.
- Do not touch bare wires that could carry a high-voltage. If you must touch them, put on insulated gloves, and measure the voltage between the body grounds. If the voltage is above the 12 volt battery voltage, insulate the part with insulating tape before performing an operation to prevent shorting the battery module.
- When insulating a high voltage area with insulating tape, be sure to cover it thoroughly.
- Check around the battery module for electrolyte leaks and adhesion before starting your work. If you encounter a leak, you must wear insulated protective equipment (protective eyeglasses, insulated gloves, insulated shoes, and insulating tools) as it may cause electrical shock.
- Organic electrolyte is poisonous. If ingested, get medical attention immediately.
- Keep sparks and flames away from the battery module, leaking electrolyte from the battery is flammable. Always work in a well ventilated area.
- Strong impact (i. e., dropping the high voltage battery, collision damage) may cause electrolyte leaks, internal short circuits and heat increase resulting in fire. Avoid impact to the high voltage battery.
- Do not disassemble the battery module when doing a repair or replacement procedure.
- Seal the replaced battery module and any shop towels or rags used to wipe the electrolyte in a P. P. (Polypropylene) bag, and keep it in a well-ventilated area away from sparks and flames. Make sure to dispose these items according to local regulations.
- Inspect all high voltage related parts near the battery module for electrolyte. If you find electrolyte, you must replace the part(s).

Updating Control Units

NOTE:

- When updating control units, use the most current version of the HDS software and interface device. Refer to available service information for more information about updating control units.
- High temperature in the motor compartment might cause the motor control module (built into the PCU) to become too hot to run the update. If the motor has been running before this procedure, open the hood and cool the motor compartment.

The following control units can be updated.

- Motor control module (built into the PCU)
- Battery condition monitor module

Collision Shutoff History Clear Command

When the battery condition monitor module receives a collision detection signal (CDS) from the SRS unit, the battery condition monitor module updates the collision shutoff history, and stores it in the nonvolatile memory located inside the module. The battery condition module monitor stops supplying power to the high-voltage circuits disrupting the control signal to be sent to the high-voltage contactor inside the battery module the next time the system is being turned on. To resume power supply to the high-voltage circuits, the collision shutoff history needs to be cleared. Do the following procedures to clear the collision shutoff history.

1. Check the battery high voltage wires (orange coated) for damage. If any damage is found, replace the damaged wire harness or component, then go to step 2.

2. **Connect the HDS to the data link connector (DLC)**

3. Make sure the HDS communicates with the vehicle and the Electric Powertrain system. If it doesn't, **go to the DLC circuit troubleshooting**

4. Select the Electric Powertrain system with the HDS.

5. Clear the DTC with the HDS while the engine is stopped.

Other Precautions

High temperature may damage the battery module. When drying paint in a heated paint booth, make sure the temperature does not exceed 149 deg. F (65 deg. C).

No-Load Charging Procedure

When the vehicle is stored for an extended period of time, the expected life cycle of the high voltage battery may be affected. To reduce this possibility, the no-load charging procedure should be conducted at least once every 12 months of vehicle storage. The no-load charging should be conducted under the following conditions:

- Apply the parking brake, and block the front wheels.

- Firmly press the brake pedal, and turn the vehicle to the READY TO DRIVE mode.
- Press the accelerator pedal to the floor for 10 seconds while pressing the brake pedal. After 10 seconds, the vehicle starts the engine and holds the engine speed at 1, 200 rpm automatically for high voltage battery charging.

  NOTE:

-
  - Do not release the accelerator pedal and brake pedal during high voltage battery charging.
  - After the high voltage battery charging is completed, the engine stops automatically.
- After engine stops, turn the vehicle to the OFF (LOCK) mode.

Turning Off and On Power to the High Voltage Circuit

The following procedure should be done before you work on or near any energized high voltage components. Follow the procedure exactly. Otherwise, you may be injured or may damage equipment.

NOTE: Wear insulated gloves and use insulated tools to protect you from electrical shock. Always use them when removing or installing high-voltage items. Wrap the high voltage items with insulating tape after removing. Please be careful when you see ⚠ on the illustration.

Service Plug Location & Disconnect Procedure

NOTE:

- Secure the service plug in a safe location to prevent other personnel from installing the service plug while the vehicle is being repaired or serviced.
- If the service plug is damaged, replace it.

1. **Connect the HDS to the data link connector (DLC)** .

2. Make sure the HDS communicates with the vehicle and the Electric Powertrain system. If it doesn't, go to the DLC circuit troubleshooting. **go to the DLC circuit troubleshooting**

3. Select the Electric Powertrain system with the HDS.

4. Check the DTC and note it if any DTCs are stored.

5. Turn the vehicle to the OFF (LOCK) mode, then put the remote away to avoid starting of the vehicle.

6. **Do the 12 volt battery terminal disconnection procedure**

7. **Remove the cargo floor cover** .

8. **Remove the tool box** .

9. Remove the service plug lid (A).

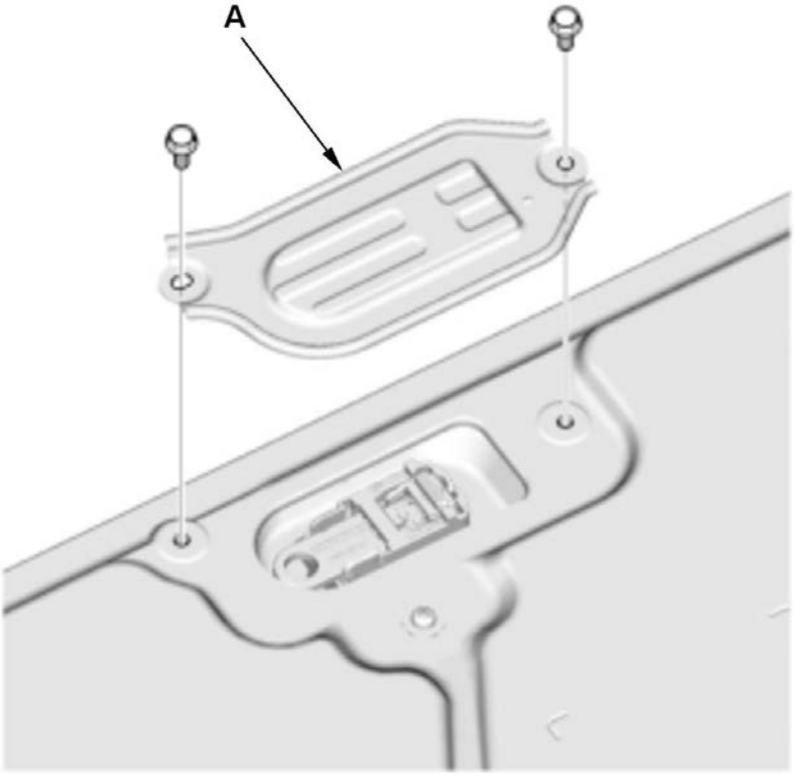

Push down and slide back the tab (A) to the off position until you hear a click.

NOTE:

- **When removing or installing the service plug or items marked with ⚡ , always use insulated tools, and wrap the items with insulating tape.**
- **Secure the service plug in a safe location to prevent other personnel from installing the service plug while the vehicle is being repaired or serviced.**
- **Operate with the tab.**
- **Do not insert a finger in the gap to let the tab slide.**

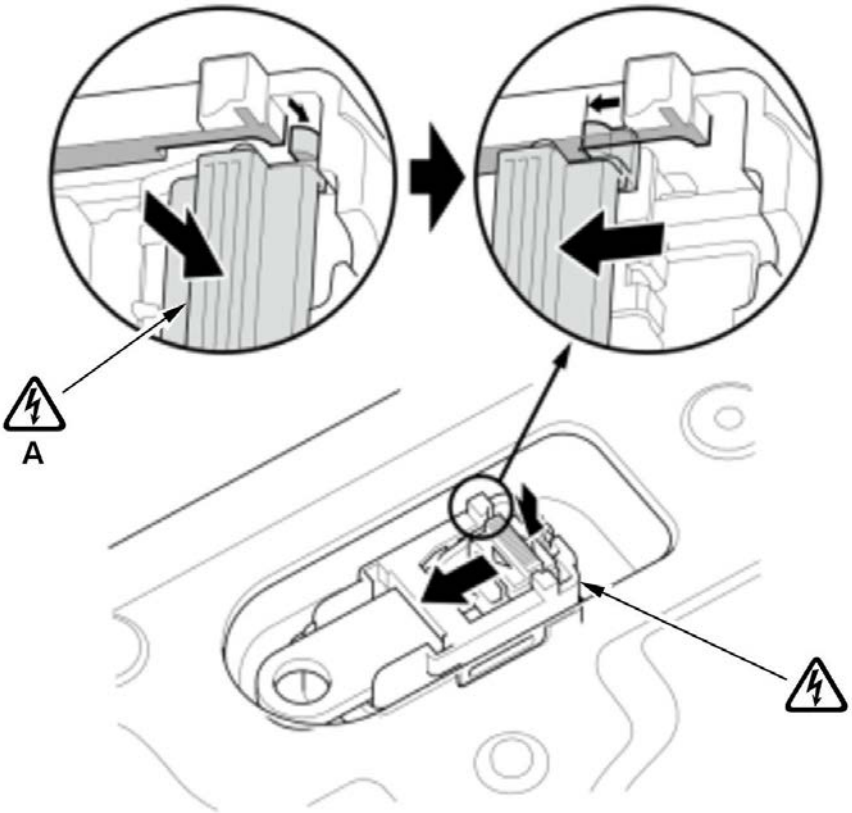

11. Raise the lever (A), and remove the service plug (B).

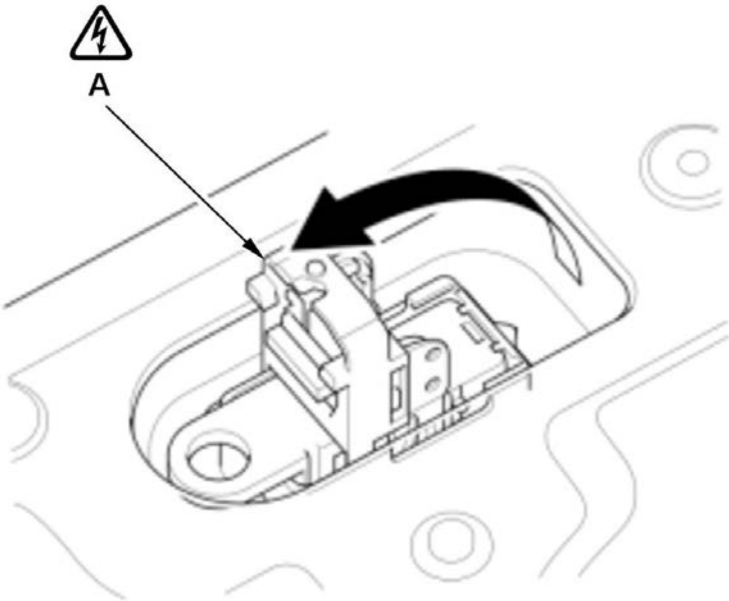

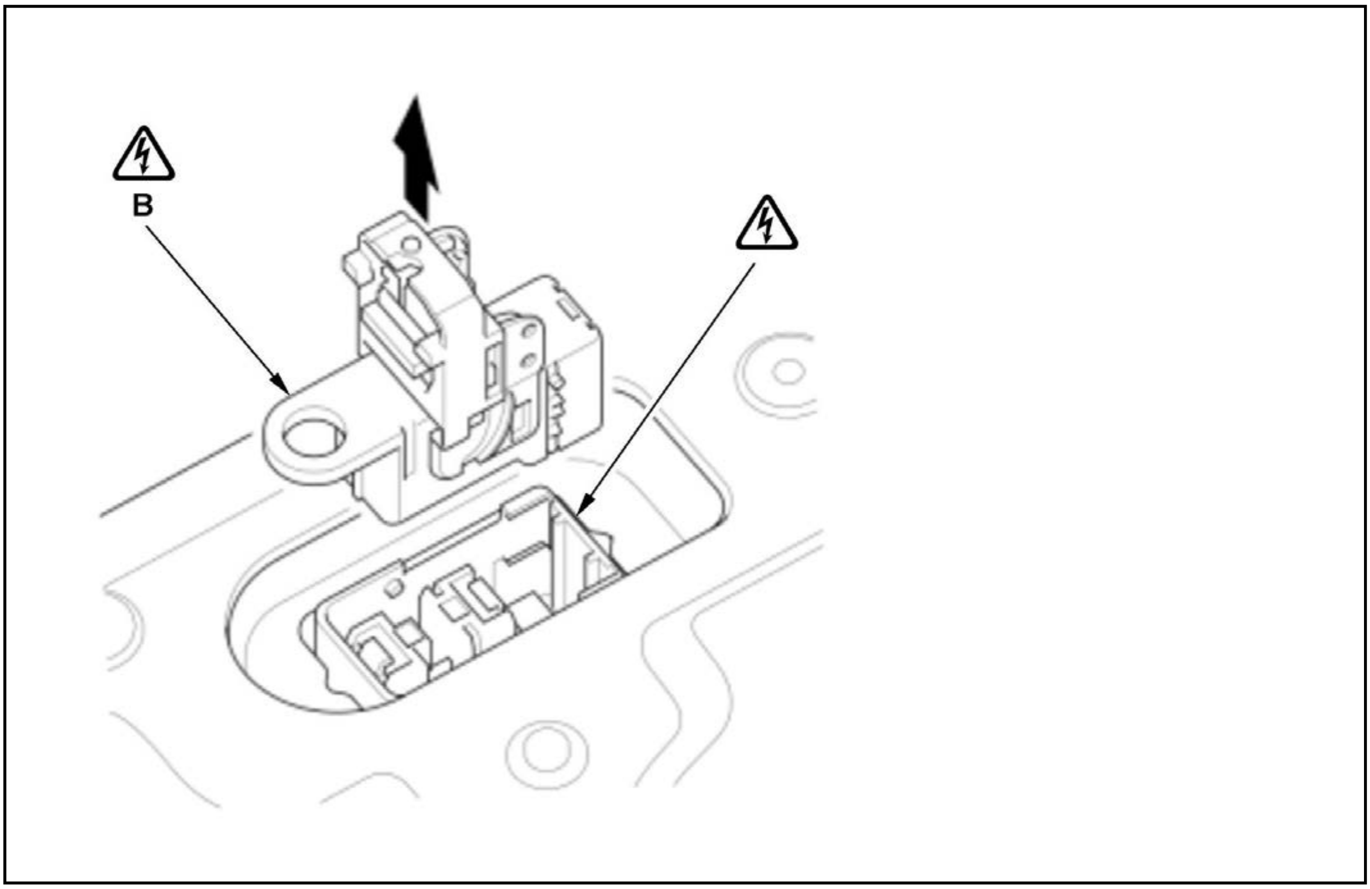

12. Wrap the service plug base (A) with insulating tape.

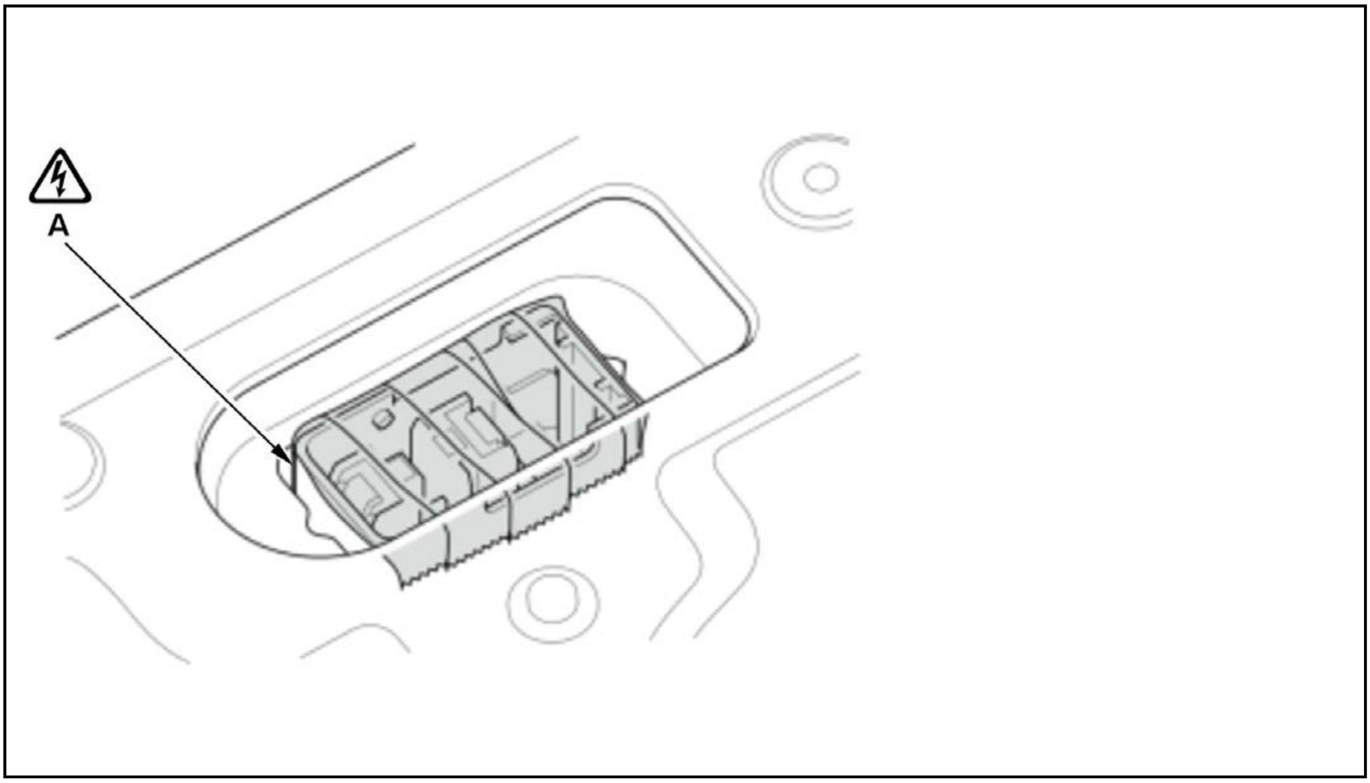

13. **Do the 12 volt battery negative terminal reconnection procedure**

14. Turn the vehicle to the ON mode.

15. Select the Electric Powertrain system with the HDS.

16. Check the Motor Inverter Voltage (GEN) in the Data List with the HDS, then make sure it is 30 V or less.

17. **Do the 12 volt battery negative terminal disconnection procedure** .

Turning On the Service Plug

NOTE: **How to read the torque specifications** .

1. Remove insulating tape and insert the service plug (A) to the service plug base (B) as shown.

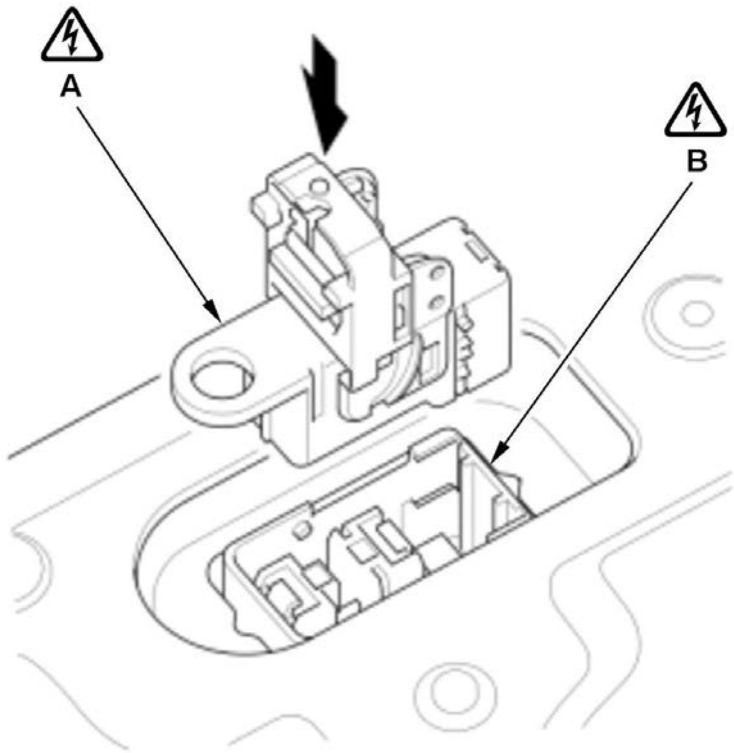

2. Lower the lever (A) to set the locked position.

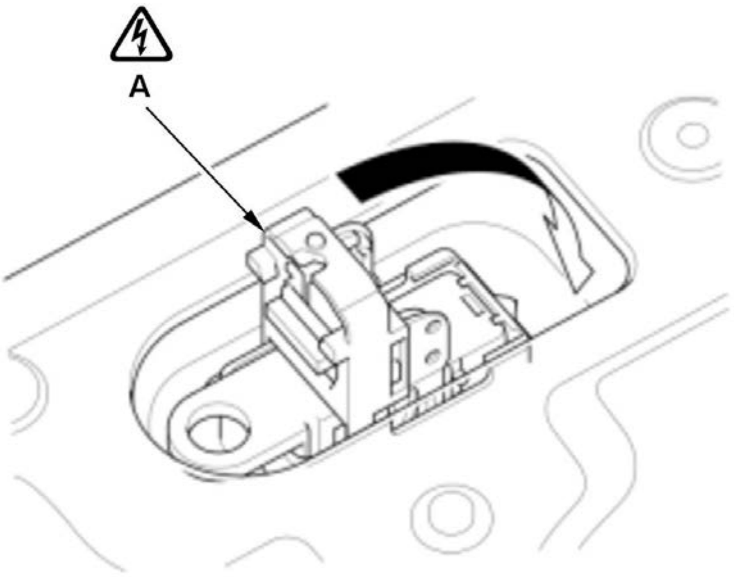

3. Push and slide the tab (A) to the locked position (B) while holding the lever (C).

NOTE: Confirm that the lever does not disengage.

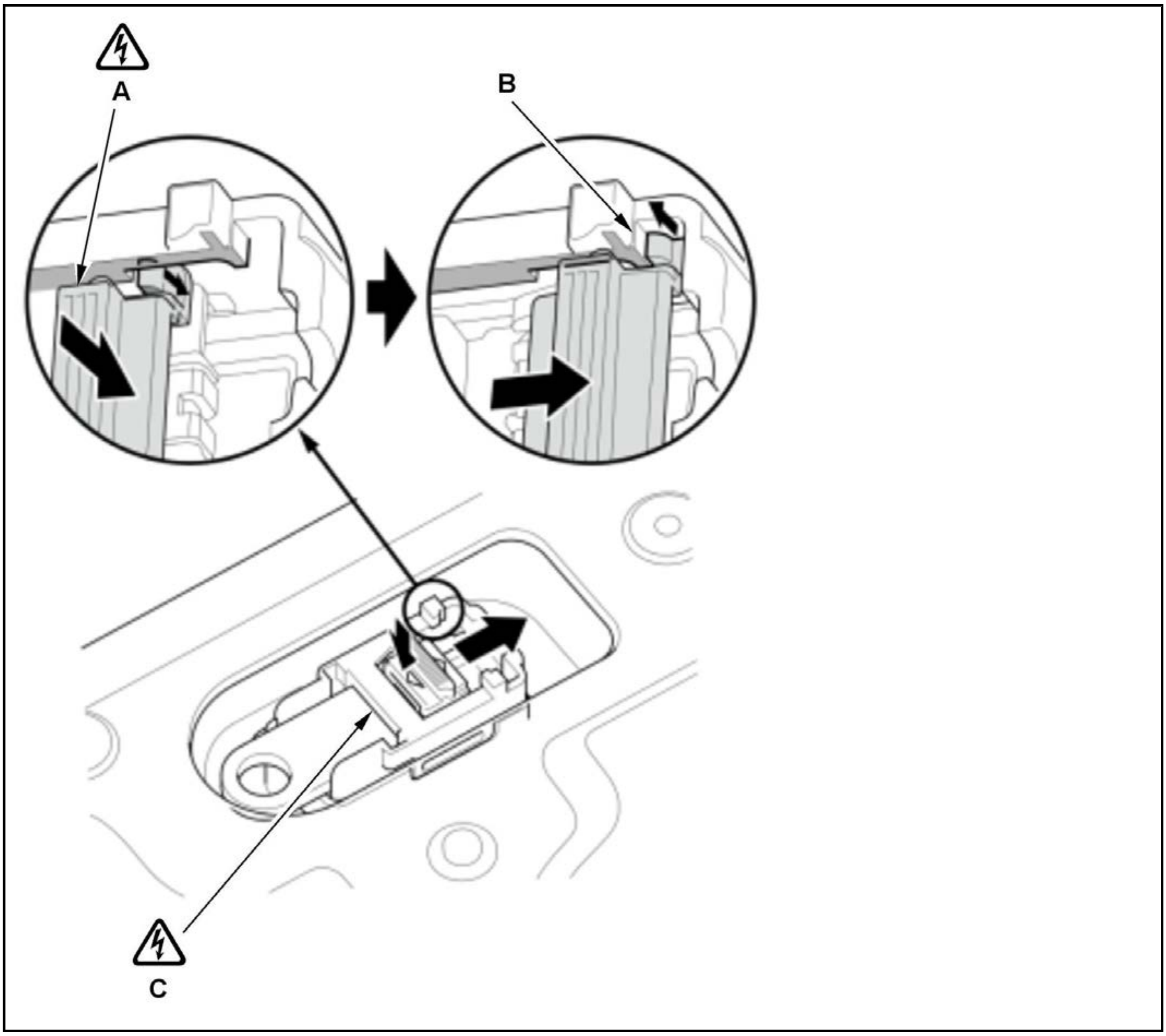

4. Install the service plug lid (A).

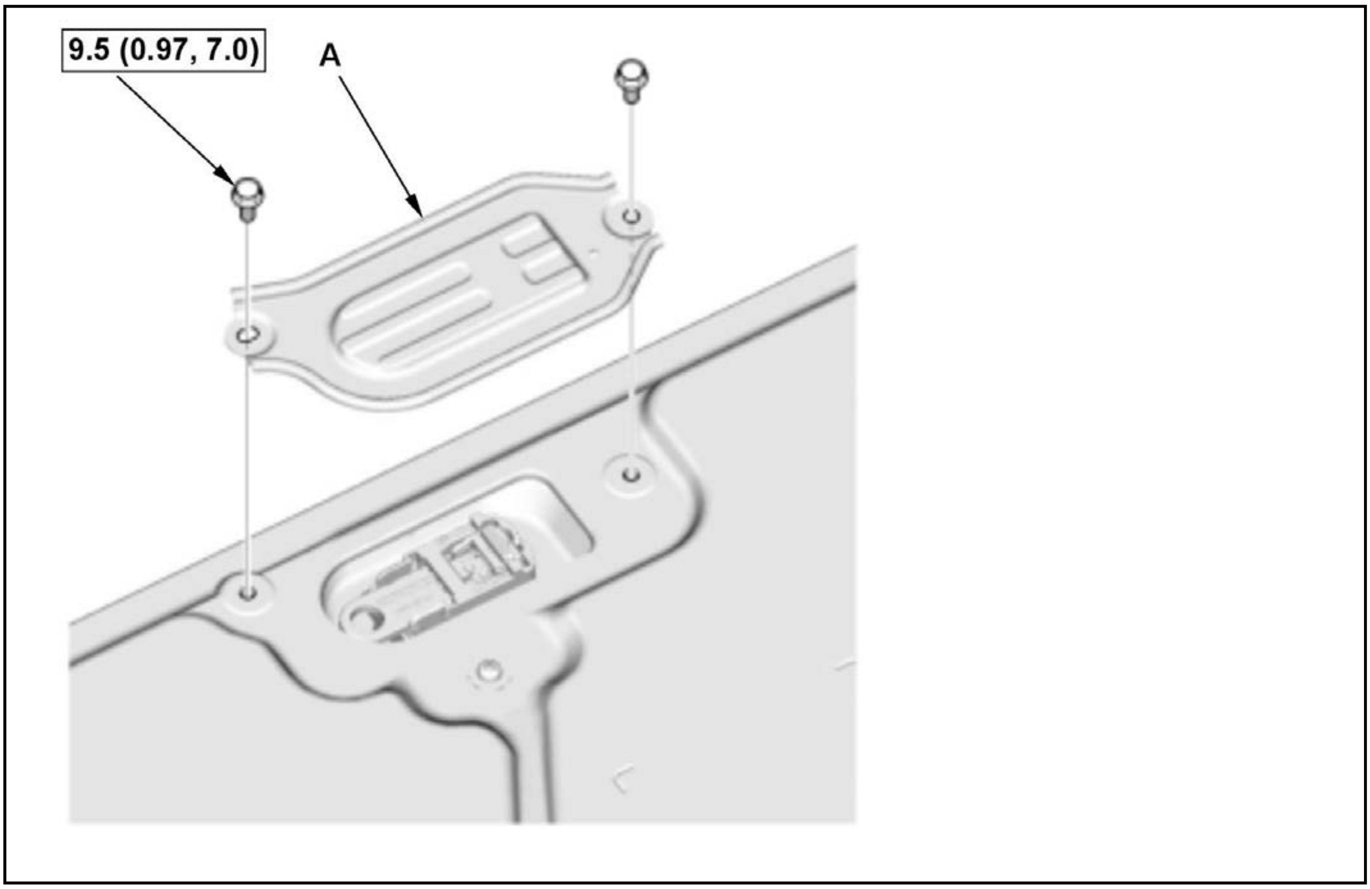

5. **Install the tool box** .

6. **Install the cargo floor cover**

7. **Do the 12 volt battery terminal reconnection procedure** .

Disconnecting and Reconnecting the Connector

Lever-Locked Connector

1. Raise the lever (A) while pushing the tab (B) in the direction of the arrow.

NOTE: **The following illustration is an example only. Appearance and structure of the actual parts may vary depending on the model.**

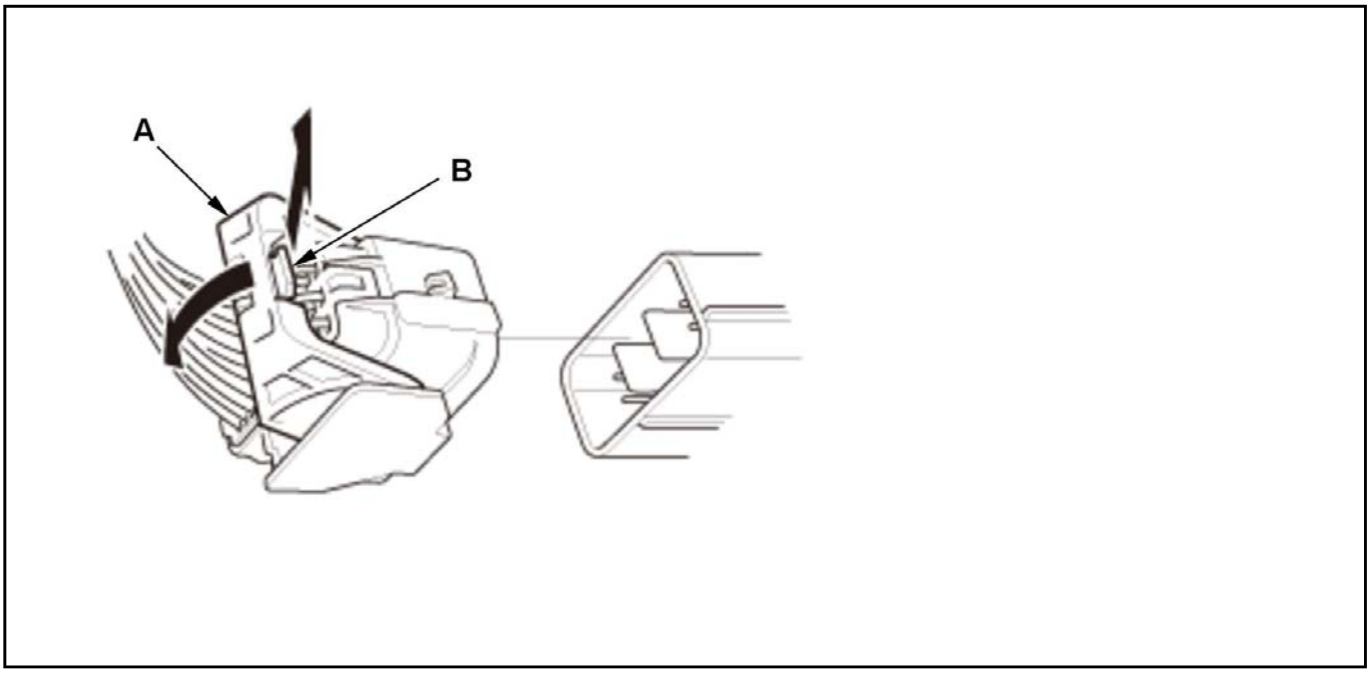

Slider-Locked Connector

NOTE: **How to read the torque specifications** .

1. Remove the connector (A) from the bracket (B).

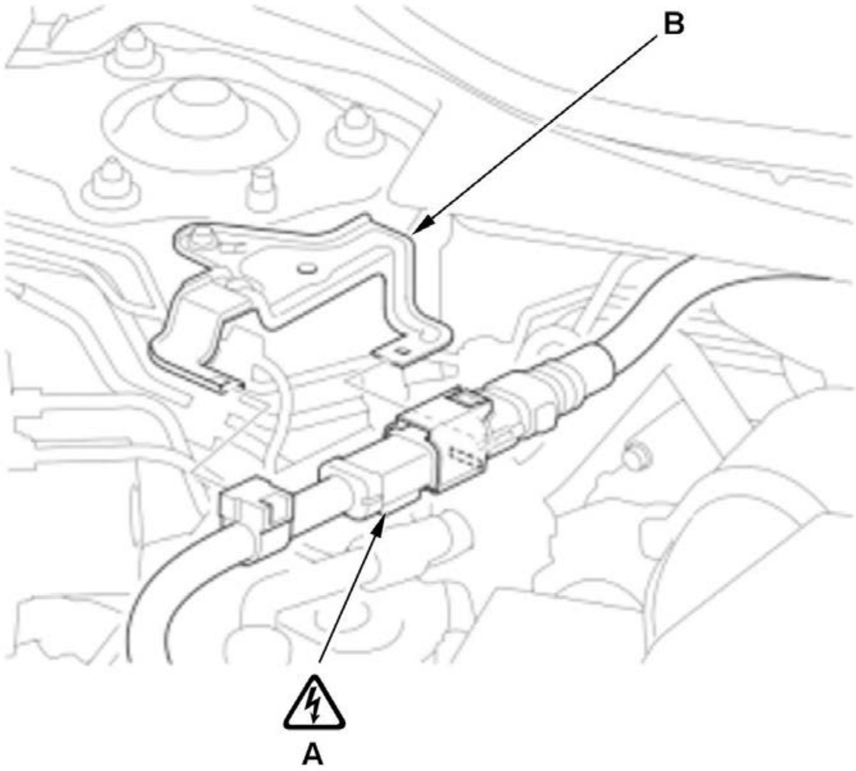

Move the slider (A) in the direction of the arrow, then disconnect the connector (B) while pushing the tab (C).

NOTE:

- **When removing or installing the service plug or items marked with ⚠ , always use insulated tools, and wrap the items with insulating tape.**
- **The following illustration is an example only. Appearance and structure of the actual parts may vary depending on the model.**

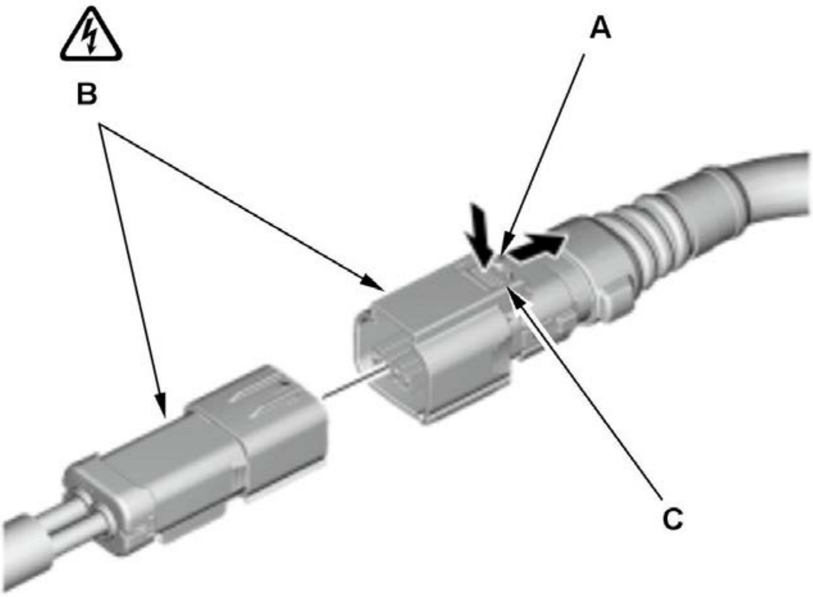

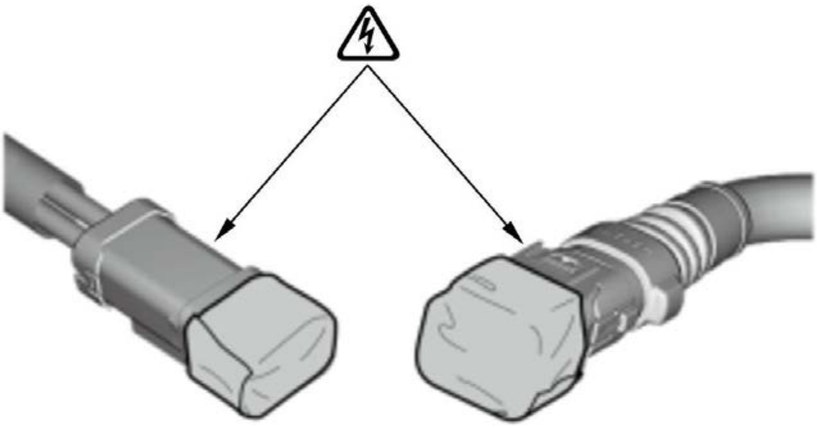

Power Cable Connector

NOTE: How to read the torque specifications .

Disconnect the power cable connector, and wrap the items with insulating tape.

NOTE:

- **The connector is removed by loosening the bolt.**
- **When removing or installing the service plug or items marked with ⚠ , always use insulated tools, and wrap the items with insulating tape.**
- **The following illustration is an example only. Appearance and structure of the actual parts may vary depending on the model.**

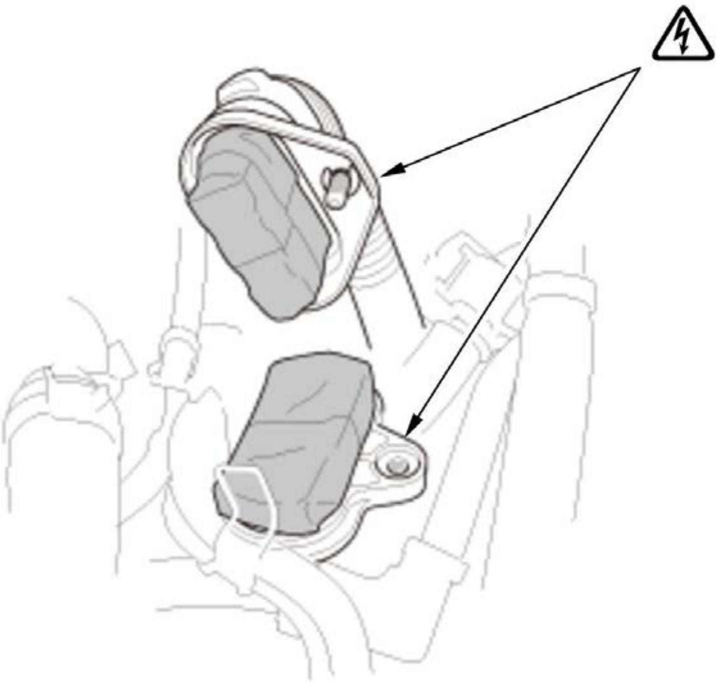

How to Cable Connector Bolt Replacement

Removal procedure

NOTE:

- When replacing the connector bolt, replace the cable if there are any damages, scratches or coating deterioration on the aluminum portion of the connector or resin parts.

- The following illustration is an example only. Appearance and structure of the actual parts may vary depending on the model.
- If necessary, remove the orange cable cover.

1. Apply protective tape to the connector (A) as shown.

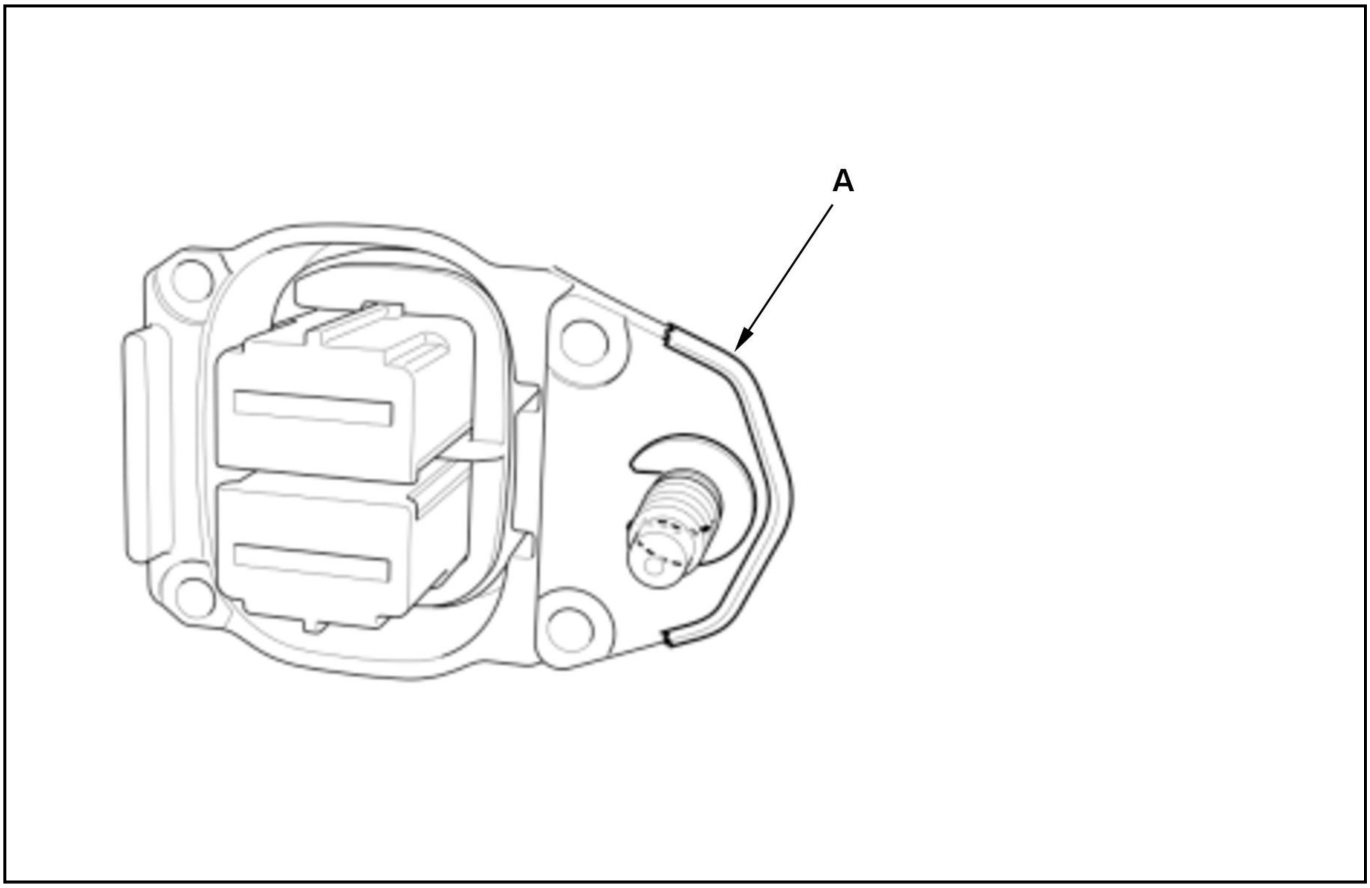

2. Adjust the position of the bolt clip (A) as shown. By using pliers (B), move the clip a bit toward the arrow as shown.

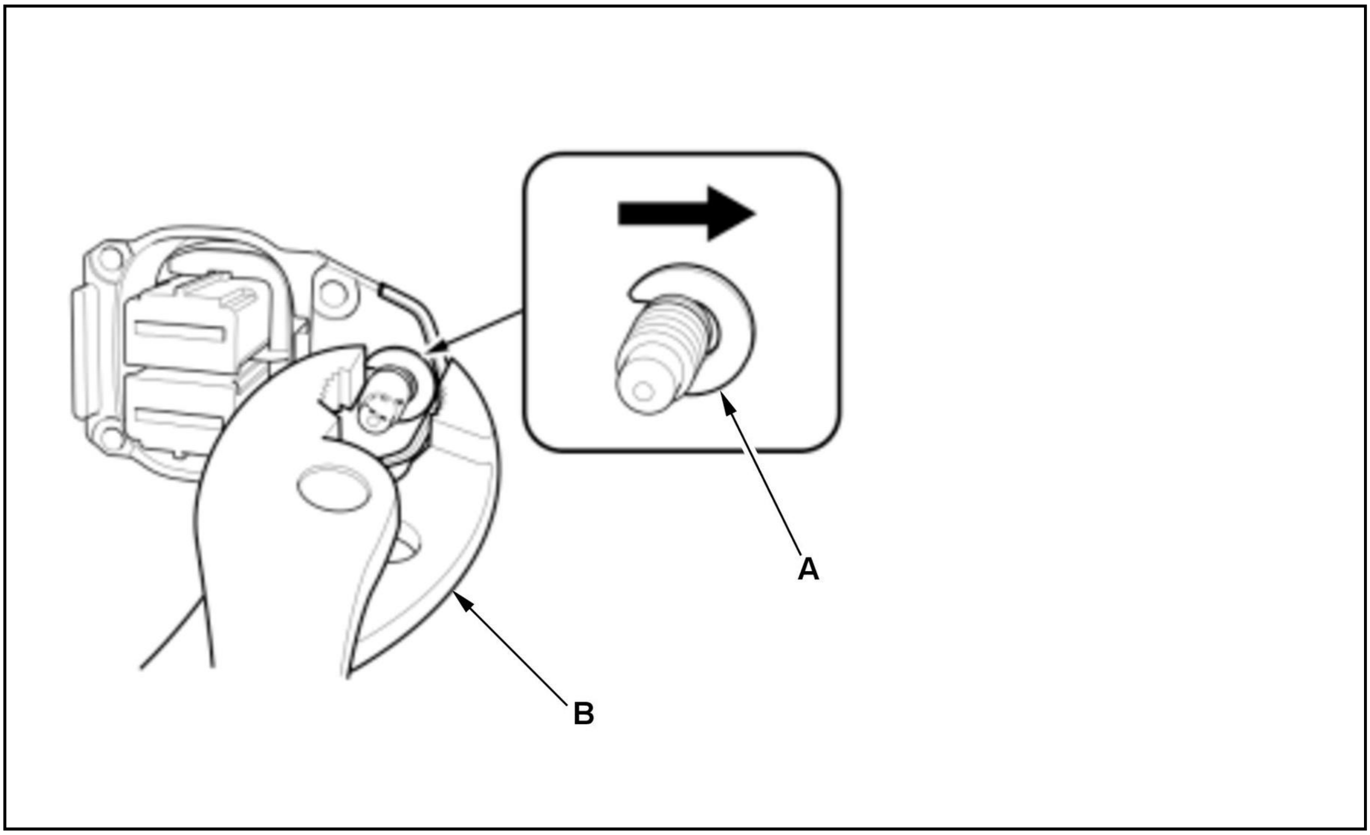

3. Put 2 long nose pliers onto the areas as shown and remove the bolt clip by gripping the pliers tightly. Then, remove the bolt.

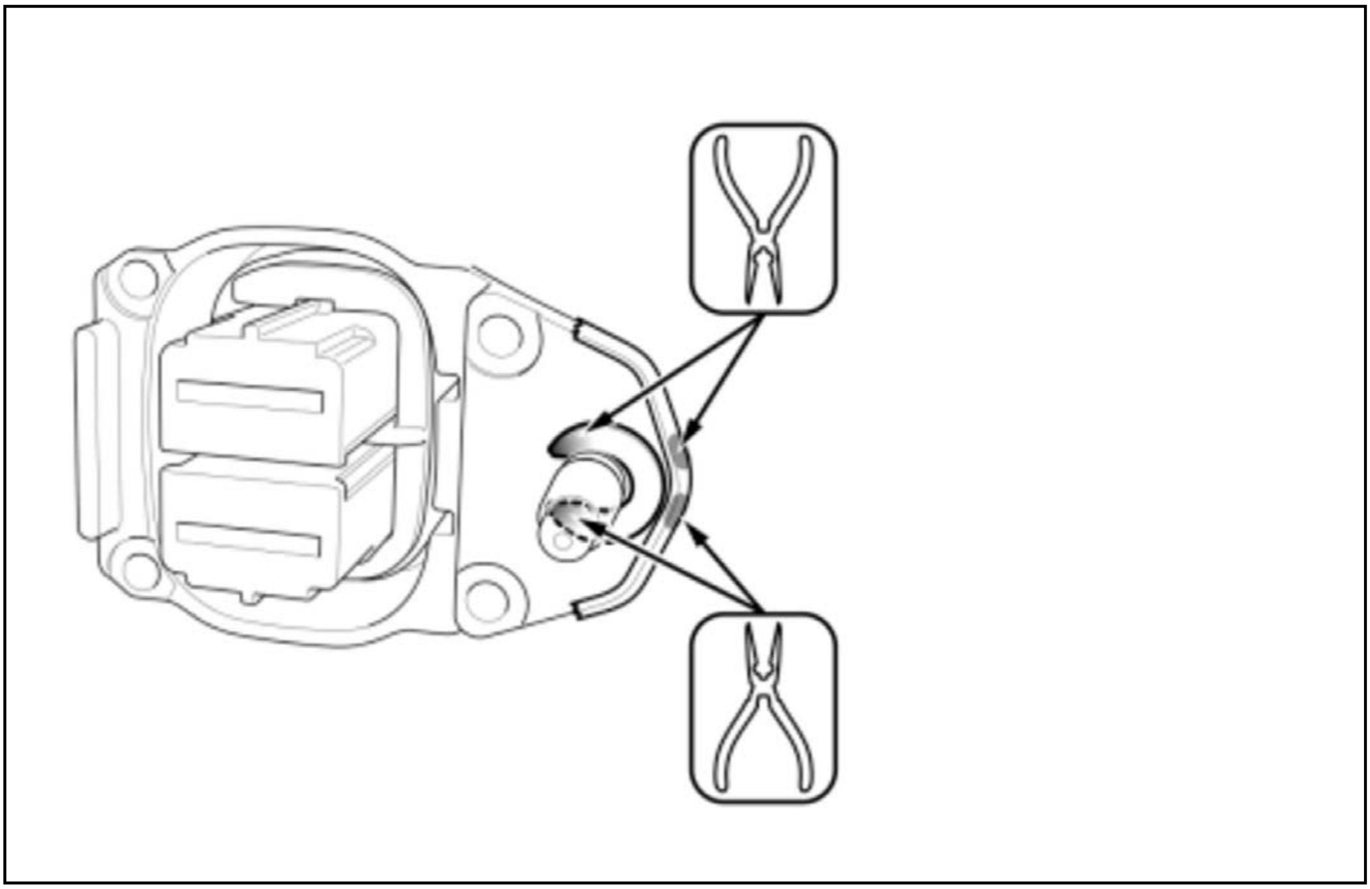

Installation procedure

1. Place the bolt clip as shown. Put pliers onto the areas (A) as shown and install the clip by gripping the pliers tightly.

NOTE: Install the bolt clip into a groove, not into a screw thread.

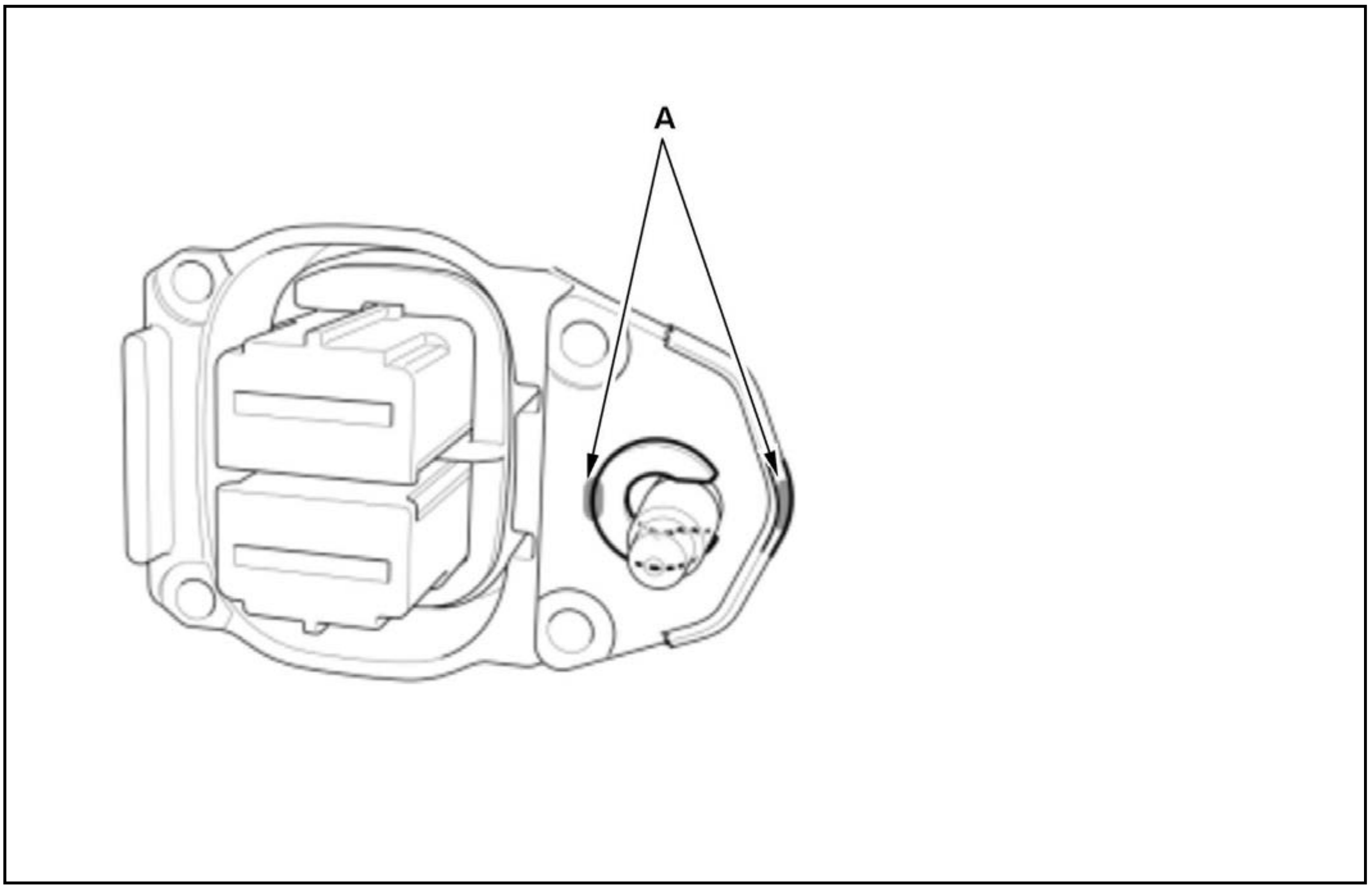

SYSTEM WARNING/INDICATOR INDEX

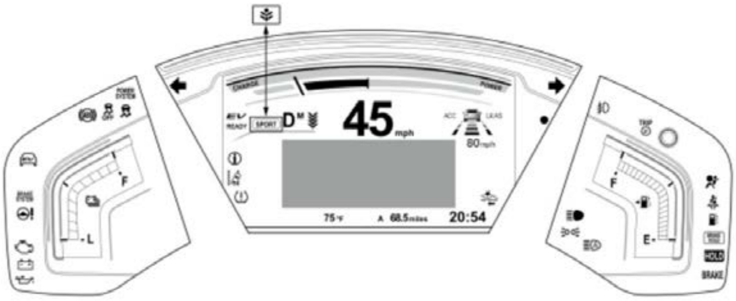

NOTE:

- Check the diagnostic trouble code (DTC) with the HDS, then refer to the indicated DTC's troubleshooting.
- There are some indicators displayed on the multi-information display (MID).

Indicator	Indicator Name	Fault Detection Unit	HDS System Menu (DTC Check)	Diagnostic Procedure
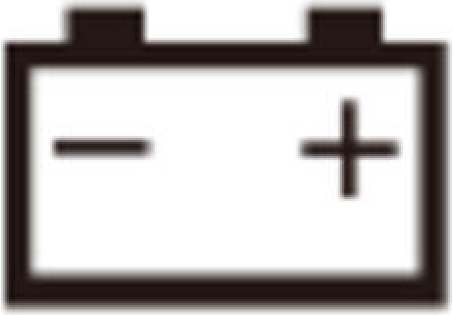	12 VOLT CHARGING SYSTEM INDICATOR(Red)	PCM Battery condition monitor module Motor control module	PGM-FI ⇨ DTCs/Freeze Data Electric Powertrain ⇨ DTCs/Freeze Data	PGM-FI system general troubleshooting information PGM-FI system DTC troubleshooting index PGM-FI system symptom troubleshooting index Electric powertrain system general troubleshooting information Electric powertrain system DTC troubleshooting index Electric powertrain system symptom troubleshooting index
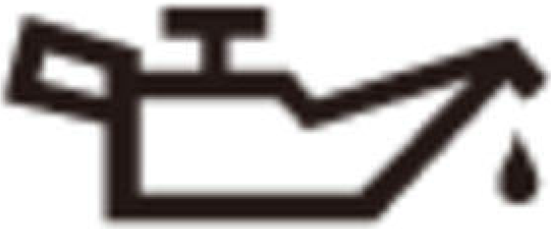	LOW OIL PRESSURE INDICATOR (Red)	PCM	PGM-FI ⇨ DTCs/Freeze Data	PGM-FI system general troubleshooting information PGM-FI system DTC troubleshooting index Engine lubrication system symptom troubleshooting index

Indicator	Indicator Name	Fault Detection Unit	HDS System Menu (DTC Check)	Diagnostic Procedure
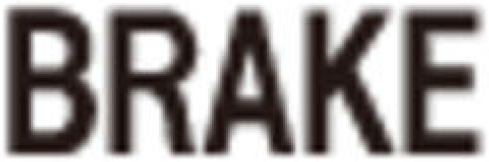	BRAKE SYSTEM INDICATOR(Red)	- VSA modulator-control unit - Electric serbo brake control unit	ABS/TCS/VSA ⇨ DTCs BRAKE SYSTEM ⇨ ESB ⇨ DTCs	- VSA system general troubleshooting information - VSA system DTC troubleshooting index - VSA system symptom troubleshooting index - Electric parking brake system general troubleshooting information - Electric parking brake system symptom troubleshooting index - Electric servo brake system general troubleshooting information - Electric servo brake system DTC troubleshooting index
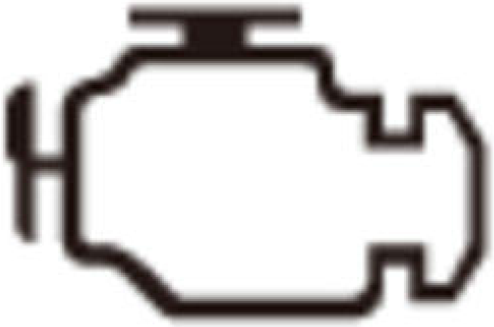	MALFUNCTION INDICATOR LAMP (MIL) (Amber)	PCM	PGM-FI ⇨ DTCs/Freeze Data	- PGM-FI system general troubleshooting information - PGM-FI system DTC troubleshooting index - PGM-FI system symptom troubleshooting index
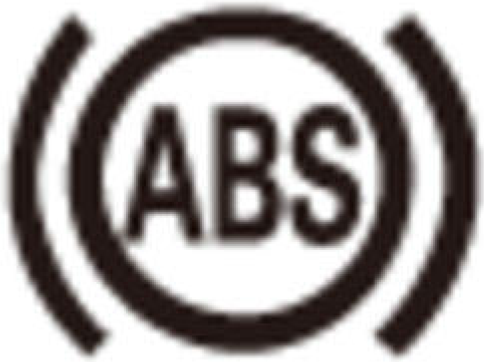	ABS INDICATOR (Amber)	VSA modulator-control unit	ABS/TCS/VSA ⇨ DTCs	- VSA system general troubleshooting information - VSA system DTC troubleshooting index - VSA system symptom troubleshooting index

Indicator	Indicator Name	Fault Detection Unit	HDS System Menu (DTC Check)	Diagnostic Procedure
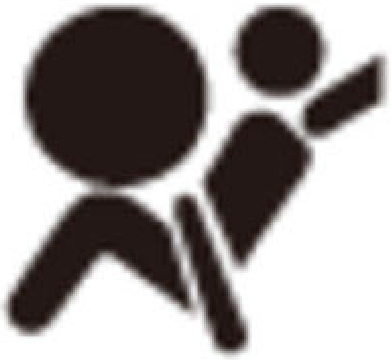	SRS INDICATOR (Red)	SRS Unit	SRS ⇨ SRS/SWS ⇨ DTCs	- SRS general troubleshooting information - SRS DTC troubleshooting index - SRS symptom troubleshooting index
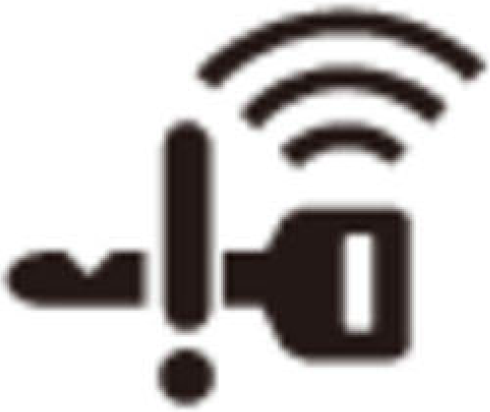	KEYLESS ACCESS INDICATOR	Body control module	ONE-PUSH START ⇨ PCU ⇨ DTCs ONE-PUSH START ⇨ Backup Control Unit ⇨ DTCs ONE-PUSH START ⇨ KEYLESS ACCESS CONTROL Unit ⇨ DTCs	- Body electrical general troubleshooting information - Keyless access system DTC troubleshooting index - Keyless access system symptom troubleshooting information - Keyless access system symptom troubleshooting index
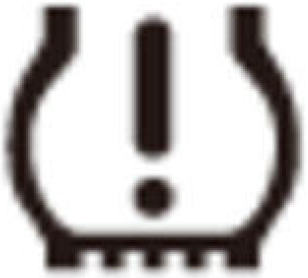	LOW TIRE PRESSURE/TPMS INDICATOR (Amber)	VSA modulator-control unit	ABS/TCS/VSA ⇨ DTCs	- TPMS general troubleshooting information - TPMS DTC troubleshooting index - TPMS symptom troubleshooting index

Indicator	Indicator Name	Fault Detection Unit	HDS System Menu (DTC Check)	Diagnostic Procedure
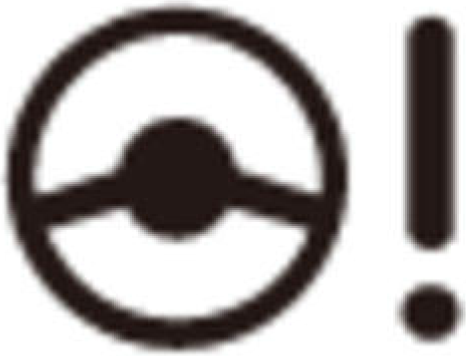	EPS INDICATOR (Amber)	EPS control unit	EPS ⇨ DTCs/Freeze Data	- **EPS system general troubleshooting information** - **EPS system DTC troubleshooting index** - **EPS system symptom troubleshooting index**
TAIL GATE	POWER TAILGATE INDICATOR	Power tailgate control unit	BODY ELECTRICAL ⇨ Power tailgate ⇨ DTCs	- **Body electrical general troubleshooting information** - **Power tailgate system DTC troubleshooting index**
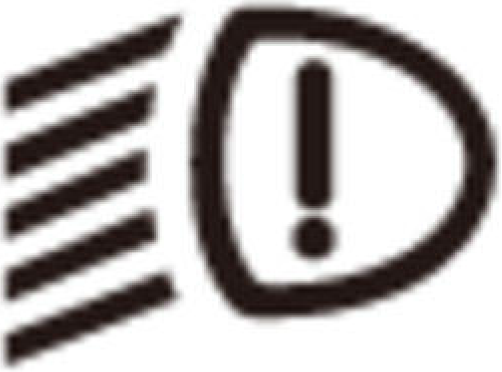	LIGHT CONTROL INDICATOR	Body control module	BODY ELECTRICAL ⇨ Lighting ⇨ DTCs	- **Body electrical general troubleshooting information** - **Body control module DTC troubleshooting index**
ACC	ACC INDICATOR	- Multipurpose camera unit - Millimeter wave radar	DRIVING SUPPORT ⇨ Integrated Driver Support System ⇨ DTCs	- **Driving support system DTC troubleshooting index** - **ACC system general troubleshooting information** - **ACC system symptom troubleshooting index**

Indicator	Indicator Name	Fault Detection Unit	HDS System Menu (DTC Check)	Diagnostic Procedure
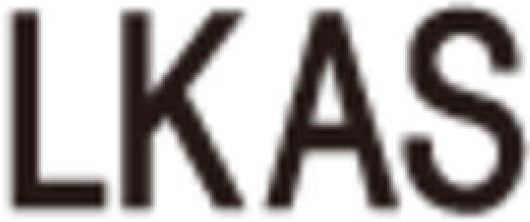	LKAS INDICATOR	- Multipurpose camera unit - Millimeter wave radar	DRIVING SUPPORT ⇨ Integrated Driver Support System ⇨ DTCs	- **Driving support system DTC troubleshooting index** - **LKAS general troubleshooting information** - **LKAS symptom troubleshooting index**
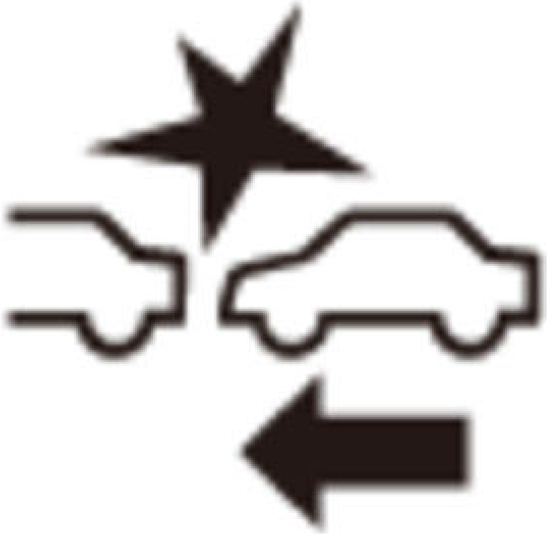	CMBS INDICATOR	- Multipurpose camera unit - Millimeter wave radar	DRIVING SUPPORT ⇨ Integrated Driver Support System ⇨ DTCs	- **Driving support system DTC troubleshooting index** - **CMBS general troubleshooting information** - **CMBS symptom troubleshooting index**

Indicator	Indicator Name	Fault Detection Unit	HDS System Menu (DTC Check)	Diagnostic Procedure
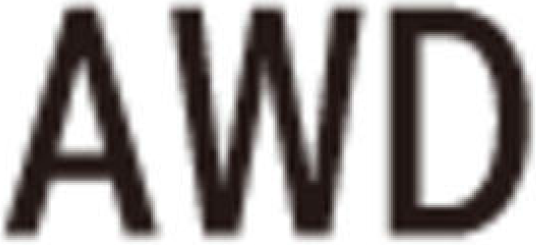	AWD SYSTEM INDICATOR	Real time AWD control unit	SH-AWD ⇨ DTC/Freeze Data	- **AWD system general troubleshooting information** - **AWD system DTC troubleshooting index** - **AWD system symptom troubleshooting index**

Indicator	Indicator Name	Fault Detection Unit	HDS System Menu (DTC Check)	Diagnostic Procedure
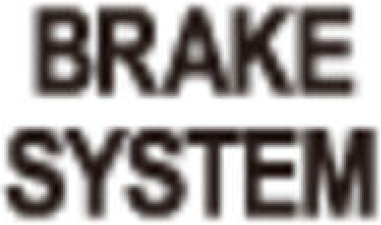	BRAKE SYSTEM INDICATOR (Amber)	- VSA modulator-control unit - PCM - Electric serbo brake control unit - Millimeter wave radar - Multipurpose camera unit	ABS/TCS/VSA ⇨ DTCs PGM-FI ⇨ DTCs/Freeze Data BRAKE SYSTEM ⇨ ESB ⇨ DTCs DRIVING SUPPORT ⇨ Integrated Driver Support System ⇨ System DTCs	- VSA system general troubleshooting information - VSA system DTC troubleshooting index - VSA system symptom troubleshooting index - Brake system symptom troubleshooting index - PGM-FI system general troubleshooting information - PGM-FI system DTC troubleshooting index - PGM-FI system symptom troubleshooting index - Electric parking brake system general troubleshooting information - Electric parking brake system symptom troubleshooting index - Electric servo brake system general troubleshooting information - Electric servo brake system DTC troubleshooting index
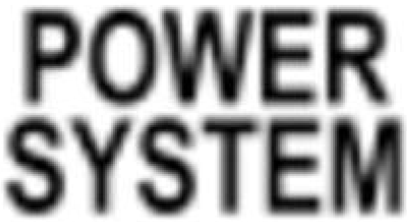	POWER SYSTEM INDICATOR (Amber)	- Battery condition monitor module - Motor control module	Electric Powertrain ⇨ DTCs/Freeze Data	- Electric powertrain system general troubleshooting information - Electric powertrain system DTC troubleshooting index - Electric powertrain system symptom troubleshooting index

Indicator	Indicator Name	Fault Detection Unit	HDS System Menu (DTC Check)	Diagnostic Procedure
●	SECURITY INDICATOR (Red)	Body control module	ONE-PUSH START ⇨ Backup Control Unit ⇨ System Information ⇨ System Check ONE-PUSH START ⇨ Backup Control Unit ⇨ System Information ⇨ Status Log ONE-PUSH START ⇨ KEYLESS ACCESS CONTROL Unit ⇨ KEYLESS ACCESS System Information ⇨ System Check 1 ONE-PUSH START ⇨ KEYLESS ACCESS CONTROL Unit ⇨ KEYLESS ACCESS System Information ⇨ System Check 2	- Body electrical general troubleshooting information - Keyless access system symptom troubleshooting information - Keyless access system system check - Keyless access system symptom troubleshooting index
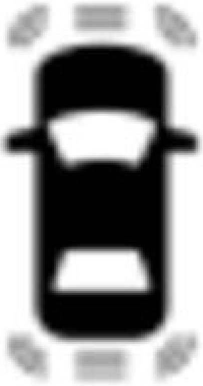	PARKING and BACK-UP SENSOR INDICATOR	Parking and back-up sensor control unit	BODY ELECTRICAL ⇨ Parking Sensor ⇨ DTCs	- Body electrical general troubleshooting information - Parking and back-up sensor system DTC troubleshooting index
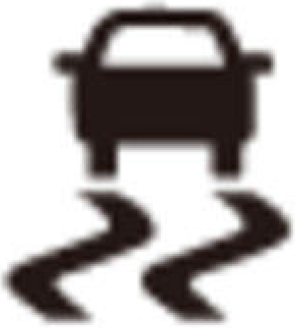	VSA INDICATOR (Amber)	VSA modulator-control unit	ABS/TCS/VSA ⇨ DTCs	- VSA system general troubleshooting information - VSA system DTC troubleshooting index - VSA system symptom troubleshooting index

Indicator	Indicator Name	Fault Detection Unit	HDS System Menu (DTC Check)	Diagnostic Procedure
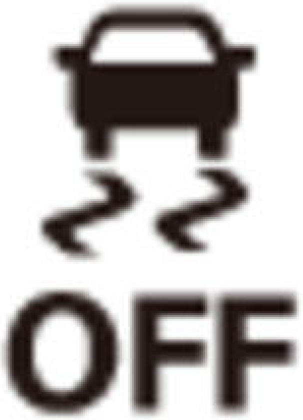	VSA OFF INDICATOR (Amber)	VSA modulator-control unit	ABS/TCS/VSA ⇨ DTCs	- VSA system general troubleshooting information - VSA system DTC troubleshooting index - VSA system symptom troubleshooting index

Indicator	Indicator Name	Fault Detection Unit	HDS System Menu (DTC Check)	Diagnostic Procedure
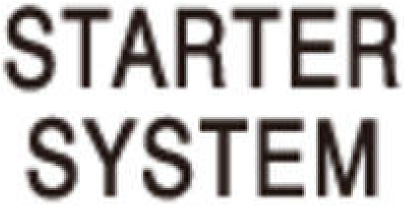	STARTER SYSTEM INDICATOR	- PCM - Battery condition monitor module - Motor control module	PGM-FI ⇨ DTCs/Freeze Data Electric Powertrain ⇨ DTCs/Freeze Data	- PGM-FI system general troubleshooting information - PGM-FI system DTC troubleshooting index - PGM-FI system symptom troubleshooting index - Electric powertrain system general troubleshooting information - Electric powertrain system DTC troubleshooting index - Electric powertrain system symptom troubleshooting index
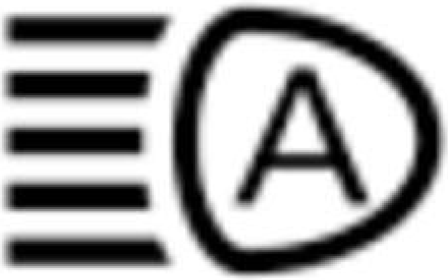	AUTO HIGH-BEAM INDICATOR	- Multipurpose camera unit - Millimeter wave radar	DRIVING SUPPORT ⇨ Integrated Driver Support System ⇨ DTCs	- Driving support system DTC troubleshooting index - Auto high-beam (High-beam support system) general troubleshooting information

Indicator	Indicator Name	Fault Detection Unit	HDS System Menu (DTC Check)	Diagnostic Procedure
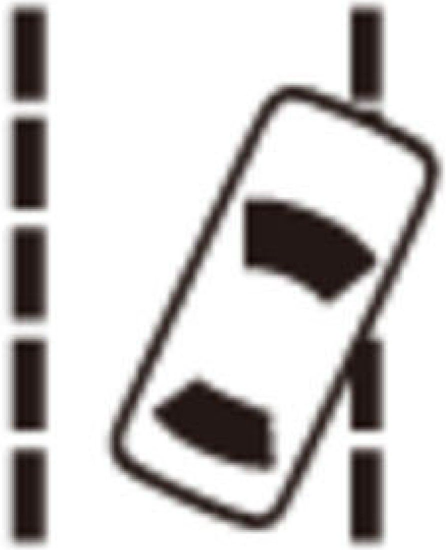	RDM INDICATOR	- Multipurpose camera unit - Millimeter wave radar	DRIVING SUPPORT ⇨ Integrated Driver Support System ⇨ DTCs	- **Driving support system DTC troubleshooting index** - **RDM system general troubleshooting information** - **RDM system symptom troubleshooting index**
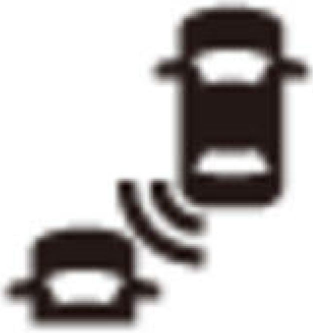	BSI INDICATOR	- Left side BSI radar unit - Right side BSI radar unit	DRIVING SUPPORT ⇨ Blind Spot Information/Cross Traffic Monitor ⇨ DTCs	- **Driving support system DTC troubleshooting index** - **BSI general troubleshooting information** - **BSI DTC troubleshooting index** - **BSI symptom troubleshooting index** - **CTM general troubleshooting information**
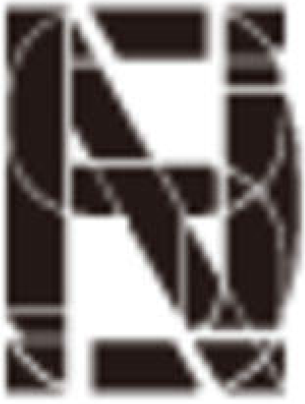	SHIFT POSITION INDICATOR	PCM	AT ⇨ DTCs/Freeze Data	- **Gear unit control system general troubleshooting information** - **Gear unit control system DTC troubleshooting index** - **Gear unit control system symptom troubleshooting index**

SYMPTOM TROUBLESHOOTING

ELECTRIC POWERTRAIN SYMPTOM TROUBLESHOOTING - 12 VOLT CHARGING SYSTEM INDICATOR COMES ON FAINTLY, NO DTCS SET

1. The 12 volt charging system indicator may faintly illuminate when the vehicle is in READY TO DRIVE mode during extremely cold weather -22 deg. F (-30 deg. C). As the battery module temperature increases, the 12 volt charging system indicator will turn off.

ELECTRIC POWERTRAIN SYMPTOM TROUBLESHOOTING - 12 VOLT CHARGING SYSTEM INDICATOR NEVER COMES ON, NO DTCS SET

1. HDS communication check

-1. Turn the vehicle to the OFF (LOCK) mode.

-2. Connect the HDS to the DLC.

-3. Turn the vehicle to the ON mode, and read the HDS

Does the HDS identify the vehicle?

YES

Go to step 2.

NO

Do the DLC circuit troubleshooting.

2. Gauge control module check

-1. Turn the vehicle to the OFF (LOCK) mode.

-2. **Do the gauge control module self-diagnostic function** .

Does the 12 volt charging system indicator flash?

YES

Intermittent failure, the system is OK at this time.

NO

Substitute a known-good gauge control module , then recheck. If the symptom/indication goes away with a known-good gauge control module, **replace the original gauge control module** .

ELECTRIC POWERTRAIN SYMPTOM TROUBLESHOOTING - 12 VOLT CHARGING SYSTEM INDICATOR STAYS ON, NO DTCS SET

1. PGM-FI system DTC check

-1. Check for Pending or Confirmed DTCs in the PGM-FI system with the HDS.

DTC Description	Confirmed DTC	Pending DTC
B	B	B

Are any Pending or Confirmed DTCs indicated?

YES

The failure is duplicated. **Go to the troubleshooting for PGM-FI system DTC(s)** .

NO

Go to step 2.

2. Problem verification 1

-1. Check the parameter(s) below with the HDS.

Signal	Threshold		Current conditions	
	Values	Unit	Values	Unit
History of DC-DC Converter Stop 2	1	B	B	B

Does the current condition(s) match the threshold?

YES

The system is OK at this time. The 12 volt charging system indicator will turn off when the state-of charge (SOC) increases.

NO

Go to step 3.

3. Problem verification 2

-1. Check the parameter(s) below with the HDS.

Signal	Current conditions	
	Values	Unit
DC-DC Converter Temperature	B	B

Is 217 deg. F (103 deg. C) or more indicated?

YES

The system is OK at this time. The 12 volt charging system indicator will turn off when the DC-DC converter temperature decreases.

NO

Go to step 4.

4. Problem verification 3

-1. Check the parameter(s) below with the HDS.

Signal	Threshold		Current conditions	
	Values	Unit	Values	Unit
HV Battery Total Voltage	115. 8 - 315	V	B	B

Does the current condition(s) match the threshold?

YES

Go to step 5.

NO

The system is OK at this time. The 12 volt charging system indicator will turn on when the DC-DC converter temperature increases or over the operating voltage range temporary.

5. Gauge control module check

-1. Turn the vehicle to the ON mode.

-2. **Do the gauge control module self-diagnostic function** .

Does the 12 volt charging system indicator flash?

YES

Replace the PCU .

NO

Substitute a known-good gauge control module , then recheck. If the symptom/indication goes away with a known-good gauge control module, **replace the original gauge control module** .

ELECTRIC POWERTRAIN SYMPTOM TROUBLESHOOTING - POWER SYSTEM INDICATOR NEVER COMES ON, NO DTCS SET

1. Gauge control module check

-1. **Do the gauge control module self-diagnostic function** .

Does the POWER SYSTEM indicator flash?

YES

Intermittent failure, the system is OK at this time.

NO

Substitute a known-good gauge control module , then recheck. If the symptom/indication goes away with a known-good gauge control module, **replace the original gauge control module** .

ELECTRIC POWERTRAIN SYMPTOM TROUBLESHOOTING - POWER SYSTEM INDICATOR STAYS ON, NO DTCS SET

1. HDS communication check

-1. Turn the vehicle to the OFF (LOCK) mode.

-2. Connect the HDS to the DLC.

-3. Turn the vehicle to the ON mode, and read the HDS.

Does the HDS identify the vehicle?

YES

Go to step 2.

NO

Do the DLC circuit troubleshooting.

2. Gauge control module check

-1. Turn the vehicle to the OFF (LOCK) mode.

-2. **Do the gauge control module self-diagnostic function** .

Does the POWER SYSTEM indicator flash?

YES

Intermittent failure, the system is OK at this time.

NO

Substitute a known-good gauge control module , then recheck. If the symptom/indication goes away with a known-good gauge control module, **replace the original gauge control module** .

ELECTRIC POWERTRAIN SYMPTOM TROUBLESHOOTING - THE MESSAGE (HIGH VOLTAGE BATTERY CHARGE TOO LOW, VEHICLE CANNOT START) IS INDICATED ON THE MULTI-INFORMATION DISPLAY

1. Diagnostic interview (lack of fuel)

-1. Interview to the customer; Before the failure, the vehicle lacked fuel.

Fuel is lacked before the failure?

YES

Check the fuel level on the gauge. If it is OK, **enter the maintenance mode** to charge the high voltage battery.

NO

Go to the symptom troubleshooting in the fuel and emissions systems . **NOTE:** This vehicle has a fail-safe function that leave the SOC of the high voltage battery when the generation function has failed. Start the engine by **maintenance mode** if you want to use the SOC of the high voltage battery in the vehicle maintenance. At that time, make sure the SOC of the high voltage battery.

SYMPTOM TROUBLESHOOTING INDEX

ELECTRIC POWERTRAIN SYMPTOM TROUBLESHOOTING INDEX

When the vehicle has one of these symptoms, check for a diagnostic trouble code (DTC) with the HDS. If there is no DTC, do the diagnostic procedure for the symptom in the sequence listed until you find the cause.

Symptom	Diagnostic procedure	Also check for
Vehicle does not go into READY TO DRIVE mode, and HDS does not communicate with the PCM (POWER SYSTEM indicator comes on and stays on)	**Troubleshoot the PCM power and ground circuits** .	• No power to PCM • No ground to PCM • Short in reference voltage circuit
POWER SYSTEM indicator stays on, no DTCs set	**Symptom troubleshooting**.	B
POWER SYSTEM indicator never comes on, no DTCs set	**Symptom troubleshooting**.	B
12 volt charging system indicator stays on, no DTCs set	**Symptom troubleshooting**.	B
12 volt charging system indicator comes on faintly, no DTCs set	**Symptom troubleshooting**.	B
12 volt charging system indicator never comes on, no DTCs set	**Symptom troubleshooting**.	B
The word (High Voltage Battery Charge Too Low, Vehicle Cannot Start) is indicated on the multi-information display	**Symptom troubleshooting**.	B
Vehicle will not operate on either electric motor or gasoline engine (POWER SYSTEM indicator works OK, no DTCs set, immobilizer indicator stays on or flashes)	**Check the immobilizer system** .	B
HDS does not communicate with the Electric Powertrain System	**Troubleshoot the DLC circuit**.	Correct HDS software

SYMPTOM TROUBLESHOOTING INDEX FOR VIEWER

12 VOLT CHARGING SYSTEM INDICATOR COMES ON FAINTLY, NO DTCS SET

Diagnostic procedure

- **Symptom troubleshooting**.

12 VOLT CHARGING SYSTEM INDICATOR NEVER COMES ON, NO DTCS SET

Diagnostic procedure

- Symptom troubleshooting.

12 VOLT CHARGING SYSTEM INDICATOR STAYS ON, NO DTCS SET

Diagnostic procedure

- Symptom troubleshooting.

HDS DOES NOT COMMUNICATE WITH THE ELECTRIC POWERTRAIN SYSTEM

Diagnostic procedure

- Troubleshoot the DLC circuit.

Also check for

Correct HDS software

POWER SYSTEM INDICATOR NEVER COMES ON, NO DTCS SET

Diagnostic procedure

- Symptom troubleshooting.

POWER SYSTEM INDICATOR STAYS ON, NO DTCS SET

Diagnostic procedure

- Symptom troubleshooting.

THE WORD (HIGH VOLTAGE BATTERY CHARGE TOO LOW, VEHICLE CANNOT START) IS INDICATED ON THE MULTI-INFORMATION DISPLAY

Diagnostic procedure

- Symptom troubleshooting.

VEHICLE DOES NOT GO INTO READY TO DRIVE MODE, AND HDS DOES NOT COMMUNICATE WITH THE PCM (POWER SYSTEM INDICATOR COMES ON AND STAYS ON)

Diagnostic procedure

- Troubleshoot the PCM power and ground circuits .

Also check for

- No power to PCM
- No ground to PCM
- Short in reference voltage circuit

VEHICLE WILL NOT OPERATE ON EITHER ELECTRIC MOTOR OR GASOLINE ENGINE (POWER SYSTEM INDICATOR WORKS OK, NO DTCS SET, IMMOBILIZER INDICATOR STAYS ON OR FLASHES)

Diagnostic procedure

- Check the immobilizer system .

TEST

EXPANSION TANK CAP TEST (ELECTRIC POWERTRAIN)

Test

NOTE: Do not spill the PCU coolant on the surrounding parts. If you spill the PCU coolant, wipe the PCU coolant off immediately.

1. Expansion Tank Cap - Remove

   NOTE: Wait until the PCU coolant is cool, then carefully remove the radiator cap.

2. Expansion Tank Cap - Test

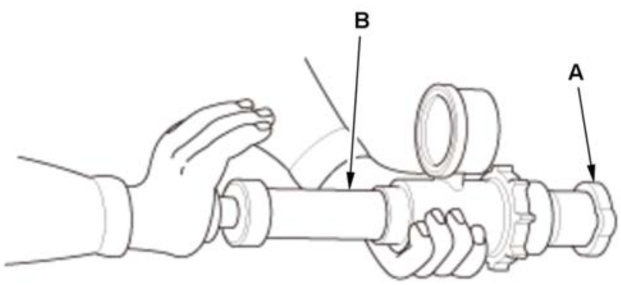	1. Wet the expansion tank cap (A) seal with coolant, then install it on a commercially available pressure tester (B). 2. Apply a pressure of **34. 3-63. 7 kPa (0. 350-0. 650 kgf/cm 2, 4. 97-9. 24 psi)** 3. Check for a drop in pressure. 4. If the pressure drops, replace the expansion tank cap.

3. All Removed Parts - Install

1. Install the parts in the reverse order of removal.

RADIATOR TEST (ELECTRIC POWERTRAIN)

Test

1. **Expansion Tank Cap - Remove**

   NOTE: Wait until the PCU coolant is cool, then carefully remove the radiator cap.

2. Radiator - Test

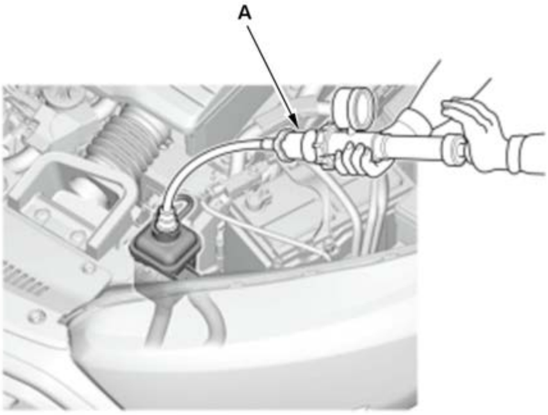	1. **Fill the expansion tank with coolant to the MAX mark of the expansion tank**. 2. Attach a commercially available pressure tester (A) to the radiator, and apply a pressure of **34. 3-63. 7 kPa (0. 350-0. 650 kgf/cm 2, 4. 97-9. 24 psi)** 3. Inspect for coolant leaks and a drop in pressure. 4. If coolant leaks and a drop in pressure, repair it if needed.

3. All Removed Parts - Install

1. Install the parts in the reverse order of removal.

DLC TROUBLESHOOTING

DLC CIRCUIT TROUBLESHOOTING (ELECTRIC POWERTRAIN)

NOTE: If you suspect the HDS or the HDS DLC cable may be the source of the communication problem, verify that they are working properly by connecting them to a known-good vehicle and system and checking for communication problems.

1. Fuse check 1

   -1. Turn the vehicle to the OFF (LOCK) mode.

   -2. Check the following fuse.

Fuse	**No. A10**

Is the fuse OK?

YES

Go to step 2.

NO

Replace the No. A10 fuse. Also check for a short to ground on the No. A10 fuse circuit if needed.

2. Fuse check 2

-1. Check the following fuse.

Fuse	No. D3

Is the fuse OK?

YES

Go to step 3.

NO

Replace the No. D3 fuse. Also check for a short to ground on the No. D3 fuse circuit if needed.

3. Open wire check (PG line)

-1. Turn the vehicle to the OFF (LOCK) mode.

-2. Remove the service plug.

-3. Remove the IPU cover .

-4. Disconnect the following connector.

Battery condition monitor module connector E (32P)

-5. Check for continuity between test points 1 and 2.

Test condition	Vehicle OFF (LOCK) mode
B	Battery condition monitor module connector E (32P): disconnected
Test point 1	Battery condition monitor module connector E (32P) No. 17
Test point 2	Body ground

Is there 1. 0 Ω or less?

YES

Go to step 4

NO

Repair an open in the PG wire between the battery condition monitor module and G701.

4. Open wire check (IG1MONI line)

-1. Reconnect the following connector.

Battery condition monitor module connector E (32P)

-2. Do the 12 volt battery terminal reconnection procedure .

-3. Turn the vehicle to the ON mode.

-4. Measure the voltage between test points 1 and 2.

Test condition	Vehicle ON mode

Test point 1	Battery condition monitor module connector E (32P) No. 7
Test point 2	Body ground

Is there battery voltage?

YES

Go to step 5

NO

Repair an open in the IG1MONI wire between the No. D3 fuse and the battery condition monitor module.

5. Open wire check (IGAMONI line)

-1. Measure the voltage between test points 1 and 2.

Test condition	Vehicle ON mode
Test point 1	Battery condition monitor module connector E (32P) No. 23

Test point 2	Body ground

Is there battery voltage?

YES

Go to step 6

NO

Go to step 8.

6. Open wire check (F-CAN A_H line, F-CAN A_L line)

   -1. Turn the vehicle to the OFF (LOCK) mode.

   -2. **Do the 12 volt battery terminal disconnection procedure** .

   -3. Disconnect the following connectors.

CAN gateway 16P connector
Battery condition monitor module connector E (32P)

   -4. Measure the resistance between test points 1 and 2 respectively.

Test condition	Vehicle OFF (LOCK) mode
B	CAN gateway 16P connector: disconnected
B	Battery condition monitor module connector E (32P): disconnected
Test point 1	CAN gateway 16P connector (female terminals) No. 3: ①
Test point 2	**Battery condition monitor module connector E (32P) No. 9**

Test point 1	CAN gateway 16P connector (female terminals) No. 11: ①
Test point 2	**Battery condition monitor module connector E (32P) No. 8**

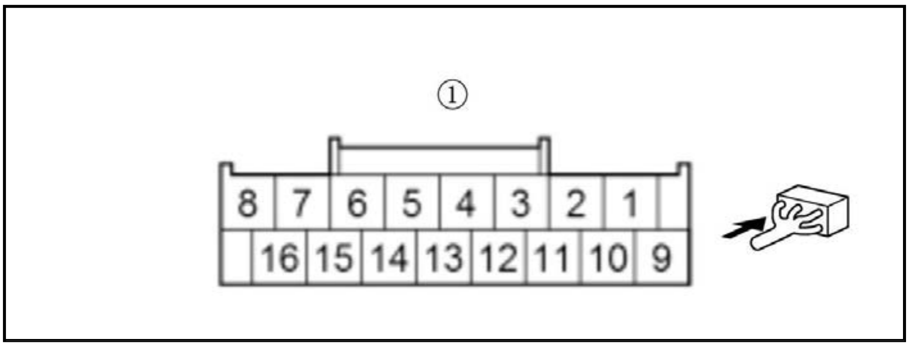

Is there 1. 0 Ω or less?

YES

Go to step 7.

NO

Repair an open or poor connection in the F-CAN A_H wire or F-CAN A_L between the CAN gateway and the battery condition monitor module.

7. Shorted wire check (F-CAN A_H line, F-CAN A_L line)

   -1. Measure the resistance between test points 1 and 2 respectively.

Test condition	Vehicle OFF (LOCK) mode
B	CAN gateway 16P connector: disconnected
B	Battery condition monitor module connector E (32P): disconnected
Test point 1	**Battery condition monitor module connector E (32P) No. 9**
Test point 2	Body ground

Test point 1	**Battery condition monitor module connector E (32P) No. 8**
Test point 2	Body ground

Is there 1 MΩ or more?

YES

The F-CAN A wires are OK. Replace the battery condition monitor module .

NO

Repair a short in the F-CAN A_H wire or F-CAN A_L wire between the CAN gateway and the battery condition monitor module.

8. Relay check

-1. Turn the vehicle to the OFF (LOCK) mode.

-2. Remove the IGHLD1 relay .

-3. Test the IGHLD1 relay .

Is the relay OK?

YES

Go to step 9.

NO

Replace the IGHLD1 relay.

9. Open wire check (+B_IG_HOLD1 line)

-1. Measure the voltage between test points 1 and 2.

Test condition	Vehicle OFF (LOCK) mode
B	IGHLD1 relay: disconnected
Test point 1	IGHLD1 relay 4P socket (female terminals) No. 1, No. 3: ①
Test point 2	Body ground

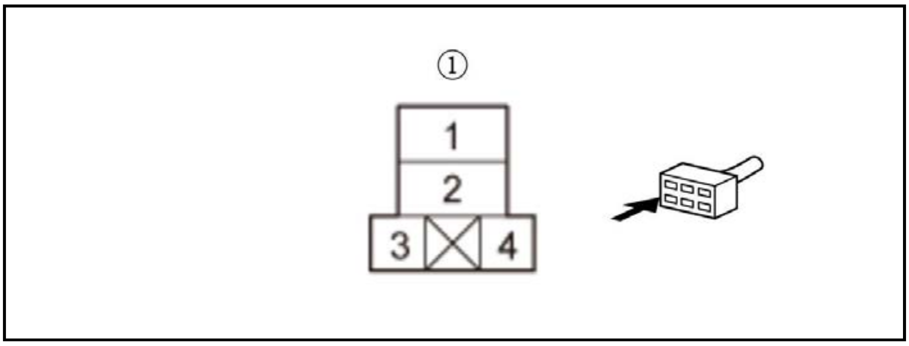

Is there battery voltage?

YES

Go to step 10.

NO

Repair an open in the +B_IG_HOLD1 wire between the No. A10 fuse and the IGHLD1 relay.

10. Open wire check (IGA/IGAMONI line)

-1. Disconnect the following connector.

Battery condition monitor module connector E (32P)

-2. Measure the resistance between test points 1 and 2.

Test condition	Vehicle OFF (LOCK) mode
B	IGHLD1 relay: disconnected
B	Battery condition monitor module connector E (32P): disconnected
Test point 1	IGHLD1 relay 4P socket (female terminals) No. 2: ①
Test point 2	Battery condition monitor module connector E (32P) No. 23

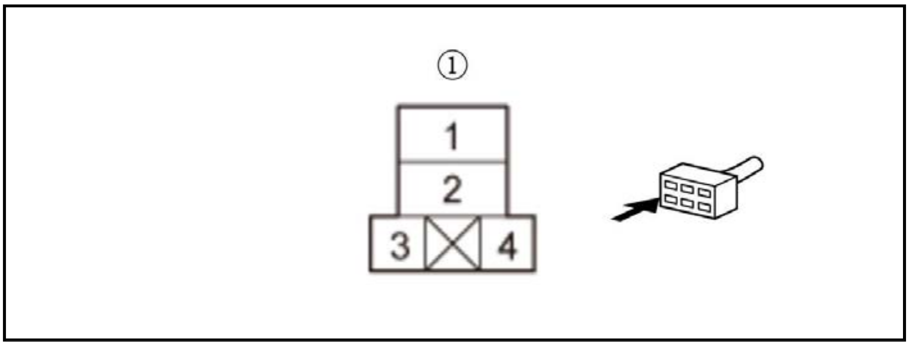

Is there 1. 0 Ω or less?

YES

The IGA/IGAMONI wire is OK. Repair an open in the IGHLD wire between the IGHLD1 relay and the battery condition monitor module.

NO

Repair an open in the IGA/IGAMONI wire between the IGHLD1 relay and the battery condition monitor module.

REMOVAL AND INSTALLATION

12 VOLT BATTERY SENSOR REMOVAL AND INSTALLATION

Removal and Installation

NOTE:

- Where icon is shown, for further information see below.
- With the driver's door open, turn the vehicle to the OFF (LOCK) mode, then wait at least 3 minutes before disconnecting the 12 volt negative battery cable.

Procedure

NOTE: **Numbered call-outs in figure pertain to list numbers in following procedure.**

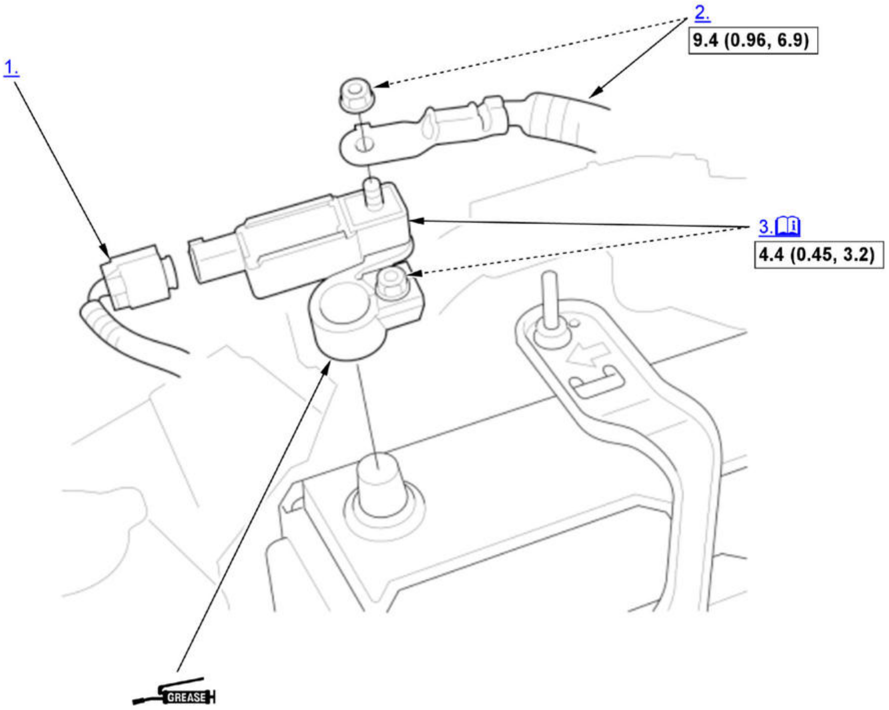

Fig. 1: Exploded View Of 12 Volt Battery Sensor Replacement Components
Courtesy of HONDA, U.S.A., INC.

▭	Torque: N.m (kgf.m, lbf.ft)
GREASE	Multipurpose Grease

1. Connector - Disconnect
2. Cable - Disconnect
3. 12 Volt Battery Sensor - Remove

NOTE: To protect the 12 volt battery sensor connector from damage, do not hold it when removing the negative terminal.

Note for installation

NOTE:

- Make sure the areas between the negative terminal and the 12 volt battery sensor are clean.
- To protect the 12 volt battery sensor connector from damage, do not hold it when installing the negative terminal.

4. All Removed Parts - Install

1. Install the parts in the reverse order of removal.

5. 12 Volt Battery - After the Installation Procedure

12 VOLT BATTERY TERMINAL DISCONNECTION AND RECONNECTION

Removal

NOTE: With the driver's door open, turn the vehicle to the OFF (LOCK) mode, then wait at least 3 minutes before disconnecting the 12 volt negative battery cable.

1. 12 Volt Battery Terminals - Disconnect

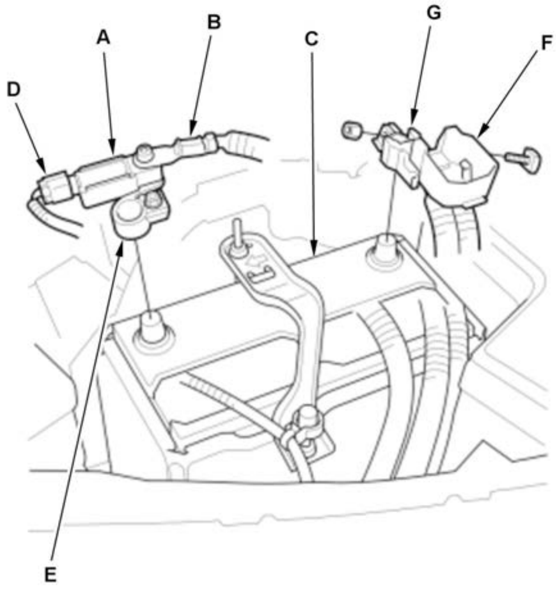	1. Make sure the vehicle is in the OFF (LOCK) mode. 2. Disconnect and isolate the 12 volt battery sensor (A) with the cable (B) from the 12 volt battery (C). **NOTE:** • Always disconnect the negative side first. • To protect the 12 volt battery sensor connector (D) from damage, do not hold it when removing the terminal (E). • Do not disconnect the cable from the 12 volt battery sensor unless you replace the 12 volt battery sensor. 3. Open the cover (F). 4. Disconnect the terminal (G) from the 12 volt battery.

Installation

NOTE:

- How to read the torque specifications.
- If the 12 volt battery performed abnormally, test the 12 volt battery before installation.

1. 12 Volt Battery Terminals - Connect

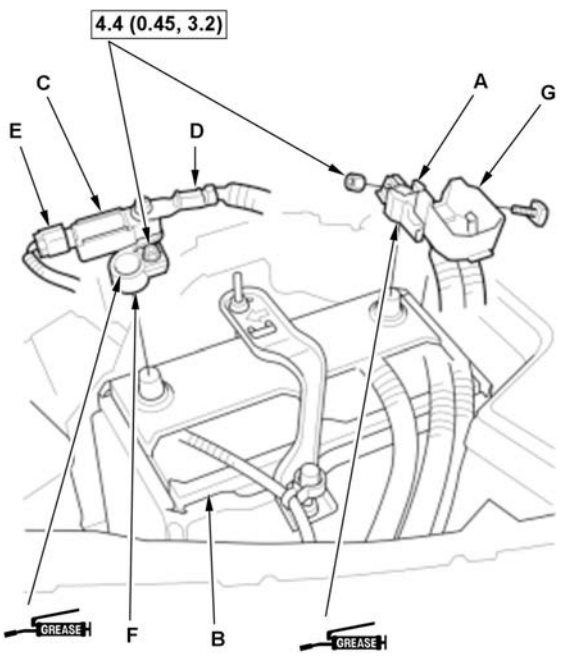 4.4 (0.45, 3.2) C E D A G GREASE F B GREASE	1. Clean the 12 volt battery terminals. 2. Connect the terminal (A) to the 12 volt battery (B). **NOTE:** Always connect the positive side first. 3. Connect the 12 volt battery sensor (C) with the cable (D) to the 12 volt battery. **NOTE:** To protect the 12 volt battery sensor connector (E) from damage, do not hold it when installing the terminal (F). 4. Apply multipurpose grease to the terminals to prevent corrosion. 5. Close the cover (G).

Procedure After Installation 12 Volt Battery

2. Steering Angle Neutral Position - Learn

ACCESSORY POWER SOCKET REMOVAL AND INSTALLATION

Removal and Installation

NOTE: ℹ Where icon is shown, for further information see below.

Console

NOTE: **Numbered call-outs in figure pertain to list numbers in following procedure.**

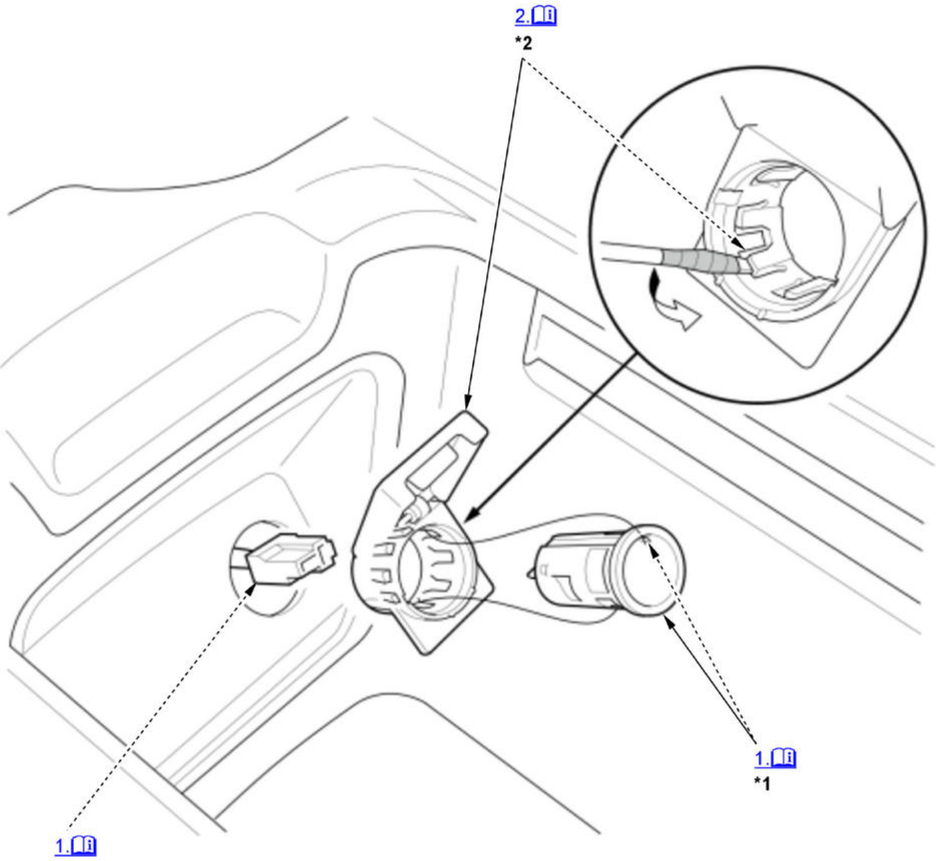

Fig. 2: Exploded View Of Accessory Power Socket Replacement Components
Courtesy of HONDA, U.S.A., INC.

*1	Tab
*2	Indexing tab

1. Console Accessory Power Socket - Remove

   1. Gently press the tabs.

2. Housing - Remove

   Note the location of the indexing tab.

   1. Gently press the tabs.

3. All Removed Parts - Install

   1. Install the parts in the reverse order of removal.

UNDER-DASH FUSE/RELAY BOX REMOVAL AND INSTALLATION

Special Tools Required

Image	Description/Tool Number
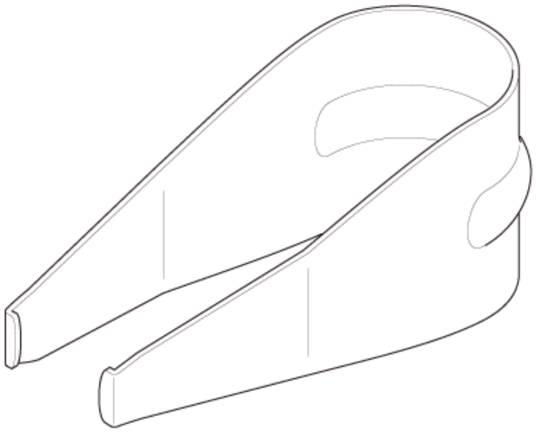	Relay Puller 07AAC-000A2A1

Removal and Installation

SRS components are located in this area. Review the **SRS component locations** and the **precautions and procedures** before doing repairs or service.

NOTE:

- 📖 Where icon is shown, for further information see below.
- **Do the installation operation after reconnecting the 12 volt battery terminal**.

Procedure

NOTE: **Numbered call-outs in figure pertain to list numbers in following procedure.**

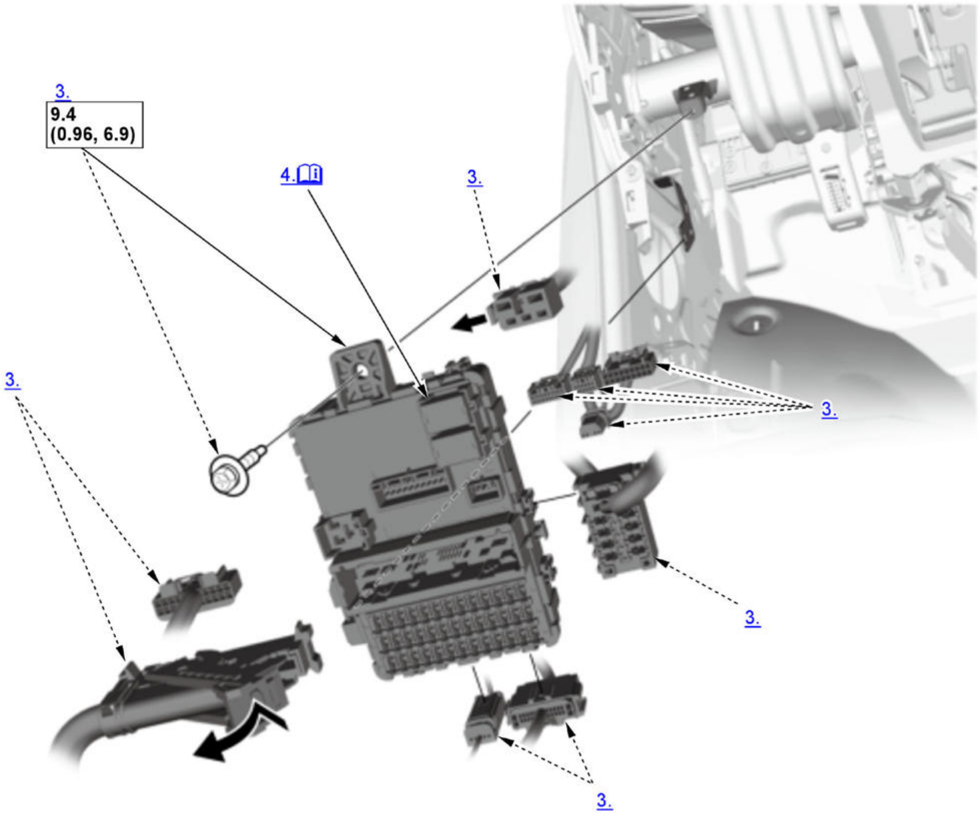

Fig. 3: Exploded View Of Under-Dash Fuse/Relay Box Replacement Components
Courtesy of HONDA, U.S.A., INC.

▭	Torque: N.m (kgf.m, lbf.ft)

1. **12 Volt Battery Terminals - Disconnect**

   Note for installation

   Do reconnection procedure after reconnecting the 12 volt battery terminal.

2. **Driver's Dashboard Lower Cover - Remove**
3. Under-Dash Fuse/Relay Box - Remove
4. Relays - Remove

   1. Carefully remove the relays using the relay puller tool.
   NOTE: Do not use pliers. Pliers will damage the relays, which could cause the engine to stall, not start, or cause other functions to fail.

5. All Removed Parts - Install

   1. Install the parts in the reverse order of removal.

UNDER-HOOD FUSE/RELAY BOX REMOVAL AND INSTALLATION

Special Tools Required

Image	Description/Tool Number
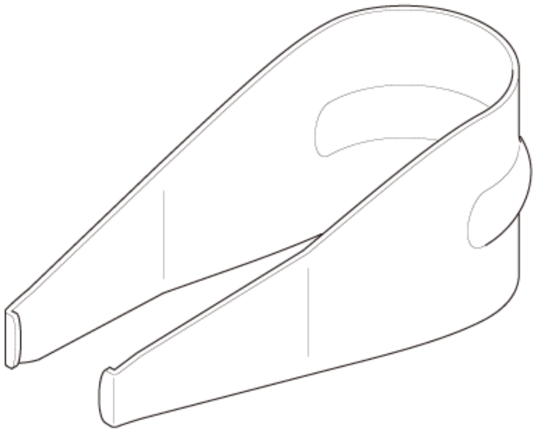	Relay Puller 07AAC-000A2A1

Removal and Installation

NOTE:

- 📖 Where icon is shown, for further information see below.
- The under-hood fuse/relay box is a part of the engine compartment wire harness, and it cannot be replaced individually.
- **Do the installation operation after reconnecting the 12 volt battery terminal**.

Procedure

NOTE: **Numbered call-outs in figure pertain to list numbers in following procedure.**

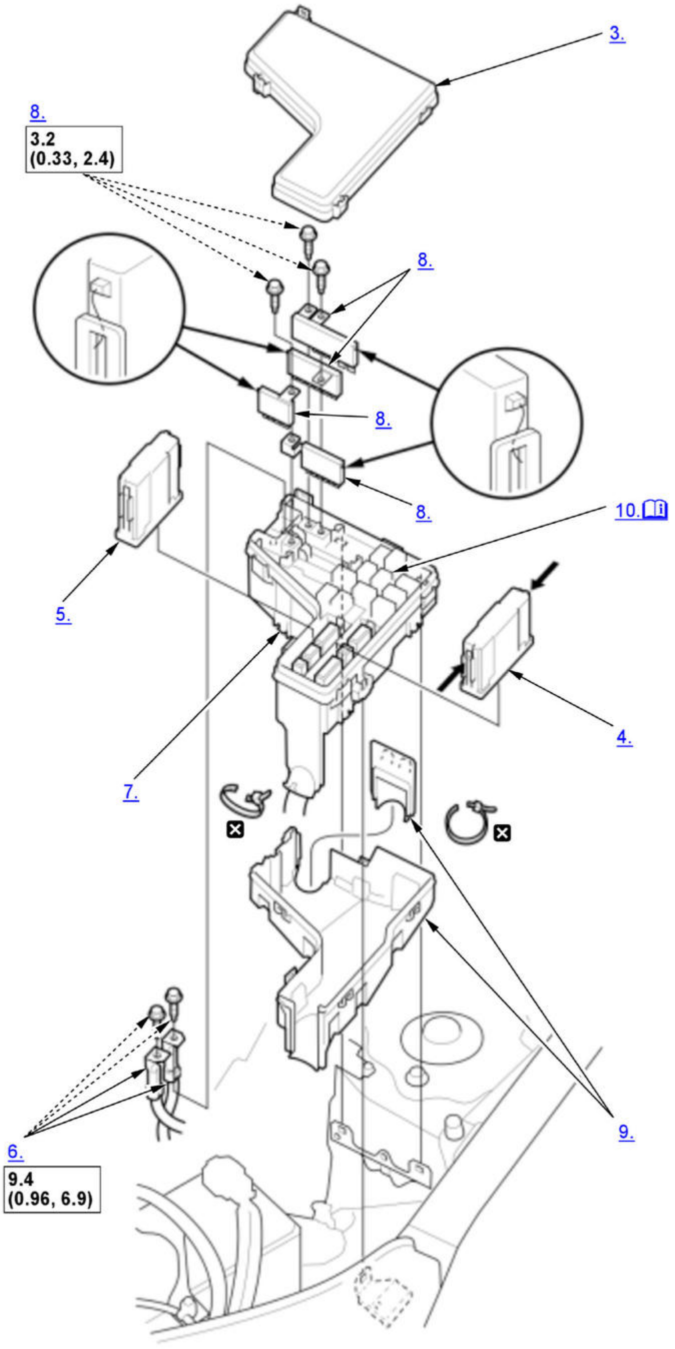

Fig. 4: Exploded View Of Under-Hood Fuse/Relay Box Replacement Components
Courtesy of HONDA, U.S.A., INC.

☐	Torque: N.m (kgf.m, lbf.ft)
☒	Replace

1. PCM - Remove
2. 12 Volt Battery Terminals - Disconnect

   Note for installation

   Do reconnection procedure after reconnecting the 12 volt battery terminal.

3. Upper Cover - Remove
4. Relay Circuit Board - Remove
5. Relay Control Module - Remove

6. Cables - Disconnect
7. Under-Hood Fuse/Relay Box - Remove
8. Fuse Blocks - Remove
9. Bottom Covers - Remove
10. Relays - Remove

> 1. Carefully remove the relays using the relay puller tool.
> **NOTE:** Do not use pliers. Pliers will damage the relays, which could cause the engine to stall, not start, or cause other functions to fail.

11. All Removed Parts - Install

> 1. Install the parts in the reverse order of removal.

12. 12 Volt Battery - After the Installation Procedure

WIRELESS CHARGER REMOVAL AND INSTALLATION

Removal and Installation

Procedure

NOTE: **Numbered call-outs in figure pertain to list numbers in following procedure.**

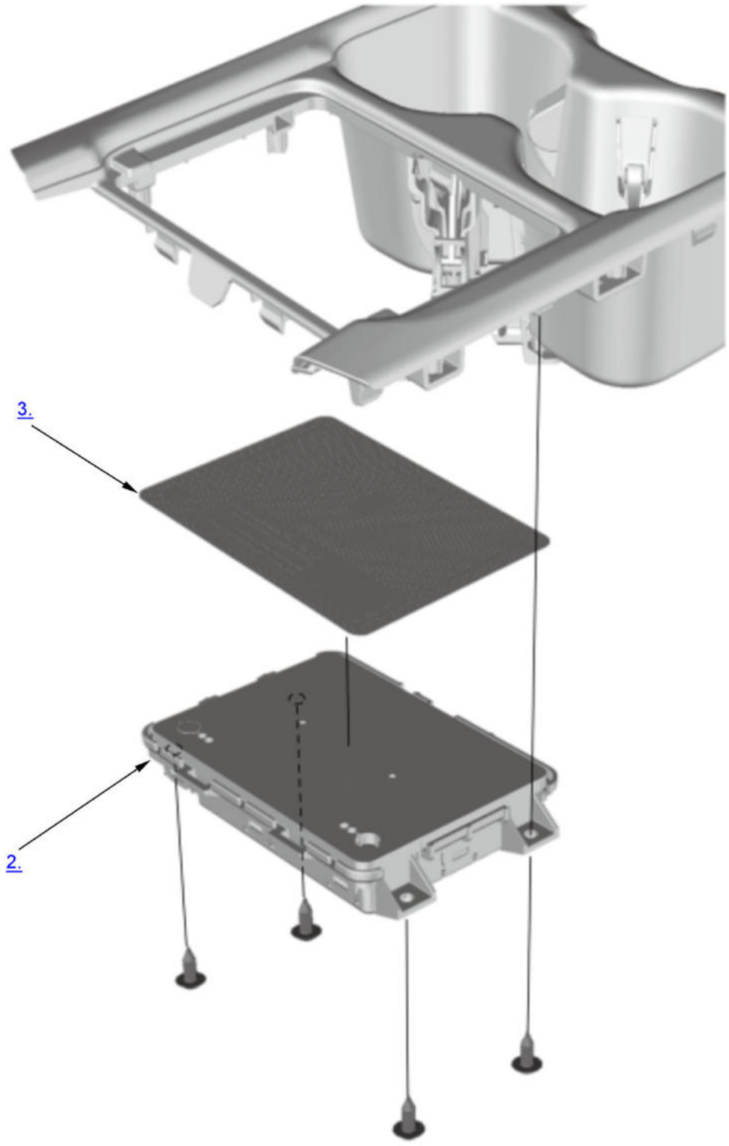

Fig. 5: Exploded View Of Wireless Charger Replacement Components
Courtesy of HONDA, U.S.A., INC.

1. Center Console Panel - Remove
2. Wireless Charger - Remove
3. Anti Slip Sheet Assembly - Remove
4. All Removed Parts - Install

1. Install the parts in the reverse order of removal.

REMOVAL, INSTALLATION & TEST

12 VOLT BATTERY REMOVAL, INSTALLATION, AND TEST

Special Tools Required

Image	Description/Tool Number
	Honda ED-18 Battery Tester (12 Volt) INBED18V3H*
	Honda GR8 Battery Diagnostic Station with AST Module (12 Volt) MTRGR811ASTH*

*Available through the Honda Tool and Equipment Program 888-424-6857

Removal and Installation

NOTE:

- 🕮 Where icon is shown, for further information see below.
- Strong impact (i.e., dropping the 12 volt battery, collision damage) may cause electrolyte leaks, internal short circuit and heat increase resulting in fire. Avoid impact to the 12 volt battery.
- Organic electrolyte is poisonous. If ingested, get medical attention immediately.
- 12 volt battery damage may cause flammable gas or electrolyte leaks and may result in fire. Do not damage the 12 volt battery and keep sparks, flame and cigarettes away.
- **Do the installation operation after reconnecting the 12 volt battery terminal**.

Procedure

NOTE: **Numbered call-outs in figure pertain to list numbers in following procedure.**

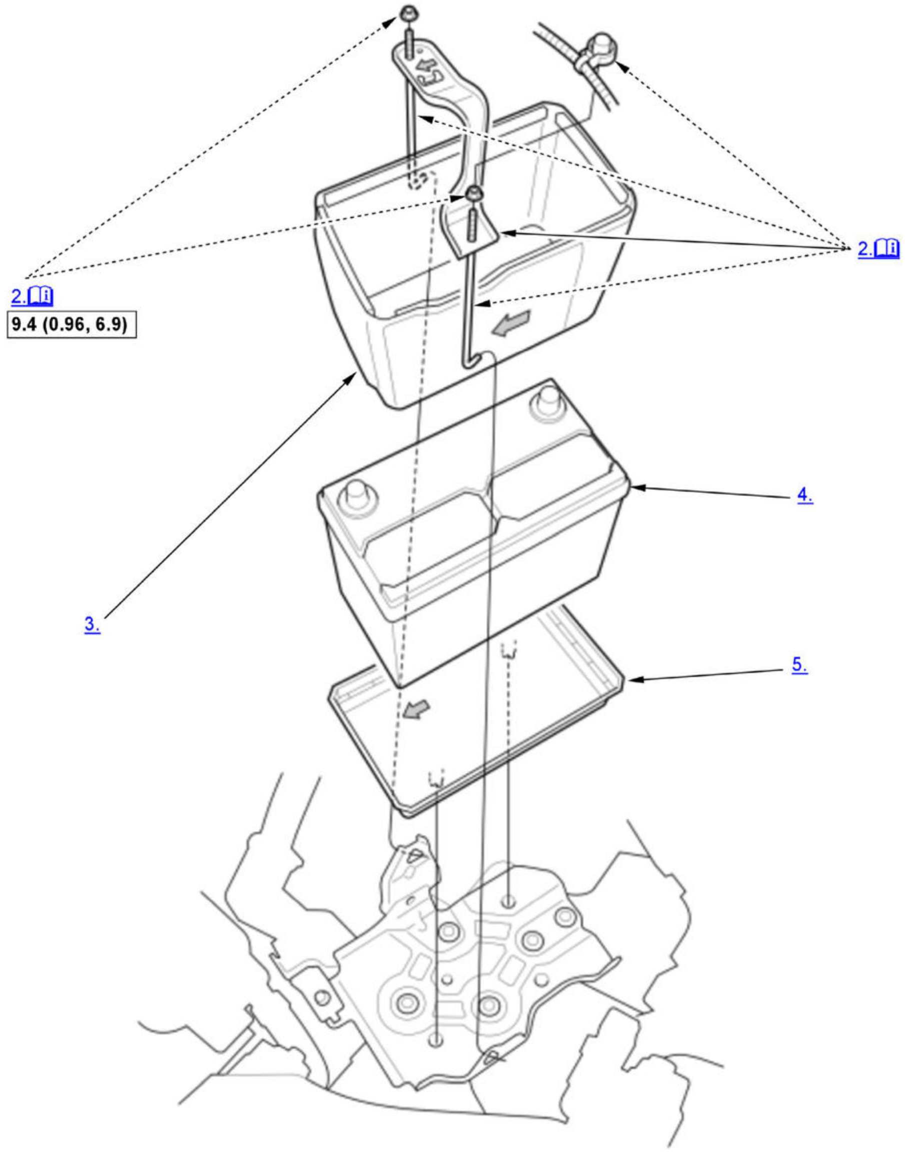

Fig. 6: Exploded View Of 12 Volt Battery Replacement Components
Courtesy of HONDA, U.S.A., INC.

▭	Torque: N.m (kgf.m, lbf.ft)

1. 12 Volt Battery Terminals - Disconnect

   Note for installation

   Do reconnection procedure after reconnecting the 12 volt battery terminal.

2. 12 Volt Battery Setting Plate - Remove

   NOTE: Do not deform the 12 volt battery setting plate by over-tightening the nuts.

3. 12 Volt Battery Cover - Remove
4. 12 Volt Battery - Remove
5. 12 Volt Battery Box - Remove
6. All Removed Parts - Install

   1. Install the parts in the reverse order of removal.

7. 12 Volt Battery - After the Installation Procedure

Test

1. 12 Volt Battery - Test

WARNING:

A 12 volt battery can explode if you do not follow the proper procedure, causing serious injury to anyone nearby.

Follow all procedures carefully and keep sparks and open flames away from the 12 volt battery.

Software Version

Make sure you have the latest software for the ED-18 and GR8.

To check the software version on the ED-18, do this:

- Press the POWER button.
- Read the version number on the screen. It should appear for about 3 seconds.
- Or you can select: Language> Options> Info> Version. The version number will appear near the top of the screen.

Check that this is the latest version on iN > Service > Service Bay > Diagnostic Tool Software Versions.

To check the software version on the GR8, do this:

- Press the POWER button.
- Read the version number on the screen. It should appear for about 5 seconds.
- Or from the Main Menu, select: Options> Info> Version. The version number will appear on the screen.

Using the ED-18 Battery Tester (12 Volt)

NOTE: For setup, customization, and other available features, refer to the ED-18 user's manual.

1. Connect the leads to the positive and negative terminals.

2. Use the arrow keys to select the Battery test and press ENTER and follow the prompts.

NOTE:

- Make sure to enter the correct cold cranking ampere (CCA) rating of the 12 volt battery. You can find the CCA printed on the label on the top of the 12 volt battery. If the CCA rating is not entered correctly, the test result will not be accurate.
- Make sure to select FLOODED (FLA) for the 12 volt battery type.

3. Here are the four possible 12 volt battery conditions:

- GOOD BATTERY: The 12 volt battery has at least 60 percent of its charge and required no action.
- GR8 DIAGNOSTIC NEEDED: The battery voltage is below 60 percent of its state-of-charge, and the condition of the 12 volt battery is unknown. Use the GR8 to charge the 12 volt battery and properly diagnose it.
- REPLACE BATTERY: The 12 volt battery condition is poor. Replace it.
- BAD CELL: There is an internal problem with the 12 volt battery. Replace it.

Using the GR8 Battery Diagnostic Station with AST Module (12 Volt)

NOTE:

- For setup, customization, and other available features, refer to the GR8 user's manual.
- On the GR8, you can select two modes: DEALER INVENTORY or CUSTOMER VEHICLE:
-
    - DEALER INVENTORY: Use this mode for vehicles in dealer inventory. The GR8 charges the 12 volt battery to 80% of its state-of-charge. If the 12 volt battery condition is OK, the GR8 states the 12 volt battery is GOOD. If you leave the GR8 attached to the 12 volt battery, it changes to Top Off mode, and continues to charge the 12 volt battery until it is at 100% of its state-of-charge.
    - CUSTOMER VEHICLE: In order to give a waiting customer quicker service, the GR8 charges the 12 volt battery to 60% of its state-of-charge. If the 12 volt battery condition is OK, the GR8 states the 12 volt battery is GOOD. If you leave the GR8 attached to the 12 volt battery, it will enter Top Off mode, and continues to charge the 12 volt battery until it is at 100% of its state-of-charge.

1. Connect the leads to the positive and negative terminal of the 12 volt battery.

2. Use the arrow keys to select Diagnostic, and follow the prompts.

NOTE:

- Make sure to enter the correct cold cranking ampere (CCA) rating of the 12 volt battery. You can find the CCA printed on the label on the top of the 12 volt battery. If the CCA rating is not entered correctly, the test result will not be accurate.
- Make sure to select FLOODED (FLA) for the 12 volt battery type.

3. Here are the three possible 12 volt battery conditions:

- GOOD BATTERY: The 12 volt battery state of health is good and state of charge is at least 60%.
- REPLACE BATTERY: The 12 volt battery condition is poor. Replace it.
- BAD CELL: There is a problem with the 12 volt battery. Replace it.

RELAY CIRCUIT BOARD REMOVAL, INSTALLATION, AND TEST

Removal and Installation

1. **Relay Circuit Board - Remove**
2. All Removed Parts - Install

1. Install the parts in the reverse order of removal.

Test

1. Relay Circuit Board - Test

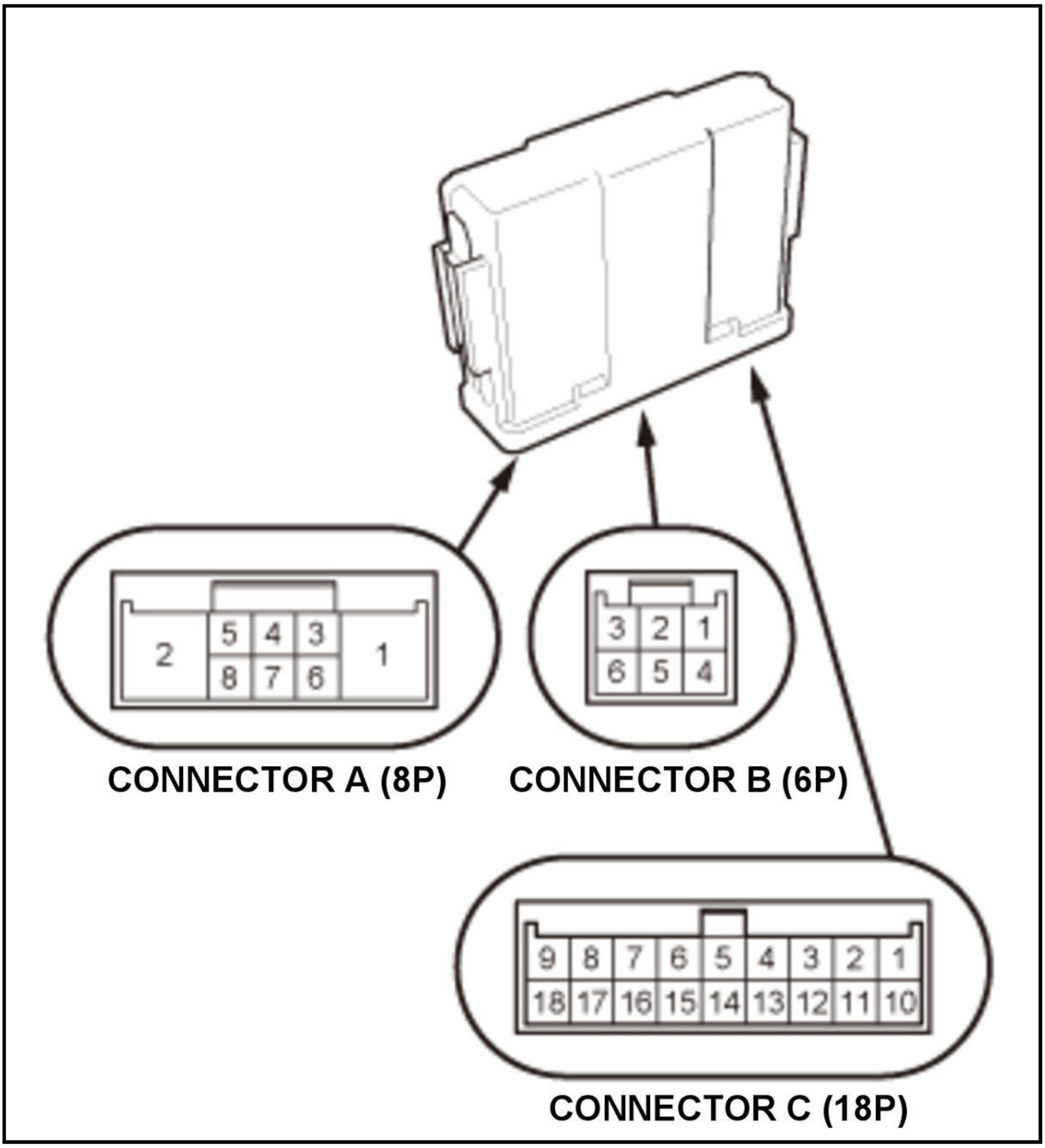
5 4 3
2
8 7 6
1
CONNECTOR A (8P)
3 2 1
6 5 4
CONNECTOR B (6P)
9 8 7 6 5 4 3 2 1
18 17 16 15 14 13 12 11 10
CONNECTOR C (18P)

The relay circuit board is part of the under-hood fuse/relay box, and it contains these relay circuits:

- Brake light relay circuit
- Electric heater coolant pump relay circuit
- Electric VTC relay circuit
- Ignition coil relay circuit
- PGM-FI main relay 1 circuit
- PGM-FI subrelay circuit
- RFC diode
- Security horn circuit diode
- Security horn relay circuit

NOTE:

- Make sure the correct test lead (+ or -) is placed on the terminal.
- When checking for continuity across the diode, use the diode setting (—▶|—) on the digital volt/ohm meter to check the diode bias.

- Note this important operating characteristic; diode bias causes a diode to fully conduct electricity in one direction (forward), while not at all in the opposite direction (reverse).

Electric Heater Coolant Pump Relay Circuit, Electric VTC Relay Circuit, and RFC Diode

Electric heater coolant pump relay circuit

- There should be continuity between terminals C15 and C7, when 12 volt battery power is connected to terminal C6, and body ground is connected to terminal C8.
- There should be no continuity between terminals C15 and C7 when terminal C8 is disconnected.

Electric VTC relay circuit

- There should be battery voltage at terminal B5 when 12 volt battery power is connected to terminal B4, and body ground is connected to terminal C2.
- There should be no voltage at terminal B5 when terminal C2 is disconnected.

RFC diode

- There should be continuity between terminals A1 and A2.

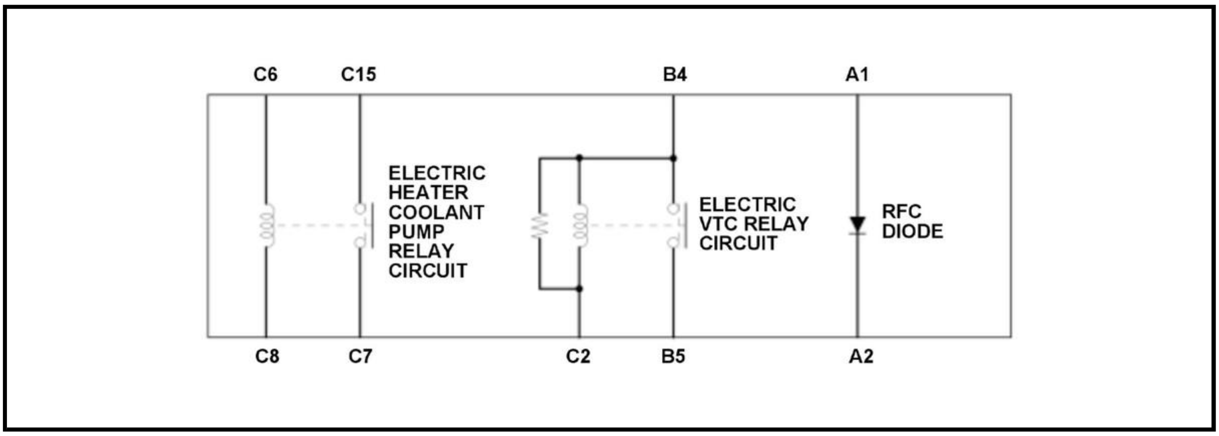
C6
C15
B4
A1
ELECTRIC HEATER COOLANT PUMP RELAY CIRCUIT
ELECTRIC VTC RELAY CIRCUIT
RFC DIODE
C8
C7
C2
B5
A2

Brake Light Relay Circuit, Security Horn Relay Circuit, and Security Horn Circuit Diode

Brake light relay circuit

- There should be continuity between terminals A6 and C4, when 12 volt battery power is connected to terminal A3, and body ground is connected to terminal B1.
- There should be no continuity between terminals A6 and C4, and there should be continuity between terminals A6 and A7 when terminal B1 is disconnected.

Security horn relay circuit

- There should be battery voltage at terminal C12 when 12 volt battery power is connected to terminal C13, and body ground is connected to terminal C3.
- There should be no voltage at terminal C12 when terminal C3 is disconnected.

Security horn circuit diode

- There should be continuity between terminals A4 and A8.

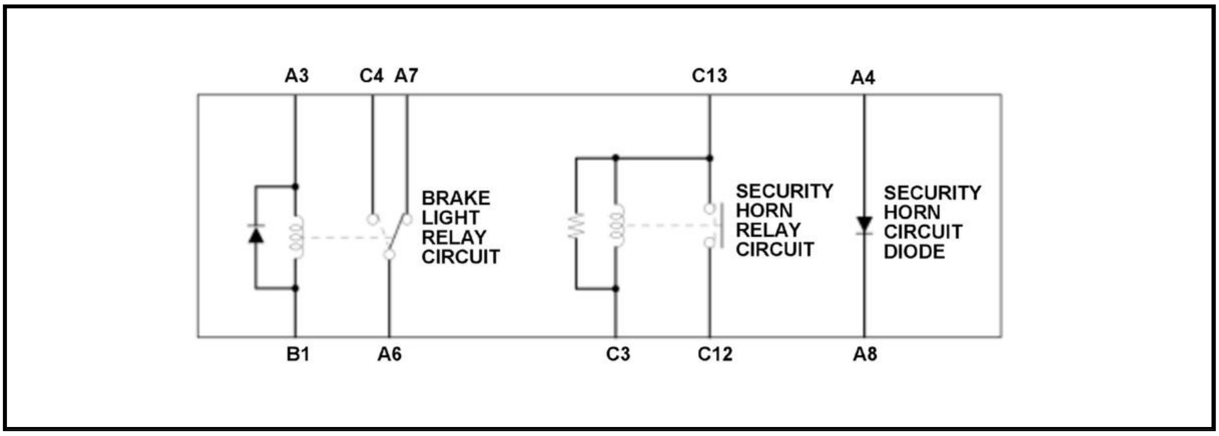
A3
C4
A7
C13
A4
BRAKE LIGHT RELAY CIRCUIT
SECURITY HORN RELAY CIRCUIT
SECURITY HORN CIRCUIT DIODE
B1
A6
C3
C12
A8

Ignition Coil Relay Circuit, PGM-FI Main Relay 1 Circuit, and PGM-FI Subrelay Circuit

Ignition coil relay circuit

- There should be battery voltage at terminal B6 when 12 volt battery power is connected to terminal C9, and body ground is connected to terminal C5.
- There should be no voltage at terminal B6 when terminal C5 is disconnected.

PGM-FI main relay 1 circuit

- There should be battery voltage at terminal C17 when 12 volt battery power is connected to terminal C18, and body ground is connected to terminal C5.
- There should be no voltage at terminal C17 when terminal C5 is disconnected.

PGM-FI subrelay circuit

- There should be battery voltage at terminal B3 when 12 volt battery power is connected to terminal C14, and body ground is connected to terminal B2.
- There should be no voltage at terminal B3 when terminal B2 is disconnected.

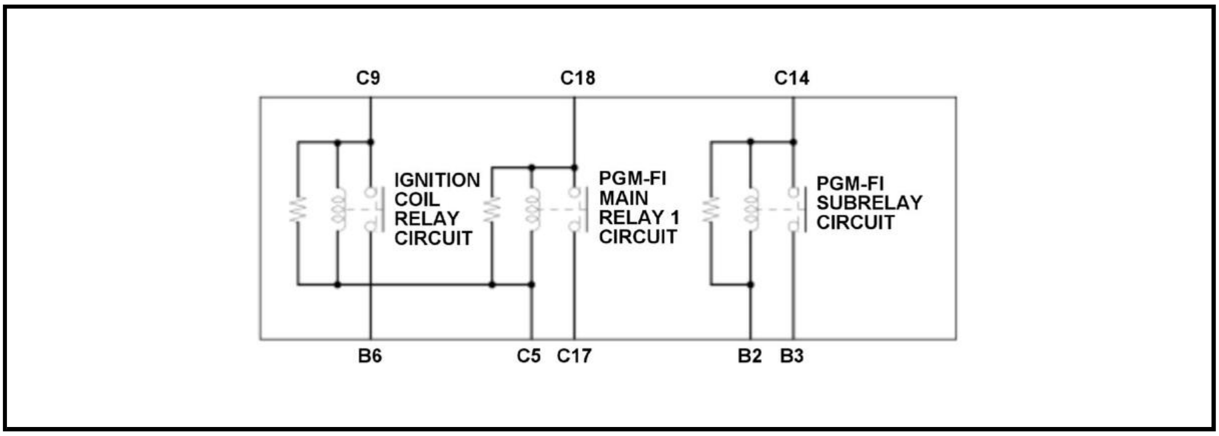
C9
C18
C14
IGNITION COIL RELAY CIRCUIT
PGM-FI MAIN RELAY 1 CIRCUIT
PGM-FI SUBRELAY CIRCUIT
B6
C5
C17
B2
B3

REMOVAL & INSTALLATION AND TEST

12 VOLT BATTERY REMOVAL, INSTALLATION, AND TEST

*Available through the Honda Tool and Equipment Program 888-424-6857

Special Tools Required

Image	Description/Tool Number
	Honda ED-18 Battery Tester (12 Volt) INBED18V3H*
	Honda GR8 Battery Diagnostic Station with AST Module (12 Volt) MTRGR811ASTH*

*Available through the Honda Tool and Equipment Program 888-424-6857

Removal and Installation

NOTE:

- ℹ Where icon is shown, for further information continue to the information below.
- Strong impact (i.e., dropping the 12 volt battery, collision damage) may cause electrolyte leaks, internal short circuit and heat increase resulting in fire. Avoid impact to the 12 volt battery.
- Organic electrolyte is poisonous. If ingested, get medical attention immediately.
- 12 volt battery damage may cause flammable gas or electrolyte leaks and may result in fire. Do not damage the 12 volt battery and keep sparks, flame and cigarettes away.
- Do the installation operation after reconnecting the 12 volt battery terminal.

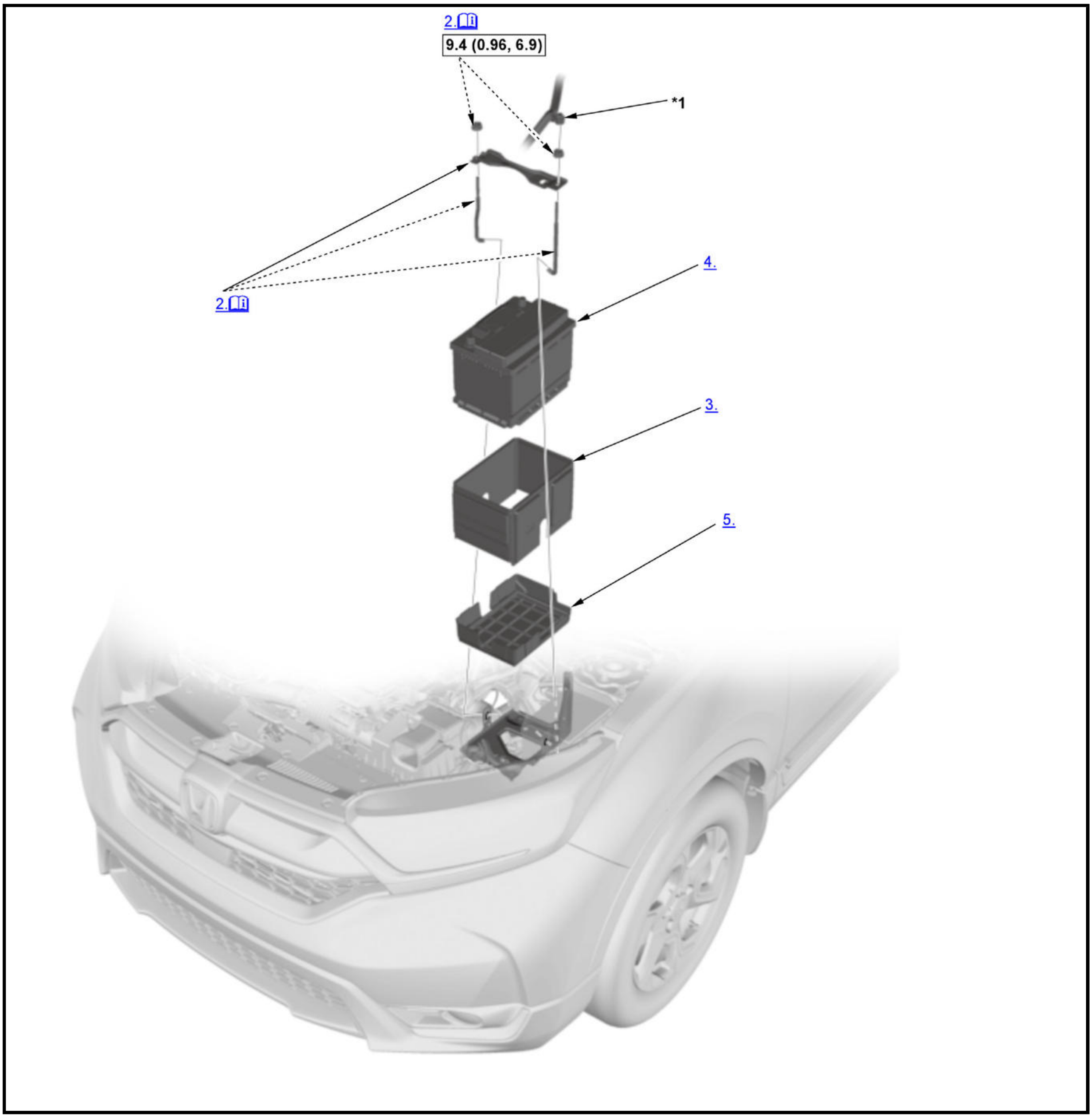

ℹ	Detailed information, notes, and precautions
☐	Torque: N.m (kgf.m, lbf.ft)
*1	For some model

1. 12 Volt Battery Terminals - Disconnect

   NOTE: Do the installation operation after reconnecting the 12 volt battery terminal.

2. 12 Volt Battery Setting Plate - Remove

   NOTE: Do not deform the 12 volt battery setting plate by over-tightening the nuts.

3. 12 Volt Battery Cover - Remove
4. 12 Volt Battery - Remove
5. 12 Volt Battery Box - Remove
6. All Removed Parts - Install

1. Install the parts in the reverse order of removal.

Test

1. 12 Volt Battery - Test

WARNING:

A 12 volt battery can explode if you do not follow the proper procedure, causing serious injury to anyone nearby.

Follow all procedures carefully and keep sparks and open flames away from the 12 volt battery.

NOTE: To get accurate results, the temperature of the electrolyte must be between 70 and 100 deg.F (21 and 38 deg.C) before testing.

Software Version

Make sure you have the latest software for the ED-18 and GR8.

To check the software version on the ED-18, do this:

- Press the POWER button.
- Read the version number on the screen. It should appear for about 3 seconds.
- Or you can select: Language> Options> Info> Version. The version number will appear near the top of the screen.

Check that this is the latest version on iN > Service > Service Bay > Diagnostic Tool Software Versions.

To check the software version on the GR8, do this:

- Press the POWER button.
- Read the version number on the screen. It should appear for about 5 seconds.
- Or from the Main Menu, select: Options> Info> Version. The version number will appear on the screen.

Using the ED-18 Battery Tester (12 Volt)

NOTE: For setup, customization, and other available features, refer to the ED-18 user's manual.

1. Connect the leads to the positive and negative terminals.

2. Use the arrow keys to select the Battery test and press ENTER and follow the prompts.

NOTE:

- Make sure to enter the correct cold cranking ampere (CCA) rating of the 12 volt battery. You can find the CCA printed on the label on the top of the 12 volt battery. If the CCA rating is not entered correctly, the test result will not be accurate.
- Make sure to select FLOODED (FLA) for the 12 volt battery type.

3. Here are the four possible 12 volt battery conditions:

- GOOD BATTERY: The 12 volt battery has at least 60 percent of its charge and required no action.
- GR8 DIAGNOSTIC NEEDED: The battery voltage is below 60 percent of its state-of-charge, and the condition of the 12 volt battery is unknown. Use the GR8 to charge the 12 volt battery and properly diagnose it.
- REPLACE BATTERY: The 12 volt battery condition is poor. Replace it.

- BAD CELL: There is an internal problem with the 12 volt battery. Replace it.

Using the GR8 Battery Diagnostic Station (12 Volt)

NOTE:

- For setup, customization, and other available features, refer to the GR8 user's manual.
- On the GR8, you can select two modes: DEALER INVENTORY or CUSTOMER VEHICLE:
-
    - DEALER INVENTORY: Use this mode for vehicles in dealer inventory. The GR8 charges the 12 volt battery to 80 % of its state-of-charge. If the 12 volt battery condition is OK, the GR8 states the 12 volt battery is GOOD. If you leave the GR8 attached to the 12 volt battery, it changes to Top Off mode, and continues to charge the 12 volt battery until it is at 100 % of its state-of-charge.
    - CUSTOMER VEHICLE: In order to give a waiting customer quicker service, the GR8 charges the 12 volt battery to 60 % of its state-of-charge. If the 12 volt battery condition is OK, the GR8 states the 12 volt battery is GOOD. If you leave the GR8 attached to the 12 volt battery, it will enter Top Off mode, and continues to charge the 12 volt battery until it is at 100 % of its state-of-charge.

1. Connect the leads to the positive and negative terminal of the 12 volt battery.

2. Use the arrow keys to select Diagnostic, and follow the prompts.

NOTE:

- Make sure to enter the correct cold cranking ampere (CCA) rating of the 12 volt battery. You can find the CCA printed on the label on the top of the 12 volt battery. If the CCA rating is not entered correctly, the test result will not be accurate.
- Make sure to select FLOODED (FLA) for the 12 volt battery type.

3. Here are the three possible 12 volt battery conditions:

- GOOD BATTERY: The 12 volt battery state of health is good and state of charge is at least 60 %.
- REPLACE BATTERY: The 12 volt battery condition is poor. Replace it.
- BAD CELL: There is a problem with the 12 volt battery. Replace it.

IGNITION SWITCH REMOVAL, INSTALLATION, AND TEST

Removal and Installation

NOTE: SRS components are located in this area. Review the **SRS component locations** and the **precautions and procedures** before doing repairs or service.

1

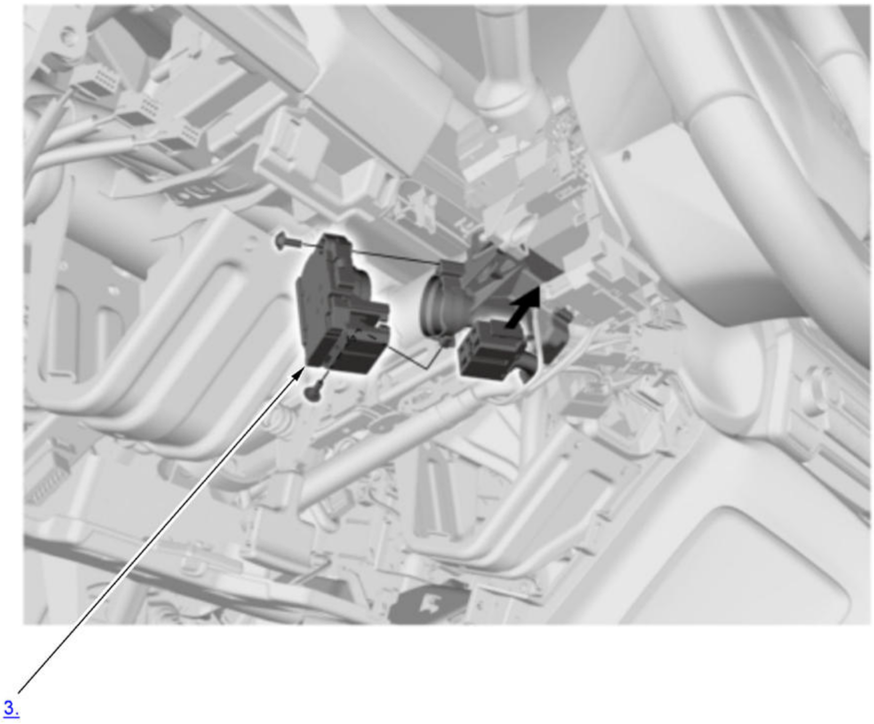

1. **12 Volt Battery Terminal - Disconnect**
2. **Column Covers - Remove**
3. Ignition Switch - Remove
4. All Removed Parts - Install

   1. Install the parts in the reverse order of removal.

Test

1. Ignition Switch - Test

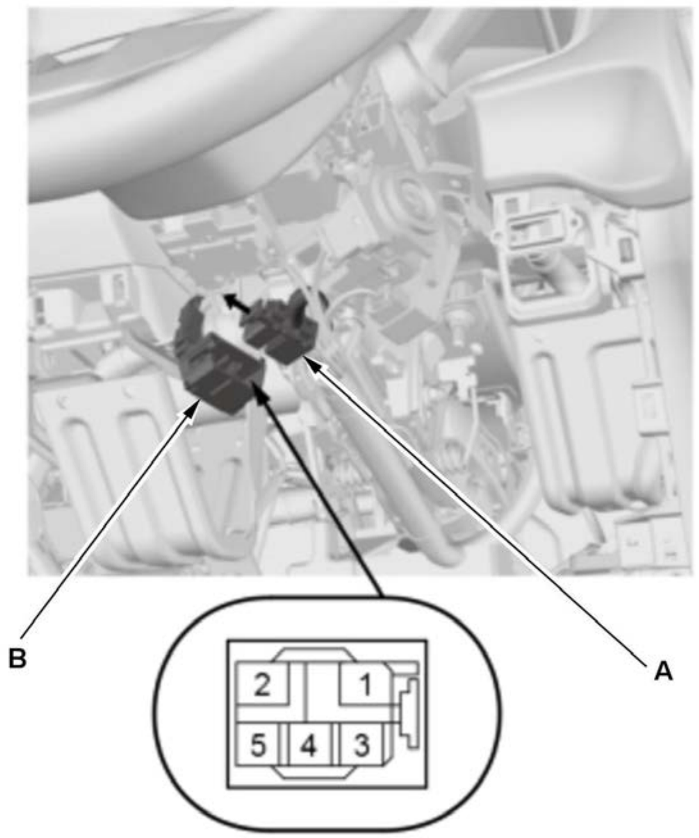

Terminal / Position	1 (BAT)	3 (ACC)	2 (IG1)	4 (IG2)	5 (ST)
0 (LOCK)					
I (ACC)	○	○			
II (ON)	○	○	○	○	
III (START)	○		○		○

1. Disconnect the connector (A).

2. Check for continuity between the terminals in each switch position according to the table.

3. If the continuity is not as specified, replace the ignition switch (B).

2. All Removed Parts - Install

1. Install the parts in the reverse order of removal.

RELAY CIRCUIT BOARD REMOVAL, INSTALLATION, AND TEST

Removal and Installation

1

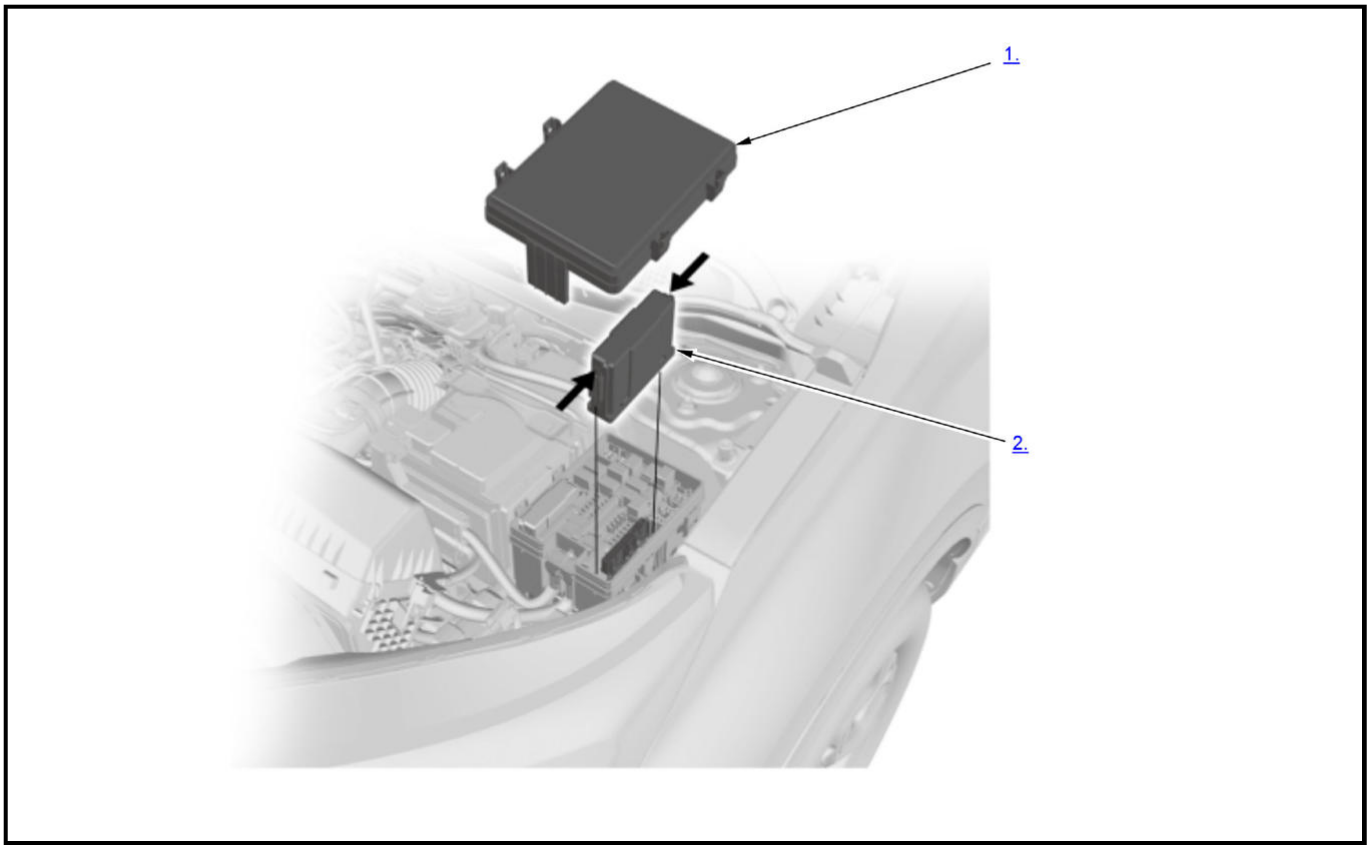

1. Cover - Remove
2. Relay Circuit Board - Remove
3. All Removed Parts - Install

   1. Install the parts in the reverse order of removal.

Test

1. Relay Circuit Board - Test

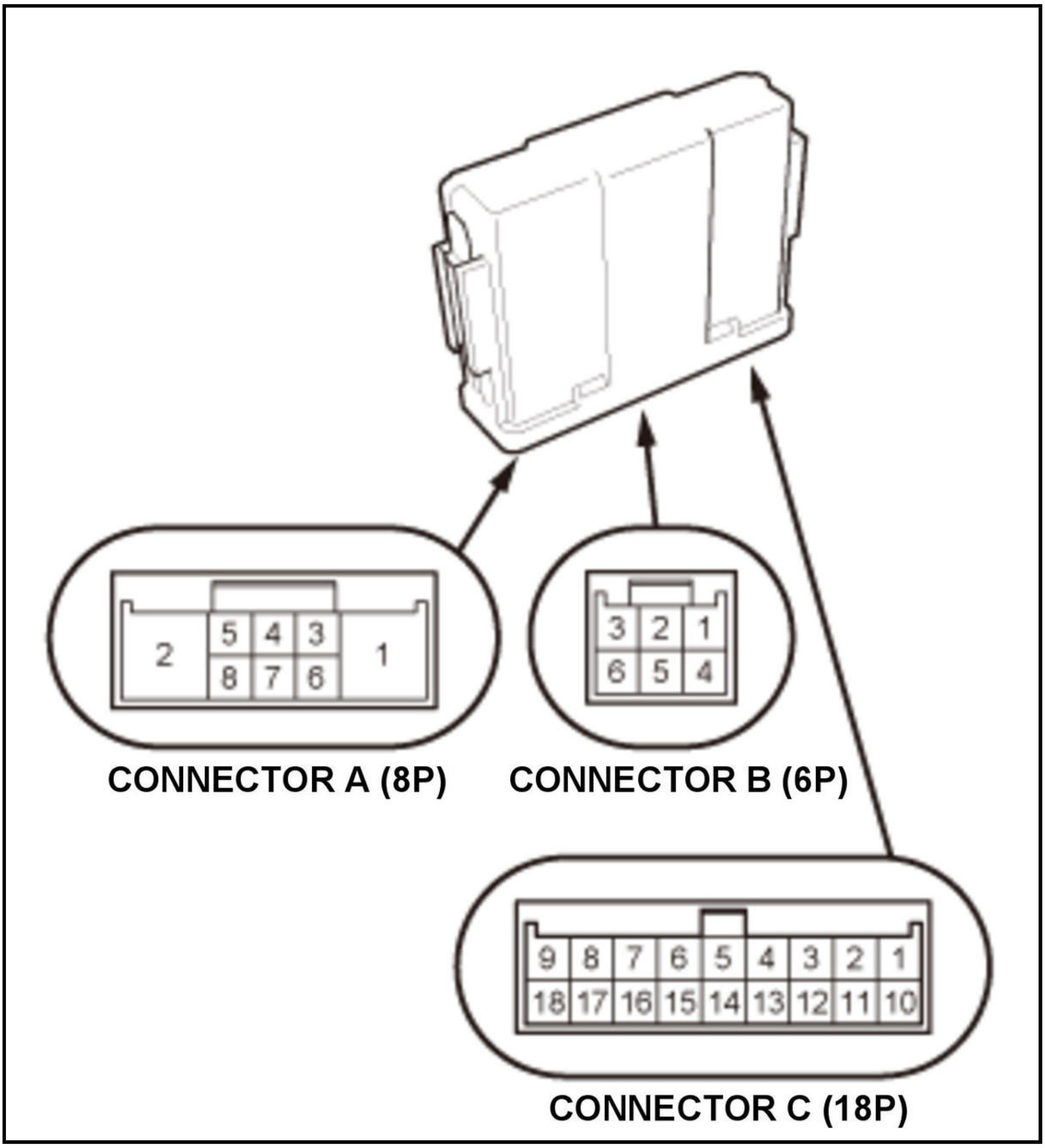
2
5 4 3
8 7 6
1
CONNECTOR A (8P)
3 2 1
6 5 4
CONNECTOR B (6P)
9 8 7 6 5 4 3 2 1
18 17 16 15 14 13 12 11 10
CONNECTOR C (18P)

The relay circuit board is part of the under-hood fuse/relay box, and it contains these relay circuits:

- Brake light relay circuit
- Ignition coil relay circuit
- PGM-FI main relay 1 circuit
- PGM-FI subrelay circuit
- Starter cut relay 1 circuit
- Starter cut relay 2 circuit

NOTE:

- Make sure the correct test lead (+or -) is placed on the terminal.
- When checking for continuity across the diode, use the diode setting (▶|) on the digital volt/ohm meter to check the diode bias.
- Note this important operating characteristic; diode bias causes a diode to fully conduct electricity in one direction (forward), while not at all in the opposite direction (reverse).

Brake Light Relay Circuit

Brake light relay circuit

- There should be continuity between terminals C4 and A6, when 12 volt battery power is connected to terminal B2, and 12 volt battery ground is connected to terminal B1.
- There should be no continuity between terminals C4 and A6, and there should be continuity between terminals C5 and A6 when terminal B1 is disconnected.

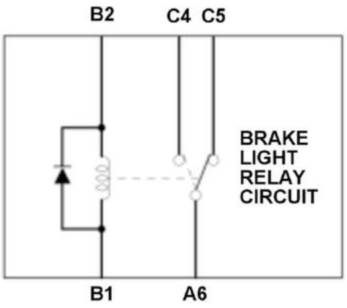

Ignition Coil Relay Circuit, PGM-FI Main Relay 1 Circuit, and PGM-FI Subrelay Circuit

Ignition coil relay circuit

- There should be battery voltage at terminal B6 when 12 volt battery power is connected to terminal C9, and 12 volt battery ground is connected to terminal A7.
- There should be no voltage at terminal B6 when terminal A7 is disconnected.

PGM-FI main relay 1 circuit

- There should be battery voltage at terminal C17 when 12 volt battery power is connected to terminal C18, and 12 volt battery ground is connected to terminal A7.
- There should be no voltage at terminal C17 when terminal A7 is disconnected.

PGM-FI subrelay circuit

- There should be battery voltage at terminal B3, C1 and C11 when 12 volt battery power is connected to terminal C14, and 12 volt battery ground is connected to terminal A3.
- There should be no voltage at terminal B3, C1 and C11 when terminal A3 is disconnected.
- There should be continuity between terminals A3 and C7.

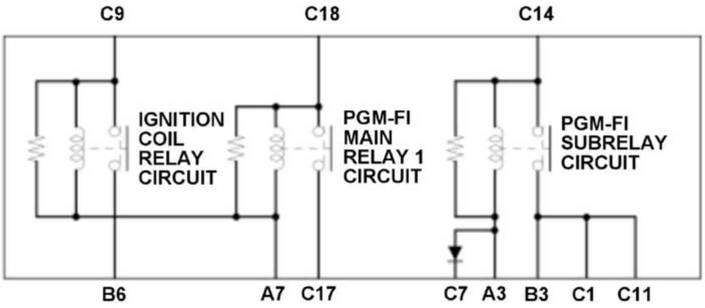

Starter Cut Relay 1 Circuit and Starter Cut Relay 2 Circuit

Starter cut relay 1 circuit

- There should be continuity between terminals A1 and A8, when 12 volt battery power is connected to terminal B4, and 12 volt battery ground is connected to terminal A5.
- There should be no continuity between terminals A1 and A8 when terminal A5 is disconnected.

Starter cut relay 2 circuit

- There should be continuity between terminals A2 and A8, when 12 volt battery power is connected to terminal B4, and 12 volt battery ground is connected to terminal A4.
- There should be no continuity between terminals A2 and A8 when terminal A4 is disconnected.
- There should be continuity between terminals C10 and A2.

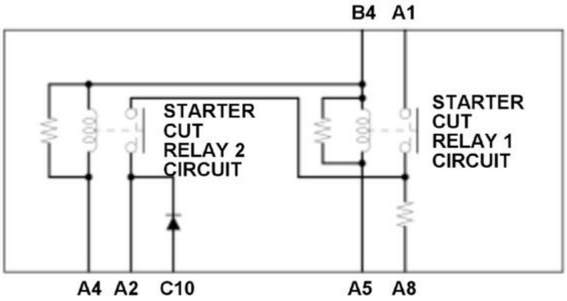

REMOVAL AND INSTALLATION

12 VOLT BATTERY SENSOR REMOVAL AND INSTALLATION

Removal and Installation

NOTE: 📖 Where icon is shown, for further information continue to the information below.

1

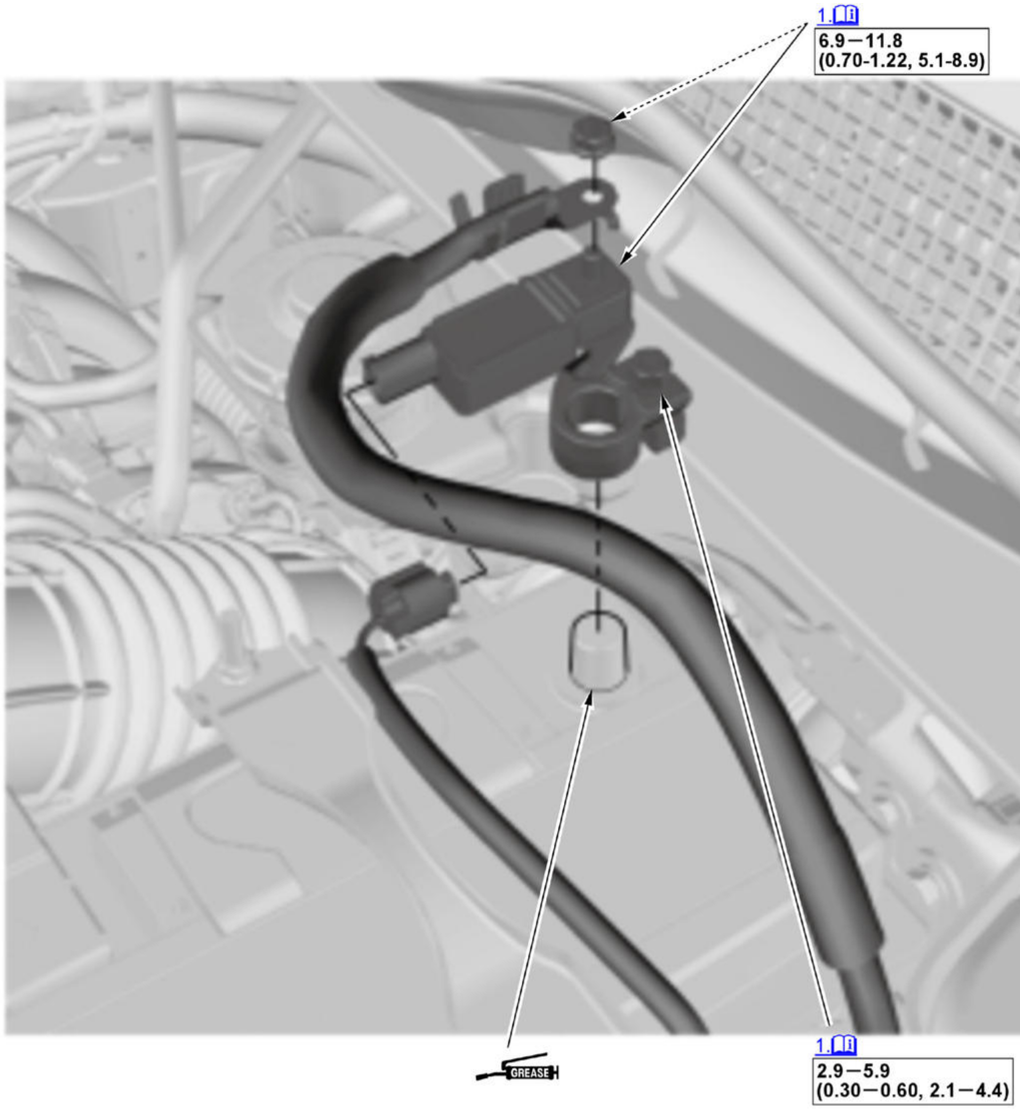

Fig. 1: 12 Volt Battery Sensor Replacement Components With Torque Specifications
Courtesy of HONDA, U.S.A., INC.

ℹ	Detailed information, notes, and precautions
☐	Torque: N.m (kgf.m, lbf.ft)
GREASE	Multipurpose Grease

1. 12 Volt Battery Sensor - Remove

   NOTE:

   - Make sure the areas between the negative terminal and the 12 volt battery sensor are clean.
   - To protect the 12 volt battery sensor connector from damage, do not hold it when installing the negative terminal.
   - Do the operation after reconnecting the 12 volt battery terminal.

2. All Removed Parts - Install

   1. Install the parts in the reverse order of removal.

12 VOLT BATTERY TERMINAL DISCONNECTION AND RECONNECTION

Removal

NOTE:

- With the driver's door open, turn the vehicle to the OFF (LOCK) mode, then wait at least 3 minutes before disconnecting the 12 volt negative battery cable.
- Canada models: When turning the vehicle to the ON mode for the first time after the 12 volt battery is reconnected, turn the vehicle to the ON mode while depressing the brake pedal for the immobilizer mutual authentication between the body control module and the VSA modulator-control unit.

1. 12 Volt Battery Terminals - Disconnect

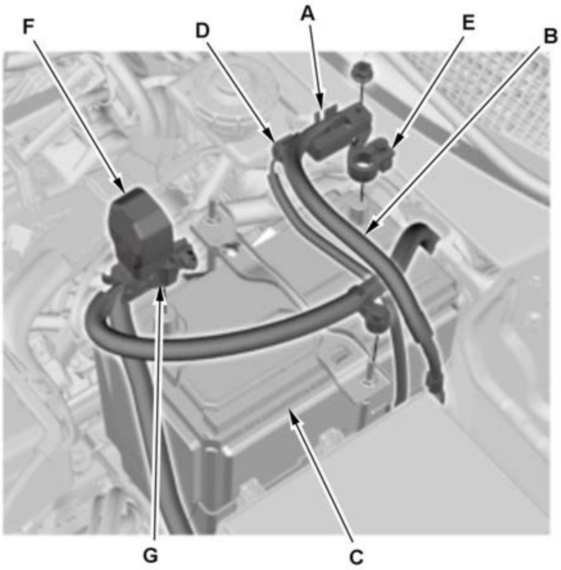 **Type A** **Type B** 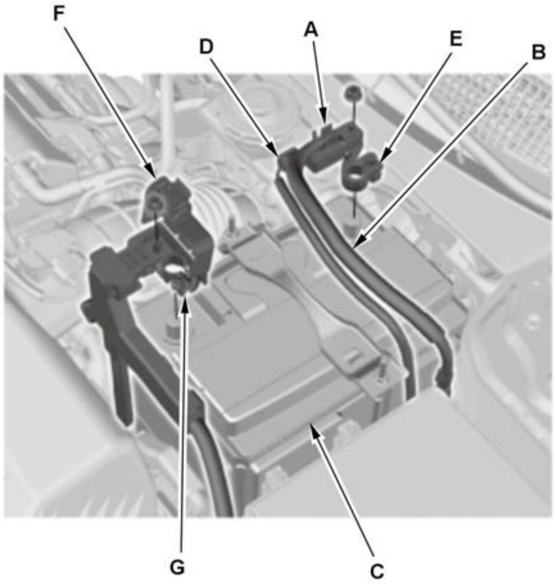	1. Make sure the vehicle is turned to the OFF (LOCK) mode. 2. Disconnect and isolate the 12 volt battery sensor (A) with the cable (B) from the 12 volt battery (C). **NOTE:** - Always disconnect the negative side first. - To protect the 12 volt battery sensor connector (D) from damage, do not hold it when removing the terminal (E). - Do not disconnect the 12 volt battery sensor from the cable. 3. Open the cover (F). 4. Disconnect the terminal (G) from the 12 volt battery.

Installation

NOTE: How to read the torque specifications .

1. 12 Volt Battery Terminals - Connect

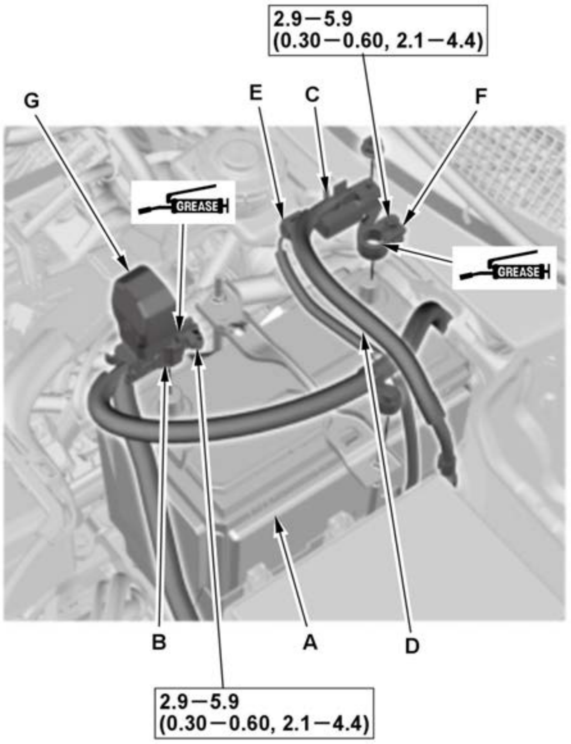
2.9—5.9
(0.30—0.60, 2.1—4.4)
G
E
C
F
GREASE
GREASE
B
A
D
2.9—5.9
(0.30—0.60, 2.1—4.4)

Type A

Type B

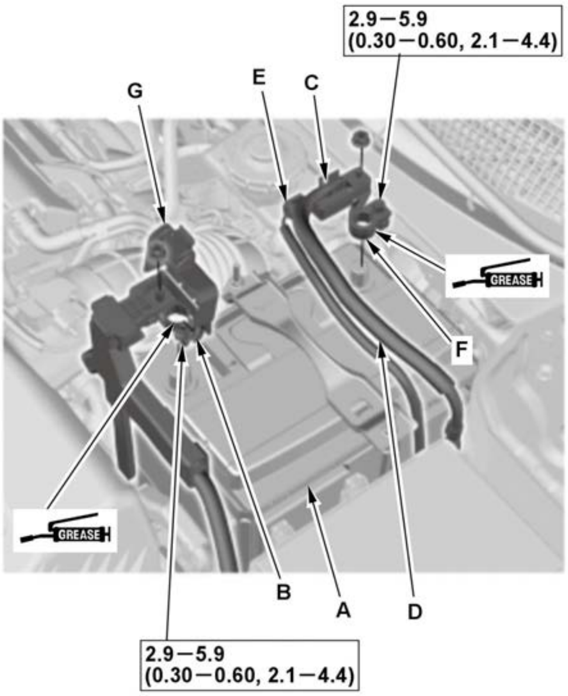
2.9—5.9
(0.30—0.60, 2.1—4.4)
G
E
C
GREASE
F
GREASE
B
A
D
2.9—5.9
(0.30—0.60, 2.1—4.4)

NOTE: If the 12 volt battery performs abnormally, test the 12 volt battery (A).

1. Clean the 12 volt battery terminals.

2. Connect the terminal (B) to the 12 volt battery.

NOTE: Always connect the positive side first.

3. Connect the 12 volt battery sensor (C) with the cable (D) to the 12 volt battery.

NOTE: To protect the 12 volt battery sensor connector (E) from damage, do not hold it when installing the terminal (F).

4. Apply multipurpose grease to the terminals to prevent corrosion.

5. Close the cover (G).

2. Steering Angle Neutral Position - Learn

ACCESSORY POWER SOCKET REMOVAL AND INSTALLATION

Removal and Installation

1

Front (With front accessory power socket)

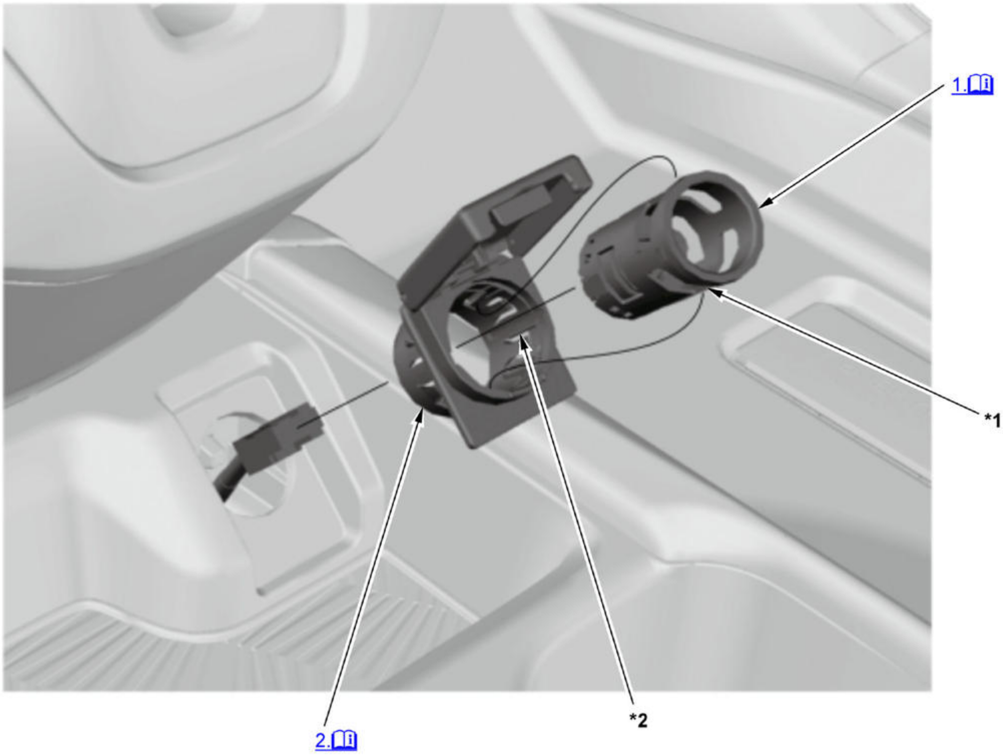

ℹ	Detailed information, notes, and precautions
*1	Tab
*2	Indexing tab

2

Console

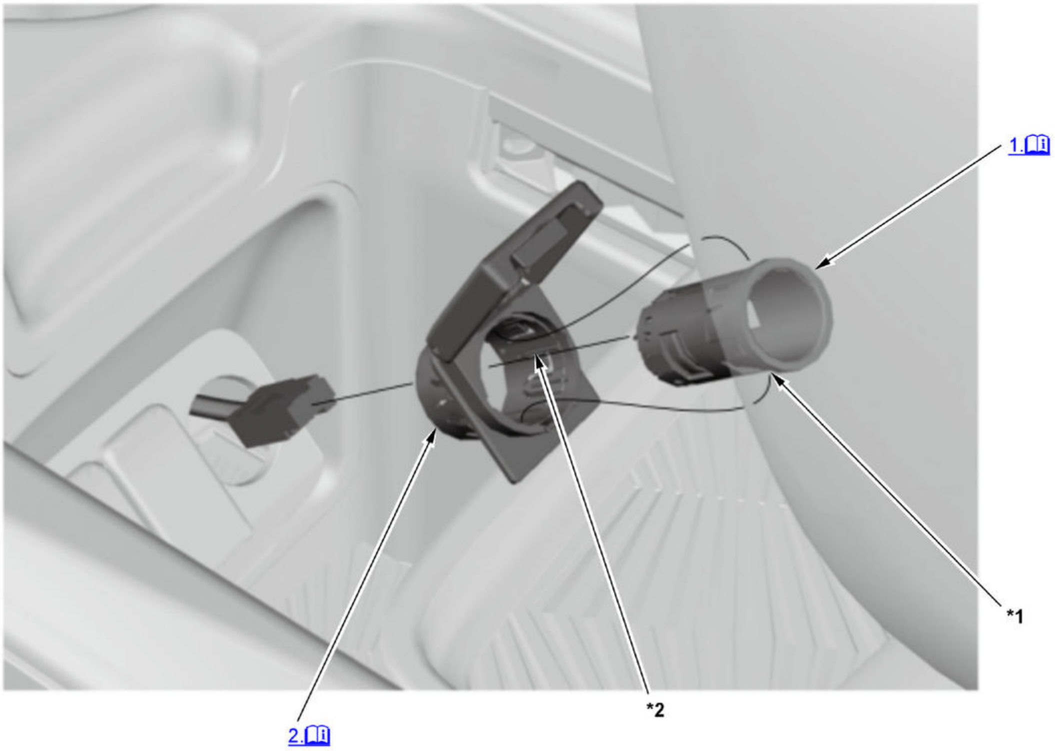

ℹ	Detailed information, notes, and precautions
*1	Tab
*2	Indexing tab

3

Cargo area

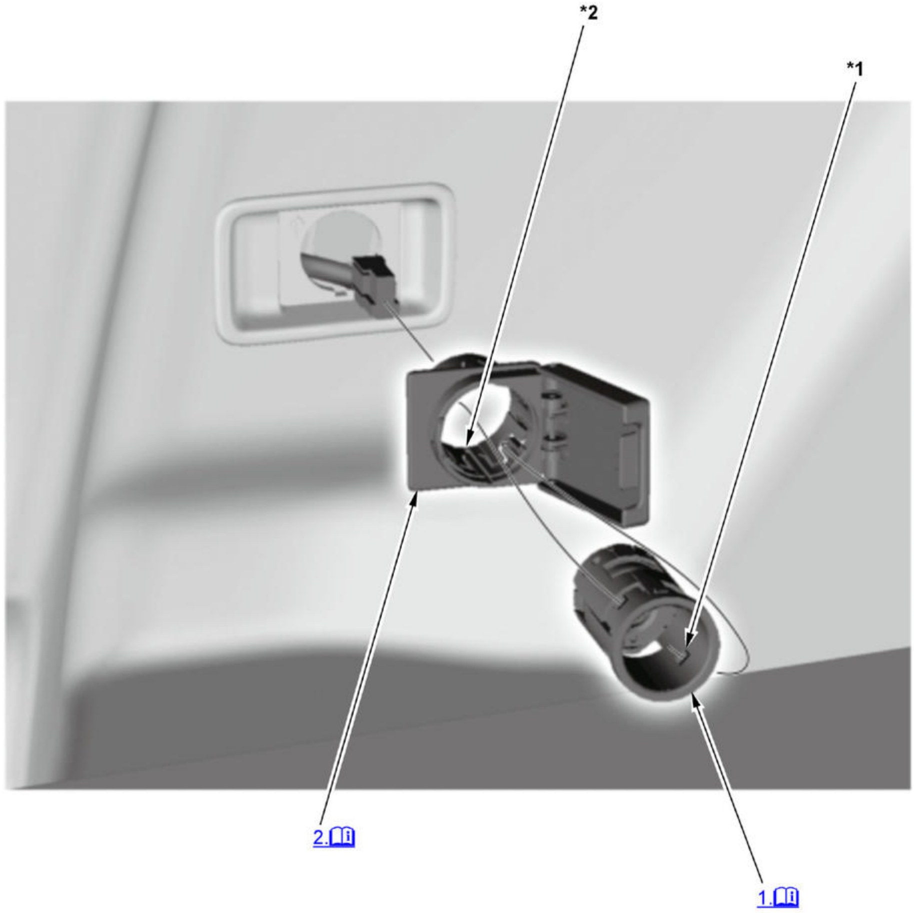

Front Accessory Power Socket (With front accessory power socket)

1. Front Accessory Power Socket - Remove

   1. Gently press the tabs.

2. Housing - Remove

   Note the location of the indexing tab.

   1. Gently press the tabs.

3. All Removed Parts - Install

   1. Install the parts in the reverse order of removal.

   Console Accessory Power Socket

4. Console Accessory Power Socket - Remove

1. Gently press the tabs.

5. Housing - Remove

Note the location of the indexing tab.

1. Gently press the tabs.

6. All Removed Parts - Install

1. Install the parts in the reverse order of removal.

Cargo Area Accessory Power Socket

7. Cargo Area Accessory Power Socket - Remove

1. Gently press the tabs.

8. Housing - Remove

Note the location of the indexing tab.

1. Gently press the tabs.

9. All Removed Parts - Install

1. Install the parts in the reverse order of removal.

AUXILIARY UNDER-DASH FUSE/RELAY BOX REMOVAL AND INSTALLATION (2020 2021)

Special Tools Required

Image	Description/Tool Number
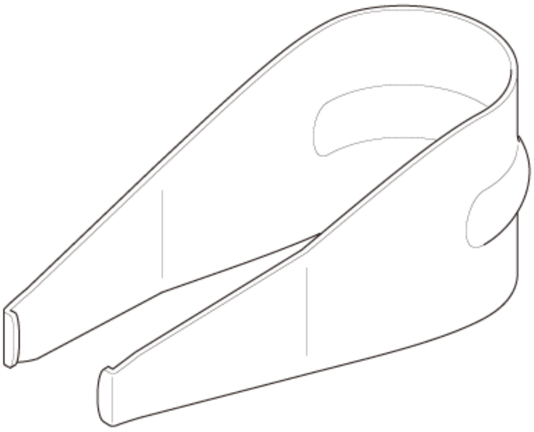	Relay Puller 07AAC-000A2A1

Removal and Installation

NOTE:

- ℹ Where icon is shown, for further information continue to the information below.
- SRS components are located in this area. Review the SRS component locations and the precautions and procedures before doing repairs or service.
- Do the installation operation after reconnecting the 12 volt battery terminal.

1

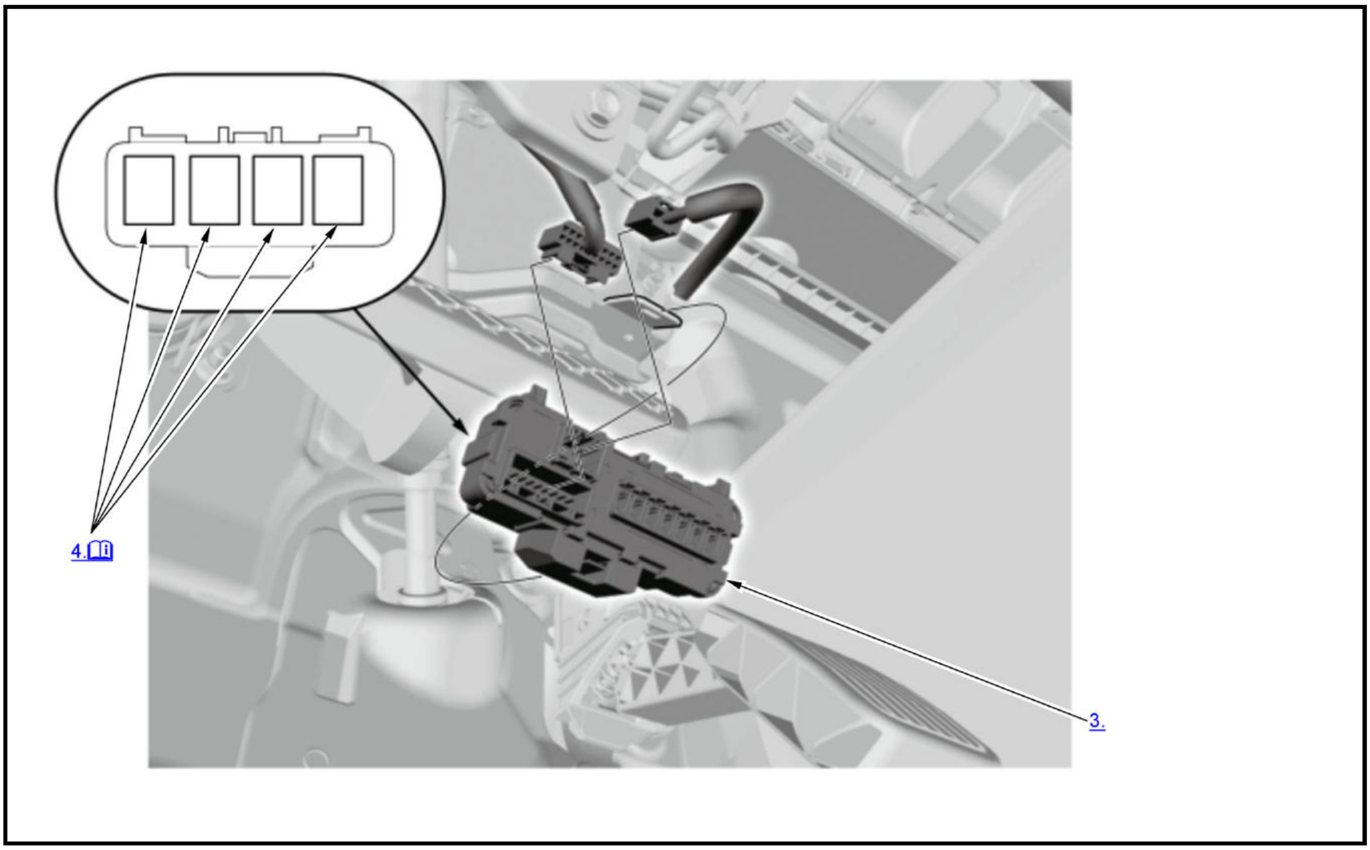

ℹ	Detailed information, notes, and precautions

1. 12 Volt Battery Terminal - Disconnect

   Note for installation

   Do reconnection procedure after reconnecting the 12 volt battery terminal.

2. Driver's Dashboard Lower Cover - Removal
3. Auxiliary Under-Dash Fuse/Relay Box - Remove
4. Relays - Remove

   1. Carefully remove the relays using the relay puller tool.
   NOTE: Do not use pliers. Pliers will damage the relays, which could cause the engine to stall, not start, or cause other functions to fail.

5. All Removed Parts - Install

   1. Install the parts in the reverse order of removal.

UNDER-DASH FUSE/RELAY BOX REMOVAL AND INSTALLATION

Special Tools Required

Image	Description/Tool Number
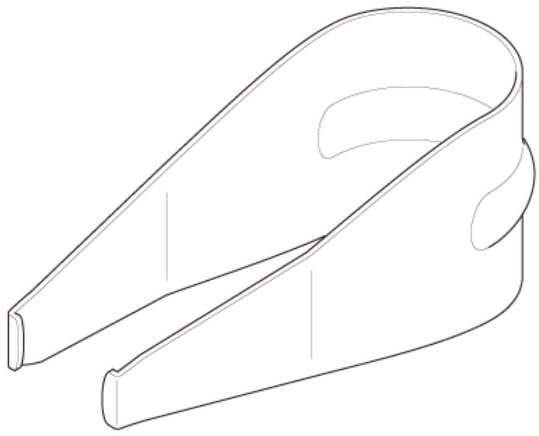	Relay Puller 07AAC-000A2A1

Removal and Installation

- ℹ Where icon is shown, for further information continue to the information below.
- SRS components are located in this area. Review the **SRS component locations** and the **precautions and procedures** before doing repairs or service.

1

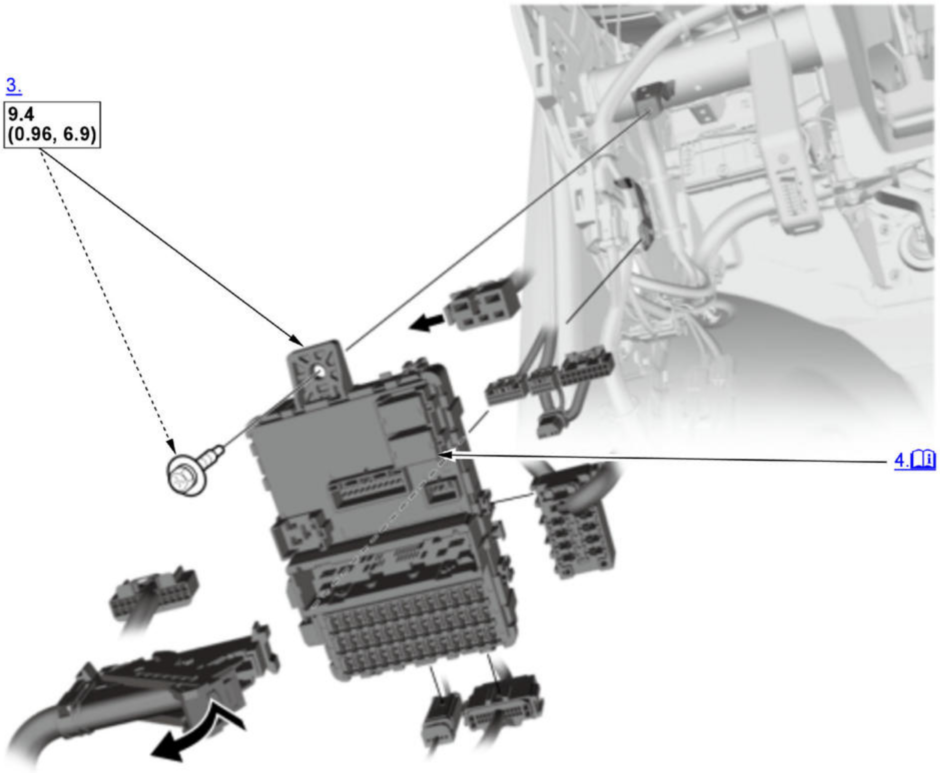

ℹ	Detailed information, notes, and precautions
☐	Torque: N.m (kgf.m, lbf.ft)

1. 12 Volt Battery Terminal - Disconnect
2. Driver's Dashboard Lower Cover - Remove
3. Under-Dash Fuse/Relay Box - Remove
4. Relays - Remove

> 1. Carefully remove the relays using the relay puller tool.
> **NOTE:** Do not use pliers. Pliers will damage the relays, which could cause the engine to stall, not start, or cause other functions to fail.

5. All Removed Parts - Install

> 1. Install the parts in the reverse order of removal.

UNDER-HOOD FUSE/RELAY BOX REMOVAL AND INSTALLATION

Special Tools Required

Image	Description/Tool Number
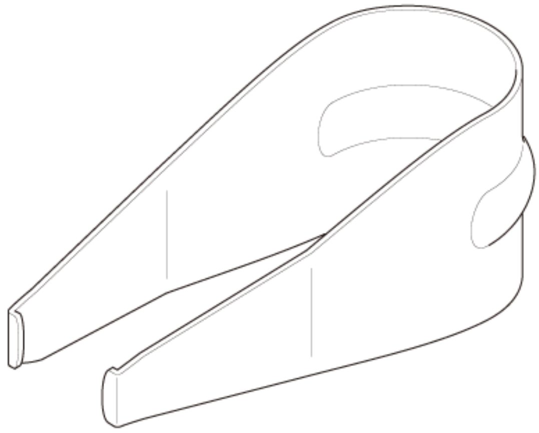	Relay Puller 07AAC-000A2A1

Removal and Installation

NOTE:

- ℹ Where icon is shown, for further information continue to the information below.
- The under-hood fuse/relay box is a part of the engine compartment wire harness, and it cannot be replaced by itself.

1

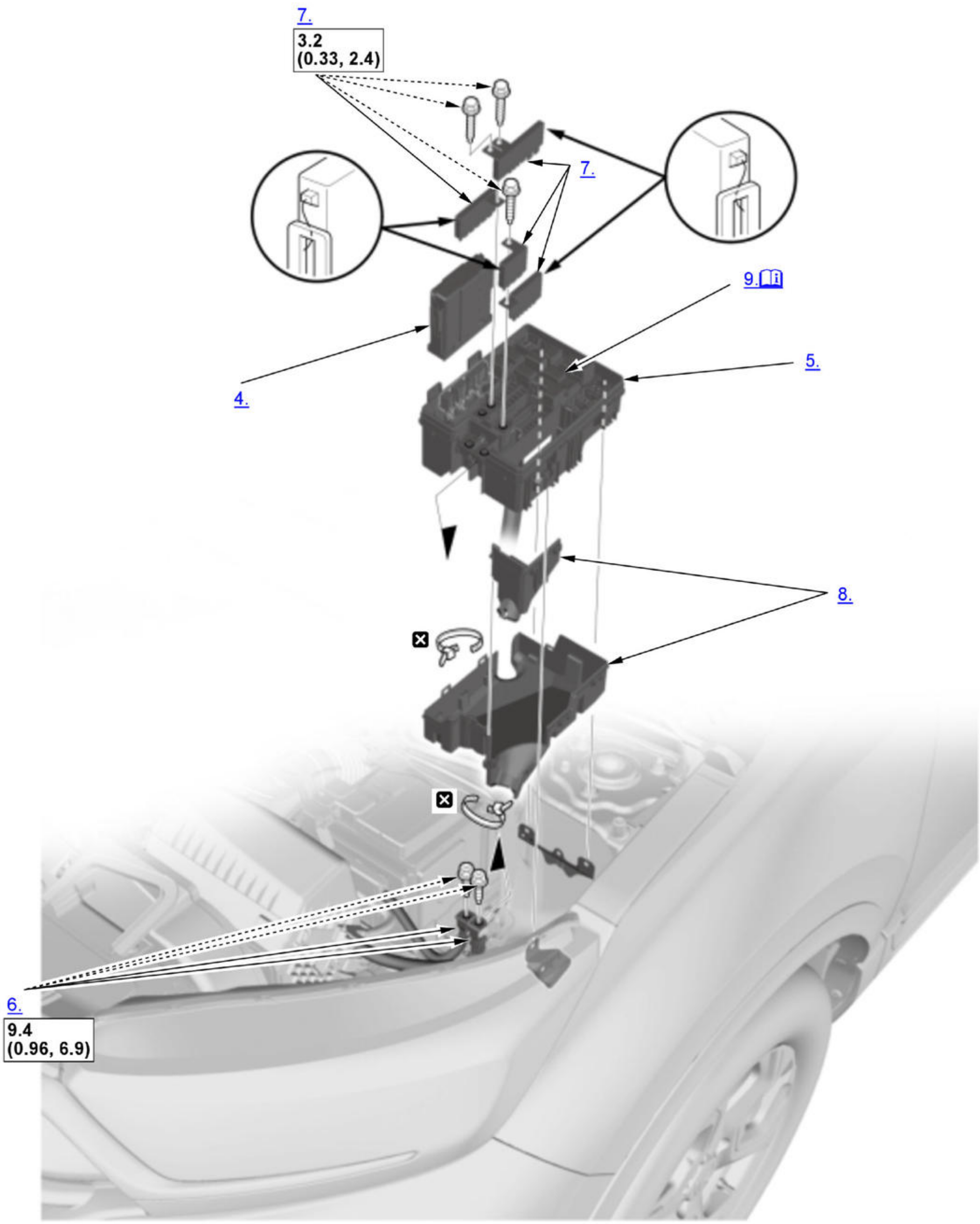

📖	Detailed information, notes, and precautions
▭	Torque: N.m (kgf.m, lbf.ft)
☒	Replace

1. **PCM - Remove**
2. **12 Volt Battery Terminal - Disconnect**
3. **Relay Circuit Board - Remove**
4. Relay Control Module - Remove
5. Under-Hood Fuse/Relay Box - Remove
6. Cable - Disconnect
7. Fuse Block - Remove
8. Bottom Covers - Remove
9. Relays - Remove

1. Carefully remove the relays using the relay puller tool.
NOTE: Do not use pliers. Pliers will damage the relays, which could cause the engine to stall, not start, or cause other functions to fail.

10. All Removed Parts - Install

1. Install the parts in the reverse order of removal.

WIRELESS CHARGER REMOVAL AND INSTALLATION (2020 2021)

Removal and Installation

1

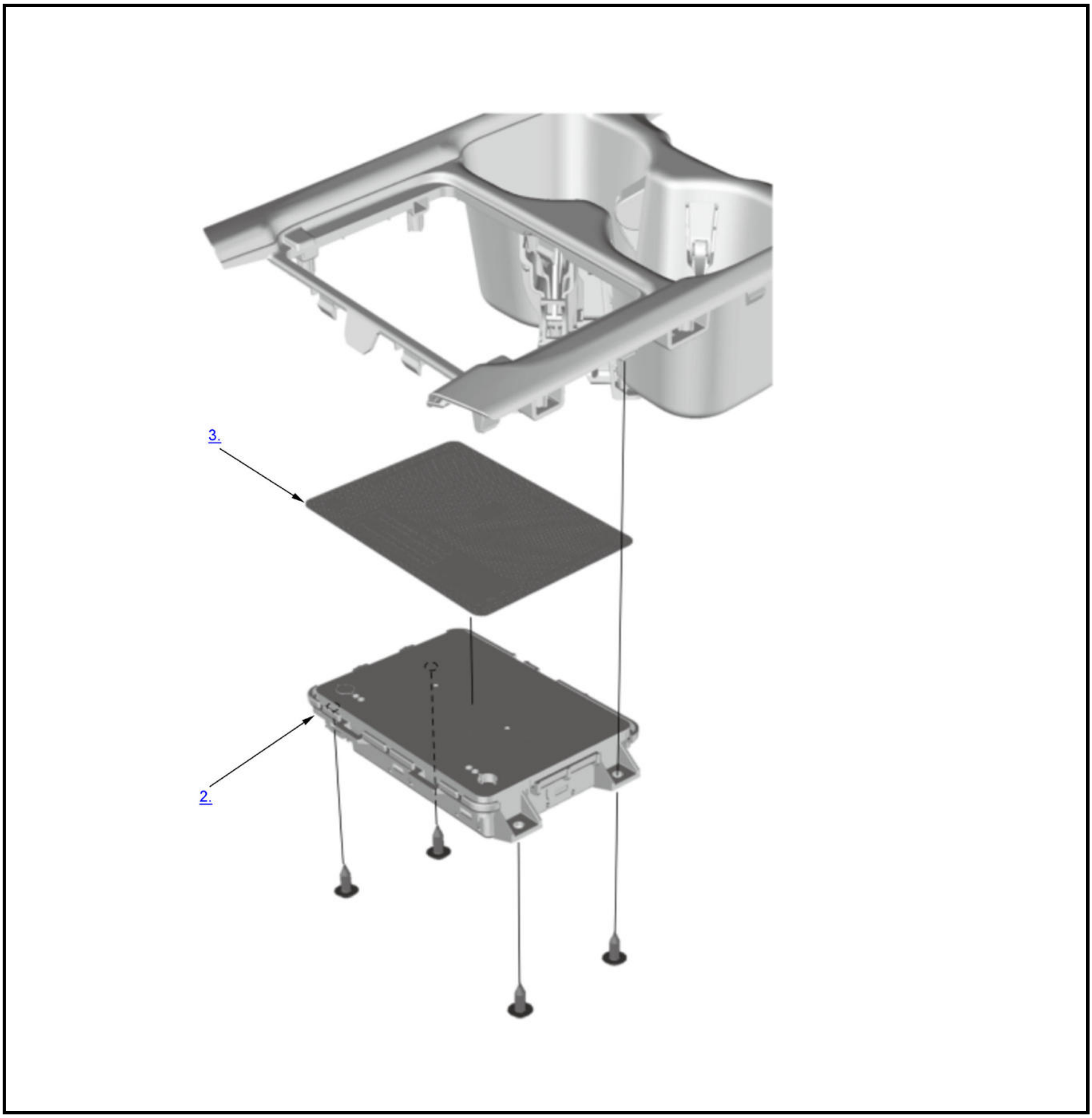

1. Center Console Panel - Remove
2. Wireless Charger - Remove
3. Anti Slip Sheet Assembly - Remove
4. All Removed Parts - Install

1. Install the parts in the reverse order of removal.

DESCRIPTION & OPERATION

WIRELESS CHARGER SYSTEM DESCRIPTION (2020 2021)

Overview

Some models come equipped with the wireless charger. The wireless charger can charge the battery (like a smartphone) that is placed on top of the wireless charger, without a charging cable. This system uses the law of electromagnetic induction.

Basic Control

The wireless charger system begins to charge a battery of a wireless device (like a smartphone) as soon as it detects the device on the wireless charger. The charger receives the radio frequency signal from the audio-navigation unit or the audio unit (dispaly audio type) via the B-CAN. Charging frequency is controlled so that it will not interfere with the receiving frequency of the radio. When a remote communicates to the body control module by LF communication, the charger momentarily stops charging so it will not interfere with the keyless access system.

The following conditions will stop battery charging:

- When the battery of the device becomes full.
- When an object is placed between the charger and the wireless device that prevents detection.
- When the wireless device is placed out of the charging area.

LED Indicator Function

As charging starts, the amber indicator turns on, and as charging stops, the green indicator turns on. When a failure occurs, the indicator (s) will flash.

Operation Mode State	Indicator	
	Green	Amber
Standby	ON	OFF
Power Transfer	OFF	ON
Abnormal Termination	FLASH	FLASH
Hardware Failure	OFF	FLASH

Flash Pattern

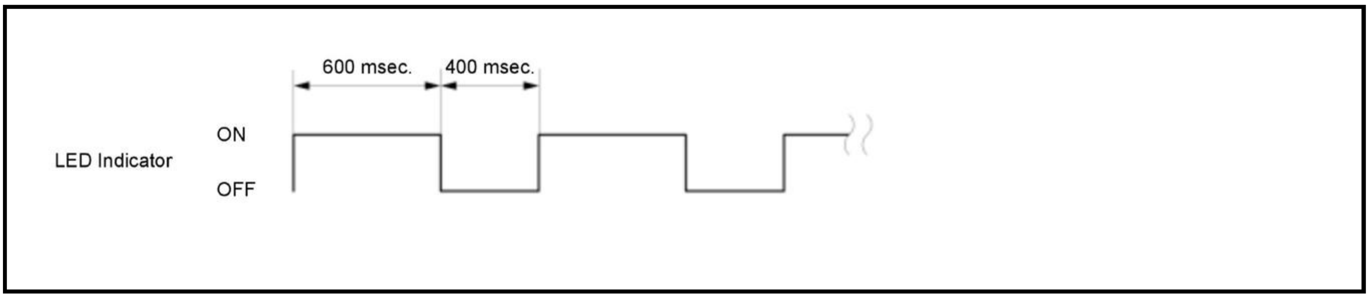

Failsafe Function

Hardware Failsafe Control

When the CPU is reset due to a CPU program runaway or a drop in the 5 V supply voltage, it changes to failsafe.

Software Failsafe Control

When any of the data from the B-CAN circuit cannot be received within a specified time, or an unusual combination of the data is recognized, the wireless charger moves to the software failsafe. The data that cannot be received is forced to a pre-programmed value.

WIRELESS CHARGER SYSTEM DESCRIPTION - SYSTEM DIAGRAM (2020 2021)

For locations of each component on the vehicle, refer to Component Location Index

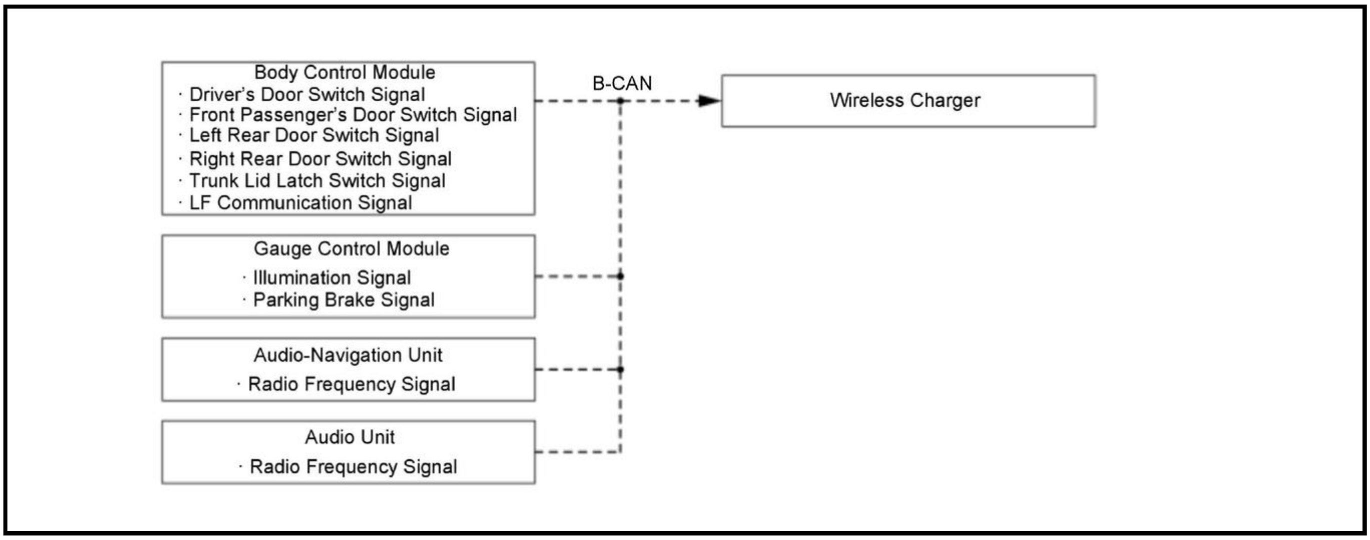
Body Control Module
· Driver's Door Switch Signal
· Front Passenger's Door Switch Signal
· Left Rear Door Switch Signal
· Right Rear Door Switch Signal
· Trunk Lid Latch Switch Signal
· LF Communication Signal
B-CAN
Wireless Charger
Gauge Control Module
· Illumination Signal
· Parking Brake Signal
Audio-Navigation Unit
· Radio Frequency Signal
Audio Unit
· Radio Frequency Signal

CONNECTOR VIEW

RELAY CONTROL MODULE CONNECTOR FOR INPUTS AND OUTPUTS

Connector Index
Relay Control Module Connector A (6P)
Relay Control Module Connector B (10P)
Relay Control Module Connector C (18P)

Relay Control Module Connector A (6P) (female terminals)

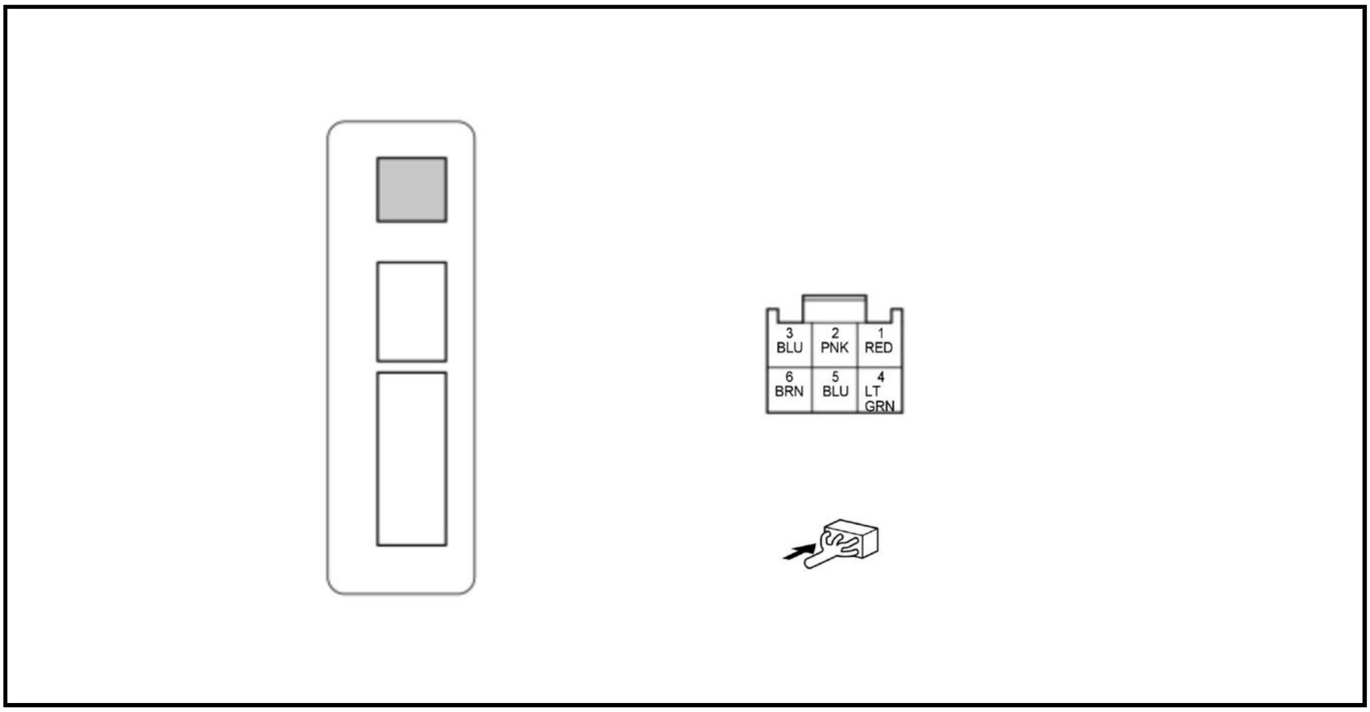

Terminal number	Terminal name	Description	Signal
1	+B BACK UP	+B power source	About battery voltage at all times
2	B-CAN_H	Communication line	---
3	B-CAN_L	Communication line	---
4	IG1 METER	IG1 power source	With vehicle in ON or START mode: about battery voltage
5*	HOOD SW	Detects hood latch switch signal	With hood latch switch ON: less than 0.2 VWith hood latch switch OFF and wakeup mode: about battery voltageWith hood latch switch OFF and sleep mode: pulse
6	GND	Relay control module ground	Less than 0.2 V at all times

*: With hood latch switch

Relay Control Module Connector B (10P) (female terminals)

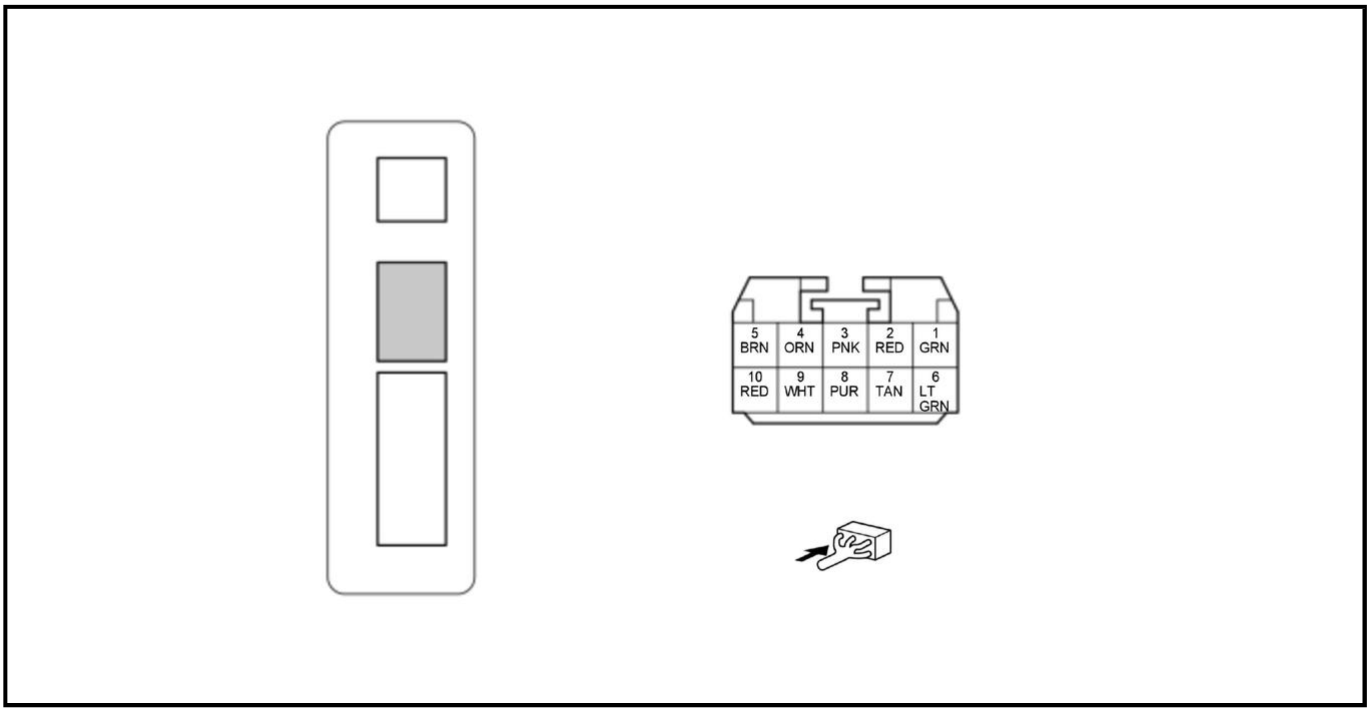

Terminal number	Terminal name	Description	Signal
1	ILLUMI+	Outputs illumination signal	With combination light switch PARKING or ON: about battery voltageWith combination light switch OFF: less than 0.2 V
2	INTR LT CUT RLY OUT2	Outputs interior light signal	With interior lights ON: about battery voltageWith interior lights OFF: less than 0.2 V
3	DRL RLY OUT2	Outputs right daytime running light signal	With right daytime running lights ON: about battery voltageWith right daytime running lights OFF: less than 0.2 V
4	+B R/MOD2	+B power source	About battery voltage at all times
5	L H/L HI	Outputs left headlight (HIGH) signal	With left headlight (HIGH) ON: about battery voltageWith left headlight (HIGH) OFF: less than 0.2 V
6* 1	FR DEICER RLY CL-	Drives heated windshield wiper area relay	With heated windshield wiper area ON: less than 0.2 VWith heated windshield wiper area OFF: about battery voltage
7	RR DEF RLY CL-	Drives rear window defogger relay	With vehicle in ON mode and rear window defogger ON: less than 0.2 VWith vehicle in ON mode and rear window defogger OFF: about battery voltage
8	L H/L LO	Outputs left headlight (LOW) signal	With left headlight (LOW) ON: about battery voltageWith left headlight (LOW) OFF: less than 0.2 V
9* 2	H/L LO SIG	Communication line	---
10	PARKING R	Outputs right parking light signal	With right parking lights ON: about battery voltageWith right parking lights OFF: less than 0.2 V

*1: With heated windshield wiper area

*2: With LED headlight (HIGH/LOW beam)

Relay Control Module Connector C (18P) (female terminals)

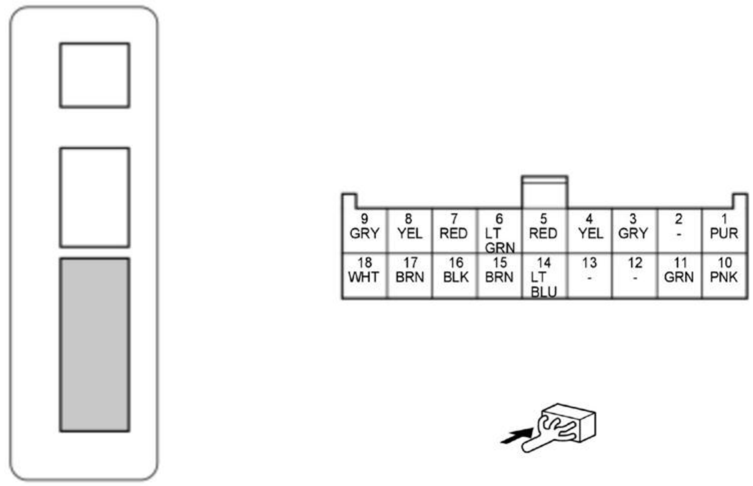

Terminal number	Terminal name	Description	Signal
1	PARKING L	Outputs left parking light signal	With left parking lights ON: about battery voltageWith left parking lights OFF: less than 0.2 V
2	---	Not used	---
3	R H/L HI	Outputs right headlight (HIGH) signal	With right headlight (HIGH) ON: about battery voltageWith right headlight (HIGH) OFF: less than 0.2 V
4	FR FOG LT RLY CL-	Drives front fog light relay	With front fog light switch ON: less than 0.2 VWith front fog light switch OFF: about battery voltage
5	+B R/MOD1	+B power source	About battery voltage at all times
6	HORN SW	Detects horn switch signal	With horn switch ON: less than 0.2 VWith horn switch OFF: about battery voltage
7	INTR LT CUT RLY OUT1	Outputs interior light signal	With interior lights ON: about battery voltageWith interior lights OFF: less than 0.2 V
8	DRL RLY OUT	Outputs left daytime running light signal	With left daytime running lights ON: about battery voltageWith left daytime running lights OFF: less than 0.2 V
9	FR WASHER MTR	Drives windshield washer motor	With windshield washer switch ON: about battery voltageWith windshield washer switch OFF: less than 0.2 V
10	H/L ON SW	Detects combination light switch ON signal	With combination light switch ON: less than 0.2 VWith combination light switch OFF and wake-up mode:

Terminal number	Terminal name	Description	Signal
			about battery voltageWith combination light switch OFF and sleep mode: pulse

Terminal number	Terminal name	Description	Signal
11	R H/L LO	Outputs right headlight (LOW) signal	With right headlight (LOW) ON: about battery voltageWith right headlight (LOW) OFF: less than 0.2 V
12	---	Not used	---
13	---	Not used	---
14	HORN RLY CL-	Drives horn relay	With horn (s) ON: less than 0.2 VWith horn (s) OFF: about battery voltage
15	GND	Relay control module ground	Less than 0.2 V at all times
16	GND	Relay control module ground	Less than 0.2 V at all times
17	RR WASHER MTR	Drives rear window washer motor	With rear window washer switch ON: about battery voltageWith rear window washer switch OFF: less than 0.2 V
18	+B WASHER	+B power supply	About battery voltage at all times

WIRELESS CHARGER CONNECTOR FOR INPUTS AND OUTPUTS (2020 2021)

Wireless Charger 7P Connector (female terminals)

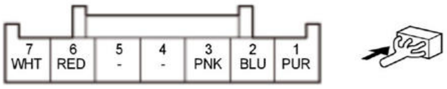

Terminal number	Terminal name	Description	Signal
1	GND	Wireless charger ground	Less than 0.2 V at all times
2	B-CAN_L	Communication line	---
3	B-CAN_H	Communication line	---
4	---	Not used	---
5	---	Not used	---
6	ACC KEYLOCK	ACC power source	With vehicle in ACCESSORY or ON mode: about battery voltage
7	+B BACK UP	Power source for wireless charger	About battery voltage at all times

CHECK

PARASITIC DRAW CHECK

Special Tools Required

LH41 AC/DC low current clamp meter, FLULH41A**: Available through the Honda Tool and Equipment Program, 888-424-6857

1. Parasitic draw check 1

   -1. Make sure the 12 volt battery is fully charged, and that all the vehicle's electrical accessories are turned off.

   -2. With hood latch switch: Order to recognize that the hood is closed, disconnect the hood latch switch 2P connector then connect the hood latch switch 2P connector terminals No. 1 and No. 2 with a jumper wire.

   -3. Turn the vehicle to the ON mode.

   -4. Turn the vehicle to the OFF (LOCK) mode.

   -5. Get out of the vehicle, and close all doors and tailgate securely.

   -6. Lock the doors with the keyless remote/transmitter.

   -7. Make sure the individual map lights are turned off, and the security alarm system is armed (with security).

   -8. Wait for at least 20 minutes.

   -9. Attach the LH41 AC/DC low current clamp meter (A) to the 12 volt battery ground cable (B). Follow the equipment manufacturer's instructions, then measure the parasitic draw.

   NOTE: If you are using a digital multimeter: go to step 2.

12 volt battery size	Threshold of the parasitic draw
55B24, L2	27.0 mA

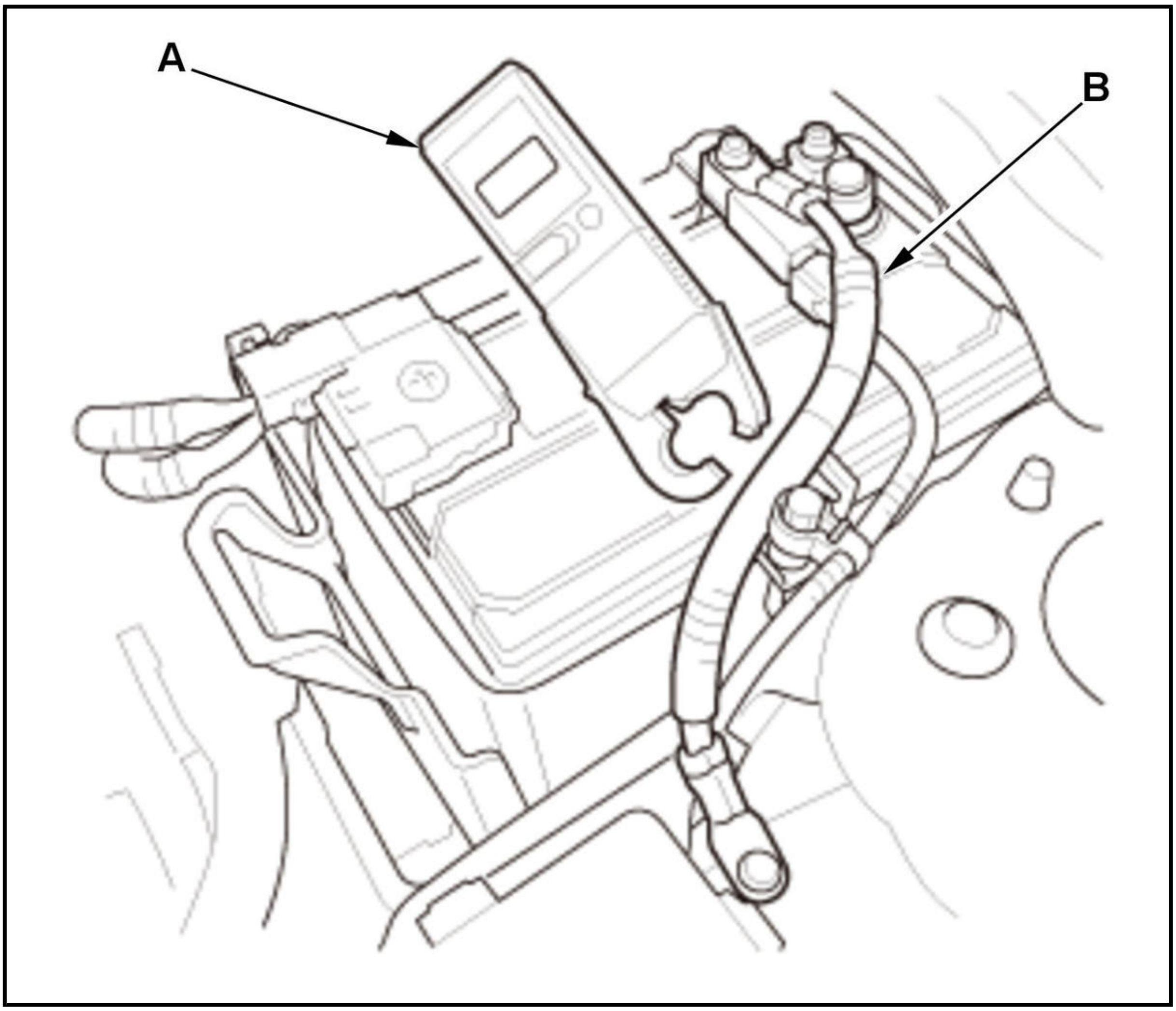

Is the measured valued less than the threshold?

YES

Intermittent failure, the system is normal at this time.

NO

Go to step 3.

2. Parasitic draw check 2:

   Check the following items before measuring:

   - Set the multimeter dial to the DCA (direct current amps) range.
   - Plug the red test probe into the red A (Amps) jack, and plug the black test probe into the COM jack.
   - To avoid blowing an input fuse, start by setting the range above 10 A.

   -2. Loosen the nut (A) on the 12 volt battery negative terminal.

   NOTE: Follow the instructions exactly to avoid disconnecting the 12 volt battery ground cable terminal from the 12 volt battery negative terminal.

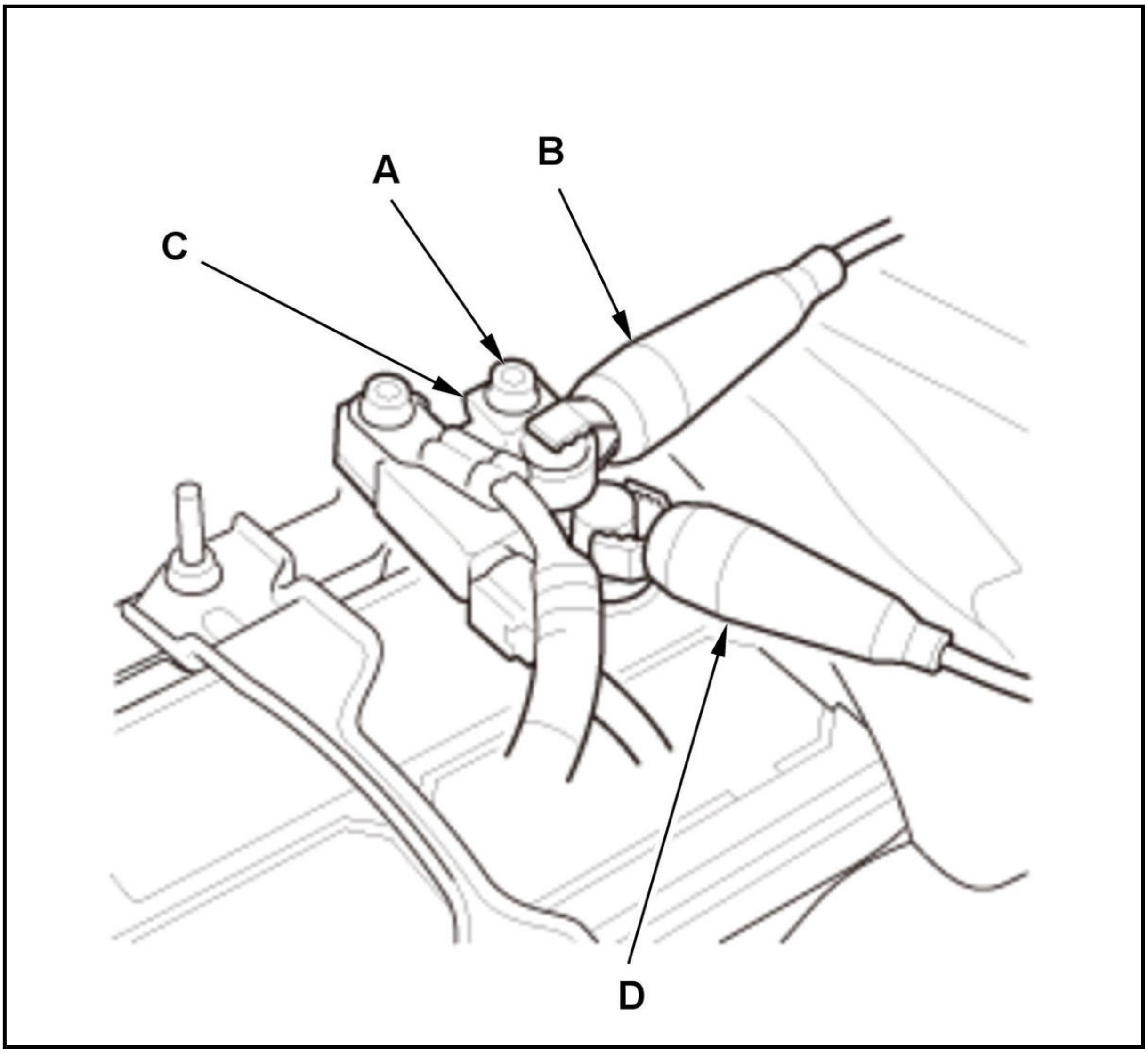

-3. Connect the red (+) test lead (B) to the 12 volt battery ground cable terminal (C).

-4. Carefully slide the 12 volt battery ground cable terminal upwards from the 12 volt battery negative terminal post to maintain contact and avoid disconnection. Then connect the black (-) test lead (D) to the 12 volt battery negative terminal post.

-5. Disconnect the 12 volt battery ground cable terminal (A) from the 12 volt battery negative terminal.

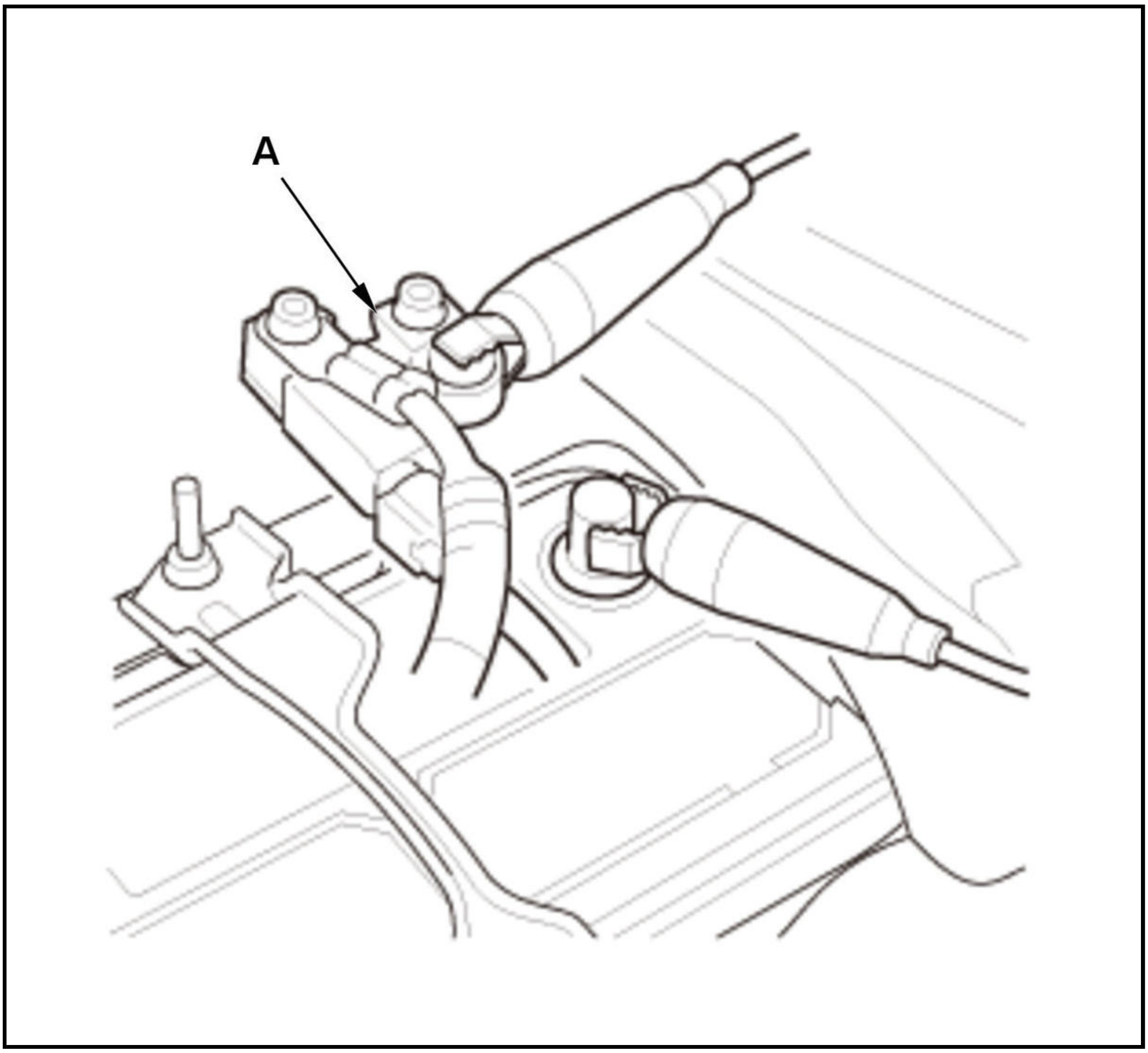

-6. Measure the parasitic draw.

NOTE: If the measured value is over the threshold, wait 10 minutes and recheck.

12 volt battery size	Threshold of the parasitic draw
55B24, L2	27.0 mA

Is the measured valued less than the threshold?

YES

Intermittent failure, the system is normal at this time.

NO

Go to step 3.

3. Electrical equipment check

-1. Check if there are any aftermarket electrical accessories installed on the vehicle.

Are there any aftermarket electrical accessories installed?

YES

Remove any installed aftermarket accessories and do parasitic draw tests again.

NO

Go to step 4.

4. Parasitic draw check 3

-1. Remove the BACK UP fuse while the test leads are connected, and measure the parasitic draw.

12 volt battery size	Threshold of the parasitic draw
55B24, L2	14.0 mA

Is the measured valued less than the threshold?

YES

Go to step 5.

NO

Go to step 6.

5. Parasitic draw check 4

-1. Install the BACK UP fuse.

-2. Short the B-CAN_H line to B-CAN_L line with a jumper wire while the test leads are connected.

-3. Turn the vehicle to the ON mode and then the OFF (LOCK) mode.

-4. Get out of the vehicle, and close all doors and tailgate securely.

-5. Wait for at least 40 seconds.

-6. Measure the parasitic draw.

12 volt battery size	Threshold of the parasitic draw
55B24, L2	27.0 mA

Is the measured valued less than the threshold?

YES

Disconnect the control units from the B-CAN circuit one at a time, perform step 3-6 above, then measure the parasitic draw. Do the input test for the control unit that reduced the parasitic draw to less than the threshold when disconnected.

NO

Disconnect the control units from the back-up fuse circuit one at a time, perform step 3-6 above, then measure the parasitic draw. Replace the control unit that reduced the parasitic draw to less than the threshold when disconnected.

6. Parasitic draw check 4

-1. Remove the IG MAIN 1 fuse and IG MAIN 2 fuse (with keyless access system) while the test leads are connected.

-2. Turn the vehicle to the ON mode and then the OFF (LOCK) mode.

-3. Get out of the vehicle, and close all doors and tailgate securely.

-4. Wait for at least 40 seconds.

-5. Measure the parasitic draw.

12 volt battery size	Threshold of the parasitic draw
55B24, L2	27.0 mA

Is the measured valued less than the threshold?

YES: With keyless access system

Go to step 7.

YES: Without keyless access system

Go to step 8.

NO

Remove the fuse (s) one at a time, and identify the parts which excessively consume current.

NO

If all electrical circuits are OK, check the starter system circuit.

NO

Perform the starter performance test.

7. Parasitic draw check 5 (with keyless access system)

-1. Install the IG MAIN 1 and IG MAIN 2 fuses.

-2. Disconnect under-dash fuse/relay box connector C (27P) while the test leads are connected, and measure the parasitic draw.

12 volt battery size	Threshold of the parasitic draw
55B24, L2	27.0 mA

Is the measured valued less than the threshold?

YES

Replace the under-dash fuse/relay box .

NO

Repair a short to ground in the +B IG MAIN wire.

NO

Repair a short to ground in the +B IG MAIN2 wire.

8. Parasitic draw check 5 (without keyless access system)

-1. Install the IG MAIN 1 fuse.

-2. Disconnect the ignition switch 7P connector while the test leads are connected, and measure the parasitic draw.

12 volt battery size	Threshold of the parasitic draw
55B24, L2	27.0 mA

Is the measured valued less than the threshold?

YES

Replace the ignition switch .

NO

Repair a short to ground in the wire.

INPUT TEST

WIRELESS CHARGER INPUT TEST (2020 2021)

NOTE:

- Make sure the fuses associated with the system are OK.
- Before testing, check for DTCs. If any DTCs are indicated, troubleshoot those DTCs first.
- If you are troubleshooting multiple DTCs, be sure to follow the instructions in B-CAN System Diagnosis Test Mode A .

1. Turn the vehicle to the OFF (LOCK) mode.

2. Disconnect the wireless charger 7P connector.

Wireless Charger 7P Connector (female terminals)

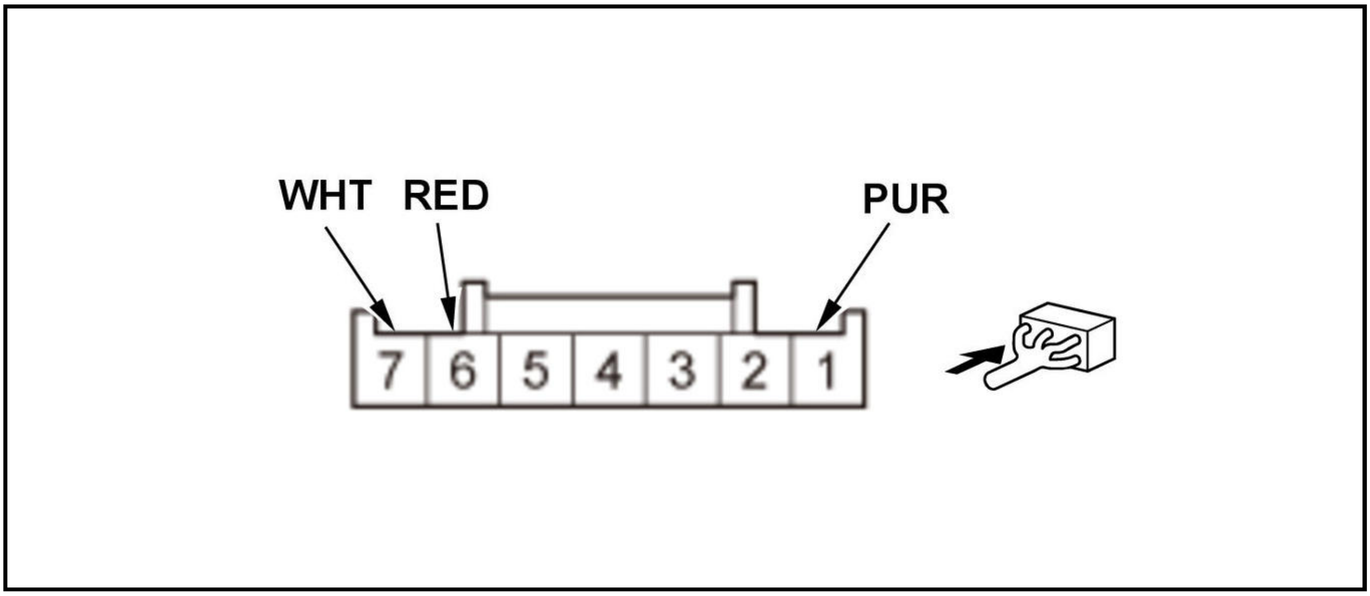

Inspect the connector and socket terminals to be sure they are all making good contact:

- If the terminals are bent, loose, or corroded, repair them as necessary, and recheck the system.
- If the terminals are OK, go to step 4.

Reconnect the connector to the wireless charger, and do the following input tests:

- If any test indicates a problem, find and correct the cause, then recheck the system.
- If all the input tests prove OK, replace the wireless charger .

Cavity	Wire	Test condition	Test: Desired result	Possible cause if desired result is not obtained
7	WHT	Under all conditions	Measure the voltage to ground: There should be battery voltage.	An open or high resistance in the wire
6	RED	Vehicle ACCESSORY mode	Measure the voltage to ground: There should be battery voltage.	An open or high resistance in the wire
1	PUR	In all power modes	Measure the voltage to ground: There should be less than 0.2 V.	• Poor ground (G402) • An open or high resistance in the ground wire

TEST

KEY INTERLOCK SOLENOID TEST

Test

NOTE: SRS components are located in this area. Review the **SRS component locations** and the **precautions and procedures** before doing repairs or service.

1. **Column Covers - Remove**
2. Key Interlock Solenoid - Test

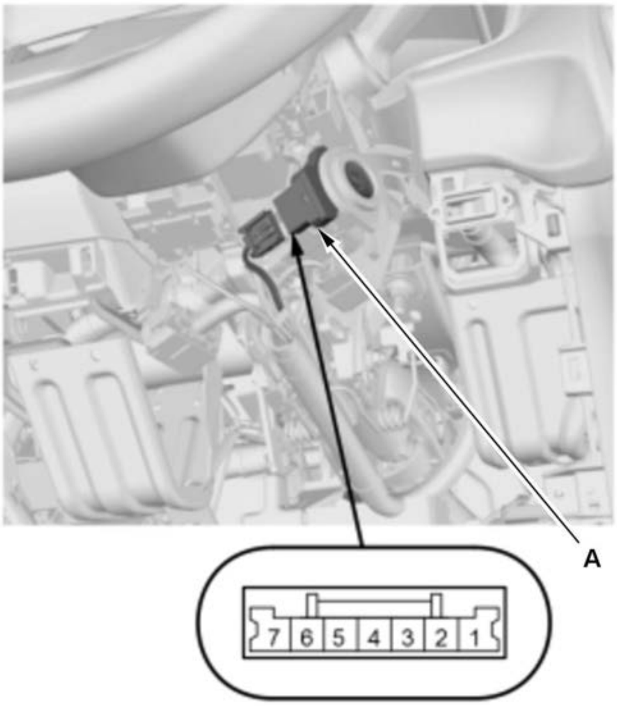

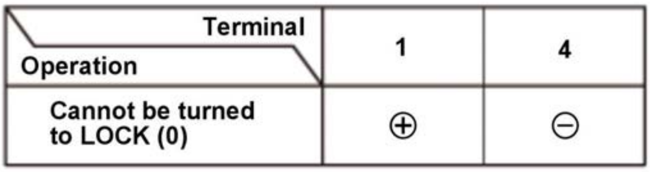

Terminal / Operation	1	4
Cannot be turned to LOCK (0)	⊕	⊖

1. Turn the ignition switch to LOCK (0).

2. Disconnect the connector.

3. Turn the ignition switch to ACCESSORY (I).

4. Check the solenoid operation by connecting power and ground according to the table.

NOTE: To prevent damage to the actuator, apply battery voltage only momentarily.

5. If the key interlock solenoid does not work properly, the key interlock solenoid is faulty; **replace the steering lock**

(A).

3. All Removed Parts - Install

1. Install the parts in the reverse order of removal.

PARK PIN SWITCH TEST

Test

1. **Center Console - Remove**
2. Park Pin Switch - Test

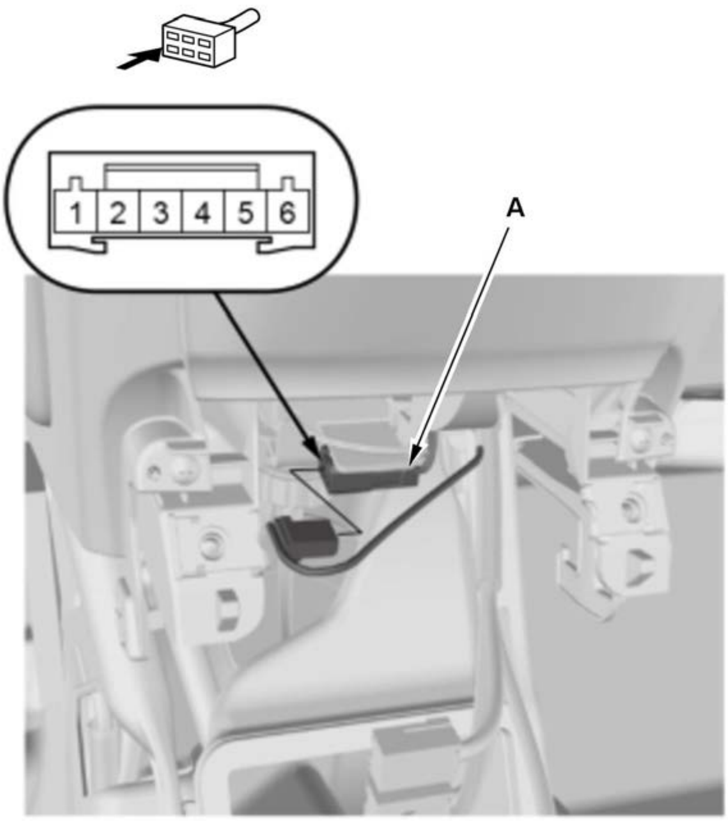

Condition \ Terminal	3	4
P		
Out of P or Pressed Shift Lever Button	○	○

1. Disconnect the connector.

2. Check for continuity between the terminals in each shift lever condition according to the table.

3. If the continuity is not as specified, **check the shift cable adjustment**

If the cable adjustment is OK, the park pin switch is faulty; **replace the shift lock unit** (A).

3. All Removed Parts - Install

1. Install the parts in the reverse order of removal.

FUSE TO COMPONENTS INDEX

FUSE TO COMPONENTS INDEX

Fuses	Location
A	Under-Hood Fuse/Relay Box
B	Fuse/Relay Holder A
C	Fuse/Relay Holder B
G	Fuse Holder A (with fuse holder A)
D	Under-Dash Fuse/Relay Box
E	Auxiliary Under-Dash Fuse Box
F	Auxiliary Under-Dash Fuse/Relay Box (with auto idle stop system)

Under-Hood Fuse/Relay Box

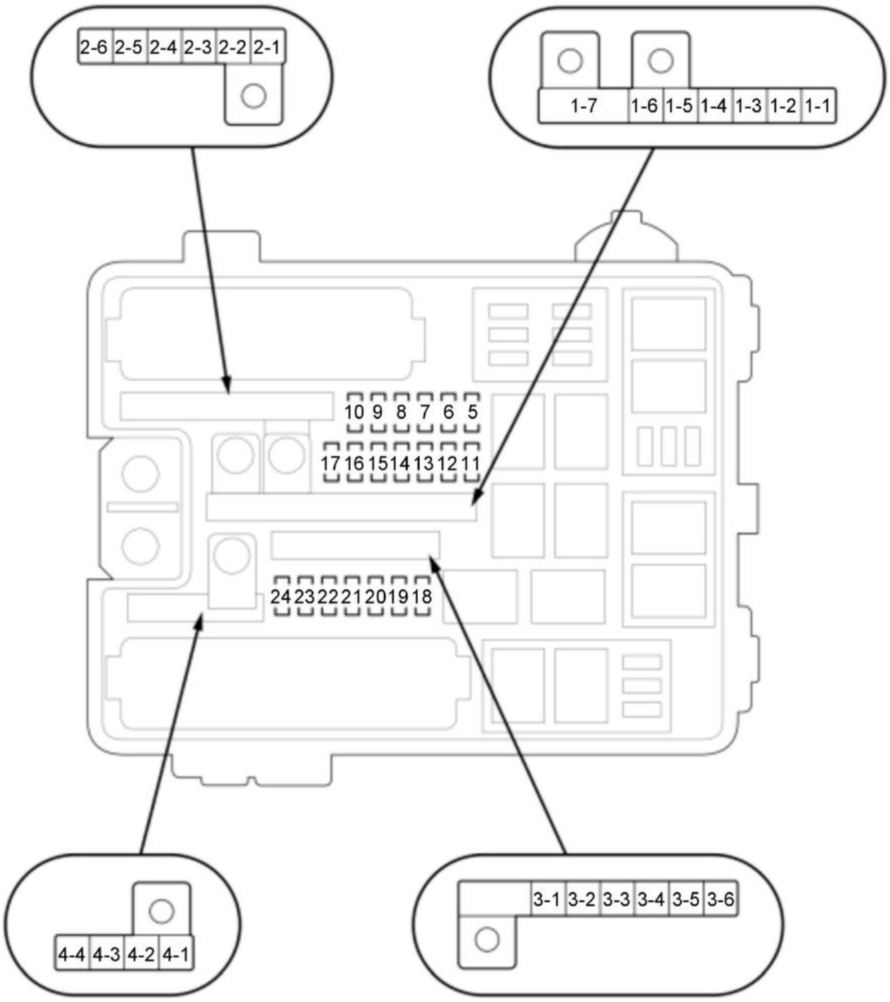
2-6 2-5 2-4 2-3 2-2 2-1
1-7 1-6 1-5 1-4 1-3 1-2 1-1
10 9 8 7 6 5
17 16 15 14 13 12 11
24 23 22 21 20 19 18
4-4 4-3 4-2 4-1
3-1 3-2 3-3 3-4 3-5 3-6

Fig. 1: Under-Hood Fuse/Relay Box Component Locations
Courtesy of HONDA, U.S.A., INC.

Under-Hood Fuse/Relay Box Legend

Fuse Number	Amps	Component (s) or Circuit (s) Protected	Feature
A1-1	30 A	DC-DC converter* 1, Stereo amplifier* 2* 3	*1: With auto idle stop system *2: Without auto idle stop

Fuse Number	Amps	Component (s) or Circuit (s) Protected	Feature
			system *3: With stereo amplifier
A1-2	40 A	Electric brake booster	B
A1-3	30 A	Radiator fan motor (via radiator fan relay)	B
A1-4	30 A	Relay control module	B
A1-5*	30 A	Via IG1B relay circuit (built into the under-dash fuse/relay box): Body control module, No. D3, No. D4, No. D5, No. D6, No. D7, and No. D17 fuses in the under-dash fuse/relay box Via IG2 relay circuit (built into the under-dash fuse/relay box): Body control module, No. D9 and No. D22 fuses in the under-dash fuse/relay box	*: With keyless access system
A1-6	30 A	Relay control module	B
A1-7	125 A	No. A3-1, No. A3-2, No. A3-3, No. A3-4, No. A3-5, No. A3-6, No. A4-1, No. A4-2, No. A4-3* 1, No. A4-4* 3, No. A18, No. A19* 2, No. A20* 4, No. A21, No. A22, No. A23, and No. A24 fuses in the under-hood fuse/relay box	*1: With auto idle stop system *2: Without auto idle stop system *3: With power tailgate *4: AWD
A2-1	70 A	EPS motor/control unit	B
A2-2	30 A* 1	Via IG1A relay circuit (built into the under-dash fuse/relay box): Body control module, No. D8, No. D20, No. D21, No. D34, and No. D35 fuses in the under-dash fuse/relay box Via ACC relay circuit (built into the under-dash fuse/relay box): No. D1 and No. D2 fuses in the under-dash fuse/relay box	*1: With keyless access system *2: Without keyless access system
	50 A* 2	Ignition switch (via under-dash fuse/relay box)	
A2-3	40 A	No. D18* 1, No. D19* 2, No. D31* 3, No. D32* 4, and No. D33* 3 fuses in the under-dash fuse/relay box	*1: With lumbar support *2: With panoramic glass roof or with moonroof *3: With driver's power seat *4: With front seat heater
A2-4	60 A	No. D15, No. D16, No. D28, No. D29, and No. D30* fuses in the under-dash fuse/relay box, Power window relay Via power window relay:	*: With keyless access system

Fuse Number	Amps	Component (s) or Circuit (s) Protected	Feature
		No. D14 and No. D27 fuses in the under-dash fuse/relay box	
A2-5	30 A	Windshield wiper control unit/motor	B
A2-6	30 A	A/C condenser fan motor (via A/C condenser fan relay)	B
A3-1	40 A	Blower motor	B
A3-2	40 A	VSA modulator-control unit	B
A3-3	40 A	VSA modulator-control unit	B
A3-4	40 A	No. D10, No. D23, No. D24, No. D36, and No. D37 fuses in the under-dash fuse/relay box	B
A3-5	30 A	No. C28 fuse in the fuse/relay holder B (via starter cut relay 1 circuit (built into the relay circuit board) and starter cut relay 2 circuit (built into the relay circuit board))* 2, PCM (via starter cut relay 1 circuit (built into the relay circuit board)), Starter (via starter cut relay 1 circuit (built into the relay circuit board) and starter cut relay 2 circuit (built into the relay circuit board))* 1, Starter (via starter cut relay 1 circuit, starter cut relay 2 circuit (built into the relay circuit board), and fuse/relay holder B)* 2	*1: With keyless access system *2: Without keyless access system
A3-6	40 A	Rear window defogger (via rear window defogger relay)	B
A4-1	40 A	No. E1* 1, No. E2* 2, No. E3* 2, and No. E4* 3 fuses in the auxiliary under-dash fuse box	*1: With power tailgate *2: With front passenger's power seat *3: With panoramic glass roof
A4-2	40 A	No. E5* 1* 2 and No. E8* 3 fuse in the auxiliary under-dash fuse box	*1: With auto idle stop system *2: With stereo amplifier *3: With cargo area accessory power socket
A4-3*	30 A	DC-DC converter	*: With auto idle stop system
A4-4*	40 A	Power tailgate control unit	*: With power tailgate
A5*	7.5 A	PCM	*: 1.5 L engine
A6	15 A	Relay control module	B
A7	15 A	Injector relay* 1, PGM-FI main relay 1 circuit (built into the relay circuit board) Via PGM-FI main relay 1 circuit (built into the relay circuit board): CKP sensor* 2, CMP sensor B* 2,	*1: 1.5 L engine *2: 2.4 L engine

Fuse Number	Amps	Component (s) or Circuit (s) Protected	Feature
		Injector relay* 2, PCM, PGM-FI main relay 2	
A8	15 A	PGM-FI subrelay circuit (built into the relay circuit board) Via PGM-FI subrelay circuit (built into the relay circuit board): EVAP canister vent shut valve*, No. A5 (1.5 L engine) and No. A11 fuses in the under-hood fuse/relay box, No. B25 fuse in the fuse/relay holder A, PCM	*:'172.4L engine (USA models)
A9	10 A	Via brake light relay circuit (built into the relay circuit board): High mount brake light, Left brake light, Right brake light, VSA modulator-control unit Via brake pedal position switch: Body control module, PCM Via brake pedal position switch and brake light relay circuit (built into the relay circuit board): High mount brake light, Left brake light, Right brake light, VSA modulator-control unit	B
A10	20 A	PCM (via injector relay)	B
A11	7.5 A	A/F sensor, EVAP canister purge valve* 1, EVAP canister vent shut valve* 2, EVAP leak detection module* 1	*1: 1.5 L engine *2:'18-21 2.4L engine (USA models)
A12*	10 A	PCM	*: 1.5 L engine
A13*	15 A	Via heated windshield wiper area relay:	*: With heated windshield wiper area

Fuse Number	Amps	Component (s) or Circuit (s) Protected	Feature
		Heated windshield wiper area, Heated windshield wiper area switch	
A14	10 A	Body control module	B
A15	15 A	Ignition coils (via ignition coil relay circuit (built into the relay circuit board)), Ignition coil relay circuit (built into the relay circuit board)	B
A16*	15 A	TCM	*: 1.5 L engine
A17	---	Not used	B
A18	10 A	ANC/active sound control unit, Automatic lighting control unit-sensor* 1* 3, Automatic lighting/rain sensor* 2, Body control module, CAN gateway* 4, Data link connector (DLC), Gauge control module, HomeLink unit* 5, Immobilizer-keyless control unit* 6, Power seat control unit* 7, Power tailgate control unit* 8, Power window master switch, Relay control module, USB charger unit* 9* 11, Wireless charger* 10	*1: With automatic lighting *2: With automatic wiper *3: Without automatic wiper *4: With CAN gateway *5: With HomeLink *6: Without keyless access system *7: With DPMS *8: With power tailgate *9: With USB charger unit *10: With wireless charger *11: Without wireless charger
A19* 1	15 A	Audio unit* 3, Audio-navigation unit* 2, Center display unit* 4	*1: Without auto idle stop system *2: With navigation *3: Without navigation *4: Display audio type
A20*	20 A	Real time AWD control unit	*: AWD
A21*	20 A	Rear seat heater control unit	*: With rear seat heater
A22	15 A* 3 10 A* 4	Front fog light relay* 1, Shutter grille (lower)* 2 Via front fog light relay* 2: Left front fog light, Right front fog light	*1: With front fog light *2: With shutter grille *3:'17-19 *4:'20-21

Fuse Number	Amps	Component (s) or Circuit (s) Protected	Feature
A23	10 A* 2	A/C compressor clutch (via A/C compressor clutch relay), Shutter grille (upper)* 3	*1: With wireless charger *2: Without wireless charger *3: With shutter grille
	20 A* 1	No. G31 and No. G34 fuses in the fuse holder A	
A24	10 A	12 Volt battery sensor, Horn relay Via horn relay: Horn (HIGH), Horn (LOW)	B

Fuse/Relay Holder A (Built Into The Under-Hood Fuse/Relay Box)

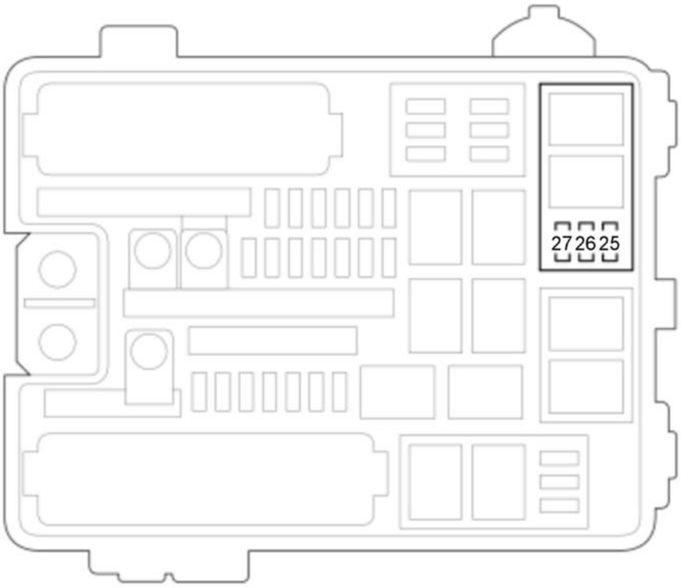

Fig. 2: Fuse/Relay Holder A (Built Into The Under-Hood Fuse/Relay Box) Component Locations
Courtesy of HONDA, U.S.A., INC.

Fuse/Relay Holder A (Built Into The Under-Hood Fuse/Relay Box) Legend

Fuse Number	Amps	Component (s) or Circuit (s) Protected	Feature
B25	7.5 A	A/C condenser fan relay, Fan control relay	B
B26	---	Not used	B
B27* 1	30 A	Audio unit* 3, Audio-navigation unit* 2, Automatic lighting control unit-sensor* 4* 5,	*1: With auto idle stop system *2: With navigation

Fuse Number	Amps	Component (s) or Circuit (s) Protected	Feature
		Center display unit* 6, Climate control panel, Climate control unit	*3: Without navigation *4: With automatic lighting *5: Without automatic wiper *6: Display audio type

Fuse/Relay Holder B (Built Into The Under-Hood Fuse/Relay Box)

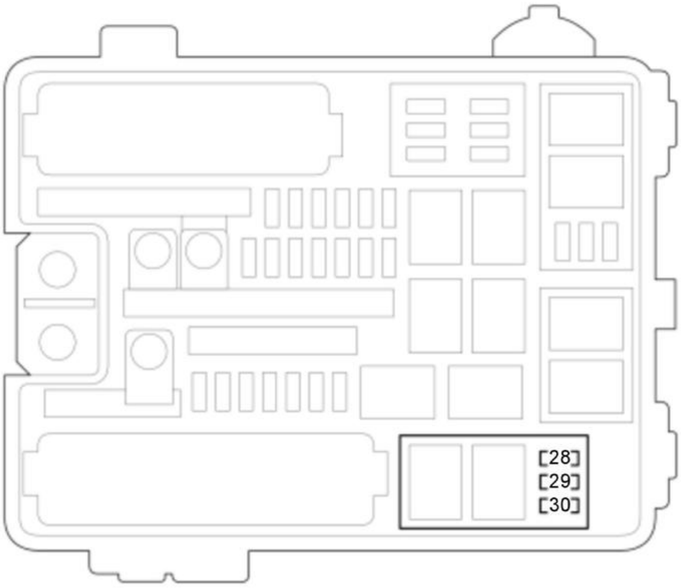

Fig. 3: Fuse/Relay Holder B (Built Into The Under-Hood Fuse/Relay Box) Component Locations
Courtesy of HONDA, U.S.A., INC.

Fuse/Relay Holder B (Built Into The Under-Hood Fuse/Relay Box) Legend

Fuse Number	Amps	Component (s) or Circuit (s) Protected	Feature
C28*	7.5 A	Starter solenoid diode	*: 2.4 L engine
C29*	Busbar	Starter	*: Without keyless access system
C30*		No. C28 fuse in the fuse/relay holder B	

Fuse Holder A (With Fuse Holder A)

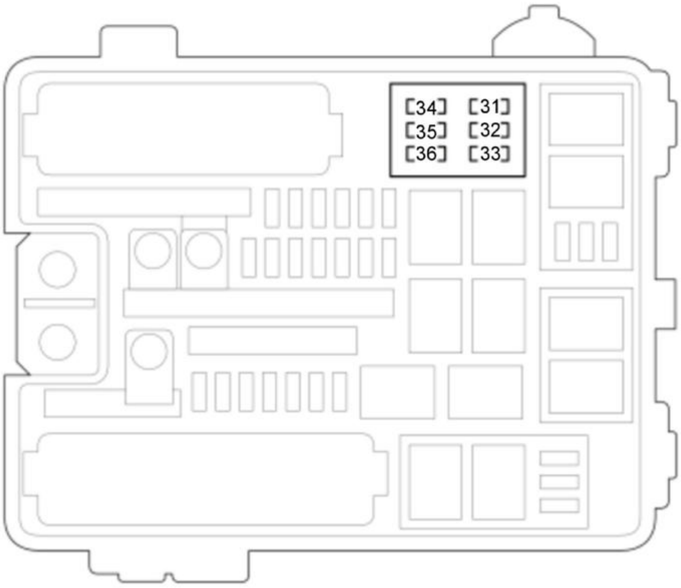

Fig. 4: Fuse Holder A (With Fuse Holder A) Component Locations
Courtesy of HONDA, U.S.A., INC.

Fuse Holder A (With Fuse Holder A) Legend

Fuse Number	Amps	Component (s) or Circuit (s) Protected	Feature
G31*	10 A	A/C compressor clutch (Via A/C compressor clutch relay), Shutter grille (upper)	*: With wireless charger
G32	---	Not used	B
G33	---	Not used	B
G34* 1	7.5 A	USB charger unit* 2	*1: With wireless charger *2: With USB charger unit
G35	---	Not used	B
G36	---	Not used	B

Under-Dash Fuse/Relay Box

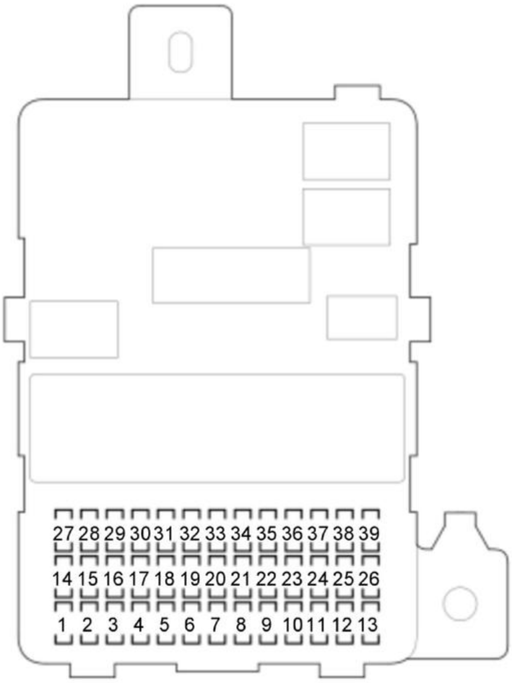

Fig. 5: Under-Dash Fuse/Relay Box Component Locations
Courtesy of HONDA, U.S.A., INC.

Under-Dash Fuse/Relay Box Legend

Fuse Number	Amps	Component (s) or Circuit (s) Protected	Feature
D1	10 A	Audio unit* 1* 5, Audio unit (Via ACC cut relay)* 2* 5, Audio-navigation unit*1*4, Audio-navigation unit (Via ACC cut relay)* 2* 4, Cargo area accessory power socket relay* 1* 8, Cargo area accessory power socket relay (Via ACC cut relay)* 2* 8, Console accessory power socket relay* 1, Console accessory power socket relay (Via ACC cut relay)* 2, DC-DC converter ACC relay* 1* 3, DC-DC converter ACC relay (Via ACC cut relay)* 2* 3, Front accessory power socket relay* 1* 7, Front accessory power socket relay (Via ACC cut relay)* 2* 7, USB charger unit* 1* 6, USB charger unit (Via ACC cut relay)* 2* 6, USB port light (USB port A)* 1* 9, USB port light (USB port A) (Via ACC cut relay)* 2* 9, USB port light (USB port B)* 1* 9, USB port light (USB port B) (Via ACC cut relay)* 2* 9	*1: With keyless access system *2: Without keyless access system *3: With auto idle stop system *4: With navigation *5: Without navigation *6: With USB charger unit *7: With front accessory power socket socket *8: With cargo area accessory power *9: With USB port light
D2	5 A	Body control module, Key interlock solenoid* 1, Wireless charger* 2	*1: Without keyless access system *2: With wireless charger
D3	10 A	Not used	B
D4	5 A* 1	Rear window wiper motor	*1: With keyless access system *2: Without keyless access
	10 A* 2	PCM* 4,	

Fuse Number	Amps	Component (s) or Circuit (s) Protected	Feature
		TCM* 3	system *3: 1.5 L engine *4: 2.4 L engine
D5	10 A	Automatic dimming inside mirror, Brake light relay circuit (built into the relay circuit board), BSI radar units* 1* 7, Electric brake booster, Front seat heater control unit* 2* 7, Left rear seat heater switch* 3* 7, Millimeter wave radar* 4* 7, Multipurpose camera unit* 4* 7, Power seat control unit* 5, RDM switch* 6* 7, Right rear seat heater switch* 3* 7, Rear seat heater control unit* 3* 7	*1: With BSI *2: With front seat heater *3: With rear seat heater *4: With ACC *5: With DPMS *6: With RDM *7: Without auto idle stop system
D6	10 A	Front passenger's airbag cutoff indicator, Front passenger's airbag ON/OFF indicator	B
D7	10 A	ANC/active sound control unit, Audio unit* 2* 3, Audio unit (Via reverse relay circuit (built into the under-dash fuse/relay box))* 2* 3, Audio-navigation unit* 1, Audio-navigation unit (Via reverse relay circuit (built into the under-dash fuse/relay box))* 1, Automatic dimming inside mirror (Via reverse relay circuit (built into the under-dash fuse/relay box)), Body control module (Via reverse relay circuit (built into the under-dash fuse/relay box)), CAN gateway* 4, DC-DC converter IG1 relay 1* 8, Electrical compass unit* 5, Gauge control module* 9, Left back-up light (Via reverse relay circuit (built into the under-dash fuse/relay box)), Parking and back-up sensor control unit (Via parking and back-up sensor switch)* 10, Parking and back-up sensor control unit* 9* 10, Parking and back-up sensor switch* 10, Power tailgate control unit* 6, Real time AWD control unit* 7* 9, Relay control module, Reverse relay circuit (built into the under-dash fuse/relay box), Right back-up light (Via reverse relay circuit (built into the under-dash fuse/relay box)), Shift lock solenoid	*1: With navigation *2: Without navigation *3: Display audio type *4: With CAN gateway *5: With electric compass *6: With power tailgate *7: AWD *8: With auto idle stop system *9: Without auto idle stop system *10: With parking and back-up sensor control unit
D8	15 A	Body control module,	*1: With keyless access system

Fuse Number	Amps	Component (s) or Circuit (s) Protected	Feature
		Electric steering lock* 1* 3, Fuel pump (via PGM-FI main relay 2), Immobilizer-keyless control unit* 2, No. D11 fuse in the under-dash fuse/relay box, PCM* 4	*2: Without keyless access system *3: With electric steering lock *4: 2.4 L engine
D9	10 A	A/C compressor clutch relay, Climate control panel, Climate control unit, Front blower motor relay, Front seat heater relay circuit (built into the under-dash fuse/relay box), Heated steering wheel relay* 1, Heated windshield wiper area relay* 2, Power mirror switch, Power window master switch, Radiator fan relay, Rear window defogger relay, Rear seat heater relay* 3	*1: With heated steering wheel *2: With heated windshield wiper area *3: With rear seat heater
D10	20 A	Console accessory power socket (via console accessory power socket relay)	B
D11*	5 A	PCM	*: 1.5 L engine
D12	10 A	Front passenger's door lock actuator, Right rear door lock actuator	B
D13	10 A	Left rear door lock actuator	B
D14	20 A	Left rear power window motor (via left rear power window switch)	B
D15	20 A	Front passenger's power window switch	B
D16	20 A	No. D12, No. D25, and No. D38 fuses in the under-dash fuse/relay box (via power door lock relay circuit (LOCK)), No. D13 and No. D26 fuses in the under-dash fuse/relay box (via power door lock relay circuit (UNLOCK)), No. D39 fuse in the under-dash fuse/relay box (via power door lock relay circuit (DR UNLOCK)), Power door lock relay circuit (DR UNLOCK),	B

Fuse Number	Amps	Component (s) or Circuit (s) Protected	Feature
		Power door lock relay circuit (LOCK), Power door lock relay circuit (UNLOCK), Tailgate release actuator (via tailgate release actuator relay circuit (built into the under-dash fuse/relay box)), Tailgate release actuator relay circuit	
D17	10 A* 3	PCM* 2, TCM* 1	*1: 1.5 L engine *2: 2.4 L engine *3: With keyless access system *4: Without keyless access system
	5 A* 4	Rear window wiper motor	
D18	10 A	Via power lumbar support switch: Power lumbar support motor A, Power lumbar support motor B	B
D19	20 A	Moonroof motor-control unit* 1, Panoramic glass roof motor-control unit* 2	*1: With moonroof *2: With panoramic glass roof
D20	10 A	Starter cut relay 1 circuit (built into the relay circuit board), Starter cut relay 2 circuit (built into the relay circuit board)	B
D21	10 A	ACC cut relay* 1, CMP sensor A* 3, DC-DC converter* 4, EVAP canister purge valve* 3, IG2 cut relay* 1, MAF sensor* 3, PCM (via brake pedal position switch), Secondary HO2S, Turbocharger bypass control solenoid valve* 2	*1: Without keyless access system *2: 1.5 L engine *3: 2.4 L engine *4: With auto idle stop system
D22	10 A	Body control module	B
D23	10 A	Hands free access power tailgate control unit/sensor*, Heated steering wheel control unit (via heated steering wheel relay and cable reel)	*: With hands free access power tailgate
D24	5 A	Audio remote-HFL switch (via cable reel)*, Electric brake booster	*: With multi-information display
D25	10 A	Driver's door lock actuator	B
D26	10 A	Front passenger's door lock actuator,	B

Fuse Number	Amps	Component (s) or Circuit (s) Protected	Feature
		Right rear door lock actuator	
D27	20 A	Right rear power window motor (via right rear power window switch)	B
D28	20 A	Power window master switch	B
D29*	20 A	Front accessory power socket (via front accessory power socket relay)	*: With front accessory power socket
D30	10 A	Body control module* 1, Electric steering lock* 1* 2, Engine start/stop switch* 1	*1: With keyless access system *2: With electric steering lock *3: 2.4 L engine
	5 A	PCM* 3	
D31	20 A	Power seat control unit* 1 Via driver's power seat adjustment switch* 2: Recline motor, UP-DOWN motor	*1: With DPMS *2: Without DPMS
D32	20 A	Front seat heater control unit (via front seat heater relay circuit (built into the under-dash fuse/relay box))	B
D33	20 A	Power seat control unit* 1 Via driver's power seat adjustment switch* 2: Front UP-DOWN motor, Slide motor	*1: With DPMS *2: Without DPMS
D34	10 A	DC-DC converter IG1 relay 2* 1, EPS control unit* 2, Parking and back-up sensor switch* 3, Parking and back-up sensor control unit (Via parking and back-up sensor switch)* 3, VSA modulator-control unit* 2	*1: With auto idle stop system *2: Without auto idle stop system *3: With parking and back-up sensor control unit
D35	10 A	SRS unit	B
D36	20 A	Not used	B
D37	15 A	Not used	B
D38	10 A	Left rear door lock actuator	B
D39	10 A	Driver's door lock actuator	B

Auxiliary Under-Dash Fuse Box

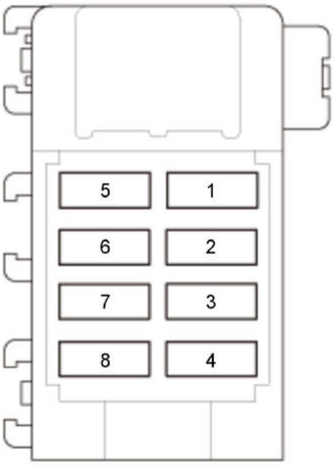

[Fig. 6: Auxiliary Under-Dash Fuse Box Component Locations](#)
Courtesy of HONDA, U.S.A., INC.

Auxiliary Under-Dash Fuse Box Legend

Fuse Number	Amps	Component (s) or Circuit (s) Protected	Feature
E1	20 A	Power tailgate control unit	B
E2	20 A	Slide motor (via front passenger's power seat adjustment switch)	B
E3	20 A	Recline motor (via front passenger's power seat adjustment switch)	B
E4*	20 A	Power sunshade motor-control unit	*: With panoramic glass roof
E5	20 A	Stereo amplifier* 1* 2	*1: With auto idle stop system *2: With stereo amplifier
E6	---	Not used	B
E7	---	Not used	B
E8*	20 A	Cargo area accessory power socket (via cargo area accessory power socket relay)	*: With cargo area accessory power socket

Auxiliary Under-Dash Fuse/Relay Box (with Auto Idle Stop System)

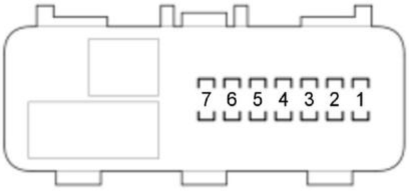

Fig. 7: Auxiliary Under-Dash Fuse/Relay Box (with Auto Idle Stop System) Component Locations
Courtesy of HONDA, U.S.A., INC.

Auxiliary Under-Dash Fuse/Relay Box (with Auto Idle Stop System)

Fuse Number	Amps	Component (s) or Circuit (s) Protected	Feature
F1	5 A	Audio unit (Via DC-DC converter ACC relay)* 2, Audio-navigation unit (Via DC-DC converter ACC relay)* 1	*1: With navigation *2: Without navigation
F2	15 A	No. B27 fuse in the under-hood fuse/relay box	B
F3	7.5 A	Auxiliary transmission fluid pump relay, Auxiliary transmission fluid pump (via auxiliary transmission fluid pump relay)	B
F4	5 A	VSA modulator-control unit	B
F5	7.5 A	EPS control unit, Front seat heater control unit* 1, Left rear seat heater switch* 2, Rear seat heater control unit (Via left second row seat heater switch)* 2, Rear seat heater control unit (Via right second row seat heater switch)* 2, Rear seat heater control unit* 2, Right rear seat heater switch* 2, VSA modulator-control unit	*1: With front seat heater *2: With rear seat heater
F6	5 A	Gauge control module, Real time AWD control unit*	*: AWD
F7	7.5 A	BSI radar units* 1, Millimeter wave radar* 2, Multipurpose camera unit* 2, Multipurpose camera unit (Via RDM switch)* 2, Parking and back-up sensor control unit* 3, RDM switch* 2	*1: With BSI *2: With millimeter wave radar *3: With parking and back-up sensor control unit

CIRCUIT DIAGRAM

ACCESSORY POWER SOCKETS CIRCUIT DIAGRAM

With keyless access system

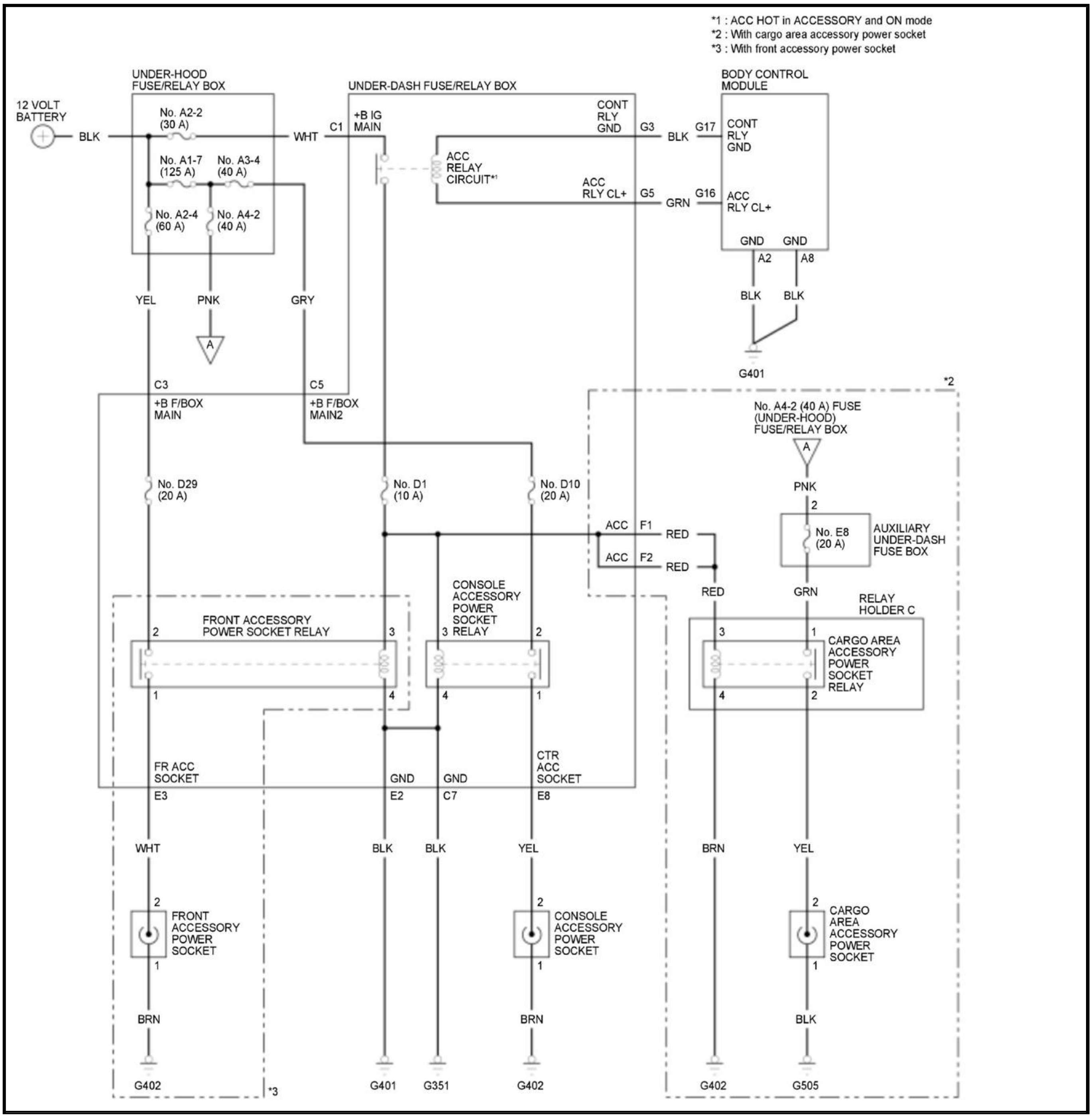
*1 : ACC HOT in ACCESSORY and ON mode
*2 : With cargo area accessory power socket
*3 : With front accessory power socket
12 VOLT BATTERY
BLK
UNDER-HOOD FUSE/RELAY BOX
No. A2-2 (30 A)
No. A1-7 (125 A)
No. A3-4 (40 A)
No. A2-4 (60 A)
No. A4-2 (40 A)
WHT
C1
UNDER-DASH FUSE/RELAY BOX
+B IG MAIN
ACC RELAY CIRCUIT*1
CONT RLY GND
G3
BLK
G17
ACC RLY CL+
G5
GRN
G16
BODY CONTROL MODULE
CONT RLY GND
ACC RLY CL+
GND
GND
A2
A8
BLK
BLK
G401
YEL
PNK
GRY
A
C3
+B F/BOX MAIN
C5
+B F/BOX MAIN2
No. D29 (20 A)
No. D1 (10 A)
No. D10 (20 A)
ACC
F1
RED
ACC
F2
RED
*2
No. A4-2 (40 A) FUSE (UNDER-HOOD) FUSE/RELAY BOX
A
PNK
2
No. E8 (20 A)
AUXILIARY UNDER-DASH FUSE BOX
RED
GRN
RELAY HOLDER C
FRONT ACCESSORY POWER SOCKET RELAY
2
3
1
4
CONSOLE ACCESSORY POWER SOCKET RELAY
3
2
4
1
3
1
4
2
CARGO AREA ACCESSORY POWER SOCKET RELAY
FR ACC SOCKET
GND
GND
CTR ACC SOCKET
E3
E2
C7
E8
WHT
BLK
BLK
YEL
BRN
YEL
2
FRONT ACCESSORY POWER SOCKET
1
2
CONSOLE ACCESSORY POWER SOCKET
1
2
CARGO AREA ACCESSORY POWER SOCKET
1
BRN
BRN
BLK
G402
*3
G401
G351
G402
G402
G505

Without keyless access system

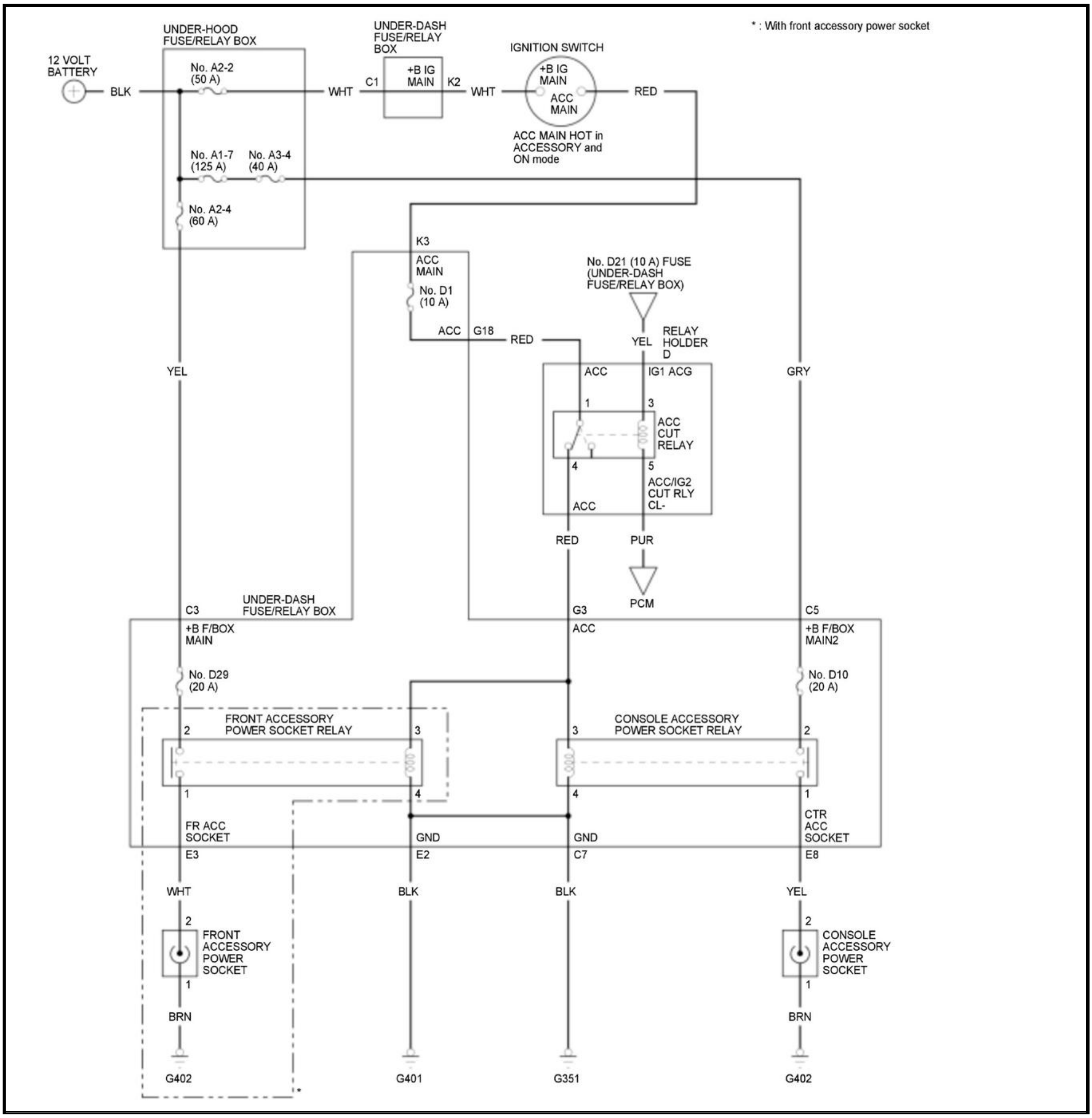
* : With front accessory power socket
12 VOLT BATTERY
BLK
UNDER-HOOD FUSE/RELAY BOX
No. A2-2 (50 A)
No. A1-7 (125 A)
No. A3-4 (40 A)
No. A2-4 (60 A)
WHT
UNDER-DASH FUSE/RELAY BOX
C1
+B IG MAIN
K2
WHT
IGNITION SWITCH
+B IG MAIN
ACC MAIN
RED
ACC MAIN HOT in ACCESSORY and ON mode
K3
ACC MAIN
No. D1 (10 A)
ACC
G18
RED
No. D21 (10 A) FUSE (UNDER-DASH FUSE/RELAY BOX)
YEL
RELAY HOLDER D
ACC
IG1 ACG
1
3
ACC CUT RELAY
4
5
ACC/IG2 CUT RLY CL-
ACC
RED
PUR
PCM
YEL
GRY
C3
UNDER-DASH FUSE/RELAY BOX
+B F/BOX MAIN
No. D29 (20 A)
G3
ACC
C5
+B F/BOX MAIN2
No. D10 (20 A)
FRONT ACCESSORY POWER SOCKET RELAY
2
3
1
4
CONSOLE ACCESSORY POWER SOCKET RELAY
3
2
4
1
FR ACC SOCKET
E3
GND
E2
GND
C7
CTR ACC SOCKET
E8
WHT
BLK
BLK
YEL
2
FRONT ACCESSORY POWER SOCKET
1
2
CONSOLE ACCESSORY POWER SOCKET
1
BRN
BRN
G402
G401
G351
G402
*

IGNITION SWITCH CIRCUIT DIAGRAM

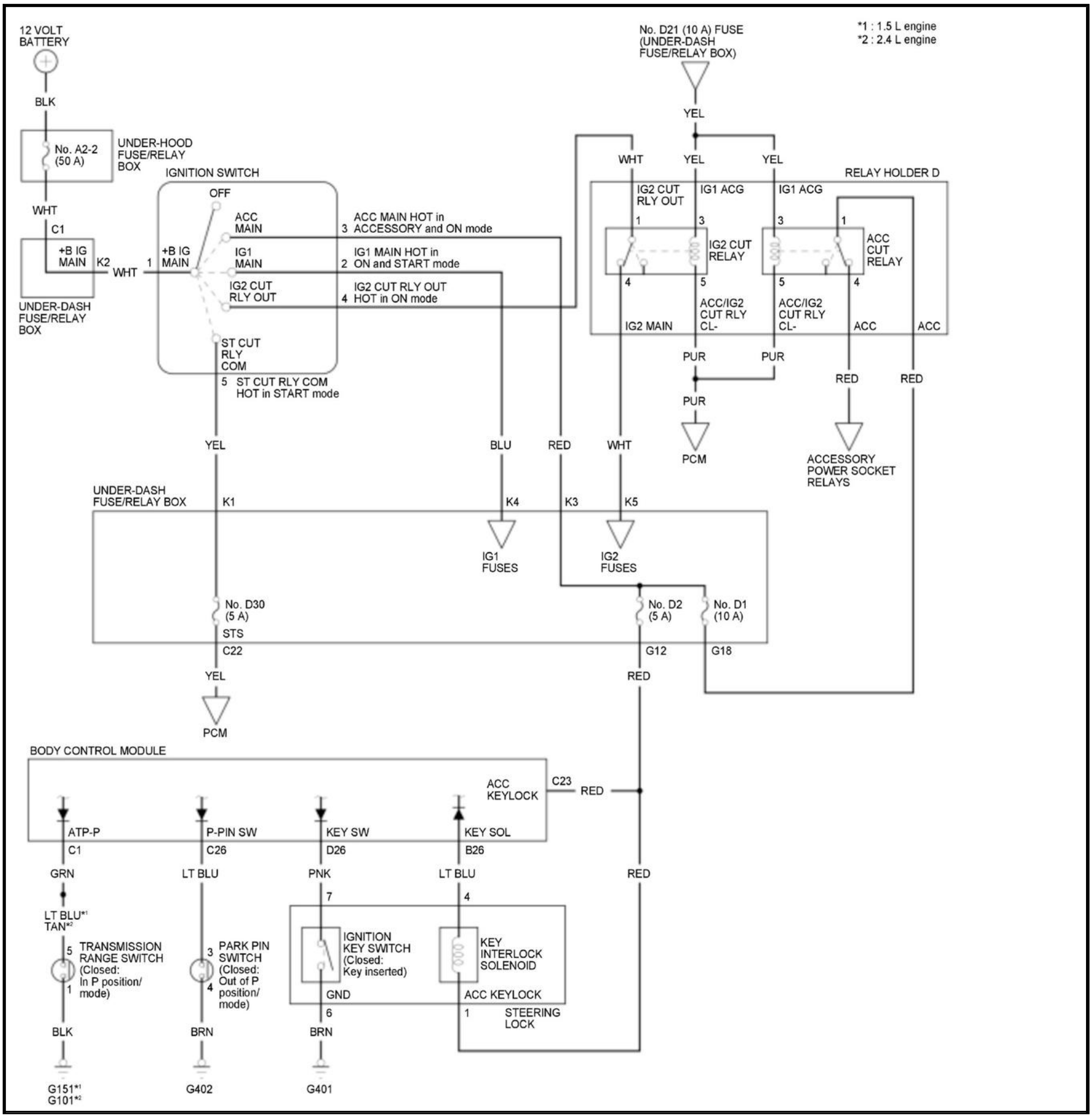
12 VOLT BATTERY
BLK
No. A2-2 (50 A)
UNDER-HOOD FUSE/RELAY BOX
WHT
C1
+B IG MAIN
K2
WHT
UNDER-DASH FUSE/RELAY BOX
IGNITION SWITCH
1
+B IG MAIN
OFF
ACC MAIN
IG1 MAIN
IG2 CUT RLY OUT
ST CUT RLY COM
ACC MAIN HOT in
3 ACCESSORY and ON mode
IG1 MAIN HOT in
2 ON and START mode
IG2 CUT RLY OUT
4 HOT in ON mode
5 ST CUT RLY COM HOT in START mode
No. D21 (10 A) FUSE (UNDER-DASH FUSE/RELAY BOX)
*1 : 1.5 L engine
*2 : 2.4 L engine
YEL
WHT
YEL
YEL
RELAY HOLDER D
IG2 CUT RLY OUT
IG1 ACG
IG1 ACG
1
3
3
1
IG2 CUT RELAY
ACC CUT RELAY
4
5
5
4
IG2 MAIN
ACC/IG2 CUT RLY CL-
ACC/IG2 CUT RLY CL-
ACC
ACC
PUR
PUR
PUR
PCM
RED
RED
ACCESSORY POWER SOCKET RELAYS
YEL
BLU
RED
WHT
UNDER-DASH FUSE/RELAY BOX
K1
K4
K3
K5
IG1 FUSES
IG2 FUSES
No. D30 (5 A)
STS
No. D2 (5 A)
No. D1 (10 A)
C22
G12
G18
YEL
PCM
RED
BODY CONTROL MODULE
ACC KEYLOCK
C23
RED
ATP-P
P-PIN SW
KEY SW
KEY SOL
C1
C26
D26
B26
GRN
LT BLU
PNK
LT BLU
RED
LT BLU*1
TAN*2
5
TRANSMISSION RANGE SWITCH (Closed: In P position/ mode)
1
3
PARK PIN SWITCH (Closed: Out of P position/ mode)
4
7
4
IGNITION KEY SWITCH (Closed: Key inserted)
KEY INTERLOCK SOLENOID
GND
ACC KEYLOCK
6
1
STEERING LOCK
BLK
BRN
BRN
G151*1
G101*2
G402
G401

WIRELESS CHARGER CIRCUIT DIAGRAM (2020 2021)

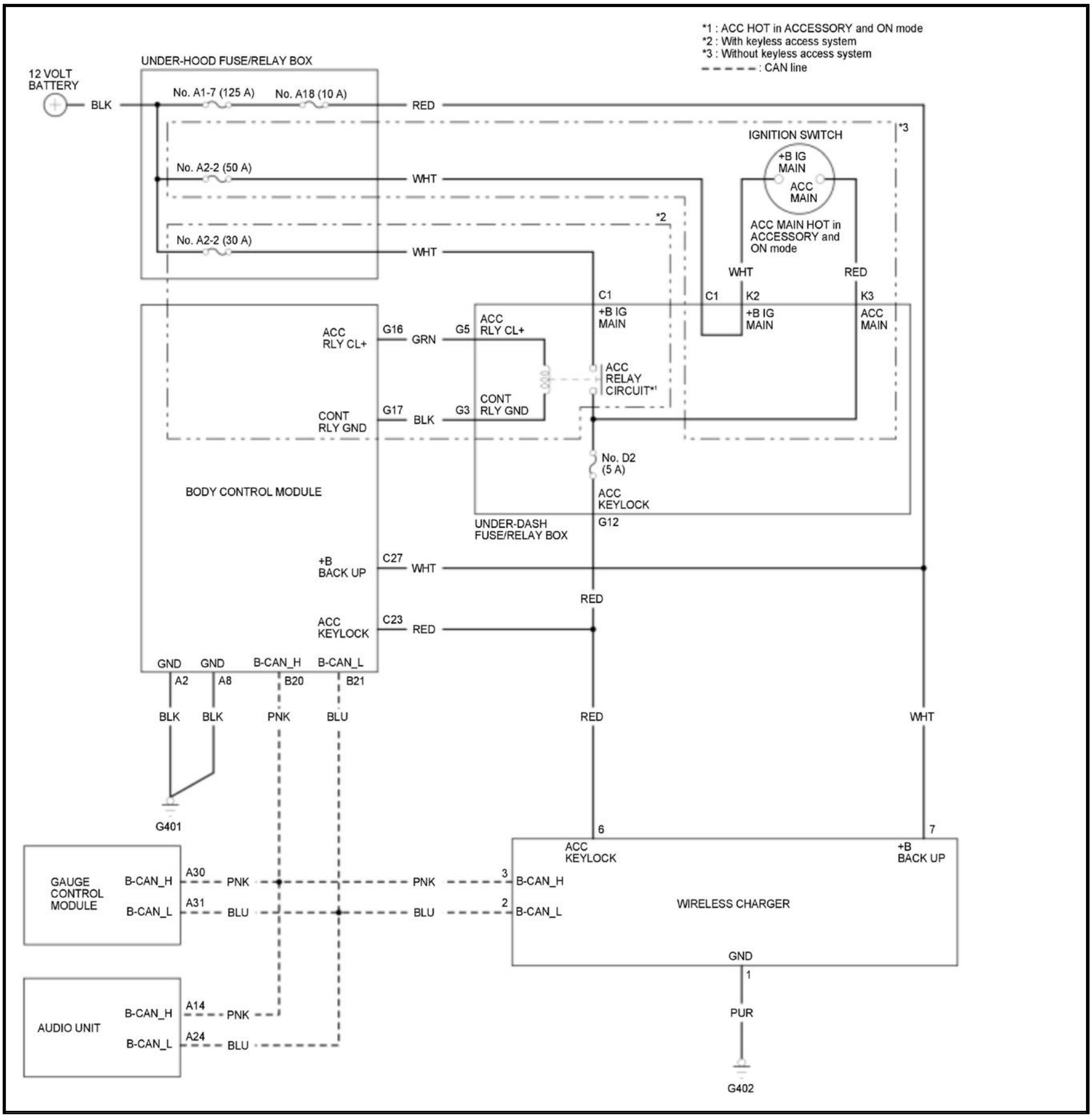
*1 : ACC HOT in ACCESSORY and ON mode
*2 : With keyless access system
*3 : Without keyless access system
- - - - : CAN line
12 VOLT BATTERY
BLK
UNDER-HOOD FUSE/RELAY BOX
No. A1-7 (125 A)
No. A18 (10 A)
RED
No. A2-2 (50 A)
WHT
No. A2-2 (30 A)
WHT
*2
*3
IGNITION SWITCH
+B IG MAIN
ACC MAIN
ACC MAIN HOT in ACCESSORY and ON mode
WHT
RED
C1
C1
K2
K3
+B IG MAIN
+B IG MAIN
ACC MAIN
ACC RLY CL+
G16
GRN
G5
ACC RLY CL+
ACC RELAY CIRCUIT*1
CONT RLY GND
G17
BLK
G3
CONT RLY GND
No. D2 (5 A)
ACC KEYLOCK
G12
UNDER-DASH FUSE/RELAY BOX
BODY CONTROL MODULE
+B BACK UP
C27
WHT
RED
ACC KEYLOCK
C23
RED
GND
GND
B-CAN_H
B-CAN_L
A2
A8
B20
B21
BLK
BLK
PNK
BLU
RED
WHT
G401
6
7
ACC KEYLOCK
+B BACK UP
GAUGE CONTROL MODULE
B-CAN_H
B-CAN_L
A30
A31
PNK
BLU
PNK
BLU
3
2
B-CAN_H
B-CAN_L
WIRELESS CHARGER
GND
1
PUR
G402
AUDIO UNIT
B-CAN_H
B-CAN_L
A14
A24
PNK
BLU

GROUND TO COMPONENTS INDEX

GROUND TO COMPONENTS INDEX

Ground	Component (s) or circuit (s) grounded	Feature
G1	12 volt battery	B
G2	Engine mount bracket	B
G3	Transmission mount bracket	B
G101	CKP sensor* 2, CMP sensor A* 2, CMP sensor B* 2, Ignition coils, PCM (three wires)* 1,	*1: 1.5 L engine *2: 2.4 L engine

Ground	Component (s) or circuit (s) grounded	Feature
	PCM (four wires)* 2, Rocker arm oil control solenoid* 2, Shielding between the PCM and the high pressure fuel pump* 2, Shielding between the PCM and the knock sensor* 2, Shielding between the PCM and the injectors* 2, Transmission range switch* 2, VTC oil control solenoid valve* 2, VTC oil control solenoid valve A* 1, VTC oil control solenoid valve B* 1	
G102	PCM (three wires)* 1, PCM (two wires)* 2, Shielding between the PCM and the A/F sensor (sensor 1)* 1, Shielding between the PCM and the high pressure fuel pump* 1, Shielding between the PCM and the knock sensor* 1, Shielding between the PCM and the injectors* 1	*1: 1.5 L engine *2: 2.4 L engine
G151* 1	Auxiliary transmission fluid pump* 2, TCM (two wires), Transmission range switch	*1: 1.5 L engine *2: With auto idle stop system
G161	CVT drive pulley pressure control solenoid valve, CVT driven pulley pressure control solenoid valve	B
G162	CVT clutch pressure control solenoid valve, CVT lock-up clutch control solenoid valve	B
G201	VSA modulator-control unit (two wires)	B
G202	EPS control unit	B
G251	Brake fluid level switch, Hood latch switch, Left front fog light, Millimeter wave radar* 1, Power transistor, Relay control module (two wires), Right front fog light, Right headlight (high beam)* 2,	*1: With ACC *2: HIGH/LOW beam (HALOGEN type) *3: With headlight manual leveling system *4: With shutter grille *5: With washer fluid level switch *6:'20-21

Ground	Component (s) or circuit (s) grounded	Feature
	Right headlight (LED control unit), Right headlight (low beam)* 2, Right headlight leveling motor* 3, Shielding between the PCM and the EVAP leak check module* 6, Shutter grille (lower)* 4, Washer fluid level switch* 5	

Ground	Component (s) or circuit (s) grounded	Feature
G351	A/C condenser fan motor, Console accessory power socket relay, Electric brake booster, Fan control relay, Front accessory power socket relay, Front blower motor relay, Front seat heater relay circuit (built into the under-dash fuse/relay box)* 1, Heated windshield wiper area (two wires)* 2, Horn (HIGH), Horn (LOW), Left headlight (high beam)* 3, Left headlight (LED control unit), Left headlight (low beam)* 3, Power door lock relay circuit (DR UNLOCK) (built into the under-dash fuse/relay box), Power door lock relay circuit (LOCK) (built into the under-dash fuse/relay box), Power door lock relay circuit (UNLOCK) (built into the under-dash fuse/relay box), Relay control module, Shutter grille (upper)* 4, Starter solenoid diode* 5, Tailgate release actuator relay circuit (built into the under-dash fuse/relay box), Windshield wiper control unit/motor	*1: With front seat heater *2: With heated windshield wiper area *3: HIGH/LOW beam (HALOGEN type) *4: With shutter grille *5: 2.4 L engine

Ground	Component (s) or circuit (s) grounded	Feature
G352*	DC-DC converter	*: With auto idle stop system

Ground	Component (s) or circuit (s) grounded	Feature
G401	Audio remote-HFL switch* 1, Automatic dimming inside mirror, Automatic lighting/rain sensor* 2, Body control module (three wires), CAN gateway* 3, CMBS OFF switch* 4, Console accessory power socket relay, Data link connector (DLC) (two wires), Driver's door key cylinder switch, Driver's door lock knob switch, Driver's door outer handle, Driver's power window motor, Driver's vanity mirror light* 5, Driving position memory switch* 7, Electrical compass unit* 8, Electric steering lock* 9* 11, Engine start/stop switch* 9, Front accessory power socket relay* 24, Front individual map lights, Front passenger's door lock knob switch, Front passenger's power window switch, Front seat heater relay circuit (built into the under-dash fuse/relay box)* 12, Gauge control module, Heated windshield wiper area switch* 13, Heater pad* 14, HomeLink unit* 15, Horn switch, Ignition key switch* 10,	*1: With multi-information displayr *2: With automatic wipe *3: With CAN gateway *4: With CMBS *5: With driver's vanity mirror light *6: With passenger's vanity mirror light *7: With DPMS *8: With electrical compass *9: With keyless access system *10: Without keyless access system *11: With electric steering lock *12: With front seat heater *13: With heated windshield wiper area *14: With heated steering wheel *15: With HomeLink *16: With moonroof *17: With panoramic glass roof *18: With LaneWatch *19: With BSI *20: With mirror defogger *21: With ACC *22: With paddle shifter *23: With TPMS switch *24: With front accessory power socket *25: With USB port light

Ground	Component (s) or circuit (s) grounded	Feature
	Immobilizer-keyless control unit* 10, Interior light switch* 16, LaneWatch switch* 18, Left BSI alert indicator* 19, Left power mirror defogger* 20, Left side turn signal light, Moonroof motor-control unit* 16, Moonroof switch* 16, Multipurpose camera unit* 21, Panoramic glass roof motor-control unit* 17, Paddle shifter + (upshift switch)* 22, Paddle shifter - (downshift switch)* 22, Passenger's vanity mirror light* 6, Power door lock relay circuit (DR UNLOCK) (built into the under-dash fuse/relay box), Power door lock relay circuit (LOCK) (built into the under-dash fuse/relay box), Power door lock relay circuit (UNLOCK) (built into the under-dash fuse/relay box), Power mirror switch (two wires), Power sunshade switch* 17, Power window master switch (two wires), Rear individual map light* 17, Roof console module* 17, Tailgate release actuator relay circuit (built into the under-dash fuse/relay box), TPMS switch* 23, USB port light (USB port A)* 25, USB port light (USB port B)* 25, VSA OFF switch	

Ground	Component (s) or circuit (s) grounded	Feature
G402	ANC/active sound control unit, Audio unit,	*1: With automatic lighting *2: Without automatic wiper *3: Display audio type *4: With cargo area accessory

Ground	Component (s) or circuit (s) grounded	Feature
	Audio-navigation unit, Automatic lighting control unit-sensor* 1* 2, Center display unit* 3, Climate control panel (two wires), Climate control unit, Cargo area accessory power socket relay* 4, Console accessory power socket, Console box light* 14, DC-DC converter ACC relay* 11, DC-DC converter IG1 relay 1* 11, DC-DC converter IG1 relay 2* 11, ECON switch, Electric parking brake/automatic brake hold switch (two wires), Front accessory power socket* 12, Front passenger's door outer handle, Front seat heater control unit* 5, Glove box light, Hazard warning switch, Heated steering wheel relay* 6, Idle stop OFF switch* 11, Right BSI alert indicator* 7, Right power mirror defogger* 8, Right side turn signal light, Park pin switch, Stereo amplifier* 9, USB charger unit* 10, Wireless charger* 13	power socket *5: With front seat heater *6: With heated steering wheel *7: With BSI *8: With mirror defoggerr *9: With stereo amplifie *10: With USB charger unit *11: With auto idle stop system *12: With front accessory power socket *13: With wireless charger *14: With console box light
G403	SRS unit	B
G501	Driver's power seat adjustment switch (two wires)* 1* 3, Driver's seat belt buckle switch, Driver's seat position sensor, Left rear door lock knob switch* 4, Left rear power window switch, Power lumbar support switch* 5,	*1: With driver's power seat *2: With DPMS *3: Without DPMS *4: With security *5: With lumbar support

Ground	Component (s) or circuit (s) grounded	Feature
	Power seat control unit (three wires)* 2	
G502	Driver's seat cushion heater* 1, Driver's seat-back heater* 1, Front passenger's power seat adjustment switch (two wires)* 2, Front passenger's seat cushion heater* 1, Front passenger's seat-back heater* 1, Front passenger's seat belt buckle switch, Front passenger's seat sitting switch (front side), Front passenger's seat sitting switch (rear side), Right rear door lock knob switch* 3, Right rear power window switch	*1: With front seat heater *2: With front passenger's power seat *3: With security
G503	Real time AWD control unit (two wires)*, Fuel pump, Rear differential assembly (two wires)*	*: AWD
G504	EVAP leak detection module* 1, Right side BSI radar unit (two wires)* 2, Right taillight (two wires)	*1: 1.5 L engine *2: With BSI

Ground	Component (s) or circuit (s) grounded	Feature
G505	Cargo area accessory power socket* 3, Hands free access power tailgate control unit/sensor* 2* 4, High mount brake light, Keyless buzzer* 2, Left back-up light, Left inner taillight, Left rear seat cushion heater* 5, Left side BSI radar unit* 6, Left taillight (two wires), License plate light, Parking and back-up sensor control unit* 10, Power tailgate control unit* 1* 7, Power tailgate control unit (two wires)* 2* 7,	*1: Japan production *2: Except japan production *3: With cargo area accessory power socket *4: With hands free access power tailgate *5: With rear seat heater *6: With BSI *7: With power tailgate *8: Without power tailgate *9: With keyless access system *10 With parking and back-up sensor control unit

Ground	Component (s) or circuit (s) grounded	Feature
	Rear window defogger, Rear window wiper motor, Right back-up light, Right inner taillight, Right rear seat cushion heater* 5, Rear seat heater control unit* 5, Rear seat heater relay* 5, Tailgate latch switch* 8, Tailgate lock switch* 9, Tailgate outer handle switch* 8, Tailgate release actuator* 8	
G506* 1	Hands free access power tailgate control unit/sensor* 2, Keyless buzzer, Power tailgate control unit (two wires)* 3,	*1: Japan production *2: With hands free access power tailgate *3: With power tailgate
G601	Body ground (G503) (two wires)	B

LEARNING RESET CLEAR

12 VOLT BATTERY INTERNAL RESISTANCE RESET (WITH AUTO IDLE STOP SYSTEM) (2020 2021)

Procedure

NOTE:

- At every engine startup, the PCM updates and records the internal resistance of the 12 volt battery. When the average of past internal resistance (multiple memories) exceeds a threshold value, the PCM judges it as deterioration of the 12 volt battery.
- A 12 volt battery cancel or a PCM reset does not clear the recorded internal resistance values of the 12 volt battery in the PCM.
- The Idle Stop Inhibit (Battery Deterioration) can be checked by HDS.

1. 12 Volt Battery Internal Resistance - Reset

1. Make sure all electrical items (the A/C, the audio, the lights, etc.) are off.

2. Turn the vehicle to the OFF (LOCK) mode.

3. Turn the vehicle to the ACCESSORY mode.

NOTE: The internal resistance of the 12 volt battery may not be updated if the engine starts up immediately from the OFF (LOCK) mode without going through the ACCESSORY mode and ON mode.

4. Turn the vehicle to the ON mode.

5. Start the engine, and let it idle for 1 minute or more.

6. Turn the vehicle to the OFF (LOCK) mode.

7. Repeat steps 3 through 6 four times or more.

8. Check if the auto idle system is operating properly according to the conditions listed in **Auto Idle Stop System Inspection**

If the system is not operating, go to the next step.

9. **Connect the HDS to the data link connector**

10. Select the PGM-FI system with the HDS.

11. Check the Idle Stop Inhibit (Battery Deterioration) in the Data ListS.

.**NOTE:**

- Normal: Reset is complete.
- INHIBITED: **Replace the 12 volt battery** , then do this 12 volt battery internal resistance reset procedure again.

COMPONENT LOCATION INDEX

ACCESSORY POWER SOCKETS COMPONENT LOCATION INDEX

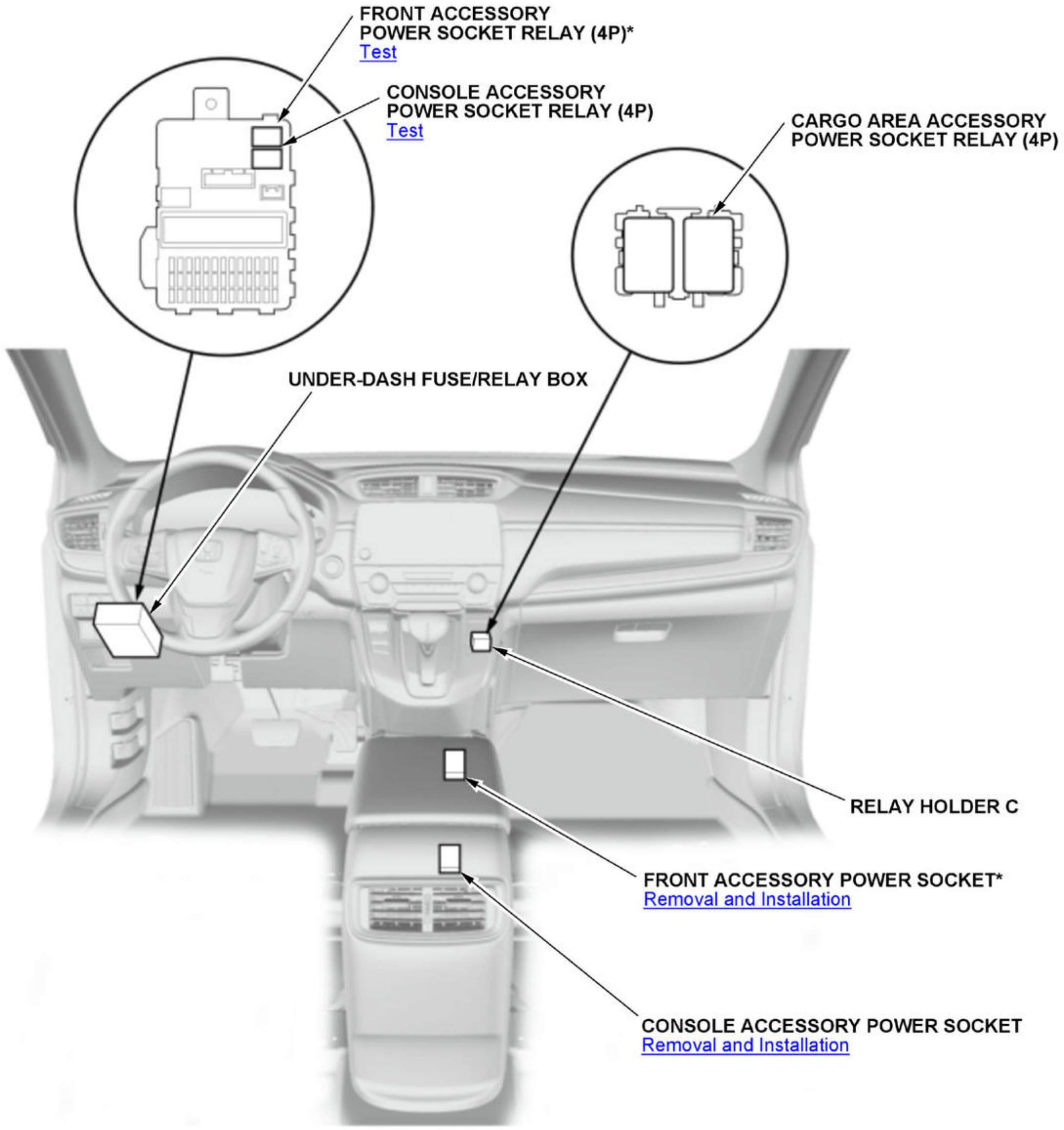
FRONT ACCESSORY
POWER SOCKET RELAY (4P)*
Test
CONSOLE ACCESSORY
POWER SOCKET RELAY (4P)
Test
CARGO AREA ACCESSORY
POWER SOCKET RELAY (4P)
UNDER-DASH FUSE/RELAY BOX
RELAY HOLDER C
FRONT ACCESSORY POWER SOCKET*
Removal and Installation
CONSOLE ACCESSORY POWER SOCKET
Removal and Installation

*: With front accessory power socket

Fig. 8: Accessory Power Sockets Component Locations (1 Of 2)
Courtesy of HONDA, U.S.A., INC.

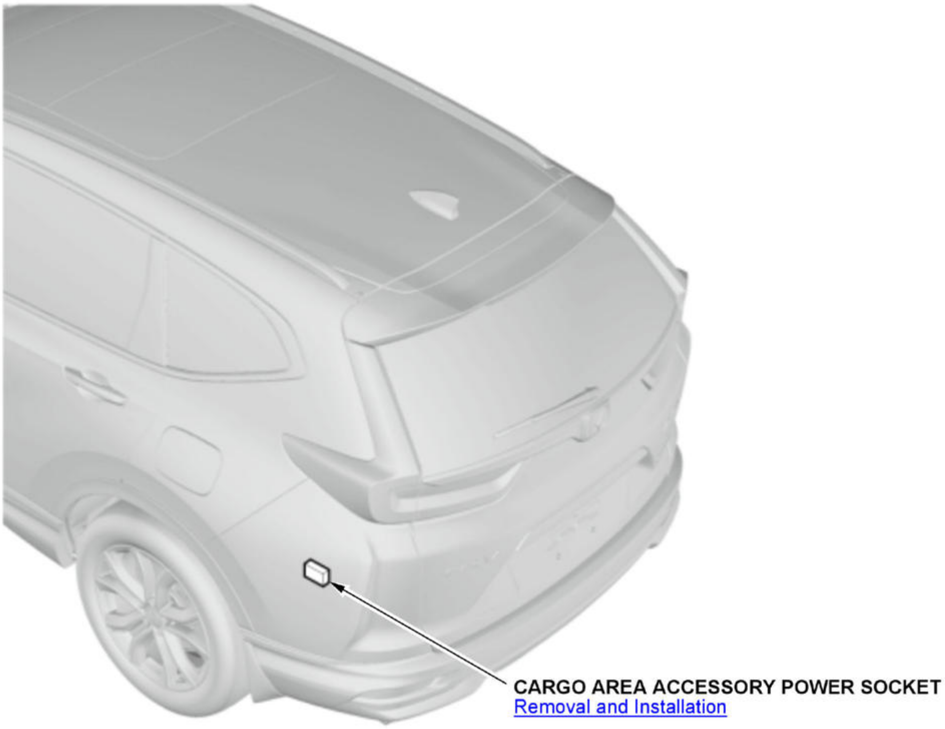
CARGO AREA ACCESSORY POWER SOCKET
Removal and Installation

Fig. 9: Accessory Power Sockets Component Locations (2 Of 2)
Courtesy of HONDA, U.S.A., INC.

IGNITION SWITCH COMPONENT LOCATION INDEX

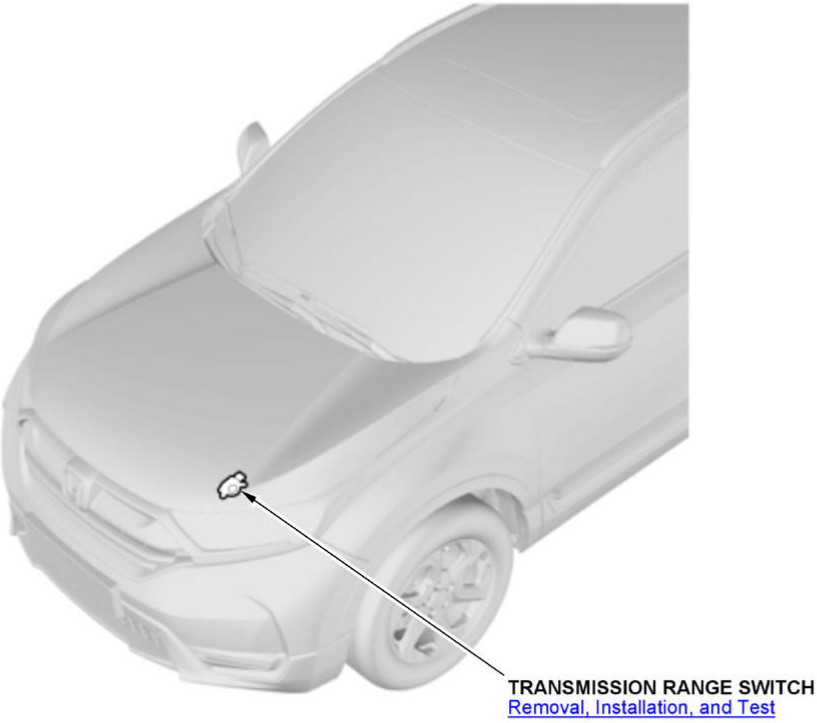
TRANSMISSION RANGE SWITCH
Removal, Installation, and Test

Fig. 10: Ignition Switch Component Locations (1 Of 2)
Courtesy of HONDA, U.S.A., INC.

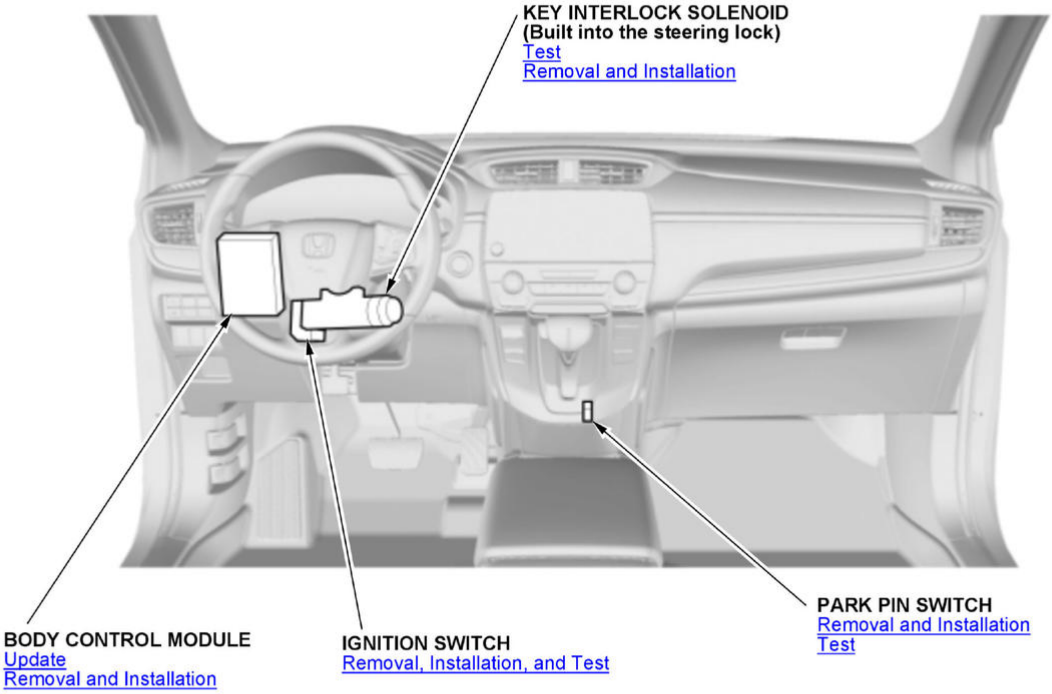
KEY INTERLOCK SOLENOID
(Built into the steering lock)
Test
Removal and Installation
BODY CONTROL MODULE
Update
Removal and Installation
IGNITION SWITCH
Removal, Installation, and Test
PARK PIN SWITCH
Removal and Installation
Test

Fig. 11: Ignition Switch Component Locations (2 Of 2)
Courtesy of HONDA, U.S.A., INC.

WIRELESS CHARGER COMPONENT LOCATION INDEX (2020 2021)

For relationships between signals in a system, refer to System Diagram.

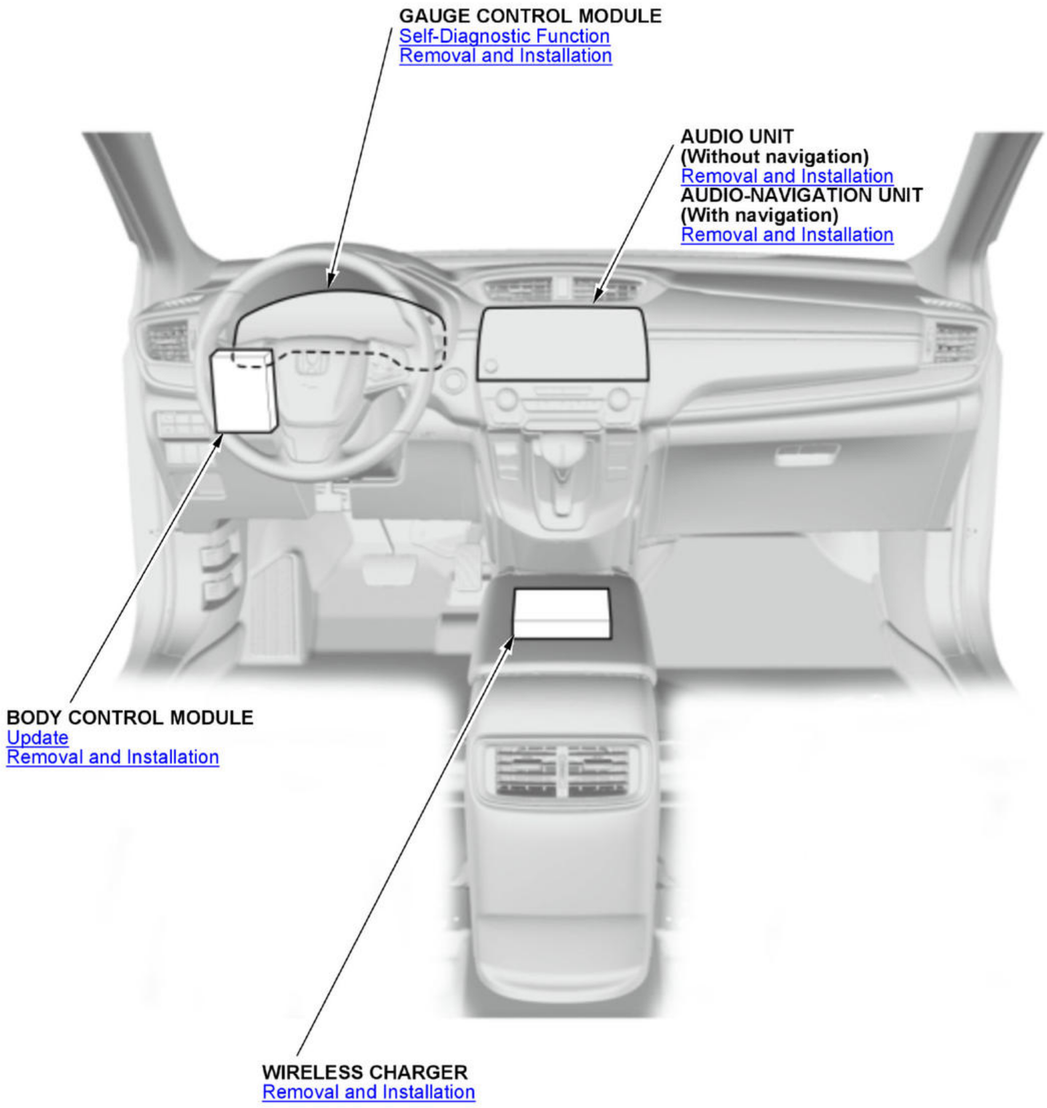
GAUGE CONTROL MODULE
Self-Diagnostic Function
Removal and Installation
AUDIO UNIT
(Without navigation)
Removal and Installation
AUDIO-NAVIGATION UNIT
(With navigation)
Removal and Installation
BODY CONTROL MODULE
Update
Removal and Installation
WIRELESS CHARGER
Removal and Installation

Fig. 12: Ignition Switch Component Locations
Courtesy of HONDA, U.S.A., INC.

FUSE RELAY BOX CONNECTOR LOCATIONS

FUSE RELAY BOX CONNECTOR LOCATIONS

Location
Under-Hood Fuse/Relay Box
Relay Circuit Board
Under-Dash Fuse/Relay Box
Auxiliary Under-Dash Fuse Box
Auxiliary Under-Dash Fuse/Relay Box (with auto idle stop system)

Under-Hood Fuse/Relay Box

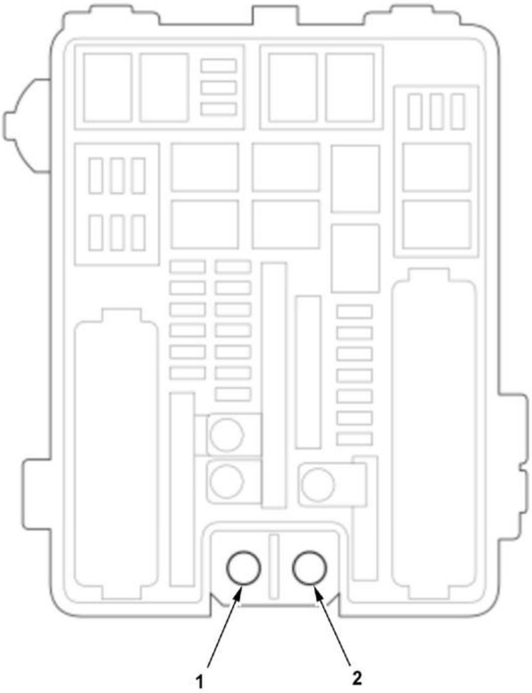

Fig. 13: Under-Hood Fuse/Relay Box Component Locations
Courtesy of HONDA, U.S.A., INC.

Under-Hood Fuse/Relay Box Legend

Socket	Ref	Terminal	Connects to	Notes
T1	1	---	Starter cable	B
T101	2	---	Engine wire harness	B

Relay Circuit Board

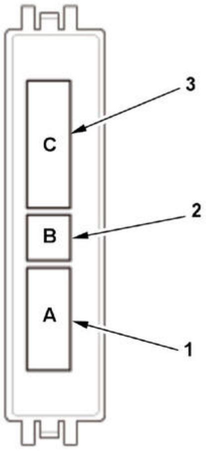

Fig. 14: Relay Circuit Board Component Locations
Courtesy of HONDA, U.S.A., INC.

Relay Circuit Board Legend

Socket	Ref	Terminal	Connects to	Notes
Relay circuit board connector A	1	8	Engine compartment wire harness	B
Relay circuit board connector B	2	6	Engine compartment wire harness	B
Relay circuit board connector C	3	18	Engine compartment wire harness	B

Under-Dash Fuse/Relay Box

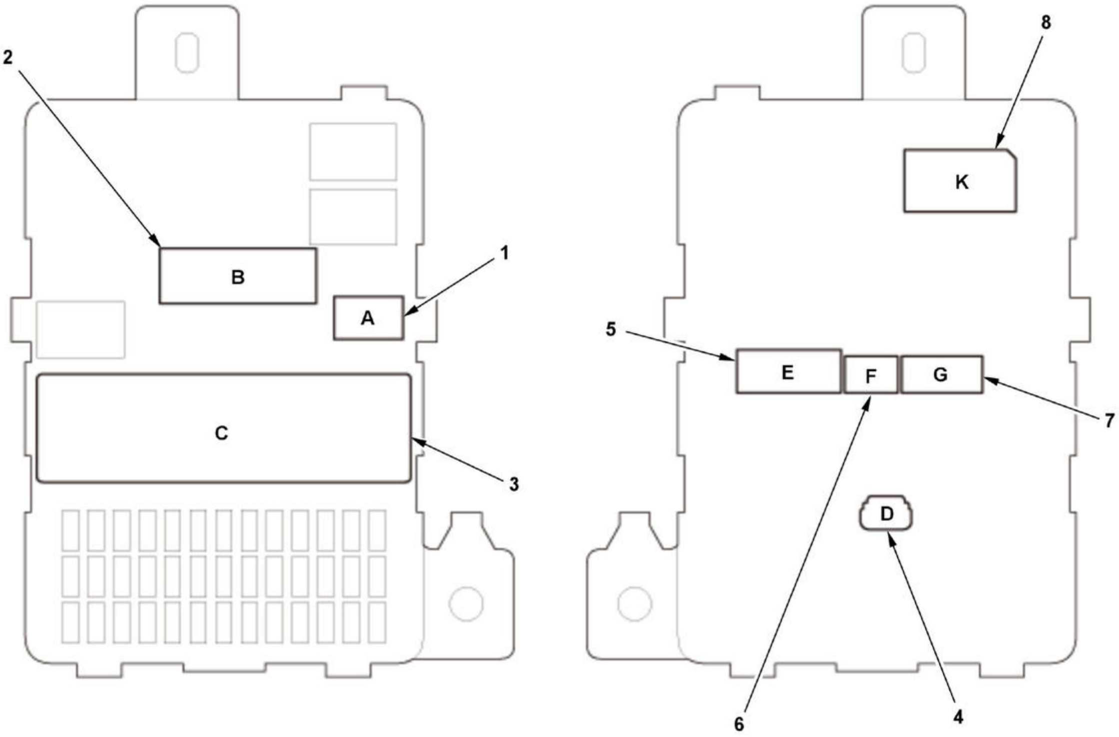

Fig. 15: Under-Dash Fuse/Relay Box Component Locations
Courtesy of HONDA, U.S.A., INC.

Under-Dash Fuse/Relay Box

Socket	Ref	Terminal	Connects to	Notes
A (optional connector)	1	4	Not used	B
B	2	22	Floor wire harness	B
C	3	27	Engine compartment wire harness	B
D	4	4	Dashboard wire harness	B
E	5	18	Dashboard wire harness	B
F	6	12	Dashboard wire harness	B
G	7	20	Dashboard wire harness	B
K	8	5	Dashboard wire harness	Without keyless access system

Auxiliary Under-Dash Fuse Box

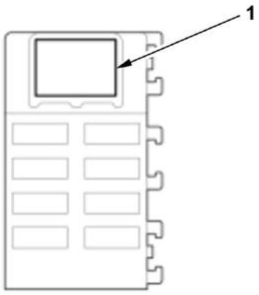

Fig. 16: Auxiliary Under-Dash Fuse Box Component Locations
Courtesy of HONDA, U.S.A., INC.

Auxiliary Under-Dash Fuse Box Legend

Socket	Ref	Terminal	Connects to	Notes
Auxiliary under-dash fuse box connector	1	2	Engine compartment wire harness	B

Auxiliary Under-Dash Fuse/Relay Box (With Auto Idle Stop System)

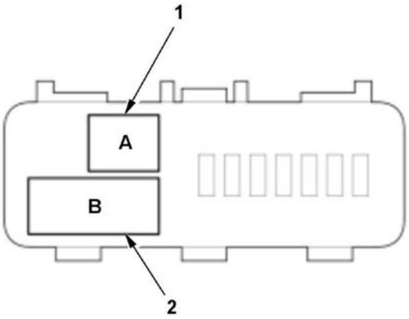

Fig. 17: Auxiliary Under-Dash Fuse/Relay Box (With Auto Idle Stop System) Component Locations
Courtesy of HONDA, U.S.A., INC.

Auxiliary Under-Dash Fuse/Relay Box (With Auto Idle Stop System) Legend

Socket	Ref	Terminal	Connects to	Notes
A	1	2	Engine compartment wire harness	B
B	2	18	Dashboard wire harness	B

RELAY BOX LOCATIONS AND CONTROL UNIT LOCATIONS

RELAY LOCATIONS

Engine Compartment - 1/2 (With Relay Holder E)

Engine Compartment - 1/2 (With Relay Holder E) Location

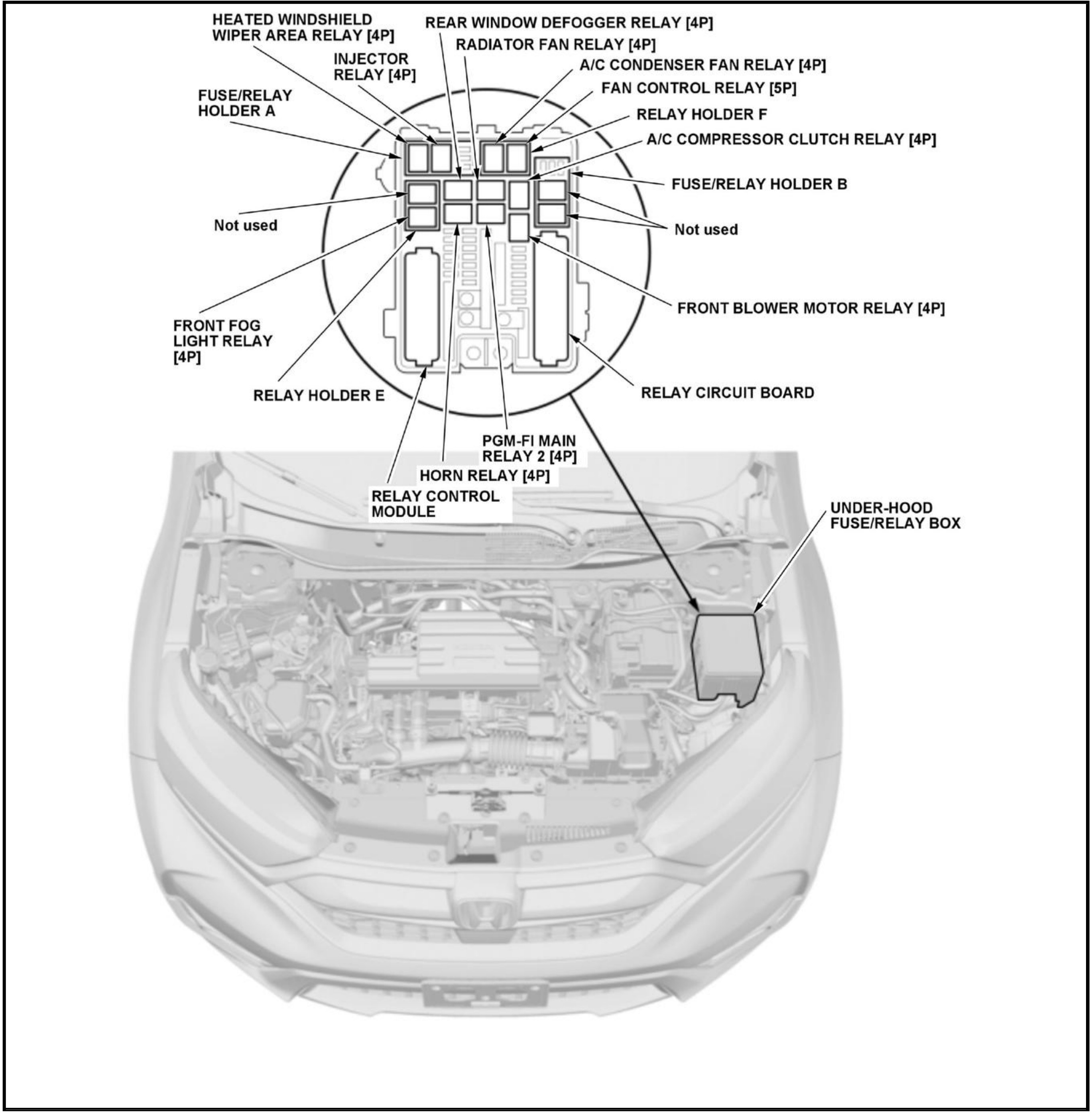
HEATED WINDSHIELD WIPER AREA RELAY [4P]
REAR WINDOW DEFOGGER RELAY [4P]
RADIATOR FAN RELAY [4P]
INJECTOR RELAY [4P]
A/C CONDENSER FAN RELAY [4P]
FAN CONTROL RELAY [5P]
FUSE/RELAY HOLDER A
RELAY HOLDER F
A/C COMPRESSOR CLUTCH RELAY [4P]
FUSE/RELAY HOLDER B
Not used
Not used
FRONT BLOWER MOTOR RELAY [4P]
FRONT FOG LIGHT RELAY [4P]
RELAY HOLDER E
RELAY CIRCUIT BOARD
PGM-FI MAIN RELAY 2 [4P]
HORN RELAY [4P]
RELAY CONTROL MODULE
UNDER-HOOD FUSE/RELAY BOX

Engine Compartment - 2/2 (With Fuse Holder A)

Engine Compartment - 2/2 (With Fuse Holder A) Location

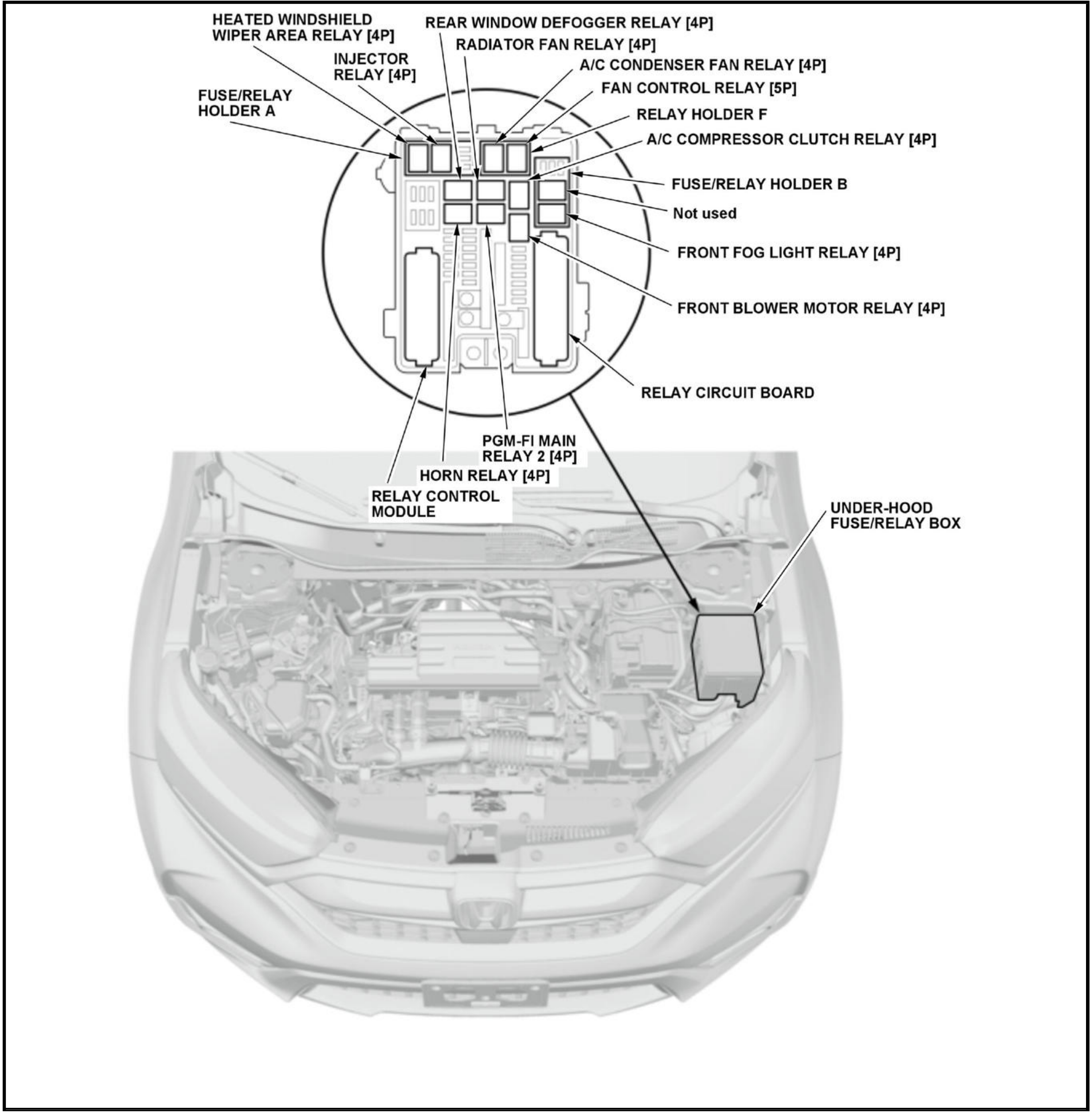
HEATED WINDSHIELD WIPER AREA RELAY [4P]
REAR WINDOW DEFOGGER RELAY [4P]
RADIATOR FAN RELAY [4P]
INJECTOR RELAY [4P]
A/C CONDENSER FAN RELAY [4P]
FAN CONTROL RELAY [5P]
FUSE/RELAY HOLDER A
RELAY HOLDER F
A/C COMPRESSOR CLUTCH RELAY [4P]
FUSE/RELAY HOLDER B
Not used
FRONT FOG LIGHT RELAY [4P]
FRONT BLOWER MOTOR RELAY [4P]
RELAY CIRCUIT BOARD
PGM-FI MAIN RELAY 2 [4P]
HORN RELAY [4P]
RELAY CONTROL MODULE
UNDER-HOOD FUSE/RELAY BOX

Dashboard

Dashboard Location

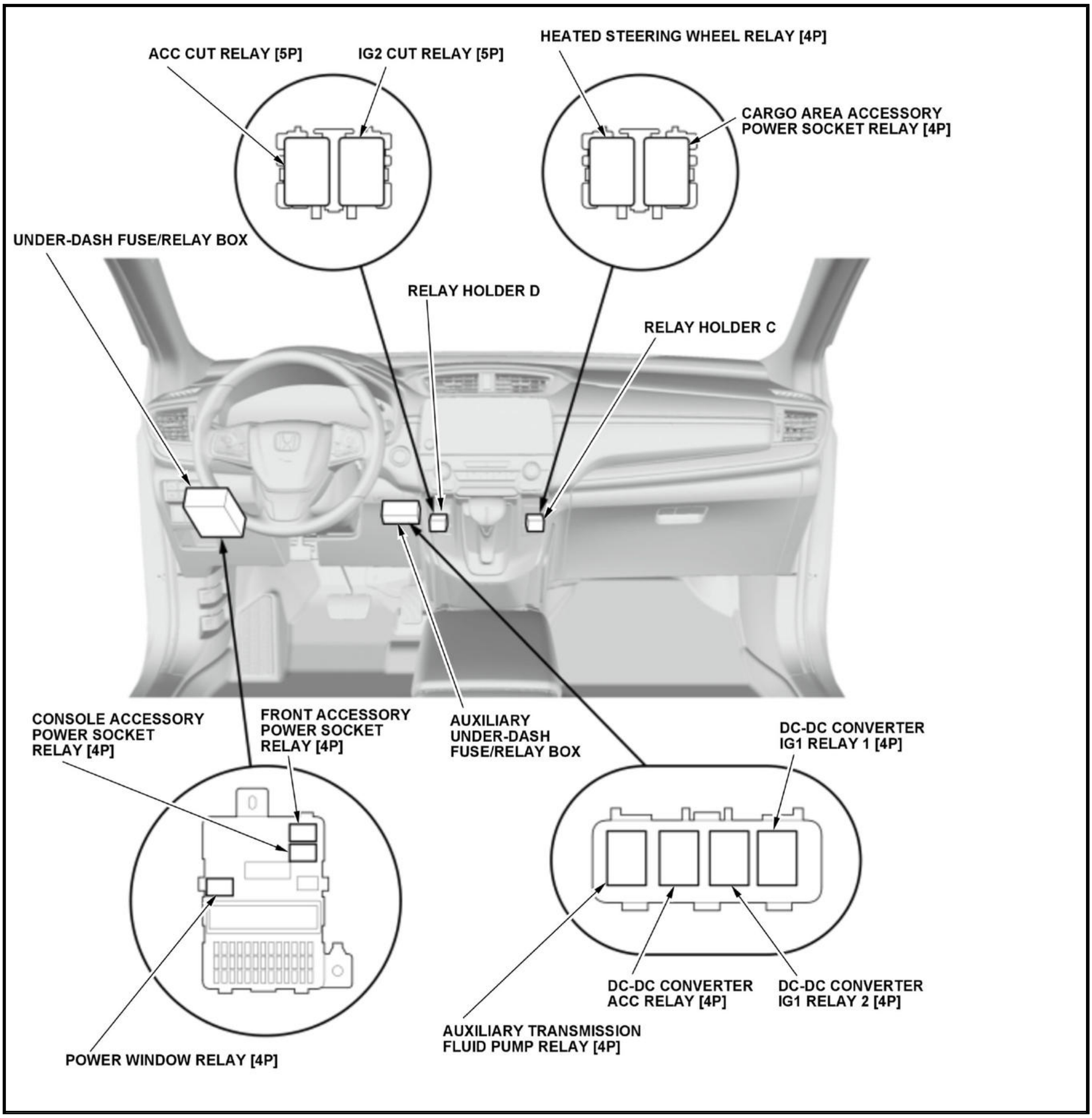

ACC CUT RELAY [5P]
IG2 CUT RELAY [5P]
HEATED STEERING WHEEL RELAY [4P]
CARGO AREA ACCESSORY POWER SOCKET RELAY [4P]
UNDER-DASH FUSE/RELAY BOX
RELAY HOLDER D
RELAY HOLDER C
CONSOLE ACCESSORY POWER SOCKET RELAY [4P]
FRONT ACCESSORY POWER SOCKET RELAY [4P]
AUXILIARY UNDER-DASH FUSE/RELAY BOX
DC-DC CONVERTER IG1 RELAY 1 [4P]
DC-DC CONVERTER ACC RELAY [4P]
DC-DC CONVERTER IG1 RELAY 2 [4P]
AUXILIARY TRANSMISSION FLUID PUMP RELAY [4P]
POWER WINDOW RELAY [4P]

Floor

Floor Location

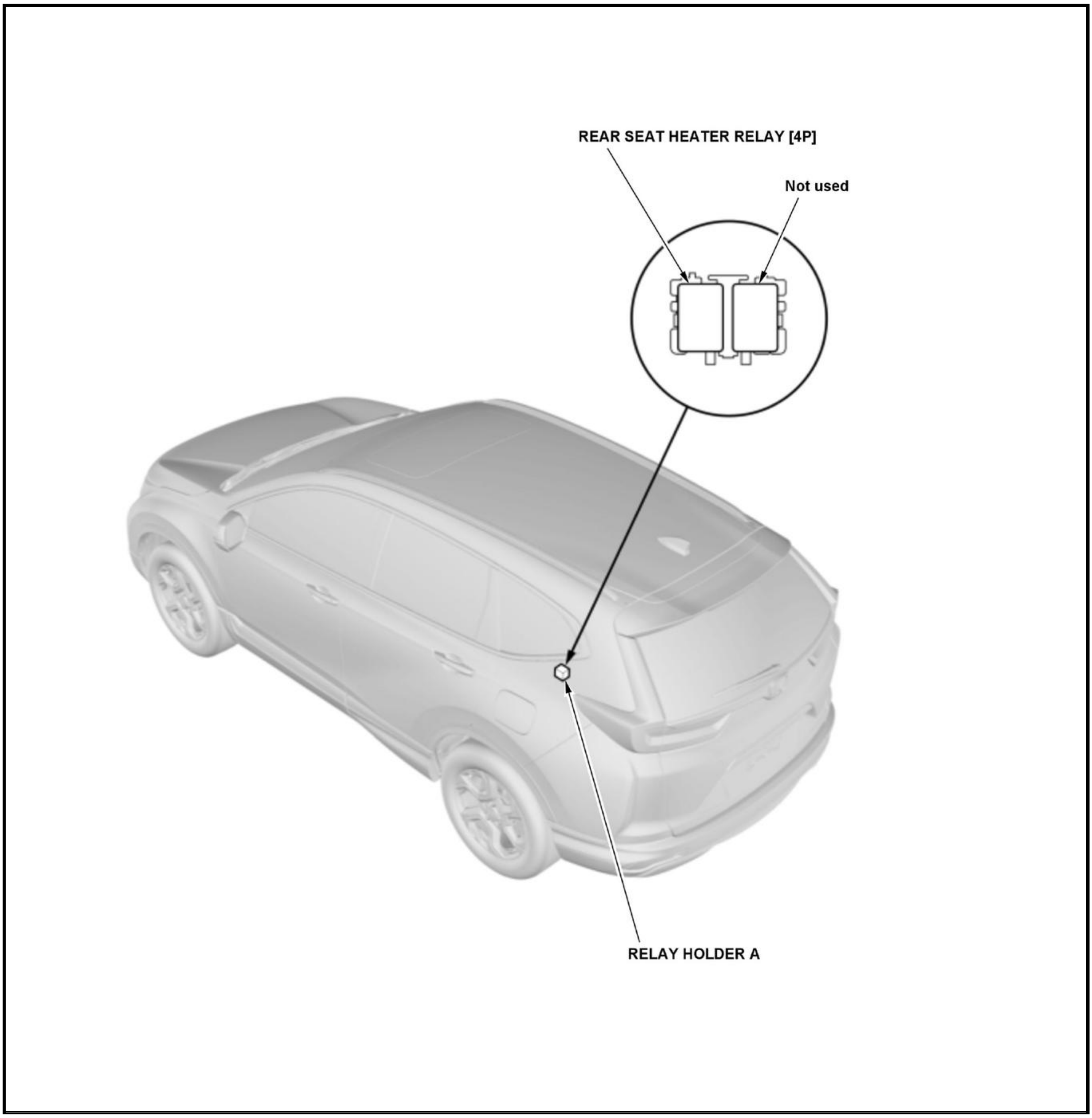
REAR SEAT HEATER RELAY [4P]
Not used
RELAY HOLDER A

SYMPTOM TROUBLESHOOTING

12 VOLT BATTERY SYMPTOM TROUBLESHOOTING - LOW OR DEAD 12 VOLT BATTERY

Low or dead 12 volt battery

NOTE:

- A 12 volt battery might be discharged under these conditions:
-
    - -

      Driving a vehicle 6 miles (10 km) or less per day.
    - -

Leaving a vehicle idling with high electrical loads such as headlight, seat heaters, wipers, rear window defogger, etc.

- When doing the following operation during the measurement of the parasitic draw, it may not be measured accurate:
-
    - -

      Approaching a vehicle with remote.
    - -

      Locking or unlocking a door.

Indication Example

- Latest History -
Duration: 22 hours
Discharge: 300 mAh
Average current: 14 mA

Data	Value
Current immediately after IG OFF	-3.82 A
Average current from immediately after IG OFF to 1 hour	-990 mA
Average current from 1 hour to 2 hours	-10 mA
Average current of 1 hour just before IG ON	-10 mA

1. PGM-FI system check

   -1. Check for PGM-FI DTCs.

   DTC (PGM-FI)

DTC Description	Confirmed DTC	Pending DTC
P0562 Charging System Low Voltage	B	B
P065A ACG No Charging Malfunction	B	B

DTC Description	Confirmed DTC	Pending DTC
P16BB ACG B Terminal Circuit Low Voltage	B	B

   Are DTCs P0562, P065A, and/or P16BB indicated?

   YES

   Go to indicated DTCs troubleshooting .

   NO

   Go to step 2.

2. Parasitic draw check

   -1. Check all the BATTERY CONSUMPTION CURRENT HISTORY with the HDS.

   Battery Consumption Current History

12 volt battery size	Threshold of the average current
55B24, L2	27.0 mA

Are all the values of average current from 1 hour to 2 hours less than the threshold?

YES

Check the 12 volt battery .

NO

Go to step 3.

3. Problem verification

-1. Turn the vehicle to the OFF (LOCK) mode.

-2. Get out of the vehicle, and close all doors, hood, and tailgate securely.

-3. Lock the doors with the keyless remote/transmitter.

-4. Make sure the individual map lights are turned off and the security alarm system is armed (with security).

-5. Wait 130 minutes or more.

-6. Turn the vehicle to the ON mode.

-7. Check the latest BATTERY CONSUMPTION CURRENT HISTORY with the HDS.

Battery Consumption Current History

12 volt battery size	Threshold of the average current
55B24, L2	27.0 mA

Is the value of average current from 1 hour to 2 hours less than the threshold?

1. **YES**

   Intermittent failure, the system is OK at this time.The possible cause could be that an incorrect parasitic draw value was recorded:

   - A switch was not turned off.
   - The vehicle's accessories were operated for a long time with the vehicle ignition was in the ACCESSORY mode.

   NO

   Go to the parasitic draw check.

WIRELESS CHARGER SYMPTOM TROUBLESHOOTING - WIRELESS CHARGER INDICATOR DOES NOT COME ON (2020 2021)

Wireless charger indicator does not come on

NOTE: Check the fuses and relays associated with the system, and check for a short in the related lines.

1. Open wire check (+B BACK UP line)

-1. Turn the vehicle to the OFF (LOCK) mode.

-2. Disconnect the following connector.

Wireless charger 7P connector

-3. Measure the voltage between test points 1 and 2.

Test condition	OFF (LOCK) modeWireless charger 7P connector: disconnected
Test point 1	**Wireless charger 7P connector No. 7**
Test point 2	Body ground

Is there battery voltage?

YES

Go to step 2.

NO

Repair an open or high resistance in the wire.

2. Open wire check (GND line)

-1. Measure the resistance between test points 1 and 2.

Test condition	OFF (LOCK) modeWireless charger 7P connector: disconnected
Test point 1	**Wireless charger 7P connector No. 1**
Test point 2	Body ground

Is there 1.0 Ω or less?

YES

Replace the wireless charger .

NO

Repair an open or high resistance in the ground wire or poor ground (G402).

SYMPTOM TROUBLESHOOTING INDEX

WIRELESS CHARGER SYMPTOM TROUBLESHOOTING INDEX (2020 2021)

Symptom	Diagnostic procedure	Check for
Wireless charger indicator blinks (green and amber)	Check the wireless charger	- Foreign matters between the wireless charger and electronic device - Misalignment of the electronic device
Wireless charger indicator blinks (amber)	Check for DTCs with the HDS; if a DTC is indicated, troubleshoot the DTC first.	Wireless charger
Wireless charger indicator does not come on (green and amber)	Symptom troubleshooting	- Open in +B BACK UP wire - Open in GND wire or poor ground (G402) - Wireless charger

CONNECTOR AND HARNESS LOCATIONS

WIRE HARNESS AND GROUND LOCATIONS

Engine Compartment - 1/6 (With Auto Idle Stop System)

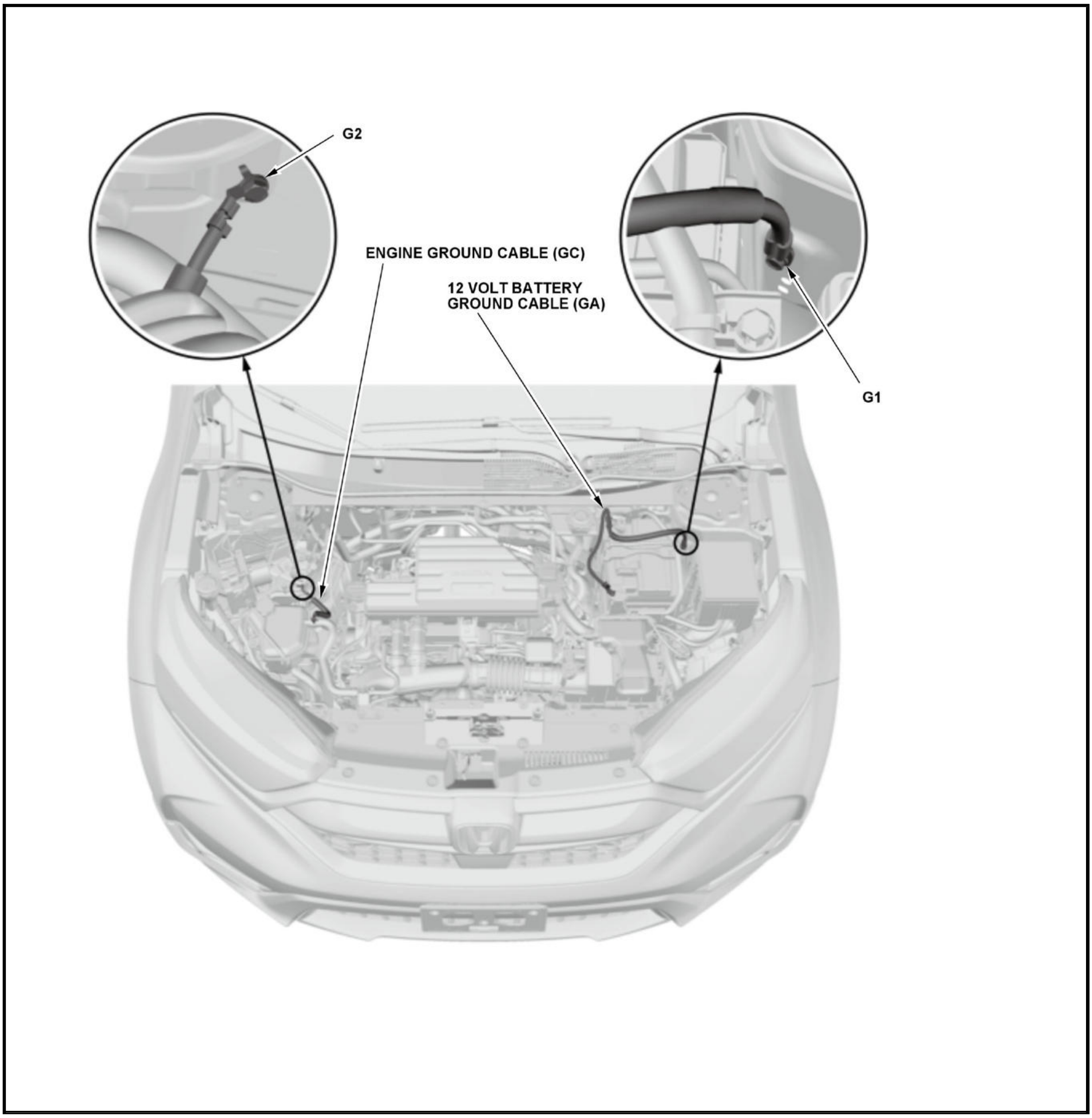
G2
ENGINE GROUND CABLE (GC)
12 VOLT BATTERY GROUND CABLE (GA)
G1

Engine Compartment - 2/6 (Without Auto Idle Stop System)

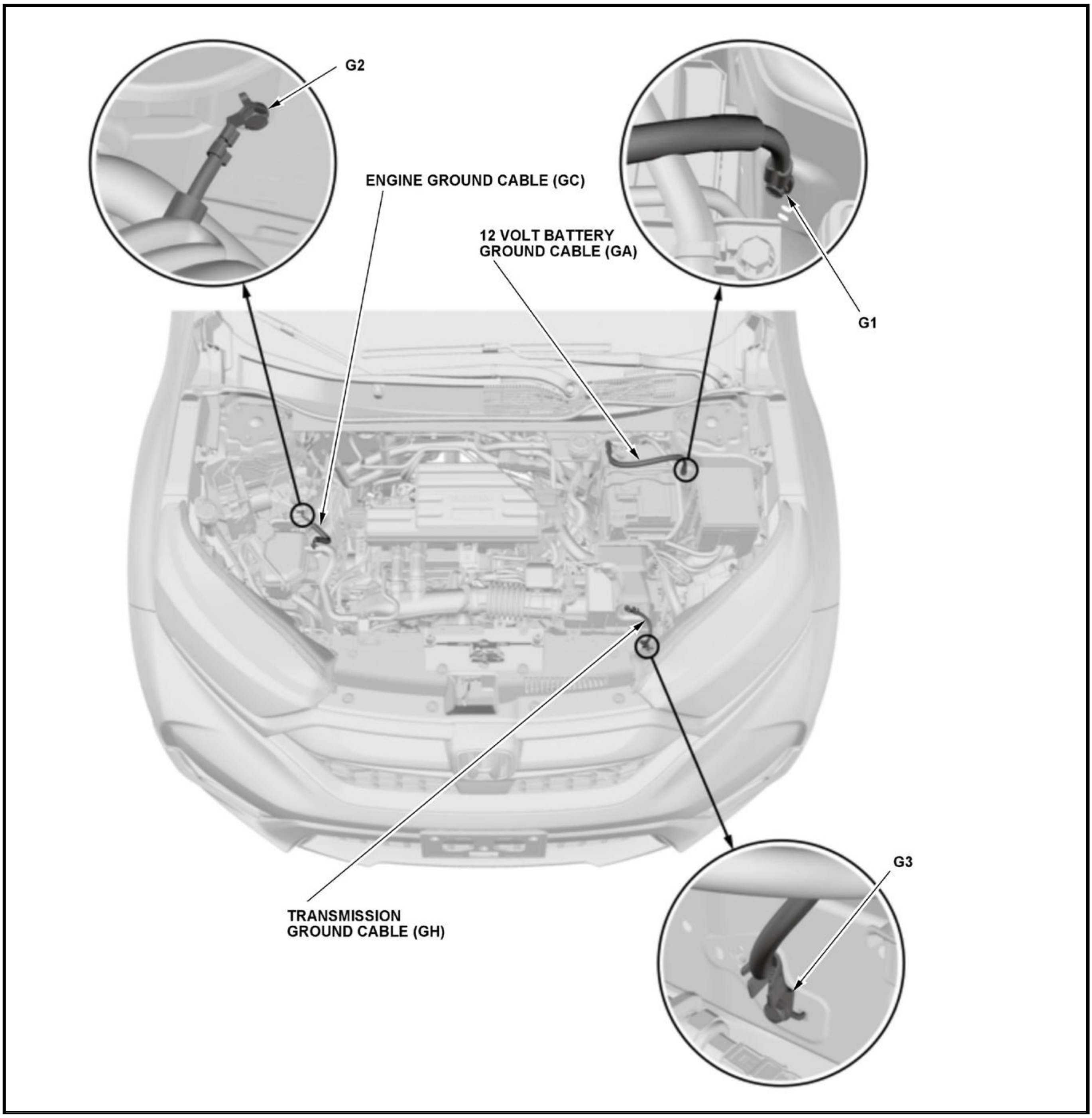
G2
ENGINE GROUND CABLE (GC)
12 VOLT BATTERY GROUND CABLE (GA)
G1
G3
TRANSMISSION GROUND CABLE (GH)

Engine Compartment - 3/6 (1.5 L Engine)

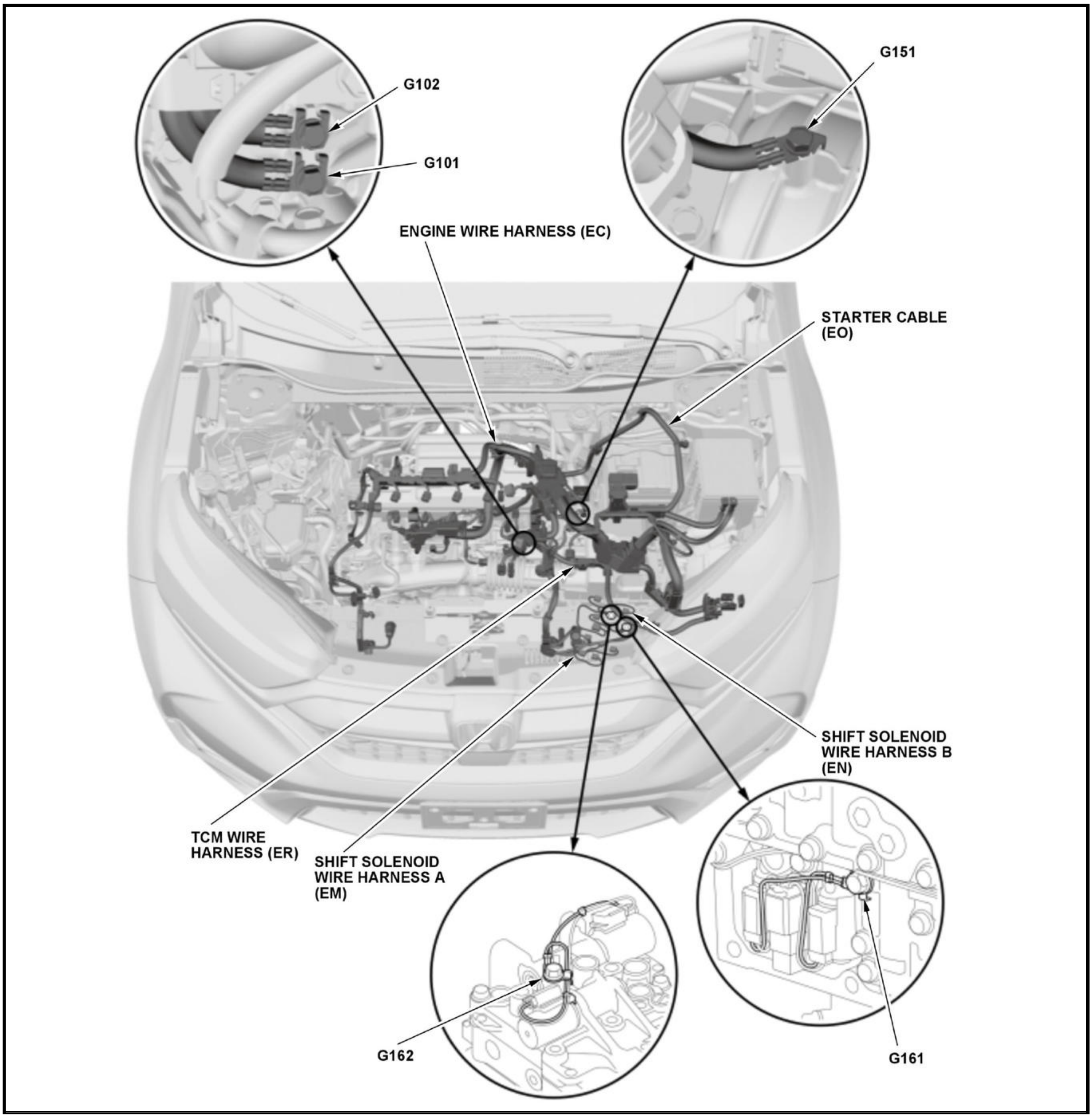
G102
G101
G151
ENGINE WIRE HARNESS (EC)
STARTER CABLE (EO)
SHIFT SOLENOID WIRE HARNESS B (EN)
TCM WIRE HARNESS (ER)
SHIFT SOLENOID WIRE HARNESS A (EM)
G162
G161

Engine Compartment - 4/6 (2.4 L Engine)

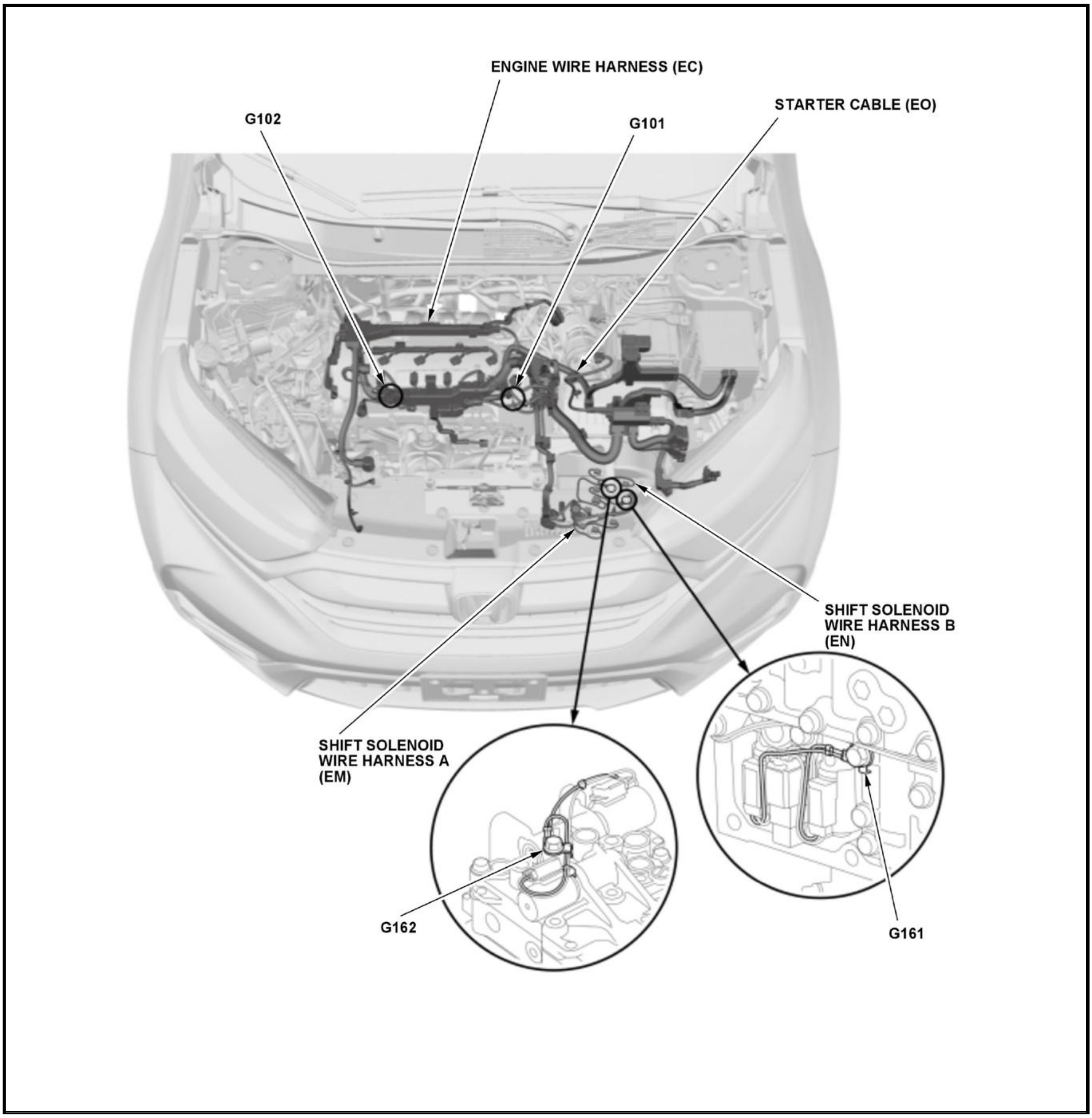
ENGINE WIRE HARNESS (EC)
G102
G101
STARTER CABLE (EO)
SHIFT SOLENOID WIRE HARNESS B (EN)
SHIFT SOLENOID WIRE HARNESS A (EM)
G162
G161

Engine Compartment - 5/6

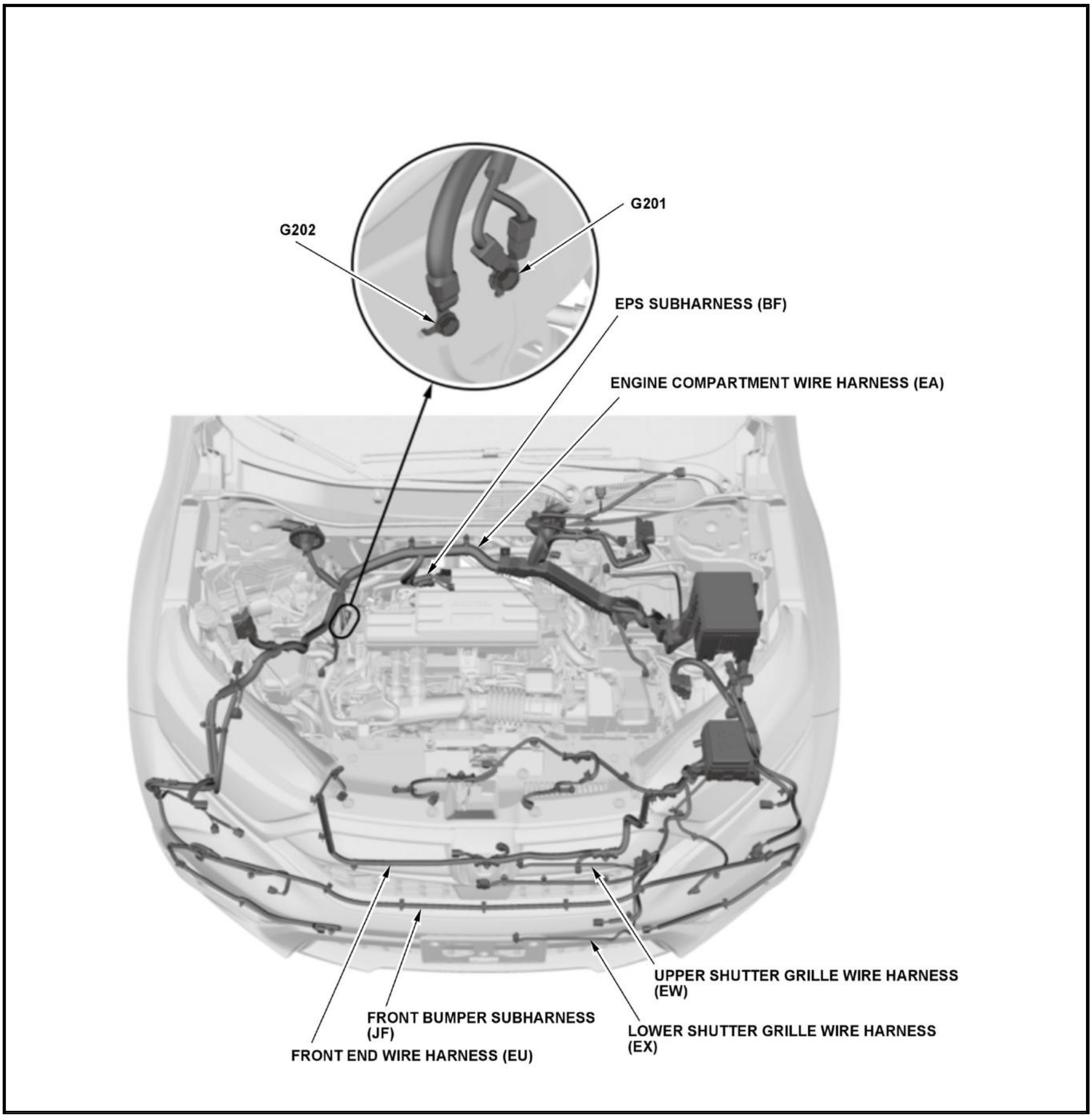
G202
G201
EPS SUBHARNESS (BF)
ENGINE COMPARTMENT WIRE HARNESS (EA)
UPPER SHUTTER GRILLE WIRE HARNESS (EW)
FRONT BUMPER SUBHARNESS (JF)
LOWER SHUTTER GRILLE WIRE HARNESS (EX)
FRONT END WIRE HARNESS (EU)

Engine Compartment - 6/6

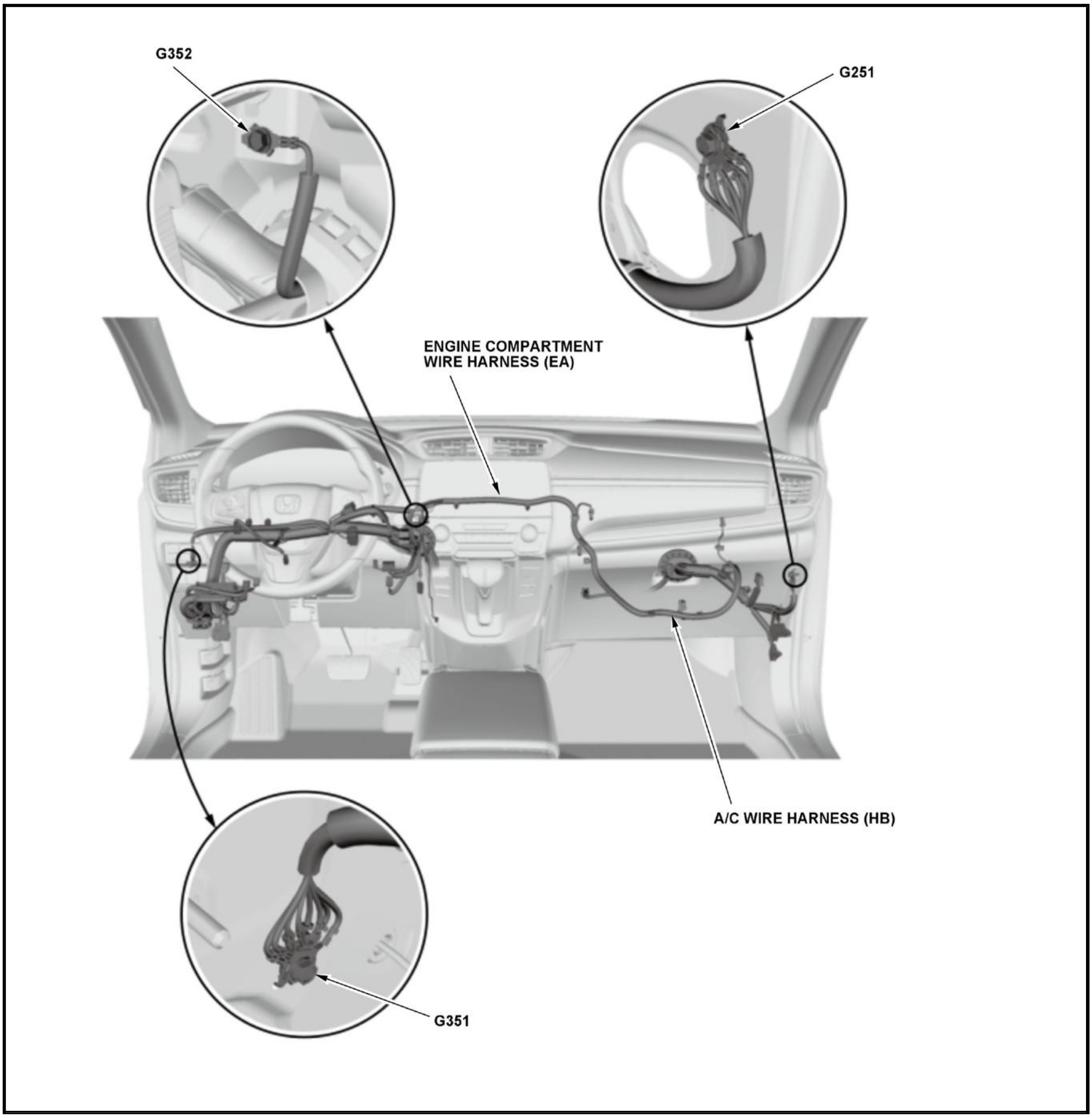
G352
G251
ENGINE COMPARTMENT
WIRE HARNESS (EA)
A/C WIRE HARNESS (HB)
G351

Dashboard

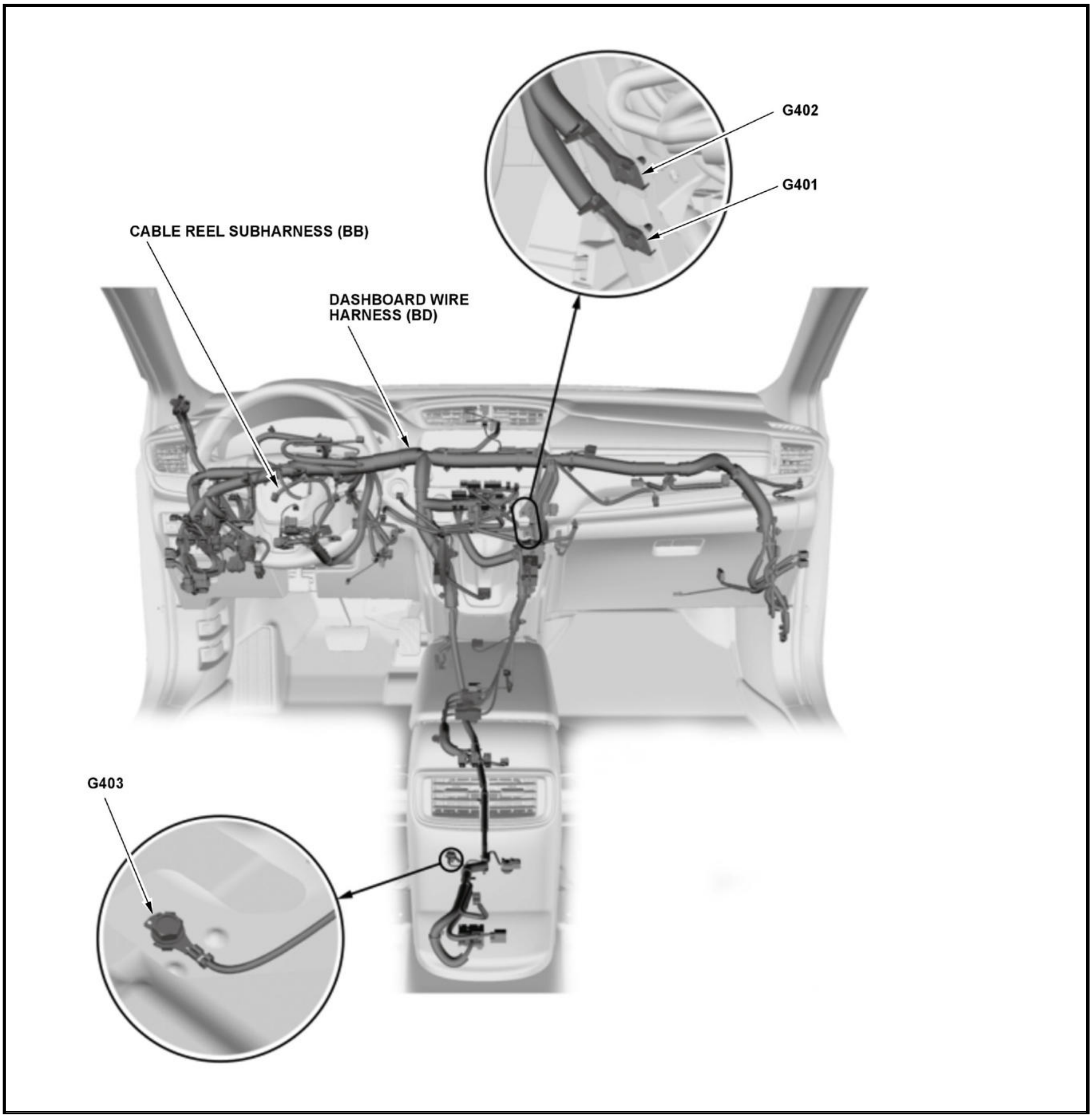
G402
G401
CABLE REEL SUBHARNESS (BB)
DASHBOARD WIRE HARNESS (BD)
G403

Roof

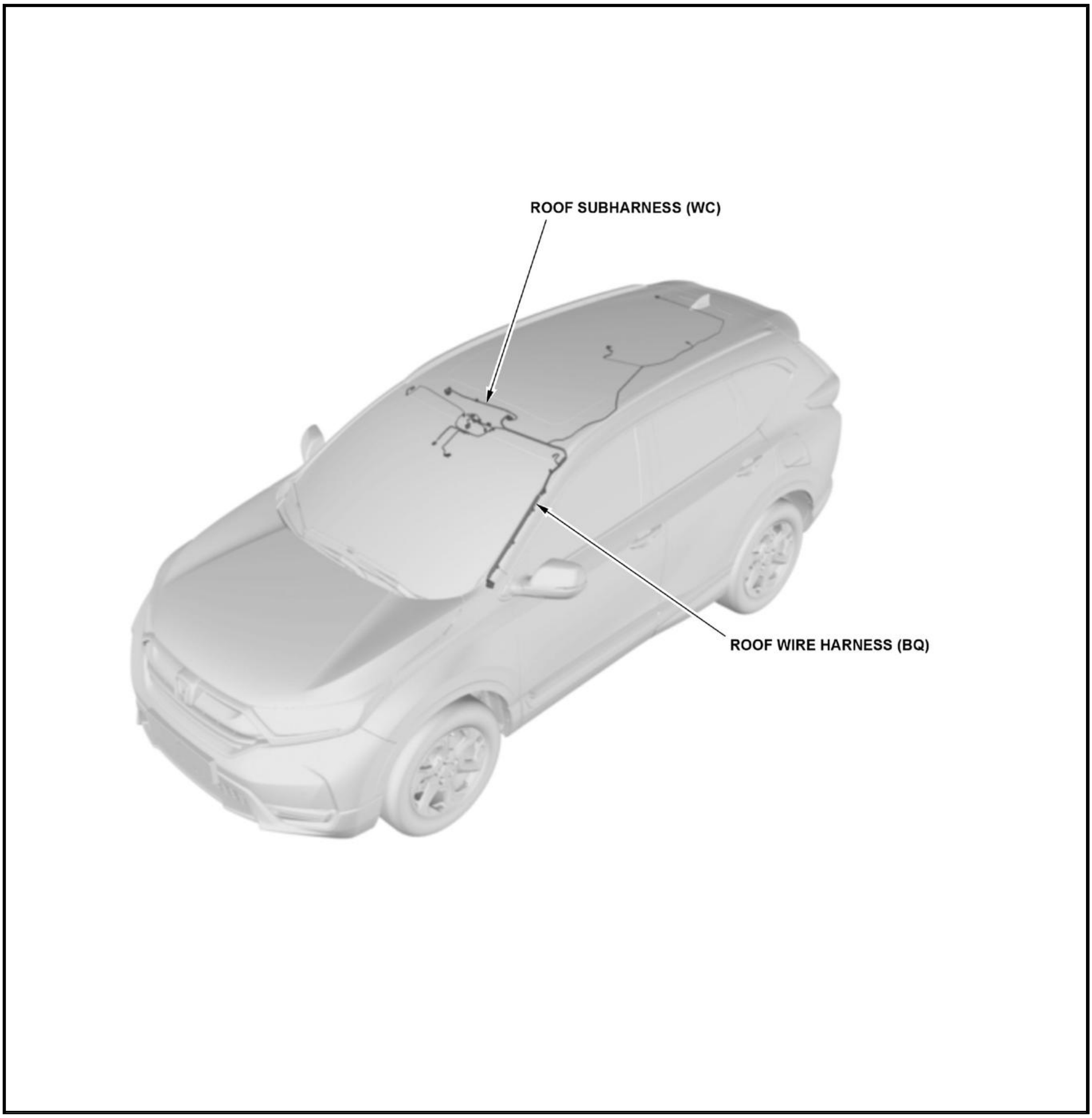
ROOF SUBHARNESS (WC)
ROOF WIRE HARNESS (BQ)

Floor - 1/2

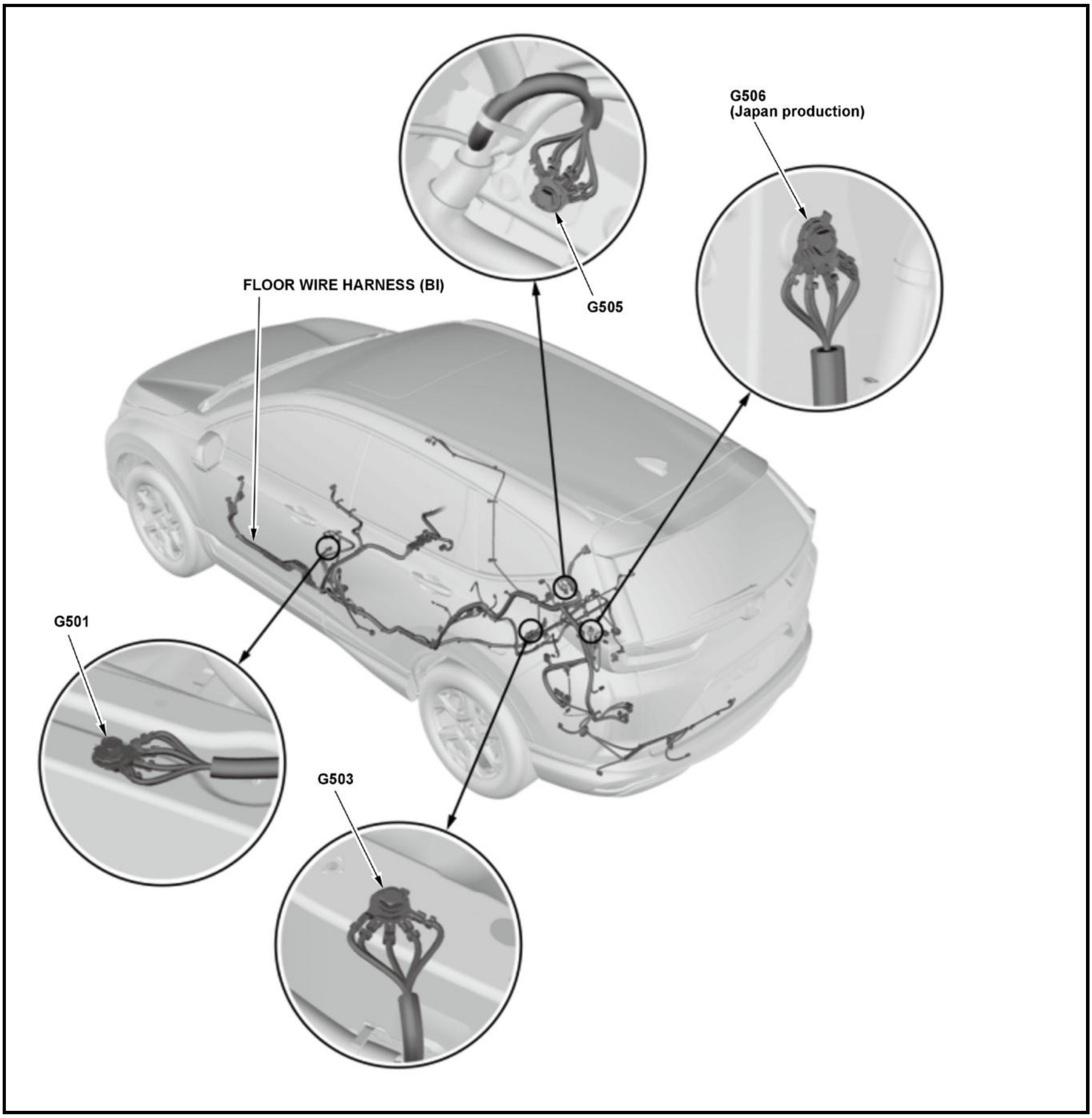
G506
(Japan production)
FLOOR WIRE HARNESS (BI)
G505
G501
G503

Floor - 2/2

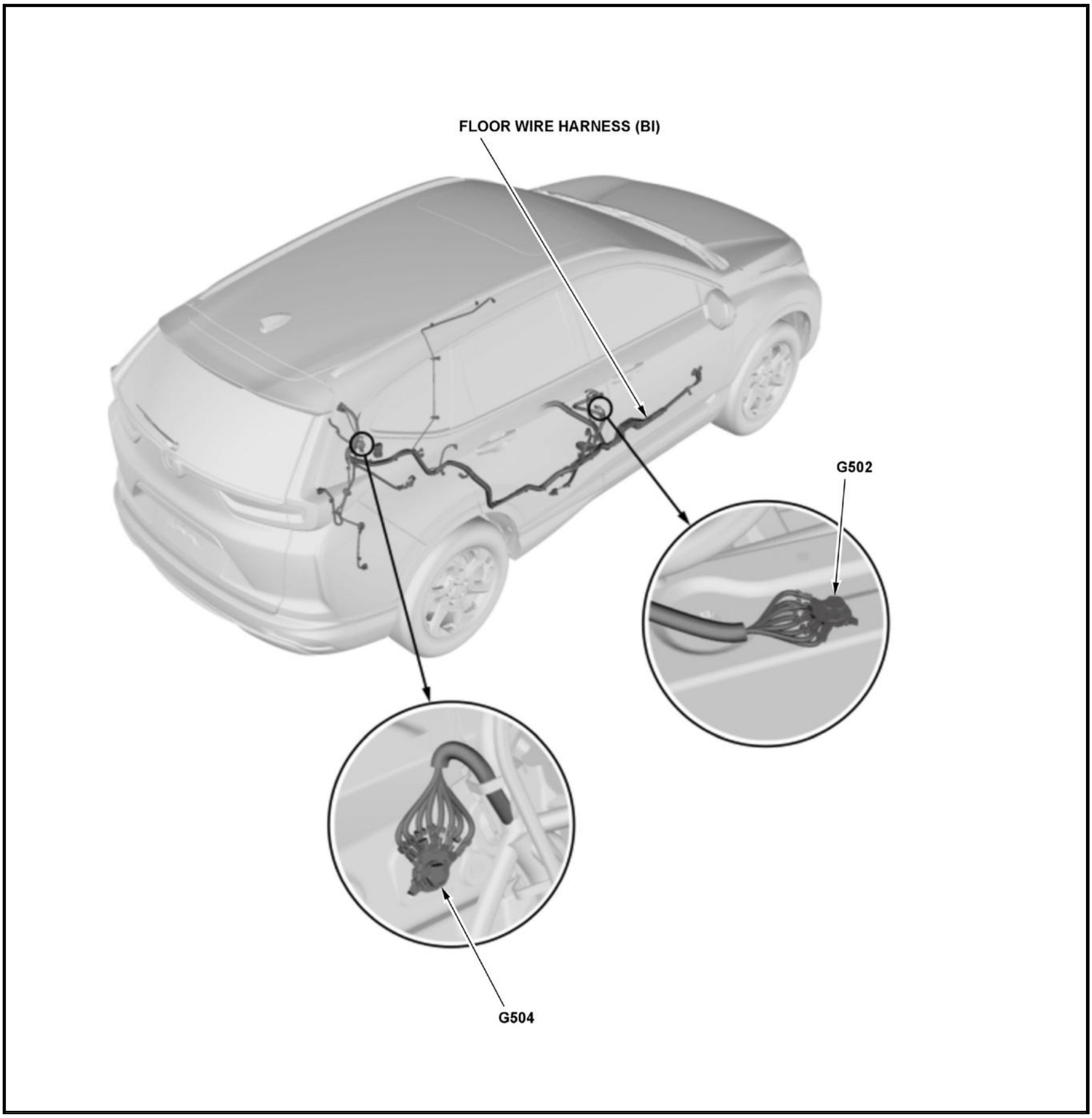
FLOOR WIRE HARNESS (BI)
G502
G504

Rear - 1/2

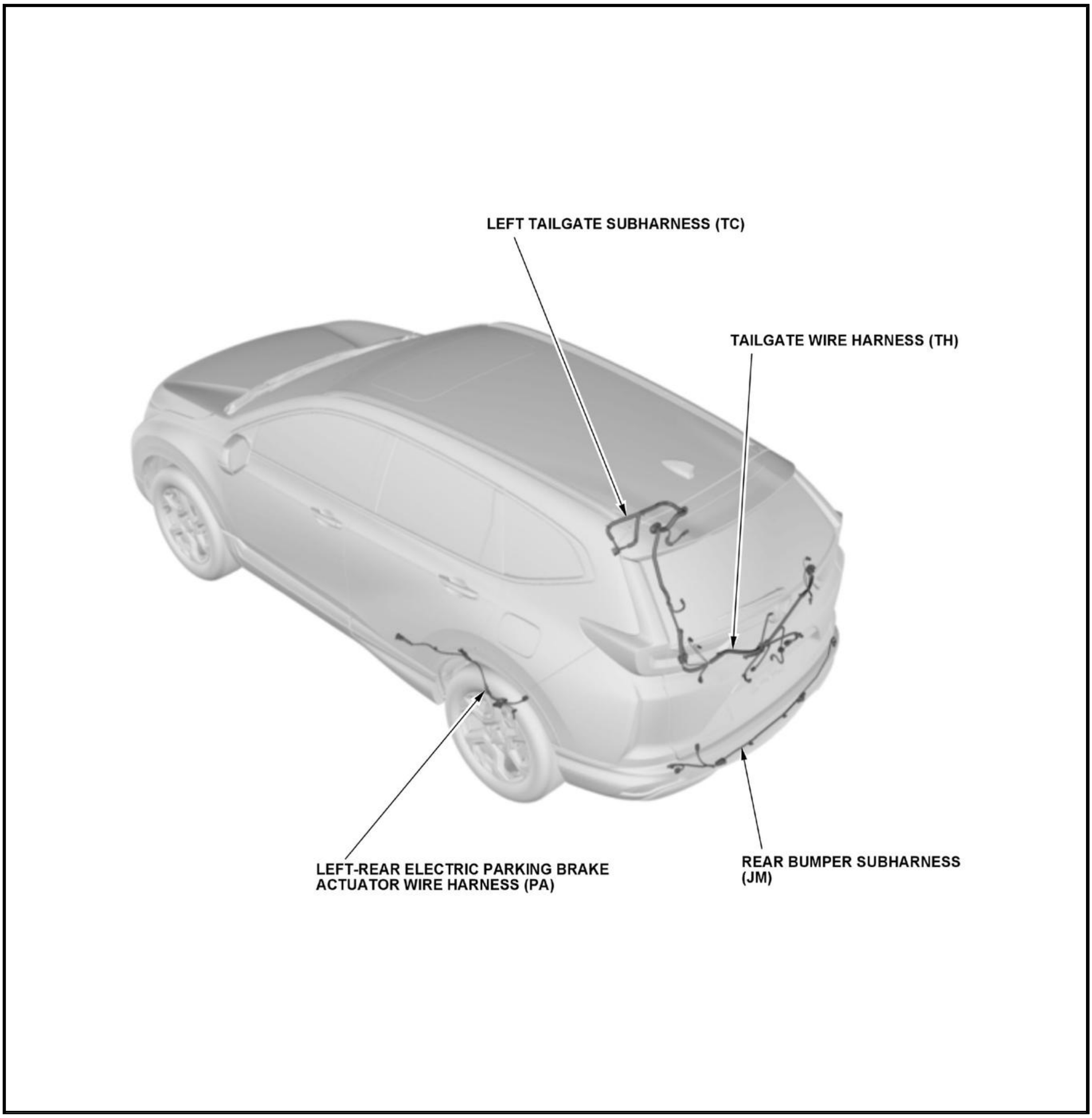
LEFT TAILGATE SUBHARNESS (TC)
TAILGATE WIRE HARNESS (TH)
LEFT-REAR ELECTRIC PARKING BRAKE ACTUATOR WIRE HARNESS (PA)
REAR BUMPER SUBHARNESS (JM)

Rear - 2/2

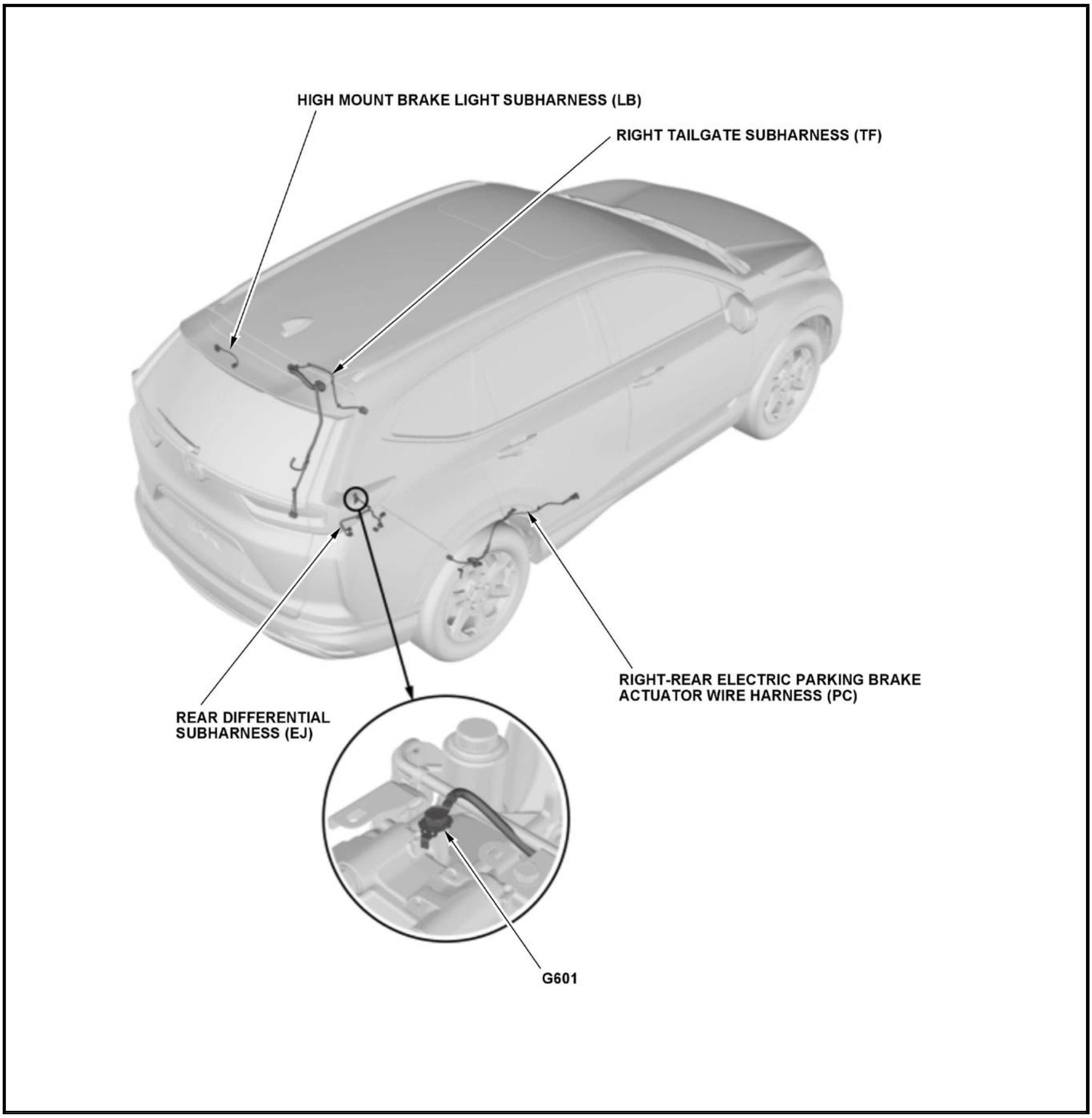
HIGH MOUNT BRAKE LIGHT SUBHARNESS (LB)
RIGHT TAILGATE SUBHARNESS (TF)
REAR DIFFERENTIAL SUBHARNESS (EJ)
RIGHT-REAR ELECTRIC PARKING BRAKE ACTUATOR WIRE HARNESS (PC)
G601

Driver's Door

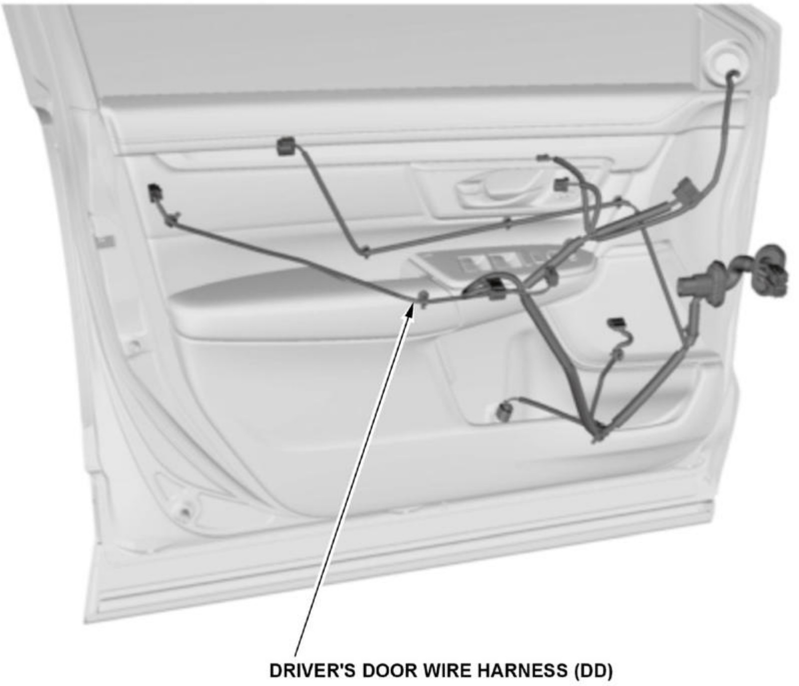
DRIVER'S DOOR WIRE HARNESS (DD)

Front Passenger's Door

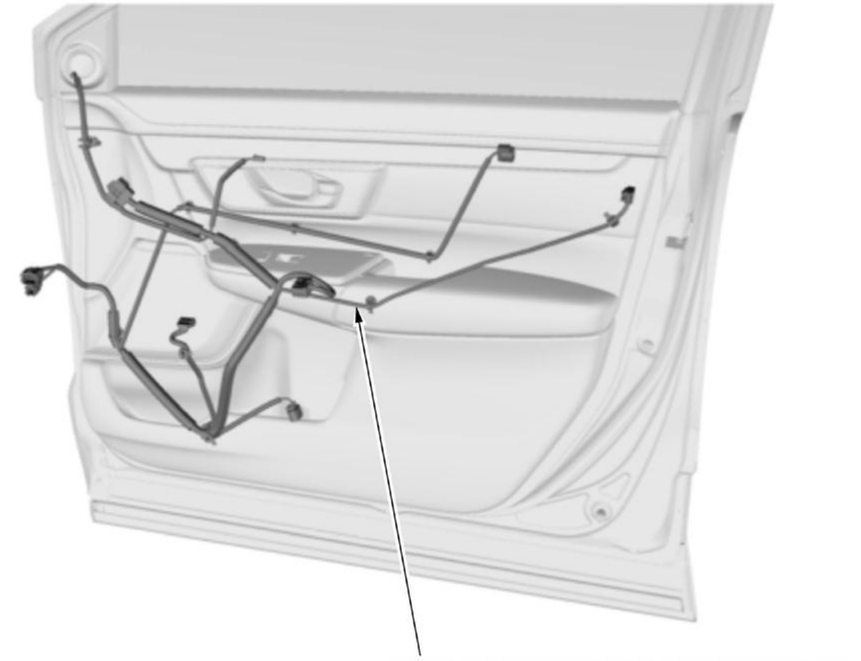
FRONT PASSENGER'S DOOR WIRE HARNESS (DH)

Left Rear Door

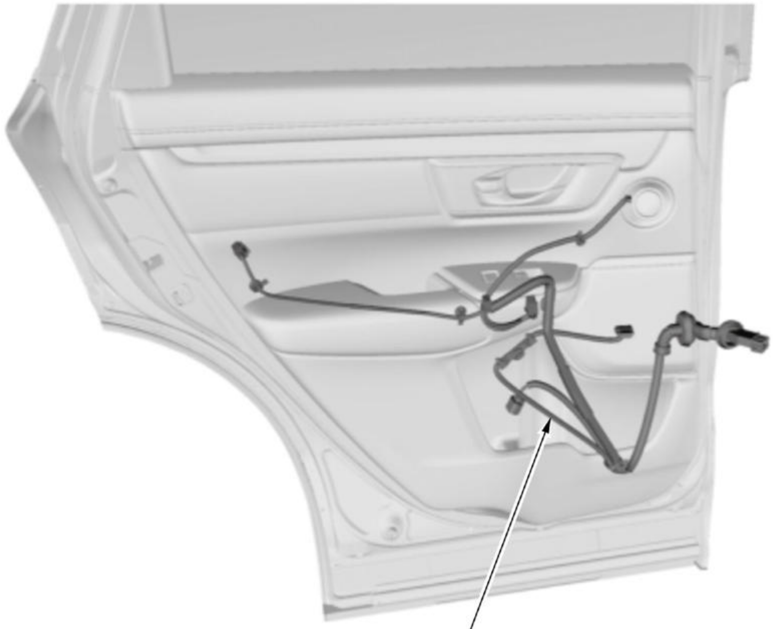
LEFT REAR DOOR WIRE HARNESS (DJ)

Right Rear Door

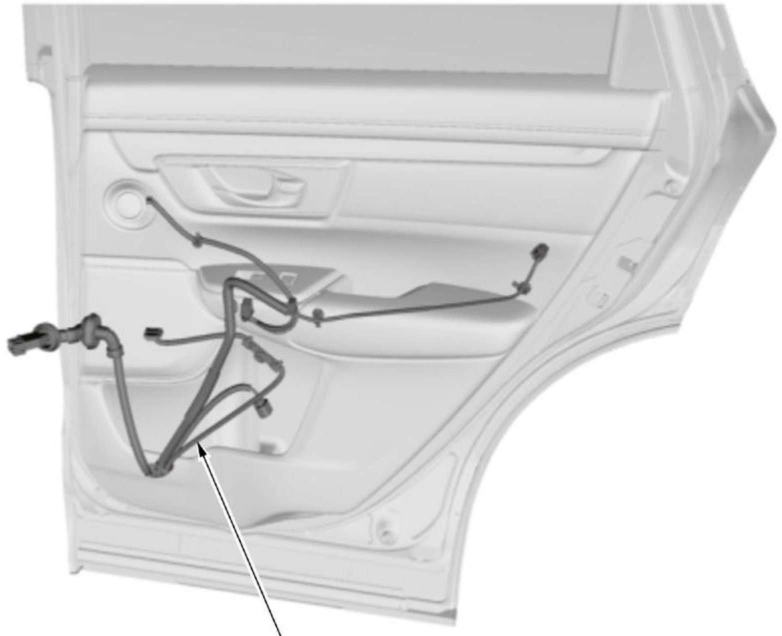
RIGHT REAR DOOR WIRE HARNESS (DN)

Seat

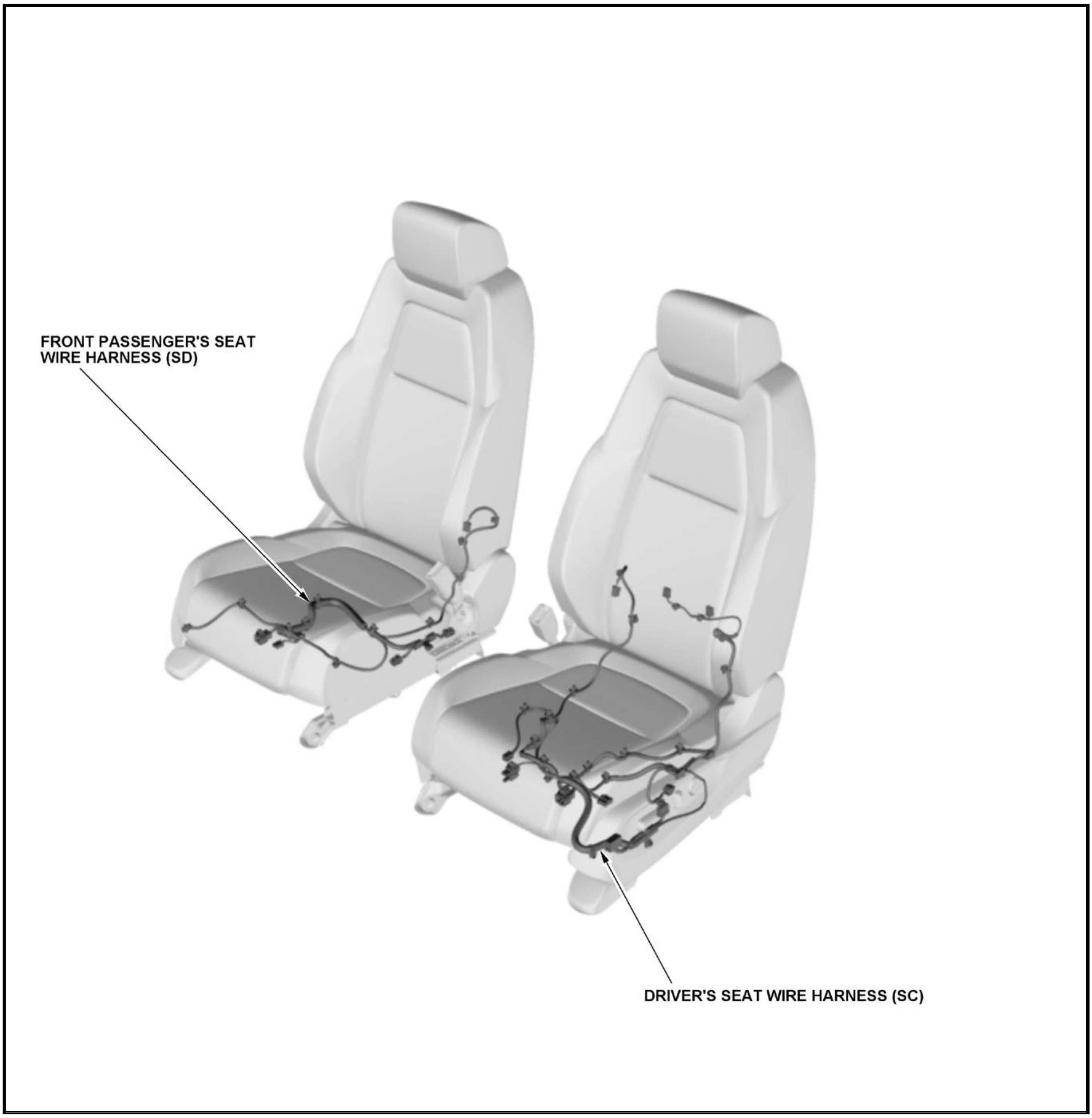
FRONT PASSENGER'S SEAT WIRE HARNESS (SD)
DRIVER'S SEAT WIRE HARNESS (SC)

SYMPTOM TROUBLESHOOTING INDEX FOR VIEWER

WIRELESS CHARGER INDICATOR BLINKS (AMBER) (2020 2021)

Diagnostic procedure

- Check for DTCs with the HDS; if a DTC is indicated, troubleshoot the DTC first.

Check for

Wireless charger

WIRELESS CHARGER INDICATOR BLINKS (GREEN AND AMBER) (2020 2021)

Diagnostic procedure

- Check the wireless charger

Check for

- Foreign matters between the wireless charger and electronic device
- Misalignment of the electronic device

WIRELESS CHARGER INDICATOR DOES NOT COME ON (GREEN AND AMBER) (2020 2021)

Diagnostic procedure

- **Symptom troubleshooting**

Check for

- Open in +B BACK UP wire
- Open in GND wire or poor ground (G402)
- Wireless charger

SYMPTOM TROUBLESHOOTING INDEX FOR VIEWER

WIRELESS CHARGER INDICATOR BLINKS (AMBER)

Diagnostic procedure

- Check for DTCs with the HDS; if a DTC is indicated, troubleshoot the DTC first.

Check for

Wireless charger

WIRELESS CHARGER INDICATOR BLINKS (GREEN AND AMBER)

Diagnostic procedure

- Check the wireless charger

Check for

- Foreign matters between the wireless charger and electronic device
- Misalignment of the electronic device

WIRELESS CHARGER INDICATOR DOES NOT COME ON (GREEN AND AMBER)

Diagnostic procedure

- Symptom troubleshooting

Check for

- Open in +B_BACK_UP wire
- Open in GND wire or poor ground (G402)
- Wireless charger

DESCRIPTION & OPERATION

WIRELESS CHARGER SYSTEM DESCRIPTION

Overview

Some models come equipped with the wireless charger. The wireless charger can charge the battery (like a smartphone) that is placed on top of the wireless charger, without a charging cable. This system uses the law of electromagnetic induction.

Basic Control

The wireless charger system begins to charge a battery of a wireless device (like a smartphone) as soon as it detects the device on the wireless charger. The charger receives the radio frequency signal from the audio unit via the B-CAN. Charging frequency is controlled so that it will not interfere with the receiving frequency of the radio. When a remote communicates to the body control module by LF communication, the charger momentarily stops charging so it will not interfere with the keyless access system.

The following conditions will stop battery charging:

- When the battery of the device becomes full.
- When an object is placed between the charger and the wireless device that prevents detection.
- When the wireless device is placed out of the charging area.

LED Indicator Function

As charging starts, the amber indicator turns on, and as charging stops, the green indicator turns on. When a failure occurs, the indicator(s) will flash.

Operation Mode State	Indicator	
	Green	Amber
Standby	ON	OFF
Power Transfer	OFF	ON
Abnormal Termination	FLASH	FLASH
Hardware Failure	OFF	FLASH

Flash Pattern

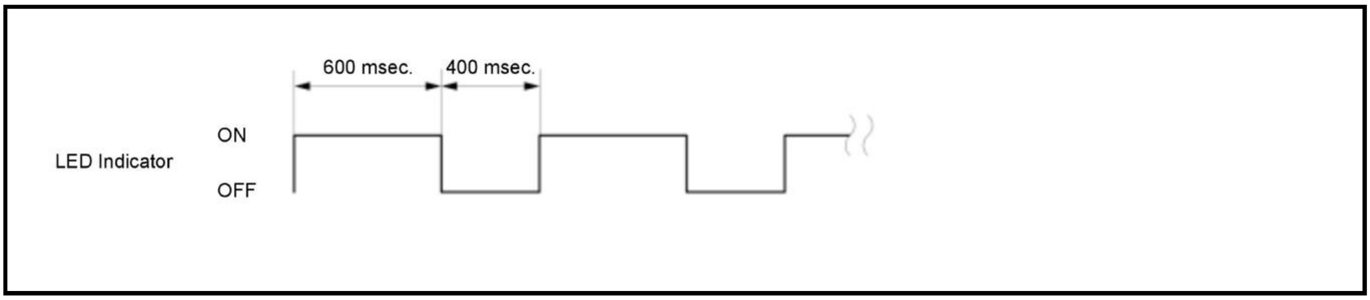
600 msec.
400 msec.
ON
LED Indicator
OFF

Failsafe Function

Hardware Failsafe Control

When the CPU is reset due to a CPU program runaway or a drop in the 5 V supply voltage, it changes to failsafe.

Software Failsafe Control

When any of the data from the B-CAN circuit cannot be received within a specified time, or an unusual combination of the data is recognized, the wireless charger moves to the software failsafe. The data that cannot be received is forced to a pre-programmed value.

WIRELESS CHARGER SYSTEM DESCRIPTION - SYSTEM DIAGRAM

For locations of each component on the vehicle, refer to Component Location Index

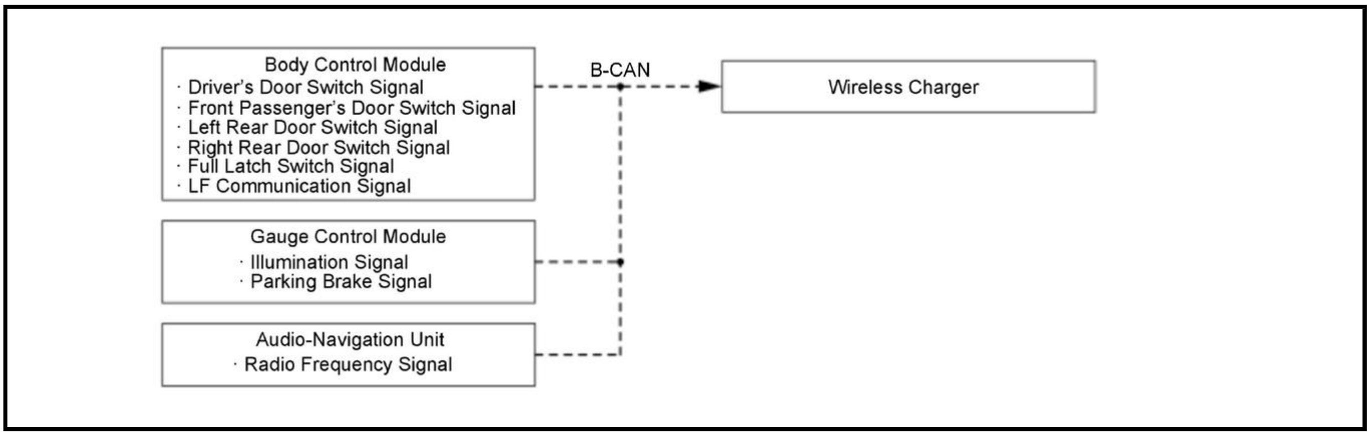
Body Control Module
· Driver's Door Switch Signal
· Front Passenger's Door Switch Signal
· Left Rear Door Switch Signal
· Right Rear Door Switch Signal
· Full Latch Switch Signal
· LF Communication Signal
Gauge Control Module
· Illumination Signal
· Parking Brake Signal
Audio-Navigation Unit
· Radio Frequency Signal
B-CAN
Wireless Charger

FUSE RELAY BOX CONNECTOR LOCATIONS

FUSE/RELAY BOX CONNECTOR LOCATIONS

Location
Under-Hood Fuse/Relay Box
Relay Circuit Board
Relay Control Module
Fuse Holder A
Under-Dash Fuse/Relay Box
Auxiliary Under-Dash Fuse Box

Under-Hood Fuse/Relay Box

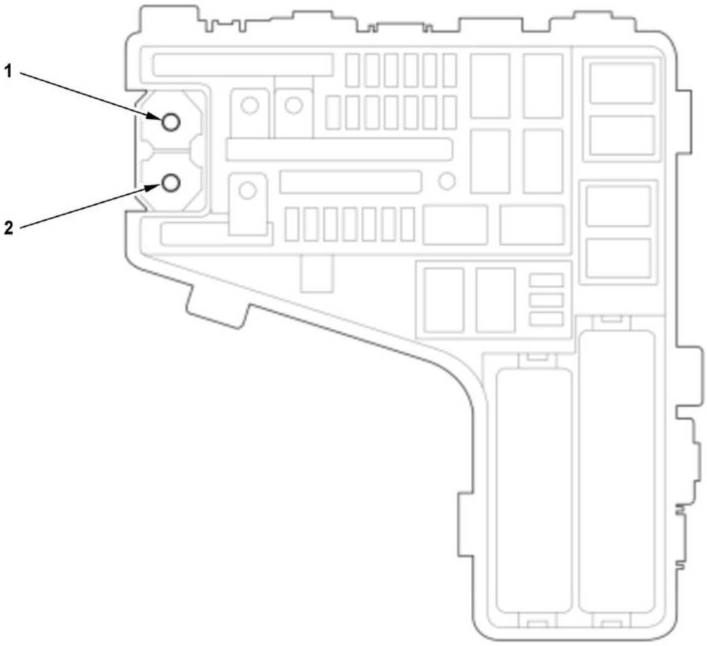

Fig. 1: Under-Hood Fuse/Relay Box Componet Locations
Courtesy of HONDA, U.S.A., INC.

Under-Hood Fuse/Relay Box Legend

Socket	Ref	Terminal	Connects to	Notes
T1	1	---	12 volt battery cable	B
T14	2	---	Battery power cable	B

Relay Circuit Board

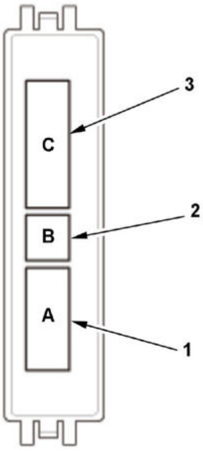

Fig. 2: Relay Circuit Board Component Locations
Courtesy of HONDA, U.S.A., INC.

Relay Circuit Board Legend

Socket	Ref	Terminal	Connects to	Notes
Relay circuit board connector A	1	8	Engine compartment wire harness	B
Relay circuit board connector B	2	6	Engine compartment wire harness	B
Relay circuit board connector C	3	18	Engine compartment wire harness	B

Relay Control Module

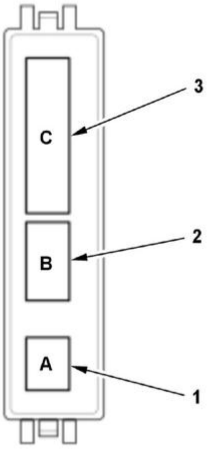

Fig. 3: Relay Control Module Component Locations
Courtesy of HONDA, U.S.A., INC.

Relay Control Module Legend

Socket	Ref	Terminal	Connects to	Notes
Relay control module connector A	1	6	Engine compartment wire harness	B
Relay control module connector B	2	10	Engine compartment wire harness	B
Relay control module connector C	6	18	Engine compartment wire harness	B

Fuse Holder A

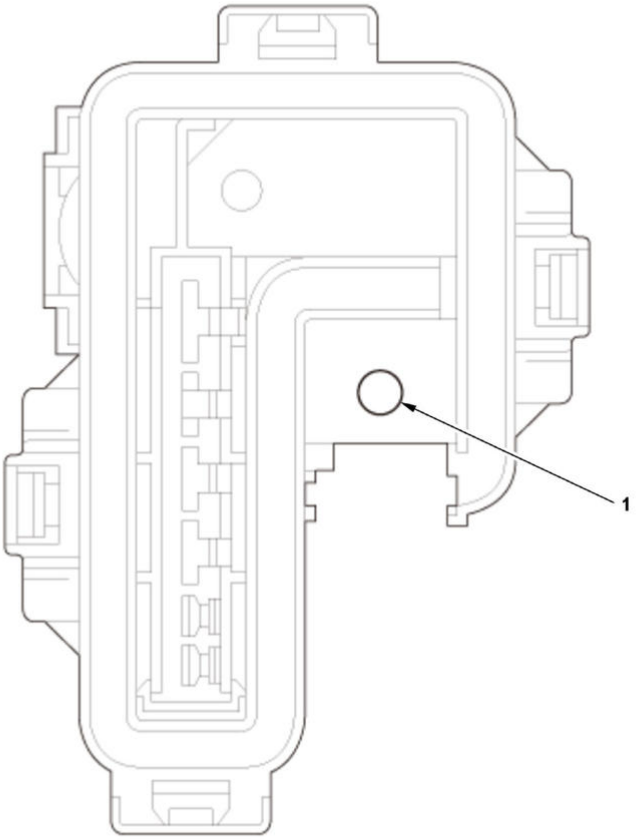

Fig. 4: Fuse Holder A Component Locations
Courtesy of HONDA, U.S.A., INC.

Fuse Holder A Legend

Socket	Ref	Terminal	Connects to	Notes
T2	1	---	12 volt battery cable	B

Under-Dash Fuse/Relay Box

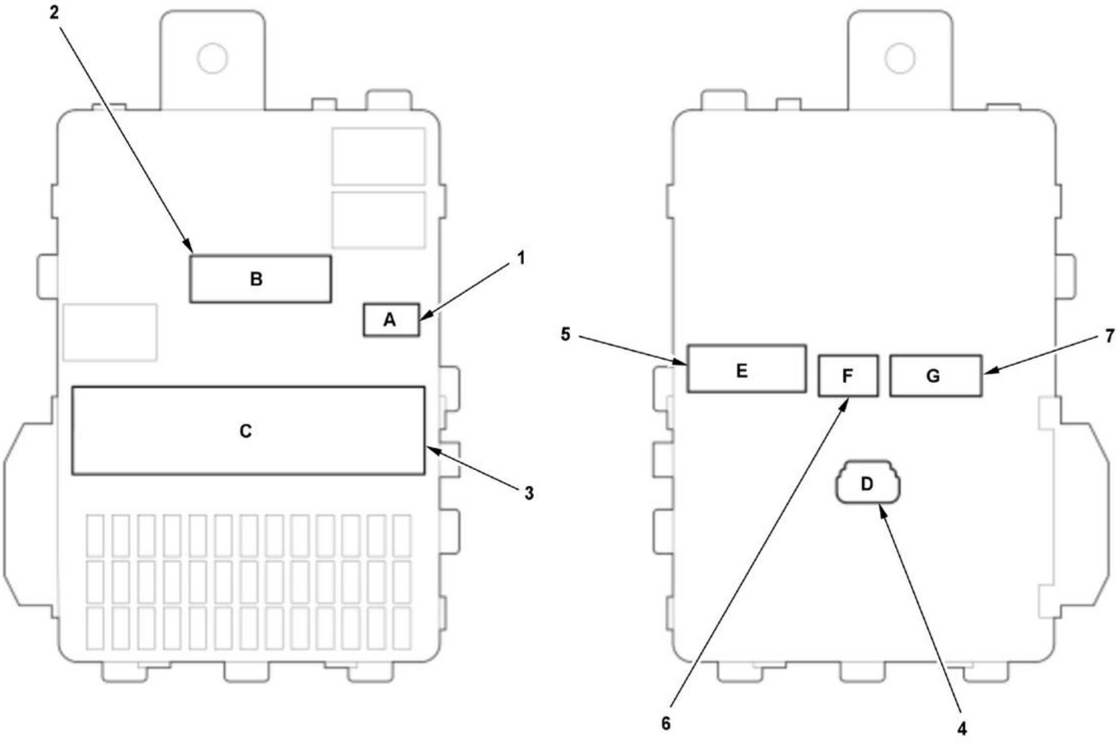

Fig. 5: Under-Dash Fuse/Relay Box Component Locations
Courtesy of HONDA, U.S.A., INC.

Under-Dash Fuse/Relay Box Legend

Socket	Ref	Terminal	Connects to	Notes
A (optional connector)	1	4	Not used	B
B	2	22	Floor wire harness	B
C	3	27	Engine compartment wire harness	B
D	4	4	Dashboard wire harness	B
E	5	18	Dashboard wire harness	B
F	6	12	Dashboard wire harness	B
G	7	20	Dashboard wire harness	B

Auxiliary Under-Dash Fuse Box

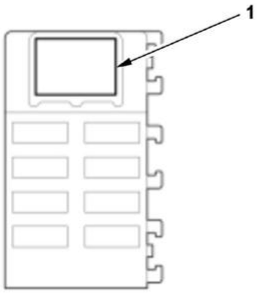

Fig. 6: Auxiliary Under-Dash Fuse Box Component Locations
Courtesy of HONDA, U.S.A., INC.

Auxiliary Under-Dash Fuse Box Legend

Socket	Ref	Terminal	Connects to	Notes
Auxiliary under-dash fuse box connector	1	2	Engine compartment wire harness	B

SYMPTOM TROUBLESHOOTING INDEX

WIRELESS CHARGER SYMPTOM TROUBLESHOOTING INDEX

Symptom	Diagnostic procedure	Check for
Wireless charger indicator blinks(green and amber)	Check the wireless charger	• Foreign matters between the wireless charger and electronic device • Misalignment of the electronic device
Wireless charger indicator blinks(amber)	Check for DTCs with the HDS; if a DTC is indicated, troubleshoot the DTC first.	Wireless charger
Wireless charger indicator does not come on (green and amber)	Symptom troubleshooting	• Open in +B_BACK_UP wire • Open in GND wire or poor ground (G402) • Wireless charger

GROUND TO COMPONENTS INDEX

GROUND TO COMPONENTS INDEX

Ground	Component(s) or circuit(s) grounded	Feature
G1	12 volt battery	B
G2	Side engine mount	B
G3	Transmission assembly	B
G4	IPU assembly	B

Ground	Component(s) or circuit(s) grounded	Feature
G101	EGR valve actuator Electric A/C compressor Ignition coils PCM (four wires) Rocker arm oil control solenoid Shielding between the PCM and the A/F sensor (SENSOR 1) Shielding between the PCM and the knock sensor Shift solenoid valve A, Shift solenoid valve B	B
G102	Electric engine coolant pump, Electric VTC motor	B
G201	Body ground (G301)	B
G202	VSA modulator-control unit (two wires)	B
G203	Electric servo brake control unit/pedal feel simulator	B
G204	EPS control unit	B
G251	Brake fluid level switch, Hood latch switch* 3, Left front fog light* 2, Millimeter wave radar, Park pawl actuator driver unit (four wires), Power transistor, Relay control module (two wires), Right front fog light* 2, Right headlight (LED control unit), Right headlight (LED control unit)* 1	*1: Headlight type A *2: With front fog light *3: With hood latch switch
G301	Body ground (G201)	B
G351	Acoustic vehicle alerting control unit, Body Ground (G401), Body Ground (G401) Console accessory power socket relay, Electric heater coolant pump, Electric heater coolant pump relay circuit (built into the relay circuit board), Front blower motor relay, Front seat heater relay circuit (built into the under-dash fuse/relay box)* 3, Horn (HIGH), Horn (LOW), Left headlight (LED control unit), Left headlight (LED control unit)* 1, Power door lock relay circuit (DR UNLOCK) (built into the under-dash fuse/relay box), Power door lock relay circuit (LOCK) (built into the under-dash fuse/relay box), Power door lock relay circuit (UNLOCK) (built into the under-dash fuse/relay box), Relay control module, RFC unit, Shutter grille, Tailgate release actuator relay circuit (built into the under-	*1: Headlight type A *2: Without power tailgate *3: With front seat heater

Ground	Component(s) or circuit(s) grounded	Feature
	dash fuse/relay box)* 2, Windshield wiper control unit/motor	

Ground	Component(s) or circuit(s) grounded	Feature
G352	PCU electric coolant pump, PCU, PTC heater B, PTC heater D, Shielding between the electric servo brake control unit/pedal feel simulator and the brake pedal stroke sensor	B
G401	Audio remote-HFL switch, Automatic dimming inside mirror, Automatic lighting/rain sensor* 1, Body control module (three wires), CAN gateway, CMBS OFF switch, Console accessory power socket relay, Data link connector (DLC) (two wires), Driver's door key cylinder switch, Driver's door lock knob switch, Driver's door outer handle, Driver's power window motor, Driver's vanity mirror light* 2, Driving position memory switch* 4, Electrical compass unit* 5, Front individual map lights, Front passenger's door lock knob switch, Front passenger's power window switch, Front seat heater relay circuit (built into the under-dash fuse/relay box)* 6, Gauge control module (two wires), HomeLink B® unit* 7, Horn switch, Interior light switch* 8, Left BSI alert indicator* 9, Left power mirror defogger* 10, Left side turn signal light, Moonroof motor-control unit* 8, Moonroof switch* 8, Multipurpose camera unit, Paddle shifter+(upshift switch), Paddle shifter-(downshift switch), Passenger's vanity mirror light* 3, Power door lock relay circuit (DR UNLOCK) (built into the under-dash fuse/relay box), Power door lock relay circuit (LOCK) (built into the under-dash fuse/relay box), Power door lock relay circuit (UNLOCK) (built into the under-dash fuse/relay box), Power mirror switch (two wires), Power switch, Power window master switch (two wires), Steering wheel heater pad* 11, Tailgate release actuator relay circuit (built into the under-dash fuse/relay box)* 12, USB port light (USB port A),	*1: With automatic wiper *2: With driver's vanity mirror light *3: With passenger's vanity mirror light *4: With DPMS *5: With electrical compass *6: With front seat heater *7: With HomeLink B® *8: With moonroof *9: With BSI *10: With mirror defogger *11: With heated steering wheel *12: Without power tailgate *13: Display audio type

Ground	Component(s) or circuit(s) grounded	Feature
	USB port light (USB port B)* 13, VSA OFF switch	

Ground	Component(s) or circuit(s) grounded	Feature
G402	ANC/active sound control unit, Audio-navigation unit* 1, Audio unit* 2, Automatic lighting control unit-sensor* 3, Center display unit* 4, Climate control panel, Climate control panel* 5, Climate control unit, Console accessory power socket, Electric parking brake/automatic brake hold switch (two wires), Front passenger's door outer handle, Front seat heater control unit* 6, Hazard warning switch, Heated steering wheel relay* 7, Right BSI alert indicator* 8, Right power mirror defogger* 9, Right side turn signal light, SBW shifter control module, Sport mode/ECON/EV switch, Stereo amplifier* 10, USB charger unit* 11, Wireless charger* 12	*1: With navigation *2: Without navigation *3: Without automatic wiper *4: Display audio type *5: Color audio type *6: With front seat heater *7: With heated steering wheel *8: With BSI *9: With mirror defogger *10: With stereo amplifier *11: With USB charger unit *12: With wireless charger
G403	SRS unit	B
G501	Driver's seat belt buckle switch, Driver's seat position sensor, Left rear door lock knob switch, Left rear power window switch, Power lumbar support switch* 2, Power seat control unit (three wires)* 1, Shielding between the PCM and the EVAP leak check module pressure sensor	*1: With DPMS *2: With power lumbar support
G502	Driver's seat cushion heater* 1, Driver's seat-back heater* 1, Front passenger's power seat adjustment switch (two wires)* 2, Front passenger's seat cushion heater* 1, Front passenger's seat-back heater* 1, Front passenger's seat belt buckle switch, Right rear door lock knob switch,	*1: With front seat heater *2: With front passenger's power seat

Ground	Component(s) or circuit(s) grounded	Feature
	Right rear power window switch	
G503	Body ground (G601) (two wires), EVAP leak check module vacuum pump, Fuel pump, Real time AWD control unit (two wires)	B
G504	Right side BSI radar unit (two wires)*, Right taillight (two wires)	*: With BSI
G505	Hands free access power tailgate control unit/sensor* 1, High mount brake light, Keyless buzzer, Left back-up light, Left inner taillight, Left side BSI radar unit* 2, Left taillight (two wires), License plate light, Parking and back-up sensor control unit* 3, Power tailgate control unit (two wires)* 4, Rear window defogger, Rear window wiper motor, Right back-up light, Right inner taillight, Tailgate latch switch* 5, Tailgate lock switch, Tailgate release actuator* 5	*1: With hands free access power tailgate *2: With BSI *3: With parking and back-up sensor control unit *4: With power tailgate *5: Without power tailgate
G601	Body ground (G503) (two wires), EVAP leak check module vacuum pump, Fuel pump, Real time AWD control unit (two wires)	B
G701	Battery condition monitor module, High voltage battery module fan	B
G801	Shielding between the electric A/C compressor and the subjunction board, Shielding between the PCU and the subjunction board	B

SYMPTOM TROUBLESHOOTING

12 VOLT BATTERY SYMPTOM TROUBLESHOOTING - LOW OR DEAD 12 VOLT BATTERY

NOTE:

- A 12 volt battery might be discharged under these conditions:
-
    - -

      Driving a vehicle 6 miles (10 km) or less per day.

    - -

      Leaving a vehicle idling with high electrical loads such as headlight, seat heaters, wipers, rear window defogger, etc.

- When doing the following operation during the measurement of the parasitic draw, it may not be measured accurate:
-
    - -

      Approaching a vehicle with remote.
    - -

      Locking or unlocking a door.

Indication Example

- Latest History -
Duration: 22 hours
Discharge: 300 mAh
Average current: 14 mA

Data	Value
Current immediately after IG OFF	-3.82 A
Average current from immediately after IG OFF to 1 hour	-990 mA
Average current from 1 hour to 2 hours	-10 mA
Average current of 1 hour just before IG ON	-10 mA

1. BCM system check

   -1. Check for PGM-FI DTCs.

   DTC (Electric Powertrain)

DTC Description	Confirmed DTC	Pending DTC
P0A94 DC-DC Converter Performance	B	B

   Is DTC P0A94 indicated?

   YES

   Go to indicated DTCs troubleshooting .

   NO

   Go to step 2.

2. Parasitic draw check

   -1. Check all the BATTERY CONSUMPTION CURRENT HISTORY with the HDS.

   Battery Consumption Current History

Threshold of the average current
27.0 mA

   Are all the values of average current from 1 hour to 2 hours less than the threshold?

   YES

   Check the 12 volt battery .

NO

Go to step 3.

3. Problem verification

-1. Turn the vehicle to the OFF (LOCK) mode.

-2. Get out of the vehicle, and close all doors, hood, and tailgate securely.

-3. Lock the doors with the keyless remote/transmitter.

-4. Make sure the individual map lights are turned off and the security alarm system is armed (with security).

-5. Wait 130 minutes or more.

-6. Turn the vehicle to the ON mode.

-7. Check the latest BATTERY CONSUMPTION CURRENT HISTORY with the HDS.

Battery Consumption Current History

Threshold of the average current
27.0 mA

Is the value of average current from 1 hour to 2 hours less than the threshold?

1. **YES**

   Intermittent failure, the system is OK at this time.The possible cause could be that an incorrect parasitic draw value was recorded:

   - A switch was not turned off.
   - The vehicle's accessories were operated for a long time with the vehicle ignition was in the ACCESSORY mode.

   NO

   Go to the parasitic draw check.

WIRELESS CHARGER SYMPTOM TROUBLESHOOTING - WIRELESS CHARGER INDICATOR DOES NOT COME ON

NOTE: Before troubleshooting, make sure the fuses and **relays** associated with the system is OK.

1. Open wire check (+B_BACK_UP line)

-1. Turn the vehicle to the OFF (LOCK) mode.

-2. Disconnect the following connector.

Wireless charger 7P connector

-3. Measure the voltage between test points 1 and 2.

Test condition	OFF (LOCK) modeWireless charger 7P connector: disconnected
Test point 1	**Wireless charger 7P connector No. 7**
Test point 2	Body ground

Is there battery voltage?

YES

Go to step 2.

NO

Repair an open or high resistance in the wire.

2. Open wire check (GND line)

-1. Measure the resistance between test points 1 and 2.

Test condition	OFF (LOCK) modeWireless charger 7P connector: disconnected
Test point 1	**Wireless charger 7P connector No. 1**
Test point 2	Body ground

Is there 1.0 Ω or less?

YES

Replace the wireless charger .

NO

Repair an open or high resistance in the ground wire or poor ground (G402).

HOW TO INFORMATION

HOW TO TROUBLESHOOT THE BODY ELECTRICAL

Tips and Precautions

Special Tools Required

Back Probe Adapter, 17 mm 07TAZ-001020A

Before Troubleshooting

1. Check applicable fuses in the appropriate fuse/relay box.Check the 12 volt battery for damage, state of charge, and clean and tight connections.

CAUTION:

- **Do not quick-charge a 12 volt battery unless the 12 volt battery ground cable has been disconnected; otherwise you will damage the alternator diodes.**
- **Do not attempt to crank the engine with the 12 volt battery ground cable loosely connected, or you will severely damage the wiring.**

Handling Connectors

- Make sure the connectors are clean and have no loose wire terminals.
- Make sure multiple cavity connectors are packed with dielectric grease (except waterproof connectors).
- All connectors have press-down release type locks (A).

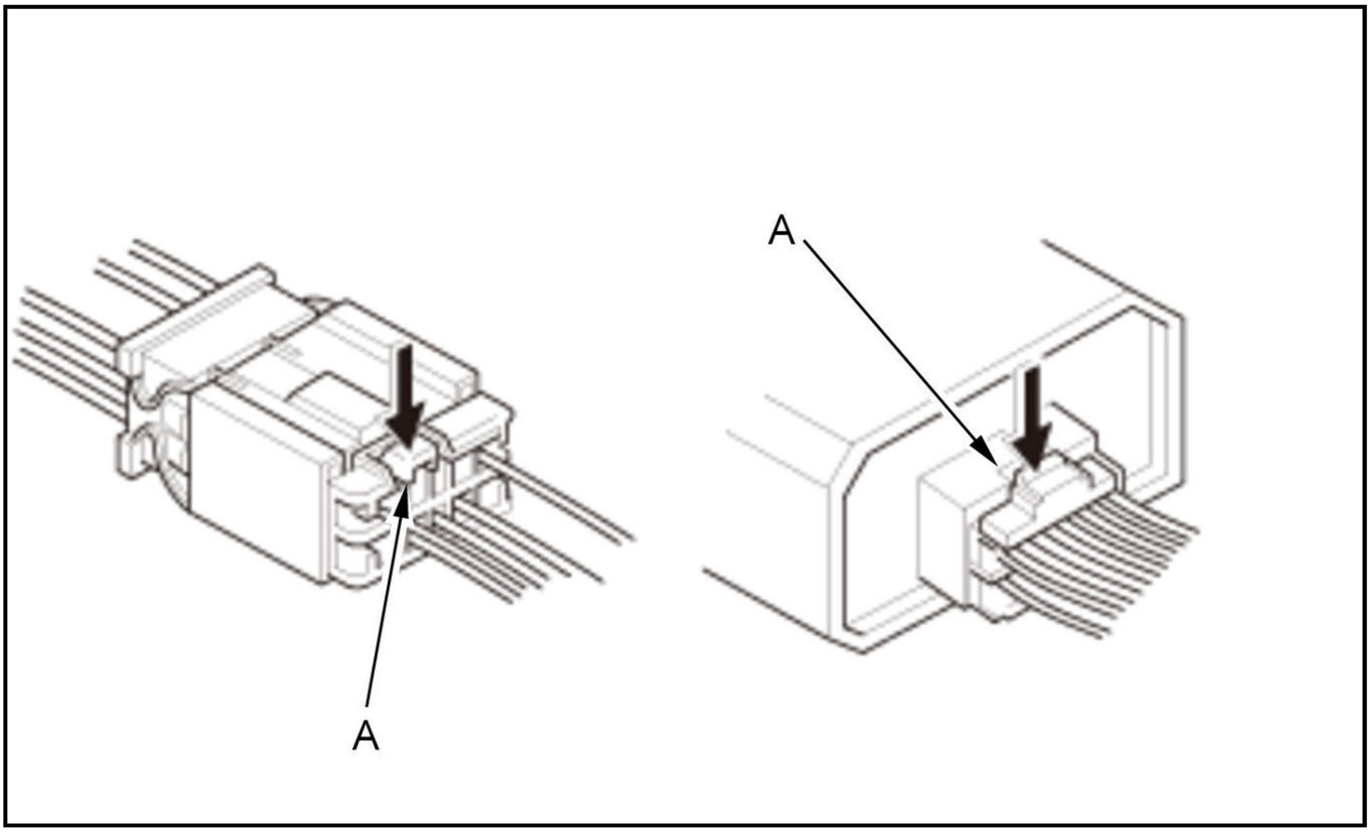

- Some connectors have a clip on their side used to attach them to a mount bracket on the body or on another component. This clip has a pull type lock.
- Some mounted connectors cannot be disconnected unless you first release the lock and remove the connector from its mount bracket (A).

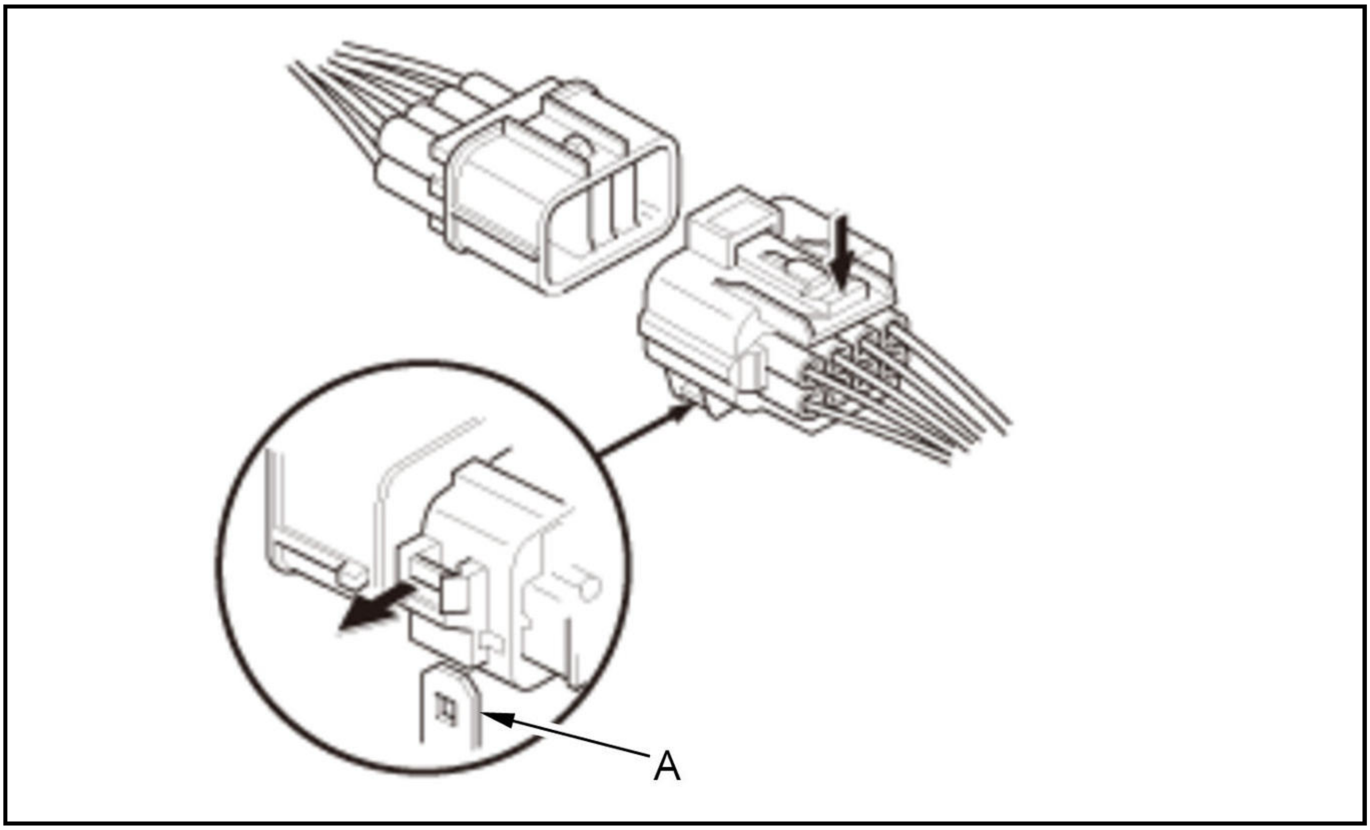

- Never try to disconnect connectors by pulling on their wires; pull on the connector halves instead.
- Always reinstall plastic covers.

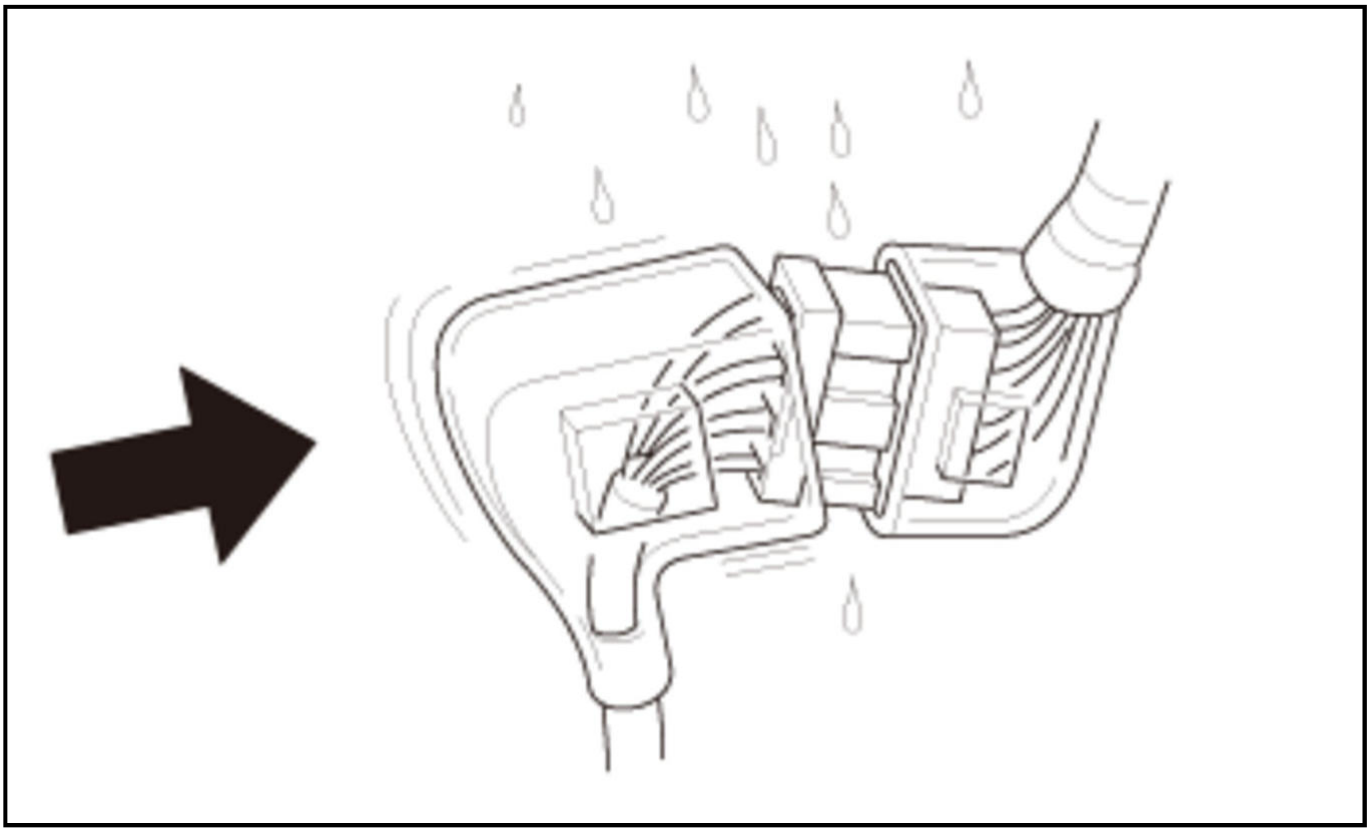

- Before connecting connectors, make sure the terminals are in place and not bent (A).

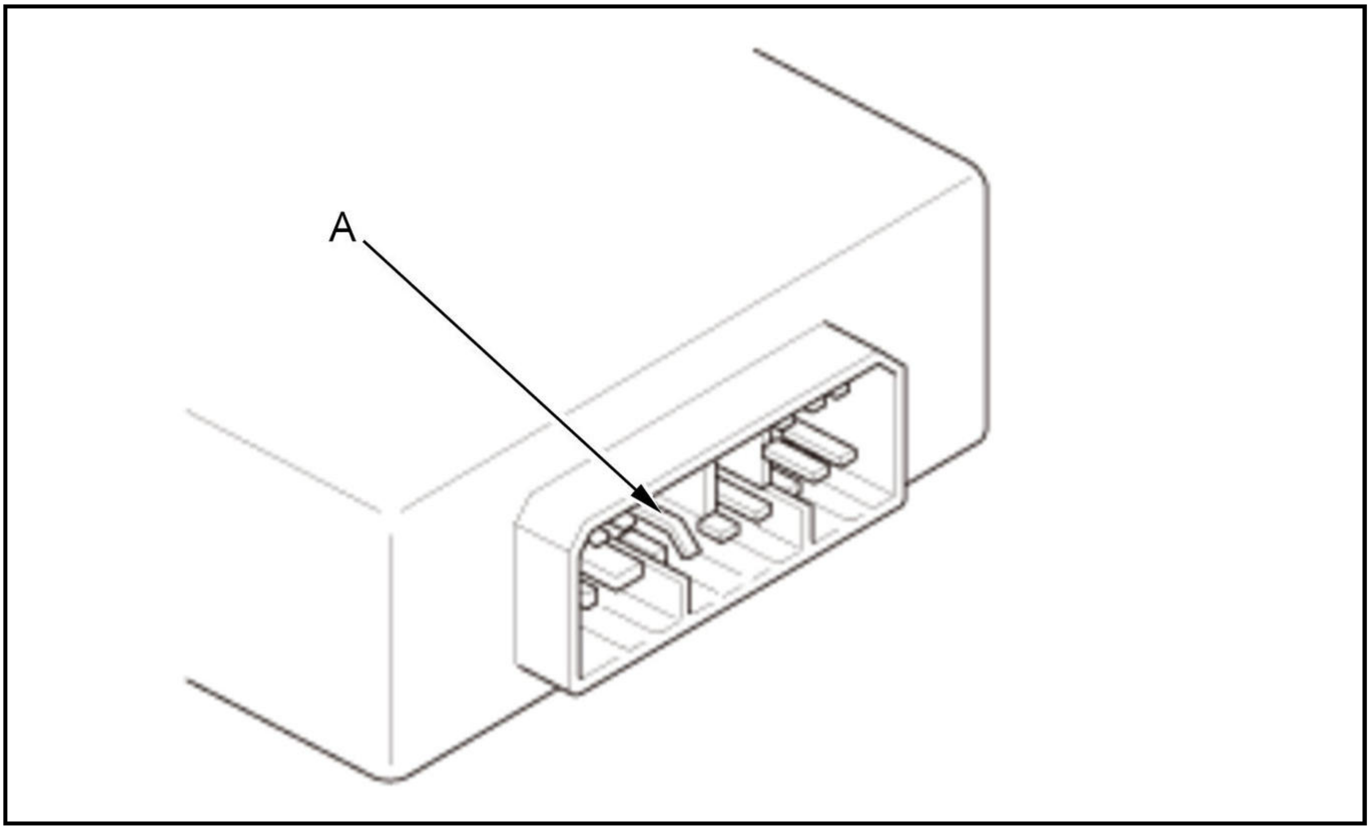

- Check for loose retainers (A) and rubber seals (B).

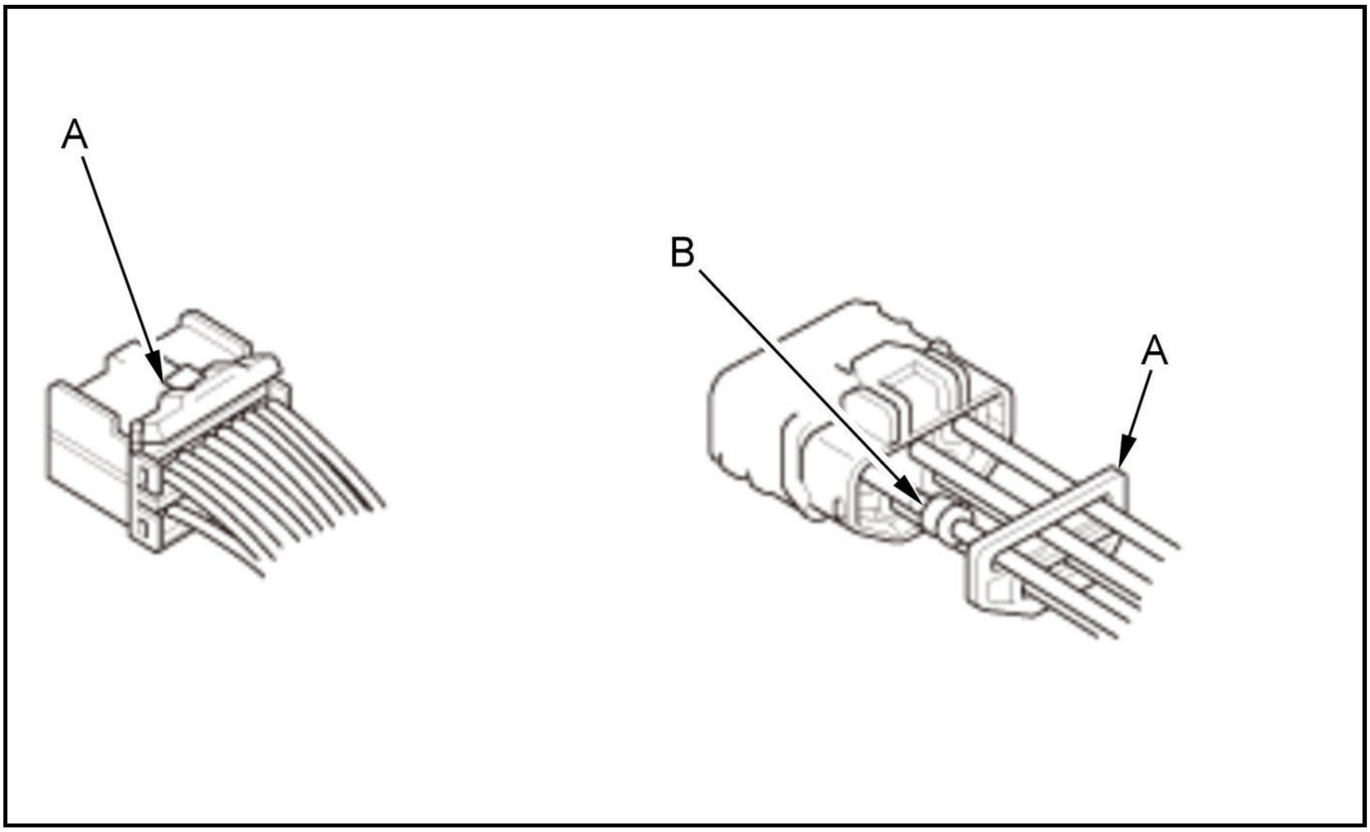

- The backs of some connectors are packed with dielectric grease. Add grease if necessary. If the grease is contaminated, replace it.

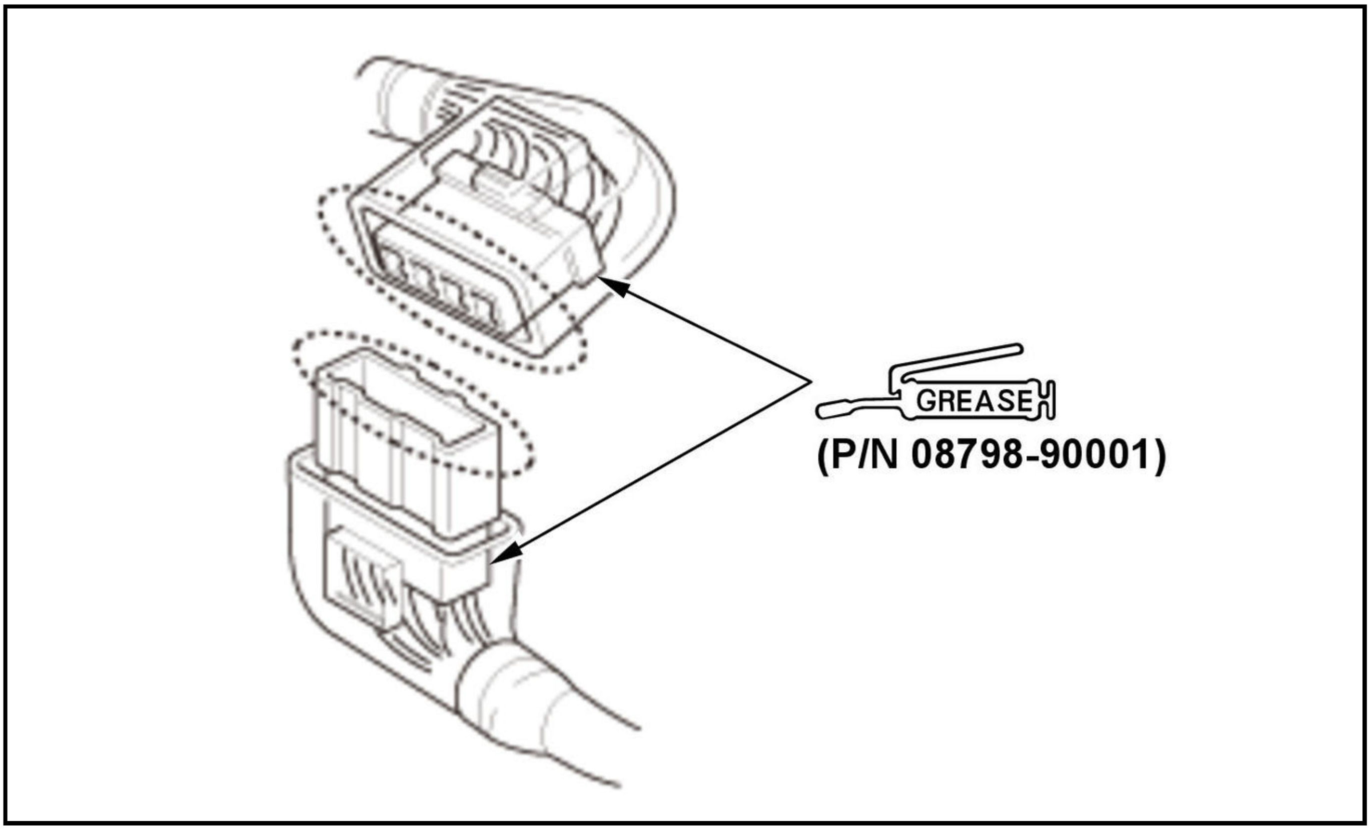

- Insert the connector all the way and make sure it is securely locked.
- Position wires so that the open end of the cover faces down.

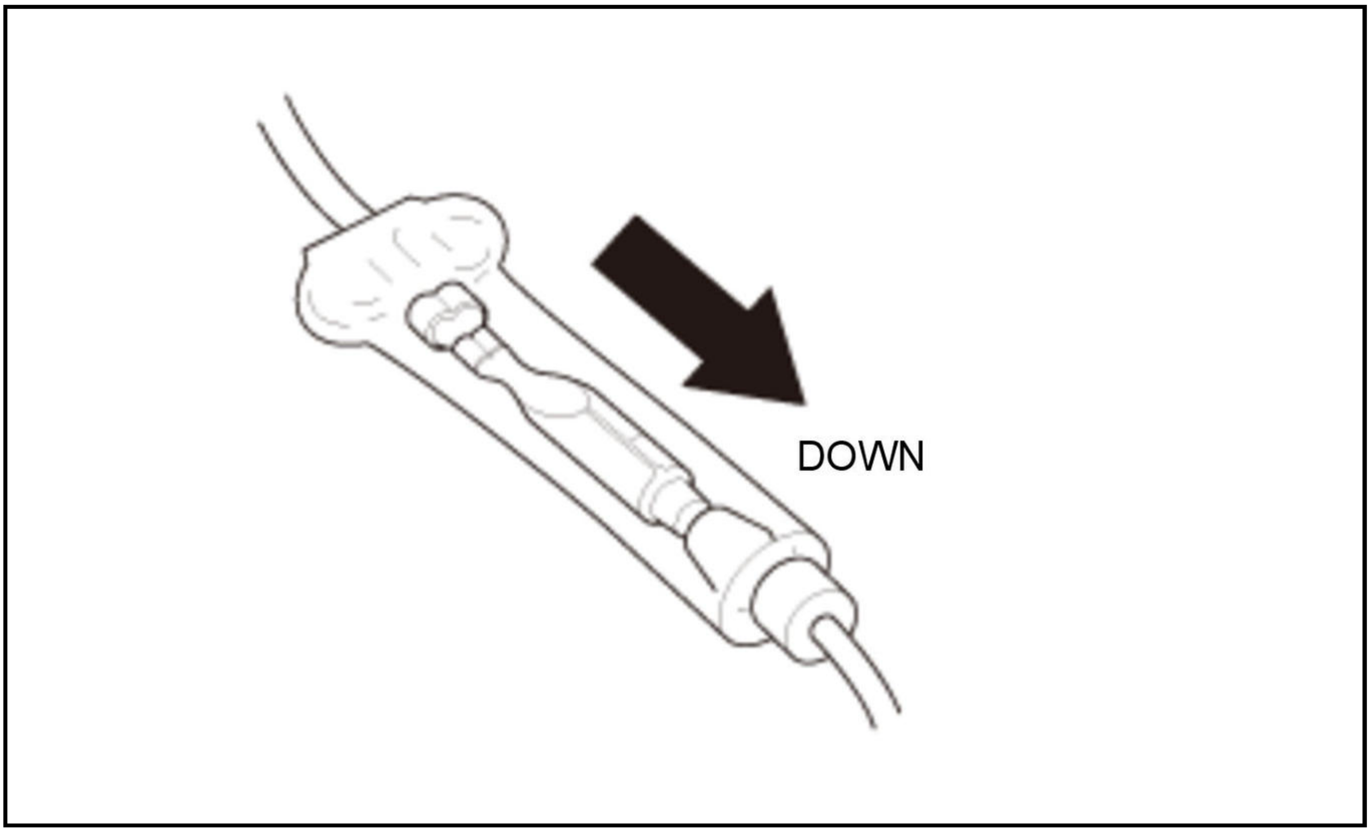

Handling Wires and Harnesses

- Secure wires and wire harnesses to the frame with their respective wire ties at the designated locations.
- Remove clips carefully; do not damage their locks (A).

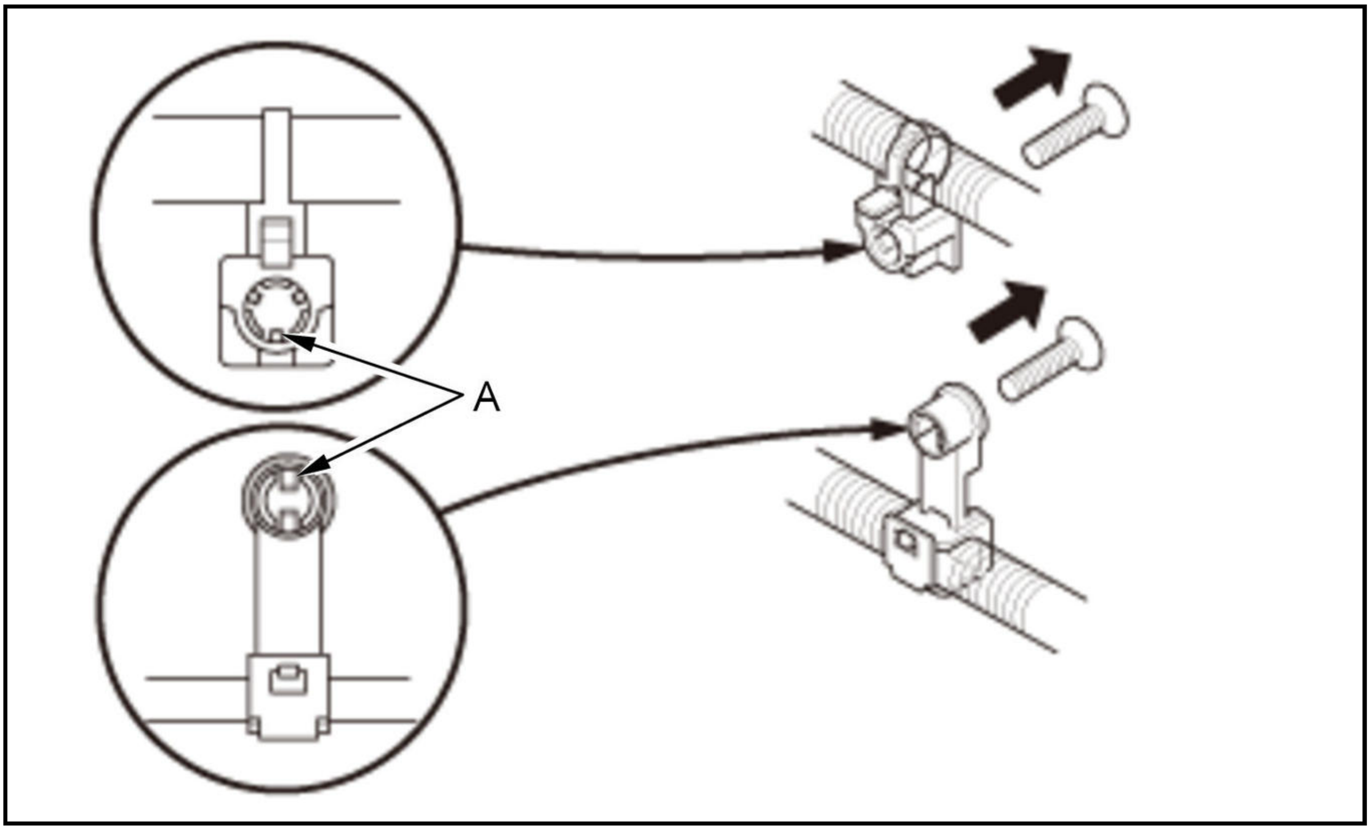

- After installing harness clips, make sure the harness does not interfere with any moving parts.
- Keep wire harnesses away from exhaust components and other hot parts, from sharp edges of brackets and holes, and from exposed screws and bolts.
- Seat grommets in their grooves properly (A). Do not leave grommets distorted (B).

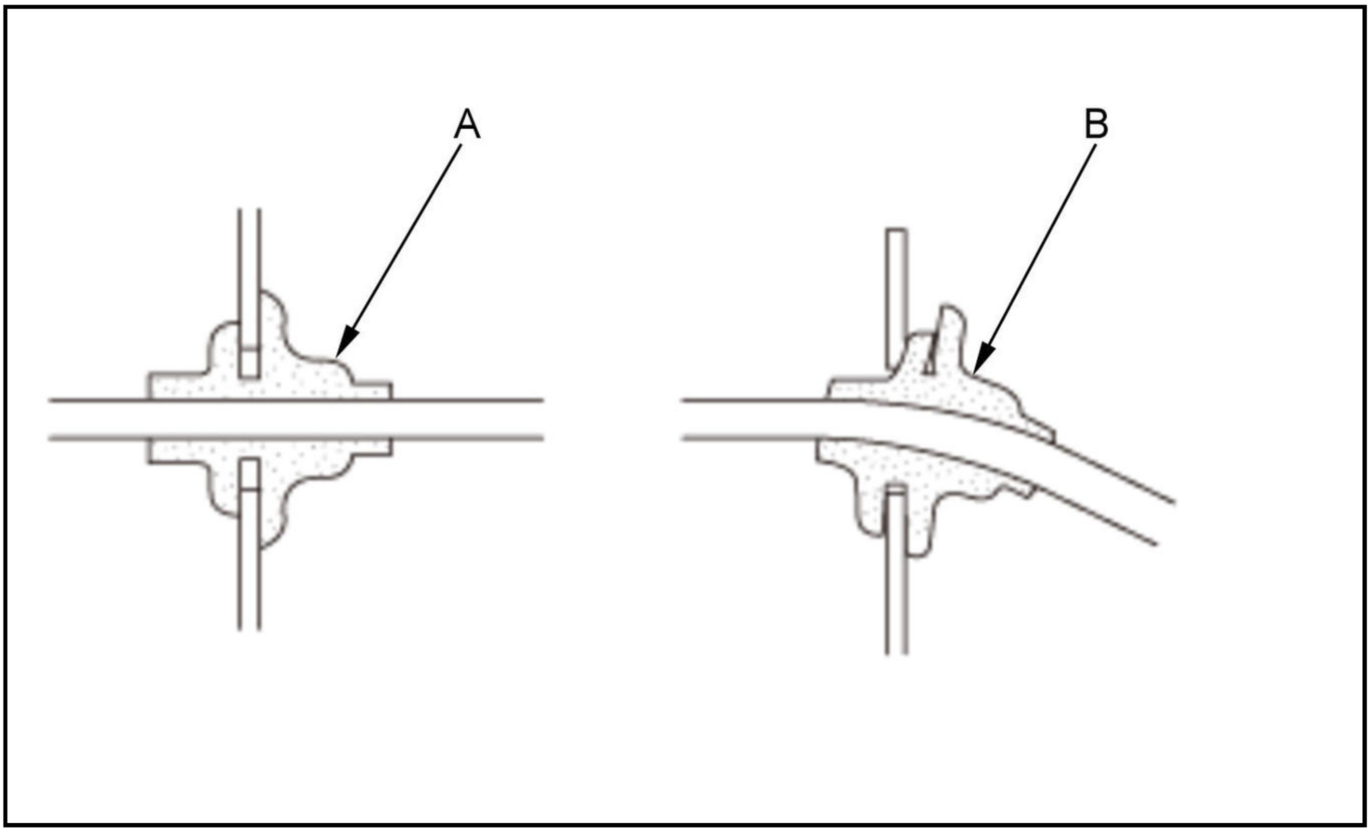

Testing and Repairs

- Do not use wires or harnesses with broken insulation. Replace them or repair them by wrapping the break with electrical tape or shrink tubing.
- Never attempt to modify, splice, or repair SRS wiring. If there is an open or damage to the SRS wiring or terminals, replace the harness.
- After installing parts, make sure that no wires are pinched under them.
- When using electrical test equipment, follow the manufacturer's instructions and those described in this repair service information
- If possible, insert the probe of the tester from the wire side (except waterproof connectors).

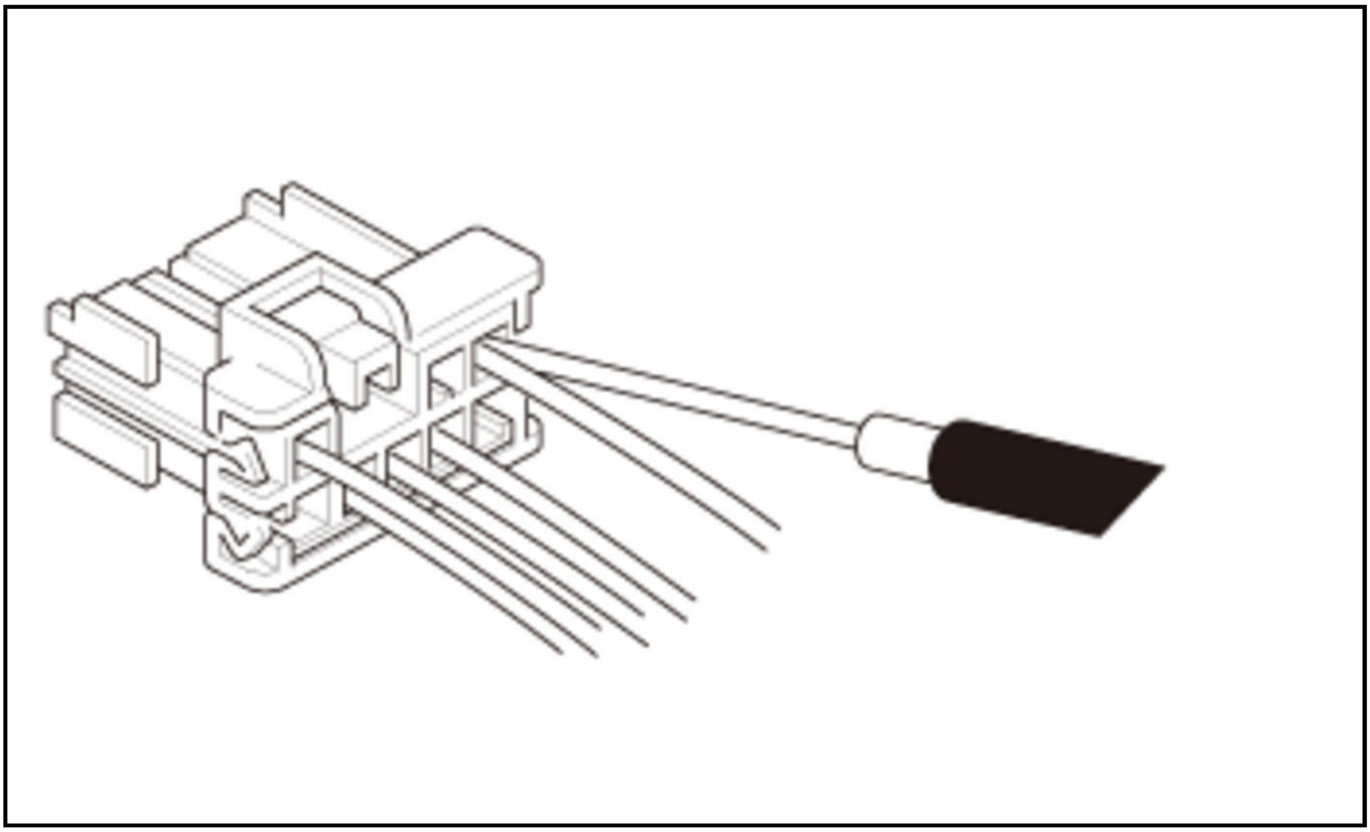

- Use back probe adapter, 17mm 07TAZ-001020A.

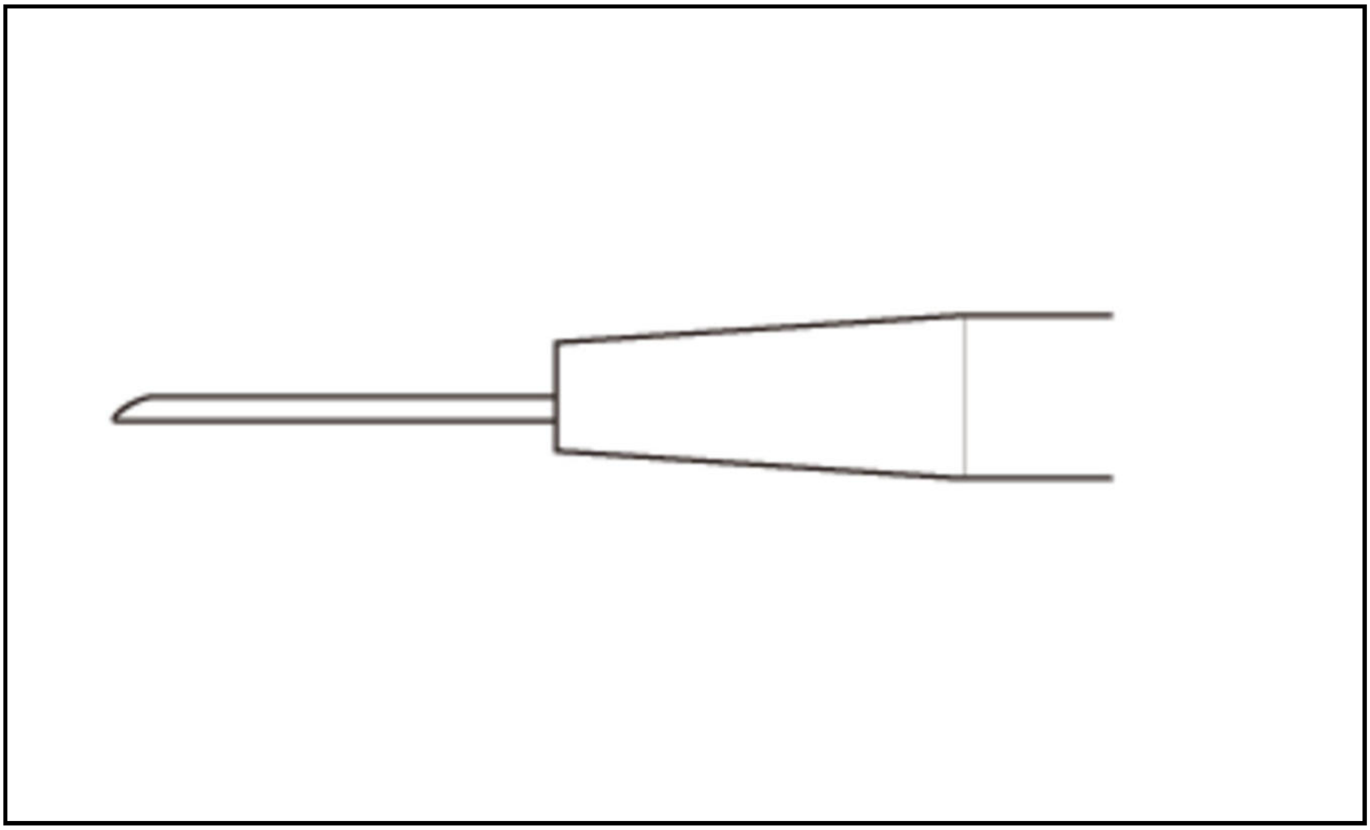

- Refer to the instructions in the Honda Terminal Kit for identification and replacement of connector terminals.

Five-Step Troubleshooting

1. Verify The Complaint: Turn on all the components in the problem circuit to verify the customer complaint. Note the symptoms. Do not begin disassembly or testing until you have narrowed down the problem area.

2. Analyze The Schematic: Look up the schematic for the problem circuit. Determine how the circuit is supposed to work by tracing the current paths from the power feed through the circuit components to ground. If several circuits fail at the same time, the fuse or a ground is a likely cause. Based on the symptoms and your understanding of the circuit operation, identify one or more possible causes of the problem.

3. Isolate The Problem By Testing The Circuit: Make circuit tests to check the diagnosis you made in step 2. Keep in mind that a logical, simple procedure is the key to efficient troubleshooting. Test for the most likely cause of failure first. Try to make tests at points that are easily accessible.

4. Fix The Problem: Once the specific problem is identified, make the repair. Be sure to use proper tools and safe procedures.

5. Make Sure The Circuit Works: Turn on all components in the repaired circuit in all modes to make sure you've fixed the entire problem. If the problem was a blown fuse, be sure to test all of the circuits on the fuse. Make sure no new problems turn up and the original problem does not recur.

Wire Color Codes

The following abbreviations are used to identify wire colors in the circuit schematics:

WHT	White
YEL	Yellow
BLK	Black
BLU	Blue
GRN	Green
RED	Red
ORN	Orange
PNK	Pink
BRN	Brown
GRY	Gray
PUR	Purple
TAN	Tan
LT BLU	Light Blue
LT GRN	Light Green
LT PUR	Light Purple

The wire insulation has one color or one color with another color stripe. The second color is the stripe.

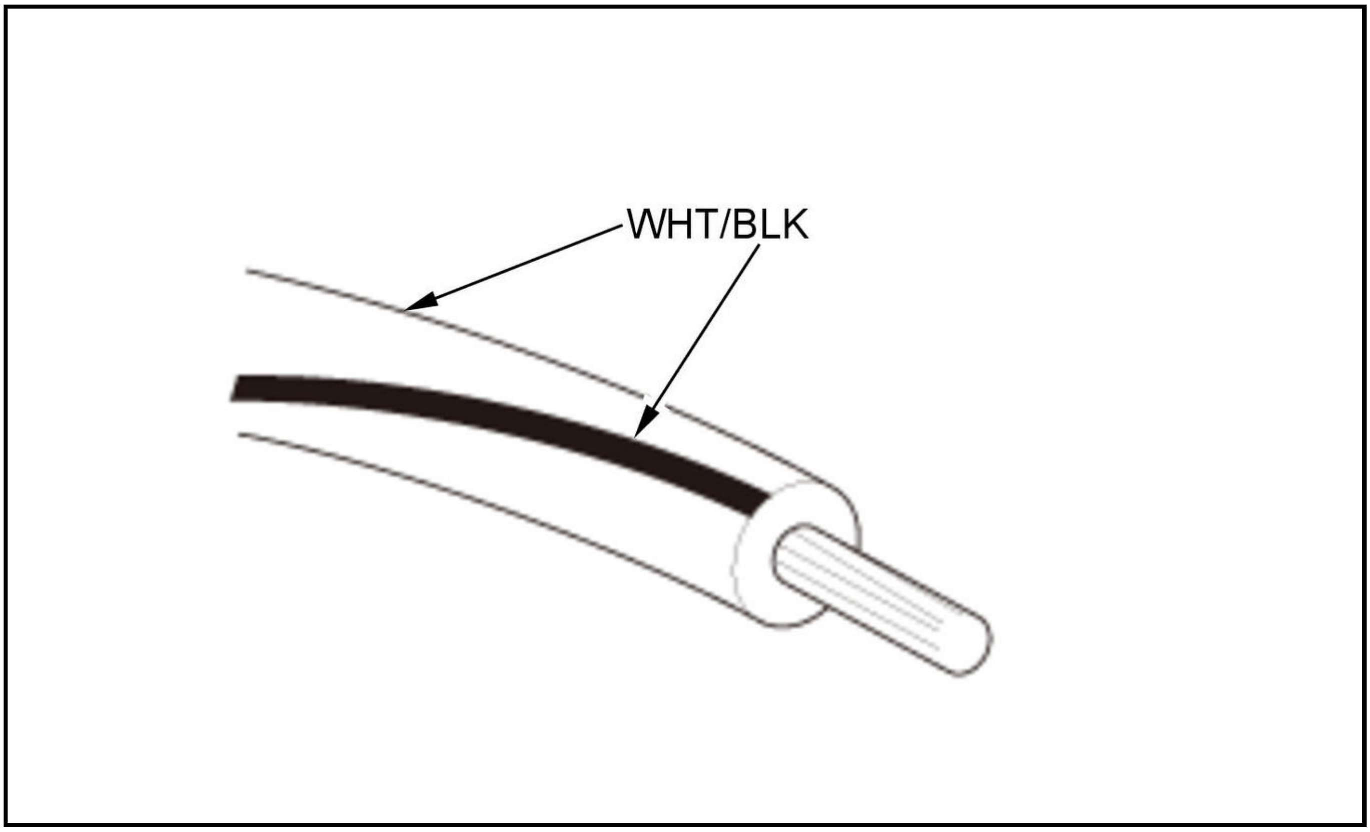

Troubleshoot the B-CAN Circuit Related Problems

Check the PCM for DTCs and troubleshoot PCM or F-CAN loss of communication errors first.

How to check for DTCs with the HDS (preferred method)

The HDS can check F-CAN and B-CAN communication status, read and clear DTCs, display data list, and perform function tests.

Check for DTCs

1. Connect the HDS to the data link connector (DLC) .

2. Select BODY ELECTRICAL, then select the desired MODE TEL, and check for DTCs. If the DTCs do not pertain to the select menu, select the ALL DTC Check icon to view all Body Electrical DTCs.

NOTE: For specific operations, refer to the HDS user's manual.

3. If any DTCs are indicated, go to the indicated DTCs troubleshooting.

NOTE: If DTC U1280 is stored, troubleshoot DTC U1280 first.

How to Clear DTCs with the HDS

1. Connect the HDS to the data link connector (DLC)

2. Clear the DTCs with the HDS.

3. Turn the vehicle to the OFF (LOCK) mode, and disconnect the HDS from the DLC.

B-CAN Circuit Troubleshooting Information

1. Connect the HDS to the data link connector (DLC) .

2. From the BODY ELECTRICAL SYSTEM SELECT menu, select B-CAN CONTROL UNITS INFORMATION, and then select CHECK CONNECTED CONTROL UNITS. Check that the electronic

control units (ECU) are communicating with the HDS.

3. Check that the electronic control units (ECU) are communicating with the HDS.

NOTE:

- **If an ECU is communicating with the HDS, "DETECT" will be displayed.**
- **If an ECU is not communicating, or the vehicle is not equipped with that ECU, "NOT AVAILABLE" will be displayed.**

4. If a control unit is not communicating, confirm which ECUs are communicating, then refer to the B-CAN Communication Line from the Electrical Wiring Diagrams to find the malfunction point. For example, when unit "K" is communicating, but units "G", "M", and "N" are not communicating, that will direct you to the malfunction point (A).

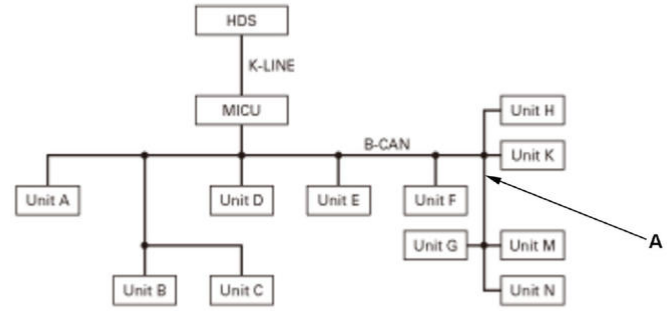

Loss of Communication DTC Cross-Reference Chart

When an ECU on the CAN circuit is unable to communicate with other ECUs on the CAN circuit, the other control units will set loss of communication DTCs. Use this chart to find the ECU that is not communicating with the other ECUs on the CAN circuit.

1. Find the Transmitting Control Unit that is in the same row as all of the loss of communication DTCs that you retrieved.

2. Do the input test for the transmitting control unit.

BUS OFF and Internal Error Codes

DTC Type	**Related Unit**				
	Acoustic Vehicle Alerting Control Unit	Automatic Lighting Control Unit-Sensor	Body Control Module	BSI Radar Unit	Climate Control Unit
BUS OFF	B	U1280	U1280	U1280	U1280
ECU (EEPROM) Error	B	B	B1002	B	B

DTC Type	**Related Unit**				
	Front Seat Heater Control Unit	Gauge Control Module	Keyless Access Backup Control Unit	Keyless Access Control Unit	Keyless Access Power Control Unit
BUS OFF	U1280	U1280	U1280	U1280	U1280
ECU (EEPROM) Error	B	B	B	B1602	B

DTC Type	**Related Unit**

	Multiplex Control Unit, Door (Power Window Master Switch)	Parking and Back-Up Sensor Control Unit	Power Seat Control Unit	Power Tailgate Control Unit	Relay Control Module
BUS OFF	U1280	U1280	U1280	U1280	U1280
ECU (EEPROM) Error	B	B2602	B1802	B1352	B1052

DTC Type	**Related Unit**
	Wireless Charger
BUS OFF	U1280
ECU (EEPROM) Error	B

Loss of Communication

Transmitting Control Unit	**Receiving Unit/Loss of Communication DTC**				
	Acoustic Vehicle Alerting Control Unit	Automatic Lighting Control Unit-Sensor	Body Control Module	BSI Radar Unit	Climate Control Unit
Body Control Module	B	U1281	TX	U1281	U1281
Gauge Control Module	U0155-00	U128D	U128D	U128D	U128D
Front Seat Heater Control Unit	B	B	B	B	U1290
Relay Control Module	B	B	U1291	B	B
PCM	U0100-00 / U0101-00	B	U0100	B	B
VSA Modulator-Control Unit	U0122-00	B	U0122	B	B
Electric Parking Brake Control Unit	U0128-00	B	B	B	B
Electric Servo Brake Control Unit	U0129-00	B	B	B	B

Transmitting Control Unit	**Receiving Unit/Loss of Communication DTC**				
	Front Seat Heater Control Unit	Gauge Control Module	Keyless Access Backup Control Unit	Keyless Access Control Unit	Keyless Access Power Control Unit
Body Control Module	B	U1281	B	U1281	U1281
Parking and Back-Up Sensor Control Unit	B	U1288	B	B	B
Gauge Control Module	B	TX	U128D	U128D	U128D
Climate Control Unit	U1064	B	B	B	B
PCM	B	U0100 / U0101	B	B	U0100
Millimeter Wave Radar	B	U0104	B	B	B
Battery Condition Monitor Module	B	U0111	B	B	B

Real Time AWD Control Unit	B	U0114	B	B	B
VSA Modulator-Control Unit	B	U0122	B	B	U0122
Electric Parking Brake Control Unit	B	U0128	B	B	B
EPS Control Unit	B	U0131	B	B	B
SRS Unit	B	U0151	B	B	B
Multipurpose Camera Unit	B	U129C	B	B	B
Acoustic Vehicle Alerting Control Unit	B	U12A0	B	B	B

Transmitting Control Unit	**Receiving Unit/Loss of Communication DTC**				
	Multiplex Control Unit, Door (Power Window Master Switch)	Parking and Back-Up Sensor Control Unit	Power Seat Control Unit	Power Tailgate Control Unit	Relay Control Module
Body Control Module	U1281	U1281	U1281	U1281	U1281
Gauge Control Module	U128D	U0155	U128D	U128D	U128D
Climate Control Unit	U1299	B	B	B	B
Multiplex Control Unit, Door (Power Window Master Switch)	TX	B	U0199	U0199	B

Transmitting Control Unit	**Receiving Unit/Loss of Communication DTC**
	Wireless Charger
Body Control Module	U1281
Keyless Access Control Unit	U1286
Gauge Control Module	U128D
Audio Unit / Audio-Navigation Unit	U128E

TX: Transmitting units do not set loss of communication DTCs.

CONNECTOR VIEW

RELAY CONTROL MODULE CONNECTOR FOR INPUTS AND OUTPUTS

Connector Index
Relay Control Module Connector A (6P)
Relay Control Module Connector B (10P)
Relay Control Module Connector C (18P)

Relay Control Module Connector A (6P) (female terminals)

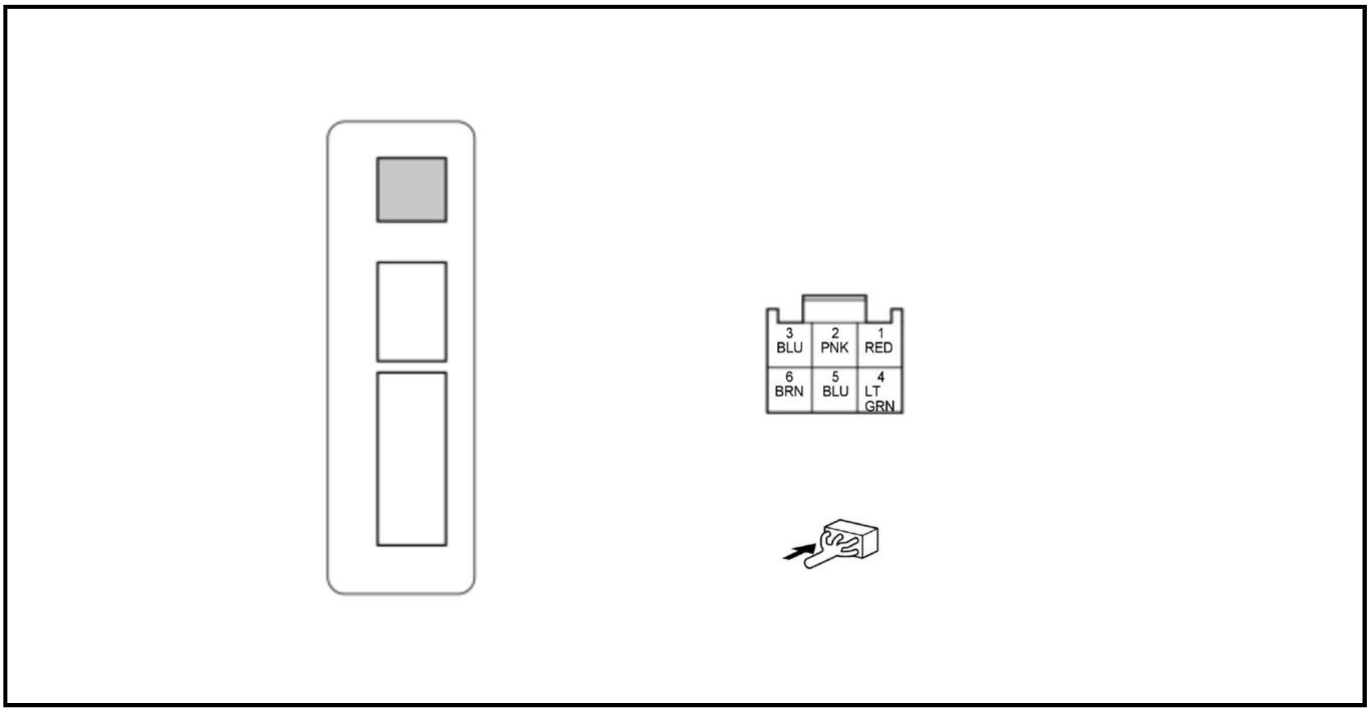

Terminal number	Terminal name	Description	Signal
1	+B_BACK_UP	+B power source	About battery voltage at all times
2	B-CAN_H	Communication line	---
3	B-CAN_L	Communication line	---
4	IG1_METER	IG1 power source	With vehicle in ON or START mode: about battery voltage
5*	HOOD_SW	Detects hood latch switch signal	With hood latch switch ON: less than 0.2 V With hood latch switch OFF and wakeup mode: about battery voltage With hood latch switch OFF and sleep mode: pulse
6	GND	Relay control module ground	Less than 0.2 V at all times

*: With hood latch switch

Relay Control Module Connector B (10P) (female terminals)

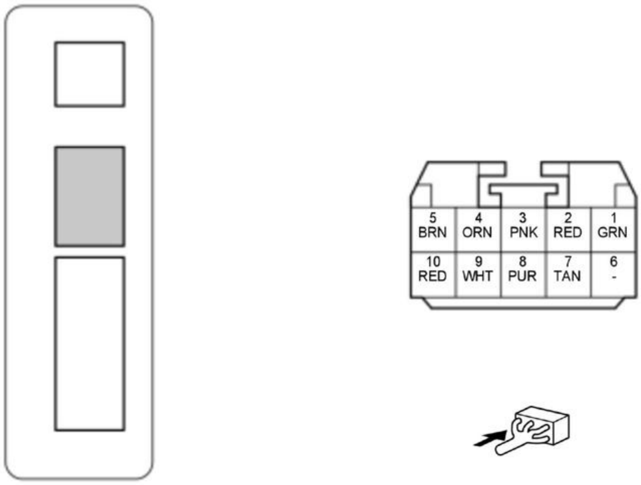

Terminal number	Terminal name	Description	Signal
1	ILLUMI+	Outputs illumination signal	With combination light switch PARKING or ON: about battery voltage With combination light switch OFF: less than 0.2 V
2	INTR_LT_CUT_RLY_OUT2	Outputs interior light signal	With interior lights ON: about battery voltage With interior lights OFF: less than 0.2 V
3	DRL_RLY_OUT2	Outputs right daytime running light signal	With right daytime running lights ON: about battery voltage With right daytime running lights OFF: less than 0.2 V
4	+B_R/MOD2	+B power source	About battery voltage at all times
5	L_H/L_HI	Outputs left headlight (HIGH) signal	With left headlight (HIGH) ON: about battery voltage With left headlight (HIGH) OFF: less than 0.2 V
6	---	Not used	---
7	RR_DEF_RLY_CL-	Drives rear window defogger relay	With vehicle in ON mode and rear window defogger ON: less than 0.2 V With vehicle in ON mode and rear window defogger OFF: about battery voltage
8	L_H/L_LO	Outputs left headlight (LOW) signal	With left headlight (LOW) ON: about battery voltage With left headlight (LOW) OFF: less than 0.2 V
9	H/L_LO_SIG	Communication line	---

Terminal number	Terminal name	Description	Signal
10	PARKING_R	Outputs right parking light signal	With right parking lights ON: about battery voltage With right parking lights OFF: less than 0.2 V

Relay Control Module Connector C (18P) (female terminals)

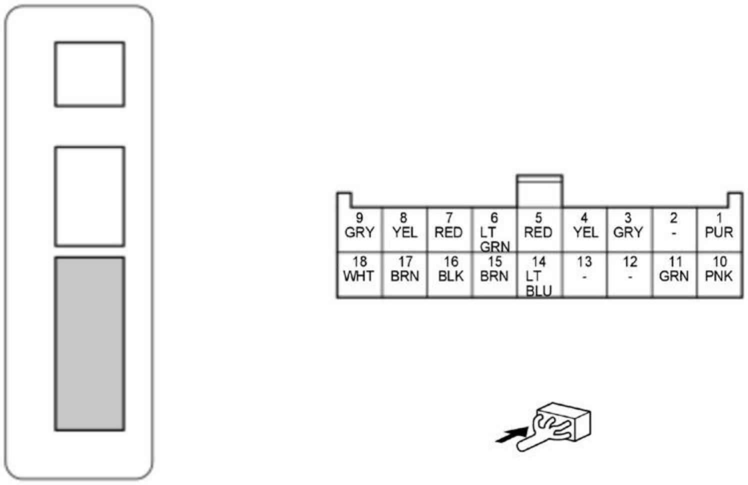
9 GRY
8 YEL
7 RED
6 LT GRN
5 RED
4 YEL
3 GRY
2 -
1 PUR
18 WHT
17 BRN
16 BLK
15 BRN
14 LT BLU
13 -
12 -
11 GRN
10 PNK

Terminal number	Terminal name	Description	Signal
1	PARKING_L	Outputs left parking light signal	With left parking lights ON: about battery voltage With left parking lights OFF: less than 0.2 V
2	---	Not used	---
3	R_H/L_HI	Outputs right headlight (HIGH) signal	With right headlight (HIGH) ON: about battery voltage With right headlight (HIGH) OFF: less than 0.2 V
4	FR_FOG_LT_RLY_CL-	Drives front fog light relay	With front fog light switch ON: less than 0.2 V With front fog light switch OFF: about battery voltage
5	+B_R/MOD1	+B power source	About battery voltage at all times
6	HORN_SW	Detects horn switch signal	With horn switch ON: less than 0.2 V With horn switch OFF: about battery voltage
7	INTR_LT_CUT_RLY_OUT1	Outputs interior light signal	With interior lights ON: about battery voltage With interior lights OFF: less than 0.2 V
8	DRL_RLY_OUT	Outputs left daytime running light signal	With left daytime running lights ON: about battery voltage With left daytime running lights OFF: less than 0.2 V
9	FR_WASHER_MTR	Drives windshield washer motor	With windshield washer switch ON: about battery voltage With windshield washer switch OFF: less than 0.2 V
10	H/L_ON_SW	Detects combination light switch ON signal	With combination light switch ON: less than 0.2 V With combination light switch OFF and wake-up mode: about battery voltage With combination light switch OFF and sleep mode: pulse

Terminal number	Terminal name	Description	Signal
11	R_H/L_LO	Outputs right headlight (LOW) signal	With right headlight (LOW) ON: about battery voltage With right headlight (LOW) OFF: less than 0.2 V
12	---	Not used	---
13	---	Not used	---
14	HORN_RLY_CL-	Drives horn relay	With horn(s) ON: less than 0.2 V With horn(s) OFF: about battery voltage
15	GND	Relay control module ground	Less than 0.2 V at all times

Terminal number	Terminal name	Description	Signal
16	GND	Relay control module ground	Less than 0.2 V at all times
17	RR_WASHER_MTR	Drives rear window washer motor	With rear window washer switch ON: about battery voltage With rear window washer switch OFF: less than 0.2 V
18	+B_WASHER	+B power supply	About battery voltage at all times

WIRELESS CHARGER CONNECTOR FOR INPUTS AND OUTPUTS

Wireless Charger 7P Connector (female terminals)

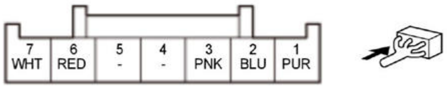

Terminal number	Terminal name	Description	Signal
1	GND	Wireless charger ground	Less than 0.2 V at all times
2	B-CAN_L	Communication line	---
3	B-CAN_H	Communication line	---
4	---	Not used	---
5	---	Not used	---
6	ACC_KEYLOCK	ACC power source	With vehicle in ACCESSORY or ON mode: about battery voltage
7	+B_BACK_UP	Power source for wireless charger	About battery voltage at all times

CHECK

PARASITIC DRAW CHECK

Special Tools Required

LH41 AC/DC low current clamp meter, FLULH41A**: Available through the Honda Tool and Equipment Program, 888-424-6857

1. Parasitic draw check 1

   -1. Make sure the 12 volt battery is fully charged, and that all the vehicle's electrical accessories are turned off.

   -2. Disconnect the following connectors.

Hood latch switch 2P connector (with hood latch switch)

-3. With hood latch switch: Order to recognize that the hood is closed, connect terminals A and B with a jumper wire.

Terminals A	Hood latch switch 2P connector (female terminals) No. 1: ①
Terminals B	Hood latch switch 2P connector (female terminals) No. 2: ①

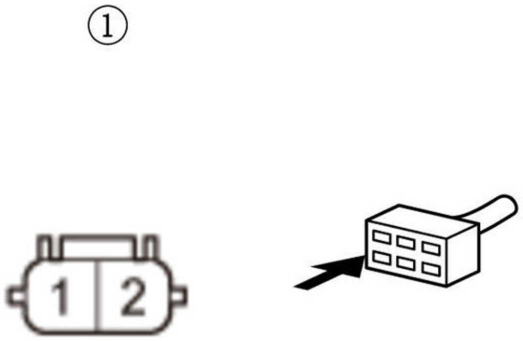

-4. Turn the vehicle to the ON mode.

-5. Turn the vehicle to the OFF (LOCK) mode.

-6. Get out of the vehicle, and close all doors and tailgate securely.

-7. Lock the doors with the keyless remote/transmitter.

-8. Make sure the individual map lights are turned off, and the security alarm system is armed (with security).

-9. Wait for at least 20 minutes.

-10.

Attach the LH41 AC/DC low current clamp meter (A) to the 12 volt battery ground cable (B). Follow the equipment manufacturer's instructions, then measure the parasitic draw.

NOTE: If you are using a digital multimeter: go to step 2.

Threshold of the parasitic draw
27.0 mA

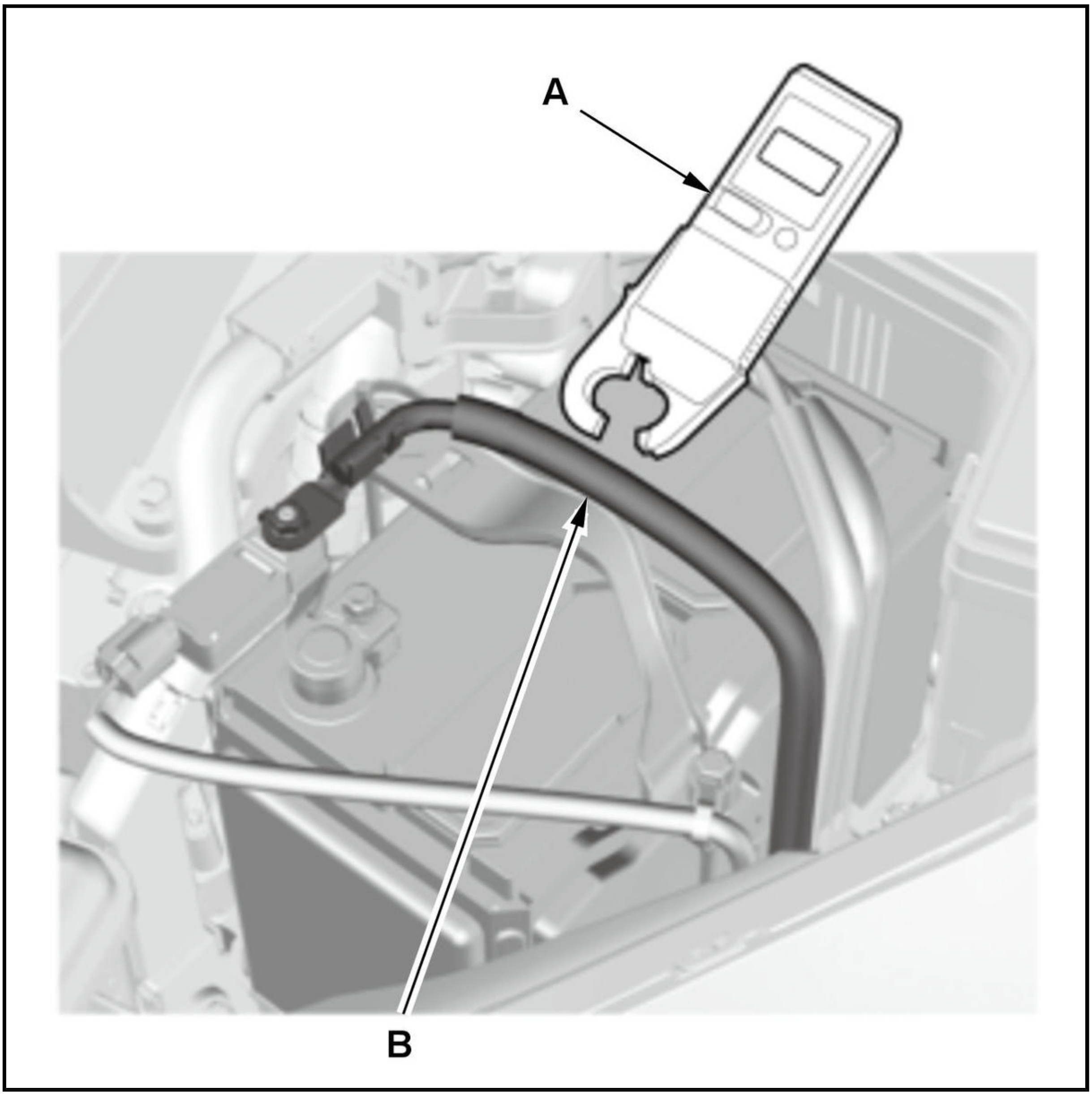

Is the measured valued less than the threshold?

YES

Intermittent failure, the system is normal at this time.

NO

Go to step 3.

2. Parasitic draw check 2:

Check the following items before measuring:

- Set the multimeter dial to the DCA (direct current amps) range.
- Plug the red test probe into the red A (Amps) jack, and plug the black test probe into the COM jack.
- To avoid blowing an input fuse, start by setting the range above 10 A.

-2. Loosen the nut (A) on the 12 volt battery negative terminal.

NOTE: Follow the instructions exactly to avoid disconnecting the 12 volt battery ground cable terminal from the 12 volt battery negative terminal.

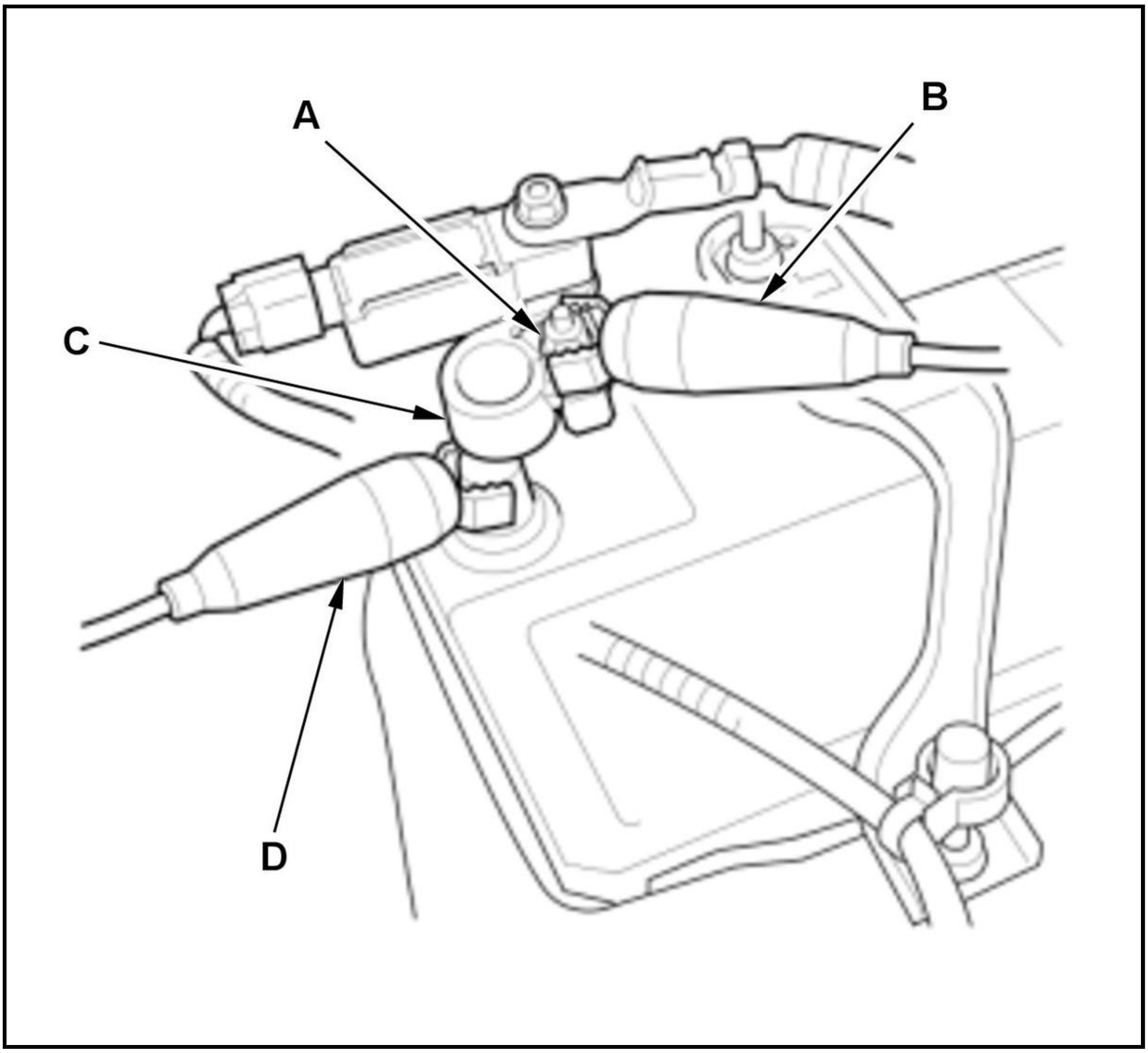

-3. Connect the red (+) test lead (B) to the 12 volt battery ground cable terminal (C).

-4. Carefully slide the 12 volt battery ground cable terminal upwards from the 12 volt battery negative terminal post to maintain contact and avoid disconnection. Then connect the black (-) test lead (D) to the 12 volt battery negative terminal post.

-5. Disconnect the 12 volt battery ground cable terminal (A) from the 12 volt battery negative terminal.

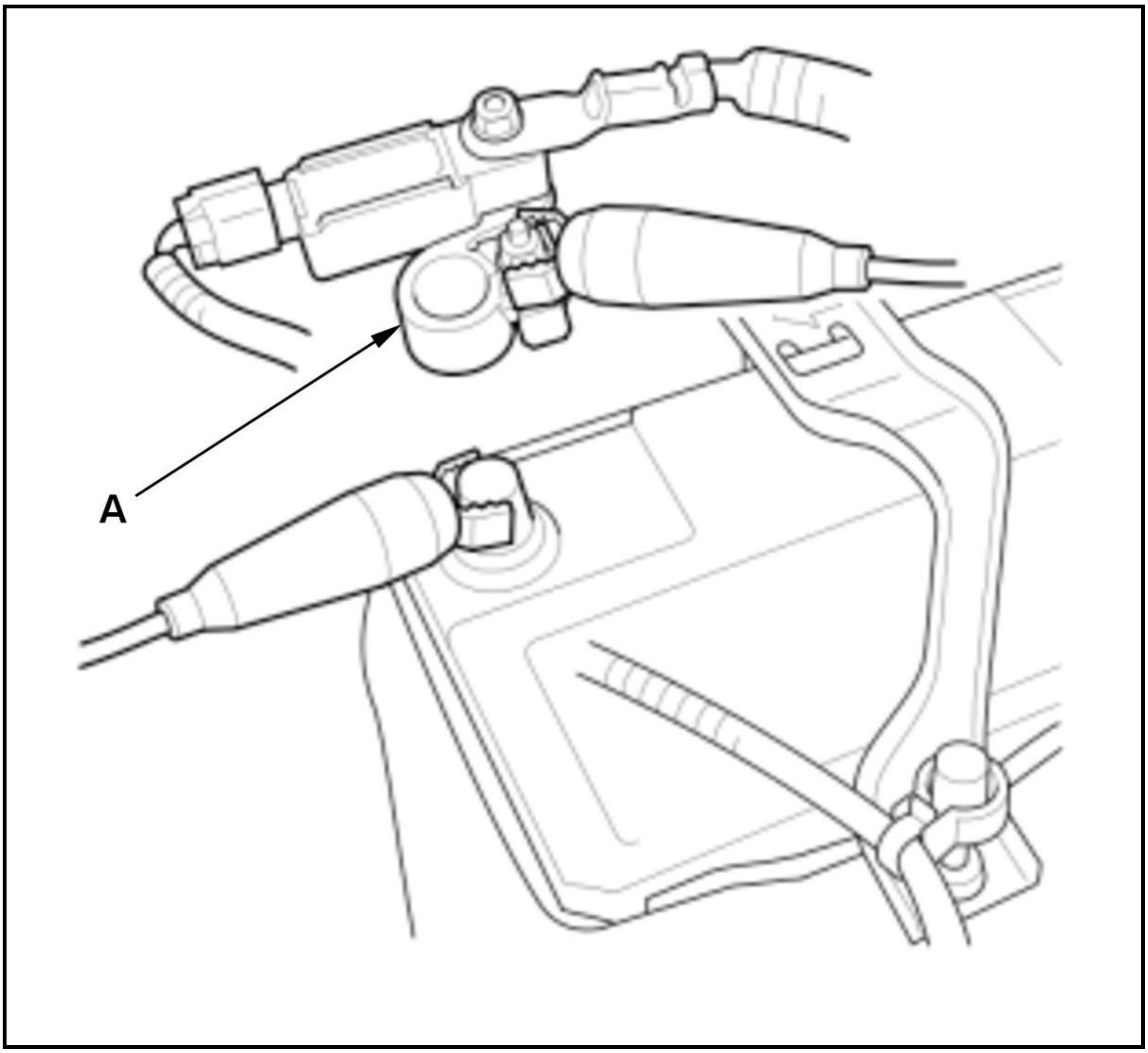

-6. Measure the parasitic draw.

NOTE: If the measured value is over the threshold, wait 10 minutes and recheck.

Threshold of the parasitic draw
27.0 mA

Is the measured valued less than the threshold?

YES

Intermittent failure, the system is normal at this time.

NO

Go to step 3.

3. Electrical equipment check

-1. Check if there are any aftermarket electrical accessories installed on the vehicle.

Are there any aftermarket electrical accessories installed?

YES

Remove any installed aftermarket accessories and do parasitic draw tests again.

NO

Go to step 4.

4. Parasitic draw check 3

-1. Remove the BACK UP fuse while the test leads are connected, and measure the parasitic draw.

Threshold of the parasitic draw
14.0 mA

Is the measured valued less than the threshold?

YES

Go to step 5.

NO

Go to step 6.

5. Parasitic draw check 4

-1. Install the BACK UP fuse.

-2. Short the B-CAN_H line to B-CAN_L line with a jumper wire while the test leads are connected.

-3. Turn the vehicle to the ON mode and then the OFF (LOCK) mode.

-4. Get out of the vehicle, and close all doors and tailgate securely.

-5. Wait for at least 40 seconds.

-6. Measure the parasitic draw.

Threshold of the parasitic draw
27.0 mA

Is the measured valued less than the threshold?

YES

Disconnect the control units from the B-CAN circuit one at a time, perform step 3-6 above, then measure the parasitic draw. Do the input test for the control unit that reduced the parasitic draw to less than the threshold when disconnected.

NO

Disconnect the control units from the back-up fuse circuit one at a time, perform step 3-6 above, then measure the parasitic draw. Replace the control unit that reduced the parasitic draw to less than the threshold when disconnected.

6. Parasitic draw check 4

-1. Remove the IG MAIN fuses while the test leads are connected.

-2. Turn the vehicle to the ON mode and then the OFF (LOCK) mode.

-3. Get out of the vehicle, and close all doors and tailgate securely.

-4. Wait for at least 40 seconds.

-5. Measure the parasitic draw.

Threshold of the parasitic draw
27.0 mA

Is the measured valued less than the threshold?

YES

Go to step 7.

NO

Remove the fuse(s) one at a time, and identify the parts which excessively consume current.

NO

If all electrical circuits are OK, check the starter system circuit.

NO

Perform the starter performance test.

7. Parasitic draw check 5

-1. Install the IG MAIN fuses.

-2. Disconnect under-dash fuse/relay box connector C (27P) while the test leads are connected, and measure the parasitic draw.

Threshold of the parasitic draw
27.0 mA

Is the measured valued less than the threshold?

YES

Replace the under-dash fuse/relay box .

NO

Repair a short to ground in the +B IG MAIN wire.

NO

Repair a short to ground in the +B IG MAIN2 wire.

FUSE TO COMPONENTS INDEX

FUSE TO COMPONENTS INDEX

Fuses	Location
A	Under-Hood Fuse/Relay Box
B	Fuse/Relay Holder A
C	Fuse Holder A
D	Under-Dash Fuse/Relay Box
E	Auxiliary Under-Dash Fuse Box

Under-Hood Fuse/Relay Box

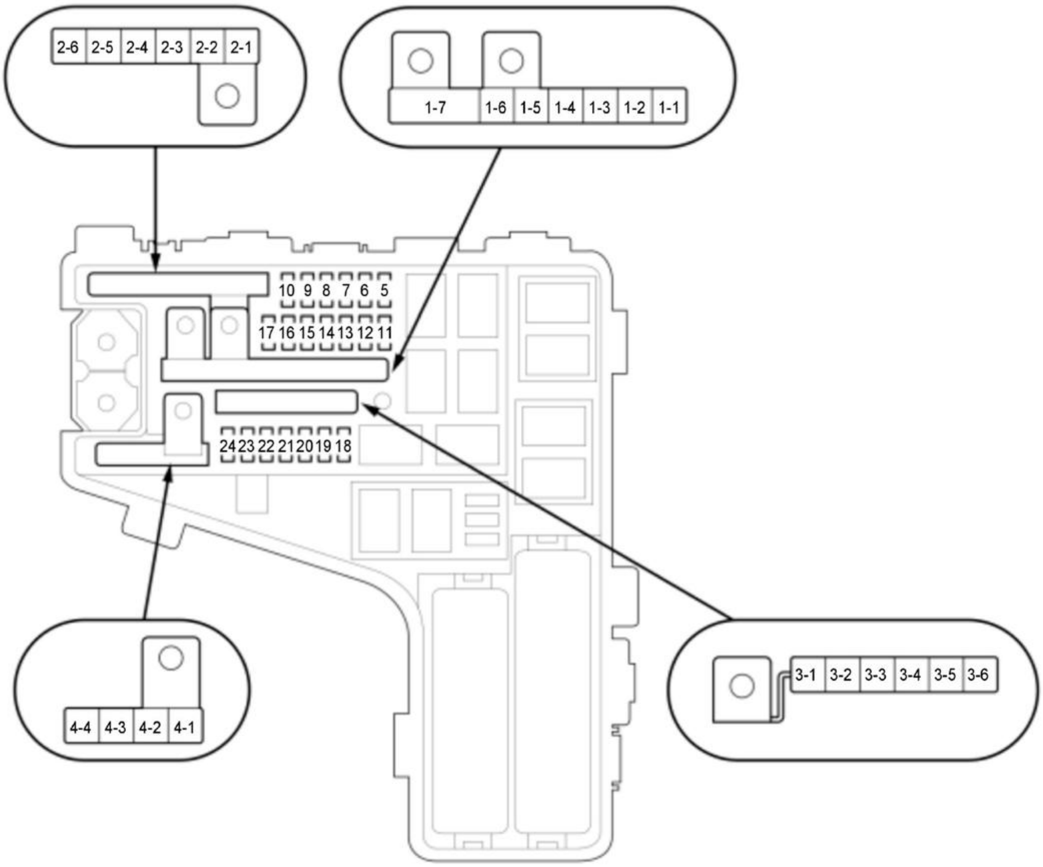
2-6
2-5
2-4
2-3
2-2
2-1
1-7
1-6
1-5
1-4
1-3
1-2
1-1
10 9 8 7 6 5
17 16 15 14 13 12 11
24 23 22 21 20 19 18
4-4
4-3
4-2
4-1
3-1
3-2
3-3
3-4
3-5
3-6

Fig. 7: Under-Hood Fuse/Relay Box Component Locations
Courtesy of HONDA, U.S.A., INC.

Fuse Number	Amps	Component(s) or Circuit(s) Protected	Feature
A1-1	40 A	No. E5, No. E7, and No. E8 fuses in the auxiliary under-dash fuse box	B
A1-2	40 A	Electric servo brake control unit/pedal feel simulator	B
A1-3	40 A	VSA modulator-control unit	B
A1-4	30 A	Relay control module	B
A1-5	30 A	Via IG1B relay circuit (built into the under-dash fuse/relay box): Body control module, No. D3, No. D4, No. D5, No. D6, No. D7, and No. D17 fuses in the under-dash fuse/relay box Via IG2 relay circuit (built into the under-dash fuse/relay box): Body control module, No. D9 and No. D22 fuses in the under-dash fuse/relay box	B
A1-6	30 A	Relay control module	B

Fuse Number	Amps	Component(s) or Circuit(s) Protected	Feature
A1-7	150 A	DC-DC converter (built into the PCU), No. A3-1, No. A3-2, No. A3-3, No. A3-4, No. A3-5, No. A3-6, No. A4-1* 1, No. A4-2, No. A4-3, No. A4-4, No. A18, No. A19, No. A20* 2, No. A22, No. A23, and No. A24 fuses in the under-hood fuse/relay box	*1: With power tailgate *2: With stereo amplifier
A2-1	70 A	EPS control unit	B
A2-2	30 A	Via IG1A relay circuit (built into the under-dash fuse/relay box): Body control module, No. D8, No. D20, No. D21, No. D34, and No. D35 fuses in the under-dash fuse/relay box Via ACC relay circuit (built into the under-dash fuse/relay box): No. D1 and No. D2 fuses in the under-dash fuse/relay box	B
A2-3	40 A	No. D18* 1, No. D19* 2, No. D31* 3, No. D32* 4, and No. D33* 3 fuses in the under-dash fuse/relay box	*1: With power lumbar support *2: With moonroof *3: With driver's power seat *4: With front seat heater
A2-4	60 A	No. D15, No. D16, No. D28, No. D29, and No. D30 fuses in the under-dash fuse/relay box, Power window relay Via power window relay: No. D14 and No. D27 fuses in the under-dash fuse/relay box	B
A2-5	30 A	Windshield wiper control unit/motor	B
A2-6	30 A	Park pawl actuator relay, Park pawl actuator (via park pawl actuator relay)	B
A3-1	40 A	Blower motor (via front blower motor relay)	B
A3-2	40 A	Not used	B
A3-3	40 A	VSA modulator-control unit	B
A3-4	40 A	No. D10, No. D23*, No. D24, No. D36, and No. D37 fuses in the under-dash fuse/relay box	*: With wireless charger and USB charger unit
A3-5	30 A	Not used	B
A3-6	40 A	Rear window defogger (via rear window defogger relay)	B
A4-1*	40 A	Power tailgate control unit	*: With power tailgate
A4-2	40 A	No. E1* 1, No. E2* 2, and No. E3* 2 fuses in the auxiliary under-dash fuse box	*1: With power tailgate *2: With front passenger's power seat
A4-3	20 A	Real time AWD control unit	B
A4-4	20 A	High voltage battery module fan (via battery fan relay)	B

Fuse Number	**Amps**	**Component(s) or Circuit(s) Protected**	**Feature**
A5	---	Not used	B
A6	15 A	Relay control module	B
A7	15 A	PGM-FI main relay 1 circuit (built into the relay circuit board) Via PGM-FI main relay 1 circuit (built into the relay circuit board): Injectors, PCM, PGM-FI main relay 2	B
A8	15 A	PGM-FI subrelay circuit (built into the relay circuit board) Via PGM-FI subrelay circuit (built into the relay circuit board): No. A11 fuse in the under-hood fuse/relay box, PCM	B
A9	10 A	Via brake light relay circuit (built into the relay circuit board): Electric servo brake control unit/pedal feel simulator, High mount brake light, Left taillight (left brake light), Right taillight (right brake light) Via brake pedal position switch: Body control module, PCM Via brake pedal position switch and brake light relay circuit (built into the relay circuit board): Electric servo brake control unit/pedal feel simulator, High mount brake light, Left taillight (left brake light), Right taillight (right brake light)	B
A10	10 A	IGHLD1 relay Via IGHLD1 relay: Battery condition monitor module, PCU electric coolant pump relay, Motor control module (built into the PCU)	B
A11	7.5 A	A/F sensor (SENSOR 1), Canister charge over valve, EVAP canister purge valve 1, EVAP canister purge valve 2	B
A12	10 A	Park pawl actuator driver unit, PCM	B

Fuse Number	Amps	Component(s) or Circuit(s) Protected	Feature
A13	10 A	PCU electric coolant pump (via PCU electric coolant pump relay)	B
A14	10 A	Body control module	B
A15	15 A	Ignition coils (via ignition coil relay circuit (built into the relay circuit board)), Ignition coil relay circuit (built into the relay circuit board)	B
A16	5 A	RFC relay	B
A17	---	Not used	B
A18	10 A	ANC/active sound control unit, Automatic lighting control unit-sensor* 2, Automatic lighting/rain sensor* 1, Body control module, CAN gateway, Data link connector (DLC), Gauge control module, HomeLink B® unit* 3, Power seat control unit* 4, Power tailgate control unit* 5, Power window master switch Relay control module, USB charger unit* 6, Wireless charger* 7	*1: With automatic wiper *2: Without automatic wiper *3: With HomeLink B® *4: With DPMS *5: With power tailgate *6: With USB charger and without wireless charger *7: With wireless charger
A19	15 A	Audio-navigation unit* 1, Audio unit* 2, Center display unit* 3	*1: With navigation *2: Without navigation *3: Display audio type
A20*	20 A	Stereo amplifier	*: With stereo amplifier
A21	---	Not used	B
A22	10 A	Front fog light relay*, Shutter grille Via front fog light relay*: Left front fog light, Right front fog light	*: With front fog light
A23	10 A	Electric heater coolant pump (via electric heater coolant pump relay circuit (built into the relay circuit board))	B
A24	10 A	12 volt battery sensor,	B

Fuse Number	Amps	Component(s) or Circuit(s) Protected	Feature
		Horn relay Via horn relay: Horn (HIGH), Horn (LOW)	

Fuse/Relay Holder A

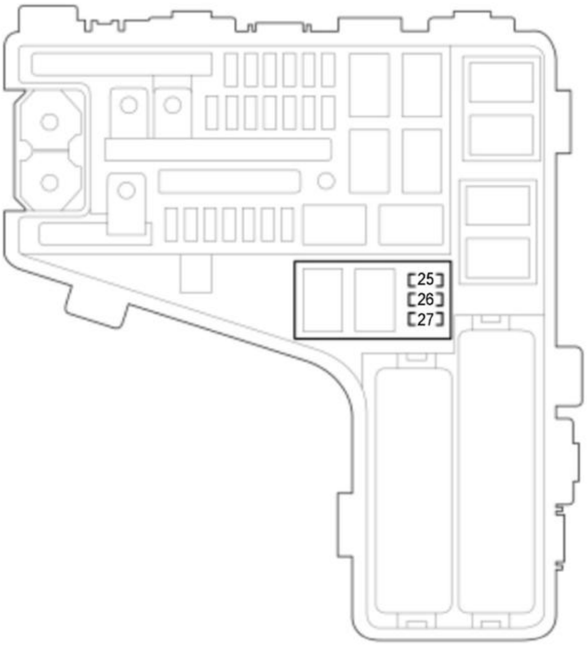

Fig. 8: Fuse/Relay Holder A Component Location
Courtesy of HONDA, U.S.A., INC.

Fuse Number	Amps	Component(s) or Circuit(s) Protected	Feature
B25	---	Not used	B
B26	---	Not used	B
B27	---	Not used	B

Fuse Holder A

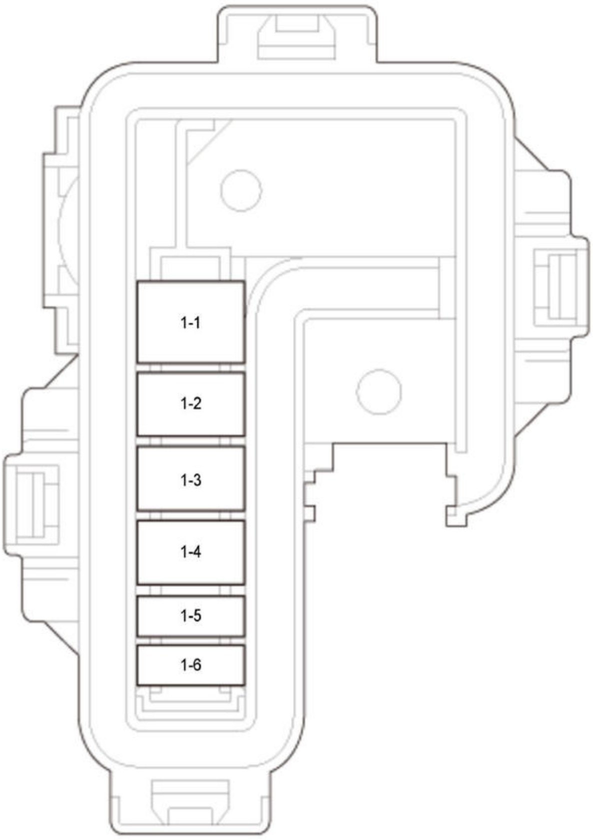

Fig. 9: Fuse Holder A Component Locations
Courtesy of HONDA, U.S.A., INC.

Fuse Number	Amps	Component(s) or Circuit(s) Protected	Feature
C1-1	40 A	PTC heater core (via PTC heater B relay)	B
C1-2	20 A	Not used	B
C1-3	40 A	PTC heater core (via PTC heater D relay)	B
C1-4	20 A	Electric VTC motor (via electric VTC relay circuit (built into the relay circuit board)), Electric VTC relay circuit (built into the relay circuit board)	B
C1-5	40 A	RFC unit (via RFC relay)	B
C1-6	30 A	Electric engine coolant pump (via engine EWP relay), Engine EWP relay	B

Under-Dash Fuse/Relay Box

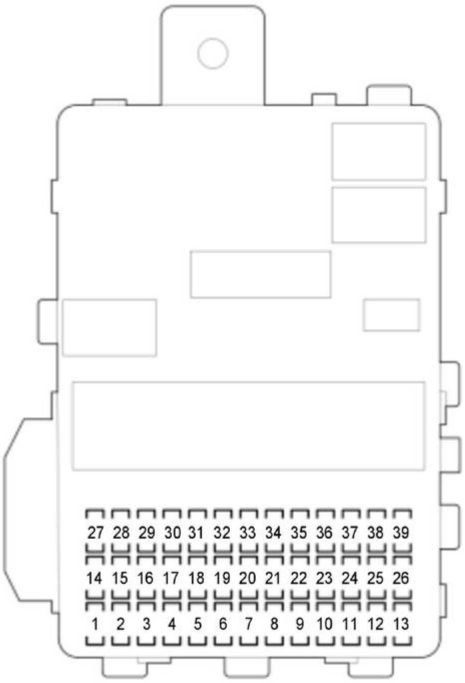

Fig. 10: Under-Dash Fuse/Relay Box Component Locations
Courtesy of HONDA, U.S.A., INC.

Fuse Number	Amps	Component(s) or Circuit(s) Protected	Feature
D1	10 A	Audio-navigation unit* 1, Audio unit* 2, Console accessory power socket relay, SBW shifter control module, USB charger unit* 3, USB port light (USB port A), USB port light (USB port B)* 4	*1: With navigation *2: Without navigation *3: With USB charger *4: Display audio type
D2	5 A	Body control module, Wireless charger*	*: With wireless charger
D3	5 A	Battery condition monitor module	B
D4	5 A	Electric servo brake control unit/pedal feel simulator, Rear window wiper motor	B
D5	10 A	Automatic dimming inside mirror, Brake light relay circuit (built into the relay circuit board), BSI radar units* 1, Front seat heater control unit* 2, Millimeter wave radar, Multipurpose camera unit, Power seat control unit* 3,	*1: With BSI *2: With front seat heater *3: With DPMS

Fuse Number	Amps	Component(s) or Circuit(s) Protected	Feature
		RDM switch, SBW shifter control module	
D6	10 A	Climate control panel, Front passenger's airbag cutoff indicator, Park pawl actuator driver unit, RFC unit	B
D7	10 A	ANC/active sound control unit, Audio-navigation unit* 1, Audio unit* 2, CAN gateway, Electrical compass unit* 3, Gauge control module, Parking and back-up sensor control unit* 4, Parking and back-up sensor switch* 4, Power tailgate control unit* 5, Real time AWD control unit, Relay control module, Reverse relay circuit (built into the under-dash fuse/relay box) Via reverse relay circuit (built into the under-dash fuse/relay box): Audio-navigation unit* 1, Audio unit* 2, Automatic dimming inside mirror, Body control module, Left inner taillight (left back-up light), Right inner taillight (right back-up light)	*1: With navigation *2: Display audio type without navigation *3: With electric compass *4: With parking and back-up sensor control unit *5: With power tailgate
D8	15 A	Body control module, Fuel pump (via PGM-FI main relay 2), No. D11 fuse in the under-dash fuse/relay box	B
D9	10 A	Climate control panel, Climate control unit, Electric heater coolant pump relay circuit (built into the relay circuit board),	*1: With front seat heater *2: With heated steering wheel

Fuse Number	Amps	Component(s) or Circuit(s) Protected	Feature
		Front blower motor relay, Front seat heater relay circuit (built into the under-dash fuse/relay box)* 1, Heated steering wheel relay* 2, Power mirror switch, Power window master switch, PTC heater B relay, PTC heater D relay, Rear window defogger relay	
D10	20 A	Console accessory power socket (via console accessory power socket relay)	B
D11	5 A	PCM	B
D12	10 A	Front passenger's door lock actuator, Right rear door lock actuator	B
D13	10 A	Left rear door lock actuator	B
D14	20 A	Left rear power window motor (via left rear power window switch)	B
D15	20 A	Front passenger's power window switch	B
D16	20 A	No. D12, No. D25, and No. D38 fuses in the under-dash fuse/relay box (via power door lock relay circuit (LOCK) (built into the under-dash fuse/relay box)), No. D13 and No. D26 fuses in the under-dash fuse/relay box (via power door lock relay circuit (UNLOCK) (built into the under-dash fuse/relay box)), No. D39 fuse in the under-dash fuse/relay box (via power door lock relay circuit (DR UNLOCK)) (built into the under-dash fuse/relay box)), Power door lock relay circuit (LOCK) (built into the under-dash fuse/relay box), Power door lock relay circuit (UNLOCK) (built into the under-dash fuse/relay box), Tailgate release actuator (via tailgate release actuator relay circuit (built into the under-dash fuse/relay box))*, Tailgate release actuator relay circuit (built into the under-dash fuse/relay box)*	*: Without power tailgate

Fuse Number	Amps	Component(s) or Circuit(s) Protected	Feature
D17	10 A	PCM	B
D18*	10 A	Via power lumbar support switch: Power lumbar support motor A, Power lumbar support motor B	*: With power lumbar support
D19*	20 A	Moonroof motor-control unit	*: With moonroof
D20	10 A	Not used	B
D21	10 A	Electric A/C compressor, MAF sensor, PCM (via brake pedal position switch), Secondary HO2S (SENSOR 2)	B
D22	10 A	Body control module	B
D23*	7.5 A	USB charger unit	*: With wireless charger and USB charger unit
D24	5 A	Audio remote-HFL switch (via cable reel)	B
D25	10 A	Driver's door lock actuator	B
D26	10 A	Front passenger's door lock actuator, Right rear door lock actuator	B
D27	20 A	Right rear power window motor (via right rear power window switch)	B
D28	20 A	Power window master switch	B
D29	20 A	Not used	B
D30	10 A	Body control module, Power switch	B
D31* 1	20 A	Power seat control unit* 2 Via driver's power seat adjustment switch* 3: Rear UP-DOWN motor, Recline motor	*1: With driver's power seat *2: With DPMS *3: Without DPMS
D32*	20 A	Front seat heater control unit (via front seat heater relay circuit (built into the under-dash fuse/relay box))	*: With front seat heater
D33* 1	20 A	Power seat control unit* 2 Via driver's power seat adjustment switch* 3: Front UP-DOWN motor, Slide motor	*1: With driver's power seat *2: With DPMS *3: Without DPMS
D34	10 A	Acoustic vehicle alerting control unit, EPS control unit, VSA modulator-control unit	B
D35	10 A	SRS unit	B
D36	20 A	Not used	B
D37	15 A	Not used	B
D38	10 A	Left rear door lock actuator	B
D39	10 A	Driver's door lock actuator	B

Auxiliary Under-Dash Fuse Box

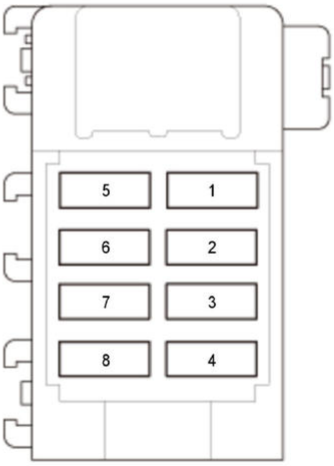

Fig. 11: Auxiliary Under-Dash Fuse Box Component Locations
Courtesy of HONDA, U.S.A., INC.

Fuse Number	Amps	Component(S) Or Circuit(S) Protected	Feature
E1*	20 A	Power Tailgate Control Unit	*: With Power Tailgate
E2*	20 A	Slide Motor (Via Front Passenger's Power Seat Adjustment Switch)	*: With Front Passenger's Power Seat
E3*	20 A	Recline Motor (Via Front Passenger's Power Seat Adjustment Switch)	*: With Front Passenger's Power Seat
E4	---	Not Used	B
E5	10 A	Battery Condition Monitor Module, Ighldb Relay Via Ighldb Relay: Battery Condition Monitor Module, Battery Fan Relay	B
E6	---	Not Used	B
E7	10 A	Body Control Module, Heated Steering Wheel Control Unit (Via Heated Steering Wheel Relay And Cable Reel)* 2 Hands Free Access Power Tailgate Control Unit/Sensor* 1, Heated Steering Wheel Control Unit (Via Heated Steering Wheel Relay And Cable Reel)* 2	*1: With Hands Free Access Power Tailgate *2: With Heated Steering Wheel
E8	15 A	Sbw Shifter Control Module	B

CONNECTOR AND HARNESS LOCATIONS

WIRE HARNESS AND GROUND LOCATIONS

Engine Compartment - 1/4

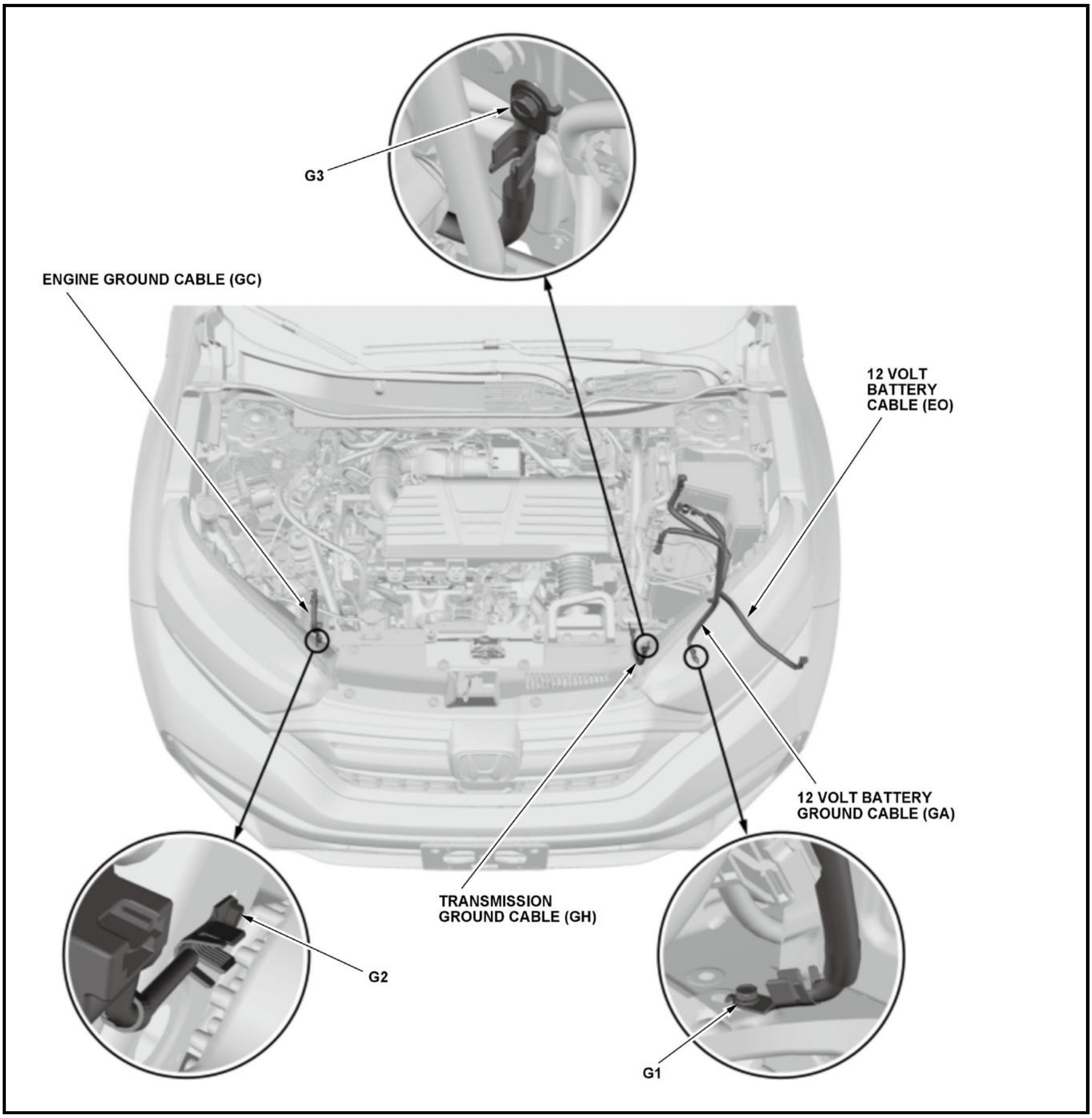
G3
ENGINE GROUND CABLE (GC)
12 VOLT
BATTERY
CABLE (EO)
12 VOLT BATTERY
GROUND CABLE (GA)
TRANSMISSION
GROUND CABLE (GH)
G2
G1

Engine Compartment - 2/4

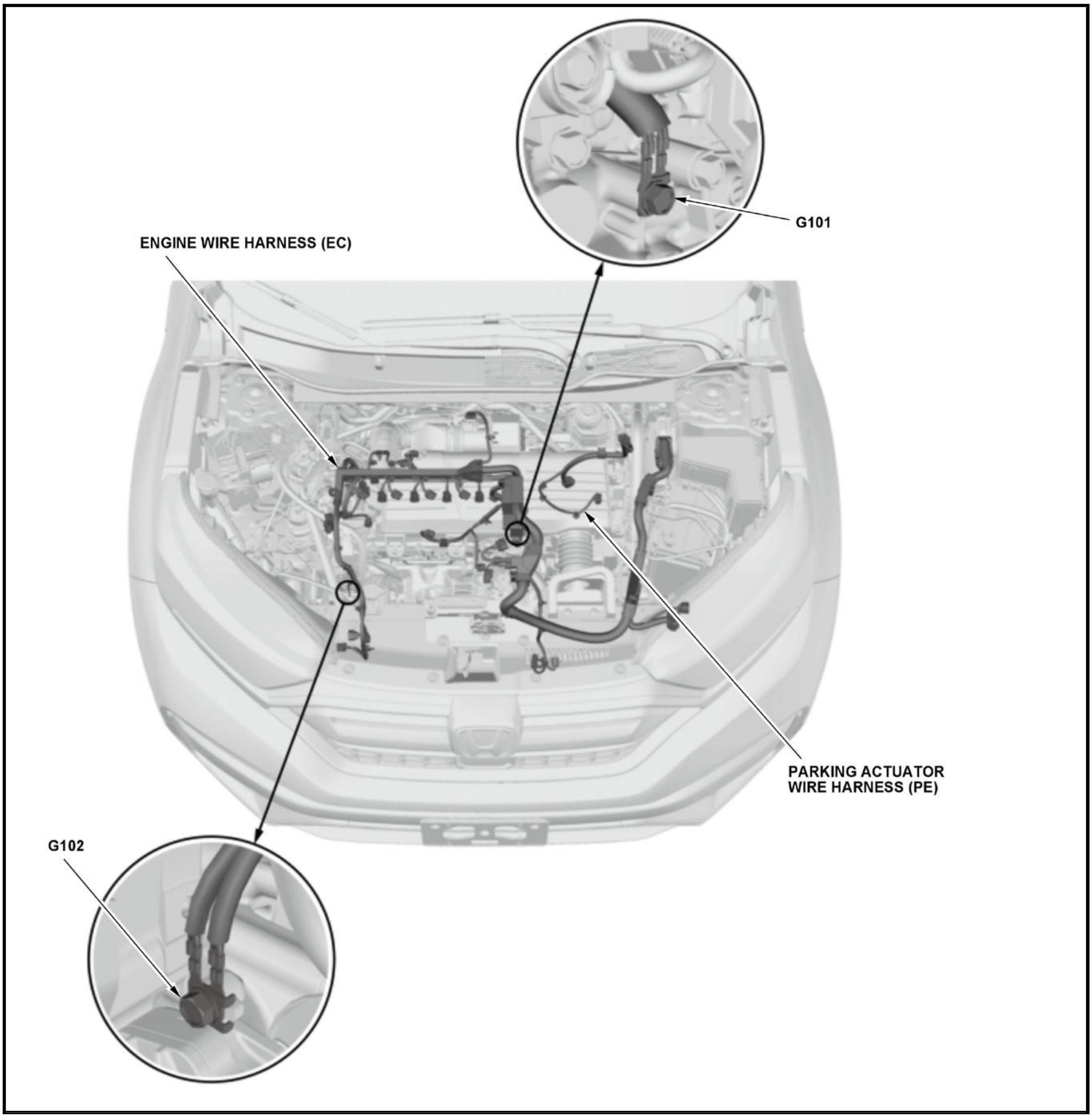
G101
ENGINE WIRE HARNESS (EC)
PARKING ACTUATOR WIRE HARNESS (PE)
G102

Engine Compartment - 3/4

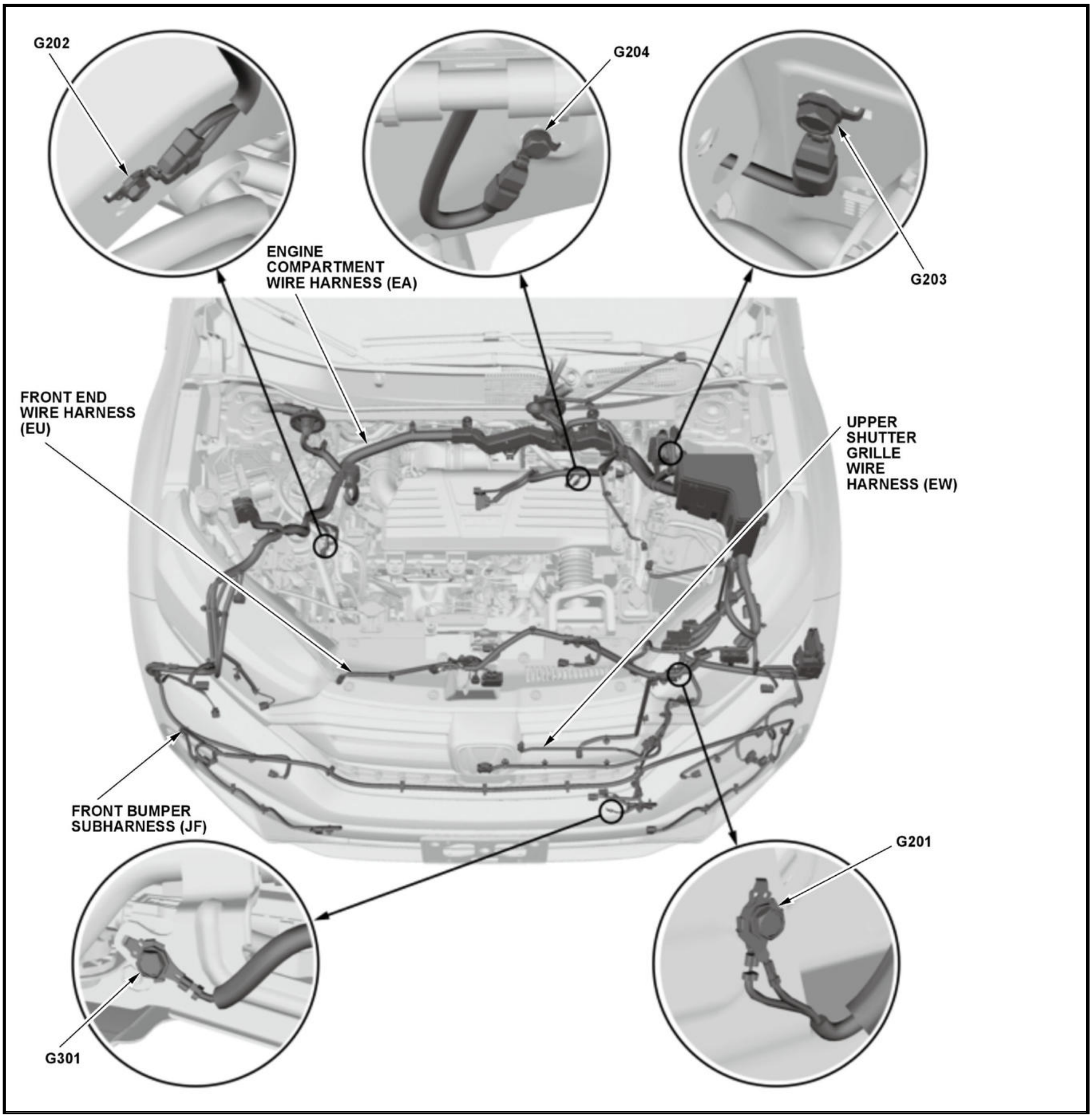
G202
G204
G203
ENGINE COMPARTMENT WIRE HARNESS (EA)
FRONT END WIRE HARNESS (EU)
UPPER SHUTTER GRILLE WIRE HARNESS (EW)
FRONT BUMPER SUBHARNESS (JF)
G201
G301

Engine Compartment - 4/4

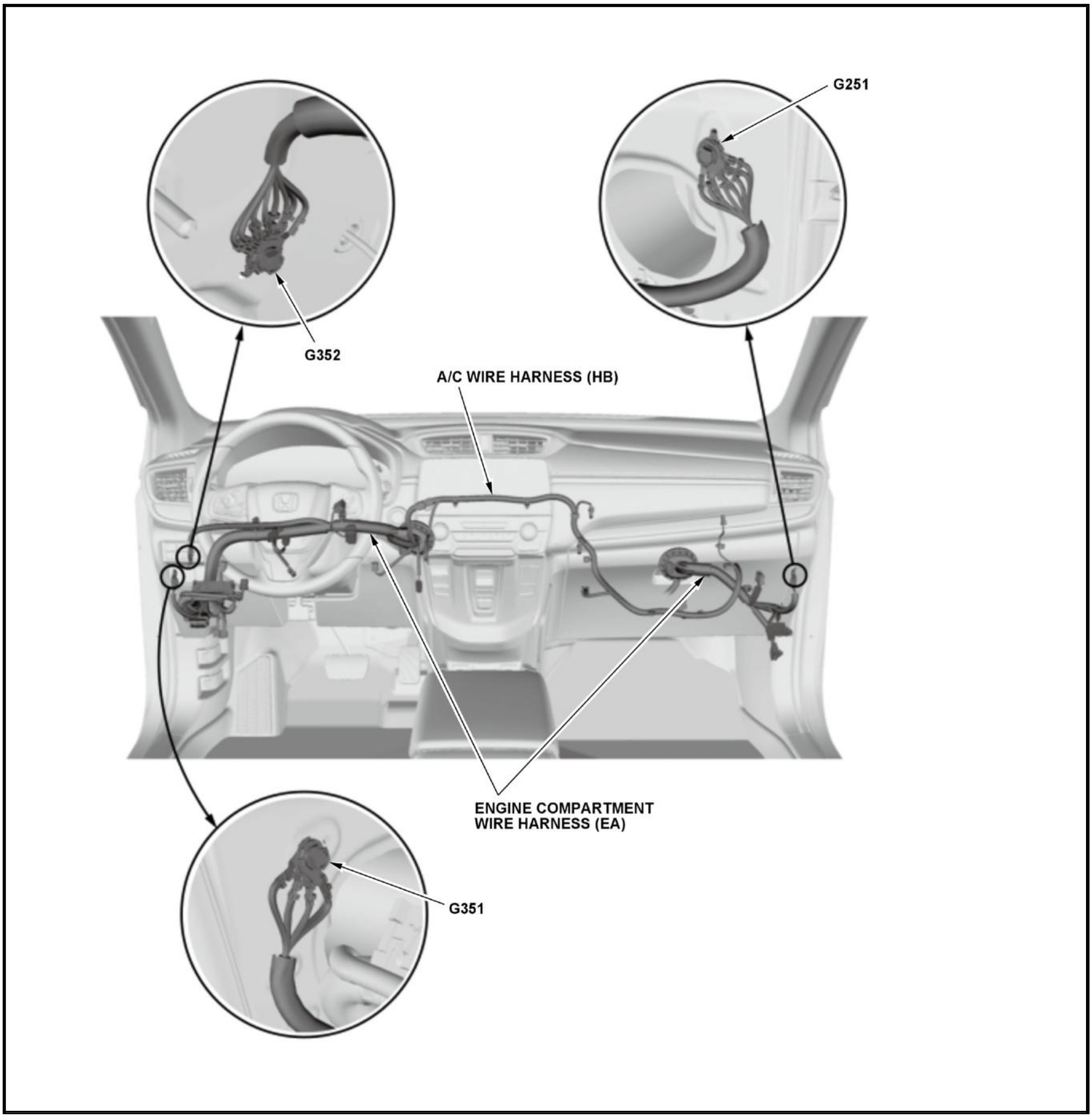
G251
G352
A/C WIRE HARNESS (HB)
ENGINE COMPARTMENT WIRE HARNESS (EA)
G351

Dashboard

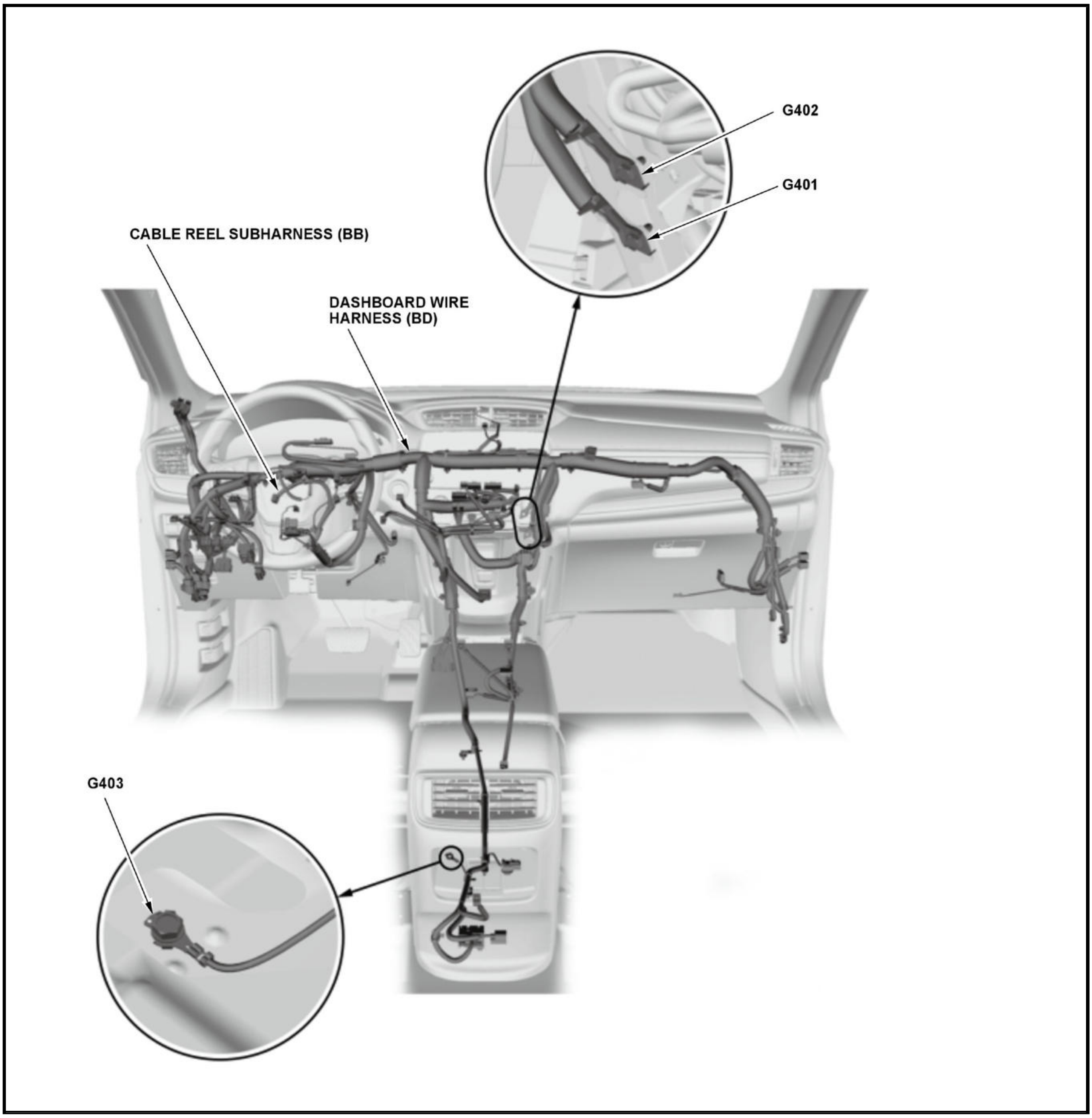
G402
G401
CABLE REEL SUBHARNESS (BB)
DASHBOARD WIRE HARNESS (BD)
G403

Roof

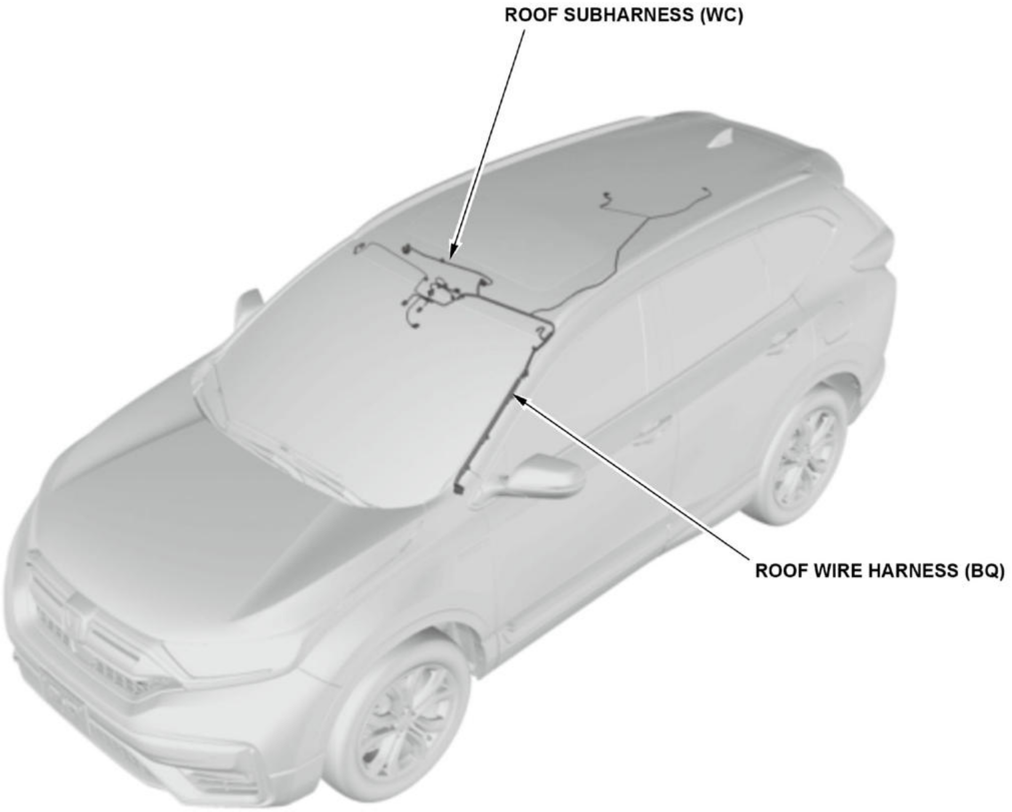
ROOF SUBHARNESS (WC)
ROOF WIRE HARNESS (BQ)

Floor - 1/2

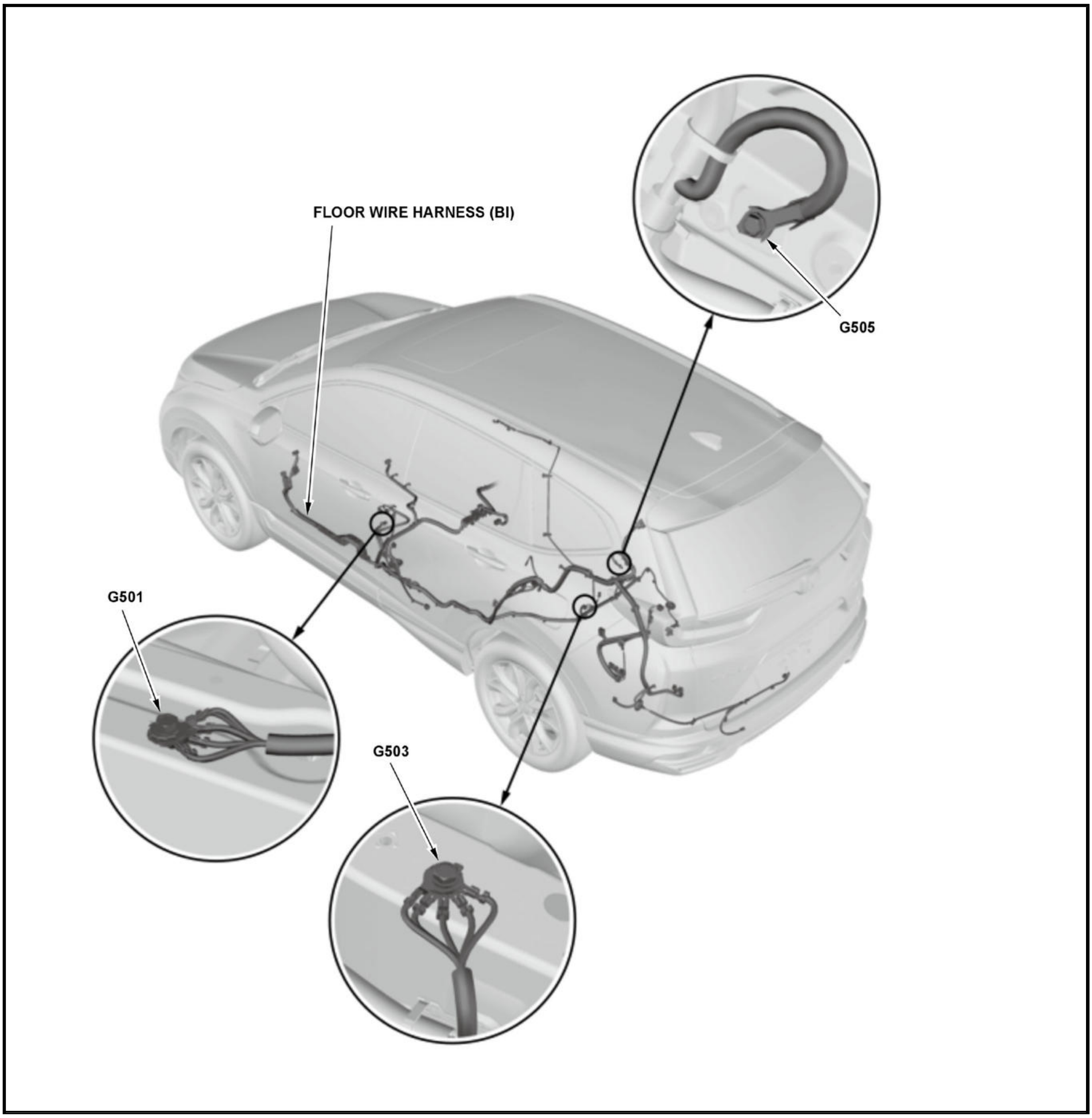
FLOOR WIRE HARNESS (BI)
G505
G501
G503

Floor - 2/2

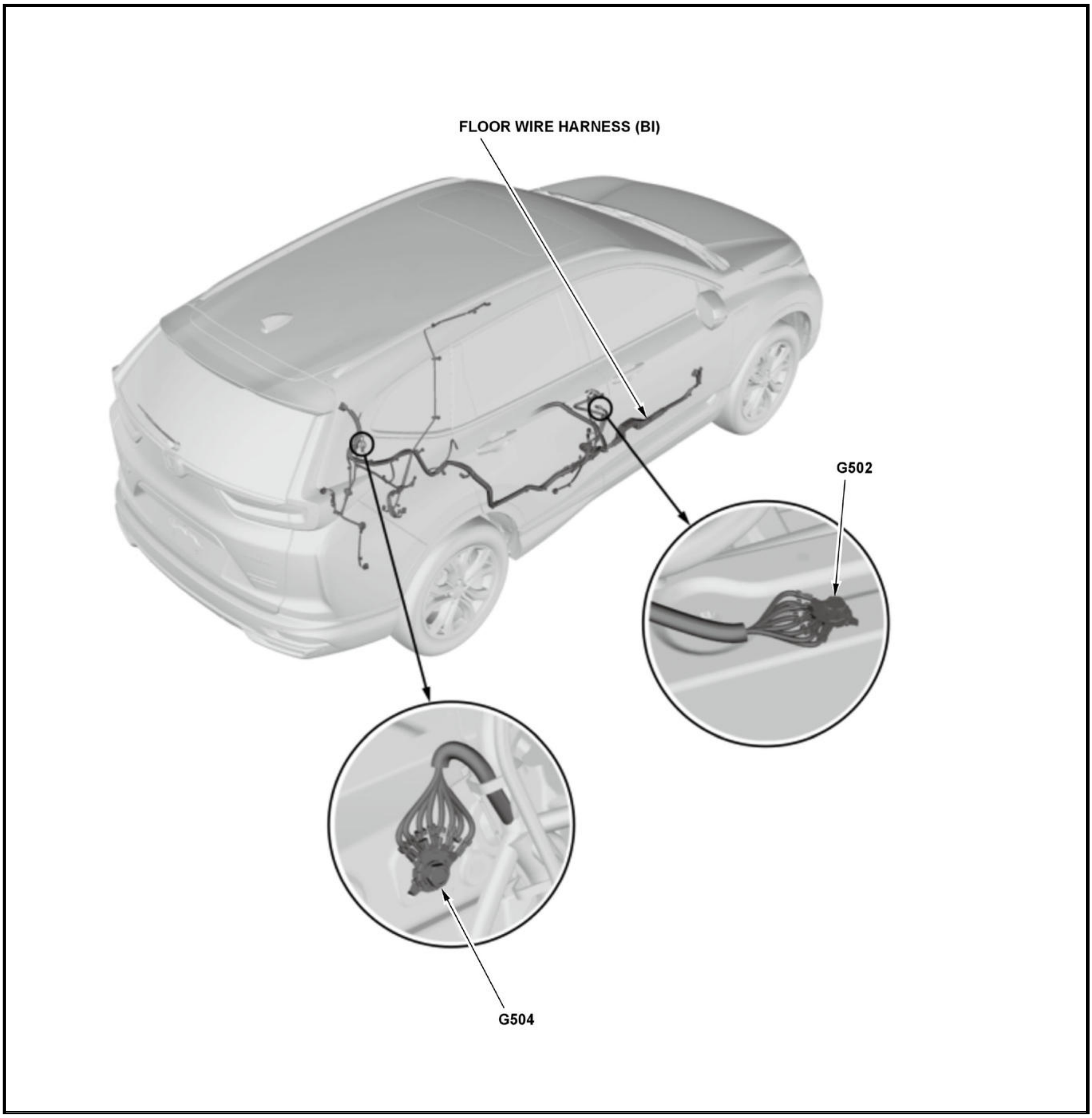
FLOOR WIRE HARNESS (BI)
G502
G504

Rear - 1/2

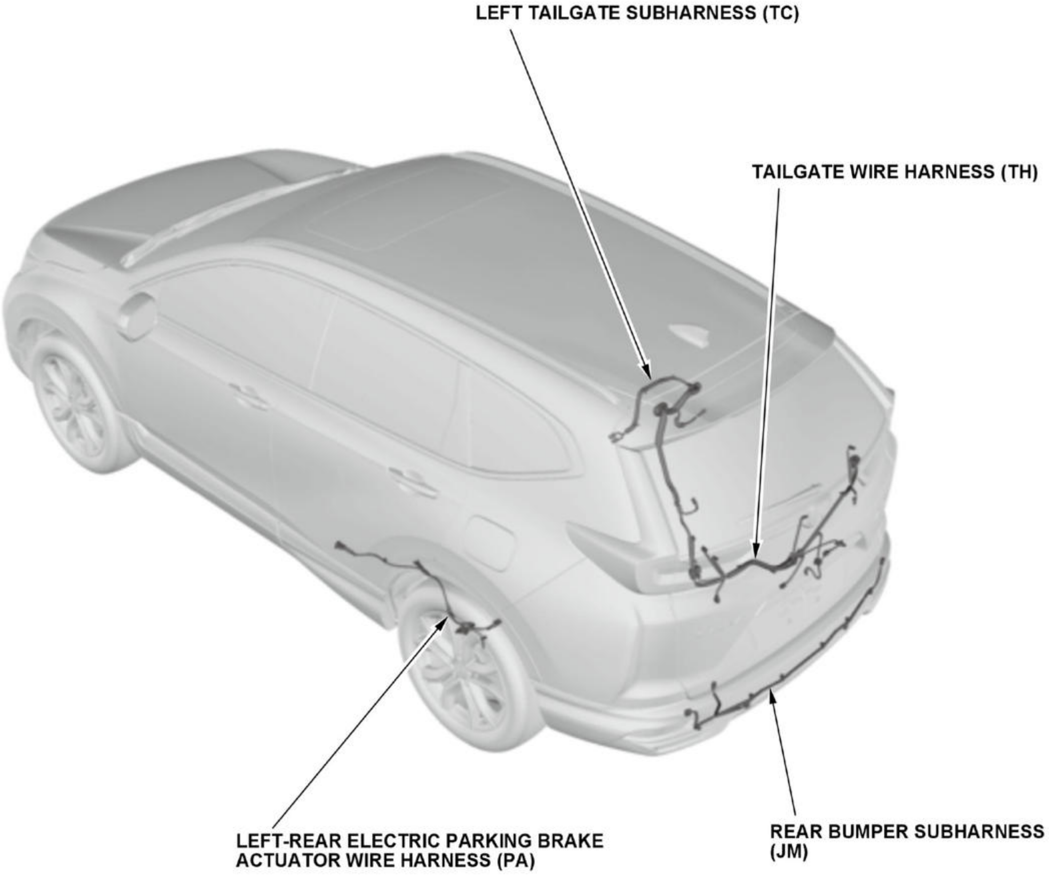
LEFT TAILGATE SUBHARNESS (TC)
TAILGATE WIRE HARNESS (TH)
LEFT-REAR ELECTRIC PARKING BRAKE ACTUATOR WIRE HARNESS (PA)
REAR BUMPER SUBHARNESS (JM)

Rear - 2/2

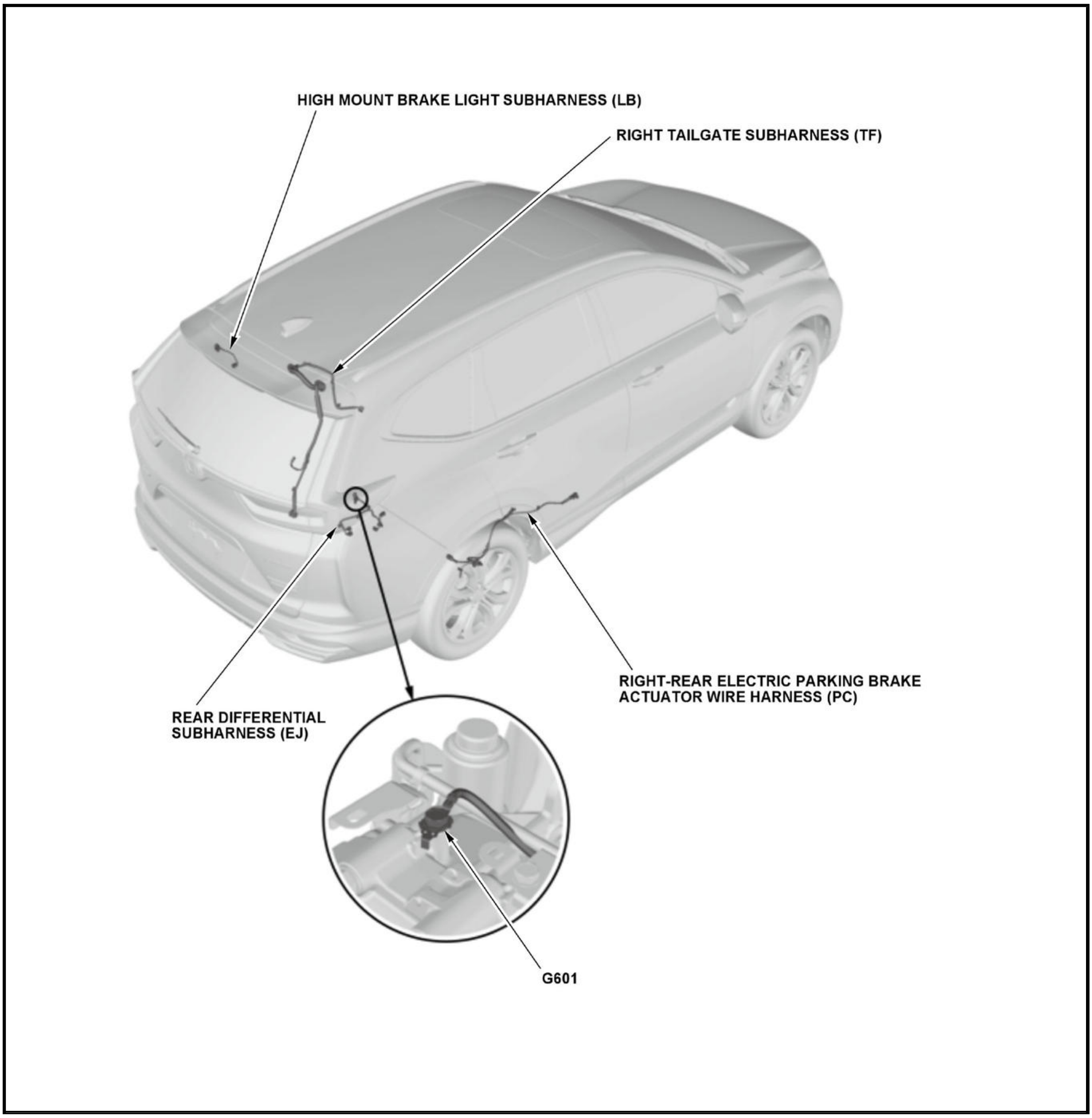
HIGH MOUNT BRAKE LIGHT SUBHARNESS (LB)
RIGHT TAILGATE SUBHARNESS (TF)
RIGHT-REAR ELECTRIC PARKING BRAKE ACTUATOR WIRE HARNESS (PC)
REAR DIFFERENTIAL SUBHARNESS (EJ)
G601

Electric Powertrain - 1/2

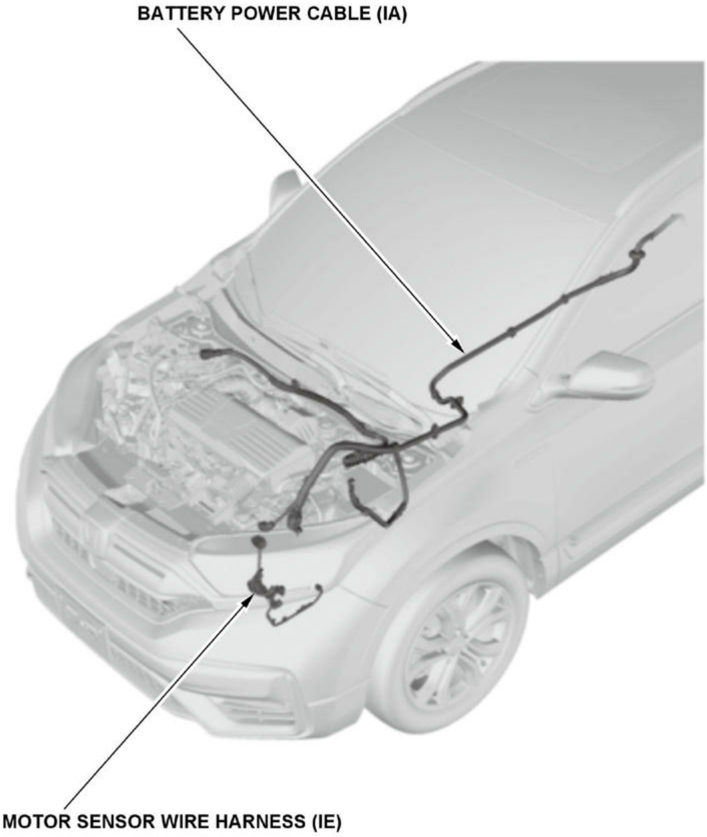
BATTERY POWER CABLE (IA)
MOTOR SENSOR WIRE HARNESS (IE)

Electric Powertrain - 2/2

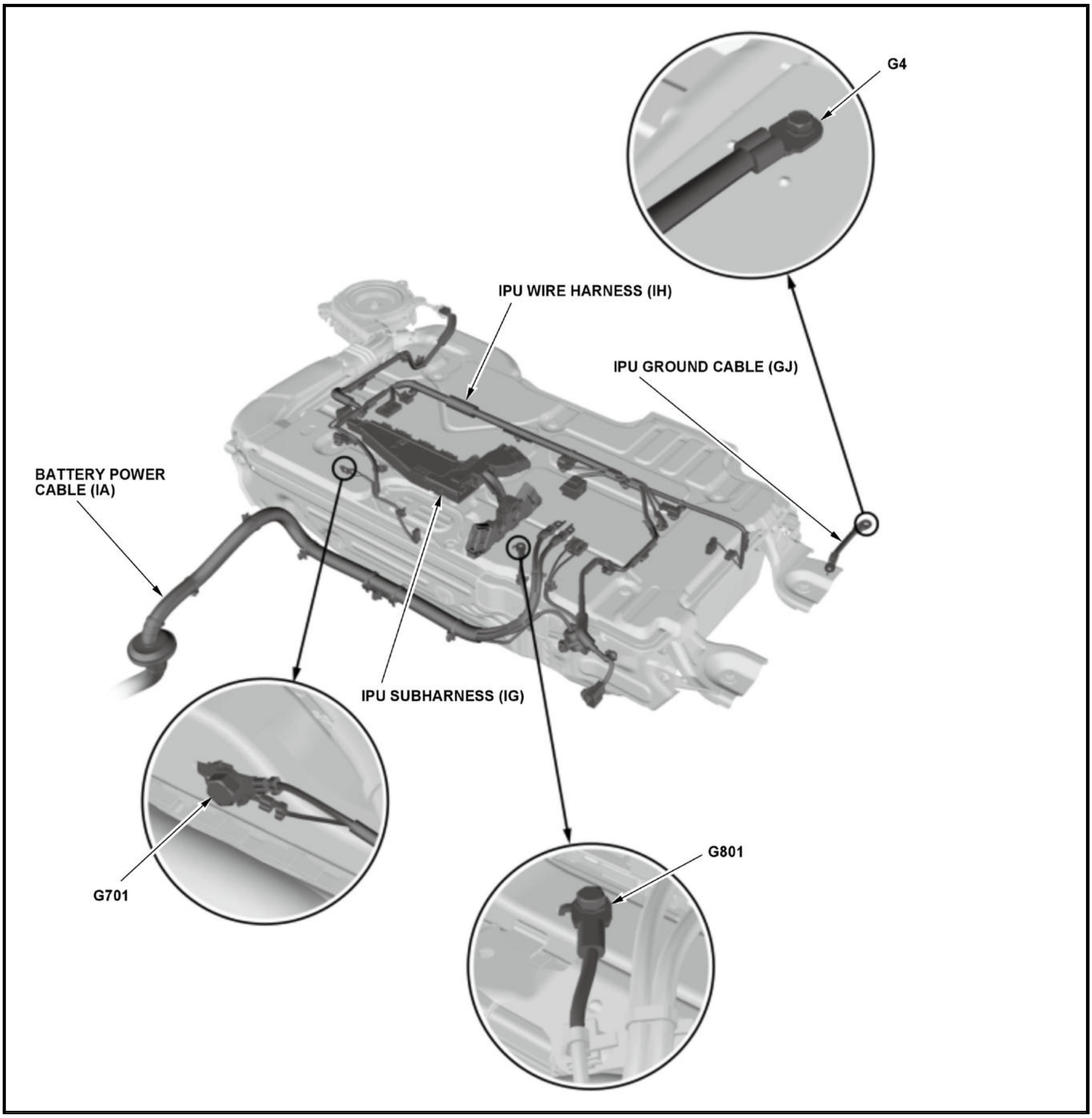
G4
IPU WIRE HARNESS (IH)
IPU GROUND CABLE (GJ)
BATTERY POWER CABLE (IA)
IPU SUBHARNESS (IG)
G701
G801

Driver's Door

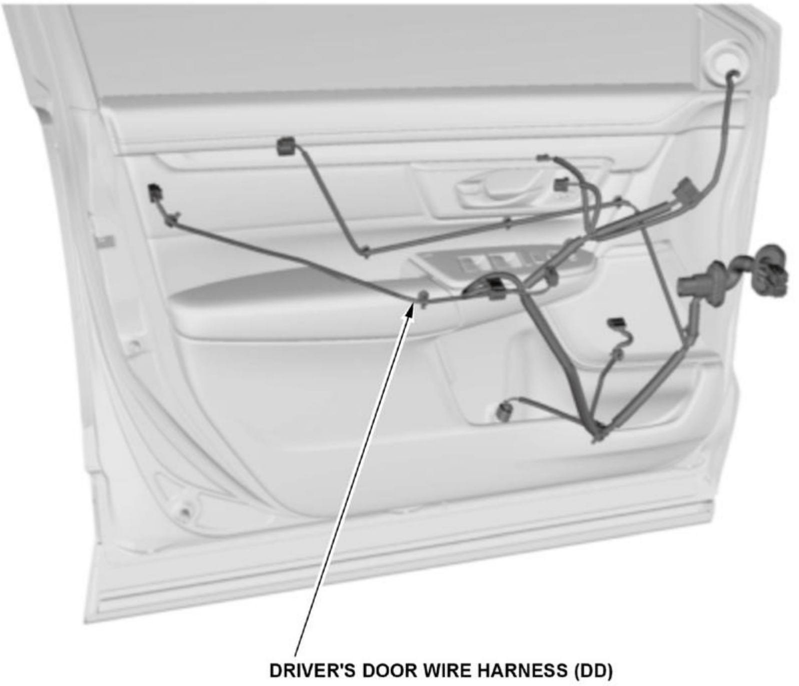
DRIVER'S DOOR WIRE HARNESS (DD)

Front Passenger's Door

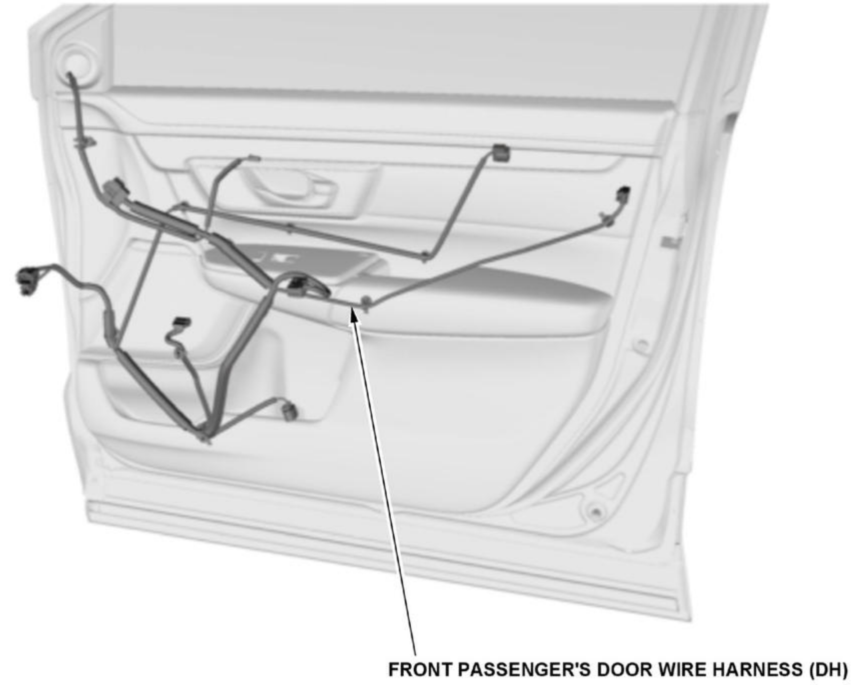
FRONT PASSENGER'S DOOR WIRE HARNESS (DH)

Left Rear Door

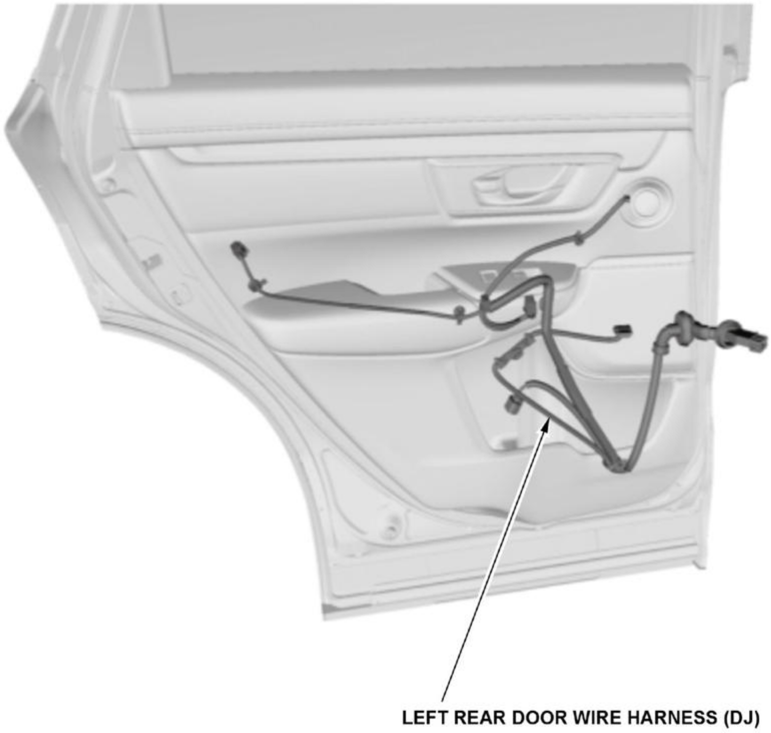
LEFT REAR DOOR WIRE HARNESS (DJ)

Right Rear Door

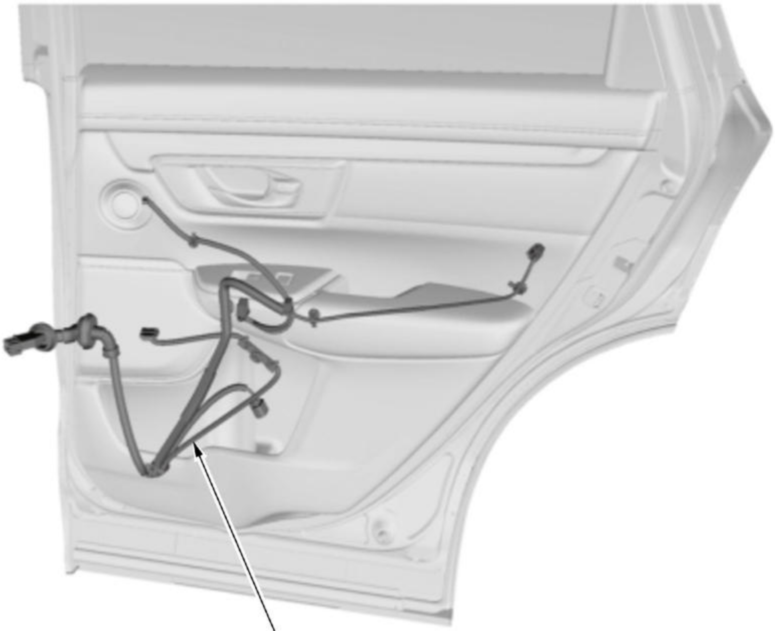
RIGHT REAR DOOR WIRE HARNESS (DN)

Seat

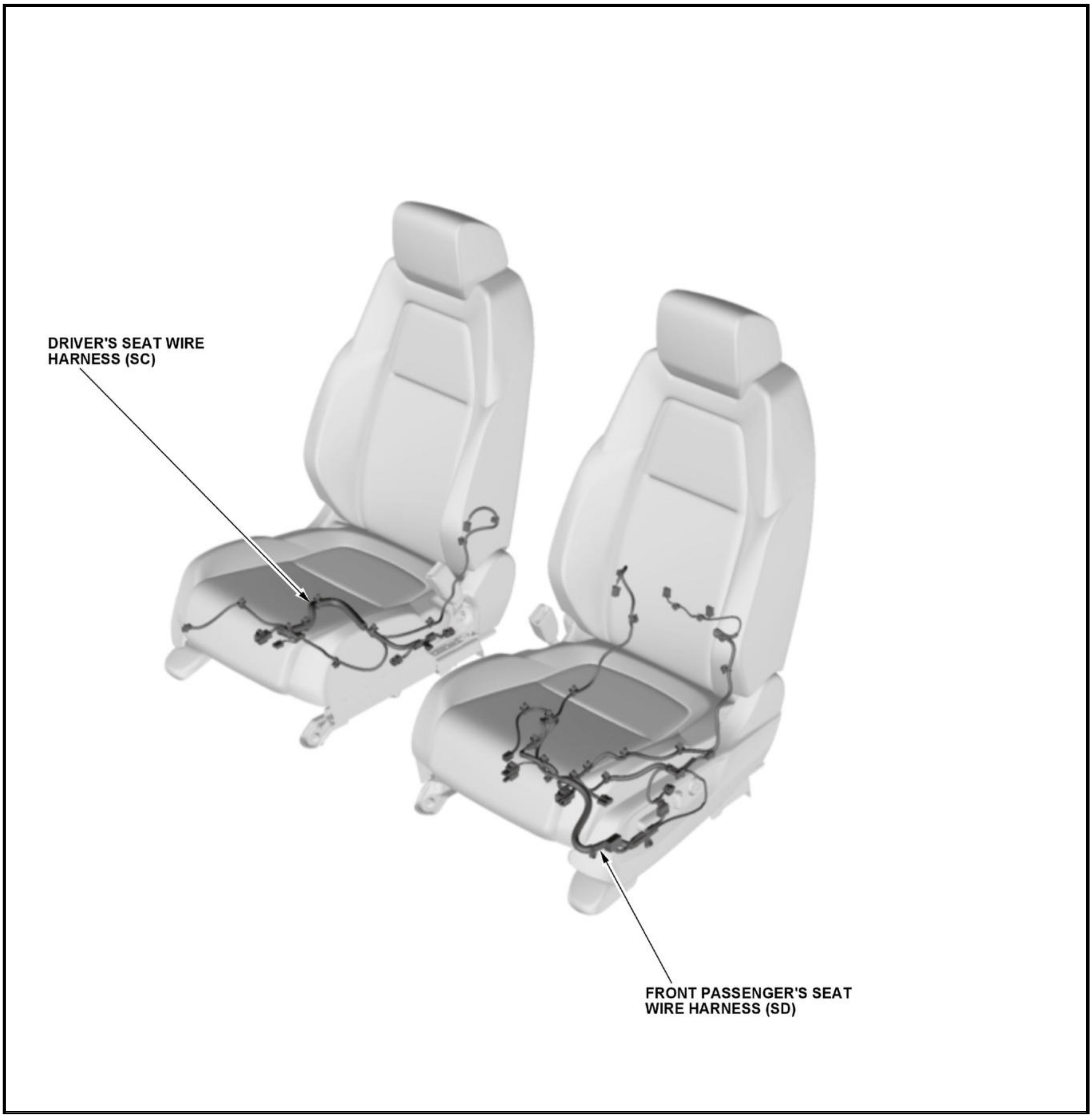
DRIVER'S SEAT WIRE HARNESS (SC)
FRONT PASSENGER'S SEAT WIRE HARNESS (SD)

CIRCUIT DIAGRAM

ACCESSORY POWER SOCKETS CIRCUIT DIAGRAM

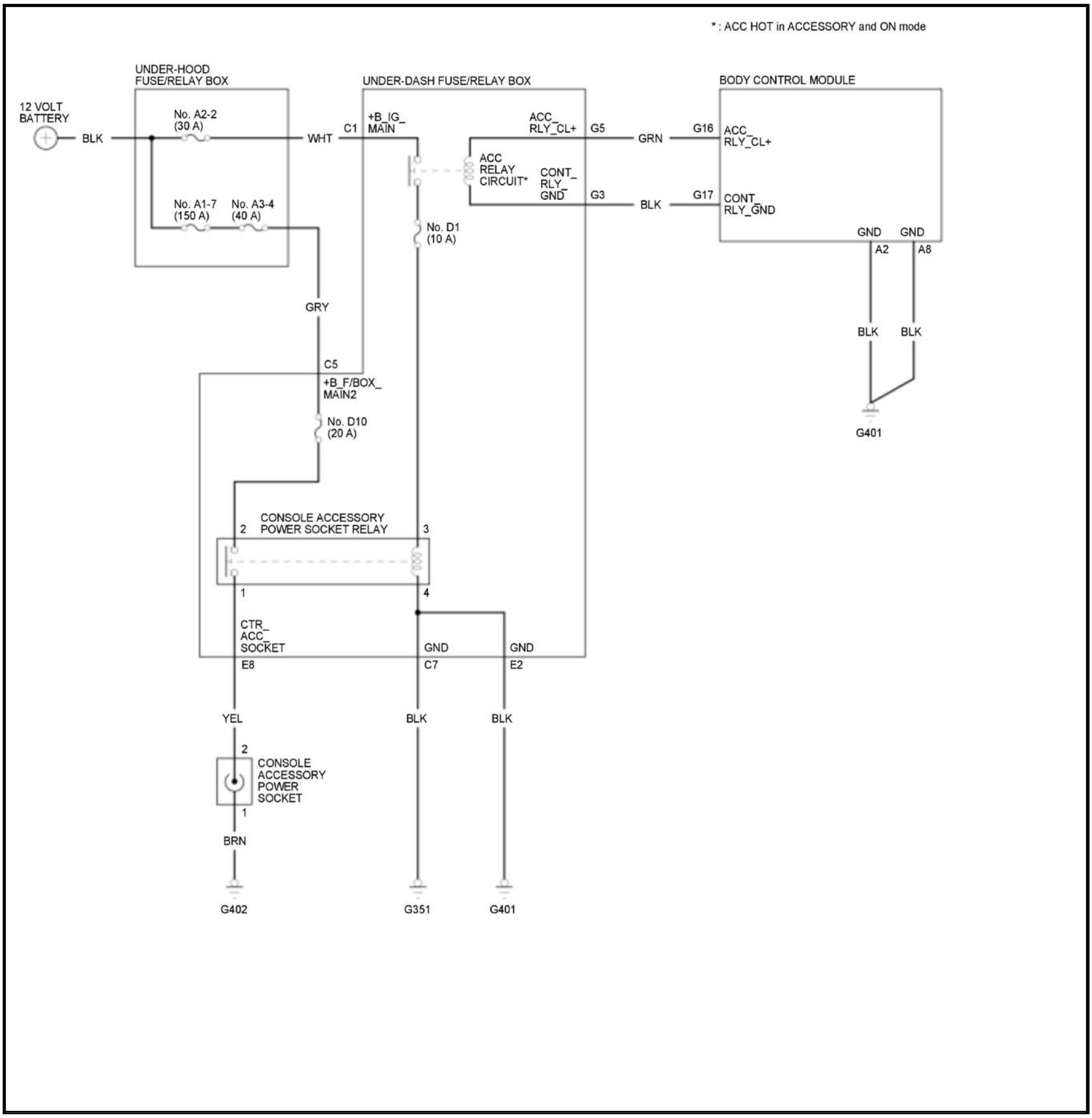
* : ACC HOT in ACCESSORY and ON mode
UNDER-HOOD FUSE/RELAY BOX
UNDER-DASH FUSE/RELAY BOX
BODY CONTROL MODULE
12 VOLT BATTERY
BLK
No. A2-2 (30 A)
WHT
C1
+B_IG_MAIN
ACC_RLY_CL+
G5
GRN
G16
ACC_RLY_CL+
ACC RELAY CIRCUIT*
CONT_RLY_GND
G3
BLK
G17
CONT_RLY_GND
No. A1-7 (150 A)
No. A3-4 (40 A)
No. D1 (10 A)
GND
GND
A2
A8
GRY
BLK
BLK
C5
+B_F/BOX_MAIN2
No. D10 (20 A)
G401
CONSOLE ACCESSORY POWER SOCKET RELAY
2
3
1
4
CTR_ACC_SOCKET
GND
GND
E8
C7
E2
YEL
BLK
BLK
2
CONSOLE ACCESSORY POWER SOCKET
1
BRN
G402
G351
G401

WIRELESS CHARGER CIRCUIT DIAGRAM

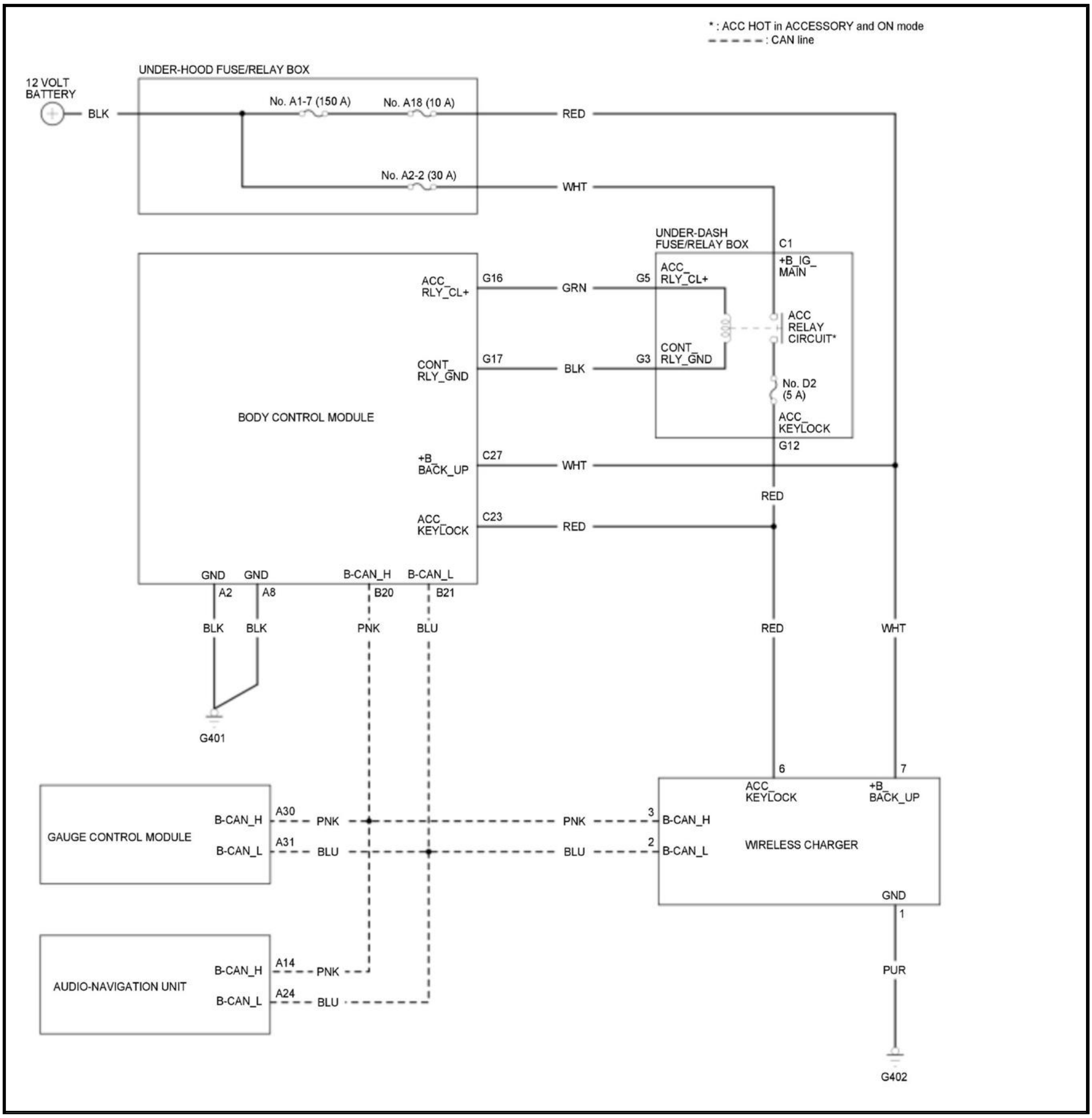
* : ACC HOT in ACCESSORY and ON mode
- - - - - : CAN line
12 VOLT BATTERY
BLK
UNDER-HOOD FUSE/RELAY BOX
No. A1-7 (150 A)
No. A18 (10 A)
No. A2-2 (30 A)
RED
WHT
UNDER-DASH FUSE/RELAY BOX
C1
+B_IG_MAIN
ACC_RLY_CL+
G5
ACC RELAY CIRCUIT*
CONT_RLY_GND
G3
No. D2 (5 A)
ACC_KEYLOCK
G12
BODY CONTROL MODULE
ACC_RLY_CL+
G16
GRN
CONT_RLY_GND
G17
BLK
+B_BACK_UP
C27
WHT
ACC_KEYLOCK
C23
RED
RED
GND
GND
A2
A8
B-CAN_H
B-CAN_L
B20
B21
BLK
BLK
PNK
BLU
RED
WHT
G401
GAUGE CONTROL MODULE
B-CAN_H
A30
PNK
B-CAN_L
A31
BLU
PNK
BLU
6
7
ACC_KEYLOCK
+B_BACK_UP
3
B-CAN_H
2
B-CAN_L
WIRELESS CHARGER
GND
1
PUR
G402
AUDIO-NAVIGATION UNIT
B-CAN_H
A14
PNK
B-CAN_L
A24
BLU

COMPONENT LOCATION INDEX

ACCESSORY POWER SOCKETS COMPONENT LOCATION INDEX

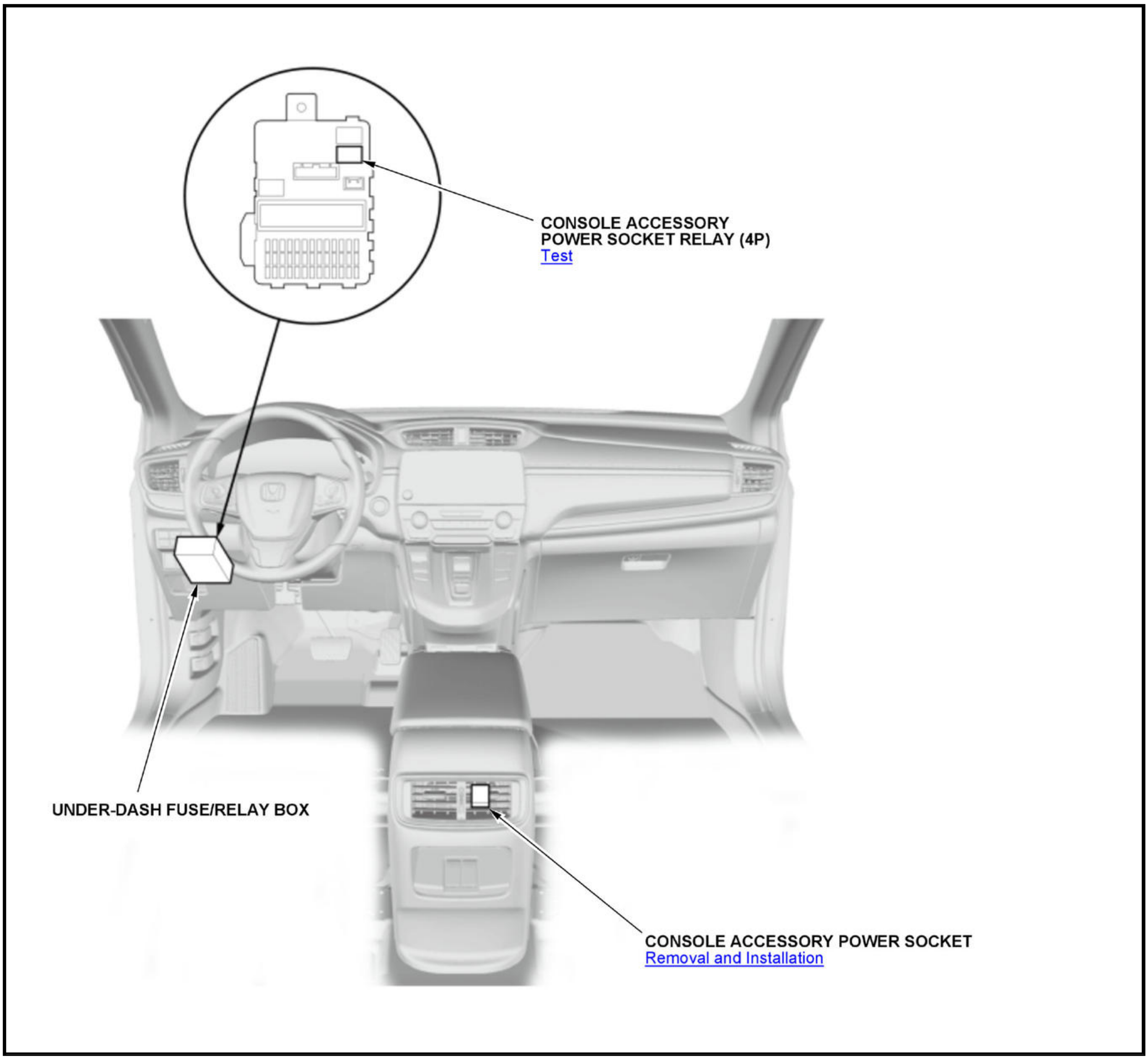
CONSOLE ACCESSORY
POWER SOCKET RELAY (4P)
Test
UNDER-DASH FUSE/RELAY BOX
CONSOLE ACCESSORY POWER SOCKET
Removal and Installation

WIRELESS CHARGER COMPONENT LOCATION INDEX

For relationships between signals in a system, refer to System Diagram.

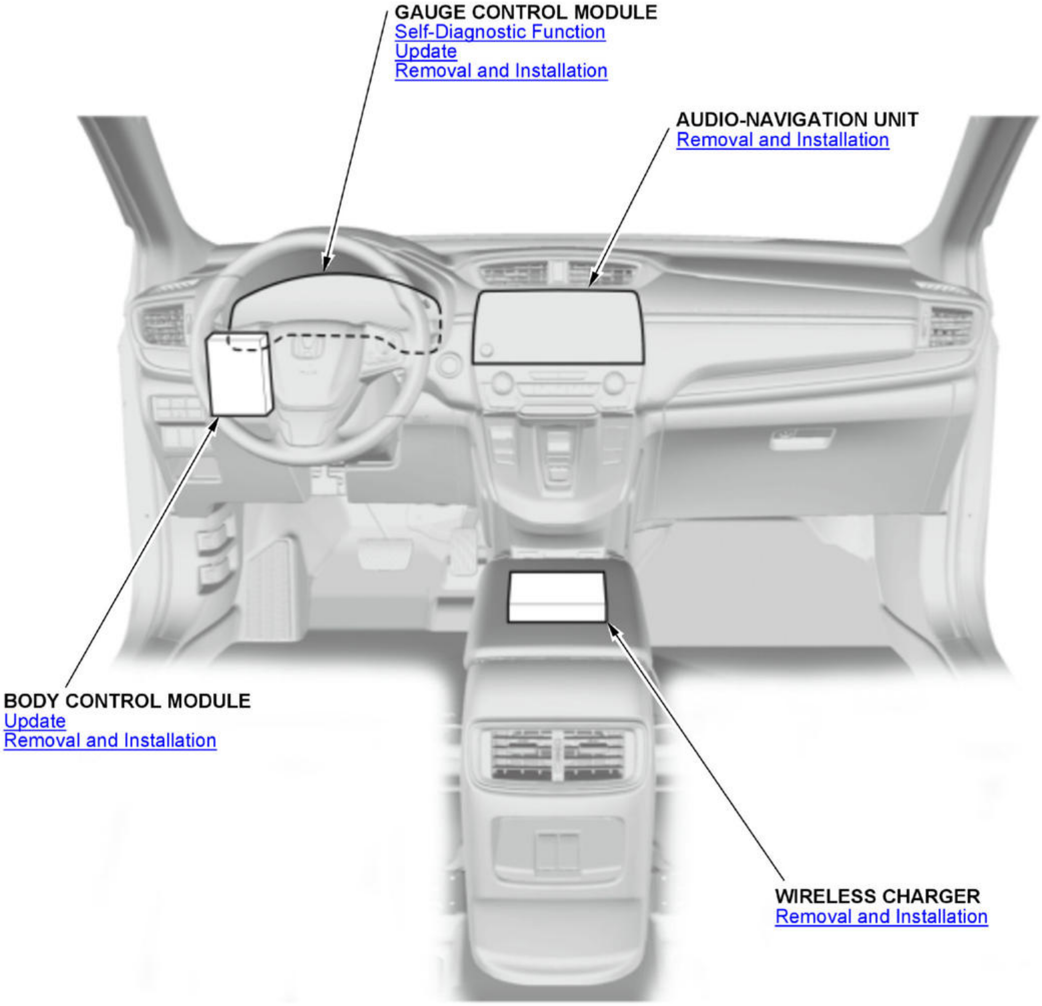
GAUGE CONTROL MODULE
Self-Diagnostic Function
Update
Removal and Installation
AUDIO-NAVIGATION UNIT
Removal and Installation
BODY CONTROL MODULE
Update
Removal and Installation
WIRELESS CHARGER
Removal and Installation

RELAY BOX LOCATIONS AND CONTROL UNIT LOCATIONS

RELAY LOCATIONS

Engine Compartment

Engine Compartment Locaiton

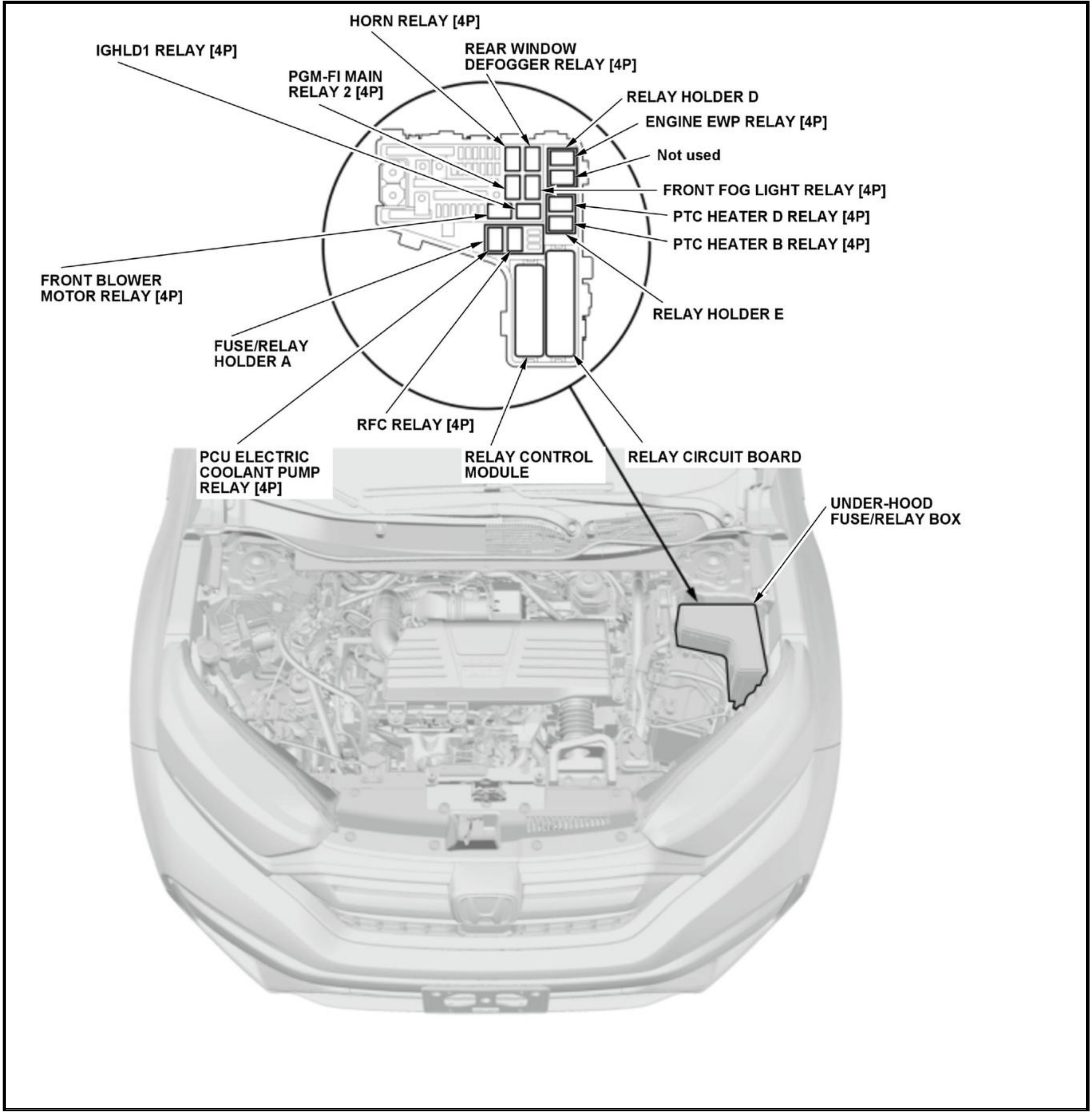
HORN RELAY [4P]
IGHLD1 RELAY [4P]
REAR WINDOW DEFOGGER RELAY [4P]
PGM-FI MAIN RELAY 2 [4P]
RELAY HOLDER D
ENGINE EWP RELAY [4P]
Not used
FRONT FOG LIGHT RELAY [4P]
PTC HEATER D RELAY [4P]
PTC HEATER B RELAY [4P]
FRONT BLOWER MOTOR RELAY [4P]
RELAY HOLDER E
FUSE/RELAY HOLDER A
RFC RELAY [4P]
PCU ELECTRIC COOLANT PUMP RELAY [4P]
RELAY CONTROL MODULE
RELAY CIRCUIT BOARD
UNDER-HOOD FUSE/RELAY BOX

Dashboard

Dashboard Locaiton

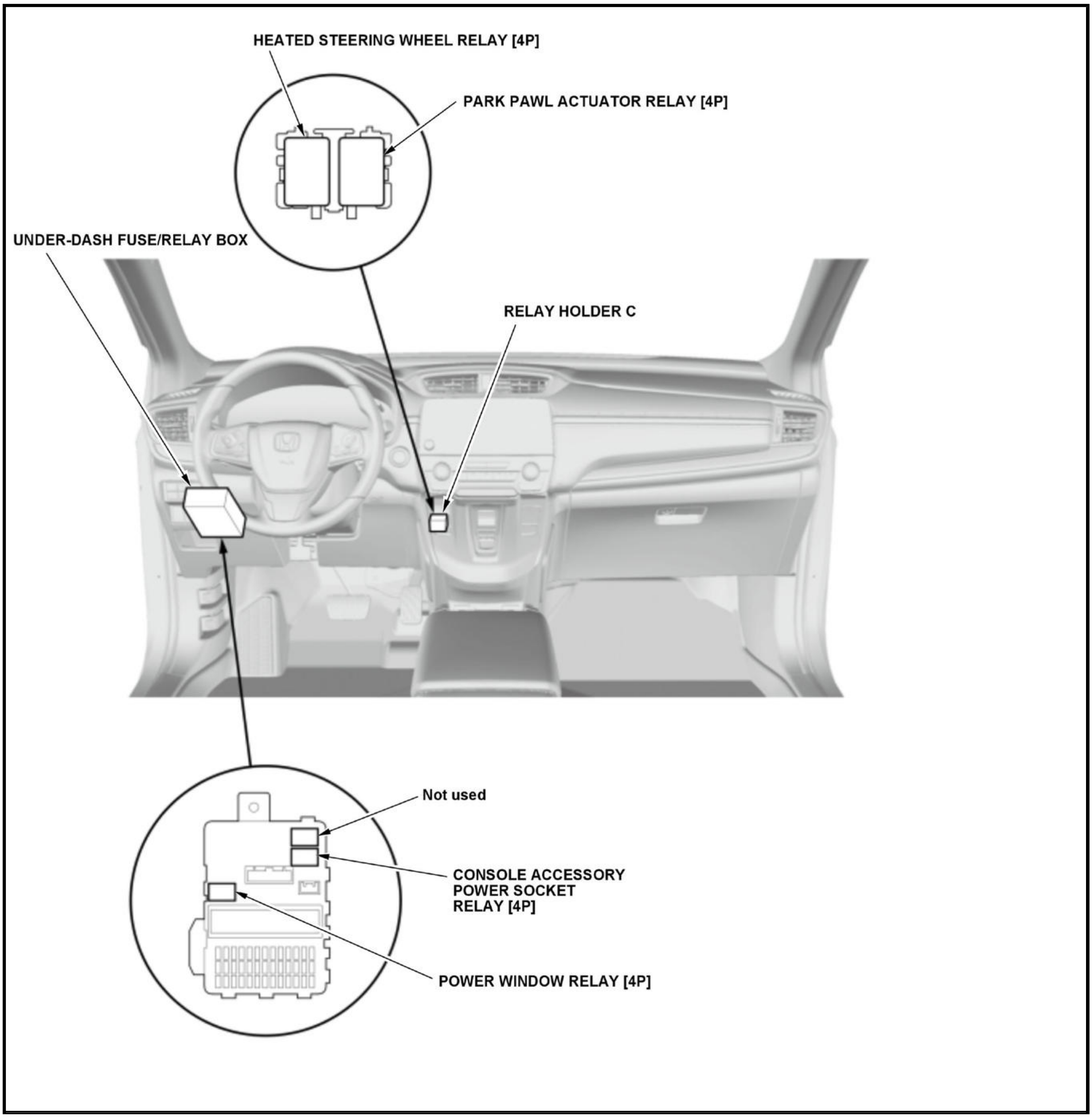
HEATED STEERING WHEEL RELAY [4P]
PARK PAWL ACTUATOR RELAY [4P]
UNDER-DASH FUSE/RELAY BOX
RELAY HOLDER C
Not used
CONSOLE ACCESSORY POWER SOCKET RELAY [4P]
POWER WINDOW RELAY [4P]

Floor

Floor Locaiton

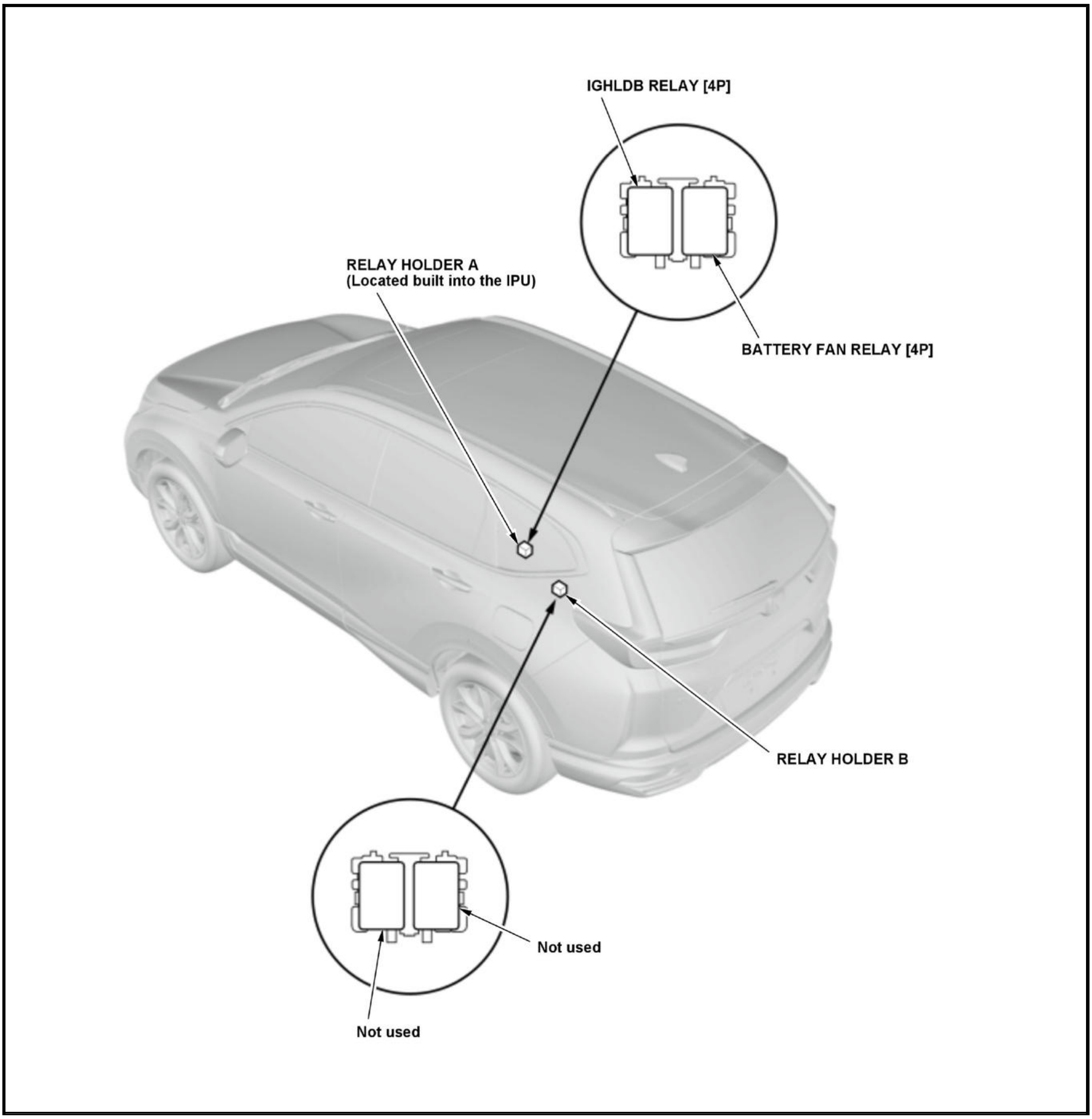
IGHLDB RELAY [4P]
RELAY HOLDER A
(Located built into the IPU)
BATTERY FAN RELAY [4P]
RELAY HOLDER B
Not used
Not used

2020-22 ELECTRICAL

Engine Electrical - CR-V (Hybrid)

ENGINE ELECTRICAL

Item	Measurement	Qualification	Standard or New	Service Limit
Ignition coil	Firing order	B	1-3-4-2	
Spark plug	Gap	B	1.0-1.1 mm (0.039-0.043 in)	-
Ignition timing	At idle Check the red mark	In N or P	20+/-2B° BTDC	

STANDARDS AND SERVICE LIMITS (2020-21)

ENGINE ELECTRICAL (2020-2021)

Item	Measurement	Qualification	Standard or New	Service Limit
Ignition coil	Firing order	B	1-3-4-2	
Spark plug	Gap	B	0.70-0.75 mm (0.0276-0.0295 in)	-
Ignition timing	At idle Check the red mark	In N or P	4 +/-2 deg. BTDC	
Drive belt	Tension	B	Auto-tensioner	
Alternator	Brush length	B	10.5 mm (0.413 in)	1.5 mm (0.059 in)
Starter (KX)	Commutator mica depth	B	0.40-0.50 mm (0.0157-0.0197 in)	0.15 mm (0.0059 in)
	Commutator runout	B	0.02 mm (0.0008 in) max.	0.05 mm (0.0020 in)
	Commutator O.D.	B	28.0-28.1 mm (1.102-1.106 in)	27.5 mm (1.083 in)
	Brush length	B	11.1-11.5 mm (0.437-0.453 in)	4.3 mm (0.169 in)

DTC TROUBLESHOOTING

DTC B1051

DTC B1051 : Relay control module internal (CPU) error

NOTE: If you are troubleshooting multiple DTCs, be sure to follow the instructions in B-CAN System Diagnosis Test Mode A .

DTC Description	DTC
B1051 Relay control module internal (CPU) error	B

DTC (Relay Control Module)

1. Problem verification

   -1. Clear the DTCs with the HDS.

   -2. Turn the vehicle to the OFF (LOCK) mode and then the ON mode.

   -3. Wait for at least 6 seconds.

   -4. Check for DTCs with the HDS.

DTC Description	DTC
B1051 Relay control module internal (CPU) error	B

Is DTC B1051 indicated?

YES

Replace the relay control module .

NO

Intermittent failure, the system is OK at this time. Check for loose or poor connections.

DTC B1052

DTC B1052 : Relay control module internal (EEPROM) error

NOTE: If you are troubleshooting multiple DTCs, be sure to follow the instructions in B-CAN System Diagnosis Test Mode A .

DTC Description	DTC
B1052 Relay control module internal (EEPROM) error	B

DTC (Relay Control Module)

1. Problem verification

   -1. Clear the DTCs with the HDS.

   -2. Turn the vehicle to the OFF (LOCK) mode and then the ON mode.

-3. Check for DTCs with the HDS.

DTC Description	DTC
B1052 Relay control module internal (EEPROM) error	B

Is DTC B1052 indicated?

YES

Replace the relay control module .

NO

Intermittent failure, the system is OK at this time. Check for loose or poor connections.

DTC B1075

DTC B1075 : Headlight switch malfunction

NOTE: If you are troubleshooting multiple DTCs, be sure to follow the instructions in **B-CAN System Diagnosis Test Mode A** .

DTC Description	DTC
B1075 Headlight switch malfunction	B

DTC (Relay Control Module)

1. Problem verification

-1. Clear the DTCs with the HDS.

-2. Turn the vehicle to the OFF (LOCK) mode and then the ON mode.

-3. Turn the headlight switch ON position.

-4. Wait for at least 6 seconds.

-5. Check for DTCs with the HDS.

DTC Description	DTC
B1075 Headlight Switch Malfunction	B

Is DTC B1075 indicated?

YES

Go to step 2.

NO

Intermittent failure, the system is OK at this time. Check for loose or poor connections.

2. DTC check

-1. Check for body control module and relay control module DTCs with the HDS.

Body Control Module

DTC Description	DTC
B1275 Head light OFF position Circuit Malfunction	B
B1276 Headlight Switch Parking (Small) Position Circuit Malfunction	B
B1277 Head light AUTO position Circuit Malfunction	B
B1278 Head light ON position Circuit Malfunction	B

Relay Control Module

DTC Description	DTC
B1080 Power supply circuit (IG1 line) input error for Relay Control Module and MICU	B

Are any DTCs indicated?

YES

Go to indicated DTCs troubleshooting.

NO

Go to step 3.

3. Relay control module H/L_ON_SW line check 1

-1. Turn the combination light switch OFF position.

-2. Check the parameter(s) below with the HDS.

Signal	Current conditions	
	Values	Unit
Headlight Switch (BACK-UP)	B	B

Is the information indicator OFF?

YES

Go to step 4.

NO

Go to step 6.

4. Relay control module H/L_ON_SW line check 2

-1. Turn the combination light switch ON position.

-2. Check the parameter(s) below with the HDS.

Signal	Current conditions	
	Values	Unit
Headlight Switch (BACK-UP)	B	B

Is the information indicator ON?

YES

Replace the relay control module .

NO

Go to step 5.

5. Open wire check (H/L_ON_SW line)

-1. Connect terminals A and B with a jumper wire.

Terminal A	**Relay control module connector C (18P) No. 10**
Terminal B	Body ground

-2. Check the parameter(s) below with the HDS.

Signal	Current conditions	
	Values	Unit
Headlight Switch (BACK-UP)	B	B

Is the information indicator ON?

YES

Repair an open or high resistance in the wire.

NO

Replace the relay control module .

6. Shorted wire check (H/L_ON_SW line)

-1. Turn the vehicle to the OFF (LOCK) mode.

-2. Disconnect the following connectors.

Combination light switch 12P connector Relay control module connector C (18P)

-3. Measure the resistance between test points 1 and 2.

Test condition	Vehicle OFF (LOCK) mode Combination light switch 12P connector: disconnected Relay control module connector C (18P): disconnected
Test point 1	**Relay control module connector C (18P) No. 10**
Test point 2	Body ground

Is there 1.0 MΩ or more?

YES

Replace the relay control module .

NO

Repair a short to ground in the wire.

DTC B1080

DTC B1080 : Power supply circuit (IG1 line) input error for Relay Control Module and MICU

NOTE: If you are troubleshooting multiple DTCs, be sure to follow the instructions in **B-CAN System Diagnosis Test Mode A** .

DTC Description	DTC
B1080 Power supply circuit (IG1 line) input error for Relay Control Module and MICU	B

DTC (Relay Control Module)

1. Problem verification

   -1. Clear the DTCs with the HDS.

   -2. Turn the vehicle to the OFF (LOCK) mode and then the ON mode.

   -3. Wait for at least 6 seconds.

   -4. Check for DTCs with the HDS.

DTC Description	DTC
B1080 Power supply circuit (IG1 line) input error for Relay Control Module and MICU	B

   Is DTC B1080 indicated?

   YES

   Repair an open or high resistance in the IG1_METER wire.

   NO

   Intermittent failure, the system is OK at this time. Check for loose or poor connections.

DTC B1085

DTC B1085 : Head Light Low Beam Power Source Abnormality

NOTE: If you are troubleshooting multiple DTCs, be sure to follow the instructions in **B-CAN System Diagnosis Test Mode A** .

DTC Description	DTC
B1085 Head Light Low Beam Power Source Abnormality	B

DTC (Relay Control Module)

1. Problem verification

   -1. Clear the DTCs with the HDS.

   -2. Turn the combination light switch to the ON position.

   -3. Wait for at least 6 seconds.

   -4. Check for DTCs with the HDS.

DTC Description	DTC
B1085 Head Light Low Beam Power Source Abnormality	B

Is DTC B1085 indicated?

YES

Go to step 2.

NO

Intermittent failure, the system is OK at this time.

2. Headlight operation check

-1. Turn the combination light switch ON position then check the status of the headlights.

Does one side of headlight go off?

YES

Go to step 3.

NO

Go to step 4.

3. Headlight check

-1. **Swap the left headlight and the right headlight** .

Are the symptoms swapped left and right?

YES

Replace the failure headlight .

NO

Replace the relay control module .

4. Shorted wire check (H/L_LO_SIG line)

-1. Turn the vehicle to the OFF (LOCK) mode.

-2. Disconnect the following connectors.

Relay control module connector B (10P) Left headlight 8P connector Right headlight 8P connector

-3. Measure the resistance between test points 1 and 2.

Test condition	Vehicle OFF (LOCK) mode Relay control module connector B (10P): disconnected Left headlight 8P connector: disconnected Right headlight 8P connector: disconnected
Test point 1	**Relay control module connector B (10P) No. 9**
Test point 2	Body ground

Is there 1.0 MΩ or more?

YES

Replace the relay control module .

NO

Repair a short to ground in the wire.

DTC B108A, B108B, B108C, B108D, B108E, B108F, B1090, B1091, B1092

DTC B108A : Right Side Parking Light Circuit Shorted

DTC B108B : Left Side Parking Light Circuit Shorted

DTC B108C : Right Side Head Light Low Beam Circuit Shorted

DTC B108D : Left Side Head Light Low Beam Circuit Shorted

DTC B108E : Right Side Head Light High Beam Circuit Shorted

DTC B108F : Left Side Head Light High Beam Circuit Shorted

DTC B1090 : Illumination Circuit Shorted

DTC B1091 : DRL Circuit Shorted

DTC B1092 : Interior Light Cut Circuit Shorted

NOTE:

- If you are troubleshooting multiple DTCs, be sure to follow the instructions in B-CAN System Diagnosis Test Mode A .
- These DTC is stored when the relay control module detects ground fault of the harness and controls the circuit in a cutoff state inside the relay control module.

DTC Description	DTC
B108A Right Side Parking Light Circuit Shorted	B
B108B Left Side Parking Light Circuit Shorted	B
B108C Right Side Head Light Low Beam Circuit Shorted	B
B108D Left Side Head Light Low Beam Circuit Shorted	B
B108E Right Side Head Light High Beam Circuit Shorted	B
B108F Left Side Head Light High Beam Circuit Shorted	B
B1090 Illumination Circuit Shorted	B
B1091 DRL Circuit Shorted	B
B1092 Interior Light Cut Circuit Shorted	B

DTC (Relay Control Module)

1. Problem verification

-1. Clear the DTCs with the HDS.

-2. Turn the vehicle to the OFF (LOCK) mode and then the ON mode.

-3. Check for DTCs with the HDS.

DTC Description	DTC
B108A Right Side Parking Light Circuit Shorted	B
B108B Left Side Parking Light Circuit Shorted	B

DTC Description	DTC
B108C Right Side Head Light Low Beam Circuit Shorted	B
B108D Left Side Head Light Low Beam Circuit Shorted	B
B108E Right Side Head Light High Beam Circuit Shorted	B
B108F Left Side Head Light High Beam Circuit Shorted	B
B1090 Illumination Circuit Shorted	B
B1091 DRL Circuit Shorted	B
B1092 Interior Light Cut Circuit Shorted	B

Are any DTCs indicated?

YES

Refer to the DTC shown on the display, then repair a short to body ground in the wire based on the instructions (see table), or **replace the relay control module** .

DTC	Operation for failure wire
B108A	PARKING_R
B108B	PARKING_L
B108C	R_H/L_LO
B108D	L_H/L_LO
B108E	R_H/L_HI
B108F	L_H/L_HI
B1090	ILLUMI+
B1091	DRL_RLY_OUT, DRL_RLY_OUT2
B1092	INTR_LT_CUT_RLY_OUT1, INTR_LT_CUT_RLY_OUT2

NO

Intermittent failure, the system is OK at this time. Check for loose or poor connections.

DTC U1280 (RELAY CONTROL MODULE)

DTC U1280 : B-CAN communication bus line error (BUS-OFF)

NOTE: If you are troubleshooting multiple DTCs, be sure to follow the instructions in **B-CAN System Diagnosis Test Mode A** .

DTC Description	DTC
U1280 B-CAN communication bus line error (BUS-OFF)	B

DTC (Relay Control Module)

1. Problem verification

-1. Clear the DTCs with the HDS.

-2. Turn the vehicle to the OFF (LOCK) mode and then the ON mode.

-3. Wait for at least 6 seconds.

-4. Check for DTCs with the HDS.

DTC Description	DTC
U1280 B-CAN communication bus line error (BUS-OFF)	B

Is DTC U1280 indicated?

YES

Go to body control module DTC U1280 troubleshooting .

NO

Intermittent failure, the system is OK at this time. Check for loose or poor connections.

DTC U1281, U128D (RELAY CONTROL MODULE)

DTC U1281 : Relay control module lost communication with MICU (MICU frame)

DTC U128D : Relay control module lost communication with gauge control module (VSP/NE frame)

NOTE:

- If you are troubleshooting multiple DTCs, be sure to follow the instructions in **B-CAN System Diagnosis Test Mode A** .
- Refer to the DTC code shown on the display, and then inspect the connectors and terminals based on the instructions in the table below.
- The DTC may be stored due to the grounding failure or the power source failure at the transmitting control unit (the grounding inspection and the power source inspection on each control unit are required prior to this checking process).

DTC Description	DTC
U1281 Relay control module lost communication with MICU (MICU frame)	B
U128D Relay control module lost communication with gauge control module (VSP/NE frame)	B

DTC (Relay Control Module)

1. Problem verification

-1. Clear the DTC with the HDS.

-2. Turn the vehicle to the OFF (LOCK) mode and then the ON mode.

-3. Wait for at least 6 seconds.

-4. Check for DTCs with the HDS.

DTC Description	DTC
U1281 Relay control module lost communication with MICU (MICU frame)	B
U128D Relay control module lost communication with gauge control module (VSP/NE frame)	B

Are any DTCs indicated?

YES

Go to step 2.

NO

Intermittent failure, the system is OK at this time. Check for poor connections or loose terminals.

2. Open wire check (B-CAN_H line, B-CAN_L line)

-1. Turn the vehicle to the OFF (LOCK) mode.

-2. Disconnect the receiving control unit connector.

Relay control module connector A (6P)

-3. Disconnect the transmitting control unit connector(s).

Refer to the DTC shown on the display, then disconnect the connector(s) based on the instructions (see table).

DTC	Connector
U1281	Body control module connector B (36P)
U128D	Gauge control module connector A (32P)

-4. Measure the resistance between the receiving control unit and the transmitting control unit on the B-CAN_H circuit and the B-CAN_L circuit.

Test condition	Vehicle OFF (LOCK) mode Relay control module connector A (6P): disconnected Transmitting control unit connector(s) for indicated DTCs: disconnected

DTC	Circuit name	Receiving control unit		Transmitting control unit	
		Connector	Terminal	Connector	Terminal
U1281	B-CAN_H	**Relay control module connector A (6P)**	No. 2	**Body control module connector B (36P)**	No. 20
	B-CAN_L		No. 3		No. 21
U128D	B-CAN_H	**Relay control module connector A (6P)**	No. 2	**Gauge control module connector A (32P)**	No. 30
	B-CAN_L		No. 3		No. 31

Is there 1.0 Ω or less?

YES

The B-CAN_H wire and the B-CAN_L wire are OK. Refer to the DTC shown on the display, then replace the control unit based on the instructions (see table).

DTC	Operation for transmitting control unit
U1281	**Body control module**
U128D	**Gauge control module**

NO

Repair an open in the B-CAN_H wire and/or the B-CAN_L wire.

DTC TROUBLESHOOTING

DTC B1051

DTC B1051 : Relay control module internal (CPU) error

NOTE: If you are troubleshooting multiple DTCs, be sure to follow the instructions in B-CAN System Diagnosis Test Mode A .

DTC Description	DTC
B1051 Relay control module internal (CPU) error	B

DTC (Relay Control Module)

1. Problem verification

   -1. Clear the DTCs with the HDS.

   -2. Turn the vehicle to the OFF (LOCK) mode and then the ON mode.

   -3. Wait for at least 6 seconds.

   -4. Check for DTCs with the HDS.

DTC Description	DTC
B1051 Relay control module internal (CPU) error	B

   Is DTC B1051 indicated?

   YES

   Replace the relay control module .

   NO

   Intermittent failure, the system is OK at this time. Check for loose or poor connections.

DTC B1052

DTC B1052 : Relay control module internal (EEPROM) error

NOTE: If you are troubleshooting multiple DTCs, be sure to follow the instructions in B-CAN System Diagnosis Test Mode A .

DTC Description	DTC
B1052 Relay control module internal (EEPROM) error	B

DTC (Relay Control Module)

1. Problem verification

   -1. Clear the DTCs with the HDS.

   -2. Turn the vehicle to the OFF (LOCK) mode and then the ON mode.

-3. Check for DTCs with the HDS.

DTC Description	DTC
B1052 Relay control module internal (EEPROM) error	B

Is DTC B1052 indicated?

YES

Replace the relay control module .

NO

Intermittent failure, the system is OK at this time. Check for loose or poor connections.

DTC B1075

DTC B1075 : Headlight switch malfunction

NOTE: If you are troubleshooting multiple DTCs, be sure to follow the instructions in **B-CAN System Diagnosis Test Mode A** .

DTC Description	DTC
B1075 Headlight switch malfunction	B

DTC (Relay Control Module)

1. Problem verification

   -1. Clear the DTCs with the HDS.

   -2. Turn the vehicle to the OFF (LOCK) mode and then the ON mode.

   -3. Turn the headlight switch ON position.

   -4. Wait for at least 6 seconds.

   -5. Check for DTCs with the HDS.

DTC Description	DTC
B1075 Headlight Switch Malfunction	B

Is DTC B1075 indicated?

YES

Go to step 2.

NO

Intermittent failure, the system is OK at this time. Check for loose or poor connections.

2. DTC check

   -1. Check for body control module and relay control module DTCs with the HDS.

Body Control Module

DTC Description	DTC
B1275 Head light OFF position Circuit Malfunction	B
B1276 Head light switch parking (small) position Circuit Malfunction	B
B1277 Head light AUTO position Circuit Malfunction	B
B1278 Head light ON position Circuit Malfunction	B

Relay Control Module

DTC Description	DTC
B1080 Power supply circuit (IG1 line) input error for Relay Control Module and MICU	B

Are any DTCs indicated?

YES

Go to indicated DTCs troubleshooting.

NO

Go to step 3.

3. Relay control module H/L ON SW line check 1

-1. Turn the combination light switch OFF position.

-2. Check the parameter(s) below with the HDS.

Signal	Current conditions	
	Values	Unit
Headlight Switch (BACK-UP)	B	B

Is the information indicator OFF?

YES

Go to step 4.

NO

Go to step 6.

4. Relay control module H/L ON SW line check 2

-1. Turn the combination light switch ON position.

-2. Check the parameter(s) below with the HDS.

Signal	Current conditions	
	Values	Unit
Headlight Switch (BACK-UP)	B	B

Is the information indicator ON?

YES

Replace the relay control module .

NO

Go to step 5.

5. Open wire check (H/L ON SW line)

-1. Connect terminals A and B with a jumper wire.

Terminal A	**Relay control module connector C (18P) No. 10**
Terminal B	Body ground

-2. Check the parameter(s) below with the HDS.

Signal	Current conditions	
	Values	Unit
Headlight Switch (BACK-UP)	B	B

Is the information indicator ON?

YES

Repair an open or high resistance in the wire.

NO

Replace the relay control module .

6. Shorted wire check (H/L ON SW line)

-1. Turn the vehicle to the OFF (LOCK) mode.

-2. Disconnect the following connectors.

Combination light switch 12P connector Relay control module connector C (18P)

-3. Check for continuity between test points 1 and 2.

Test condition	Vehicle OFF (LOCK) mode Combination light switch 12P connector: disconnected Relay control module connector C (18P): disconnected
Test point 1	**Relay control module connector C (18P) No. 10**
Test point 2	Body ground

Is there continuity?

YES

Repair a short to ground in the wire.

NO

Replace the relay control module .

DTC B1080

DTC B1080 : Power supply circuit (IG1 line) input error for Relay Control Module and MICU

NOTE: If you are troubleshooting multiple DTCs, be sure to follow the instructions in **B-CAN System Diagnosis Test Mode A** .

DTC Description	DTC
B1080 Power supply circuit (IG1 line) input error for Relay Control Module and MICU	B

DTC (Relay Control Module)

1. Problem verification

   -1. Clear the DTCs with the HDS.

   -2. Turn the vehicle to the OFF (LOCK) mode and then the ON mode.

   -3. Wait for at least 6 seconds.

   -4. Check for DTCs with the HDS.

DTC Description	DTC
B1080 Power supply circuit (IG1 line) input error for Relay Control Module and MICU	B

   Is DTC B1080 indicated?

   YES

   Repair an open or high resistance in the IG1 METER wire.

   NO

   Intermittent failure, the system is OK at this time. Check for loose or poor connections.

DTC B1085

DTC B1085 : Head Light Low Beam Power Source Abnormality

NOTE: If you are troubleshooting multiple DTCs, be sure to follow the instructions in **B-CAN System Diagnosis Test Mode A** .

DTC Description	DTC
B1085 Head Light Low Beam Power Source Abnormality	B

DTC (Relay Control Module)

1. Problem verification

   -1. Clear the DTCs with the HDS.

   -2. Turn the combination light switch to the ON position.

   -3. Wait for at least 6 seconds.

   -4. Check for DTCs with the HDS.

DTC Description	DTC
B1085 Head Light Low Beam Power Source Abnormality	B

   Is DTC B1085 indicated?

   YES

Go to step 2.

NO

Intermittent failure, the system is OK at this time.

2. Headlight operation check

-1. Turn the combination light switch ON position then check the status of the headlights.

Does one side of headlight go off?

YES

Go to step 3.

NO

Go to step 4.

3. Headlight check

-1. **Swap the left headlight and the right headlight** .

Are the symptoms swapped left and right?

YES

Replace the failure headlight .

NO

Replace the relay control module .

4. Shorted wire check (H/L LO SIG line)

-1. Turn the vehicle to the OFF (LOCK) mode.

-2. Disconnect the following connectors.

Relay control module connector B (10P)Left headlight 8P connector Right headlight 8P connector

-3. Check for continuity between test points 1 and 2.

Test condition	Vehicle OFF (LOCK) mode Relay control module connector B (10P): disconnected Left headlight 8P connector: disconnected Right headlight 8P connector: disconnected
Test point 1	**Relay control module connector B (10P) No. 9**
Test point 2	Body ground

Is there continuity?

YES

Repair a short to ground in the wire.

NO

Replace the relay control module .

DTC B108A, B108B, B108C, B108D, B108E, B108F, B1090, B1091, B1092

DTC B108A : Right Side Parking Light Circuit Shorted

DTC B108B : Left Side Parking Light Circuit Shorted

DTC B108C : Right Side Head Light Low Beam Circuit Shorted

DTC B108D : Left Side Head Light Low Beam Circuit Shorted

DTC B108E : Right Side Head Light High Beam Circuit Shorted

DTC B108F : Left Side Head Light High Beam Circuit Shorted

DTC B1090 : Illumination Circuit Shorted

DTC B1091 : DRL Circuit Shorted

DTC B1092 : Interior Light Cut Circuit Shorted

NOTE:

- If you are troubleshooting multiple DTCs, be sure to follow the instructions in **B-CAN System Diagnosis Test Mode A** .
- These DTC is stored when the relay control module detects ground fault of the harness and controls the circuit in a cutoff state inside the relay control module.

DTC Description	DTC
B108A Right Side Parking Light Circuit Shorted	B
B108B Left Side Parking Light Circuit Shorted	B
B108C Right Side Head Light Low Beam Circuit Shorted	B
B108D Left Side Head Light Low Beam Circuit Shorted	B
B108E Right Side Head Light High Beam Circuit Shorted	B
B108F Left Side Head Light High Beam Circuit Shorted	B
B1090 Illumination Circuit Shorted	B
B1091 DRL Circuit Shorted	B
B1092 Interior Light Cut Circuit Shorted	B

DTC (Relay Control Module)

1. Problem verification

    -1. Clear the DTCs with the HDS.

    -2. Turn the vehicle to the OFF (LOCK) mode and then the ON mode.

    -3. Check for DTCs with the HDS.

DTC Description	DTC
B108A Right Side Parking Light Circuit Shorted	B
B108B Left Side Parking Light Circuit Shorted	B
B108C Right Side Head Light Low Beam Circuit Shorted	B
B108D Left Side Head Light Low Beam Circuit Shorted	B
B108E Right Side Head Light High Beam Circuit Shorted	B
B108F Left Side Head Light High Beam Circuit Shorted	B
B1090 Illumination Circuit Shorted	B

DTC Description	DTC
B1091 DRL Circuit Shorted	B
B1092 Interior Light Cut Circuit Shorted	B

Are any DTCs indicated?

YES

Refer to the DTC shown on the display, then repair a short to body ground in the wire based on the instructions (see table), or **replace the relay control module** .

DTC	Operation for failure wire
B108A	PARKING R
B108B	PARKING L
B108C	R H/L LO
B108D	L H/L LO
B108E	R H/L HI
B108F	L H/L HI
B1090	ILLUMI+
B1091	DRL RLY OUT, DRL RLY OUT2
B1092	INTR LT CUT RLY OUT1, INTR LT CUT RLY OUT2

NO

Intermittent failure, the system is OK at this time. Check for loose or poor connections.

DTC U1280(RELAY CONTROL MODULE)

DTC U1280 : B-CAN communication bus line error (BUS-OFF)

NOTE: If you are troubleshooting multiple DTCs, be sure to follow the instructions in **B-CAN System Diagnosis Test Mode A** .

DTC Description	DTC
U1280 B-CAN communication bus line error (BUS-OFF)	B

DTC (Relay Control Module)

1. Problem verification

-1. Clear the DTCs with the HDS.

-2. Turn the vehicle to the OFF (LOCK) mode and then the ON mode.

-3. Wait for at least 6 seconds.

-4. Check for DTCs with the HDS.

DTC Description	DTC
U1280 B-CAN communication bus line error (BUS-OFF)	B

Is DTC U1280 indicated?

YES

Go to body control module DTC U1280 troubleshooting .

NO

Intermittent failure, the system is OK at this time. Check for loose or poor connections.

DTC U1281, U128D (RELAY CONTROL MODULE)

DTC U1281 : Relay control module lost communication with MICU(MICU frame)

DTC U128D : Relay control module lost communication with gauge control module(VSP/NE frame)

NOTE:

- If you are troubleshooting multiple DTCs, be sure to follow the instructions in **B-CAN System Diagnosis Test Mode A** .
- Refer to the DTC code shown on the display, and then inspect the connectors and terminals based on the instructions in the table below.
- The DTC may be stored due to the grounding failure or the power source failure at the transmitting control unit (the grounding inspection and the power source inspection on each control unit are required prior to this checking process).

DTC Description	DTC
U1281 Relay control module lost communication with MICU(MICU frame)	B
U128D Relay control module lost communication with gauge control module(VSP/NE frame)	B

DTC (Relay Control Module)

1. Problem verification

   -1. Clear the DTC with the HDS.

   -2. Turn the vehicle to the OFF (LOCK) mode and then the ON mode.

   -3. Wait for at least 6 seconds.

   -4. Check for DTCs with the HDS.

DTC Description	DTC
U1281 Relay control module lost communication with MICU(MICU frame)	B
U128D Relay control module lost communication with gauge control module (VSP/NE frame)	B

   Are any DTCs indicated?

   YES

   Go to step 2.

   NO

   Intermittent failure, the system is OK at this time. Check for poor connections or loose terminals.

2. Open wire check (B-CAN_H line, B-CAN_L line)

   -1. Turn the vehicle to the OFF (LOCK) mode.

   -2. Disconnect the receiving control unit connector.

Relay control module connector A (6P)

-3. Disconnect the transmitting control unit connector(s).

Refer to the DTC shown on the display, then disconnect the connector(s) based on the instructions (see table).

DTC	Connector
U1281	Body control module connector B (36P)
U128D	Gauge control module connector A (32P)

-4. Check for continuity between the receiving control unit and the transmitting control unit on the B-CAN_H circuit and the B-CAN_L circuit.

Test condition	Vehicle OFF (LOCK) mode Relay control module connector A (6P): disconnected Transmitting control unit connector(s) for indicated DTCs: disconnected

DTC	Circuit name	Receiving control unit		Transmitting control unit	
		Connector	Terminal	Connector	Terminal
U1281	B-CAN_H	**Relay control module connector A (6P)**	No. 2	**Body control module connector B (36P)**	No. 20
	B-CAN_L		No. 3		No. 21
U128D	B-CAN_H	**Relay control module connector A (6P)**	No. 2	**Gauge control module connector A (32P)**	No. 30
	B-CAN_L		No. 3		No. 31

Is there continuity?

YES

The B-CAN_H wire and the B-CAN_L wire are OK. Refer to the DTC shown on the display, then replace the control unit based on the instructions (see table).

DTC	Operation for transmitting control unit
U1281	**Body control module**
U128D	**Gauge control module**

NO

Repair an open in the B-CAN_H wire and/or the B-CAN_L wire.

DTC TROUBLESHOOTING

DTC B22A0

DTC B22A0 : Wireless charger unit failure

NOTE: If you are troubleshooting multiple DTCs, be sure to follow the instructions in **B-CAN System Diagnosis Test Mode A** .

DTC Description	DTC
B22A0 Wireless charger unit failure	B

DTC (Wireless Charger)

1. Problem verification

   -1. Clear the DTCs with the HDS.

   -2. Turn the vehicle to the OFF (LOCK) mode and then the ON mode.

   -3. Wait for at least 6 seconds.

   -4. Check for DTCs with the HDS.

DTC Description	DTC
B22A0 Wireless charger unit failure	B

Is DTC B22A0 indicated?

YES

Replace the wireless charger .

NO

Intermittent failure, the system is OK at this time. Check for loose or poor connections.

DTC B22A1

DTC B22A1 : Wireless charger unit ACC input circuit failure

NOTE: If you are troubleshooting multiple DTCs, be sure to follow the instructions in **B-CAN System Diagnosis Test Mode A** .

DTC Description	DTC
B22A1 Wireless charger unit ACC input circuit failure	B

DTC (Wireless Charger)

1. Problem verification

   -1. Clear the DTCs with the HDS.

   -2. Turn the vehicle to the OFF (LOCK) mode and then the ON mode.

-3. Wait for at least 6 seconds.

-4. Check for DTCs with the HDS.

DTC Description	DTC
B22A1 Wireless charger unit ACC input circuit failure	B

Is DTC B22A1 indicated?

YES

Go to step 2.

NO

Intermittent failure, the system is OK at this time. Check for loose or poor connections.

2. Open wire check (ACC_KEYLOCK line)

-1. Turn the vehicle to the OFF (LOCK) mode.

-2. Disconnect the following connector.

Wireless charger 7P connector

-3. Turn the vehicle to the ACCESSORY mode.

-4. Measure the voltage between test points 1 and 2.

Test condition	Vehicle ACCESSORY modeWireless charger 7P connector: disconnected

Test point 1	**Wireless charger 7P connector No. 6**
Test point 2	Body ground

Is there battery voltage?

YES

Replace the wireless charger .

NO

Repair an open or high resistance in the wire.

DTC U1280 (WIRELESS CHARGER)

DTC U1280 : Communication bus line Error (BUS-OFF)

NOTE: If you are troubleshooting multiple DTCs, be sure to follow the instructions in **B-CAN System Diagnosis Test Mode A** .

DTC Description	DTC
U1280 Communication bus line Error (BUS-OFF)	B

DTC (Wireless Charger)

1. Problem verification

-1. Clear the DTCs with the HDS.

-2. Turn the vehicle to the OFF (LOCK) mode and then the ON mode.

-3. Wait for at least 6 seconds.

-4. Check for DTCs with the HDS.

DTC Description	DTC
U1280 Communication bus line Error (BUS-OFF)	B

Is DTC U1280 indicated?

YES

Go to body control module DTC U1280 troubleshooting .

NO

Intermittent failure, the system is OK at this time. Check for loose or poor connections.

DTC U1281, U1286, U128D, U128E (WIRELESS CHARGER)

DTC U1281 : Wireless charger unit lost communication with MICU

DTC U1286 : Wireless charger unit lost communication with Keyless Access Control Unit

DTC U128D : Wireless charger unit lost communication with Gauge control module

DTC U128E : Wireless charger unit lost communication with Audio-Navigation Unit

NOTE:

- If you are troubleshooting multiple DTCs, be sure to follow the instructions in **B-CAN System Diagnosis Test Mode A** .
- Refer to the DTC code shown on the display, and then inspect the connectors and terminals based on the instructions in the table below.
- The DTC may be stored due to the grounding failure or the power source failure at the transmitting control unit (the grounding inspection and the power source inspection on each control unit are required prior to this checking process).

DTC Description	DTC
U1281 Wireless charger unit lost communication with MICU	B
U1286 Wireless charger unit lost communication with Keyless Access Control Unit	B
U128D Wireless charger unit lost communication with Gauge control module	B
U128E Wireless charger unit lost communication with Audio-Navigation Unit	B

DTC (Wireless Charger)

1. Problem verification

-1. Clear the DTC with the HDS.

-2. Turn the vehicle to the OFF (LOCK) mode and then the ON mode.

-3. Wait for at least 6 seconds.

-4. Check for DTCs with the HDS.

DTC Description	DTC
U1281 Wireless charger unit lost communication with MICU	B
U1286 Wireless charger unit lost communication with Keyless Access Control Unit	B
U128D Wireless charger unit lost communication with Gauge control module	B
U128E Wireless charger unit lost communication with Audio-Navigation Unit	B

Are any DTCs indicated?

YES

Go to step 2.

NO

Intermittent failure, the system is OK at this time. Check for poor connections or loose terminals.

2. Open wire check (B-CAN_H line, B-CAN_L line)

-1. Turn the vehicle to the OFF (LOCK) mode.

-2. Disconnect the receiving control unit connector.

Wireless charger 7P connector

-3. Disconnect the transmitting control unit connector(s).

Refer to the DTC shown on the display, then disconnect the connector(s) based on the instructions (see table).

DTC	Connector
U1281	Body control module connector B (36P)
U1286	Body control module connector B (36P)
U128D	Gauge control module connector A (32P)
U128E	Audio unit connector A (24P) (display audio type without navigation) Audio-navigation unit connector A (24P) (with navigation)

-4. Measure the resistance between the receiving control unit and the transmitting control unit on the B-CAN_H circuit and the B-CAN_L circuit.

Test condition	Vehicle OFF (LOCK) modeWireless charger 7P connector: disconnected Transmitting control unit connector(s) for indicated DTCs: disconnected

DTC	Circuit name	Receiving control unit		Transmitting control unit	
		Connector	Terminal	Connector	Terminal
U1281	B-CAN_H	Wireless charger 7P connector	No. 3	Body control module connector B (36P)	No. 20
	B-CAN_L		No. 2		No. 21
U1286	B-CAN_H	Wireless charger 7P connector	No. 3	Body control module connector B (36P)	No. 20
	B-CAN_L		No. 2		No. 21
U128D	B-CAN_H	Wireless charger 7P connector	No. 3	Gauge control module connector A (32P)	No. 30
	B-CAN_L		No. 2		No. 31

DTC	Circuit name	Receiving control unit		Transmitting control unit	
		Connector	Terminal	Connector	Terminal
U128E	B-CAN_H	Wireless charger 7P connector	No. 3	Audio unit connector A (24P) (display audio type without navigation) Audio-navigation unit connector A (24P) (with navigation)	No. 14
	B-CAN_L		No. 2		No. 24

Is there 1.0 Ω or less?

YES

The B-CAN_H wire and the B-CAN_L wire are OK. Refer to the DTC shown on the display, then replace the control unit based on the instructions (see table).

DTC	Operation for transmitting control unit
U1281	Body control module
U1286	Body control module
U128D	Gauge control module
U128E	Audio unit (display audio type without navigation) Audio-navigation unit (with navigation)

NO

Repair an open in the B-CAN_H wire and/or the B-CAN_L wire.

DTC TROUBLESHOOTING

DTC B22A0 (2020 2021)

DTC B22A0 : Wireless charger unit failure

NOTE: If you are troubleshooting multiple DTCs, be sure to follow the instructions in **B-CAN System Diagnosis Test Mode A** .

DTC Description	DTC
B22A0 Wireless charger unit failure	B

DTC (Wireless Charger)

1. Problem verification

   -1. Clear the DTCs with the HDS.

   -2. Turn the vehicle to the OFF (LOCK) mode and then the ON mode.

   -3. Wait for at least 6 seconds.

   -4. Check for DTCs with the HDS.

DTC Description	DTC
B22A0 Wireless charger unit failure	B

   Is DTC B22A0 indicated?

   YES

   Replace the wireless charger .

   NO

   Intermittent failure, the system is OK at this time. Check for loose or poor connections.

DTC B22A1 (2020 2021)

DTC B22A1 : Wireless charger unit ACC input circuit failure

NOTE: If you are troubleshooting multiple DTCs, be sure to follow the instructions in **B-CAN System Diagnosis Test Mode A** .

DTC Description	DTC
B22A1 Wireless charger unit ACC input circuit failure	B

DTC (Wireless Charger)

1. Problem verification

   -1. Clear the DTCs with the HDS.

   -2. Turn the vehicle to the OFF (LOCK) mode and then the ON mode.

-3. Wait for at least 6 seconds.

-4. Check for DTCs with the HDS.

DTC Description	DTC
B22A1 Wireless charger unit ACC input circuit failure	B

Is DTC B22A1 indicated?

YES

Go to step 2.

NO

Intermittent failure, the system is OK at this time. Check for loose or poor connections.

2. Open wire check (ACC KEYLOCK line)

-1. Turn the vehicle to the OFF (LOCK) mode.

-2. Disconnect the following connector.

Wireless charger 7P connector

-3. Turn the vehicle to the ACCESSORY mode.

-4. Measure the voltage between test points 1 and 2.

Test condition	Vehicle ACCESSORY mode Wireless charger 7P connector: disconnected

Test point 1	**Wireless charger 7P connector No. 6**
Test point 2	Body ground

Is there battery voltage?

YES

Replace the wireless charger .

NO

Repair an open or high resistance in the wire.

DTC U1280 (WIRELESS CHARGER) (2020 2021)

DTC U1280 : Communication bus line Error (BUS-OFF)

NOTE: If you are troubleshooting multiple DTCs, be sure to follow the instructions in **B-CAN System Diagnosis Test Mode A** .

DTC Description	DTC
U1280 Communication bus line Error (BUS-OFF)	B

DTC (Wireless Charger)

1. Problem verification

-1. Clear the DTCs with the HDS.

-2. Turn the vehicle to the OFF (LOCK) mode and then the ON mode.

-3. Wait for at least 6 seconds.

-4. Check for DTCs with the HDS.

DTC Description	DTC
U1280 Communication bus line Error (BUS-OFF)	B

Is DTC U1280 indicated?

YES

Go to body control module DTC U1280 troubleshooting .

NO

Intermittent failure, the system is OK at this time. Check for loose or poor connections.

DTC U1281, U1286, U128D, U128E (WIRELESS CHARGER) (2020 2021)

DTC U1281 : Wireless charger unit lost communication with MICU

DTC U1286 : Wireless charger unit lost communication with Keyless Access Control Unit

DTC U128D : Wireless charger unit lost communication with Gauge control module

DTC U128E : Wireless charger unit lost communication with Audio-Navigation Unit

NOTE:

- If you are troubleshooting multiple DTCs, be sure to follow the instructions in **B-CAN System Diagnosis Test Mode A** .
- Refer to the DTC code shown on the display, and then inspect the connectors and terminals based on the instructions in the table below.
- The DTC may be stored due to the grounding failure or the power source failure at the transmitting control unit (the grounding inspection and the power source inspection on each control unit are required prior to this checking process).

DTC Description	DTC
U1281 Wireless charger unit lost communication with MICU	B
U1286 Wireless charger unit lost communication with Keyless Access Control Unit	B
U128D Wireless charger unit lost communication with Gauge control module	B
U128E Wireless charger unit lost communication with Audio-Navigation Unit	B

DTC (Wireless Charger)

1. Problem verification

-1. Clear the DTC with the HDS.

-2. Turn the vehicle to the OFF (LOCK) mode and then the ON mode.

-3. Wait for at least 6 seconds.

-4. Check for DTCs with the HDS.

DTC Description	DTC
U1281 Wireless charger unit lost communication with MICU	B
U1286 Wireless charger unit lost communication with Keyless Access Control Unit	B
U128D Wireless charger unit lost communication with Gauge control module	B
U128E Wireless charger unit lost communication with Audio-Navigation Unit	B

Are any DTCs indicated?

YES

Go to step 2.

NO

Intermittent failure, the system is OK at this time. Check for poor connections or loose terminals.

2. Open wire check (B-CAN_H line, B-CAN_L line)

-1. Turn the vehicle to the OFF (LOCK) mode.

-2. Disconnect the receiving control unit connector.

Wireless charger 7P connector

-3. Disconnect the transmitting control unit connector(s).

Refer to the DTC shown on the display, then disconnect the connector(s) based on the instructions (see table).

DTC	Connector
U1281	Body control module connector B (36P)
U1286	Body control module connector B (36P)
U128D	Gauge control module connector A (32P)
U128E	Audio unit connector A (24P) (display audio type without navigation) Audio-navigation unit connector A (24P) (with navigation)

-4. Measure the resistance between the receiving control unit and the transmitting control unit on the B-CAN_H circuit and the B-CAN_L circuit.

Test condition	Vehicle OFF (LOCK) mode Wireless charger 7P connector: disconnected Transmitting control unit connector(s) for indicated DTCs: disconnected

DTC	Circuit name	Receiving control unit		Transmitting control unit	
		Connector	Terminal	Connector	Terminal
U1281	B-CAN_H	Wireless charger 7P connector	No. 3	Body control module connector B (36P)	No. 20
	B-CAN_L		No. 2		No. 21
U1286	B-CAN_H	Wireless charger 7P connector	No. 3	Body control module connector B (36P)	No. 20
	B-CAN_L		No. 2		No. 21
U128D	B-CAN_H	Wireless charger 7P connector	No. 3	Gauge control module connector A (32P)	No. 30
	B-CAN_L		No. 2		No. 31

DTC	Circuit name	Receiving control unit		Transmitting control unit	
		Connector	Terminal	Connector	Terminal
U128E	B-CAN_H	Wireless charger 7P connector	No. 3	Audio unit connector A (24P) (display audio type without navigation) Audio-navigation unit connector A (24P) (with navigation)	No. 14
	B-CAN_L		No. 2		No. 24

Is there 1.0 Ω or less?

YES

The B-CAN_H wire and the B-CAN_L wire are OK. Refer to the DTC shown on the display, then replace the control unit based on the instructions (see table).

DTC	Operation for transmitting control unit
U1281	Body control module
U1286	Body control module
U128D	Gauge control module
U128E	Audio unit (display audio type without navigation) Audio-navigation unit (with navigation)

NO

Repair an open in the B-CAN_H wire and/or the B-CAN_L wire.

EMISSION CONTROL ABBREVIATIONS

Gasoline & Diesel

"A"

A/C

Air Conditioning

A/C-ISUS

A/C Idle Speed-Up Solenoid

A/F

Air/Fuel

AAI

Air Assist Injector

ACL

Air Cleaner (Thermostatic Air Cleaner)

ACL-BMS

ACL Bimetallic Sensor

ACL-CKV

ACL Check Valve

ACL-DV

ACL Delay Valve

ACL-ESC

Electronic Spark Control

ACL-PVS

ACL Ported Vacuum Switch

ACL-RDV

ACL Reverse Delay Valve

ACL-RDVS

ACL Reverse Delay Valve (Single)

ACL-TCV

ACL Thermal Control Valve

ACL-TS

ACL Temperature Sensor

ACL-TSOV

ACL Temperature Sensor Override Valve

ACL-TVS

ACL Thermal Vacuum Switch

ACL-TVV

ACL Thermal Vacuum Valve

ACL-VCDV

ACL Vacuum Control Delay Valve

ACL-VCV

ACL Vacuum Control Valve

ACL-VM

ACL Vacuum Motor

ACL-WP

ACL Wax Pellet Type Motor

ADS

Anti-Dieseling Solenoid

AFR

Air/Fuel Ratio Sensor

AFS

Air/Fuel Ratio Sensor

AIH

Air Intake Heaters

AIH-TS

AIH Temperature Sensor

AIR

Air Injection System

AIS

Air Injection System

AIS-ACV

AIS Air Control Valve

AIS-AF

Air Injection System Air Filter

AIS-AMV

AIS Air Management Valve

AIS-ASV

AIS Air Switching Valve

AIS-BPV

AIS By-Pass Valve

AIS-CC

AIS Computer Controlled

AIS-CKV

AIS Check Valve

AIS-CSV

AIS Control Solenoid Valve

AIS-CV

AIS Combination Valve

AIS-DV

AIS Diverter Valve

AIS-IMCV

AIS Intake Manifold Change-Over Valve

AIS-MCV

AIS Manifold Change-Over Valve

AIS-OWV

AIS One Way Valve

AIS-PAF

AIS Pulse Air Feeder

AIS-PM

AIS Pump Motor

AIS-PV

AIS Pneumatic Valve

AIS-RV	AIS Relief Valve
AIS-SAV	AIS Secondary Air Valve
AIS-SOL	AIS Solenoid
AIS-SV	AIS Solenoid Valve
AIS-VCV	AIS Vacuum Control Valve
AIS-VSV	AIS Vacuum Switching Valve
AIS-VT	AIS Vacuum Tank
AIS-VCV	AIS Vacuum Control Valve
AIS-VSV	AIS Vacuum Switching Valve
AIV	Air Injection Valve
AIV-SOL	Air Injection Valve Solenoid
ALVW	Adjusted Loaded Vehicle Weight
AMV	Air Management Valve
AP	Air Pump Injection System
AP-ABV	Air Pump Air Bypass Valve
AP-ACV	

AP Air Control Valve

AP-AMV

AP Air Management Valve

AP-ASRV

AP Air Switching Relief Valve

AP-ASS

AP Air Switching Solenoid

AP-ASV

AP Air Switching Valve

AP-BP

AP By-Pass Valve

AP-BPV

AP By-Pass Valve

AP-CKV

AP Check Valve

AP-CS

AP Control Solenoid

AP-CV

AIR Cut-Off Valve

AP-DCTO

AP Dual Coolant Temperature Override

AP-DLY

AP Delay Valve

AP-DV

AP Diverter Valve

AP-EADV

AP Electric Air Control Diverter Valve

AP-EAMR

AP Electric Air Management Relay

AP-EAMS

AP Electric Air Management Solenoid

AP-EAP

AP Electric Air Pump

AP-EC

AP Electromagnetic Clutch

AP-ERLY

AP Electric Air Pump Relay

AP/PAIR

Pulsed Secondary Air Injection

AP-RDV

AP Reed Valve

AP-RV

AP Relief Valve

AP-SOL

AP Solenoid

AP-SOV

AP Shut-Off Valve

AP-SV

AP Solenoid Valve

AP-SWV

AP Switchover Valve

AP-TV

AP Transmitting Valve

AP-VCS

AP Vacuum Control Solenoid

AP-VCSV

AP Vacuum Controlled Air Shut-Off Valve

AP-VCV

AP Vacuum Control Valve

AP-VSV

AP Vacuum Switching Valve

A/T

Automatic Transmission

ATCV

Air Temperature Control Valve

"B"

BP/EGR

Backpressure EGR System

BP/EGR-BPS

BP/EGR Backpressure Sensor

BP/EGR-BPT

BP/EGR Backpressure Transducer

BP/EGR-BPV

BP/EGR Backpressure Valve

BP/EGR-BS

BP/EGR Bleed Solenoid

BP/EGR-BVSV

BP/EGR Bimetallic Vacuum Switching Valve

BP/EGR-C

BP/EGR Controller

BP/EGR-CLR

BP/EGR Cooler

BP/EGR-CS

BP/EGR Control Solenoid

BP/EGR-CTO

BP/EGR Coolant Temperature Override

BP/EGR-CV

BP/EGR Control Valve

BP/EGR-DCTO

BP/EGR Dual Coolant Temperature Override

BP/EGR-DS

BP/EGR Diagnostic Solenoid

BP/EGR-DSOL

BP/EGR Duty Solenoid

BP/EGR-DTVSW

BP/EGR Distributor Thermal Vacuum Switch

BP/EGR-DV

BP/EGR Delay Valve

BP/EGR-EET

BP/EGR Electric Transducer

BP/EGR-EPV

BP/EGR External Pressure Valve

BP/EGR-FDV

BP/EGR Forward Delay Valve

BP/EGR-LCV

BP/EGR Vacuum Control Valve

BP/EGR-LC

BP/EGR Load Control Valve

BP/EGR-OVS

BP/EGR Orifice Valve Sensing

BP/EGR-PS

BP/EGR Position Sensor

BP/EGR-PT

BP/EGR Pressure Tranducer

BP/EGR-PVS

BP/EGR Ported Vacuum Switch

BP/EGR-RES

BP/EGR Reservoir

BP/EGR-RST

BP/EGR Restrictor

BP/EGR-SOL

BP/EGR Solenoid

BP/EGR-TCTVS

BP/EGR Torque Converter Thermal Vacuum Switch

BP/EGR-TCV

BP/EGR Thermal Control Valve

BP/EGR-TCVLV

BP/EGR Temperature Control Valve

BP/EGR-T

BP/EGR Temperature Sensor

BP/EGR-TS

BP/EGR Temperature Sensor

BP/EGR-TVC

BP/EGR Thermal Control Valve

BP/EGR-TVS

BP/EGR Thermal Vacuum Switch

BP/EGR-TVV

BP/EGR Thermal Vacuum Valve

BP/EGR-VC

BP/EGR Diagnostic Valve

BP/EGR-VCV

BP/EGR Vacuum Control Valve

BP/EGR-VM

BP/EGR Vacuum Modulator

BP/EGR-VRV

BP/EGR Vacuum Regulator Valve

BP/EGR-VS

BP/EGR Vacuum Switch

BP/EGR-VSOL

BP/EGR Vent Solenoid

BP/EGR-VSV

BP/EGR Vacuum Switching Valve

"C"

C-4

Computer Controlled Catalytic Converter

CAC

Charge Air Cooler

CAS

Clean Air System

CB

Crankcase Breather

CB-VC

Crankcase Breather-Vapor Canister

CBPS

Coasting By-Pass System

CBVC

Crankcase Breather Vapor Canister

CCIEV

Coolant Controlled Idle Enrichment Valve

CCO

Computerized Engine Controls

CCS

Controlled Combustion System

CCV

Closed Crankcase Ventilation

CD-REGVLV

Crankcase Depression Regulator Valve

CDRV

Crankcase Depression Relief Valve

CEAB

Cold Engine Air Bleed

CEAB-TVS

CEAB Thermal Vacuum Switch

CEAB-TVV

CEAB Thermal Vacuum Valve

CEC

Computerized Engine Controls

CESS

Cold Engine Sensor Switch

CETS

Cold Engine Temperature Switch

CFI

Continuous Fuel Injection

CMH

Cold Mixture Heater

CNG

Compressed Natural Gas

CO

Carbon Monoxide

CO2

Carbon Dioxide

CPI

Central Port Injection

CRV

Coasting Richer Valve

CSI

Central Sequential Injection

CTAVS

Cold Temperature Activated Vacuum System

CTOX

Continous Trap Oxidizer

CVOT

Crankcase Ventilation Orifice Tube

CVOT-CKV

Crankcase Ventilation Orifice Tube Check Valve

"D"

DCLV

Deceleration Valve

DCS

Deceleration Control System

DDI

Direct Diesel Injection

DFI

Direct Diesel Injection

DI

Direct Injection

DKV

Deceleration Kick Valve

DLCV

Deceleration Mixture Control Valve

DM-TL

Diagnostic Module Tank Leakage

DMS

Dual Manifold System

DOC

Diesel Oxidation Catalyst

DOHC

Dual Overhead Cam

DPD

Dual Point Distributor

DPF

Diesel Particulate Filter

DPF/TWC

Combination Diesel Particulate Filter and Three Way Catalyst

DPFE

Differential Pressure Feedback EGR Valve

DPFEGR

Differential Pressure Feedback EGR Valve

DTM

Deceleration Throttle Modulator

"E"

EAIR

Electric Air Injection System

EAIR-DV

EAIR Diverter Valve

EC

Computerized Engine Controls

ECM

Electronic Control Module

ECU

Electronic Control Unit

EDC

Electronic Diesel Control

EDS

Electronic Diesel System

EEC

Electronic Engine Control

EFE

Early Fuel Evaporation

EFE-CKV

EFE Check Valve

EFE-CV

EFE Control Valve

EFE-DTVS

EFE Delay Thermal Vacuum Switch

EFE-HTR

EFE Heater

EFE-HCV

EFE Heat Control Valve

EFE-OTS

EFE Oil Temperature Switch

EFE-PTC

EFE Positive Temperature Coefficient (Intake Heater Grid)

EFE-PVS

EFE Ported Vacuum Switch

EFE-SOL

EFE Solenoid

EFE-TVS

EFE Thermal Vacuum Switch

EFE-TVV

EFE Thermal Vacuum Valve

EFE-VSV

EFE Vacuum Switching Valve

EFI

Electronic Fuel Injection

EFI-MA

EFI Mass Airflow Sensor

EFI-MAF

EFI Mass Airflow Sensor

EGR

Exhaust Gas Recirculation System

EGR-BCS

EGR Boost Check Solenoid

EGR-BPBV

EGR By-Pass Backpressure Valve

EGR-BPT

EGR Backpressure Transducer

EGR-BPV

EGR By-Pass Valve

EGR-BS

EGR Bleed Solenoid

EGR-BSSV

EGR Boost Sensor Solenoid Valve

EGR-BV

EGR Bypass Valve

EGR-BVSV

EGR Bimetallic Vacuum Switching Valve

EGR-C

EGR Controller

EGR-CC

EGR Coolant Controlled

EGR-CLR

EGR Cooler

EGR-VSOL

EGR Vacuum Solenoid

EGR-CKV

EGR Check Valve

EGR-CS

EGR Control Solenoid

EGR-CSOL

EGR Cut-Off Solenoid

EGR-CSV

EGR Control Solenoid

EGR-CTO

EGR Coolant Temperature Override

EGR-CTS

EGR Charge Temperature Sensor

EGR-CTSW

EGR Charge Temperature Switch

EGR-CTTS

EGR Coolant Temperature Thermoswitch

EGR-CV

EGR Control Valve

EGR-CVCV

EGR Constant Vacuum Control Valve

EGR-CVS

EGR Control Vent Solenoid

EGR-DC

EGR Digital Control

EGR-DCTO

EGR Dual Coolant Temperature Override

EGR-DPFE

Differential Pressure Feedback EGR Sensor

EGR-DPFS

EGR Differential Pressure Feedback Sensor

EGR-DS

EGR Diagnostic Solenoid

EGR-DSOL

EGR Duty Solenoid

EGR-DTVS

EGR Delay Thermal Vacuum Switch

EGR-DTVSW

EGR Distributor Thermal Vacuum Switch

EGR-DV

EGR Delay Valve

EGR-EPRS

EGR Exhaust Pressure Regulator Solenoid

EGR-EPRV

EGR Exhaust Pressure Regulator Valve

EGR-EPV

EGR External Pressure Valve

EGR/EVAP-CSV

EGR/EVAP Control Solenoid Valve

EGR-EVR

EGR Vacuum Regulator

EGR-EVRV

EGR Electronic Vacuum Regulator Valve

EGR-FDV

EGR Forward Delay Valve

EGR-FJS

EGR Floor Jet System

EGR-FPS

EGR Feedback Pressure Sensor

EGR-LCV

EGR Load Control Valve

EGR-MAP

EGR Manifold Absolute Pressure Sensor

EGR-PFE

EGR-PFE Sensor

EGR-PS

EGR Position Sensor

EGR-PSW

EGR Pulse Switch

EGR-PVS

EGR Ported Vacuum Switch

EGR-REG

EGR Regulator

EGR-RES

EGR Reservoir

EGR-RST

EGR Restrictor

EGR-SC

EGR Signal Converter

EGR-SEC

EGR, Secondary

EGR-SEN

EGR Sensor

EGR-SM

EGR Stepper Motor

EGR-SOL

EGR Solenoid

EGR-SU

EGR Switchover Valve

EGR-SUB

Sub-EGR Valve

EGR-SV

EGR Switchover Valve

EGR-SVV

EGR Solenoid Vacuum Valve

EGR-T

EGR Temperature Sensor

EGR-TC

EGR Transmission Controlled

EGR-TCTVS

EGR Torque Converter Thermal Vacuum Switch

EGR-TCV

EGR Thermal Control Valve

EGR-TCVLV

EGR Temperature Control Valve

EGR-TRANS

EGR Transducer

EGR-TS

EGR Temperature Sensor

EGR-TSW

EGR Temperature Switch

EGR-TV

EGR Thermal Valve

EGR-TVD

EGR Throttle Valve Diaphragm

EGR-TVS

EGR Thermal Vacuum Switch

EGR-TVSOL

EGR Throttle Valve Solenoid

EGR-TVV

EGR Thermal Vacuum Valve

EGR-V

EGR Valve

EGR-VA

EGR Vacuum Amplifier

EGR-VCV

EGR Vacuum Control Valve

EGR-VM

EGR Vacuum Modulator

EGR-VR

EGR Vacuum Regulator

EGR-VRS

EGR Vacuum Regulator Solenoid

EGR-VRSV

EGR Vacuum Regulator Solenoid Valve

EGR-VRV

EGR Vacuum Regulator Valve

EGR-VS

EGR Vacuum Switch

EGR-VSDV

EGR Vacuum Switch Dump Valve

EGR-VSEN

EGR Vacuum Sensor

EGR-VSOL

EGR Vent Solenoid

EGR-VSS

EGR Vacuum Switching Solenoid

EGR-VST

EGR Vacuum Surge Tank

EGR-VSV

EGR Vacuum Switching Valve

EGR-VVCS

EGR Venturi Vacuum Control System

EGRB

EGR Boost Sensor

EGRC

EGR Control Solenoid

EGRC-BPT

EGR Control Backpressure Transducer

EGRC-SV

EGR Control Solenoid Valve

EHOC

Electronically Heated Oxidation Catalyst

EHTWC

Electronically Heated Three-Way Catalyst

EI

Electronic Ignition System

EIS

Electronic Ignition System

ELB

Electronic Lean Burn

EPR

Exhaust Pressure Regulator

EPR-SOL

EPR Solenoid

ESA

Electronic Spark Advance

ESIM

Evaporative System Integrity Monitor

EVAP

Fuel Evaporative System

EVAP-AAC

EVAP Auxiliary Air Control

EVAP-BPSV

EVAP By-Pass Solenoid Valve

EVAP-BVSV

EVAP Bimetallic Vacuum Switching Valve

EVAP-CAV

EVAP Canister Air Valve

EVAP-CCV

EVAP Control Canister Close Valve

EVAP-CCVSV

EVAP Control Canister Vent Shut Valve

EVAP-CCVVSV

EVAP Closed Canister Valve Vacuum Switching Valve

EVAP-CDCV

EVAP Canister Drain Cut Valve

EVAP-CKV

EVAP Check Valve

EVAP-CPCS

EVAP Canister Purge Control Solenoid

EVAP-CPCSV

EVAP Canister Purge Control Solenoid Valve

EVAP-CPCV	EVAP Canister Purge Control Valve
EVAP-CPRV	EVAP Canister Purge Regulator Valve
EVAP-CPSV	EVAP Canister Vent Shut Valve
EVAP-CPT	EVAP Canister Purge Timer
EVAP-CPTVS	EVAP Canister Purge Thermal Vacuum Switch
EVAP-CPV	EVAP Canister Vent Valve
EVAP-CPVCSV	EVAP Canister Purge Volume Control
EVAP-CPVCV	EVAP Canister Purge Volume Control Valve
EVAP-CPVDV	EVAP Canister Purge Vacuum Delay Valve
EVAP-CPVR	EVAP Canister Purge Valve Resonator
EVAP-CS	EVAP Control Solenoid
EVAP-CSPS	EVAP Control System Pressure Sensor
EVAP-CSPV	EVAP Canister Purge Valve
EVAP-CST	EVAP Canister Surge Tank
EVAP-CSV	EVAP Control Solenoid Valve
EVAP-CT	

EVAP Catch Tank

EVAP-CV

EVAP Control Solenoid Valve

EVAP-CVCS

EVAP Canister Vent Control Solenoid

EVAP-CVCSV

EVAP Canister Vent Control Solenoid Valve

EVAP-CVCV

EVAP Canister Vent Control Valve

EVAP-CVS

EVAP Canister Vent Solenoid

EVAP-CVSV

EVAP Carburetor Vent Switching Valve

EVAP-CVV

EVAP Canister Vent Valve

EVAP-DCTO

EVAP Dual Coolant Temperature Override

EVAP-DF

EVAP Drain Filter

EVAP-DPS

EVAP Differential Pressure Sensor

EVAP-DV

EVAP-Drain Valve

EVAP-ESIM

Evaporative System Integrity Monitor

EVAP-EV

EVAP Emission Valve

EVAP-FBVV

EVAP Fuel Bowl Vent Valve

EVAP-FBVS

EVAP Fuel Bowl Vent Solenoid

EVAP-FCV

EVAP Fuel Cut Valve

EVAP-FLS

EVAP Fuel Level Sensor

EVAP-FOLV

EVAP Fuel Overflow Limiter Valve

EVAP-FR/FTPS

EVAP Rollover Valve/Fuel Tank

EVAP-FS

EVAP Flow Switch

EVAP-FSV

EVAP Flow Switchover Valve

EVAP-FTCV

EVAP Tank Pressure Control Valve

EVAP-FTEV

EVAP Fuel Tank EVAP Valve

EVAP-FTPCSV

EVAP Fuel Tank Pressure Control Solenoid Valve

EVAP-FTPS

EVAP Fuel Tank Pressure Sensor

EVAP-FTS

EVAP Fuel Temperature Sensor

EVAP-FVCV

EVAP Fuel Vapor Control Valve

EVAP-FVS

EVAP Fuel Vapor Separator

EVAP-FVTS

EVAP Fuel Vapor Temperature Sensor

EVAP-FVV

EVAP Fuel Vent Valve

EVAP-FVVV

EVAP Fuel Vapor Vent Valve

EVAP-FWV

EVAP Fuel Vent Valve

EVAP-IVS

EVAP Inner Vent Solenoid

EVAP-LDAF

EVAP Leak Detection Pump Air Filter

EVAP-LDP

EVAP Leak Detection Pump

EVAP-LDPAF

EVAP Leak Detection Pump Air Filter

EVAP-LDPF

EVAP Leak Detection Pump Filter

EVAP-LDPVV

EVAP Leak Detection Pump Vent Valve

EVAP-LSEP

EVAP Liquid Separator

EVAP-NVLD

EVAP Natural Vacuum Leak Detection

EVAP-ORVR

Evaporative On-Board Refueling Vapor Recovery System

EVAP-ORVRCV

Evaporative On-Board Refueling Vapor Recovery Check Valve

EVAP-ORVRFTVRV

EVAP-ORVR Fuel Tank Vapor Recirculation

EVAP-OVCV

EVAP Outer Vent Control Valve

EVAP-OWV

EVAP One-Way Valve

EVAP-PCDV

EVAP Purge Control Diaphram Valve

EVAP-PCS

EVAP Purge Control Solenoid Valve

EVAP-PCSV

EVAP Purge Cut-Off Solenoid Valve

EVAP-PFS

EVAP Purge Flow Sensor

EVAP-PFSVVSV

EVAP Purge Flow Switching Valve Vacuum Switching Valve

EVAP-PPS

EVAP Proportional Purge Solenoid

EVAP-PR

EVAP Purge Resonator

EVAP-PRRV

EVAP Pressure Relief Rollover Valve

EVAP-PRV

EVAP Pressure Relief Valve

EVAP-PS

EVAP Purge Solenoid

EVAP-PSOL

EVAP Purge Solenoid

EVAP-PSSV

EVAP Pressure Switching Solenoid

EVAP-PSVVSV

EVAP Pressure Switching Valve Vacuum Switching Valve

EVAP-PV

EVAP Purge (Frequency) Valve

EVAP-PVS

EVAP Ported Vacuum Switch

EVAP-RV

EVAP Rollover Valve

EVAP-RV/FTPS

EVAP Rollover Valve/Fuel Tank

EVAP-RVSV

EVAP Rollover Vapor Separator Valve

EVAP-SNR

EVAP Canister Sensor

EVAP-SOL

EVAP Solenoid

EVAP-SOV

EVAP Shutoff Valve

EVAP-SSV

EVAP Shut-Off Solenoid Valve

EVAP-SV

EVAP Solenoid Valve

EVAP-TC

EVAP Trap Canister

EVAP-TS

EVAP Temperature Switch

EVAP-TPBPV

EVAP Tank Pressure By-Pass Valve

EVAP-TPCS

EVAP Tank Pressure Control Solenoid

EVAP-TPCV

EVAP Tank Pressure Control Valve

EVAP-TRWV

EVAP Tree-Way Valve

EVAP-TV

EVAP Thermal Valve

EVAP-TVS

EVAP Thermal Vacuum Switch

EVAP-TVV

EVAP Thermal Vacuum Valve

EVAP-TWV	EVAP Two-Way Valve
EVAP-VC	EVAP Vapor Canister
EVAP-VCAT	EVAP Vapor Canister Air Tank
EVAP-VCF	EVAP Vapor Canister Filter
EVAP-VCSV	EVAP Vapor Canister Shut-off Valve
EVAP-VCTV	EVAP Vacuum Control Valve
EVAP-VCV	EVAP Vacuum Canister Valve
EVAP-VCVS	EVAP Vapor Canister Vent Solenoid
EVAP-VLFR	EVAP Vent Line Flow Restrictor
EVAP-VM	EVAP Vacuum Motor
EVAP-VMV	EVAP Vapor Management Valve
EVAP-VPS	EVAP Vapor Pressure Sensor
EVAP-VPSVSV	EVAP Vapor Pressure Sensor Vacuum Switching Valve
EVAP-VS	EVAP Vacuum Sensor
EVAP-VSOL	EVAP Ventilation Solenoid
EVAP-VSOL/LDP	

EVAP Ventilation Solenoid/Leak Detection Pump

EVAP-VST	EVAP Vacuum Surge Tank
EVAP-VSV	EVAP Vacuum Switching Valve
EVAP-VV	EVAP Ventilation Valve
EVRS	EGR Vacuum Regulator Solenoid

"F"

FBC	Feedback Carburetor
FCOV	Fuel Change Over Valve
FF	Flex Fuel
FF-CKV	Fuel Fill Check Valve
FF-FCV	Fuel Tank Fuel Cut-Off Valve
FF-FLVV	Fuel Tank Fill Limit Vent Valve
FFC-PVRV	Fuel Fill Cap Pressure Vacuum Relief Valve
FGOV	Fuel Gravity/Overflow Valve
FGVV	Fuel Gravity Vent Valve
FI	Fuel Injected
FICD	

Fast Idle Control Device

FISR

Fast Idle Solenoid Relay

FLV

Fill Limit Valve

FLVV

Fill Limiting Vent Valve

FP-CKV

Fill Pipe Check Valve

FP-RV

Fill Pipe Rollover Valve

FR

Fill Pipe Restrictor

FT-FLVV

Fuel Tank Fill Limit Vent Valve

FT-GVV

Fuel Tank Grade Vent Valve

FT-OPRV

Fuel Tank Over Pressure Vent Valve

FT-PCV

Fuel Tank Pressure Control Valve

FT-VCV

Fuel Tank Vapor Control Valve

FT-VRV

Fuel Tank Vapor Recirculation Valve

FTCV

Fuel Tank Check Valve

FTDPS

Fuel Tank Differential Pressure Sensor

FTEV

Fuel Tank EVAP Valve

FTPS

Fuel Tank Pressure Sensor

FTT

Fuel Tank Temperature Sensor

FTTS

Fuel Tank Temperature Sensor

FTV/LSV

Fuel Tank Vapor/Liquid Seperation Valve

FTVCV

Fuel Tank Vapor Control Valve

FTVPRV

Fuel Tank Ventilation Pressure Retention Valve

FVPS

Fuel Vapor Pressure Sensor

FTVV

Fuel Tank Vent Valve

FVV

Fuel Vapor Valve

"G"

GVWR

Gross Vehicle Weight Rating

"H"

HAC

High Altitude Compensator

HAFS

Heated Air Fuel Ratio Sensor

HAI

Hot Air Intake

HAS

High Altitude System

HC

Hydrocarbons

HCAC-VSV

Hydrocarbon Absorber Catalyst Vacuum Switching Valve

HDC

Heavy Duty Cooling

HDC-CTO

HDC Coolant Temperature Override

HFM-SFI

Hot Film Engine Management SFI

HIC

Hot Idle Compensator

HIM

Heated Intake Manifold

HO

High Output

HO2S

Heated Oxygen Sensor

HP

High Performance

HP

Horsepower

HPCA

Housing Pressure Cold Advance

HSC

High Swirl Combustion

"I"

IAC

Idle Air Control Valve

IACV-SW

IACV Switch

ICOM

Idle Compensator

IDI

Indirect Diesel Injection

IES

Idle Enrichment System

IMCO

Improved Combustion System

"K"

KS

Knock Sensor

"L"

LH-SFI

Hot Wire Sequential Multiport Fuel Injection

LVFD

Liquid/Vapor Fuel Discriminator

LVW

Loaded Vehicle Weight

"M"

MD-TICS

Timing & Injection rate Control System

MDP

Manifold Differential Pressure sensor

ME-SFI

Motor Electronics Sequential Fuel Injection

MFI

Multiport Fuel Injection

MFI-MAF

MFI Mass Airflow Sensor

MFLS

Main Fuel Level Sensor

MI

Mechanical Fuel Injection

MIL

Malfunction Indicator Light

M/T

Manual Transmission

"N"

NAC

Nitrogen Oxides (NOx) Adsorbing Catalyst

NLV

Non-Linear Valve

NOS

NOx Sensor

NOx

NOx Emission Control

NOxATWC

NOx Adsorptive TWC

NOxC

Nitrogen Oxide Catalyst

NOxS

Nitrogen Oxide Sensor

NOxTWC

NOx Adsorptive TWC

NSC

Nitrogen Oxides (NOx) Storage Catalyst

"O"

OBD

On-Board Diagnostic System

PBD (F)/(P)

Full/Partial On-Board Diagnostic

OC

Oxidation Catalytic Converter

OHC

Overhead Cam

ORVR

On-Board Refueling Vapor Recovery

ORVR-COV

ORVR Cut-Off Valve

ORVR-CV

ORVR Control Valve

ORVR-FAV

ORVR Fresh Air Valve

ORVR-FMV

ORVR Flow Management Valve

ORVR-FTVCV

ORVR Fuel Tank Vapor Control Valve

ORVR-FTVRV

ORVR Fuel Tank Vapor Recirculation Valve

ORVR-FVRS

ORVR Fuel Vapor Recovery System

ORVR-FVV

ORVR Fuel Vent Valve

ORVR-LV

ORVR Leveling Valve

ORVR-OCKV

ORVR Overfill Check Valve

ORVR-RCV

ORVR Refueling Control Valve

ORVR-VCV

ORVR Vapor Cut Valve

ORVR-VRV

ORVR Vapor Recirculating Valve

ORVR-VSV

ORVR Vent Shut Valve

ORVR-VV

ORVR Vent Valve

OVCV

Outer Vent Control Valve

O2S

Oxygen Sensor

"P"

PAIR

Pulsed Secondary Air Injection

PAIR-ABV

PAIR Anti-Backfire Valve

PAIR-ACOV

PAIR Air Cut-Off Valve

PAIR-ACS

PAIR Air Control Solenoid

PAIR-ACV

PAIR Air Control Valve

PAIR-AIV

PAIR Air Injection Valve

PAIR-ASCS

PAIR Air Suction Control Solenoid

PAIR-ASOV

PAIR Air Shutoff Valve

PAIR-ASS

PAIR Air Switching Solenoid

PAIR-ASV

PAIR Air Switching Valve

PAIR-ASVL

PAIR Air Suction Valve

PAIR-AVCS

PAIR Air Valve Control Solenoid

PAIR-CSV

PAIR Control Solenoid Valve

PAIR-CKV

PAIR Check Valve

PAIR-DV

PAIR Diverter Valve

PAIR-PAF

PAIR Pulse Air Feeder

PAIR-PAV

PAIR Pulse Air Valve

PAIR-RES

PAIR Resonator

PAIR-RV

PAIR Reed Valve

PAIR-SCSV

PAIR Swirl Control Solenoid Valve

PAIR-SCV

PAIR Swirl Control Valve

PAIR-SOL

PAIR Solenoid

PAIR-VSV

PAIR Vacuum Switching Valve

PCM

Powertrain Control Module

PCV

Positive Crankcase Ventilation

PCV-DOV

PCV Dual Orifice Valve

PCV-HCB

PCV Heated Crankcase Breather

PCV-HE

PCV Heating Element

PCV-PRV

PCV Pressure Regulator Valve

PCV-SOL

PCV Solenoid

PEVR

Power Enrichment Vacuum Regulator

PPM

Parts Per Million

PTOX

Periodic Trap Oxidizer

PURCV

Purge Crankcase Ventilation

PVCS

Ported Valve Control System

PVCS-A

PVCS Actuator

PVCS-CS

PVCS Control Solenoid

PVLCS

Power Valve Control System

"R"

RC

NOx Reduction Catalyst

ROV

Rollover Valve

"S"

SAI-SV

Secondary Air Injection Shutoff Valve

SAIR-CV

Secondary Air Injection Control Valve

SC

Supercharged or Super Charger

SC MFI

Supercharged Multiport Fuel Injection

SCR

Selective Catalytic Reduction

SCSV

Swirl Control Solenoid Valve

SCV

Swirl Control Valve

SCV-A

SCV Actuator

SFI

Sequential Multiport Fuel Injection

SFI-MAF

SFI Mass Airflow Sensor

SFLS

Sub-Fuel Level Sensor

SOHC

Single Overhead Cam

SPK

Spark Controls

SPK-AVM

SPK Advance Vacuum Modulator

SPK-BVSV

SPK Bimetal Vacuum Switching Valve

SPK-CC

SPK Computer Controlled

SPK-CKV

SPK Check Valve

SPK-CSSA

SPK Cold Start Spark Advance System

SPK-CSSH

SPK Cold Start Spark Hold System

SPK-CTO

SPK Coolant Temperature Override

SPK-DAVS

SPK Distributor Vacuum Advance Solenoid

SPK-DCKV

SPK Distributor Check Valve

SPK-DCTO

SPK Dual Coolant Temperature Override

SPK-DDD

SPK Dual Diaphragm Distributor

SPK-DMV

SPK Distributor Modulator Valve

SPK-DPD

SPK Dual Point Distributor

SPK-DPVS

SPK Distributor Ported Vacuum Switch

SPK-DRCV

SPK Distributor Retard Control Valve

SPK-DRS

SPK Distributor Retard Solenoid

SPK-DSVMV

SPK Distributor Spark Vacuum Modulator Valve

SPK-DTVS

SPK Distributor Thermal Vacuum Switch

SPK-DTVV

SPK Distributor Thermal Vacuum Valve

SPK-DV

SPK Delay Valve

SPK-DVA

SPK Distributor Vacuum Advance

SPK-DVAS

SPK Distributor Vacuum Advance Solenoid

SPK-DVCS

SPK Distributor Vacuum Control Solenoid

SPK-DVCSW

SPK Distributor Vacuum Controlled Switch

SPK-DVCV

SPK Distributor Vacuum Control Valve

SPK-DVDV

SPK Distributor Vacuum Delay Valve

SPK-DVRS

SPK Distributor Vacuum Retard Switch

SPK-DVRV

SPK Distributor Vacuum Regulating Valve

SPK-DVVV

SPK Distributor Vacuum Vent Valve

SPK-EAVS

SPK Electronically Actuated Vacuum Switch

SPK-EDM

SPK Electronic Distributor Modulator

SPK-EI

SPK Electronic Ignition

SPK-ESA

SPK Electronic Spark Advance

SPK-ESC

SPK Electronic Spark Control (Retard)

SPK-ESS

SPK Electronic Spark Selection

SPK-EST

SPK Electronic Spark Timing

SPK-FDV

SPK Forward Delay Valve

SPK-HPCA

SPK Housing Pressure Cold Advance

SPK-ITCS

SPK Ignition Timing Control System

SPK-ITVS

SPK Ignition Timing Vacuum Switch

SPK-NLVR

SPK Non-Linear Vacuum Regulator

SPK-OSAC

SPK Orifice Spark Advance Control

SPK-PVA

SPK Ported Vacuum Advance

SPK-PVS

SPK Ported Vacuum Switch

SPK-RDO

SPK Retard Delay Orifice

SPK-RDV

SPK Reverse Delay Valve

SPK-RDVD

SPK Reverse Delay Valve (Dual)

SPK-RDVLV

SPK Retard Delay Valve

SPK-RDVS

SPK Reverse Delay Valve (Single)

SPK-RETS

SPK Retard Switch

SPK-SC

SPK Speed Controlled

SPK-SDV

SPK Spark Delay Valve

SPK-SOL

SPK Solenoid

SPK-SRRV

SPK Spark Relay Regulator Valve

SPK-TAVIA

SPK Temperature Activated Vacuum Ignition Advance

SPK-TCS

SPK Transmission Controlled Spark

SPK-TCSYS

SPK Timing Control System

SPK-TIDC

SPK Thermostatic Ignition Distributor Control

SPK-TV

SPK Thermal Valve

SPK-TVS

SPK Thermal Vacuum Switch

SPK-VACTO

SPK Vacuum Advance Coolant Temperature Override

SPK-VAS

SPK Vacuum Advance Solenoid

SPK-VAV

SPK Vacuum Advance Valve

SPK-VR

SPK Vacuum Retard

SPK-VRSW

SPK Vacuum Retard Switch

SPK-VSV

SPK Vacuum Switching Valve

SPK-VTCS

SPK Vacuum Timing Control System

SPL

Smoke Puff Limiter

SRI

Service Reminder Indicator

SSCA

Stepped Speed Control Actuator

SSCS

Stepped Speed Control Solenoid

STS

Service Throttle Soon Light

STVS

Secondary Throttle Valve System

SUB-HO2S

Sub-Heated Oxygen Sensor (after CAT)

SUB-O2S

Sub-Oxygen Sensor

SUB-TWC

Sub Three-Way Catalytic Converter

"T"

TAA

Turbo Air-To-Air

TAA

Throttle Actuator Assembly

TAB

Thermactor Air By-Pass

TAD

Thermactor Air Diverter

TAC

Thermostatic Air Cleaner

TBI

Throttle Body Injection

TBPCS

Throttle By-Pass Control System

TC

Turbo Charger

TCC

Torque Converter Clutch

TCCL

Torque Converter Control

TCD

Throttle Closing Dashpot

TC-DV

TC Delay Valve

TC-TVC

TC Thermal Vacuum Switch

TC-VS

TC Vacuum Switch

TD

Thermactor Diverter

TFT

Tank Fuel Temperature Sensor

THOS2

Third Heated Oxygen Sensor

TICV

Thermal Ignition Control Valve

TIV

Thermal Idle Valve

TK

Throttle Kicker

TLUC

Transmission Lock-Up Converter

TLUC-TVS

TLUC Thermal Vacuum Switch

TLUC-VS

TLUC Vacuum Switch

TM

Throttle Modulator

TOS

Throttle Opener System

TP

Throttle Positioner

TPI

Tuned Port Fuel Injection

TPV

Throttle Poppet Valve

TR

Thermal Reactor

TRC

Throttle Return Control

TRCS

Throttle Return Control Solenoid

TRCTL

Throttle Return Control Throttle Lever Actuator

TRSCV

Throttle Return Solenoid Control Valve

TRTVV

Temperature Regulator Thermal Vacuum Valve

TRVV

Transmission Vacuum Valve

TSOL

Throttle Solenoid

TVISD

Throttle Vacuum Idle Speed Diaphragm

TVM

Transmission Vacuum Modulator

TVS

Thermal Vacuum Switch

TWC

Three-Way Catalytic Converter

TWC+OC

Three-Way + Oxidation Catalytic Converter

"V"

VA

Vacuum Advance Unit

VAC-AMP

Vacuum Amplifier

VA-CTO

VA Coolant Temperature Override

VC

Vapor Canister

VCV

Vacuum Cut Valve

VCV-BV

VCV By-Pass Valve

VLFR

Vent Line Flow Restrictor/Anti-Trickle Fill Valve

"W"

WU

Warm-Up Catalyst

WU-OC

Warm-Up Oxidation Converter

WU-TWC

Warm-Up Three-Way Catalytic Converter

2020-22 ENGINE

Cooling System Service Specifications - CR-V (Hybrid)

COOLING SYSTEM

Item	Measurement	Qualification	Standard or New	Service Limit
Radiator	Coolant capacity (including coolant reservoir)	Engine overhaul	6.9 L (1.82 US gal)	-
		Coolant change	5.6 L (1.48 US gal)	-
	Coolant type	B	Use Honda Long Life Antifreeze/Coolant Type 2, and add Honda Extreme Cold Weather Antifreeze/Coolant Type 2. **NOTE:** If the vehicle is regularly driven in very low temperatures (below -22B°F (-30B°C)), a 60% concentration of coolant should be used.	
Coolant reservoir	Coolant capacity	B	0.7 L (0.18 US gal)	-
Radiator cap	Opening pressure	B	93-123 kPa (0.95-1.25 kgf/cm 2, 13.5-17.8 psi)	-
Thermostat	Opening temperature	Begins to open	176-183B°F (80-84B°C)	-
		Fully open	203B°F (95B°C)	-
	Valve lift at fully open	B	8.0 mm (0.315 in) min.	-

Cylinder Head Assembly - Components Location - CR-V (Hybrid)

COMPONENT LOCATION INDEX

CYLINDER HEAD ASSEMBLY COMPONENT LOCATION INDEX

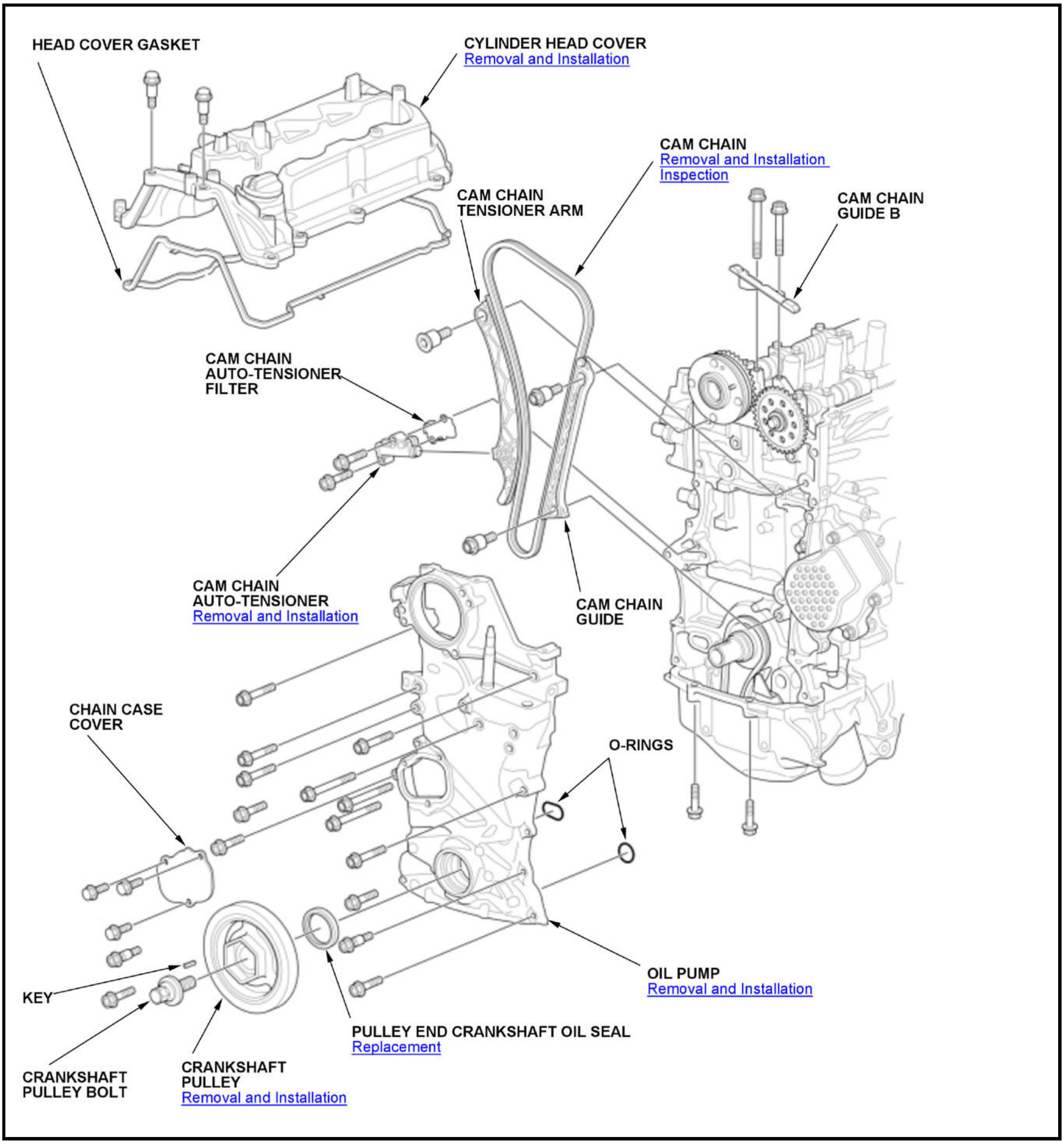
HEAD COVER GASKET
CYLINDER HEAD COVER
Removal and Installation
CAM CHAIN
Removal and Installation
Inspection
CAM CHAIN TENSIONER ARM
CAM CHAIN GUIDE B
CAM CHAIN AUTO-TENSIONER FILTER
CAM CHAIN AUTO-TENSIONER
Removal and Installation
CAM CHAIN GUIDE
CHAIN CASE COVER
O-RINGS
KEY
OIL PUMP
Removal and Installation
PULLEY END CRANKSHAFT OIL SEAL
Replacement
CRANKSHAFT PULLEY BOLT
CRANKSHAFT PULLEY
Removal and Installation

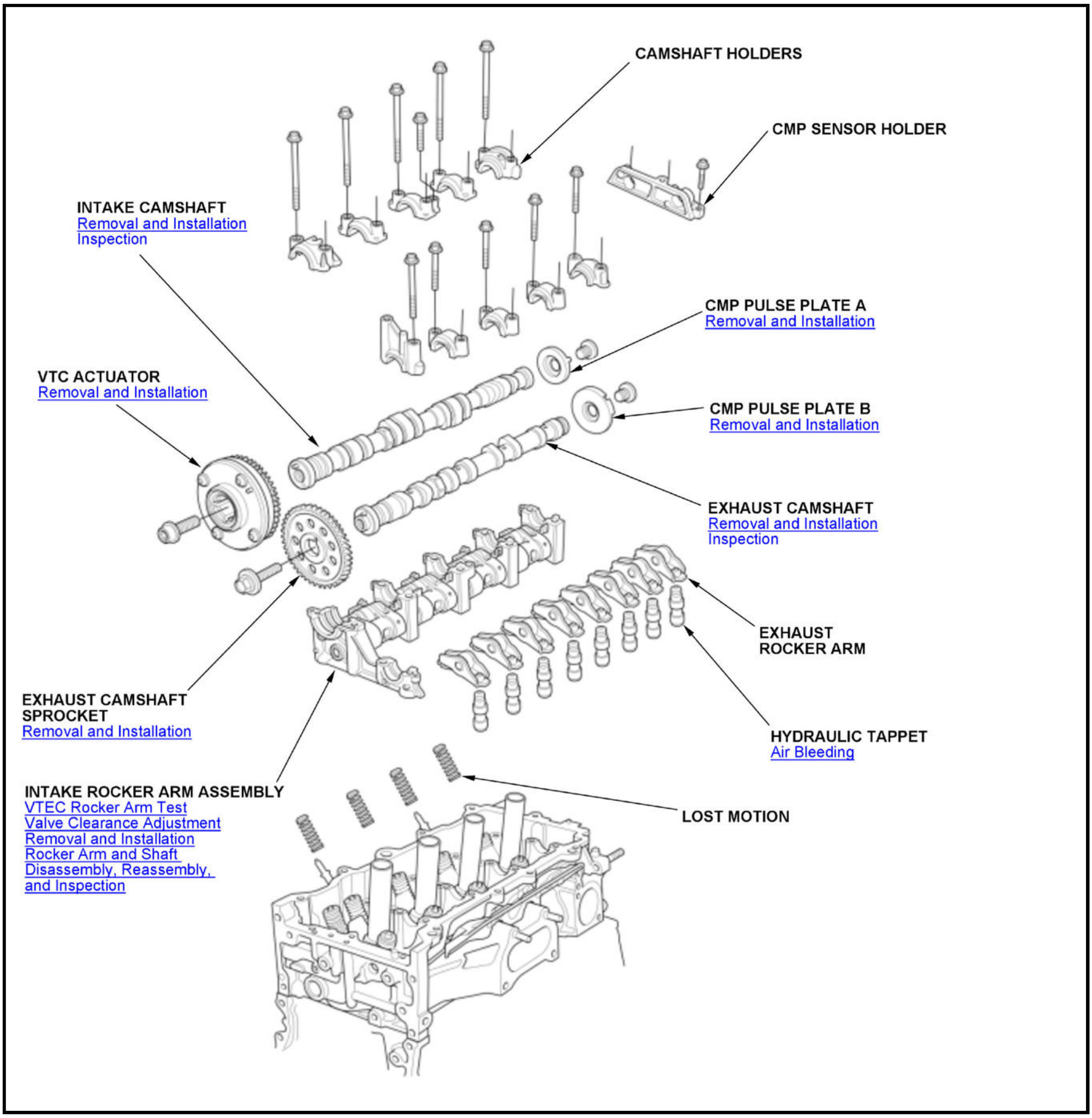
CAMSHAFT HOLDERS
CMP SENSOR HOLDER
INTAKE CAMSHAFT
Removal and Installation
Inspection
CMP PULSE PLATE A
Removal and Installation
VTC ACTUATOR
Removal and Installation
CMP PULSE PLATE B
Removal and Installation
EXHAUST CAMSHAFT
Removal and Installation
Inspection
EXHAUST
ROCKER ARM
EXHAUST CAMSHAFT
SPROCKET
Removal and Installation
HYDRAULIC TAPPET
Air Bleeding
INTAKE ROCKER ARM ASSEMBLY
VTEC Rocker Arm Test
Valve Clearance Adjustment
Removal and Installation
Rocker Arm and Shaft
Disassembly, Reassembly,
and Inspection
LOST MOTION

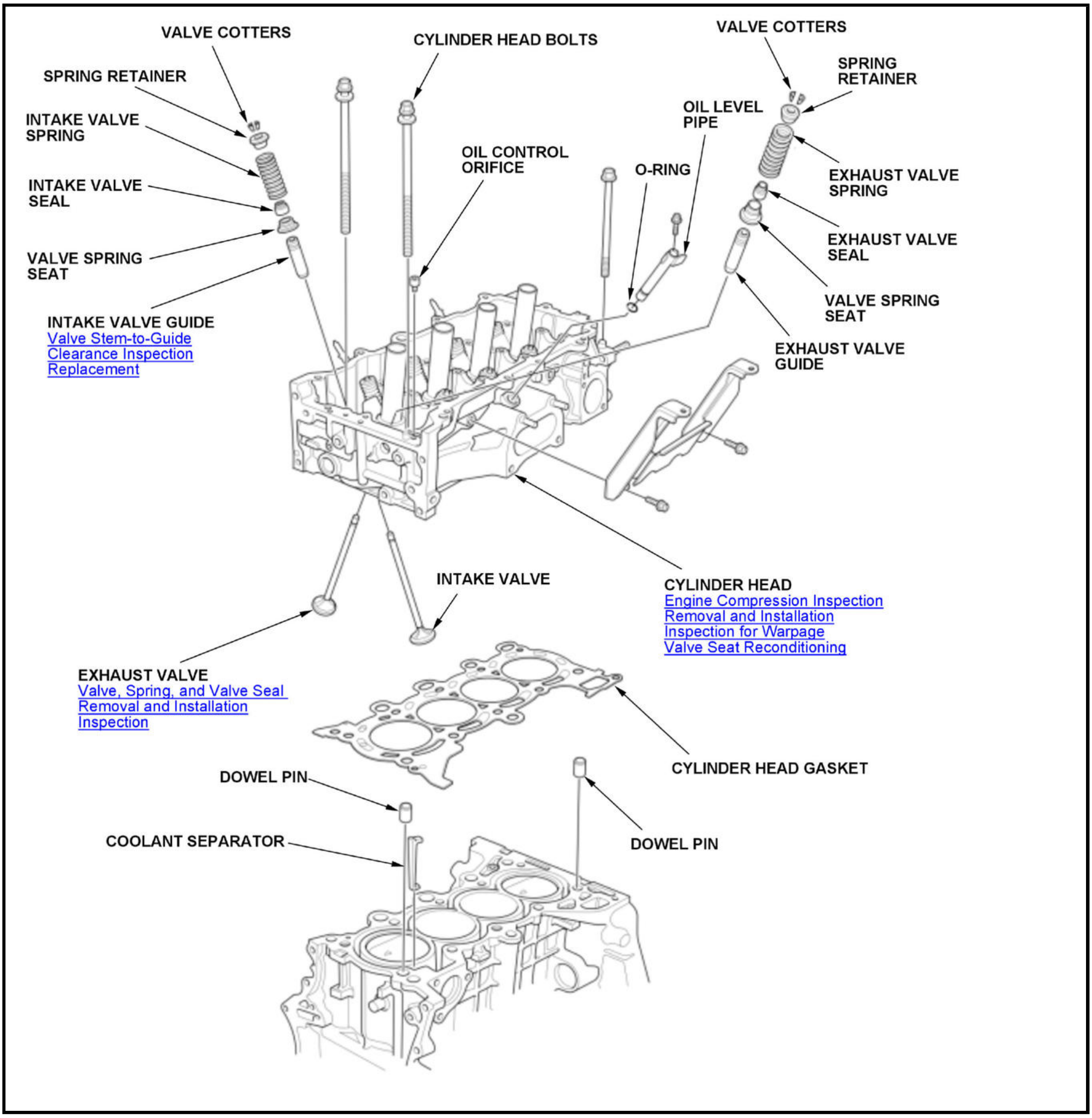
VALVE COTTERS
CYLINDER HEAD BOLTS
VALVE COTTERS
SPRING RETAINER
SPRING RETAINER
INTAKE VALVE SPRING
OIL LEVEL PIPE
OIL CONTROL ORIFICE
O-RING
EXHAUST VALVE SPRING
INTAKE VALVE SEAL
EXHAUST VALVE SEAL
VALVE SPRING SEAT
VALVE SPRING SEAT
INTAKE VALVE GUIDE
Valve Stem-to-Guide
Clearance Inspection
Replacement
EXHAUST VALVE GUIDE
INTAKE VALVE
CYLINDER HEAD
Engine Compression Inspection
Removal and Installation
Inspection for Warpage
Valve Seat Reconditioning
EXHAUST VALVE
Valve, Spring, and Valve Seal
Removal and Installation
Inspection
CYLINDER HEAD GASKET
DOWEL PIN
COOLANT SEPARATOR
DOWEL PIN

INSPECTION

CYLINDER HEAD INSPECTION FOR WARPAGE (1.5 L ENGINE)

Inspection

1. Cylinder Head - Remove
2. Cylinder Head Warpage - Inspect

    1. Check the cylinder head for warpage. Measure along the edges, and three ways across the center:

        - If warpage is less than 0.08 mm (0.003 in) cylinder head resurfacing is not required.
        - Maximum resurface limited to the cylinder head height standard as shown.

Warpage	
Standard (New):	**0.08 mm (0.003 in) max.**

Cylinder Head Height	
Standard (New):	**126.95-127.05 mm (4.9980-5.0020 in)**

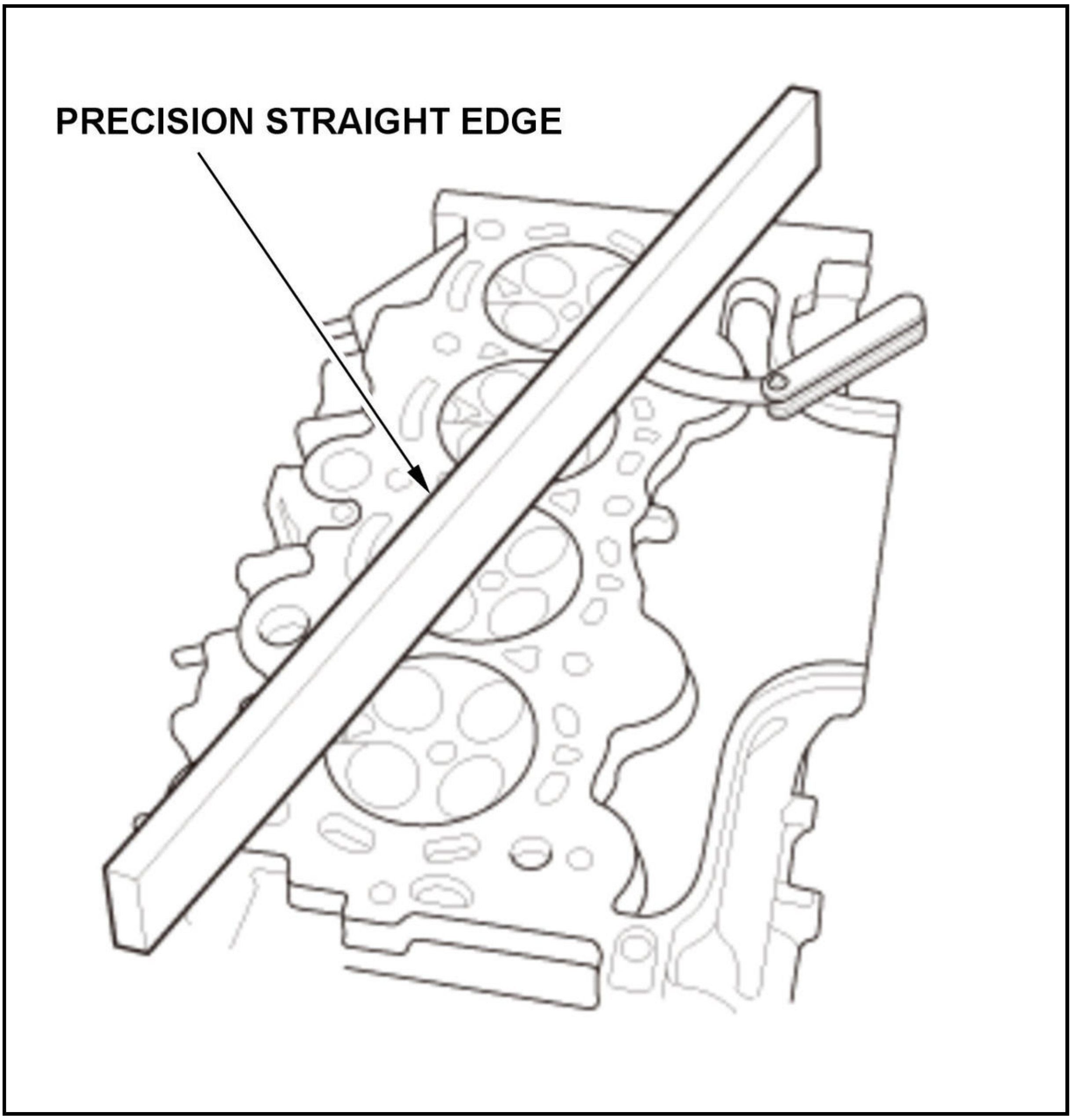
PRECISION STRAIGHT EDGE

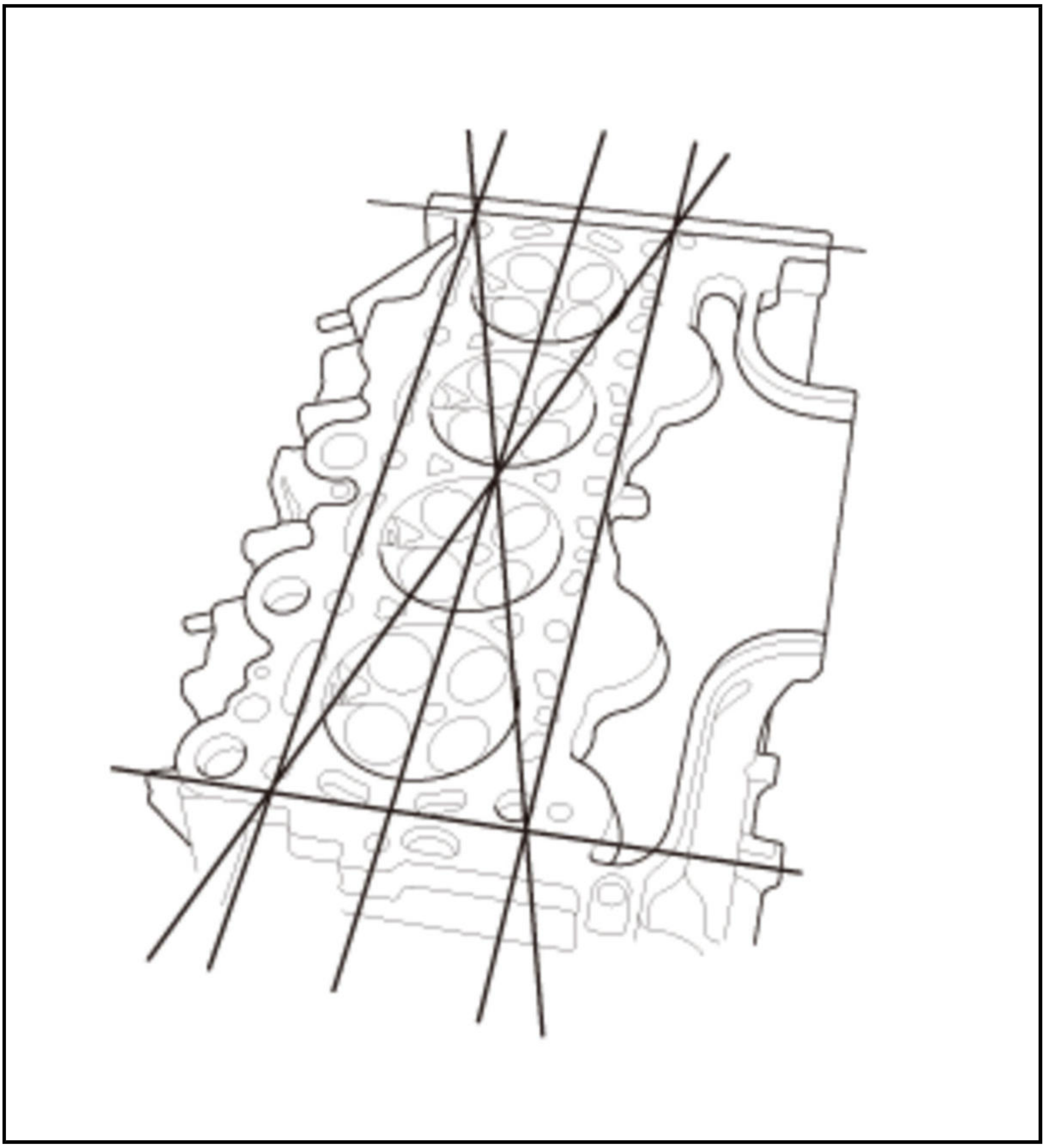

3. All Removed Parts - Install

   1. Install the parts in the reverse order of removal.

CYLINDER HEAD INSPECTION FOR WARPAGE (2.4 L ENGINE) (2017 2018 2019)

Inspection

1. Cylinder Head - Remove
2. Cylinder Head Warpage - Inspect

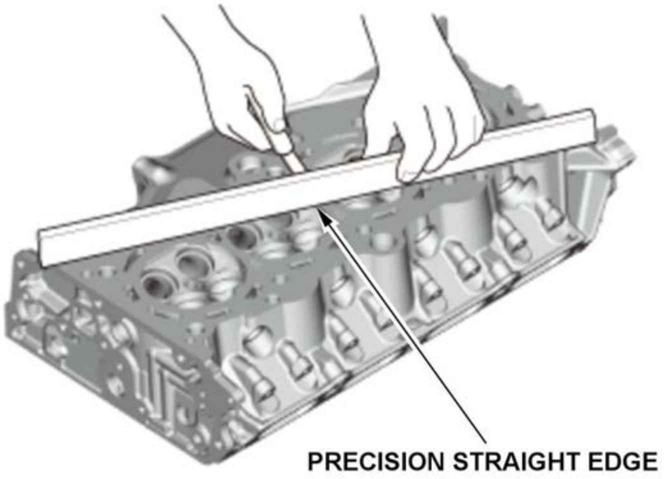

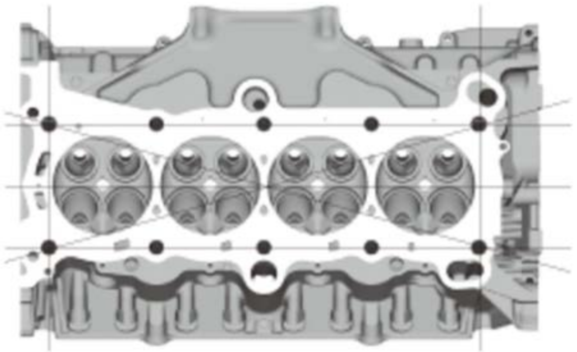

1. Check the cylinder head for warpage. Measure along the edges, and three ways across the center:

- If warpage is less than 0.05 mm (0.002 in) cylinder head resurfacing is not required.
- Maximum resurface limited to the cylinder head height standard as shown.

Cylinder Head Height	
Standard (New):	**111.95-112.05 mm (4.4075-4.4114 in)**

Cylinder Head Warpage	
Standard (New):	**0.05 mm (0.002 in) max.**

3. All Removed Parts - Install

1. Install the parts in the reverse order of removal.

COMPONENT LOCATION INDEX

CYLINDER HEAD ASSEMBLY COMPONENT LOCATION INDEX (1.5 L ENGINE)

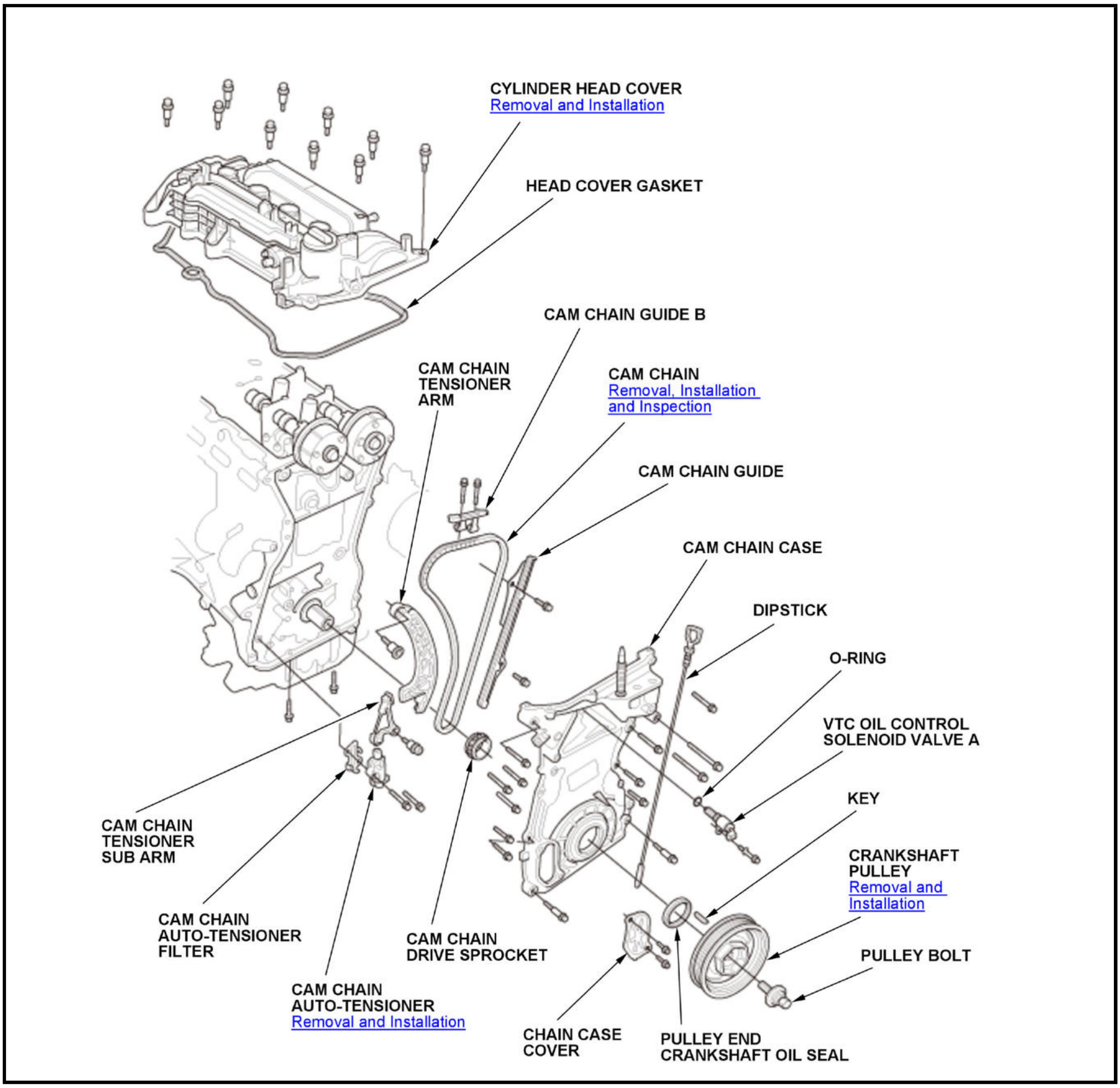
CYLINDER HEAD COVER
Removal and Installation
HEAD COVER GASKET
CAM CHAIN GUIDE B
CAM CHAIN TENSIONER ARM
CAM CHAIN
Removal, Installation and Inspection
CAM CHAIN GUIDE
CAM CHAIN CASE
DIPSTICK
O-RING
VTC OIL CONTROL SOLENOID VALVE A
KEY
CRANKSHAFT PULLEY
Removal and Installation
PULLEY BOLT
CAM CHAIN TENSIONER SUB ARM
CAM CHAIN AUTO-TENSIONER FILTER
CAM CHAIN AUTO-TENSIONER
Removal and Installation
CAM CHAIN DRIVE SPROCKET
CHAIN CASE COVER
PULLEY END CRANKSHAFT OIL SEAL

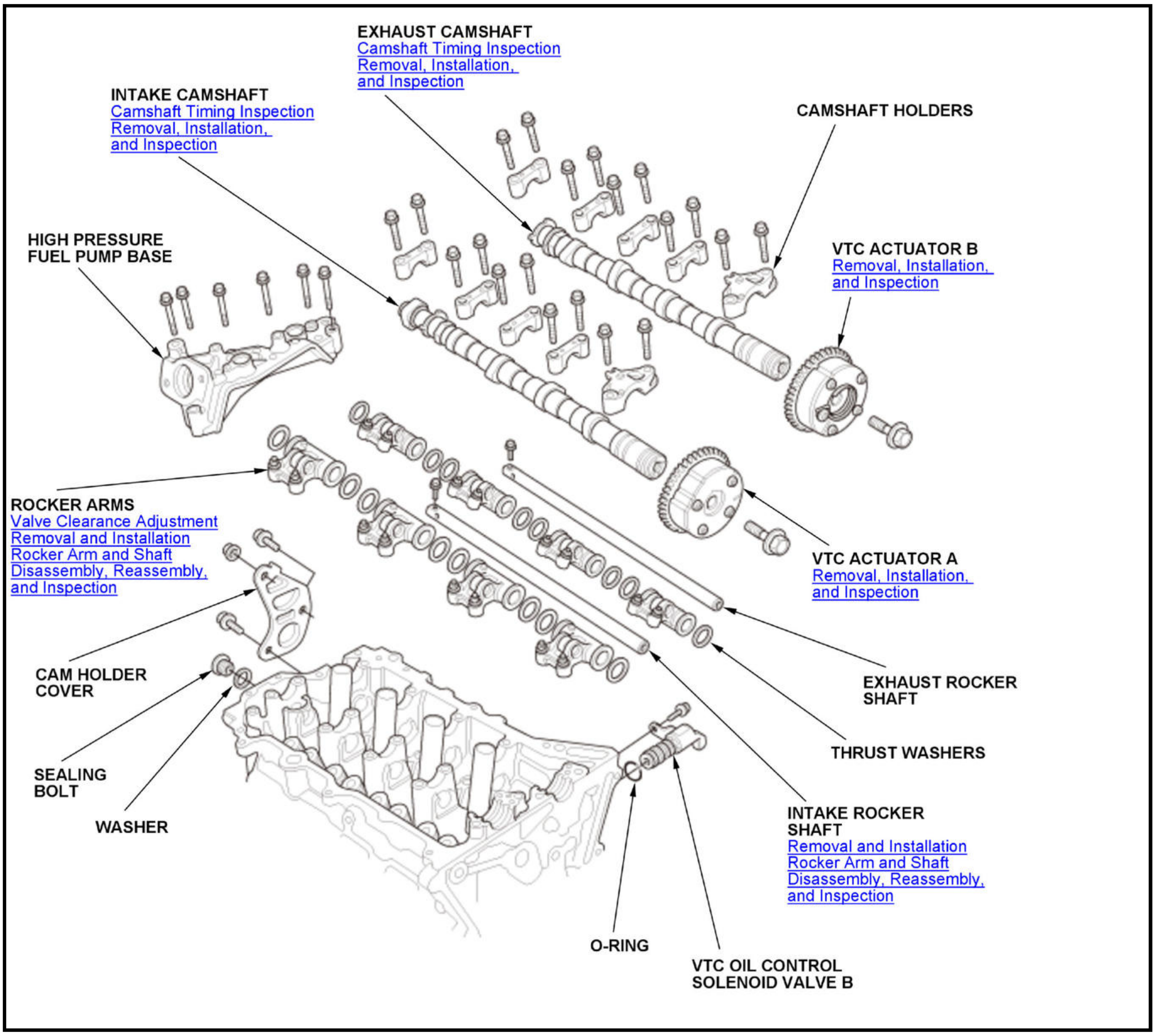
EXHAUST CAMSHAFT
Camshaft Timing Inspection
Removal, Installation, and Inspection
INTAKE CAMSHAFT
Camshaft Timing Inspection
Removal, Installation, and Inspection
CAMSHAFT HOLDERS
HIGH PRESSURE FUEL PUMP BASE
VTC ACTUATOR B
Removal, Installation, and Inspection
ROCKER ARMS
Valve Clearance Adjustment
Removal and Installation
Rocker Arm and Shaft Disassembly, Reassembly, and Inspection
VTC ACTUATOR A
Removal, Installation, and Inspection
CAM HOLDER COVER
EXHAUST ROCKER SHAFT
SEALING BOLT
THRUST WASHERS
WASHER
INTAKE ROCKER SHAFT
Removal and Installation
Rocker Arm and Shaft Disassembly, Reassembly, and Inspection
O-RING
VTC OIL CONTROL SOLENOID VALVE B

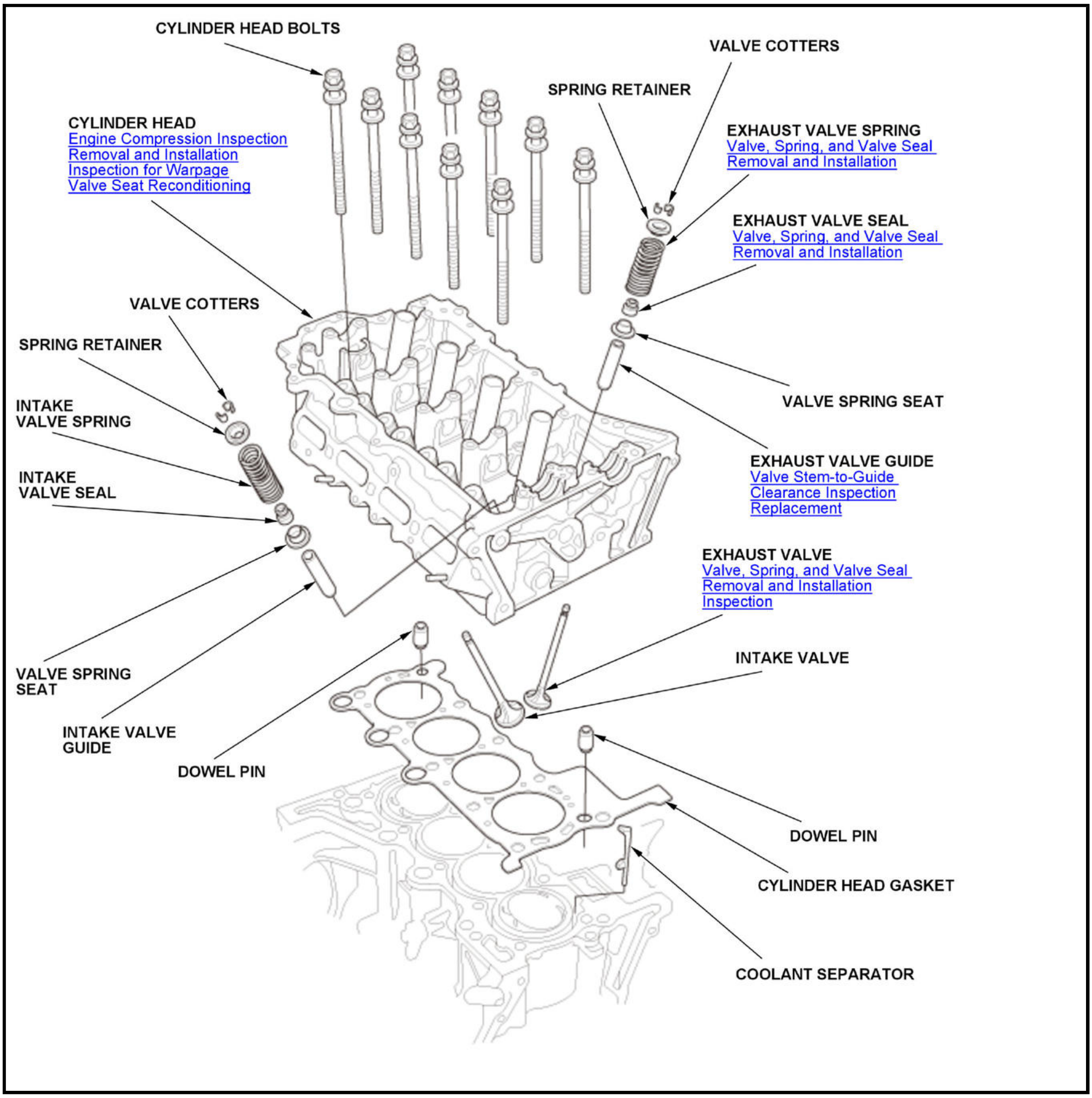
CYLINDER HEAD BOLTS
VALVE COTTERS
SPRING RETAINER
CYLINDER HEAD
Engine Compression Inspection
Removal and Installation
Inspection for Warpage
Valve Seat Reconditioning
EXHAUST VALVE SPRING
Valve, Spring, and Valve Seal
Removal and Installation
EXHAUST VALVE SEAL
Valve, Spring, and Valve Seal
Removal and Installation
VALVE COTTERS
SPRING RETAINER
INTAKE VALVE SPRING
INTAKE VALVE SEAL
VALVE SPRING SEAT
EXHAUST VALVE GUIDE
Valve Stem-to-Guide
Clearance Inspection
Replacement
EXHAUST VALVE
Valve, Spring, and Valve Seal
Removal and Installation
Inspection
INTAKE VALVE
VALVE SPRING SEAT
INTAKE VALVE GUIDE
DOWEL PIN
DOWEL PIN
CYLINDER HEAD GASKET
COOLANT SEPARATOR

CYLINDER HEAD ASSEMBLY COMPONENT LOCATION INDEX (2.4 L ENGINE) (2017 2018 2019)

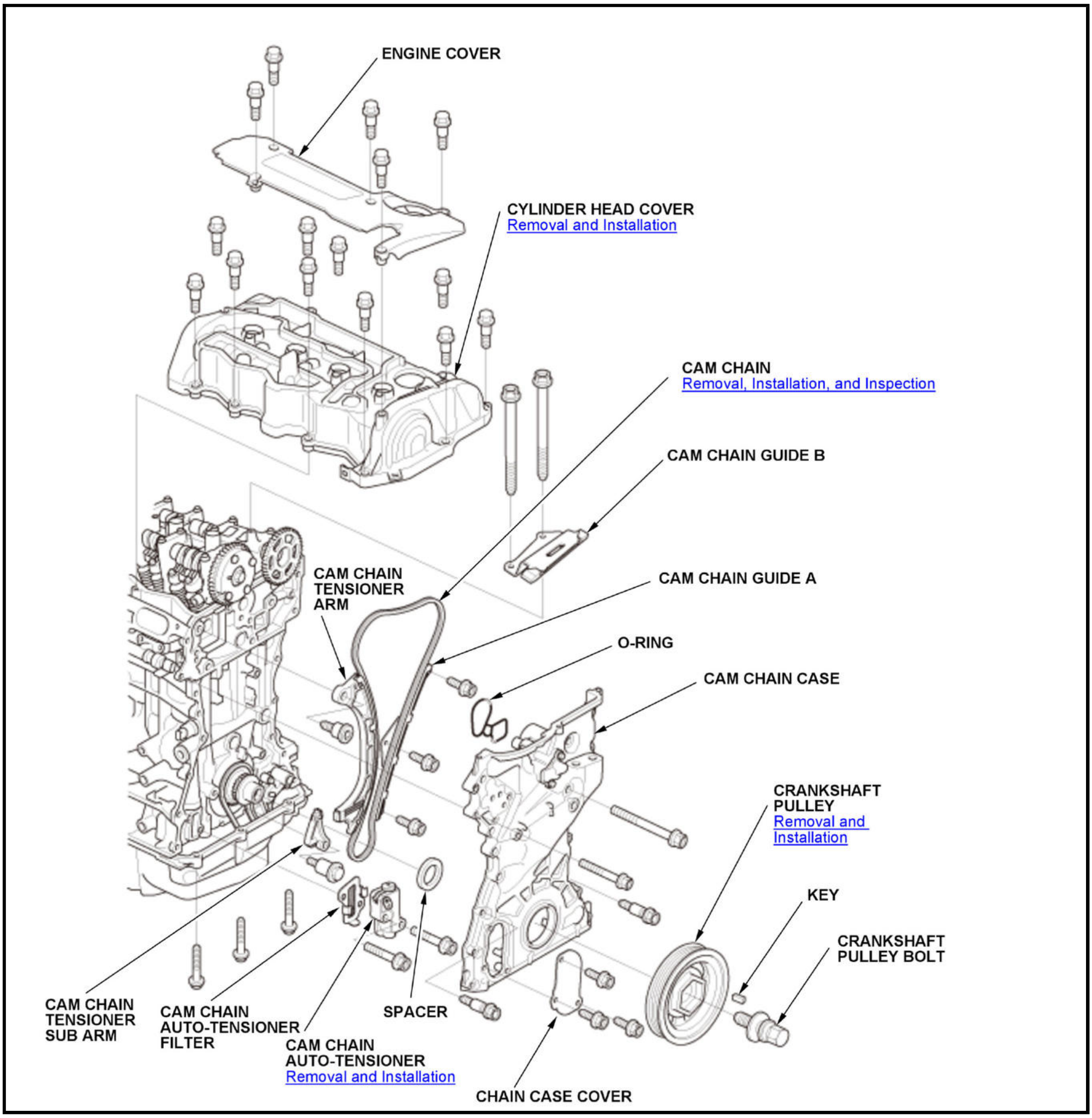
ENGINE COVER
CYLINDER HEAD COVER
Removal and Installation
CAM CHAIN
Removal, Installation, and Inspection
CAM CHAIN GUIDE B
CAM CHAIN TENSIONER ARM
CAM CHAIN GUIDE A
O-RING
CAM CHAIN CASE
CRANKSHAFT PULLEY
Removal and Installation
KEY
CRANKSHAFT PULLEY BOLT
CAM CHAIN TENSIONER SUB ARM
CAM CHAIN AUTO-TENSIONER FILTER
CAM CHAIN AUTO-TENSIONER
Removal and Installation
SPACER
CHAIN CASE COVER

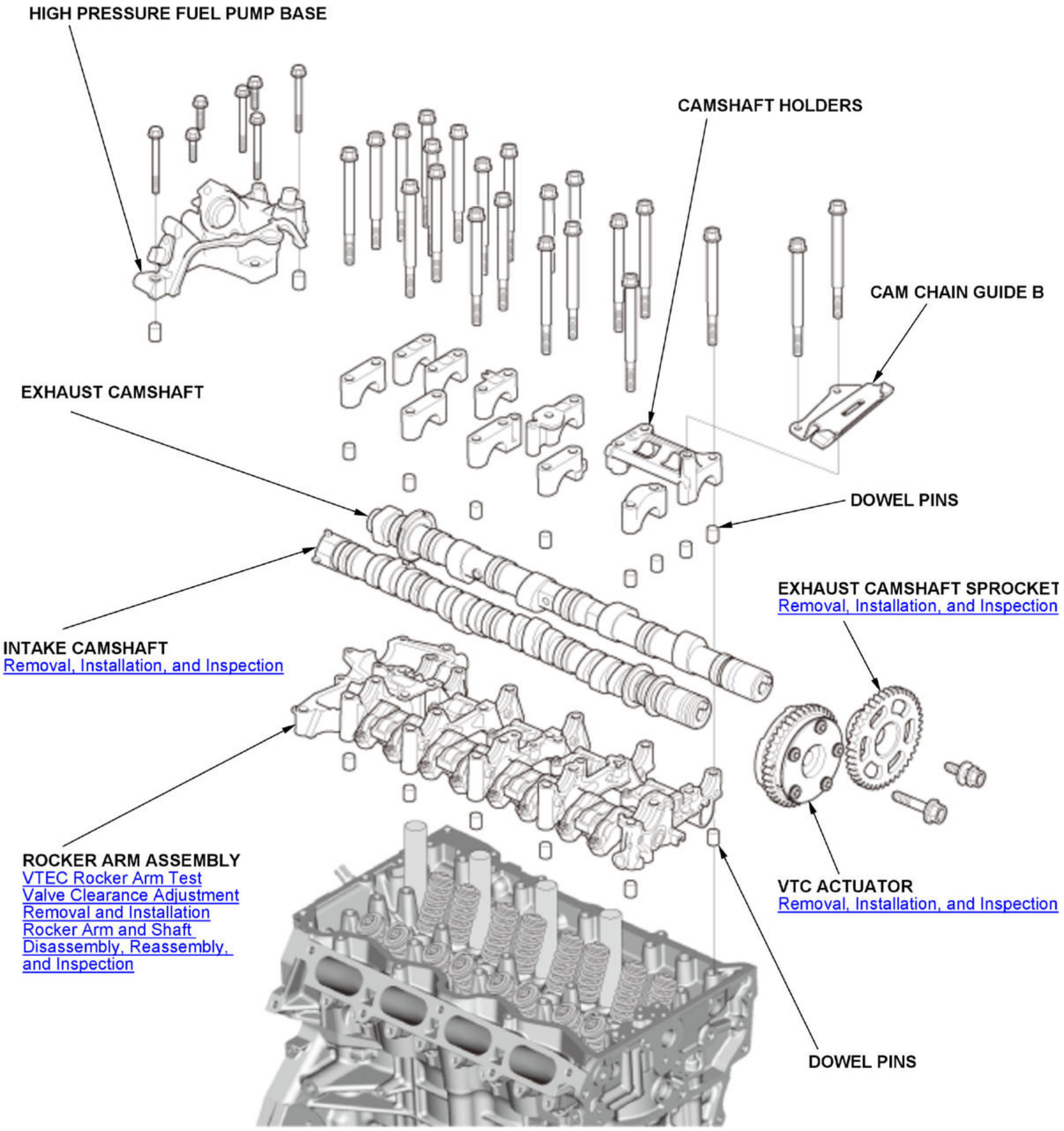
HIGH PRESSURE FUEL PUMP BASE
CAMSHAFT HOLDERS
CAM CHAIN GUIDE B
EXHAUST CAMSHAFT
DOWEL PINS
EXHAUST CAMSHAFT SPROCKET
Removal, Installation, and Inspection
INTAKE CAMSHAFT
Removal, Installation, and Inspection
ROCKER ARM ASSEMBLY
VTEC Rocker Arm Test
Valve Clearance Adjustment
Removal and Installation
Rocker Arm and Shaft
Disassembly, Reassembly,
and Inspection
VTC ACTUATOR
Removal, Installation, and Inspection
DOWEL PINS

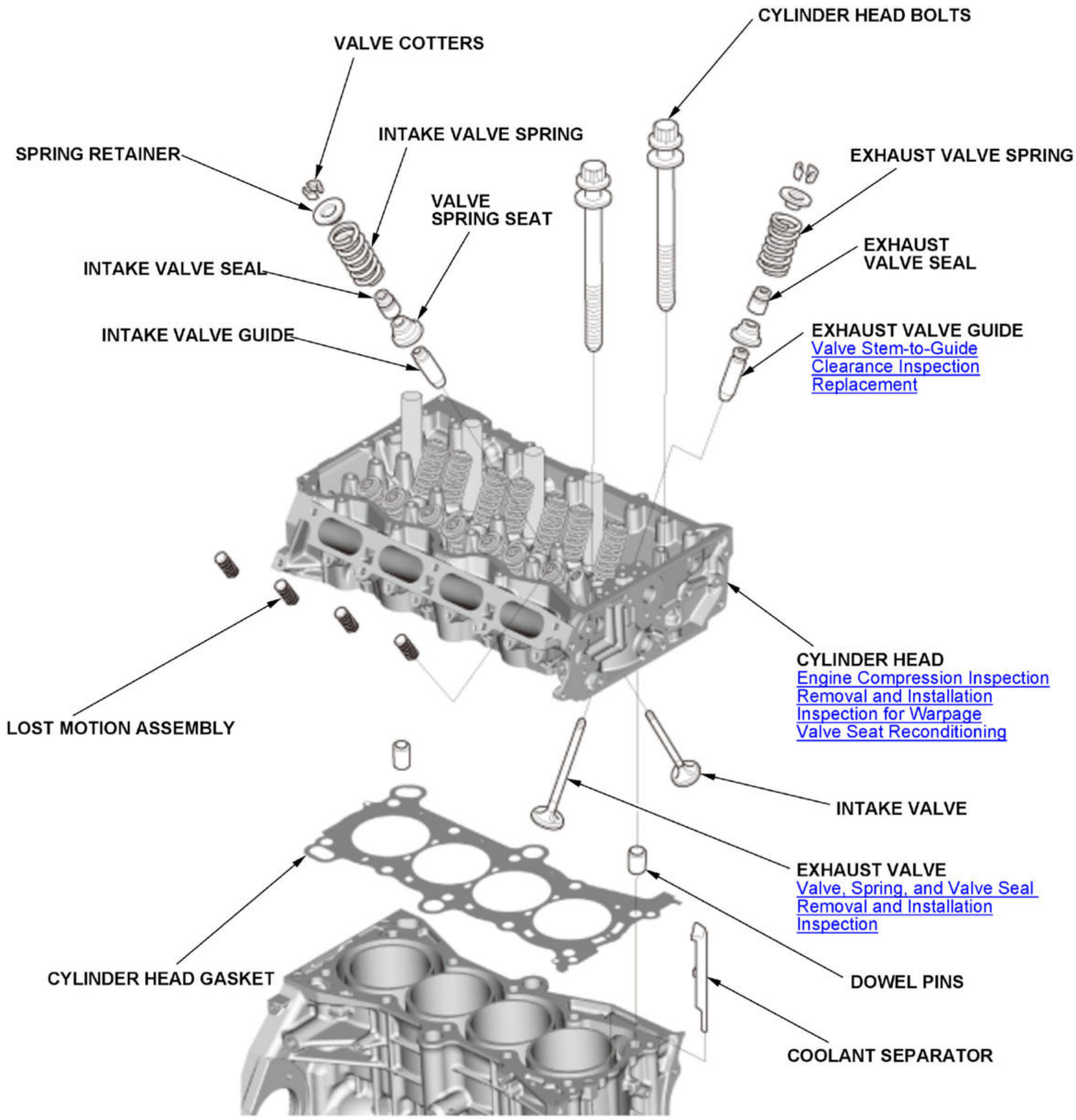
CYLINDER HEAD BOLTS
VALVE COTTERS
INTAKE VALVE SPRING
SPRING RETAINER
EXHAUST VALVE SPRING
VALVE SPRING SEAT
EXHAUST VALVE SEAL
INTAKE VALVE SEAL
INTAKE VALVE GUIDE
EXHAUST VALVE GUIDE
Valve Stem-to-Guide Clearance Inspection
Replacement
CYLINDER HEAD
Engine Compression Inspection
Removal and Installation
Inspection for Warpage
Valve Seat Reconditioning
LOST MOTION ASSEMBLY
INTAKE VALVE
EXHAUST VALVE
Valve, Spring, and Valve Seal Removal and Installation
Inspection
DOWEL PINS
CYLINDER HEAD GASKET
COOLANT SEPARATOR

OVERHAUL

CYLINDER HEAD OVERHAUL

Special Tools Required

Image	Description/Tool Number
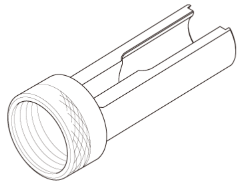	Valve Spring Compressor Attachment 070AE-5K0A100
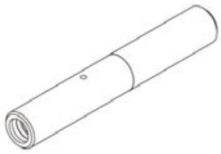	Stem Seal Driver 070AD-5K0A100
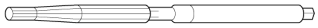	Valve Guide Reamer, 5.5 mm 07HAH-PJ7A100
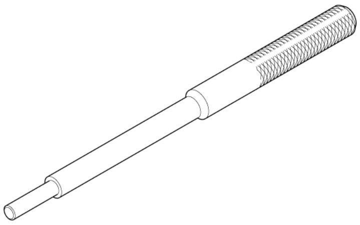	Valve Guide Driver, 5.35 x 9.7 mm 07742-0010100
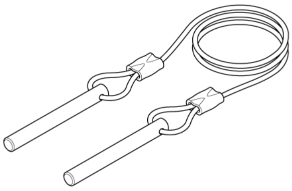	Camshaft Lock Pin Set 07AAB-RWCA120

Removal

WARNING: **The power cables carry high voltage when the electric powertrain system is energized. To avoid serious injury from electrical shock, do not turn on the system with the power cables disconnected.**

CAUTION: **Please carefully read "Precaution for Handling Sodium-Filled Valves" and follow the instructions as the exhaust valves contain metal sodium .**

The electric powertrain components are located in this area. The electric powertrain is a high-voltage system. You must be familiar with the electric powertrain system before working on or around it. Make sure you have read the electric powertrain **service precautions** before doing repairs or service.

NOTE:

- Connect the HDS to the DLC, and monitor ECT SENSOR 1. To avoid damaging the cylinder head, wait until the engine coolant temperature drops below 100B°F (38B°C) before loosening the cylinder head bolts.
- Keep the cam chain away from magnetic fields.
- Identify the valves and the valve springs as they are removed so that each item can be reinstalled in its original position.
- When removing the cam shaft, turn the crankshaft to align No. 1 position at top dead center (TDC).
- The No. 1 journal is on the crankshaft pulley side.
- Make sure that the removed parts, such as valves and valve springs, are free from rust when storing.

Cylinder Head Cover, CMP Pulse Plate, VTC Actuator, Exhaust Camshaft Sprocket, Camshaft, and Rocker Arm Assembly

NOTE: **Numbered call-outs in figure pertain to list numbers in following procedure.**

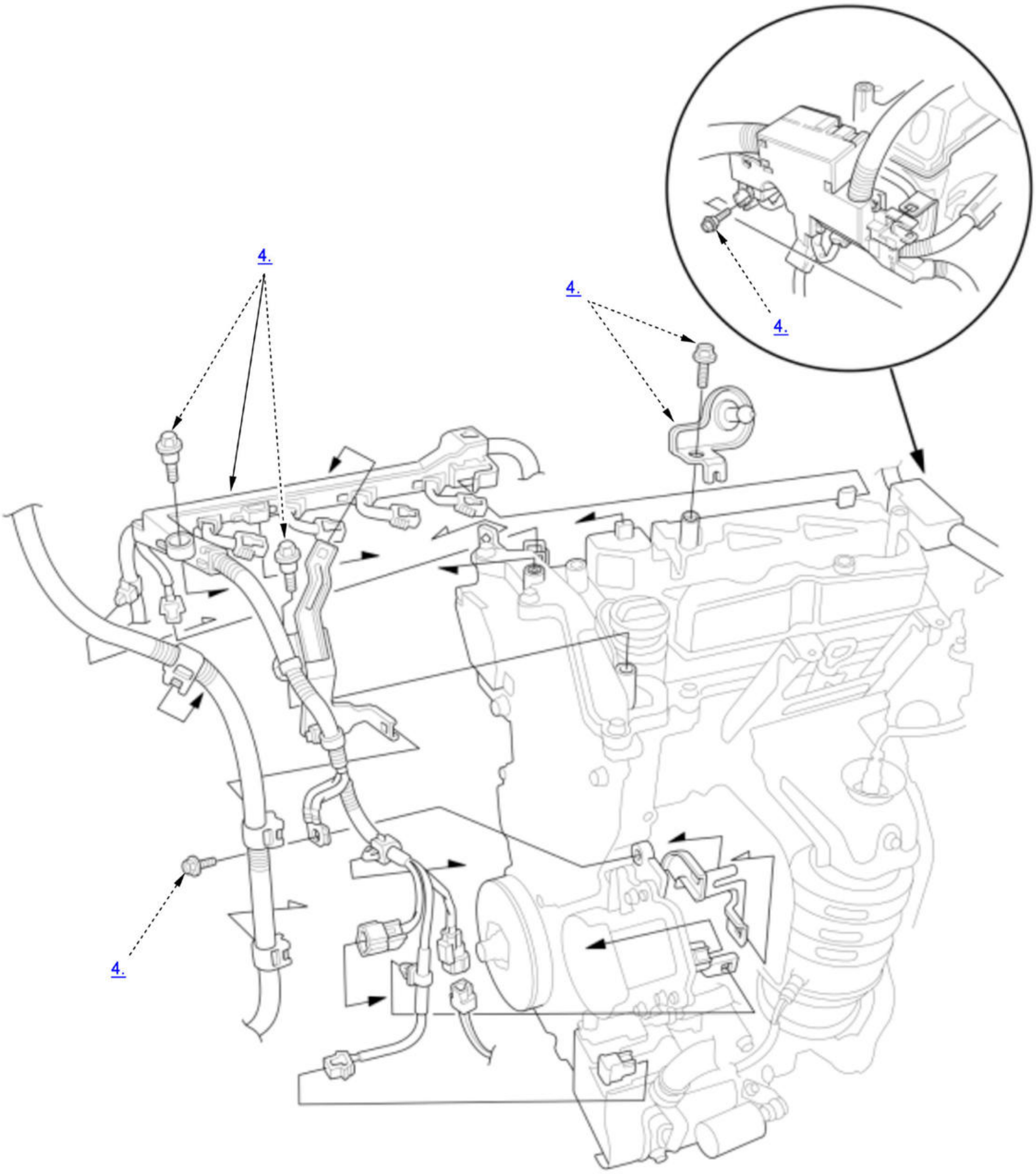

Fig. 1: Exploded View Of Cylinder Head Cover, CMP Pulse Plate, VTC Actuator, Exhaust Camshaft Sprocket, Camshaft, and Rocker Arm Assembly Components (1 Of 3)
Courtesy of HONDA, U.S.A., INC.

NOTE: Numbered call-outs in figure pertain to list numbers in following procedure.

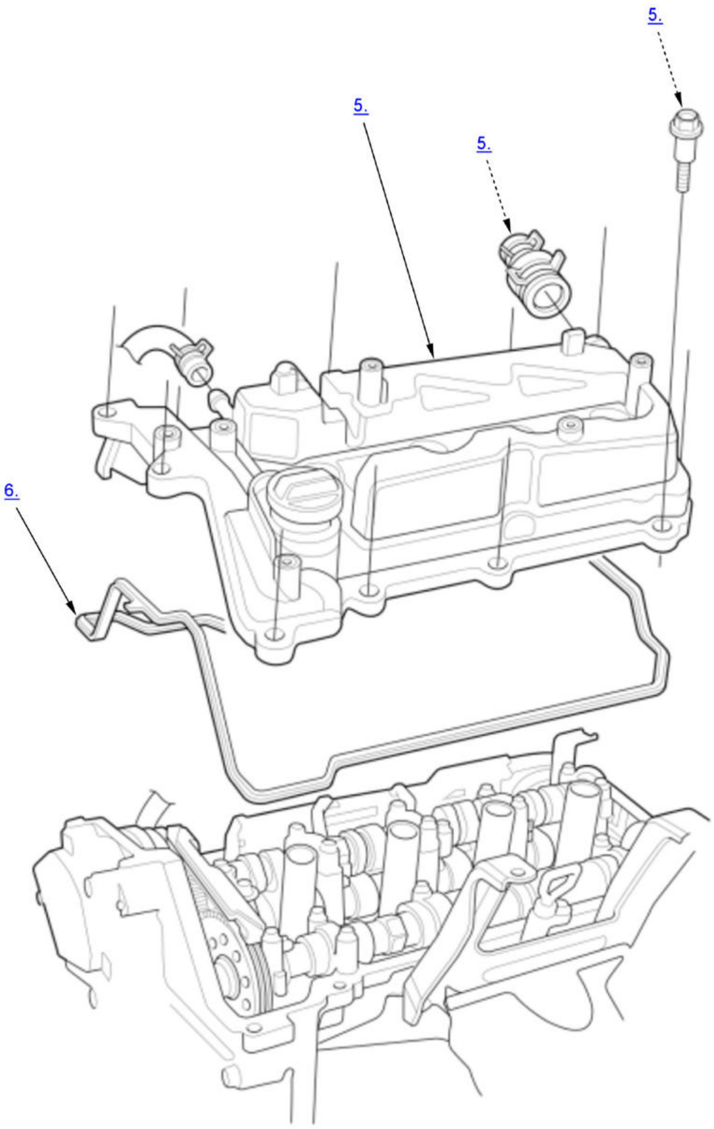

Fig. 2: Exploded View Of Cylinder Head Cover, CMP Pulse Plate, VTC Actuator, Exhaust Camshaft Sprocket, Camshaft, and Rocker Arm Assembly Components (2 Of 3)
Courtesy of HONDA, U.S.A., INC.

NOTE: Numbered call-outs in figure pertain to list numbers in following procedure.

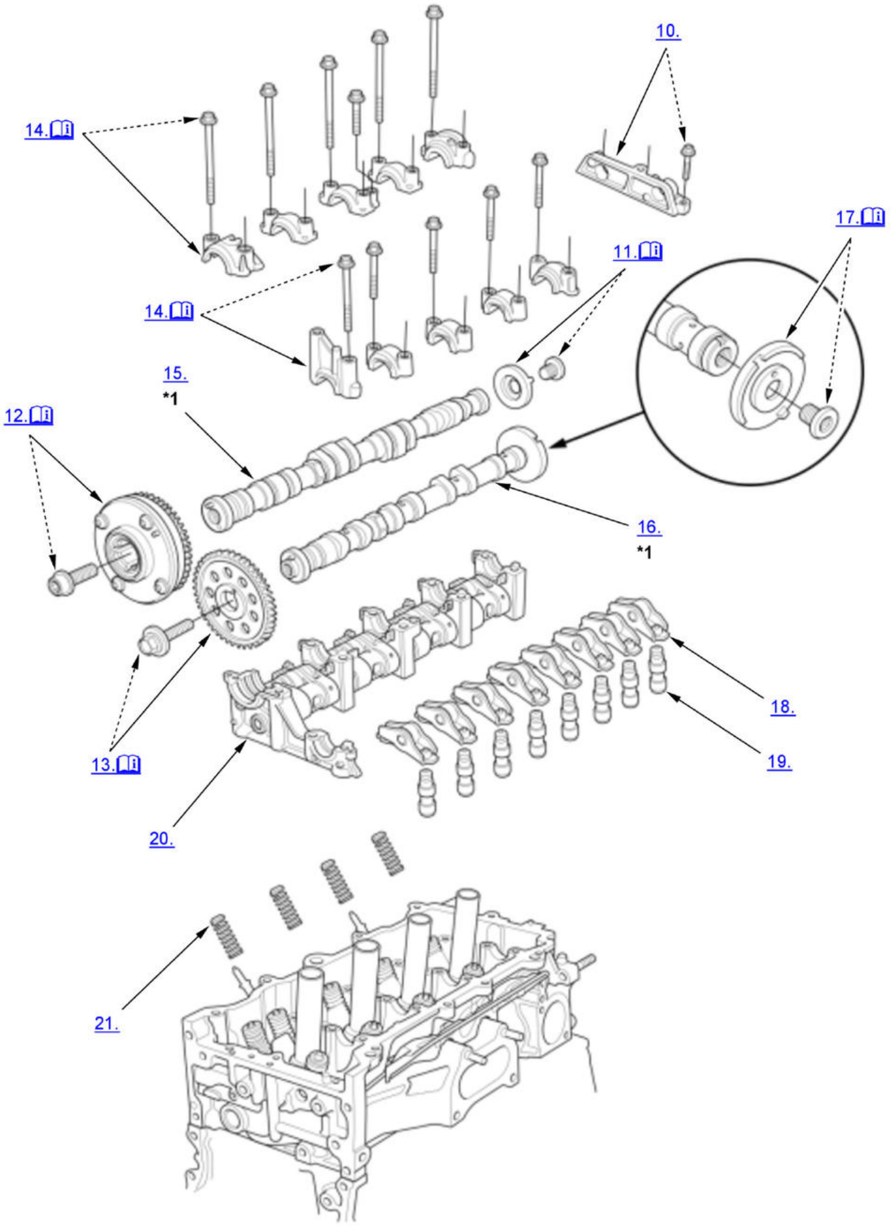

Fig. 3: Exploded View Of Cylinder Head Cover, CMP Pulse Plate, VTC Actuator, Exhaust Camshaft Sprocket, Camshaft, and Rocker Arm Assembly Components (3 Of 3)
Courtesy of HONDA, U.S.A., INC.

*1	These parts have inspection items

1. Intake Air Resonator - Remove
2. Air Cleaner - Remove
3. Ignition Coil - Remove
4. Engine Wire Harness - Move
5. Cylinder Head Cover - Remove
6. Head Cover Gasket - Remove
7. CMP Sensor B - Remove
8. CMP Sensor A - Remove
9. Cam Chain - Remove

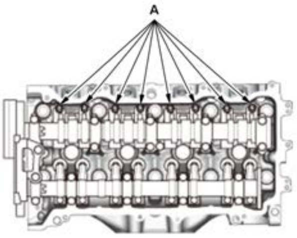	1. Loosen the rocker arm adjusting screws (A). 2. **Remove the cam chain** .

10. CMP Sensor Holder - Remove
11. CMP Pulse Plate A - Remove

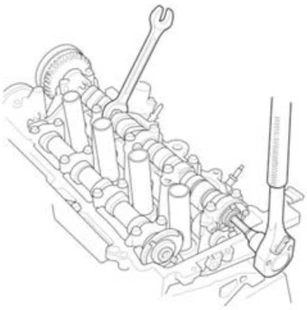	1. Hold the intake camshaft with an open-end wrench, then loosen the CMP pulse plate A mounting bolt. 2. Remove CMP pulse plate A.

12. VTC Actuator - Remove

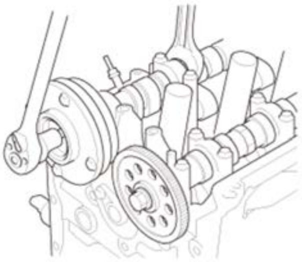	1. Hold the intake camshaft with an open-end wrench, then loosen the VTC actuator mounting bolt. 2. Remove the VTC actuator.

13. Exhaust Camshaft Sprocket - Remove

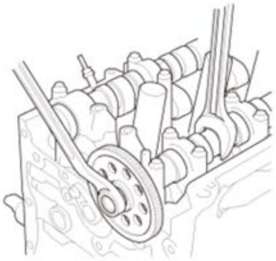	1. Hold the exhaust camshaft with an open-end wrench, then loosen the exhaust camshaft sprocket mounting bolt. 2. Remove the exhaust camshaft sprocket.

14. Camshaft Holder - Remove

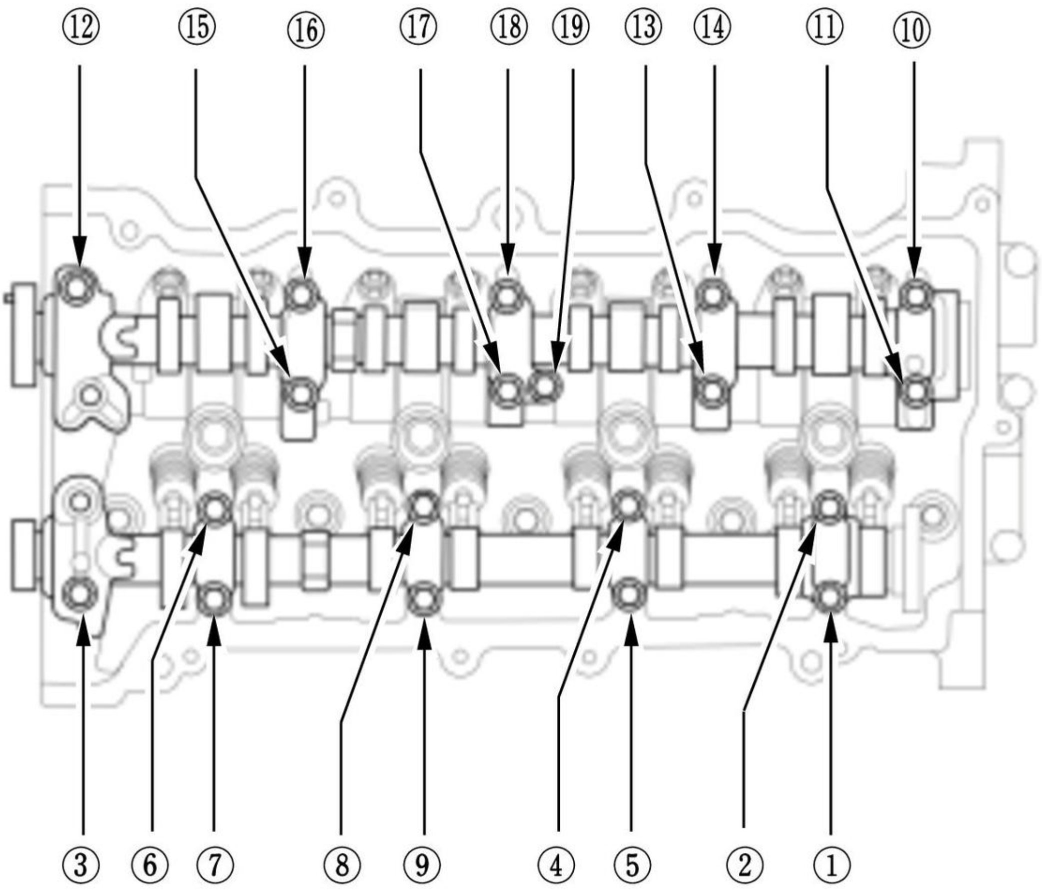

Fig. 4: Camshaft Holder Bolts With Loosening Sequence
Courtesy of HONDA, U.S.A., INC.

1. Remove the camshaft holder bolts. To prevent damaging the camshafts, loosen the bolts, in sequence, two turns at a time.

15. Intake Camshaft - Remove
16. Exhaust Camshaft - Remove
17. CMP Pulse Plate B - Remove

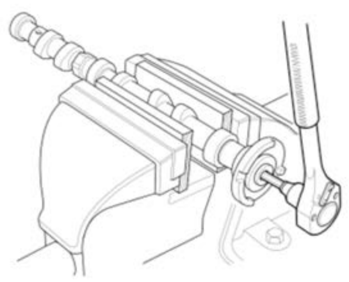	1. Secure the exhaust camshaft in a vise with wood blocks, then loosen the CMP pulse plate B mounting bolt. **NOTE:** After this procedure, remove wood chips that may be stuck to the exhaust camshaft. 2. Remove CMP pulse plate B.

18. Exhaust Rocker Arm - Remove
19. Hydraulic Tappet - Remove
20. Intake Rocker Arm Assembly - Remove
21. Lost Motion - Remove

Intake Rocker Arm Assembly Disassembly

NOTE: **Numbered call-outs in figure pertain to list numbers in following procedure.**

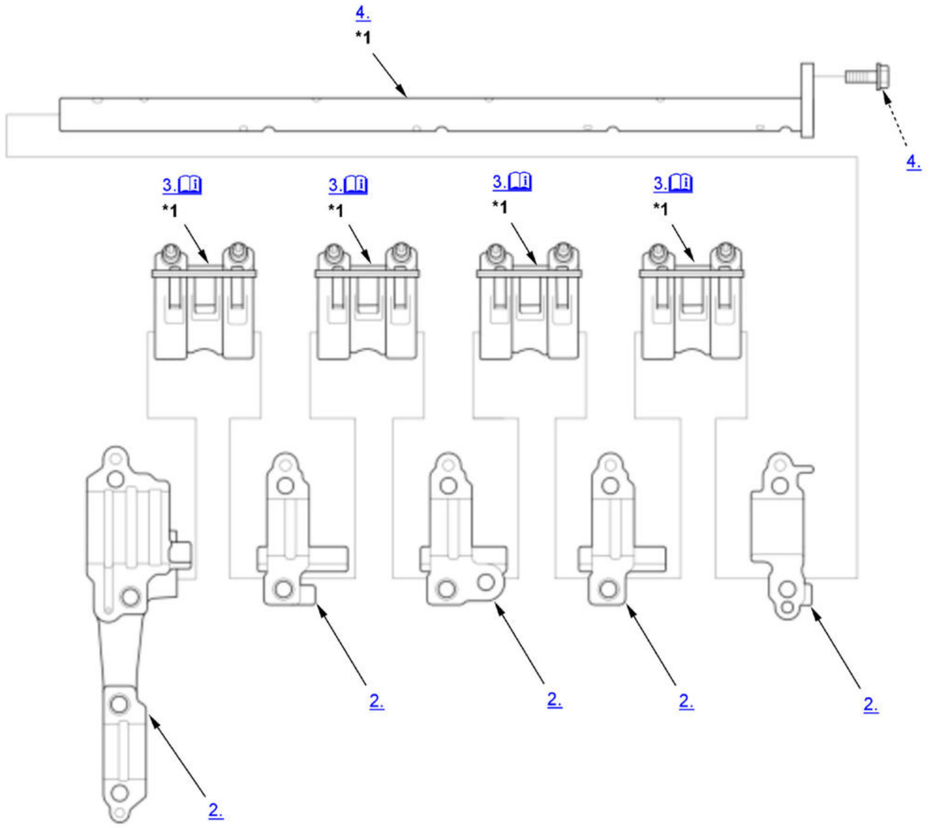

Fig. 5: Intake Rocker Arm Assembly Disassembly Components
Courtesy of HONDA, U.S.A., INC.

*1	These parts have inspection items

1. Intake Rocker Arm Assembly - Remove
2. Rocker Shaft Holder - Remove
3. Intake Rocker Arm Assembly - Remove

   NOTE:

   - Identify parts as they are removed so they can be reinstalled in its original locations.
   - If reused, the rocker arms must be installed in their original location.
   - Bundle the intake rocker arms with rubber bands to keep them together as a set, and remove the bands after the intake rocker arms have been installed.
   - When replacing the intake rocker arm assembly, remove the fastening hardware from the new intake rocker arm assembly.
4. Intake Rocker Shaft - Remove

Cylinder Head, Valve, Valve Spring, Valve Seal, and Valve Guide

NOTE: **Numbered call-outs in figure pertain to list numbers in following procedure.**

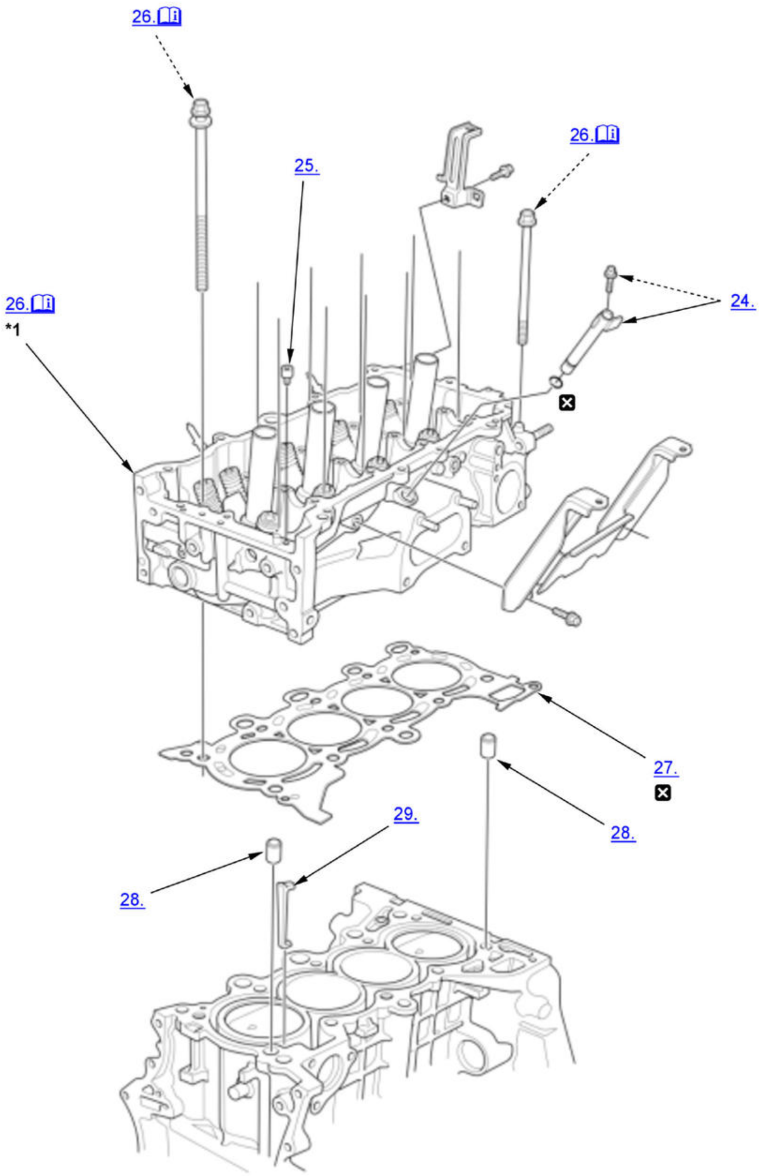

Fig. 6: Exploded View Of Cylinder Head, Valve, Valve Spring, Valve Seal, And Valve Guide Components (1 Of 2)
Courtesy of HONDA, U.S.A., INC.

☒	Replace
*1	These parts have inspection items

NOTE: **Numbered call-outs in figure pertain to list numbers in following procedure.**

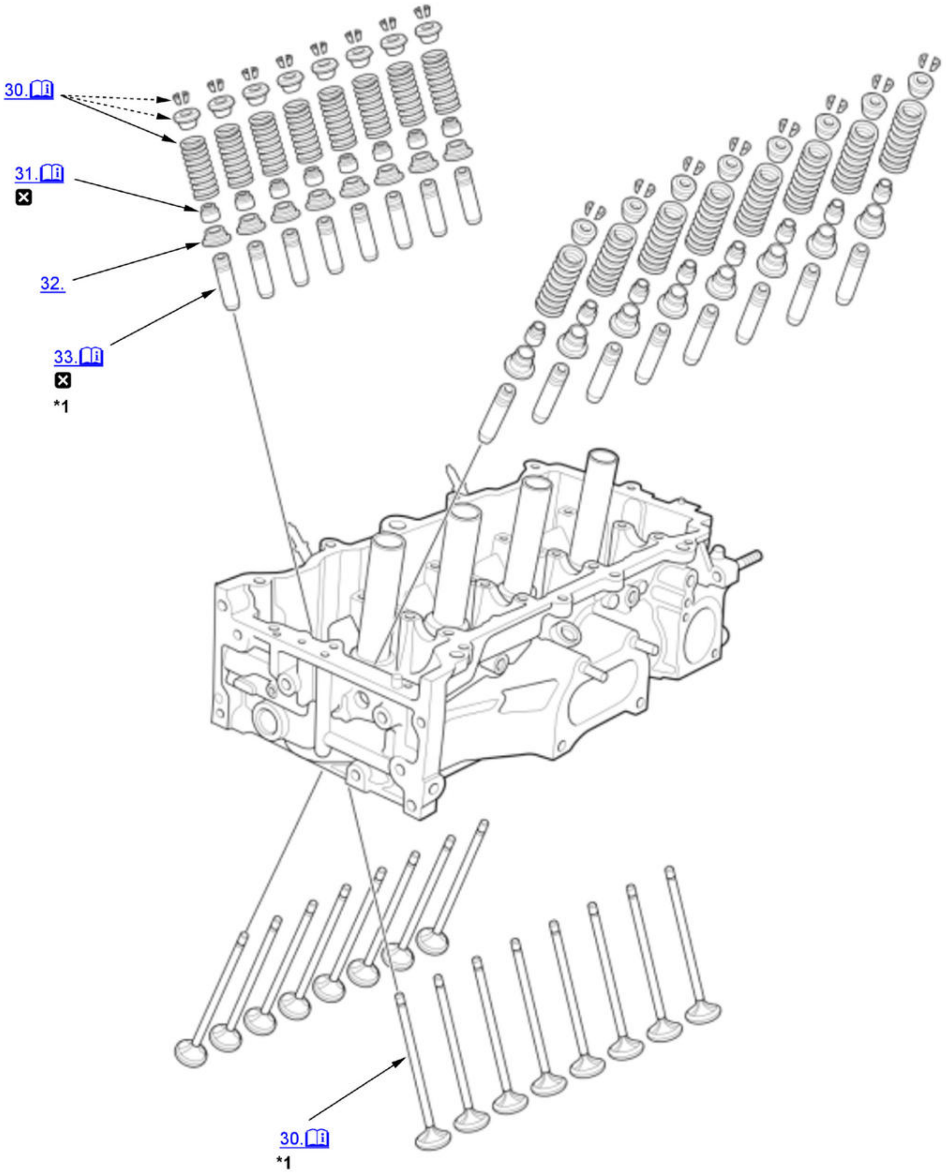

Fig. 7: Exploded View Of Exploded View Of Cylinder Head, Valve, Valve Spring, Valve Seal, And Valve Guide Components (2 Of 2)
Courtesy of HONDA, U.S.A., INC.

☒	Replace
*1	These parts have inspection items

1. Fuel Pressure - Relieve
2. Service Plug - Turn Off
3. Engine Coolant - Drain
4. 12 Volt Battery - Remove
5. PCU Coolant - Drain
6. Intake Air Resonator - Remove
7. Air Cleaner - Remove
8. PCU - Remove
9. Rocker Arm Oil Control Valve Assembly - Remove
10. Fuel Rail and Injector - Remove
11. Intake Manifold - Remove

12. **Water Outlet - Remove**
13. **Thermostat - Remove**
14. **CMP Sensor A - Remove**
15. **CMP Sensor B - Remove**
16. **TWC Assembly - Remove**
17. Cylinder Head Cover - Remove
18. **Dipstick - Remove**
19. **Cam Chain - Remove**
20. Intake Camshaft - Remove
21. Exhaust Camshaft - Remove
22. Intake Rocker Arm Assembly - Remove
23. Exhaust Rocker Arm - Remove
24. Oil Level Pipe - Remove (if necessary)
25. Oil Control Orifice - Remove (if necessary)
26. Cylinder Head - Remove

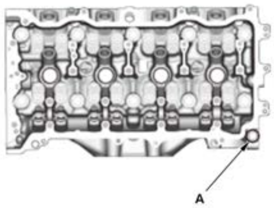	1. Remove the cylinder head mounting bolt (A).

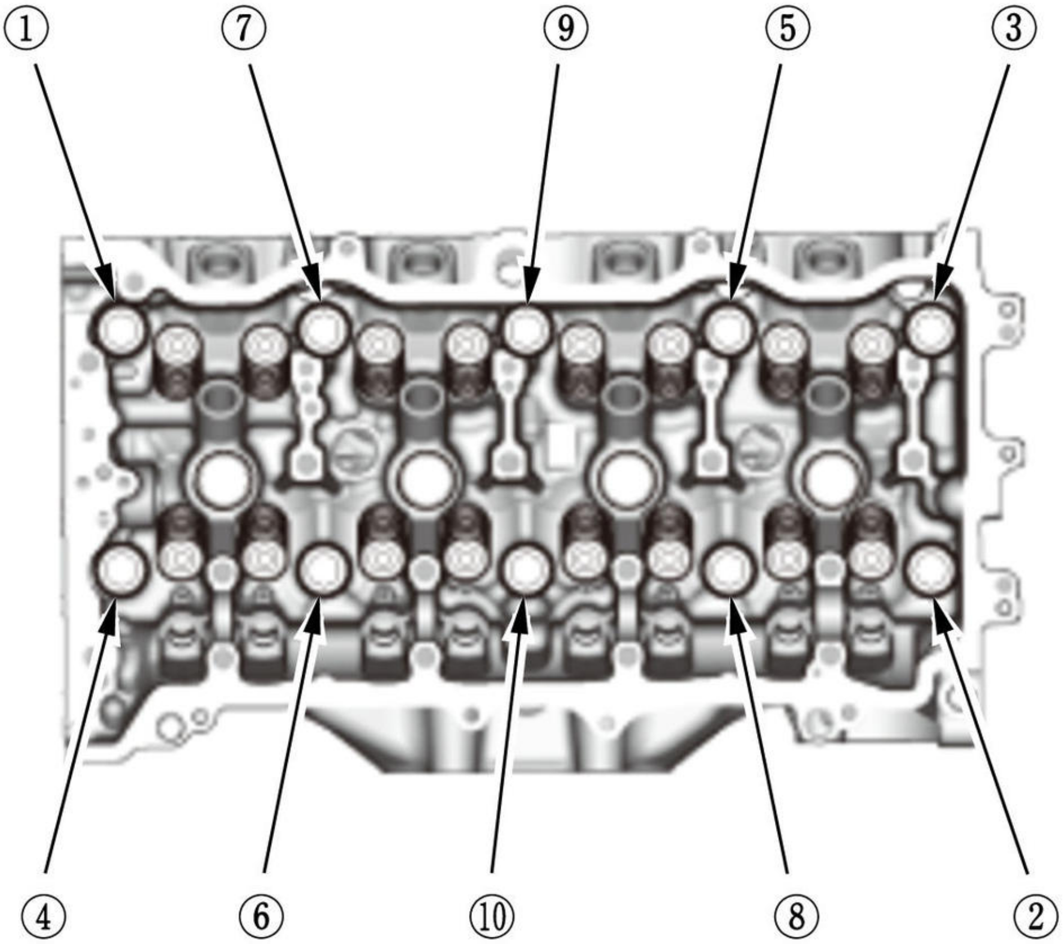

2. Remove the cylinder head bolts. To prevent warpage, loosen the bolts in sequence, 1/3 turn at a time, repeat the sequence until all bolts are loosened.

3. Remove the cylinder head.

27. Cylinder Head Gasket - Remove
28. Dowel Pin - Remove
29. Coolant Separator - Remove
30. Valve and Valve Spring - Remove

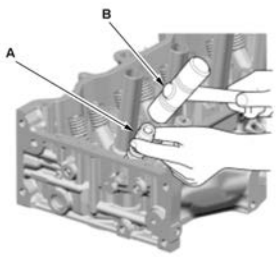	1. Using an appropriate-sized socket (A) and a plastic mallet (B), lightly tap the spring retainer to loosen the valve cotters.

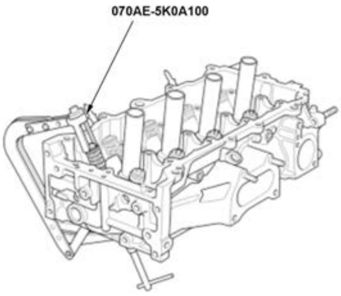

2. Install the valve spring compressor attachment and the valve spring compressor. Compress the valve spring, and remove the valve cotters.

3. Remove the valve spring compressor and the valve spring compressor attachment, then remove the spring retainer, the valve spring, and the valve.

31. Valve Seal - Remove

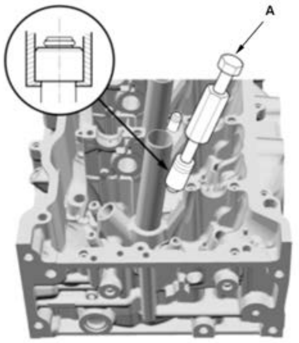

1. Install the valve guide seal remover (A).

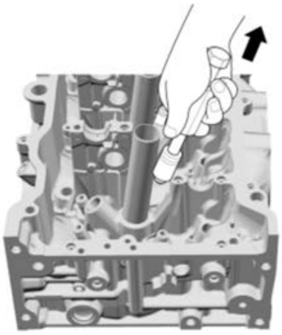

2. Remove the valve seal.

32. Valve Spring Seat - Remove

33. Valve Guide - Remove

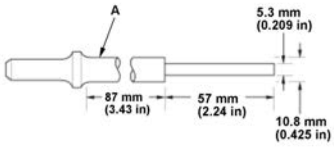

1. Use a commercially available air-impact valve guide driver (A) modified to fit the diameter of the valve guides. In most cases, the same procedure can be done using the valve guide driver, 5.35 x 9.7 mm and a conventional hammer.

2. Select the proper replacement valve guides, and chill them in the freezer section of a refrigerator for at least an hour.

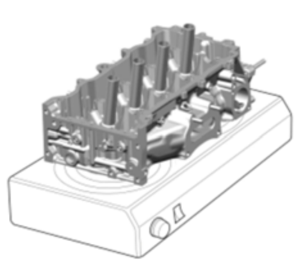

3. Use a hot plate or an oven to evenly heat the cylinder head to 302B°F (150B°C). Monitor the temperature with a cooking thermometer. Do not get the head hotter than 302B°F (150B°C); excessive heat may loosen the valve seats.

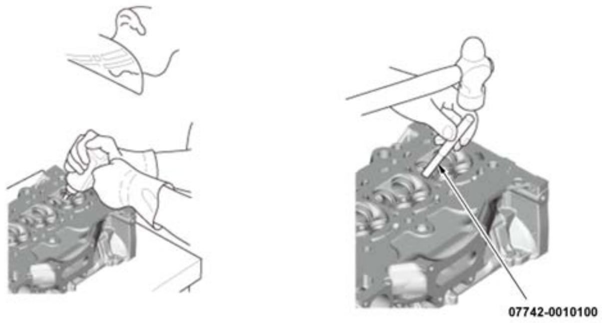

4. Working from the camshaft side, use the valve guide driver and an air hammer to drive the valve guide about 2 mm (0.08 in) towards the combustion chamber. This will knock off some of the carbon and make removal easier. Hold the air hammer directly in line with the valve guide to prevent damaging the driver. Wear safety goggles or a face shield.

5. Turn the cylinder head over, and drive the valve guide out toward the camshaft side of the cylinder head.

6. If a valve guide will not move, drill it out with an 8 mm (5/16 in) drill bit, then try again.

NOTE: Drill guides only in extreme cases; you could damage the cylinder head if the valve guide breaks.

Installation

WARNING: **The power cables carry high voltage when the electric powertrain system is energized. To avoid serious injury from electrical shock, do not turn on the system with the power cables disconnected.**

CAUTION: **Please carefully read "Precaution for Handling Sodium-Filled Valves" and follow the instructions as the exhaust valves contain metal sodium .**

The electric powertrain components are located in this area. The electric powertrain is a high-voltage system. You must be familiar with the electric powertrain system before working on or around it. Make sure you have read the electric powertrain service precautions before doing repairs or service.

NOTE:

- Keep the cam chain away from magnetic fields.
- The No. 1 journal is on the crankshaft pulley side.
- If tighten the specified angle, using a commercially available angle gauge.

Cylinder Head, Valve, Valve Spring, Valve Seal, and Valve Guide

NOTE: **Numbered call-outs in figure pertain to list numbers in following procedure.**

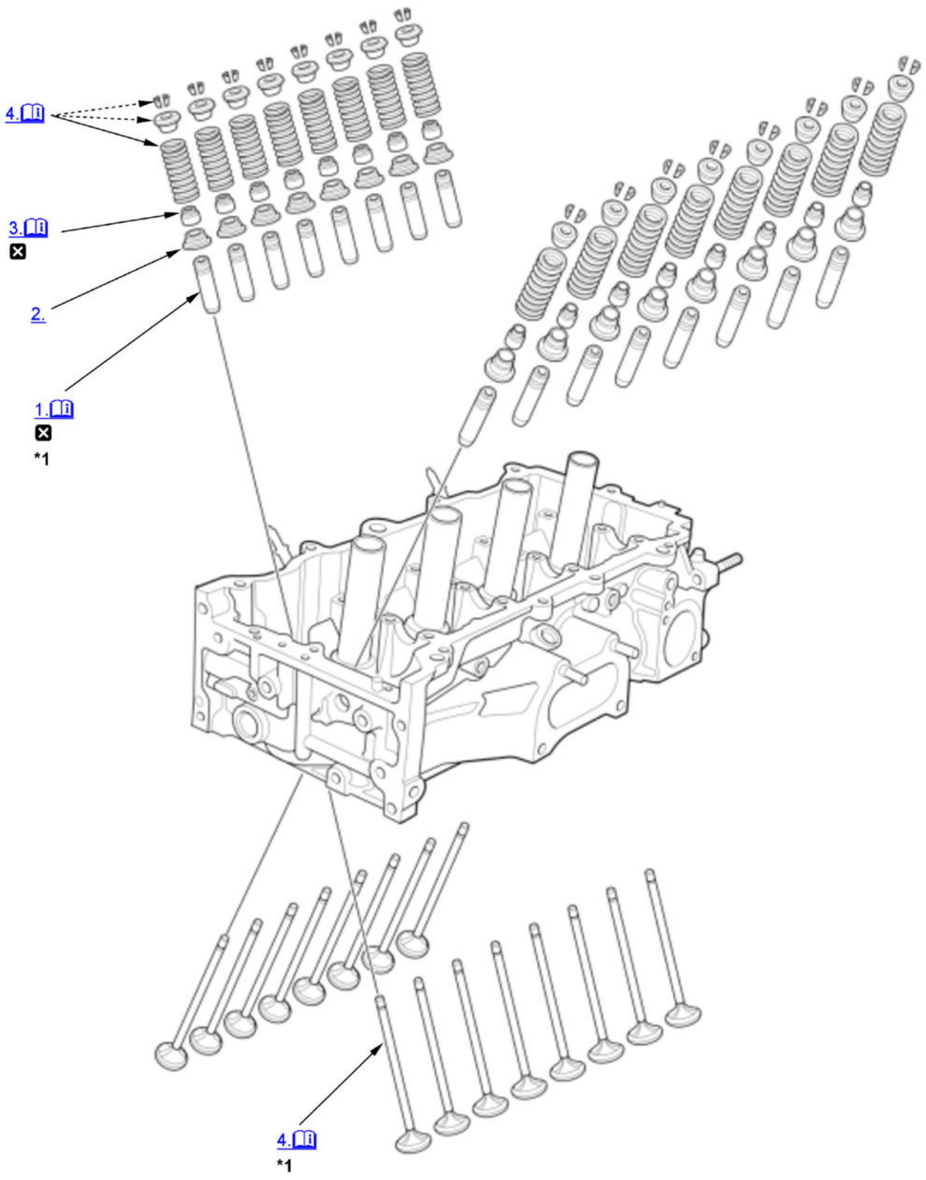

Fig. 8: Exploded View Of Cylinder Head, Valve, Valve Spring, Valve Seal, And Valve Guide Components (1 Of 2)
Courtesy of HONDA, U.S.A., INC.

☒	Replace
*1	These parts have inspection items

NOTE: **Numbered call-outs in figure pertain to list numbers in following procedure.**

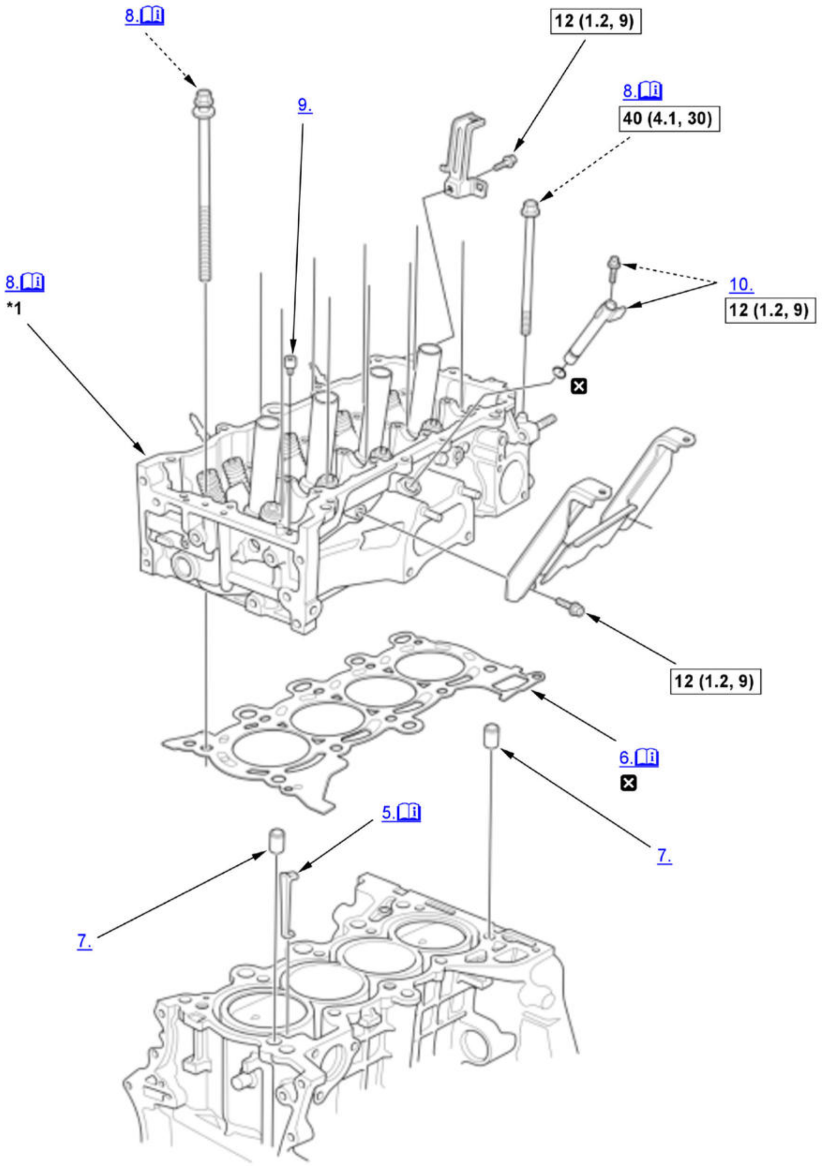
8.
12 (1.2, 9)
9.
8.
40 (4.1, 30)
8.
*1
10.
12 (1.2, 9)
12 (1.2, 9)
6.
5.
7.
7.

Fig. 9: Exploded View Of Cylinder Head, Valve, Valve Spring, Valve Seal, And Valve Guide Components With Torque Specifications (2 Of 2)
Courtesy of HONDA, U.S.A., INC.

☐	Torque: N.m (kgf.m, lbf.ft)
☒	Replace
*1	These parts have inspection items

1. Valve Guide - Install

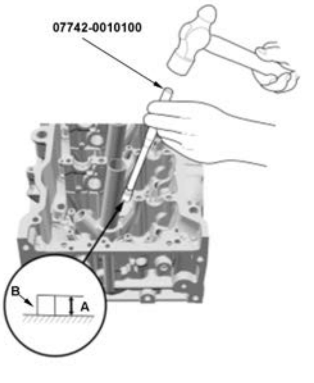	1. Take out the valve guide(s) from the freezer, one at a time, as you need them. 2. Apply a thin coat of new engine oil to the outside of a valve guide. 3. Install the valve guide from the camshaft side of the head; use the valve guide driver to drive the valve guide in to the specified installed height (A) of the valve guide (B). If you have all 16 valve guides to do, you may have to reheat the head.

Valve Guide Installed Height	
Intake:	**17.35-17.85 mm (0.6831-0.7028 in)**
Exhaust:	**17.25-17.75 mm (0.6791-0.6988 in)**

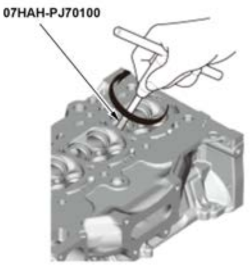	4. Coat both the valve guide reamer, 5.525 mm and the valve guide with cutting oil. 5. Rotate the reamer clockwise the full length of the valve guide bore. 6. Continue to rotate the reamer clockwise while removing it from the bore. 7. Thoroughly wash the valve guide in detergent and water to remove any cutting residue.

2. Valve Spring Seat - Install
3. Valve Seal - Install

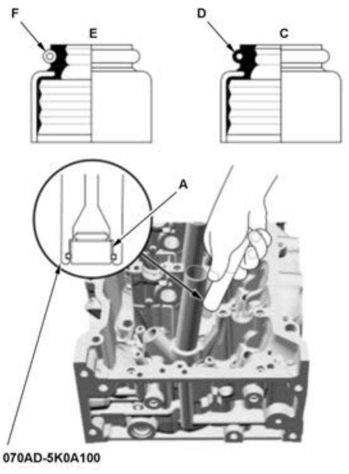	1. Coat the valve stems with new engine oil. Install the valves in the valve guides. 2. Check that the valves move up and down smoothly, then remove the valves. 3. Install the valve seals (A) with the stem seal driver. **NOTE:** The exhaust valve seal (C) has a black spring (D), and the intake valve seal (E) has a white or silver spring (F); they are not interchangeable.

4. Valve and Valve Spring - Install

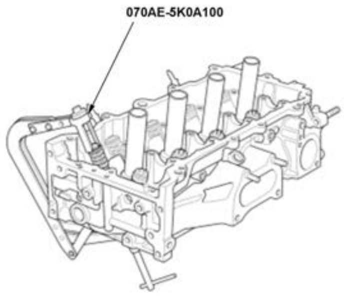	1. Install the valve, the valve spring, and the spring retainer. Place the end of the valve spring with the closely wound coils toward the cylinder head. 2. Install the valve spring compressor attachment and the valve spring compressor. Compress the valve spring, and install the valve cotters. 3. Remove the valve spring compressor and the valve spring compressor attachment.

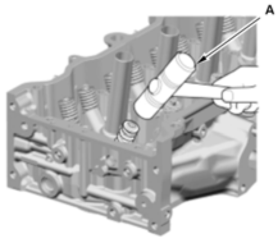	4. Lightly tap the end of each valve stem two or three times with a plastic mallet (A) to ensure proper seating of the valve and the valve cotters. Tap the valve stem only along its axis so you do not bend the stem. **NOTE:** Be sure to raise the cylinder head off the work bench so the valve is not possibly damaged.

5. Coolant Separator - Install

   NOTE: Install a new coolant separator in the engine block whenever the engine block is replaced.

6. Cylinder Head Gasket - Install

   NOTE: Clean the cylinder head and engine block surfaces.

7. Dowel Pin - Install
8. Cylinder Head - Install

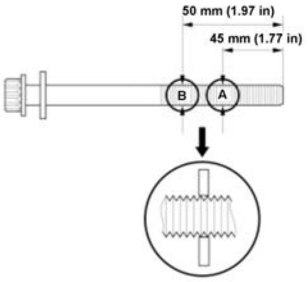	1. Measure the diameter of each cylinder head bolt at point A and point B. 2. If either diameter is less than 10.6 mm (0.417 in), replace the cylinder head bolt.

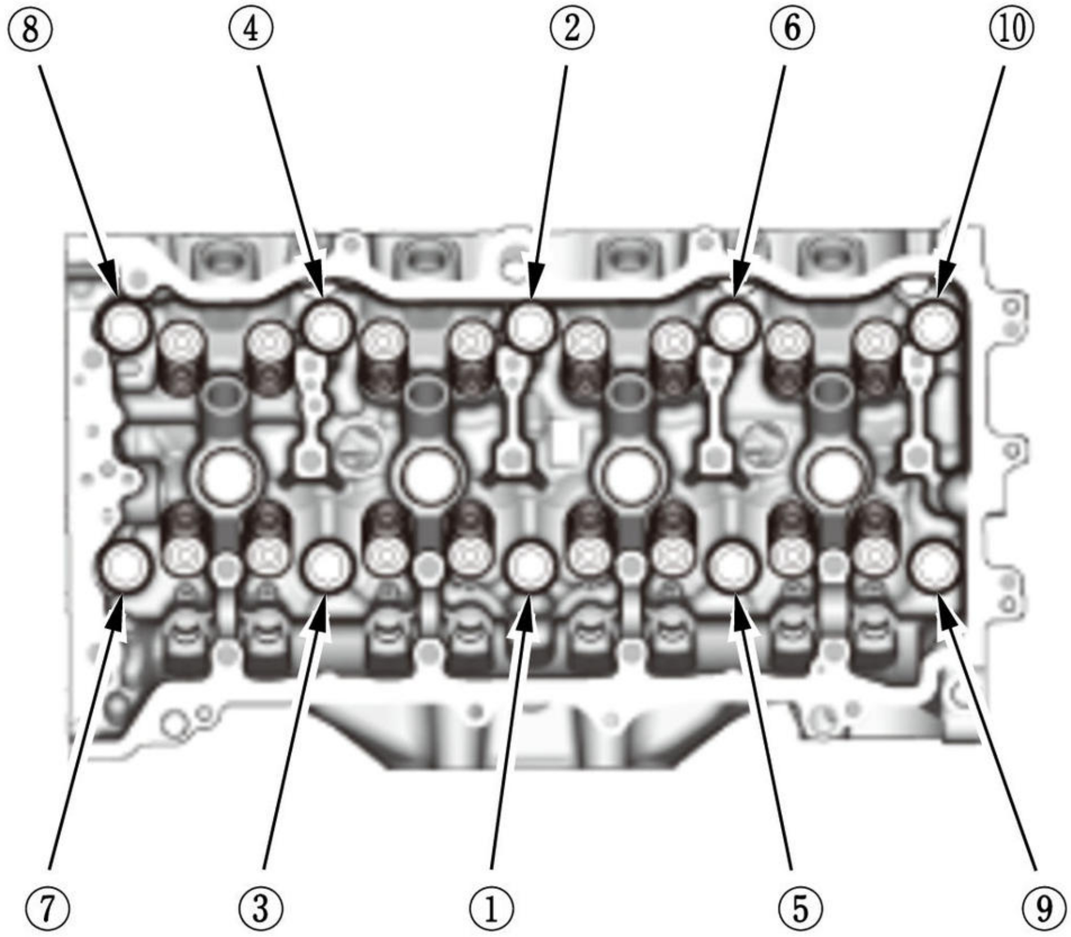

3. Apply new engine oil to the threads and under the bolt heads of all cylinder head bolts.

4. Torque the cylinder head bolts in sequence to 40 N.m (4.1 kgf.m, 30 lbf.ft). Use a beam-type torque wrench. When using a preset click-type torque wrench, be sure to tighten slowly and do not overtighten. If a bolt makes any noise while you are torquing it, loosen the bolt and retighten it from the first step.

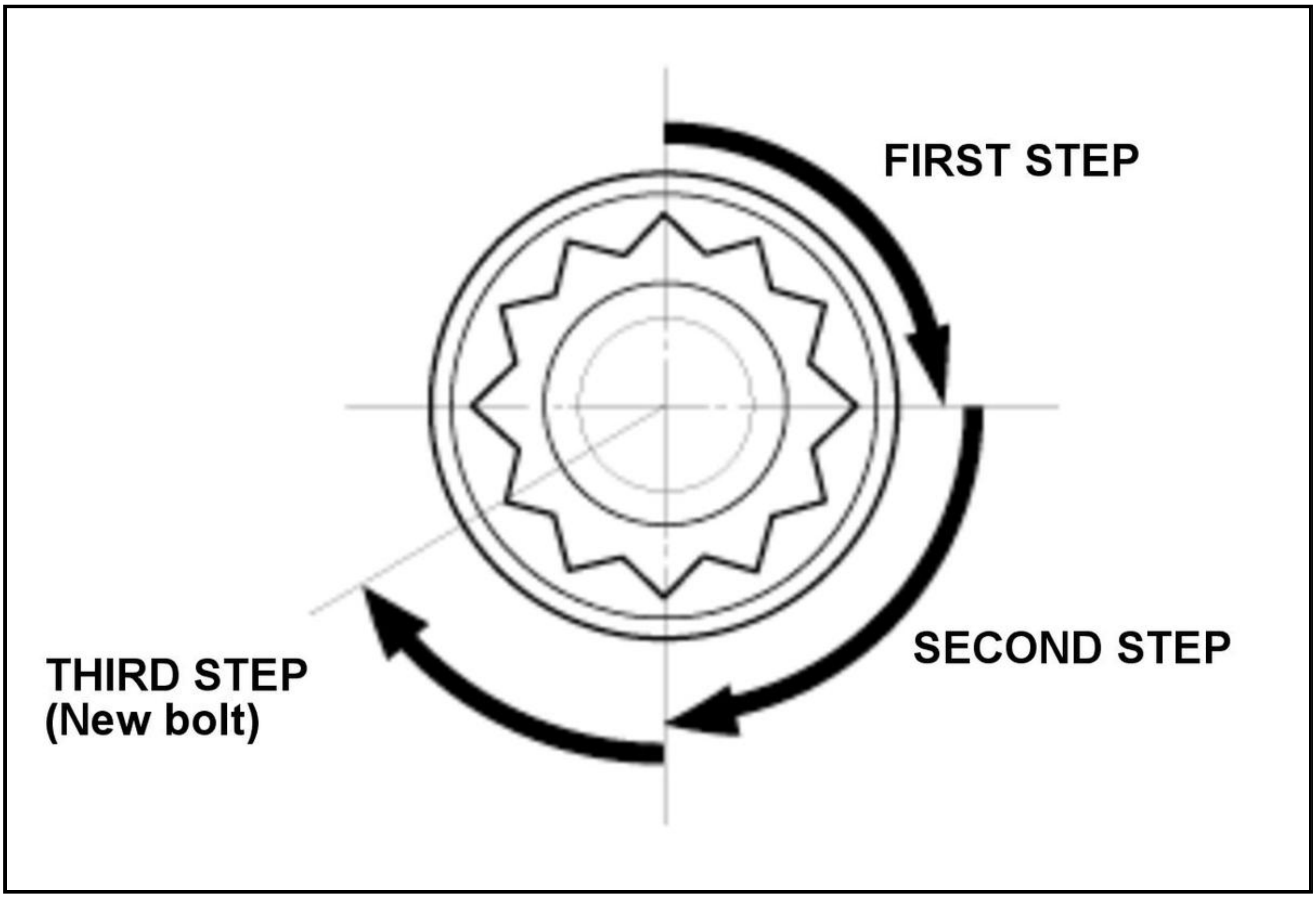

5. After torquing, tighten all cylinder head bolts in two steps (90B° per step using the sequence shown in step 4). If you are using a new cylinder head bolt, tighten the bolt an extra 60B°.
NOTE: Remove the cylinder head bolt if you tightened it beyond the specified angle, and go back to step 1 of the procedure. Do not loosen it back to the specified angle.

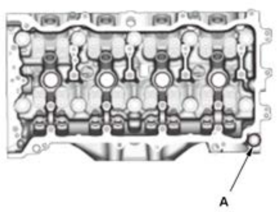	6. Tighten the cylinder head mounting bolt (A) to the specified torque.

9. Oil Control Orifice - Install (if necessary)
10. Oil Level Pipe - Install (if necessary)
11. Exhaust Rocker Arm - Install
12. Intake Rocker Arm Assembly - Install
13. Exhaust Camshaft - Install
14. Intake Camshaft - Install
15. Cam Chain - Install
16. Valve Clearance - Adjust
17. Dipstick - Install
18. Cylinder Head Cover - Install
19. TWC Assembly - Install
20. CMP Sensor B - Install
21. CMP Sensor A - Install

22. Thermostat - Install
23. Water Outlet - Install
24. Intake Manifold - Install
25. Fuel Rail and Injector - Install
26. Rocker Arm Oil Control Valve Assembly - Install
27. PCU - Install
28. Air Cleaner - Install
29. Intake Air Resonator - Install
30. After Installation - Check

    1. After installation, check that all tubes, hoses, and connectors are installed correctly.

31. Service Plug - Turn On
32. 12 Volt Battery - Install
33. PCU Coolant - Refill
34. Engine Coolant - Refill
35. Fuel Leak - Check

    1. Turn the vehicle to the ON mode, but do not turn the READY TO DRIVE mode. After the fuel pump runs for about 2 seconds, the fuel line will be pressurized. Repeat this two or three time, then check for fuel leakage.

36. CKP Pattern - Clear/Learn
37. Idle Speed - Inspect
38. Ignition Timing - Inspect

Intake Rocker Arm Assembly Reassembly

NOTE: **Numbered call-outs in figure pertain to list numbers in following procedure.**

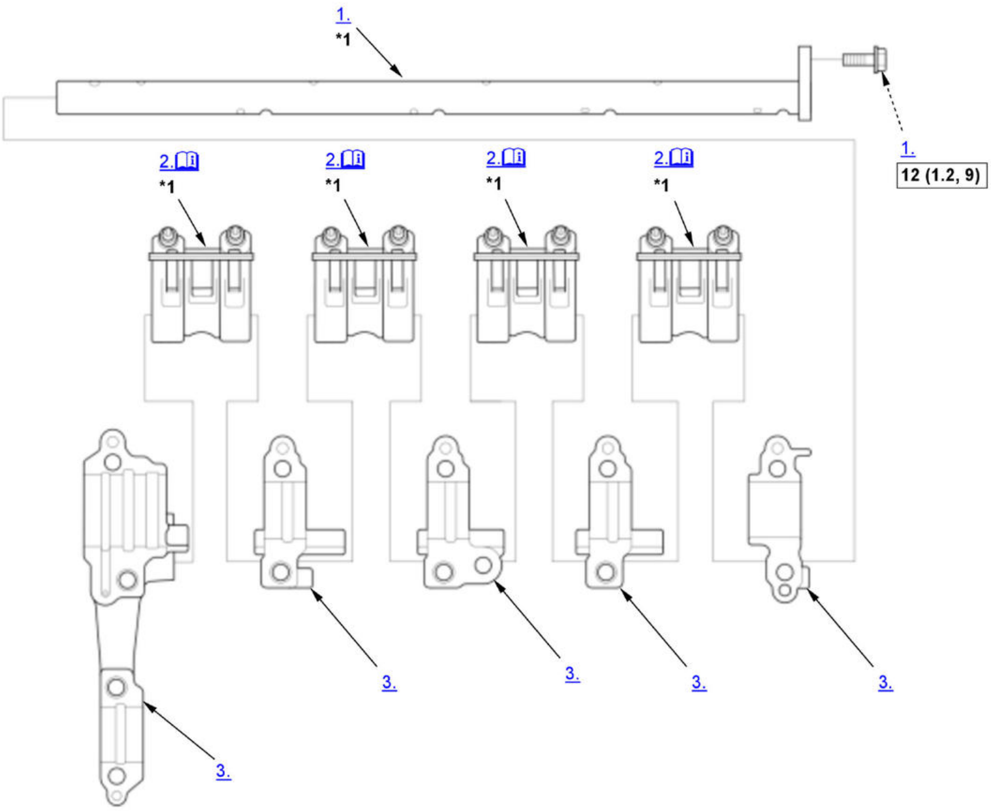

Fig. 10: Intake Rocker Arm Assembly Reassembly Components With Torque Specifications
Courtesy of HONDA, U.S.A., INC.

☐	Torque: N.m (kgf.m, lbf.ft)
*1	These parts have inspection items

1. Intake Rocker Shaft - Install
2. Intake Rocker Arm Assembly - Install

   NOTE:

   - If reused, the rocker arms must be installed in their original locations.
   - Bundle the intake rocker arms with rubber bands to keep them together as a set, and remove the bands after the intake rocker arms have been installed.
   - Prior to reassembling, clean all the parts in solvent, dry them, and apply new engine oil to all contact points and the bearing surface.
   - When replacing the intake rocker arm assembly, remove the fastening hardware from the new intake rocker arm assembly.
3. Rocker Shaft Holder - Install
4. Intake Rocker Arm Assembly - Install

Cylinder Head Cover, CMP Pulse Plate, VTC Actuator, Exhaust Camshaft Sprocket, Camshaft, and Rocker Arm Assembly

NOTE: **Numbered call-outs in figure pertain to list numbers in following procedure.**

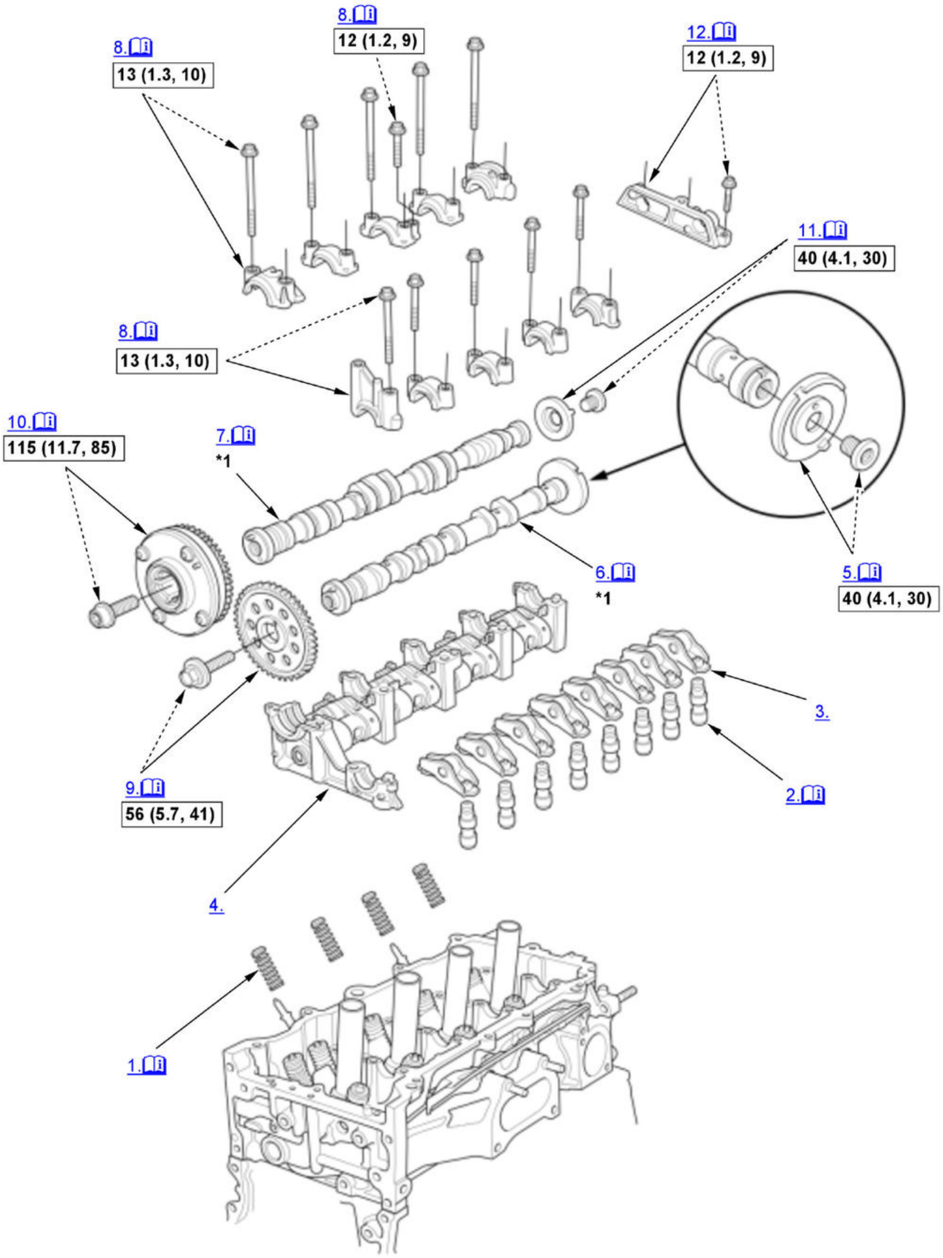
8.
13 (1.3, 10)
8.
12 (1.2, 9)
12.
12 (1.2, 9)
11.
40 (4.1, 30)
8.
13 (1.3, 10)
10.
115 (11.7, 85)
7.
*1
6.
*1
5.
40 (4.1, 30)
3.
2.
9.
56 (5.7, 41)
4.
1.

Fig. 11: Exploded View Of Cylinder Head Cover, CMP Pulse Plate, VTC Actuator, Exhaust Camshaft Sprocket, Camshaft, And Rocker Arm Assembly Components With Torque Specifications (1 Of 3)
Courtesy of HONDA, U.S.A., INC.

☐	Torque: N.m (kgf.m, lbf.ft)
*1	These parts have inspection items

NOTE: **Numbered call-outs in figure pertain to list numbers in following procedure.**

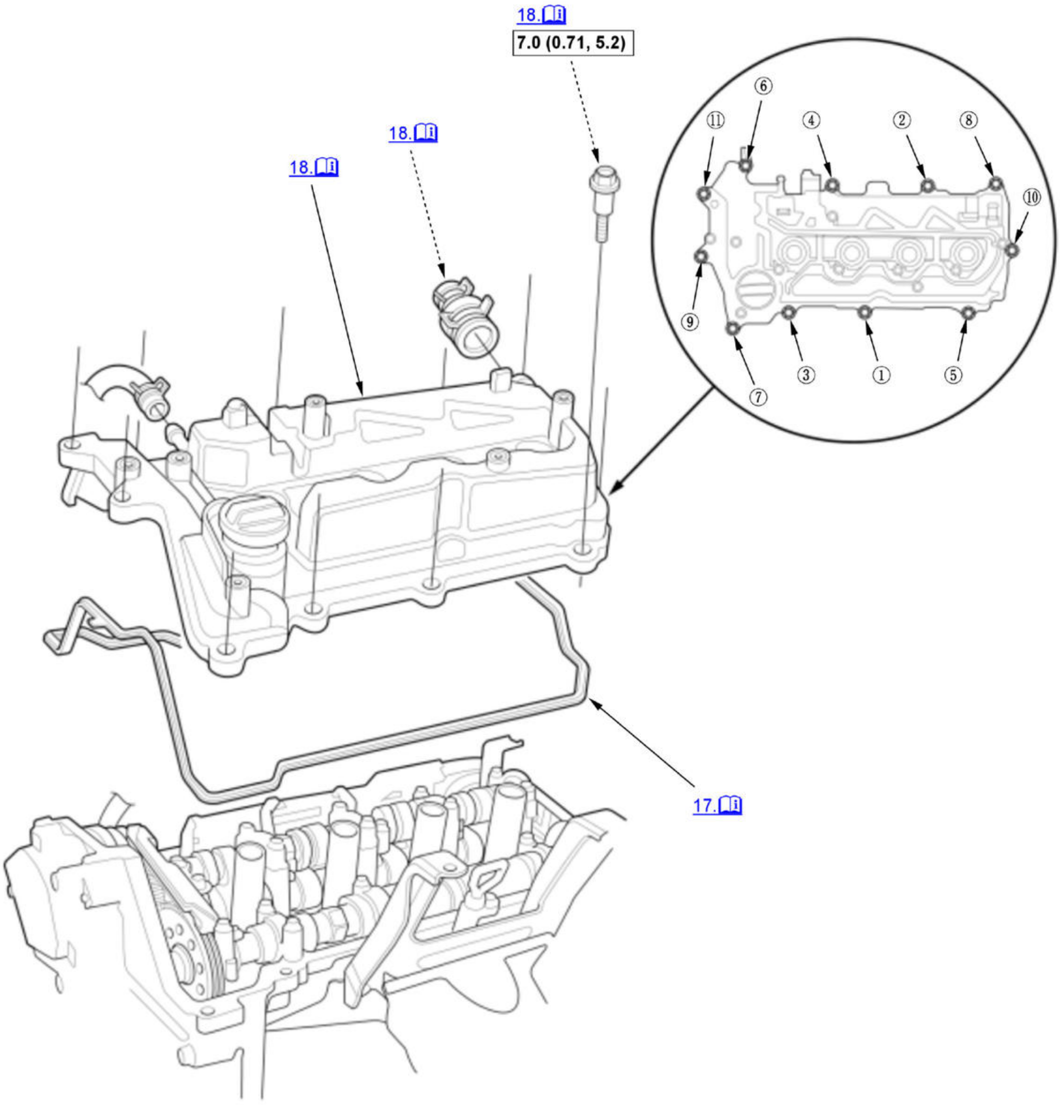

Fig. 12: Exploded View Of Cylinder Head Cover, CMP Pulse Plate, VTC Actuator, Exhaust Camshaft Sprocket, Camshaft, And Rocker Arm Assembly Components With Tightening Sequence And Torque Specifications (2 Of 3)

Courtesy of HONDA, U.S.A., INC.

▭	Torque: N.m (kgf.m, lbf.ft)

NOTE: **Numbered call-outs in figure pertain to list numbers in following procedure.**

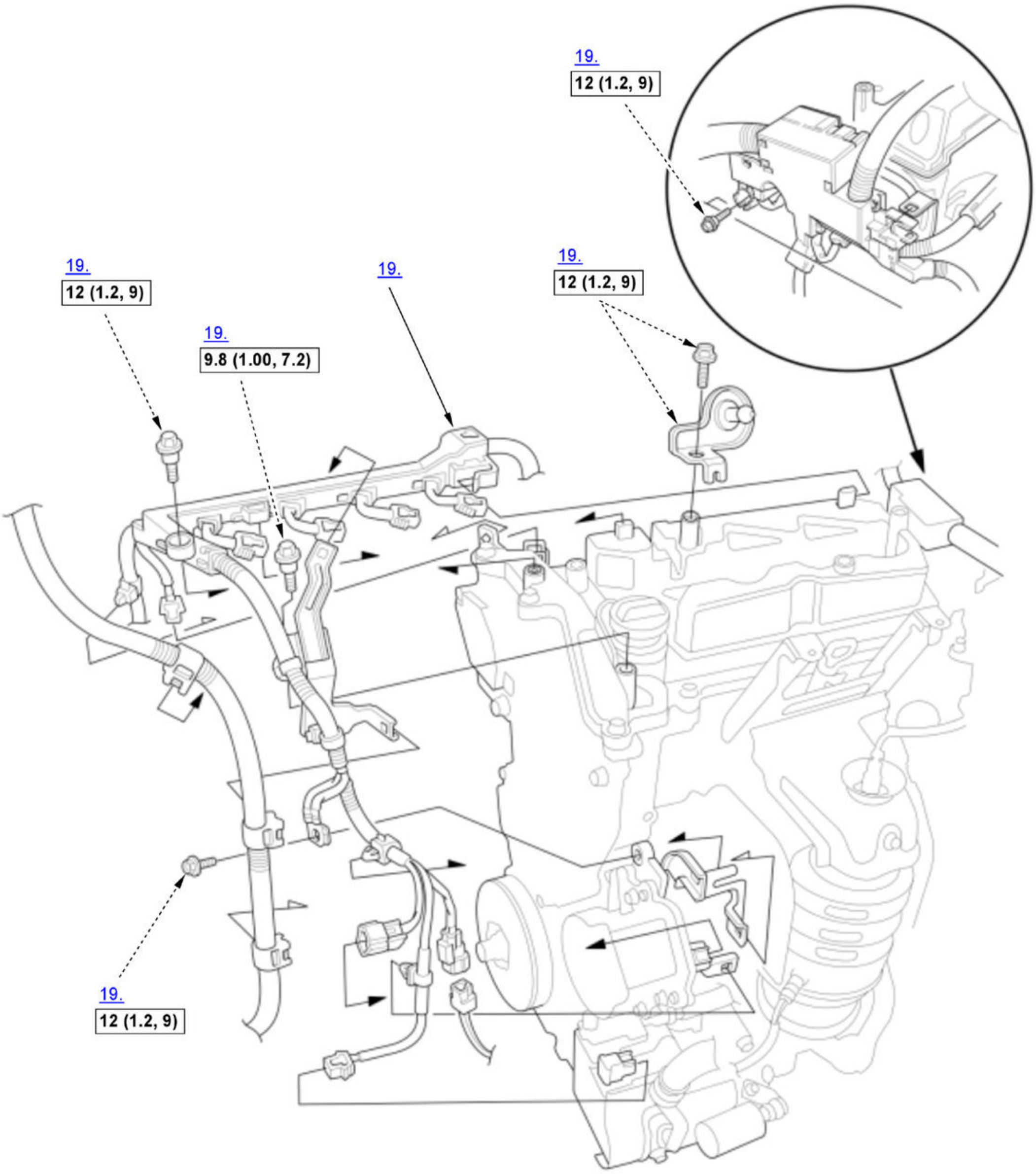

Fig. 13: Exploded View Of Cylinder Head Cover, CMP Pulse Plate, VTC Actuator, Exhaust Camshaft Sprocket, Camshaft, And Rocker Arm Assembly Components With Torque Specifications (3 Of 3)
Courtesy of HONDA, U.S.A., INC.

▭	Torque: N.m (kgf.m, lbf.ft)

1. Lost Motion - Install

   NOTE: Apply new engine oil to the lost motion.

2. Hydraulic Tappet - Air Bleeding and Install

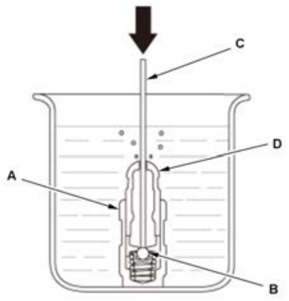	1. Fill a container with new recommended engine oil , and place the hydraulic tappet (A) in it. Press down on the check ball (B) with a thin wire (C). Bleed the hydraulic tappet of air by pumping the plunger (D) slowly until no bubbles come out of the hydraulic tappet.

	2. Install the hydraulic tappet.

3. Exhaust Rocker Arm - Install
4. Intake Rocker Arm Assembly - Install
5. CMP Pulse Plate B - Install

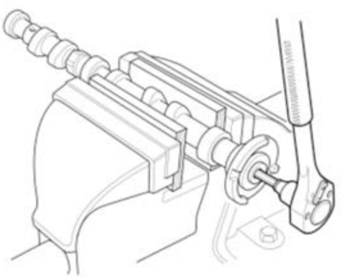	1. Secure the exhaust camshaft in a vise with wood blocks, then install CMP pulse plate B. **NOTE:** After this procedure, remove wood chips that may be stuck to the exhaust camshaft. 2. Tighten the CMP pulse plate B mounting bolt to the specified torque.

6. Exhaust Camshaft - Install

NOTE: Apply new engine oil to the journals and cam lobes.

7. Intake Camshaft - Install

NOTE: Apply new engine oil to the journals and cam lobes.

8. Camshaft Holder - Install

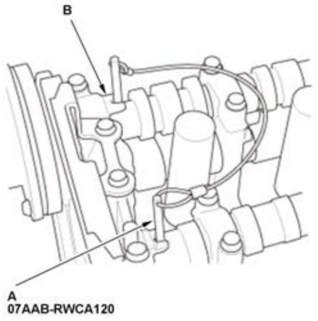	1. Apply new engine oil to the threads of the camshaft holder bolts. 2. Set the camshaft holders in place. 3. To hold the intake camshaft and the exhaust camshaft, insert a camshaft lock pin set (A) into the maintenance hole in the camshaft and the No. 1 camshaft holder (B).

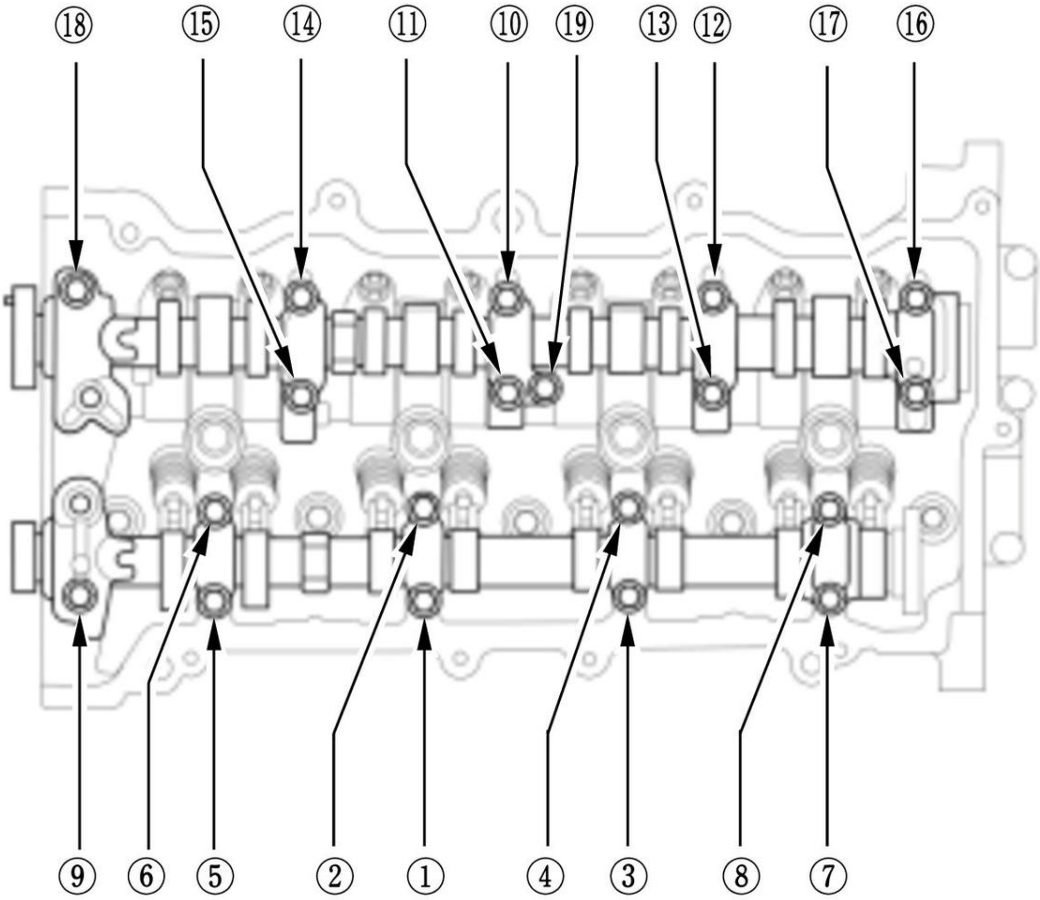

Fig. 14: Camshaft Holder Bolts With Tightening Sequence
Courtesy of HONDA, U.S.A., INC.

4. Tighten the camshaft holder bolts, in sequence, to the specified torque. 5. Remove the camshaft lock pin set.

9. Exhaust Camshaft Sprocket - Install

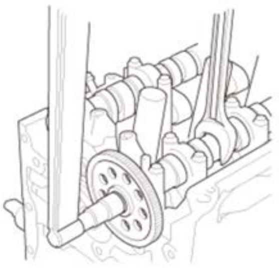	1. Install the exhaust camshaft sprocket. 2. Apply new engine oil to the threads of the exhaust camshaft sprocket mounting bolt, then loosely install it. 3. Hold the exhaust camshaft with an open-end wrench, then tighten the exhaust camshaft sprocket mounting bolt to the specified torque.

10. VTC Actuator - Install

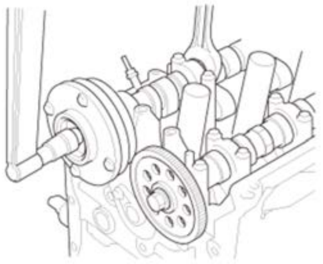	1. Install the VTC actuator. 2. Apply new engine oil to the threads of the VTC actuator mounting bolt, then loosely install it. 3. Hold the intake camshaft with an open-end wrench, then tighten the VTC actuator mounting bolt to the specified torque.

11. CMP Pulse Plate A - Install

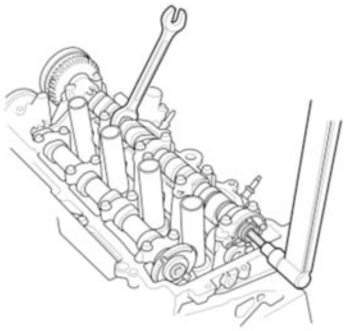	1. Install CMP pulse plate A. 2. Hold the intake camshaft with an open-end wrench, then tighten the mounting bolt to the specified torque.

12. CMP Sensor Holder - Install

    NOTE: Apply liquid gasket to the cylinder head mating surface of the CMP sensor holder and to the inside edge of the threaded bolt holes.

13. Cam Chain - Install
14. Valve Clearance - Adjust
15. CMP Sensor B - Install
16. CMP Sensor A - Install
17. Head Cover Gasket - Install

    1. Thoroughly clean the head cover gasket and the groove of the cylinder head cover.

    NOTE: Check and, if necessary, replace the head cover gasket.

    2. Install the head cover gasket in the groove of the cylinder head cover. Make sure the head cover gasket is seated securely.

18. Cylinder Head Cover - Install

    1. Check the spark plug seals for damage. If any seals are damaged, replace the cylinder head cover.

    2. Apply liquid gasket to the oil pump, the CMP sensor holder, and the cylinder head mating areas.

    3. Place the cylinder head cover on the cylinder head, then slide the cover slightly back and forth to seat the head cover gasket.

    4. Tighten the bolts in two steps. In the final step, torque all bolts, in sequence as shown, to the specified torque.

19. Engine Wire Harness - Install
20. **Ignition Coil - Install**
21. **Air Cleaner - Install**
22. **Intake Air Resonator - Install**

Inspection

Camshaft Inspection

1. VTC Actuator - Remove
2. Exhaust Camshaft Sprocket - Remove
3. Intake Camshaft - Remove
4. Exhaust Camshaft - Remove
5. CMP Pulse Plate B - Remove
6. Exhaust Rocker Arm - Remove
7. Intake Rocker Arm Assembly - Remove
8. Intake Rocker Arm Assembly - Disassemble
9. Camshaft - Inspect

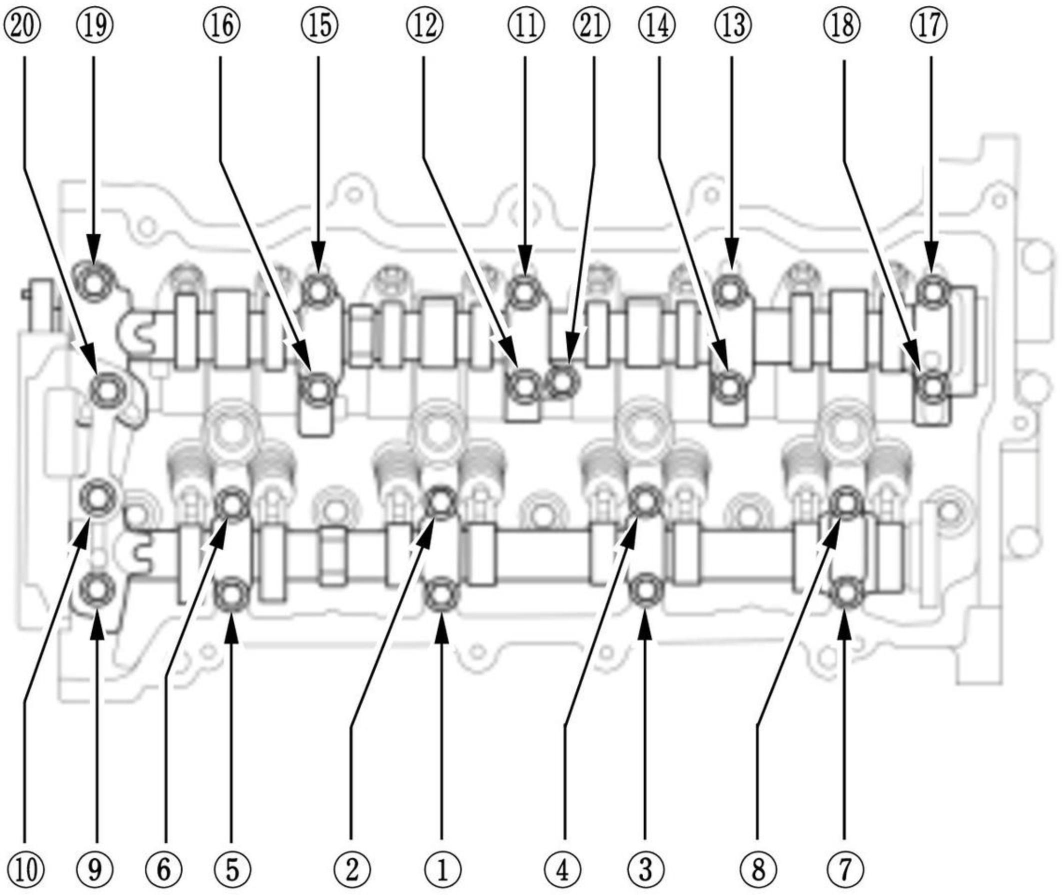

Fig. 15: Camshaft Holder Bolts With Tightening Sequence
Courtesy of HONDA, U.S.A., INC.

1. Apply new engine oil to the threads of the camshaft holder bolts.

2. Put the rocker shaft holders, the camshafts, the camshaft holders, and cam chain guide B on the cylinder head, then tighten the camshaft holder bolts, in sequence, to the specified torque.

Specified Torque	
① - ⑳ :	**15 N.m (1.5 kgf.m, 11 lbf.ft)**
㉑ :	**12 N.m (1.2 kgf.m, 9 lbf.ft)**

3. Zero the dial indicator against the end of the camshaft, then push the camshaft back and forth, and read the end play. If the end play is beyond the service limit, replace the cylinder head and recheck. If it is still beyond the service limit, replace the camshaft.

NOTE: Do not rotate the camshaft during inspection.

Camshaft End Play	
Standard (New):	**0.05-0.25 mm (0.0020-0.0098 in)**
Service Limit:	**0.40 mm (0.0157 in)**

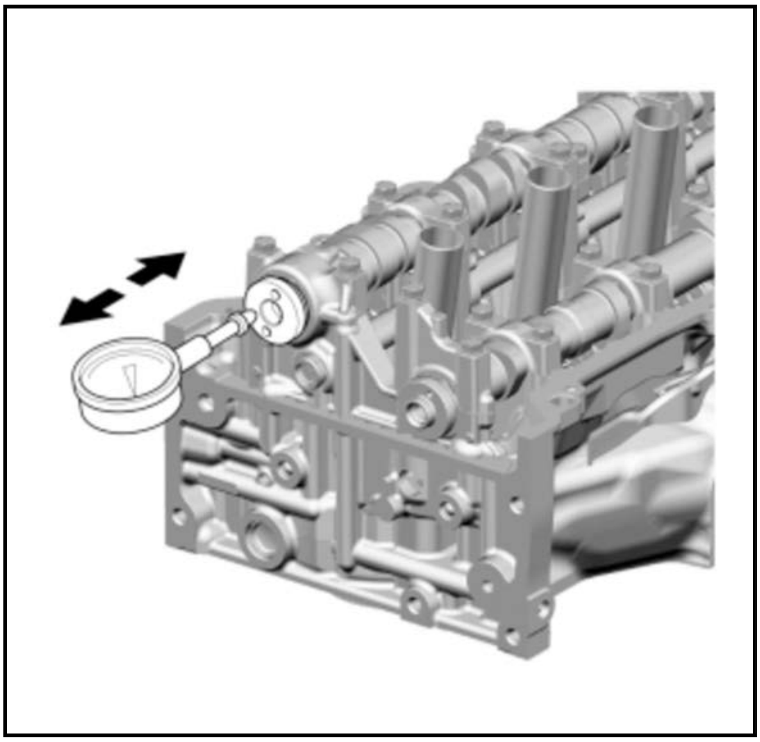

4. Loosen the camshaft holder bolts two turns at a time, in a crisscross pattern. Then remove the camshaft holders from the cylinder head.

5. Lift the camshafts out of the cylinder head, and wipe them clean, then inspect the lift ramps. Replace the camshaft if any lobes are pitted, scored, or excessively worn.

6. Clean the camshaft journal surfaces in the cylinder head, then set the camshafts back in place. Place a plastigage strip across each journal.

7. Install the camshaft holders, then tighten the camshaft holder bolts to the specified torque as shown in step 2.

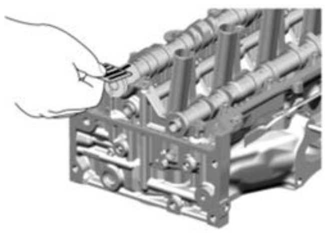

8. Remove the camshaft holders. Measure the widest portion of plastigage on each journal:

- If the camshaft-to-holder clearance is within the service limits, go to step 10.
- If the camshaft-to-holder clearance is beyond the service limit, and the camshaft has been replaced, replace the cylinder head.
- If the camshaft-to-holder clearance is beyond the service limit, and the camshaft has not been replaced, go to step 9.

Exhaust Camshaft-to-Holder Oil Clearance	
Standard (New):	B
No. 1 and No. 2 Journals:	**0.064-0.099 mm (0.00252-0.00390 in)**
No. 3, No. 4, and No. 5 Journals:	**0.060-0.099 mm (0.00236-0.00390 in)**
Service Limit:	**0.150 mm (0.00591 in)**

No. 2 Journal:	**0.064-0.099 mm (0.00252-0.00390 in)**
No. 3, No. 4, and No. 5 Journals:	**0.060-0.099 mm (0.00236-0.00390 in)**
Service Limit:	**0.150 mm (0.00591 in)**

Intake Camshaft-to-Holder Oil Clearance	
Standard (New):	
No. 1 Journal:	**0.034-0.069 mm (0.00134-0.00272 in)**

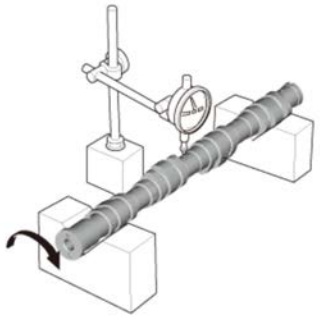

9. Check the total runout with the camshaft supported on V-blocks:

- If the total runout of the camshaft is within the standard, replace the cylinder head.
- If the total runout is beyond the standard, replace the camshaft and recheck the camshaft-to-holder oil clearance. If the oil clearance is still beyond the standard, replace the cylinder head.

Camshaft Total Runout	
Standard (New):	**0.03 mm (0.0012 in) max.**

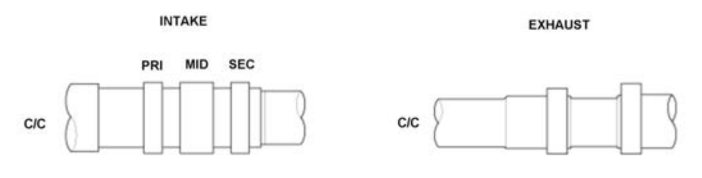	10. Measure cam lobe height. **Cam Lobe Height Standard (New):**

PRI: Primary	MID: Mid	SEC: Secondary
C/C: Cam Chain		B

B	**INTAKE**	**EXHAUST**
PRI	**35.555 mm (1.39980 in)**	**35.095 mm (1.38169 in)**
MID	**35.874 mm (1.41236 in)**	
SEC	**35.555 mm (1.39980 in)**	

Rocker Arm-to-Shaft Clearance Inspection

1. Rocker Arm and Shaft - Inspect

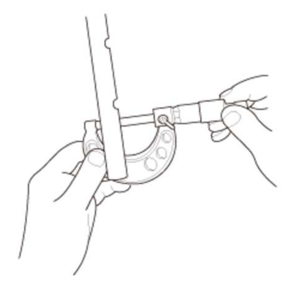	1. Measure the diameter of the shaft at the first rocker location.

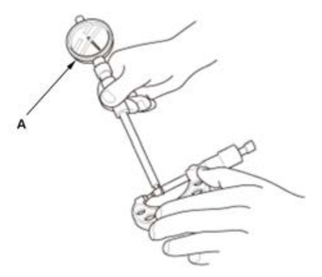	2. Zero the gauge (A) to the shaft diameter.

3. Measure the inside diameter of the rocker arm, and check it for an out-of-round condition.

Rocker Arm-to-Shaft Clearance	
Standard (New):	
Intake:	**0.018-0.059 mm (0.00071-0.00232 in)**
Service Limit:	**0.080 mm (0.00315 in)**

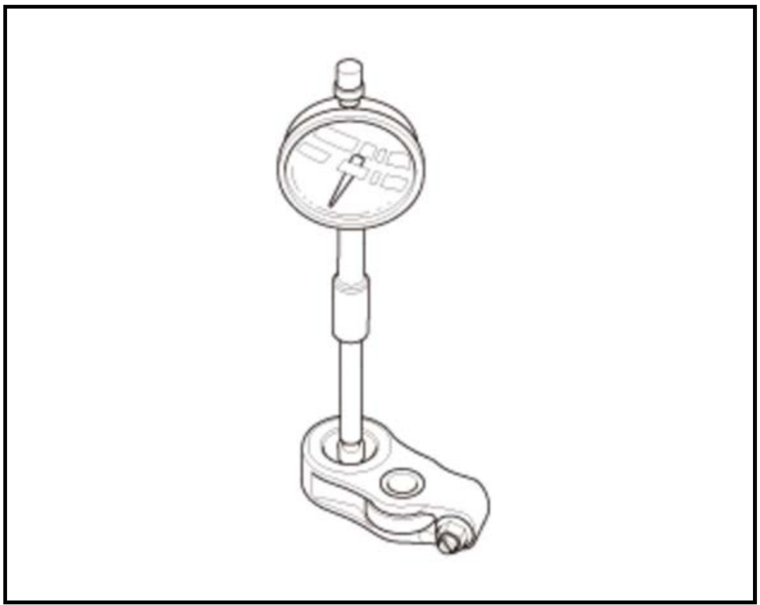

   4. Repeat for all rocker arms and both shafts. If the clearance is beyond the service limit, replace the rocker shaft and all out of service limit rocker arms. If any VTEC rocker arm needs replacement, replace the rocker arms (primary, mid, and secondary), as a set.

2. VTEC Rocker Arm - Inspect

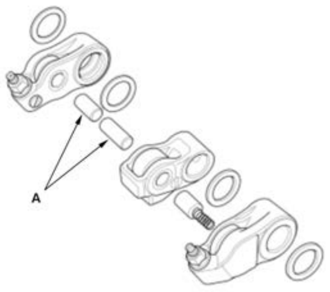	1. Inspect the rocker arm pistons (A). Push on each piston manually. If it does not move smoothly, replace the rocker arm set. **NOTE:** Apply new engine oil to the rocker arm pistons when reassembling.

Valve Inspection

1. Valve - Inspect

   1. Measure the valve in these areas.

Intake Valve Dimensions

A Standard (New):	**32.85-33.15 mm (1.2933-1.3051 in)**
B Standard (New):	**109.45-110.05 mm (4.3090-4.3327 in)**
C Standard (New):	**5.475-5.490 mm (0.21555-0.21614 in)**
C Service Limit:	**5.450 mm (0.21457 in)**

Exhaust Valve Dimensions

A Standard (New):	**25.90-26.10 mm (1.0197-1.0276 in)**
B Standard (New):	**95.50-95.90 mm (3.7598-3.7756 in)**
C Standard (New):	**5.450-5.460 mm (0.21457-0.21496 in)**

C Service Limit:	**5.420 mm (0.21339 in)**

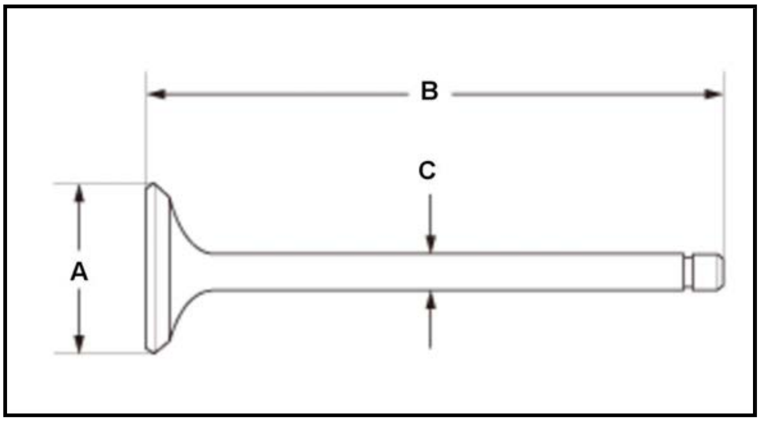

Valve Stem-to-Guide Clearance Inspection

1. Valve Stem-to-Guide Clearance - Inspect

   1. Subtract the O.D. of the valve stem, measured with a micrometer, from the I.D. of the valve guide, measured with an inside micrometer or ball gauge. Take the measurements in three places along the valve stem and three places inside the valve guide. The difference between the largest valve guide measurement and the smallest valve stem measurement should not exceed the service limit.

   Intake Valve Stem-to-Guide Clearance

Standard (New):	**0.020-0.055 mm (0.00079-0.00217 in)**
Service Limit:	**0.080 mm (0.00315 in)**

   Exhaust Valve Stem-to-Guide Clearance

Standard (New):	**0.050-0.080 mm (0.00197-0.00315 in)**
Service Limit:	**0.110 mm (0.00433 in)**

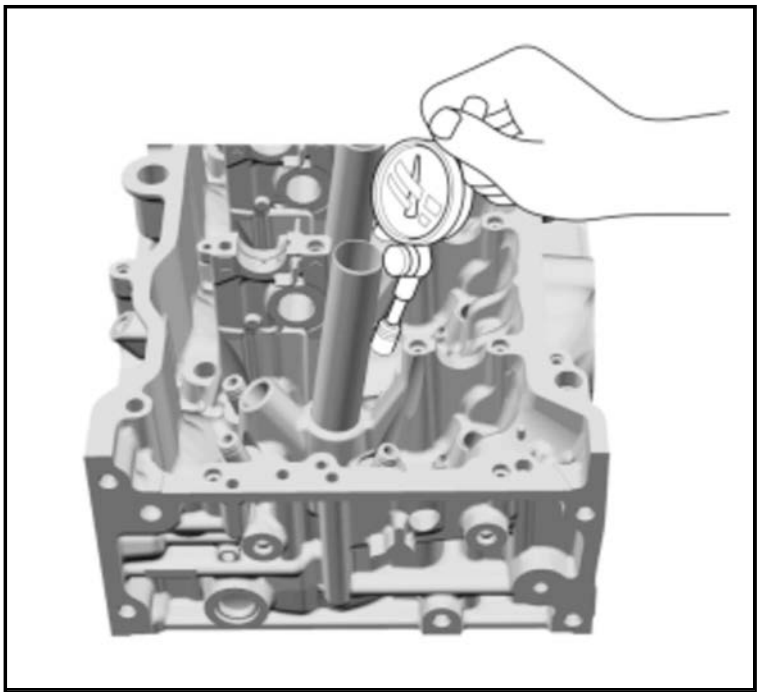

Cylinder Head Inspection for Warpage

1. Cylinder Head Warpage - Inspect

   1. Check the cylinder head for warpage. Measure along the edges, and three ways across the center:

- If warpage is less than 0.05 mm (0.0020 in) cylinder head resurfacing is not required.
- Maximum resurface limited to the cylinder head height standard as shown.

Cylinder Head Warpage	
Standard (New):	**0.05 mm (0.0020 in) max.**

Cylinder Head Height	
Standard (New):	**120.95-121.05 mm (4.7618-4.7657 in)**

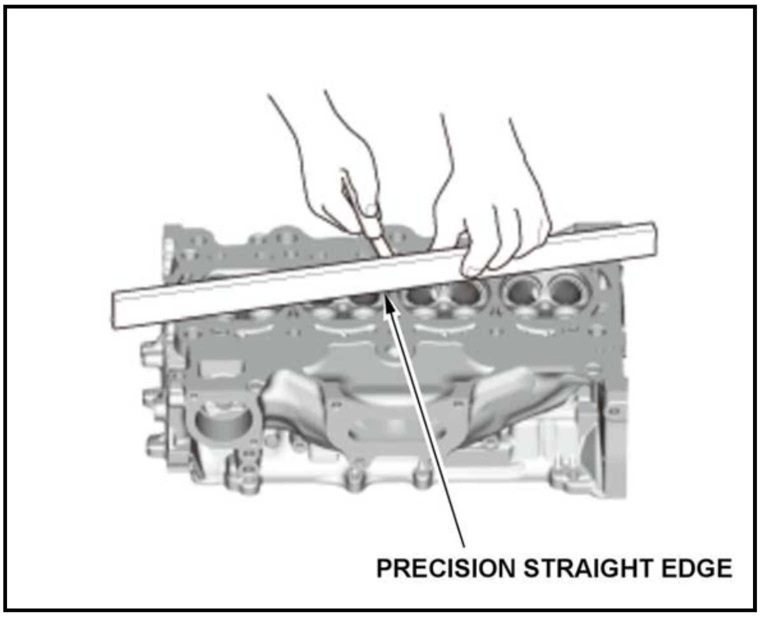

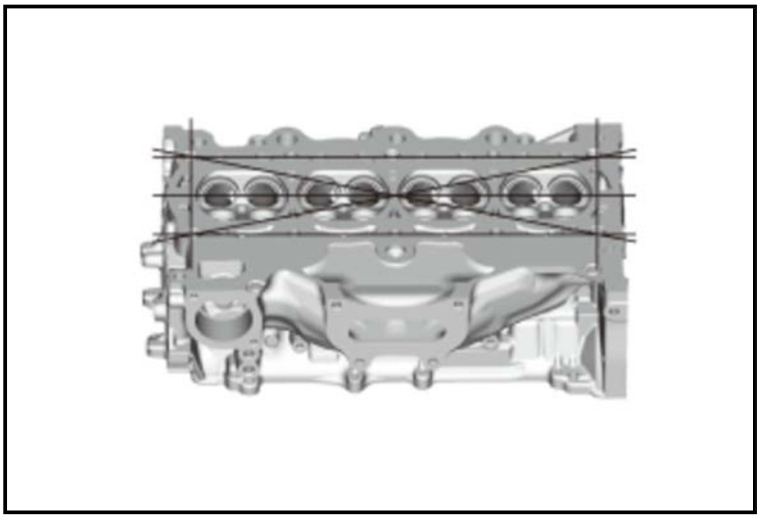

Reconditioning

1. Valve Seat - Reconditioning

	1. Inspect valve stem-to-guide clearance. If the valve guides are worn, replace them before cutting the valve seats. 2. Renew the valve seats in the cylinder head using a valve seat cutter. 3. Carefully cut a 45B° seat, removing only enough

	material to ensure a smooth and concentric seat.

4. Bevel the upper and lower edges at the angles shown in the illustration. Check the width of the seat and adjust accordingly.

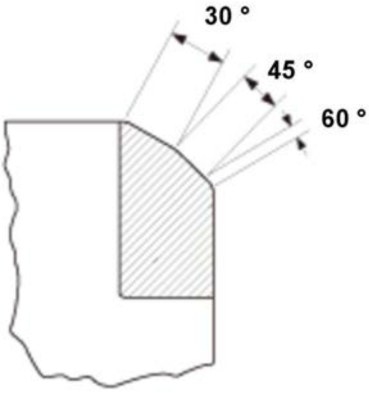

5. Make one more very light passes with the 45B° cutter to remove any possible burrs caused by the other cutters.

Valve Seat Width

Intake:	
Standard (New):	**0.85-1.15 mm (0.0335-0.0453 in)**
Service Limit:	**1.60 mm (0.0630 in)**
Exhaust:	
Standard (New):	**1.25-1.55 mm (0.0492-0.0610 in)**
Service Limit:	**2.00 mm (0.0787 in)**

<table>
<tr>
<td>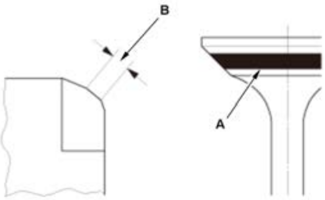
</td>
<td>6. After resurfacing the seat, inspect for even valve seating: Apply Prussian Blue compound (A) to the valve face. Insert the valve in its original location in the head, then lift it and snap it closed against the seat several times.
7. The actual valve seating surface (B), as shown by the blue compound, should be centered on the seat:
If it is too high (closer to the valve stem), you must make a second cut with the 60B° cutter to move it down, then one more cut with the 45B° cutter to restore seat width.
If it is too low (close to the valve edge), you must make a second cut with the 30B° cutter to move it up, then make one more cut with the</td>
</tr>
</table>

	45B° cutter to restore seat width. **NOTE:** The final cut should always be made with the 45B° cutter.

8. Insert the intake and exhaust valves in the head, and measure valve stem installed height (A).

Intake Valve Stem Installed Height

Standard (New):	**48.65-49.35 mm (1.9154-1.9429 in)**
Service Limit:	**49.68 mm (1.9559 in)**

Exhaust Valve Stem Installed Height

Standard (New):	**44.90-45.60 mm (1.7677-1.7953 in)**
Service Limit:	**45.93 mm (1.8083 in)**

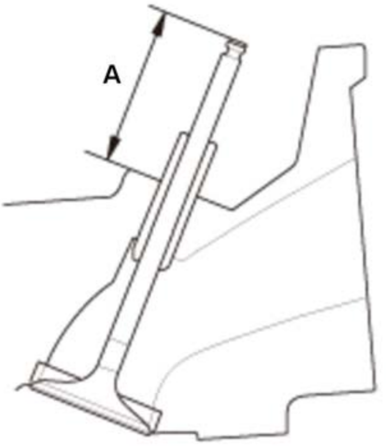

9. If valve stem installed height is over the service limit, replace the valve and recheck. If it is still over the service limit, replace the cylinder head; the valve seat in the head is too deep.

REMOVAL AND INSTALLATION

CYLINDER HEAD COVER REMOVAL AND INSTALLATION (1.5 L ENGINE)

Removal

1. **Ignition Coil - Remove**
2. Turbocharger Water Return Pipe - Remove

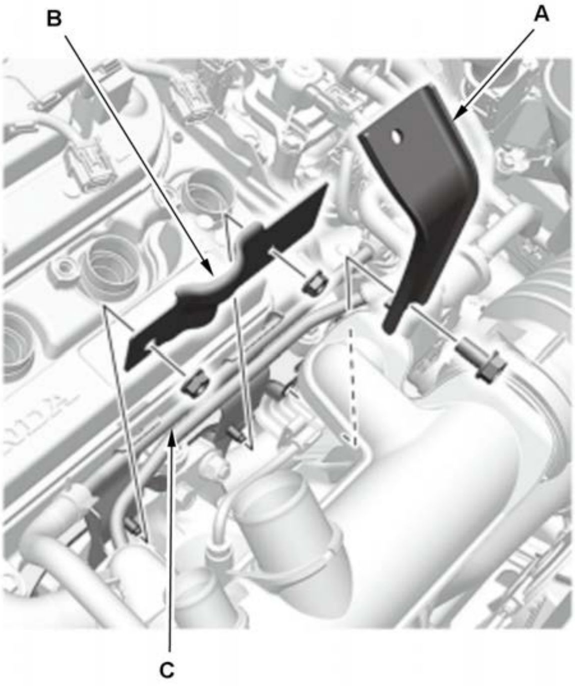	1. Remove the resonator bracket (A). 2. Remove the cylinder head cover heat insulator (B) and the turbocharger water return pipe (C).

3. Breather Hose, PCV Hose, and Harness Holder - Remove

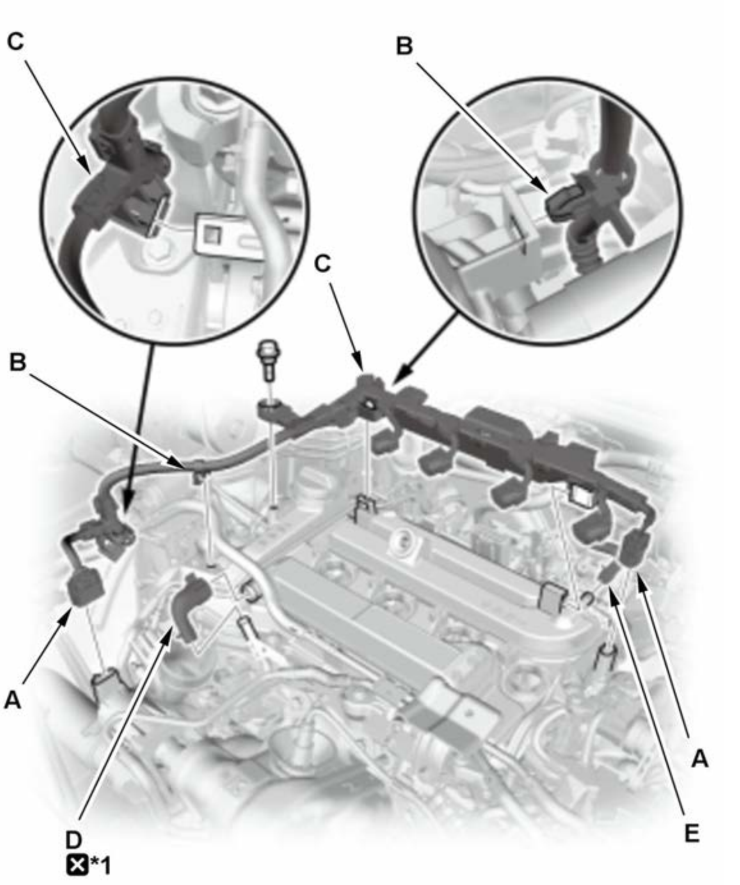 *1: With break head band	1. Disconnect the connectors (A). 2. Remove the harness clips (B) and the harness holders (C). 3. Disconnect the breather hose (D) and the PCV hose (E). **NOTE:** **(With break head band) Use commercially available cutting pliers as necessary to cut the band off the hose while avoiding damage to the hose.**

4. Turbocharger Bypass Control Valve Solenoid Pipe - Remove

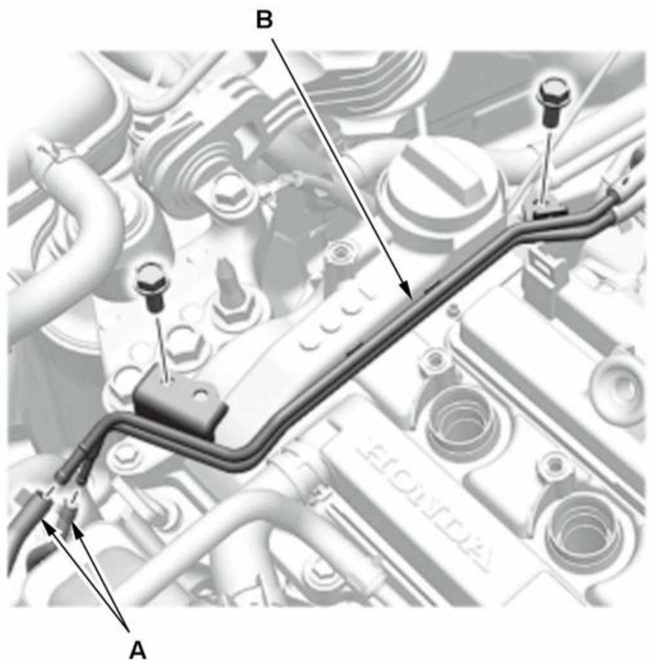 	1. Disconnect the hoses (A). 2. Remove the turbocharger bypass control valve solenoid pipe (B).

5. PCV Valve - Remove

1. If necessary, remove the PCV valve.

6. Cylinder Head Cover - Remove

<table>
<tr>
<td>
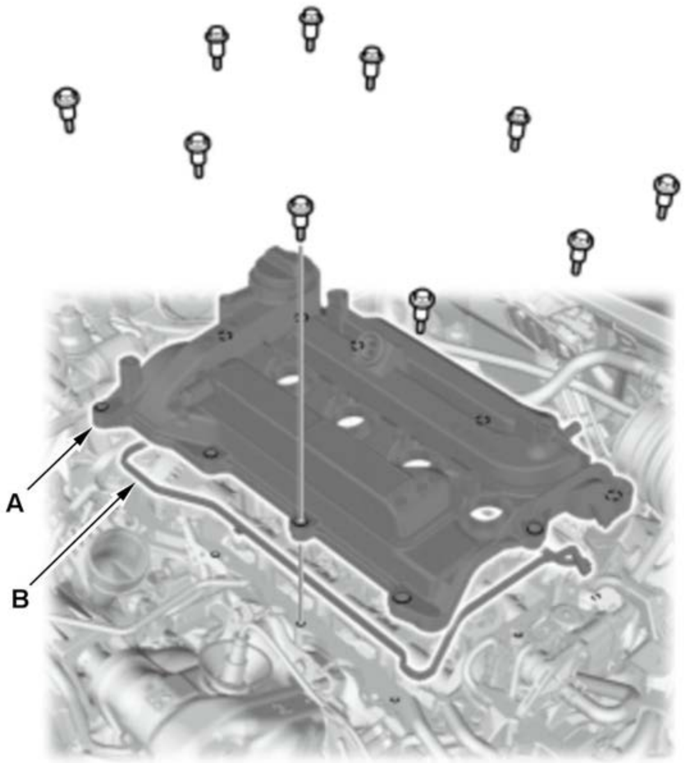

</td>
<td>1. Remove the cylinder head cover (A) and the head cover gasket (B).</td>
</tr>
</table>

Installation

NOTE: How to read the torque specifications .

1. Cylinder Head Cover - Install

<table>
<tr>
<td>
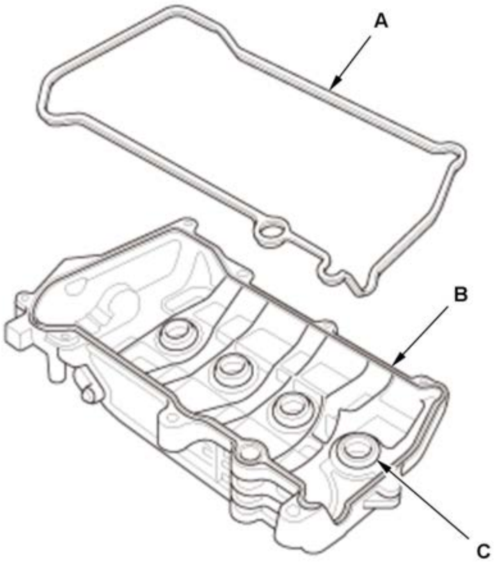

</td>
<td>
1. Thoroughly clean the head cover gasket (A) and the groove of the cylinder head cover (B).

NOTE:

Check and, if necessary, replace the head cover gasket.

2. Check the spark plug seals (C) for damage. If any seals are damaged, replace the cylinder head cover.

3. Install the head cover gasket in the groove of the cylinder head cover. Make sure the head cover gasket is seated securely.
</td>
</tr>
</table>

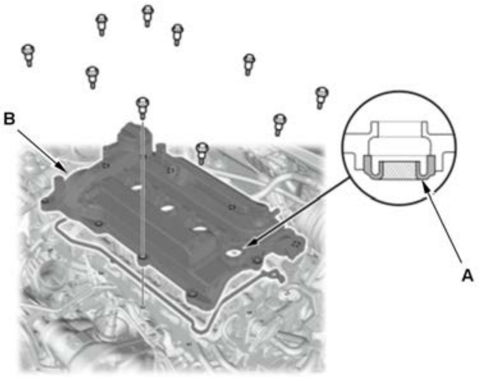	4. **Apply liquid gasket** to the cam chain case, the high pressure fuel pump base, and the cylinder head mating areas. 5. Apply a light coat of new engine oil to the lip of the spark plug seals (A). 6. Set the spark plug seals on the spark plug tubes. Place the cylinder head cover (B) on the cylinder head, then slide the cylinder head cover slightly back and forth to seat the head cover gasket. 7. Inspect the spark plug seals for damage.

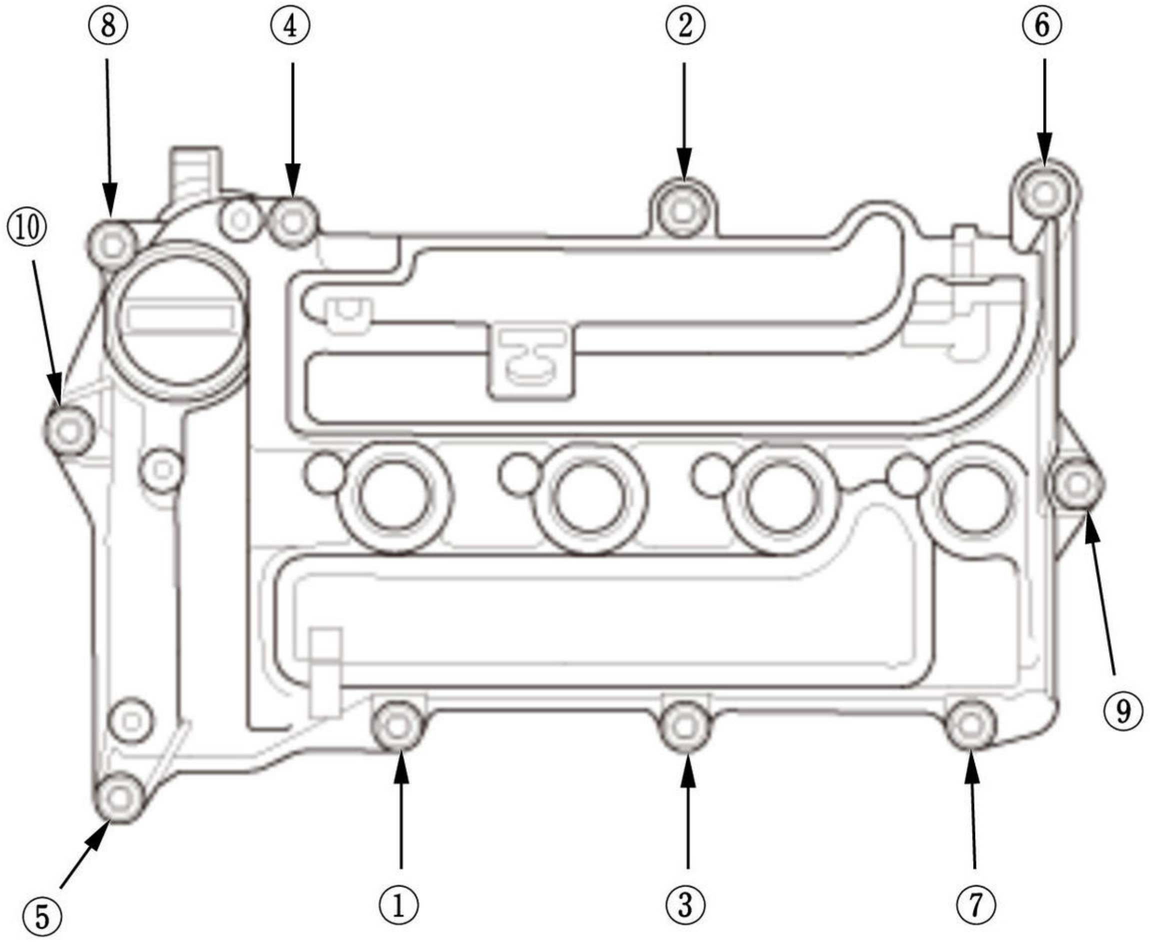

Fig. 1: Cylinder Head Cover Bolts In Sequence
Courtesy of HONDA, U.S.A., INC.

8. Tighten the bolts in two steps. In the final step, torque all bolts in sequence to 7.0 N.m (0.71 kgf.m, 5.2 lbf.ft).

2. PCV Valve - Install

1. If the PCV valve was removed, **install the PCV valve.**

3. Turbocharger Bypass Control Valve Solenoid Pipe - Install

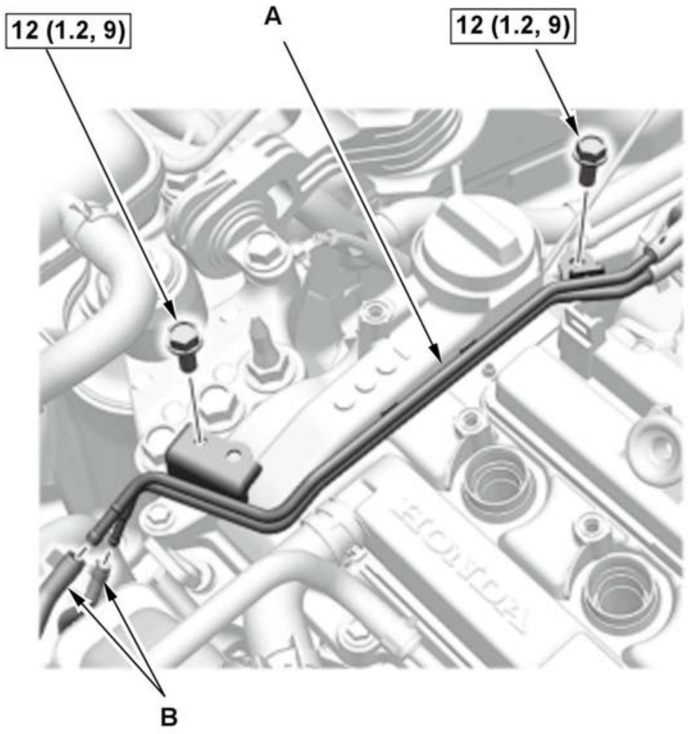

1. Install the turbocharger bypass control valve solenoid pipe (A).

2. Connect the hoses (B).

4. Breather Hose, PCV Hose, and Harness Holder - Install

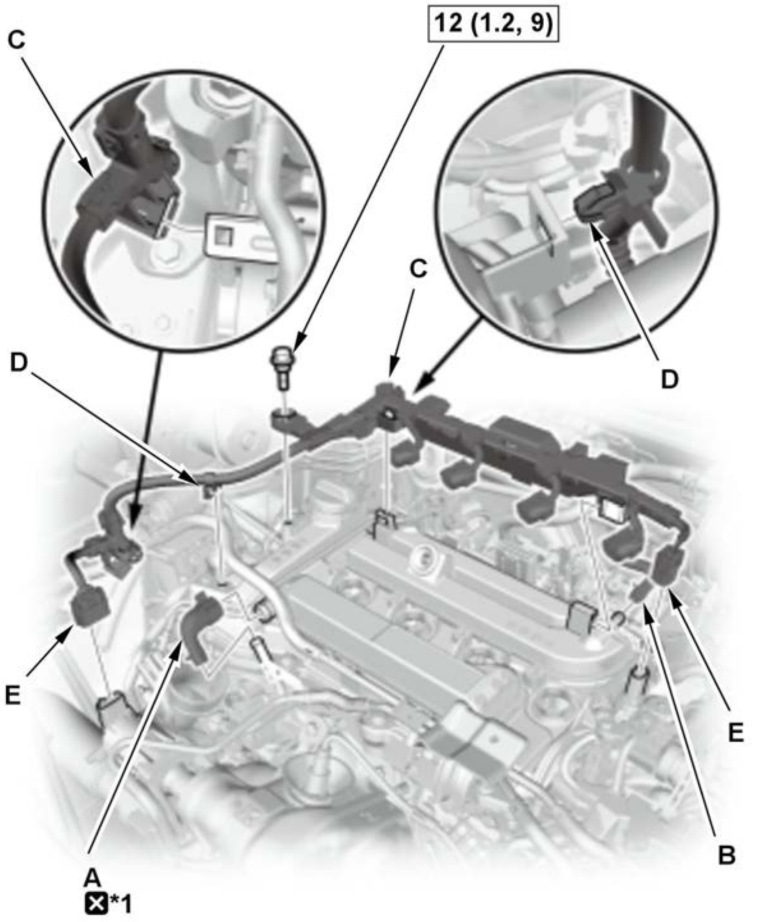

*1: With break head band

1. Connect the breather hose (A) and the PCV hose (B).

2. Install the harness holders (C) and the harness clips (D).

3. Connect the connectors (E).

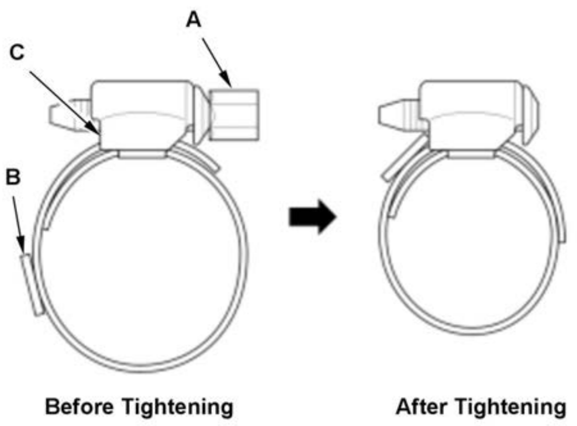	**NOTE (with break head band):** When installing a new break head band, do the following procedures. 4. Tighten the break head bolt until the bolt head (A) is twisted off completely. **NOTE:** **Do not use an air tool.** 5. Make sure the stopper end (B) contacts to the housing end (C) after tightening the break head bolt.

5. Turbocharger Water Return Pipe - Install

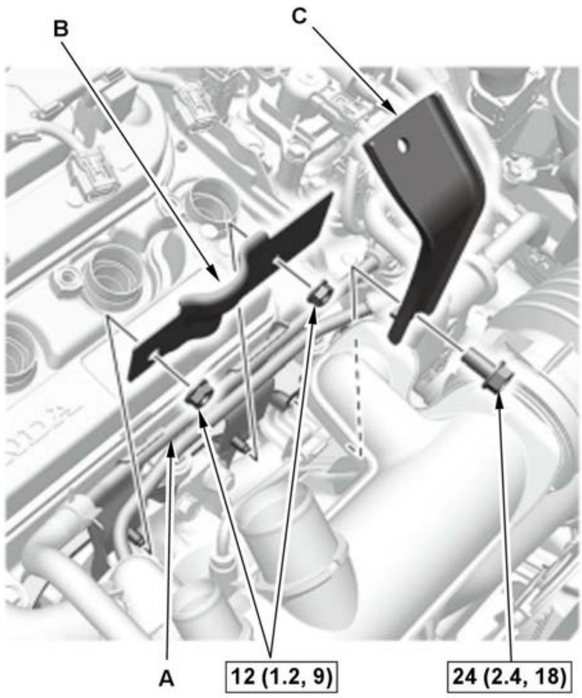	1. Install the turbocharger water return pipe (A) and the cylinder head cover heat insulator (B). 2. Install the air cleaner stay (C).

6. **Ignition Coil - Install**

CYLINDER HEAD COVER REMOVAL AND INSTALLATION (2.4 L ENGINE) (2017 2018 2019)

Removal

1. **12 Volt Battery Terminal - Disconnect**
2. **Ignition Coil - Remove**
3. Breather Hose and PCV Hose - Disconnect

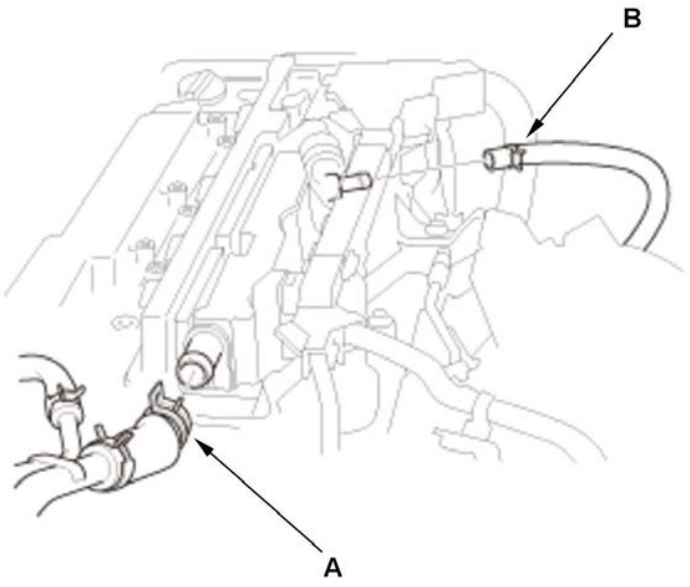	1. Disconnect the breather hose (A) and the PCV hose (B).

4. Harness Holder - Remove

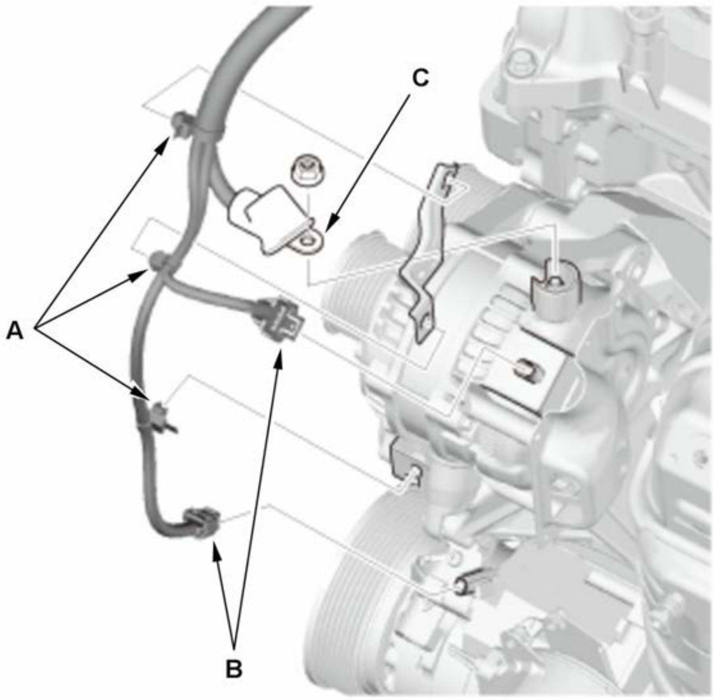	1. Remove the harness clamps (A). 2. Disconnect the connectors (B) and the positive alternator cable (C).

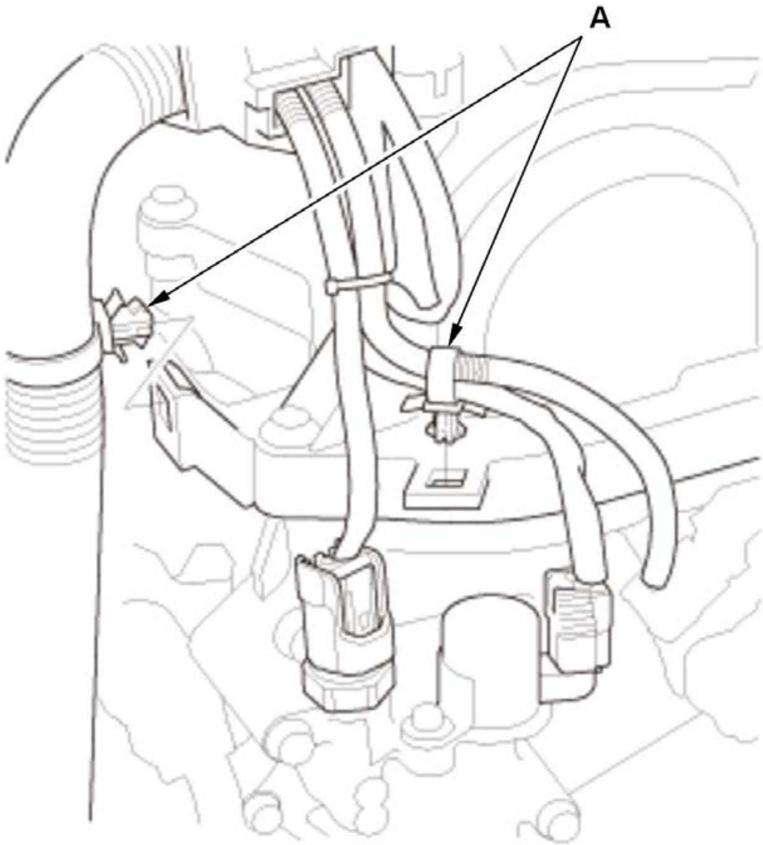	3. Remove the harness clamps (A).

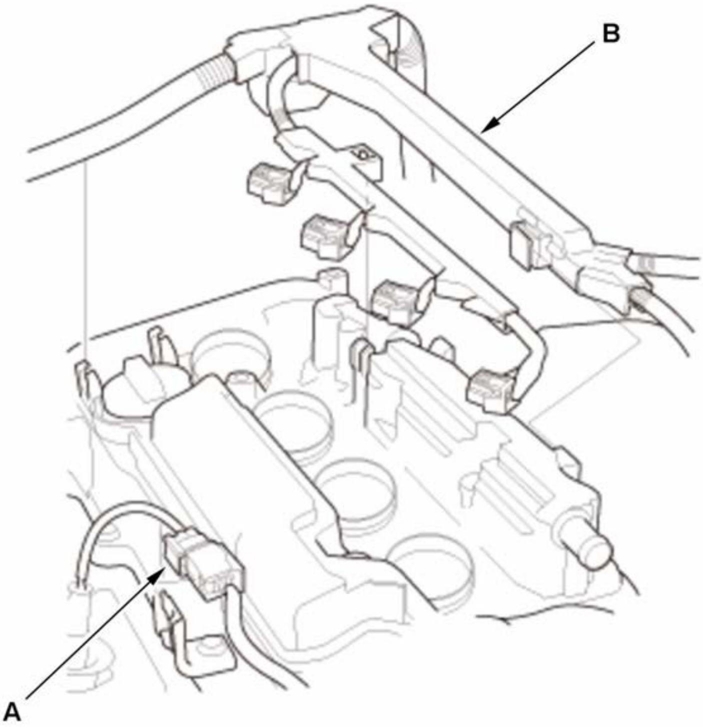	4. Remove the connector clamp (A) and the harness holder (B).

5. **High Pressure Fuel Pump Cover - Remove**

6. Cylinder Head Cover - Remove

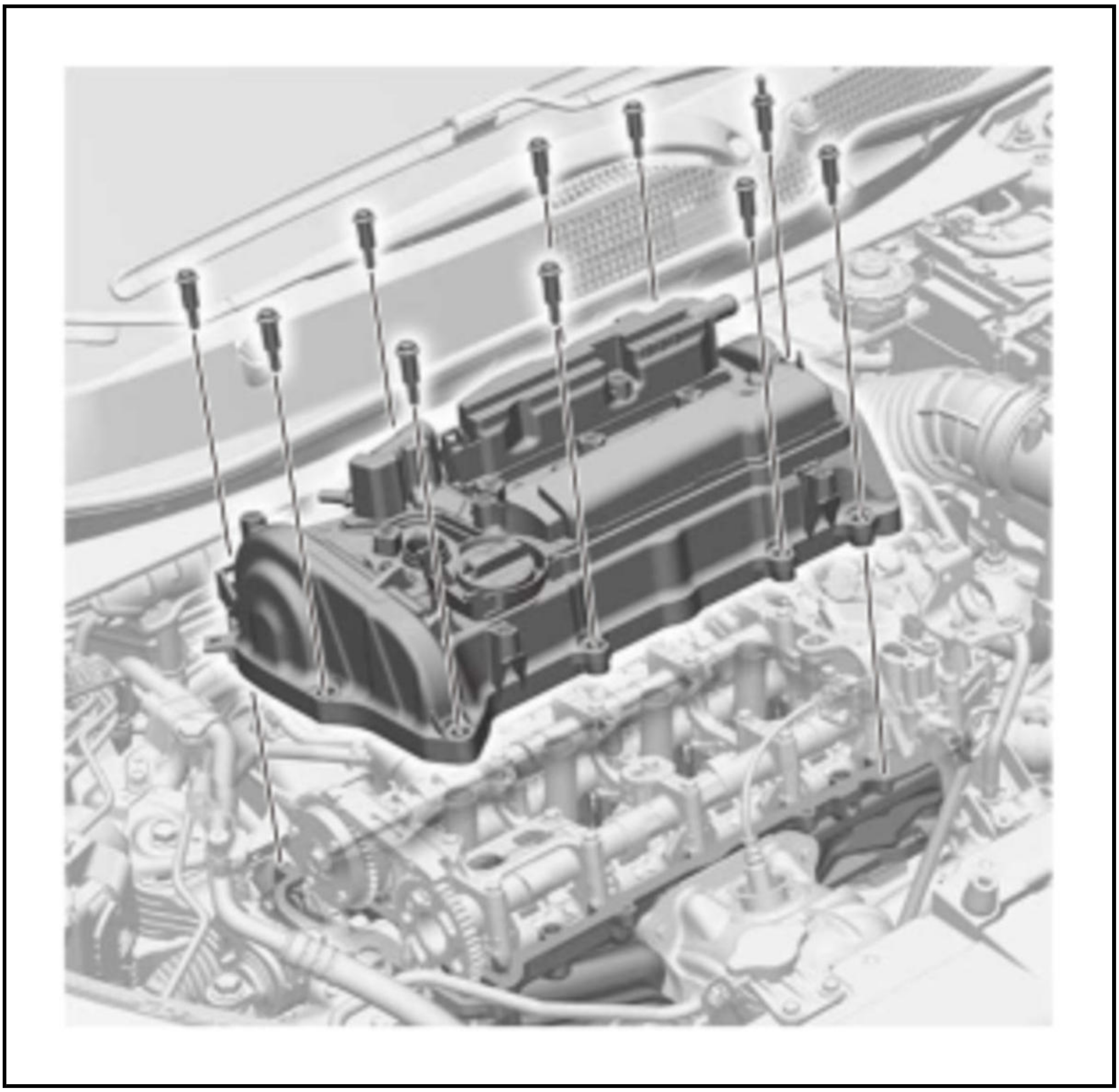

Installation

NOTE: **How to read the torque specifications** .

1. Cylinder Head Cover - Install

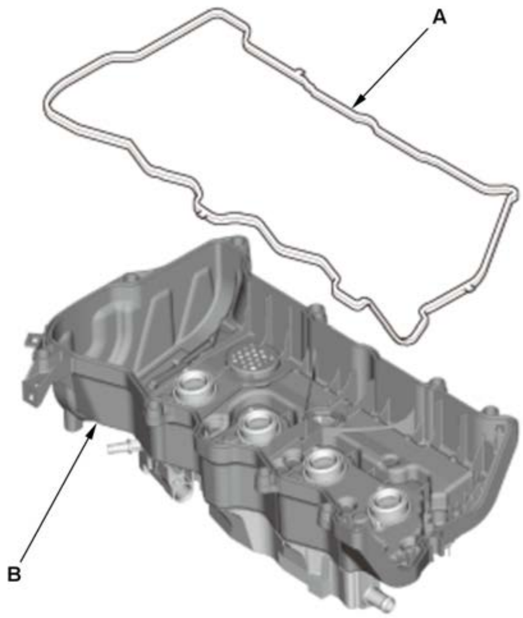

1. Check the spark plug seals for damage. If any seals are damaged, replace it.

2. Thoroughly clean the head cover gasket (A) and the groove of the cylinder head cover (B).

NOTE:

Check and, if necessary, replace the head cover gasket.

3. Install the head cover gasket in the groove of the cylinder head cover. Make sure the head cover gasket is seated securely.

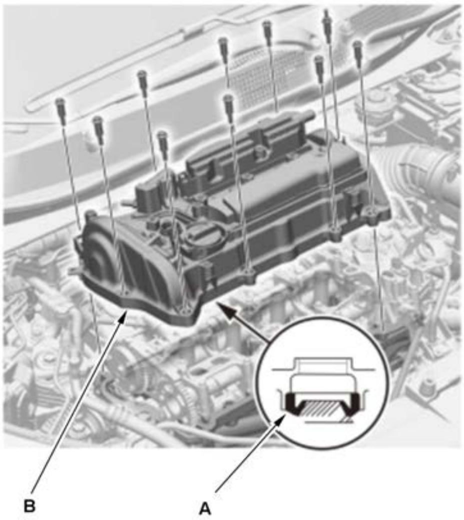

4. Apply liquid gasket

, on the chain case and the high pressure fuel pump base or the side cover mating areas.

5. Set the spark plug seals (A) on the spark plug tubes. Place the cylinder head cover (B) on the cylinder head, then slide the cover slightly back and forth to seat the head cover gasket.

6. Inspect the spark plug seals for damage.

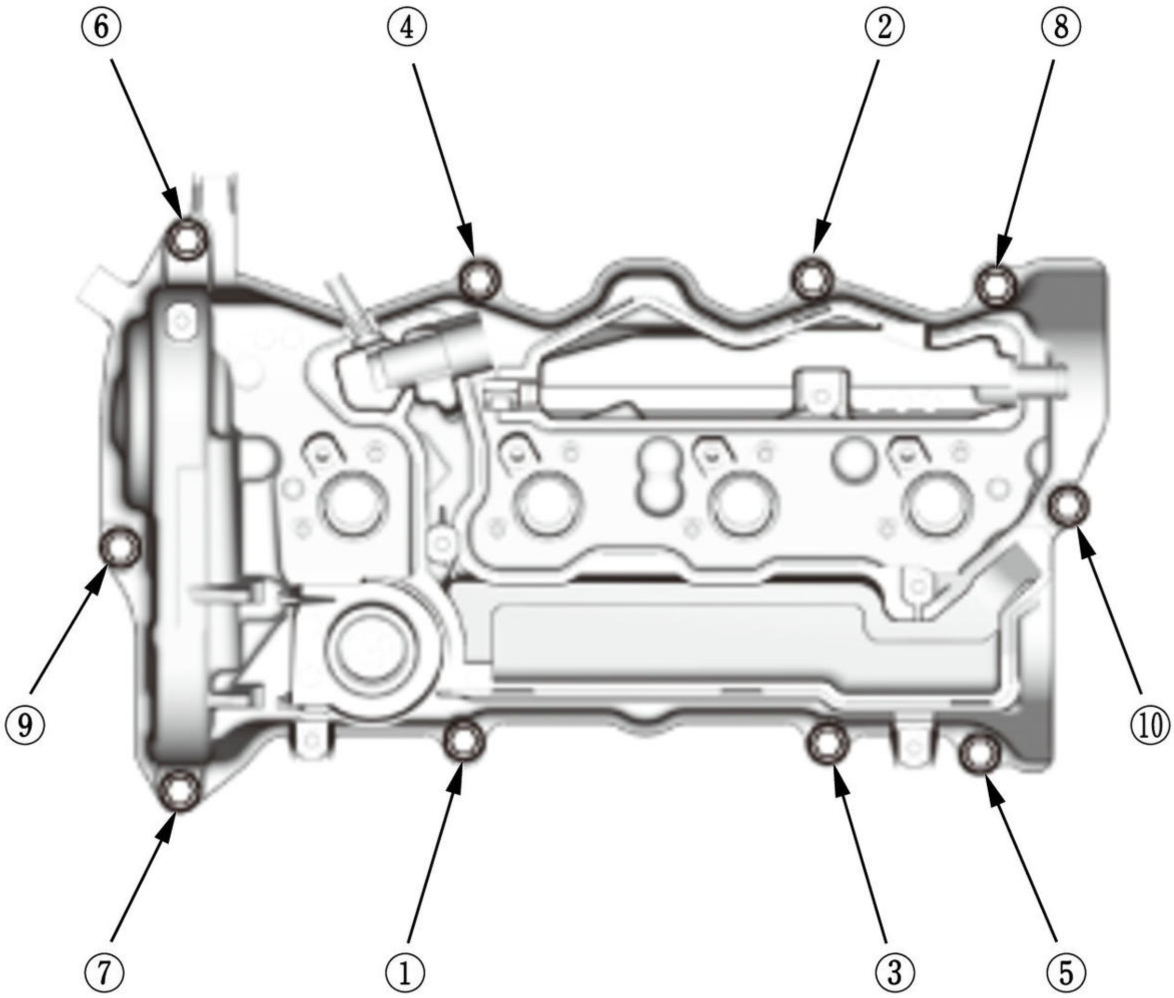

Fig. 2: Tightening Cylinder Head Cover Bolts In Sequence
Courtesy of HONDA, U.S.A., INC.

7. Tighten the bolts in two steps. In the final step torque bolts, in sequence, to 7.0 N.m (0.71 kgf.m, 5.2 lbf.ft).**NOTE:**

- Wait at least 30 minutes before filling the engine with oil.
- Do not run the engine for at least 3 hours after installing the head cover.

2. **High Pressure Fuel Pump Cover - Install**
3. Harness Holder - Install

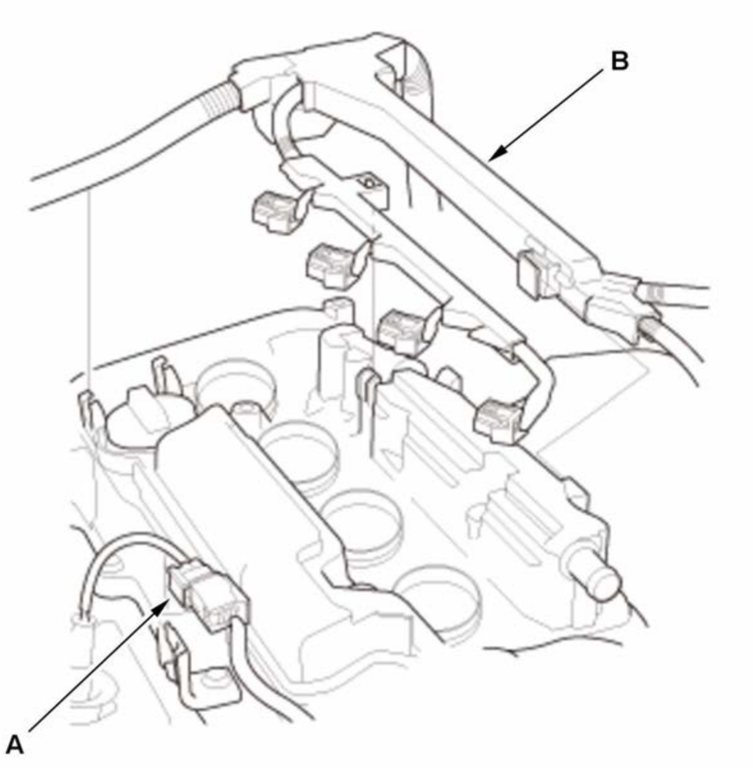

1. Install the connector clamp (A) and the harness holder (B).

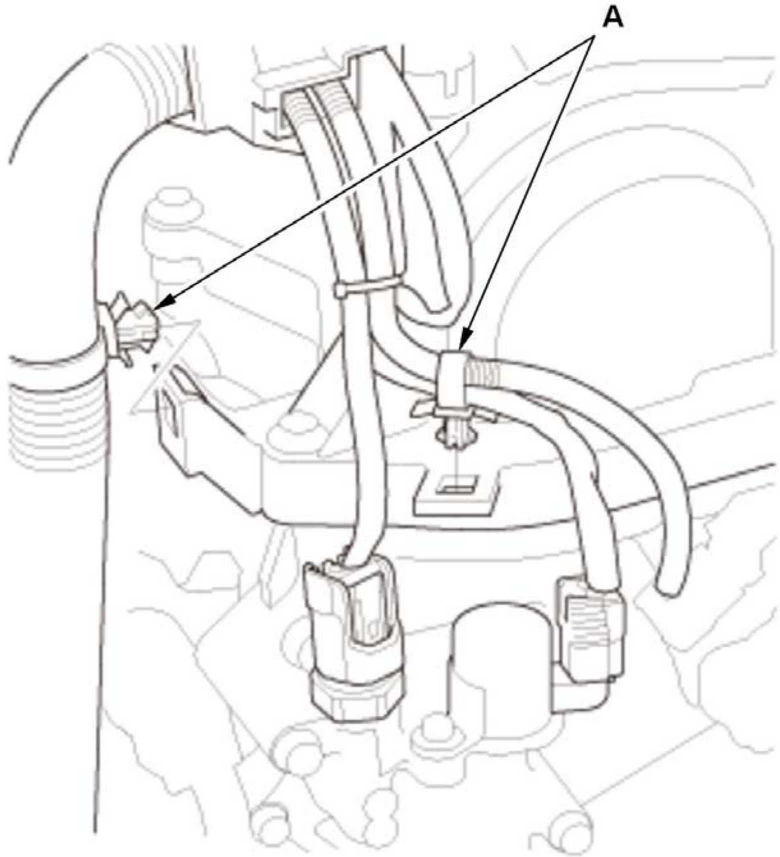

2. Install the harness clamps (A).

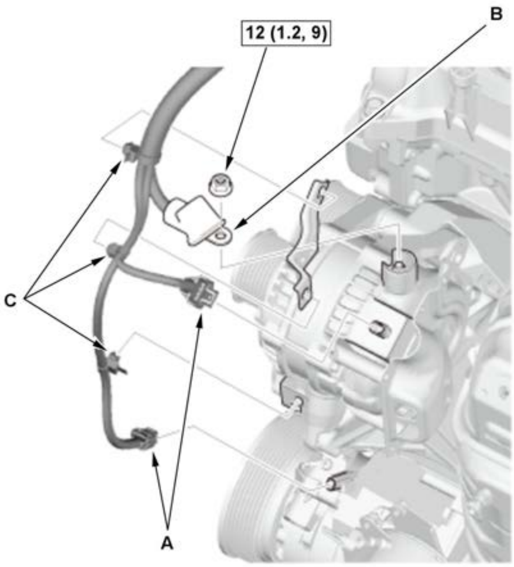	3. Connect the connectors (A) and the positive alternator cable (B). Make sure the crimped side of the ring terminal faces away from the alternator when you connect it. 4. Install the harness clamps (C).

4. Breather Hose and PCV Hose - Connect

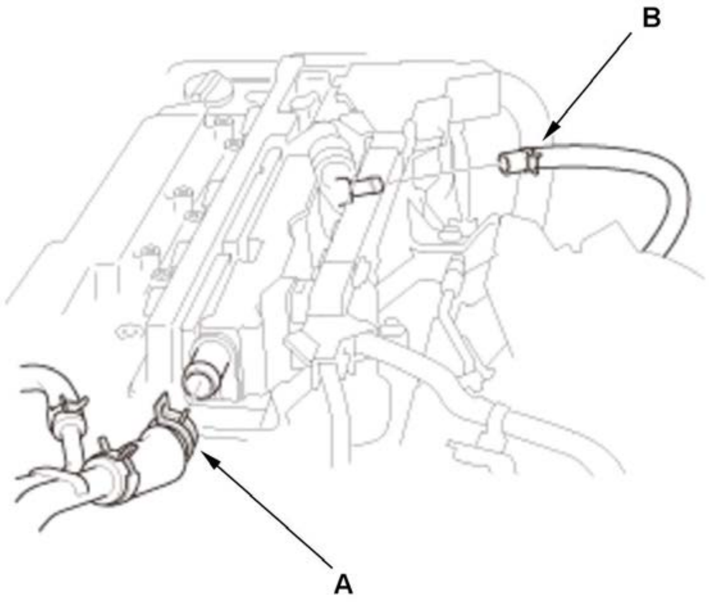	1. Connect the breather hose (A) and the PCV hose (B).

5. **Ignition Coil - Install**
6. **12 Volt Battery Terminal - Connect**

CYLINDER HEAD REMOVAL AND INSTALLATION (1.5 L ENGINE)

Removal

WARNING:

Please carefully read "Precaution for Handling Sodium-Filled Valves" and follow the instructions as the exhaust valves contain metal sodium .

NOTE:

- Use fender covers to avoid damaging painted surfaces.
- To avoid damage, unplug the wiring connectors carefully while holding the connector portion.
- **Connect the HDS to the DLC** , and monitor ECT SENSOR 1. To avoid damaging the cylinder head, wait until the engine coolant temperature drops below 100B°F (38B°C) before loosening the cylinder head bolts.

- Mark all wiring and hoses to avoid misconnection. Also, be sure that they do not contact other wiring or hoses, or interfere with other parts.
- Keep the cam chain away from magnetic fields.

1. **Fuel Pressure - Relieve**
2. **Engine Coolant - Drain**
3. **Air Cleaner - Remove**
4. **TWC Assembly - Remove**
5. **Turbocharger - Remove**
6. **VTC Oil Control Solenoid Valve B - Remove**
7. **Intake Manifold - Remove**
8. **High Pressure Fuel Pump - Remove**
9. **Injector - Remove**
10. Harness Holder Mounting Bolt - Remove

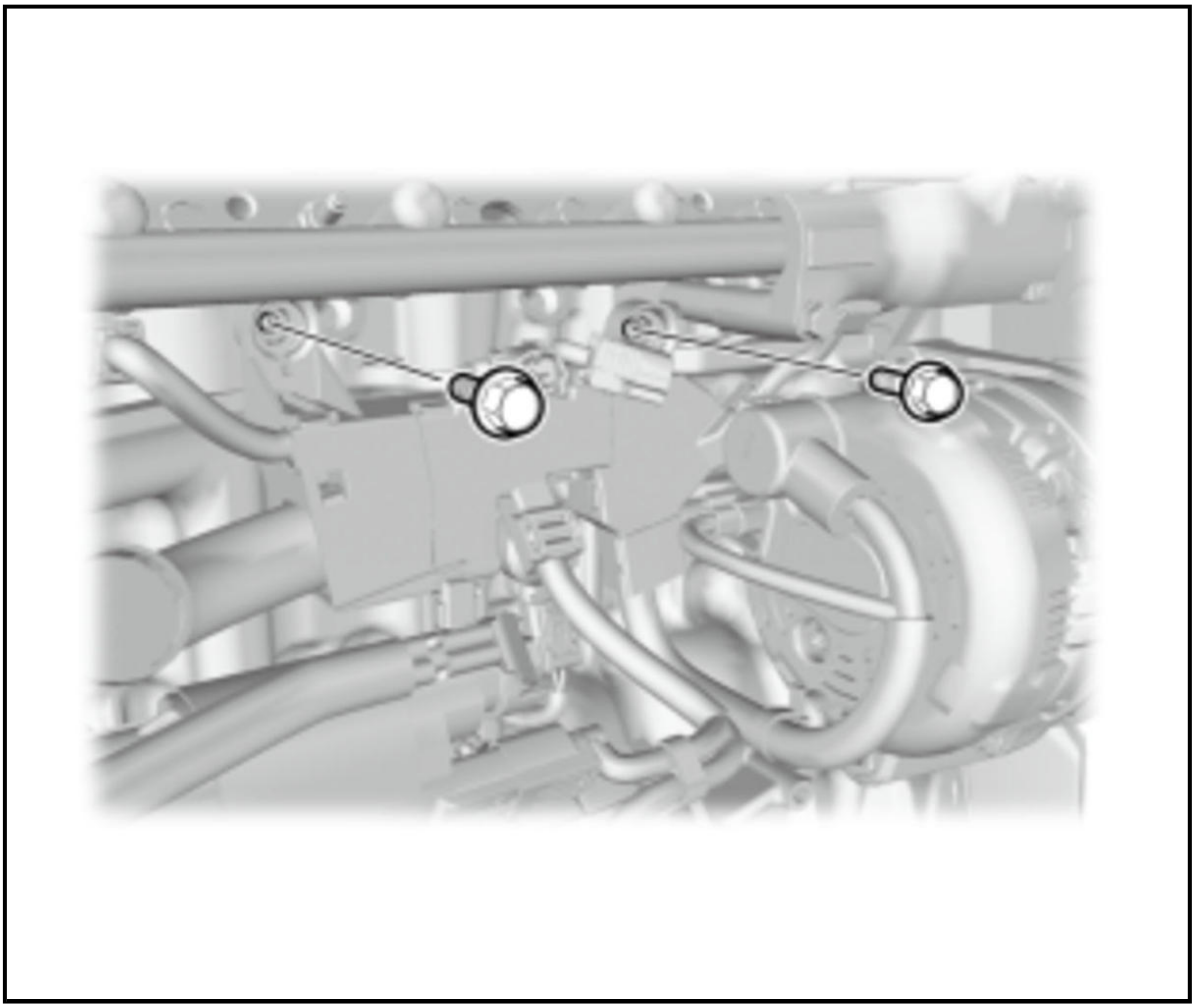

11. **Cylinder Head Cover - Remove**
12. **EVAP Canister Purge Valve - Remove**
13. **CMP Sensor A/B - Remove**
14. High Pressure Fuel Pump Base - Remove

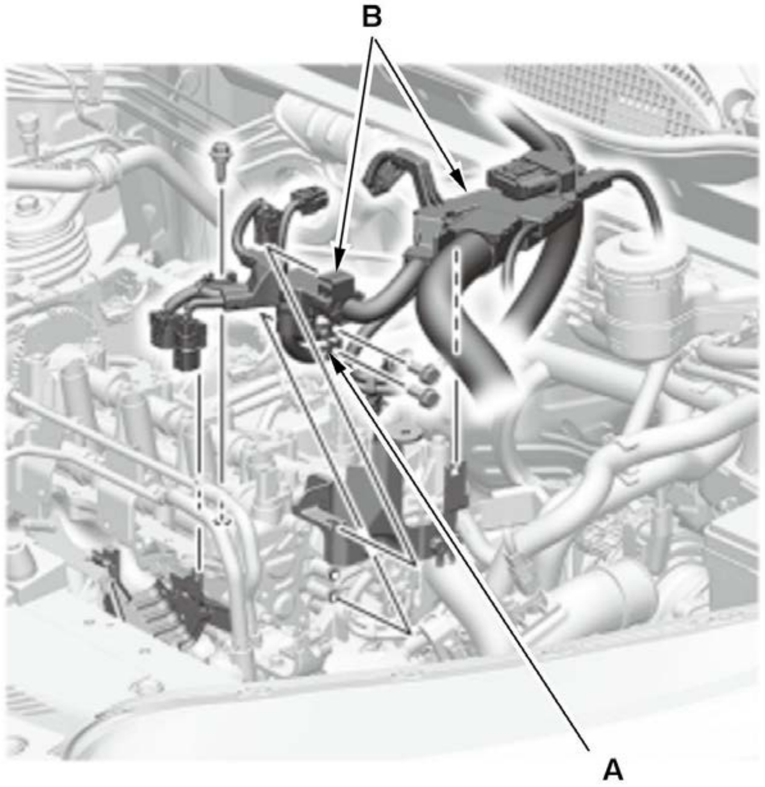

1. Remove the ground cables (A).

2. Remove the harness holders (B).

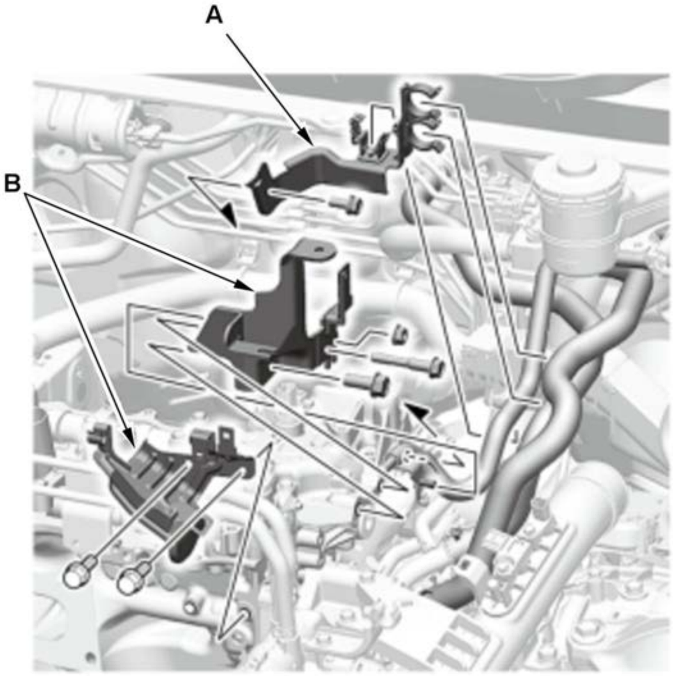

3. Remove the heater hose bracket (A) and the harness holder brackets (B).

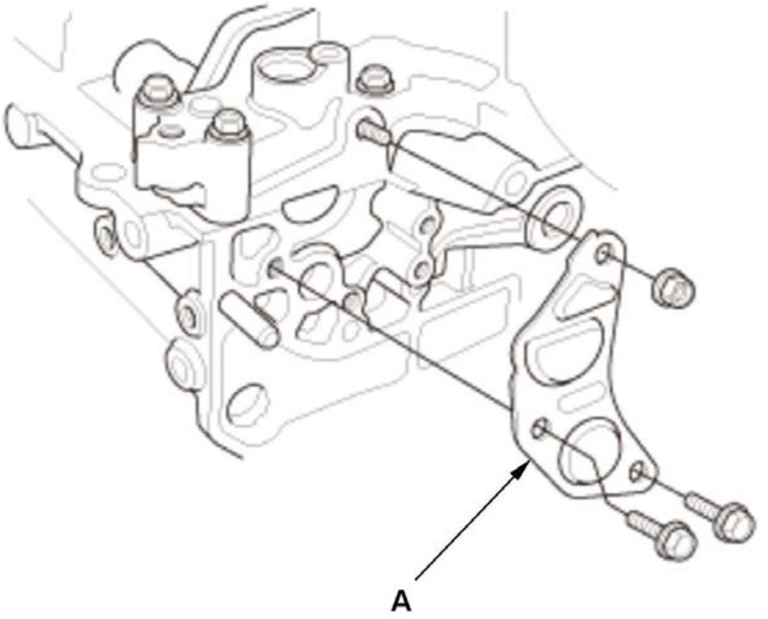	4. Remove the cam holder cover (A).
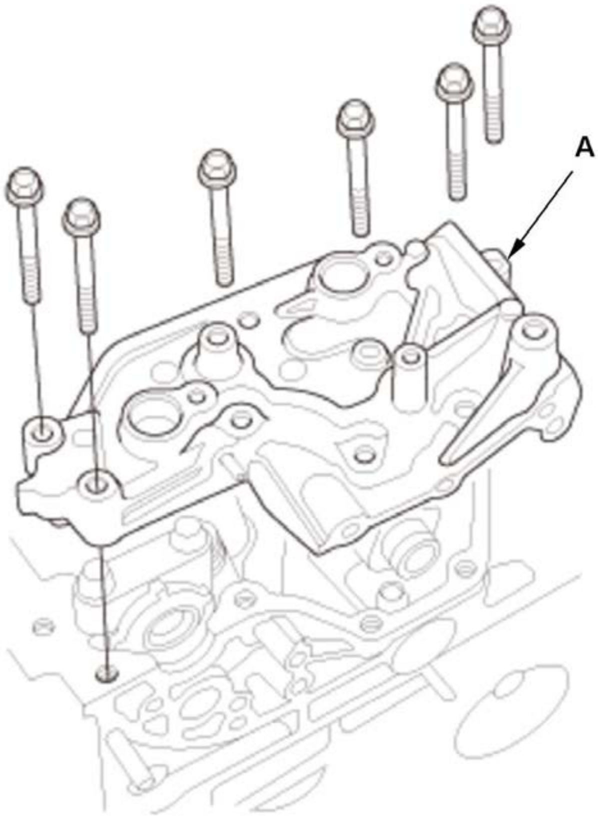	5. Remove the high pressure fuel pump base (A).

15. Thermostat Housing - Remove
16. Cam Chain - Remove
17. Camshaft - Remove
18. Rocker Arm Assembly - Remove
19. Cylinder Head - Remove

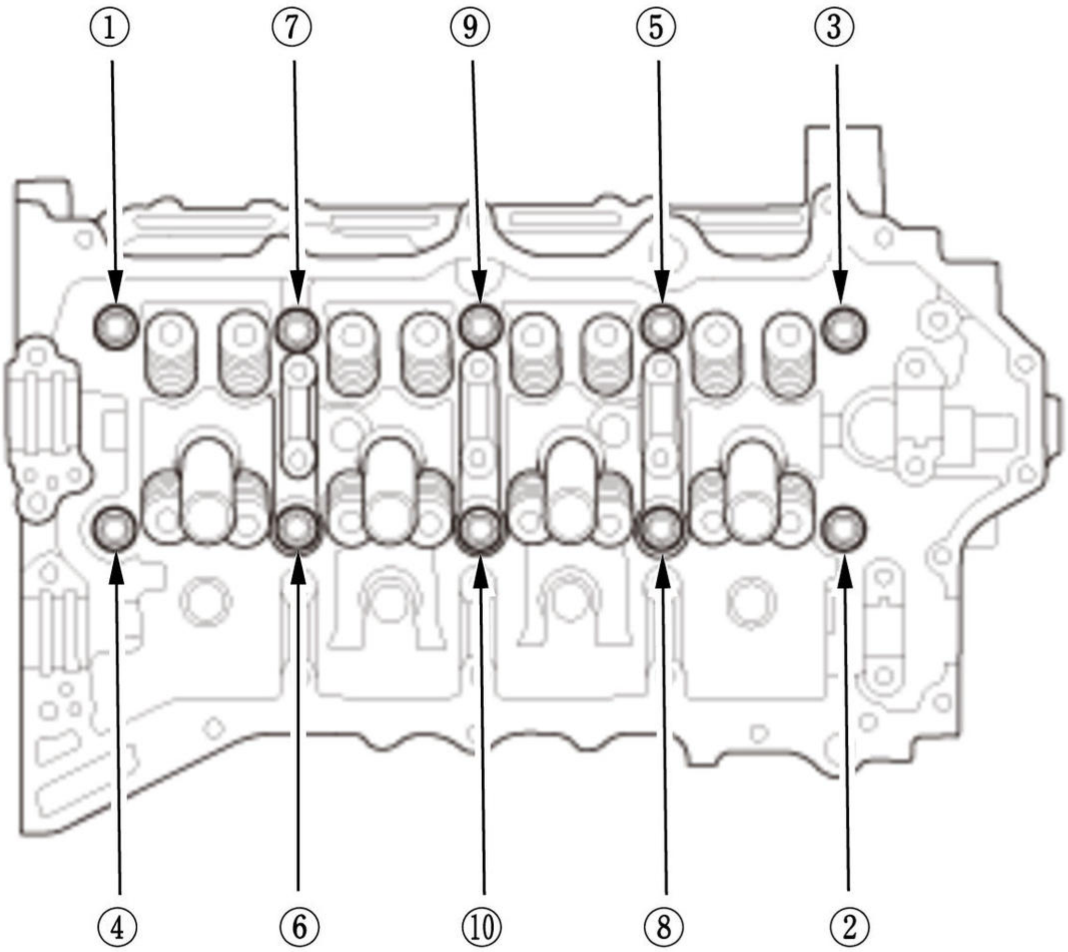

Fig. 3: Removing Cylinder Head Bolts In Sequence
Courtesy of HONDA, U.S.A., INC.

1. Remove the cylinder head bolts. To prevent warpage, loosen the bolts in sequence, 1/3 turn at a time, repeat the sequence until all bolts are loosened. 2. Remove the cylinder head.

Installation

NOTE: How to read the torque specifications .

1. Cylinder Head - Install

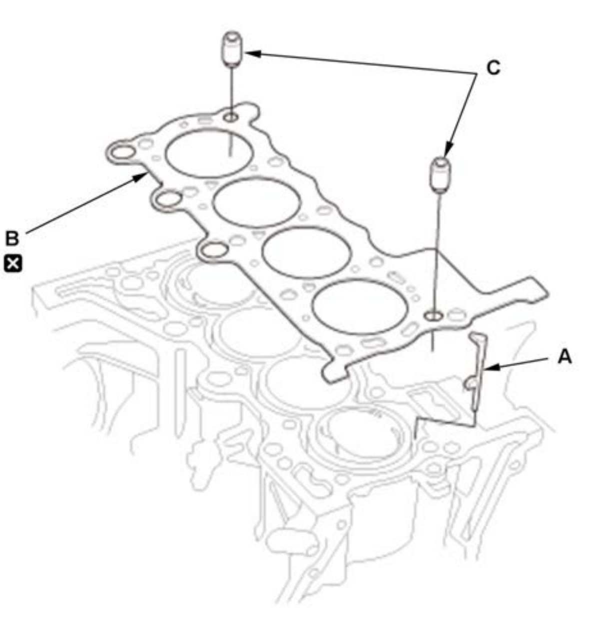 	1. Clean the cylinder head and engine block surfaces. 2. Install a new coolant separator (A) in the engine block whenever the engine block is replaced. 3. Install the new cylinder head gasket (B) and the dowel pins (C) on the engine block. Always use a new cylinder head gasket. 4. Install the cylinder head on the engine block.

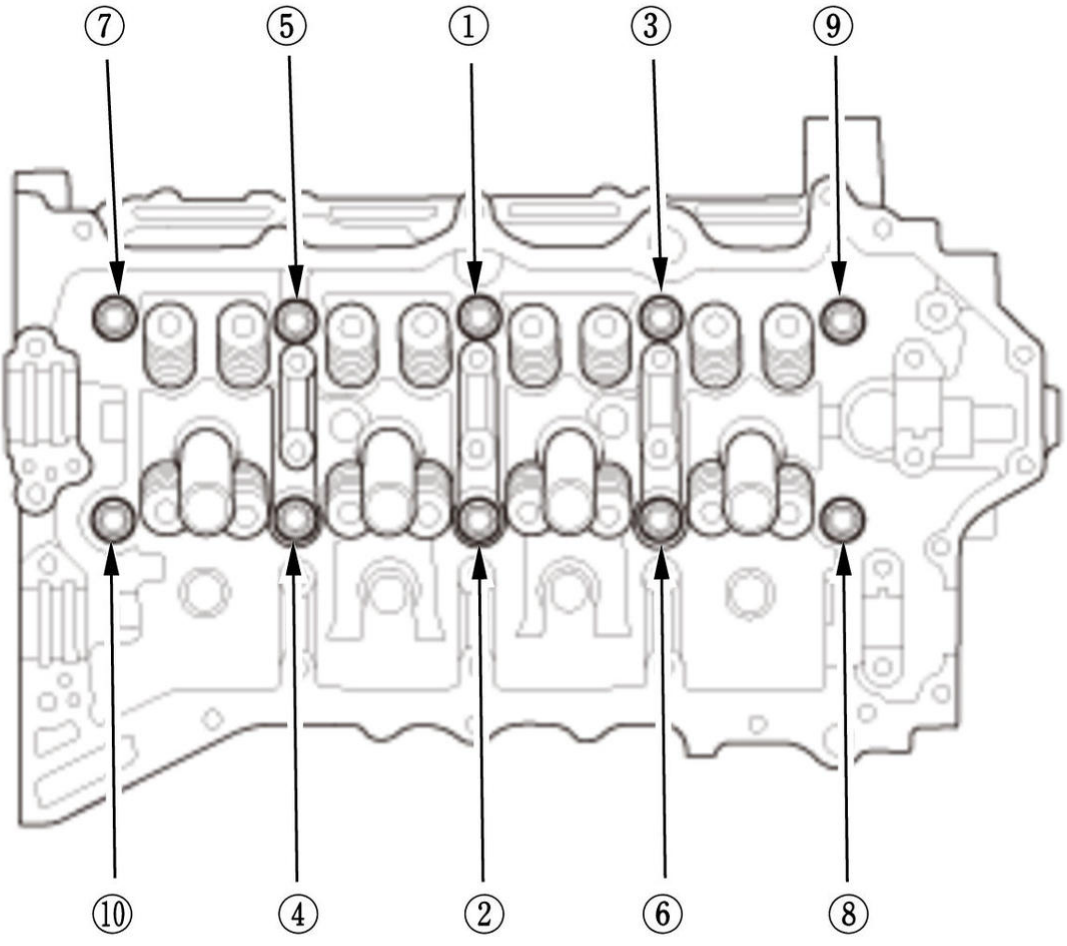

Fig. 4: Tightening Cylinder Head Bolts In Sequence
Courtesy of HONDA, U.S.A., INC.

When the new cylinder head bolt is installed
5. Apply new engine oil to the threads and under the bolt heads of all cylinder head bolts.

6. Torque the cylinder head bolts in sequence to 30 N.m (3.1 kgf.m, 22 lbf.ft) with a beam-type torque wrench if possible. When using a preset click-type torque wrench, be sure to tighten slowly and do not overtighten. If a bolt makes any noise while you are torquing it, loosen the bolt and go back to step 5.

7. After torquing, tighten all cylinder head bolts an additional 165B°, in the numbered sequence shown.

NOTE:

- **Tighten the cylinder head bolts to the specified angle, using a commercially available angle gauge.**
- **Remove the cylinder head bolt if you tightened it beyond the specified angle and go back to step 5 of the procedure. Do not loosen it back to the specified angle.**

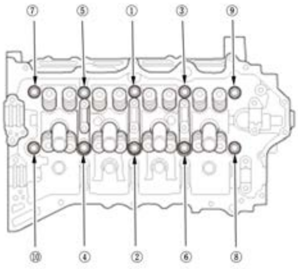

When the cylinder head bolt is reused

8. Apply new engine oil to the threads and under the bolt heads of all cylinder head bolts.

9. Torque the cylinder head bolts in sequence to 30 N.m (3.1 kgf.m, 22 lbf.ft) with a beam-type torque wrench if possible. When using a preset click-type torque wrench, be sure to tighten slowly and do not overtighten. If a bolt makes any noise while you are torquing it, loosen the bolt and go back to step 8.

10. After torquing, tighten all cylinder head bolts an additional 140B°, in the numbered sequence shown.

NOTE:

- **Tighten the cylinder head bolts to the specified**

	angle, using a commercially available angle gauge. • Remove the cylinder head bolt if you tightened it beyond the specified angle and go back to step 8 of the procedure. Do not loosen it back to the specified angle.

2. Rocker Arm Assembly - Install
3. Camshaft - Install
4. Cam Chain - Install
5. Valve Clearance - Adjust
6. Thermostat Housing - Install
7. High Pressure Fuel Pump Base - Install

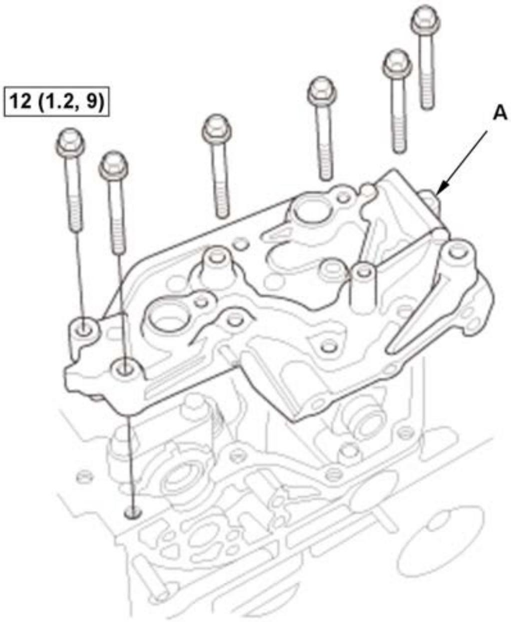	1. Apply liquid gasket to the cylinder head mating surface of the high pressure fuel pump base and to the inside edge of the threaded bolt holes. 2. Install the high pressure fuel pump base (A).

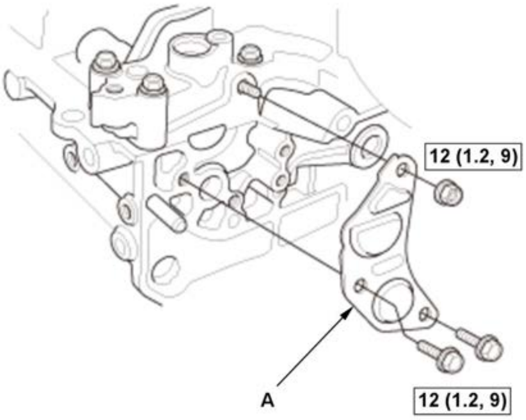 12 (1.2, 9) 12 (1.2, 9) A	3. **Apply liquid gasket** to the cylinder head and the high pressure fuel pump base mating surface of the cam holder cover and to the inside edge of the threaded bolt holes. 4. Install the cam holder cover (A).

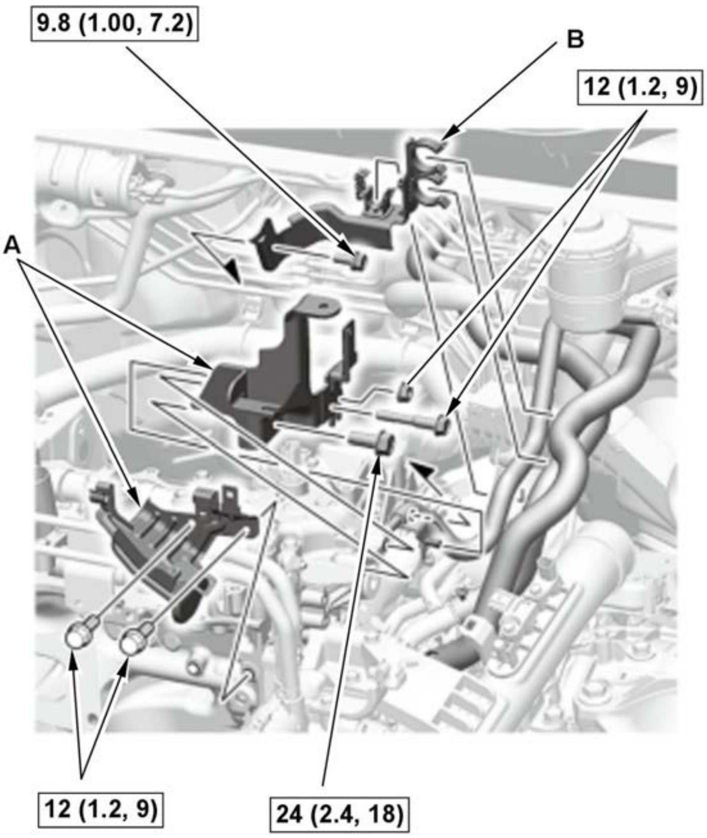 9.8 (1.00, 7.2) B 12 (1.2, 9) A 12 (1.2, 9) 24 (2.4, 18)	5. Install the harness holder bracket (A) and the heater hose brackets (B).

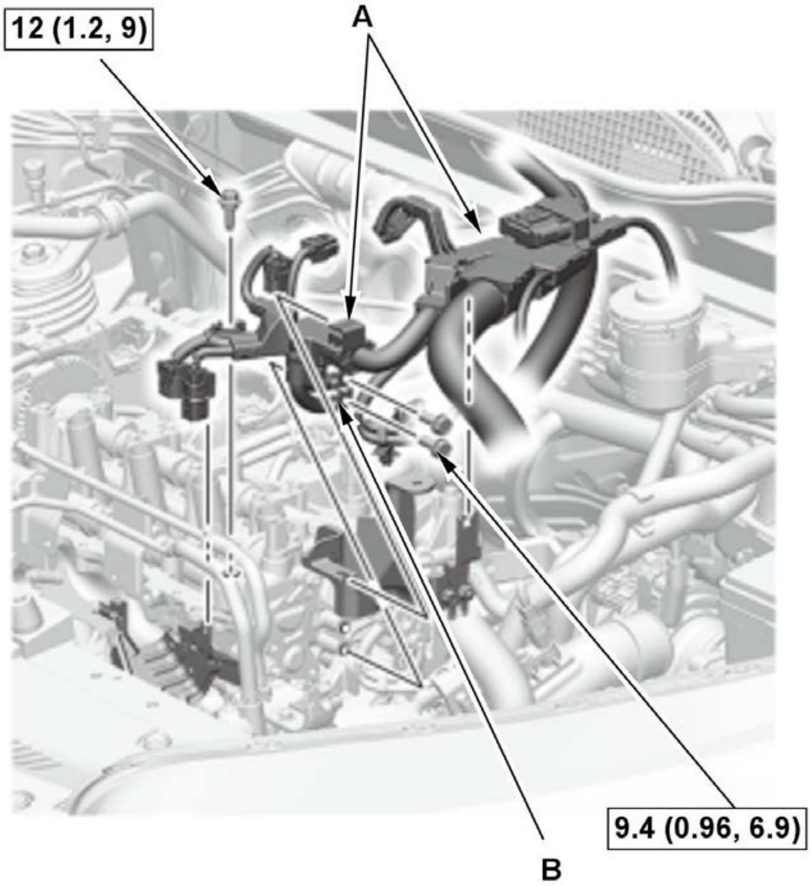

6. Install the harness holders (A).

7. Install the ground cables (B).

8. **CMP Sensor A/B - Install**
9. **EVAP Canister Purge Valve - Install**
10. **Cylinder Head Cover - Install**
11. Harness Holder Mounting Bolt - Install

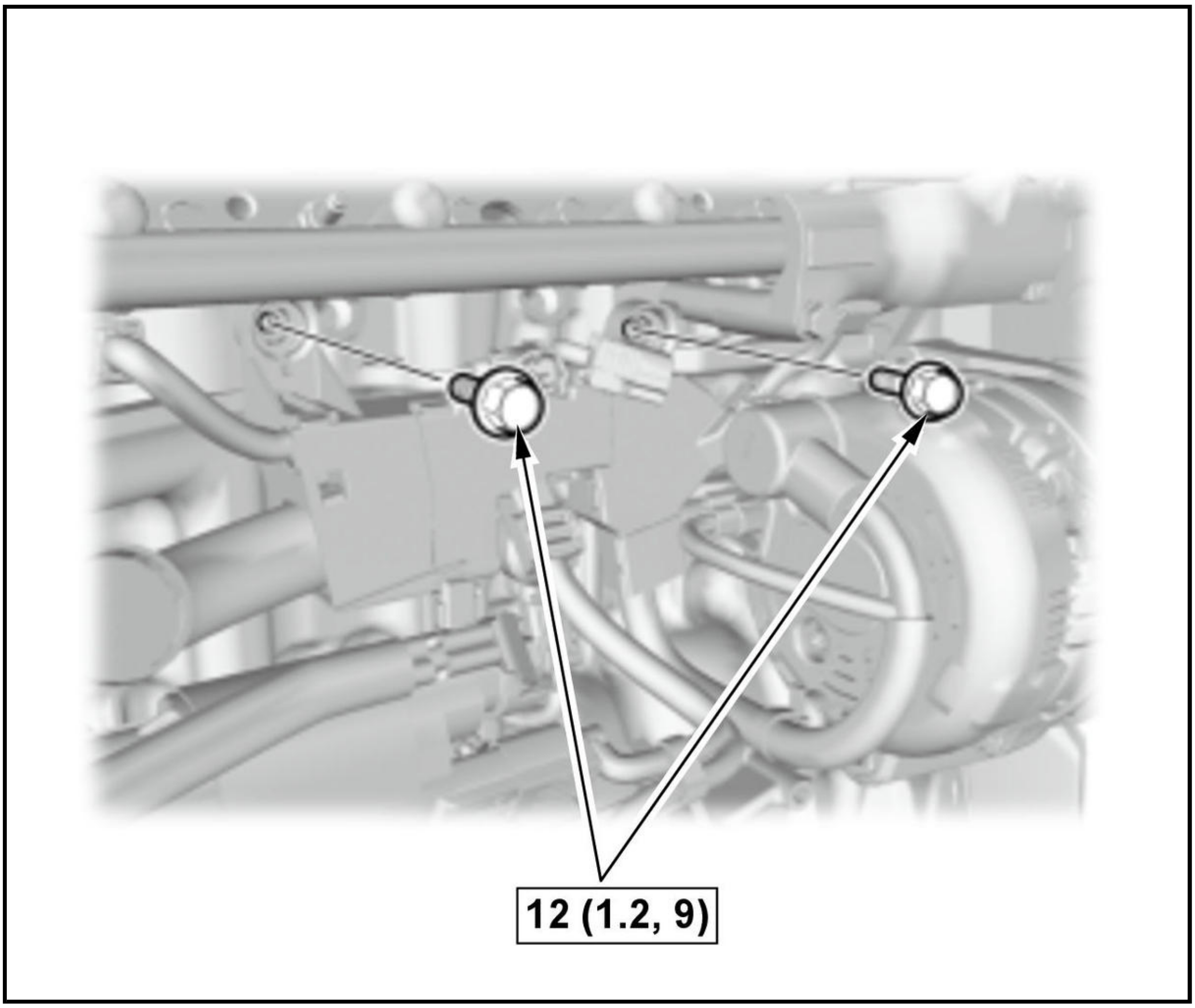

12. Injector - Install
13. High Pressure Fuel Pump - Install
14. Intake Manifold - Install
15. VTC Oil Control Solenoid Valve B - Install
16. Turbocharger - Install
17. TWC Assembly - Install
18. Air Cleaner - Install
19. After Installation - Check

1. After installation, check that all tubes, hoses, and connectors are installed correctly.

20. Engine Coolant - Refill
21. Fuel Leak (Low Pressure Side) - Check

1. Turn the vehicle to the ON mode, but do not start the engine. After the fuel pump runs for about 2 seconds, the fuel line will be pressurized. Repeat this two or three time, then check for fuel leakage.

22. Fuel Leak (High Pressure Side) - Check
23. Idle Speed - Inspect
24. Ignition Timing - Inspect

CYLINDER HEAD REMOVAL AND INSTALLATION (2.4 L ENGINE) (2017 2018 2019)

Removal

NOTE:

- Use fender covers to avoid damaging painted surfaces.
- To avoid damage, unplug the wiring connectors carefully while holding the connector portion.
- Connect the HDS to the DLC , and monitor ECT SENSOR 1. To avoid damaging the cylinder head, wait until the engine coolant temperature drops below 100B°F (38B°C) before loosening the cylinder head bolts.
- Mark all wiring and hoses to avoid misconnection. Also, be sure that they do not contact other wiring or hoses, or interfere with other parts.

1. Fuel Pressure - Relieve
2. 12 Volt Battery Terminal - Disconnect
3. Engine Coolant - Drain
4. Intake Manifold - Remove
5. Fuel Rail and Injector - Remove
6. Warm Up TWC - Remove
7. High Pressure Fuel Pump - Remove
8. Cylinder Head Cover - Remove
9. Thermostat Housing - Remove
10. Cam Chain - Remove
11. Rocker Arm Assembly - Remove
12. Cylinder Head - Remove

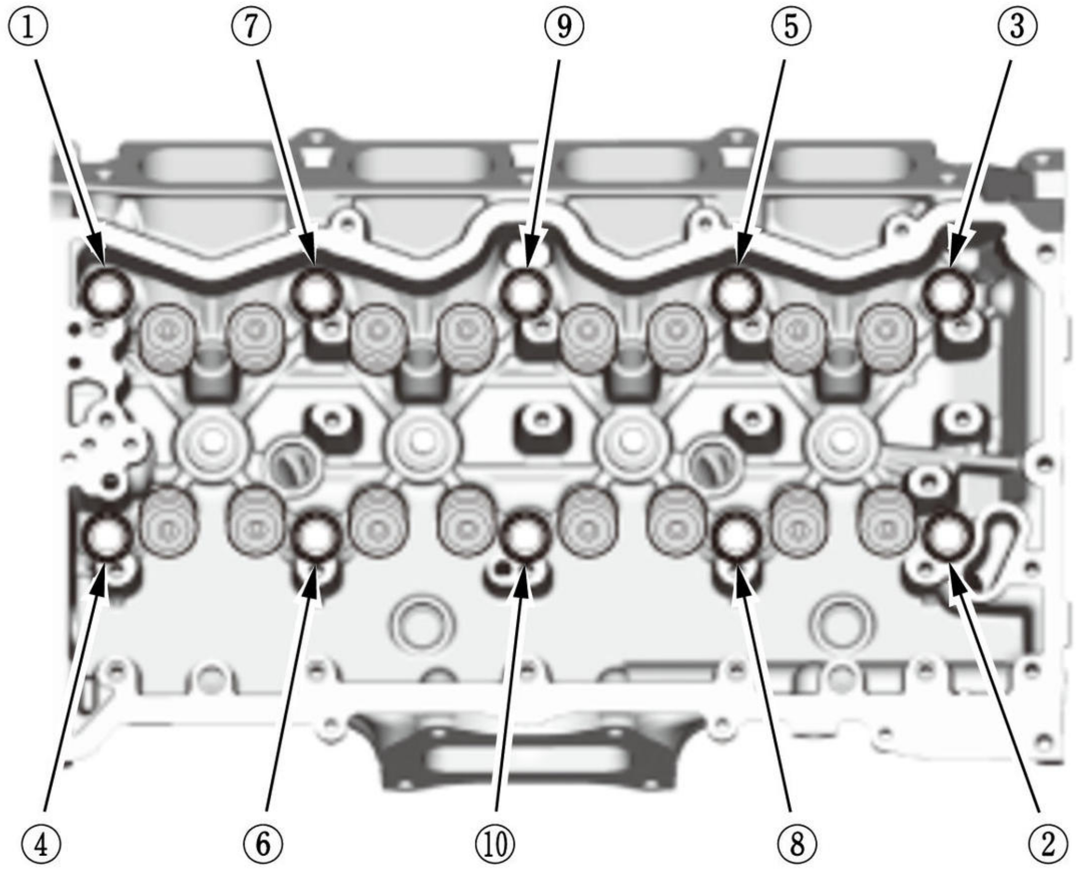

Fig. 5: Removing Cylinder Head Bolts In Sequence
Courtesy of HONDA, U.S.A., INC.

1. Remove the cylinder head bolts. To prevent warpage, loosen the bolts in sequence 1/3 turn at a time; repeat the sequence until all bolts are loosened.

2. Remove the cylinder head.

Installation

1. Cylinder Head - Install

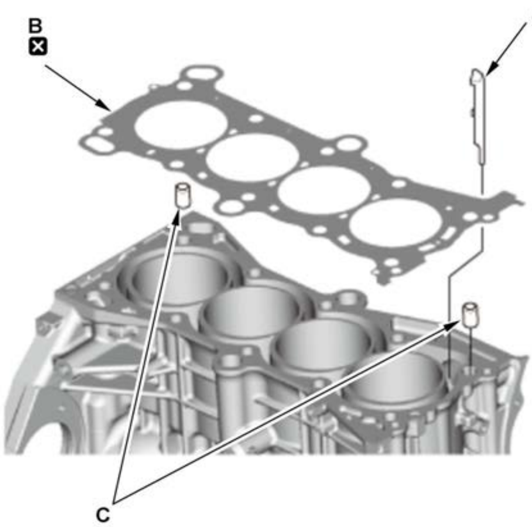

1. Clean the cylinder head and the engine block surface.

2. Install a new coolant separator (A) in the engine block whenever the engine block is replaced.

3. Install a new cylinder head gasket (B) and the dowel pins (C) on the engine block. Always use a new cylinder head gasket.

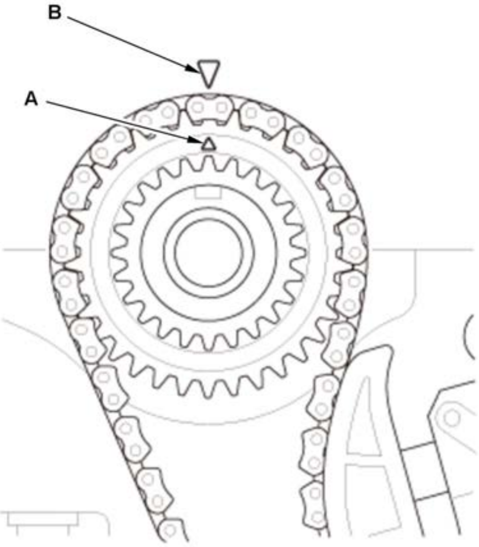

4. Set the crankshaft to top dead center (TDC). Align the TDC mark (A) on the crankshaft sprocket with the pointer (B) on the engine block.

5. Install the cylinder head on the engine block.

6. Measure the diameter of each cylinder head bolt at point A and point B.

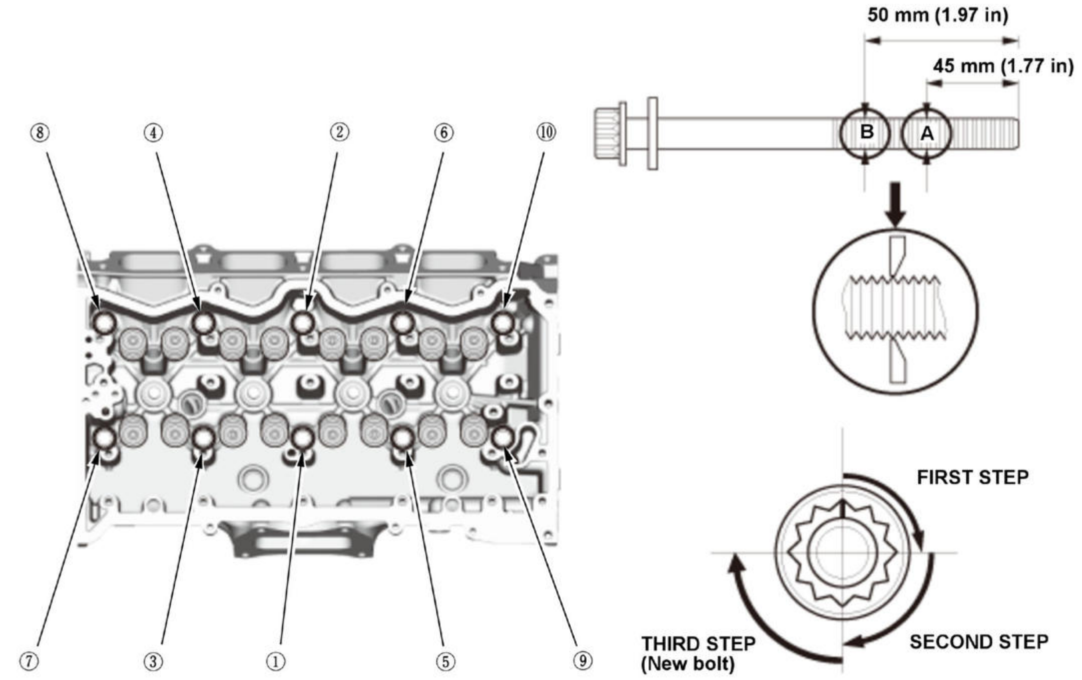

Fig. 6: Tightening Cylinder Head In Sequence
Courtesy of HONDA, U.S.A., INC.

7. If either diameter is less than 10.6 mm (0.417 in), replace the cylinder head bolt.

8. Apply new engine oil to the threads and under the bolt heads of all cylinder head bolts.

9. Torque the cylinder head bolts in sequence to 40 N.m (4.1 kgf.m, 30 lbf.ft). Use a beam-type torque wrench. When using a preset click-type torque wrench, be sure to tighten slowly and do not overtighten. If a bolt makes any noise while you are torquing it, loosen the bolt and retighten it from the first step.

10. After torquing, tighten all cylinder head bolts in two steps (90B° per step) using the sequence shown in step 9. If you are using a new cylinder head bolt, tighten the bolt an extra 90B°

NOTE: **Remove the cylinder head bolt if you tightened it beyond the specified angle, and go back to step 6 of the procedure. Do not loosen it back to the specified angle.**

2. Rocker Arm Assembly - Install
3. Cam Chain - Install
4. Valve Clearance - Adjust
5. Thermostat Housing - Install
6. Cylinder Head Cover - Install
7. High Pressure Fuel Pump - Install
8. Warm Up TWC - Install
9. Fuel Rail and Injector - Install
10. Intake Manifold - Install
11. After Installation - Check

1. After installation, check that all tubes, hoses, and connectors are installed correctly.

12. **12 Volt Battery Terminal - Connect**
13. Fuel Leak (Low Pressure) - Check

1. Turn the vehicle to the ON mode, but do not operate the starter. After the fuel pump runs for about 2 seconds, the fuel rail will be pressurized. Repeat this two or three times, then check for fuel leakage.

14. **Fuel Leak (High Pressure) - Check**
15. **Engine Coolant - Refill**
16. **CKP Pattern - Clear/Learn**
17. **Idle Speed - Inspect**
18. **Ignition Timing - Inspect**

Electric Powertrain Cooling System Service Specifications - CR-V (Hybrid)

ELECTRIC POWERTRAIN

Item	Measurement	Qualification	Standard or New	Service Limit
Radiator	Coolant capacity (including expansion tank)	PCU coolant change	0.93 L (0.246 US gal)	-
		PCU removal	1.60 L (0.423 US gal)	-
	Coolant type	B	Use Honda Long Life Antifreeze/Coolant Type 2, and add Honda Extreme Cold Weather Antifreeze/Coolant Type 2. **NOTE:** If the vehicle is regularly driven in very low temperatures (below -22B°F (-30B°C)), a 60 % concentration of coolant should be used.	
Expansion tank	Coolant capacity	B	0.31 L (0.082 US gal)	-
Expansion tank cap	Opening pressure	B	34.3-63.7 kPa (0.350-0.650 kgf/cm 2, 4.97-9.24 psi)	-

2020-22 ENGINE

Engine Assembly Service Specifications - CR-V (Hybrid)

ENGINE ASSEMBLY

Item	Measurement	Qualification	Standard or New	Service Limit
Compression	Pressure	Minimum	-	880 kPa (8.97 kgf/cm 2, 127.6 psi)
		Maximum variation	-	200 kPa (2.04 kgf/cm 2, 29.0 psi)

CYLINDER HEAD

Item	Measurement	Qualification	Standard or New	Service Limit
Head	Warpage	B	0.05 mm (0.0020 in) max.	-
	Height	B	120.95-121.05 mm (4.7618-4.7657 in)	-
Camshaft	End play	B	0.05-0.25 mm (0.0020-0.0098 in)	0.40 mm (0.0157 in)
	Camshaft-to-holder oil clearance (intake)	No. 1 journal	0.034-0.069 mm (0.00134-0.00272 in)	0.150 mm (0.00591 in)
		No. 2 journal	0.064-0.099 mm (0.00252-0.00390 in)	0.150 mm (0.00591 in)
		No. 3, 4, 5 journals	0.060-0.099 mm (0.00236-0.00390 in)	0.150 mm (0.00591 in)
	Camshaft-to-holder oil clearance (exhaust)	No. 1, 2 journals	0.064-0.099 mm (0.00252-0.00390 in)	0.150 mm (0.00591 in)
		No. 3, 4, 5 journals	0.060-0.099 mm (0.00236-0.00390 in)	0.150 mm (0.00591 in)
	Total runout	B	0.03 mm (0.0012 in) max.	-
	Cam lobe height	Intake PRI	35.555 mm (1.39980 in)	-
		Intake MID	35.874 mm (1.41236 in)	-
		Intake SEC	35.555 mm (1.39980 in)	-
		Exhaust	35.095 mm (1.38169 in)	-

Item	Measurement	Qualification	Standard or New	Service Limit
Valve	Clearance (cold)	Intake	0.18-0.22 mm (0.0071-0.0087 in)	-
		Exhaust	No adjustment, hydraulic tappet	
	Stem O.D.	Intake	5.475-5.490 mm (0.21555-0.21614 in)	5.450 mm (0.21457 in)
		Exhaust	5.450-5.460 mm (0.21457-0.21496 in)	5.420 mm (0.21339 in)
	Stem-to-guide clearance	Intake	0.020-0.055 mm (0.00079-0.00217 in)	0.080 mm (0.00315 in)
		Exhaust	0.050-0.080 mm (0.00197-0.00315 in)	0.110 mm (0.00433 in)
Valve seat	Width	Intake	0.85-1.15 mm (0.0335-0.0453 in)	1.60 mm (0.0630 in)

Item	Measurement	Qualification	Standard or New	Service Limit
		Exhaust	1.25-1.55 mm (0.0492-0.0610 in)	2.00 mm (0.0787 in)
	Stem installed height	Intake	48.65-49.35 mm (1.9154-1.9429 in)	49.68 mm (1.9559 in)
		Exhaust	44.90-45.60 mm (1.7677-1.7953 in)	45.93 mm (1.8083 in)
Valve guide	Installed height	Intake	17.35-17.85 mm (0.6831-0.7028 in)	-
		Exhaust	17.25-17.75 mm (0.6791-0.6988 in)	-
Rocker arm	Arm-to-shaft clearance	Intake	0.018-0.059 mm (0.00071-0.00232 in)	0.080 mm (0.00315 in)

ENGINE BLOCK

Item	Measurement	Qualification	Standard or New	Service Limit
Block	Warpage of deck	B	0.07 mm (0.002 in) max.	-
	Bore diameter	X	81.000-81.020 mm (3.18897-3.18976 in)	81.070 mm (3.19173 in)
		Y	81.000-81.015 mm (3.18897-3.18956 in)	81.070 mm (3.19173 in)
	Bore taper	B	-	0.050 mm (0.00197 in)
	Reboring limit	B	-	0.25 mm (0.0098 in) max.
Piston	Skirt O.D. at 14 mm (0.55 in) from bottom of skirt	B	80.98-80.99 mm (3.1882-3.1886 in)	80.93 mm (3.1862 in)
	Clearance in cylinder	B	0.010-0.035 mm (0.00039-0.00138 in)	0.050 mm (0.00197 in)
Piston ring	Ring-to-groove clearance	Top	0.045-0.085 mm (0.002-0.003 in)	0.165 mm (0.006 in)
		Second	0.030-0.055 mm (0.002 in)	0.125 mm (0.004 in)
	Ring end gap	Top	0.20-0.30 mm (0.008-0.012 in)	0.60 mm (0.023 in)
		Second	0.30-0.42 mm (0.012-0.017 in)	0.70 mm (0.027 in)
		Oil	0.20-0.50 mm (0.008-0.019 in)	0.80 mm (0.031 in)

Item	Measurement	Qualification	Standard or New	Service Limit
Piston pin	O.D.	B	17.960-17.964 mm (0.70709-0.70724 in)	17.960 mm (0.70709 in)
	Pin-to-piston clearance	B	-0.004-0.003 mm (-0.00016-0.00012 in)	0.006 mm (0.00024 in)
Connecting rod	Pin-to-rod clearance	B	0.004-0.016 mm (0.00016-0.00063 in)	0.020 mm (0.00079 in)
	Big end bore diameter	B	48.0 mm (1.890 in)	-
	End play	B	0.15-0.35 mm (0.0059-0.0138 in)	0.45 mm (0.0177 in)
Crankshaft	Rod/main journal taper	B	0.005 mm (0.00020 in) max.	0.010 mm (0.00039 in)

Item	Measurement	Qualification	Standard or New	Service Limit
	Rod/main journal out-of-round	B	0.005 mm (0.00020 in) max.	0.010 mm (0.00039 in)
	End play	B	0.10-0.35 mm (0.0039-0.0138 in)	0.45 mm (0.0177 in)
	Total runout	B	0.03 mm (0.0012 in) max.	0.04 mm (0.0016 in)
Crankshaft bearing	Main bearing-to-journal oil clearance	B	0.017-0.035 mm (0.00067-0.00138 in)	0.045 mm (0.00177 in)
	Connecting rod bearing-to-journal oil clearance	B	0.024-0.042 mm (0.00094-0.00165 in)	-
Balancer shaft	Journal taper	B	0.005 mm (0.00020 in) max.	-
	End play	Front/Rear	0.070-0.120 mm (0.00276-0.00472 in)	0.135 mm (0.00531 in)
	Shaft-to-bearing clearance (front shaft)	No. 1 journal	0.030-0.062 mm (0.00118-0.00244 in)	0.080 mm (0.00315 in)
		No. 2 journal	0.040-0.100 mm (0.00157-0.00394 in)	0.130 mm (0.00512 in)
	Shaft-to-bearing clearance (rear shaft)	No. 1, 2 journals	0.030-0.062 mm (0.00118-0.00244 in)	0.080 mm (0.00315 in)
		No. 3 journal	0.040-0.100 mm (0.00157-0.00394 in)	0.130 mm (0.00512 in)

REPLACEMENT

CONNECTING ROD BEARING REPLACEMENT (1.5 L ENGINE)

Replacement

1. Engine - Remove
2. Transmission - Remove
3. Drive Plate - Remove
4. Cylinder Head - Remove
5. Oil Pan - Remove
6. Oil Strainer - Remove
7. Connecting Rod Cap and Bearing Half - Remove
8. Connecting Rod Bearing Clearance - Inspect

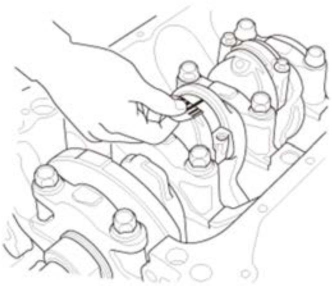

1. Clean the connecting rod journal and the bearing half with a clean shop towel.

2. Place plastigage across the rod journal.

3. Reinstall the bearing half and the connecting rod cap, then torque the bolts to 13 N.m (1.3 kgf.m, 10 lbf.ft) +90 deg..

NOTE:

- Apply new engine oil to the bolt threads and flanges.
- Do not rotate the crankshaft during inspection.

4. Remove the connecting rod cap and the bearing half, and measure the widest part of the plastigage.

5. If the plastigage measures too wide or too narrow, remove the connecting rod cap, and the upper half of the bearing. Install a new, complete bearing with the appropriate color code, and recheck the clearance. Do not file, shim, or scrape the bearings or the caps to adjust clearance.

6. If the plastigage shows the clearance is still incorrect, try the next larger or smaller bearing (the color listed above or below the current one), and check the clearance again. If the proper clearance cannot be obtained by using the appropriate larger or smaller bearings, replace the crankshaft

and start over.

Connecting Rod Bearing-to-Journal Oil Clearance	
Standard (New):	**0.020-0.038 mm (0.00079-0.00150 in)**

9. Connecting Rod Bearing - Select

Connecting Rod Big End Bore Code Locations

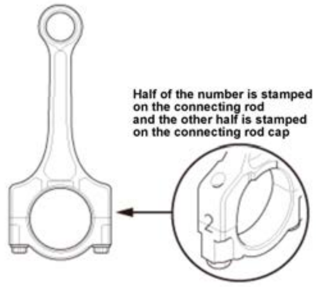
Half of the number is stamped on the connecting rod and the other half is stamped on the connecting rod cap
2

1. Inspect each connecting rod for cracks and heat damage.

2. Each connecting rod has a tolerance range from 0 to 0.024 mm (0.00094 in), in 0.006 mm (0.00024 in) increments, depending on the size of its big end bore. It's then stamped with a number (1, 2, 3, or 4) indicating the range. You may find any combination of numbers in any engine. (Half the number is stamped on the connecting rod cap, the other half is on the connecting rod.) If you cannot read the code because of an accumulation of oil and varnish, do not scrub it with a wire brush or scraper. Clean it only with solvent or detergent.

Big End Bore Size:	**43.0 mm (1.693 in)**

Connecting Rod Journal Code Location

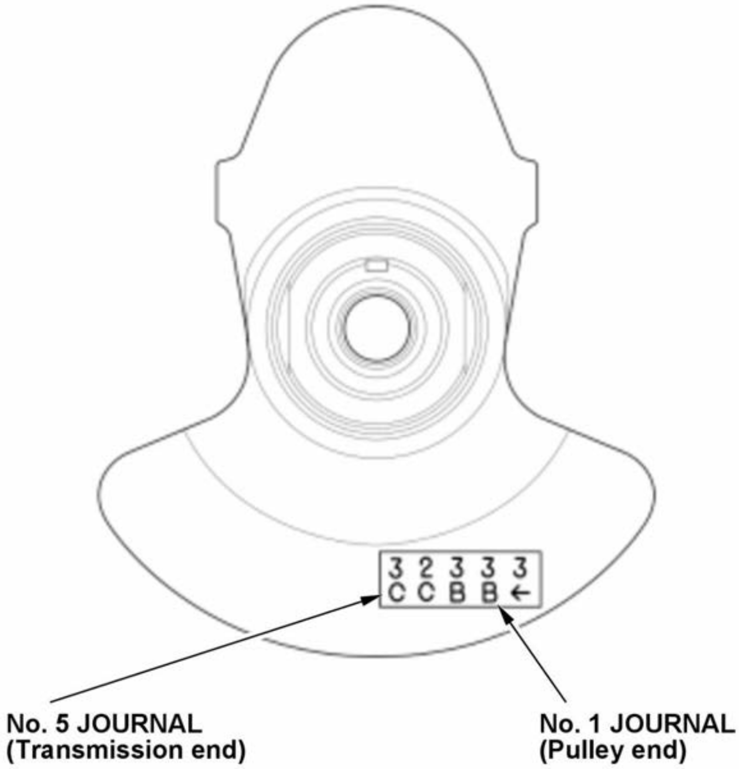
3 2 3 3 3
C C B B ←
No. 5 JOURNAL
(Transmission end)
No. 1 JOURNAL
(Pulley end)

3. The connecting rod journal codes are stamped on the crankshaft in either location.

Bearing Identification

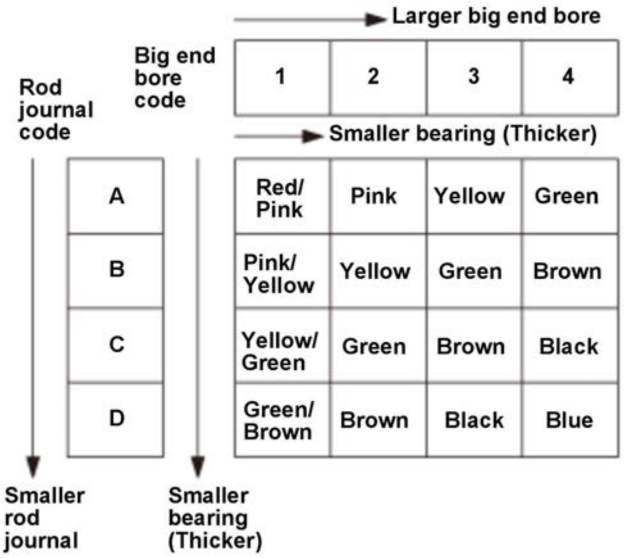
Larger big end bore
Big end bore code
Smaller bearing (Thicker)
Smaller rod journal
Smaller bearing (Thicker)

Rod journal code	1	2	3	4
A	Red/ Pink	Pink	Yellow	Green
B	Pink/ Yellow	Yellow	Green	Brown
C	Yellow/ Green	Green	Brown	Black
D	Green/ Brown	Brown	Black	Blue

4. Use the big end bore codes and the rod journal codes to select appropriate replacement bearings from the following table.

NOTE:

- Color code is on the edge of the bearing.
- When using bearing halves of different colors, it does not matter which color is used in the top or bottom.

10. All Removed Parts - Install

1. Install the parts in the reverse order of removal.**NOTE:** **Inspect the diameter of each connecting rod bolt** when you install the connecting rod caps.

CONNECTING ROD BEARING REPLACEMENT (2.4 L ENGINE) (2017 2018 2019)

Replacement

1. **Engine - Remove**
2. **Transmission - Remove**
3. **Drive Plate - Remove**
4. **Cylinder Head - Remove**
5. **Oil Pump - Remove**
6. **Baffle Plate - Remove**
7. **Connecting Rod Cap and Bearing Half - Remove**
8. Connecting Rod Bearing Clearance - Inspect

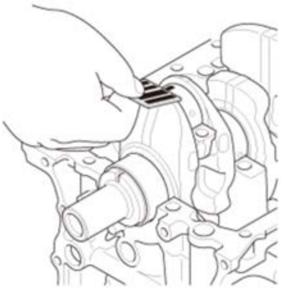

1. Clean the connecting rod journal and the bearing half with a clean shop towel.

2. Place plastigage across the connecting rod journal.

3. Reinstall the bearing half and the connecting rod cap, then torque the bolts to 41 N.m (4.2 kgf.m, 30 lbf.ft) + 120 deg..

NOTE:

- Apply new engine oil to the bolt threads and flanges.
- Do not rotate the crankshaft during inspection.

4. Remove the connecting rod cap and the bearing half, and measure the widest part of the plastigage.

5. If the plastigage measures too wide or too narrow, remove the cap, and the upper half of the bearing. Install a new, complete bearing with the appropriate color code (s), and recheck the clearance. Do not file, shim, or scrape the bearings or the caps to adjust clearance.

6. If the plastigage shows the clearance is still incorrect, try the next larger or smaller bearing (the color listed above or below the current one), and check the clearance again. If the proper clearance cannot be obtained by using the appropriate larger or smaller bearings, **replace the crankshaft**

and start over.

Connecting Rod Bearing-to-Journal Oil Clearance	
Standard (New):	**0.032-0.066 mm (0.00126-0.00260 in)**
Service Limit:	**0.077 mm (0.00303 in)**

9. Connecting Rod Bearing - Select

Big End Bore Code Locations

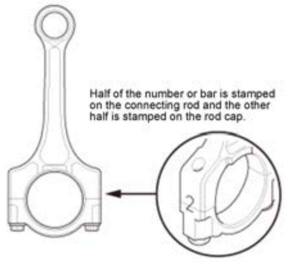
Half of the number or bar is stamped on the connecting rod and the other half is stamped on the rod cap.
2

1. Inspect each connecting rod for cracks and heat damage.

2. Each connecting rod has a tolerance range from 0 to 0.024 mm (0.00094 in), in 0.006 mm (0.00024 in) increments, depending on the size of its big end bore. It's then stamped with a number or bar (1, 2, 3, or 4/l, ll, lll, or llll) indicating the range. You may find any combination of numbers and bars in any engine. (Half the number or bar is stamped on the rod cap, the other half is on the connecting rod.) If you cannot read the code because of an accumulation of oil and varnish, do not scrub it with a wire brush or scraper. Clean it only with solvent or detergent.

Big End Bore Size:	**51.0 mm (2.008 in)**

Main Journal Code Locations

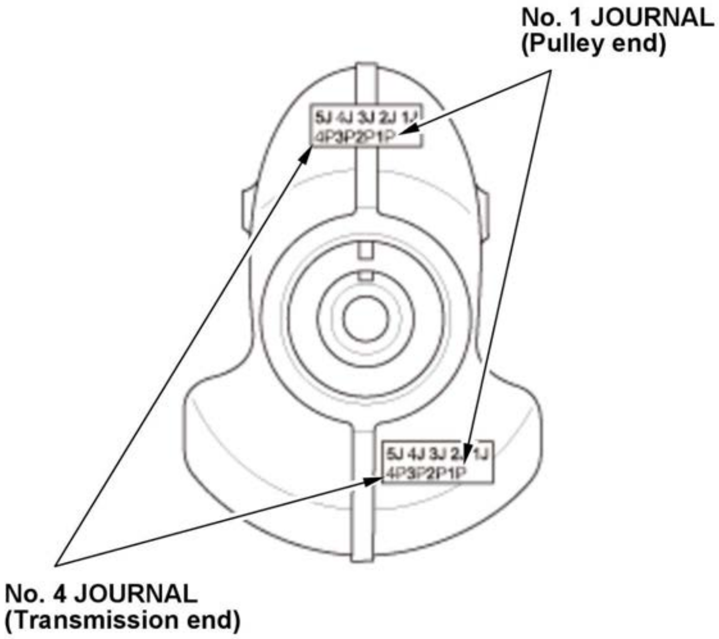
No. 1 JOURNAL
(Pulley end)
5J 4J 3J 2J 1J
4P3P2P1P
5J 4J 3J 2J 1J
4P3P2P1P
No. 4 JOURNAL
(Transmission end)

3. The connecting rod journal codes are stamped on the crankshaft in either location.

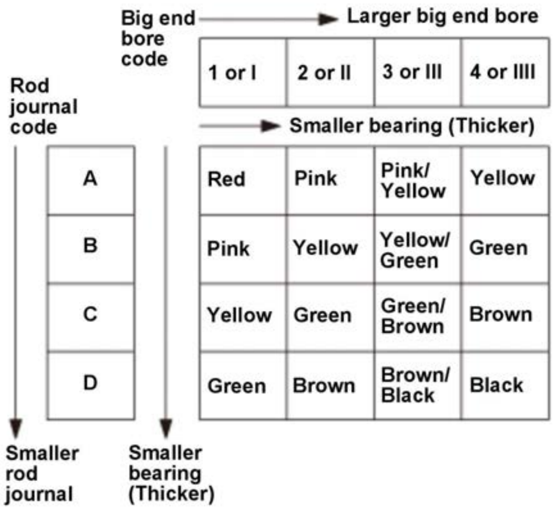
Big end bore code → Larger big end bore

→ Smaller bearing (Thicker)

Rod journal code	1 or I	2 or II	3 or III	4 or IIII
A	Red	Pink	Pink/ Yellow	Yellow
B	Pink	Yellow	Yellow/ Green	Green
C	Yellow	Green	Green/ Brown	Brown
D	Green	Brown	Brown/ Black	Black

Smaller rod journal

Smaller bearing (Thicker)

4. Use the big end bore codes and the rod journal codes to select appropriate replacement bearings from the following table.

NOTE:

- Color code is on the edge of the bearing.
- When using bearing halves of different colors, it does not matter which color is used in the top or bottom.

10. All Removed Parts - Install

1. Install the parts in the reverse order of removal.

CRANKSHAFT MAIN BEARING REPLACEMENT (1.5 L ENGINE)

Replacement

1. Engine - Remove
2. Transmission - Remove

3. Drive Plate - Remove
4. Cylinder Head - Remove
5. Cam Chain Drive Sprocket - Remove

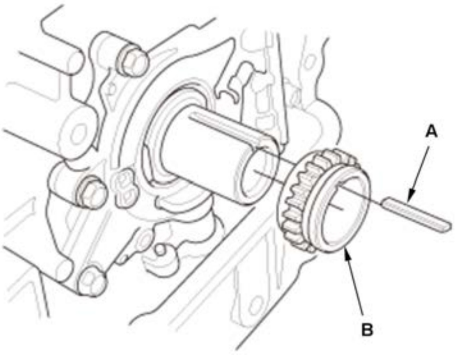 	1. Remove the key (A) and the cam chain drive sprocket (B).**NOTE:** Check the direction of the key. When the key is installed, install the key as same direction of the original one.

6. Oil Pan - Remove
7. Oil Pump - Remove
8. Oil Seal Case - Remove
9. Main Bearing Cap and Bearing Half - Remove
10. Crankshaft Main Bearing Clearance - Inspect

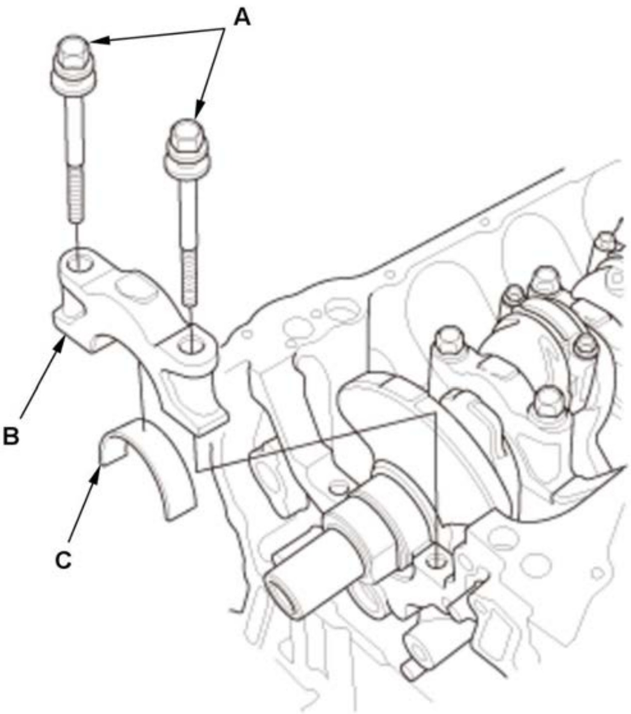

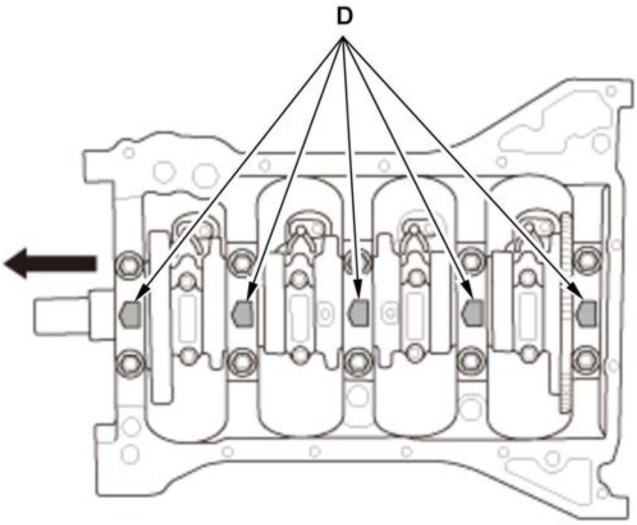

1. Clean each main journal and the bearing half with a clean shop towel.

2. Place one strip of plastigage across each main journal.

3. Apply new engine oil to the bearing cap bolts (A) threads and flanges.

4. Install the bearing cap bolts to the main bearing cap (B).

5. Set the bearing halves (C), the main bearing caps, and the bearing cap bolts in place. Then loosely tighten the bearing cap bolts.

NOTE:

- Install the main bearing caps aligning the arrows (D) with the direction to the cam chain case.
- When loosely tightening the bearing cap bolts, do not sit the bolts on the bearing caps.

6. Lightly tap the main bearing caps with a plastic mallet until the main bearing caps sit on the engine block.

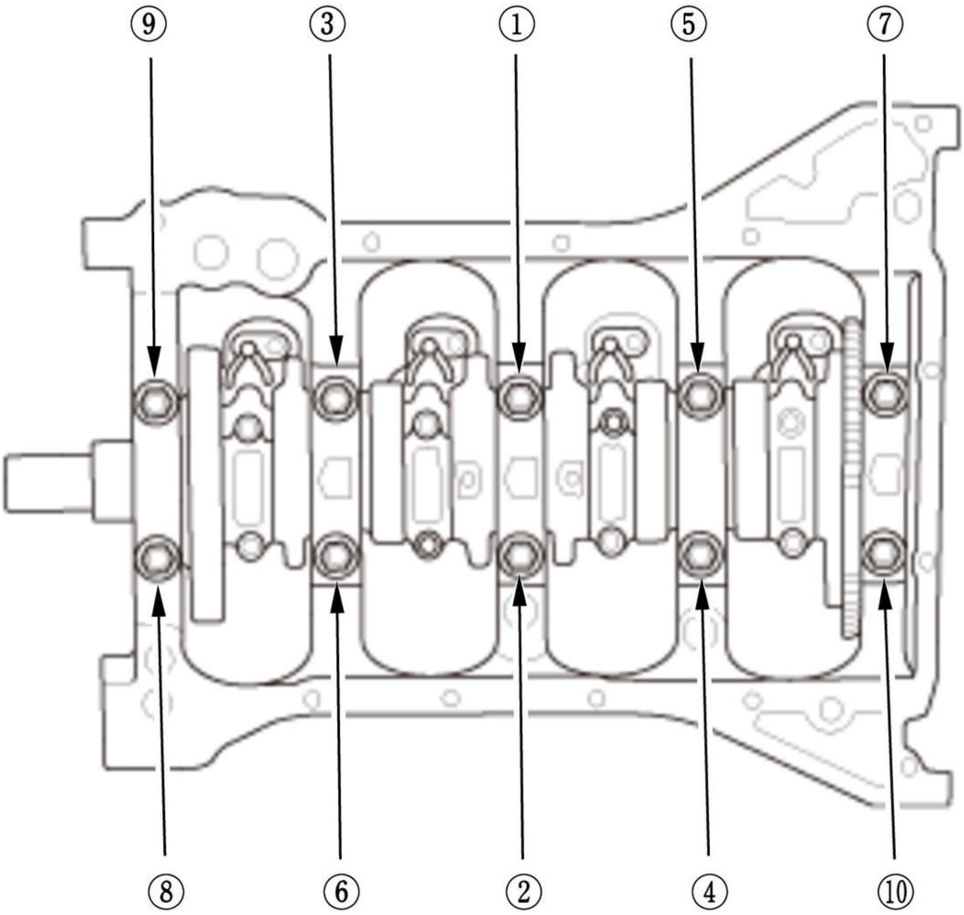

Fig. 1: Bearing Cap Bolts Tightening Sequence
Courtesy of HONDA, U.S.A., INC.

B	7. Tighten the bearing cap bolts, in the numbered sequence shown, to the specified torque. **NOTE:** Do not rotate the crankshaft during inspection.

Specified Torque:
30 N.m (3.1 kgf.m, 22 lbf.ft)

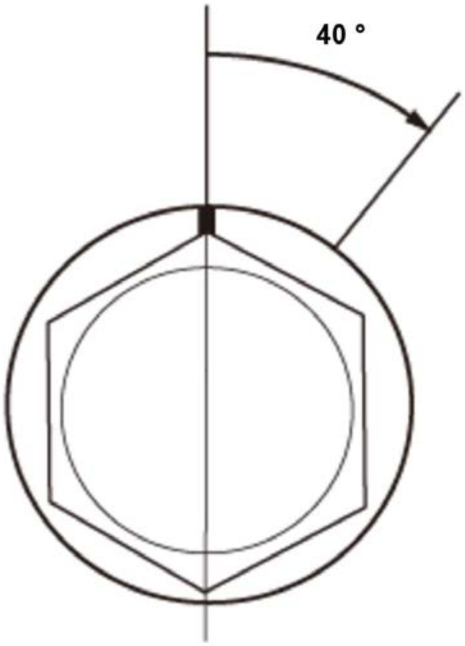 	8. Tighten the bearing cap bolts an additional 40 deg..

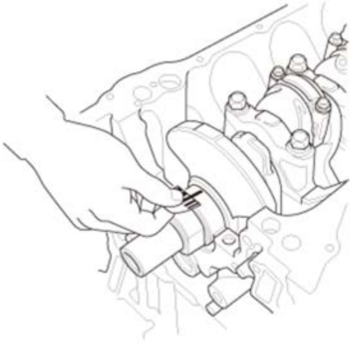	9. Remove the main bearing cap and the bearings again, and measure the widest part of the plastigage. 10. If the plastigage measures too wide or too narrow, remove the crankshaft, and remove the upper half of the bearing. Install a new, complete bearing with the appropriate color code (s), and recheck the clearance. Do not file, shim, or scrape the bearings or the caps to adjust clearance. 11. If the plastigage shows the clearance is still incorrect, try the next larger or smaller bearing (the color listed above or below the current one), and check again. If the proper clearance cannot be obtained by using the appropriate larger or smaller bearings, **replace the crankshaft** and start over.

Main Bearing-to-Journal Oil Clearance	
Standard (New):	**0.018-0.036 mm (0.00071-0.00142 in)**
Service Limit:	**0.050 mm (0.00197 in)**

11. Crankshaft Main Bearing - Select

Block Bore Code Location 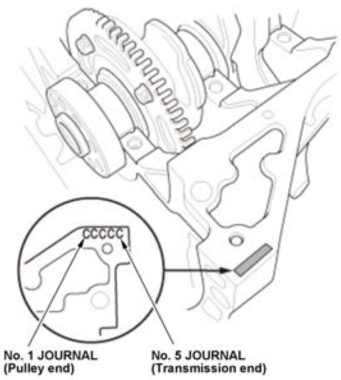 CCCCC No. 1 JOURNAL (Pulley end) No. 5 JOURNAL (Transmission end)	1. Numbers, letters, or bars have been stamped on the end of the engine block as a code for the size of each of the five main journal bores. Use them, and the numbers stamped on the crankshaft (codes for main journal size), to choose the correct main bearings.**NOTE:** If the codes are indecipherable because of an accumulation of dirt and dust, do not scrub them with a wire brush or scraper. Clean them only with solvent or detergent.

Main Journal Code Location

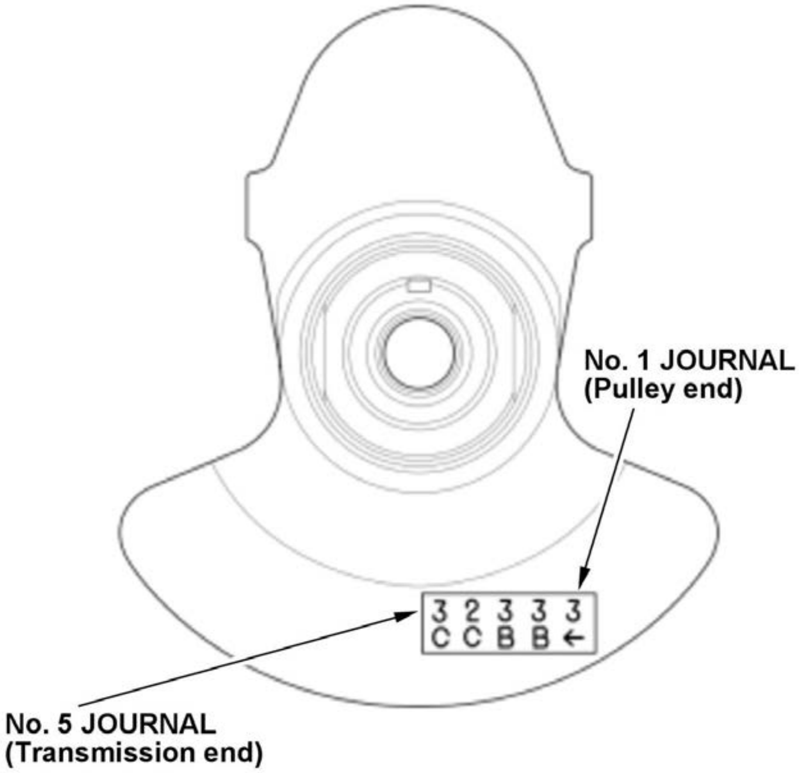
No. 1 JOURNAL
(Pulley end)
3 2 3 3 3
C C B B ←
No. 5 JOURNAL
(Transmission end)

2. The main journal codes are stamped on the crankshaft.

Bearing Identification

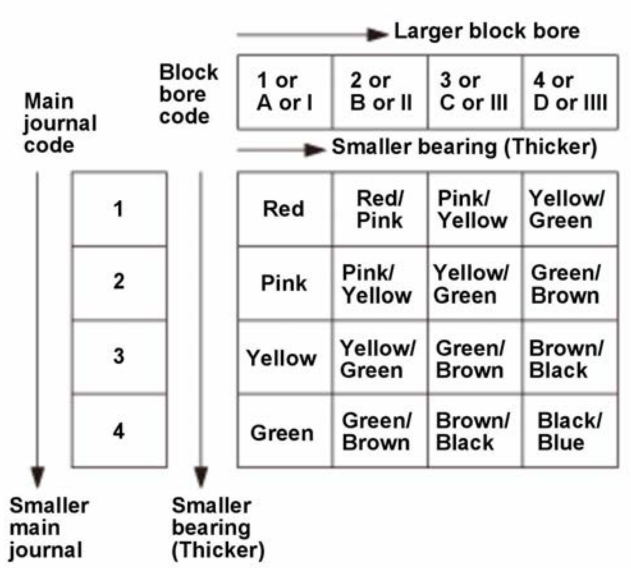
Larger block bore
Smaller bearing (Thicker)
Smaller main journal
Smaller bearing (Thicker)

Main journal code \ Block bore code	1 or A or I	2 or B or II	3 or C or III	4 or D or IIII
1	Red	Red/ Pink	Pink/ Yellow	Yellow/ Green
2	Pink	Pink/ Yellow	Yellow/ Green	Green/ Brown
3	Yellow	Yellow/ Green	Green/ Brown	Brown/ Black
4	Green	Green/ Brown	Brown/ Black	Black/ Blue

3. Use the block bore codes and the main journal codes to select the appropriate replacement bearings from the following table.

NOTE:

- Color code is on the edge of the bearing.
- When using bearing halves of different colors, it does not matter which color is used in the top or bottom.

12. All Removed Parts - Install

1. Install the parts in the reverse order of removal.

CRANKSHAFT MAIN BEARING REPLACEMENT (2.4 L ENGINE) (2017 2018 2019)

Replacement

1. Engine - Remove
2. Transmission - Remove
3. Drive Plate - Remove
4. Cylinder Head - Remove
5. Oil Pump - Remove
6. Lower Block - Remove
7. Crankshaft Main Bearing Clearance - Inspect

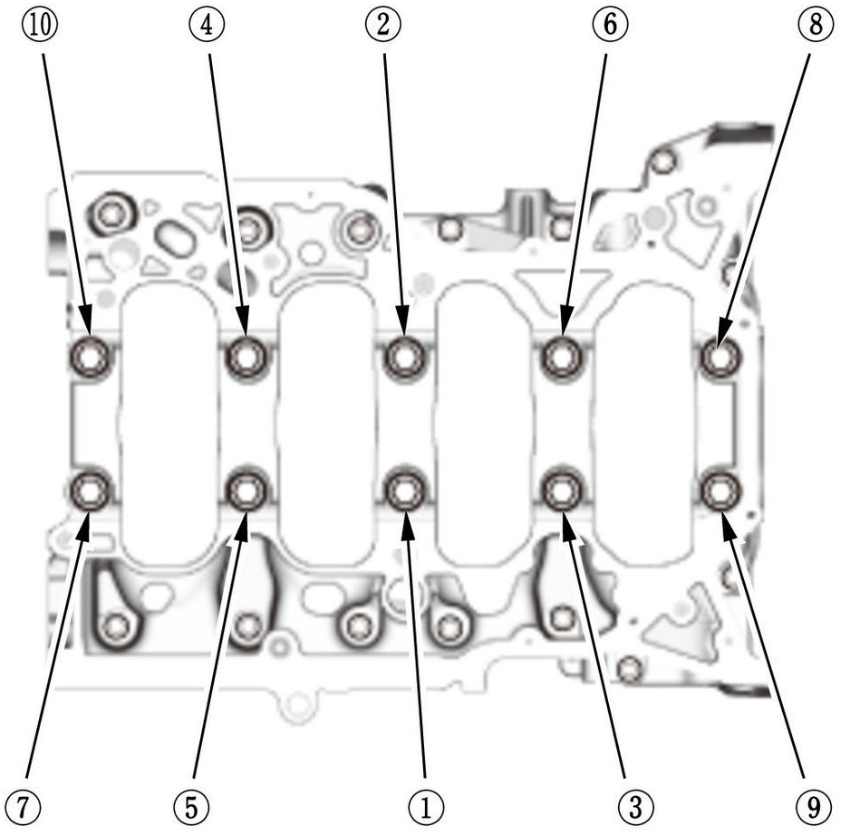

Fig. 2: Crankshaft Main Bearings Tightening Sequence
Courtesy of HONDA, U.S.A., INC.

B	1. Clean each main journal and main bearing half with a clean shop towel. 2. Place one strip of plastigage across each main journal. 3. Reinstall the main bearings and the lower block, then torque the bolts to 35 N.m (3.6 kgf.m, 26 lbf.ft). **NOTE:** • Apply new engine oil to the bolt threads and flanges. • Do not rotate the crankshaft during inspection.

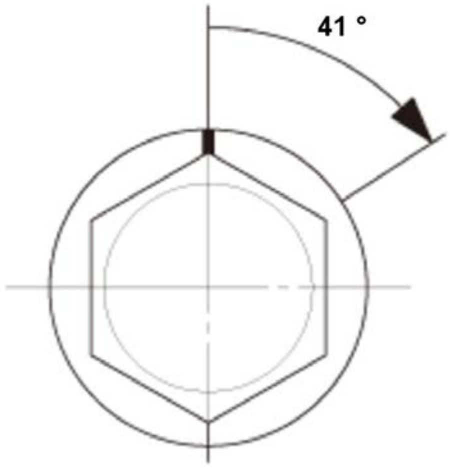	4. Tighten the bearing cap bolts an additional 41 deg..

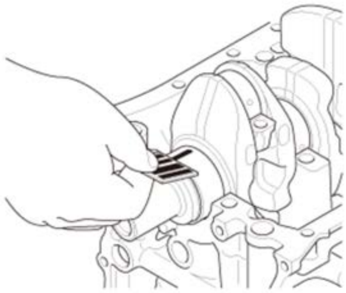	5. Remove the lower block and the main bearings again, and measure the widest part of the plastigage. 6. If the plastigage measures too wide or too narrow, remove the crankshaft, and the upper half of the bearing. Install a new, complete bearing with the appropriate color code (s), and recheck the clearance. Do not file, shim, or scrape the bearings or the caps to adjust clearance. 7. If the plastigage shows the clearance is still incorrect, try the next larger or smaller bearing (the color listed above or below the current one), then recheck. If the proper clearance cannot be obtained by using the appropriate larger or smaller bearings, **replace the crankshaft** and start over.

No. 3 Journal:	
Standard (New):	**0.025-0.049 mm (0.00098-0.00193 in)**
Service Limit:	**0.055 mm (0.00217 in)**

Main Bearing-to-Journal Oil Clearance	
No. 1, No. 2, No. 4, and No. 5 Journals:	
Standard (New):	**0.017-0.041 mm (0.00067-0.00161 in)**
Service Limit:	**0.050 mm (0.00197 in)**

8. Crankshaft Main Bearing - Select

Block Bore Code Locations 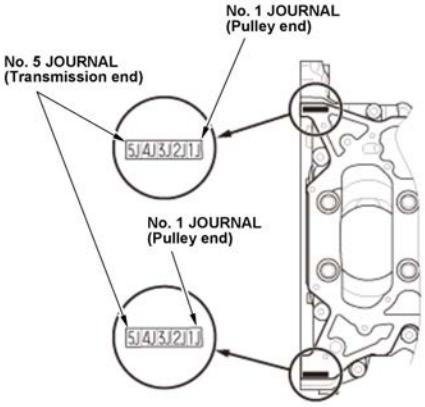 No. 1 JOURNAL (Pulley end) No. 5 JOURNAL (Transmission end) 5J4J3J2J1J No. 1 JOURNAL (Pulley end) 5J4J3J2J1J	1. Numbers, letters, or bars have been stamped on the end of the lower block as a code for the size of each of the five main journal bores. Write down the block bore codes. If you cannot read the codes because of accumulated dirt and dust, do not scrub them with a wire brush or scraper. Clean them only with solvent or detergent.

Main Journal Code Locations

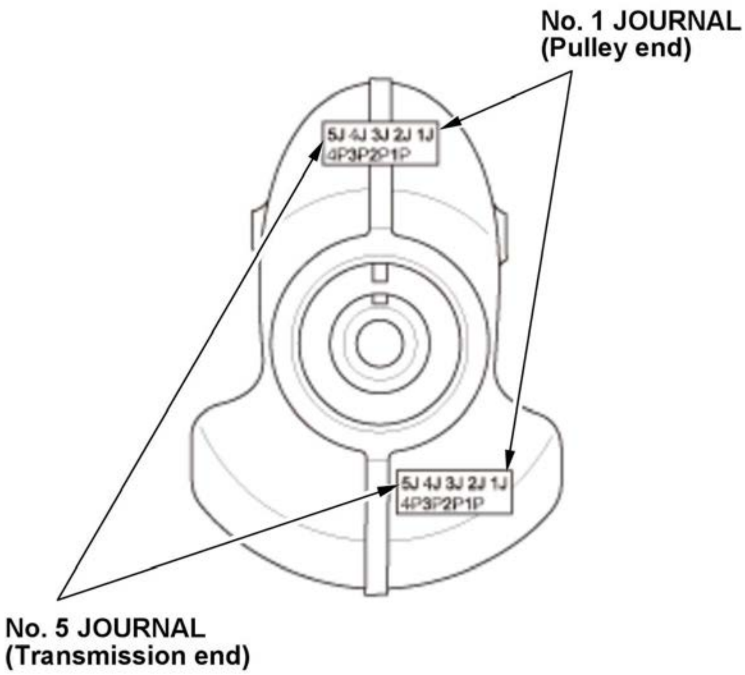
No. 1 JOURNAL
(Pulley end)
5J 4J 3J 2J 1J
4P3P2P1P
5J 4J 3J 2J 1J
4P3P2P1P
No. 5 JOURNAL
(Transmission end)

2. The main journal codes are stamped on the crankshaft in either location.

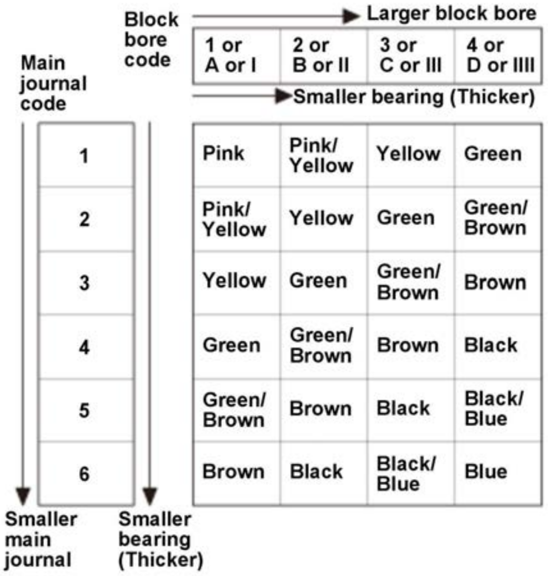
Larger block bore
Smaller bearing (Thicker)
Smaller main journal
Smaller bearing (Thicker)

Main journal code \ Block bore code	1 or A or I	2 or B or II	3 or C or III	4 or D or IIII
1	Pink	Pink/ Yellow	Yellow	Green
2	Pink/ Yellow	Yellow	Green	Green/ Brown
3	Yellow	Green	Green/ Brown	Brown
4	Green	Green/ Brown	Brown	Black
5	Green/ Brown	Brown	Black	Black/ Blue
6	Brown	Black	Black/ Blue	Blue

3. Use the block bore codes and the main journal codes to select the appropriate replacement bearings from the following table.

NOTE:

- Color code is on the edge of the bearing.
- When using bearing halves of different colors, it does not matter which color is used in the top or bottom.

9. All Removed Parts - Install

1. Install the parts in the reverse order of removal.

PULLEY END CRANKSHAFT OIL SEAL REPLACEMENT - IN CAR (1.5 L ENGINE)

Special Tools Required

Image	Description/Tool Number
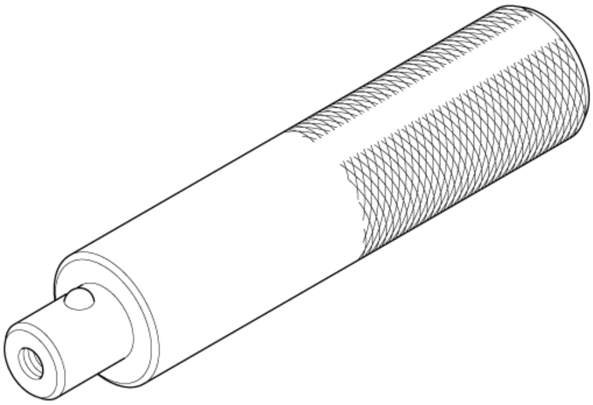	Driver Handle, 15 x 135L 07749-0010000
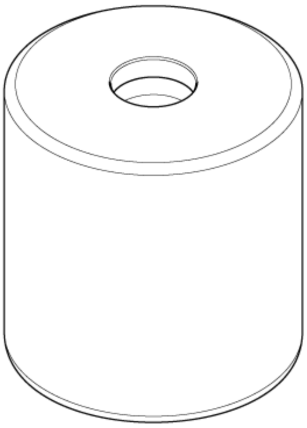	Bearing Driver Attachment, 40 mm 07GAF-SE00200

Replacement

NOTE: Where icon is shown, further information shown below.

1

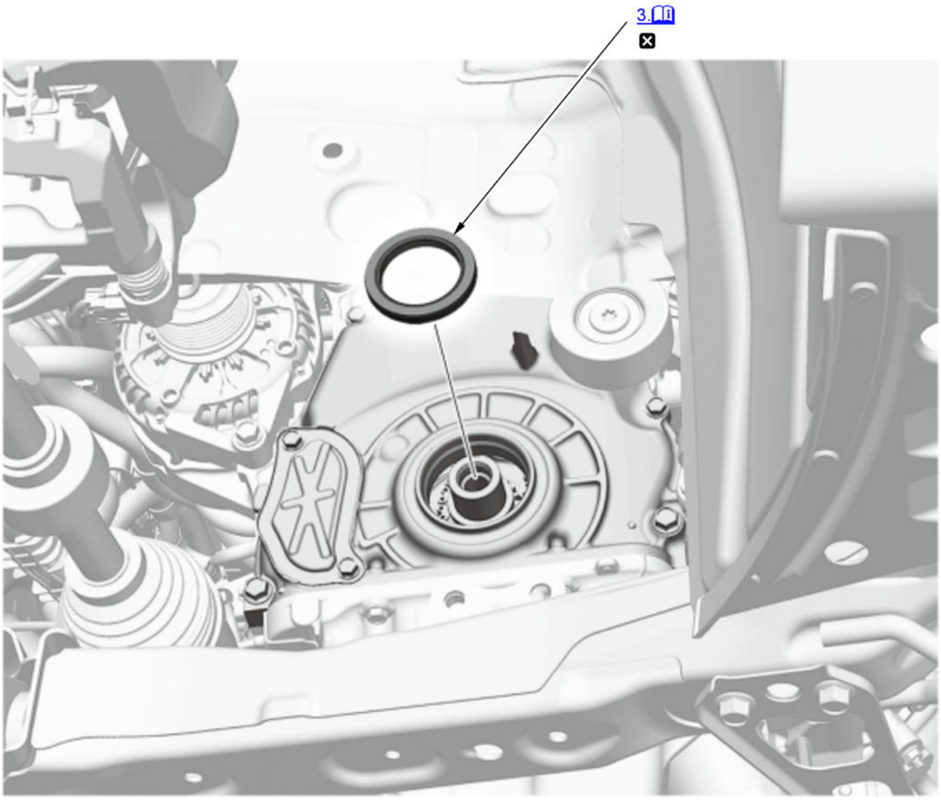

ℹ	Detailed information, notes, and precautions
✖	Replace

1. Crankshaft Pulley - Remove
2. Pulley End Crankshaft Oil Seal - Remove
3. Pulley End Crankshaft Oil Seal - Install

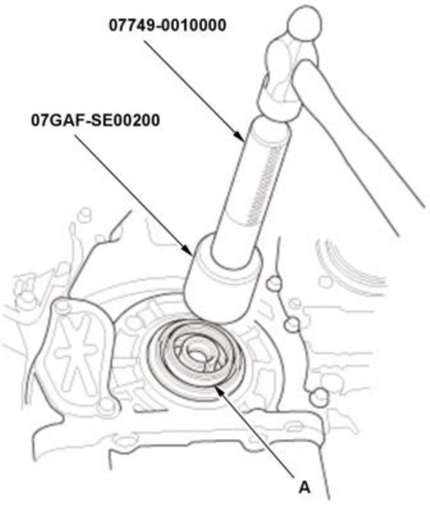 	1. Clean and dry the pulley end crankshaft oil seal housing. 2. Apply a light coat of new engine oil to the lip of the pulley end crankshaft oil seal. 3. Using the driver handle, 15 x 135L and the bearing driver attachment, 40 mm to drive in the pulley end crankshaft oil seal (A) squarely into the cam chain case to the specified installed height.

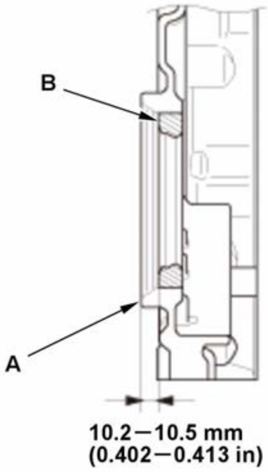 	4. Measure the distance between the cam chain case surface (A) and the pulley end crankshaft oil seal (B). 5. Clean the excess oil off the crankshaft, and check that the oil seal lip is not distorted.

Oil Seal Installed Height:
10.2-10.5 mm (0.402-0.413 in)

4. All Removed Parts - Install

1. Install the parts in the reverse order of removal.

TRANSMISSION END CRANKSHAFT OIL SEAL REPLACEMENT - IN CAR (1.5 L ENGINE)

Special Tools Required

Image	Description/Tool Number
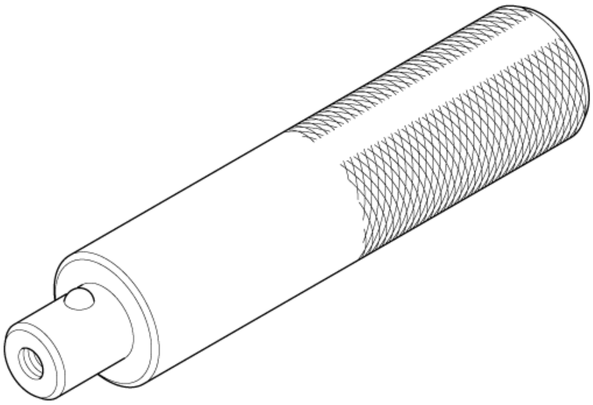	Driver Handle, 15 x 135L 07749-0010000
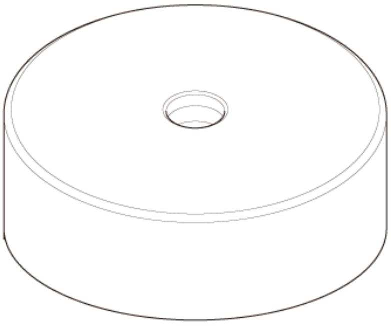	Oil Seal Driver Attachment, 92 mm 070AD-5R00100

Replacement

NOTE: Where icon is shown, further information shown below.

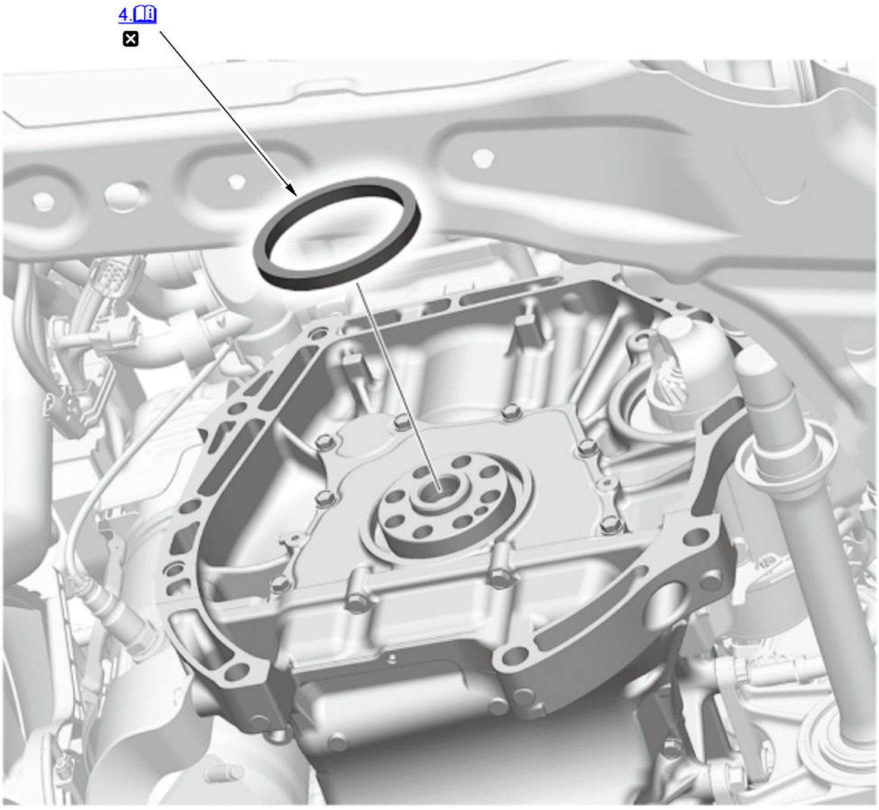

ℹ	Detailed information, notes, and precautions
✖	Replace

1. **Transmission - Remove**
2. **Drive Plate - Remove**
3. Transmission End Crankshaft Oil Seal - Remove
4. Transmission End Crankshaft Oil Seal - Install

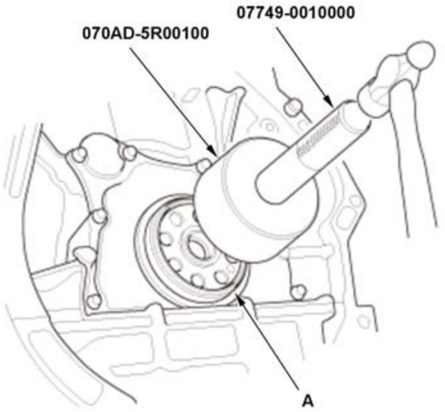	1. Clean and dry the transmission end crankshaft oil seal housing. 2. Apply a light coat of new engine oil to the crankshaft and to the lip of the transmission end crankshaft oil seal. 3. Use the driver handle, 15 x 135L and the oil seal driver attachment, 92 mm to drive a transmission end crankshaft oil seal (A) squarely into the oil seal case to the specified installed height. 4. Clean the excess oil off the crankshaft, and check that the oil seal lip is not distorted.

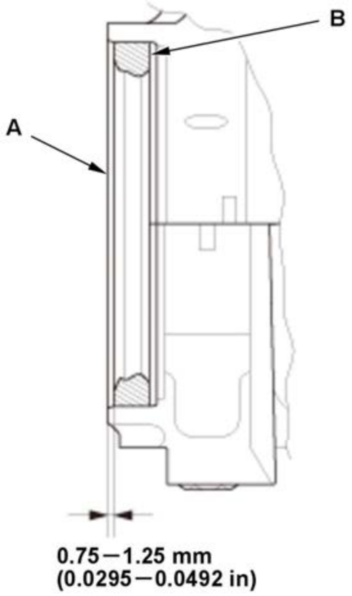	5. Measure the distance between the oil seal case (A) and the transmission end crankshaft oil seal (B).

Oil Seal Installed Height:
0.75-1.25 mm (0.0295-0.0492 in)

5. All Removed Parts - Install

1. Install the parts in the reverse order of removal.

TRANSMISSION END CRANKSHAFT OIL SEAL REPLACEMENT - IN CAR (2.4 L ENGINE) (2017 2018 2019)

Special Tools Required

Image	Description/Tool Number
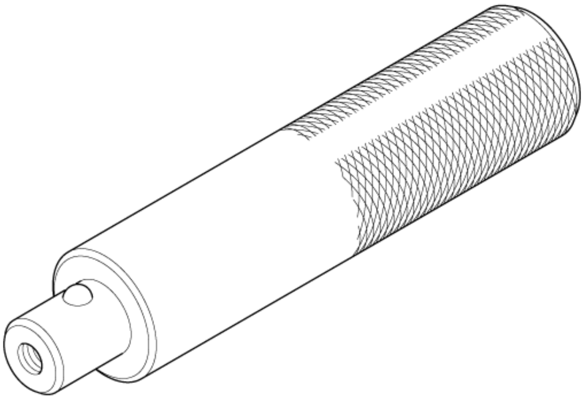	Driver Handle, 15 x 135L 07749-0010000
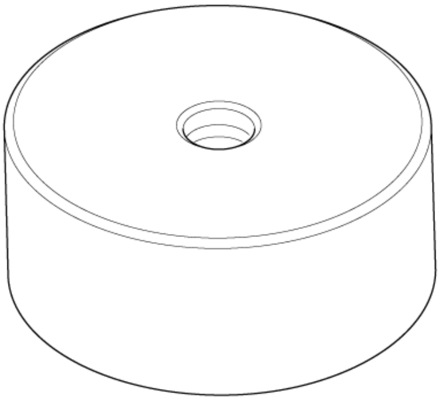	Oil Seal Driver Attachment, 96 mm 07ZAD-PNAA100

Replacement

NOTE: ℹ Where icon is shown, further information shown below.

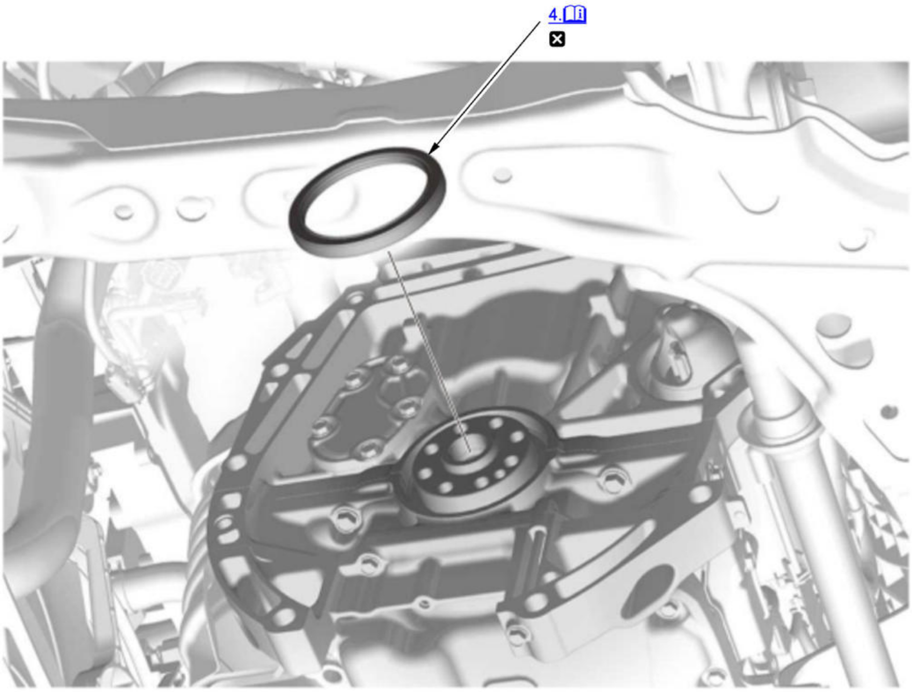

ℹ	Detailed information, notes, and precautions
☒	Replace

1. **Transmission - Remove**

2. **Drive Plate - Remove**
3. Transmission End Crankshaft Oil Seal - Remove
4. Transmission End Crankshaft Oil Seal - Install

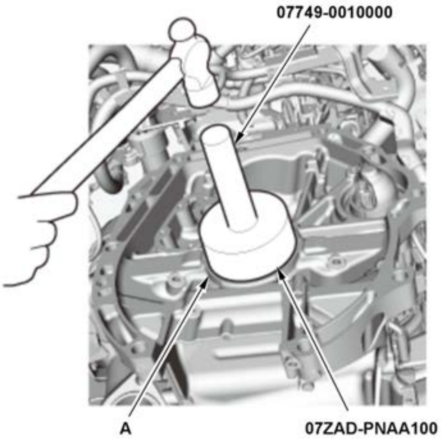	1. Clean and dry the transmission end crankshaft oil seal housing. 2. Apply a light coat of new engine oil to the lip of the transmission end crankshaft oil seal. 3. Using the driver handle, 15 x 135L and the oil seal driver attachment, 96 mm, to drive a new transmission end crankshaft oil seal (A) squarely into the engine block to the specified installed height.

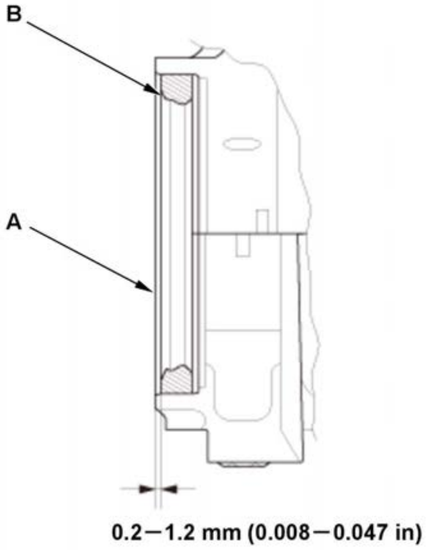	4. Measure the distance between the engine block (A) and the transmission end crankshaft oil seal (B). **Oil Seal Installed Height:**

0.2-1.2 mm (0.008-0.047 in)

5. All Removed Parts - Install

1. Install the parts in the reverse order of removal.

VALVE GUIDE REPLACEMENT (1.5 L ENGINE)

Special Tools Required

Image	Description/Tool Number
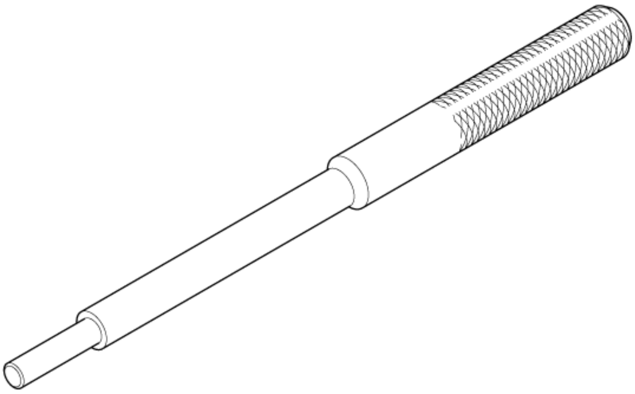	Valve Guide Driver, 5.35 x 9.7 mm 07742-0010100
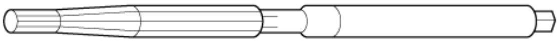	Valve Guide Reamer, 5.5 mm 07HAH-PJ7A100

Replacement

WARNING: **Please carefully read "Precaution for Handling Sodium-Filled Valves" and follow the instructions as the exhaust valves contain metal sodium .**

1. **Valve Seal and Valve Spring Seat - Remove**
2. **Valve Stem-to-Guide Clearance - Inspect**
3. Valve Guide - Remove

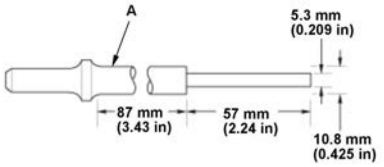 A 5.3 mm (0.209 in) 87 mm (3.43 in) 57 mm (2.24 in) 10.8 mm (0.425 in)	1. As illustrated, use a commercially available air-impact valve guide driver (A) modified to fit the diameter of the valve guides. In most cases, the same procedure can be done using the valve guide driver, 5.35 x 9.7 mm and a conventional hammer. 2. Select the proper replacement guides, and chill them in the freezer section of a refrigerator for at least an hour.

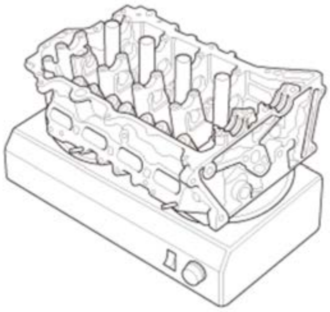	3. Use a hot plate or oven to evenly heat the cylinder head to 300 deg. F (150 deg. C). Monitor the temperature with a cooking thermometer. Do not get the head hotter than 300 deg. F (150 deg. C); excessive heat may loosen the valve seats.

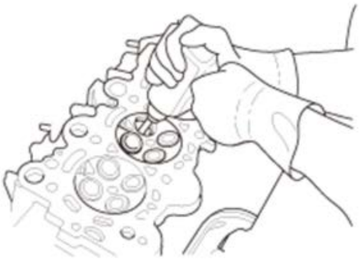

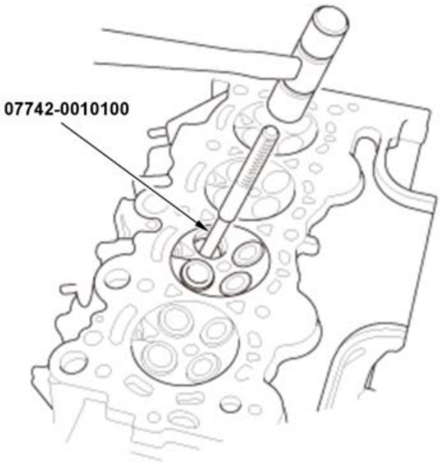

4. Working from the camshaft side, use the driver and an air hammer to drive the guide about 2 mm (0.08 in) towards the combustion chamber. This will knock off some of the carbon and make removal easier. Hold the air hammer directly in line with the valve guide to prevent damaging the driver. Wear safety goggles or a face shield.

5. Turn the cylinder head over, and drive the guide out toward the camshaft side of the cylinder head.

6. If a valve guide will not move, drill it out with an 8 mm (5/16 in) drill bit, then try again.

NOTE:

Drill guides only in extreme cases; you could damage the cylinder head if the guide breaks.

4. Valve Guide - Install

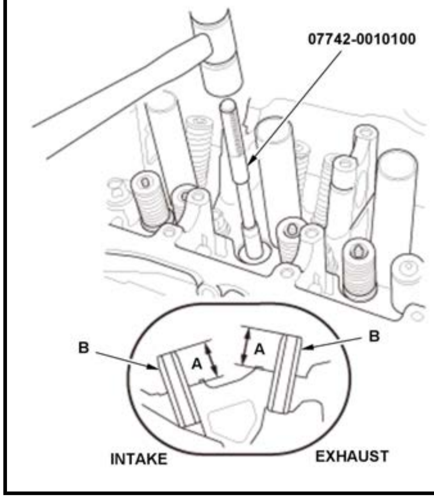

1. Take out the new valve guide (s) from the freezer, one at a time, as you need them.

2. Apply a thin coat of new engine oil to the outside of the new valve guide.

3. Install the guide from the camshaft side of the head; use the valve guide driver, 5.35 x 9.7 to drive the guide into the specified installed height (A) of the guide (B). If you have all 16 valve guides to do, you may have to reheat the head.

Valve Guide Installed Height:	
Intake:	**21.25-21.75 mm (0.8366-0.8563 in)**
Exhaust:	**19.75-20.25 mm (0.7776-0.7972 in)**

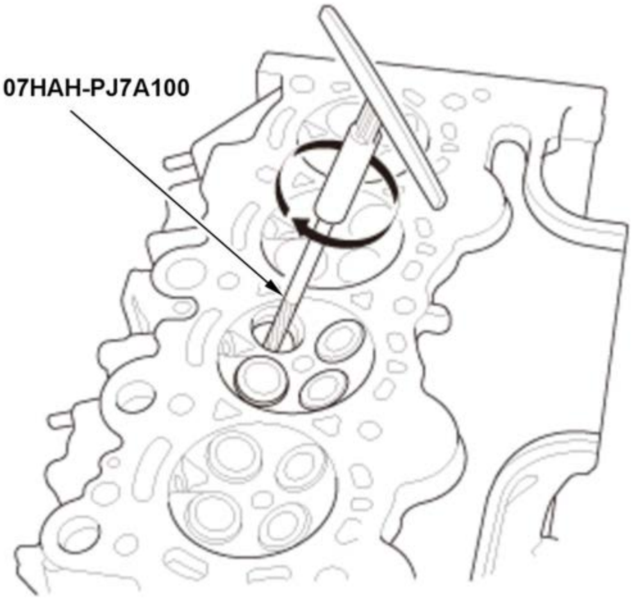	4. Coat both the valve guide reamer, 5.5 mm and the valve guide with cutting oil. 5. Rotate the valve guide reamer clockwise the full length of the valve guide bore. 6. Continue to rotate the reamer clockwise while drawing it from the bore. 7. Thoroughly wash the guide in detergent and water to remove any cutting residue.

5. Valve Stem-to-Guide Clearance - Inspect
6. Valve Seat - Inspect
7. Valve Seal and Valve Spring Seat - Install

VALVE GUIDE REPLACEMENT (2.4 L ENGINE) (2017 2018 2019)

Special Tools Required

Image	Description/Tool Number
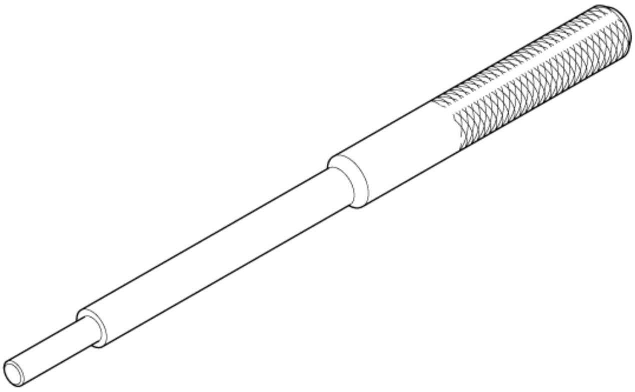	Valve Guide Driver, 5.35 x 9.7 mm 07742-0010100
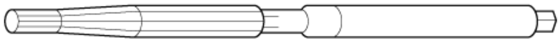	Valve Guide Reamer, 5.5 mm 07HAH-PJ7A100

Replacement

1. Valve Seal and Valve Spring Seat - Remove
2. Valve Guide - Remove

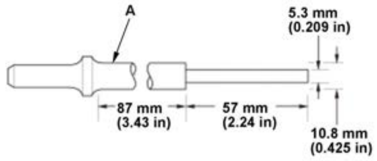 A 5.3 mm (0.209 in) 87 mm (3.43 in) 57 mm (2.24 in) 10.8 mm (0.425 in)	1. As illustrated below, use a commercially available air-impact valve guide driver (A) modified to fit the diameter of the valve guides. In most cases, the same procedure can be done using the valve guide driver, 5.35 x 9.7 mm and a conventional hammer. 2. Select the proper replacement valve guides, and chill them in the freezer section of a refrigerator for at least an hour.

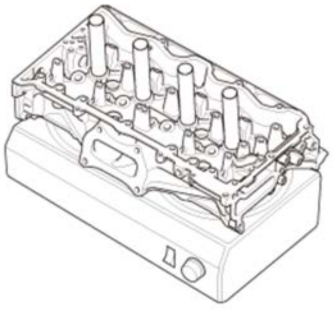	3. Use a hot plate or an oven to evenly heat the cylinder head to 300 deg. F (150 deg. C). Monitor the temperature with a cooking thermometer. Do not get the head hotter than 300 deg. F (150 deg. C); excessive heat may loosen the valve seats.

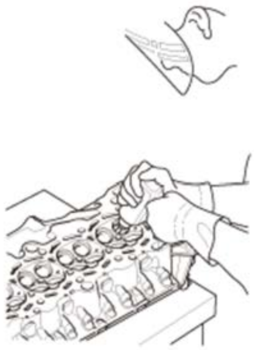 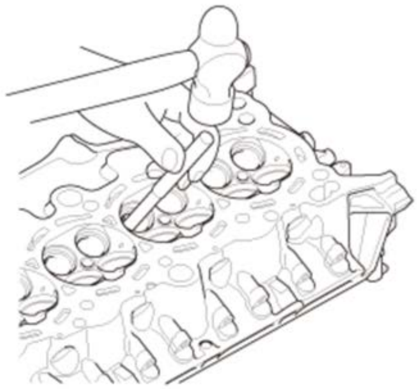	4. Working from the camshaft side, use the valve guide driver and an air hammer to drive the valve guide about 2 mm (0.08 in) towards the combustion chamber. This will knock off some of the carbon and make removal easier. Hold the air hammer directly in line with the valve guide to prevent damaging the driver. Wear safety goggles or a face shield. 5. Turn the head over, and drive the valve guide out toward the camshaft side of the head. 6. If a valve guide will not move, drill it out with an 8 mm (0.31 in) drill bit, then try again. **NOTE:** Drill guides only in extreme cases; you could damage the cylinder head if the valve guide breaks.

3. Valve Guide - Install

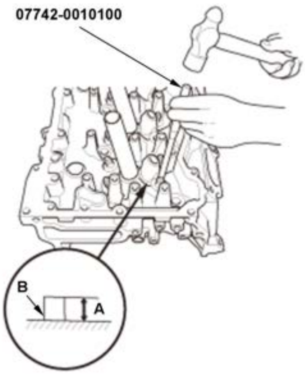	1. Take out the new valve guide (s) from the freezer, one at a time, as you need them. 2. Apply a thin coat of new engine oil to the outside of a new valve guide. 3. Install the valve guide from the camshaft side of the head; use the valve guide driver to drive the valve guide in to the specified installed height (A) of the valve guide (B). If you have all 16 valve guides to do, you may have to reheat the head.

Valve Guide Installed Height

Intake:	**21.2-22.2 mm (0.835-0.874 in)**
Exhaust:	**19.6-20.6 mm (0.772-0.811 in)**

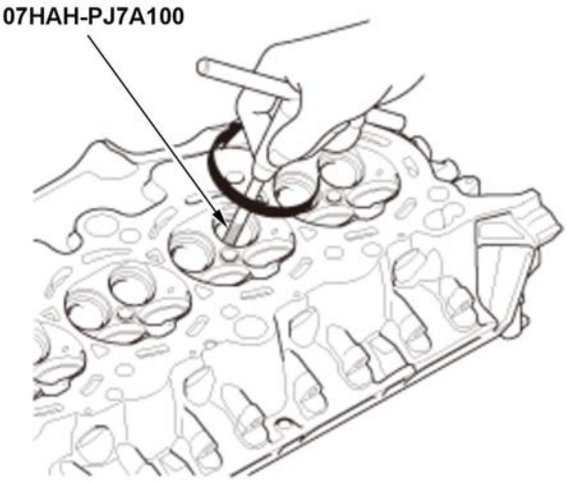

4. Coat both the valve guide reamer, 5.525 mm and the valve guide with cutting oil.

5. Rotate the reamer clockwise the full length of the valve guide bore.

6. Continue to rotate the reamer clockwise while removing it from the bore.

7. Thoroughly wash the valve guide in detergent and water to remove any cutting residue.

4. Valve Stem-to-Guide Clearance - Inspect
5. Valve Seat - Inspect
6. Valve Seal and Valve Spring Seat - Install

REPAIR REGENERATION

CYLINDER BORE HONING (1.5 L ENGINE)

Honing

1. Oil Jet - Remove
2. Cylinder Bore - Honing

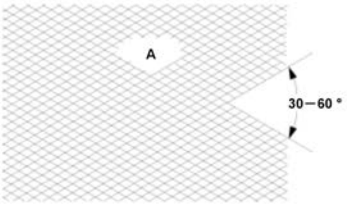

1. Measure the cylinder bores

If the engine block is to be reused, hone the cylinders and re-measure the bores. Only scored or scratched cylinder bore must be honed.

2. Hone the cylinder bores with honing oil and a fine (400 grit) stone.

NOTE:

- Use only a rigid hone with 400 grit or finer stone such as Sunnen, Ammco, or equivalent.
- Do not use stones that are worn or broken.

3. When honing is complete, thoroughly clean the engine block of all metal particles. Wash the cylinder bores with hot soapy water, then dry and oil them immediately to prevent rusting.

NOTE:

Never use solvent, it will only redistribute the grit on the cylinder walls.

4. If scoring or scratches are still present in the cylinder bores after to the service limit, rebore the engine block. Some light vertical scoring and scratching is acceptable if it is not deep enough to catch your fingernail, and does not run the full length of the bore.

Honing Pattern:	**Within 30-60 degree cross-hatch pattern (A)**

3. All Removed Parts - Install

1. Install the parts in the reverse order of removal.

CYLINDER BORE HONING (2.4 L ENGINE) (2017 2018 2019)

Honing

1. Oil Jet - Remove
2. Cylinder Bore - Honing

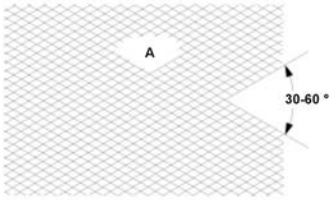	1. Measure the cylinder bores If the engine block is to be reused, hone the cylinders and remeasure the bores. Only scored or scratched cylinder bore must be honed. 2. Hone the cylinder bores with honing oil and a fine (400 grit) stone. **NOTE:** - Use only a rigid hone with 400 grit or finer stone such as Sunnen, Ammco, or equivalent. - Do not use stones that are worn or broken. 3. When honing is complete, thoroughly clean the engine block of all metal particles. Wash the cylinder bores with hot soapy water, then dry and oil them immediately to prevent rusting. **NOTE:** Never use solvent, it will only redistribute the grit on the cylinder walls. 4. If scoring or scratches are still present in the cylinder bores after honing to the service limit, rebore the engine block. Some light vertical scoring and scratching is acceptable if it is not deep enough to catch your fingernail, and does not run the full length of the bore.

Honing Pattern:	**Within 30-60 degree cross-hatch pattern (A)**

3. All Removed Parts - Install

1. Install the parts in the reverse order of removal.

VALVE SEAT RECONDITIONING (1.5 L ENGINE)

Reconditioning

WARNING: Please carefully read "Precaution for Handling Sodium-Filled Valves" and follow the instructions as the exhaust valves contain metal sodium .

1. Valve Seat - Reconditioning

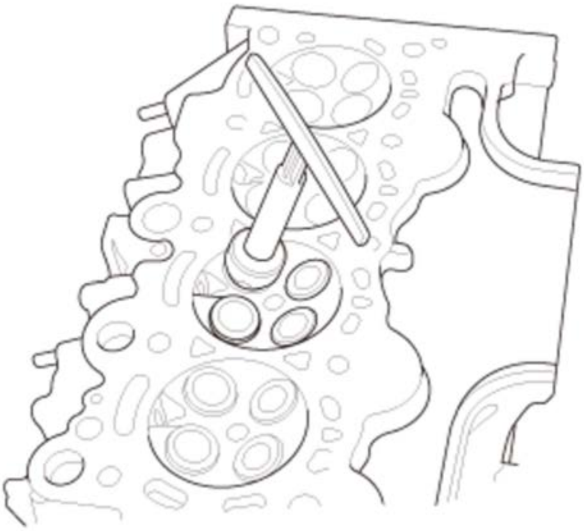

1. **Inspect valve stem-to-guide clearance**. If the valve guides are worn, **replace them**

before cutting the valve seats.

2. Renew the valve seats in the cylinder head using a valve seat cutter.

3. Carefully cut a 45 deg. seat, removing only enough material to ensure a smooth and concentric seat.

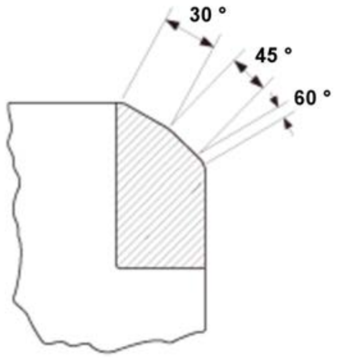

4. Bevel the upper and lower edges at the angles shown in the illustration. Check the width of the seat and adjust accordingly.

5. Make one more very light passes with the 45 deg. cutter to remove any possible burrs caused by the other cutters.

Valve Seat Width (Intake/Exhaust)	
Standard (New):	**1.25-1.55 mm (0.0492-0.0610 in)**
Service Limit:	**2.00 mm (0.0787 in)**

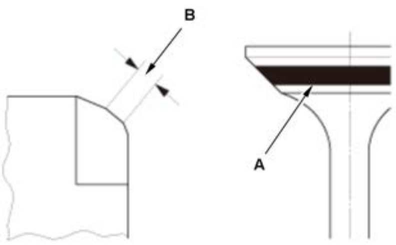

6. After resurfacing the seat, inspect for even valve seating: Apply Prussian Blue compound (A) to the valve face. Insert the valve in its original location in the head, then lift it and snap it closed against the seat several times.

7. The actual valve seating surface (B), as shown by the blue compound, should be centered on the seat:

- If it is too high (closer to the valve stem), you must make a second cut with the 60 deg. cutter to move it down, then one more cut with the 45 deg. cutter to restore seat width.
- If it is too low (close to the valve edge), you must make a second cut with the 30 deg. cutter to move it up, then make one more cut with the 45 deg. cutter to restore seat width.

NOTE: The final cut should always be made with the 45 deg. cutter.

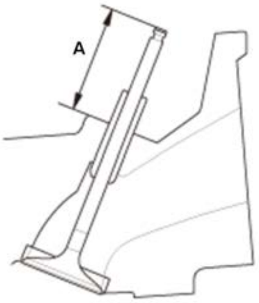

8. Insert the intake and exhaust valves in the cylinder head, and measure the valve stem installed height (A).

9. If the valve stem installed height is over the service limit, replace the valve and recheck. If it is still over the service limit, replace the cylinder head; the valve seat in the head is too deep.

Intake Valve Stem Installed Height	
Standard (New):	53.40-54.40 mm (2.1024-2.1417 in)
Service Limit:	54.60 mm (2.1496 in)
Exhaust Valve Stem Installed Height	
Standard (New):	45.90-46.90 mm (1.8071-1.8465 in)
Service Limit:	47.10 mm (1.8543 in)

VALVE SEAT RECONDITIONING (2.4 L ENGINE) (2017 2018 2019)

Reconditioning

1. Valve Seat - Reconditioning

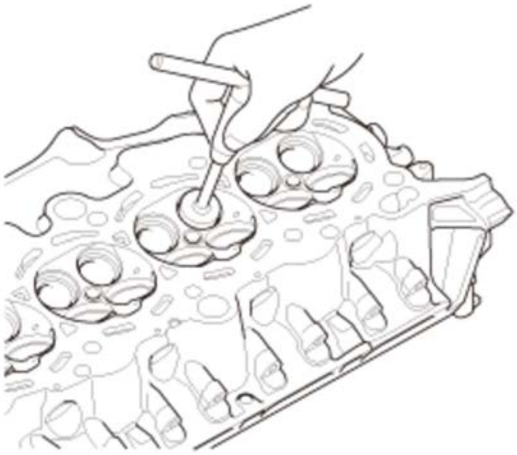

1. Inspect valve stem-to-guide clearance. If the valve guides are worn, replace them before cutting the valve seats.

2. Renew the valve seats in the cylinder head using a valve seat cutter.

3. Carefully cut a 45 deg. seat, removing only enough material to ensure a smooth and concentric seat.

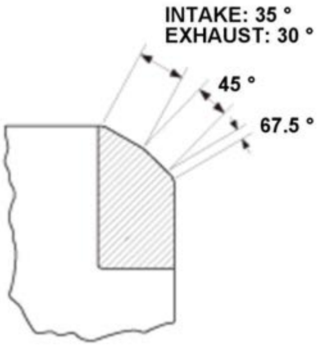

4. Bevel the upper and lower edges at the angles shown in the illustration. Check the width of the seat and adjust accordingly.

5. Make one more very light passes with the 45 deg. cutter to remove any possible burrs caused by the other cutters.

Valve Seat Width

Intake:	B
Standard (New):	1.25-1.55 mm (0.0492-0.0610 in)
Service Limit:	1.90 mm (0.0748 in)
Exhaust:	B
Standard (New):	1.25-1.55 mm (0.0492-0.0610 in)
Service Limit:	2.00 mm (0.0787 in)

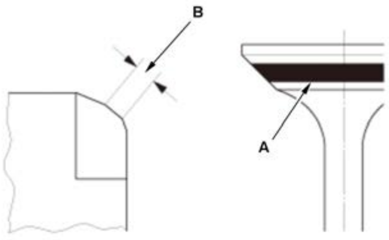

6. After resurfacing the seat, inspect for even valve seating: Apply Prussian Blue compound (A) to the valve face. Insert the valve in its original location in the head, then lift it and snap it closed against the seat several times.

7. The actual valve seating surface (B), as shown by the blue compound, should be centered on the seat:

- If it is too high (closer to the valve stem), you must make a second cut with the 55 deg. cutter (intake side) or the 60 deg. (exhaust side) cutter to move it down, then one more cut with the 45 deg. cutter to restore seat width.
- If it is too low (close to the valve edge), you must make a second cut with the 30 deg. cutter to move it up, then make one more cut with the 45 deg. cutter to restore seat width.

NOTE: The final cut should always be made with the 45 deg. cutter.

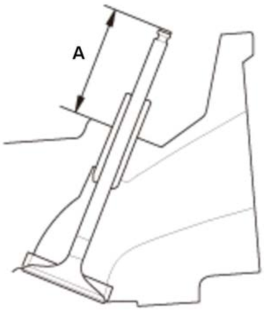

8. Insert the intake and exhaust valves in the head, and measure valve stem installed height (A).

Intake Valve Stem Installed Height

Exhaust Valve Stem Installed Height

9. If valve stem installed height is over the service limit, replace the valve and recheck. If it is still over the service limit, replace the cylinder head; the valve seat in the head is too deep.

Standard (New):	**51.40-52.30 mm (2.0236-2.0591 in)**
Service Limit:	**52.40 mm (2.0630 in)**

Standard (New):	**52.75-53.65 mm (2.0768-2.1122 in)**
Service Limit:	**53.75 mm (2.1161 in)**

DESCRIPTION & OPERATION

AUTO IDLE STOP SYSTEM DESCRIPTION - OPERATION CONDITIONS (WITH AUTO IDLE STOP SYSTEM) (2020 2021)

Conditions for Auto Idle Stop and Engine Restart

Available Conditions for Auto Idle Stop and Engine Restart Conditions After Auto Idle Stop

Determination Items	Available Conditions for Auto Idle Stop	Engine Restart Conditions After Auto Idle Stop	HDS Parameter [Menu]
Related Systems	Normal (no DTCs are stored)	Related system malfunction occurred (DTCs are stored). Some conditions will prevent restart* 1	--
Idle Stop Off Switch	OFF (system is not cancelled on purpose)	ON (system is cancelled on purpose)	IDLE STOP INHIBIT (IDLE STOP CANCEL SWITCH) [PGM FI]
Hood	Closed* 2	Not a condition* 1	IDLE STOP INHIBIT (HOOD OPEN) [PGM FI]
Driver's Seat Belt	Buckled	Unbuckled	IDLE STOP INHIBIT (SEAT BELT UNFASTENED) [PGM FI]
Incline	No-sloping	Not a condition	IDLE STOP INHIBIT (INCLINED STATE) [PGM

Determination Items	Available Conditions for Auto Idle Stop	Engine Restart Conditions After Auto Idle Stop	HDS Parameter [Menu]
			FI]
Vehicle Speed Record	The vehicle speed exceeds more than 3 mph (5 km/h) (or 9.3 mph (15 km/h)) *3 after its last engine restart.	Not a condition	VEHICLE SPEED [PGM FI] VEHICLE SPEED [AT] LEFT FRONT WHEEL SPEED [ABS/VSA] RIGHT FRONT WHEEL SPEED [ABS/VSA] LEFT REAR WHEEL SPEED [ABS/VSA] RIGHT REAR WHEEL SPEED [ABS/VSA]
Vehicle Speed	0 mph (0 km/h)	Exceed 0 mph (0 km/h)	
Vehicle Stop Record	20 seconds or more has elapsed after the last vehicle stop.	Not a condition	
Steering Wheel Operation	Unmoved	Moved	IDLE STOP INHIBIT (EPS UNIT) [PGM FI]
Shift Position	D Position If the shift lever is moved from D to the P position during auto idle stop activation, auto idle stop will continue.	Except D->N operation - If the shift lever moves from P to any other position, the engine will restart. - If the shifter is in the D or N position and is shifted to P, the engine can restart depending on the inclination angle. - If the shifter is in the P position and if the vehicle moves, the engine will restart.	A/T D SWITCH [AT]
Transmission Fluid Temperature	77 deg. F (25 deg. C) - 239 deg. F (115 deg. C)	Except 77 deg. F (25 deg. C) - 239 deg. F (115 deg. C)	CVTF Temperature [AT]
CVT Ratio	Not a condition	Not a condition	--
Auxiliary Transmission Fluid Pump	During a not protection control	160 sec. has elapsed after the pump starts.	--
Correction of Inclination Sensor Learn Procedure	Not a condition	Not a condition	--
Brake Pedal Position Switch	- ON (brake pedal is pressed or automatic brake hold in operation) - OFF (brake pedal is released) - - - In the P position	- OFF (brake pedal is released) *8*9	Cruise Brake Sw/Idle Stop Sw [PGM FI] Brake Switch [PGM FI]
Brake Master Cylinder Fluid Pressure	Brake pedal pressed firmly	Pressure falls specified value	
VSA Modulator-control Unit Hydraulic Operation	Not operating	Malfunction is detected	Idle Stop Inhibit (ABS/VSA Unit) [PGM FI]

Determination Items	Available Conditions for Auto Idle Stop	Engine Restart Conditions After Auto Idle Stop	HDS Parameter [Menu]
SRS Unit Yaw Rate-Acceleration Neutral Position Memorization	Completed	Not a condition	-
Accelerator Pedal Position	Accelerator pedal is released	Accelerator pedal is pressed	APP Sensor [PGM FI]
Engine Coolant Temperature	149 deg. F (65 deg. C) - 230 deg. F (110 deg. C)	The specified value is out of specifications as detected by the HVAC system.	ECT Sensor 1 [PGM FI]
Status of Engine Conditions	The engine is idling normal and both VTC actuator A/B are 10 deg. or less.	Not a condition	--
PCM Idle Learning	Completed	Not a condition	IDLE LEARN [PGM FI]

*1: Refer to Disable Conditions for the Engine Restart After Auto Idle Stop.

*2: Except in case of the engine started with the hood opened (safety for the service technician).

*3: When the auto idle stop is activated repeatedly (more than 2 times) within 20 seconds.

*4: When the ACC/LSF system is activated.

*5: When the ECON mode is on.

*6: When the climate control system is turned on.

*7: When the transmission is D, the engine is restarted. When the ACC/LSF system and the automatic brake hold system is activated, and the transmission is N, the engine is not restarted.

*8: When the automatic brake hold system is not activated.

*9: While the automatic brake hold is activated, the engine is restarted by pressing the accelerator pedal which also releases the brake hold function.

Determination Items	Available Conditions for Auto Idle Stop	Engine Restart Conditions After Auto Idle Stop	HDS Parameter [Menu]
Starter/Starter Cut Relay Operation	Within the specified number	Not a condition	--
Status of Starter Motor Operating Conditions	Not a condition	Not a condition* 1	--
Windshield Defrost Button* 6	OFF	ON	Idle Stop Inhibit (HVAC) [PGM FI]
Climate Control Temperature Setting* 6	Other than MAX COOL/HOT	When set to MAX COOL/HOT	
Blower Fan Control Indication	Speed 4 or less	-	
Blower Fan Voltage	8 V (10 V) *5 or less	Not a condition	
Outside Air Temperature* 6	-4 deg. F (-20 deg. C) - 104 deg. F (40 deg. C)	Not a condition	
Humidity* 6	Not a condition	Specified value or more	
Cabin Temperature Difference Between Commanded Versus Actual* 6	Small (comfortable)	Large (uncomfortable)	
Estimation 12 Volt Battery Temperature	41 deg. F (5 deg. C) or more	41 deg. F (5 deg. C) or less than	Idle Stop Inhibit (Battery Management System) [PGM FI] Estimated Battery Temperature [PGM FI]
12 Volt Battery Charged/Discharged	Sufficient	Insufficient	Idle Stop Inhibit (Battery Management System) [PGM

Determination Items	Available Conditions for Auto Idle Stop	Engine Restart Conditions After Auto Idle Stop	HDS Parameter [Menu]
Condition			FI]
12 Volt Battery Deteriorated Determination	Not detected	Not a condition	Idle Stop Inhibit (Battery Management System) [PGM FI] IDLE STOP INHIBIT (BATTERY DETERIORATION) [PGM FI]
Automatic Brake Hold Switch	Not a condition	ON *9	--
Driving Support System	ON *4	If the system meets the following conditions (cooperative control of the driving support system and the auto idle stop system): • Detects the preceding vehicle starting • RES/+ or SET/- button, or accelerator pedal is pressed • ACC system is turned off	--
DC-DC Converter	No temperature failure/internal failure/input voltage failure (no DTC is stored)	When the failure is confirmed	IDLE STOP INHIBIT (DC-DC CONVERTER) [PGM FI]
Smart Parking Assist System	Nonfunctional	Assist start	--
Electric Brake Booster	Not a condition	Malfunction is detected* 7	--
Starting Assist Brake Function (controlled by PGM-FI system and VSA system)	Related system is normal	Related system malfunction occurs.	Idle Stop Inhibit (Starting Assist Brake) [PGM FI]
Barometric Pressure	**The elevation is lower than 9, 842 ft (3, 000 m)**	Not a condition* 1	BARO SENSOR [PGM FI]

*1: Refer to Disable Conditions for the Engine Restart After Auto Idle Stop.

*2: Except in case of the engine started with the hood opened (safety for the service technician).

*3: When the auto idle stop is activated repeatedly (more than 2 times) within 20 seconds.

*4: When the ACC/LSF system is activated.

*5: When the ECON mode is on.

*6: When the climate control system is turned on.

*7: When the transmission is D, the engine is restarted. When the ACC/LSF system and the automatic brake hold system is activated, and the transmission is N, the engine is not restarted.

*8: When the automatic brake hold system is not activated.

*9: While the automatic brake hold is activated, the engine is restarted by pressing the accelerator pedal which also releases the brake hold function.

Disable Conditions for the Engine Restart After Auto Idle Stop

The Disable Conditions for the Engine Restart After Auto Idle Stop have priority over an Engine Restart Conditions After Auto Idle Stop. During auto idle stop, if any of the below conditions are met, engine restart is prohibited.

- The hood is opened.
- Engine cranks for 5 seconds or more.
- Engine does not crank.
- DC-DC converter has a temperature failure/internal failure/input voltage failure.

AUTO IDLE STOP SYSTEM DESCRIPTION (WITH AUTO IDLE STOP SYSTEM) (2020 2021)

Overview

System Description

The auto idle stop system is a system that stops and restarts the engine automatically to help maximize fuel economy depending on environmental and vehicle operating conditions. The system can help reduce fuel consumption, idling noise and any emissions. Conditions such as driver's operation, vehicle state and the environment determine if the vehicle can enter auto idle stop.

Basic System Operations

- When the brake pedal is depressed, the vehicle stops and auto idle stop is activated (if conditions are met). During auto idle stop, the auto idle stop indicator (green) indicator turns on in the gauge control module. When you release the brake pedal, the engine starts automatically (if conditions are met).
- The auto idle stop system is executed when the certain conditions are met. Refer to the Available Conditions for Auto Idle Stop.
- If one of the conditions are met, the engine restarts automatically. However, there are conditions that will prohibit the engine to start automatically. Refer to Engine Restart Conditions After Auto Idle Stop and Disable Conditions for the Engine Restart After Auto Idle Stop.
- The driver can cancel the auto idle stop system from operating with the auto idle stop off switch.
- When the system is off, the auto idle stop indicator (amber) in the gauge control module turns on.

Auto Idle Stop Indicator

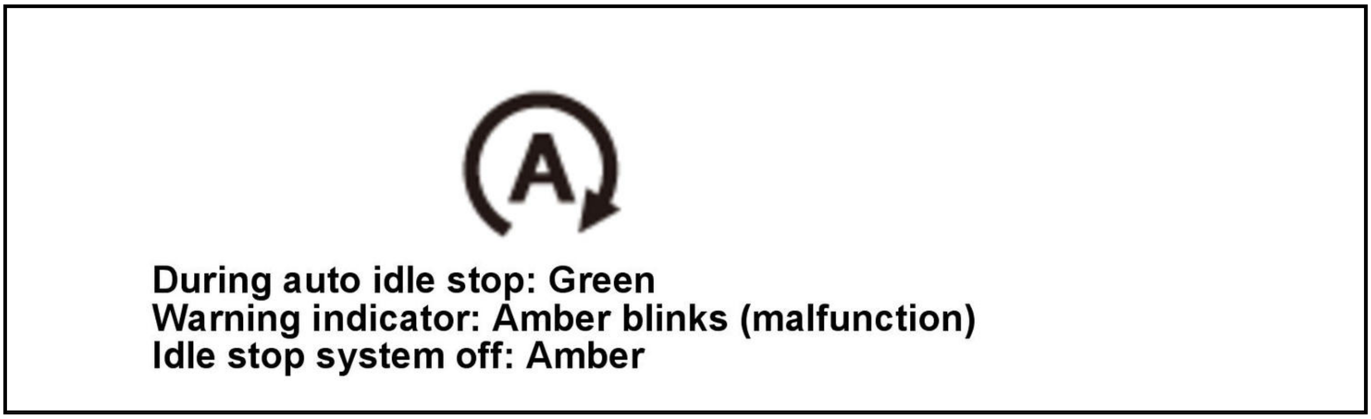
During auto idle stop: Green
Warning indicator: Amber blinks (malfunction)
Idle stop system off: Amber

System Determination Pattern

After the vehicle is turned to the ON mode, the system is activated and starts a constant monitor of various conditions. The system then determines if a auto idle stop or an engine restart (after the engine has stopped) can be executed.

Auto idle stop at full stop (vehicle speed is 0 km/h (0 mph))

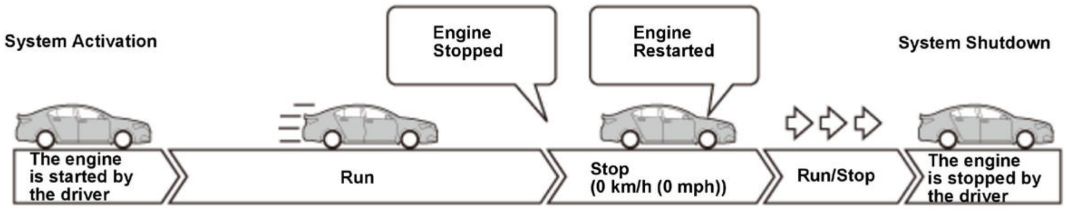

NOTE: This illustration is an example of the system operation and does not include include related controls such as the automatic brake hold and the driving support system.

Auto Idle Stop Control Signal

The PCM monitors signals from control units, sensors and switches to determine if the vehicle can execute/continue an auto idle stop or if it can restart the engine. When the PCM determines that the auto idle stop can executed, it stops the fuel injection and stops the engine. When it determines an engine restart, it operates the starter and resumes fuel injection to start the engine. If the PCM receives a malfunction signal from a control unit or the conditions are not met, the auto idle stop is not executed.

Transmitting and Received Signals to/from the PCM

Target unit, sensor and switch	Transmitting Signal	Received Signal	Remarks
Related control units	System malfunction signal*	-	-
Idle stop off switch	Auto idle stop cancellation signal	-	-

*: See detailed information

Target unit, sensor and switch	Transmitting Signal	Received Signal	Remarks
Hood latch switch	Hood open/close signal	-	-
Driver's seat belt switch	Seat belt buckle/unbuckle signal	-	-
CVT speed sensor	Vehicle speed/vehicle speed record information	-	-
EPS control unit	Steering torque signal	-	-
Transmission range switch	Shift position information	-	The signal is sent to the TCM. The TCM sends the determination of the auto idle stop system to the PCM based on the signal.
Transmission fluid temperature sensor	Transmission warm-up information	-	The signal is sent to the TCM. The TCM sends the determination of the auto idle stop system to the PCM based on the signal.
Auxiliary transmission fluid pump	-	• During engine stop: pump operation command signal • When engine restarting: pump stop command signal	Auxiliary transmission fluid pump is controlled by the TCM.
Brake pedal position switch	Brake pedal on/off signal	-	-
VSA modulator-control unit	• Hydraulic control operating information	Auto idle stop status information	See detailed information

Target unit, sensor and switch	Transmitting Signal	Received Signal	Remarks
	- Vehicle speed information - Master cylinder pressure information* - Starting Assist Brake Function information - Automatic brake hold system operating information		
SRS unit	Vehicle inclination angle information	-	-
Accelerator pedal module (APP sensor)	Accelerator pedal on/off signal	-	-
Engine coolant temperature (ECT) sensor	Engine warm-up information	-	-
Barometric pressure (BARO) sensor	Atmospheric pressure (altitude) information	-	-
Climate control unit	Auto idle stop permission signal by the climate control system	-	See Detail Information of the Control or Communication Signal
Starter	-	Starter operating command signal*	See Detail Information of the Control or Communication Signal
12 volt battery sensor	12 volt battery status information - Internal resistance value - Battery fluid temperature - Current value - Voltage value	-	See Detail Information of the Control or Communication Signal
DC-DC converter	Unit quality information	-	-

*: See detailed information

Target unit, sensor and switch	Transmitting Signal	Received Signal	Remarks
Gauge control module	-	Indicator lamps turn on/off signal	During auto idle stop: - Auto idle stop indicator (green) is turned on Idle Stop Off Switch ON: - Auto idle stop indicator (amber) is turned on During auto idle stop system failure: - Auto idle stop warning indicator (amber) blinks

Target unit, sensor and switch	Transmitting Signal	Received Signal	Remarks
Multi view camera unit	Smart parking assist control signal	Auto idle stop status information	-
Driving support system	ACC/LSF system operating information	-	-
Injector	-	Fuel injection stop/injection command signal	-
Alternator	-	Alternator operating command	-

*: See detailed information

Detail Information of the Control or Communication Signal

System Malfunction Signal

If a malfunction in the following systems that are related to the auto idle stop have occurred, a warning indicator is turned on or flashes, and the auto idle stop is prohibited. A warning indicator is displayed on the gauge control module (multi-information display), and informs the malfunction to the driver.

System malfunction indications for prohibiting the auto idle stop

System	Warning indicator	Remarks
Auto idle stop system	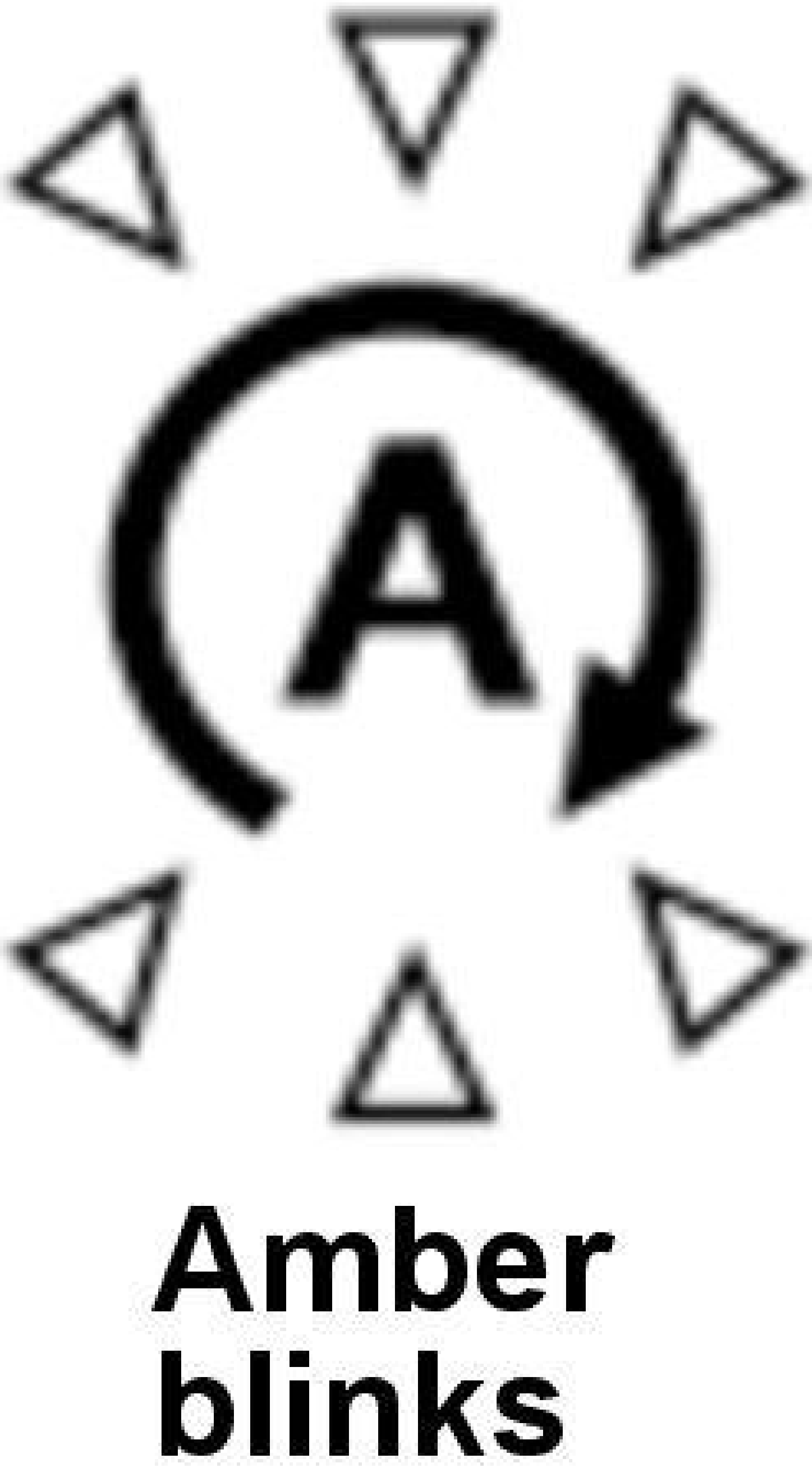	Possible cause: - DC-DC converter - 12 volt battery sensor - Alternator - Climate control unit - Brake system (electric brake booster system information)

System	Warning indicator	Remarks
Charging system	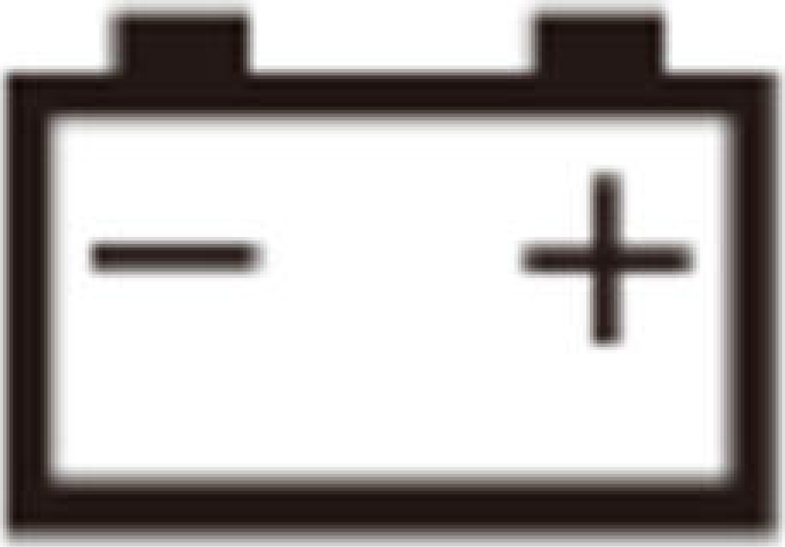	Possible cause: - Alternator - Power generation abnormality (Auto idle stop indicator is OFF)
Starter system	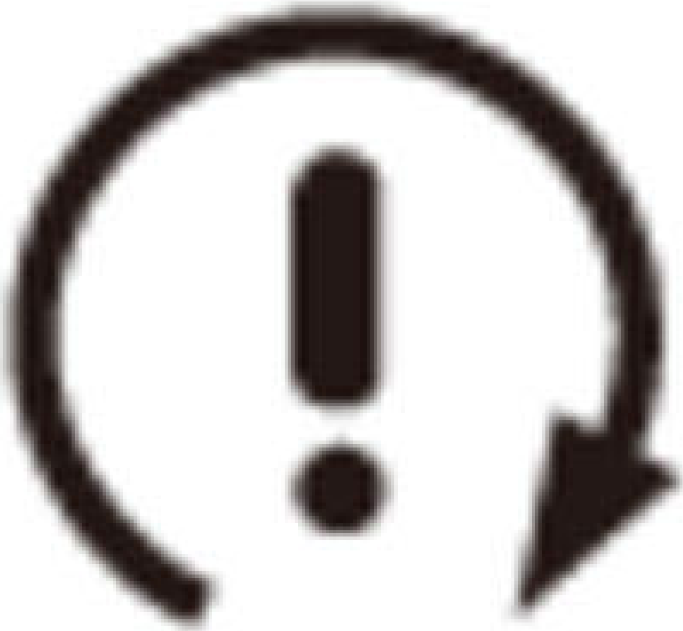	B

System	Warning indicator	Remarks
PGM-FI system	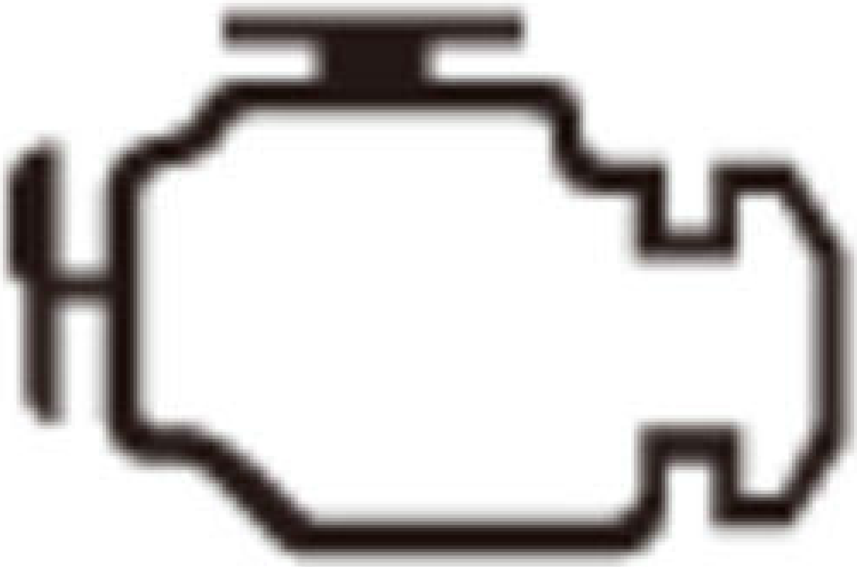	Even if this indicator is displayed, the auto idle stop system may be enabled according to the contents of malfunction.
CVT control system	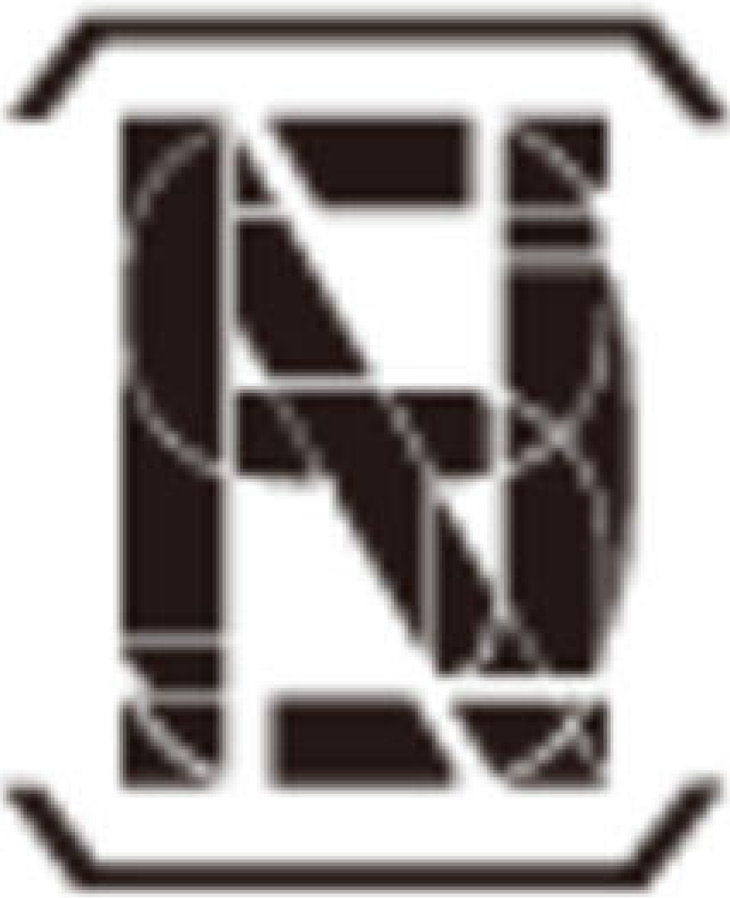	All segments blink.

System	Warning indicator	Remarks
EPS control system	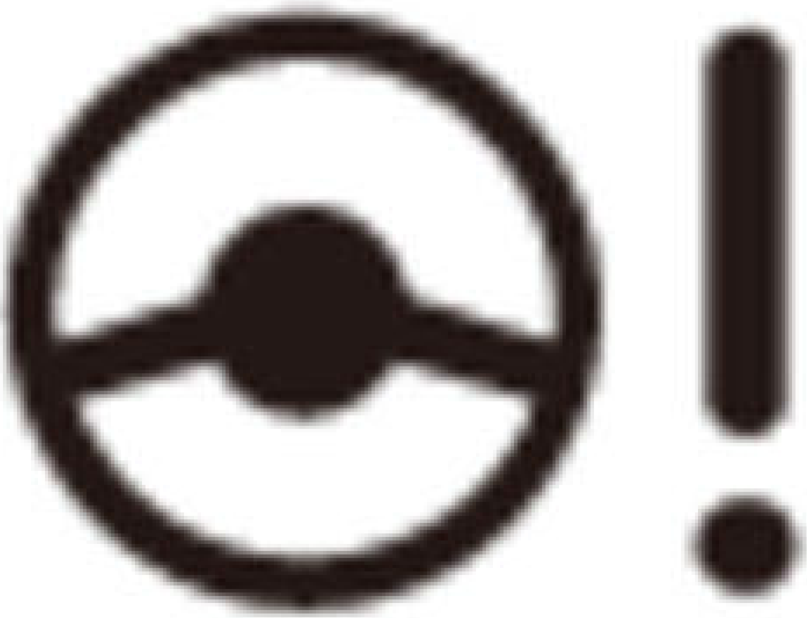	B
VSA system (ABS)	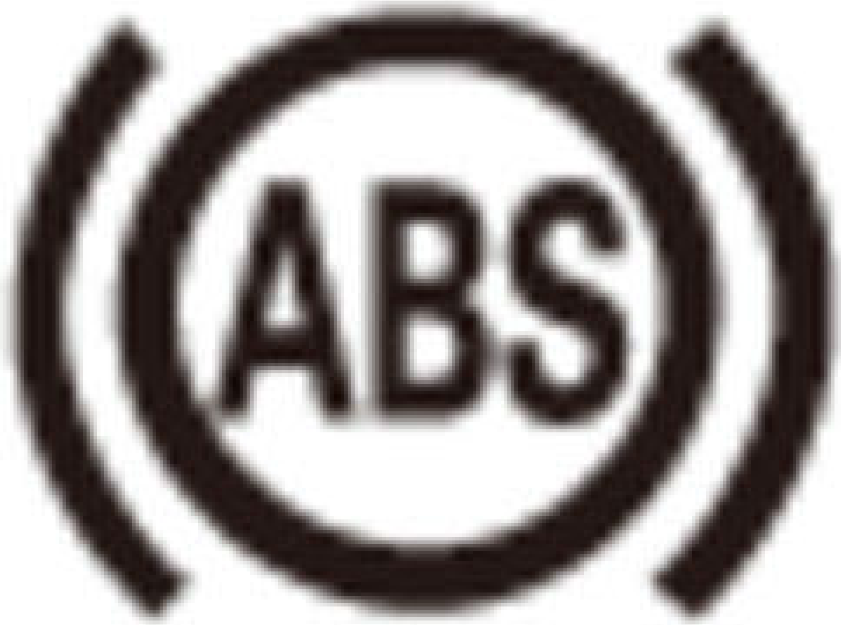	Even if this indicator is displayed, the auto idle stop system may be enabled according to the contents of malfunction.

System	Warning indicator	Remarks
VSA system	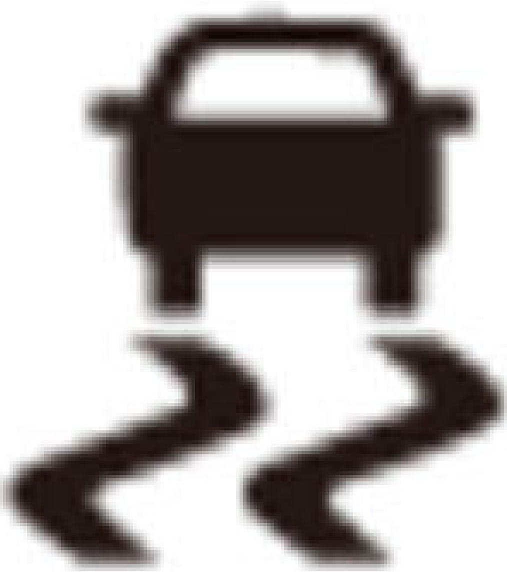	Even if this indicator is displayed, the auto idle stop system may be enabled according to the contents of malfunction.
Brake system	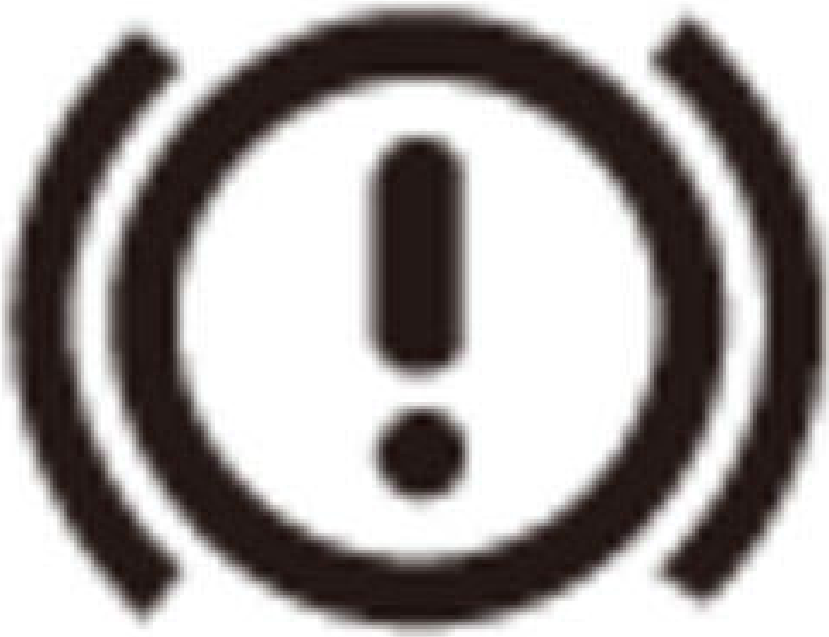 (Red)	Even if this indicator is displayed, the auto idle stop system may be enabled according to the contents of malfunction.
Electric brake booster system		Electric brake booster system malfunction

System	Warning indicator	Remarks
Automatic brake hold system	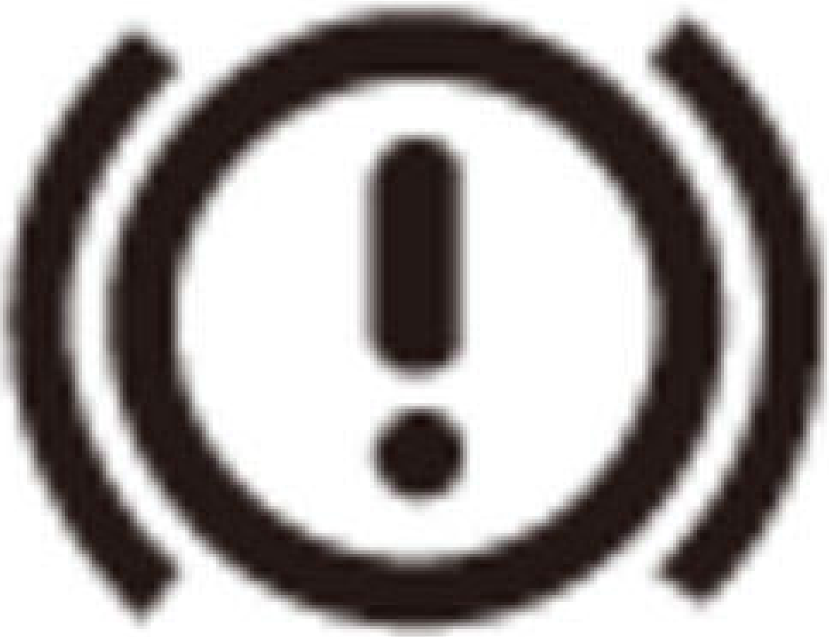 (Amber)	Even if this indicator is displayed, the auto idle stop system may be enabled according to the contents of malfunction.
SRS system	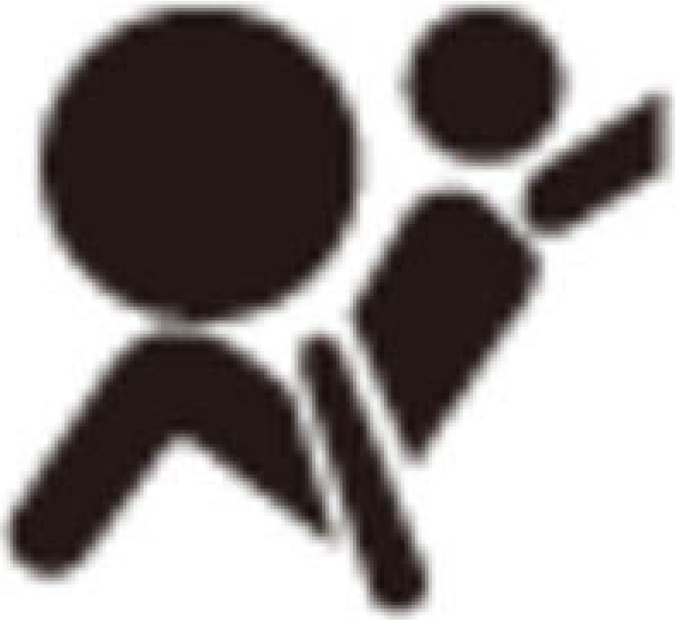	Even if this indicator is displayed, the auto idle stop system may be enabled according to the contents of malfunction.

Master Cylinder Fluid Pressure Information (lack of brake pedal force)

The master cylinder fluid pressure information is transmitted to the PCM via the VSA modulator-control unit. If the brake pedal force by the driver is insufficient, and if the master cylinder fluid pressure is less than specified value, the auto idle stop is prohibited. In this case, a message is displayed in the multi-information display to inform the driver.

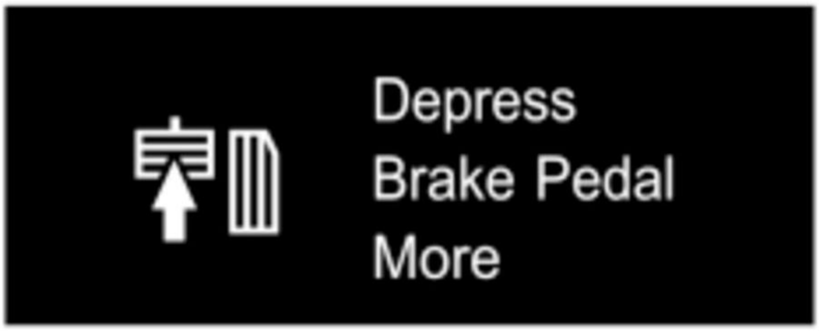

Depress
Brake Pedal
More

Idle Stop Permission Signal from the Climate Control System

To maintain cabin comfort, the climate control unit transmits the auto idle stop activate, prohibit or engine restart judgment to the PCM based on sensors and switches. When a engine restart request is received from during idle stop, the auto idle stop indicator is turned off and the engine restarts. If the climate control unit malfunctions, the malfunction information is sent to the PCM, and the auto idle stop system warning indicator (orange) blinks.

Transmitting and received signals to/from climate control unit

Target unit, sensor and switch	Transmitting Signal	Received Signal
ECON switch	ECON ON/OFF mode selection signal	-
Engine coolant temperature (ECT) sensor	Engine warm-up information	-
Windshield defrost button/switch	Windshield defrost on/off signal	-
Temperature and fan control button/switch (climate control unit)	Cabin temperature and air volume setting information	-

Target unit, sensor and switch	Transmitting Signal	Received Signal
Outside air temperature sensor	Outside air temperature information	-
Evaporator temperature sensor/in-car temperature sensor	Air temperature adjustments made before and after	-
Humidity sensor	Humidity information in the cabin	-
Sunlight sensor	Sunlight information	-
PCM	-	Auto idle stop implementation/prohibition determination information from the climate control system.

Starter Operating Command Signal

The PCM counts the number of times that the start operates and if it exceeds a specified number, prohibits auto idle stop operation. In this case, the indicator on the gauge control module blinks (except when the system is turned off by the driver manually). The starter and the starter cut relay operation number are memorized in the PCM.

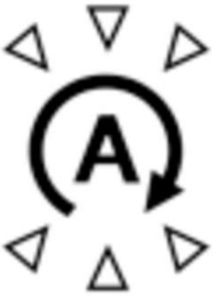

12 Volt Battery Status Information

The PCM receives the 12 volt battery status signal and determines the state of quality and its amount of deterioration. When a malfunction is detected, the auto idle stop operation is prohibited and a message is displayed in the multi-information to alert the driver (when the battery is deteriorated).

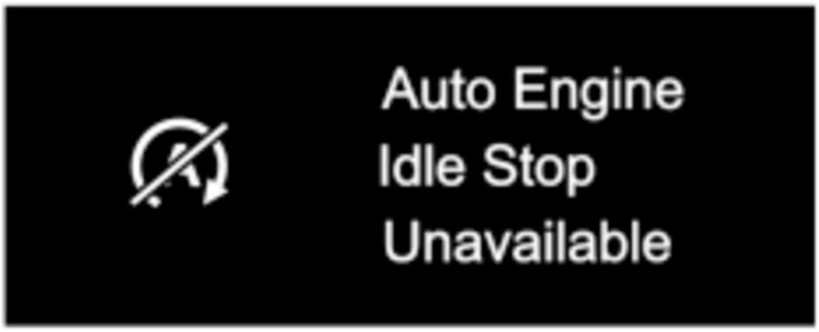
Auto Engine
Idle Stop
Unavailable

NOTE: The message is not displayed on the multi-information display in the factory default setting.

MID (auto engine idle stop system problem)

If there is a malfunction in the auto idle system and related systems, the auto idle stop indicator will turn on with a message on the multi-information display.

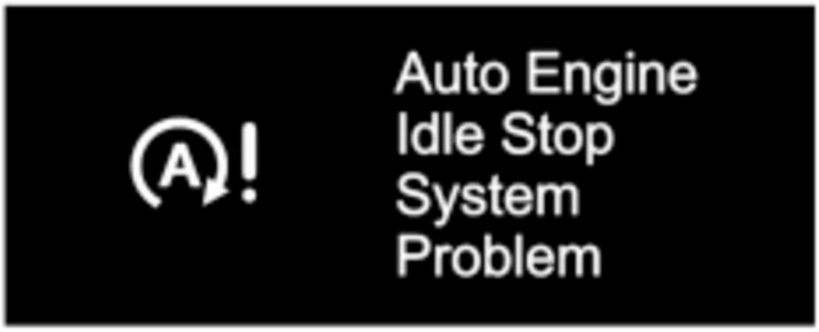
Auto Engine
Idle Stop
System
Problem

NOTE: This illustration shows an example.

MID (auto engine idle stop unavailable)

If the auto idle system and related systems are normal but auto idle stop operation is prohibited by the system, the following message will be displayed in the multi-information display.

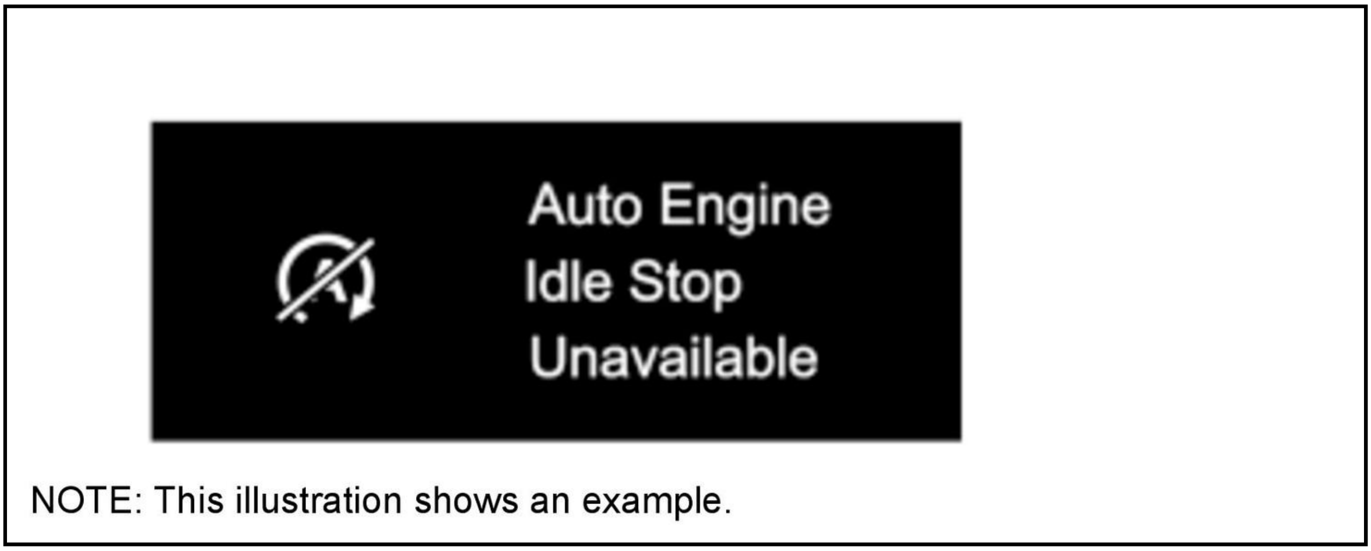

Auto Engine
Idle Stop
Unavailable

NOTE: This illustration shows an example.

MID (auto engine idle stop: engine will restart soon)

The following message with be displayed right before the engine is restarted by the system when the auto idle stop system is in operation.

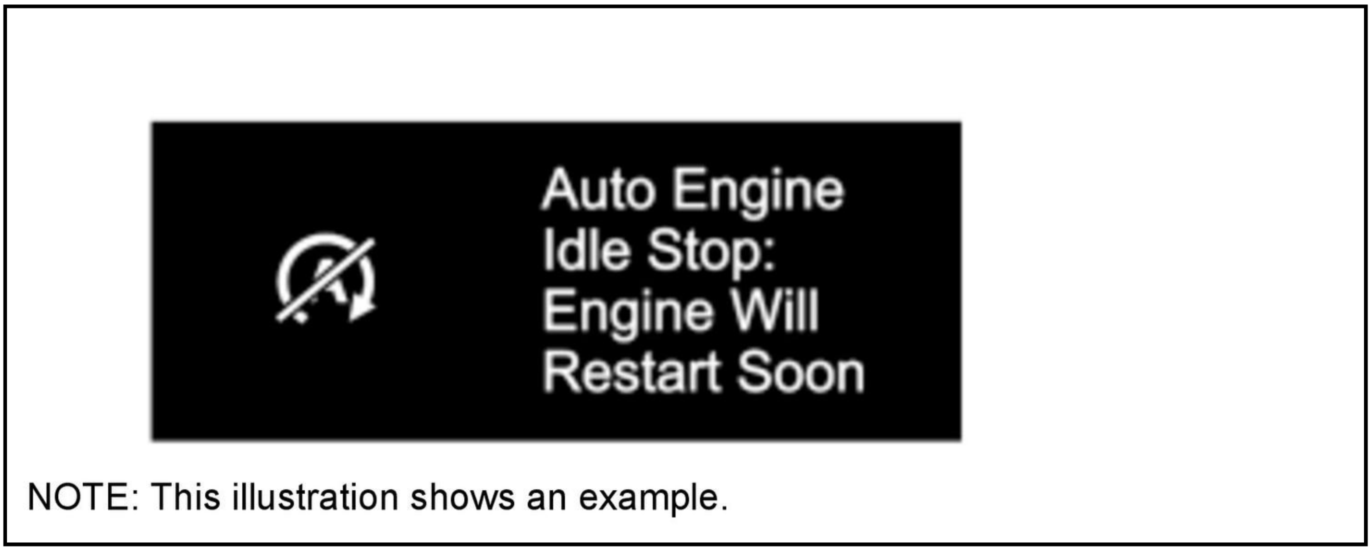

Auto Engine
Idle Stop:
Engine Will
Restart Soon

NOTE: This illustration shows an example.

DC-DC Converter Unit Quality Information

The DC-DC converter supplies stable power to the vehicle when the battery voltage drops during engine restart. If there is a malfunction in the DC-DC converter, a signal is sent to the PCM and either prohibits the auto idle stop operation or engine restart. If the DC-DC converter malfunctions during engine restart, the starter operation continues but the stable power that the vehicle would have received from the DC-DC converter is not supplied.

Simple Circuit Diagram for Description

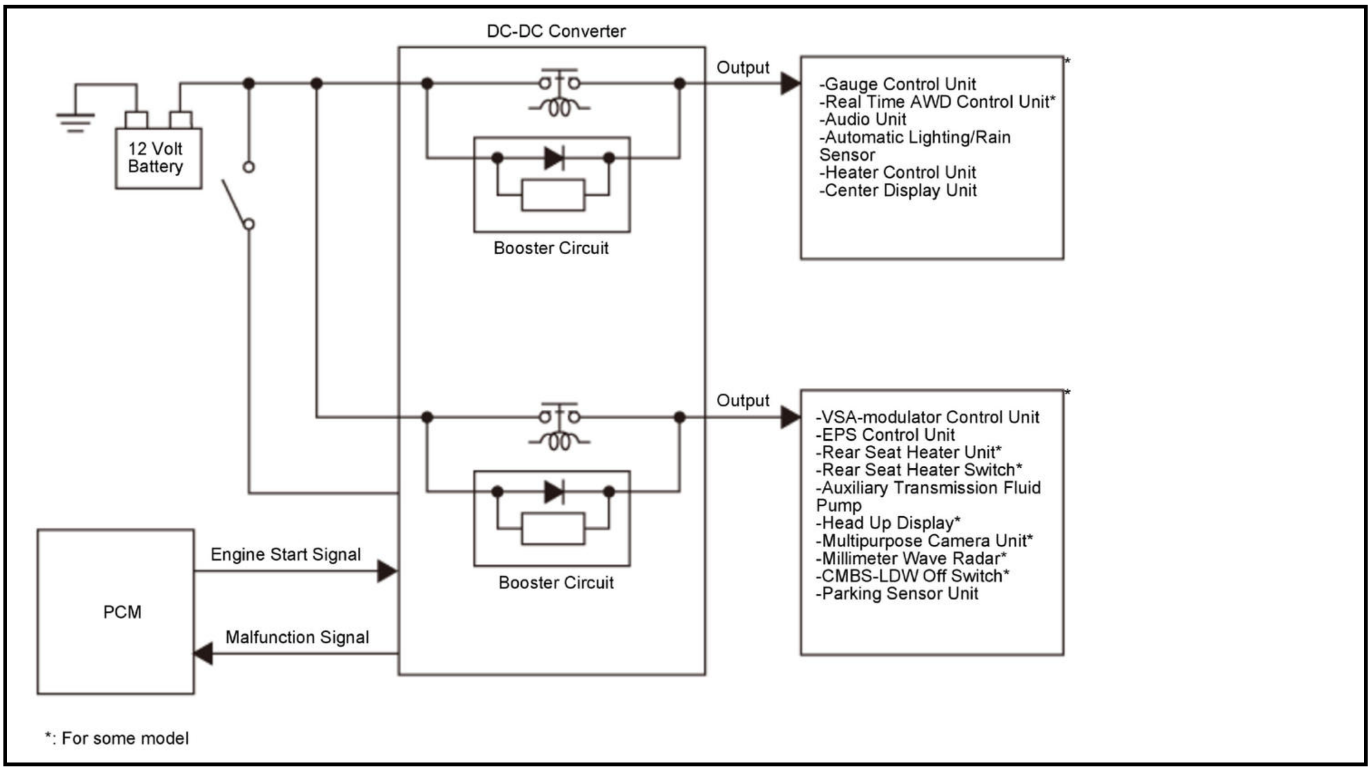
DC-DC Converter
12 Volt Battery
Output
Output
-Gauge Control Unit
-Real Time AWD Control Unit*
-Audio Unit
-Automatic Lighting/Rain Sensor
-Heater Control Unit
-Center Display Unit
Booster Circuit
-VSA-modulator Control Unit
-EPS Control Unit
-Rear Seat Heater Unit*
-Rear Seat Heater Switch*
-Auxiliary Transmission Fluid Pump
-Head Up Display*
-Multipurpose Camera Unit*
-Millimeter Wave Radar*
-CMBS-LDW Off Switch*
-Parking Sensor Unit
Booster Circuit
PCM
Engine Start Signal
Malfunction Signal
*: For some model

Pressurization Graphic by the DC-DC converter

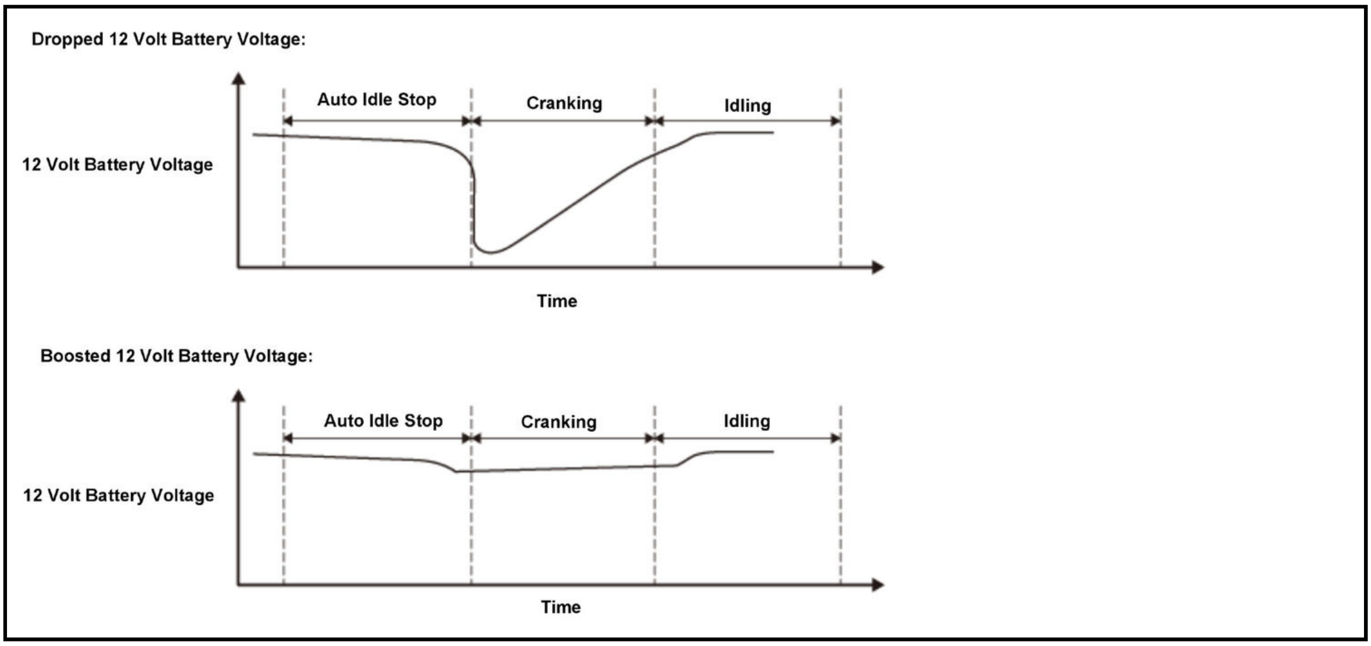

CATALYTIC CONVERTER SYSTEM DESCRIPTION

The three way catalytic converter (TWC) converts hydrocarbons (HC), carbon monoxide (CO), and oxides of nitrogen (NOx) in the exhaust gas to carbon dioxide (CO 2), nitrogen (N 2), and water vapor.

The TWC is attached to the turbocharger.

EVAP SYSTEM DESCRIPTION

For locations of each component on vehicle, refer to Component Location Index

The evaporative emission (EVAP) controls minimize the amount of fuel vapor escaping to the atmosphere. Vapor from the fuel tank is temporarily stored in the EVAP canister until it can be purged from the canister into the engine and burned. The EVAP canister is purged by drawing fresh air through it and into a port on the intake manifold. The purging vacuum is controlled by the EVAP canister purge valve. When vapor pressure in the fuel tank is higher than the set value of the EVAP two way valve, the valve opens and regulates the flow of fuel vapor to the EVAP canister (Mexico models). Also attached to the EVAP canister are the EVAP leak check module (1.5 L engine (USA and Canada models)) or the EVAP canister vent shut valve and the fuel tank pressure (FTP) sensor (2.4 L engine (USA models)).

Operation (2.4 L engine (USA models))

When fuel tank pressure increases because of heat and fuel vapor generation, evaporated fuel vapors are sent to the EVAP canister where they are stored. When the engine coolant is hot enough, the PCM opens the EVAP canister purge valve to draw the stored fuel vapor in the EVAP canister into the intake manifold to be burned. To regulate the amount of fuel vapor drawn into the engine, the PCM varies the EVAP canister purge valve opening using duty cycle control. When the outside air or other factor cools the fuel tank inside, the fuel tank pressure decreases. The EVAP canister vent shut valve is normally open and allows outside air to enter the fuel tank through the EVAP canister. If there is a system malfunction or blockage in the vent hose, a pressure valve on the fuel fill port opens and allows outside air to enter preventing system damage. The PCM uses the FTP sensor and EVAP canister vent shut valve to check for leaks in the system. When the enabling conditions are met, the EVAP canister vent shut valve is closed, the PCM monitors for changes in the FTP sensor.

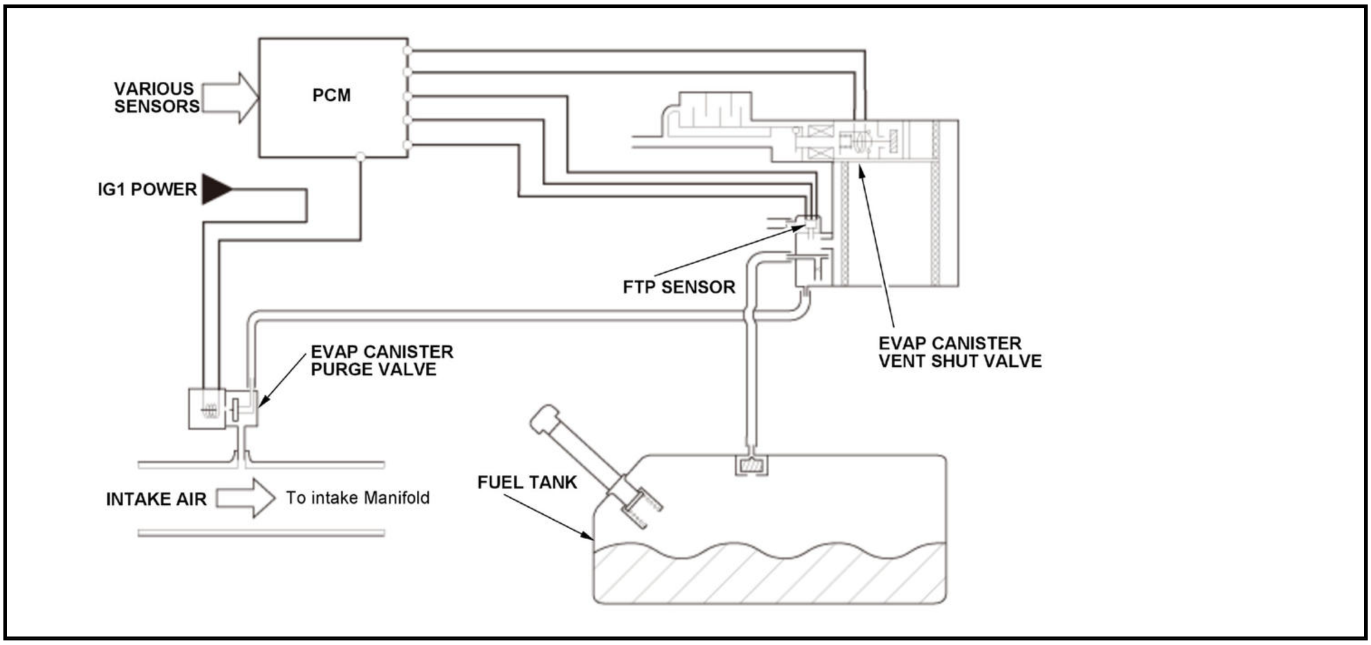
VARIOUS SENSORS
PCM
IG1 POWER
FTP SENSOR
EVAP CANISTER VENT SHUT VALVE
EVAP CANISTER PURGE VALVE
FUEL TANK
INTAKE AIR
To intake Manifold

Operation (1.5 L engine (USA and Canada models))

When fuel tank pressure increases because of heat and fuel vapor generation, evaporated fuel vapors are sent to the EVAP canister where they are stored. When the engine coolant is hot enough, the PCM opens the EVAP canister purge valve to draw the stored fuel vapor in the EVAP canister into the intake manifold to be burned. To regulate the amount of fuel vapor drawn into the engine, the PCM varies the EVAP canister purge valve opening using duty cycle control. When the outside air or other factor cools the fuel tank inside, the fuel tank pressure decreases. The EVAP leak check module is normally open and allows outside air to enter the fuel tank through the EVAP canister. If there is a system malfunction or blockage in the vent hose, a pressure valve on the fuel fill port opens and allows outside air to enter preventing system damage. The PCM uses the EVAP leak check module to check for leaks in the system. When the enabling conditions are met, the EVAP leak check module is operated, the PCM monitors for changes in the EVAP leak check module.

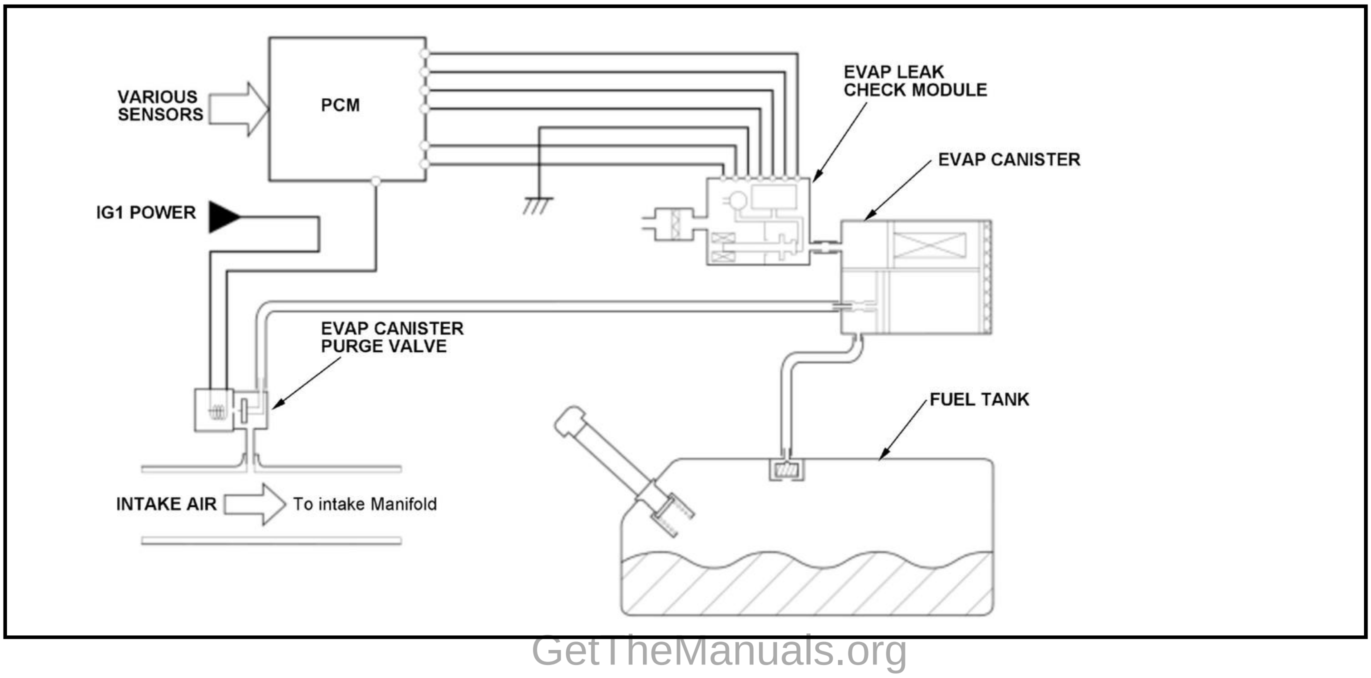
VARIOUS SENSORS
PCM
EVAP LEAK CHECK MODULE
EVAP CANISTER
IG1 POWER
EVAP CANISTER PURGE VALVE
FUEL TANK
INTAKE AIR
To intake Manifold

Operation (Mexico models)

The evaporated fuel vapors in the fuel tank increases the inside pressure of fuel tank. The increased pressure causes the positive pressure valve to open when the pressure is over the preset value for the two way valve. The evaporated fuel vapors which passed the two way valve are sent to the EVAP canister where they are stored. When the engine coolant is hot enough, the powertrain control module (PCM) opens the EVAP canister purge valve to draw the stored fuel vapor in the EVAP canister into the intake manifold to be burned. To regulate the amount of fuel vapor drawn into the engine, the PCM varies the EVAP canister purge valve opening using duty cycle control. When the outside air or other factor cools the fuel tank inside, the tank pressure decreases. The decreased pressure is negative and opens the negative pressure valve when the pressure is over the preset value for two way valve. Low pressure may deform the fuel tank. Therefore, outside air is inhaled into the evaporative canister through its intake. The inhaled outside air and evaporative emission in the evaporative emission canister are returned into the fuel tank. If there is a system malfunction or blockage in the vent hose, a pressure valve on the fuel fill port opens and allows outside air to enter preventing system damage.

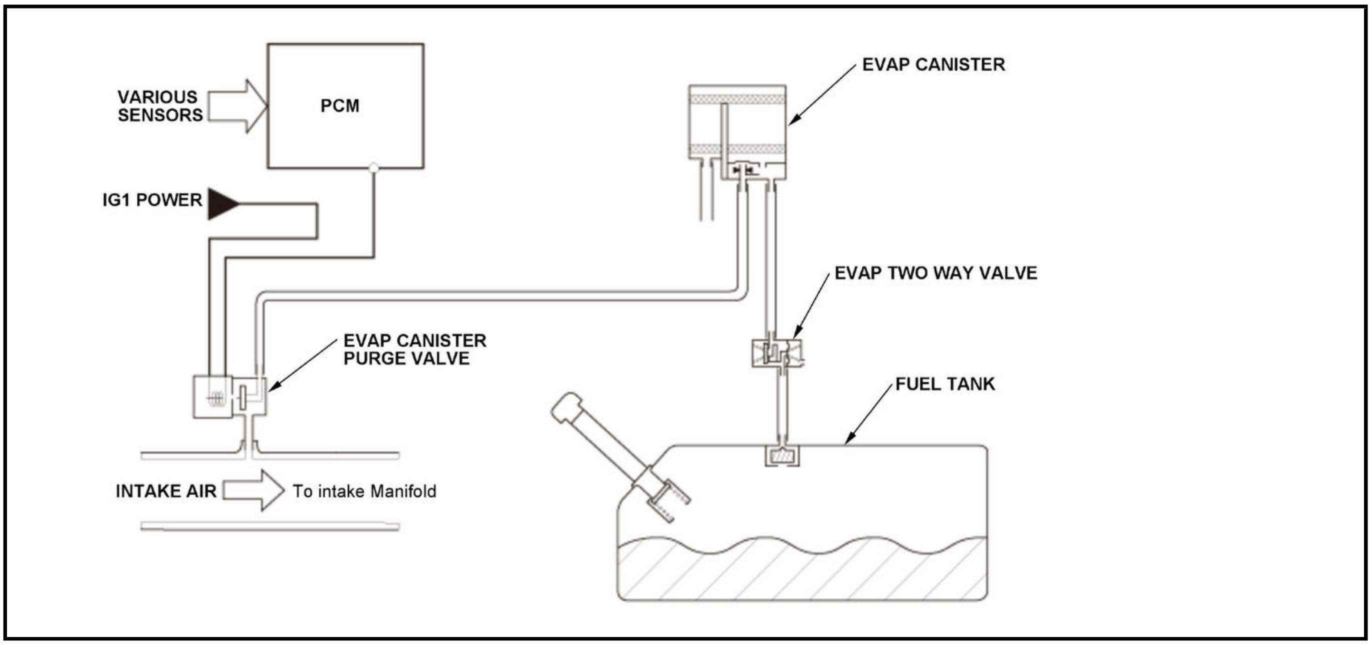

Joint of Intake Air Line (1.5 L engine)

The purge air from the EVAP canister is drawn into the intake air at the merge point where more strong suction force. Therefore, the merge point is variable by the engine condition with the turbocharger boost pressure.

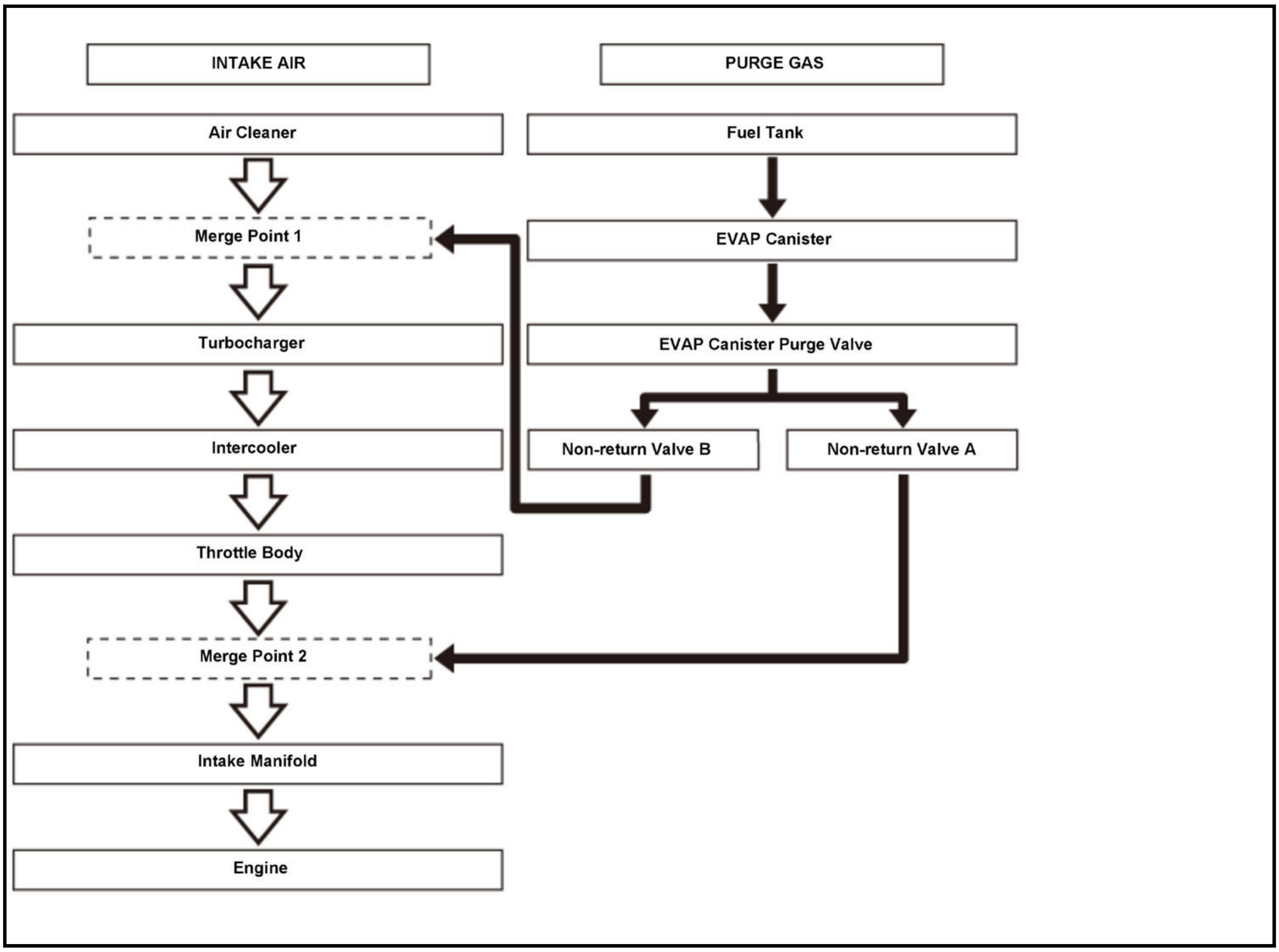
INTAKE AIR
PURGE GAS
Air Cleaner
Fuel Tank
Merge Point 1
EVAP Canister
Turbocharger
EVAP Canister Purge Valve
Intercooler
Non-return Valve B
Non-return Valve A
Throttle Body
Merge Point 2
Intake Manifold
Engine

Engine Condition	Turbocharger Boost Pressure	Non-return Valve A	Non-return Valve B	Merge Point
Low Load	Zero	Open	Close	Point 2
Mid Load	Rising-up from Zero	Open	Open	Point 1 and Point 2
High Load	High	Close	Open	Point 1

EVAP Leak Check Module (1.5 L engine (USA and Canada models))

The EVAP leak check module is a small vacuum pump used to leak check the EVAP system to create a vacuum in the system and is mounted on a bracket to the side of the EVAP canister. Inside of the module has a EVAP leak check module pressure sensor and a canister changeover valve. The canister changeover valve is normally open when not energized. When open the valve allows air to flow in and out of the canister. When energized the valve seals the canister side of the system from the atmosphere.

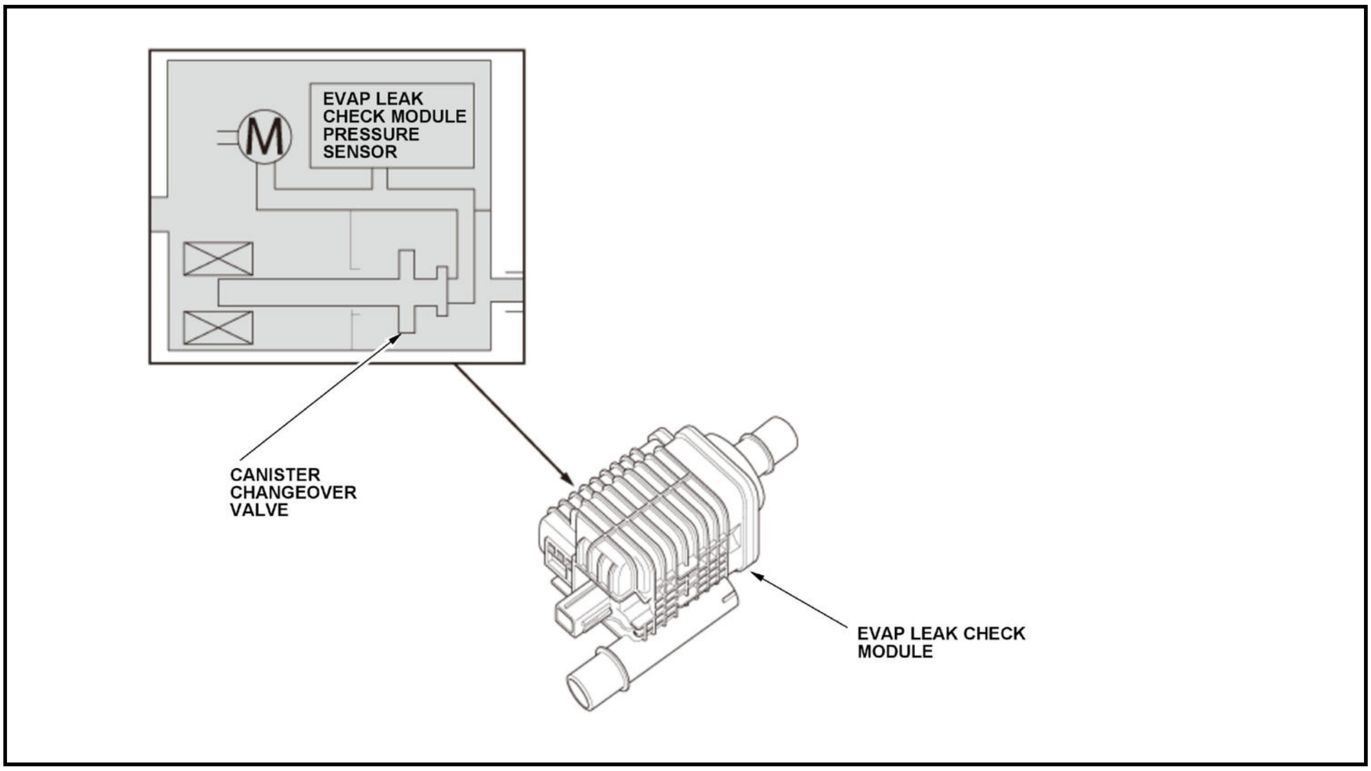
EVAP LEAK CHECK MODULE PRESSURE SENSOR
M
CANISTER CHANGEOVER VALVE
EVAP LEAK CHECK MODULE

ELECTRONIC THROTTLE CONTROL SYSTEM DESCRIPTION

For locations of each component on vehicle, refer to Component Location Index

Overview

The electronic throttle control system (ETCS) opens and closes the throttle valve by electronic control. This system consists of a throttle actuator built into the throttle body, throttle valve and throttle position (TP) sensor A/B, accelerator pedal position (APP) sensor A/B, ETCS driver built into the powertrain control module (PCM).

ETCS is a system that opens and closes the throttle valve electronically, it has various functions such as:

- Idle Control Function
- Accelerator Control Function
- Fail-Safe Function
- Relationship Action with Other Systems

Control

When the accelerator pedal is operated, APP sensors are driven and the accelerator pedal position is detected. The accelerator pedal position is delivered to the PCM, and the PCM drives the throttle actuator in the throttle body based on the delivered throttle pedal position to open or close the throttle valve. Throttle position is detected by the TP sensors in the throttle body and delivered to the PCM. The PCM drives the throttle actuator to control the throttle position during idling, during various system control, and when necessary, as well as based on the signals from the APP sensors.

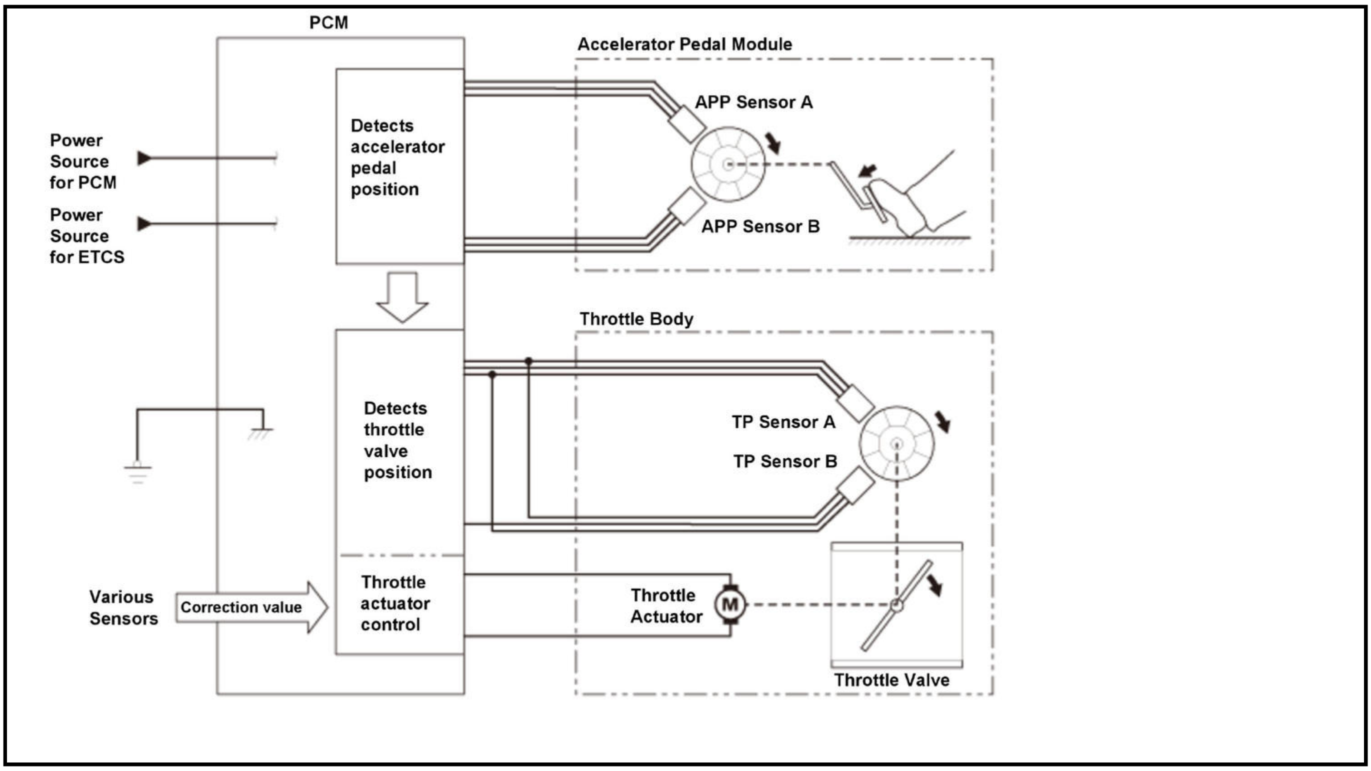
PCM
Accelerator Pedal Module
Power Source for PCM
Power Source for ETCS
Detects accelerator pedal position
APP Sensor A
APP Sensor B
Throttle Body
Detects throttle valve position
TP Sensor A
TP Sensor B
Various Sensors
Correction value
Throttle actuator control
Throttle Actuator
M
Throttle Valve

Change of ETCS system control (with ECON)

The ECON ON mode softens throttle valve control to reduce fuel consumption when the accelerator pedal is roughly depressed. Also, throttle opening becomes slow in comparison with the ECON OFF mode. However, if the accelerator pedal is depressed more than a certain level, control automatically becomes equivalent to the ECON OFF mode in order to ensure the acceleration.

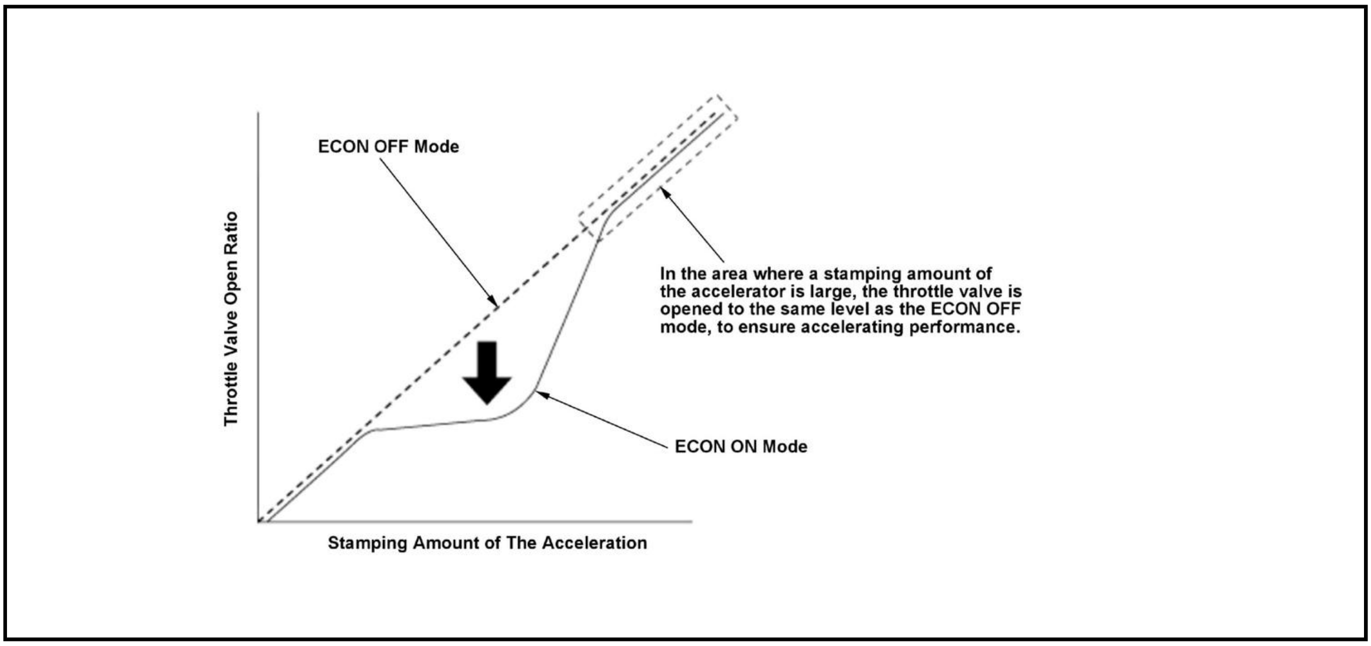

PCV SYSTEM DESCRIPTION

Some of the unburned gases in the combustion chamber will leak past the gap between the pistons and cylinders into the crankcase. The blow-by gases that include the unburned gases are returned through the positive crankcase ventilation (PCV) valve and are burned. This prevents the blow-by gases from flowing into the atmosphere.

1.5 L engine

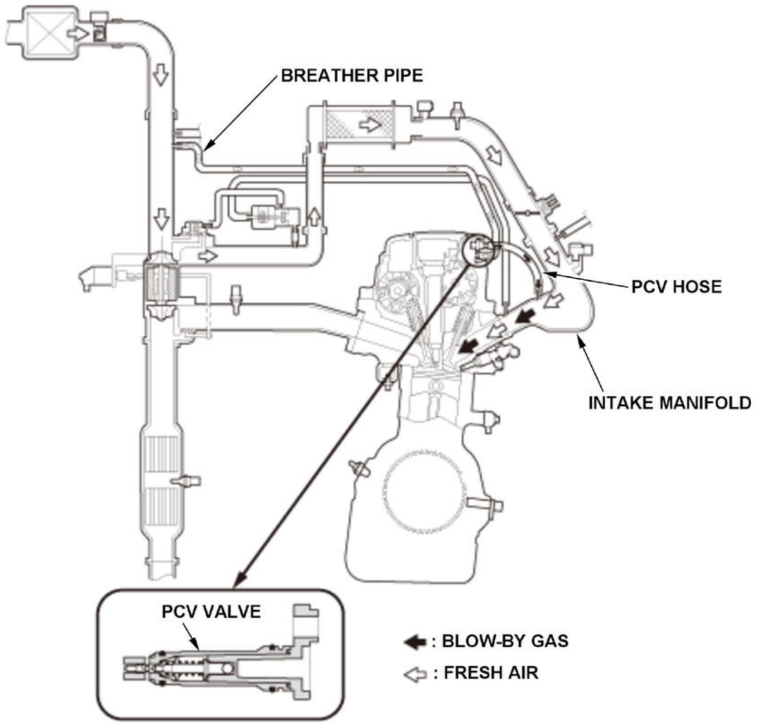
BREATHER PIPE
PCV HOSE
INTAKE MANIFOLD
PCV VALVE
←: BLOW-BY GAS
⇦: FRESH AIR

2.4 L engine

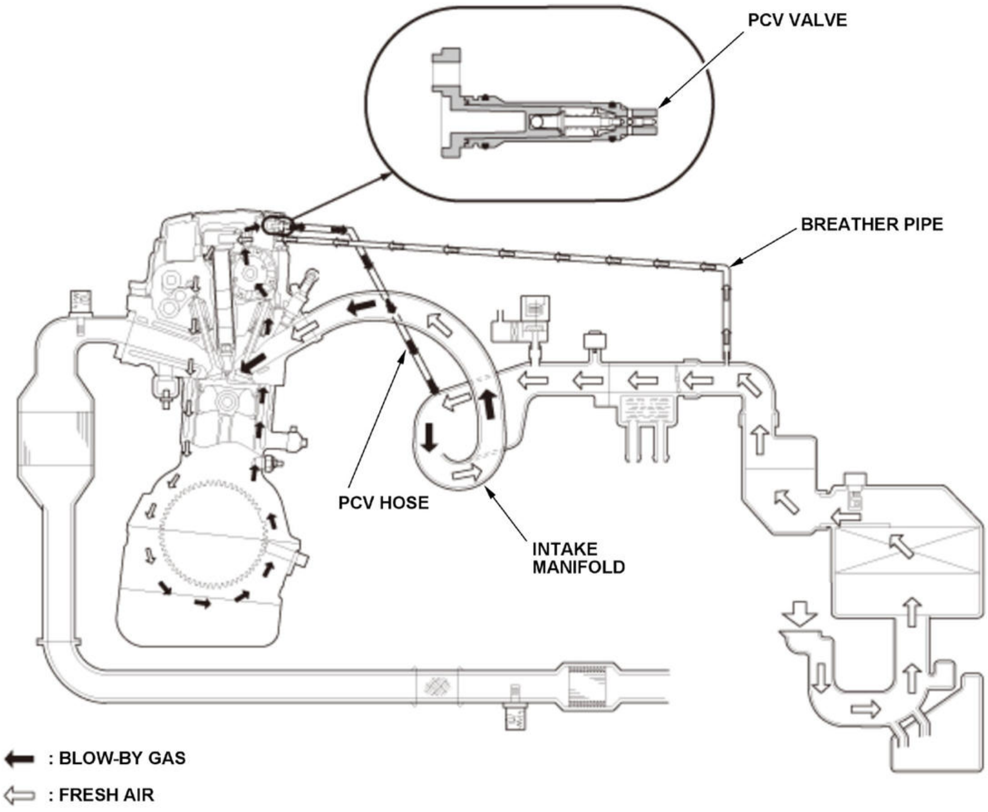
PCV VALVE
BREATHER PIPE
PCV HOSE
INTAKE MANIFOLD
←: BLOW-BY GAS
⇦: FRESH AIR

For locations of each component on vehicle, refer to Component Location Index

Components

1.5 L engine (USA and Canada models)

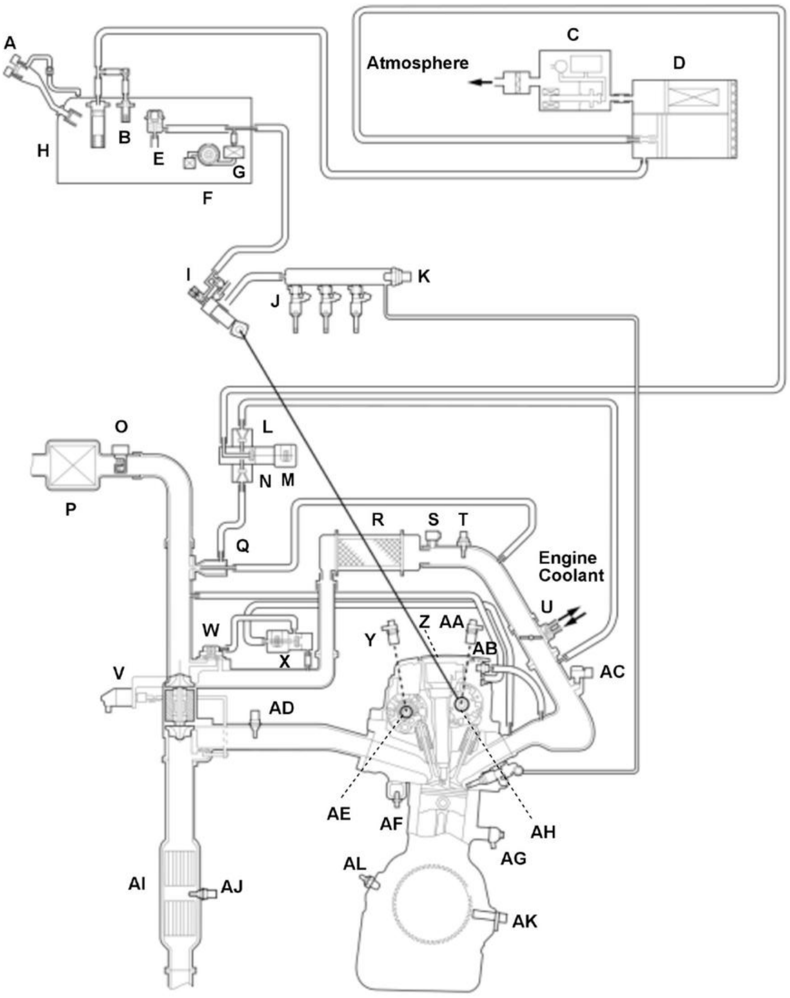
A
C
Atmosphere
D
H
B
E
G
F
I
K
J
O
L
N M
P
R
S
T
Q
Engine
Coolant
U
Z
AA
W
Y
AB
X
V
AC
AD
AE
AF
AH
AG
AL
AI
AJ
AK

A	MIS-FUEL INHIBIT DEVICE	T	IAT SENSOR 2
B	FUEL TANK VAPOR CONTROL VALVE	U	THROTTLE BODY
C	EVAP LEAK CHECK MODULE	V	TURBOCHARGER WASTEGATE CONTROL ACTUATOR
D	EVAP CANISTER	W	TURBOCHARGER BYPASS CONTROL VALVE
E	FUEL PRESSURE REGULATOR	X	TURBOCHARGER BYPASS CONTROL SOLENOID VALVE
F	FUEL PUMP	Y	CMP SENSOR B
G	FUEL FILTER	Z	IGNITION COIL

H	FUEL TANK	AA	CMP SENSOR A
I	HIGH PRESSURE FUEL PUMP	AB	PCV VALVE
J	FUEL INJECTOR	AC	MAP SENSOR
K	FUEL RAIL PRESSURE SENSOR	AD	A/F SENSOR (SENSOR 1)
L	NON-RETURN VALVE A	AE	VTC OIL CONTROL SOLENOID VALVE B
M	EVAP CANISTER PURGE VALVE	AF	ECT SENSOR 1
N	NON-RETURN VALVE B	AG	KNOCK SENSOR
O	MAF SENSOR/IAT SENSOR 1	AH	VTC OIL CONTROL SOLENOID VALVE A

P	AIR CLEANER	AI	TWC
Q	EVAP CANISTER PURGE NOZZLE	AJ	SECONDARY HO2S (SENSOR 2)
R	INTERCOOLER	AK	CKP SENSOR
S	TURBOCHARGER BOOST SENSOR	AL	OIL PRESSURE SWITCH

1.5 L engine (Mexico models)

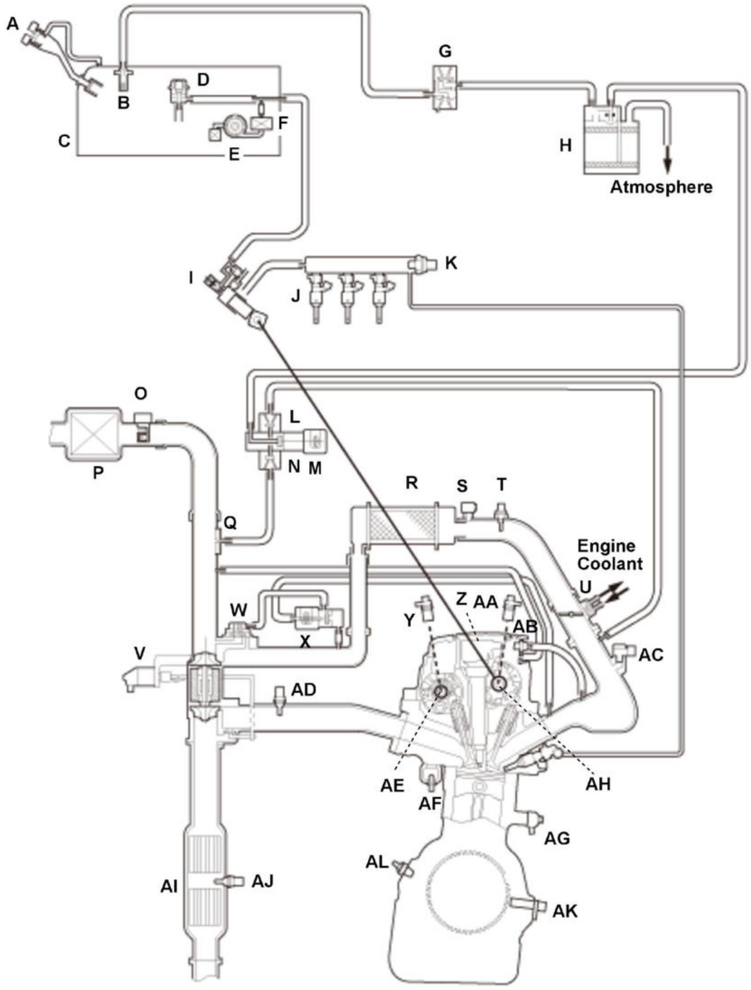
A
B
C
D
E
F
G
H
Atmosphere
I
J
K
O
P
L
N M
Q
R
S
T
Engine Coolant
U
W
X
Y
Z AA
AB
AC
V
AD
AE
AF
AH
AG
AL
AI
AJ
AK

A	FUEL FILL CAP	T	IAT SENSOR 2

B	FUEL TANK VAPOR CONTROL VALVE	U	THROTTLE BODY
C	FUEL TANK	V	TURBOCHARGER WASTEGATE CONTROL ACTUATOR
D	FUEL PRESSURE REGULATOR	W	TURBOCHARGER BYPASS CONTROL VALVE
E	FUEL PUMP	X	TURBOCHARGER BYPASS CONTROL SOLENOID VALVE
F	FUEL FILTER	Y	CMP SENSOR B
G	EVAP TWO WAY VALVE	Z	IGNITION COIL
H	EVAP CANISTER	AA	CMP SENSOR A
I	HIGH PRESSURE FUEL PUMP	AB	PCV VALVE
J	FUEL INJECTOR	AC	MAP SENSOR
K	FUEL RAIL PRESSURE SENSOR	AD	A/F SENSOR (SENSOR 1)
L	NON-RETURN VALVE A	AE	VTC OIL CONTROL SOLENOID VALVE B
M	EVAP CANISTER PURGE VALVE	AF	ECT SENSOR 1
N	NON-RETURN VALVE B	AG	KNOCK SENSOR

O	MAF SENSOR/IAT SENSOR 1	AH	VTC OIL CONTROL SOLENOID VALVE A
P	AIR CLEANER	AI	TWC
Q	EVAP CANISTER PURGE NOZZLE	AJ	SECONDARY HO2S (SENSOR 2)
R	INTERCOOLER	AK	CKP SENSOR
S	TURBOCHARGER BOOST SENSOR	AL	OIL PRESSURE SWITCH

2.4 L engine (USA models)

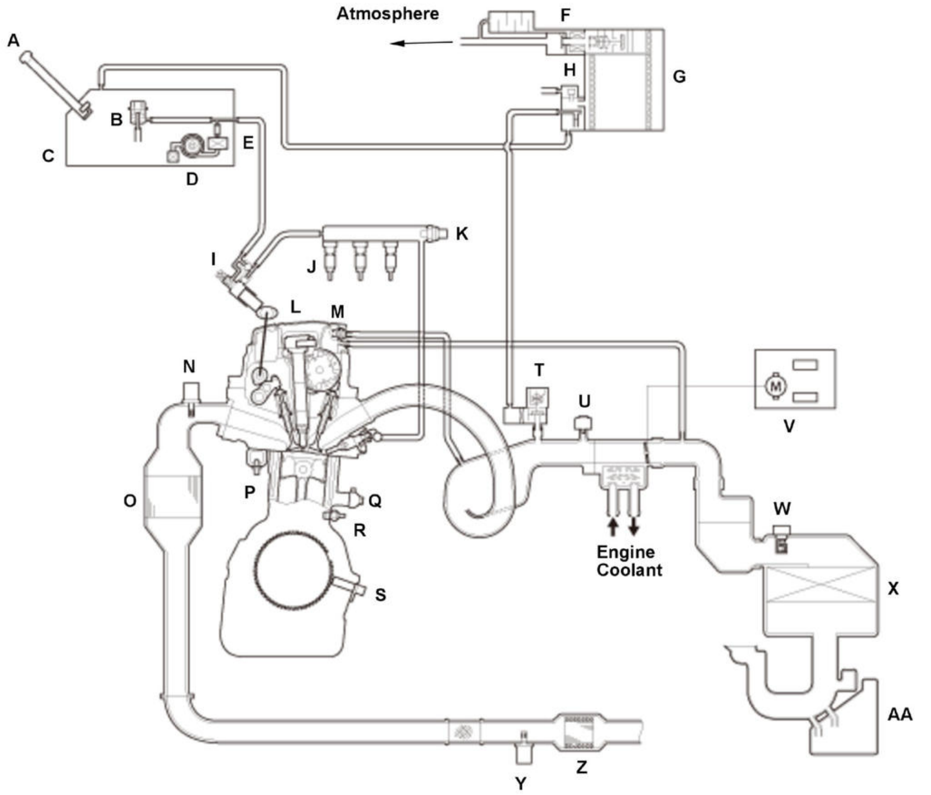

A	MIS-FUEL INHIBIT DEVICE	O	WU-TWC
B	FUEL PRESSURE REGULATOR	P	ECT SENSOR 1
C	FUEL TANK	Q	KNOCK SENSOR
D	FUEL PUMP	R	OIL PRESSURE SWITCH
E	FUEL FILTER	S	CKP SENSOR
F	EVAP CANISTER VENT SHUT VALVE	T	EVAP CANISTER PURGE VALVE
G	EVAP CANISTER	U	MAP SENSOR
H	FTP SENSOR	V	THROTTLE BODY
I	HIGH PRESSURE FUEL PUMP	W	MAF SENSOR/IAT SENSOR
J	FUEL INJECTOR	X	AIR CLEANER
K	FUEL RAIL PRESSURE SENSOR	Y	SECONDARY HO2S (SENSOR 2)
L	IGNITION COIL	Z	TWC
M	PCV VALVE	AA	INTAKE AIR RESONATOR
N	A/F SENSOR (SENSOR 1)	B	B

2.4 L engine (Mexico models)

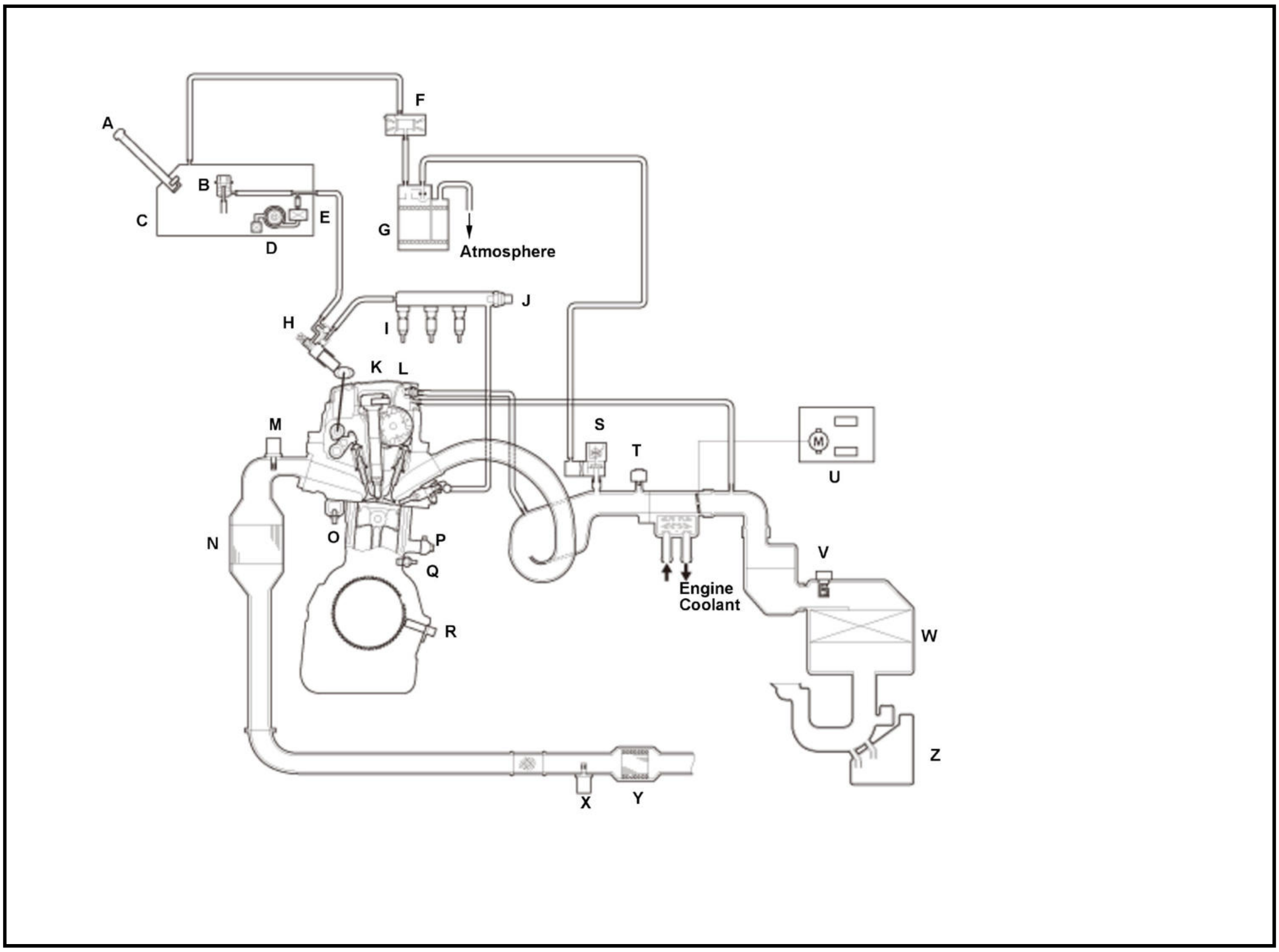

A	FUEL FILL CAP	N	WU-TWC
B	FUEL PRESSURE REGULATOR	O	ECT SENSOR 1
C	FUEL TANK	P	KNOCK SENSOR
D	FUEL PUMP	Q	OIL PRESSURE SWITCH
E	FUEL FILTER	R	CKP SENSOR
F	EVAP TWO WAY VALVE	S	EVAP CANISTER PURGE VALVE
G	EVAP CANISTER	T	MAP SENSOR
H	HIGH PRESSURE FUEL PUMP	U	THROTTLE BODY
I	FUEL INJECTOR	V	MAF SENSOR/IAT SENSOR
J	FUEL RAIL PRESSURE SENSOR	W	AIR CLEANER
K	IGNITION COIL	X	SECONDARY HO2S (SENSOR 2)
L	PCV VALVE	Y	TWC
M	A/F SENSOR (SENSOR 1)	Z	INTAKE AIR RESONATOR

Electronic Control

The powertrain control module (PCM) consists of a CPU memory (storage unit) and inputs/outputs that control the fuel injection, injection timing, and electronic throttle control system (ETCS).

Fail-Safe Function

When a malfunction occurs in the signal from a sensor or from another control unit, the PCM ignores that signal and substitutes a pre-programmed value that allows the engine to continue running. This causes a Confirmed DTC to be stored and the MIL to come on.

Updated Function

The PCM has a rewritable ROM. The ROM can acquire the latest software version.

MIL Indicator Check

When the vehicle is turned to the ON mode, the PCM turns on the MIL via the F-CAN circuit for about 15 to 20 seconds to check the indicator condition.

Self Shut Down (SSD) Mode

After the vehicle is turned to the OFF (LOCK) mode, the PCM stays on for up to an hour. If a PCM connector is disconnected during this time, the PCM may be damaged. To cancel the SSD, jump the SCS line with the HDS after the vehicle is turned to the OFF (LOCK) mode.

Two Drive Cycle Detection Method

The DTCs are detected with the one or two driving cycle method in the PCM. Specific DTCs which are considered as a not intermittent failure apply the two driving cycle method. When a malfunction occurs in the signal from a sensor or from another control unit in the first drive cycle, the PCM stores a pending DTC. The MIL does not come on at this time. If the failure continues in the second drive cycle, the PCM stores a confirmed DTC and turns on the MIL.

Engine Start Conditions

When any of the following conditions are met, the engine starts.

- Vehicle is stop and shift position/mode is P.
- Vehicle is stop, shift position/mode is N, and vehicle fixed condition (vehicle is stop and electric parking brake system is operated).
- Vehicle is running and brake pedal is not pressed.

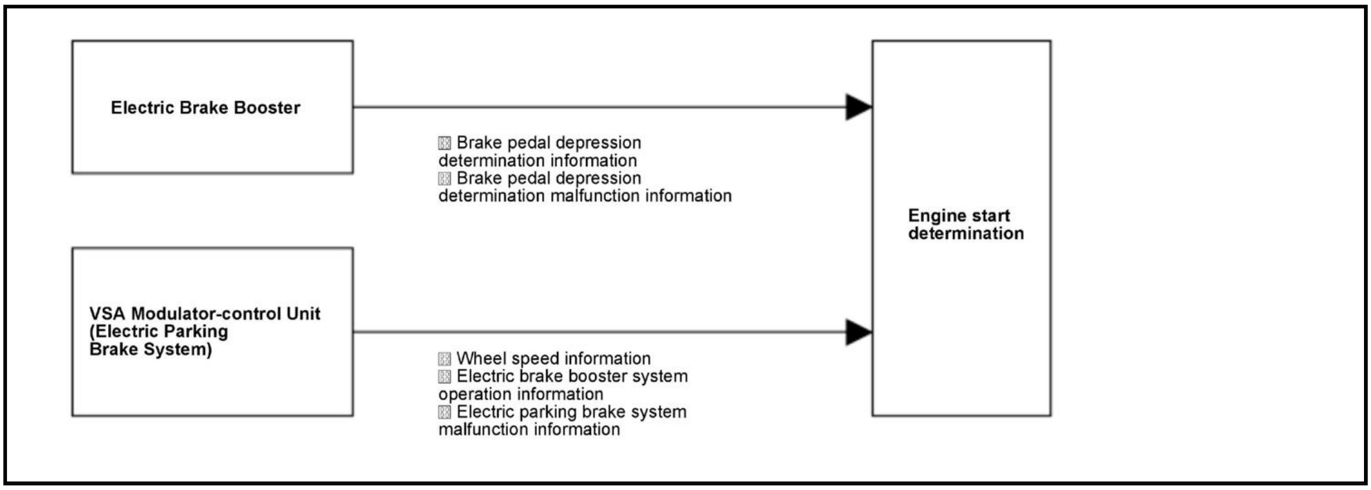
Electric Brake Booster
▨ Brake pedal depression determination information
▨ Brake pedal depression determination malfunction information
Engine start determination
VSA Modulator-control Unit (Electric Parking Brake System)
▨ Wheel speed information
▨ Electric brake booster system operation information
▨ Electric parking brake system malfunction information

Injection Control

Fuel injection controls include fuel injection amount control, fuel cut control, and fuel pump control. Adaptive PGM-FI (programmed-fuel injection) technology enables accurate fuel controls, which contributes to increasing engine power and decreasing fuel consumption.

Fuel Injection

The fuel injection is determined by adding correction values to a basic injection. The powertrain control module (PCM) controls the amount of fuel injection by the length of time the injector is energized.

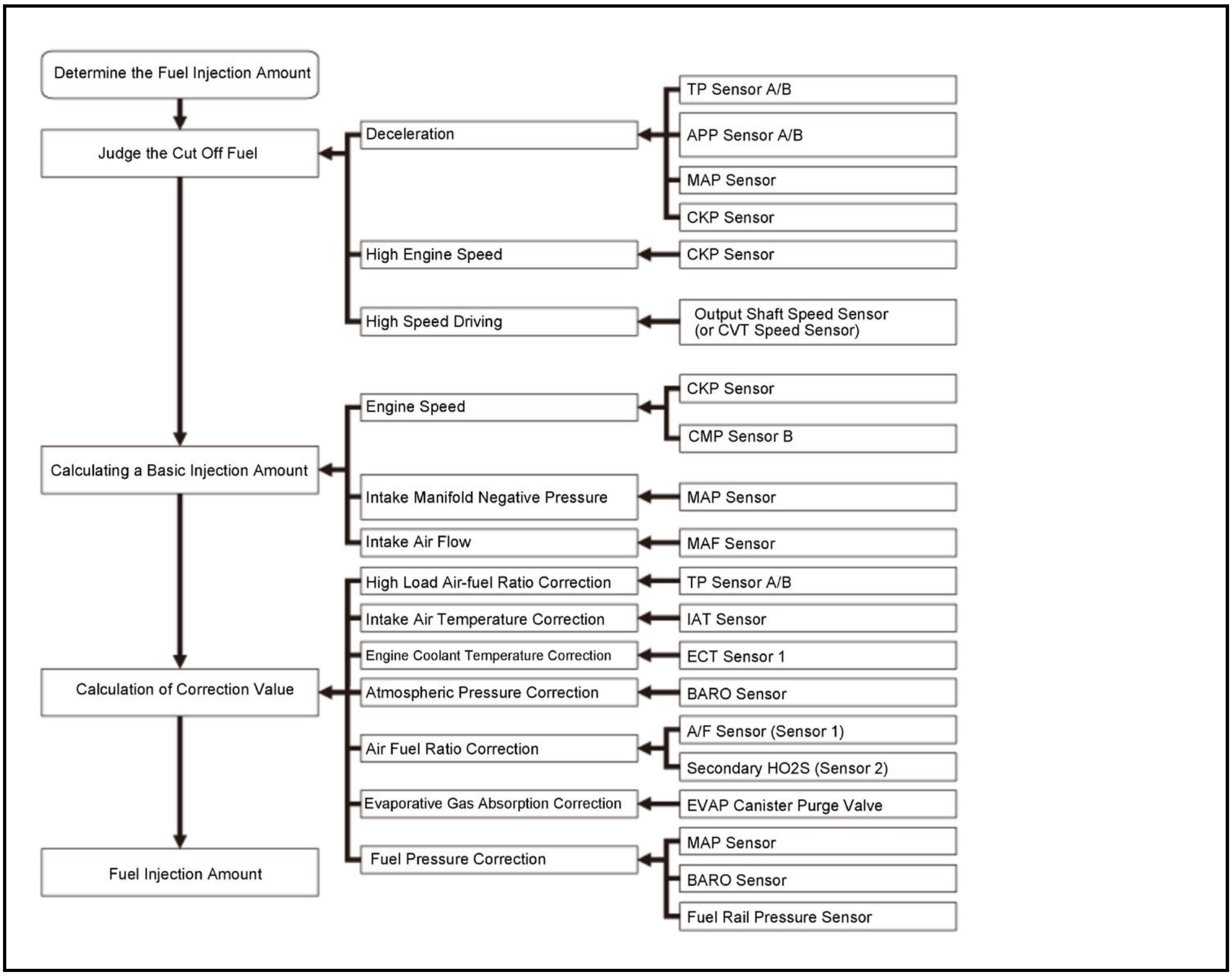
Determine the Fuel Injection Amount
Judge the Cut Off Fuel
Deceleration
TP Sensor A/B
APP Sensor A/B
MAP Sensor
CKP Sensor
High Engine Speed
CKP Sensor
High Speed Driving
Output Shaft Speed Sensor (or CVT Speed Sensor)
Calculating a Basic Injection Amount
Engine Speed
CKP Sensor
CMP Sensor B
Intake Manifold Negative Pressure
MAP Sensor
Intake Air Flow
MAF Sensor
Calculation of Correction Value
High Load Air-fuel Ratio Correction
TP Sensor A/B
Intake Air Temperature Correction
IAT Sensor
Engine Coolant Temperature Correction
ECT Sensor 1
Atmospheric Pressure Correction
BARO Sensor
Air Fuel Ratio Correction
A/F Sensor (Sensor 1)
Secondary HO2S (Sensor 2)
Evaporative Gas Absorption Correction
EVAP Canister Purge Valve
Fuel Pressure Correction
MAP Sensor
BARO Sensor
Fuel Rail Pressure Sensor
Fuel Injection Amount

Fuel Injection Timing

The fuel injection timing is determined by the PCM, which calculates the injection time for each cylinder based on the signals from the crankshaft position (CKP) sensor and camshaft position (CMP) sensor A. The PCM then controls the time to energize the injector. Therefore, the fuel injection control will vary depending on the state of the vehicle. In addition, the fully sequential injection system is adopted as a fuel injection system.

Fuel Injector

The fuel injectors use multiple nozzles to inject high pressure fuel into the combustion chamber. Providing few injection ports promotes a finer fuel spray and improved fuel consumption by reducing fuel adherence to the top surface of the piston, reduction of hydrocarbons (HC) discharge, and higher engine performance.

1.5 L engine

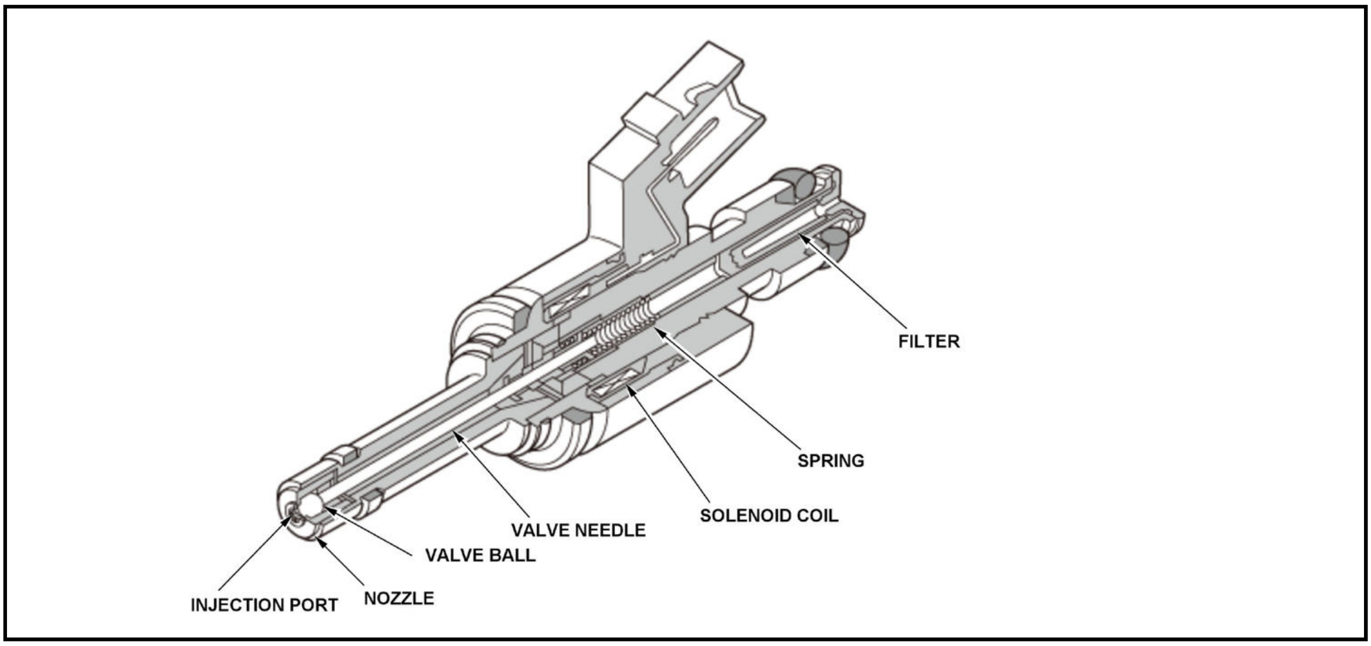
FILTER
SPRING
SOLENOID COIL
VALVE NEEDLE
VALVE BALL
INJECTION PORT
NOZZLE

2.4 L engine

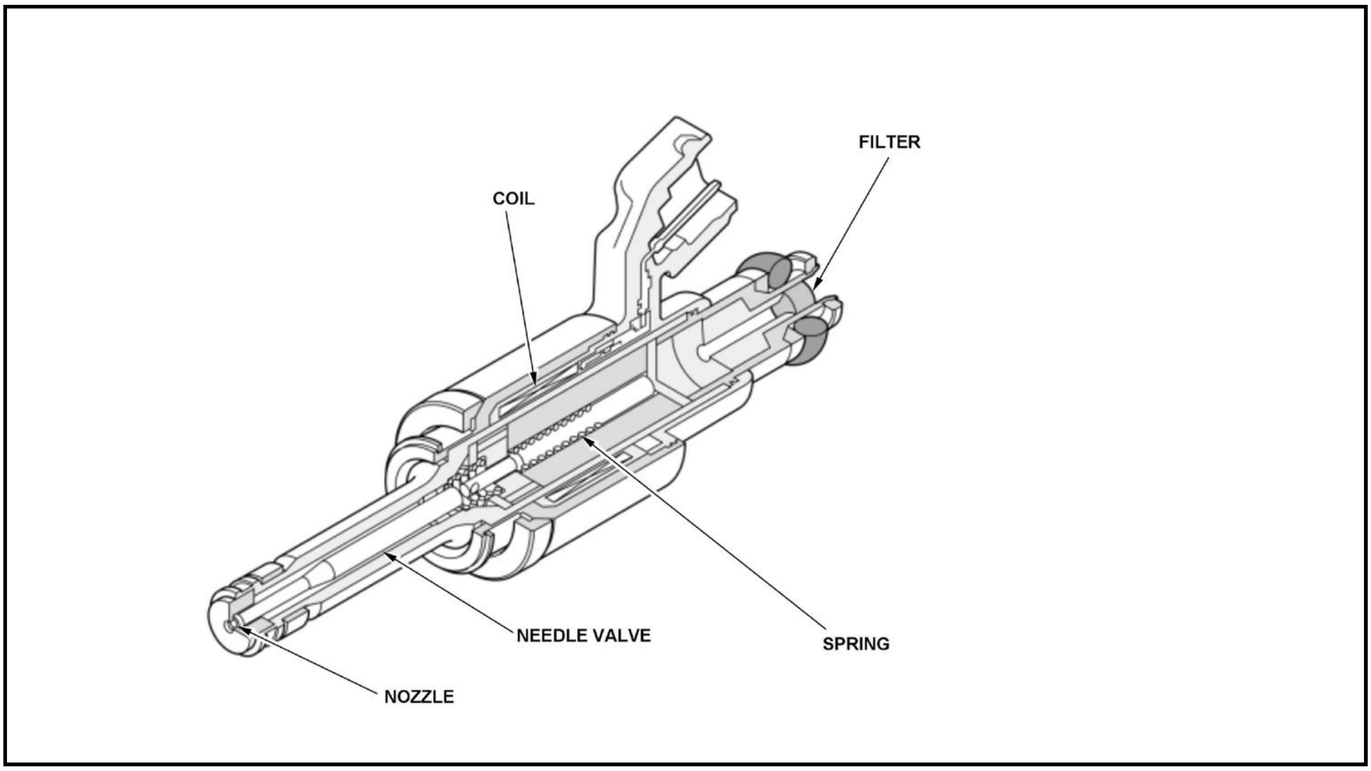
FILTER
COIL
NEEDLE VALVE
SPRING
NOZZLE

A/F Sensor/HO2S Feedback Air/Fuel Ratio Control

Air fuel ratio control is part of fuel injection control and comprises the steps of:

- Calculating basic injection amount from intake air flow amount and engine speed
- Calculating air fuel ratio correction value from the oxygen density in the exhaust gas and reflecting the calculated values to the injection amount

Air fuel ratio control stops feedback under the following conditions in order to maintain operational performance and catalytic protection.

- When starting the engine or during fuel increase after the engine is started
- While the engine coolant is cold
- During fuel increase under high load
- During fuel increase at high engine speed
- During fuel cut-off at deceleration

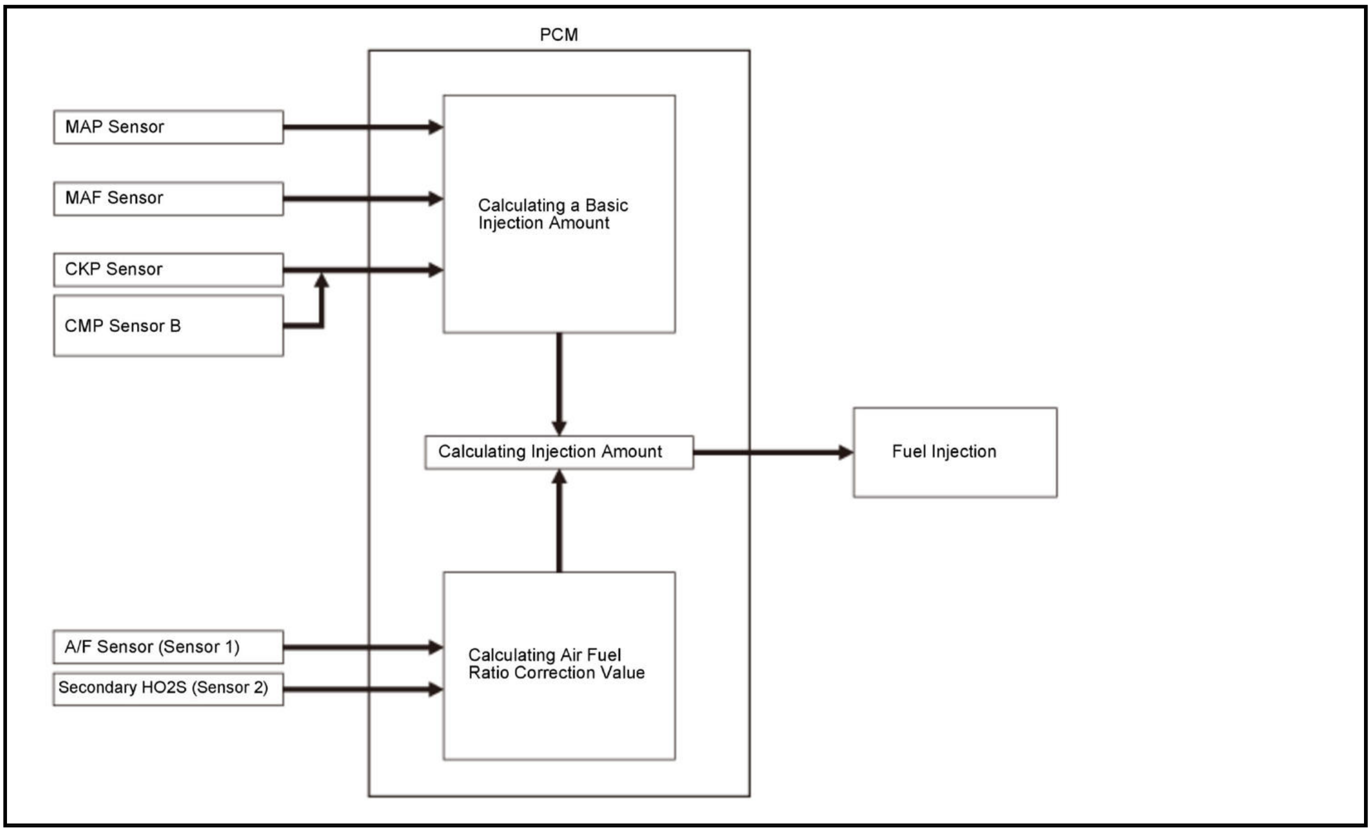
PCM
MAP Sensor
MAF Sensor
CKP Sensor
CMP Sensor B
Calculating a Basic Injection Amount
Calculating Injection Amount
Fuel Injection
A/F Sensor (Sensor 1)
Secondary HO2S (Sensor 2)
Calculating Air Fuel Ratio Correction Value

Ignition Timing Control

The powertrain control module (PCM) contains the memory for basic ignition timing at various engine speeds and manifold absolute pressures. It also adjusts the timing according to engine coolant temperature and intake air temperature.

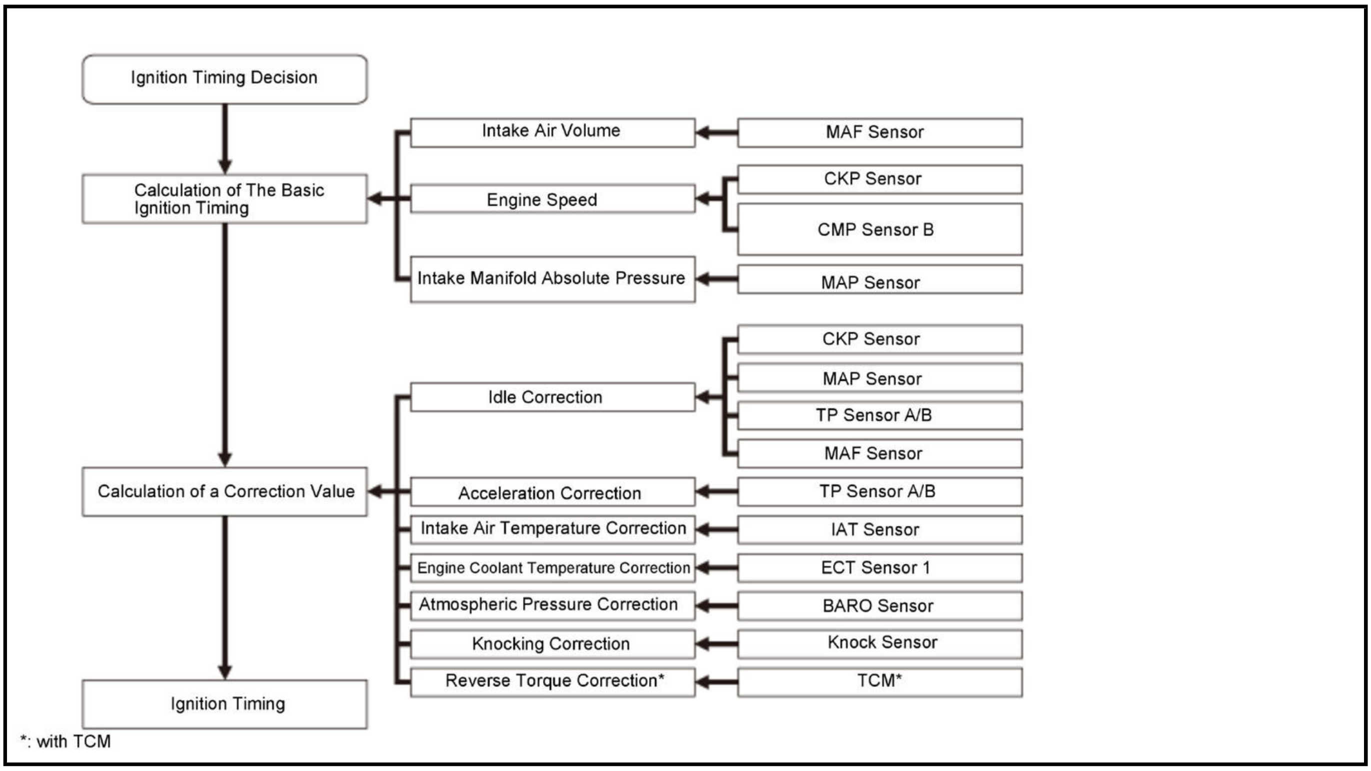
Ignition Timing Decision
Calculation of The Basic Ignition Timing
Intake Air Volume
MAF Sensor
Engine Speed
CKP Sensor
CMP Sensor B
Intake Manifold Absolute Pressure
MAP Sensor
Idle Correction
CKP Sensor
MAP Sensor
TP Sensor A/B
MAF Sensor
Calculation of a Correction Value
Acceleration Correction
TP Sensor A/B
Intake Air Temperature Correction
IAT Sensor
Engine Coolant Temperature Correction
ECT Sensor 1
Atmospheric Pressure Correction
BARO Sensor
Knocking Correction
Knock Sensor
Reverse Torque Correction*
TCM*
Ignition Timing
*: with TCM

Idle Speed Control (High Altitude) (

For some models)

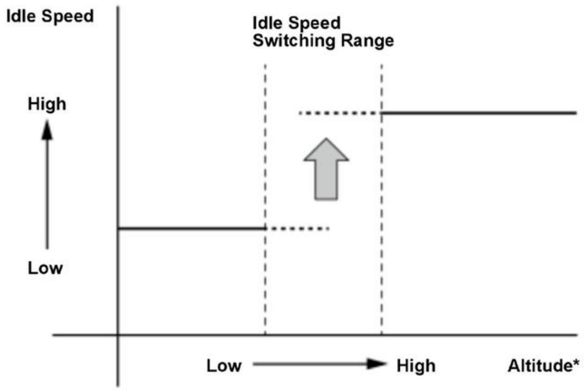

*: Altitude is based on the value of the barometric pressure sensor.

Fuel Cut-off Control

Fuel Cut-off Control

After warming up, during deceleration with the throttle valve slightly opened from the fully closed position, the powertrain control module (PCM) stops the fuel injection when the engine speed is over the specified value to improve fuel efficiency.

Fuel cut-off at high engine speed

To prevent engine damage, the PCM stops the fuel injection when the engine speed is in the limited area (red zone). PCM stops fuel injection while the vehicle is driven and while at a stop. Engine speed fuel cut is lower when stopped compared to when driven.

Engine Type	When the vehicle is being driven	When the vehicle is stopped
1.5 L engine	6, 600 rpm	4, 000 rpm
2.4 L engine	7, 000 rpm	4, 000 rpm

At High Speed Driving

PCM stops fuel injection when the vehicle speed is over than the listed speed in the following chart.

High speed driving
118 mph (190 km/h) and over

PGM-FI SYSTEM DESCRIPTION - COMPONENTS

Air Fuel Ratio (A/F) Sensor (Sensor 1)

Air fuel ratio control performs fuel injection control based on the oxygen density detected in exhaust gas in order to bring the intake mixture in the vicinity of a target air fuel ratio. This high-precision air fuel ratio control is realized by detecting a correction value with an air fuel ratio (A/F) sensor (Sensor 1) and then applying further correction with a secondary heated oxygen sensor (secondary HO2S) (Sensor 2). The powertrain control module (PCM) supplies a current to the A/F sensor (Sensor 1), and monitors the current value which varies with the oxygen density in the measuring chamber of the sensor. The current value is proportional to the air fuel ratio, therefore the PCM can calculate the air fuel ratio from the value of the current.

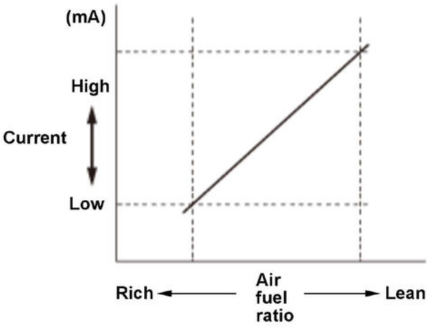

Secondary HO2S (Sensor 2)

The secondary heated oxygen sensor (secondary HO2S) (Sensor 2) detects the oxygen density in the exhaust gas passing through the catalyst and outputs it to the powertrain control module (PCM) to enable the high-precision air fuel ratio control, which cannot be realized only with an A/F sensor (Sensor 1). A ceramic heater is equipped inside the element in order to shorten sensor reaction time and to enable output that is constantly stable.

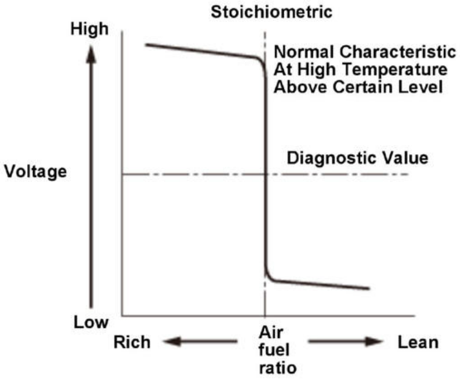

CKP Sensor

Regularly continuous teeth except for the one position on the CKP pulse plate passes over the CKP sensor, a pulse signal is delivered to the PCM.

CMP Sensor A

Every time one of the three protrusions of the pulse plate attached to the intake camshaft passes over camshaft position (CMP) sensor A, a pulse signal is delivered.

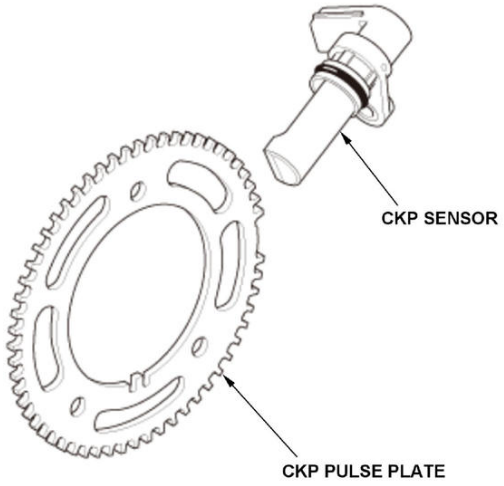

NOTE: This illustration is an example only. Appearance and structure of the actual parts may vary depending on the model.

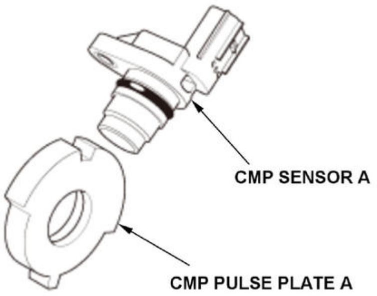

NOTE: This illustration is an example only. Appearance and structure of the actual parts may vary depending on the model.

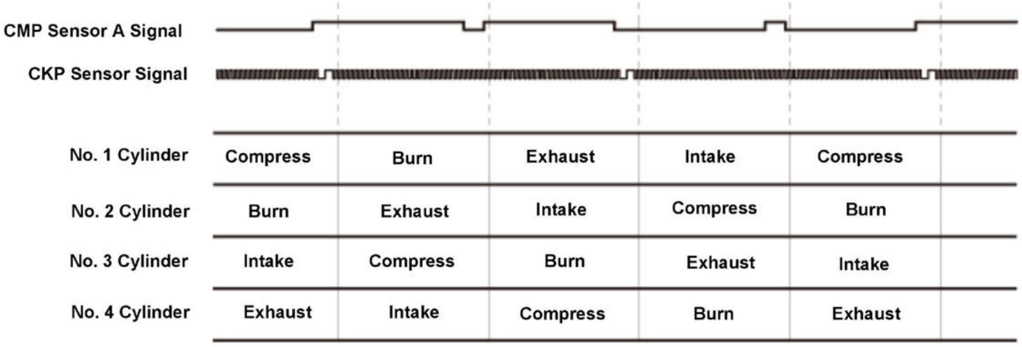

No. 1 Cylinder	Compress	Burn	Exhaust	Intake	Compress
No. 2 Cylinder	Burn	Exhaust	Intake	Compress	Burn
No. 3 Cylinder	Intake	Compress	Burn	Exhaust	Intake
No. 4 Cylinder	Exhaust	Intake	Compress	Burn	Exhaust

MAF Sensor/IAT Sensor 1

1.5 L engine:The mass air flow (MAF) sensor/intake air temperature (IAT) sensor has the MAF sensor contains a heater and two temperature sensors that are located on both sides of the heater at a very close distance. The heater is supplied current to the heating control at a constant temperature. The sensors upstream side and downstream side detect the mass air flow and the direction of air flow from the temperature difference due to heat conduction of air. The MAF sensor outputs the signal using a frequency (Hz).

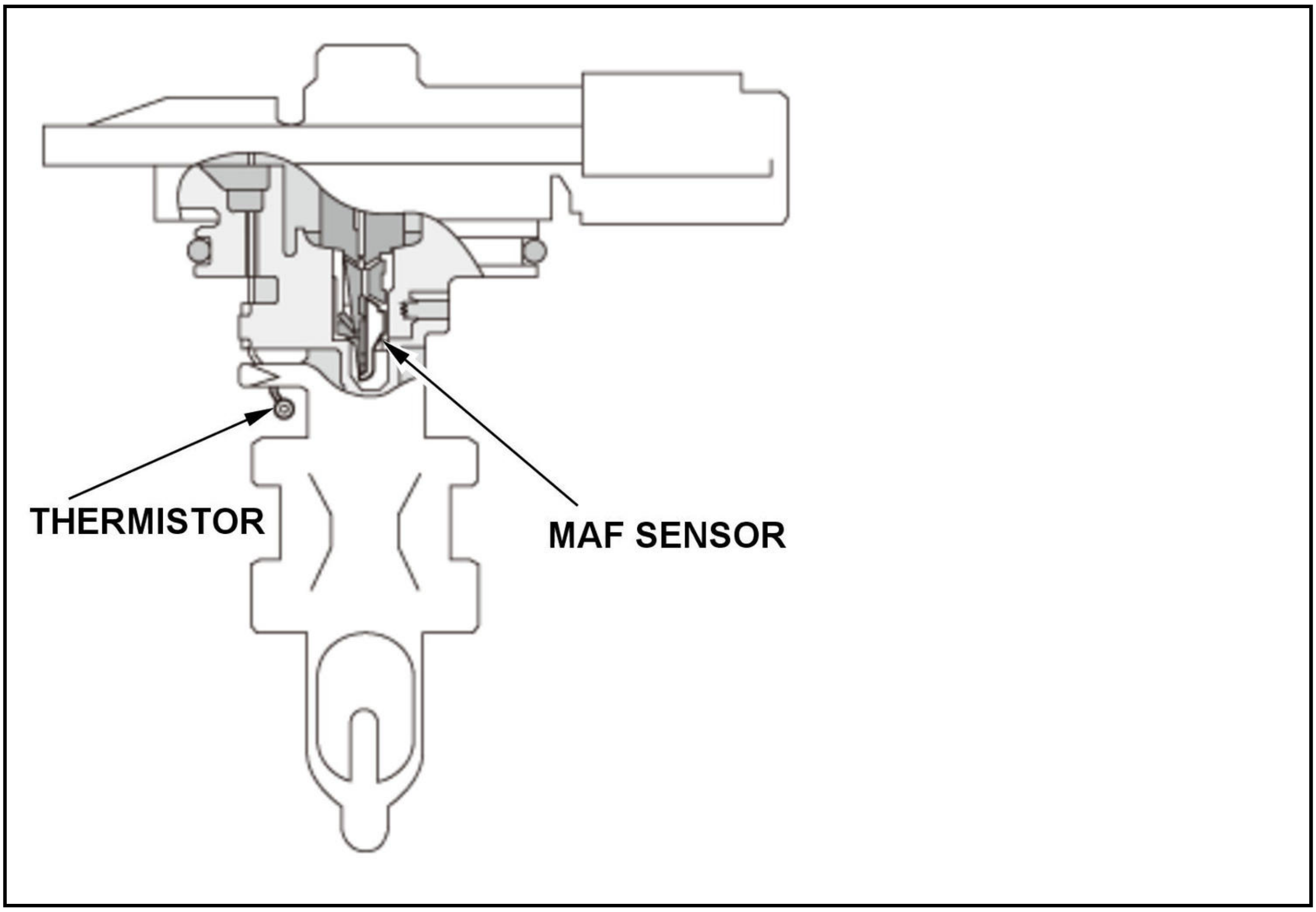
THERMISTOR
MAF SENSOR

2.4 L engine:The mass air flow (MAF) sensor/intake air temperature (IAT) sensor 1 contains a hot wire sensor, a cold wire sensor, and a thermistor. The sensor is in the intake air passage. The resistance of the hot wire, the cold wire, and the thermistor changes due to intake air temperature and air flow. The control circuit in the MAF sensor controls the current to keep the hot wire at a set temperature. The current is converted to voltage in the control circuit, then sent as an input to the PCM.

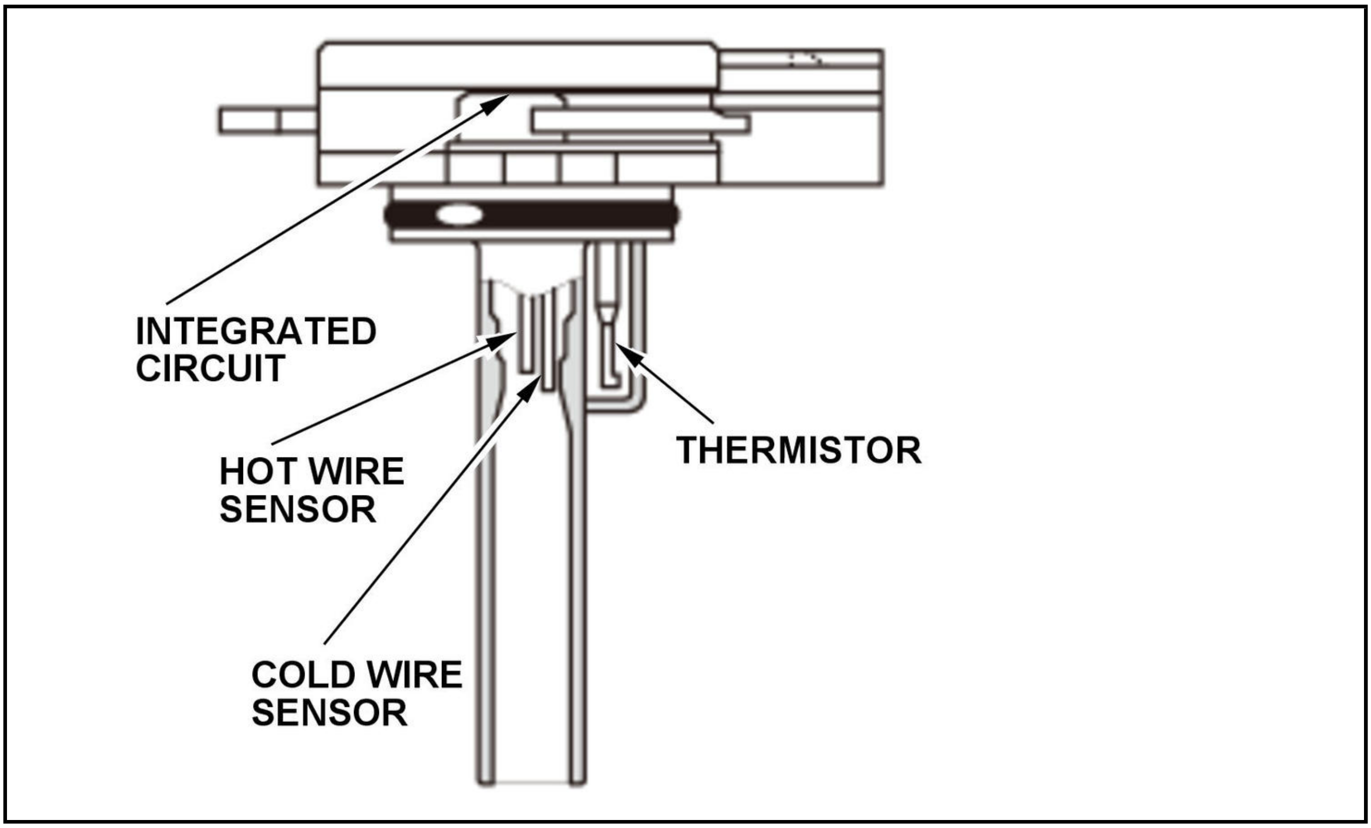
INTEGRATED CIRCUIT
HOT WIRE SENSOR
THERMISTOR
COLD WIRE SENSOR

Throttle Body

Manifold Absolute Pressure (MAP) Sensor

The MAP sensor converts manifold absolute pressure into electrical signals to the PCM.

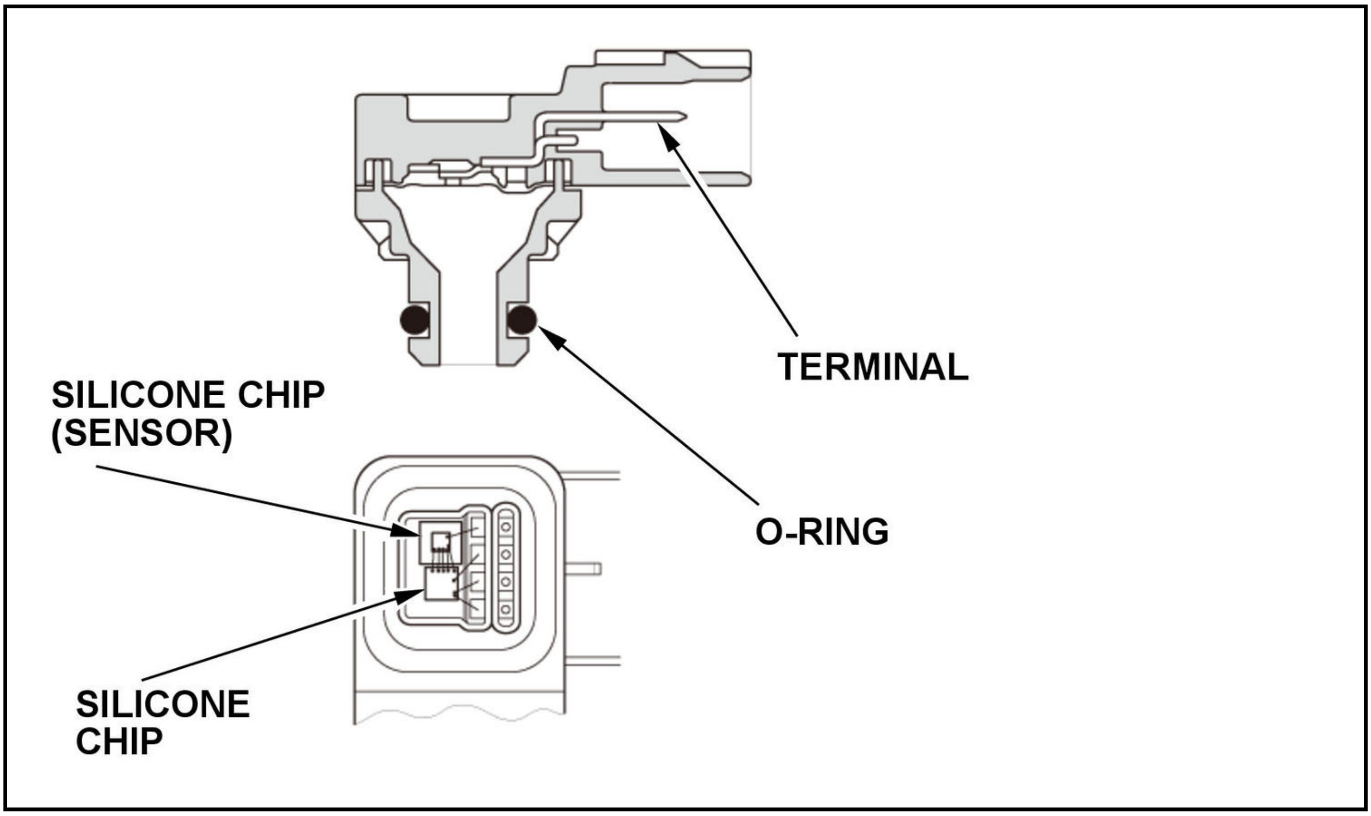
TERMINAL
SILICONE CHIP (SENSOR)
O-RING
SILICONE CHIP

Knock Sensor

The knock control system adjusts the ignition timing to minimize knock.

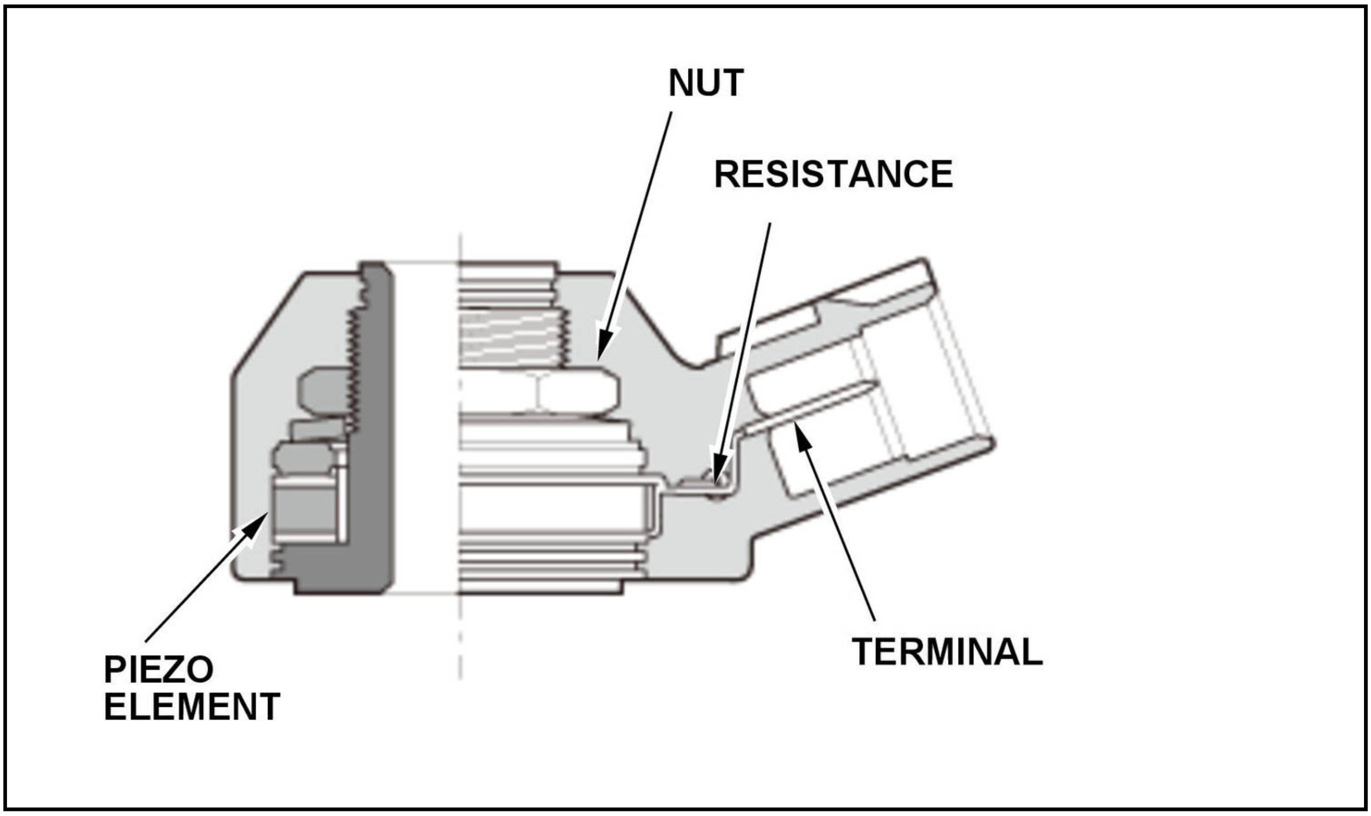
NUT
RESISTANCE
TERMINAL
PIEZO ELEMENT

Barometric Pressure (BARO) Sensor

The BARO sensor is inside the PCM. It converts atmospheric pressure into a voltage signal that is used by the PCM to modify the basic duration of the fuel injection discharge.

Engine Coolant Temperature (ECT) Sensors 1 and 2

ECT sensors 1 and 2 are temperature dependent resistors (thermistors). The resistance decreases as the engine coolant temperature increases.

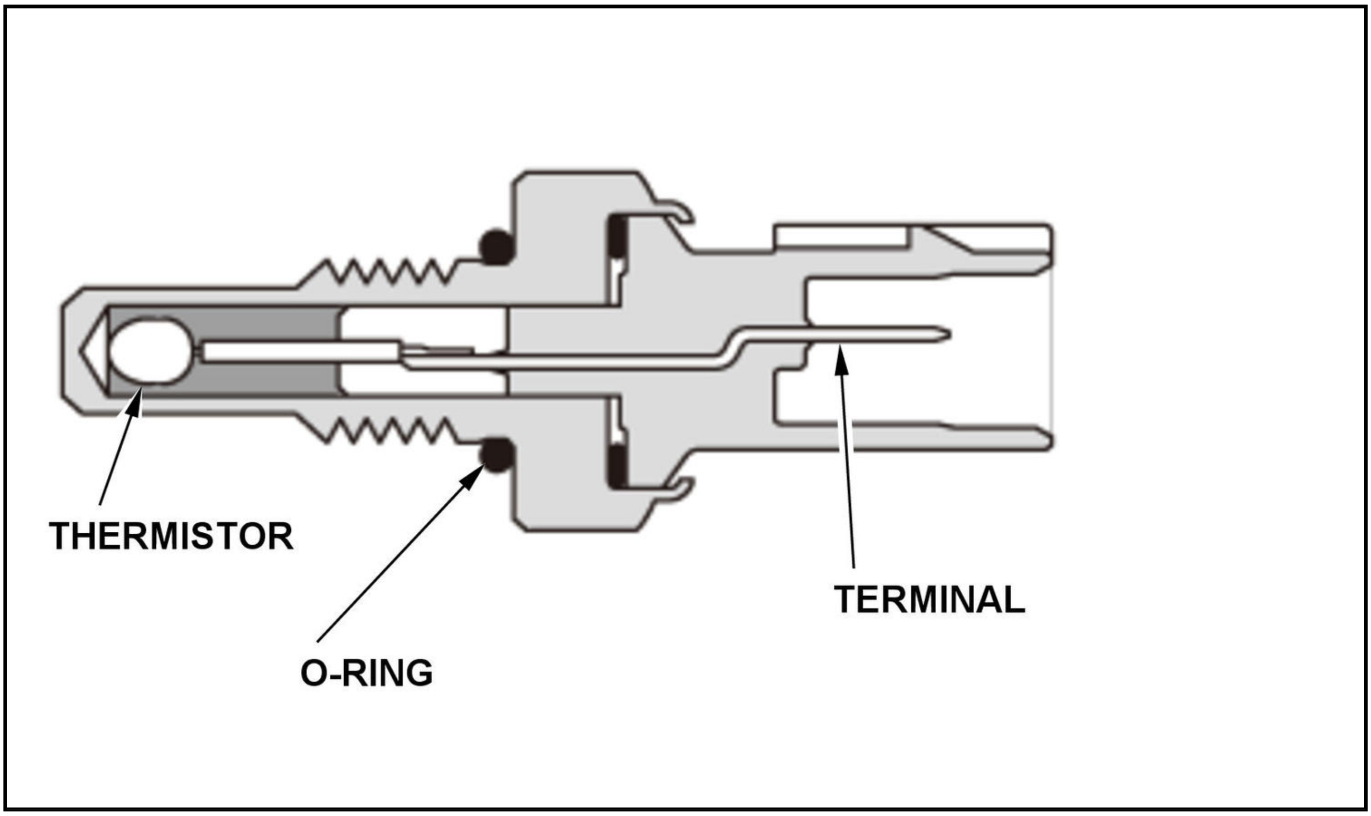

PGM-FI SYSTEM DESCRIPTION - ON-BOARD SNAPSHOT

Overview

For an easy analysis of problems caused by engine stalls and starting problems, the powertrain control module (PCM) uses an on-board snapshot to record the operational conditions at the time of engine stalls and engine starting problems.

There are three types of on-board snapshots: the on-board snapshot when DTC is stored, the on-board snapshot when engine stalls, and the on-board snapshot when engine does not start.

Basically the latest on-board snapshot data is memorized into the PCM. Therefore, a data memorized before is overwritten and cleared by a new one. However, because an on-board snapshot data has a priority which must be memorized into the PCM, the on-board snapshot which means the engine is hard to start cannot be memorized when the on-board snapshot which does the engine stalls is stored in advance. The data of the on-board snapshots can be checked with the HDS. Make sure to clear each type of on-board snapshots after checking it.

Control

On-board snapshot when engine stalls

The preconditions for recording an on-board snapshot when the engine stalls are shown below. When an engine stall occurs under these preconditions, the parameters related to the engine stall are stored in the PCM - for a time span extending for 9 seconds before the engine stall and 1 second after the engine stall - covering a total of 10 seconds.

The precondition is:

- 5 seconds have elapsed after engine start (engine speed 500 rpm or higher) (In case of an engine stall within 5 seconds after the engine started, this is memorized on the side of the on-board snapshot when engine does not start (engine starts but stalls immediately))
- Engine speed at the time of an engine stall below 3, 000 rpm
- After 1 drive cycle, after PCM reset, or 12 volt battery terminal disconnection.
- Not during SCS short

*: In case of an engine stall for a vehicle with manual transmission at a vehicle speed of 3.1 mph (5 km/h) or lower, the on-board snapshot is not memorized.

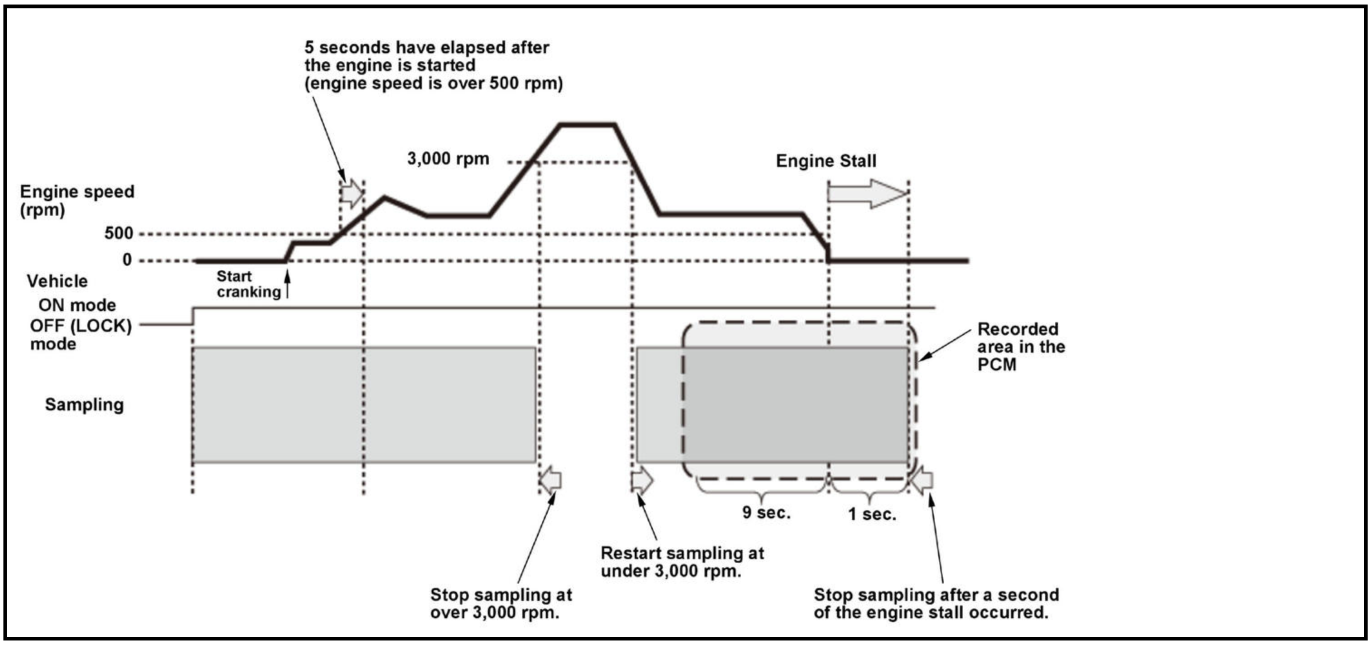

5 seconds have elapsed after the engine is started (engine speed is over 500 rpm)
3,000 rpm
Engine Stall
Engine speed (rpm)
500
0
Vehicle
Start cranking
ON mode
OFF (LOCK) mode
Recorded area in the PCM
Sampling
9 sec.
1 sec.
Restart sampling at under 3,000 rpm.
Stop sampling at over 3,000 rpm.
Stop sampling after a second of the engine stall occurred.

On-board snapshot when engine does not start

The three types of 'engine is hard to start', 'engine will not start', and 'engine start but stalls immediately' are set for an on-board snapshot at the time of engine starting problems.

The preconditions for recording an on-board snapshot when engine does not start are as shown below, and when engine starting problems occur under these preconditions, the parameters related to the engine starting problems are memorized in the PCM.

The precondition is:

- After 1 drive cycle, after PCM reset, or 12 volt battery terminal disconnection.
- On-board snapshot of Engine stalls is not stored.
- Not during SCS short

The on-board snapshot when engine does not start has the timer for the evaluation of starting problems as a factor is variable, and it depends on the engine coolant temperature when the engine starts, the relation between the engine coolant temperature and the engine start time; as it is shown below.

Initial engine coolant temperature (deg. F (deg. C))	-40 (-40)	-22 (-30)	-13 (-25)	-4 (-20)	5 (-15)	14 (-10)	194 (90)
Engine start time (sec)	6.00	6.00	3.00	2.25	1.50	1.50	1.50

On-board Snapshot Recording Zone (except R20Z9 engine)

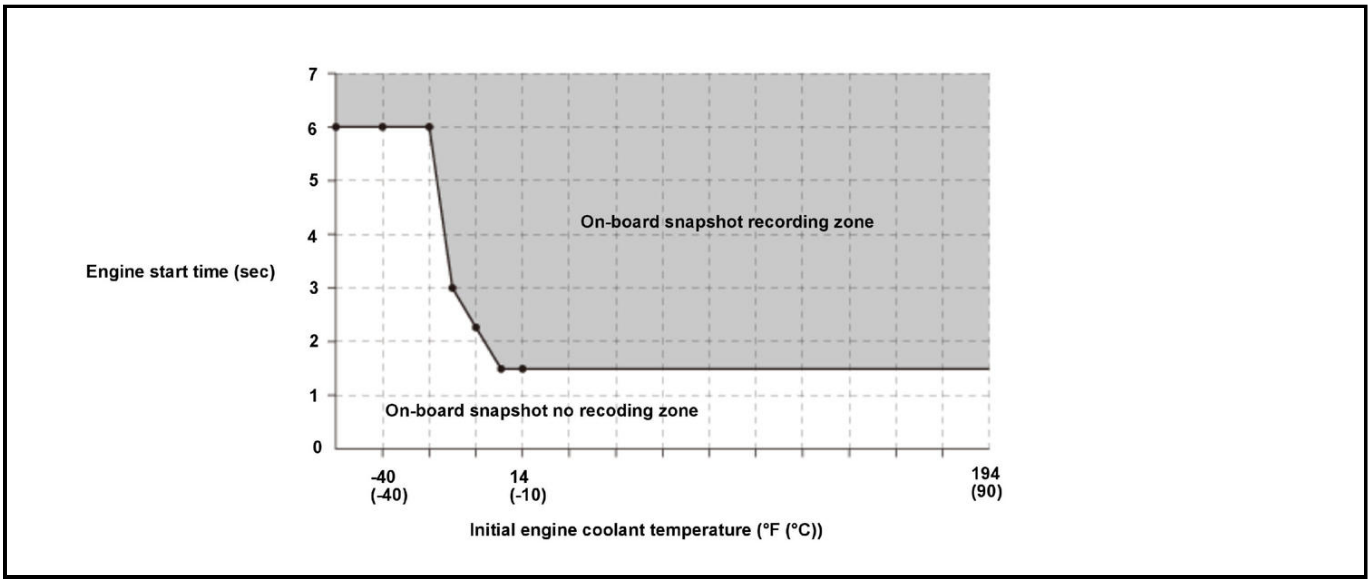

The on-board snapshot when engine does not start functions during the first cranking after the vehicle ON mode, though it is nonfunctional when cranking the second and later in the same vehicle ON mode. If the on-board snapshot goes back to a state of possible recording again, it needs to go through once the vehicle OFF (LOCK) mode.

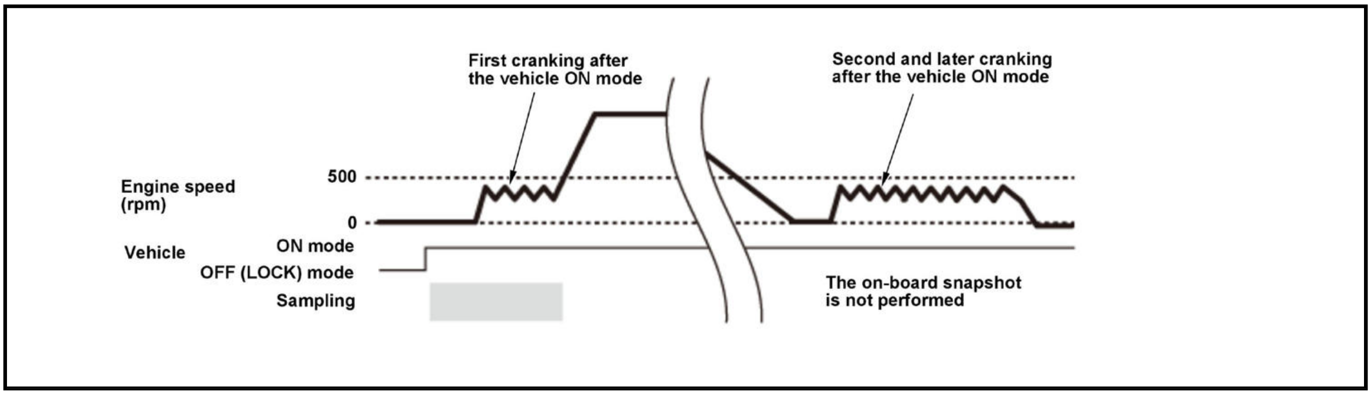
First cranking after
the vehicle ON mode
Second and later cranking
after the vehicle ON mode
Engine speed
(rpm)
500
0
Vehicle
ON mode
OFF (LOCK) mode
Sampling
The on-board snapshot
is not performed

On-board snapshot of "engine is hard to start" and "engine will not start":

An on-board snapshot is taken when an engine does not start or when an engine is hard to start. The snapshot is taken when cranking (engine speed 500 rpm) or lower takes longer than the specified time (timer for the evaluation of starting problems: variable according to the conditions at the time of start). If it is determined that a starting problem exists, the parameters related to the starting problem (for 9 seconds before the evaluation of the starting problem and 1 second after the evaluation of starting problem) are stored in the PCM, covering a total of 10 seconds.

Engine is hard to start

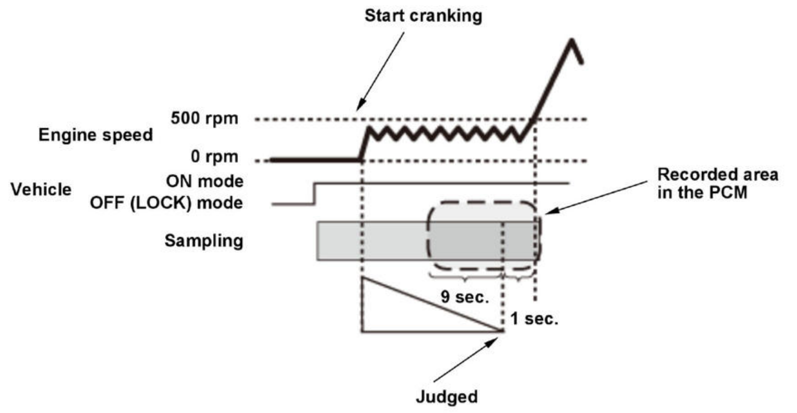

Start cranking
Engine speed
500 rpm
0 rpm
Vehicle
ON mode
OFF (LOCK) mode
Sampling
Recorded area
in the PCM
9 sec.
1 sec.
Judged

Engine will not start

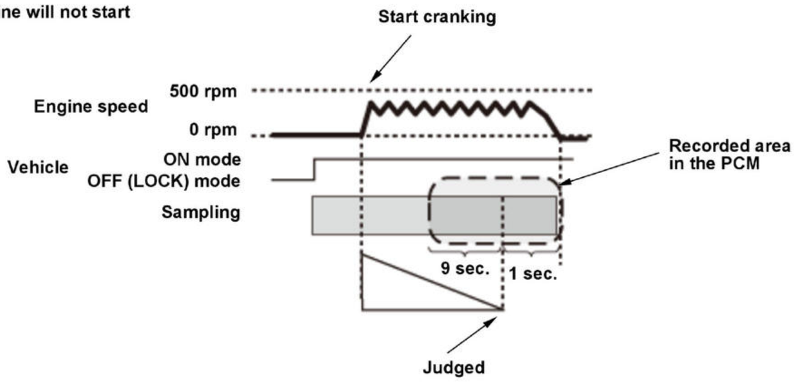

Start cranking
Engine speed
500 rpm
0 rpm
Vehicle
ON mode
OFF (LOCK) mode
Sampling
Recorded area
in the PCM
9 sec.
1 sec.
Judged

On-board snapshot of "engine starts but stalls immediately":

An on-board snapshot is taken when an engine stall occurs within 5 seconds after the engine start, although the engine started (engine speed 500 rpm or higher) with cranking (engine speed 500 rpm or lower) within the specified time (timer for evaluation of starting problems: variable according to the conditions at the time of start). The parameters related to the stall after a complete combustion process for the 9 seconds before the engine stall and 1 second after the engine stall are stored in the PCM, covering a total of 10 seconds.

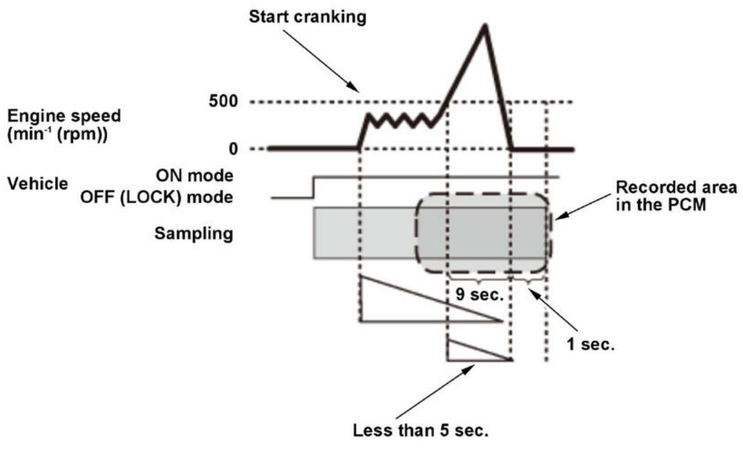

Start cranking
Engine speed
(min^{-1} (rpm))
500
0
Vehicle
ON mode
OFF (LOCK) mode
Sampling
Recorded area
in the PCM
9 sec.
1 sec.
Less than 5 sec.

SHUTTER GRILLE SYSTEM DESCRIPTION

The shutter grille system controls the heat dissipation by controlling the air flow to the engine room during engine warm-up. While vehicle running, improving the aerodynamic performance by controlling the opening and closing the shutter grille. Improving the fuel efficiency by the improvement of the engine warm-up and the aerodynamic performances.

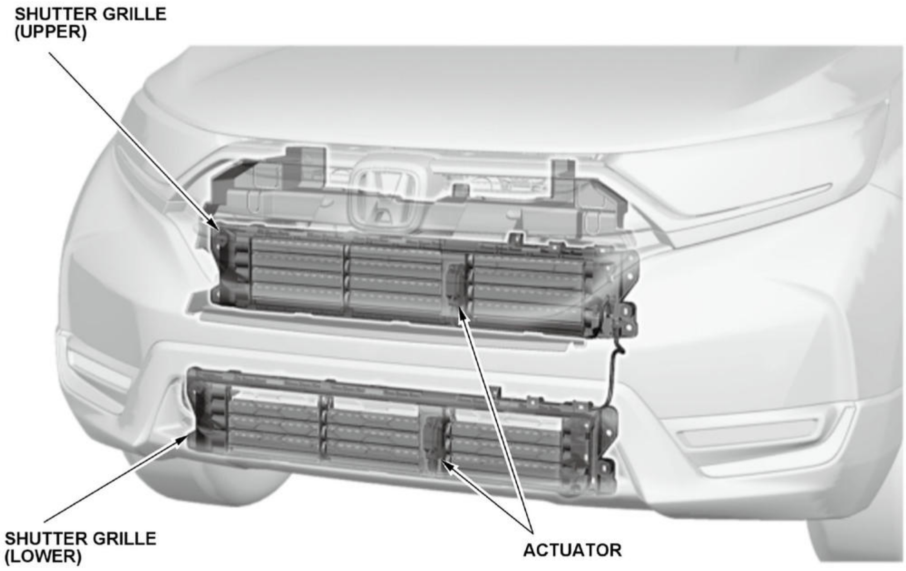
SHUTTER GRILLE (UPPER)
SHUTTER GRILLE (LOWER)
ACTUATOR

Operation

The PCM communicates to the shutter grille through the LIN communication line.

For locations of each component on vehicle, refer to Component Location Index

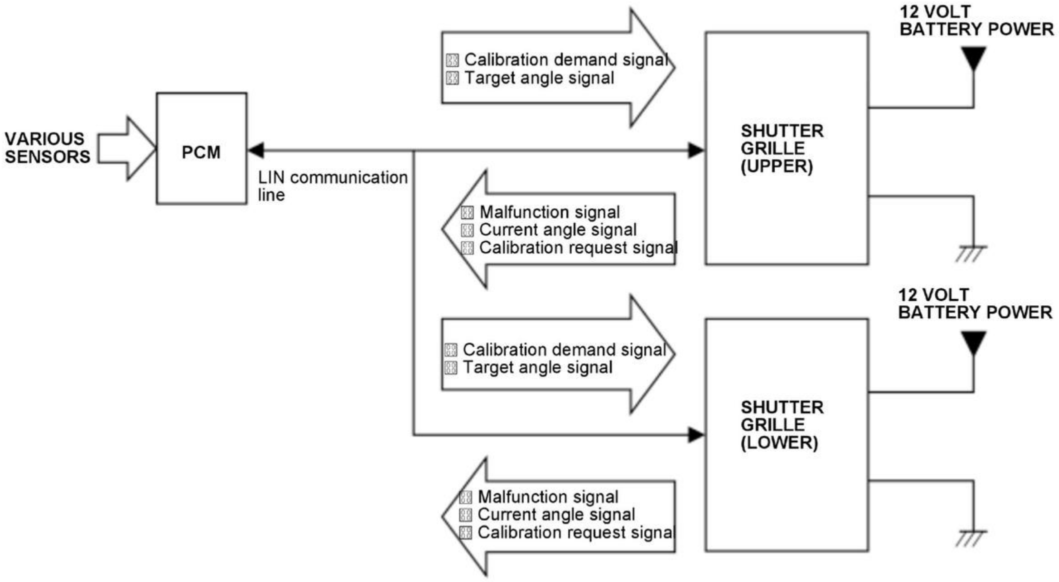
VARIOUS SENSORS
PCM
LIN communication line
▨ Calibration demand signal
▨ Target angle signal
▨ Malfunction signal
▨ Current angle signal
▨ Calibration request signal
SHUTTER GRILLE (UPPER)
12 VOLT BATTERY POWER
▨ Calibration demand signal
▨ Target angle signal
▨ Malfunction signal
▨ Current angle signal
▨ Calibration request signal
SHUTTER GRILLE (LOWER)
12 VOLT BATTERY POWER

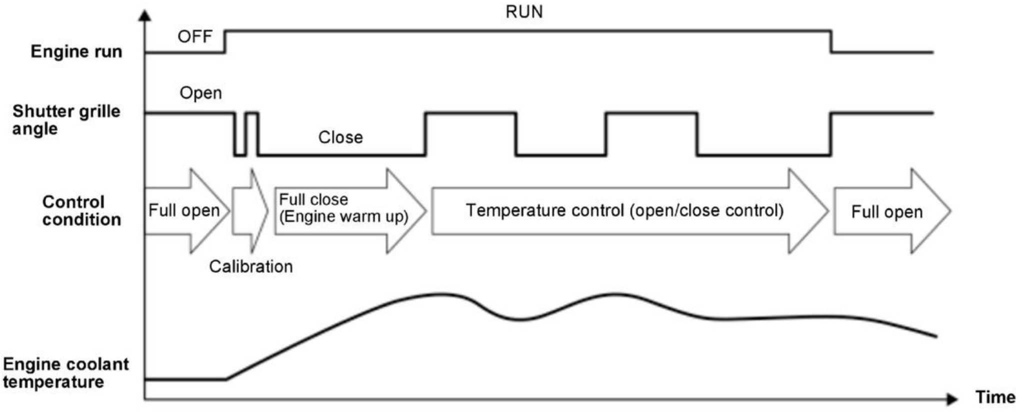

TURBOCHARGER CONTROL SYSTEM DESCRIPTION (1.5 L ENGINE)

Outline

The turbine in the turbocharger is turned by the exhaust gas, compresses the fresh intake air with the compressor mounted coaxially with the turbine, and discharges the air into the intercooler. The fresh intake air gets hot when compressed, is cooled in the intercooler, then enter the cylinders. The turbocharger equips with the turbocharger wastegate control valve and the turbocharger bypass control valve to control the system pressure and gas flow rate. The turbocharger wastegate control valve is actuated by an electric actuator.

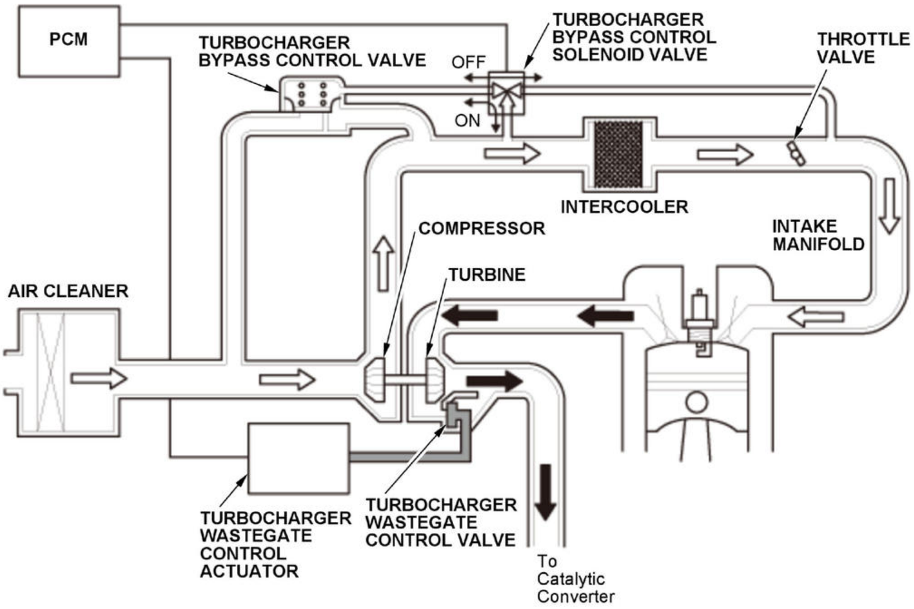
PCM
TURBOCHARGER BYPASS CONTROL VALVE
OFF
ON
TURBOCHARGER BYPASS CONTROL SOLENOID VALVE
THROTTLE VALVE
INTERCOOLER
COMPRESSOR
INTAKE MANIFOLD
TURBINE
AIR CLEANER
TURBOCHARGER WASTEGATE CONTROL ACTUATOR
TURBOCHARGER WASTEGATE CONTROL VALVE
To Catalytic Converter

Operation

To control the boost pressure, the PCM changes the turbocharger wastegate control valve open ration using the duty control of the stroke of the turbocharger wastegate control actuator. When the turbocharger wastegate control valve closes, all the exhaust gas flows from the exhaust manifold to the turbine and serves the driving force for turning the turbine. This increases the turbine shaft speed and increases the compression pressure of the fresh intake air, causing the boost pressure to increase. When the turbocharger wastegate control valve opens, some of the exhaust gas bypasses the turbine and flows directly into the catalytic converter mounted downstream of the turbocharger. This decreases the turbine shaft speed, causing the boost pressure to decrease. This mechanism prevents the boost pressure from increasing excessively, and protects the engine and turbocharger.

The turbocharger bypass control valve consists of a diaphragm, a return spring, and a valve and is connected to the turbocharger bypass control solenoid valve for control. Normally, the turbocharger bypass control solenoid valve is kept ON by the PCM. Because equal pressure is applied to the both sides of the diaphragm, the turbocharger bypass control valve is kept closed by the return spring. When the throttle valve is closed from the supercharged condition, the PCM turns OFF the turbocharger bypass control solenoid valve. At this time, the negative pressure in the downstream of the throttle valve, which has passed through the solenoid valve, is applied to the solenoid side of the diaphragm, causing a pressure difference between the both sides of the diaphragm. The differential pressure overcomes the return spring force and the valve opens, causing the fresh intake air which has passed through the compressor to leak into the upstream of the compressor. This adjusts the system internal pressure and at the same time prevents the intake air drag in the compressor from increasing and the turbine shaft speed from decreasing, which provides improved response at the time of re-acceleration.

Engine Output Control

The turbocharger wastegate control actuator is an electric type, which enables flexible and precise control of the turbocharger wastegate control valve open ratio regardless of the operating condition of the engine. This enables the turbocharger wastegate control valve to function as an engine output control device in cooperation with the throttle valve.

In the area where the intake manifold absolute pressure (PBA) is below the atmospheric pressure (NA area), the engine output is controlled by changing the throttle valve open ratio. In the NA area, the turbocharger wastegate control valve is opened to keep the pressure in the upstream of the throttle valve (P2) to almost the atmospheric pressure, which prevents the exhaust pressure increasing by the turbine operation and reduces exhaust loss. In the area where the PBA is at or above the atmospheric pressure (supercharged area), the engine output is controlled by changing the turbocharger wastegate control valve open ratio to control the boost pressure.

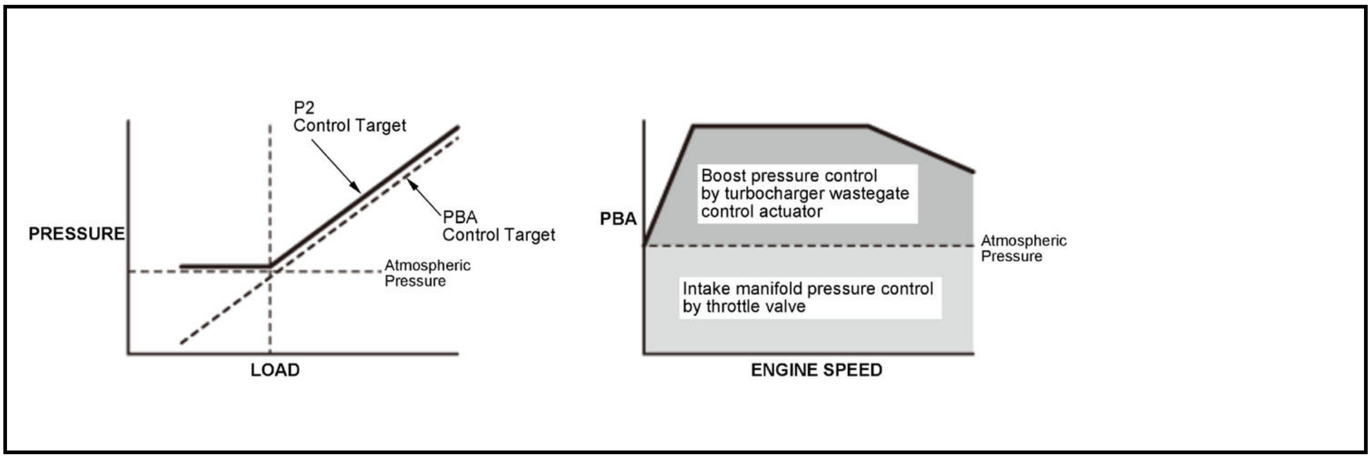

In the supercharging response period, where the target PBA increases with the required torque to the engine and the internal pressure of the intake manifold increases from the NA area into the supercharged area, the throttle valve open ratio increases, the PBA increases, and the turbocharger wastegate control valve starts to close to ensure sufficient responsiveness. When the PBA reaches around the atmospheric pressure, the throttle valve is fixed in the fully-open position to minimize the air flow drag at the throttle valve. In the supercharged area, the turbocharger wastegate control valve open ratio is controlled so that the target PBA is achieved. After that, when the required torque to the engine decreases, the throttle valve closes and the turbocharger wastegate control valve opens to reduce the exhaust loss.

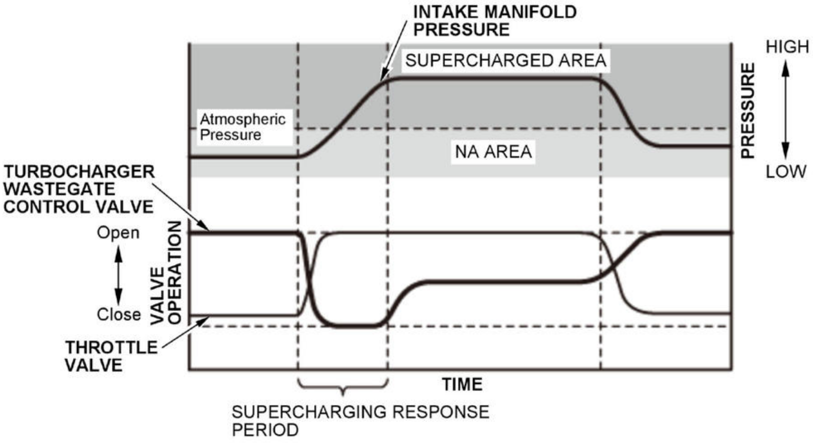

VTEC/VTC SYSTEM DESCRIPTION - VTC (1.5 L ENGINE)

For locations of each component on vehicle, refer to Component Location Index

Overview

The VTC system makes continuous intake and exhaust valve timing changes depending on the engine speed, the engine load, and the vehicle speed.

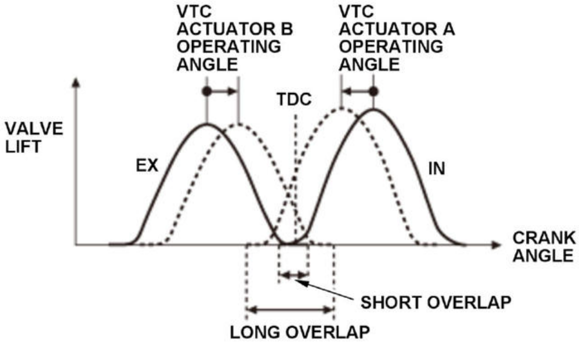

Construction

VTC Actuator

The VTC actuator is composed of the vane, the lock pin, the pin spring, and the housing with the timing gear. It is installed at the end of the camshaft. When the VTC actuator vane rotates to advance or retard position, the intake camshaft timing is changed. When the engine stops, the vane is locked in the initial position by the lock pin so that the engine will start smoothly. After the engine starts, the vane turns freely because the lock pin is pushed back against the spring tension by oil pressure.

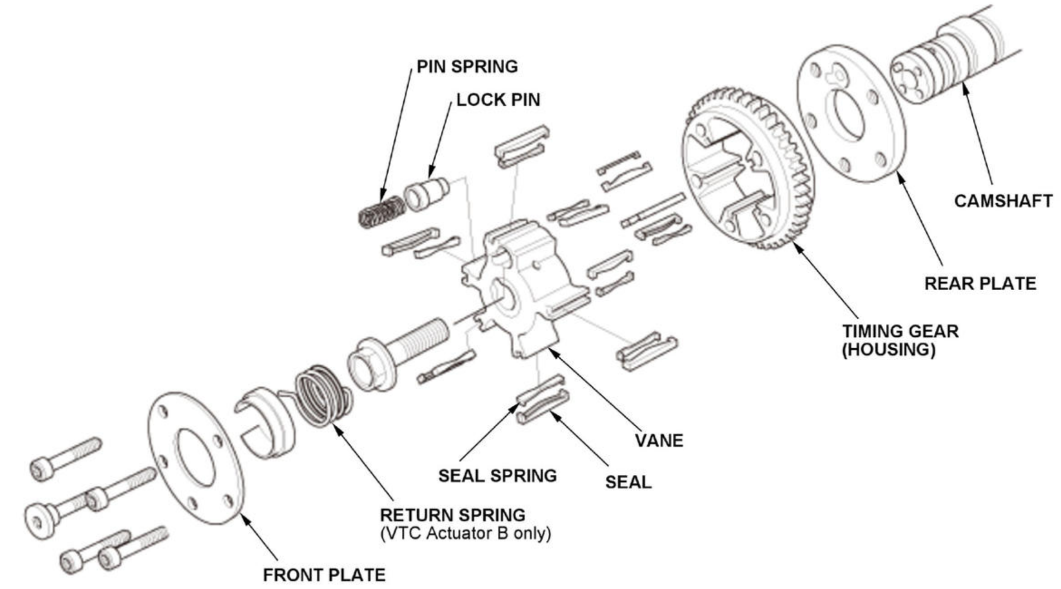
PIN SPRING
LOCK PIN
CAMSHAFT
REAR PLATE
TIMING GEAR
(HOUSING)
VANE
SEAL SPRING
SEAL
RETURN SPRING
(VTC Actuator B only)
FRONT PLATE

NOTE: This illustration is an example only of VTC actuator B.
Appearance and structure of the actual parts may vary depending on the model.

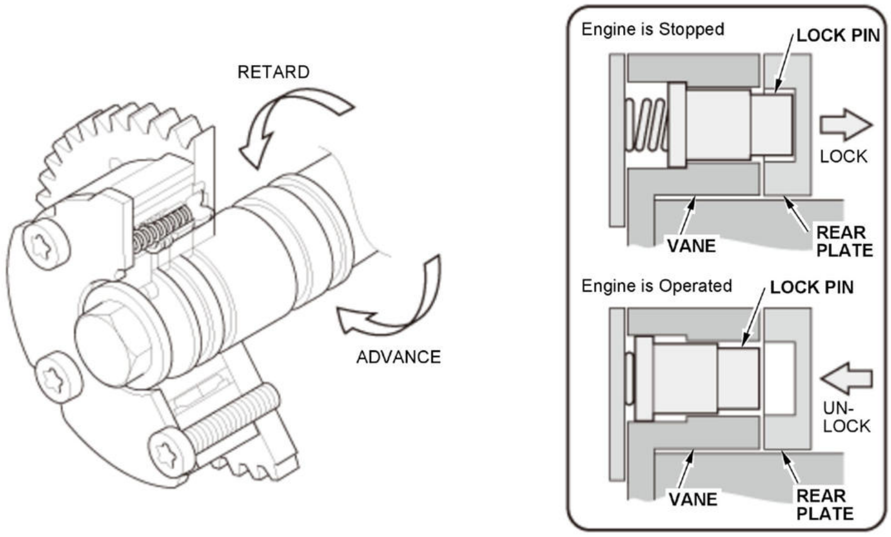
RETARD
ADVANCE
Engine is Stopped
LOCK PIN
LOCK
VANE
REAR
PLATE
Engine is Operated
LOCK PIN
UN-
LOCK
VANE
REAR
PLATE

NOTE: This illustration is an example only of VTC actuator A (Lock pin is locked position).
Appearance and structure of the actual parts may vary depending on the model.

VTC Oil Control Solenoid Valve

To control the camshaft angle continuously, the VTC oil control solenoid valve controls oil pressure to the advance chamber/retard chamber of the VTC actuator according to a signal from the PCM. The solenoid valve has a strainer that to avoid foreign material contamination.

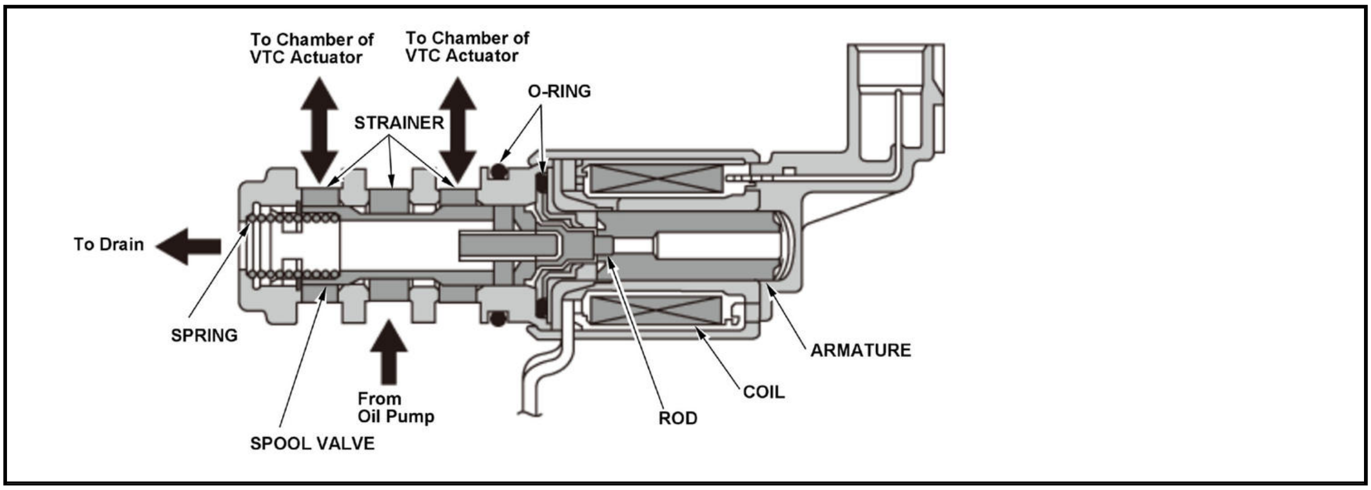
To Chamber of VTC Actuator
To Chamber of VTC Actuator
STRAINER
O-RING
To Drain
SPRING
SPOOL VALVE
From Oil Pump
ROD
COIL
ARMATURE

Control

The VTC system diagram is as follows. The PCM advances or retards the valve timing based on the data from various sensors, and performs feedback-control to the VTC oil control solenoid valves.

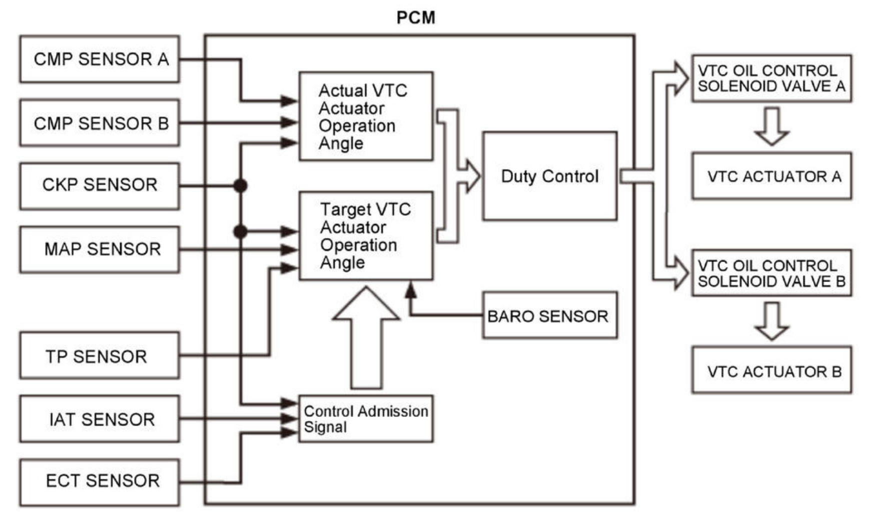
PCM
CMP SENSOR A
CMP SENSOR B
CKP SENSOR
MAP SENSOR
TP SENSOR
IAT SENSOR
ECT SENSOR
Actual VTC Actuator Operation Angle
Target VTC Actuator Operation Angle
Duty Control
BARO SENSOR
Control Admission Signal
VTC OIL CONTROL SOLENOID VALVE A
VTC ACTUATOR A
VTC OIL CONTROL SOLENOID VALVE B
VTC ACTUATOR B

Operation

Advance Rotation Operation

When the advance chamber is charged with pressured oil from the VTC oil control solenoid valve, the camshaft rotates to the advanced side. In case of the oil non-pressurized state (engine is stopped), VTC actuator B is locked in the most advanced position by the return spring and the lock pin.

Intake Side (VTC Actuator A, VTC Oil Control Solenoid Valve A)

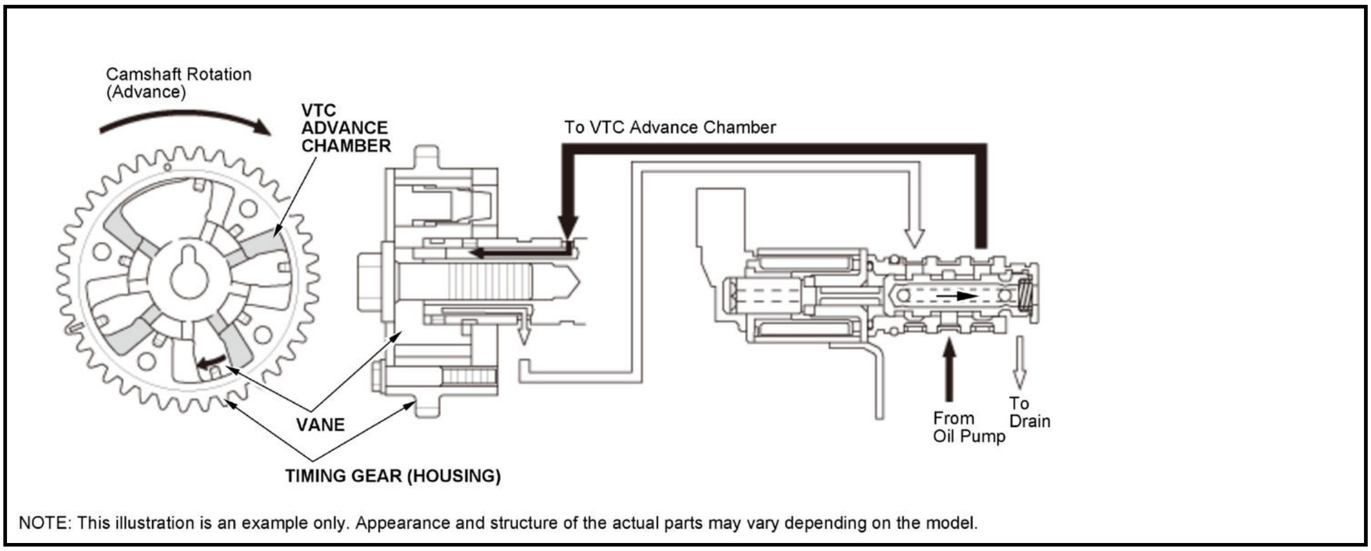
Camshaft Rotation
(Advance)
VTC
ADVANCE
CHAMBER
To VTC Advance Chamber
VANE
TIMING GEAR (HOUSING)
From
Oil Pump
To
Drain
NOTE: This illustration is an example only. Appearance and structure of the actual parts may vary depending on the model.

Exhaust Side (VTC Actuator B, VTC Oil Control Solenoid Valve B)

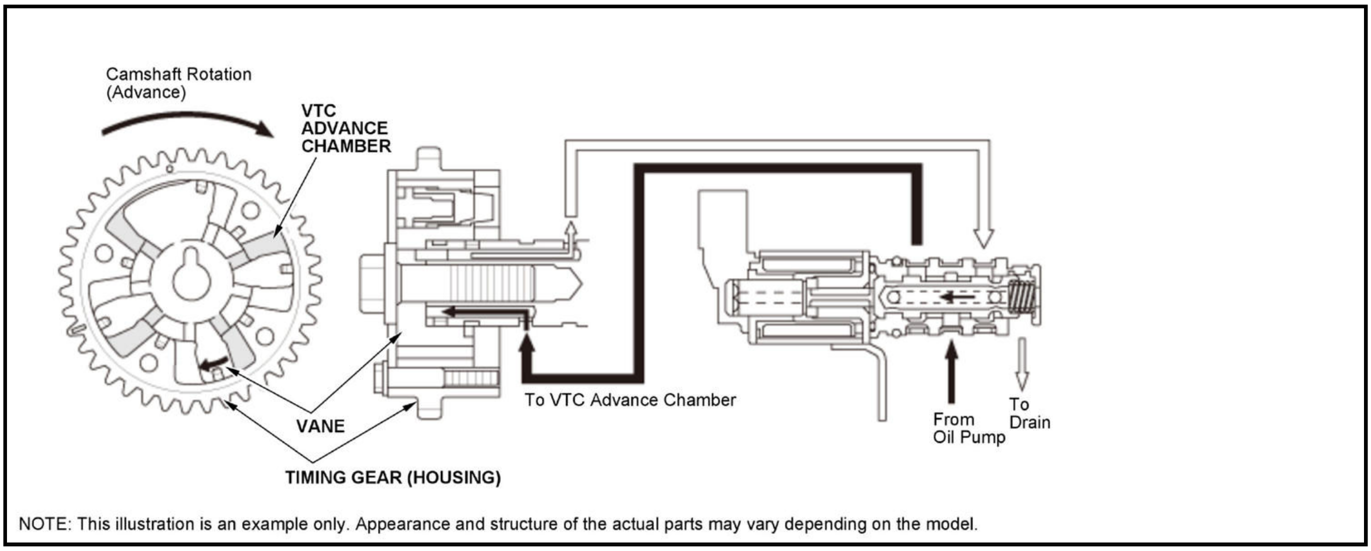
Camshaft Rotation
(Advance)
VTC
ADVANCE
CHAMBER
To VTC Advance Chamber
VANE
TIMING GEAR (HOUSING)
From
Oil Pump
To
Drain
NOTE: This illustration is an example only. Appearance and structure of the actual parts may vary depending on the model.

Retard Rotation Operation

When the retard chamber is charged with pressured oil from the VTC oil control solenoid valve, the camshaft rotates to the retarded side. In case of the oil non-pressurized state (engine is stopped), VTC actuator A is locked in the most retarded position by the lock pin.

Intake Side (VTC Actuator A, VTC Oil Control Solenoid Valve A)

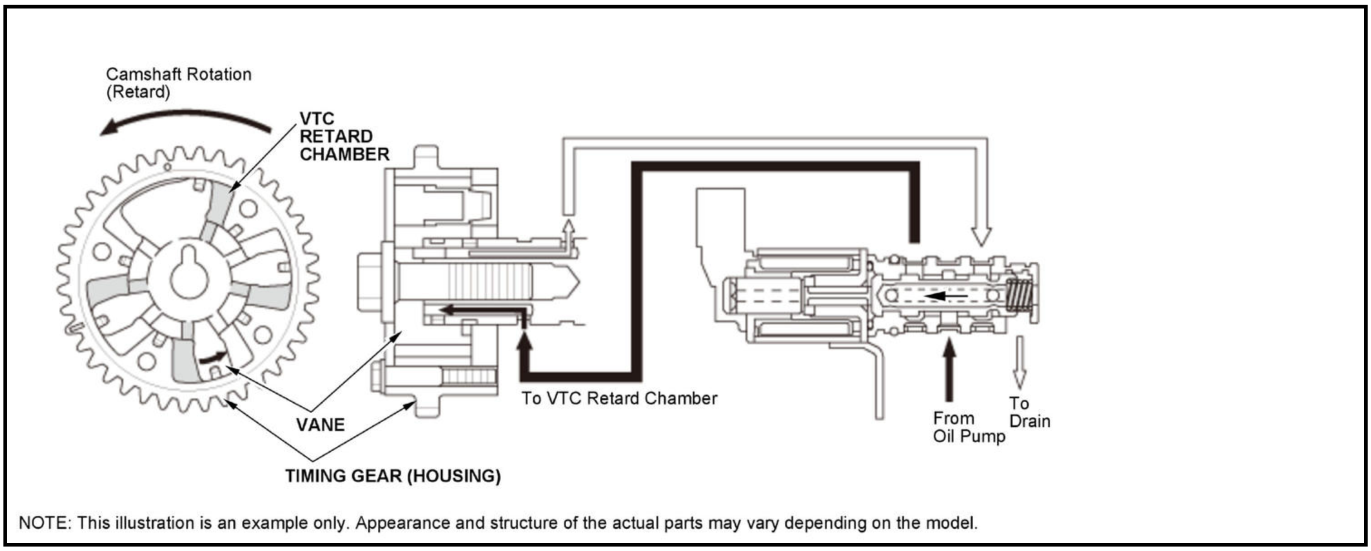
Camshaft Rotation
(Retard)
VTC
RETARD
CHAMBER
To VTC Retard Chamber
VANE
TIMING GEAR (HOUSING)
From
Oil Pump
To
Drain
NOTE: This illustration is an example only. Appearance and structure of the actual parts may vary depending on the model.

Exhaust Side (VTC Actuator B, VTC Oil Control Solenoid Valve B)

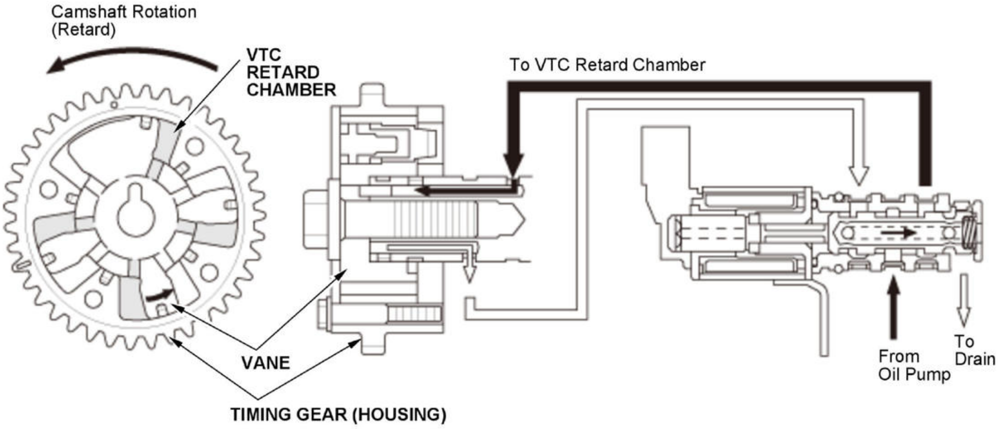
Camshaft Rotation (Retard)
VTC RETARD CHAMBER
To VTC Retard Chamber
VANE
TIMING GEAR (HOUSING)
From Oil Pump
To Drain

NOTE: This illustration is an example only. Appearance and structure of the actual parts may vary depending on the model.

VTEC/VTC SYSTEM DESCRIPTION (2.4 L ENGINE) (2017 2018 2019)

Overview

This system improves fuel efficiency and reduces exhaust emissions at all engine speeds, vehicle speeds, and engine loads. The powertrain control module (PCM) switches the low and high lift cam depending on the engine speed and load in order to optimize the fuel efficiency and the engine output. The rocker arm oil control solenoid switches the intake valve side of the VTEC system on and off; the solenoid is controlled by the PCM.

Valve Timing Operation Image

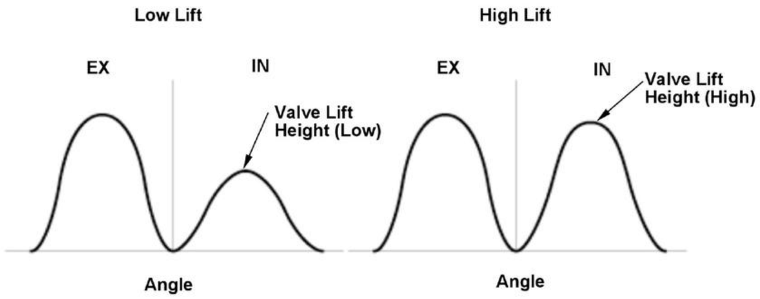

Construction

VTEC is composed of the VTEC camshaft, the VTEC rocker arm, and the rocker arm oil control valve.

VTEC Camshaft

The intake camshaft is structured so that each cylinder has a separate low lift cam lobe and a high lift cam lobe.

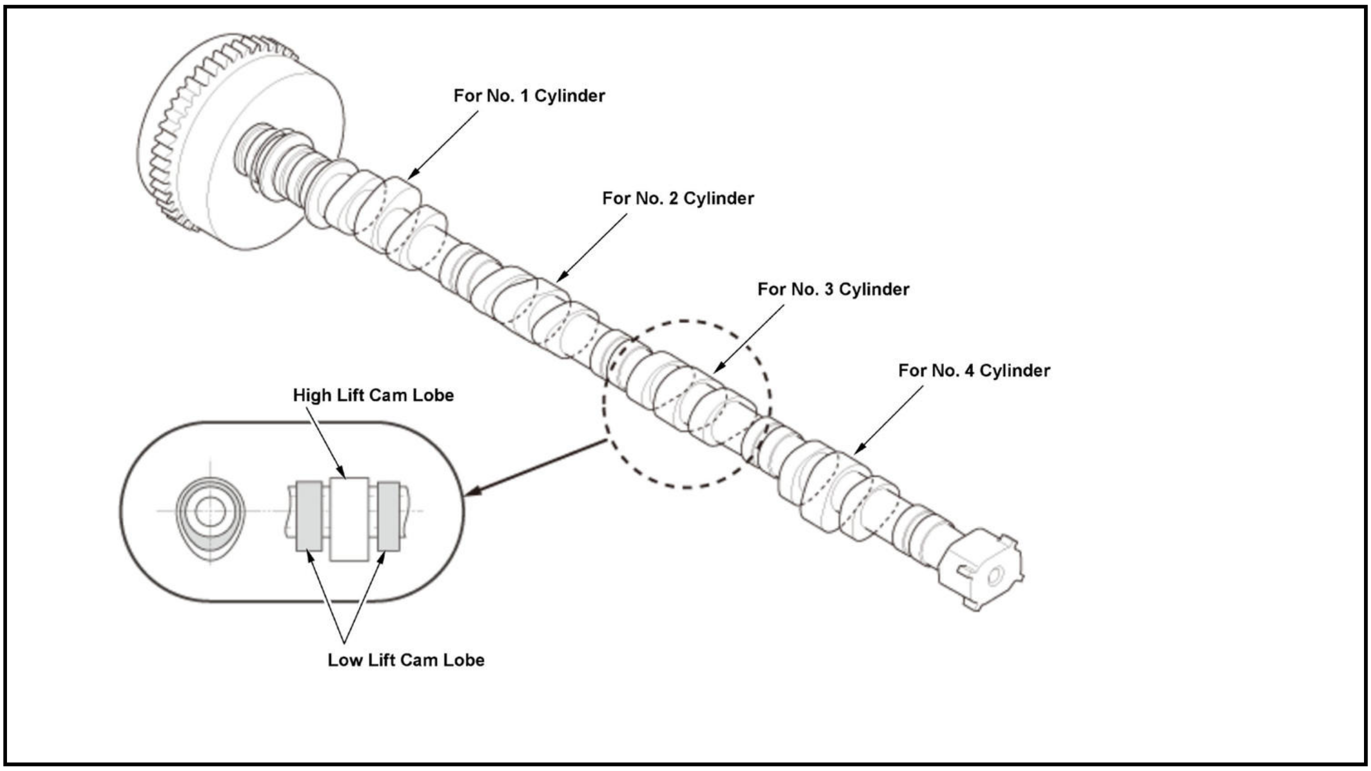
For No. 1 Cylinder
For No. 2 Cylinder
For No. 3 Cylinder
For No. 4 Cylinder
High Lift Cam Lobe
Low Lift Cam Lobe

VTEC Rocker Arm

The intake rocker arm is composed of the primary, the medium, and the secondary rocker arms. The inner side of the intake primary rocker arm and the intake medium rocker arm have a VTEC switching piston in each rocker arm. The inner side of the intake secondary rocker arm has a stopper piston and a return spring.

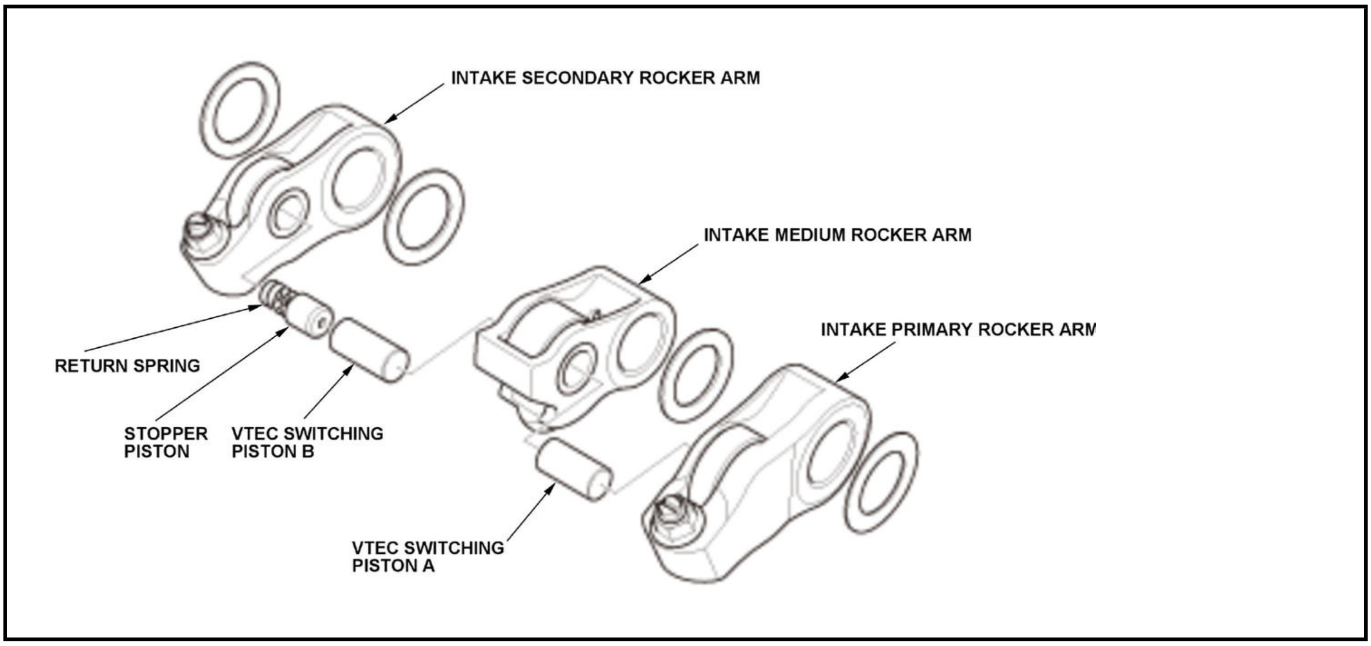
INTAKE SECONDARY ROCKER ARM
INTAKE MEDIUM ROCKER ARM
INTAKE PRIMARY ROCKER ARM
RETURN SPRING
STOPPER PISTON
VTEC SWITCHING PISTON B
VTEC SWITCHING PISTON A

Rocker Arm Oil Control Valve

The rocker arm oil control valve is integrated with the rocker arm oil control solenoid and the valve, it is installed on the cylinder head. When the rocker arm oil control solenoid turns on or off depending on a signal from the PCM, the hydraulic pressure subjects the valve to an ON/OFF control. By switching the ON/OFF of the valve, the hydraulic pressure applied to the VTEC switching piston in the rocker arms is controlled.

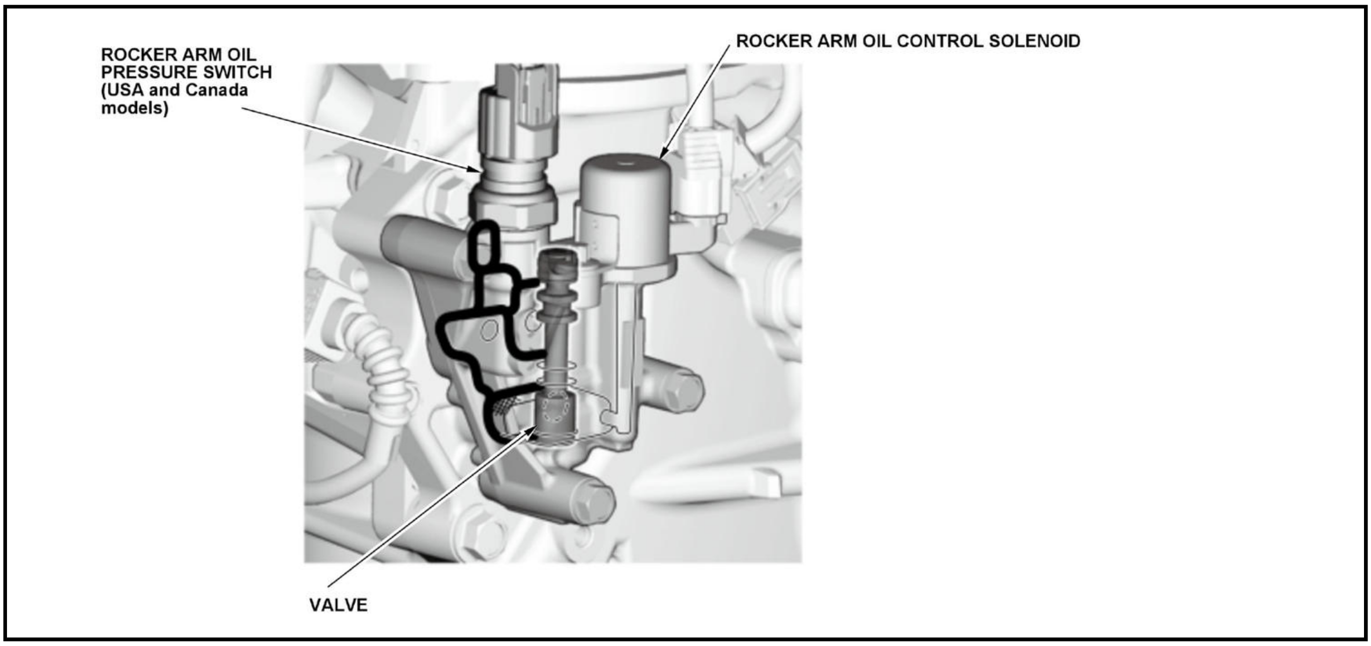
ROCKER ARM OIL PRESSURE SWITCH (USA and Canada models)
ROCKER ARM OIL CONTROL SOLENOID
VALVE

Rocker Arm Oil Pressure Switch (USA models)

The rocker arm oil pressure switch is attached to the rocker arm oil control valve. It monitors the hydraulic pressure condition, and the statuses of the rocker arm oil control solenoid and the rocker arm oil control valve.

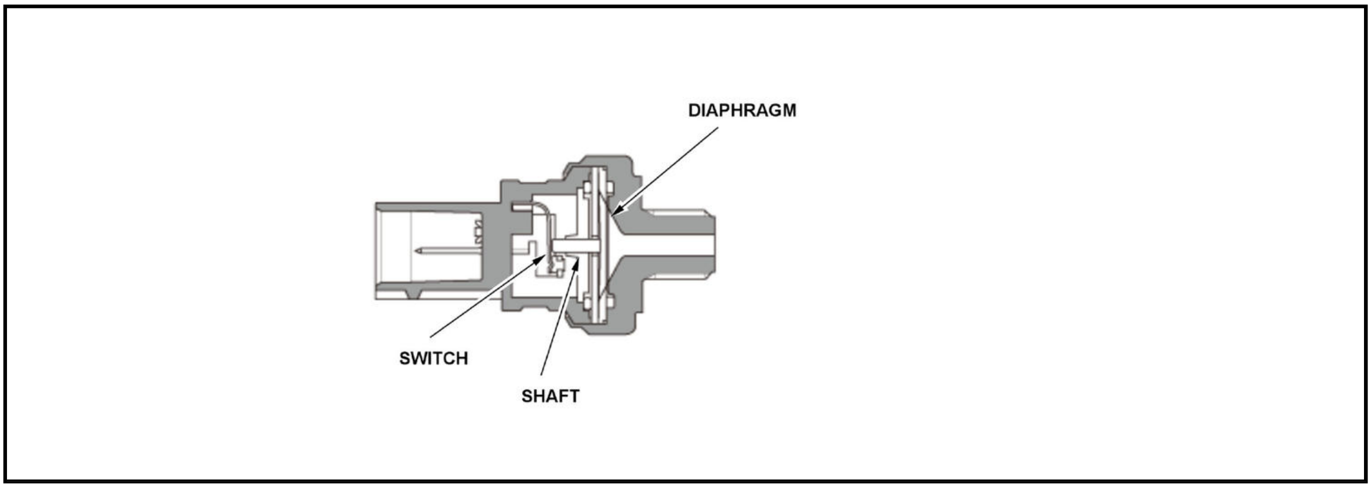
DIAPHRAGM
SWITCH
SHAFT

Control

Based on the vehicle speed signal, engine speed signal, engine load signal, throttle position signal, and engine coolant signal sent from various sensors, the PCM determines the lift amount and controls the ON/OFF of the rocker arm oil control solenoid. The PCM generates and determines the control amount based on signals from various sensors to subject the rocker arm oil control solenoid to a feedback control.

For locations of each component on vehicle, refer to Component Location Index

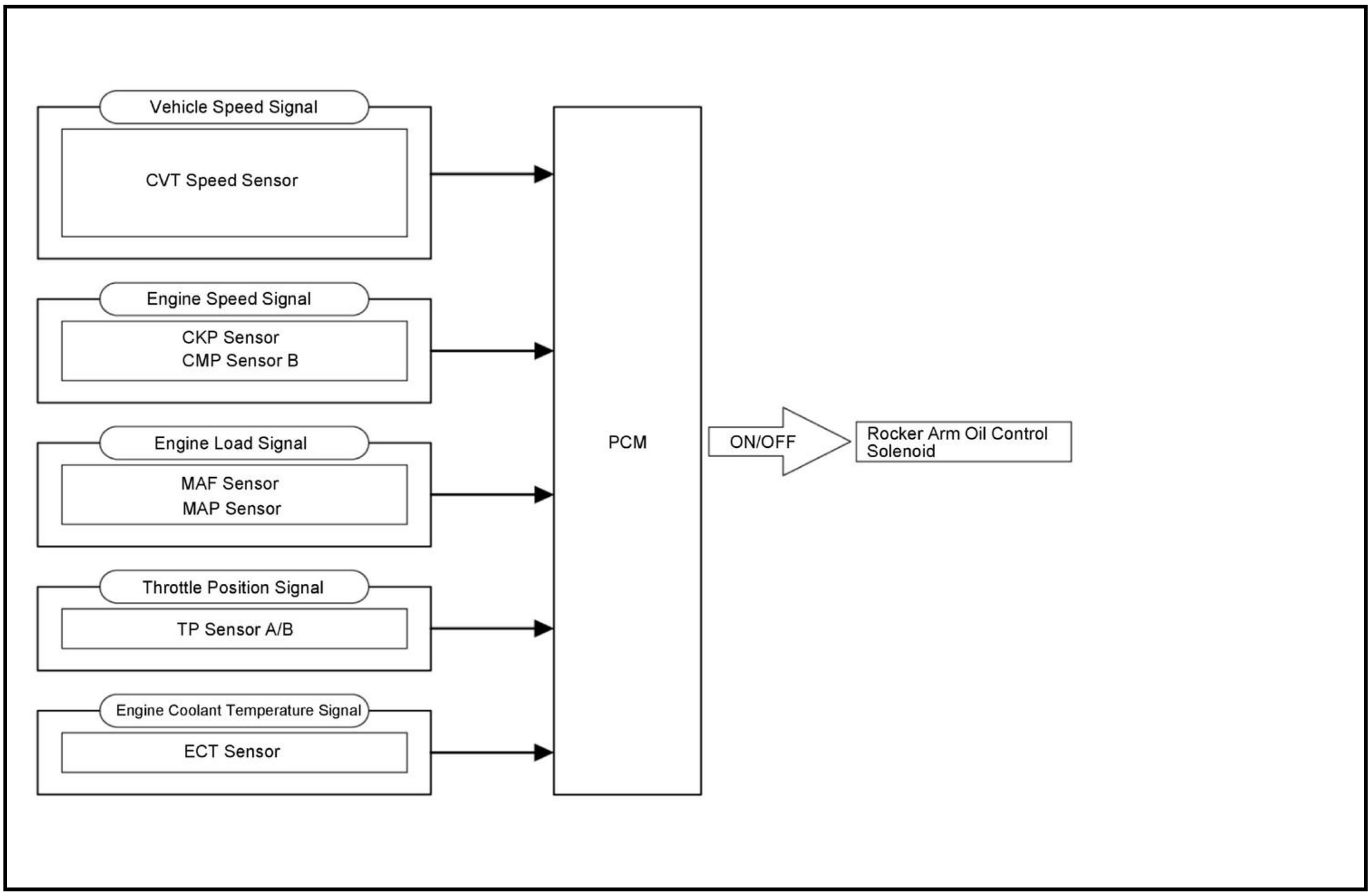
Vehicle Speed Signal
CVT Speed Sensor
Engine Speed Signal
CKP Sensor
CMP Sensor B
Engine Load Signal
MAF Sensor
MAP Sensor
Throttle Position Signal
TP Sensor A/B
Engine Coolant Temperature Signal
ECT Sensor
PCM
ON/OFF
Rocker Arm Oil Control Solenoid

Operation

At low engine speed

At low engine speed, the rocker arm oil control solenoid is turned off by the PCM. Oil pressure from the rocker arm oil control valve does not enter the intake rocker shaft. The primary and the secondary intake rocker arms are lifted by the low lift cam lobe.

Rocker Arm Oil Control Solenoid OFF

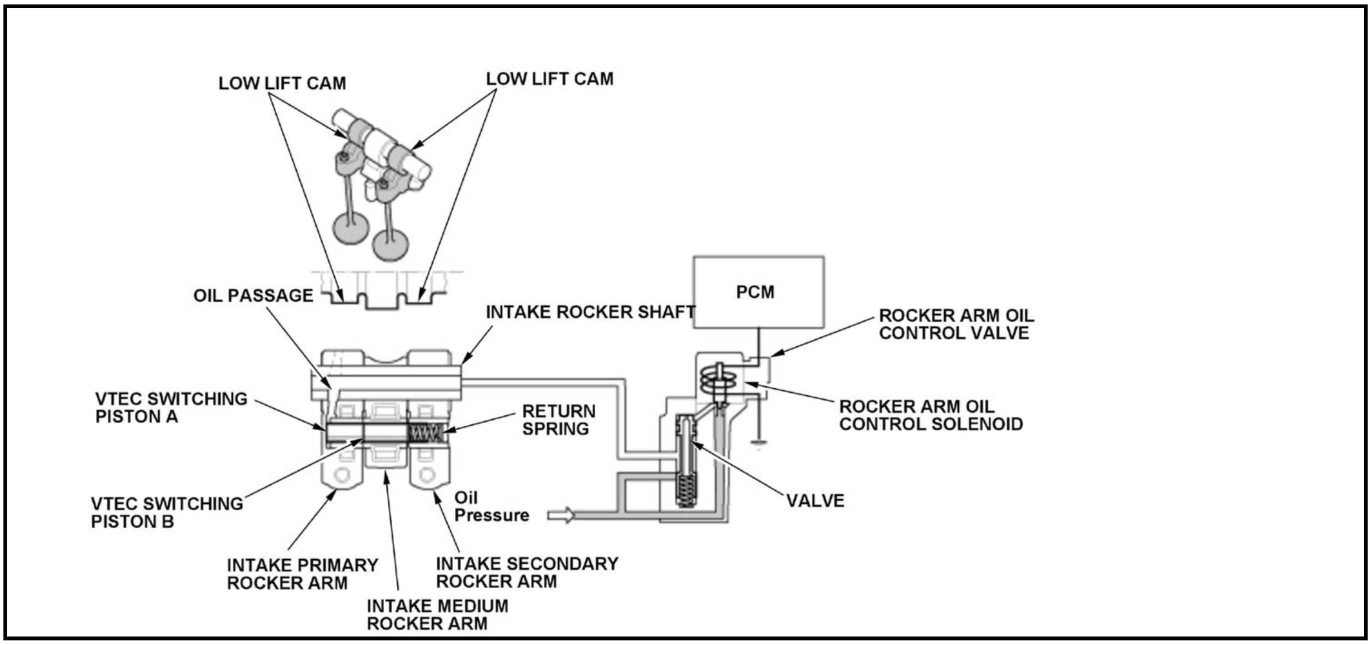
LOW LIFT CAM
LOW LIFT CAM
OIL PASSAGE
INTAKE ROCKER SHAFT
PCM
ROCKER ARM OIL CONTROL VALVE
VTEC SWITCHING PISTON A
RETURN SPRING
ROCKER ARM OIL CONTROL SOLENOID
VTEC SWITCHING PISTON B
Oil Pressure
VALVE
INTAKE PRIMARY ROCKER ARM
INTAKE SECONDARY ROCKER ARM
INTAKE MEDIUM ROCKER ARM

At high engine speed/high load operation

At high engine speed, the rocker arm oil control solenoid is turned on by the PCM. Oil pressure from the rocker arm oil control solenoid enters the intake primary rocker arm via the intake rocker shaft, and it moves the VTEC switching piston in the rocker arm. This causes the VTEC switching piston to slide into the intake medium rocker arm, locking the intake secondary and medium rocker arms together. Both intake rocker arms are lifted by the high lift cam lobe.

Rocker Arm Oil Control Solenoid ON

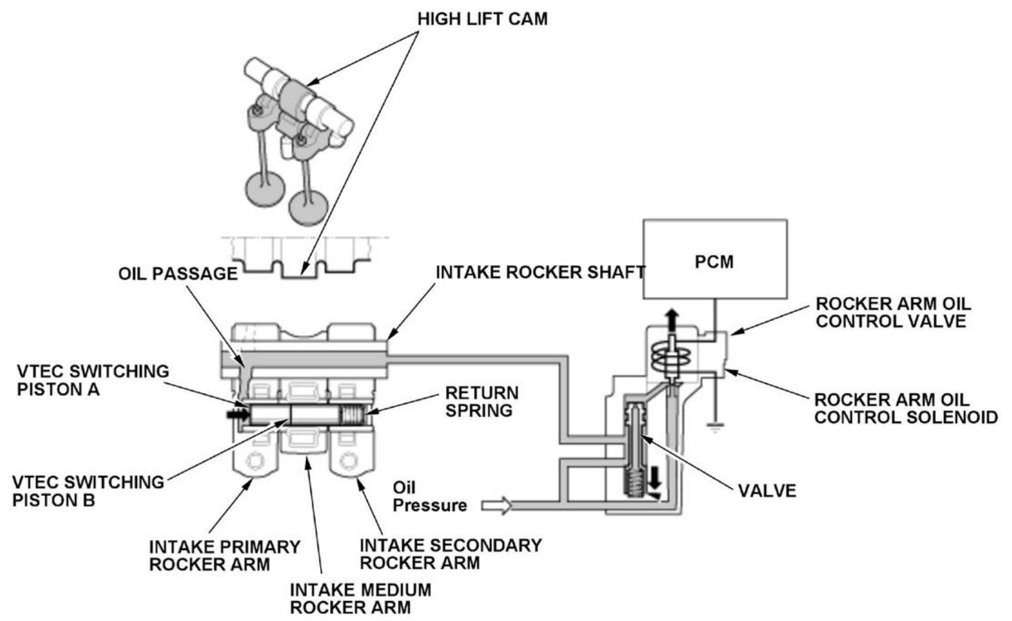
HIGH LIFT CAM
OIL PASSAGE
INTAKE ROCKER SHAFT
PCM
ROCKER ARM OIL CONTROL VALVE
VTEC SWITCHING PISTON A
RETURN SPRING
ROCKER ARM OIL CONTROL SOLENOID
VTEC SWITCHING PISTON B
Oil Pressure
VALVE
INTAKE PRIMARY ROCKER ARM
INTAKE SECONDARY ROCKER ARM
INTAKE MEDIUM ROCKER ARM

CONNECTOR VIEW

PCM CONNECTOR FOR INPUTS AND OUTPUTS (1.5 L ENGINE)

PCM Connector for Inputs and Outputs

Connector Index
PCM Connector A (50P)
PCM Connector E (80P)

PCM Inputs and Outputs at PCM Connector A (50P) (female terminals)

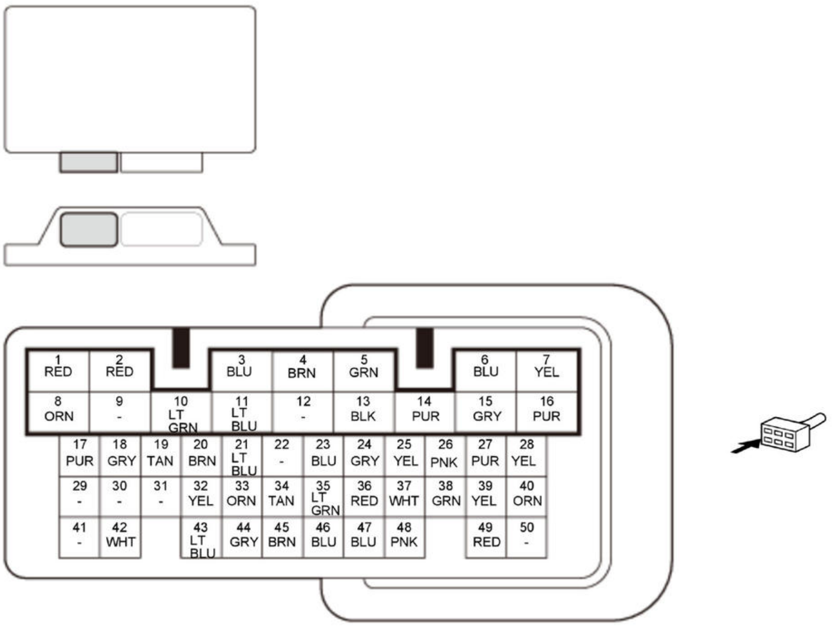
1 RED
2 RED
3 BLU
4 BRN
5 GRN
6 BLU
7 YEL
8 ORN
9 -
10 LT GRN
11 LT BLU
12 -
13 BLK
14 PUR
15 GRY
16 PUR
17 PUR
18 GRY
19 TAN
20 BRN
21 LT BLU
22 -
23 BLU
24 GRY
25 YEL
26 PNK
27 PUR
28 YEL
29 -
30 -
31 -
32 YEL
33 ORN
34 TAN
35 LT GRN
36 RED
37 WHT
38 GRN
39 YEL
40 ORN
41 -
42 WHT
43 LT BLU
44 GRY
45 BRN
46 BLU
47 BLU
48 PNK
49 RED
50 -

Terminal number	Terminal name	Description
1	INJ RLY OUT (INJECTOR POWER SOURCE)	Power source for PCM (injector driver)

Terminal number	Terminal name	Description
2	INJ RLY OUT (INJECTOR POWER SOURCE)	Power source for PCM (injector driver)
3	+B VBACT (TURBOCHARGER WASTEGATE CONTROL ACTUATOR POWER SOURCE)	Power source for PCM (Turbocharger wastegate control actuator)
4	SO2HT (SECONDARY HEATED OXYGEN SENSOR (SECONDARY HO2S) (SENSOR 2) HEATER CONTROL)	Drives secondary HO2S (Sensor 2) heater
5	FI MAIN RLY CL- (PGM-FI MAIN RELAY 1)	Drives PGM-FI main relay 1, injector relay, ignition coil relay
6 *1	CCV (EVAP LEAK CHECK VALVE)	Drives EVAP leak check valve
7	+B BACKUP FI-ECU (VOLTAGE BACK UP)	Power source for PCM memory
8	FI MAIN RLY OUT (POWER SOURCE)	Power source for PCM
9	Not used	B
10	LIN (BATT SENSOR) (LOCAL INTERCONNECT NETWORK)	Sends and receives communication signal
11	FUEL PUMP RLY CL- (FUEL PUMP RELAY)	Drives PGM-FI main relay 2
12	Not used	B
13	FI ECU GND (GROUND)	Ground for PCM
14 *2	DCDC STS	Output DC-DC converter operation signal
15	ST CUT RLY1 CL- (STARTER CUT RELAY 1)	Drives starter cut relay 1

*1: USA and Canada models*2: With auto idle stop system*3: Without keyless access system

Terminal number	Terminal name	Description
16	FI SUB RLY OUT (POWER SOURCE)	Power source for PCM
17	FAN LO SIGNAL (RADIATOR FAN CONTROL)	Drives radiator fan relay
18	FAN HI SIGNAL (RADIATOR FAN CONTROL)	Drives A/C condenser fan relay and fan control relay
19	START DIAG (STARTER SIGNAL LOAD)	Detects starter signal
20	TM-CAN L (TM-CAN COMMUNICATION SIGNAL LOW)	Sends and receives communication signal for TCM
21	TM-CAN H (TM-CAN COMMUNICATION SIGNAL HIGH)	Sends and receives communication signal for TCM
22	Not used	B
23	ST CUT RLY2 CL- (STARTER CUT RELAY 2)	Drives starter cut relay 2
24 *3	ACC/IG2 CUT RELAY CL- (ACC/IG2 CUT RELAY)	Drive ACC cut relay and IG2 cut relay
25	FI SUB RLY CL- (PGM-FI SUBRELAY)	Drives PGM-FI subrelay
26	STOP SW (BRAKE PEDAL POSITION SWITCH)	Detects brake pedal position switch signal
27	SCS (SERVICE CHECK SIGNAL)	Detects service check signal
28	STS (STARTER SWITCH SIGNAL)	Detects starter switch signal
29	Not used	B
30	Not used	B
31	Not used	B
32	APS1 (ACCELERATOR PEDAL POSITION (APP) SENSOR A)	Detects APP sensor A signal
33	PD SENSOR (A/C PRESSURE SENSOR)	Detects A/C pressure sensor signal
34	APS2 (ACCELERATOR PEDAL POSITION (APP) SENSOR B)	Detects APP sensor B signal
35	VSP (VEHICLE SPEED SIGNAL OUTPUT)	Sends vehicle speed signal
36	F-CAN A L (CAN COMMUNICATION A SIGNAL LOW)	Sends and receives communication signal
37	F-CAN A H (CAN COMMUNICATION A SIGNAL HIGH)	Sends and receives communication signal

Terminal number	Terminal name	Description
38	F-CAN B L (CAN COMMUNICATION B SIGNAL LOW)	Sends and receives communication signal
39	F-CAN B H (CAN COMMUNICATION B SIGNAL HIGH)	Sends and receives communication signal
40	S-NET (SERIAL COMMUNICATION FOR IMMOBILIZER)	Sends serial communication signal
41	Not used	B
42 *1	ELCMPA (EVAP LEAK CHECK MODULE PRESSURE SENSOR)	Detects EVAP leak check module pressure sensor signal
43	SG5 (SENSOR GROUND)	Sensor ground
44	VCC5 (SENSOR VOLTAGE)	Provides sensor reference voltage
45	VCC4 (SENSOR VOLTAGE)	Provides sensor reference voltage
46	SG4 (SENSOR GROUND)	Sensor ground
47	SO2 (SECONDARY HEATED OXYGEN SENSOR (SECONDARY HO2S) (SENSOR 2))	Detects secondary HO2S (Sensor 2) signal
48	SO2 SG (SECONDARY HEATED OXYGEN SENSOR (SECONDARY HO2S) (SENSOR 2) SENSOR GROUND)	Sensor ground for secondary HO2S (Sensor 2)
49	BKSWNC (BRAKE PEDAL POSITION SWITCH)	Detects brake pedal position switch signal
50	Not used	B

*1: USA and Canada models*2: With auto idle stop system*3: Without keyless access system

PCM Inputs and Outputs at PCM Connector E (80P) (female terminals)

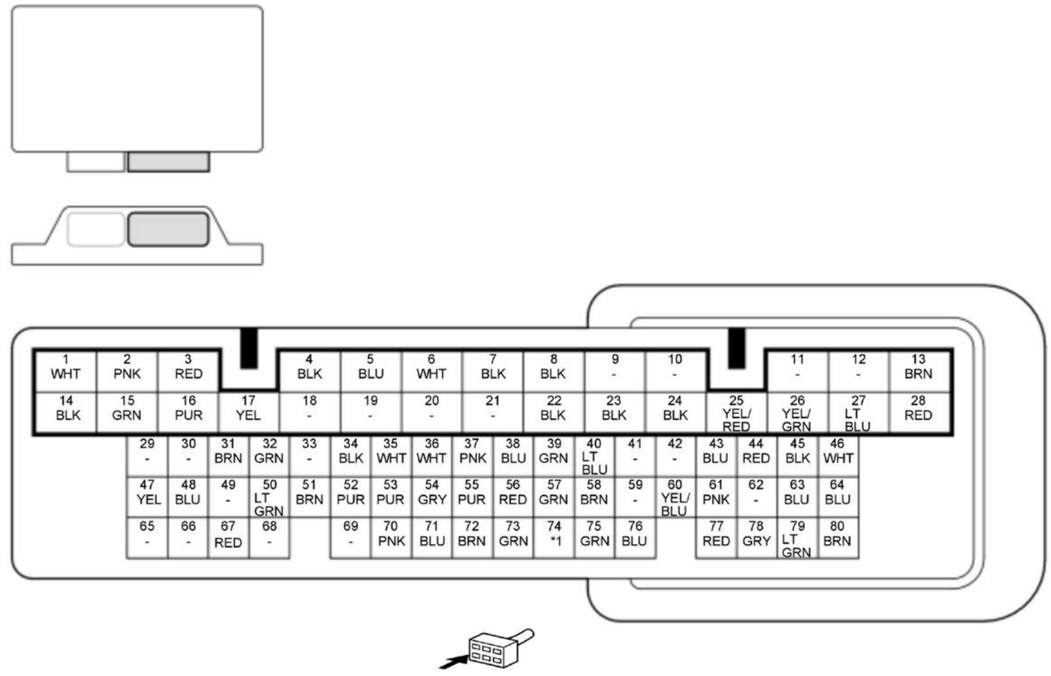
1 WHT
2 PNK
3 RED
4 BLK
5 BLU
6 WHT
7 BLK
8 BLK
9 -
10 -
11 -
12 -
13 BRN
14 BLK
15 GRN
16 PUR
17 YEL
18 -
19 -
20 -
21 -
22 BLK
23 BLK
24 BLK
25 YEL/ RED
26 YEL/ GRN
27 LT BLU
28 RED
29 -
30 -
31 BRN
32 GRN
33 -
34 BLK
35 WHT
36 WHT
37 PNK
38 BLU
39 GRN
40 LT BLU
41 -
42 -
43 BLU
44 RED
45 BLK
46 WHT
47 YEL
48 BLU
49 -
50 LT GRN
51 BRN
52 PUR
53 PUR
54 GRY
55 PUR
56 RED
57 GRN
58 BRN
59 -
60 YEL/ BLU
61 PNK
62 -
63 BLU
64 BLU
65 -
66 -
67 RED
68 -
69 -
70 PNK
71 BLU
72 BRN
73 GRN
74 *1
75 GRN
76 BLU
77 RED
78 GRY
79 LT GRN
80 BRN

*1: BRN or YEL

Terminal number	Terminal name	Description
1	HPUMP H (HIGH PRESSURE FUEL PUMP +)	Drives fuel control solenoid (built into high pressure fuel pump)
2	INJH4 (No. 4 INJECTOR +)	Drives No. 4 injector
3	INJL1 (No. 1 INJECTOR -)	Drives No. 1 injector
4	INJL3 (No. 3 INJECTOR -)	Drives No. 3 injector
5	INJH2 (No. 2 INJECTOR +)	Drives No. 2 injector
6	INJH3 (No. 3 INJECTOR +)	Drives No. 3 injector

Terminal number	Terminal name	Description
7	INJ GND2 (INJECTOR GROUND)	Ground for PCM (injector driver)
8	INJ GND1 (INJECTOR GROUND)	Ground for PCM (injector driver)
9	Not used	B
10	Not used	B
11	Not used	B
12	Not used	B
13	AFHT N (AIR FUEL RATIO (A/F) SENSOR (SENSOR 1) HEATER CONTROL)	Drives A/F sensor (Sensor 1) heater
14	HPUMP L (HIGH PRESSURE FUEL PUMP -)	Drives fuel control solenoid (built into high pressure fuel pump)
15	INJH1 (No. 1 INJECTOR +)	Drives No. 1 injector
16	INJL4 (No. 4 INJECTOR -)	Drives No. 4 injector
17	INJL2 (No. 2 INJECTOR -)	Drives No. 2 injector
18	Not used	B
19	Not used	B
20	Not used	B
21	Not used	B
22	GND4 (GROUND)	Ground for PCM
23	GND3 (GROUND)	Ground for PCM
24	GND2 (GROUND)	Ground for PCM

*1: USA and Canada models

Terminal number	Terminal name	Description
25	WGMTR2 (-) (TURBOCHARGER WASTEGATE CONTROL ACTUATOR - SIDE)	Drives turbocharger wastegate control actuator
26	WGMTR1 (+) (TURBOCHARGER WASTEGATE CONTROL ACTUATOR + SIDE)	Drives turbocharger wastegate control actuator
27	MTR1 (THROTTLE ACTUATOR)	Drives throttle actuator
28	MTR2 (THROTTLE ACTUATOR)	Drives throttle actuator
29	Not used	B
30	Not used	B
31	ACC (A/C COMPRESSOR CLUTCH RELAY)	Drives A/C compressor clutch relay
32	CAM EX (CAMSHAFT POSITION (CMP) SENSOR B)	Detects CMP sensor B signal
33	Not used	B
34	KSGND (KNOCK SENSOR GROUND)	Sensor ground for knock sensor
35	KS (KNOCK SENSOR)	Detects knock sensor signal
36	IG1 (MONI) (IGNITION SIGNAL)	Detects ignition signal
37	IGN01 (No. 1 IGNITION COIL PULSE)	Drives No. 1 ignition coil
38	IGN02 (No. 2 IGNITION COIL PULSE)	Drives No. 2 ignition coil
39	IGN03 (No. 3 IGNITION COIL PULSE)	Drives No. 3 ignition coil
40	IGN04 (No. 4 IGNITION COIL PULSE)	Drives No. 4 ignition coil
41	Not used	B
42	Not used	B
43	TDCAM (CAMSHAFT POSITION (CMP) SENSOR A)	Detects CMP sensor A signal
44	CRKP (CRANKSHAFT POSITION (CKP) SENSOR)	Detects CKP sensor signal
45	SG6 (SENSOR GROUND)	Sensor ground
46	VTC (EX) (VTC OIL CONTROL SOLENOID VALVE B)	Drives VTC oil control solenoid valve B
47 *1	ELCMP (EVAP LEAK CHECK MODULE VACUUM PUMP)	Drives EVAP leak check module vacuum pump

Terminal number	Terminal name	Description
48	IP (AIR FUEL RATIO (A/F) SENSOR (SENSOR 1) IP CELL)	Detects A/F sensor (Sensor 1) pump cell
49	Not used	B
50	THL1 (THROTTLE POSITION (TP) SENSOR A)	Detects TP sensor A signal
51	THL2 (THROTTLE POSITION (TP) SENSOR B)	Detects TP sensor B signal
52	TW (ENGINE COOLANT TEMPERATURE (ECT) SENSOR 1)	Detects ECT sensor 1 signal
53	ITA1 (TA) (INTAKE AIR TEMPERATURE (IAT) SENSOR 1)	Detects IAT sensor 1 signal
54	TW2 (ENGINE COOLANT TEMPERATURE (ECT) SENSOR 2)	Detects ECT sensor 2 signal
55	ITA2 (INTA) (INTAKE AIR TEMPERATURE (IAT) SENSOR 2)	Detects IAT sensor 2 signal
56	PB (MANIFOLD ABSOLUTE PRESSURE (MAP) SENSOR)	Detects MAP sensor signal
57	P3 (TURBOCHARGER BOOST SENSOR)	Detects turbocharger boost sensor signal
58	ENG OPSW (OIL PRESSURE SWITCH)	Detects oil pressure switch signal
59	Not used	B
60	DCWGL (TURBOCHARGER WASTEGATE CONTROL ACTUATOR POSITION SENSOR)	Detects turbocharger wastegate control actuator position sensor signal
61	FGP (MASS AIR FLOW (MAF) SENSOR PULSE)	Detects MAF sensor signal
62	Not used	B
63	VCC6 (SENSOR VOLTAGE)	Provides sensor reference voltage
64	VTC (IN) (VTC OIL CONTROL SOLENOID VALVE A)	Drives VTC oil control solenoid valve A
65	Not used	B
66	Not used	B
67	ATPST (TRANSMISSION RANGE SWITCH P/N POSITION)	Detects transmission range switch P/N position signal
68	Not used	B
69	Not used	B
70	VCC1 (SENSOR VOLTAGE)	Provides sensor reference voltage

*1: USA and Canada models

Terminal number	Terminal name	Description
71	SG1 (SENSOR GROUND)	Sensor ground
72	PF (FUEL RAIL PRESSURE SENSOR)	Detects fuel rail pressure sensor signal
73	VS (AIR FUEL RATIO (A/F) SENSOR (SENSOR 1) VS CELL)	Detects A/F sensor (Sensor 1) VS cell
74	VCENT (AIR FUEL RATIO (A/F) SENSOR (SENSOR 1) VIRTUAL GROUND)	Provides reference voltage for A/F sensor (Sensor 1)
75	VCC3 (SENSOR VOLTAGE)	Provides sensor reference voltage
76	SG3 (SENSOR GROUND)	Sensor ground
77	VCC2 (SENSOR VOLTAGE)	Provides sensor reference voltage
78	SG2 (SENSOR GROUND)	Sensor ground
79	ABV (TURBOCHARGER BYPASS CONTROL SOLENOID VALVE)	Drives turbocharger bypass control solenoid valve
80	IPV (EVAPORATIVE EMISSION (EVAP) CANISTER PURGE VALVE)	Drives EVAP canister purge valve

*1: USA and Canada models

PCM CONNECTOR FOR INPUTS AND OUTPUTS (2.4 L ENGINE) (2017 2018 2019)

PCM Connector for Inputs and Outputs

Connector Index
PCM Connector A (51P)
PCM Connector B (51P)
PCM Connector C (51P)

PCM Inputs and Outputs at PCM Connector A (□) (51P) (female terminals)

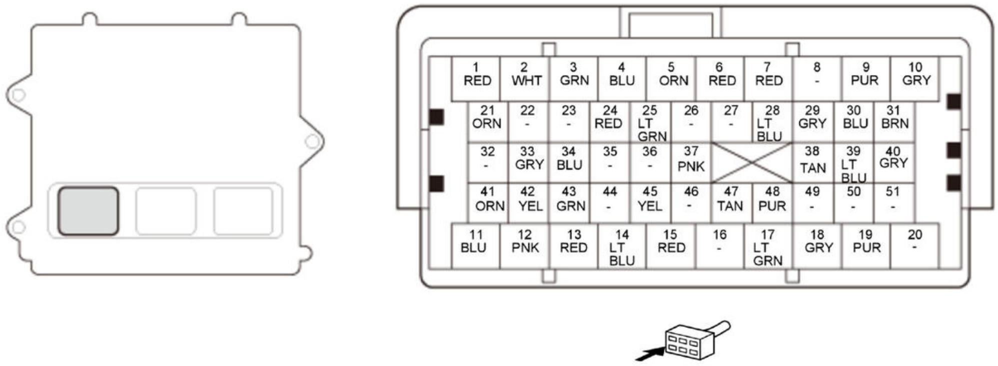
1 RED
2 WHT
3 GRN
4 BLU
5 ORN
6 RED
7 RED
8 -
9 PUR
10 GRY
21 ORN
22 -
23 -
24 RED
25 LT GRN
26 -
27 -
28 LT BLU
29 GRY
30 BLU
31 BRN
32 -
33 GRY
34 BLU
35 -
36 -
37 PNK
38 TAN
39 LT BLU
40 GRY
41 ORN
42 YEL
43 GRN
44 -
45 YEL
46 -
47 TAN
48 PUR
49 -
50 -
51 -
11 BLU
12 PNK
13 RED
14 LT BLU
15 RED
16 -
17 LT GRN
18 GRY
19 PUR
20 -

Terminal number	Terminal name	Description
1	F-CAN L (F-CAN COMMUNICATION SIGNAL LOW)	Sends and receives communication signal
2	F-CAN H (F-CAN COMMUNICATION SIGNAL HIGH)	Sends and receives communication signal
3	FI MAIN RLY CL- (PGM-FI MAIN RELAY 1)	Drives PGM-FI main relay 1
4	IG1 FUEL PUMP (IGNITION SIGNAL)	Detects ignition signal
5	FI MAIN RLY OUT (POWER SOURCE)	Power source for PCM
6	INJ RLY OUT (INJECTOR POWER SOURCE)	Power source for PCM (injector driver)
7	INJ RLY OUT (INJECTOR POWER SOURCE)	Power source for PCM (injector driver)
8	Not used	B
9	FAN LO SIGNAL (RADIATOR FAN CONTROL)	Drives radiator fan relay
10	FAN HI SIGNAL (RADIATOR FAN CONTROL)	Drives A/C condenser fan relay and fan control relay
11	IG1 MISS SOL (POWER SOURCE FOR PCM)	Power source for PCM
12	SHIFT LOCK SOL (SHIFT LOCK SOLENOID)	Drives shift lock solenoid
13	A/C MG CLUTCH RLY CL- (A/C COMPRESSOR CLUTCH RELAY)	Drives A/C compressor clutch relay
14	FUEL PUMP RLY CL- (FUEL PUMP RELAY)	Drives PGM-FI main relay 2
15	INJ RLY CL- (INJECTOR DRIVER RELAY)	Drives injector relay
16	Not used	B
17 *1	VSV (EVAPORATIVE EMISSION (EVAP) CANISTER VENT SHUT VALVE)	Drives EVAP canister vent shut valve
18	ACC/IG2 CUT RELAY CL- (ACC/IG2 CUT RELAY)	Drive ACC cut relay and IG2 cut relay
19	DBW RLY- (ELECTRONIC THROTTLE CONTROL SYSTEM (ETCS) CONTROL RELAY)	Drives PGM-FI subrelay
20	Not used	B
21	S-NET (SERIAL COMMUNICATION FOR IMMOBILIZER)	Sends and receives communication signal
22	Not used	B
23	Not used	B

*1: USA models

Terminal number	Terminal name	Description
24	BKSWNC (BRAKE PEDAL POSITION SWITCH)	Detects brake pedal position switch signal
25	VSP (VEHICLE SPEED SIGNAL OUTPUT)	Sends vehicle speed signal
26	Not used	B
27	Not used	B
28	SG6 (SENSOR GROUND)	Sensor ground
29	VCC6 (SENSOR VOLTAGE)	Provides sensor reference voltage
30	SG4 (SENSOR GROUND)	B
31	VCC4 (SENSOR VOLTAGE)	Provides sensor reference voltage
32	Not used	B
33	ST CUT RLY1 CL- (STARTER CUT RELAY 1)	Drives starter cut relay 1
34	ST CUT RLY2 CL- (STARTER CUT RELAY 2)	Drives starter cut relay 2
35	Not used	B
36	Not used	B
37	STOP SW (BRAKE PEDAL POSITION SWITCH)	Detects brake pedal position switch signal
38	APS2 (ACCELERATOR PEDAL POSITION (APP) SENSOR B)	Detects APP sensor B signal
39	SG5 (SENSOR GROUND)	Sensor ground
40	VCC5 (SENSOR VOLTAGE)	Provides sensor reference voltage
41	PD SENSOR (A/C PRESSURE SENSOR)	Detects A/C pressure sensor signal
42 *1	PTANK (FUEL TANK PRESSURE (FTP) SENSOR)	Detects FTP sensor signal
43	TW2 SENSOR (ENGINE COOLANT TEMPERATURE (ECT) SENSOR 2)	Detects ECT sensor 2 signal
44	Not used	B
45	APS1 (ACCELERATOR PEDAL POSITION (APP) SENSOR A)	Detects APP sensor A signal
46	Not used	B
47	START DIAG (STARTER SIGNAL LOAD)	Detects starter signal
48	SCS (SERVICE CHECK SIGNAL)	Detects service check signal
49	Not used	B
50	Not used	Detects clutch pedal position switch B signal
51	Not used	B

*1: USA models

PCM Inputs and Outputs at PCM Connector B (□) (51P) (female terminals)

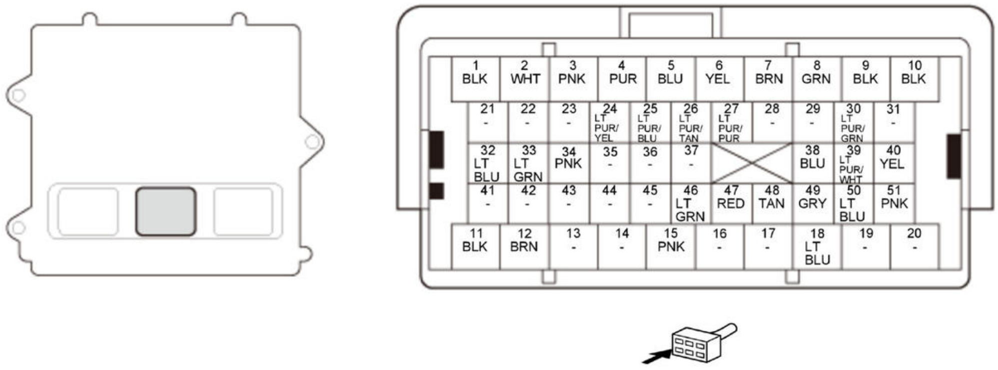
1 BLK
2 WHT
3 PNK
4 PUR
5 BLU
6 YEL
7 BRN
8 GRN
9 BLK
10 BLK
21 -
22 -
23 -
24 LT PUR/YEL
25 LT PUR/BLU
26 LT PUR/TAN
27 LT PUR/PUR
28 -
29 -
30 LT PUR/GRN
31 -
32 LT BLU
33 LT GRN
34 PNK
35 -
36 -
37 -
38 BLU
39 LT PUR/WHT
40 YEL
41 -
42 -
43 -
44 -
45 -
46 LT GRN
47 RED
48 TAN
49 GRY
50 LT BLU
51 PNK
11 BLK
12 BRN
13 -
14 -
15 PNK
16 -
17 -
18 LT BLU
19 -
20 -

Terminal number	Terminal name	Description
1	INJ H1 (No. 1 INJECTOR +)	Drives No. 1 injector
2	INJ L1 (No. 1 INJECTOR -)	Drives No. 1 injector

Terminal number	Terminal name	Description
3	INJ H4 (No. 4 INJECTOR +)	Drives No. 4 injector
4	INJ L4 (No. 4 INJECTOR -)	Drives No. 4 injector
5	INJ H2 (No. 2 INJECTOR +)	Drives No. 2 injector
6	INJ L2 (No. 2 INJECTOR -)	Drives No. 2 injector
7	INJ H3 (No. 3 INJECTOR +)	Drives No. 3 injector
8	INJ L3 (No. 3 INJECTOR -)	Drives No. 3 injector
9	GND INJ 1 (INJECTOR GROUND)	Ground for PCM (injector driver)
10	GND INJ 2 (INJECTOR GROUND)	Ground for PCM (injector driver)
11	GND1 (PCM GROUND)	Ground for PCM
12	GND2 (PCM GROUND)	Ground for PCM
13	Not used	B
14	Not used	B
15	PCS (EVAPORATIVE EMISSION (EVAP) CANISTER PURGE VALVE)	Drives EVAP canister purge valve
16	Not used	B
17	Not used	B
18	VTS (ROCKER ARM OIL CONTROL SOLENOID)	Drives rocker arm oil control solenoid
19	Not used	B
20	Not used	B
21 *1	VTM (ROCKER ARM OIL PRESSURE SWITCH)	Detects rocker arm oil pressure switch signal
22	Not used	B
23	Not used	B
24	IGN01 (No. 1 IGNITION COIL PULSE)	Drives No. 1 ignition coil
25	IGN02 (No. 2 IGNITION COIL PULSE)	Drives No. 2 ignition coil
26	IGN03 (No. 3 IGNITION COIL PULSE)	Drives No. 3 ignition coil
27	IGN04 (No. 4 IGNITION COIL PULSE)	Drives No. 4 ignition coil
28	Not used	B
29	Not used	B
30	TDC (CAMSHAFT POSITION (CMP) SENSOR B)	Detects CMP sensor B signal
31	Not used	B
32	VGP (MASS AIR FLOW (MAF) SENSOR +SIDE)	Detects MAF sensor signal
33	VGM (MASS AIR FLOW (MAF) SENSOR -SIDE)	Ground for MAF sensor
34	ENG OP SW (OIL PRESSURE SWITCH)	Detects oil pressure switch signal
35	Not used	B
36	Not used	B
37	Not used	B
38	CRKN (CRANKSHAFT POSITION (CKP) SENSOR)	Detects CKP sensor signal
39	CAM (CAMSHAFT POSITION (CMP) SENSOR A)	Detects CMP sensor A signal
40	LIN (LOCAL INTERCONNECT NETWORK)	Sends and receives communication signal
41	Not used	B
42	Not used	B
43	Not used	B
44	Not used	B
45	Not used	B
46	THL1 (THROTTLE POSITION (TP) SENSOR A)	Detects TP sensor A signal
47	THL2 (THROTTLE POSITION (TP) SENSOR B)	Detects TP sensor B signal

*1: USA models

Terminal number	Terminal name	Description
48	VCC3 (SENSOR VOLTAGE)	Provides sensor reference voltage
49	SG3 (DBW) (SENSOR GROUND)	Sensor ground
50	TW (ENGINE COOLANT TEMPERATURE (ECT) SENSOR 1)	Detects ECT sensor 1 signal
51	TA (INTAKE AIR TEMPERATURE (IAT) SENSOR)	Detects IAT sensor signal

*1: USA models

PCM Inputs and Outputs at PCM Connector C (o) (51P) (female terminals)

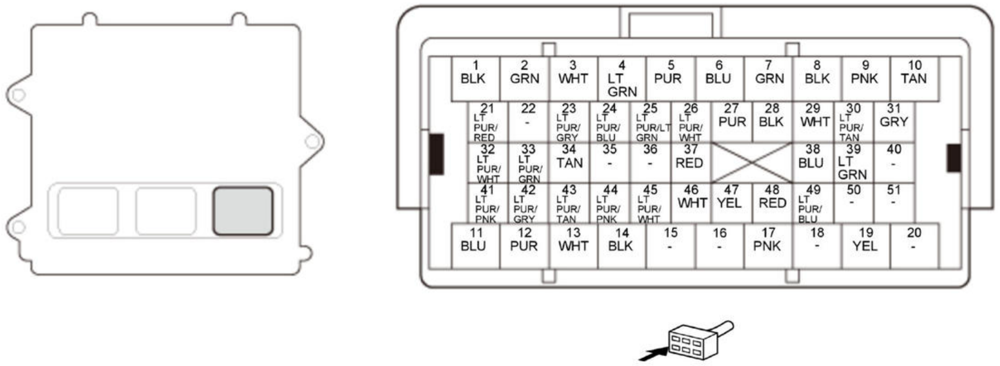
1 BLK
2 GRN
3 WHT
4 LT GRN
5 PUR
6 BLU
7 GRN
8 BLK
9 PNK
10 TAN
21 LT PUR/RED
22 -
23 LT PUR/GRY
24 LT PUR/BLU
25 LT PUR/LT GRN
26 LT PUR/WHT
27 PUR
28 BLK
29 WHT
30 LT PUR/TAN
31 GRY
32 LT PUR/WHT
33 LT PUR/GRN
34 TAN
35 -
36 -
37 RED
38 BLU
39 LT GRN
40 -
41 LT PUR/PNK
42 LT PUR/GRY
43 LT PUR/TAN
44 LT PUR/PNK
45 LT PUR/WHT
46 WHT
47 YEL
48 RED
49 LT PUR/BLU
50 -
51 -
11 BLU
12 PUR
13 WHT
14 BLK
15 -
16 -
17 PNK
18 -
19 YEL
20 -

Terminal number	Terminal name	Description
1	PGM (POWER GROUND ETCS)	Ground for PCM
2	VBDBW (IGNITION SIGNAL ETCS)	Detects ignition signal
3	LC LS (CVT LOCK-UP CLUTCH CONTROL SOLENOID VALVE)	Drives CVT lock-up clutch control solenoid valve
4	DR LS (CVT DRIVE PULLEY PRESSURE CONTROL SOLENOID VALVE)	Drives CVT drive pulley pressure control solenoid valve
5	CPC LS (CVT CLUTCH PRESSURE CONTROL SOLENOID VALVE)	Drives CVT clutch pressure control solenoid valve
6	VTC (VTC OIL CONTROL SOLENOID VALVE)	Drives VTC oil control solenoid valve
7	AFHT (AIR FUEL RATIO (A/F) SENSOR (SENSOR 1) HEATER CONTROL)	Drives A/F sensor (sensor 1) heater
8	GND3 (PCM GROUND)	Ground for PCM
9	SO2 HT (SECONDARY HEATED OXYGEN SENSOR (SECONDARY HO2S) (SENSOR 2) HEATER)	Drives secondary HO2S (sensor 2) heater
10	DN LS (CVT DRIVEN PULLEY PRESSURE CONTROL SOLENOID VALVE)	Drives CVT driven pulley pressure control solenoid valve
11	MTR1 (THROTTLE ACTUATOR -SIDE)	Ground for throttle actuator
12	MTR2 (THROTTLE ACTUATOR +SIDE)	Drives throttle actuator
13	HPUMP H (HIGH PRESSURE FUEL PUMP +)	Drives high pressure fuel pump
14	HPUMP L (HIGH PRESSURE FUEL PUMP -)	Drives high pressure fuel pump
15	Not used	B
16	Not used	B
17	SOL C (SHIFT SOLENOID VALVE O/P)	Drives shift solenoid valve O/P
18	Not used	B
19	SOL B (SHIFT SOLENOID VALVE B)	Drives shift solenoid valve B
20	Not used	B
21	NT (TORQUE CONVERTER TURBINE SPEED SENSOR)	Detects torque converter turbine speed sensor signal

Terminal number	Terminal name	Description
22	Not used	B
23	ATP RVS (TRANSMISSION RANGE SWITCH RVS POSITION)	Detects transmission range switch R position signal
24	ATP N (TRANSMISSION RANGE SWITCH N POSITION)	Detects transmission range switch N position signal

Terminal number	Terminal name	Description
25	ATP D (TRANSMISSION RANGE SWITCH D POSITION)	Detects transmission range switch D position signal
26	ATP FWD (TRANSMISSION RANGE SWITCH FWD POSITION)	Detects transmission range switch FWD position signal
27	ATP R (TRANSMISSION RANGE SWITCH R POSITION)	Detects transmission range switch R position signal
28	KSGND (KNOCK SENSOR GROUND)	Sensor ground for knock sensor
29	KS (KNOCK SENSOR)	Detects knock sensor signal
30	VCC2 (SENSOR VOLTAGE)	Provides sensor reference voltage
31	SG2 (SENSOR GROUND)	Sensor ground
32	VELL DD (CVT SPEED SENSOR)	Detects CVT speed sensor signal
33	NDR DD (CVT DRIVE PULLEY SPEED SENSOR)	Detects CVT drive pulley speed sensor signal
34	ATP P (TRANSMISSION RANGE SWITCH P POSITION)	Detects transmission range switch P position signal
35	Not used	B
36	Not used	B
37	TATF (TRANSMISSION FLUID TEMPERATURE SENSOR)	Detects transmission fluid temperature sensor signal
38	SO2 (SECONDARY HEATED OXYGEN SENSOR (SECONDARY HO2S) (SENSOR 2))	Detects secondary HO2S (sensor 2) signal
39	SO2SG (SECONDARY HEATED OXYGEN SENSOR (SECONDARY HO2S (SENSOR 2)) SENSOR GROUND)	Sensor ground for secondary HO2S (sensor 2)
40	Not used	B
41	VCC1 (SENSOR VOLTAGE)	Provides sensor reference voltage
42	SG1 (SENSOR GROUND)	Sensor ground
43	ATP S (TRANSMISSION RANGE SWITCH S POSITION)	Detects transmission range switch S position signal
44	ATP L (TRANSMISSION RANGE SWITCH L POSITION)	Detects transmission range switch L position signal
45	PB (MANIFOLD ABSOLUTE PRESSURE (MAP) SENSOR)	Detects MAP sensor signal
46	PF (FUEL RAIL PRESSURE SENSOR)	Detects fuel rail pressure sensor signal
47	AFS- (AIR FUEL RATIO (A/F) SENSOR (SENSOR 1) -SIDE)	Detects A/F sensor (sensor 1) signal
48	AFS+ (AIR FUEL RATIO (A/F) SENSOR (SENSOR 1) +SIDE)	Detects A/F sensor (sensor 1) signal
49	PDN (CVT DRIVEN PULLEY PRESSURE SENSOR)	Detects CVT driven pulley pressure sensor signal
50	Not used	B
51	Not used	B

DTC TROUBLESHOOTING

MIL CIRCUIT TROUBLESHOOTING (1.5 L ENGINE)

MIL Circuit Troubleshooting

1. Gauge control module check

   -1. Turn the vehicle to the ON mode.

   -2. Do the gauge control module self-diagnostic function .

   Does the MIL flash?

   YES

   Go to step 2.

   NO

   Substitute a known-good gauge control module , then recheck. If the symptom/indication goes away with a known-good gauge control module, replace the original gauge control module .

2. PCM check

   -1. Turn the vehicle to the OFF (LOCK) mode.

   -2. Connect the HDS to the data link connector.

   -3. Turn the vehicle to the ON mode.

   -4. Check the parameter (s) below with the HDS.

Signal	Threshold		Current conditions	
	Values	Unit	Values	Unit
SCS	Short	B	B	B

   Do the current condition (s) match the threshold?

   YES

   Go to step 3.

   NO

   Check for any authorized service information related to the DTCs or symptoms you are troubleshooting, or substitute a known-good PCM .

3. Shorted wire check (SCS line)

   -1. Turn the vehicle to the OFF (LOCK) mode.

   -2. Jump the SCS line with the HDS, and wait more than 1 minute.

   -3. Disconnect the following connector.

PCM connector A (50P)

   -4. Disconnect the HDS from the data link connector.

   -5. Check for continuity between test points 1 and 2.

Test condition	Vehicle OFF (LOCK) mode
B	PCM connector A (50P): disconnected
Test point 1	PCM connector A (50P) No. 27
Test point 2	Body ground

   Is there continuity?

   YES

Repair a short in the SCS wire between the PCM (A27) and the data link connector.

NO

The SCS wire is OK. Check for any authorized service information related to the DTCs or symptoms you are troubleshooting, or **substitute a known-good PCM** .

MIL CIRCUIT TROUBLESHOOTING (2.4 L ENGINE) (2017 2018 2019)

MIL Circuit Troubleshooting

1. Gauge control module check

-1. Turn the vehicle to the ON mode.

-2. **Do the gauge control module self-diagnostic function** .

Does the MIL flash?

YES

Go to step 2.

NO

Substitute a known-good gauge control module , then recheck. If the symptom/indication goes away with a known-good gauge control module, **replace the original gauge control module** .

2. PCM check

-1. Turn the vehicle to the OFF (LOCK) mode.

-2. **Connect the HDS to the data link connector**.

-3. Turn the vehicle to the ON mode.

-4. Check the parameter (s) below with the HDS.

Signal	Threshold		Current conditions	
	Values	Unit	Values	Unit
SCS	Short	B	B	B

Do the current condition (s) match the threshold?

YES

Go to step 3.

NO

Check for any authorized service information related to the DTCs or symptoms you are troubleshooting, or **substitute a known-good PCM** .

3. Shorted wire check (SCS line)

-1. Turn the vehicle to the OFF (LOCK) mode.

-2. Jump the SCS line with the HDS, and wait more than 1 minute.

-3. Disconnect the following connector.

PCM connector A (51P)

-4. Disconnect the HDS from the data link connector.

-5. Check for continuity between test points 1 and 2.

Test condition	Vehicle OFF (LOCK) mode
B	PCM connector A (51P): disconnected
Test point 1	**PCM connector A (51P) No. 48**
Test point 2	Body ground

Is there continuity?

YES

Repair a short in the SCS wire between the PCM (A48) and the data link connector.

NO

The SCS wire is OK. Check for any authorized service information related to the DTCs or symptoms you are troubleshooting, or **substitute a known-good PCM** .

PCM POWER AND GROUND CIRCUIT TROUBLESHOOTING (1.5 L ENGINE)

PCM Power and Ground Circuit Troubleshooting

1. Engine starting check

   -1. Try to start the engine.

   Does the engine start and idle smoothly?

   YES

   Go to the troubleshooting for CAN gateway system DTC (s) .

   NO

   Go to step 2.

2. Fuse check 1

   -1. Turn the vehicle to the OFF (LOCK) mode.

   -2. Check the following fuse.

Fuse	No. A12 (10 A)
Location	Under-hood fuse/relay box

   Is the fuse OK?

   YES

   Go to step 3.

   NO

   Go to step 4.

3. Determine possible failure area (+B BACKUP FI-ECU line, others)

   -1. Jump the SCS line with the HDS, and wait more than 1 minute.

   -2. Disconnect the following connector.

PCM connector A (50P)

   -3. Measure the voltage between test points 1 and 2.

Test condition	Vehicle OFF (LOCK) mode
B	PCM connector A (50P): disconnected

Test point 1	**PCM connector A (50P) No. 7**
Test point 2	Body ground

Is there battery voltage?

YES

Go to step 5.

NO

Repair an open in the +B BACKUP FI-ECU wire between PCM (A7) and the No. A12 (10 A) fuse in the under-hood fuse/relay box.

4. Shorted wire check (+B BACKUP FI-ECU line)

-1. Remove the blown No. A12 (10 A) fuse from the under-hood fuse/relay box.

-2. Jump the SCS line with the HDS, and wait more than 1 minute.

-3. Disconnect the following connector.

PCM connector A (50P)

-4. Check for continuity between test points 1 and 2.

Test condition	Vehicle OFF (LOCK) mode
B	PCM connector A (50P): disconnected
Test point 1	**PCM connector A (50P) No. 7**
Test point 2	Body ground

Is there continuity?

YES

Repair a short in the +B BACKUP FI-ECU wire between the PCM (A7) and the No. A12 (10 A) fuse in the under-hood fuse/relay box. Also replace the No. A12 (10 A) fuse.

NO

Go to step 5.

5. Fuse check 2

-1. Check the following fuse.

Fuse	No. A7 (15 A)
Location	Under-hood fuse/relay box

Is the fuse OK?

YES

Go to step 9.

NO

Go to step 6.

6. Shorted wire check (+B IGP line)

-1. Remove the blown No. A7 (15 A) fuse from the under-hood fuse/relay box.

-2. **Remove the injector relay** .

-3. Disconnect the following connector.

Relay circuit board connector C (18P)

-4. Check for continuity between test points 1 and 2.

Test condition	Vehicle OFF (LOCK) mode
B	Relay circuit board connector C (18P): disconnected
B	PCM connector A (50P): disconnected
B	Injector relay: disconnected
Test point 1	Relay circuit board connector C (18P) (female terminals) No. 18: ①
Test point 2	Body ground

Test point 1	Injector relay 4P socket (female terminals) No. 3: ②
Test point 2	Body ground

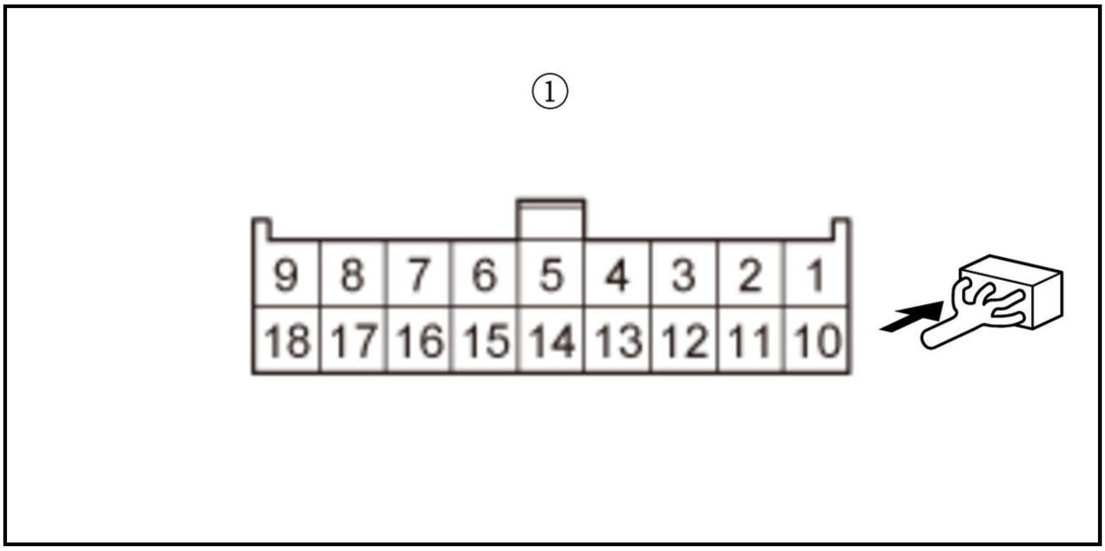

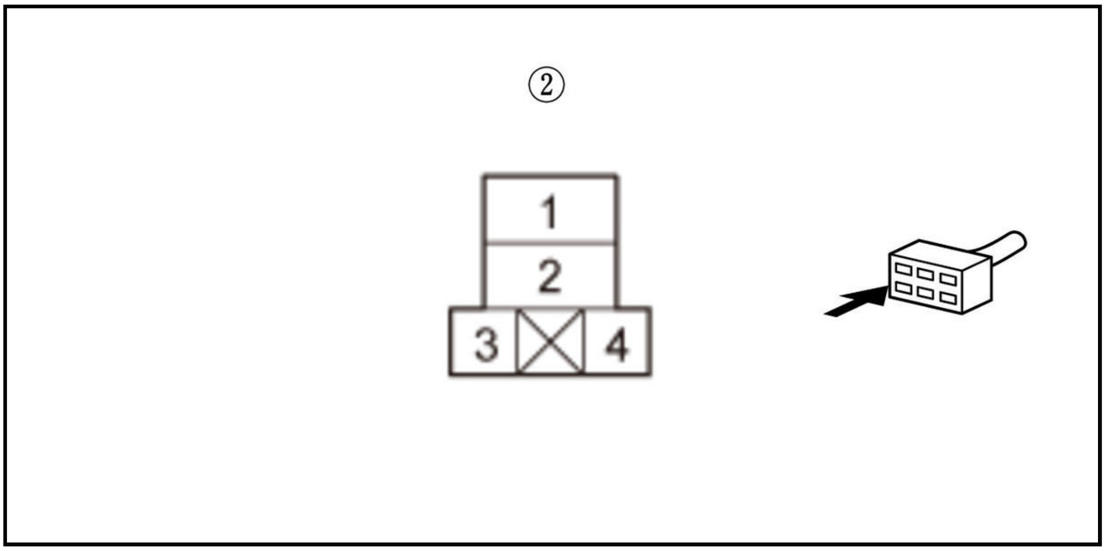

Is there continuity?

YES

Repair a short in the +B IGP wire between the No. A7 (15 A) fuse and the relay circuit board or the No. A7 (15 A) fuse and the injector relay. If the wire is OK, replace the under-hood fuse/relay box . Also replace the No. A7 (15 A) fuse.

NO

Go to step 7.

7. Part (s) internal circuit check (short in FI MAIN RLY OUT line):

Disconnect each of the parts or connectors below, one at a time, then check for continuity between test points 1 and 2.

- PGM-FI main relay 2
- PCM connector A (50P)

Test condition	Vehicle OFF (LOCK) mode Relay circuit board connector C (18P): disconnected Injector relay: disconnected
Test point 1	Relay circuit board connector C (18P) (female terminals) No. 17: ①
Test point 2	Body ground

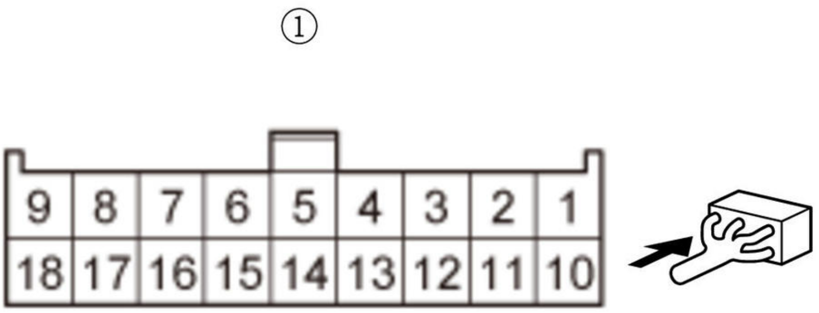

Does continuity go away when one of the above components is disconnected?

YES

Replace the part that made the short to body ground go away when it was disconnected. If the part is the PCM, check for any authorized service information related to the DTCs or symptoms you are troubleshooting, or **substitute a known-good PCM** , then recheck. If the symptom/indication goes away and the PCM was substituted, **replace the original PCM** . Also replace the No. A7 (15 A) fuse in the under-hood fuse/relay box.

NO

Parts are OK. Go to step 8.

8. Shorted wire check (FI MAIN RLY OUT line):

Disconnect the following parts or connectors:

- PGM-FI main relay 2
- PCM connector A (50P)

-2. Check for continuity between test points 1 and 2.

Test condition	Vehicle OFF (LOCK) mode Relay circuit board connector C (18P): disconnected PGM-FI main relay 2: disconnected Injector relay: disconnected PCM connector A (50P): disconnected
Test point 1	Relay circuit board connector C (18P) (female terminals) No. 17: ①

Test point 2	Body ground

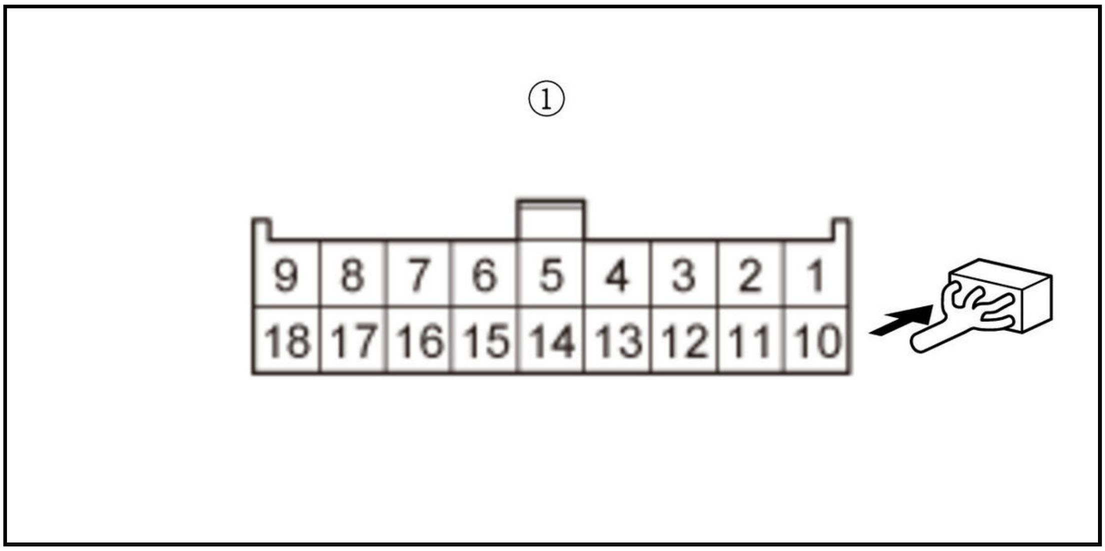

Is there continuity?

YES

Repair a short in the FI MAIN RLY OUT wire between the relay circuit board and each part. Also replace the No. A7 (15 A) fuse in the under-hood fuse/relay box.

NO

The FI MAIN RLY OUT wire is OK. **Replace the relay circuit board** . Also replace the No. A7 (15 A) fuse in the under-hood fuse/relay box.

9. Fuse check 3

-1. Check the following fuse.

Fuse	No. D8 (15 A)
Location	Under-dash fuse/relay box

Is the fuse OK?

YES

Go to step 14.

NO

Go to step 10.

10. Relay check

-1. **Remove PGM-FI main relay 2** .

-2. **Test PGM-FI main relay 2** .

Is the relay OK?

YES

PGM-FI main relay 2 is OK. Go to step 11.

NO

Replace PGM-FI main relay 2. Also replace the No. D8 (15 A) fuse in the under-dash fuse/relay box.

11. Determine possible failure area (IG1 FUEL PUMP line, others)

-1. Remove the blown No. D8 (15 A) fuse from the under-dash fuse/relay box.

-2. Check for continuity between test points 1 and 2.

Test condition	Vehicle OFF (LOCK) mode
	PGM-FI main relay 2: disconnected
	PCM connector A (50P): disconnected

Test point 1	PGM-FI main relay 2 4P socket (female terminals) No. 1: ①
Test point 2	Body ground

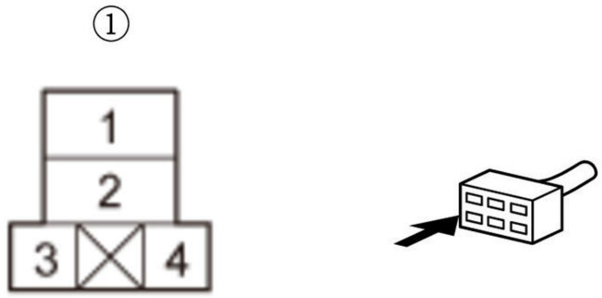

Is there continuity?

YES

Go to step 12.

NO

Go to step 13.

12. Shorted wire check (IG1 FUEL PUMP line)

-1. Disconnect the following connector.

Under-dash fuse/relay box connector C (27P)

-2. Check for continuity between test points 1 and 2.

Test condition	Vehicle OFF (LOCK) mode
B	PGM-FI main relay 2: disconnected
B	Under-dash fuse/relay box connector C (27P): disconnected
B	PCM connector A (50P): disconnected
Test point 1	PGM-FI main relay 2 4P socket (female terminals) No. 1: ①
Test point 2	Body ground

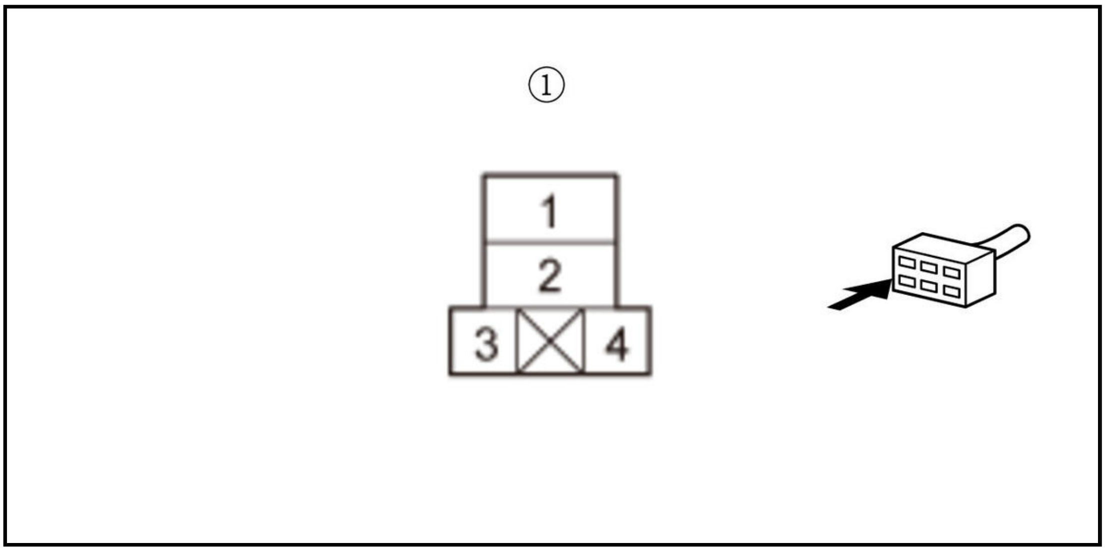

Is there continuity?

YES

Repair a short in the IG1 FUEL PUMP wire between PGM-FI main relay 2 and the No. D8 (15 A) fuse in the under-dash fuse/relay box. Also replace the No. D8 (15 A) fuse.

NO

The IG1 FUEL PUMP wire is OK. Replace the No. D8 (15 A) fuse in the under-dash fuse/relay box. If the fuse blown again, **replace the under-dash fuse/relay box** .

13. Shorted wire check (FUEL PUMP RLY OUT line)

-1. Disconnect the following connector.

Fuel tank unit 4P connector

-2. Check for continuity between test points 1 and 2.

Test condition	Vehicle OFF (LOCK) mode PGM-FI main relay 2: disconnected PCM connector A (50P): disconnected Fuel tank unit 4P connector: disconnected
Test point 1	Fuel tank unit 4P connector (female terminals) No. 1: ①
Test point 2	Body ground

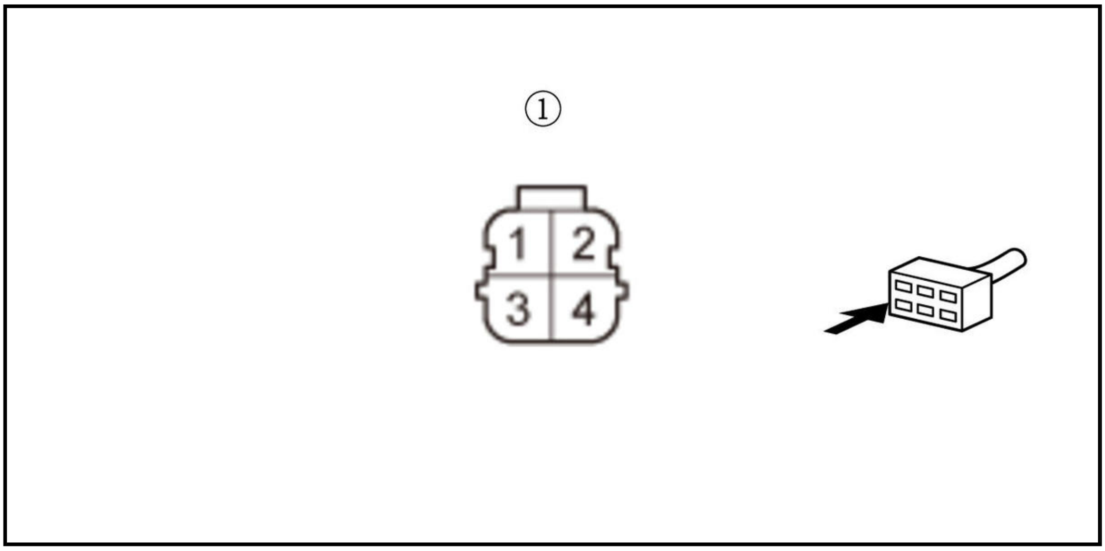

Is there continuity?

YES

Repair a short in the FUEL PUMP RLY OUT wire between PGM-FI main relay 2 and the fuel tank unit. Also replace the No. D8 (15 A) fuse in the under-dash fuse/relay box.

NO

The FUEL PUMP RLY OUT wire is OK. Check the fuel pump, and **replace it** if needed. Also replace the No. D8 (15 A) fuse in the under-dash fuse/relay box.

14. Open wire check (IG1 FUEL PUMP line)

-1. **Remove PGM-FI main relay 2** .

-2. Exit the SCS mode with the HDS.

-3. Turn the vehicle to the ON mode.

-4. Measure the voltage between test points 1 and 2.

Test condition	Vehicle ON mode
B	PCM connector A (50P): disconnected
B	PGM-FI main relay 2: disconnected
Test point 1	PGM-FI main relay 2 4P socket (female terminals) No. 1: ①
Test point 2	Body ground

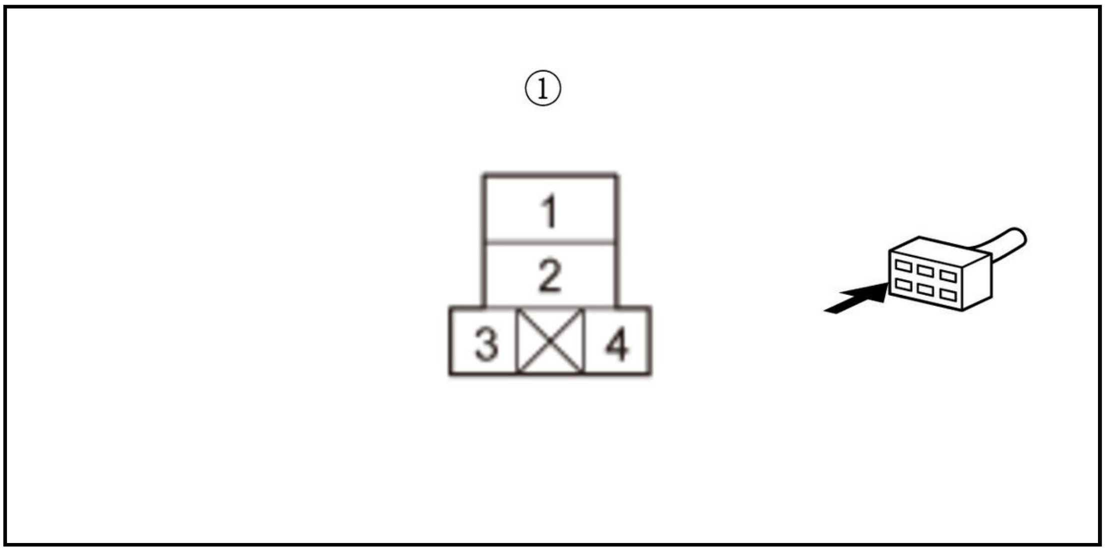

Is there battery voltage?

YES

The IG1 FUEL PUMP wire is OK. Go to step 15.

NO

Repair an open in the IG1 FUEL PUMP wire between the No. D8 (15 A) fuse in the under-dash fuse/relay box and PGM-FI main relay 2.

15. Fuse check 4

-1. Turn the vehicle to the OFF (LOCK) mode.

-2. Check the following fuse.

Fuse	No. D11 (5 A)
Location	Under-dash fuse/relay box

Is the fuse OK?

YES

Go to step 17.

NO

Go to step 16.

16. Shorted wire check (IG1 (MONI)/IG1 MON line)

-1. Jump the SCS line with the HDS, and wait more than 1 minute.

-2. Disconnect the following connector.

PCM connector E (80P)

-3. Check for continuity between test points 1 and 2.

Test condition	Vehicle OFF (LOCK) mode
	PCM connector A (50P): disconnected
	PCM connector E (80P): disconnected
	PGM-FI main relay 2: disconnected
Test point 1	**PCM connector E (80P) No. 36**
Test point 2	Body ground

Is there continuity?

YES

Repair a short in the IG1 (MONI)/IG1 MON wire between the PCM (E36) and the No. D11 (5 A) fuse in the under-dash fuse/relay box. Also replace the No. D11 (5 A) fuse.

NO

The IG1 (MONI)/IG1 MON wire is not shorted. Go to step 18.

17. Open wire check (IG1 (MONI)/IG1 MON line)

-1. Reinstall the No. D11 (5 A) fuse in the under-dash fuse/relay box.

-2. Jump the SCS line with the HDS, and wait more than 1 minute.

-3. Disconnect the following connector.

PCM connector E (80P)

-4. Turn the vehicle to the ON mode.

-5. Measure the voltage between test points 1 and 2.

Test condition	Vehicle ON mode
	PCM connector A (50P): disconnected
	PCM connector E (80P): disconnected
	PGM-FI main relay 2: disconnected
Test point 1	**PCM connector E (80P) No. 36**
Test point 2	Body ground

Is there battery voltage?

YES

The IG1 (MONI)/IG1 MON wire is OK. Go to step 18.

NO

Repair an open in the IG1 (MONI)/IG1 MON wire between the PCM (E36) and the No. D11 (5 A) fuse in the under-dash fuse/relay box.

18. Determine possible failure area (PGM-FI main relay 1 control circuit, others)

-1. Turn the vehicle to the OFF (LOCK) mode.

-2. Measure the voltage between test points 1 and 2.

Test condition	Vehicle OFF (LOCK) mode
B	PCM connector A (50P): disconnected
B	PCM connector E (80P): disconnected
Test point 1	PCM connector A (50P) No. 5
Test point 2	Body ground

Is there battery voltage?

YES

Go to step 21.

NO

Go to step 19.

19. Open wire check (+B IGP line)

-1. Disconnect the following connector.

Relay circuit board connector C (18P)

-2. Measure the voltage between test points 1 and 2.

Test condition	Vehicle OFF (LOCK) mode
B	PCM connector A (50P): disconnected
B	PCM connector E (80P): disconnected
B	Relay circuit board connector C (18P): disconnected
Test point 1	Relay circuit board connector C (18P) (female terminals) No. 18: ①
Test point 2	Body ground

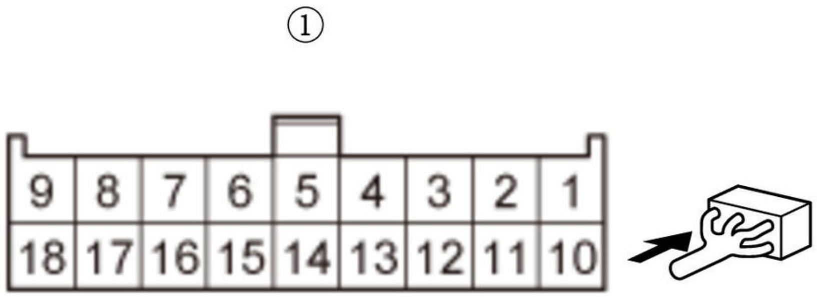

Is there battery voltage?

YES

Go to step 20.

NO

Repair an open in the +B IGP wire between the relay circuit board and the No. A7 (15 A) fuse in the under-hood fuse/relay box.

20. Open wire check (FI MAIN RLY CL- line)

-1. Disconnect the following connector.

Relay circuit board connector A (8P)

-2. Check for continuity between test points 1 and 2.

Test condition	Vehicle OFF (LOCK) mode
B	PCM connector A (50P): disconnected
B	PCM connector E (80P): disconnected
B	Relay circuit board connector A (8P): disconnected
B	Relay circuit board connector C (18P): disconnected
Test point 1	Relay circuit board connector A (8P) (female terminals) No. 7: ①
Test point 2	**PCM connector A (50P) No. 5**

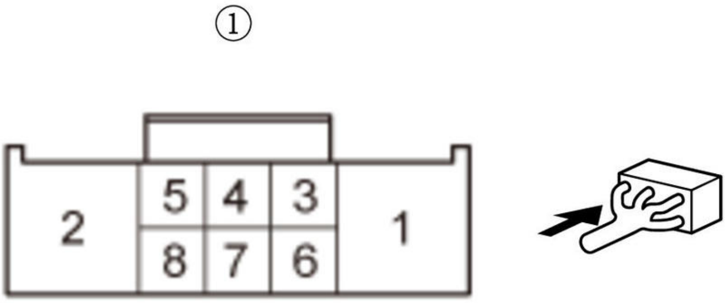

Is there continuity?

YES

The FI MAIN RLY CL- wire is OK. **Remove and test the relay circuit board** . If the relay circuit board is OK, check for any authorized service information related to the DTCs or symptoms you are troubleshooting, or **substitute a known-good PCM** .

NO

Repair an open in the FI MAIN RLY CL- wire between the PCM (A5) and the relay circuit board.

21. Open wire check (FI MAIN RLY OUT line)

-1. Check for continuity between test points 1 and 2.

Test condition	Vehicle OFF (LOCK) mode
	PCM connector A (50P): disconnected

	PCM connector E (80P): disconnected
	Relay circuit board connector C (18P): disconnected
Test point 1	Relay circuit board connector C (18P) (female terminals) No. 17: ①
Test point 2	**PCM connector A (50P) No. 8**

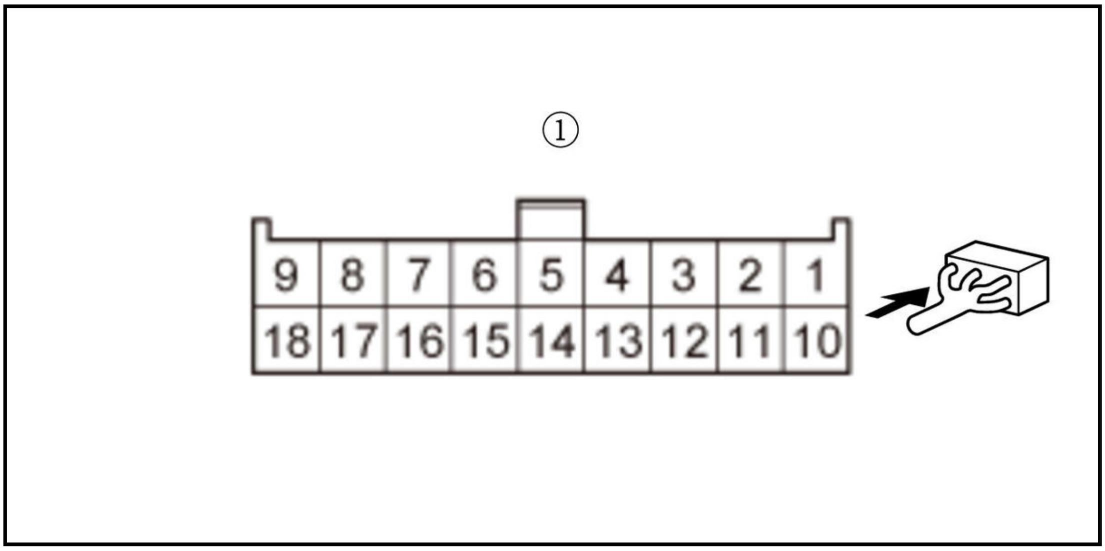

Is there continuity?

YES

The FI MAIN RLY OUT wire is OK. Go to step 22.

NO

Repair an open in the FI MAIN RLY OUT wire between the PCM (A8) and the relay circuit board.

22. Relay circuit board check

-1. **Remove and test the relay circuit board** .

Is the relay circuit board OK?

YES

The relay circuit board is OK. Go to step 23.

NO

Replace the relay circuit board .

23. Open wire check (GND lines)

-1. Check for continuity between the following test points and body ground individually.

Test condition	Vehicle OFF (LOCK) mode
B	PCM connector A (50P): disconnected
B	PCM connector E (80P): disconnected
B	Relay circuit board: removed

Connector	Terminal
PCM connector A (50P)	No. 13
PCM connector E (80P)	No. 7
	No. 8
	No. 22
	No. 23
	No. 24

Is there continuity?

YES

The FI ECU GND, INJ GND1, INJ GND2, GND2, GND3, and GND4 wires are OK. Check for any authorized service information related to the DTCs or symptoms you are troubleshooting, or **substitute a known-good PCM** .

NO

Repair an open in the FI ECU GND, INJ GND1, or INJ GND2 wire between the PCM (A13, E7, E8) and G102, or an open in the GND2, GND3, or GND4 wire between the PCM (E22, E23, E24) and G101.

PCM POWER AND GROUND CIRCUIT TROUBLESHOOTING (2.4 L ENGINE) (2017 2018 2019)

PCM Power and Ground Circuit Troubleshooting

1. Engine starting check

   -1. Try to start the engine.

   Does the engine start and idle smoothly?

   YES

   Go to the F-CAN circuit troubleshooting .

   NO

   Go to step 2.

2. Fuse check 1

   -1. Check the following fuse.

Fuse	No. A7 (15 A)
Location	Under-hood fuse/relay box

   Is the fuse OK?

   YES

   Go to step 6.

   NO

   Go to step 3.

3. Shorted wire check (+B IGP line)

   -1. Remove the blown No. A7 (15 A) fuse from the under-hood fuse/relay box.

   -2. Disconnect the following connector.

Relay circuit board connector C (18P)

   -3. Check for continuity between test points 1 and 2.

Test condition	Vehicle OFF (LOCK) mode
B	Relay circuit board connector C (18P): disconnected
Test point 1	Relay circuit board connector C (18P) (female terminals) No. 18: ①
Test point 2	Body ground

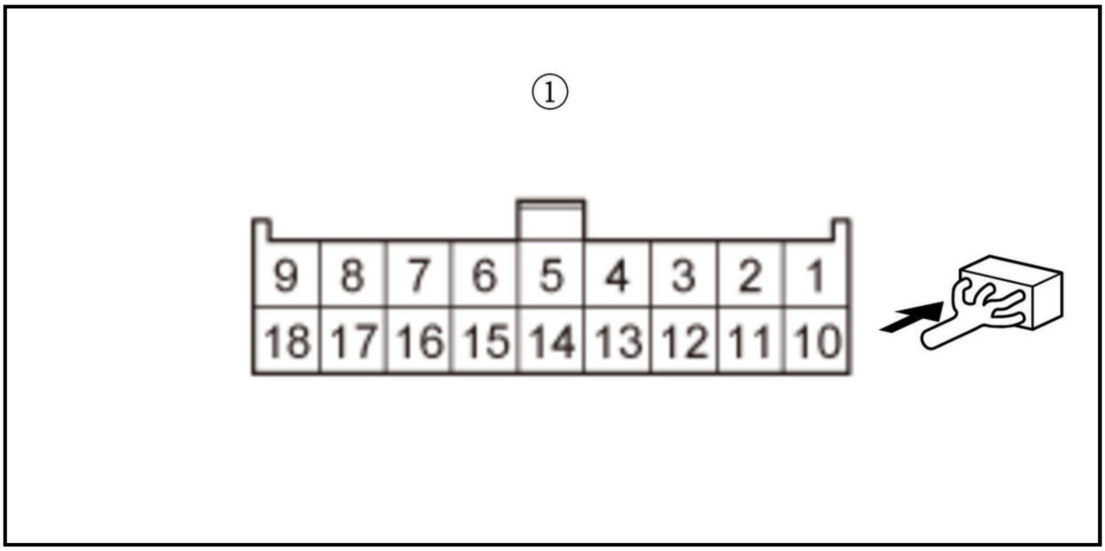

Is there continuity?

YES

Repair a short in the +B IGP wire between the No. A7 (15 A) fuse and the relay circuit board. If the wire is OK, **replace the under-hood fuse/relay box** . Also replace the No. A7 (15 A) fuse.

NO

Go to step 4.

4. Part (s) internal circuit check (short in FI MAIN RLY OUT line)

-1. **Remove the injector relay** .

-2. Jump the SCS line with the HDS, and wait more than 1 minute.

Disconnect each of the parts or connectors below, one at a time, then check for continuity between test points 1 and 2.

- PGM-FI main relay 2
- PCM connector A (51P)

Test condition	Vehicle OFF (LOCK) mode
	Relay circuit board connector C (18P): disconnected
B	Injector relay: disconnected
Test point 1	Relay circuit board connector C (18P) (female terminals) No. 17: ①
Test point 2	Body ground

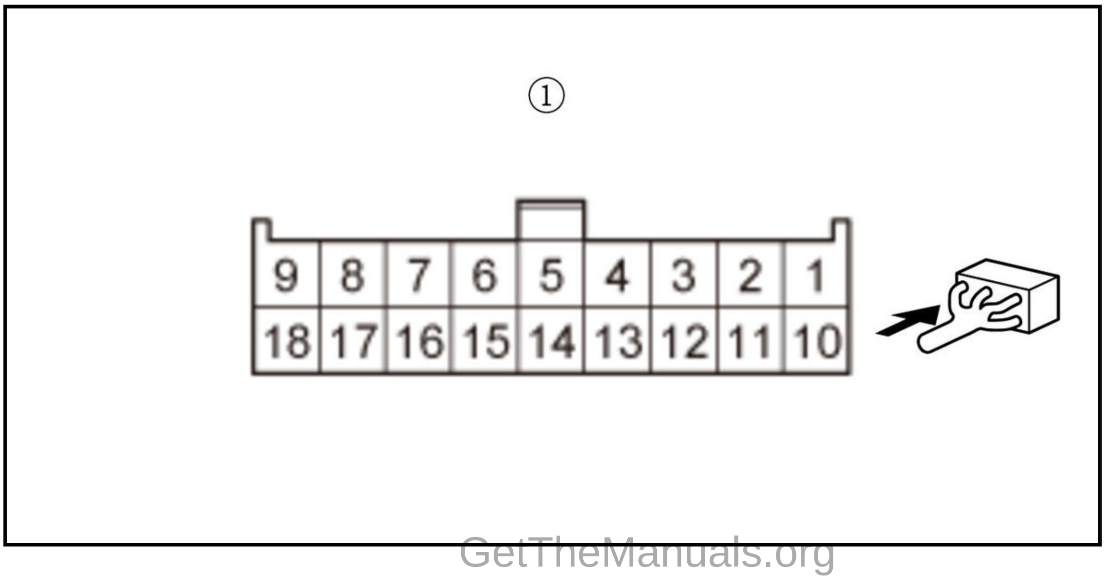

Does continuity go away when one of the above components is disconnected?

YES

Replace the part that made the short to body ground go away when it was disconnected. If the part is the PCM, check for any authorized service information related to the DTCs or symptoms you are troubleshooting, or **substitute a known-good PCM** , then recheck. If the symptom/indication goes away and the PCM was substituted, **replace the original PCM** . Also replace the No. A7 (15 A) fuse in the under-hood fuse/relay box.

NO

Parts are OK. Go to step 5.

5. Shorted wire check (FI MAIN RLY OUT line):

Disconnect the following parts or connectors:

- PGM-FI main relay 2
- PCM connector A (51P)

-2. Check for continuity between test points 1 and 2.

Test condition	Vehicle OFF (LOCK) mode
	Relay circuit board connector C (18P): disconnected
	PGM-FI main relay 2: disconnected
	Injector relay: disconnected
	PCM connector A (51P): disconnected
Test point 1	Relay circuit board connector C (18P) (female terminals) No. 17: ①
Test point 2	Body ground

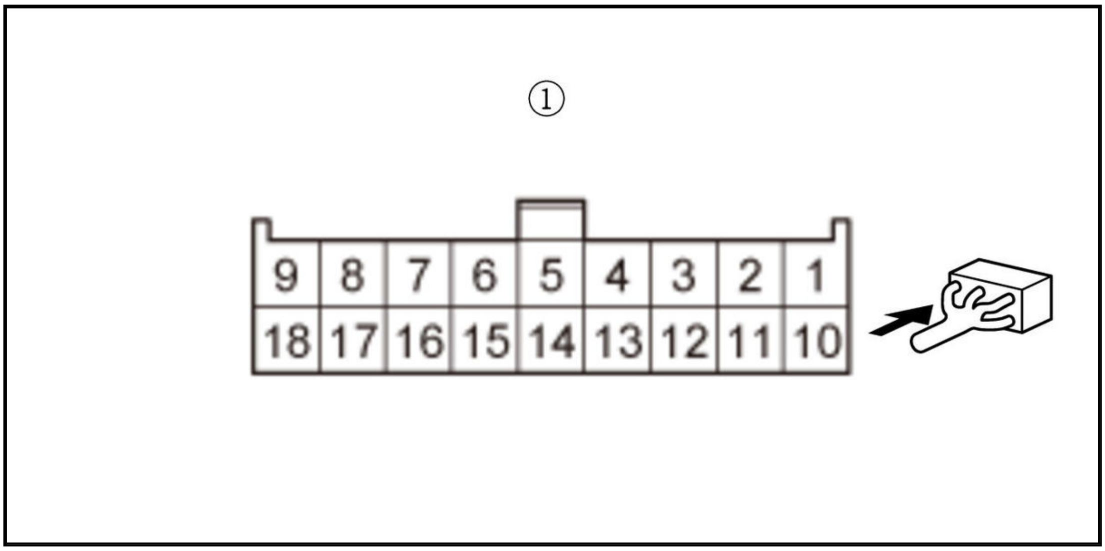

Is there continuity?

YES

Repair a short in the FI MAIN RLY OUT wire between the relay circuit board and each part. Also replace the No. A7 (15 A) fuse in the under-hood fuse/relay box.

NO

The FI MAIN RLY OUT wire is OK. **Replace the relay circuit board** . Also replace the No. A7 (15 A) fuse in the under-hood fuse/relay box.

6. Fuse check 2

-1. Check the following fuse.

Fuse	No. D8 (15 A)
Location	Under-dash fuse/relay box

Is the fuse OK?

YES

Go to step 11.

NO

Go to step 7.

7. Relay check

-1. **Remove PGM-FI main relay 2** .

-2. **Test PGM-FI main relay 2** .

Is the relay OK?

YES

PGM-FI main relay 2 is OK. Go to step 8.

NO

Replace PGM-FI main relay 2. Also replace the No. D8 (15 A) fuse in the under-dash fuse/relay box.

8. Determine possible failure area (IG1 FUEL PUMP line, others)

-1. Remove the blown No. D8 (15 A) fuse from the under-dash fuse/relay box.

-2. Check for continuity between test points 1 and 2.

Test condition	Vehicle OFF (LOCK) mode PGM-FI main relay 2: disconnected
Test point 1	PGM-FI main relay 2 4P socket (female terminals) No. 1: ①
Test point 2	Body ground

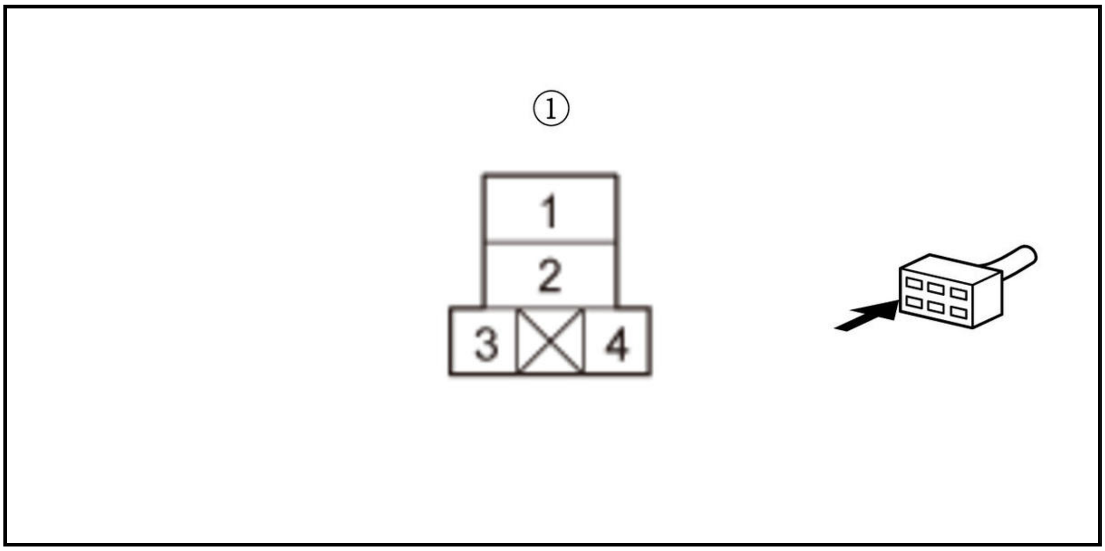

Is there continuity?

YES

Go to step 9.

NO

Go to step 10.

9. Shorted wire check (IG1 FUEL PUMP line)

-1. Jump the SCS line with the HDS, and wait more than 1 minute.

-2. Disconnect the following connector.

PCM connector A (51P)
Under-dash fuse/relay box connector C (27P)

-3. Check for continuity between test points 1 and 2.

Test condition	Vehicle OFF (LOCK) mode
B	PGM-FI main relay 2: disconnected
B	Under-dash fuse/relay box connector C (27P): disconnected
B	PCM connector A (51P): disconnected
Test point 1	PGM-FI main relay 2 4P socket (female terminals) No. 1: ①
Test point 2	Body ground

Test point 1	**PCM connector A (51P) No. 4**
Test point 2	Body ground

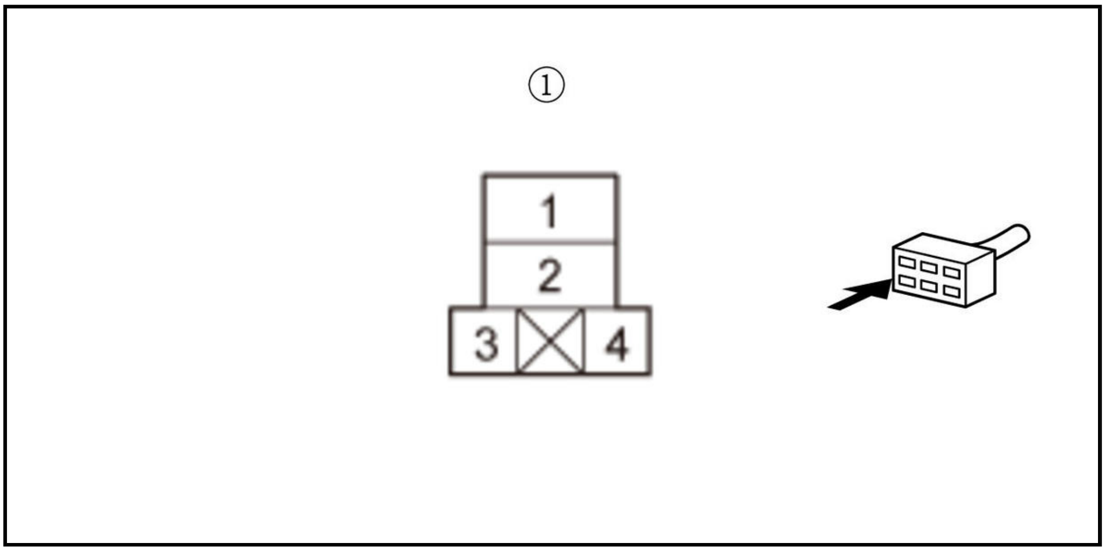

Is there continuity?

YES

Repair a short in the IG1 FUEL PUMP wire between PGM-FI main relay 2, PCM (A4) and the No. D8 (15 A) fuse in the under-dash fuse/relay box. Also replace the No. D8 (15 A) fuse.

NO

The IG1 FUEL PUMP wire is OK. Replace the No. D8 (15 A) fuse in the under-dash fuse/relay box. If the fuse blown again, **replace the under-dash fuse/relay box** .

10. Shorted wire check (FUEL PUMP RLY OUT line)

-1. Disconnect the following connector.

Fuel tank unit 4P connector

-2. Check for continuity between test points 1 and 2.

Test condition	Vehicle OFF (LOCK) mode
	PGM-FI main relay 2: disconnected

	PCM connector A (51P): disconnected
	Fuel tank unit 4P connector: disconnected
Test point 1	Fuel tank unit 4P connector (female terminals) No. 1: ①
Test point 2	Body ground

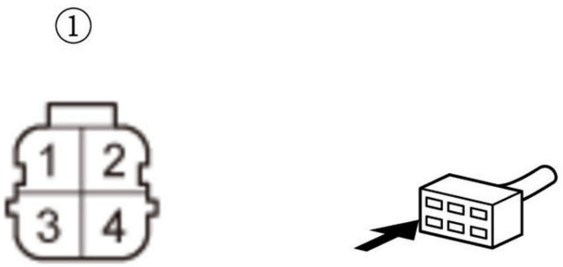

Is there continuity?

YES

Repair a short in the FUEL PUMP RLY OUT wire between PGM-FI main relay 2 and the fuel tank unit. Also replace the No. D8 (15 A) fuse in the under-dash fuse/relay box.

NO

The FUEL PUMP RLY OUT wire is OK. Check the fuel pump, and **replace it** if needed. Also replace the No. D8 (15 A) fuse in the under-dash fuse/relay box.

11. Open wire check (IG1 FUEL PUMP line) 1

-1. **Remove PGM-FI main relay 2** .

-2. Turn the vehicle to the ON mode.

-3. Measure the voltage between test points 1 and 2.

Test condition	Vehicle ON mode
B	PGM-FI main relay 2: disconnected
Test point 1	PGM-FI main relay 2 4P socket (female terminals) No. 1: ①
Test point 2	Body ground

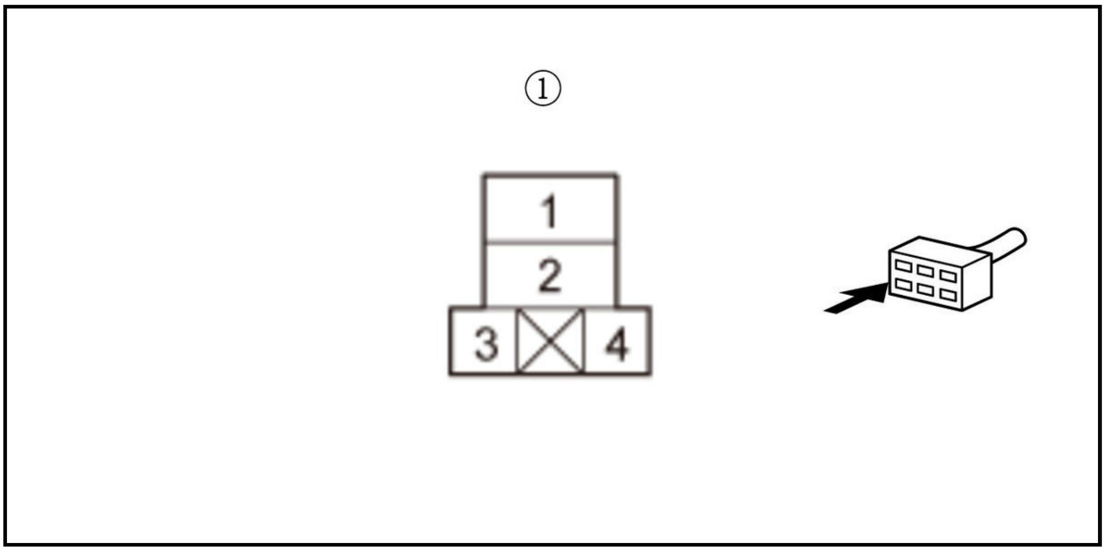

Is there battery voltage?

YES

Go to step 12.

NO

Repair an open in the IG1 FUEL PUMP wire between the No. D8 (15 A) fuse in the under-dash fuse/relay box and PGM-FI main relay 2.

12. Open wire check (IG1 FUEL PUMP line) 2

-1. Jump the SCS line with the HDS, and wait more than 1 minute.

-2. Disconnect the following connector.

PCM connector A (51P)

-3. Turn the vehicle to the ON mode.

-4. Measure the voltage between test points 1 and 2.

Test condition	Vehicle ON mode
	PCM connector A (51P): disconnected
	PGM-FI main relay 2: disconnected
Test point 1	**PCM connector A (51P) No. 4**
Test point 2	Body ground

Is there battery voltage?

YES

The IG1 FUEL PUMP wire is OK. Go to step 13.

NO

Repair an open in the IG1 FUEL PUMP wire between the PCM (A4) and the No. D8 (15 A) fuse in the under-dash fuse/relay box.

13. Determine possible failure area (PGM-FI main relay 1 control circuit, others)

-1. Turn the vehicle to the OFF (LOCK) mode.

-2. Measure the voltage between test points 1 and 2.

Test condition	Vehicle OFF (LOCK) mode

B	PCM connector A (51P): disconnected
Test point 1	**PCM connector A (51P) No. 3**
Test point 2	Body ground

Is there battery voltage?

YES

Go to step 16.

NO

Go to step 14.

14. Open wire check (+B IGP line)

-1. Disconnect the following connector.

Relay circuit board connector C (18P)

-2. Measure the voltage between test points 1 and 2.

Test condition	Vehicle OFF (LOCK) mode
B	PCM connector A (51P): disconnected
B	Relay circuit board connector C (18P): disconnected
Test point 1	Relay circuit board connector C (18P) (female terminals) No. 18: ①
Test point 2	Body ground

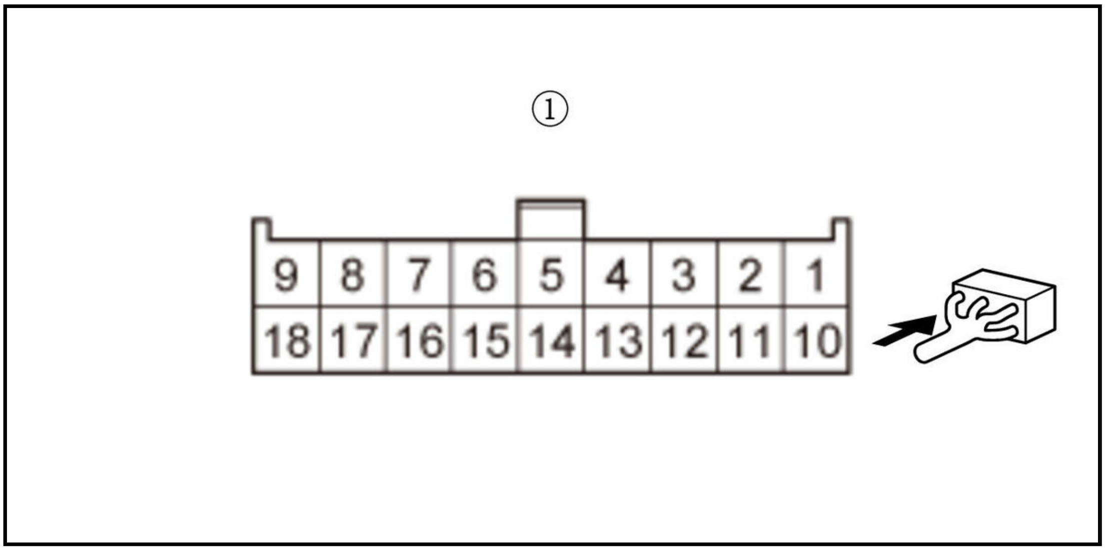

Is there battery voltage?

YES

Go to step 15.

NO

Repair an open in the +B IGP wire between the relay circuit board and the No. A7 (15 A) fuse in the under-hood fuse/relay box.

15. Open wire check (FI MAIN RLY CL- line)

-1. Disconnect the following connector.

Relay circuit board connector A (8P)

-2. Check for continuity between test points 1 and 2.

Test condition	Vehicle OFF (LOCK) mode
B	PCM connector A (51P): disconnected
B	Relay circuit board connector A (8P): disconnected
B	Relay circuit board connector C (18P): disconnected
Test point 1	Relay circuit board connector A (8P) (female terminals) No. 7: ①
Test point 2	**PCM connector A (51P) No. 3**

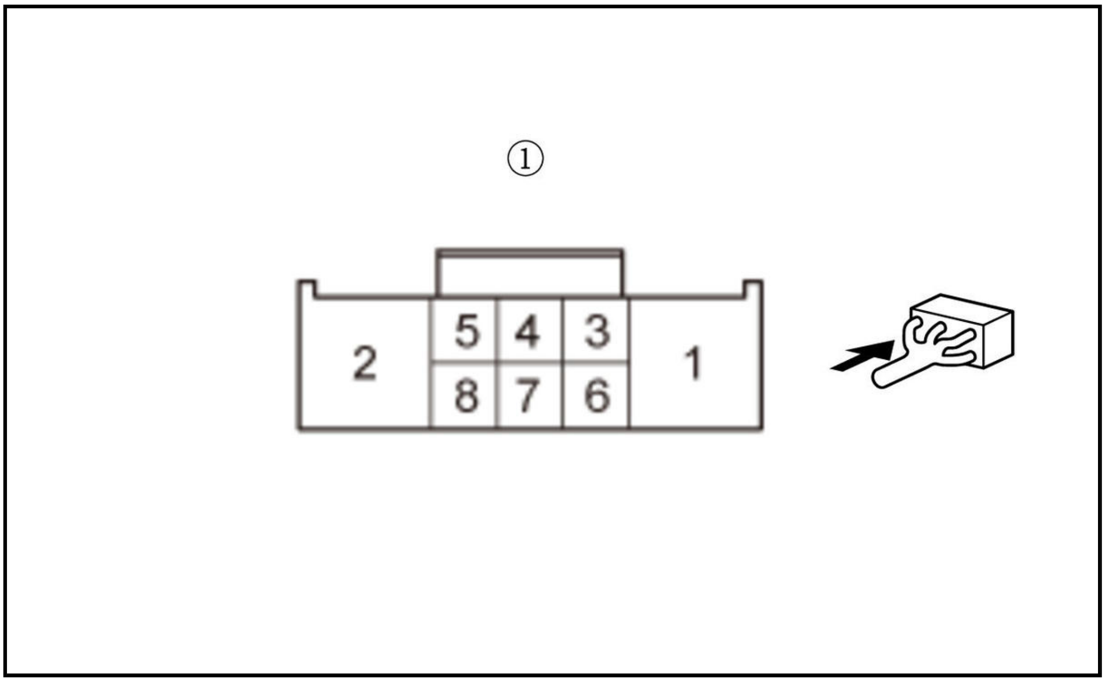

Is there continuity?

YES

The FI MAIN RLY CL- wire is OK. **Remove and test the relay circuit board** . If the relay circuit board is OK, check for any authorized service information related to the DTCs or symptoms you are troubleshooting, or **substitute a known-good PCM** .

NO

Repair an open in the FI MAIN RLY CL- wire between the PCM (A3) and the relay circuit board.

16. Open wire check (FI MAIN RLY OUT line)

-1. Disconnect the following connector.

Relay circuit board connector C (18P)

-2. Check for continuity between test points 1 and 2.

Test condition	Vehicle OFF (LOCK) mode
	PCM connector A (51P): disconnected
	Relay circuit board connector C (18P): disconnected
Test point 1	Relay circuit board connector C (18P) (female terminals) No. 17: ①
Test point 2	**PCM connector A (51P) No. 5**

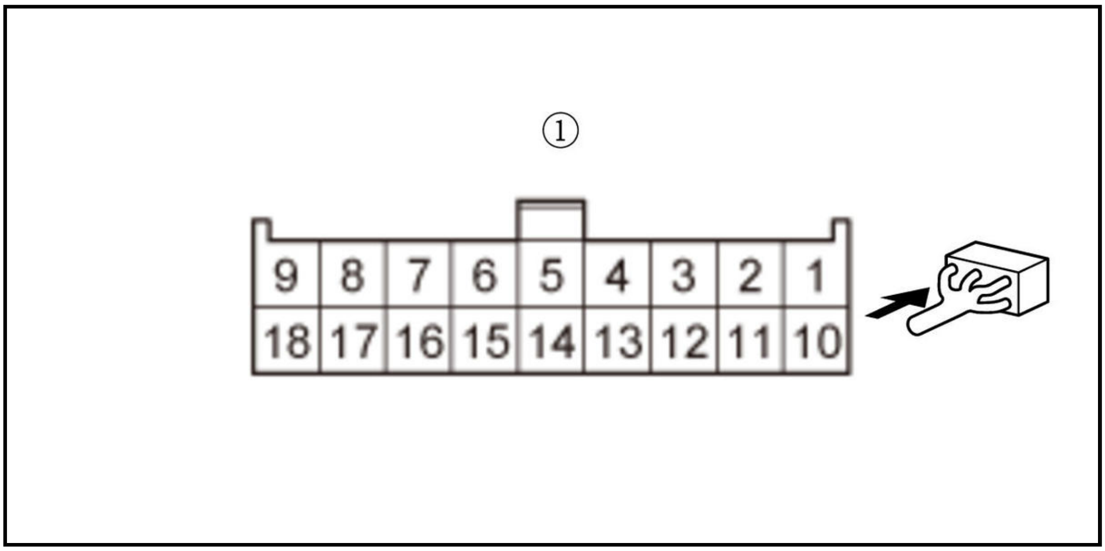

Is there continuity?

YES

The FI MAIN RLY OUT wire is OK. Go to step 17.

NO

Repair an open in the FI MAIN RLY OUT wire between the PCM (A5) and the relay circuit board.

17. Relay circuit board check

-1. **Remove and test the relay circuit board** .

Is the relay circuit board OK?

YES

The relay circuit board is OK. Go to step 18.

NO

Replace the relay circuit board .

18. Open wire check (GND lines)

-1. Disconnect the following connector.

PCM connector B (51P)
PCM connector C (51P)

-2. Check for continuity between the following test points and body ground individually.

Test condition	Vehicle OFF (LOCK) mode
B	PCM connector A (51P): disconnected
B	PCM connector E (80P): disconnected
B	Relay circuit board: removed

Connector	Terminal
PCM connector B (51P)	No. 11
	No. 12
PCM connector C (51P)	No. 1
	No. 8

Is there continuity?

YES

The PGM (GND), GND1, GND2, and GND3 wires are OK. Check for any authorized service information related to the DTCs or symptoms you are troubleshooting, or substitute a known-good PCM .

NO

Repair an open in the PGM, GND1, GND2, and/or GND3 wire between the PCM (B11, B12, C1, C8) and G101.

SERVICE INFORMATION

LIQUID GASKET APPLYING PROCEDURE (1.5 L ENGINE)

Procedure

1. Liquid Gasket - Apply

    1. Apply liquid gasket as shown.

    NOTE:

    - Remove all of the old liquid gasket of the mating surfaces of each part and clean.
    - Apply liquid gasket (08718-0003, 08718-0004, or 08718-0009). Install the component within 5 minutes of applying the liquid gasket.
    - If too much time has passed after applying the liquid gasket, remove the old liquid gasket and residue, then reapply new liquid gasket.
    - Wait at least 30 minutes before filling the engine with oil.
    - Do not run the engine for at least 3 hours after installing the parts.

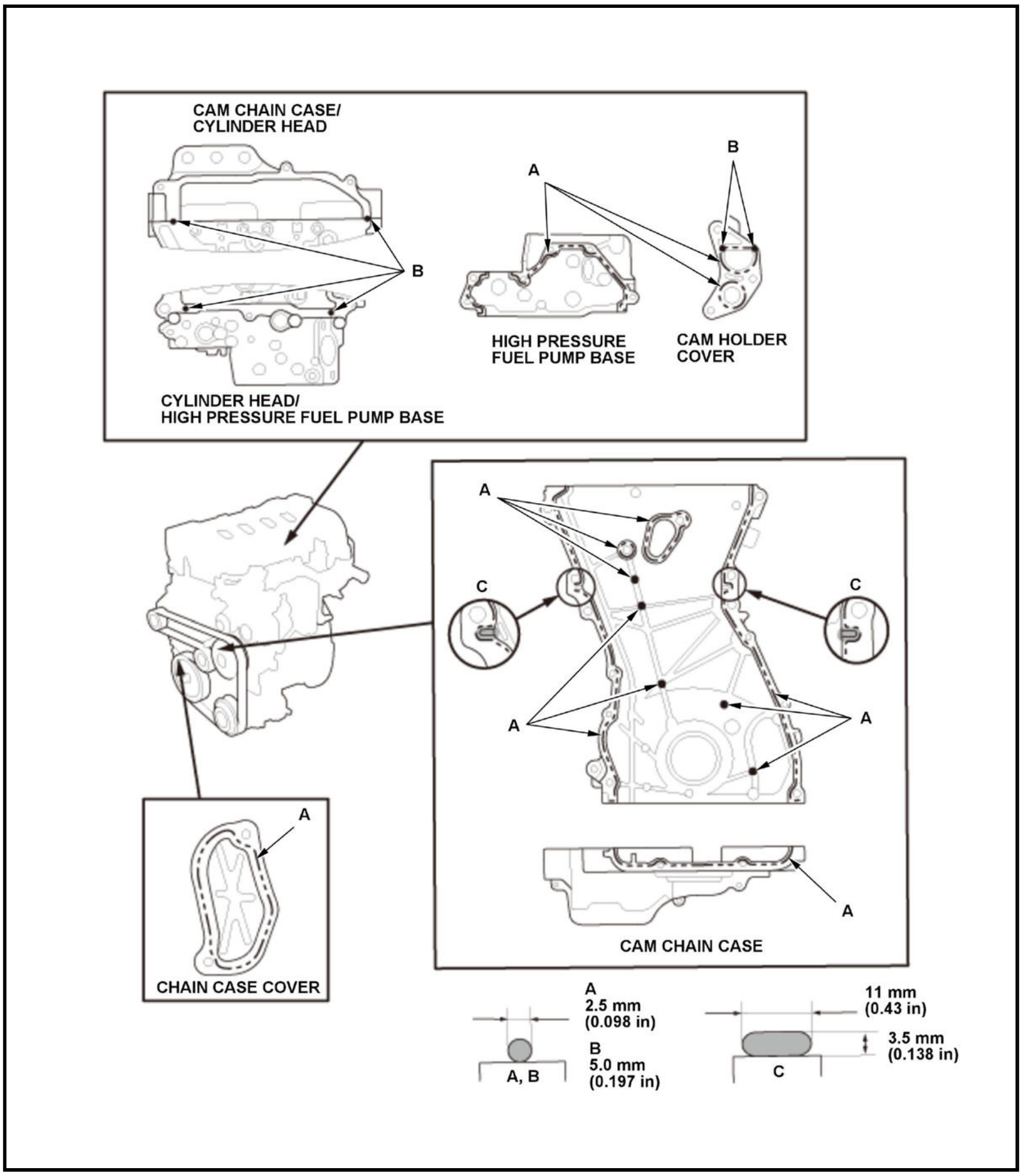
CAM CHAIN CASE/
CYLINDER HEAD
A
B
B
HIGH PRESSURE
FUEL PUMP BASE
CAM HOLDER
COVER
CYLINDER HEAD/
HIGH PRESSURE FUEL PUMP BASE
A
C
C
A
A
A
CHAIN CASE COVER
A
CAM CHAIN CASE
A
2.5 mm
(0.098 in)
B
5.0 mm
(0.197 in)
A, B
11 mm
(0.43 in)
3.5 mm
(0.138 in)
C

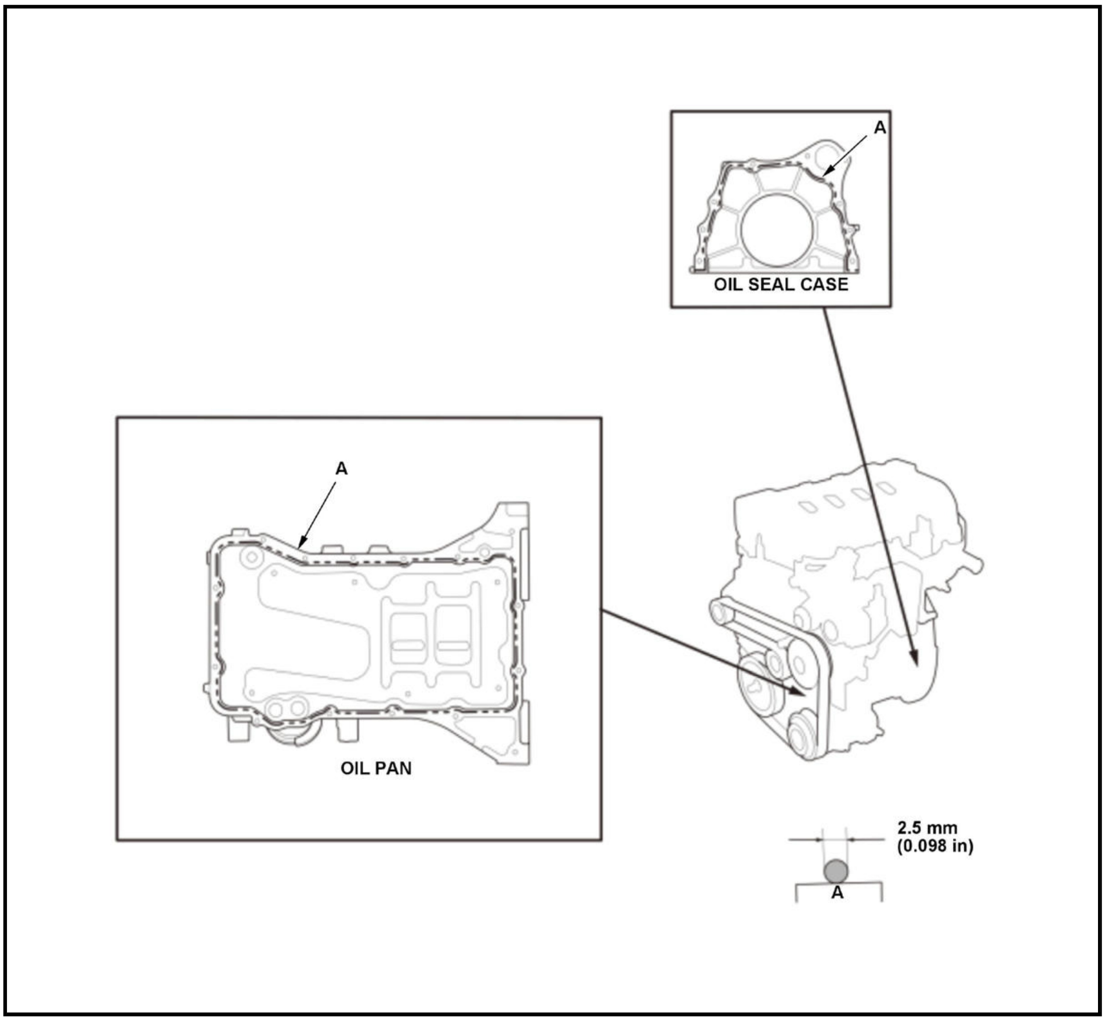

LIQUID GASKET APPLYING PROCEDURE (2.4 L ENGINE) (2017 2018 2019)

Procedure

1. Liquid Gasket - Apply

   1. Apply liquid gasket as shown.

   NOTE:

   - Remove all of the old liquid gasket of the mating surfaces of each part and clean.
   - Apply liquid gasket (P/N 08718-0003, 08718-0004, or 08718- 0009). Install the component within 5 minutes of applying the liquid gasket.
   - If too much time has passed after applying the liquid gasket, remove the old liquid gasket and residue, then reapply new liquid gasket.
   - Wait at least 30 minutes before filling the engine with oil.
   - Do not run the engine for at least 3 hours after installing the parts.

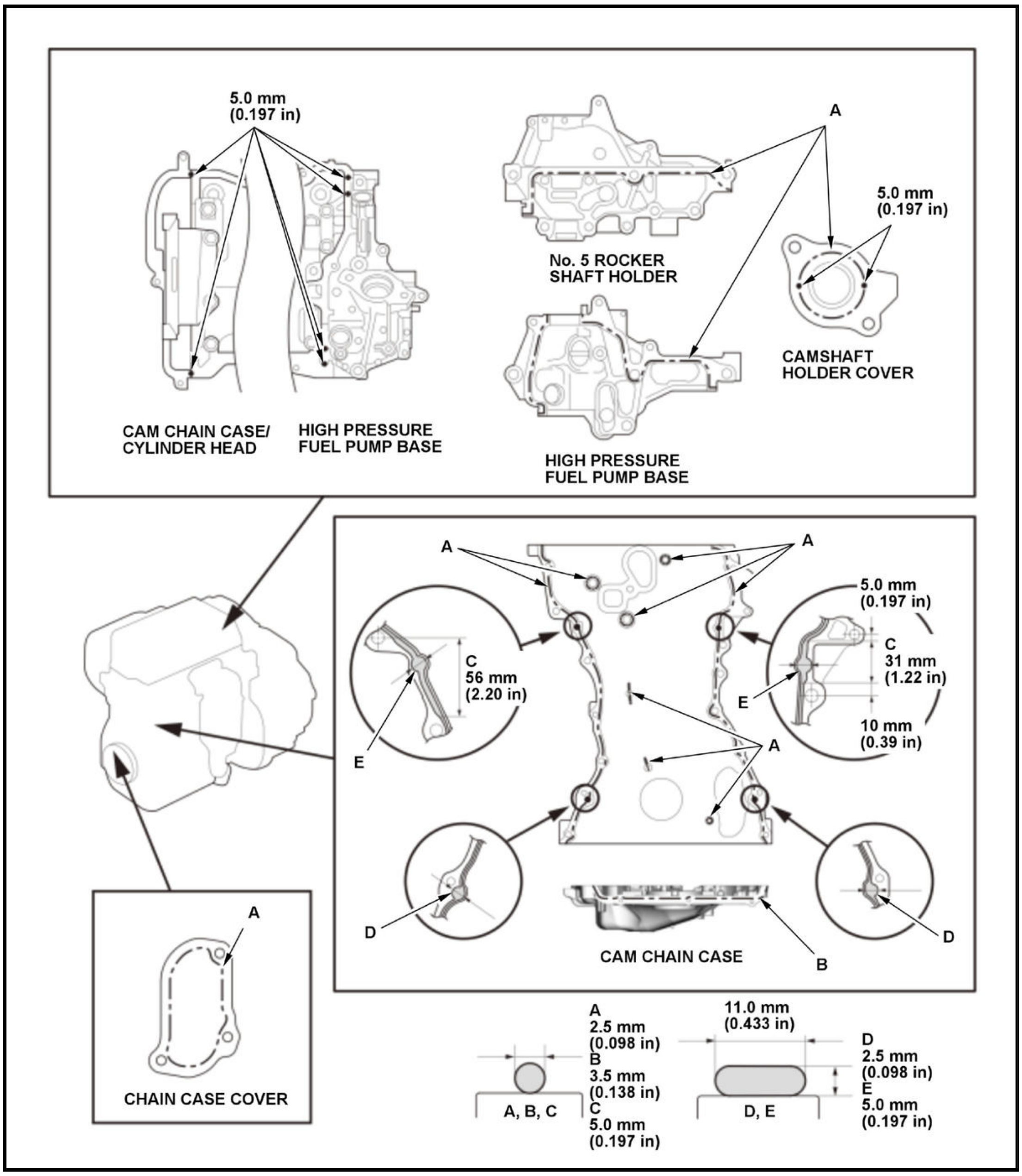
5.0 mm
(0.197 in)
CAM CHAIN CASE/
CYLINDER HEAD
HIGH PRESSURE
FUEL PUMP BASE
A
No. 5 ROCKER
SHAFT HOLDER
5.0 mm
(0.197 in)
CAMSHAFT
HOLDER COVER
HIGH PRESSURE
FUEL PUMP BASE
A
A
5.0 mm
(0.197 in)
C
56 mm
(2.20 in)
E
C
31 mm
(1.22 in)
E
10 mm
(0.39 in)
A
D
D
CAM CHAIN CASE
B
A
CHAIN CASE COVER
A
2.5 mm
(0.098 in)
B
3.5 mm
(0.138 in)
C
5.0 mm
(0.197 in)
A, B, C
11.0 mm
(0.433 in)
D
2.5 mm
(0.098 in)
E
5.0 mm
(0.197 in)
D, E

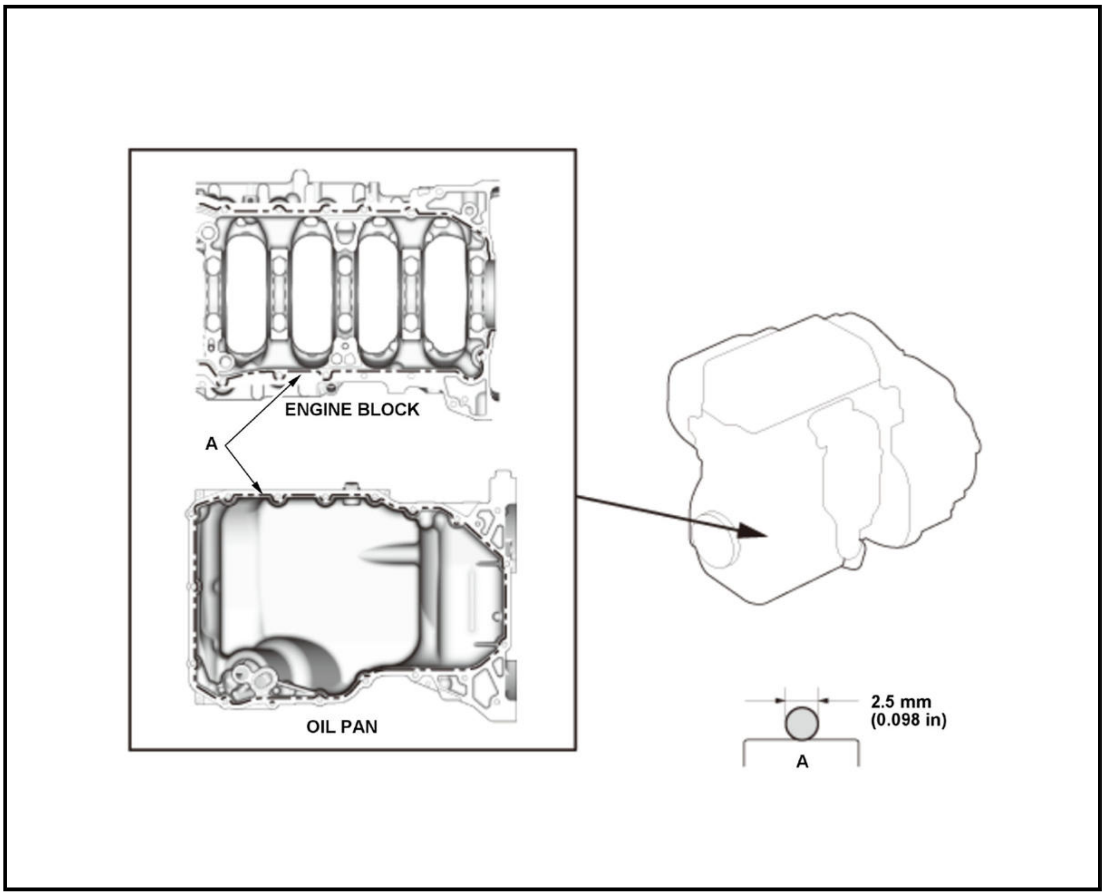

ROCKER ARM AND SHAFT DISASSEMBLY, REASSEMBLY, AND INSPECTION (1.5 L ENGINE)

Disassembly and Reassembly

1. Rocker Arm Assembly - Disassemble

NOTE:

- Identify each part as it is removed so that each item can be reinstalled in its original location.
- Inspect the rocker shafts and the rocker arms.
- If reused, the rocker arms must be installed in their original locations.
- When replacing the rocker arm assembly, remove the fastening hardware from a new rocker arm assembly.

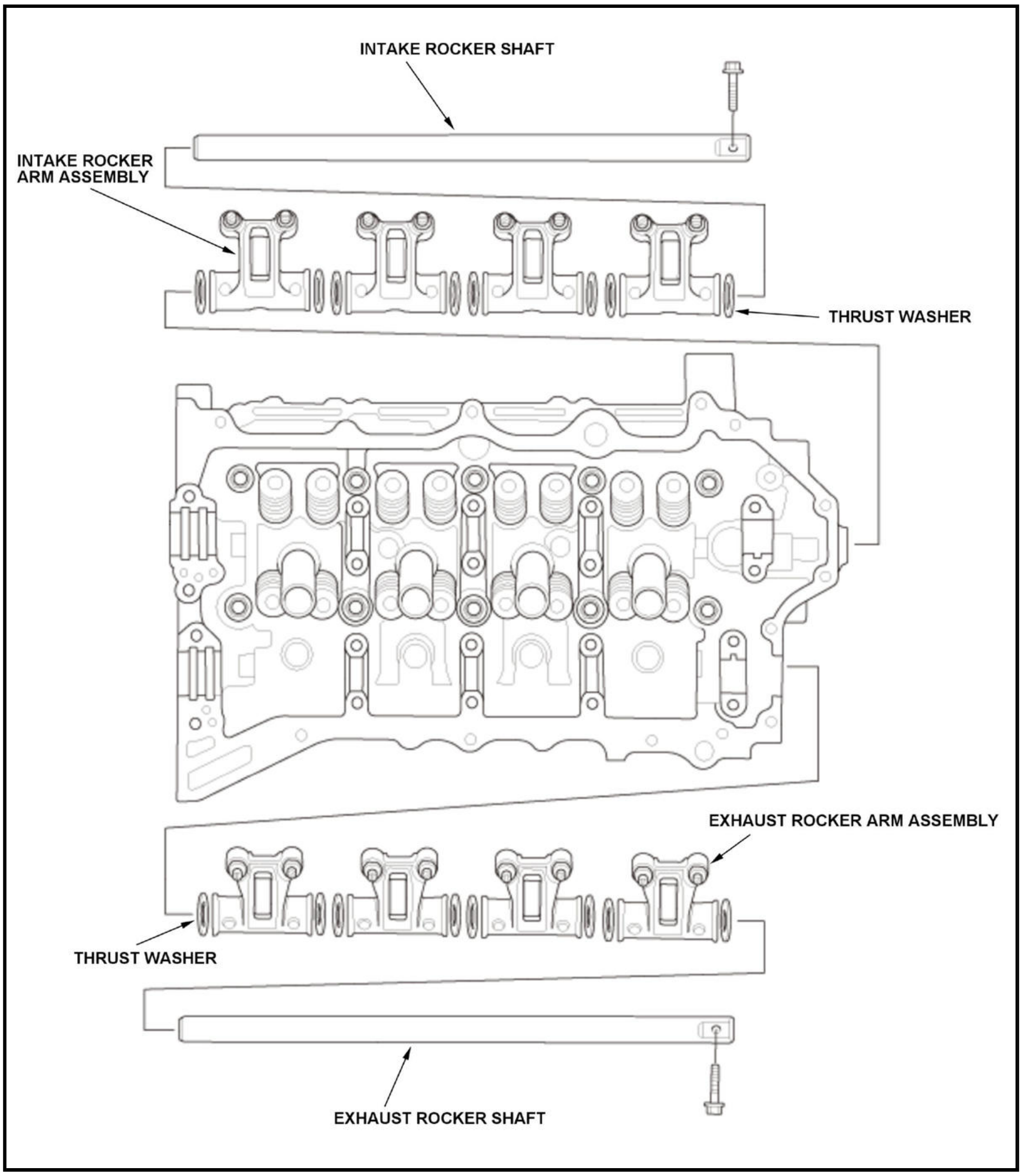
INTAKE ROCKER SHAFT
INTAKE ROCKER ARM ASSEMBLY
THRUST WASHER
EXHAUST ROCKER ARM ASSEMBLY
THRUST WASHER
EXHAUST ROCKER SHAFT

2. All Disassembled Parts - Reassembly

1. Reassemble the parts in the reverse order of disassembly.

NOTE:

- If reused, the rocker arms must be installed in their original locations.
- Prior to reassembling, clean all the parts in solvent, dry them, and apply new engine oil to all contact points and the bearing surface.
- When replacing the rocker arm assembly, remove the fastening hardware from the new rocker arm assembly.

Inspection

1. Rocker Arm and Shaft - Inspect

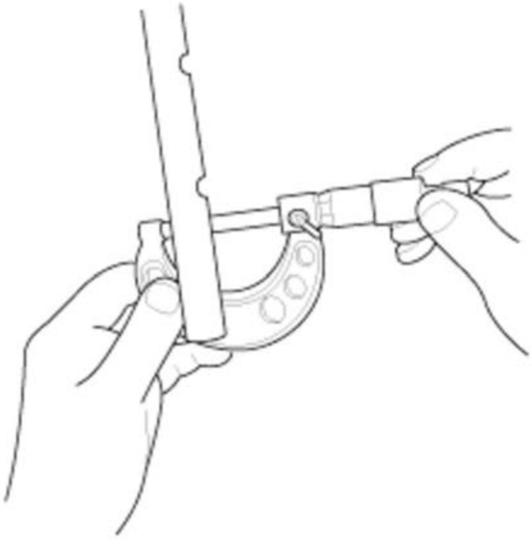

1. Measure the diameter of the rocker shaft at the first rocker location.

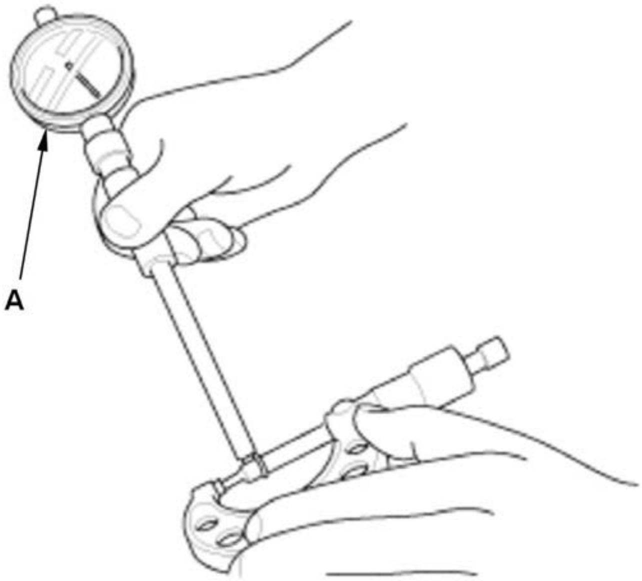

2. Zero the gauge (A) to the rocker shaft diameter.

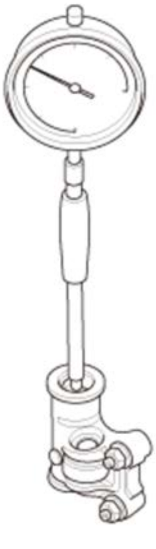

3. Measure the inside diameter of the rocker arm, and check it for an out-of-round condition.

4. Repeat for all rocker arms and both shafts. If the clearance is beyond the service limit, replace the rocker shaft and all out of service limit rocker arms.

Rocker Arm-to-Shaft Clearance	
Standard (New):	**0.018-0.059 mm (0.00071-0.00232 in)**
Service Limit:	**0.080 mm (0.00315 in)**

ROCKER ARM AND SHAFT DISASSEMBLY, REASSEMBLY, AND INSPECTION (2.4 L ENGINE) (2017 2018 2019)

Disassembly and Reassembly

1. Rocker Arm Assembly - Disassemble

NOTE:

- Identify parts as they are removed so they can be reinstalled in its original locations.
- Inspect the rocker arm shaft and rocker arms.
- If reused, the rocker arms must be installed in their original location.
- When removing, or installing the rocker arm assembly, do not remove the camshaft holder bolts. The bolts will keep the holders and the rocker arms on the shaft.
- Bundle the intake rocker arms with rubber bands to keep them together as a set, and remove the bands after the intake rocker arms have been installed.
- Prior to reassembling, clean all the parts in solvent, dry them, and apply new engine oil to all contact points and the lost motion assembly.
- When replacing the intake rocker arm assembly, remove the fastening hardware from the new intake rocker arm assembly.
- When reassembling the rocker arm assembly, loosely tighten the rocker shaft bolts.

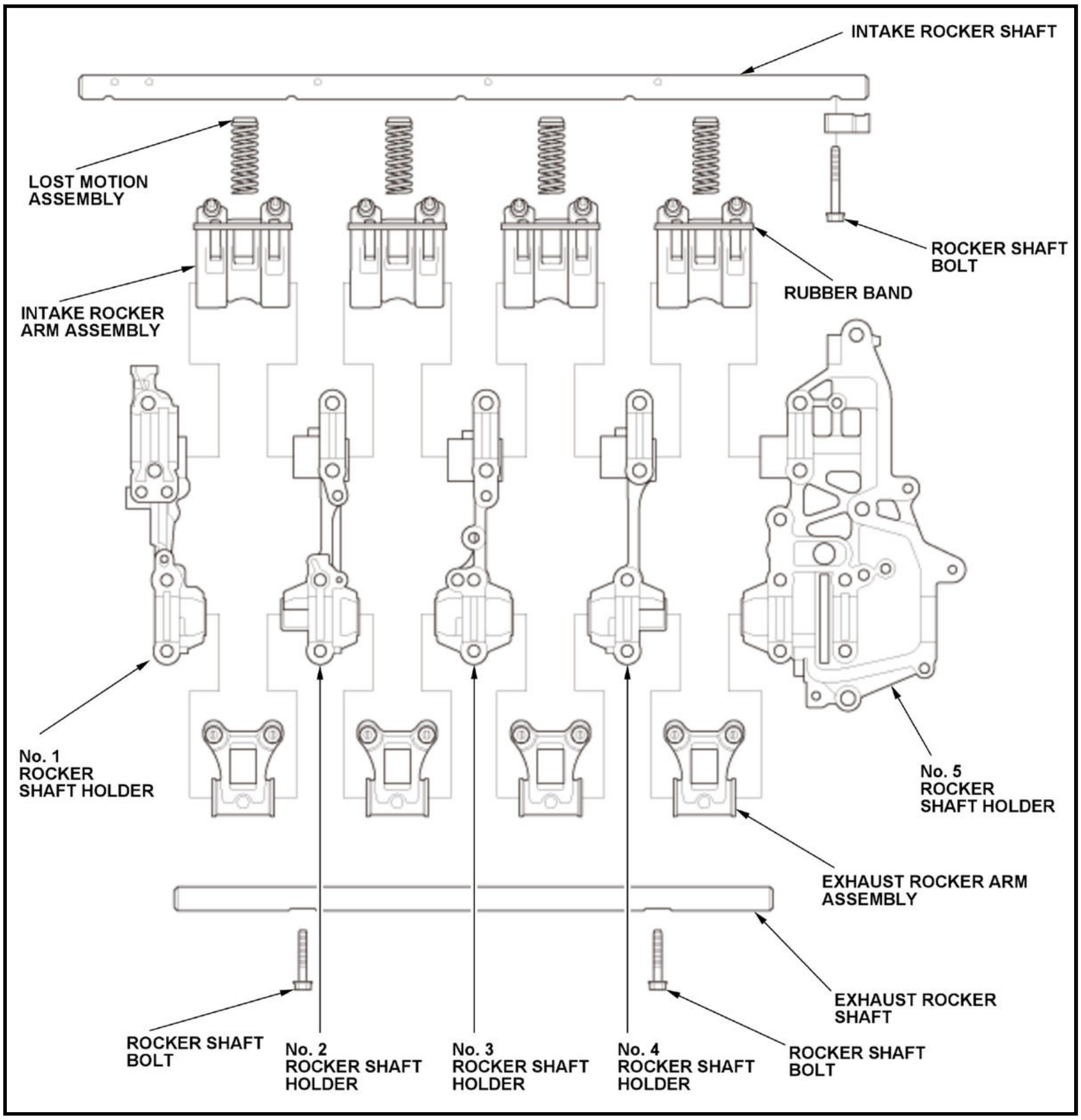
INTAKE ROCKER SHAFT
LOST MOTION ASSEMBLY
ROCKER SHAFT BOLT
RUBBER BAND
INTAKE ROCKER ARM ASSEMBLY
No. 1 ROCKER SHAFT HOLDER
No. 5 ROCKER SHAFT HOLDER
EXHAUST ROCKER ARM ASSEMBLY
EXHAUST ROCKER SHAFT
ROCKER SHAFT BOLT
No. 2 ROCKER SHAFT HOLDER
No. 3 ROCKER SHAFT HOLDER
No. 4 ROCKER SHAFT HOLDER
ROCKER SHAFT BOLT

2. All Disassembled Parts - Reassembly

1. Reassemble the parts in the reverse order of disassembly.

NOTE:

- When reassembling the rocker arm assembly, loosely tighten the rocker shaft bolts.
- If reused, the rocker arms must be installed in the their original locations.
- Bundle the intake rocker arms with rubber bands to keep them together as a set, and remove the bands after the intake rocker arms have been installed.
- Prior to reassembling, clean all the parts in solvent, dry them, and apply new engine oil to all contact points and the lost motion assembly.
- When replacing the intake rocker arm assembly, remove the fastening hardware from the new intake rocker arm assembly.

Inspection

1. Rocker Arm and Shaft - Inspect

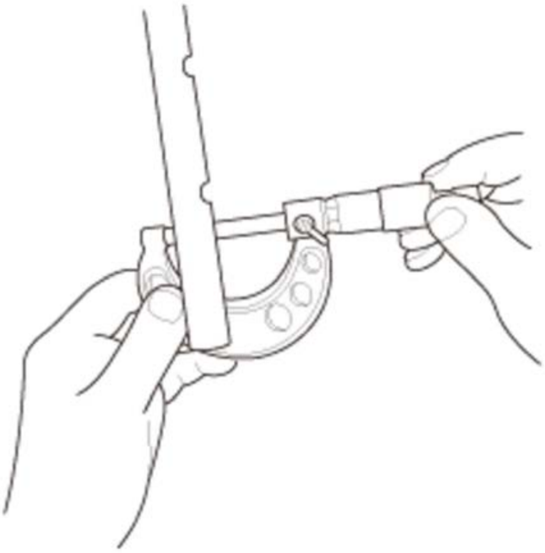	1. Measure the diameter of the shaft at the first rocker location.

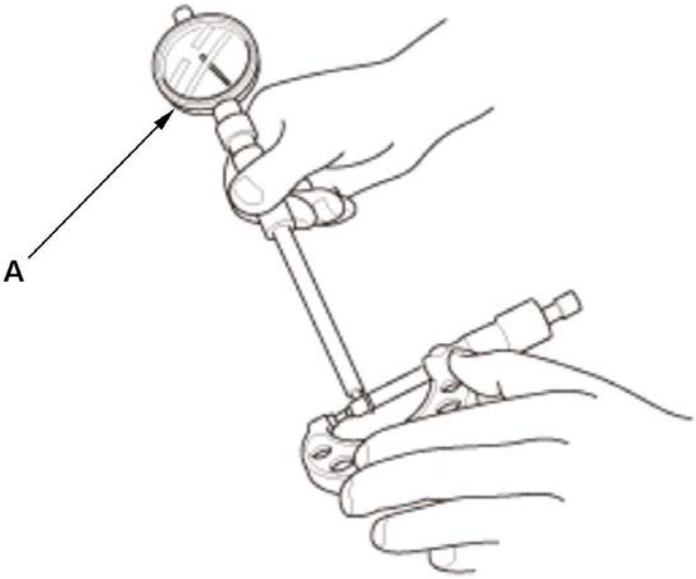	2. Zero the gauge (A) to the shaft diameter.

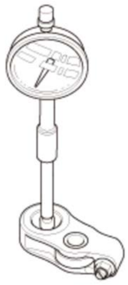	3. Measure the inside diameter of the rocker arm, and check it for an out-of-round condition. 4. Repeat for all rocker arms and both shafts. If the clearance is beyond the service limit, replace the rocker shaft and all out of service limit rocker arms. If any VTEC rocker arm needs replacement, replace the rocker arms (primary, mid, and secondary), as a set.

Rocker Arm-to-Shaft Clearance	
Standard (New):	
Intake:	**0.018-0.059 mm (0.00071-0.00232 in)**
Exhaust:	**0.018-0.056 mm (0.00071-0.00220 in)**
Service Limit:	**0.080 mm (0.00315 in)**

2. VTEC Rocker Arm - Inspect

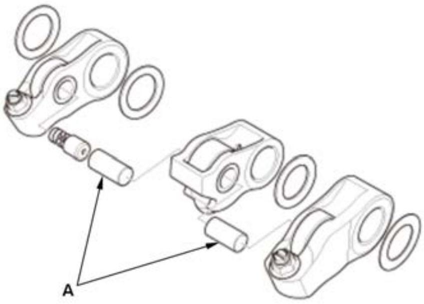	1. Inspect the rocker arm pistons (A). Push on each piston manually. If it does not move smoothly, replace the rocker arm set.**NOTE:** Apply new engine oil to the rocker arm pistons when reassembling.

THROTTLE BODY CARBON ACCUMULATION CHECK AND CLEANING

Test

1. HDS - Connect
2. Throttle Body - Test

1. Start the engine. Hold the engine speed at 3, 000 rpm without load (in P or N) until the radiator fan comes on, then let it idle. 2. Check the REL TP SENSOR in the DATA LIST with the HDS. The reading should be below 2.46 deg. If it is not, clean the throttle body.

Cleaning

WARNING: **Do not insert your fingers into the installed throttle body when you turn the vehicle to the ON mode, or while the vehicle is in ON mode. If you do, you will seriously injure your fingers if the throttle valve is activated.**

1. Air Cleaner Element - Check

1. Make sure the vehicle to the OFF (LOCK) mode. 2. Remove the air cleaner element 3. Check for damage to the air cleaner element. If the air cleaner element is damaged, replace it.

2. Throttle Body - Remove
3. Throttle Body - Clean

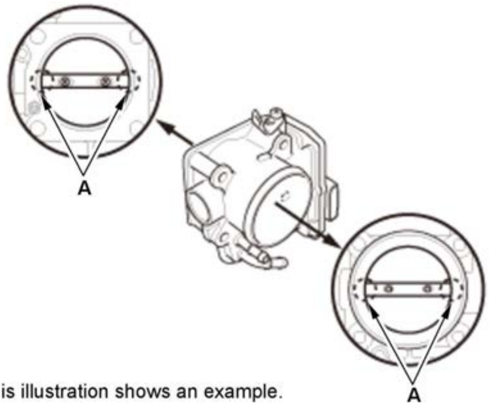 This illustration shows an example.	1. Clean off the carbon from the throttle valve and inside the throttle body with a paper towel soaked in throttle plate cleaner. • Remove the throttle body to clean it. • Be careful not to pinch your fingers. • To avoid removing the molybdenum coating, do not clean the bearing area of the throttle shaft (A). • Do not spray throttle plate cleaner directly on the throttle body. • Use a commercially available throttle plate cleaner.

4. **Throttle Body - Install**
5. **HDS - Connect**
6. **PCM - Reset**
7. TP POSITION CHECK - Select

1. Select the ETCS TEST in the INSPECTION MENU with the HDS.

2. Select TP POSITION CHECK and clear the throttle position (TP) learned value.

3. Turn the vehicle to the OFF (LOCK) mode.

4. Turn the vehicle to the ON mode, and wait 2 seconds without pressing the accelerator pedal.

8. **PCM - Idle Learn**

ADJUSTMENT

VALVE CLEARANCE ADJUSTMENT (1.5 L ENGINE)

Special Tools Required

Image	Description/Tool Number
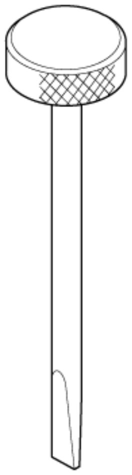	Adjuster 07MAA-PR70110

Image	Description/Tool Number
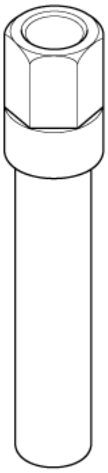	Locknut Wrench 07MAA-PR70120

Adjustment

NOTE: Connect the HDS to the DLC and monitor ECT SENSOR 1 with the HDS. Adjust the valve clearance only when the engine coolant temperature is less than 100 deg. F (38 deg. C).

1. Cylinder Head Cover - Remove
2. Camshaft Timing - Inspect
3. Valve Clearance - Adjust

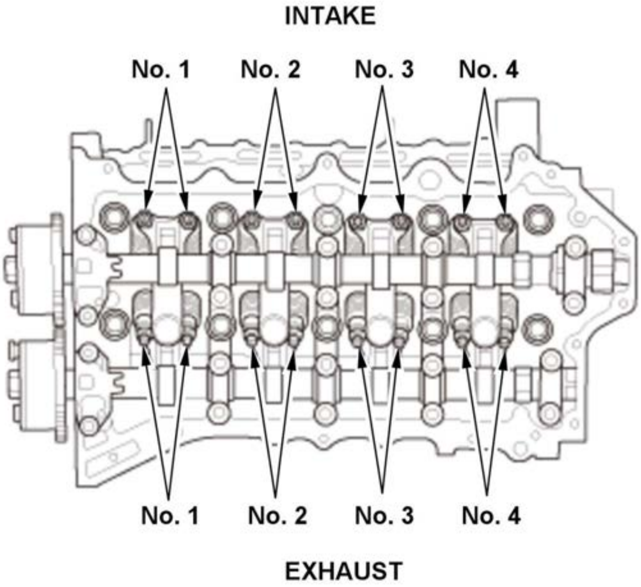 INTAKE No. 1 No. 2 No. 3 No. 4 No. 1 No. 2 No. 3 No. 4 EXHAUST	1. Select the correct feeler gauge for the valve clearance you are going to check.

Valve Clearance	
Intake:	**0.21-0.25 mm (0.009 in)**
Exhaust:	**0.25-0.29 mm (0.010-0.011 in)**

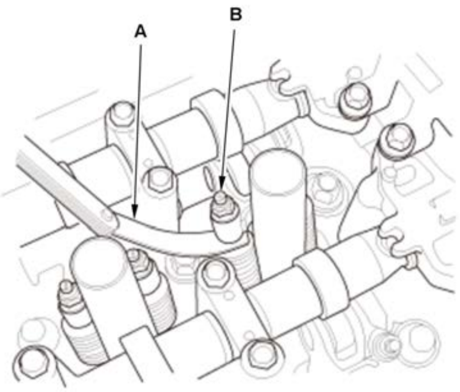

2. Insert the feeler gauge (A) between the adjusting screw (B) and the end of the valve stem on the No. 1 cylinder, and slide it back and forth; you should feel a slight amount of drag.

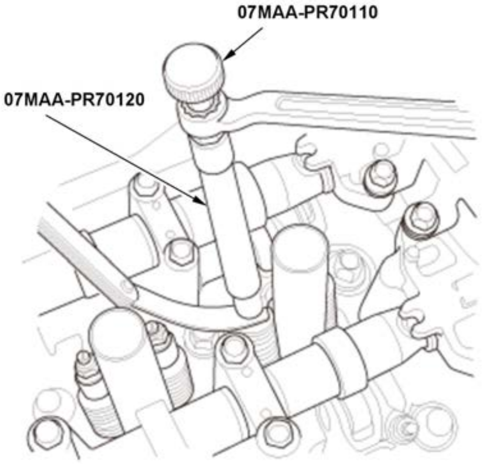

3. If you feel too much or too little drag, loosen the locknut with the locknut wrench, and turn the adjusting screw with the adjuster until the drag on the feeler gauge is correct.

4. Tighten the locknut to the specified torque, and recheck the clearance. Repeat the adjustment if necessary.

Apply new engine oil to the nut threads.

Specified Torque
14 N.m (1.4 kgf.m, 10 lbf.ft)

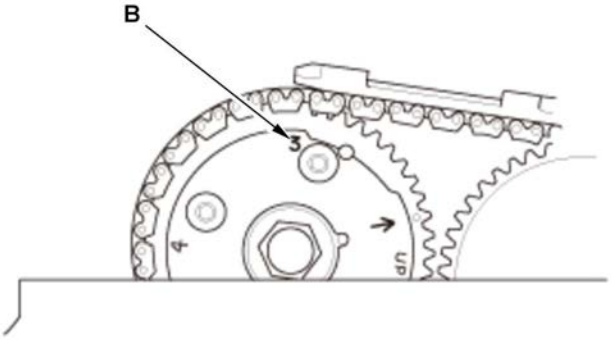

5. Rotate the crankshaft clockwise. The "3" mark (B) on VTC actuator A should be at the top.

6. Check and, if necessary, adjust the valve clearance on the No. 3 cylinder.

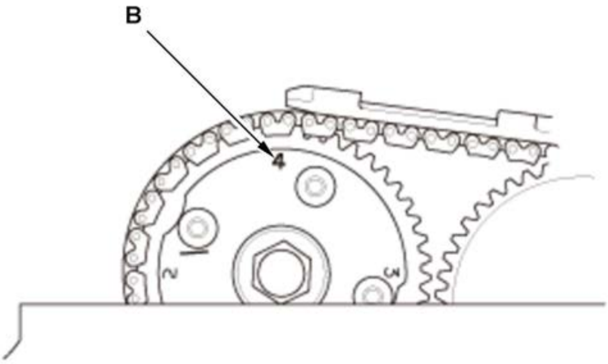	7. Rotate the crankshaft clockwise. The "4" mark (B) on VTC actuator A should be at the top. 8. Check and, if necessary, adjust the valve clearance on the No. 4 cylinder.

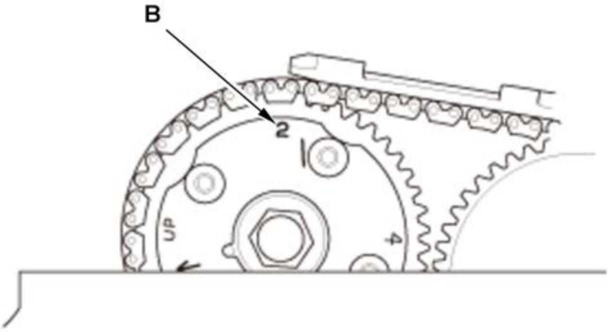	9. Rotate the crankshaft clockwise. The "2" mark (B) on VTC actuator A should be at the top. 10. Check and, if necessary, adjust the valve clearance on the No. 2 cylinder.

4. All Removed Parts - Install

1. Install the parts in the reverse order of removal.

5. Maintenance Minder - Reset (With Maintenance Minder System)

1. If the Maintenance Minder required to replace the spark plugs, reset the Maintenance Minder with the gauge (see "Resetting the Maintenance Minder").

VALVE CLEARANCE ADJUSTMENT (2.4 L ENGINE) (2017 2018 2019)

Special Tools Required

Image	Description/Tool Number
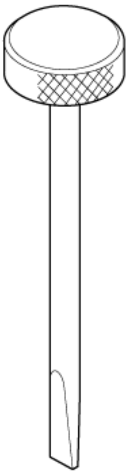	Adjuster 07MAA-PR70110
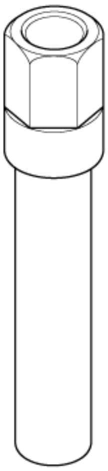	Locknut Wrench 07MAA-PR70120

Adjustment

NOTE: Connect the HDS to the DLC, and monitor ECT SENSOR 1. Adjust the valve clearance only when the engine coolant temperature is less than 100 deg. F (38 deg. C).

1. Cylinder Head Cover - Remove
2. Camshaft Timing - Inspect
3. Valve Clearance - Adjust

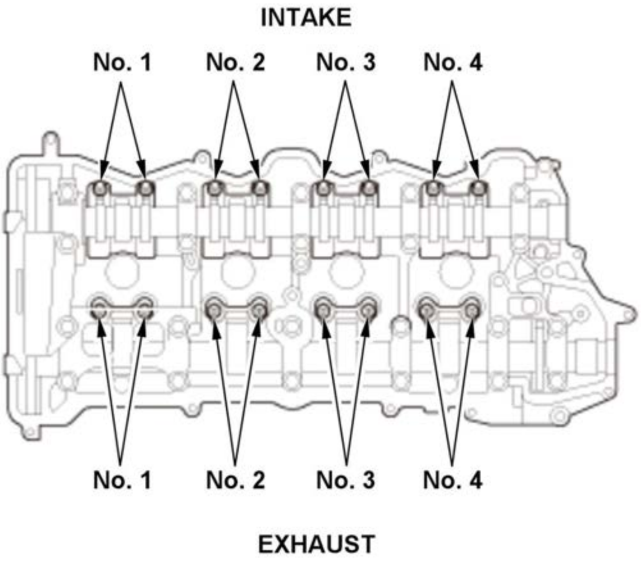 INTAKE No. 1 No. 2 No. 3 No. 4 No. 1 No. 2 No. 3 No. 4 EXHAUST	1. Select the correct feeler gauge for the valve clearance you are going to check.

Valve Clearance	
Intake:	**0.21-0.25 mm (0.009 in)**
Exhaust:	**0.25-0.29 mm (0.010-0.011 in)**

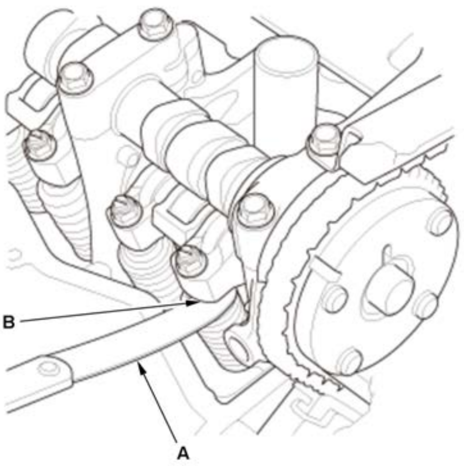	2. Insert the feeler gauge (A) between the adjusting screw (B) and the end of the valve stem on the No. 1 cylinder, and slide it back and forth; you should feel a slight amount of drag.
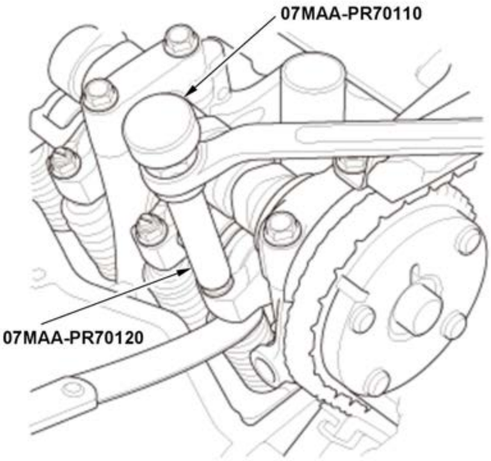	3. If you feel too much or too little drag, loosen the locknut with the locknut wrench and the adjuster, and turn the adjusting screw until the drag on the feeler gauge is correct. 4. Tighten the locknut to the specified torque, and recheck the clearance. Repeat the adjustment if necessary.

Specified Torque
14 N.m (1.4 kgf.m, 10 lbf.ft)
Apply new engine oil to the nut threads.

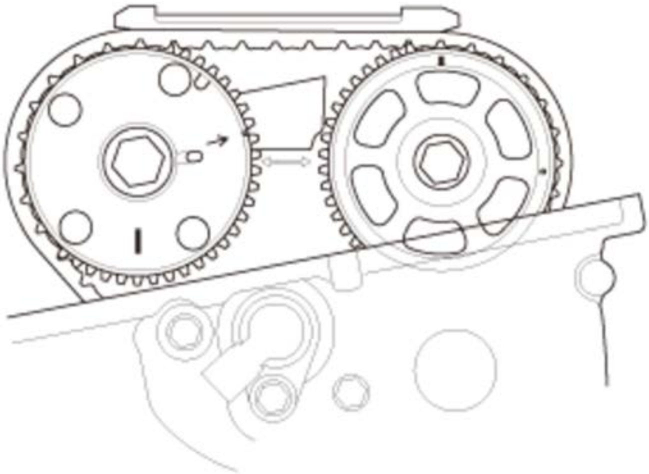	5. Rotate the crankshaft 180 deg. clockwise (camshaft pulley turns 90 deg.). 6. Check and, if necessary, adjust the valve clearance on the No. 3 cylinder.

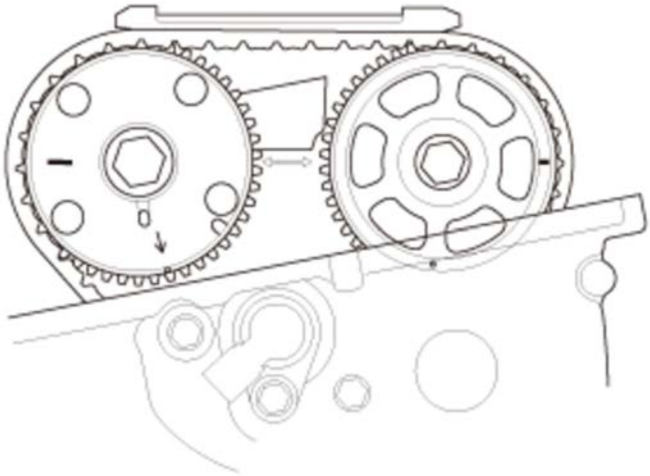	7. Rotate the crankshaft 180 deg. clockwise (camshaft pulley turns 90 deg.). 8. Check and, if necessary, adjust the valve clearance on the No. 4 cylinder.
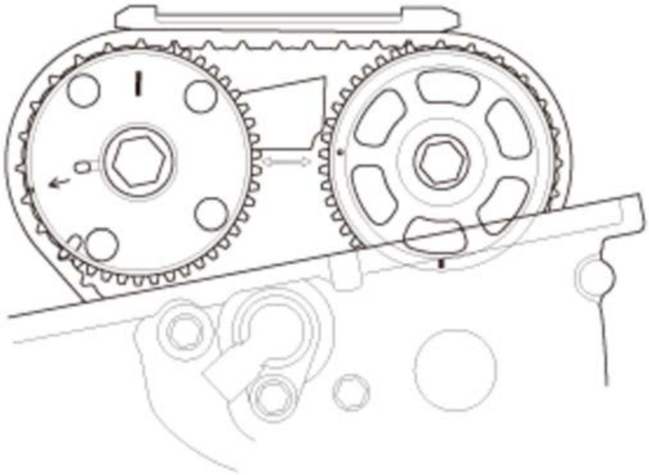	9. Rotate the crankshaft 180 deg. clockwise (camshaft pulley turns 90 deg.). 10. Check and, if necessary, adjust the valve clearance on the No. 2 cylinder.

4. All Removed Parts - Install

1. Install the parts in the reverse order of removal.

5. Maintenance Minder - Reset (With Maintenance Minder System)

1. If the Maintenance Minder required to replace the drive belt, reset the Maintenance Minder with the gauge (see "Resetting the Maintenance Minder").

TEST

VTEC ROCKER ARM TEST (2.4 L ENGINE) (2017 2018 2019)

Special Tools Required

Image	Description/Tool Number
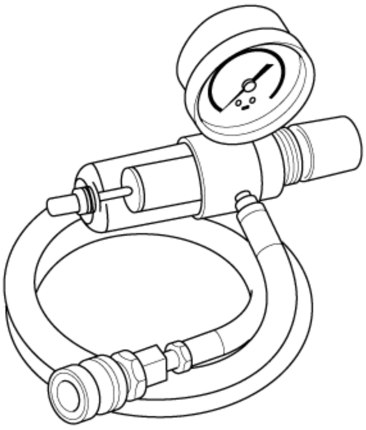	Air Pressure Regulator 07AAJ-PNAA101
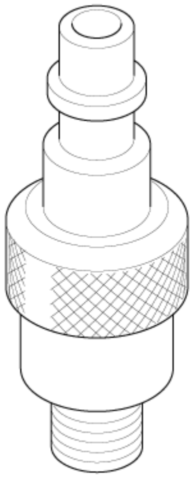	VCM Air Adapter 070AJ-001A101

Test

1. **Ignition Coil and Spark Plug - Remove**
2. **Cylinder Head Cover - Remove**
3. VTEC Rocker Arm - Test

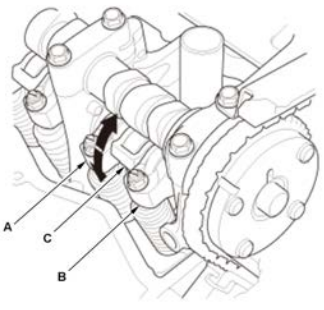 	1. Rotate the crankshaft pulley clockwise. Make sure that the intake secondary rocker arm (A), intake primary rocker arm (B), and the intake mid rocker arm (C) are separated and that the intake secondary rocker arm and the intake mid rocker arm should move independently: • If the mid and secondary rocker arms move together, remove the mid, primary, and secondary rocker arms as an assembly, and check that the pistons in the rocker arms move smoothly. If any rocker arm needs replacing, replace the mid, primary, and secondary rocker arms as an assembly, then retest. • If the secondary rocker arm moves independently, go to step 2. 2. Check that the air pressure on the shop air compressor gauge indicates over 400 kPa (4.08 kgf/cm^2, 58.0 psi). 3. **Inspect the valve clearance** .

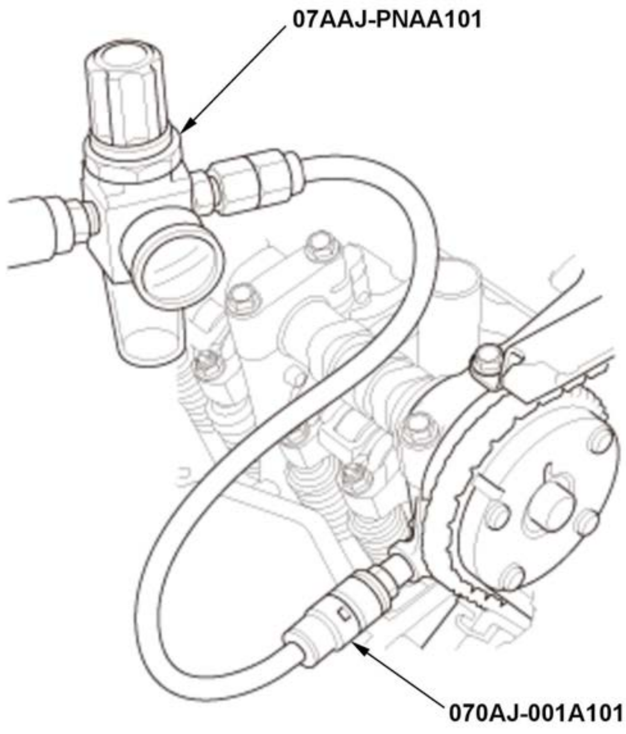	4. Install the VCM air adapter to the inspection hole. 5. Connect the air pressure regulator. 6. Loosen the valve on the air pressure regulator, and apply the specified air pressure.

Specified Air Pressure:
290 kPa (2.96 kgf/cm 2, 42.1 psi)

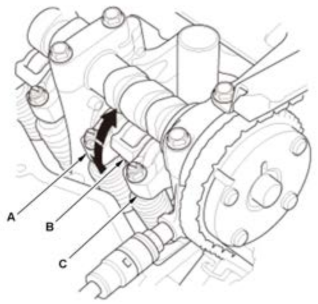	7. With the specified air pressure applied, rotate the crankshaft pulley clockwise. The secondary rocker arm (A) should move together with the mid rocker arm (B) and the primary rocker arm (C): • If the mid, primary, and secondary rocker arms move independently, remove the mid, primary, and the secondary rocker arms as an assembly, and check that the pistons in the rocker arms move smoothly. If any rocker arm needs replacing, replace the mid, primary, and secondary rocker arms as an assembly, then retest. • If the mid, primary, and secondary rocker arms move together, go to step 8. 8. Remove the air pressure regulator and the VCM air adapter.

4. All Removed Parts - Install

1. Install the parts in the reverse order of removal.

INSPECTION

APP SENSOR SIGNAL INSPECTION

Inspection

NOTE:

- This procedure checks the APP sensor in its fully closed position. In any other position, the PCM stores the APP sensor DTCs which are covered in other troubleshooting procedures.
- Check for Pending or Confirmed DTCs with the HDS before doing this procedure. If any DTCs are indicated, troubleshoot them first, then do this procedure.
- Press the accelerator pedal several times to check its operation. If it does not operate smoothly, check the pedal. If you find a problem, replace the accelerator pedal module .

1. HDS - Connect
2. APP Sensor Signal - Inspect

1. Make sure the accelerator pedal is not pressed, then check the APP SENSOR in the DATA LIST with the HDS.
   - If it is 0 %, the APP sensor is OK.
   - If it is not 0 %, **update the PCM if it does not have the latest software**, or **substitute a known-good PCM** , then go to step 2.
2. Make sure the accelerator pedal is not pressed, then check the APP SENSOR in the DATA LIST with the HDS.
   - If it is 0 %, the APP sensor is OK.
   - If it is not 0 %, **replace the accelerator pedal module** , then go to step 1.

AUTO IDLE STOP SYSTEM INSPECTION (WITH AUTO IDLE STOP SYSTEM) (2020 2021)

NOTE:

- Before you do this inspection, check for the following conditions. If any of the following condition is found, reset the 12 volt battery sensor.
-
  - -

    12 volt battery charge procedure; Check if the 12 volt battery charge is properly done. When the 12 volt battery charge procedure is not correctly followed such as charging the 12 volt battery using a 12 volt battery charger without disconnecting the 12 volt battery terminals, it may cause inaccurate measurement of the 12 volt battery sensor current and cause idle stop malfunction.
  - -

    12 volt battery negative terminal; When an electric device or additional ground cables are directly connected to the negative terminal, they need to be removed.
- 12 volt battery sensor reset procedure; Turn the vehicle to the OFF (LOCK) mode, and disconnect the 12 volt battery sensor 2P connector, then reconnect it.

Check under these conditions:

- **Brake system indicators are not indicated** .
- Vehicle is not at high altitudes.
- No indicators are on in the gauge.
- CVT: Shift position indicator does not blink.
- **Starter system indication is not indicated** .
- **The 12 volt battery is fully charged** .

  NOTE: If the 12 volt battery is replaced, **do the 12 volt battery internal resistance reset procedure** .
- Hood is closed.
- All electrical items (headlights, blower fan, radiator fan, rear window defogger, A/C, etc.) are off.
- **PCM idle learn procedure is completed**.
- Drive the vehicle on a flat road or downhill.
- Idle stop off switch is not on.

  NOTE: If there is a problem on the idle stop off switch operation, do the following procedure:
-
  - -

    Test the idle stop off switch .
  - -

    Do the gauge control module self-diagnostic function .
- Driver fasten the seat belt (check the seat belt indicator and caution).

- **VSA sensor neutral position memorization learn is completed** .

Drive the vehicle to warm up the vehicle, and check the following items that meet the temperature requirement:

- ECT SENSOR 1
- ESTIMATED BATTERY TEMPERATURE (BATTERY SENSOR)

  NOTE: The 12 volt battery temperature is easy to rise when the engine is idling with the hood closed. If the outside air temperature is low, the 12 volt battery temperature will not rise enough.

- CVT: CVTF TEMPERATURE

Start the engine, and test-drive under these conditions:

- Drive the vehicle at 25 mph (40 km/h), then stop the vehicle within 5-15 seconds.
- Press and hold the brake pedal until the vehicle stops (do not pump the brake pedal or do not brake suddenly).
- Keep the brake pedal pressed after the vehicle stops.

NOTE:

Do not turn the steering wheel within the final moment before the vehicle stops.

4. Repeat steps 1 through 3 several times, then check the auto idle stop system. If the auto idle stop system works, the system is OK. If the auto idle stop system does not work, do the **symptom troubleshooting**

.

BLOCK AND PISTON INSPECTION (1.5 L ENGINE)

Inspection

1. **Crankshaft - Remove**
2. **Piston - Remove**
3. Engine Block - Inspect

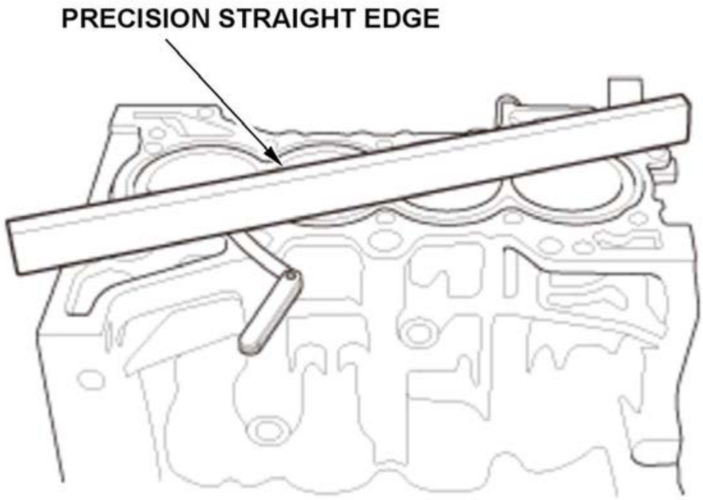 PRECISION STRAIGHT EDGE 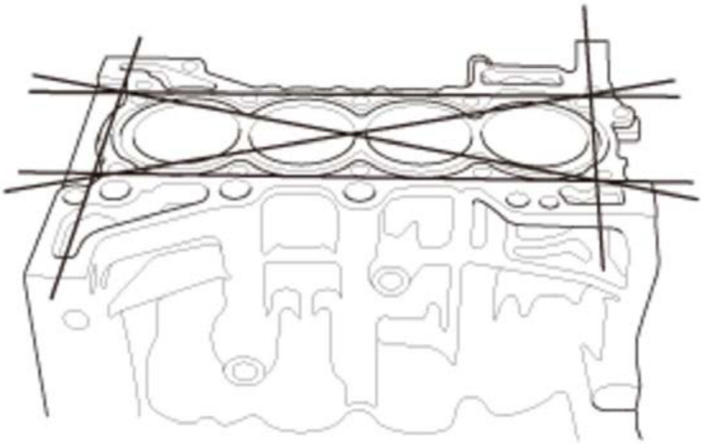	1. Check the top of the engine block for warpage. Measure along the edges and across the center as shown.

Engine Block Warpage	
Standard (New):	**0.07 mm (0.002 in) max.**

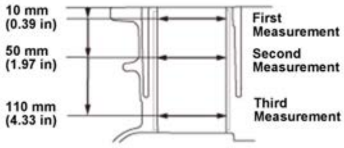 10 mm (0.39 in) 50 mm (1.97 in) 110 mm (4.33 in) First Measurement Second Measurement Third Measurement 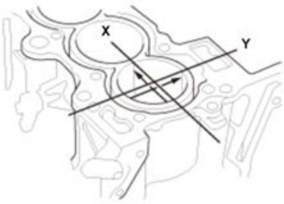 	2. Measure the wear and taper in direction Y and X at three levels inside each cylinder as shown. If measurements in any cylinder are beyond the oversize bore service limit, replace the engine block. If the engine block is being rebored, check the piston-to-cylinder bore clearance. 3. Hone any cored or scratched cylinder bores if needed.

Bore Taper	
Limit:	**(Difference between first and third measurement) 0.050 mm (0.00197 in)**

Reboring Limit:	**0.25 mm (0.0098 in) max.**

Oversize Bore

0.25:	**73.250-73.265 mm (2.88385-2.88444 in)**

Cylinder Bore Size	
Standard (New):	
Direction X:	**73.000-73.020 mm (2.87401-2.87480 in)**
Direction Y:	**73.000-73.015 mm (2.87401-2.87460 in)**
Service Limit:	**73.065 mm (2.87657 in)**

4. Piston - Inspect

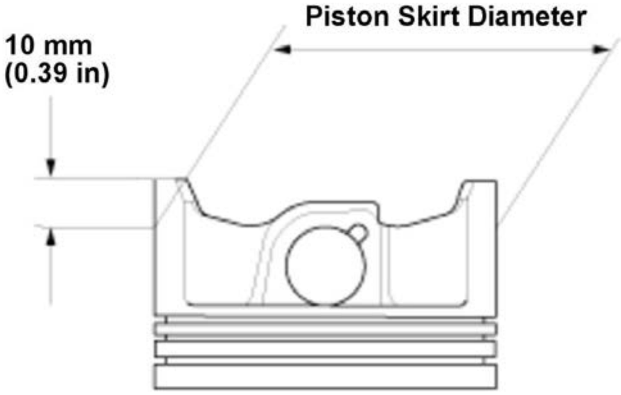

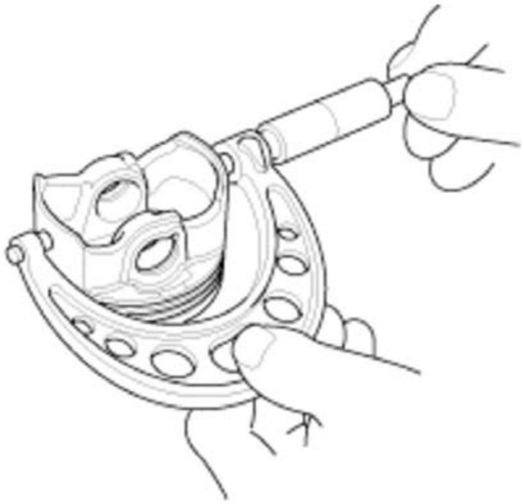

1. Check the pistons for distortion or cracks.

2. Measure the piston skirt diameter at a point 10 mm (0.39 in) from the bottom of the skirt.

Piston Skirt Diameter	
Standard (New):	**72.972-72.979 mm (2.87291 -2.87318 in)**
Service Limit:	**72.962 mm (2.87251 in)**

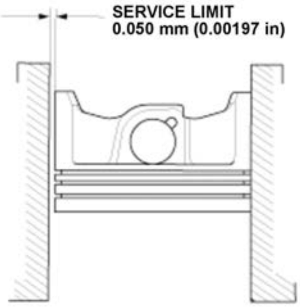

3. Calculate the difference between the cylinder bore diameter and the piston diameter. If the clearance is near, or exceeds the service limit, inspect the piston and the cylinder bore for excessive wear.

Piston-to-Cylinder Bore Clearance	
Standard (New):	**0.021-0.043 mm (0.00083- 0.00169 in)**
Service Limit:	**0.050 mm (0.00197 in)**

5. All Removed Parts - Install

1. Install the parts in the reverse order of removal.

BLOCK AND PISTON INSPECTION (2.4 L ENGINE) (2017 2018 2019)

Inspection

1. Crankshaft - Remove
2. Piston - Remove
3. Block and Piston - Inspect

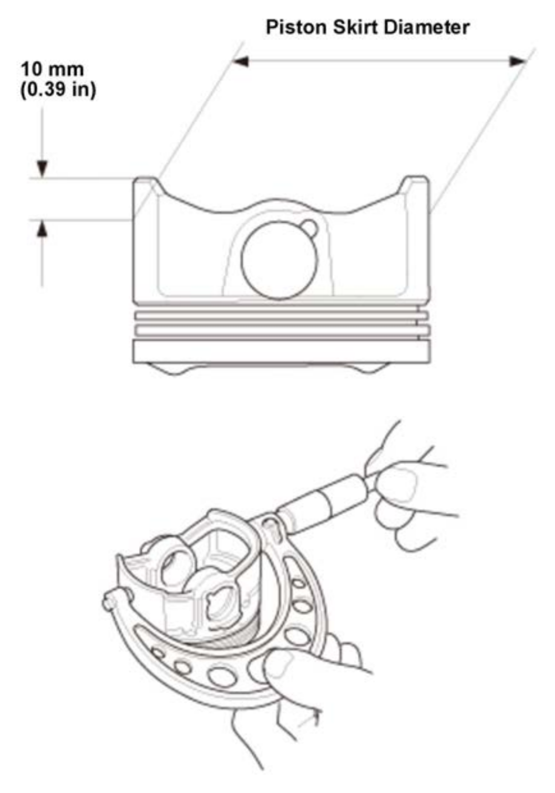	1. Check the piston for distortion or cracks. 2. Measure the piston diameter at a point 10 mm (0.39 in) from the bottom of the skirt. There are two standard-size pistons (No Letter (A), and B). The letter is stamped on the top of the piston. Letters are also stamped on the engine block as the cylinder bore sizes.

Service Limit:	
No Letter (A):	**86.930 mm (3.42243 in)**
B:	**86.920 mm (3.42204 in)**

Piston Skirt Diameter	
Standard (New):	
No Letter (A):	**86.980-86.990 mm (3.42440-3.42480 in)**
B:	**86.970-86.980 mm (3.42401-3.42440 in)**

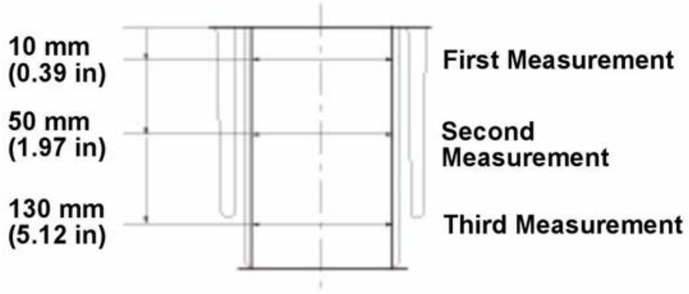
10 mm
(0.39 in)
First Measurement
50 mm
(1.97 in)
Second
Measurement
130 mm
(5.12 in)
Third Measurement

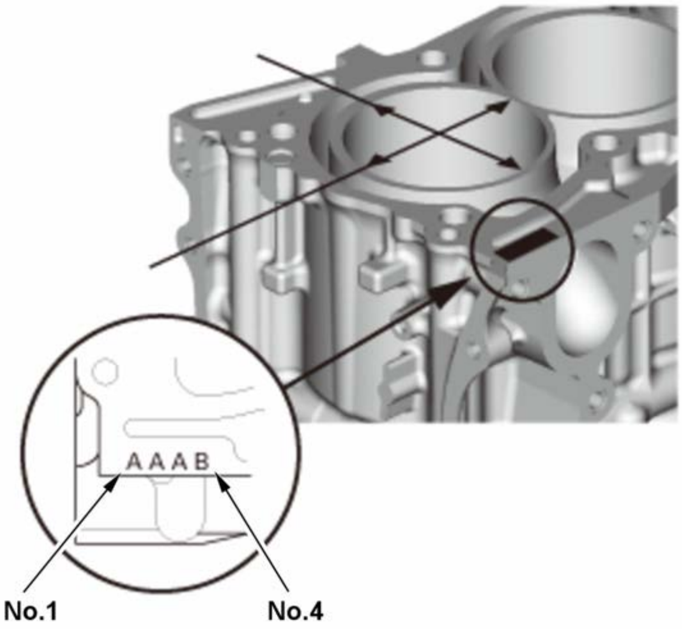
AAAB
No.1
No.4

3. Measure the wear and taper in direction X and Y at three levels in each cylinder as shown.

If the measurements in any cylinder are beyond the Oversize Bore Service Limit, replace the engine block.

If the engine block is being rebored, check the piston-to-cylinder bore clearance.

4. Hone any cored or scratched cylinder bores if needed.

Bore Taper	
Limit:	**(Difference between first and third measurement) 0.05 mm (0.0020 in)**

Oversize	
0.25:	**87.250-87.260 mm (3.43503-3.43543 in)**
B	
Reboring Limit:	**0.25 mm (0.0098 in) max.**

Cylinder Bore Size	
Standard (New):	
A or I:	**87.010-87.020 mm (3.42558-3.42598 in)**
B or II:	**87.000-87.010 mm (3.42519-3.42558 in)**
B	B
Service Limit:	**87.070 mm (3.42795 in)**

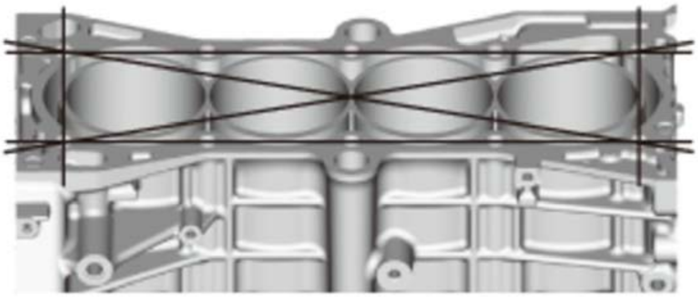 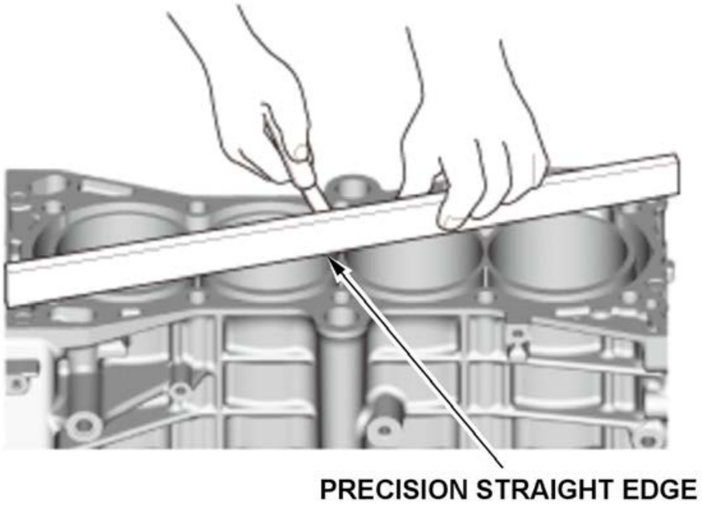	5. Check the top of the engine block for warpage. Measure along the edges and across the center as shown.

Engine Block Warpage	
Standard (New):	**0.07 mm (0.002 in) max.**

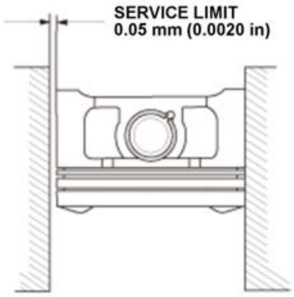	6. Calculate the difference between the cylinder bore diameter and the piston diameter. If the clearance is near or exceeds the service limit, inspect the piston and cylinder bore for excessive wear.

Piston-to-Cylinder Bore Clearance	
Standard (New):	**0.020-0.040 mm (0.00079-0.00157 in)**
Service Limit:	**0.05 mm (0.0020 in)**

4. All Removed Parts - Install

1. Install the removed parts in the reverse order of removal.

CAMSHAFT TIMING INSPECTION (1.5 L ENGINE)

Inspection

1. Cylinder Head Cover - Remove
2. Right Front Wheel - Remove
3. Engine Undercover - Remove

4. Camshaft Timing - Inspect

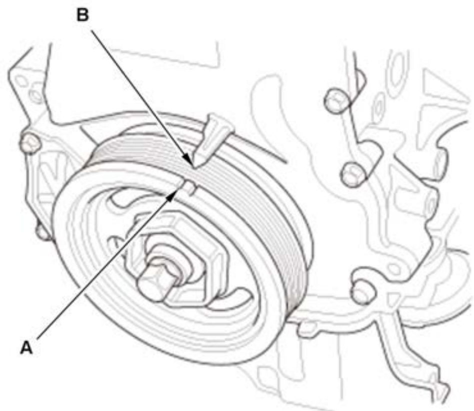	1. Turn the crankshaft to align the No. 1 position at top dead center (TDC); the white mark (A) on the crankshaft pulley lines up with the pointer (B) on the cam chain case.

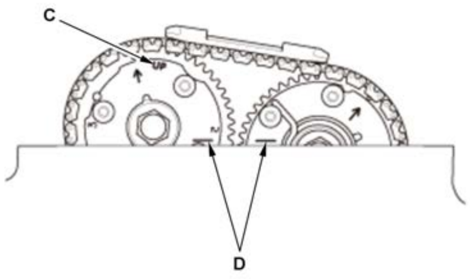	2. With the No. 1 piston at top dead center (TDC), check the "UP" mark (C) on VTC actuator A is facing up. 3. Check the TDC marks (D) on VTC actuator A and VTC actuator B, the marks should align. If the marks are not aligned, **remove the cam chain and reinstall the cam chain properly.**

5. All Removed Parts - Install

1. Install the parts in the reverse order of removal.

CAMSHAFT TIMING INSPECTION (2.4 L ENGINE) (2017 2018 2019)

Inspection

1. **Cylinder Head Cover - Remove**
2. Camshaft Timing - Inspect

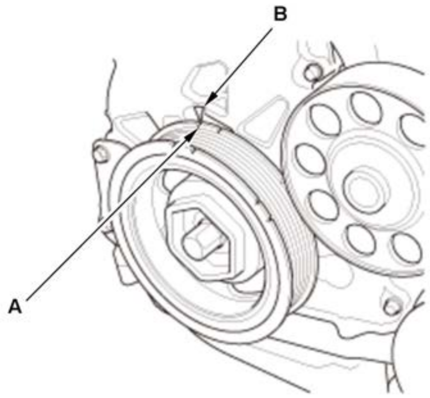	1. Turn the crankshaft to align No. 1 position at top dead center (TDC); the white mark on the crankshaft pulley (A) lines up with the pointer (B).

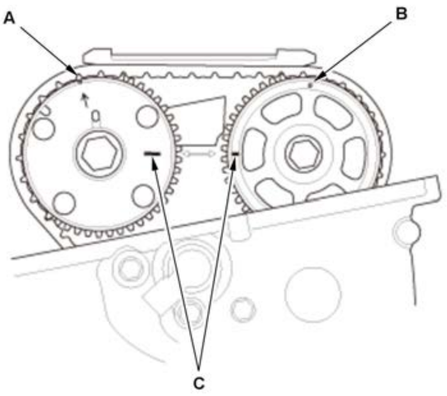	2. With the No. 1 piston at top dead center (TDC), check the punch mark (A) on the VTC actuator and the punch mark (B) on the exhaust camshaft sprocket, the punch marks should be at the top. 3. Check the TDC marks (C) on the VTC actuator and the exhaust camshaft sprocket, the marks should align. If the marks are not aligned, **remove the cam chain and reinstall the cam chain properly** .

3. All Removed Parts - Install

1. Install the parts in the reverse order of removal.

CONNECTING ROD AND CRANKSHAFT END PLAY INSPECTION (1.5 L ENGINE)

Inspection

1. **Engine - Remove**
2. **Transmission - Remove**
3. **Drive Plate - Remove**
4. **Cylinder Head - Remove**
5. Cam Chain Drive Sprocket - Remove

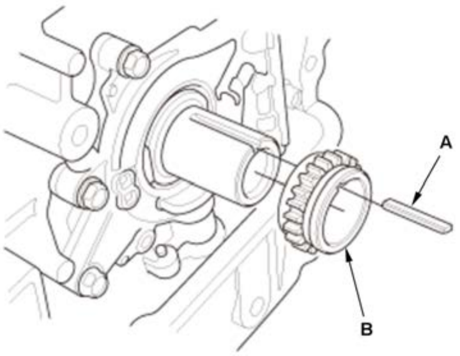	1. Remove the key (A) and the cam chain drive sprocket (B).**NOTE:** Check the direction of the key. When the key is installed, install the key as same direction of the original one.

6. **Oil Pan - Remove**
7. **Oil Pump - Remove**
8. **Oil Seal Case - Remove**
9. Connecting Rod End Play - Inspect

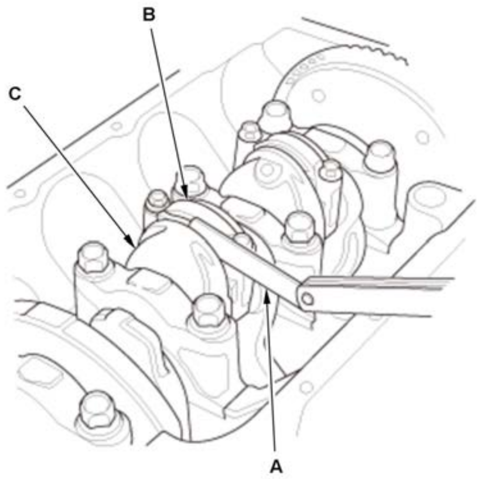

1. Measure the connecting rod end play with a feeler gauge (A) between the connecting rod (B) and the crankshaft (C).

2. If the connecting rod end play is beyond the service limit, install a new connecting rod, and recheck. If it is still beyond the service limit; **replace the crankshaft**.

Connecting Rod End Play	
Standard (New):	**0.15-0.35 mm (0.006-0.013 in)**
Service Limit:	**0.45 mm (0.017 in)**

10. Crankshaft End Play - Inspect

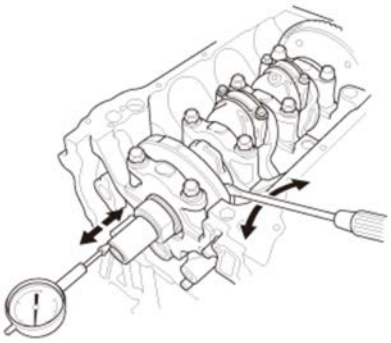

1. Push the crankshaft firmly away from the dial indicator by prying, and zero the dial against the end of the crankshaft. Then pull the crankshaft firmly back toward the indicator by prying; the dial reading should not exceed the service limit.

2. If the crankshaft end play is beyond the service limit, replace the thrust washers and recheck. If it is still beyond the service limit, **replace the crankshaft**.

Crankshaft End Play	
Standard (New):	**0.10-0.35 mm (0.0039-0.0138 in)**
Service Limit:	**0.45 mm (0.0177 in)**

11. All Removed Parts - Install

1. Install the parts in the reverse order of removal.

CONNECTING ROD AND CRANKSHAFT END PLAY INSPECTION (2.4 L ENGINE) (2017 2018 2019)

Inspection

1. **Engine - Remove**
2. **Transmission - Remove**
3. **Drive Plate - Remove**
4. **Cylinder Head - Remove**
5. **Oil Pump - Remove**
6. **Baffle Plate - Remove**
7. Connecting Rod and Crankshaft End Play - Inspect

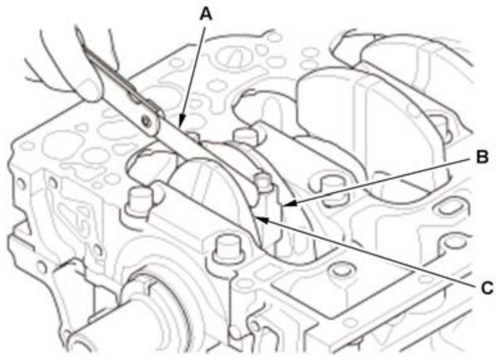	1. Measure the connecting rod end play with a feeler gauge (A) between the connecting rod (B) and the crankshaft (C). **Connecting Rod End Play** 2. If the connecting rod end play is beyond the service limit, install a new connecting rod, and recheck. If it is still beyond the service limit, replace the crankshaft.

Standard (New):	**0.15-0.35 mm (0.006-0.013 in)**
Service Limit:	**0.40 mm (0.015 in)**

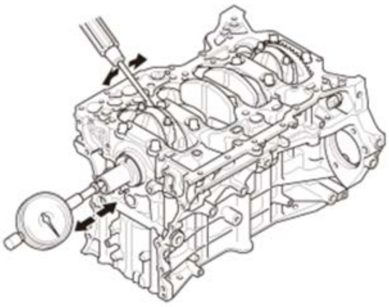	3. Push the crankshaft firmly away from the dial indicator by prying, and zero the dial against the end of the crankshaft. Then pull the crankshaft firmly back toward the indicator by prying; the dial reading should not exceed the service limit. 4. If the crankshaft end play is beyond the service limit, replace the thrust washers and recheck, if it is still beyond the service limit, replace the crankshaft.

Crankshaft End Play	
Standard (New):	**0.10-0.35 mm (0.0039-0.0138 in)**
Service Limit:	**0.45 mm (0.0177 in)**

8. All Removed Parts - Install

1. Install the parts in the reverse order of removal.

ENGINE COMPRESSION INSPECTION (1.5 L ENGINE)

Inspection

NOTE: After this inspection, you must reset the PCM. Otherwise, the PCM will continue to stop the injectors from operating.

1. Engine - Warm Up

1. Start the engine. Hold the engine speed at 3, 000 rpm with no load (in P or N) until the cooling fan comes on, then let it idle.

2. HDS - Connect
3. All INJECTORS STOP - Select

1. Select ALL INJECTORS STOP in the PGM-FI INSPECTION menu with the HDS.

4. Ignition Coil and Spark Plug - Remove
5. Engine Compression - Inspect

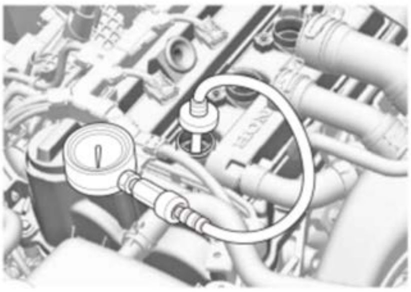

1. Attach a compression gauge to the spark plug hole.

2. Step on the accelerator pedal to open the throttle fully, then crank the engine with the starter motor, and measure the compression.

3. Measure the compression on the remaining cylinders.

4. If the compression is not within specifications, perform a cylinder leak down test to determine the problem area. Then check the following items, and remeasure the compression:

- Incorrect valve clearance
- Confirmation of camshaft timing
- Damaged or worn cam lobes
- Damaged or worn valves and seats
- Damaged cylinder head gasket
- Damaged or worn piston rings
- Damaged or worn piston and cylinder bore

5. Remove the compression gauge from the spark plug hole.

Maximum Variation:
Within 200 kPa (2.04 kgf/cm 2, 29.0 psi)

Compression Pressure:
Above 980 kPa (9.99 kgf/cm 2, 142.1 psi)

6. Ignition Coil and Spark Plug - Install
7. All INJECTORS STOP - Cancel

1. Select PCM reset in the PGM-FI Mode menu to cancel ALL INJECTORS STOP with the HDS.

8. PCM Idle - Learn

ENGINE COMPRESSION INSPECTION (2.4 L ENGINE) (2017 2018 2019)

Inspection

NOTE: After this inspection, you must reset the PCM. Otherwise, the PCM will continue to stop the injectors from operating.

1. Engine - Warm Up

1. Start the engine. Hold the engine speed at 3, 000 rpm with no load (in P or N) until the radiator fan comes on, then let it idle.

2. HDS DLC - Connect

NOTE: For specific operations, refer to the user's manual that came with the HDS. Make sure the HDS is loaded with the latest software.

3. ALL INJECTORS STOP - Select

1. Select ALL INJECTORS STOP in the PGM-FI INSPECTION menu with the HDS.

2. Turn the vehicle to the OFF (LOCK) mode.

4. Ignition Coil and Spark Plug - Remove
5. Engine Compression - Inspect

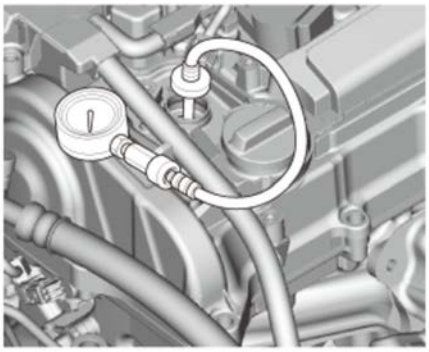	1. Attach a compression gauge to the spark plug hole. 2. Step on the accelerator pedal to open the throttle fully, then crank the engine with the starter motor, and measure the compression. 3. Measure the compression on the remaining cylinders. 4. If the compression is not within specifications, perform a cylinder leak down test to determine the problem area. Then check the following items, and remeasure the compression: • Incorrect valve clearance • Confirmation of camshaft timing • Damaged or worn cam lobes • Damaged or worn valves and seats • Damaged cylinder head gasket • Damaged or worn piston rings • Damaged or worn piston and cylinder bore 5. Remove the compression gauge from the spark plug hole.

Maximum Variation:
Within 200 kPa (2.04 kgf/cm 2, 29.0 psi)

Compression Pressure:
Above 930 kPa (9.48 kgf/cm 2, 134.8 psi)

6. All Removed Parts - Install

1. Install the parts in the reverse order of removal.

7. ALL INJECTORS STOP - Cancel

1. **Select PCM reset** in the PGM-FI mode menu to cancel ALL INJECTORS STOP with the HDS.

IDLE SPEED INSPECTION

Inspection

NOTE:

- Before checking the idle speed, check these items:
-
  - -

    The malfunction indicator lamp (MIL) has not been reported on, and there are no DTCs.
  - -

    Spark plugs
  - -

    Air cleaner
  - -

    PCV system
- If DTCs are not indicated, the idle speed is normal.
- Apply the parking brake.

1. HDS - Connect
2. Idle Speed - Inspect

1. Start the engine. Hold the engine speed at 3, 000 rpm without load (in P or N) until the radiator fan comes on, then let it idle. 2. Check the idle speed under no load conditions: headlights, blower fan, radiator fan, audio system, and air conditioner off.**Idle speed should be:** *1: Idle speed is controlled to improve driving performance at the high altitude point of view. 3. Let the engine idle for 1 minute with high electric load (A/C on, temperature set to max cool, blower fan on high, headlights on high beam).**Idle speed should be: 720 +/- 50 rpm (in P or N) NOTE:** If the idle speed is not within specification, do the PCM idle learn procedure. If the idle speed is still not within specification, go to the symptom troubleshooting .

1.5 L engine	**720 +/- 50 rpm** (in P or N)
	975 +/- 50 min -1 (rpm) (in P or N) *1 (high altitude (BARO sensor in the DATA LIST with the HDS: less than 563 mmHg)
2.4 L engine	**720 +/- 50 rpm** (in P or N)

VALVE INSPECTION (1.5 L ENGINE)

Inspection

WARNING: Please carefully read "Precaution for Handling Sodium-Filled Valves" and follow the instructions as the exhaust valves contain metal sodium .

1. Valve - Remove
2. Valve - Inspect

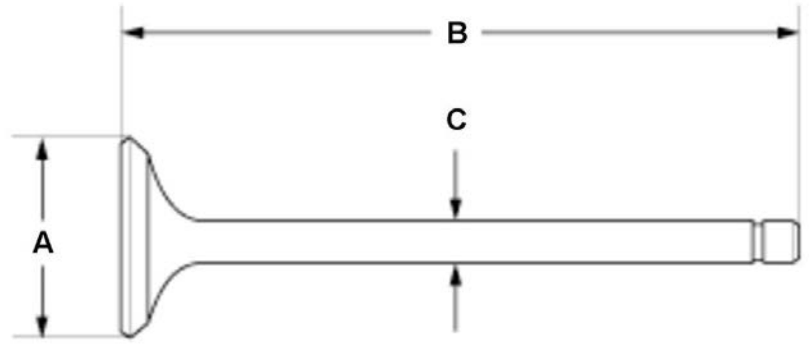

1. Measure the valve in these areas.

Exhaust Valve Dimensions	
A Standard (New):	**22.90-23.10 mm (0.9016-0.9094 in)**
B Standard (New):	**98.80-99.20 mm (3.8898-3.9055 in)**
C Standard (New):	**5.45-5.46 mm (0.2146-0.2150 in)**
C Service Limit:	**5.42 mm (0.2134 in)**

Intake Valve Dimensions	
A Standard (New):	**27.90-28.10 mm (1.0984-1.1063 in)**
B Standard (New):	**99.15-99.65 mm (3.9035-3.9232 in)**
C Standard (New):	**5.48-5.49 mm (0.2157-0.2161 in)**
C Service Limit:	**5.45 mm (0.2146 in)**

3. All Removed Parts - Install

1. Install the parts in the reverse order of removal.

VALVE INSPECTION (2.4 L ENGINE) (2017 2018 2019)

Inspection

1. Valve - Remove
2. Valve - Inspect

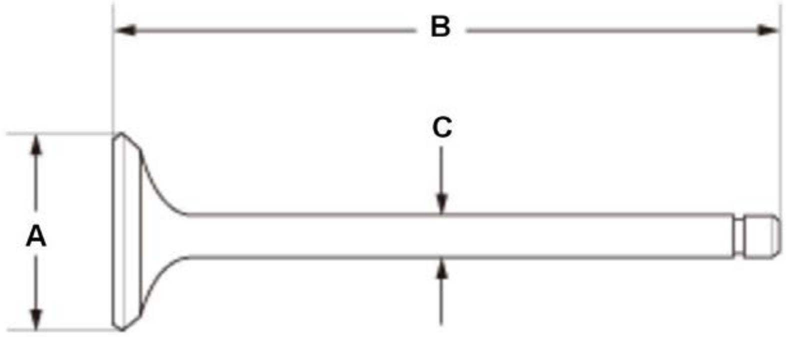	1. Measure the valve in these areas. **Intake Valve Dimensions** **Exhaust Valve Dimensions**

A Standard (New):	**29.85-30.15 mm (1.1752-1.1870 in)**
B Standard (New):	**115.40-116.00 mm (4.5433-4.5669 in)**
C Standard (New):	**5.445-5.460 mm (0.21437-0.21496 in)**
C Service Limit:	**5.435 mm (0.21398 in)**

A Standard (New):	**35.85-36.15 mm (1.4114-1.4232 in)**
B Standard (New):	**116.65-117.25 mm (4.5925-4.6161 in)**
C Standard (New):	**5.470-5.485 mm (0.21535-0.21594 in)**
C Service Limit:	**5.445 mm (0.21437 in)**

3. All Removed Parts - Install

1. Install the parts in the reverse order of removal.

VALVE STEM-TO-GUIDE CLEARANCE INSPECTION (1.5 L ENGINE)

Inspection

WARNING: Please carefully read "Precaution for Handling Sodium-Filled Valves" and follow the instructions as the exhaust valves contain metal sodium .

1. Valve - Remove
2. Valve - Inspect
3. Valve Stem To Guide Clearance - Inspect

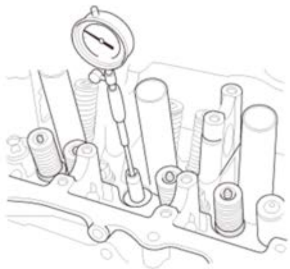	1. Subtract the O. D. of the valve stem, measured with a micrometer, from the I. D. of the valve guide measured with an inside micrometer or a ball gauge. Take the measurements in three places along the valve stem and three places inside the valve guide. The difference between the largest guide measurement and the smallest stem measurement should not exceed the service limit.

Intake Valve Stem-to-Guide Clearance	
Standard (New):	**0.025-0.050 mm (0.00098-0.00197 in)**
Service Limit:	**0.08 mm (0.0031 in)**

Exhaust Valve Stem-to-Guide Clearance	
Standard (New):	**0.055-0.080 mm (0.00217-0.00315 in)**
Service Limit:	**0.11 mm (0.0043 in)**

4. All Removed Parts - Install

1. Install the parts in the reverse order of removal.

VALVE STEM-TO-GUIDE CLEARANCE INSPECTION (2.4 L ENGINE) (2017 2018 2019)

Inspection

1. Valve - Remove
2. Valve - Inspect
3. Valve Stem-to-Guide Clearance - Inspect

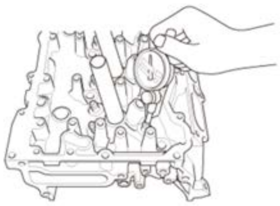

1. Subtract the O. D. of the valve stem, measured with a micrometer, from the I. D. of the valve guide, measured with an inside micrometer or ball gauge. Take the measurements in three places along the valve stem and three places inside the valve guide. The difference between the largest valve guide measurement and the smallest valve stem measurement should not exceed the service limit.

Intake Valve Stem-to-Guide Clearance

Exhaust Valve Stem-to-Guide Clearance

Standard (New):	**0.055-0.085 mm (0.00217-0.00335 in)**
Service Limit:	**0.110 mm (0.00433 in)**

Standard (New):	**0.030-0.060 mm (0.00118-0.00236 in)**
Service Limit:	**0.080 mm (0.00315 in)**

4. All Removed Parts - Install

1. Install the parts in the reverse order of removal.

REWRITE

PCM UPDATE

Procedure

NOTE: High temperature in the engine compartment might cause the PCM to become too hot to run the update. If the engine has been running before this procedure, open the hood and cool the engine compartment.

1. PCM - Update
2. PCM - Idle Learn
3. CKP Pattern - Clear/Learn

LEARNING RESET CLEAR

CKP PATTERN CLEAR/CKP PATTERN LEARN PROCEDURE

Procedure

NOTE:

- Clearing the DTCs with the HDS does not require you to do this procedure.
- The PCM memorizes the learning status in its memory after passed an hour from turning the vehicle to the OFF (LOCK) mode. If you need to disconnect the 12 volt battery terminals before memorizing the learning status in the PCM, jump the SCS line with the HDS, and wait 60 seconds, then disconnect the 12 volt battery terminals.

Clear/Learn Procedure (with the HDS)

1. **HDS - Connect**
2. CKP Pattern - Clear/Learn

1. Select CRANK PATTERN in the ADJUSTMENT MENU with the HDS.

2. Select CRANK PATTERN CLEAR with the HDS, and clear the CKP pattern.

3. Select CRANK PATTERN LEARNING with the HDS, and follow the screen prompts.

4. Turn the vehicle to the OFF (LOCK) mode.

5. Jump the SCS line with the HDS.

6. Wait 60 seconds, and exit the SCS mode with the HDS.

Learn Procedure (without the HDS)

3. CKP Pattern - Learn

1. Start the engine. Hold the engine speed at 3, 000 rpm without load (in P or N) until the radiator fan comes on.

2. 1.5 L engine: Test-drive the vehicle on a level road: Decelerate (with the throttle fully closed) from an engine speed of 3, 200 rpm down to 1, 500 rpm with in L.

3. 2.4 L engine: Test-drive the vehicle on a level road: Decelerate (with the throttle fully closed) from an engine speed of 4, 000 rpm down to 1, 500 rpm with the in L.

4. Repeat step 2 several times.

5. Turn the vehicle to the OFF (LOCK) mode.

6. Turn the vehicle to the ON mode, and wait 30 seconds.

7. Turn the vehicle to the OFF (LOCK) mode, and wait an hour. The CKP pattern learn procedure is complete.

PCM IDLE LEARN PROCEDURE

Procedure

The idle learn procedure must be done so the PCM can learn the engine idle characteristics.

Do the idle learn procedure whenever you do any of these actions:

- Replace the PCM.
- Reset the PCM.
- Update the PCM.
- Replace or clean the throttle body.
- When the engine or transmission is disassembled.

NOTE:

- Clearing the DTCs with the HDS does not require you to do the idle learn procedure.
- The PCM memorizes the learning status in its memory after passed an hour from turning the vehicle to the OFF (LOCK) mode. If you need to disconnect the 12 volt battery terminals before memorizing the learning status in the PCM, jump the SCS line with the HDS, and wait 60 seconds, then disconnect the 12 volt battery terminals.

1. PCM Idle - Learn

Procedure

1. Make sure all electrical items (the A/C, the audio, the lights, etc.) are off.

2. **Reset the PCM with the HDS**

3. Turn the vehicle to the ON mode, and wait 2 seconds.

4. Start the engine. Hold the engine speed at 3, 000 rpm without load (in P or N) until the radiator fan comes on, or until the engine coolant temperature reaches 194 deg. F (90 deg. C).

5. Let the engine idle for about 5 minutes with the throttle fully closed.

NOTE: If the radiator fan comes on, do not include its running time in the 5 minutes.

6. Turn the vehicle to the OFF (LOCK) mode.

7. Jump the SCS line with the HDS.

8. Wait 60 seconds, and exit the SCS mode with the HDS.

PCM RESET

Procedure

1. HDS - Connect
2. PCM - Reset

1. Select the PGM-FI system with the HDS.

2. Reset the PCM with the HDS while the engine is stopped.

3. Turn the vehicle to the OFF (LOCK) mode.

4. Turn the vehicle to the ON mode, and wait 30 seconds.

5. Turn the vehicle to the OFF (LOCK) mode, and disconnect the HDS from the DLC.

Fuel and Emissions Systems Learning Procedure

3. PCM - Idle Learn

GENERAL INFORMATION

ENGINE CONFIGURATION (1.5 L ENGINE)

Cylinder Arrangement/Firing Order:

1-3-4-2

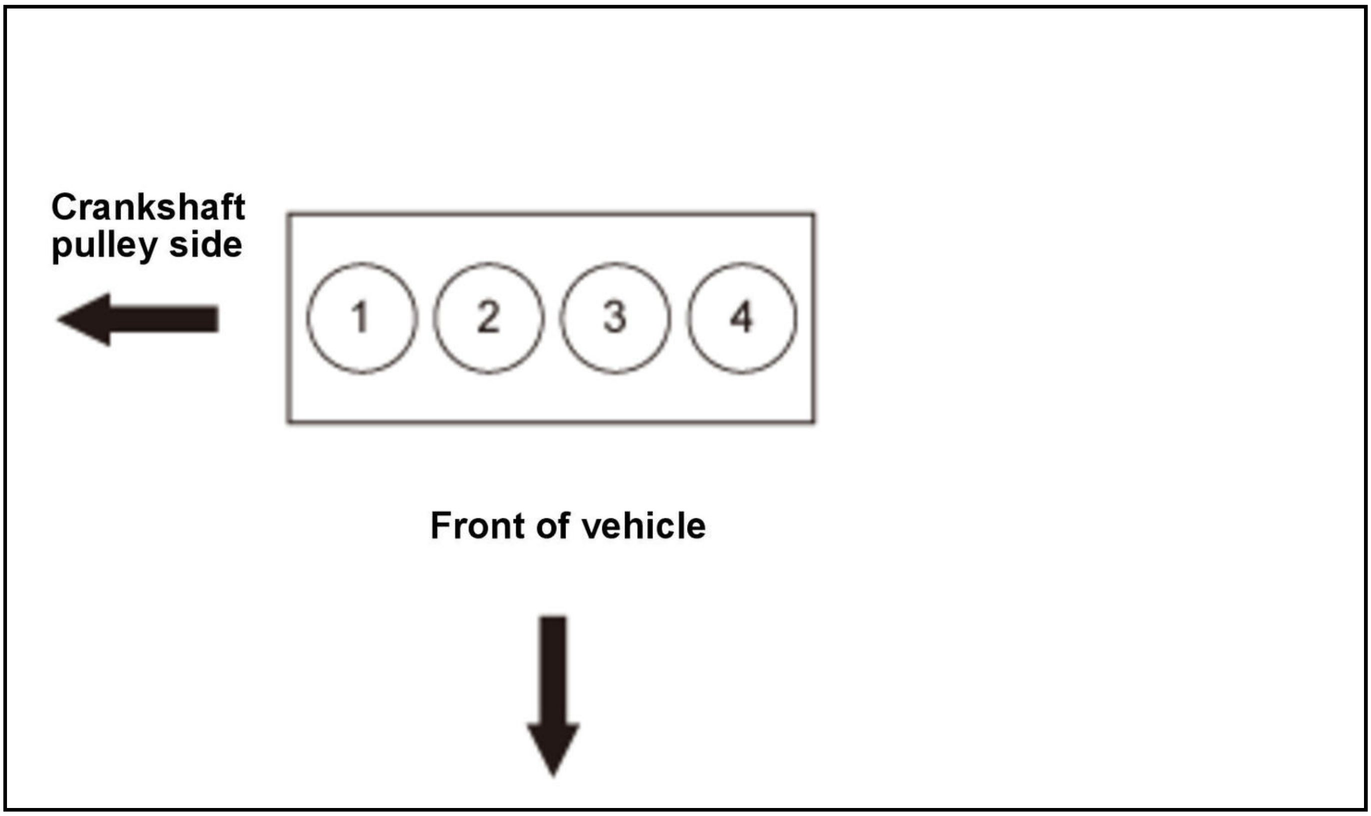
Crankshaft pulley side
1
2
3
4
Front of vehicle

Engine Rotation: Clockwise

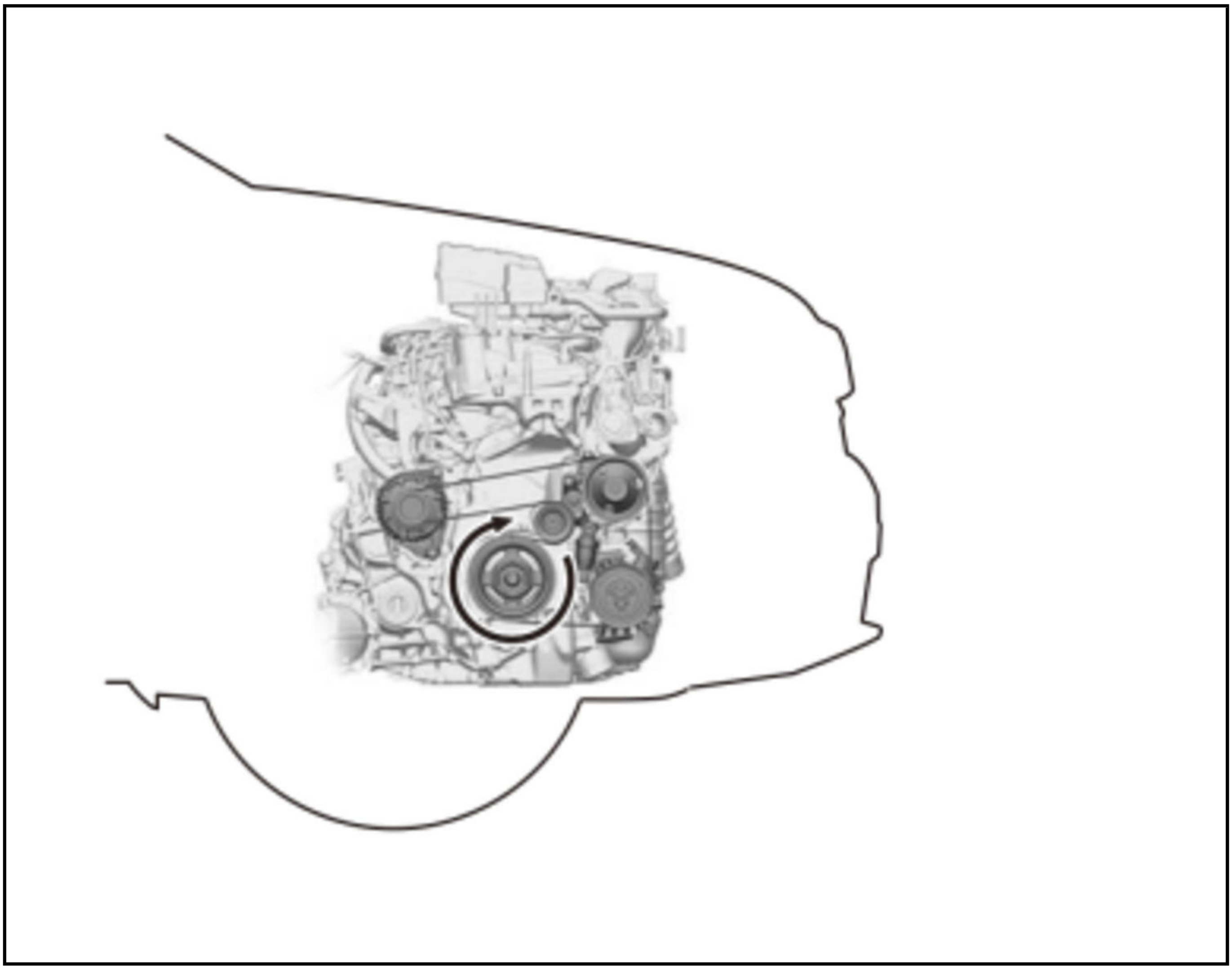

ENGINE CONFIGURATION (2.4 L ENGINE) (2017 2018 2019)

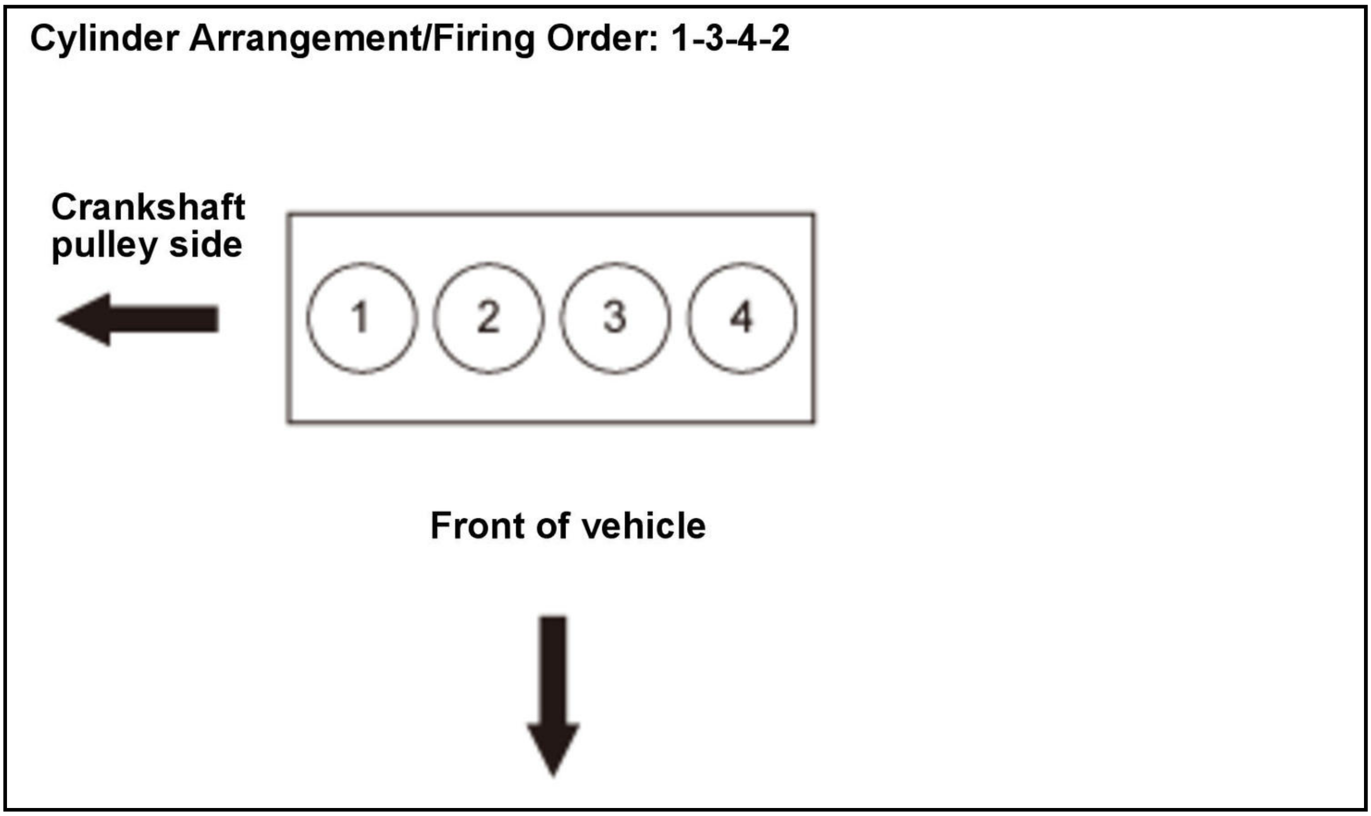
Cylinder Arrangement/Firing Order: 1-3-4-2
Crankshaft pulley side
1
2
3
4
Front of vehicle

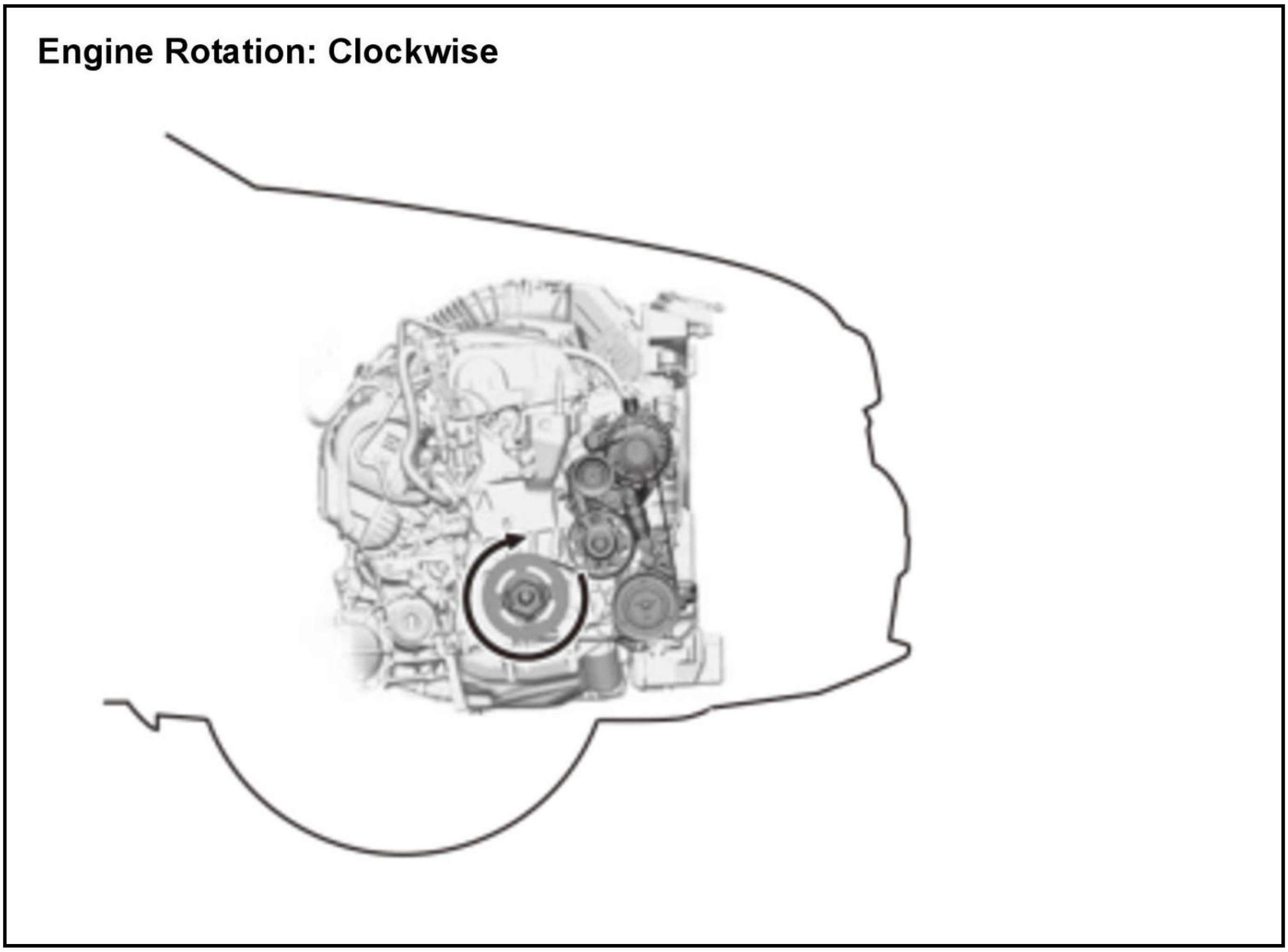
Engine Rotation: Clockwise

HOW TO SET READINESS CODES

Malfunction Indicator Lamp (MIL) Indication (In relation to Readiness Codes)

The vehicle has certain readiness codes that are part of the on-board diagnostics for the emissions systems. If the vehicle's 12 volt battery has been disconnected or gone dead, if DTCs have been cleared, or if the PCM has been reset, these readiness codes are reset to incomplete. In some states, part of the emissions testing is to make sure these codes are set to complete. If all of them are not set to complete, the vehicle may fail the emission test, or the test cannot be finished.

To check if the readiness codes are set to complete, turn the vehicle to the ON mode, but do not start the engine. The MIL comes on for 15-20 seconds. If it then goes off, the readiness codes are set to complete. If it flashes five times, one or more readiness codes are not set to complete. To set readiness codes from incomplete to complete, do the procedure for the appropriate code.

To check the status of a specific DTC system, **check the OBD status in the DTC MENU with the HDS** . This screen displays the DTC, the current data list of the enable criteria, and the status of the readiness testing.

Catalytic Converter Monitor and Readiness Code

NOTE:

- During the procedure, do not turn the vehicle to the ACCESSORY mode or the OFF (LOCK) mode.
- All readiness codes are cleared when the 12 volt battery is disconnected, if DTCs have been cleared, or if the PCM is reset with the HDS.
- Low ambient temperatures or excessive stop-and-go traffic may increase the drive time needed to switch the readiness code from incomplete to complete.
- The readiness code will not switch to complete until all the enable criteria are met.
- If a fault in the secondary HO2S system caused the MIL to come on, the readiness code cannot be set to complete until you correct the fault.

Enable Criteria

- ECT SENSOR 1 at 158 deg. F (70 deg. C) or more.
- IAT SENSOR at 20 deg. F (-7 deg. C) or more.
- Vehicle speed above 25 mph (40 km/h).

Procedure

1. **Connect the HDS to the vehicle's data link connector (DLC)**

, and bring up the READINESS CODEs screen for Catalyst in the DTCs MENU.

2. Start the engine.

3. Test-drive the vehicle under stop-and-go conditions with short periods of steady cruise. After about 5 miles (8 km), the readiness code should switch to complete.

4. If the readiness code is still not set to complete, check for a Pending DTC with the HDS. If there is no DTC, one or more of the enable criteria were probably not met; repeat the procedure.

Evaporative Emission (EVAP) Control System Monitor and Readiness Code (1.5 L engine)

NOTE: All readiness codes are cleared when the 12 volt battery is disconnected, if DTCs have been cleared, or if the PCM is reset with the HDS.

Enable Criteria

Refer to the following DTC.

- **P0441**
- **P0456**
- **P145D**

Procedure

Refer to the following DTC.

NOTE: Do not FUNCTION TEST with the HDS.

- **P0441**

- **P0456**
- **P145D**

Evaporative Emission (EVAP) Control System Monitor and Readiness Code (2.4 L engine)

NOTE: All readiness codes are cleared when the 12 volt battery is disconnected, if DTCs have been cleared, or if the PCM is reset with the HDS.

Enable Criteria

- **P0441**
- **P0456**

Procedure

Refer to the following DTC.

NOTE: Do not FUNCTION TEST with the HDS.

- **P0441**
- **P0456**

Air Fuel Ratio (A/F) Sensor Monitor and Readiness Code

NOTE:

- During the procedure, do not turn the vehicle to the ACCESSORY mode or the OFF (LOCK) mode.
- All readiness codes are cleared when the 12 volt battery is disconnected, if DTCs have been cleared, or if the PCM is reset with the HDS.

Enable Criteria

ECT SENSOR 1 at 140 deg. F (60 deg. C) or more.

Procedure

1. Start the engine.

2. Test-drive the vehicle under stop-and-go conditions with short periods of steady cruise. During the drive, decelerate (with the throttle fully closed) for 5 seconds. After about 3.5 miles (5.6 km), the readiness code should switch from incomplete to complete. Check the readiness codes screen for the AIR FUEL RATIO (A/F) SENSOR in the DTCs MENU with the HDS.

- If the HDS indicates complete, readiness is complete.
- If the HDS indicates not complete, go to the next step.

4. Check for a Pending DTC. If there is no DTC, the enable criteria was probably not met. Select the DATA LIST Menu. Check ECT SENSOR 1 in the ALL DATA LIST with the HDS. If ECT SENSOR 1 is less than 140 deg. F (60 deg. C), run the engine until it is more than 140 deg. F (60 deg. C), then repeat the procedure.

Air Fuel Ratio (A/F) Sensor Heater Monitor Readiness Code

NOTE: All readiness codes are cleared when the 12 volt battery is disconnected, if DTCs have been cleared, or if the PCM is reset with the HDS.

Procedure

1. Start the engine, and let it idle for 1 minute. The readiness code should switch from incomplete to complete.

2. If the readiness code is still not set to complete, check for a Pending DTC. If there is no DTC, repeat the procedure.

Misfire Monitor and Readiness Code

- This readiness code is always set to available because misfiring is continuously monitored.
- Monitoring pauses, and the misfire counter resets, if the vehicle is driven over a rough road.

- Monitoring also pauses, and the misfire counter holds at its current value, if the throttle position changes more than a predetermined value, or if driving conditions fall outside the range of any related enable criteria.

Fuel System Monitor and Readiness Code

- This readiness code is always set to available because the fuel system is continuously monitored during closed loop operation.
- Monitoring pauses when the catalytic converter, the EVAP control system, and the A/F sensor monitors are active.
- Monitoring also pauses when any related enable criteria are not being met. Monitoring resumes when the enable criteria is again being met.

Comprehensive Component Monitor and Readiness Code

This readiness code is always set to available because the comprehensive component monitor is continuously running whenever the engine is cranking or running.

EGR Monitor and Readiness Code

NOTE:

- During the procedure, do not turn the vehicle to the ACCESSORY mode or the OFF (LOCK) mode.
- All readiness codes are cleared when the 12 volt battery is disconnected, if DTCs have been cleared, or if the PCM is reset with the HDS.

Enable Criteria

ECT SENSOR 1 at 176 deg. F (80 deg. C) or more.

Procedure

1. Connect the HDS to the DLC

2. Start the engine.

3. Drive at a steady speed with the transmission in D at 50-62 mph (80-100 km/h) or above for more than 10 seconds.

4. With the transmission in D, decelerate from 62 mph (100 km/h) or above by completely releasing the throttle for at least 5 seconds. If the engine is stopped during this step, repeat steps 3 and 4. Check the OBD status screen for DTC P0401 in the DTC's MENU with the HDS.

- If it is passed, the readiness code is complete.
- If it is not passed, go to step 3 and retest.

COMPONENT LOCATION INDEX

ENGINE BLOCK ASSEMBLY COMPONENT LOCATION INDEX (1.5 L ENGINE)

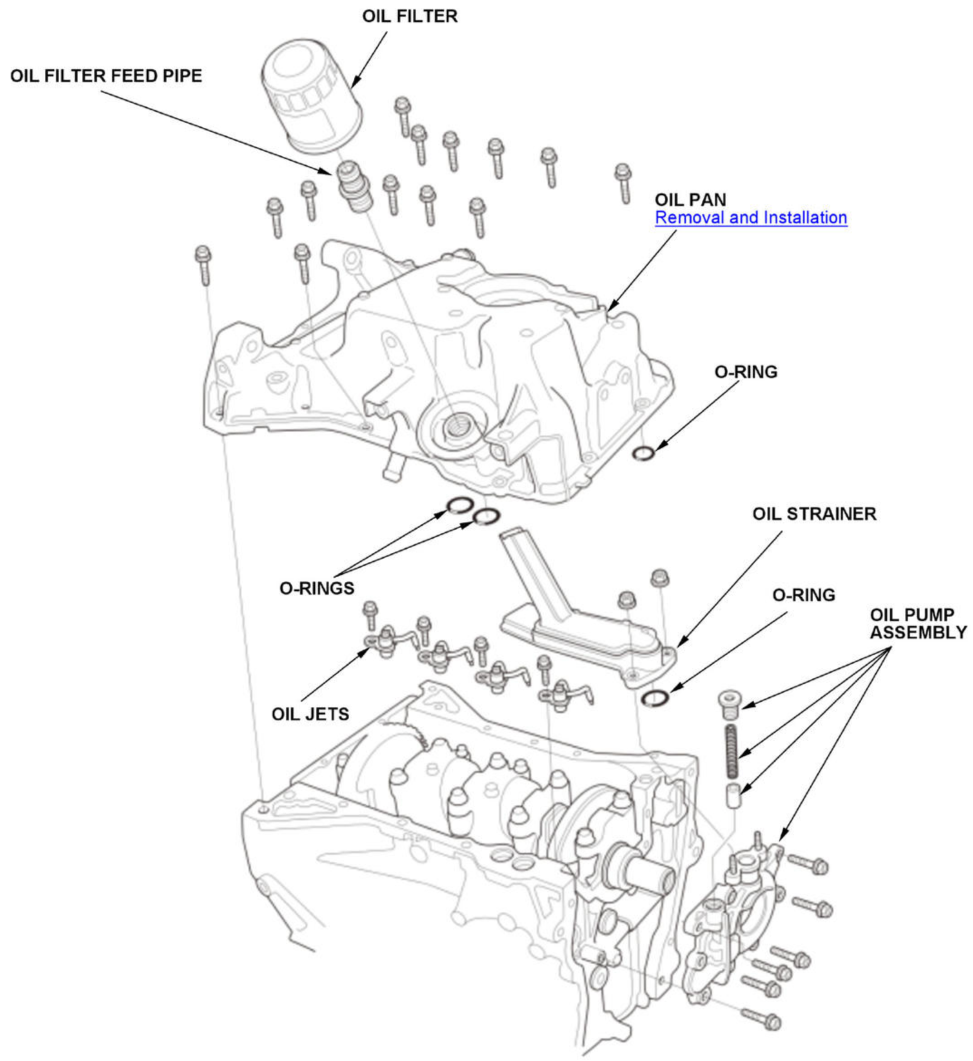
OIL FILTER
OIL FILTER FEED PIPE
OIL PAN
Removal and Installation
O-RING
OIL STRAINER
O-RINGS
O-RING
OIL PUMP ASSEMBLY
OIL JETS

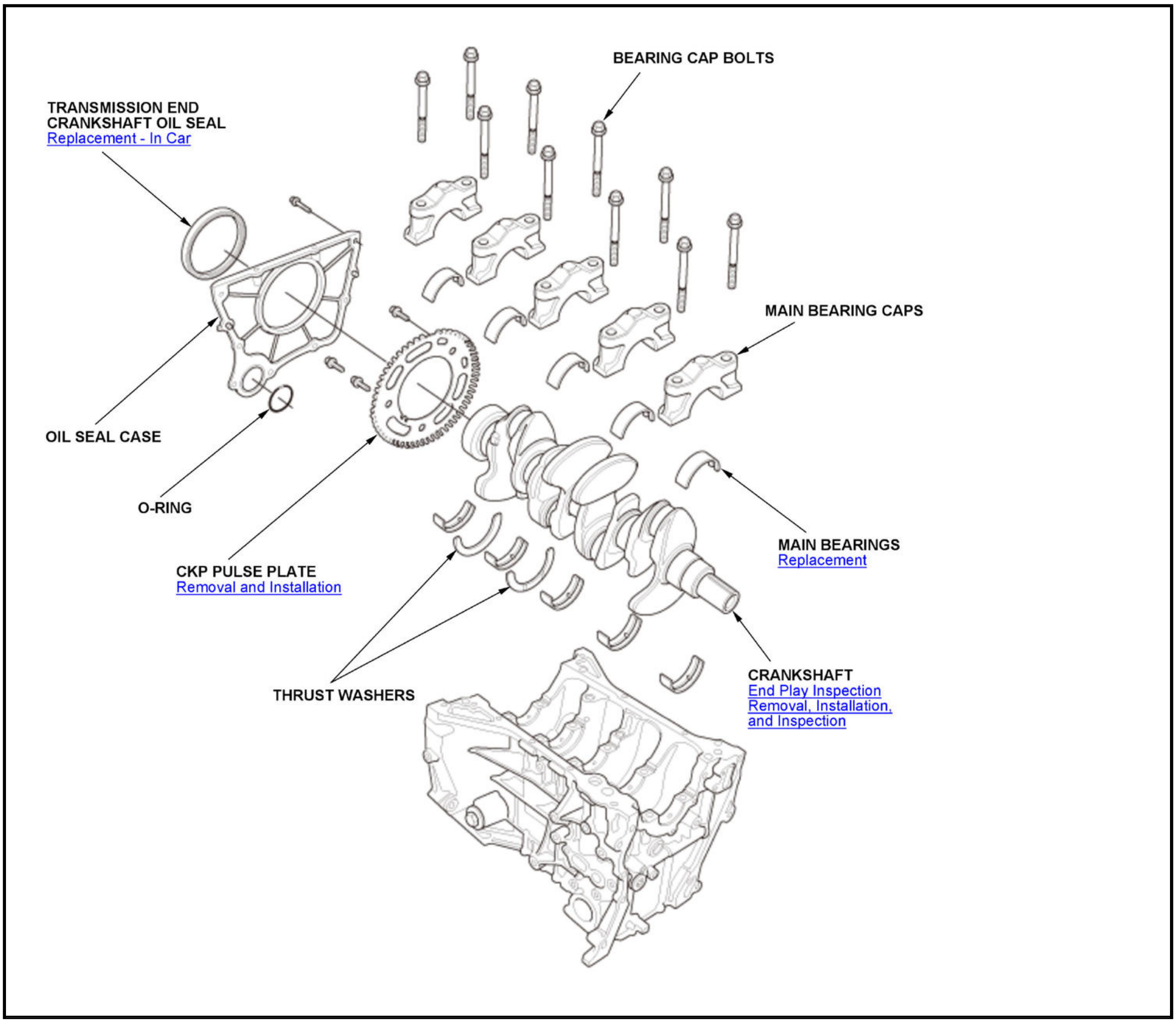
BEARING CAP BOLTS
TRANSMISSION END CRANKSHAFT OIL SEAL
Replacement - In Car
MAIN BEARING CAPS
OIL SEAL CASE
O-RING
CKP PULSE PLATE
Removal and Installation
MAIN BEARINGS
Replacement
THRUST WASHERS
CRANKSHAFT
End Play Inspection
Removal, Installation, and Inspection

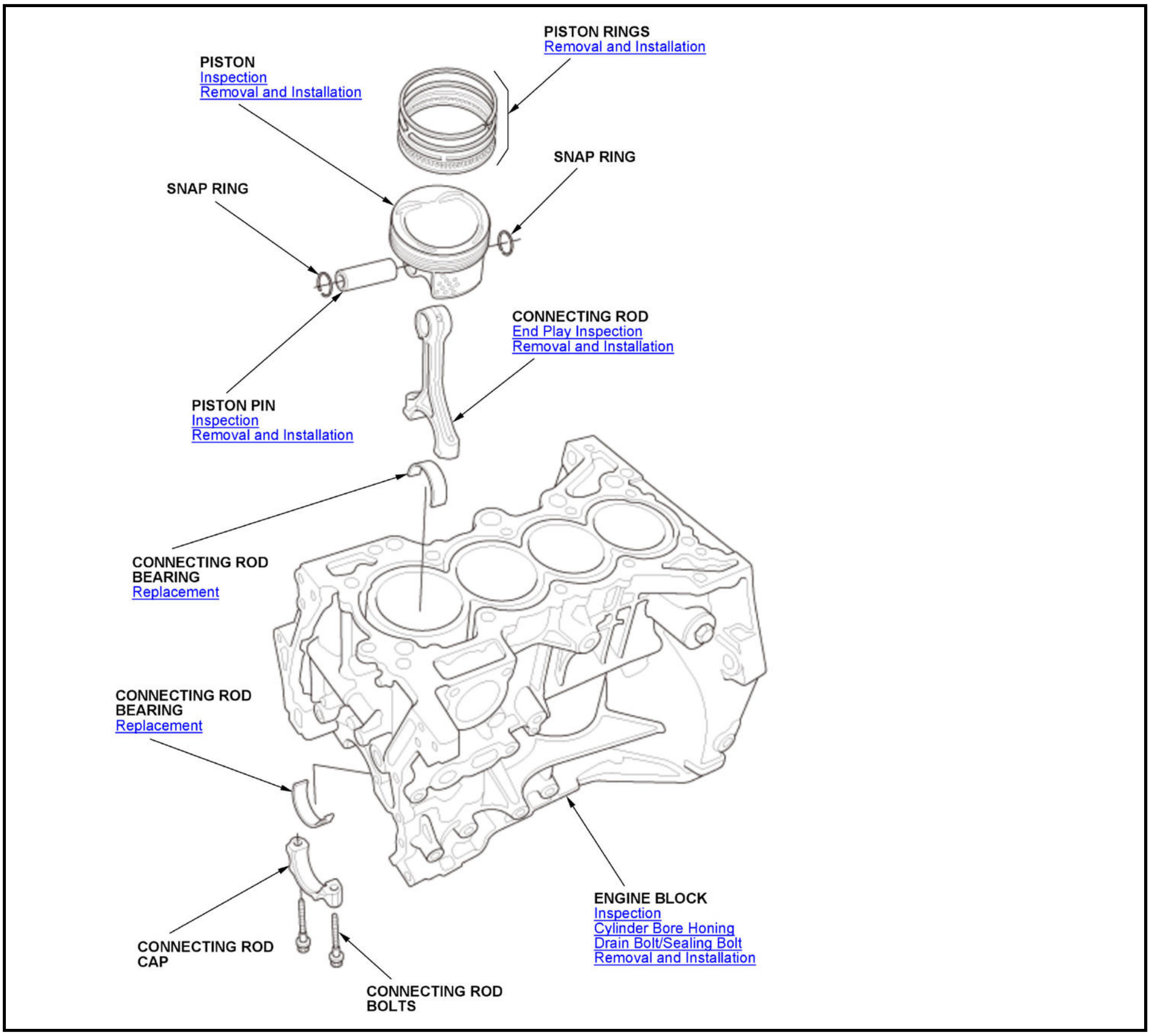
PISTON RINGS
Removal and Installation
PISTON
Inspection
Removal and Installation
SNAP RING
SNAP RING
CONNECTING ROD
End Play Inspection
Removal and Installation
PISTON PIN
Inspection
Removal and Installation
CONNECTING ROD BEARING
Replacement
CONNECTING ROD BEARING
Replacement
CONNECTING ROD CAP
CONNECTING ROD BOLTS
ENGINE BLOCK
Inspection
Cylinder Bore Honing
Drain Bolt/Sealing Bolt
Removal and Installation

ENGINE BLOCK ASSEMBLY COMPONENT LOCATION INDEX (2.4 L ENGINE) (2017 2018 2019)

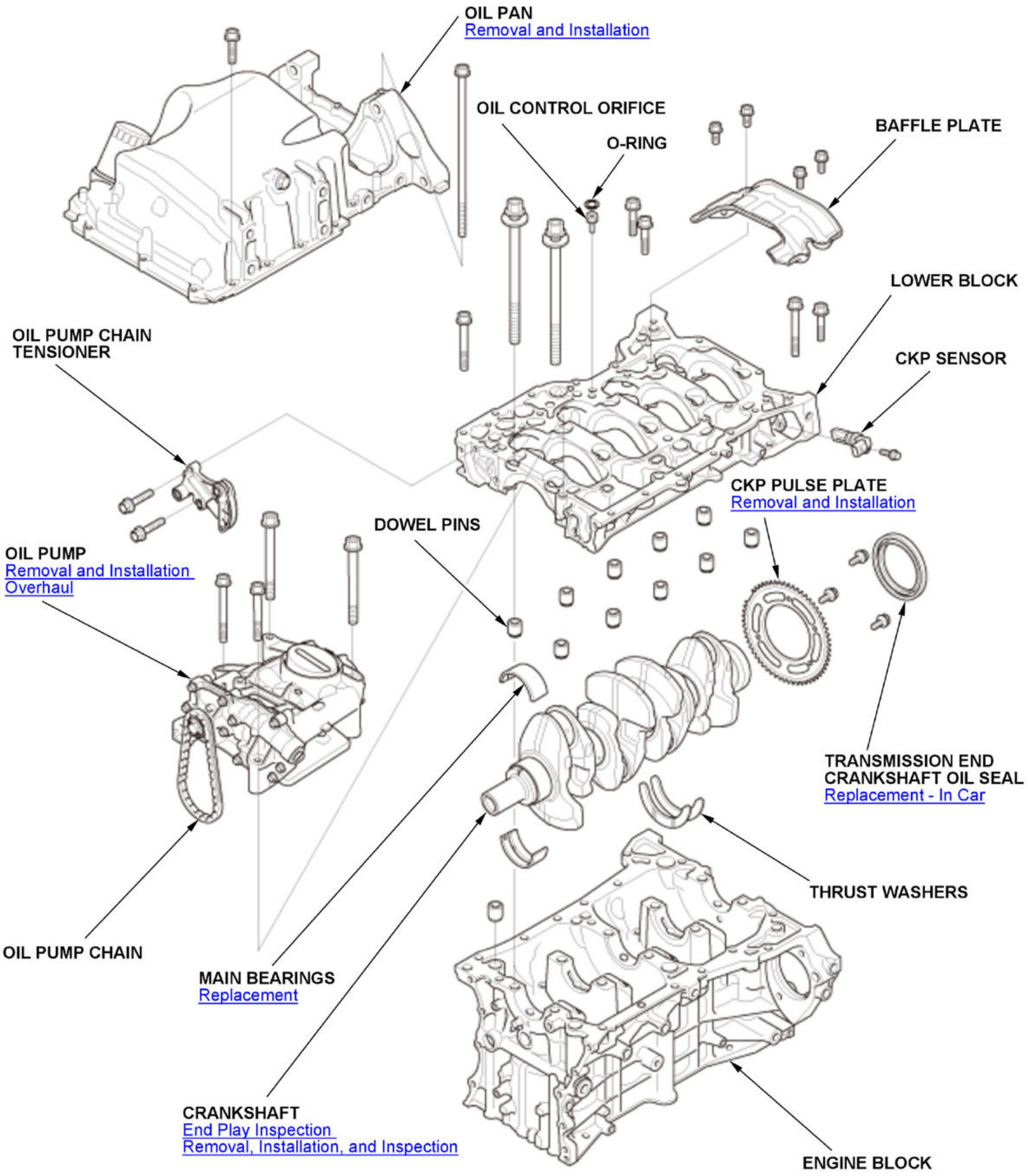
OIL PAN
Removal and Installation
OIL CONTROL ORIFICE
O-RING
BAFFLE PLATE
LOWER BLOCK
CKP SENSOR
OIL PUMP CHAIN TENSIONER
CKP PULSE PLATE
Removal and Installation
DOWEL PINS
OIL PUMP
Removal and Installation
Overhaul
TRANSMISSION END CRANKSHAFT OIL SEAL
Replacement - In Car
THRUST WASHERS
OIL PUMP CHAIN
MAIN BEARINGS
Replacement
CRANKSHAFT
End Play Inspection
Removal, Installation, and Inspection
ENGINE BLOCK

Fig. 3: Engine Block Assembly Component Location With Torque Specifications
Courtesy of HONDA, U.S.A., INC.

B

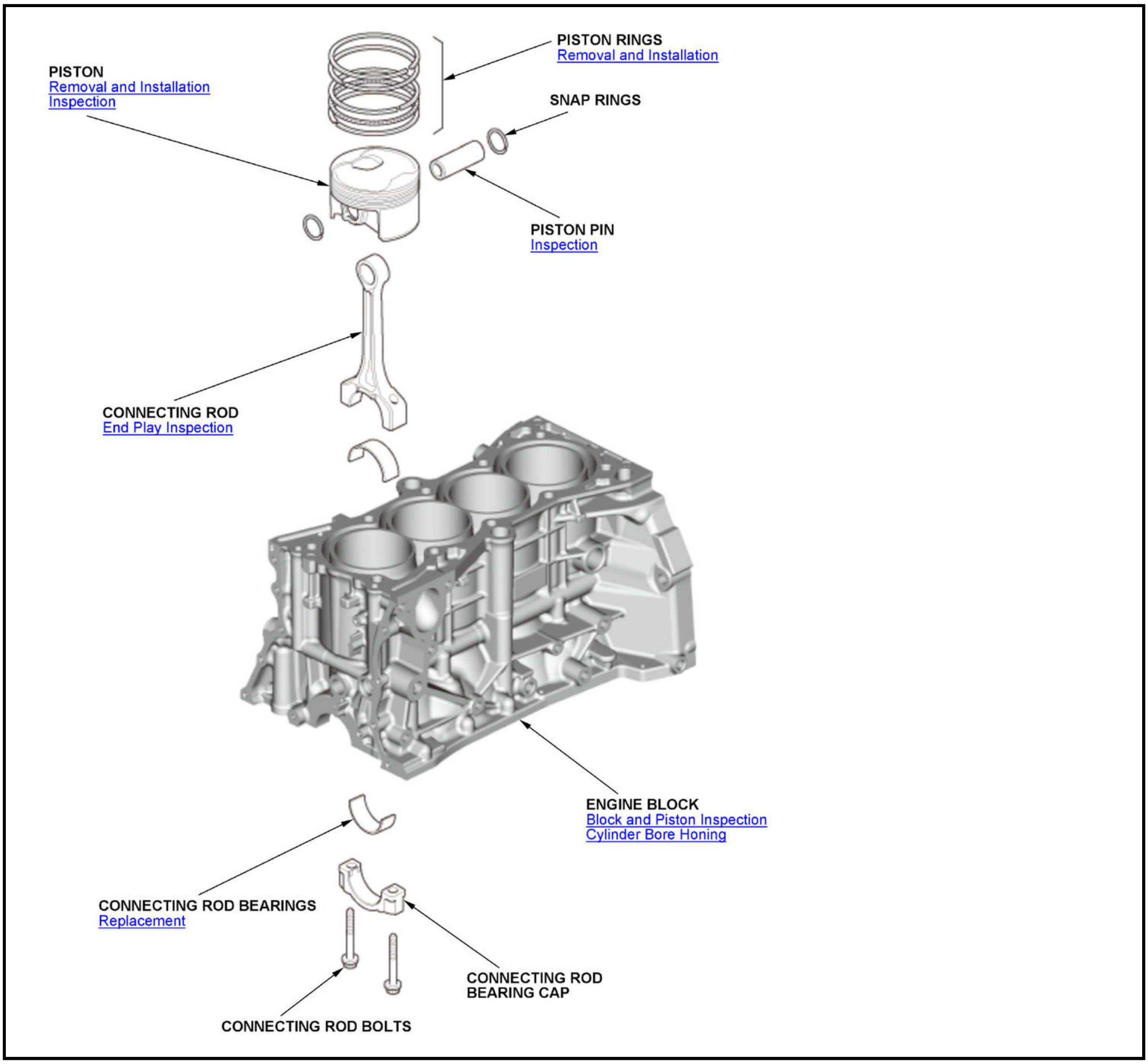
PISTON
Removal and Installation
Inspection
PISTON RINGS
Removal and Installation
SNAP RINGS
PISTON PIN
Inspection
CONNECTING ROD
End Play Inspection
ENGINE BLOCK
Block and Piston Inspection
Cylinder Bore Honing
CONNECTING ROD BEARINGS
Replacement
CONNECTING ROD BEARING CAP
CONNECTING ROD BOLTS

INTAKE AIR SYSTEM AND EXHAUST SYSTEM COMPONENT LOCATION INDEX (2.4 L ENGINE) (2017 2018 2019)

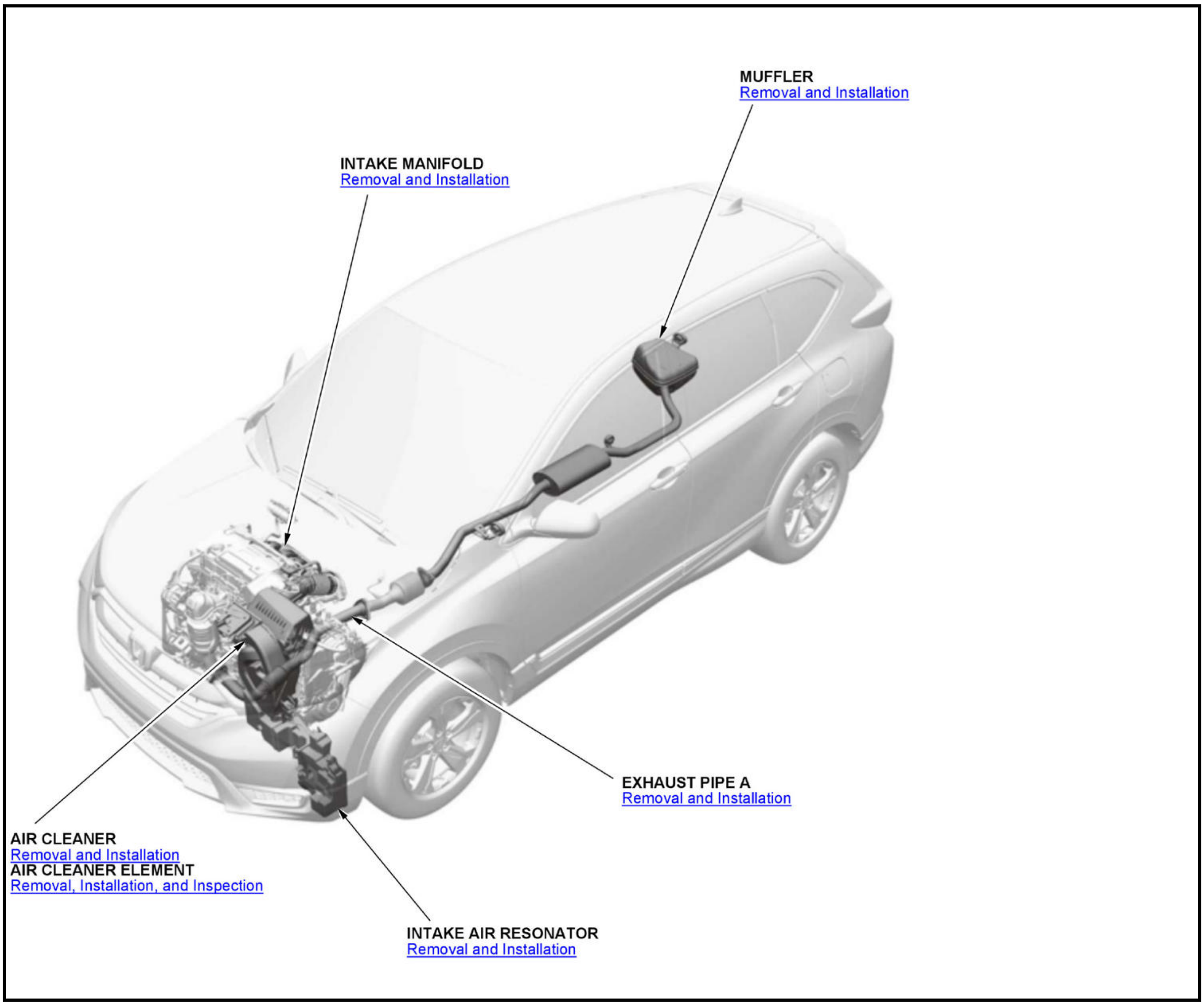
MUFFLER
Removal and Installation
INTAKE MANIFOLD
Removal and Installation
EXHAUST PIPE A
Removal and Installation
AIR CLEANER
Removal and Installation
AIR CLEANER ELEMENT
Removal, Installation, and Inspection
INTAKE AIR RESONATOR
Removal and Installation

SYMPTOM TROUBLESHOOTING

AUTO IDLE STOP SYSTEM SYMPTOM TROUBLESHOOTING - AUTO IDLE STOP SYSTEM DOES NOT OPERATE (WITH AUTO IDLE STOP SYSTEM) (2020 2021)

Auto idle stop system does not operate

NOTE:

- If the auto idle stop system indicator (amber) blinks, go to the auto idle stop system symptom troubleshooting (Auto idle stop system indicator blinks).
- When the 12 volt battery terminals are loose or corroded or an aftermarket electronic device is directly connected to the 12 volt battery negative terminal, the vehicle may wrongly detect the battery deterioration and this symptom may appear. Check for these conditions of the 12 volt battery terminals listed above before you troubleshoot and fix them as needed, then make sure that the indicator goes off when you start up the engine.

1. DTC check 1

-1. Turn the vehicle to the OFF (LOCK) mode.

-2. Connect the HDS to the data link connector, then select the PGM-FI system with the HDS.

-3. Check for Pending or Confirmed DTCs with the HDS.

DTC Description	Confirmed DTC	Pending DTC
P154A Battery Sensor Internal Failure	B	B
P154B Battery Sensor Malfunction	B	B

DTC Description	Confirmed DTC	Pending DTC
P16E3 PGM-FI - Battery Sensor LIN Communication Error	B	B

DTC (PGM-FI)

Is DTC P154A, P154B, and/or P16E3 indicated?

YES

Do the indicated DTC's troubleshooting.

NO

Go to step 2.

2. 12 volt battery check

-1. Start the engine.

-2. Check the parameter (s) below with the HDS.

Signal	Threshold		Current conditions	
	Values	Unit	Values	Unit
IDLE STOP INHIBIT (BATTERY DETERIORATION)	INHIBITED	B	B	B

Do the current condition (s) match the threshold?

YES

Replace the 12 volt battery .

NO

Go to step 3.

3. DTC check 2

-1. Check for Pending or Confirmed DTCs with the HDS.

NOTE: **The low atmospheric pressure caused by the high altitudes can inhibit the auto idle stop**.

DTC Description	Confirmed DTC	Pending DTC
P2226 BARO Sensor Circuit Malfunction	B	B
P2228 BARO Sensor Circuit Low Voltage	B	B
P2229 BARO Sensor Circuit High Voltage	B	B

DTC (PGM-FI)

Is DTC P2226, P2228, and/or P2229 indicated?

YES

Go to the indicated DTC's troubleshooting.

NO

Go to step 4.

4. Problem verification:

Do the auto idle stop system inspection.

NOTE:

- Some prohibited condition of the auto idle stop system can be checked by the parameter of the HDS. Check the following parameters while a vehicle stops. If the parameter is indicated INHIBITED, the auto idle stop is prohibited by its item.
- If the IDLE STOP INHIBIT (BATTERY DETERIORATION) is INHIBITED, **do the 12 volt battery internal resistance reset procedure** , then recheck. If INHIBITED is still displayed after reset procedure, **replace the 12 volt battery** , then **do the 12 volt battery internal resistance reset procedure** , and recheck.
- There is a parameter that is not supported by the application. Parameters that are not supported will not be displayed.

Signal	Current conditions	
	Values	Unit
IDLE STOP INHIBIT (EPS UNIT)	B	B
IDLE STOP INHIBIT (ABS/VSA UNIT)	B	B
IDLE STOP INHIBIT (HVAC)	B	B
IDLE STOP INHIBIT (BATTERY MANAGEMENT SYSTEM)	B	B
IDLE STOP INHIBIT (BRAKE SYSTEM)	B	B
IDLE STOP INHIBIT (DC-DC CONVERTER)	B	B
IDLE STOP INHIBIT (IDLE STOP CANCEL SWITCH)	B	B
IDLE STOP INHIBIT (HOOD OPEN)	B	B
IDLE STOP INHIBIT (SEAT BELT UNFASTENED)	B	B
IDLE STOP INHIBIT (PCU)	B	B
IDLE STOP INHIBIT (BATTERY DETERIORATION)	B	B
IDLE STOP INHIBIT (AT/CVT: PRECONDITION)	B	B
IDLE STOP INHIBIT (AT/CVT: TRANSITION CONDITION)	B	B
IDLE STOP INHIBIT (LOW BATTERY VOLTAGE)	B	B
IDLE STOP INHIBIT (HOOD OPEN HISTORY)	B	B
IDLE STOP INHIBIT (DRIVING HISTORY)	B	B
IDLE STOP INHIBIT (PRECONDITION)	B	B
IDLE STOP INHIBIT (INCLINED STATE)	B	B
IDLE STOP INHIBIT (STARTING ASSIST BRAKE)	B	B
IDLE STOP INHIBIT (VEHICLE STOP JUDGMENT)	B	B

Signal	Current conditions	
	Values	Unit
IDLE STOP INHIBIT (OPERATING CONDITION)	B	B
IDLE STOP INHIBIT (BAROMETRIC AIR PRESSURE)	B	B

Is auto idle stop working?

YES

The system is OK at this time.

NO

Go to step 5.

5. Starter, Brake, Charging, CVT, EPS, VSA, EBB, SRS, PGM-FI system check

-1. Start the engine, and check the indicator on the gauge, and check for any DTC with the HDS.

Do charging system indicator, shift position indicator, EPS indicator, VSA indicator, brake system indicator, SRS indicator, and MIL indicator stay on or are any DTCs set?

1. **YES**

   Do the troubleshooting for the system that indicator stays on.

   - **PGM-FI system**
   - **Starter system**

- CVT: CVT system
- Electric brake booster system
- VSA system
- Electric parking brake system
- Charging system
- EPS system
- SRS system

NO

Go to step 6.

6. SRS system check

-1. Turn the vehicle to the OFF (LOCK) mode.

-2. Turn the vehicle to the ON mode.

-3. Check for Pending or Confirmed DTCs in the SRS system with the HDS.

DTC Description	DTC
B	B

DTC (SRS)

Are any Pending or Confirmed DTCs indicated?

YES

Go to the indicated DTC's troubleshooting .

NO

Go to step 7.

7. CVT system check

-1. Turn the vehicle to the OFF (LOCK) mode.

-2. Turn the vehicle to the ON mode.

-3. Check for Pending or Confirmed DTCs in the CVT system with the HDS.

DTC Description	Confirmed DTC	Pending DTC	Freeze Frame
B	B	B	B

DTC (CVT)

Are any Pending or Confirmed DTCs indicated?

YES

Go to the indicated DTC's troubleshooting .

NO

Go to step 8.

8. Shift position indicator check

-1. Shift the transmission to D position/mode while pressing the brake pedal firmly.

Does the shift position indicator display D position/mode?

YES

Go to step 9.

NO

Do the following procedures.

- **Do the gauge self-diagnostic function** .
- **Do the CVT system symptom troubleshooting** .

9. A/C system check

-1. Select the BODY ELECTRICAL system with the HDS.

-2. Select the HVAC/Climate Control, then check for DTCs with the HDS.

DTC Description	DTC
B	B

DTC (AC)

Are any DTCs indicated?

YES

Go to the indicated DTC's troubleshooting .

NO

Go to step 10.

10. Starter system check

-1. Check the indicator on the gauge and stored DTC.

DTC Description	Confirmed DTC	Pending DTC
B	B	B

DTC (PGM-FI)

Is the starter system indication indicated, or are any DTCs stored?

YES

Do the troubleshooting for the starter system .

NO

Go to step 11.

11. Brake pedal position switch signal check

-1. Turn the vehicle to the ON mode.

-2. Check the parameter (s) below with the HDS.

Signal	Current conditions	
	Values	Unit
BRAKE SWITCH	B	B

Does the signal change ON and OFF when the brake pedal is pressed and released?

YES

Go to step 12.

NO

Test the brake pedal position switch .

12. Climate control system check

    -1. Select the BODY ELECTRICAL system with the HDS.

    -2. Select the HVAC/Climate Control, then check for DTCs with the HDS.

DTC Description	DTC
B	B

DTC (AC)

Are any DTCs indicated?

YES

Go to the indicated DTC's troubleshooting .

NO

Go to step 13.

13. Climate control unit check

    -1. Turn the vehicle to the ON mode.

    -2. Check the outside air temperature reading on the gauge control module.

Is the outside air temperature reading accurate?

YES

The system is OK at this time.

NO

- If the outside air temperature is not indicated, substitute a known-good climate control unit , then recheck. If the auto idle stop system is OK, replace the original climate control unit .
- If the outside air temperature reading is not accurate, check the outside air temperature sensor .

AUTO IDLE STOP SYSTEM SYMPTOM TROUBLESHOOTING - AUTO IDLE STOP SYSTEM INDICATOR (AMBER) BLINKS (WITH AUTO IDLE STOP SYSTEM) (2020 2021)

Auto idle stop system indicator (amber) blinks

NOTE: When the 12 volt battery terminals are loose or corroded or an aftermarket electronic device is directly connected to the 12 volt battery negative terminal, the vehicle may wrongly detect the battery deterioration and this symptom may appear. Check for these conditions of the 12 volt battery terminals listed above before you troubleshoot and fix them as needed, then make sure that the indicator goes off when you start up the engine.

1. 12 volt battery check

    -1. Connect the HDS to the DLC, then select the PGM-FI system with the HDS.

    -2. Start the engine.

    -3. Check the parameter (s) below with the HDS.

Signal	Threshold		Current conditions	
	Values	Unit	Values	Unit
IDLE STOP INHIBIT (BATTERY DETERIORATION)	INHIBITED	B	B	B

Do the current condition (s) match the threshold?

YES

Replace the 12 volt battery .

NO

Go to step 2.

2. Starter counter check

   -1. Turn the vehicle to the OFF (LOCK) mode.

   -2. Turn the vehicle to the ON mode.

   -3. Do the IDLE STOP STARTER COUNTER CHECK in the PGM-FI Function Test menu with the HDS.

   NOTE: **If the number of starter motor operations exceeds the setting limit, auto idle stop is disabled**.

   IDLE STOP STARTER COUNTER CHECK

   Is the counter more than 275, 000 times?

   YES

   Replace **the starter** , **the relay circuit board which includes starter cut relay 1 and starter cut relay 2** , and **the oil pressure switch** . After replacing them, select the IDLE STOP STARTER COUNTER CLEAR in the Adjustment menu, and select the STARTER and STARTER CUT RELAY in the IDLE STOP STARTER COUNTER CLEAR, then follow the screen prompts.

   NO

   Go to step 3.

3. PGM-FI system check

   -1. Select the PGM-FI system with the HDS.

   -2. Check for Pending or Confirmed DTCs with the HDS.

DTC Description	Confirmed DTC	Pending DTC
B	B	B

   DTC (PGM-FI)

   Are any DTCs indicated?

   YES

   Go to the indicated DTC's troubleshooting .

   NO

   Go to step 4.

4. A/C system check

   -1. Select the BODY ELECTRICAL system with the HDS.

   -2. Select the HVAC/Climate Control, then check for DTCs with the HDS.

DTC Description	DTC
B	B

   DTC (AC)

   Are any DTCs indicated?

YES

Go to the indicated DTC's troubleshooting .

NO

The auto idle stop system is OK. Do the gauge control module self-diagnostic function .

AUTO IDLE STOP SYSTEM SYMPTOM TROUBLESHOOTING - AUTO IDLE STOP SYSTEM INDICATOR (GREEN/AMBER) DOES NOT COME ON (WITH AUTO IDLE STOP SYSTEM) (2020 2021)

Auto idle stop system indicator (green/amber) does not come on

1. Auto idle stop system indicator check

-1. Turn the vehicle to the ON mode.

-2. Do the gauge control module self-diagnostic function .

Does the auto idle stop system indicator flash?

YES

Intermittent failure, the system is OK at this time.

NO

Replace the gauge control module .

SYMPTOM TROUBLESHOOTING INDEX

AUTO IDLE STOP SYSTEM SYMPTOM TROUBLESHOOTING INDEX (WITH AUTO IDLE STOP SYSTEM) (2020 2021)

When the vehicle has one of these symptoms, do the diagnostic procedure for the symptom, until you find the cause.

Auto Idle Stop System Symptom Troubleshooting Index

Symptom	Diagnostic procedure	Also check for
Auto idle stop system does not operate	• Inspect the auto idle stop system. • Troubleshoot the auto idle stop system (Auto idle stop system does not operate).	B
Auto idle stop system indicator (amber) blinks	Troubleshoot the auto idle stop system (Auto idle stop system indicator blinks).	B
Auto idle stop system indicator (green/amber) does not come on	Troubleshoot the auto idle stop system (Auto idle stop system indicator does not come on).	B
Idle stop time is short	Troubleshoot the auto idle stop system.	B

HOW TO INFORMATION

HOW TO CONNECT THE HDS

1. Turn the vehicle to the OFF (LOCK) mode.

2. Connect the HDS to the DLC (A) located under the driver's side of the dashboard.

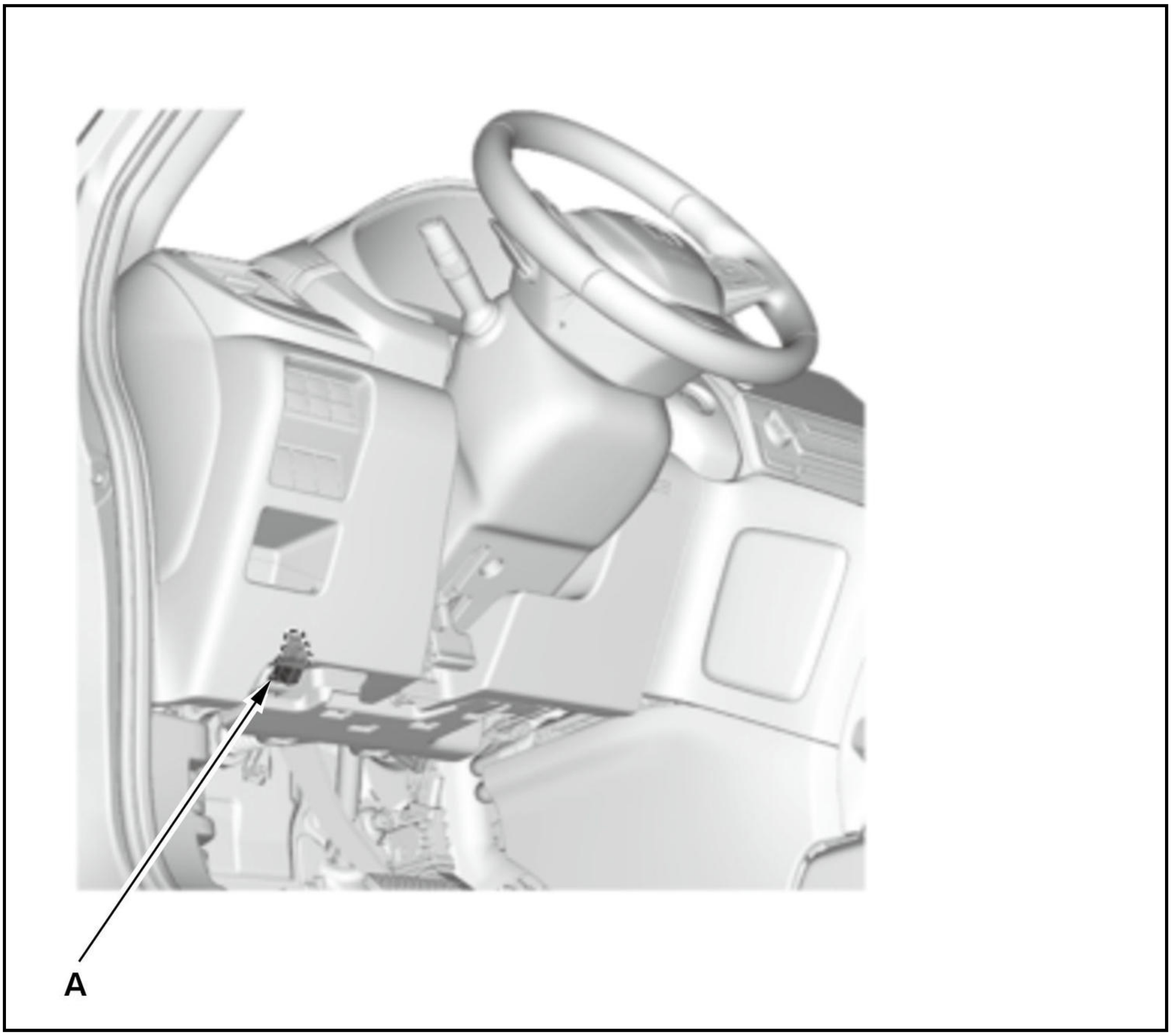

3. Turn the vehicle to the ON mode, but do not start the engine.

4. Activate the HDS, then make sure the HDS communicates with the PCM and other vehicle systems. If it doesn't, **go to the DLC circuit troubleshooting**

.

REMOVAL & INSTALLATION INSPECTION

AIR CLEANER ELEMENT/AIR CLEANER/INTAKE AIR RESONATOR REMOVAL, INSTALLATION, AND INSPECTION (1.5 L ENGINE)

Removal and Installation

NOTE: Make sure the length of the bands as shown.

Air Cleaner Element/Air Cleaner/Intake Air Resonator Exploded View

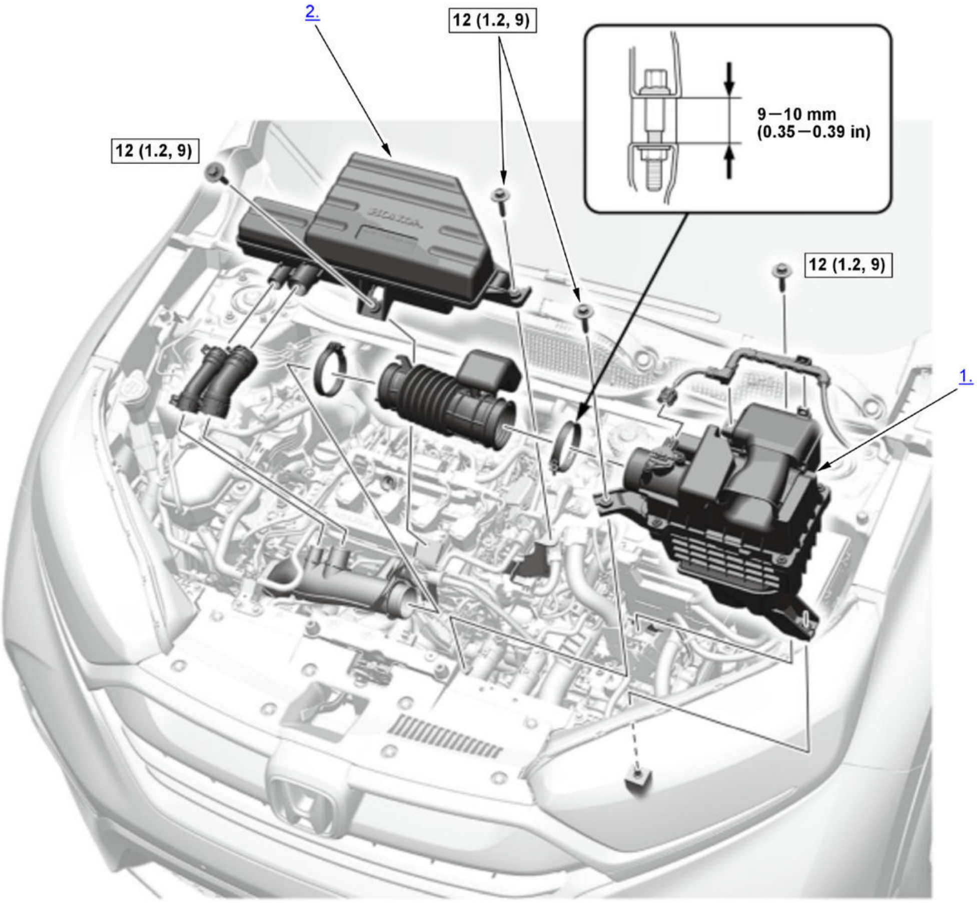
2.
12 (1.2, 9)
12 (1.2, 9)
9−10 mm
(0.35−0.39 in)
12 (1.2, 9)
12 (1.2, 9)
1.

Fig. 4: Air Cleaner Element/Air Cleaner/Intake Air Resonator Replacement Components With Torque Specifications
Courtesy of HONDA, U.S.A., INC.

▭	Torque: N.m (kgf.m, lbf.ft)

Air Cleaner Element/Air Cleaner/Intake Air Resonator Removal

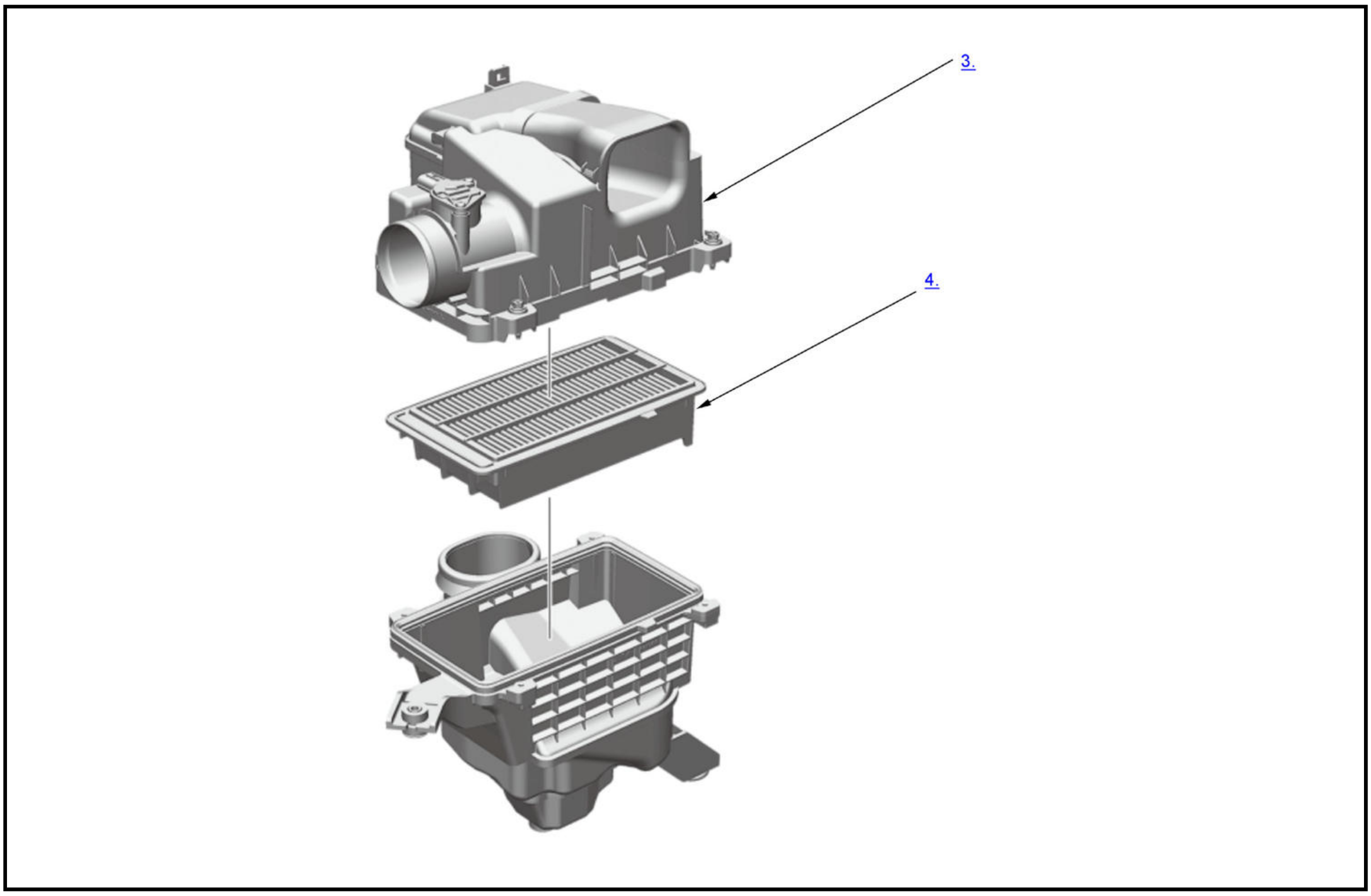

1. Air Cleaner - Remove
2. Intake Air Resonator - Remove
3. Air Cleaner Housing Cover - Remove
4. Air Cleaner Element - Remove
5. All Removed Parts - Install

> 1. Install the parts in the reverse order of removal.**NOTE:** **If the idle speed fluctuates, do the idle speed inspection**.

6. Maintenance Minder - Reset (With Maintenance Minder System)

> 1. If the Maintenance Minder required to replace the air cleaner element, **reset the Maintenance Minder with the gauge** (see "Resetting the Maintenance Minder").

Inspection

1. Air Cleaner Element - Inspect

> 1. Check the air cleaner element for damage or clogging. If it is damaged or clogged, replace it.
> **NOTE:**
>
> Do not use compressed air to clean the air cleaner element.
>
> 2. Clean and remove any debris from inside the air cleaner.

AIR CLEANER ELEMENT/AIR CLEANER/INTAKE AIR RESONATOR REMOVAL, INSTALLATION, AND INSPECTION (2.4 L ENGINE) (2017 2018 2019)

Removal and Installation

Air Cleaner Element/Air Cleaner/Intake Air Resonator Exploded View

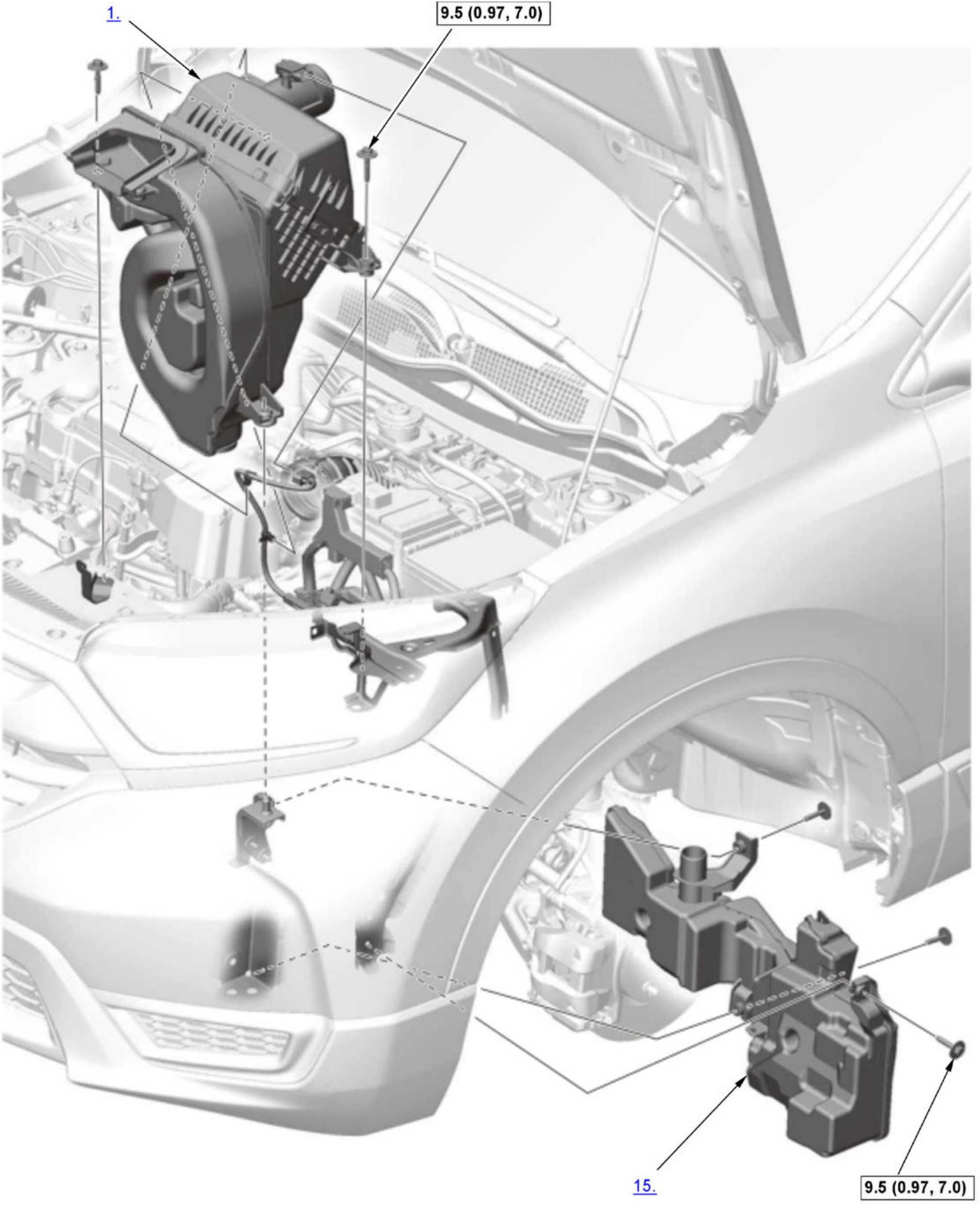
1.
9.5 (0.97, 7.0)
15.
9.5 (0.97, 7.0)

☐	Torque: N.m (kgf.m, lbf.ft)

Air Cleaner Element/Air Cleaner/Intake Air Resonator Removal

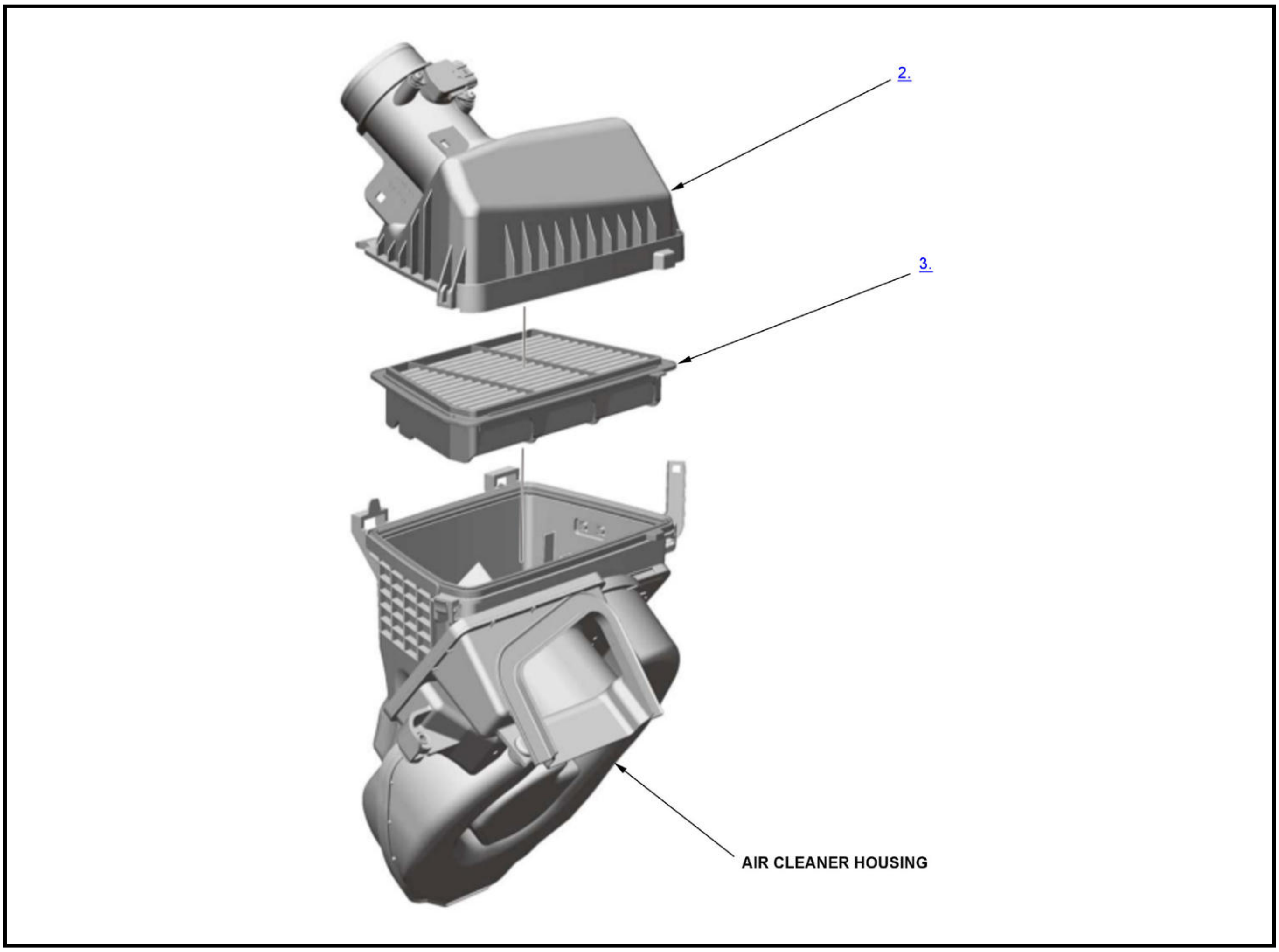

Air Cleaner and Air Cleaner Element

1. Air Cleaner - Remove
2. Air Cleaner Housing Cover - Remove
3. Air Cleaner Element - Remove
4. All Removed Parts - Install

> 1. Install the parts in the reverse order of removal.**NOTE:** If the idle speed fluctuates, do the idle speed inspection.

5. Maintenance Minder - Reset (With Maintenance Minder System)

> 1. If the Maintenance Minder required to replace the air cleaner element, reset the Maintenance Minder with the gauge (see "Resetting the Maintenance Minder").

Intake Air Resonator

6. Air Cleaner - Remove
7. Steering Joint - Disconnect
8. Engine Undercover - Remove
9. Exhaust Pipe A - Remove
10. Connectors (EPS Subharness) - Disconnect
11. Lower Arm Ball Joint - Disconnect
12. Tie-Rod End Ball Joint - Disconnect
13. Front Stabilizer Link Ball Joint - Disconnect
14. Propeller Shaft - Remove (AWD)
15. Transfer Assembly - Remove (AWD)
16. Lower Torque Rod - Remove

17. Front Subframe - Support
18. Front Subframe - Remove
19. Left Front Inner Fender - Remove

NOTE: Remove the appropriate portion of the left front inner fender.

20. Intake Air Resonator - Remove
21. All Removed Parts - Install

1. Install the parts in the reverse order of removal.

22. Wheel Alignment - Check

Inspection

1. Air Cleaner Element - Inspect

1. Check the air cleaner element for damage or clogging. If it is damaged or clogged, replace it.
NOTE:

Do not use compressed air to clean the air cleaner element.

2. Clean and remove any debris from inside the air cleaner.

CAM CHAIN REMOVAL, INSTALLATION, AND INSPECTION (1.5 L ENGINE)

Special Tools Required

Image	Description/Tool Number
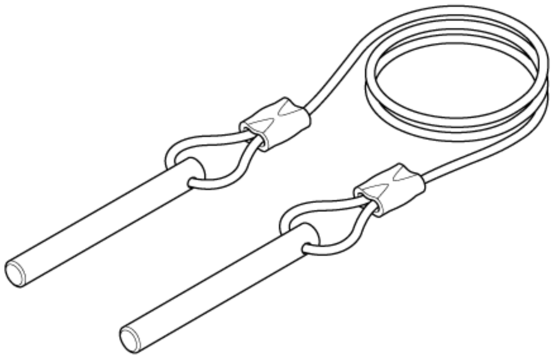	Camshaft Lock Pin Set 07AAB-RWCA120

Removal

NOTE: Keep the cam chain away from magnetic fields.

1. Right Front Wheel - Remove
2. Engine Undercover - Remove
3. Drive Belt - Remove
4. Camshaft Timing - Inspect
5. Crankshaft Pulley - Remove
6. Drive Belt Auto-Tensioner - Remove
7. Dipstick - Remove
8. Side Engine Mount - Remove
9. Connector (VTC Oil Control Solenoid Valve A) - Disconnect

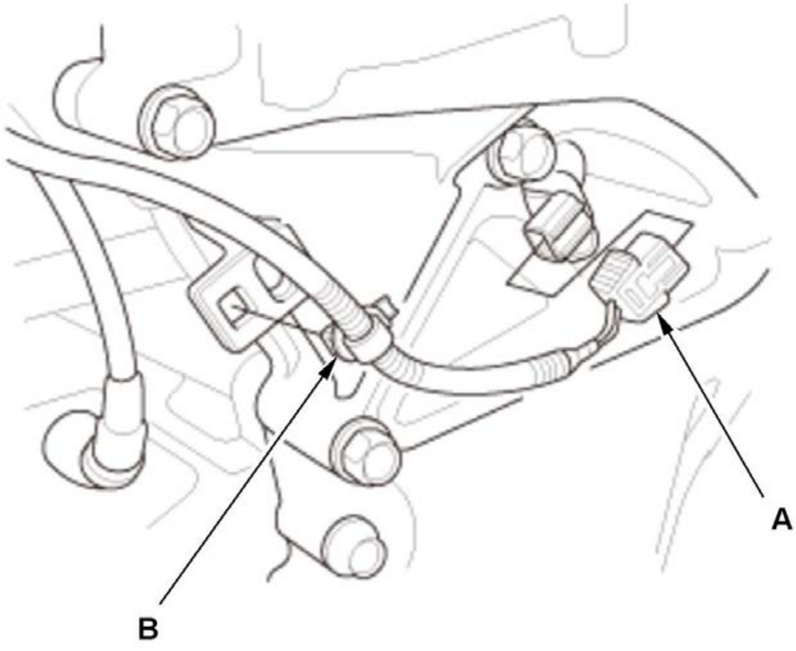	1. Disconnect the connector (A). 2. Remove the harness clip (B).

10. **VTC Oil Control Solenoid Valve A - Remove**
11. Cam Chain Case - Remove

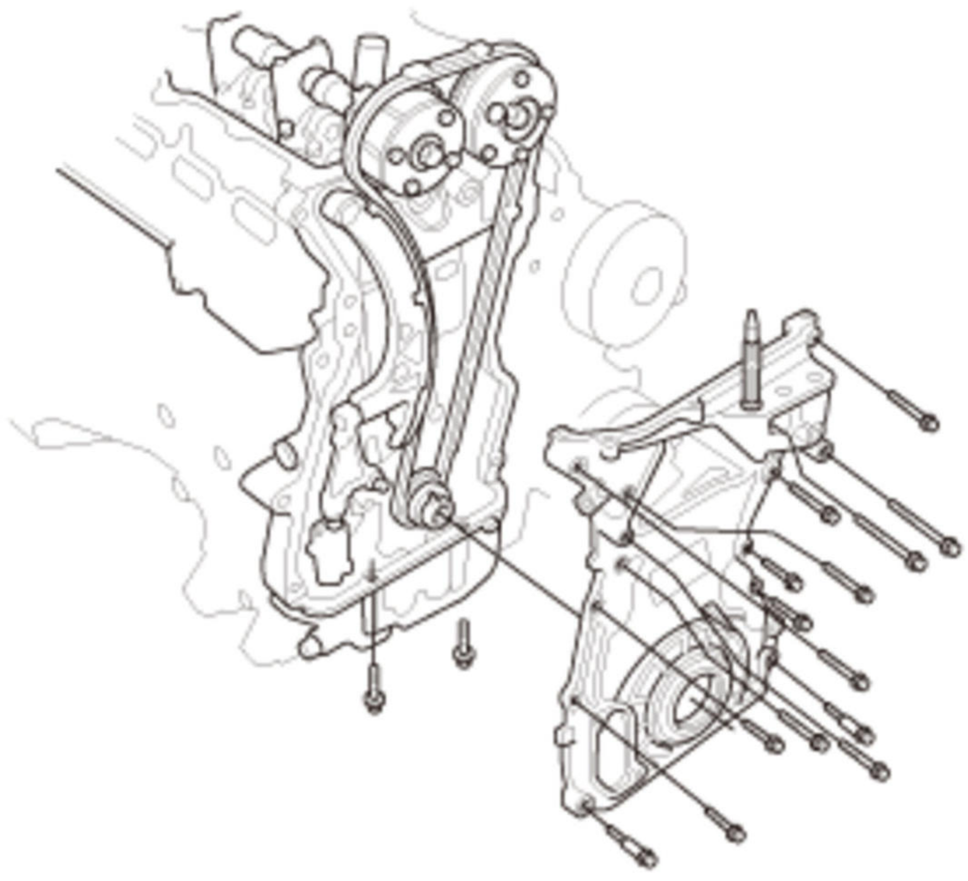

12. Cam Chain Auto-Tensioner - Remove

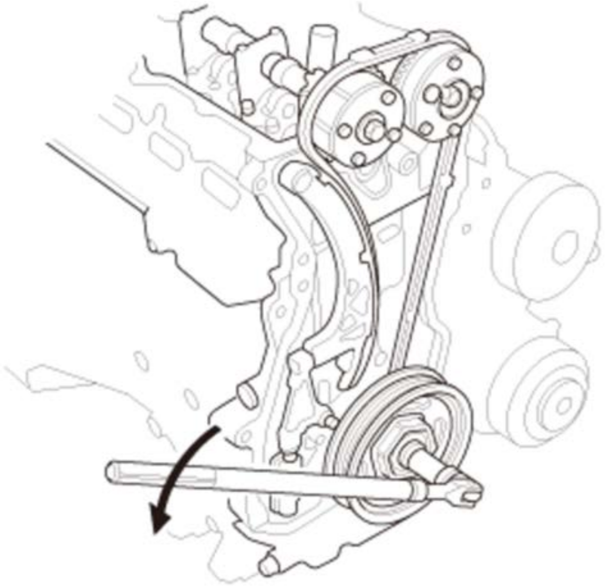	1. Loosely install the crankshaft pulley. 2. Turn the crankshaft counterclockwise to compress the cam chain auto-tensioner.

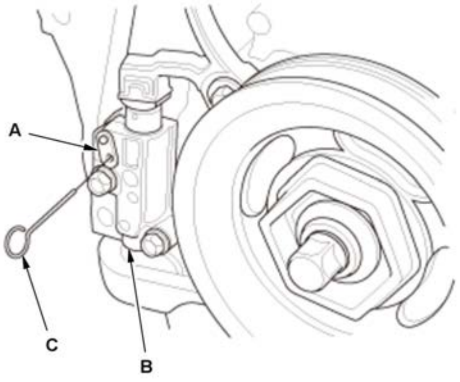	3. Rotate the crankshaft counterclockwise to align the holes on the lock (A) and the cam chain auto-tensioner (B). 4. Insert a 1.2 mm (3/64 in) diameter pin (C) into the holes. 5. Turn the crankshaft clockwise to secure the pin. **NOTE:** If the holes in the lock and the cam chain auto-tensioner do not align, continue to rotating the crankshaft counterclockwise until the holes align, then install the pin.

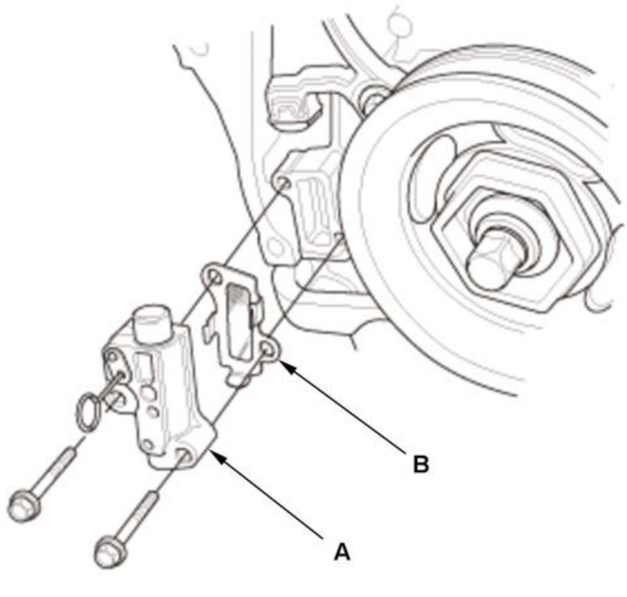	6. Remove the cam chain auto-tensioner (A) and the cam chain auto-tensioner filter (B). **NOTE:** Check the cam chain auto-tensioner filter for damage. If filter is damaged, replace it. 7. Remove the crankshaft pulley.

13. Cam Chain Guide B - Remove

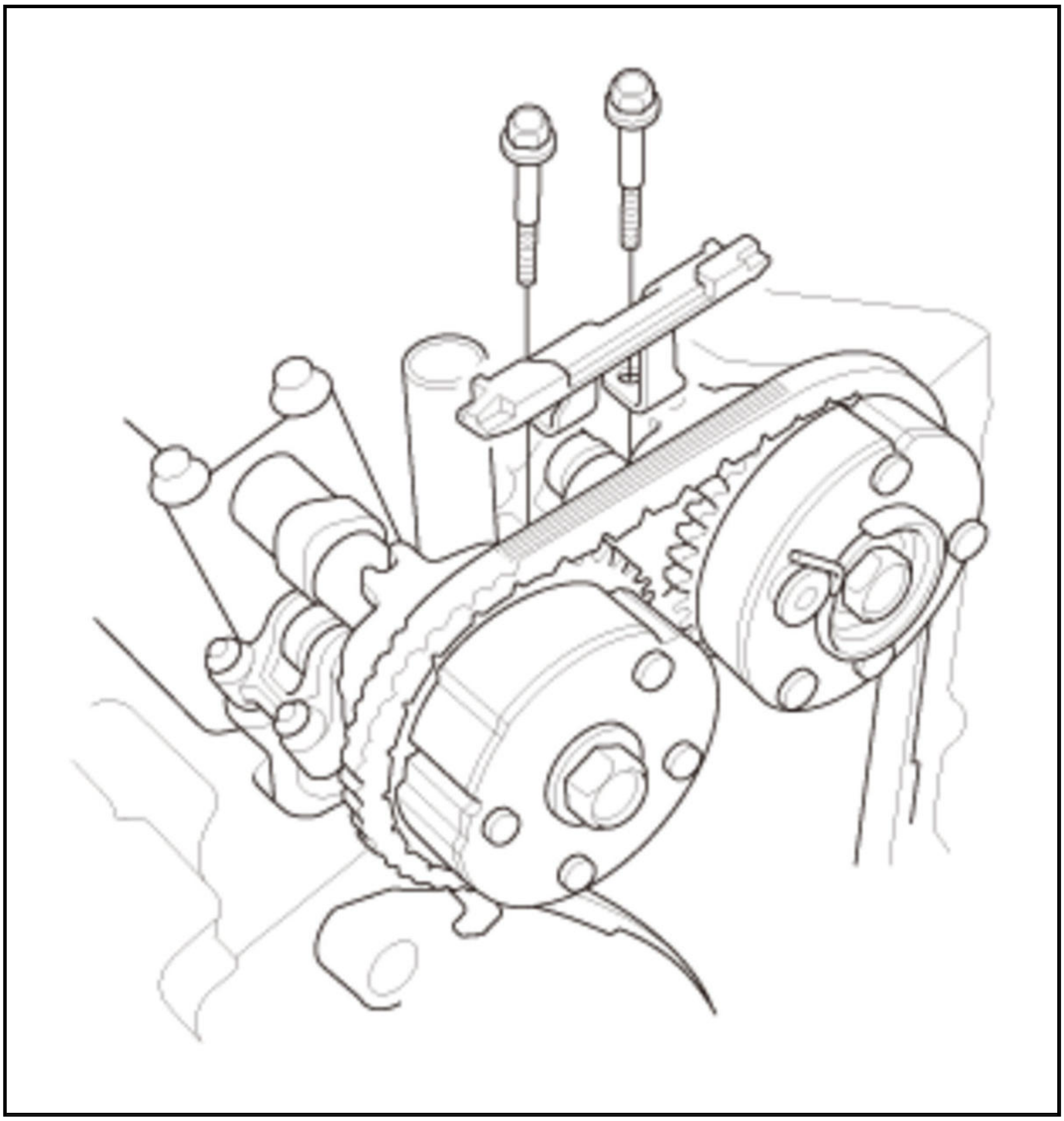

14. Cam Chain - Remove

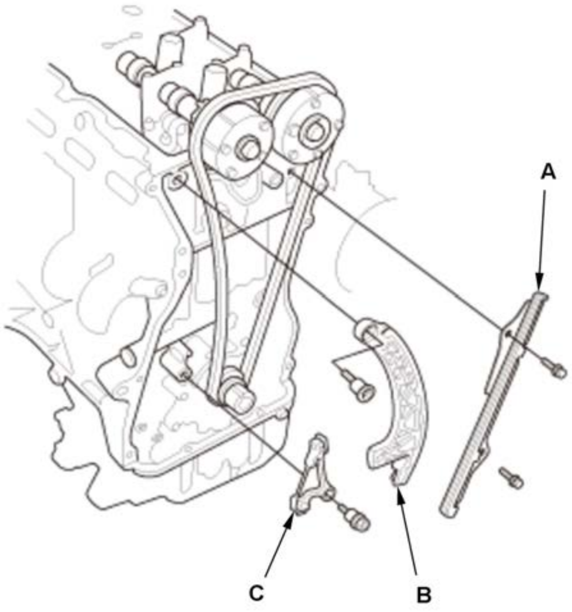	1. Remove the cam chain guide (A), the cam chain tensioner arm (B), and the cam chain tensioner sub arm (C). 2. Remove the cam chain.

Installation

NOTE:

- **How to read the torque specifications** .
- Keep the cam chain away from magnetic fields.

1. No. 1 Piston at Top Dead Center - Set (Crank Side)

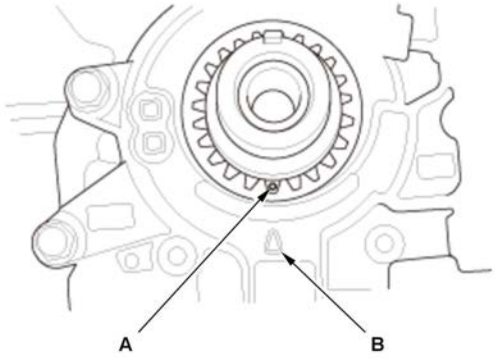	1. Set the crankshaft to top dead center (TDC). Align the TDC mark (punch mark) (A) on the cam chain drive sprocket with the pointer (B) on the oil pump.

2. No. 1 Piston at Top Dead Center - Set (Cam Side)

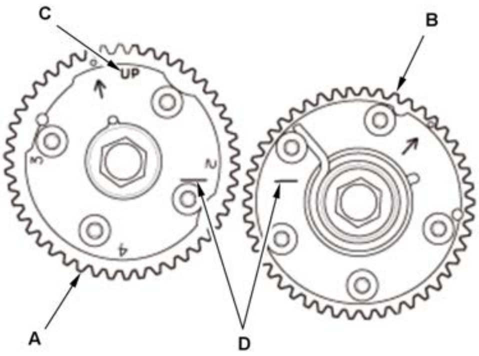	1. Set the No. 1 piston at top dead center (TDC). The "UP" mark (C) on VTC actuator A should be at the top and align the TDC marks (D) on VTC actuator A and VTC actuator B.

3. Pin - Insert

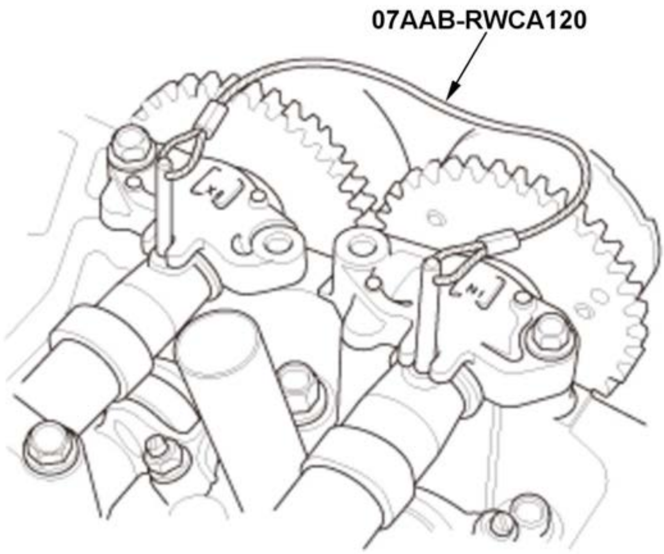	1. Insert the camshaft lock pin set to camshaft maintenance holes.

4. Cam Chain - Install

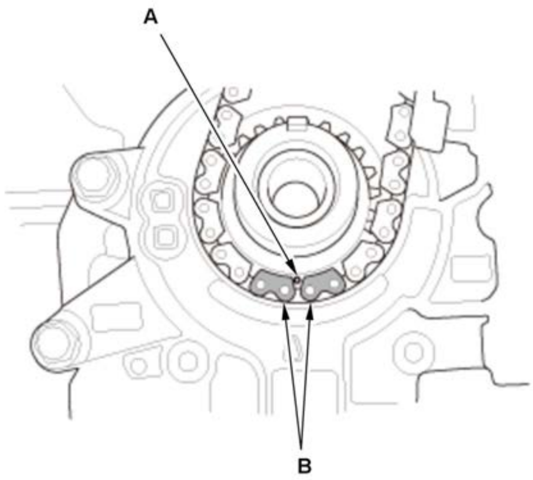	1. Install the cam chain on the cam chain drive sprocket with the punch mark (A) aligned with the center of the colored link plates (B).
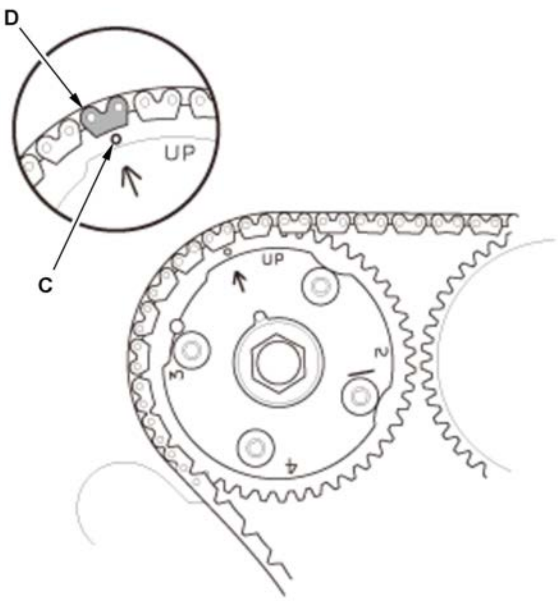 **Intake** **Exhaust** 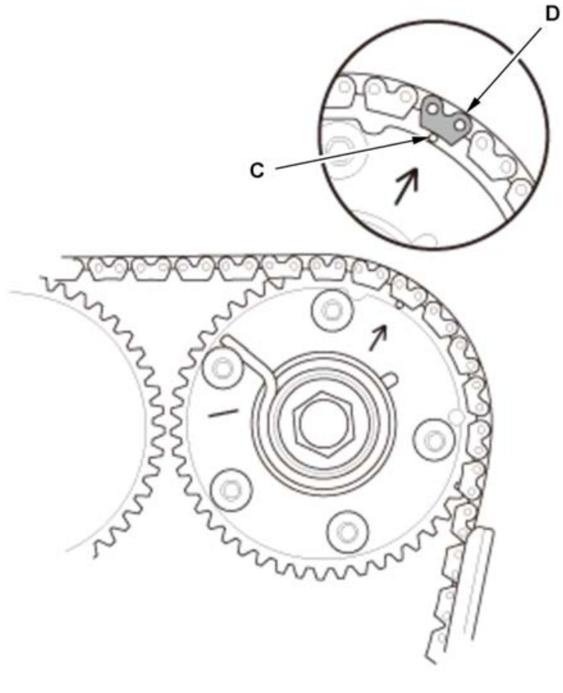	2. Install the cam chain on VTC actuator A and VTC actuator B with the punch marks (C) aligned with the center of the colored link plates (D).

5. Cam Chain Tensioner Arm, Cam Chain Tensioner Sub Arm, and Cam Chain Guide - Install

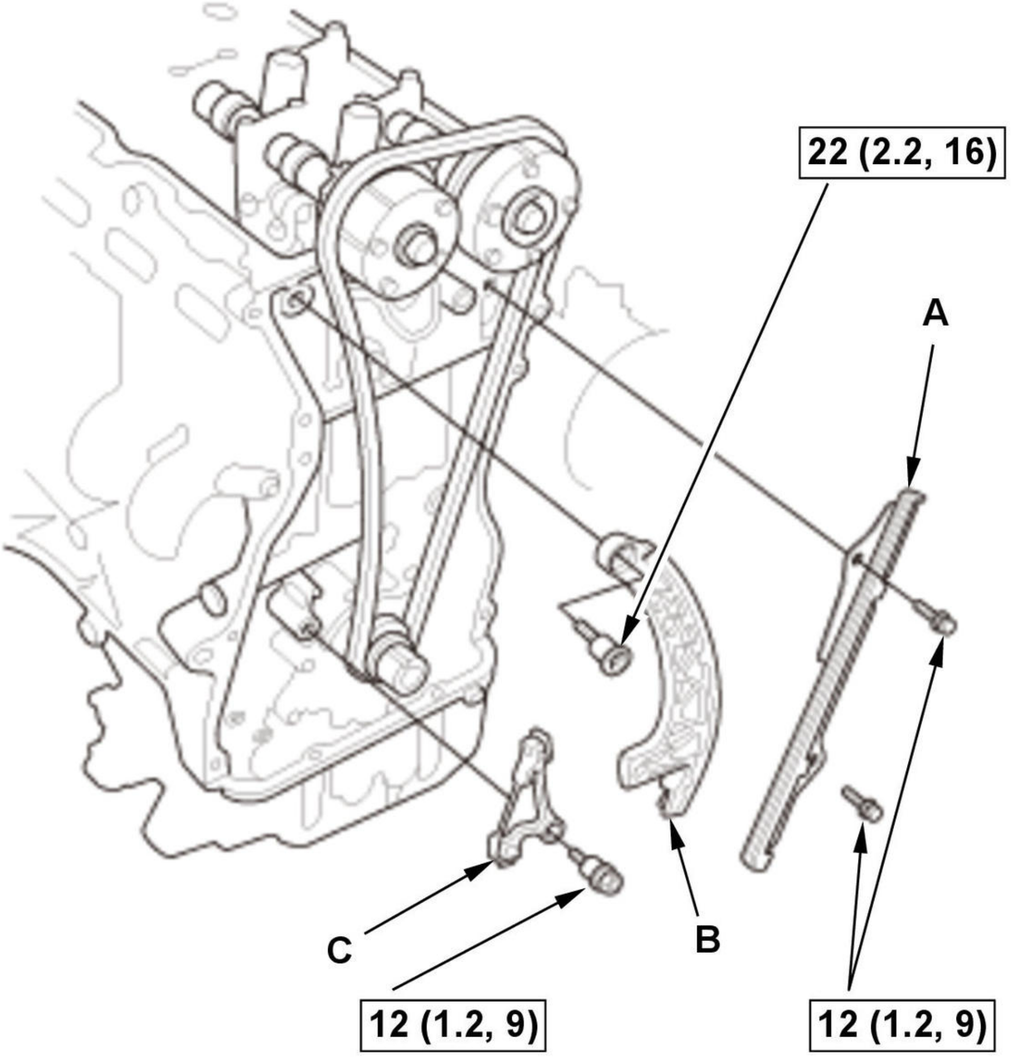
22 (2.2, 16)
A
C
B
12 (1.2, 9)
12 (1.2, 9)

Fig. 5: Cam Chain Tensioner With Torque Specifications
Courtesy of HONDA, U.S.A., INC.

B	1. Install the cam chain guide (A), the cam chain tensioner arm (B), and the cam chain tensioner sub arm (C).

6. Cam Chain Guide B - Install

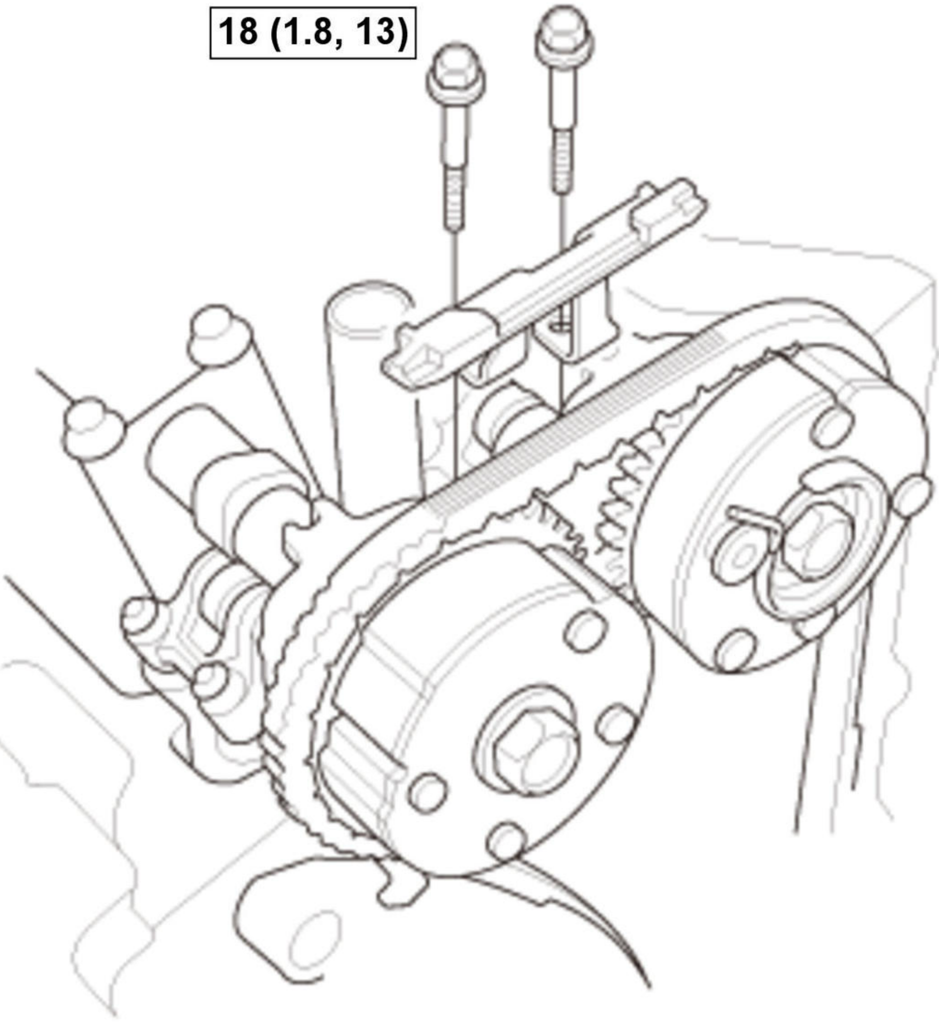

Fig. 6: Cam Chain Guide With Torque Specifications
Courtesy of HONDA, U.S.A., INC.

7. Pin - Remove

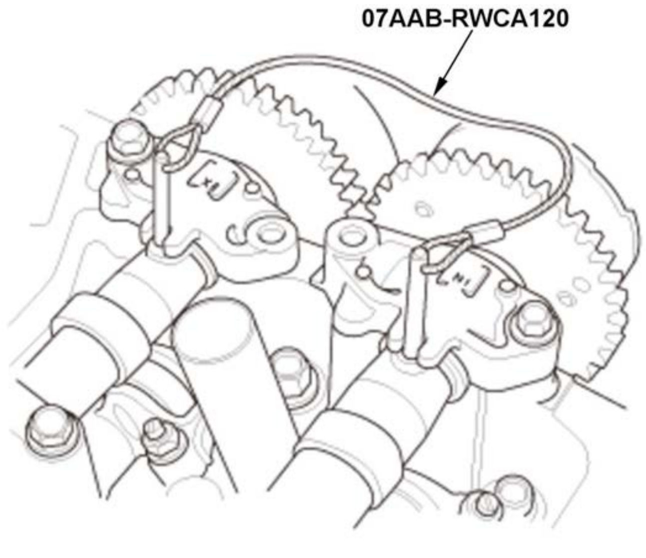 07AAB-RWCA120	1. Remove the camshaft lock pin set from the camshaft maintenance holes.

8. Cam Chain Auto-Tensioner - Install

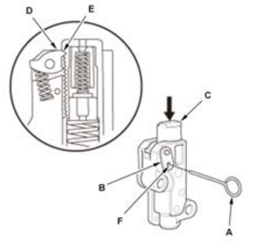	1. Compress the cam chain auto-tensioner when replacing the cam chain. Remove the pin (A) from the cam chain auto-tensioner that was installed during removal. Turn the plate (B) counterclockwise, to release the lock, then press the rod (C), and set the first cam (D) to the first edge of the rack (E). Insert the 1.2 mm (3/64 in) diameter pin back into the holes (F).**NOTE:** If the cam chain auto-tensioner is not set up as described, the cam chain auto-tensioner will be damaged.

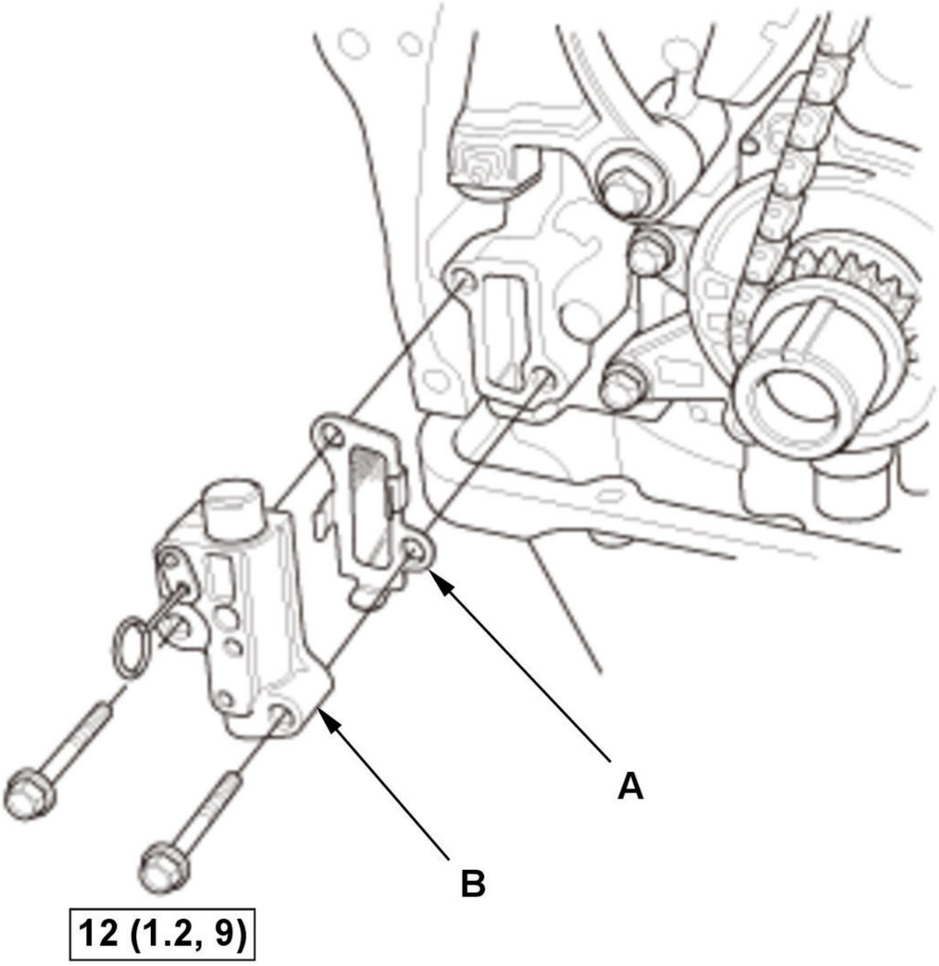

Fig. 7: Cam Chain Auto-Tensioner With Torque Specifications
Courtesy of HONDA, U.S.A., INC.

B	2. Install the cam chain auto-tensioner filter (A) and the cam chain auto-tensioner (B).

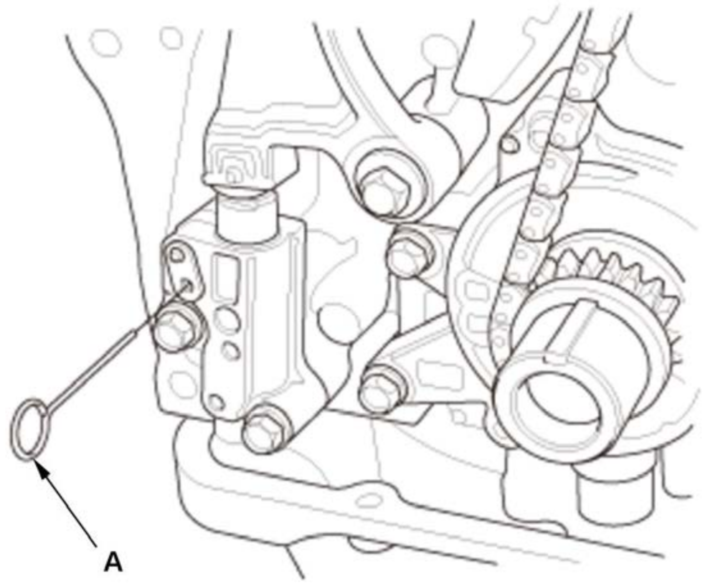	3. Remove the pin (A) from the cam chain auto-tensioner.

9. Cam Chain Case - Install

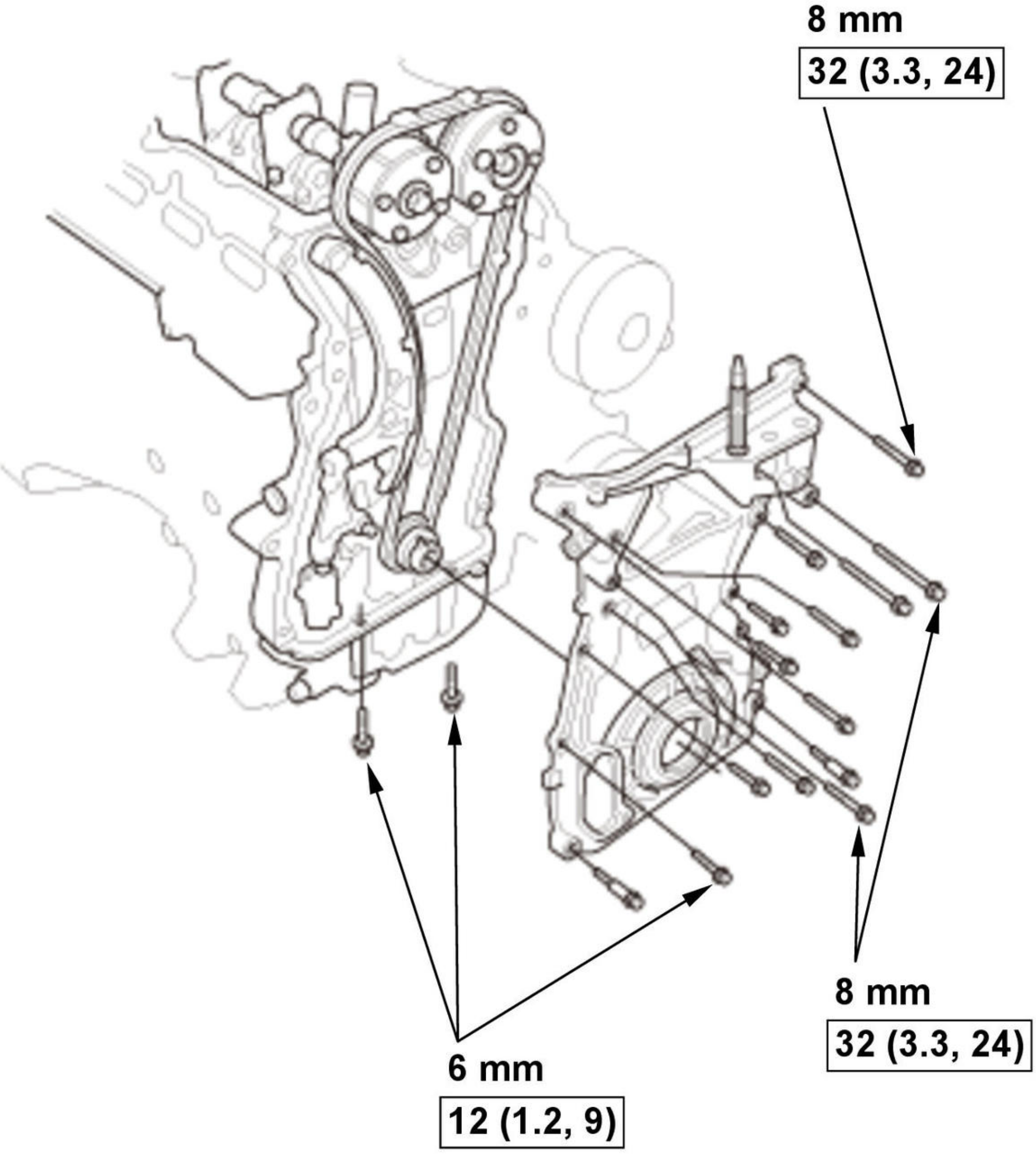
8 mm
32 (3.3, 24)
8 mm
32 (3.3, 24)
6 mm
12 (1.2, 9)

Fig. 8: Cam Chain Case With Torque Specifications
Courtesy of HONDA, U.S.A., INC.

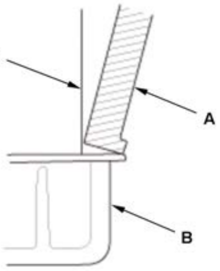	1. Check the pulley end crankshaft oil seal for damage. If the oil seal is damaged, replace the pulley end crankshaft oil seal. 2. Apply liquid gasket to the engine block, the cylinder head, and the oil pan mating surface of the cam chain case and to the inside edge of the threaded bolt holes. 3. Set the edge of the cam chain case (A) to the edge of the oil pan (B), then install the cam chain case on the engine block (C). Wipe off the excess liquid gasket on the oil pan and the cam chain case mating area. **NOTE:** When installing the cam chain case, do not slide the bottom surface onto the oil pan mounting surface.

10. VTC Oil Control Solenoid Valve A - Install
11. Connector (VTC Oil Control Solenoid Valve A) - Connect

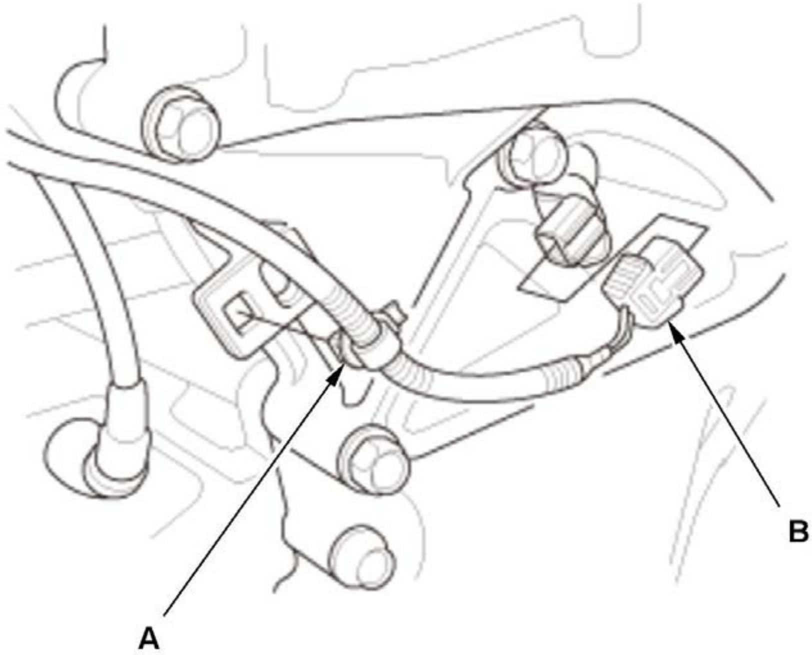	1. Install the harness clip (A). 2. Connect the connector (B).

12. Side Engine Mount - Install
13. Cylinder Head Cover - Install
14. Dipstick - Install
15. Drive Belt Auto-Tensioner - Install
16. Crankshaft Pulley - Install
17. Drive Belt - Install
18. Engine Undercover - Install
19. Right Front Wheel - Install
20. Ignition Timing - Inspect

Inspection

1. Right Front Wheel - Remove
2. Engine Undercover - Remove
3. Chain Case Cover - Remove
4. Cam Chain - Inspect

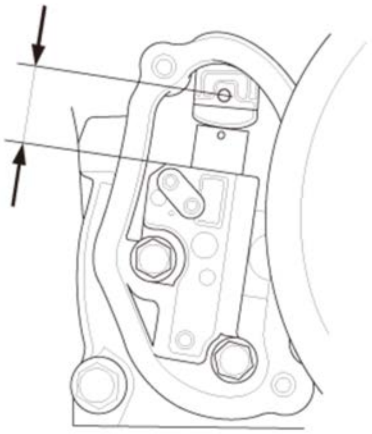	1. Measure the length of the cam chain auto-tensioner rod. 2. If the length is over the service limit, replace the cam chain. When replacing, check the teeth on the cam chain drive sprocket, VTC actuator A, and VTC actuator B for wear and damage. If any of them are worn or damaged, replace if necessary. 3. Check the oil passage on the cam chain auto-tensioner for clogs. If the cam chain auto-tensioner is clogged, replace it.

Cam Chain Auto-Tensioner Rod Length	
Standard (New):	**20.0 mm (0.787 in)**
Service Limit:	**23.9 mm (0.941 in)**

5. All Removed Parts - Install

1. Install the parts in the reverse order of removal.

CAM CHAIN REMOVAL, INSTALLATION, AND INSPECTION (2.4 L ENGINE) (2017 2018 2019)

Removal

NOTE: Keep the cam chain away from magnetic fields.

1. Right Front Wheel - Remove
2. Engine Undercover - Remove
3. Cylinder Head Cover - Remove
4. Camshaft Timing - Inspect
5. VTC Oil Control Solenoid Valve - Remove
6. Rocker Arm Oil Control Valve - Remove
7. Crankshaft Pulley - Remove
8. Side Engine Mount - Remove
9. Cam Chain Case - Remove

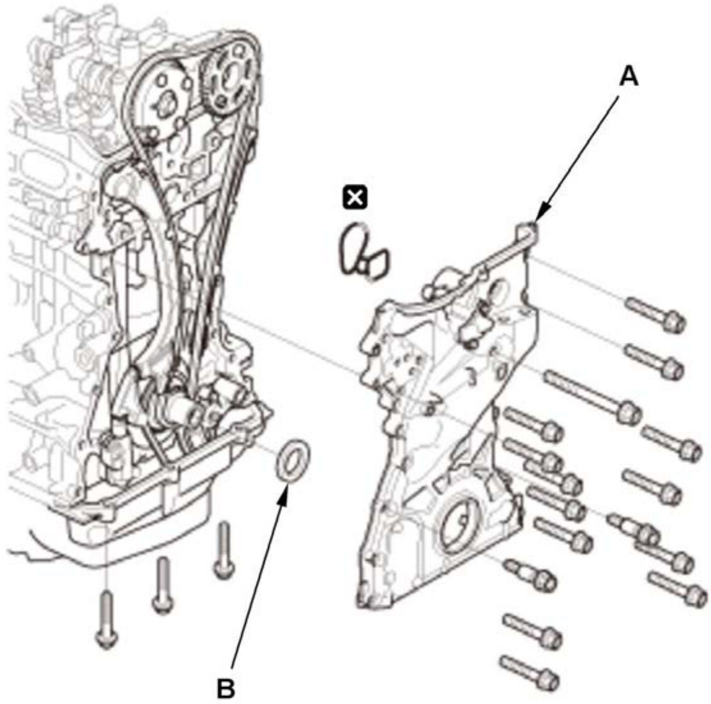	1. Remove the cam chain case (A) and the spacer (B).

10. Cam Chain Auto-Tensioner - Remove

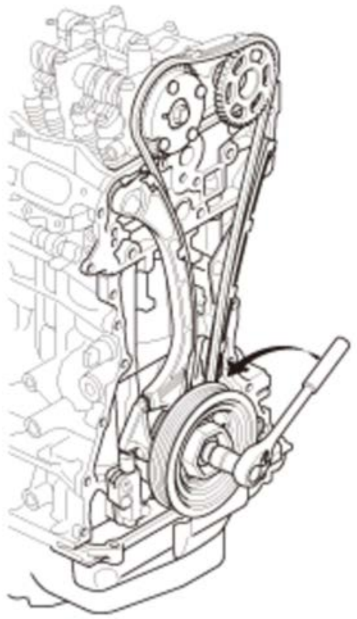	1. Loosely install the crankshaft pulley. 2. Turn the crankshaft counterclockwise to compress the cam chain auto-tensioner.

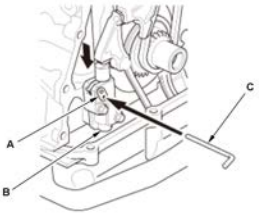	3. Rotate the crankshaft counterclockwise to align the holes on the lock (A) and the cam chain auto-tensioner (B), then insert a 1.2 mm (3/64 in) diameter pin (C) into the holes. Turn the crankshaft clockwise to secure the pin.**NOTE:** If the holes in the lock and the cam chain auto-tensioner do not align, continue to rotating the crankshaft counterclockwise until the holes align, then install the pin.

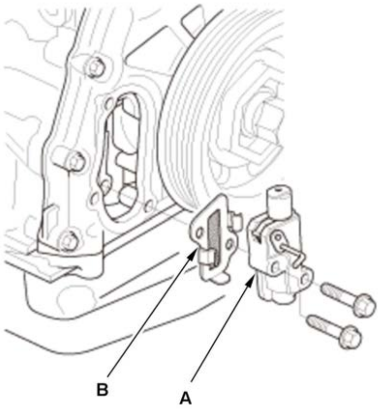	4. Remove the cam chain auto-tensioner (A) and the cam chain auto-tensioner filter (B).**NOTE:** Check the cam chain auto-tensioner filter for damage. If filter is damaged, replace it.

11. Cam Chain Guide B - Remove

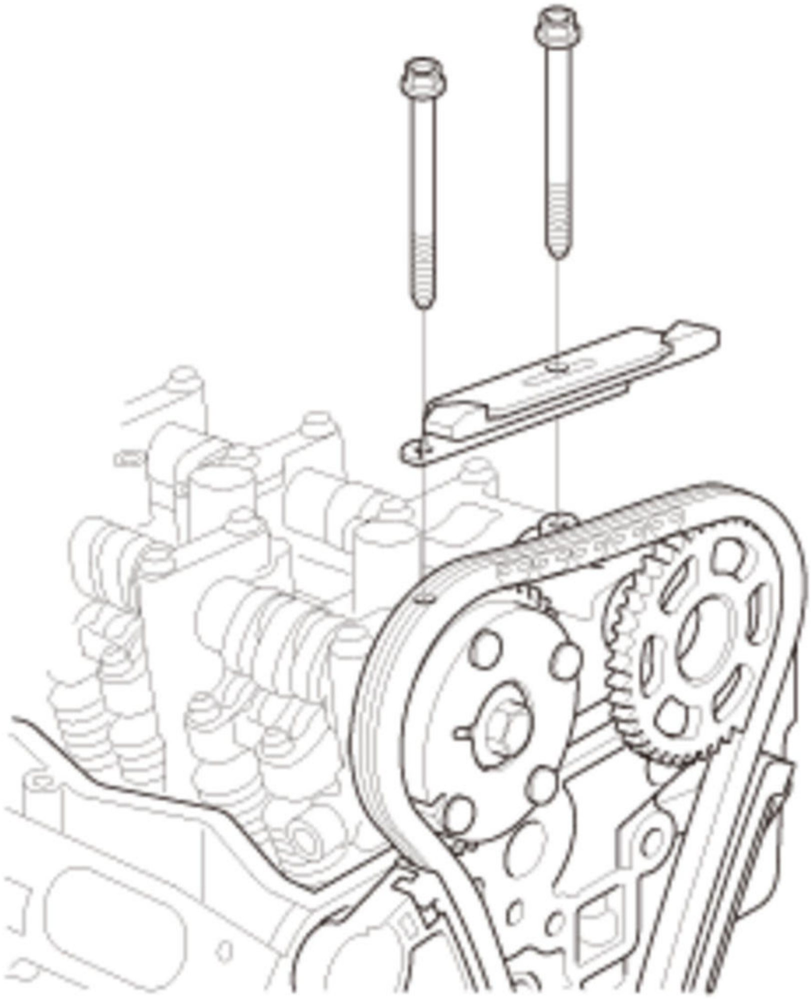

12. Cam Chain - Remove

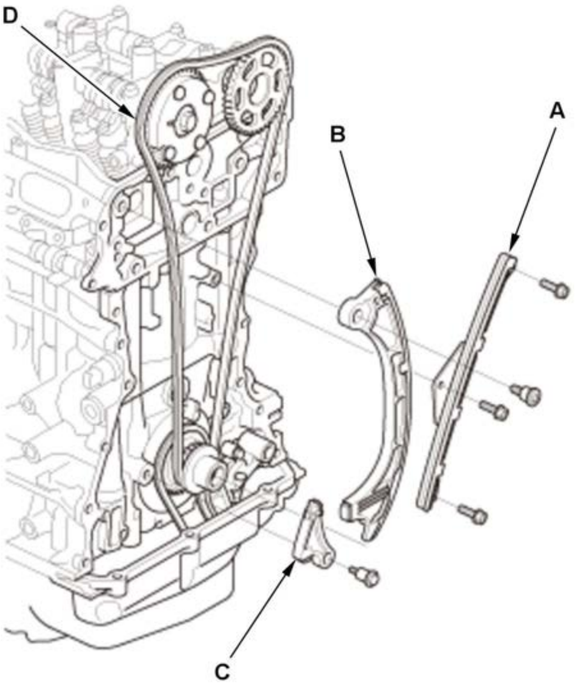	1. Remove cam chain guide A, the cam chain tensioner arm (B), and the cam chain tensioner sub arm (C). 2. Remove the cam chain (D).

Installation

NOTE:

- **How to read the torque specifications** .
- Keep the cam chain away from magnetic fields.
- Before doing this procedure, check that the VTC actuator is locked by turning the VTC actuator counterclockwise. If not locked, turn the VTC actuator clockwise until it stops, then recheck it. If it is still not locked, replace the VTC actuator.

1. No. 1 Piston at Top Dead Center (Crank Side) - Set

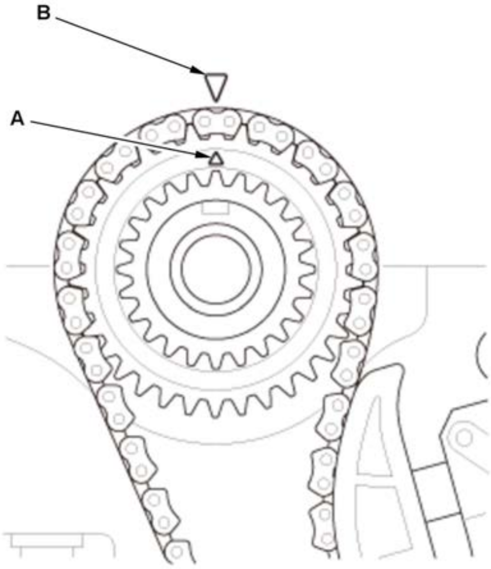	1. Set the crankshaft to top dead center (TDC). Align the TDC mark (A) on the crankshaft sprocket with the pointer (B) on the engine block.

2. No. 1 Piston at Top Dead Center (Cam Side) - Set

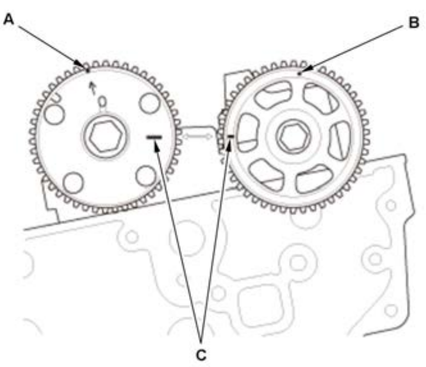

1. Set the camshafts to TDC. The punch mark (A) on the VTC actuator and the punch mark (B) on the exhaust camshaft sprocket should be at the top. Align the TDC marks (C) on the VTC actuator and the exhaust camshaft sprocket.

3. Cam Chain - Install

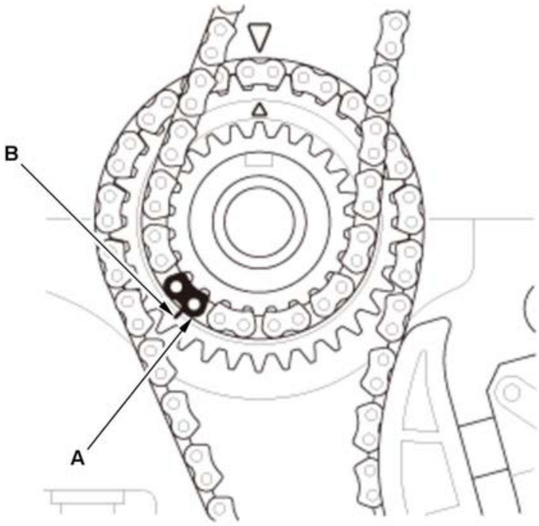

1. Install the cam chain on the crankshaft sprocket with the colored link plate (A) aligned with the mark (B) on the crankshaft sprocket.

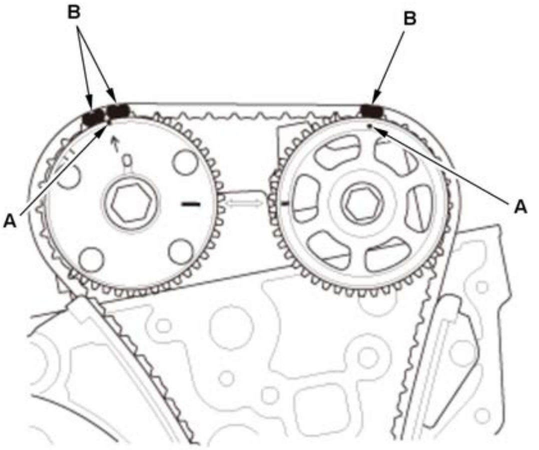

2. Install the cam chain on the VTC actuator and the exhaust camshaft sprocket with the punch marks (A) aligned with the center of the colored link plates (B).

4. Cam Chain Guide B - Install

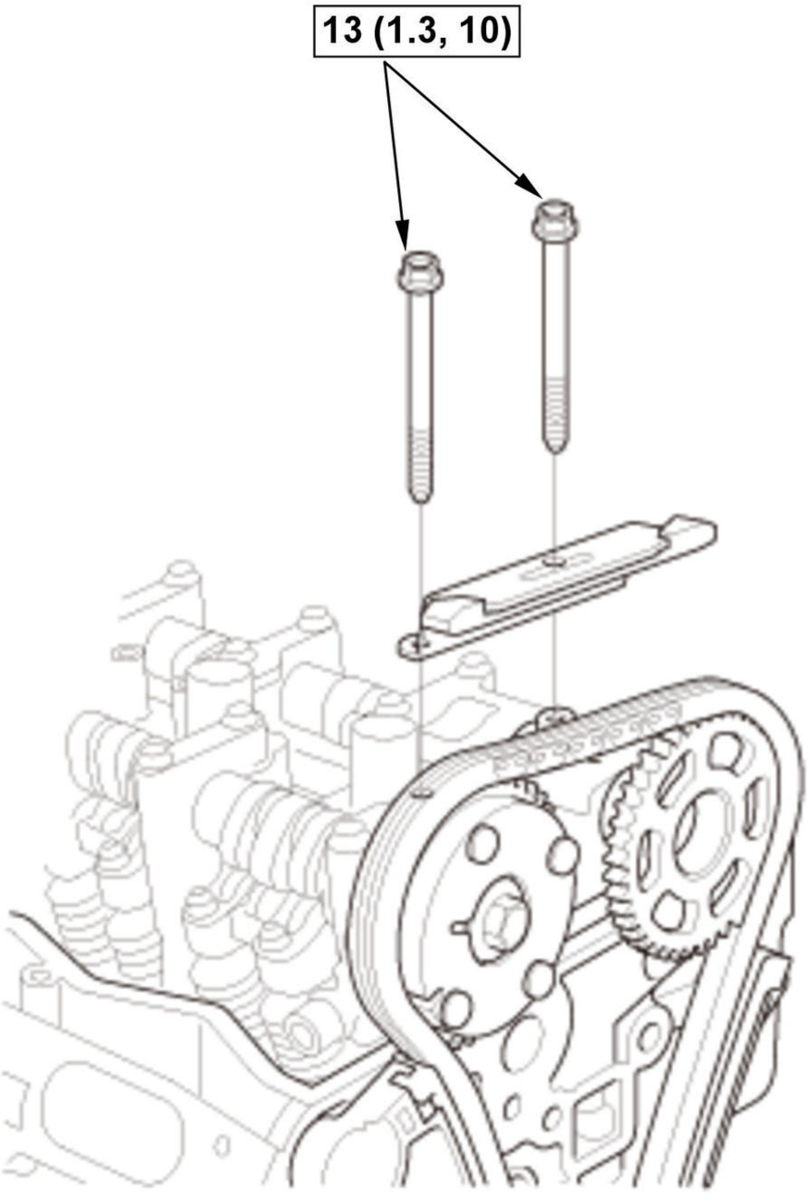

Fig. 9: Cam Chain Guide B With Torque Specifications
Courtesy of HONDA, U.S.A., INC.

B

NOTE: Apply new engine oil to the threads of the camshaft holder bolts.

5. Cam Chain Guide A, Tensioner Sub Arm, and Tensioner Arm - Install

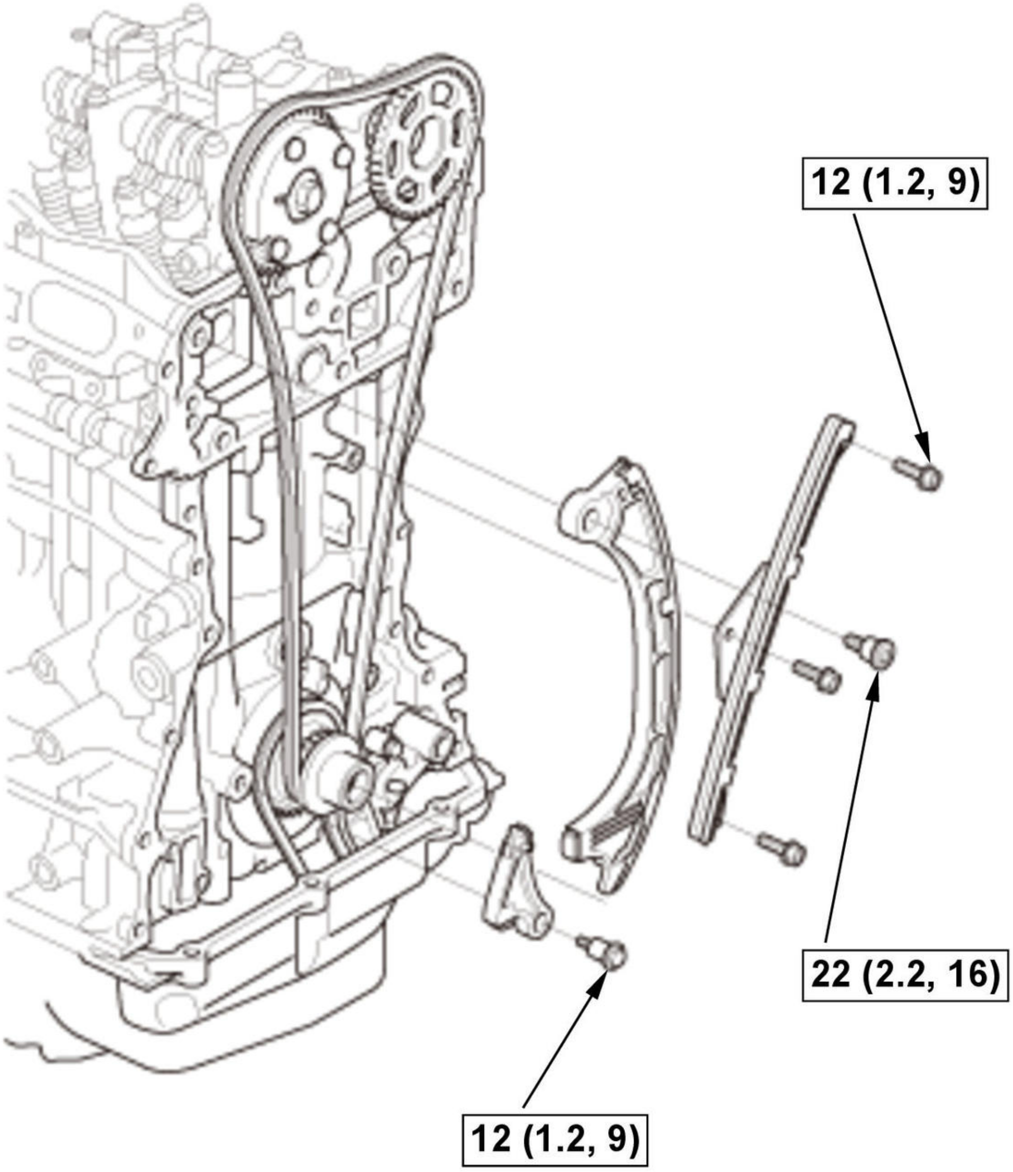

Fig. 10: Cam Chain Guide A / Tensioner Arm With Torque Specifications
Courtesy of HONDA, U.S.A., INC.

B

6. Cam Chain Auto-Tensioner - Install

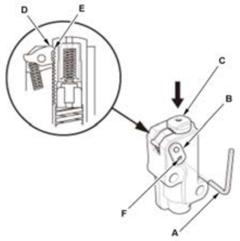	1. Compress the cam chain auto-tensioner when replacing the cam chain. Remove the pin (A) from the cam chain auto-tensioner that was installed during removal. Turn the plate (B) counterclockwise, to release the lock, then press the rod (C), and set the first cam (D) to the first edge of the rack (E). Insert the 1.2 mm (3/64 in) diameter pin back into the holes (F).**NOTE:** If the cam chain auto-tensioner is not set up as described, the cam chain auto-tensioner will be damaged.

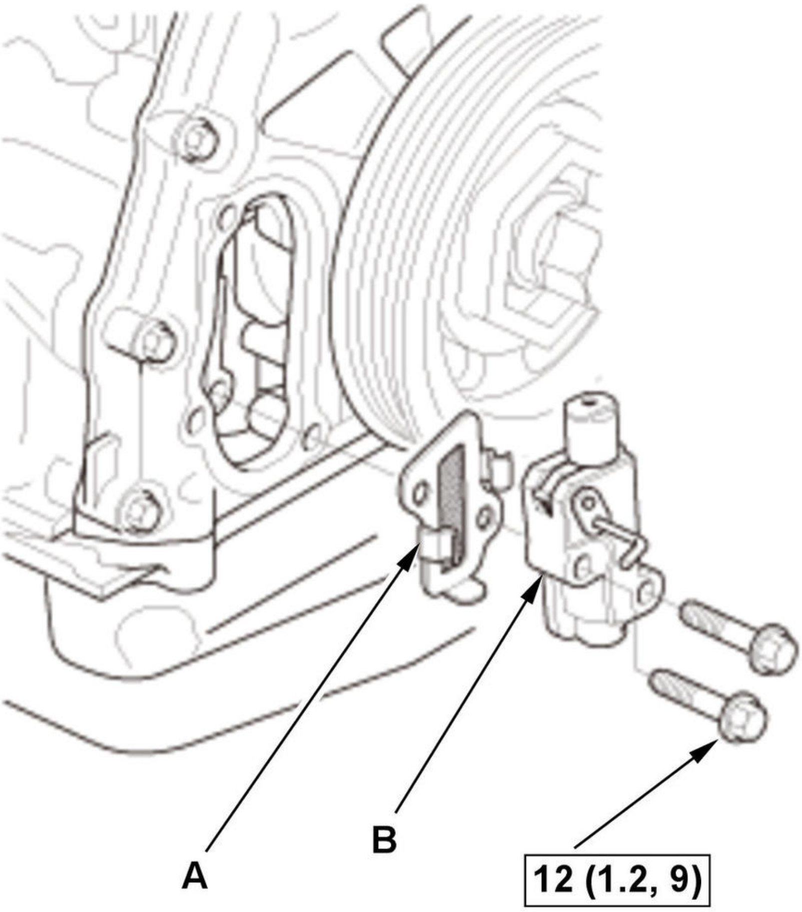

Fig. 11: Cam Chain Auto-Tensioner With Torque Specifications
Courtesy of HONDA, U.S.A., INC.

B	2. Install the cam chain auto-tensioner filter (A) and the cam chain auto-tensioner (B).

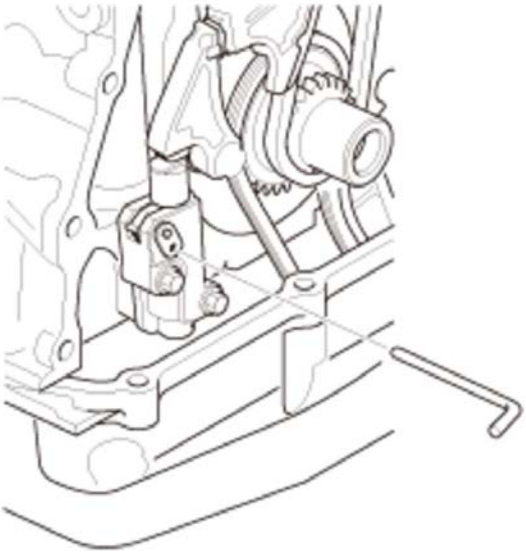	3. Remove the pin from the cam chain auto-tensioner.

7. Cam Chain Case - Install

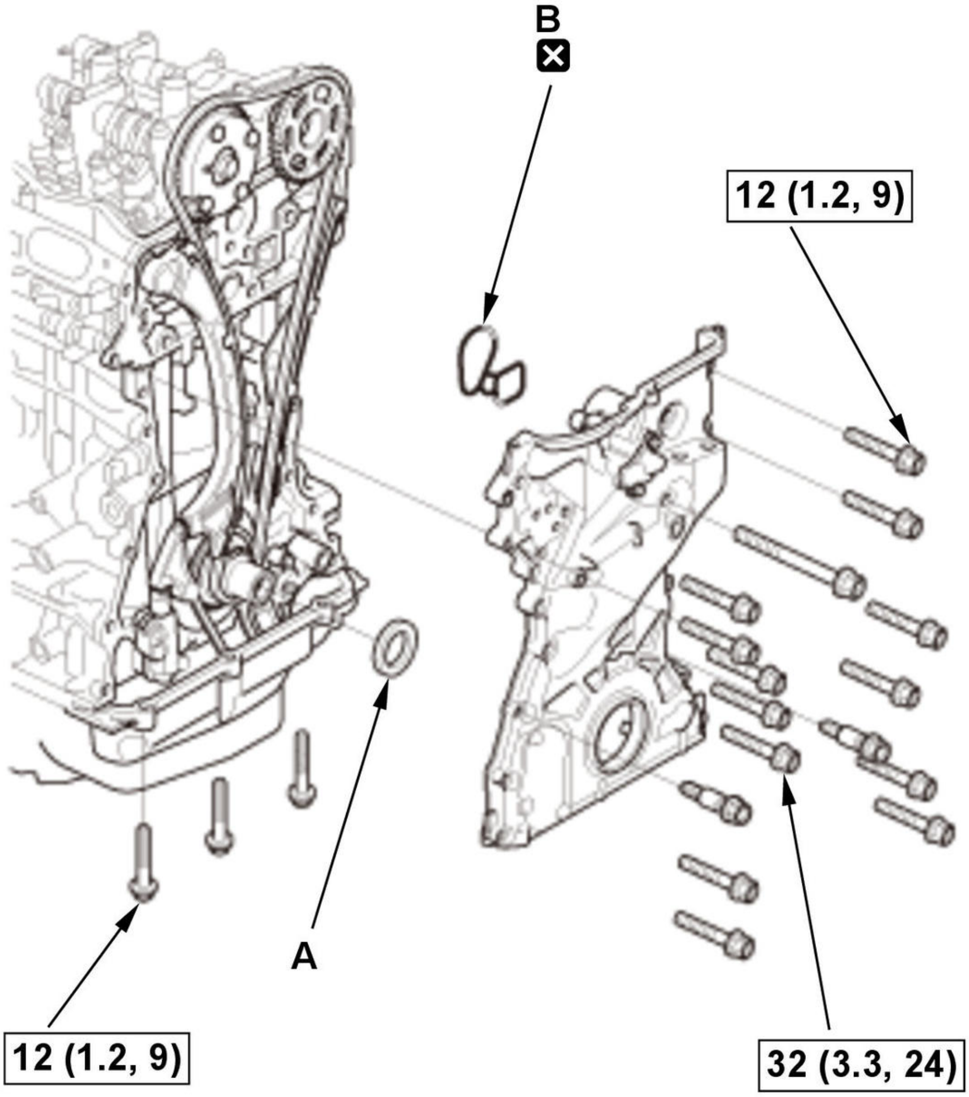

Fig. 12: Cam Chain Case With Torque Specifications
Courtesy of HONDA, U.S.A., INC.

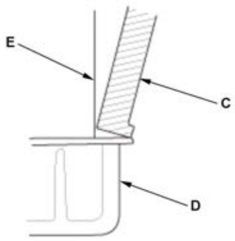	1. Check the pulley end crankshaft oil seal for damage. If the oil seal is damaged, replace the pulley end crankshaft oil seal . 2. Apply liquid gasket to the engine block and the oil pan mating surface of the chain case and to the inside edge of the threaded bolt holes. 3. Install the spacer (A), then install a new O-ring (B) on the chain case. Set the edge of the chain case (C) to the edge of the oil pan (D), then install the chain case on the engine block (E). Wipe off the excess liquid gasket on the oil pan and the chain case mating area. **NOTE:** When installing the chain case, do not slide the bottom surface onto the oil pan mounting surface.

8. Side Engine Mount - Install
9. Crankshaft Pulley - Install
10. Rocker Arm Oil Control Valve - Install
11. VTC Oil Control Solenoid Valve - Install
12. Cylinder Head Cover - Install

13. Engine Undercover - Install
14. Right Front Wheel - Install

Inspection

NOTE: How to read the torque specifications .

1. Right Front Wheel - Remove
2. Engine Undercover - Remove
3. Chain Case Cover - Remove
4. Cam Chain - Inspect

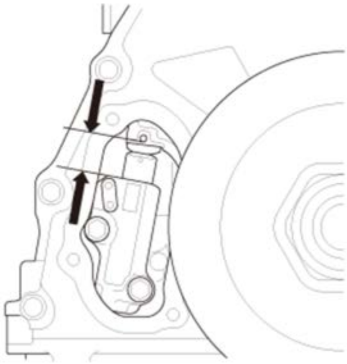	1. Measure the length of the cam chain auto-tensioner rod. 2. If the length is over the service limit, replace the cam chain. When replacing, check the teeth on the crankshaft sprocket, the VTC actuator, and the exhaust camshaft sprocket for wear and damage. If any of them are worn or damaged, replace if necessary. 3. Check the oil passage on the cam chain auto-tensioner for clogs. If the cam chain auto-tensioner is clogged, replace it.

Cam Chain Auto-Tensioner Rod Length	
Service Limit:	**26.6 mm (1.047 in)**

5. All Removed Parts - Install

1. Install the parts in the reverse order of removal.

CAMSHAFT AND VTC ACTUATOR REMOVAL, INSTALLATION, AND INSPECTION (1.5 L ENGINE)

Removal

1. Fuel Pressure - Relieve
2. Air Cleaner - Remove
3. High Pressure Fuel Pump - Remove
4. EVAP Canister Purge Valve - Remove
5. CMP Sensor A/B - Remove
6. High Pressure Fuel Pump Base - Remove
7. Cam Chain - Remove

   NOTE: After cam chain removal, reinstall the cam chain guide B mounting bolts to the specified torque, if remove VTC actuator A/B.

8. Adjusting Screw - Loosen

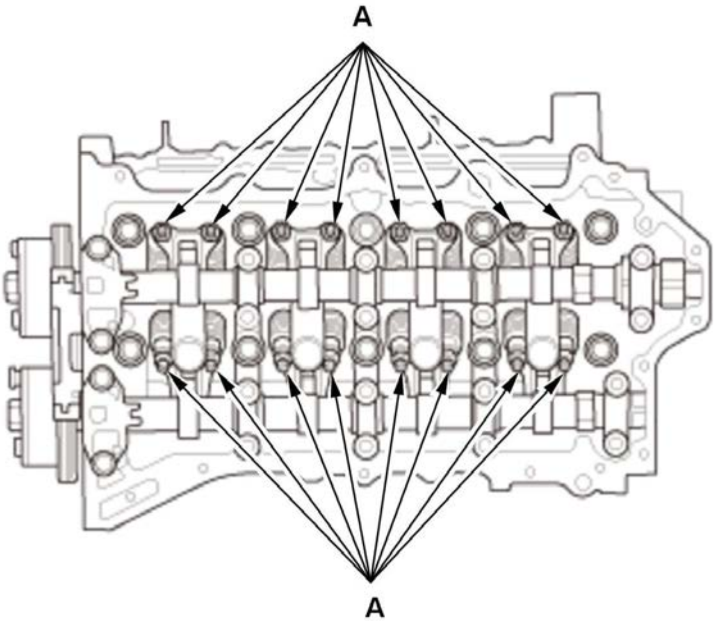	1. Loosen the locknuts and the adjusting screws (A).

9. VTC Actuator A/B Mounting Bolt - Loosen

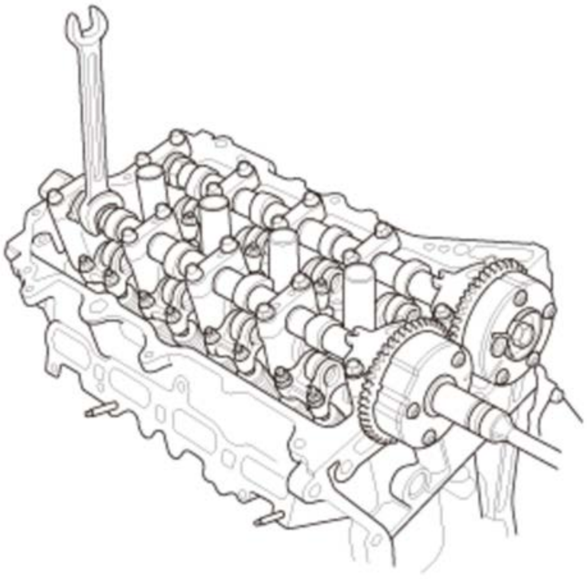	**NOTE:** If remove VTC actuator A/B, do this procedure. 1. Hold the intake camshaft with an open-end wrench, then loosen the VTC actuator A mounting bolt.

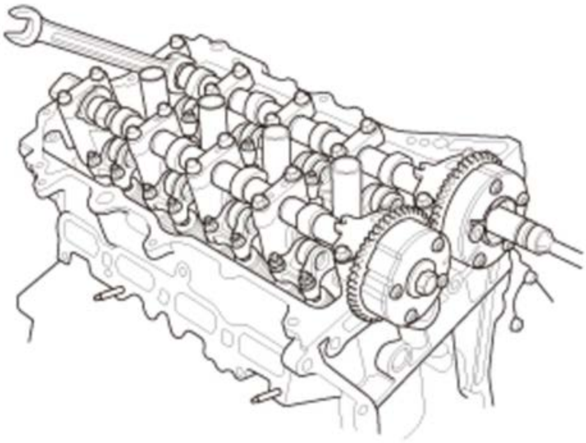	2. Hold the exhaust camshaft with an open-end wrench, then loosen the VTC actuator B mounting bolt.

10. Camshaft - Remove

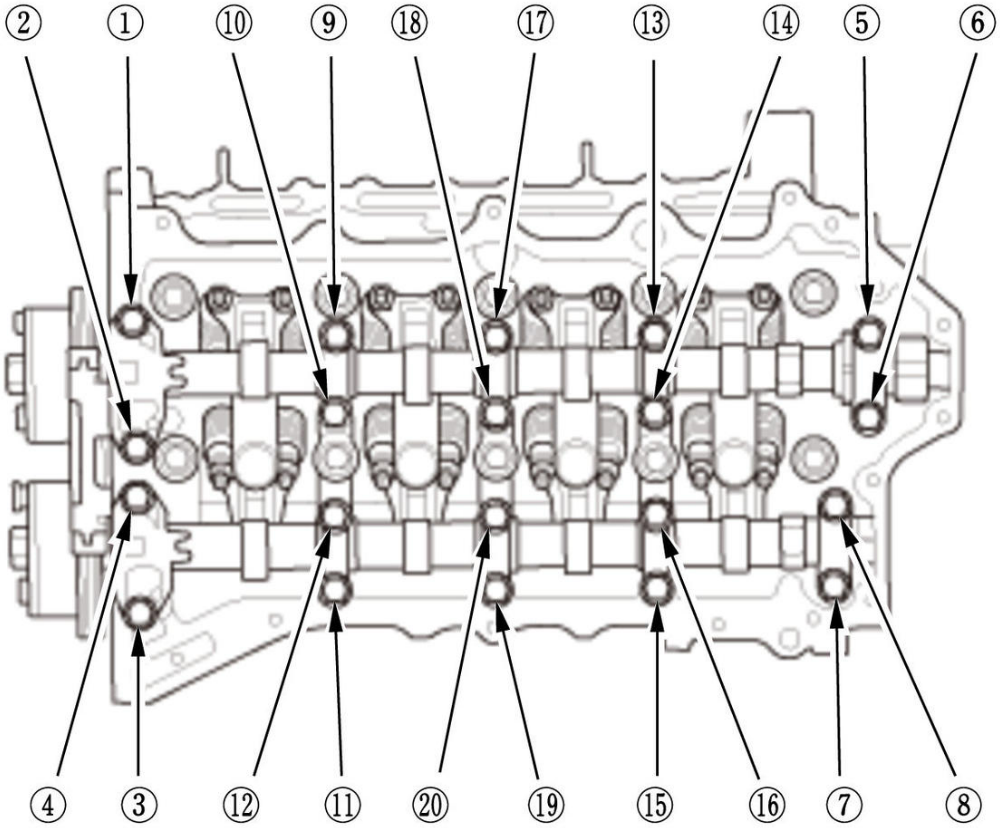

Fig. 13: Camshaft Loosening Sequence
Courtesy of HONDA, U.S.A., INC.

B	1. Remove the camshaft holder bolts. To prevent damaging the camshafts, loosen the bolts, in sequence, two turns at a time.

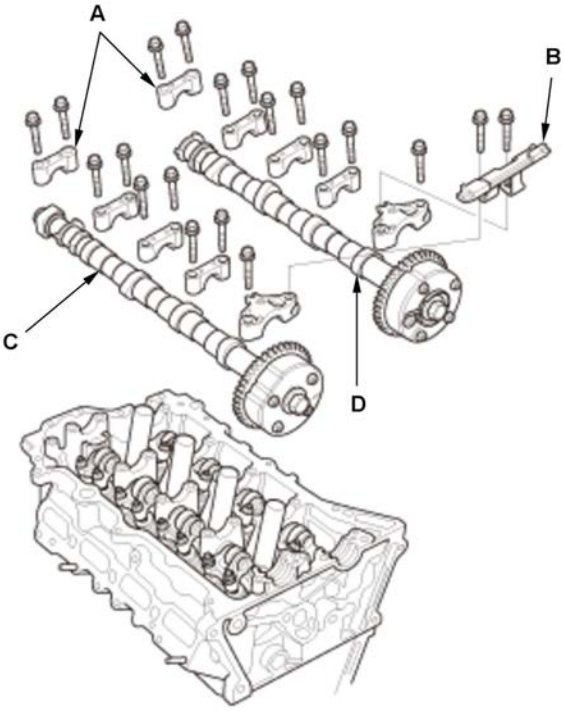	2. Remove the camshaft holders (A), cam chain guide B, the intake camshaft (C), and the exhaust camshaft (D).

11. VTC Actuator A/B - Remove

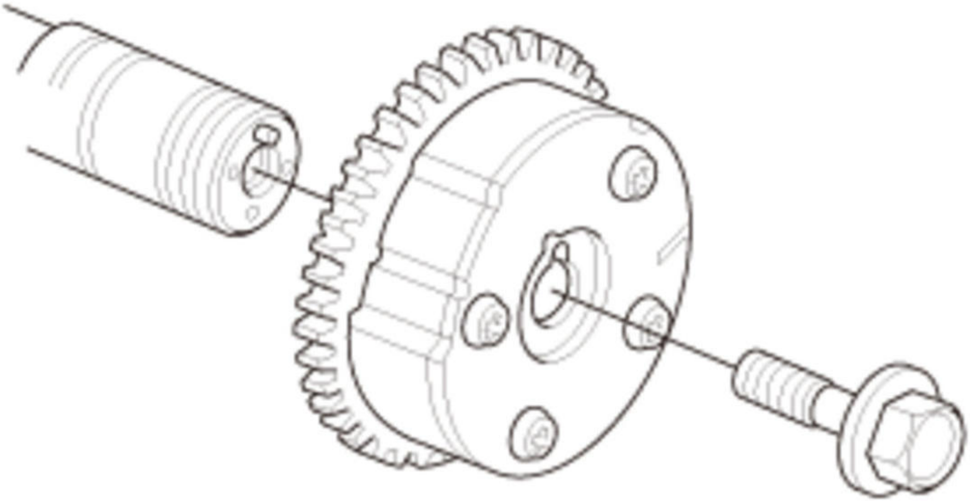

This illustration shows VTC actuator A.

NOTE: If remove VTC actuator A/B, do this procedure.

Installation

1. VTC Actuator A/B - Install

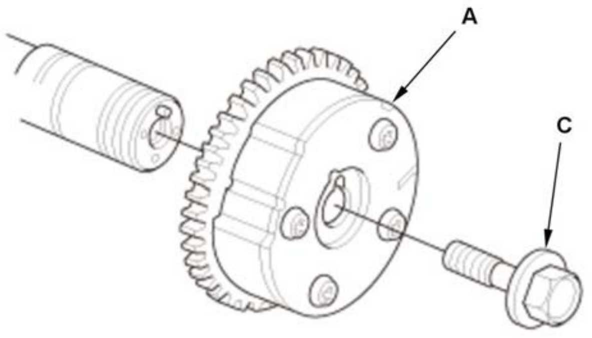 This illustration shows VTC actuator A.	**NOTE:** If VTC actuator A/B is removed, do this procedure. 1. Install VTC actuator A/B. 2. Apply new engine oil to the threads of the VTC actuator A/B mounting bolt (C), then loosely install it.

2. Camshaft - Install

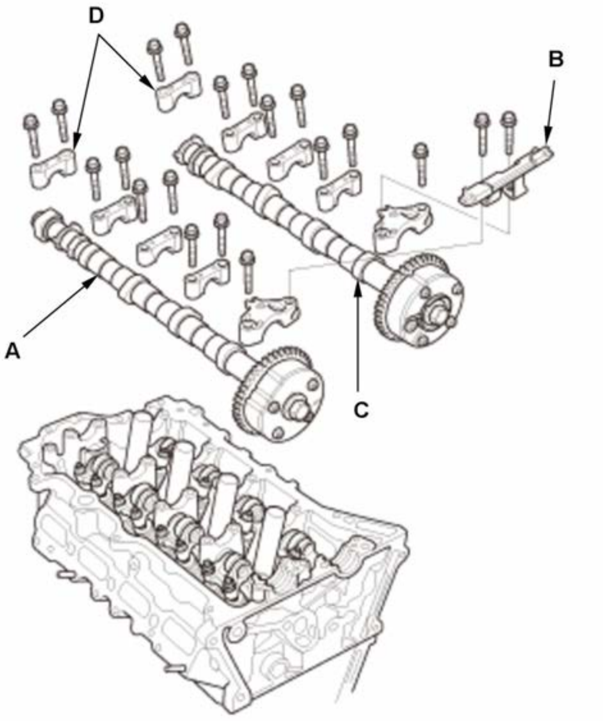	1. Install the intake camshaft (A), the exhaust camshaft (C), the camshaft holders (D), and cam chain guide B.

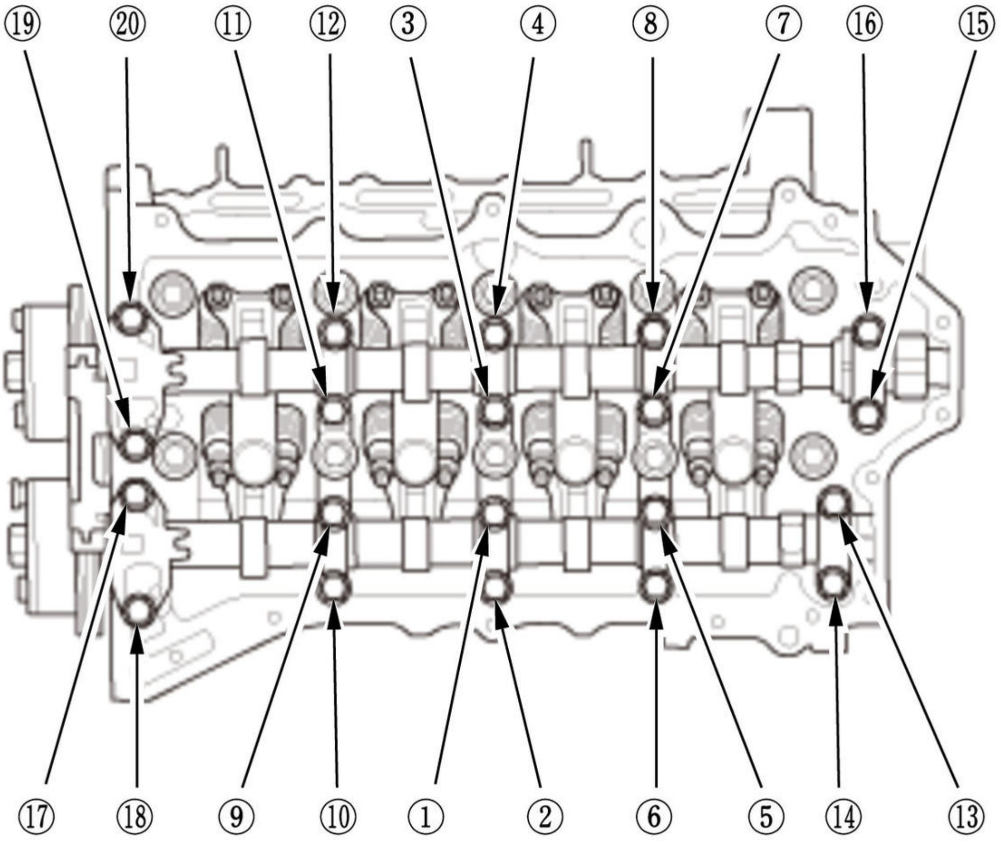

Fig. 14: Camshaft Bolts Tightening Sequence
Courtesy of HONDA, U.S.A., INC.

B	2. Install the camshaft holder bolts, in sequence, to 5.0 N.m (0.51 kgf.m, 3.7 lbf.ft). 3. Tighten the camshaft holder bolts, in sequence, to the specified torque.

Specified Torque:
18 N.m (1.8 kgf.m, 13 lbf.ft)

3. VTC Actuator A/B Mounting Bolt - Tighten

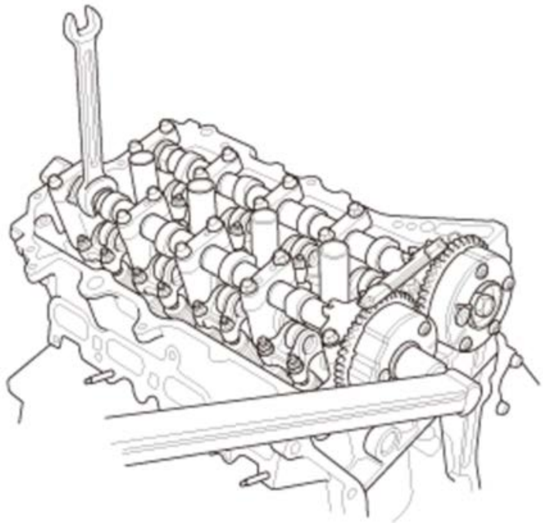	**NOTE:** If VTC actuator A/B is removed, do this procedure. 1. Hold the intake camshaft with an open-end wrench, then tighten the VTC actuator A mounting bolt to the specified torque.

115 N.m (11.7 kgf.m, 85 lbf.ft)

Specified Torque:

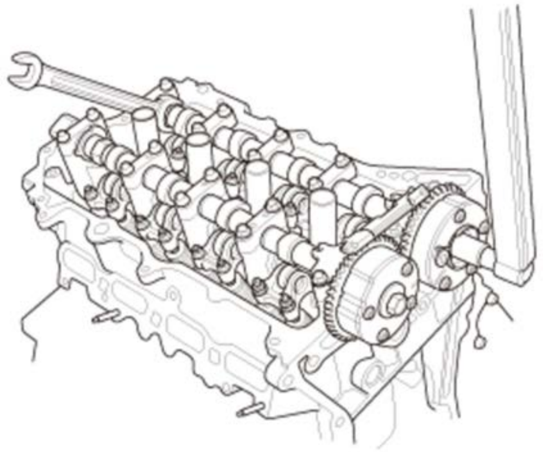	2. Hold the exhaust camshaft with an open-end wrench, then tighten the VTC actuator B mounting bolt to the specified torque.

Specified Torque:
115 N.m (11.7 kgf.m, 85 lbf.ft)

4. Cam Chain - Install
5. Valve Clearance - Adjust
6. High Pressure Fuel Pump Base - Install
7. CMP Sensor A/B - Install
8. EVAP Canister Purge Valve - Install
9. Cylinder Head Cover - Install
10. High Pressure Fuel Pump - Install
11. Air Cleaner - Install
12. Fuel Leak (Low Pressure Side) - Check

1. Turn the vehicle to the ON mode, but do not start the engine. After the fuel pump runs for about 2 seconds, the fuel line will be pressurized. Repeat this two or three time, then check for fuel leakage.

13. Fuel Leak (High Pressure Side) - Check
14. Ignition Timing - Inspect

Inspection

VTC Actuator A and VTC Actuator B

1. VTC Actuator A/B - Inspect

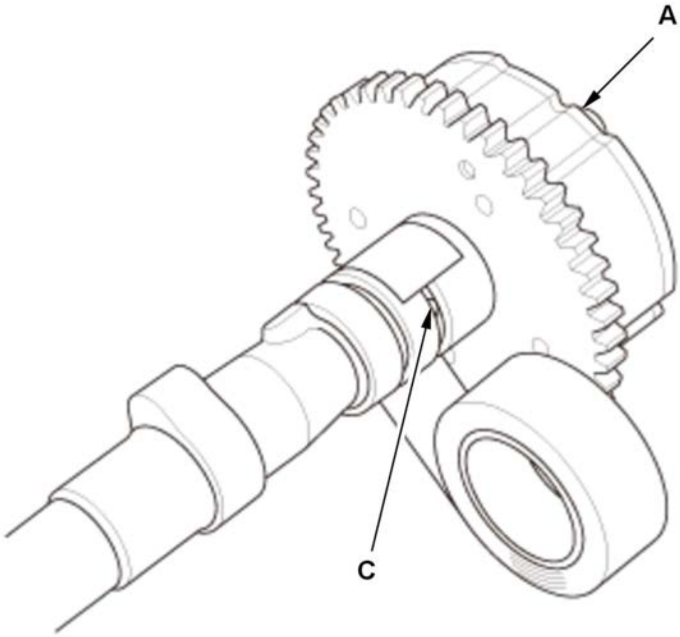 This illustration shows VTC actuator A. 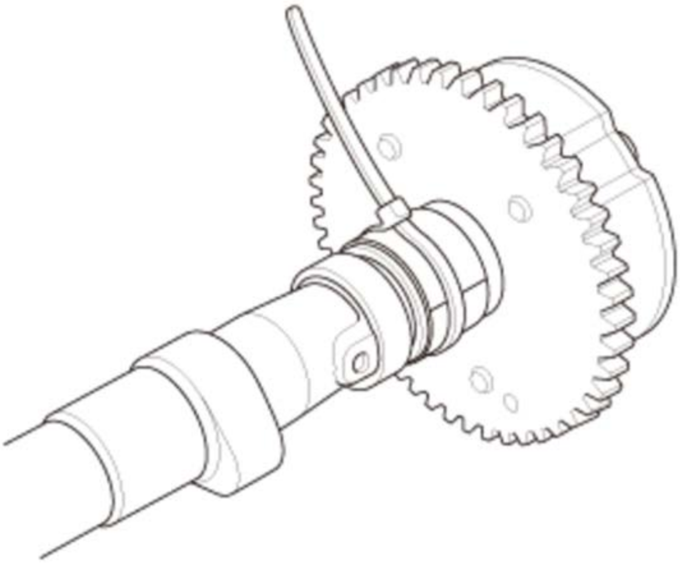 This illustration shows VTC actuator A.	1. Check that VTC actuator A/B is locked by turning it. If it is not locked, replace VTC actuator A/B. 2. Seal the retard/advance holes (C) of the intake/exhaust camshaft with tape and a wire tie.

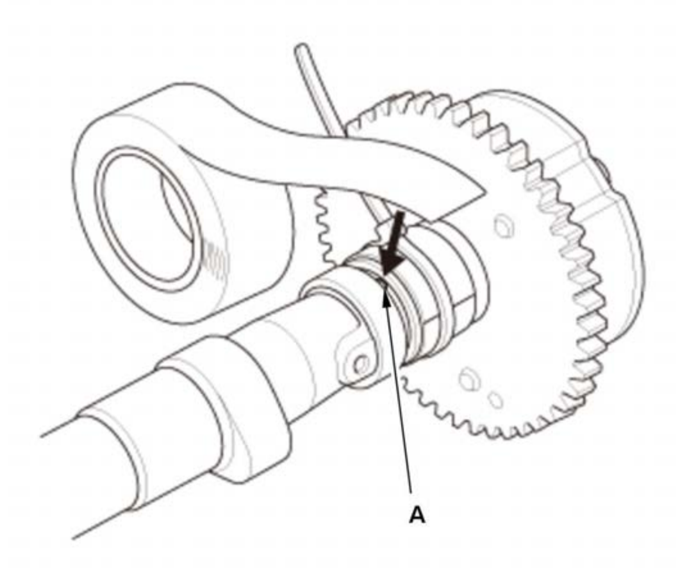 This illustration shows VTC actuator A.	3. Seal one of the advance/retard holes (A) of the intake/exhaust camshaft with tape.

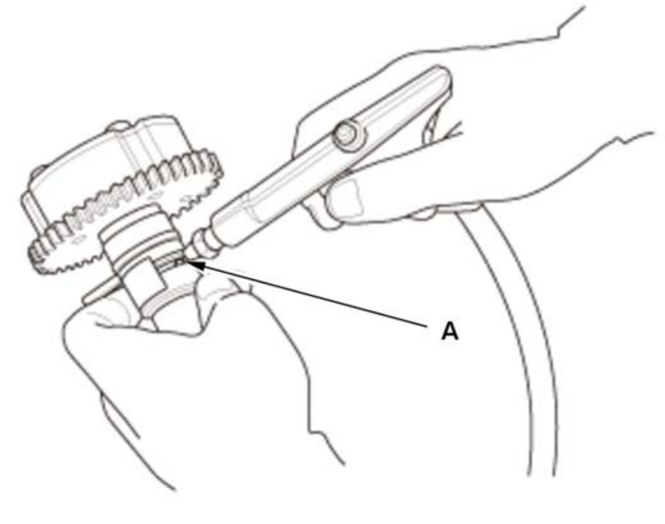 This illustration shows VTC actuator A.	4. Apply air to the unsealed advance/retard hole (A) to release the lock.

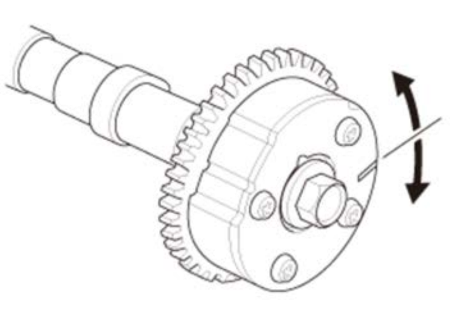 This illustration shows VTC actuator A.	5. Check that VTC actuator A/B moves smoothly. If VTC actuator A/B does not move smoothly, replace VTC actuator A/B. **NOTE:** Turn VTC actuator B by hand while applying air. 6. Remove the wire tie, the tape, and the adhesive residue from the camshaft journal. 7. VTC actuator A: Turn VTC actuator A clockwise until you hear it click. Make sure to lock VTC actuator A by turning it. VTC actuator B: Check that VTC actuator B is locked by turning it.

Camshaft

2. Rocker Arm Assembly - Remove
3. Camshaft - Inspect

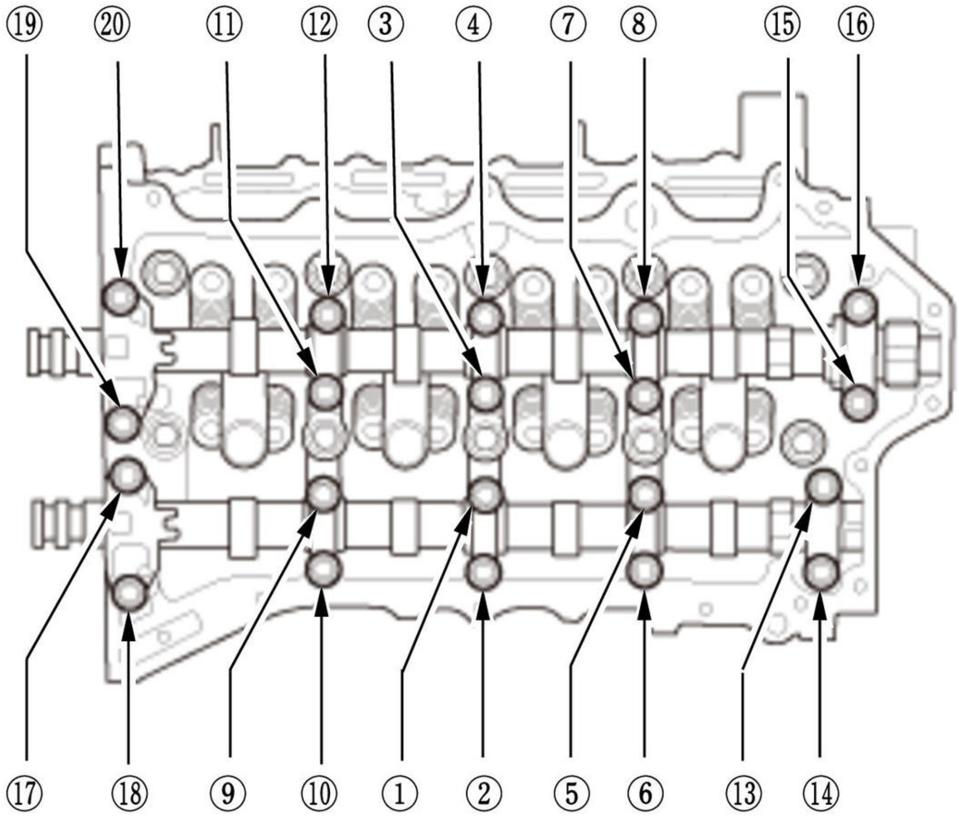

Fig. 15: Camshaft Bolts Tightening Sequence
Courtesy of HONDA, U.S.A., INC.

B	1. Put the camshaft holders and the camshafts on the cylinder head, then install the camshaft holder bolts, in sequence, to 5.0 N.m (0.5 kgf.m, 3.7 lbf.ft). 2. Tighten the camshaft holder bolts, in sequence, to the specified torque.

Specified Torque:
18 N.m (1.8 kgf.m, 13 lbf.ft)

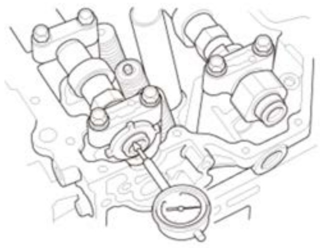	3. Zero the dial indicator against the end of the camshaft, then push the camshaft back and forth, and read the end play. If the end play is beyond the service limit, replace the cylinder head and recheck. If it is still beyond the service limit, replace the camshaft.**NOTE:** Do not rotate the camshaft during inspection. 4. Loosen the camshaft holder bolts two turns at a time, in a crisscross pattern. Then remove the camshaft holders from the cylinder head. 5. Lift the camshafts out of the cylinder head, and wipe them clean, then inspect the lift ramps. Replace the camshaft if any lobes are pitted, scored, or excessively worn. 6. Clean the camshaft journal surfaces in the cylinder head, then set the camshafts back in place. Place a plastigage strip across each journal. 7. Install the camshaft holders, then tighten the camshaft holder bolts to the specified torque as shown in step 1 and step 2.

Camshaft End Play	
Standard (New):	**0.065-0.215 mm (0.00256-0.00846 in)**
Service Limit:	**0.415 mm (0.01634 in)**

8. Remove the camshaft holders. Measure the widest portion of plastigage on each journal:

- If the camshaft-to-holder clearance is within limits, go to step 10.
- If the camshaft-to-holder clearance is beyond the service limit, and the camshaft has been replaced, replace the cylinder head.
- If the camshaft-to-holder clearance is beyond the service limit, and the camshaft has not been replaced, go to step 9.

Camshaft-to-Holder Oil Clearance	
Standard (New):	
Intake: No. 1 Journal:	**0.030-0.069 mm (0.00118-0.00272 in)**
Exhaust: No. 1 and No. 2 Journals:	**0.030-0.069 mm (0.00118-0.00272 in)**
Intake: No. 2, No. 3, No. 4, and No. 5 Journals:	**0.060-0.099 mm (0.00236-0.00390 in)**
Exhaust: No. 3, No. 4, and No. 5 Journals:	**0.060-0.099 mm (0.00236-0.00390 in)**
Service Limit:	
Intake: No. 1 Journal:	**0.120 mm (0.00472 in)**
Exhaust: No. 1 and No. 2 Journals:	**0.120 mm (0.00472 in)**
Intake: No. 2, No. 3, No. 4, and No. 5 Journals:	**0.150 mm (0.00591 in)**
Exhaust: No. 3, No. 4, and No. 5 Journals:	**0.150 mm (0.00591 in)**

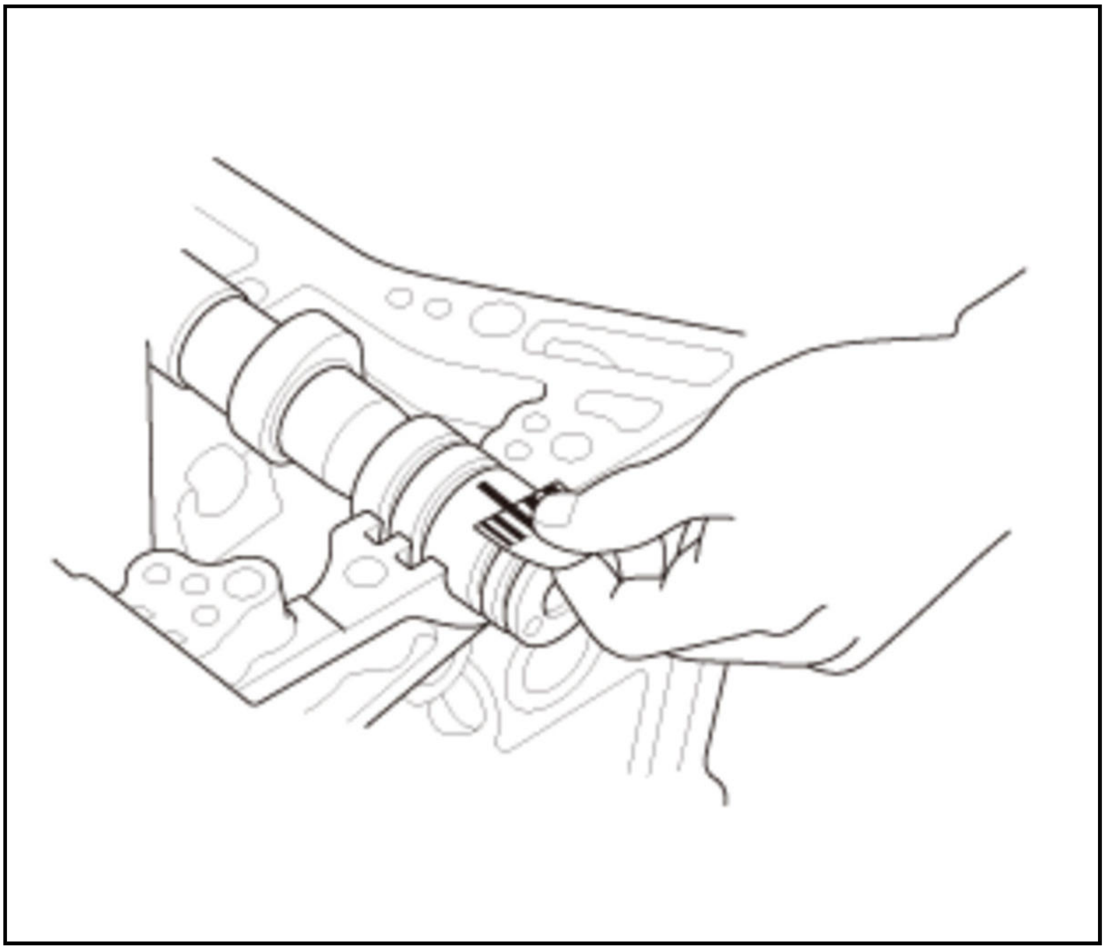

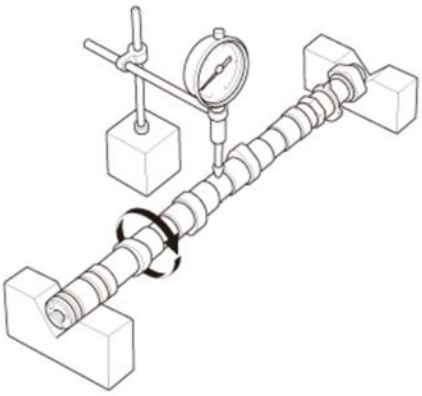	9. Check the total runout with the camshaft supported on V-blocks. • If the total runout of the camshaft is within the standard, replace the cylinder head. • If the total runout is beyond the standard, replace the camshaft, and recheck the camshaft-to-holder oil clearance. If the oil clearance is still beyond the service limit, replace the cylinder head.

Camshaft Total Runout	
Standard (New):	**0.03 mm (0.0012 in) max.**

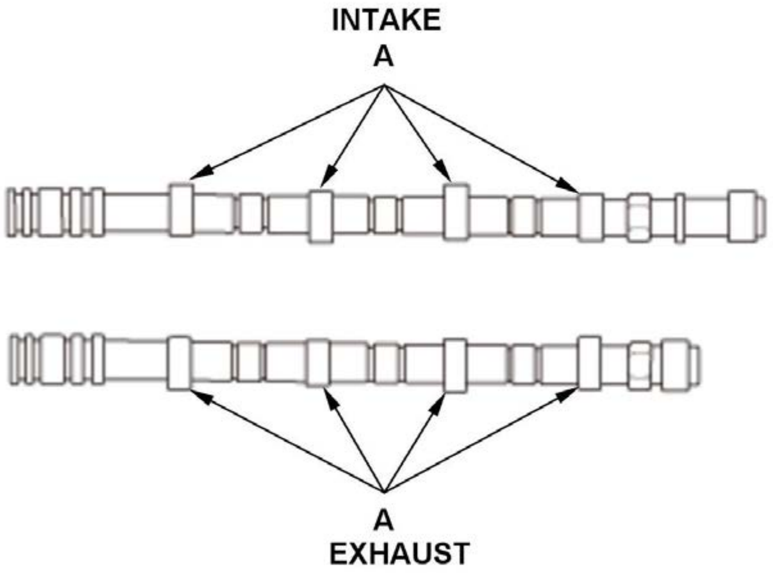	10. Measure the cam lobe (A) height.

Cam Lobe Height Standard (New):	
Intake:	**33.099 mm (1.30311 in)**
Exhaust:	**33.273 mm (1.30996 in)**

4. Rocker Arm Assembly - Install

CAMSHAFT/VTC ACTUATOR/EXHAUST CAMSHAFT SPROCKET REMOVAL, INSTALLATION, AND INSPECTION (2.4 L ENGINE) (2017 2018 2019)

Removal

Camshaft

1. Fuel Pressure - Relieve
2. High Pressure Fuel Pump - Remove
3. Cylinder Head Cover - Remove
4. Camshaft Timing - Inspect
5. CMP Sensor A - Remove
6. Connector (CMP Sensor B) - Disconnect
7. Camshaft Holder Cover - Remove

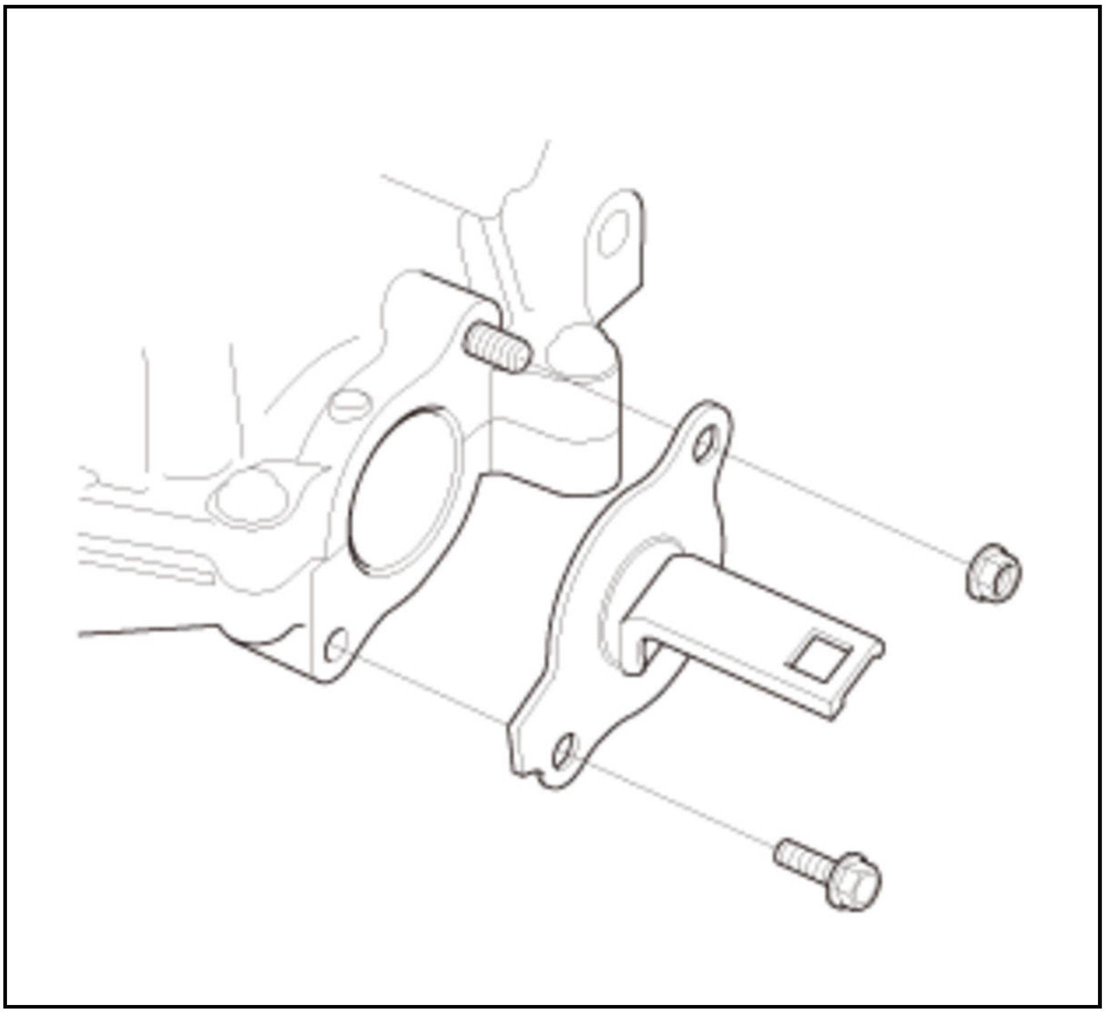

8. High Pressure Fuel Pump Base - Remove

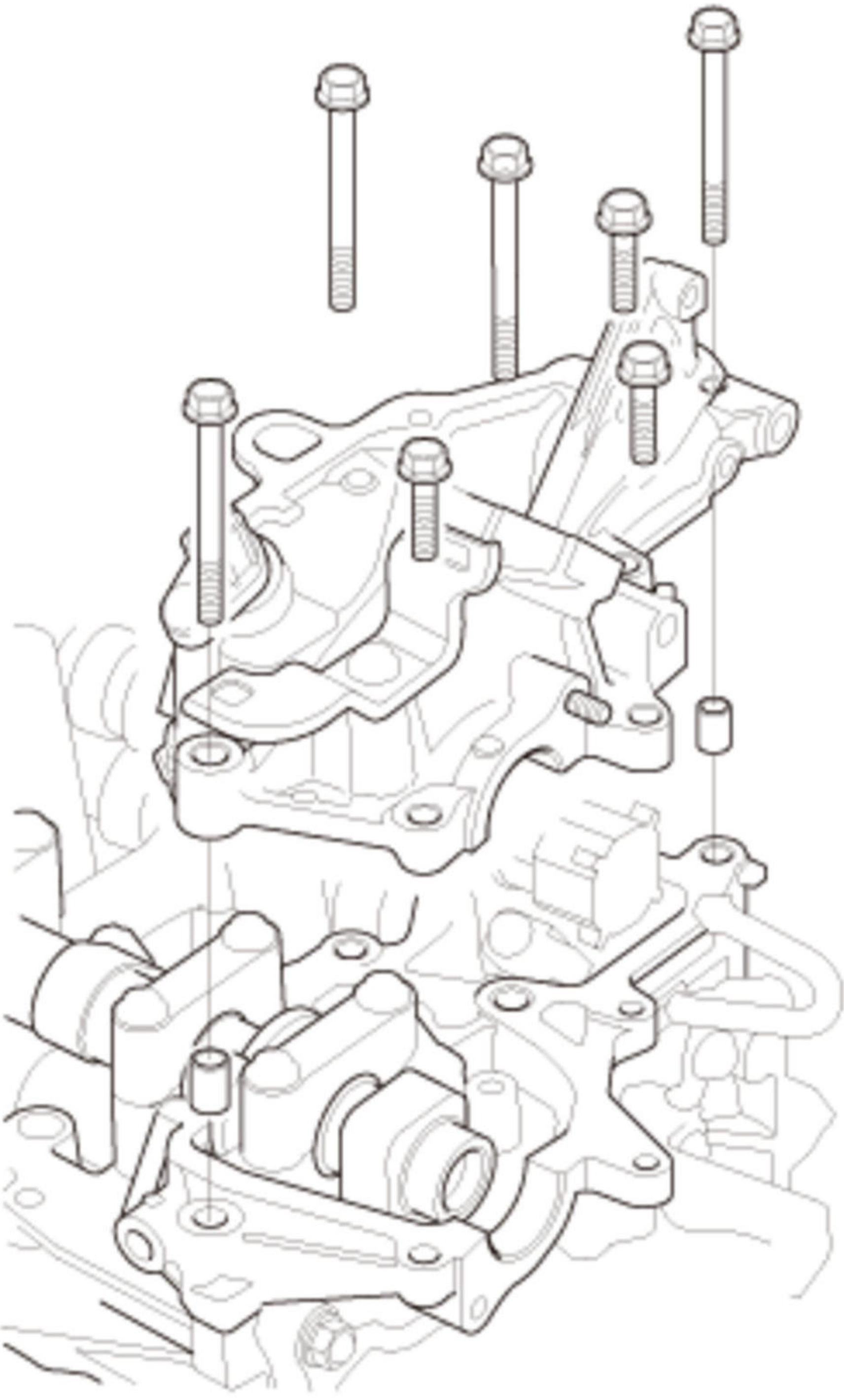

9. **Chain Case Cover - Remove**
10. Cam Chain Auto-Tensioner - Lock

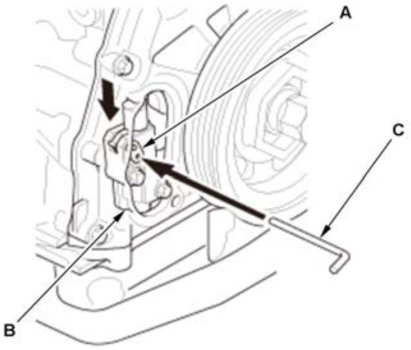	1. Rotate the crankshaft counterclockwise to align the holes on the lock (A) and the cam chain auto-tensioner (B), then insert a 1.2 mm (0.047 in) diameter pin (C) into the holes. **NOTE:** If the holes in the lock and the cam chain auto-tensioner do not align, continue to rotating the crankshaft counterclockwise until the holes align, then install the pin. 2. Turn the crankshaft clockwise to secure the pin and the TDC on the No. 1 cylinder.

11. Camshaft Holder - Remove

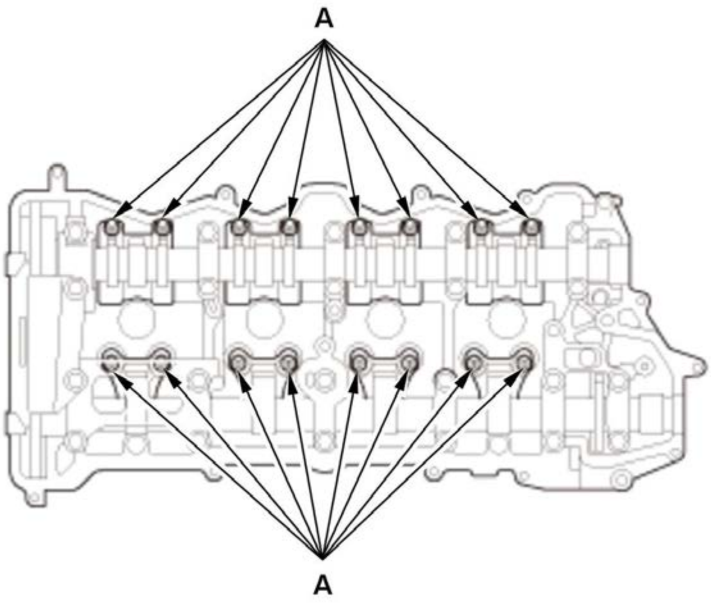	1. Loosen the rocker arm and the adjusting screws (A).

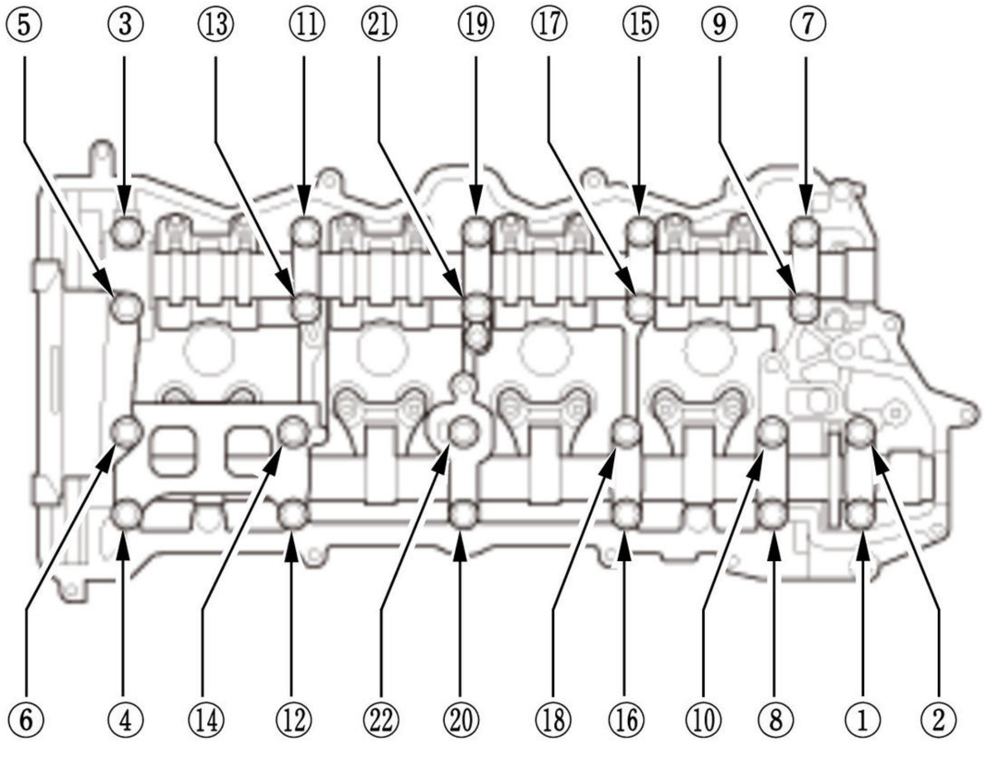

Fig. 16: Camshaft Holder Bolts Loosening Sequence
Courtesy of HONDA, U.S.A., INC.

B	2. Remove the camshaft holder bolts. To prevent damaging the camshafts, loosen the bolts, in sequence, two turns at a time.

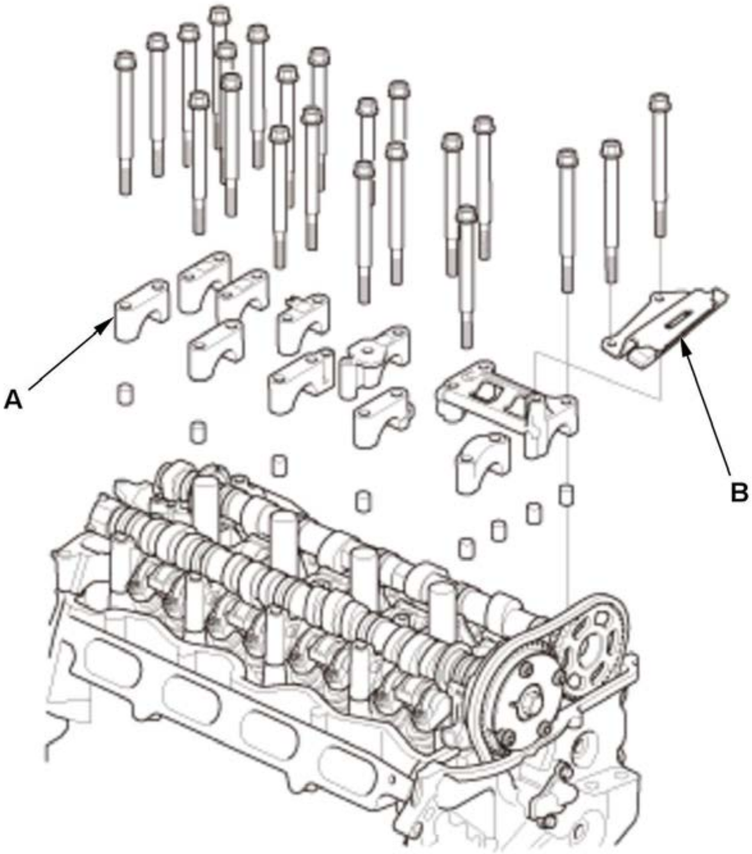 	3. Remove cam chain guide B and the camshaft holders (A).

12. Camshaft - Remove

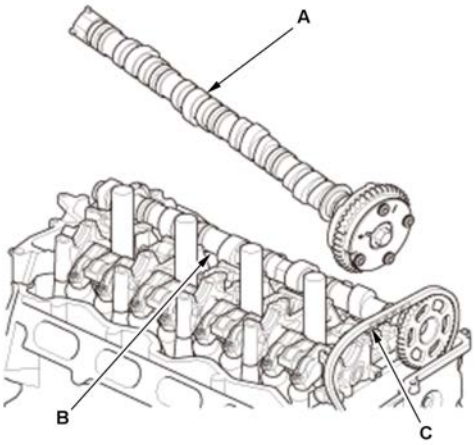 	1. Carefully tip up the intake camshaft on the transmission side of the engine until there is enough slack in the chain to lift the chain off of the VTC actuator's teeth. 2. Remove the intake camshaft (A), then remove the exhaust camshaft (B) while keeping some tension on the cam chain. 3. Secure the cam chain (C) to the A/C compressor suction hose with a wire tie to prevent the chain from falling down into the chain case.

VTC Actuator

13. VTC Actuator Lock Pin - Release

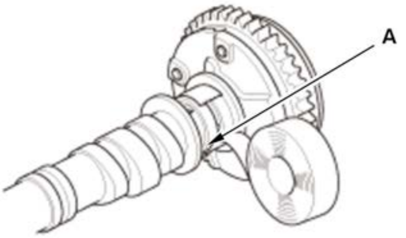 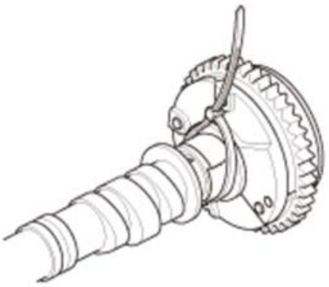	1. Check that the VTC actuator is locked by turning the VTC actuator counterclockwise. If it is not locked, turn the VTC actuator clockwise until it stops, then recheck it. If it is still not locked, replace the VTC actuator. 2. Seal the retard holes (A) in the No. 1 camshaft journal with tape and a wire tie.

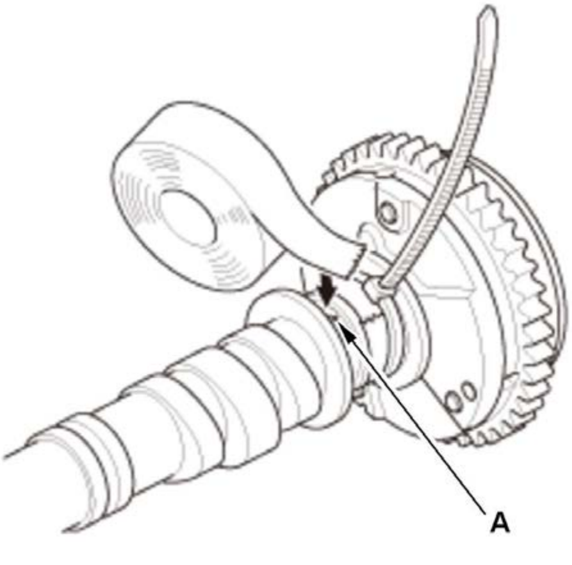	3. Seal one of the advance holes (A) with tape.

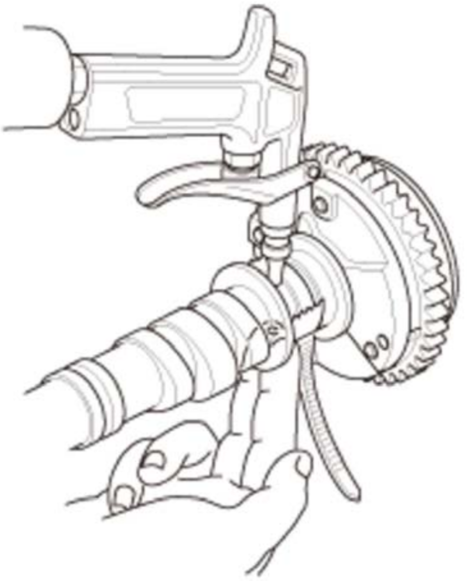	4. Apply air to the unsealed advance hole to release the lock.

14. VTC Actuator - Remove

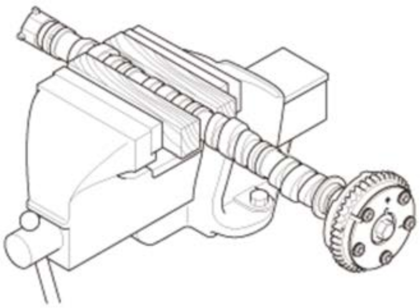	1. Secure the intake camshaft in a vise with wood blocks, then loosen the VTC actuator mounting bolt.**NOTE:** After this procedure, remove wood chips that may be stuck to the intake camshaft.

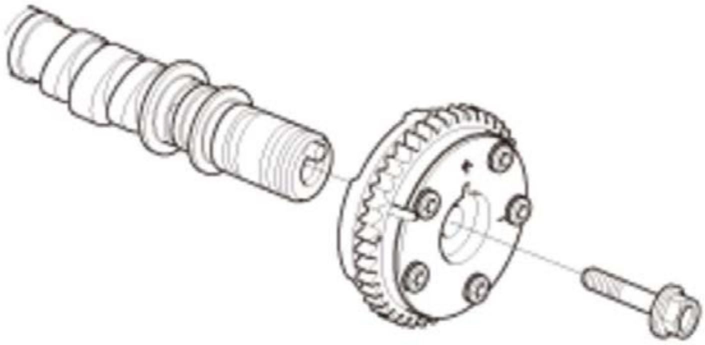	2. Remove the VTC actuator.

Exhaust Camshaft Sprocket

15. Exhaust Camshaft Sprocket - Remove

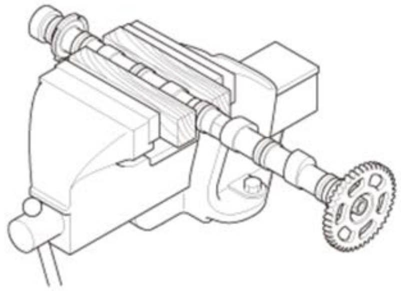	1. Secure the exhaust camshaft in a vise with wood blocks, then loosen the exhaust camshaft sprocket mounting bolt.**NOTE:** After this procedure, remove wood chips that may be stuck to the exhaust camshaft.

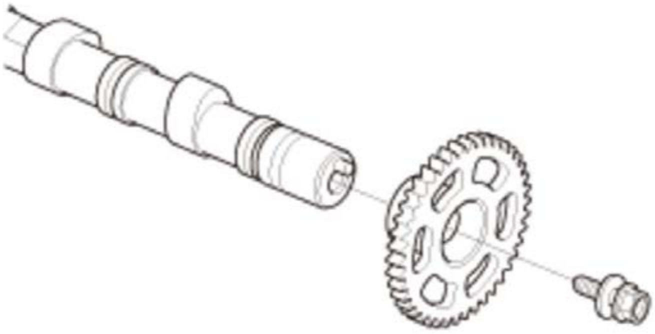	2. Remove the exhaust camshaft sprocket.

Installation

NOTE: How to read the torque specifications .

Exhaust Camshaft Sprocket

1. Exhaust Camshaft Sprocket - Install

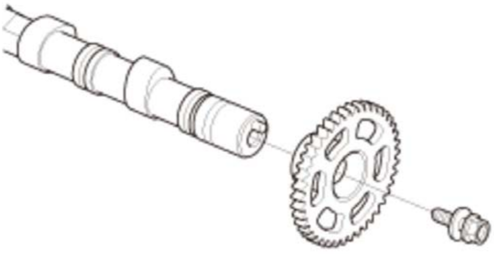	1. Install the exhaust camshaft sprocket. 2. Apply new engine oil to the threads of the exhaust camshaft sprocket mounting bolts, then loosely install them.

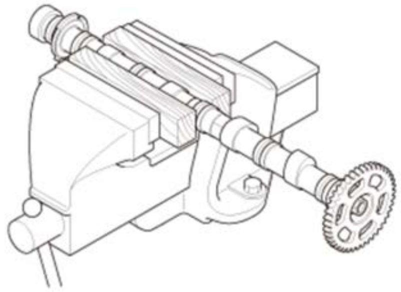	3. Secure the exhaust camshaft in a vise with wood blocks, then tighten the exhaust camshaft sprocket mounting bolt.**NOTE:** After this procedure, remove wood chips that may be stuck to the exhaust camshaft.

Specified Torque:
73 N.m (7.4 kgf.m, 54 lbf.ft)

VTC Actuator

2. VTC Actuator - Install

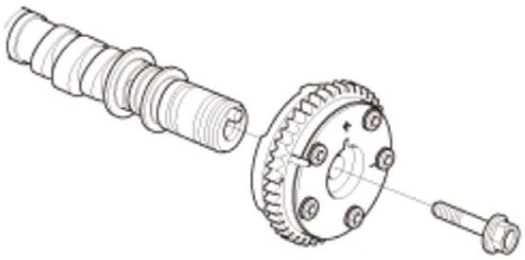	1. Install the VTC actuator. **NOTE:** Install the VTC actuator while in the unlocked position. 2. Apply new engine oil to the threads of the VTC actuator mounting bolts, then loosely install them.

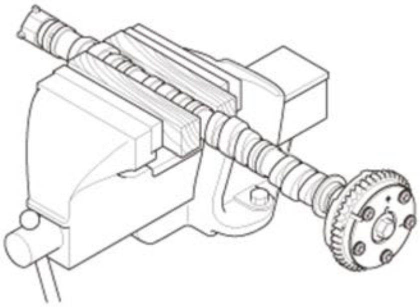	3. Secure the intake camshaft in a vise with wood blocks, then tighten the VTC actuator mounting bolt.**NOTE:** After this procedure, remove wood chips that may be stuck to the intake camshaft. 4. Turn the VTC actuator clockwise until you hear it click. Make sure to lock the VTC actuator by turning it.

Specified Torque:
115 N.m (11.7 kgf.m, 85 lbf.ft)

Camshaft

3. Camshaft - Install

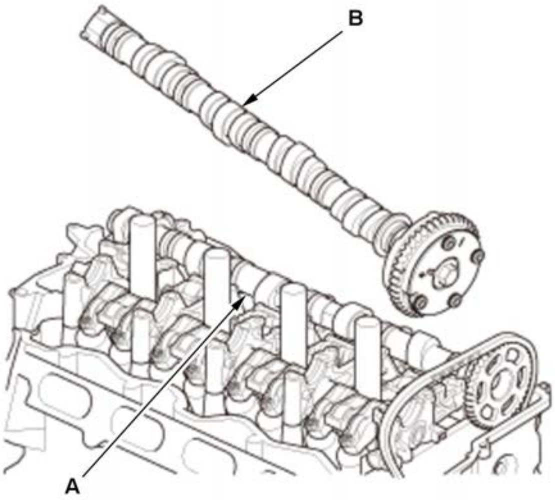	1. Remove the wire tie while keeping light tension on the cam chain. 2. Slide the exhaust camshaft (A) and the intake camshaft (B) in at an angle to allow the cam chain to slip over the teeth.

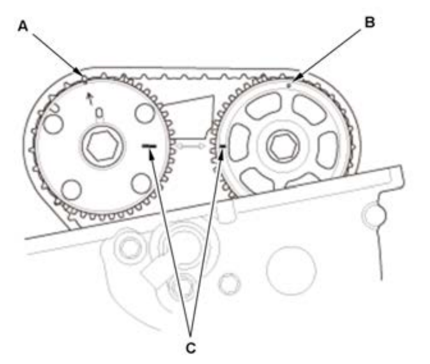	3. Set the No. 1 piston at top dead center (TDC). The punch mark (A) on the VTC actuator and the punch mark (B) on the exhaust camshaft sprocket should be at the top. Align the TDC marks (C) on the VTC actuator and the exhaust camshaft sprocket. 4. Apply new engine oil to the camshaft journals and lobes on both cams.

4. Camshaft Holder - Install

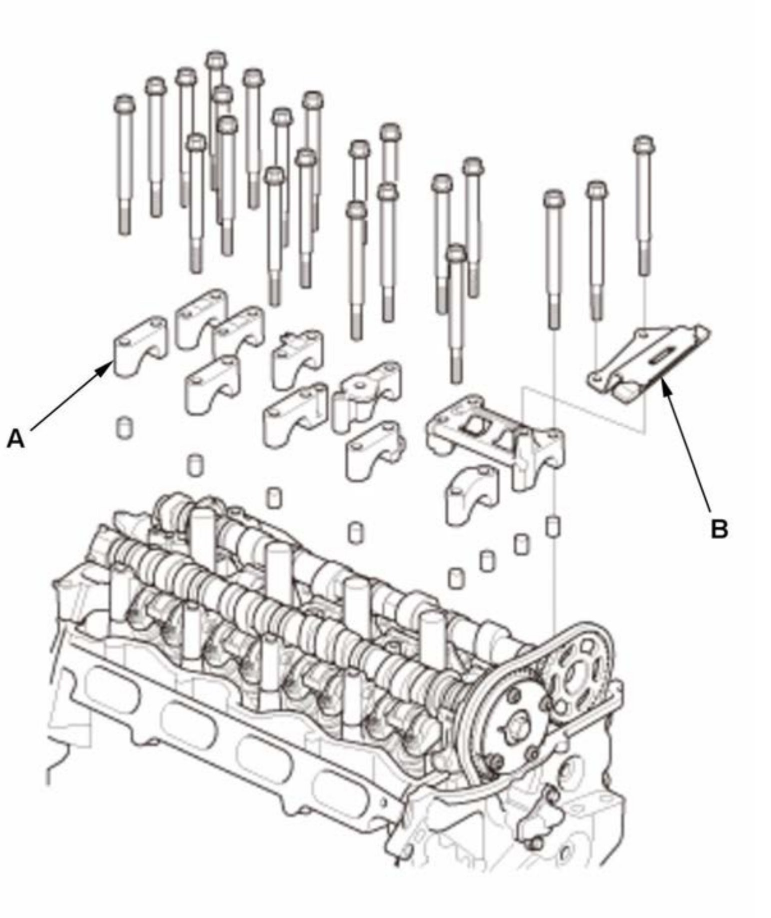	1. Apply new engine oil to the threads of the camshaft holder bolts. 2. Set the camshaft holders (A) and cam chain guide B in place.

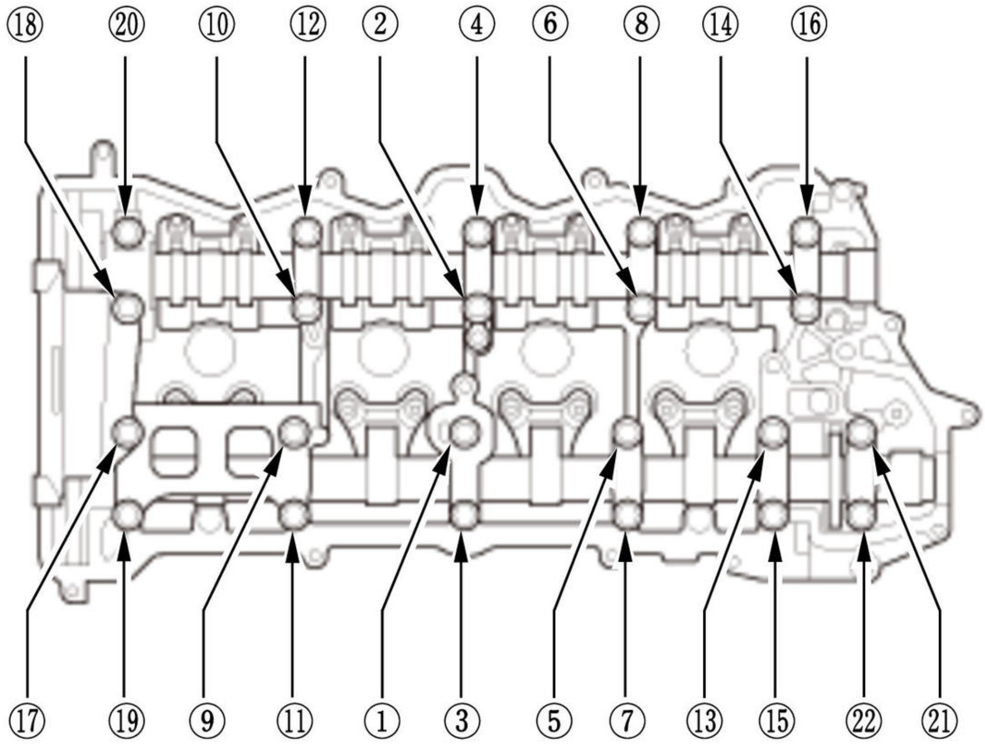
⑱
⑳
⑩
⑫
②
④
⑥
⑧
⑭
⑯
⑰
⑲
⑨
⑪
①
③
⑤
⑦
⑬
⑮
㉒
㉑

Fig. 17: Camshaft Holder Bolts Tightening Sequence
Courtesy of HONDA, U.S.A., INC.

B	3. Tighten the bolts to the specified torque.

Specified Torque:
13 N.m (1.3 kgf.m, 10 lbf.ft)

5. Rocker Shaft Bolt - Tighten

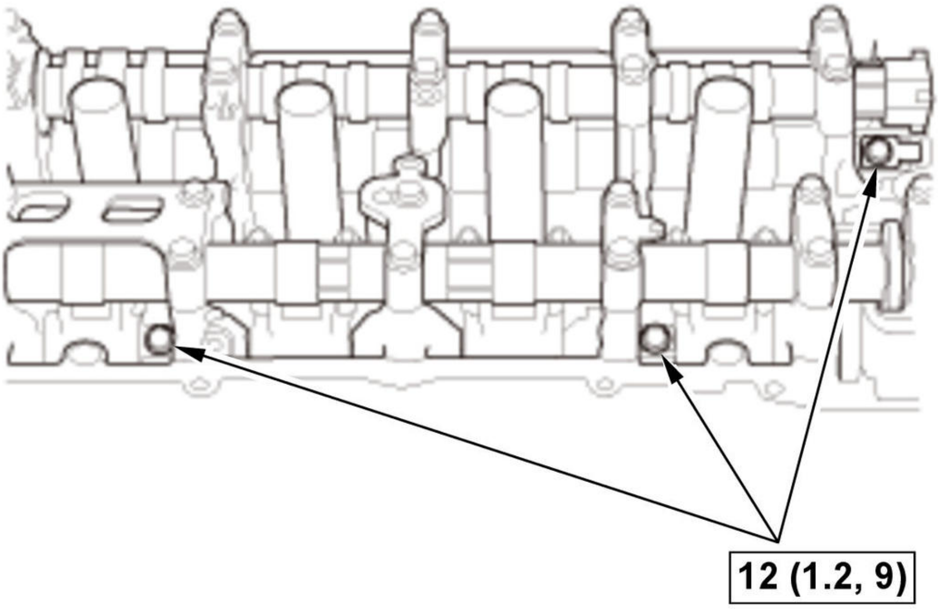

Fig. 18: Rocker Shaft With Torque Specifications
Courtesy of HONDA, U.S.A., INC.

NOTE: If the rocker arm assembly is disassembled, tighten the rocker shaft bolts.

6. Cam Chain Auto-Tensioner - Unlock

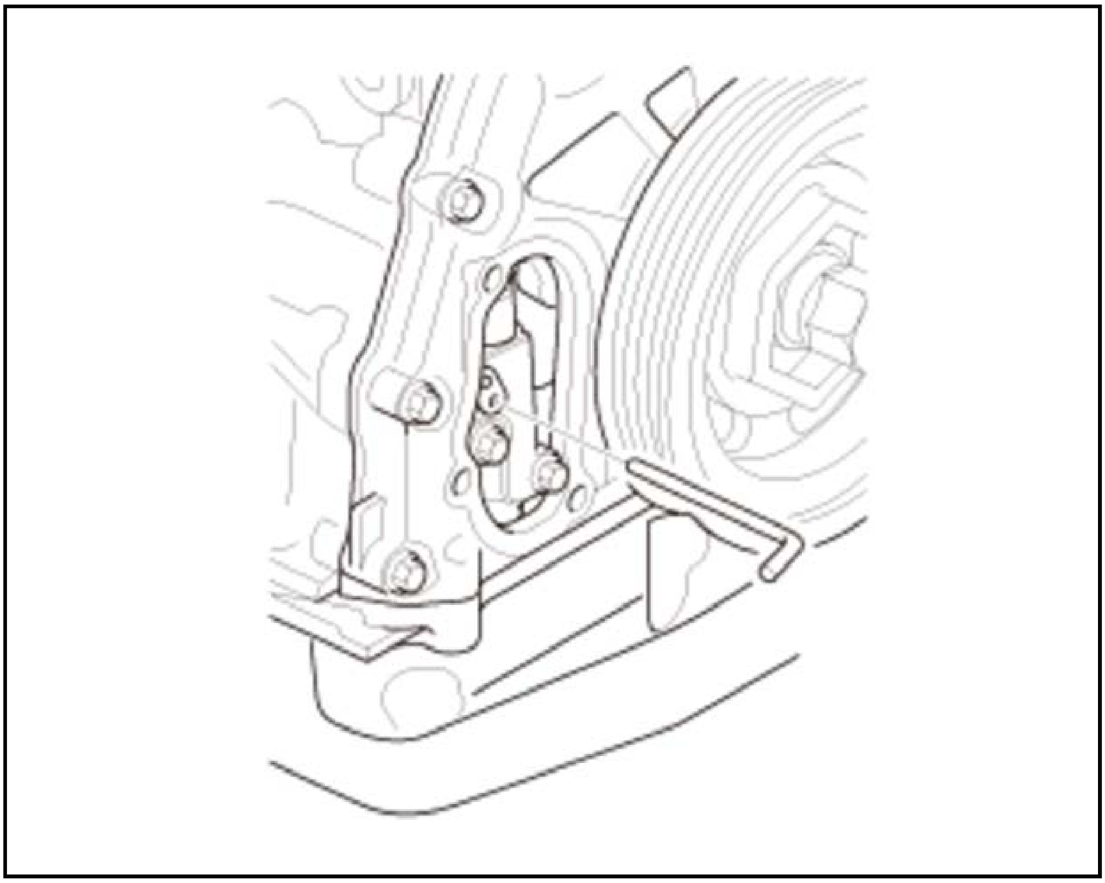

7. Chain Case Cover - Install

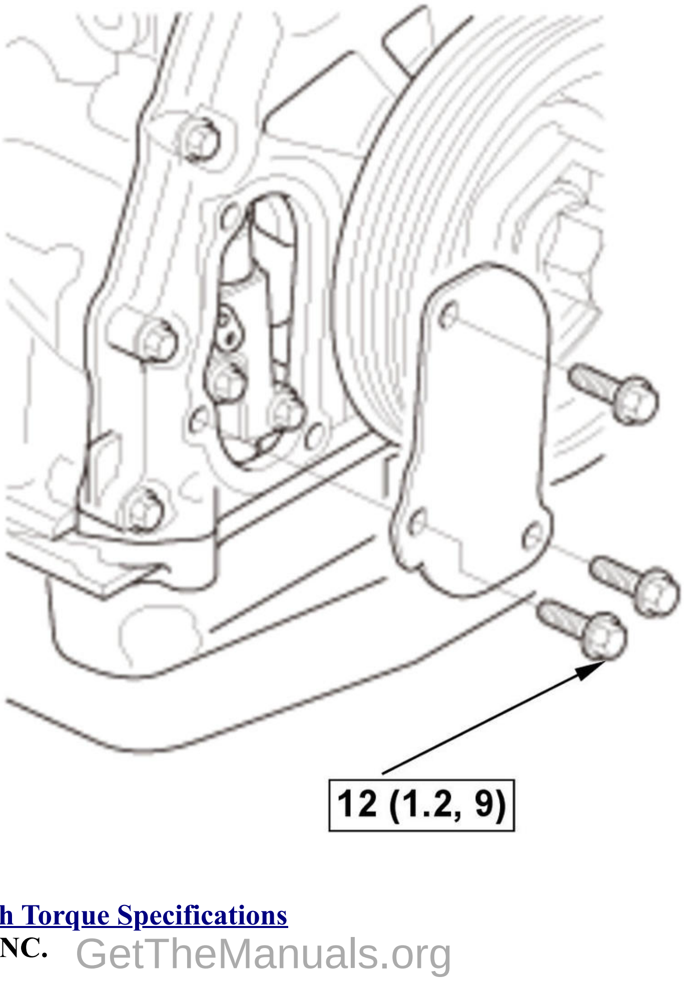

Fig. 19: Chain Case Cover With Torque Specifications
Courtesy of HONDA, U.S.A., INC.

B	1. **Apply liquid gasket** to the chain case mating surface of the chain case cover and to the inside edge of the threaded bolt holes. 2. Install the chain case cover.

8. **Valve Clearance - Adjust**
9. High Pressure Fuel Pump Base - Install

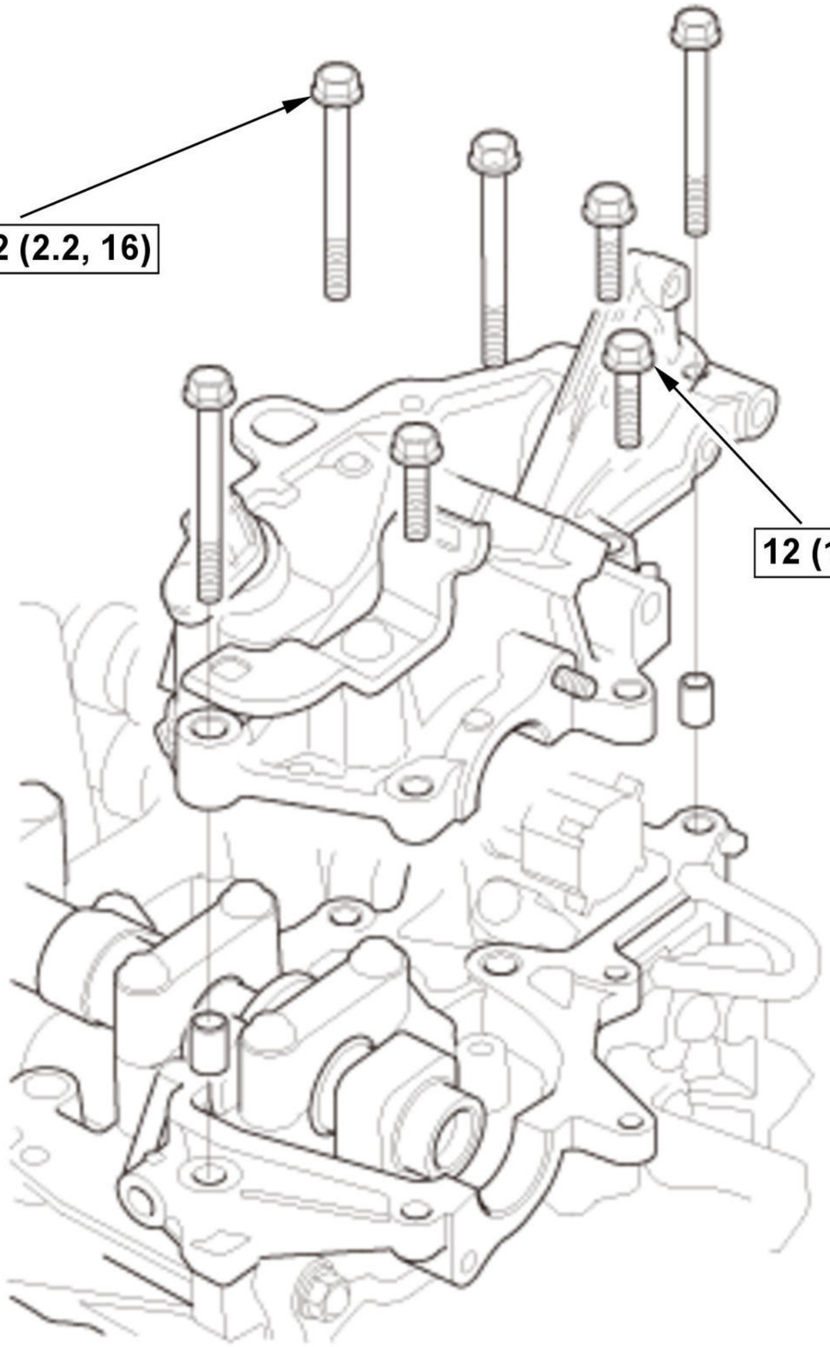

Fig. 20: High Pressure Fuel Pump Base With Torque Specifications
Courtesy of HONDA, U.S.A., INC.

B	1. **Apply liquid gasket** to the cylinder head mating surface of the high pressure fuel pump base and to the inside edge of the threaded bolt holes. 2. Install the high pressure fuel pump base.

10. Camshaft Holder Cover - Install

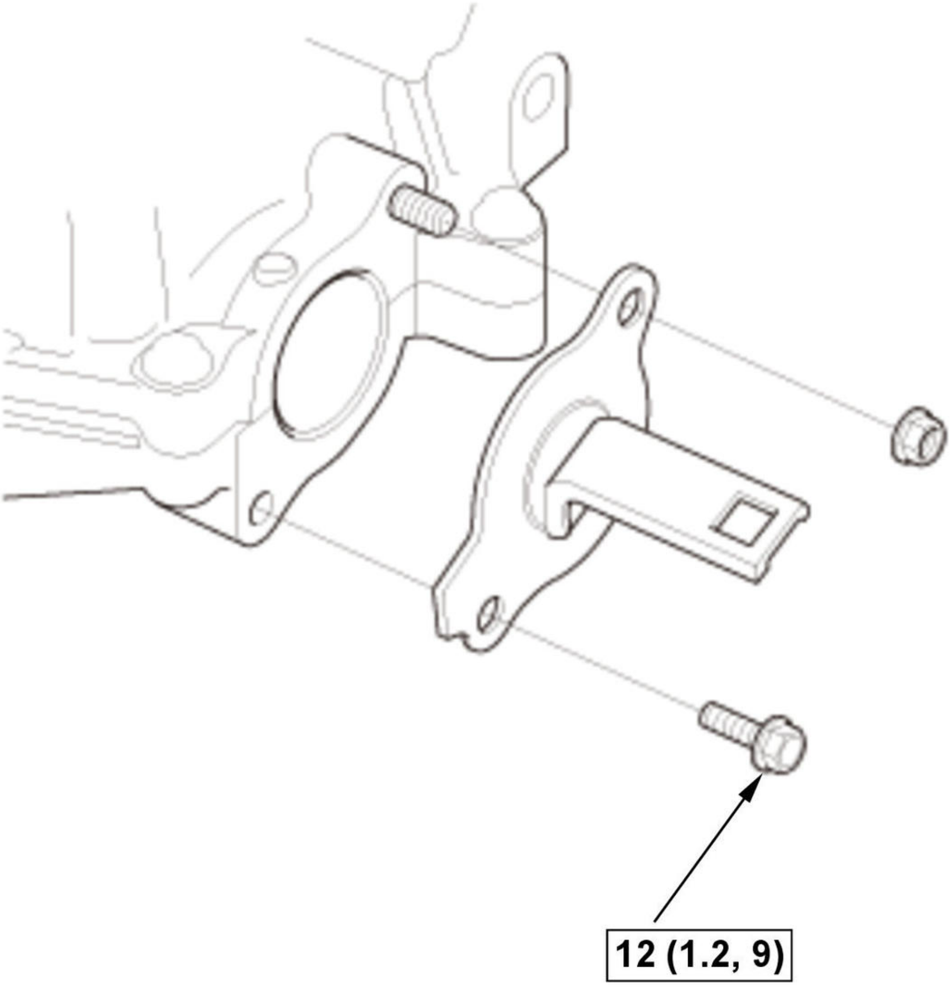

Fig. 21: Camshaft Holder Cover With Torque Specifications
Courtesy of HONDA, U.S.A., INC.

B	1. Apply liquid gasket to the cylinder head mating surface of the camshaft holder cover and to the inside edge of the threaded bolt holes. 2. Install the camshaft holder cover.

11. Connector (CMP Sensor B) - Connect
12. CMP Sensor A - Install
13. High Pressure Fuel Pump - Install
14. Cylinder Head Cover - Install
15. Fuel Leak (Low Pressure) - Check

1. Turn the vehicle to the ON mode, but do not operate the starter. After the fuel pump runs for about 2 seconds, the fuel rail will be pressurized. Repeat this two or three times, then check for fuel leakage.

16. Fuel Leak (High Pressure) - Check

Inspection

VTC Actuator

1. Intake Camshaft - Remove
2. VTC Actuator - Inspection

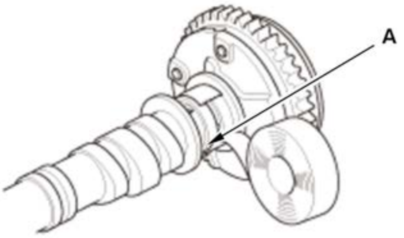 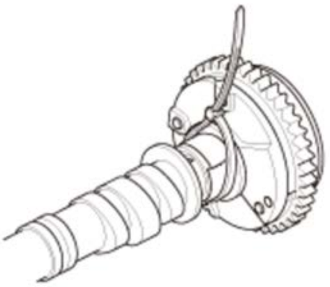	1. Check that the VTC actuator is locked by turning the VTC actuator counterclockwise. If it is not locked, turn the VTC actuator clockwise until it stops, then recheck it. If it is still not locked, replace the VTC actuator. 2. Seal the retard holes (A) in the No. 1 camshaft journal with tape and a wire tie.

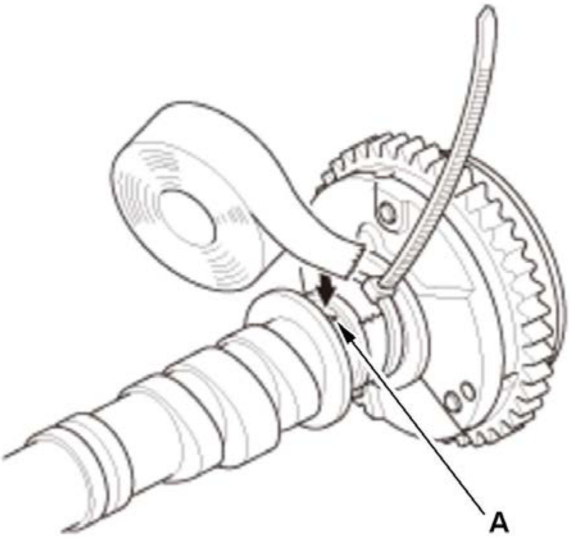	3. Seal one of the advance holes (A) with tape.

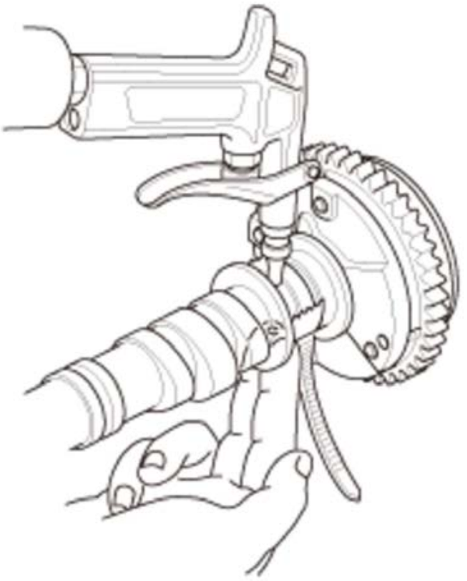	4. Apply air to the unsealed advance hole to release the lock.

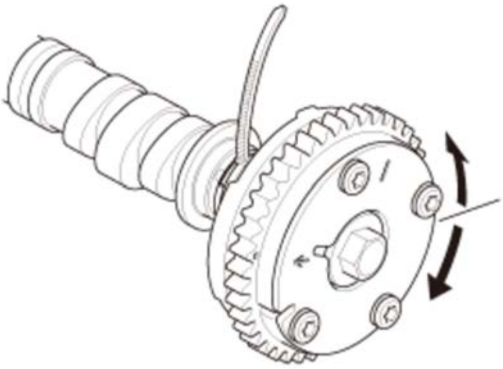	5. Check that the VTC actuator moves smoothly. If the VTC actuator does not move smoothly, replace the VTC actuator. 6. Remove the wire tie, the tape, and the adhesive residue from the camshaft journal.

3. All Removed Parts - Install

1. Install the parts in the reverse order of removal.

Camshaft

4. Camshaft - Remove
5. VTC Actuator - Remove
6. Exhaust Camshaft Sprocket - Remove
7. **Rocker Arm Assembly - Remove**
8. **Rocker Arm - Disassemble**
9. Camshaft - Inspect

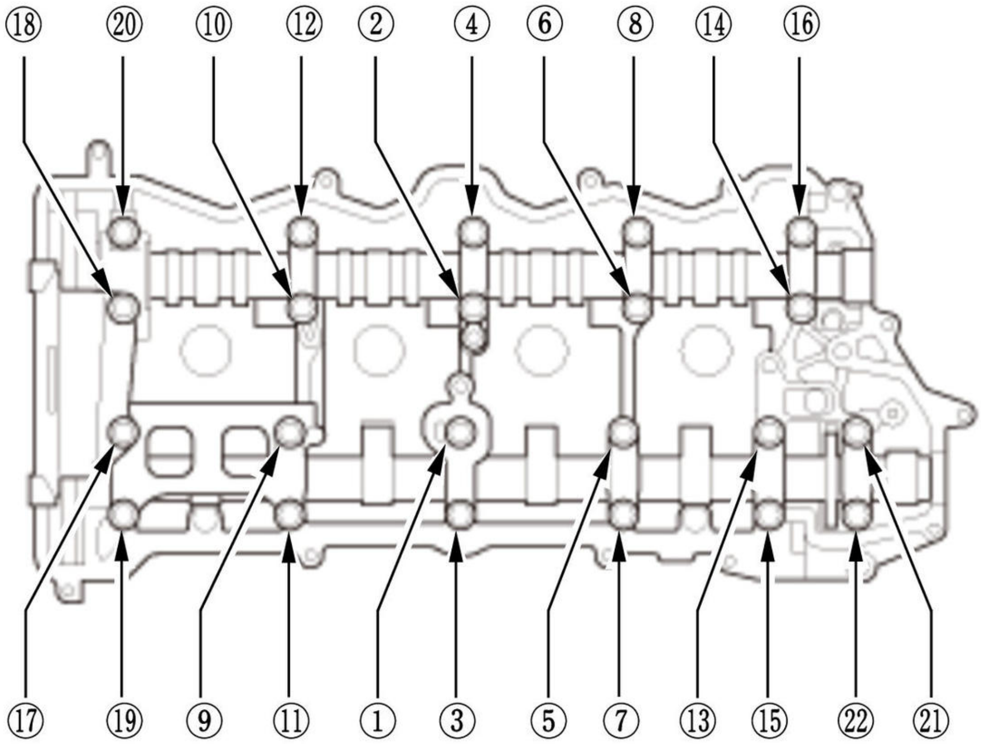

Fig. 22: Camshaft Bolts Tightening Sequence
Courtesy of HONDA, U.S.A., INC.

B	1. Put the rocker shaft holders, the camshaft, and the camshaft holders on the cylinder head, then tighten the bolts, in sequence, to the specified torque. 2. Seat the camshaft by pushing it away from the camshaft pulley end of the cylinder head.

Specified Torque:
13 N.m (1.3 kgf.m, 10 lbf.ft)

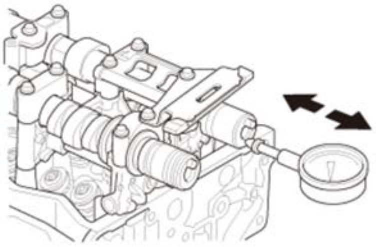	3. Zero the dial indicator against the end of the camshaft, then push the camshaft back and forth, and read the end play. If the end play is beyond the service limit, replace the cylinder head and recheck. If it is still beyond the service limit, replace the camshaft. 4. Loosen the camshaft holder bolts two turns at a time, in a crisscross pattern. Then remove the camshaft holders from the cylinder head. 5. Lift the camshafts out of the cylinder head, and wipe them clean, then inspect the lift ramps. Replace the camshaft if any lobes are pitted, scored, or excessively worn. 6. Clean the camshaft journal surfaces in the cylinder head, then set the camshafts back in place. Place a plastigage strip across each journal. 7. Install the camshaft holders, then tighten the bolts to the specified torque as shown in step 1.

Camshaft End Play	
Intake:	
Standard (New):	**0.05-0.20 mm (0.0020-0.0079 in)**
Service Limit:	**0.40 mm (0.0157 in)**
Exhaust:	
Standard (New):	**0.05-0.15 mm (0.0020-0.0059 in)**
Service Limit:	**0.40 mm (0.0157 in)**

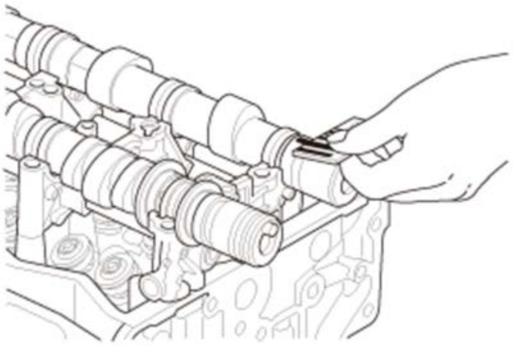

8. Remove the camshaft holders. Measure the widest portion of plastigage on each journal:

- If the camshaft-to-holder clearance is within the service limits, go to step 10.
- If the camshaft-to-holder clearance is beyond the service limit, and the camshaft has been replaced, replace the cylinder head.
- If the camshaft-to-holder clearance is beyond the service limit, and the camshaft has not been replaced, go to step 9.

Camshaft-to-Holder Oil Clearance	
Standard (New):	
No. 1 Journal:	**0.030-0.069 mm (0.00118-0.00272 in)**
Service Limit:	**0.150 mm (0.00591 in)**
No. 2, No. 3, No. 4, No. 5, and No. 6 Journals:	**0.060-0.099 mm (0.00236-0.00390 in)**
Service Limit:	**0.150 mm (0.00591 in)**

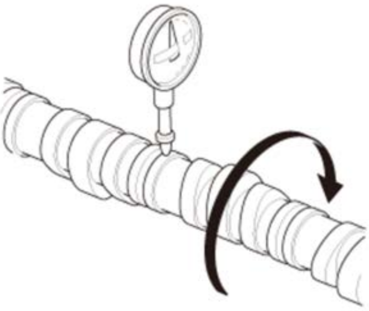

9. Check the total runout with the camshaft supported on V-blocks:

- If the total runout of the camshaft is within the standard, replace the cylinder head.
- If the total runout is beyond the standard, replace the camshaft and recheck the camshaft-to-holder oil clearance. If the oil clearance is still beyond the standard, replace the cylinder head.

Camshaft Total Runout	
Standard (New):	**0.03 mm (0.0012 in) max.**

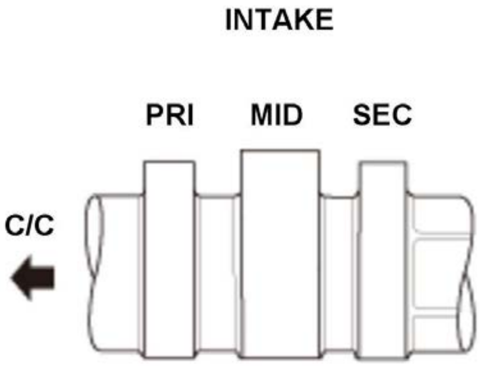

10. Measure cam lobe height.

Cam Lobe Height Standard (New):

PRI: Primary	MID: Mid	SEC: Secondary
C/C: Cam Chain		B

B	INTAKE	EXHAUST
PRI	33.858 mm (1.33299 in)	34.340 mm (1.35197 in)
MID	35.252 mm (1.38787 in)	
SEC	33.858 mm (1.33299 in)	

10. All Removed Parts - Install

1. Install the parts in the reverse order of removal.

CATALYTIC CONVERTER REMOVAL, INSTALLATION, AND INSPECTION (1.5 L ENGINE)

Removal and Installation

NOTE:

- 📖 Where icon is shown, further information shown below.
- Due to the high temperatures of the exhaust system, the exhaust nut, studs and bolts may seize preventing easy removal. If you encounter a seized condition, do the following.
-
    - Apply rust penetrant to the nut/stud or bolt.
    - Allow the penetrant to sit. The amount of time may vary.
    - Lightly tap the nut/stud or bolt with a hammer.
    - Slowly loosen the nut or bolt.
    - If the nut or bolt still will not loosen, repeat steps ① to ④ .

Catalytic Converter Removal

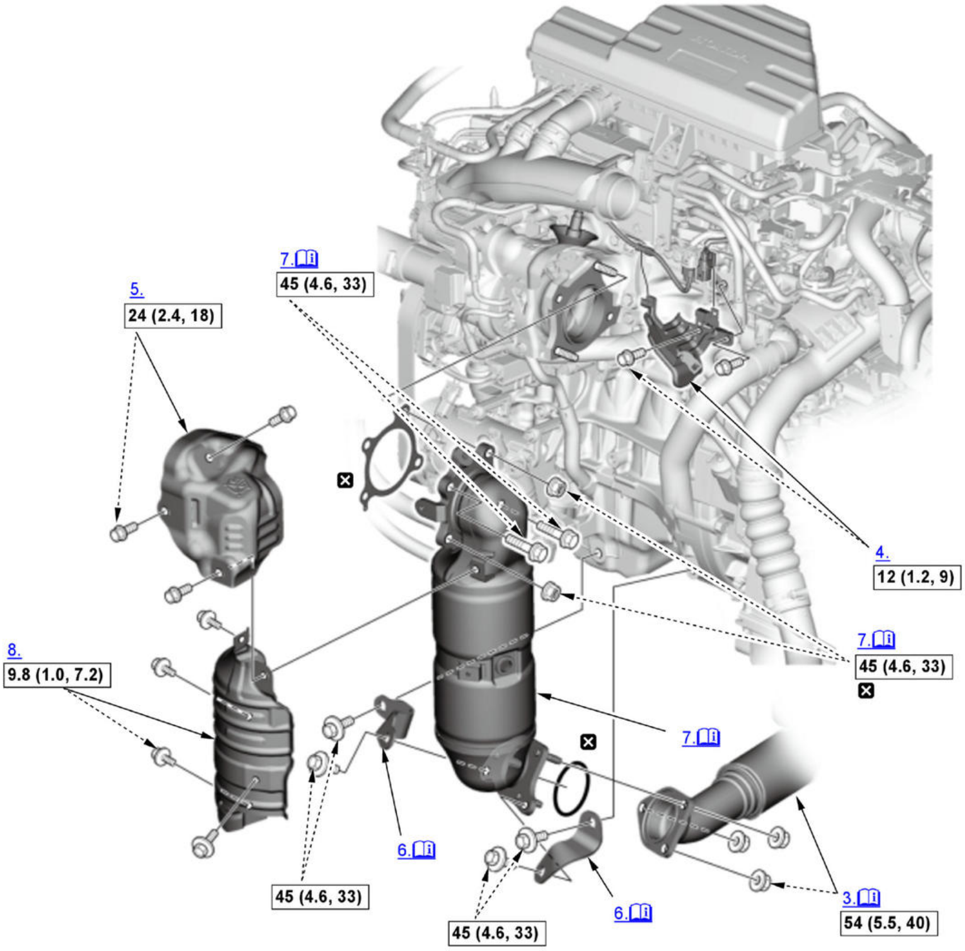

Fig. 23: Catalytic Converter Replacement Components With Torque Specifications
Courtesy of HONDA, U.S.A., INC.

B

📖	Detailed information, notes and precautions
☐	Torque: N.m (kgf.m, lbf.ft)
☒	Replace

1. Secondary HO2S (Sensor 2) - Remove
2. Front Engine Undercover Lid - Remove
3. Exhaust Pipe A - Remove

   NOTE: Remove the exhaust mounting rubber.

4. Bracket - Remove
5. Exhaust Chamber Cover - Remove
6. TWC Bracket - Remove

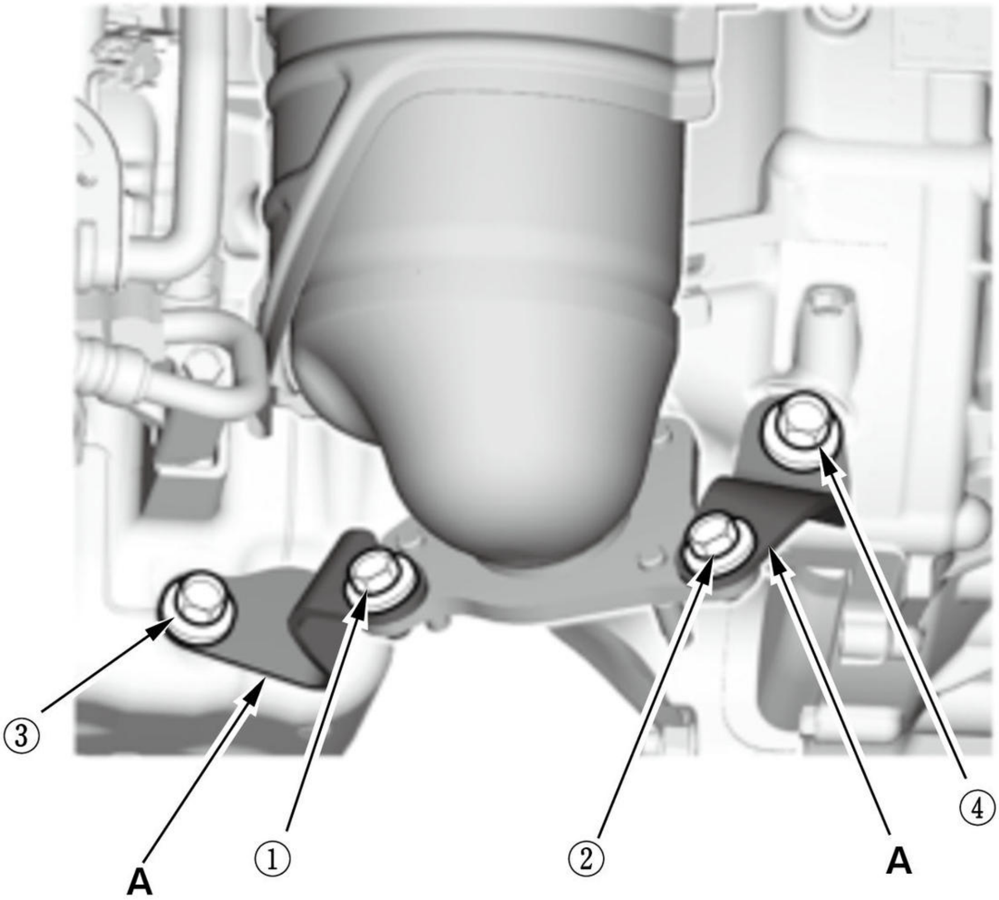

Fig. 24: TWC Bracket Bolts Tightening Sequence
Courtesy of HONDA, U.S.A., INC.

B

Note for installation

- Before installing the TWC brackets (A), confirm the bolts and nuts fixing the TWC to the turbocharger are tightened to the specified torque.
- When installing the TWC, loosely install all bolts by hand. Then tighten the TWC bracket mounting bolts in the numbered sequence shown.

7. TWC Assembly - Remove

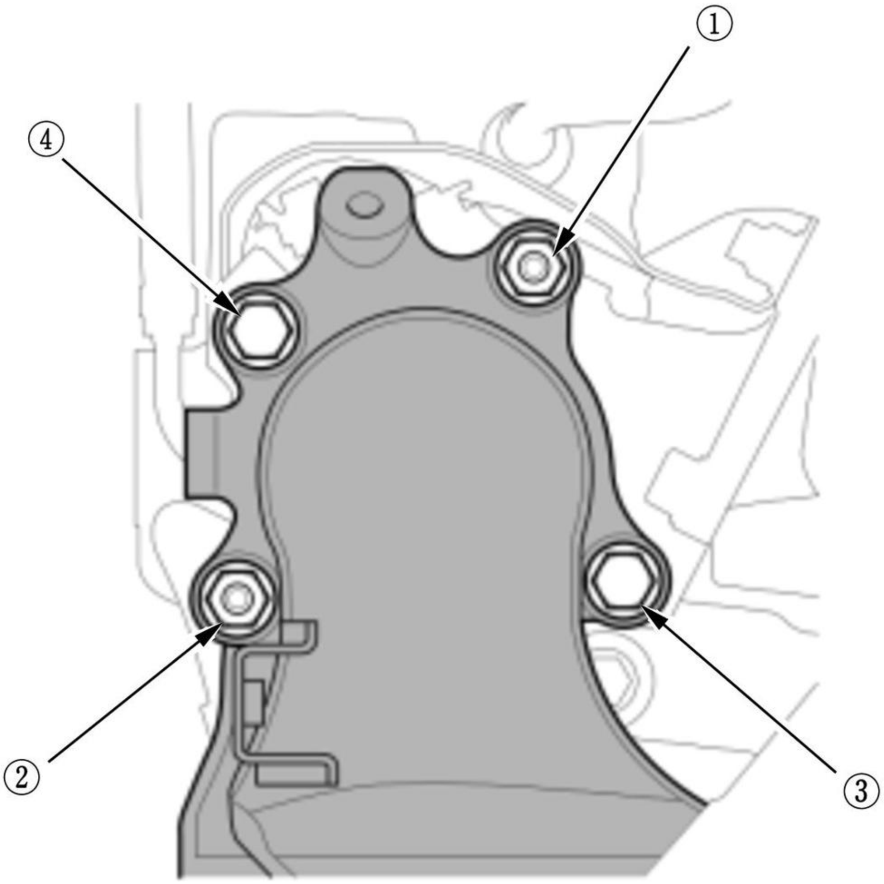

Fig. 25: TWC Assembly Bolts Tightening Sequence
Courtesy of HONDA, U.S.A., INC.

B

Note for installation

- When installing the TWC, loosely install all bolts and nuts by hand. Then tighten the TWC mounting bolts and nuts in the numbered sequence shown.

8. TWC Cover - Remove (if necessary)
9. All Removed Parts - Install

1. Install the parts in the reverse order of removal with new gaskets and new self-locking nuts.

Inspection

1. TWC - Remove
2. TWC - Inspect

1. Plug up the hole (s) other than main exhaust gas route. 2. Using a flashlight visually check for plugging, melting, or cracking of the catalyst. Replace the TWC if any of the visible area is damaged or plugged.

CATALYTIC CONVERTER REMOVAL, INSTALLATION, AND INSPECTION (2.4 L ENGINE) (2017 2018 2019)

Removal and Installation

NOTE:

- 🕮 Where icon is shown, further information shown below.

- Although a numbered sequence is shown, these "*1" indicated parts are separate components. If removal or replacement of one of the components is needed, it is not necessary to remove the other.
- Due to the high temperatures of the exhaust system, the exhaust nut, studs and bolts may seize preventing easy removal. If you encounter a seized condition, do the following.
-
    - Apply rust penetrant to the nut/stud or bolt.
    - Allow the penetrant to sit. The amount of time may vary.
    - Lightly tap the nut/stud or bolt with a hammer.
    - Slowly loosen the nut or bolt.
    - If the nut or bolt still will not loosen, repeat steps ① to ④.

Catalytic Converter Exploded View

WU-TWC*1

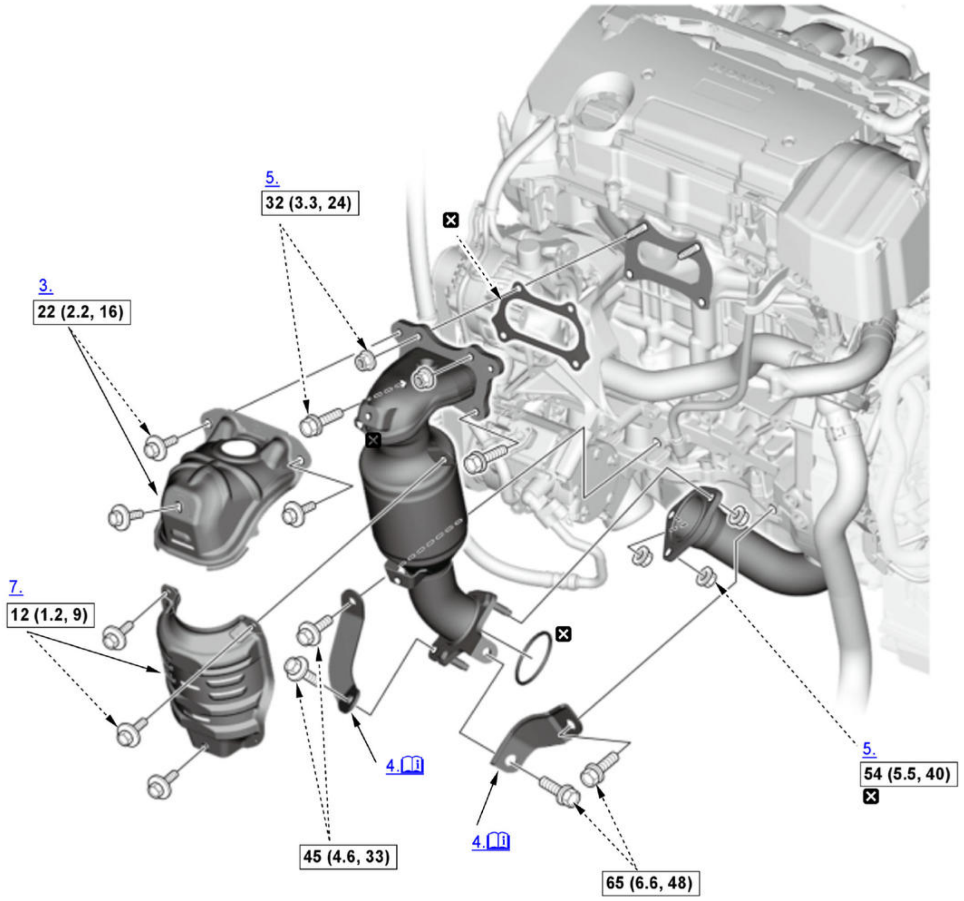

Fig. 26: Catalytic Converter Exploded View With Torque Specifications
Courtesy of HONDA, U.S.A., INC.

ⓘ	Detailed information, notes and precautions
☐	Torque: N.m (kgf.m, lbf.ft)
☒	Replace

Catalytic Converter Removal

Under-Floor TWC*1

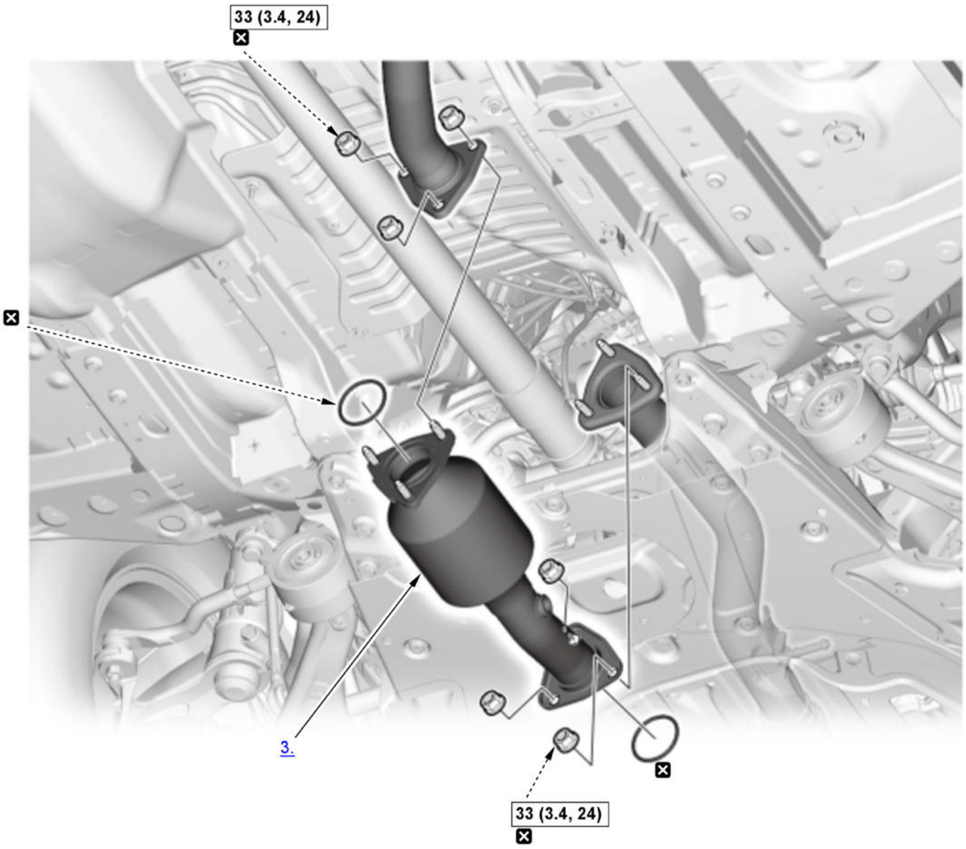

Fig. 27: Catalytic Converter Replacement Components With Torque Specifications
Courtesy of HONDA, U.S.A., INC.

B

ℹ	Detailed information, notes and precautions
▭	Torque: N.m (kgf.m, lbf.ft)
☒	Replace

WU-TWC

1. A/F Sensor (Sensor 1) - Remove
2. Front Engine Undercover Lid - Remove
3. Exhaust Chamber Cover - Remove
4. TWC Bracket - Remove

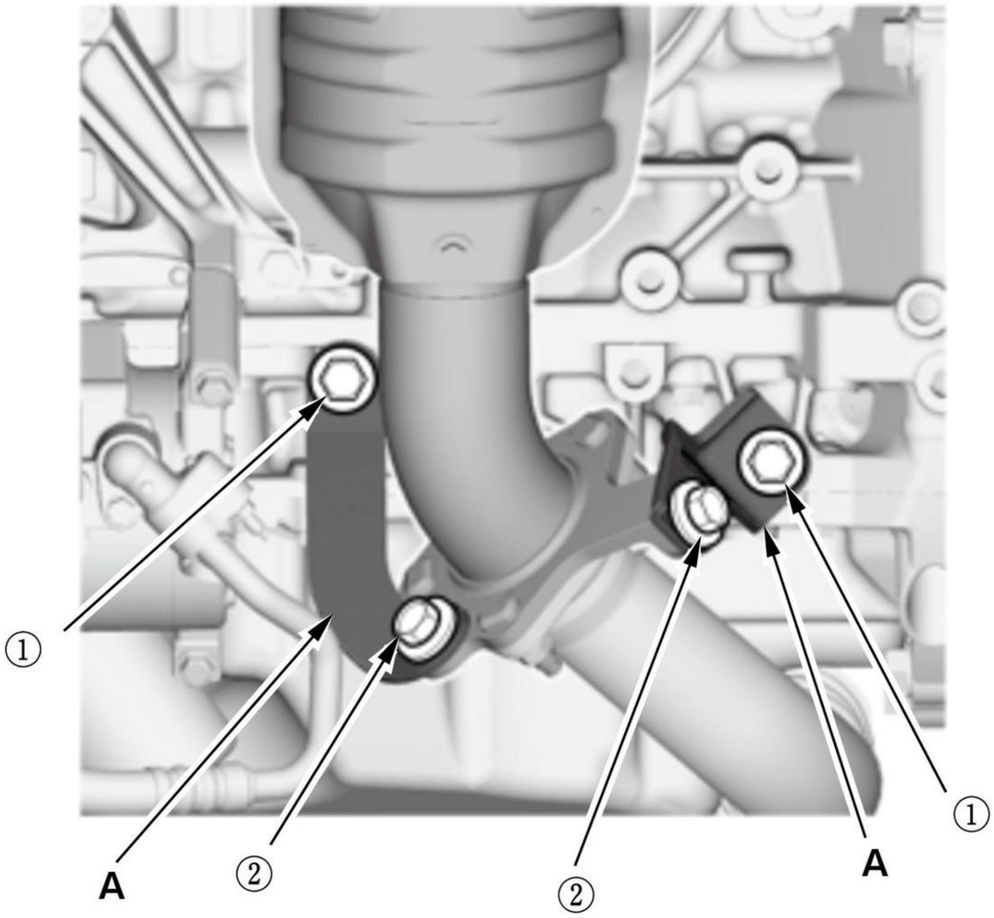

Fig. 28: TWC Bracket Bolts Tightening Sequence
Courtesy of HONDA, U.S.A., INC.

Note for installation

- Before installing the TWC brackets (A), confirm the bolts and nuts fixing the TWC to the cylinder head are tightened to the specified torque.
- Tighten the TWC bracket mounting bolts in the numbered sequence shown.

5. TWC Assembly - Remove
6. Under-Floor TWC - Move (Only for installation)

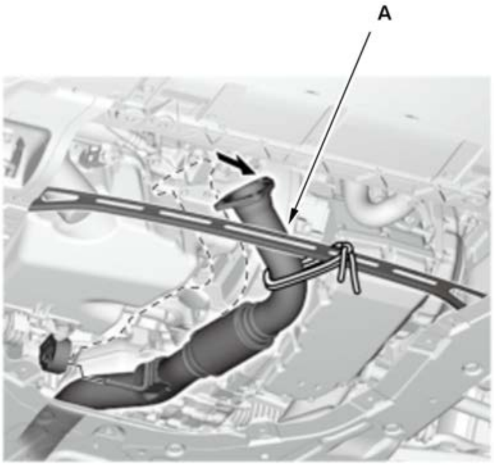	1. Move the under-floor TWC leftward and tie it up with string so as not to allow it to touch the WU-TWC (A). **NOTE:** • When the under-floor TWC is high temperature, be careful for thermal effect on the material and work. • If there is not enough clearance between the WU-TWC and the under-floor TWC, remove rubbers mounts as necessary.

7. TWC Cover - Remove (if necessary)
8. All Removed Parts - Install

1. Install the parts in the reverse order of removal with new gaskets and new self-locking nuts.

Under-Floor TWC

9. Engine Undercover - Remove
10. Secondary HO2S (Sensor 2) - Remove
11. Under-Floor TWC - Remove
12. All Removed Parts - Install

1. Install the parts in the reverse order of removal with new gaskets and new self-locking nuts.

Inspection

1. TWC - Remove
2. TWC - Inspect

1. Plug up the hole (s) other than main exhaust gas route.

2. Using a flashlight visually check for plugging, melting, or cracking of the catalyst. Replace the TWC if any of the visible area is damaged or plugged.

CRANKSHAFT AND CKP PULSE PLATE REMOVAL, INSTALLATION, AND INSPECTION (1.5 L ENGINE)

Special Tools Required

Image	Description/Tool Number
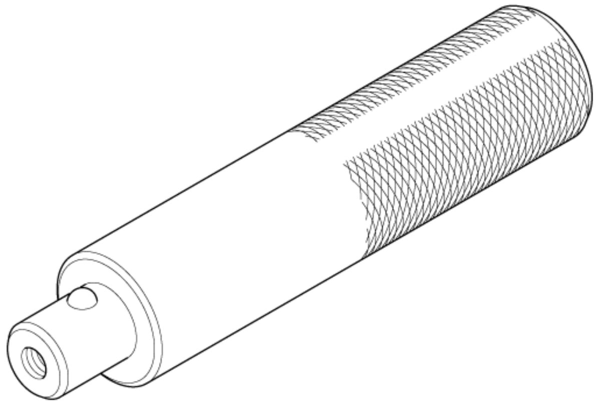	Driver Handle, 15 x 135L 07749-0010000
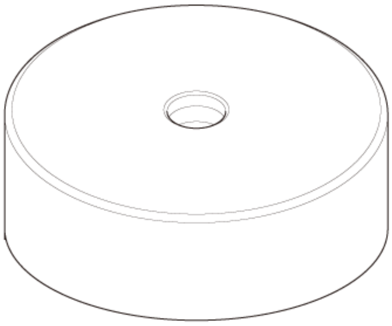	Oil Seal Driver Attachment, 92 mm 070AD-5R00100

Removal

1. Engine - Remove
2. Transmission - Remove
3. Drive Plate - Remove
4. Cylinder Head - Remove
5. Cam Chain Drive Sprocket - Remove

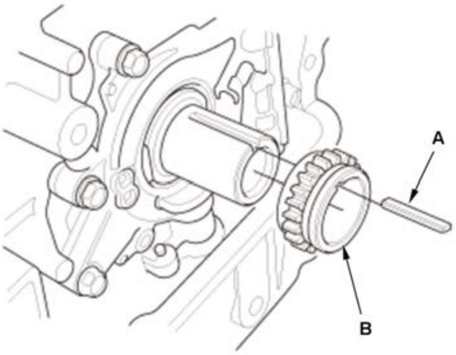	1. Remove the key (A) and the cam chain drive sprocket (B).**NOTE:** Check the direction of the key. When the key is installed, install the key as same direction of the original one.

6. **Oil Pan - Remove**
7. **Oil Pump - Remove**
8. Oil Seal Case - Remove

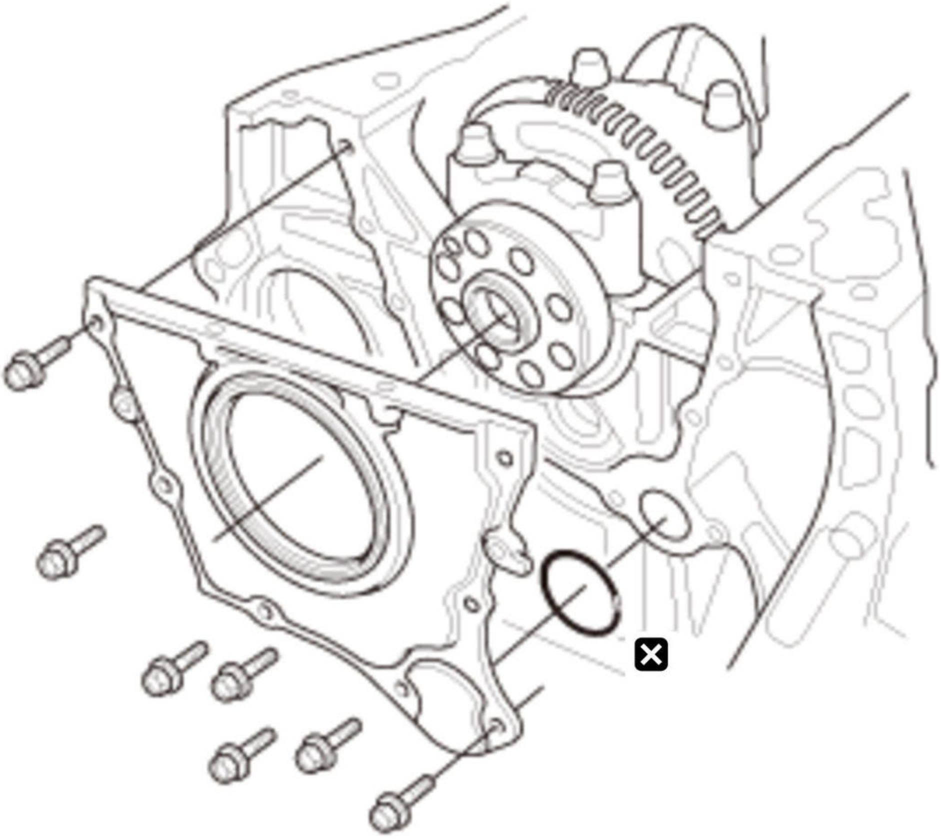

9. Connecting Rod Cap and Bearing Half - Remove

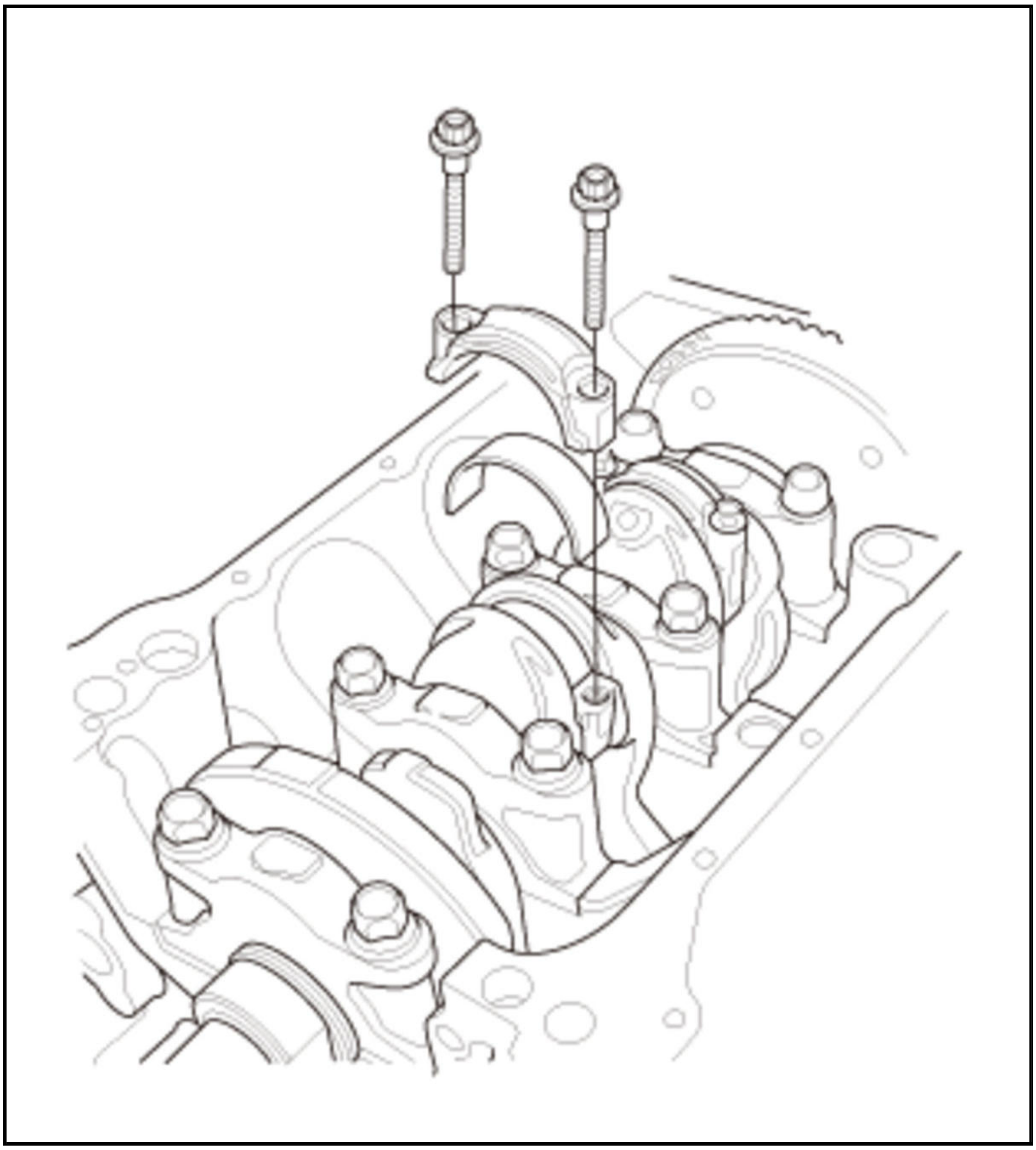

NOTE: Keep all connecting rod caps and connecting rod bearings in order.

10. Main Bearing Cap and Bearing Half - Remove

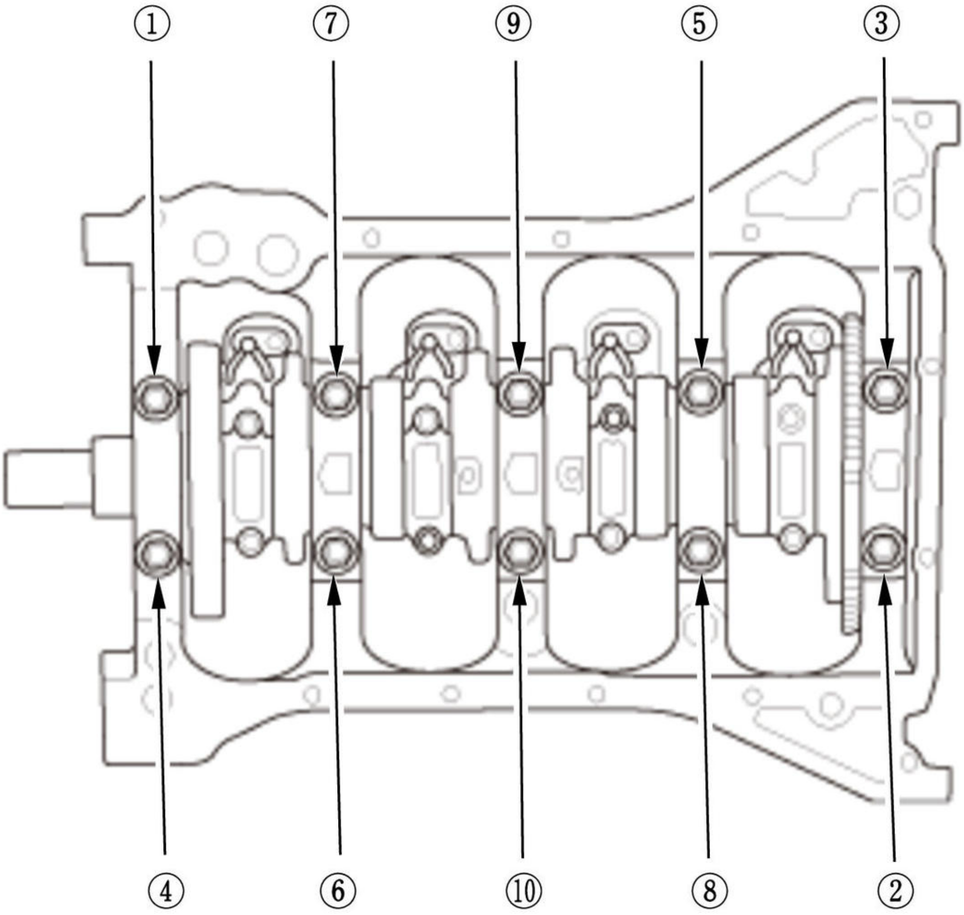

Fig. 29: Main Bearing Cap And Bearing Half Bolts Loosening Sequence
Courtesy of HONDA, U.S.A., INC.

B	1. Remove the bearing cap bolts. To prevent warpage, loosen the bolts in sequence 1/3 turn at a time; repeat the sequence until all bolts are loosened.

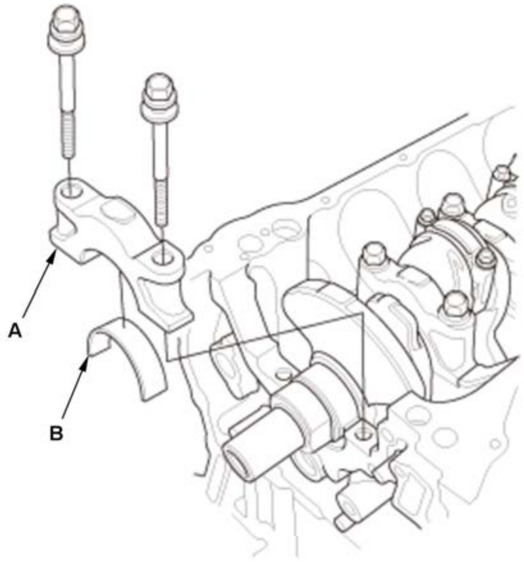	2. Remove the main bearing caps (A) and the main bearings (B). **NOTE:** • Check the installed position and direction of the main bearing caps. • When the main bearing caps are installed, install the main bearing caps as same location and direction of the original them.

11. Crankshaft - Remove

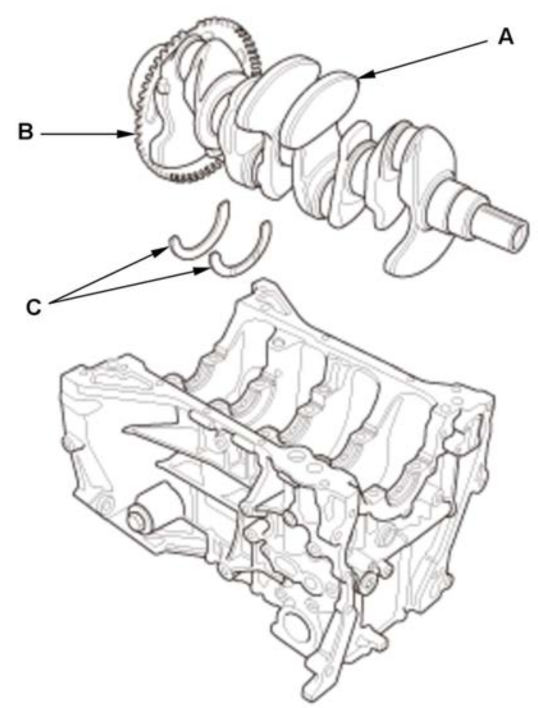	1. Lift the crankshaft (A) out of the engine block, being careful not to damage the CKP pulse plate (B). 2. Remove the thrust washers (C).

12. CKP Pulse Plate - Remove

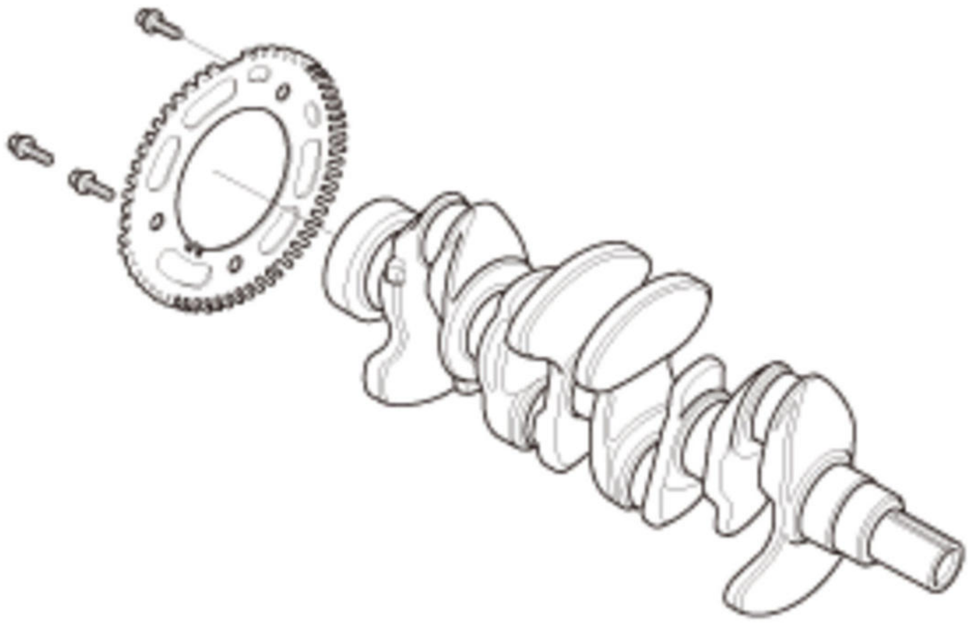

Installation

NOTE: How to read the torque specifications .

1. Crankshaft Main Bearing Clearance - Check
2. CKP Pulse Plate - Install

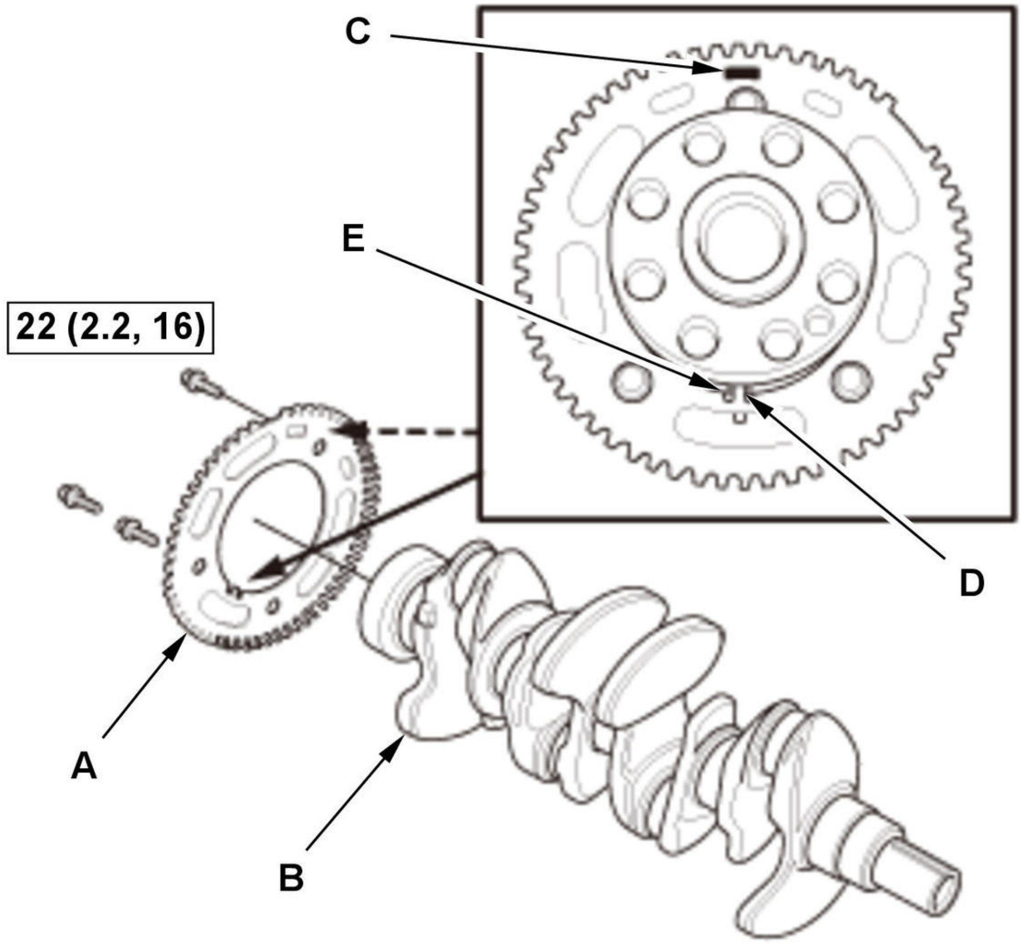

Fig. 30: CKP Pulse Plate With Torque Specifications
Courtesy of HONDA, U.S.A., INC.

B	1. Apply new engine oil to the threads and flanges of CKP pulse plate mounting bolts. 2. Install the CKP pulse plate (A) on the crankshaft (B). **NOTE:** • Be careful not to damage the CKP pulse plate. • Position the mark (C) facing it out side and align the portion (D) on the CKP pulse plate and groove (E) on the crankshaft.

3. Crankshaft - Install

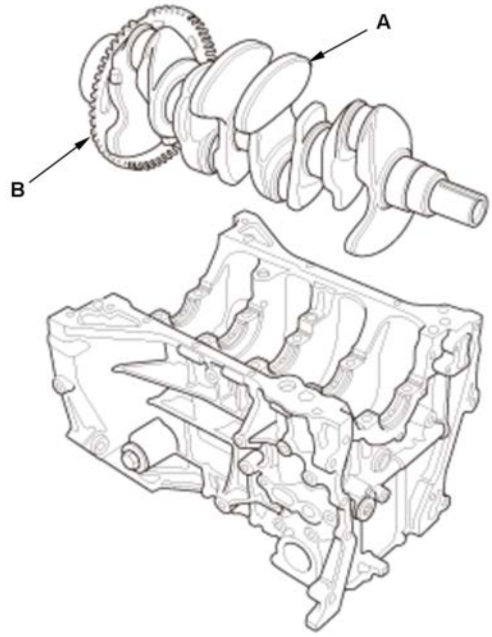	1. Install the bearing halves in the engine block and the connecting rods. 2. Apply a coat of new engine oil to the main bearings and the connecting rod bearings. 3. Hold the crankshaft (A) so rod journal No. 2 and rod journal No. 3 are straight up, then lower the crankshaft into the engine block. **NOTE:** Be careful not to damage the journals and the CKP pulse plate (B).

4. Thrust Washer - Install

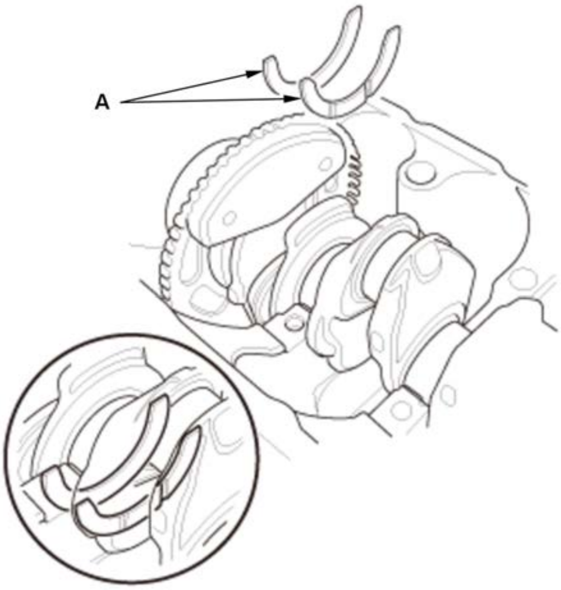	1. Apply new engine oil to the thrust washer surfaces. Install the thrust washers (A) in the No. 4 journal of the engine block.

5. Main Bearing Cap and Bearing Half - Install

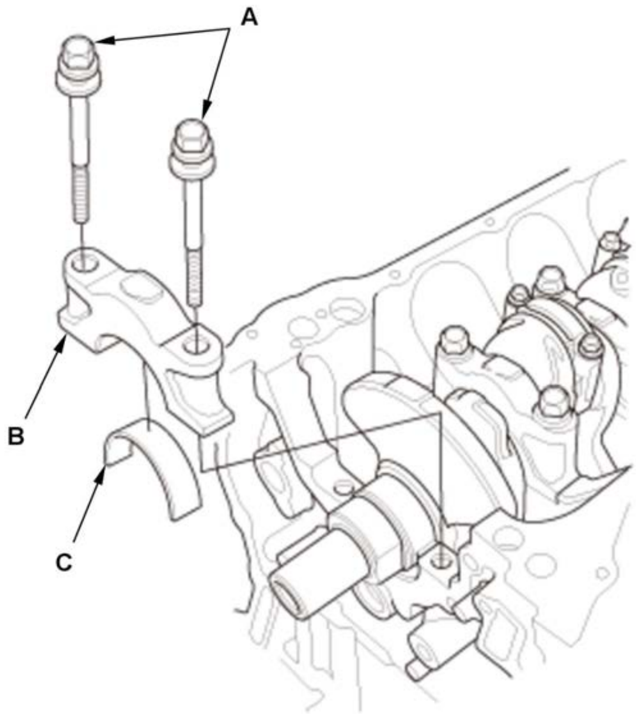

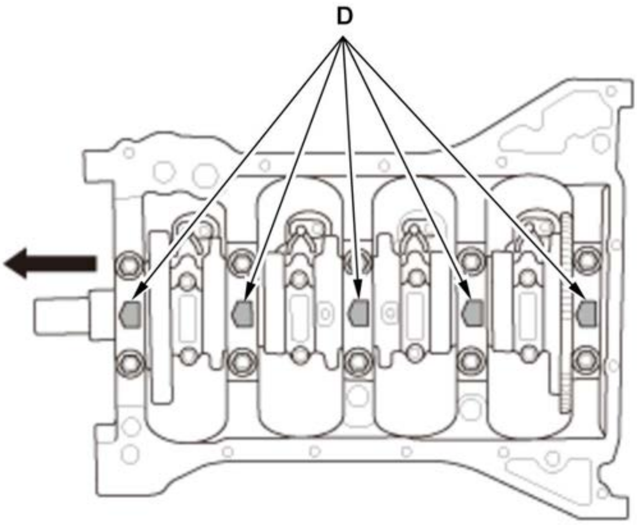

1. Apply new engine oil to the bearing cap bolts (A) threads and flanges.

2. Install the bearing cap bolts to the main bearing cap (B).

3. Set the bearing halves (C), the main bearing caps, and the bearing cap bolts in place. Then loosely tighten the bearing cap bolts.

NOTE:

- Install the main bearing caps aligning the arrows (D) with the direction to the cam chain case.
- When loosely tightening the bearing cap bolts, do not sit the bolts on the main bearing caps.

4. Lightly tap the main bearing caps with a plastic mallet until the main bearing caps sit on the engine block.

6. Bearing Cap Bolt - Tighten

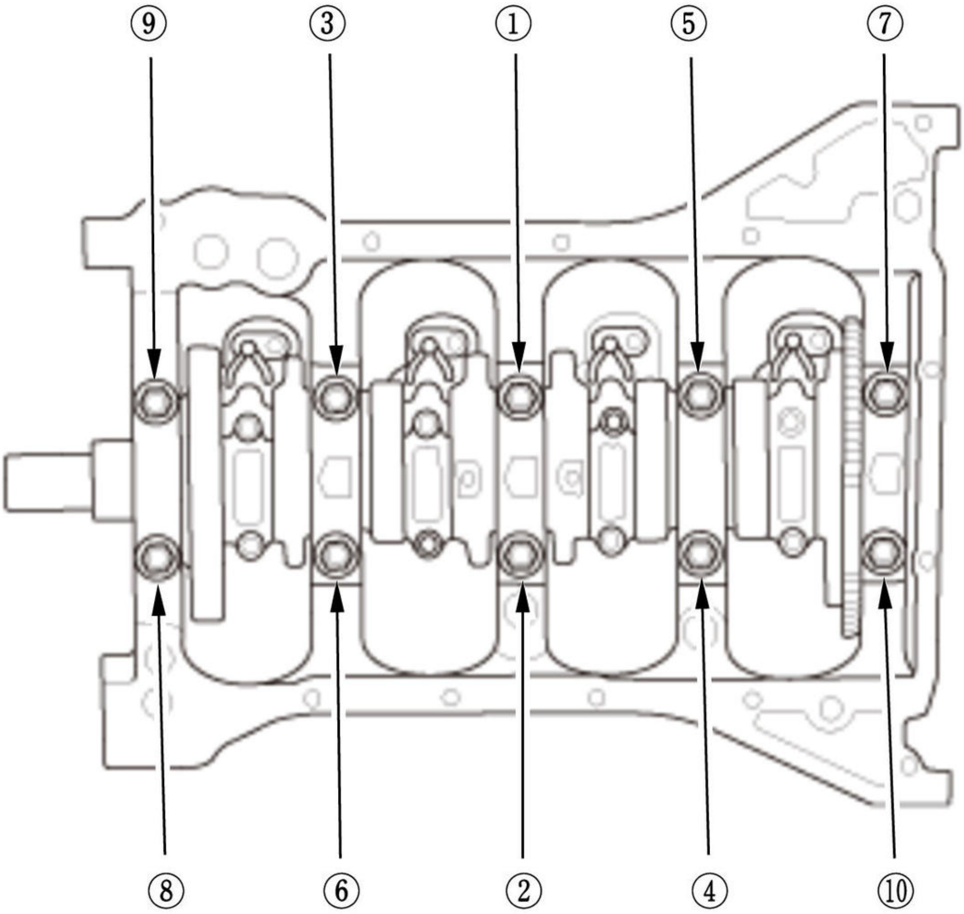

Fig. 31: Bearing Cap Bolts Tightening Sequence
Courtesy of HONDA, U.S.A., INC.

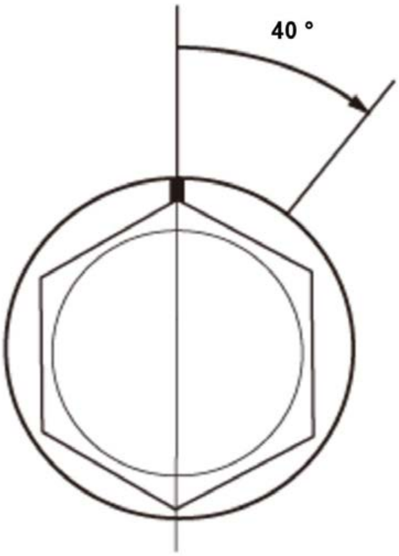	1. Tighten the bearing cap bolts, in the numbered sequence shown, to the specified torque. **NOTE:** Do not rotate the crankshaft during inspection. 2. Tighten the bearing cap bolts an additional 40 deg..

Specified Torque:
30 N.m (3.1 kgf.m, 22 lbf.ft)

7. Connecting Rod Bearing Clearance - Check
8. Connecting Rod Bolt - Inspect

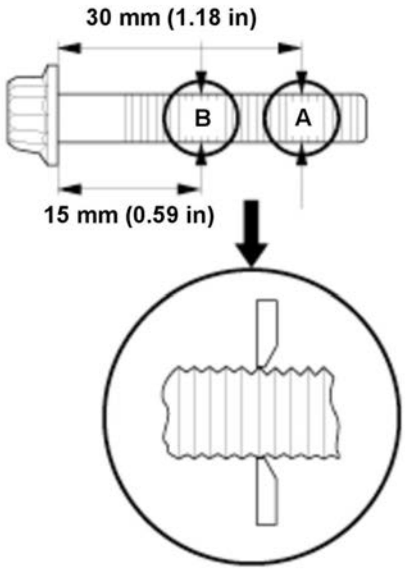	1. Measure the diameter of each connecting rod bolt at point A and point B. 2. Calculate the difference in diameter between point A and point B. 3. If the difference in diameter is out of specification, replace the connecting rod bolt.

Point A-Point B = Difference in Diameter	
Difference in Diameter	
Specification:	**0-0.05 mm (0-0.0020 in)**

9. Connecting Rod Cap and Bearing Half - Install

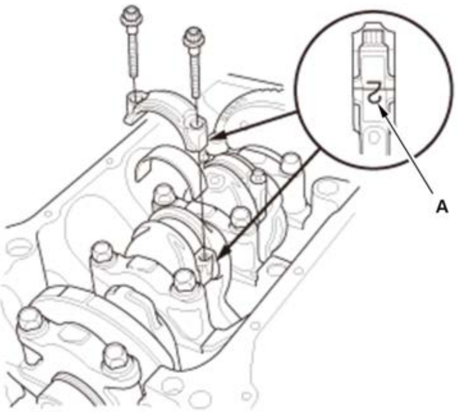	1. Apply new engine oil to the threads of the connecting rod bolts. 2. Seat the rod journals into connecting rod No. 1 and connecting rod No. 4. Line up the mark (A) on the connecting rod and the connecting rod cap. 3. Install the connecting rod caps and the bolts finger-tight. 4. Rotate the crankshaft clockwise, and seat the journals into connecting rod No. 2 and connecting rod No. 3. Line up the mark on the connecting rod and the connecting rod cap. 5. Install the connecting rod caps and the bolts finger-tight.

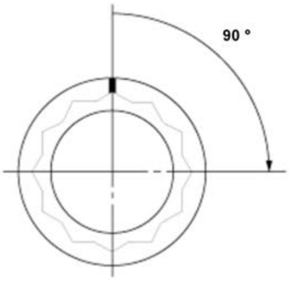	6. Torque the connecting rod bolts to the specified torque. 7. Tighten the connecting rod bolts an additional 90 deg..**NOTE:** Remove the connecting rod bolt if you tightened it beyond the specified angle, inspect the connecting rod bolts. Do not loosen it back to the specified angle.

Specified Torque:
13 N.m (1.3 kgf.m, 10 lbf.ft)

10. Transmission End Crankshaft Oil Seal - Install

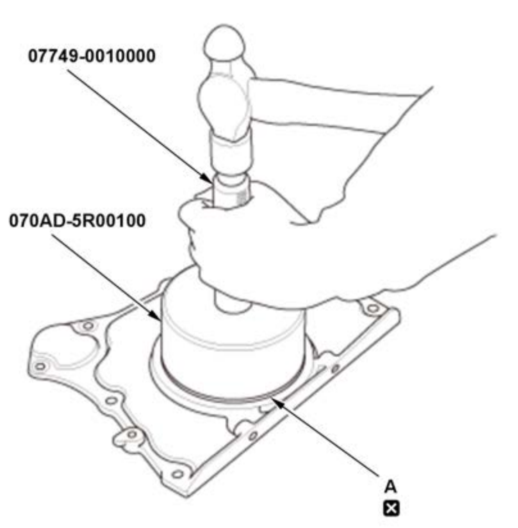	1. Remove the transmission end crankshaft oil seal. 2. Clean and dry the transmission end crankshaft oil seal housing. 3. Apply a light coat of new engine oil to the lip of the new transmission end crankshaft oil seal. 4. Use the driver handle, 15 x 135L and the oil seal driver attachment, 92 mm to drive a new transmission end crankshaft oil seal (A) squarely into the oil seal case.

11. Oil Seal Case - Install

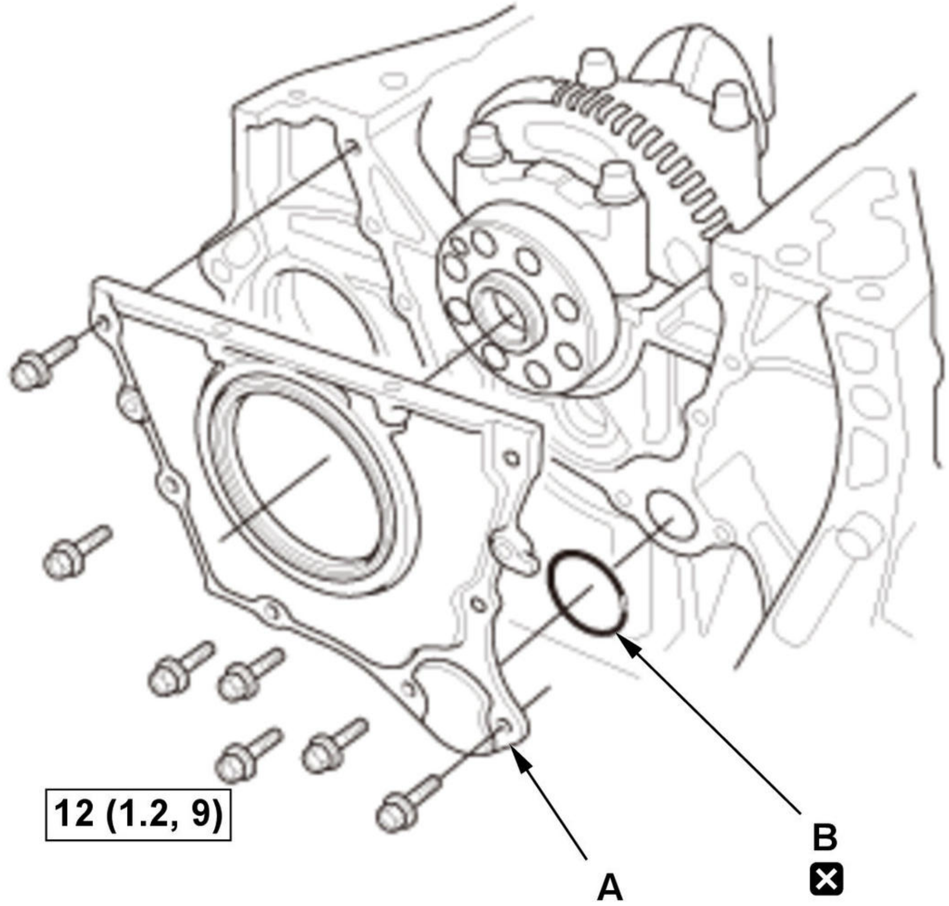

Fig. 32: Oil Seal Case With Torque Specifications
Courtesy of HONDA, U.S.A., INC.

B	1. **Apply liquid gasket** to the engine block mating surface of the oil seal case, and to the inside edge of the threaded bolt holes. 2. Install the oil seal case (A) with a new O-ring (B).

12. **Oil Pump - Install**
13. **Oil Pan - Install**
14. Cam Chain Drive Sprocket - Install

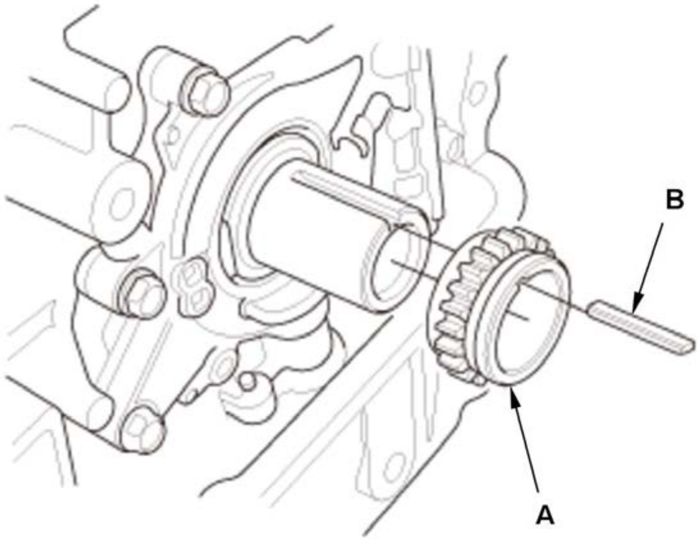	1. Install the cam chain drive sprocket (A) and the key (B).

15. Cylinder Head - Install
16. Drive Plate - Install
17. Transmission - Install
18. Engine - Install

Inspection

1. Crankshaft - Inspect

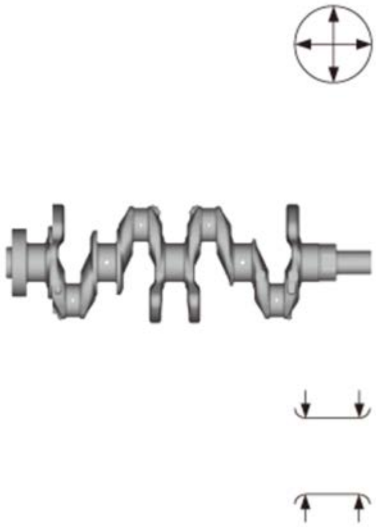	**Out-of-Round and Taper** 1. Clean the crankshaft oil passages with pipe cleaners or a suitable brush. 2. Check the keyway slot and the threaded holes. 3. Measure the out-of-round at the middle of each rod and main journal in two places. The difference between measurements on each journal must not be more than the service limit. 4. Measure the taper at the edges of each rod and the main journal. The difference between measurements on each journal must not be more than the service limit.

Journal Taper	
Standard (New):	**0.005 mm (0.00020 in) max.**
Service Limit:	**0.010 mm (0.00039 in)**

Journal Out-of-Round	
Standard (New):	**0.005 mm (0.00020 in) max.**
Service Limit:	**0.010 mm (0.00039 in)**

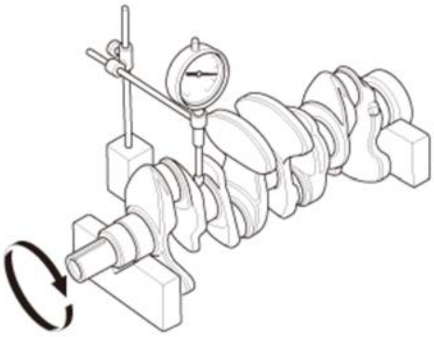	**Straightness** 5. Place the V-blocks on a flat surface. 6. Check the total runout with the crankshaft supported on V-blocks. 7. Measure the runout on all of the main journals. Rotate the crankshaft two complete revolutions. The difference between measurements on each journal must not be more than the service limit.

Crankshaft Total Runout	
Standard (New):	**0.03 mm (0.0012 in) max.**
Service Limit:	**0.040 mm (0.00157 in)**

CRANKSHAFT AND CKP PULSE PLATE REMOVAL, INSTALLATION, AND INSPECTION (2.4 L ENGINE) (2017 2018 2019)

Removal

1. Engine - Remove
2. Transmission - Remove
3. Drive Plate - Remove
4. Cylinder Head - Remove
5. Transmission End Crankshaft Oil Seal - Remove
6. Intermediate Shaft Assembly - Remove
7. Oil Pan - Remove
8. Oil Pump - Remove
9. Baffle Plate - Remove

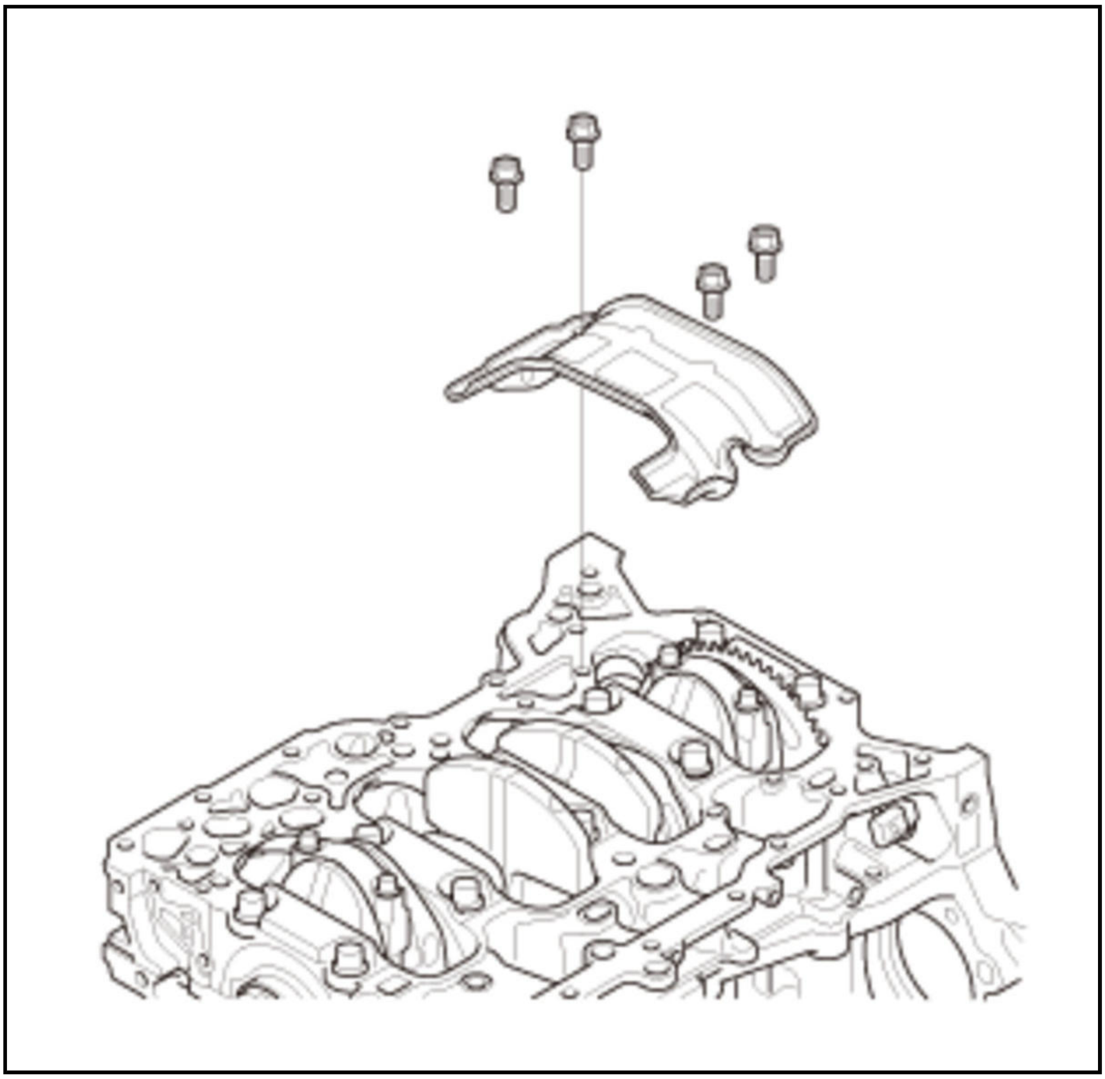

10. Connecting Rod Cap and Bearing Half - Remove

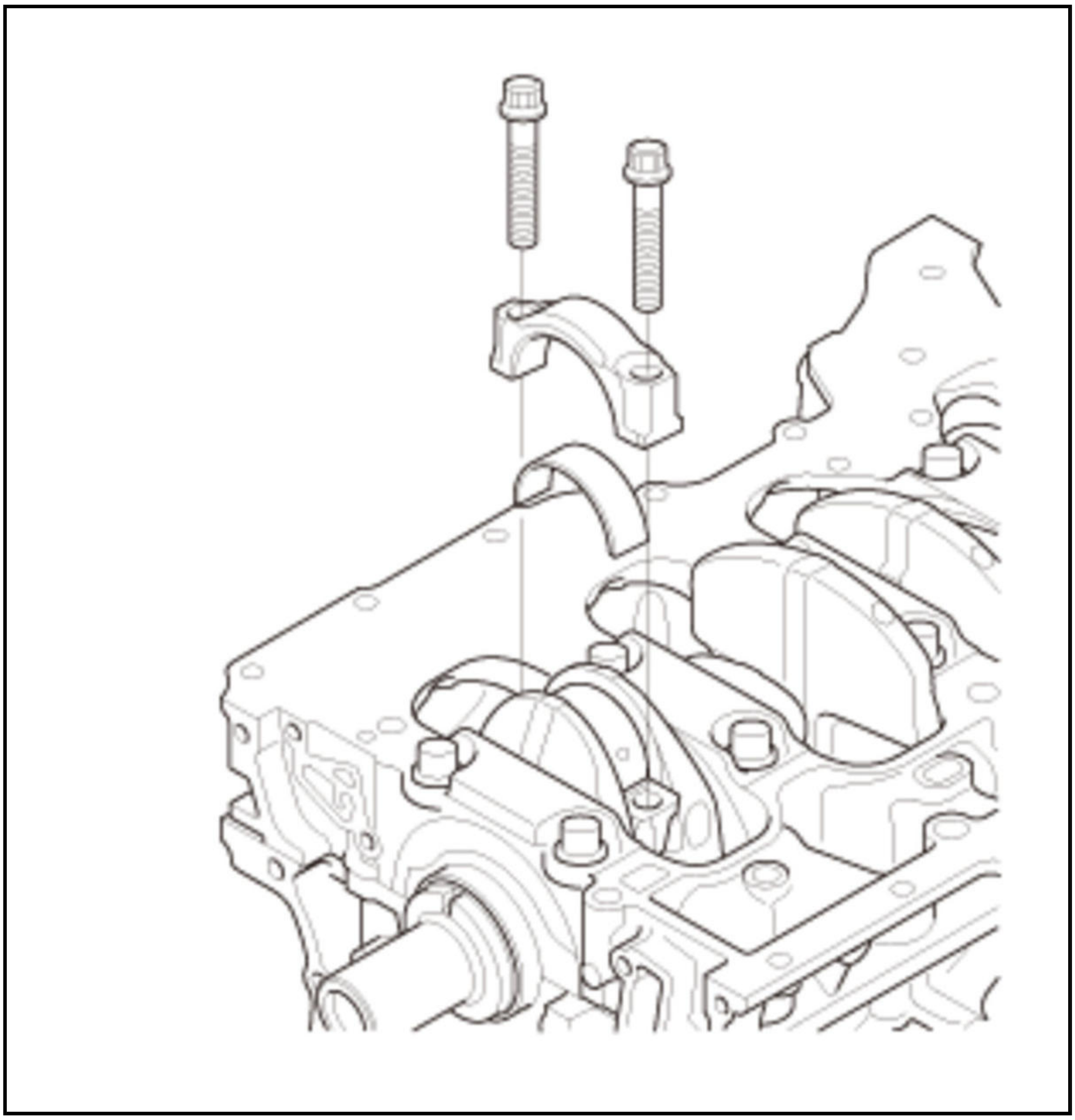

NOTE: Keep all connecting rod caps/bearing halves in order.

11. Lower Block - Remove

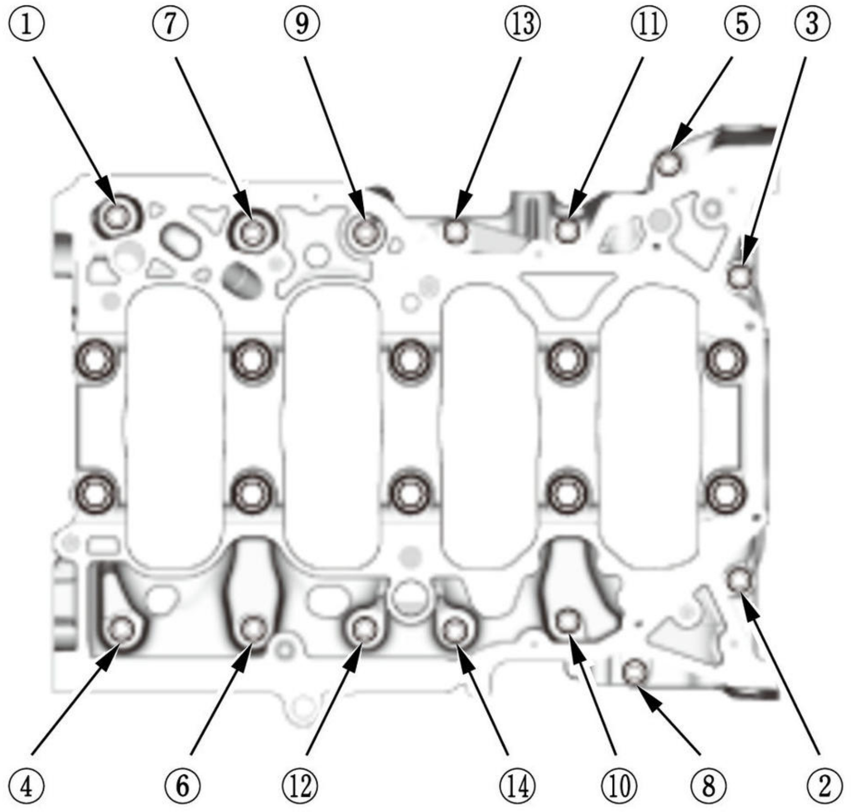
①
⑦
⑨
⑬
⑪
⑤
③
④
⑥
⑫
⑭
⑩
⑧
②

Fig. 33: Lower Block Bolts Loosening Sequence
Courtesy of HONDA, U.S.A., INC.

B	1. Remove the 8 mm bolts.

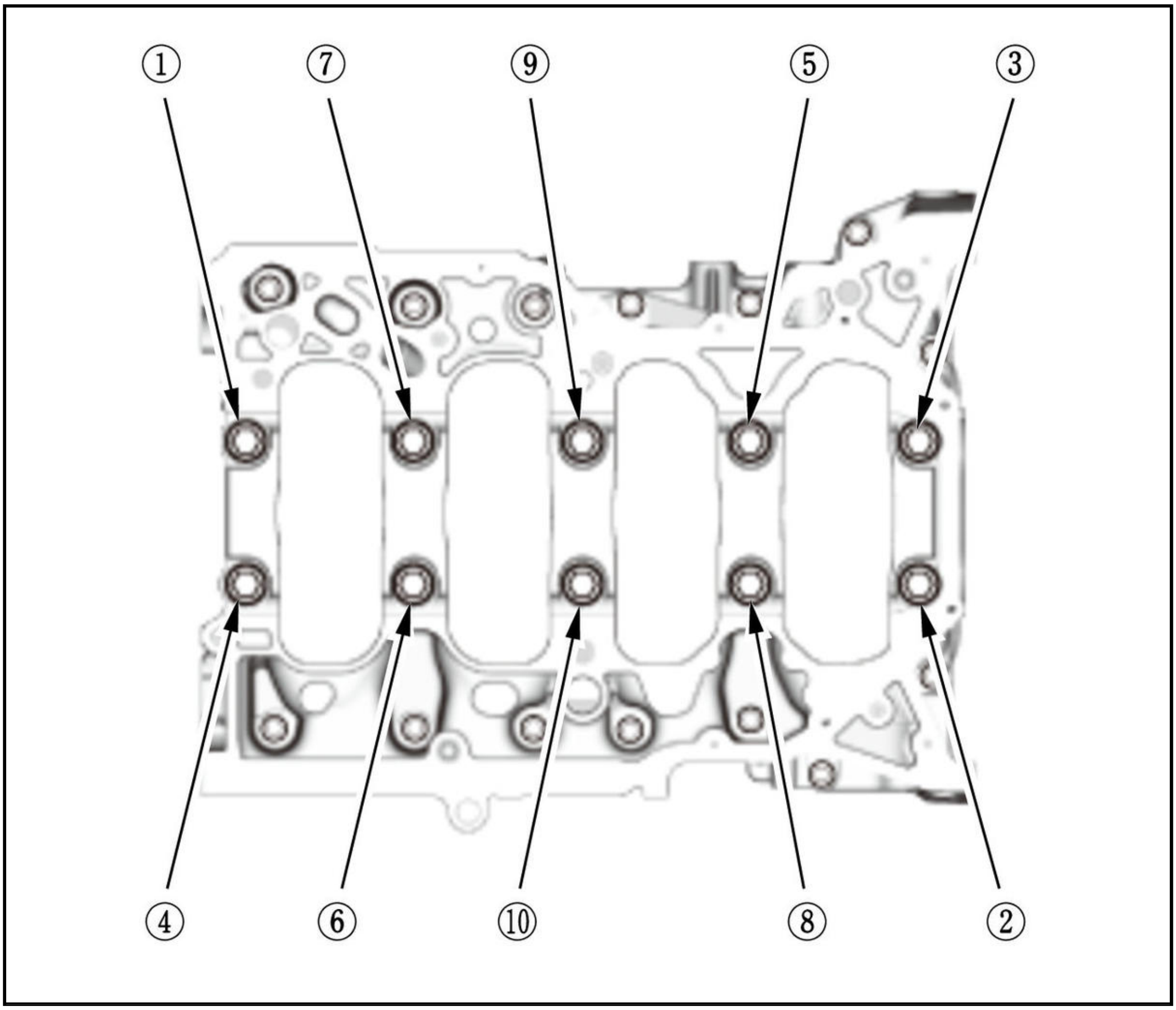

B	2. Remove the bearing cap bolts. To prevent warpage, loosen the bolts in sequence 1/3 turn at a time; repeat the sequence until all bolts are loosened.

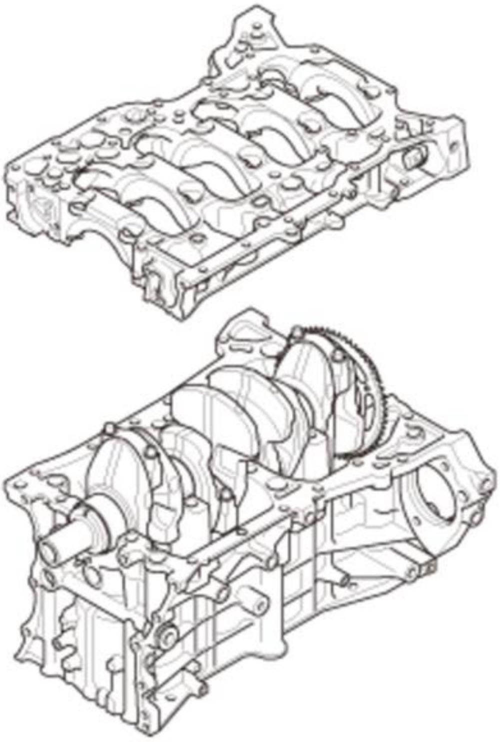	3. Remove the lower block and the bearings. Keep all the bearings in order.

12. Crankshaft - Remove

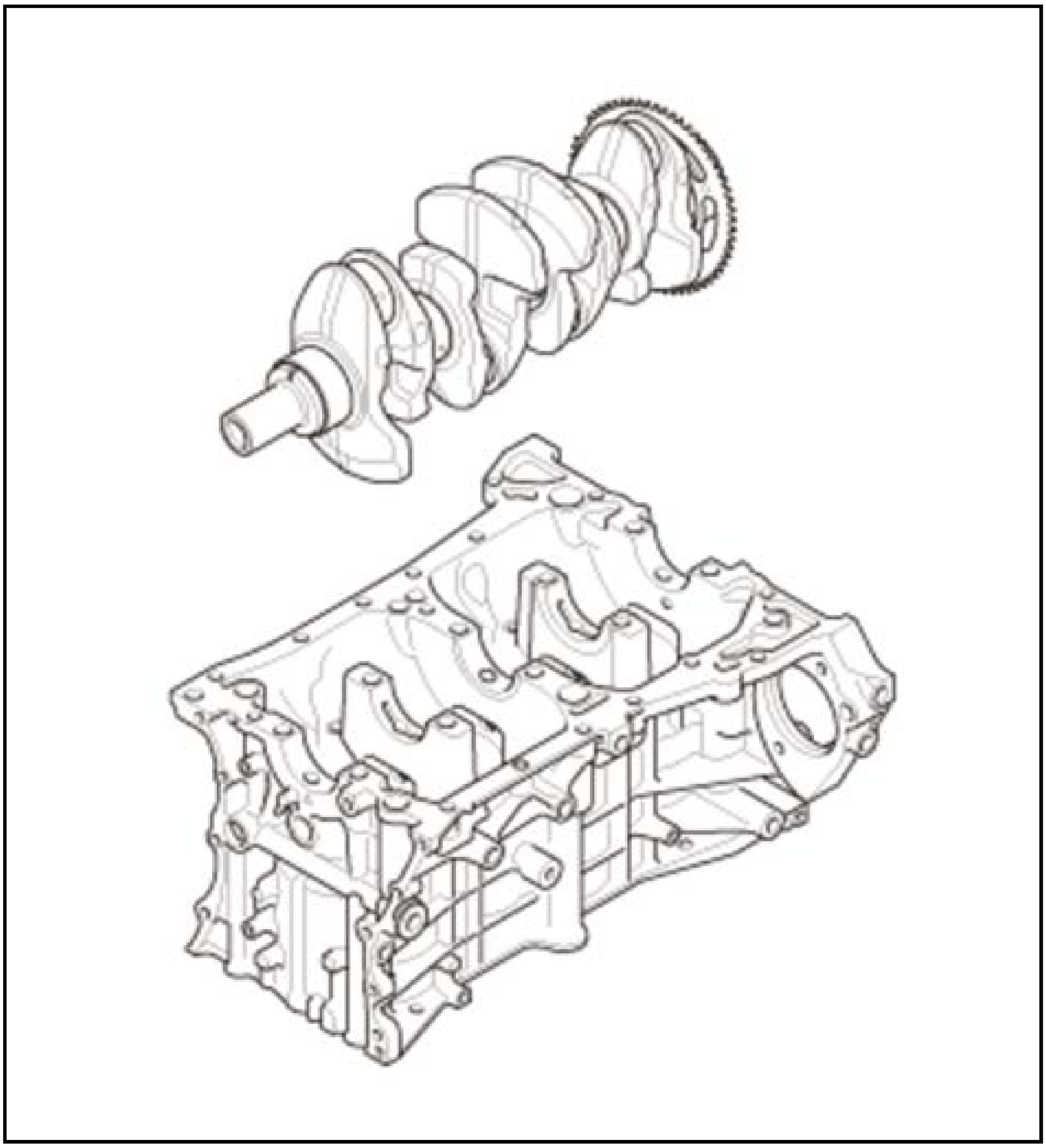

13. CKP Pulse Plate - Remove

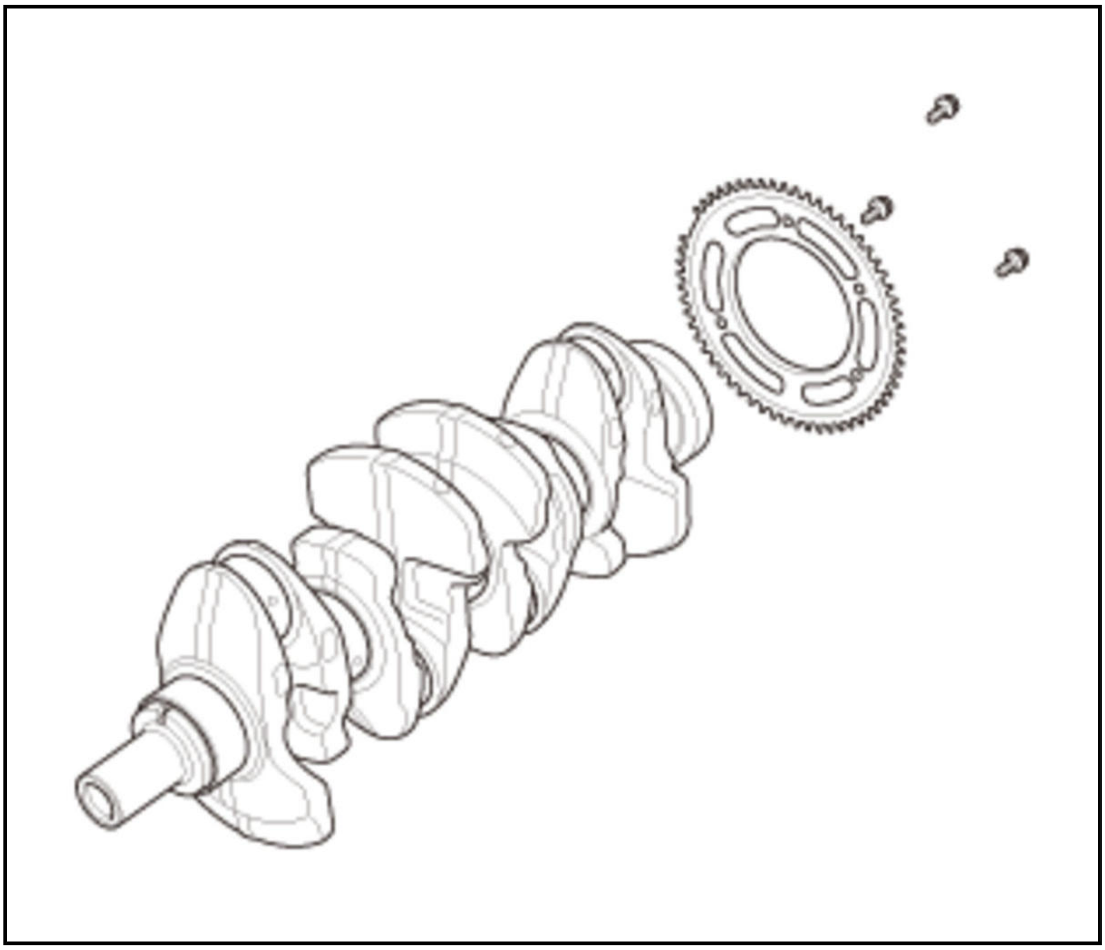

Installation

NOTE: How to read the torque specifications .

1. Main Bearing Clearance - Inspect
2. CKP Pulse Plate - Install

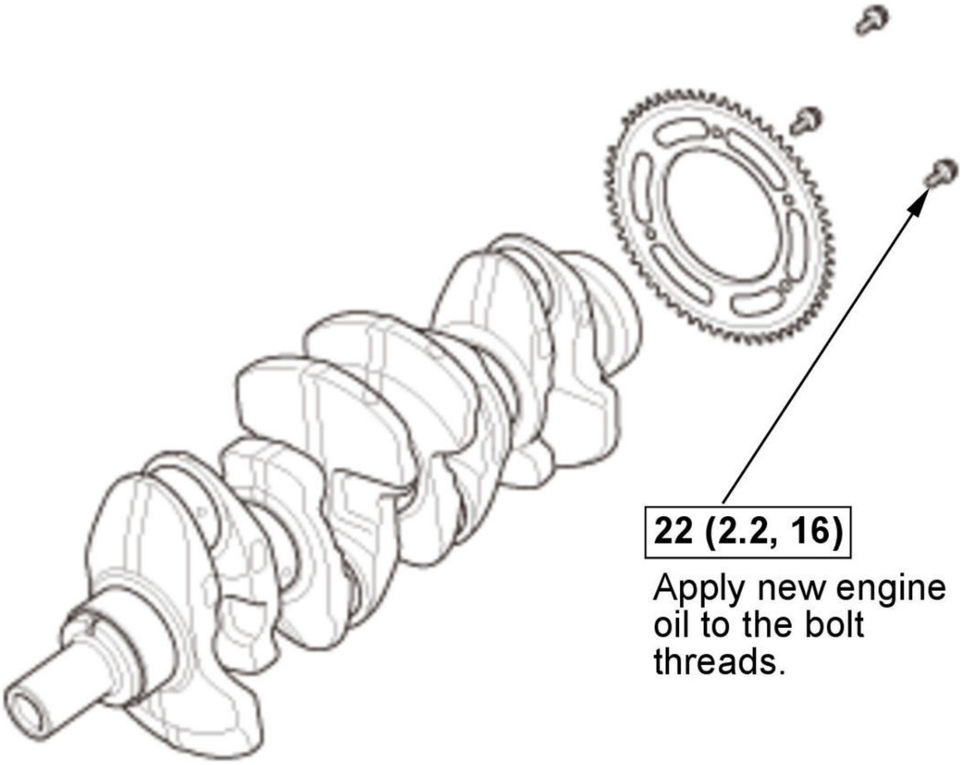
22 (2.2, 16)
Apply new engine oil to the bolt threads.

[Fig. 34:](#)
Courtesy of HONDA, U.S.A., INC.

B

3. Crankshaft - Install

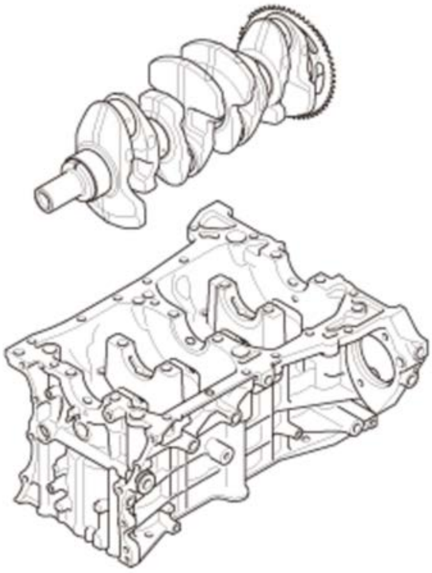	1. Install the bearing halves in the engine block and the connecting rods. 2. Apply a coat of new engine oil to the main bearings and the connecting rod bearings. 3. Hold the crankshaft so rod journal No. 2 and rod journal No. 3 are straight up, then lower the crankshaft into the engine block. **NOTE:** Be careful not to damage the journals and the CKP pulse plate.

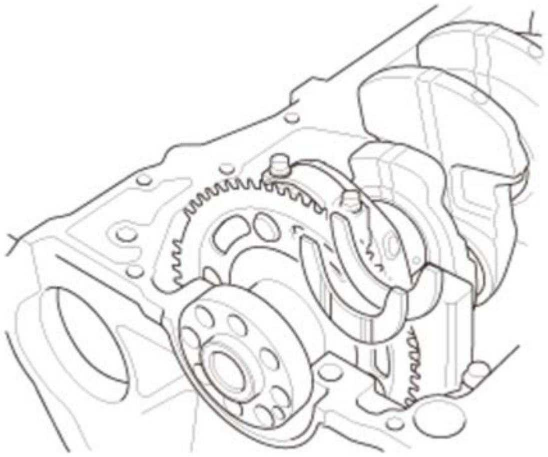	4. Apply new engine oil to the thrust washer surfaces. Install the thrust washers in the No. 4 journal of the engine block.

4. Lower Block - Install

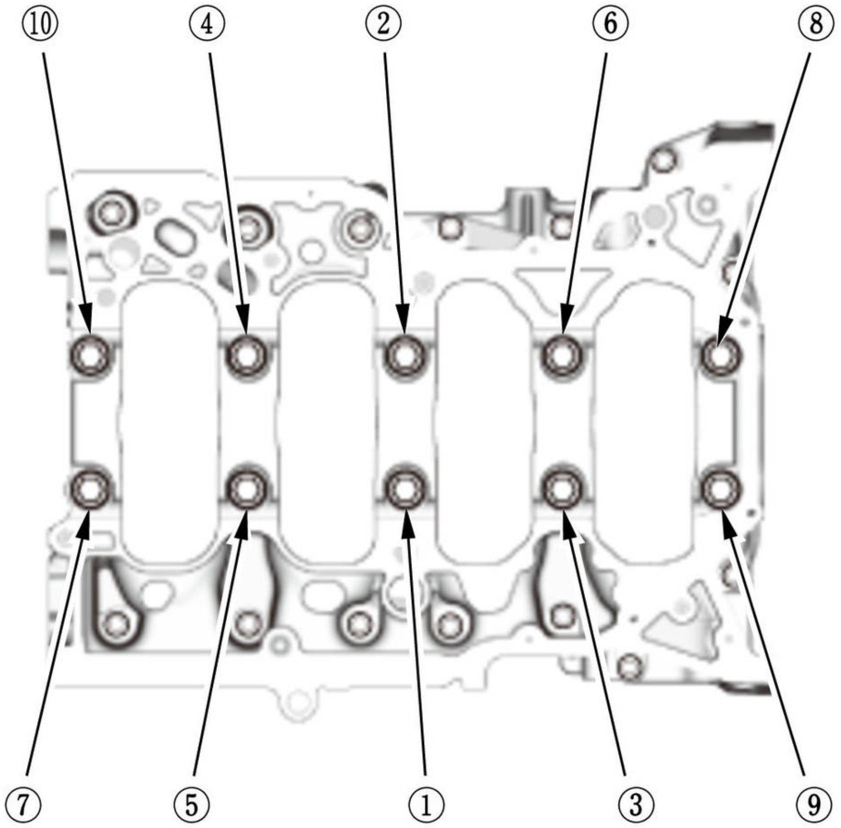

Fig. 35: Lower Block Bolts Tightening Sequence
Courtesy of HONDA, U.S.A., INC.

B	1. **Apply liquid gasket** to the engine block mating surface of the lower block and to the inside edge of the threaded bolt holes. 2. Put the lower block on the engine block. 3. Apply new engine oil to the threads of the bearing cap bolts. Torque the bearing cap bolts in sequence, to 35 N.m (3.6 kgf.m, 26 lbf.ft).

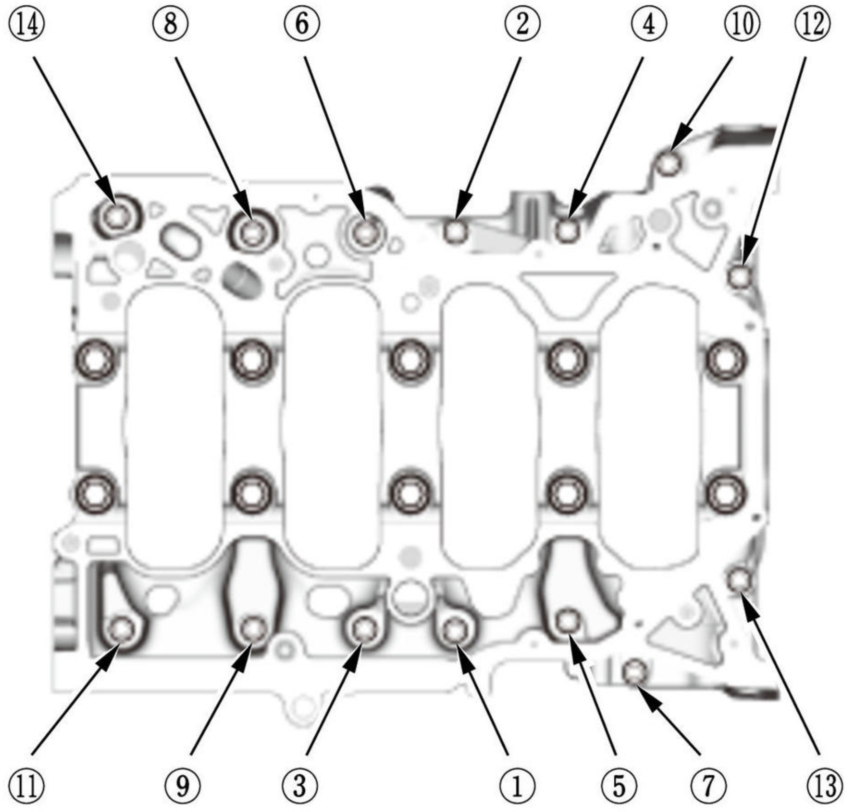

Fig. 36: Bearing Cap Bolts Bolts Tightening Sequence
Courtesy of HONDA, U.S.A., INC.

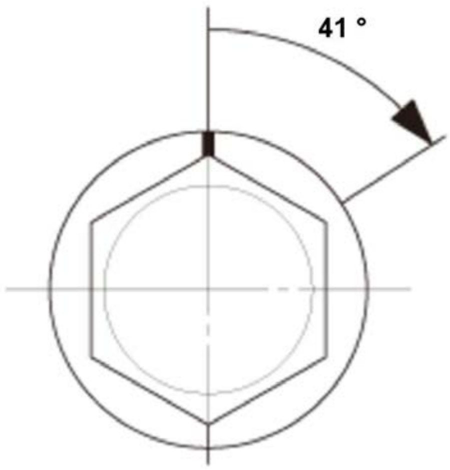	4. Tighten the bearing cap bolts an additional 41 deg..

B	5. Torque the 8 mm bolts in sequence to 24 N.m (2.2 kgf.m, 16 lbf.ft). **NOTE:** • Wait at least 30 minutes before filling the engine with oil. • Do not run the engine for at least 3 hours after installing the lower block.

5. Connecting Rod Bearing Clearance - Inspect
6. Connecting Rod Cap and Bearing Half - Install

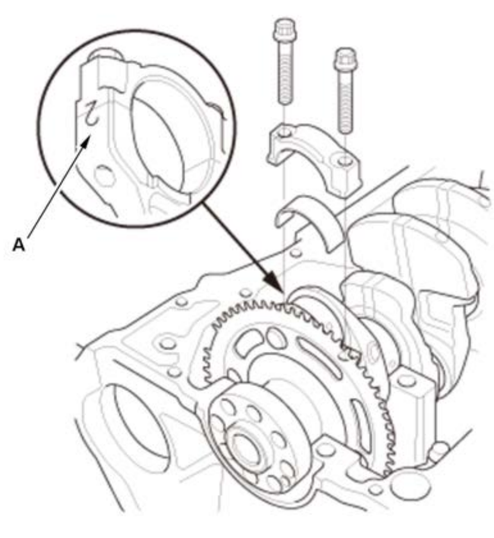	1. Apply new engine oil to the threads of the connecting rod bolts. 2. Seat the rod journals into connecting rod No. 1 and connecting rod No. 4. Line up the mark (A) on the connecting rod and the bearing cap. 3. Install the bearing caps and the bolts finger-tight. 4. Rotate the crankshaft clockwise, and seat the journals into connecting rod No. 2 and connecting rod No. 3. Line up the mark on the connecting rod and the bearing cap. 5. Install the bearing caps and the bolts finger-tight. 6. Tighten the connecting rod bolts to 5.0 N.m (0.51 kgf.m, 3.7 lbf.ft).

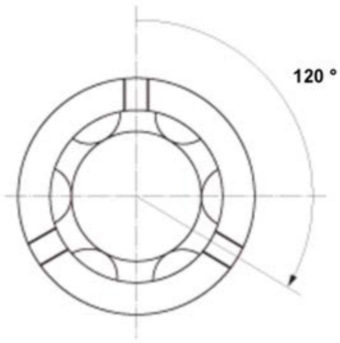	7. Torque the connecting rod bolts to 41 N.m (4.2 kgf.m, 30 lbf.ft). 8. Tighten the connecting rod bolts an additional 120 deg.. **NOTE:** Remove the connecting rod bolt if you tightened it beyond the specified angle, inspect the connecting rod bolts. Do not loosen it back to the specified angle.

7. **Transmission End Crankshaft Oil Seal - Install**
8. Baffle Plate - Install

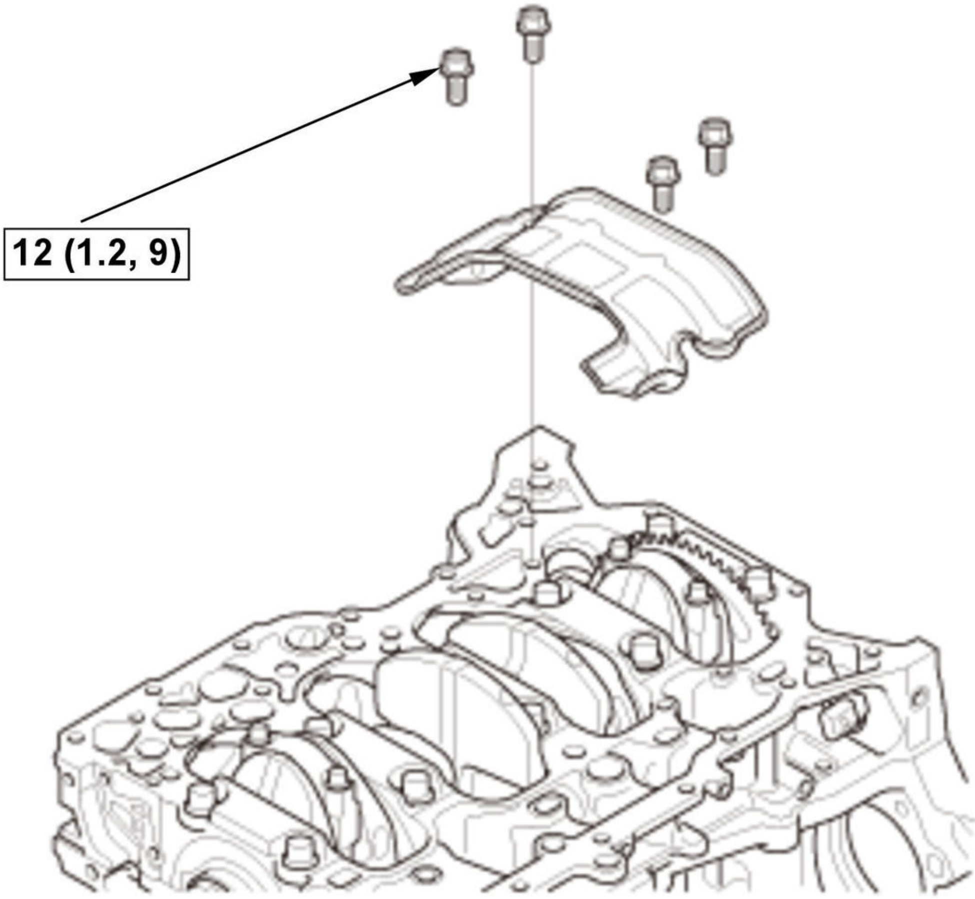

Fig. 37: Baffle Plate With Torque Specifications
Courtesy of HONDA, U.S.A., INC.

9. Oil Pump - Install
10. Oil Pan - Install
11. Intermediate Shaft Assembly - Install
12. Cylinder Head - Install
13. Drive Plate - Install
14. Transmission - Install
15. Engine - Install

NOTE: The CKP pattern learn is required after this procedure.

Inspection

1. Crankshaft - Inspect

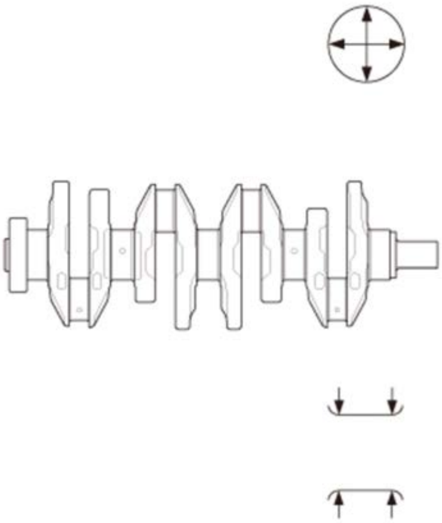

1. Clean the crankshaft oil passages with pipe cleaners or a suitable brush.

2. Check the keyway slot and the threaded holes for damage.

3. Measure the out-of-round at the middle of each rod and the main journal in two places. The difference between measurements on each journal must not be more than the service limit.

4. Measure the taper at the edges of each rod and the main journal. The difference between measurements on each journal must not be more than the service limit.

Journal Taper	
Standard (New):	**0.005 mm (0.00020 in) max.**
Service Limit:	**0.010 mm (0.00039 in)**

Journal Out-of-Round	
Standard (New):	**0.004 mm (0.00016 in) max.**
Service Limit:	**0.010 mm (0.00039 in)**

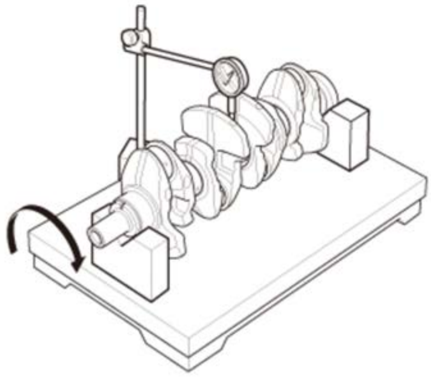

5. Place the V-blocks on a flat surface.

6. Check the total runout with the crankshaft supported on V-blocks.

7. Measure the runout on all of the main journals. Rotate the crankshaft two complete revolutions. The difference between measurements on each journal must not be more than the service limit.

Crankshaft Total Runout	
Standard (New):	**0.03 mm (0.0012 in) max.**

ENGINE OIL JET AND BOLT REMOVAL, INSTALLATION, AND INSPECTION (2.4 L ENGINE) (2017 2018 2019)

Removal and Installation

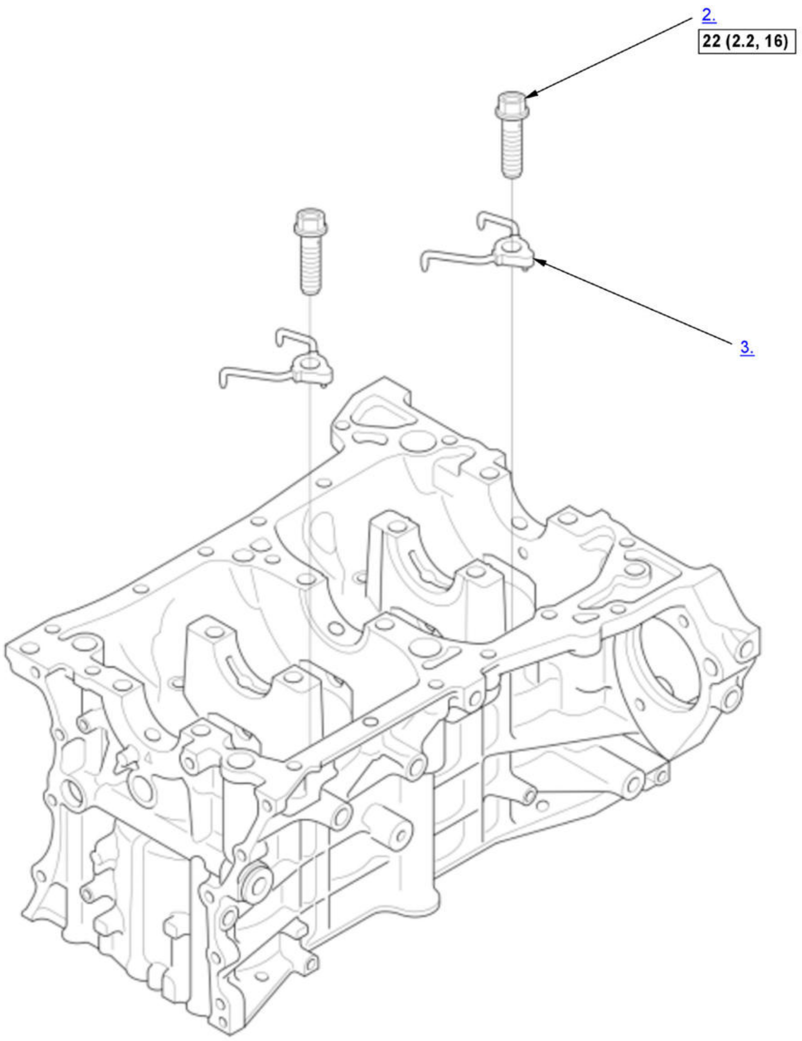

Fig. 38: Oil Jet Replacement Components With Torque Specifications
Courtesy of HONDA, U.S.A., INC.

B

▭	Torque: N.m (kgf.m, lbf.ft)

1. Crankshaft - Remove
2. Oil Jet Bolt - Remove
3. Oil Jet - Remove
4. All Removed Parts - Install

1. Install the parts in the reverse order of removal.

Inspection

1. Engine Oil Jet and Oil Jet Bolt - Inspect

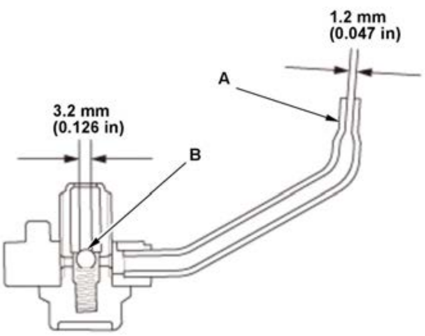	1. Inspect the oil jet and the bolt as follows.**NOTE:** Replace the oil jet assembly, if the nozzle is damaged or bent. • Make sure that a 1.0 mm (3/64 in) diameter drill bit will go through the nozzle hole (A) (1.2 mm (0.047 in) diameter). • Insert the other end of a 3.0 mm (1/8 in) drill into the oil intake (3.2 mm (0.126 in) diameter). Make sure the check ball (B) moves smoothly and has a stroke of about 2.0 mm (0.079 in). • Check the oil jet operation with an air nozzle. It should take at least 175 kPa (1.78 kgf/cm 2, 25.4 psi) to unseat the check ball.

PCV VALVE REMOVAL, INSTALLATION, AND INSPECTION (1.5 L ENGINE)

Removal and Installation

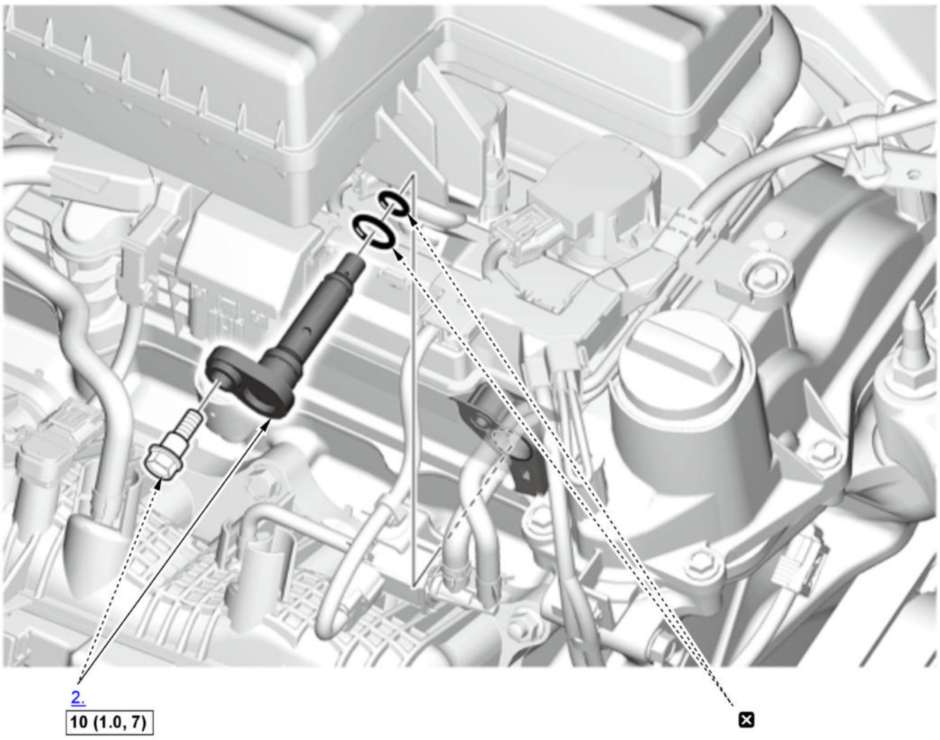

Fig. 39: PCV Valve Replacement Components With Torque Specifications
Courtesy of HONDA, U.S.A., INC.

☐	Torque: N.m (kgf.m, lbf.ft)
☒	Replace

1. Turbocharger Bypass Control Solenoid Valve - Remove
2. PCV Valve - Remove
3. All Removed Parts - Install

1. Install the parts in the reverse order of removal with new O-rings.**NOTE:** Make sure the O-rings are in place.

Inspection

1. PCV Valve - Inspect

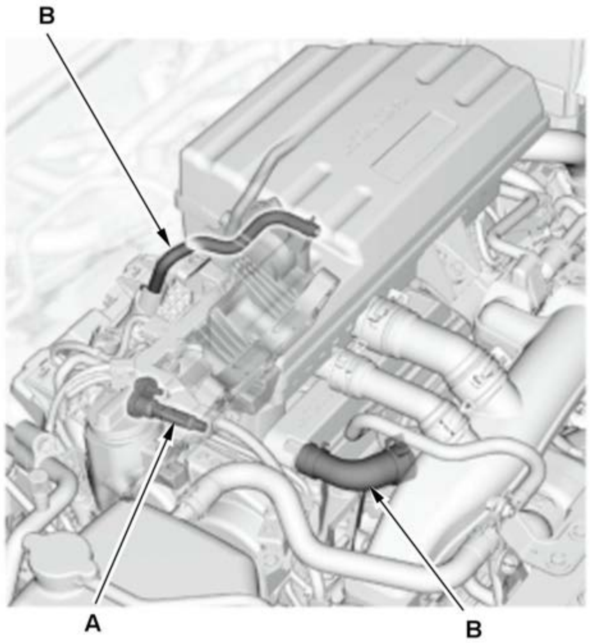	1. Check the PCV valve (A), the hoses (B), and their connections for leaks or restrictions.

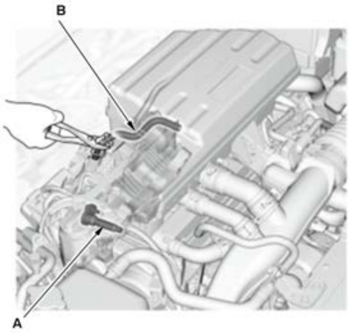	2. Start the engine. 3. At idle, make sure there is a clicking sound from the PCV valve (A) when the hose (B) between the PCV valve and intake manifold is lightly pinched with your fingers or pliers. If there is no clicking sound, check the O-rings for cracks or damage. If they are OK, replace the PCV valve and recheck.

PCV VALVE REMOVAL, INSTALLATION, AND INSPECTION (2.4 L ENGINE) (2017 2018 2019)

Removal and Installation

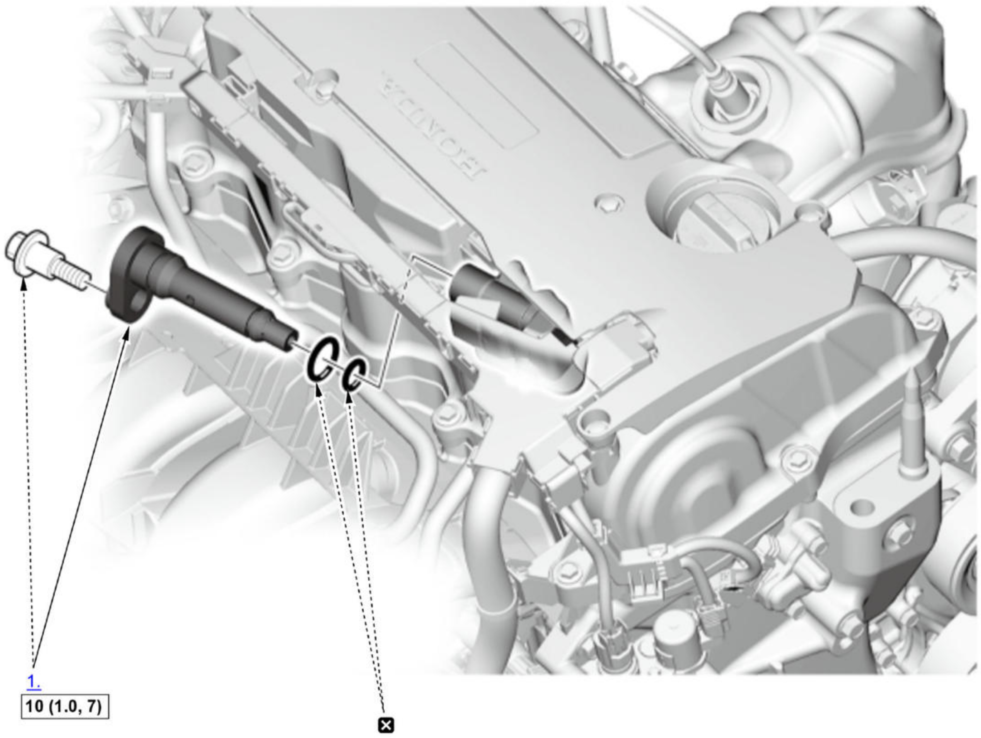

☐	Torque: N.m (kgf.m, lbf.ft)
☒	Replace

1. PCV Valve - Remove
2. All Removed Parts - Install

1. Install the parts in the reverse order of removal with new O-rings.**NOTE:** Make sure the O-rings are in place.

Inspection

1. PCV Valve - Inspect

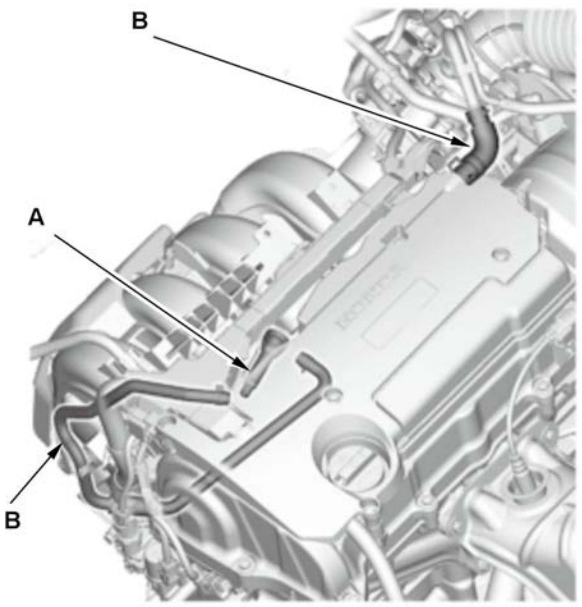	1. Check the PCV valve (A), the hoses (B), and their connections for leaks or restrictions.

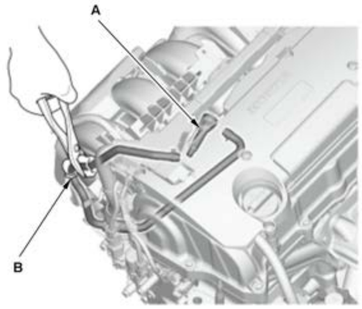	2. Start the engine. 3. At idle, make sure there is a clicking sound from the PCV valve (A) when the hose (B) between the PCV valve and intake manifold is lightly pinched with your fingers or pliers. If there is no clicking sound, check the O-rings for cracks or damage. If they are OK, replace the PCV valve and recheck.

TURBOCHARGER BYPASS CONTROL SOLENOID VALVE REMOVAL, INSTALLATION, AND INSPECTION (1.5 L ENGINE)

Removal and Installation

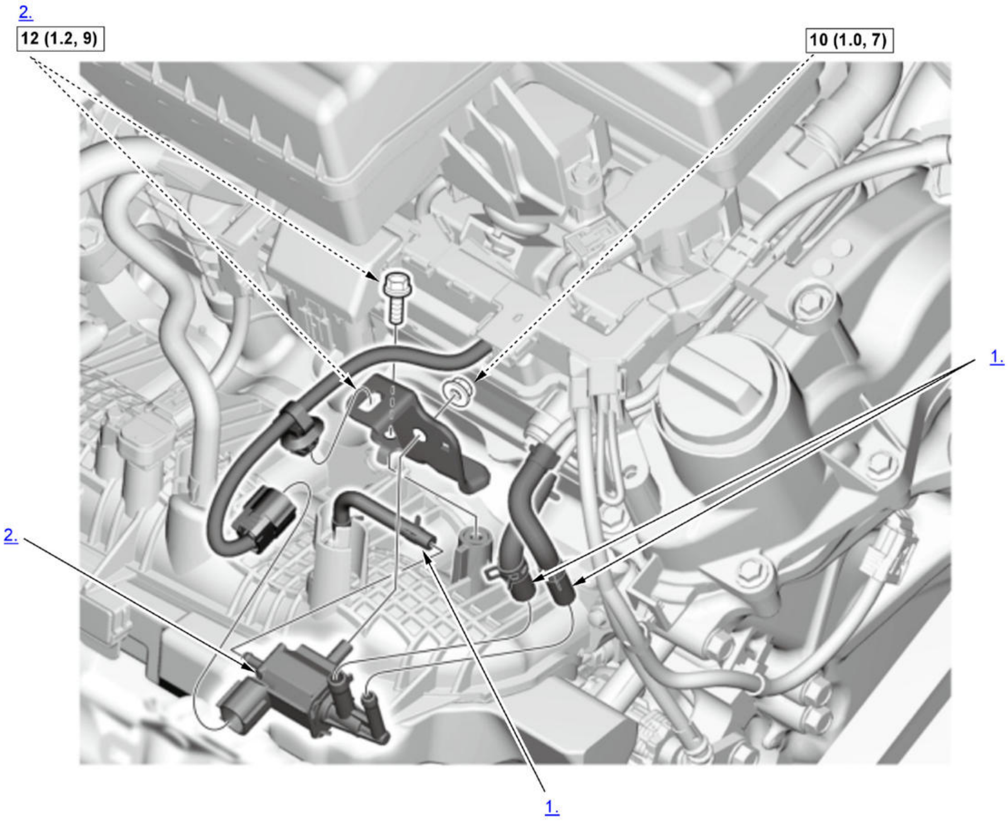

Fig. 40: Turbocharger Bypass Control Solenoid Valve Replacement Components With Torque Specifications
Courtesy of HONDA, U.S.A., INC.

▭	Torque: N.m (kgf.m, lbf.ft)

1. Hoses - Disconnect
2. Turbocharger Bypass Control Solenoid Valve - Remove
3. All Removed Parts - Install

1. Install the parts in the reverse order of removal.

Inspection

1. Turbocharger Bypass Control Solenoid Valve - Bypass Air Line Open Stuck Check

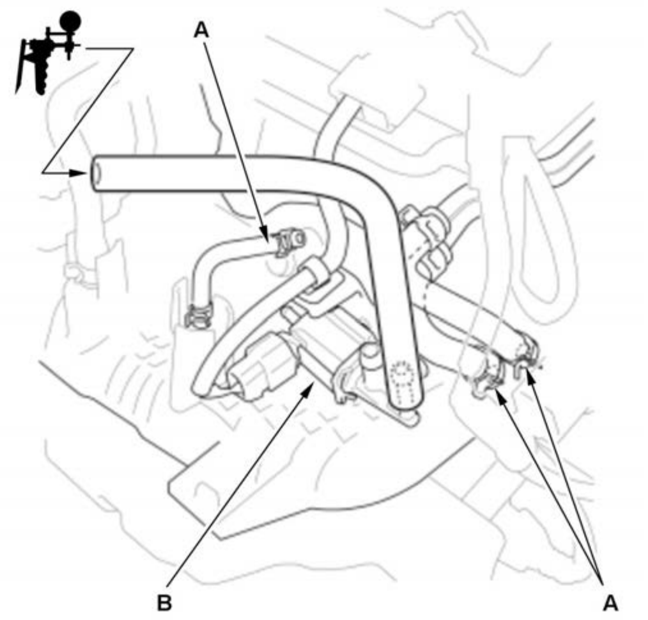

1. Disconnect the hoses (A).

2. Connect the vacuum pump to the turbocharger bypass control solenoid valve (B) as shown.

3. Apply vacuum to the port.

- If it holds vacuum, release the vacuum, then go to step 2.
- If it does not hold vacuum, replace the turbocharger bypass control solenoid valve.

2. **HDS - Connect**
3. Turbocharger Bypass Control Solenoid Valve - Bypass Air Line Closed Stuck Check

1. Turn the vehicle to the ON mode.

2. Select TURBOCHARGER BYPASS CONTROL SOLENOID VALVE ON in the INSPECTION MENU with the HDS.

3. Reapply vacuum to the port.

- If it holds vacuum, replace the turbocharger bypass control solenoid valve.
- If it does not hold vacuum, release the vacuum, and turn the vehicle to the OFF (LOCK) mode, then go to step 4.

4. Turbocharger Bypass Control Solenoid Valve - Vacuum Line Closed Stuck Check

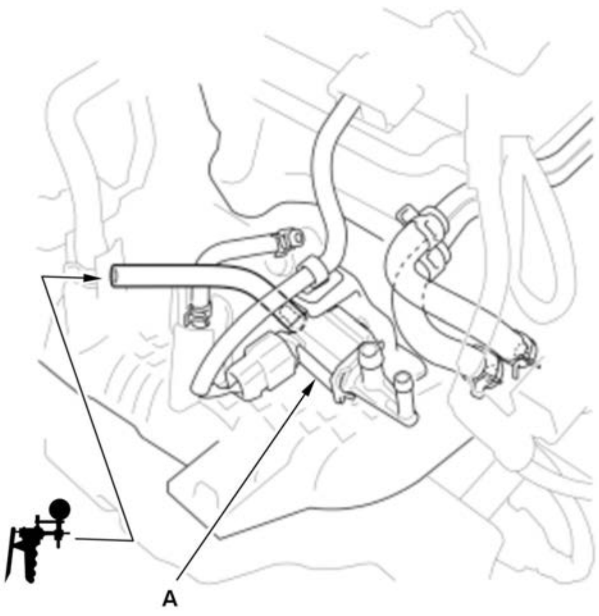

1. Connect the vacuum pump to the turbocharger bypass control solenoid valve (A) as shown.

2. Apply vacuum to the port.

- If it does not hold vacuum, release the vacuum, then go to step 5.
- If it holds vacuum, replace the turbocharger bypass control solenoid valve.

5. Turbocharger Bypass Control Solenoid Valve - Vacuum Line Open Stuck Check

1. Turn the vehicle to the ON mode.

2. Select TURBOCHARGER BYPASS CONTROL SOLENOID VALVE ON in the INSPECTION MENU with the HDS.

3. Reapply vacuum to the port.

- If it does not hold vacuum, replace the turbocharger bypass control solenoid valve.
- If it holds vacuum, the turbocharger bypass control solenoid valve is OK. Check the vacuum hose between the turbocharger bypass control solenoid valve, the intake manifold, turbocharger bypass valve, and the turbocharger joint.

SYMPTOM TROUBLESHOOTING INDEX FOR VIEWER

AFTER WARMING UP, IDLE SPEED IS ABOVE SPECIFICATIONS WITHOUT LOAD (MIL WORKS OK, NO DTCS SET) (KA/KC)

Diagnostic procedure

- **Inspect the APP sensor**.

Also check for

Intake air leaks

AFTER WARMING UP, IDLE SPEED IS BELOW SPECIFICATIONS WITHOUT LOAD (MIL WORKS OK, NO DTCS SET) (KA/KC)

Diagnostic procedure

- **Do the carbon accumulation check**.

Also check for

Incorrect valve timing or clearance adjustment

AUTO IDLE STOP SYSTEM DOES NOT OPERATE (WITH AUTO IDLE STOP SYSTEM) (2020 2021)

Diagnostic procedure

- **Inspect the auto idle stop system**.
- **Troubleshoot the auto idle stop system (Auto idle stop system does not operate)**.

AUTO IDLE STOP SYSTEM INDICATOR (AMBER) BLINKS (WITH AUTO IDLE STOP SYSTEM) (2020 2021)

Diagnostic procedure

- **Troubleshoot the auto idle stop system (Auto idle stop system indicator blinks)**.

AUTO IDLE STOP SYSTEM INDICATOR (GREEN/AMBER) DOES NOT COME ON (WITH AUTO IDLE STOP SYSTEM) (2020 2021)

Diagnostic procedure

- **Troubleshoot the auto idle stop system (Auto idle stop system indicator does not come on)**.

COLD FAST IDLE TOO HIGH (MIL WORKS OK, NO DTCS SET) (KA/KC)

Diagnostic procedure

- **Do the PCM idle learn procedure**.
- **Check the idle speed**.

Also check for

Intake air leaks

COLD FAST IDLE TOO LOW (MIL WORKS OK, NO DTCS SET) (KA/KC)

Diagnostic procedure

- Do the PCM idle learn procedure.
- Check the idle speed.
- Do the carbon accumulation check.

DIFFICULT TO REFUEL (MIL WORKS OK, NO DTCS SET) (KA/KC)

Diagnostic procedure

- Check the fuel vent tube between the EVAP canister and the fuel tank unit.
- Check the fuel tank vapor recirculation tube between the fuel fill pipe and the fuel tank unit.
- Insert the emergency fuel funnel into the fuel filler neck, then check the operation of the shut-off valve flap.

  NOTE: The emergency fuel funnel is stored in the trunk tool box.

- Replace the fuel tank .

Also check for

Malfunctioning gas station filling nozzle

ENGINE IS HARD TO START (MIL WORKS OK, NO DTCS SET) (KA/KC)

Diagnostic procedure

- Troubleshoot the engine will not start, engine starts but stalls immediately, or engine is hard to start .
- Do the CVT system symptom troubleshooting .

ENGINE STALLS (MIL WORKS OK, NO DTCS SET) (KA/KC)

Diagnostic procedure

- Troubleshoot the engine stalls .

ENGINE STARTS BUT STALLS IMMEDIATELY (MIL WORKS OK, NO DTCS SET, SECURITY INDICATOR STAYS ON OR FLASHES) (KA/KC)

Diagnostic procedure

- Without keyless access system: Check the immobilizer system .
- With keyless access system: Check the keyless access system .

ENGINE WILL NOT START (MIL WORKS OK, NO DTCS SET) (KA/KC)

Diagnostic procedure

- Troubleshoot the engine will not start, engine starts but stalls immediately, or engine is hard to start .
- Do the CVT system symptom troubleshooting .

ENGINE WILL NOT START (MIL WORKS OK, NO DTCS SET, SECURITY INDICATOR STAYS ON OR FLASHES) (KA/KC)

Diagnostic procedure

- Without keyless access system: Check the immobilizer system .
- With keyless access system: Check the keyless access system .

ENGINE WILL NOT START AND HDS DOES NOT COMMUNICATE WITH THE PCM (MIL COMES ON AND STAYS ON, NO DTCS SET) (KA/KC)

Diagnostic procedure

- PCM power and ground circuit troubleshooting.

HDS DOES NOT COMMUNICATE WITH THE PCM OR THE VEHICLE (KA/KC)

Diagnostic procedure

- Troubleshoot the DLC circuit .

Also check for

Correct HDS software

IDLE SPEED FLUCTUATES (MIL WORKS OK, NO DTCS SET) (KA/KC)

Diagnostic procedure

- Do the PCM idle learn procedure.
- Check the idle speed.
- Check the fuel pressure .
- Do the carbon accumulation check.
- Troubleshoot the A/C signal circuit .
- Check the A/C refrigerant amount .

  NOTE: Turning the A/C to ON under the conditions that the A/C refrigerant amount is out of specification (excessive or too little) may cause the idle speed fluctuation.

Also check for

- Incorrect valve adjustment
- Intake air leaks

IDLE STOP TIME IS SHORT (WITH AUTO IDLE STOP SYSTEM) (2020 2021)

Diagnostic procedure

- Troubleshoot the auto idle stop system.

LOW POWER (MIL WORKS OK, NO DTCS SET) (KA/KC)

Diagnostic procedure

- Check the fuel pressure .
- Check the air cleaner element.

Also check for

- Low compression
- Incorrect camshaft timing
- Incorrect engine oil level
- Exhaust restriction
- Fuel contamination
- Intercooler insufficient cooling (for some models)

MIL COMES ON AND STAYS ON, OR NEVER COMES ON AT ALL, NO DTCS SET (KA/KC)

Diagnostic procedure

- Troubleshoot the MIL circuit.

OVERHAUL

BALANCER SHAFT/BALANCER SHAFT HOLDER ASSEMBLY OVERHAUL

Disassembly and Reassembly

Procedure

NOTE: **Numbered call-outs in figure pertain to list numbers in following procedure.**

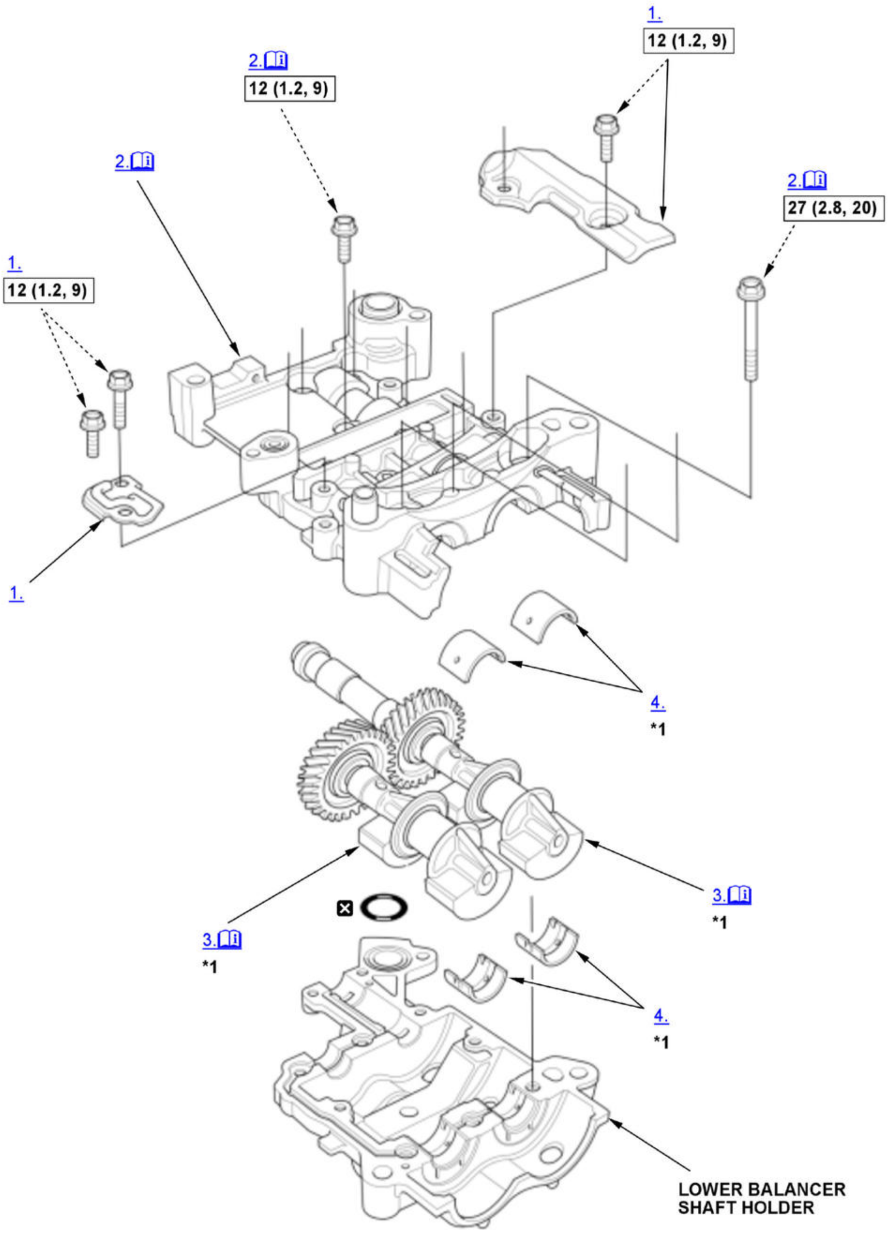
1.
12 (1.2, 9)
2.
12 (1.2, 9)
2.
2.
27 (2.8, 20)
1.
12 (1.2, 9)
1.
4.
*1
3.
*1
3.
*1
4.
*1
LOWER BALANCER
SHAFT HOLDER

Fig. 1: Exploded View Of Balancer Shaft/Balancer Shaft Holder Assembly Overhaul Components With Torque Specifications

Courtesy of HONDA, U.S.A., INC.

☐	Torque: N.m (kgf.m, lbf.ft)
☒	Replace
*1	These parts have inspection items.

1. Baffle Plate - Remove
2. Upper Balancer Shaft Holder - Remove

   Note for installation

   NOTE: Apply new engine oil to the 8 mm bolts threads and flanges.

3. Front Balancer Shaft and Rear Balancer Shaft - Remove

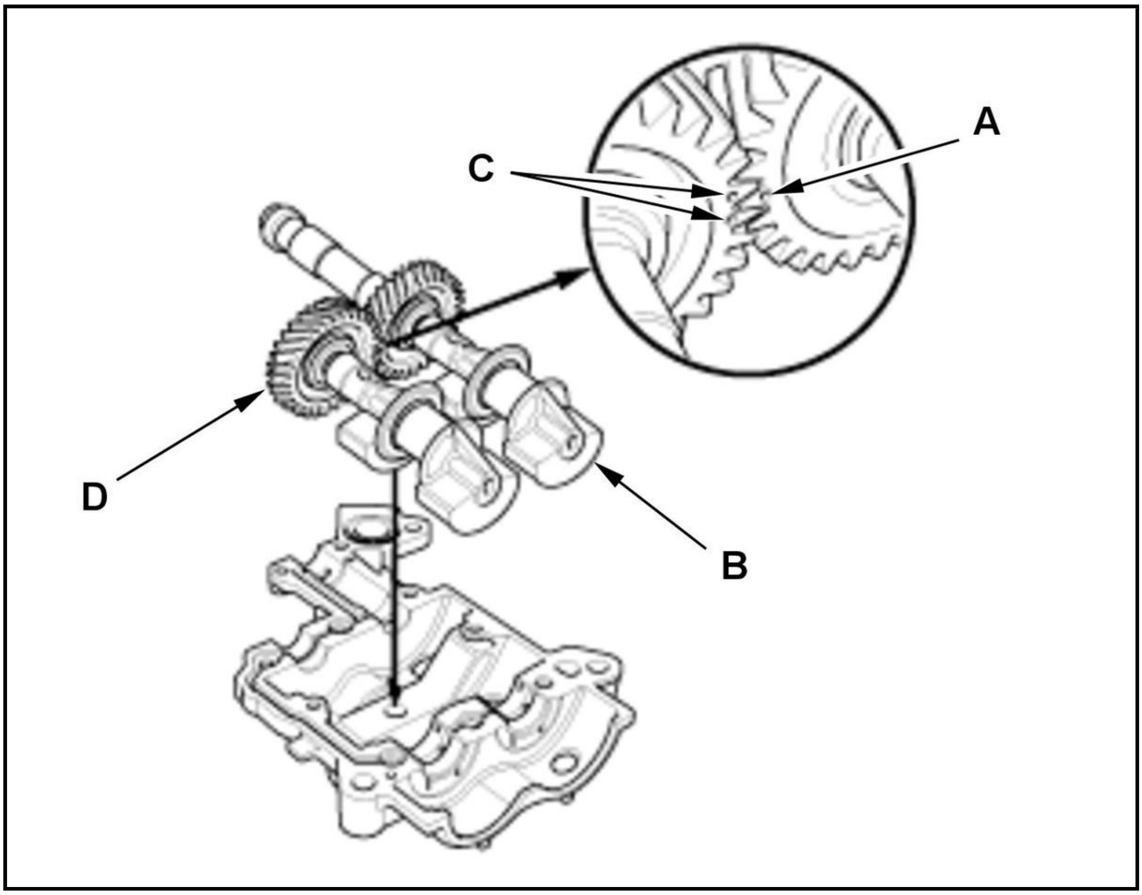

   Note for installation

   1. Apply new engine oil to the journals.

   2. Align the punch mark (A) on the rear balancer shaft (B) in the center of the two punch marks (C) on the front balancer shaft (D), then install the balancer shafts on the lower balancer shaft holder.

4. Balancer Shaft Bearing - Remove
5. All Removed Parts - Install

   1. Install the parts in the reverse order of removal.

Inspection

1. Balancer Shaft End Play - Inspect

   1. Seat the balancer shaft by pushing it away from the balancer shaft sprocket end of the balancer shaft holder.

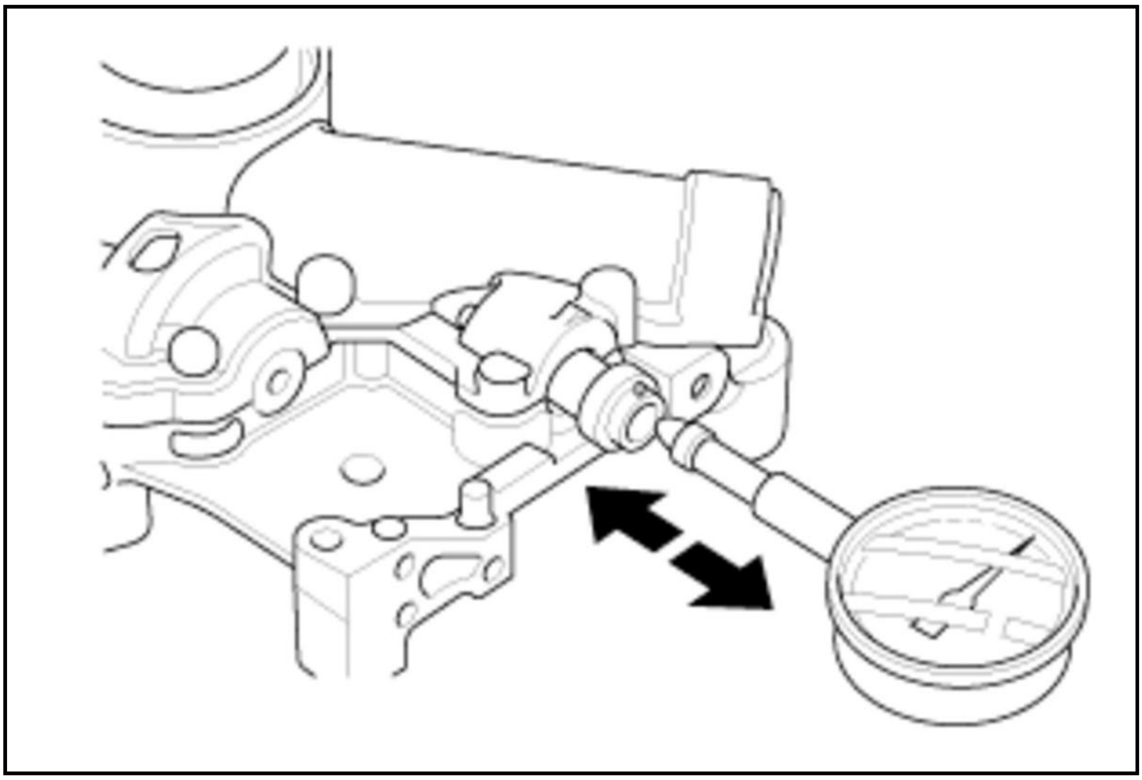

2. Zero the dial indicator against the end of the balancer shaft, then push the balancer shaft back and forth and read the end play.

Balancer Shaft End Play	
Standard (New):	**0.070-0.120 mm (0.00276-0.00472 in)**
Service Limit:	**0.135 mm (0.00531 in)**

2. Balancer Shaft Journal Oil Clearance - Inspect

1. Clean the both balancer shaft journals, the balancer shaft holders, and the bearing halves with a clean shop towel.

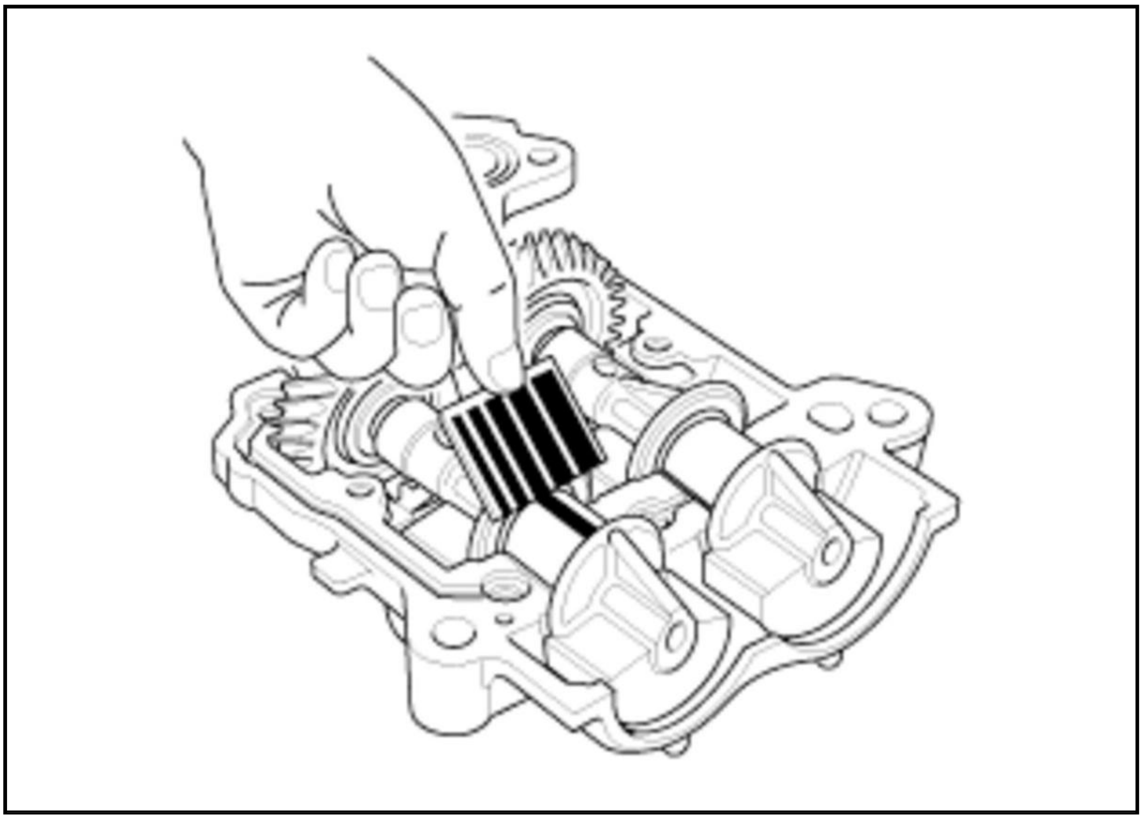

2. Place one strip of plastigage across each journal.

3. Reinstall the bearings and the upper balancer shaft holder, then tighten the bolts to the specified torque.

NOTE: Do not rotate the balancer shafts during inspection.

4. Remove the upper balancer shaft holder and the bearings again, and measure the widest part with the plastigage.

- If the front balancer shaft No. 1 journal and the rear balancer shaft No. 1, 2 journals oil clearance is out-of-tolerance, replace the balancer shaft and recheck. If it is still out-of-tolerance, replace the balancer shaft holders.
- If the front balancer shaft No. 2 journal and the rear balancer shaft No. 3 journal oil clearance is out-of-tolerance, install new bearings, and recheck. If it is still out-of-tolerance, replace the balancer shafts.

Journal Oil Clearance	
Front No. 1 Journal:	
Standard (New):	**0.030-0.062 mm (0.00118-0.00244 in)**
Service Limit:	**0.080 mm (0.00315 in)**
Front No. 2 Journal:	
Standard (New):	**0.040-0.100 mm (0.00157-0.00394 in)**
Service Limit:	**0.130 mm (0.00512 in)**
Rear No. 1, 2 Journals:	
Standard (New):	**0.030-0.062 mm (0.00118-0.00244 in)**
Service Limit:	**0.080 mm (0.00315 in)**
Rear No. 3 Journal:	
Standard (New):	**0.040-0.100 mm (0.00157-0.00394 in)**
Service Limit:	**0.130 mm (0.00512 in)**

3. Balancer Shaft Journal Taper - Inspect

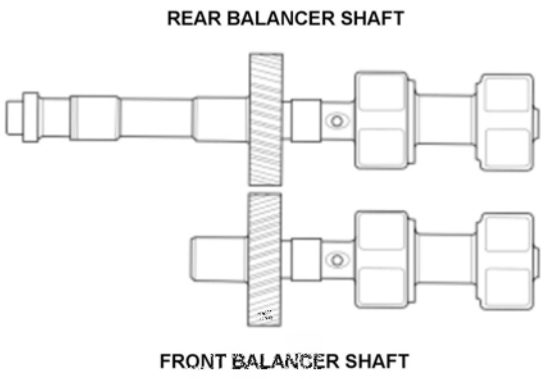

1. Remove the balancer shafts.

2. Measure the taper at the edges of each journal. The difference between measurements on each journal must not be more than the standard.

Balancer Shaft Journal Taper

Standard (New):	**0.005 mm (0.00020 in) max.**

ENGINE BLOCK OVERHAUL

Removal

NOTE:

- Be careful not to damage the journals and the CKP pulse plate.
- The No. 1 journal is on the crankshaft pulley side.

Procedure

NOTE: **Numbered call-outs in figure pertain to list numbers in following procedure.**

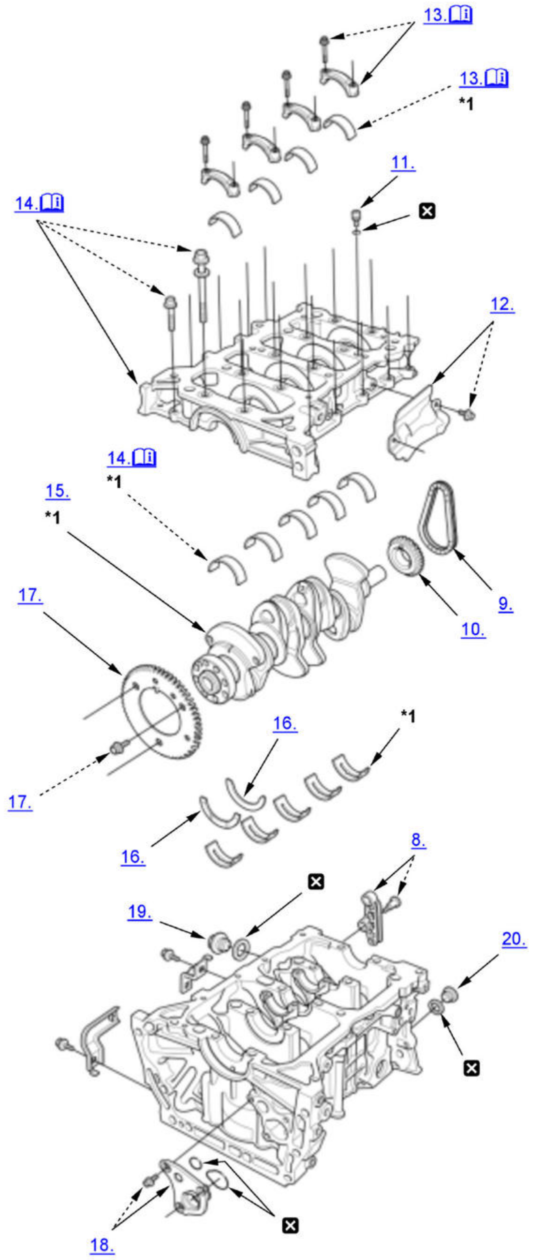
13.
13.
*1
11.
☒
14.
12.
14.
*1
15.
*1
17.
9.
10.
16.
*1
17.
16.
8.
☒
19.
20.
☒
☒
18.

Fig. 2: Exploded View Of Engine Block Overhaul Components For Removal (1 Of 2)
Courtesy of HONDA, U.S.A., INC.

☒	Replace
*1	These parts have inspection items

NOTE: **Numbered call-outs in figure pertain to list numbers in following procedure.**

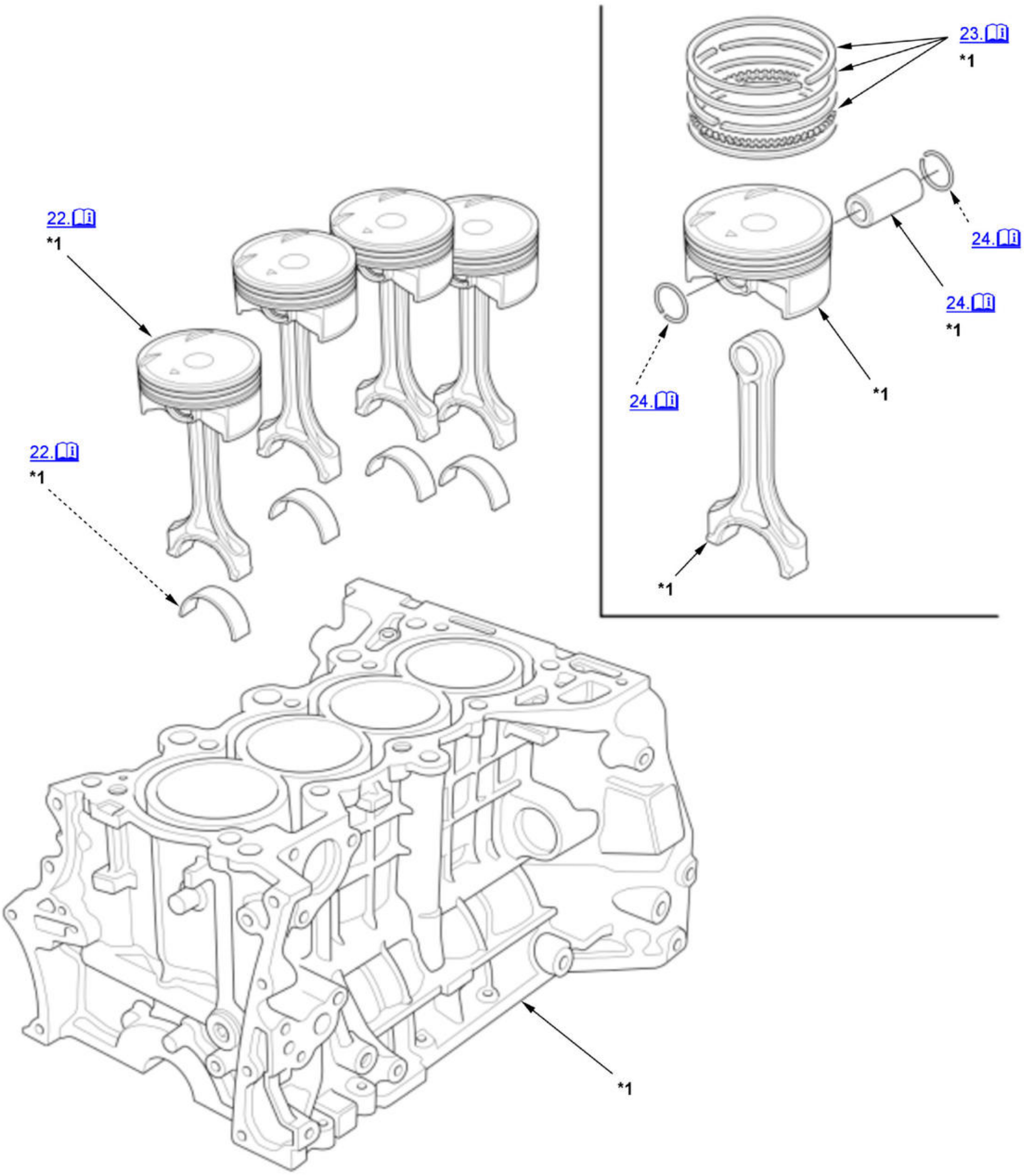

Fig. 3: Exploded View Of Engine Block Overhaul Components For Removal (2 Of 2)
Courtesy of HONDA, U.S.A., INC.

*1	These parts have inspection items

1. **Engine - Remove**
2. **Transmission (e-CVT) - Remove**
3. **Drive Plate - Remove**
4. **Cylinder Head - Remove**
5. **Oil Pan - Remove**
6. **Balancer Shaft/Balancer Shaft Holder Assembly - Remove**
7. **Transmission End Crankshaft Oil Seal - Remove**
8. Balancer Chain Guide - Remove
9. Balancer Chain - Remove
10. Crankshaft Sprocket - Remove
11. Oil Control Orifice - Remove (if necessary)
12. Engine Block Heat Insulator - Remove (if necessary)
13. Connecting Rod Bearing Cap and Bearing Half - Remove

NOTE: Keep all connecting rod bearing caps and connecting rod bearings in order.

14. Lower Block and Bearing Half - Remove

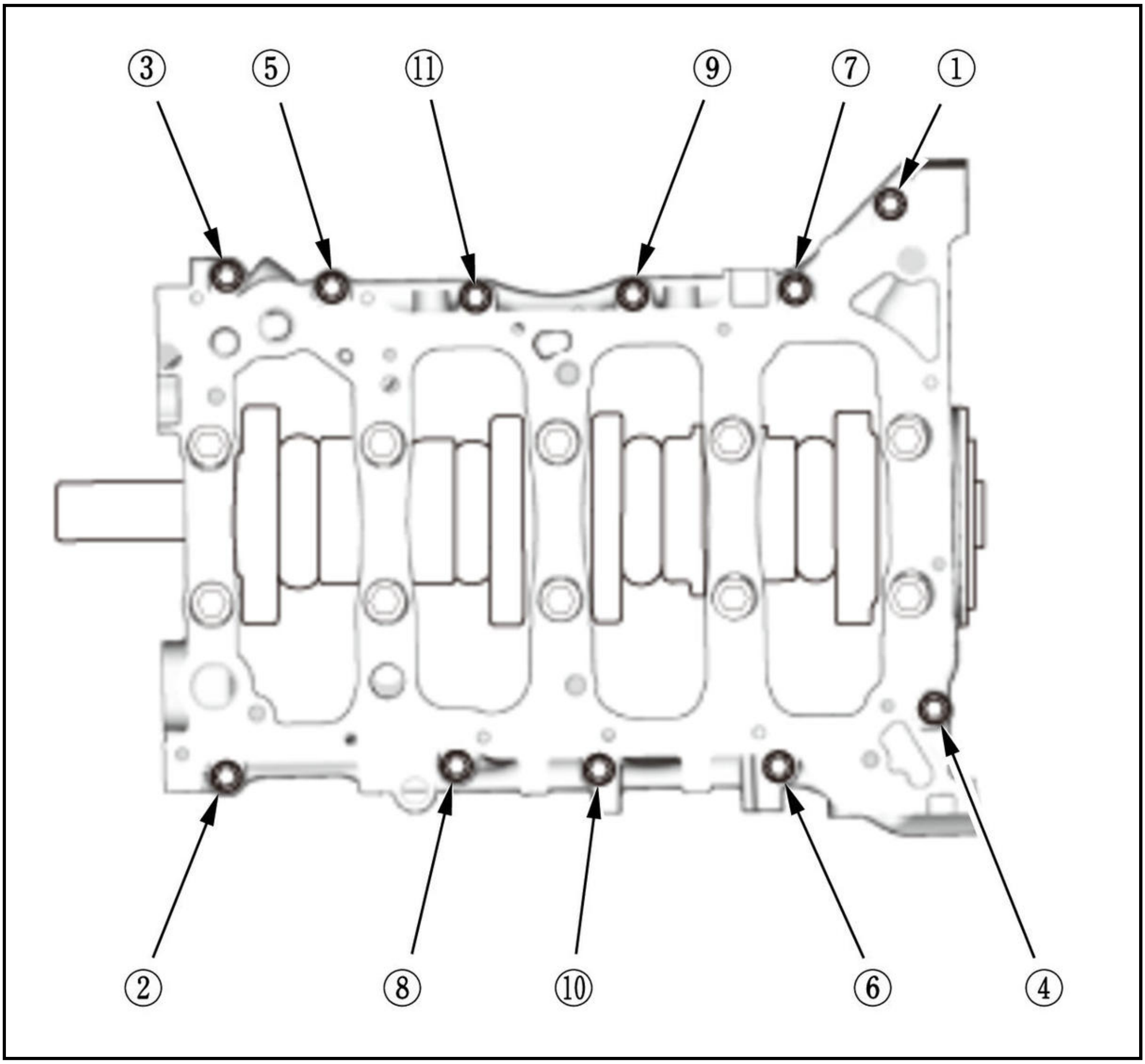

1. Remove the 8 mm bolts in the sequence shown.

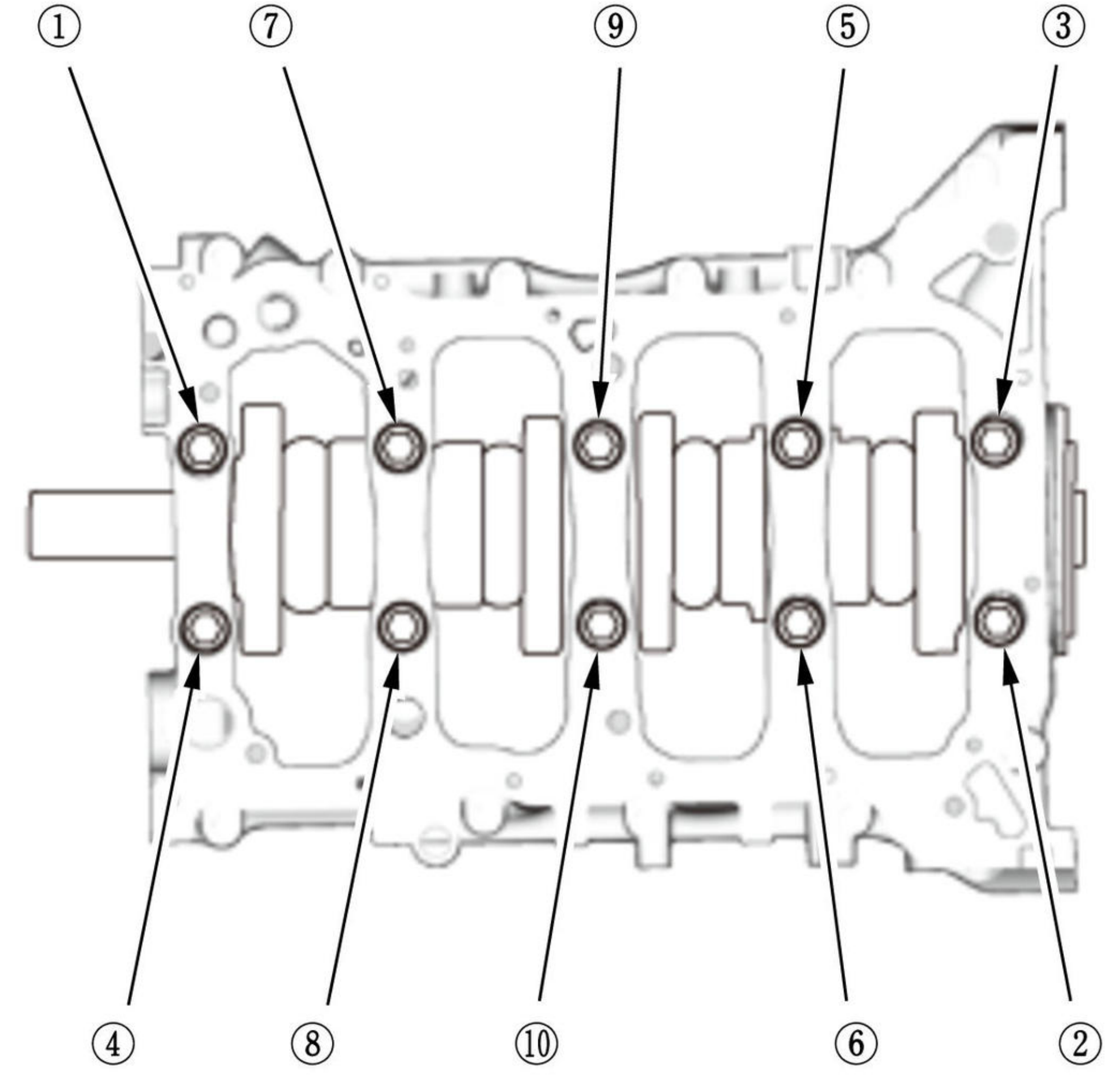

2. Remove the bearing cap bolts. To prevent warpage, loosen the bolts in sequence 1/3 turn at a time; repeat the sequence until all bolts are loosened.

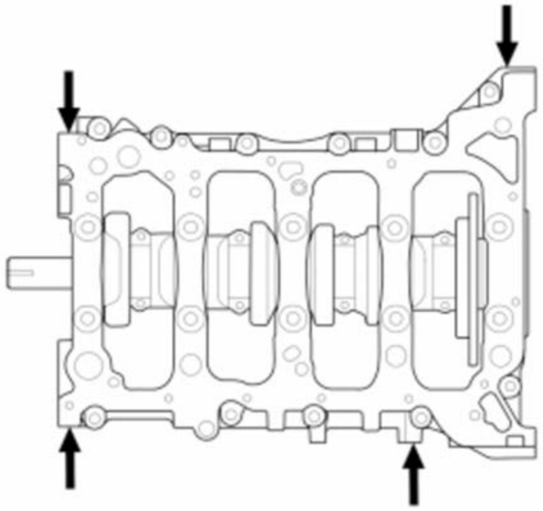

3. Using a flat blade screwdriver, separate the lower block from the engine block in the places shown.

4. Remove the lower block and the bearings. Keep all the bearings in order.

15. Crankshaft - Remove
16. Thrust Washer - Remove
17. CKP Pulse Plate - Remove
18. L Side Cover - Remove (if necessary)
19. Drain Bolt - Remove (if necessary)
20. Sealing Bolt - Remove (if necessary)
21. **Oil Jet and Oil Jet Bolt - Remove**
22. Piston/Connecting Rod Assembly - Remove

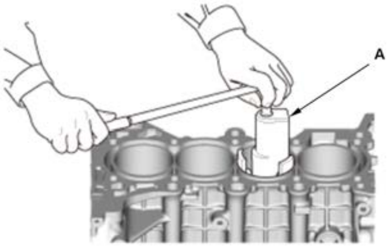	1. If you can feel a ridge of metal or hard carbon around the top of each cylinder, remove it with a ridge reamer (A). Follow the reamer manufacturer's instructions. If the ridge is not removed, it may damage the piston as it is pushed out.

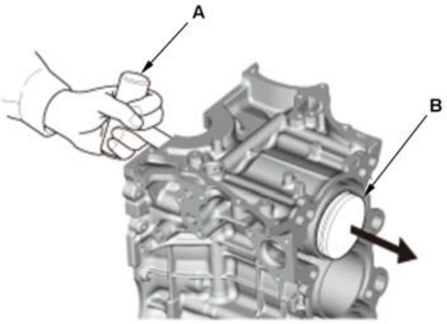	2. Use the wooden handle of a hammer (A) to drive out the piston/connecting rod assembly (B). Take care not to damage the cylinder with the connecting rod. 3. Reinstall the connecting rod bearings and caps after removing each piston/connecting rod assembly. 4. Mark each piston/connecting rod assembly with its cylinder number to make sure they are reinstalled in the original order. **NOTE:** The existing number on the connecting rod does not indicate its position in the engine, it indicates the rod bore size.

23. Piston Ring - Remove

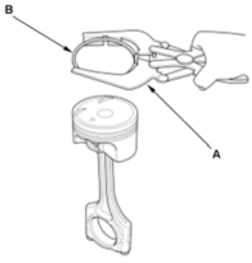	1. Using a ring expander (A), remove the old piston rings (B). 2. Clean all ring grooves thoroughly with a squared-off broken ring or a ring groove cleaner with a blade to fit the piston grooves. The top and second grooves are 1.0 mm (0.039 in) wide. The oil ring groove is 2.0 mm (0.079 in) wide. File down a blade if necessary. Do not use a wire brush to clean the ring grooves, or cut the ring grooves deeper with the cleaning tools. **NOTE:** If the piston is to be separated from the connecting rod, do not install new rings yet.

24. Piston Pin - Remove

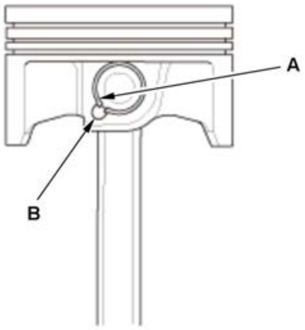	1. Apply new engine oil to the piston pin snap rings (A), and turn them in the ring grooves until the end gaps are lined up with the cutouts in the piston pin bores (B). **NOTE:** Take care not to damage the ring grooves.

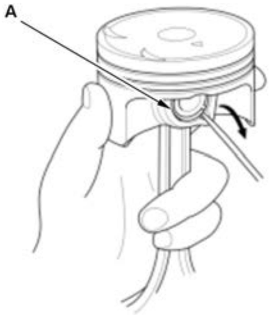	2. Remove the snap rings (A) from both sides of each piston. Start at the cutout in the piston pin bore. Remove the snap rings carefully so they do not go flying or get lost. Wear eye protection.

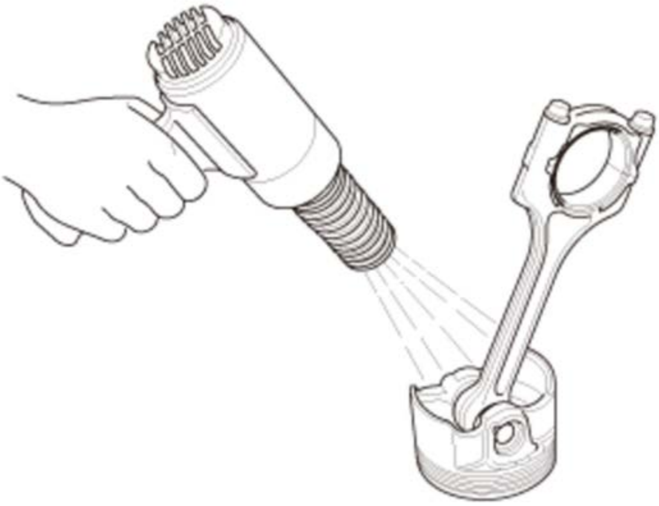	3. Heat the piston and connecting rod assembly to about 158B°F (70B°C). 4. Remove the piston pin.

Installation

NOTE:

- Be careful not to damage the journals and the CKP pulse plate.
- The No. 1 journal is on the crankshaft pulley side.

Procedure

NOTE: **Numbered call-outs in figure pertain to list numbers in following procedure.**

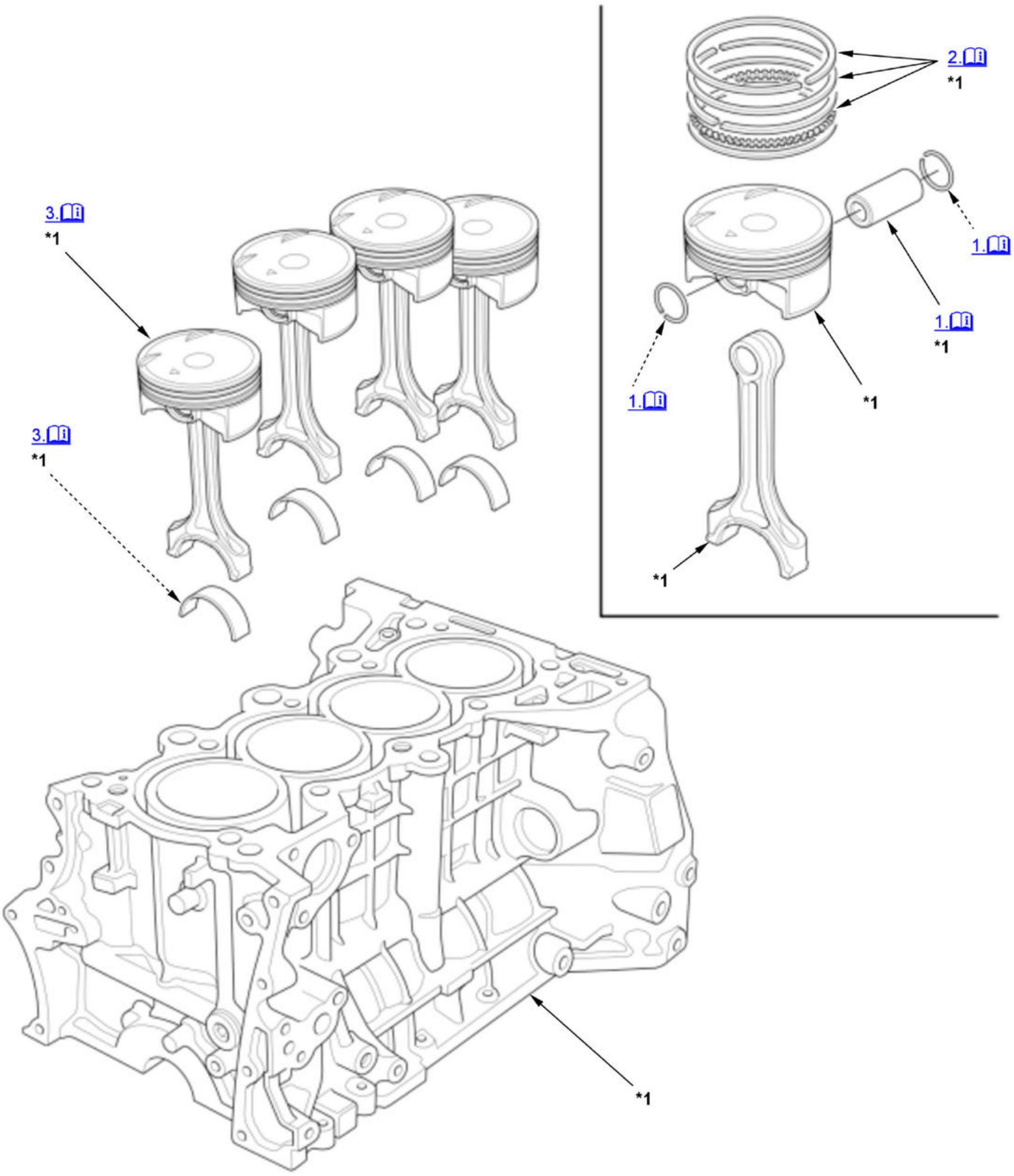

Fig. 4: Exploded View Of Engine Block Overhaul Components For Installation (1 Of 2)
Courtesy of HONDA, U.S.A., INC.

*1	These parts have inspection items

NOTE: **Numbered call-outs in figure pertain to list numbers in following procedure.**

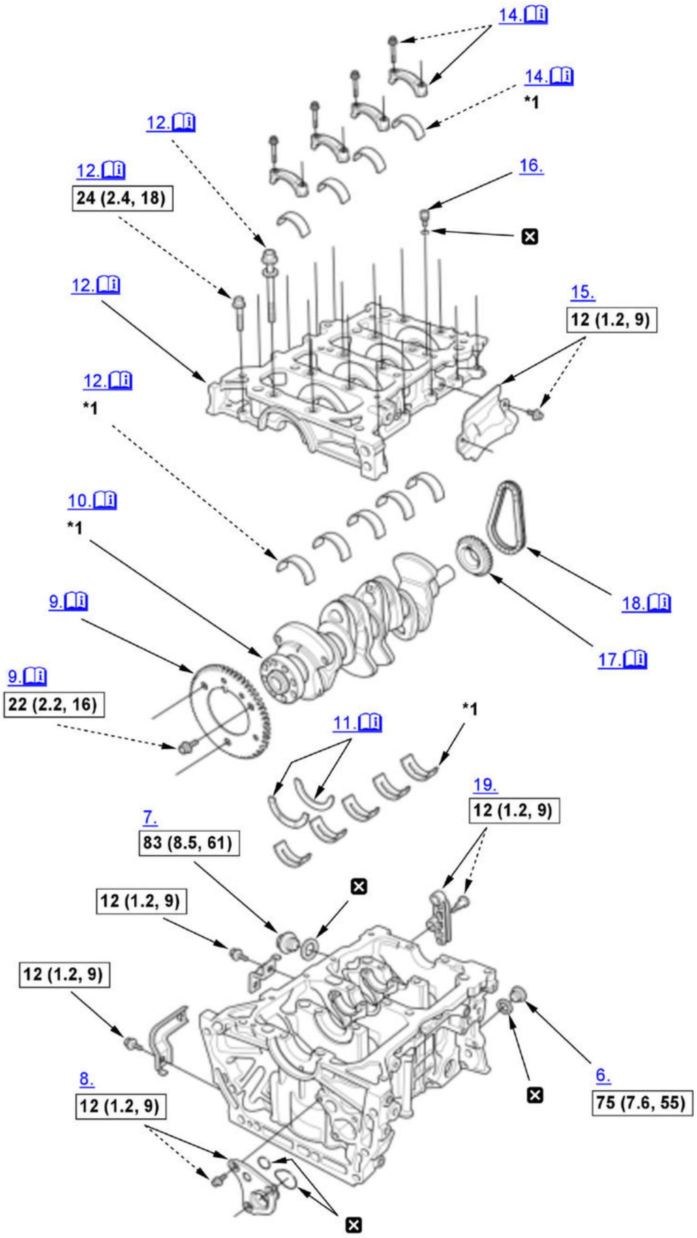
14.
14.
*1
12.
12.
24 (2.4, 18)
16.
☒
12.
15.
12 (1.2, 9)
12.
*1
10.
*1
18.
9.
17.
9.
22 (2.2, 16)
11.
*1
19.
12 (1.2, 9)
7.
83 (8.5, 61)
☒
12 (1.2, 9)
12 (1.2, 9)
6.
75 (7.6, 55)
☒
8.
12 (1.2, 9)
☒

Fig. 5: Exploded View Of Engine Block Overhaul Components With Torque Specifications For Installation (2 Of 2)
Courtesy of HONDA, U.S.A., INC.

▭	Torque: N.m (kgf.m, lbf.ft)
☒	Replace
*1	These parts have inspection items

1. Piston Pin - Install

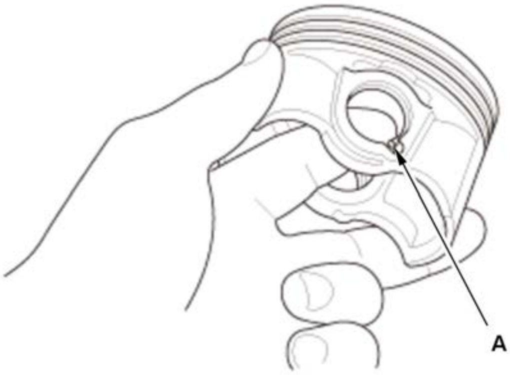	1. Install a piston pin snap ring (A) only on one side. 2. Coat the piston pin bore in the piston, the bore in the connecting rod, and the piston pin with new engine oil.

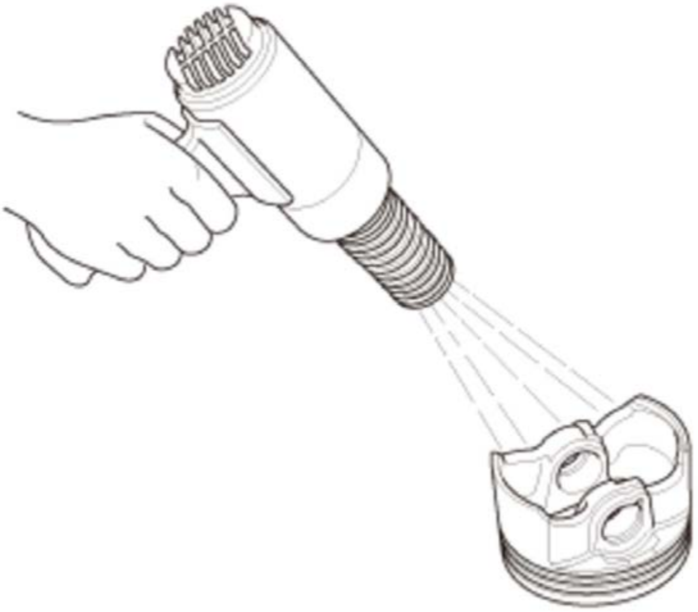	3. Heat the piston to about 158B°F (70B°C).

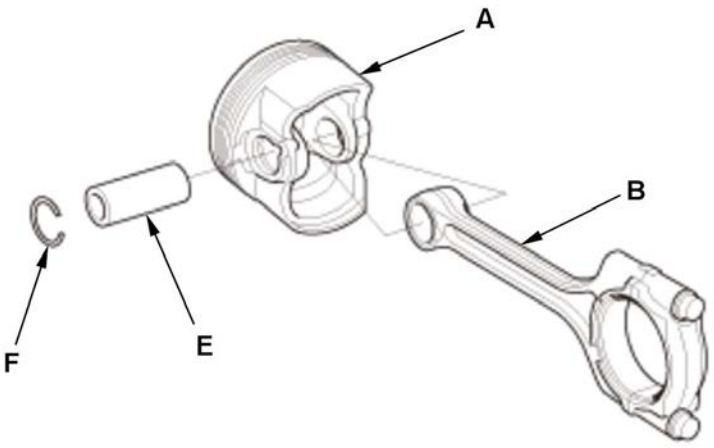 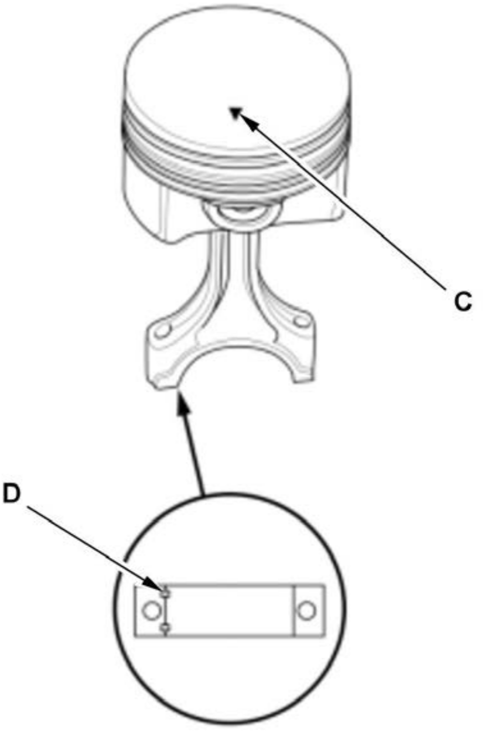	4. Assemble the piston (A) and the connecting rod (B). **NOTE:** Align the mark (C) with the groove (D) direction on the connecting rod as shown. 5. Install the piston pin (E). 6. Install the remaining snap ring (F). 7. Turn the snap rings in the ring grooves until the end gaps are positioned at the bottom of the piston.

2. Piston Ring - Install

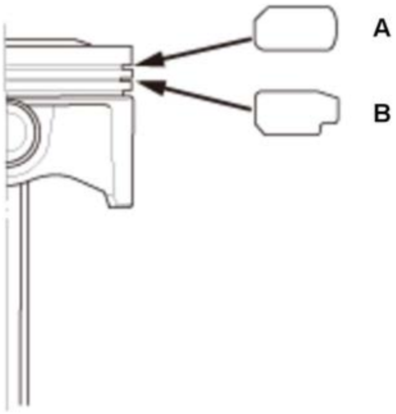

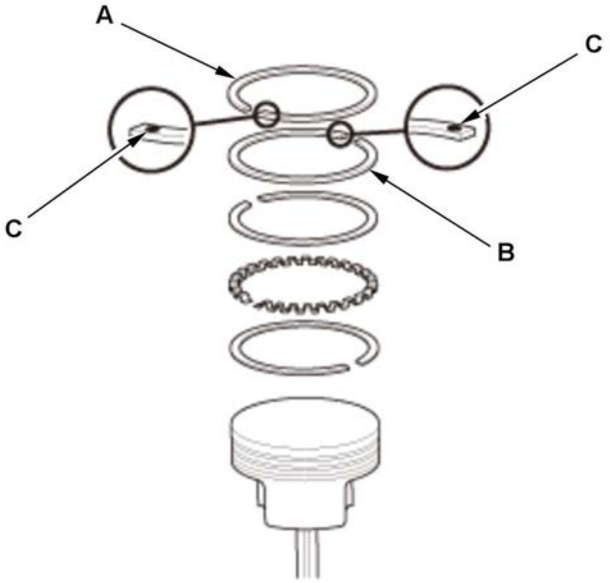

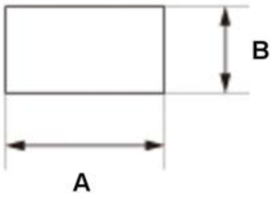

Top Ring (Standard):
A: 2.3 mm (0.091 in)
B: 1.0 mm (0.039 in)
Second Ring (Standard):
A: 2.3 mm (0.091 in)
B: 1.0 mm (0.039 in)

1. Apply new engine oil to the piston rings.

2. Install the top ring and the second ring as shown. The top ring (A) has a 1R mark, and the second ring (B) has a 2R mark. The manufacturing marks (C) must be facing upward.

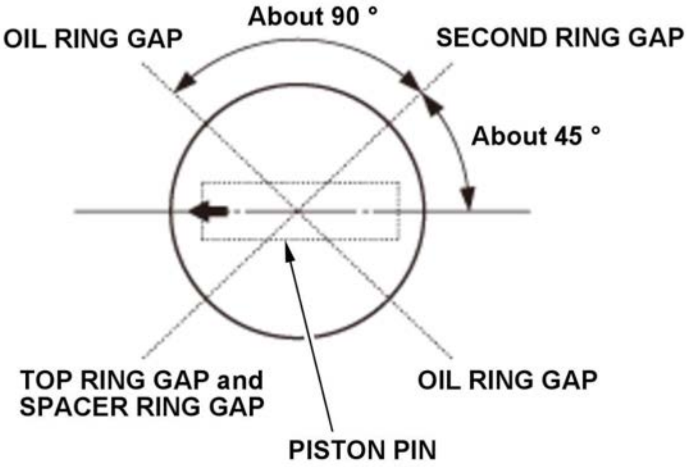
About 90 °
OIL RING GAP
SECOND RING GAP
About 45 °
TOP RING GAP and SPACER RING GAP
OIL RING GAP
PISTON PIN

3. Rotate the rings in their grooves to make sure they do not bind.

4. Position the ring end gaps as shown.

3. Piston/Connecting Rod Assembly - Install

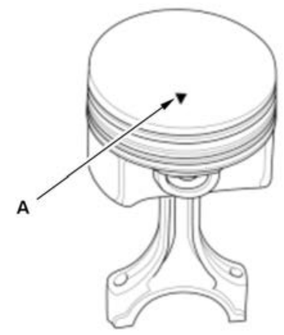	1. Remove the connecting rod caps. Check that the bearing is securely in place. 2. Apply new engine oil to the piston, the inside of the ring compressor, and the cylinder bore, then attach the ring compressor to the piston/connecting rod assembly. 3. Position the mark (A) to face the cam chain side of the engine.
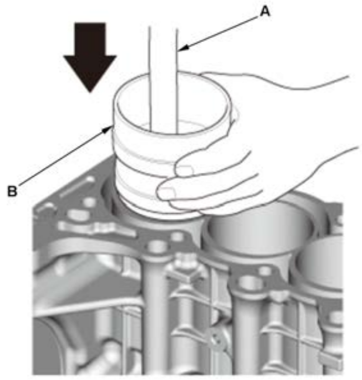	4. Position the piston/connecting rod assembly in the cylinder, and tap it in using the wooden handle of a hammer (A). Push down on the ring compressor (B) to prevent the rings from expanding before entering the cylinder bore. 5. Stop after the ring compressor pops free, and check the connecting rod-to-rod journal alignment before pushing the piston into place.

4. **Oil Jet and Oil Jet Bolt - Install**
5. Main Bearing Clearance - Check
6. Sealing Bolt - Install (if necessary)
7. Drain Bolt - Install (if necessary)
8. L Side Cover - Install (if necessary)
9. CKP Pulse Plate - Install

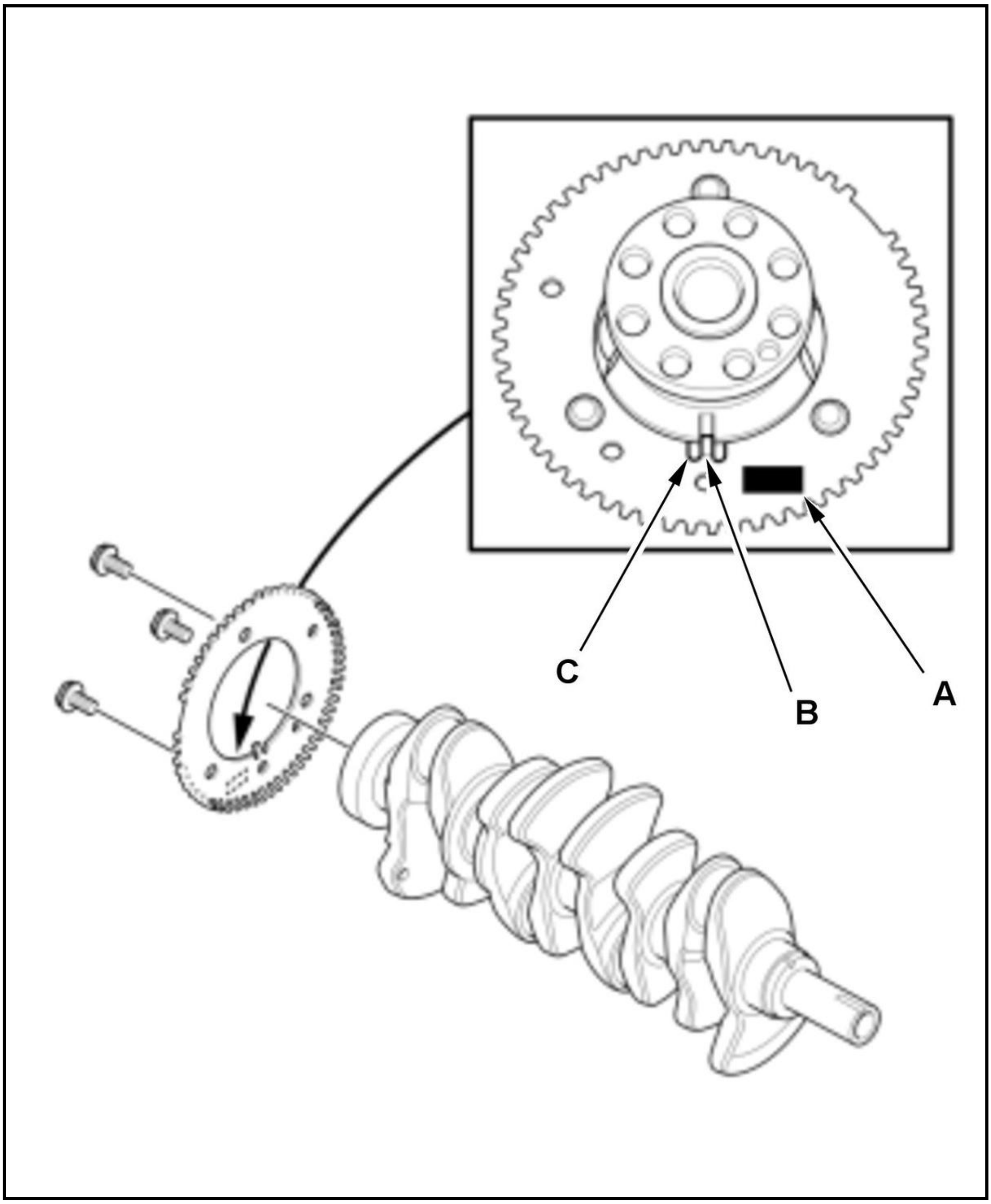

NOTE:

- Apply new engine oil to the threads and flange of the CKP pulse plate mounting bolts.
- Position the mark (A) facing it out side and align the portion (B) on the CKP pulse plate and groove (C) on the crankshaft.

10. Crankshaft - Install

NOTE:

- Apply a coat of new engine oil to the main bearings and the connecting rod bearings.
- Hold the crankshaft so rod journal No. 2 and rod journal No. 3 are straight up, then lower the crankshaft into the engine block.

11. Thrust Washer - Install

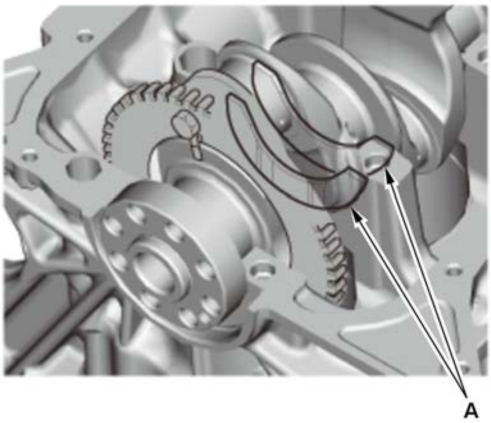

1. Apply new engine oil to the thrust washer surfaces. Install the thrust washers (A) in the No. 4 journal of the engine block.

12. Lower Block and Bearing Half - Install

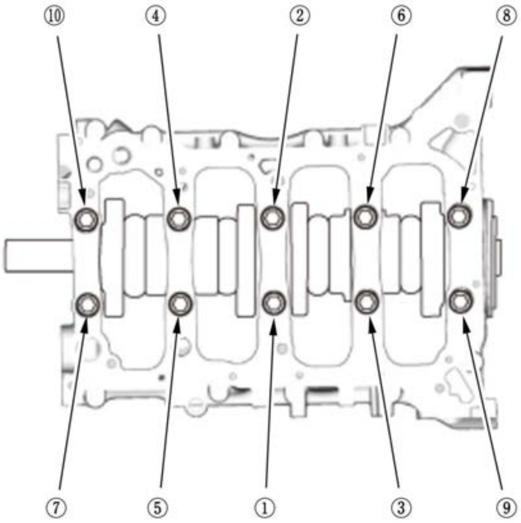

1. **Apply liquid gasket** to the engine block mating surface of the lower block, and to the inside edge of the threaded bolt holes.

2. Put the lower block on the engine block.

3. Apply new engine oil to the threads and flange of the bearing cap bolts.

4. Torque the bearing cap bolts, in sequence, to 30 N.m (3.1 kgf.m, 22 lbf.ft).

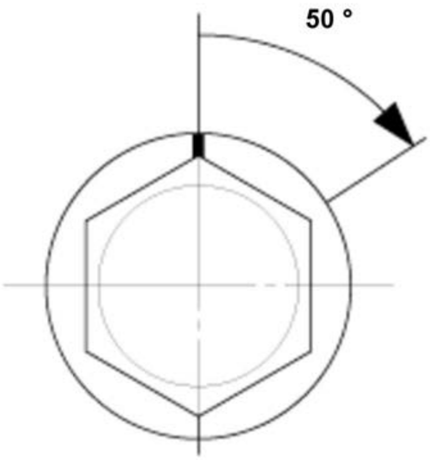

5. Tighten the bearing cap bolts an additional specified angle.

Specified Angle: 50B°

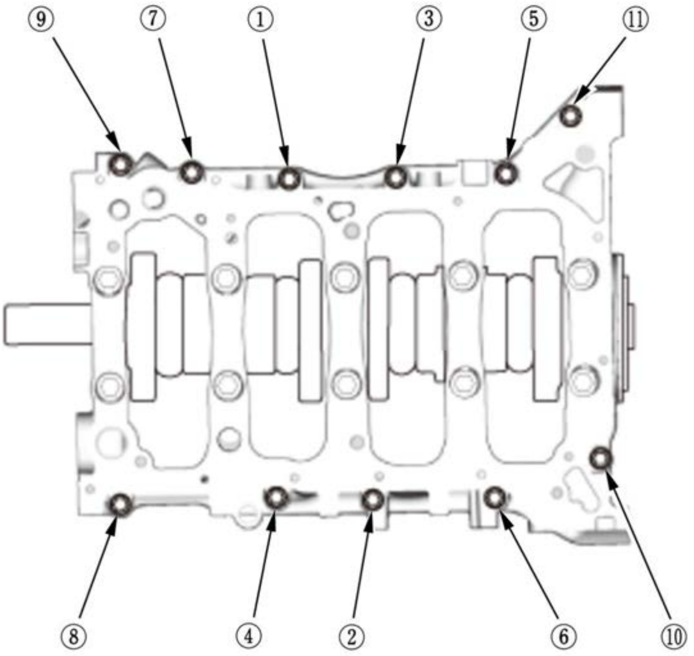	6. Torque the 8 mm bolts, in sequence, to the specified torque.

13. Connecting Rod Bearing Clearance - Check
14. Connecting Rod Bearing Cap and Bearing Half - Install

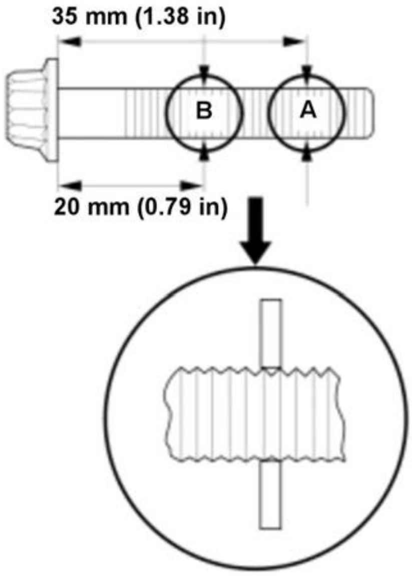	1. Measure the diameter of each connecting rod bolt at point A and point B. 2. Calculate the difference in diameter between point A and point B. **Point A-Point B = Difference in Diameter** 3. If the difference in diameter is out of tolerance, replace the connecting rod bolt.

Difference in Diameter

Specification:	**0-0.1 mm (0-0.004 in)**

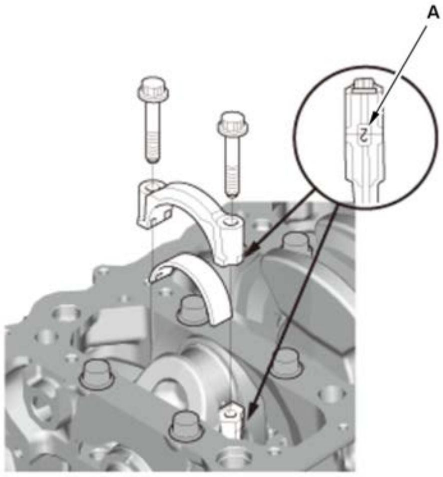	4. Apply new engine oil to the threads and flanges of the connecting rod bolts and the bearing half. 5. Seat the rod journals into connecting rod No. 1 and connecting rod No. 4. Line up the mark (A) on the connecting rod and the bearing cap. 6. Install the bearing caps and the bolts finger-tight. 7. Rotate the crankshaft clockwise, and seat the journals into connecting rod No. 2 and connecting rod No. 3. Line up the mark on the connecting rod and the bearing cap. 8. Install the bearing caps and the bolts finger-tight. 9. Torque the connecting rod bolts to 20 N.m (2.0 kgf.m, 15 lbf.ft).

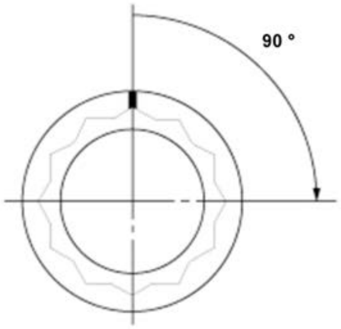	10. Tighten the connecting rod bolts an additional 90B°. **NOTE:** Remove the connecting rod bolt if you tightened it beyond the specified angle, inspect the connecting rod bolts. Do not loosen it back to the specified angle.

15. Engine Block Heat Insulator - Install (if necessary)
16. Oil Control Orifice - Install (if necessary)
17. Crankshaft Sprocket - Install

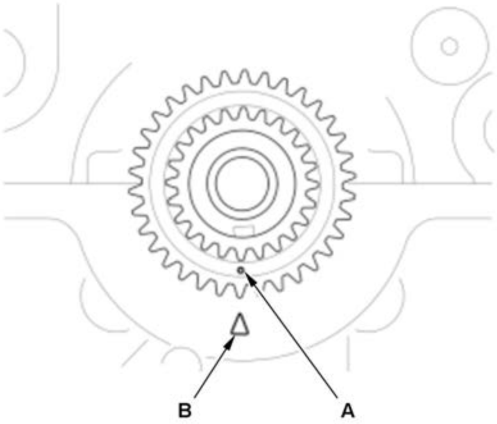	1. Install the crankshaft sprocket. 2. Set the crankshaft to top dead center (TDC). Align the TDC mark (A) on the crankshaft sprocket with the pointer (B) on the engine block.

18. Balancer Chain - Install

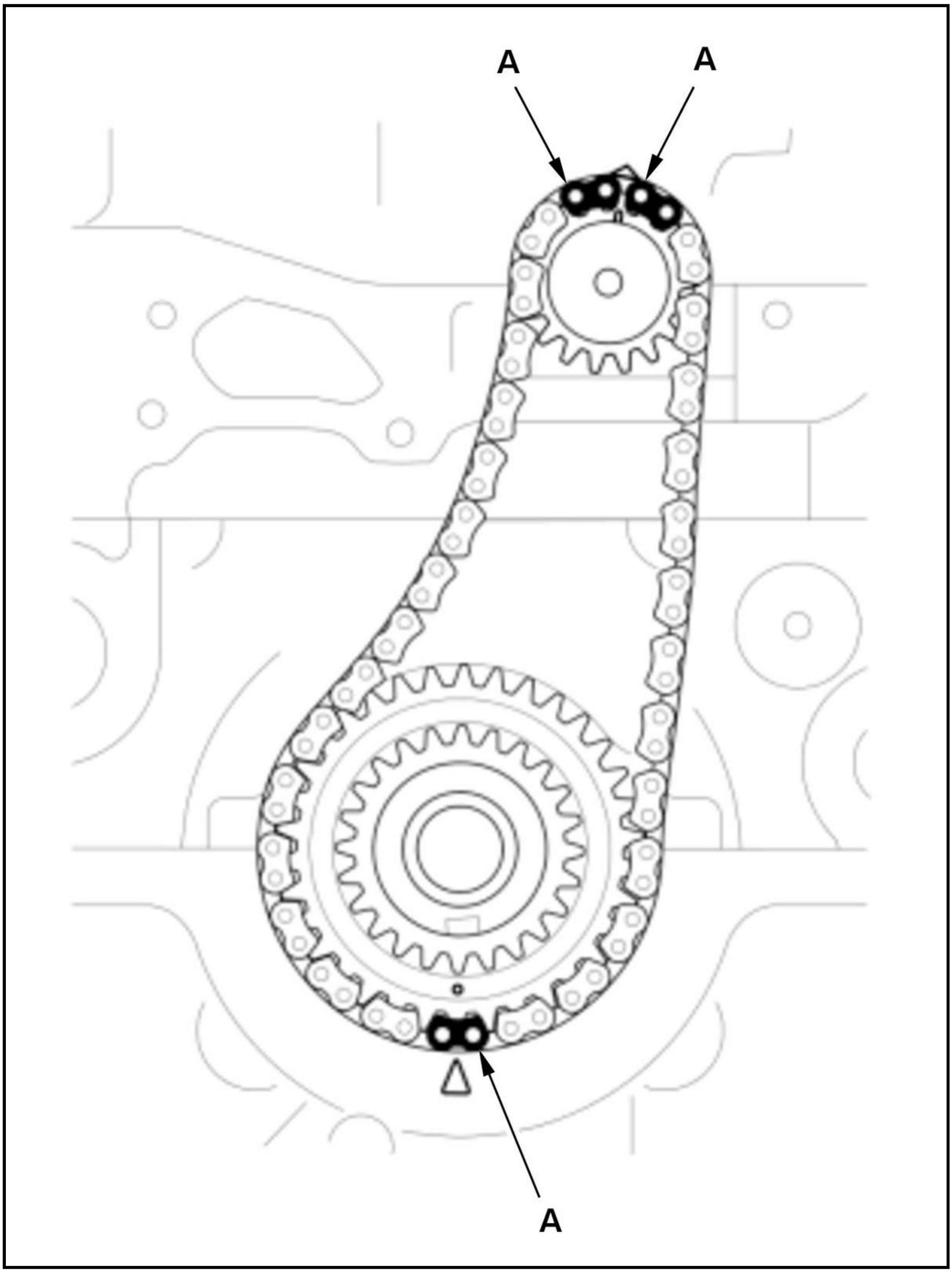

NOTE: These colored link plates (A) shall be used in product process only and not used for maintenance purpose. There is no need to line up the colored link plates as it has no effect on the engine operation.

19. Balancer Chain Guide - Install
20. Transmission End Crankshaft Oil Seal - Install
21. Balancer Shaft/Balancer Shaft Holder Assembly - Install
22. Oil Pan - Install
23. Cylinder Head - Install
24. Drive Plate - Install
25. Transmission (e-CVT) - Install
26. Engine - Install

Inspection

Connecting Rod and Crankshaft End Play Inspection

1. Connecting Rod - Inspect

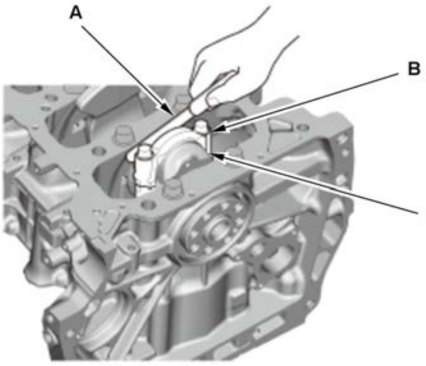	1. Measure the connecting rod end play with a feeler gauge (A) between the connecting rod (B) and the crankshaft (C). 2. If the connecting rod end play is beyond the service limit, install a new connecting rod, and recheck. If it is still beyond the service limit, replace the crankshaft.

Connecting Rod End Play	
Standard (New):	**0.15-0.35 mm (0.0059-0.0138 in)**
Service Limit:	**0.45 mm (0.0177 in)**

2. Crankshaft End Play - Inspect

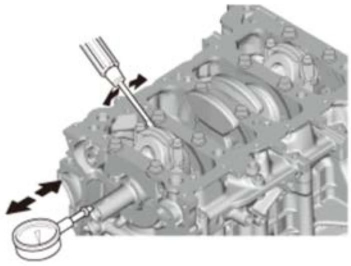	1. Push the crankshaft firmly away from the dial indicator by prying, and zero the dial against the end of the crankshaft. Then pull the crankshaft firmly back toward the indicator by prying; the dial reading should not exceed the service limit. 2. If the crankshaft end play is beyond the service limit, replace the thrust washers and recheck, if it is still beyond the service limit, replace the crankshaft.

Crankshaft End Play	
Standard (New):	**0.10-0.35 mm (0.0039-0.0138 in)**
Service Limit:	**0.45 mm (0.0177 in)**

Main Bearing Clearance Inspection

1. Lower Block and Bearing Half - Remove
2. Main Bearing Clearance - Inspect

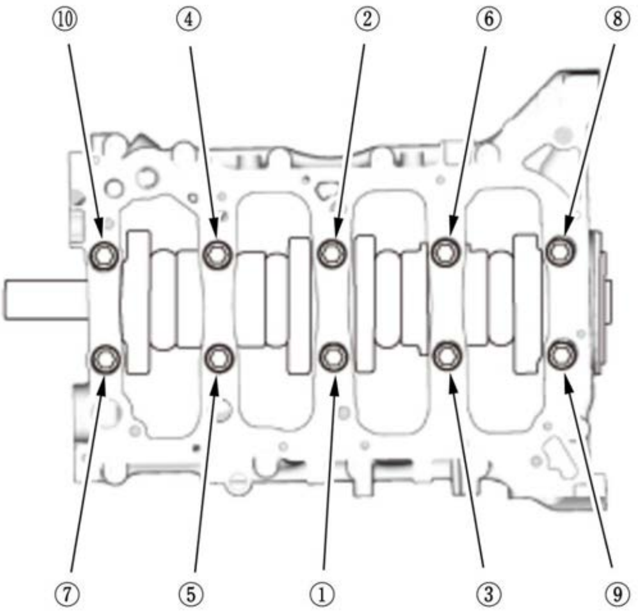

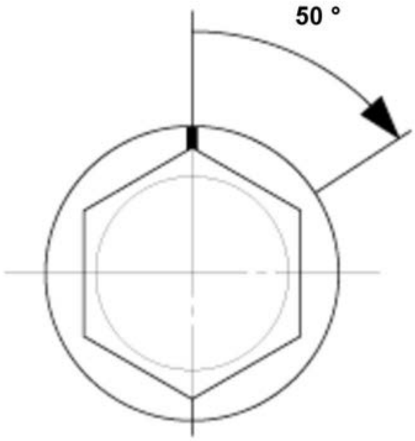

1. Clean each main journal and the bearing half with a clean shop towel.

2. Place one strip of plastigage across each main journal.

3. Reinstall the main bearings and the lower block, then torque the bolts to 30 N.m (3.1 kgf.m, 22 lbf.ft).

NOTE:

- Apply new engine oil to the bolt threads and flanges.
- Do not rotate the crankshaft during inspection.

4. Tighten the bearing cap bolts an additional 50B°.

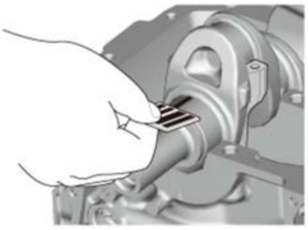

5. Remove the lower block and the bearings again, and measure the widest part of the plastigage.

6. If the plastigage measures too wide or too narrow, remove the crankshaft, and remove the upper half of the bearing. Install a new, complete bearing with the appropriate color code(s), and recheck the clearance. Do not file, shim, or scrape the bearings or the caps to adjust clearance.

7. If the plastigage shows the clearance is still incorrect, try the next larger or smaller bearing (the color listed above or below the current one), and check again. If the proper clearance cannot be obtained by using the appropriate larger or smaller bearings, replace the crankshaft and start over.

Main Bearing-to-Journal Oil Clearance	
Standard (New):	**0.017-0.035 mm (0.00067-0.00138 in)**
Service Limit:	**0.045 mm (0.00177 in)**

3. Crankshaft Main Bearing - Select

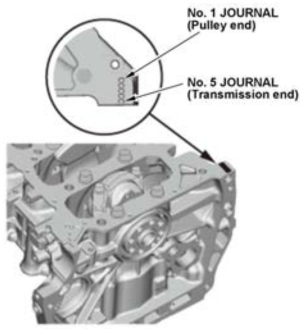

Crankshaft Bore Code Location

1. Numbers, letters, or bars have been stamped on either side of the lower block end as a code for the size of each of the five main journal bores. Write down the block bore codes. If you cannot read the codes because of accumulated dirt and dust, do not scrub them with a wire brush or scraper. Clean them only with solvent or detergent.

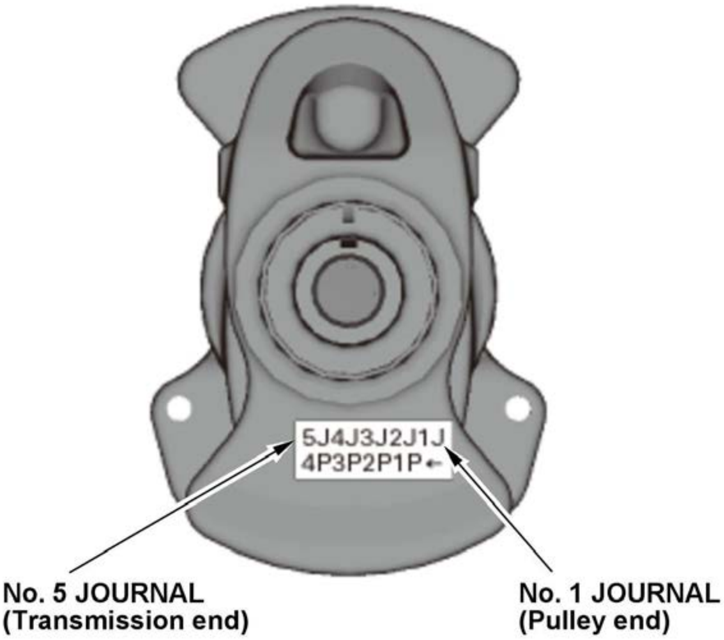

Main Journal Code Location

2. The main journal codes are stamped on the crankshaft.

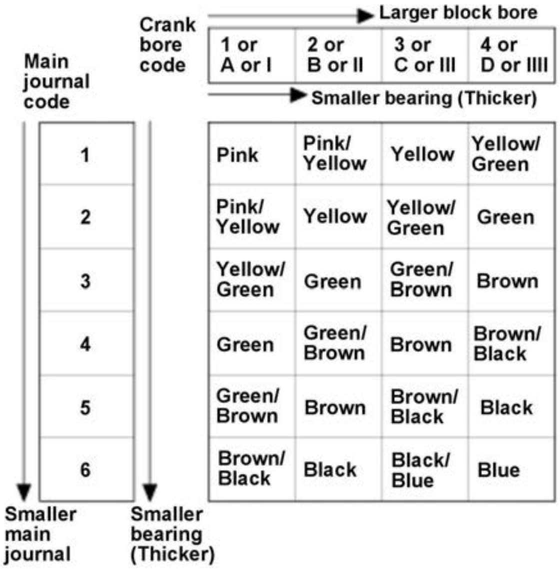

Crank bore code: → Larger block bore; → Smaller bearing (Thicker)

Main journal code: ↓ Smaller main journal; ↓ Smaller bearing (Thicker)

Main journal code	1 or A or I	2 or B or II	3 or C or III	4 or D or IIII
1	Pink	Pink/ Yellow	Yellow	Yellow/ Green
2	Pink/ Yellow	Yellow	Yellow/ Green	Green
3	Yellow/ Green	Green	Green/ Brown	Brown
4	Green	Green/ Brown	Brown	Brown/ Black
5	Green/ Brown	Brown	Brown/ Black	Black
6	Brown/ Black	Black	Black/ Blue	Blue

3. Use the block bore codes and the main journal codes to select the appropriate replacement bearings from the following table.

NOTE:

- Color code is on the edge of the bearing.
- When using bearing halves of different colors, it does not matter which color is used in the top or bottom.

Connecting Rod Bearing Clearance Inspection

1. Connecting Rod Bearing Cap and Bearing Half - Remove
2. Connecting Rod Bearing Clearance - Inspect

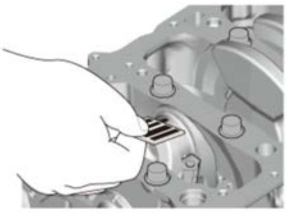

1. Clean the connecting rod journal and the bearing half with a clean shop towel.

2. Place plastigage across the rod journal.

3. Reinstall the bearing half and the cap, then torque the bolts to 20 N.m (2.0 kgf.m, 15 lbf.ft) +90B°.

NOTE:

- Apply new engine oil to the bolt threads and flanges.
- Do not rotate the crankshaft during inspection.

4. Remove the connecting rod bearing cap and the bearing half, and measure the widest part of the plastigage.

Connecting Rod Bearing-to-Journal Oil Clearance

5. If the plastigage measures too wide or too narrow, remove the cap, and the upper half of the bearing. Install a new, complete bearing with the appropriate color code(s), and recheck the clearance. Do not file, shim, or scrape the bearings or the caps to adjust clearance.

6. If the plastigage shows the clearance is still incorrect, try the next larger or smaller bearing (the color listed above or below the current one), and check the clearance again. If the proper clearance cannot be obtained by using the appropriate larger or smaller bearings, replace the crankshaft and start over.

Standard (New):	**0.024-0.042 mm (0.00094-0.00165 in)**

3. Connecting Rod Bearing - Select

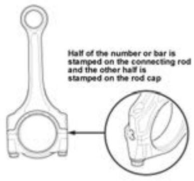
Half of the number or bar is stamped on the connecting rod and the other half is stamped on the rod cap
3

1. Inspect each connecting rod for cracks and heat damage.

Big End Bore Code Locations

2. Each connecting rod has a tolerance range from 0 to 0.024 mm (0.00094 in), in 0.006 mm (0.00024 in) increments, depending on the size of its big end bore. It's then stamped with a number or bar (1, 2, 3, or 4/l, ll, lll, or llll) indicating the range. You may find any combination of numbers and bars in any engine. (Half the number or bar is stamped on the rod cap, the other half is on the connecting rod.) If you cannot read the code because of an accumulation of oil and varnish, do not scrub it with a wire brush or scraper. Clean it only with solvent or detergent.

Big End Bore Size:	**48.0 mm (1.890 in)**

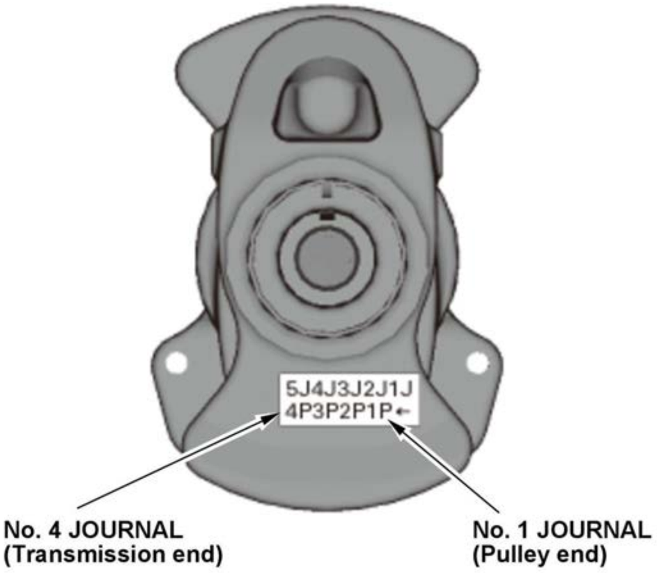

Connecting Rod Journal Code Location

3. The connecting rod journal codes are stamped on the crankshaft in either location.

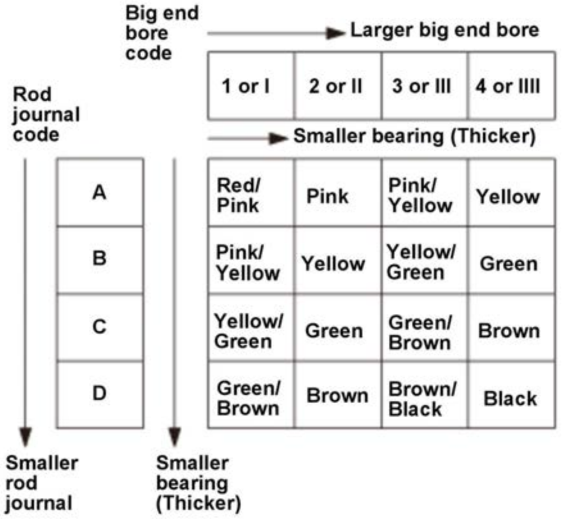

Big end bore code → Larger big end bore

→ Smaller bearing (Thicker)

Rod journal code	1 or I	2 or II	3 or III	4 or IIII
A	Red/ Pink	Pink	Pink/ Yellow	Yellow
B	Pink/ Yellow	Yellow	Yellow/ Green	Green
C	Yellow/ Green	Green	Green/ Brown	Brown
D	Green/ Brown	Brown	Brown/ Black	Black

↓ Smaller rod journal

↓ Smaller bearing (Thicker)

4. Use the big end bore codes and the rod journal codes to select appropriate replacement bearings from the following table.

NOTE:

- Color code is on the edge of the bearing.
- When using bearing halves of different colors, it does not matter which color is used in the top or bottom.

Crankshaft Inspection

1. Crankshaft - Inspect

Out-of-Round and Taper

1. Clean the crankshaft oil passages with pipe cleaners or a suitable brush.

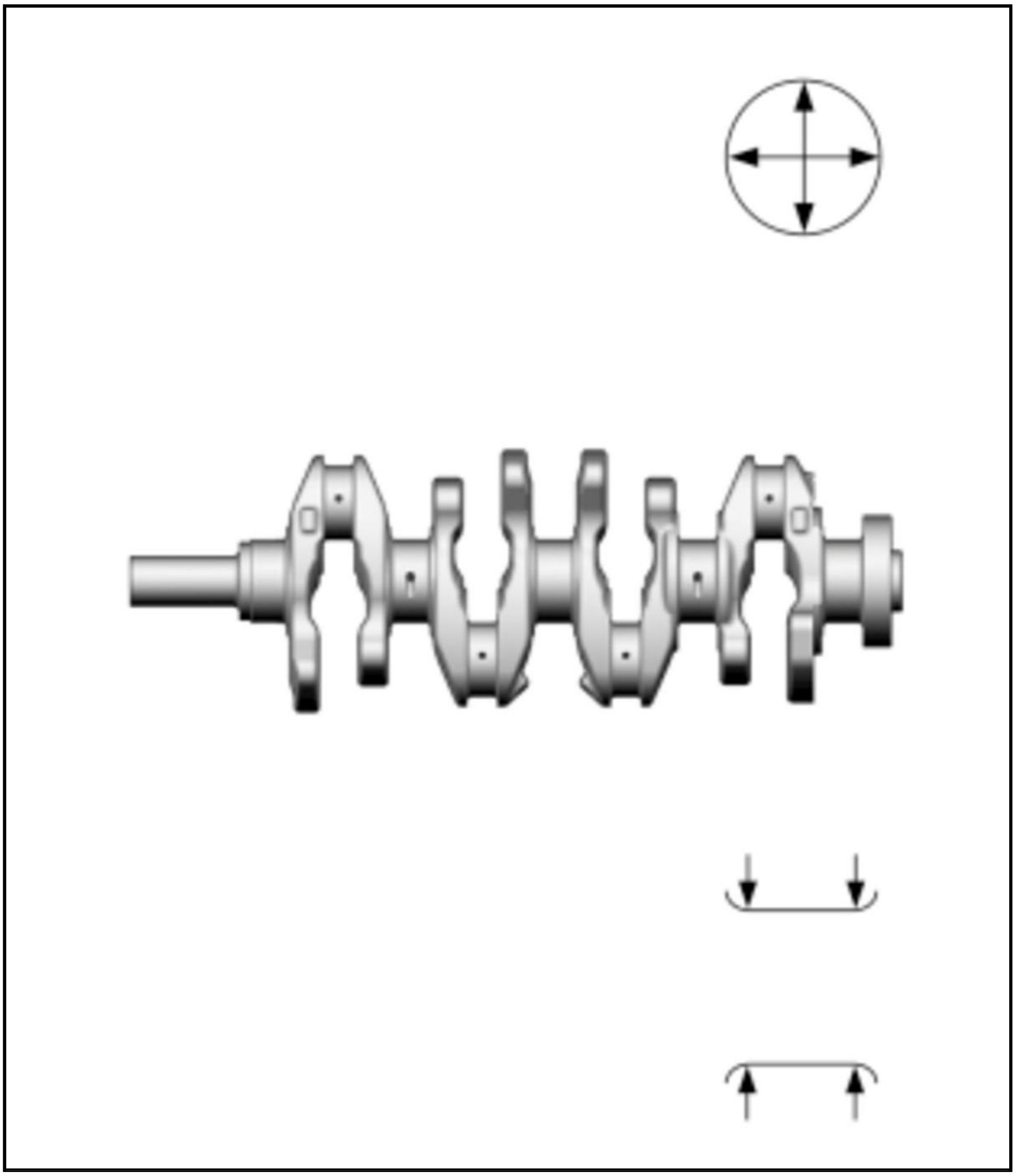

2. Check the keyway slot and the threaded holes.

3. Measure the out-of-round at the middle of each rod and main journal in two places. The difference between measurements on each journal must not be more than the service limit.

Journal Out-of-Round	
Standard (New):	**0.005 mm (0.00020 in) max.**
Service Limit:	**0.010 mm (0.00039 in)**

4. Measure the taper at the edges of each rod and the main journal. The difference between measurements on each journal must not be more than the service limit.

Journal Taper	
Standard (New):	**0.005 mm (0.00020 in) max.**
Service Limit:	**0.010 mm (0.00039 in)**

Straightness

5. Place the V-blocks on a flat surface.

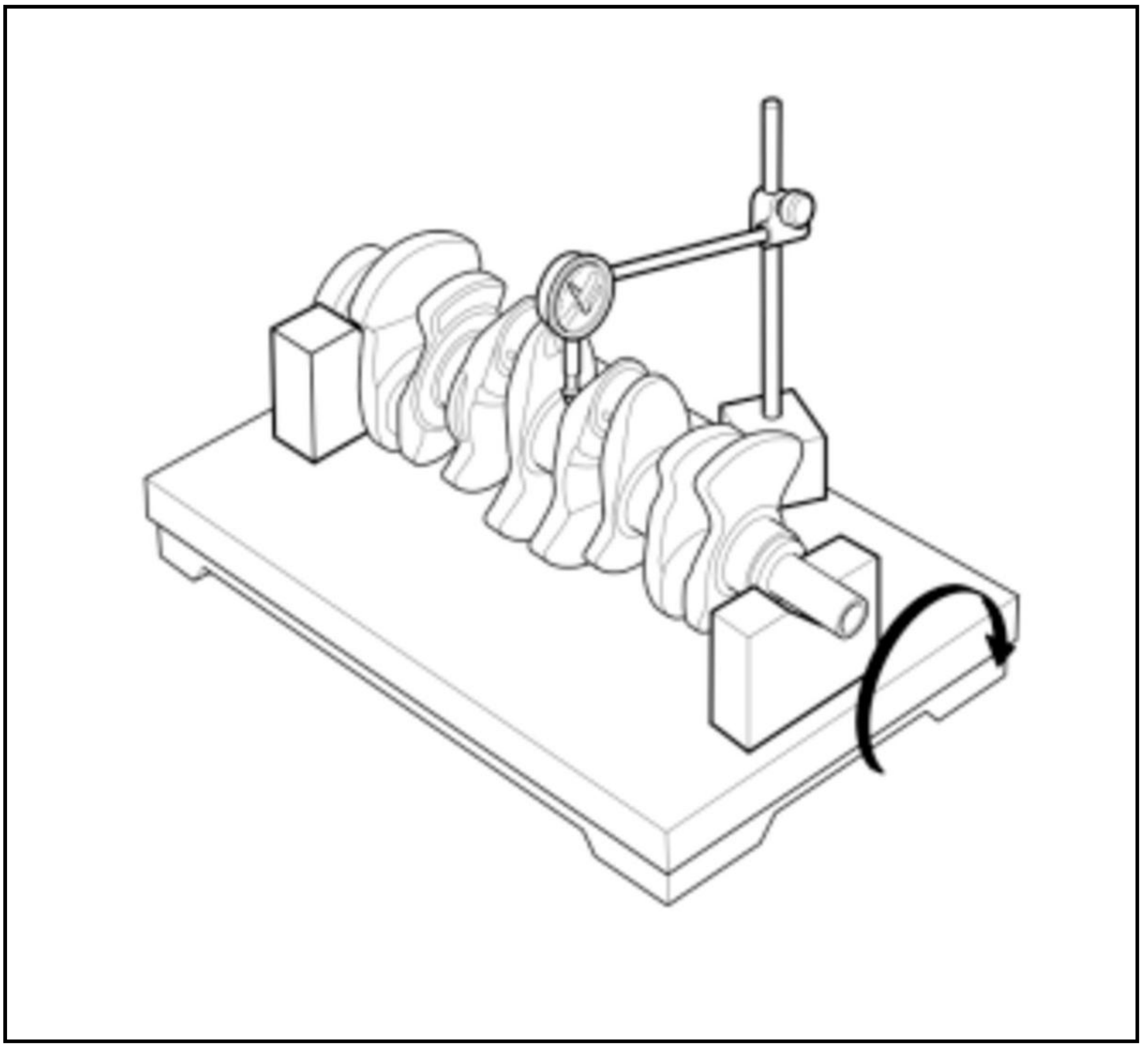

6. Check the total runout with the crankshaft supported on V-blocks.

7. Measure the runout on all of the main journals. Rotate the crankshaft two complete revolutions. The difference between measurements on each journal must not be more than the service limit.

Crankshaft Total Runout	
Standard (New):	**0.03 mm (0.0012 in)**
Service Limit:	**0.04 mm (0.0016 in)**

Piston, Ring, Pin, and Connecting Rod Inspection

1. Piston Ring End Gap - Inspect

1. Using a piston that has its rings removed, push a new ring (A) into the cylinder bore 15-20 mm (0.59-0.79 in) from the bottom.

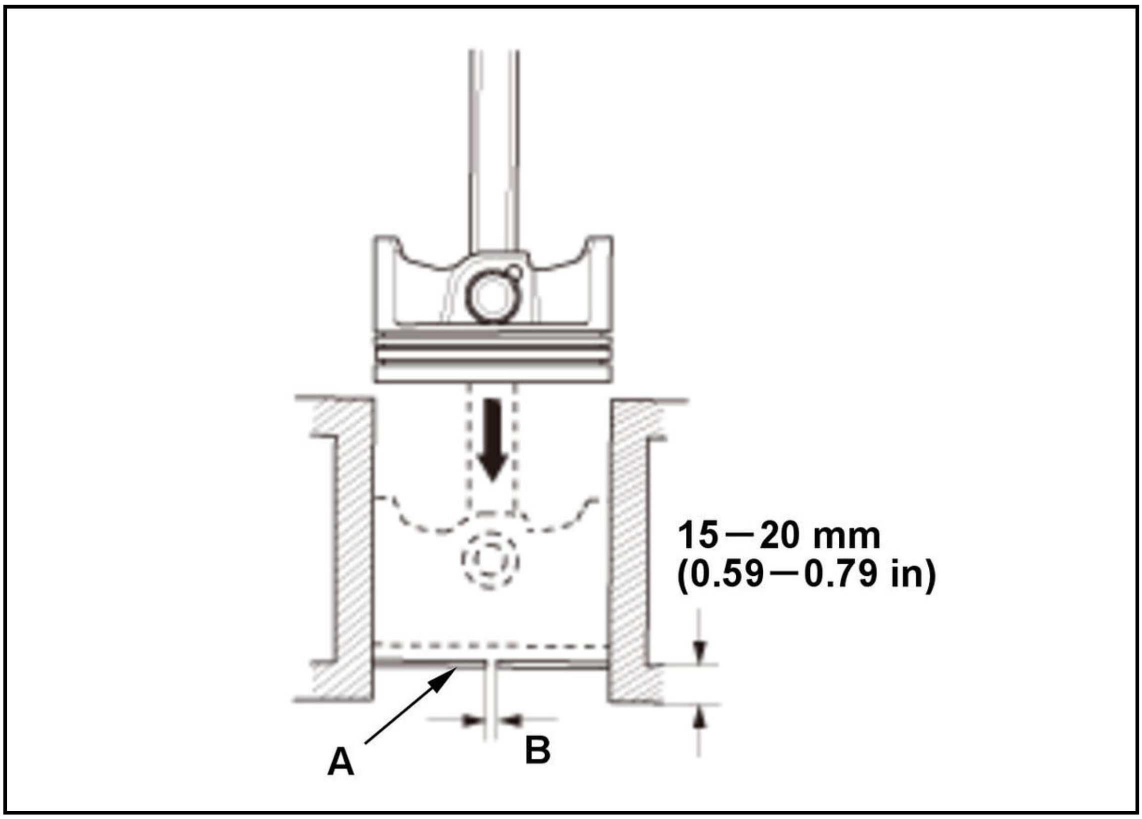

2. Measure the piston ring end-gap (B) with a feeler gauge:

- If the gap is too small, check to see if you have the proper rings for your engine.
- If the gap is too large, recheck the cylinder bore diameter against the wear limits. If the bore is beyond the service limit, the engine block must be rebored.

Piston Ring End-Gap	
Top Ring	
Standard (New):	**0.20-0.30 mm (0.0079-0.0118 in)**
Service Limit:	**0.60 mm (0.0236 in)**
Second Ring	
Standard (New):	**0.30-0.42 mm (0.0118-0.0165 in)**
Service Limit:	**0.70 mm (0.0276 in)**
Oil Ring	
Standard (New):	**0.20-0.50 mm (0.0079-0.0197 in)**
Service Limit:	**0.80 mm (0.0315 in)**

2. Piston Pin - Inspect

1. Measure the diameter of the piston pin.

Piston Pin Diameter	
Standard (New):	**17.960-17.964 mm (0.70709-0.70724 in)**
Service Limit:	**17.960 mm (0.70709 in)**

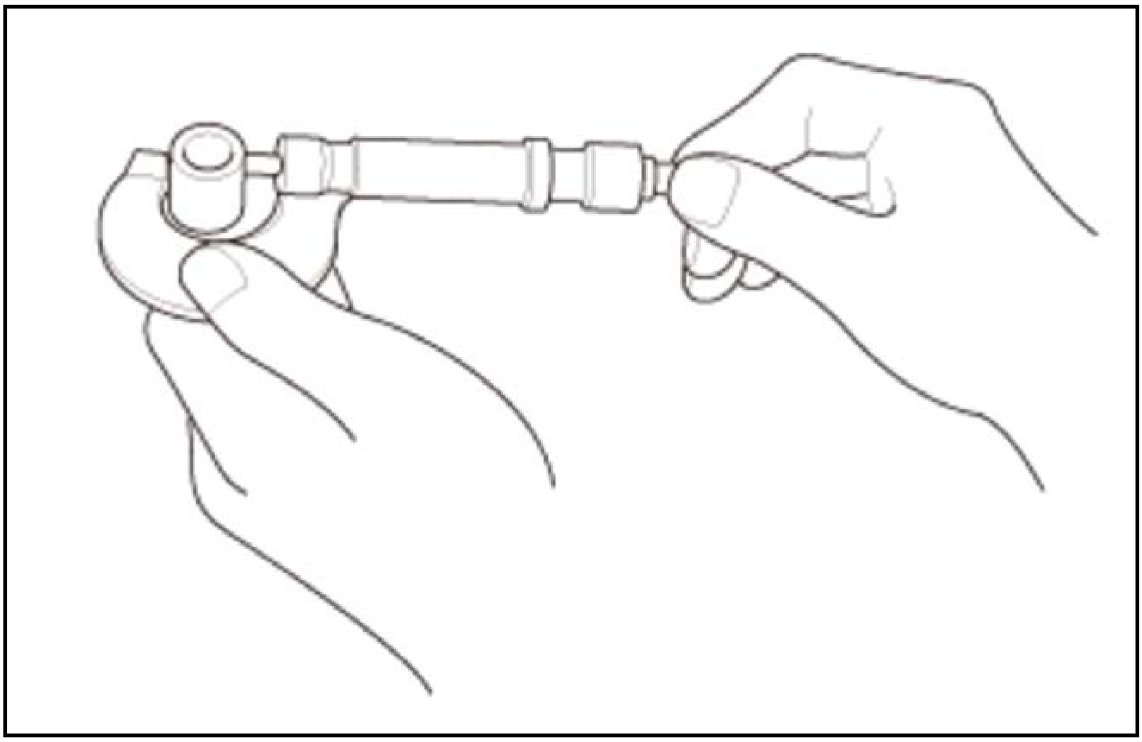

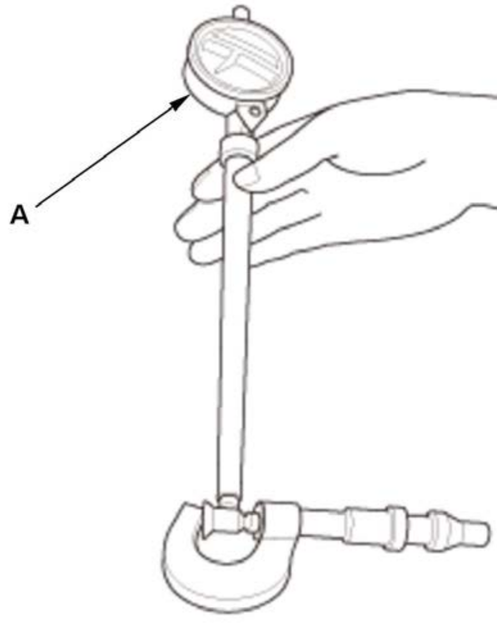	2. Zero the dial indicator (A) to the piston pin diameter.

3. Check the difference between the piston pin diameter and the piston pin hole diameter in the piston.

Piston Pin-to-Piston Clearance	
Standard (New):	**-0.004-0.003 mm (-0.00016-0.00012 in)**
Service Limit:	**0.006 mm (0.00024 in)**

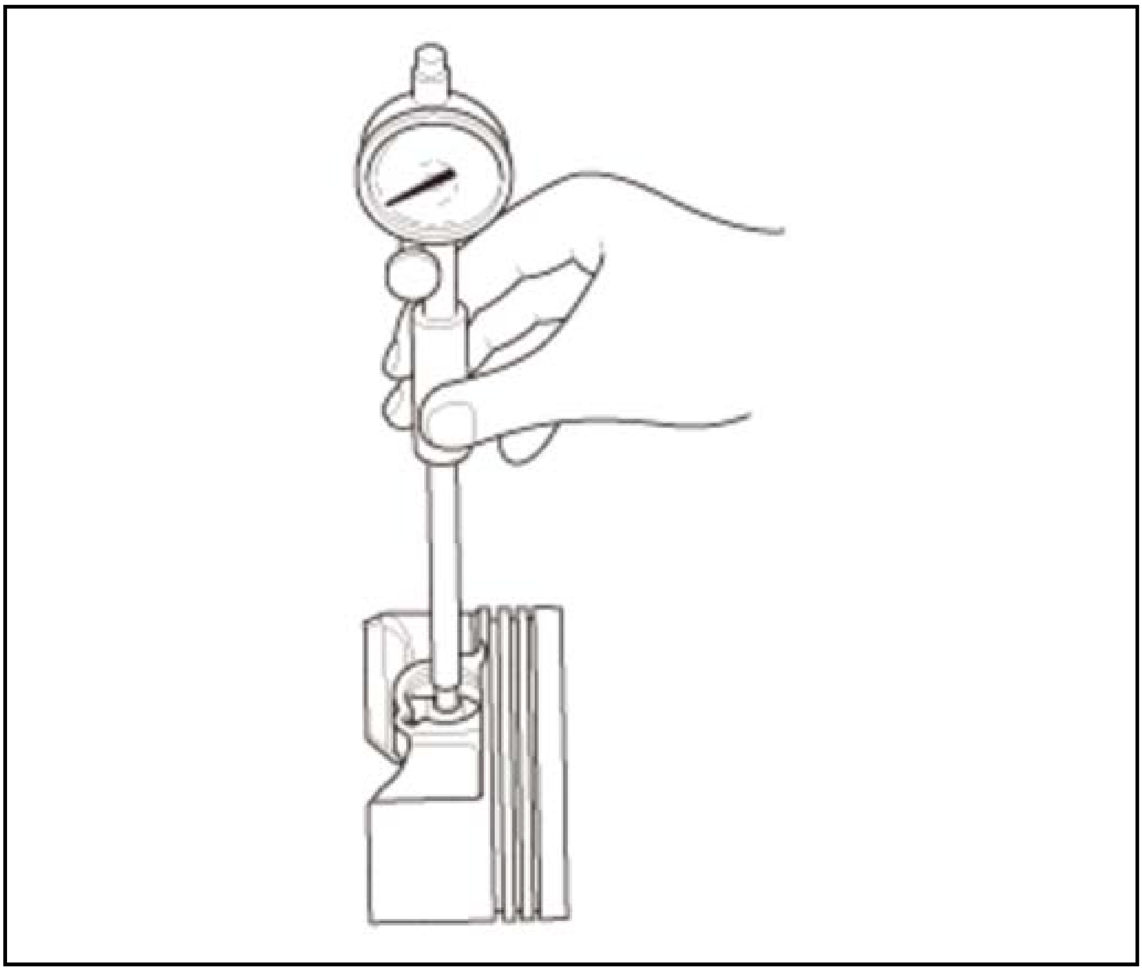

4. Measure the piston pin-to-connecting rod clearance.

Piston Pin-to-Connecting Rod Clearance	
Standard (New):	**0.004-0.016 mm (0.00016-0.00063 in)**
Service Limit:	**0.020 mm (0.00079 in)**

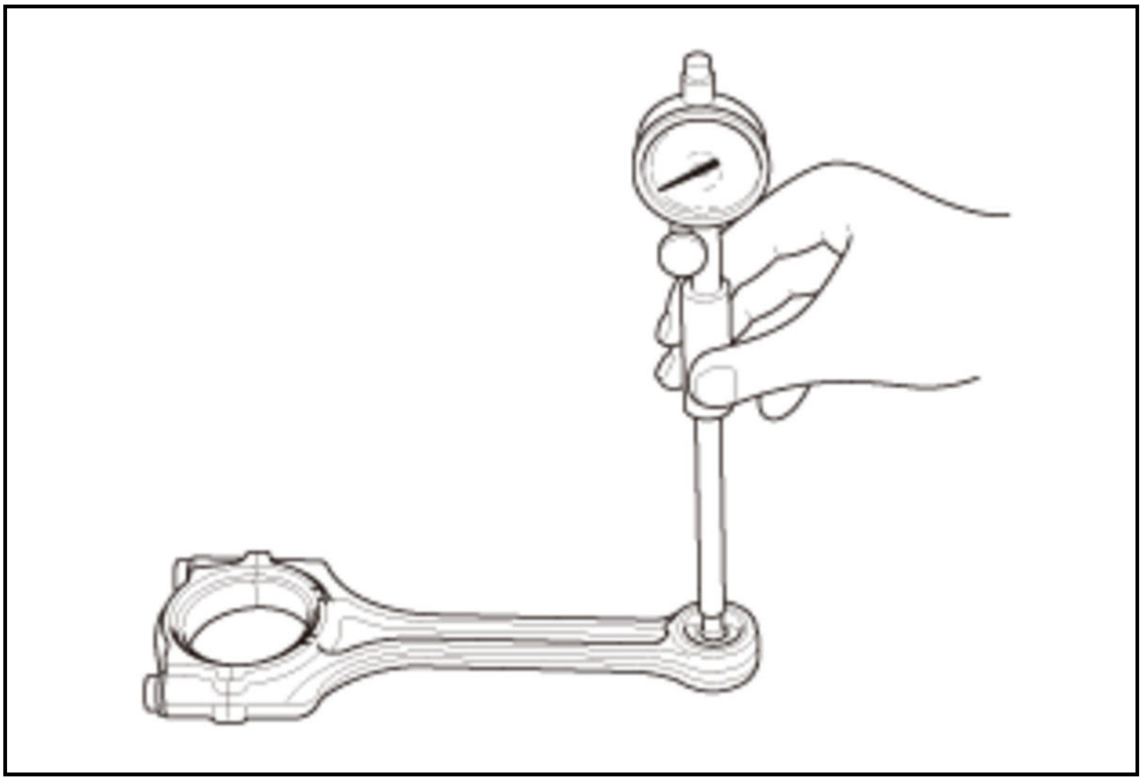

3. Piston Ring-to-Piston Ring Groove Clearance - Inspect

1. After installing a new set of rings, measure the ring-to-groove clearances:

Top Ring Clearance	
Standard (New):	**0.045-0.085 mm (0.00177-0.00335 in)**
Service Limit:	**0.165 mm (0.00650 in)**

Second Ring Clearance	
Standard (New):	**0.030-0.055 mm (0.00118-0.00217 in)**
Service Limit:	**0.125 mm (0.00492 in)**

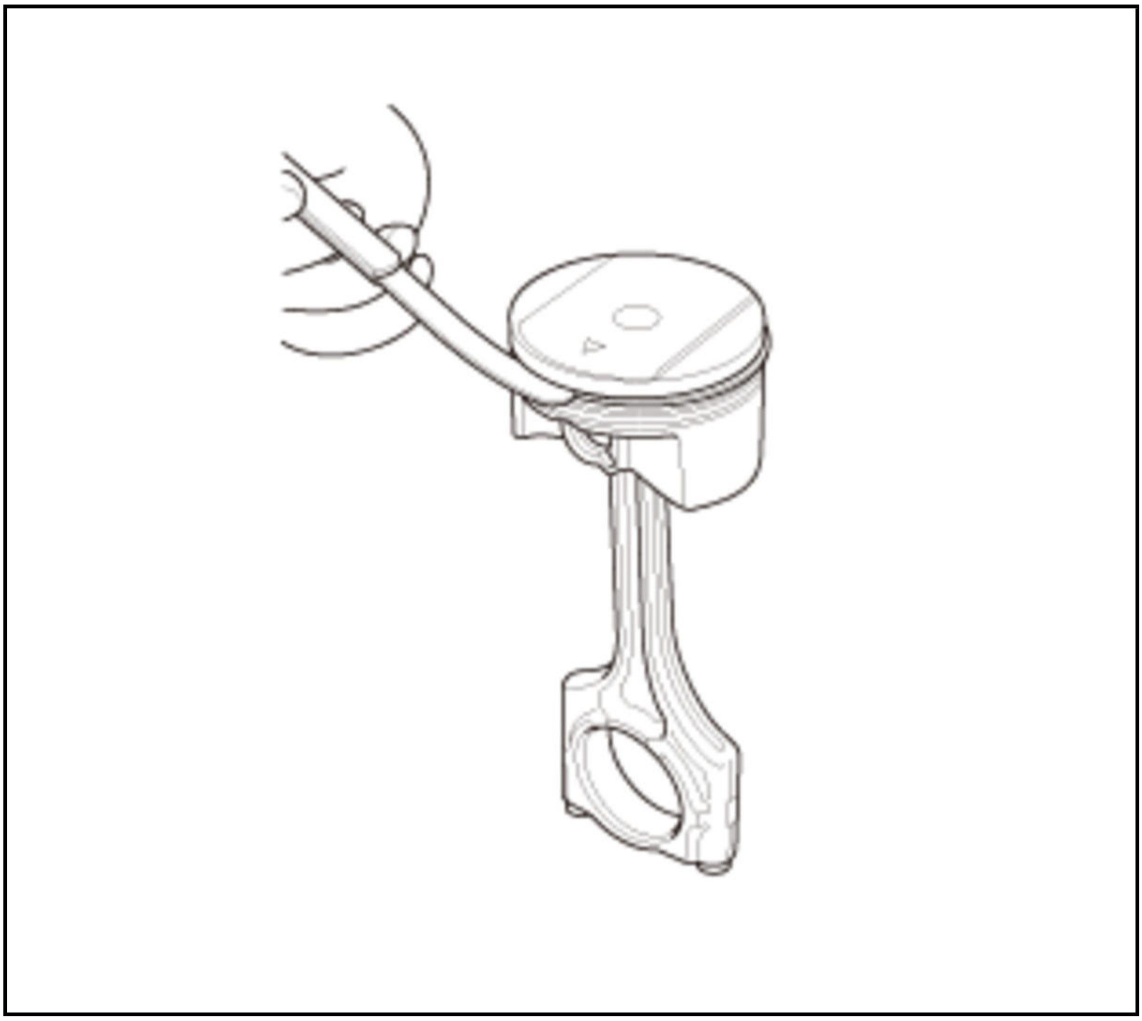

Block and Piston Inspection

1. Block and Piston - Inspect

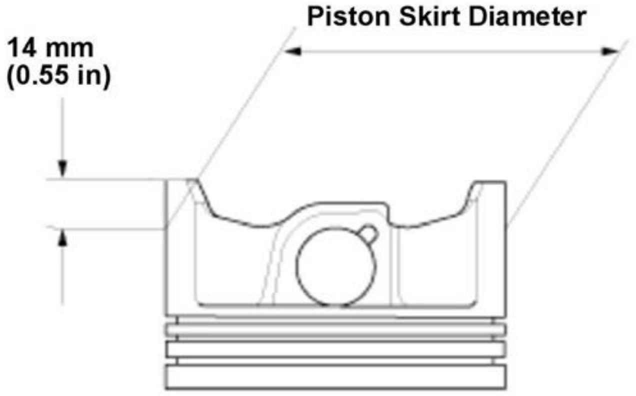
Piston Skirt Diameter
14 mm
(0.55 in)

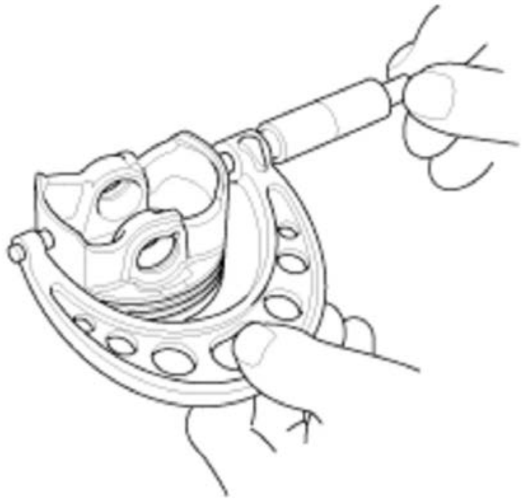

1. Check the pistons for distortion or cracks.

2. Measure the piston skirt diameter at a point 14 mm (0.55 in) from the bottom of the skirt.

Piston Skirt Diameter	
Service Limit:	**80.93 mm (3.1862 in)**
Oversize Piston 0.25 mm (0.0098 in) Skirt Diameter	
Service Limit:	**81.18 mm (3.1961 in)**

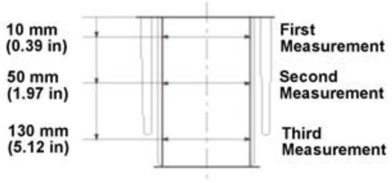
10 mm
(0.39 in)
First
Measurement
50 mm
(1.97 in)
Second
Measurement
130 mm
(5.12 in)
Third
Measurement

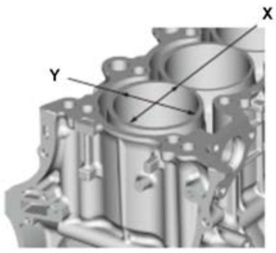

3. Measure the wear and taper in direction X and Y at three levels inside each cylinder as shown. If measurements in any cylinder are beyond the oversize bore service limit, replace the engine block.

4. Hone any cored or scratched cylinder bores if needed.

Bore Taper	B
Limit:	**(Difference between first and third measurement) 0.050 mm (0.00197 in)**

Reboring limit:	**0.25 mm (0.0098 in) max.**

Oversize Bore	
Oversize Bore:	**+ 0.25 mm (0.0098 in)**

Cylinder Bore Size	
Standard (New):	
X:	**81.000-81.020 mm (3.18897-3.18976 in)**
Y:	**81.000-81.015 mm (3.18897-3.18956 in)**
Service Limit:	**81.070 mm (3.19173 in)**

5. Check the top of the engine block for warpage. Measure along the edges and across the center as shown.

Engine Block Warpage	
Standard (New):	**0.07 mm (0.0028 in) max.**

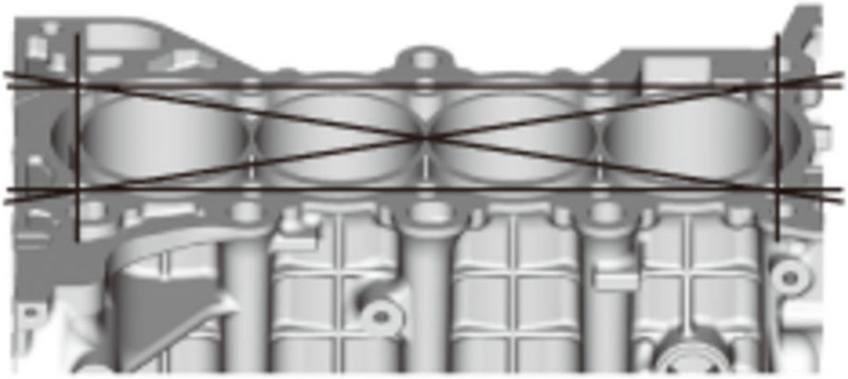

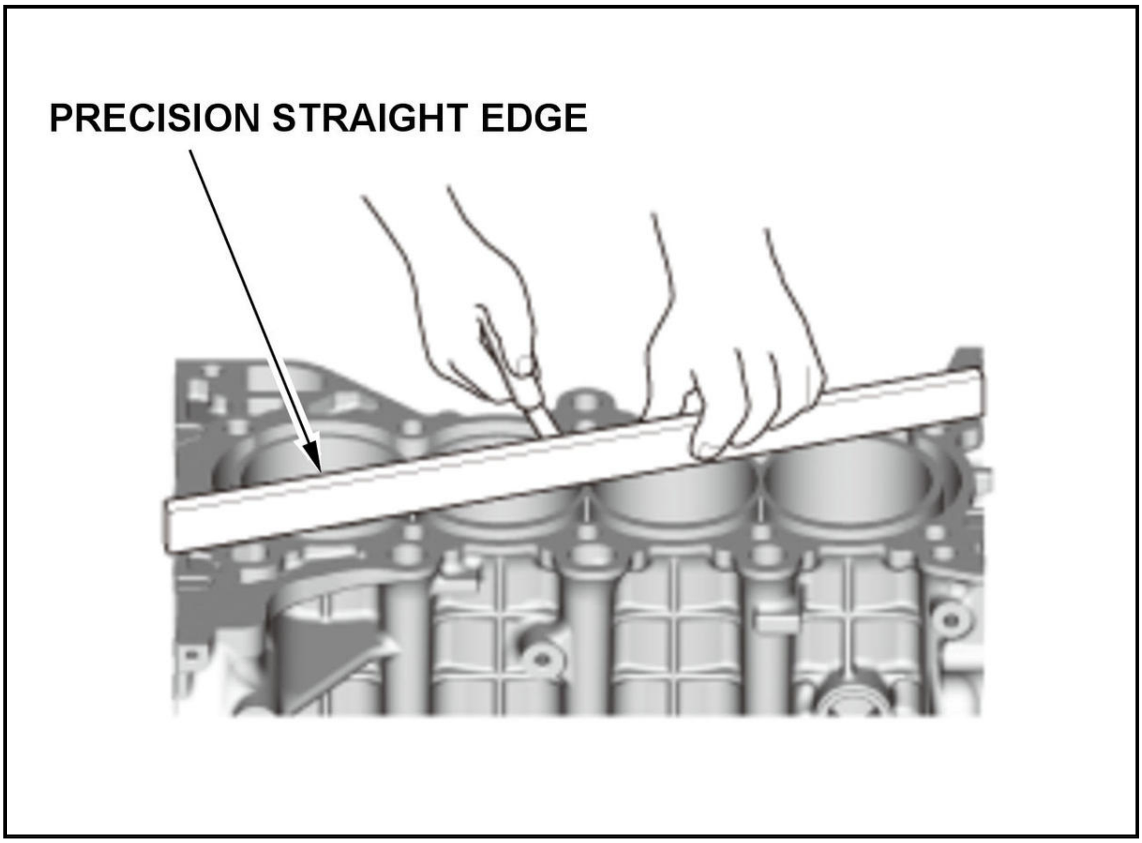
PRECISION STRAIGHT EDGE

6. Calculate the difference between the cylinder bore diameter and the piston diameter. If the clearance is near, or exceeds the service limit, inspect the piston and the cylinder bore for excessive wear.

Piston-to-Cylinder Bore Clearance	
Service Limit:	**0.050 mm (0.00197 in)**

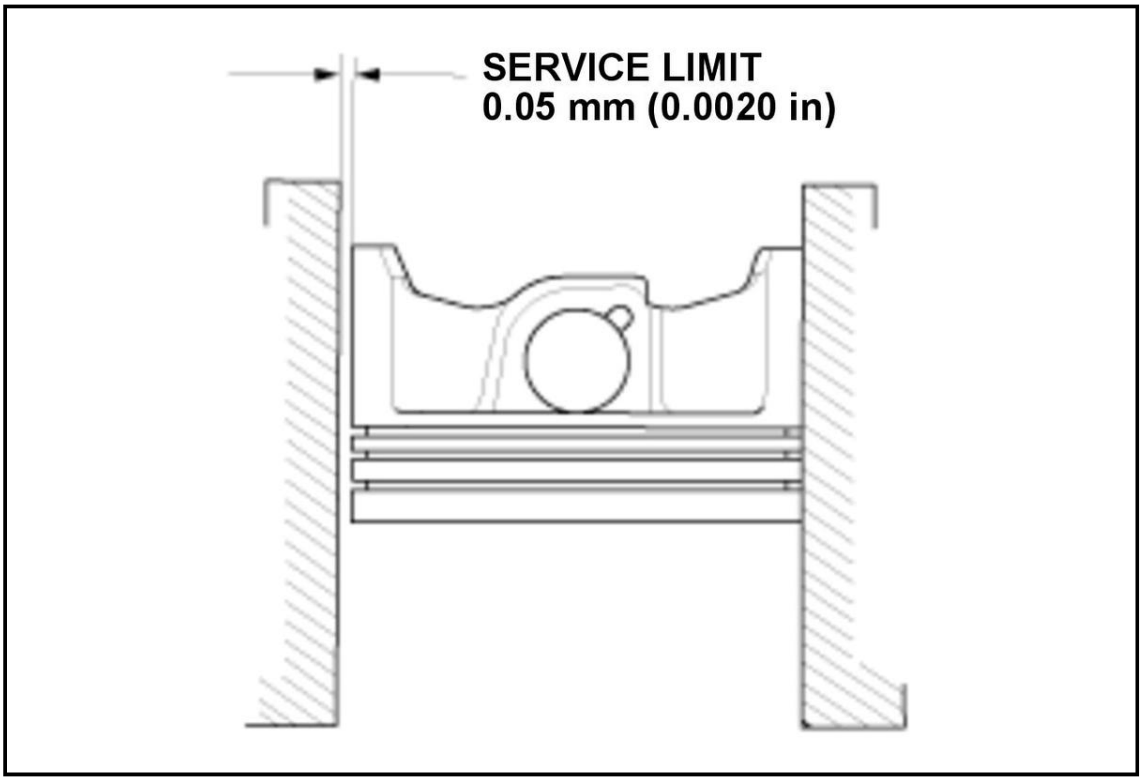
SERVICE LIMIT
0.05 mm (0.0020 in)

Honing

1. Oil Jet - Remove
2. Cylinder Bore - Honing

1. Measure the cylinder bores. If the engine block is to be reused, hone the cylinders and remeasure the bores. Only scored or scratched cylinder bore must be honed.

2. Hone the cylinder bores with honing oil and a fine (400 grit) stone.

NOTE:

- Use only a rigid hone with 400 grit or finer stone such as Sunnen, Ammco, or equivalent.
- Do not use stones that are worn or broken.

Honing Pattern:	**Within 30-60 degree cross-hatch pattern (A)**

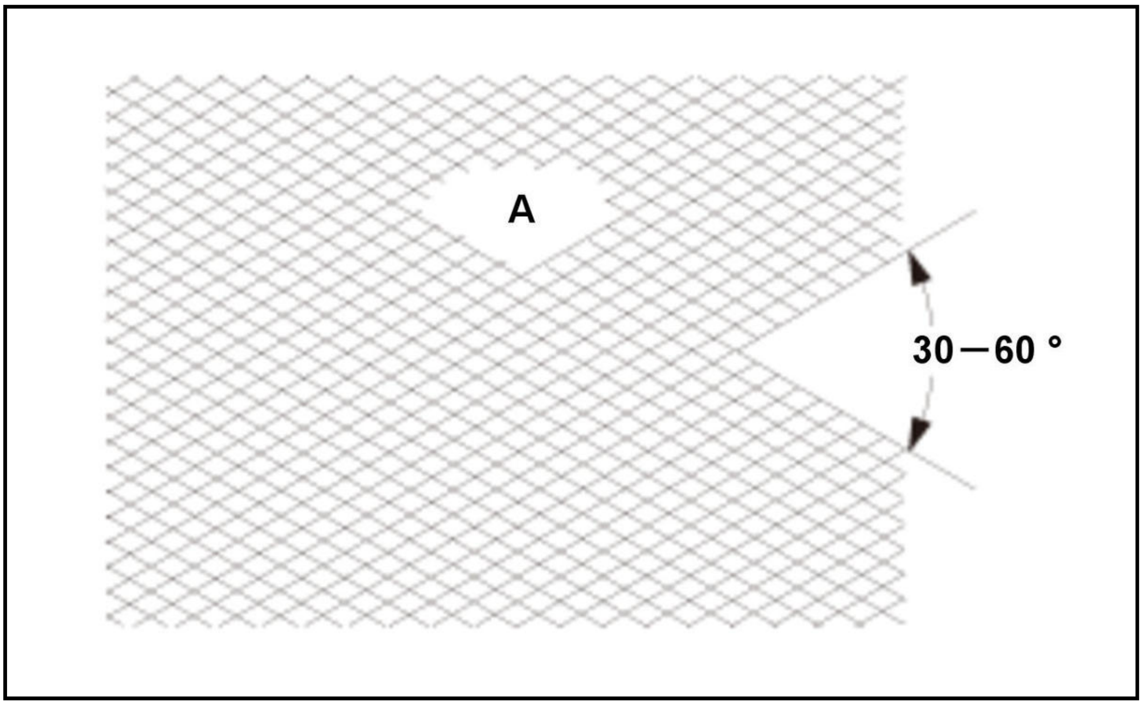

3. When honing is complete, thoroughly clean the engine block of all metal particles. Wash the cylinder bores with hot soapy water, then dry and oil them immediately to prevent rusting.

NOTE: Never use solvent, it will only redistribute the grit on the cylinder walls.

4. If scoring or scratches are still present in the cylinder bores after honing to the service limit, rebore the engine block. Some light vertical scoring and scratching is acceptable if it is not deep enough to catch your fingernail and does not run the full length of the bore.

3. All Removed Parts - Install

1. Install the parts in the reverse order of removal.

REMOVAL AND INSTALLATION

A/F SENSOR REMOVAL AND INSTALLATION

Special Tools Required

Image	Description/Tool Number
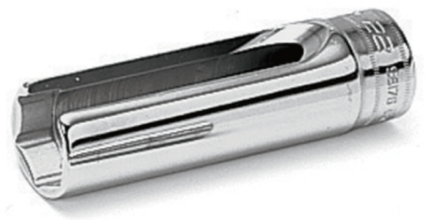	O2 Sensor Wrench Snap-on S6176 or equivalent, commercially available

Removal and Installation

Procedure

NOTE: **Numbered call-outs in figure pertain to list numbers in following procedure.**

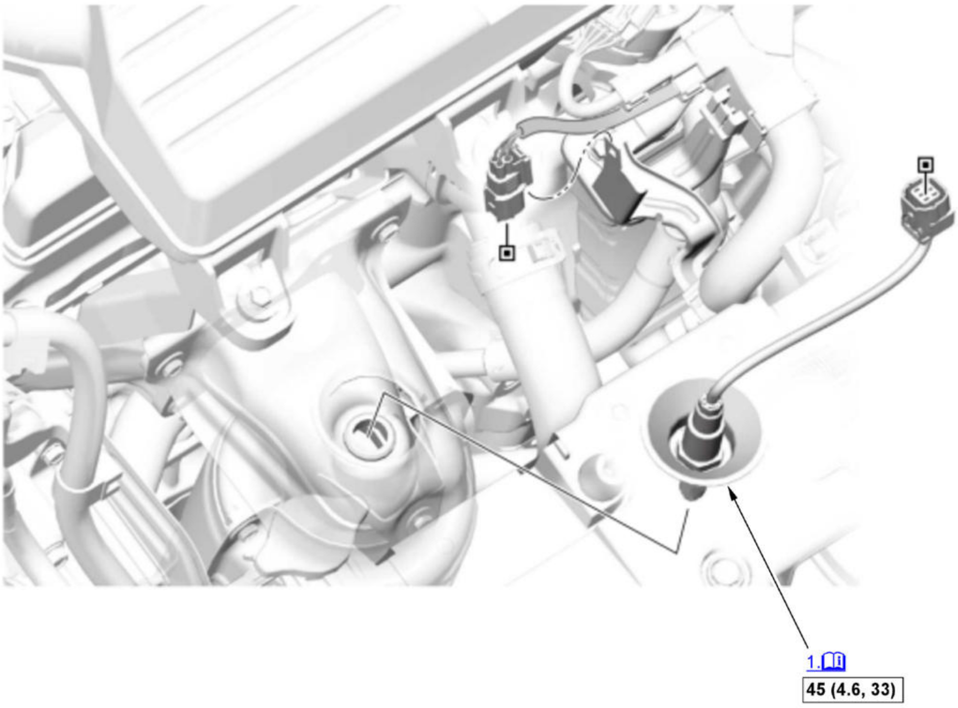

Fig. 6: Exploded View Of A/F Sensor Components With Torque Specifications
Courtesy of HONDA, U.S.A., INC.

☐	Torque: N.m (kgf.m, lbf.ft)

1. A/F Sensor - Remove

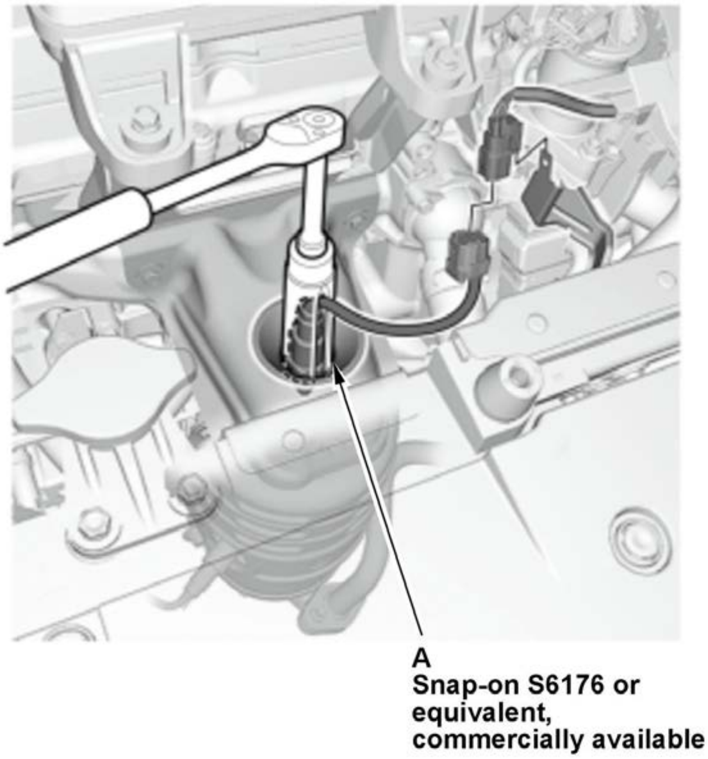 A Snap-on S6176 or equivalent, commercially available	1. Using the O2 sensor wrench (A), remove the A/F sensor.

2. All Removed Parts - Install

1. Install the parts in the reverse order of removal.

ACCELERATOR PEDAL MODULE REMOVAL AND INSTALLATION

Removal and Installation

Procedure

NOTE: **Numbered call-outs in figure pertain to list numbers in following procedure.**

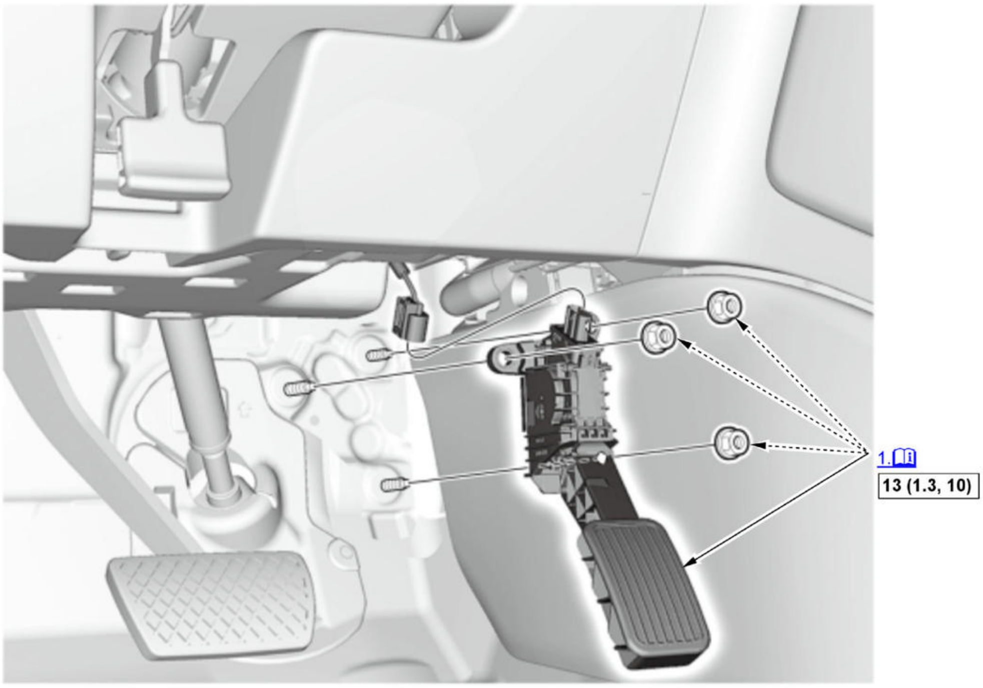

Fig. 7: Exploded View Of Accelerator Pedal Module Components With Torque Specifications
Courtesy of HONDA, U.S.A., INC.

▭	Torque: N.m (kgf.m, lbf.ft)

1. Accelerator Pedal Module - Remove

   NOTE: The APP sensor is not available separately. Do not disassemble the accelerator pedal module.

2. All Removed Parts - Install

   1. Install the parts in the reverse order of removal.

AIR CLEANER ELEMENT/AIR CLEANER/INTAKE AIR RESONATOR REMOVAL AND INSTALLATION

Removal and Installation

Procedure

NOTE: **Numbered call-outs in figure pertain to list numbers in following procedure.**

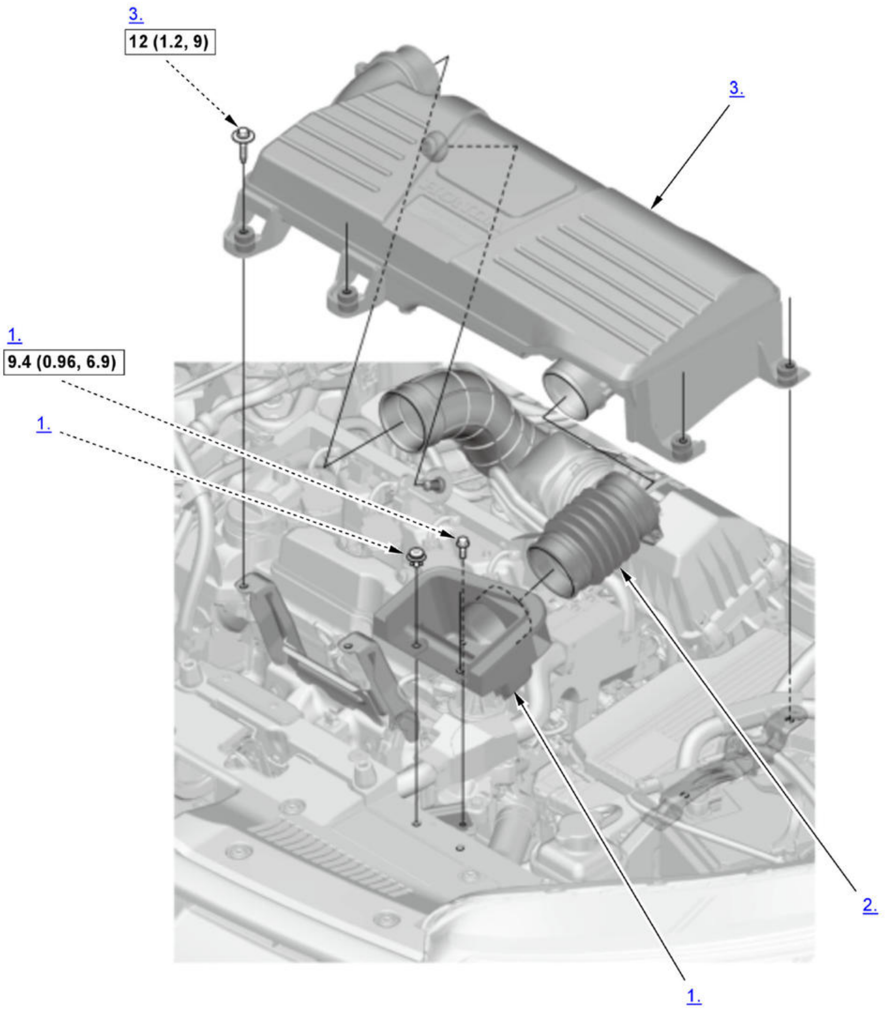

Fig. 8: Exploded View Of Air Cleaner Element/Air Cleaner/Intake Air Resonator Replacement Components With Torque Specifications (1 Of 3)
Courtesy of HONDA, U.S.A., INC.

☐	Torque: N.m (kgf.m, lbf.ft)

NOTE: **Numbered call-outs in figure pertain to list numbers in following procedure.**

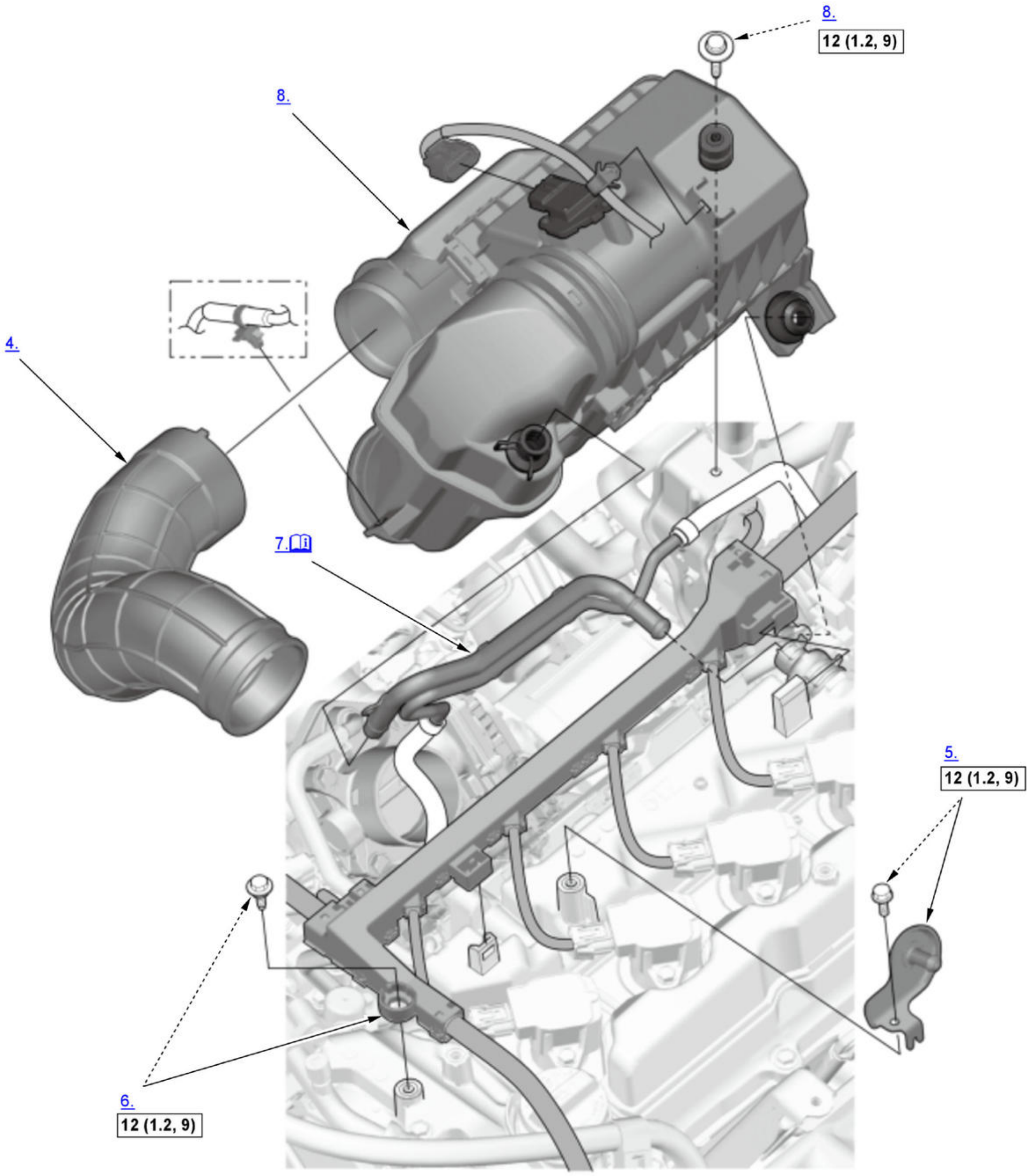

Fig. 9: Exploded View Of Air Cleaner Element/Air Cleaner/Intake Air Resonator Replacement Components With Torque Specifications (2 Of 3)
Courtesy of HONDA, U.S.A., INC.

☐	Torque: N.m (kgf.m, lbf.ft)

NOTE: **Numbered call-outs in figure pertain to list numbers in following procedure.**

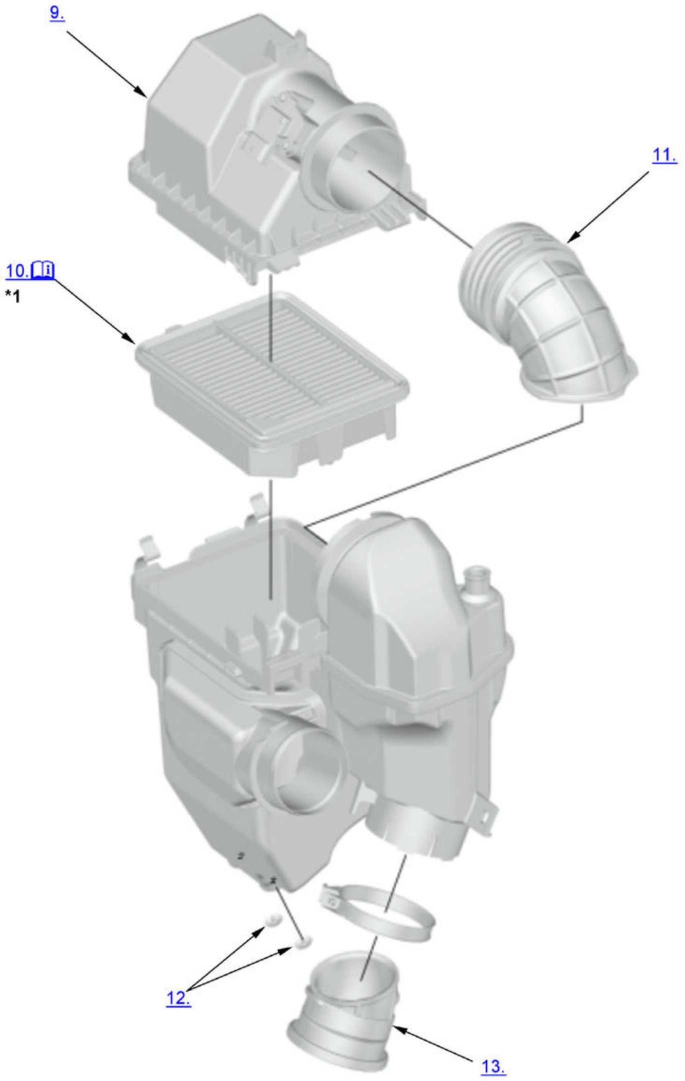

[Fig. 10: Exploded View Of Air Cleaner Element/Air Cleaner/Intake Air Resonator Replacement Components (3 Of 3)]

Courtesy of HONDA, U.S.A., INC.

*1	These parts have inspection items

Intake Air Resonator

1. Air Intake Tube C - Remove
2. Air Intake Tube A - Remove
3. Intake Air Resonator - Remove

   Air Cleaner

4. Air Intake Tube B - Remove
5. Intake Air Resonator Bracket - Remove
6. Harness Holder - Remove
7. Breather Pipe - Move

   NOTE: Do not disconnect the water bypass hoses.

8. Air Cleaner - Remove
9. Air Cleaner Housing Cover - Remove
10. Air Cleaner Element - Remove

Note for installation

NOTE: **If the idle speed fluctuates, do the idle speed inspection** .

11. Air Cleaner Tube - Remove
12. Umbrella Valve - Remove
13. Throttle Body Rubber Joint - Remove
14. All Removed Parts - Install

1. Install the parts in the reverse order of removal.

15. Maintenance Minder - Reset

1. If the Maintenance Minder required to replace the air cleaner element, **reset the Maintenance Minder with the gauge** (see "Resetting the Maintenance Minder").

Inspection

1. Air Cleaner Element - Inspect

1. Check the air cleaner element for damage or clogging. If it is damaged or clogged, replace it.

NOTE: Do not use compressed air to clean the air cleaner element.

2. Clean and remove any debris from inside the air cleaner.

BALANCER SHAFT/BALANCER SHAFT HOLDER ASSEMBLY REMOVAL AND INSTALLATION

Special Tools Required

Image	Description/Tool Number
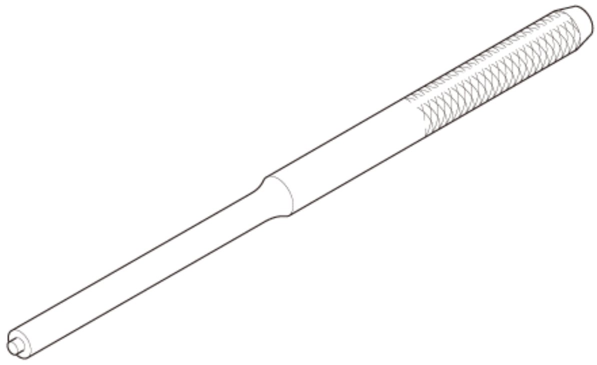	Pin Driver, 6.0 mm 07744-0010500

Removal

Procedure

NOTE: **Numbered call-outs in figure pertain to list numbers in following procedure.**

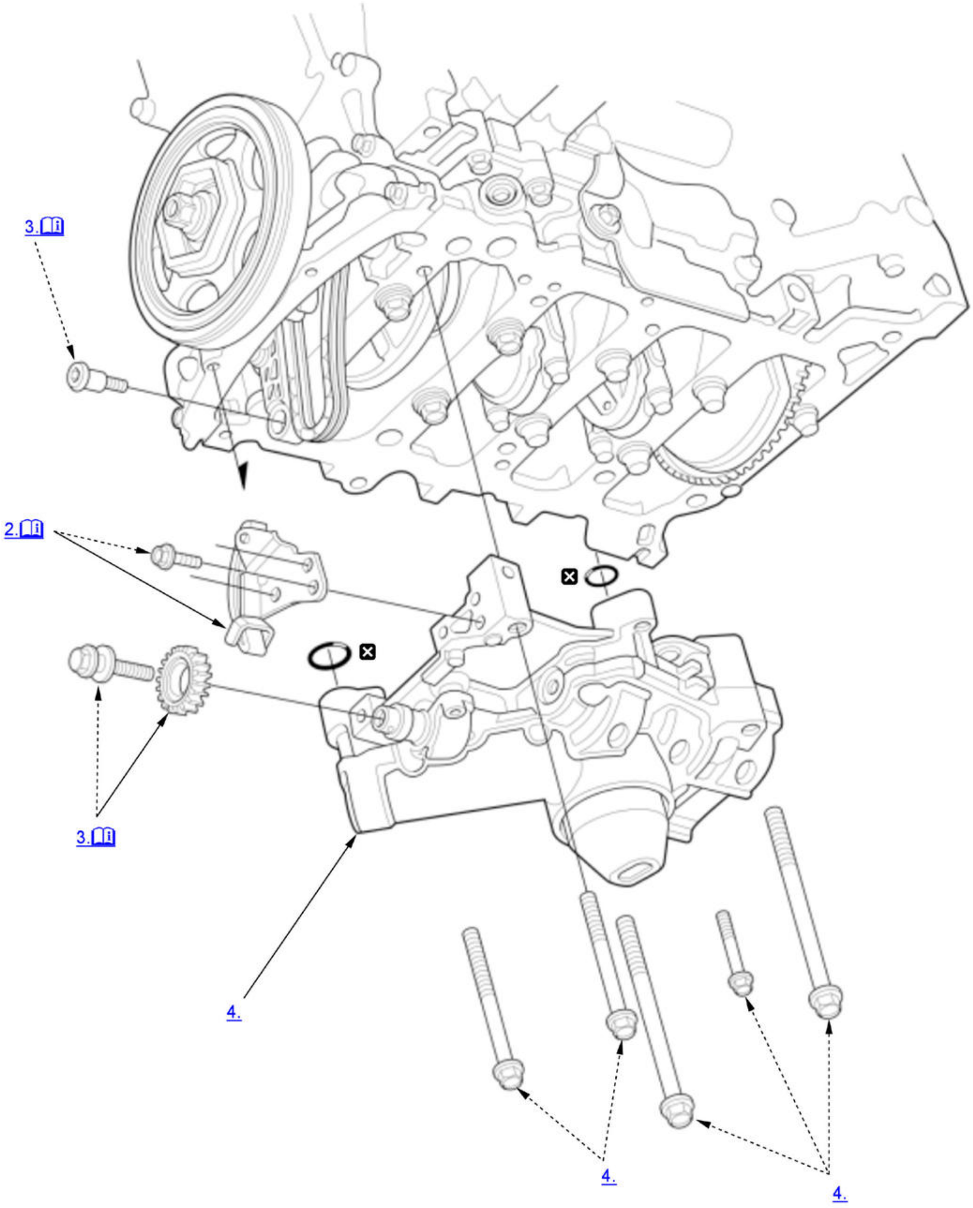

Fig. 11: Exploded View Of Balancer Shaft/Balancer Shaft Holder Assembly Removal Components
Courtesy of HONDA, U.S.A., INC.

☒	Replace

1. Oil Pan - Remove
2. Balancer Chain Tensioner - Remove

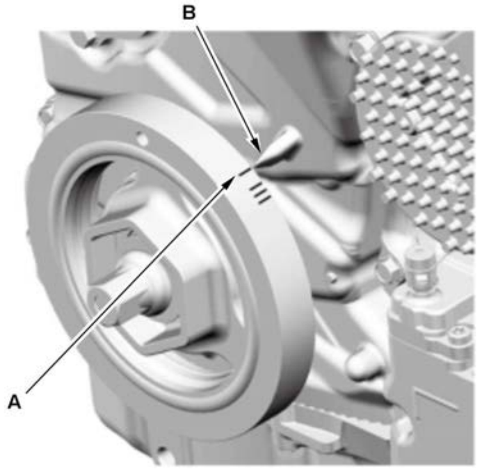	1. Turn the crankshaft to align No. 1 position at top dead center (TDC); the white mark (A) on the crankshaft pulley lines up with the pointer (B). 2. Remove and discard the balancer chain tensioner.

3. Balancer Shaft Sprocket - Remove

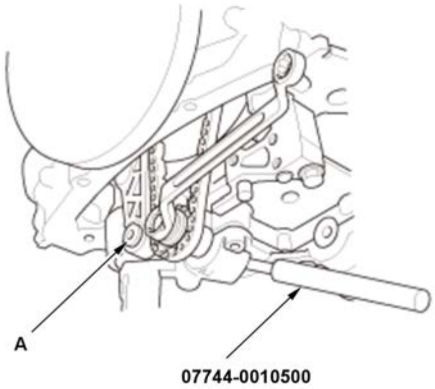	1. To hold the rear balancer shaft, insert a pin driver, 6.0 mm into the maintenance hole in the lower balancer shaft holder and through the rear balancer shaft. 2. Loosen the balancer shaft sprocket mounting bolt. 3. Remove the balancer chain guide mounting bolt (A), then remove the balancer shaft sprocket mounting bolt and the balancer shaft sprocket.

4. Balancer Shaft/Balancer Shaft Holder Assembly - Remove

Installation

Procedure

NOTE: **Numbered call-outs in figure pertain to list numbers in following procedure.**

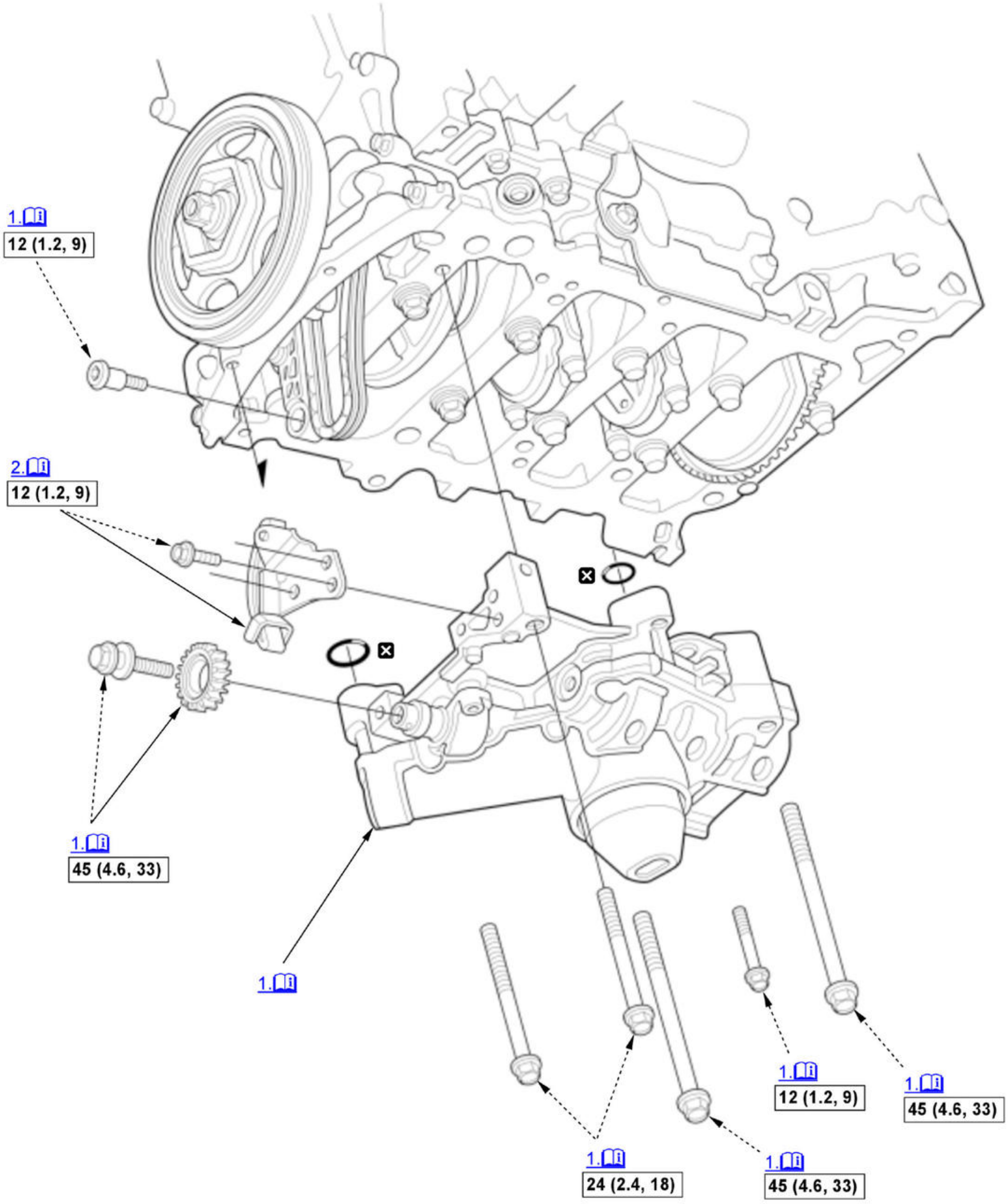
1.
12 (1.2, 9)
2.
12 (1.2, 9)
1.
45 (4.6, 33)
1.
1.
12 (1.2, 9)
1.
45 (4.6, 33)
1.
24 (2.4, 18)
1.
45 (4.6, 33)

Fig. 12: Exploded View Of Balancer Shaft/Balancer Shaft Holder Assembly Installation Components With Torque Specifications
Courtesy of HONDA, U.S.A., INC.

▭	Torque: N.m (kgf.m, lbf.ft)
☒	Replace

1. Balancer Shaft Sprocket and Balancer Shaft/Balancer Shaft Holder Assembly - Install

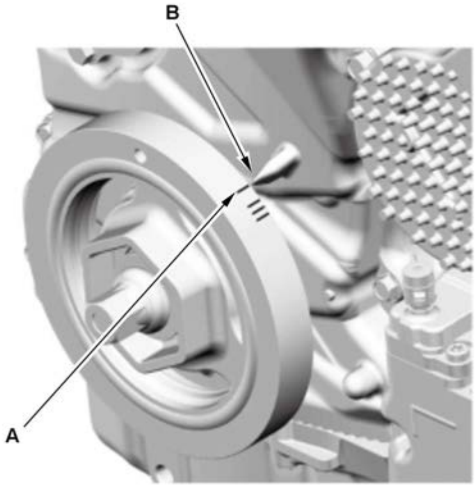

1. Turn the crankshaft to align No. 1 position at top dead center (TDC); the white mark (A) on the crankshaft pulley lines up with the pointer (B).

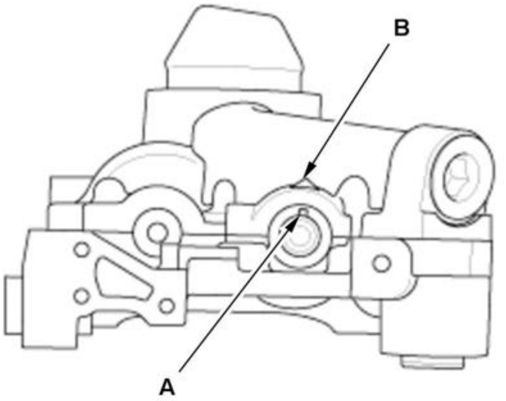

2. Align the dowel pin (A) on the rear balancer shaft with the mark (B) on the balancer shaft holder.

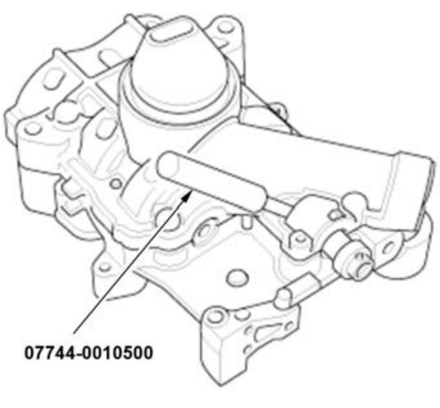

3. To hold the rear balancer shaft, insert a pin driver, 6.0 mm into the maintenance hole in the lower balancer shaft holder and through the rear balancer shaft.

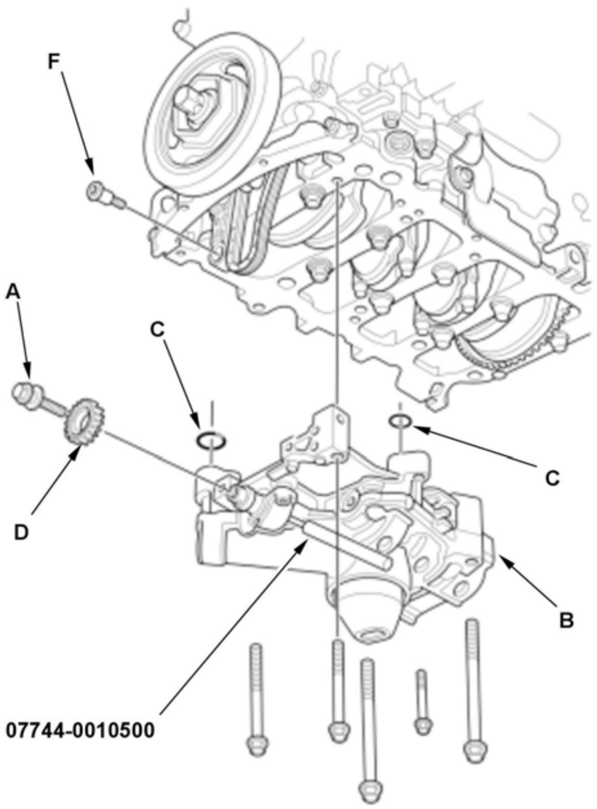 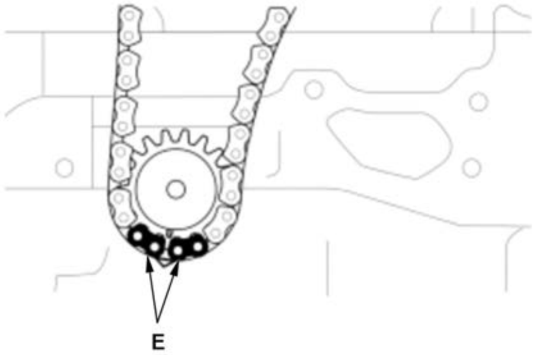	4. Apply new engine oil to the threads of the balancer shaft sprocket mounting bolt (A). 5. Loosely install the balancer shaft/balancer shaft holder assembly (B) with the O-rings (C), then install the balancer shaft sprocket (D). **NOTE:** These colored link plates (E) shall be used in product process only and not used for maintenance purpose. There is no need to line up the colored link plates as it has no effect on the engine operation. 6. Remove the pin driver, 6.0 mm, then tighten the balancer shaft/balancer shaft holder assembly mounting bolts. 7. Tighten the balancer chain guide mounting bolt (F).

2. Balancer Chain Tensioner - Install

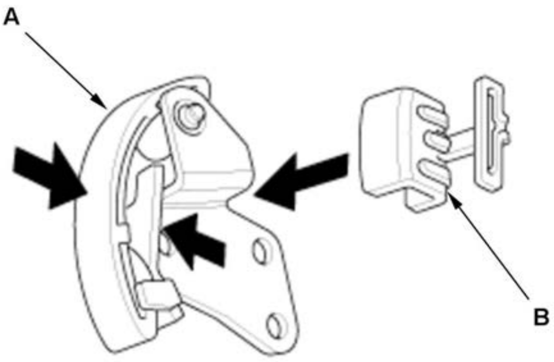	1. Squeeze the new balancer chain tensioner (A), then install the set clip (B) on it as shown. **NOTE:** The set clip is supplied with the balancer chain tensioner.

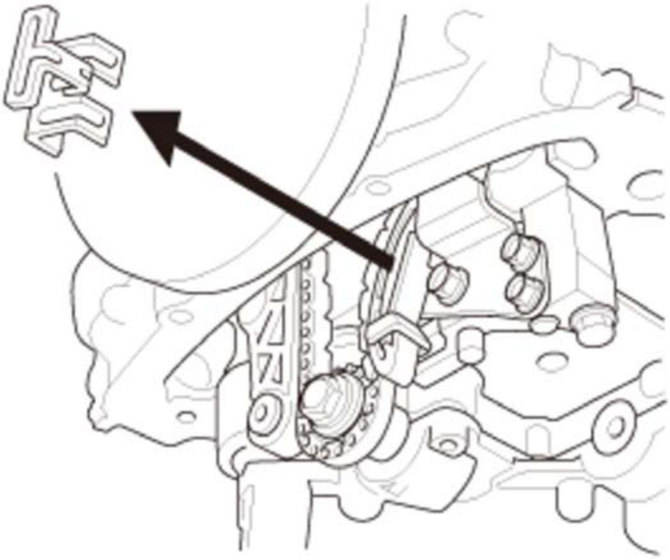	2. Install the new balancer chain tensioner. 3. Remove the set clip from the balancer chain tensioner.

3. Oil Pan - Install

CMP SENSOR/CKP SENSOR REMOVAL AND INSTALLATION

Removal and Installation

CMP Sensor A, CMP Sensor B

NOTE: **Numbered call-outs in figure pertain to list numbers in following procedure.**

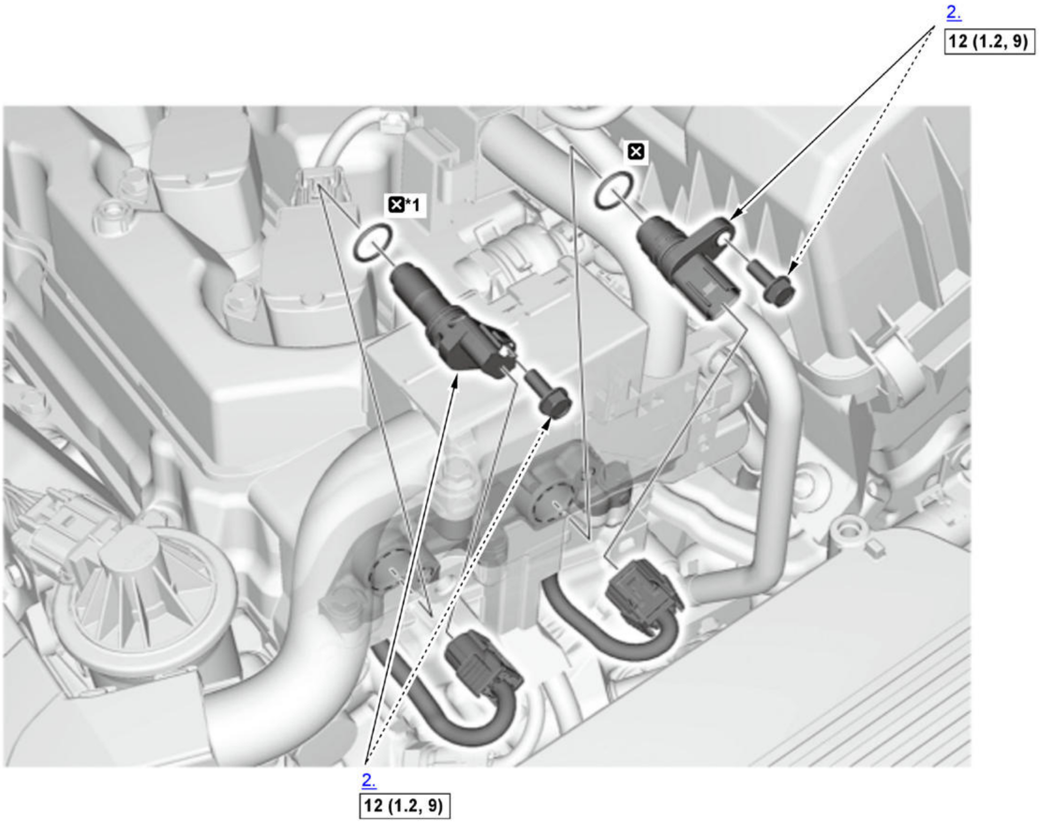

Fig. 13: Exploded View Of CMP Sensor A, CMP Sensor B Components With Torque Specifications
Courtesy of HONDA, U.S.A., INC.

☐	Torque: N.m (kgf.m, lbf.ft)
☒	Replace
*1	Coat the clean engine oil

CMP Sensor A

1. Intake Air Resonator - Remove
2. CMP Sensor A - Remove
3. All Removed Parts - Install

1. Install the parts in the reverse order of removal.

CMP Sensor B

1. Intake Air Resonator - Remove
2. CMP Sensor B - Remove
3. All Removed Parts - Install

1. Install the parts in the reverse order of removal.

4. CKP Pattern - Clear/Learn

CKP Sensor

NOTE: **Numbered call-outs in figure pertain to list numbers in following procedure.**

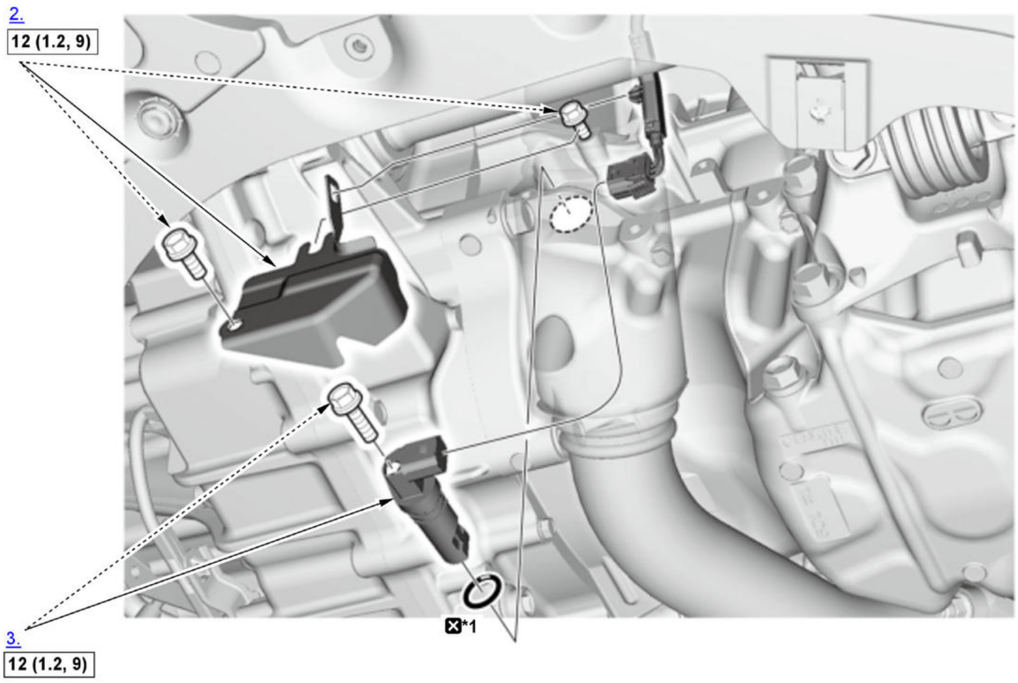

Fig. 14: Exploded View Of CKP Sensor Components With Torque Specifications
Courtesy of HONDA, U.S.A., INC.

☐	Torque: N.m (kgf.m, lbf.ft)
☒	Replace
*1	Coat the clean engine oil

1. **Engine Undercover Lid - Remove**
2. CKP Sensor Cover - Remove
3. CKP Sensor - Remove
4. All Removed Parts - Install

   1. Install the parts in the reverse order of removal.

5. **CKP Pattern - Clear/Learn**

CRANKSHAFT PULLEY, CAM CHAIN, AND OIL PUMP REMOVAL AND INSTALLATION

Special Tools Required

Image	Description/Tool Number
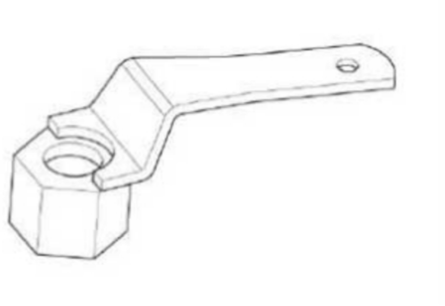	Holder Attachment, 50 mm, Offset 07MAB-PY3010A or 07MAB-PY3010B
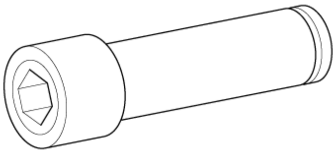	Socket, 19 mm 07JAA-001020A or equivalent
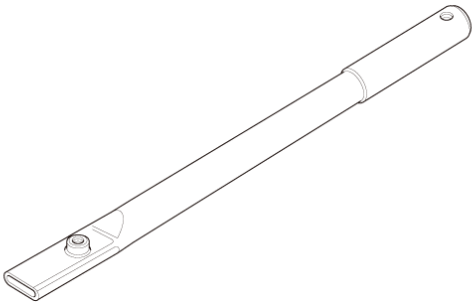	Holder Handle 07JAB-001020B
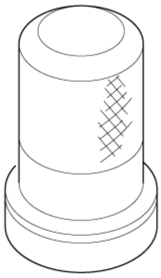	Oil Seal Driver 07LAD-PT3010A

Removal

NOTE: Keep the cam chain away from magnetic fields.

Crankshaft Pulley

NOTE: **Numbered call-outs in figure pertain to list numbers in following procedure.**

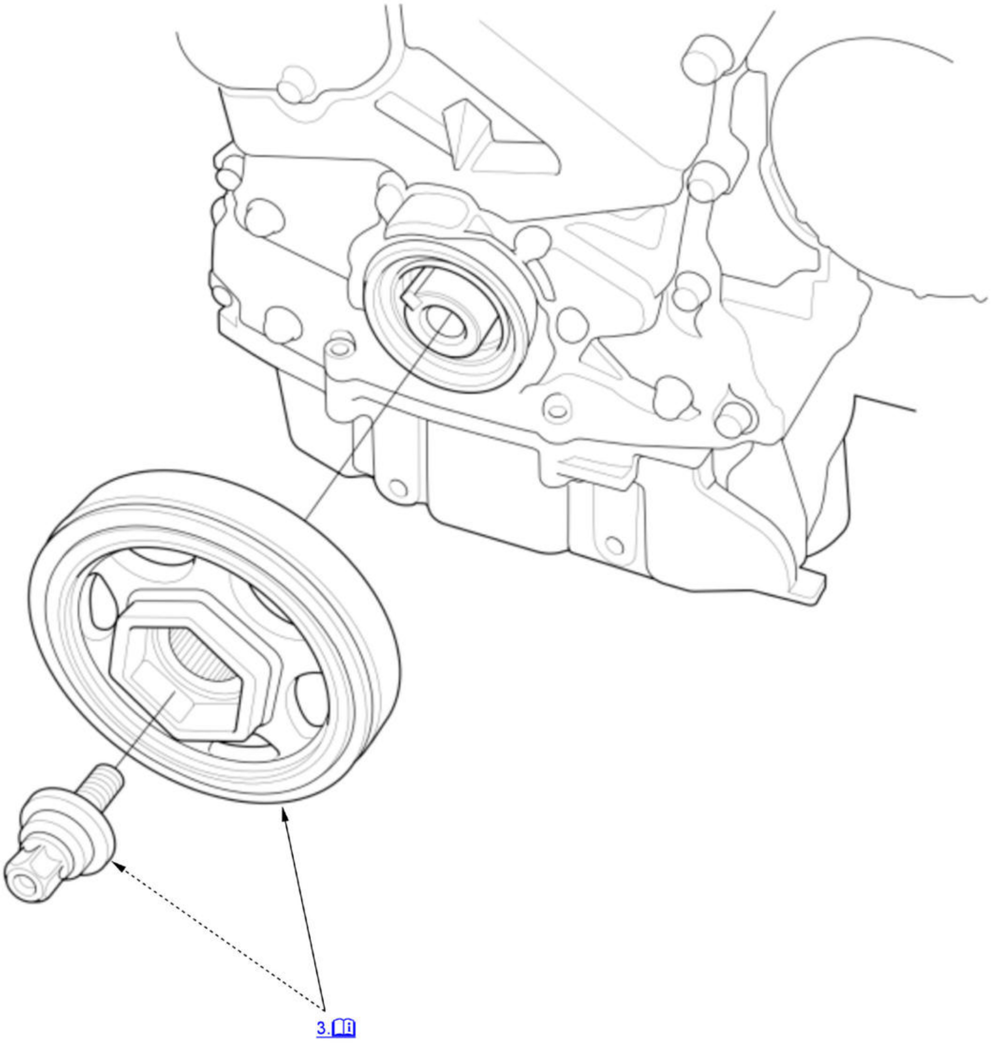

Fig. 15: Exploded View Of Crankshaft Pulley Components For Removal
Courtesy of HONDA, U.S.A., INC.

1. Right Front Wheel - Remove
2. Engine Undercover - Remove

   NOTE: Remove the necessary part(s).

3. Crankshaft Pulley - Remove

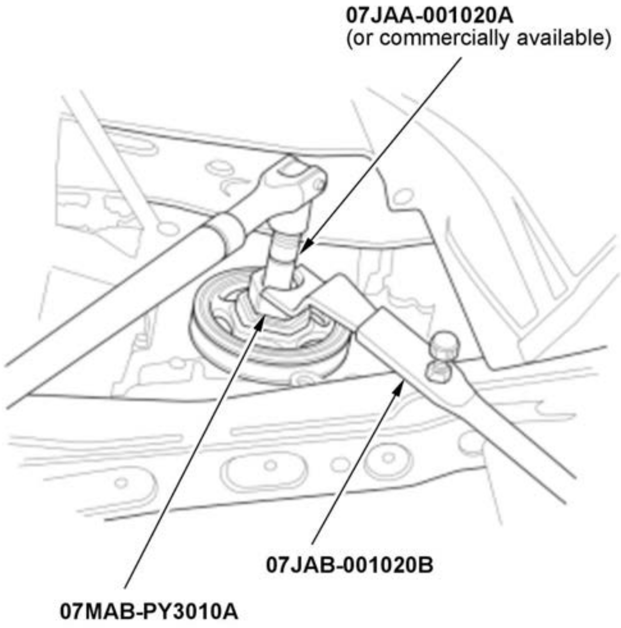 07JAA-001020A (or commercially available) 07JAB-001020B 07MAB-PY3010A	1. Hold the crankshaft pulley with the holder handle and the holder attachment, 50 mm, offset. 2. Remove the pulley bolt with a socket, 19 mm and a breaker bar, then remove the crankshaft pulley.

Oil Pump, Pulley End Crankshaft Oil Seal, and Cam Chain

NOTE: **Numbered call-outs in figure pertain to list numbers in following procedure.**

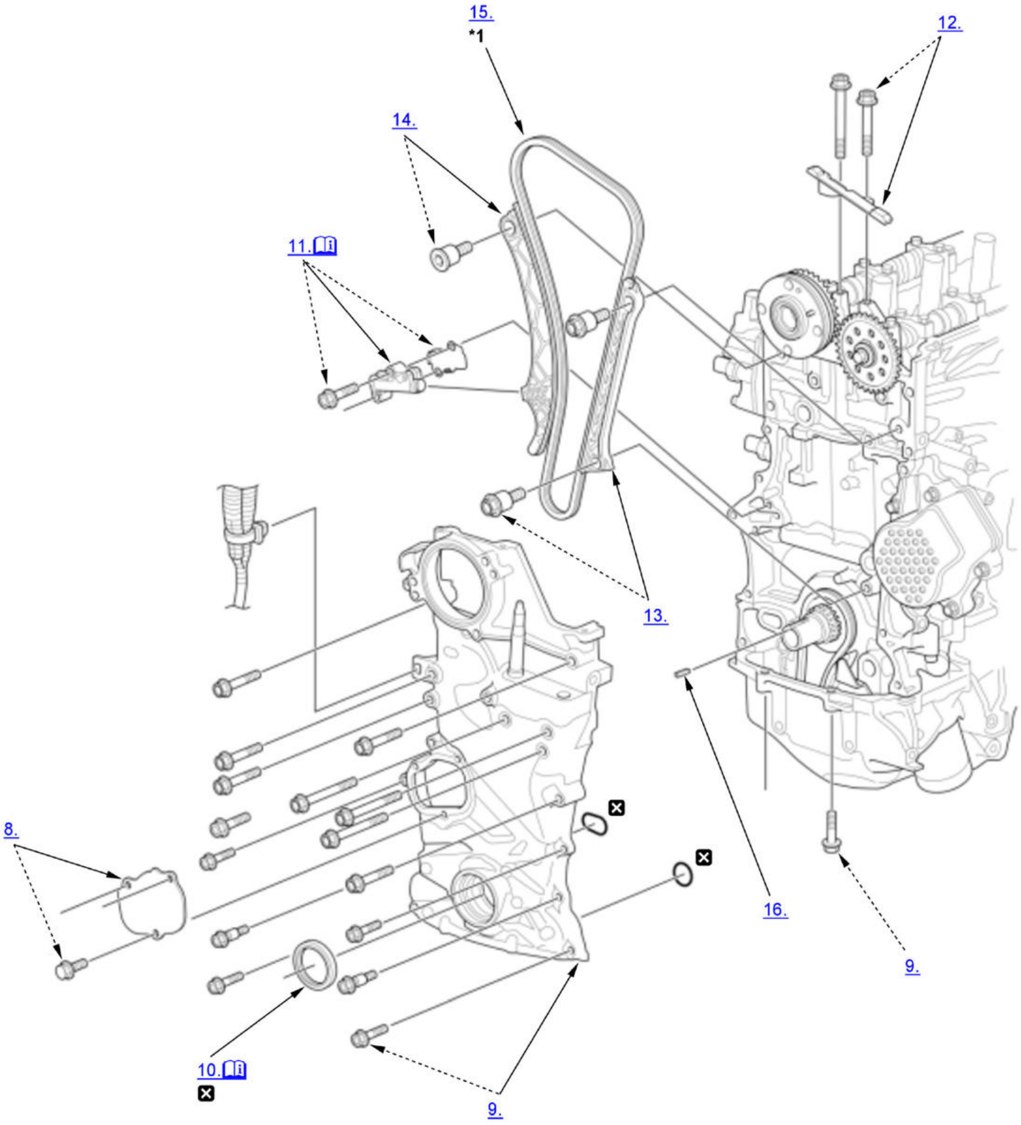
15.
*1
12.
14.
11.
13.
8.
☒
☒
16.
9.
10.
☒
9.

Fig. 16: Exploded View Of Oil Pump, Pulley End Crankshaft Oil Seal, And Cam Chain Components For Removal
Courtesy of HONDA, U.S.A., INC.

☒	Replace
*1	These parts have inspection items

1. 12 Volt Battery Terminal - Disconnect
2. Right Front Wheel - Remove
3. Engine Undercover - Remove

   NOTE: Remove the necessary part(s).

4. Crankshaft Pulley - Remove
5. Cylinder Head Cover - Remove
6. Electric VTC Motor - Remove
7. Side Engine Mount - Remove
8. Chain Case Cover - Remove (if necessary)
9. Oil Pump - Remove
10. Pulley End Crankshaft Oil Seal - Remove (if necessary)

    NOTE: Check the pulley end crankshaft oil seal for damage. If the pulley end crankshaft oil seal is damaged, remove the pulley end crankshaft oil seal.

11. Cam Chain Auto-Tensioner - Remove

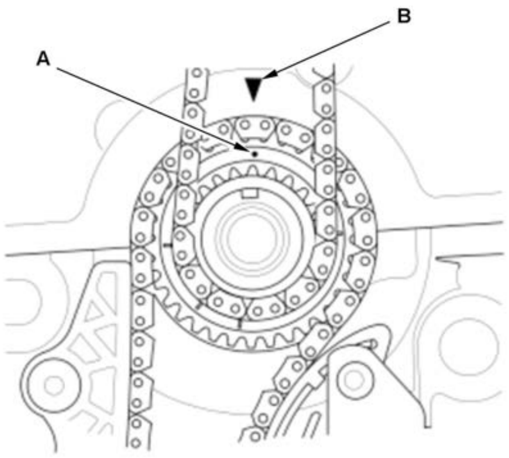	1. Set the crankshaft to top dead center (TDC). Align the TDC mark (A) on the crankshaft sprocket with the pointer (B) on the engine block.

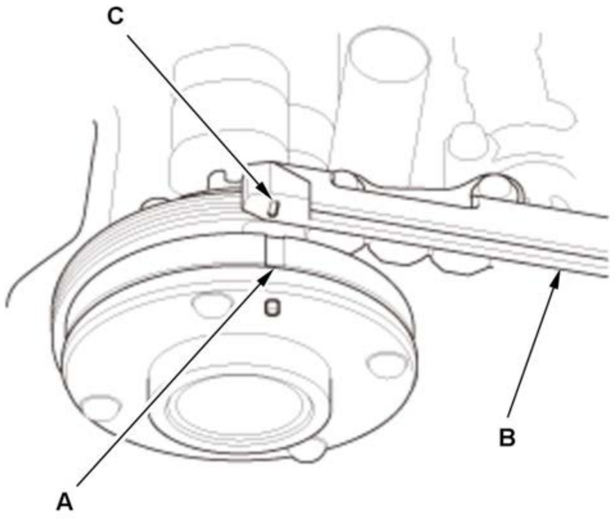	2. Align the mark (A) on the VTC actuator with the mark (C) on cam chain guide B.
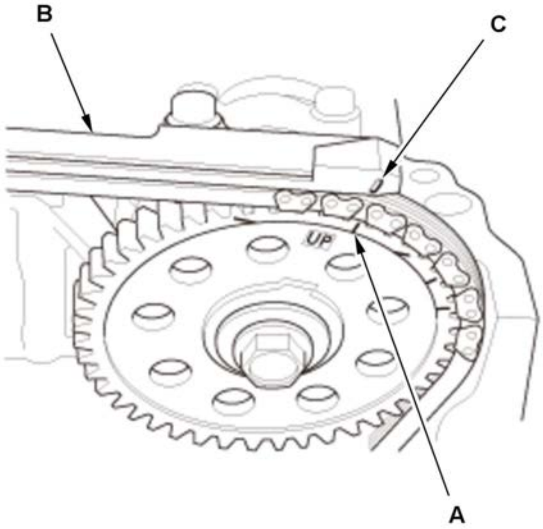	3. Align the mark (A) on the exhaust camshaft sprocket with the mark (C) on cam chain guide B.
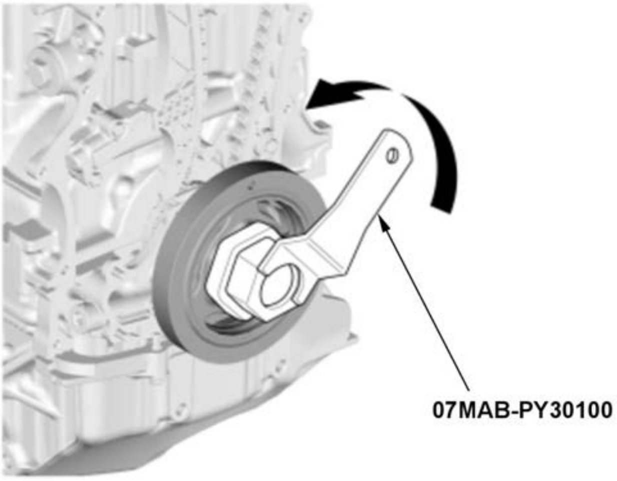	4. Loosely install the crankshaft pulley. 5. Turn the crankshaft counterclockwise to compress the cam chain auto-tensioner.

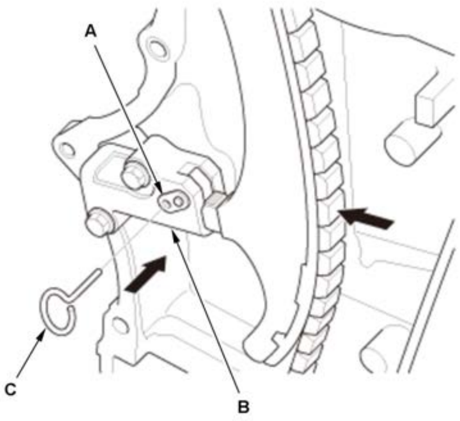

6. Rotate the crankshaft counterclockwise to align the holes on the lock (A) and the cam chain auto-tensioner (B).

7. Insert a 1.2 mm (0.047 in) diameter pin (C) into the holes.

8. Turn the crankshaft clockwise to secure the pin.

NOTE: If the holes in the lock and the cam chain auto-tensioner do not align, continue to rotating the crankshaft counterclockwise until the holes align, then install the pin.

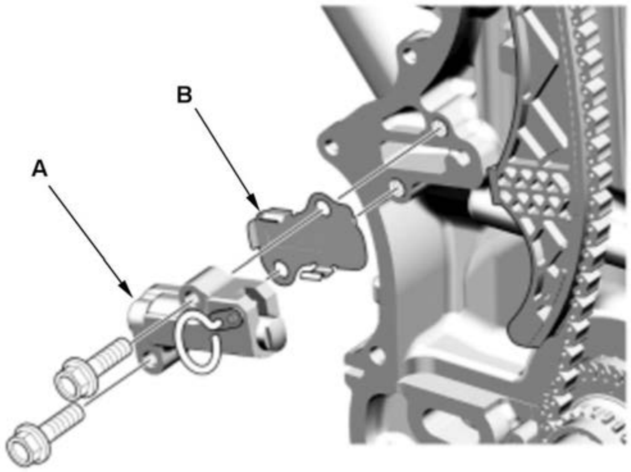

9. Remove the cam chain auto-tensioner (A) and the cam chain auto-tensioner filter (B).

NOTE: Check the cam chain auto-tensioner filter for damage. If the filter is damaged, replace it.

10. Remove the crankshaft pulley.

12. Cam Chain Guide B - Remove
13. Cam Chain Guide - Remove
14. Cam Chain Tensioner Arm - Remove
15. Cam Chain - Remove
16. Key - Remove (if necessary)

Installation

NOTE: Keep the cam chain away from magnetic fields.

Oil Pump, Pulley End Crankshaft Oil Seal, and Cam Chain

NOTE: **Numbered call-outs in figure pertain to list numbers in following procedure.**

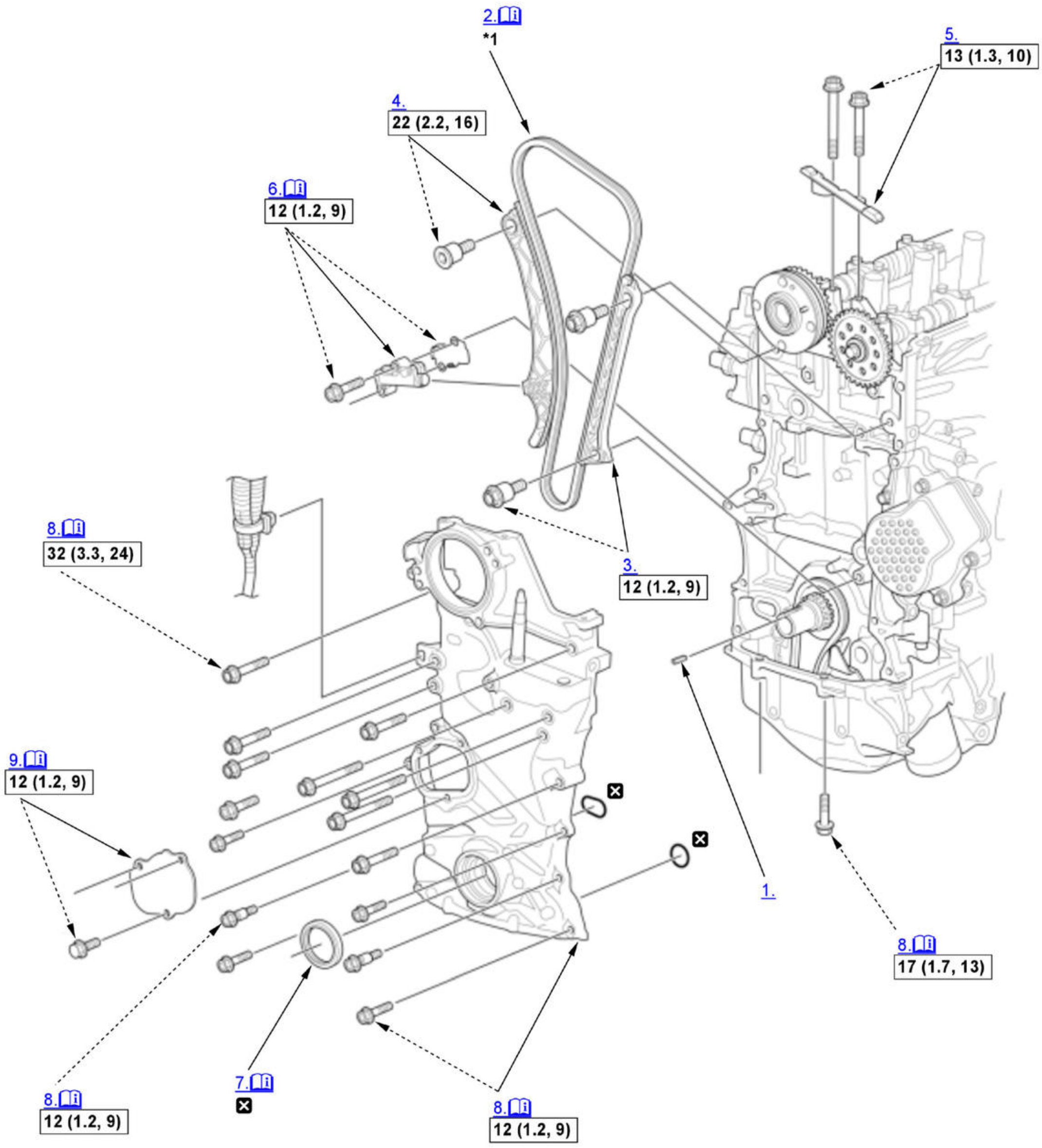
2.
*1
5.
13 (1.3, 10)
4.
22 (2.2, 16)
6.
12 (1.2, 9)
8.
32 (3.3, 24)
3.
12 (1.2, 9)
9.
12 (1.2, 9)
☒
☒
1.
8.
17 (1.7, 13)
8.
12 (1.2, 9)
7.
☒
8.
12 (1.2, 9)

Fig. 17: Exploded View Of Oil Pump, Pulley End Crankshaft Oil Seal, And Cam Chain Components With Torque Specifications For Installation
Courtesy of HONDA, U.S.A., INC.

▭	Torque: N.m (kgf.m, lbf.ft)
☒	Replace
*1	These parts have inspection items

1. Key - Install (if necessary)
2. Cam Chain - Install

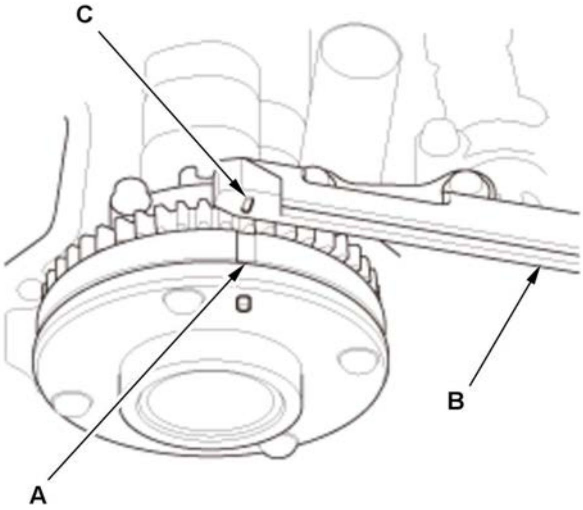

1. Install cam chain guide B.

2. Align the mark (A) on the VTC actuator with the mark (C) on cam chain guide B.

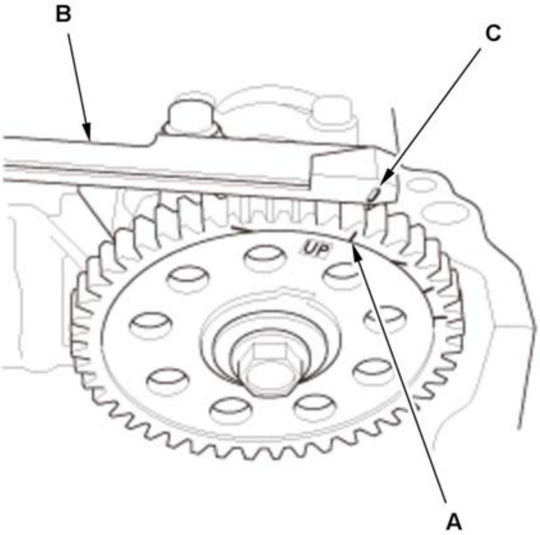

3. Align the mark (A) on the exhaust camshaft sprocket with the mark (C) on cam chain guide B.

4. Remove cam chain guide B.

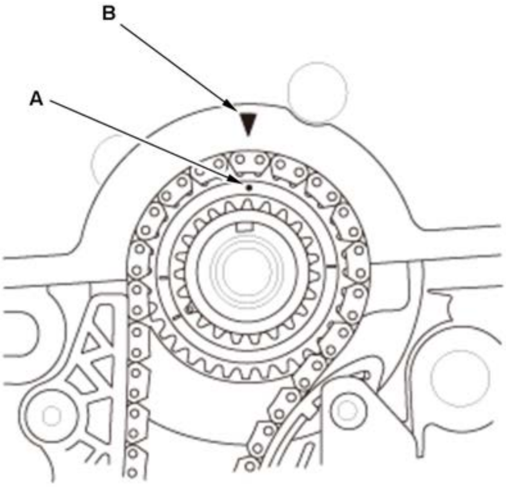

5. Set the crankshaft to top dead center (TDC). Align the TDC mark (A) on the crankshaft sprocket with the pointer (B) on the engine block.

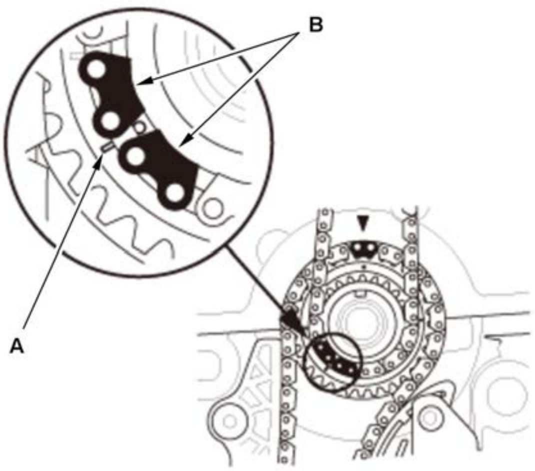

6. Install the cam chain on the crankshaft sprocket with the mark (A) aligned with the center of the two colored link plates (B).

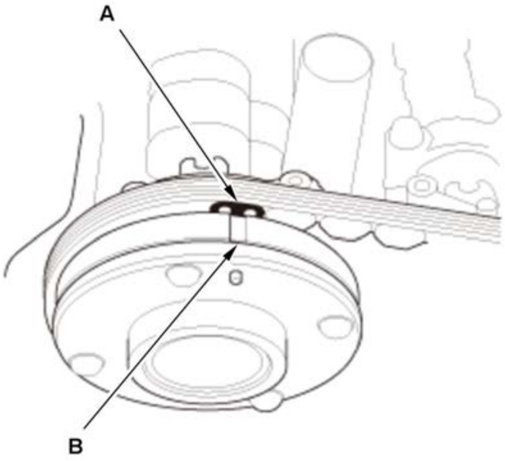

7. Install the cam chain on the VTC actuator with the colored link plate (A) aligned with the mark (B) on the VTC actuator.

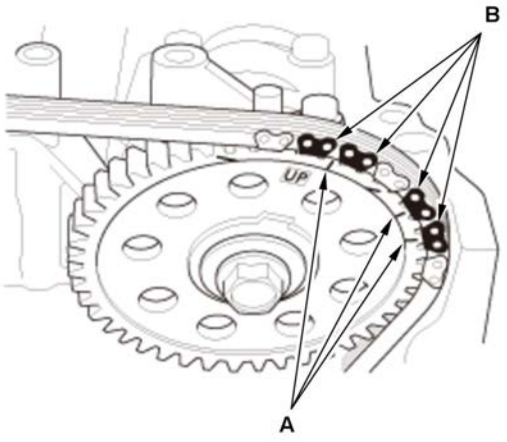

8. Install the cam chain on the exhaust camshaft sprocket with the marks (A) aligned with each colored link plates (B).

3. Cam Chain Guide - Install
4. Cam Chain Tensioner Arm - Install
5. Cam Chain Guide B - Install
6. Cam Chain Auto-Tensioner - Install

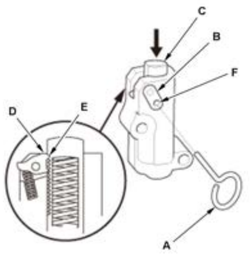	1. Compress the cam chain auto-tensioner when replacing the cam chain. Remove the pin (A) from the cam chain auto-tensioner that was installed during removal. Turn the plate (B) counterclockwise, to release the lock, then press the rod (C), and set the first cam (D) to the first edge of the rack (E). Insert the 1.2 mm (0.047 in) diameter pin back into the holes (F). **NOTE:** If the cam chain auto-tensioner is not set up as described, the cam chain auto-tensioner will be damaged.

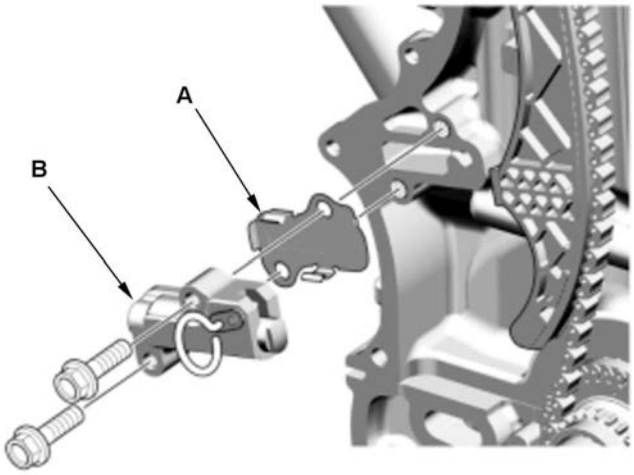	2. Install the cam chain auto-tensioner filter (A) and the cam chain auto-tensioner (B). **NOTE:** Check the cam chain auto-tensioner filter for damage. If the filter is damaged, replace it.

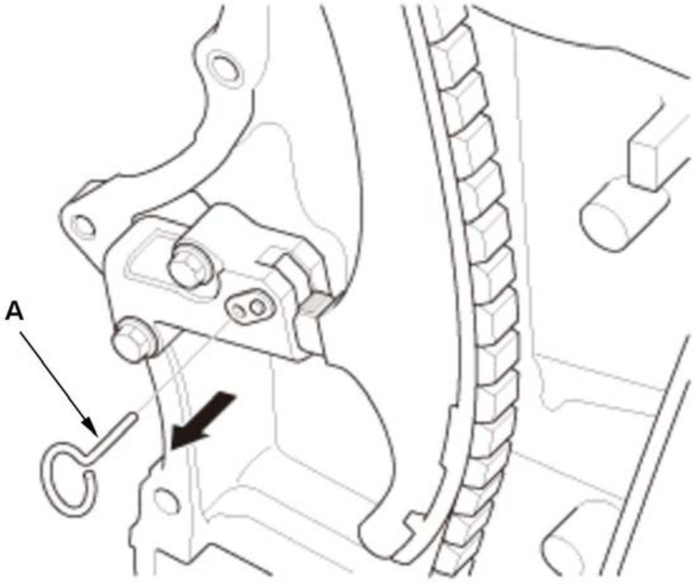	3. Remove the pin (A) from the cam chain auto-tensioner.

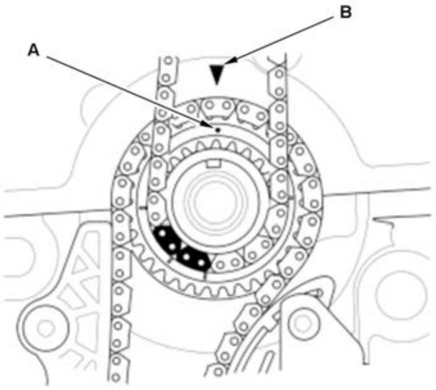

4. Check the camshaft position. Turn the crankshaft to align No. 1 position at top dead center (TDC). Align the TDC mark (A) on the crankshaft sprocket with the pointer (B) on the engine block.

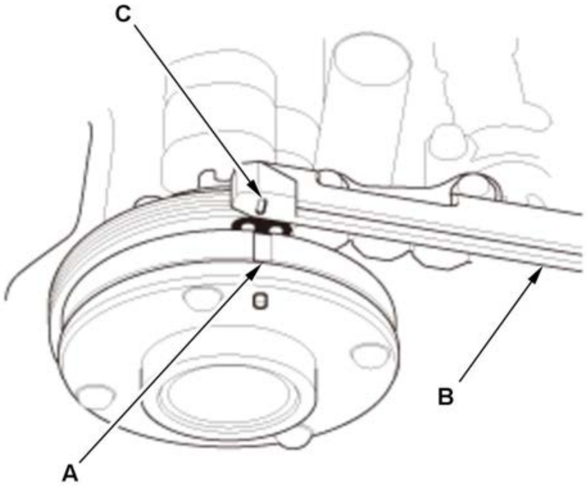

5. Make sure the mark (A) on the VTC actuator aligns with the mark (C) on cam chain guide B.

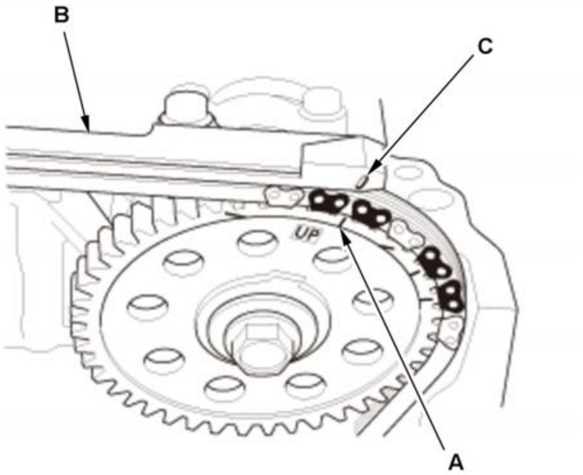

6. Make sure the mark (A) on the exhaust camshaft sprocket aligns with the mark (C) on cam chain guide B.

7. Pulley End Crankshaft Oil Seal - Install (if necessary)

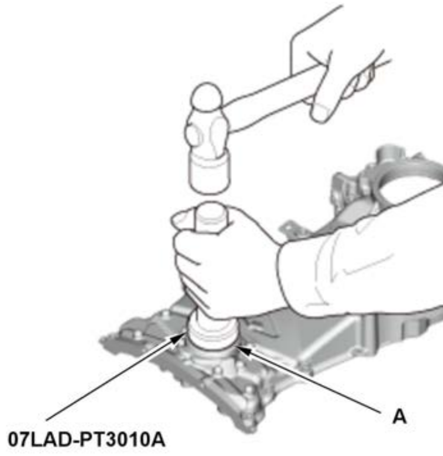	1. Clean and dry the pulley end crankshaft oil seal housing. 2. Apply light coat of new engine oil to the lip of the pulley end crankshaft oil seal. 3. Use the oil seal driver to drive the pulley end crankshaft oil seal (A) squarely into the oil pump to the specified installed height.

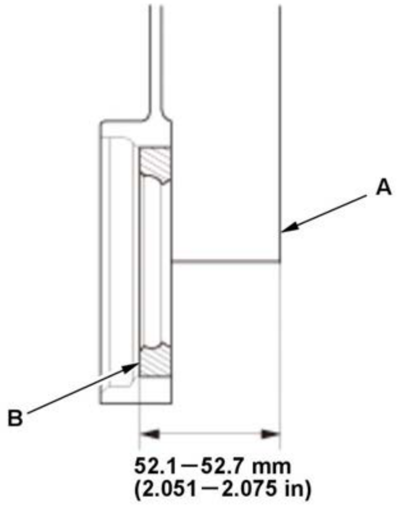	4. Measure the distance between the oil pump surface (A) and the pulley end crankshaft oil seal (B).

Pulley End Crankshaft Oil Seal Installed Height:
52.1-52.7 mm (2.051-2.075 in)

8. Oil Pump - Install

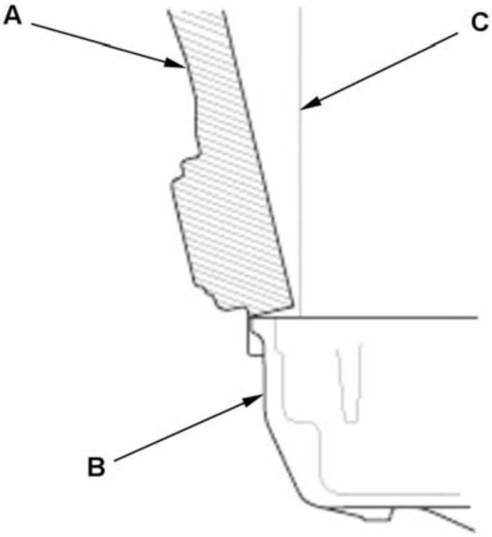

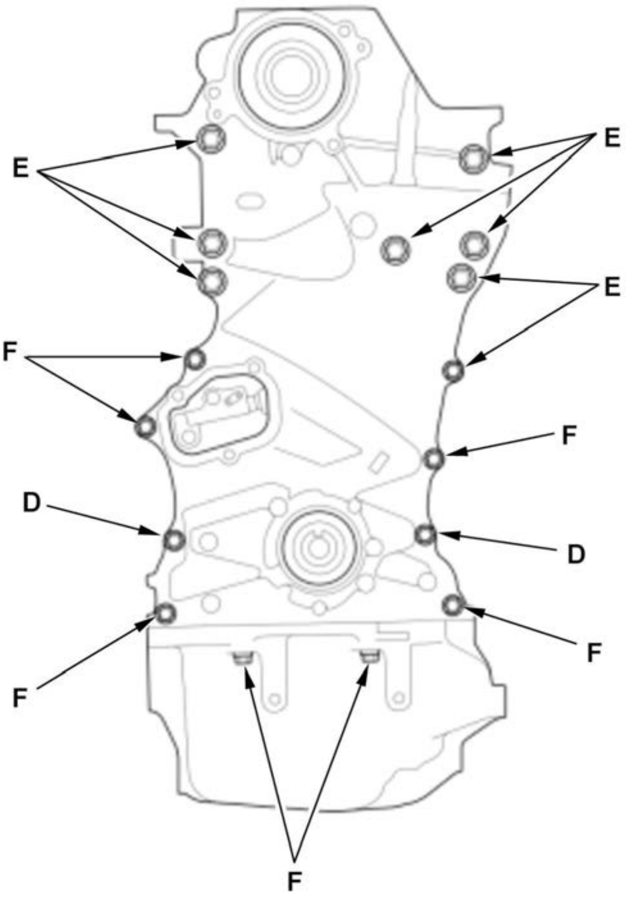

1. **Apply liquid gasket**

to the engine block and the oil pan mating surface of the oil pump and to the inside edge of the threaded bolt holes.

2. Set the edge of the oil pump (A) on the edge of the oil pan (B).

3. Install the oil pump on the engine block (C).

4. Loosely install the dowel bolts (D), then tighten the 8 mm bolts (E), the 6 mm bolts (F), and the dowel bolts.

5. Wipe off the excess liquid gasket on the oil pan and oil pump mating surface.

NOTE: Do not slide the bottom surface onto the oil pan mounting surface.

9. Chain Case Cover - Install (if necessary)

   NOTE: **Apply liquid gasket** to the oil pump mating surface of the chain case cover and to the inside edge of the threaded bolt holes.

10. **Side Engine Mount - Install**
11. **Electric VTC Motor - Install**
12. **Cylinder Head Cover - Install**
13. Crankshaft Pulley - Install
14. **Engine Undercover - Install**
15. **Right Front Wheel - Install**

16. 12 Volt Battery Terminal - Connect

Crankshaft Pulley

NOTE: **Numbered call-outs in figure pertain to list numbers in following procedure.**

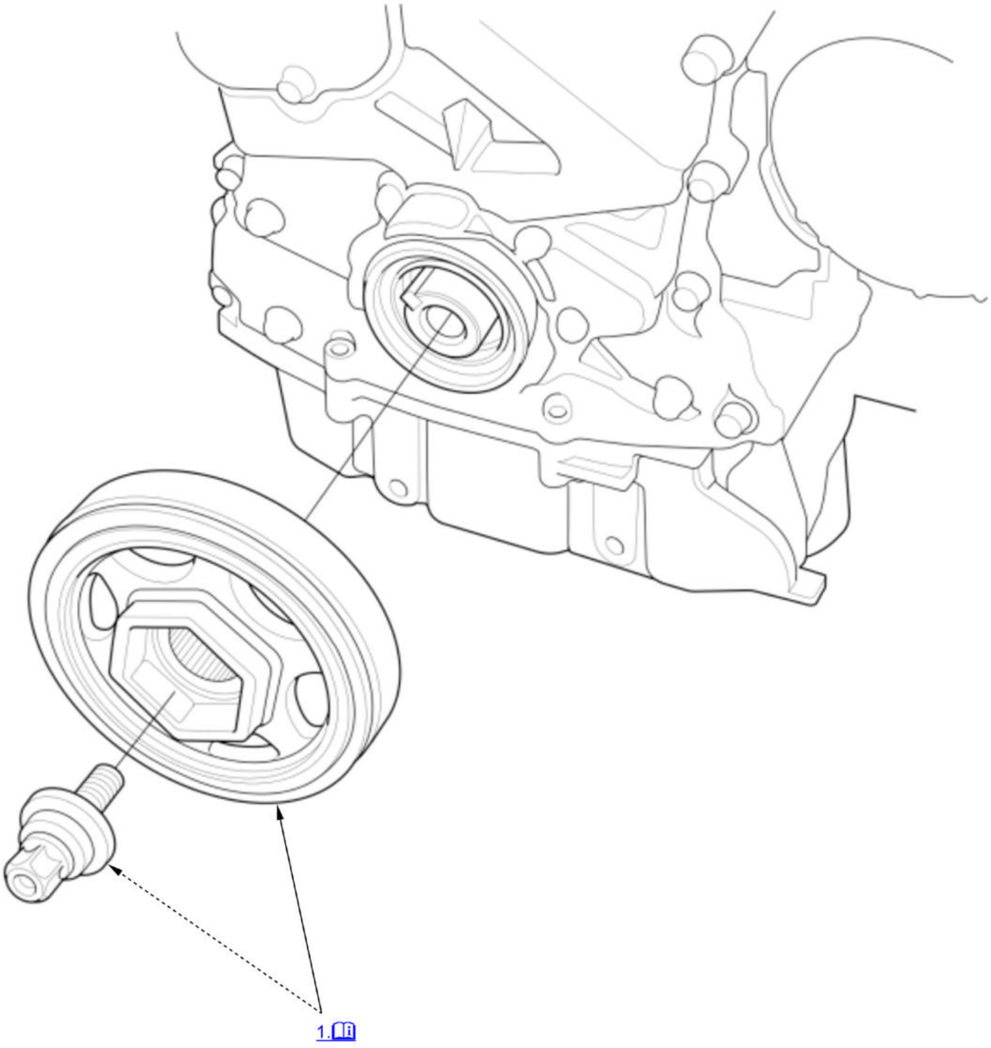

Fig. 18: Exploded View Of Crankshaft Pulley Components For Installation
Courtesy of HONDA, U.S.A., INC.

1. Crankshaft Pulley - Install

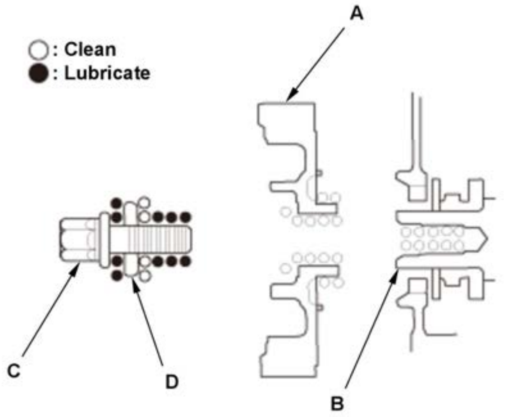
○: Clean
●: Lubricate
A
C
D
B

1. Remove any oil and clean the crankshaft pulley (A), the crankshaft (B), the bolt (C), and the washer (D). Lubricate with new engine oil as shown.

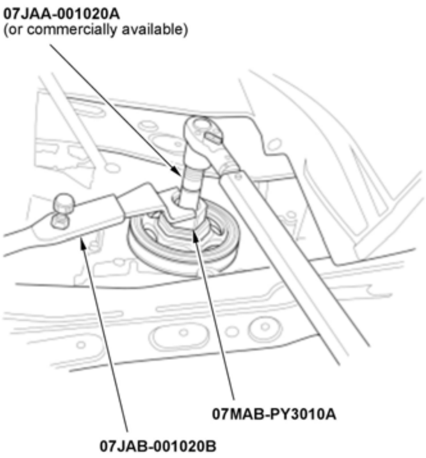
07JAA-001020A
(or commercially available)
07MAB-PY3010A
07JAB-001020B

When a new crankshaft or a new pulley bolt is installed

2. Install the crankshaft pulley and the pulley bolt.

3. Hold the crankshaft pulley with the holder handle and the holder attachment, 50 mm, offset, torque the pulley bolt to 180 N.m (18.4 kgf.m, 133 lbf.ft) with a torque wrench and a socket, 19 mm, then remove the pulley bolt.

4. Torque the pulley bolt to 92 N.m (9.4 kgf.m, 68 lbf.ft) with a torque wrench and a socket, 19 mm.

NOTE: Do not use an impact wrench.

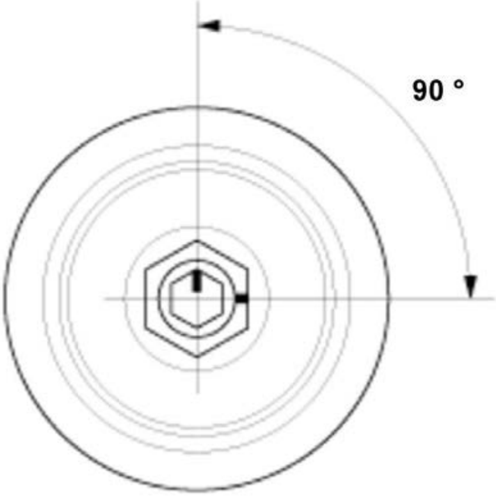

5. Tighten the bolt an additional 90B°.

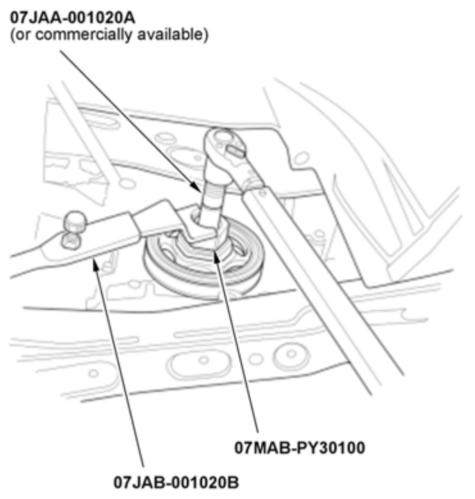 07JAA-001020A (or commercially available) 07MAB-PY30100 07JAB-001020B	**When the crankshaft or the pulley bolt is reused** 6. Install the crankshaft pulley and the pulley bolt. 7. Hold the crankshaft pulley with the holder handle and the holder attachment, 50 mm, offset, then torque the pulley bolt to 86 N.m (8.8 kgf.m, 63 lbf.ft) with a torque wrench and a socket, 19 mm. **NOTE:** Do not use an impact wrench.

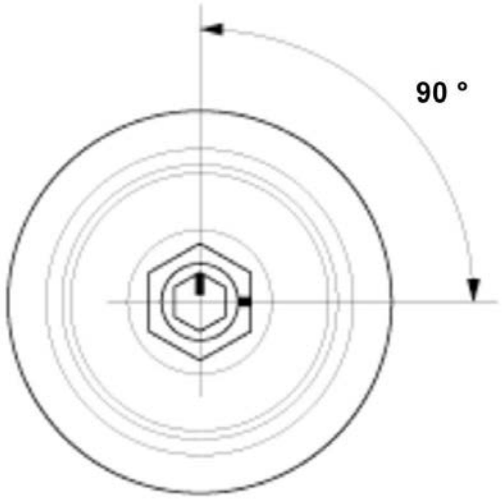	8. Tighten the bolt an additional 90B°.

2. Engine Undercover - Install
3. Right Front Wheel - Install

Inspection

1. Right Front Wheel - Remove
2. Engine Undercover - Remove

   NOTE: Remove the necessary part(s).

3. Chain Case Cover - Remove
4. Cam Chain - Inspect

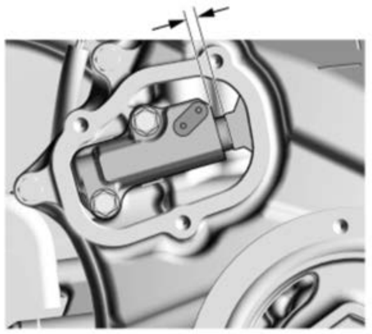	1. Measure the length of the cam chain auto-tensioner rod. 2. If the length is over the service limit, replace the cam chain. When replacing, check the teeth on the crankshaft sprocket, the VTC actuator, and the exhaust camshaft sprocket for wear and damage. If any of them are worn or damaged, replace if necessary. 3. Check the oil passage on the cam chain auto-tensioner for clogs. If the cam chain auto-tensioner is clogged, replace it.

Cam Chain Auto-Tensioner Rod Length	
Service Limit:	**13.55 mm (0.5335 in)**

5. All Removed Parts - Install

   1. Install the parts in the reverse order of removal.

DRIVE PLATE REMOVAL AND INSTALLATION

Removal and Installation

Procedure

NOTE: **Numbered call-outs in figure pertain to list numbers in following procedure.**

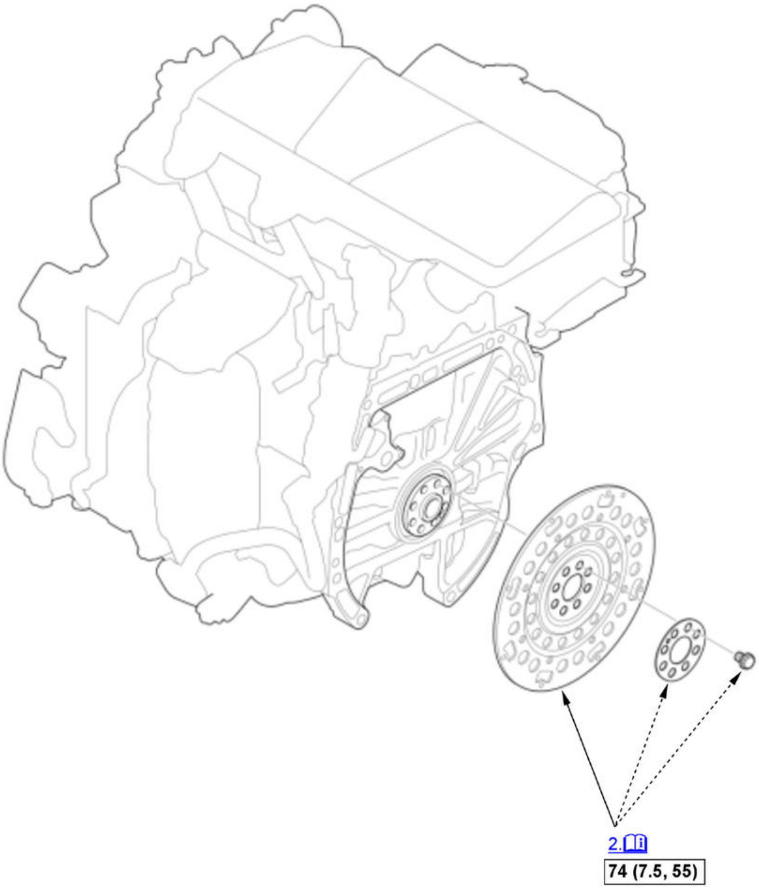

Fig. 19: Exploded View Of Drive Plate Components With Torque Specifications
Courtesy of HONDA, U.S.A., INC.

☐	Torque: N.m (kgf.m, lbf.ft)

1. Transmission (e-CVT) - Remove
2. Drive Plate - Remove

   Note for installation

   Tighten the bolts in a crisscross pattern in at least two steps.

3. All Removed Parts - Install

   1. Install the parts in the reverse order of removal.

ECT SENSOR REMOVAL AND INSTALLATION

Removal and Installation

ECT Sensor 1

NOTE: **Numbered call-outs in figure pertain to list numbers in following procedure.**

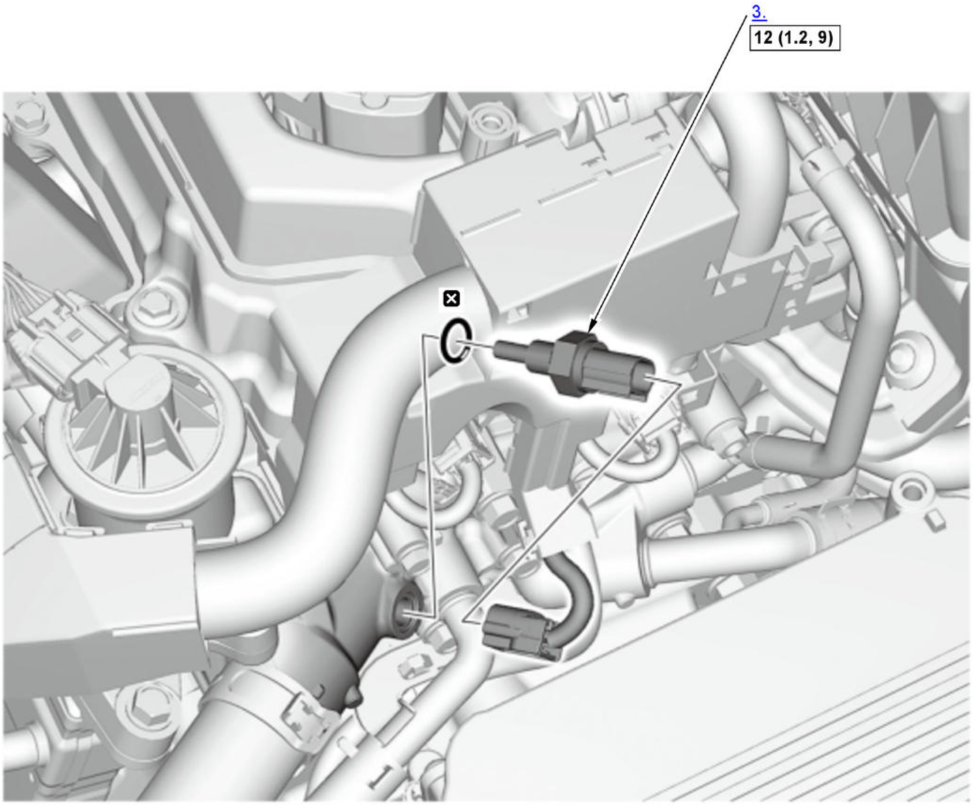

Fig. 20: Exploded View Of ECT Sensor 1 Components With Torque Specifications
Courtesy of HONDA, U.S.A., INC.

☐	Torque: N.m (kgf.m, lbf.ft)
☒	Replace

1. Engine Coolant - Drain
2. Intake Air Resonator - Remove
3. ECT Sensor 1 - Remove
4. All Removed Parts - Install

    1. Install the parts in the reverse order of removal.

ECT Sensor 2

NOTE: **Numbered call-outs in figure pertain to list numbers in following procedure.**

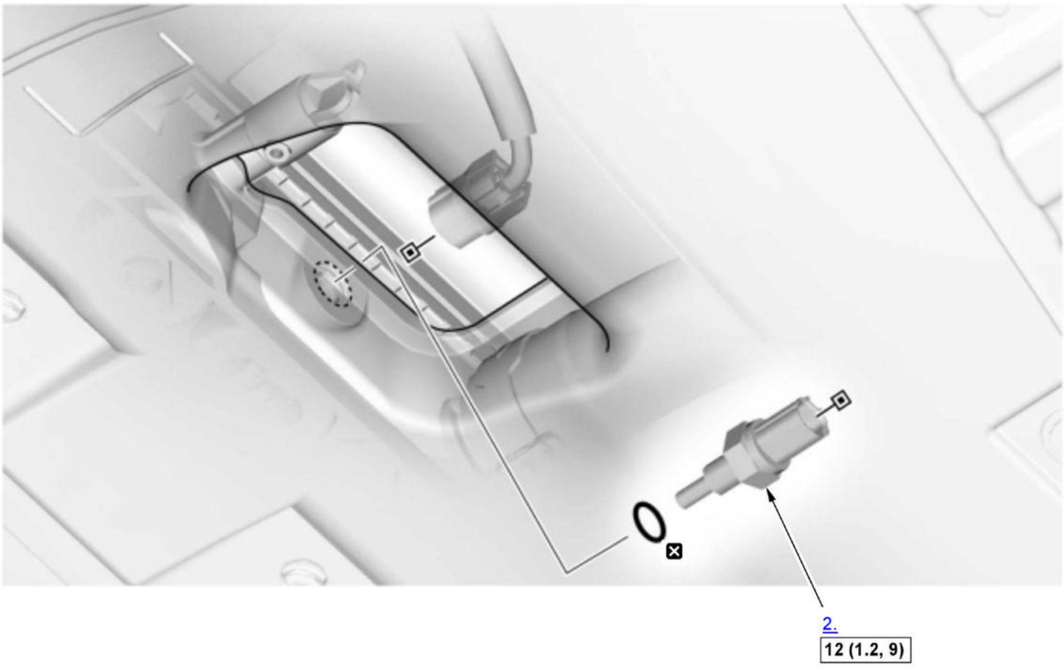

Fig. 21: Exploded View Of ECT Sensor 2 Components With Torque Specifications
Courtesy of HONDA, U.S.A., INC.

▭	Torque: N.m (kgf.m, lbf.ft)
☒	Replace

1. Engine Coolant - Drain
2. ECT Sensor 2 - Remove
3. All Removed Parts - Install

1. Install the parts in the reverse order of removal.

EGR VALVE, EGR PIPE, AND EGR COOLER REMOVAL AND INSTALLATION

Removal and Installation

Procedure

NOTE: **Numbered call-outs in figure pertain to list numbers in following procedure.**

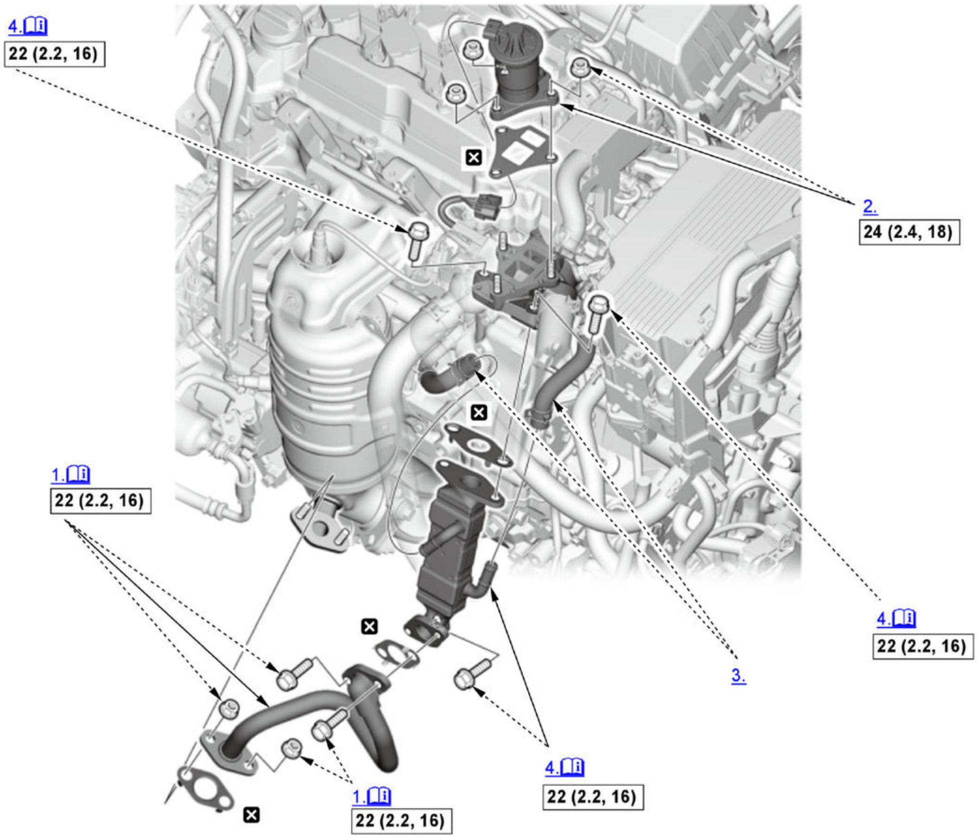
4.
22 (2.2, 16)
2.
24 (2.4, 18)
1.
22 (2.2, 16)
4.
22 (2.2, 16)
3.
4.
22 (2.2, 16)
1.
22 (2.2, 16)

Fig. 22: Exploded View Of EGR Valve, EGR Pipe, And EGR Cooler Components With Torque Specifications
Courtesy of HONDA, U.S.A., INC.

☐	Torque: N.m (kgf.m, lbf.ft)
☒	Replace

EGR Valve

1. Intake Air Resonator - Remove
2. EGR Valve - Remove
3. All Removed Parts - Install

> 1. Install the parts in the reverse order of removal.

EGR Pipe, EGR Cooler

1. EGR Pipe - Remove

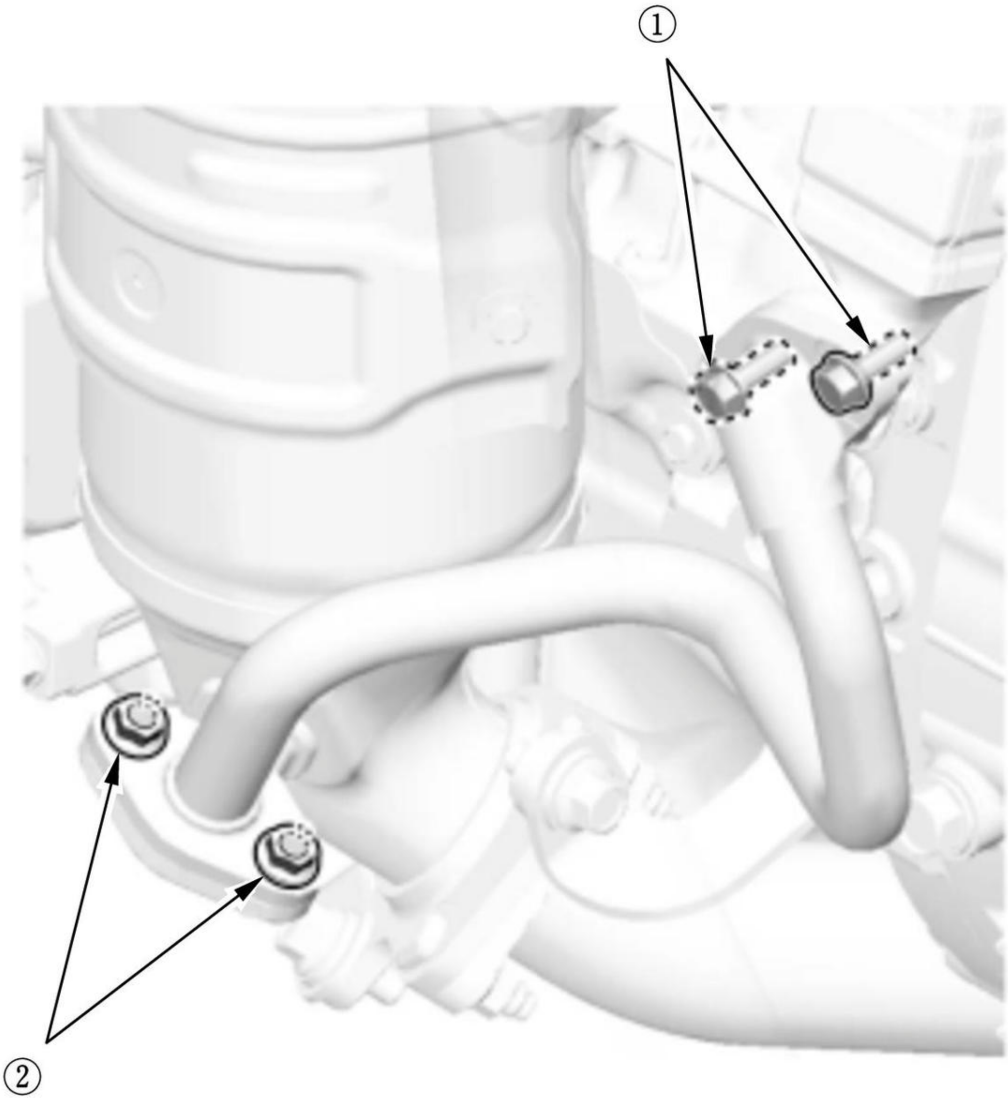

Fig. 23: EGR Pipe Bolts/Nuts With Tightening Sequence
Courtesy of HONDA, U.S.A., INC.

Note for installation

Tighten the bolts and the nuts until they sit on the parts, then tighten the bolts and the nuts in the numbered sequence shown.

2. Engine Coolant - Drain
3. EGR Cooler Hose - Remove
4. EGR Cooler - Remove

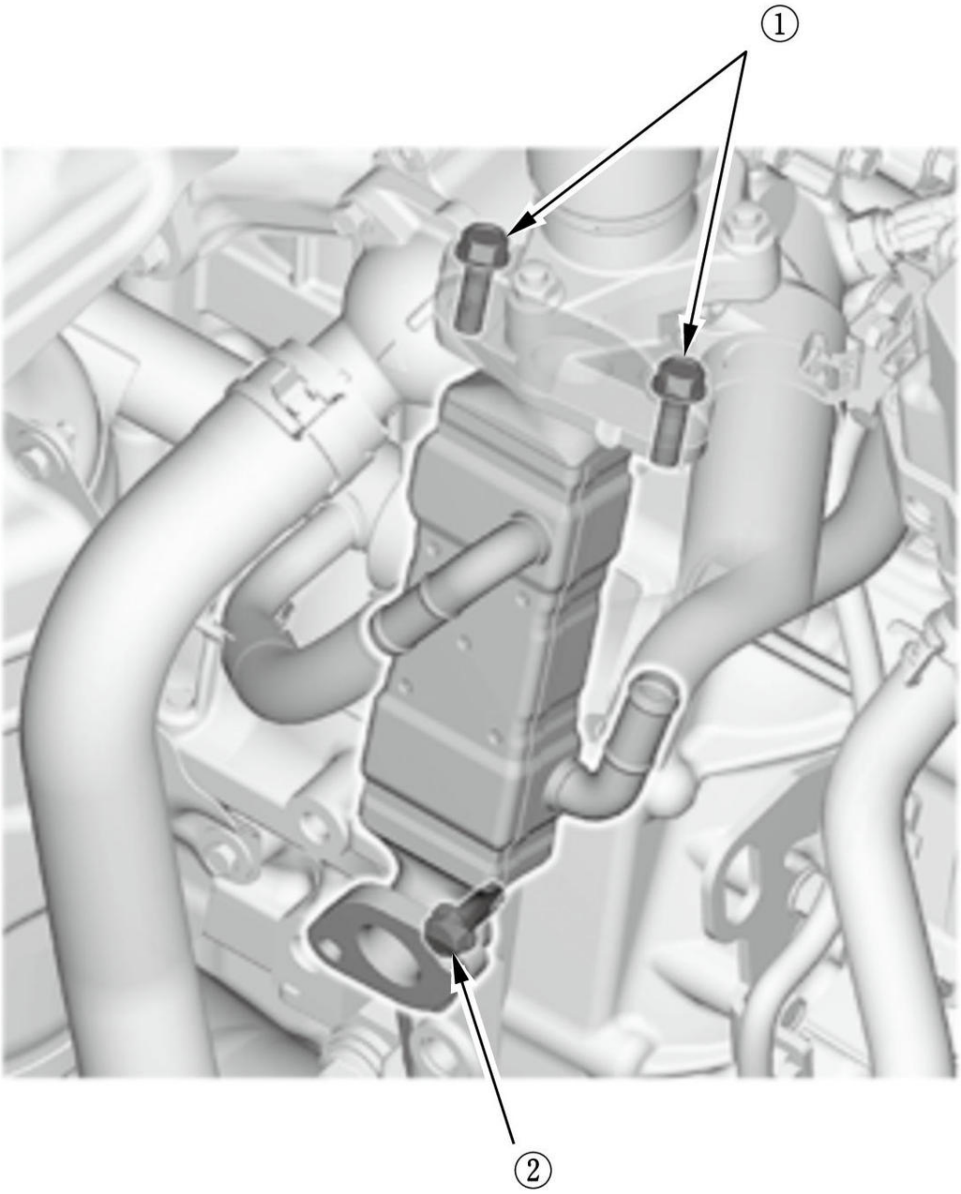

Fig. 24: EGR Cooler Bolts With Tightening Sequence
Courtesy of HONDA, U.S.A., INC.

Note for installation

Tighten the bolts until they sit on the parts, then tighten the bolts in the numbered sequence shown.

5. All Removed Parts - Install

1. Install the parts in the reverse order of removal.

EVAP SYSTEM REMOVAL AND INSTALLATION

Removal and Installation

WARNING:

Flammable - Keep Fire Away

NOTE:

- Refer to the Fuel and Emissions Systems Service Precautions before disconnecting the fuel line.
- Fuel may cause flammable gas leaks and may result in fire. Keep sparks, flame and cigarettes away.

EVAP Canister Purge Valve 2

NOTE: **Numbered call-outs in figure pertain to list numbers in following procedure.**

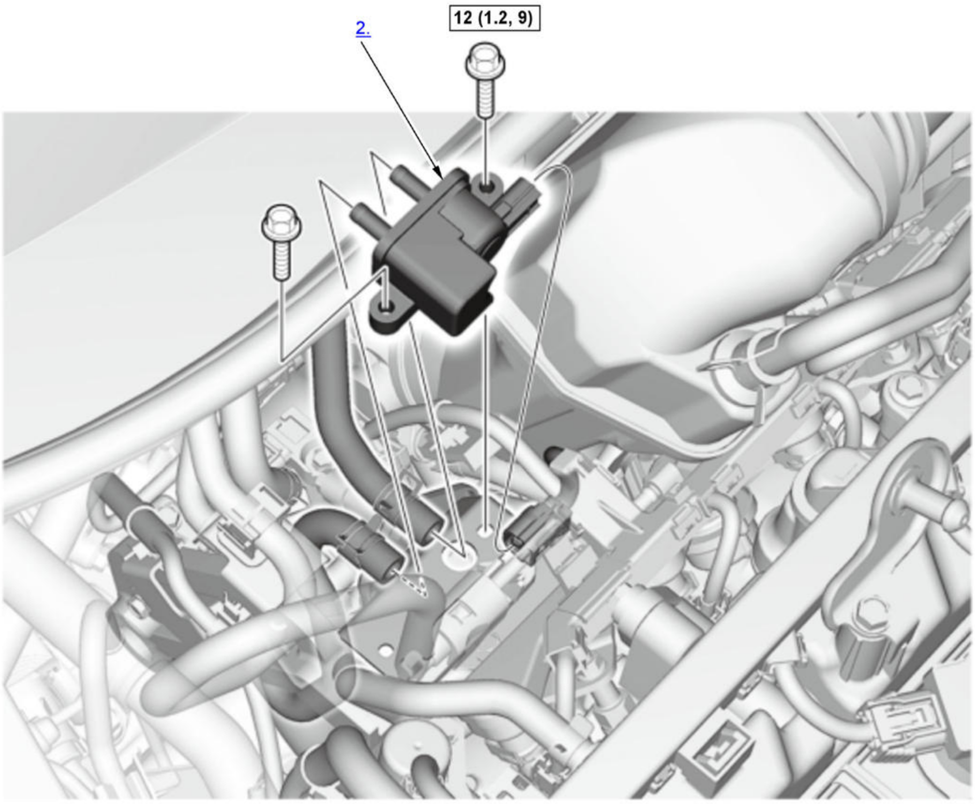

Fig. 25: Exploded View Of EVAP Canister Purge Valve 2 Components With Torque Specifications
Courtesy of HONDA, U.S.A., INC.

☐	Torque: N.m (kgf.m, lbf.ft)

EVAP Canister Purge Valve 1

NOTE: **Numbered call-outs in figure pertain to list numbers in following procedure.**

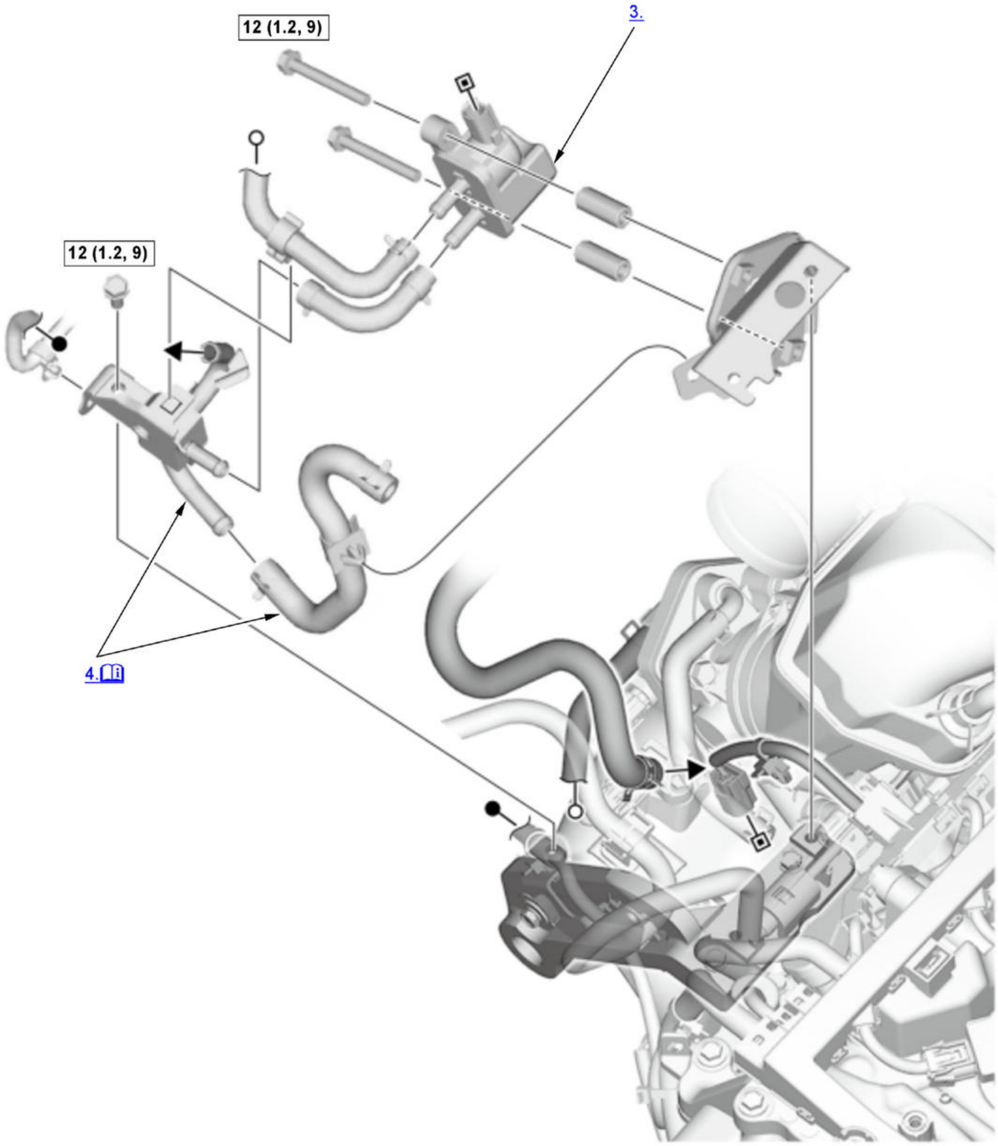

Fig. 26: Exploded View Of EVAP Canister Purge Valve 1 Components With Torque Specifications
Courtesy of HONDA, U.S.A., INC.

▭	Torque: N.m (kgf.m, lbf.ft)

EVAP Canister Purge Valve 1 and 2

1. Air Intake Tube B - Remove
2. EVAP Canister Purge Valve 2 - Remove
3. EVAP Canister Purge Valve 1 - Remove
4. 3-Way Joint and Hose - Remove (If Necessary)

   Note for Installation

   Make sure the hose clamps are properly positioned and tightened .

5. All Removed Parts - Install

   1. Install the parts in the reverse order of removal.

EVAP Canister Filter

NOTE: **Numbered call-outs in figure pertain to list numbers in following procedure.**

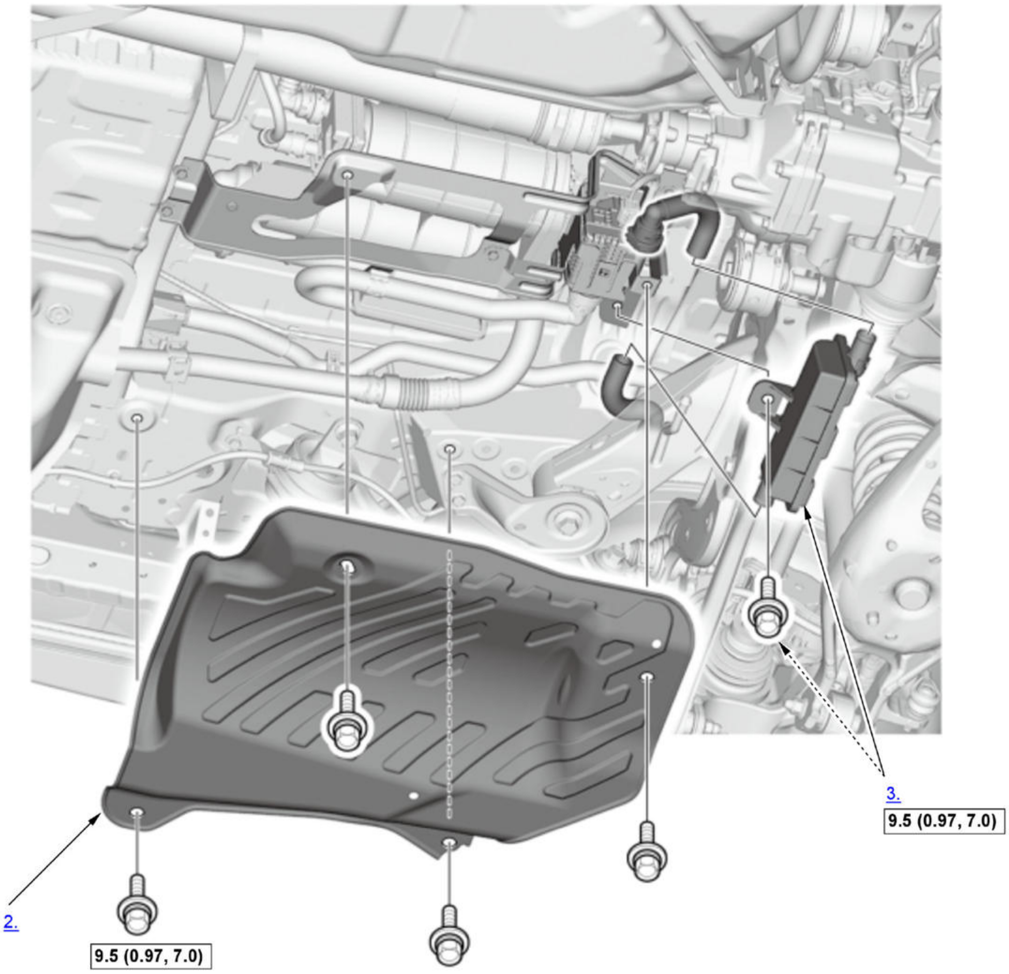

Fig. 27: Exploded View Of EVAP Canister Filter Components With Torque Specifications
Courtesy of HONDA, U.S.A., INC.

☐	Torque: N.m (kgf.m, lbf.ft)

1. Muffler - Remove
2. Heat Shield - Remove
3. EVAP Canister Filter - Remove
4. All Removed Parts - Install

1. Install the parts in the reverse order of removal.

EVAP Leak Check Module

NOTE: **Numbered call-outs in figure pertain to list numbers in following procedure.**

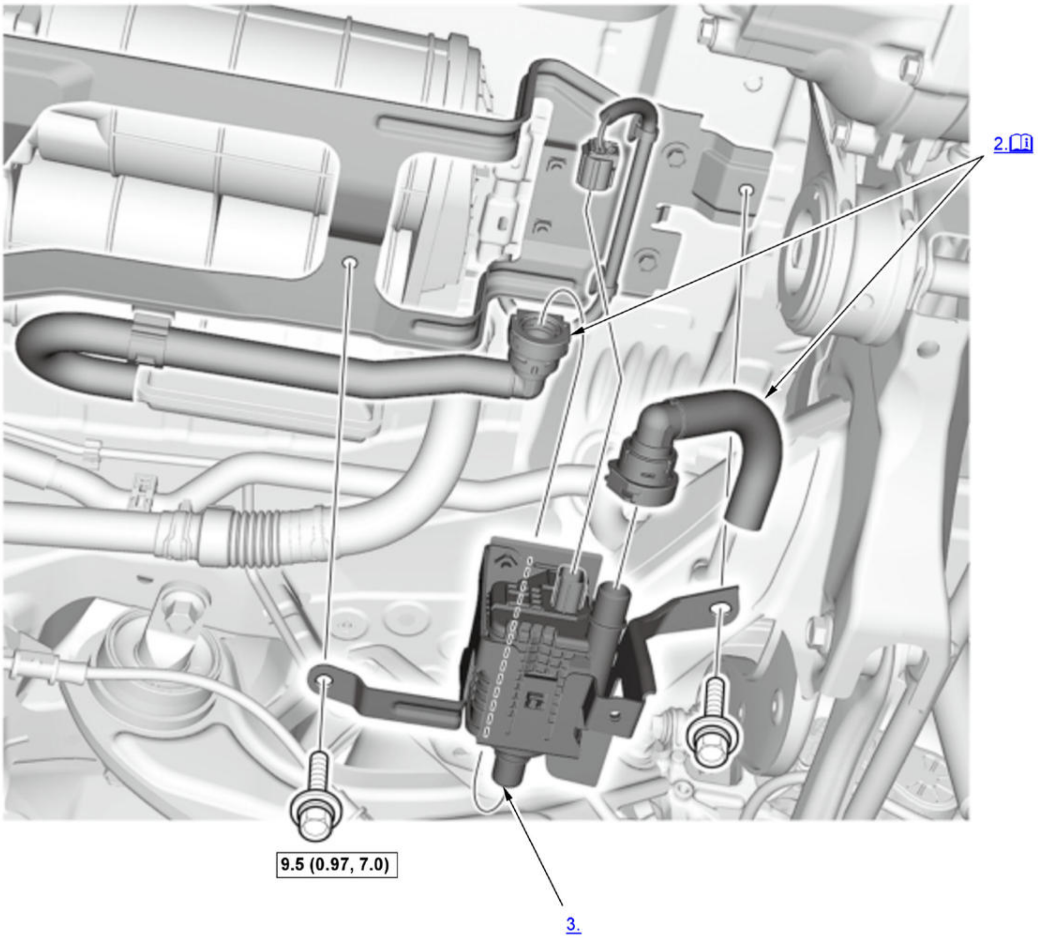

Fig. 28: Exploded View Of EVAP Leak Check Module Components With Torque Specifications
Courtesy of HONDA, U.S.A., INC.

▭	Torque: N.m (kgf.m, lbf.ft)

1. EVAP Canister Filter - Remove
2. EVAP Leak Check Module Line Hose - Disconnect

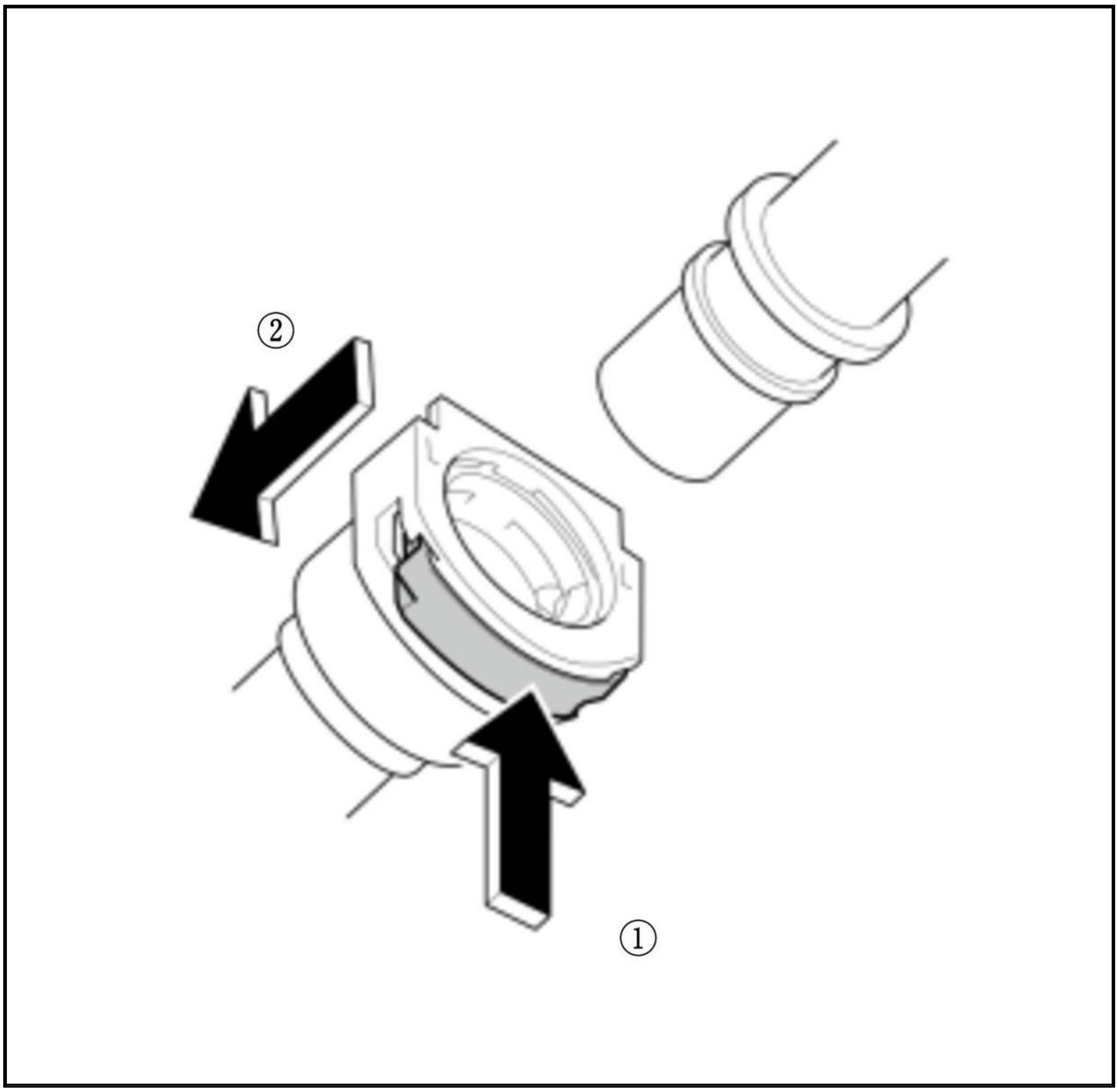

Note for Installation

Make sure the connector is connected securely.

3. EVAP Leak Check Module - Remove
4. All Removed Parts - Install

1. Install the parts in the reverse order of removal.

EVAP Canister

NOTE: **Numbered call-outs in figure pertain to list numbers in following procedure.**

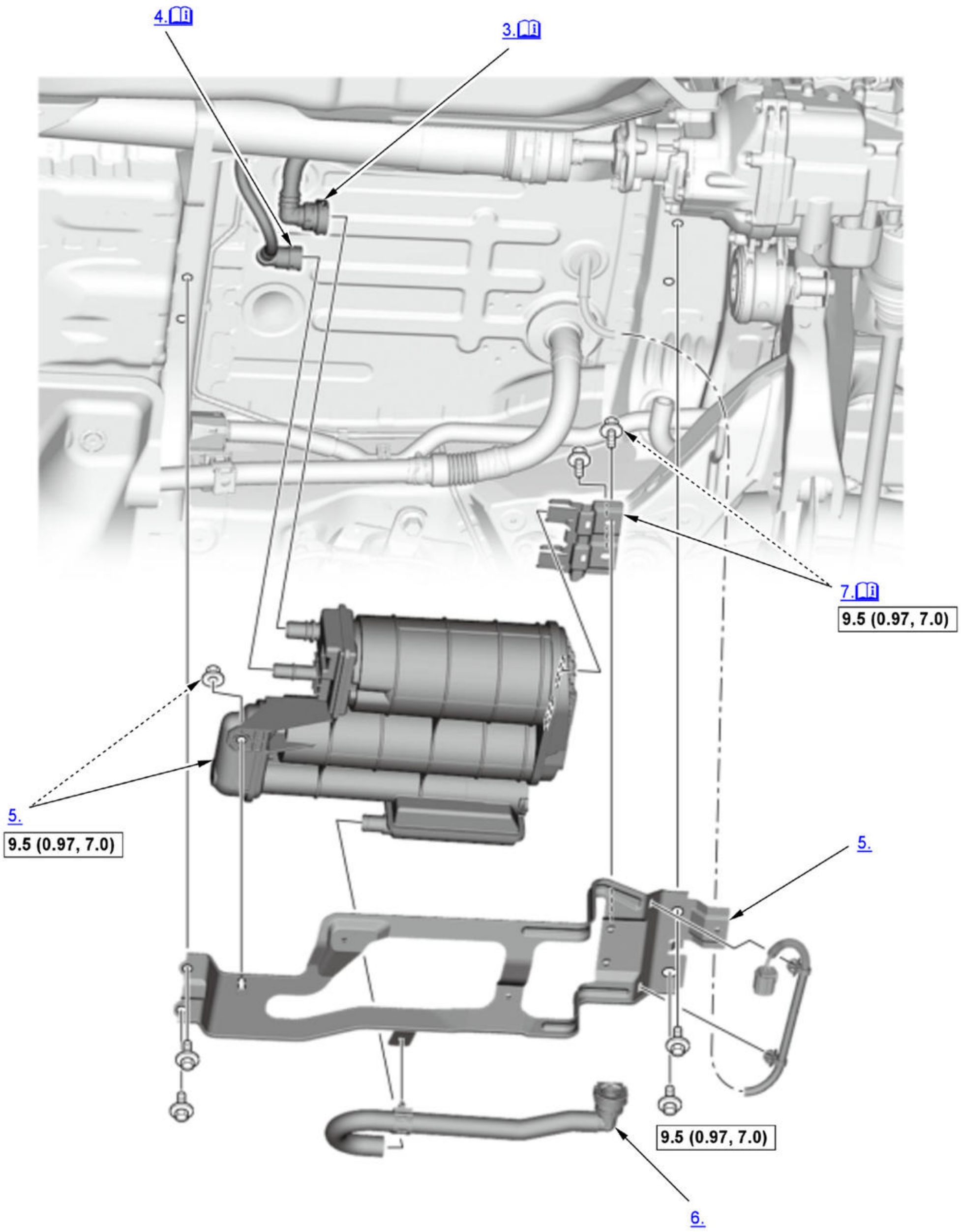
4.
3.
7.
9.5 (0.97, 7.0)
5.
9.5 (0.97, 7.0)
5.
9.5 (0.97, 7.0)
6.

Fig. 29: Exploded View Of EVAP Canister Components With Torque Specifications
Courtesy of HONDA, U.S.A., INC.

☐	Torque: N.m (kgf.m, lbf.ft)

1. EVAP Canister Filter - Remove
2. EVAP Leak Check Module - Remove
3. EVAP Canister Line Hose - Disconnect

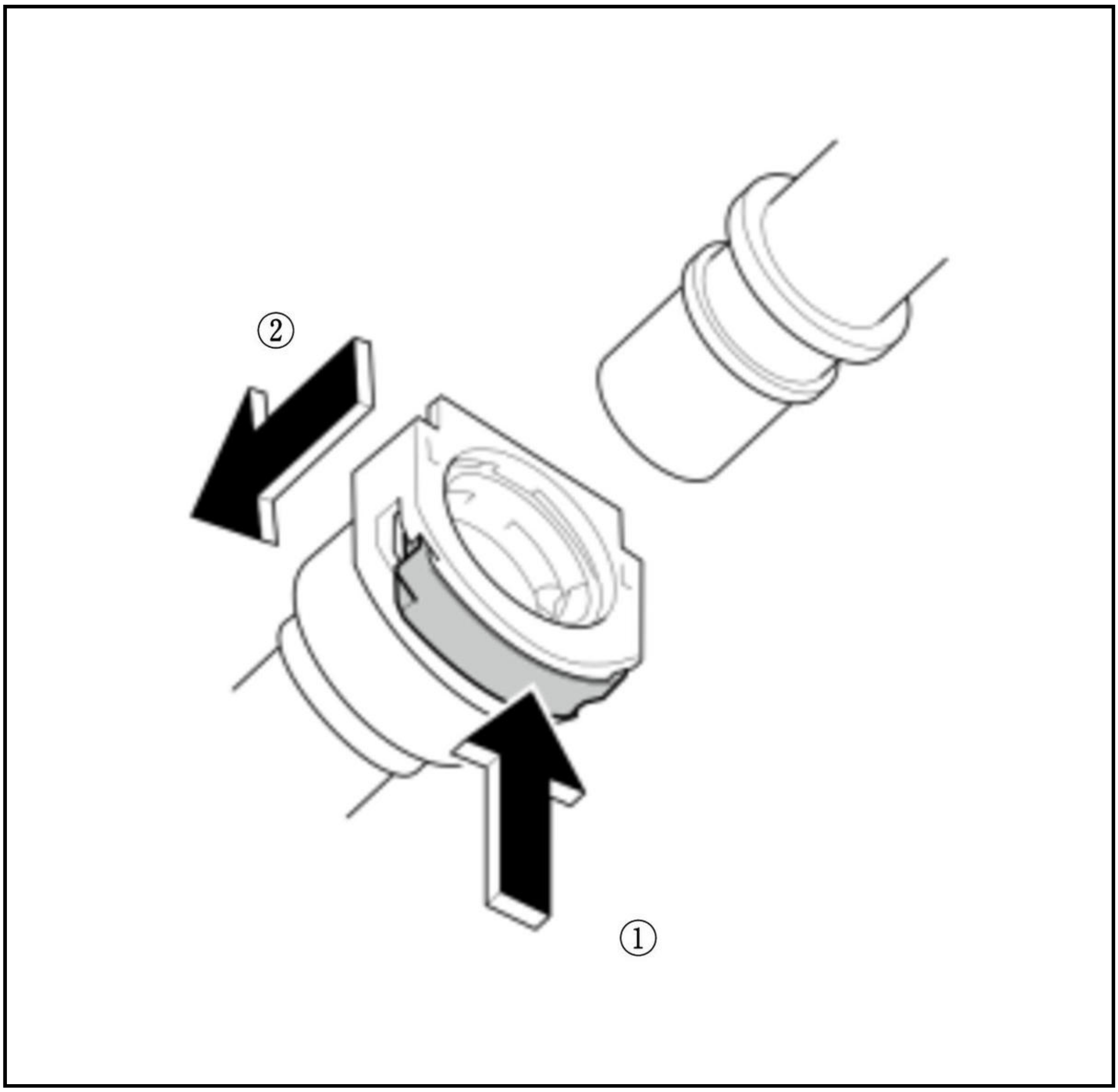

Note for Installation

Make sure the connector is connected securely.

4. Fuel Line Quick-Connect Fitting - Disconnect

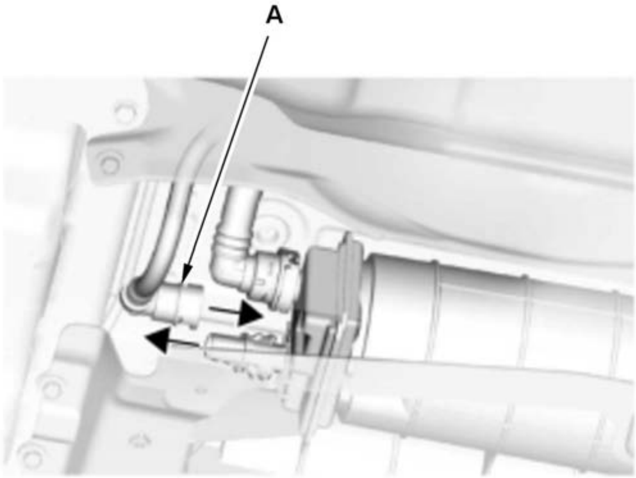	1. Check the fuel quick-connect fitting (A) for dirt, and clean it if needed. 2. **Disconnect the quick-connect fitting** from the EVAP canister.

5. EVAP Canister and Bracket B - Remove
6. EVAP Leak Check Module Drain Hose A - Remove
7. EVAP Canister Bracket A - Remove

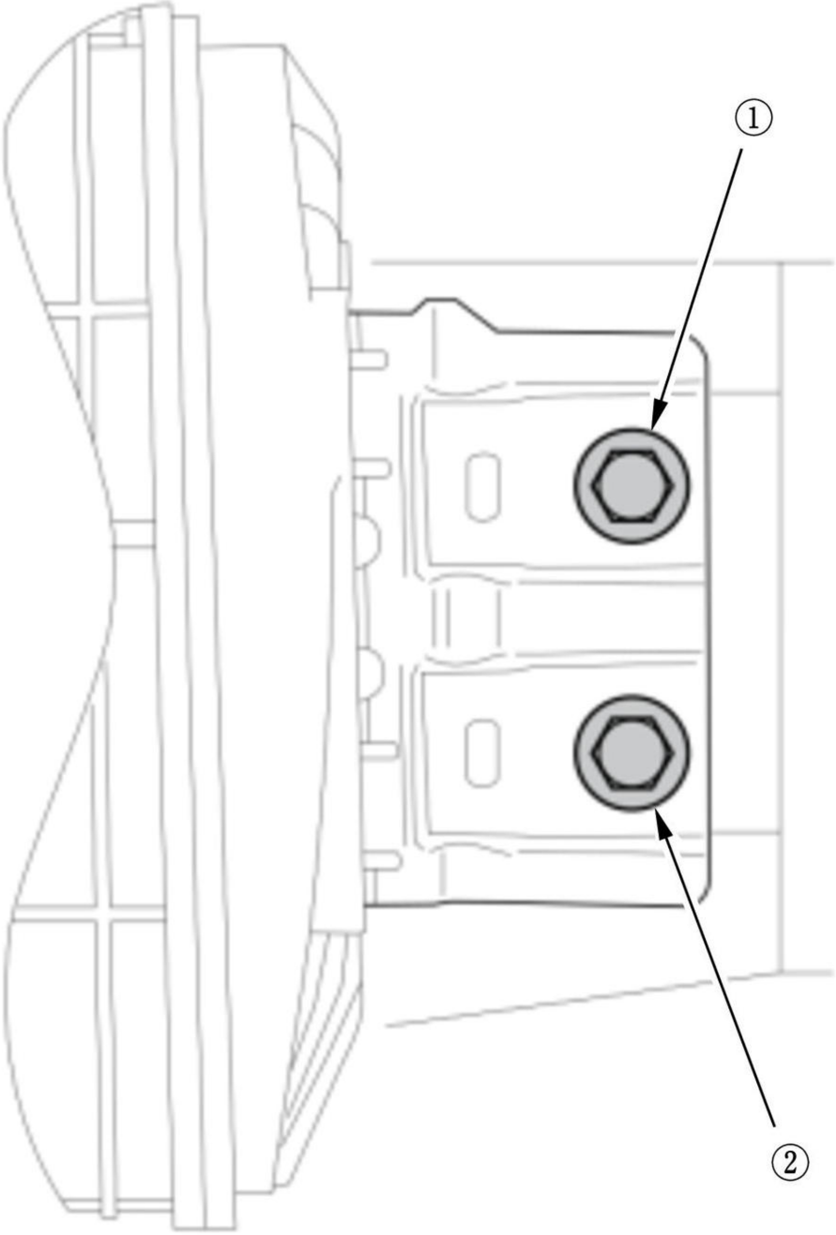

Fig. 30: EVAP Canister Bracket A Bolts With Tightening Sequence
Courtesy of HONDA, U.S.A., INC.

Note for installation

Loosely install all bolts by hand. Then tighten the bracket mounting bolts in the numbered sequence shown.

8. All Removed Parts - Install

1. Install the parts in the reverse order of removal.

EVAP Canister Drain Pipe Parts, EVAP Canister One Way Valve

NOTE: **Numbered call-outs in figure pertain to list numbers in following procedure.**

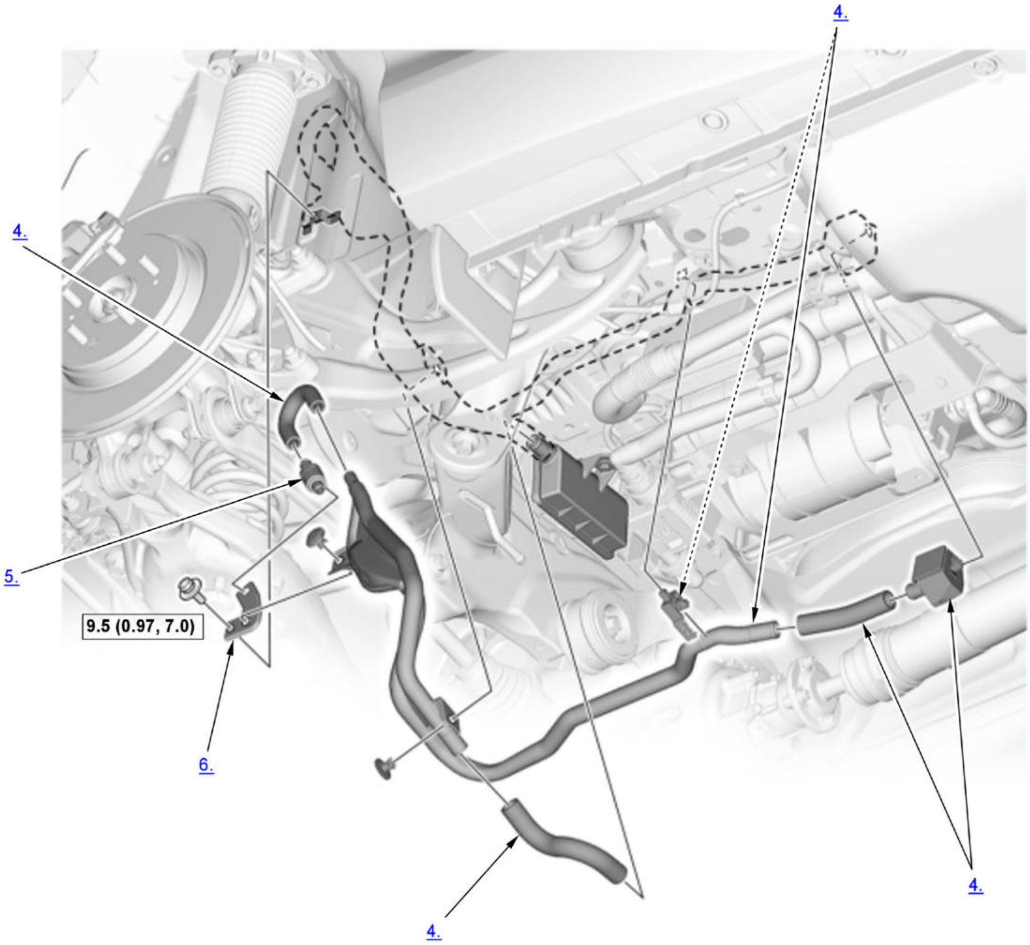

Fig. 31: Exploded View Of EVAP Canister Drain Pipe Parts, EVAP Canister One Way Valve Components With Torque Specifications
Courtesy of HONDA, U.S.A., INC.

▭	Torque: N.m (kgf.m, lbf.ft)

1. Muffler - Remove
2. Heat Shield - Remove
3. Rear Inner Fender (Right Side) - Remove
4. EVAP Canister Drain Pipe Assembly - Remove
5. EVAP Canister One Way Valve - Remove
6. Bracket - Remove (If Necessary)
7. All Removed Parts - Install

1. Install the parts in the reverse order of removal.

ELECTRIC VTC MOTOR REMOVAL AND INSTALLATION

Removal and Installation

Procedure

NOTE: **Numbered call-outs in figure pertain to list numbers in following procedure.**

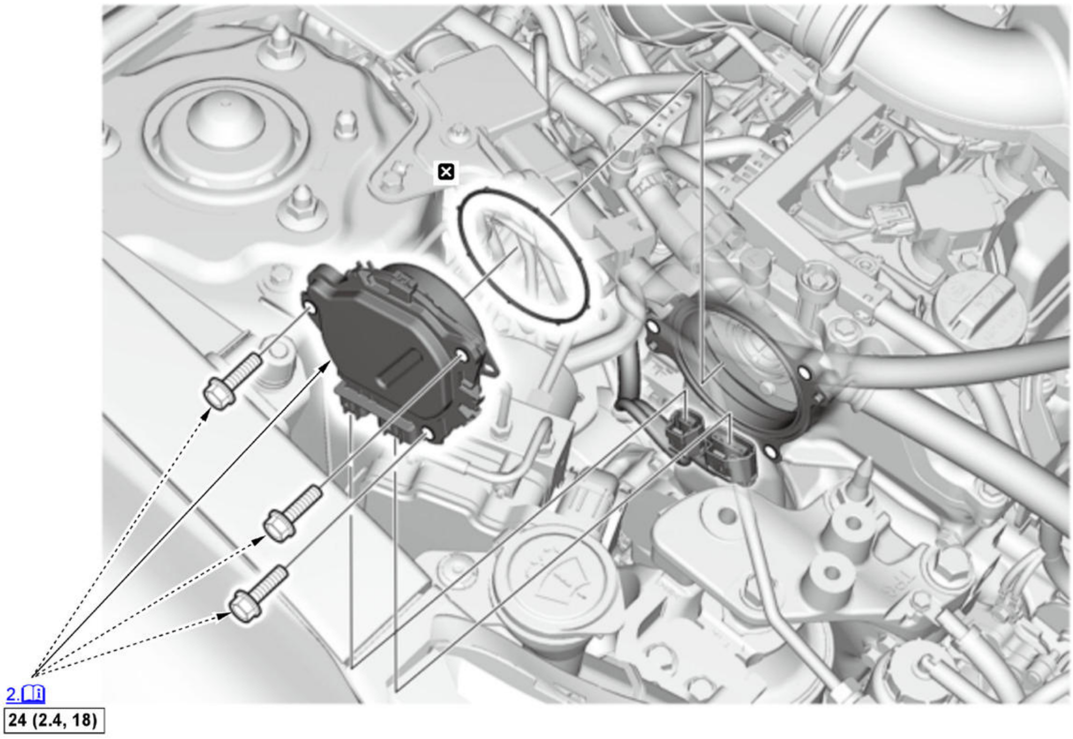

Fig. 32: Exploded View Of Electric VTC Motor Components With Torque Specifications
Courtesy of HONDA, U.S.A., INC.

▭	Torque: N.m (kgf.m, lbf.ft)
☒	Replace

1. Upper Torque Rod - Remove
2. Electric VTC Motor - Remove

   Note for installation

   Align the direction of the joint (A) with the electric VTC gear (B).

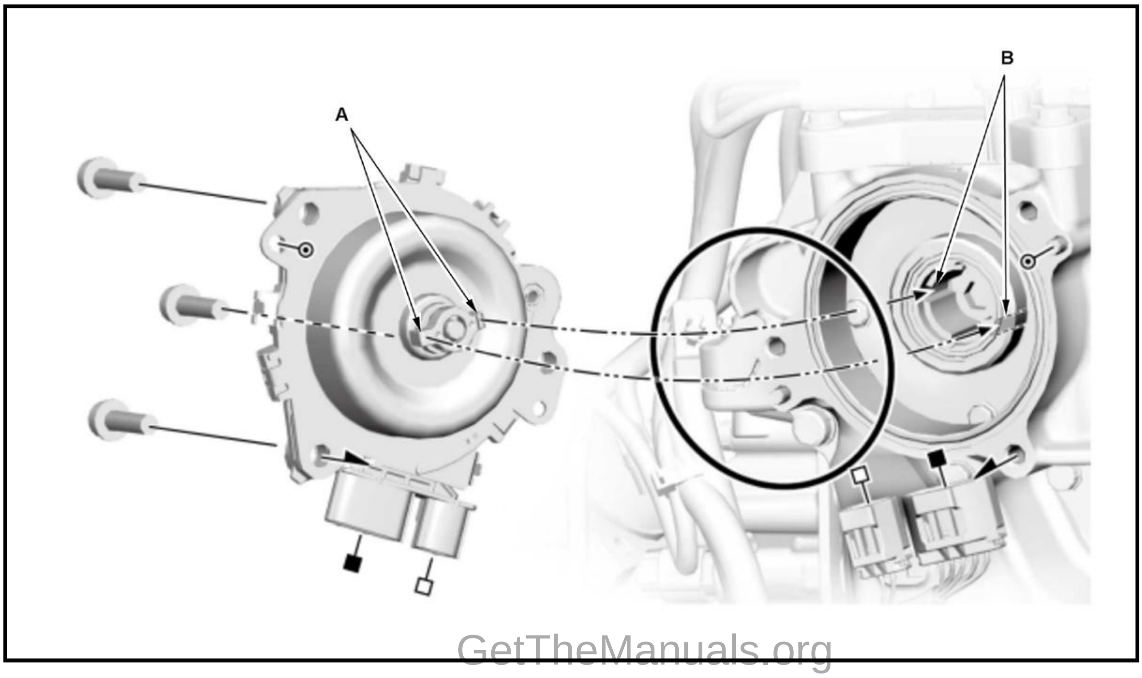

3. All Removed Parts - Install

1. Install the parts in the reverse order of removal.

4. VTC Position - Learn

ENGINE OIL PAN REMOVAL AND INSTALLATION

Removal

NOTE: Unless otherwise indicated, illustrations used in the procedure are for the model with the engine oil level sensor.

Procedure

NOTE: **Numbered call-outs in figure pertain to list numbers in following procedure.**

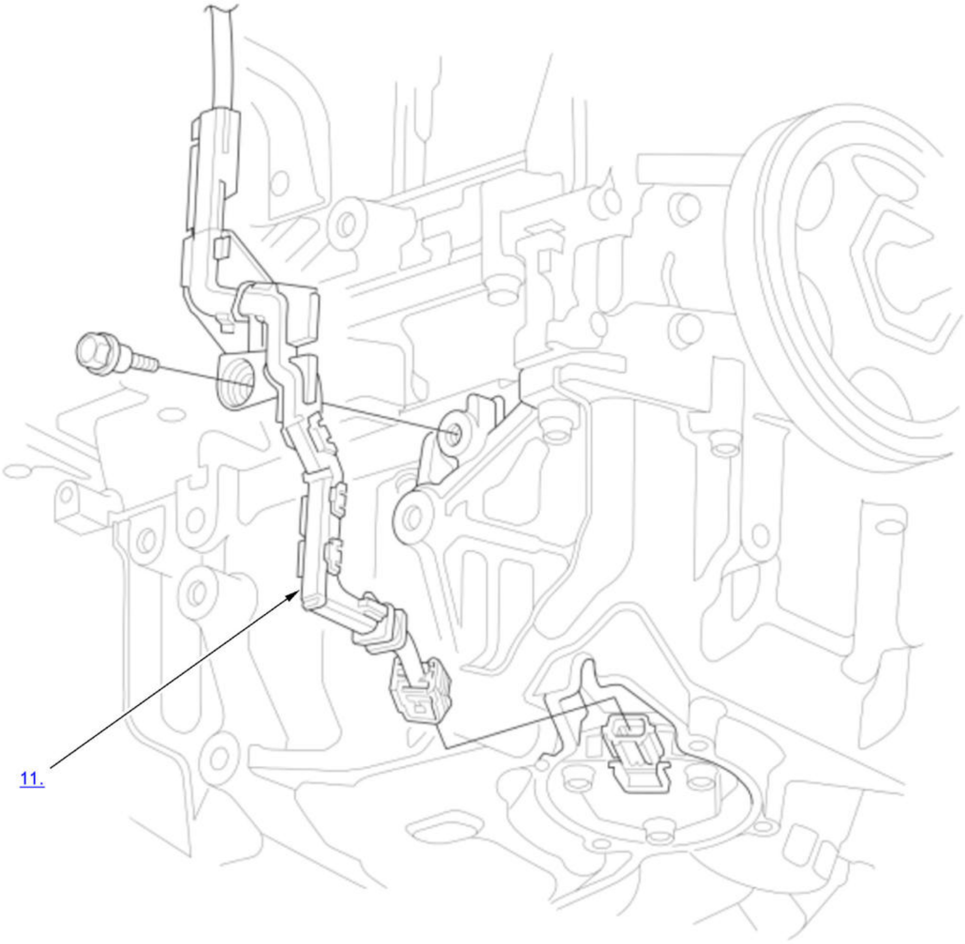

Fig. 33: Exploded View Of Engine Oil Pan Components For Removal (1 Of 2)
Courtesy of HONDA, U.S.A., INC.

NOTE: **Numbered call-outs in figure pertain to list numbers in following procedure.**

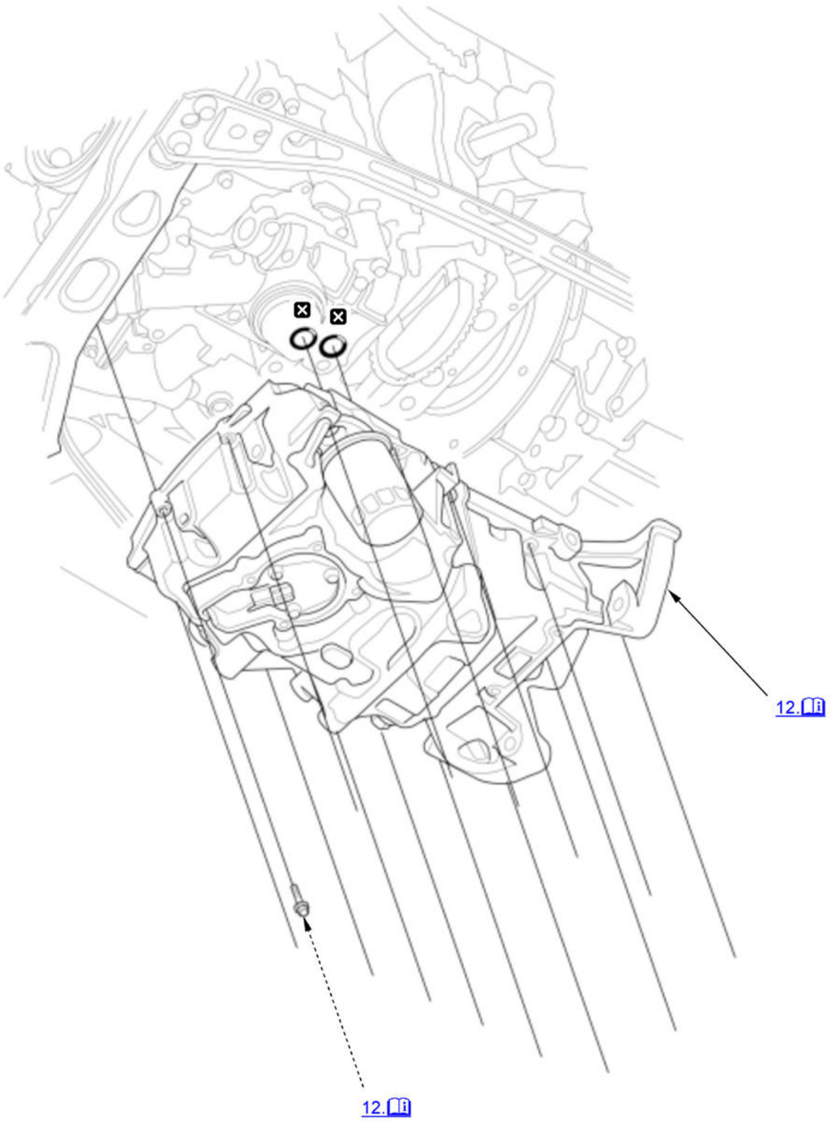

Fig. 34: Exploded View Of Engine Oil Pan Components For Removal (2 Of 2)
Courtesy of HONDA, U.S.A., INC.

☒	Replace

1. Engine Undercover - Remove
2. Engine Oil - Drain
3. Exhaust Pipe A - Remove
4. TWC Bracket - Remove
5. Electric A/C Compressor - Move

   NOTE:

   - Do not disconnect the connector (electric A/C compressor).
   - Do not disconnect the suction hose and the discharge pipe.
   - Do not bend the suction hose and the discharge hose excessively.
   - Hang the electric A/C compressor with a wire tie.
6. Intermediate Shaft Assembly Mounting Bolt - Remove
7. CKP Sensor Cover - Remove

8. Lower Torque Rod and Lower Torque Rod Bracket - Remove
9. Flywheel Cover - Remove
10. Lower Transmission (e-CVT) Mounting Bolt - Remove
11. Engine Oil Level Sensor Subharness - Remove (With Engine Oil Level Sensor)
12. Oil Pan - Remove

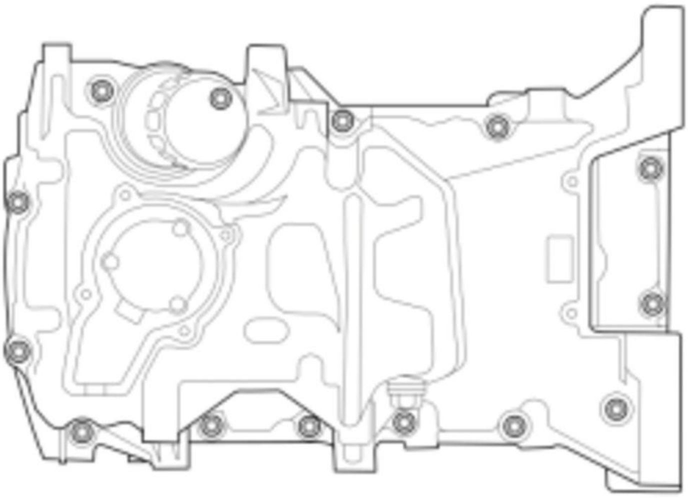	1. Remove the oil pan mounting bolts.

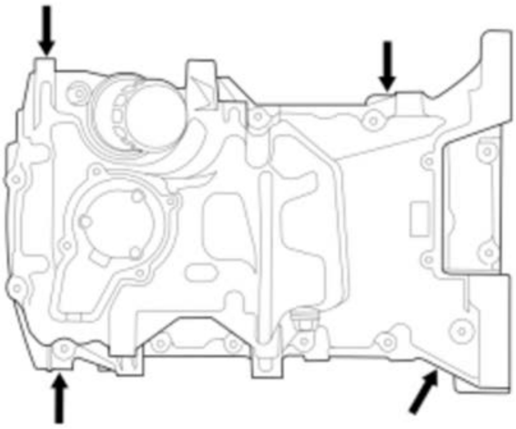	2. Using a flat blade screwdriver, separate the oil pan from the lower block in the places shown.

Installation

NOTE: Unless otherwise indicated, illustrations used in the procedure are for the model with the engine oil level sensor.

Procedure

NOTE: **Numbered call-outs in figure pertain to list numbers in following procedure.**

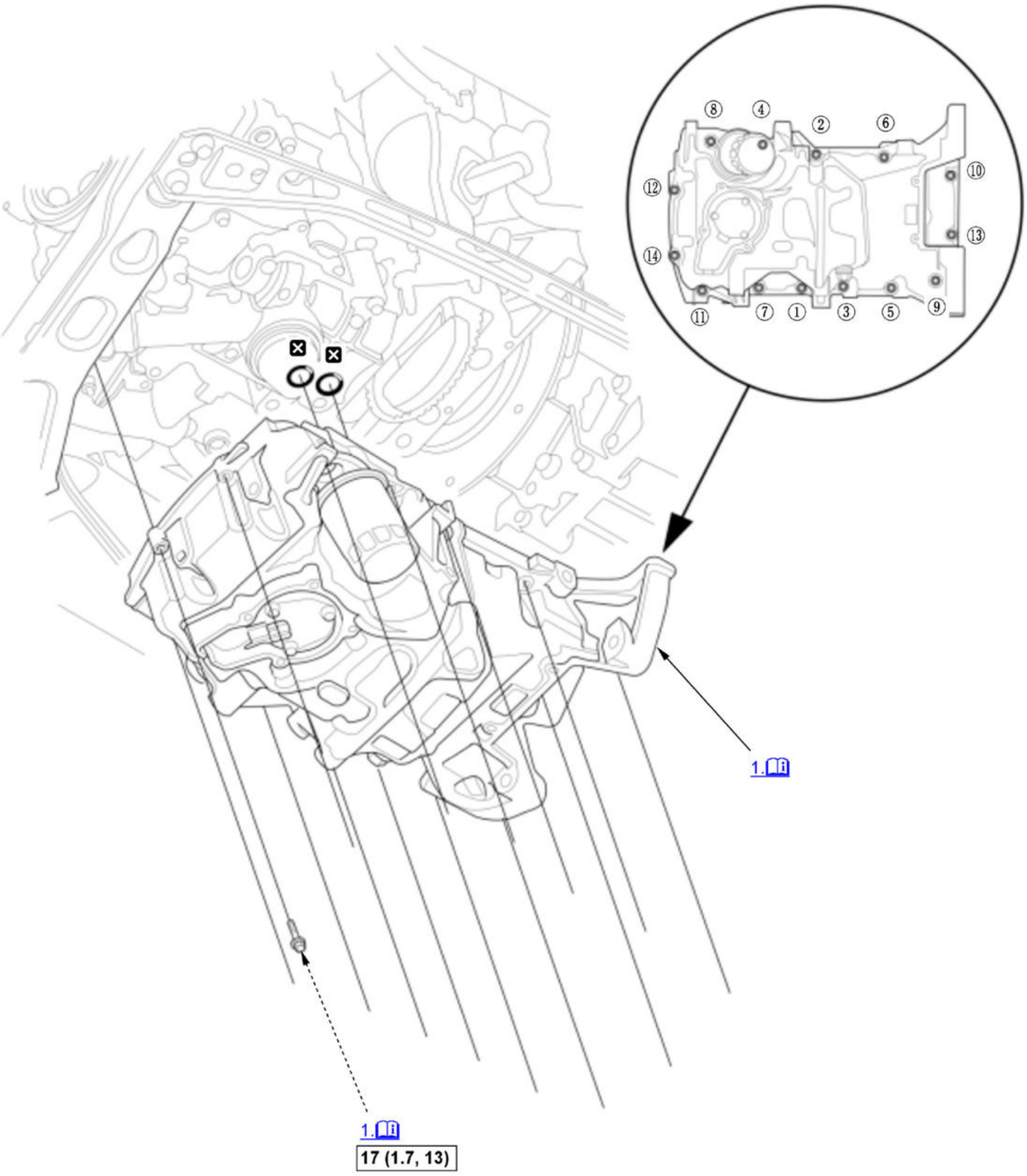

Fig. 35: Exploded View Of Engine Oil Pan Components With Tightening Sequence And Torque Specifications For Installation (1 Of 2)
Courtesy of HONDA, U.S.A., INC.

▭	Torque: N.m (kgf.m, lbf.ft)
☒	Replace

NOTE: **Numbered call-outs in figure pertain to list numbers in following procedure.**

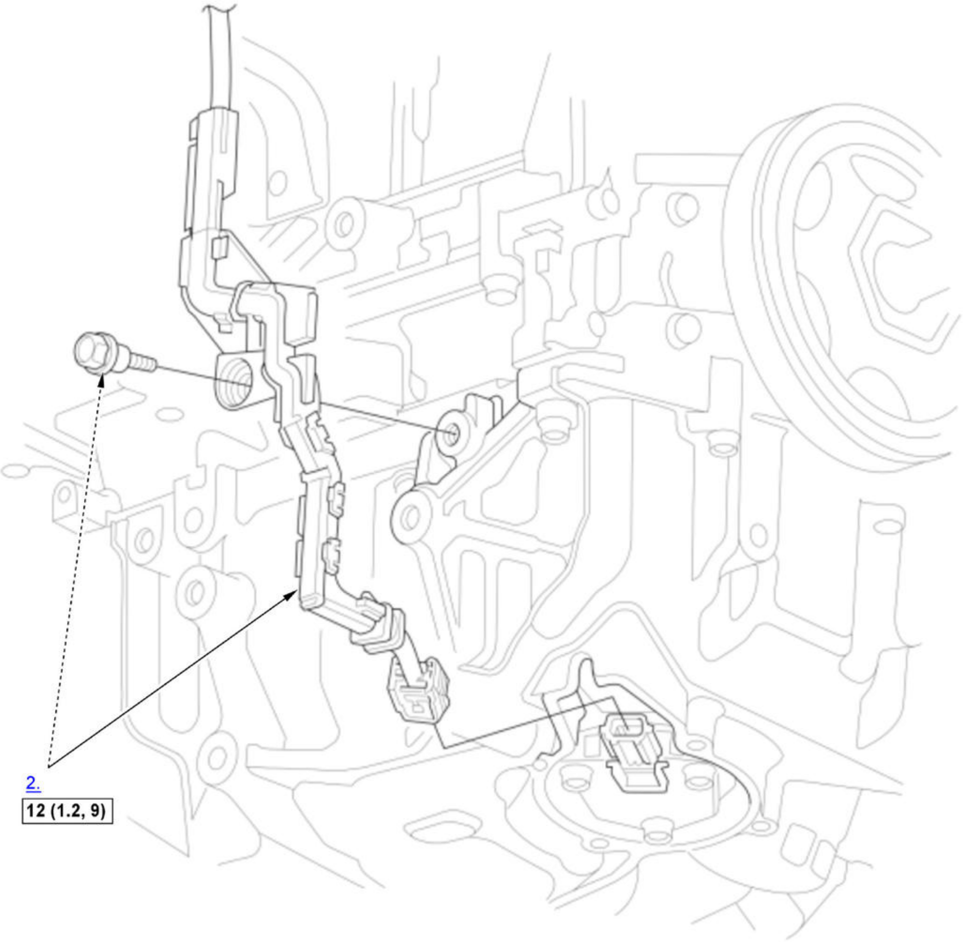

Fig. 36: Exploded View Of Engine Oil Pan Components With Torque Specifications For Installation (2 Of 2)
Courtesy of HONDA, U.S.A., INC.

▭	Torque: N.m (kgf.m, lbf.ft)

1. Oil Pan - Install

    1. **Apply liquid gasket** to the lower block mating surface of the oil pan and to the inside edge of the threaded bolt holes.

    2. Tighten the bolts in three steps; tighten the bolts until the bolts sit on the oil pan, tighten the bolts until the gasket is compressed, tighten the bolts to specified torque in the numbered sequence shown.

2. Engine Oil Level Sensor Subharness - Install (With Engine Oil Level Sensor)
3. **Lower Transmission (e-CVT) Mounting Bolt - Install**
4. **Flywheel Cover - Install**
5. **Lower Torque Rod and Lower Torque Rod Bracket - Install**
6. **CKP Sensor Cover - Install**
7. **Intermediate Shaft Assembly Mounting Bolt - Install**
8. **TWC Bracket - Install**
9. **Exhaust Pipe A - Install**
10. **Electric A/C Compressor - Install**
11. **Engine Undercover - Install**
12. **Engine Oil - Refill**

ENGINE REMOVAL AND INSTALLATION

Special Tools Required

Image	Description/Tool Number
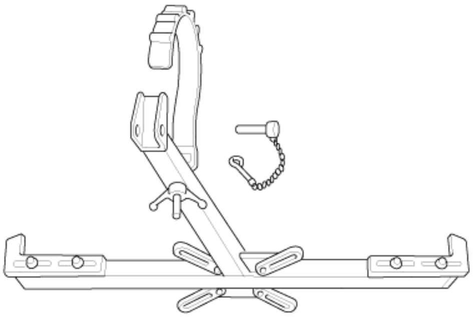	Subframe Adapter VSB02C000016*
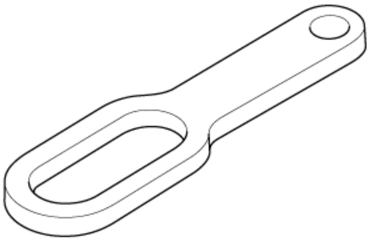	Universal Lifting Eyelet 07AAK-SNAA120

Removal

WARNING:

The power cables carry high voltage when the electric powertrain system is energized. To avoid serious injury from electrical shock, do not turn on the system with the power cables disconnected.

The electric powertrain components are located in this area. The electric powertrain is a high-voltage system. You must be familiar with the electric powertrain system before working on or around it. Make sure you have read the electric powertrain **service precautions** before doing repairs or service.

NOTE:

- Use fender covers to avoid damaging painted surfaces.
- To avoid damaging the wiring and terminals, unplug the wiring connectors carefully while holding the connector portion.
- Mark all wiring and hoses to avoid misconnection. Also, be sure that they do not contact other wiring or hoses, or interfere with other parts.

1. Hood - Wide Open

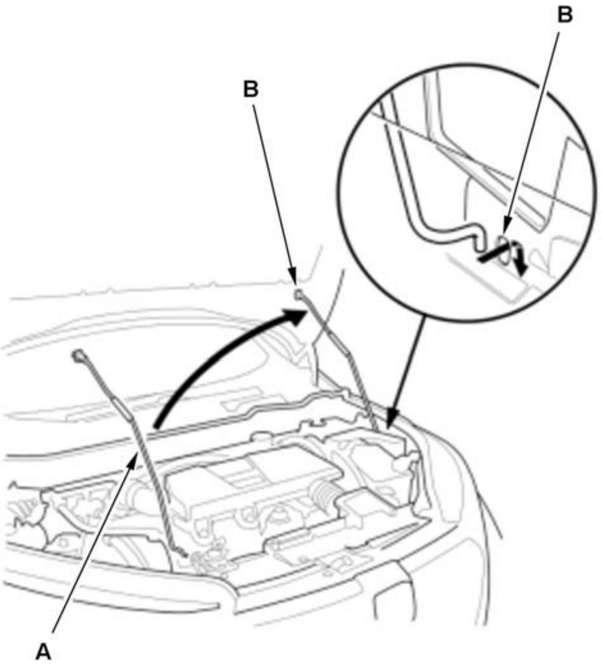	1. Open the hood. 2. Remove and relocate the hood support rod (A) to the wide-open positions (B) and secure the hood.

2. **Fuel Pressure - Relieve**
3. **Service Plug - Turn Off**
4. **Front Bulkhead Cover - Remove**
5. **Intake Air Resonator - Remove**
6. **Air Intake Tube B - Remove**
7. **12 Volt Battery - Remove**
8. **PCM - Remove**
9. **12 Volt Battery Base - Remove**
10. Connector (Engine Wire Harness and Park Pawl Actuator Harness) - Disconnect

    1. Disconnect the connectors (A).

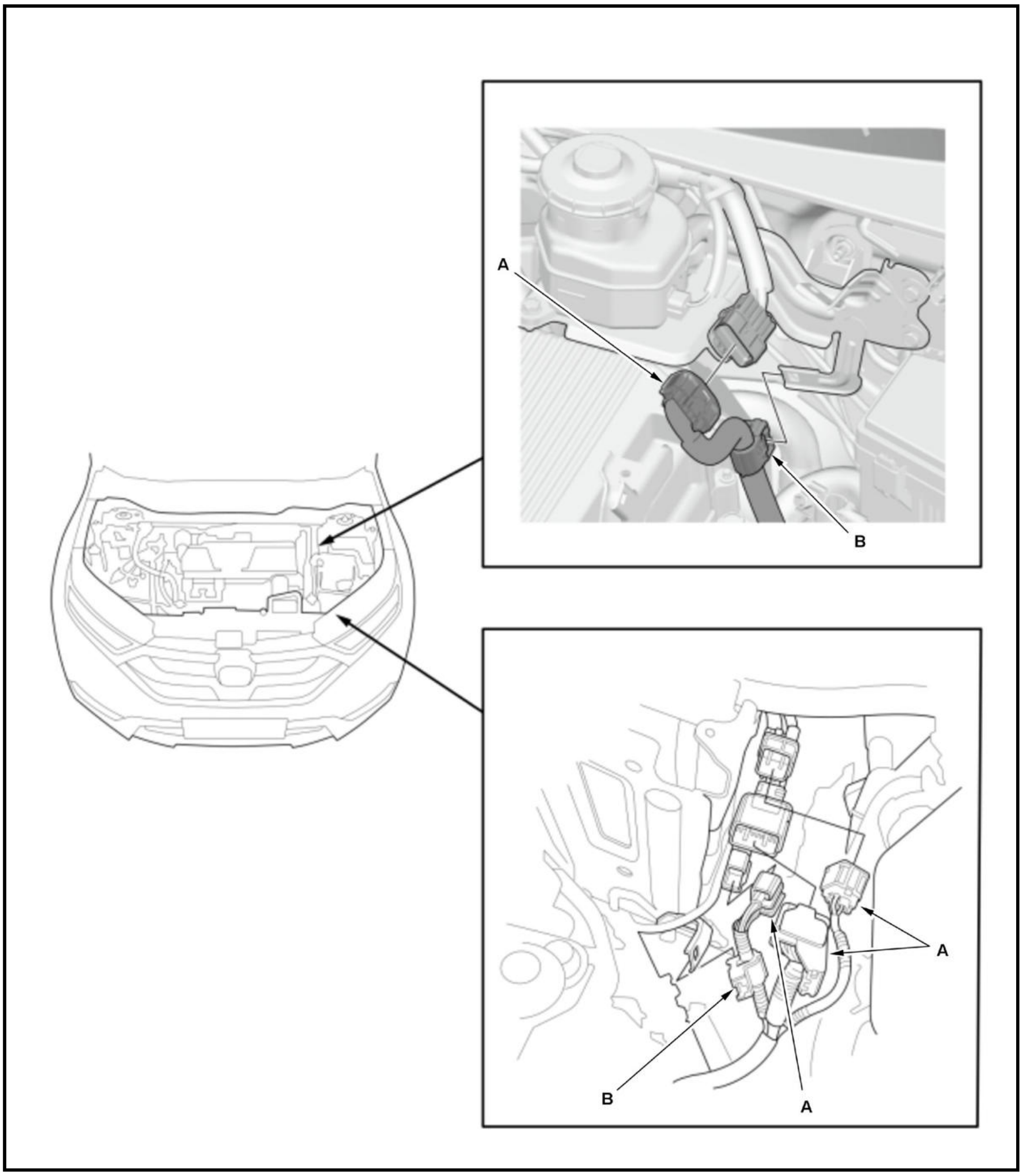

2. Remove the harness clamps (B).

11. **Engine Undercover - Remove**
12. **PCU Coolant - Drain**
13. **PCU - Remove**
14. **Cooling Hose - Disconnect**
15. EVAP Canister Purge Hose and Fuel Feed Hose - Disconnect

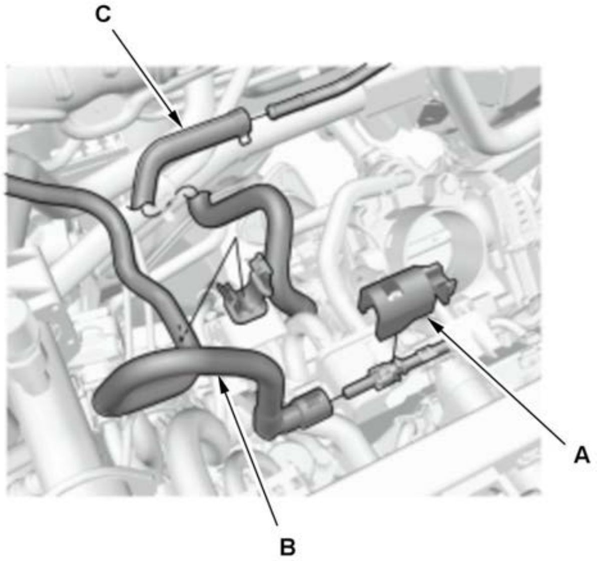	1. **Remove the quick-connect fitting cover (A), then disconnect the fuel feed hose (B)** . 2. Disconnect the EVAP canister purge hose (C).

16. **Steering Joint - Disconnect**
17. Vehicle - Lift

1. **Raise and support the vehicle** .

18. **Front Wheel - Remove**
19. **Engine Coolant - Drain**
20. **Engine Oil - Drain**
21. **ATF - Drain**
22. **Radiator - Remove**
23. **Electric A/C Compressor - Move**

NOTE:

- Do not disconnect the connector (electric A/C compressor).
- Do not disconnect the suction hose and the discharge pipe.
- Do not bend the suction hose and the discharge hose excessively.
- Hang the electric A/C compressor with a wire tie.

24. **Connector (EPS Motor/Control Unit) - Disconnect**
25. **Exhaust Pipe A - Remove**
26. **Tie-Rod End Ball Joint - Disconnect**
27. **Front Stabilizer Link Ball Joint - Disconnect**
28. **Lower Arm - Disconnect**
29. **Front Driveshaft - Remove**
30. **Propeller Shaft - Remove**
31. **ATF Hose - Disconnect**
32. **Ground Cable (Transmission (e-CVT) Side) - Disconnect**
33. Vehicle - Lower
34. Heater Hose - Disconnect

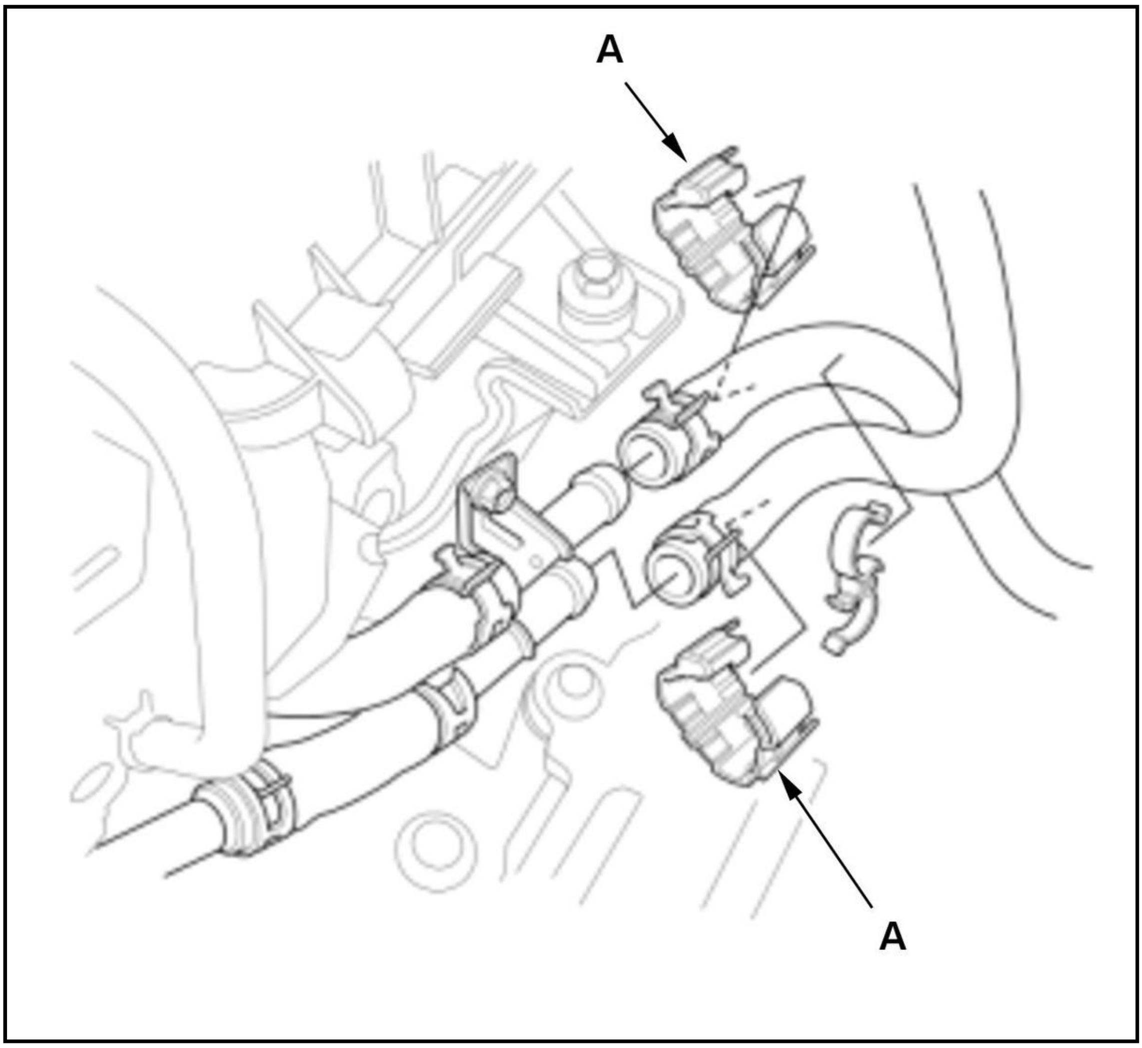

NOTE: The hose band clip (A) can be installed after the heater hoses are connected.

35. Vehicle - Lift

    1. Raise the vehicle.

36. Lower Torque Rod Mounting Bolt - Remove

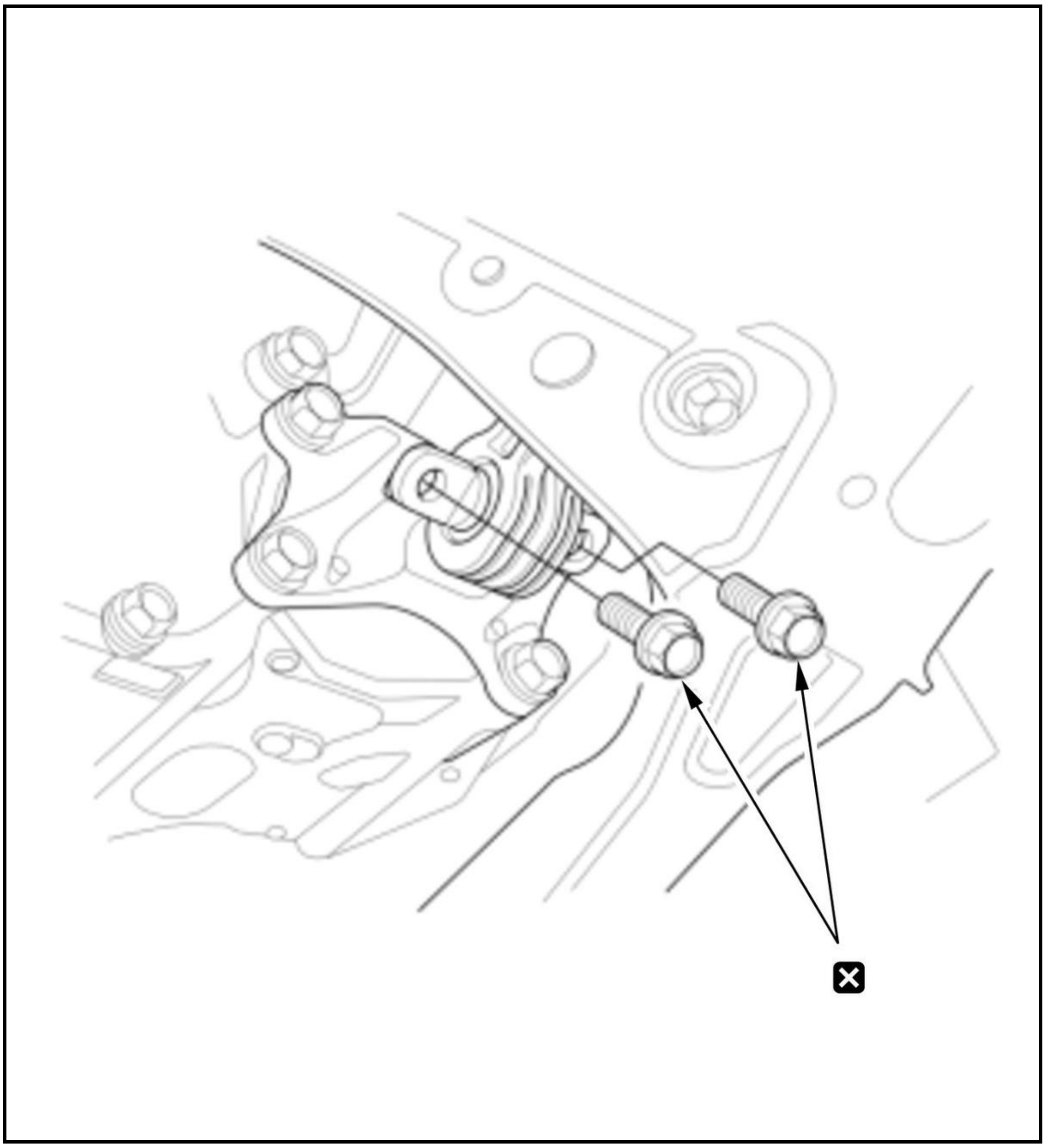

37. Lower Arm Mounting Bolt - Remove

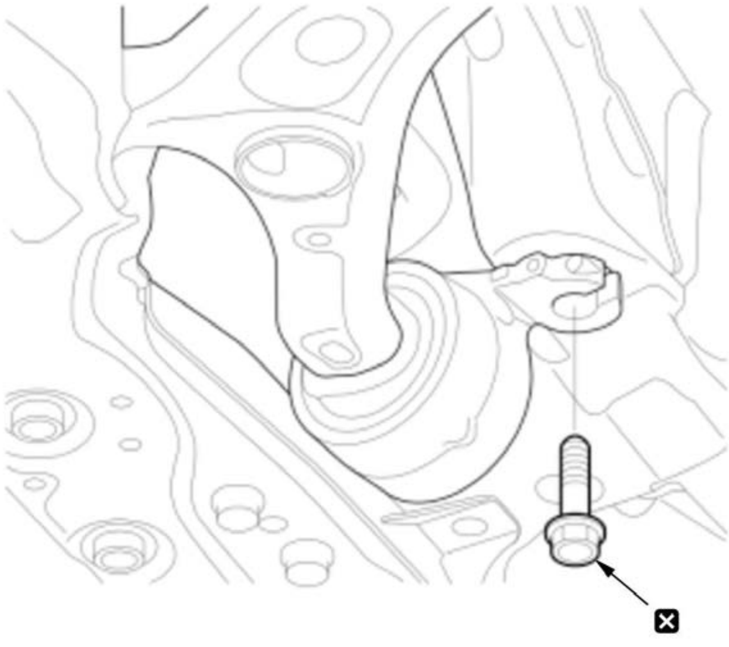	1. Remove the lower arm mounting bolt on both sides.

38. Front Subframe - Support

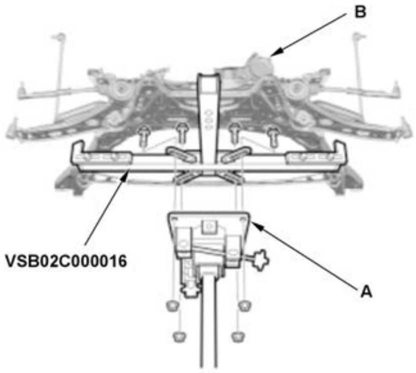	1. Set the subframe adapter (VSB02C000016) on a transmission jack (A), line up the slots in the arms with the bolt holes on the corner of the jack base, and tighten the bolts. 2. Attach the subframe adapter to the front subframe (B).

39. **Front Subframe - Remove**
40. Vehicle - Lower
41. **Side Engine Mount - Remove**
42. Universal Lifting Eyelet - Install

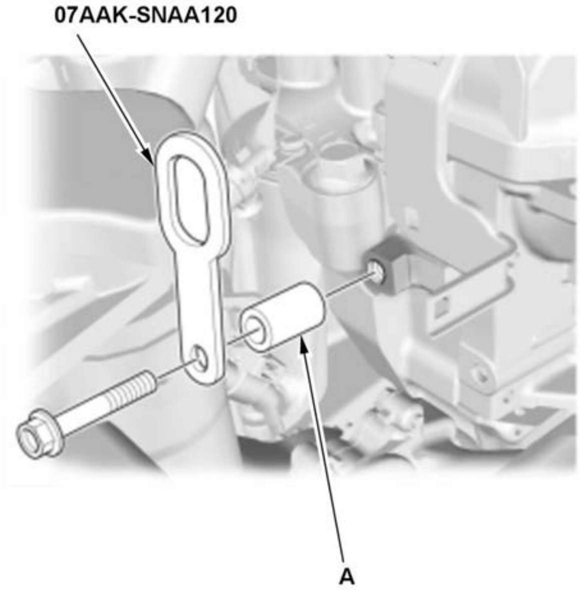	1. Install the universal lifting eyelet with a commercially available spacer (A) to the oil pump.

43. Transmission Hanger Bracket - Install

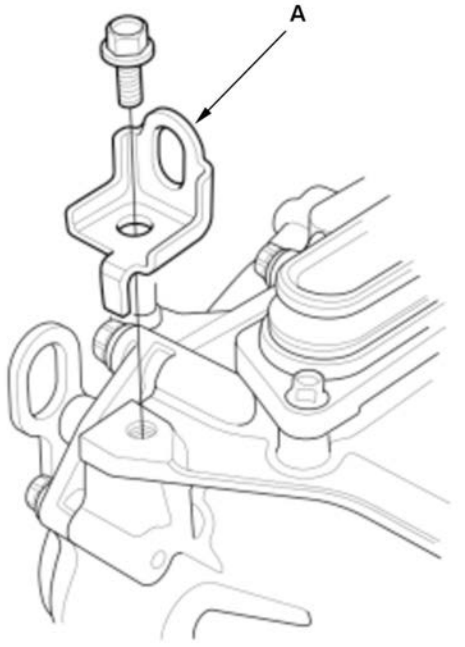	1. Install the transmission hanger bracket (P/N 21232-RCT-A00) (A) to the transmission (e-CVT).

44. Chain Hoist - Install

1. Attach a chain hoist (A) to the universal lifting eyelet and the transmission hanger bracket (C), then lift the engine/transmission (e-CVT) until it is securely supported by the chain hoist.

NOTE: Do not use transmission hanger B.

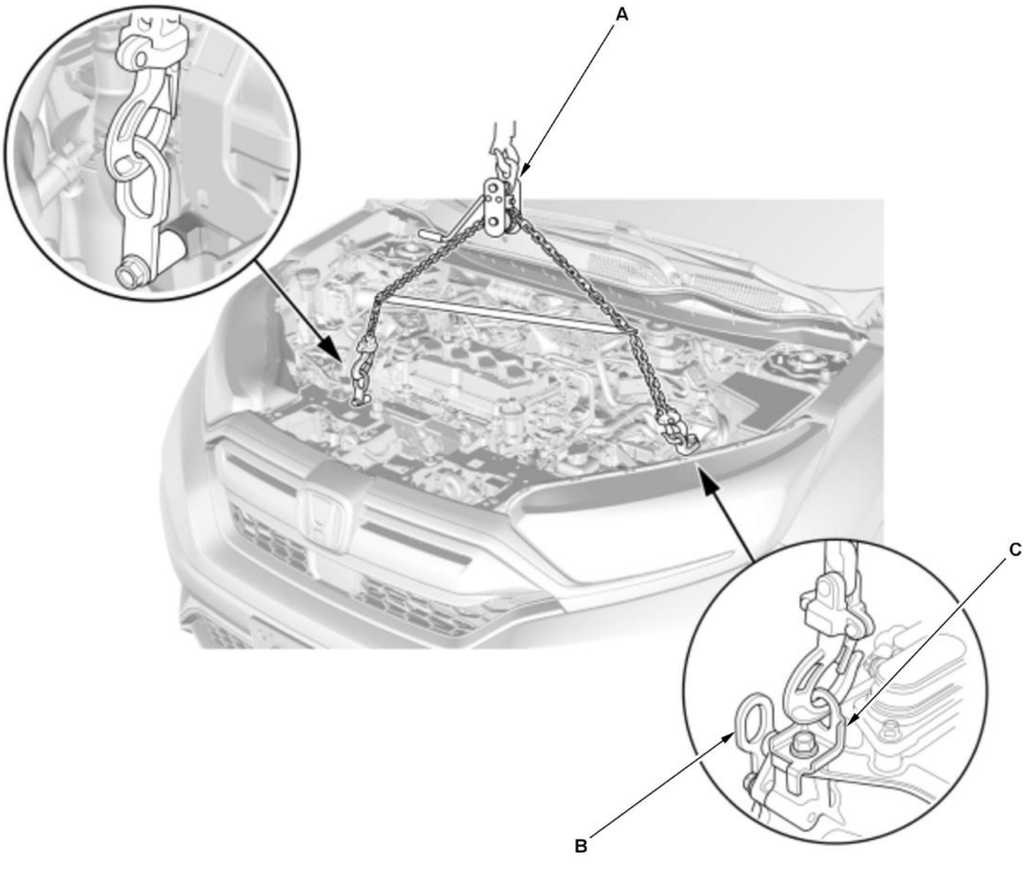

45. Transmission Mount Bracket Mounting Bolt and Nut - Remove

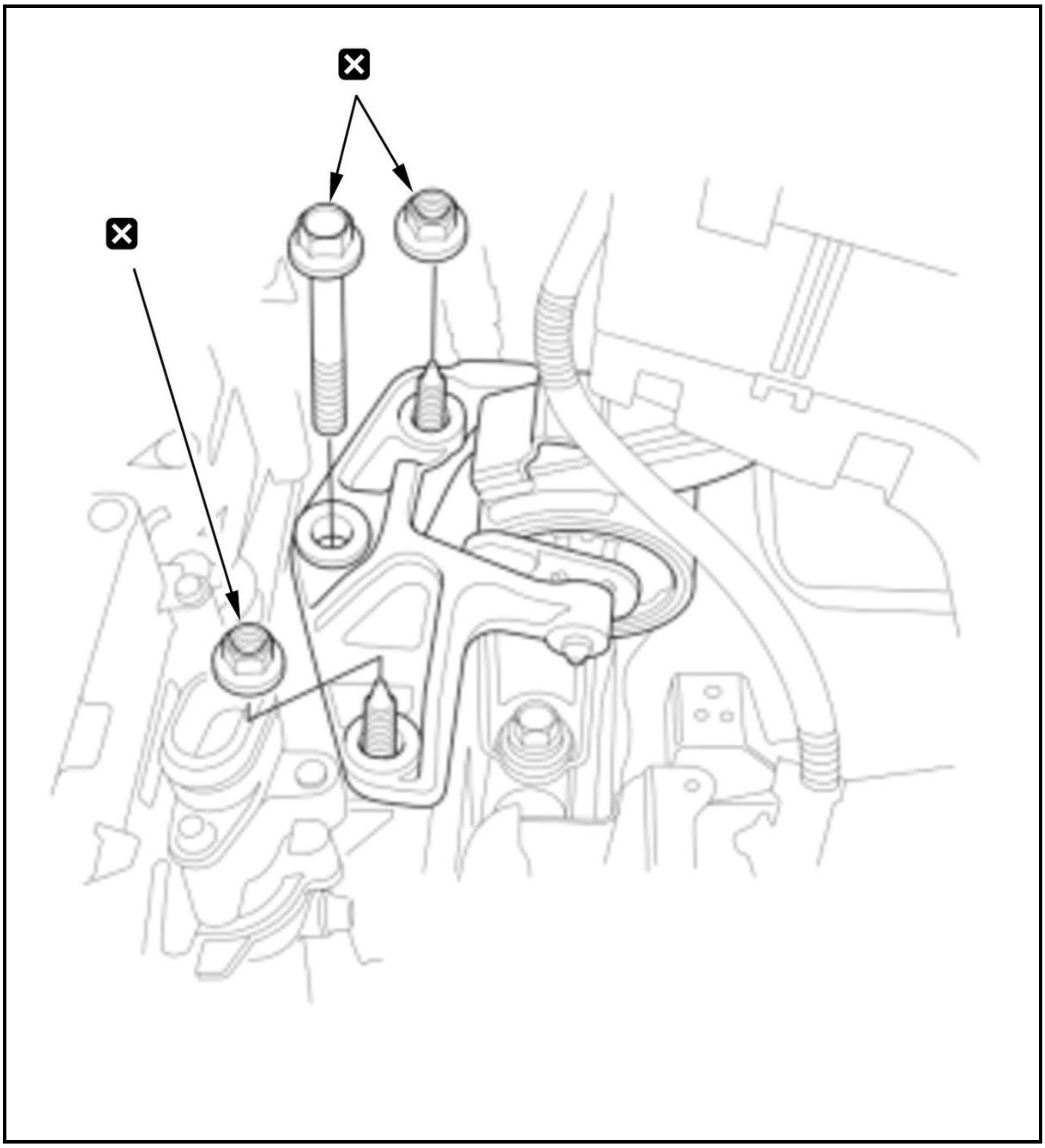

46. Engine - Remove

1. Check that the engine/transmission (e-CVT) is completely free of the vacuum hoses, the fuel hoses, the coolant hoses, and the electrical wiring.

2. Slowly lower the engine/transmission (e-CVT) about 150 mm (5.91 in). Check once again that all the hoses and the electrical wiring are disconnected and free from the engine/transmission (e-CVT), then lower it all the way and support it.

3. Remove the chain hoist from the engine/transmission (e-CVT).

4. Raise the vehicle, and remove the engine/transmission (e-CVT) from under the vehicle.

Installation

WARNING:

The power cables carry high voltage when the electric powertrain system is energized. To avoid serious injury from electrical shock, do not turn on the system with the power cables disconnected.

The electric powertrain components are located in this area. The electric powertrain is a high-voltage system. You must be familiar with the electric powertrain system before working on or around it. Make sure you have read the electric powertrain **service precautions** before doing repairs or service.

NOTE:

- Use fender covers to avoid damaging painted surfaces.
- To avoid damaging the wiring and terminals, unplug the wiring connectors carefully while holding the connector portion.
- Mark all wiring and hoses to avoid misconnection. Also, be sure that they do not contact other wiring or hoses, or interfere with other parts.

1. Lower Torque Rod Bracket - Install

   1. If the lower torque rod bracket is removed, install the lower torque rod bracket .

2. Engine/Transmission (e-CVT) - Position

   1. Position the engine/transmission (e-CVT) under the vehicle, and be sure that they are properly positioned. Carefully lower the vehicle, and stop with the installation position of the engine/transmission (e-CVT).

3. Chain Hoist - Install

   1. Attach a chain hoist (A) to the universal lifting eyelet and the transmission hanger bracket (C), then lift the engine/transmission (e-CVT) until it is securely supported by the chain hoist.

   NOTE: Do not use transmission hanger B.

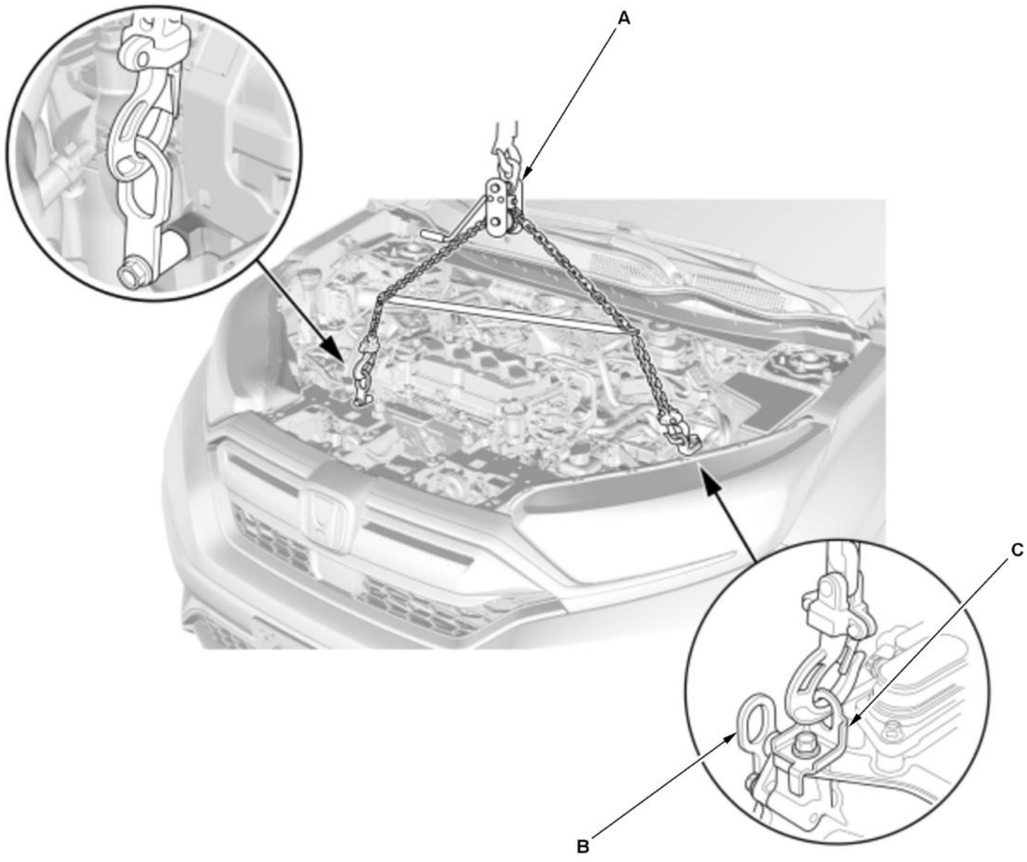

4. Transmission Mount Bracket Mounting Bolt and Nut - Loosely Install

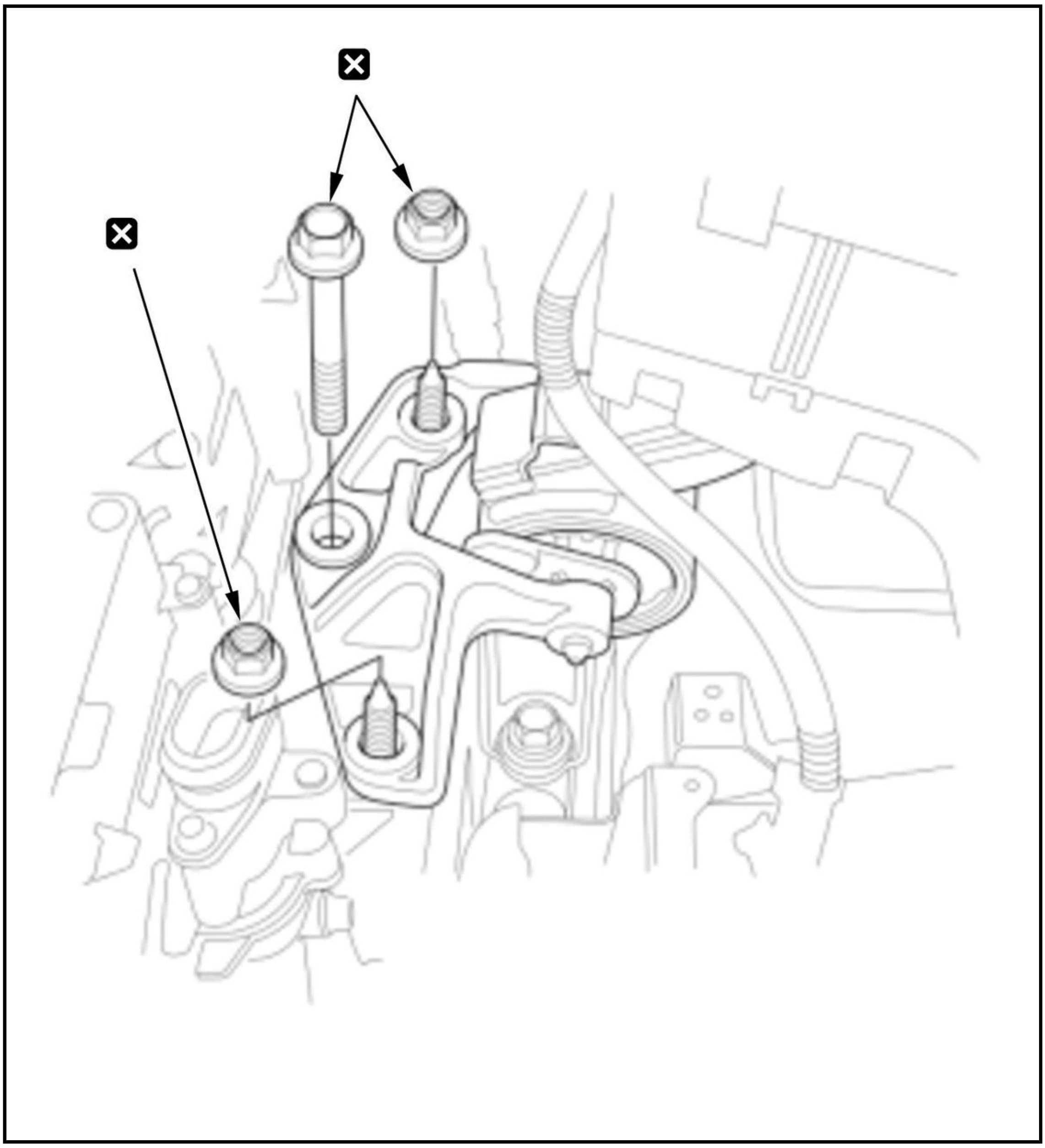

5. Engine - Support

   1. Lift and support the engine with a jack and a wood block under the oil pan.

6. Chain Hoist and Universal Lifting Eyelet - Remove
7. **Side Engine Mount - Loosely Install**
8. Transmission Hanger Bracket - Remove

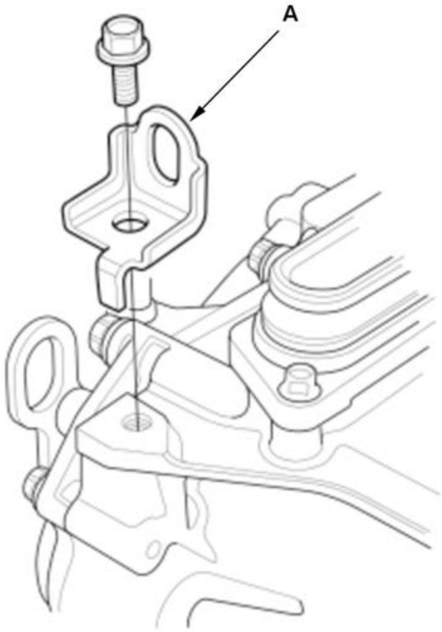	1. Remove the transmission hanger bracket (P/N 21232-RCT-A00) (A) from the transmission (e-CVT).

9. Vehicle - Lift

1. Raise the vehicle.

10. Front Subframe - Support

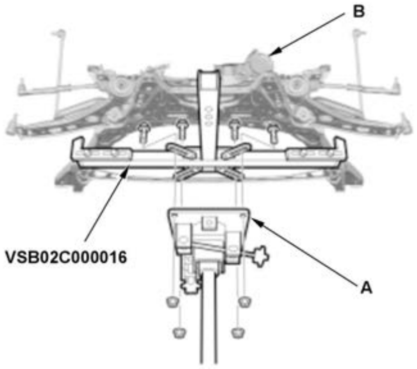	1. Set the subframe adapter (VSB02C000016) on a transmission jack (A), line up the slots in the arms with the bolt holes on the corner of the jack base, and tighten the bolts. 2. Attach the subframe adapter to the front subframe (B).

11. **Front Subframe - Install**
12. Lower Arm Mounting Bolt - Install

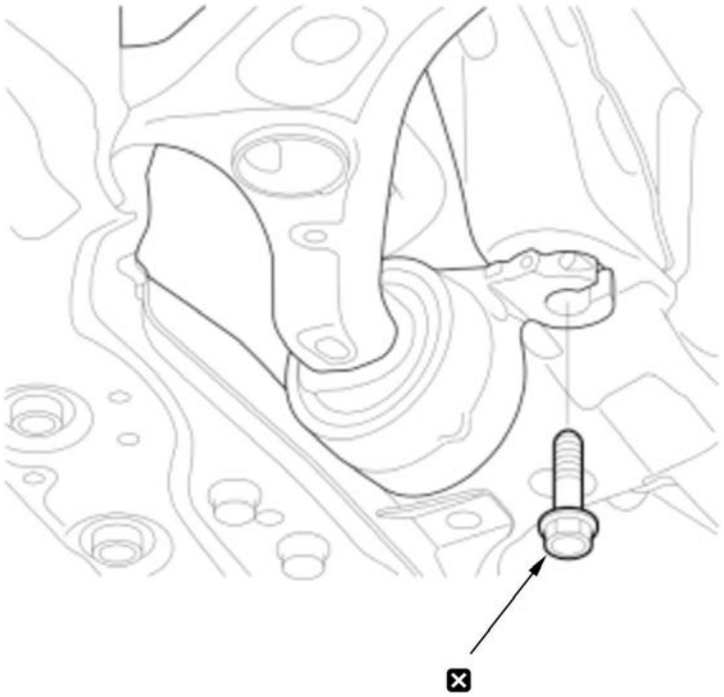	1. **Install the lower arm mounting bolt on both sides**.

13. Lower Torque Rod Mounting Bolt - Loosely Install

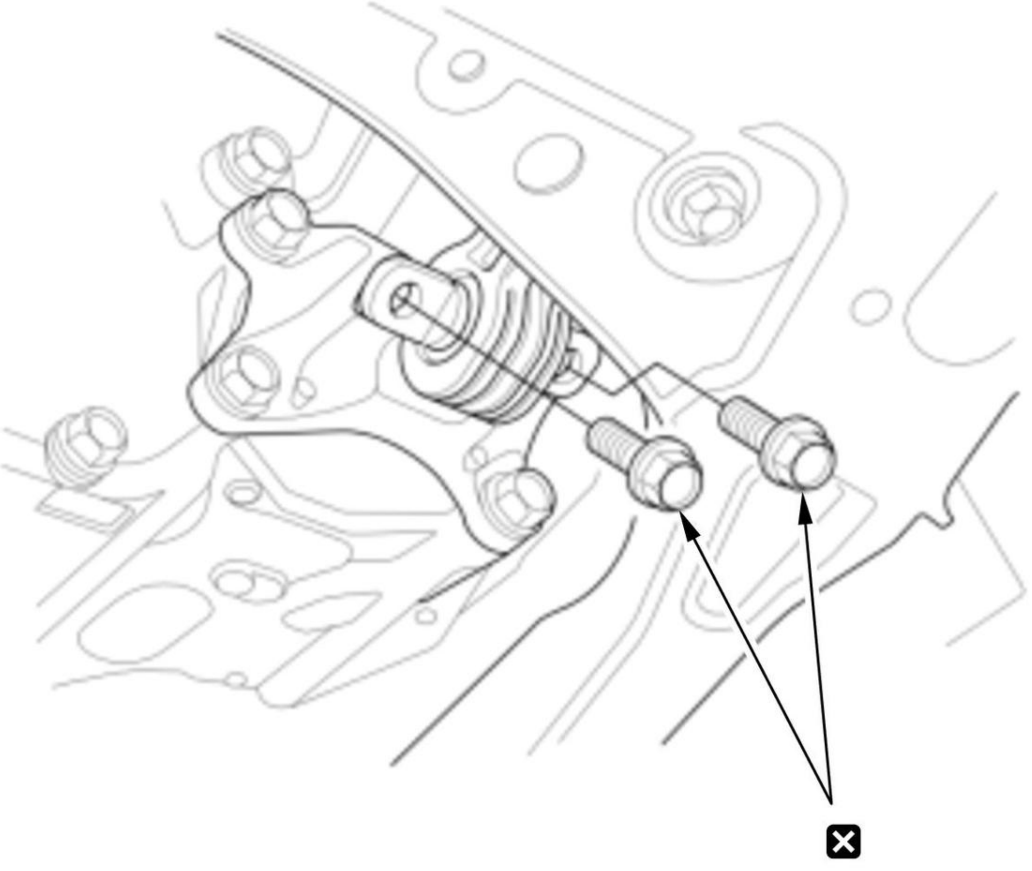

14. Vehicle - Lower
15. All Engine Mount Mounting Bolt and Nut - Tighten
16. Vehicle - Lift

1. Raise the vehicle.

17. Propeller Shaft - Install
18. Front Driveshaft - Install
19. Lower Arm - Connect
20. Front Stabilizer Link Ball Joint - Connect
21. Tie-Rod End Ball Joint - Connect
22. Exhaust Pipe A - Install
23. Connector (EPS Motor/Control Unit) - Connect
24. Electric A/C Compressor - Install
25. Radiator - Install
26. ATF Hose - Connect
27. Ground Cable (Transmission (e-CVT) Side) - Connect
28. Vehicle - Lower
29. Steering Joint - Connect
30. Heater Hose - Connect

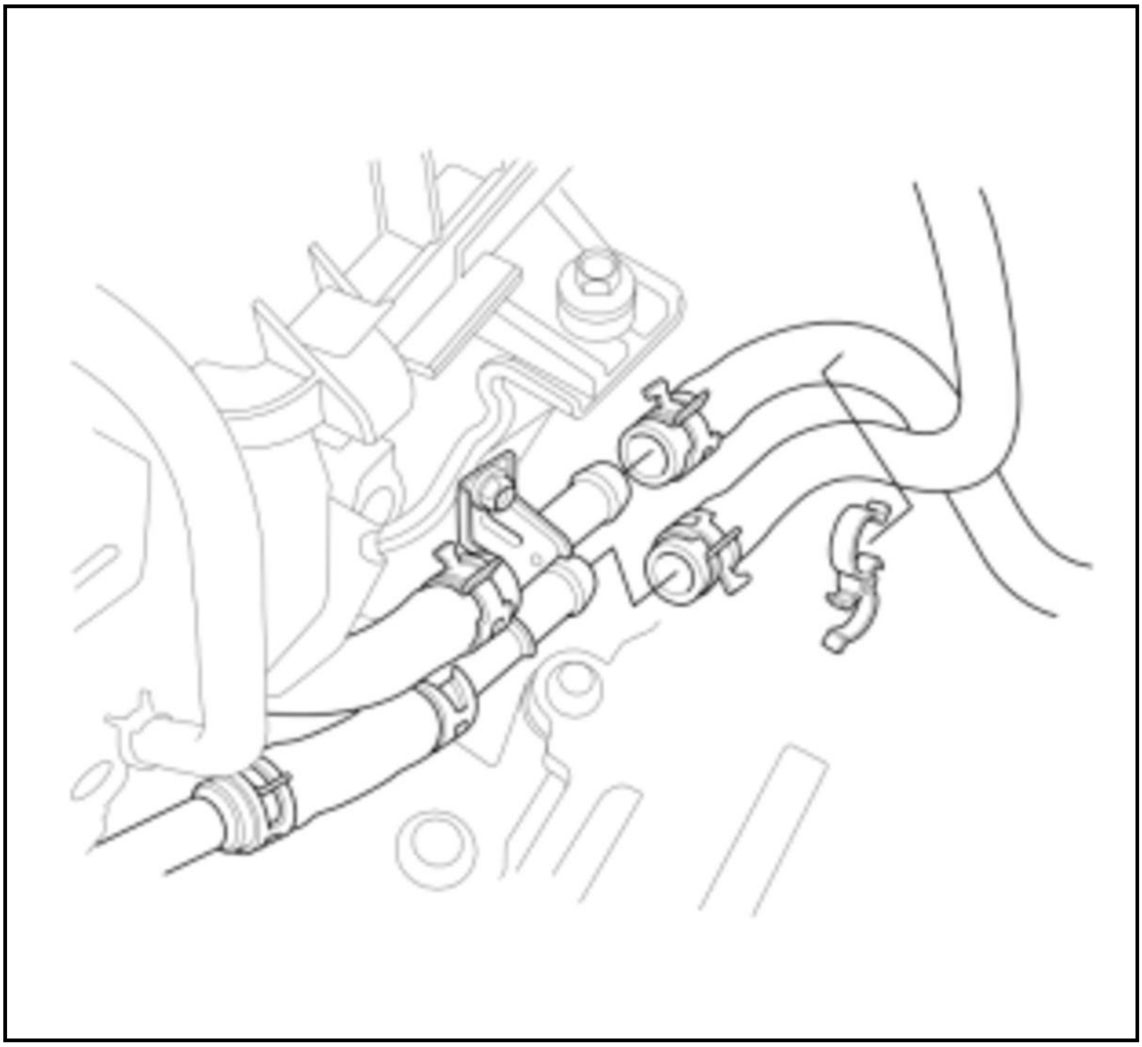

31. Fuel Feed Hose and EVAP Canister Purge Hose - Connect

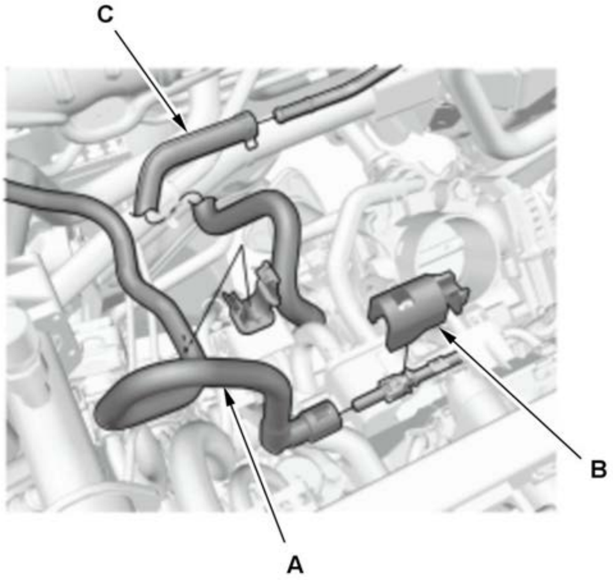	1. **Connect the fuel feed hose (A), then install the quick-connect fitting cover (B)** . 2. **Connect the EVAP canister purge hose (C)** .

32. **Cooling Hose - Connect**
33. **PCU - Install**
34. Connector (Engine Wire Harness and Park Pawl Actuator Harness) - Connect

    1. Install the harness clamps (A).

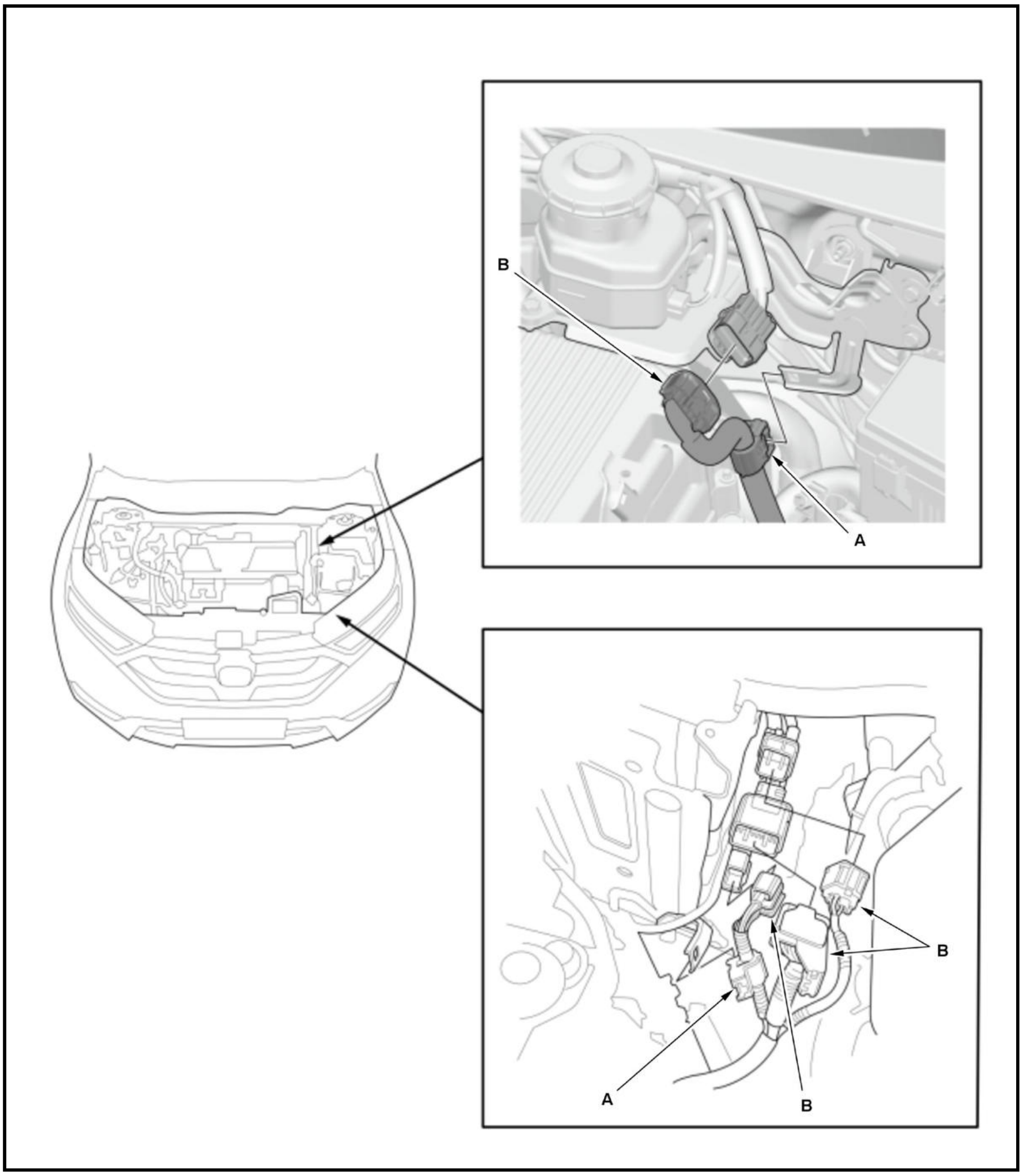

2. Connect the connectors (B).

35. 12 Volt Battery Base - Install
36. PCM - Install
37. Air Intake Tube B - Install
38. Intake Air Resonator - Install
39. Service Plug - Turn On
40. 12 Volt Battery - Install
41. ATF - Refill
42. PCU Coolant - Refill
43. Engine Oil - Refill
44. Engine Coolant - Refill
45. Fuel Leak - Check

> 1. Turn the vehicle to the ON mode, but do not turn the READY TO DRIVE mode. After the fuel pump runs for about 2 seconds, the fuel line will be pressurized. Repeat this two or three time, then check for fuel leakage.

46. Fluid Leak - Check
47. Front Bulkhead Cover - Install

48. Vehicle - Lift

    1. Raise the vehicle.

49. Engine Undercover - Install
50. Front Wheel - Install
51. Vehicle - Lower
52. PCM - Reset
53. CKP Pattern - Clear/Learn
54. Idle Speed - Inspect
55. Ignition Timing - Inspect
56. Wheel Alignment - Check
57. VSA Sensor Neutral Position - Memorize

INJECTOR REMOVAL AND INSTALLATION

Removal

WARNING:

Flammable - Keep Fire Away

NOTE:

- Refer to the Fuel and Emissions Systems Service Precautions before disconnecting the fuel line.
- Fuel may cause flammable gas leaks and may result in fire. Keep sparks, flame and cigarettes away.

Procedure

NOTE: **Numbered call-outs in figure pertain to list numbers in following procedure.**

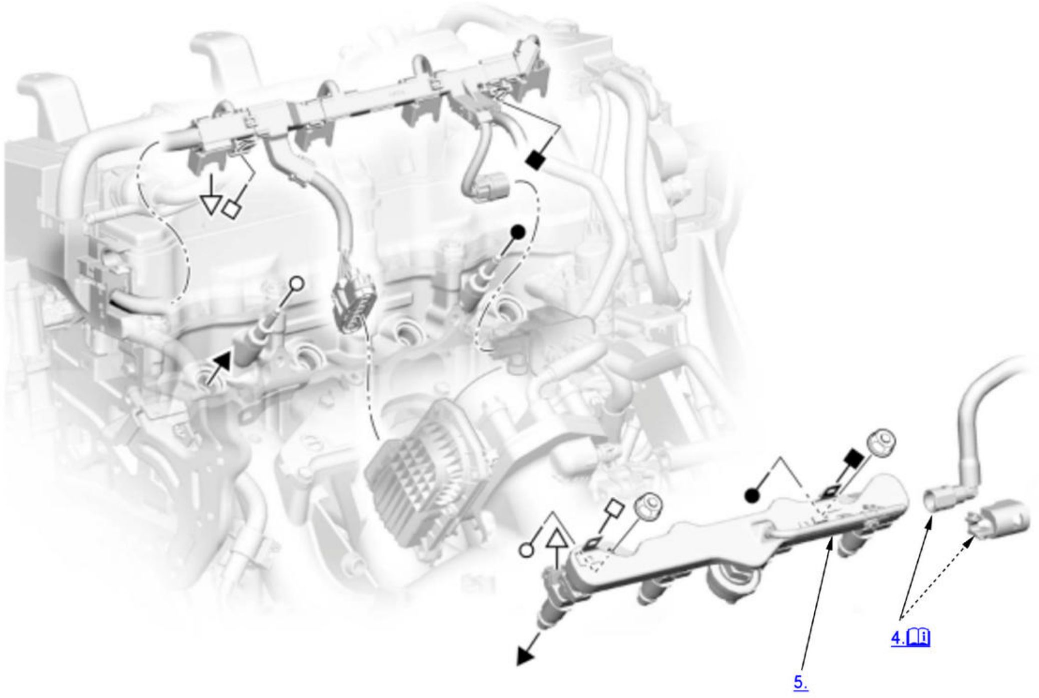

Fig. 37: Exploded View Of Injector Components For Removal (1 Of 2)
Courtesy of HONDA, U.S.A., INC.

NOTE: **Numbered call-outs in figure pertain to list numbers in following procedure.**

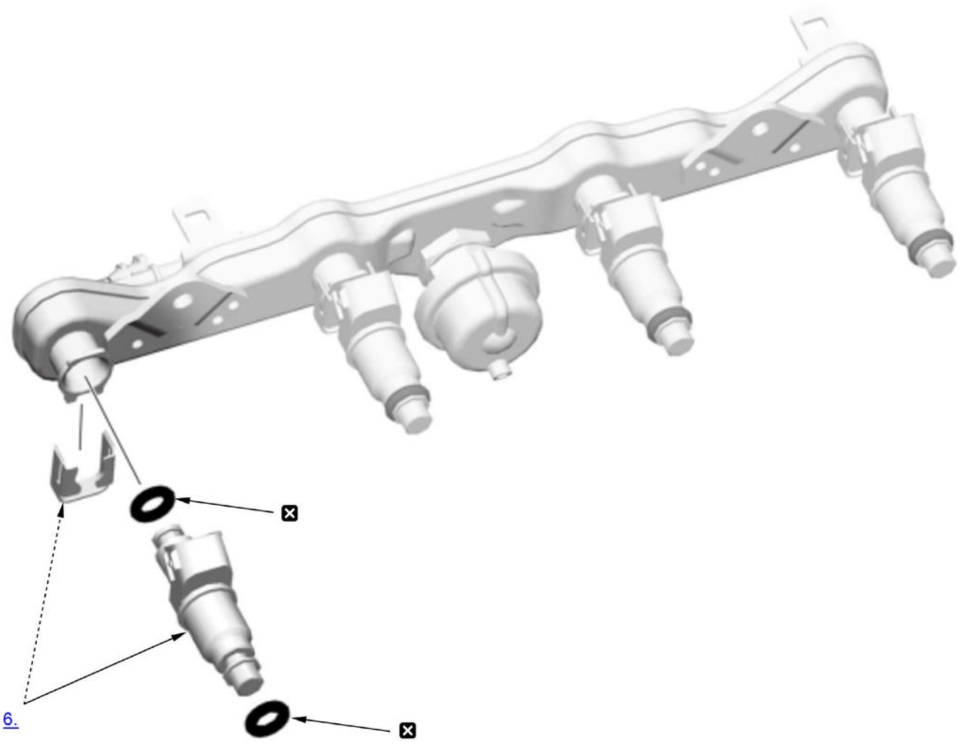

Fig. 38: Exploded View Of Injector Components For Removal (2 Of 2)
Courtesy of HONDA, U.S.A., INC.

☒	Replace

1. **Fuel Pressure - Relieve**
2. **Intake Air Resonator - Remove**
3. **Air Cleaner - Remove**
4. Quick-Connector Fitting - Disconnect
    1. **Disconnect the quick-connect fitting** from the fuel rail.
5. Fuel Rail and Injector - Remove
6. Injector - Remove

Installation

WARNING:

Flammable - Keep Fire Away

NOTE:

- Refer to the **Fuel and Emissions Systems Service Precautions** before disconnecting the fuel line.
- Fuel may cause flammable gas leaks and may result in fire. Keep sparks, flame and cigarettes away.

Procedure

NOTE: **Numbered call-outs in figure pertain to list numbers in following procedure.**

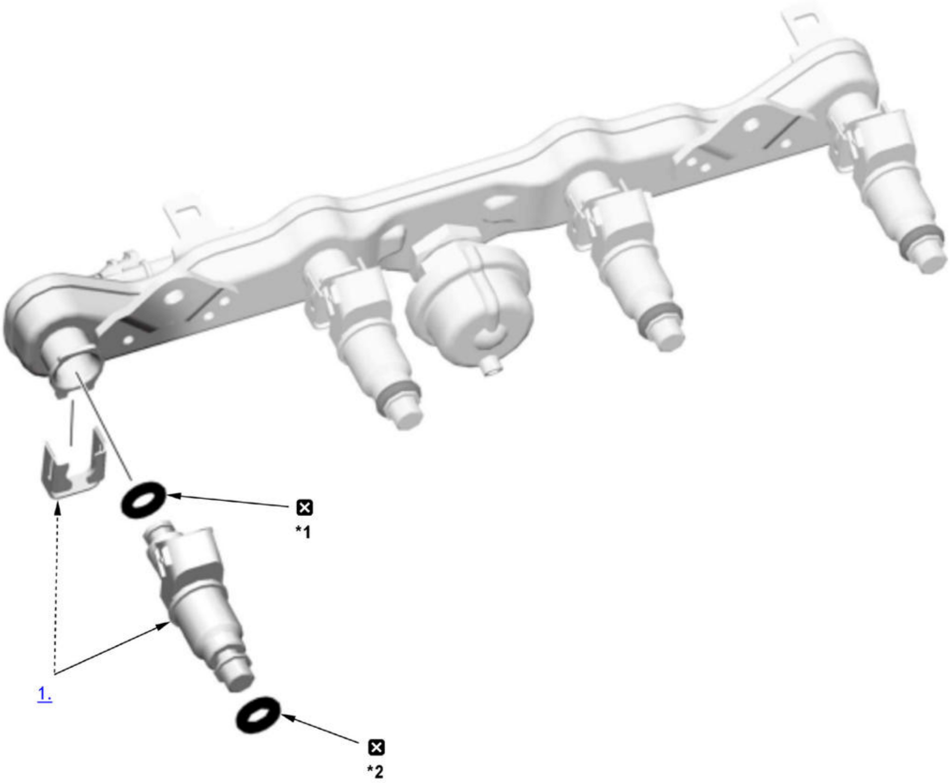

Fig. 39: Exploded View Of Injector Components For Installation (1 Of 2)
Courtesy of HONDA, U.S.A., INC.

☒	Replace
*1	O-rings (black); coat the clean engine oil
*2	O-rings (brown); coat the clean engine oil

NOTE: **Numbered call-outs in figure pertain to list numbers in following procedure.**

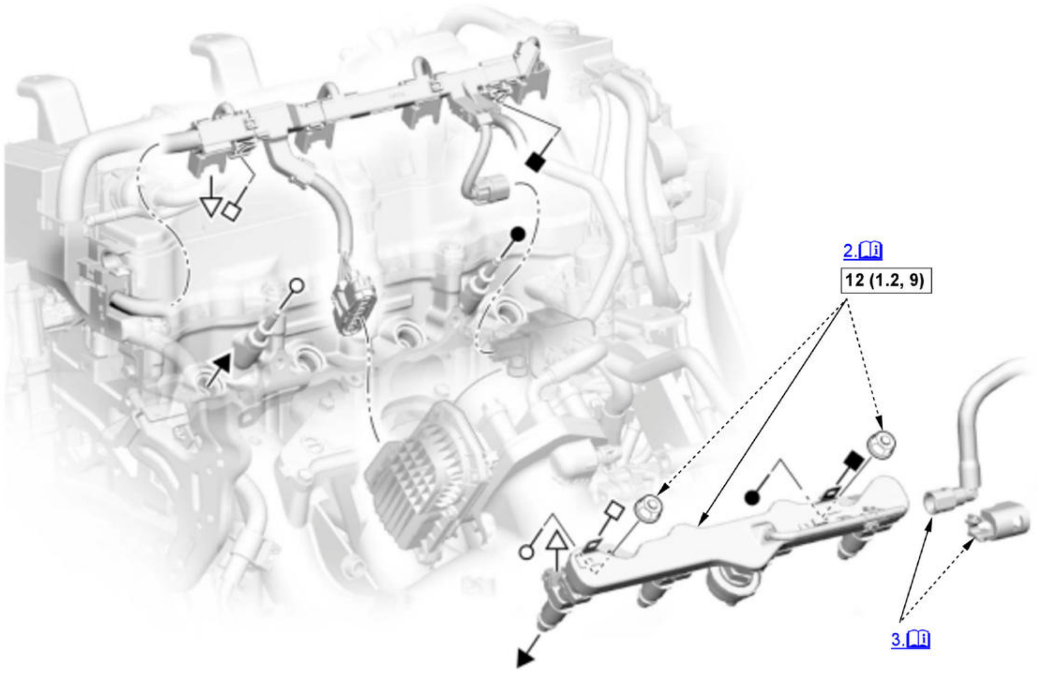

Fig. 40: Exploded View Of Injector Components With Torque Specifications For Installation (2 Of 2)
Courtesy of HONDA, U.S.A., INC.

☐	Torque: N.m (kgf.m, lbf.ft)

1. Injector - Install
2. Fuel Rail and Injector - Install

   NOTE: Carefully install the fuel rail and the injectors to the cylinder head.

3. Quick-Connector Fitting - Connect

   1. Connect the quick-connect fitting to the fuel rail.

4. Fuel Leak - Check

   1. Turn the vehicle to the ON mode, but do not turn the READY TO DRIVE mode. After the fuel pump runs for about 2 seconds, the fuel line will be pressurized. Repeat this two or three times, then check for fuel leakage.

5. Air Cleaner - Install
6. Intake Air Resonator - Install

INTAKE MANIFOLD REMOVAL AND INSTALLATION

Removal and Installation

Procedure

NOTE: **Numbered call-outs in figure pertain to list numbers in following procedure.**

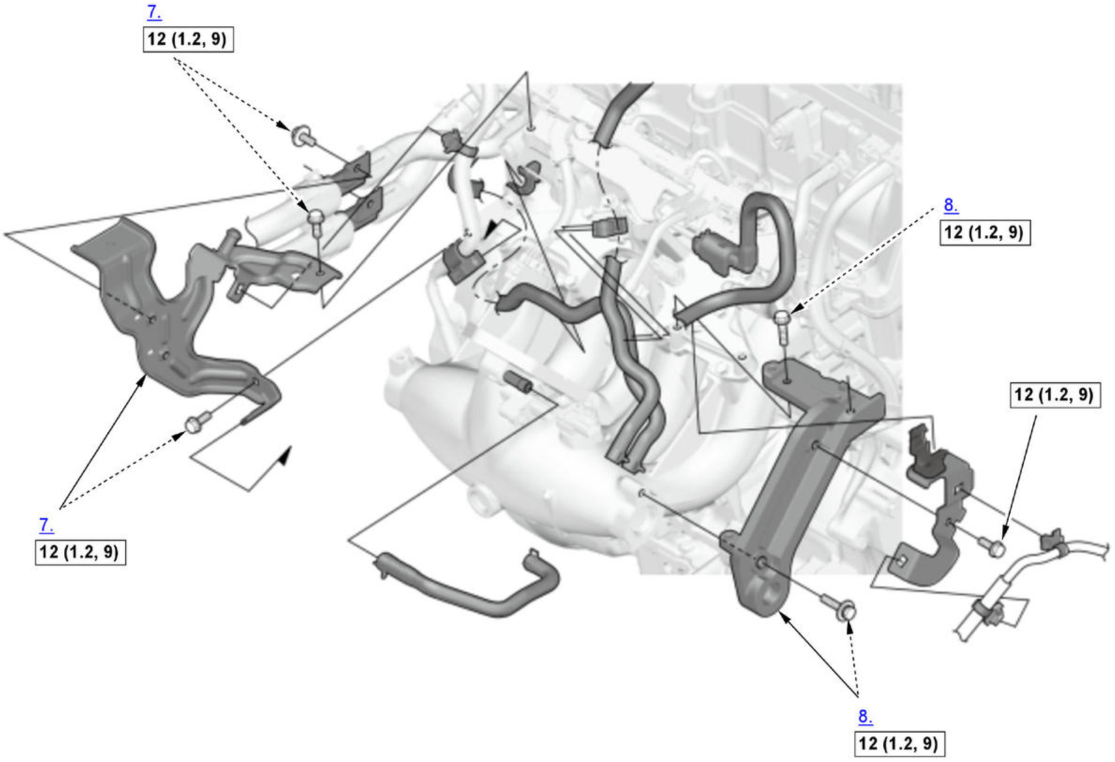

Fig. 41: Exploded View Of Intake Manifold Components With Torque Specifications (1 Of 2)
Courtesy of HONDA, U.S.A., INC.

☐	Torque: N.m (kgf.m, lbf.ft)

NOTE: **Numbered call-outs in figure pertain to list numbers in following procedure.**

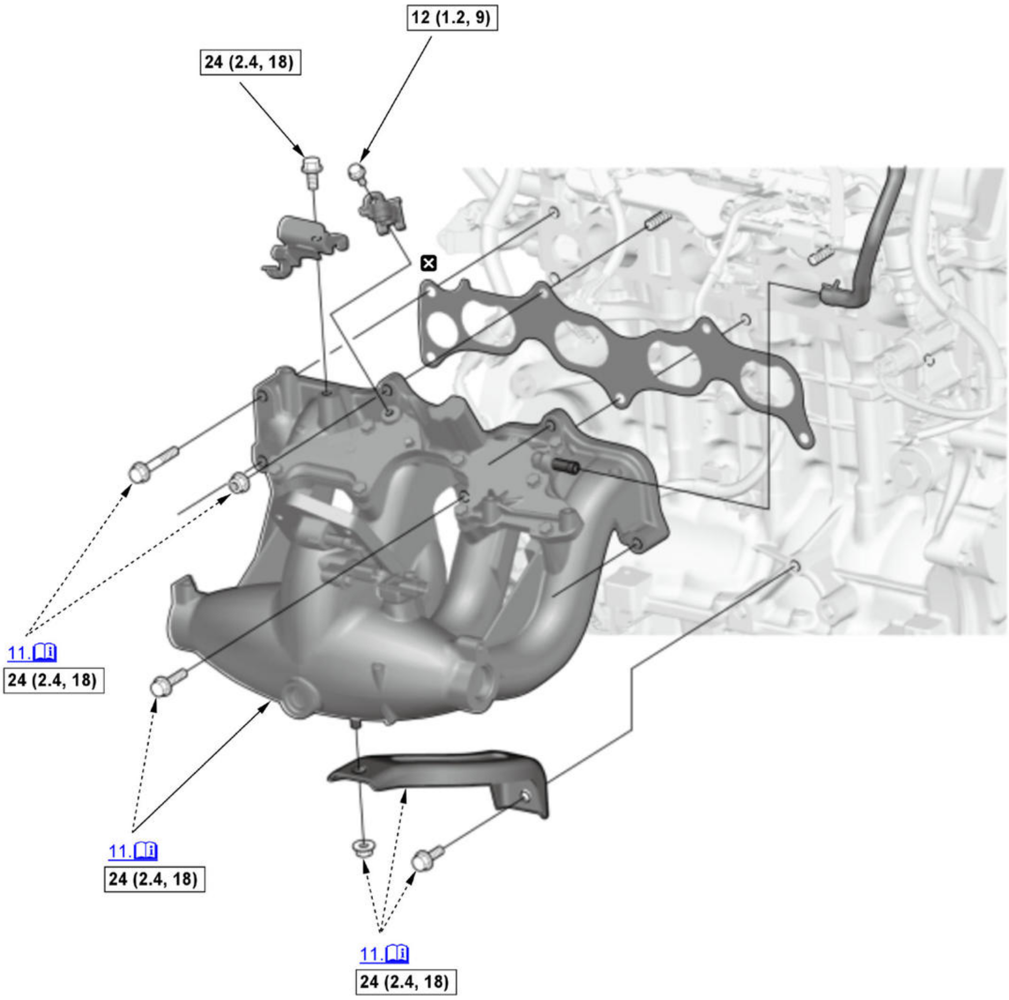

Fig. 42: Exploded View Of Intake Manifold Components With Torque Specifications (2 Of 2)
Courtesy of HONDA, U.S.A., INC.

☐	Torque: N.m (kgf.m, lbf.ft)
☒	Replace

1. Engine Undercover - Remove
2. Center Cowl Cover - Remove
3. Intake Air Resonator - Remove
4. Air Cleaner - Remove
5. EVAP Canister Purge Valve 1/2 and 3-Way Joint - Remove
6. Throttle Body - Move

   NOTE:

   - Do not disconnect the water bypass hoses.
   - Do not bend the water bypass hoses excessively.
7. Air Cleaner Bracket - Remove
8. PCS Guard - Remove
9. Connector (IAT Sensor 2) - Disconnect

10. **Connector (MAP Sensor) - Disconnect**
11. Intake Manifold Assembly - Remove

Note for installation

- Tighten the bolts and nuts in a crisscross pattern in three steps, beginning with the inner bolt.
- After installation, check that all tubes, hoses, and connectors are installed correctly.

12. All Removed Parts - Install

1. Install the parts in the reverse order of removal.

KNOCK SENSOR REMOVAL AND INSTALLATION

Removal and Installation

Procedure

NOTE: **Numbered call-outs in figure pertain to list numbers in following procedure.**

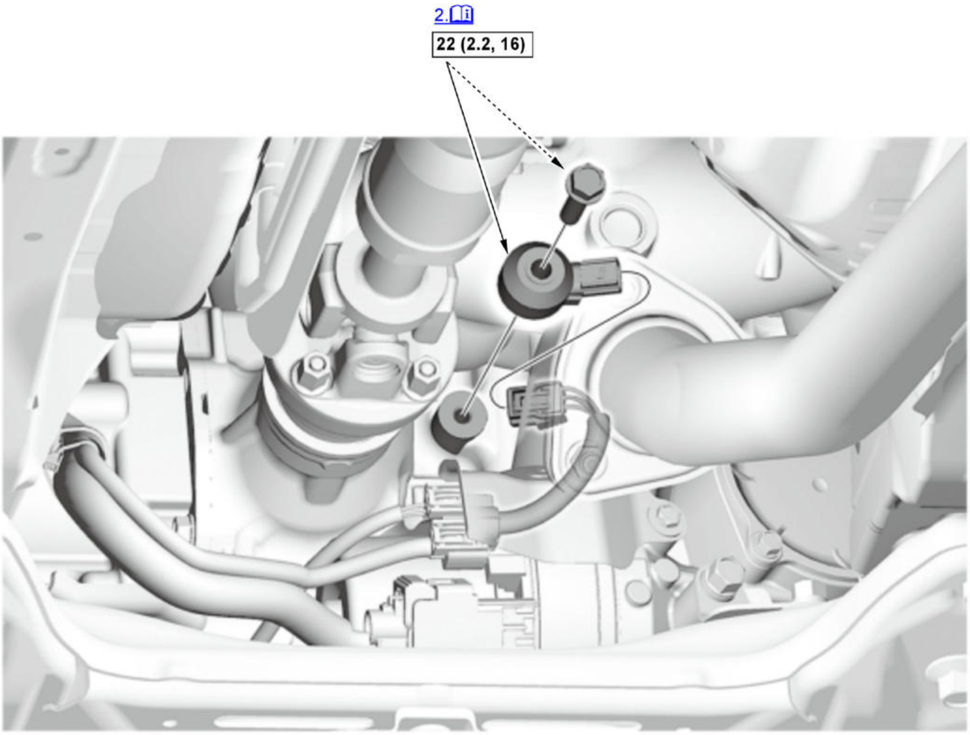

Fig. 43: Exploded View Of Knock Sensor Components With Torque Specifications
Courtesy of HONDA, U.S.A., INC.

☐	Torque: N.m (kgf.m, lbf.ft)

1. **Engine Undercover Lid - Remove**
2. Knock Sensor - Remove

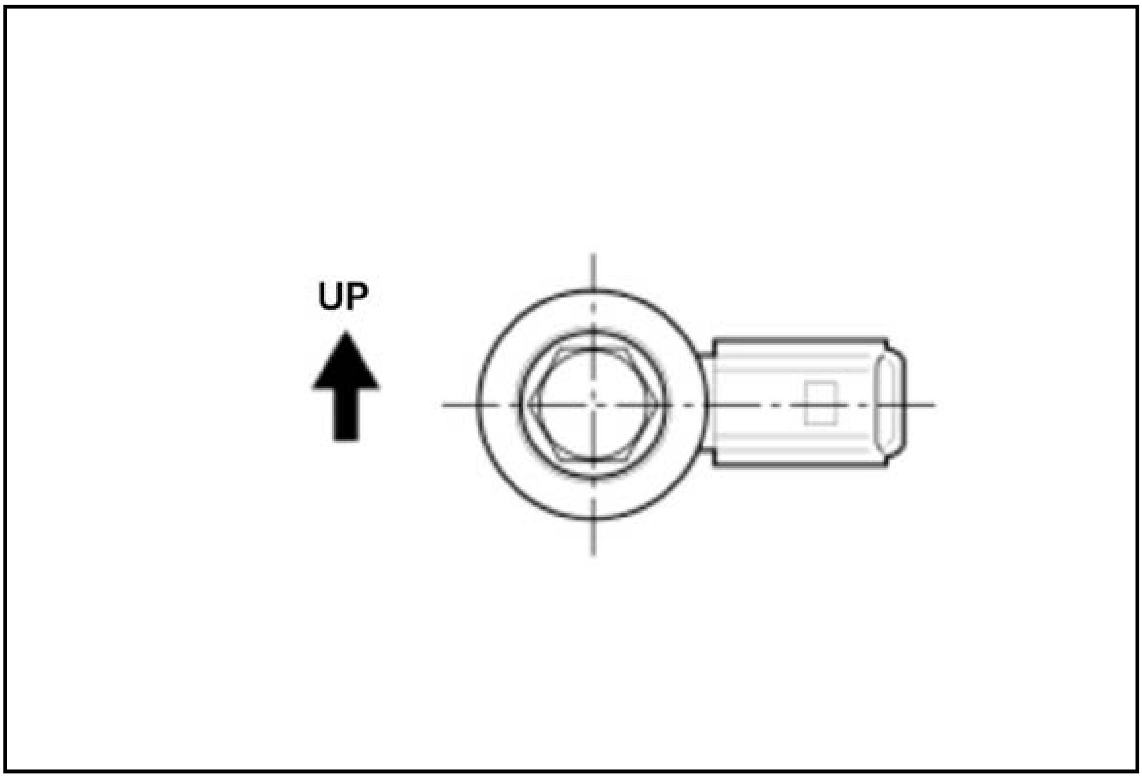

Note for installation

Make sure the direction of the sensor connector as shown.

3. All Removed Parts - Install

1. Install the parts in the reverse order of removal.

MAP SENSOR/MAF SENSOR/IAT SENSOR REMOVAL AND INSTALLATION

Removal and Installation

MAP Sensor, IAT Sensor 2

NOTE: **Numbered call-outs in figure pertain to list numbers in following procedure.**

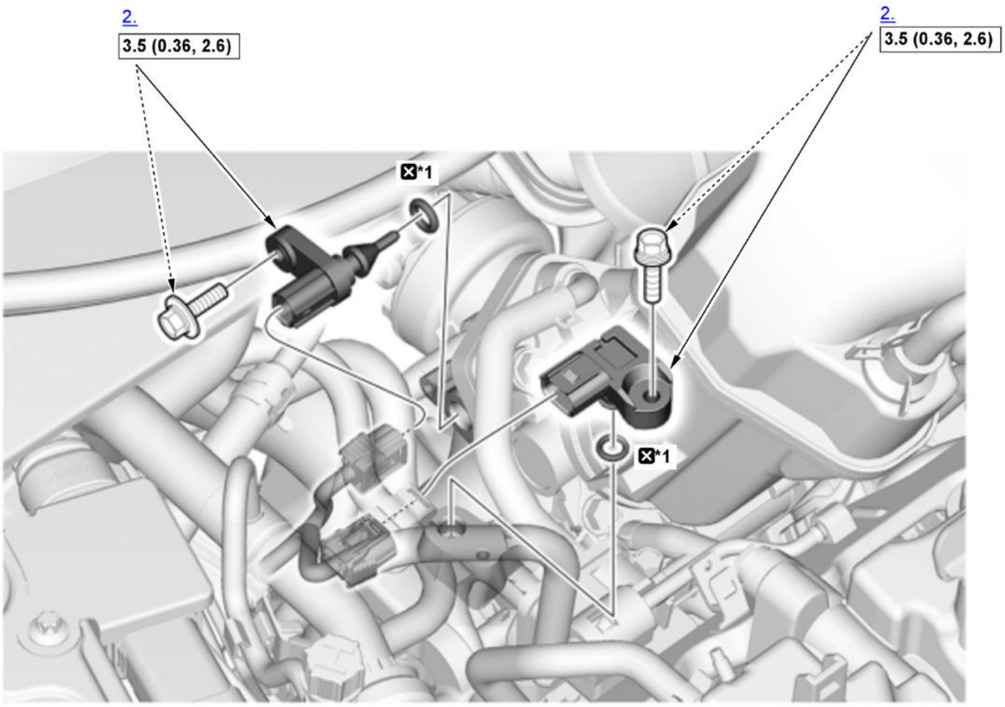

Fig. 44: Exploded View Of MAP Sensor, IAT Sensor 2 Components With Torque Specifications
Courtesy of HONDA, U.S.A., INC.

☐	Torque: N.m (kgf.m, lbf.ft)
☒	Replace
*1	Coat the clean engine oil

MAP Sensor

1. EVAP Canister Purge Valve 1 - Remove
2. MAP Sensor - Remove
3. All Removed Parts - Install

> 1. Install the parts in the reverse order of removal.

IAT Sensor 2

1. EVAP Canister Purge Valve 1 - Remove
2. IAT Sensor 2 - Remove
3. All Removed Parts - Install

> 1. Install the parts in the reverse order of removal.

MAF Sensor/IAT Sensor 1

NOTE: **Numbered call-outs in figure pertain to list numbers in following procedure.**

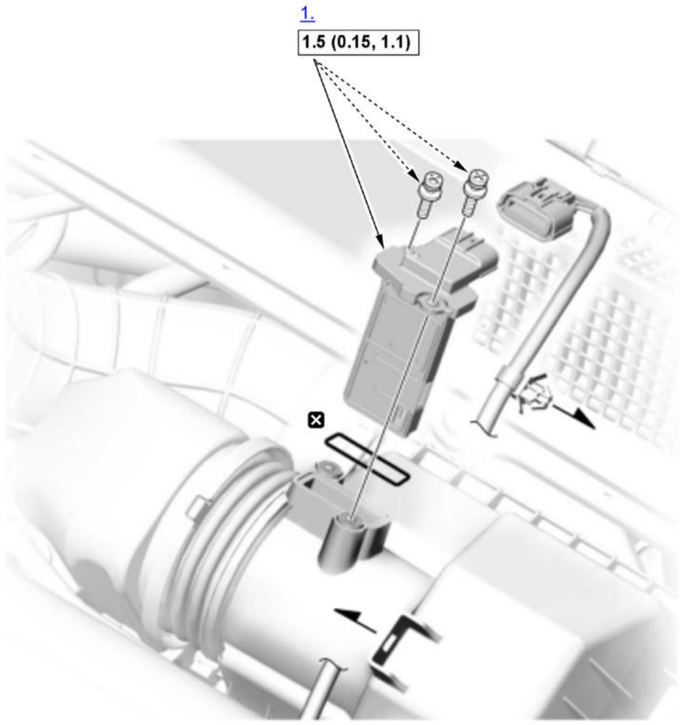

Fig. 45: Exploded View Of MAF Sensor/IAT Sensor 1 Components With Torque Specifications
Courtesy of HONDA, U.S.A., INC.

☐	Torque: N.m (kgf.m, lbf.ft)
☒	Replace

1. MAF Sensor/IAT Sensor 1 - Remove
2. All Removed Parts - Install
    1. Install the parts in the reverse order of removal.

PCM REMOVAL AND INSTALLATION

Removal

NOTE:

- Make sure the HDS or the MVCI has the latest HDS software version.
- If you are replacing the PCM after substituting a known-good PCM, reinstall the original PCM, then do this procedure.
- If you are replacing the PCM, do the all procedures.
- If you are removing or substituting the PCM, skip the procedures of READ DATA (Engine Oil Life).

Procedure

NOTE: **Numbered call-outs in figure pertain to list numbers in following procedure.**

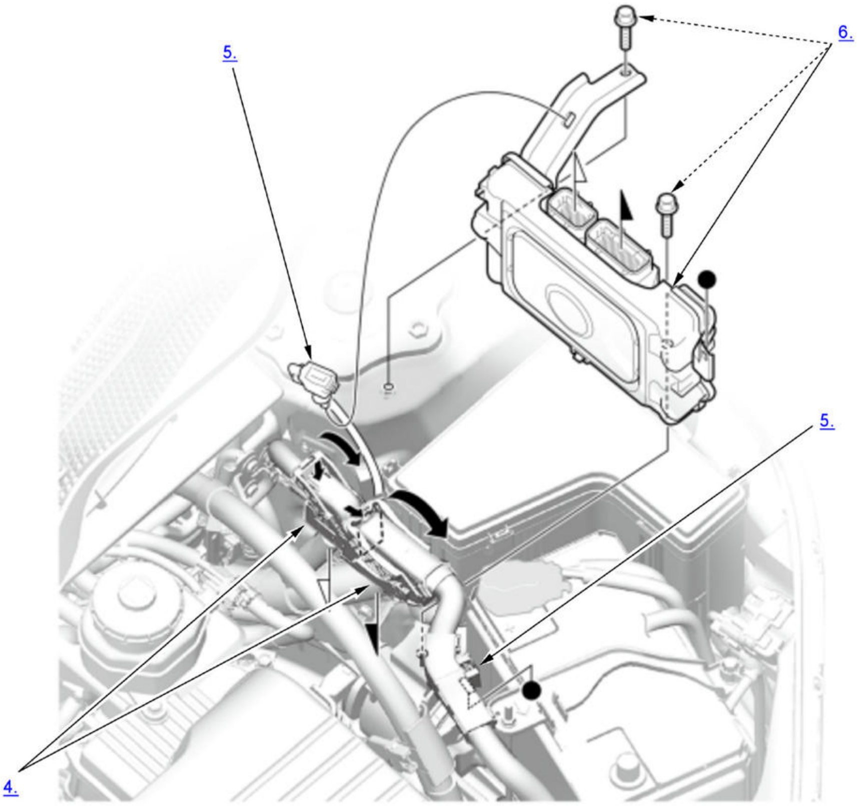

Fig. 46: Exploded View Of PCM Components For Removal (1 Of 2)
Courtesy of HONDA, U.S.A., INC.

NOTE: Numbered call-outs in figure pertain to list numbers in following procedure.

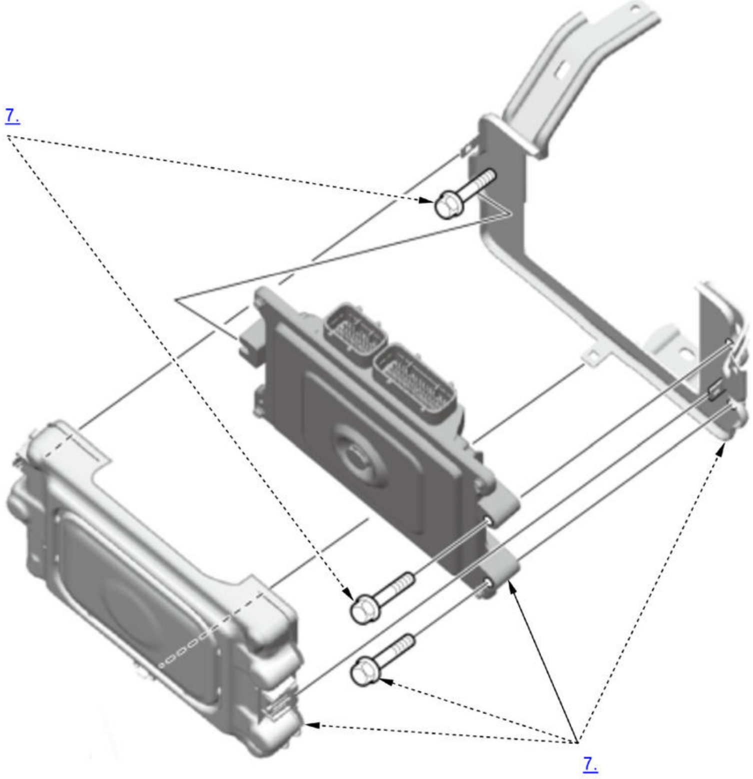

Fig. 47: Exploded View Of PCM Components For Removal (2 Of 2)
Courtesy of HONDA, U.S.A., INC.

1. HDS - Connect
2. READ DATA - Select

1. Select the PGM-FI system with the HDS. 2. Select the ECU Replacement Menu with the HDS, then select READ DATA, and follow the screen prompts. **NOTE:** • Doing this step copies (READS) the data from the original PCM so you can later download (WRITES) them into the new PCM. • If the READ DATA indicates FAILED, continue with this procedure.

3. SCS - Short

1. Turn the vehicle to the OFF (LOCK) mode. 2. Jump the SCS line with the HDS, and wait more than 1 minute.

4. Connector (PCM) - Disconnect
5. Harness Clamp - Remove
6. PCM assembly - Remove
7. PCM - Remove

Installation

NOTE:

- If you are replacing the PCM, do the all procedures.
- If you are removing the PCM, skip the procedures of using the HDS.

- If you are substituting the PCM, skip the procedures of WRITE DATA (Engine Oil Life).

Procedure

NOTE: **Numbered call-outs in figure pertain to list numbers in following procedure.**

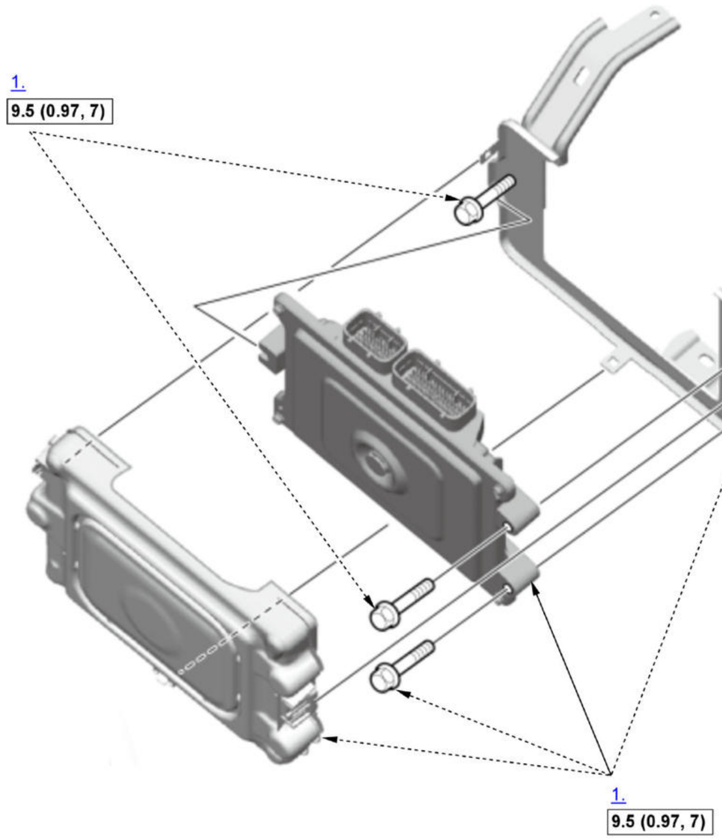

Fig. 48: Exploded View Of PCM Components With Torque Specifications For Installation (1 Of 2)
Courtesy of HONDA, U.S.A., INC.

▭	Torque: N.m (kgf.m, lbf.ft)

NOTE: **Numbered call-outs in figure pertain to list numbers in following procedure.**

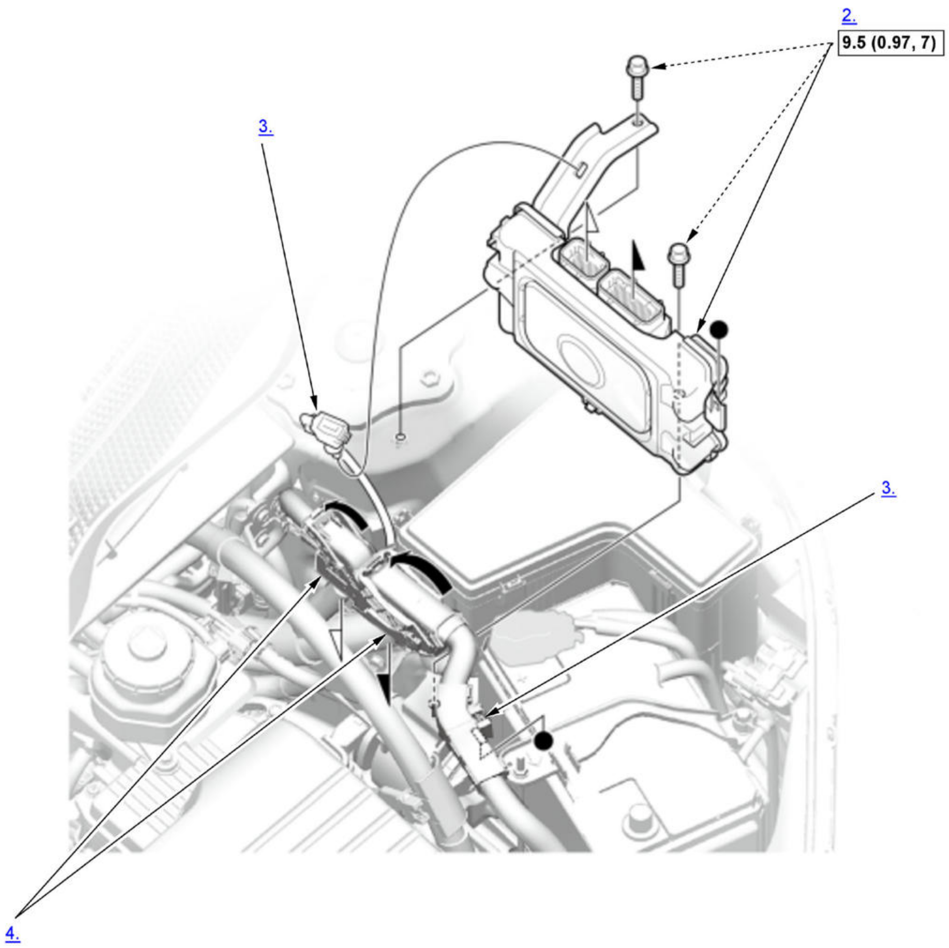

Fig. 49: Exploded View Of PCM Components With Torque Specifications For Installation (2 Of 2)
Courtesy of HONDA, U.S.A., INC.

▭	Torque: N.m (kgf.m, lbf.ft)

1. PCM - Install
2. PCM assembly - Install
3. Harness Clamp - Install
4. Connector (PCM) - Connect
5. SCS - Open

1. Exit the SCS mode with the HDS.

Procedure After Replacing PCM

6. VIN - Input

1. Turn the vehicle to the ON mode.

NOTE: DTC P0630 VIN Not Programmed or Mismatch may be stored because the VIN has not been programmed into the PCM; ignore it, and continue this procedure.

2. Manually input the VIN to the PCM with the HDS.

7. Keyless Access System - Registration
8. WRITE DATA (Engine Oil Life) - Select

NOTE: If the READ DATA (Engine Oil Life) failed in "READ DATA (Engine Oil Life) - Select", skip this procedure.

1. Select the ECU Replacement Menu with the HDS, then select WRITE DATA, and follow the screen prompts.

9. Other Procedures for PCM Replacement - Do

1. If the READ DATA failed in "READ DATA (Engine Oil Life) - Select", do these procedures:
    - **Replace the engine oil** .
    - **Replace the engine oil filter** .

10. DTC - Clear

1. Clear the Pending or Confirmed DTCs with the HDS.

11. **PCM - Update**
12. **CKP Pattern - Clear/Learn**

ROCKER ARM OIL CONTROL VALVE/ROCKER ARM OIL PRESSURE SENSOR REMOVAL AND INSTALLATION

Removal and Installation

Rocker Arm Oil Control Valve

NOTE: **Numbered call-outs in figure pertain to list numbers in following procedure.**

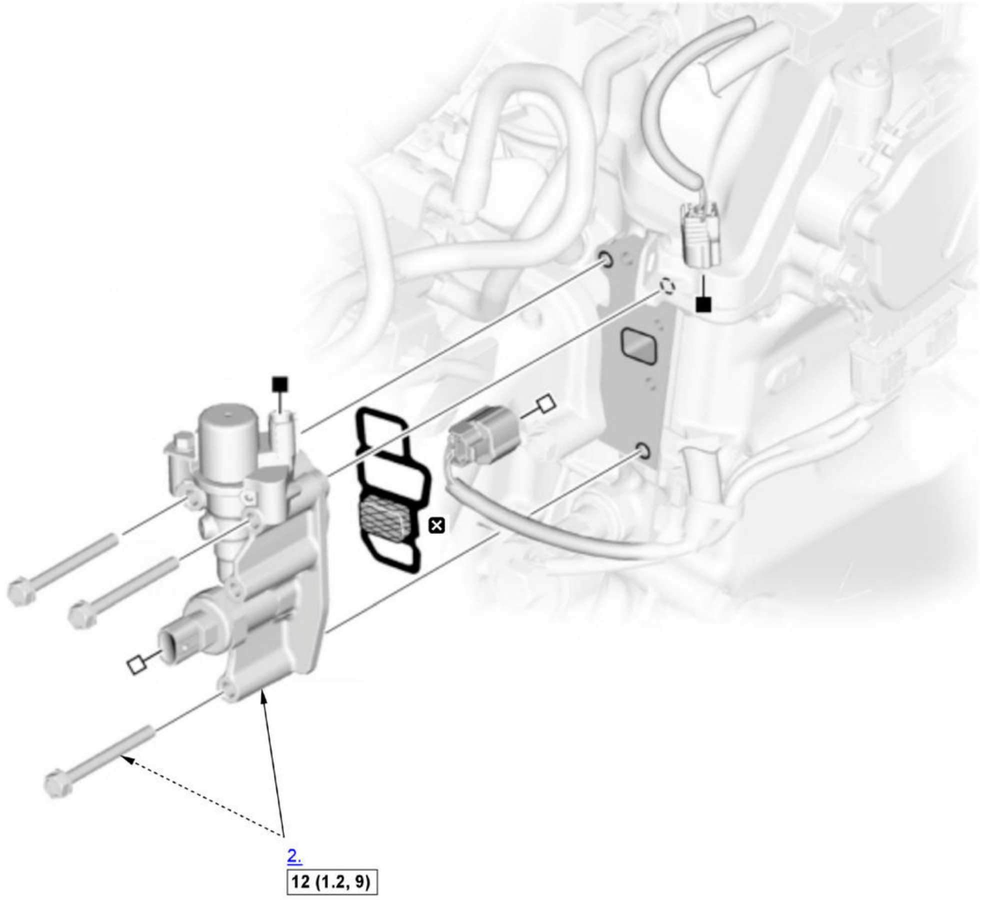

Fig. 50: Exploded View Of Rocker Arm Oil Control Valve Components With Torque Specifications
Courtesy of HONDA, U.S.A., INC.

☐	Torque: N.m (kgf.m, lbf.ft)
☒	Replace

1. Air Intake Tube B - Remove
2. Rocker Arm Oil Control Valve - Remove
3. All Removed Parts - Install

1. Install the parts in the reverse order of removal.

Rocker Arm Oil Pressure Sensor

NOTE: **Numbered call-outs in figure pertain to list numbers in following procedure.**

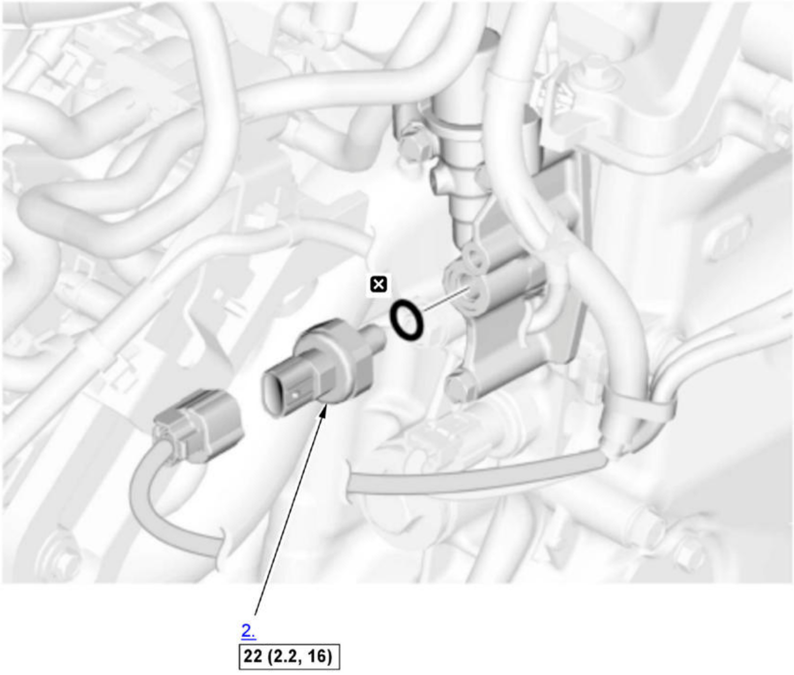

Fig. 51: Exploded View Of Rocker Arm Oil Pressure Sensor Components With Torque Specifications
Courtesy of HONDA, U.S.A., INC.

☐	Torque: N.m (kgf.m, lbf.ft)
☒	Replace

1. Air Intake Tube B - Remove
2. Rocker Arm Oil Pressure Sensor - Remove
3. All Removed Parts - Install

1. Install the parts in the reverse order of removal.

SECONDARY HO2S REMOVAL AND INSTALLATION

Special Tools Required

Image	Description/Tool Number
	O2 Sensor Socket Wrench Snap-on SWR2 or Snap-on YA8875, commercially available

Removal and Installation

Procedure

NOTE: **Numbered call-outs in figure pertain to list numbers in following procedure.**

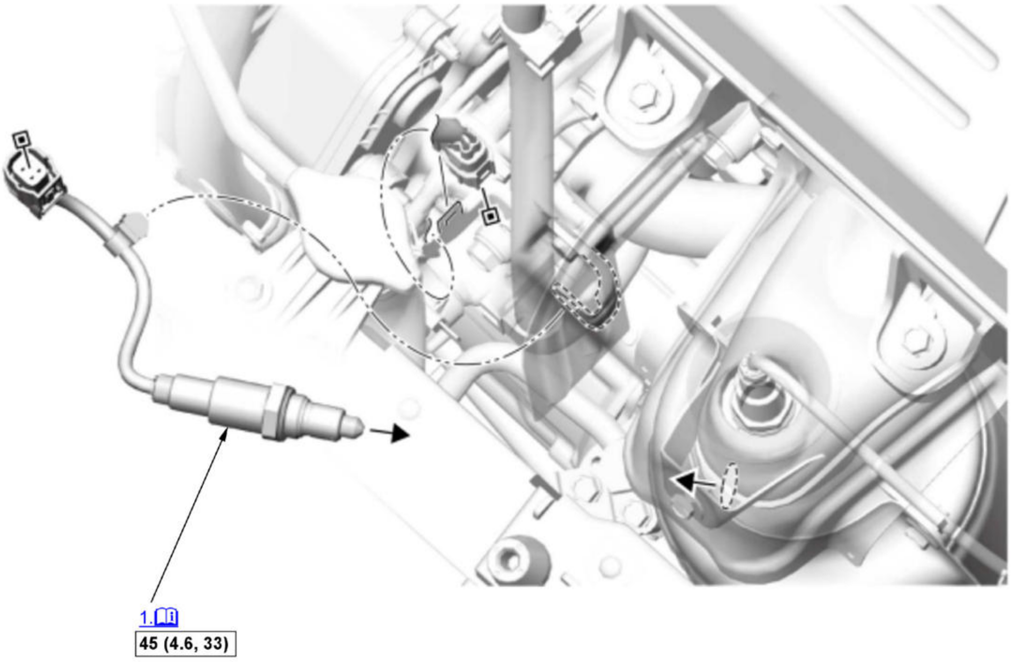

Fig. 52: Exploded View Of Secondary HO2S Components With Torque Specifications
Courtesy of HONDA, U.S.A., INC.

▭	Torque: N.m (kgf.m, lbf.ft)

1. Secondary HO2S - Remove

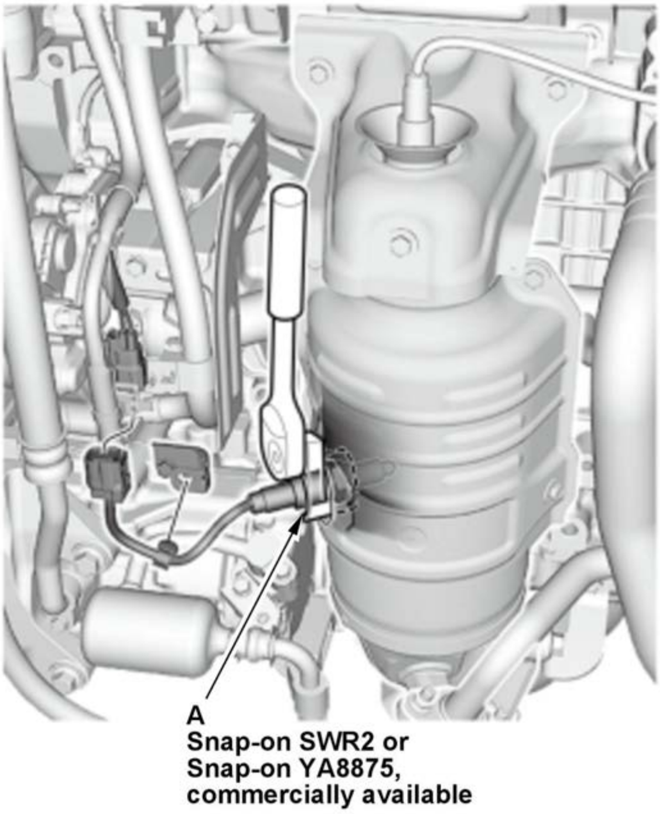 A Snap-on SWR2 or Snap-on YA8875, commercially available	1. Using the O2 sensor wrench (A), remove secondary HO2S.

2. All Removed Parts - Install

1. Install the parts in the reverse order of removal.

SHUTTER GRILLE REMOVAL AND INSTALLATION

Removal and Installation

Procedure

NOTE: **Numbered call-outs in figure pertain to list numbers in following procedure.**

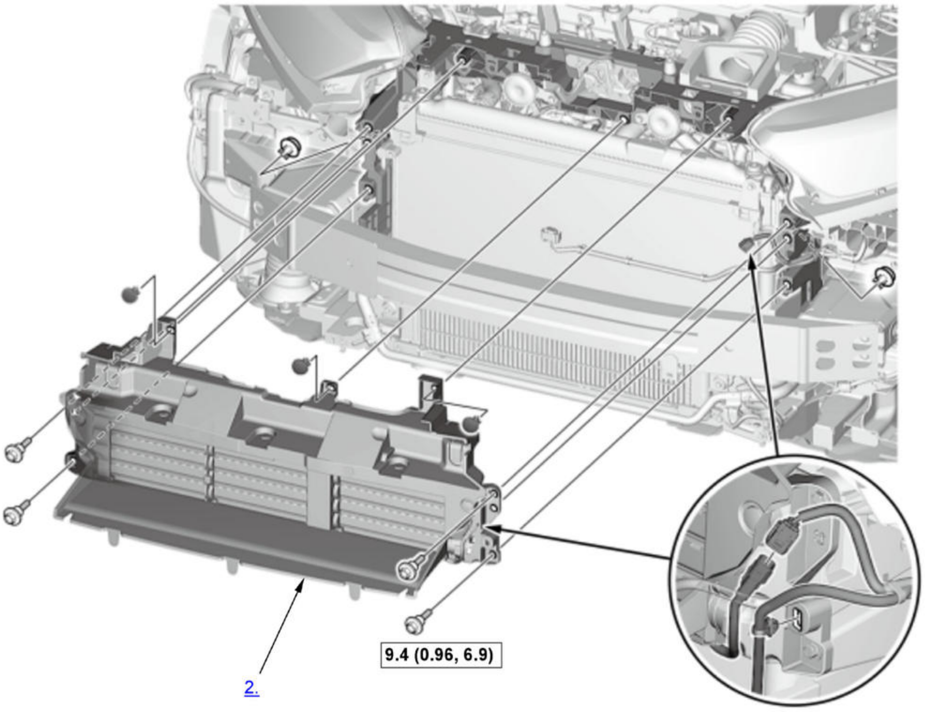

Fig. 53: Exploded View Of Shutter Grille Components With Torque Specifications
Courtesy of HONDA, U.S.A., INC.

▭	Torque: N.m (kgf.m, lbf.ft)

1. **Millimeter Wave Radar Assembly - Remove** (If Necessary)
2. Shutter Grille Assembly - Remove
3. All Removed Parts - Install

   1. Install the parts in the reverse order of removal.

4. **Millimeter Wave Radar - Update**
5. **Millimeter Wave Radar - Aim**

REMOVAL INSTALLATION AND TEST

EVAP SYSTEM REMOVAL, INSTALLATION, AND TEST (1.5 L ENGINE (KA/KC))

Removal and Installation

WARNING:

Flammable - Keep Fire Away

NOTE:

- Refer to the **Fuel and Emissions Systems Service Precautions** before disconnecting the fuel line.
- Fuel may cause flammable gas leaks and may result in fire. Keep sparks, flame and cigarettes away.
- Although a numbered sequence is shown, these "*1" indicated parts are separate components. If removal or replacement of one of the components is needed, it is not necessary to remove the other.

1

EVAP Canister/EVAP Leak Check Module*1

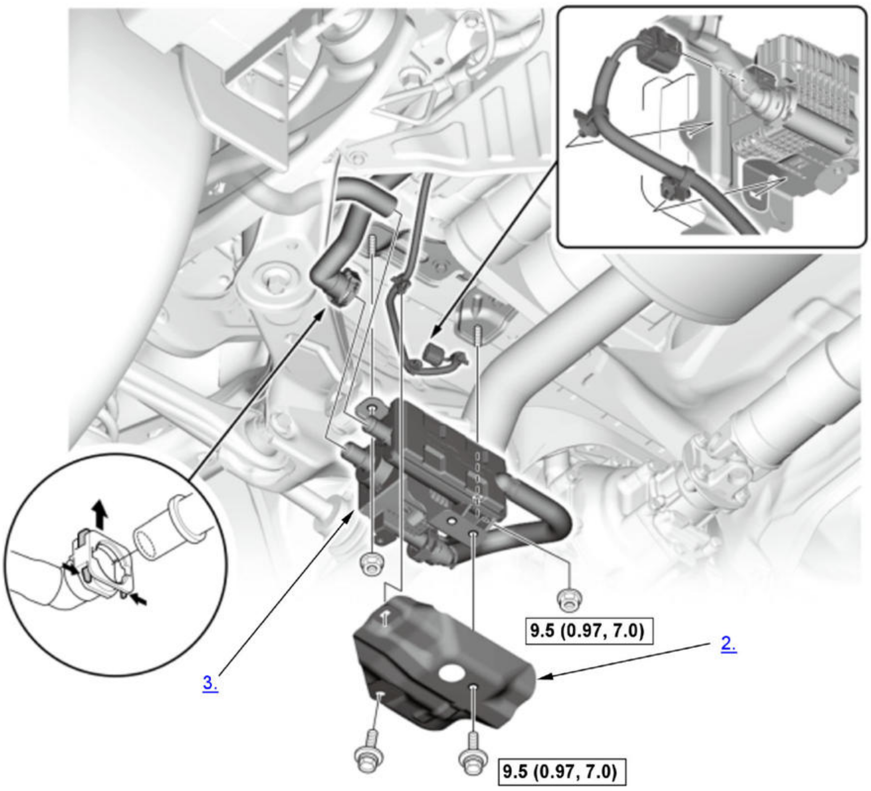

Fig. 1: EVAP Canister/EVAP Leak Check Module Replacement Components With Torque Specifications (1 Of 3)
Courtesy of HONDA, U.S.A., INC.

☐	Torque: N.m (kgf.m, lbf.ft)

2

EVAP Canister/EVAP Leak Check Module*1

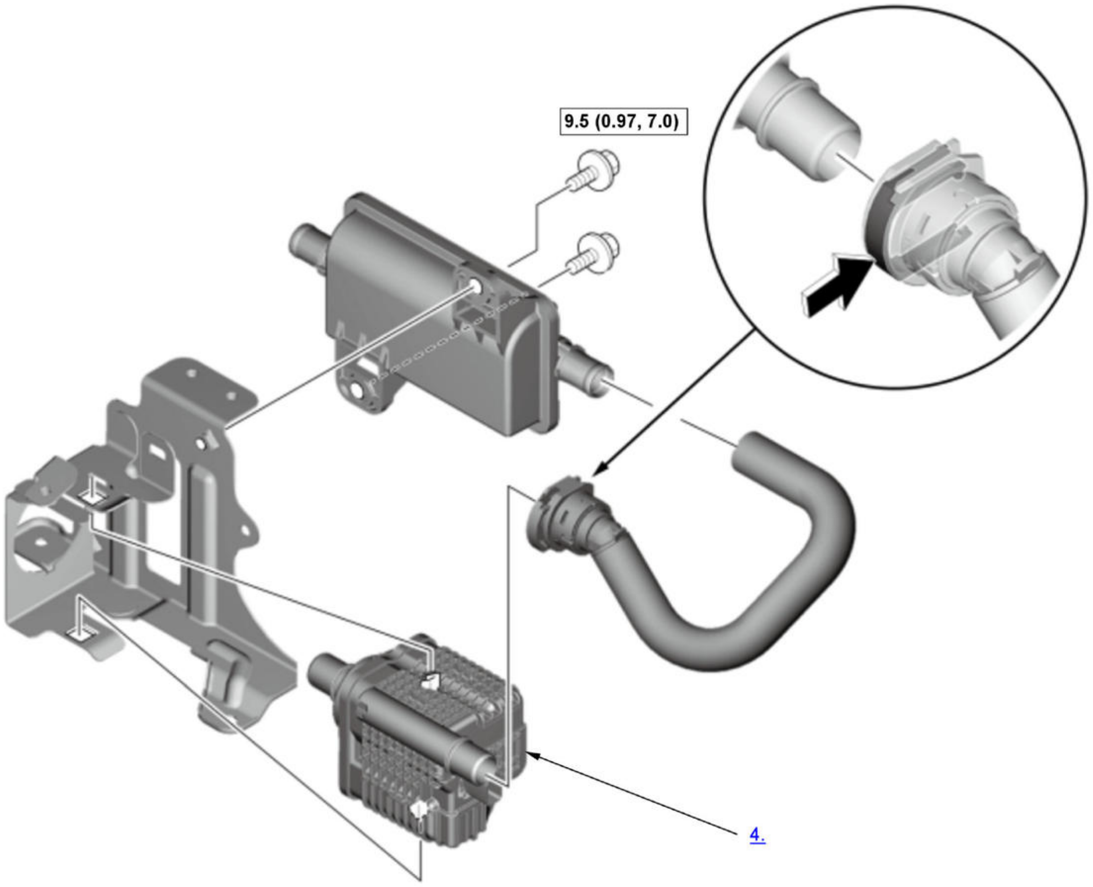

Fig. 2: EVAP Canister/EVAP Leak Check Module Replacement Components With Torque Specifications (2 Of 3)
Courtesy of HONDA, U.S.A., INC.

▭	Torque: N.m (kgf.m, lbf.ft)

3

EVAP Canister/EVAP Leak Check Module*1

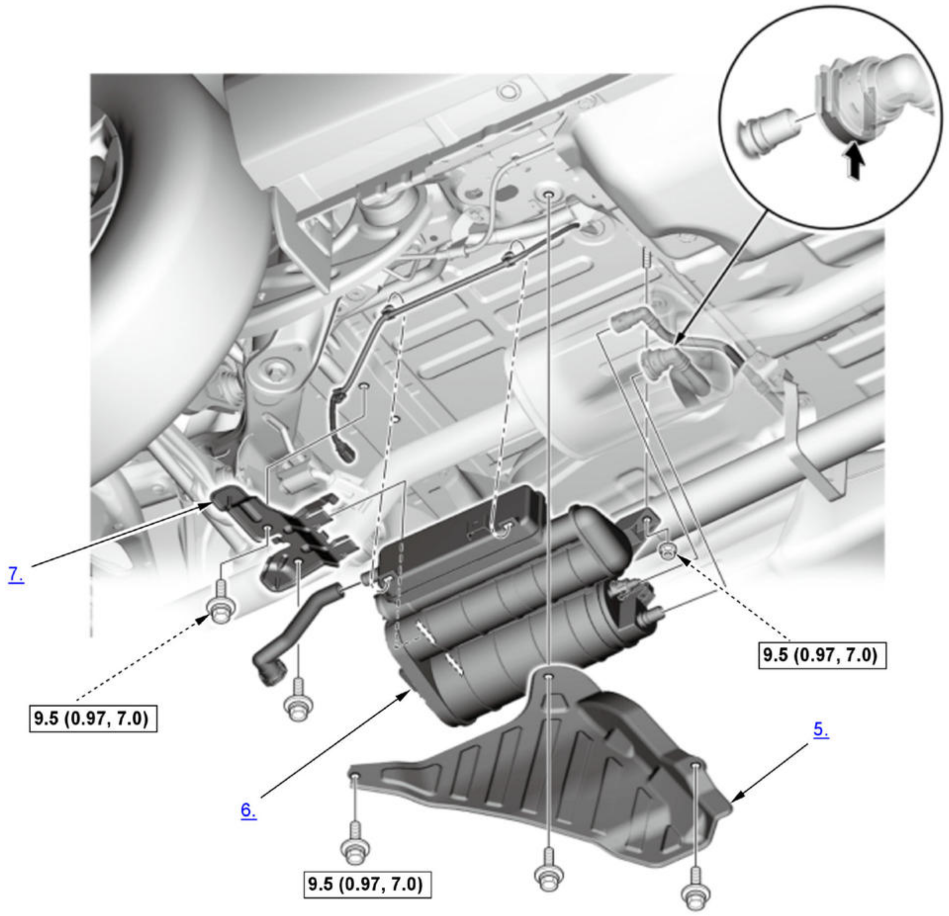
7.
9.5 (0.97, 7.0)
9.5 (0.97, 7.0)
5.
6.
9.5 (0.97, 7.0)

Fig. 3: EVAP Canister/EVAP Leak Check Module Replacement Components With Torque Specifications (3 Of 3)
Courtesy of HONDA, U.S.A., INC.

☐	Torque: N.m (kgf.m, lbf.ft)

4

EVAP Canister Purge Valve*1

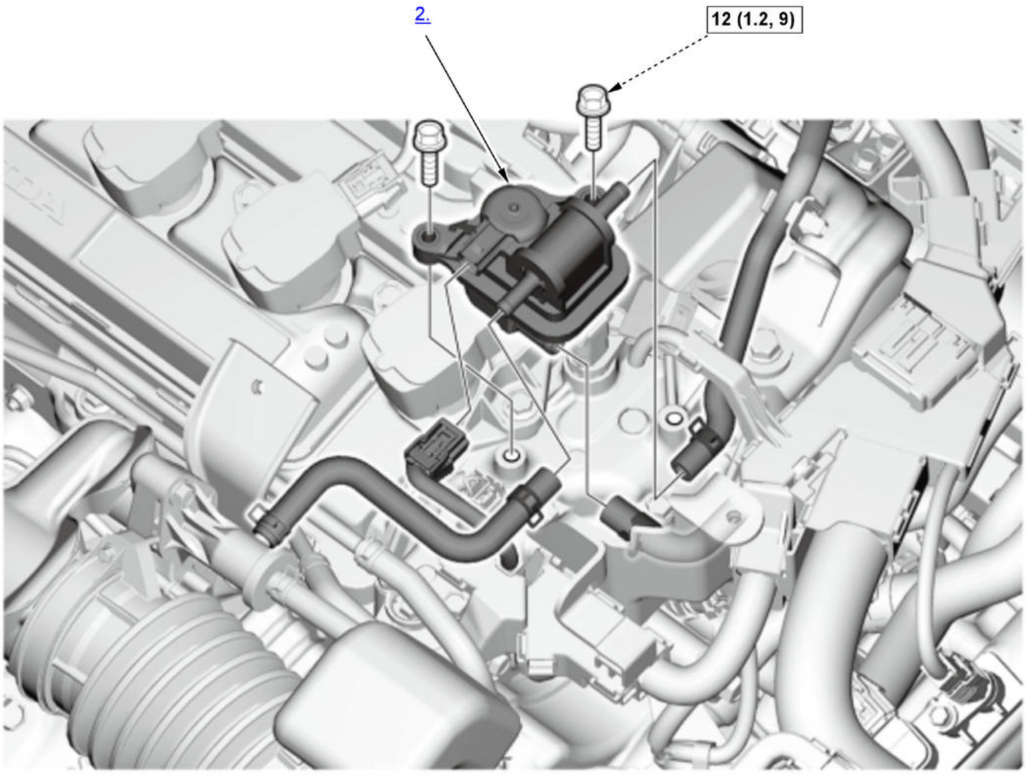

[Fig. 4: EVAP Canister Purge Valve Replacement Components With Torque Specifications]

Courtesy of HONDA, U.S.A., INC.

▭	Torque: N.m (kgf.m, lbf.ft)

5

EVAP Canister Purge Nozzle*1

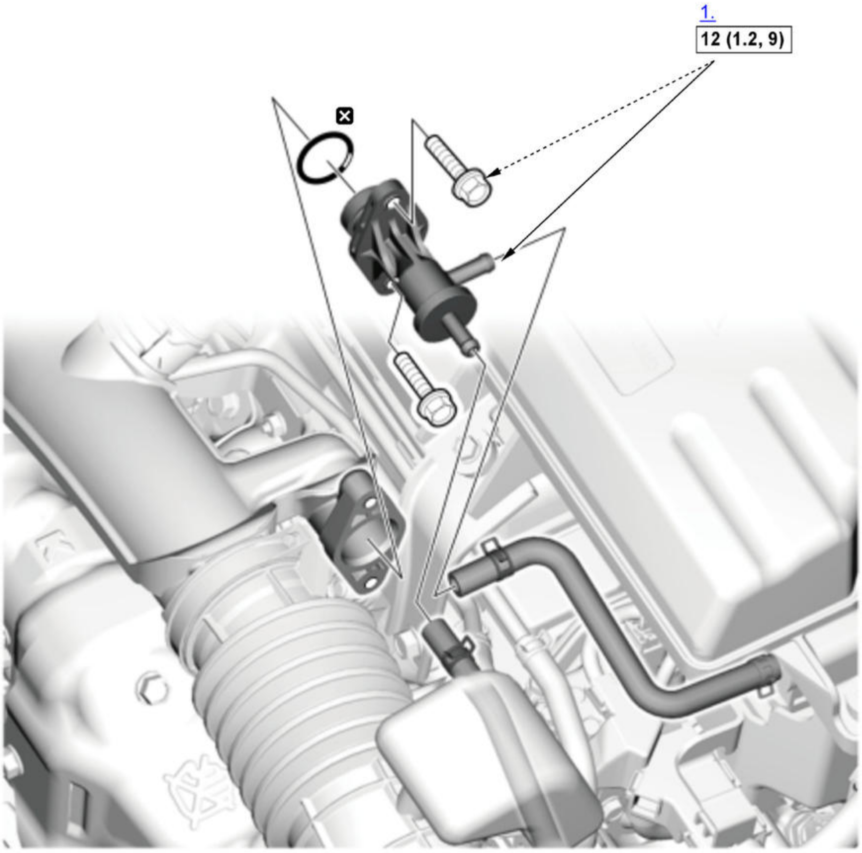

Fig. 5: EVAP Canister Purge Nozzle Replacement Components With Torque Specifications
Courtesy of HONDA, U.S.A., INC.

▭	Torque: N.m (kgf.m, lbf.ft)
☒	Replace

6

EVAP Canister Drain Pipe/EVAP Canister One Way Valve*1

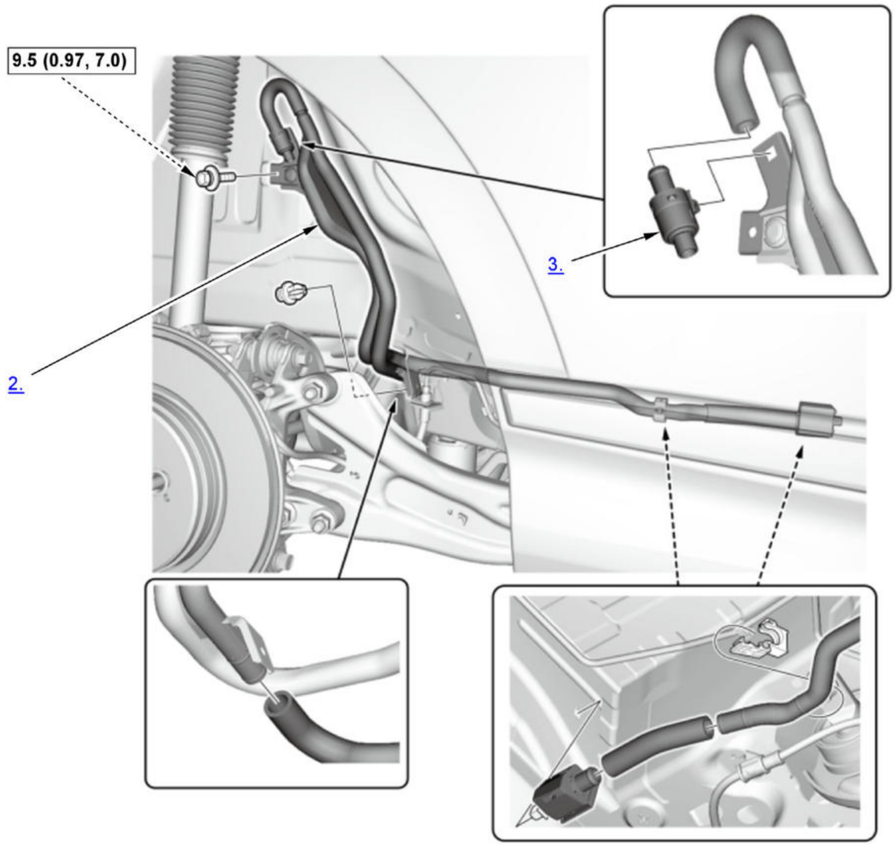

Fig. 6: EVAP Canister Drain Pipe/EVAP Canister One Way Valve Replacement Components With Torque Specifications
Courtesy of HONDA, U.S.A., INC.

☐	Torque: N.m (kgf.m, lbf.ft)

EVAP Canister/EVAP Leak Check Module

1. Vehicle - Lift
2. Heat Shield - Remove
3. EVAP Leak Check Module Assembly - Remove
4. EVAP Leak Check Module - Remove
5. Heat Shield - Remove
6. EVAP Canister - Remove
7. Bracket - Remove
8. All Removed Parts - Install

    1. Install the parts in the reverse order of removal.

    EVAP Canister Purge Valve

9. Intake Air Resonator - Remove
10. EVAP Canister Purge Valve - Remove
11. All Removed Parts - Install

    1. Install the parts in the reverse order of removal.

EVAP Canister Purge Nozzle

12. EVAP Canister Purge Nozzle - Remove
13. All Removed Parts - Install

1. Install the parts in the reverse order of removal.

EVAP Canister Drain Pipe/EVAP Canister One Way Valve

14. Rear Inner Fender (Right Side) - Remove
15. EVAP Canister Drain Pipe - Remove
16. EVAP Canister One Way Valve - Remove
17. All Removed Parts - Install

1. Install the parts in the reverse order of removal.

Inspection

WARNING:

Flammable - Keep Fire Away

NOTE: Refer to the **Fuel and Emissions Systems Service Precautions** before disconnecting the fuel line.

Non-Return Valve Inspection

1. EVAP Canister Purge Valve Hose - Disconnect

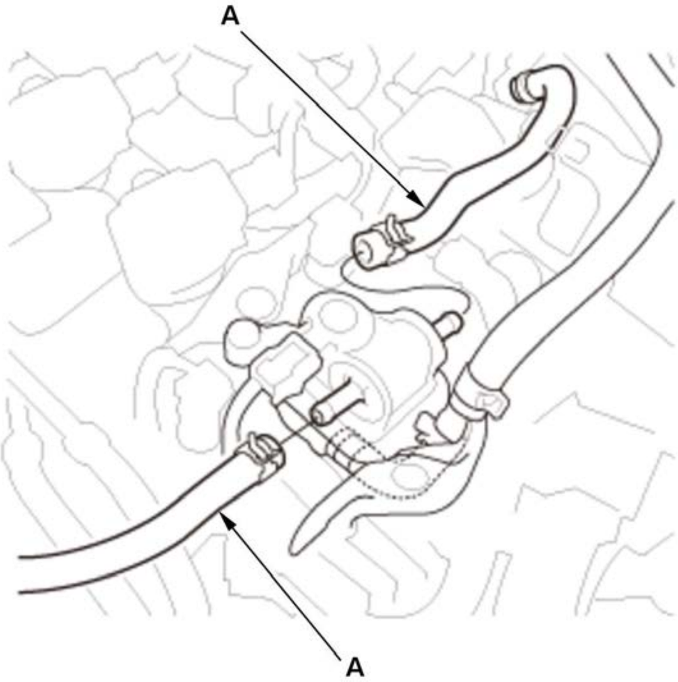	1. Disconnect the EVAP canister purge valve hoses (A).

2. HDS - Connect
3. Non-return Valve - Inspection

Non-Return Valve A (Intake Manifold Side)

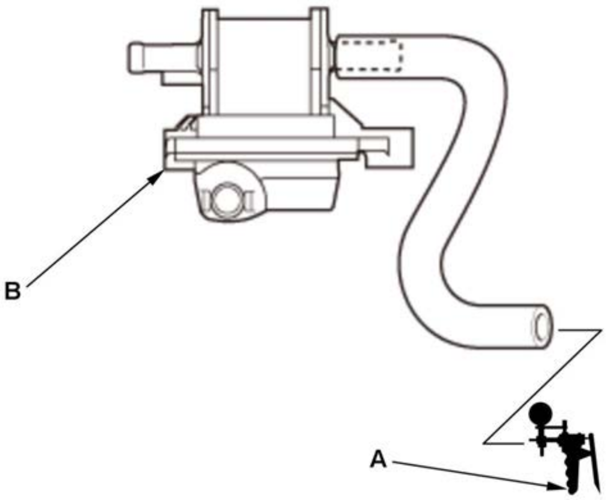

Non-Return Valve B (Turbocharger Side)

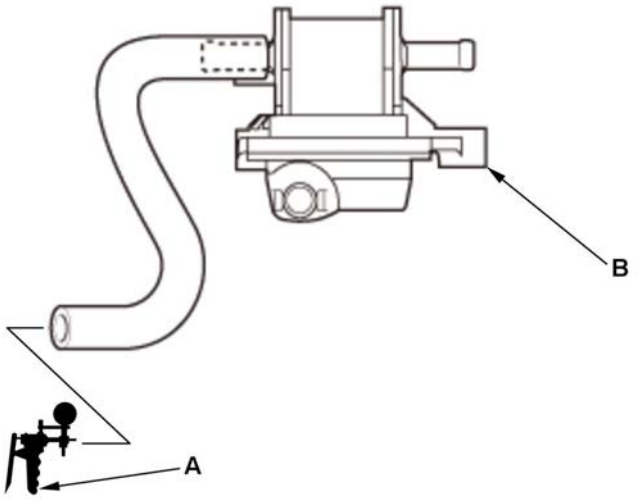

1. Select the PGM-FI system with the HDS.

2. Select the INSPECTION MENU, then select EVAP TEST (ELCM), and follow the screen prompts.

3. Select the Single Solenoid Test, then select PCS ON, and follow the screen prompts.

4. Connect the vacuum pump (A) to the EVAP canister purge valve (B) as shown.

5. Apply vacuum to the valve.

- If it holds vacuum, replace the EVAP canister purge valve.
- If it doesn't hold the vacuum, go to next step.

Non-Return Valve A (Intake Manifold Side)

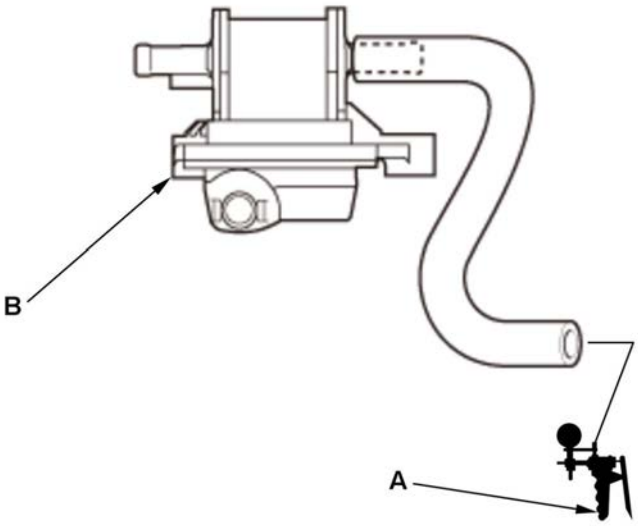

6. Connect the vacuum pump (A) to the EVAP canister purge valve (B) as shown.

7. Apply pressure to the valve.

- If it holds pressure, the EVAP canister purge valve is OK.
- If it doesn't hold the pressure, replace the EVAP canister purge valve.

Non-Return Valve B (Turbocharger Side) 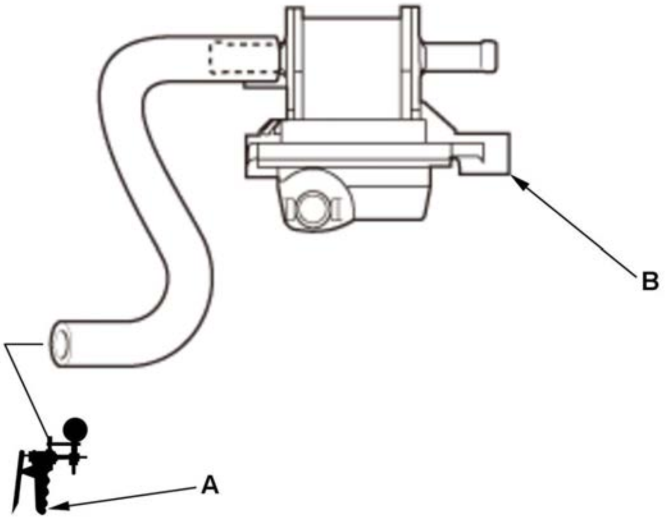 	

IDLE STOP OFF SWITCH REMOVAL, INSTALLATION, AND TEST (WITH AUTO IDLE STOP SYSTEM) (2020 2021)

Removal and Installation

1

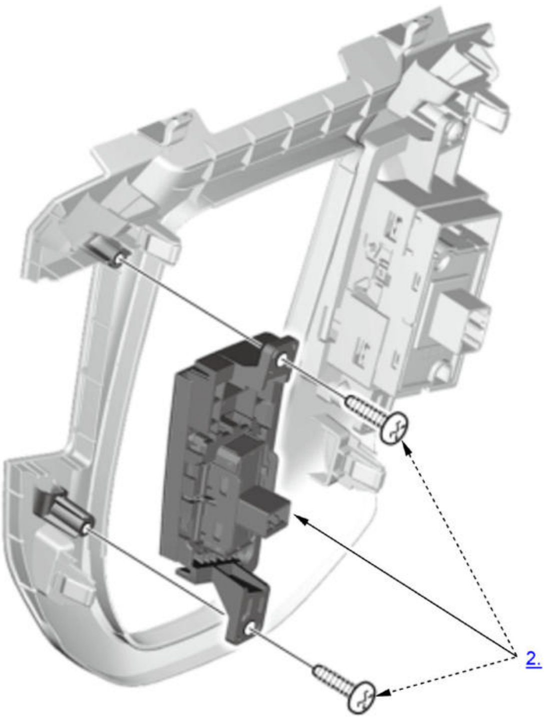

1. Shift Lever Panel - Remove
2. Idle Stop Off Switch - Remove
3. All Removed Parts - Install

1. Install the parts in the reverse order of removal.

Test

1. Idle Stop Off Switch - Test

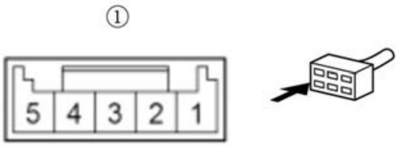	**Contact point - Test** 1. Check for continuity between idle stop off switch connector terminals according to the table. If the result is not normal, replace the Idle stop off switch.

Connector		
Idle stop off switch 5P connector (male terminals): ①		
Test terminal	**Switch position**	**Normal**
No. 1 - No. 3	pressed	continuity
	not pressed	not continuity

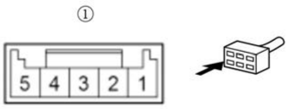	**LED - Test** **NOTE:** - When an LED is located between terminals, check if the LED illuminates by connecting power and ground to the LED. - Note this important operating characteristic; diode bias causes a diode to fully conduct electricity in one direction (forward), while not at all in the opposite direction. 2. Connect the 12 volt battery to the Idle stop off switch according to the table. 3. Check that the LED of the idle stop off switch comes on.If the LED does not come on, replace the idle stop off switch.

Connector	
Idle stop off switch 5P connector (male terminals): ①	
Terminal	**12 volt battery**
No. 4	+
No. 5	-

VTC OIL CONTROL SOLENOID VALVE REMOVAL, INSTALLATION, AND TEST (1.5 L ENGINE)

Removal and Installation

NOTE: Although a numbered sequence is shown, these "*1" indicated parts are separate components. If removal or replacement of one of the components is needed, it is not necessary to remove the other.

Intake Side (VTC Oil Control Solenoid Valve A)*1

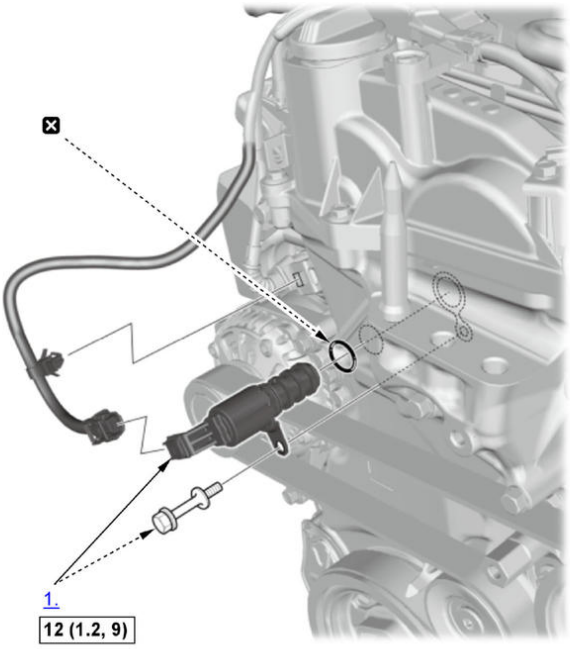

Fig. 7: Intake Side VTC Oil Control Solenoid Valve A Replacement Components With Torque Specifications (1.5 L Engine)
Courtesy of HONDA, U.S.A., INC.

☐	Torque: N.m (kgf.m, lbf.ft)
☒	Replace

2

Exhaust Side (VTC Oil Control Solenoid Valve B)*1

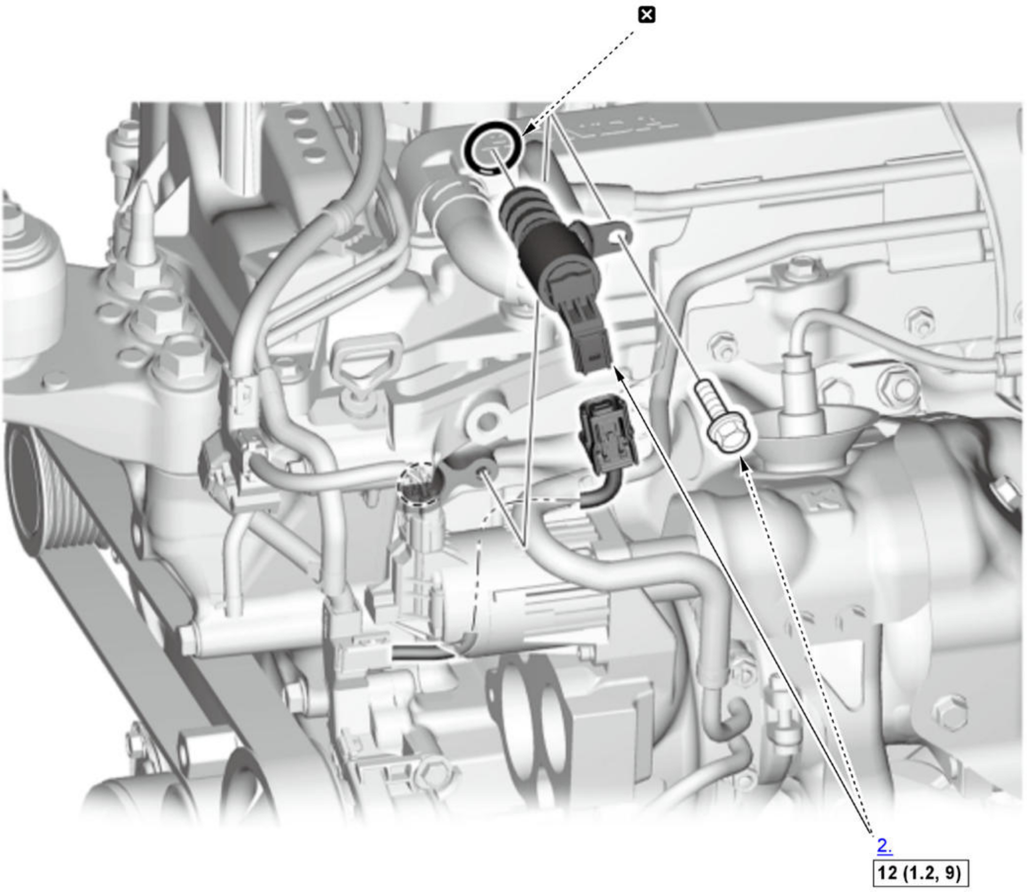

Fig. 8: Exhaust Side VTC Oil Control Solenoid Valve B Replacement Components With Torque Specifications (1.5 L Engine)
Courtesy of HONDA, U.S.A., INC.

▭	Torque: N.m (kgf.m, lbf.ft)
☒	Replace

Intake Side (VTC Oil Control Solenoid Valve A)

1. VTC Oil Control Solenoid Valve A - Remove
2. All Removed Parts - Install

> 1. Install the parts in the reverse order of removal with a new O-ring.
>   - Coat the new O-ring with clean engine oil.
>   - Clean and dry the mating surface of the valve.

Exhaust Side (VTC Oil Control Solenoid Valve B)

3. Turbocharger Joint - Remove
4. VTC Oil Control Solenoid Valve B - Remove
5. All Removed Parts - Install

> 1. Install the parts in the reverse order of removal with a new O-ring.
>   - Coat the new O-ring with clean engine oil.
>   - Clean and dry the mating surface of the valve.

Test

1. VTC Oil Control Solenoid Valve - Test

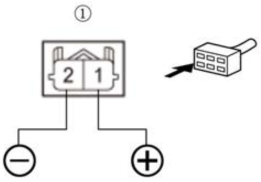	1. Check for any blockage in the ports of the VTC oil control solenoid valve. 2. Connect VTC oil control solenoid valve 2P connector (male terminals) No. 1 to the 12 volt battery positive terminal with a jumper wire: ① Connect VTC oil control solenoid valve 2P connector (male terminals) No. 2 to the 12 volt battery negative terminal with a jumper wire: ① 3. It is normal to a click sound by the valve function when turning on electricity. If the no sound heard, replace the VTC oil control solenoid valve because of a functional malfunction.

VTC OIL CONTROL SOLENOID VALVE REMOVAL, INSTALLATION, AND TEST (2.4 L ENGINE) (2017 2018 2019)

Removal and Installation

NOTE: Although a numbered sequence is shown, these "*1" indicated parts are separate components. If removal or replacement of one of the components is needed, it is not necessary to remove the other.

1

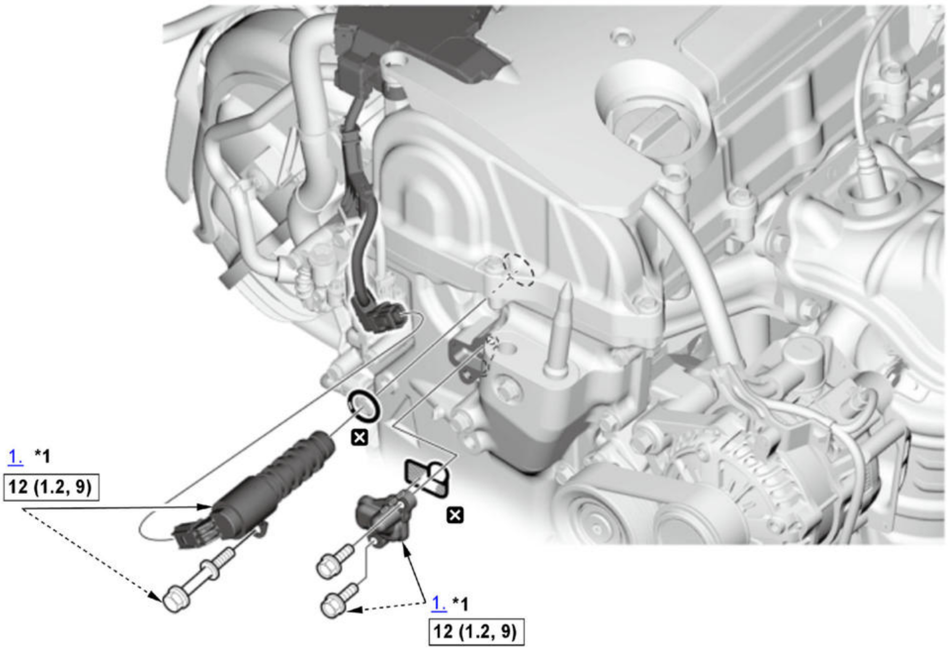

Fig. 9: VTC Oil Control Solenoid Valve Replacement Components With Torque Specifications 2.4 L Engine (2017 2018 2019)
Courtesy of HONDA, U.S.A., INC.

☐	Torque: N.m (kgf.m, lbf.ft)
☒	Replace

VTC Oil Control Solenoid Valve

1. VTC Oil Control Solenoid Valve - Remove
2. All Removed Parts - Install

> 1. Install the parts in the reverse order of removal with a new O-ring.
>   - Coat the new O-ring with clean engine oil.
>   - Clean and dry the mating surface of the valve.

VTC Strainer

3. VTC Strainer - Remove
4. All Removed Parts - Install

> 1. Install the parts in the reverse order of removal with a new filter.

Test

1. VTC Oil Control Solenoid Valve - Test

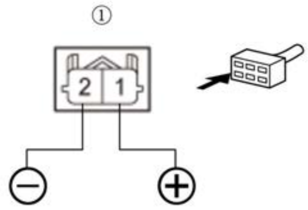

1. Check for any blockage in the ports of the VTC oil control solenoid valve.

2. Connect VTC oil control solenoid valve 2P connector (male terminals) No. 1 to the 12 volt battery positive terminal with a jumper wire:

①

Connect VTC oil control solenoid valve 2P connector (male terminals) No. 2 to the 12 volt battery negative terminal with a jumper wire:

①

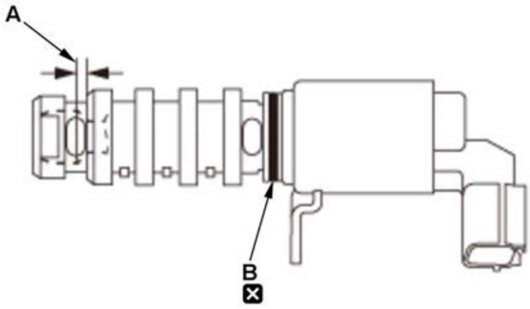

3. Measure the clearance of the valve (A). The clearance should be at least 1.2 mm (0.047 in).

- If the clearance is as specified, the valve is OK; reinstall it with a new O-ring (B).
- If the clearance is not as specified, install a new valve and O-ring.

REMOVAL AND INSTALLATION

A/F SENSOR REMOVAL AND INSTALLATION (1.5 L ENGINE)

Special Tools Required

Image	Description/Tool Number
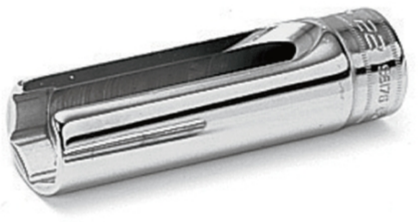	O2 Sensor Wrench Snap-on S6176 or equivalent, commercially available

Removal and Installation

NOTE: ℹ Where icon is shown for further information in the information below.

1

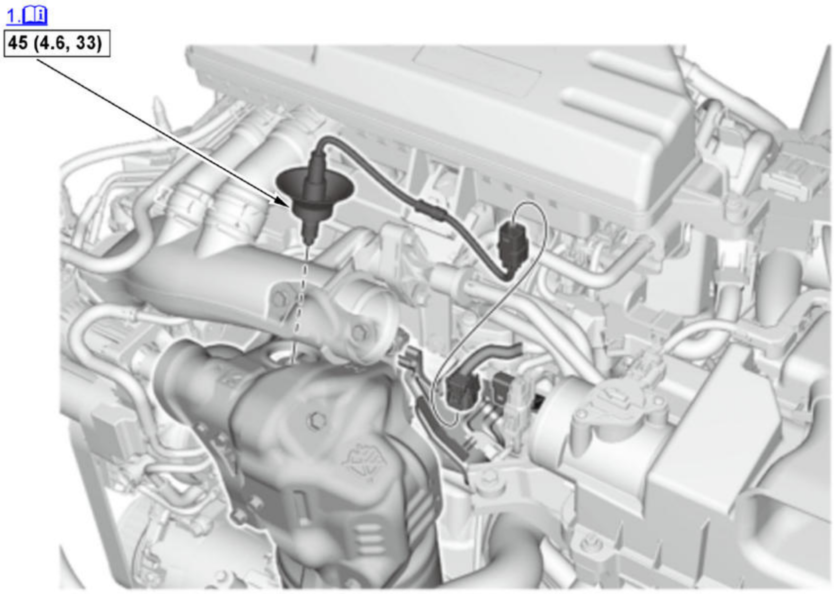

Fig. 10: A/F Sensor Replacement Components With Torque Specifications (1.5 L Engine)
Courtesy of HONDA, U.S.A., INC.

ℹ	Detailed information, notes and precautions
☐	Torque: N.m (kgf.m, lbf.ft)

1. A/F Sensor - Remove

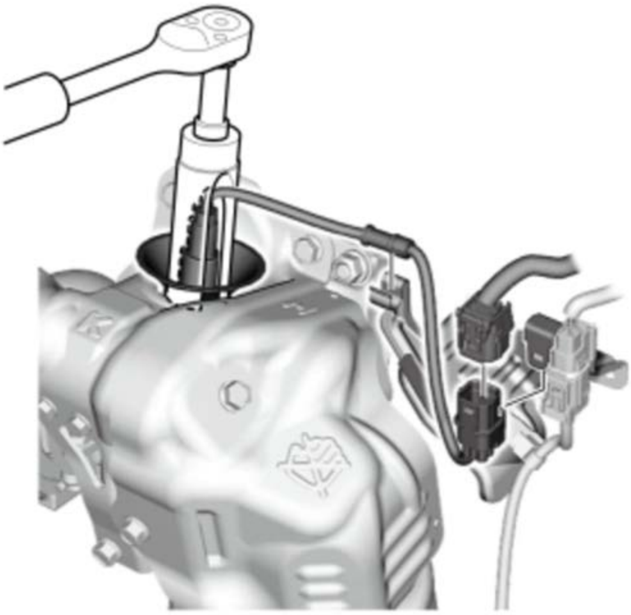	1. Using a commercially available O2 sensor wrench, remove the A/F sensor.

2. All Removed Parts - Install

1. Install the parts in the reverse order of removal.

A/F SENSOR REMOVAL AND INSTALLATION (2.4 L ENGINE) (2017 2018 2019)

Special Tools Required

Image	Description/Tool Number
	O2 Sensor Wrench Snap-on S6176 or equivalent, commercially available

Removal and Installation

NOTE: 🕮 Where icon is shown for further information in the information below.

1

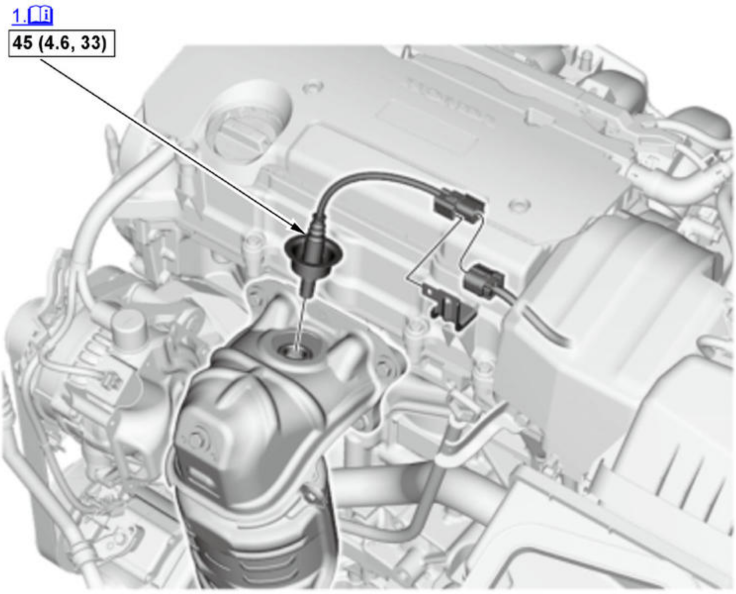

Fig. 11: A/F Sensor Replacement Components With Torque Specifications (2.4 L Engine) (2017 2018 2019)
Courtesy of HONDA, U.S.A., INC.

ℹ	Detailed information, notes and precautions
☐	Torque: N.m (kgf.m, lbf.ft)

1. A/F Sensor - Remove

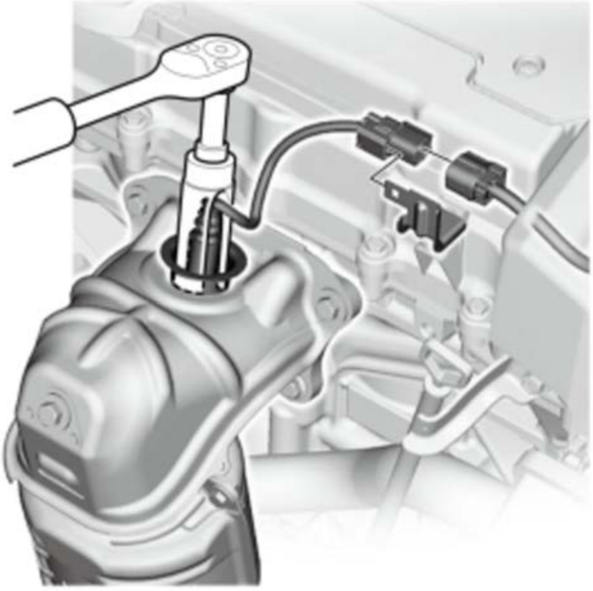	1. Using a commercially available O2 sensor wrench, remove the A/F sensor.

2. All Removed Parts - Install

1. Install the parts in the reverse order of removal.

ACCELERATOR PEDAL MODULE REMOVAL AND INSTALLATION

Removal and Installation

NOTE: ℹ Where icon is shown for further information in the information below.

1

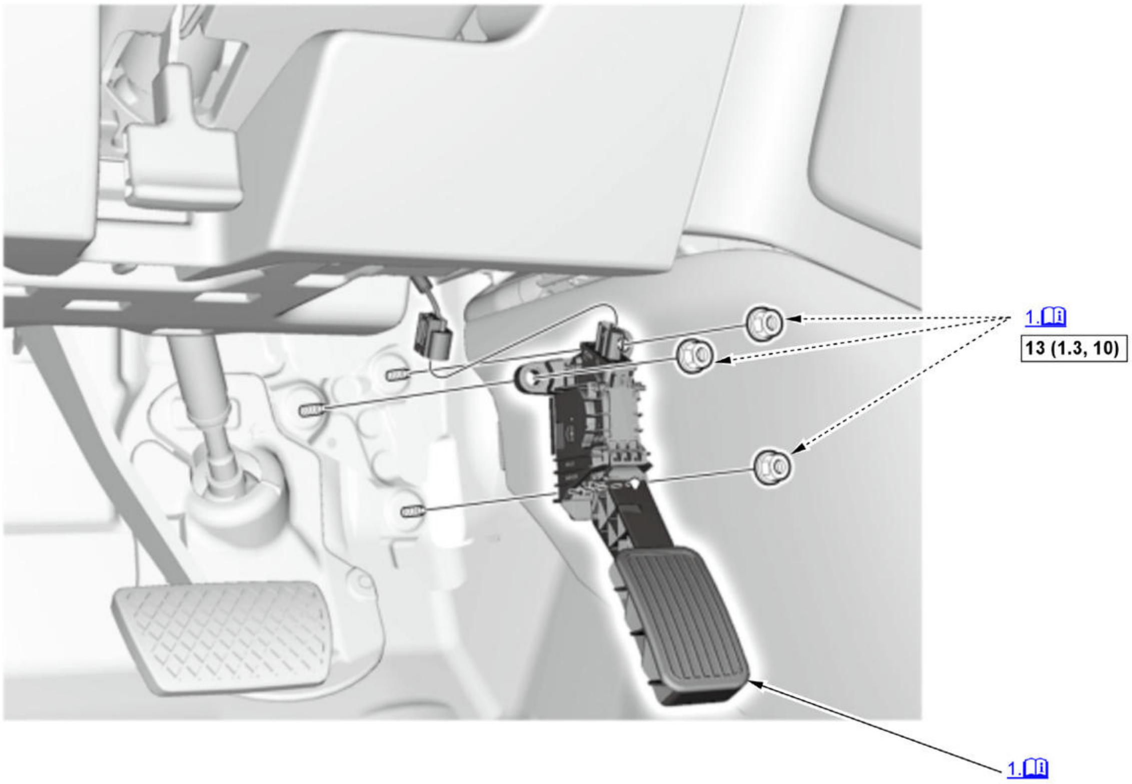

Fig. 12: Accelerator Pedal Module Replacement Components With Torque Specifications
Courtesy of HONDA, U.S.A., INC.

ℹ	Detailed information, notes and precautions
☐	Torque: N.m (kgf.m, lbf.ft)

1. Accelerator Pedal Module - Remove

   NOTE: The APP sensor is not available separately. Do not disassemble the accelerator pedal module.

2. All Removed Parts - Install

   1. Install the parts in the reverse order of removal.

CKP SENSOR REMOVAL AND INSTALLATION (1.5 L ENGINE)

Removal and Installation

1

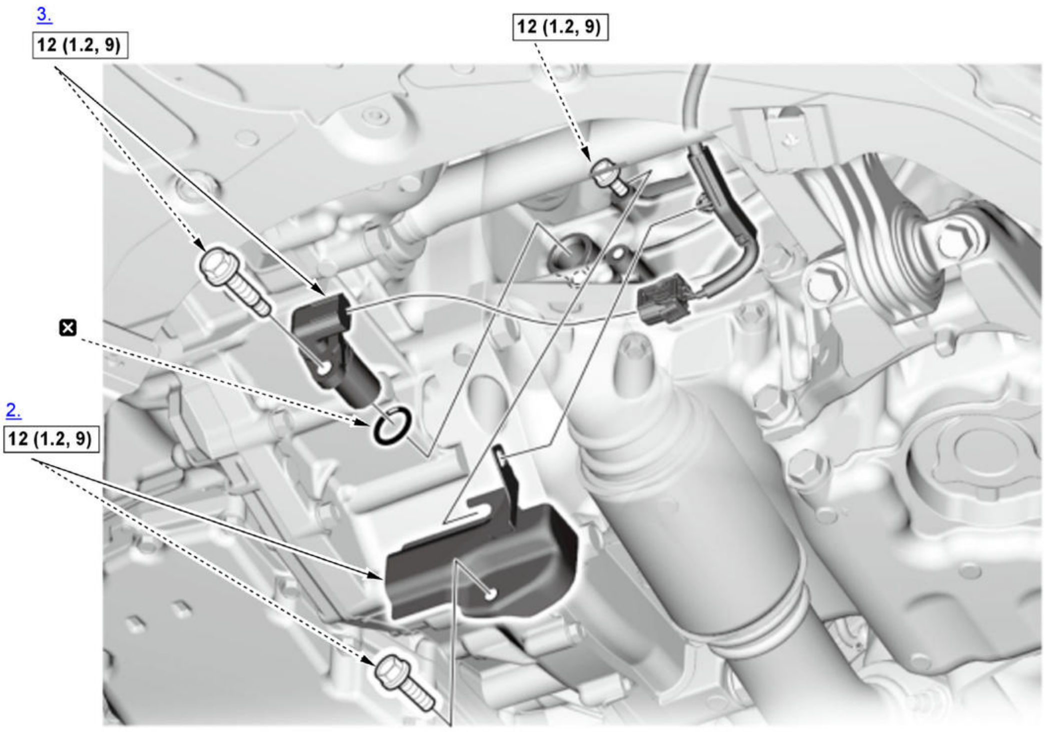

Fig. 13: CKP Sensor Replacement Components With Torque Specifications (1.5 L Engine)
Courtesy of HONDA, U.S.A., INC.

▭	Torque: N.m (kgf.m, lbf.ft)
☒	Replace

1. Engine Undercover - Remove
2. CKP Sensor Cover - Remove
3. CKP Sensor - Remove
4. All Removed Parts - Install

   1. Install the parts in the reverse order of removal with a new O-ring.

5. CKP Pattern - Clear/Learn

   NOTE: When replacing the CKP Sensor, do this procedure.

CKP SENSOR REMOVAL AND INSTALLATION (2.4 L ENGINE) (2017 2018 2019)

Removal and Installation

1

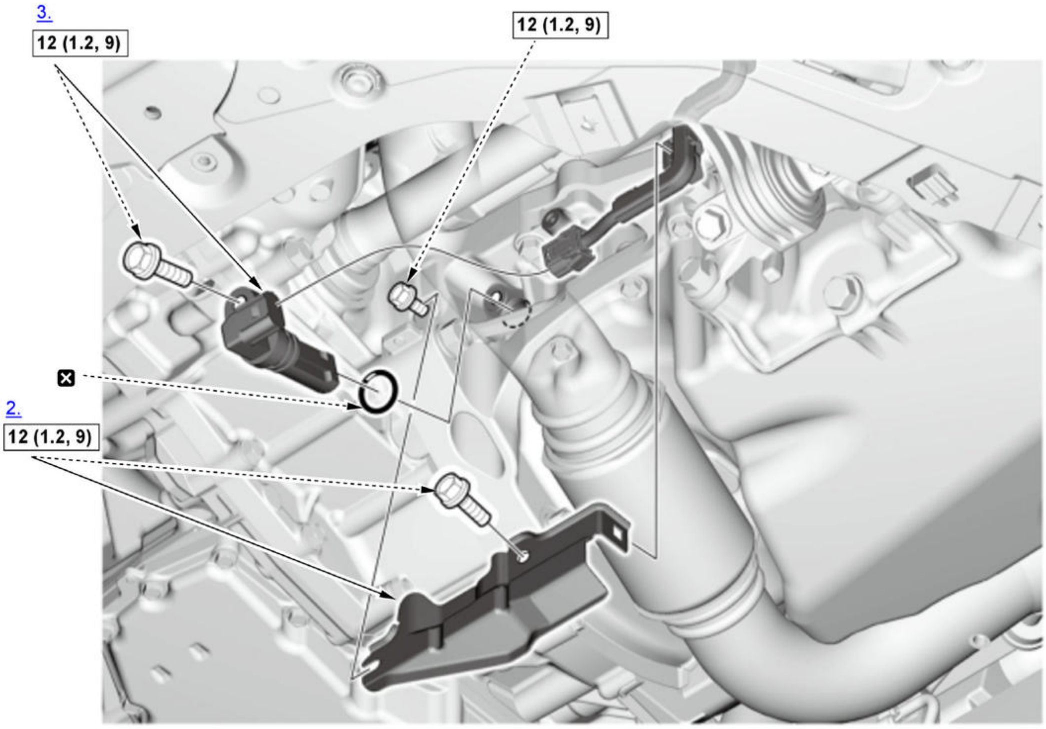

Fig. 14: CKP Sensor Replacement Components With Torque Specifications (2.4 L Engine) (2017 2018 2019)
Courtesy of HONDA, U.S.A., INC.

☐	Torque: N.m (kgf.m, lbf.ft)
☒	Replace

1. **Engine Undercover - Remove**
2. CKP Sensor Cover - Remove
3. CKP Sensor - Remove
4. All Removed Parts - Install

   1. Install the parts in the reverse order of removal with a new O-ring.

5. **CKP Pattern - Clear/Learn**

   NOTE: When replacing the CKP Sensor, do this procedure.

CMP SENSOR A REMOVAL AND INSTALLATION (2.4 L ENGINE) (2017 2018 2019)

Removal and Installation

1

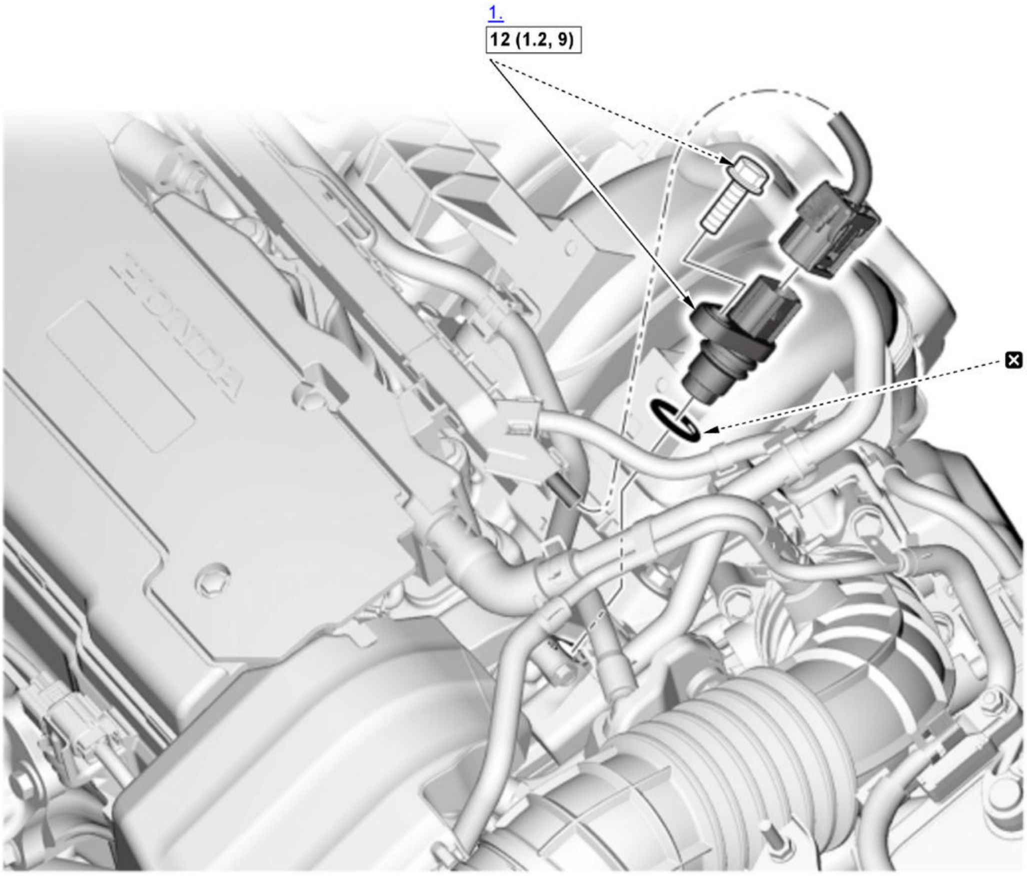

Fig. 15: CMP Sensor A Replacement Components With Torque Specifications (2.4 L Engine) (2017 2018 2019)
Courtesy of HONDA, U.S.A., INC.

☐	Torque: N.m (kgf.m, lbf.ft)
☒	Replace

1. CMP Sensor A - Remove
2. All Removed Parts - Install

1. Install the parts in the reverse order of removal with a new O-ring.

CMP SENSOR B REMOVAL AND INSTALLATION (2.4 L ENGINE) (2017 2018 2019)

Removal and Installation

1

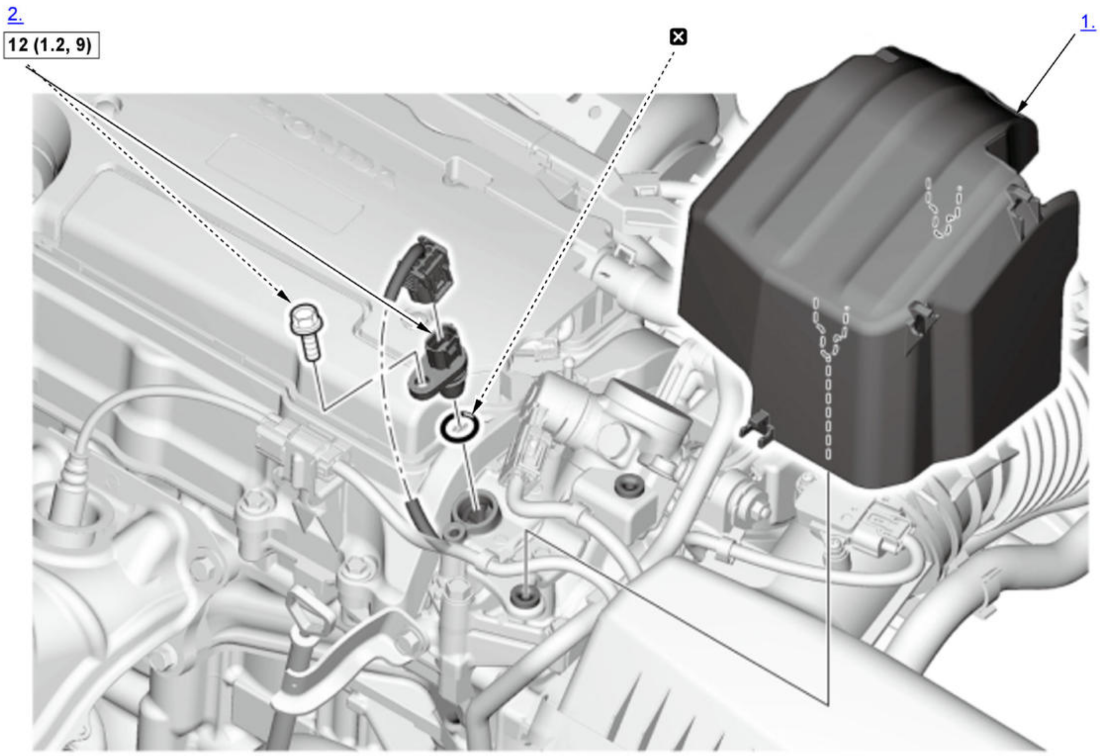

Fig. 16: CMP Sensor B Replacement Components With Torque Specifications (2.4 L Engine) (2017 2018 2019)
Courtesy of HONDA, U.S.A., INC.

☐	Torque: N.m (kgf.m, lbf.ft)
☒	Replace

1. High Pressure Fuel Pump Cover - Remove
2. CMP Sensor B - Remove
3. All Removed Parts - Install

   1. Install the parts in the reverse order of removal with a new O-ring.

4. CKP Pattern - Clear/Learn

   NOTE: When replacing the CMP sensor B, do this procedure.

CMP SENSOR REMOVAL AND INSTALLATION (1.5 L ENGINE)

Removal and Installation

NOTE: Although a numbered sequence is shown, these "*1" indicated parts are separate components. If removal or replacement of one of the components is needed, it is not necessary to remove the other.

1

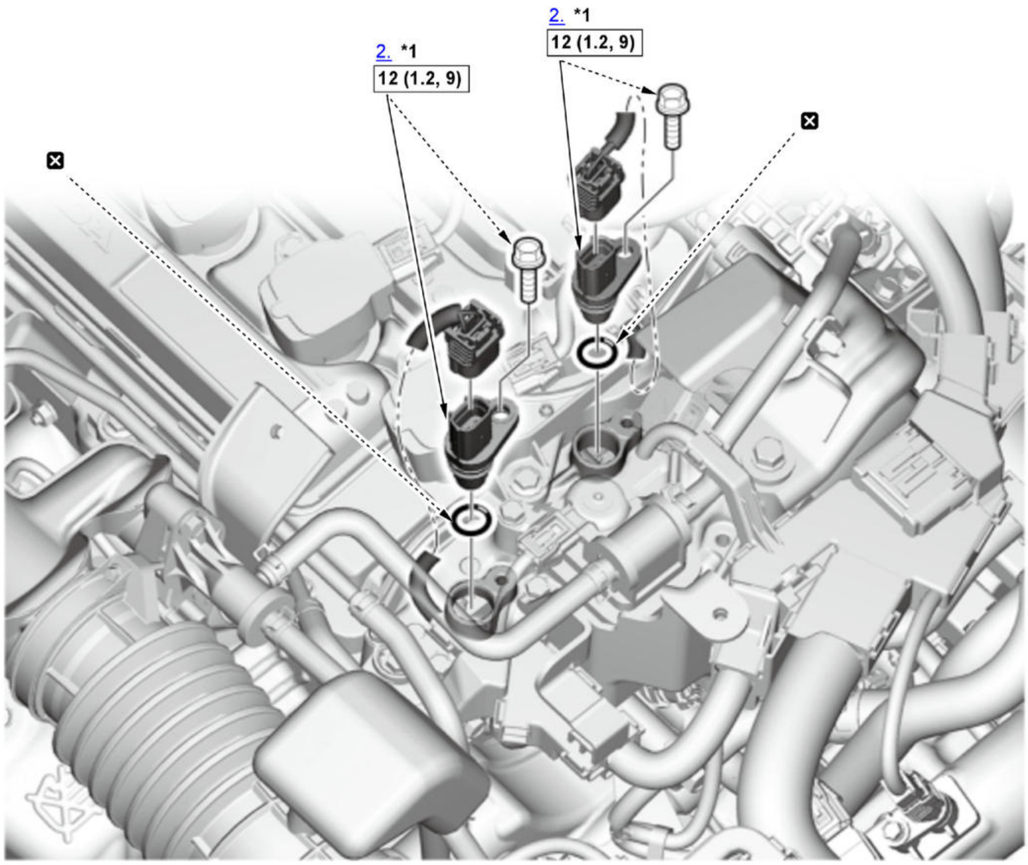

Fig. 17: CMP Sensor Replacement Components With Torque Specifications (1.5 L Engine)
Courtesy of HONDA, U.S.A., INC.

☐	Torque: N.m (kgf.m, lbf.ft)
☒	Replace

Intake Side (CMP Sensor A)

1. Intake Air Resonator - Remove

   NOTE: Remove intake pipe as needed to access CMP Sensor A.

2. CMP Sensor A - Remove
3. All Removed Parts - Install

   1. Install the parts in the reverse order of removal with a new O-ring.

4. CKP Pattern - Clear/Learn

   NOTE: When replacing the CMP sensor A, do this procedure.

   Exhaust Side (CMP Sensor B)

5. Intake Air Resonator - Remove

   NOTE: Remove intake pipe as needed to access CMP Sensor B.

6. CMP Sensor B - Remove
7. All Removed Parts - Install

1. Install the parts in the reverse order of removal with a new O-ring.

CAM CHAIN AUTO-TENSIONER REMOVAL AND INSTALLATION (1.5 L ENGINE)

Removal

1. Right Front Wheel - Remove
2. Engine Undercover - Remove
3. Chain Case Cover - Remove

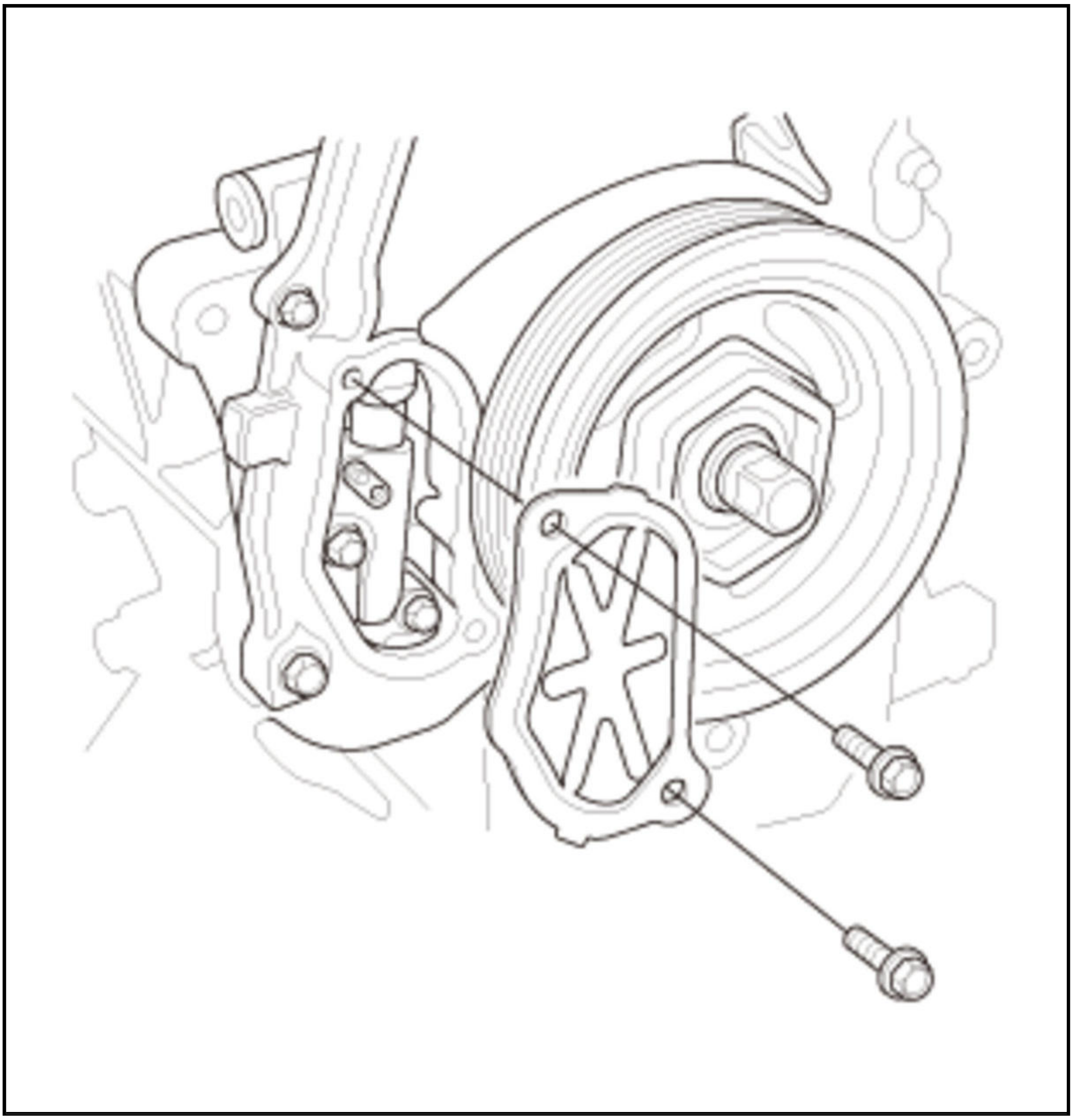

4. Cam Chain Auto-Tensioner - Remove

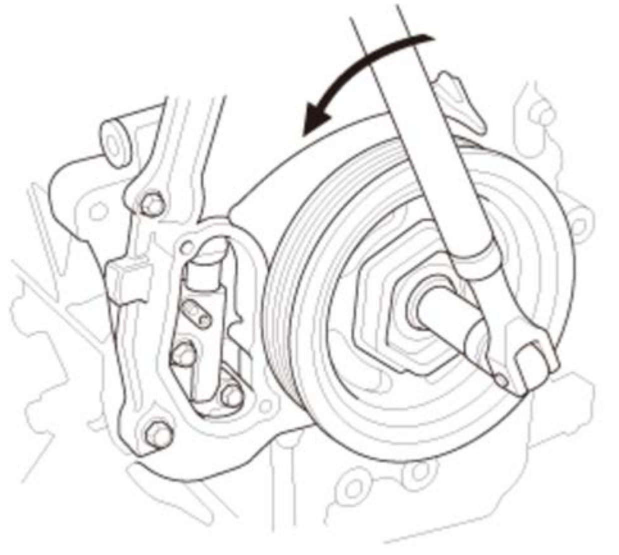	1. Turn the crankshaft counterclockwise to compress the cam chain auto-tensioner.

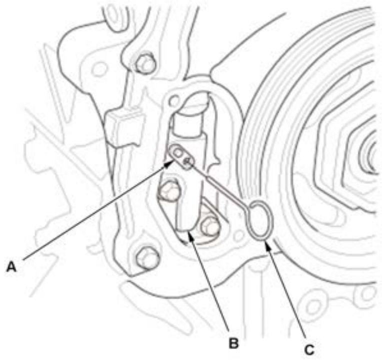	2. Rotate the crankshaft counterclockwise to align the holes on the lock (A) and the cam chain auto-tensioner (B), then insert a 1.2 mm (3/64 in) diameter pin (C) into the holes. Turn the crankshaft clockwise to secure the pin. **NOTE:** If the holes in the lock and the cam chain auto-tensioner do not align, continue to rotating the crankshaft counterclockwise until the holes align, then install the pin.

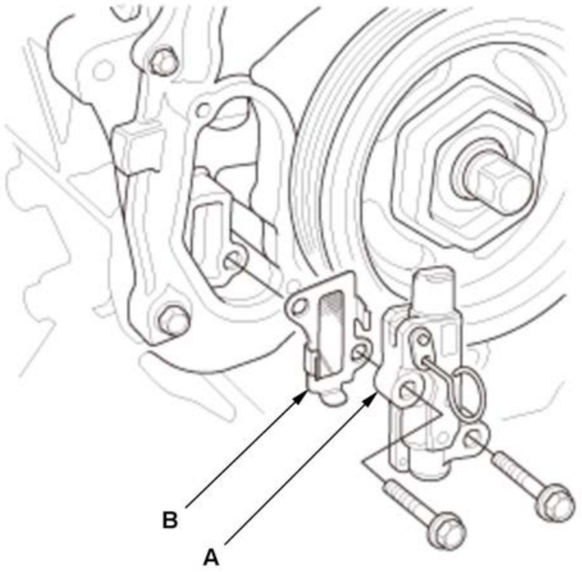	3. Remove the cam chain auto-tensioner (A) and the cam chain auto-tensioner filter (B). **NOTE:** Check the cam chain auto-tensioner filter for damage. If filter is damaged, replace it.

Installation

NOTE: How to read the torque specifications .

1. Cam Chain Auto-Tensioner - Install

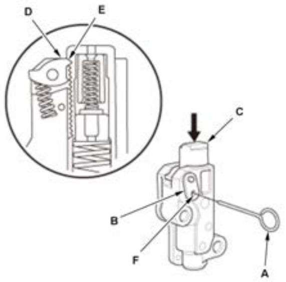	1. Compress the cam chain auto-tensioner when replacing the cam chain. Remove the pin (A) from the cam chain auto-tensioner that was installed during removal. Turn the plate (B) counterclockwise, to release the lock, then press the rod (C), and set the first cam (D) to the first edge of the rack (E). Insert the 1.2 mm (3/64 in) diameter pin back into the holes (F). **NOTE:** If the cam chain auto-tensioner is not set up as described, the cam chain auto-tensioner will be damaged.

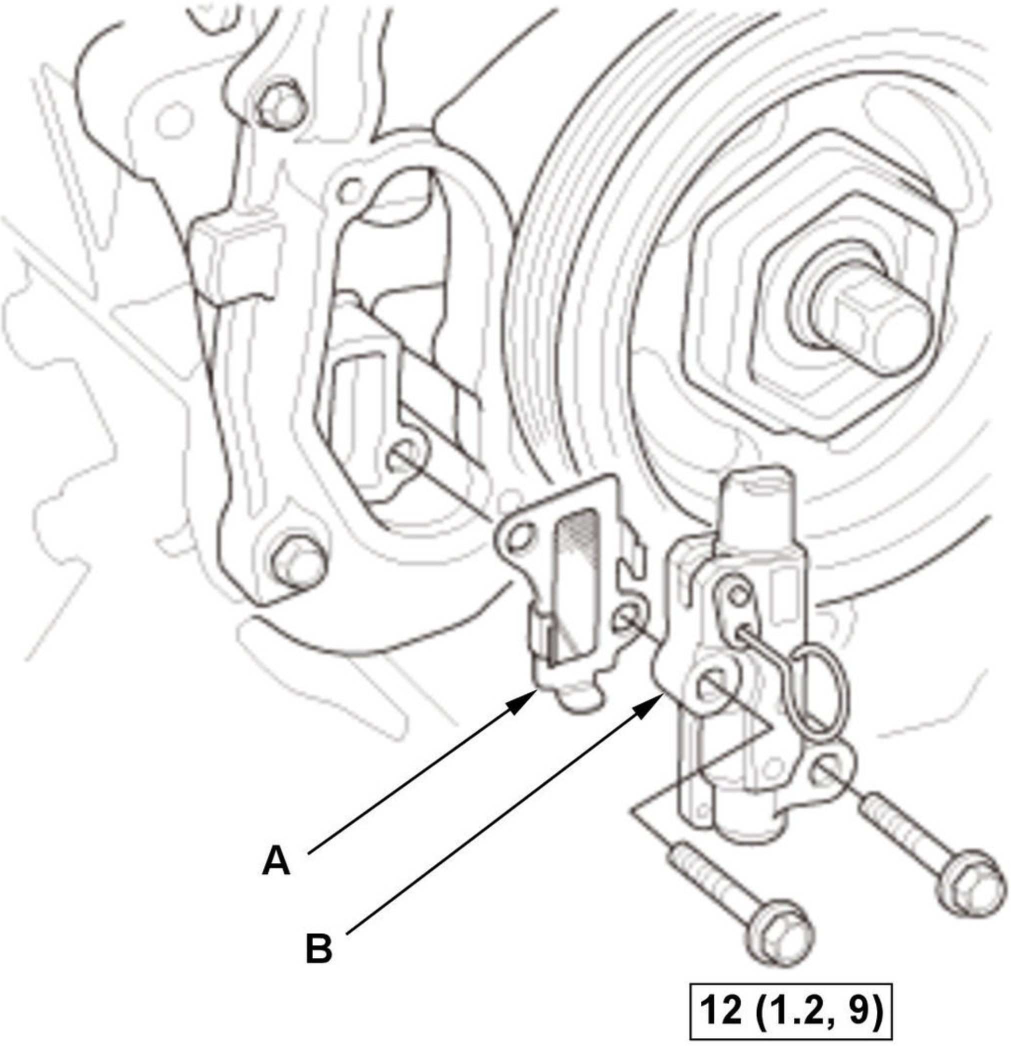

Fig. 18: Cam Chain Auto-Tensioner Replacement Components With Torque Specifications (1.5 L Engine)
Courtesy of HONDA, U.S.A., INC.

2. Install the cam chain auto-tensioner filter (A) and the cam chain auto-tensioner (B).

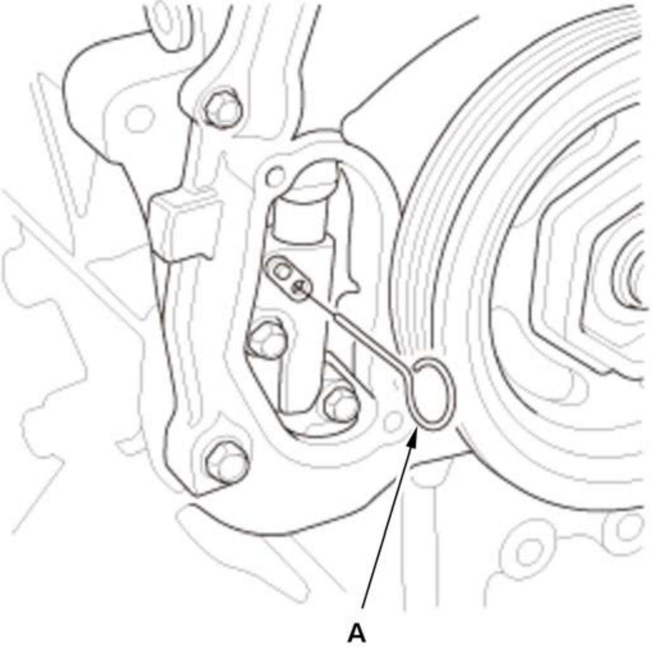	3. Remove the pin (A) from the cam chain auto-tensioner.

2. Chain Case Cover - Install

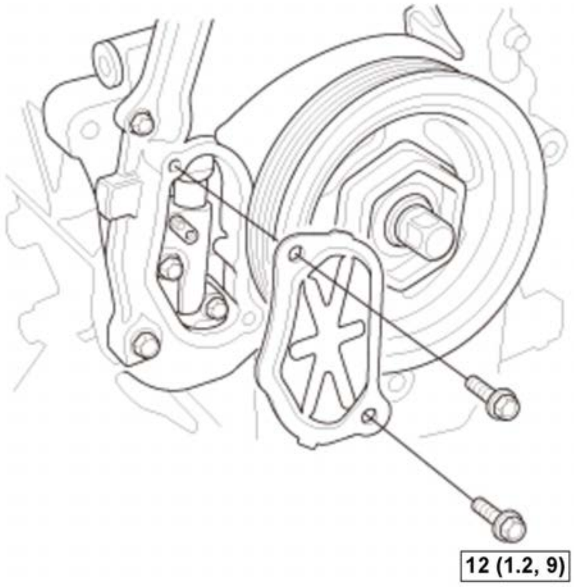	1. **Apply liquid gasket** to the cam chain case mating surface of the chain case cover, and to the inside edge of the threaded bolt holes. 2. Install the chain case cover.

3. **Engine Undercover - Install**
4. **Right Front Wheel - Install**

CAM CHAIN AUTO-TENSIONER REMOVAL AND INSTALLATION (2.4 L ENGINE) (2017 2018 2019)

Removal

1. **Right Front Wheel - Remove**
2. **Engine Undercover - Remove**
3. Chain Case Cover - Remove

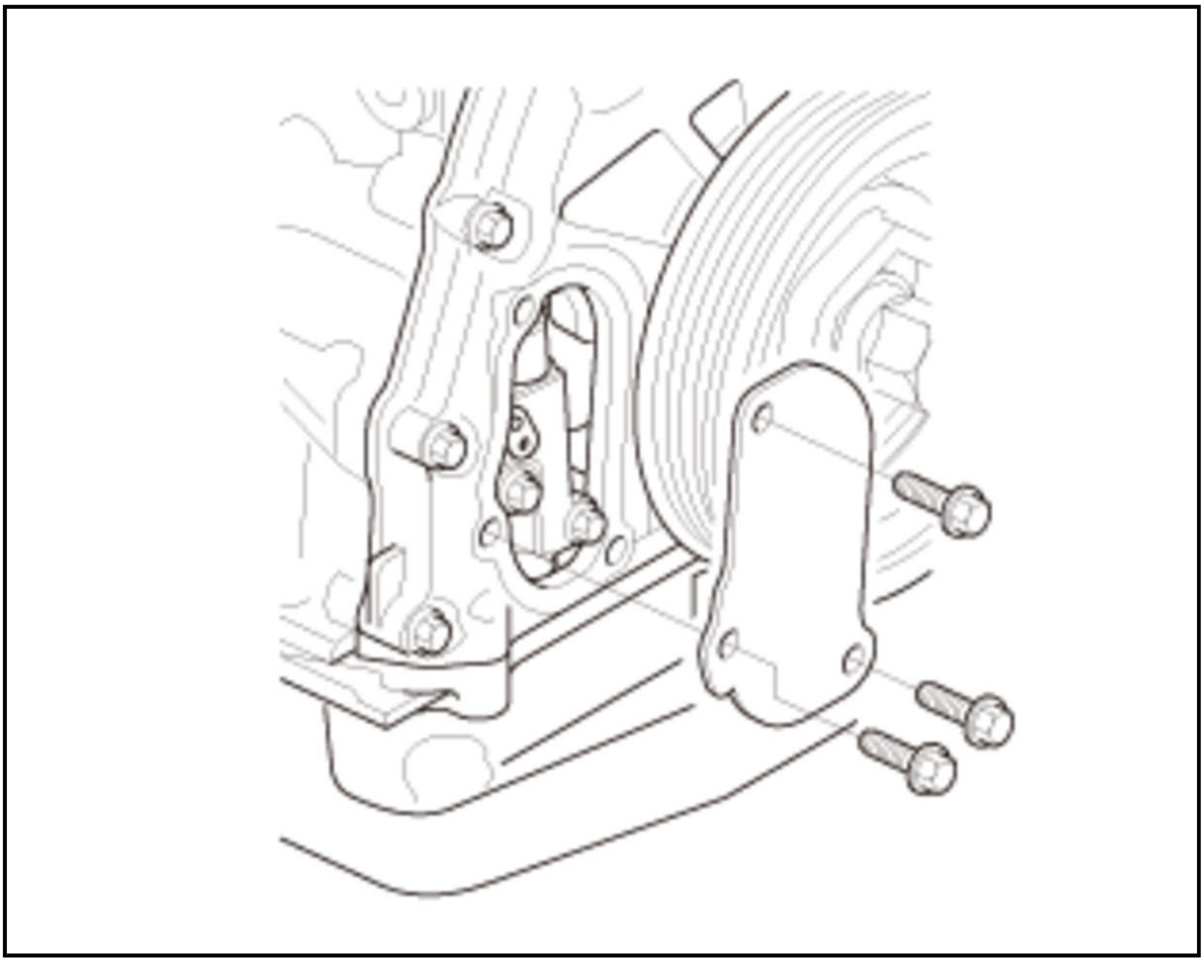

4. Cam Chain Auto-Tensioner - Remove

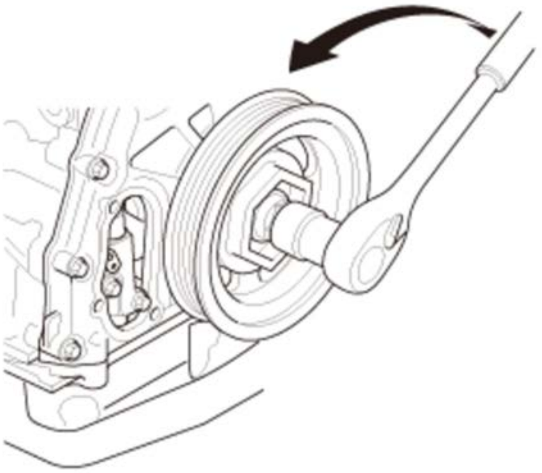	1. Turn the crankshaft counterclockwise to compress the cam chain auto-tensioner.
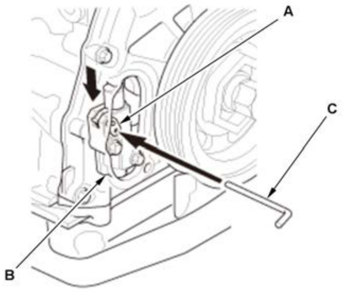	2. Rotate the crankshaft counterclockwise to align the holes on the lock (A) and the cam chain auto-tensioner (B), then insert a 1.2 mm (3/64 in) diameter pin (C) into the holes. Turn the crankshaft clockwise about 90 deg. to secure the pin. **NOTE:** If the holes in the lock and the cam chain auto-tensioner do not align, continue to rotating the crankshaft counterclockwise until the holes align, then install the pin.

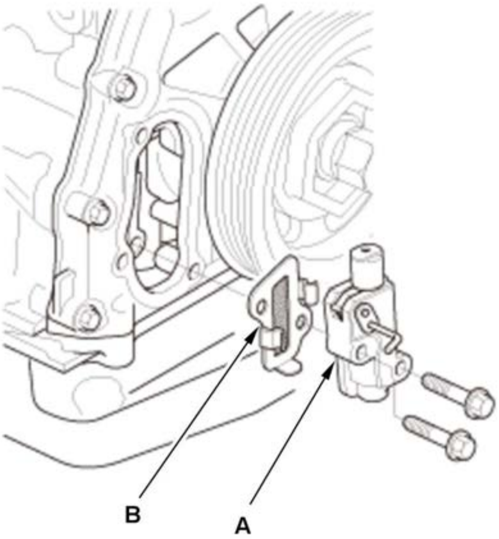	3. Remove the cam chain auto-tensioner (A) and the cam chain auto-tensioner filter (B). **NOTE:** Check the cam chain auto-tensioner filter for damage. If filter is damaged, replace it.

Installation

NOTE: How to read the torque specifications .

1. Cam Chain Auto-Tensioner - Install

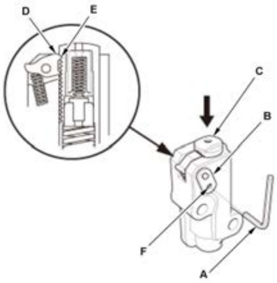	1. Compress the cam chain auto-tensioner when replacing the cam chain. Remove the pin (A) from the cam chain auto-tensioner that was installed during removal. Turn the plate (B) counterclockwise, to release the lock, then press the rod (C), and set the first cam (D) to the first edge of the rack (E). Insert the 1.2 mm (3/64 in) diameter pin back into the holes (F). **NOTE:** If the cam chain auto-tensioner is not set up as described, the cam chain auto-tensioner will be damaged.

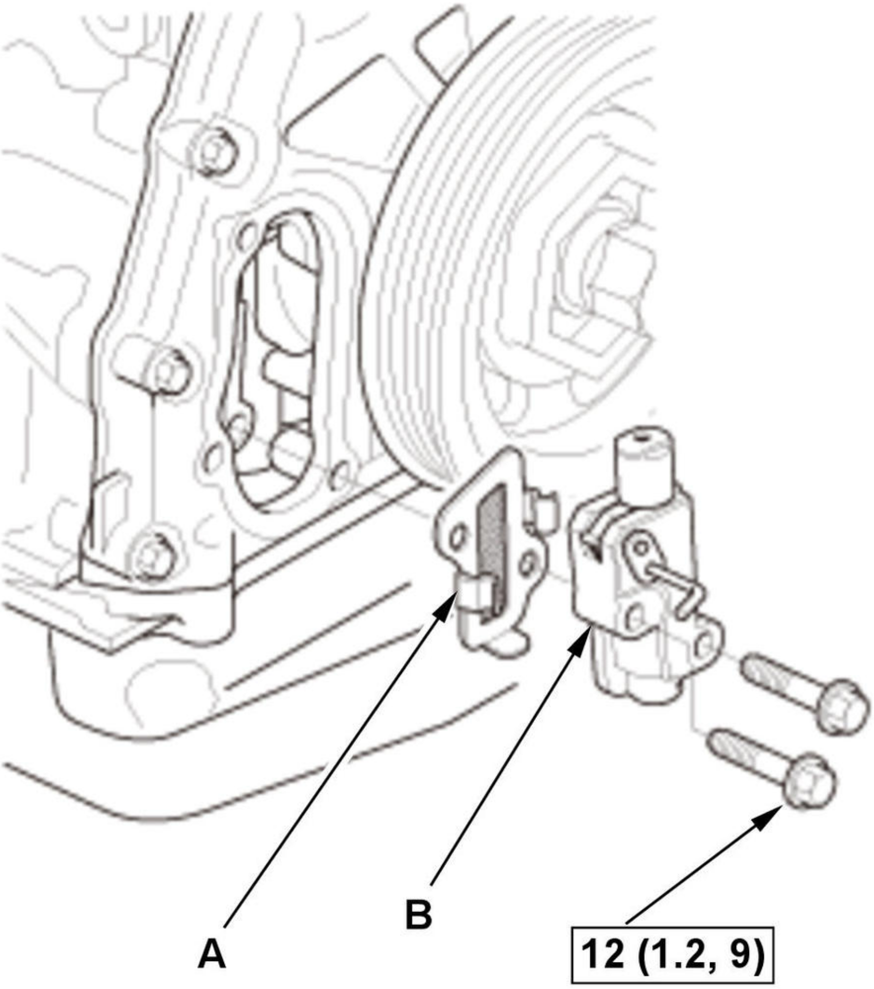

Fig. 19: Cam Chain Auto-Tensioner Replacement Components With Torque Specifications (2.4 L Engine) (2017 2018 2019)
Courtesy of HONDA, U.S.A., INC.

2. Install the cam chain auto-tensioner filter (A) and the cam chain auto-tensioner (B).

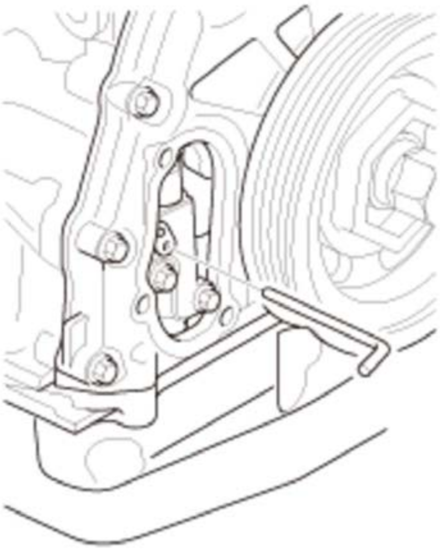	3. Remove the pin from the cam chain auto- tensioner.

2. Chain Case Cover - Install

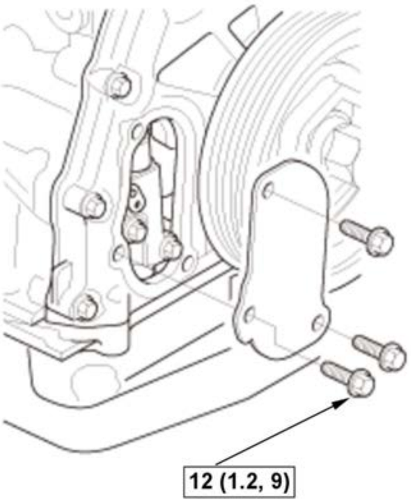	1. **Apply liquid gasket** to the chain case mating surface of the chain case cover and to the inside edge of the threaded bolt holes. 2. Install the chain case cover.

3. **Engine Undercover - Install**
4. **Right Front Wheel - Install**

CRANKSHAFT PULLEY REMOVAL AND INSTALLATION (1.5 L ENGINE)

Special Tools Required

Image	Description/Tool Number
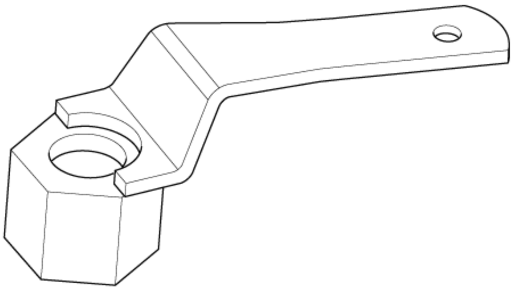	Holder Attachment, 50 mm, Offset 07MAB-PY3010A
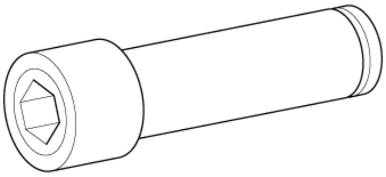	Socket, 19 mm 07JAA-001020A or equivalent

Image	Description/Tool Number
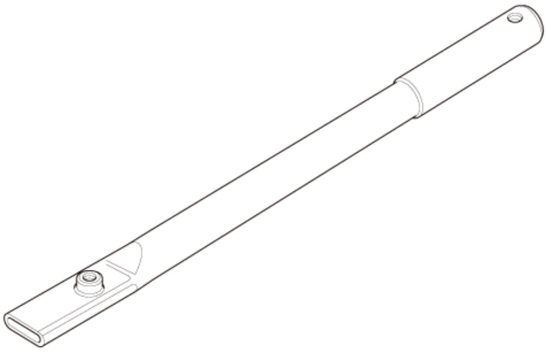	Holder Handle 07JAB-001020B

Removal

NOTE: ℹ Where icon is shown for further information in the information below.

1

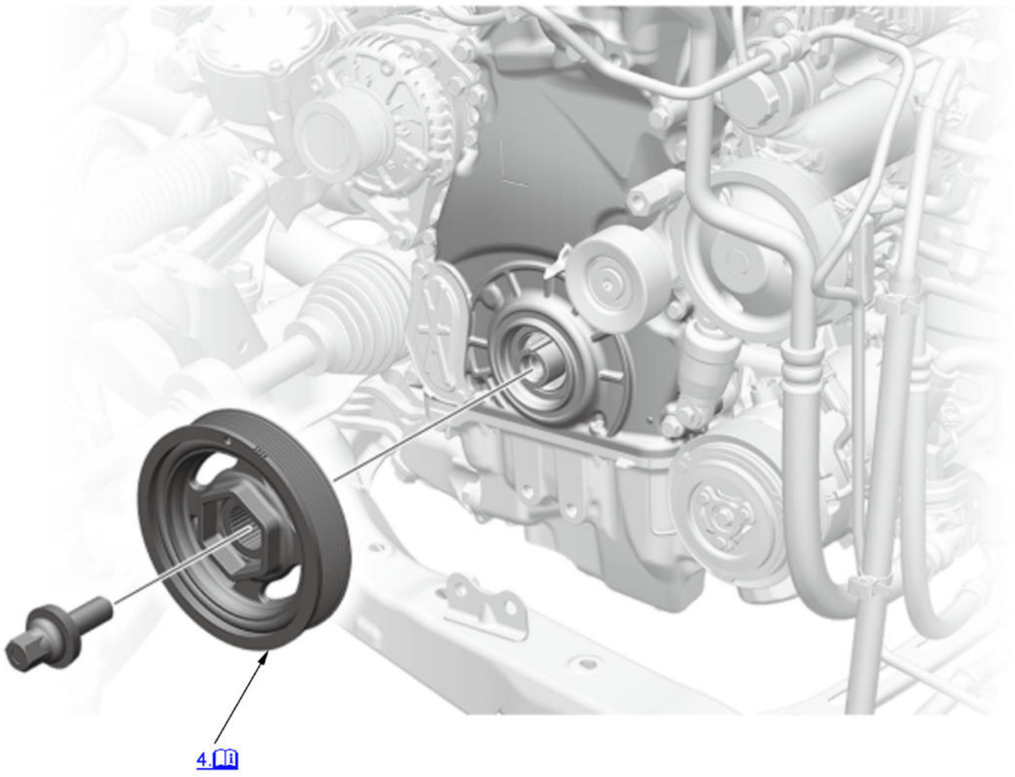

ℹ	Detailed information, notes, and precautions

1. **Right Front Wheel - Remove**
2. **Engine Undercover - Remove**
3. **Drive Belt - Remove**
4. Crankshaft Pulley - Remove

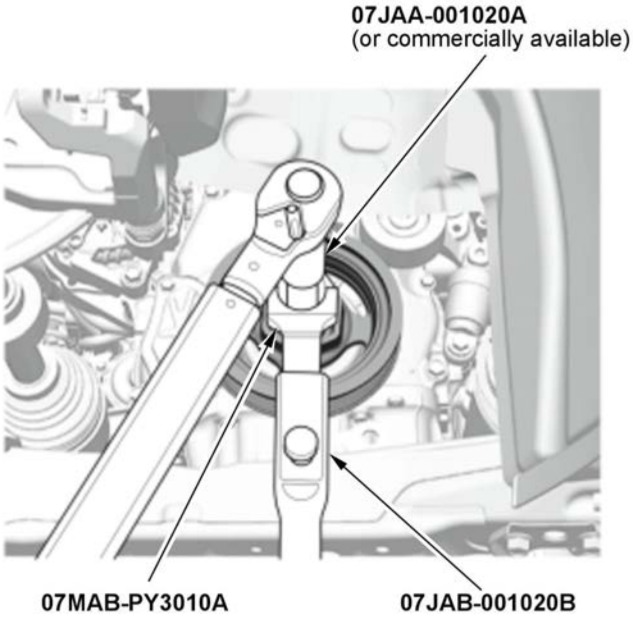 07JAA-001020A (or commercially available) 07MAB-PY3010A 07JAB-001020B	1. Hold the crankshaft pulley with the holder handle and the pulley holder attachment. 2. Remove the pulley bolt with a socket, 19 mm and a breaker bar. 3. Remove the crankshaft pulley.

Installation

NOTE: ℹ Where icon is shown for further information in the information below.

1

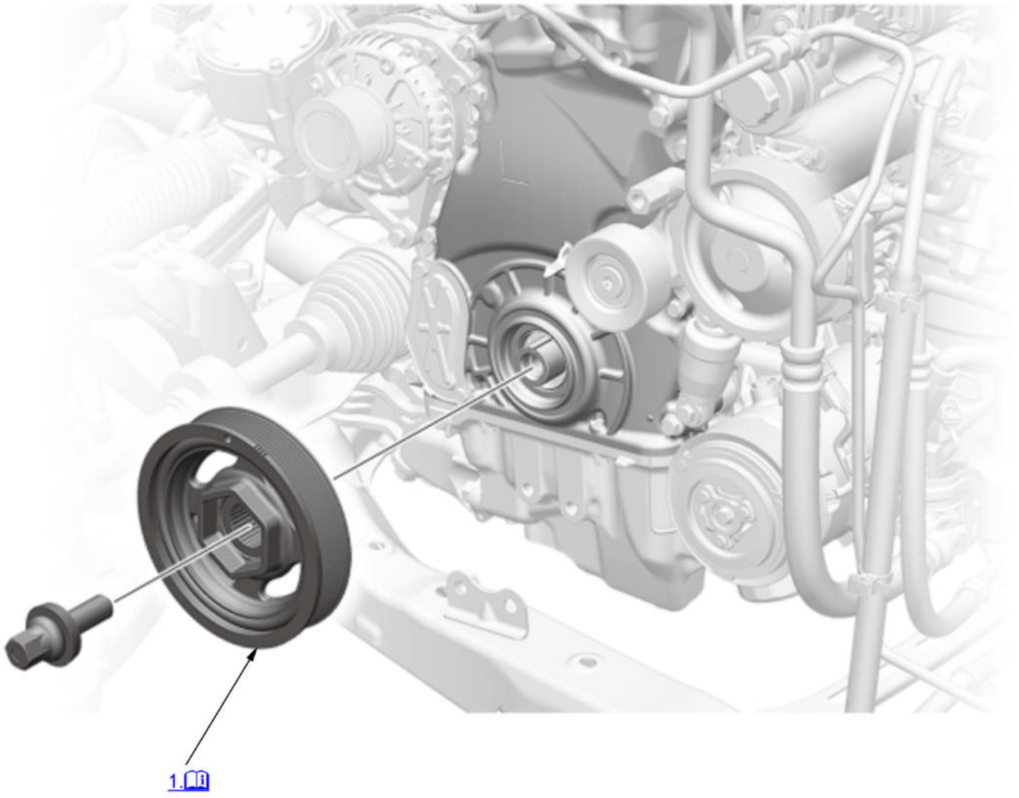

ℹ	Detailed information, notes, and precautions

1. Crankshaft Pulley - Install

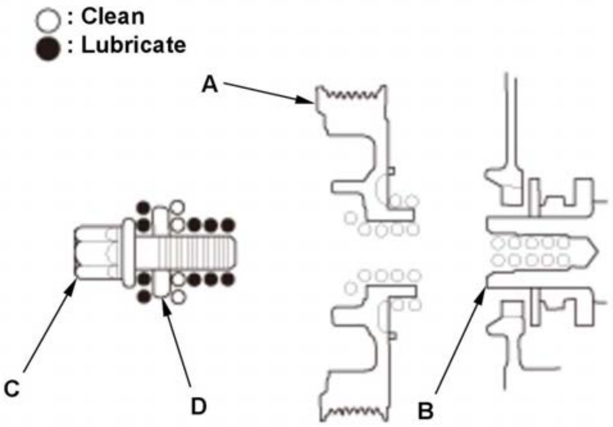
○ : Clean
● : Lubricate
A
C
D
B

1. Clean the crankshaft pulley (A), the crankshaft (B), the bolt (C), and the washer (D).

2. Lubricate with new engine oil as shown.

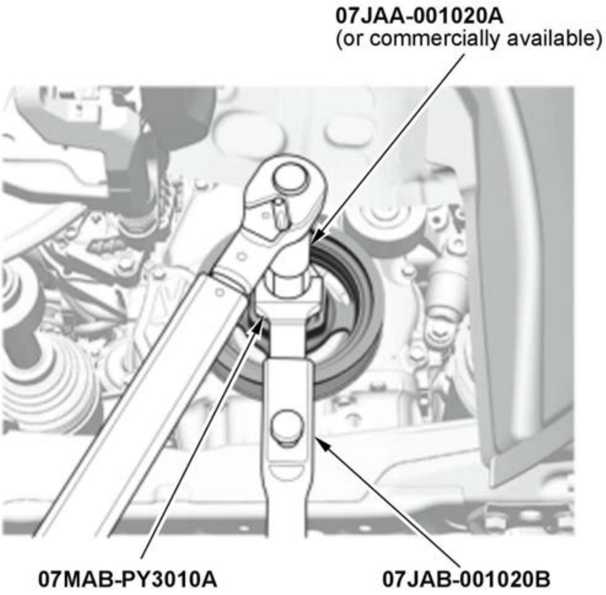
07JAA-001020A
(or commercially available)
07MAB-PY3010A
07JAB-001020B

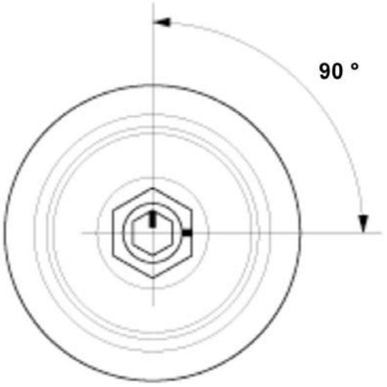

3. Install the crankshaft pulley and the pulley bolt.

4. Hold the crankshaft pulley with the holder handle and the pulley holder attachment, torque the pulley bolt to 70 N.m (7.1 kgf.m, 52 lbf.ft) with a torque wrench and a socket, 19mm.

NOTE: Tighten the pulley bolt. Do not use an impact wrench.

5. Tighten the pulley bolt an additional 90 deg..

2. Drive Belt - Install
3. Engine Undercover - Install
4. Right Front Wheel - Install

CRANKSHAFT PULLEY REMOVAL AND INSTALLATION (2.4 L ENGINE) (2017 2018 2019)

Special Tools Required

Image	Description/Tool Number
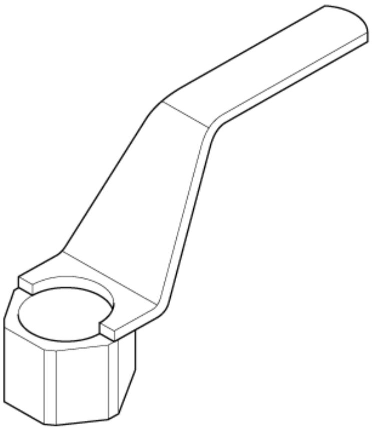	Crankshaft Pulley Holder 07AAB-RJAA100
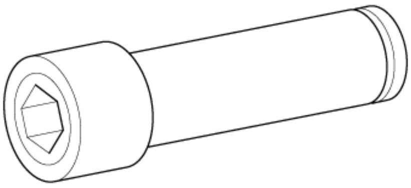	Socket, 19 mm 07JAA-001020A or equivalent
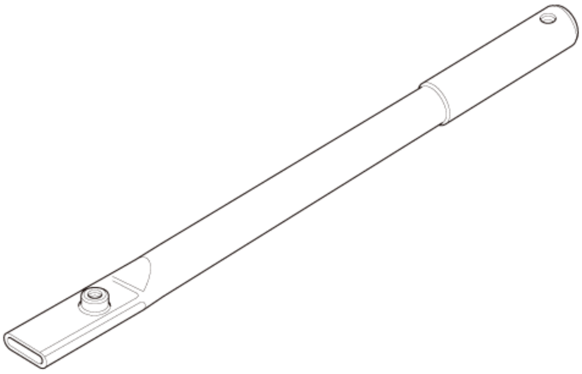	Holder Handle 07JAB-001020B

Removal

NOTE: 📖ℹ Where icon is shown for further information in the information below.

1

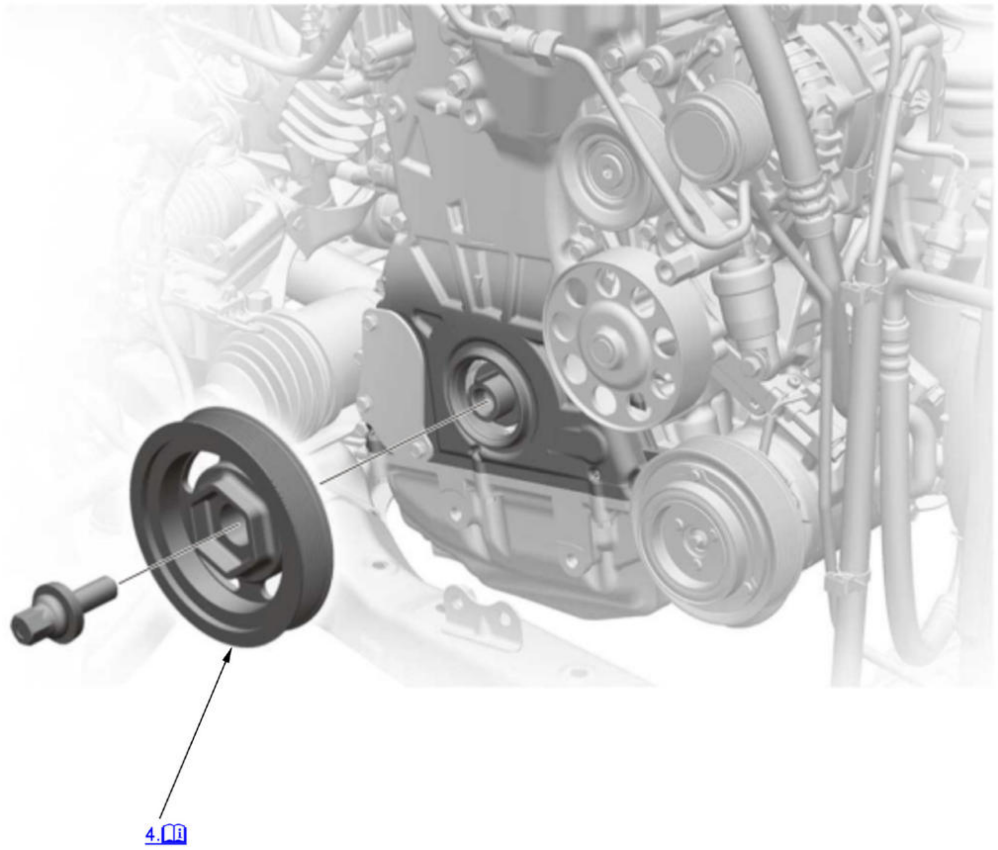

🛈	Detailed information, notes, and precautions

1. **Right Front Wheel - Remove**
2. **Engine Undercover - Remove**
3. **Drive Belt - Remove**
4. Crankshaft Pulley - Remove

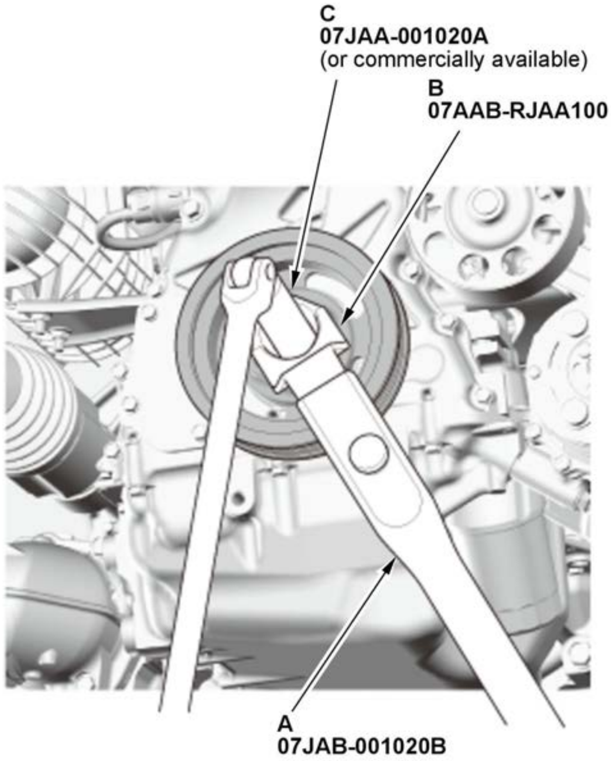
C
07JAA-001020A
(or commercially available)
B
07AAB-RJAA100
A
07JAB-001020B

1. Hold the pulley with the holder handle (A) and the crankshaft pulley holder (B).

2. Remove the bolt with a socket, 19 mm (C) and a breaker bar, then remove the crankshaft pulley.

Installation

NOTE: ℹ Where icon is shown for further information in the information below.

1

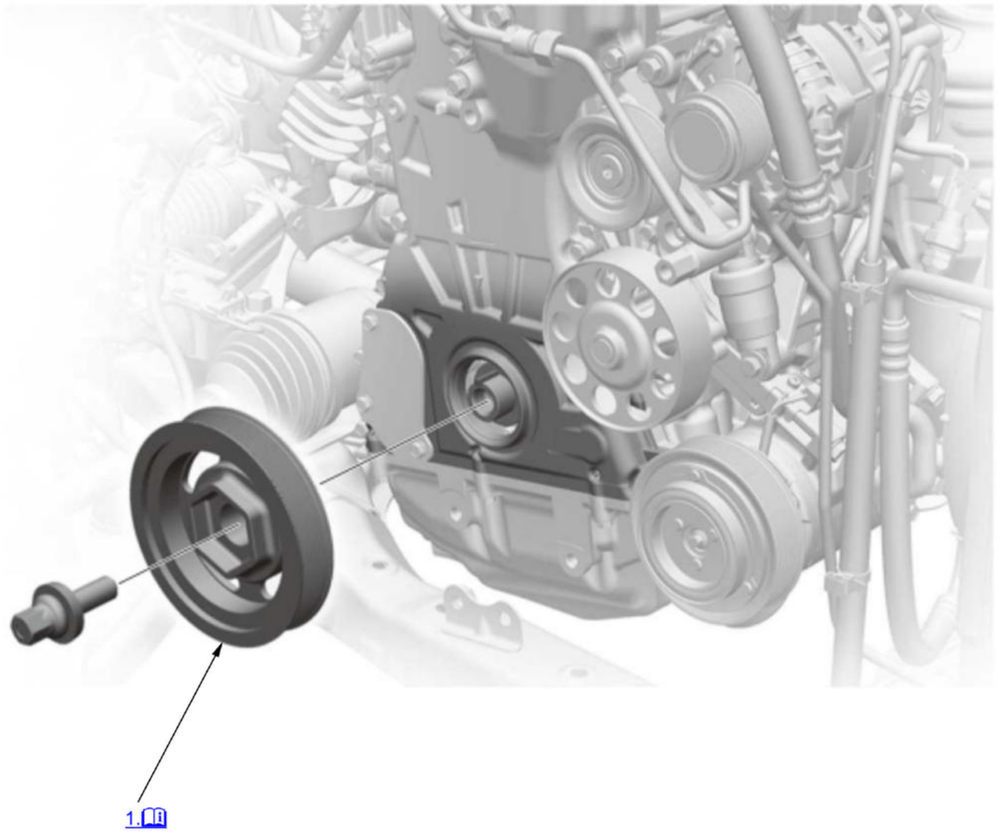

Detailed information, notes, and precautions

1. Crankshaft Pulley - Install

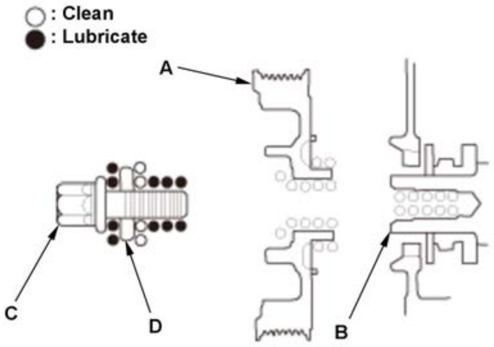	1. Remove any oil and clean the crankshaft pulley (A), the crankshaft (B), the bolt (C), and the washer (D). Lubricate with new engine oil as shown.

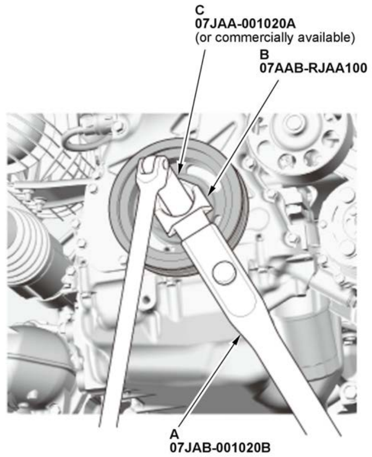 C 07JAA-001020A (or commercially available) B 07AAB-RJAA100 A 07JAB-001020B	2. Install the crankshaft pulley, and hold the pulley with the holder handle (A) and the crankshaft pulley holder (B). 3. Torque the bolt to 50 N.m (5.1 kgf.m, 37 lbf.ft) with a torque wrench and a socket, 19 mm (C). Do not use an impact wrench. If the pulley bolt or crankshaft are new, torque the bolt to 180 N.m (18.4 kgf.m, 133 lbf.ft), then remove the bolt and torque it to 50 N.m (5.1 kgf.m, 37 lbf.ft).

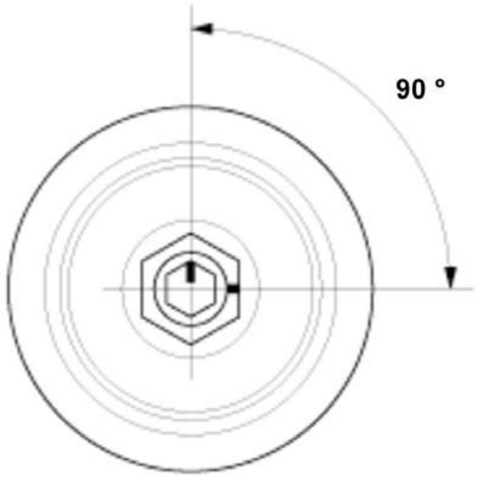	4. Tighten the pulley bolt an additional 90 deg..

2. **Drive Belt - Install**
3. **Engine Undercover - Install**
4. **Right Front Wheel - Install**

DC-DC CONVERTER REMOVAL AND INSTALLATION (WITH AUTO IDLE STOP SYSTEM) (2020 2021)

Removal and Installation

NOTE: SRS components are located in this area. Review the **SRS component locations** and the **precautions and procedures** before doing repairs or service.

1

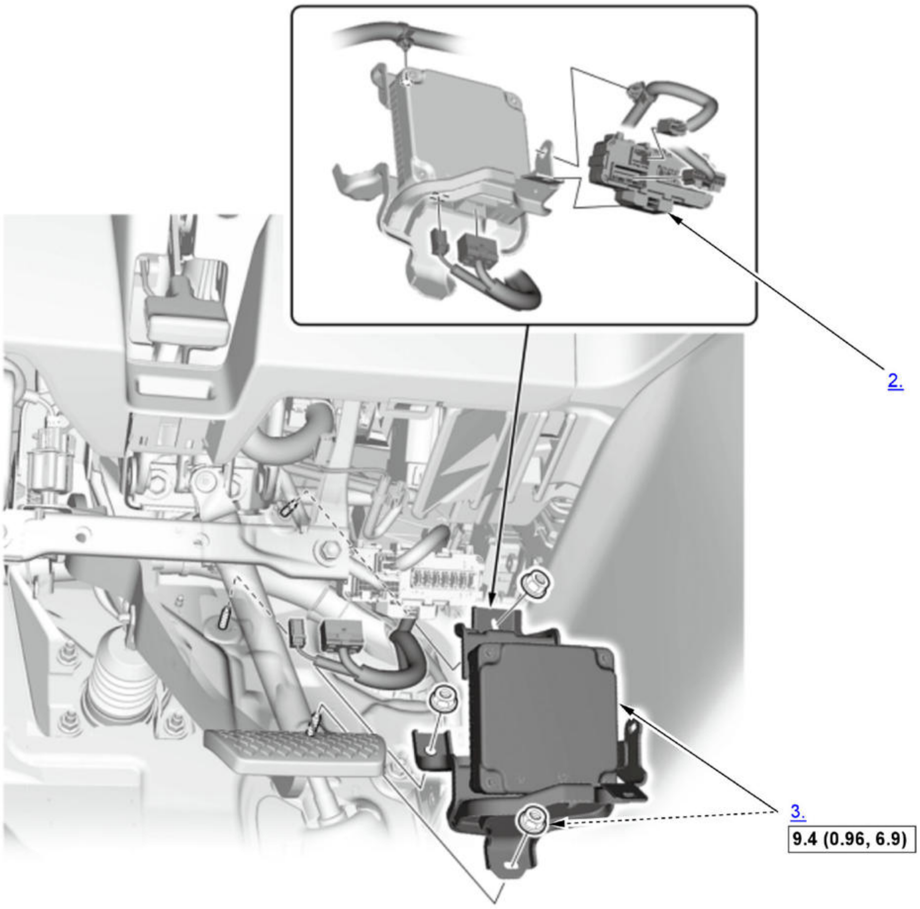

Fig. 20: DC-DC Converter Replacement Components With Torque Specifications (With Auto Idle Stop System) (2020 2021)
Courtesy of HONDA, U.S.A., INC.

☐	Torque: N.m (kgf.m, lbf.ft)

1. Driver's Dashboard Undercover - Remove
2. Auxiliary Under-dash Fuse/Relay Box - Remove
3. DC-DC Converter - Remove
4. All Removed Parts - Install

1. Install the parts in the reverse order of removal.

ECT SENSOR REMOVAL AND INSTALLATION (1.5 L ENGINE)

Removal and Installation

NOTE: Although a numbered sequence is shown, these "*1" indicated parts are separate components. If removal or replacement of one of the components is needed, it is not necessary to remove the other.

1

ECT Sensor 1*1

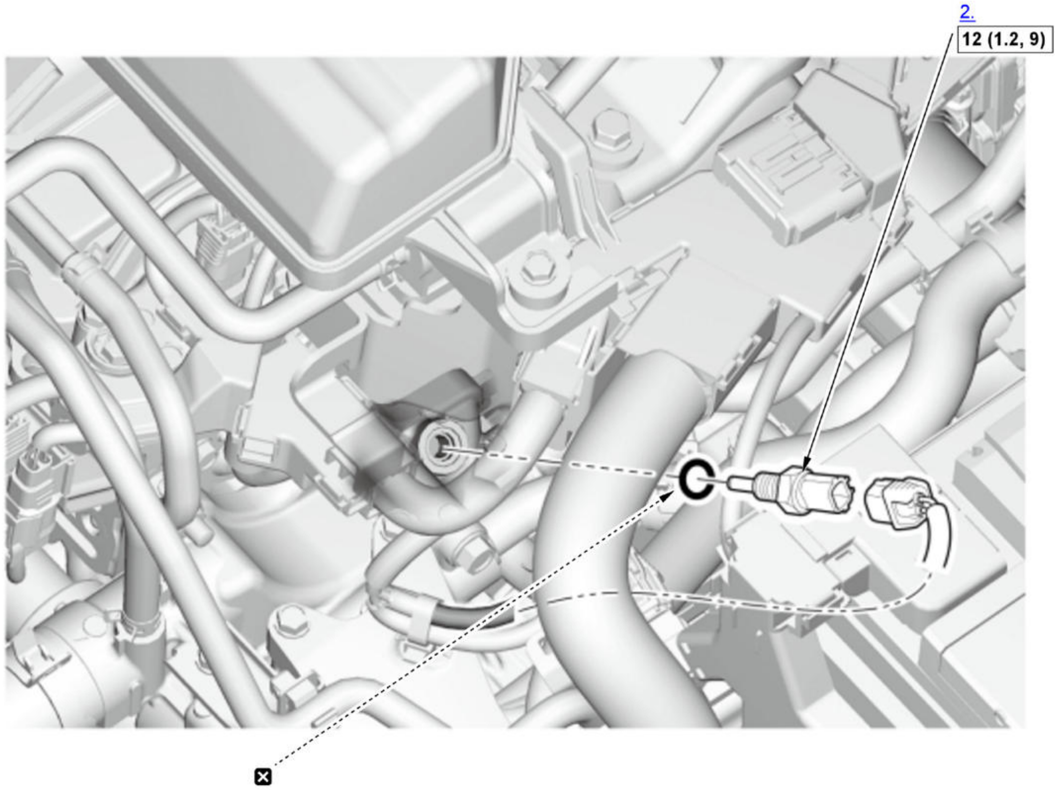

Fig. 21: ECT Sensor 1 Replacement Components With Torque Specifications (1.5 L Engine)
Courtesy of HONDA, U.S.A., INC.

☐	Torque: N.m (kgf.m, lbf.ft)
☒	Replace

2

ECT Sensor 2*1

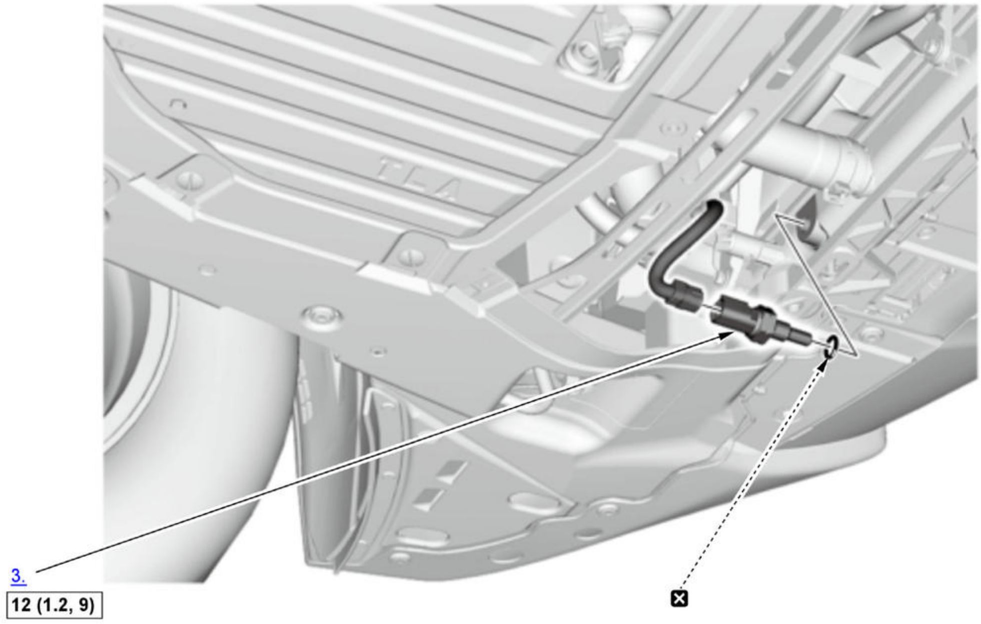

Fig. 22: ECT Sensor 2 Replacement Components With Torque Specifications (1.5 L Engine)
Courtesy of HONDA, U.S.A., INC.

▭	Torque: N.m (kgf.m, lbf.ft)
☒	Replace

ECT Sensor 1

1. **Engine Coolant - Drain**
2. ECT Sensor 1 - Remove
3. All Removed Parts - Install

   1. Install the parts in the reverse order of removal with a new O-ring.

ECT Sensor 2

4. **Front Engine Undercover Lid - Remove**
5. **Engine Coolant - Drain**
6. ECT Sensor 2 - Remove
7. All Removed Parts - Install

   1. Install the parts in the reverse order of removal with a new O-ring.

ECT SENSOR REMOVAL AND INSTALLATION (2.4 L ENGINE) (2017 2018 2019)

Removal and Installation

NOTE: Although a numbered sequence is shown, these "*1" indicated parts are separate components. If removal or replacement of one of the components is needed, it is not necessary to remove the other.

1

ECT Sensor 1*1

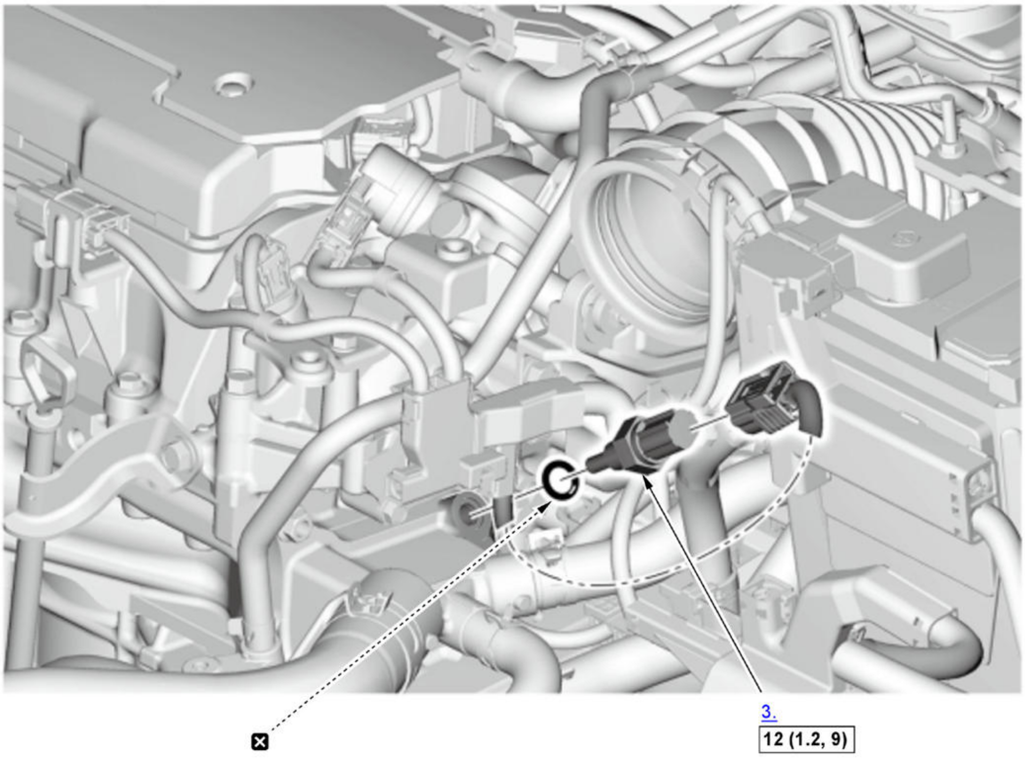

Fig. 23: ECT Sensor Replacement Components With Torque Specifications (2.4 L Engine) (2017 2018

2019)
Courtesy of HONDA, U.S.A., INC.

☐	Torque: N.m (kgf.m, lbf.ft)
☒	Replace

2

ECT Sensor 2*1

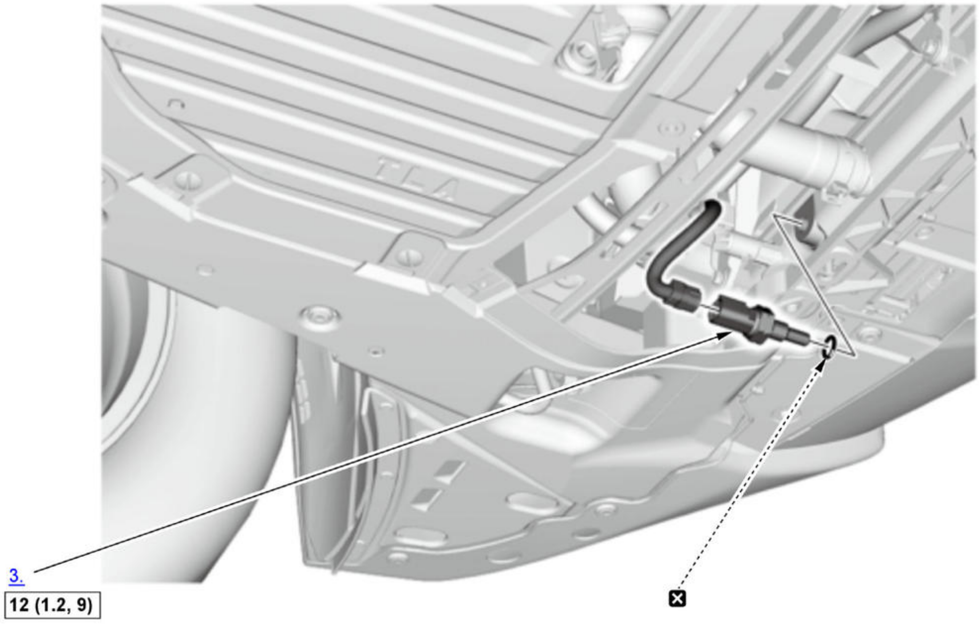

Fig. 24: ECT Sensor 2 Replacement Components With Torque Specifications (2.4 L Engine) (2017 2018 2019)
Courtesy of HONDA, U.S.A., INC.

☐	Torque: N.m (kgf.m, lbf.ft)
☒	Replace

ECT Sensor 1

1. **Engine Coolant - Drain**
2. **Air Cleaner - Remove**
3. ECT Sensor 1 - Remove
4. All Removed Parts - Install

1. Install the parts in the reverse order of removal with a new O-ring.

ECT Sensor 2

5. **Front Engine Undercover Lid - Remove**
6. **Engine Coolant - Drain**
7. ECT Sensor 2 - Remove
8. All Removed Parts - Install

1. Install the parts in the reverse order of removal with a new O-ring.

EVAP SYSTEM REMOVAL AND INSTALLATION (2.4 L ENGINE (KA)) (2017 2018 2019)

Removal and Installation

WARNING:

Flammable - Keep Fire Away

NOTE:

- Refer to the **Fuel and Emissions Systems Service Precautions** before disconnecting the fuel line.
- Fuel may cause flammable gas leaks and may result in fire. Keep sparks, flame and cigarettes away.
- Although a numbered sequence is shown, these "*1" indicated parts are separate components. If removal or replacement of one of the components is needed, it is not necessary to remove the other.

1

EVAP Canister*1

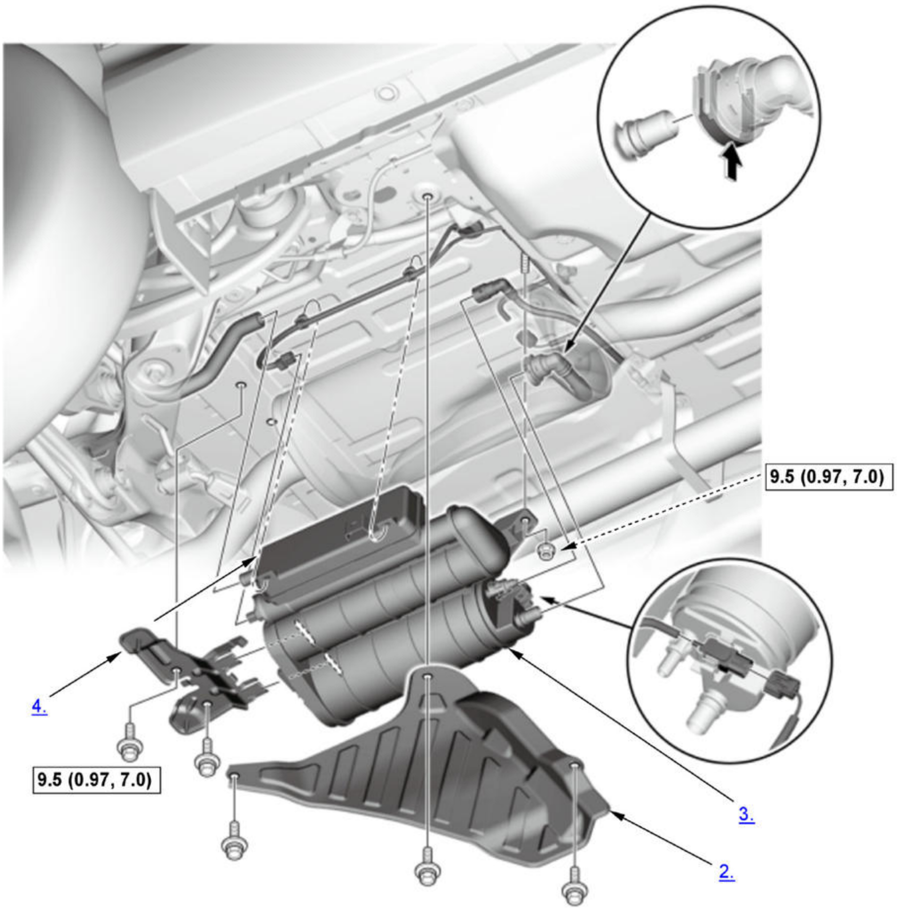

Fig. 25: EVAP Canister Replacement Components With Torque Specifications (2.4 L Engine (KA)) (2017 2018 2019)
Courtesy of HONDA, U.S.A., INC.

☐	Torque: N.m (kgf.m, lbf.ft)

2

EVAP Canister Purge Valve*1

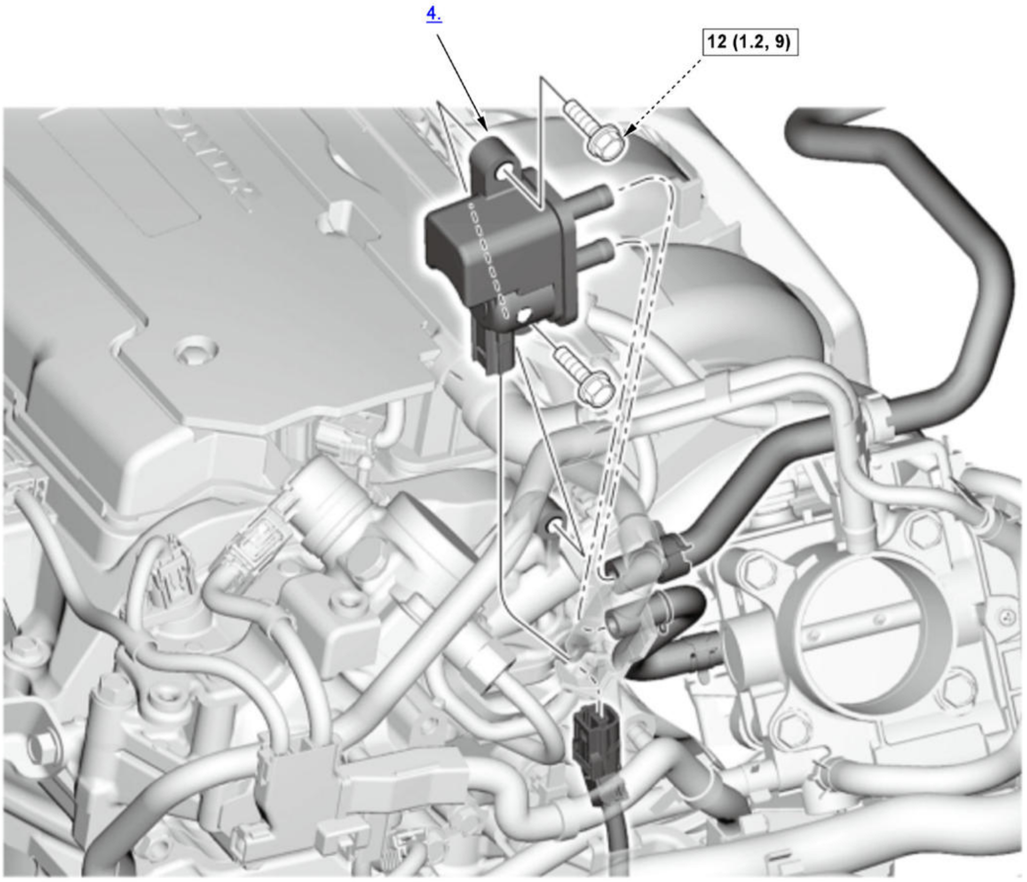

Fig. 26: EVAP Canister Purge Valve Replacement Components With Torque Specifications (2.4 L Engine (KA)) (2017 2018 2019)
Courtesy of HONDA, U.S.A., INC.

☐	Torque: N.m (kgf.m, lbf.ft)

3

FTP Sensor/EVAP Canister Vent Shut Valve

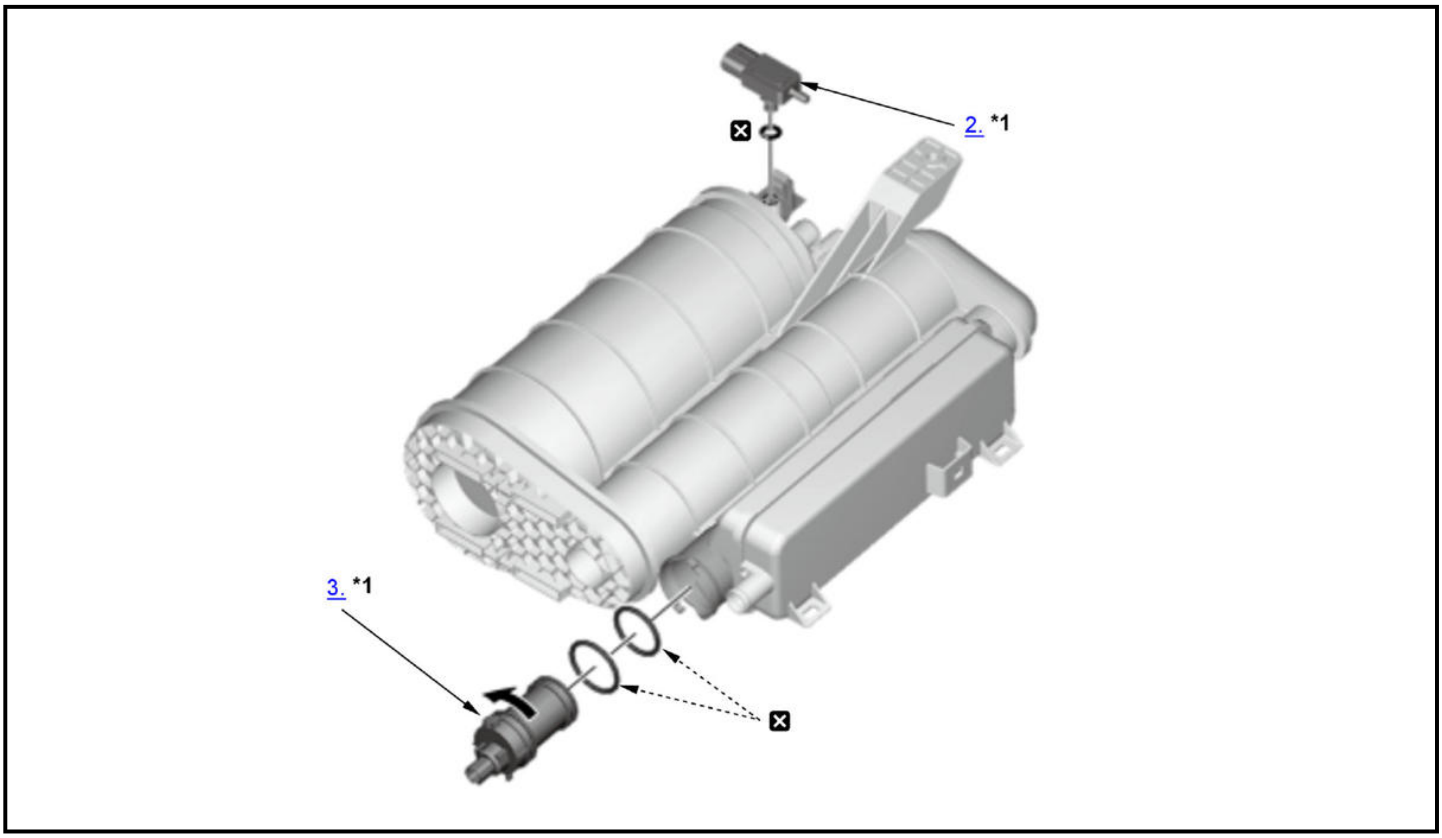

☒	Replace

4

EVAP Canister Drain Pipe/EVAP Canister One Way Valve*1

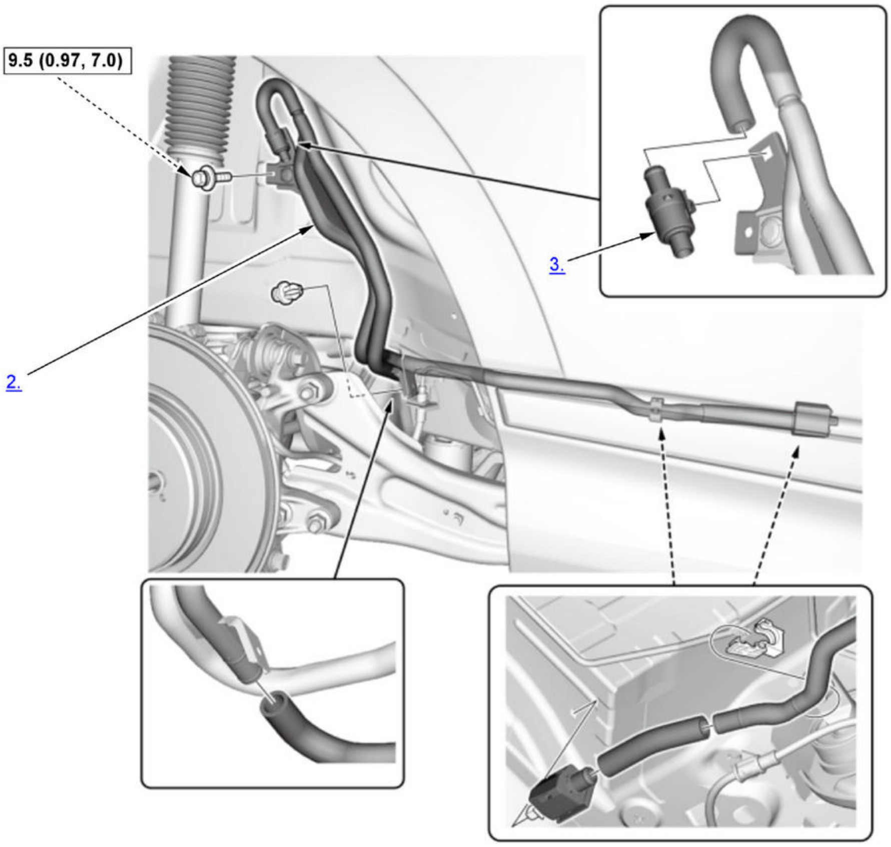

Fig. 27: EVAP Canister Drain Pipe/EVAP Canister One Way Valve Replacement Components With Torque Specifications (2.4 L Engine (KA)) (2017 2018 2019)
Courtesy of HONDA, U.S.A., INC.

▭	Torque: N.m (kgf.m, lbf.ft)

EVAP Canister

1. **Vehicle - Lift**
2. Heat Shield - Remove
3. EVAP Canister - Remove
4. Bracket - Remove
5. All Removed Parts - Install

    1. Install the parts in the reverse order of removal.

EVAP Canister Purge Valve

6. **Air Cleaner - Remove**
7. **High Pressure Fuel Pump Cover - Remove**
8. **Fuel Bracket - Remove**
9. EVAP Canister Purge Valve - Remove
10. All Removed Parts - Install

    1. Install the parts in the reverse order of removal.

FTP Sensor/EVAP Canister Vent Shut Valve

11. EVAP Canister - Remove
12. FTP Senor - Remove
13. EVAP Canister Vent Shut Valve - Remove
14. All Removed Parts - Install

    1. Install the parts in the reverse order of removal.

EVAP Canister Drain Pipe/EVAP Canister One Way Valve

15. **Rear Inner Fender (Right Side) - Remove**
16. EVAP Canister Drain Pipe - Remove
17. EVAP Canister One Way Valve - Remove
18. All Removed Parts - Install

    1. Install the parts in the reverse order of removal.

ENGINE ASSEMBLY LOWER TORQUE ROD REMOVAL AND INSTALLATION (1.5 L ENGINE)

Removal and Installation

NOTE: ℹ Where icon is shown for further information in the information below.

1

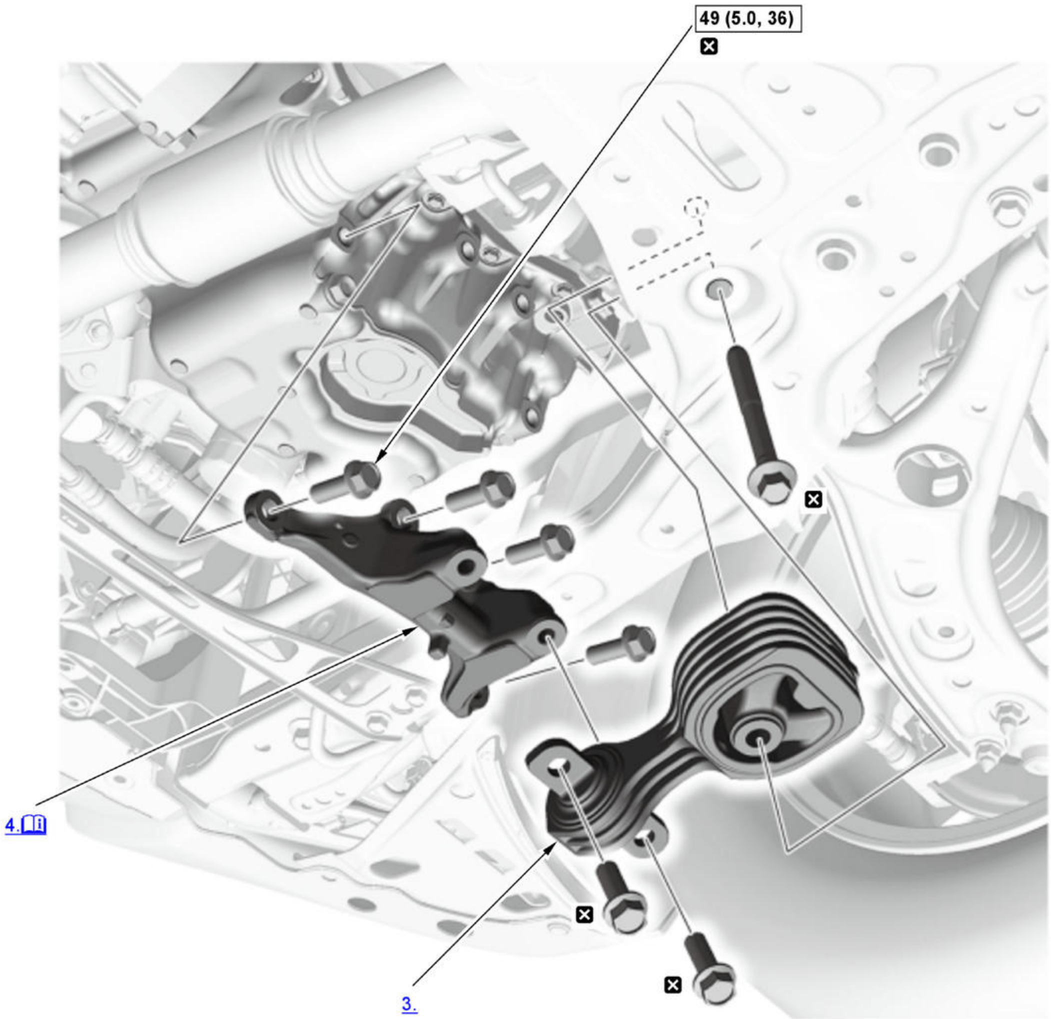

[Fig. 28: Engine Assembly Lower Torque Rod Replacement Components With Torque Specifications (1.5 L Engine)](#)
Courtesy of HONDA, U.S.A., INC.

ℹ	Detailed information, notes, and precautions
☐	Torque: N.m (kgf.m, lbf.ft)
☒	Replace

1. [Engine Undercover - Remove](#)
2. Engine - Support

   1. Support the engine with a transmission jack and a wood block under the oil pan.

3. Lower Torque Rod - Remove
4. Lower Torque Rod Bracket - Remove

   NOTE: If necessary, remove the lower torque rod bracket.

5. All Removed Parts - Install

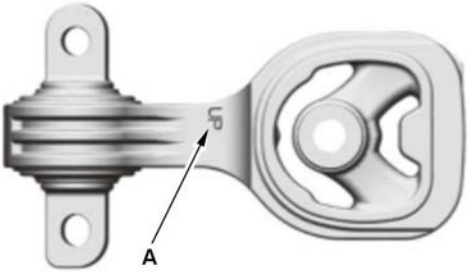 	1. Install the parts in the reverse order of removal. **NOTE:** • Make sure to install the lower torque rod with the "UP" mark (A) facing up. • Do the mounts tightening procedure before tightening all of the mounts' bolts and nuts.

ENGINE ASSEMBLY LOWER TORQUE ROD REMOVAL AND INSTALLATION (2.4 L ENGINE) (2017 2018 2019)

Removal and Installation

1

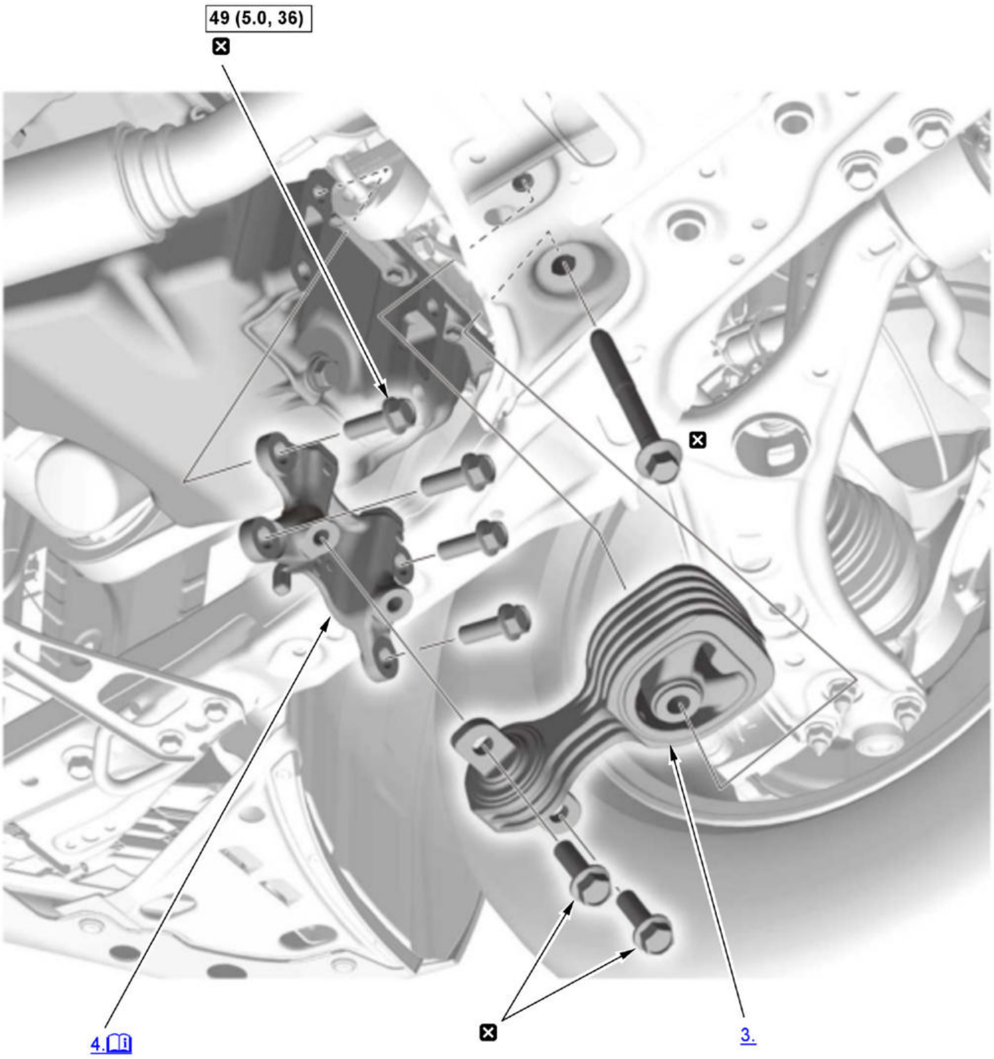

Fig. 29: Engine Assembly Lower Torque Rod (2.4 L Engine) (2017 2018 2019)
Courtesy of HONDA, U.S.A., INC.

☐	Torque: N.m (kgf.m, lbf.ft)
☒	Replace

1. Engine Undercover - Remove

2. Engine - Support

1. Support the engine with a transmission jack and a wood block under the oil pan.

3. Lower Torque Rod - Remove
4. Lower Torque Rod Bracket - Remove

1. Remove the lower torque rod bracket as needed.

5. All Removed Parts - Install

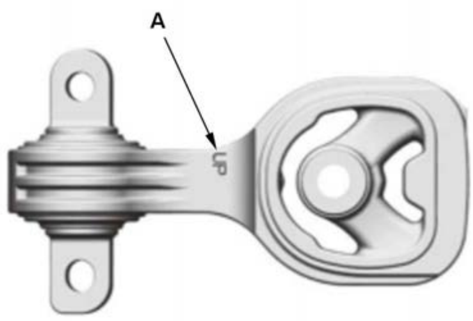	1. Install the parts in the reverse order of removal. **NOTE:** - Make sure to install the lower torque rod with the "UP" mark (A) facing up. - **Do the mounts tightening procedure before tightening all of the mounts' bolts and nuts** .

ENGINE ASSEMBLY UPPER TORQUE ROD REMOVAL AND INSTALLATION (1.5 L ENGINE)

Removal and Installation

1

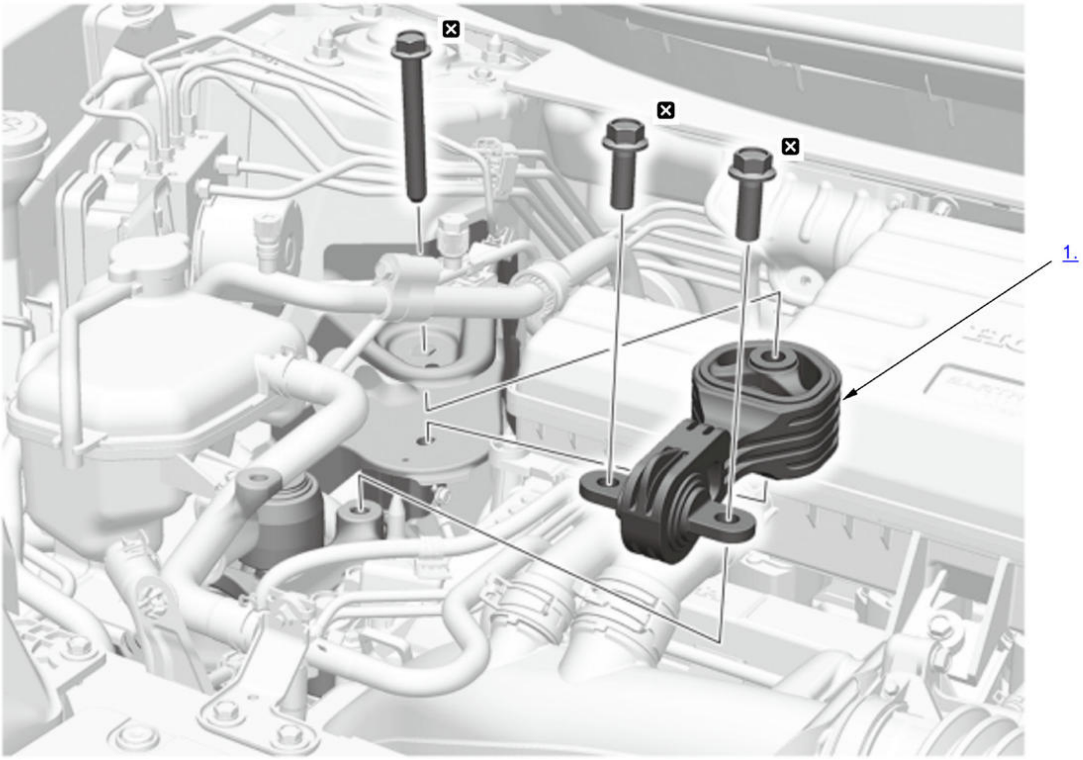

☒	Replace

1. Upper Torque Rod - Remove
2. All Removed Parts - Install

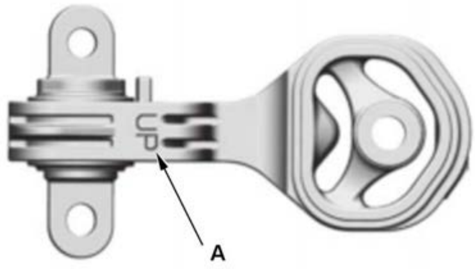	1. Install the parts in the reverse order of removal. **NOTE:** - Make sure to install the upper torque rod with the "UP" mark (A) facing up. - **Do the mounts tightening procedure before tightening all of the mounts' bolts and nuts** .

ENGINE ASSEMBLY UPPER TORQUE ROD REMOVAL AND INSTALLATION (2.4 L ENGINE) (2017 2018 2019)

Removal and Installation

1

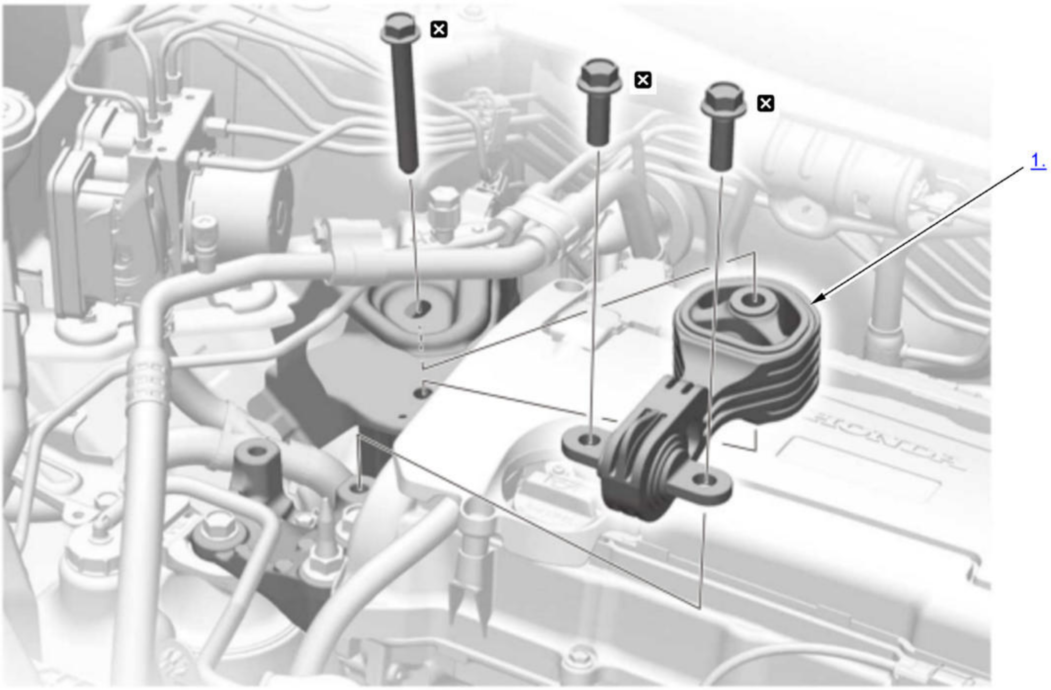

☒	Replace

1. Upper Torque Rod - Remove
2. All Removed Parts - Install

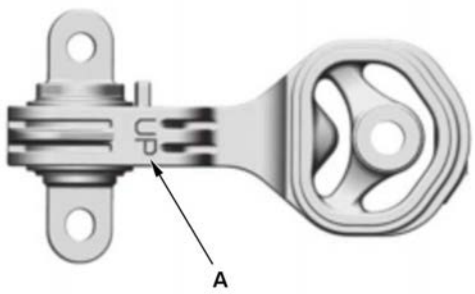	1. Install the parts in the reverse order of removal. **NOTE:** • Make sure to install the upper torque rod with the "UP" mark (A) facing up. • Do the mounts tightening procedure before tightening all of the mounts' bolts and nuts .

ENGINE BLOCK DRAIN BOLT/SEALING BOLT REMOVAL AND INSTALLATION (1.5 L ENGINE)

Removal and Installation

1

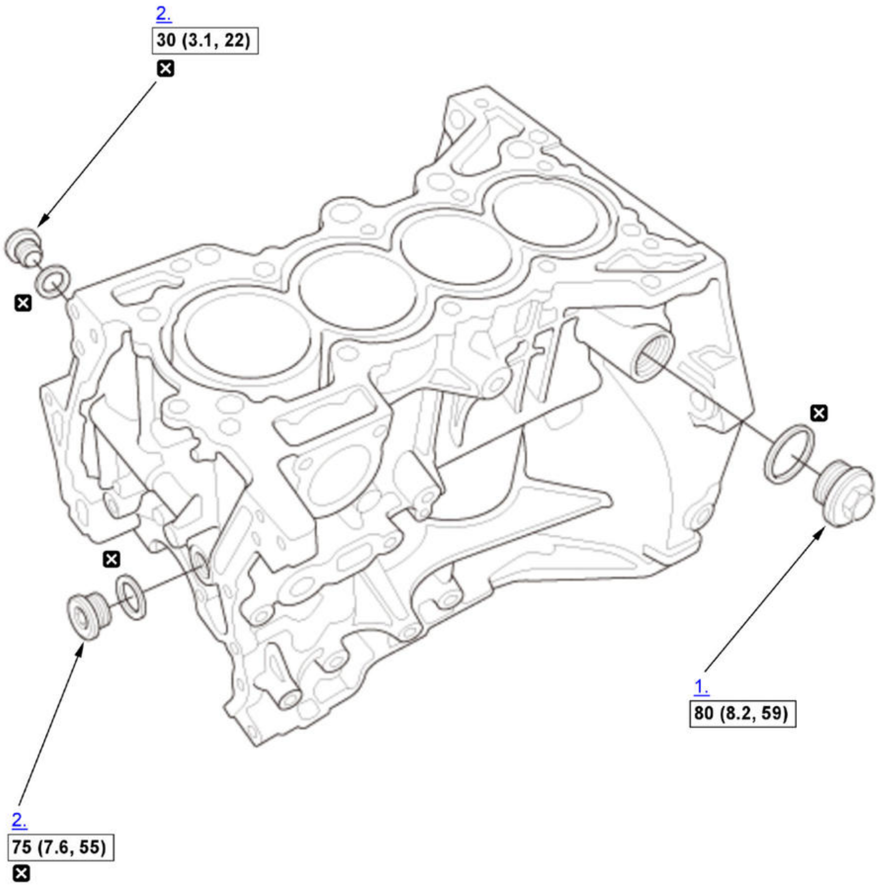

Fig. 30: Engine Block Drain Bolt/Sealing Bolt Replacement Components With Torque Specifications (1.5 L Engine)
Courtesy of HONDA, U.S.A., INC.

☐	Torque: N.m (kgf.m, lbf.ft)
☒	Replace

1. Drain Bolt - Remove
2. Sealing Bolt - Remove
3. All Removed Parts - Install

1. Install the parts in the reverse order of removal.

ENGINE BLOCK DRAIN BOLT/SEALING BOLT REMOVAL AND INSTALLATION (2.4 L ENGINE) (2017 2018 2019)

Removal and Installation

1

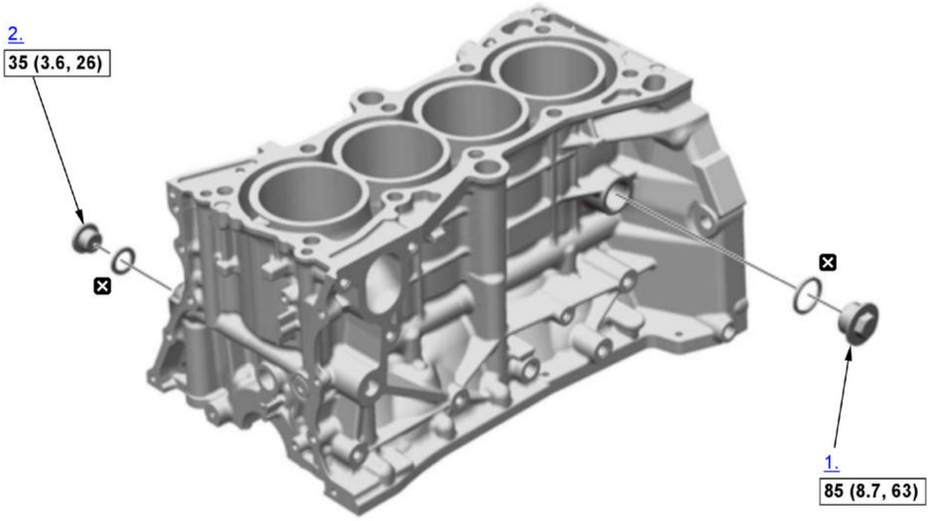

Fig. 31: Engine Block Drain Bolt/Sealing Bolt Replacement Components With Torque Specifications (2.4 L Engine) (2017 2018 2019)
Courtesy of HONDA, U.S.A., INC.

☐	Torque: N.m (kgf.m, lbf.ft)
☒	Replace

1. Drain Bolt - Remove
2. Sealing Bolt - Remove
3. All Removed Parts - Install
    1. Install the parts in the reverse order of removal.

ENGINE OIL PAN REMOVAL AND INSTALLATION (1.5 L ENGINE)

Removal

NOTE: ℹ Where icon is shown for further information in the information below.

1

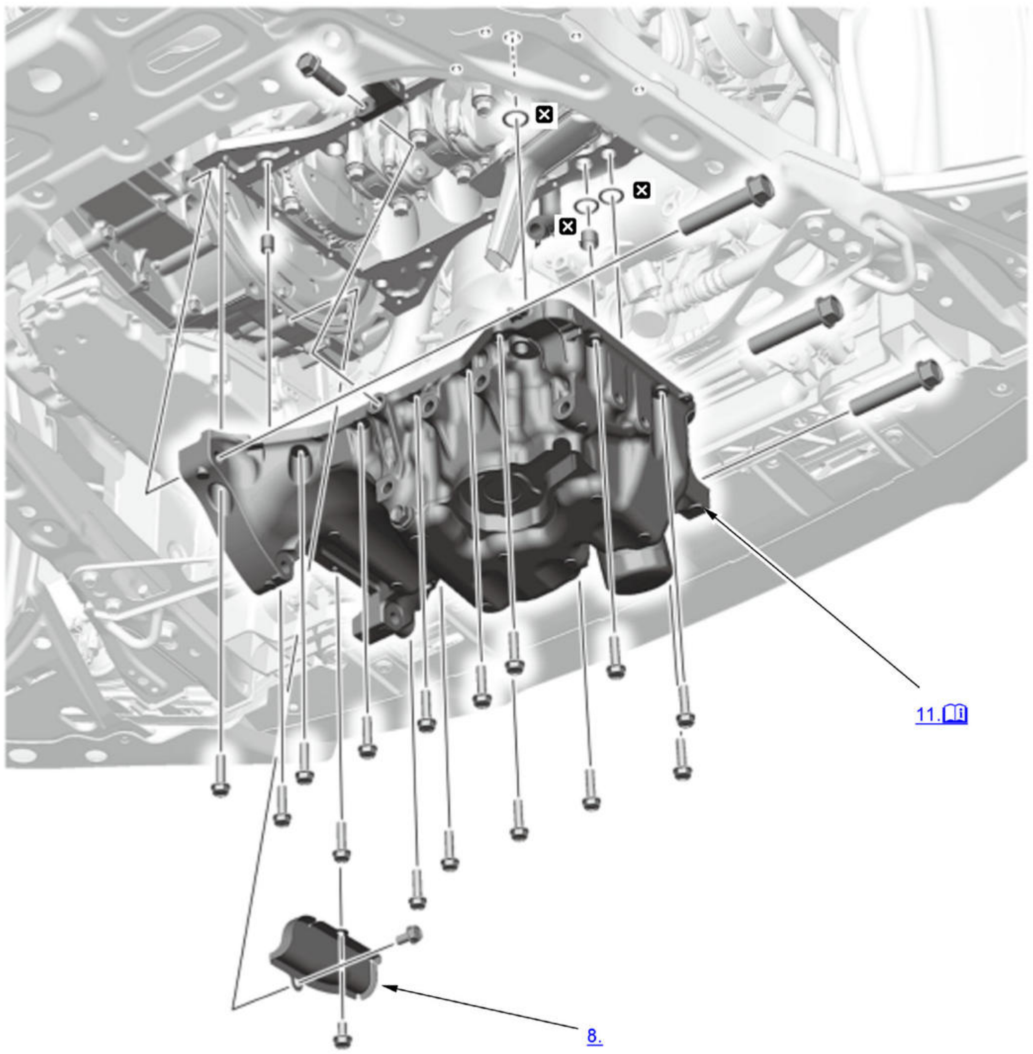

ℹ	Detailed information, notes, and precautions
☒	Replace

1. Engine Undercover - Remove
2. Engine Oil - Drain
3. Drive Belt - Remove
4. Exhaust Pipe A - Remove
5. TWC Bracket - Remove
6. A/C Compressor - Move

   NOTE:

   - Do not disconnect the suction hose and the discharge hose.
   - Do not bend the suction hose and the discharge hose excessively.
   - Hang the A/C compressor with a wire tie.
7. Oil Return Hose - Disconnect
8. Torque Converter Cover - Remove
9. Lower Torque Rod and Lower Torque Rod Bracket - Remove

10. Intermediate Shaft Mounting Bolt - Remove
11. Oil Pan - Remove

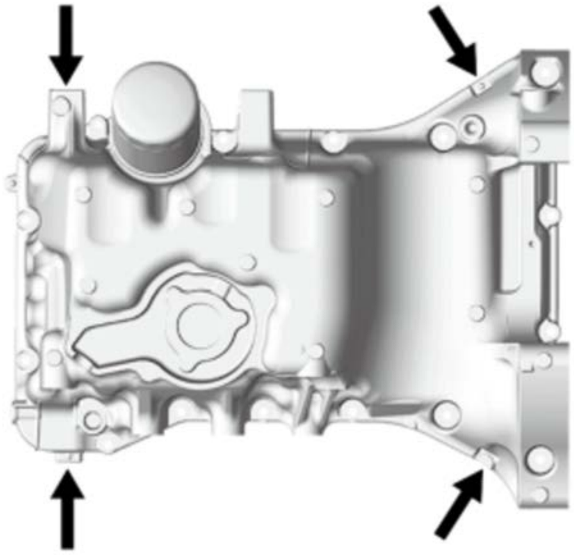	1. Remove the oil pan mounting bolts. 2. Using a flat blade screwdriver, separate the oil pan from the engine block in the places shown. 3. Remove the oil pan.

Installation

NOTE: ℹ Where icon is shown for further information in the information below.

1

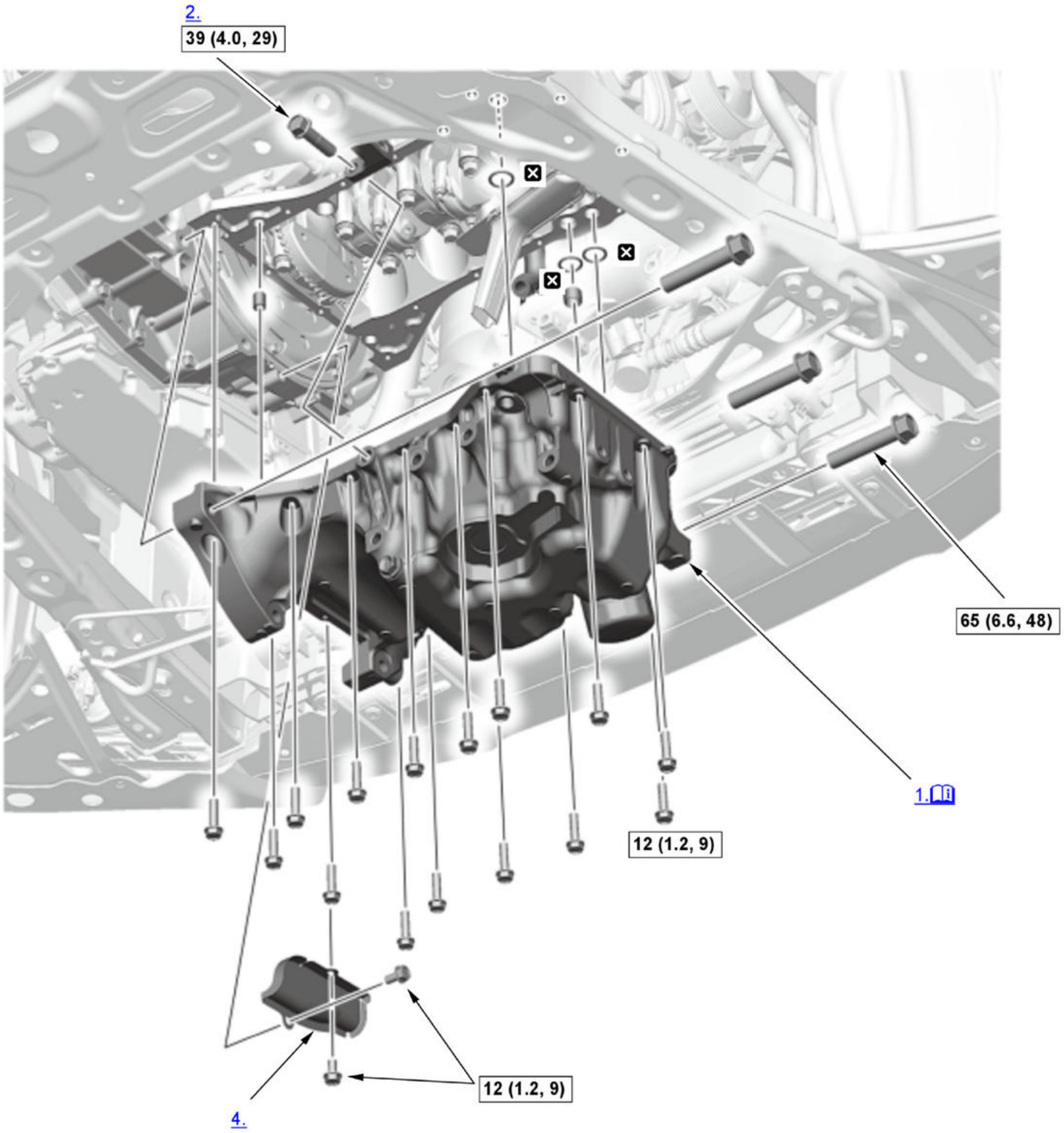
2.
39 (4.0, 29)
☒
☒
☒
65 (6.6, 48)
1.
12 (1.2, 9)
12 (1.2, 9)
4.

[Fig. 32: Engine Oil Pan Replacement Components With Torque Specifications (1.5 L Engine)](#)
Courtesy of HONDA, U.S.A., INC.

ℹ	Detailed information, notes, and precautions
☐	Torque: N.m (kgf.m, lbf.ft)
☒	Replace

1. Oil Pan - Install

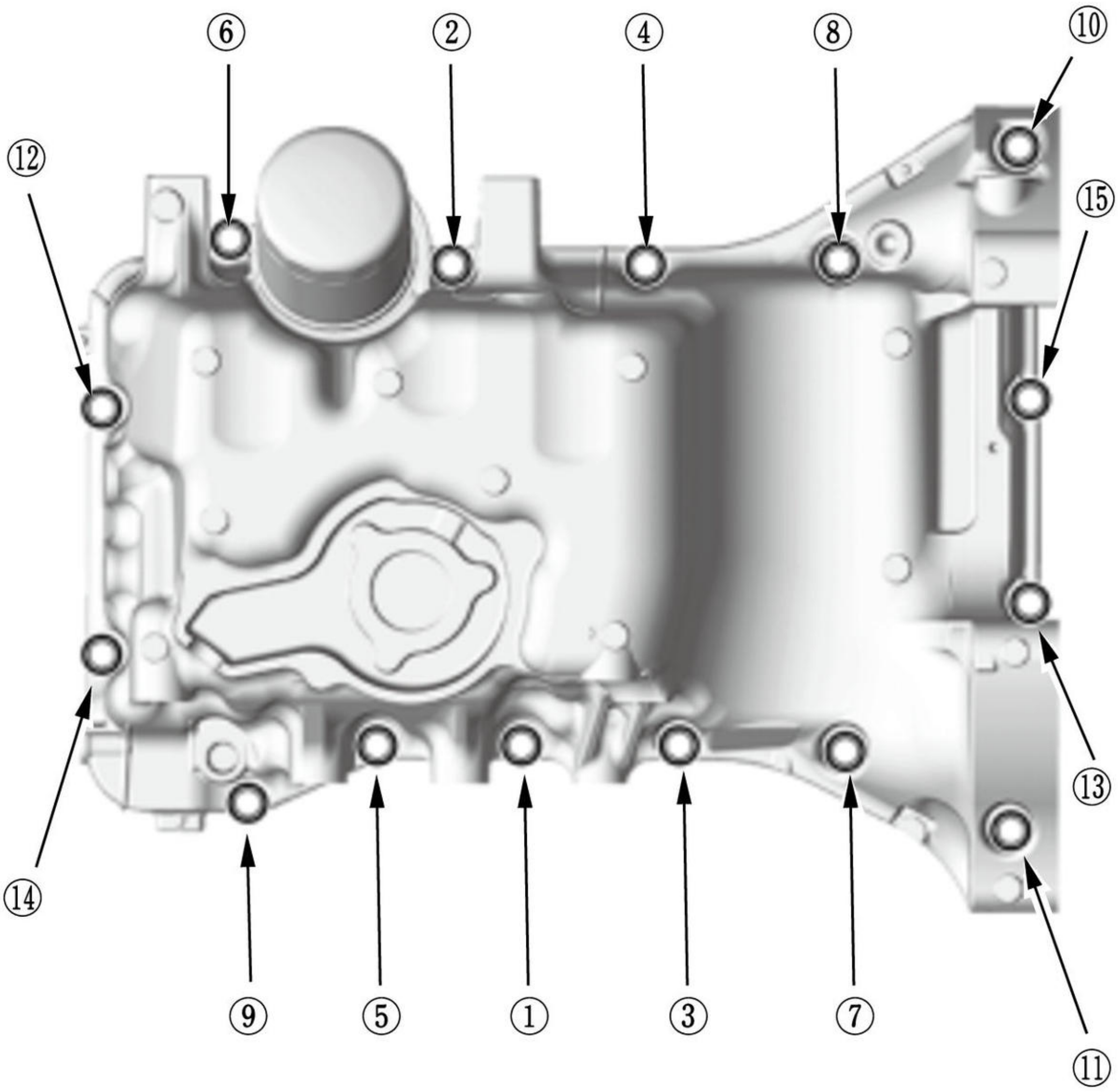

Fig. 33: Oil Pan Bolts Tightening Sequence (1.5 L Engine)
Courtesy of HONDA, U.S.A., INC.

1. **Apply liquid gasket**

to the engine block and the cam chain case mating surface of the oil pan, and to the inside edge of the threaded bolt holes.

2. Install the oil pan (A) with new O-rings (B).

3. Tighten the oil pan mounting bolts in three steps. In the final step, torque all bolts, in sequence, to the specified torque. Wipe off the excess liquid gasket on the each side of crankshaft pulley and drive plate.

Specified Torque:
12 N.m (1.2 kgf.m, 9 lbf.ft)

2. Intermediate Shaft Mounting Bolt - Install
3. **Lower Torque Rod and Lower Torque Rod Bracket - Install**
4. Torque Converter Cover - Install
5. Oil Return Hose - Connect
6. **A/C Compressor - Install**
7. **TWC Bracket - Install**
8. **Exhaust Pipe A - Install**

9. Drive Belt - Install
10. Engine Undercover - Install
11. Engine Oil - Refill

ENGINE OIL PAN REMOVAL AND INSTALLATION (2.4 L ENGINE) (2017 2018 2019)

Removal

NOTE: ℹ Where icon is shown for further information in the information below.

1

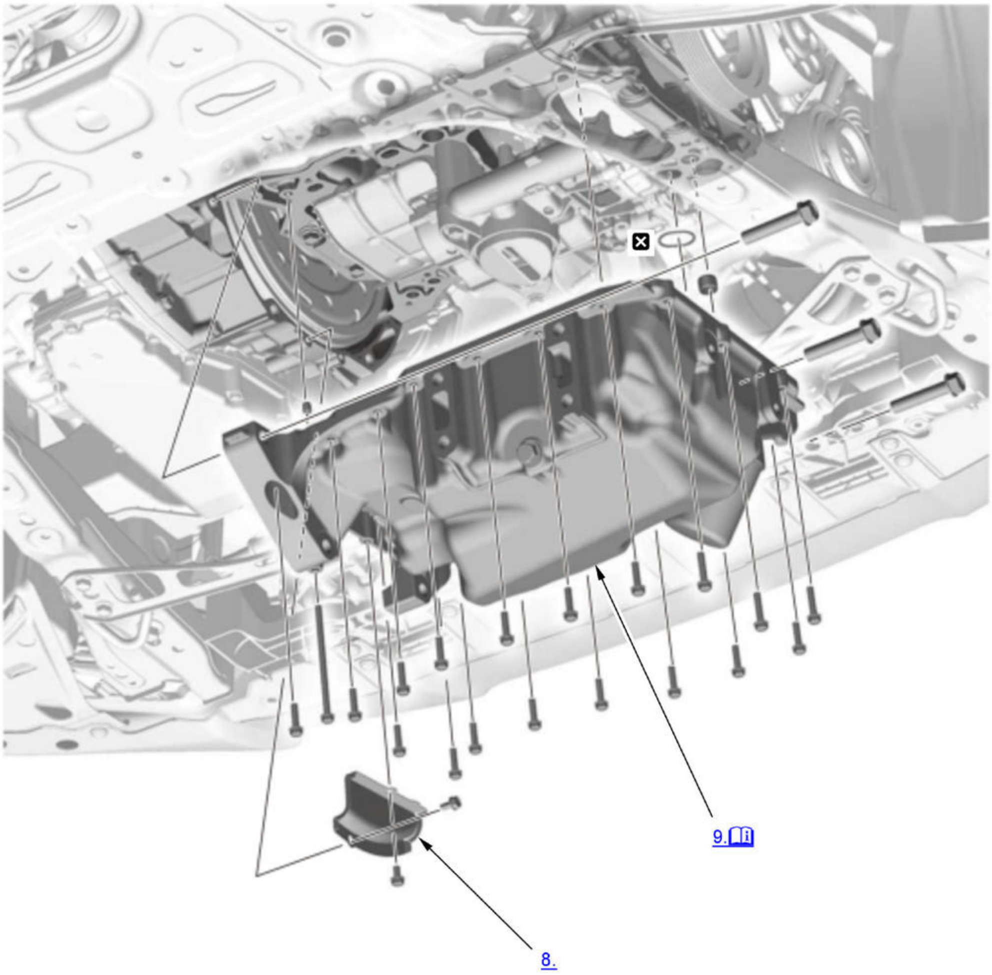

ℹ	Detailed information, notes, and precautions
☒	Replace

1. Engine Undercover - Remove
2. Drive Belt - Remove
3. A/C Compressor - Move

   NOTE:

   - Do not disconnect the A/C hoses.
   - Do not bend the A/C hoses excessively.

- Hang the A/C compressor with a wire tie.

4. **Engine Oil - Drain**
5. **Exhaust Pipe A - Remove**
6. Engine - Support

1. Support the engine with a transmission jack and a wood block under the oil pan.

7. **Lower Torque Rod and Lower Torque Rod Bracket - Remove**
8. Torque Converter Case Cover - Remove
9. Oil Pan - Remove

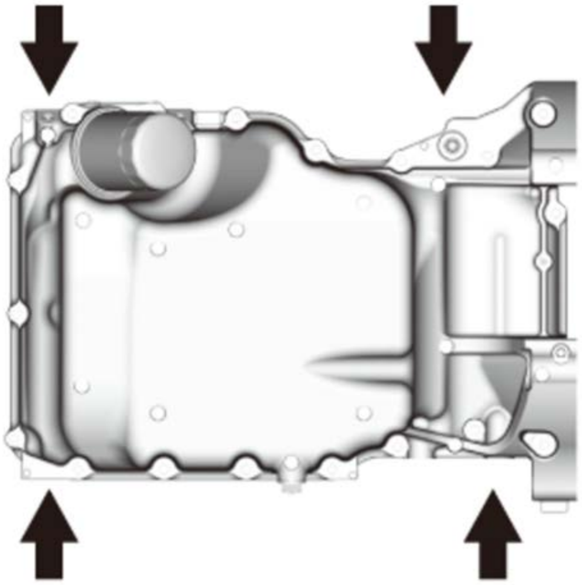	1. Remove the bolts securing the oil pan. 2. Using a flat blade screwdriver, separate the oil pan from the lower block in the places shown.

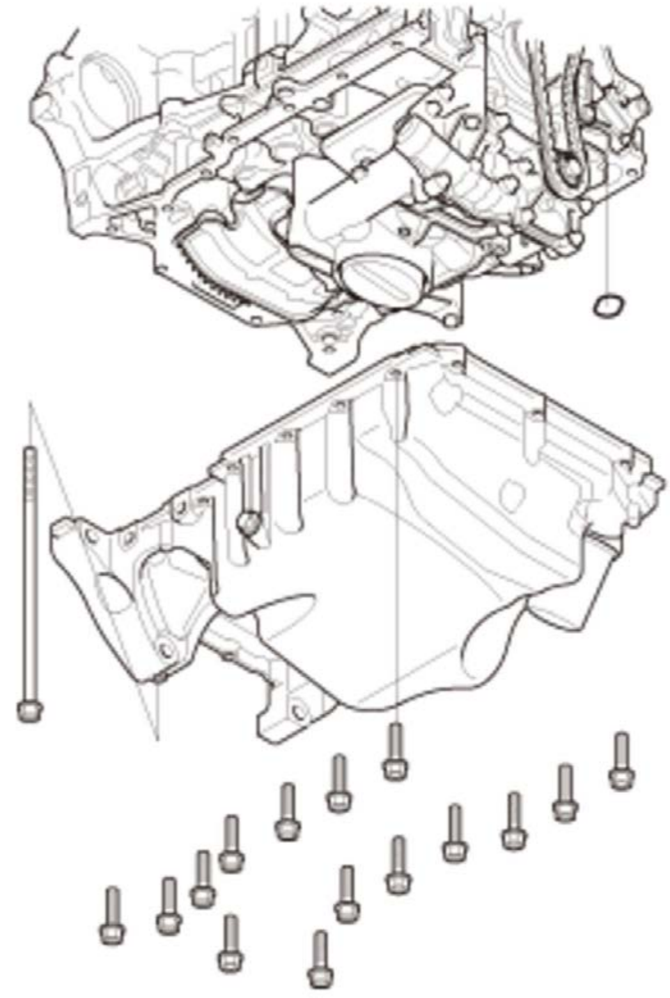	3. Remove the oil pan.

Installation

NOTE: 🕮 Where icon is shown for further information in the information below.

1

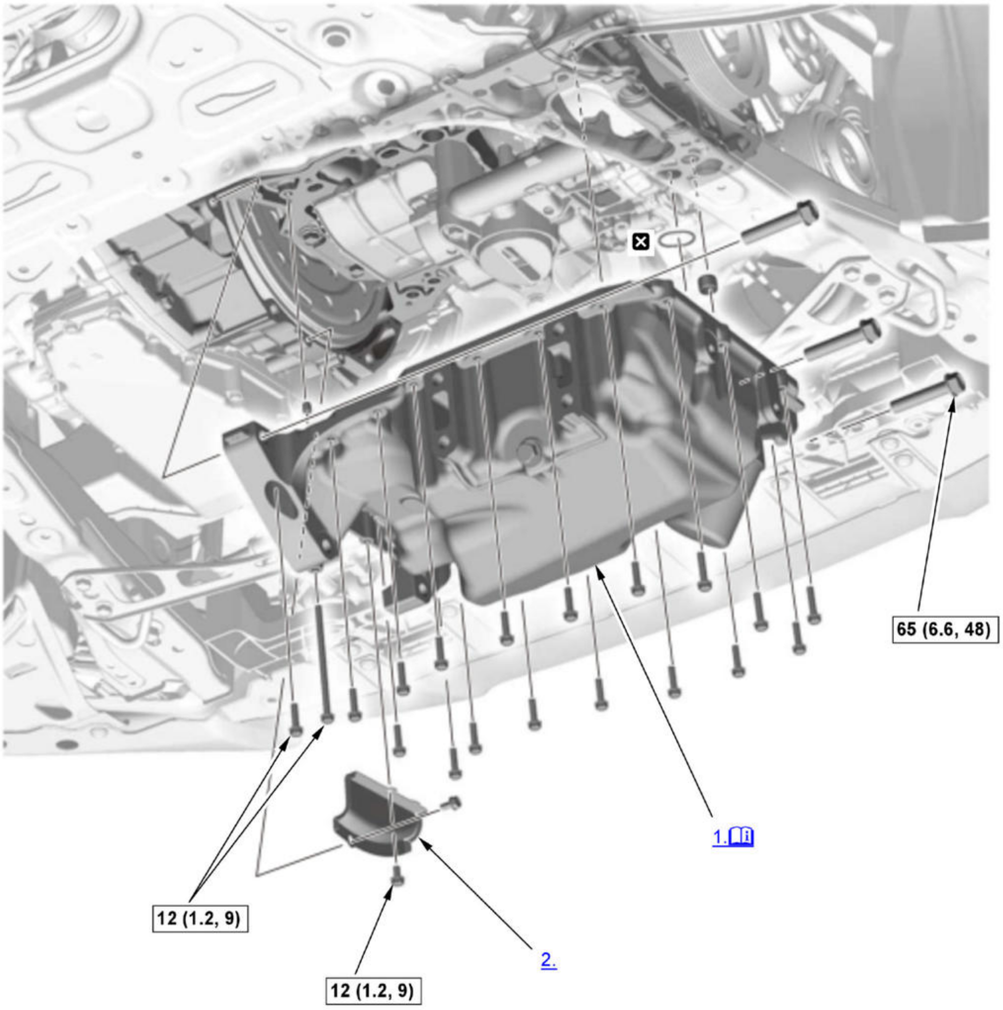

Fig. 34: Engine Oil Pan Replacement Components With Torque Specifications (2.4 L Engine) (2017 2018 2019)
Courtesy of HONDA, U.S.A., INC.

ℹ	Detailed information, notes, and precautions
☐	Torque: N.m (kgf.m, lbf.ft)
☒	Replace

1. Oil Pan - Install

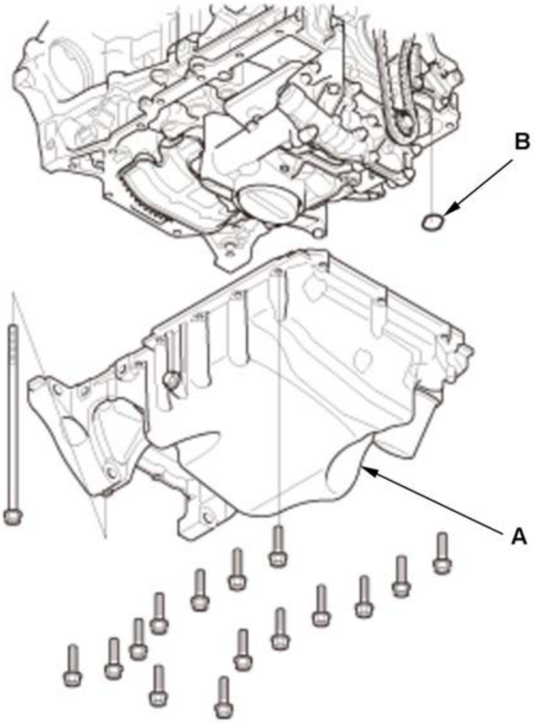	1. **Apply liquid gasket** to the engine block mating surface of the oil pan, and to the inside edge of the threaded bolt holes. 2. Install the oil pan (A) with a new O-ring (B).

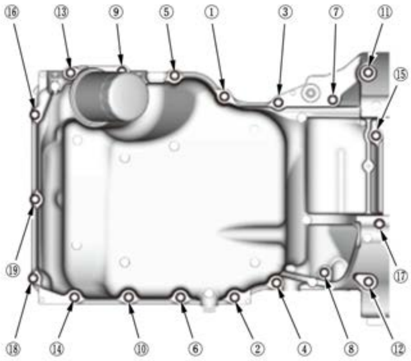 ⑯ ⑬ ⑨ ⑤ ① ③ ⑦ ⑪ ⑮ ⑲ ⑰ ⑱ ⑭ ⑩ ⑥ ② ④ ⑧ ⑫	3. Tighten the bolts in three steps; tighten the bolts until the bolts sit on the oil pan, tighten the bolts until the gasket is compressed, tighten the bolts to specified torque. Wipe off the excess liquid gasket on the each side of crankshaft pulley and drive plate.

2. Torque Converter Case Cover - Install
3. **Lower Torque Rod and Lower Torque Rod Bracket - Install**
4. **Exhaust Pipe A and Exhaust Pipe Bracket - Install**
5. **A/C Compressor - Install**
6. **Drive Belt - Install**
7. **Engine Undercover - Install**
8. **Engine Oil - Refill**

ENGINE OIL PUMP REMOVAL AND INSTALLATION (1.5 L ENGINE)

*: Available through the Honda Tool and Equipment Program 888-424-6857.

Engine Oil Pump Removal and Installation

Special Tools Required

Image	Description/Tool Number
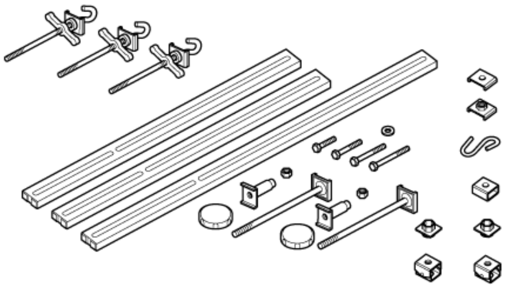	Engine Support Hanger, A and Reds AAR-T1256*
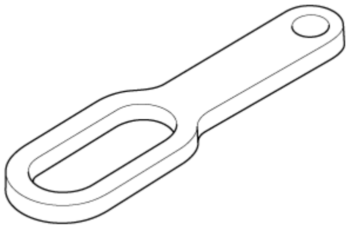	Universal Lifting Eyelet 07AAK-SNAA120

*: Available through the Honda Tool and Equipment Program 888-424-6857.

Removal

1. **Front Bulkhead Cover - Remove**
2. **Cowl Cover - Remove**
3. **Expansion Tank Bracket - Remove**
4. **Turbocharger Joint - Remove**
5. **Cam Chain - Remove**
6. Cam Chain Drive Sprocket - Remove

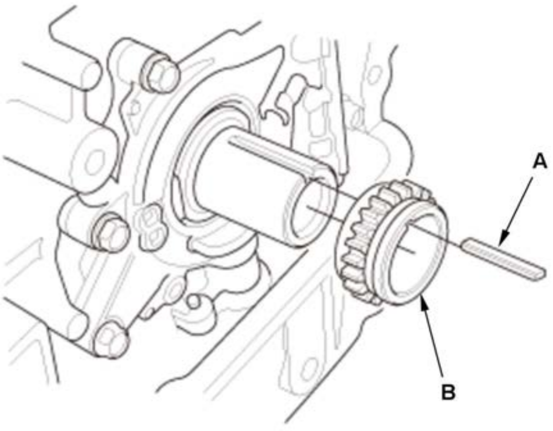	1. Remove the key (A) and the cam chain drive sprocket (B). **NOTE:** Check the direction of the key. When the key is installed, install the key as same direction of the original one.

7. Sub Hanger Stay - Install

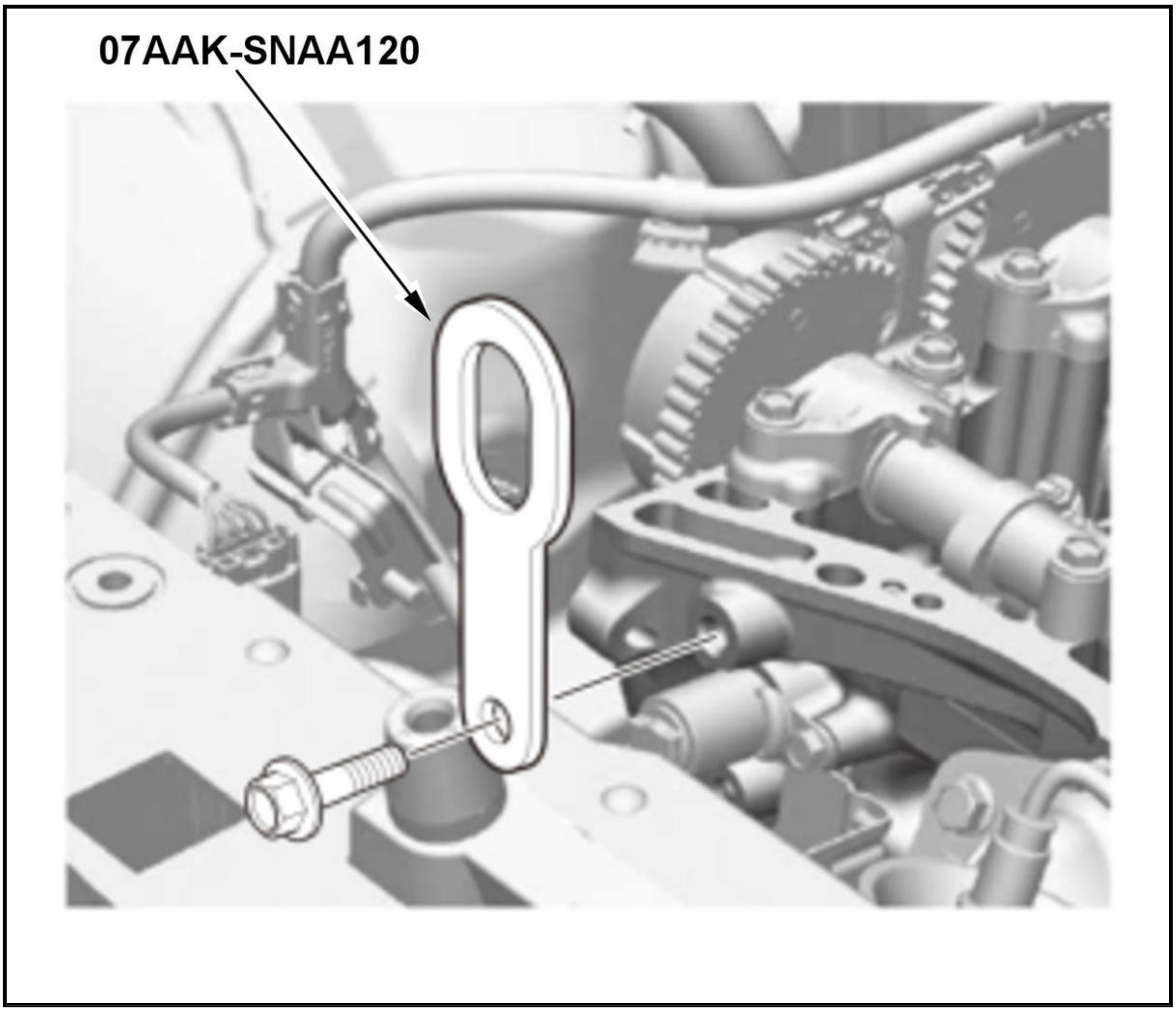
07AAK-SNAA120

8. Engine Support Hanger - Install

NOTE: Be careful when working around the windshield.

1. Remove the front damper caps.

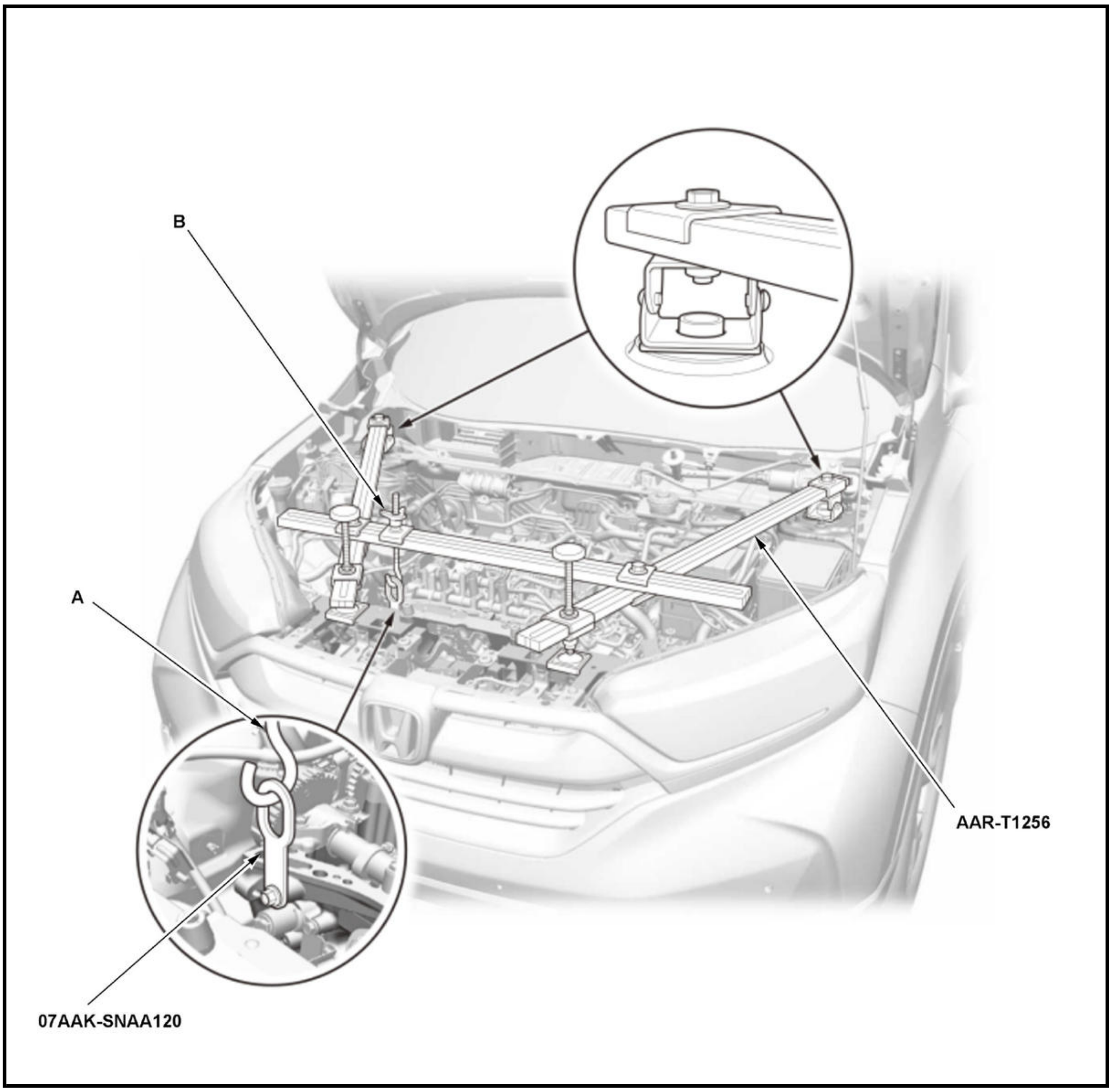
B
A
AAR-T1256
07AAK-SNAA120

2. Install the engine support hanger onto the vehicle as shown.

3. Attach the hook (A) to the slotted hole in the universal lifting eyelet.

4. Tighten the wing nut (B) by hand, and lift and support the engine.

9. **Oil Pan - Remove**
10. Oil Pump - Remove

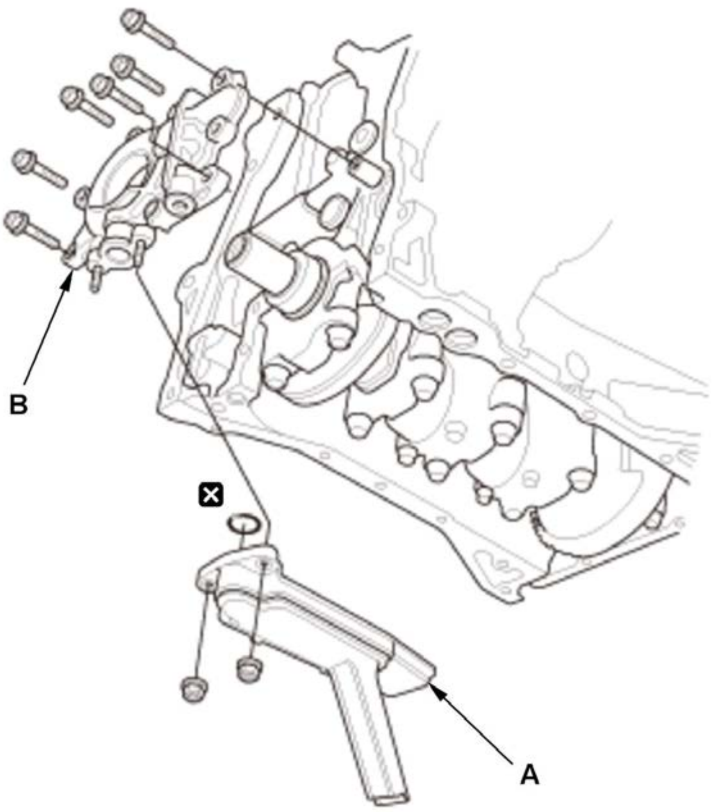	1. Remove the oil strainer (A) and the oil pump (B).

Installation

NOTE: How to read the torque specifications .

1. Oil Pump - Install

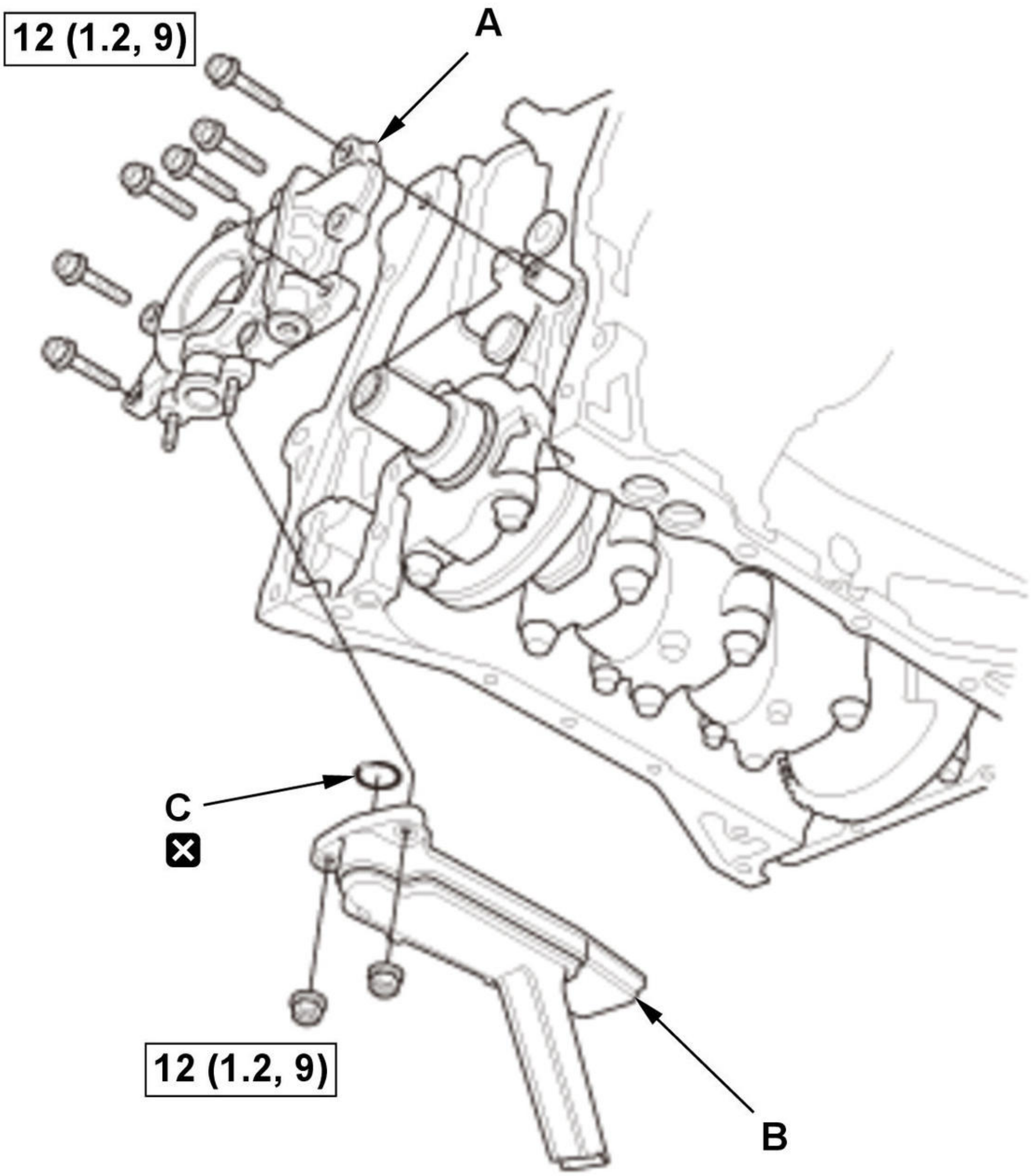

Fig. 35: Engine Oil Pump Replacement Components With Torque Specifications (1.5 L Engine)
Courtesy of HONDA, U.S.A., INC.

1. Install the oil pump (A).

2. Install the oil strainer (B) with a new O-ring (C).

2. **Oil Pan - Install**
3. Engine - Support

1. Lift and support the engine with a jack and a wood block under the oil pan.

4. Engine Support Hanger and Sub Hanger Stay - Remove
5. **Expansion Tank Bracket - Install**
6. Cam Chain Drive Sprocket - Install

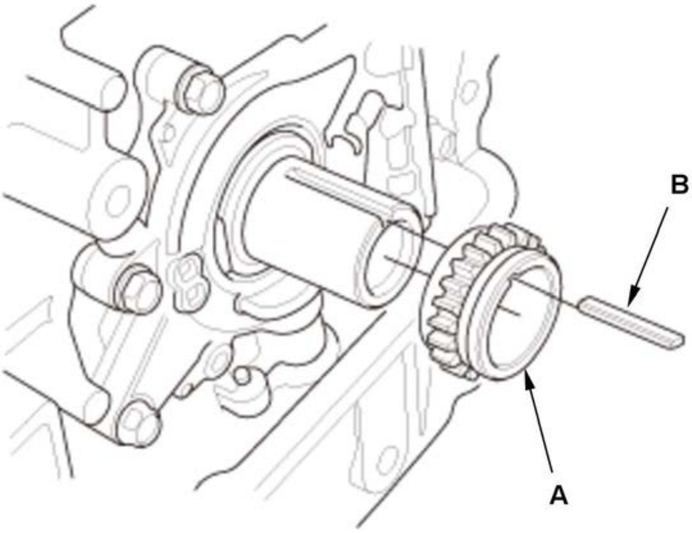	1. Install the cam chain drive sprocket (A) and the key (B).

7. **Cam Chain - Install**
8. **Cowl Cover - Install**
9. **Front Bulkhead Cover - Install**
10. **Engine Oil - Refill**

ENGINE REMOVAL AND INSTALLATION (1.5 L ENGINE)

Special Tools Required

Image	Description/Tool Number
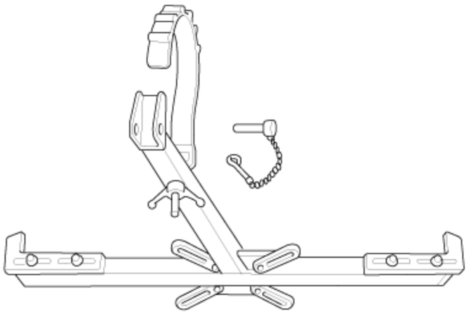	Subframe Adapter VSB02C000016*

Image	Description/Tool Number
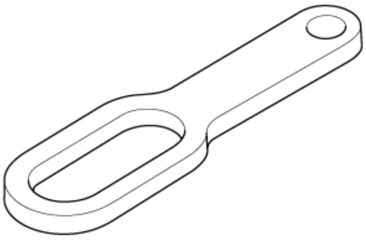	Universal Lifting Eyelet 07AAK-SNAA120

Removal

NOTE:

- Use fender covers to avoid damaging painted surfaces.
- To avoid damaging the wiring and terminals, unplug the wiring connectors carefully while holding the connector portion.
- Mark all wiring and hoses to avoid misconnection. Also, be sure that they do not contact other wiring or hoses, or interfere with other parts.

1. Hood - Wide Open

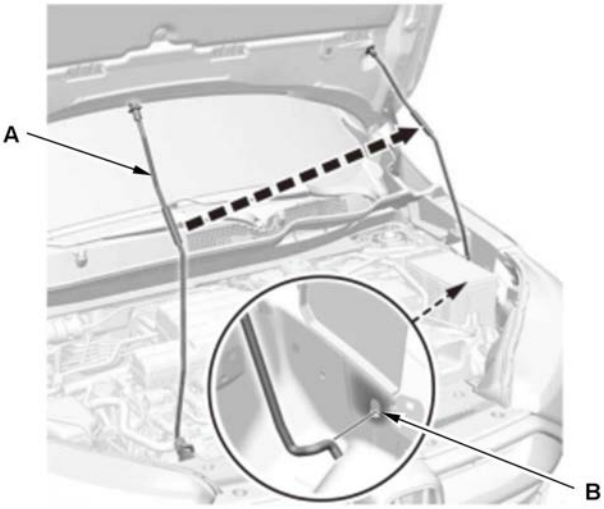	1. Open the hood. 2. Remove and relocate the hood support rod (A) to the wide-open positions (B) and secure the hood.

2. **Fuel Pressure - Relieve**
3. **Front Bulkhead Cover - Remove**
4. **12 Volt Battery - Remove**
5. **12 Volt Battery Base - Remove**
6. **Intake Parts - Remove**
7. Connector (Engine Wire Harness) and Positive Cable (Under-Hood Fuse/Relay Box) - Disconnect

    1. Remove the cables (A).

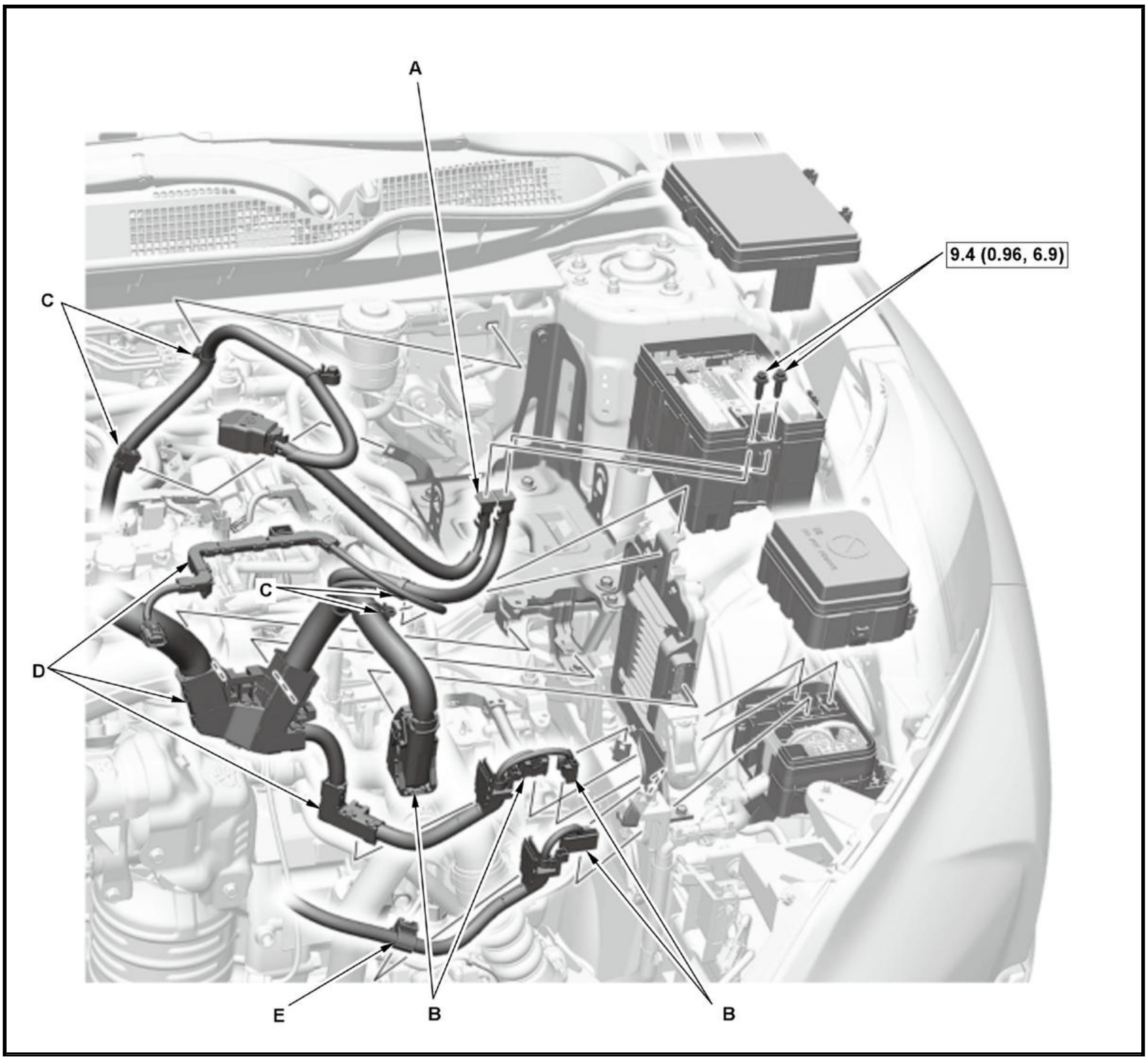

   2. Disconnect the connectors (B).

   3. Remove the harness clips (C).

   4. Remove the harness holder (D).

   5. Remove the harness clamp (E).

8. **Throttle Body Inlet Pipe - Remove**
9. **Shift Cable (Transmission Side) - Disconnect**
10. **Fuel Feed Hose - Disconnect**
11. **Steering Joint - Disconnect**

    NOTE: Hold the steering wheel with the steering wheel holder tool.

12. Vehicle - Lift

    1. **Raise and support the vehicle** .

13. **Front Wheel - Remove**
14. **Engine Undercover - Remove**
15. **Engine Coolant - Drain**
16. **Engine Oil - Drain**
17. **Transmission Fluid - Drain**
18. **Drive Belt - Remove**

19. Radiator Assembly - Remove
20. A/C Compressor - Move

    NOTE:

    - Do not disconnect the suction hose and the discharge hose.
    - Do not bend the suction hose and the discharge hose excessively.
    - Hang the A/C compressor with a wire tie.
21. Connector (EPS Subharness) - Disconnect
22. Exhaust Pipe A - Remove
23. Tie-Rod End Ball Joint - Disconnect
24. Front Stabilizer Link Ball Joint - Disconnect
25. Lower Arm Ball Joint - Disconnect
26. Front Driveshaft - Remove
27. Propeller Shaft - Remove (AWD)
28. Transfer Assembly - Remove (AWD)
29. Vehicle - Lift

    1. Lower the vehicle.
30. Expansion Tank - Remove
31. Intercooler Inlet Hose, EVAP Canister Purge Hose, Heater Hose and Water Bypass Hose - Disconnect

    1. Disconnect the intercooler inlet hose (A), the EVAP canister purge hose (B), the water bypass hose (C) and the heater hoses (D).

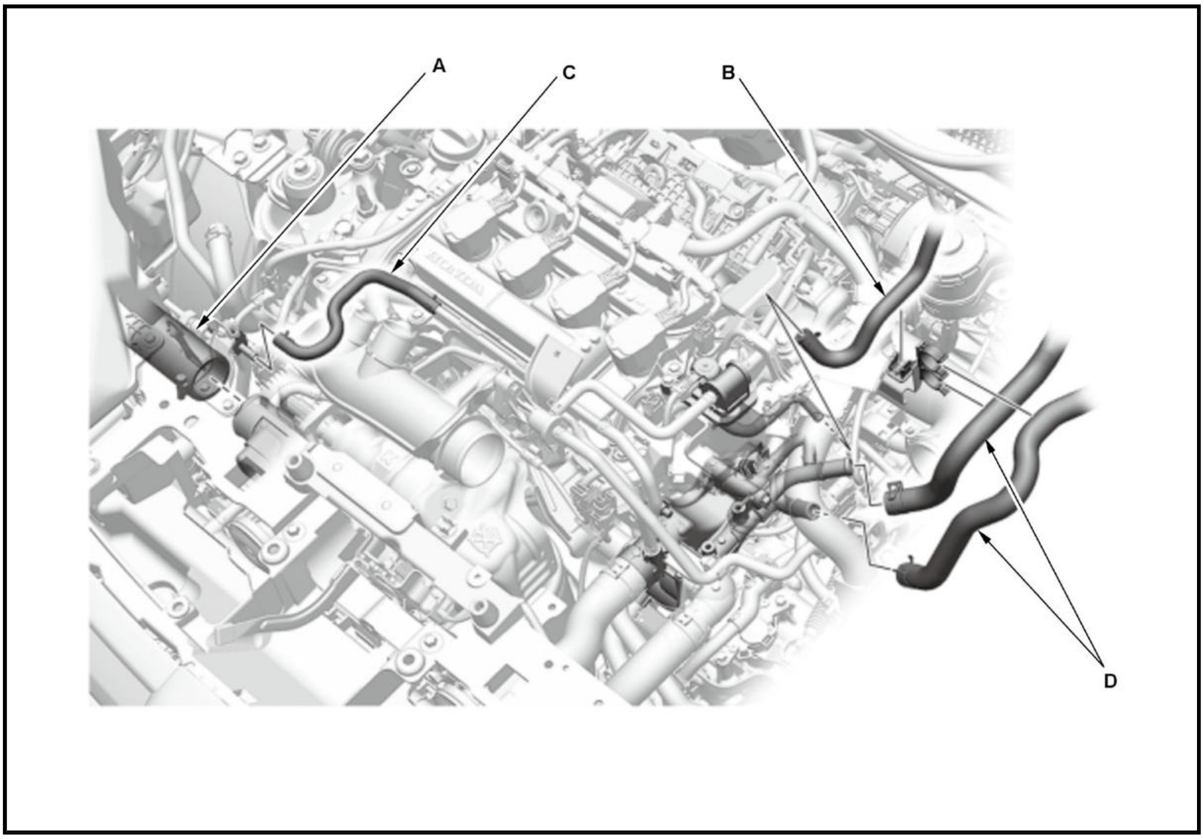

32. Vehicle - Lift

    1. Raise the vehicle.
33. Lower Torque Rod - Remove

34. Front Lower Arm Mounting Bolt - Remove

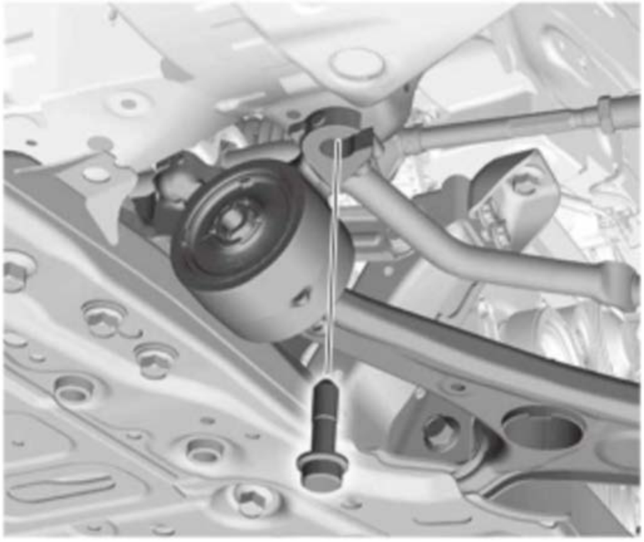	1. **Remove both sides of the front lower arm mounting bolt from the body** .

35. Front Subframe - Support

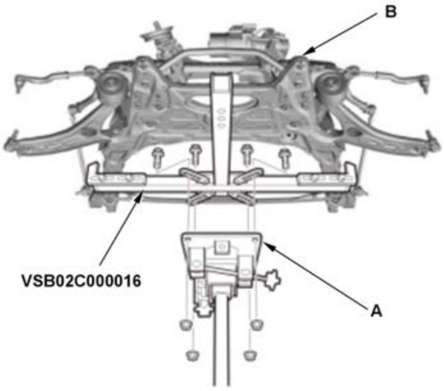	1. Set the subframe adapter (VSB02C000016) on a transmission jack (A), line up the slots in the arms with the bolt holes on the corner of the jack base, and tighten the bolts. 2. Attach the subframe adapter to the front subframe (B).

36. **Front Subframe - Remove**

37. Vehicle - Lift

1. Lower the vehicle.

38. Engine - Support

1. Lift and support the engine with a jack and a wood block under the oil pan.

39. **Upper Torque Rod - Remove**

40. **Side Engine Mount - Remove**

41. Universal Lifting Eyelet - Install

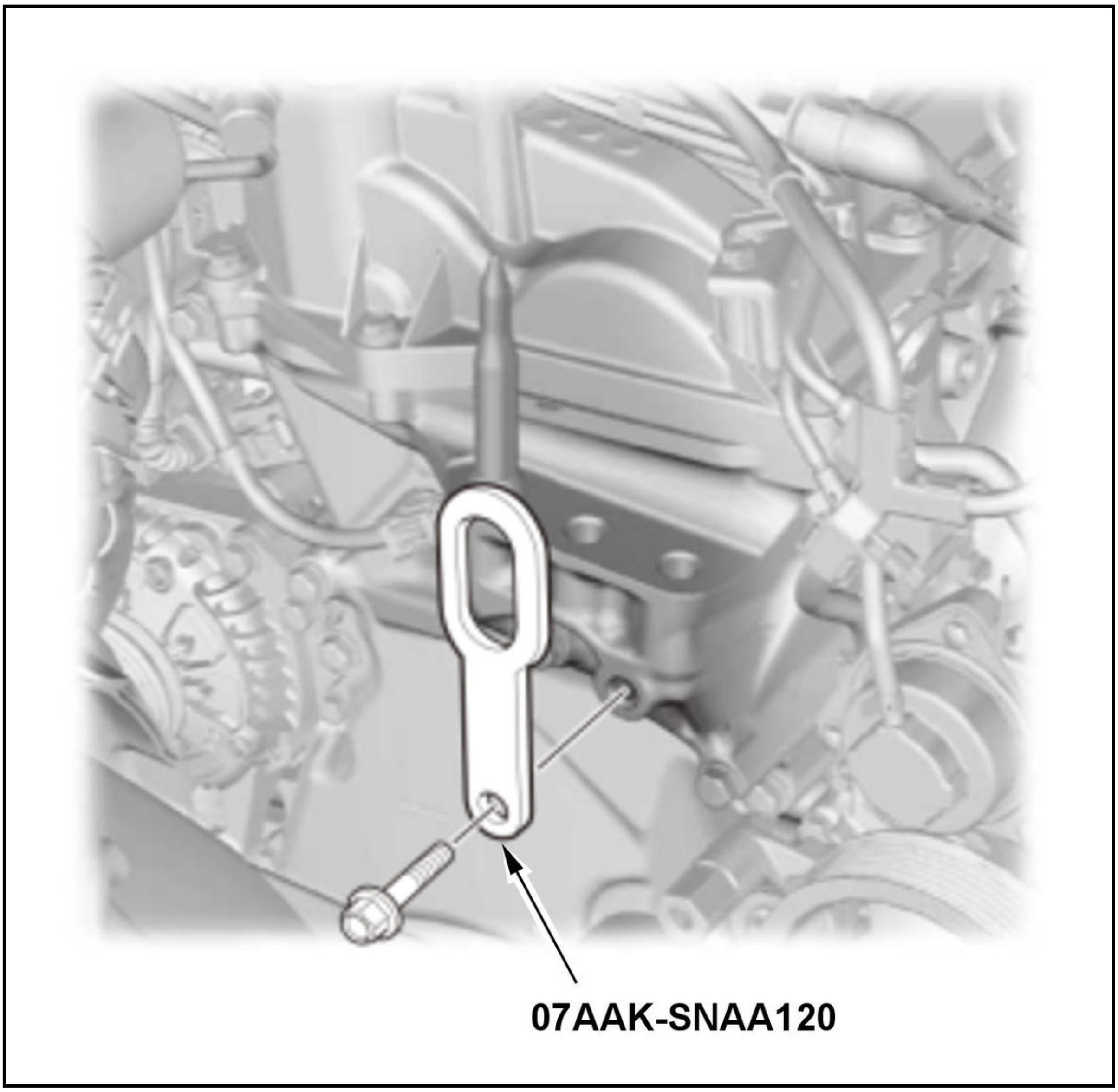

42. Chain Hoist - Install

1. Attach a chain hoist (A) to the universal lifting eyelet and the transmission hanger (B), then lift the engine/transmission until it is securely supported by the chain hoist.

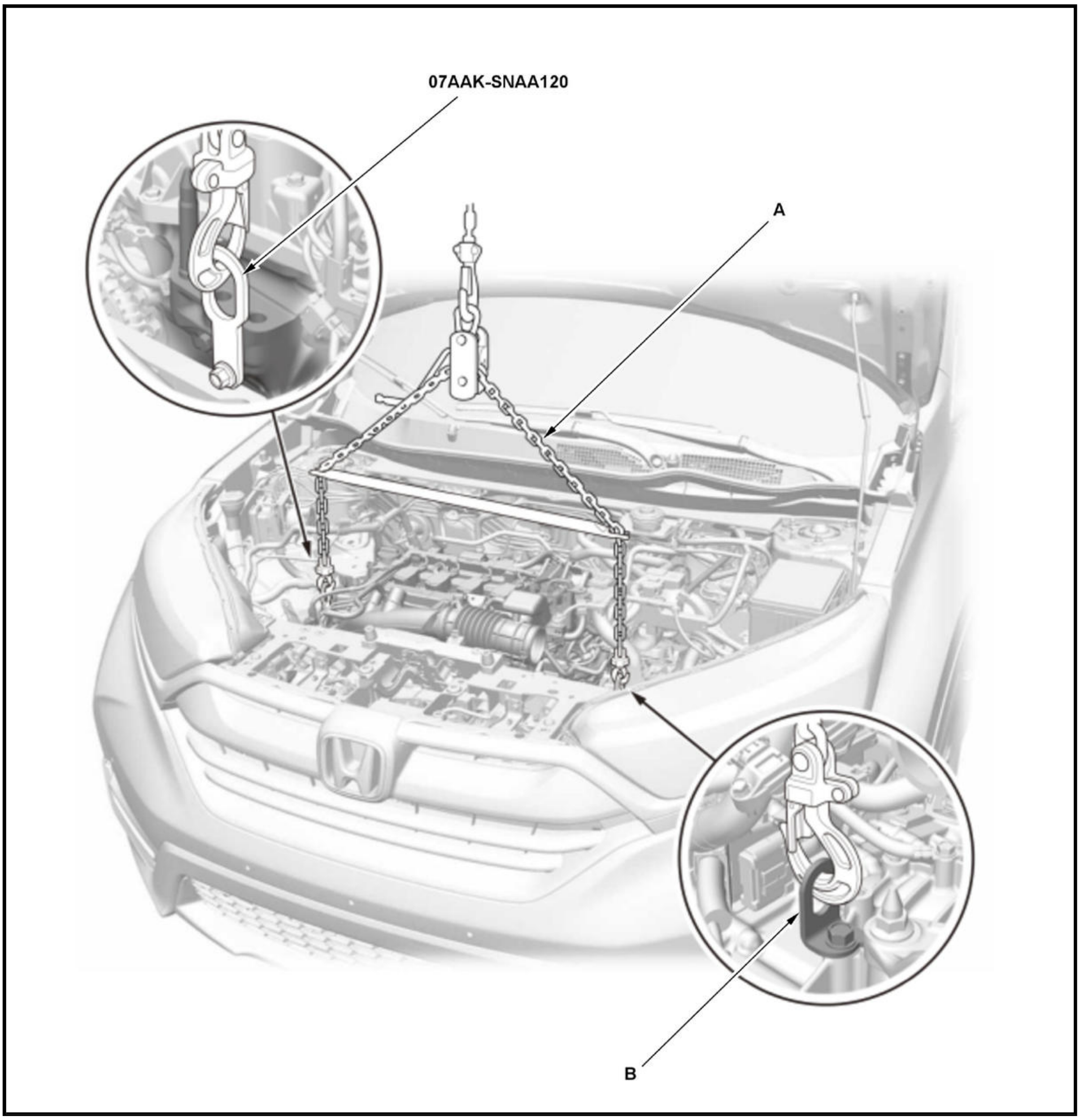
07AAK-SNAA120
A
B

43. Transmission Mount Bracket Mounting Bolt and Nut - Remove

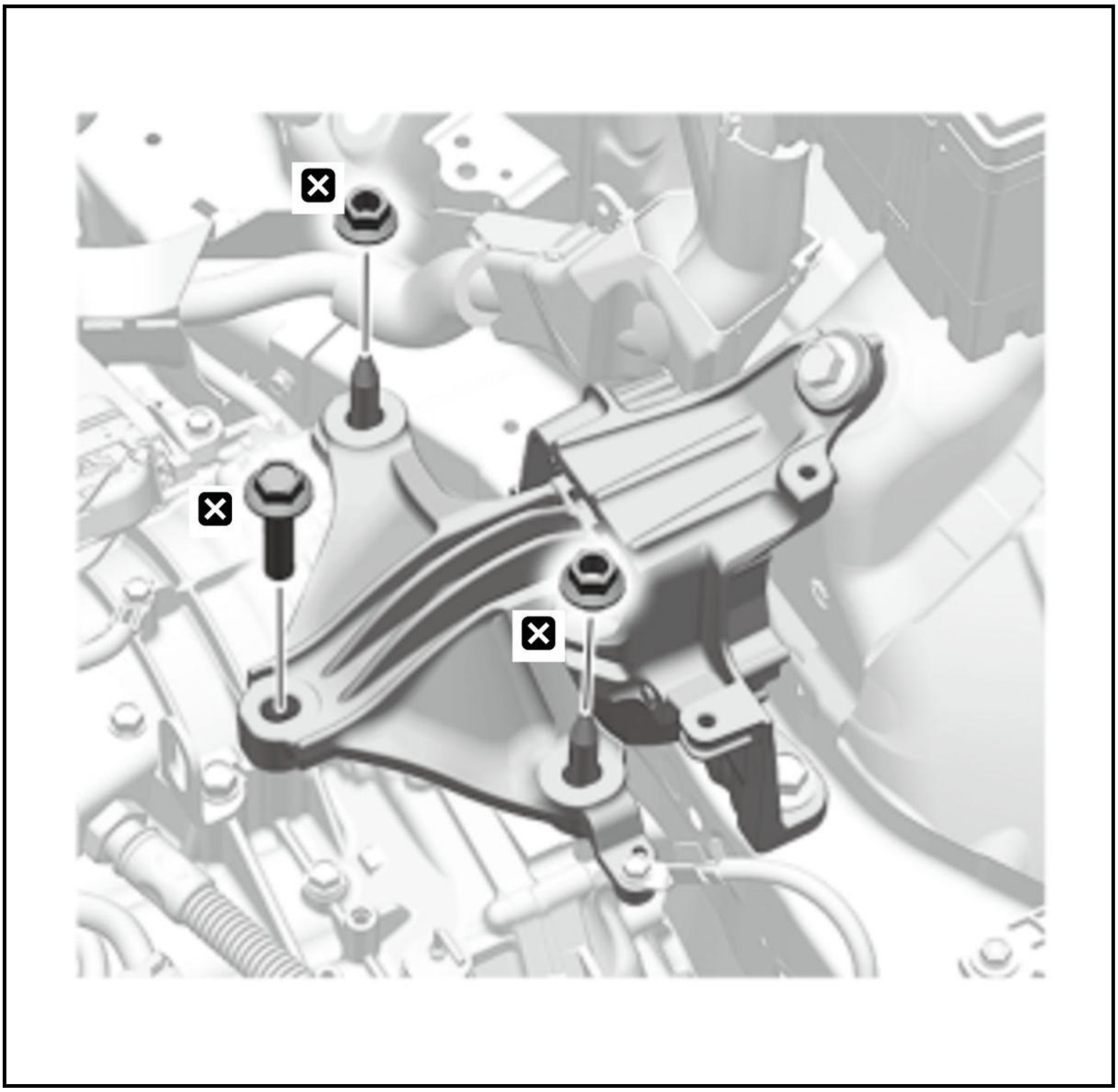

44. Engine - Remove

1. Check that the engine/transmission is completely free of the vacuum hoses, the fuel hoses, the coolant hoses, and the electrical wiring.

2. Slowly lower the engine/transmission about 150 mm (5.91 in). Check once again that all the hoses and the electrical wiring are disconnected and free from the engine/transmission, then lower it all the way and support it.

3. Remove the chain hoist from the engine/transmission.

4. Raise the vehicle, and remove the engine/transmission from under the vehicle.

Installation

NOTE: How to read the torque specifications.

1. **Lower Torque Rod Bracket - Install**
2. Universal Lifting Eyelet - Install

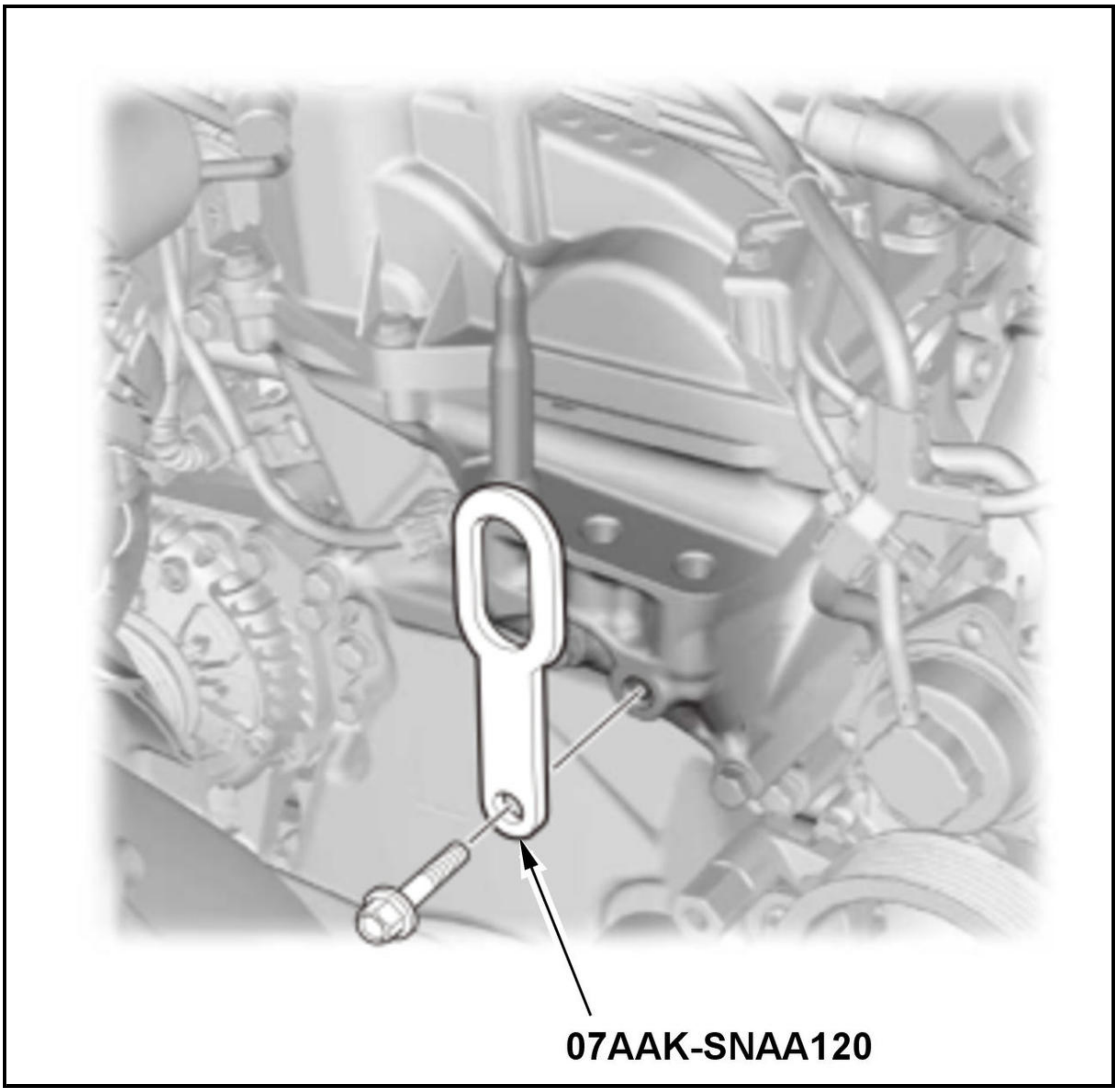

3. Engine/Transmission Assembly - Position

1. Position the engine/transmission assembly under the vehicle, and be sure that they are properly positioned. Carefully lower the vehicle, and stop with the installation position of the engine/transmission assembly.

4. Chain Hoist - Install

1. Attach a chain hoist (A) to the universal lifting eyelet and the transmission hanger (B), then lift the engine/transmission until it is securely supported by the chain hoist.

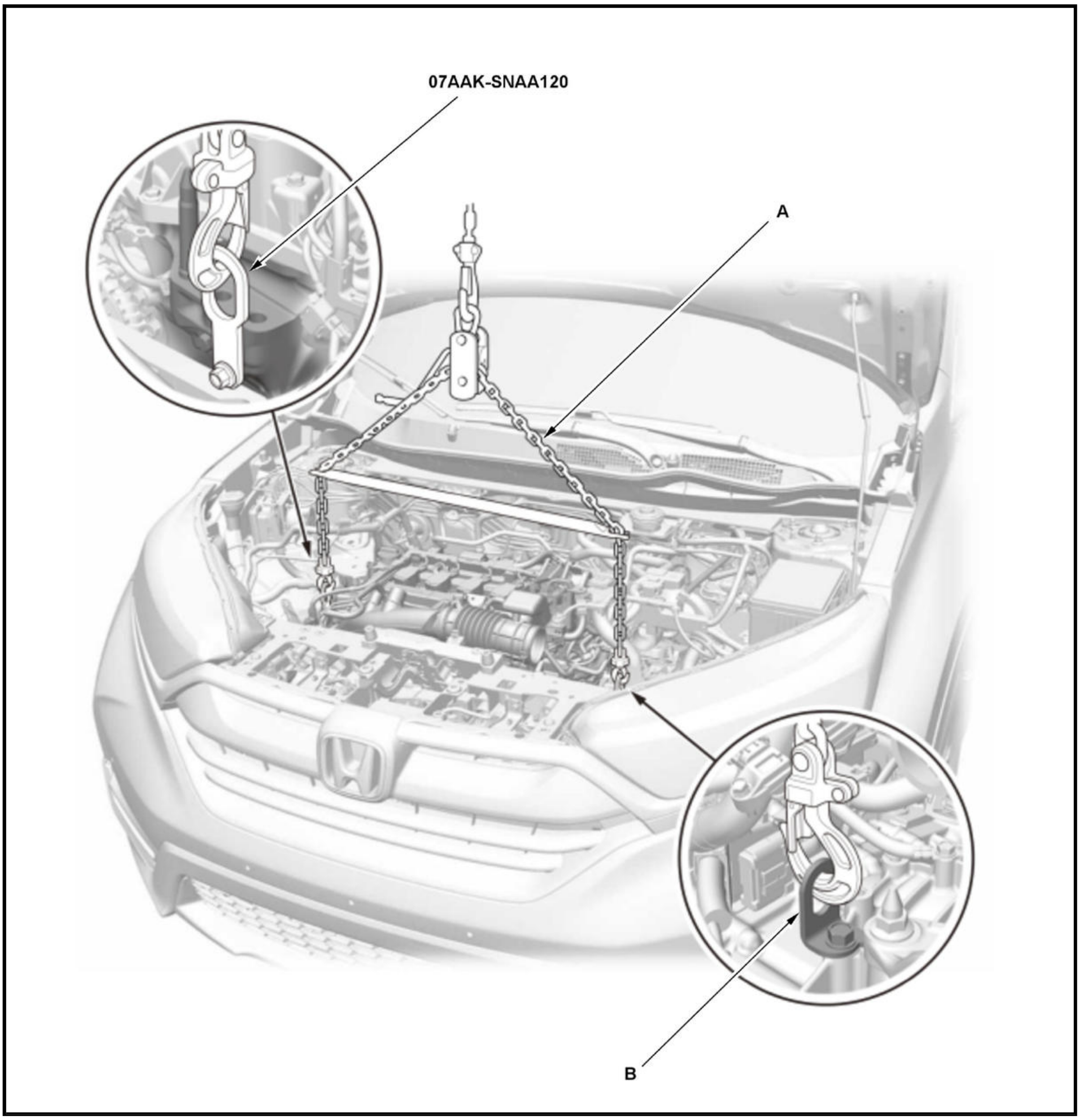
07AAK-SNAA120
A
B

5. Transmission Mount Bracket Mounting Bolt and Nut - Loosely Install

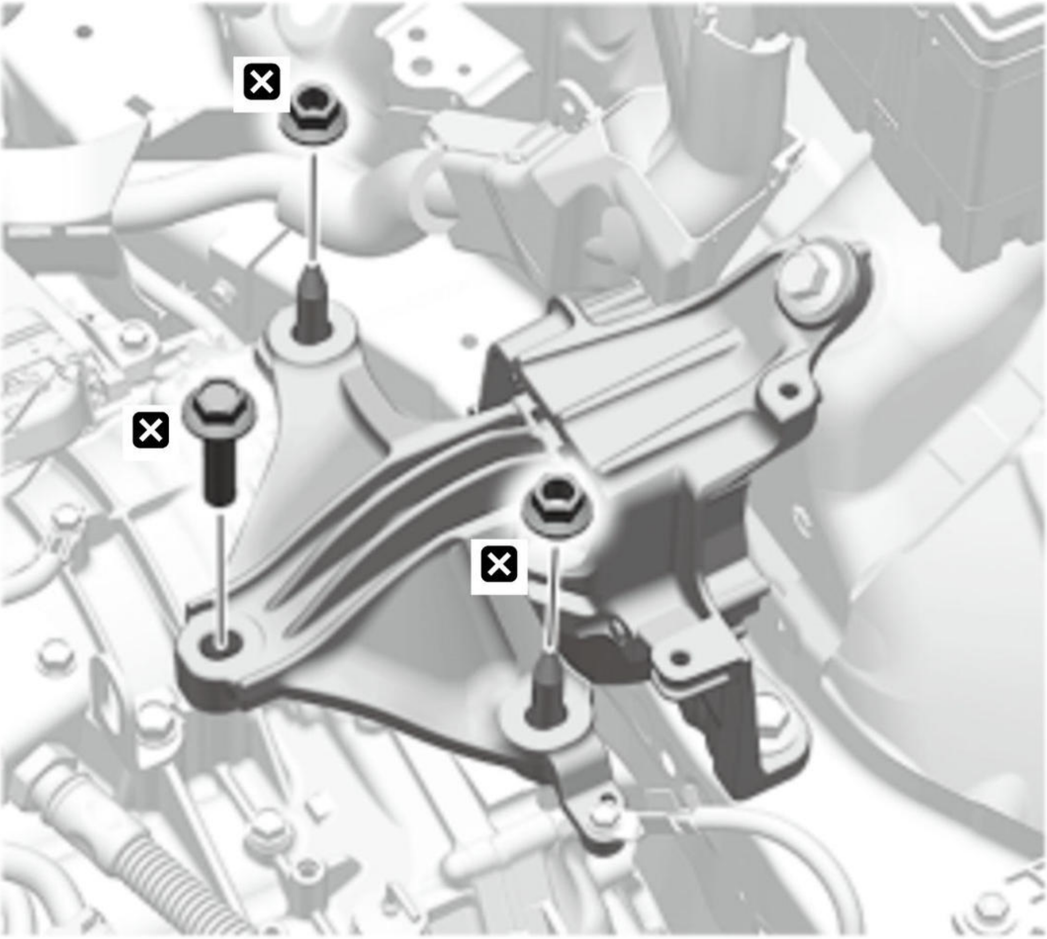

6. Engine - Support

1. Lift and support the engine with a jack and a wood block under the oil pan.

7. Chain Hoist and Universal Lifting Eyelet - Remove
8. **Side Engine Mount - Loosely Install**
9. **Upper Torque Rod - Loosely Install**
10. Vehicle - Lift

1. Raise the vehicle.

11. Front Subframe - Support

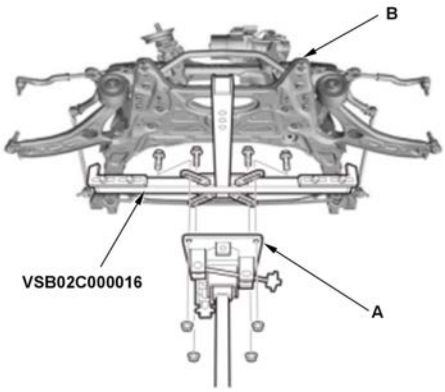	1. Set the subframe adapter (VSB02C000016) on a transmission jack (A), line up the slots in the arms with the bolt holes on the corner of the jack base, and tighten the bolts. 2. Attach the subframe adapter to the front subframe (B).

12. Front Subframe - Install
13. Front Lower Arm Mounting Bolt - Install

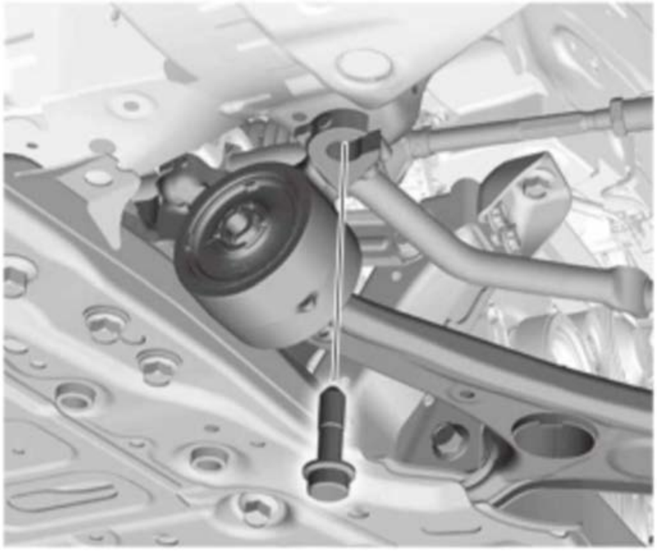	1. Install both sides of the front lower arm mounting bolt to the body .

14. Lower Torque Rod - Loosely Install
15. All Engine Mount Mounting Bolt and Nut - Tighten
16. Transfer Assembly - Install (AWD)
17. Propeller Shaft - Install (AWD)
18. Front Driveshaft - Install
19. Lower Arm Ball Joint - Connect
20. Front Stabilizer Link Ball Joint - Connect
21. Tie-Rod End Ball Joint - Connect
22. Exhaust Pipe A - Install
23. Connector (EPS Subharness) - Connect
24. A/C Compressor - Install
25. Radiator Assembly - Install
26. Drive Belt - Install
27. Engine Undercover - Install
28. Vehicle - Lift

1. Lower the vehicle.

29. Steering Joint - Connect
30. Water Bypass Hose, Heater Hose, Intercooler Inlet Hose, and EVAP Canister Purge Hose - Connect

1. Connect the water bypass hose (A), the heater hoses (B), the EVAP canister purge hose (C), and the intercooler inlet hose (D).

NOTE: **Make sure the end of hose band is aligned with the mark on the hose band after the intercooler inlet hose is installed.**

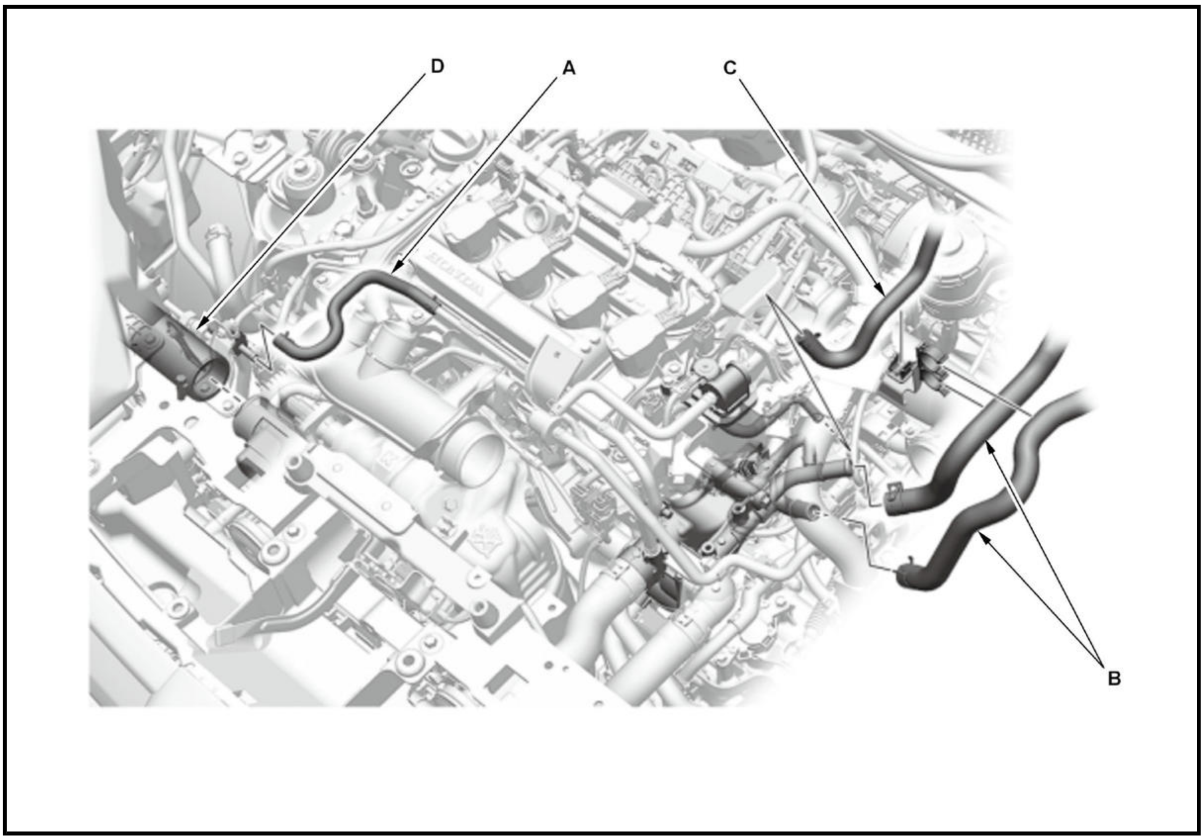

31. **Expansion Tank - Install**
32. **Fuel Feed Hose - Connect**
33. **Shift Cable (Transmission Side) - Connect**
34. **Throttle Body Inlet Pipe - Install**
35. Connector (Engine Wire Harness) and Positive Cable (Under-Hood Fuse/Relay Box) - Connect

1. Install the harness clamp (A).

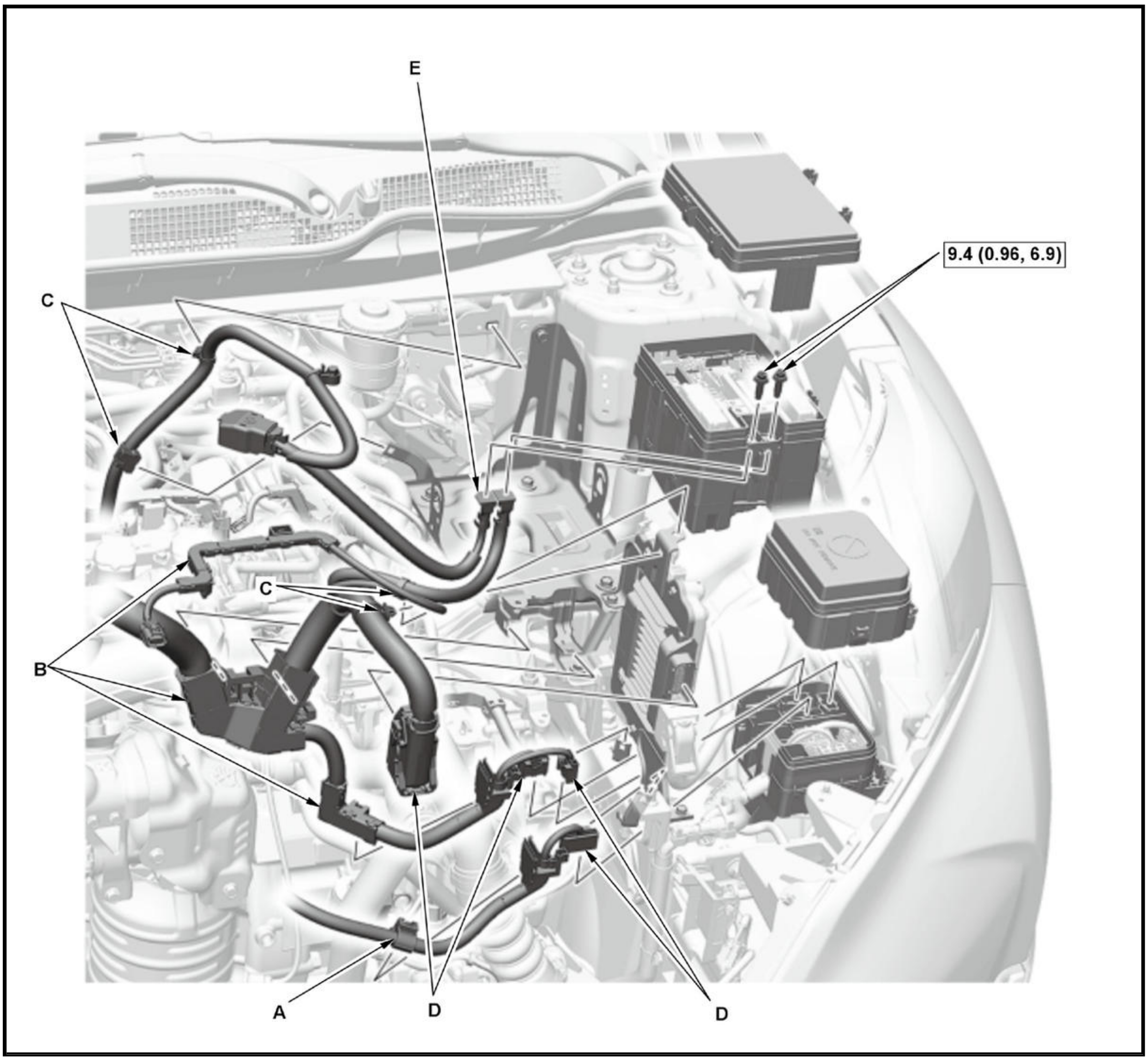

2. Install the harness holder (B).

3. Install the harness clips (C).

4. Connect the connectors (D).

5. Install the cables (E).

36. **Intake Parts - Install**
37. **12 Volt Battery Base - Install**
38. **12 Volt Battery - Install**
39. **Front Bulkhead Cover - Install**
40. **Transmission Fluid - Refill**
41. **Engine Oil - Refill**
42. **Engine Coolant - Refill**
43. Fuel Leak (Low Pressure Side) - Check

1. Turn the vehicle to the ON mode, but do not start the engine. After the fuel pump runs for about 2 seconds, the fuel line will be pressurized. Repeat this two or three time, then check for fuel leakage.

44. **Fuel Leak (High Pressure Side) - Check**
45. Fluid Leak - Check
46. **Front Wheel - Install**
47. **PCM - Reset**

48. CKP Pattern - Clear/Learn
49. PCM Idle - Learn
50. Idle Speed - Inspect
51. Ignition Timing - Inspect
52. Wheel Alignment - Check
53. VSA Sensor Neutral Position - Memorize

ENGINE REMOVAL AND INSTALLATION (2.4 L ENGINE) (2017 2018 2019)

*: Available through the Honda Tool and Equipment Program 888-424-6857.

Engine Removal and Installation

Special Tools Required

Image	Description/Tool Number
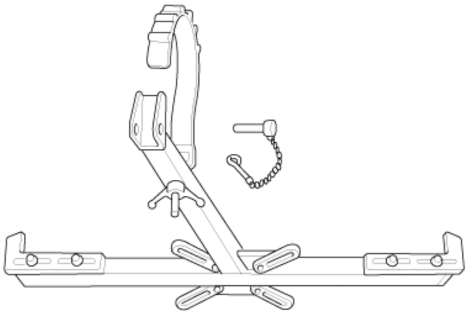	Subframe Adapter VSB02C000016*
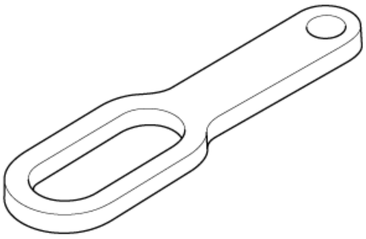	Universal Lifting Eyelet 07AAK-SNAA120

*: Available through the Honda Tool and Equipment Program 888-424-6857.

Removal

NOTE:

- Use fender covers to avoid damaging painted surfaces.
- To avoid damaging the wiring and terminals, unplug the wiring connectors carefully while holding the connector portion.
- Mark all wiring and hoses to avoid misconnection. Also, be sure that they do not contact other wiring or hoses, or interfere with other parts.

1. Hood - Wide Open

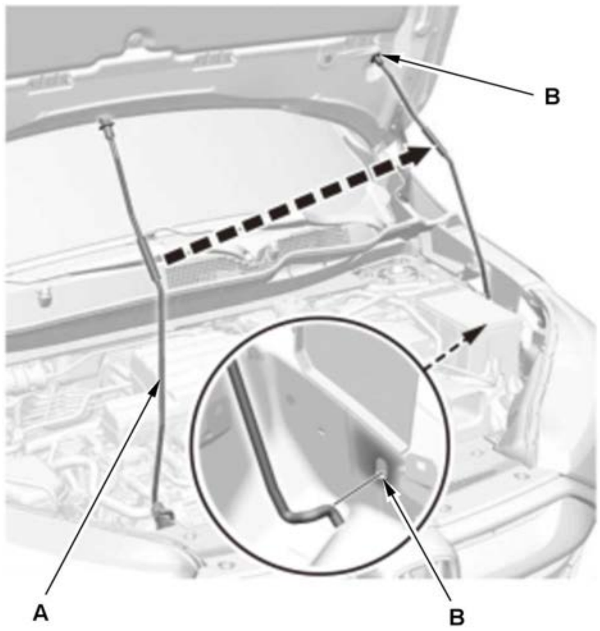	1. Open the hood. 2. Remove and relocate the hood support rod (A) to the wide-open positions (B) and secure the hood.

2. **Fuel Pressure - Relieve**
3. **Front Bulkhead Cover - Remove**
4. **12 Volt Battery - Remove**
5. **12 Volt Battery Base - Remove**
6. **Air Cleaner - Remove**
7. **PCM - Remove**
8. Connector (Engine Wire Harness) and Positive Cable (Under-Hood Fuse/Relay Box) - Disconnect

    1. Remove the positive cables (A).

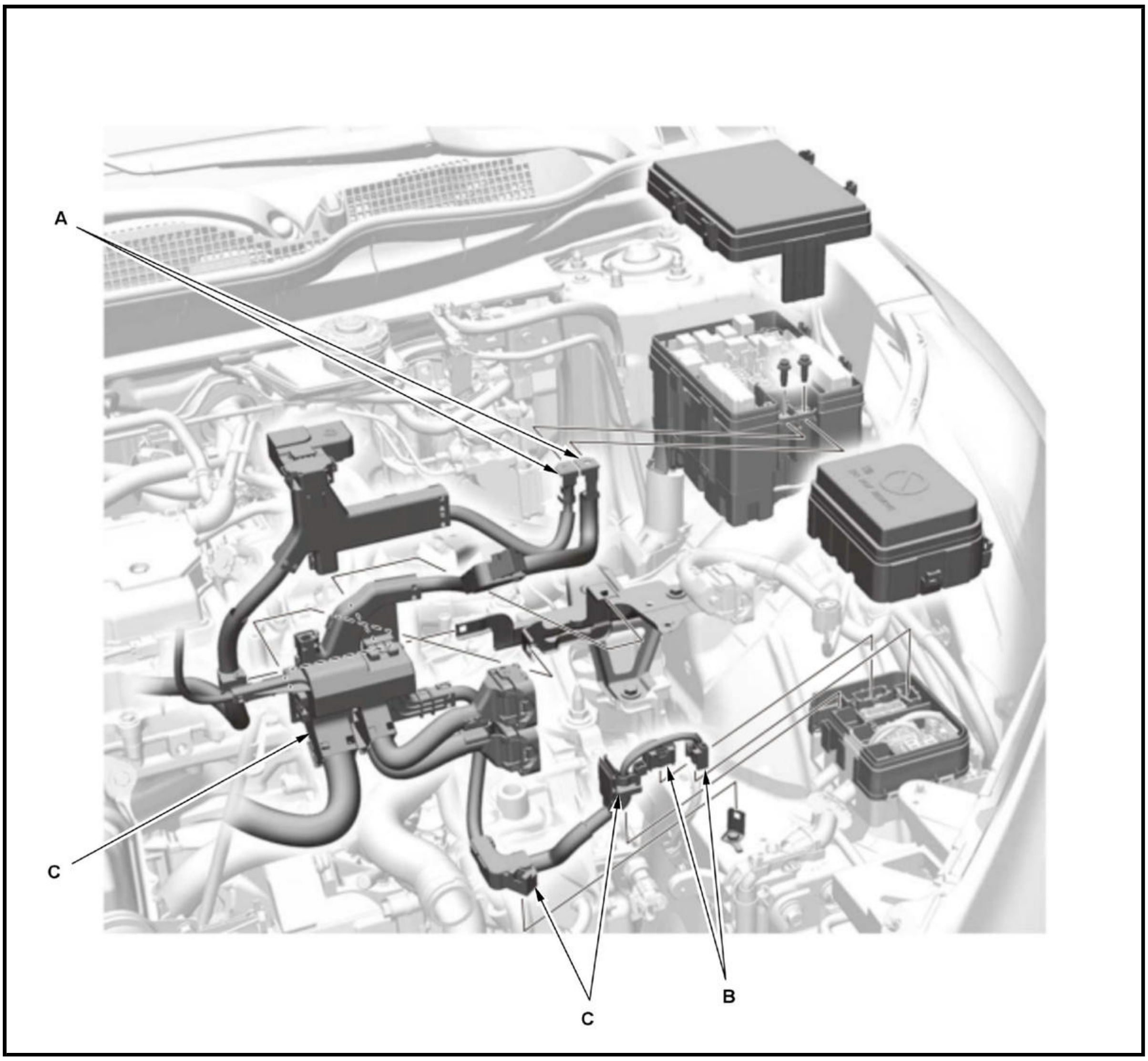

2. Disconnect the connectors (B).

3. Remove the harness holders (C).

9. Shift Cable (Transmission Side) - Disconnect
10. Fuel Feed Hose - Disconnect
11. Steering Joint - Disconnect
12. Vehicle - Lift

1. Raise and support the vehicle .

13. Front Wheel - Remove
14. Engine Undercover - Remove
15. Engine Coolant - Drain
16. Engine Oil - Drain
17. Transmission Fluid - Drain
18. Drive Belt - Remove
19. Radiator Assembly - Remove
20. A/C Compressor - Move

NOTE:

- Do not disconnect the suction hose and the discharge hose.
- Do not bend the suction hose and the discharge hose excessively.

- Hang the A/C compressor with a wire tie.

21. Connectors (EPS Subharness) - Disconnect
22. Exhaust Pipe A - Remove
23. Tie-Rod End Ball Joint - Disconnect
24. Front Stabilizer Link Ball Joint - Disconnect
25. Lower Arm Ball Joint - Disconnect
26. Front Driveshaft - Remove
27. Propeller Shaft - Remove (AWD)
28. Transfer Assembly - Remove (AWD)
29. Vehicle - Lift

1. Lower the vehicle.

30. EVAP Canister Purge Hose and Heater Hose - Disconnect

1. Disconnect the EVAP canister purge hose (A).

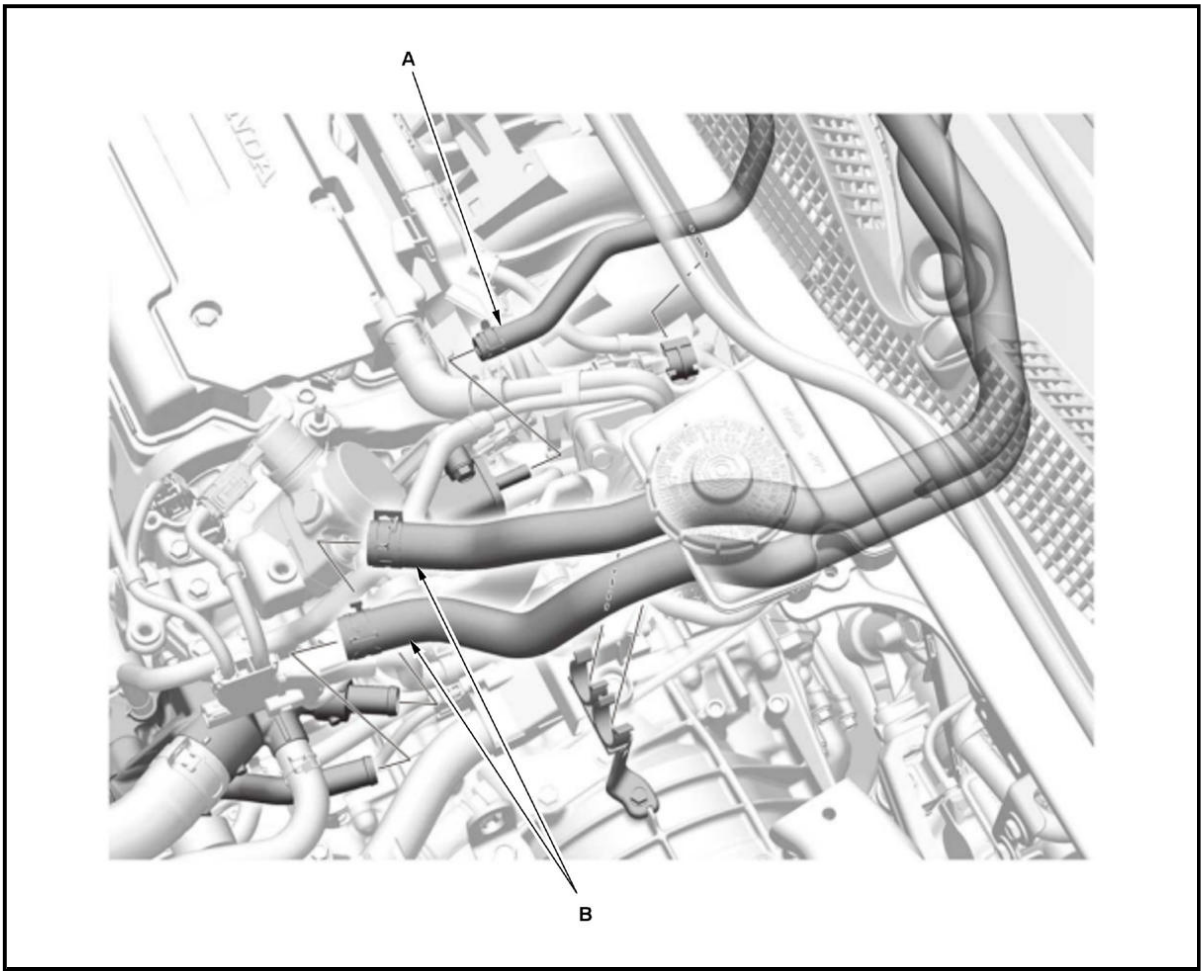

2. Disconnect the heater hoses (B).

31. Vehicle - Lift

1. Raise the vehicle.

32. Lower Torque Rod - Remove
33. Front Lower Arm Mounting Bolt - Remove

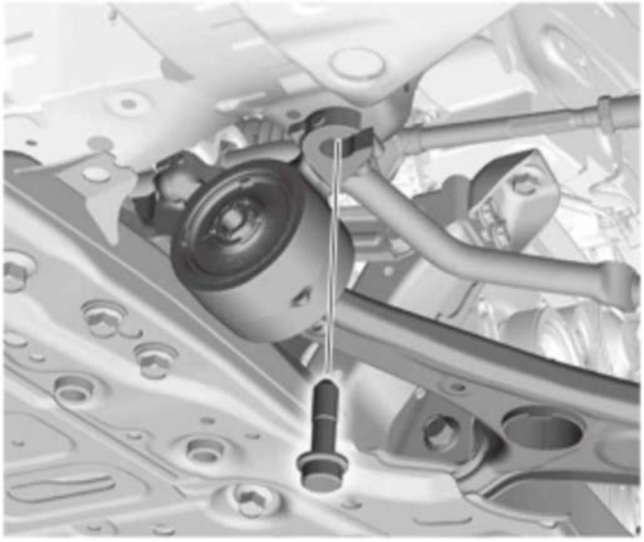	1. **Remove both sides of the front lower arm mounting bolt from the body** .

34. Front Subframe - Support

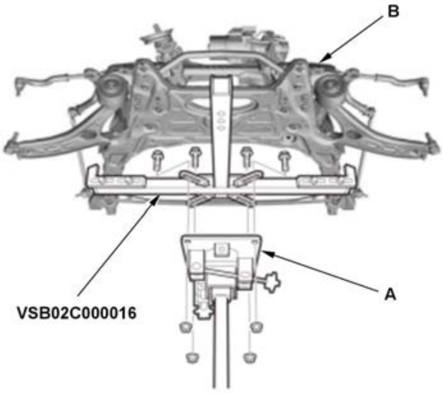	1. Set the subframe adapter (VSB02C000016) on a transmission jack (A), line up the slots in the arms with the bolt holes on the corner of the jack base, and tighten the bolts. 2. Attach the subframe adapter to the front subframe (B).

35. **Front Subframe - Remove**
36. Vehicle - Lift

1. Lower the vehicle.

37. Engine - Support

1. Lift and support the engine with a jack and a wood block under the oil pan.

38. **Upper Torque Rod - Remove**
39. **Side Engine Mount - Remove**
40. Universal Lifting Eyelet - Install

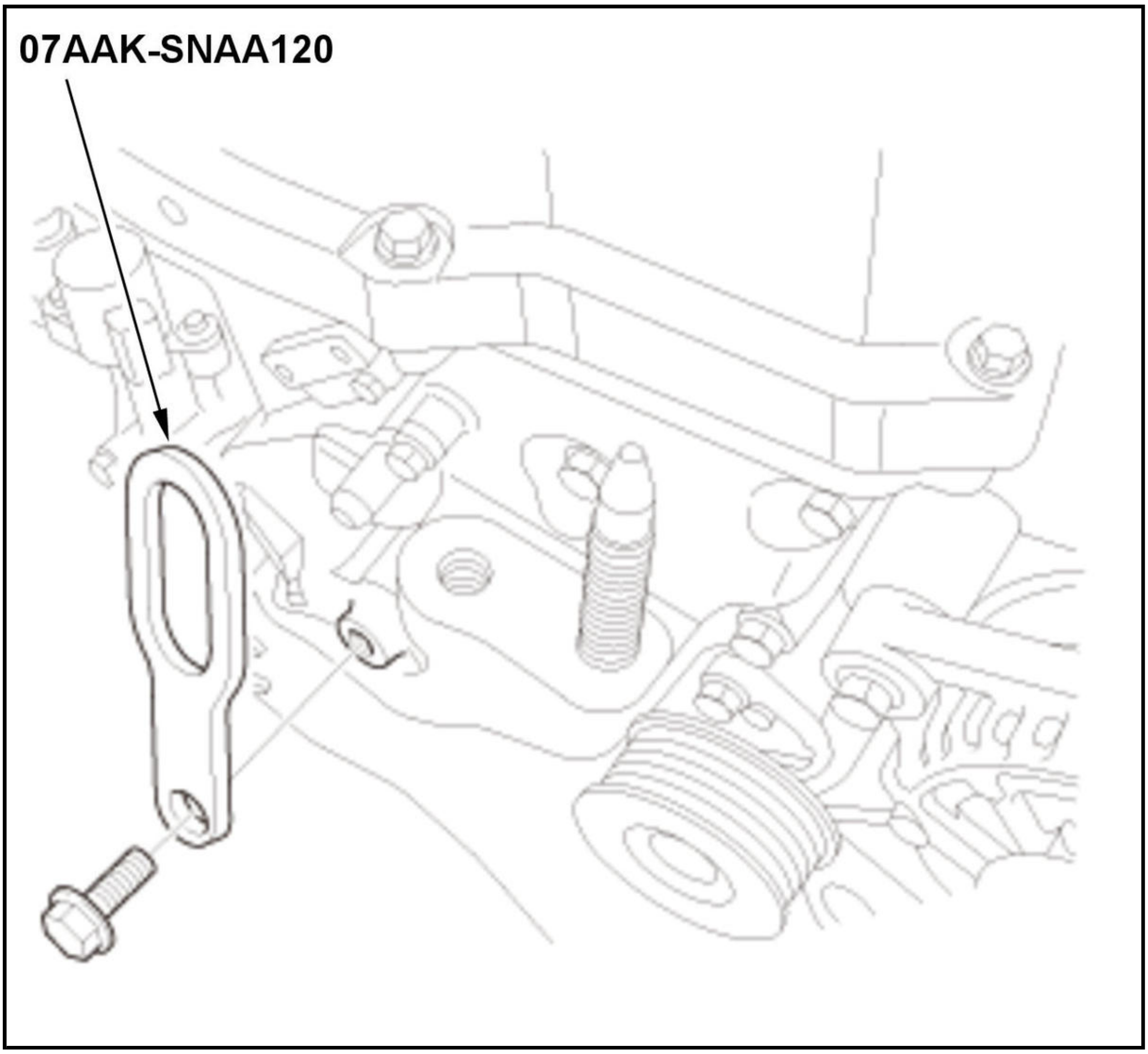

41. Chain Hoist - Install

1. Attach a chain hoist (A) to the universal lifting eyelet and the transmission hanger (B), then lift the engine/transmission until it is securely supported by the chain hoist.

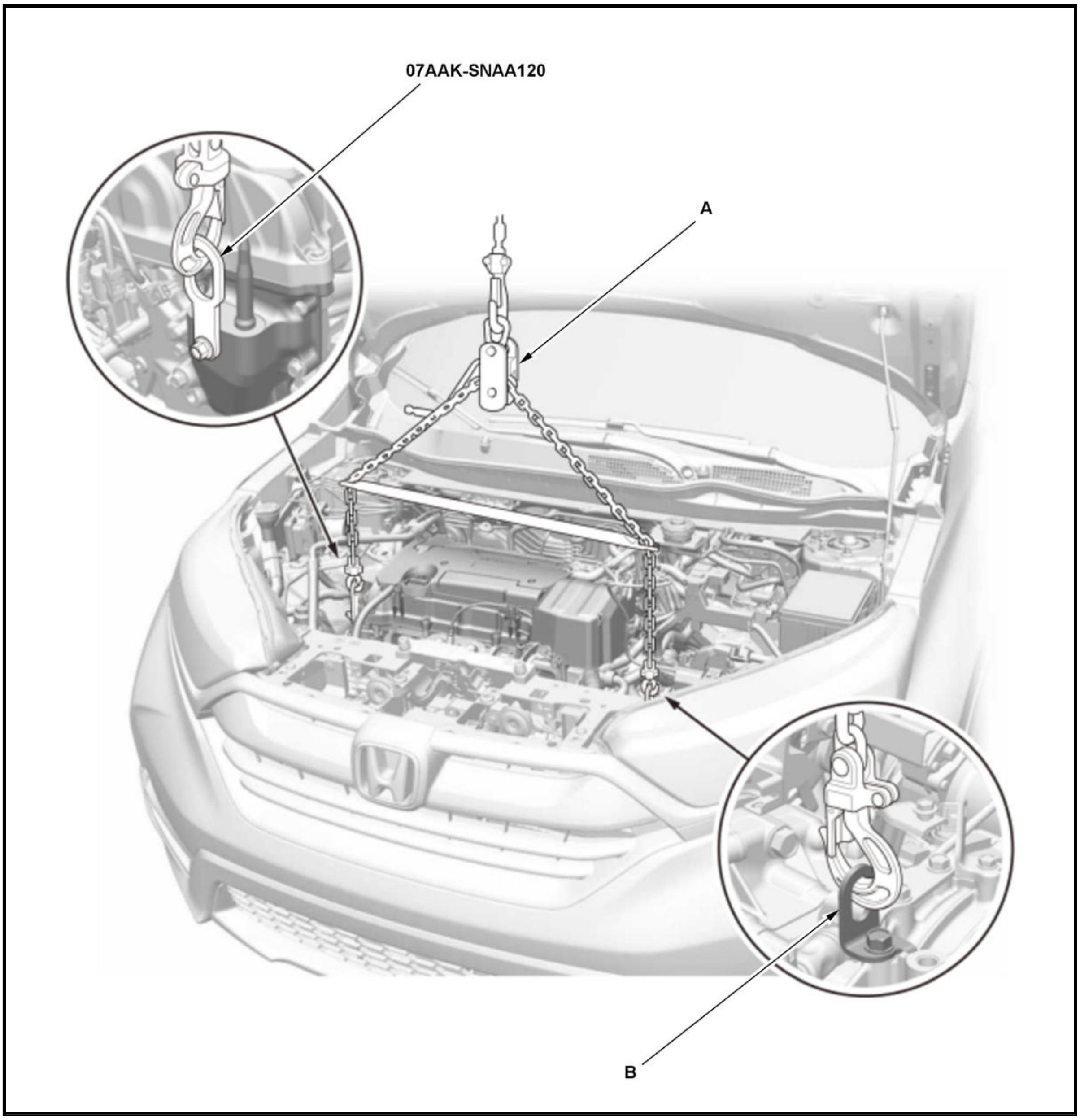
07AAK-SNAA120
A
B

42. Transmission Mount Bracket Mounting Bolt and Nut - Remove

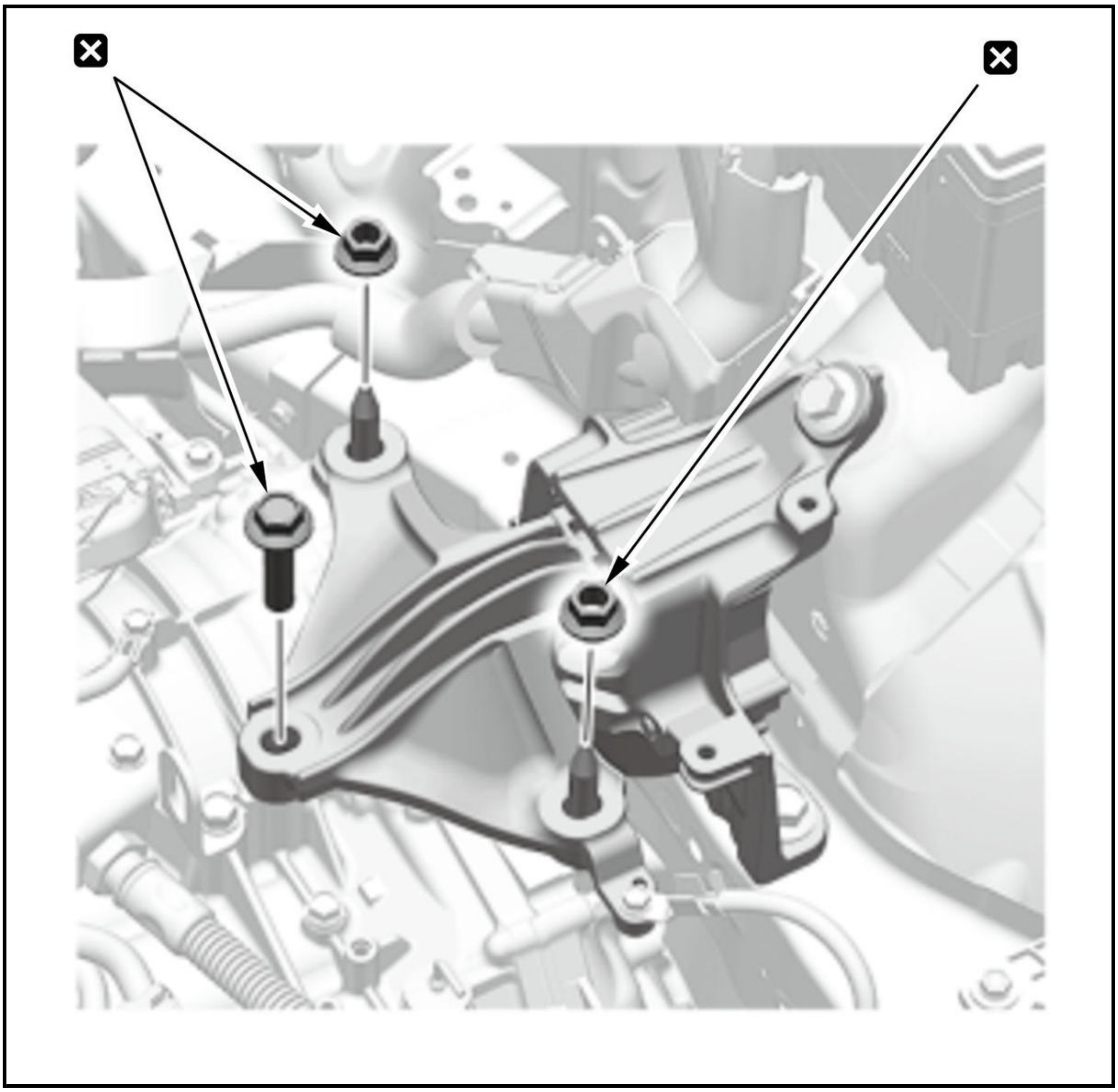

43. Engine - Remove

1. Check that the engine/transmission is completely free of the vacuum hoses, the fuel hoses, the coolant hoses, and the electrical wiring.

2. Slowly lower the engine/transmission about 150 mm (5.91 in). Check once again that all the hoses and the electrical wiring are disconnected and free from the engine/transmission, then lower it all the way and support it.

3. Remove the chain hoist and universal lifting eyelet from the engine/transmission.

4. Raise the vehicle, and remove the engine/transmission from under the vehicle.

Installation

NOTE: How to read the torque specifications .

1. Lower Torque Rod Bracket - Install
2. Universal Lifting Eyelet - Install

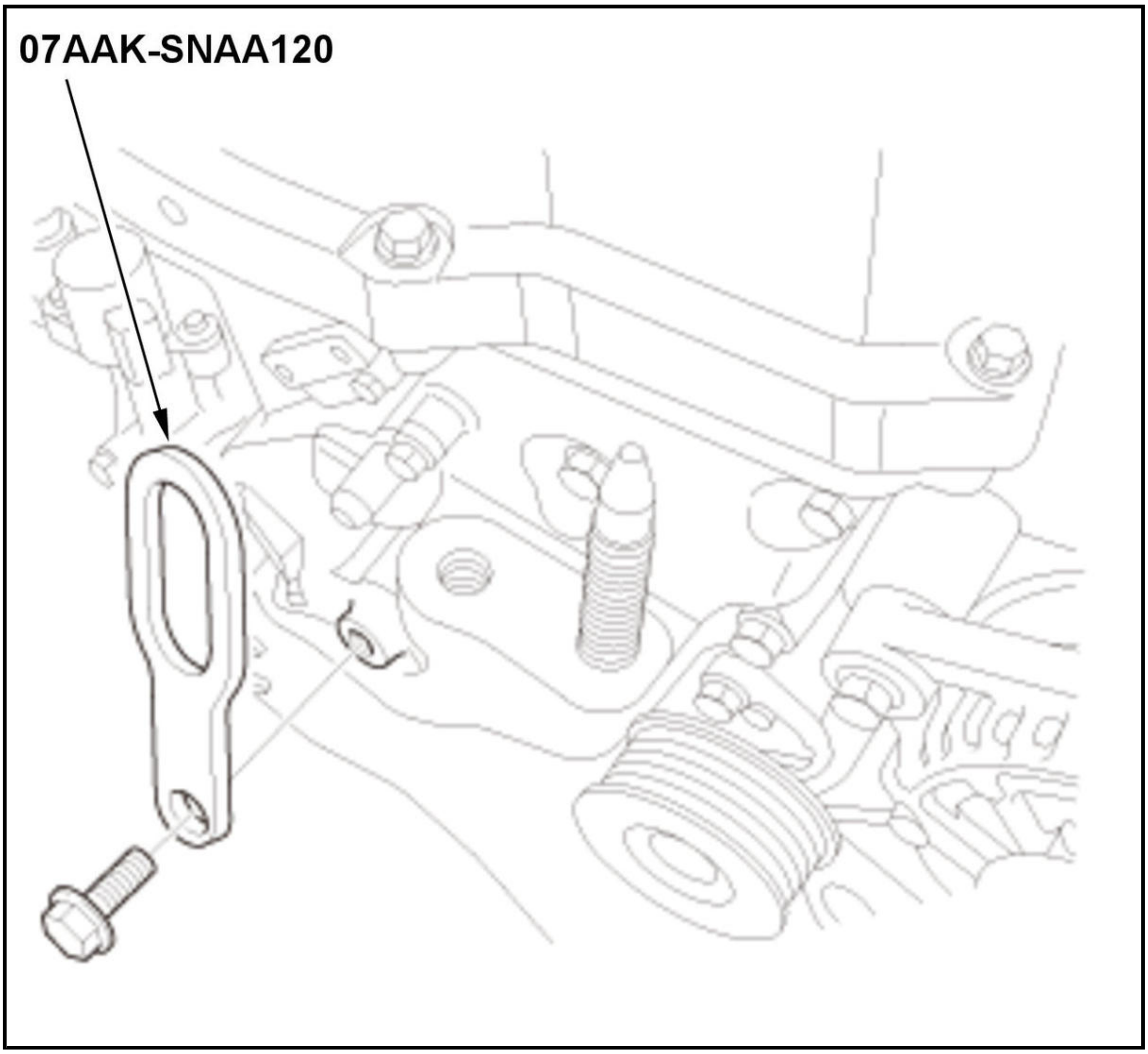

3. Engine/Transmission Assembly - Position

1. Position the engine/transmission assembly under the vehicle, and be sure that they are properly positioned. Carefully lower the vehicle, and stop with the installation position of the engine/transmission assembly.

4. Chain Hoist - Install

1. Attach the chain hoist (A) to the universal lifting eyelet and the transmission hanger (B), then lift the engine/transmission until it is securely supported by the chain hoist.

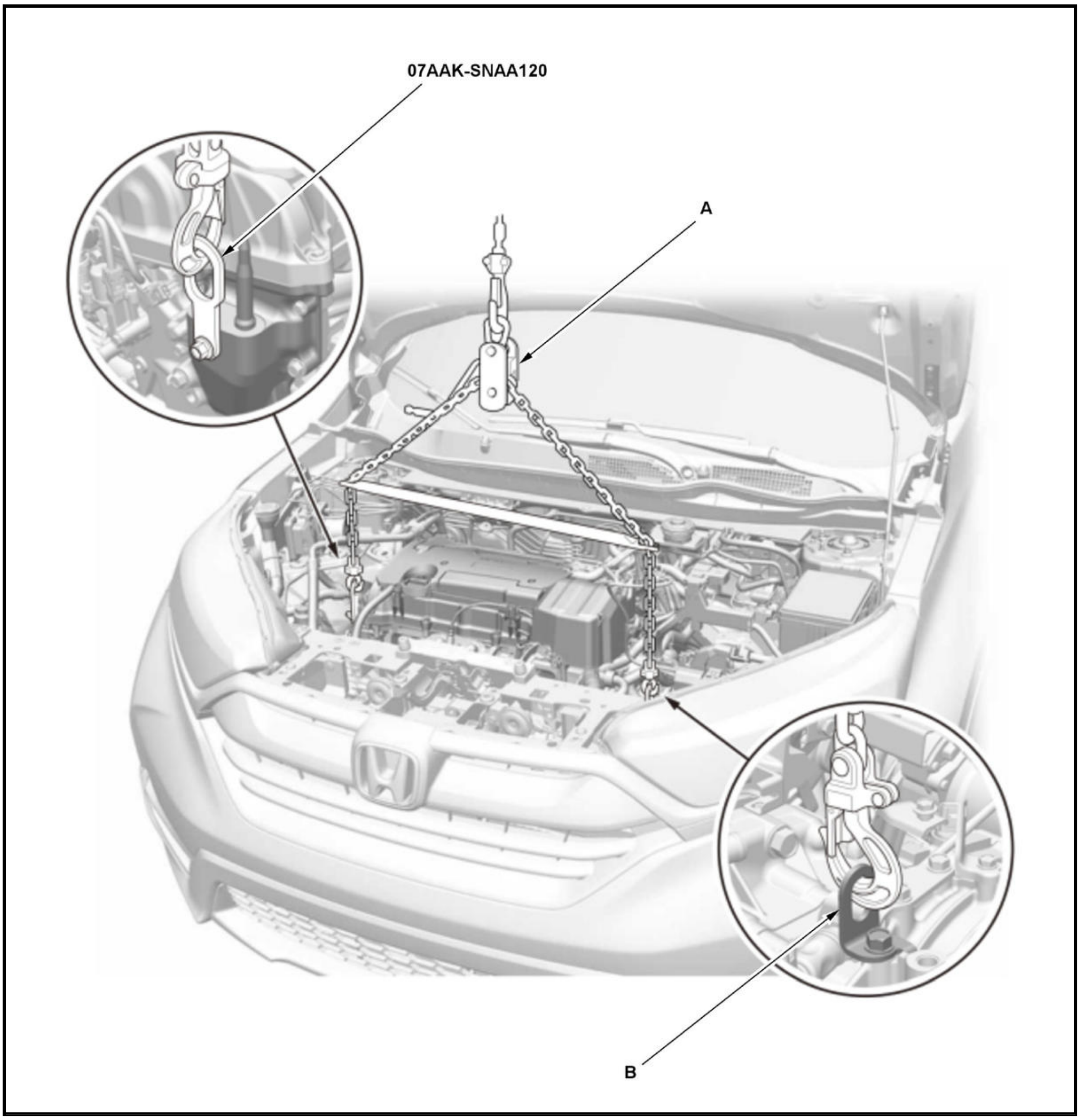
07AAK-SNAA120
A
B

5. Transmission Mount Bracket Mounting Bolt and Nut - Loosely Install

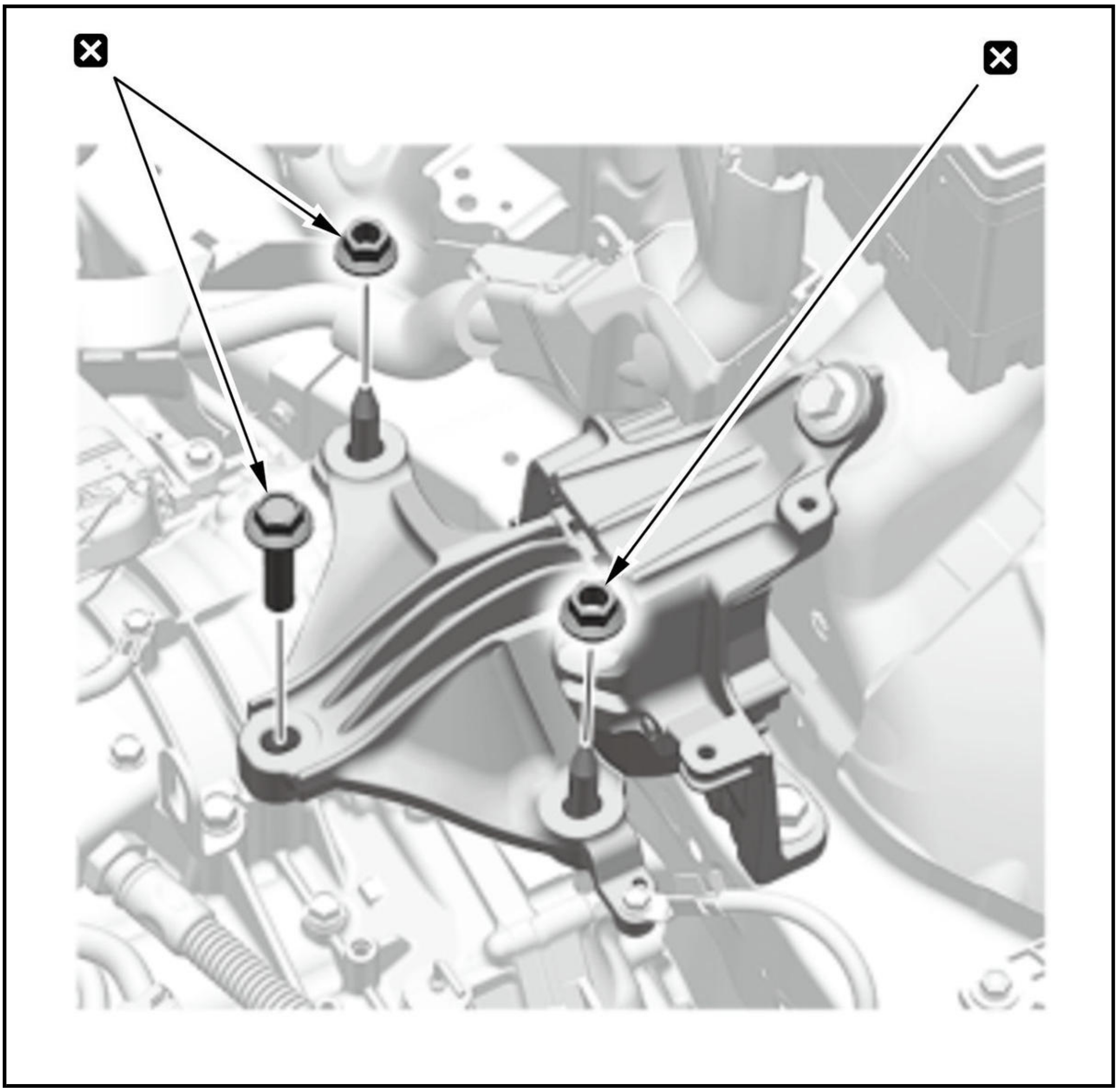

6. Engine - Support

   1. Lift and support the engine with a jack and a wood block under the oil pan.

7. Chain Hoist and Universal Lifting Eyelet - Remove
8. **Side Engine Mount - Loosely Install**
9. **Upper Torque Rod - Loosely Install**
10. Vehicle - Lift

    1. Raise the vehicle.

11. Front Subframe - Support

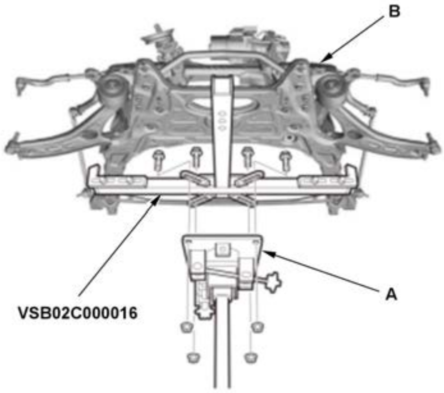	1. Set the subframe adapter (VSB02C000016) on a transmission jack (A), line up the slots in the arms with the bolt holes on the corner of the jack base, and tighten the bolts. 2. Attach the subframe adapter to the front subframe (B).

12. Front Subframe - Install
13. Front Lower Arm Mounting Bolt - Install

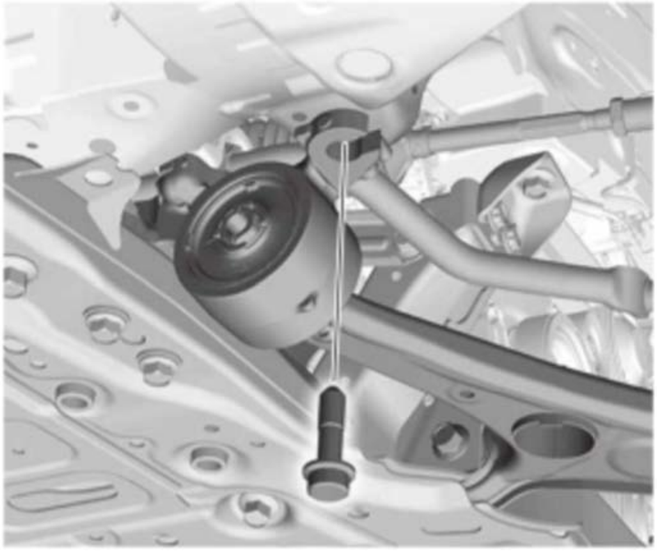	1. Install both sides of the front lower arm mounting bolt to the body .

14. Lower Torque Rod - Loosely Install
15. All Engine Mount Mounting Bolt and Nut - Tighten
16. Transfer Assembly - Install (AWD)
17. Propeller Shaft - Install (AWD)
18. Front Driveshaft - Install
19. Lower Arm Ball Joint - Connect
20. Front Stabilizer Link Ball Joint - Connect
21. Tie-Rod End Ball Joint - Connect
22. Exhaust Pipe A - Install
23. Connectors (EPS Subharness) - Connect
24. A/C Compressor - Install
25. Radiator Assembly - Install
26. Drive Belt - Install
27. Engine Undercover - Install
28. Vehicle - Lift

1. Lower the vehicle.

29. Steering Joint - Connect
30. EVAP Canister Purge Hose and Heater Hose - Connect

1. Connect the EVAP canister purge hose (A).

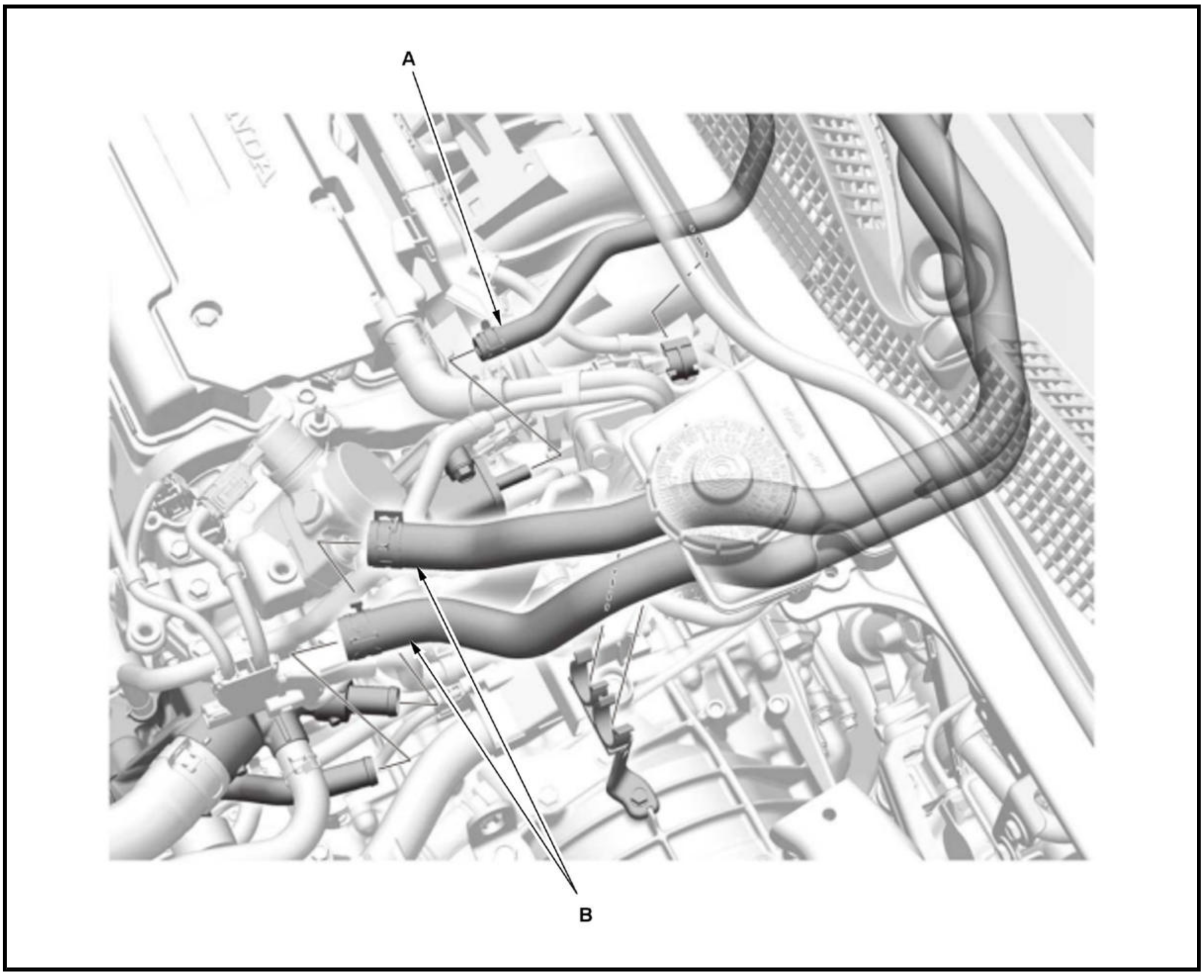

2. Connect the heater hoses (B).

31. **Fuel Feed Hose - Connect**
32. **Shift Cable (Transmission Side) - Connect**
33. Connector (Engine Wire Harness) and Positive Cable (Under-Hood Fuse/Relay Box) - Connect

1. Install the harness holder (A).

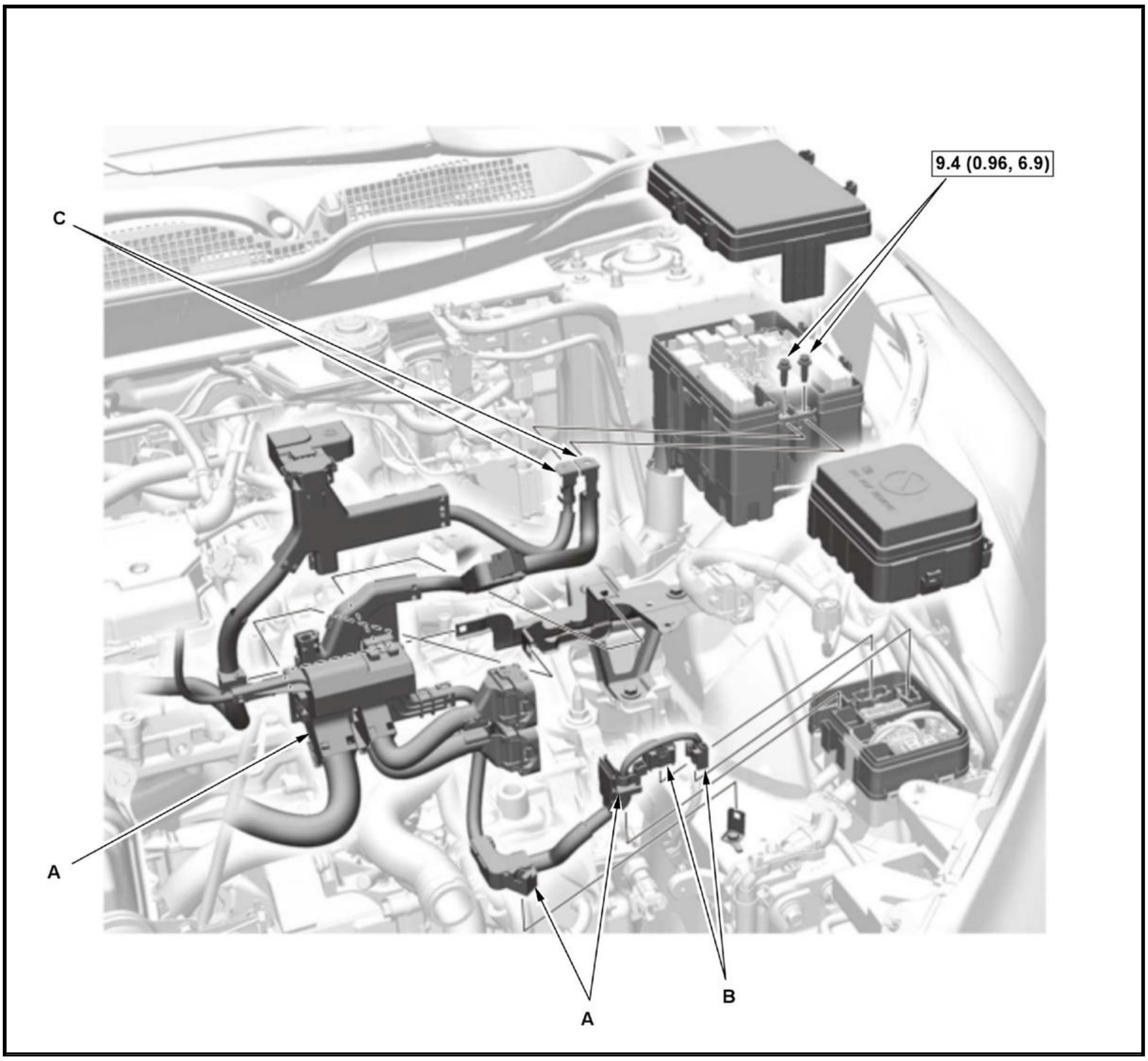

2. Connect the connectors (B).

3. Install the positive cables (C).

34. PCM - Install
35. Air Cleaner - Install
36. 12 Volt Battery Base - Install
37. 12 Volt Battery - Install
38. Front Bulkhead Cover - Install
39. Transmission Fluid - Refill
40. Engine Oil - Refill
41. Engine Coolant - Refill
42. Fuel Leak (Low Pressure Side) - Check

1. Turn the vehicle to the ON mode, but do not start the engine. After the fuel pump runs for about 2 seconds, the fuel line will be pressurized. Repeat this two or three time, then check for fuel leakage.

43. Fuel Leak (High Pressure Side) - Check
44. Fluid Leak - Check
45. Front Wheel - Install
46. PCM - Reset
47. CKP Pattern - Clear/Learn
48. PCM Idle - Learn

49. Idle Speed - Inspect
50. Ignition Timing - Inspect
51. Wheel Alignment - Check
52. VSA Sensor Neutral Position - Memorize

INJECTOR REMOVAL AND INSTALLATION (1.5 L ENGINE)

Special Tools Required

Image	Description/Tool Number
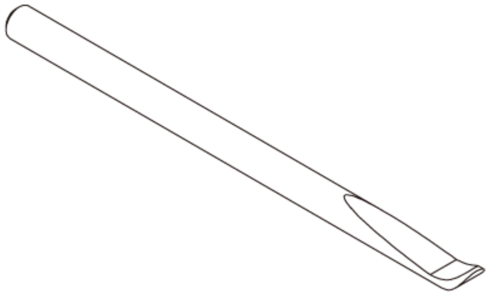	Pick Up Tool 070AC-5A00100
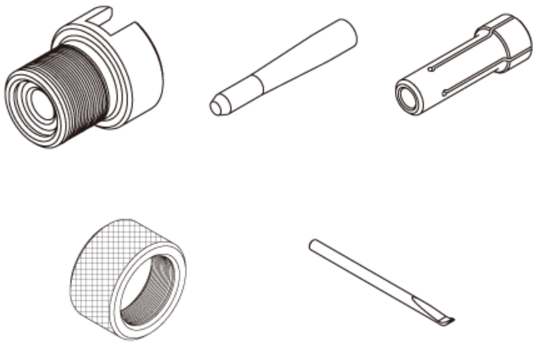	Injector Seal Installer Kit 070AG-5A00100

Removal

WARNING:

Flammable - Keep Fire Away

NOTE:

- Where icon is shown continue to the information below.
- Refer to the Fuel and Emissions Systems Service Precautions before disconnecting the fuel line.
- Fuel may cause flammable gas leaks and may result in fire. Keep sparks, flame and cigarettes away.
- When replacing the injector, you must replace all injectors on the fuel rail as a set and the fuel joint pipe.Failure to do so will cause poor engine performance and fuel leaks.

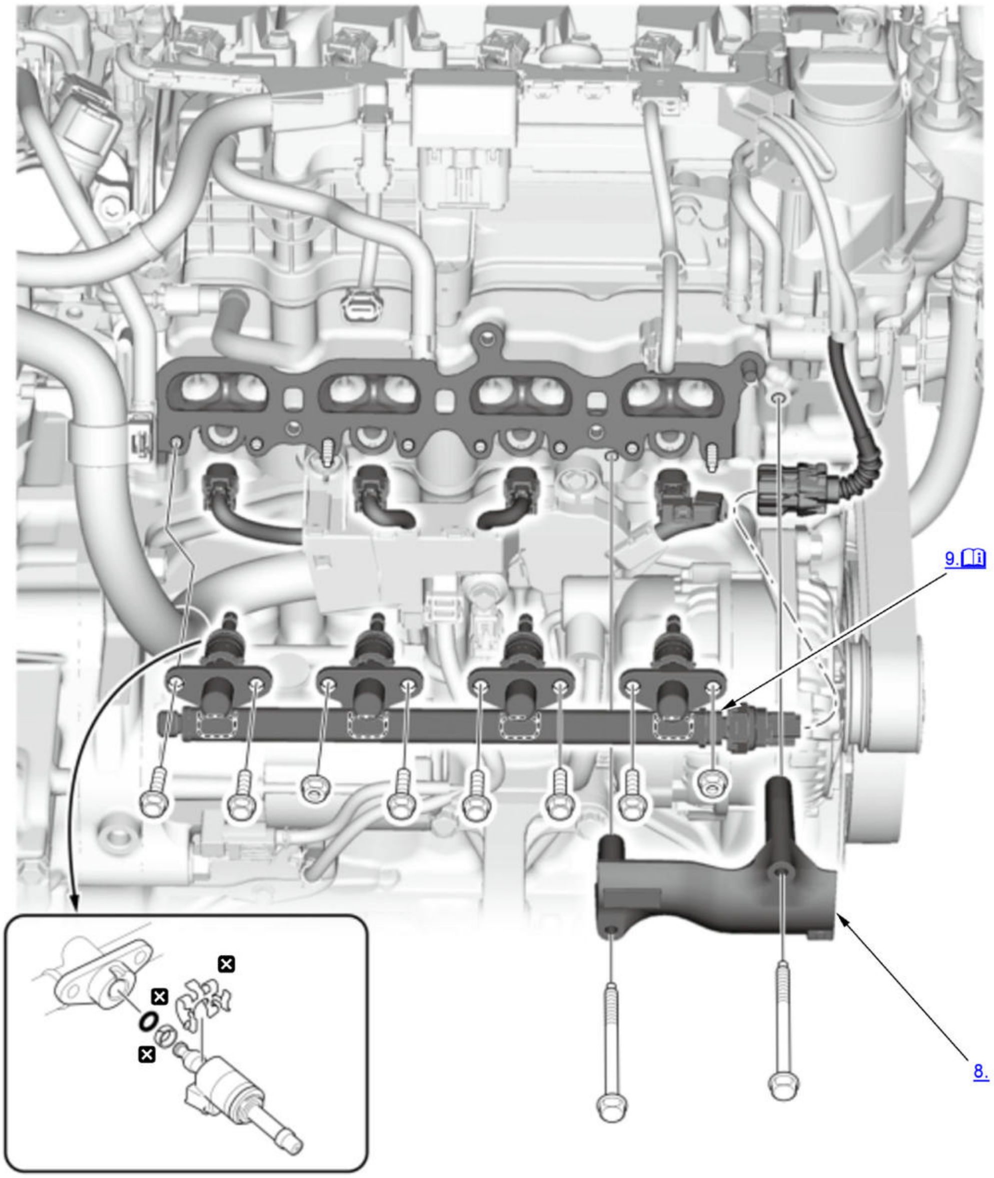

ℹ	Detailed information, notes and precautions
☒	Replace

1. **Fuel Pressure - Relieve**
2. **Intake Air Resonator - Remove**
3. **Throttle Body - Move**

   NOTE:

   - Do not disconnect the water bypass hoses.
   - Do not bend the water bypass hoses excessively.
4. Intake Manifold Bracket - Remove

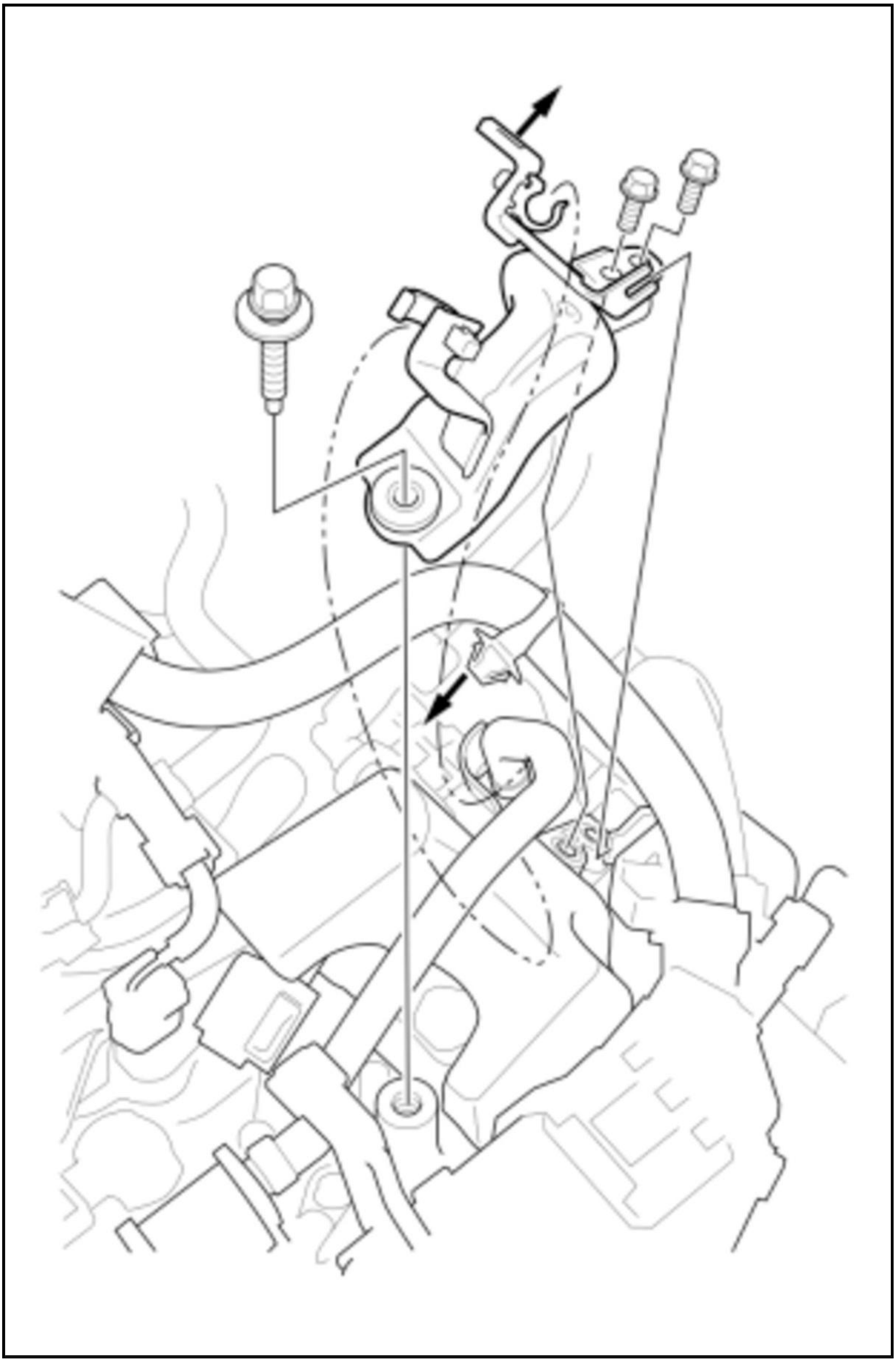

5. **Intake Manifold - Remove**

6. High Pressure Fuel Pump Cover - Remove

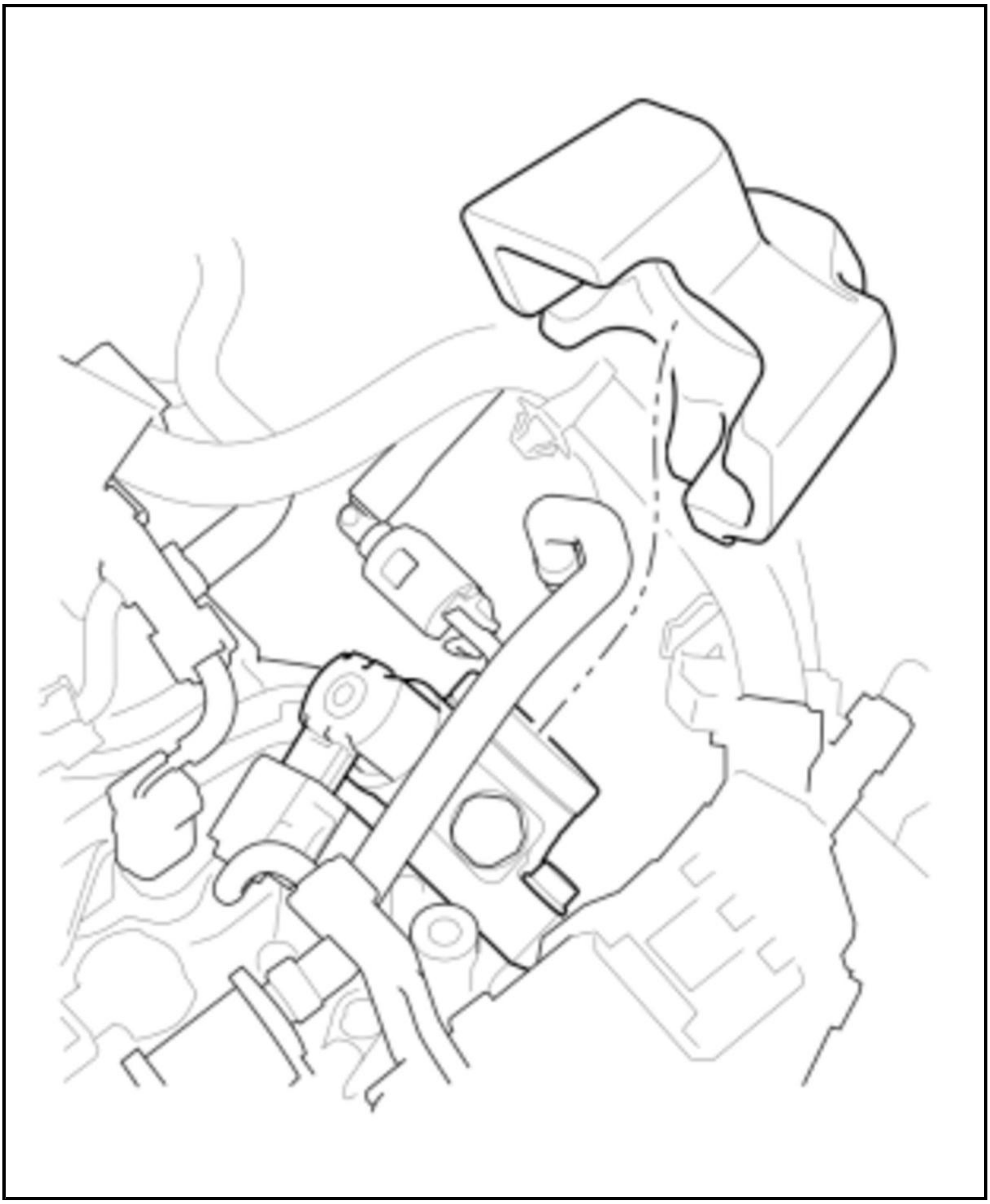

7. **Fuel Joint Pipe - Remove**
8. Bracket - Remove
9. Fuel Rail and Injector - Remove

1. Carefully remove the fuel rail with the injectors straight from the cylinder head.

NOTE:

- If the injector remains on the cylinder head, carefully remove the injector straight from the cylinder head.
- Note the cylinder number of the injector, and install it to the same cylinder when reinstalling.
- If you replace the injector, the fuel rail, or the cylinder head, use a new injector clip.

10. Injector - Remove

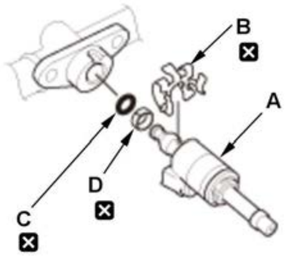	1. Remove the injectors (A) from the fuel rail. 2. Remove the injector clip (B), the O-ring (C), and the back-up ring (D) from the injector. **NOTE:** If you replace the injector, the fuel rail, or the cylinder head, use a new injector clip, O-ring, and back-up ring.

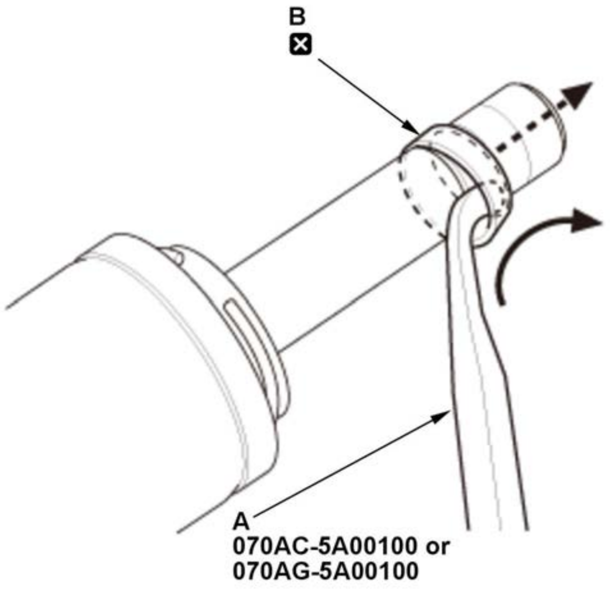	3. Using the pick up tool (A), carefully remove the seal (B) from the injector.

Installation

WARNING:

Flammable - Keep Fire Away

NOTE:

- ℹ Where icon is shown continue to the information below.
- Fuel may cause flammable gas leaks and may result in fire. Keep sparks, flame and cigarettes away.
- Refer to the **Fuel and Emissions Systems Service Precautions** before disconnecting the fuel line.
- When replacing the injector, you must replace all injectors on the fuel rail as a set.

1

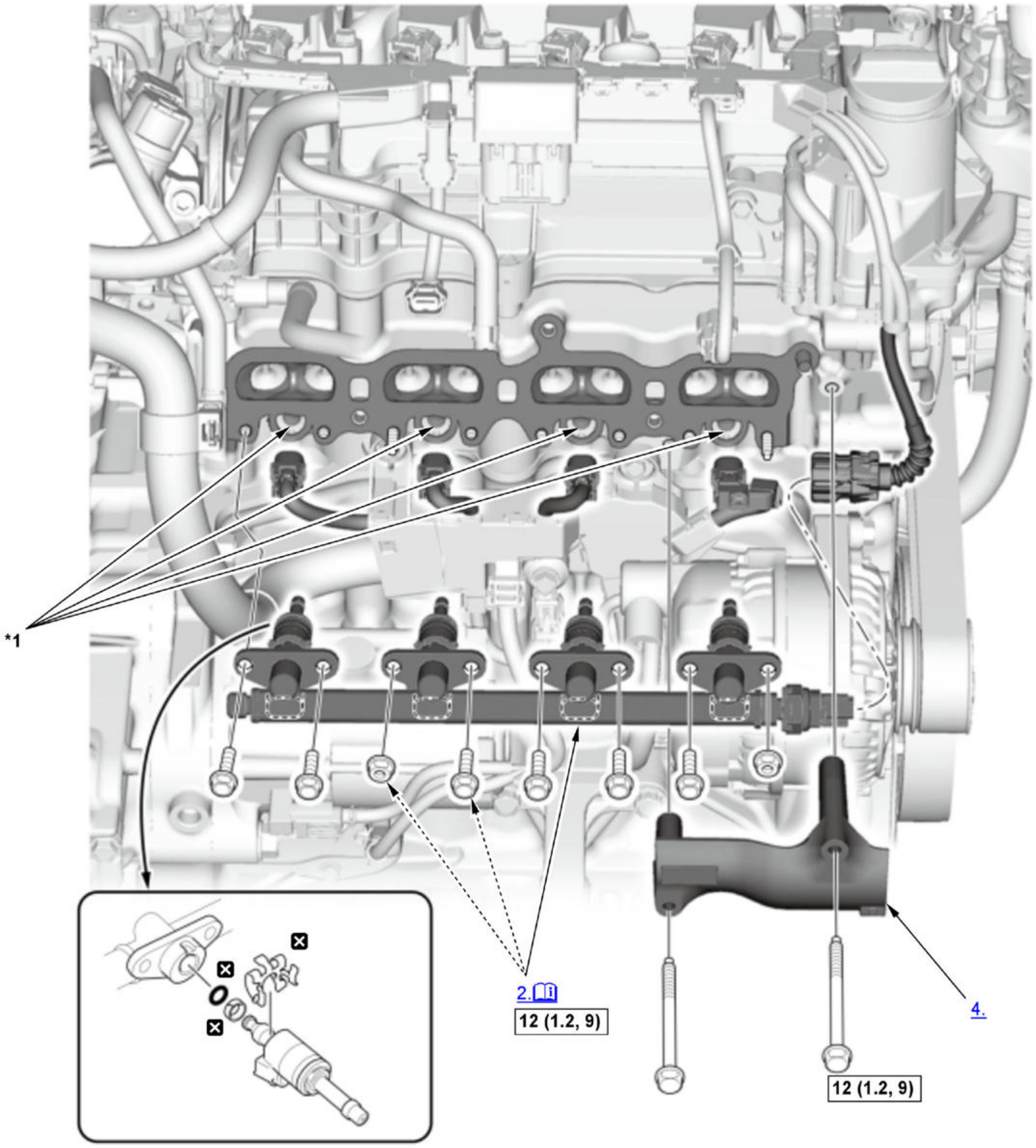

Fig. 36: Injector Replacement Components With Torque Specifications (1.5 L Engine)
Courtesy of HONDA, U.S.A., INC.

ℹ	Detailed information, notes and precautions
☐	Torque: N.m (kgf.m, lbf.ft)
☒	Replace
*1	Coat the clean engine oil

1. Injector Seal - Install

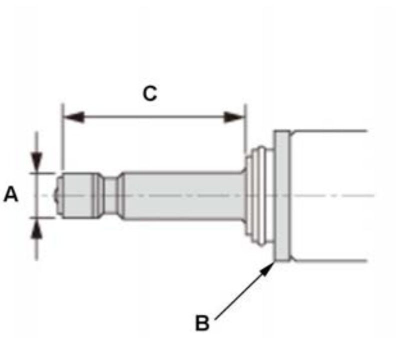

The illustration shows an example.

NOTE:

- Do not wipe off the tip area (A) of the injector as it may be damaged.
- If the tip of the injector is dirty or clogged, it must be replaced. The injectors cannot be cleaned.

1. Use compressed air to ensure that there are no dust or debris around the ring (B).

2. With a paper towel, carefully wipe off any carbon from the area (C) shown.

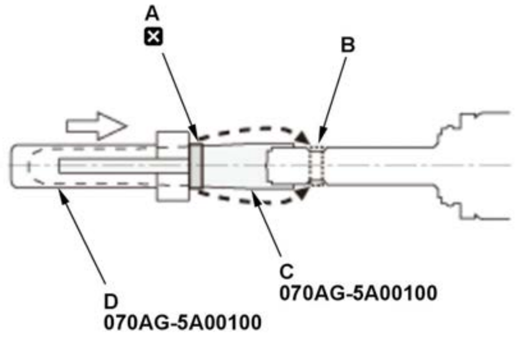

3. Quickly push a new seal (A) down to the groove (B) of the injector using the seal guide tool (C) and the seal installer (D).

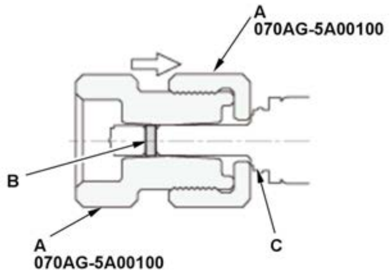

4. Joint the sizing tools (A), then slide them as a set onto the seal (B) until tools touch to the injector stepped surface (C) as shown, and hold the tools to reform the seal for 30 seconds or more.

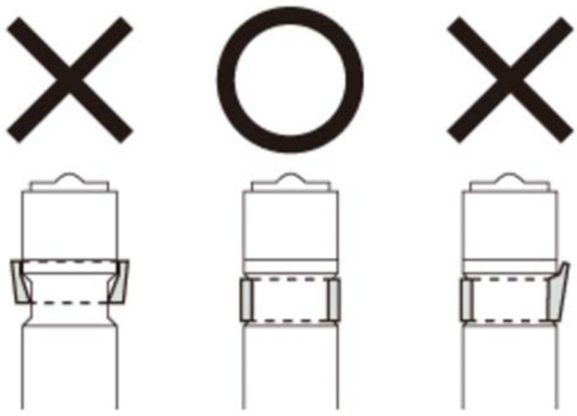

5. Remove the sizing tools, and check that the seal is installed correctly.
NOTE: When cleaning the sizing tool, be careful not to scratch the sizing tool bore.

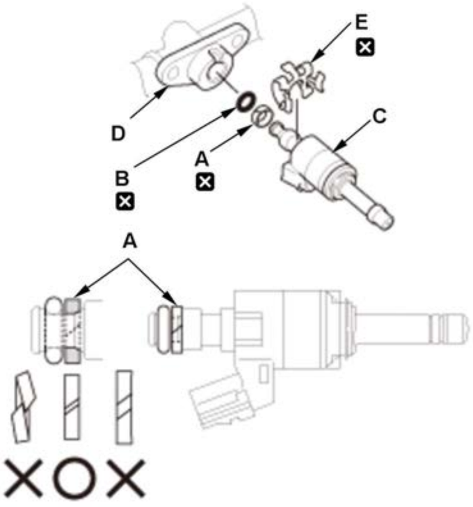

6. Install a new back-up ring (A) and a new O-ring (B) on the injector (C).

NOTE:

- Set the direction of the back-up ring as shown
- Check that the back-up ring sets correctly after installation.

7. Coat the O-ring with clean engine oil, then install the injector onto the fuel rail (D) with a new clip (E).

NOTE: When installing the injector, be sure to protect the injector from dust or debris.

2. Fuel Rail and Fuel Injector - Install

1. Carefully install the fuel rails with the injectors into the cylinder head straight and equal.

NOTE: When installing the injector, protect the tip of the injector from dust or debris.

2. Install the nuts, and tighten them slowly in an alternating pattern until the fuel rail sits on the cylinder head.

3. Tighten the nuts and the bolts to the specified torque.

3. **Fuel Joint Pipe - Install**

NOTE: Failure to install a new fuel joint pipe will cause fuel leaks.

4. Bracket - Install
5. **Fuel Leak - Check**
6. High Pressure Fuel Pump Cover - Install

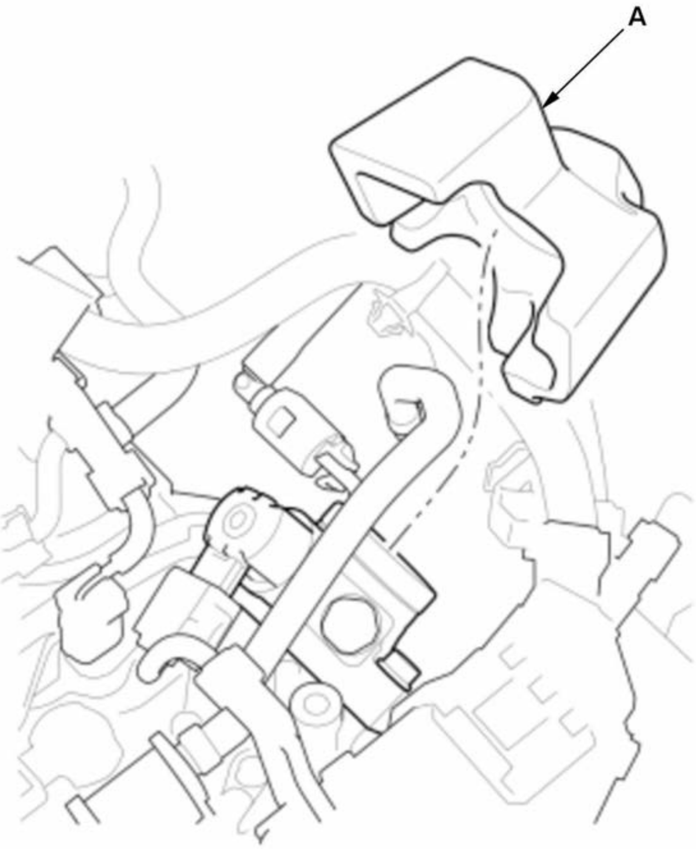 	1. Install the high pressure fuel pump cover (A).. **NOTE:** The cover will be reinstalled after the fuel leak check

INJECTOR REMOVAL AND INSTALLATION (2.4 L ENGINE) (2017 2018 2019)

Special Tools Required

Image	Description/Tool Number
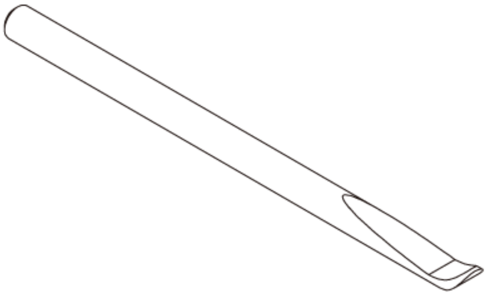	Pick Up Tool 070AC-5A00100

Image	Description/Tool Number
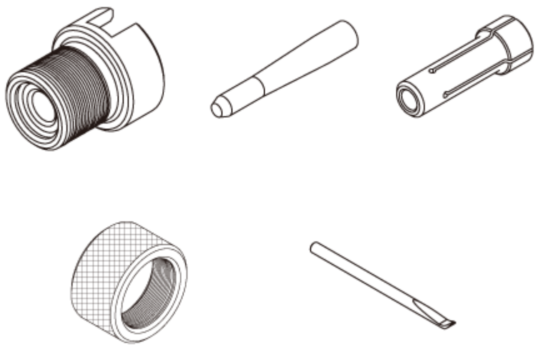	Injector Seal Installer Kit 070AG-5A00100

Removal

WARNING:

Flammable - Keep Fire Away

NOTE:

- ℹ Where icon is shown continue to the information below.
- Refer to the **Fuel and Emissions Systems Service Precautions** before disconnecting the fuel line.
- Fuel may cause flammable gas leaks and may result in fire. Keep sparks, flame and cigarettes away.
- When replacing the injector, you must replace all injectors on the fuel rail as a set and the fuel joint pipe.Failure to do so will cause poor engine performance and fuel leaks.

1

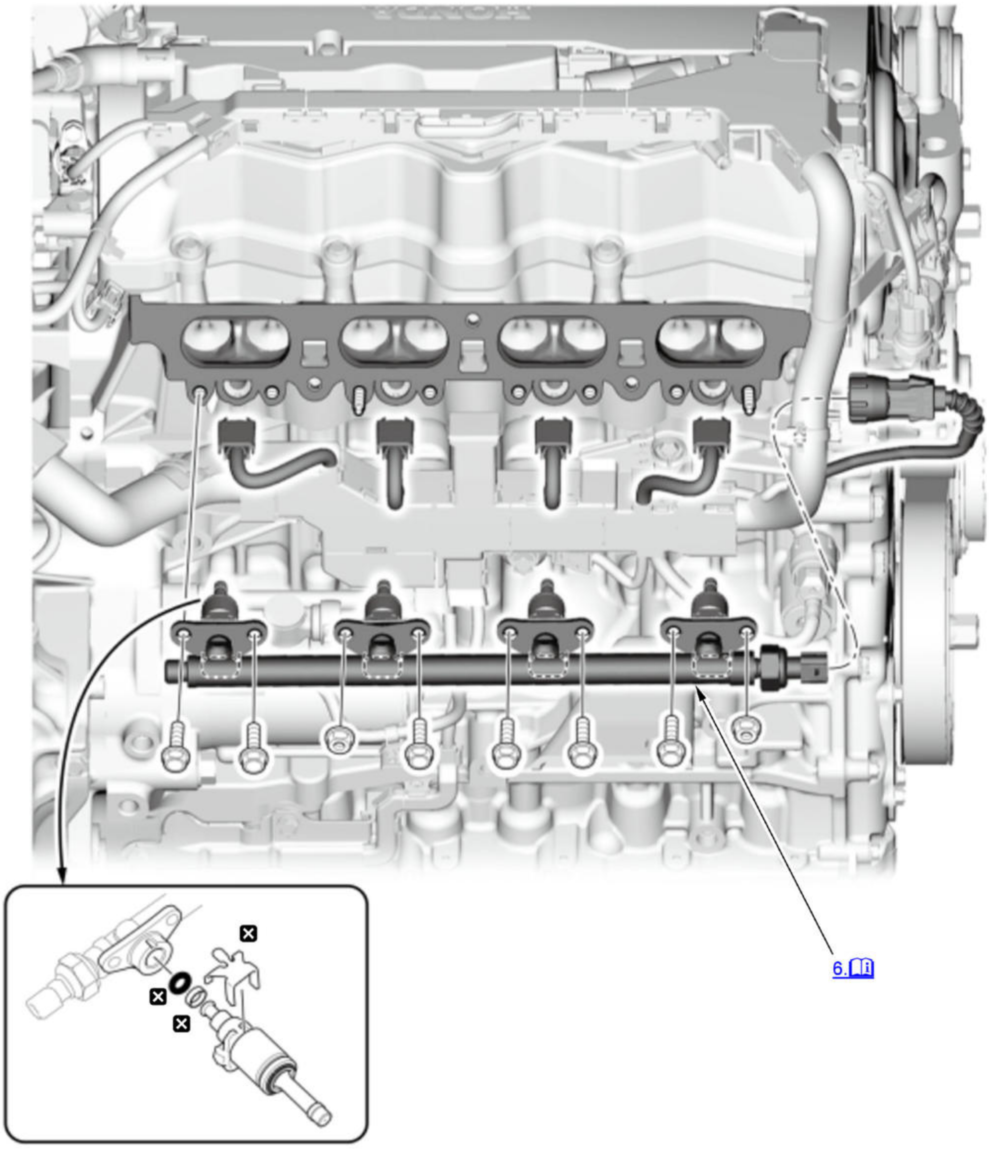

📖	Detailed information, notes and precautions
☒	Replace

1. **Fuel Pressure - Relieve**
2. **Air Cleaner - Remove**
3. **Throttle Body - Move**

   NOTE:

   - Do not disconnect the water bypass hoses.
   - Do not bend the water bypass hoses excessively.
4. **Intake Manifold - Remove**
5. **Fuel Joint Pipe - Remove**
6. Fuel Rail and Injector - Remove

1. Carefully remove the fuel rail with the injectors straight from the cylinder head.

NOTE:

- If the injector remains on the cylinder head, carefully remove the injector straight from the cylinder head.

- Note the cylinder number of the injector, and install it to the same cylinder when reinstalling.
- If you replace the injector, the fuel rail, or the cylinder head, use a new injector clip.

7. Injector - Remove

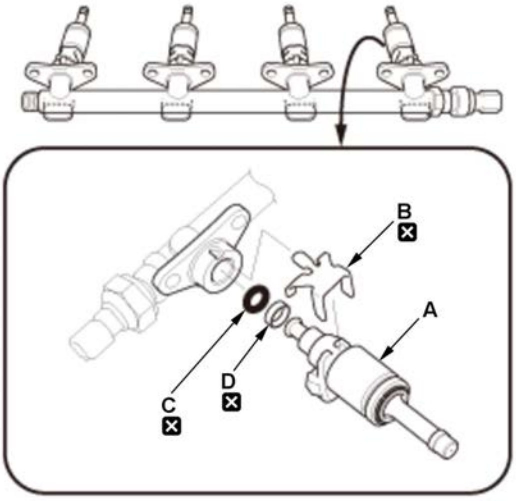	1. Remove the injectors (A) from the fuel rail. 2. Remove the injector clip (B), the O-ring (C), and the back-up ring (D) from the injector. **NOTE:** If you replace the injector, the fuel rail, or the cylinder head, use a new injector clip, O-ring, and back-up ring.

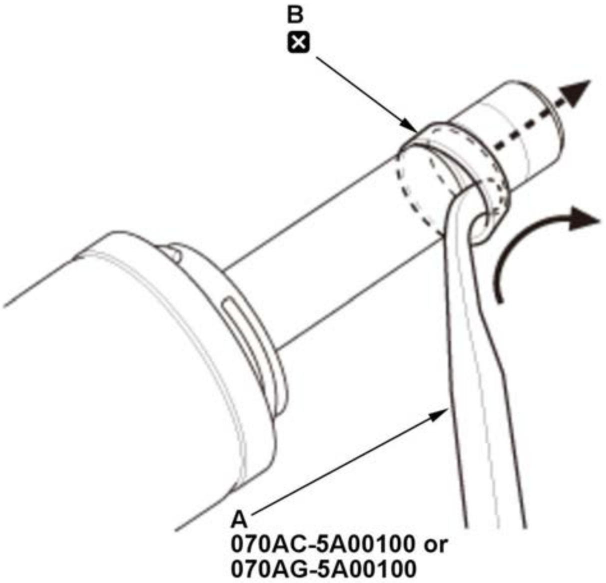	3. Using the pick up tool (A), carefully remove the seal (B) from the injector.

Installation

WARNING:

Flammable - Keep Fire Away

NOTE:

- ℹ Where icon is shown continue to the information below.
- Fuel may cause flammable gas leaks and may result in fire. Keep sparks, flame and cigarettes away.
- Refer to the **Fuel and Emissions Systems Service Precautions** before disconnecting the fuel line.
- When replacing the injector, you must replace all injectors on the fuel rail as a set.

1

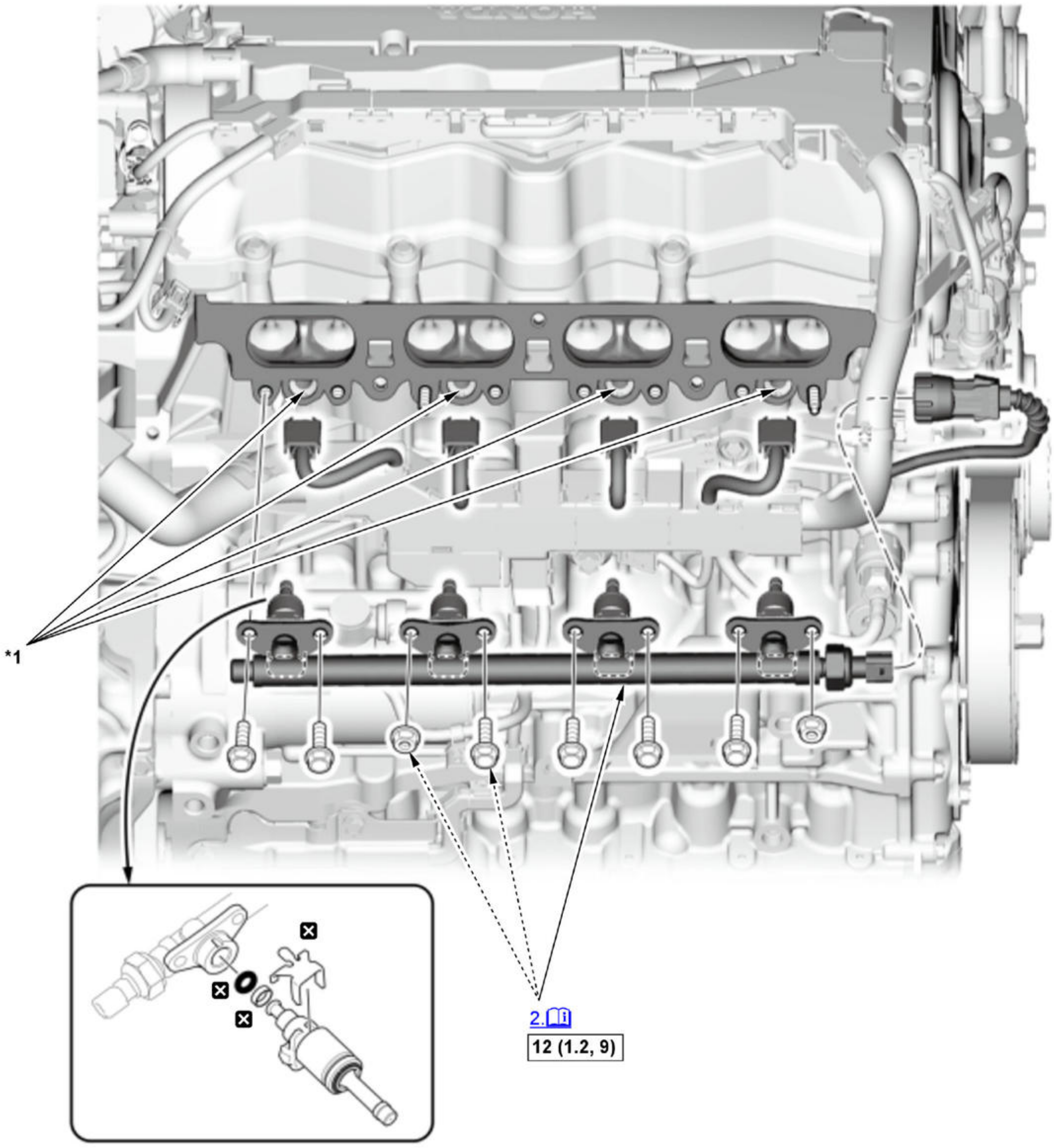

[Fig. 37: Injector Replacement Components With Torque Specifications (2.4 L Engine) (2017 2018 2019)]()
Courtesy of HONDA, U.S.A., INC.

📖	Detailed information, notes and precautions
☐	Torque: N.m (kgf.m, lbf.ft)
☒	Replace
*1	Coat the clean engine oil

1. Injector Seal - Install

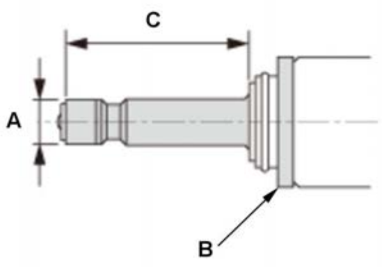

The illustration shows an example.

NOTE:

- Do not wipe off the tip area (A) of the injector as it may be damaged.
- If the tip of the injector is dirty or clogged, it must be replaced. The injectors cannot be cleaned.

1. Use compressed air to ensure that there are no dust or debris around the ring (B).

2. With a paper towel, carefully wipe off any carbon from the area (C) shown.

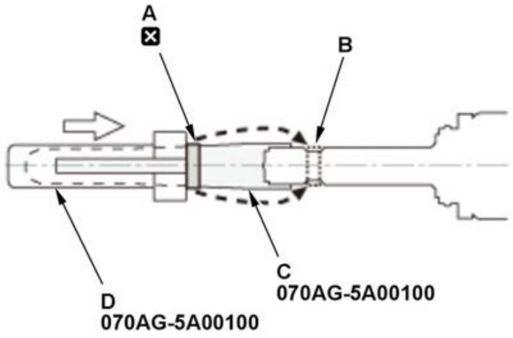

3. Quickly push a new seal (A) down to the groove (B) of the injector using the seal guide tool (C) and the seal installer (D).

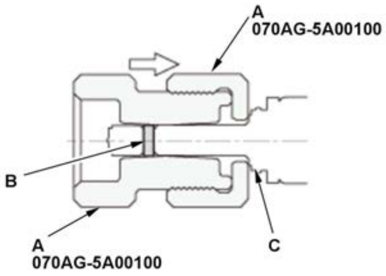

4. Joint the sizing tools (A), then slide them as a set onto the seal (B) until tools touch to the injector stepped surface (C) as shown, and hold the tools to reform the seal for 30 seconds or more.

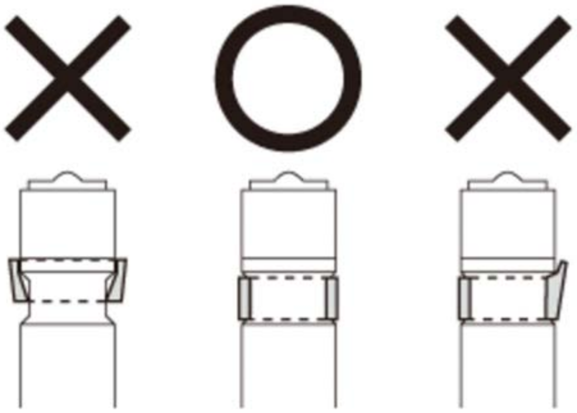

5. Remove the sizing tools, and check that the seal is installed correctly.
NOTE: When cleaning the sizing tool, be careful not to scratch the sizing tool bore.

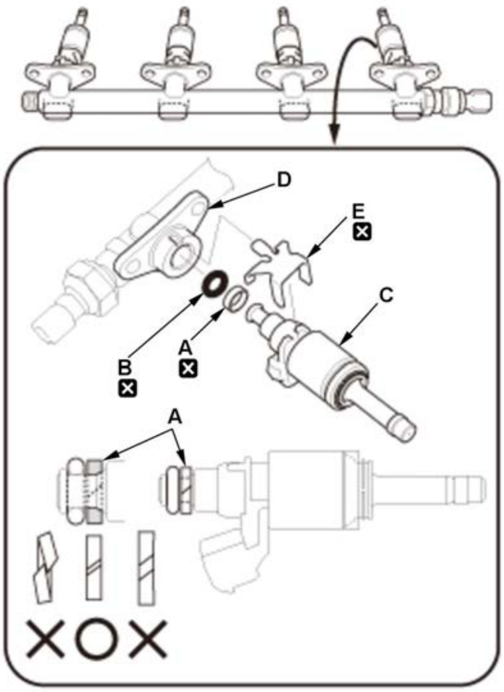

6. Install a new back-up ring (A) and a new O-ring (B) on the injector (C).

NOTE:

- Set the direction of the back-up ring as shown
- Check that the back-up ring sets correctly after installation.

7. Coat the O-ring with clean engine oil, then install the injector onto the fuel rail (D) with a new clip (E).

NOTE: When installing the injector, be sure to protect the injector from dust or debris.

2. Fuel Rail and Fuel Injector - Install

1. Carefully install the fuel rails with the injectors into the cylinder head straight and equal.

NOTE: When installing the injector, protect the tip of the injector from dust or debris.

2. Install the nuts, and tighten them slowly in an alternating pattern until the fuel rail sits on the cylinder head.

3. Tighten the nuts and the bolts to the specified torque.

3. **Fuel Joint Pipe - Install**

NOTE: Failure to install a new fuel joint pipe will cause fuel leaks.

4. **Fuel Leak - Check**

INTAKE MANIFOLD REMOVAL AND INSTALLATION (1.5 L ENGINE)

Removal and Installation

1

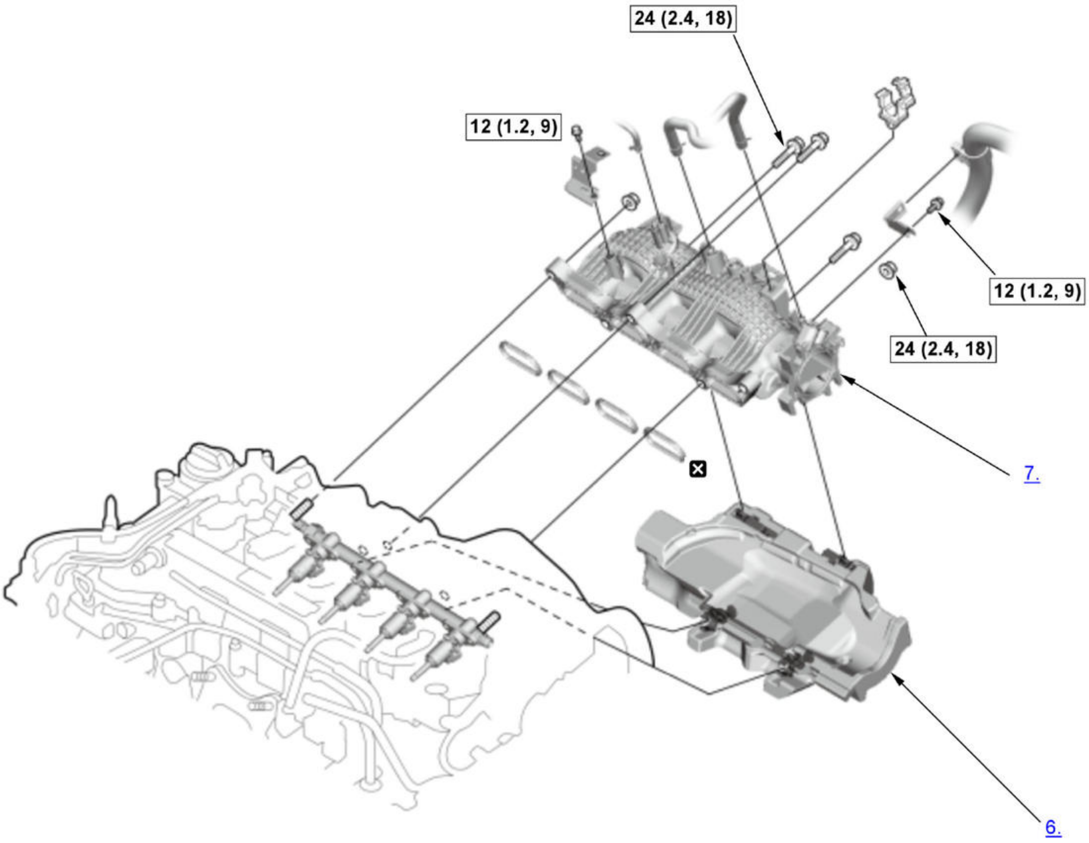

Fig. 38: Intake Manifold Replacement Components With Torque Specifications (1.5 L Engine)
Courtesy of HONDA, U.S.A., INC.

☐	Torque: N.m (kgf.m, lbf.ft)
☒	Replace

1. **Air Cleaner - Remove**
2. **Throttle Body - Move**

   NOTE:

   - Do not disconnect the water bypass hoses.
   - Do not bend the water bypass hoses excessively.
3. **Intake Manifold Bracket - Remove**
4. **MAP Sensor - Remove**
5. **Turbocharger Bypass Control Solenoid Valve - Remove**
6. Insulator - Remove
7. Intake Manifold - Remove
8. All Removed Parts - Install

1. Install the parts in the reverse order of removal.
NOTE:

- Tighten the bolts/nuts in three steps; tighten the bolts/nuts until the bolts/nuts sit on the intake manifold, tighten the bolts/nuts until the gasket is compressed, tighten the bolts/nuts to specified torque.
- After installation, check that all tubes, hoses, and connectors are installed correctly.

INTAKE MANIFOLD REMOVAL AND INSTALLATION (2.4 L ENGINE) (2017 2018 2019)

Removal and Installation

NOTE: 📖 Where icon is shown continue to the information below.

1

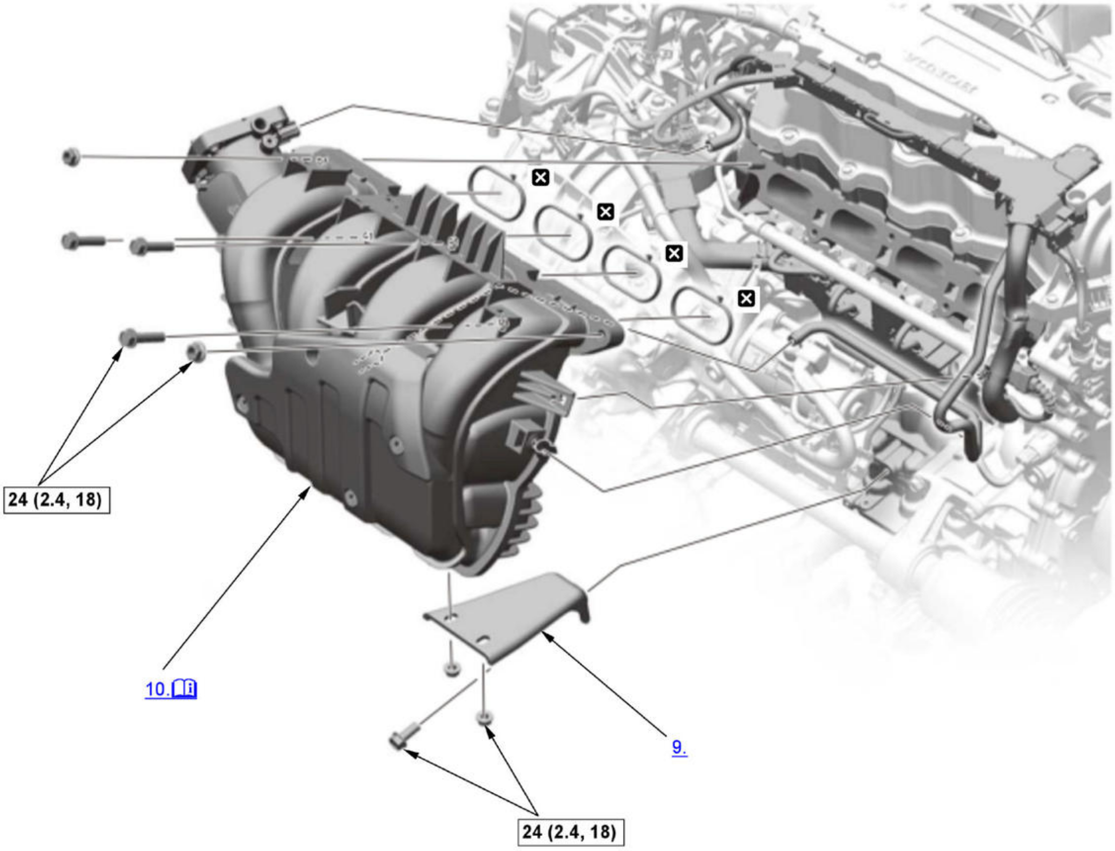

Fig. 39: Intake Manifold Replacement Components With Torque Specifications (2.4 L Engine) (2017 2018 2019)
Courtesy of HONDA, U.S.A., INC.

📖	Detailed information, notes, and precautions
☐	Torque: N.m (kgf.m, lbf.ft)
☒	Replace

1. Fuel Pressure - Relieve
2. Air Cleaner - Remove
3. Center Cowl Cover - Removal
4. Under-Cowl Panel - Remove
5. Throttle Body - Move

   NOTE: Do not disconnect the water bypass hoses.

6. Fuel Bracket - Remove
7. Fuel Feed Hose (Fuel Rail Side) - Disconnect

8. MAP Sensor - Remove
9. Intake Manifold Bracket - Remove
10. Intake Manifold - Remove

    NOTE: Replace if cracked or if mating surface is damaged.

11. All Removed Parts - Install

1. Install the parts in the reverse order of removal.

NOTE:

- Tighten the bolts/nuts in three steps; tighten the bolts/nuts until the bolts/nuts sit on the intake manifold, tighten the bolts/nuts until the gasket is compressed, tighten the bolts/nuts to specified torque.
- Turn the vehicle to the ON mode, but do not operate the starter. After the fuel pump runs for about 2 seconds, the fuel rail will be pressurized. Repeat this two or three times, then check for fuel leakage.
- After installation, check that all tubes, hoses, and connectors are installed correctly.

INTERCOOLER REMOVAL AND INSTALLATION (1.5 L ENGINE)

Removal and Installation

1

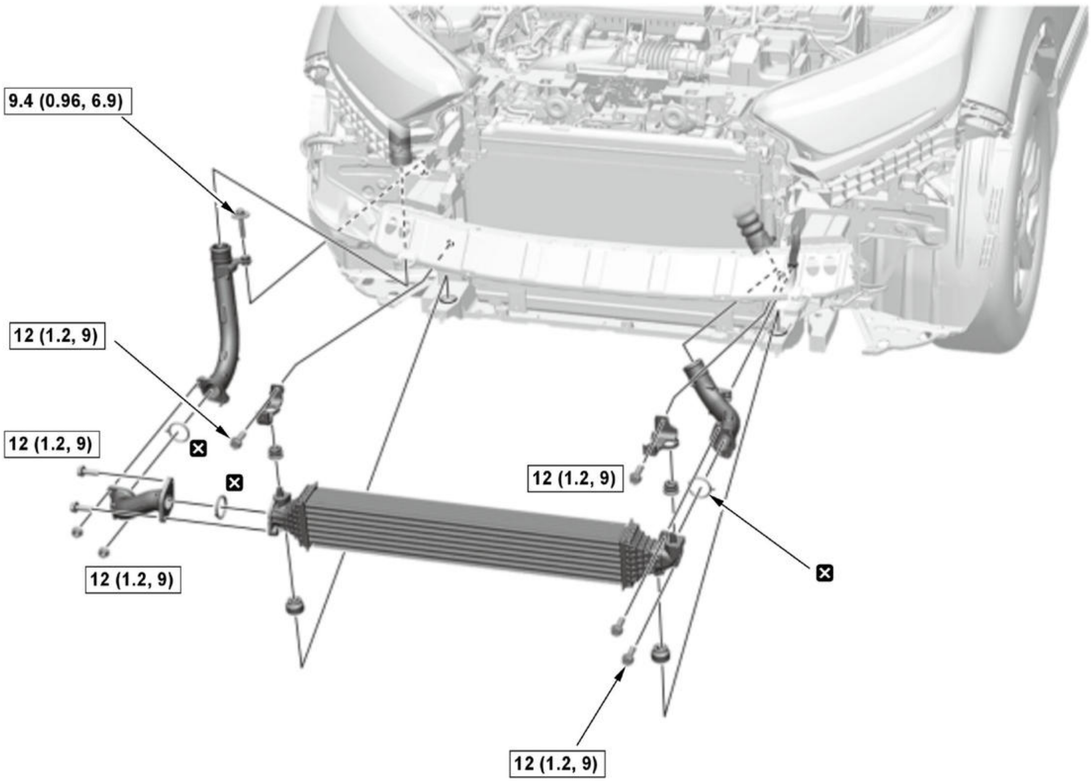

Fig. 40: Intercooler Replacement Components With Torque Specifications (1.5 L Engine)
Courtesy of HONDA, U.S.A., INC.

☐	Torque: N.m (kgf.m, lbf.ft)

☒	Replace

1. Front Bumper - Remove
2. Shutter Grille (Lower) - Remove
3. Intercooler - Remove
4. All Removed Parts - Install

1. Install the parts in the reverse order of removal.

KNOCK SENSOR REMOVAL AND INSTALLATION (1.5 L ENGINE)

Removal and Installation

1

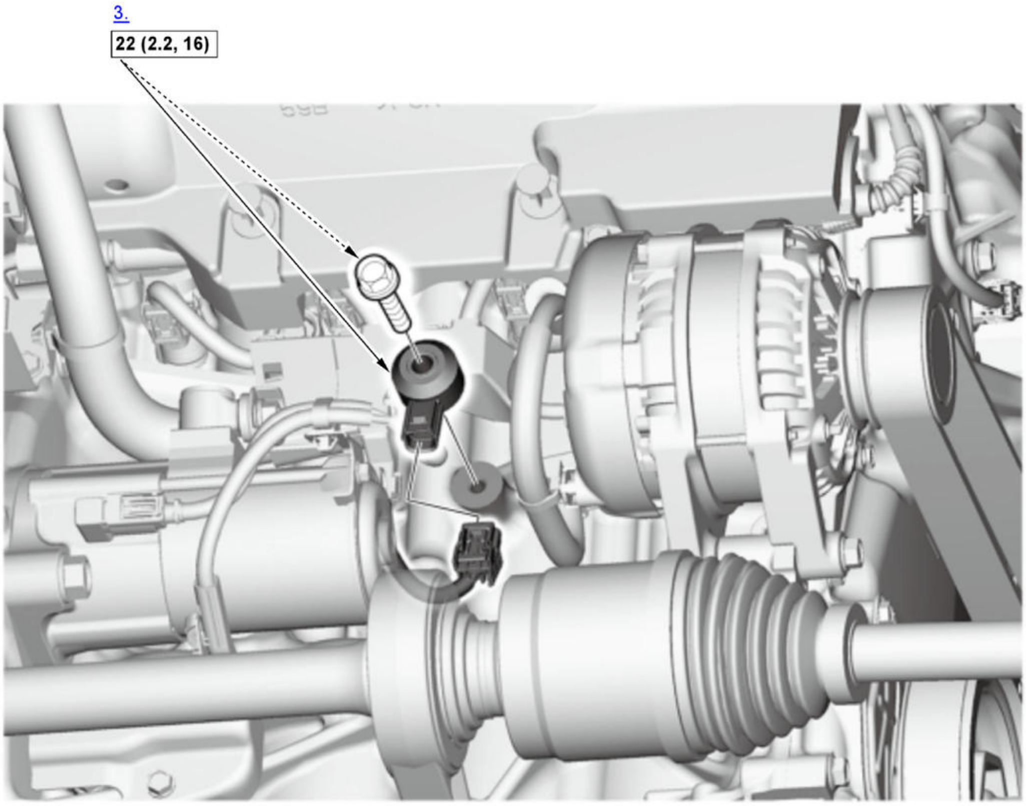

Fig. 41: Knock Sensor Replacement Components With Torque Specifications (1.5 L Engine)
Courtesy of HONDA, U.S.A., INC.

▭	Torque: N.m (kgf.m, lbf.ft)

1. Engine Undercover - Remove
2. Exhaust Pipe A - Remove
3. Knock Sensor - Remove
4. All Removed Parts - Install

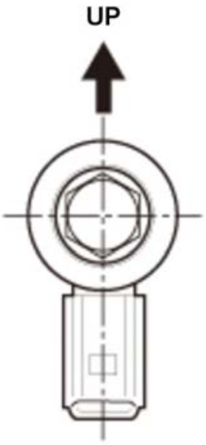	1. Install the parts in the reverse order of removal. **NOTE:** Make sure the direction of the sensor connector is as shown.

KNOCK SENSOR REMOVAL AND INSTALLATION (2.4 L ENGINE) (2017 2018 2019)

Removal and Installation

1

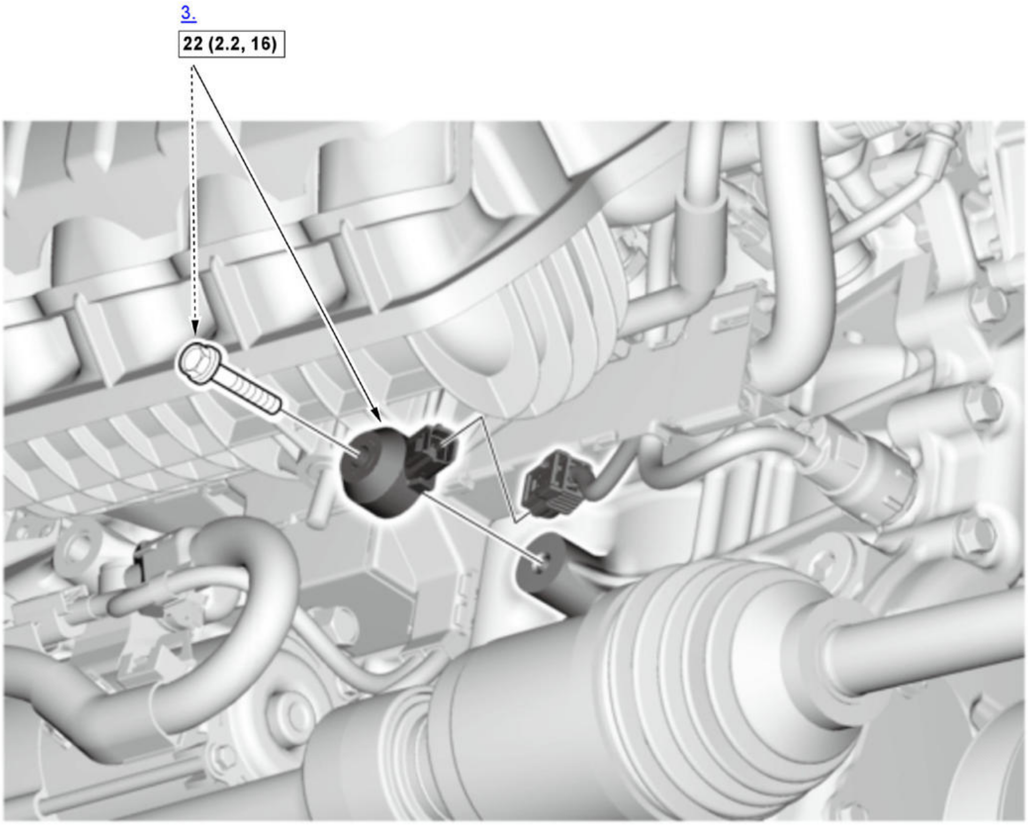

Fig. 42: Knock Sensor Replacement Components With Torque Specifications (2.4 L Engine) (2017 2018 2019)
Courtesy of HONDA, U.S.A., INC.

☐	Torque: N.m (kgf.m, lbf.ft)

1. Right Front Wheel - Remove
2. Intake Manifold Bracket - Remove
3. Knock Sensor - Remove

4. All Removed Parts - Install

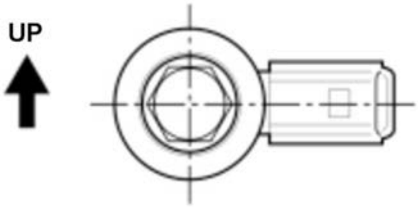	1. Install the parts in the reverse order of removal. **NOTE:** Make sure the direction of the sensor connector is as shown.

MAP SENSOR/MAF SENSOR/IAT SENSOR REMOVAL AND INSTALLATION (1.5 L ENGINE)

Removal and Installation

NOTE: Although a numbered sequence is shown, these "*1" indicated parts are separate components. If removal or replacement of one of the components is needed, it is not necessary to remove the other.

1

MAP Sensor*1

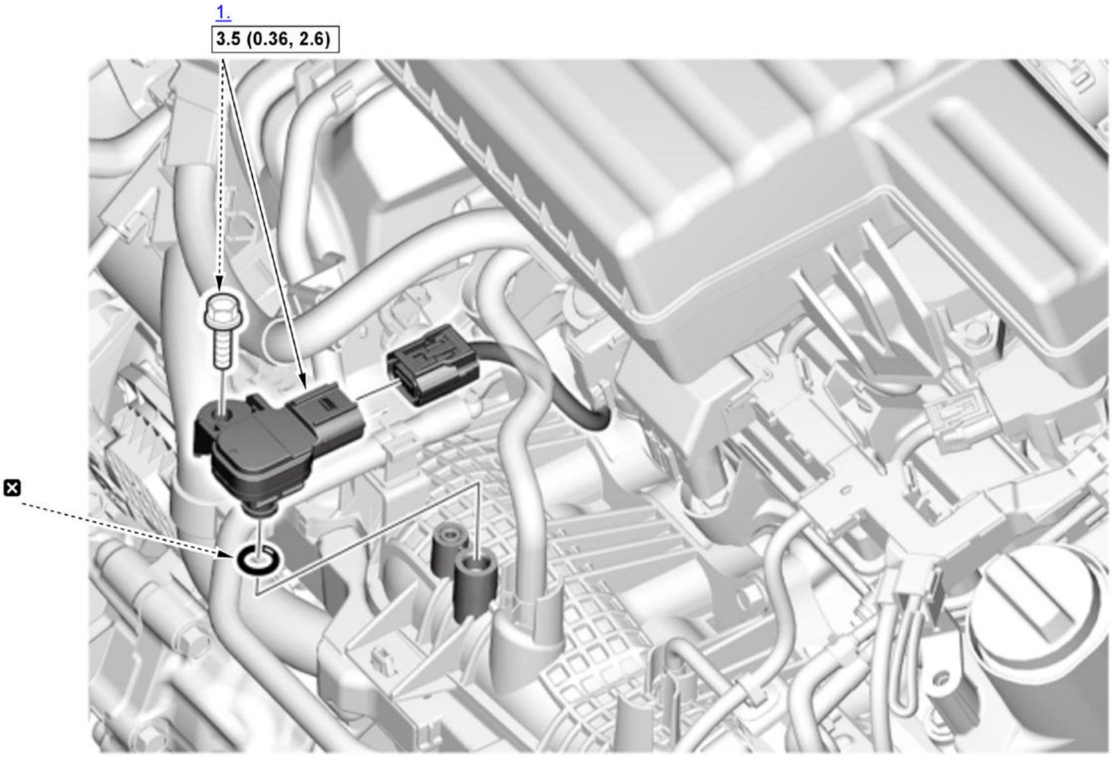

Fig. 43: MAP Sensor Replacement Components With Torque Specifications (1.5 L Engine)
Courtesy of HONDA, U.S.A., INC.

☐	Torque: N.m (kgf.m, lbf.ft)
☒	Replace

2

MAF Sensor/IAT Sensor 1*1

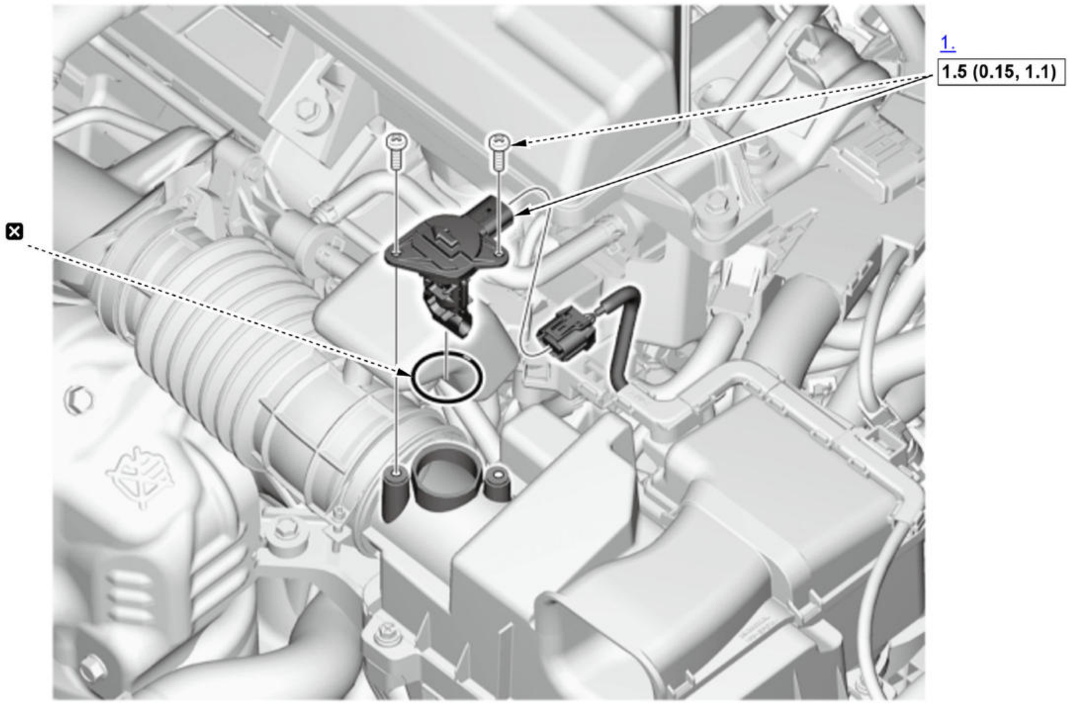

Fig. 44: MAF Sensor/IAT Sensor 1 Replacement Components With Torque Specifications (1.5 L Engine)
Courtesy of HONDA, U.S.A., INC.

☐	Torque: N.m (kgf.m, lbf.ft)
☒	Replace

3

IAT Sensor 2*1

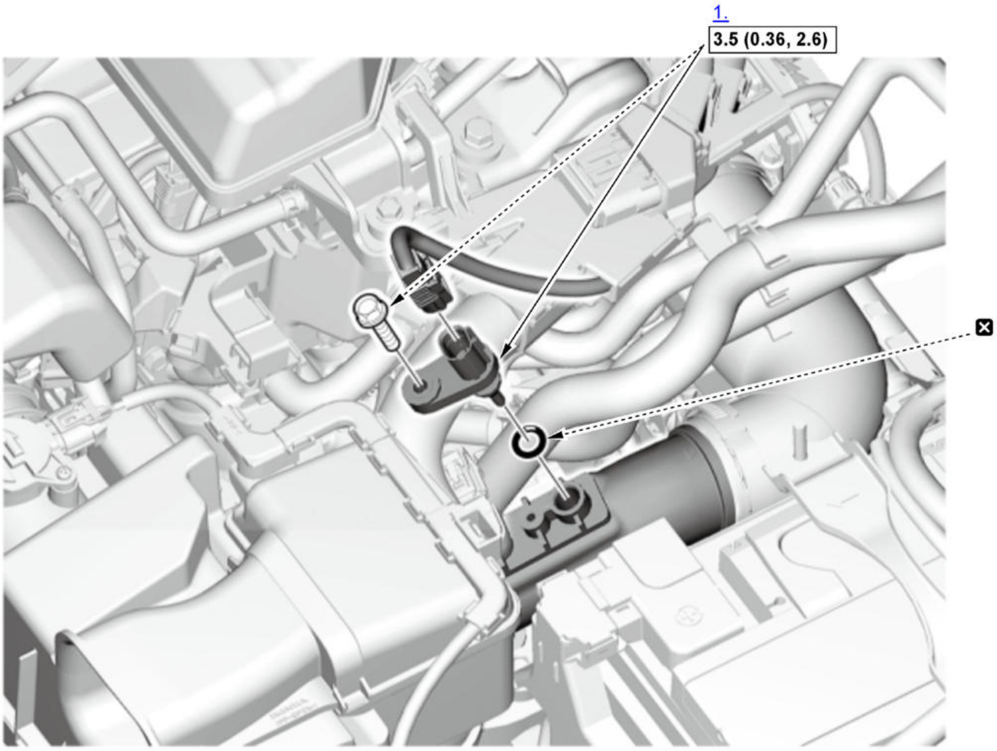

Fig. 45: IAT Sensor 2 Replacement Componnets With Torque Specifications (1.5 L Engine)
Courtesy of HONDA, U.S.A., INC.

☐	Torque: N.m (kgf.m, lbf.ft)
☒	Replace

MAP Sensor

1. MAP Sensor - Remove
2. All Removed Parts - Install

> 1. Install the parts in the reverse order of removal with a new O-ring.

MAF Sensor/IAT Sensor 1

3. MAF Sensor/IAT Sensor 1 - Remove
4. All Removed Parts - Install

> 1. Install the parts in the reverse order of removal with a new O-ring.

IAT Sensor 2

5. IAT Sensor 2 - Remove
6. All Removed Parts - Install

> 1. Install the parts in the reverse order of removal with a new O-ring.

MAP SENSOR/MAF SENSOR/IAT SENSOR REMOVAL AND INSTALLATION (2.4 L ENGINE) (2017 2018 2019)

Removal and Installation

NOTE: Although a numbered sequence is shown, these "*1" indicated parts are separate components. If removal or replacement of one of the components is needed, it is not necessary to remove the other.

1

MAP Sensor*1

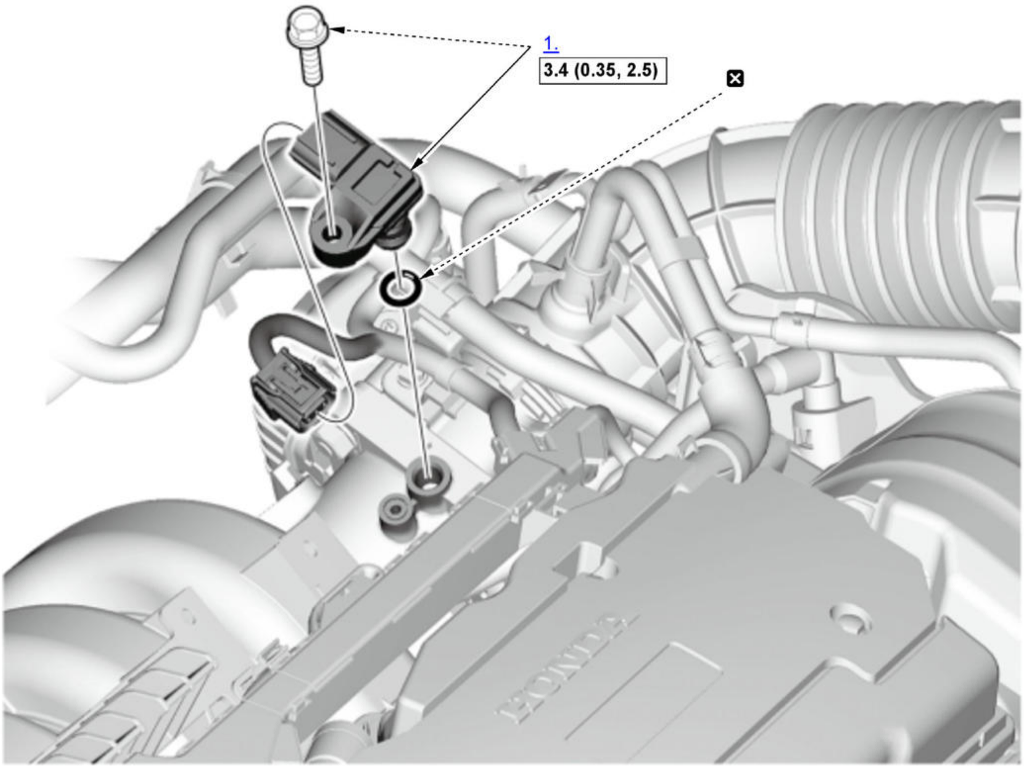

Fig. 46: MAP Sensor Replacement Componnets With Torque Specifications (2.4 L Engine) (2017 2018 2019)
Courtesy of HONDA, U.S.A., INC.

☐	Torque: N.m (kgf.m, lbf.ft)
☒	Replace

2

MAF Sensor/IAT Sensor*1

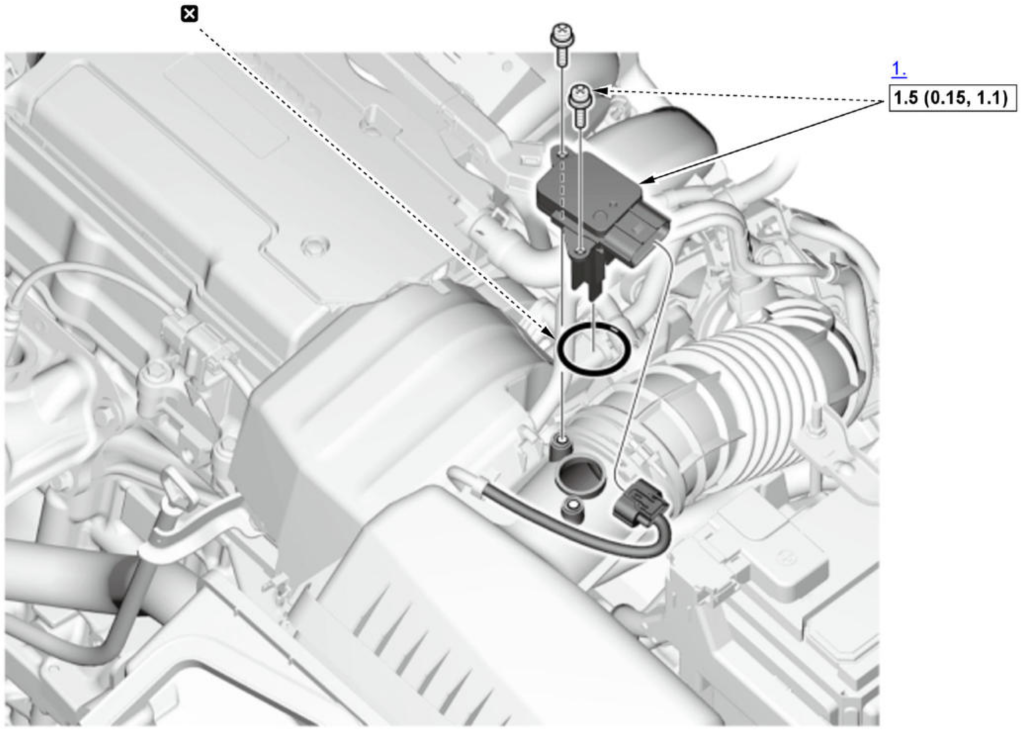

Fig. 47: MAF Sensor/IAT Sensor Replacement Components With Torque Specifications (2.4 L Engine) (2017 2018 2019)
Courtesy of HONDA, U.S.A., INC.

☐	Torque: N.m (kgf.m, lbf.ft)
☒	Replace

MAP Sensor

1. MAP Sensor - Remove
2. All Removed Parts - Install

    1. Install the parts in the reverse order of removal with a new O-ring.

    MAF Sensor/IAT Sensor

3. MAF Sensor/IAT Sensor - Remove
4. All Removed Parts - Install

    1. Install the parts in the reverse order of removal with a new O-ring.

PCM REMOVAL AND INSTALLATION (1.5 L ENGINE)

Removal

NOTE:

- Make sure the HDS or the MVCI has the latest HDS software version.
- If you are replacing the PCM after substituting a known-good PCM, reinstall the original PCM, then do this procedure.
- If you are replacing the PCM, do the all procedures.
- If you are removing or substituting the PCM, skip the procedures of READ DATA (Engine Oil Life).

1

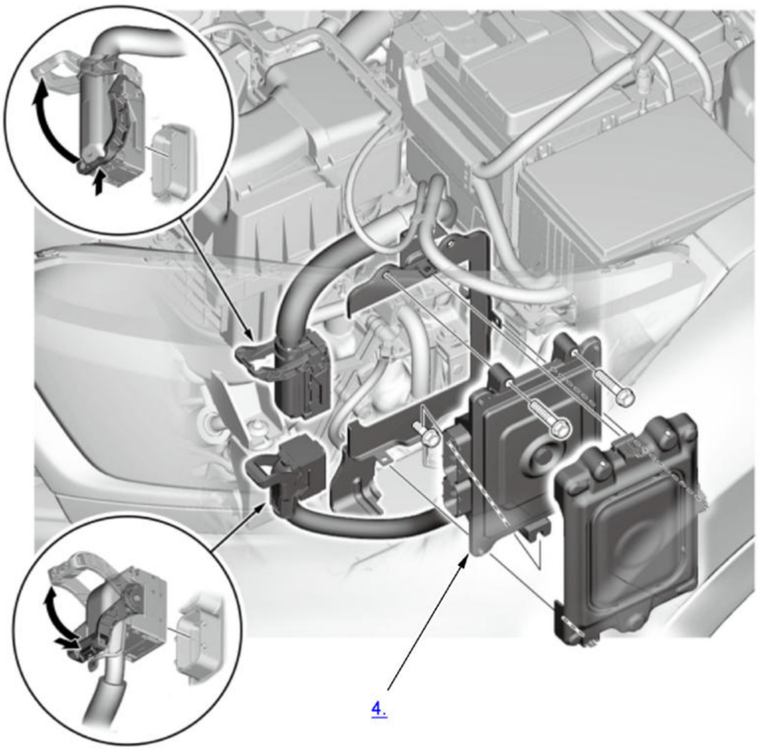

1. **HDS - Connect**
2. READ DATA - Select

1. Select the REPLACE PCM MENU, then select READ DATA, and follow the screen prompts.
NOTE:
- Doing this step copies (READS) the engine oil life data from the original PCM so you can later download (WRITES) them into the new PCM.
- If the READ DATA indicates FAILED, go to next step.

3. SCS - Short

1. Turn the vehicle to the OFF (LOCK) mode.

2. Jump the SCS line with the HDS, and wait more than 1 minute.

4. PCM - Remove

Installation

NOTE:

- If you are removing the PCM, skip the procedures of using the HDS.
- If you are substituting the PCM, skip the procedures of WRITE DATA (Engine Oil Life).
- If you are replacing the PCM, do the all procedures.

1

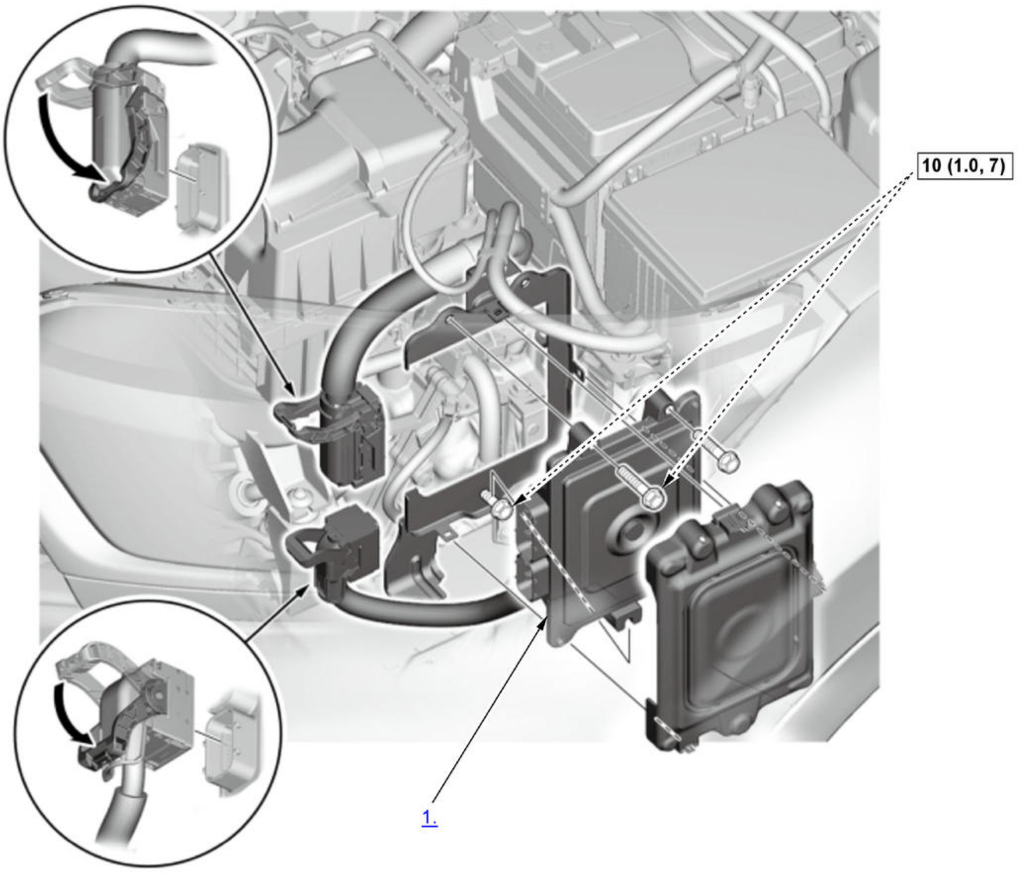

Fig. 48: PCM Replacement Components With Torque Specifications (1.5 L Engine)
Courtesy of HONDA, U.S.A., INC.

☐	Torque: N.m (kgf.m, lbf.ft)

1. PCM - Install
2. SCS - Open

   1. Exit the SCS mode with the HDS.

   Procedure After Replacing PCM

3. HDS - Connect
4. VIN - Input

   1. Turn the vehicle to the ON mode.

   NOTE: DTC P0630 VIN Not Programmed or Mismatch may be stored because the VIN has not been programmed into the PCM; ignore it, and continue this procedure.

   2. Manually input the VIN to the PCM with the HDS.

5. WRITE DATA (Engine Oil Life) - Select

   NOTE: If the READ DATA (Engine Oil Life) failed in "READ DATA (Engine Oil Life) - Select", skip this procedure.

   1. Select the REPLACE PCM MENU, then select WRITE DATA, and follow the screen prompts.

6. Other Procedures for PCM Replacement - Do

1. If the READ DATA failed in "READ DATA (Engine Oil Life) - Select", do these procedures:
   - Replace the engine oil .
   - Replace the engine oil filter .

7. Keyless Access System - Registration
8. DTC - Clear

1. Clear the Pending or Confirmed DTCs with the HDS.

9. PCM - Update
10. PCM - Idle Learn
11. CKP Pattern - Clear/Learn

PCM REMOVAL AND INSTALLATION (2.4 L ENGINE) (2017 2018 2019)

Removal

NOTE:

- Make sure the HDS or the MVCI has the latest HDS software version.
- If you are replacing the PCM after substituting a known-good PCM, reinstall the original PCM, then do this procedure.
- If you are replacing the PCM, do the all procedures.
- If you are removing or substituting the PCM, skip the procedures of READ DATA.

1

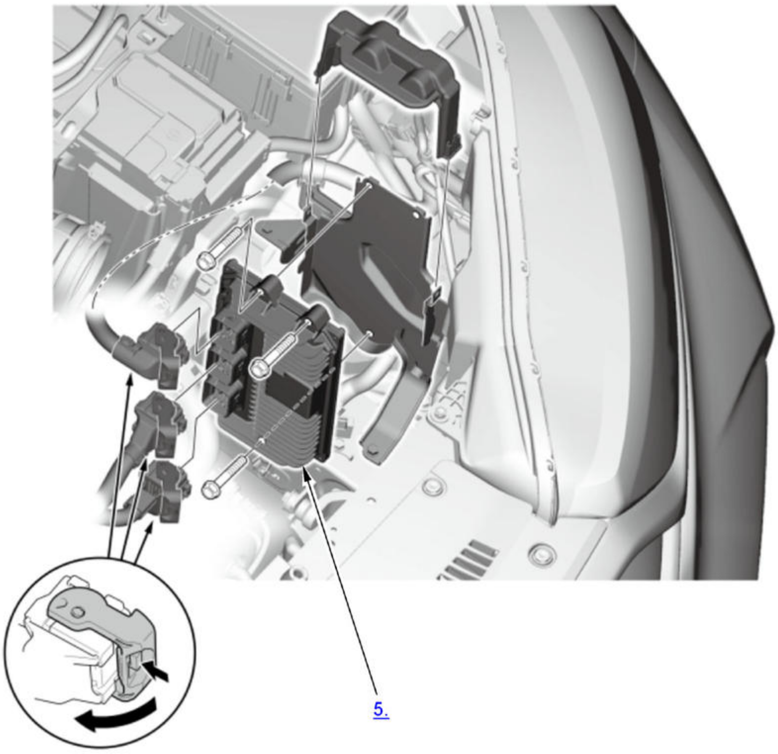

1. HDS - Connect
2. READ DATA (Engine Oil Life) - Select (USA models)

1. Select the REPLACE PCM MENU, then select READ DATA, and follow the screen prompts.

NOTE:

- Doing this step copies (READS) the engine oil life data from the original PCM so you can later download (WRITES) them into the new PCM.
- If the READ DATA indicates FAILED, go to next step.

3. SCS - Short

1. Turn the vehicle to the OFF (LOCK) mode.

2. Jump the SCS line with the HDS, and wait more than 1 minute.

4. **Air Cleaner - Remove**
5. PCM - Remove

Installation

NOTE:

- If you are removing the PCM, skip the procedures of using the HDS.
- If you are substituting the PCM, skip the procedures of WRITE DATA.
- If you are replacing the PCM, do the all procedures.

1

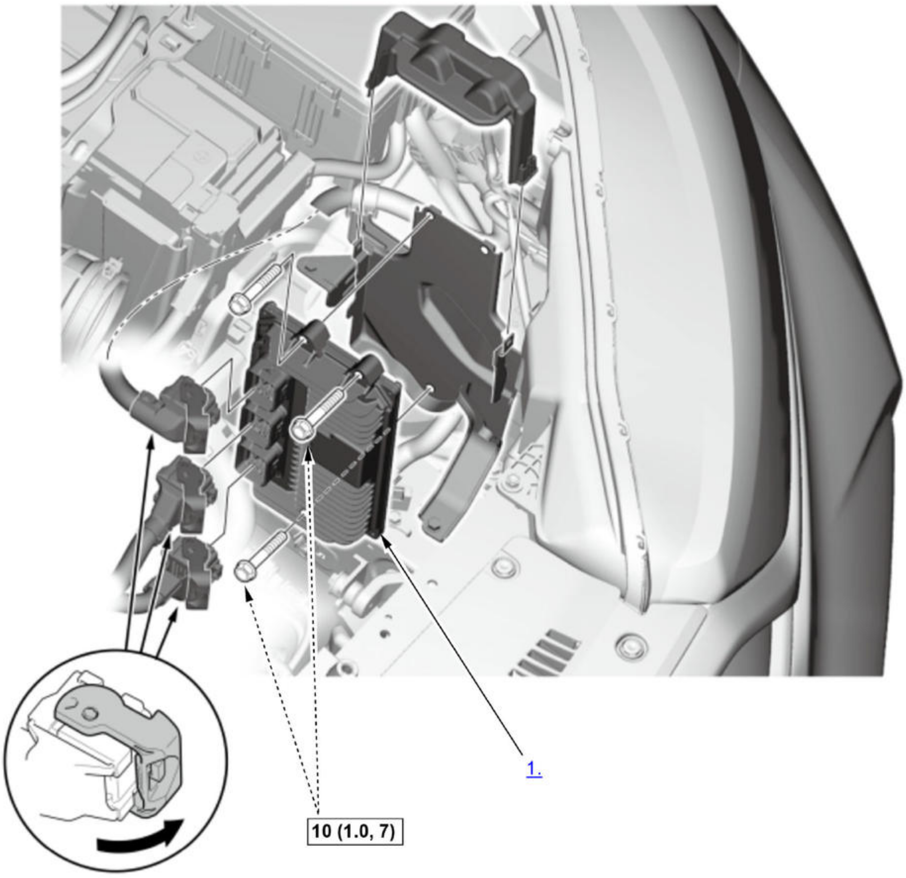

Fig. 49: PCM Replacement Components With Torque Specifications (2.4 L Engine) (2017 2018 2019)
Courtesy of HONDA, U.S.A., INC.

▭	Torque: N.m (kgf.m, lbf.ft)

1. PCM - Install
2. SCS - Open

1. Exit the SCS mode with the HDS.

Procedure After Replacing PCM

3. **HDS - Connect**
4. VIN - Input

1. Turn the vehicle to the ON mode.

NOTE: DTC P0630 VIN Not Programmed or Mismatch may be stored because the VIN has not been programmed into the PCM; ignore it, and continue this procedure.

2. Manually input the VIN to the PCM with the HDS.

5. WRITE DATA (Engine Oil Life) - Select (USA models)

NOTE: If the READ DATA (Engine Oil Life) failed in "READ DATA (Engine Oil Life) - Select", skip this procedure.

1. Select the REPLACE PCM MENU, then select WRITE DATA, and follow the screen prompts.

6. Other Procedures for PCM Replacement - Do (USA models)

1. If the READ DATA failed in "READ DATA (Engine Oil Life) - Select", do these procedures:
   - **Replace the engine oil** .
   - **Replace the engine oil filter** .

7. **IMMOBI SYSTEM - Registration**
8. DTC - Clear

1. Clear the Pending or Confirmed DTCs with the HDS.

9. **PCM - Update**
10. **PCM - Idle Learn**
11. **CKP Pattern - Clear/Learn**
12. **Air Cleaner - Install**

PISTON, RING, PIN, AND CONNECTING ROD REMOVAL AND INSTALLATION (1.5 L ENGINE)

Removal

1. **Crankshaft - Remove**
2. **Oil Jet - Remove**
3. Metal or Hard Carbon - Remove

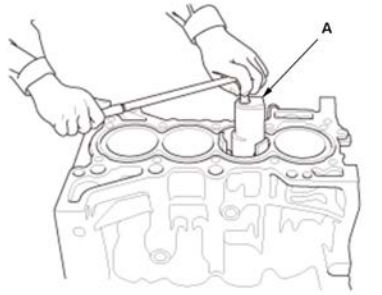

1. If you can feel a ridge of metal or hard carbon around the top of each cylinder, remove it with a ridge reamer (A). Follow the reamer manufacturer's instructions. If the ridge is not removed, it may damage the piston as it is pushed out.

4. Piston/Connecting Rod Assembly - Remove

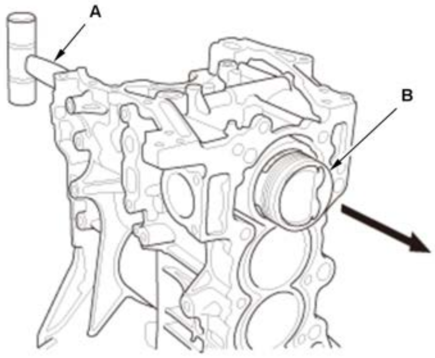

1. Use the wooden handle of a hammer (A) to drive out the piston/connecting rod assembly (B). Take care not to damage the cylinder with the connecting rod.

2. Reinstall the connecting rod bearings and caps after removing each piston/connecting rod assembly.

NOTE:

- Mark each piston/connecting rod assembly with its cylinder number to make sure they are reinstalled in the original order.
- The existing number on the connecting rod does not indicate its position in the engine, it indicates the rod bore size.

5. Piston Ring End Gap - Inspect

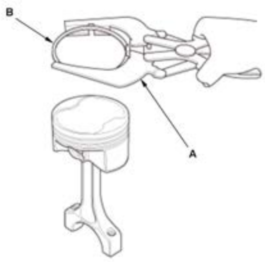

1. Using a ring expander (A), remove the old piston rings (B).

2. Clean all ring grooves thoroughly with a squared-off broken ring or a ring groove cleaner with a blade to fit the piston grooves. The top ring groove is 1.2 mm (0.047 in) wide. The second ring groove is 1.0 mm (0.039 in) wide. The oil ring groove is 2.0 mm (0.079 in) wide. File down a blade if necessary. Do not use a wire brush to clean the ring grooves, or cut the ring grooves deeper with the cleaning tools.

NOTE: If the piston is to be separated from the connecting rod, do not install new rings yet.

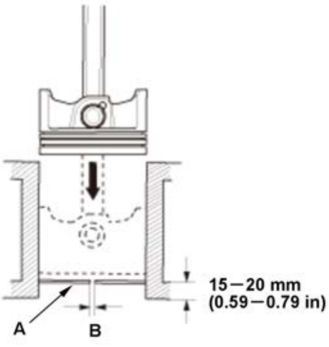

3. Using a piston that has its rings removed, push a new ring (A) into the cylinder bore 15-20 mm (0.59-0.79 in) from the bottom.

4. Measure the piston ring end-gap (B) with a feeler gauge:

- If the gap is too small, check to see if you have the proper rings for your engine.
- If the gap is too large, **recheck the cylinder bore diameter against the wear limits** . If the bore is beyond the service limit, the engine block must be rebored.

Oil Ring:	
Standard (New):	**0.20-0.50 mm (0.008-0.019 in)**
Service Limit:	**0.80 mm (0.031 in)**

Second Ring:	
Standard (New):	**0.25-0.37 mm (0.010-0.014 in)**
Service Limit:	**0.60 mm (0.023 in)**

Piston Ring End-Gap	
Top Ring:	
Standard (New):	**0.15-0.20 mm (0.006-0.007 in)**
Service Limit:	**0.55 mm (0.021 in)**

6. Piston Pin - Remove

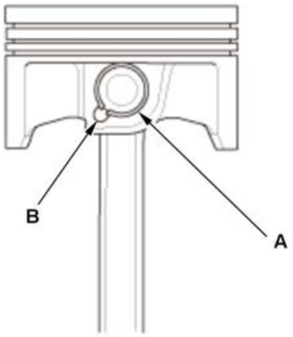	1. Apply new engine oil to the snap rings (A), and turn them in the ring grooves until the end gaps are lined up with the cutouts in the piston pin bores (B). **NOTE:** Take care not to damage the ring grooves.

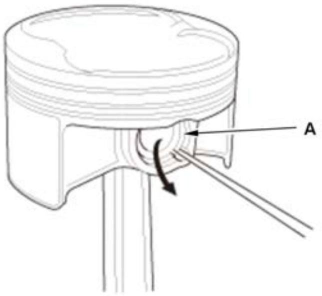	2. Remove the snap rings (A) from both sides of each piston. Start at the cutout in the piston pin bore. Remove the snap rings carefully so they do not go flying or get lost. Wear eye protection.

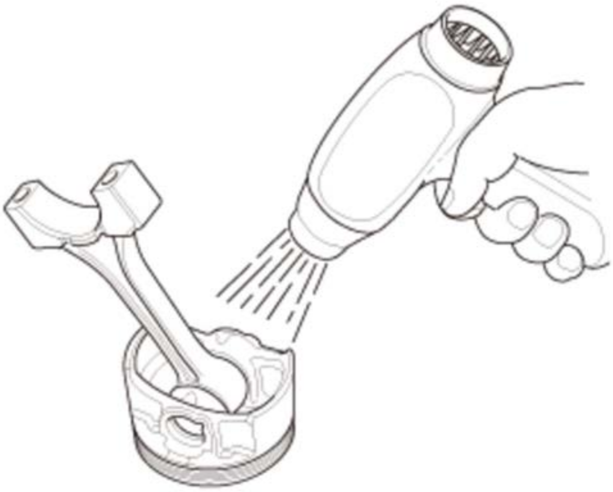	3. Heat the piston and connecting rod assembly to about 158 deg.F (70 deg.C). 4. Remove the piston pin.

7. Piston Pin - Inspect

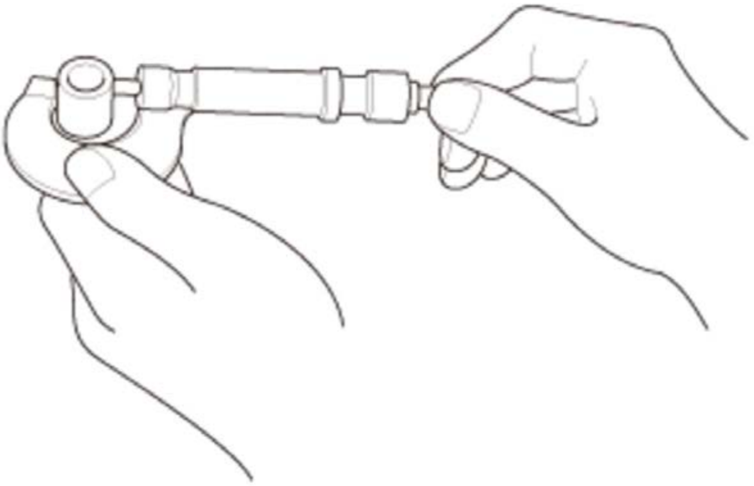

1. Measure the diameter of the piston pin.

Service Limit:	19.960 mm (0.78583 in)

Piston Pin Diameter	
Standard (New):	19.960-19.964 mm (0.78583-0.78598 in)

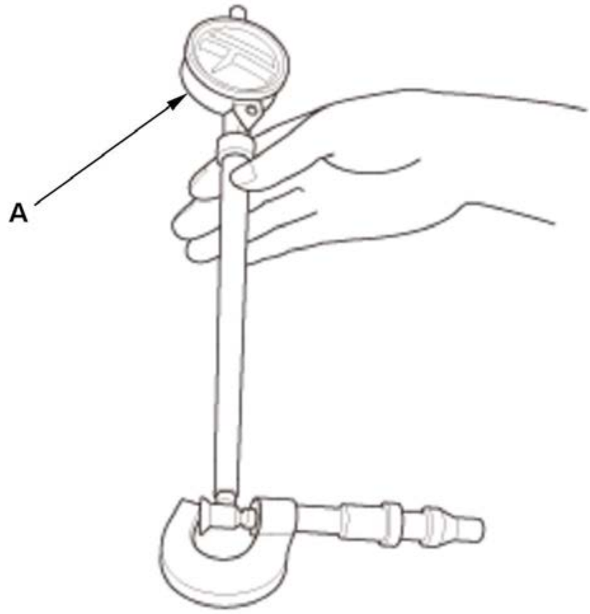

2. Zero the dial indicator (A) to the piston pin diameter.

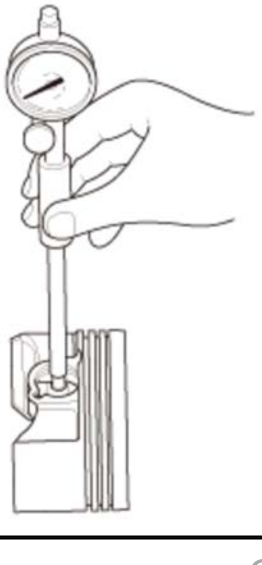

3. Check the difference between the piston pin diameter and the piston pin hole diameter in the piston.

Piston Pin-to-Piston Clearance	
Standard (New):	**-0.004-0.003 mm (-0.00016-0.00012 in)**
Service Limit:	**0.006 mm (0.00024 in)**

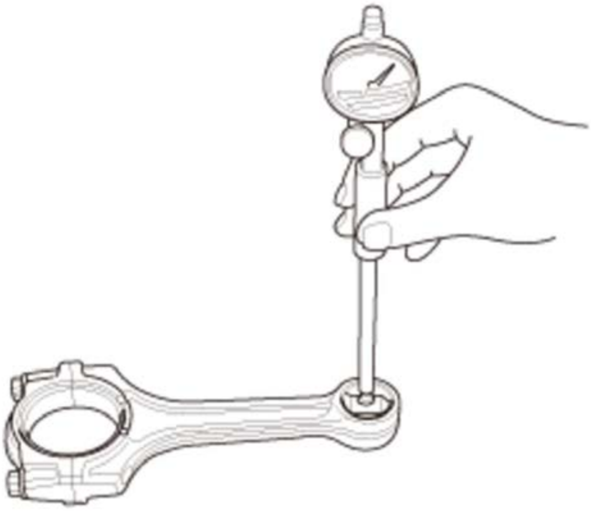	4. Measure the piston pin-to-connecting rod clearance.

Service Limit:	**0.020 mm (0.00079 in)**

Piston Pin-to-Connecting Rod Clearance	
Standard (New):	**0.004-0.016 mm (0.00016-0.00063 in)**

Installation

1. Piston Pin - Install

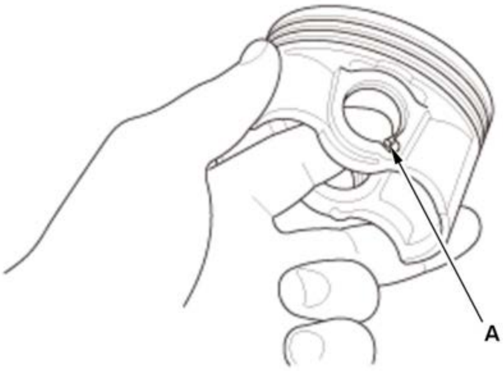	1. Install a snap ring (A) only on one side. 2. Coat the piston pin bore in the piston, the bore in the connecting rod, and the piston pin with new engine oil.

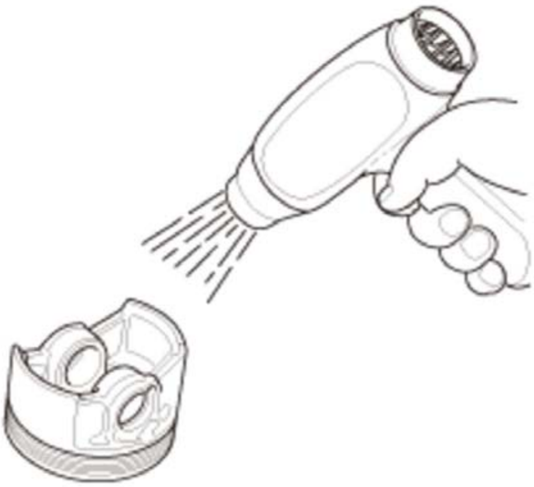

3. Heat the piston to about 158 deg.F (70 deg.C).

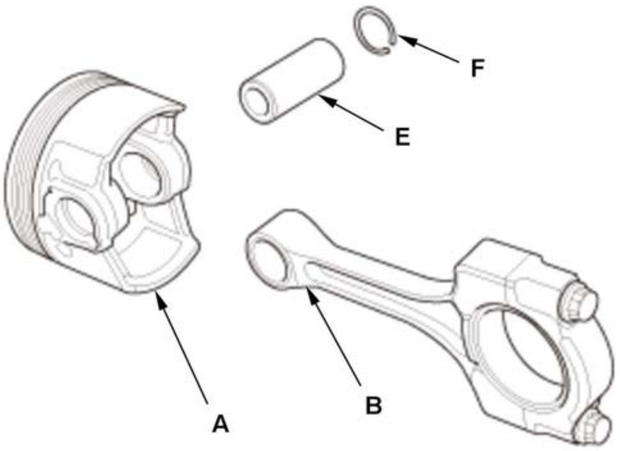

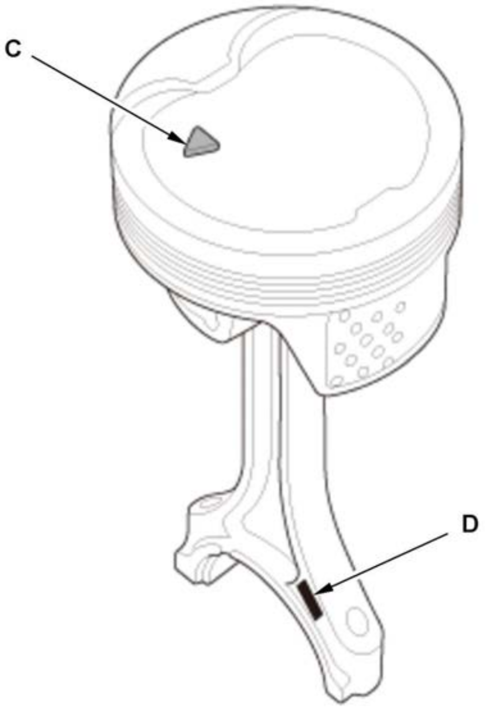

4. Assemble the piston (A) and the connecting rod (B) with the arrow (C) and the embossed mark (D) on the same side. Install the piston pin (E).

5. Install the remaining snap ring (F).

6. Turn the snap rings in the ring grooves until the end gaps are positioned at the bottom of the piston.

2. Piston Ring - Install

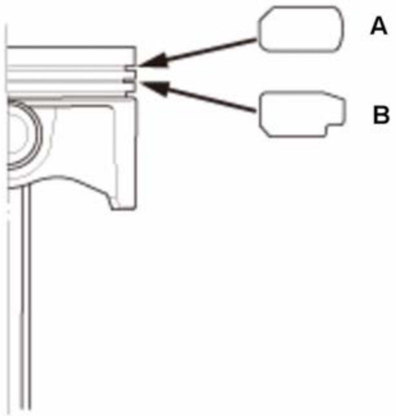 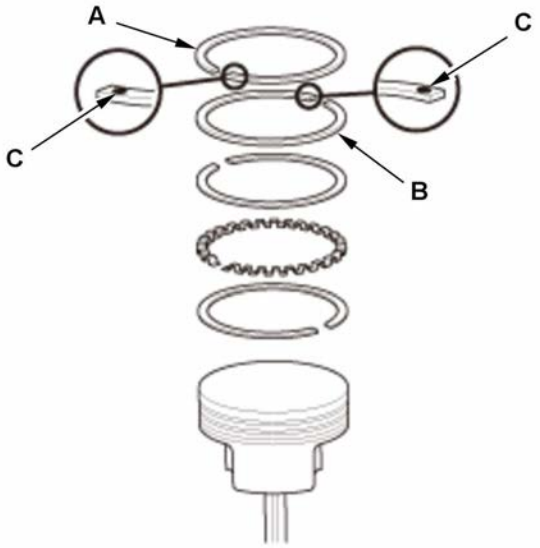 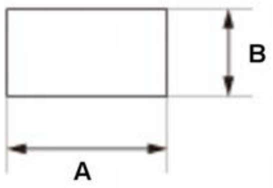 **Top Ring (Standard):** **A: 2.3 mm (0.091 in)** **B: 1.2 mm (0.047 in)** **Second Ring (Standard):** **A: 2.3 mm (0.091 in)** **B: 1.0 mm (0.039 in)**	1. Install the piston rings as shown. The top ring (A) has a 1RF mark, and the second ring (B) has a 2RF mark. The manufacturing marks (C) must be facing upward.

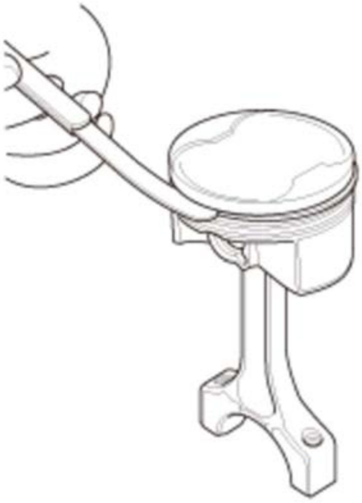	2. After installing a new set of rings, measure the ring-to-groove clearances:

Service Limit:	**0.120 mm (0.004 in)**

Second Ring Clearance	
Standard (New):	**0.030-0.055 mm (0.002 in)**

Top Ring Clearance	
Standard (New):	**0.040-0.065 mm (0.002 in)**
Service Limit:	**0.130 mm (0.005 in)**

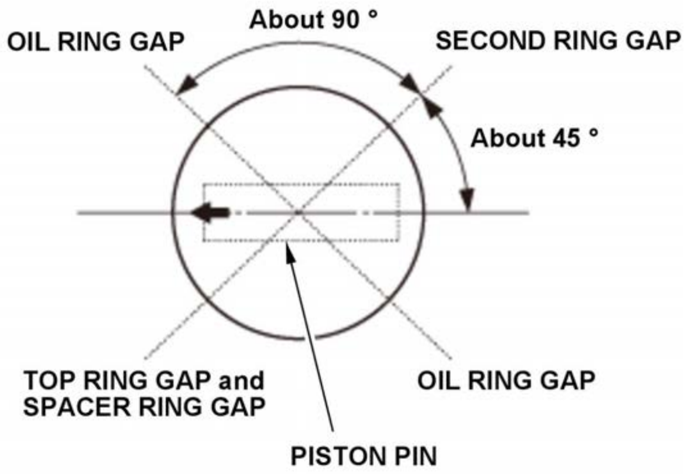 OIL RING GAP About 90 ° SECOND RING GAP About 45 ° TOP RING GAP and SPACER RING GAP OIL RING GAP PISTON PIN	3. Rotate the rings in their grooves to make sure they do not bind. 4. Position the ring end gaps as shown.

3. Piston/Connecting Rod Assembly - Install

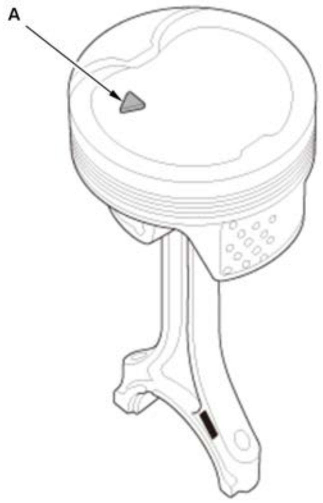 	1. Remove the connecting rod caps. Check that the bearing is securely in place. 2. Apply new engine oil to the piston, the inside of the ring compressor, and the cylinder bore, then attach the ring compressor to the piston/connecting rod assembly. 3. Position the piston/connecting rod assembly with the arrow (A) facing the cam chain side of the engine block.

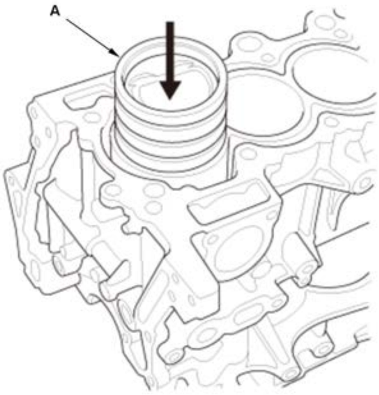 	4. Position the piston/connecting rod assembly in the cylinder, and tap it in using the wooden handle of a hammer. Push down on the ring compressor (A) to prevent the rings from expanding before entering the cylinder bore. 5. Stop after the ring compressor pops free, and check the connecting rod-to-rod journal alignment before pushing the piston into place.

4. **Oil Jet - Install**
5. **Crankshaft - Install**

PISTON, RING, PIN, AND CONNECTING ROD REMOVAL AND INSTALLATION (2.4 L ENGINE) (2017 2018 2019)

Removal

1. **Crankshaft - Remove**
2. Metal or Hard Carbon - Remove

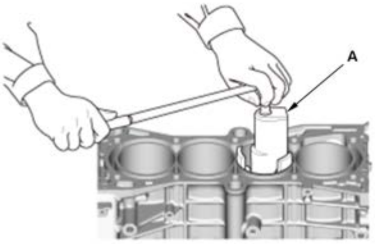 	1. If you can feel a ridge of metal or hard carbon around the top of each cylinder, remove it with a ridge reamer (A). Follow the reamer manufacturer's instructions. If the ridge is not removed, it may damage the piston as it is pushed out.

3. Piston/Connecting Rod Assembly - Remove

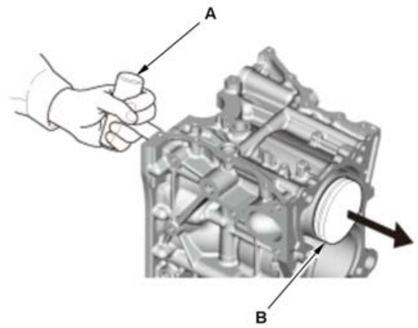

1. Use the wooden handle of a hammer (A) to drive out the piston/connecting rod assembly (B). Take care not to damage the oil jets or cylinder with the connecting rod.

2. Reinstall the connecting rod bearings and caps after removing each piston/connecting rod assembly.

NOTE:

- Mark each piston/connecting rod assembly with its cylinder number to make sure they are reinstalled in the original order.
- The existing number on the connecting rod does not indicate its position in the engine, it indicates the rod bore size.

4. Piston Ring End Gap - Inspect

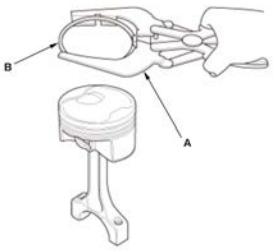

1. Using a ring expander (A), remove the old piston rings (B).

2. Clean all ring grooves thoroughly with a squared-off broken ring or a ring groove cleaner with a blade to fit the piston grooves. The top ring groove is 1.2 mm (0.047 in) wide. The second ring groove is 1.0 mm (0.039 in) wide. The oil ring groove is 2.0 mm (0.079 in) wide. File down a blade if necessary. Do not use a wire brush to clean the ring grooves, or cut the ring grooves deeper with the cleaning tools.

NOTE: If the piston is to be separated from the connecting rod, do not install the new rings yet.

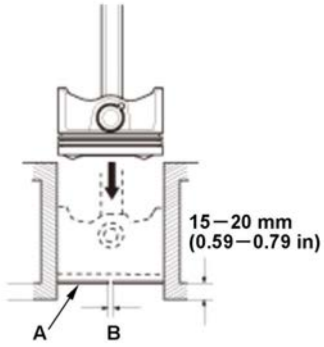

3. Using a piston that has its rings removed, push a new ring (A) into the cylinder bore 15-20 mm (0.59-0.79 in) from the bottom.

4. Measure the piston ring end-gap (B) with a feeler gauge:

- If the gap is too small, check to see if you have the proper rings for your engine.
- If the gap is too large, recheck the cylinder bore diameter against the wear limits .

  If the bore is beyond the service limit, the engine block must be rebored.

Oil Ring:	
Standard (New):	**0.10-0.40 mm (0.004-0.015 in)**
Service Limit:	**0.60 mm (0.023 in)**

Second Ring:	
Standard (New):	**0.29-0.41 mm (0.012-0.016 in)**
Service Limit:	**0.45 mm (0.017 in)**

Piston Ring End-Gap
Top Ring:

Standard (New):	**0.20-0.28 mm (0.008-0.011 in)**
Service Limit:	**0.50 mm (0.019 in)**

5. Piston Pin - Remove

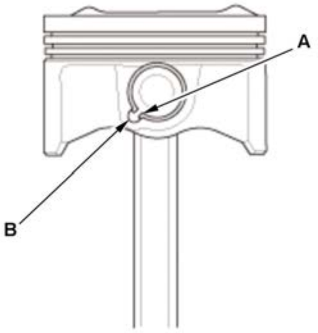	1. Apply new engine oil to the piston pin snap rings (A), and turn them in the ring grooves until the end gaps are lined up with the cutouts in the piston pin bores (B). **NOTE:** Take care not to damage the ring grooves.

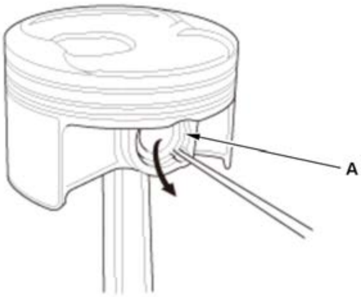	2. Remove the snap rings (A) from both sides of each piston. Start at the cutout in the piston pin bore. Remove the snap rings carefully so they do not go flying or get lost. Wear eye protection.

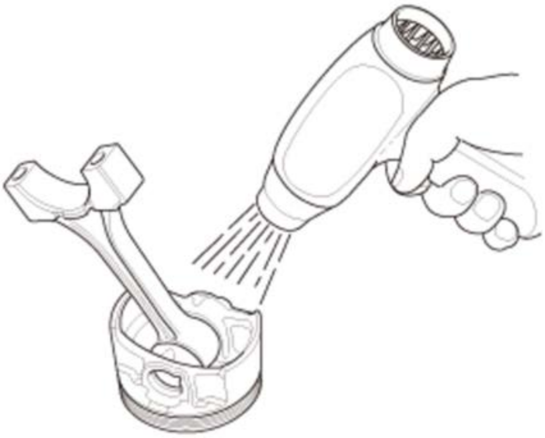	3. Heat the piston and the connecting rod assembly to about 70 deg.C (158 deg.F), then remove the piston pin.

6. Piston Pin - Inspect

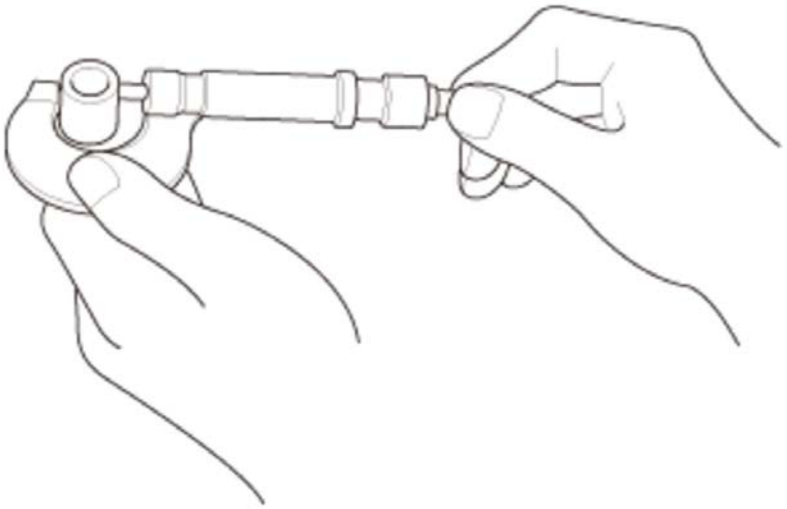

1. Measure the diameter of the piston pin.

Piston Pin Diameter

Standard (New):	**21.961-21.965 mm (0.86460-0.86476 in)**
Service Limit:	**21.953 mm (0.86429 in)**

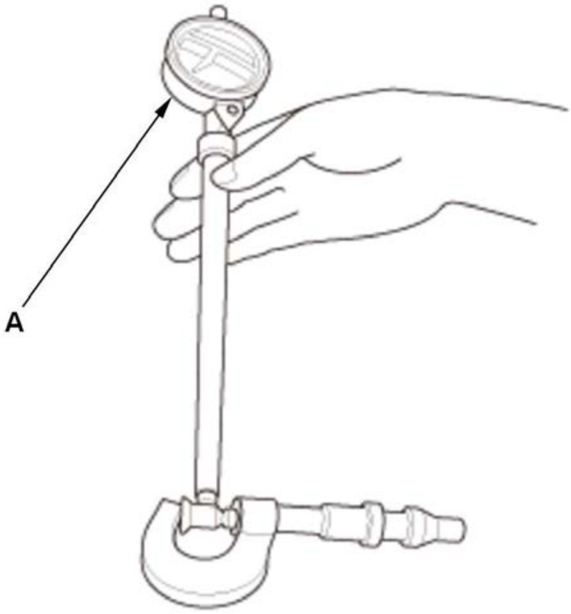

2. Zero the dial indicator (A) to the piston pin diameter.

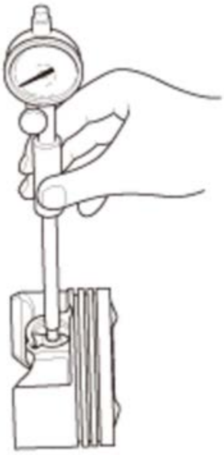

3. Check the difference between the piston pin diameter and the piston pin hole diameter in the piston.

Piston Pin-to-Piston Clearance	
Standard (New):	**-0.005-0.002 mm (-0.00020-0.00008 in)**
Service Limit:	**0.005 mm (0.00020 in)**

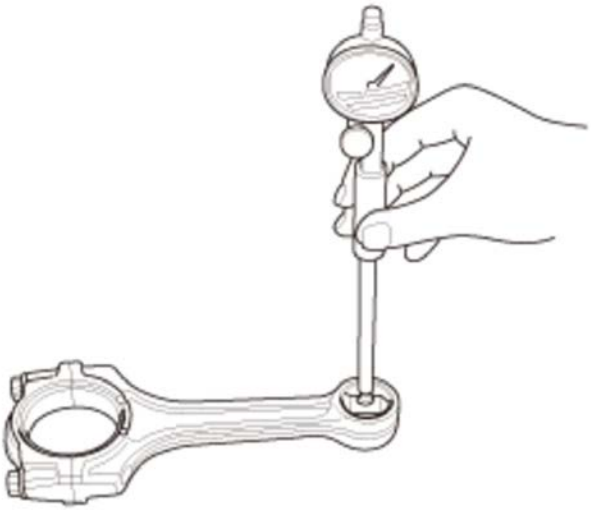	4. Measure the piston pin-to-connecting rod clearance.

Service Limit:	**0.02 mm (0.0008 in)**

Piston Pin-to-Connecting Rod Clearance	
Standard (New):	**0.005-0.015 mm (0.00020-0.00059 in)**

Installation

1. Piston Pin - Install

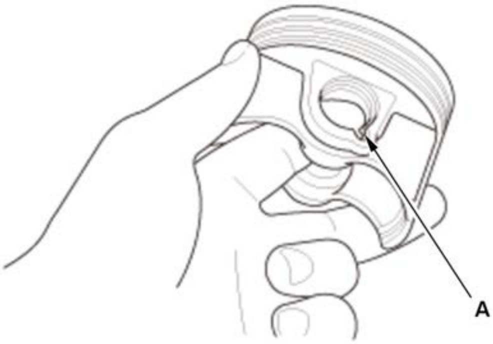	1. Install a piston pin snap ring (A) only on one side. 2. Coat the piston pin bore in the piston, the bore in the connecting rod, and the piston pin with new engine oil.

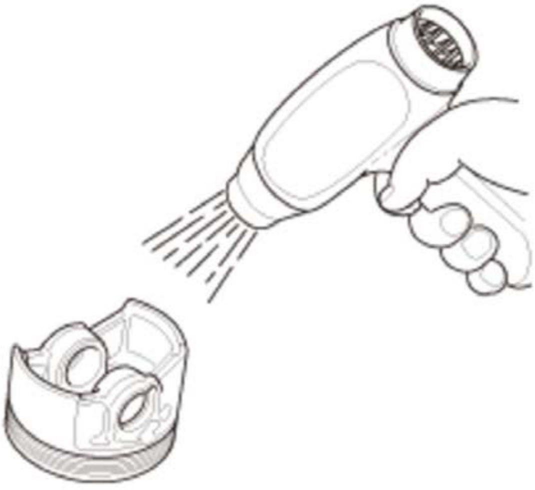	3. Heat the piston to about 70 deg.C (158 deg.F).

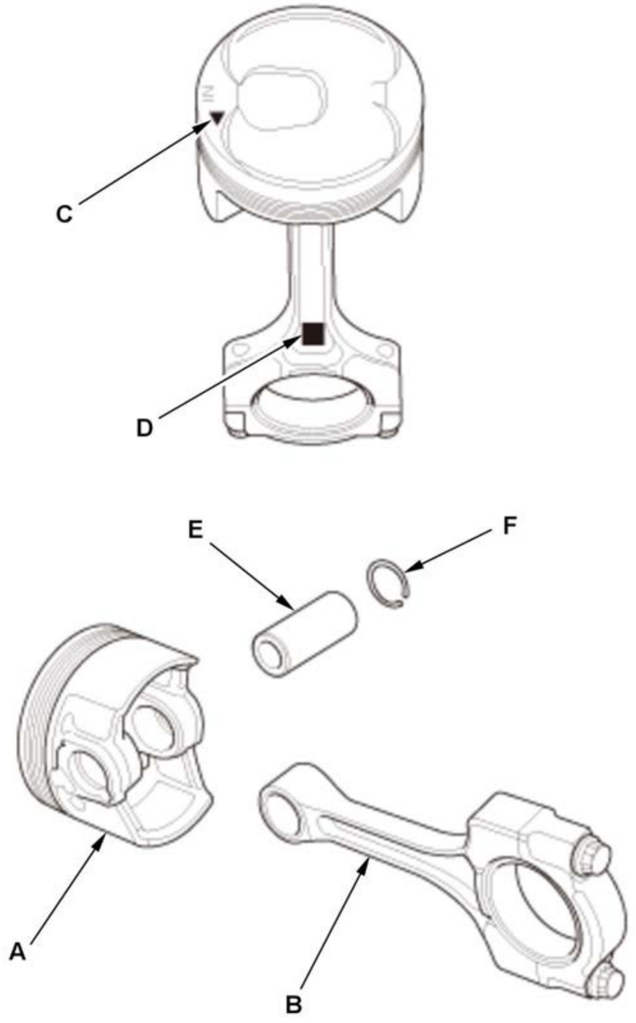	4. Assemble the piston (A) and the connecting rod (B) with the arrow (C) and the embossed mark (D) on the same side. Install the piston pin (E). 5. Install the remaining snap ring (F). 6. Turn the snap rings in the ring grooves until the end gaps are positioned at the bottom of the piston.

2. Piston Ring - Install

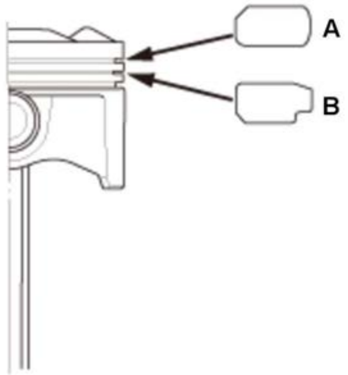

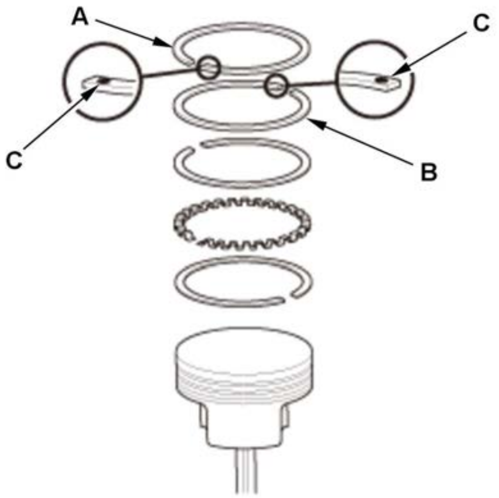

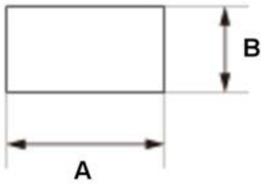

Top Ring (Standard):
A: 2.7 mm (0.106 in)
B: 1.2 mm (0.047 in)

Second Ring (Standard):
A: 2.5 mm (0.098 in)
B: 1.0 mm (0.039 in)

1. Install the top ring and the second ring as shown. The top ring (A) has a 1R mark, and the second ring (B) has a 2R mark. The manufacturing marks (C) must face upward.

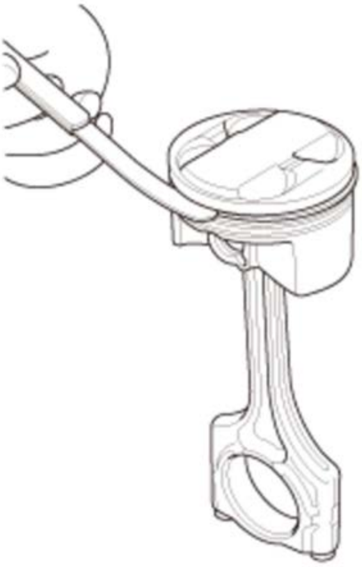

2. After installing a new set of rings, measure the ring-to-groove clearances.

Top Ring Clearance

Second Ring Clearance

3. Rotate the rings in their grooves to make sure they do not bind.

Standard (New):	**0.035-0.060 mm (0.002 in)**

Service Limit:	**0.13 mm (0.005 in)**

Standard (New):	**0.060-0.085 mm (0.003 in)**
Service Limit:	**0.13 mm (0.005 in)**

<table>
<tr><td>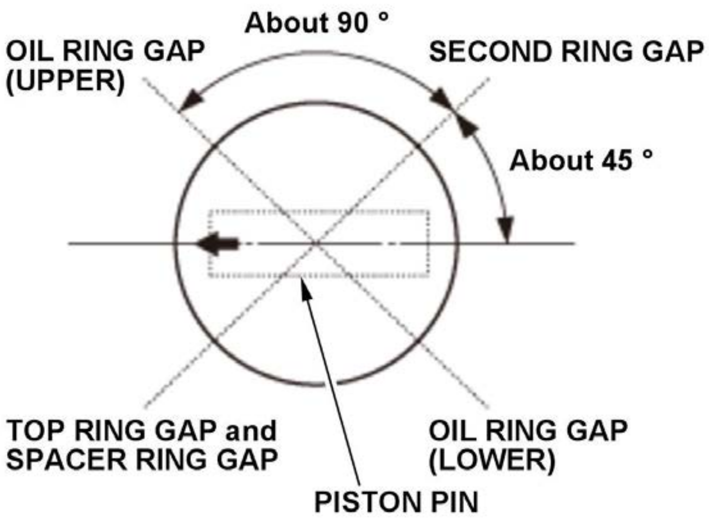
About 90 °
OIL RING GAP (UPPER)
SECOND RING GAP
About 45 °
TOP RING GAP and SPACER RING GAP
OIL RING GAP (LOWER)
PISTON PIN

</td><td>4. Position the ring end gaps as shown.</td></tr>
</table>

3. Piston/Connecting Rod Assembly - Install

<table>
<tr><td>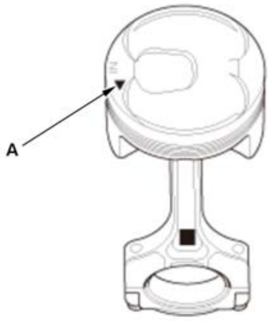
</td><td>1. Remove the connecting rod caps, then install the ring compressor, and check that the bearing is securely in place.

2. Apply new engine oil to the piston, the inside of the ring compressor, and the cylinder bore, then attach the ring compressor to the piston/connecting rod assembly.

3. Position the mark (A) to face the cam chain side of the engine block.</td></tr>
</table>

<table>
<tr><td>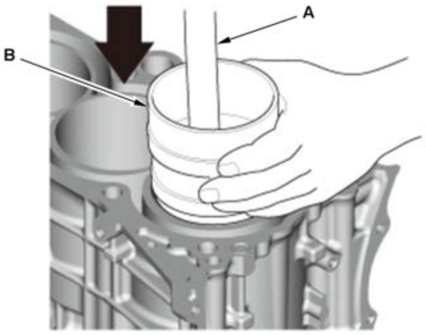
</td><td>4. Position the piston in the cylinder, and tap it in using the wooden handle of a hammer (A). Push down on the ring compressor (B) to prevent the rings from expanding before entering the cylinder bore.

5. Stop after the ring compressor pops free, and check the connecting rod-to-rod journal alignment before pushing the piston into place.</td></tr>
</table>

4. Crankshaft - Install

ROCKER ARM ASSEMBLY REMOVAL AND INSTALLATION (1.5 L ENGINE)

Removal and Installation

NOTE: How to read the torque specifications .

1. Air Cleaner - Remove
2. 12 Volt Battery - Remove

3. **Throttle Body Inlet Pipe - Remove**
4. **Camshaft - Remove**
5. Sealing Bolt - Remove

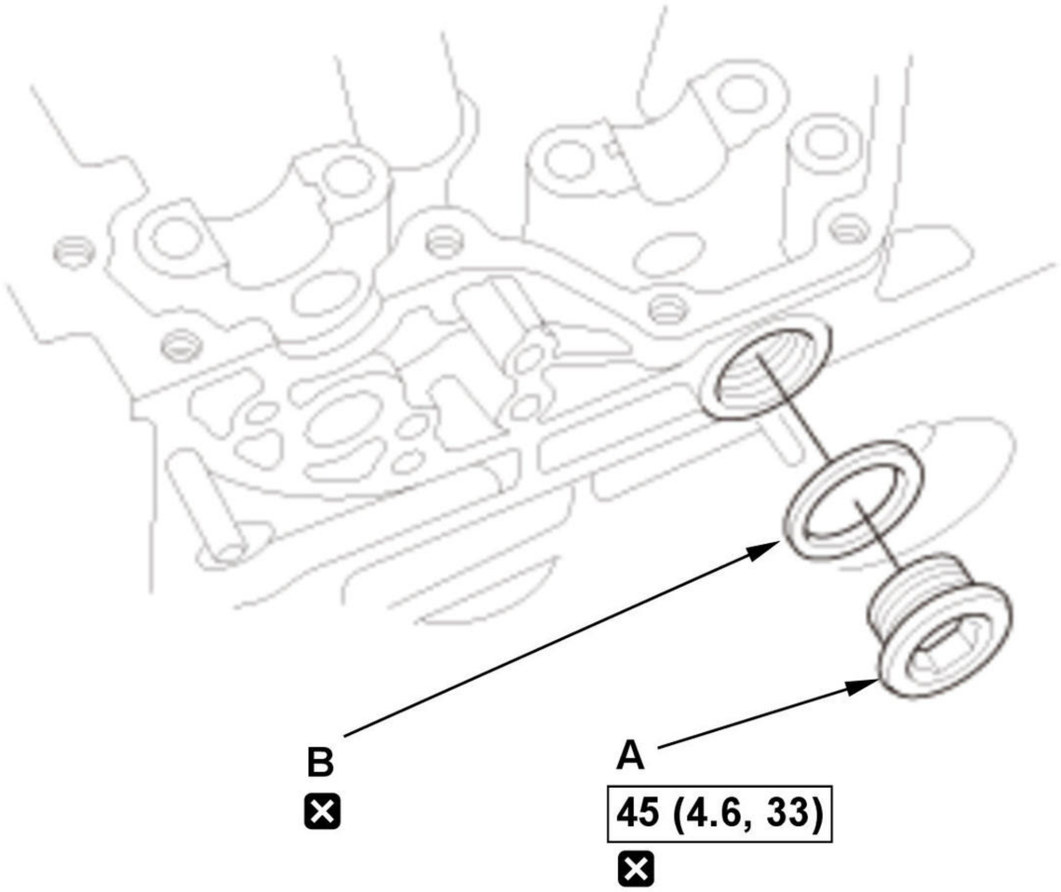

Fig. 50: Sealing Bolt Replacement Components With Torque Specifications (1.5 L Engine)
Courtesy of HONDA, U.S.A., INC.

1. Remove the sealing bolt (A) and the washer (B).

NOTE: When the new washer is installed, apply new engine oil to the new washer surfaces.

6. Rocker Arm Assembly - Remove

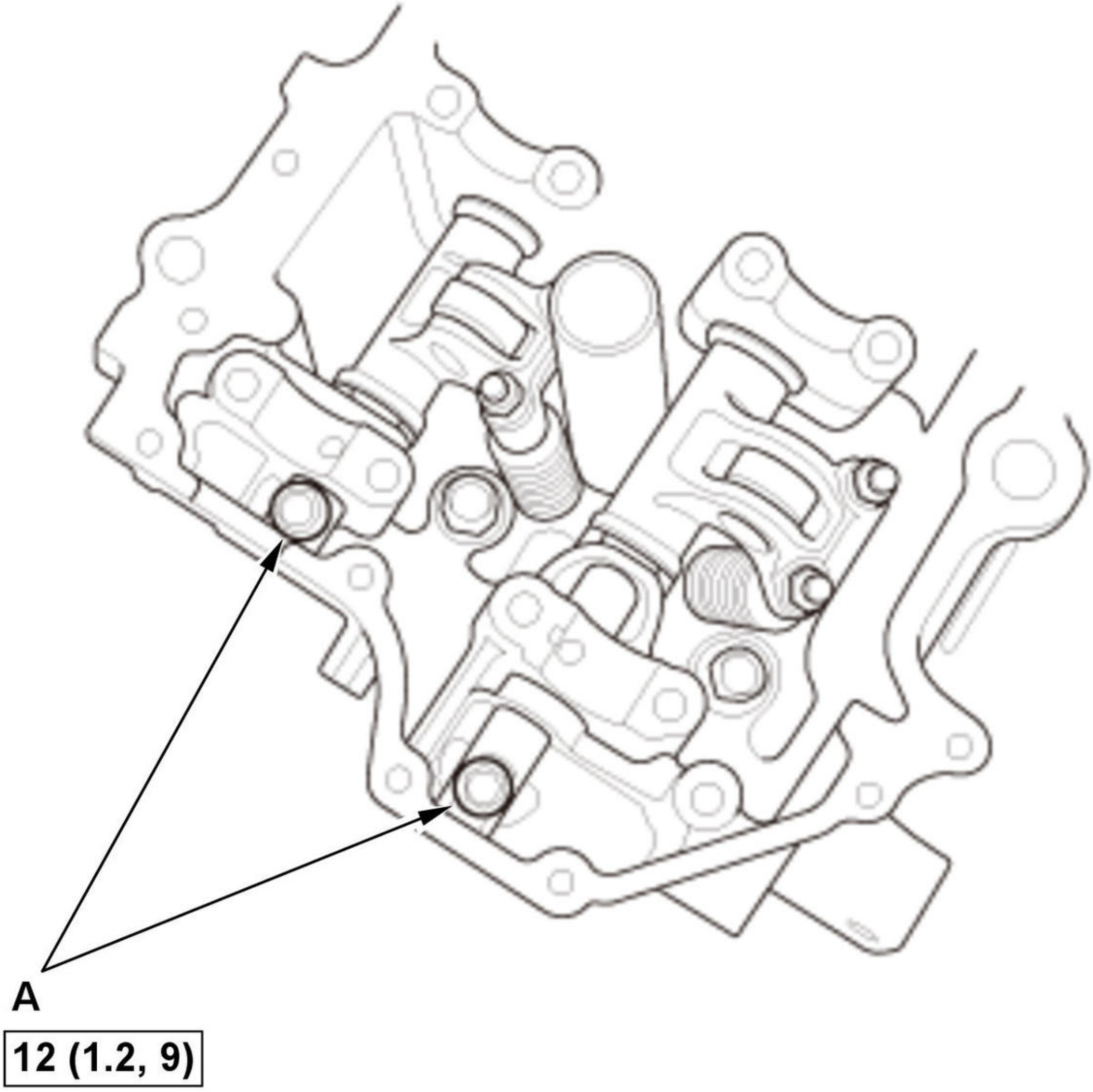

Fig. 51: Rocker Arm Assembly Replacement Components With Torque Specifications (1.5 L Engine)
Courtesy of HONDA, U.S.A., INC.

1. Remove the rocker shaft bolts (A).

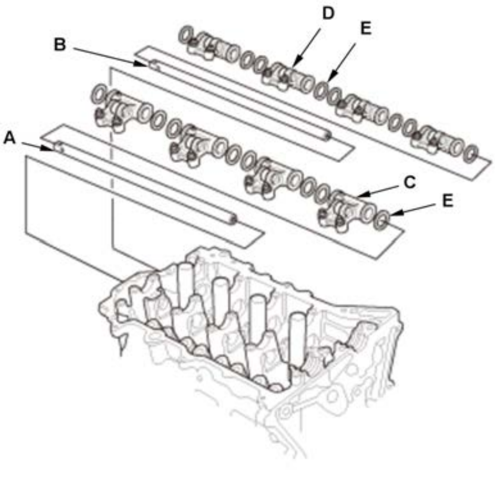	2. Remove the intake rocker shaft (A), the exhaust rocker shaft (B), the intake rocker arm assemblies (C), the exhaust rocker arm assemblies (D), and the thrust washers (E).

7. All Removed Parts - Install

    1. Install the parts in the reverse order of removal.

ROCKER ARM ASSEMBLY REMOVAL AND INSTALLATION (2.4 L ENGINE) (2017 2018 2019)

Removal

1

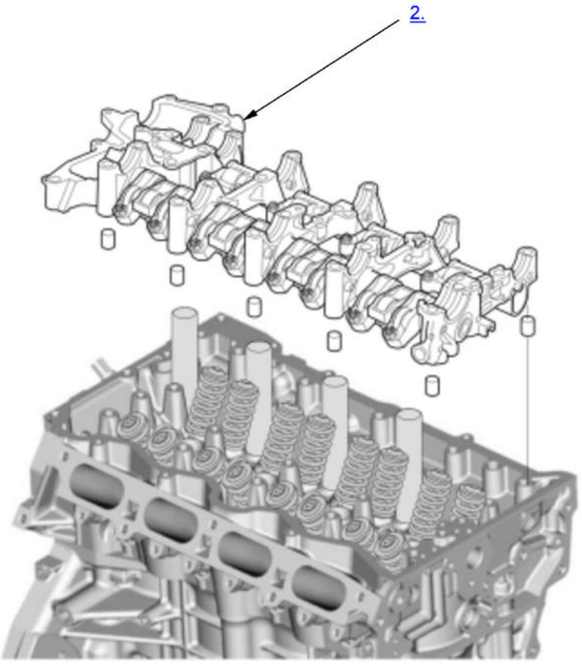

1. Intake Camshaft and Exhaust Camshaft - Remove
2. Rocker Arm Assembly - Remove

Installation

NOTE: Where icon is shown continue to the information below.

1

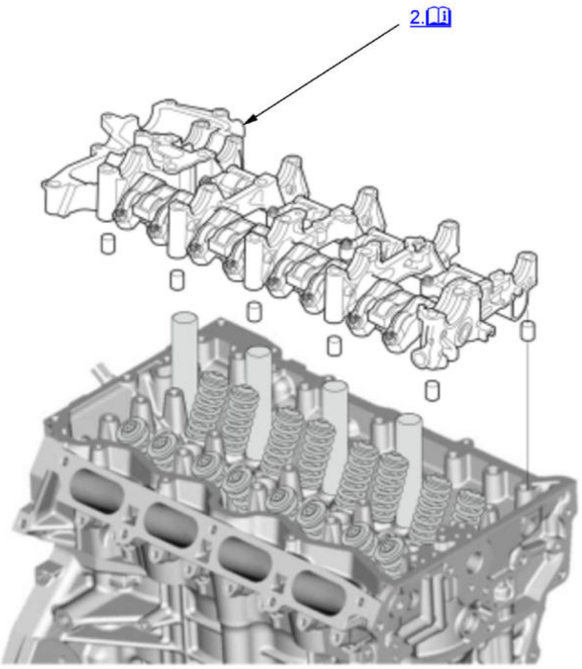

📖	Detailed information, notes, and precautions

1. Rocker Arm Assembly - Reassemble

   1. If the rocker arm assembly is disassembled, **reassemble the rocker arm assembly** .

2. Rocker Arm Assembly - Install

   1. **Apply liquid gasket** to the cylinder head mating surface of the No. 5 rocker shaft holder and to the inside edge of the threaded bolt holes.

   2. Install the lost motion assembly in the cylinder head.

   NOTE: Apply new engine oil to the lost motion assembly.

   3. Install the rocker arm assembly on the cylinder head.

3. **Intake Camshaft and Exhaust Camshaft - Install**

ROCKER ARM OIL CONTROL VALVE/ROCKER ARM OIL PRESSURE SWITCH REMOVAL AND INSTALLATION (2.4 L ENGINE) (2017 2018 2019)

Removal and Installation

NOTE: Although a numbered sequence is shown, these "*1" indicated parts are separate components. If removal or replacement of one of the components is needed, it is not necessary to remove the other.

1

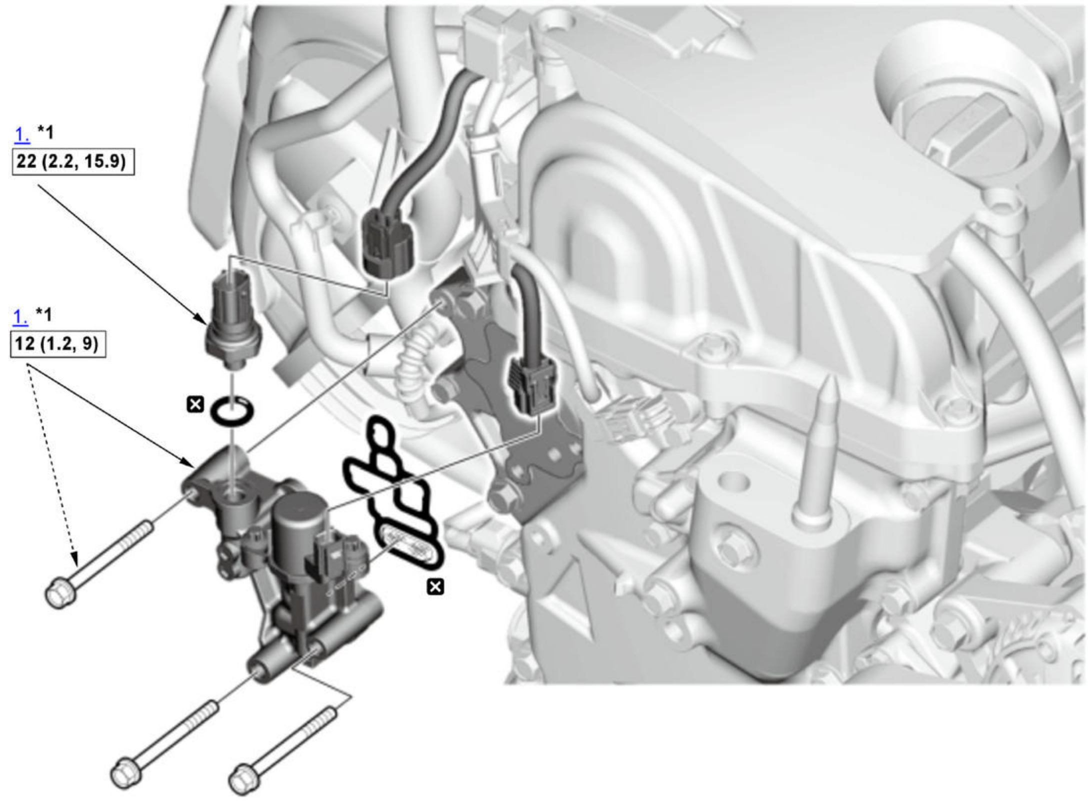

Fig. 52: Rocker Arm Oil Control Valve/Rocker Arm Oil Pressure Switch Replacement Components With Torque Specifications (2.4 L Engine) (2017 2018 2019)
Courtesy of HONDA, U.S.A., INC.

☐	Torque: N.m (kgf.m, lbf.ft)
☒	Replace

Rocker Arm Oil Control Valve

1. Rocker Arm Oil Control Valve - Remove
2. All Removed Parts - Install

> 1. Install the parts in the reverse order of removal with a new O-ring.

Rocker Arm Oil Pressure Switch

3. Rocker Arm Oil Pressure Switch - Remove
4. All Removed Parts - Install

> 1. Install the parts in the reverse order of removal with a new O-ring.

SECONDARY HO2S REMOVAL AND INSTALLATION (1.5 L ENGINE)

Special Tools Required

Image	Description/Tool Number
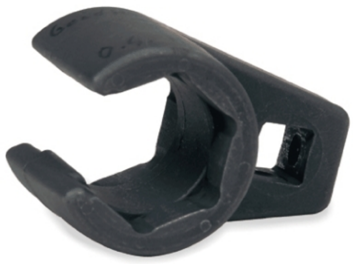	O2 Sensor Socket Wrench Snap-on SWR2 or Snap-on YA8875, commercially available

Removal and Installation

NOTE: ℹ Where icon is shown continue to the information below.

1

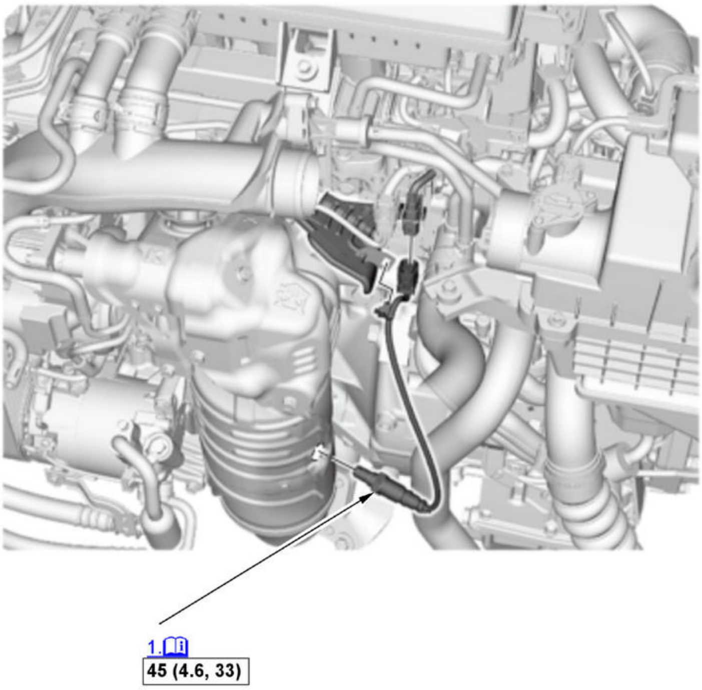

[Fig. 53: Secondary HO2S Replacement Components With Torque Specifications (1.5 L Engine)](#)
Courtesy of HONDA, U.S.A., INC.

ℹ	Detailed information, notes and precautions
▭	Torque: N.m (kgf.m, lbf.ft)

1. Secondary HO2S - Remove

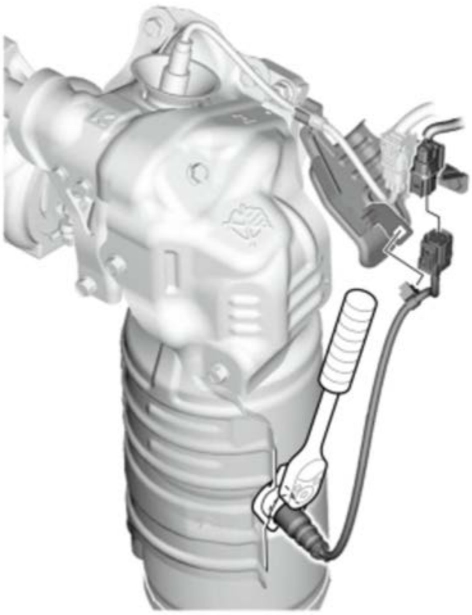	1. Using a commercially available O2 sensor socket wrench, remove secondary HO2S.

2. All Removed Parts - Install

1. Install the parts in the reverse order of removal.

SECONDARY HO2S REMOVAL AND INSTALLATION (2.4 L ENGINE) (2017 2018 2019)

Special Tools Required

Image	Description/Tool Number
	O2 Sensor Socket Wrench Snap-on SWR2 or Snap-on YA8875, commercially available

Removal and Installation

NOTE: ℹ Where icon is shown continue to the information below.

1

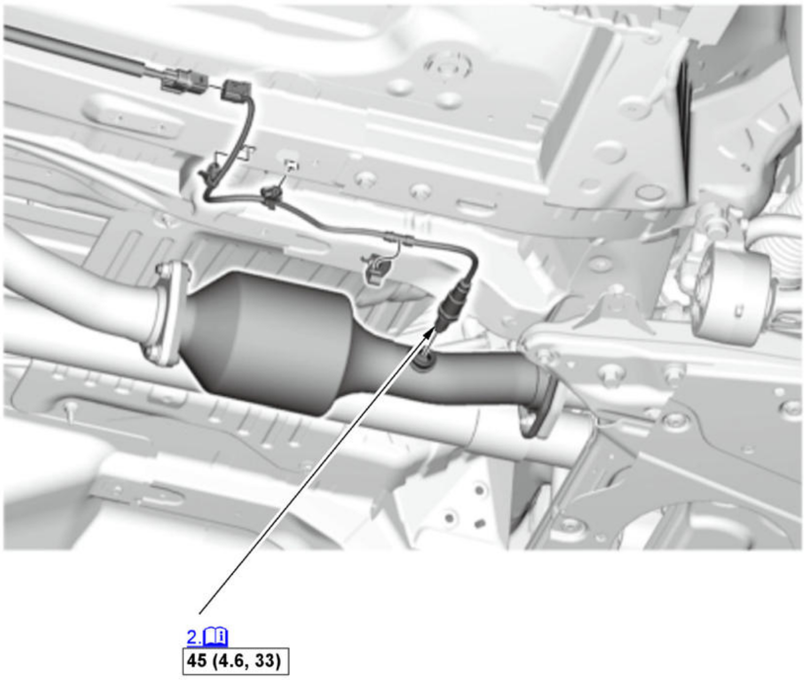

Fig. 54: Secondary HO2S Replacement Components With Torque Specifications (2.4 L Engine) (2017 2018 2019)
Courtesy of HONDA, U.S.A., INC.

📖	Detailed information, notes and precautions
▭	Torque: N.m (kgf.m, lbf.ft)

1. Middle Floor Undercover - Remove
2. Secondary HO2S - Remove

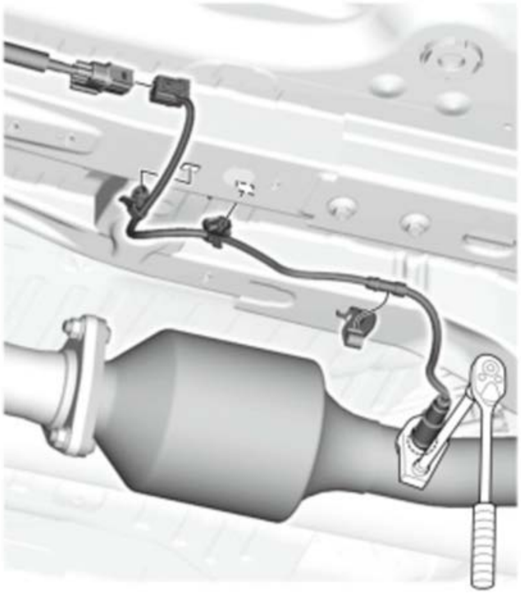	1. Using a commercially available O2 sensor socket wrench, remove secondary HO2S.

3. All Removed Parts - Install

1. Install the parts in the reverse order of removal.

SHUTTER GRILLE REMOVAL AND INSTALLATION

Removal and Installation

1

Upper

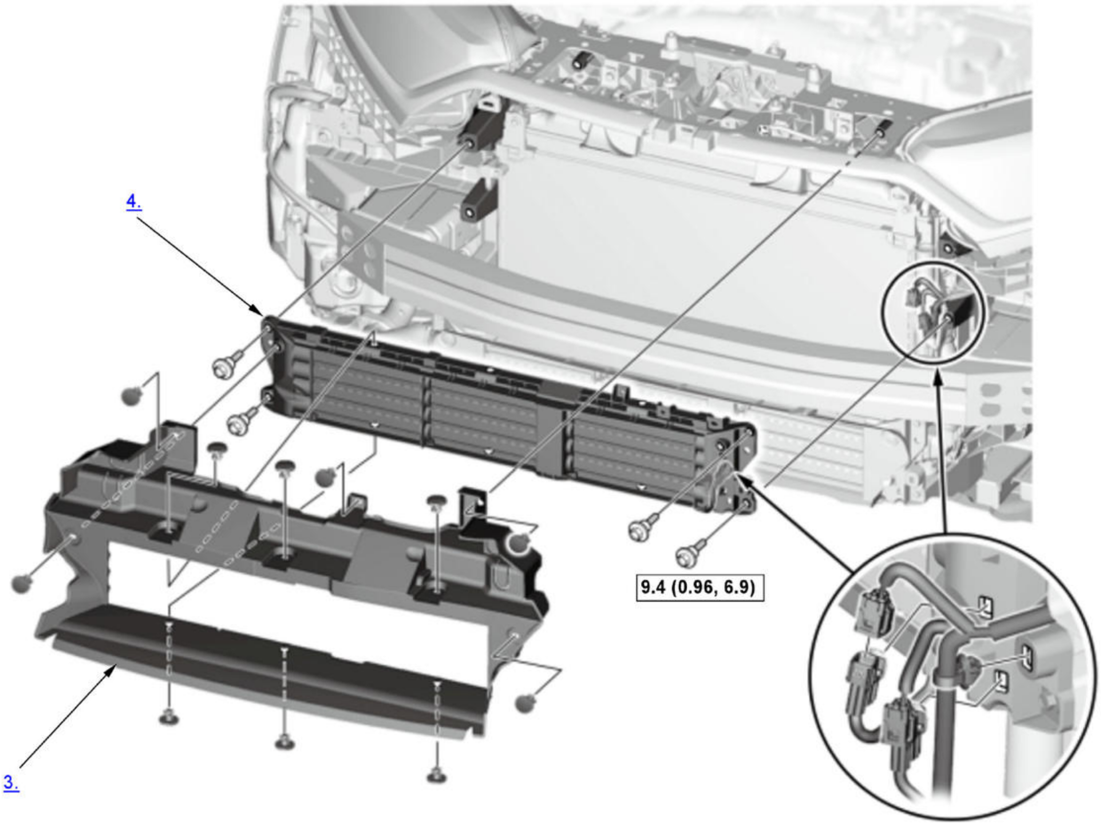

Fig. 55: Upper Shutter Grille Replacement Components With Torque Specifications
Courtesy of HONDA, U.S.A., INC.

☐	Torque: N.m (kgf.m, lbf.ft)

2

Lower

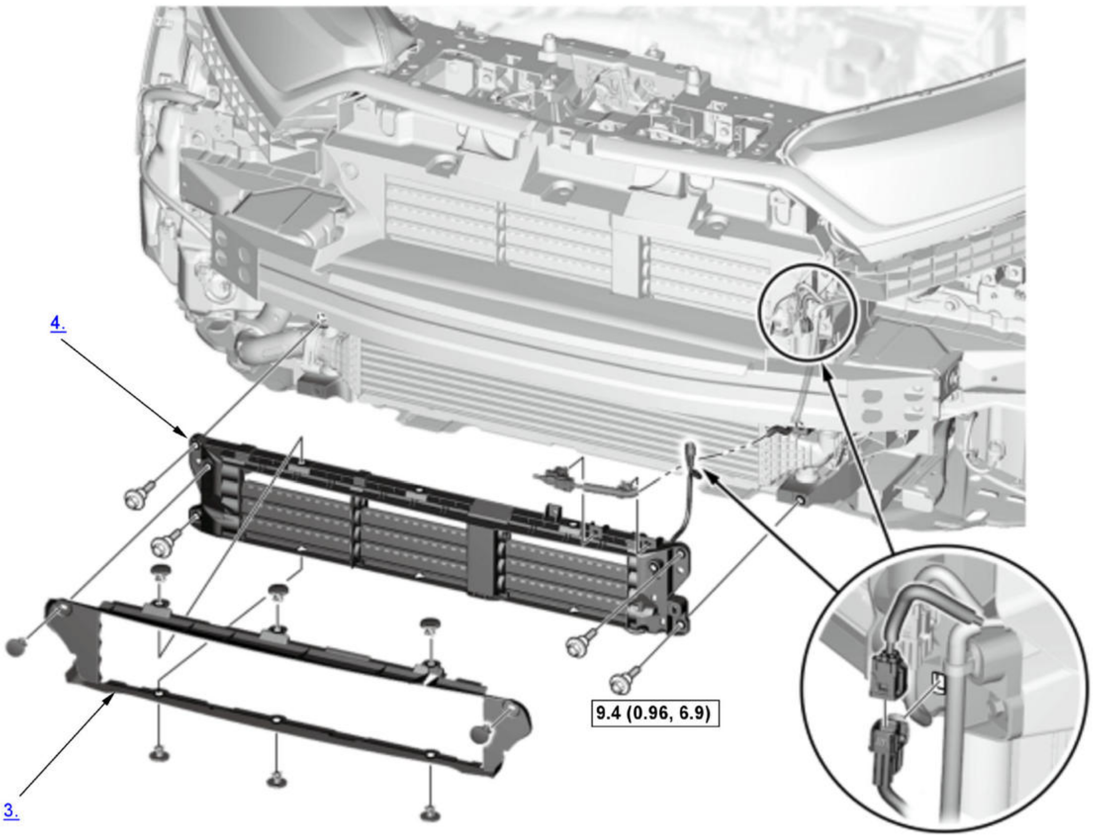

Fig. 56: Lower Shutter Grille Replacement Components With Torque Specifications
Courtesy of HONDA, U.S.A., INC.

☐	Torque: N.m (kgf.m, lbf.ft)

1. Front Bumper - Remove
2. Millimeter Wave Radar - Remove
3. Duct - Remove
4. Shutter Grille - Remove
5. All Removed Parts - Install
6. Millimeter Wave Radar - Update
7. Millimeter Wave Radar - Aim

THROTTLE BODY REMOVAL AND INSTALLATION (1.5 L ENGINE)

Removal and Installation

WARNING:

Do not insert your fingers into the installed throttle body when you turn the vehicle to the ON mode, or while the vehicle is in ON mode. If you do, you will seriously injure your fingers if the throttle valve is activated.

NOTE:

- 📖 Where icon is shown for further information in the information below.
- If you are replacing the throttle body, do the all procedures.

- If you are removing the throttle body, do 3rd procedure (12 Volt Battery - Remove) through 10th procedure (Engine Coolant - Refill).

1

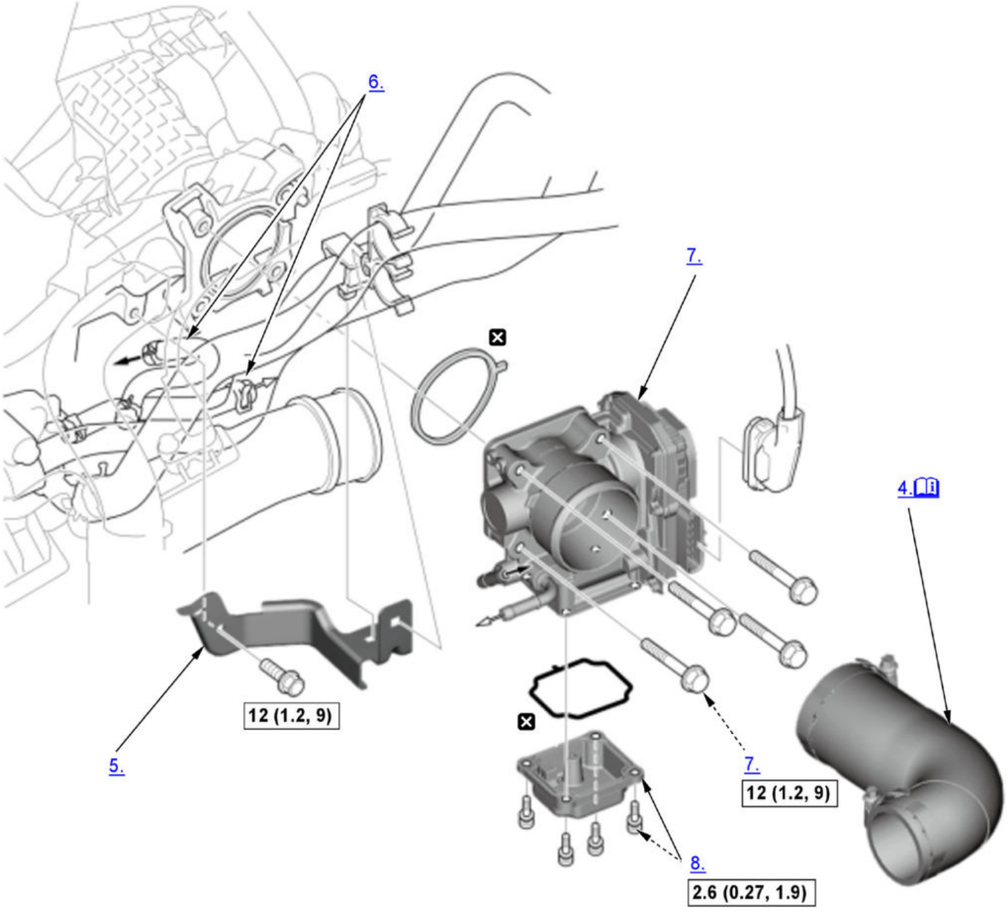

Fig. 57: Throttle Body Replacement Components With Torque Specifications (1.5 L Engine)
Courtesy of HONDA, U.S.A., INC.

ℹ	Detailed information, notes and precautions
▭	Torque: N.m (kgf.m, lbf.ft)

☒	Replace

1. HDS - Connect
2. TP POSITION CHECK - Select

    1. Select the ETCS TEST in the INSPECTION MENU with the HDS.
    2. Select TP POSITION CHECK and clear the throttle position (TP) learned value.
    3. Turn the vehicle to the OFF (LOCK) mode.
    4. Turn the vehicle to the ON mode, and wait 2 seconds without pressing the accelerator pedal.

3. 12 Volt Battery - Remove
4. Throttle Body Duct - Remove

NOTE: **Make sure the end of hose band is aligned with the mark on the hose band after the throttle body duct is installed** .

5. Heater Hose Bracket - Remove
6. Water Bypass Hose - Disconnect and Plug
7. Throttle Body - Remove
8. Throttle Body Lower Case - Remove (If Necessary)
9. All Removed Parts - Install

1. Install the parts in the reverse order of removal with a new gasket and a new O-ring.
NOTE:
- Tighten the throttle body mounting bolts in a cross pattern in three steps;
-
    - Tighten the bolts until they sit on the throttle body.
    - Tighten the bolts until the gasket is compressed and both parts are contacted.
    - Tighten the bolts to specified torque.

10. **Engine Coolant - Refill**
11. **PCM - Reset**
12. **PCM - Idle Learn**

THROTTLE BODY REMOVAL AND INSTALLATION (2.4 L ENGINE) (2017 2018 2019)

Removal and Installation

WARNING:

Do not insert your fingers into the installed throttle body when you turn the vehicle to the ON mode, or while the vehicle is in ON mode. If you do, you will seriously injure your fingers if the throttle valve is activated.

NOTE:

- ℹ Where icon is shown for further information in the information below.
- If you are replacing the throttle body, do the all procedures.
- If you are removing the throttle body, do 3rd procedure (Intake Air Duct - Remove) through 8th procedure (Engine Coolant - Refill).

1

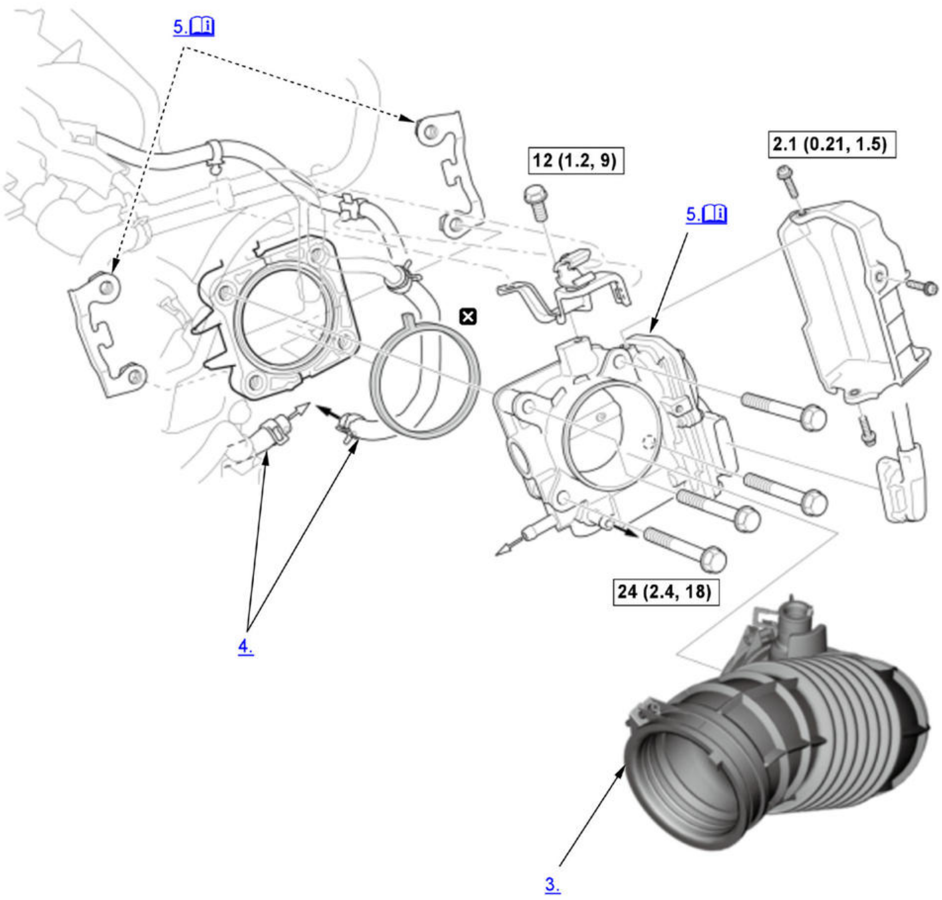

Fig. 58: Throttle Body Replacement Components With Torque Specifications (2.4 L Engine) (2017 2018 2019)

Courtesy of HONDA, U.S.A., INC.

ℹ	Detailed information, notes and precautions
▭	Torque: N.m (kgf.m, lbf.ft)

☒	Replace

1. **HDS - Connect**
2. TP POSITION CHECK - Select

    1. Select the ETCS TEST in the INSPECTION MENU with the HDS.
    2. Select TP POSITION CHECK and clear the throttle position (TP) learned value.
    3. Turn the vehicle to the OFF (LOCK) mode.
    4. Turn the vehicle to the ON mode, and wait 2 seconds without pressing the accelerator pedal.

3. Intake Air Duct - Remove
4. Water Bypass Hose - Disconnect and Plug
5. Throttle Body - Remove

    NOTE: Be careful not to damage to drops the plates.

6. Bracket - Remove (If Necessary)

7. All Removed Parts - Install

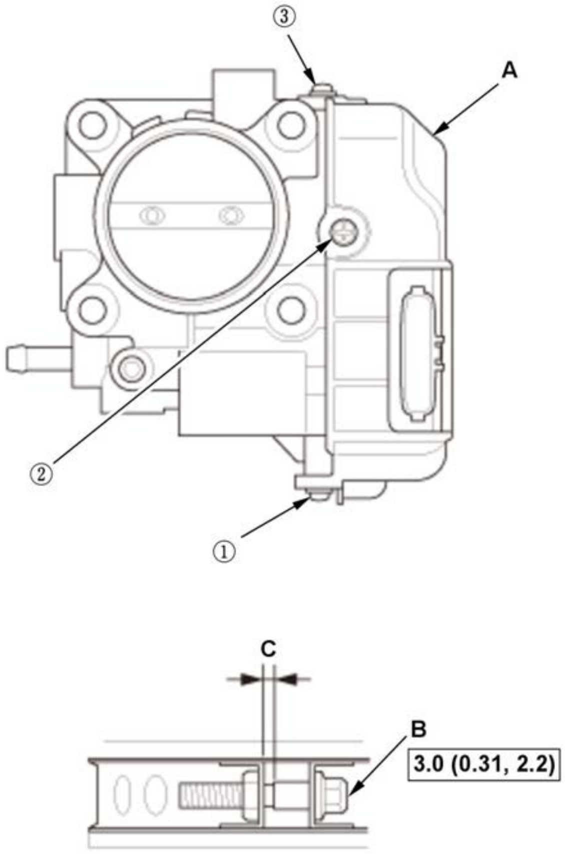

1. Install the parts in the reverse order of removal with a new gasket.

NOTE:

- When installing the throttle body cover (A), tighten its mounting screws in the numbered sequence shown.
- Tighten the throttle body mounting bolts in a cross pattern in three steps;
-
    - Tighten the bolts until they sit on the throttle body.
    - Tighten the bolts until the gasket is compressed and both parts are contacted.
    - Tighten the bolts to specified torque.
- Do not overtighten the hose band screw (B).
- After tightening the hose band screw, make sure the clearance (C) is less than 1.0 mm (0.04 in).

8. Engine Coolant - Refill
9. PCM - Reset
10. PCM - Idle Learn

TURBOCHARGER BOOST SENSOR REMOVAL AND INSTALLATION (1.5 L ENGINE)

Removal and Installation

1

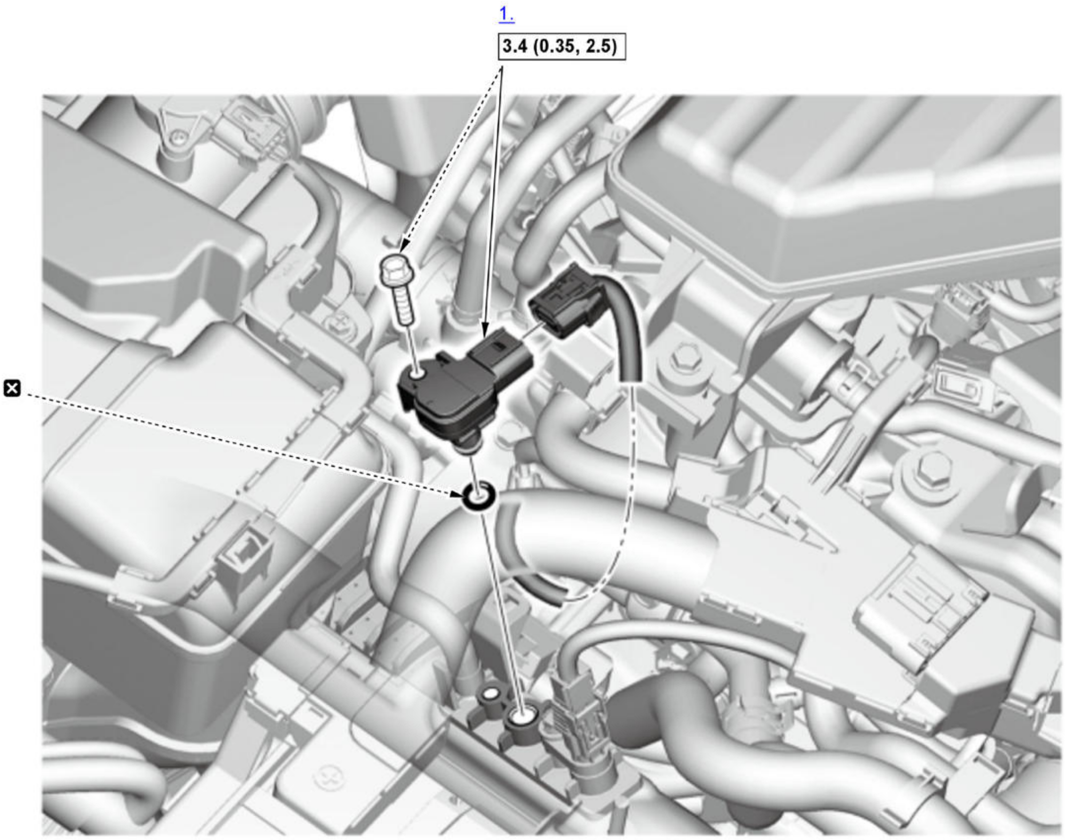

☐	Torque: N.m (kgf.m, lbf.ft)
☒	Replace

1. Turbocharger Boost Sensor - Remove
2. All Removed Parts - Install

1. Install the parts in the reverse order of removal with a new O-ring.

VALVE, SPRING, AND VALVE SEAL REMOVAL AND INSTALLATION (1.5 L ENGINE)

Special Tools Required

Image	Description/Tool Number
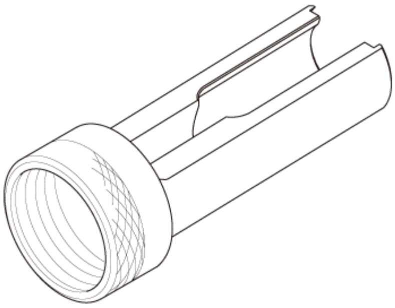	Valve Spring Compressor Attachment 070AE-5K0A100

Image	Description/Tool Number
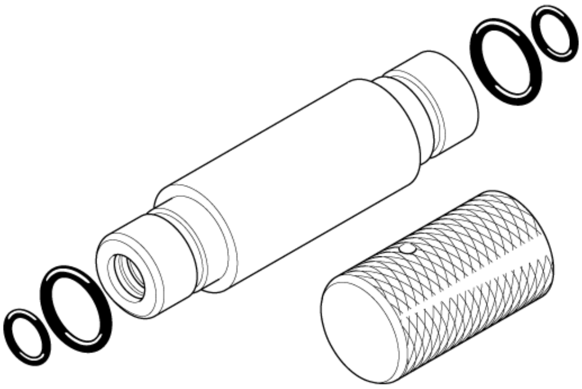	Stem Seal Driver 07PAD-0010000

Removal

WARNING:

Please carefully read "Precaution for Handling Sodium-Filled Valves" and follow the instructions as the exhaust valves contain metal sodium .

NOTE: Identify the valves and the valve springs as they are removed so that each item can be reinstalled in its original position.

1. Cylinder Head - Remove
2. Valve and Valve Spring - Remove

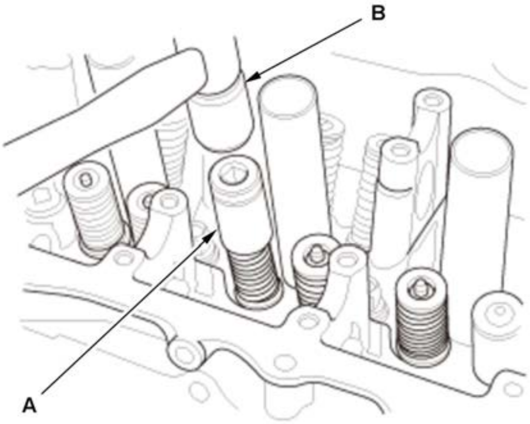	1. Using an appropriate-sized socket (A) and a plastic mallet (B), lightly tap the spring retainer to loosen the valve cotters.

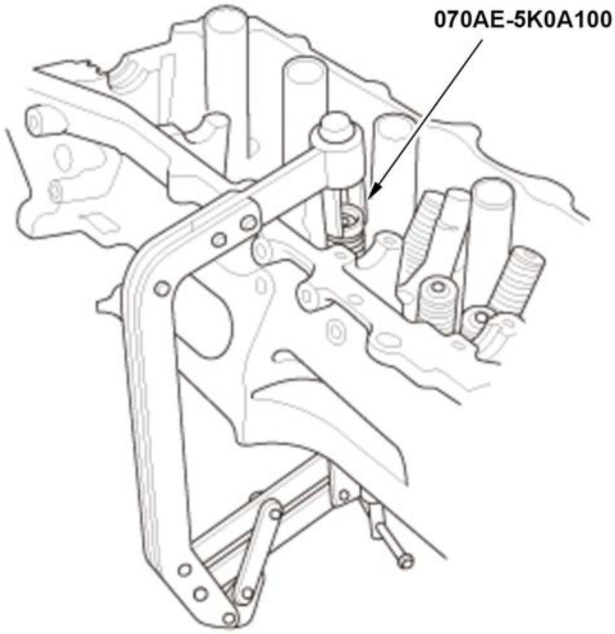	2. Install the valve spring compressor attachment and the valve spring compressor. 3. Compress the valve spring and remove the valve cotters. 4. Remove the valve spring compressor and the valve spring compressor attachment. 5. Remove the spring retainer, the valve spring, and the valve.

3. Valve Seal - Remove

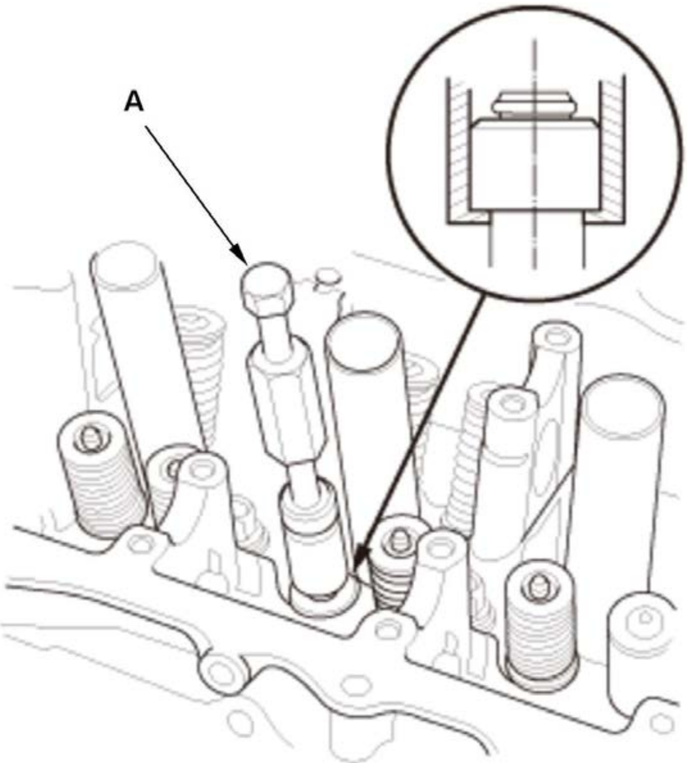	1. Install the valve guide seal remover (A).

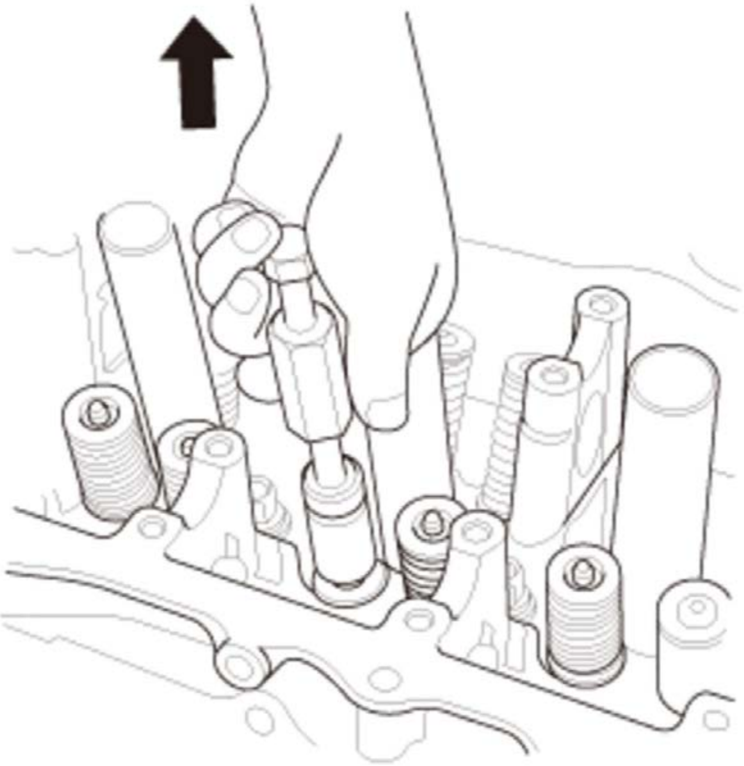	2. Remove the valve seal.

4. Valve Spring Seat - Remove

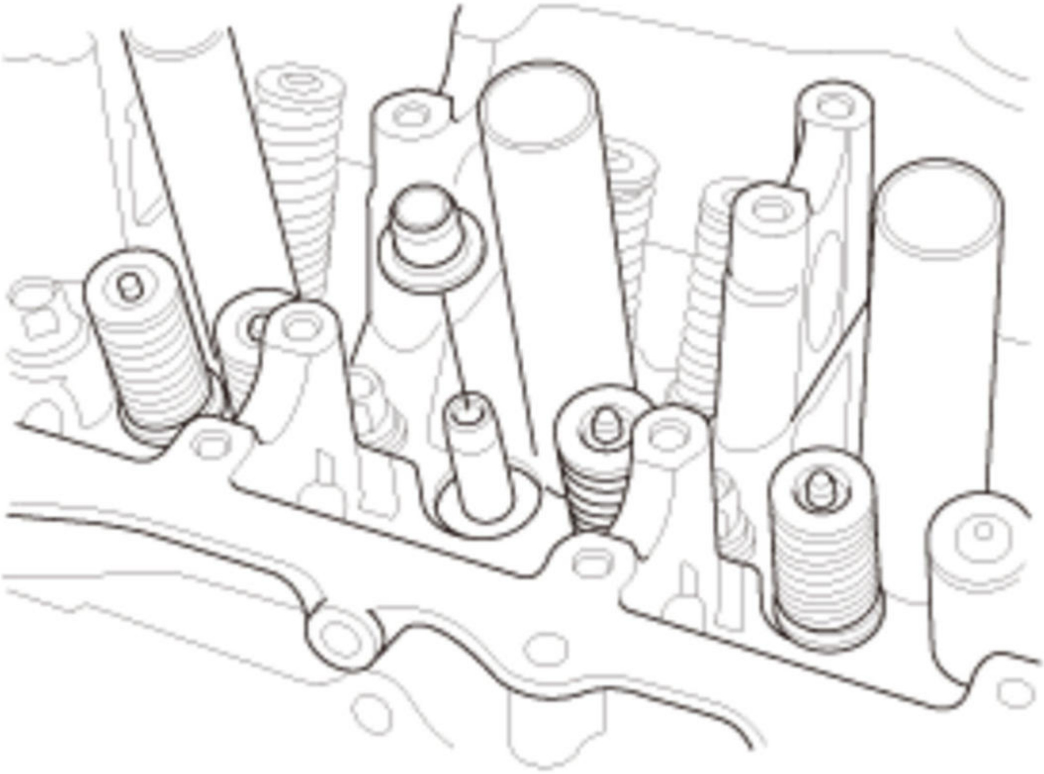

Installation

1. Valve Spring Seat and Valve Seal - Install

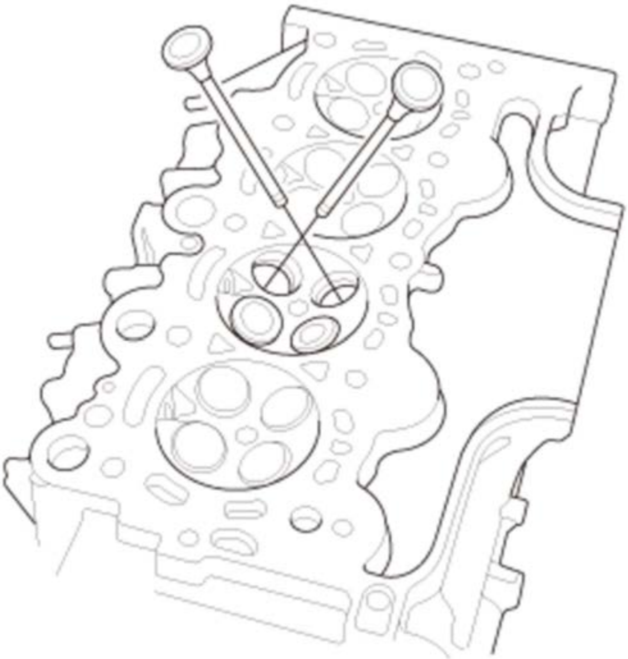	1. Coat the valve stems with new engine oil. 2. Install the valves in the valve guides. 3. Check that the valves move up and down smoothly, then remove the valves.
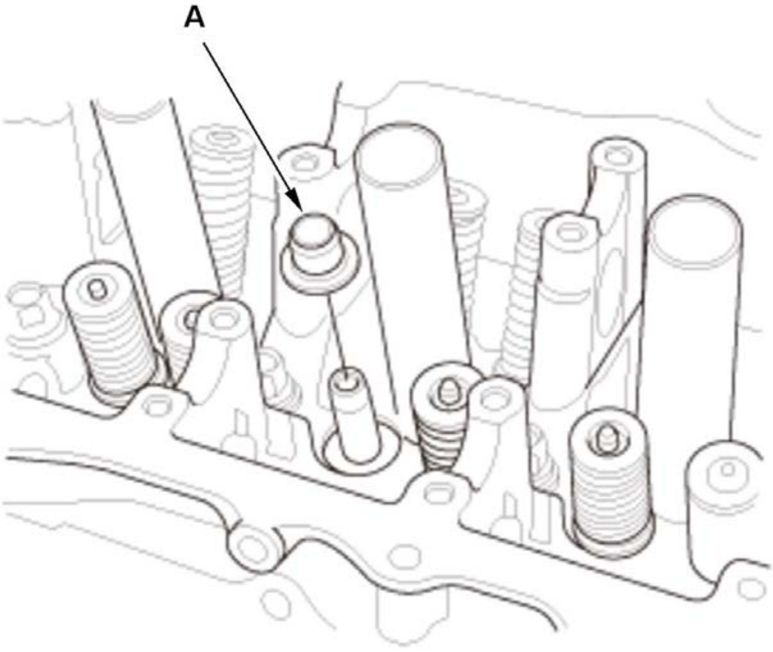	4. Install the valve spring seat (A).

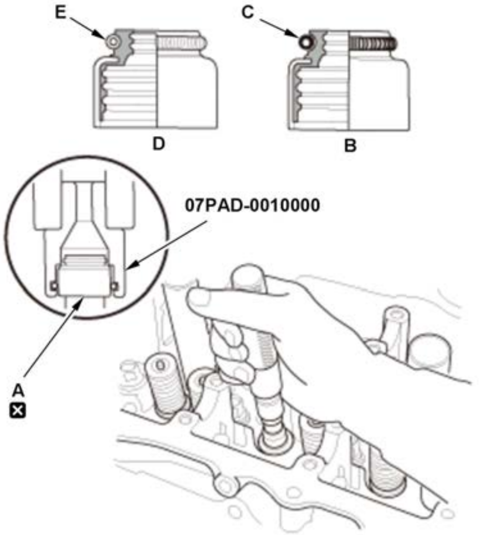

5. Install the new valve seal (A) using the 5.5 mm side of the stem seal driver.
NOTE: The exhaust valve seal (B) has a black spring (C), and the intake valve seal (D) has a white or silver spring (E), they are not interchangeable.

2. Valve and Valve Spring - Install

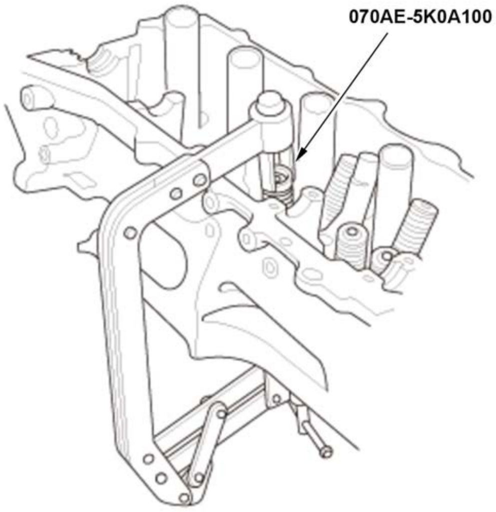

1. Install the valve, the valve spring, and the spring retainer. Place the end of the valve spring with the closely wound coils toward the cylinder head.

2. Install the valve spring compressor attachment and the valve spring compressor.

3. Compress the valve spring and install the valve cotters.

4. Remove the valve spring compressor and the valve spring compressor attachment.

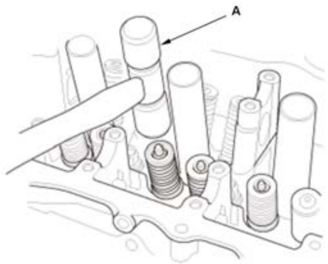

5. Lightly tap the end of each valve stem two or three times with a plastic mallet (A) to ensure proper seating of the valve and the valve cotters. Tap the valve stem only along its axis so you do not bend the stem.**NOTE:** Be sure to raise the cylinder head off the work bench so the valve is not possibly damaged.

3. **Cylinder Head - Install**

VALVE, SPRING, AND VALVE SEAL REMOVAL AND INSTALLATION (2.4 L ENGINE) (2017 2018 2019)

Special Tools Required

Image	Description/Tool Number
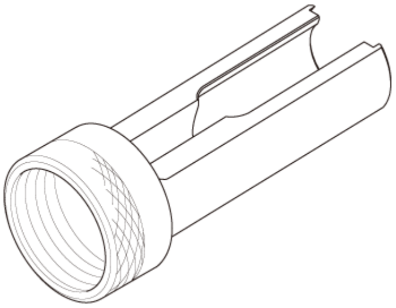	Valve Spring Compressor Attachment 070AE-5K0A100
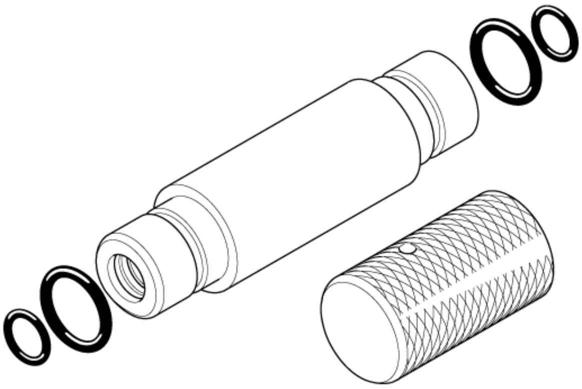	Stem Seal Driver 07PAD-0010000

Removal

NOTE: Identify the valves and the valve springs as they are removed so that each item can be reinstalled in its original position.

1. Cylinder Head - Remove
2. Valve and Valve Spring - Remove

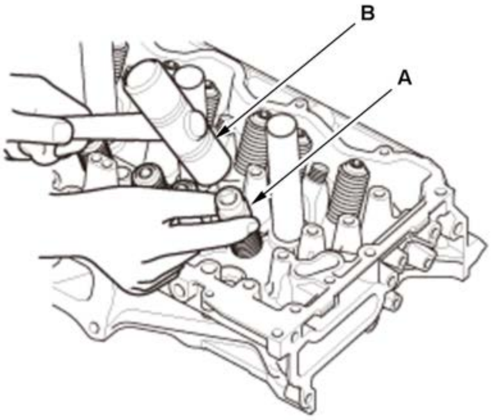	1. Using an appropriate-sized socket (A) and a plastic mallet (B), lightly tap the spring retainer to loosen the valve cotters.

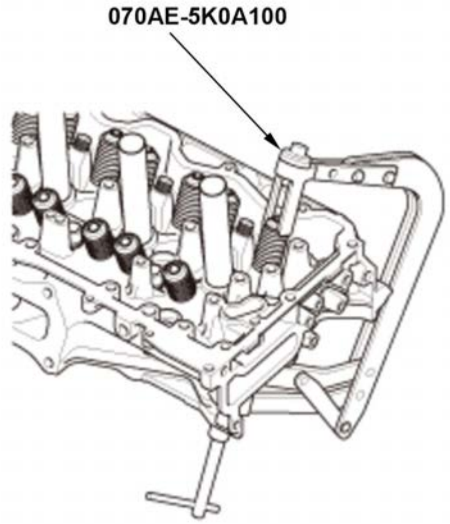	2. Install the valve spring compressor and the valve spring compressor attachment. 3. Compress the valve spring and remove the valve cotters. 4. Remove the valve spring compressor and the valve spring compressor attachment. 5. Remove the spring retainer, the valve spring, and the valve.

3. Valve Seal - Remove

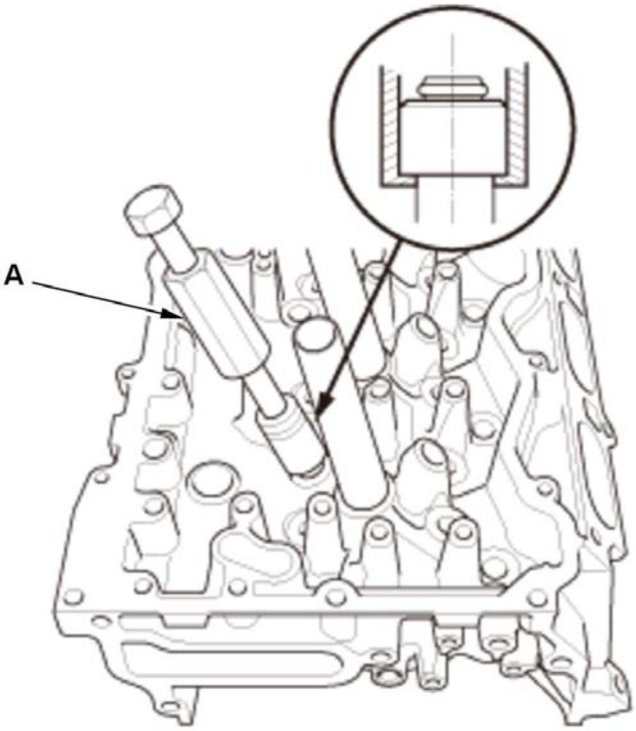	1. Install the valve guide seal remover (A).

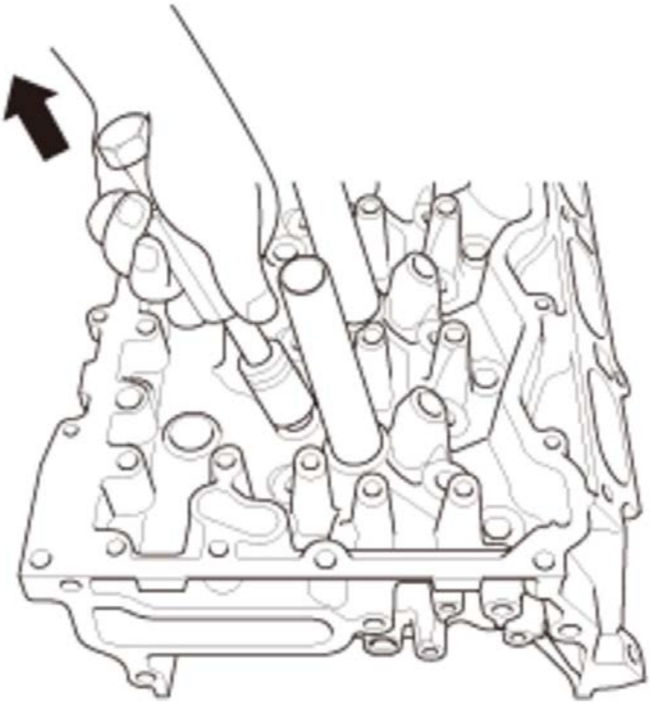	2. Remove the valve seal.

4. Valve Spring Seat - Remove

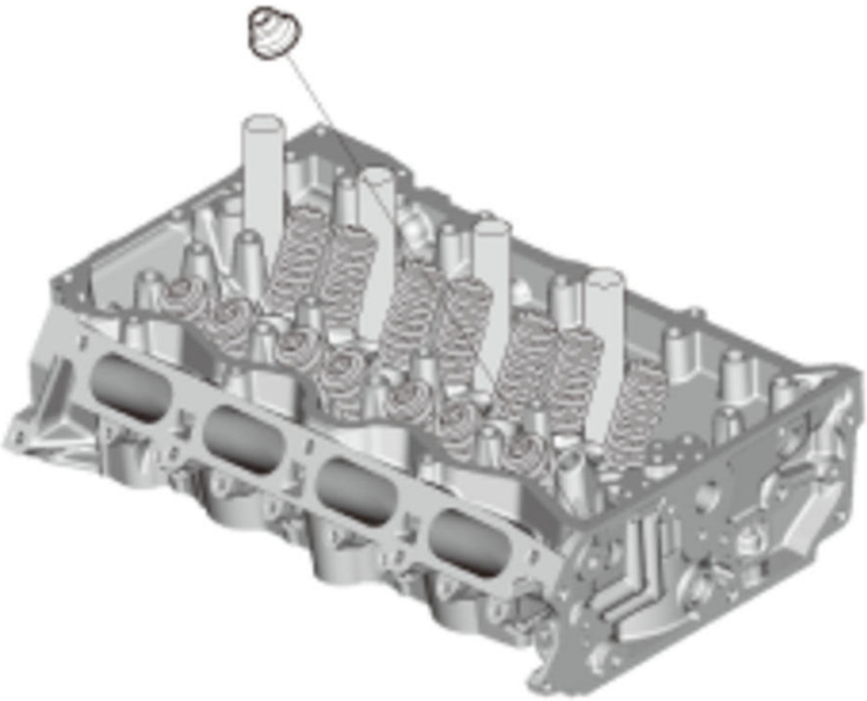

Installation

1. Valve Spring Seat - Install

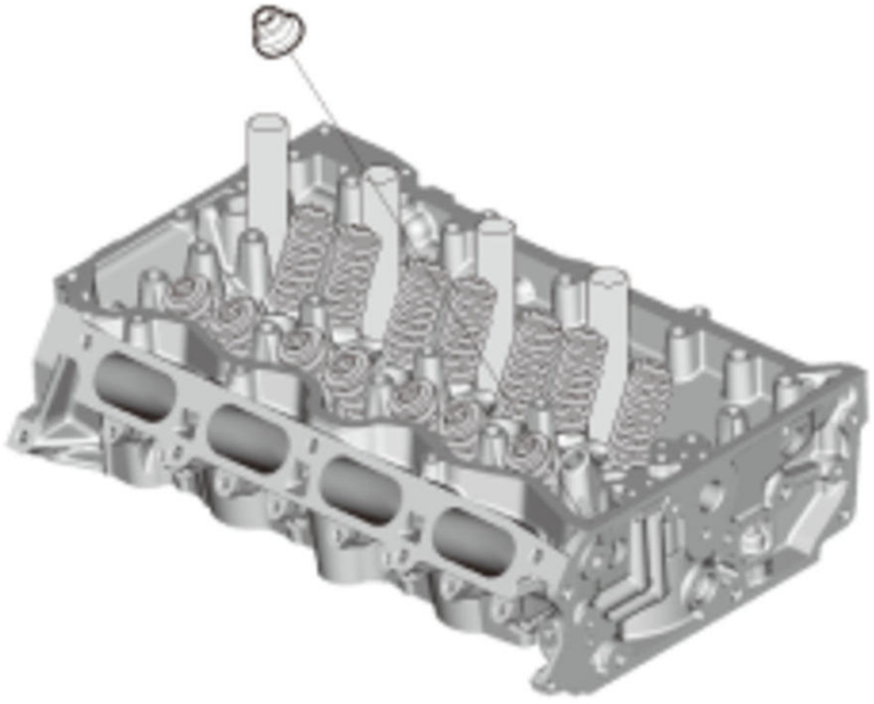

2. Valve Seal - Install

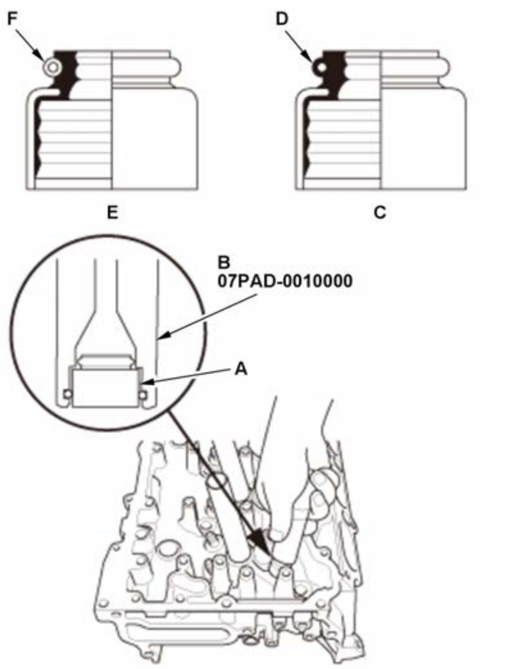	1. Install the new valve seals (A) using the 5.5 mm side of the stem seal driver (B). **NOTE:** The exhaust valve seal (C) has a black spring (D), and the intake valve seal (E) has a white or silver spring (F); they are not interchangeable.

3. Valve and Valve Spring - Install

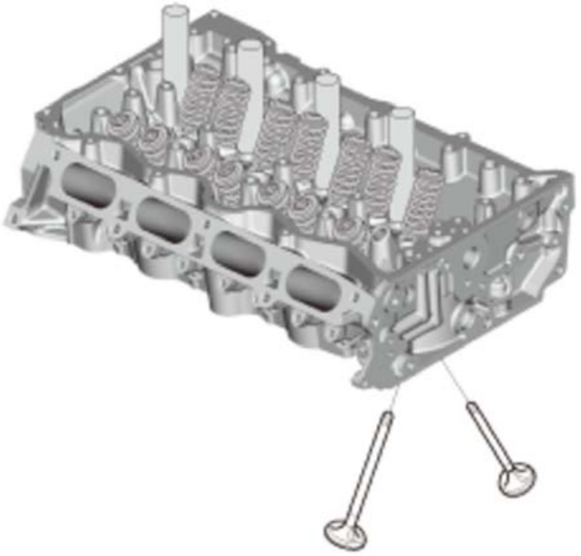

1. Coat the valve stems with new engine oil.

2. Install the valves in the valve guides.

3. Check that the valves move up and down smoothly.

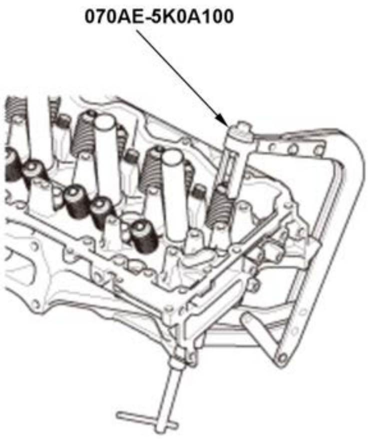

4. Install the valve spring and the spring retainer. Place the end of the valve spring with the closely wound coils toward the cylinder head.

5. Install the valve spring compressor and the valve spring compressor attachment.

6. Compress the valve spring and install the valve cotters.

7. Remove the valve spring compressor and the valve spring compressor attachment.

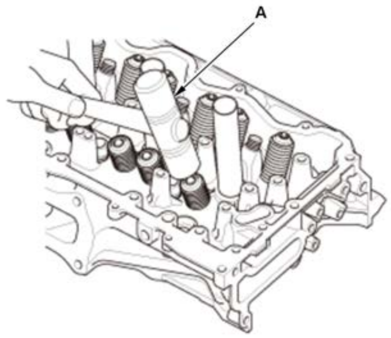

8. Lightly tap the end of each valve stem two or three times with a plastic mallet (A) to ensure proper seating of the valve and the valve cotters. Tap the valve stem only along its axis so you do not bend the stem.
NOTE: Be sure to raise the head off the work bench so the valve is not possibly damaged.

4. Cylinder Head - Install

OVERHAUL

ENGINE OIL PUMP OVERHAUL (1.5 L ENGINE)

Disassembly and Reassembly

NOTE: Where icon is shown for further information in the information below.

1

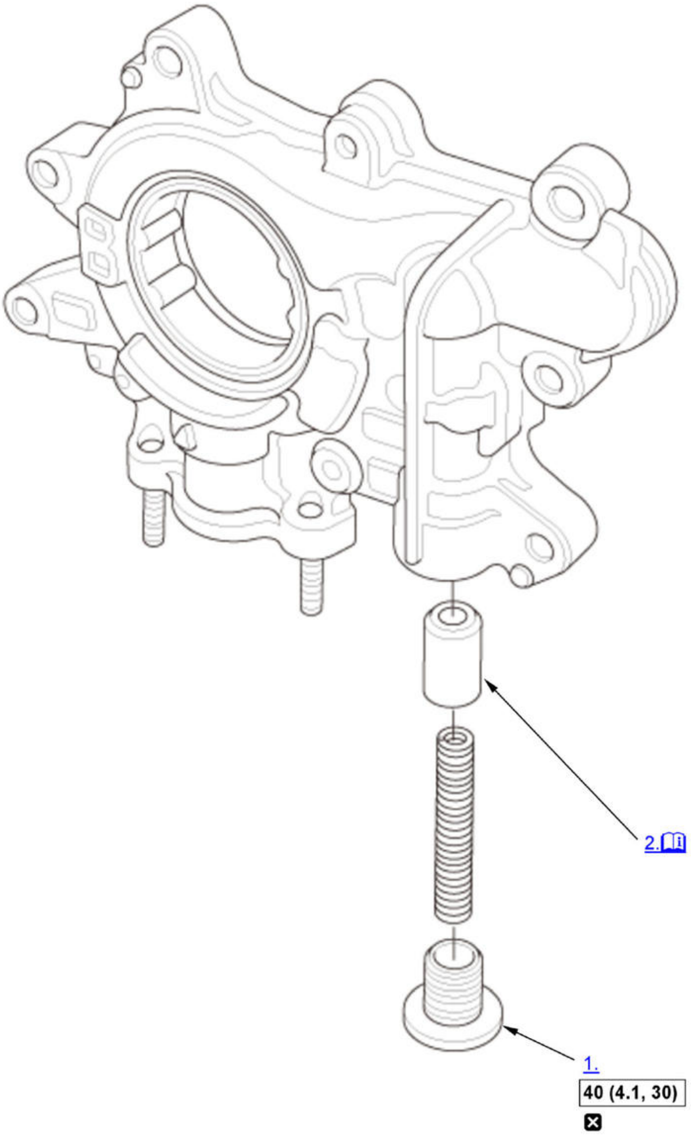

Fig. 59: Engine Oil Pump Sealing Bolts With Torque Specifications (1.5 L Engine)
Courtesy of HONDA, U.S.A., INC.

ℹ	Detailed information, notes, and precautions
▭	Torque: N.m (kgf.m, lbf.ft)

☒	Replace

1. Sealing Bolt - Remove
2. Relief Valve - Remove

   NOTE: Check the relief valve must slide freely in the housing bore. Replace if scored.

3. All Removed Parts - Install

   1. Install the parts in the reverse order of removal.

SYMPTOM TROUBLESHOOTING INDEX FOR VIEWER

AFTER WARMING UP, IDLE SPEED IS ABOVE SPECIFICATIONS WITHOUT LOAD (MIL WORKS OK, NO DTCS SET)

Diagnostic procedure

- Inspect the APP sensor.

Also check for

Intake air leaks

AFTER WARMING UP, IDLE SPEED IS BELOW SPECIFICATIONS WITHOUT LOAD (MIL WORKS OK, NO DTCS SET)

Diagnostic procedure

- Do the carbon accumulation check.

Also check for

Incorrect valve timing or clearance adjustment

COLD FAST IDLE TOO HIGH (MIL WORKS OK, NO DTCS SET)

Diagnostic procedure

- Check the idle speed.

Also check for

Intake air leaks

COLD FAST IDLE TOO LOW (MIL WORKS OK, NO DTCS SET)

Diagnostic procedure

- Check the idle speed.
- Do the carbon accumulation check.

Also check for

- Incorrect valve adjustment
- Intake air leaks

DIFFICULT TO REFUEL (MIL WORKS OK, NO DTCS SET)

Diagnostic procedure

- Check the fuel vent tube between the EVAP canister and the fuel tank unit.
- Check the fuel tank vapor recirculation tube between the fuel fill pipe and the fuel tank unit.
- Insert the emergency fuel funnel into the fuel filler neck, then check the operation of the shut-off valve flap.

NOTE: The emergency fuel funnel is stored in the trunk tool box.

- Replace the fuel tank .

Also check for

- Malfunctioning gas station filling nozzle
- Faulty fuel tank vapor control valve

ENGINE IS HARD TO START (MIL WORKS OK, NO DTCS SET)

Diagnostic procedure

- Test the 12 volt battery .
- Check the fuel pressure .
- Do the carbon accumulation check.

Also check for

- Low compression
- Intake air leaks
- Fuel contamination
- Weak spark

ENGINE STALLS (MIL WORKS OK, NO DTCS SET)

Diagnostic procedure

- Check the fuel pressure .
- Check the idle speed.

Also check for

- Intake air leaks
- Faulty harness and sensor connections
- Fuel contamination

ENGINE STARTS BUT STALLS IMMEDIATELY (MIL WORKS OK, NO DTCS SET, IMMOBILIZER INDICATOR STAYS ON OR FLASHES)

Diagnostic procedure

- Check the keyless access system .

Also check for

- Low compression
- Intake air leaks
- Weak spark
- Low fuel pressure

ENGINE WILL NOT START (MIL WORKS OK, NO DTCS SET, GENERATOR MOTOR WORKS OK)

Diagnostic procedure

- Test the 12 volt battery .

- Check the fuel pressure .
- Troubleshoot the fuel pump circuit .

Also check for

- Low compression
- No ignition spark
- Exhaust restriction
- Intake air leaks
- Locked up engine
- Broken cam chain
- Fuel contamination

ENGINE WILL NOT START, AND HDS DOES NOT COMMUNICATE WITH THE PCM (MIL COMES ON AND STAYS ON, NO DTCS SET)

Diagnostic procedure

- Do the DLC circuit troubleshooting .
- Do the PCM Power and Ground Circuit Troubleshooting.

HDS DOES NOT COMMUNICATE WITH THE PCM OR THE VEHICLE

Diagnostic procedure

- Troubleshoot the DLC circuit .

Also check for

Correct HDS software

IDLE SPEED FLUCTUATES (MIL WORKS OK, NO DTCS SET)

Diagnostic procedure

- Check the idle speed.
- Check the fuel pressure .
- Do the carbon accumulation check.

Also check for

- Incorrect valve adjustment
- Intake air leaks

LOW POWER (MIL WORKS OK, NO DTCS SET)

Diagnostic procedure

- Check the fuel pressure .
- Check the air cleaner element .

Also check for

- Low compression
- Incorrect camshaft timing
- Incorrect engine oil level

- Exhaust restriction
- Fuel contamination

MIL COMES ON AND STAYS ON, OR NEVER COMES ON AT ALL, NO DTCS SET

Diagnostic procedure

- **Troubleshoot the MIL circuit**.

DESCRIPTION & OPERATION

EGR SYSTEM DESCRIPTION

The exhaust gas recirculation (EGR) system lowers the combustion temperature and reduces oxides of nitrogen (NOx) emissions. Routing the exhaust gas through the EGR pipe helps to prevent carbon deposits from forming in the intake manifold and the throttle body. The powertrain control module (PCM) memory includes the ideal EGR valve position for varying operating conditions. The EGR valve position sensor detects the amount of EGR valve lift and sends it to the PCM. The PCM then compares it with the ideal lift in its memory (based on signals sent from other sensors). If there is any difference between the two, the PCM cuts power to the EGR valve.

For locations of each component on vehicle, refer to Component Location Index .

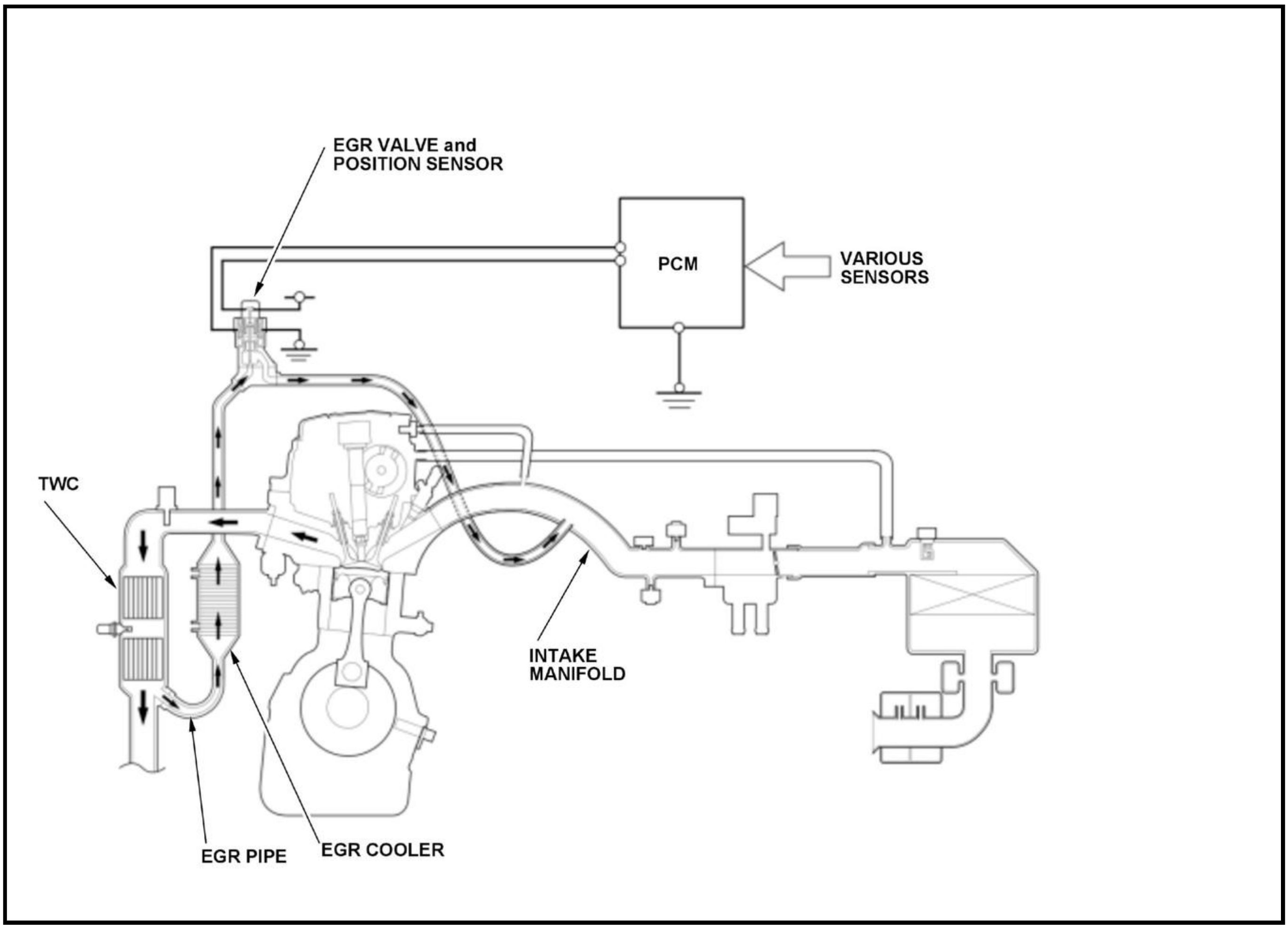

Exhaust Gas Recirculation (EGR) Cooler

A water-cooled type EGR cooler is installed between the three way catalytic converter (TWC) and the EGR valve to lower the exhaust gas temperature pass through the EGR valve more.

Because it has effects on to prevent knocking, to reduce pumping loss, and to reduce oxides of nitrogen (NOx) emissions more efficient.

Exhaust Gas Recirculation Flow

The exhaust gas downstream of the TWC flows through the EGR pipe, the EGR cooler, the passage in the cylinder head, and the EGR valve.

EVAP SYSTEM DESCRIPTION

For locations of each component on vehicle, refer to Component Location Index

Overview

The evaporative emission (EVAP) controls minimize the amount of fuel vapor escaping to the atmosphere. Vapor from the fuel tank is temporarily stored in the EVAP canister until it can be purged from the canister into the engine and burned.

The EVAP canister is purged by drawing fresh air through it and into a port on the intake manifold.

The purging vacuum is controlled by the EVAP canister purge valve(s).

With EVAP two way valve: When vapor pressure in the fuel tank is higher than the set value of the EVAP two way valve, the valve opens and regulates the flow of fuel vapor to the EVAP canister.

Operation

When fuel tank pressure increases because of heat and fuel vapor generation, evaporated fuel vapor is sent to the evaporative emission (EVAP) canister.

When the engine coolant is hot enough, the powertrain control module (PCM) opens the EVAP canister purge valves to draw the stored fuel vapor in the EVAP canister into the intake manifold to be burned.

To regulate the amount of fuel vapor drawn into the engine, the PCM varies the EVAP canister purge valves opening using duty cycle control.

The PCM commands one purge valve open, once the duty cycle is at 100%, the second purge valve will be commanded open to increase the flow of the fuel vapor.

When the outside air or other factor cools the fuel tank inside, the tank pressure decreases.

The canister change over valve in the EVAP leak check module is normally open when not energized, and allows outside air to flow in and out of the EVAP canister.

The PCM uses the EVAP leak check module to check for leaks in the system.

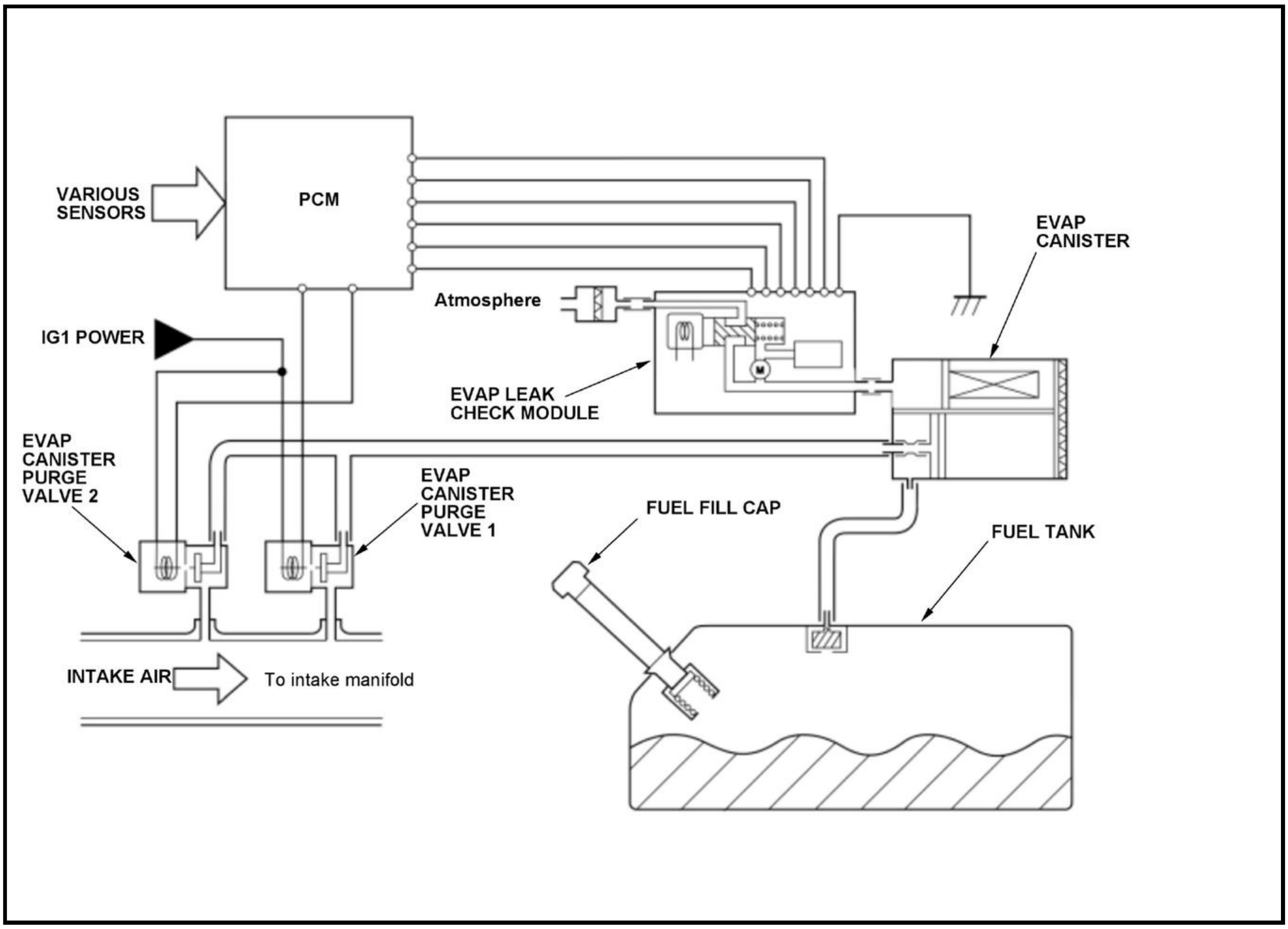
VARIOUS SENSORS
PCM
IG1 POWER
Atmosphere
EVAP CANISTER
EVAP LEAK CHECK MODULE
EVAP CANISTER PURGE VALVE 2
EVAP CANISTER PURGE VALVE 1
FUEL FILL CAP
FUEL TANK
INTAKE AIR
To intake manifold

EVAP Leak Check Module

The EVAP leak check module (ELCM; mounted on a bracket to the side of the EVAP canister) is a small vacuum pump used to check the leakage of the EVAP system to create a vacuum in the system. The EVAP leak check module pressure sensor, the canister change over valve, and the EVAP leak check module vacuum pump are inside the ELCM.

The canister change over valve is normally open when not energized. When open the valve allows air to flow in and out of the EVAP canister. When energized the valve seals the EVAP canister side of the system from the atmosphere.

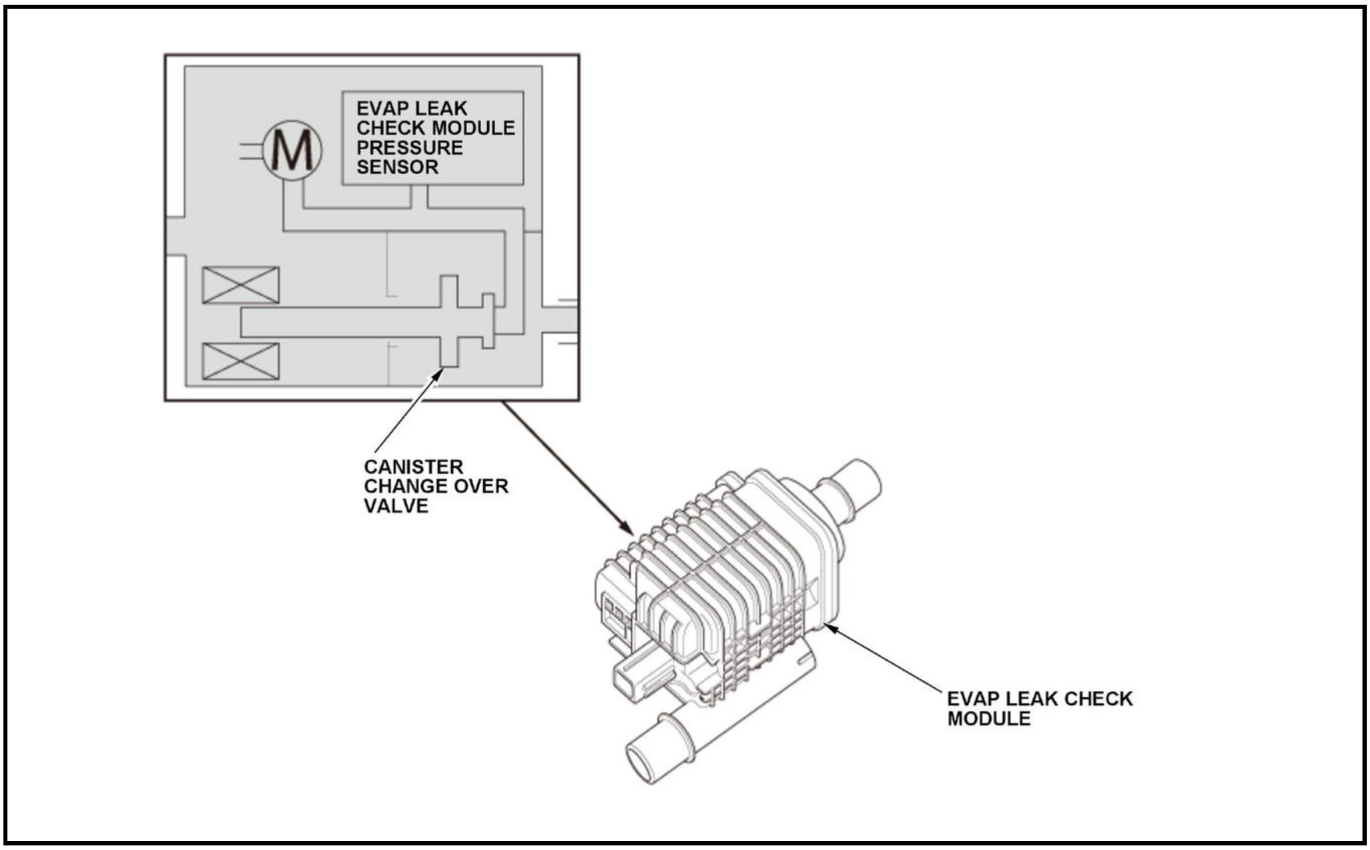
EVAP LEAK CHECK MODULE PRESSURE SENSOR
M
CANISTER CHANGE OVER VALVE
EVAP LEAK CHECK MODULE

ELECTRONIC THROTTLE CONTROL SYSTEM DESCRIPTION

For locations of each component on vehicle, refer to Component Location Index

Overview

The electronic throttle control system (ETCS) opens and closes the throttle valve by electronic control. This system consists of a throttle actuator built into the throttle body, throttle valve and throttle position (TP) sensor A/B, accelerator pedal position (APP) sensor A/B, ETCS driver built into the powertrain control module (PCM).

ETCS is a system that opens and closes the throttle valve electronically, it has various functions such as:

- Idle Control Function
- Accelerator Control Function
- Fail-Safe Function
- Relationship Action with Other Systems

Control

When the accelerator pedal is operated, APP sensors are driven and the accelerator pedal position is detected. The accelerator pedal position is delivered to the PCM, and the PCM drives the throttle actuator in the throttle body based on the delivered throttle pedal position to open or close the throttle valve.

Throttle position is detected by the TP sensors in the throttle body and delivered to the PCM.

The PCM drives the throttle actuator to control the throttle position during idling, during various system control, and when necessary, as well as based on the signals from the APP sensors.

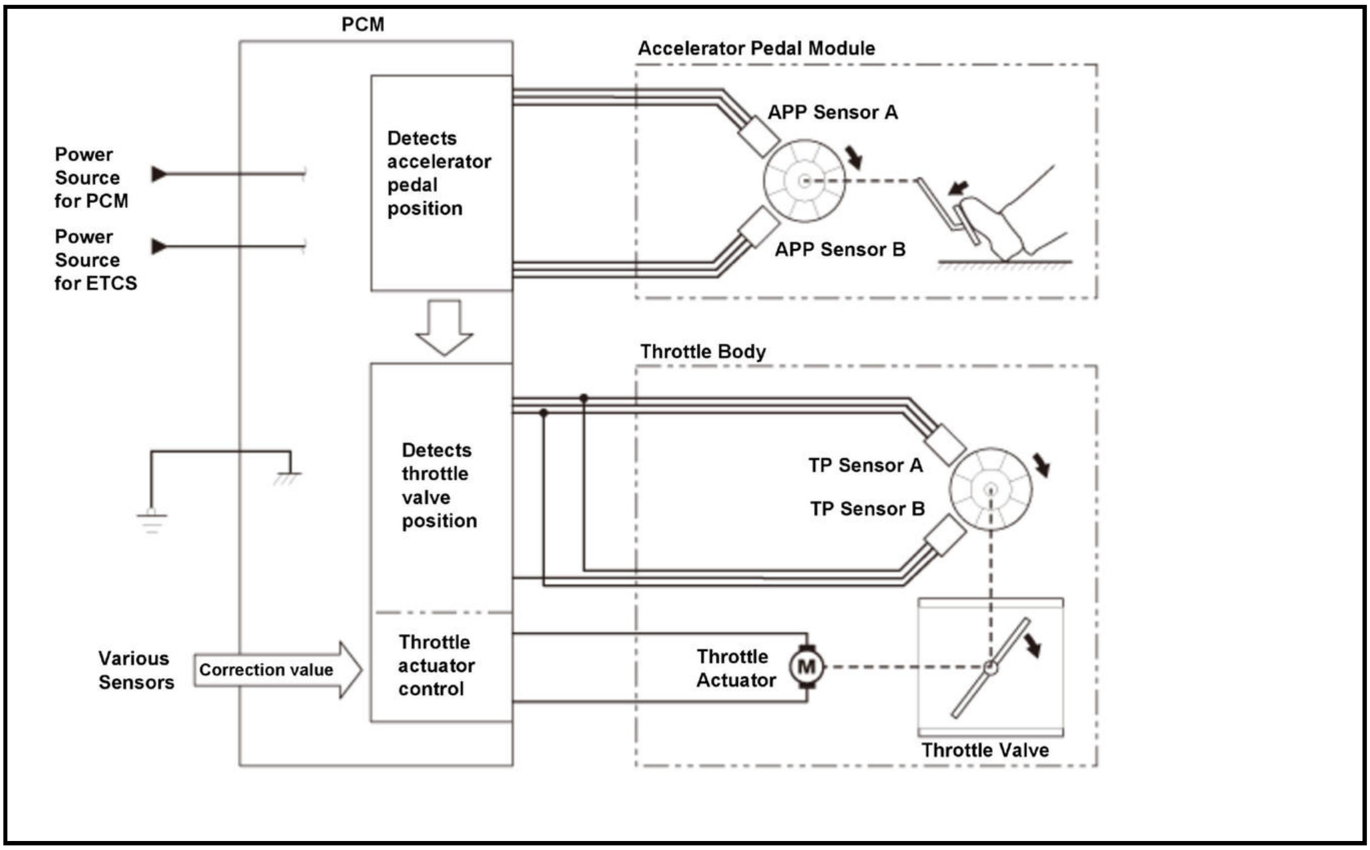
PCM
Power Source for PCM
Power Source for ETCS
Detects accelerator pedal position
Accelerator Pedal Module
APP Sensor A
APP Sensor B
Throttle Body
Detects throttle valve position
TP Sensor A
TP Sensor B
Various Sensors
Correction value
Throttle actuator control
Throttle Actuator
M
Throttle Valve

Change of ETCS system control

The ECON ON mode softens throttle valve control to reduce fuel consumption when the accelerator pedal is roughly depressed. Also, throttle opening becomes slow in comparison with the ECON OFF mode. However, if the accelerator pedal is depressed more than a certain level, control automatically becomes equivalent to the ECON OFF mode in order to ensure the acceleration.

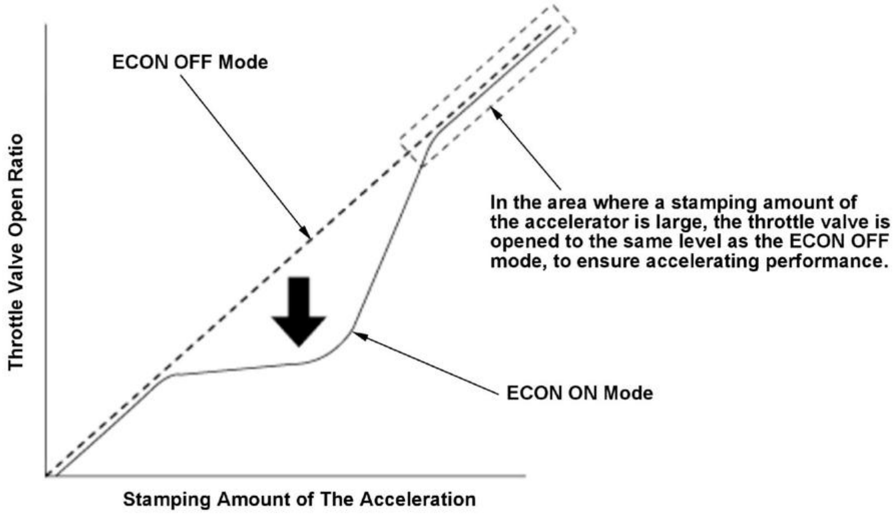

PCV SYSTEM DESCRIPTION

Some of the unburned gases in the combustion chamber will leak past the gap between the pistons and cylinders into the crankcase. The blow-by gases that include the unburned gases are returned through the positive crankcase ventilation (PCV) valve and are burned. This prevents the blow-by gases from flowing into the atmosphere.

For locations of each component on vehicle, refer to Component Location Index .

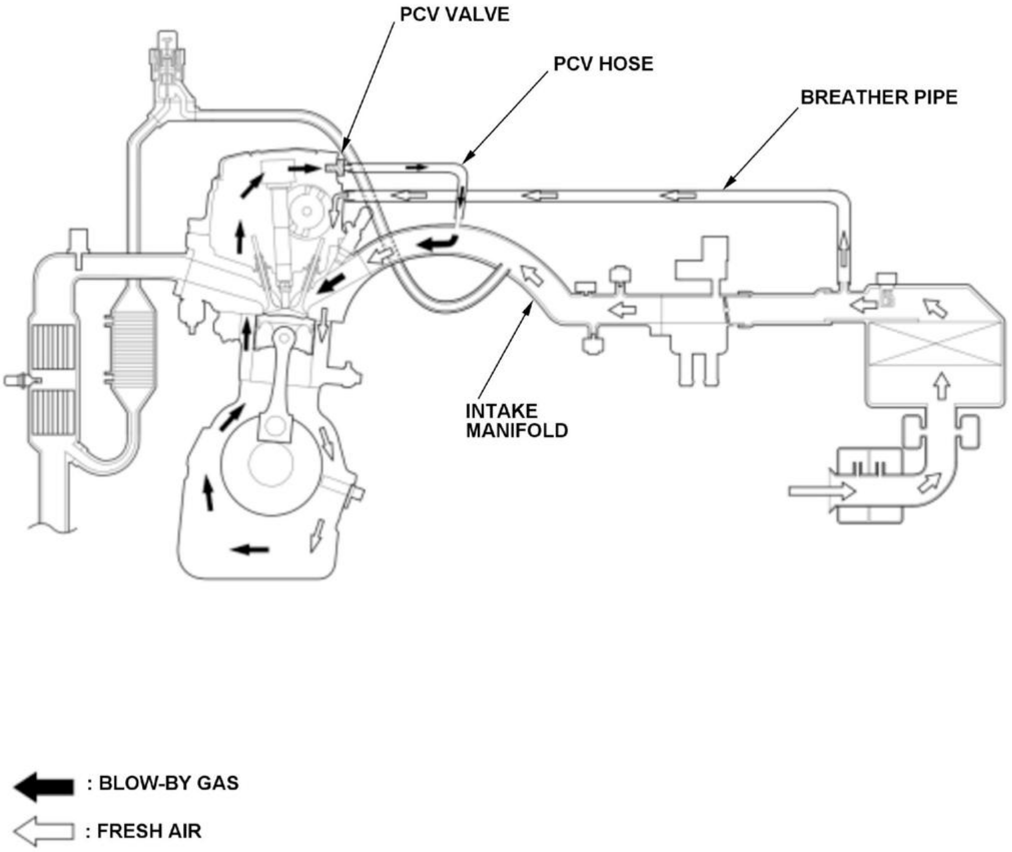
PCV VALVE
PCV HOSE
BREATHER PIPE
INTAKE MANIFOLD
: BLOW-BY GAS
: FRESH AIR

PGM-FI SYSTEM DESCRIPTION

For locations of each component on vehicle, refer to Component Location Index

Components

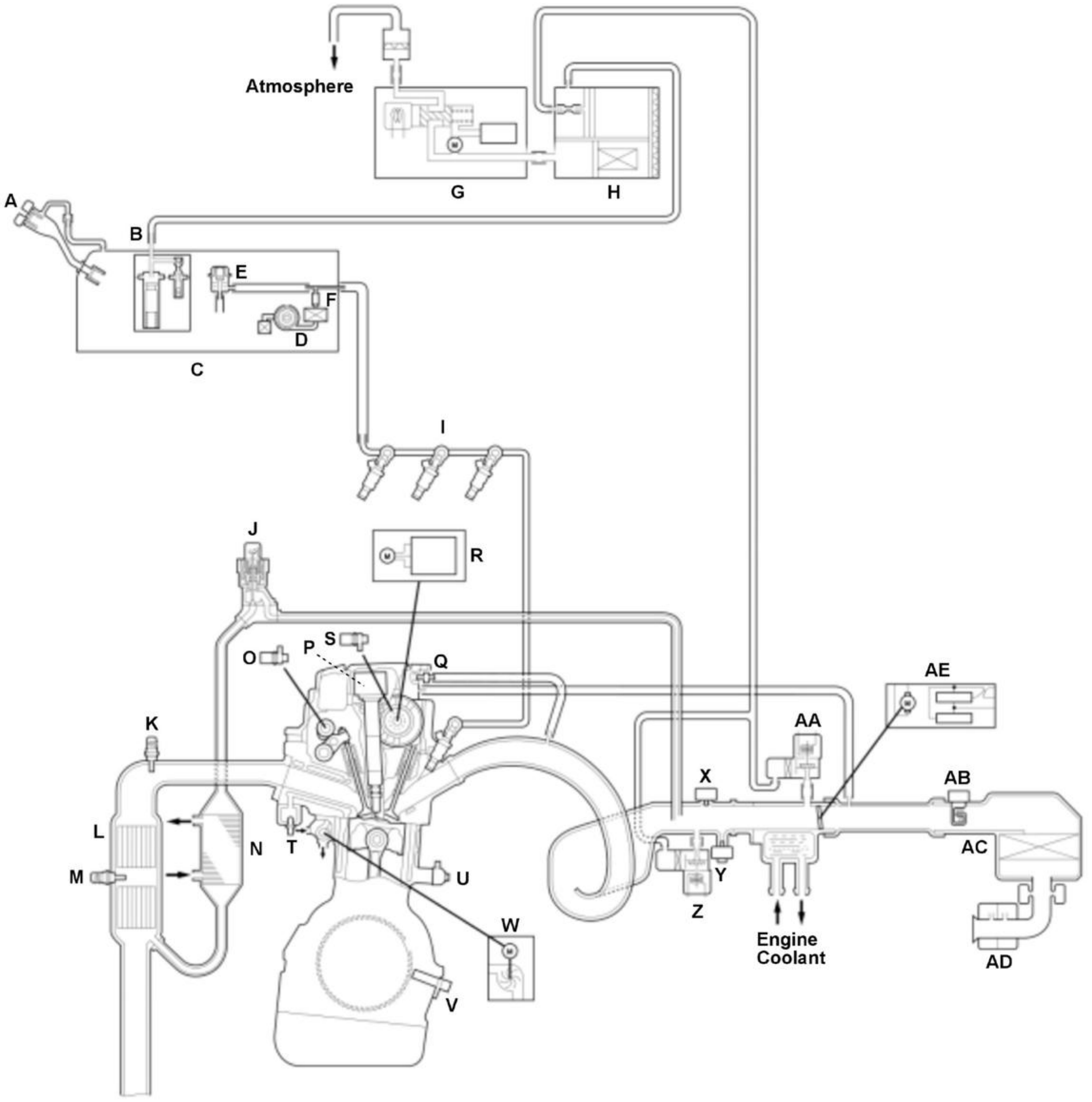
Atmosphere
G
H
A
B
E
F
D
C
I
J
R
O
P
S
Q
K
L
M
N
T
U
W
V
X
AE
AA
AB
AC
Y
Z
Engine
Coolant
AD

A	FUEL FILL CAP	Q	PCV VALVE
B	FUEL TANK VAPOR CONTROL VALVE	R	ELECTRIC VTC MOTOR
C	FUEL TANK	S	CMP SENSOR A
D	FUEL PUMP	T	ECT SENSOR 1
E	FUEL PRESSURE REGULATOR	U	KNOCK SENSOR
F	FUEL FILTER	V	CKP SENSOR

G	EVAP LEAK CHECK MODULE	W	ELECTRIC ENGINE COOLANT PUMP
H	EVAP CANISTER	X	IAT SENSOR 2
I	FUEL INJECTOR	Y	MAP SENSOR
J	EGR VALVE	Z	EVAP CANISTER PURGE VALVE 1
K	A/F SENSOR (SENSOR 1)	AA	EVAP CANISTER PURGE VALVE 2
L	CATALYTIC CONVERTER	AB	MAF SENSOR/IAT SENSOR 1
M	SECONDARY HO2S	AC	AIR CLEANER
N	EGR COOLER	AD	RESONATOR

O	CMP SENSOR B	AE	THROTTLE BODY
P	IGNITION COIL	B	B

Electronic Control

The powertrain control module (PCM) consists of a CPU memory (storage unit) and inputs/outputs that control the fuel injection, injection timing, and electronic throttle control system (ETCS).

Fail-Safe Function

When a malfunction occurs in the signal from a sensor or from another control unit, the PCM ignores that signal and substitutes a pre-programmed value that allows the engine to continue running. This causes a Confirmed DTC to be stored and the MIL to come on.

Updated Function

The PCM has a rewritable ROM. The ROM can acquire the latest software version.

MIL Bulb Check

When the vehicle is turned to the ON mode, the PCM turns on the MIL via the F-CAN circuit for about 15 to 20 seconds to check the bulb condition.

Self Shut Down (SSD) Mode

After the vehicle is turned to the OFF (LOCK) mode, the PCM stays on for up to an hour. If a PCM connector is disconnected during this time, the PCM may be damaged. To cancel the SSD, jump the SCS line with the HDS after the vehicle is turned to the OFF (LOCK) mode.

Two Drive Cycle Detection Method

The DTCs are detected with the one or two driving cycle method in the PCM. Specific DTCs which are considered as a not intermittent failure apply the two driving cycle method.

When a malfunction occurs in the signal from a sensor or from another control unit in the first drive cycle, the PCM stores a pending DTC. The MIL does not come on at this time. If the failure continues in the second drive cycle, the PCM stores a confirmed DTC and turns on the MIL.

Injection Control

Fuel injection controls include fuel injection amount control, fuel cut control, and fuel pump control. Adaptive PGM-FI (programmed-fuel injection) technology enables accurate fuel controls, which contributes to increasing engine power and decreasing fuel consumption.

Air fuel ratio control is part of fuel injection control and comprises the stops of:

- Calculating basic injection amount from intake air flow amount and engine speed
- Calculating air fuel ratio correction value from the oxygen density in the exhaust gas and reflecting the calculated values to the injection amount

Air fuel ratio control stops feedback under the following conditions in order to maintain operational performance and catalytic protection.

- When starting the engine or during fuel increase after the engine is started
- While the engine coolant is cold
- During fuel increase under high load
- During fuel increase at high engine speed
- During fuel cut-off at deceleration

Fuel Injection

The fuel injection duration is determined by adding correction values to a basic injection duration.

The powertrain control module (PCM) controls the amount of fuel injection by the length of time the injector is energized.

For locations of each component on vehicle, refer to Component Location Index

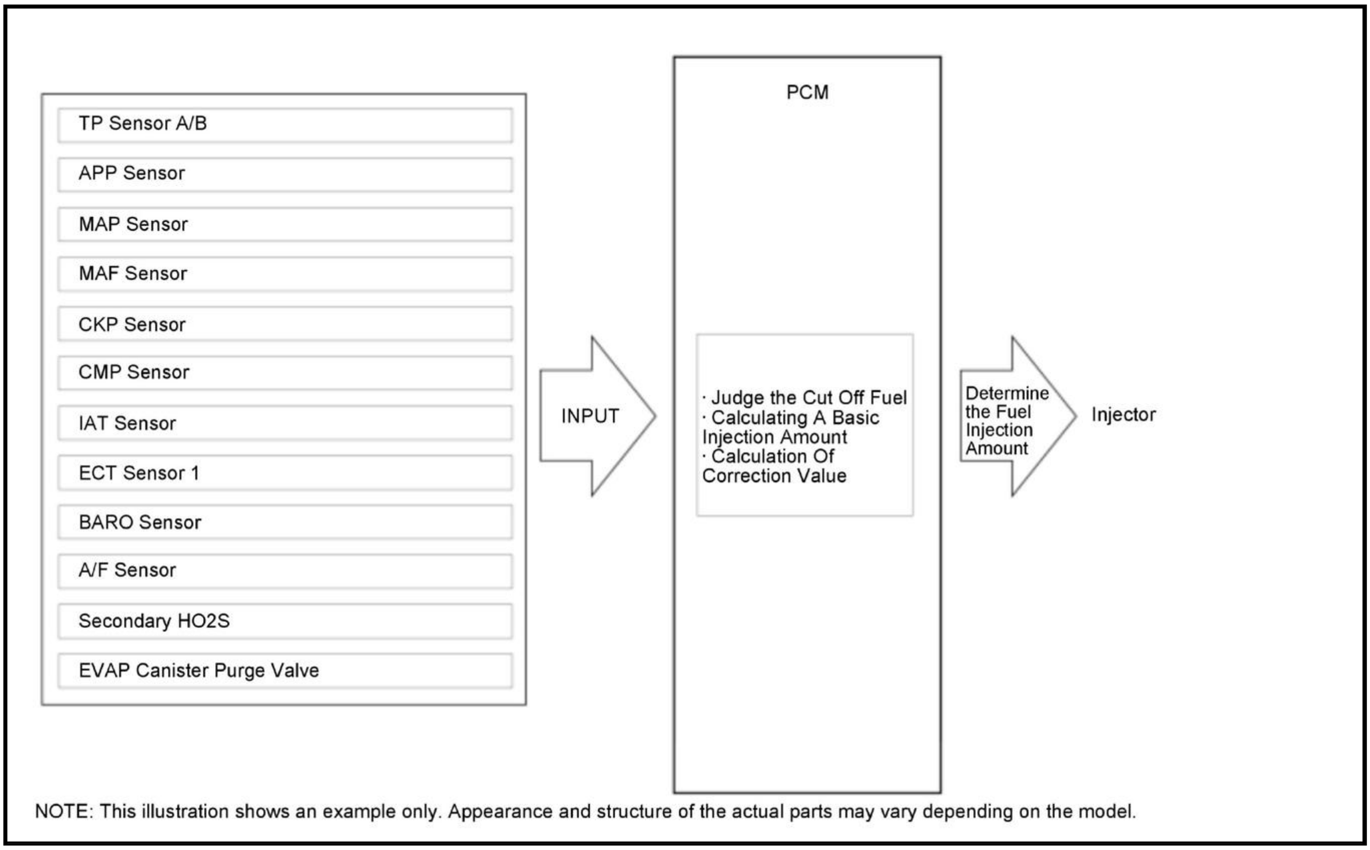
TP Sensor A/B
APP Sensor
MAP Sensor
MAF Sensor
CKP Sensor
CMP Sensor
IAT Sensor
ECT Sensor 1
BARO Sensor
A/F Sensor
Secondary HO2S
EVAP Canister Purge Valve
INPUT
PCM
· Judge the Cut Off Fuel
· Calculating A Basic Injection Amount
· Calculation Of Correction Value
Determine the Fuel Injection Amount
Injector

NOTE: This illustration shows an example only. Appearance and structure of the actual parts may vary depending on the model.

Fuel Injection Timing

The fuel injection timing is determined by the PCM, which calculates the injection time for each cylinder based on the signals from the crankshaft position (CKP) sensor and the camshaft position (CMP) sensor. The PCM then controls the time to energize the injector.

Ignition Timing Control

The powertrain control module (PCM) contains the memory for basic ignition timing at various engine speeds and manifold absolute pressures. It also adjusts the ignition timing according to engine coolant temperature and intake air temperature.

For locations of each component on vehicle, refer to Component Location Index

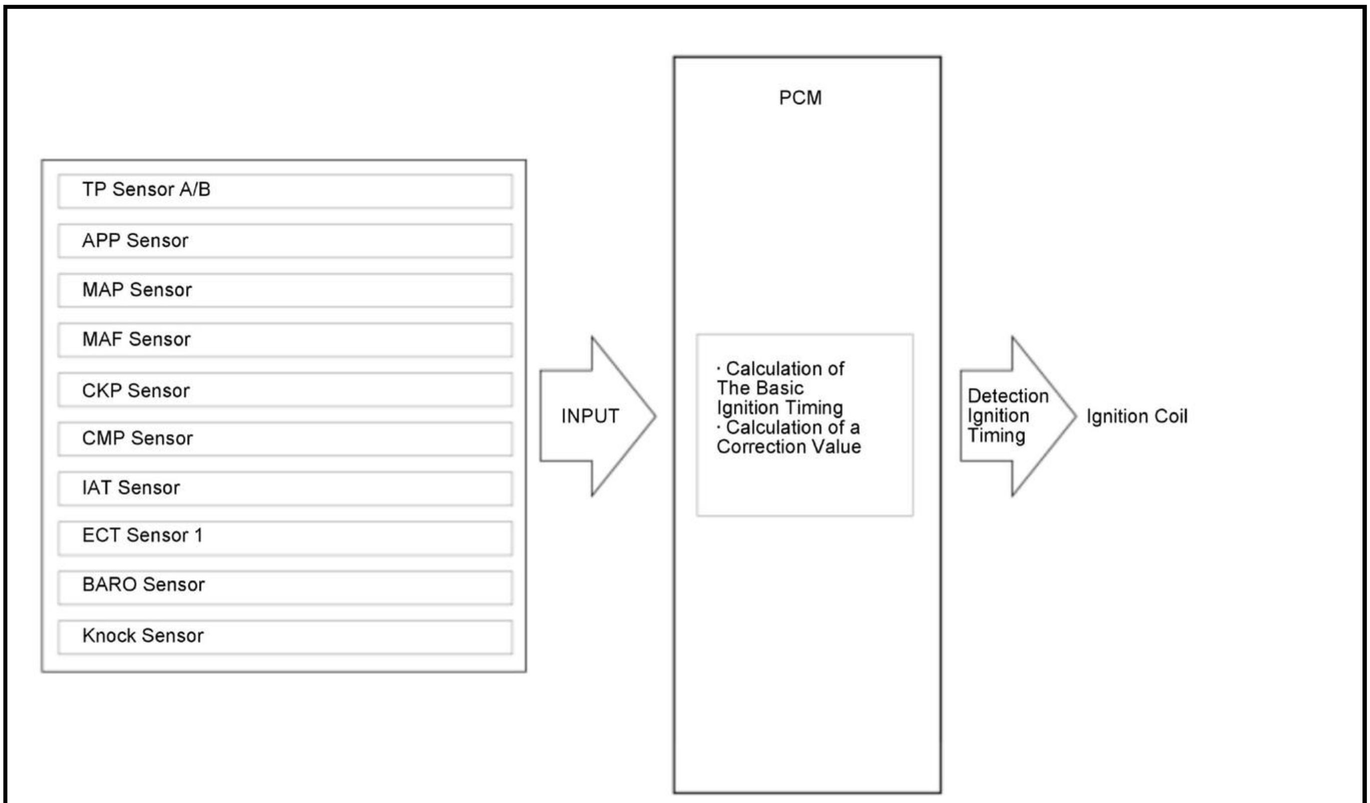
PCM
TP Sensor A/B
APP Sensor
MAP Sensor
MAF Sensor
CKP Sensor
CMP Sensor
IAT Sensor
ECT Sensor 1
BARO Sensor
Knock Sensor
INPUT
· Calculation of The Basic Ignition Timing
· Calculation of a Correction Value
Detection Ignition Timing
Ignition Coil

NOTE: This illustration shows an example only. Appearance and structure of the actual parts may vary depending on the model.

Fuel Cut-off Control

After warming up, during deceleration with the throttle valve slightly opened from the fully closed position, the PCM stops the fuel injection when the engine speed is over the specified value to improve fuel efficiency.

Fuel cut-off at high engine speed

To prevent the engine from damage, the PCM stops the fuel injection when the engine speed is in the limited area (red zone). PCM stops fuel injection while vehicle is driven and while at a stop.

Fuel cutoff at high engine speed	6500 RPM

PGM-FI SYSTEM DESCRIPTION - COMPONENTS

Air Fuel Ratio (A/F) Sensor (Sensor 1)

Air fuel ratio control performs fuel injection control based on the oxygen density detected in exhaust gas in order to bring the intake mixture in the vicinity of a target air fuel ratio.

This high-precision air fuel ratio control is achieved by detecting a correction value with an A/F sensor (Sensor 1) and then applying further correction with a secondary heated oxygen sensor (secondary HO2S) (Sensor 2).

The sensor element and the heater inside the A/F sensor (Sensor 1) have a layered construction of a plate-shaped zirconia element whose inside and outside are coated with platinum and a built-in platinum heater. A ceramic coating diffusion layer on the platinum electrode on the outside of the element creates an atmospheric chamber between the platinum electrode inside the element and the heater.

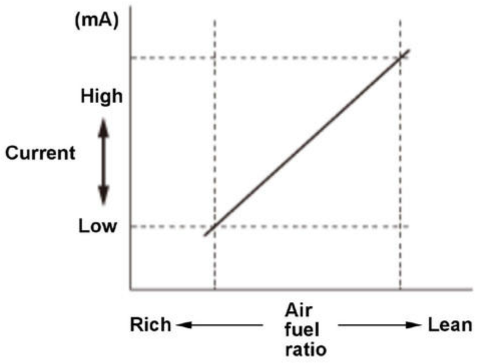

Secondary HO2S (Sensor 2)

It detects the oxygen density in the exhaust gas passing through the catalyst and outputs it to the powertrain control module (PCM) to enable the high-precision air fuel ratio control, which cannot be achieved only with an A/F sensor (Sensor 1).

Inside secondary HO2S (Sensor 2) is a test tube shaped zirconia element whose inside and outside surfaces are coated with platinum. The inside surface is exposed to the atmosphere, while the outside surface is within the exhaust gas.

A ceramic heater is equipped inside the element in order to shorten sensor reaction time and to enable output that is constantly stable.

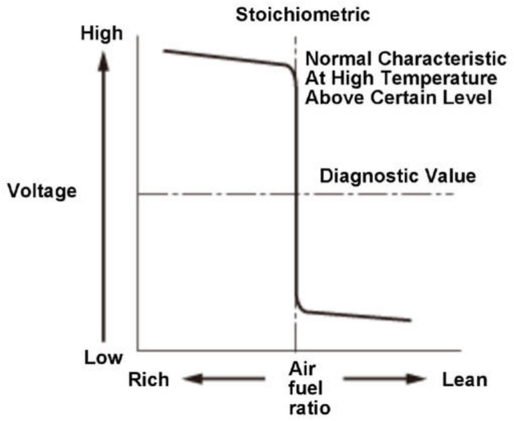

CKP Sensor

Each of the teeth on the CKP pulse plate passes over it, the CKP sensor pulse signal is delivered to the PCM

CMP Sensor

Every time one of the protrusions of the CMP pulse plate passes over it, the camshaft position (CMP) sensor pulse signal is delivered.

MAF Sensor/IAT Sensor 1

The MAF sensor/IAT sensor 1 is attached to the air cleaner to detect the intake air amount and the intake air temperature.

PGM-FI SYSTEM DESCRIPTION - MAINTENANCE MODE

Outline

The maintenance mode enables the vehicle to start and run the engine to perform various tests, inspections, learning procedures and various adjustments.

When the vehicle is switched to the maintenance mode, some functions are stopped, and the multi-information display (MID) and related indicators in the gauge control module come on to indicate the activation of the maintenance mode.

The maintenance mode can be cancelled by turning the vehicle to the OFF (LOCK) mode.

SHUTTER GRILLE SYSTEM DESCRIPTION

For locations of each component on vehicle, refer to Component Location Index

The shutter grille system controls the heat dissipation by controlling the air flow to the engine room during engine warmed-up.

While vehicle running, improving the aerodynamic performance by controlling the opening and closing the shutter grille.

Improving the fuel efficiency by the improvement of the engine warm-up and the aerodynamic performances.

Operation

The powertrain control module (PCM) communicates with the shutter grille through the LIN communication line.

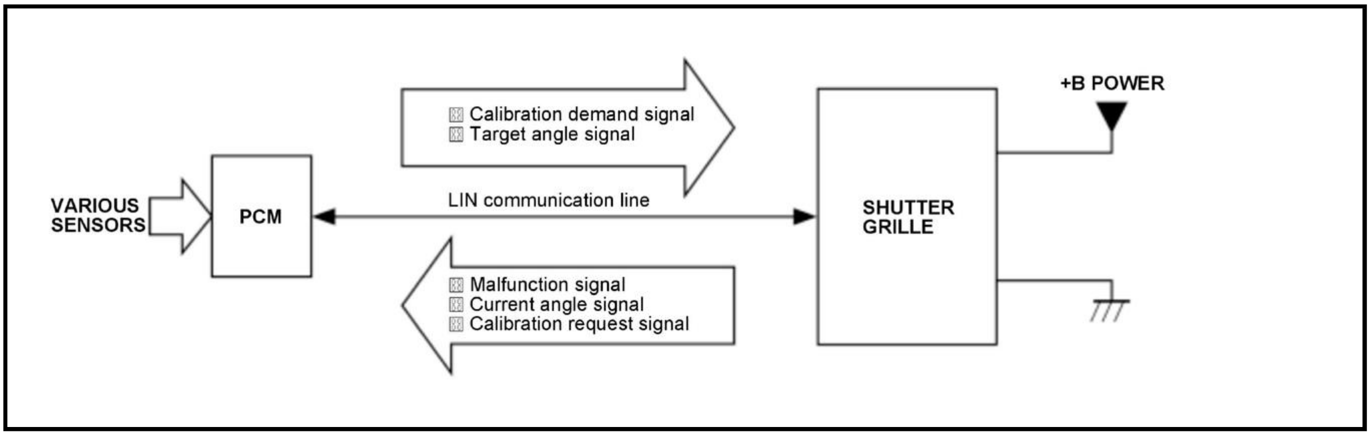
VARIOUS SENSORS
PCM
▨ Calibration demand signal
▨ Target angle signal
LIN communication line
▨ Malfunction signal
▨ Current angle signal
▨ Calibration request signal
SHUTTER GRILLE
+B POWER

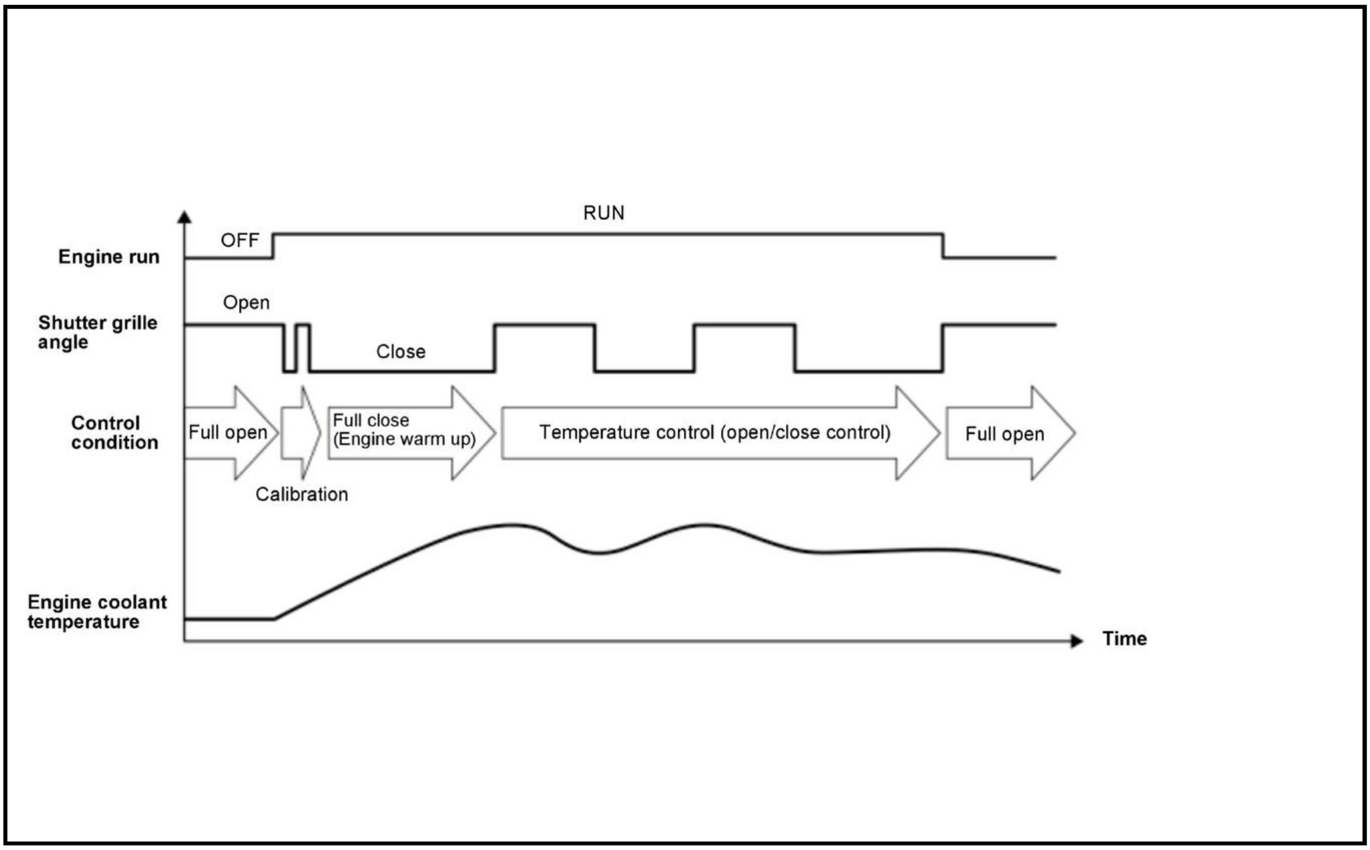

VTEC/VTC SYSTEM DESCRIPTION

VTEC

Overview

VTEC system changes the valve lift timing and lift height depending on the engine speed and load in order to optimize the fuel efficiency and the engine output.

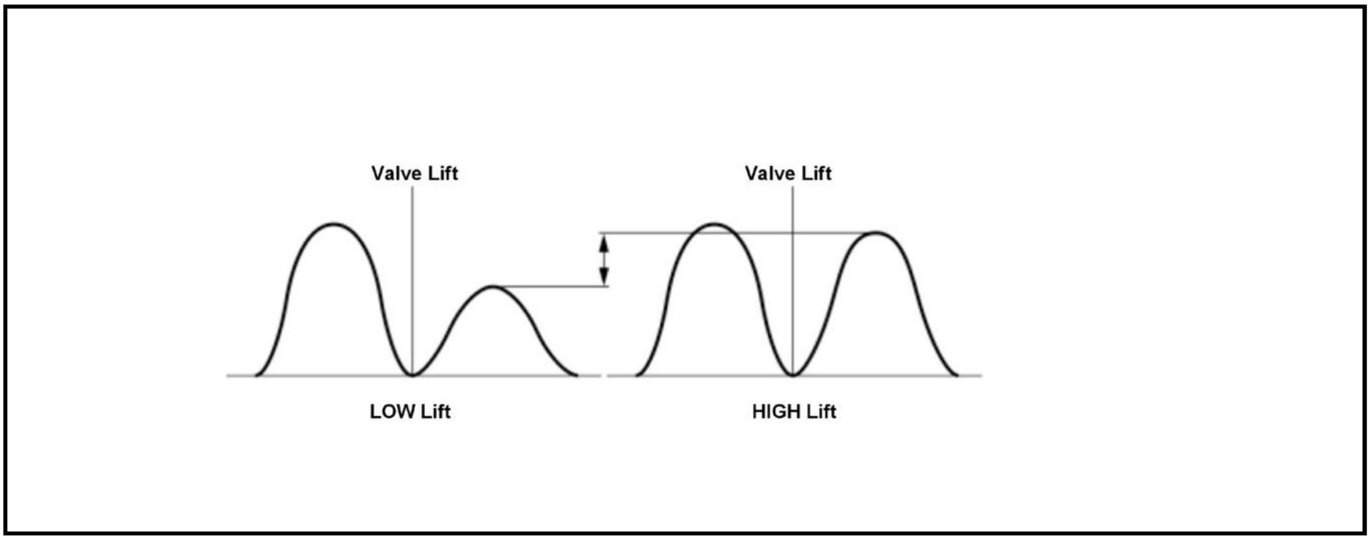

Construction

VTEC is composed of the VTEC camshaft, VTEC rocker arm, and rocker arm oil control valve.

Control

Based on the signals sent from the various sensors, the powertrain control module (PCM) determines the lift amount and controls ON/OFF of the rocker arm oil control solenoid.

The PCM generates and determines the control amount based on signals from various sensors to subject the rocker arm oil control solenoid to a feedback control.

For locations of each component on the vehicle, refer to the Component Location Index

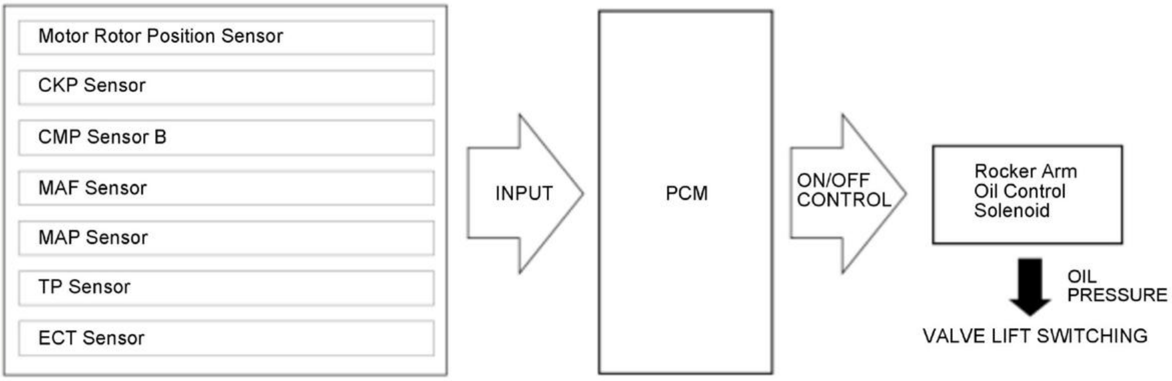
Motor Rotor Position Sensor
CKP Sensor
CMP Sensor B
MAF Sensor
MAP Sensor
TP Sensor
ECT Sensor
INPUT
PCM
ON/OFF CONTROL
Rocker Arm Oil Control Solenoid
OIL PRESSURE
VALVE LIFT SWITCHING

NOTE: This illustration shows an example only. Appearance and structure of the actual parts may vary depending on the model.

Operation

Rocker Arm Oil Control Solenoid

When the rocker arm oil control solenoid is turned off by the PCM, the spool valve is moved upward in the figure by the spring and the oil pressure from the oil pump enters the upper oil passage in the figure.

When the rocker arm oil control solenoid is turned on, the rocker arm oil control solenoid is moved upward in the figure and the spool valve is moved downward against the spring by the oil pressure, then the oil pressure from the oil pump enters the lower oil passage in the figure.

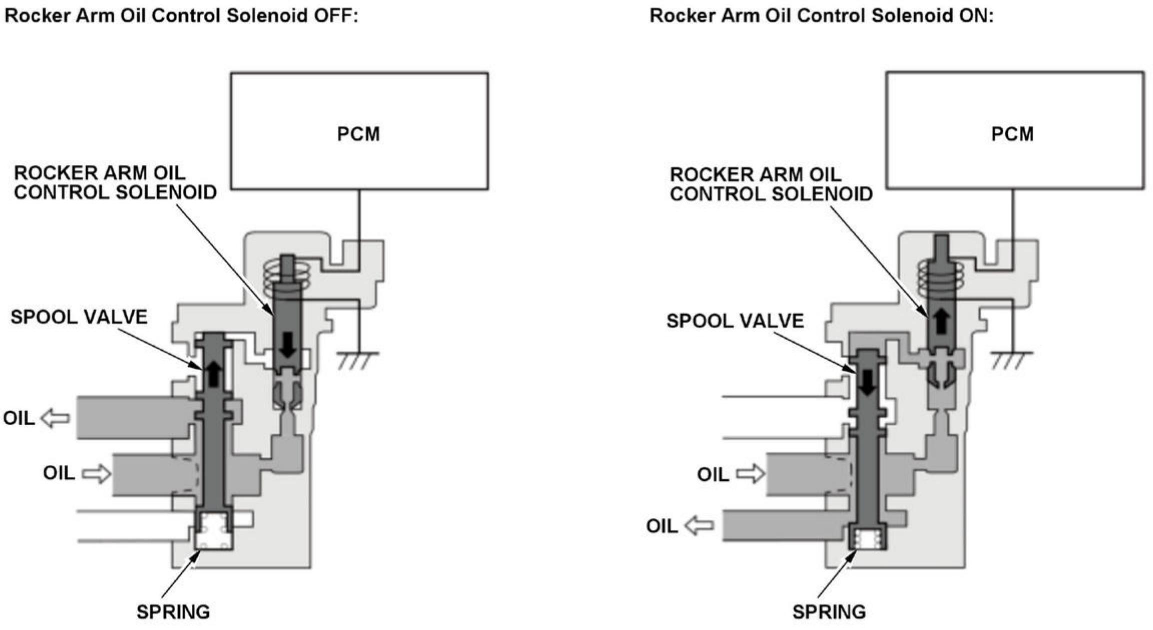
Rocker Arm Oil Control Solenoid OFF:

Rocker Arm Oil Control Solenoid ON:

PCM
ROCKER ARM OIL CONTROL SOLENOID
SPOOL VALVE
OIL
OIL
SPRING
PCM
ROCKER ARM OIL CONTROL SOLENOID
SPOOL VALVE
OIL
OIL
SPRING

The components pictured is an example and may not match your vehicle.

VTEC Rocker Arm (LOW Lift)

Oil pressure from the rocker arm oil control valve enters the primary rocker arm via the oil port. This oil pressure and the return spring tension push the stopper piston and the VTEC switching pistons to the left side in the figure. Thus the primary and the secondary rocker arms are separated from the middle rocker arm, and the primary and the secondary rocker arms are driven by the low lift cam.

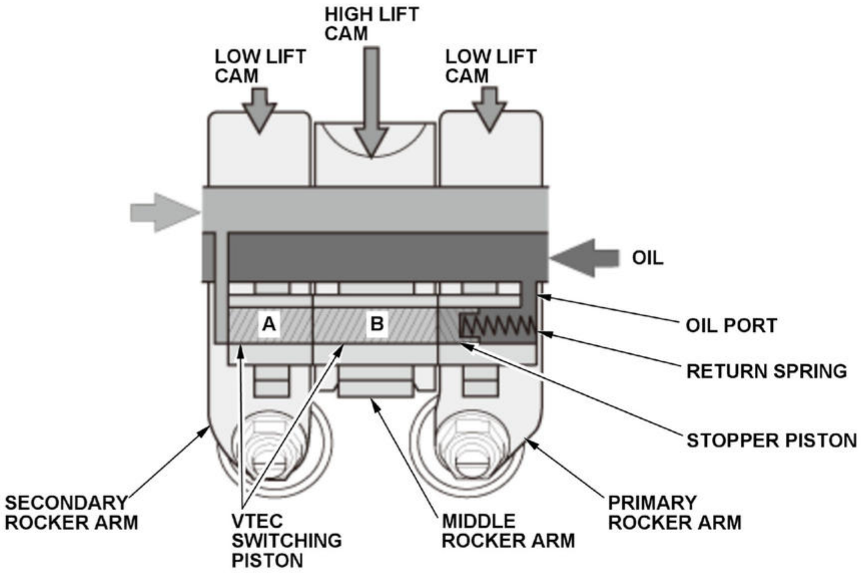
HIGH LIFT CAM
LOW LIFT CAM
LOW LIFT CAM
OIL
OIL PORT
A
B
RETURN SPRING
STOPPER PISTON
SECONDARY ROCKER ARM
VTEC SWITCHING PISTON
MIDDLE ROCKER ARM
PRIMARY ROCKER ARM

VTEC Rocker Arm (HIGH Lift)

Oil pressure from the rocker arm oil control valve enters the secondary rocker arm via the oil port. This oil pressure moves the VTEC switching piston in the secondary rocker arm to the right side in the figure. This causes the VTEC switching piston to slide into the middle rocker arm and the primary rocker arm, locking the secondary, middle, and the primary rocker arms. Thus all rocker arms are driven by the high lift cam.

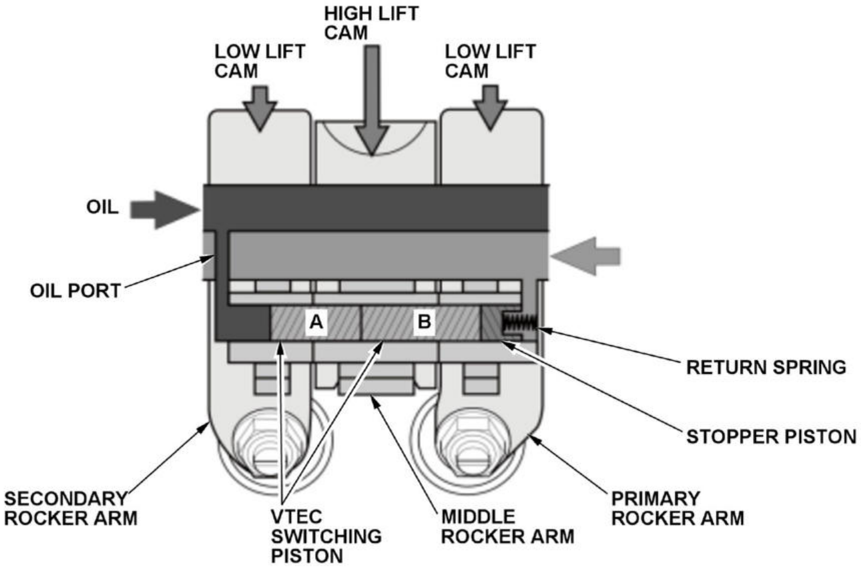
HIGH LIFT CAM
LOW LIFT CAM
LOW LIFT CAM
OIL
OIL PORT
A
B
RETURN SPRING
STOPPER PISTON
SECONDARY ROCKER ARM
VTEC SWITCHING PISTON
MIDDLE ROCKER ARM
PRIMARY ROCKER ARM

VTC

Overview

The VTC system changes intake valve timing continuously depending on the engine operating conditions.

The electrical VTC is adjusted through electric control and it enables the phase of the intake camshaft to have non-step advances or retards the valve timing.

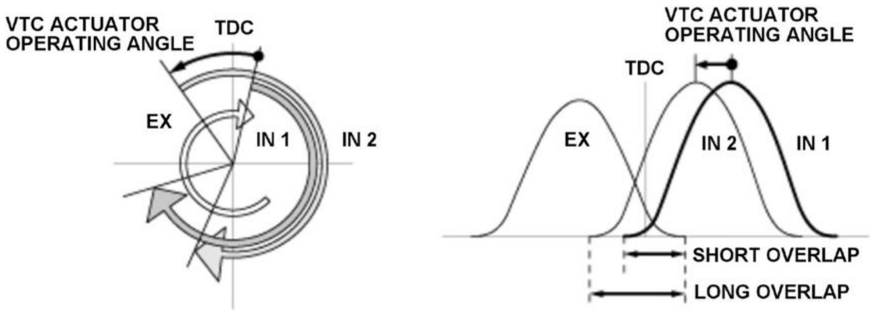
VTC ACTUATOR OPERATING ANGLE
TDC
EX
IN 1
IN 2
VTC ACTUATOR OPERATING ANGLE
TDC
EX
IN 2
IN 1
SHORT OVERLAP
LONG OVERLAP

Construction

The VTC consists of the electric VTC motor which is integrated with the control unit, and the VTC actuator. The electric VTC motor drives the VTC actuator, and advances or retards the valve timing by changing the phase.

The VTC motor in the VTC actuator has two gears that change phase. One is the gear assembly that is integrated with the timing sprocket, and the other is the gear that meshes with the planetary gear subassembly that is rotated by eccentricity, and the motor shaft rotated by the motor. The planetary gear subassembly is connected to the intake camshaft.

When the VTC actuator makes one rotation relative to the VTC motor, the planetary gear subassembly also moves by one gear tooth, and advances or retards the valve timing.

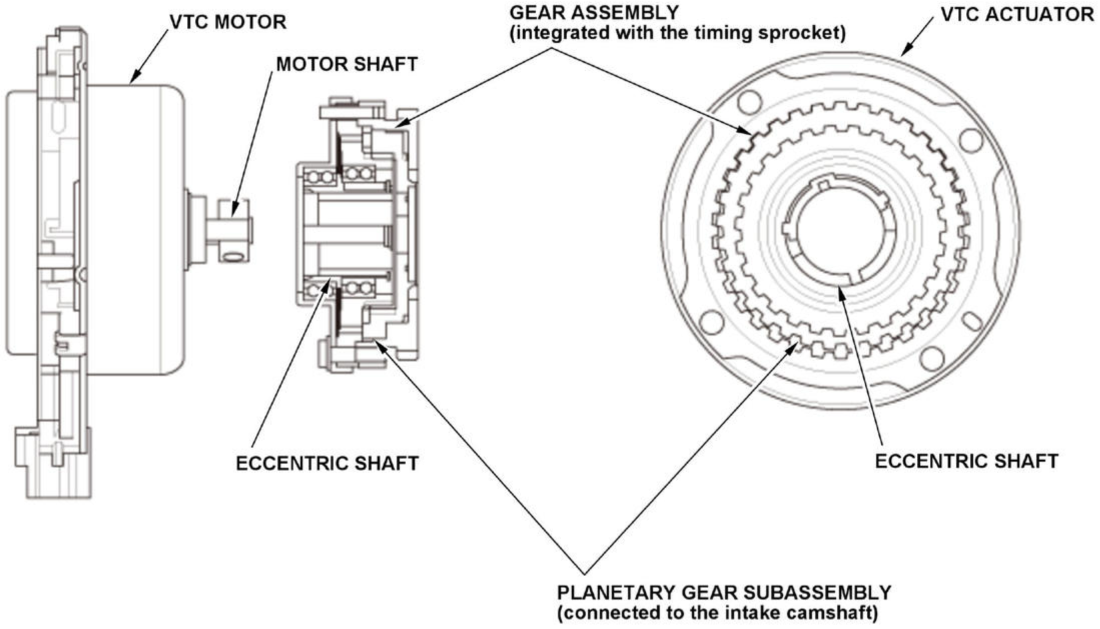
VTC MOTOR
MOTOR SHAFT
GEAR ASSEMBLY
(integrated with the timing sprocket)
VTC ACTUATOR
ECCENTRIC SHAFT
ECCENTRIC SHAFT
PLANETARY GEAR SUBASSEMBLY
(connected to the intake camshaft)

The components pictured is an example and may not match your vehicle.

Control

The electric VTC system diagram is as follows.

The motor is controlled through the command from the powertrain control module (PCM). The PCM performs advances or retards the valve timing based on the data from various sensors, and performs feedback-control based on the data from CMP sensor A.

For locations of each component on the vehicle, refer to the Component Location Index

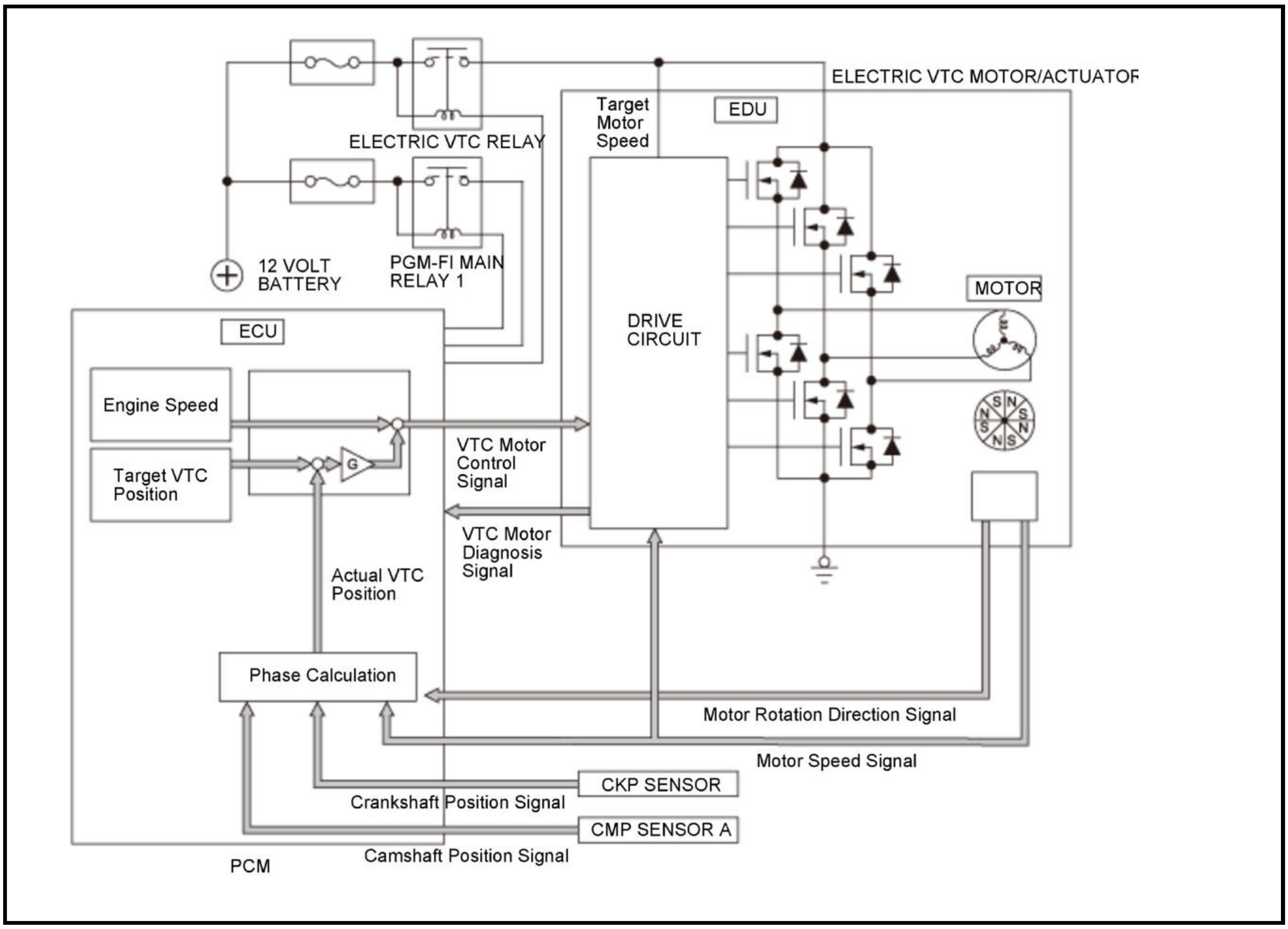
ELECTRIC VTC MOTOR/ACTUATOR
ELECTRIC VTC RELAY
Target Motor Speed
EDU
12 VOLT BATTERY
PGM-FI MAIN RELAY 1
ECU
DRIVE CIRCUIT
MOTOR
Engine Speed
Target VTC Position
G
VTC Motor Control Signal
VTC Motor Diagnosis Signal
Actual VTC Position
Phase Calculation
Motor Rotation Direction Signal
Motor Speed Signal
CKP SENSOR
Crankshaft Position Signal
CMP SENSOR A
Camshaft Position Signal
PCM
S N S N N S N S

Operation

This VTC system liaises with the VTEC system. The VTEC + VTC operation uses the long duration cam and the VTC phase control to achieve the fuel-efficient Atkinson cycle for the hybrid drive, which uses both the engine and motor. For cruising, the engine is used directly. At engine start and during acceleration when high torque and high power output are required, the operation is switched to that of the short duration cam.

REMOVAL, INSTALLATION & INSPECTION

CATALYTIC CONVERTER REMOVAL, INSTALLATION, AND INSPECTION

Removal and Installation

NOTE:

- Due to the high temperatures of the exhaust system, the exhaust nut, studs and bolts may seize preventing easy removal. If you encounter a seized condition, do the following.
-
    - Apply rust penetrant to the nut/stud or bolt.
    - Allow the penetrant to sit. The amount of time may vary.
    - Lightly tap the nut/stud or bolt with a hammer.
    - Slowly loosen the nut or bolt.
    - If the nut or bolt still will not loosed, repeat steps ① to ④.

Procedure

NOTE: **Numbered call-outs in figure pertain to list numbers in following procedure.**

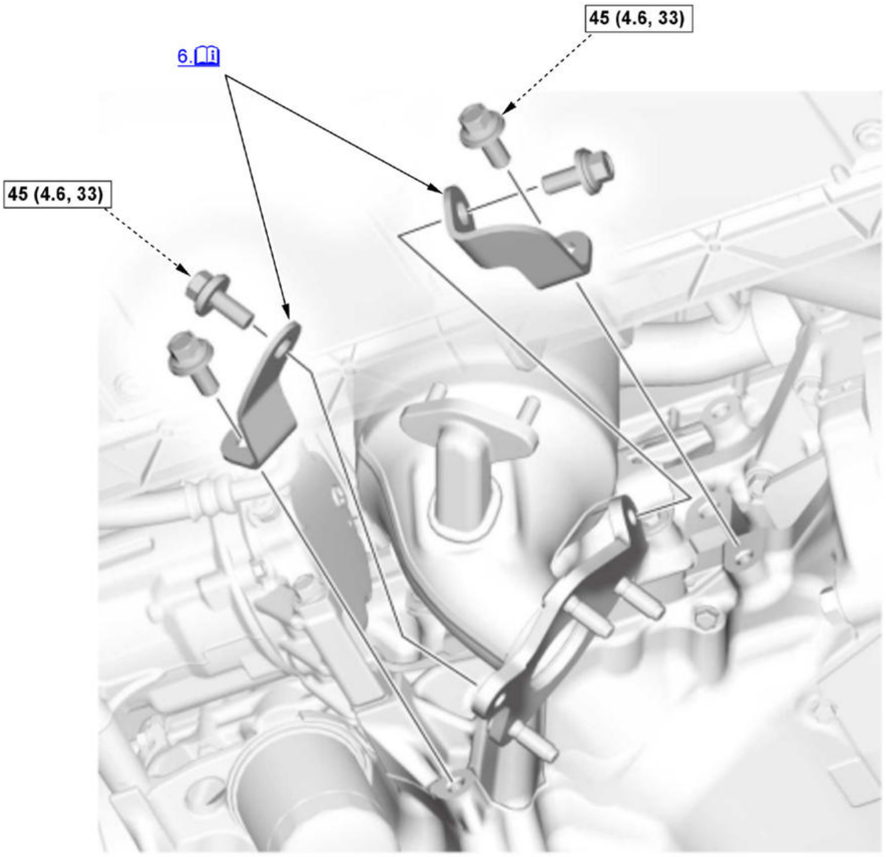

Fig. 1: Exploded View Of Catalytic Converter Replacement Components With Torque Specifications (1 Of 2)

Courtesy of HONDA, U.S.A., INC.

☐	Torque: N.m (kgf.m, lbf.ft)

NOTE: **Numbered call-outs in figure pertain to list numbers in following procedure.**

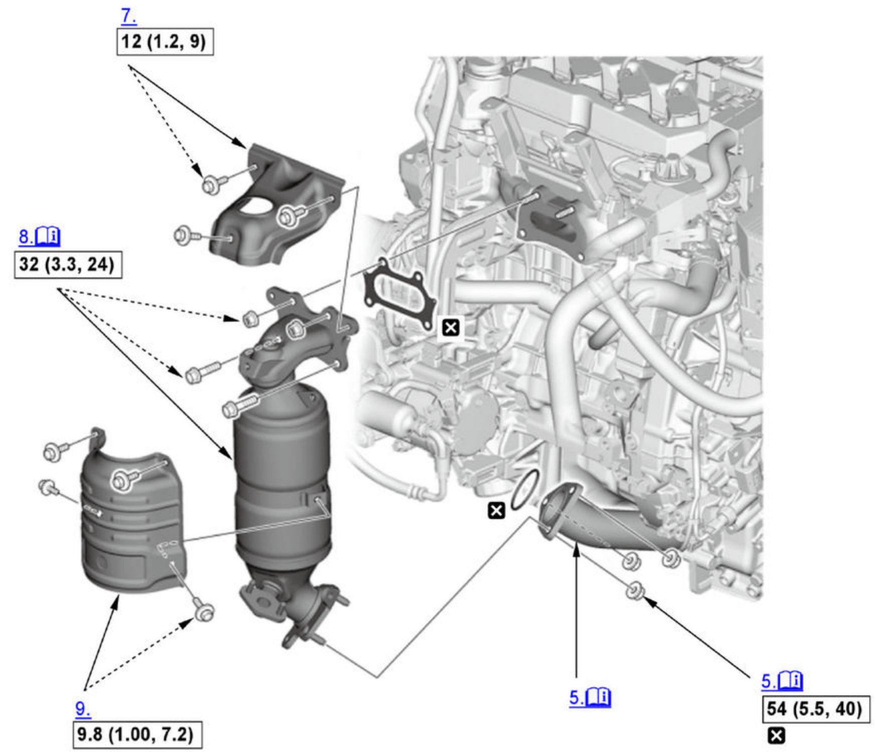

Fig. 2: Exploded View Of Catalytic Converter Replacement Components With Torque Specifications (2 Of 2)

Courtesy of HONDA, U.S.A., INC.

☐	Torque: N.m (kgf.m, lbf.ft)
☒	Replace

1. **Intake Air Resonator - Remove**
2. **A/F Sensor (Sensor 1) - Remove**
3. **Secondary HO2S (Sensor 2) - Remove**
4. **EGR Pipe - Remove**
5. Exhaust Pipe A - Remove

   NOTE: Remove the exhaust mounting rubber.

6. TWC Bracket - Remove

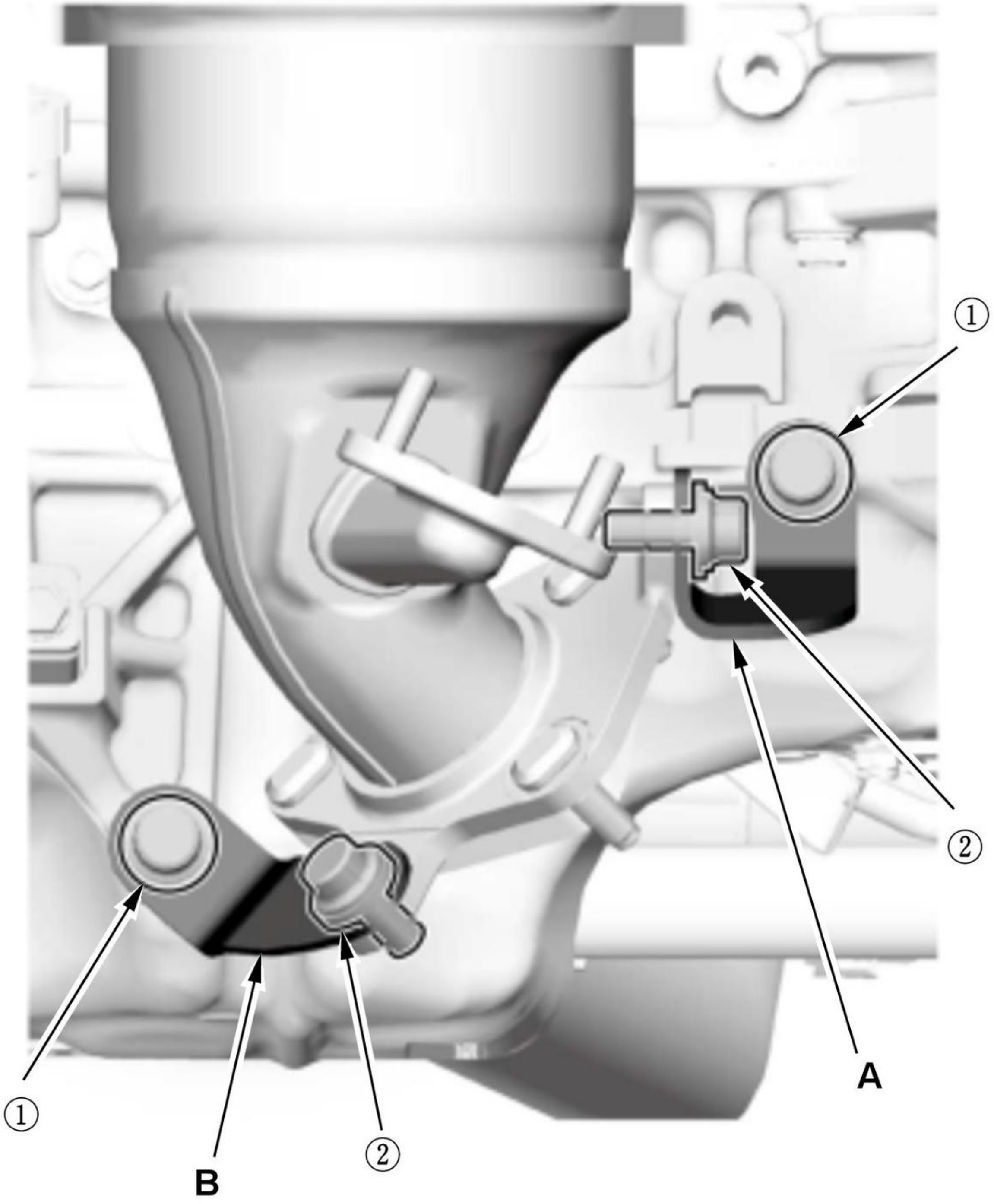

Fig. 3: TWC Brackets And Mounting Bolts With Tightening Sequence
Courtesy of HONDA, U.S.A., INC.

Note for installation

- Before installing the TWC brackets (A, B), confirm the bolts and nuts fixing the TWC to the cylinder head are tightened to the specified torque.
- Temporarily tighten all TWC bracket mounting bolts until the TWC bracket contacts to the surface of mating part, then tighten them to the specified torque in the numbered sequence shown.

7. Exhaust Chamber Cover - Remove
8. TWC Assembly - Remove

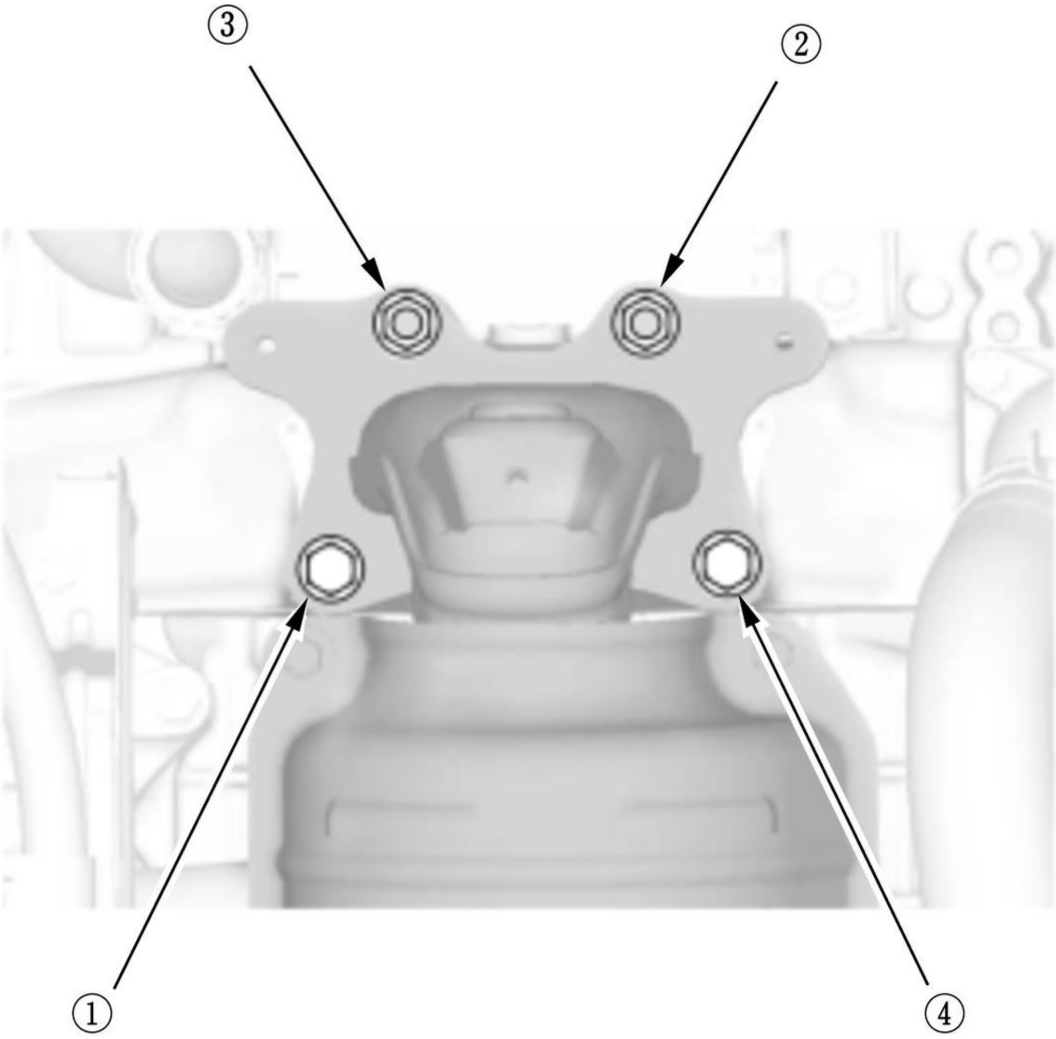

Fig. 4: TWC Assembly Mounting Bolts/Nuts With Tightening Sequence
Courtesy of HONDA, U.S.A., INC.

Note for installation

Loosely install all bolts and nuts by hand. Then tighten the warm up TWC mounting bolts and nuts in the numbered sequence shown.

9. TWC Cover - Remove (If Necessary)
10. All Removed Parts - Install

1. Install the parts in the reverse order of removal.

Inspection

1. TWC - Inspect

1. Plug up the hole(s) other than main exhaust gas route.

2. Using a flashlight visually check for plugging, melting, or cracking of the catalyst. Replace the TWC if any of the visible area is damaged or plugged.

ENGINE OIL JET AND BOLT REMOVAL, INSTALLATION, AND INSPECTION

Removal and Installation

Procedure

NOTE: **Numbered call-outs in figure pertain to list numbers in following procedure.**

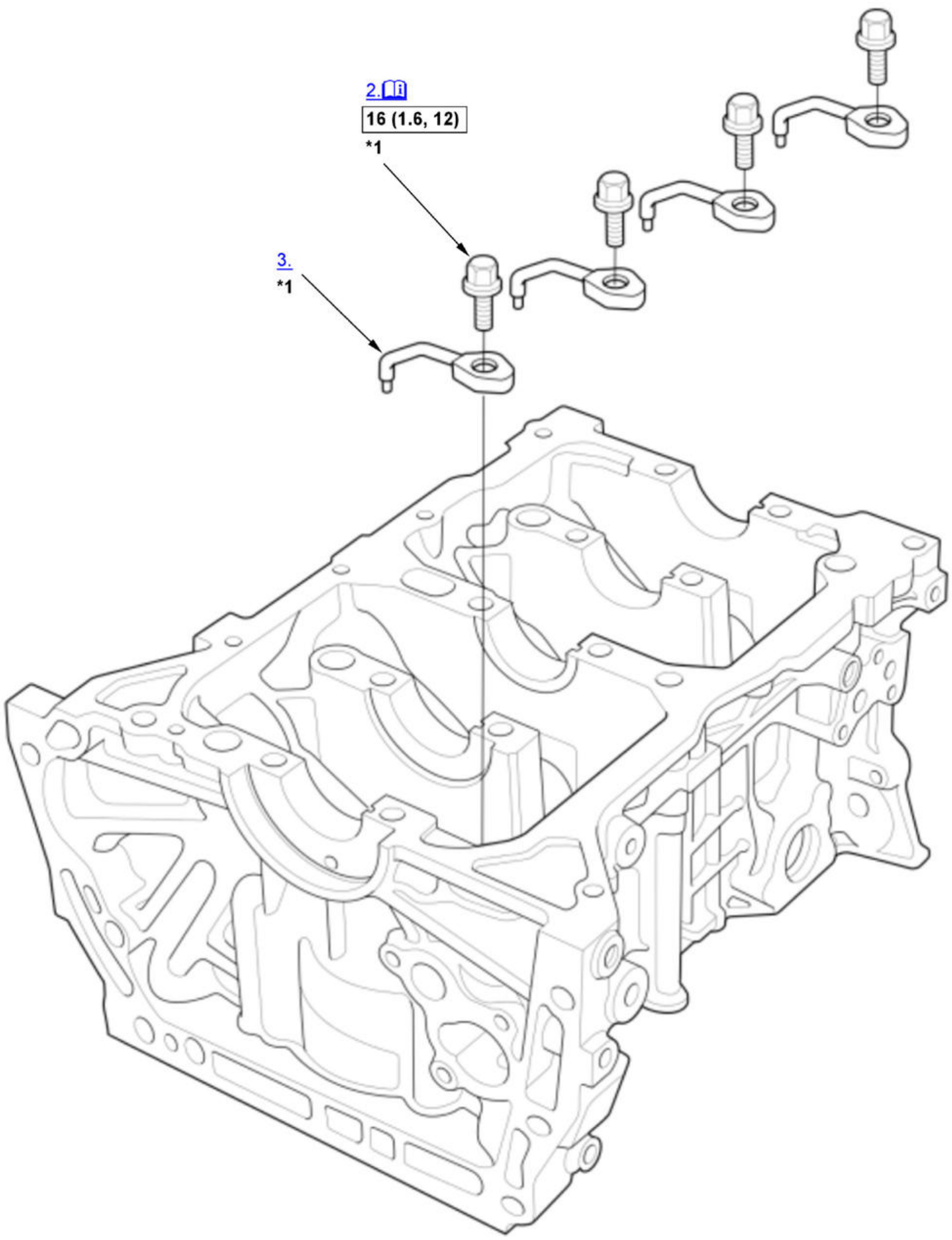

Fig. 5: Exploded View Of Engine Oil Jet And Bolt Replacement Components With Torque Specifications
Courtesy of HONDA, U.S.A., INC.

☐	Torque: N.m (kgf.m, lbf.ft)
*1	These parts have inspection items

1. Crankshaft - Remove
2. Oil Jet Bolt - Remove

Note for installation

Apply new engine oil to the threads and flange.

3. Oil Jet - Remove
4. All Removed Parts - Install

1. Install the parts in the reverse order of removal.

Inspection

1. Oil Jet and Oil Jet Bolt - Inspect

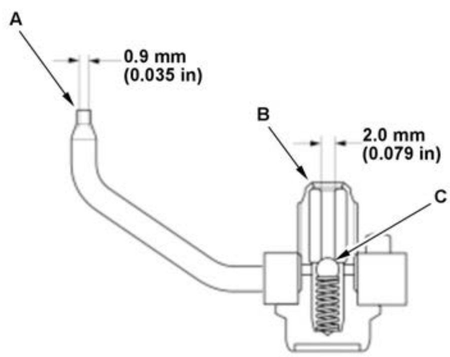	1. Inspect the oil jet and the oil jet bolt as follows. • Make sure that a 0.7 mm (1/32 in) diameter drill bit will go through the nozzle hole (A) (0.9 mm (0.035 in) diameter). • Insert the other end of a 1.8 mm (1/16 in) drill into the oil intake (2.0 mm (0.079 in) diameter). Make sure the check ball (B) moves smoothly. • Check the oil jet operation with an air nozzle. It should take at least 132 kPa (1.35 kgf/cm^2 , 19.1 psi) to unseat the check ball. **NOTE:** Replace the oil jet, if the nozzle is damaged or bent.

PCV VALVE REMOVAL, INSTALLATION, AND INSPECTION

Removal and Installation

Procedure

NOTE: **Numbered call-outs in figure pertain to list numbers in following procedure.**

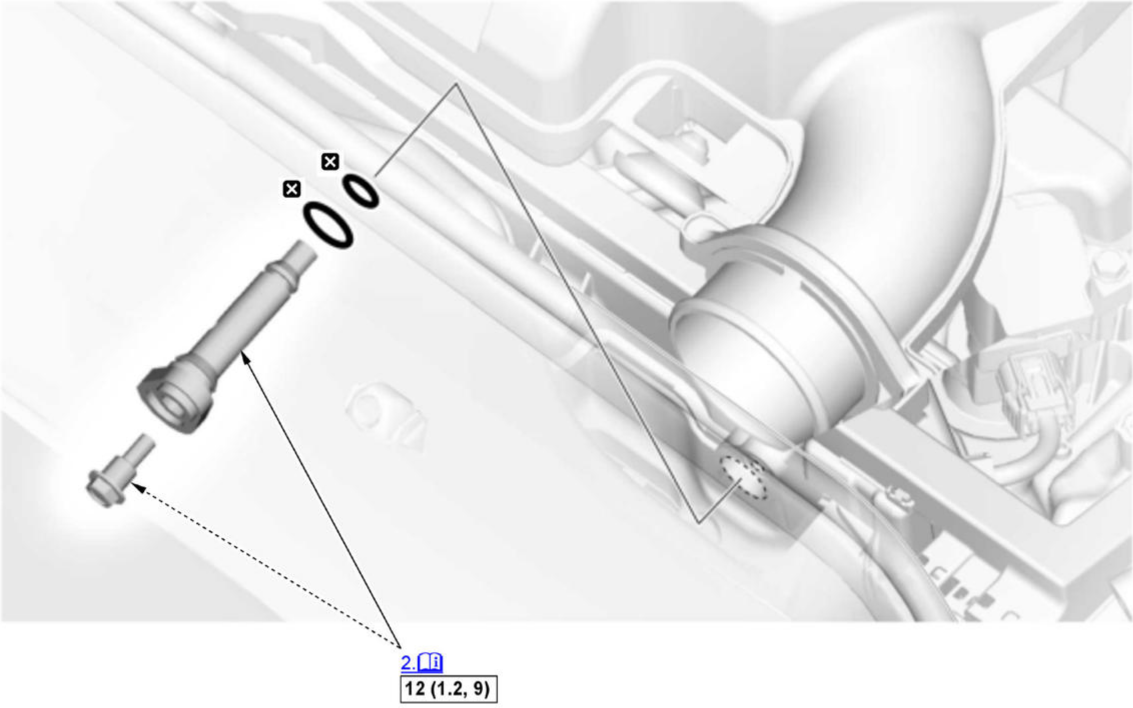

Fig. 6: Exploded View Of PCV Valve Replacement Components With Torque Specifications
Courtesy of HONDA, U.S.A., INC.

▭	Torque: N.m (kgf.m, lbf.ft)
☒	Replace

1. Air Intake Tube B - Remove
2. PCV Valve - Remove

   NOTE: Take care not to spill any oil on the hot engine.

   Note for installation

   Make sure the O-rings are in place.

3. All Removed Parts - Install

   1. Install the parts in the reverse order of removal.

Inspection

1. PCV Valve - Inspect

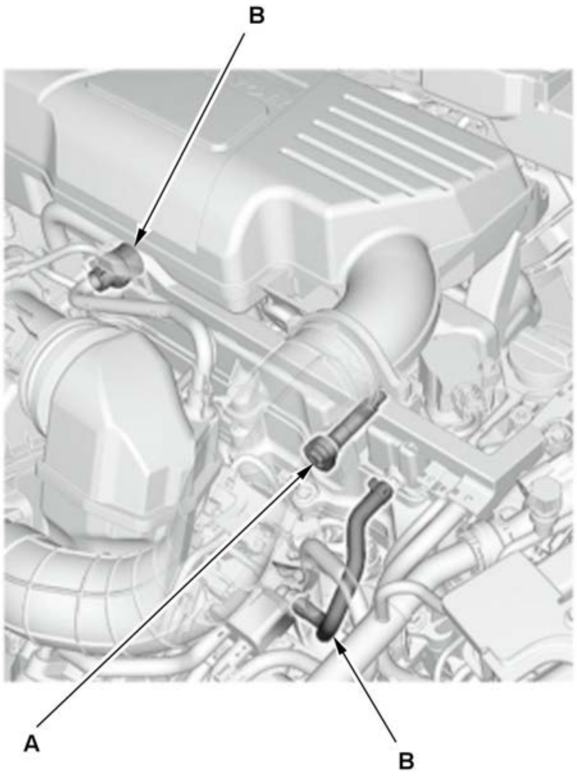	1. Check the PCV valve (A), the hoses (B), and their connections for leaks or restrictions.

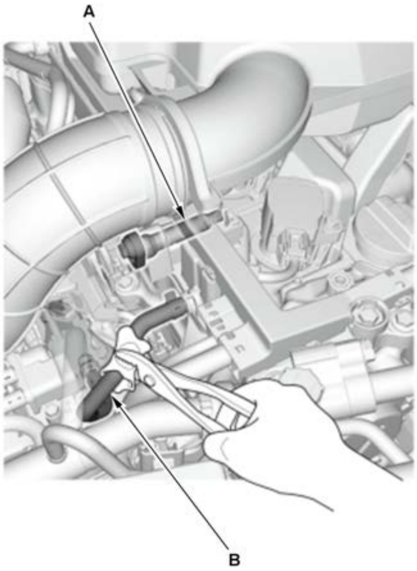	2. Enter the maintenance mode and start the engine. 3. At idle, make sure there is a clicking sound from the PCV valve (A) when the hose (B) between the cylinder head cover and intake manifold is lightly pinched with your fingers or pliers. If there is no clicking sound, check the O-rings for cracks or damage. If they are OK, replace the PCV valve and recheck.

GENERAL INFORMATION

ENGINE CONFIGURATION

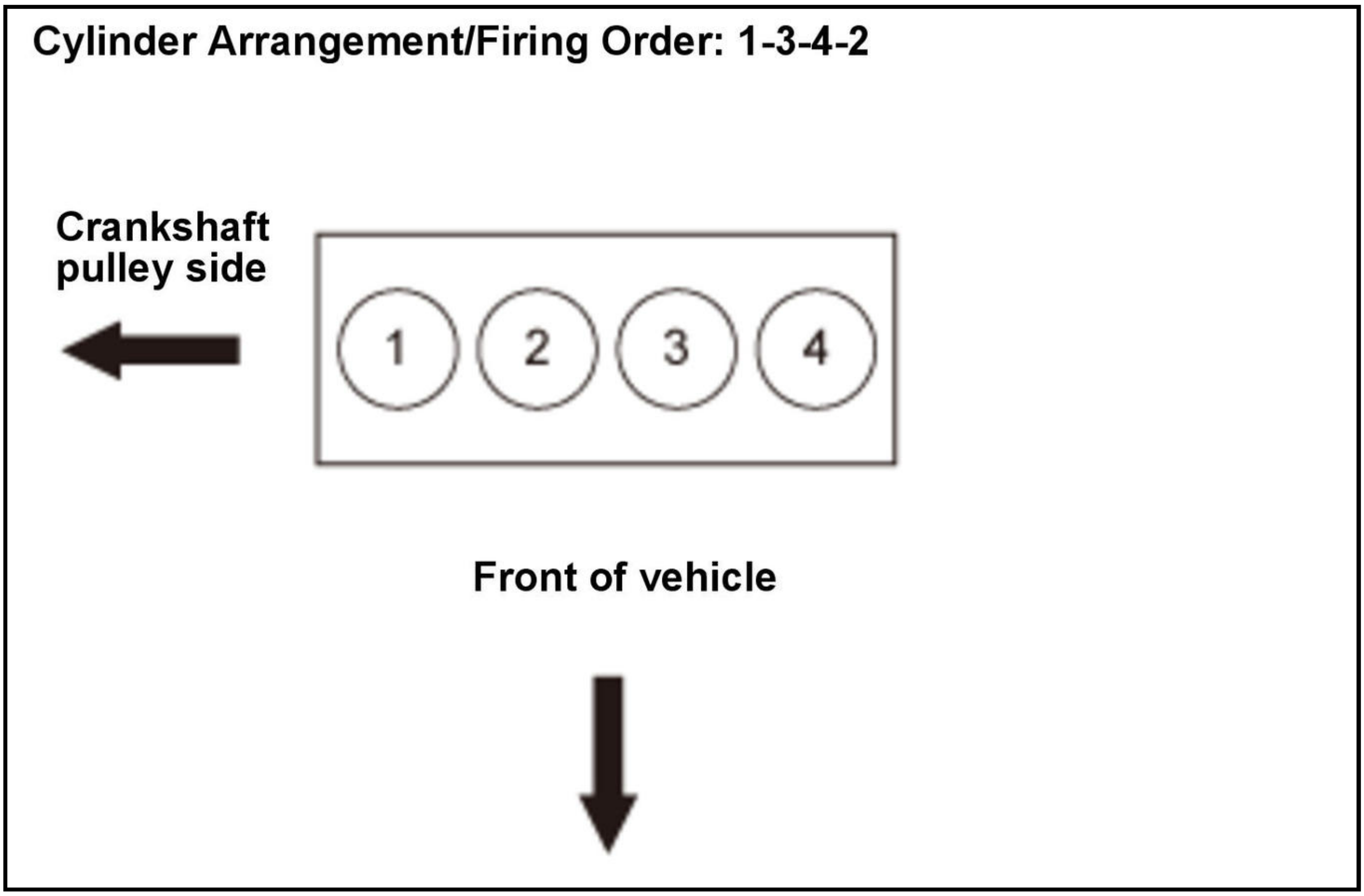
Cylinder Arrangement/Firing Order: 1-3-4-2
Crankshaft pulley side
1
2
3
4
Front of vehicle

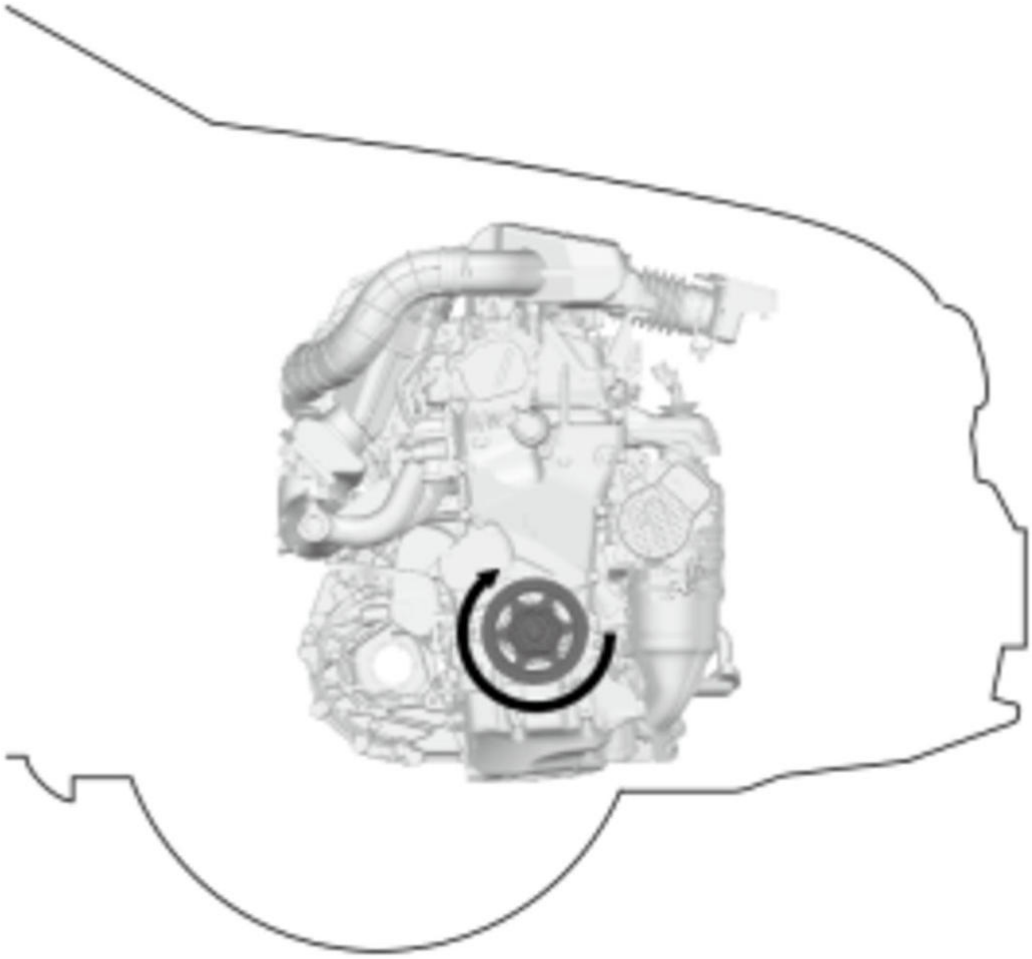

Engine Rotation: Clockwise

HOW TO ENTER PGM-FI SYSTEM MAINTENANCE MODE

Procedure

1. Maintenance Mode - Enter

1. Turn the vehicle to the OFF (LOCK) mode.

NOTE: Do the following procedure within 60 seconds to start the engine in the maintenance mode.

2. Turn the vehicle to the ON mode without stepping on the brake pedal.

3. With the transmission to P position/mode, press the accelerator pedal to the floor, twice.

4. Press the brake pedal, shift the transmission to N position/mode, then press the accelerator pedal to the floor, twice.

5. Press the brake pedal, shift the transmission to P position/mode, then press the accelerator pedal to the floor, twice.

6. Press the power switch while pressing down on the brake pedal. The vehicle is now in the maintenance mode and the engine will start.

- If the engine coolant temperature gets too hot, the engine may not start until the engine coolant temperature drops.

- To turn the engine OFF and cancel the maintenance mode, turn the vehicle to the OFF (LOCK) mode.
- The VSA operates normally while the maintenance mode is in operation.
- During cold starts in maintenance mode, for about 60 seconds there may be some additional transmission noise, this is considered normal.
- When starting the engine in maintenance mode, you may hear a groan/rattle for about the first minute, or when the engine decelerates. This noise is caused by gear tolerances, when the generator is not under load. This noise is considered normal while in maintenance mode.

HOW TO SET READINESS CODES

Malfunction Indicator Lamp (MIL) Indication (In relation to Readiness Codes)

The vehicle has certain readiness codes that are part of the on-board diagnostics for the emissions systems. If the vehicle's 12 volt battery has been disconnected or gone dead, if DTCs have been cleared, or if the PCM has been reset, these readiness codes are reset to incomplete. In some states, part of the emissions testing is to make sure these codes are set to complete. If all of them are not set to complete, the vehicle may fail the emission test, or the test cannot be finished.

To check if the readiness codes are set to complete, turn the vehicle to the ON mode, but do not start the engine. The MIL comes on for 15-20 seconds. If it then goes off, the readiness codes are set to complete. If it flashes five times, one or more readiness codes are not set to complete. To set readiness codes from incomplete to complete, do the procedure for the appropriate code.

To check the status of a specific DTC system, **check the OBD status in the DTC MENU with the HDS** . This screen displays the DTC, the current data list of the enable criteria, and the status of the readiness testing.

Catalytic Converter Monitor and Readiness Code

NOTE:

- During the procedure, do not turn the vehicle to the ACCESSORY mode or the OFF (LOCK) mode.
- All readiness codes are cleared when the 12 volt battery is disconnected, if DTCs have been cleared, or if the PCM is reset with the HDS.
- Low ambient temperatures or excessive stop-and-go traffic may increase the drive time needed to switch the readiness code from incomplete to complete.
- The readiness code will not switch to complete until all the enable criteria are met.
- If a fault in the secondary HO2S system caused the MIL to come on, the readiness code cannot be set to complete until you correct the fault.

Enable Criteria

- ECT SENSOR 1 at 158B°F (70B°C) or more.
- IAT SENSOR at 20B°F (-7B°C) or more.
- Vehicle speed above 25 mph (40 km/h).

Procedure

1. **Connect the HDS to the vehicle's data link connector (DLC)**

, and bring up the READINESS CODEs screen for Catalyst in the DTCs MENU.

2. **Enter the maintenance mode, then start the engine**

3. Test-drive the vehicle under stop-and-go conditions with short periods of steady cruise. After about 5 miles (8 km), the readiness code should switch to complete.

4. If the readiness code is still not set to complete, check for a Pending DTC with the HDS. If there is no DTC, one or more of the enable criteria were probably not met; repeat the procedure.

Evaporative Emission (EVAP) Control System Monitor and Readiness Code

NOTE: All readiness codes are cleared when the 12 volt battery is disconnected, if DTCs have been cleared, or if the PCM is reset with the HDS.

Enable Criteria

Refer to the following DTC.

- **P0441**
- **P0456**
- **P145E**

Procedure

Refer to the following DTC.

NOTE: Do not FUNCTION TEST with the HDS.

- **P0441**
- **P0456**
- **P145E**

Air Fuel Ratio (A/F) Sensor Monitor and Readiness Code

NOTE:

- During the procedure, do not turn the vehicle to the ACCESSORY mode or the OFF (LOCK) mode.
- All readiness codes are cleared when the 12 volt battery is disconnected, if DTCs have been cleared, or if the PCM is reset with the HDS.

Enable Criteria

ECT SENSOR 1 at 140B°F (60B°C) or more.

Procedure

1. **Enter the maintenance mode, then start the engine**.

2. Test-drive the vehicle under stop-and-go conditions with short periods of steady cruise. During the drive, decelerate (with the throttle fully closed) for 5 seconds. After about 3.5 miles (5.6 km), the readiness code should switch from incomplete to complete.

3. Check the readiness codes screen for the AIR FUEL RATIO (A/F) SENSOR in the DTCs MENU with the HDS.

- If the HDS indicates complete, readiness is complete.
- If the HDS indicates not complete, go to the next step.

4. Check for a Pending DTC. If there is no DTC, the enable criteria was probably not met. Select the DATA LIST Menu. Check ECT SENSOR 1 in the ALL DATA LIST with the HDS. If ECT SENSOR 1 is less than 140B°F (60B°C), run the engine until it is more than 140B°F (60B°C), then repeat the procedure.

Air Fuel Ratio (A/F) Sensor Heater Monitor Readiness Code

NOTE: All readiness codes are cleared when the 12 volt battery is disconnected, if DTCs have been cleared, or if the PCM is reset with the HDS.

Procedure

1. **Enter the maintenance mode, then start the engine**, and let it idle for 1 minute. The readiness code should switch from incomplete to complete.

2. If the readiness code is still not set to complete, check for a Pending DTC. If there is no DTC, repeat the procedure.

Misfire Monitor and Readiness Code

- This readiness code is always set to available because misfiring is continuously monitored.
- Monitoring pauses, and the misfire counter resets, if the vehicle is driven over a rough road.
- Monitoring also pauses, and the misfire counter holds at its current value, if the throttle position changes more than a predetermined value, or if driving conditions fall outside the range of any related enable criteria.

Fuel System Monitor and Readiness Code

- This readiness code is always set to available because the fuel system is continuously monitored during closed loop operation.
- Monitoring pauses when the catalytic converter, the EVAP control system, and the A/F sensor monitors are active.
- Monitoring also pauses when any related enable criteria are not being met. Monitoring resumes when the enable criteria is again being met.

Comprehensive Component Monitor and Readiness Code

This readiness code is always set to available because the comprehensive component monitor is continuously running whenever the engine is cranking or running.

EGR Monitor and Readiness Code

NOTE:

- During the procedure, do not turn the vehicle to the ACCESSORY mode or the OFF (LOCK) mode.
- All readiness codes are cleared when the 12 volt battery is disconnected, if DTCs have been cleared, or if the PCM is reset with the HDS.

Enable Criteria

ECT SENSOR 1 at 176B°F (80B°C) or more.

Procedure

1. **Connect the HDS to the DLC**.

2. **Enter the maintenance mode, then start the engine**.

3. Drive at a steady speed with the transmission in D at 50-62 mph (80-100 km/h) or above for more than 10 seconds.

4. With the transmission in D, decelerate from 62 mph (100 km/h) or above by completely releasing the throttle for at least 5 seconds. If the engine is stopped during this step, repeat steps 3 and 4.

5. Check the OBD status screen for DTC P0401 in the DTC's MENU with the HDS.

- If it is passed, the readiness code is complete.
- If it is not passed, go to step 3 and retest.

REWRITE

PCM UPDATE

Procedure

NOTE: High temperature in the engine compartment might cause the PCM to become too hot to run the update. If the engine has been running before this procedure, open the hood and cool the engine compartment.

1. PCM - Update
2. **CKP Pattern - Clear/Learn**

INSPECTION

APP SENSOR SIGNAL INSPECTION

Inspection

NOTE:

- This procedure checks the APP sensor in its fully closed position. In any other position, the PCM stores the APP sensor DTCs which are covered in other troubleshooting procedures.
- Check for Pending or Confirmed DTCs with the HDS before doing this procedure. If any DTCs are indicated, troubleshoot them first, then do this procedure.
- Press the accelerator pedal several times to check its operation. If it does not operate smoothly, check the pedal. If you find a problem, **replace the accelerator pedal module** .

1. **HDS - Connect**
2. APP Sensor Signal - Inspect

1. Select the PGM-FI System with the HDS.

2. Make sure the accelerator pedal is not pressed, then check the APP SENSOR in the DATA LIST with the HDS.

- If it is 0 %, the APP sensor is OK.
- If it is not 0 %, **update the PCM if it does not have the latest software**, or **substitute a known-good PCM** , then go to step 3.

3. Make sure the accelerator pedal is not pressed, then check the APP SENSOR in the DATA LIST with the HDS.

- If it is 0 %, the APP sensor is OK.
- If it is not 0 %, **replace the accelerator pedal module** , then go to step 1.

CAMSHAFT TIMING INSPECTION

Inspection

1. **Cylinder Head Cover - Remove**
2. Camshaft Timing - Inspect

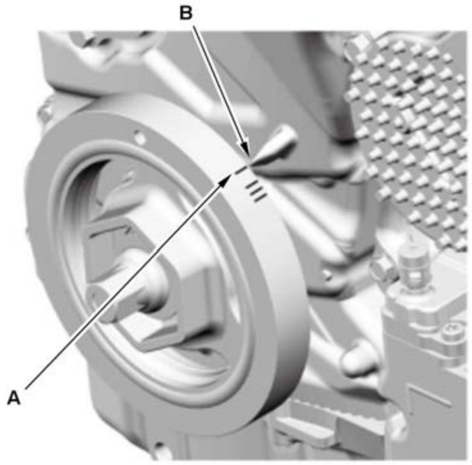

1. Turn the crankshaft to align No. 1 position at top dead center (TDC); the white mark (A) on the crankshaft pulley lines up with the pointer (B).

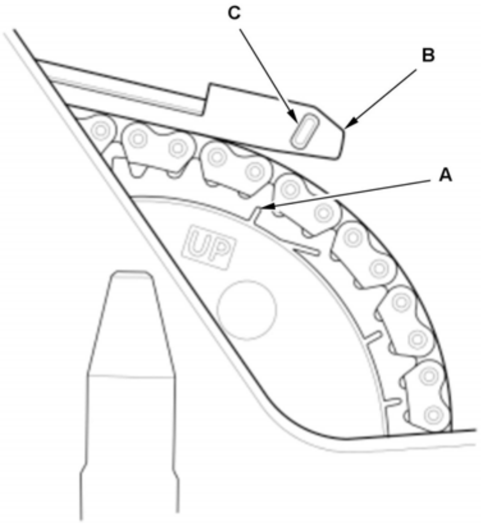

2. Check the No. 1 piston at top dead center (TDC). The mark (A) on the exhaust camshaft sprocket should align up with the mark (C) on cam chain guide B.

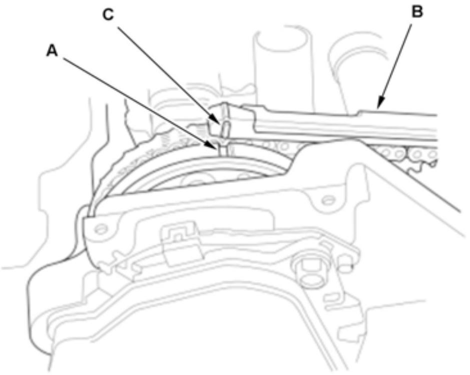

3. Check the mark (A) on the VTC actuator and the mark (C) on cam chain guide B, the marks should align. If the marks are not aligned, **remove the cam chain and reinstall the cam chain properly** .

3. All Removed Parts - Install

1. Install the parts in the reverse order of removal.

ENGINE COMPRESSION INSPECTION

Inspection

NOTE: After this inspection, you must **reset the PCM**. Otherwise, the PCM will continue to stop the injectors from operating.

1. Engine - Warm Up

1. **Enter the maintenance mode, then start the engine**. Hold the engine speed at 3000 RPM with no load (P or N) until the cooling fan(s) comes on, then let it idle.

2. **HDS - Connect**
3. **Ignition Coil and Spark Plug - Remove**
4. Engine Compression - Inspect

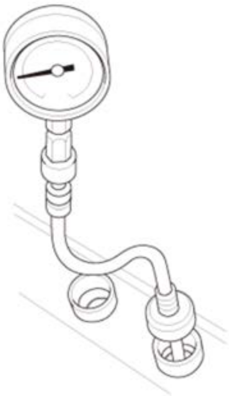

1. Attach a compression gauge to the spark plug hole.

2. Select ALL INJECTORS STOP in the PGM-FI INSPECTION menu with the HDS.

NOTE:

- The engine will be driven by the electric motor when the [ENTER] button on the HDS is pressed in the HEV Engine Crank Mode.
- When measuring the compression, step on the accelerator pedal to fully open the throttle.
- Before measuring the pressure of other cylinders, make sure to press the [ENTER] button to stop the electric motor first. Remove and install the compression gauge on the next cylinder then press the [ENTER] button to restart the electric motor again.

3. Measure the compression on the remaining cylinders.

4. If the compression is not within specifications, perform a cylinder leak down test to determine the problem area. Then check the following items, and remeasure the compression:

- **Incorrect valve clearance**
- **Confirmation of camshaft timing**
- **Damaged or worn cam lobes**
- Damaged or worn valves and seats
- Damaged cylinder head gasket
- **Damaged or worn piston rings**
- **Damaged or worn piston and cylinder bore**
- **Damaged hydraulic tappet**

5. Turn the vehicle to the OFF (LOCK) mode, then remove the compression gauge from the spark plug hole.

Maximum Variation:
Within 200 kPa (2.04 kgf/cm^2 , 29.0 psi)

Compression Pressure:
Above 880 kPa (8.97 kgf/cm^2 , 127.6 psi)

5. All Removed Parts - Install

1. Install the parts in the reverse order of removal.

IDLE SPEED INSPECTION

Inspection

NOTE:

- Before checking the idle speed, check these items:
-
    - The malfunction indicator lamp (MIL) has not been reported on, and there are no DTCs.
    - Spark plugs
    - Air cleaner
    - PCV system
- Apply the parking brake.

1. HDS - Connect
2. Idle Speed - Inspect

> 1. Enter the maintenance mode and start the engine
>
> 2. Hold the engine speed at 3000 RPM without load (in P or N) until the radiator fan comes on, then let it idle.
>
> 3. Check the idle speed under no load conditions: headlights, blower fan, radiator fan, audio system, and air conditioner off.**Idle speed should be: 1200 +/- 50 RPM (in P or N)**
>
> **NOTE:** If the idle speed is still not within specification, go to the symptom troubleshooting .

REPLACEMENT

TRANSMISSION END CRANKSHAFT OIL SEAL REPLACEMENT - IN CAR

Special Tools Required

Image	Description/Tool Number
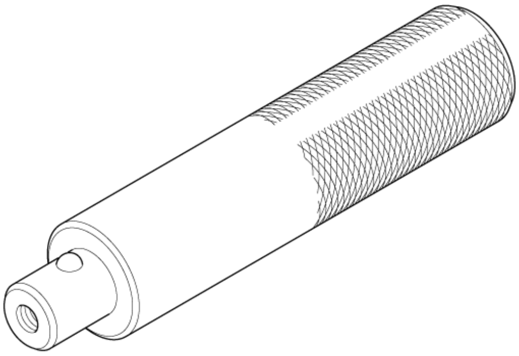	Driver Handle, 15 x 135L 07749-0010000
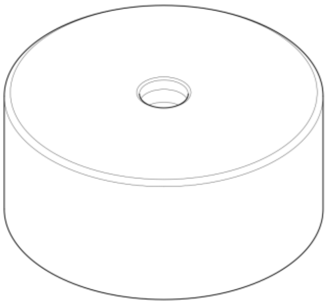	Oil Seal Attachment, 96 mm 07ZAD-PNA0100 or 07ZAD-PNAA100

Replacement

NOTE: When removing the crankshaft oil seal, be careful not to damage the crankshaft and the engine block.

Procedure

NOTE: **Numbered call-outs in figure pertain to list numbers in following procedure.**

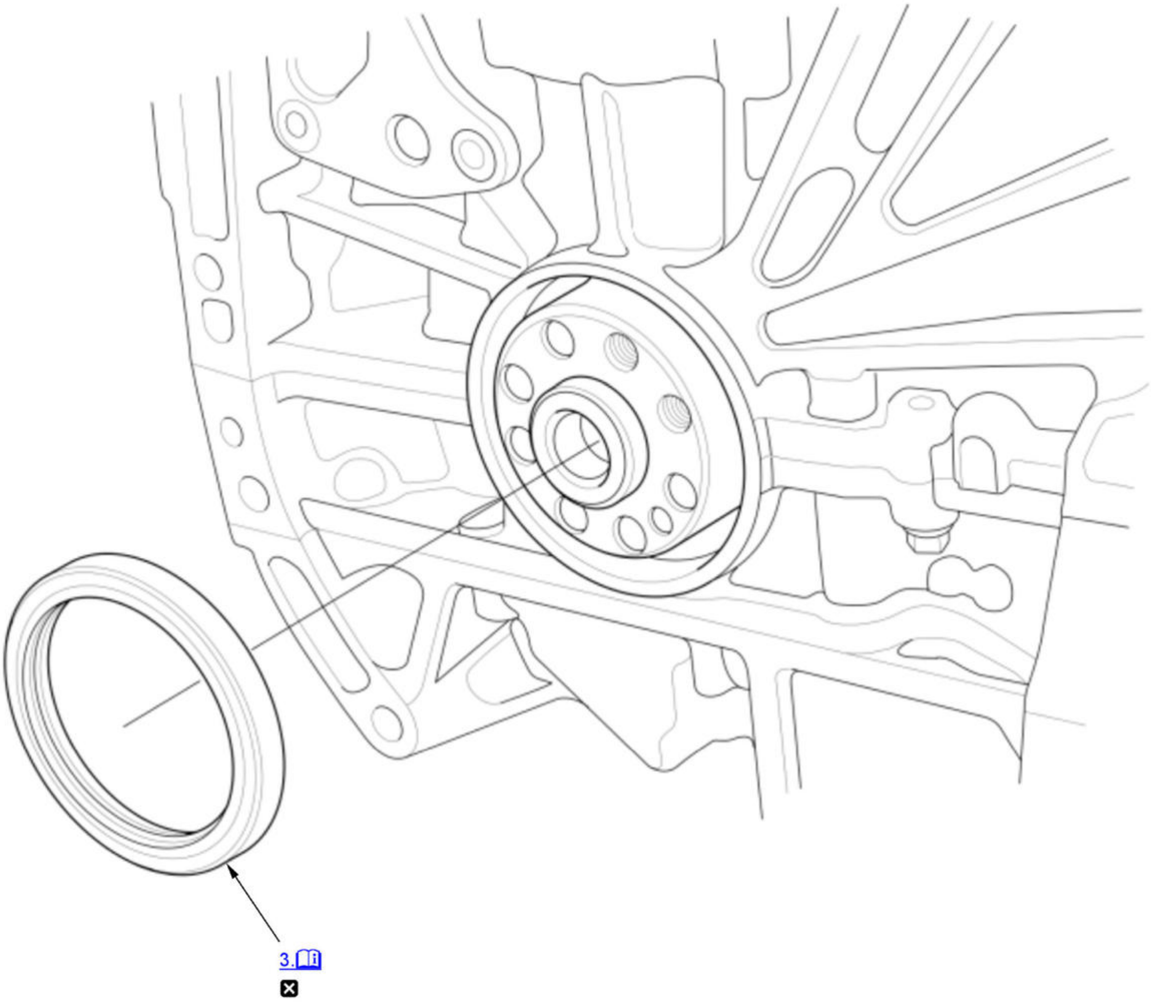

Fig. 7: Transmission End Crankshaft Oil Seal Replacement Components
Courtesy of HONDA, U.S.A., INC.

☒	Replace

1. Transmission (e-CVT) - Remove
2. Drive Plate - Remove
3. Transmission End Crankshaft Oil Seal - Replace

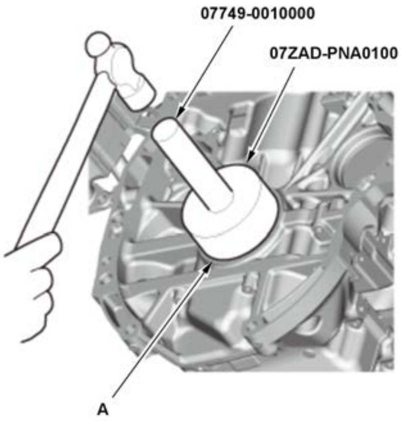

1. Clean and dry the transmission end crankshaft oil seal housing.

2. Apply a light coat of new engine oil to the lip of the transmission end crankshaft oil seal.

3. Using the driver handle, 15 x 135L and the oil seal driver attachment, 96 mm, to drive the transmission end crankshaft oil seal (A) squarely into the engine block to the specified installed height.

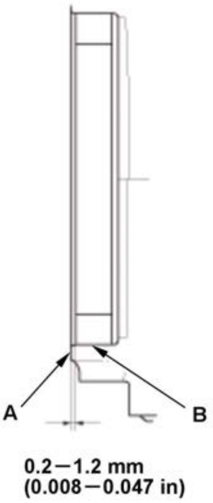

4. Measure the distance between the lower block (A) and the transmission end crankshaft oil seal (B).

Transmission End Crankshaft Oil Seal Installed Height:

5. Clean the excess oil off the crankshaft, and check that the transmission end crankshaft oil seal lip is not distorted.

0.2-1.2 mm (0.008-0.047 in)

4. All Removed Parts - Install

1. Install the parts in the reverse order of removal.

SERVICING

LIQUID GASKET APPLYING PROCEDURE

Procedure

1. Liquid Gasket - Apply

1. Apply liquid gasket as shown.

NOTE:

- Remove all of the old liquid gasket of the mating surfaces of each part and clean.
- Apply liquid gasket (08718-0003, 08718-0004, or 08718-0009). Install the component within 4 minutes of applying the liquid gasket.
- If too much time has passed after applying the liquid gasket, remove the old liquid gasket and residue, then reapply new liquid gasket.
- Wait at least 30 minutes before filling the engine with oil.
- Do not run the engine for at least 3 hours after installing the parts.

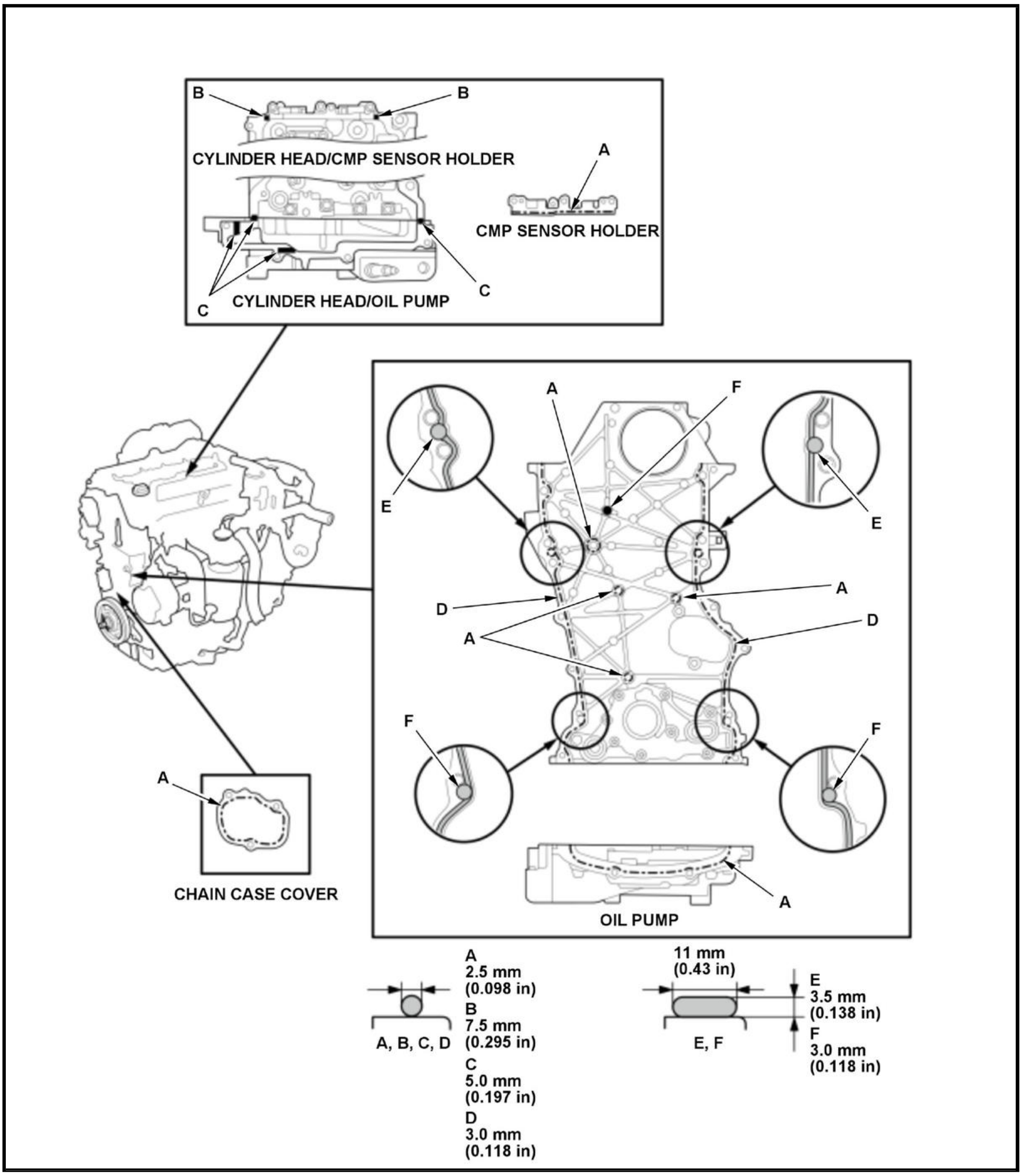
B
B
CYLINDER HEAD/CMP SENSOR HOLDER
A
CMP SENSOR HOLDER
C
C
CYLINDER HEAD/OIL PUMP
A
F
E
E
D
A
A
D
A
F
F
A
CHAIN CASE COVER
A
OIL PUMP
A
2.5 mm
(0.098 in)
B
7.5 mm
(0.295 in)
C
5.0 mm
(0.197 in)
D
3.0 mm
(0.118 in)
A, B, C, D
11 mm
(0.43 in)
E
3.5 mm
(0.138 in)
F
3.0 mm
(0.118 in)
E, F

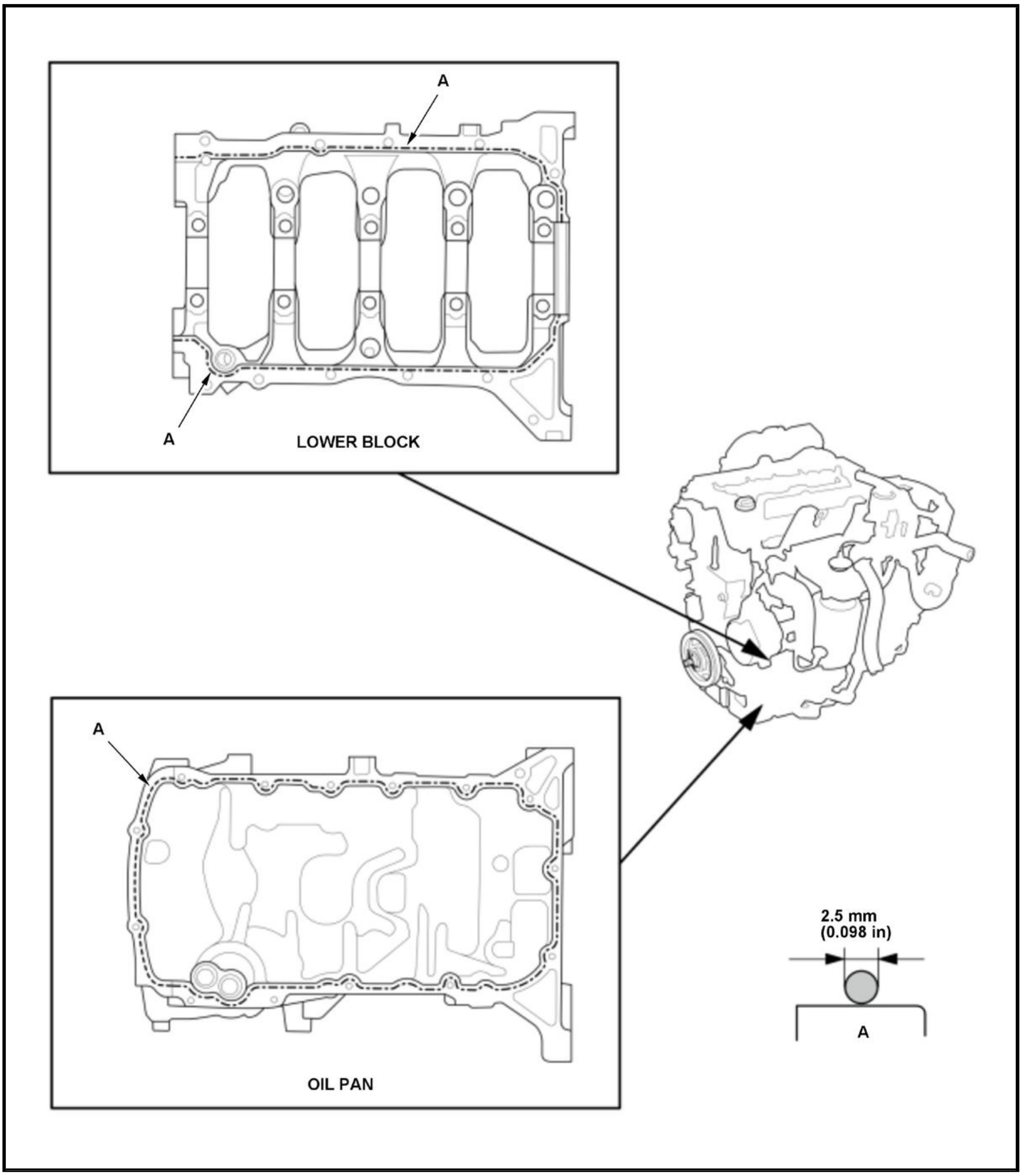

THROTTLE BODY REMOVAL, INSTALLATION, AND CLEANING

Removal and Installation

WARNING:

Do not insert your fingers into the installed throttle body when you turn the vehicle to the ON mode, or while the vehicle is in ON mode. If you do, you will seriously injure your fingers if the throttle valve is activated.

NOTE:

- If you are replacing the throttle body, do the all procedures.
- If you are removing the throttle body, do the 3rd procedure (Intake Air Resonator - Remove) through the 9th procedure (Engine Coolant - Refill).

Procedure

NOTE: **Numbered call-outs in figure pertain to list numbers in following procedure.**

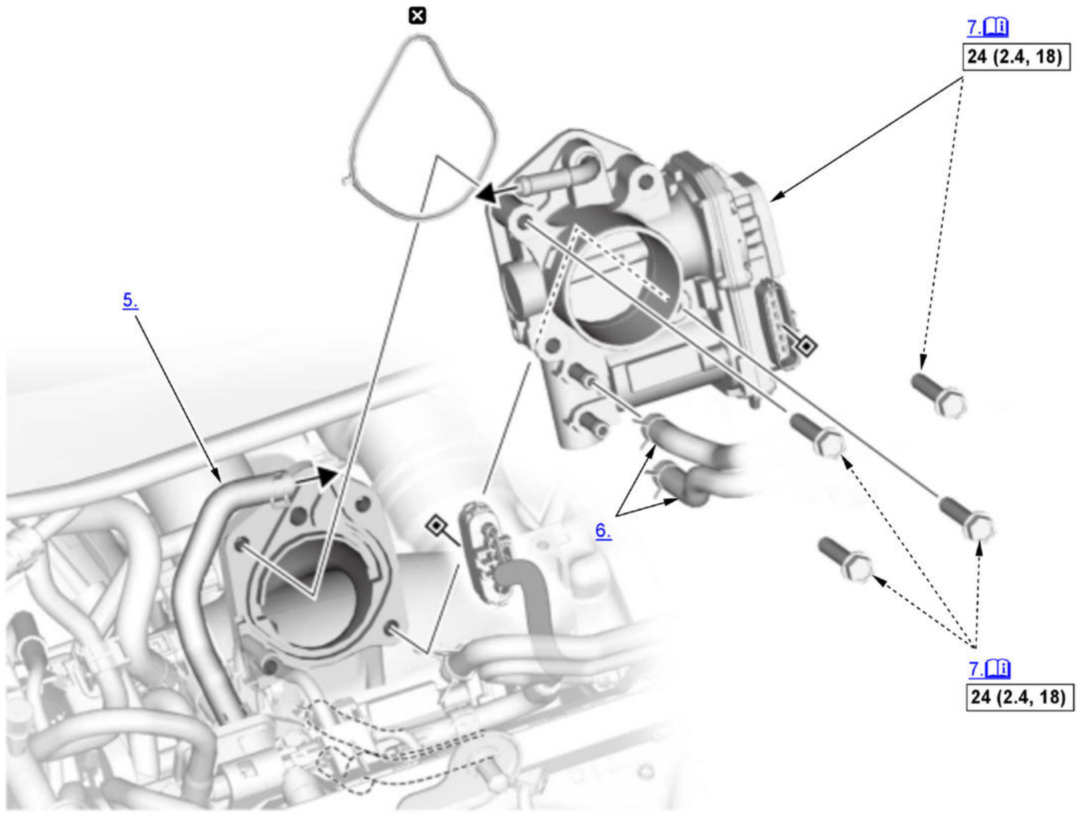

Fig. 8: Exploded View Of Throttle Body Replacement Components With Torque Specifications
Courtesy of HONDA, U.S.A., INC.

☐	Torque: N.m (kgf.m, lbf.ft)

☒	Replace

1. **HDS - Connect**
2. TP POSITION CHECK - Select

1. Select the PGM-FI System with the HDS. 2. Select the ETCS (TAC) TEST in the Function Test Menu with the HDS. 3. Select TP POSITION CHECK and clear the throttle position (TP) learned value. 4. Turn the vehicle to the OFF (LOCK) mode. 5. Turn the vehicle to the ON mode, and wait 2 seconds without pressing the accelerator pedal.

3. **Intake Air Resonator - Remove**
4. **Air Cleaner - Remove**
5. EVAP Purge Hose - Disconnect
6. Water Bypass Hoses - Disconnect and Plug
7. Throttle Body - Remove

Note for installation

- Tighten the throttle body mounting bolts in a cross pattern in three steps;
-
    - Tighten the bolts until they sit on the throttle body.
    - Tighten the bolts until the gasket is compressed and both parts are contacted.
    - Tighten the bolts to specified torque.

8. All Removed Parts - Install

1. Install the parts in the reverse order of removal.

9. **Engine Coolant - Refill**
10. **PCM - Reset**

Cleaning

WARNING:

Do not insert your fingers into the installed throttle body when you turn the vehicle to the ON mode, or while the vehicle is in ON mode. If you do, you will seriously injure your fingers if the throttle valve is activated.

1. **Air Cleaner Element - Check**
2. Throttle Body - Remove
3. Throttle Body - Clean

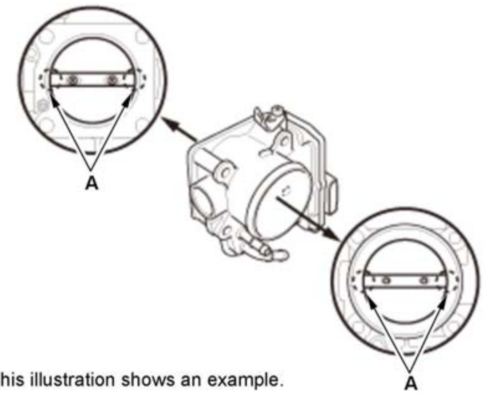 This illustration shows an example.	1. Clean off the carbon from the throttle valve and inside the throttle body with a paper towel soaked in throttle plate cleaner. • Be careful not to pinch your fingers. • To avoid removing the molybdenum coating, do not clean the bearing area of the throttle shaft (A). • Do not spray throttle plate cleaner directly on the throttle body. • Use a commercially available throttle plate cleaner.

4. Throttle Body - Install
5. **HDS - Connect**
6. **PCM - Reset**
7. TP POSITION CHECK - Select

1. Select the PGM-FI System with the HDS.

2. Select the ETCS (TAC) TEST in the Function Test Menu with the HDS.

3. Select TP POSITION CHECK and clear the throttle position (TP) learned value.

4. Turn the vehicle to the OFF (LOCK) mode.

5. Turn the vehicle to the ON mode, and wait 2 seconds without pressing the accelerator pedal.

HOW TO INFORMATION

HOW TO CONNECT THE HDS

1. Turn the vehicle to the OFF (LOCK) mode.

2. Connect the HDS to the DLC (A) located under the driver's side of the dashboard.

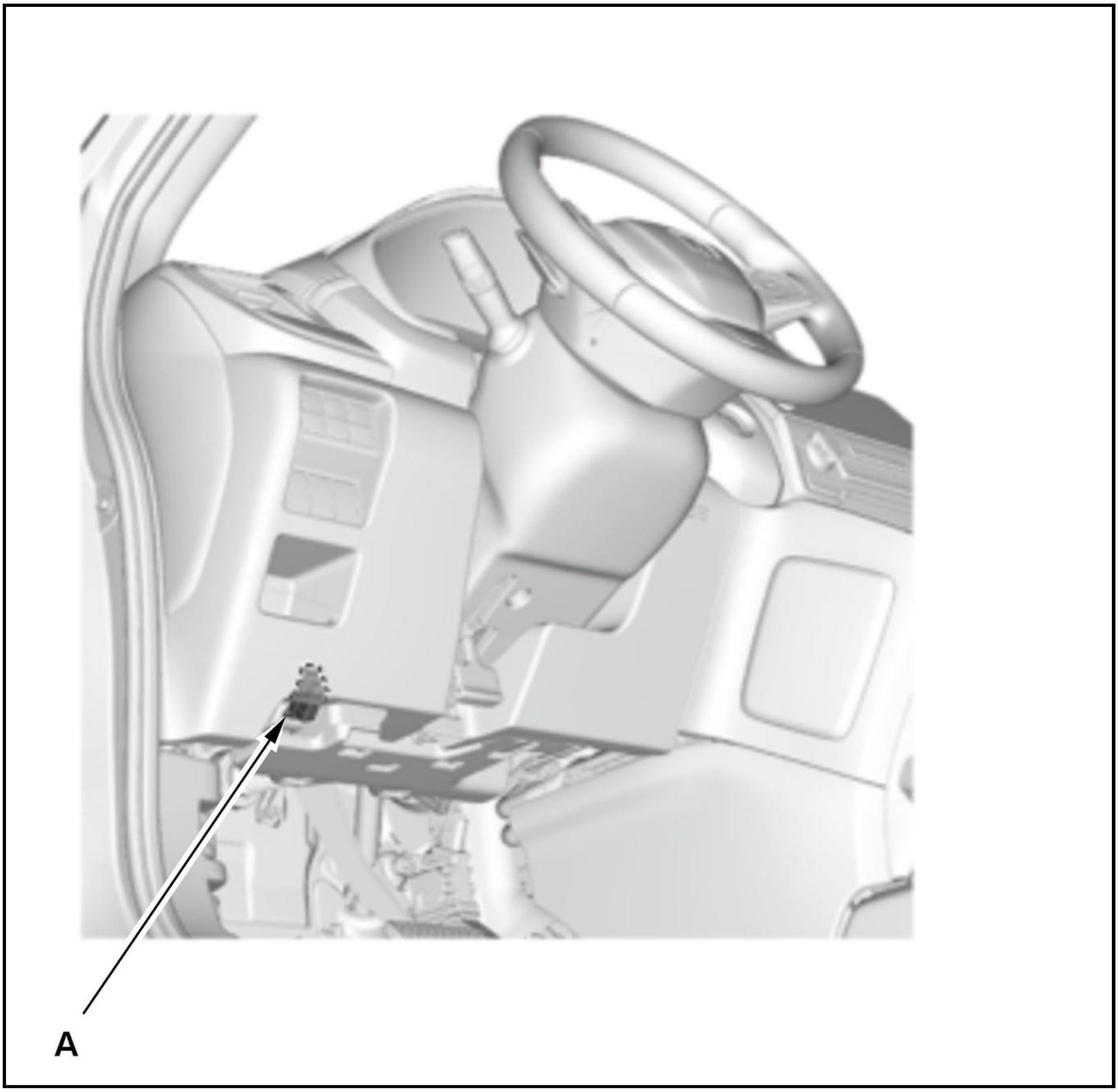

3. Turn the vehicle to the ON mode, but do not turn the vehicle to the READY TO DRIVE mode.

4. Activate the HDS, then make sure the HDS communicates with the PCM and other vehicle systems. If it doesn't, go to the DLC circuit troubleshooting

.

TEST

VTEC ROCKER ARM TEST

Special Tools Required

Image	Description/Tool Number
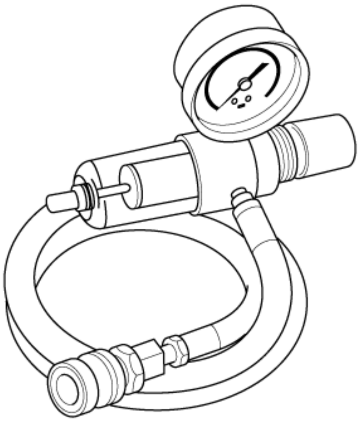	Air Pressure Regulator 07AAJ-PNAA101
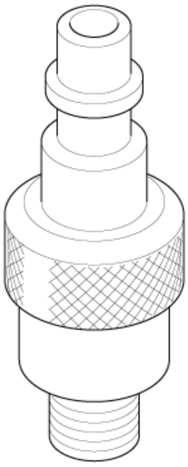	VCM Air Adapter 070AJ-001A101

Test

1. **Cylinder Head Cover - Remove**
2. VTEC Rocker Arm - Test

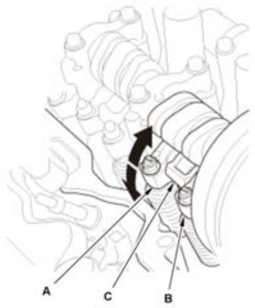	1. Rotate the crankshaft pulley clockwise. Make sure that the intake secondary rocker arm (A), intake primary rocker arm (B), and the intake mid rocker arm (C) are separated and that the intake secondary rocker arm and the intake mid rocker arm should move independently: - If the mid, primary and secondary rocker arms move together, remove the mid, primary, and secondary rocker arms as an assembly, and check that the pistons in the rocker arms move smoothly. If any rocker arm needs replacing, replace the mid, primary, and secondary rocker arms as an assembly, then retest. - If the secondary rocker arm moves independently, go to step 2. 2. Check that the air pressure on the shop air compressor gauge indicates over 400 kPa (4.08 kgf/cm^2 , 58.0 psi). 3. **Inspect the valve clearance** .

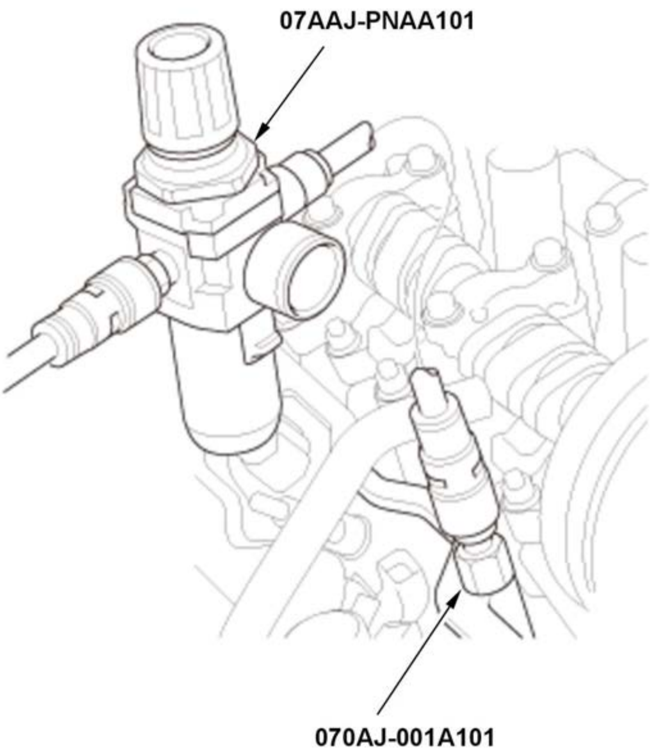	4. Install the VTEC air adapter to the inspection hole. 5. Connect the air supply. 6. Loosen the valve on the air supply, and apply the specified air pressure.

Specified Air Pressure:
290 kPa (2.96 kgf/cm^2 , 42.1 psi)

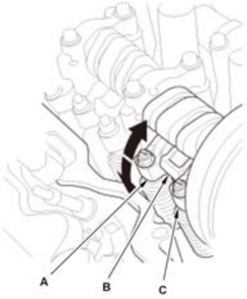	7. With the specified air pressure applied, rotate the crankshaft pulley clockwise. The secondary rocker arm (A) should move together with the mid rocker arm (B) and the primary rocker arm (C): • If the mid, primary, and secondary rocker arms move independently, remove the mid, primary, and the secondary rocker arms as an assembly, and check that the pistons in the rocker arms move smoothly. If any rocker arm needs replacing, replace the mid, primary, and secondary rocker arms as an assembly, then retest. • If the mid, primary, and secondary rocker arms move together, go to step 8. 8. Remove the air supply and the VTEC air adapter.

3. All Removed Parts - Install

1. Install the parts in the reverse order of removal.

CONNECTOR VIEW

PCM CONNECTOR FOR INPUTS AND OUTPUTS

PCM Connector for Inputs and Outputs

Connector Index
PCM Connector A (50P)
PCM Connector E (80P)

PCM Connector A (50P) (female terminals)

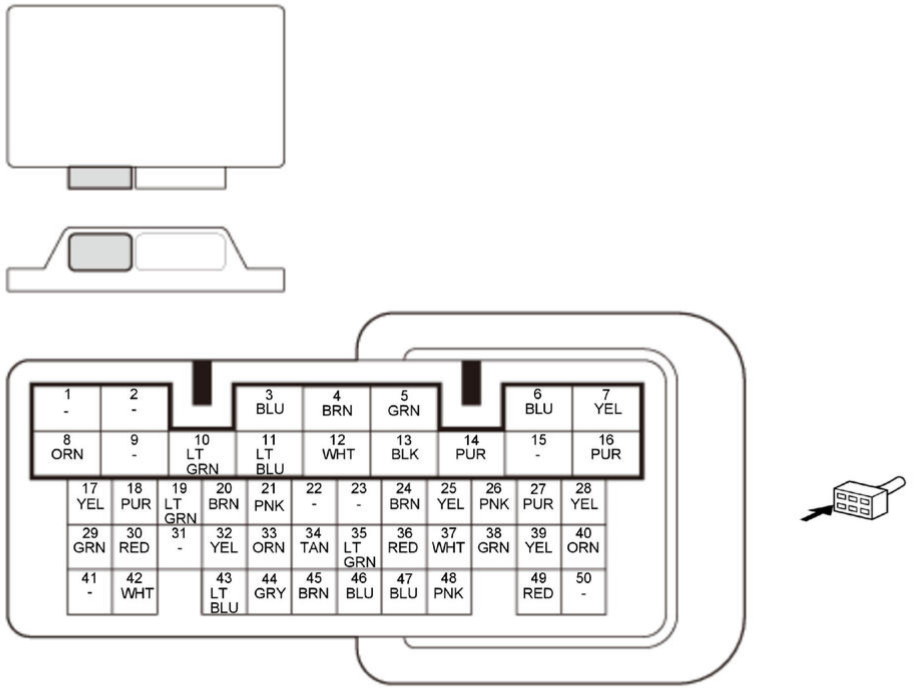
1
-
2
-
3
BLU
4
BRN
5
GRN
6
BLU
7
YEL
8
ORN
9
-
10
LT GRN
11
LT BLU
12
WHT
13
BLK
14
PUR
15
-
16
PUR
17
YEL
18
PUR
19
LT GRN
20
BRN
21
PNK
22
-
23
-
24
BRN
25
YEL
26
PNK
27
PUR
28
YEL
29
GRN
30
RED
31
-
32
YEL
33
ORN
34
TAN
35
LT GRN
36
RED
37
WHT
38
GRN
39
YEL
40
ORN
41
-
42
WHT
43
LT BLU
44
GRY
45
BRN
46
BLU
47
BLU
48
PNK
49
RED
50
-

Terminal number	Terminal name	Description
1	Not used	B
2	Not used	B
3	IG1_MISS_SOL (POWER SOURCE FOR SOLENOID VALVES)	Power source for solenoid valves
4	SO2HT (SECONDARY HEATED OXYGEN SENSOR (SECONDARY HO2S) (SENSOR 2) HEATER CONTROL)	Drives secondary HO2S (Sensor 2) heater
5	FI_MAIN_RLY_CL- (PGM-FI MAIN RELAY 1/IGNITION COIL RELAY)	Drives PGM-FI main relay 1 and ignition coil relay
6	CCV (EVAP CANISTER CHANGE OVER VALVE)	Drives EVAP canister change over valve
7	+B_BACKUP_FI-ECU (VOLTAGE BACK UP)	Power source for PCM memory
8	FI_MAIN_RLY_OUT (POWER SOURCE)	Power source for PCM
9	Not used	B
10	LIN (BATT_SENSOR) (LOCAL INTERCONNECT NETWORK)	Sends and receives communication signal
11	FUEL_PUMP_RLY_CL- (IMMOBILIZER FUEL PUMP RELAY)	Drives PGM-FI main relay 2
12	PADDLE_SW_UP (PADDLE SHIFTER +)	Detects paddle shifter + signal
13	FI_ECU_GND (GROUND)	Ground for PCM
14	ATP-R (REVERSE RELAY)	Drives reverse relay
15	Not used	B
16	FI_SUB_RLY_OUT (POWER SOURCE)	Power source for PCM
17	FAN_CONTROL (RFC UNIT CONTROL)	Drives RFC unit
18	FAN_LO_SIGNAL (RFC RELAY)	Drives RFC relay

Terminal number	Terminal name	Description
19	ELCMP (EVAP LEAK CHECK MODULE VACUUM PUMP)	Drives ELCM vacuum pump
20	EP-CAN A_L (CAN COMMUNICATION SIGNAL LOW)	Sends and receives communication signal
21	EP-CAN A_H (CAN COMMUNICATION SIGNAL HIGH)	Sends and receives communication signal
22	Not used	B
23	Not used	B
24	ENG W/PUMP RLY CL- (ENGINE EWP RELAY)	Drives engine EWP relay
25	FI_SUB_RLY_CL- (PGM-FI SUBRELAY)	Drives PGM-FI subrelay
26	STOP_SW (BRAKE PEDAL POSITION SWITCH)	Detects brake pedal position switch signal
27	SCS (SERVICE CHECK SIGNAL)	Detects service check signal
28	STS (STARTER SWITCH SIGNAL)	Detects starter switch signal
29	PADDLE_SW_DOWN (PADDLE SHIFTER -)	Detects paddle shifter - signal
30	EVTC_RLY_CL- (ELECTRIC VTC RELAY)	Drives electric VTC relay
31	Not used	B
32	APS1 (ACCELERATOR PEDAL POSITION (APP) SENSOR A)	Detects APP sensor A signal
33	PD_SENSOR (A/C PRESSURE SENSOR)	Detects A/C pressure sensor signal
34	APS2 (ACCELERATOR PEDAL POSITION (APP) SENSOR B)	Detects APP sensor B signal
35	VSP (VEHICLE SPEED SIGNAL OUTPUT)	Sends vehicle speed signal
36	F-CAN A_L (CAN COMMUNICATION SIGNAL LOW)	Sends and receives communication signal
37	F-CAN A_H (CAN COMMUNICATION SIGNAL HIGH)	Sends and receives communication signal
38	F-CAN B_L (CAN COMMUNICATION SIGNAL LOW)	Sends and receives communication signal
39	F-CAN B_H (CAN COMMUNICATION SIGNAL HIGH)	Sends and receives communication signal
40	S-NET (SERIAL COMMUNICATION FOR IMMOBILIZER)	Sends serial communication signal
41	Not used	B
42	ELCMPA (EVAP LEAK CHECK MODULE PRESSURE SENSOR)	Detects ELCM pressure sensor signal
43	SG5 (SENSOR GROUND)	Sensor ground
44	VCC5 (SENSOR VOLTAGE)	Provides sensor reference voltage
45	VCC4 (SENSOR VOLTAGE)	Provides sensor reference voltage
46	SG4 (SENSOR GROUND)	Sensor ground
47	SO2 (SECONDARY HEATED OXYGEN SENSOR (SECONDARY HO2S) (SENSOR 2))	Detects secondary HO2S (Sensor 2) signal
48	SO2_SG (SECONDARY HEATED OXYGEN SENSOR (SECONDARY HO2S) (SENSOR 2) SENSOR GROUND)	Sensor ground for secondary HO2S (Sensor 2)
49	BKSWNC (BRAKE PEDAL POSITION SWITCH)	Detects brake pedal position switch signal
50	Not used	B

PCM Connector E (80P) (female terminals)

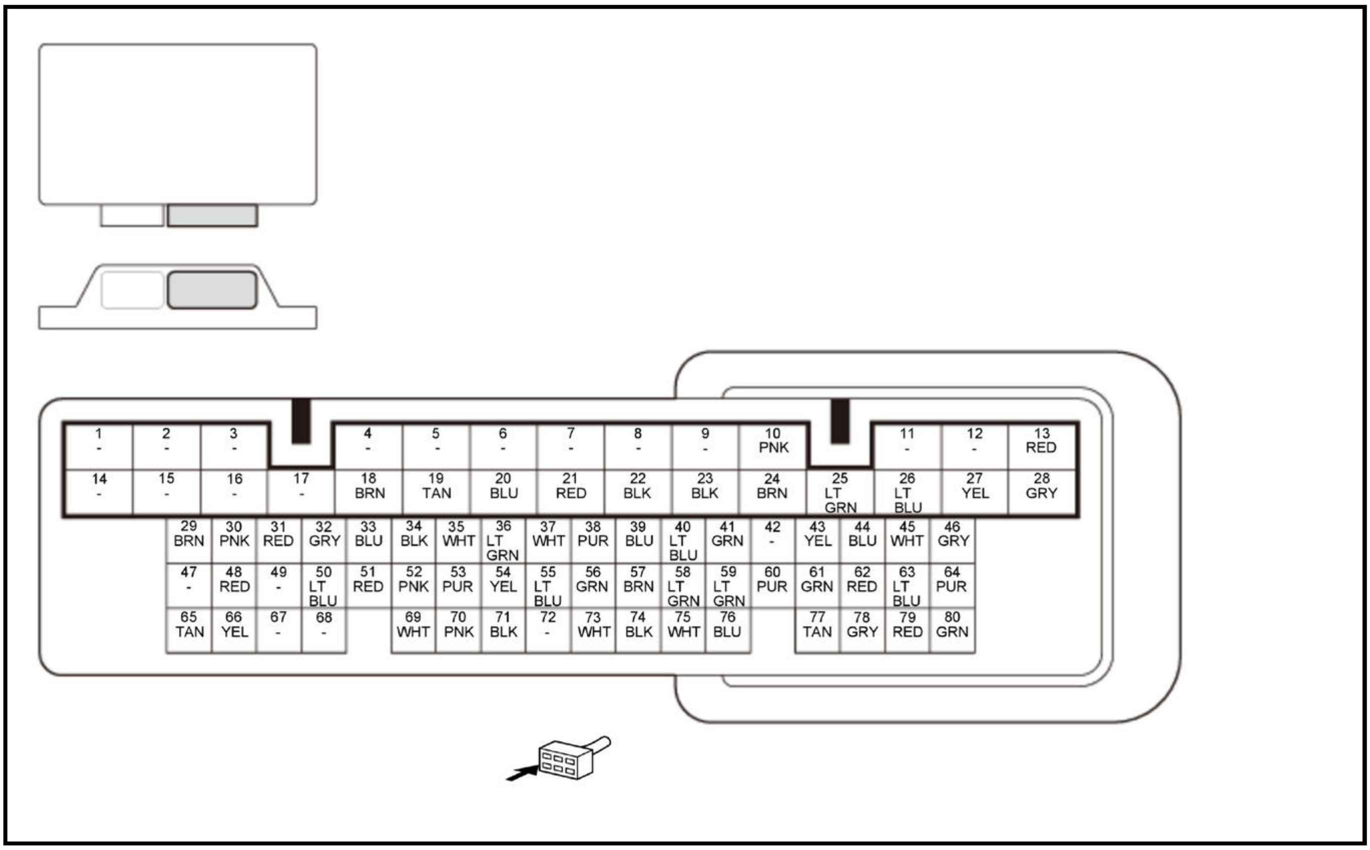

1 -
2 -
3 -
4 -
5 -
6 -
7 -
8 -
9 -
10 PNK
11 -
12 -
13 RED
14 -
15 -
16 -
17 -
18 BRN
19 TAN
20 BLU
21 RED
22 BLK
23 BLK
24 BRN
25 LT GRN
26 LT BLU
27 YEL
28 GRY
29 BRN
30 PNK
31 RED
32 GRY
33 BLU
34 BLK
35 WHT
36 LT GRN
37 WHT
38 PUR
39 BLU
40 LT BLU
41 GRN
42 -
43 YEL
44 BLU
45 WHT
46 GRY
47 -
48 RED
49 -
50 LT BLU
51 RED
52 PNK
53 PUR
54 YEL
55 LT BLU
56 GRN
57 BRN
58 LT GRN
59 LT GRN
60 PUR
61 GRN
62 RED
63 LT BLU
64 PUR
65 TAN
66 YEL
67 -
68 -
69 WHT
70 PNK
71 BLK
72 -
73 WHT
74 BLK
75 WHT
76 BLU
77 TAN
78 GRY
79 RED
80 GRN

Terminal number	Terminal name	Description
1	Not used	B
2	Not used	B
3	Not used	B
4	Not used	B
5	Not used	B
6	Not used	B
7	Not used	B
8	Not used	B
9	Not used	B
10	EEGR (EXHAUST GAS RECIRCULATION (EGR) VALVE)	Drives EGR valve
11	Not used	B
12	Not used	B
13	AFHT (AIR FUEL RATIO (A/F) SENSOR (SENSOR 1) HEATER CONTROL)	Drives A/F sensor (Sensor 1) heater
14	Not used	B
15	Not used	B
16	Not used	B
17	Not used	B
18	INJ_1 (No. 1 INJECTOR)	Drives No. 1 injector
19	INJ_4 (No. 4 INJECTOR)	Drives No. 4 injector
20	INJ_3 (No. 3 INJECTOR)	Drives No. 3 injector
21	INJ_2 (No. 2 INJECTOR)	Drives No. 2 injector
22	GND_4 (GROUND)	Ground for PCM
23	GND_3 (GROUND)	Ground for PCM

Terminal number	Terminal name	Description
24	GND_2 (GROUND)	Ground for PCM

Terminal number	Terminal name	Description
25	SHB (SHIFT SOLENOID VALVE B)	Drives shift solenoid valve B
26	SHA (SHIFT SOLENOID VALVE A)	Drives shift solenoid valve A
27	MTR1 (THROTTLE ACTUATOR)	Drives throttle actuator
28	MTR2 (THROTTLE ACTUATOR)	Drives throttle actuator
29	EWP_C (SWP) (ELECTRIC ENGINE COOLANT PUMP CONTROL)	Sends electric engine coolant pump control signal
30	EVTS (ELECTRIC VTC REVOLUTION SENSOR)	Detects electric VTC revolution sensor signal
31	EVTP (ELECTRIC VTC CONTROL SIGNAL)	Sends electric VTC control signal
32	PARKBUSY (COMMUNICATION SIGNAL FOR PARK PAWL ACTUATOR DRIVER UNIT)	Detects PARK position signal
33	PODCL (TRANSMISSION FLUID PRESSURE SENSOR)	Detects transmission fluid pressure sensor signal
34	KSGND (KNOCK SENSOR GROUND)	Sensor ground for knock sensor
35	KS (KNOCK SENSOR)	Detects knock sensor signal
36	IG1 (MONI) (IGNITION SIGNAL)	Detects ignition signal
37	IGN01A (No. 1 IGNITION COIL PULSE)	Drives No. 1 ignition coil
38	IGN02A (No. 2 IGNITION COIL PULSE)	Drives No. 2 ignition coil
39	IGN03A (No. 3 IGNITION COIL PULSE)	Drives No. 3 ignition coil
40	IGN04A (No. 4 IGNITION COIL PULSE)	Drives No. 4 ignition coil
41	CAM (CAMSHAFT POSITION (CMP) SENSOR A)	Detects CMP sensor A signal
42	Not used	B
43	TDC (CAMSHAFT POSITION (CMP) SENSOR B)	Detects CMP sensor B signal
44	CRKP (CRANKSHAFT POSITION (CKP) SENSOR)	Detects CKP sensor signal
45	SG6 (SENSOR GROUND)	Sensor ground
46	EVTD (ELECTRIC VTC REVOLUTION SENSOR)	Detects electric VTC revolution sensor signal
47	Not used	B
48	IP (AIR FUEL RATIO (A/F) SENSOR (SENSOR 1) IP CELL)	Detects A/F sensor (Sensor 1) pump cell signal
49	Not used	B
50	THL1 (THROTTLE POSITION (TP) SENSOR A)	Detects TP sensor A signal
51	THL2 (THROTTLE POSITION (TP) SENSOR B)	Detects TP sensor B signal
52	TW (ENGINE COOLANT TEMPERATURE (ECT) SENSOR 1)	Detects ECT sensor 1 signal
53	TA (INTAKE AIR TEMPERATURE (IAT) SENSOR 1)	Detects IAT sensor 1 signal
54	TW2 (ENGINE COOLANT TEMPERATURE (ECT) SENSOR 2)	Detects ECT sensor 2 signal

Terminal number	Terminal name	Description
55	INTA (INTAKE AIR TEMPERATURE (IAT) SENSOR 2)	Detects IAT sensor 2 signal
56	MAP (PB) (MANIFOLD ABSOLUTE PRESSURE (MAP) SENSOR)	Detects MAP sensor signal
57	EVTM (ELECTRIC VTC DIAGNOSIS)	Detects electric VTC diagnosis signal
58	OPSEN (ENGINE OIL PRESSURE SENSOR)	Detects engine oil pressure sensor signal
59	POIL (ROCKER ARM OIL PRESSURE SENSOR)	Detects rocker arm oil pressure sensor signal
60	EWP_REV (NWP) (ELECTRIC ENGINE COOLANT PUMP)	Detects electric engine coolant pump revolution signal
61	VGP (MASS AIR FLOW (MAF) SENSOR + SIDE)	Detects MAF sensor signal
62	VGM (MASS AIR FLOW (MAF) SENSOR - SIDE)	Ground for MAF sensor signal
63	VCC6 (SENSOR VOLTAGE)	Provides sensor reference voltage
64	PARKCMD (COMMUNICATION SIGNAL FOR PARK PAWL ACTUATOR DRIVER UNIT)	Sends PARK position switching signal
65	VTS (ROCKER ARM OIL CONTROL SOLENOID)	Drives rocker arm oil control solenoid
66	NGENPLS (GENERATOR ROTOR PULSE)	Detects generator rotor rotation pulse
67	Not used	B
68	Not used	B
69	EGRL (EXHAUST GAS RECIRCULATION (EGR) VALVE POSITION SENSOR)	Detects EGR valve position sensor signal
70	VCC1 (SENSOR VOLTAGE)	Provides sensor reference voltage

Terminal number	Terminal name	Description
71	SG1 (SENSOR GROUND)	Sensor ground
72	Not used	B
73	VS (AIR FUEL RATIO (A/F) SENSOR (SENSOR 1) VS CELL)	Detects A/F sensor (Sensor 1) VS cell signal
74	VCENT (AIR FUEL RATIO (A/F) SENSOR (SENSOR 1) VIRTUAL GROUND)	Provides reference voltage for A/F sensor (Sensor 1)
75	VCC3 (DBW) (SENSOR VOLTAGE)	Provides sensor reference voltage
76	SG3 (DBW) (SENSOR GROUND)	Sensor ground
77	VCC2 (SENSOR VOLTAGE)	Provides sensor reference voltage
78	SG2 (SENSOR GROUND)	Sensor ground
79	PCS2 (EVAPORATIVE EMISSION (EVAP) CANISTER PURGE VALVE 2)	Drives EVAP canister purge valve 2
80	PCS1 (EVAPORATIVE EMISSION (EVAP) CANISTER PURGE VALVE 1)	Drives EVAP canister purge valve 1

CHECK

THROTTLE BODY CARBON ACCUMULATION CHECK

Test

1. **HDS - Connect**

2. Throttle Body - Test

1. **Enter the maintenance mode and start the engine**

2. Hold the engine speed at 3000 RPM without load (in P or N) until the radiator fan comes on, then let it idle.

3. Select the PGM-FI System with the HDS.

4. Check the SOC in the DATA LIST with the HDS. If the reading is below 35%, keep idling until the SOC reaches 35%.

5. Check the REL TP SENSOR in the DATA LIST with the HDS. The reading should be below 2.97B°. If it is not, **clean the throttle body**

.

TROUBLESHOOTING

MIL CIRCUIT TROUBLESHOOTING

MIL Circuit Troubleshooting

1. Gauge control module check

-1. Turn the vehicle to the ON mode.

-2. **Do the gauge control module self-diagnostic function** .

Does the MIL flash?

YES

Go to step 2.

NO

Substitute a known-good gauge control module , then recheck. If the symptom/indication goes away with a known-good gauge control module, **replace the original gauge control module** .

2. PCM check

-1. Turn the vehicle to the OFF (LOCK) mode.

-2. **Connect the HDS to the DLC**.

-3. Turn the vehicle to the ON mode.

-4. Check the parameter(s) below with the HDS.

Signal	Threshold		Current conditions	
	Values	Unit	Values	Unit
SCS	Short	B	B	B

Do the current condition(s) match the threshold?

YES

Go to step 3.

NO

Check for any authorized service information related to the DTCs or symptoms you are troubleshooting, or **substitute a known-good PCM** .

3. Shorted wire check (SCS line)

-1. Turn the vehicle to the OFF (LOCK) mode.

-2. Jump the SCS line with the HDS, and wait more than 1 minute.

-3. Disconnect the following connector.

PCM connector A (50P)

-4. Disconnect the HDS from the DLC.

-5. Measure the resistance between test points 1 and 2.

Test condition	Vehicle OFF (LOCK) mode
B	PCM connector A (50P): disconnected
Test point 1	**PCM connector A (50P) No. 27**
Test point 2	Body ground

Is there 1 MΩ or more?

YES

The SCS wire is OK. Check for any authorized service information related to the DTCs or symptoms you are troubleshooting, or **substitute a known-good PCM** .

NO

Repair a short in the SCS wire between the PCM (A27) and the DLC.

PCM POWER AND GROUND CIRCUIT TROUBLESHOOTING

PCM Power and Ground Circuit Troubleshooting

1. Engine starting check

-1. **Enter the maintenance mode, then try to start the engine**.

Does the engine start and idle smoothly?

YES

Go to the troubleshooting for CAN gateway system DTC(s) .

NO

Go to step 2.

2. Fuse check 1

-1. Turn the vehicle to the OFF (LOCK) mode.

-2. Check the following fuse.

Fuse	**No. A12**

Is the fuse OK?

YES

Go to step 3.

NO

Go to step 4.

3. Determine possible failure area (+B_BACKUP_FI-ECU line, others)

-1. Jump the SCS line with the HDS, and wait more than 1 minute.

-2. Disconnect the following connector.

PCM connector A (50P)

-3. Measure the voltage between test points 1 and 2.

Test condition	Vehicle OFF (LOCK) mode
B	PCM connector A (50P): disconnected
Test point 1	**PCM connector A (50P) No. 7**
Test point 2	Body ground

Is there battery voltage?

YES

Go to step 5.

NO

Repair an open in the +B_BACKUP_FI-ECU wire between PCM (A7) and the **No. A12 fuse** .

4. Shorted wire check (+B_BACKUP_FI-ECU line)

-1. Remove the blown **No. A12 fuse** .

-2. Jump the SCS line with the HDS, and wait more than 1 minute.

-3. Disconnect the following connector.

PCM connector A (50P)

-4. Measure the resistance between test points 1 and 2.

Test condition	Vehicle OFF (LOCK) mode

B	PCM connector A (50P): disconnected
Test point 1	**PCM connector A (50P) No. 7**
Test point 2	Body ground

Is there 1 MΩ or more?

YES

Go to step 5.

NO

Repair a short in the +B_BACKUP_FI-ECU wire between the PCM (A7) and the No. A12 fuse. Also replace the No. A12 fuse.

5. Fuse check 2

-1. Check the following fuse.

Fuse	**No. A7**

Is the fuse OK?

YES

Go to step 9.

NO

Go to step 6.

6. Shorted wire check (+B_IGP line)

-1. Remove the blown **No. A7 fuse** .

-2. Disconnect the following connector.

Relay circuit board connector C (18P)

-3. Measure the resistance between test points 1 and 2.

Test condition	Vehicle OFF (LOCK) mode
B	PCM connector A (50P): disconnected
B	Relay circuit board connector C (18P): disconnected
Test point 1	Relay circuit board connector C (18P) (female terminals) No. 18: ①
Test point 2	Body ground

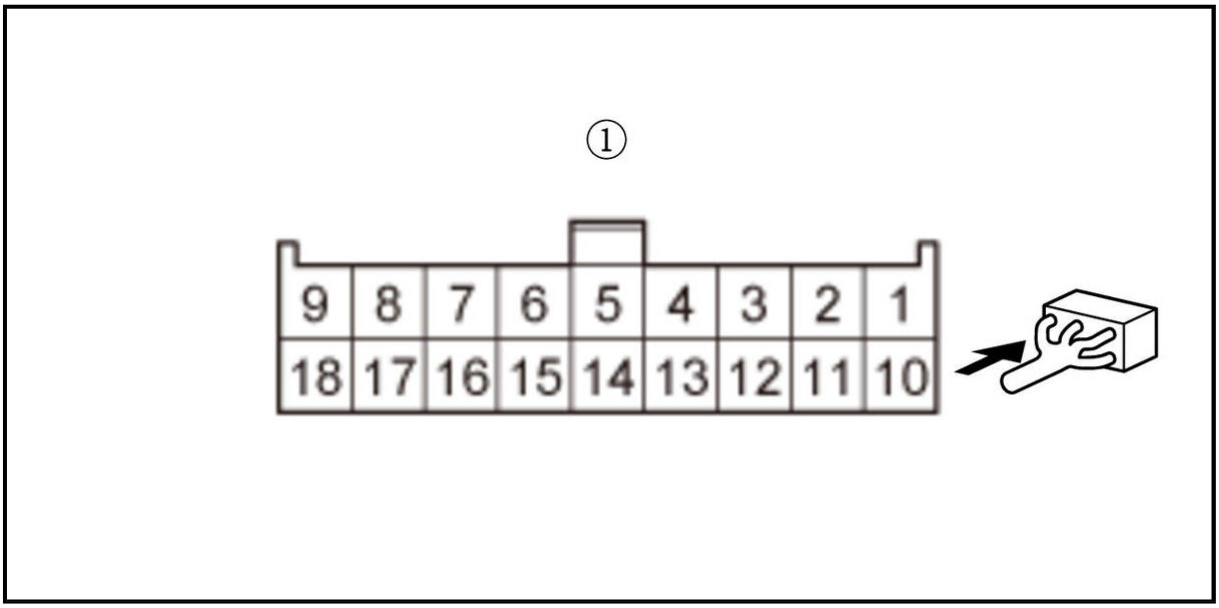

Is there 1 MΩ or more?

YES

Go to step 7.

NO

Repair a short in the +B_IGP wire between the No. A7 fuse and the relay circuit board. If the wire is OK, **replace the under-hood fuse/relay box** . Also replace the No. A7 fuse.

7. Part(s) internal circuit check (short in FI_MAIN_RLY_OUT line):

Disconnect each of the parts or connectors below, one at a time, then check for continuity between test points 1 and 2.

- PGM-FI main relay 2
- PCM connector A (50P)
- Each injector 2P connector

Test condition	Vehicle OFF (LOCK) mode Relay circuit board connector C (18P): disconnected
Test point 1	Relay circuit board connector C (18P) (female terminals) No. 17: ①
Test point 2	Body ground

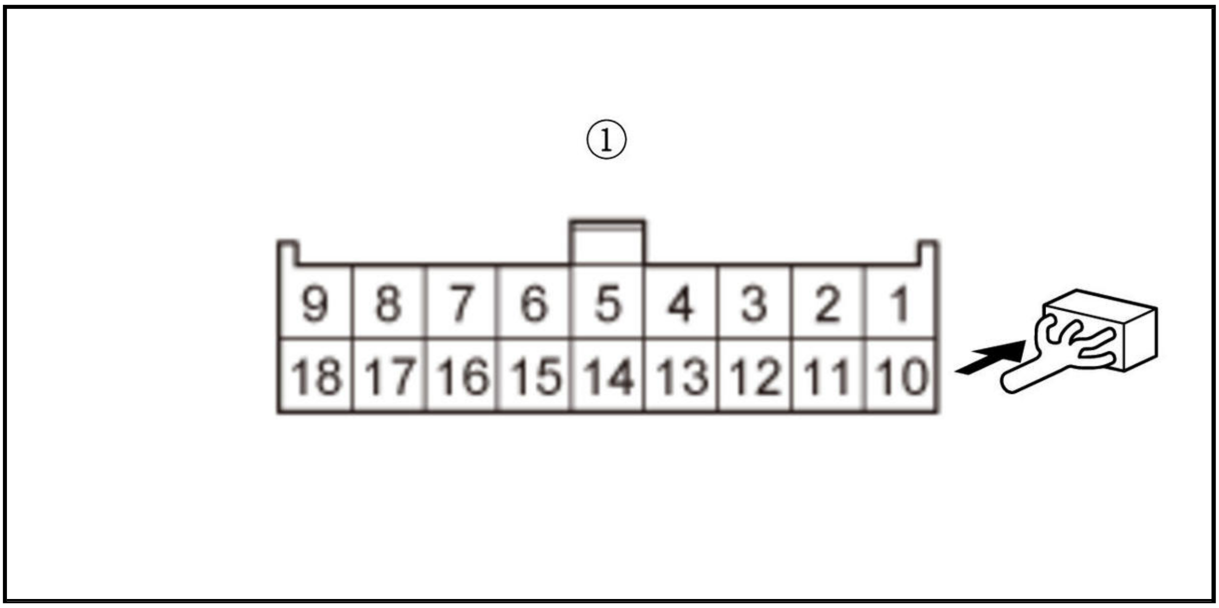

Does continuity go away when one of the above components is disconnected?

YES

Replace the part that made the short to body ground go away when it was disconnected. If the part is the PCM, check for any authorized service information related to the DTCs or symptoms you are troubleshooting, or **substitute a known-good PCM** . Also replace the **No. A7 fuse** .

NO

Parts are OK. Go to step 8.

8. Shorted wire check (FI_MAIN_RLY_OUT line):

Disconnect the following parts or connectors:

- PGM-FI main relay 2
- PCM connector A (50P)

- Each injector 2P connector

-2. Measure the resistance between test points 1 and 2.

Test condition	Vehicle OFF (LOCK) mode
B	Relay circuit board connector C (18P): disconnected
B	PGM-FI main relay 2: disconnected
B	PCM connector A (50P): disconnected
B	Each injector 2P connector: disconnected
Test point 1	Relay circuit board connector C (18P) (female terminals) No. 17: ①
Test point 2	Body ground

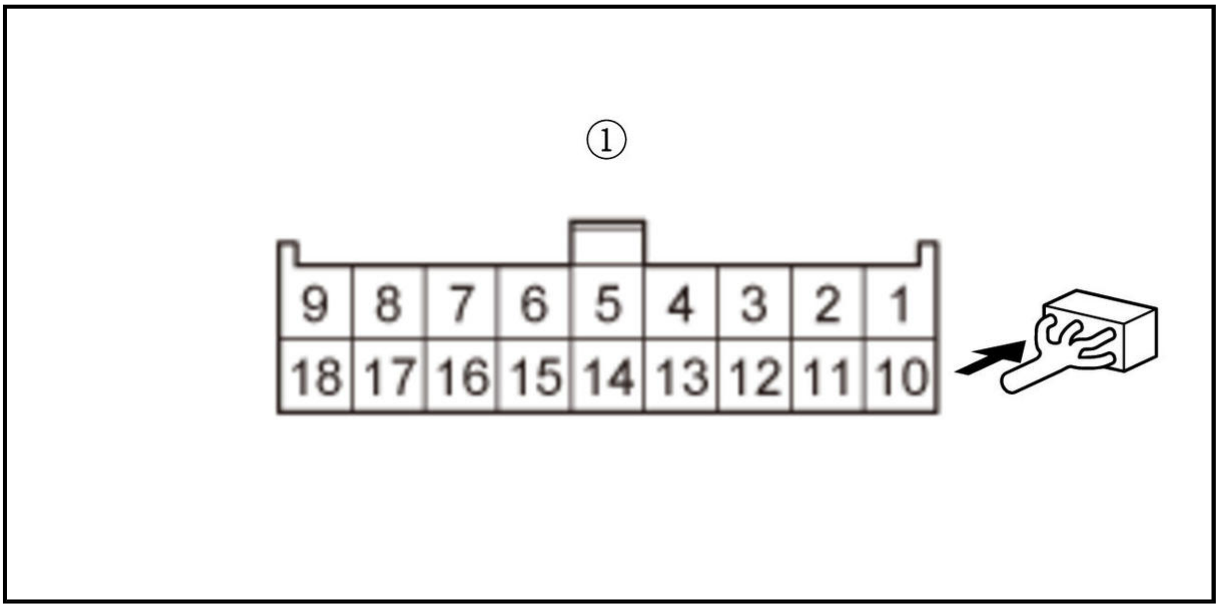

Is there 1 MΩ or more?

YES

The FI_MAIN_RLY_OUT wire is OK. **Replace the relay circuit board** . Also replace the **No. A7 fuse** .

NO

Repair a short in the FI_MAIN_RLY_OUT wire between the relay circuit board and each part. Also replace the No. A7 fuse.

9. Fuse check 3

-1. Check the following fuse.

Fuse	**No. D8**

Is the fuse OK?

YES

Go to step 14.

NO

Go to step 10.

10. Relay check

-1. **Remove PGM-FI main relay 2** .

-2. **Test PGM-FI main relay 2** .

Is the relay OK?

YES

PGM-FI main relay 2 is OK. Go to step 11.

NO

Replace PGM-FI main relay 2. Also replace the **No. D8 fuse** .

11. Determine possible failure area (IG1_FUEL_PUMP line, others)

-1. Remove the blown **No. D8 fuse** .

-2. Measure the resistance between test points 1 and 2.

Test condition	Vehicle OFF (LOCK) mode
B	PCM connector A (50P): disconnected
B	PGM-FI main relay 2: disconnected
Test point 1	PGM-FI main relay 2 4P socket (female terminals) No. 1: ①
Test point 2	Body ground

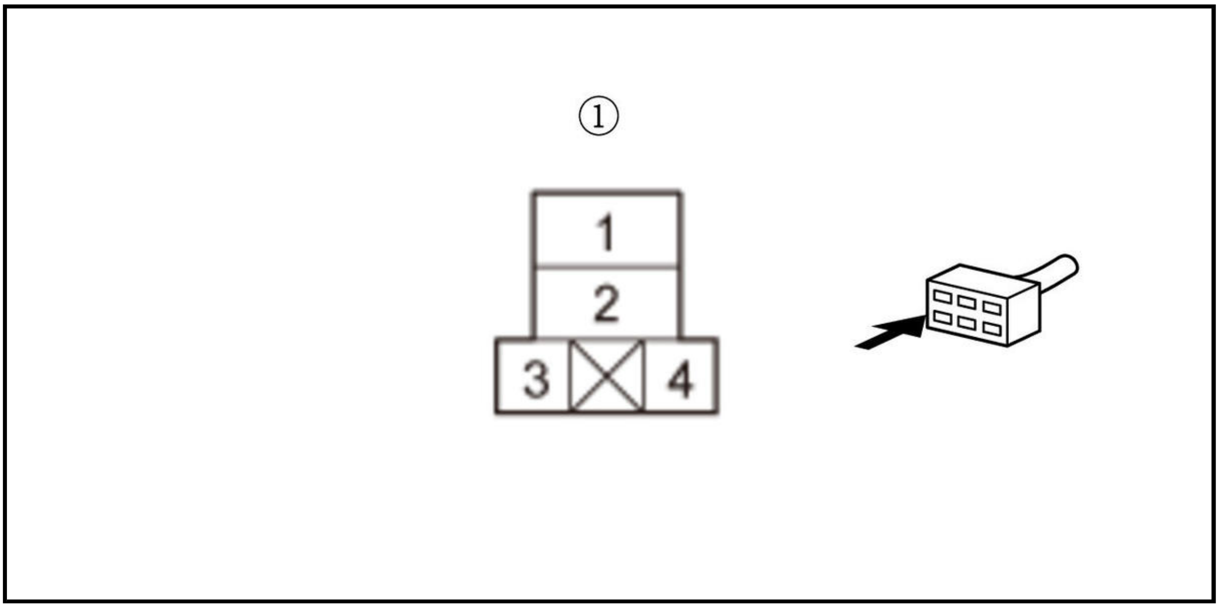

Is there 1 MΩ or more?

YES

Go to step 13.

NO

Go to step 12.

12. Shorted wire check (IG1_FUEL_PUMP line)

-1. Disconnect the following connector.

Under-dash fuse/relay box connector C (27P)

-2. Measure the resistance between test points 1 and 2.

Test condition	Vehicle OFF (LOCK) mode
B	PCM connector A (50P): disconnected
B	PGM-FI main relay 2: disconnected
B	Under-dash fuse/relay box connector C (27P): disconnected
Test point 1	PGM-FI main relay 2 4P socket (female terminals) No. 1: ①
Test point 2	Body ground

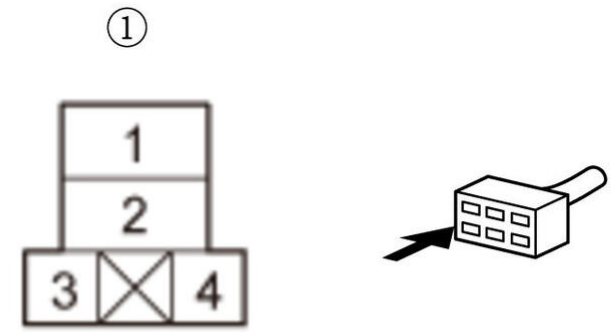

Is there 1 MΩ or more?

YES

The IG1_FUEL_PUMP wire is OK. Replace the **No. D8 fuse** . If the fuse blown again, **replace the under-dash fuse/relay box** .

NO

Repair a short in the IG1_FUEL_PUMP wire between PGM-FI main relay 2 and the No. D8 fuse. Also replace the No. D8 fuse.

13. Shorted wire check (FUEL_PUMP_RLY_OUT line)

-1. Disconnect the following connector.

Fuel tank unit 4P connector

-2. Measure the resistance between test points 1 and 2.

Test condition	Vehicle OFF (LOCK) mode
B	PCM connector A (50P): disconnected
B	PGM-FI main relay 2: disconnected
B	Fuel tank unit 4P connector: disconnected
Test point 1	Fuel tank unit 4P connector (female terminals) No. 1: ①
Test point 2	Body ground

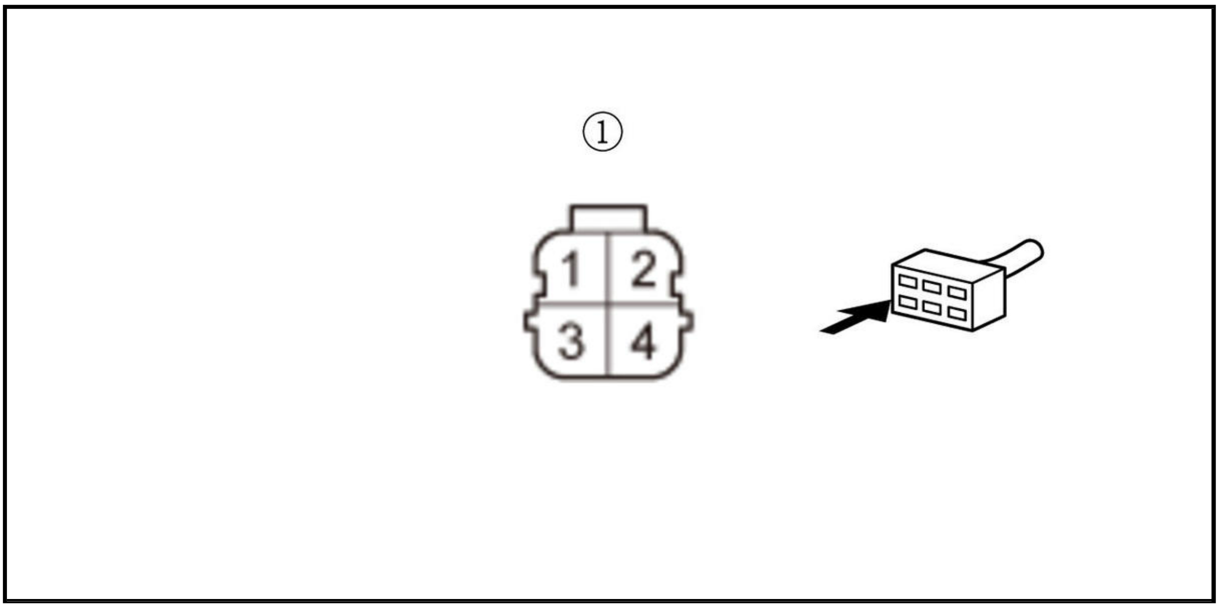

Is there 1 MΩ or more?

YES

The FUEL_PUMP_RLY_OUT wire is OK. Check the fuel pump, and **replace it** if needed. Also replace the **No. D8 fuse** .

NO

Repair a short in the FUEL_PUMP_RLY_OUT wire between PGM-FI main relay 2 and the fuel tank unit. Also replace the No. D8 fuse.

14. Open wire check (IG1_FUEL_PUMP line)

-1. **Remove PGM-FI main relay 2** .

-2. Exit the SCS mode with the HDS.

-3. Turn the vehicle to the ON mode.

-4. Measure the voltage between test points 1 and 2.

Test condition	Vehicle ON mode
B	PCM connector A (50P): disconnected
B	PGM-FI main relay 2: disconnected
Test point 1	PGM-FI main relay 2 4P socket (female terminals) No. 1: ①
Test point 2	Body ground

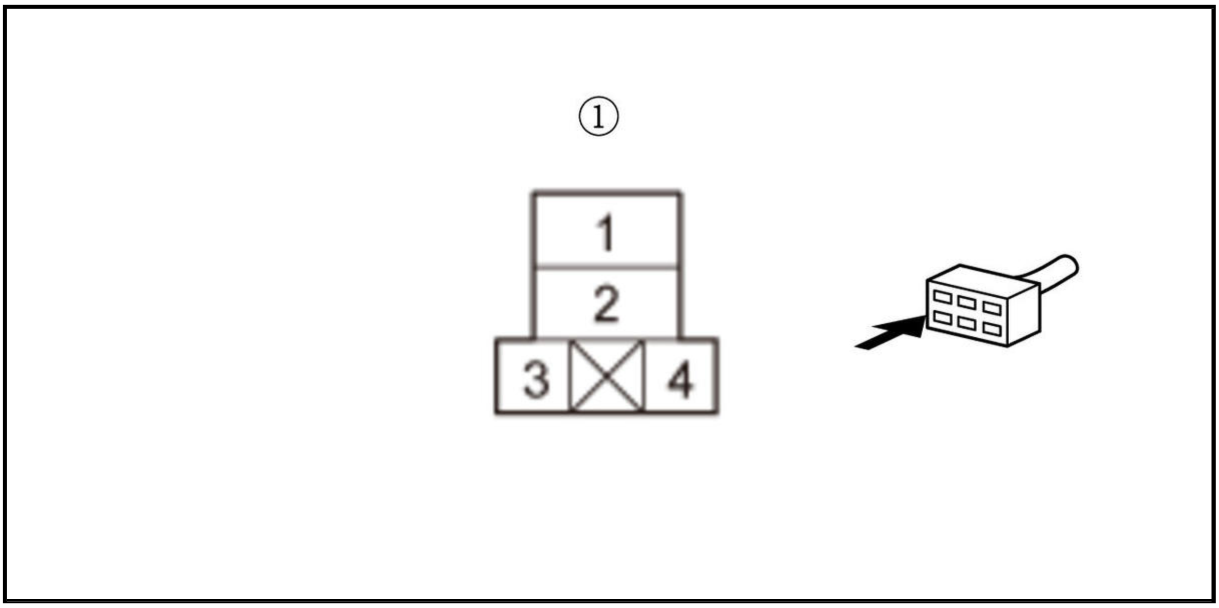

Is there battery voltage?

YES

The IG1_FUEL_PUMP wire is OK. Go to step 15.

NO

Repair an open in the IG1_FUEL_PUMP wire between the **No. D8 fuse** and PGM-FI main relay 2.

15. Fuse check 4

-1. Turn the vehicle to the OFF (LOCK) mode.

-2. Check the following fuse.

Fuse	**No. D11**

Is the fuse OK?

YES

Go to step 17.

NO

Go to step 16.

16. Shorted wire check (IG1 (MONI)/IG1_MON line)

-1. Jump the SCS line with the HDS, and wait more than 1 minute.

-2. Disconnect the following connector.

PCM connector E (80P)

-3. Measure the resistance between test points 1 and 2.

Test condition	Vehicle OFF (LOCK) mode
B	PCM connector A (50P): disconnected
B	PGM-FI main relay 2: disconnected

B	PCM connector E (80P): disconnected
Test point 1	**PCM connector E (80P) No. 36**
Test point 2	Body ground

Is there 1 MΩ or more?

YES

The IG1 (MONI)/IG1_MON wire is not shorted. Go to step 18.

NO

Repair a short in the IG1 (MONI)/IG1_MON wire between the PCM (E36) and the **No. D11 fuse** . Also replace the No. D11 fuse.

17. Open wire check (IG1 (MONI)/IG1_MON line)

-1. Reinstall the **No. D11 fuse** .

-2. Jump the SCS line with the HDS, and wait more than 1 minute.

-3. Disconnect the following connector.

PCM connector E (80P)

-4. Turn the vehicle to the ON mode.

-5. Measure the voltage between test points 1 and 2.

Test condition	Vehicle ON mode
B	PCM connector A (50P): disconnected
B	PGM-FI main relay 2: disconnected
B	PCM connector E (80P): disconnected
Test point 1	**PCM connector E (80P) No. 36**
Test point 2	Body ground

Is there battery voltage?

YES

The IG1 (MONI)/IG1_MON wire is OK. Go to step 18.

NO

Repair an open in the IG1 (MONI)/IG1_MON wire between the PCM (E36) and the No. D11 fuse.

18. Determine possible failure area (PGM-FI main relay 1 control circuit, others)

-1. Turn the vehicle to the OFF (LOCK) mode.

-2. Measure the voltage between test points 1 and 2.

Test condition	Vehicle OFF (LOCK) mode
B	PCM connector A (50P): disconnected
B	PGM-FI main relay 2: disconnected
B	PCM connector E (80P): disconnected
Test point 1	**PCM connector A (50P) No. 5**

Test point 2	Body ground

Is there battery voltage?

YES

Go to step 21.

NO

Go to step 19.

19. Open wire check (+B_IGP line)

-1. Disconnect the following connector.

Relay circuit board connector C (18P)

-2. Measure the voltage between test points 1 and 2.

Test condition	Vehicle OFF (LOCK) mode
B	PCM connector A (50P): disconnected
B	PGM-FI main relay 2: disconnected
B	PCM connector E (80P): disconnected
B	Relay circuit board connector C (18P): disconnected
Test point 1	Relay circuit board connector C (18P) (female terminals) No. 18: ①
Test point 2	Body ground

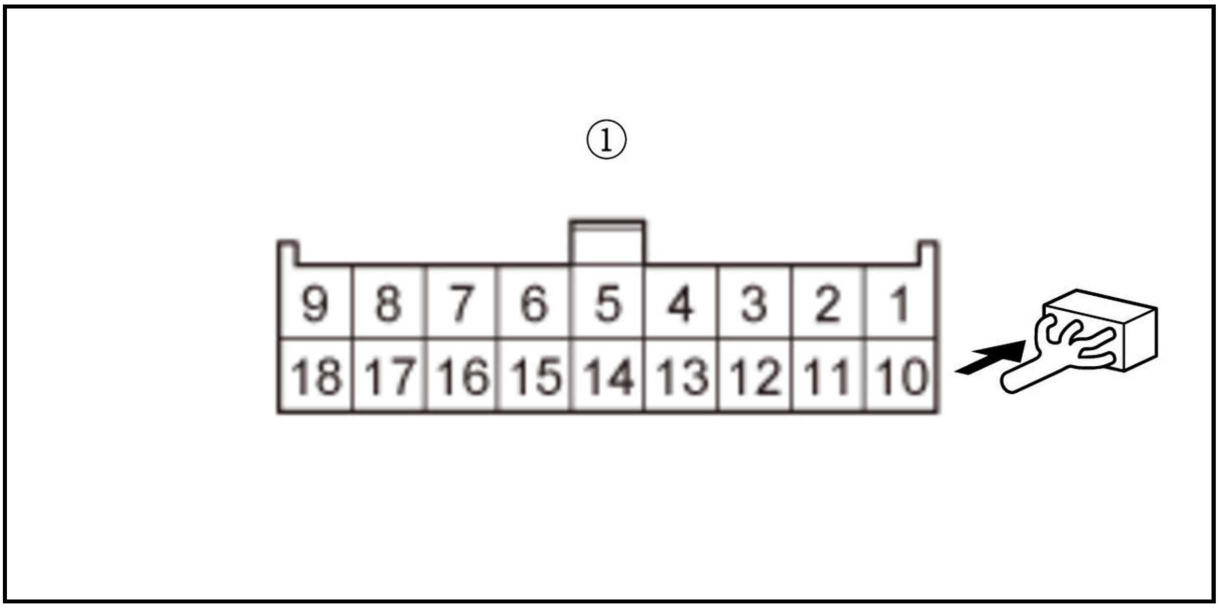

Is there battery voltage?

YES

Go to step 20.

NO

Repair an open in the +B_IGP wire between the relay circuit board and the **No. A7 fuse** .

20. Open wire check (FI_MAIN_RLY_CL- line)

-1. Measure the resistance between test points 1 and 2.

Test condition	Vehicle OFF (LOCK) mode
B	PCM connector A (50P): disconnected
B	PGM-FI main relay 2: disconnected
B	PCM connector E (80P): disconnected
B	Relay circuit board connector C (18P): disconnected
Test point 1	Relay circuit board connector C (18P) (female terminals) No. 5: ①
Test point 2	**PCM connector A (50P) No. 5**

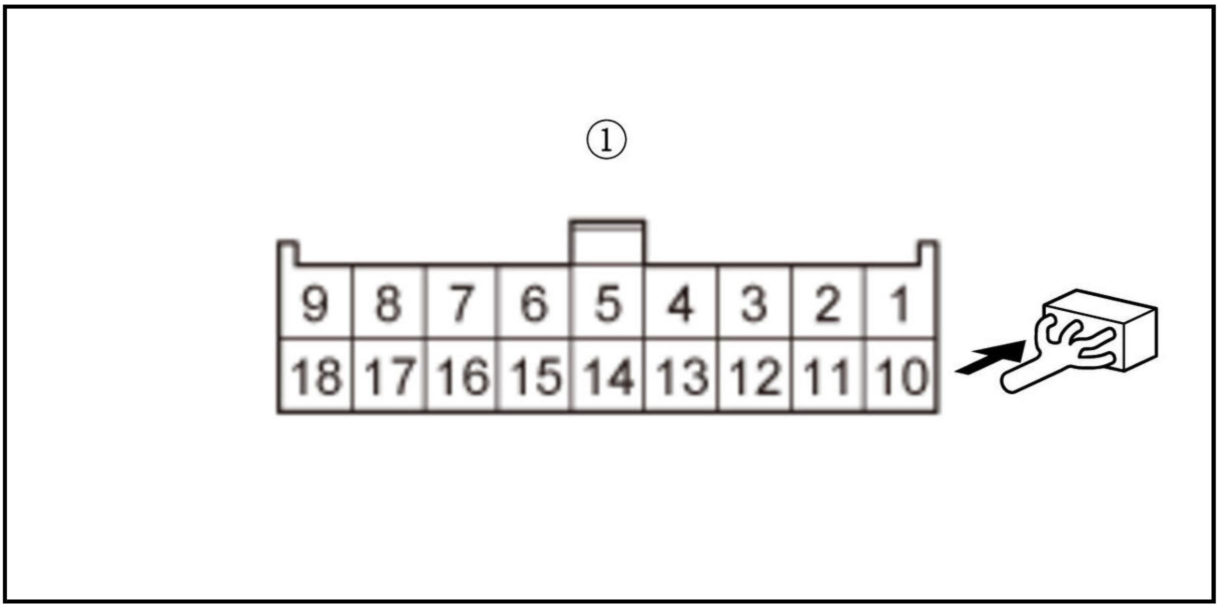

Is there 1.0 Ω or less?

YES

The FI_MAIN_RLY_CL- wire is OK. **Remove and test the relay circuit board** . If the relay circuit board is OK, check for any authorized service information related to the DTCs or symptoms you are troubleshooting, or **substitute a known-good PCM** .

NO

Repair an open in the FI_MAIN_RLY_CL- wire between the PCM (A5) and the relay circuit board.

21. Open wire check (FI_MAIN_RLY_OUT line)

-1. Measure the resistance between test points 1 and 2.

Test condition	Vehicle OFF (LOCK) mode
B	PCM connector A (50P): disconnected
B	PGM-FI main relay 2: disconnected
B	PCM connector E (80P): disconnected
B	Relay circuit board connector C (18P): disconnected
Test point 1	Relay circuit board connector C (18P) (female terminals) No. 17: ①
Test point 2	**PCM connector A (50P) No. 8**

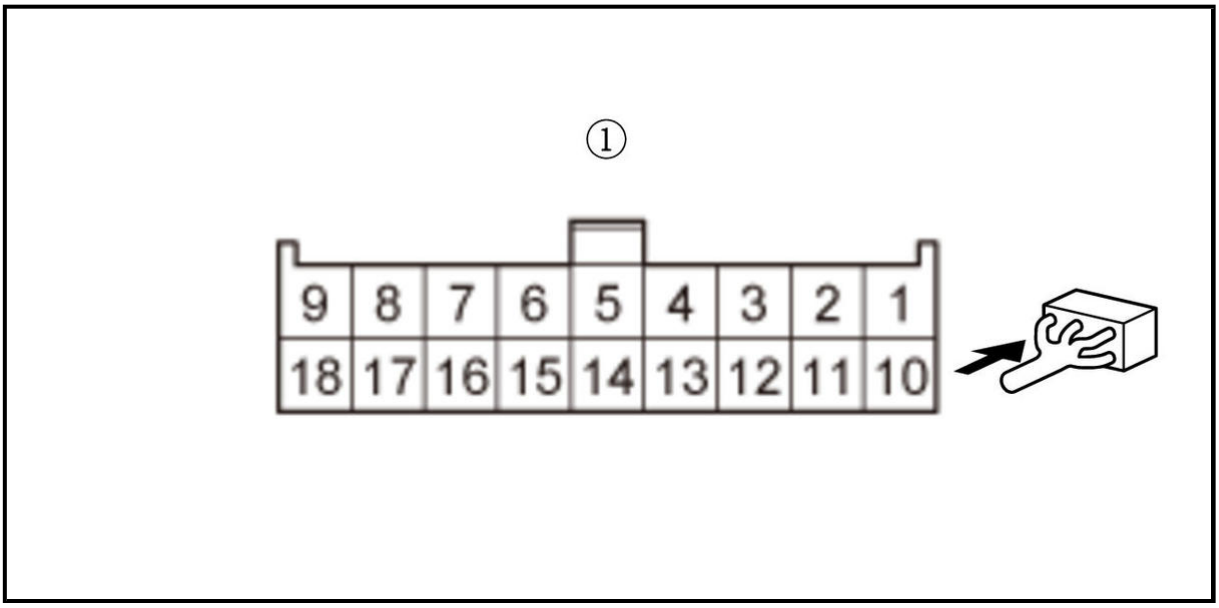

Is there 1.0 Ω or less?

YES

The FI_MAIN_RLY_OUT wire is OK. Go to step 22.

NO

Repair an open in the FI_MAIN_RLY_OUT wire between the PCM (A8) and the relay circuit board.

22. Relay circuit board check

-1. **Remove and test the relay circuit board** .

Is the relay circuit board OK?

YES

The relay circuit board is OK. Go to step 23.

NO

Replace the relay circuit board .

23. Open wire check (GND lines)

-1. Measure the resistance between the following test points and body ground individually.

Test condition	Vehicle OFF (LOCK) mode
B	PCM connector A (50P): disconnected
B	PGM-FI main relay 2: disconnected
B	PCM connector E (80P): disconnected
B	Relay circuit board: removed

Connector	Terminal
PCM connector A (50P)	No. 13

Connector	Terminal
PCM connector E (80P)	No. 22
	No. 23

Connector	Terminal
	No. 24

Is there 1.0 Ω or less?

YES

The FI_ECU_GND wire, the GND_2 wire, the GND_3 wire, and the GND_4 wire are OK. Check for any authorized service information related to the DTCs or symptoms you are troubleshooting, or **substitute a known-good PCM** .

NO

Repair an open in the FI ECU GND wire, the GND_2 wire, the GND_3 wire, and/or the GND_4 wire between the PCM (A13, E22, E23, E24) and G101.

ADJUSTMENT

VALVE CLEARANCE ADJUSTMENT

Special Tools Required

Image	Description/Tool Number
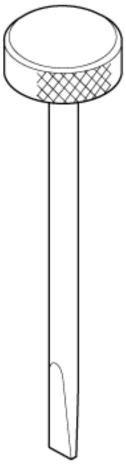	Adjuster 07MAA-PR70110
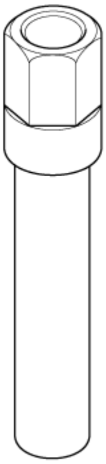	Locknut Wrench 07MAA-PR70120

Adjustment

NOTE: **Connect the HDS to the DLC**, and monitor ECT SENSOR 1. Adjust the valve clearance only when the engine coolant temperature is less than 100B°F (38B°C).

1. **Cylinder Head Cover - Remove**

2. Valve Clearance - Adjust

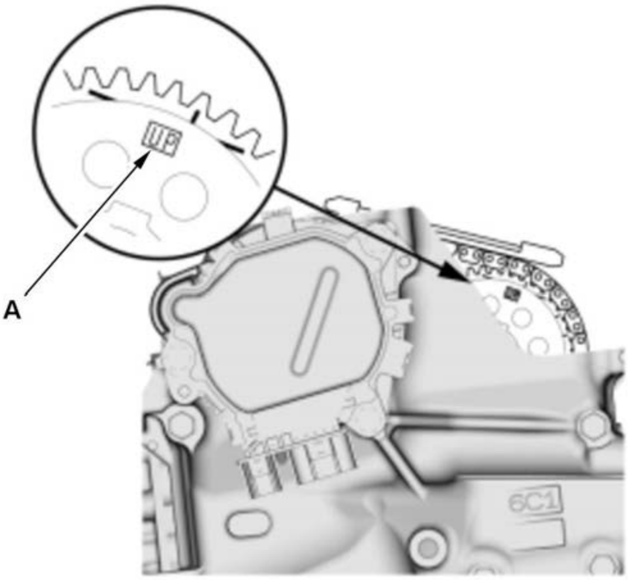	1. Set the "UP" mark (A) on the exhaust camshaft sprocket as shown.

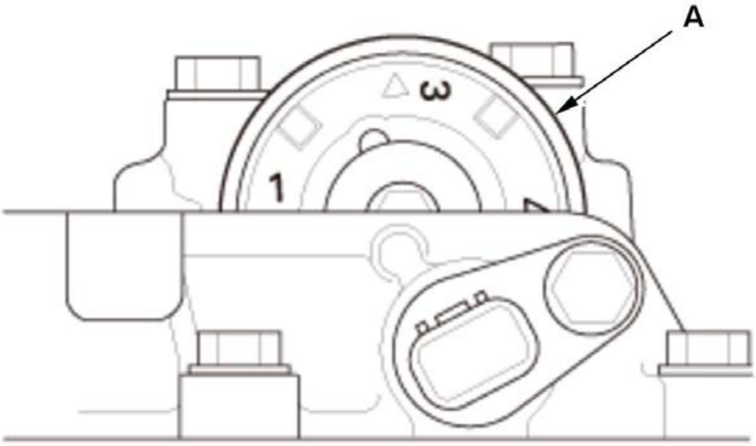	2. Set CMP pulse plate A as shown.

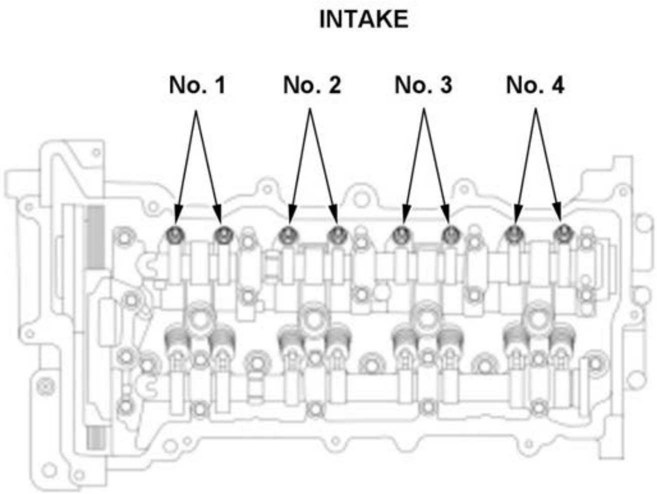

3. Select the correct feeler gauge for the valve clearance you are going to check.

Valve Clearance	
Intake:	**0.18-0.22 mm (0.0071-0.0087 in)**
Exhaust:	**No adjustment (Hydraulic tappet)**

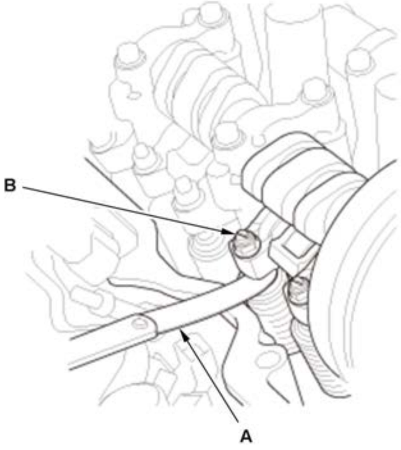

4. Insert the feeler gauge (A) between the adjusting screw (B) and the end of the valve stem on the No. 1 cylinder, and slide it back and forth; you should feel a slight amount of drag.

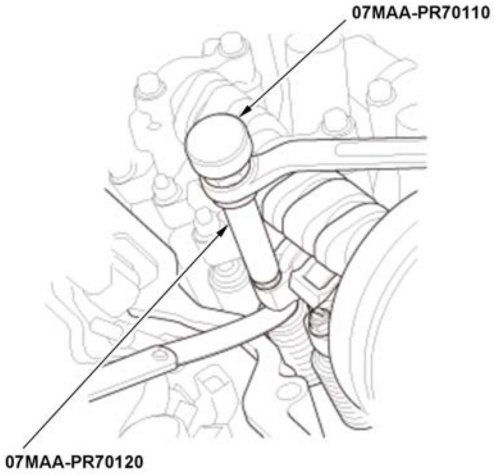

5. If you feel too much or too little drag, loosen the locknut with the locknut wrench, and turn the adjusting screw with the adjuster until the drag on the feeler gauge is correct.

6. Tighten the locknut to the specified torque, and recheck the clearance. Repeat the adjustment if necessary.

Specified Torque:
14 N.m (1.4 kgf.m, 10 lbf.ft)
Apply new engine oil to the nut threads.

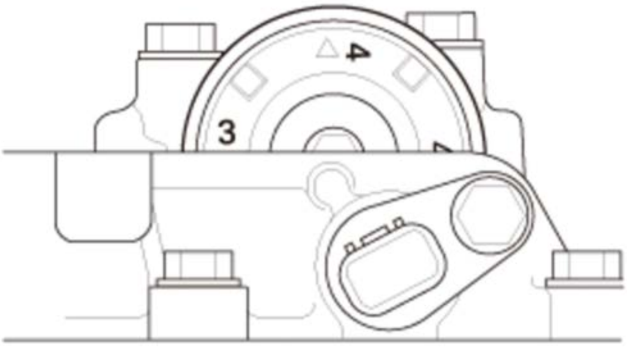	7. Rotate the crankshaft 180B° clockwise (camshaft pulley turns 90B°). 8. Check and, if necessary, adjust the valve clearance on the No. 3 cylinder.

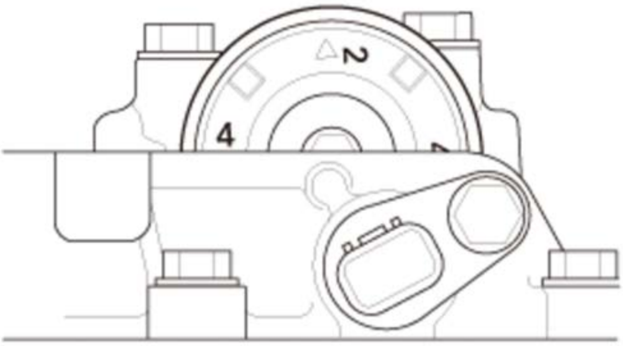	9. Rotate the crankshaft 180B° clockwise (camshaft pulley turns 90B°). 10. Check and, if necessary, adjust the valve clearance on the No. 4 cylinder.

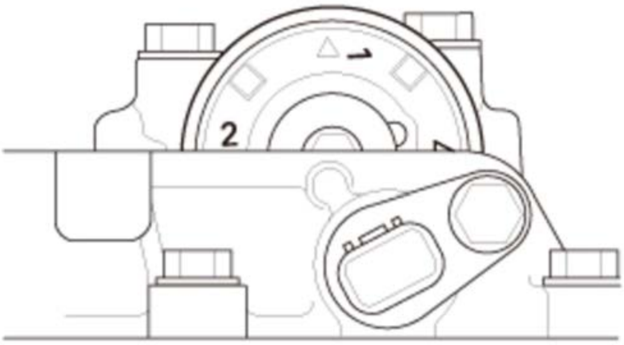	11. Rotate the crankshaft 180B° clockwise (camshaft pulley turns 90B°). 12. Check and, if necessary, adjust the valve clearance on the No. 2 cylinder.

3. All Removed Parts - Install

1. Install the parts in the reverse order of removal.

4. Maintenance Minder - Reset

1. If the Maintenance Minder requires the valve clearance to be adjusted, **reset the Maintenance Minder with the gauge** (see "Resetting the Maintenance Minder").

COMPONENT LOCATION INDEX

ENGINE BLOCK ASSEMBLY COMPONENT LOCATION INDEX

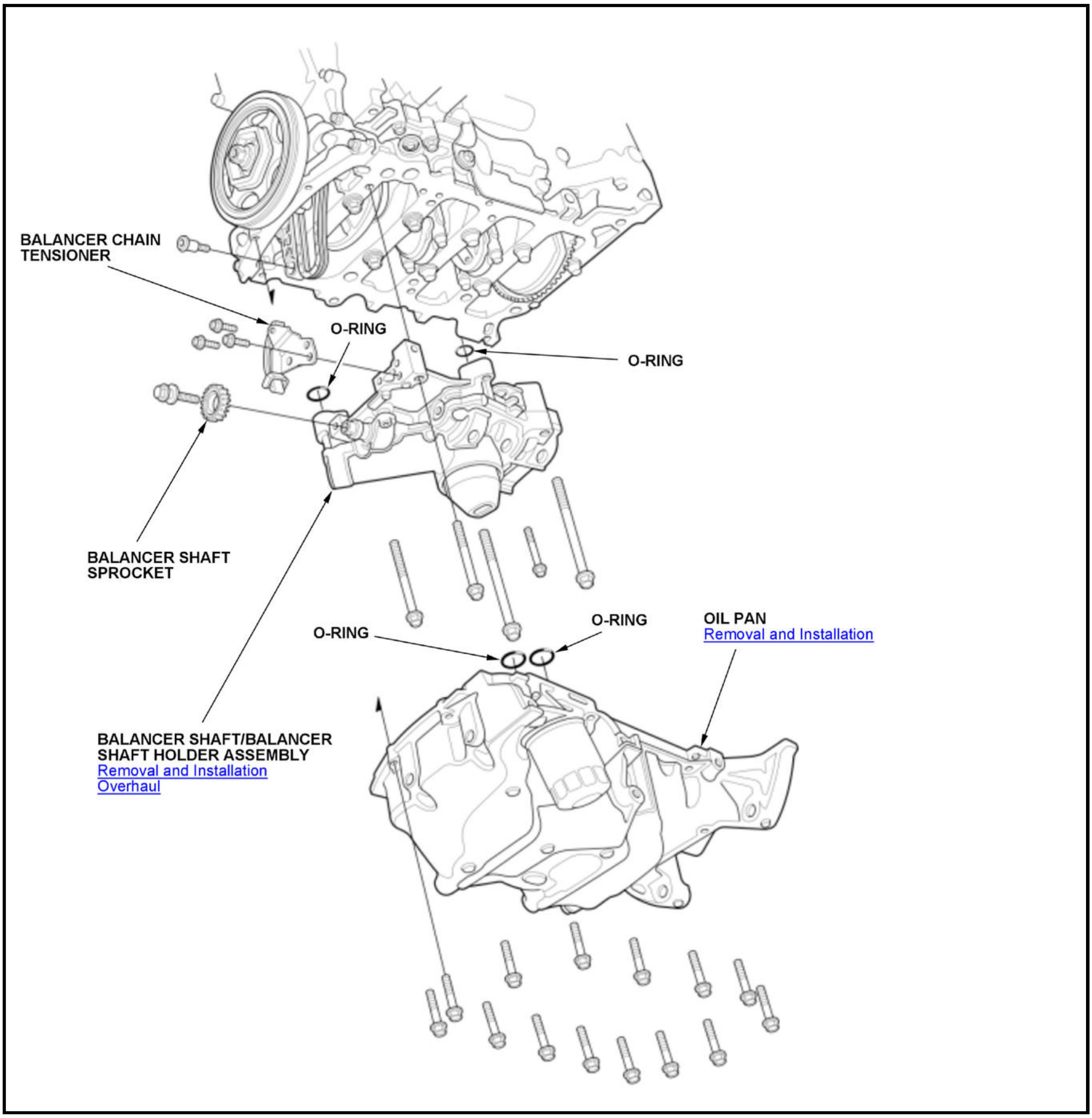
BALANCER CHAIN TENSIONER
O-RING
O-RING
BALANCER SHAFT SPROCKET
O-RING
O-RING
OIL PAN
Removal and Installation
BALANCER SHAFT/BALANCER SHAFT HOLDER ASSEMBLY
Removal and Installation
Overhaul

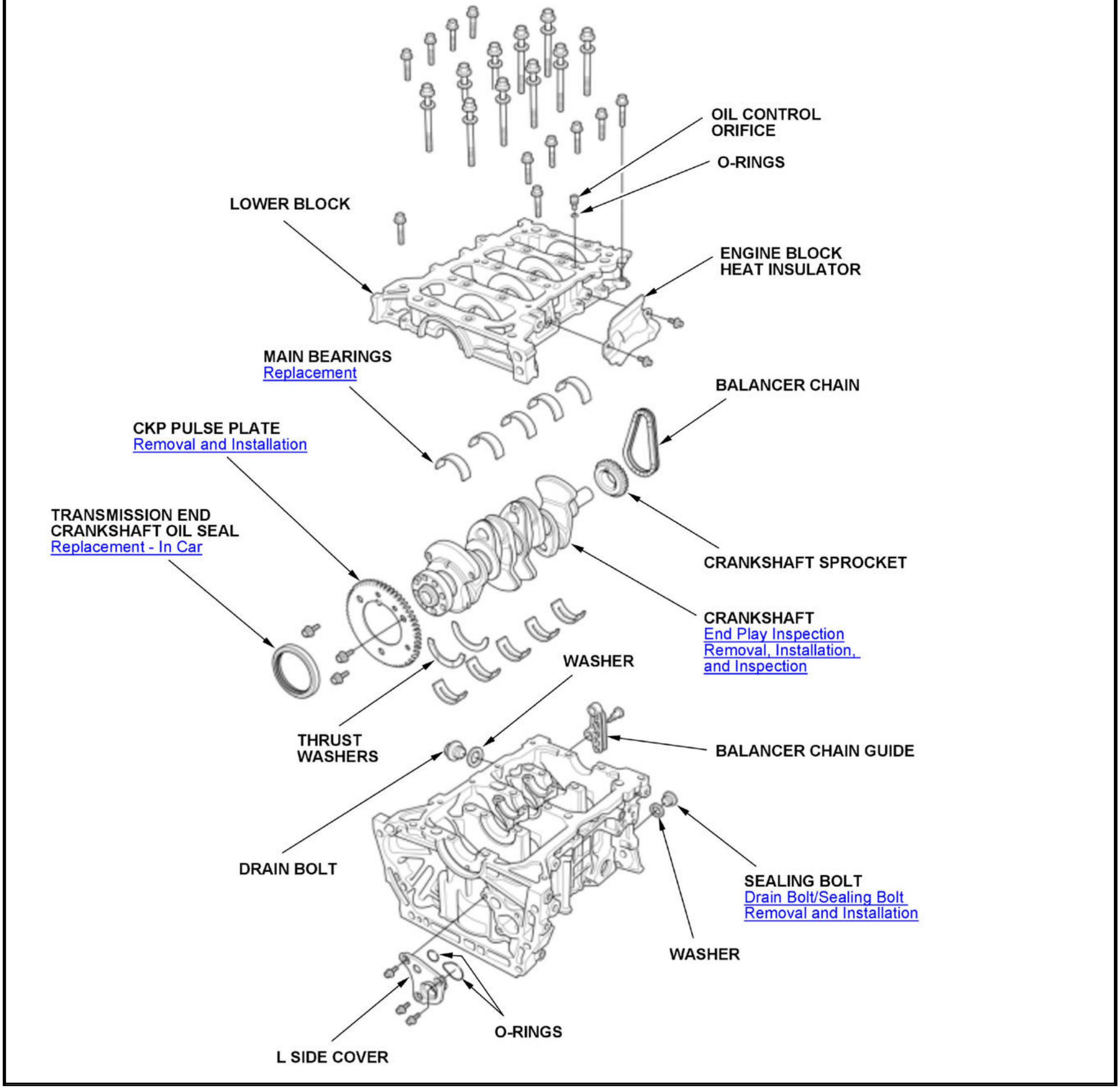
OIL CONTROL ORIFICE
O-RINGS
LOWER BLOCK
ENGINE BLOCK HEAT INSULATOR
MAIN BEARINGS
Replacement
BALANCER CHAIN
CKP PULSE PLATE
Removal and Installation
TRANSMISSION END CRANKSHAFT OIL SEAL
Replacement - In Car
CRANKSHAFT SPROCKET
CRANKSHAFT
End Play Inspection
Removal, Installation, and Inspection
WASHER
THRUST WASHERS
BALANCER CHAIN GUIDE
DRAIN BOLT
SEALING BOLT
Drain Bolt/Sealing Bolt Removal and Installation
WASHER
O-RINGS
L SIDE COVER

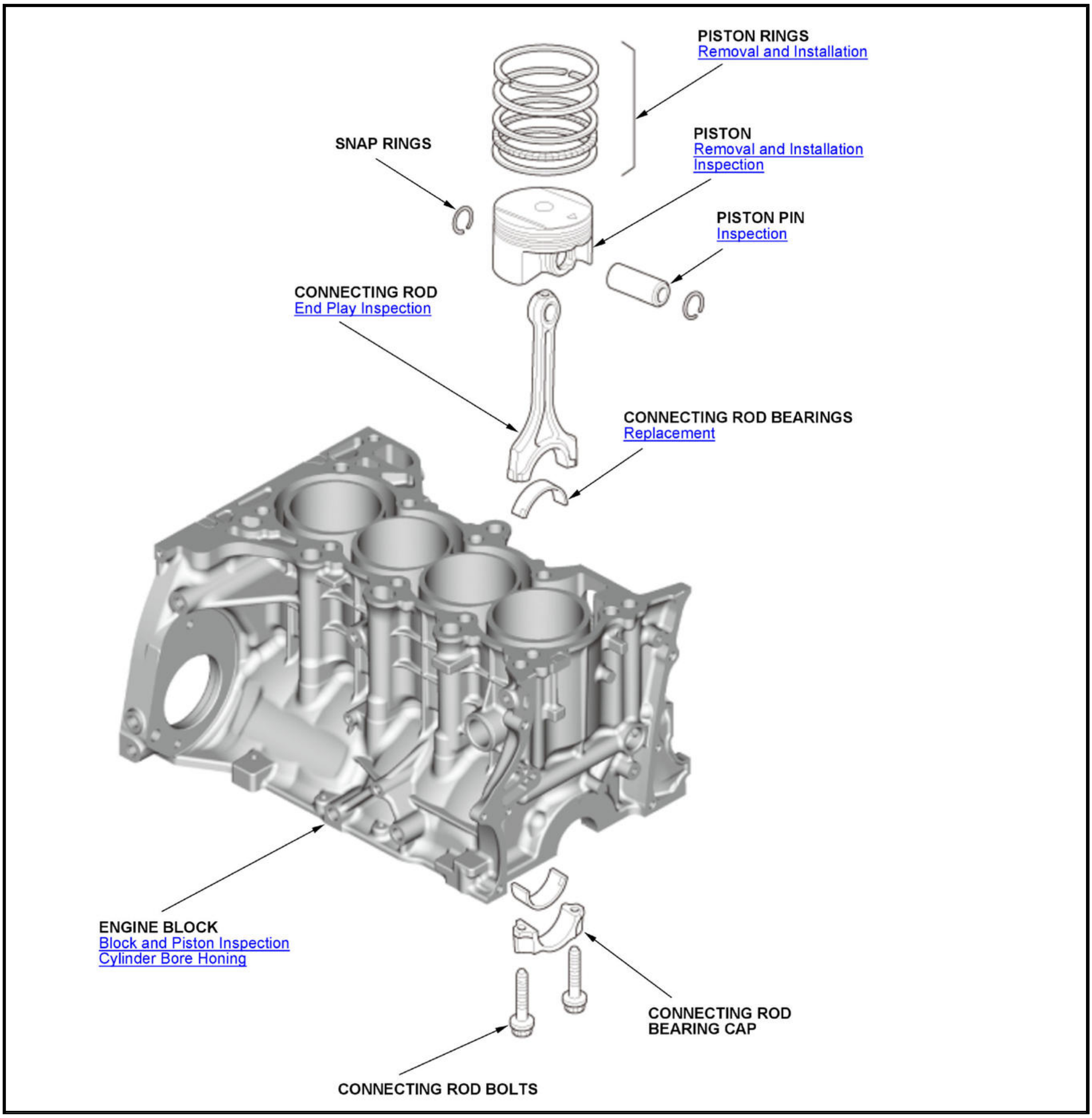
PISTON RINGS
Removal and Installation
SNAP RINGS
PISTON
Removal and Installation
Inspection
PISTON PIN
Inspection
CONNECTING ROD
End Play Inspection
CONNECTING ROD BEARINGS
Replacement
ENGINE BLOCK
Block and Piston Inspection
Cylinder Bore Honing
CONNECTING ROD
BEARING CAP
CONNECTING ROD BOLTS

LEARNING, RESET & CLEAR

CKP PATTERN CLEAR/CKP PATTERN LEARN PROCEDURE

Procedure

NOTE:

- Clearing the DTCs with the HDS does not require you to do this procedure.
- The PCM memorizes the learning status in its memory an hour after turning the vehicle to the OFF (LOCK) mode. If you need to disconnect the 12 volt battery terminals before memorizing the learning status in the PCM, jump the SCS line with the HDS, and wait 60 seconds, then disconnect the 12 volt battery terminals.

1. **HDS - Connect**
2. CKP Pattern - Clear/Learn

1. Select the PGM-FI System with the HDS.

2. Select CRANK PATTERN in the Adjustment Menu with the HDS.

3. Select CRANK PATTERN CLEAR with the HDS, and clear the CKP pattern.

4. Select CRANK PATTERN LEARNING with the HDS, and follow the screen prompts.

5. Turn the vehicle to the OFF (LOCK) mode.

6. Jump the SCS line with the HDS.

7. Wait 60 seconds, and exit the SCS mode with the HDS.

PCM RESET

Procedure

1. **HDS - Connect**
2. PCM - Reset

1. Select the PGM-FI system with the HDS.

2. Reset the PCM with the HDS while the engine is stopped.

3. Turn the vehicle to the OFF (LOCK) mode.

4. Turn the vehicle to the ON mode, and wait 30 seconds.

5. Turn the vehicle to the OFF (LOCK) mode, and disconnect the HDS from the DLC.

VTC POSITION LEARN PROCEDURE

Procedure

NOTE:

- Clearing the DTCs with the HDS does not require you to do this procedure.
- The PCM memorizes the learning status in its memory after passed an hour from turning the vehicle to the OFF (LOCK) mode. If you need to disconnect the 12 volt battery terminals before memorizing the learning status in the PCM, jump the SCS line with the HDS, and wait 60 seconds, then disconnect the 12 volt battery terminals.

1. **HDS - Connect**
2. VTC Position - Learn

1. Select the PGM-FI System with the HDS.

2. Select E-VTC LEARNING in the ADJUSTMENT with the HDS, and follow the screen prompts.

3. Turn the vehicle to the OFF (LOCK) mode.

4. Jump the SCS line with the HDS.

5. Wait 60 seconds, and exit the SCS mode with the HDS.

Engine Cooling Service Specifications - CR-V

STANDARDS AND SERVICE LIMITS (2020-21)

COOLING SYSTEM

Item	Measurement	Qualification	Standard or New	Service Limit
Radiator	Coolant capacity (including engine, heater, hoses, and expansion tank) (with cooler valve body)	Engine overhaul	7.6 L (2.01 US gal)	-
		Coolant change	6.3 L (1.66 US gal)	-
	Coolant capacity (including engine, heater, hoses, and expansion tank) (without cooler valve body)	Engine overhaul	7.6 L (2.01 US gal)	-
		Coolant change	6.2 L (1.64 US gal)	-
	Coolant type (except Ecuador)	B	Use Honda Long Life Antifreeze/Coolant Type 2, and add Honda Extreme Cold Weather Antifreeze/Coolant Type 2.**NOTE:** If the vehicle is regularly driven in very low temperatures (below -22 deg.F (-30 deg.C)), a 60 % concentration of coolant should be used.	
	Coolant type (Ecuador)	B	Honda All Season Antifreeze/Coolant Type 2	

Item	Measurement	Qualification	Standard or New	Service Limit
Expansion tank	Coolant capacity	B	0.8 L (0.21 US gal)	-
Expansion tank cap	Opening pressure	B	93-123 kPa (0.95-1.25 kgf/cm 2, 13.5-17.8 psi)	-
Thermostat	Opening temperature	Begins to open	169-176 deg.F (76-80 deg.C)	-
		Fully open	194 deg.F (90 deg.C)	-
	Valve lift at fully open	B	8.0 mm (0.315 in) min.	-

REMOVAL & INSTALLATION TEST

THERMOSTAT REMOVAL, INSTALLATION, AND TEST (1.5 L ENGINE)

Removal and Installation

NOTE:

- ℹ Where icon is shown, further information shown below.
- Be sure to install the thermostat in the direction shown.

1

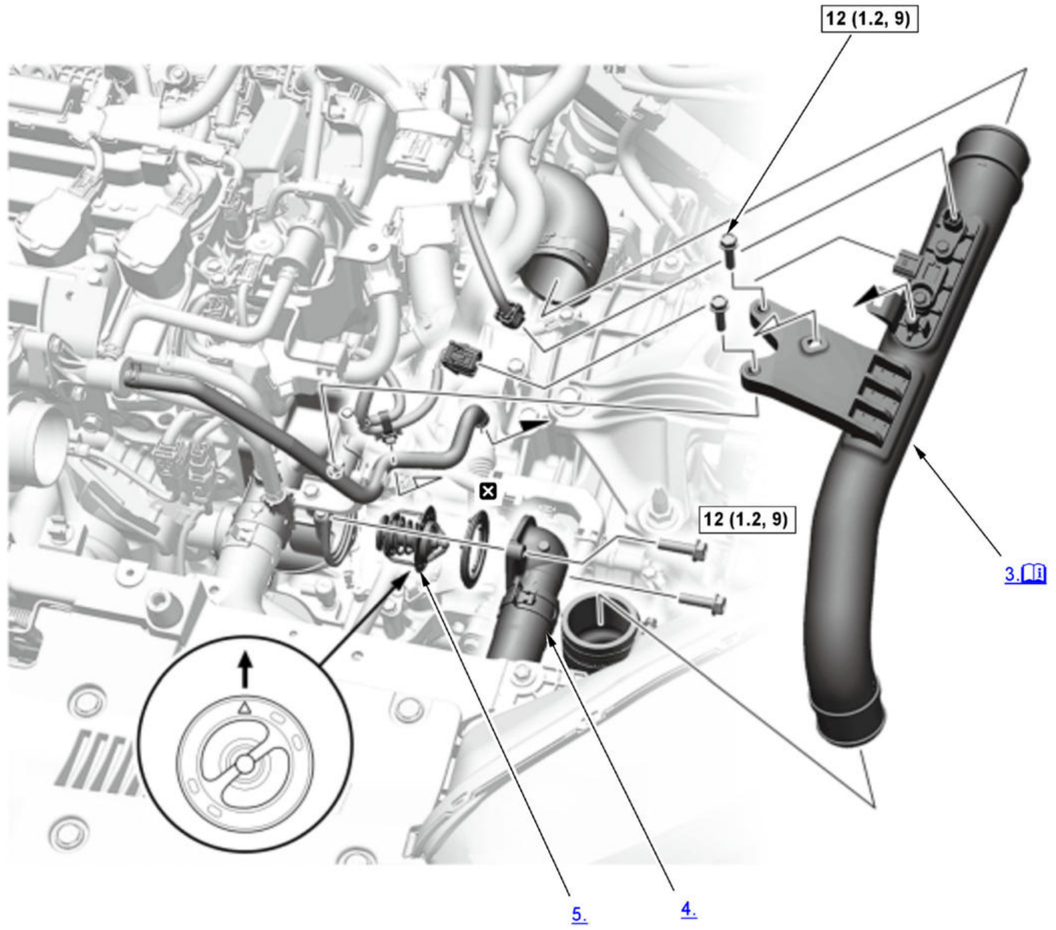

ℹ	Detailed information, notes, and precautions
☐	Torque: N.m (kgf.m, lbf.ft)
☒	Replace

1. Engine Coolant - Drain
2. Air Cleaner - Remove

3. Throttle Body Inlet Pipe - Remove

NOTE: **Make sure the end of hose band is aligned with the mark on the hose band after the throttle body inlet pipe is installed.**

4. Thermostat Cover - Remove
5. Thermostat - Remove
6. All Removed Parts - Install

1. Install the parts in the reverse order of removal.

NOTE:

After installing all the removed parts, refill the radiator with engine coolant, and bleed the air from the cooling system .

Test

NOTE: Replace the thermostat if it is stuck in the open position at room temperature.

1. Thermostat - Test

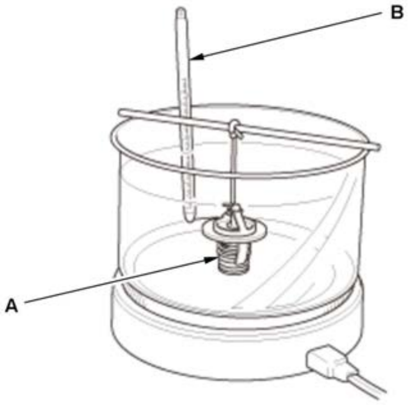	To test a closed thermostat: 1. Suspend the thermostat (A) in a container of water. Do not let the thermostat and the thermometer (B) touch the bottom of the hot container. 2. Heat the water, and check the temperature with a thermometer. Check the temperature when the thermostat first opens, and when it is fully open. 3. Measure the lift height of the thermostat when it is fully open.

Standard Thermostat	
Lift Height:	**Above 8.0 mm (0.315 in) min.**
Starts Opening:	**169-176B°F (76-80B°C)**
Fully Open:	**194B°F (90B°C)**

THERMOSTAT REMOVAL, INSTALLATION, AND TEST (2.4 L ENGINE) (2017 2018 2019)

Removal and Installation

1

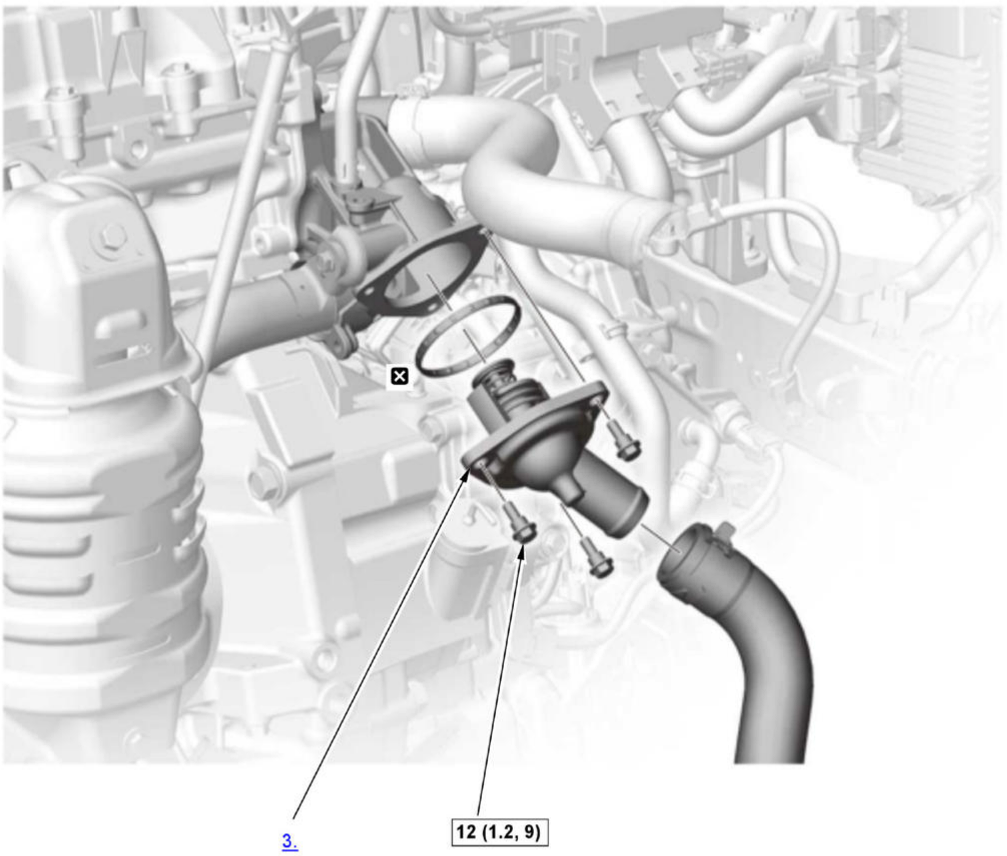

▭	Torque: N.m (kgf.m, lbf.ft)
☒	Replace

1. Engine Coolant - Drain
2. Air Cleaner - Remove
3. Thermostat - Remove
4. All Removed Parts - Install

1. Install the parts in the reverse order of removal.

NOTE:

After installing all the removed parts, refill the radiator with engine coolant, and bleed the air from the cooling system .

Test

Replace the thermostat if it is stuck in the open position at room temperature.

1. Thermostat - Test

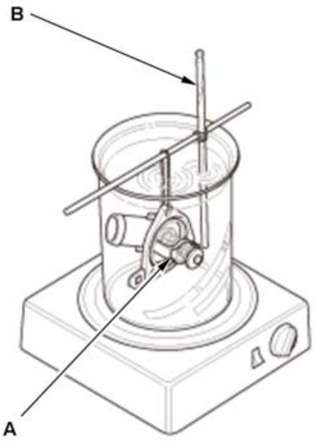

To test a closed thermostat:

1. Suspend the thermostat (A) in a container of water. Do not let the thermostat and the thermometer (B) touch the bottom of the hot container.

2. Heat the water, and check the temperature with a thermometer. Check the temperature when the thermostat first opens, and when it is fully open.

3. Measure the lift height of the thermostat when it is fully open.

Standard Thermostat	
Lift Height (NIPPON THERMOSTAT):	**Above 10.0 mm (0.394 in) min.**
Lift Height (FUJI BELLOWS):	**Above 8.0 mm (0.315 in) min.**
Starts Opening:	**169-176B°F (76-80B°C)**
Fully Open:	**194B°F (90B°C)**

REMOVAL AND INSTALLATION

EXPANSION TANK REMOVAL AND INSTALLATION (1.5 L ENGINE)

Removal and Installation

1

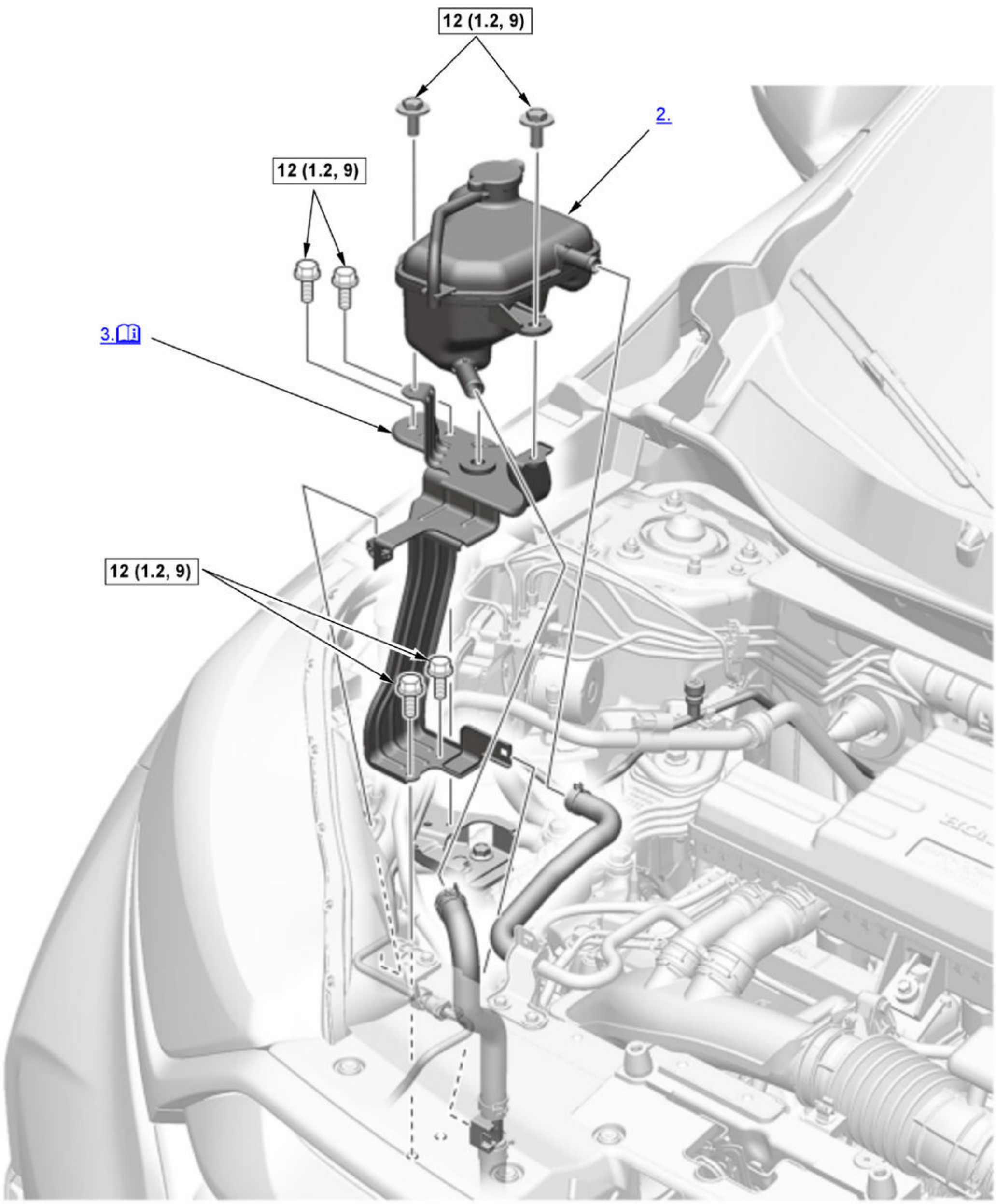

☐	Torque: N.m (kgf.m, lbf.ft)

1. Engine Coolant - Drain
2. Expansion Tank - Remove
3. Expansion Tank Bracket - Remove

   NOTE: If necessary, remove the expansion tank bracket.

4. All Removed Parts - Install

1. Install the parts in the reverse order of removal.

NOTE:

After installing all the removed

parts, refill the radiator with engine coolant, and bleed the air from the cooling system .

RADIATOR REMOVAL AND INSTALLATION (1.5 L ENGINE)

Removal and Installation

NOTE: ℹ Where icon is shown, further information shown below.

1

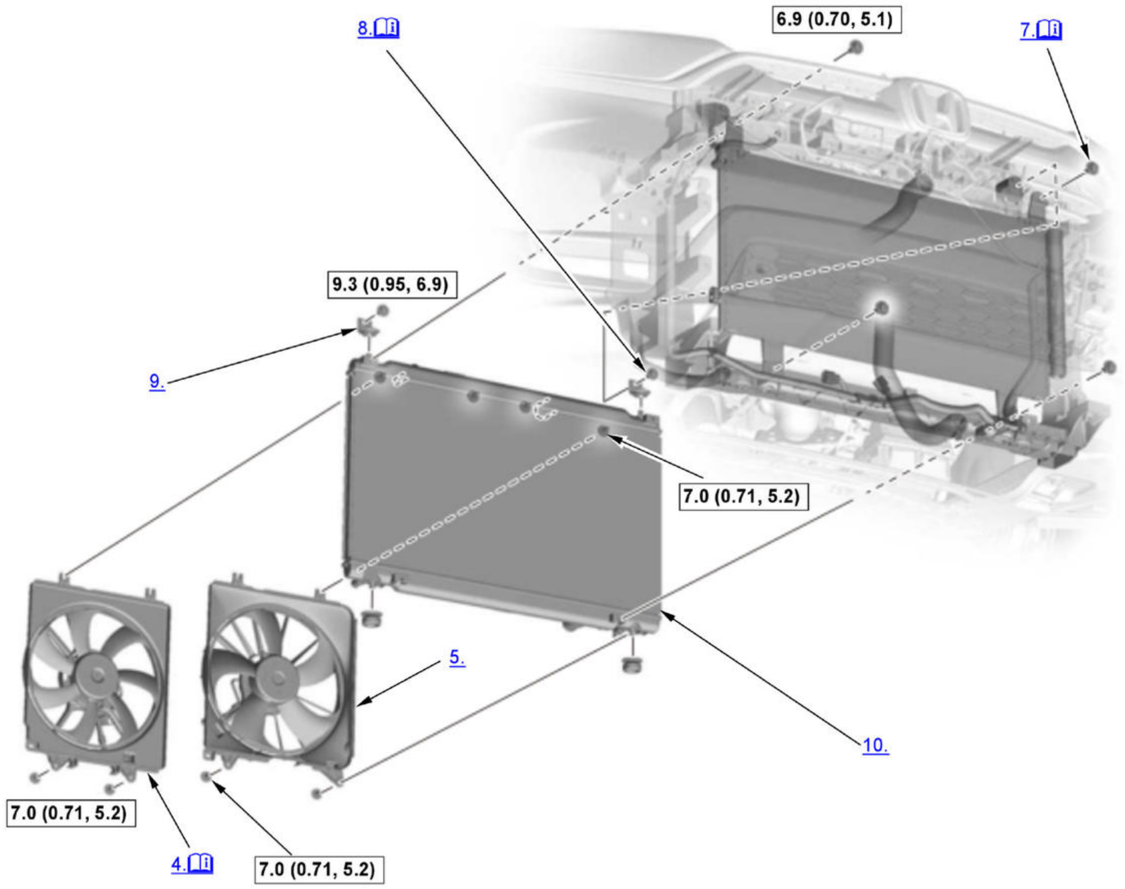
8.
6.9 (0.70, 5.1)
7.
9.3 (0.95, 6.9)
9.
7.0 (0.71, 5.2)
5.
10.
7.0 (0.71, 5.2)
4.
7.0 (0.71, 5.2)

ℹ	Detailed information, notes, and precautions
▭	Torque: N.m (kgf.m, lbf.ft)

2

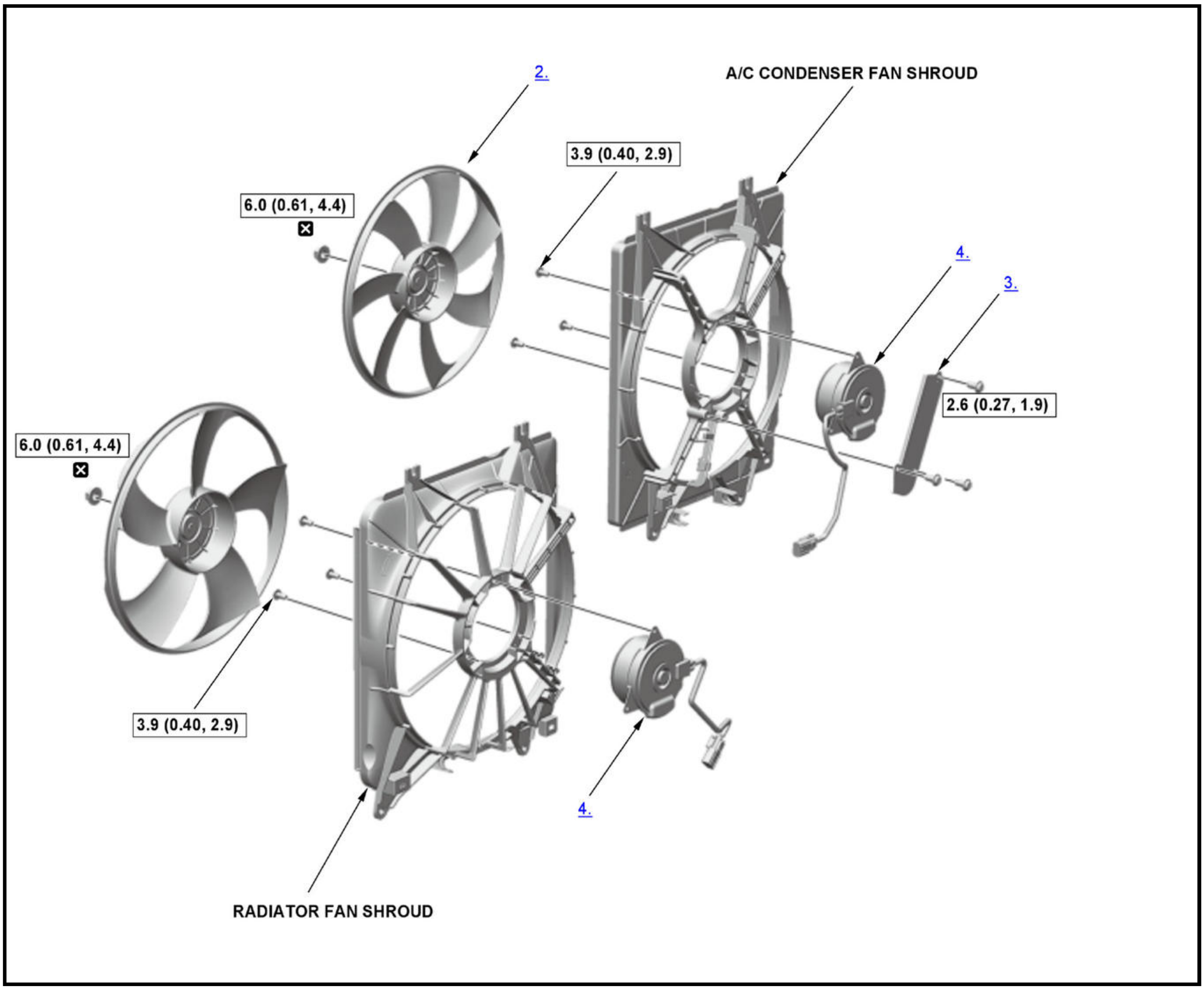
2.
A/C CONDENSER FAN SHROUD
3.9 (0.40, 2.9)
6.0 (0.61, 4.4)
☒
4.
3.
2.6 (0.27, 1.9)
6.0 (0.61, 4.4)
☒
3.9 (0.40, 2.9)
4.
RADIATOR FAN SHROUD

▭	Torque: N.m (kgf.m, lbf.ft)
☒	Replace

Fan Shroud Assembly and Radiator

1. **Front Bulkhead Cover - Remove**
2. **Intake Parts - Remove**
3. **Front Engine Undercover Lid - Remove**
4. A/C Condenser Fan Shroud Assembly - Remove

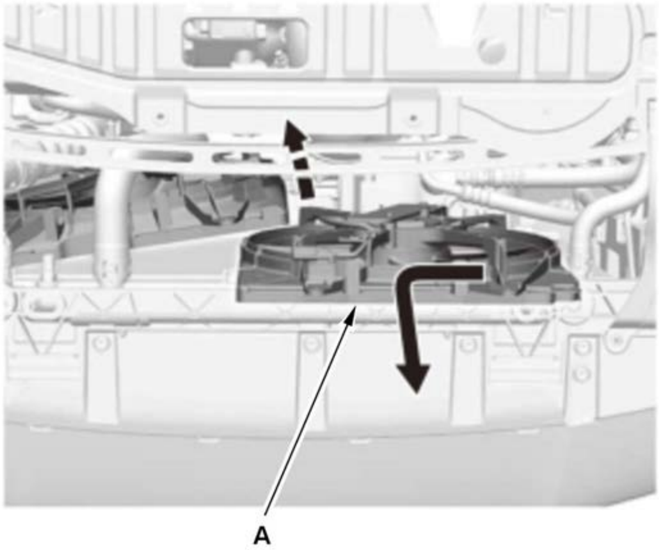	1. Remove the A/C condenser fan shroud assembly (A) as shown. **NOTE:** **Take care not to damage the radiator cooling fins during removal and installation.**

5. Radiator Fan Shroud Assembly - Remove
6. Engine Coolant - Drain
7. Condenser Upper Mount Bolts - Remove

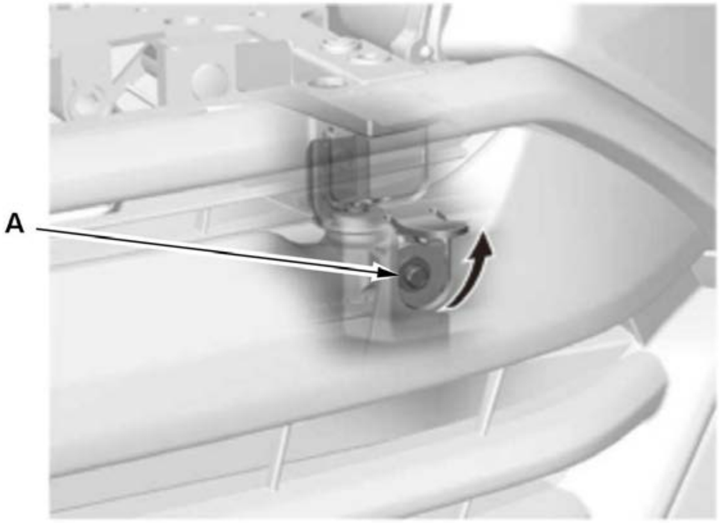	1. Remove the condenser upper mount bolts (A).

8. Radiator Upper Mount Bolts - Remove

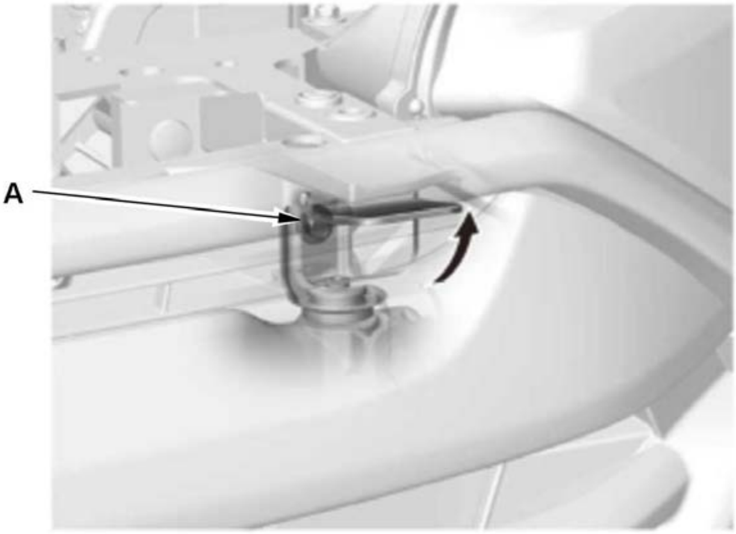 	1. Remove the radiator upper mount bolts (A).

9. Radiator Upper Mount Bracket - Remove
10. Radiator Assembly - Remove
11. Drain Plug - Remove

    NOTE: If necessary, remove the drain plug.

12. ECT Sensor 2 - Remove

    NOTE: If necessary, **remove the ECT sensor 2** .

13. All Removed Parts - Install

1. Install the parts in the reverse order of removal. **NOTE:** **After installing all the removed parts, refill the radiator with engine coolant, and bleed the air from the cooling system .**

Cooling Fan and Fan Motor

14. Fan Shroud Assembly - Remove
15. Cooling Fan - Remove
16. Fan Motor Cover - Remove
17. Fan Motor - Remove
18. All Removed Parts - Install

1. Install the parts in the reverse order of removal.

RADIATOR REMOVAL AND INSTALLATION (2.4 L ENGINE) (2017 2018 2019)

Removal and Installation

NOTE: 📖 Where icon is shown, further information shown below.

1

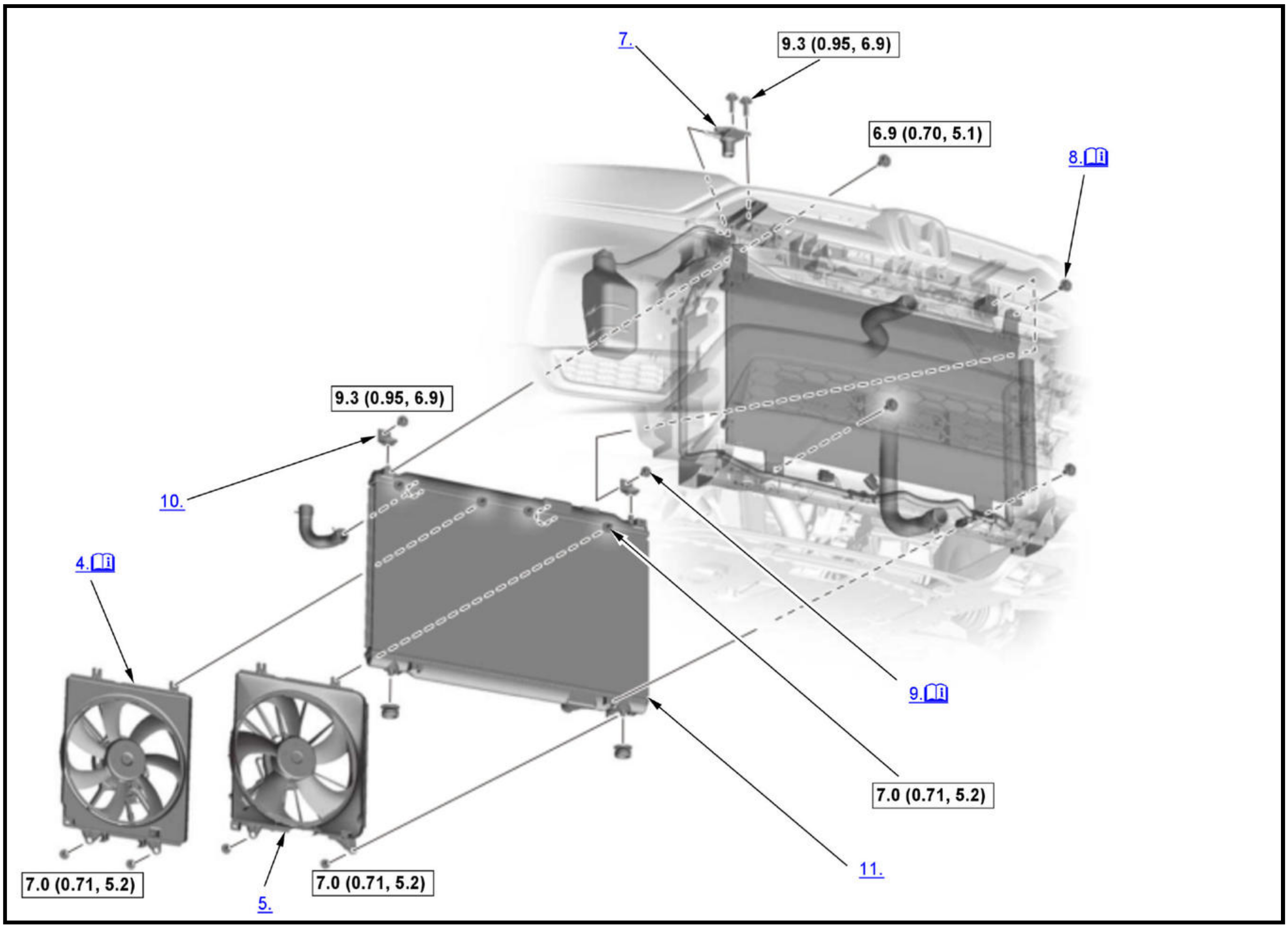
7.
9.3 (0.95, 6.9)
6.9 (0.70, 5.1)
8. 📖
9.3 (0.95, 6.9)
10.
4. 📖
9. 📖
7.0 (0.71, 5.2)
11.
7.0 (0.71, 5.2)
7.0 (0.71, 5.2)
5.

📖	Detailed information, notes, and precautions
▭	Torque: N.m (kgf.m, lbf.ft)

2

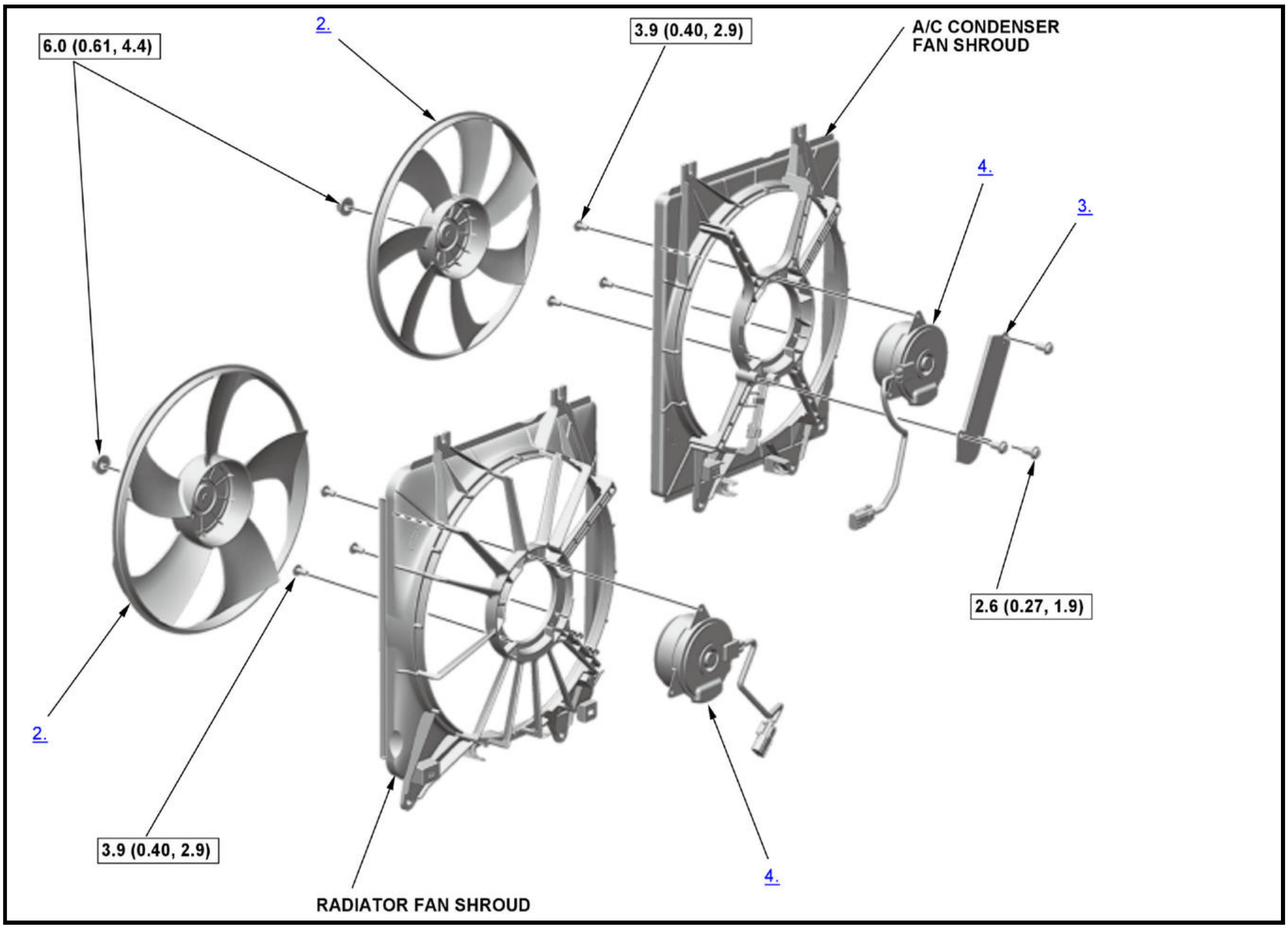
6.0 (0.61, 4.4)
2.
3.9 (0.40, 2.9)
A/C CONDENSER FAN SHROUD
4.
3.
2.6 (0.27, 1.9)
2.
3.9 (0.40, 2.9)
RADIATOR FAN SHROUD
4.

☐	Torque: N.m (kgf.m, lbf.ft)

Fan Shroud Assembly and Radiator

1. Front Bulkhead Cover - Remove
2. Air Cleaner - Remove
3. Front Engine Undercover Lid - Remove
4. A/C Condenser Fan Shroud Assembly - Remove

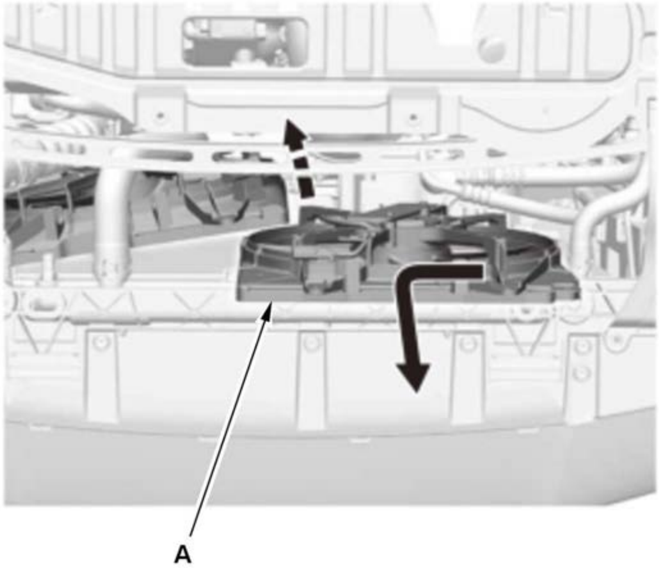	1. Remove the A/C condenser fan shroud assembly (A) as shown. **NOTE:** **Take care not to damage the radiator cooling fins during removal and installation.**

5. Radiator Fan Shroud Assembly - Remove

6. **Engine Coolant - Drain**
7. Radiator Cap Base - Remove
8. Condenser Upper Mount Bolts - Remove

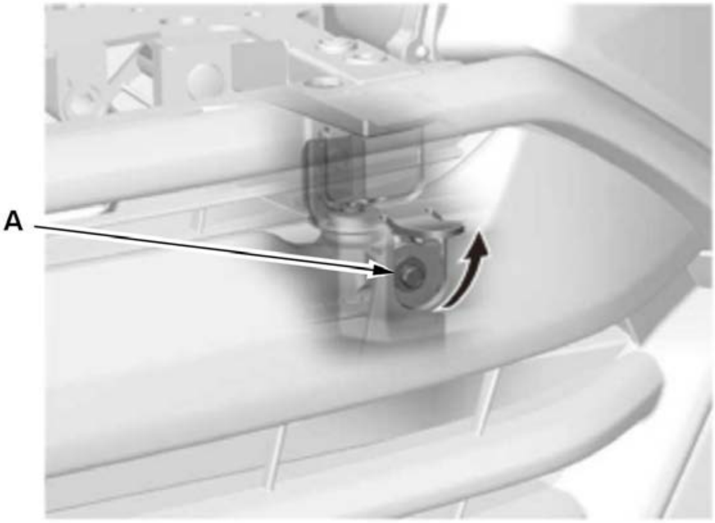	1. Remove the condenser upper mount bolts (A).

9. Radiator Upper Mount Bolts - Remove

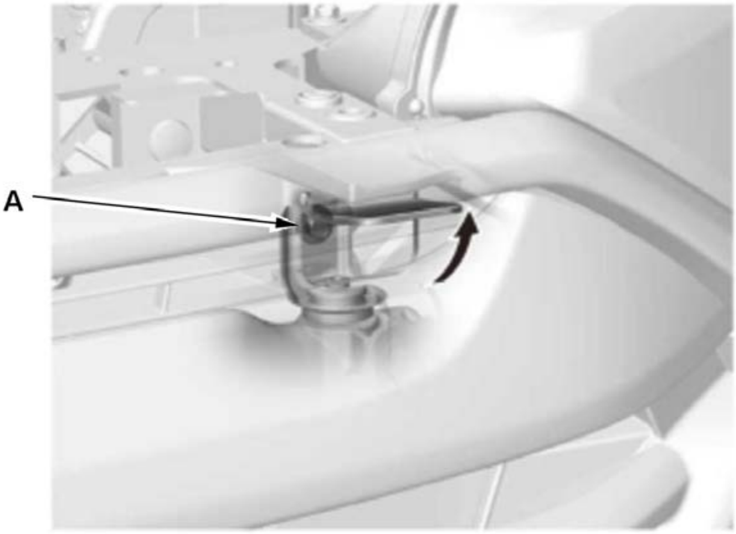	1. Remove the radiator upper mount bolts (A).

10. Radiator Upper Mount Bracket - Remove
11. Radiator Assembly - Remove
12. ECT Sensor 2 - Remove

    NOTE: If necessary, **remove the ECT sensor 2** .

13. All Removed Parts - Install

1. Install the parts in the reverse order of removal. **NOTE:** **After installing all the removed parts, refill**

the radiator with engine coolant, and bleed the air from the cooling system .

Cooling Fan and Fan Motor

14. Fan Shroud Assembly - Remove
15. Cooling Fan - Remove
16. Fan Motor Cover - Remove
17. Fan Motor - Remove
18. All Removed Parts - Install

1. Install the parts in the reverse order of removal.

THERMOSTAT HOUSING REMOVAL AND INSTALLATION (1.5 L ENGINE)

Removal and Installation

1

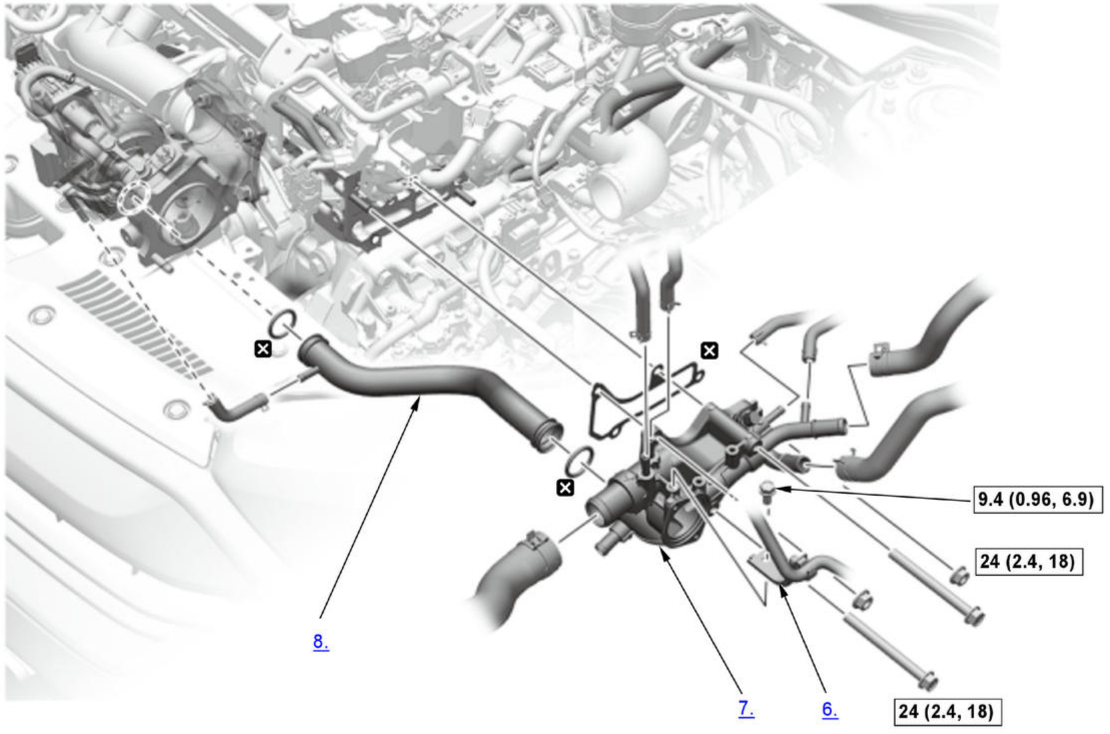

▭	Torque: N.m (kgf.m, lbf.ft)
☒	Replace

1. Engine Coolant - Drain
2. Air Cleaner - Remove
3. ECT Sensor 1 - Remove

4. Thermostat - Remove
5. ATF Warmer Hose - Disconnect
6. Bracket - Remove
7. Thermostat Housing - Remove
8. Connecting Pipe - Remove
9. All Removed Parts - Install

1. Install the parts in the reverse order of removal.

NOTE:

After installing all the removed parts, refill the radiator with engine coolant, and bleed the air from the cooling system .

THERMOSTAT HOUSING REMOVAL AND INSTALLATION (2.4 L ENGINE) (2017 2018 2019)

Removal and Installation

1

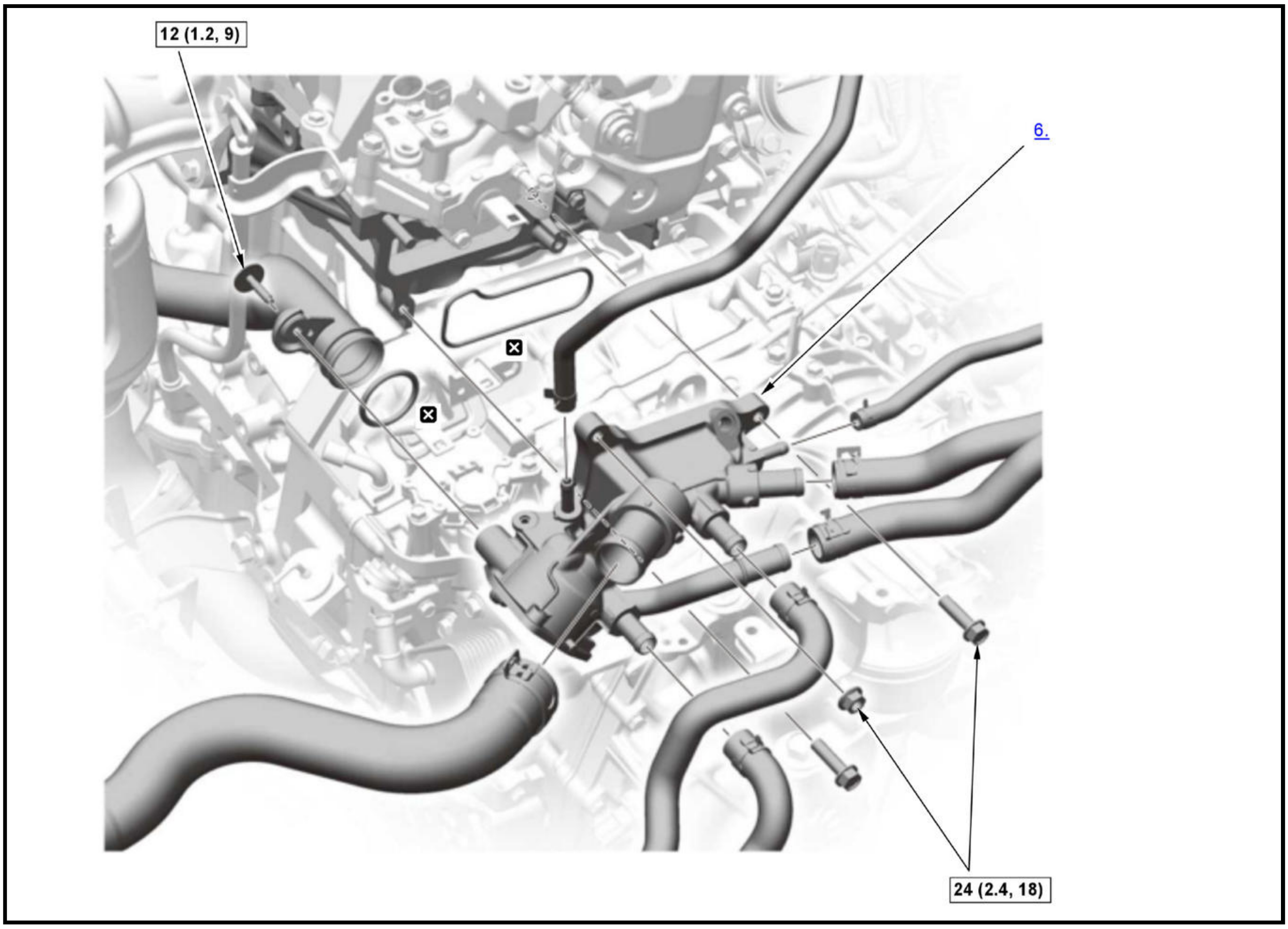

☐	Torque: N.m (kgf.m, lbf.ft)
☒	Replace

1. Engine Coolant - Drain
2. Air Cleaner - Remove
3. 12 Volt Battery - Remove
4. ECT Sensor 1 - Remove
5. Thermostat - Remove
6. Thermostat Housing - Remove
7. All Removed Parts - Install

> 1. Install the parts in the reverse order of removal.
>
> **NOTE:**
>
> **After installing all the removed parts, refill the radiator with engine coolant, and bleed the air from the cooling system .**

WATER PASSAGE REMOVAL AND INSTALLATION (1.5 L ENGINE)

Removal and Installation

1

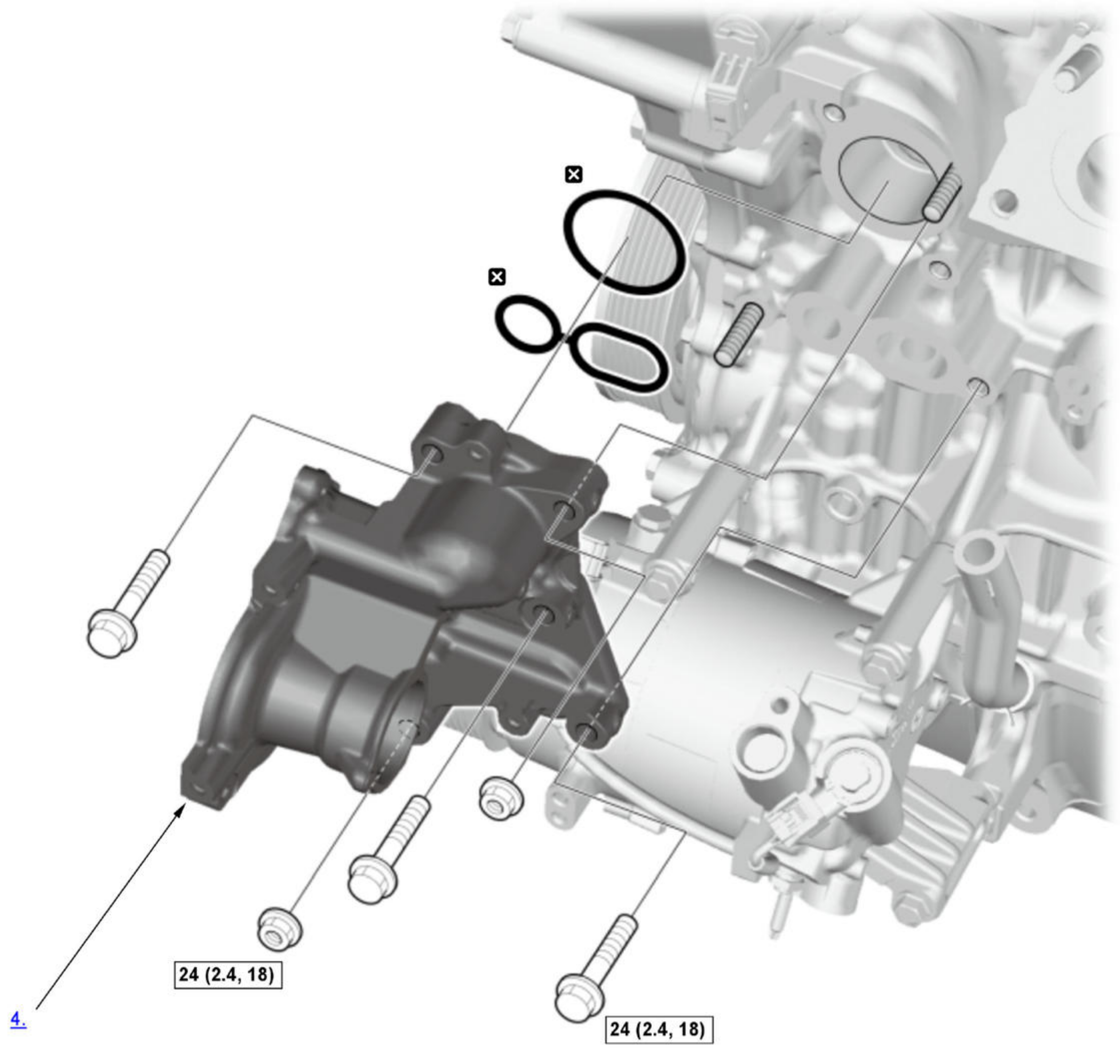

Fig. 1: Water Passage Bolts With Torque Specifications
Courtesy of HONDA, U.S.A., INC.

☐	Torque: N.m (kgf.m, lbf.ft)
☒	Replace

1. Water Pump - Remove
2. Thermostat Housing and Connecting Pipe - Remove
3. Oil Pressure Switch - Remove
4. Water Passage - Remove
5. All Removed Parts - Install

1. Install the parts in the reverse order of removal.

NOTE:

Inspect and clean the O-ring groove and the mating surface of the engine block.

WATER PASSAGE REMOVAL AND INSTALLATION (2.4 L ENGINE) (2017 2018 2019)

Removal and Installation

1

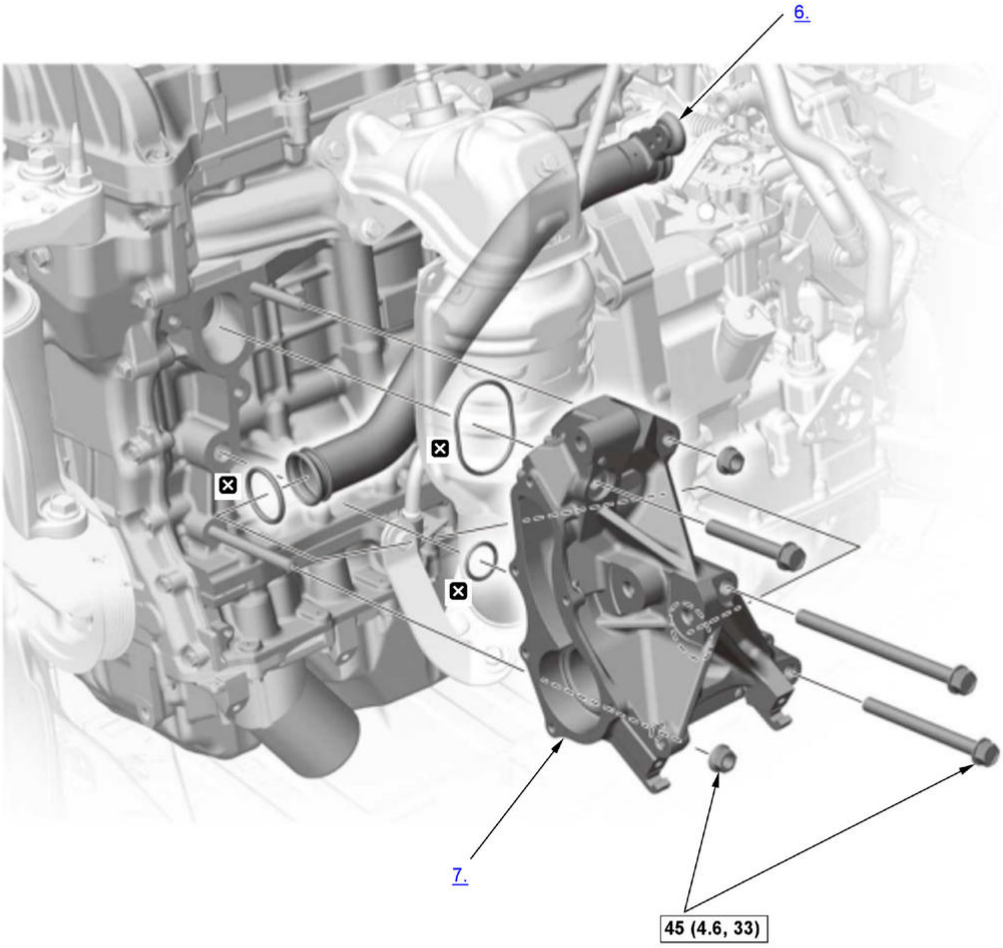

Fig. 2: Water Passage Bolts With Torque Specifications
Courtesy of HONDA, U.S.A., INC.

☐	Torque: N.m (kgf.m, lbf.ft)
☒	Replace

1. Engine Coolant - Drain
2. Alternator - Remove
3. A/C Compressor - Move

NOTE:

- Do not disconnect the A/C hoses.
- Do not bend the A/C hoses excessively.
- Hang the A/C compressor with a wire tie.

4. **Water Pump - Remove**
5. **Thermostat Housing - Remove**
6. Connecting Pipe - Remove
7. Water Passage - Remove
8. All Removed Parts - Install

1. Install the parts in the reverse order of removal.

REMOVAL AND INSTALLATION

ELECTRIC ENGINE COOLANT PUMP REMOVAL AND INSTALLATION

Removal and Installation

Procedure

NOTE: Numbered call-outs in figure pertain to list numbers in following procedure.

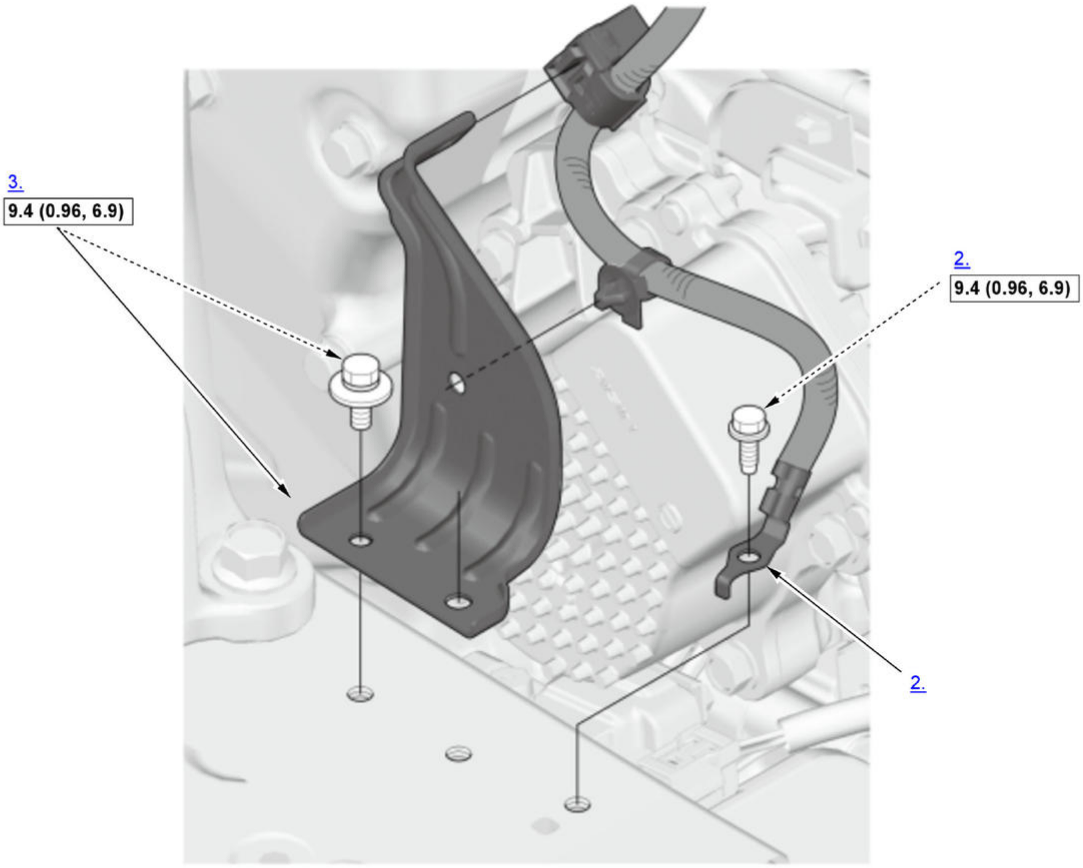

Fig. 1: Electric Engine Coolant Pump Replacement Components With Torque Specifications (1 Of 2)
Courtesy of HONDA, U.S.A., INC.

☐	Torque: N.m (kgf.m, lbf.ft)

NOTE: Numbered call-outs in figure pertain to list numbers in following procedure.

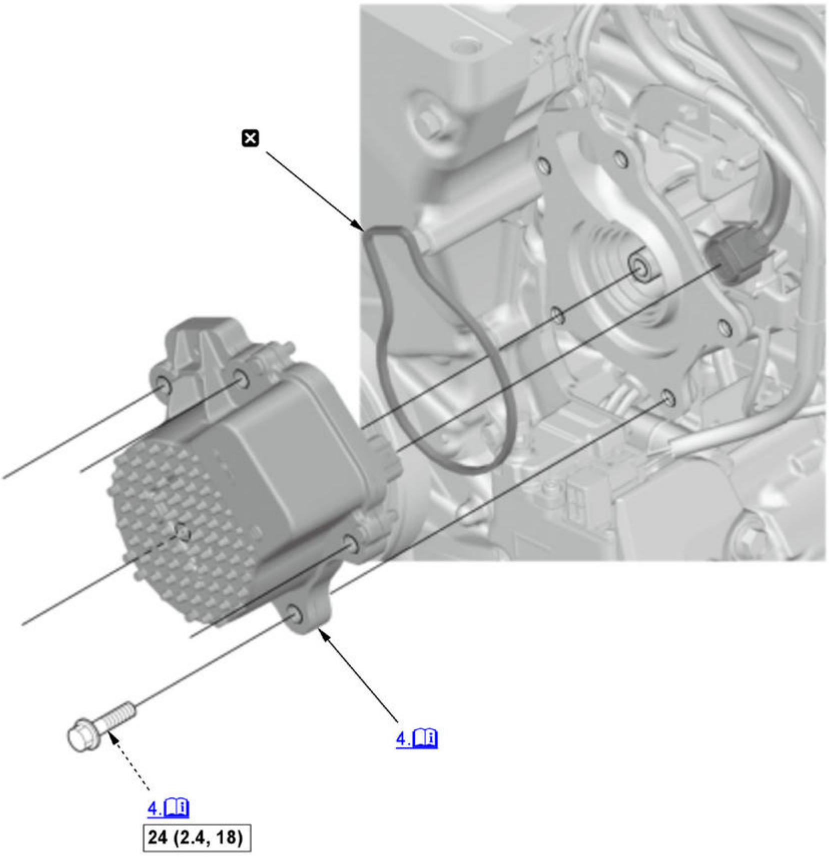

Fig. 2: Electric Engine Coolant Pump Replacement Components With Torque Specifications (2 Of 2)
Courtesy of HONDA, U.S.A., INC.

☐	Torque: N.m (kgf.m, lbf.ft)
☒	Replace

1. Engine Coolant - Drain
2. Ground Cable - Disconnect
3. Harness Bracket - Remove
4. Electric Engine Coolant Pump - Remove

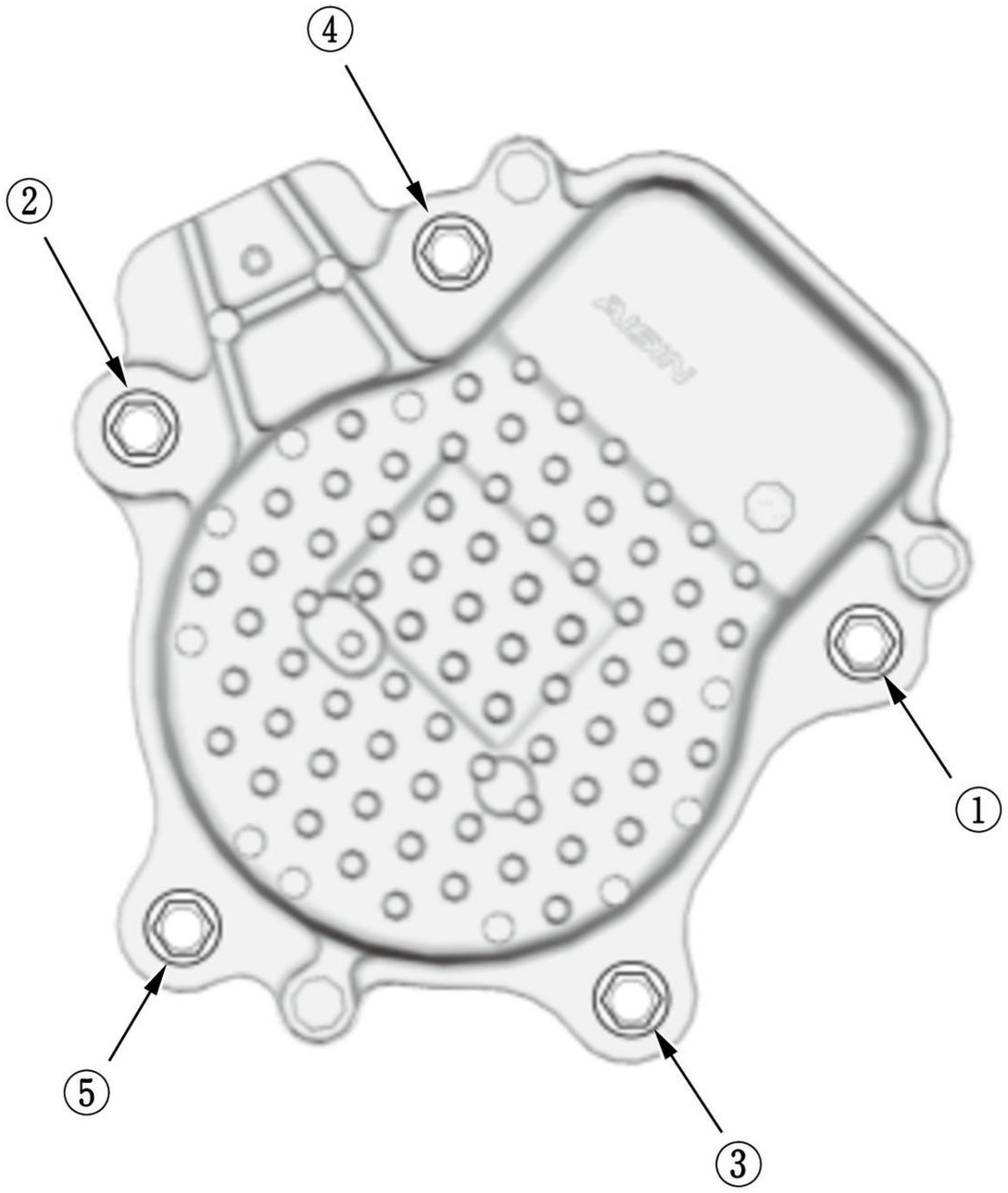

Fig. 3: Electric Engine Coolant Pump Bolts With Tightening Sequence
Courtesy of HONDA, U.S.A., INC.

Note for installation

1. Tighten the bolts (①, ②, ③, ④ and ⑤) by the finger-tight.

2. Torque the bolts (① and ②) to 20 N.m (2.0 kgf.m, 15 lbf.ft).

NOTE: Tighten the bolts in steps, alternating side-to-side at 90B° or less.

3. Torque the bolts (③, ④, ⑤) in sequence to 20 N.m (2.0 kgf.m, 15 lbf.ft).

4. The bolts in the order (①, ②, ③, ④, ⑤, ①) tighten in specified torque.

5. All Removed Parts - Install

1. Install the parts in the reverse order of removal.

RADIATOR REMOVAL AND INSTALLATION

Removal and Installation

Procedure

NOTE: **Numbered call-outs in figure pertain to list numbers in following procedure.**

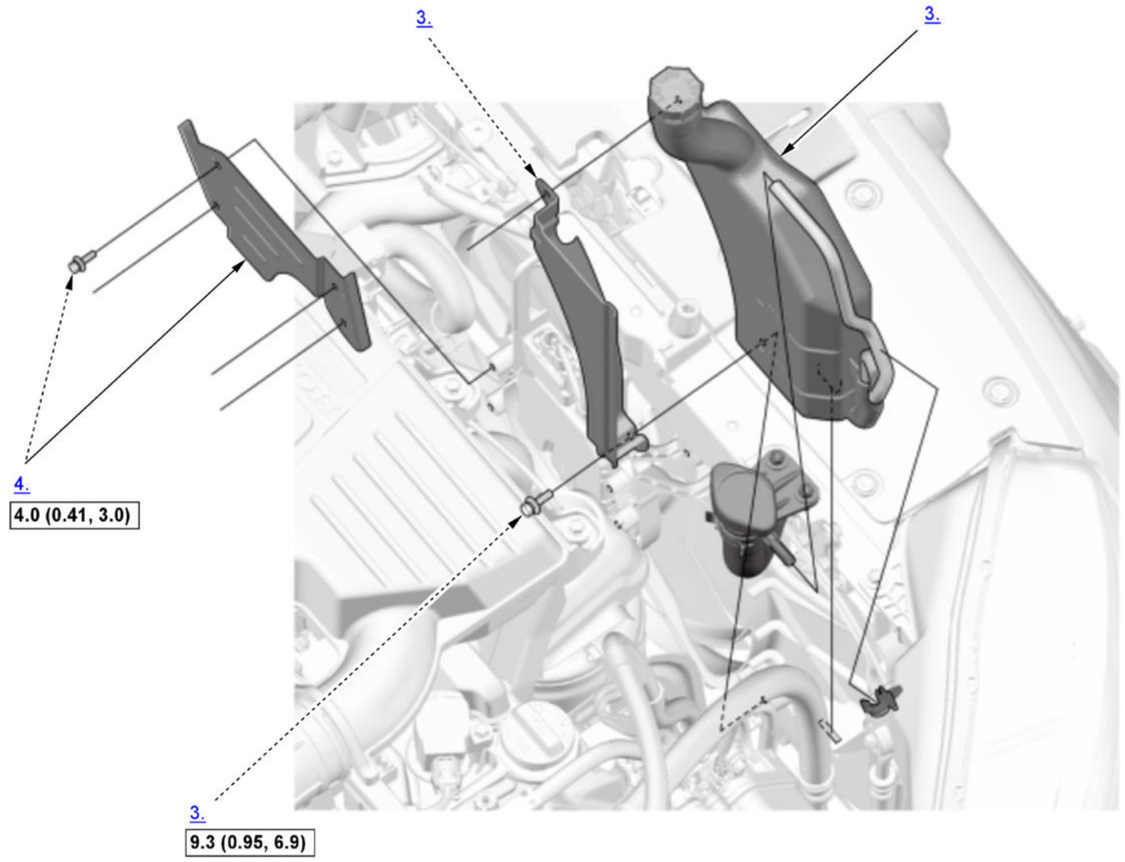

Fig. 4: Exploded View Of Radiator Replacement Components With Torque Specifications (1 Of 5)
Courtesy of HONDA, U.S.A., INC.

▭	Torque: N.m (kgf.m, lbf.ft)

NOTE: **Numbered call-outs in figure pertain to list numbers in following procedure.**

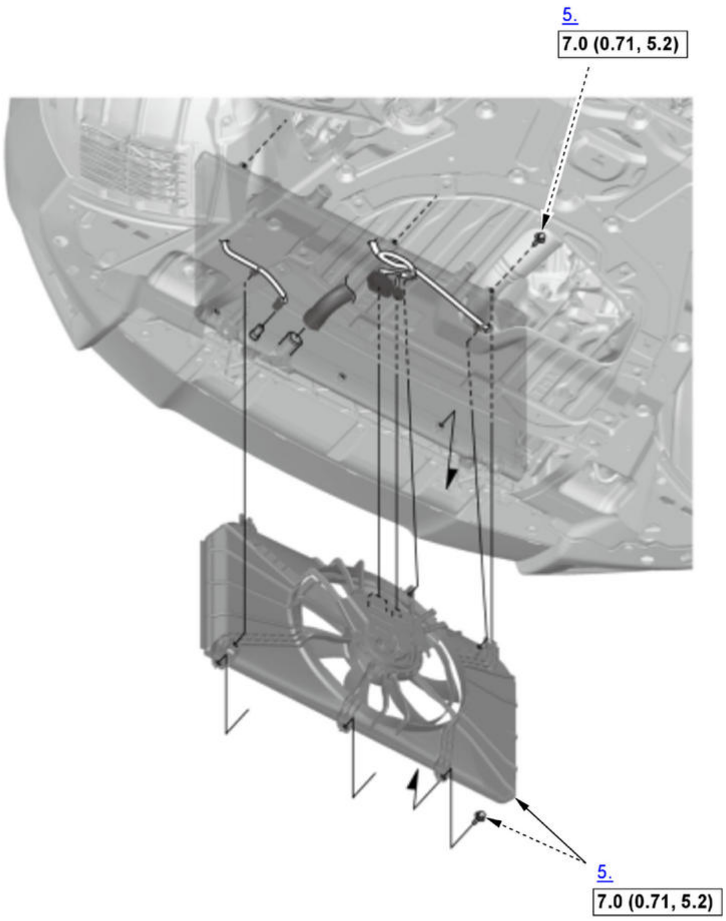

Fig. 5: Exploded View Of Radiator Replacement Components With Torque Specifications (2 Of 5)
Courtesy of HONDA, U.S.A., INC.

▭	Torque: N.m (kgf.m, lbf.ft)

NOTE: **Numbered call-outs in figure pertain to list numbers in following procedure.**

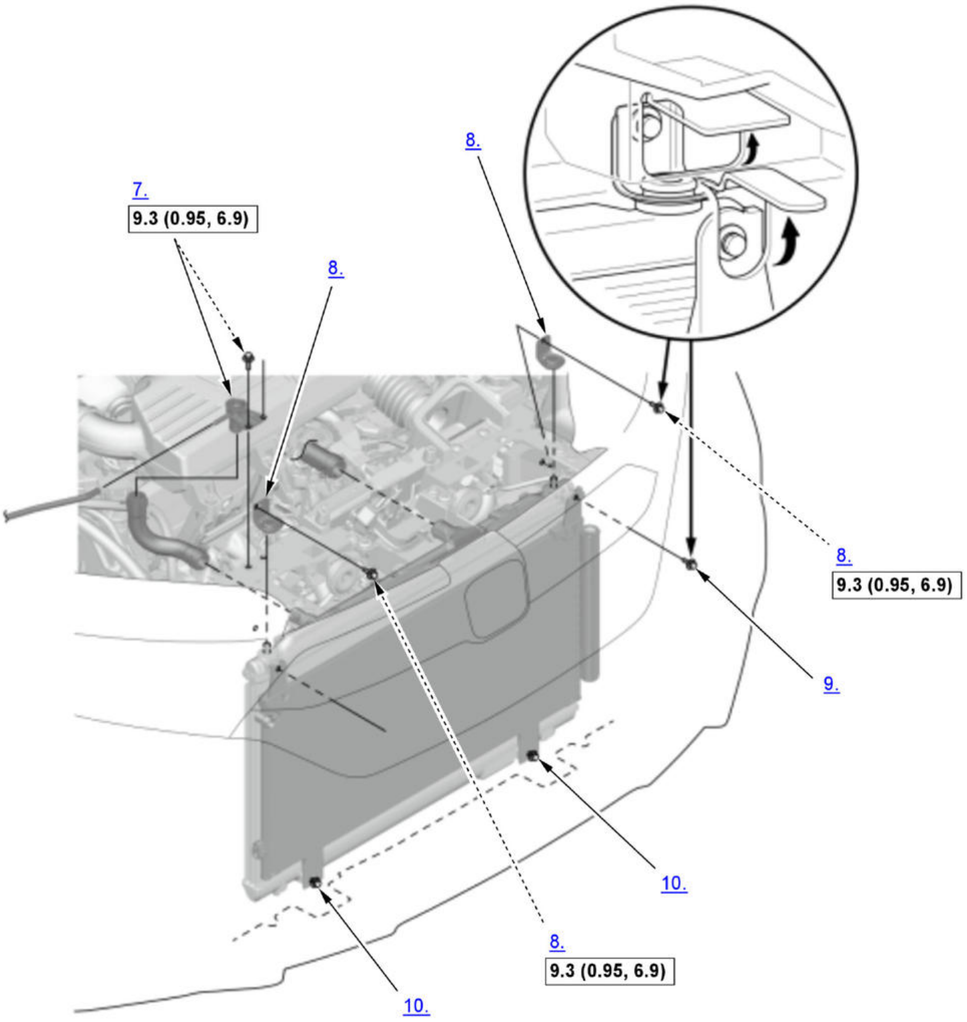
8.
7.
9.3 (0.95, 6.9)
8.
8.
9.3 (0.95, 6.9)
9.
10.
8.
9.3 (0.95, 6.9)
10.

Fig. 6: Exploded View Of Radiator Replacement Components With Torque Specifications (3 Of 5)
Courtesy of HONDA, U.S.A., INC.

☐	Torque: N.m (kgf.m, lbf.ft)

NOTE: **Numbered call-outs in figure pertain to list numbers in following procedure.**

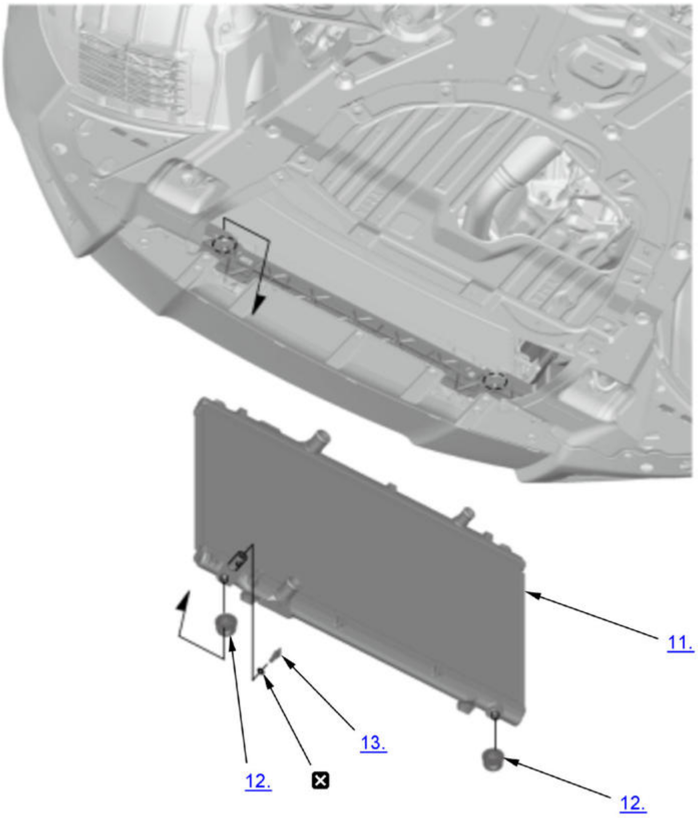

Fig. 7: Exploded View Of Radiator Replacement Components (4 Of 5)
Courtesy of HONDA, U.S.A., INC.

☒	Replace

NOTE: **Numbered call-outs in figure pertain to list numbers in following procedure.**

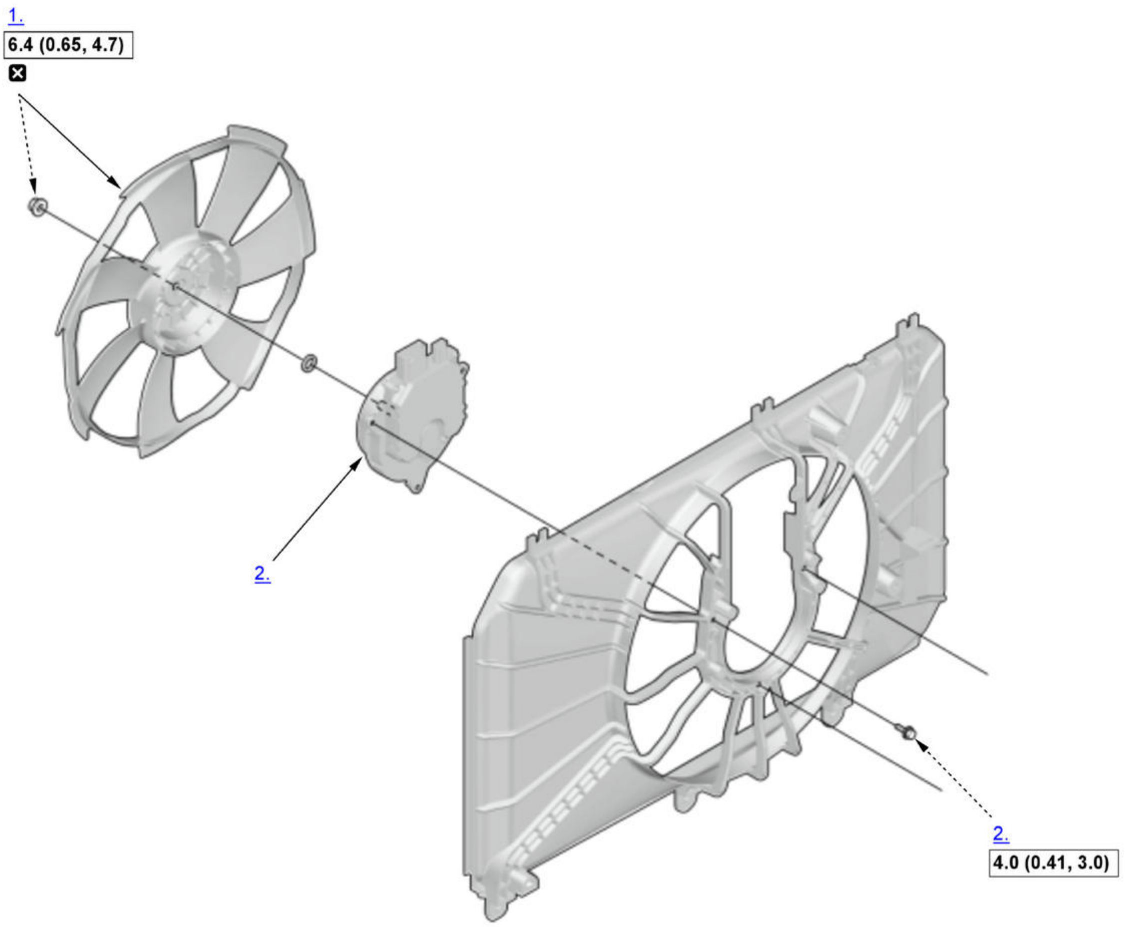

Fig. 8: Exploded View Of Radiator Replacement Components With Torque Specifications (5 Of 5)
Courtesy of HONDA, U.S.A., INC.

☐	Torque: N.m (kgf.m, lbf.ft)
☒	Replace

Fan Shroud Assembly

1. Front Engine Undercover Lid - Remove
2. Engine Coolant - Drain
3. Coolant Reservoir - Remove
4. Heat Protector - Remove
5. Cooling Fan Shroud Assembly - Remove

Radiator

6. Front Bulkhead Cover - Remove
7. Radiator Cap Base - Remove (If necessary)
8. Radiator Upper Mount Bracket - Remove
9. Upper A/C Condenser Mounting Bolt - Remove
10. Lower A/C Condenser Mounting Bolt - Loosen
11. Radiator - Remove
12. Lower Cushion - Remove

13. Drain Plug - Remove (If necessary)
14. **ECT Sensor 2 - Remove (if necessary)**
15. All Removed Parts - Install

1. Install the parts in the reverse order of removal.

Fan Shroud Assembly Disassembly

1. Cooling Fan - Remove
2. Cooling Fan Motor - Remove
3. All Removed Parts - Install

1. Install the parts in the reverse order of removal.

WATER OUTLET REMOVAL AND INSTALLATION

Removal and Installation

WARNING:

The power cables carry high voltage when the electric powertrain system is energized. To avoid serious injury from electrical shock, do not turn on the system with the power cables disconnected.

The electric powertrain components are located in this area. The electric powertrain is a high-voltage system. You must be familiar with the electric powertrain system before working on or around it. Make sure you have read the electric powertrain **service precautions** before doing repairs or service.

NOTE:

- Use fender covers to avoid damaging painted surfaces.
- To avoid damaging the wiring and terminals, unplug the wiring connectors carefully while holding the connector portion.
- Mark all wiring and hoses to avoid misconnection. Also, be sure that they do not contact other wiring, hoses, or interfere with other parts.

Procedure

NOTE: **Numbered call-outs in figure pertain to list numbers in following procedure.**

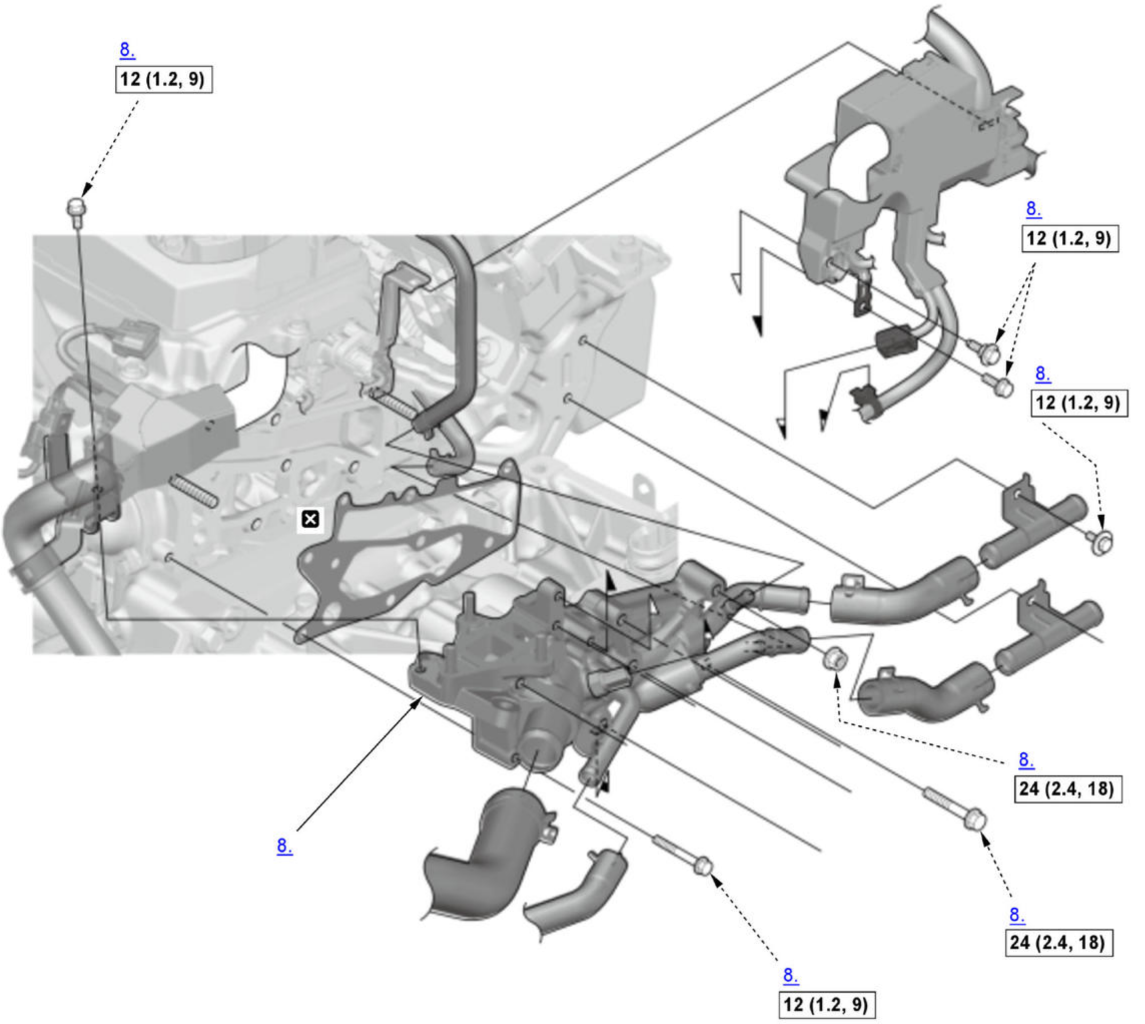

Fig. 9: Exploded View Of Water Outlet Replacement Components With Torque Specifications
Courtesy of HONDA, U.S.A., INC.

☐	Torque: N.m (kgf.m, lbf.ft)
☒	Replace

1. Service Plug - Turn Off
2. Engine Coolant - Drain
3. PCU Coolant - Drain
4. Intake Air Resonator - Remove
5. PCU - Remove
6. EGR Valve, EGR Pipe, and EGR Cooler - Remove
7. Heater Hose - Disconnect
8. Water Outlet - Remove
9. ECT Sensor 1 - Remove
10. All Removed Parts - Install

    1. Install the parts in the reverse order of removal.

WATER PASSAGE REMOVAL AND INSTALLATION

Removal and Installation

Procedure

NOTE: **Numbered call-outs in figure pertain to list numbers in following procedure.**

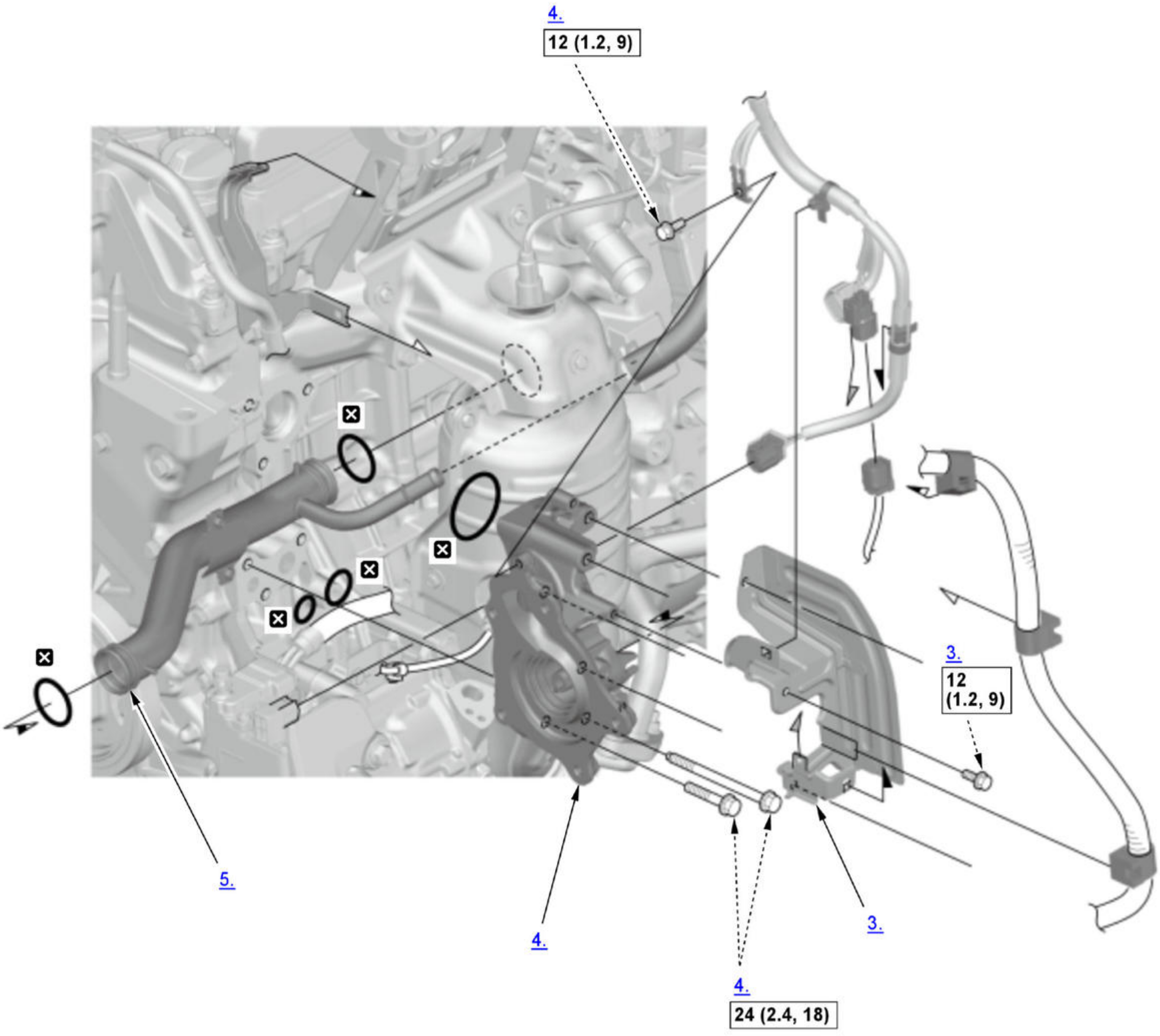

Fig. 10: Exploded View Of Water Passage Replacement Components With Torque Specifications
Courtesy of HONDA, U.S.A., INC.

☐	Torque: N.m (kgf.m, lbf.ft)
☒	Replace

1. Engine Coolant - Drain
2. Electric Engine Coolant Pump - Remove
3. Heat Shield - Remove
4. Water Passage - Remove
5. Connecting Pipe - Remove (if necessary)
6. All Removed Parts - Install
    1. Install the parts in the reverse order of removal.

REMOVAL, INSTALLATION & TEST

THERMOSTAT REMOVAL, INSTALLATION, AND TEST

Removal and Installation

Procedure

NOTE: **Numbered call-outs in figure pertain to list numbers in following procedure.**

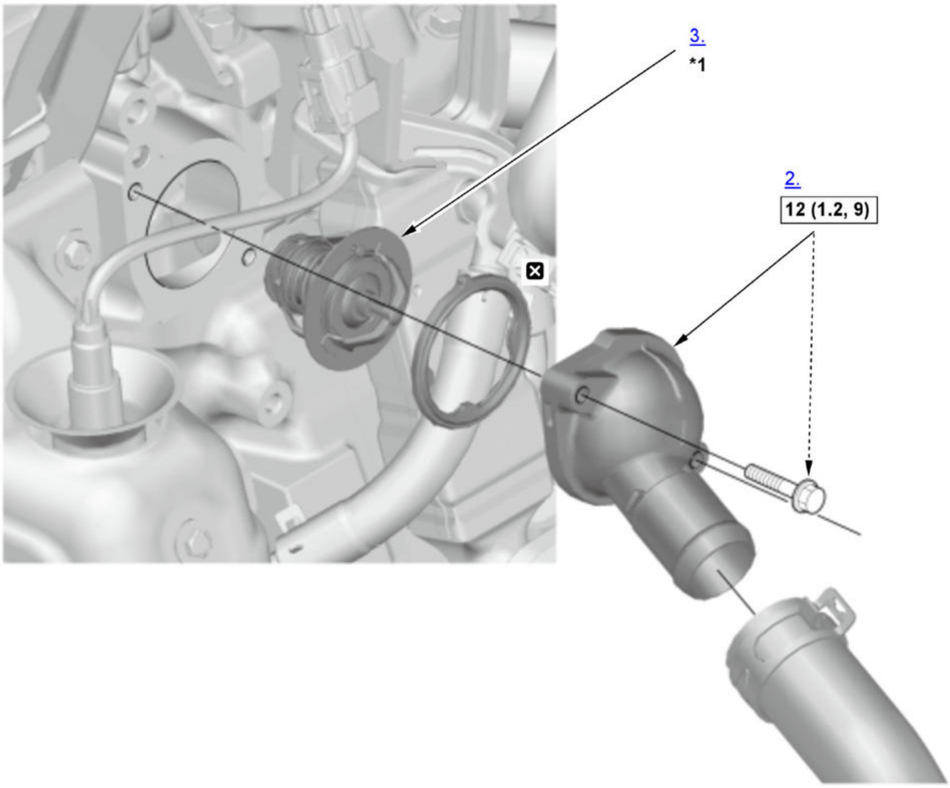

Fig. 11: Exploded View Of Thermostat Replacement Components With Torque Specifications
Courtesy of HONDA, U.S.A., INC.

☐	Torque: N.m (kgf.m, lbf.ft)
☒	Replace
*1	These parts have inspection items

1. Engine Coolant - Drain
2. Thermostat Cover - Remove
3. Thermostat - Remove
4. All Removed Parts - Install
    1. Install the parts in the reverse order of removal.

Test

NOTE: Replace the thermostat if it is stuck in the open position at room temperature.

1. Thermostat - Test

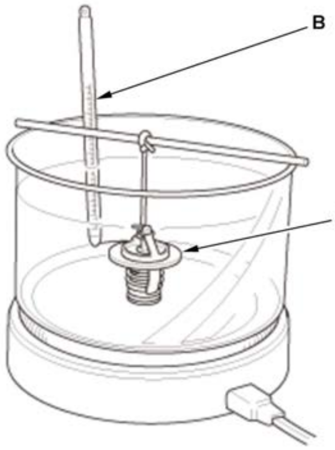	To test a closed thermostat: 1. Suspend the thermostat (A) in a container of water. Do not let the thermostat and the thermometer (B) touch the bottom of the hot container. 2. Heat the water, and check the temperature with a thermometer. Check the temperature when the thermostat first opens, and when it is fully open. 3. Measure the lift height of the thermostat when it is fully open.

Standard Thermostat	
Lift Height:	**Above 8.0 mm (0.315 in) min.**
Starts Opening:	**176-183B°F (80-84B°C)**
Fully Open:	**203B°F (95B°C)**

SYMPTOM TROUBLESHOOTING INDEX FOR VIEWER

ENGINE OVERHEATS

Diagnostic Procedure

- Check the coolant level.
- Check for any engine coolant leakage (from gaskets, hoses, O-rings, etc.).
- Check for dirt, leaves, or insects on the radiator and the A/C condenser.
- Check for deteriorated coolant.
- Check for a damaged or deformed fan shrouds.
- Check the RFC unit is operating properly (air should be blowing toward the engine).
- Check the radiator cap.
- Check the thermostat .
- Check for plugged or deteriorated radiator hoses.
- Check for a plugged heater core or hoses.
- Check for a damaged cylinder head gasket.

Also check for

Check the RFC unit is operating properly.

DESCRIPTION & OPERATION

COOLING FAN CONTROLS SYSTEM DESCRIPTION - OVERVIEW

For locations of each component on vehicle, refer to Component Location Index.

Overview

Cooling Fan Control

The PCM decides the optimal fan drive depending on the signals from various sensors, and outputs duty signals to control the cooling fan motor. By performing a sensitive drive control depending on the situation, it efficiently maintains the temperature of the coolant, and reduces fan noise. ECT sensor 2 detects the temperature of the coolant.

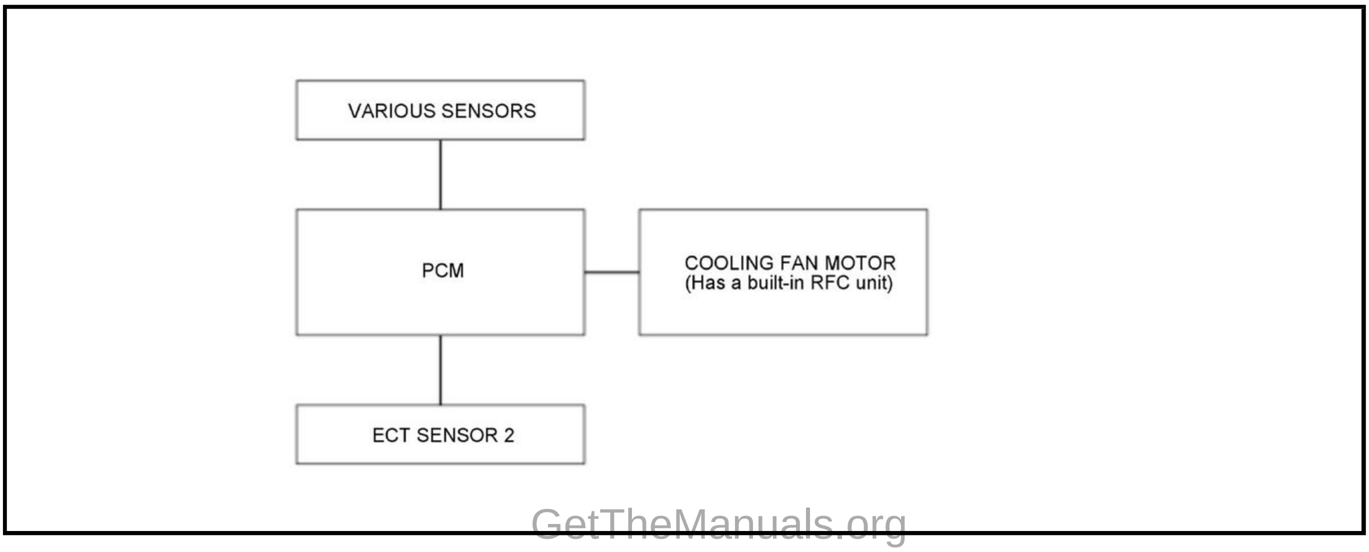

SYMPTOM TROUBLESHOOTING INDEX

COOLING FAN CONTROLS SYMPTOM TROUBLESHOOTING INDEX

NOTE: Do an all DTC check with the HDS, and troubleshoot any DTCs first before following the repair procedures listed in the index.

Symptom	Diagnostic Procedure	Also check for
Engine overheats	• **Check the coolant level**. • Check for any engine coolant leakage (from gaskets, hoses, O-rings, etc.). • Check for dirt, leaves, or insects on the radiator and the A/C condenser. • Check for deteriorated coolant. • Check for a damaged or deformed fan shrouds. • Check the RFC unit is operating properly (air should be blowing toward the engine). • **Check the radiator cap**. • **Check the thermostat** . • Check for plugged or deteriorated radiator hoses. • Check for a plugged heater core or hoses. • Check for a damaged cylinder head gasket.	Check the RFC unit is operating properly.

SERVICING

COOLANT CHECK AND REPLACEMENT

Check

Coolant Level Check

1. Coolant - Check

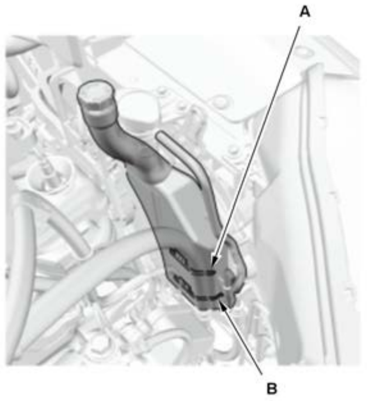	1. Check the coolant level in the coolant reservoir. Make sure it is between the MAX mark (A) and MIN mark (B). 2. If the coolant level in the coolant reservoir is at or below the MIN mark, add coolant to bring it between the MIN and MAX marks, then inspect the cooling system for leaks. 3. Check the coolant level in the radiator, and add Honda Long Life Antifreeze/Coolant Type 2 into the radiator up to the base of the filler neck, if needed. **NOTE:** • Always use Honda Long Life Antifreeze/Coolant Type 2. Using a non-Honda coolant can result in corrosion, causing the cooling system to malfunction or fail.

	- Honda Long Life Antifreeze/Coolant Type 2 is a mixture of 50% antifreeze and 50% water. Do not add water.

Coolant Leak Test

1. Coolant Leak - Test

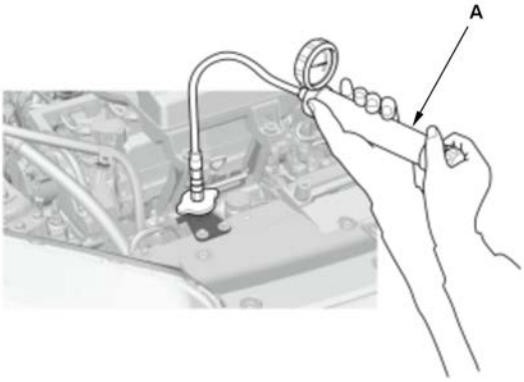	1. Wait until the engine is cool, then carefully remove the radiator cap, and fill the radiator with engine coolant to the base of the filler neck. 2. Attach a commercially available pressure tester (A) to the radiator, and apply a pressure of 93-123 kPa (0.95-1.25 kgf/cm 2, 13.5-17.8 psi). 3. Inspect for engine coolant leaks and a drop in pressure. 4. Remove the pressure tester, then reinstall the radiator cap.

Replacement

NOTE:

- **How to read the torque specifications** .
- Engine coolant is poisonous. If ingested, get medical attention immediately.

1. Radiator Cap - Remove

1. Turn the vehicle to the ON mode, and make sure to turn the A/C switch OFF, then turn the vehicle to the OFF (LOCK) mode. 2. Wait until the engine is cool, then carefully remove the radiator cap.

2. Engine Coolant - Drain

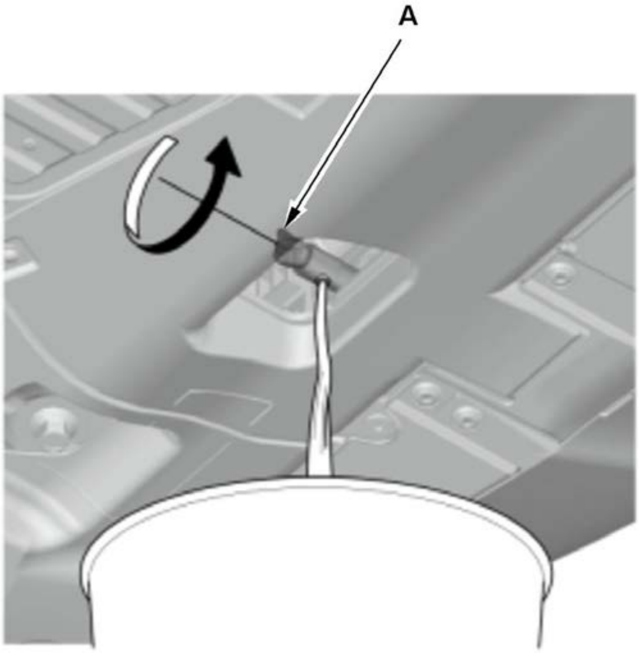	1. Loosen the drain plug (A), and drain the coolant.

3. **Right Front Wheel - Remove**
4. Cylinder Block Coolant - Drain

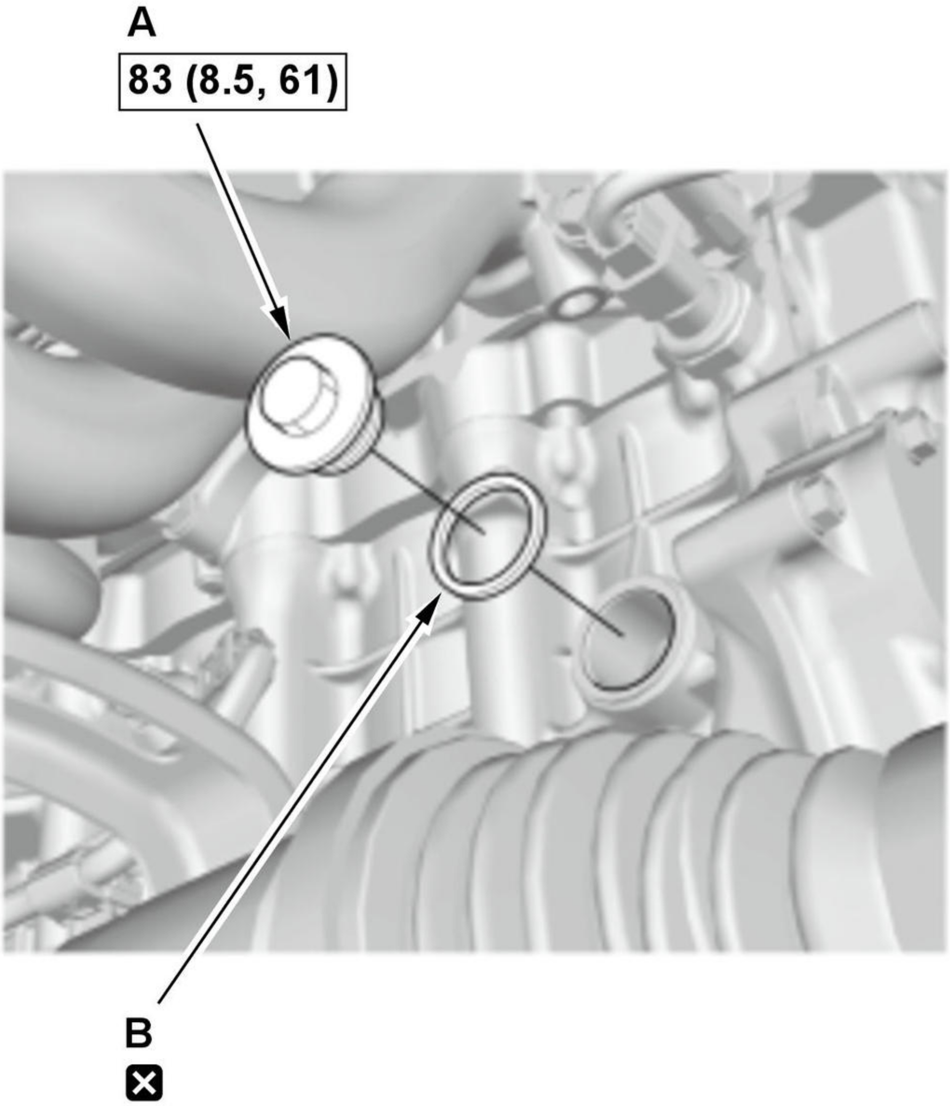

Fig. 1: Cylinder Block Coolant Drain Bolt With Torque Specifications
Courtesy of HONDA, U.S.A., INC.

1. Remove the drain bolt (A).

2. After the coolant has drained, reinstall the drain bolt with a new washer (B).

3. Tighten the radiator drain plug securely.

5. **Right Front Wheel - Install**
6. Coolant Reservoir - Refill

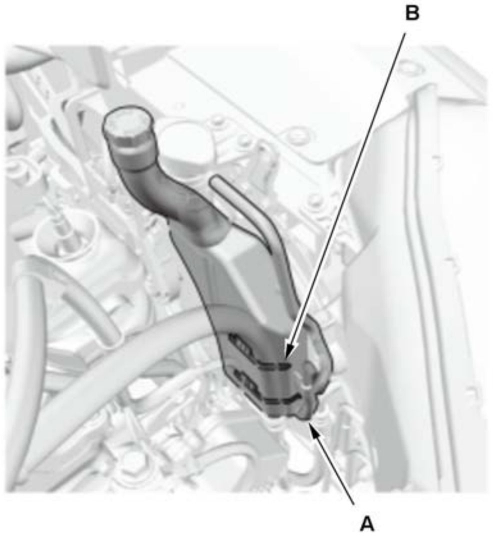	1. Remove, drain and reinstall the coolant reservoir (A). 2. Fill the coolant reservoir to the MAX mark (B) with Honda Long Life Antifreeze/Coolant Type 2.

7. Engine Coolant - Refill

1. Pour Honda Long Life Antifreeze/Coolant Type 2 into the radiator up to the base of the filler neck.

NOTE:

- Use Honda Long Life Antifreeze/Coolant Type 2, and if necessary add Honda Extreme Cold Weather Antifreeze/Coolant Type 2 (concentrate). Using a non-Honda coolant can result in corrosion, causing the cooling system to malfunction or fail.
- Honda Long Life Antifreeze/Coolant Type 2 is a mixture of 50% antifreeze and 50% water. Honda Extreme Cold Weather Antifreeze/Coolant Type 2 is a 100% concentration coolant. Do not add water to either coolant.
- If the vehicle is regularly driven in very low temperatures (below -22B°F (-30B°C)), a 60 % concentration of coolant should be used.

Operation	Vehicle Usage (Desired Mixture)	Current Mixture	Coolant Drain	Add Amount of Honda Extreme Cold Weather Antifreeze/Coolant Type 2 (100% concentrate)	Then add Honda Long Life Antifreeze/Coolant Type 2 (50/50)
Coolant Change	Normal Area (50/50)	50/50 60/40 unknown	Drain radiator and reservoir	None	Top off the cooling system
	Very Cold Area (60/40)	50/50 unknown	Drain radiator and reservoir	About **1.4 L (47 fl oz)**	
		60/40		About **1.2 L (41 fl oz)**	
Engine Overhaul	Normal Area	-	-	None	

Operation	**Vehicle Usage (Desired Mixture)**	**Current Mixture**	**Coolant Drain**	**Add Amount of Honda Extreme Cold Weather Antifreeze/Coolant Type 2 (100% concentrate)**	**Then add Honda Long Life Antifreeze/Coolant Type 2 (50/50)**
	(50/50)				
	Very Cold Area (60/40)	-	-	About **1.4 L (47 fl oz)**	
Coolant Winterizing	Very Cold Area (60/40)	50/50	Drain about **2.0 L (68 fl oz)** from radiator	About **1.4 L (47 fl oz)**	
		unknown*	Drain radiator and reservoir		

*: When you want to winterize the coolant with the minimum amount of coolant change but the current coolant concentration in the vehicle is unknown, you must drain all coolant from the cooling system.

Engine Coolant Refill Capacities (Including the coolant reservoir capacity of 0.7 L (0.18 US gal)	
At Coolant Change:	**5.6 L (1.48 US gal)**
After Engine Overhaul:	**6.9 L (1.82 US gal)**

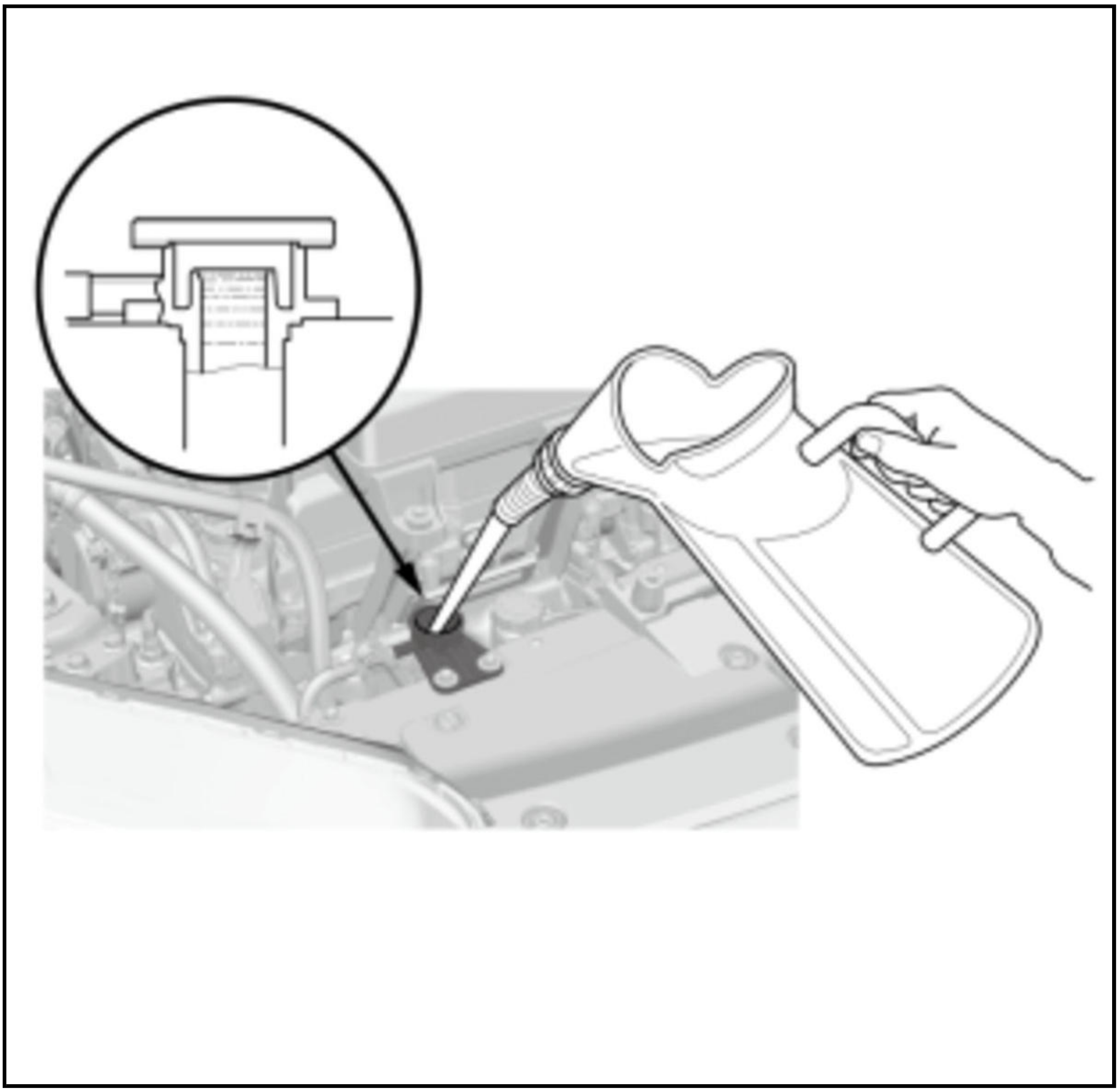

8. Engine Coolant - Air Bleed

1. Loosely install the radiator cap.

2. **Enter the maintenance mode, then start the engine** , and let it run until it warms up (the cooling fan(s) comes on at least twice).

3. Turn the vehicle to the OFF (LOCK) mode. Check the level in the radiator, and add Honda All Season Antifreeze/Coolant Type 2, if needed.

9. Engine Coolant Leak - Check

1. Put the radiator cap securely and **enter the maintenance mode, then start the engine again** , and check for leaks.

2. Clean up any spilled engine coolant.

10. Maintenance Minder - Reset

1. If the Maintenance Minder required to replace the engine coolant, **reset the Maintenance Minder with the gauge** (see "Resetting the Maintenance Minder"). If the Maintenance Minder did not require to replace the engine coolant, **reset the Maintenance Minder with the HDS** (see "Resetting the Individual Maintenance Items").

TEST

RADIATOR CAP TEST

Test

1. Radiator Cap - Test

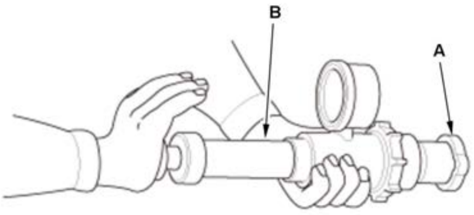	1. Wait until the engine is cool, then carefully remove the radiator cap (A). Wet the radiator cap seal with engine coolant, then install it on a commercially available pressure tester (B). 2. Apply a pressure of 93-123 kPa (0.95-1.25 kgf/cm 2, 13.5-17.8 psi). 3. Check for a drop in pressure. 4. If the pressure drops, replace the radiator cap.

CIRCUIT DIAGRAM

COOLING FAN CONTROLS CIRCUIT DIAGRAM

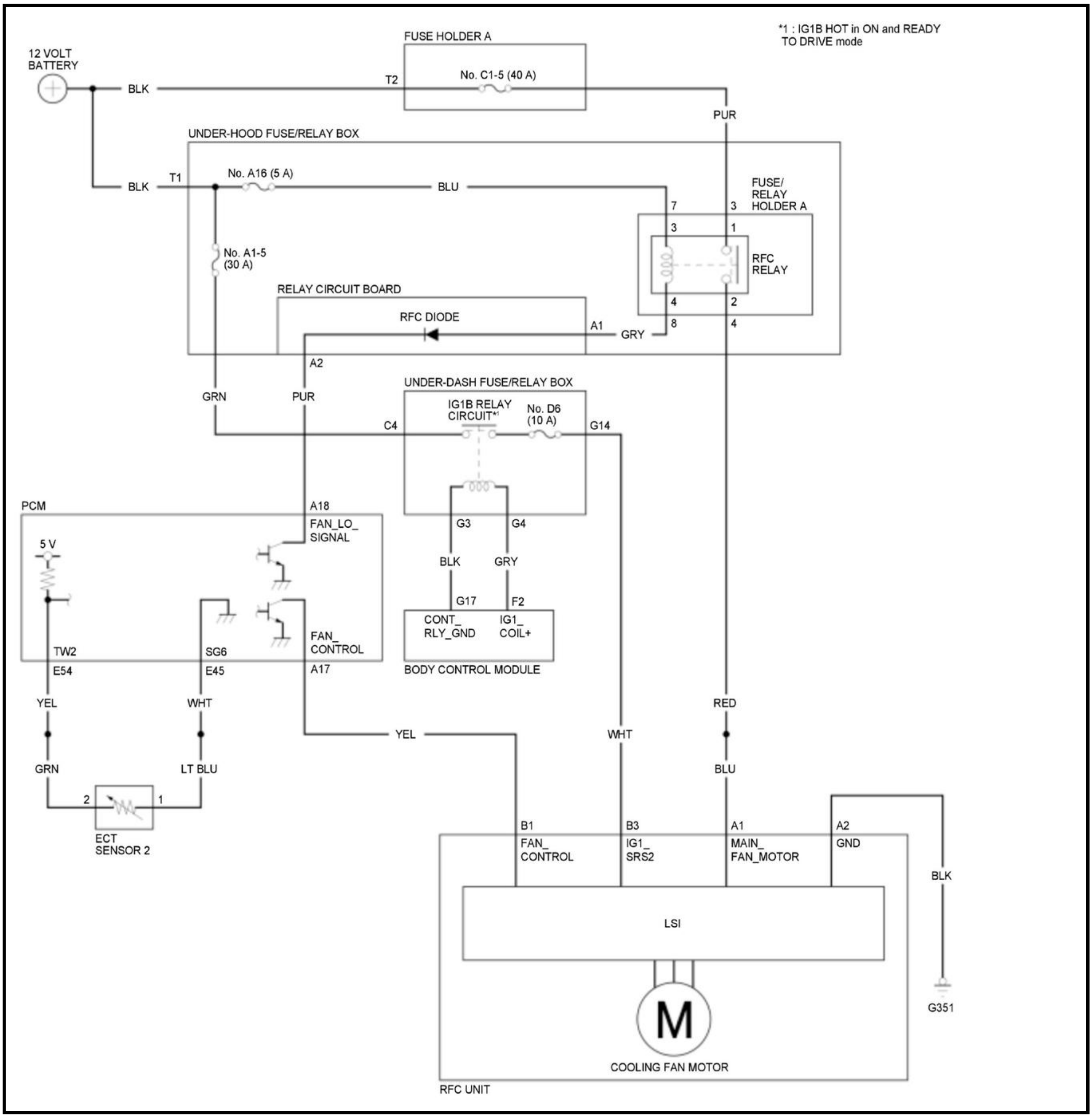
*1 : IG1B HOT in ON and READY TO DRIVE mode
12 VOLT BATTERY
FUSE HOLDER A
No. C1-5 (40 A)
T2
BLK
PUR
UNDER-HOOD FUSE/RELAY BOX
T1
No. A16 (5 A)
BLU
FUSE/ RELAY HOLDER A
7
3
1
RFC RELAY
4
2
8
No. A1-5 (30 A)
RELAY CIRCUIT BOARD
RFC DIODE
A1
GRY
A2
GRN
UNDER-DASH FUSE/RELAY BOX
IG1B RELAY CIRCUIT*1
No. D6 (10 A)
C4
G14
PCM
A18
FAN_LO_ SIGNAL
5 V
G3
G4
G17
F2
CONT_ RLY_GND
IG1_ COIL+
BODY CONTROL MODULE
TW2
SG6
FAN_ CONTROL
E54
E45
A17
YEL
WHT
RED
ECT SENSOR 2
LT BLU
B1
B3
A1
A2
FAN_ CONTROL
IG1_ SRS2
MAIN_ FAN_MOTOR
GND
LSI
M
COOLING FAN MOTOR
RFC UNIT
G351

COMPONENT LOCATION INDEX

COOLING SYSTEM COMPONENT LOCATION INDEX

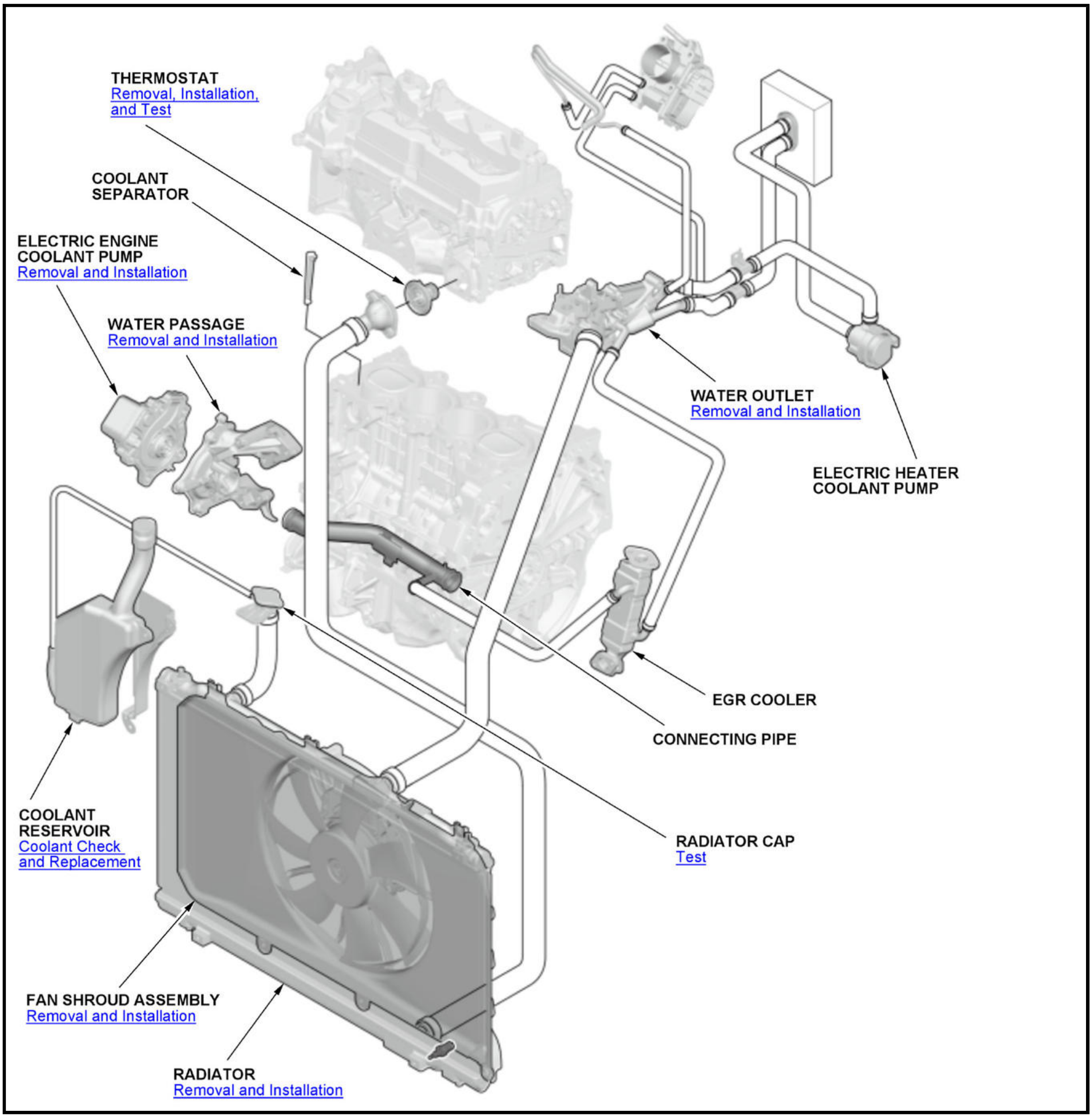
THERMOSTAT
Removal, Installation, and Test
COOLANT SEPARATOR
ELECTRIC ENGINE COOLANT PUMP
Removal and Installation
WATER PASSAGE
Removal and Installation
WATER OUTLET
Removal and Installation
ELECTRIC HEATER COOLANT PUMP
EGR COOLER
CONNECTING PIPE
RADIATOR CAP
Test
COOLANT RESERVOIR
Coolant Check and Replacement
FAN SHROUD ASSEMBLY
Removal and Installation
RADIATOR
Removal and Installation

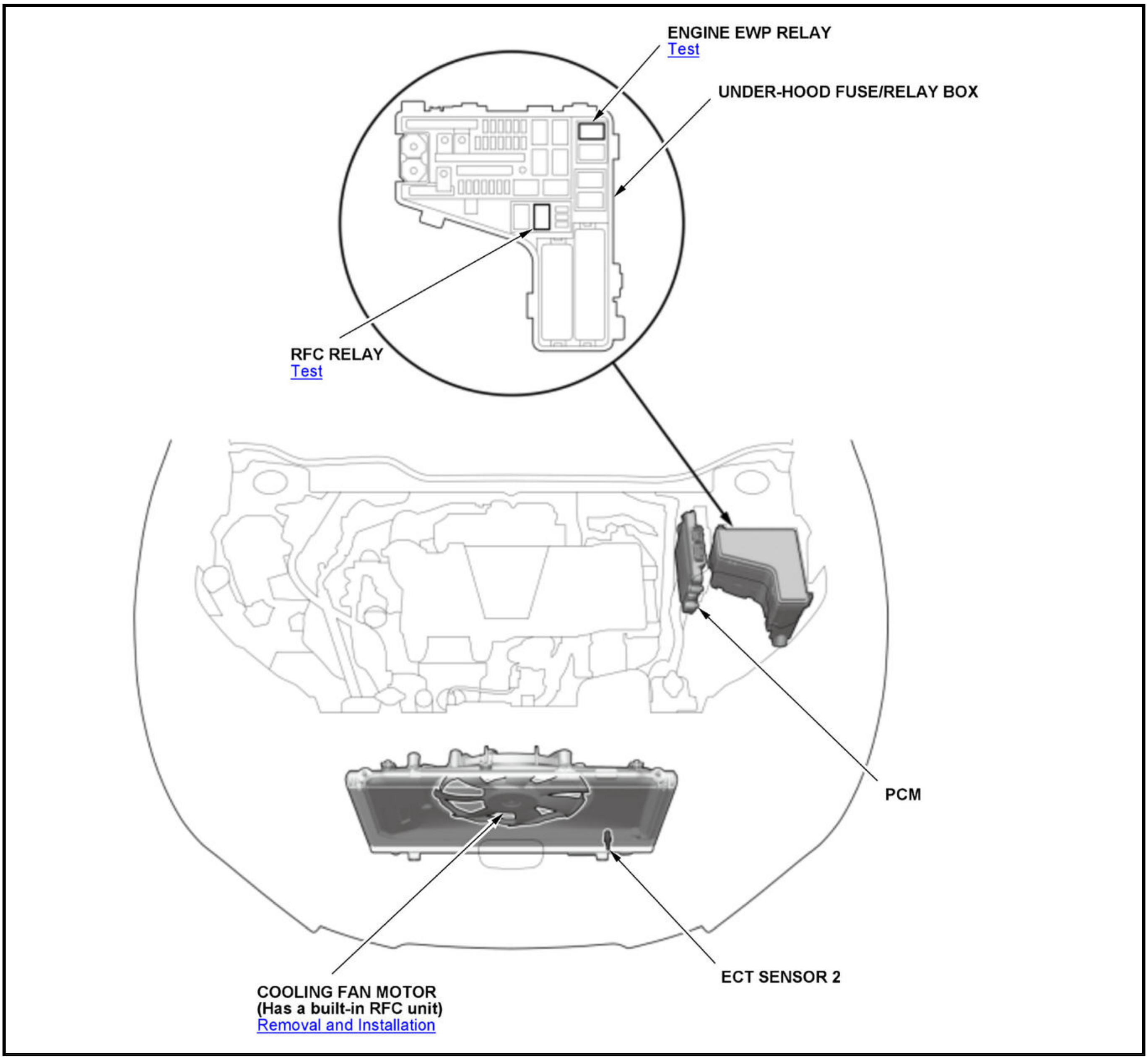
ENGINE EWP RELAY
Test
UNDER-HOOD FUSE/RELAY BOX
RFC RELAY
Test
PCM
COOLING FAN MOTOR
(Has a built-in RFC unit)
Removal and Installation
ECT SENSOR 2

REPLACEMENT

COOLANT REPLACEMENT (1.5 L ENGINE)

Replacement

NOTE: How to read the torque specifications .

1. Expansion Tank Cap - Remove

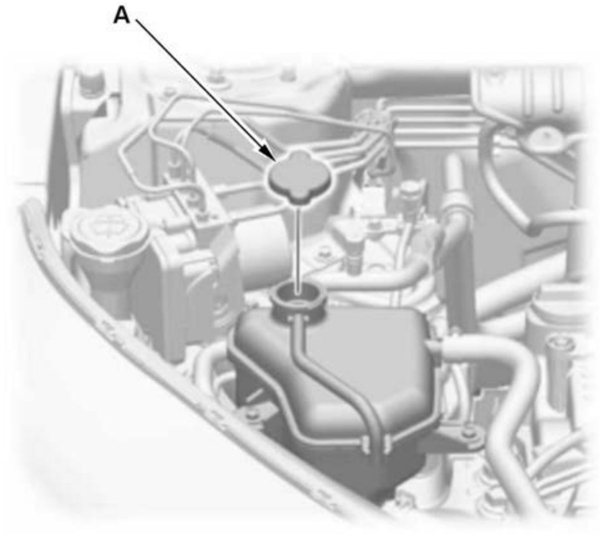	1. Wait until the engine is cool, then carefully remove the expansion tank cap (A).

2. Engine Coolant - Drain

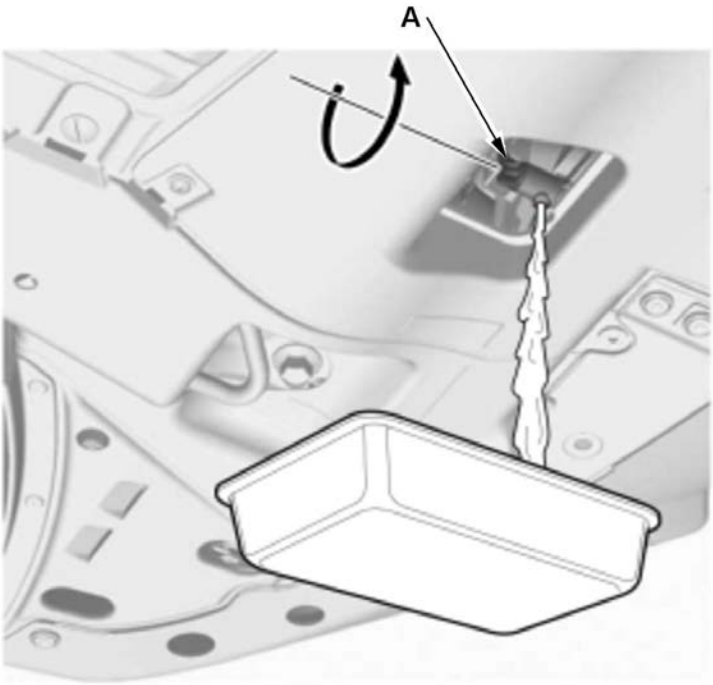	1. Loosen the drain plug (A), and drain the coolant.

3. Cylinder Block Coolant - Drain

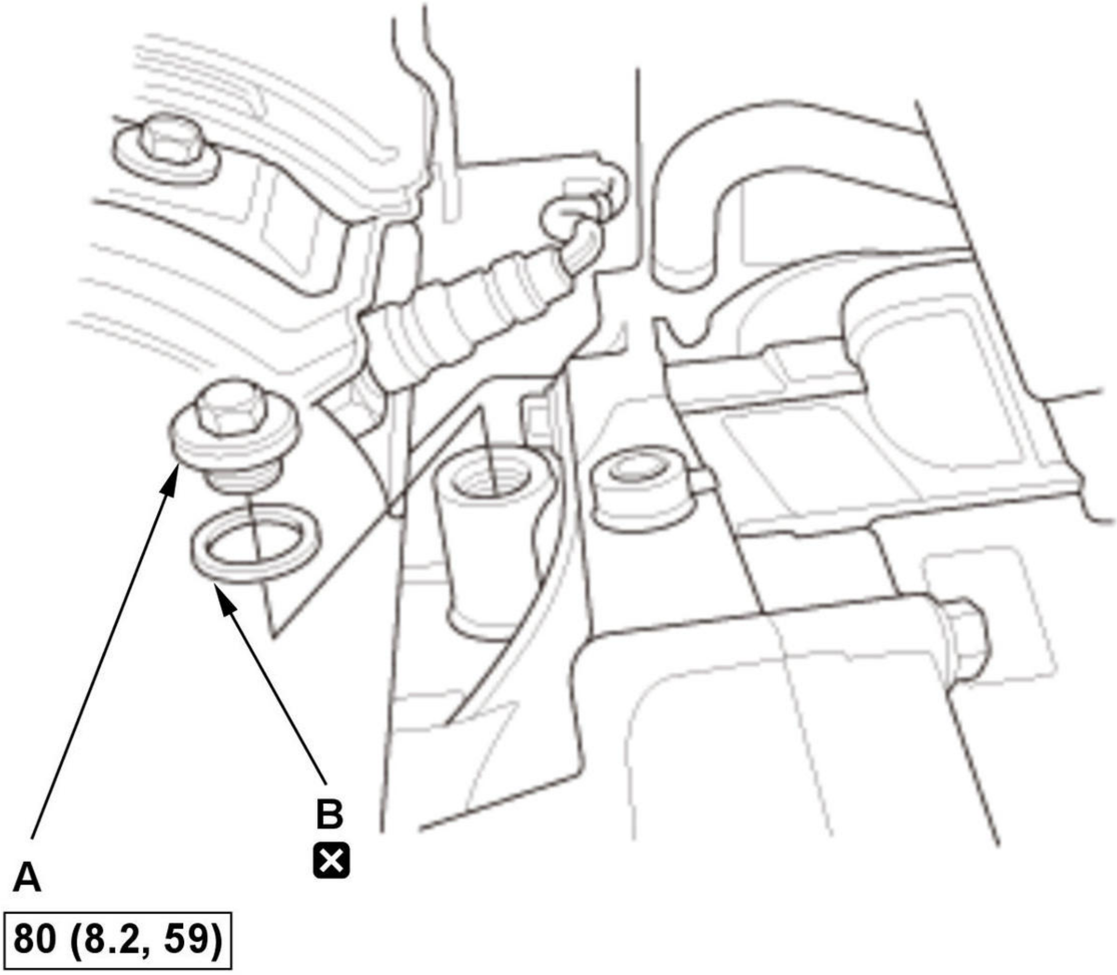

Fig. 1: Radiator Drain Plug With Torque Specifications
Courtesy of HONDA, U.S.A., INC.

1. Remove the drain bolt (A).

2. After the coolant has drained, reinstall the drain bolt with a new washer (B).

3. Tighten the radiator drain plug securely.

4. Expansion Tank Coolant - Drain
5. Engine Coolant - Refill

1. Pour Honda Long Life Antifreeze/Coolant Type 2 (for except Ecuador)/Honda All Season Antifreeze/Coolant Type 2 (for Ecuador) into the expansion tank (A) to the MAX mark (B).**Except Ecuador**

NOTE:

- Always use Honda Long Life Antifreeze/Coolant Type 2 or Honda Extreme Cold Weather Antifreeze/Coolant Type 2. Using a non-Honda coolant can result in corrosion, causing the cooling system to malfunction or fail.
- Honda Long Life Antifreeze/Coolant Type 2 is a mixture of 50 % antifreeze and 50 % water. Honda Extreme Cold Weather Antifreeze/Coolant Type 2 is a 100% concentration coolant. Do not add water to either coolant.
- If the vehicle is regularly used in very low temperatures (under -22 deg. F (-30 deg. C)), a 60% concentration of coolant should be used.

Operation	Vehicle Usage (Desired Mixture)	Current Mixture	Coolant Drain	Add Amount of Honda Extreme Cold Weather Antifreeze/Coolant Type 2 (100% concentrate)	Then add Honda Long Life Antifreeze/Coolant Type 2 (50/50)
Coolant Change	Normal Area (50/50)	50/5060/40unknown	Drain radiator, engine block, and expansion tank	None	Top off the cooling system
	Very Cold Area (60/40)	50/50unknown	Drain radiator, engine block, and expansion tank	About 1.6 L (54 fl oz)	
		60/40		About 1.3 L (44 fl oz)	
Engine Overhaul	Normal Area (50/50)	-	-	None	
	Very Cold Area (60/40)	-	-	About 1.6 L (54 fl oz)	
Coolant Winterizing	Very Cold Area (60/40)	50/50	Drain about 2.0 L (68 fl oz) from radiator	About 1.6 L (54 fl oz)	
		unknown*	Drain radiator, engine block, and expansion tank		

*: When you want to winterize the coolant with the minimum amount of coolant change but the current coolant concentration in the vehicle is unknown, you must drain all coolant from the cooling system.**Ecuador**

NOTE:

- Always use Honda All Season Antifreeze/Coolant Type 2. Using a non-Honda coolant can result in corrosion, causing the cooling system to malfunction or fail.
- Honda All Season Antifreeze/Coolant Type 2 is a mixture of 50 % antifreeze and 50 % water. Do not add water.

Engine Coolant Capacities (Including the expansion tank capacity of 0.8 L (0.21 US gal))
With cooler valve body
At Coolant Change:
6.3 L (1.66 US gal)
After Engine Overhaul:
7.6 L (2.01 US gal)
Without cooler valve body

At Coolant Change:
6.2 L (1.64 US gal)
After Engine Overhaul:
7.6 L (2.01 US gal)

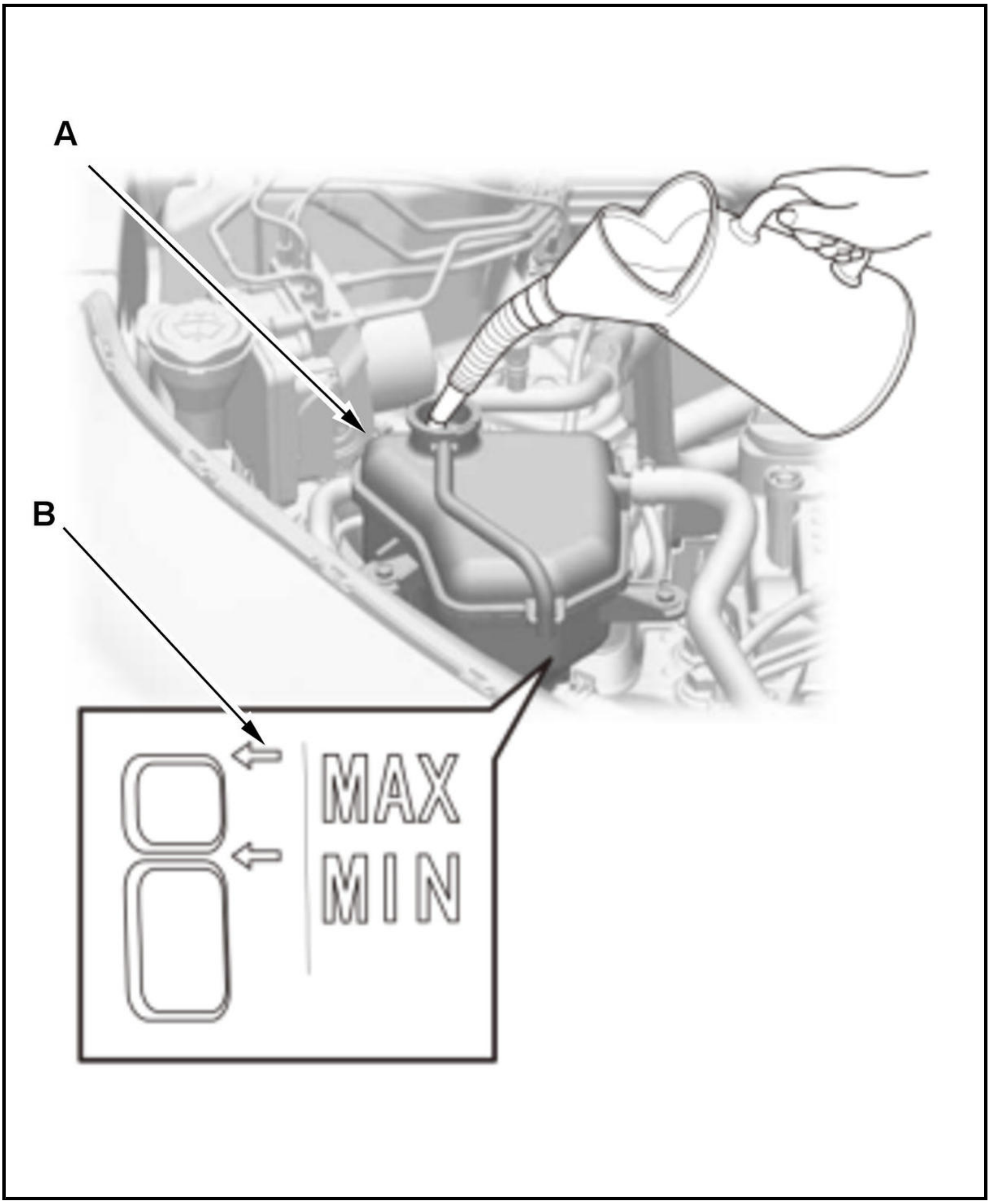

6. Engine Coolant - Air Bleed

1. Loosely install the expansion tank cap.

2. Start the engine and let it run until the cooling fan comes on at least twice. Do not operate the air conditioning system.

3. Turn off the engine. Check the level in the expansion tank, and add Honda Long Life Antifreeze/Coolant Type 2 (for except Ecuador)/Honda All Season Antifreeze/Coolant Type 2 (for Ecuador), if needed.

7. Engine Coolant Leak - Check

1. Put the expansion tank cap securely, then start the engine again, and check for leaks. 2. Clean up any spilled engine coolant.

8. Maintenance Minder - Reset (With Maintenance Minder System)

1. If the Maintenance Minder required to replace the engine coolant, **reset the Maintenance Minder with the gauge** (see "Resetting the Maintenance Minder"). If the Maintenance Minder did not require to replace the engine coolant, **reset the Maintenance Minder with the HDS** (see "Resetting the Individual Maintenance Items").

COOLANT REPLACEMENT (2.4 L ENGINE) (2017 2018 2019)

Replacement

NOTE: **How to read the torque specifications** .

1. Radiator Cap - Remove

1. Wait until the engine is cool, then carefully remove the radiator cap.

2. **Vehicle - Lift**
3. Engine Coolant - Drain

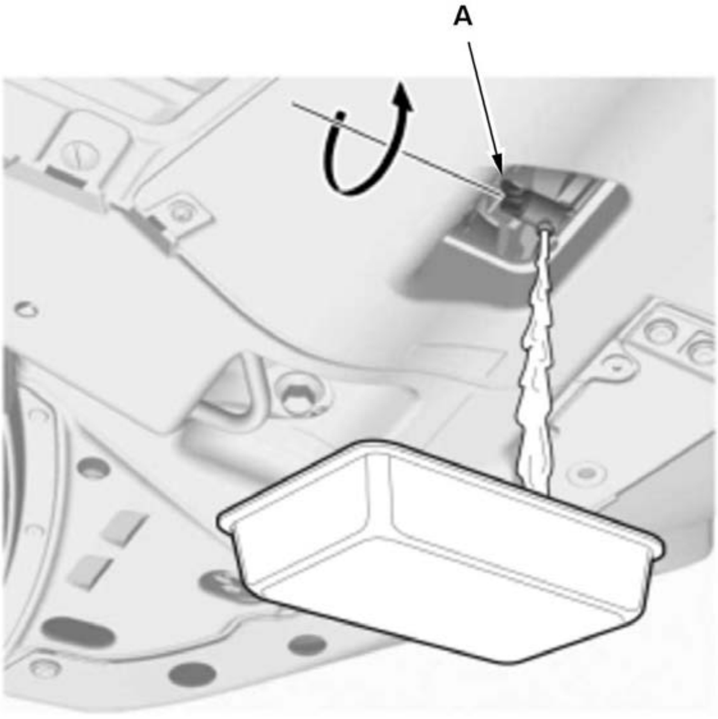	1. Loosen the drain plug (A), and drain the coolant.

4. Cylinder Block Coolant - Drain

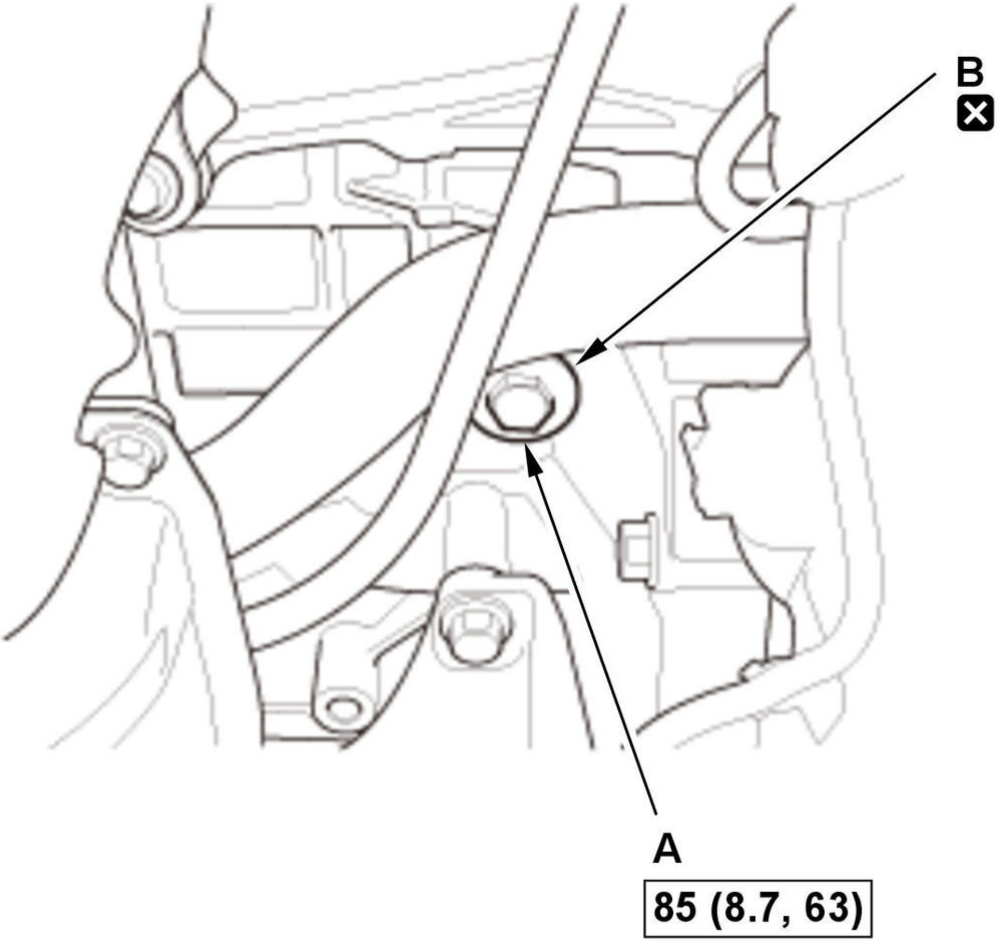

Fig. 2: Radiator Drain Plug With Torque Specifications
Courtesy of HONDA, U.S.A., INC.

1. Remove the drain bolt (A). 2. After the coolant has drained, reinstall the drain bolt with a new washer (B). 3. Tighten the radiator drain plug securely.

5. Coolant Reservoir- Refill

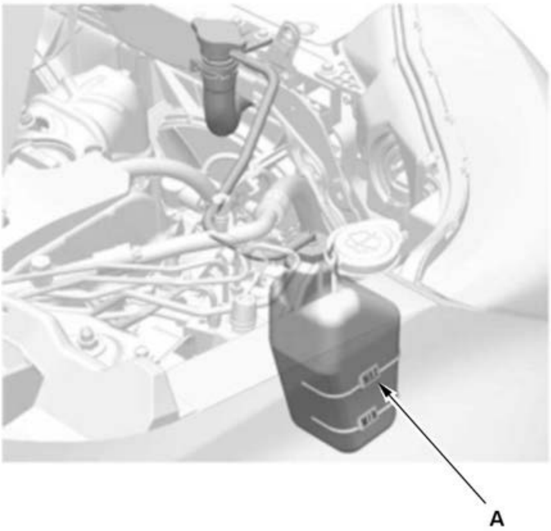	1. Remove, drain and reinstall the coolant reservoir. 2. Fill the coolant reservoir to the MAX mark (A) with Honda Long Life Antifreeze/Coolant Type 2.

6. Engine Coolant - Refill

1. Follow the chart and pour coolant into the radiator up to the base of the filler neck.**Except Ecuador**

NOTE:

- Always use Honda Long Life Antifreeze/Coolant Type 2, and if necessary add Honda Extreme Cold Weather Antifreeze/Coolant Type 2. Using a non-Honda coolant can result in corrosion, causing the cooling system to malfunction or fail.
- Honda Long Life Antifreeze/Coolant Type 2 is a mixture of 50 % antifreeze and 50 % water. Honda Extreme Cold Weather Antifreeze/Coolant Type 2 is a 100% concentration coolant. Do not add water to either coolant.
- If the vehicle is regularly used in very low temperatures (under - 22 deg. F (- 30 deg. C)) a 60% concentration of coolant should be used.

Operation	Vehicle Usage (Desired Mixture)	Current Mixture	Coolant Drain	Add Amount of Honda Extreme Cold Weather Antifreeze/Coolant Type 2 (100 % concentrate)	Then add Acura Long Life Antifreeze/Coolant Type 2 (50/50)
Coolant Change	Normal Area (50/50)	50/5060/40unknown	Drain radiator, engine block, and reservoir	None	Top off the cooling system
	Very Cold Area (60/40)	50/50unknown	Drain radiator, engine block, and reservoir	About 1.5 L (51 fl oz)	
		60/40		About 1.3 L (44 fl oz)	
Engine Overhaul	Normal Area (50/50)	-	-	None	
	Very Cold Area (60/40)	-	-	About 1.5 L (51 fl oz)	
Coolant Winterizing	Very Cold Area (60/40)	50/50	Drain about 2.0 L (68 fl oz) from radiator	About 1.5 L (51 fl oz)	
		unknown*	Drain radiator, engine block, and reservoir		

*: When you want to winterize the coolant with the minimum amount of coolant change but the current coolant concentration in the vehicle is unknown, you must drain all coolant from the cooling system.

Ecuador

NOTE:

- Always use Honda All Season Antifreeze/Coolant Type 2. Using a non-Honda coolant can result in corrosion, causing the cooling system to malfunction or fail.

- Honda All Season Antifreeze/Coolant Type 2 is a mixture of 50 % antifreeze and 50 % water. Do not add water.

Engine Coolant Refill Capacities (Including the coolant reservoir capacity of 0.7 L (0.18 US gal))	
At Coolant Change:	**6.3 L (1.66 US gal)**
After Engine Overhaul:	**7.7 L (2.03 US gal)**

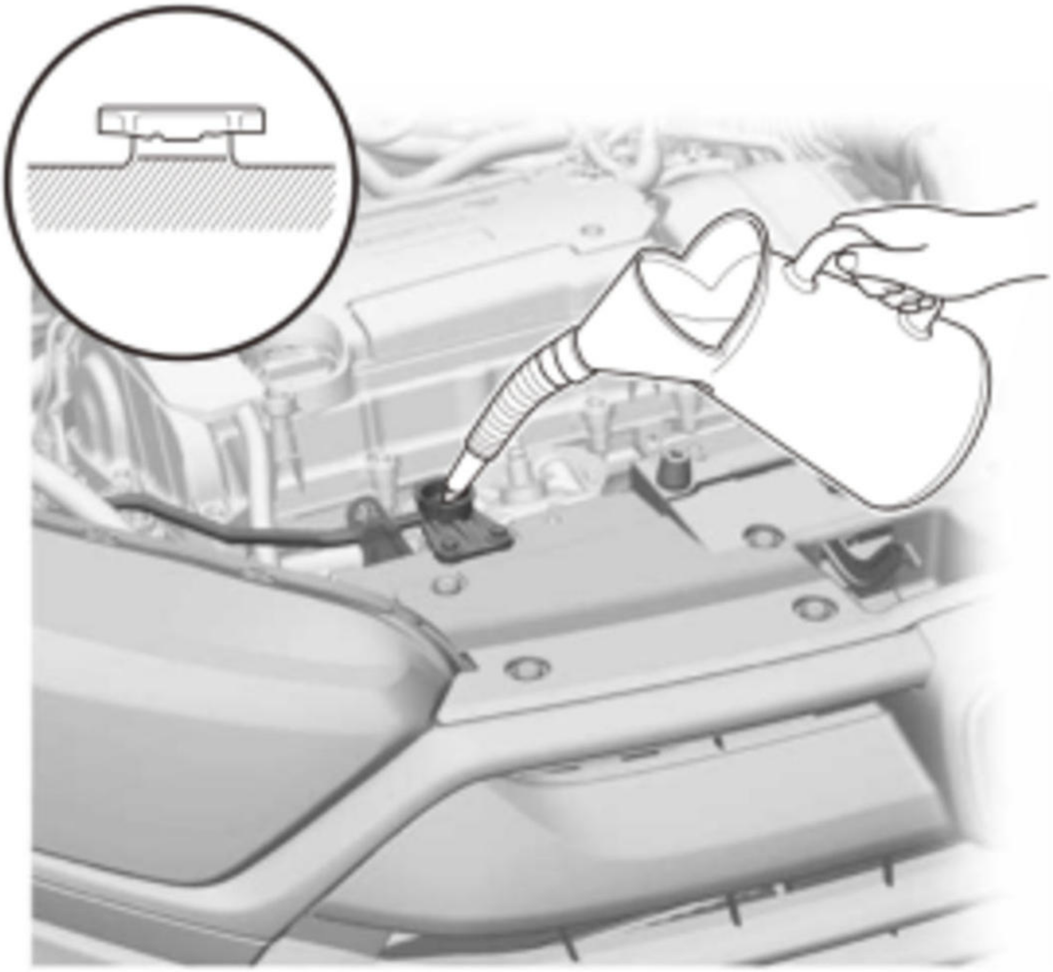

7. Engine Coolant - Air Bleed

1. Loosely install the radiator cap.

2. Start the engine, and let it run until it warms up (the radiator fan comes on at least twice).

3. Turn off the engine. Check the level in the radiator, and add Honda Long Life Antifreeze/Coolant Type 2 (for except Ecuador)/Honda All Season Antifreeze/Coolant Type 2 (for Ecuador), if needed.

8. Engine Coolant Leak - Check

1. Put the radiator cap securely, then start the engine again, and check for leaks.

2. Clean up any spilled engine coolant.

9. Maintenance Minder - Reset (With Maintenance Minder System)

1. If the Maintenance Minder required to replace the engine coolant, **reset the Maintenance Minder with the gauge** (see "Resetting the Maintenance Minder"). If the Maintenance Minder did not require to replace the engine coolant, **reset the Maintenance Minder with the HDS** (see "Resetting the Individual Maintenance Items").

DESCRIPTION & OPERATION

COOLING FAN CONTROLS SYSTEM DESCRIPTION

Overview

Receiving various signals (such as coolant temperature signals and refrigerant compression signals) from sensors, the PCM performs the fan control switching the fan speed (HI/LO) as needed. This control efficiently operates the radiator fan and A/C condenser fan, and improves fuel efficiency by reducing electrical load.

Fan LO Control Operation

In fan LO control, the PCM switches the FAN LO terminal to the ON position, which then switches the radiator fan relay to the ON position. This causes current to flow from the 12 volt battery to the radiator fan relay, the radiator fan motor, the fan control relay and the A/C condenser fan motor, to create a series connection through the radiator fan motor and the A/C condenser fan motor. Using this series connection, the fan rotates at a lower speed.

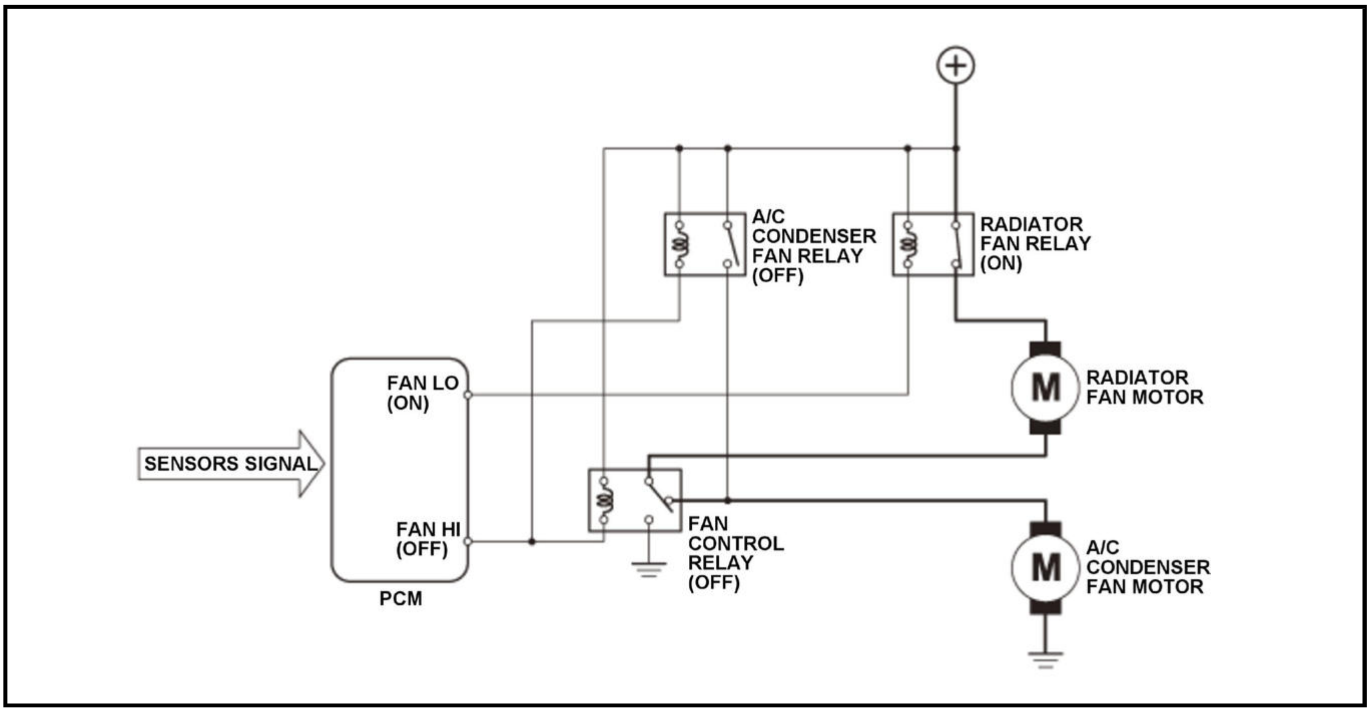

Fan HI Control Operation

In fan HI control, the PCM powers the FAN LO terminal and the FAN HIGH terminal. This switches the radiator fan relay, the fan control relay, and the A/C condenser fan relay to the ON position. With the radiator fan relay and the fan control relay in the ON position, current from the 12 volt battery flows through the radiator fan relay to the radiator fan motor, and then through the fan control relay to the ground. This rotates the radiator fan at a high speed. In addition, with the A/C condenser fan relay and the fan control relay in the ON position, current from the 12 volt battery flows through the A/C condenser fan relay to the A/C condenser fan motor to the ground. This rotates the A/C condenser fan at a high speed.

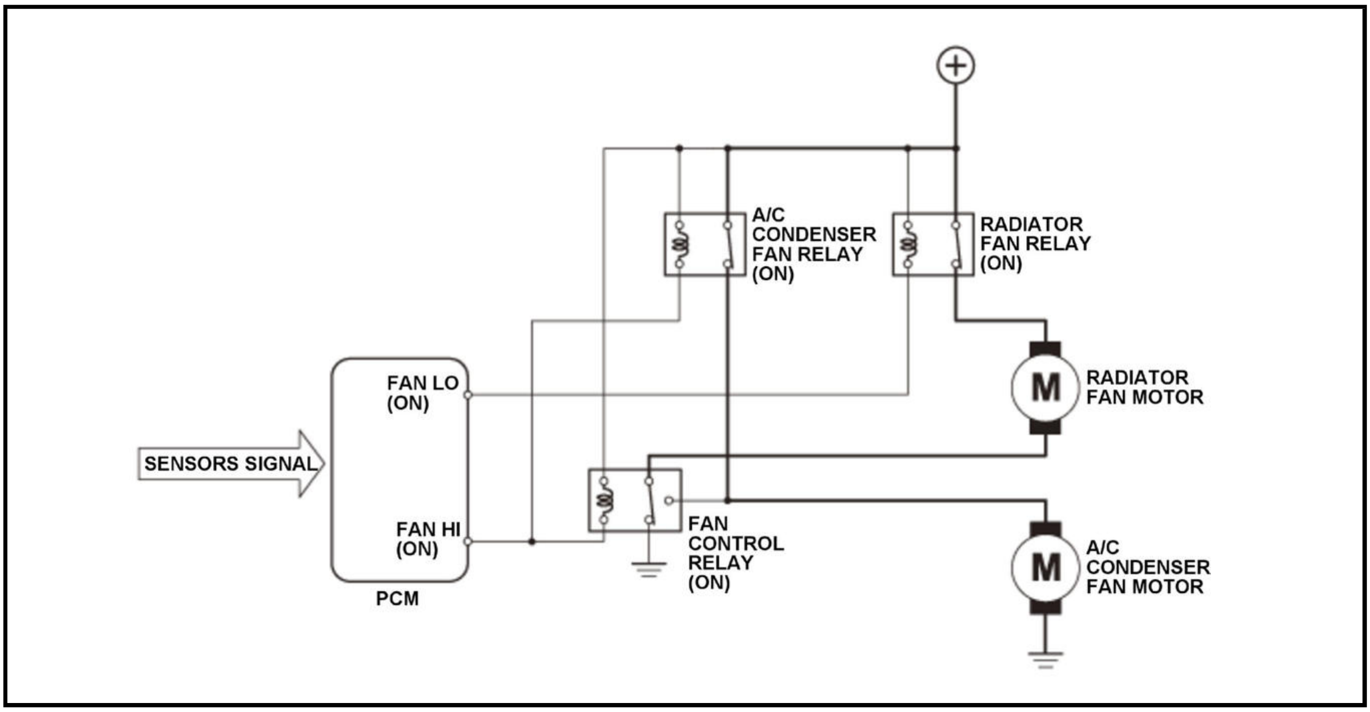
A/C CONDENSER FAN RELAY (ON)
RADIATOR FAN RELAY (ON)
FAN LO (ON)
RADIATOR FAN MOTOR
M
SENSORS SIGNAL
FAN HI (ON)
FAN CONTROL RELAY (ON)
PCM
A/C CONDENSER FAN MOTOR
M

COOLING SYSTEM DESCRIPTION (1.5 L ENGINE)

Overview

The coolant system uses a liquid cooling pressure circulation type, which is a bottom bypass system with a thermostat located at the water inlet side.

Cooling Circuit

Thermostat Close

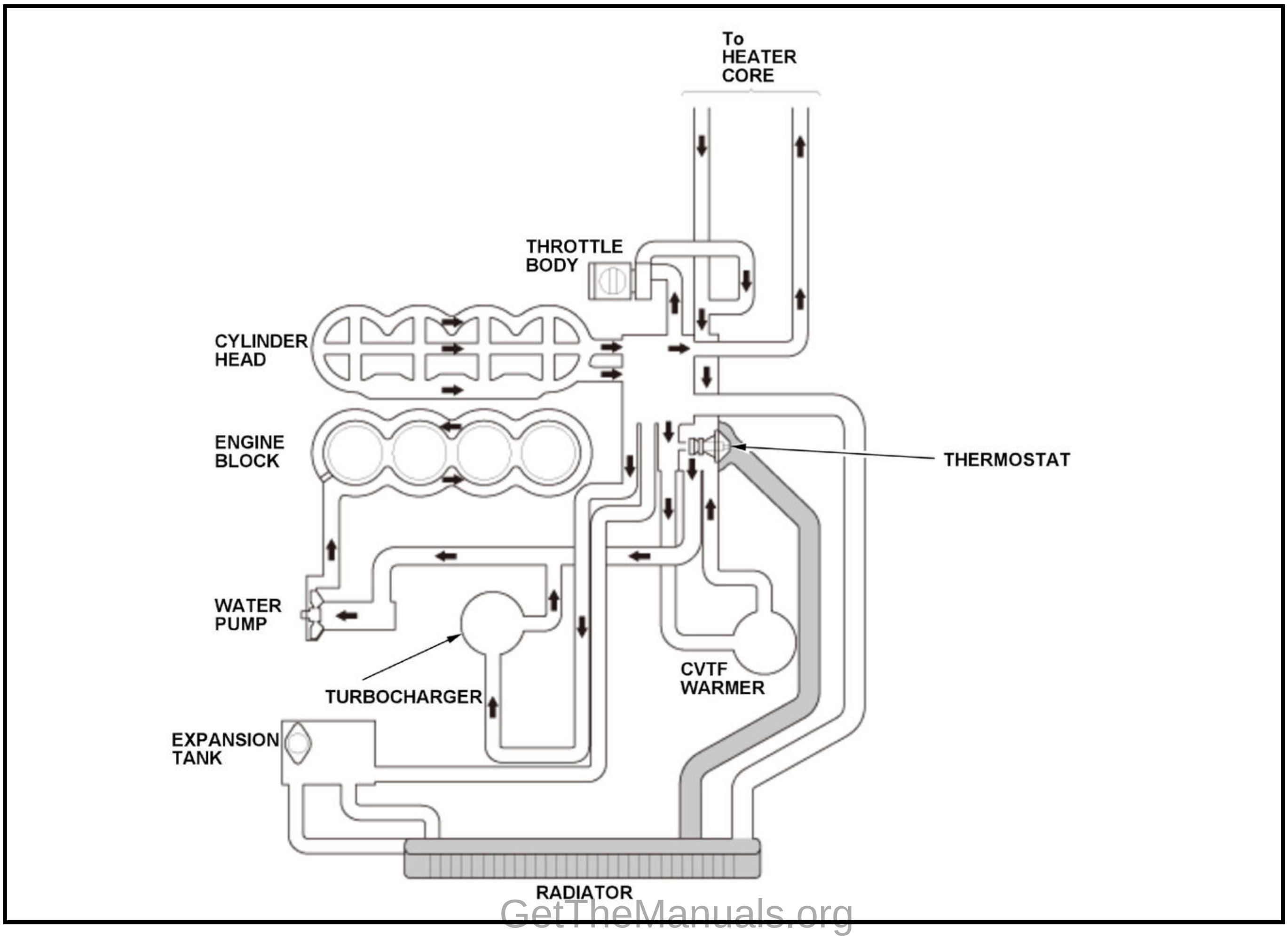
To HEATER CORE
THROTTLE BODY
CYLINDER HEAD
ENGINE BLOCK
THERMOSTAT
WATER PUMP
TURBOCHARGER
CVTF WARMER
EXPANSION TANK
RADIATOR

Thermostat Open

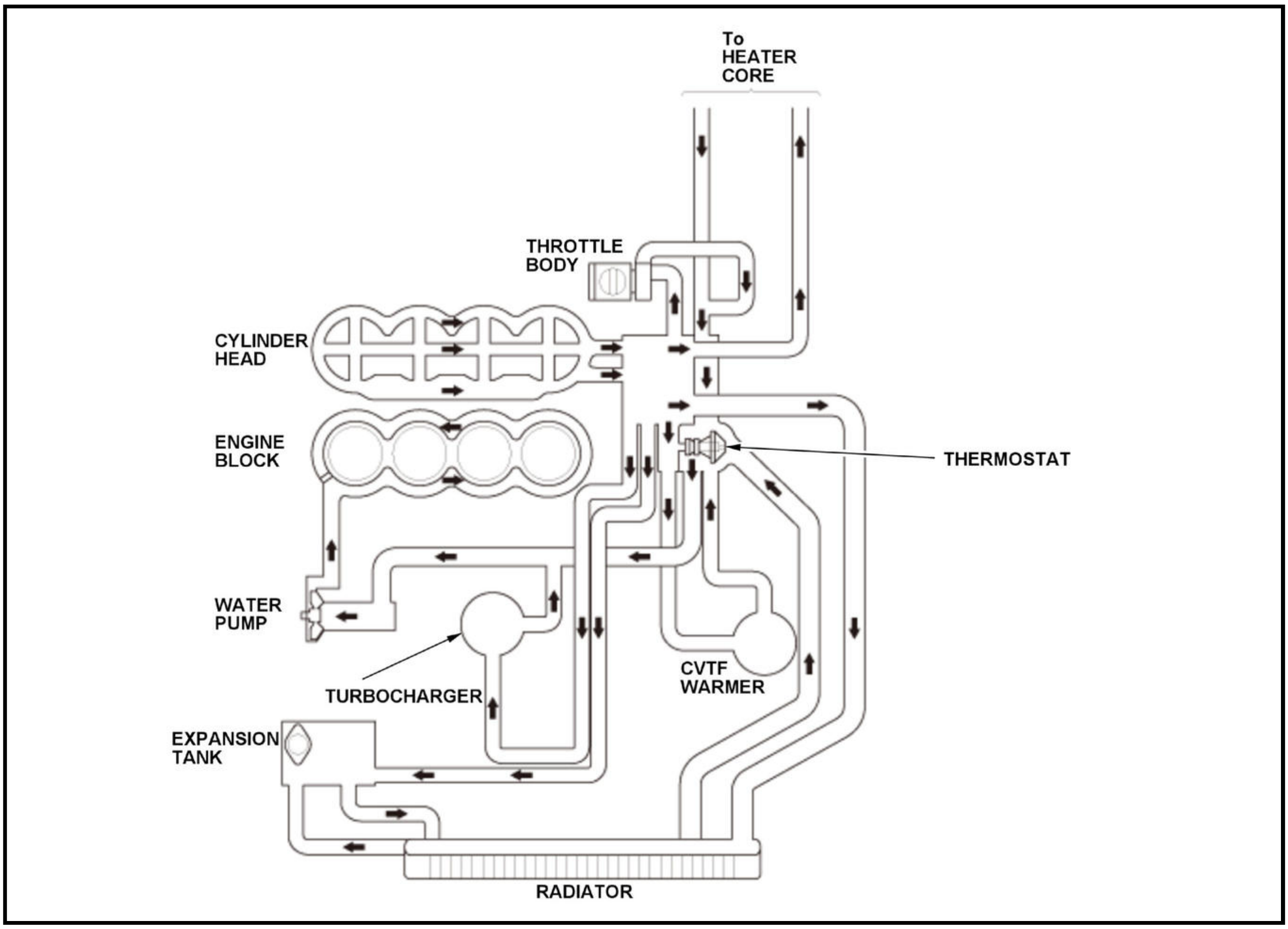
To
HEATER
CORE
THROTTLE
BODY
CYLINDER
HEAD
ENGINE
BLOCK
THERMOSTAT
WATER
PUMP
TURBOCHARGER
CVTF
WARMER
EXPANSION
TANK
RADIATOR

COOLING SYSTEM DESCRIPTION (2.4 L ENGINE) (2017 2018 2019)

Overview

The coolant system uses a liquid cooling pressure circulation type, which is a bottom bypass system with a thermostat located at the water inlet side.

Cooling Circuit

Thermostat Close

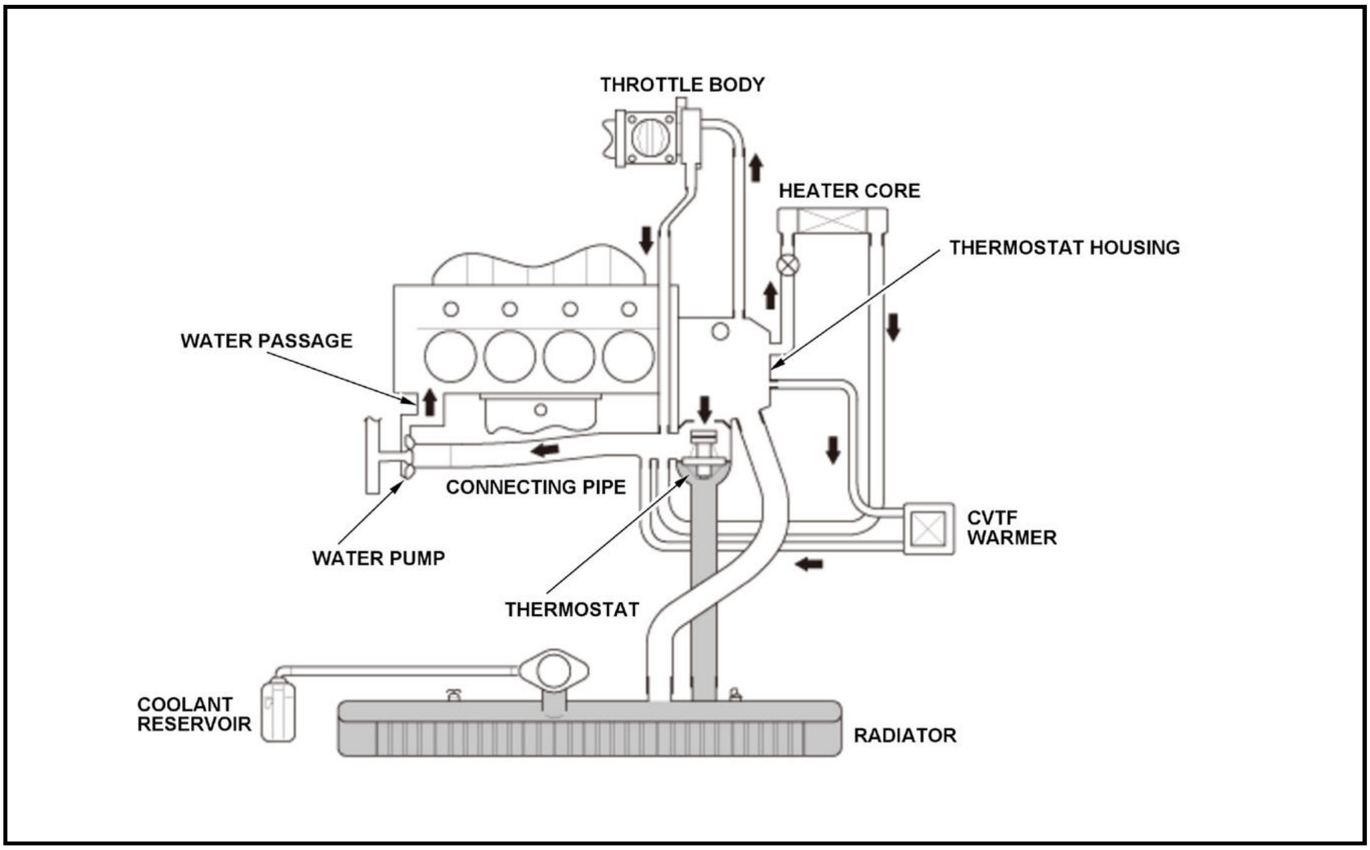
THROTTLE BODY
HEATER CORE
THERMOSTAT HOUSING
WATER PASSAGE
CONNECTING PIPE
CVTF WARMER
WATER PUMP
THERMOSTAT
COOLANT RESERVOIR
RADIATOR

Thermostat Open

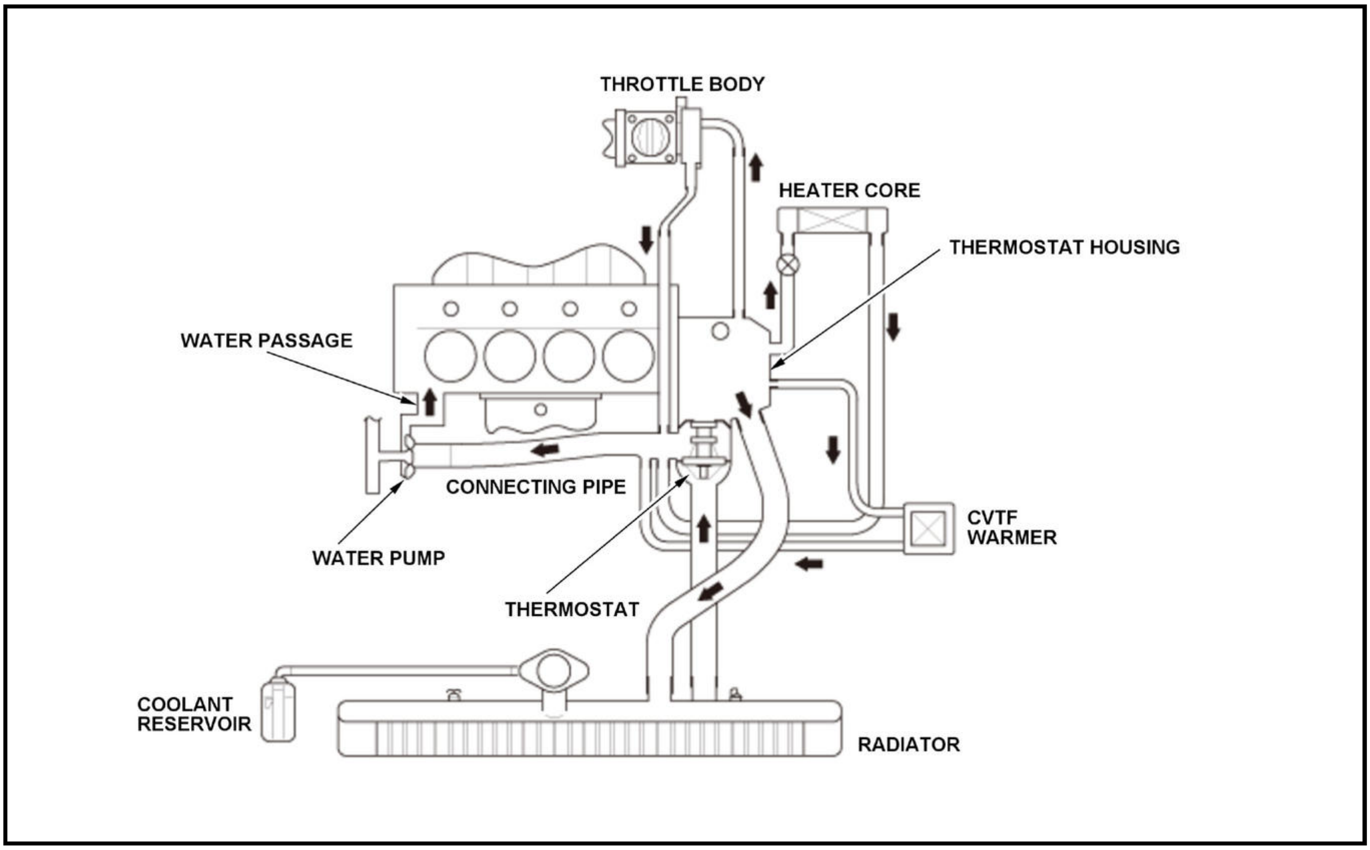
THROTTLE BODY
HEATER CORE
THERMOSTAT HOUSING
WATER PASSAGE
CONNECTING PIPE
CVTF WARMER
WATER PUMP
THERMOSTAT
COOLANT RESERVOIR
RADIATOR

CHECK

COOLANT CHECK (1.5 L ENGINE)

Check

1. Coolant - Check

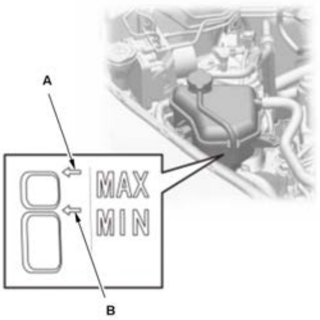	1. Check the coolant level in the expansion tank. Make sure it is between the MAX mark (A) and MIN mark (B). 2. If the coolant level in the expansion tank is at or below the MIN mark, add coolant to bring it between the MIN and MAX marks, then inspect the cooling system for leaks. 3. Check the coolant level in the expansion tank, and add Honda Long Life Antifreeze/Coolant Type 2 (for except Ecuador)/Honda All Season Antifreeze/Coolant Type 2 (for Ecuador) into the expansion tank to the MAX mark, if needed. **NOTE:** • Always use Honda Long Life Antifreeze/Coolant Type 2 (for except Ecuador)/Honda All Season Antifreeze/Coolant Type 2 (for Ecuador). Using a non-Honda coolant can result in corrosion, causing the cooling system to malfunction or fail. • Honda Long Life Antifreeze/Coolant Type 2 (for except Ecuador)/Honda All Season Antifreeze/Coolant Type 2 (for Ecuador) is a mixture of 50 % antifreeze and 50 % water. Do not add water.

COOLANT CHECK (2.4 L ENGINE) (2017 2018 2019)

Check

1. Coolant - Check

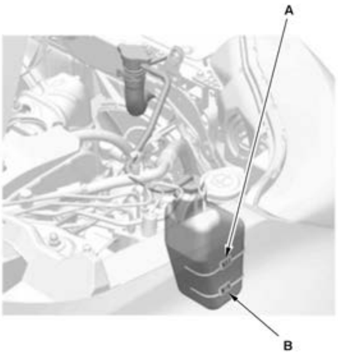	1. Check the coolant level in the coolant reservoir. Make sure it is between the MAX mark (A) and MIN mark (B). 2. If the coolant level in the coolant reservoir is at or below the MIN mark, add coolant to bring it between the MIN and MAX marks, then inspect the cooling system for leaks. 3. Check the coolant level in the radiator, and add Honda Long Life Antifreeze/Coolant Type 2 (for except Ecuador)/Honda All Season Antifreeze/Coolant Type 2 (for Ecuador) into the radiator up to the base of the filler neck, if needed. **NOTE:** • Always use Honda Long Life Antifreeze/Coolant Type 2 (for except Ecuador)/Honda All Season Antifreeze/Coolant Type 2 (for Ecuador). Using a non-Honda coolant can result in corrosion, causing the cooling system to malfunction or fail. • Honda Long Life Antifreeze/Coolant Type 2 (for except Ecuador)/Honda All Season Antifreeze/Coolant Type 2 (for Ecuador) is a mixture of 50 % antifreeze and 50 % water. Do not add water.

DTC TROUBLESHOOTING

RADIATOR FAN HIGH SPEED CIRCUIT TROUBLESHOOTING

Radiator Fan High Speed Circuit Troubleshooting

1. Fuse check

-1. Check the following fuses.

Fuse	Location
No. A1-3 (30 A)	Under-hood fuse/relay box
No. B25 (7.5 A)	Fuse/relay holder A
No. D9 (10 A)	Under-dash fuse/relay box

Are the fuses OK?

YES

Reinstall the fuses, then go to step 2.

NO

Replace the fuse (s), and recheck. If the fuse (s) blows again, repair the short to ground on the No. A1-3 (30 A) fuse, the No. B25 (7.5 A) fuse, and/or the No. D9 (10 A) fuse circuit (s).

2. Radiator fan and fan control relays check

-1. Check the following relays.

Relay	Location
Radiator fan relay	Under-hood fuse/relay box
Fan control relay	Relay holder F

Are the relays OK?

YES

Go to step 3.

NO

Replace the relay (s).

3. Open wire check (+B MAIN FAN line)

-1. Measure the voltage between test points 1 and 2.

Test condition	Vehicle OFF (LOCK) mode
	Radiator fan relay: disconnected
Test point 1	Radiator fan relay 4P socket (female terminals) No. 1: ①
Test point 2	Body ground

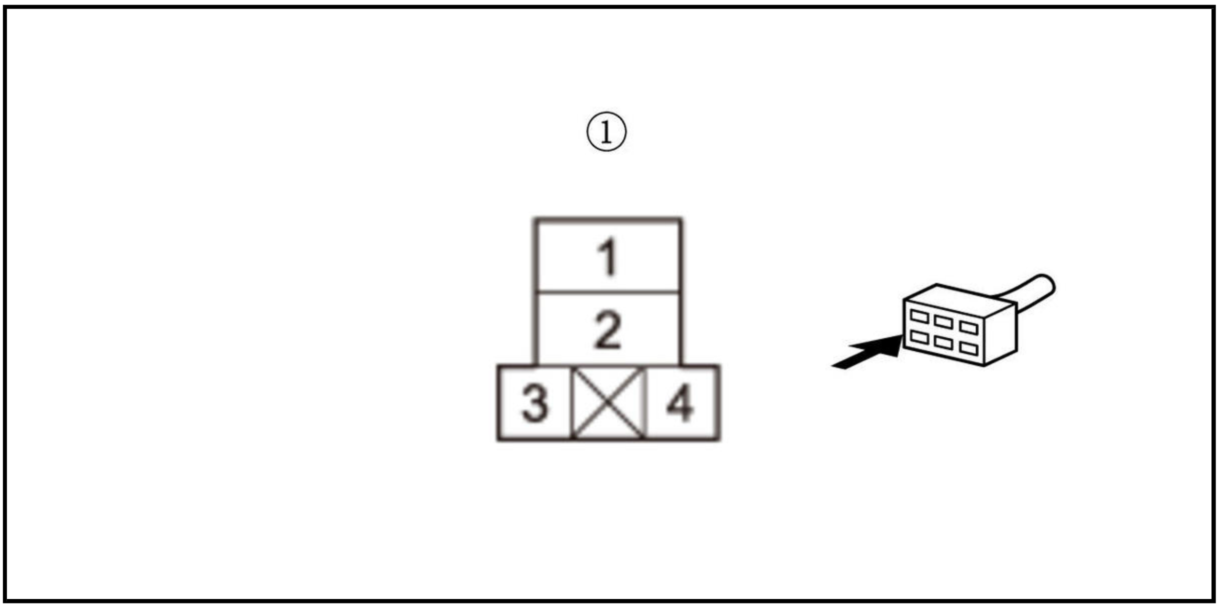

Is there battery voltage?

YES

Go to step 4.

NO

Repair an open in the +B MAIN FAN wire between the radiator fan relay and the No. A1-3 (30 A) fuse.

4. Determine possible failure area (GND line, others)

-1. Connect terminals A and B with a jumper wire.

Terminal A	Fan control relay 5P socket (female terminals) No. 1: ①

Terminal B	Fan control relay 5P socket (female terminals) No. 2: ①

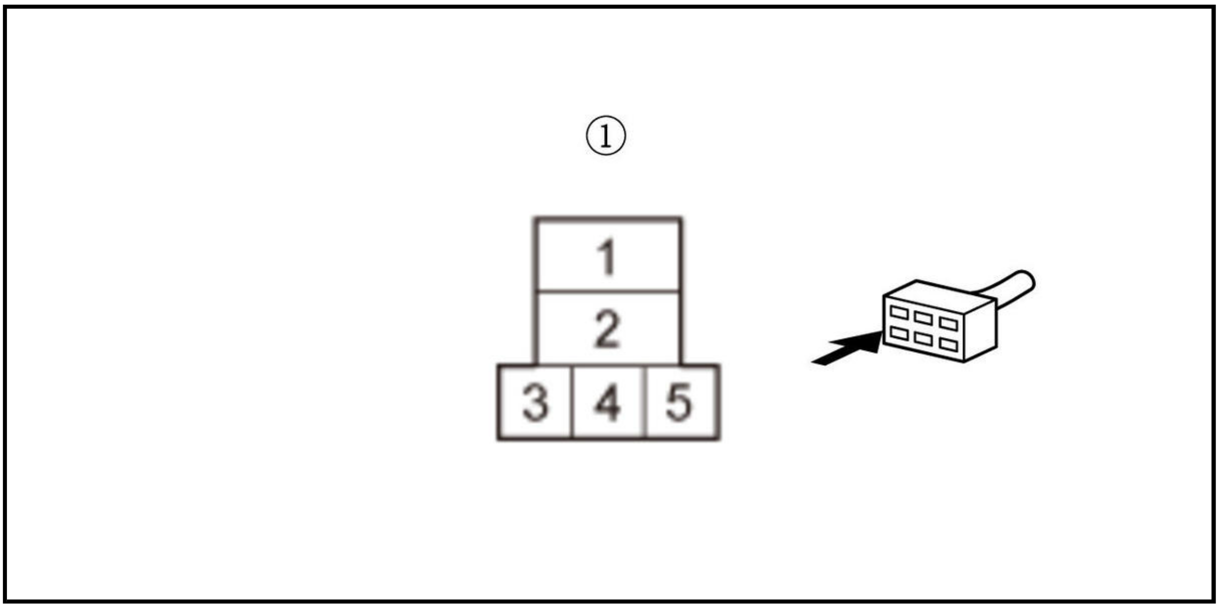

-2. Connect terminals A and B with a jumper wire.

Terminal A	Radiator fan relay 4P socket (female terminals) No. 1: ①
Terminal B	Radiator fan relay 4P socket (female terminals) No. 2: ①

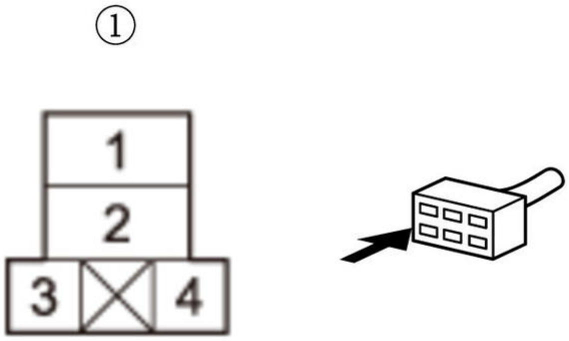

Does the radiator fan run at high speed?

YES

Remove the jumper wires, then go to step 9.

NO

Remove the jumper wires, then go to step 5.

5. Radiator fan motor operation check

-1. Test the radiator fan motor .

Is the motor OK?

YES

Go to step 6.

NO

Replace the radiator fan motor .

6. Open wire check (GND line)

-1. Check for continuity between test points 1 and 2.

Test condition	Vehicle OFF (LOCK) mode
	Radiator fan relay: disconnected
B	Fan control relay: disconnected
Test point 1	Fan control relay 5P socket (female terminals) No. 2: ①
Test point 2	Body ground

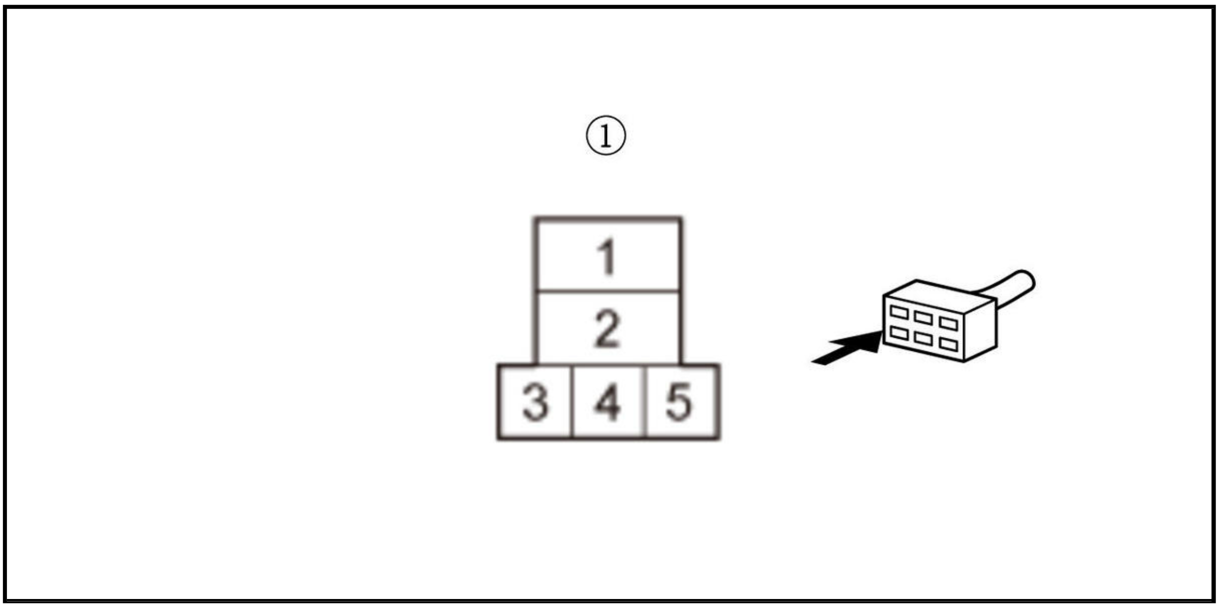

Is there continuity?

YES

Go to step 7.

NO

Repair an open in the GND wire between the fan control relay and ground G351.

7. Open wire check (MAIN FAN MOTOR line)

-1. Disconnect the following connector.

Radiator fan motor 2P connector

-2. Check for continuity between test points 1 and 2.

Test condition	Vehicle OFF (LOCK) mode
	Radiator fan relay: disconnected
B	Fan control relay: disconnected
B	Radiator fan motor 2P connector: disconnected
Test point 1	Radiator fan relay 4P socket (female terminals) No. 2: ①
Test point 2	Radiator fan motor 2P connector (female terminals) No. 1: ②

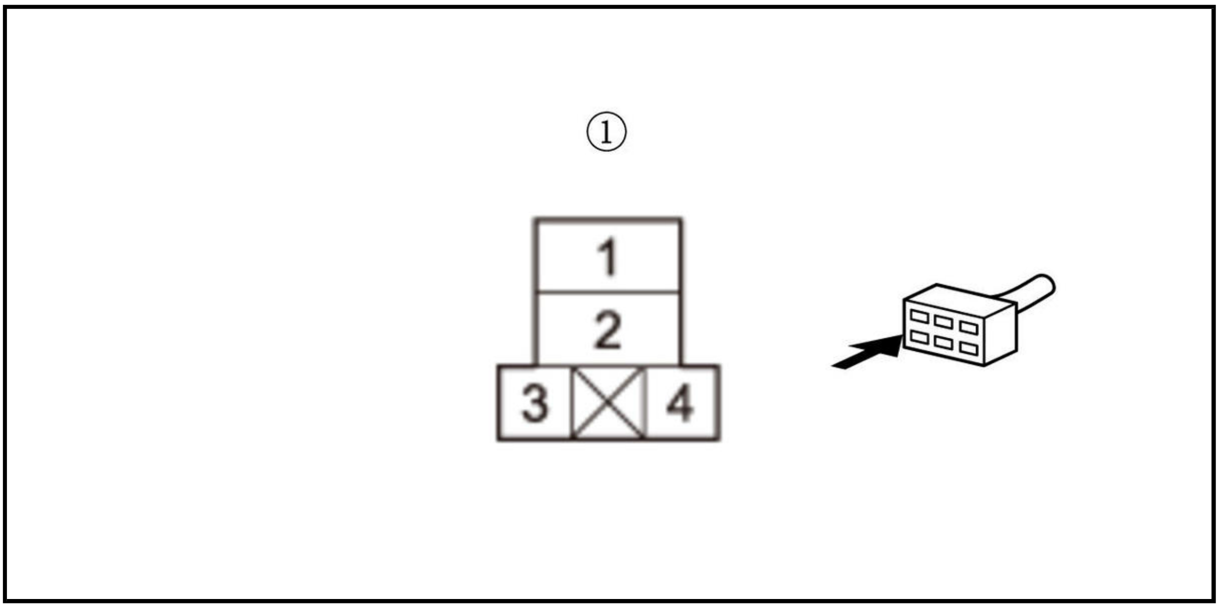

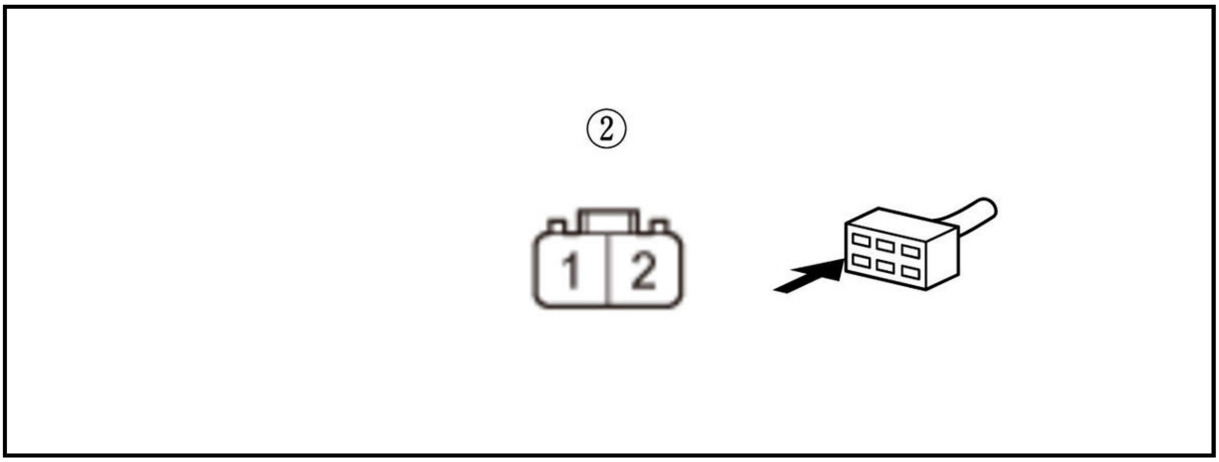

Is there continuity?

YES

Go to step 8.

NO

Repair an open in the MAIN FAN MOTOR wire between the radiator fan relay and the radiator fan motor.

8. Open wire check (FAN HI/LO RLY COM line)

-1. Check for continuity between test points 1 and 2.

Test condition	Vehicle OFF (LOCK) mode
	Radiator fan relay: disconnected
	Fan control relay: disconnected
B	Radiator fan motor 2P connector: disconnected
Test point 1	Fan control relay 5P socket (female terminals) No. 1: ①
Test point 2	Radiator fan motor 2P connector (female terminals) No. 2: ②

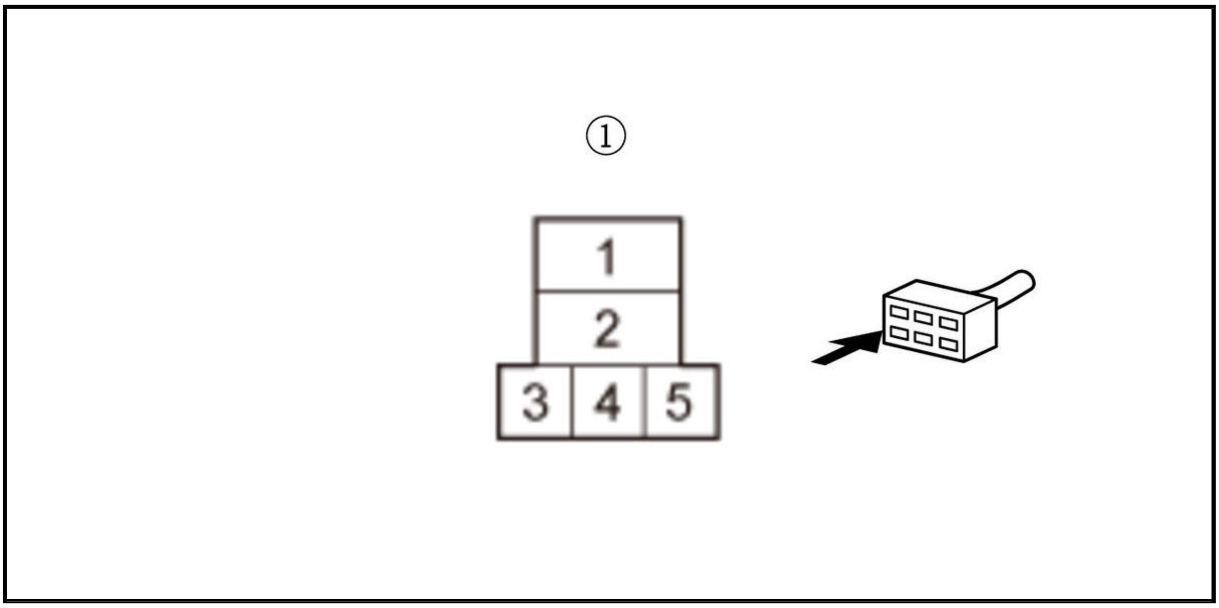

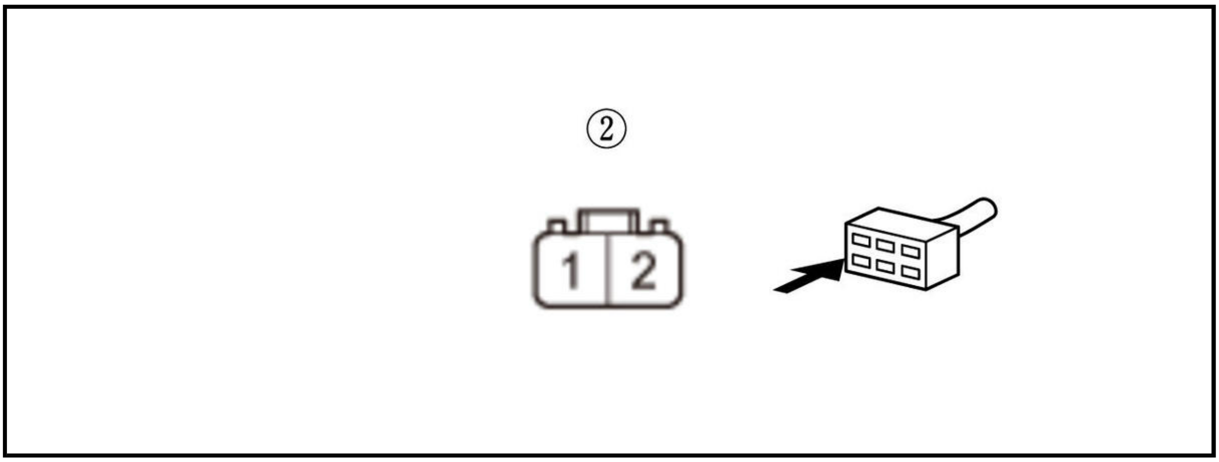

Is there continuity?

YES

Check for poor connections or loose terminals at the under-hood fuse/relay box and the radiator fan motor.

NO

Repair an open in the FAN HI/LO RLY COM wire between the fan control relay 5P and the radiator fan motor.

9. Open wire check (IG2 A/C line)

   -1. Turn the vehicle to the ON mode.

   -2. Measure the voltage between test points 1 and 2.

Test condition	Vehicle ON mode
	Radiator fan relay: disconnected
B	Fan control relay: disconnected
Test point 1	Radiator fan relay 4P socket (female terminals) No. 3: ①
Test point 2	Body ground

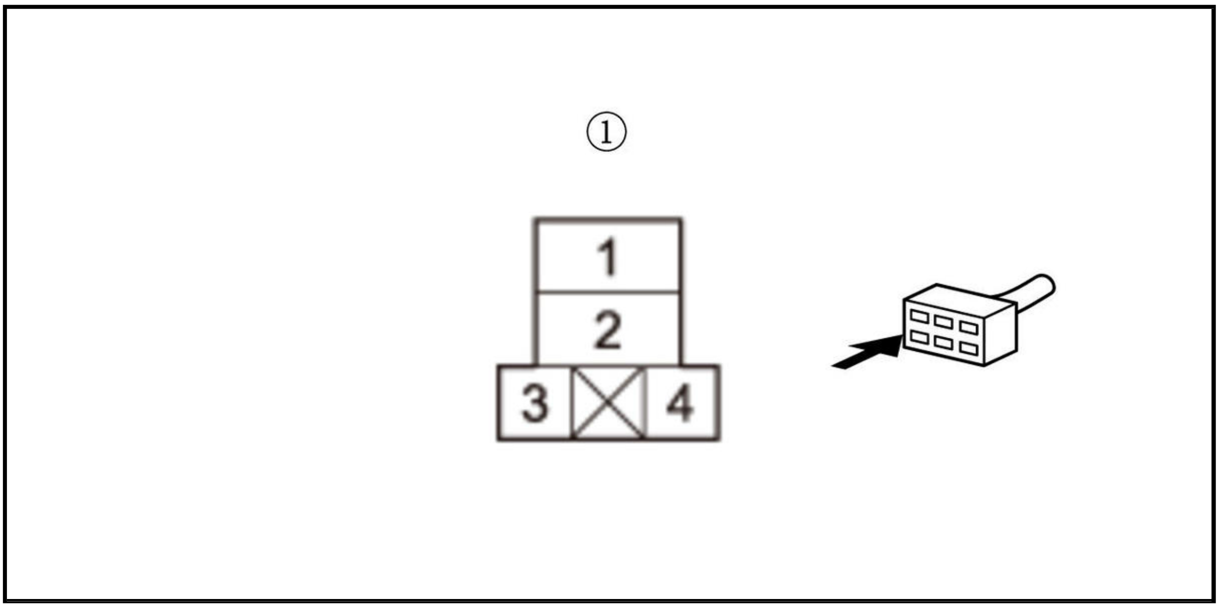

Is there battery voltage?

YES

Go to step 10.

NO

Repair an open in the IG2 A/C wire between the radiator fan relay and the No. D9 (10 A) fuse.

10. Open wire check (IGP2 SUB line)

-1. Measure the voltage between test points 1 and 2.

Test condition	Vehicle ON mode
	Radiator fan relay: disconnected
B	Fan control relay: disconnected
Test point 1	Fan control relay 5P socket (female terminals) No. 3: ①
Test point 2	Body ground

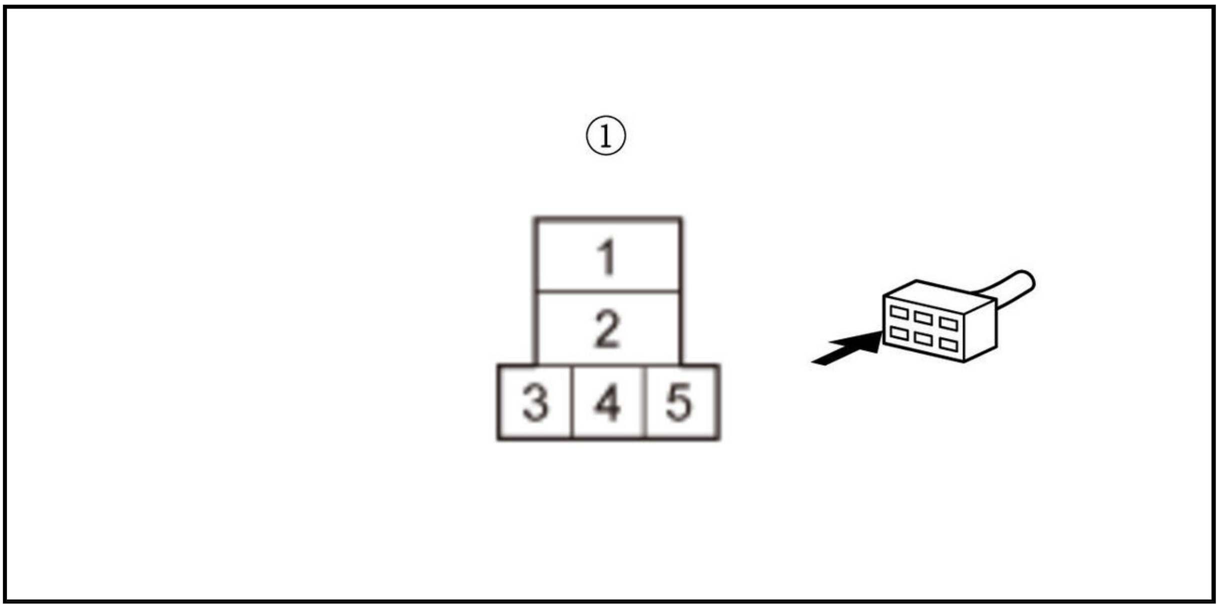

Is there battery voltage?

YES

Go to step 11.

NO

Repair an open in the IGP2 SUB wire between the fan control relay and the No. B25 (7.5 A) fuse.

11. Open wire check (FAN LO SIGNAL line)

-1. Turn the vehicle to the OFF (LOCK) mode.

-2. **Connect the HDS to the DLC** .

-3. Jump the SCS line with the HDS, and wait more than 1 minute.

NOTE: This step must be done to protect the PCM from damage.

-4. Disconnect the following connector.

1.5 L engine: PCM connector A (50P)
2.4 L engine: PCM connector A (51P)

-5. Check for continuity between test points 1 and 2.

Test condition	Vehicle OFF (LOCK) mode
	Radiator fan relay: disconnected
	Fan control relay: disconnected
B	PCM connector A (50P or 51P): disconnected
1.5 L engine:	B
Test point 1	Radiator fan relay 4P socket (female terminals) No. 4: ①
Test point 2	**PCM connector A (50P) No. 17**
2.4 L engine:	
Test point 1	Radiator fan relay 4P socket (female terminals) No. 4: ①
Test point 2	**PCM connector A (51P) No. 9**

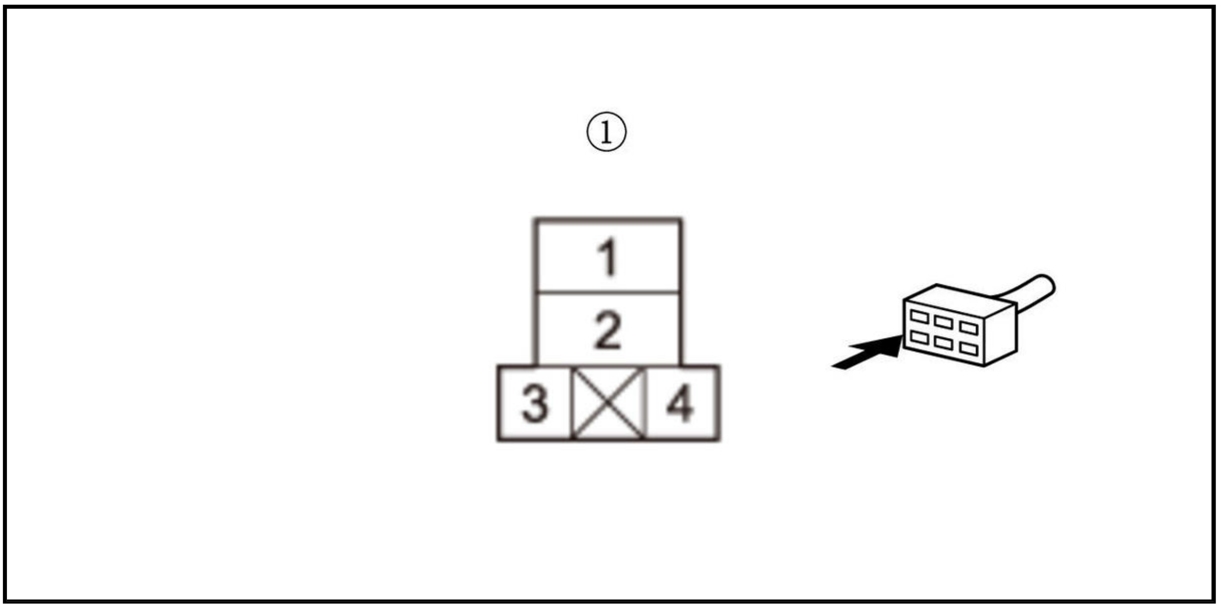

Is there continuity?

YES

Go to step 12.

NO

Repair an open in the FAN LO SIGNAL wire between the radiator fan relay and the PCM.

12. Open wire check (FAN HI SIGNAL line)

-1. Check for continuity between test points 1 and 2.

Test condition	Vehicle OFF (LOCK) mode
	Radiator fan relay: disconnected
	Fan control relay: disconnected
B	PCM connector A (50P or 51P): disconnected
1.5 L engine:	B
Test point 1	Fan control relay 5P socket (female terminals) No. 5: ①
Test point 2	**PCM connector A (50P) No. 18**
2.4 L engine:	
Test point 1	Fan control relay 5P socket (female terminals) No. 5: ①
Test point 2	**PCM connector A (51P) No. 10**

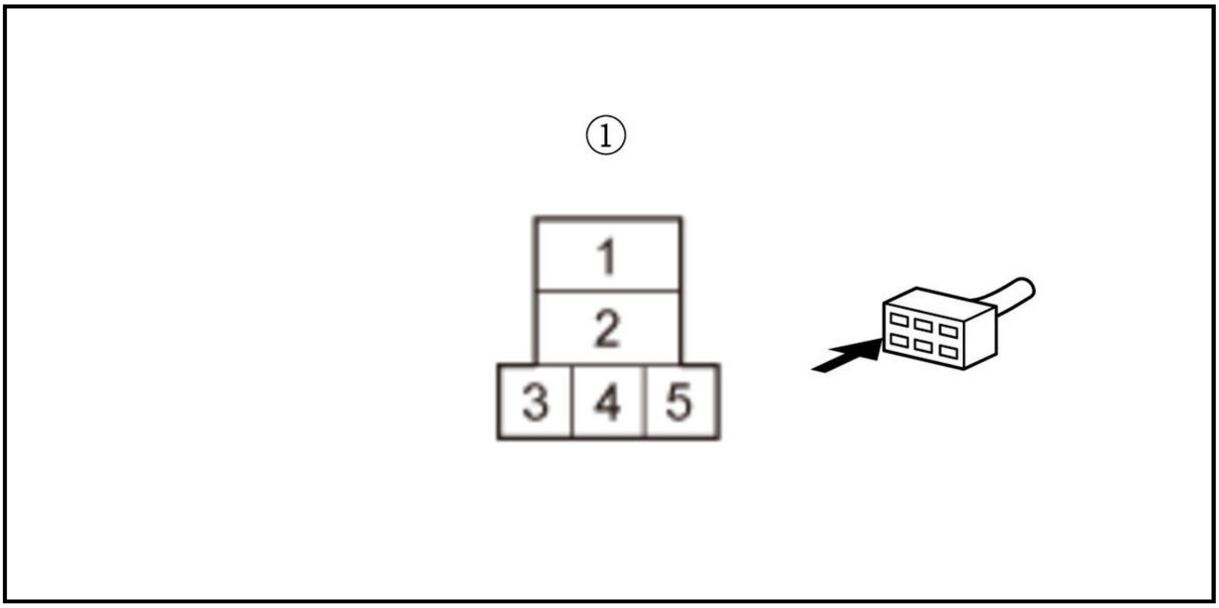

Is there continuity?

YES

Check for any authorized service information related to the DTCs or symptoms you are troubleshooting, or **substitute a known-good PCM** , then recheck. If the PCM was substituted, and the symptom/indication goes away, **replace the original PCM** .

NO

Repair an open in the FAN HI SIGNAL wire between the fan control relay and the PCM.

SERVICE INFORMATION

DRIVE BELT AUTO-TENSIONER AIR BLEEDING (2.4 L ENGINE) (2017 2018 2019)

Bleeding

1. **Drive Belt - Remove**
2. Drive Belt Auto-Tensioner - Air Bleed

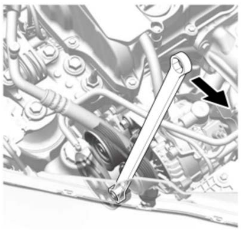	1. From the top of the engine. Set a wrench on the drive belt auto-tensioner. Take at least 3 seconds to complete a full stroke to compress the drive belt auto-tensioner in the direction of the arrow. Then take 3 seconds to complete a full stroke to move the drive belt auto-tensioner in the opposite direction (decompressing it). Repeat the full compress/decompressing action three more times.

3. All Removed Parts - Install

1. Install the parts in the reverse order of removal.

TEST

EXPANSION TANK CAP TEST (1.5 L ENGINE)

Test

1. Expansion Tank Cap - Test

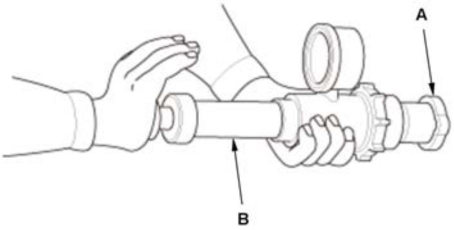	1. Wait until the engine is cool, then carefully remove the expansion tank cap (A). Wet the expansion tank cap seal with engine coolant, then install it on a commercially available pressure tester (B). 2. Apply a pressure of 93-123 kPa (0.95-1.25 kgf/cm 2, 13.5- 17.8 psi). 3. Check for a drop in pressure. 4. If the pressure drops, replace the expansion tank cap.

RADIATOR CAP TEST (2.4 L ENGINE) (2017 2018 2019)

Test

1. Radiator Cap - Test

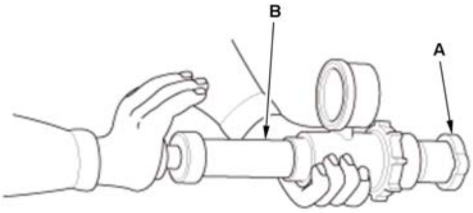	1. Wait until the engine is cool, then carefully remove the radiator cap (A). Wet the radiator cap seal with engine coolant, then install it on a commercially available pressure tester (B). 2. Apply a pressure of 93-123 kPa (0.95-1.25 kgf/cm 2, 13.5-17.8 psi). 3. Check for a drop in pressure. 4. If the pressure drops, replace the radiator cap.

CIRCUIT DIAGRAM

COOLING FAN CONTROLS CIRCUIT DIAGRAM (1.5 L ENGINE (WITH KEYLESS ACCESS SYSTEM)) (2020 2021)

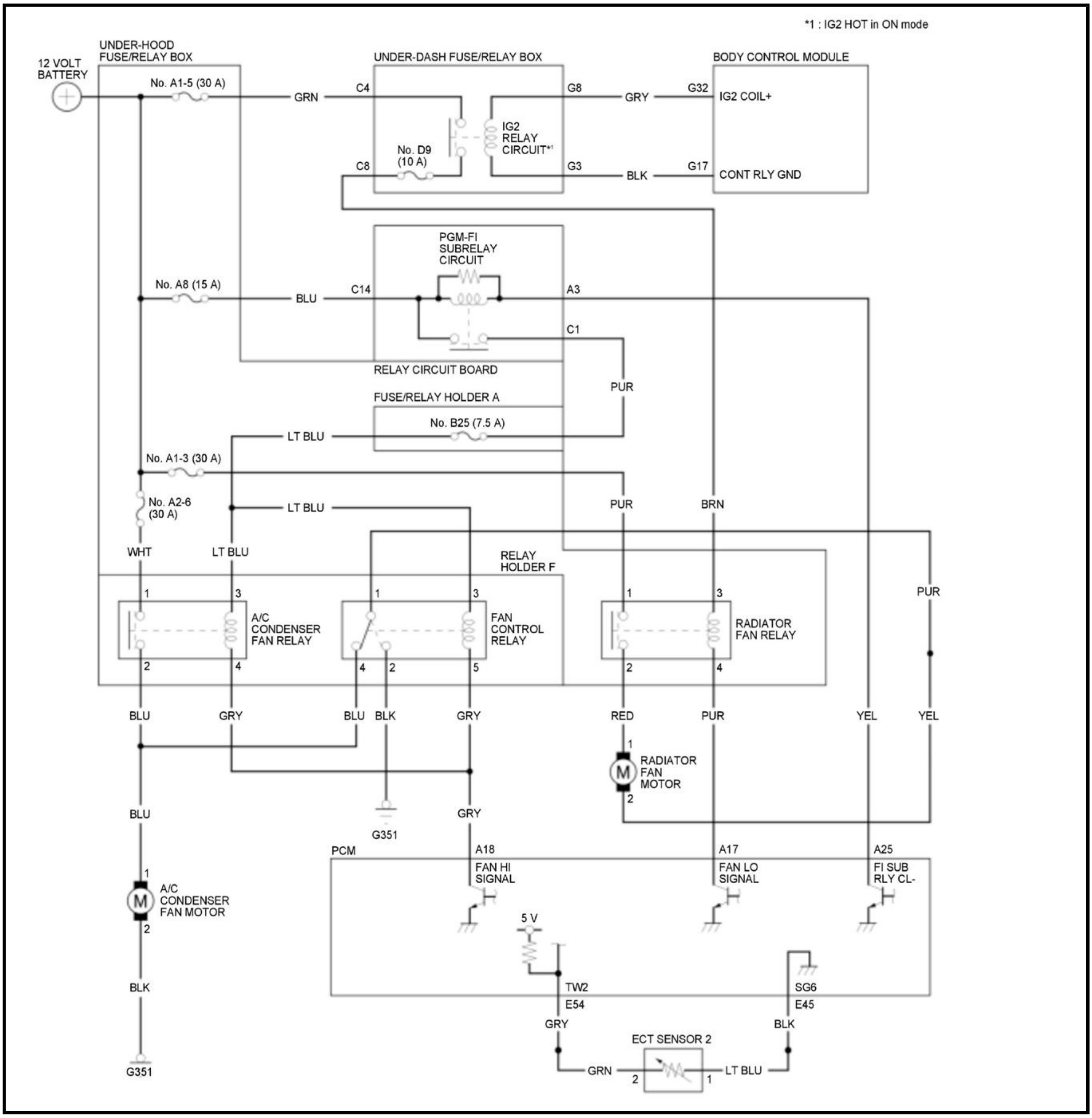

*1 : IG2 HOT in ON mode
12 VOLT BATTERY
UNDER-HOOD FUSE/RELAY BOX
No. A1-5 (30 A)
GRN
UNDER-DASH FUSE/RELAY BOX
C4
G8
GRY
G32
BODY CONTROL MODULE
IG2 COIL+
IG2 RELAY CIRCUIT*1
No. D9 (10 A)
C8
G3
BLK
G17
CONT RLY GND
PGM-FI SUBRELAY CIRCUIT
No. A8 (15 A)
BLU
C14
A3
C1
RELAY CIRCUIT BOARD
FUSE/RELAY HOLDER A
PUR
No. B25 (7.5 A)
LT BLU
No. A1-3 (30 A)
No. A2-6 (30 A)
LT BLU
PUR
BRN
WHT
LT BLU
RELAY HOLDER F
1
3
A/C CONDENSER FAN RELAY
2
4
1
3
FAN CONTROL RELAY
4
2
5
1
3
RADIATOR FAN RELAY
2
4
PUR
BLU
GRY
BLU
BLK
GRY
RED
PUR
YEL
YEL
1
RADIATOR FAN MOTOR
2
BLU
GRY
G351
PCM
A18
FAN HI SIGNAL
A17
FAN LO SIGNAL
A25
FI SUB RLY CL-
1
A/C CONDENSER FAN MOTOR
2
5 V
TW2
E54
SG6
E45
GRY
BLK
ECT SENSOR 2
GRN
2
1
LT BLU
BLK
G351

COOLING FAN CONTROLS CIRCUIT DIAGRAM (1.5 L ENGINE (WITHOUT KEYLESS ACCESS SYSTEM)) (2020 2021)

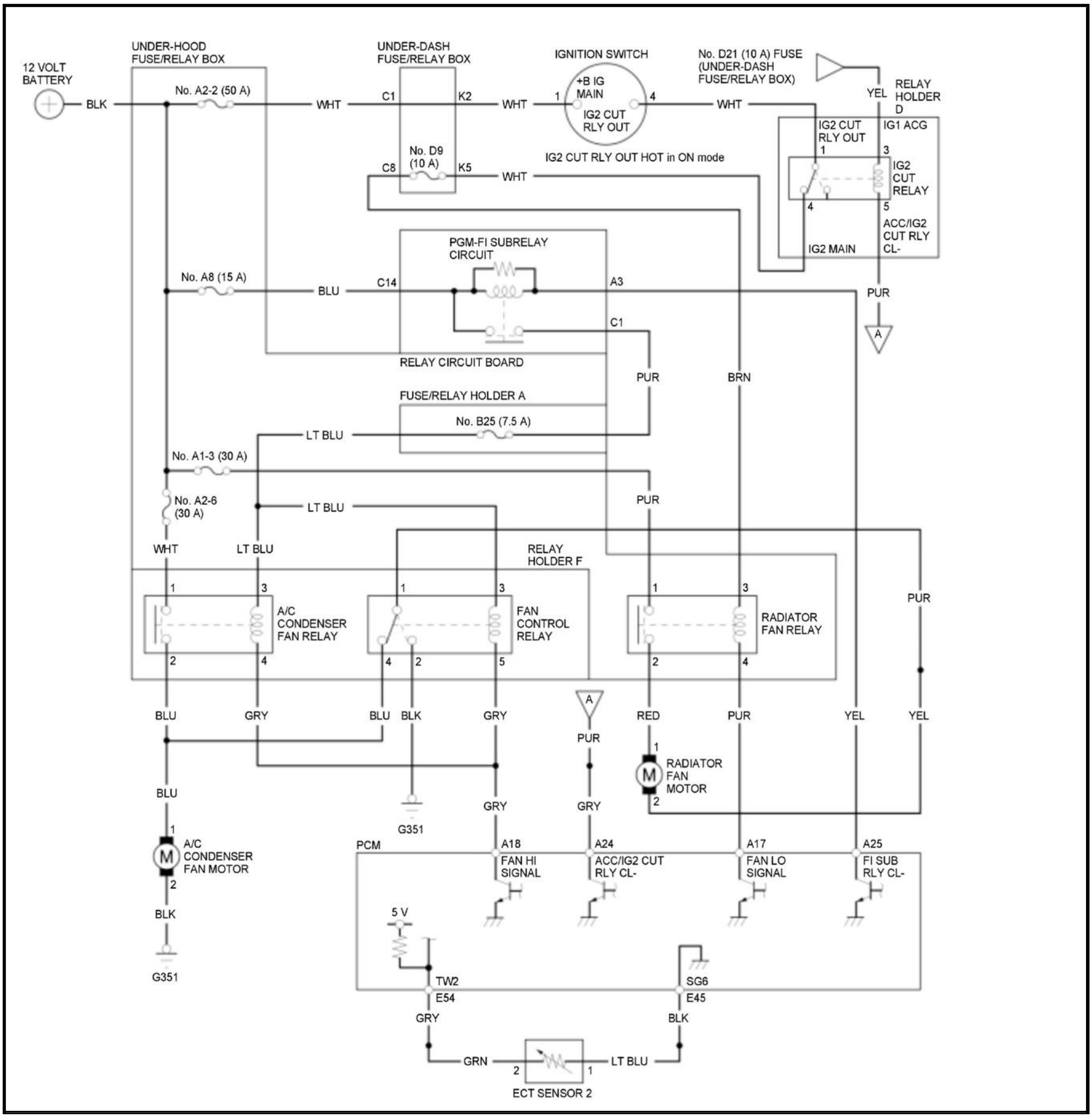
12 VOLT BATTERY
BLK
UNDER-HOOD FUSE/RELAY BOX
No. A2-2 (50 A)
WHT
UNDER-DASH FUSE/RELAY BOX
C1
K2
WHT
C8
No. D9 (10 A)
K5
WHT
IGNITION SWITCH
1
+B IG MAIN
IG2 CUT RLY OUT
4
WHT
IG2 CUT RLY OUT HOT in ON mode
No. D21 (10 A) FUSE (UNDER-DASH FUSE/RELAY BOX)
YEL
RELAY HOLDER D
IG2 CUT RLY OUT
IG1 ACG
1
3
IG2 CUT RELAY
4
5
IG2 MAIN
ACC/IG2 CUT RLY CL-
PUR
A
PGM-FI SUBRELAY CIRCUIT
No. A8 (15 A)
BLU
C14
A3
C1
RELAY CIRCUIT BOARD
PUR
BRN
FUSE/RELAY HOLDER A
No. B25 (7.5 A)
LT BLU
No. A1-3 (30 A)
PUR
No. A2-6 (30 A)
LT BLU
WHT
LT BLU
RELAY HOLDER F
1
3
A/C CONDENSER FAN RELAY
2
4
1
3
FAN CONTROL RELAY
4
2
5
1
3
RADIATOR FAN RELAY
2
4
PUR
A
BLU
GRY
BLU
BLK
GRY
RED
PUR
YEL
YEL
PUR
1
RADIATOR FAN MOTOR
2
BLU
GRY
GRY
G351
1
A/C CONDENSER FAN MOTOR
2
BLK
G351
PCM
A18
FAN HI SIGNAL
A24
ACC/IG2 CUT RLY CL-
A17
FAN LO SIGNAL
A25
FI SUB RLY CL-
5 V
TW2
E54
SG6
E45
GRY
BLK
GRN
2
1
LT BLU
ECT SENSOR 2

COOLING FAN CONTROLS CIRCUIT DIAGRAM (2.4 L ENGINE) (2017 2018 2019)

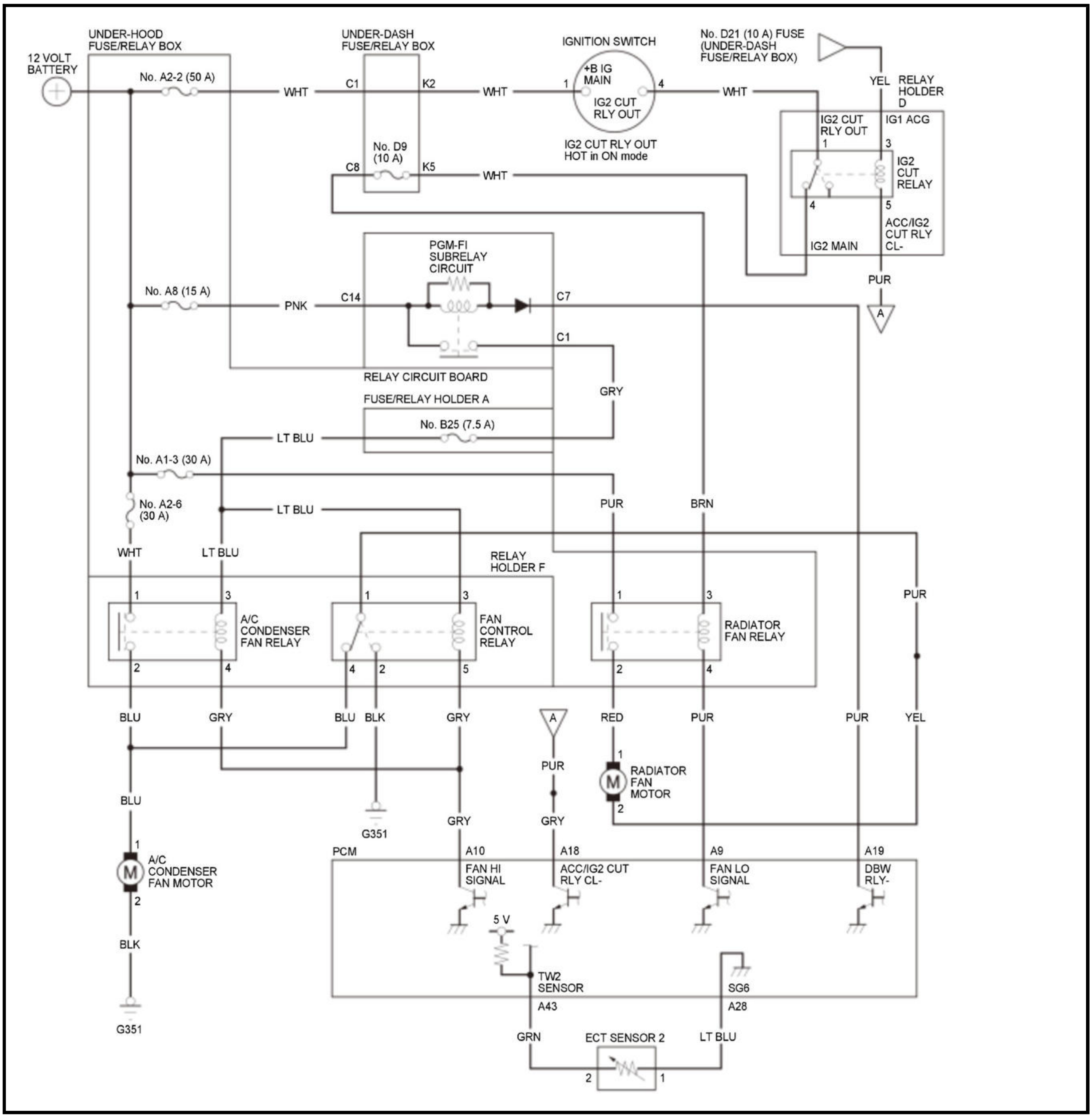
12 VOLT BATTERY
UNDER-HOOD FUSE/RELAY BOX
No. A2-2 (50 A)
WHT
UNDER-DASH FUSE/RELAY BOX
C1
K2
WHT
No. D9 (10 A)
C8
K5
WHT
IGNITION SWITCH
+B IG MAIN
IG2 CUT RLY OUT
1
4
IG2 CUT RLY OUT HOT in ON mode
WHT
No. D21 (10 A) FUSE (UNDER-DASH FUSE/RELAY BOX)
YEL
RELAY HOLDER D
IG2 CUT RLY OUT
IG1 ACG
1
3
IG2 CUT RELAY
4
5
IG2 MAIN
ACC/IG2 CUT RLY CL-
PUR
A
PGM-FI SUBRELAY CIRCUIT
No. A8 (15 A)
PNK
C14
C7
C1
RELAY CIRCUIT BOARD
FUSE/RELAY HOLDER A
GRY
No. B25 (7.5 A)
LT BLU
No. A1-3 (30 A)
No. A2-6 (30 A)
LT BLU
PUR
BRN
WHT
LT BLU
RELAY HOLDER F
PUR
1
3
A/C CONDENSER FAN RELAY
2
4
1
3
FAN CONTROL RELAY
4
2
5
1
3
RADIATOR FAN RELAY
2
4
BLU
GRY
BLU
BLK
GRY
A
RED
PUR
PUR
YEL
PUR
1
RADIATOR FAN MOTOR
M
2
GRY
GRY
BLU
G351
1
A/C CONDENSER FAN MOTOR
M
2
BLK
G351
PCM
A10
FAN HI SIGNAL
A18
ACC/IG2 CUT RLY CL-
A9
FAN LO SIGNAL
A19
DBW RLY-
5 V
TW2 SENSOR
A43
SG6
A28
GRN
ECT SENSOR 2
LT BLU
2
1

COMPONENT LOCATION INDEX

COOLING FAN CONTROLS COMPONENT LOCATION INDEX (1.5 L ENGINE)

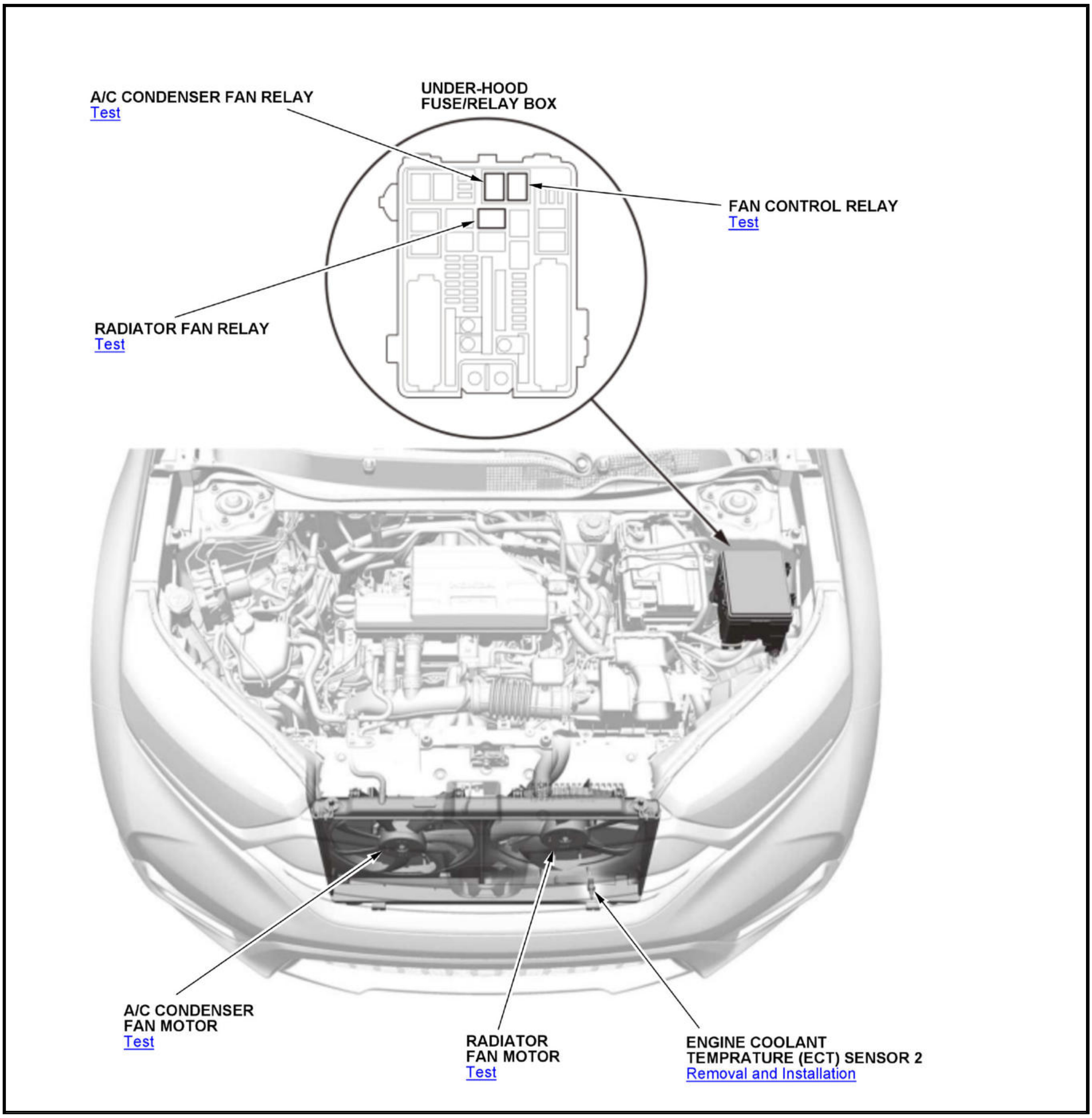
A/C CONDENSER FAN RELAY
Test
UNDER-HOOD FUSE/RELAY BOX
FAN CONTROL RELAY
Test
RADIATOR FAN RELAY
Test
A/C CONDENSER FAN MOTOR
Test
RADIATOR FAN MOTOR
Test
ENGINE COOLANT TEMPRATURE (ECT) SENSOR 2
Removal and Installation

COOLING FAN CONTROLS COMPONENT LOCATION INDEX (2.4 L ENGINE) (2017 2018 2019)

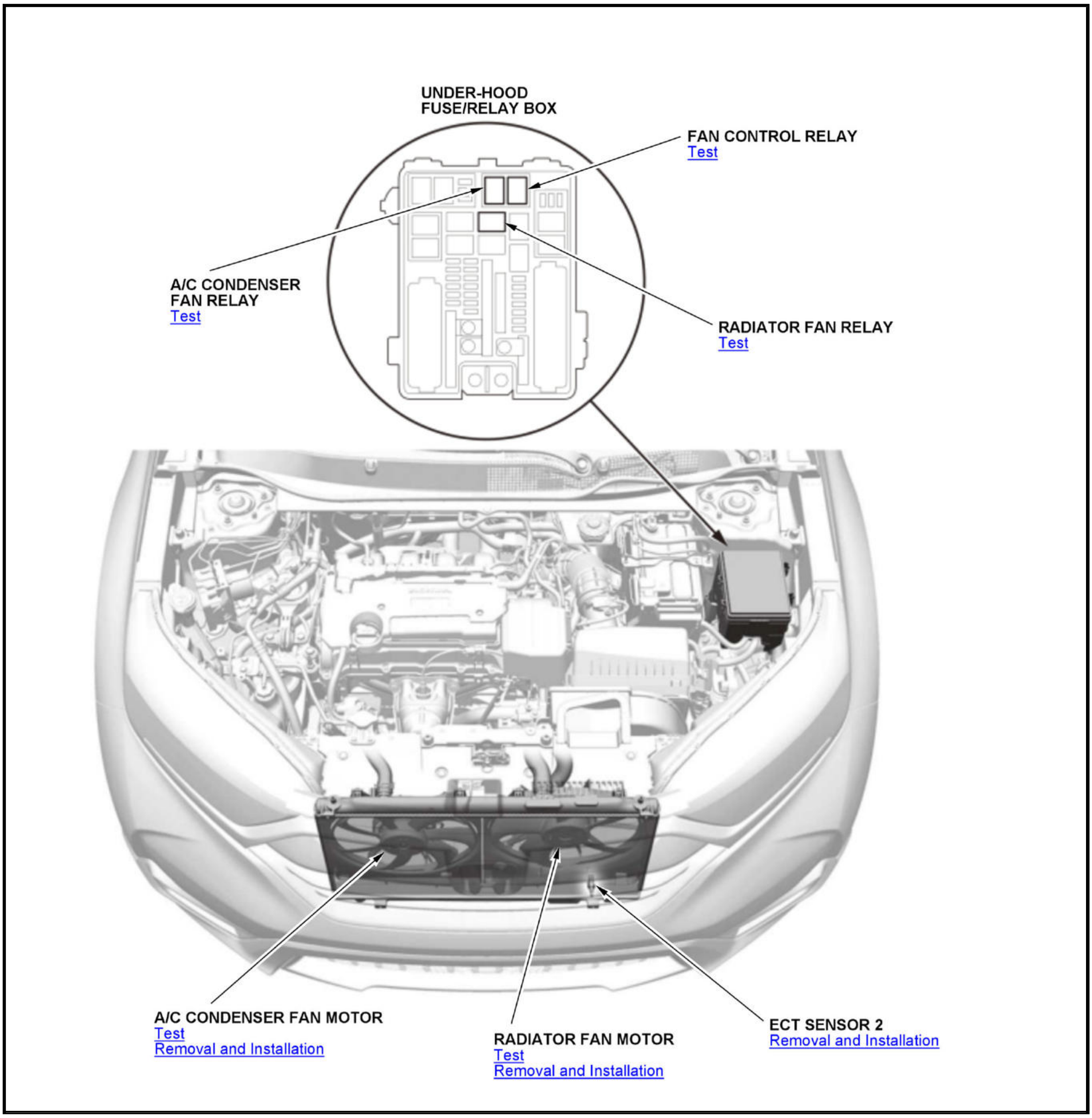
UNDER-HOOD FUSE/RELAY BOX
FAN CONTROL RELAY
Test
A/C CONDENSER FAN RELAY
Test
RADIATOR FAN RELAY
Test
A/C CONDENSER FAN MOTOR
Test
Removal and Installation
RADIATOR FAN MOTOR
Test
Removal and Installation
ECT SENSOR 2
Removal and Installation

COOLING SYSTEM COMPONENT LOCATION INDEX (1.5 L ENGINE)

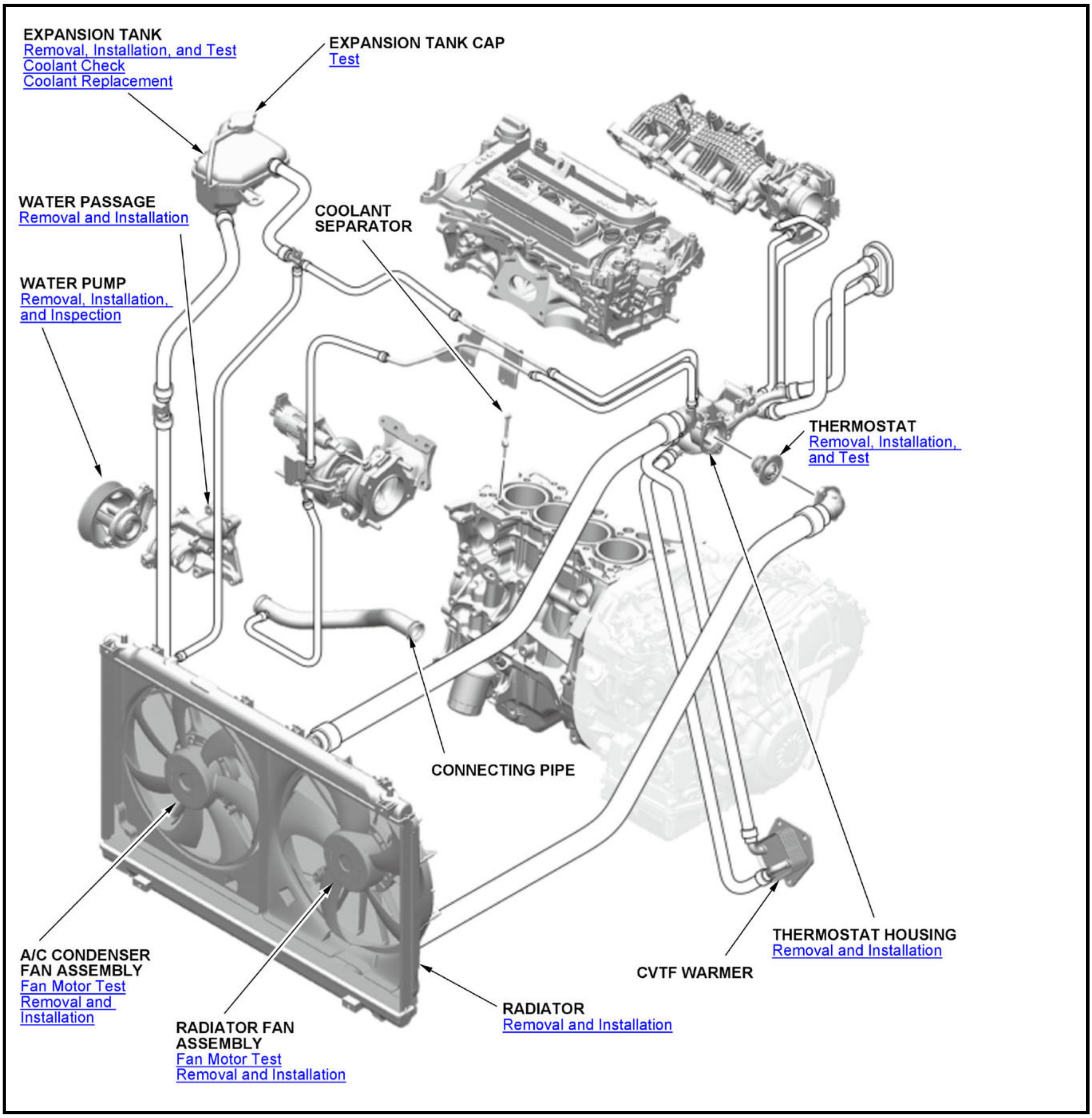
EXPANSION TANK
Removal, Installation, and Test
Coolant Check
Coolant Replacement
EXPANSION TANK CAP
Test
WATER PASSAGE
Removal and Installation
COOLANT SEPARATOR
WATER PUMP
Removal, Installation, and Inspection
THERMOSTAT
Removal, Installation, and Test
CONNECTING PIPE
THERMOSTAT HOUSING
Removal and Installation
CVTF WARMER
A/C CONDENSER FAN ASSEMBLY
Fan Motor Test
Removal and Installation
RADIATOR
Removal and Installation
RADIATOR FAN ASSEMBLY
Fan Motor Test
Removal and Installation

COOLING SYSTEM COMPONENT LOCATION INDEX (2.4 L ENGINE) (2017 2018 2019)

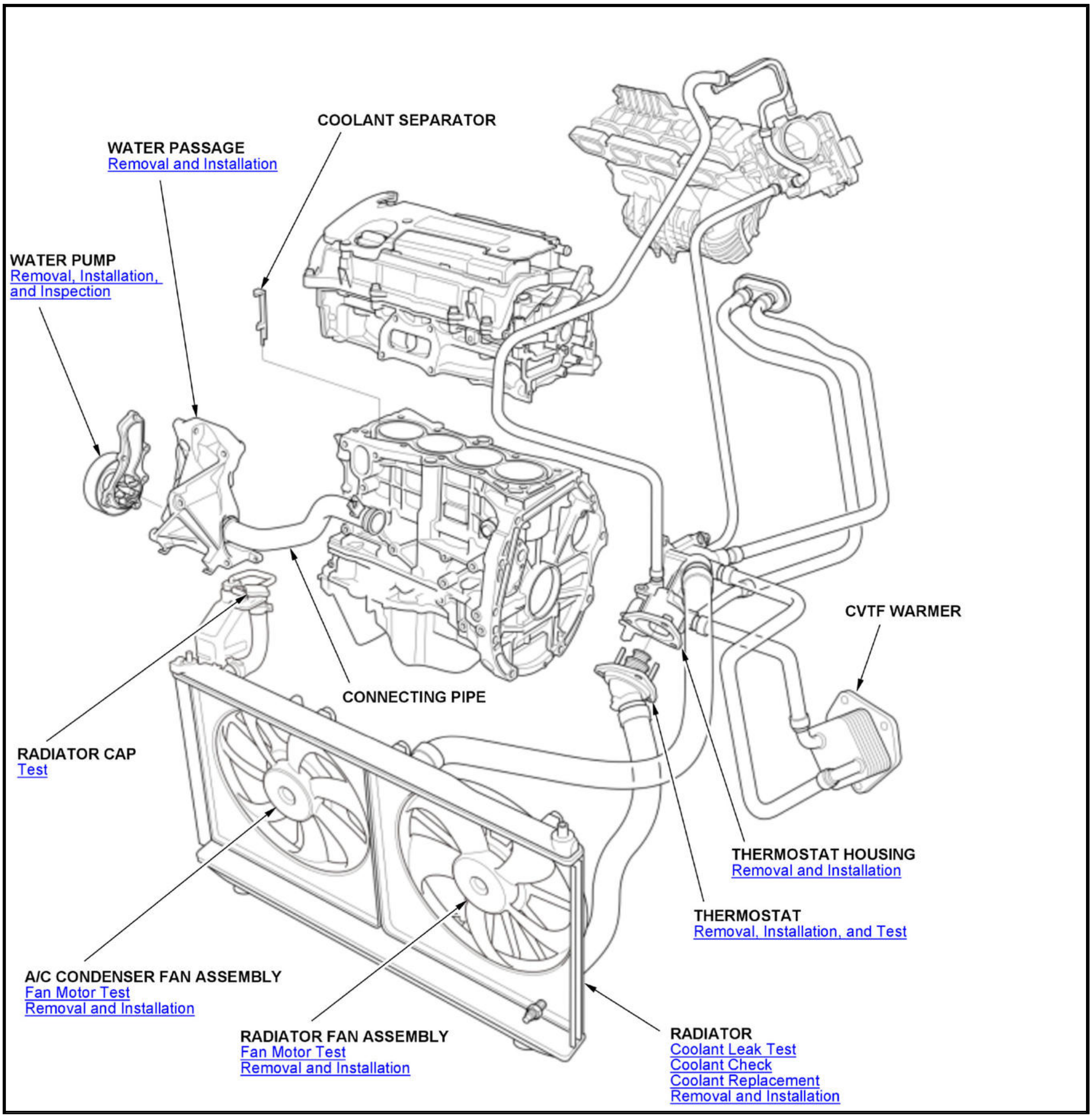
COOLANT SEPARATOR
WATER PASSAGE
Removal and Installation
WATER PUMP
Removal, Installation, and Inspection
CVTF WARMER
CONNECTING PIPE
RADIATOR CAP
Test
THERMOSTAT HOUSING
Removal and Installation
THERMOSTAT
Removal, Installation, and Test
A/C CONDENSER FAN ASSEMBLY
Fan Motor Test
Removal and Installation
RADIATOR FAN ASSEMBLY
Fan Motor Test
Removal and Installation
RADIATOR
Coolant Leak Test
Coolant Check
Coolant Replacement
Removal and Installation

SYMPTOM TROUBLESHOOTING INDEX

COOLING FAN CONTROLS SYMPTOM TROUBLESHOOTING INDEX

Symptom	Diagnostic Procedure	Also check for
Engine overheats	- Check the coolant level. - Check for any engine coolant leakage (from gaskets, hoses, O-rings, etc.). - Check for dirt, leaves, or insects on the radiator and the A/C condenser. - Check for deteriorated coolant. - Check for a damaged or deformed fan shrouds. - Check the fan motors are operating properly (air should be blowing toward the engine).	Check the radiator and A/C condenser fans are operating properly

Symptom	Diagnostic Procedure	Also check for
	- **Inspect the fan motors** or **fan relays** . - 1.5 L engine: **Check the expansion tank cap**. - 2.4 L engine: **Check the radiator cap**. - **Check the thermostat** . - **Inspect the water pump**. - Check for clogged radiator. - Check for plugged or deteriorated radiator hoses. - Check for a plugged heater core or hoses. - Check for a damaged cylinder head gasket.	
The radiator fan does not run at high speed	**Radiator fan high speed circuit troubleshooting**.	Check the connectors are properly connected and the terminals are making good contact
Both the radiator fan and the A/C condenser fan do not run at low speed	**Radiator and A/C condenser fans low speed circuit troubleshooting** .	Check the connectors are properly connected and the terminals are making good contact
The A/C condenser fan does not run at high speed	**A/C condenser fan high speed circuit troubleshooting** .	Check the connectors are properly connected and the terminals are making good contact

REMOVAL, INSTALLATION & INSPECTION

DRIVE BELT REMOVAL, INSTALLATION, AND INSPECTION (1.5 L ENGINE)

Removal and Installation

NOTE: ℹ Where icon is shown, further information shown below.

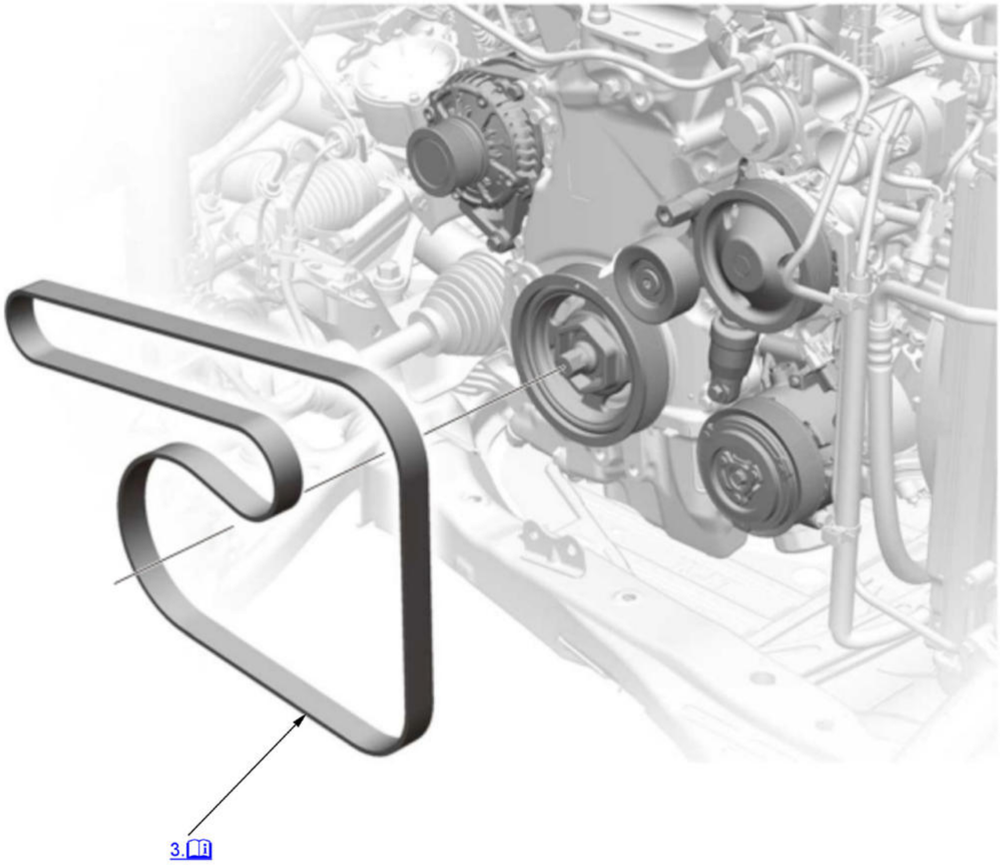

[Fig. 3: Drive Belt Routing](#)
Courtesy of HONDA, U.S.A., INC.

🛈	Detailed information, notes, and precautions

1. **Right Front Wheel - Remove**
2. **Engine Undercover - Remove**
3. Drive Belt - Remove

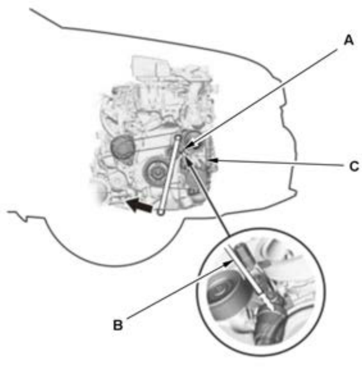	1. Attach a wrench to the drive belt auto-tensioner (A) and move it in the direction shown. Fix the drive belt auto-tensioner by aligning the water passage hole with drive belt auto-tensioner hole and inserting a 6 x 45 mm (15/64 x 1.77 in) pin (B) deep into the holes. **NOTE:** This is a hydraulic type auto-tensioner, so you must turn the wrench slowly. 2. Remove the drive belt (C).

4. All Removed Parts - Install

1. Install the parts in the reverse order of removal.

Inspection

1. Drive Belt - Inspect

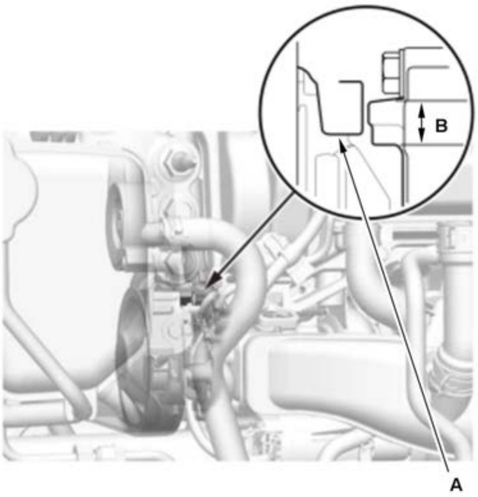	1. Inspect the belt for cracks or damage. If the belt is cracked or damaged, replace it. 2. Check the position of the drive belt auto-tensioner indicator pointer (A) is within the standard range (B) as shown. If it is out of the standard range, replace the drive belt.

2. Maintenance Minder - Reset (With Maintenance Minder System)

1. If the Maintenance Minder required to inspect the drive belt, **reset the Maintenance Minder with the gauge** (see "Resetting the Maintenance Minder").

WATER PUMP REMOVAL, INSTALLATION, AND INSPECTION (1.5 L ENGINE)

Removal and Installation

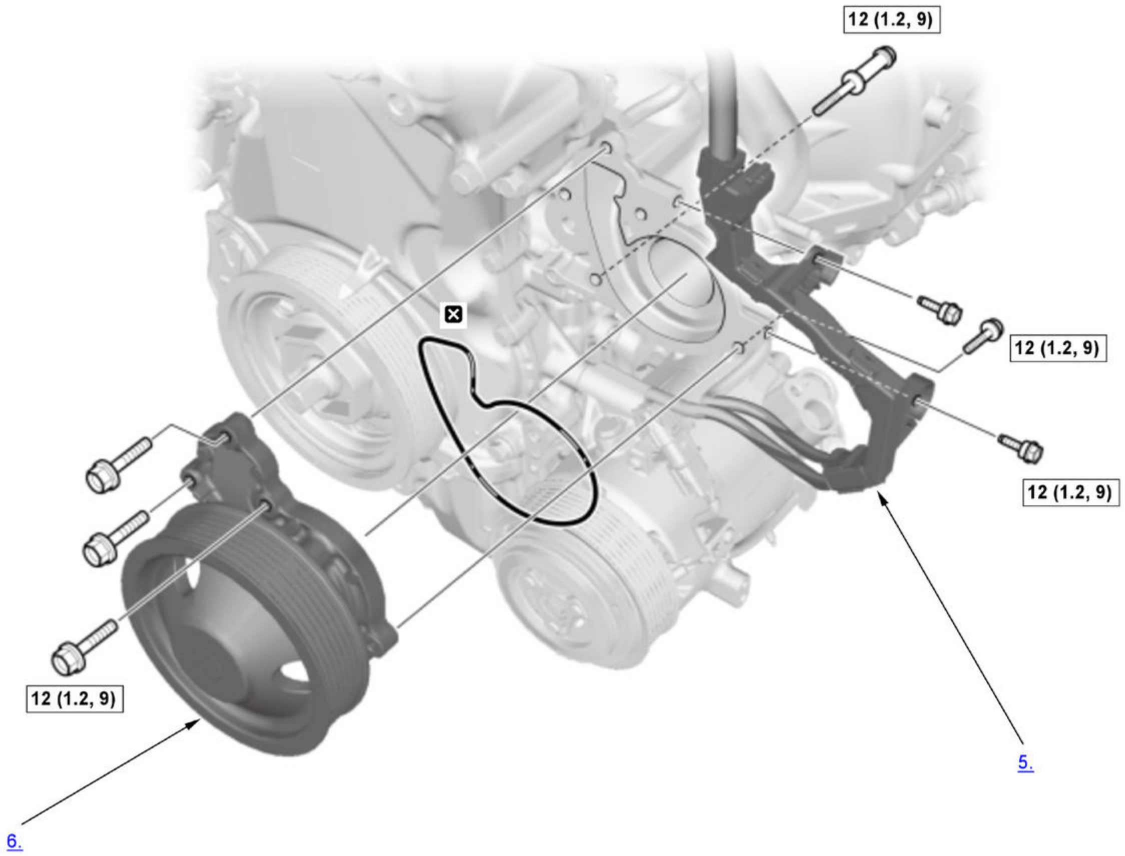

Fig. 4: Water Pump Replacement Components With Torque Specifications
Courtesy of HONDA, U.S.A., INC.

☐	Torque: N.m (kgf.m, lbf.ft)
☒	Replace

1. Engine Coolant - Drain
2. Drive Belt - Remove
3. Drive Belt Auto-Tensioner - Remove
4. Turbocharger - Remove
5. Harness Holder - Move
6. Water Pump - Remove
7. All Removed Parts - Install

1. Install the parts in the reverse order of removal.

NOTE:

- Inspect and clean the O-ring groove and the mating surface of the water passage.
- After installing all the removed parts, refill the radiator with engine coolant, and bleed the air from the cooling system.

Inspection

1. Drive Belt - Remove
2. Water Pump - Inspect

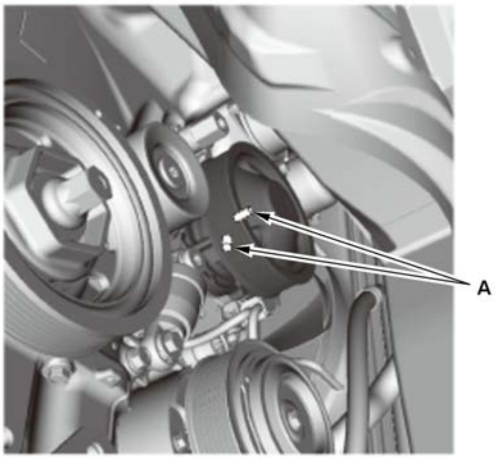	1. Turn the water pump pulley clockwise, and check that it turns freely and smoothly. If it does not turn smoothly, replace the water pump. **NOTE:** When you check the water pump, you may see a small amount of "weeping" from the bleed holes (A). This is normal.

3. All Removed Parts - Install

1. Install the parts in the reverse order of removal.

WATER PUMP REMOVAL, INSTALLATION, AND INSPECTION (2.4 L ENGINE) (2017 2018 2019)

Removal and Installation

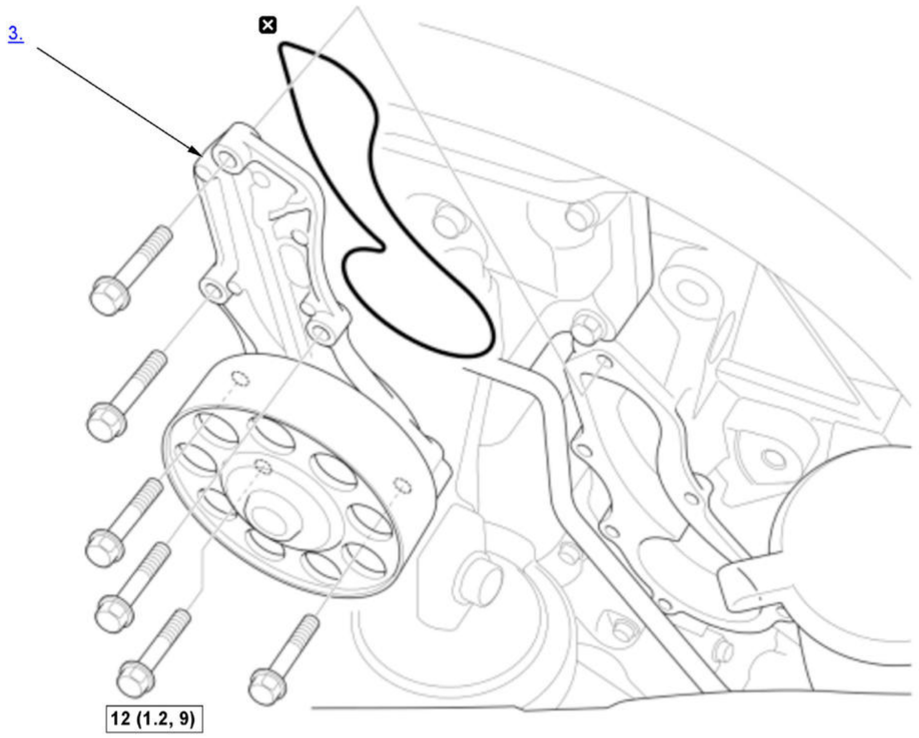

☐	Torque: N.m (kgf.m, lbf.ft)
☒	Replace

1. **Engine Coolant - Drain**
2. **Alternator - Remove**
3. Water Pump - Remove
4. All Removed Parts - Install

> 1. Install the parts in the reverse order of removal.
> **NOTE:**
>
> - Inspect and clean the O-ring groove and the mating surface of the engine block.
> - After installing all the removed parts, **refill the radiator with engine coolant, and bleed the air from the cooling system**.

Inspection

1. **Drive Belt - Remove**
2. Water Pump - Inspect

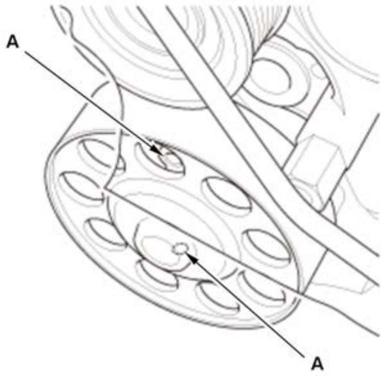	1. Turn the water pump pulley counterclockwise, and check that it turns freely and smoothly. If it does not turn smoothly, replace the water pump. **NOTE:** When you check the water pump, you may see a small amount of "weeping" from the bleed holes (A). This is normal.

3. All Removed Parts - Install

1. Install the parts in the reverse order of removal.

SYMPTOM TROUBLESHOOTING INDEX FOR VIEWER

BOTH THE RADIATOR FAN AND THE A/C CONDENSER FAN DO NOT RUN AT LOW SPEED

Diagnostic Procedure

- **Radiator and A/C condenser fans low speed circuit troubleshooting** .

Also check for

Check the connectors are properly connected and the terminals are making good contact

ENGINE OVERHEATS

Diagnostic Procedure

- **Check the coolant level**.
- Check for any engine coolant leakage (from gaskets, hoses, O-rings, etc.).
- Check for dirt, leaves, or insects on the radiator and the A/C condenser.
- Check for deteriorated coolant.
- Check for a damaged or deformed fan shrouds.
- Check the fan motors are operating properly (air should be blowing toward the engine).
- **Inspect the fan motors** or **fan relays** .
- 1.5 L engine: **Check the expansion tank cap**.
- 2.4 L engine: **Check the radiator cap**.
- **Check the thermostat** .
- **Inspect the water pump**.
- Check for clogged radiator.
- Check for plugged or deteriorated radiator hoses.
- Check for a plugged heater core or hoses.
- Check for a damaged cylinder head gasket.

Also check for

Check the radiator and A/C condenser fans are operating properly

THE A/C CONDENSER FAN DOES NOT RUN AT HIGH SPEED

Diagnostic Procedure

- **A/C condenser fan high speed circuit troubleshooting** .

Also check for

Check the connectors are properly connected and the terminals are making good contact

THE RADIATOR FAN DOES NOT RUN AT HIGH SPEED

Diagnostic Procedure

- **Radiator fan high speed circuit troubleshooting**.

Also check for

Check the connectors are properly connected and the terminals are making good contact

2020-21 ENGINE

Engine Fuel System Service Specifications - CR-V

STANDARDS AND SERVICE LIMITS (2020-21)

FUEL AND EMISSIONS

Item	Measurement	Qualification	Standard or New	Service Limit
Fuel pressure regulator	Pressure with fuel pressure gauge connected	B	390-440 kPa (3.98-4.49 kgf/cm 2, 56.6-63.9 psi)	-
Engine idle	Idle speed without load	In N or P	720 +/- 50 rpm	
		In N or P (1.5L engine: high altitude (BARO sensor in the DATA LIST with the HDS: less than 563 mmHg))	975 +/- 50 rpm	
	Idle speed with high electrical load	In N or P	720 +/- 50 rpm	
	Idle CO (KX)	B	0.1 % max.	

Engine Lubrication Service Specifications - CR-V (Hybrid)

ENGINE LUBRICATION

Item	Measurement	Qualification	Standard or New	Service Limit
Engine oil	Capacity	Engine overhaul	4.5 L (4.8 US qt)	-
		Oil change including filter	3.8 L (4.0 US qt)	-
		Oil change without filter	3.5 L (3.7 US qt)	-
Oil pump	Oil pressure with oil temperature at 176B°F (80B°C)	At idle	168.7 kPa (1.720 kgf/cm^2 , 24.46 psi) min.	-
		At 2, 000 rpm	217.7 kPa (2.220 kgf/cm^2 , 31.58 psi) min.	-

2020-21 ENGINE

Engine Lubrication Service Specifications - CR-V

STANDARDS AND SERVICE LIMITS (2020-21)

ENGINE LUBRICATION

Item	Measurement	Qualification	Standard or New	Service Limit
Engine oil	Capacity	Engine overhaul	4.0 L (4.2 US qt)	-
		Oil change including filter	3.5 L (3.7 US qt)	-
		Oil change without filter	3.2 L (3.4 US qt)	-
	Recommended oil (except Ecuador/KX)	B	API certified motor oil for gasoline engines Honda Motor Oil: 0W-20	
Oil pump	Oil pressure with oil temperature at 176 deg.F (80 deg.C)	At idle	90 kPa (0.92 kgf/cm 2, 13.1 psi) min.	-
		At 3,000 rpm	280 kPa (2.86 kgf/cm 2, 40.7 psi) min.	-

STANDARDS AND SERVICE LIMITS (2020-21)

ENGINE ASSEMBLY

Item	Measurement	Qualification	Standard or New	Service Limit
Compression	Pressure	Minimum	-	980 kPa (9.99 kgf/cm 2, 142.1 psi)
		Maximum variation	-	200 kPa (2.04 kgf/cm 2, 29.0 psi)

CYLINDER HEAD

Item	Measurement	Qualification	Standard or New	Service Limit
Head	Warpage	B	0.08 mm (0.003 in) max.	-
	Height	B	126.95-127.05 mm (4.9980-5.0020 in)	-
Camshaft	End play	Intake/Exhaust	0.065-0.215 mm (0.00256-0.00846 in)	0.415 mm (0.01634 in)
	Camshaft-to-holder oil clearance (intake)	No. 1 journal	0.030-0.069 mm (0.00118-0.00272 in)	0.120 mm (0.00472 in)
		No. 2, 3, 4, 5 journals	0.060-0.099 mm (0.00236-0.00390 in)	0.150 mm (0.00591 in)
	Camshaft-to-holder oil clearance (exhaust)	No. 1, 2 journals	0.030-0.069 mm (0.00118-0.00272 in)	0.120 mm (0.00472 in)
		No. 3, 4, 5 journals	0.060-0.099 mm (0.00236-0.00390 in)	0.150 mm (0.00591 in)
	Total runout	Intake/Exhaust	0.03 mm (0.0012 in) max.	-
	Cam lobe height	Intake	33.099 mm (1.30311 in)	-
		Exhaust	33.273 mm (1.30996 in)	-

Item	Measurement	Qualification	Standard or New	Service Limit
Valve	Clearance (cold)	Intake	0.21-0.25 mm (0.009 in)	-
		Exhaust	0.25-0.29 mm (0.010-0.011 in)	-
	Stem O.D.	Intake	5.48-5.49 mm (0.2157-0.2161 in)	5.45 mm (0.2146 in)
		Exhaust	5.45-5.46 mm (0.2146-0.2150 in)	5.42 mm (0.2134 in)
	Stem-to-guide clearance	Intake	0.025-0.050 mm (0.00098-0.00197 in)	0.08 mm (0.0031 in)
		Exhaust	0.055-0.080 mm (0.00217-0.00315 in)	0.11 mm (0.0043 in)
Valve seat	Width	Intake/Exhaust	1.25-1.55 mm (0.0492-0.0610 in)	2.00 mm (0.0787 in)
	Stem installed height	Intake	53.40-54.40 mm (2.1024-2.1417 in)	54.60 mm (2.1496 in)

Item	Measurement	Qualification	Standard or New	Service Limit
		Exhaust	45.90-46.90 mm (1.8071-1.8465 in)	47.10 mm (1.8543 in)
Valve guide	Installed height	Intake	21.25-21.75 mm (0.8366-0.8563 in)	-
		Exhaust	19.75-20.25 mm (0.7776-0.7972 in)	-
Rocker arm	Arm-to-shaft clearance	Intake/Exhaust	0.018-0.059 mm (0.00071-0.00232 in)	0.080 mm (0.00315 in)

ENGINE BLOCK

Item	Measurement	Qualification	Standard or New	Service Limit
Block	Warpage of deck	B	0.07 mm (0.002 in) max.	-
	Bore diameter	X	73.000-73.020 mm (2.87401-2.87480 in)	73.065 mm (2.87657 in)
		Y	73.000-73.015 mm (2.87401-2.87460 in)	73.065 mm (2.87657 in)
	Bore taper	B	-	0.050 mm (0.00197 in)
	Reboring limit	B	-	0.25 mm (0.0098 in)
Piston	Skirt O.D. at 11 mm (0.43 in) from bottom of skirt	B	72.972-72.979 mm (2.87291-2.87318 in)	72.962 mm (2.87251 in)
	Clearance in cylinder	B	0.021-0.043 mm (0.00083-0.00169 in)	0.050 mm (0.00197 in)
Piston ring	Ring-to-groove clearance	Top	0.040-0.065 mm (0.002 in)	0.130 mm (0.005 in)
		Second	0.030-0.055 mm (0.002 in)	0.120 mm (0.004 in)
	Ring end gap	Top	0.15-0.20 mm (0.006-0.007 in)	0.55 mm (0.021 in)
		Second	0.25-0.37 mm (0.010-0.014 in)	0.60 mm (0.023 in)
		Oil	0.20-0.50 mm (0.008-0.019 in)	0.80 mm (0.031 in)

Item	Measurement	Qualification	Standard or New	Service Limit
Piston pin	O.D.	B	19.960-19.964 mm (0.78583-0.78598 in)	19.960 mm (0.78583 in)
	Pin-to-piston clearance	B	-0.004-0.003 mm (-0.00016-0.00012 in)	0.006 mm (0.00024 in)
Connecting rod	Pin-to-rod clearance	B	0.004-0.016 mm (0.00016-0.00063 in)	0.020 mm (0.00079 in)
	Big end bore diameter	B	43.0 mm (1.693 in)	-
	End play	B	0.15-0.35 mm (0.006-0.013 in)	0.45 mm (0.017 in)
Crankshaft	Rod/main journal taper	B	0.005 mm (0.00020 in) max.	0.010 mm (0.00039 in)
	Rod/main journal out-of-round	B	0.005 mm (0.00020 in) max.	0.010 mm (0.00039 in)
	End play	B	0.10-0.35 mm (0.0039-0.0138 in)	0.45 mm (0.0177 in)

Item	Measurement	Qualification	Standard or New	Service Limit
	Total runout	B	0.03 mm (0.0012 in) max.	0.040 mm (0.00157 in)
Crankshaft bearing	Main bearing-to-journal oil clearance	B	0.018-0.036 mm (0.00071-0.00142 in)	0.050 mm (0.00197 in)
	Connecting rod bearing-to-journal oil clearance	B	0.020-0.038 mm (0.00079-0.00150 in)	-

GENERAL SERVICE

ENGINE MOUNT TIGHTENING PROCEDURE (1.5 L ENGINE)

Procedure

NOTE:

- How to read the torque specifications.
- Reinstall the mounting bolts and support nuts in the sequence given in the following steps. Failure to follow this sequence may cause excessive noise and vibration, and reduce engine mount life.

1. Jack - Remove
2. Engine/Transmission Mount/Torque Rod - Tightening Procedure

NOTE: When installing the side engine mount, tighten the ① - 1 bolts at first and temporarily tighten the ① - 3 bolt while attaching the side engine mount bracket to the side engine mount, then tighten the remaining bolts and nuts in te sequence as shown below.

Tightening Sequence

Mount Removed	Mount Tightening Sequence
Side Engine Mount:	①, ②, ③, and ④
Transmission Mount:	②, ③, and ④
Lower Torque Rod:	③ and ④
Upper Torque Rod:	④

Tightening Torque

Mount No.	Mount Name	Mount Bolt/Nut Tightening Sequence				
		1	2	3	4	5
①	Side Engine Mount	49 N.m (5.0 kgf.m, 36 lbf.ft) Replace.	55 N.m (5.6 kgf.m, 41 lbf.ft) Replace.	55 N.m (5.6 kgf.m, 41 lbf.ft) Replace.	75 N.m (7.6 kgf.m, 55 lbf.ft) Replace.	75 N.m (7.6 kgf.m, 55 lbf.ft) Replace.
②	Transmission Mount	75 N.m (7.6 kgf.m, 55 lbf.ft) Replace.	50 N.m(5.1 kgf.m, 37 lbf.ft) Replace.	50 N.m (5.1 kgf.m, 37 lbf.ft) Replace.	B	B
③	Lower Torque Rod	45 N.m (4.6 kgf.m, 33 lbf.ft) Replace.	75 N.m (7.6 kgf.m, 55 lbf.ft) Replace.	B	B	B
④	Upper Torque Rod	40 N.m (4.1 kgf.m, 30	40 N.m (4.1 kgf.m, 30	B	B	B

		lbf.ft) Replace.	lbf.ft) Replace.			

Type A/B

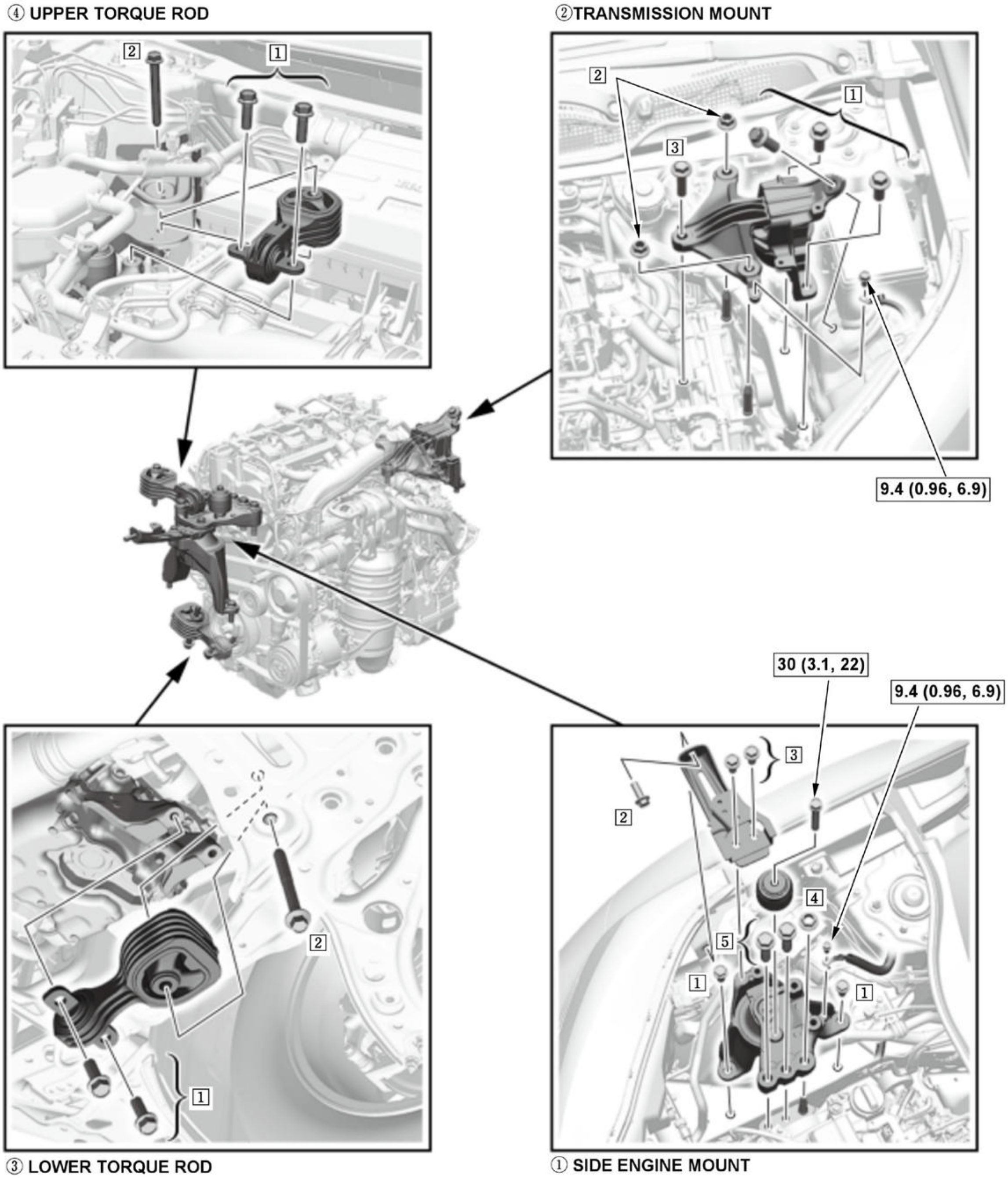
④ UPPER TORQUE ROD
2
1
②TRANSMISSION MOUNT
2
1
3
9.4 (0.96, 6.9)
30 (3.1, 22)
9.4 (0.96, 6.9)
2
3
4
5
1
1
2
1
③ LOWER TORQUE ROD
① SIDE ENGINE MOUNT

Fig. 1: Tightening Engine Mount Bolts In Sequence With Torque Specifications
Courtesy of HONDA, U.S.A., INC.

Type C

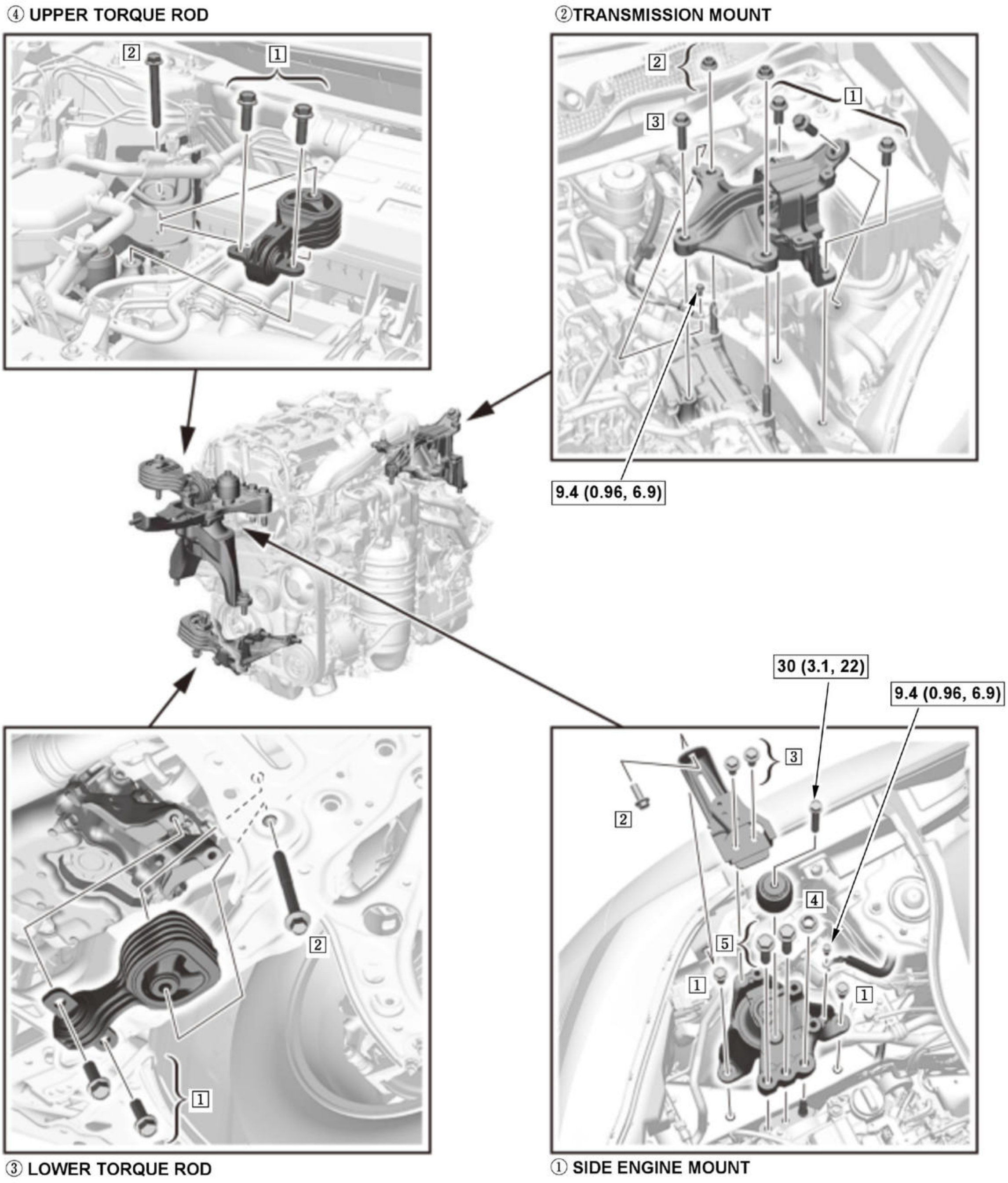
④ UPPER TORQUE ROD
2
1
②TRANSMISSION MOUNT
2
3
1
9.4 (0.96, 6.9)
30 (3.1, 22)
9.4 (0.96, 6.9)
3
2
4
5
1
1
2
1
③ LOWER TORQUE ROD
① SIDE ENGINE MOUNT

Fig. 2: Tightening Engine Mount Bolts In Sequence With Torque Specifications
Courtesy of HONDA, U.S.A., INC.

ENGINE MOUNT TIGHTENING PROCEDURE (2.4 L ENGINE) (2017 2018 2019)

Procedure

NOTE:

- How to read the torque specifications .
- Reinstall the mounting bolts and support nuts in the sequence given in the following steps. Failure to follow this sequence may cause excessive noise and vibration, and reduce engine mount life.

1. Jack - Remove
2. Engine/Transmission Mount/Torque Rod - Tightening Procedure

NOTE: When installing the side engine mount, tighten the ① - $\boxed{1}$ bolts at first and temporarily tighten the ① - $\boxed{3}$ bolt while attaching the side engine mount bracket to the side engine mount, then tighten other remaining bolts and nuts as the corresponding procedures that can be seen on the following chart.

Tightening Sequence

Mount Removed	**Mount Tightening Sequence**
Side Engine Mount:	①, ②, ③, and ④
Transmission Mount:	②, ③, and ④
Lower Torque Rod:	③ and ④
Upper Torque Rod:	④

Tightening Torque

Mount No.	**Mount Name**	**Mount Bolt/Nut Tightening Sequence**				
		$\boxed{1}$	$\boxed{2}$	$\boxed{3}$	$\boxed{4}$	$\boxed{5}$
①	**Side Engine Mount**	49 N.m (5.0 kgf.m, 36 lbf.ft) Replace.	55 N.m (5.6 kgf.m, 41 lbf.ft) Replace.	55 N.m (5.6 kgf.m, 41 lbf.ft) Replace.	75 N.m (7.6 kgf.m, 55 lbf.ft) Replace.	75 N.m (7.6 kgf.m, 55 lbf.ft) Replace.
②	**Transmission Mount**	75 N.m (7.6 kgf.m, 55 lbf.ft) Replace.	50 N.m(5.1 kgf.m, 37 lbf.ft) Replace.	50 N.m (5.1 kgf.m, 37 lbf.ft) Replace.	B	B
③	**Lower Torque Rod**	45 N.m (4.6 kgf.m, 33 lbf.ft) Replace.	75 N.m (7.6 kgf.m, 55 lbf.ft) Replace.	B	B	B
④	**Upper Torque Rod**	40 N.m (4.1 kgf.m, 30 lbf.ft) Replace.	40 N.m (4.1 kgf.m, 30 lbf.ft) Replace.	B	B	B

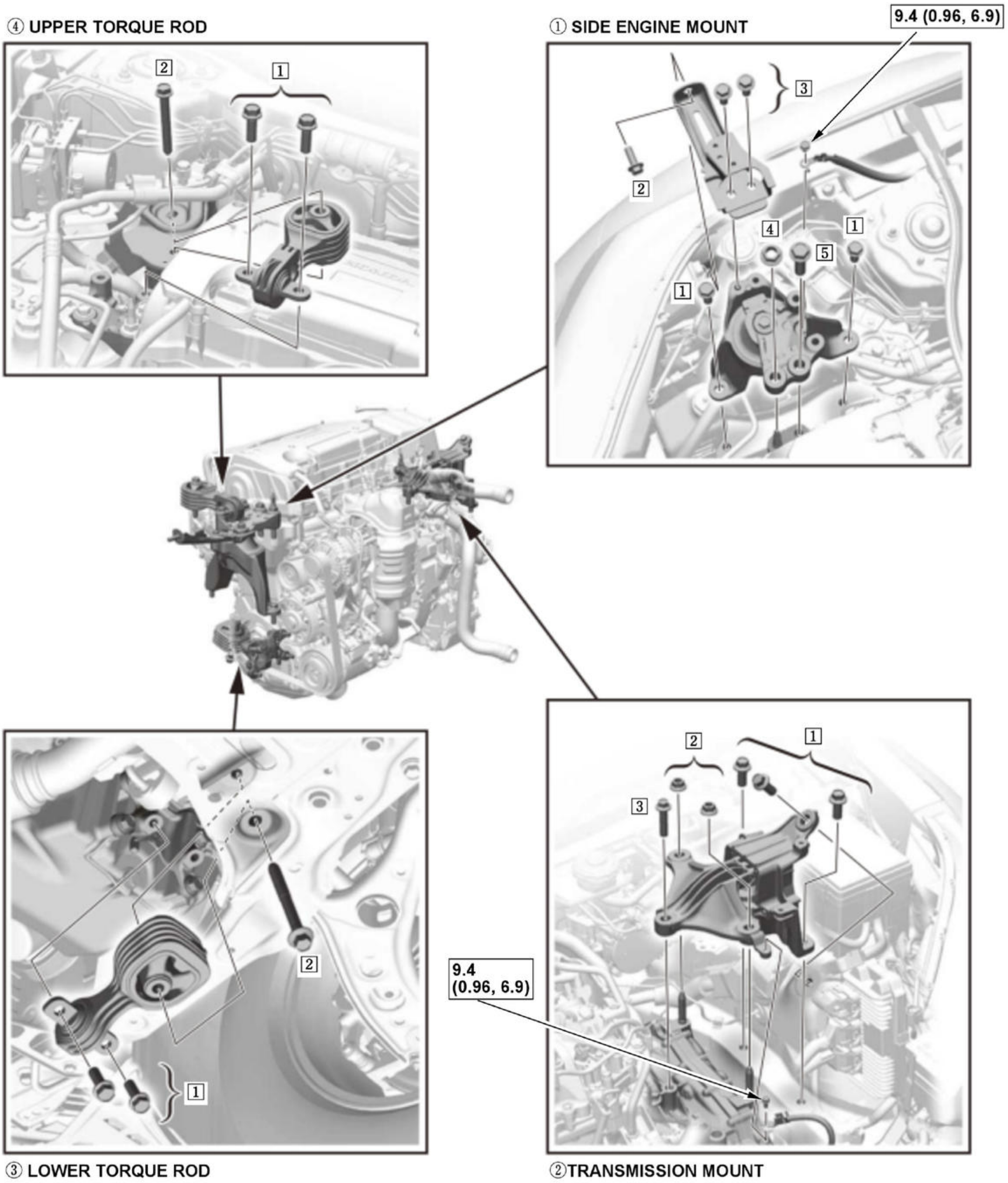
④ UPPER TORQUE ROD
2
1
① SIDE ENGINE MOUNT
9.4 (0.96, 6.9)
3
2
4
1
5
1
2
1
3
9.4
(0.96, 6.9)
2
1
③ LOWER TORQUE ROD
②TRANSMISSION MOUNT

Fig. 3: Tightening Engine Mount Bolts In Sequence With Torque Specifications
Courtesy of HONDA, U.S.A., INC.

2017-22 ENGINE

Engine Mount - Service Information - CR-V (Except Hybrid)

REMOVAL AND INSTALLATION

SIDE ENGINE MOUNT REMOVAL AND INSTALLATION (1.5 L ENGINE)

Removal and Installation

1

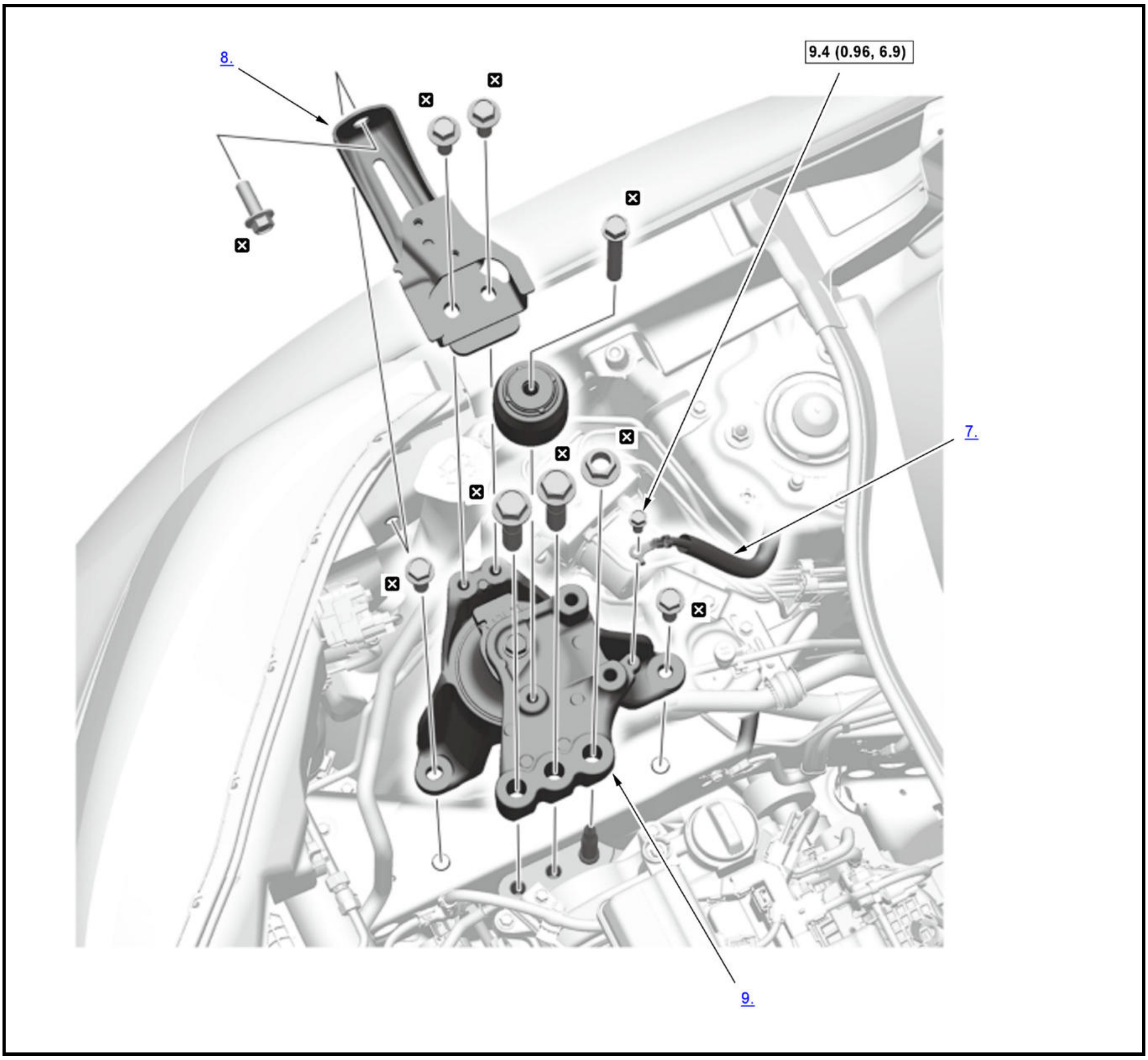

☐	Torque: N.m (kgf.m, lbf.ft)
☒	Replace

1. **Engine Undercover Lid - Remove**
2. Engine - Support

    1. Lift and support the engine with a jack and a wood block under the oil pan.

3. Upper Torque Rod - Remove
4. Expansion Tank - Move

   NOTE: Do not disconnect the water bypass hoses.

5. Expansion Tank Bracket - Remove
6. Dynamic Dumper - Remove
7. Ground Cable - Disconnect
8. Side Engine Mount Bracket - Remove
9. Side Engine Mount - Remove
10. All Removed Parts - Install

1. Install the parts in the reverse order of removal.

NOTE:

Do the mounts tightening procedure before tightening all of the mounts' bolts and nuts.

SIDE ENGINE MOUNT REMOVAL AND INSTALLATION (2.4 L ENGINE) (2017 2018 2019)

Removal and Installation

1

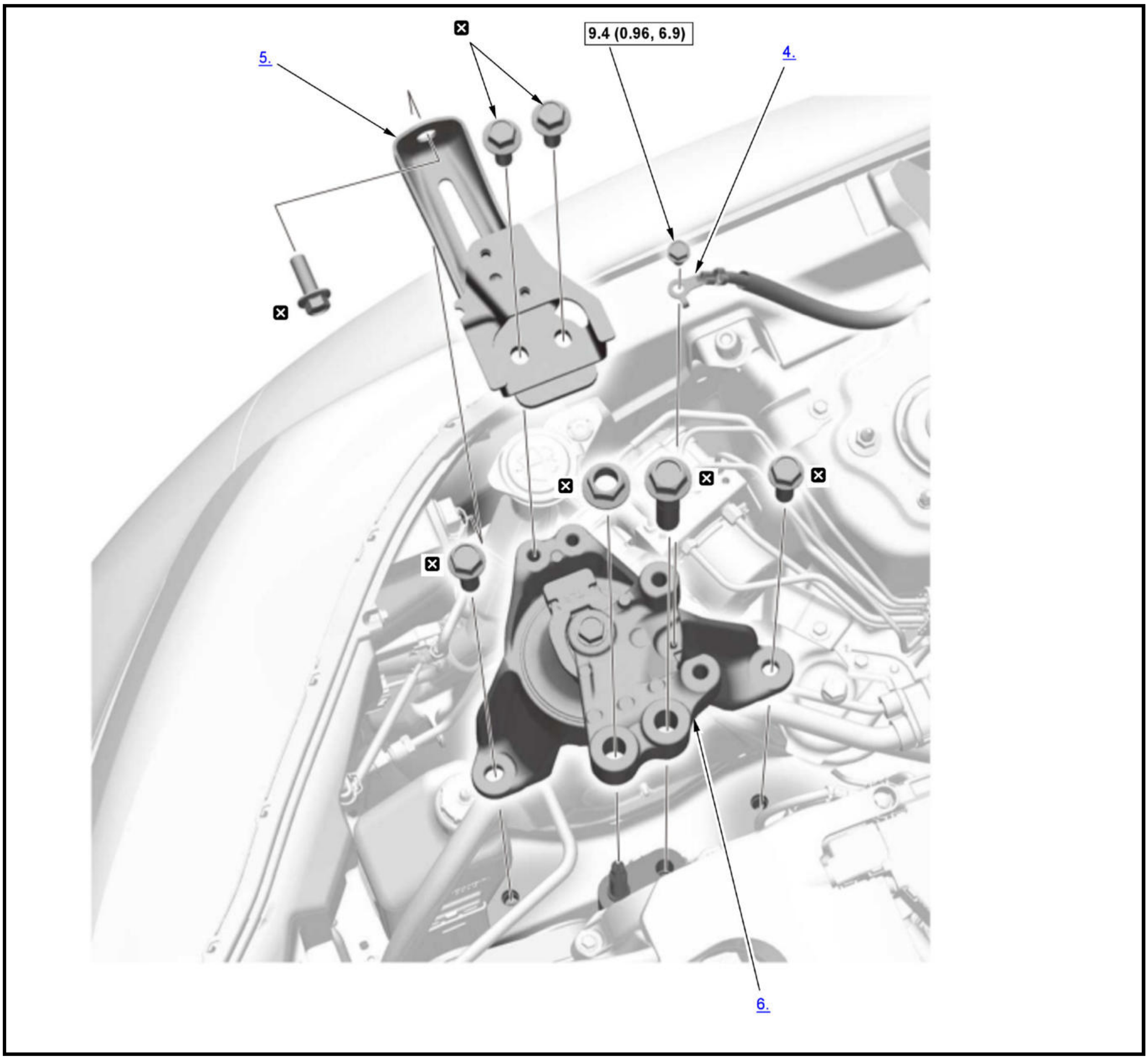

▭	Torque: N.m (kgf.m, lbf.ft)
☒	Replace

1. Engine Undercover Lid - Remove
2. Engine - Support
    1. Lift and support the engine with a jack and a wood block under the oil pan.
3. Upper Torque Rod - Remove
4. Ground Cable - Disconnect
5. Side Engine Mount Bracket - Remove
6. Side Engine Mount - Remove
7. All Removed Parts - Install
    1. Install the parts in the reverse order of removal.

NOTE:

Do the mounts tightening procedure before tightening all of the mounts' bolts and nuts.

TRANSMISSION MOUNT REMOVAL AND INSTALLATION(1.5 L ENGINE)

Removal and Installation

1

Type A

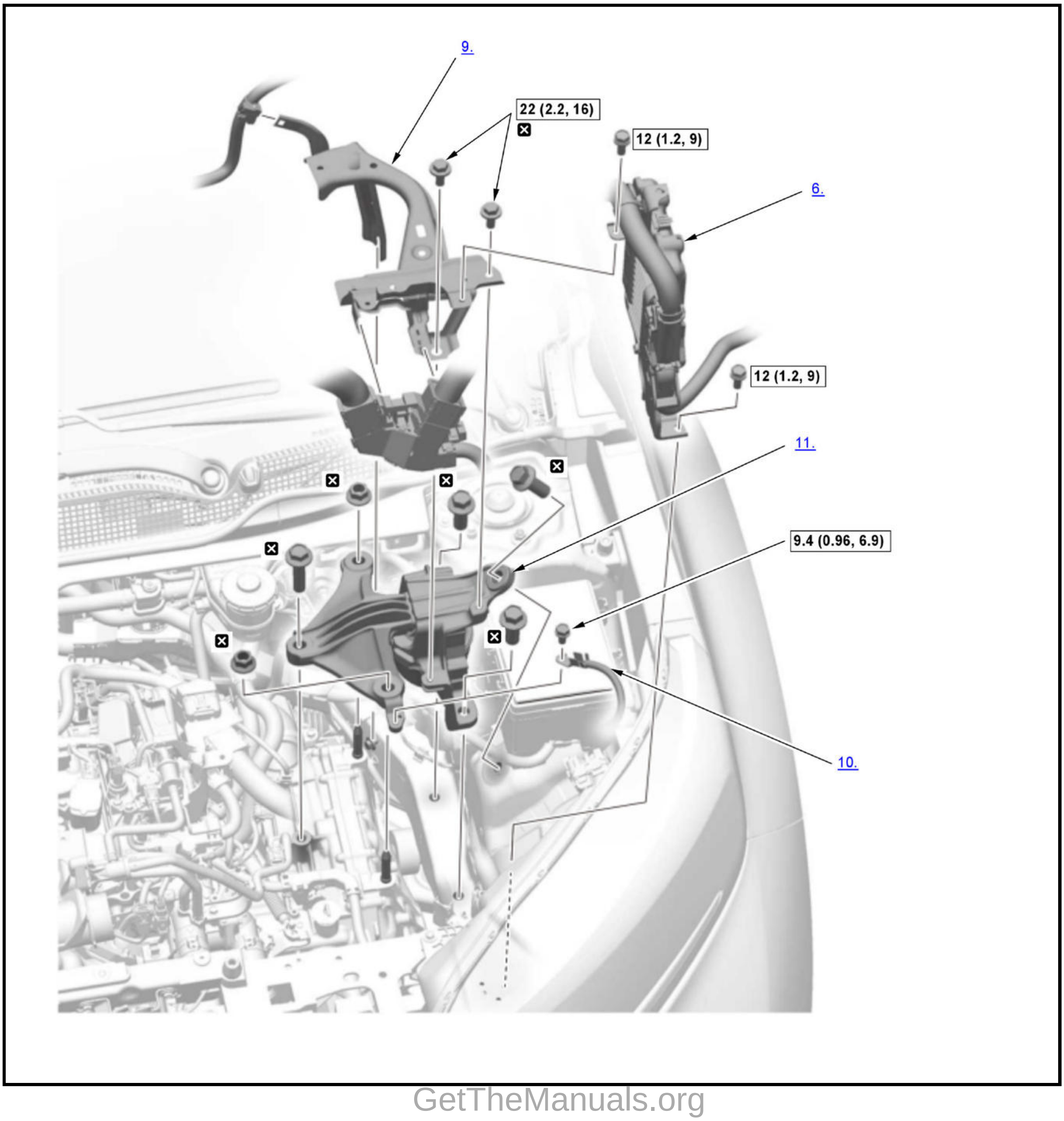

9.
22 (2.2, 16)
12 (1.2, 9)
6.
12 (1.2, 9)
11.
9.4 (0.96, 6.9)
10.

☐	Torque: N.m (kgf.m, lbf.ft)
☒	Replace

2

Type B

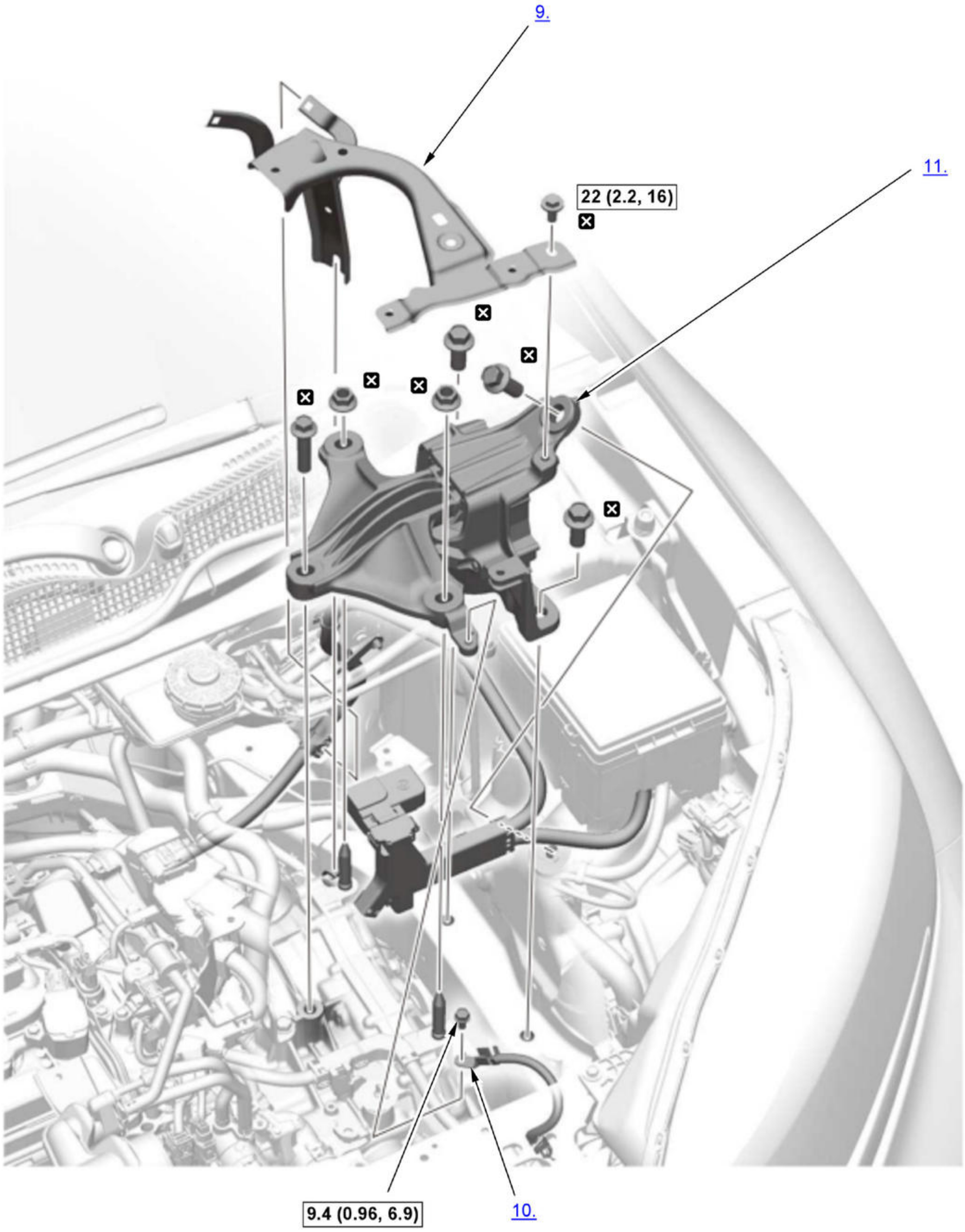
9.
11.
22 (2.2, 16)
9.4 (0.96, 6.9)
10.

☐	Torque: N.m (kgf.m, lbf.ft)
☒	Replace

3

Type C

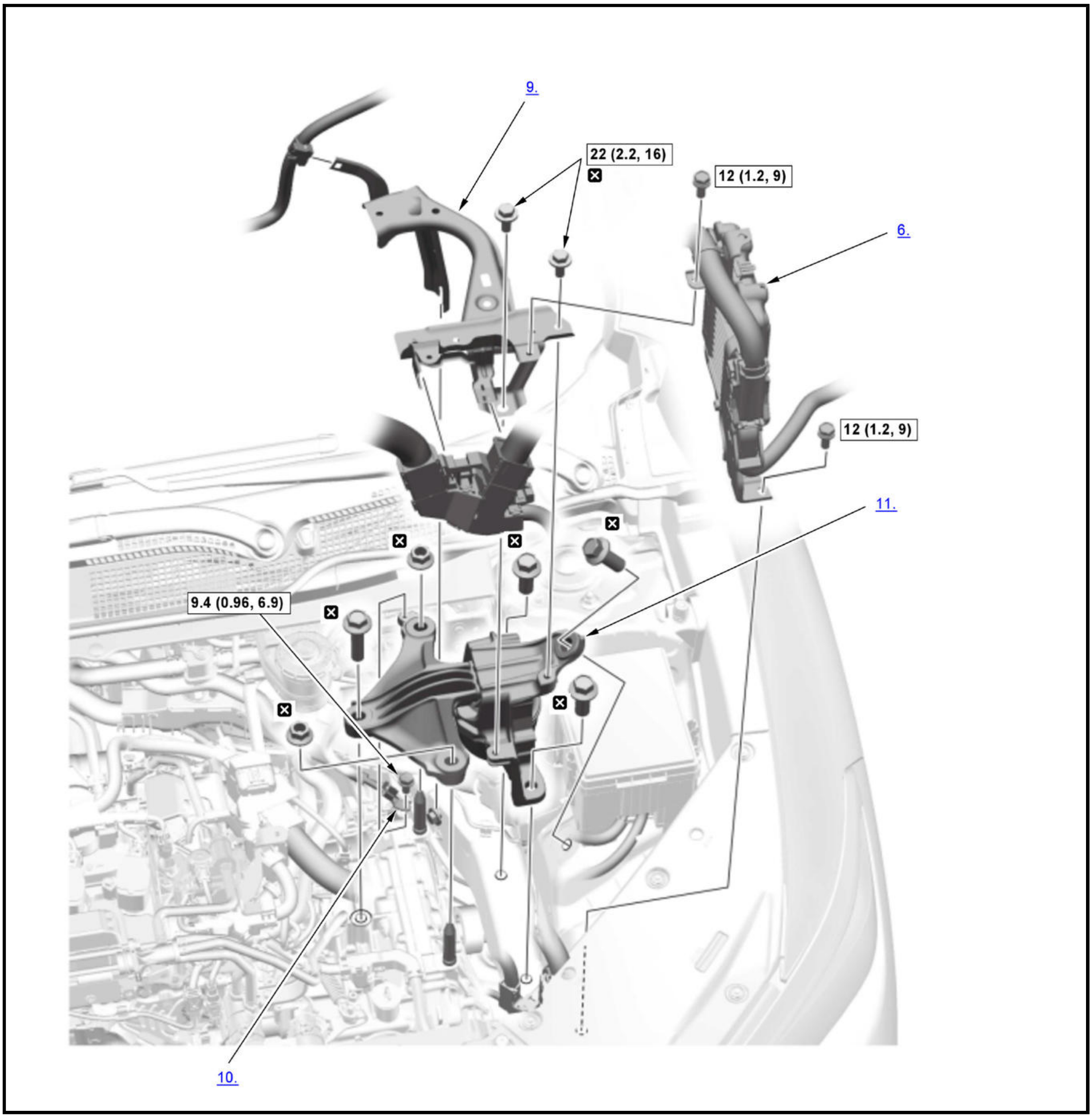

▭	Torque: N.m (kgf.m, lbf.ft)
☒	Replace

1. **Air Cleaner - Remove**
2. **12 Volt Battery - Remove**
3. **PCM - Remove (Type B)**
4. **12 Volt Battery Base - Remove**
5. **Throttle Body Inlet Pipe - Remove**
6. PCM - Remove (Type A/Type C)
7. **Engine Undercover Lid - Remove**
8. Transmission - Support

1. Lift and support the transmission with a jack and a wood block under the transmission.

9. 12 Volt Battery Base Bracket - Remove
10. Ground Cable - Disconnect
11. Transmission Mount - Remove
12. All Removed Parts - Install

1. Install the parts in the reverse order of removal. **NOTE:** **Do the mounts tightening procedure before tightening all of the mounts' bolts and nuts.**

TRANSMISSION MOUNT REMOVAL AND INSTALLATION (2.4 L ENGINE) (2017 2018 2019)

Removal and Installation

1

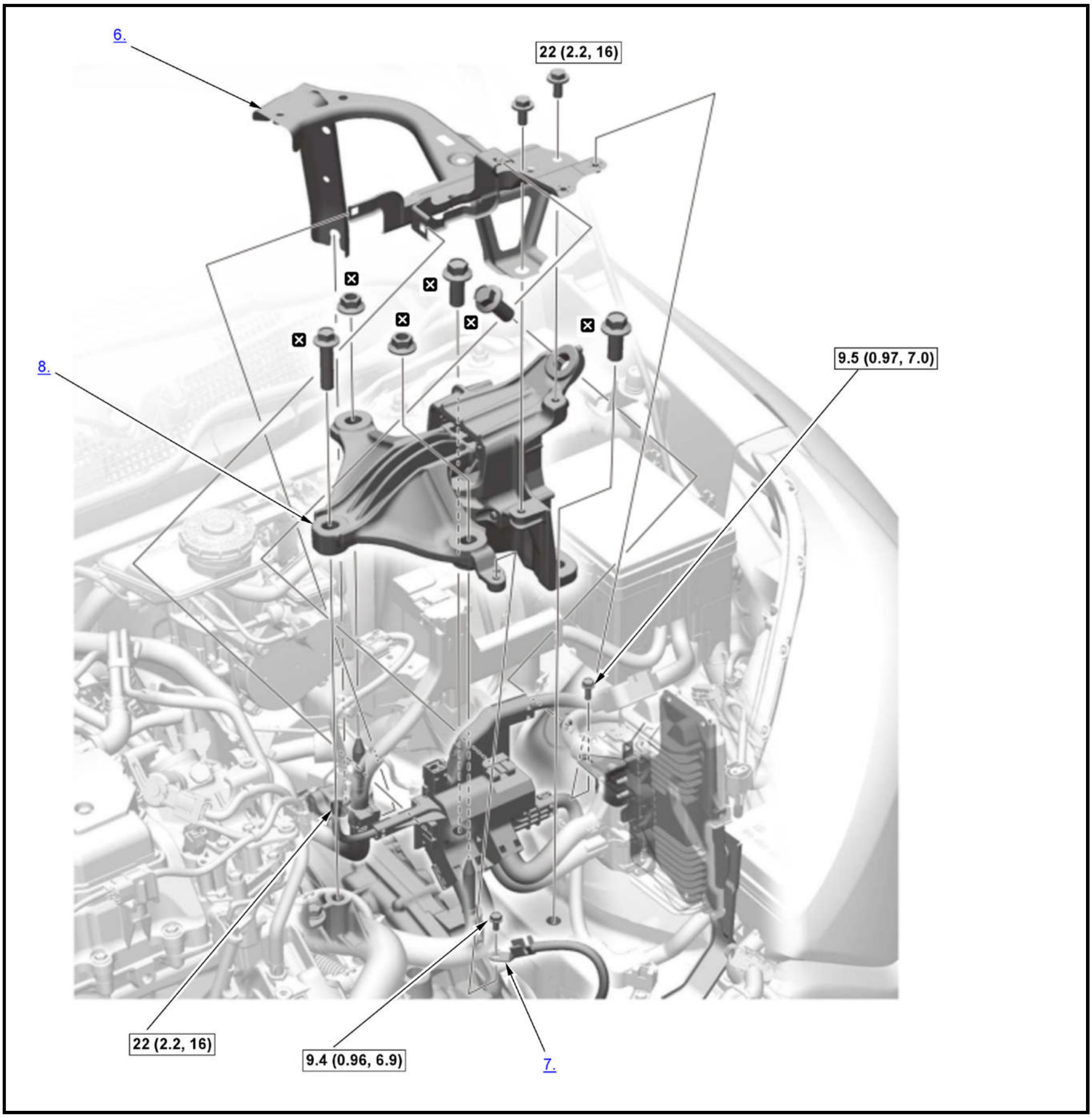

☐	Torque: N.m (kgf.m, lbf.ft)
☒	Replace

1. **12 Volt Battery - Remove**
2. **Air Cleaner - Remove**
3. **12 Volt Battery Base - Remove**
4. **Engine Undercover Lid - Remove**
5. Transmission - Support

    1. Lift and support the transmission with a jack and a wood block under the transmission.

6. 12 Volt Battery Base Bracket - Remove
7. Ground Cable - Disconnect
8. Transmission Mount - Remove

9. All Removed Parts - Install

1. Install the parts in the reverse order of removal.

NOTE:

Do the mounts tightening procedure before tightening all of the mounts' bolts and nuts.

REMOVAL AND INSTALLATION

ENGINE ASSEMBLY MOUNT REMOVAL AND INSTALLATION

Removal and Installation

NOTE: Do the mounts tightening procedure before tightening all of the mount's bolts and nuts. Refer to Tightening Procedure.

Side Engine Mount

NOTE: **Numbered call-outs in figure pertain to list numbers in following procedure.**

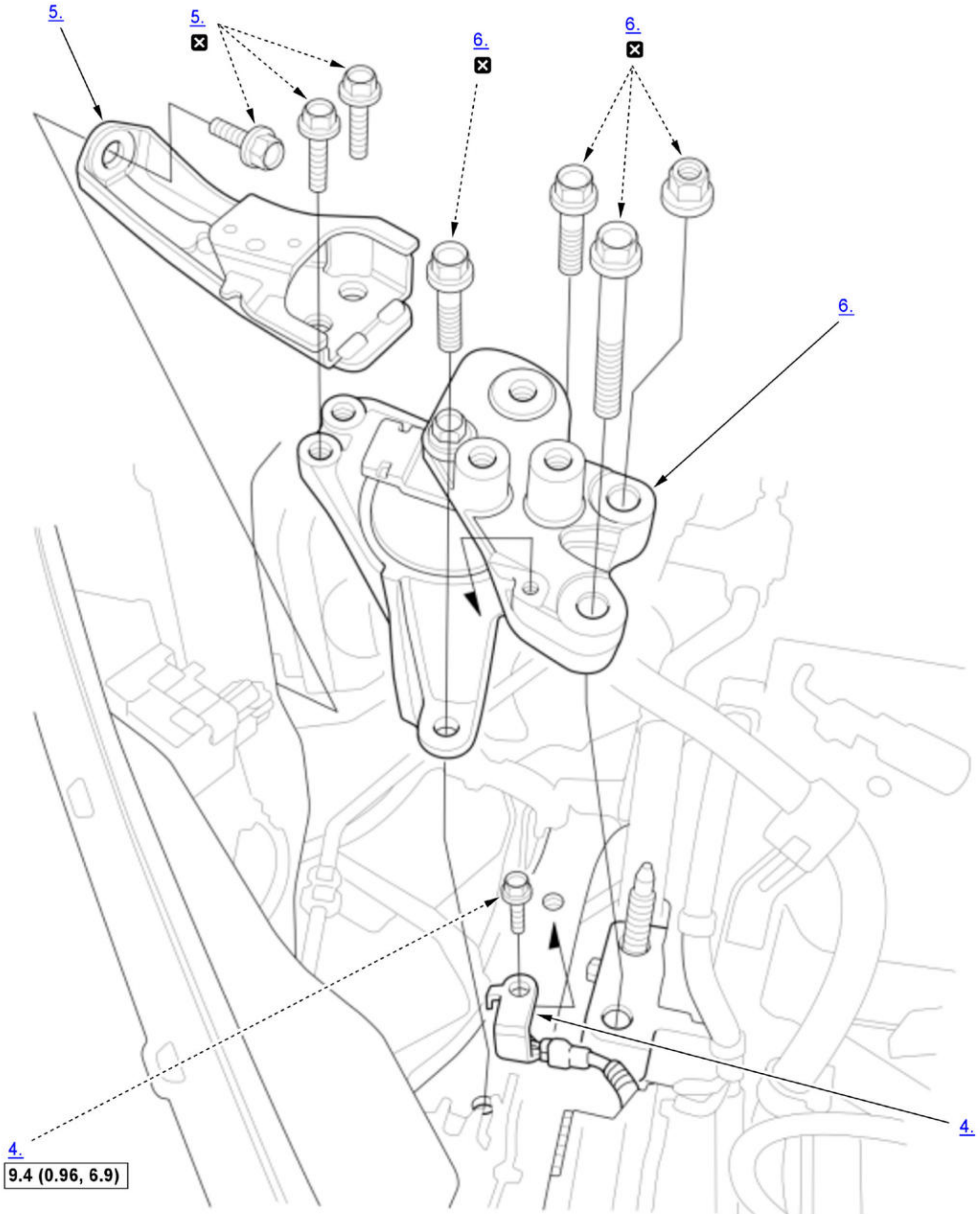

Fig. 1: Exploded View Of Side Engine Mount Replacement Components With Torque Specifications
Courtesy of HONDA, U.S.A., INC.

▭	Torque: N.m (kgf.m, lbf.ft)
☒	Replace

1. Engine Undercover Lid - Remove
2. Upper Torque Rod - Remove
3. Engine - Support

   1. Lift and support the engine with a jack and a wood block under the oil pan.

4. Ground Cable - Disconnect
5. Side Engine Mount Bracket - Remove
6. Side Engine Mount - Remove
7. All Removed Parts - Install

   1. Install the parts in the reverse order of removal.

Transmission Mount

NOTE: **Numbered call-outs in figure pertain to list numbers in following procedure.**

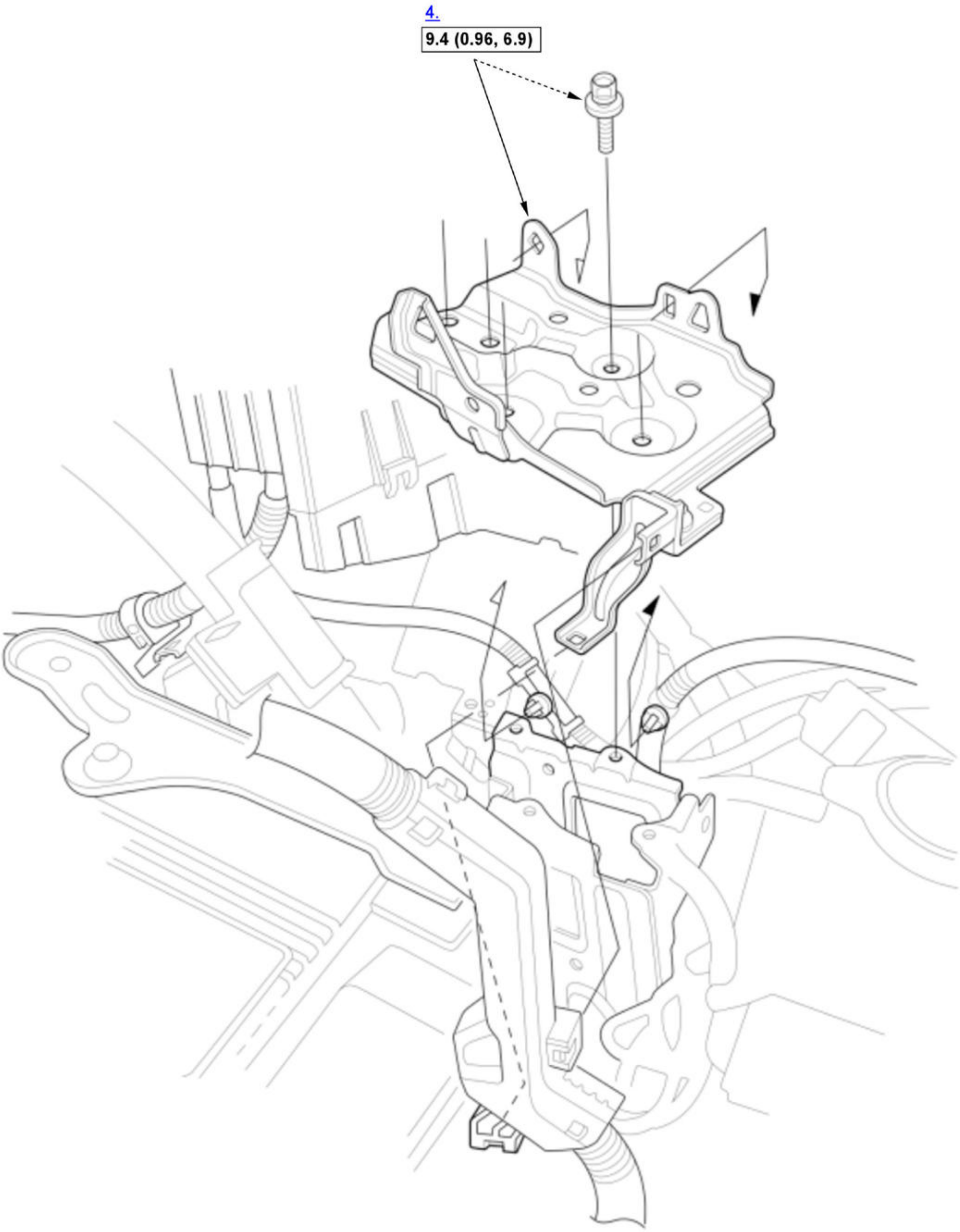

Fig. 2: Exploded View Of Transmission Mount Replacement Components With Torque Specifications (1 Of 2)
Courtesy of HONDA, U.S.A., INC.

▭	Torque: N.m (kgf.m, lbf.ft)

NOTE: **Numbered call-outs in figure pertain to list numbers in following procedure.**

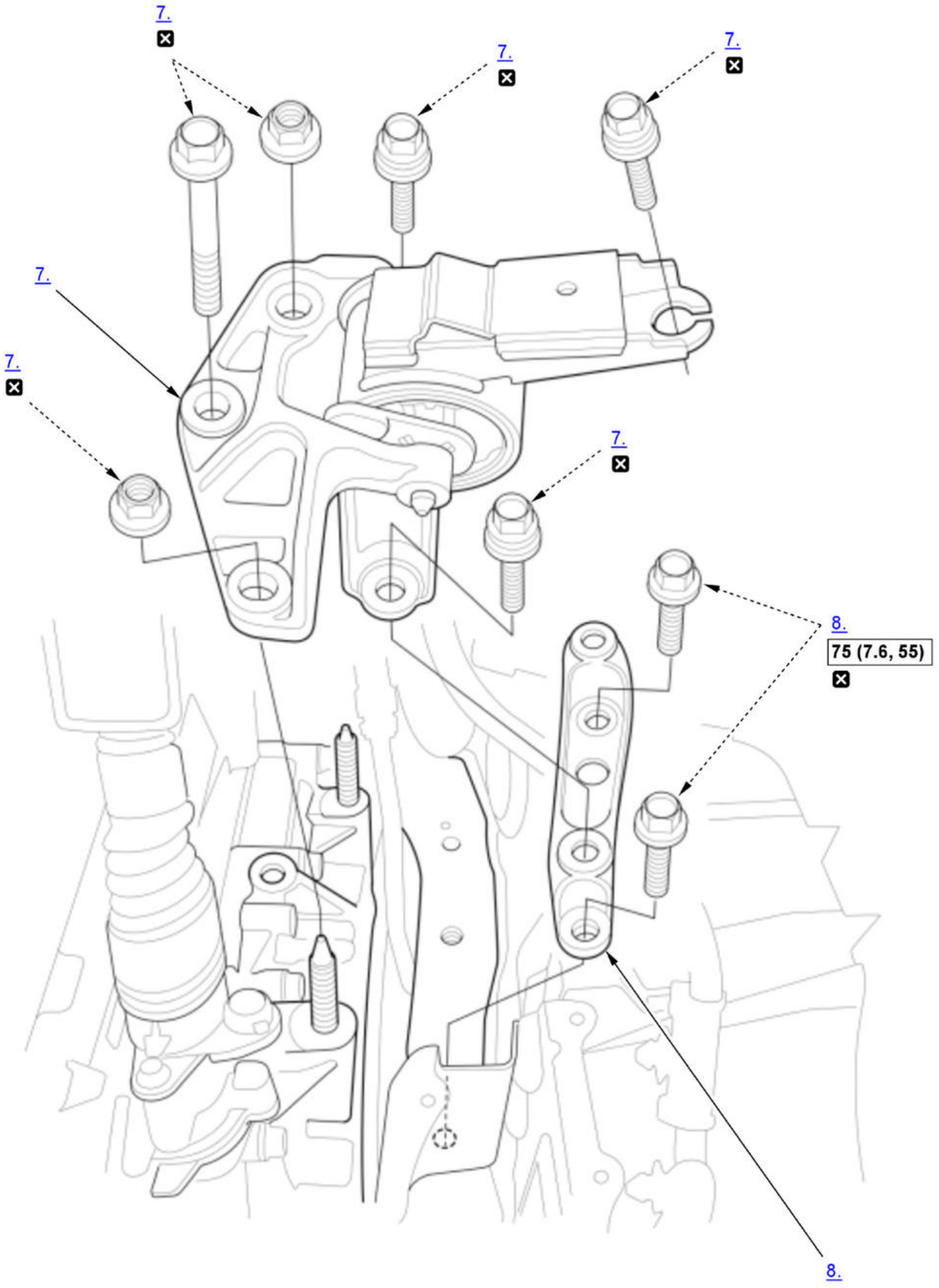

Fig. 3: Exploded View Of Transmission Mount Replacement Components With Torque Specifications (2 Of 2)
Courtesy of HONDA, U.S.A., INC.

☐	Torque: N.m (kgf.m, lbf.ft)
☒	Replace

1. Engine Undercover Lid - Remove
2. 12 Volt Battery - Remove
3. PCM - Remove
4. 12 Volt Battery Base - Remove
5. Under-Hood Fuse/Relay Box - Move
6. Transmission - Support

1. Lift and support the transmission (e-CVT) with a jack and a wood block under the transmission (e-CVT).

7. Transmission Mount - Remove
8. Transmission Mount Base Bracket - Remove (if necessary)
9. All Removed Parts - Install

1. Install the parts in the reverse order of removal.

Upper Torque Rod

NOTE: **Numbered call-outs in figure pertain to list numbers in following procedure.**

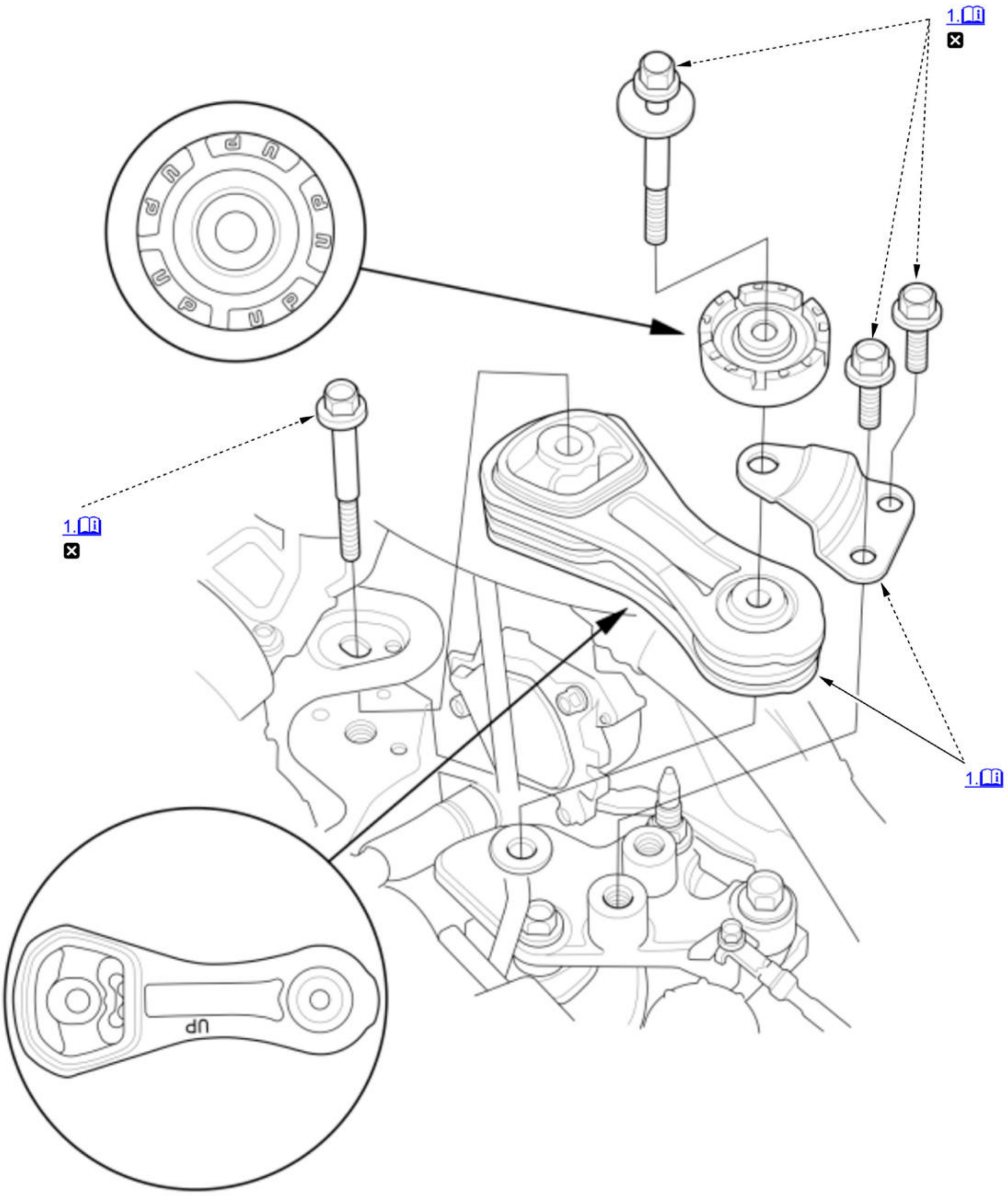

Fig. 4: Exploded View Of Upper Torque Rod Replacement Components
Courtesy of HONDA, U.S.A., INC.

☒	Replace

1. Upper Torque Rod - Remove

   Note for installation

   Make sure to install the upper torque rod with the "UP" mark facing up.

2. All Removed Parts - Install

   1. Install the parts in the reverse order of removal.

Lower Torque Rod

NOTE: **Numbered call-outs in figure pertain to list numbers in following procedure.**

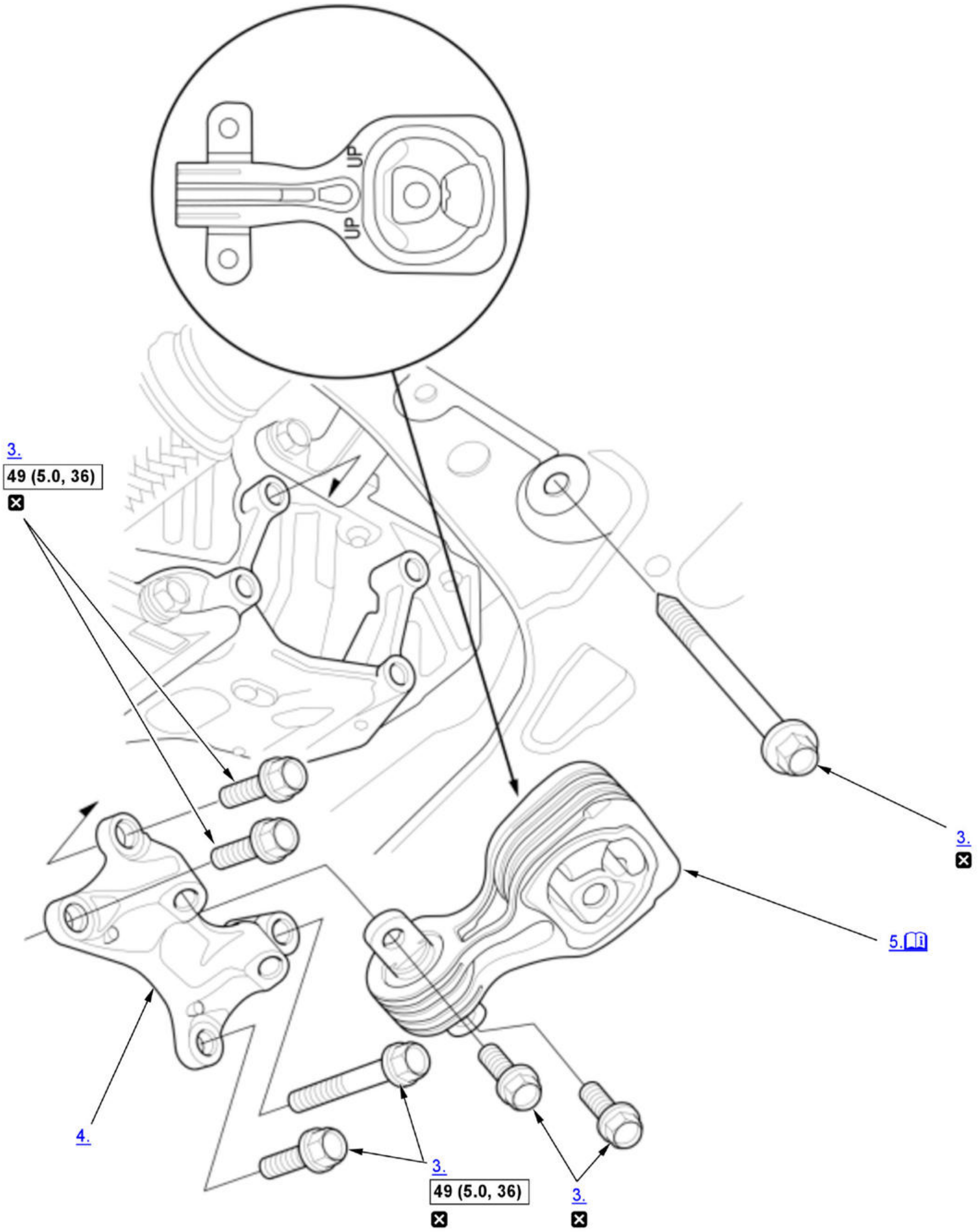

Fig. 5: Exploded View Of Lower Torque Rod Replacement Components With Torque Specifications
Courtesy of HONDA, U.S.A., INC.

▭	Torque: N.m (kgf.m, lbf.ft)
☒	Replace

Lower Torque Rod

1. Engine Undercover - Remove
2. Engine - Support

> 1. Support the engine with a transmission jack and a wood block under the oil pan.

3. Lower Torque Rod Mounting Bolt and Lower Torque Rod Bracket Mounting Bolt - Remove
4. Lower Torque Rod Bracket - Remove
5. Lower Torque Rod - Remove

   Note for installation

   Make sure to install the lower torque rod with the "UP" marks facing up.

6. All Removed Parts - Install

> 1. Install the parts in the reverse order of removal.

Tightening Procedure

NOTE: Reinstall the mounting bolts and support nuts in the sequence given in the following steps. Failure to follow this sequence may cause excessive noise, vibration, and severe damage to the engine mount brackets.

1. Jack - Remove
2. Engine/Transmission Mount - Tightening Procedure

NOTE: When installing the side engine mount, tighten the ① - $\boxed{1}$ bolts at first and temporarily tighten the ① - $\boxed{3}$ bolts while attaching the side engine mount bracket to the side engine mount, then tighten other remaining bolts and nuts as the corresponding procedures that can be seen on the following table.

Tightening Sequence

Mount Removed	Mount Tightening Sequence
Side Engine Mount	①, ②, ③, and ④
Transmission Mount	②, ③, and ④
Lower Torque Rod	③ and ④
Upper Torque Rod	④

Tightening Torque

Mount No.	Mount Name	Mount Bolt/Nut Tightening Sequence				
		$\boxed{1}$	$\boxed{2}$	$\boxed{3}$	$\boxed{4}$	$\boxed{5}$

①	Side Engine Mount	49 N.m (5.0 kgf.m, 36 lbf.ft) Replace	55 N.m (5.6 kgf.m, 41 lbf.ft) Replace	55 N.m (5.6 kgf.m, 41 lbf.ft) Replace	75 N.m (7.6 kgf.m, 55 lbf.ft) Replace	75 N.m (7.6 kgf.m, 55 lbf.ft) Replace
②	Transmission Mount	75 N.m (7.6 kgf.m, 55 lbf.ft) Replace	50 N.m (5.1 kgf.m, 37 lbf.ft) Replace	50 N.m (5.1 kgf.m, 37 lbf.ft) Replace	-	-
③	Lower Torque Rod	45 N.m (4.6 kgf.m, 33 lbf.ft) Replace	75 N.m (7.6 kgf.m, 55 lbf.ft) Replace.	-	-	-
④	Upper Torque Rod	30 N.m (3.1 kgf.m, 22 lbf.ft) Replace.	40 N.m (4.1 kgf.m, 30 lbf.ft) Replace	40 N.m (4.1 kgf.m, 30 lbf.ft) Replace	-	-

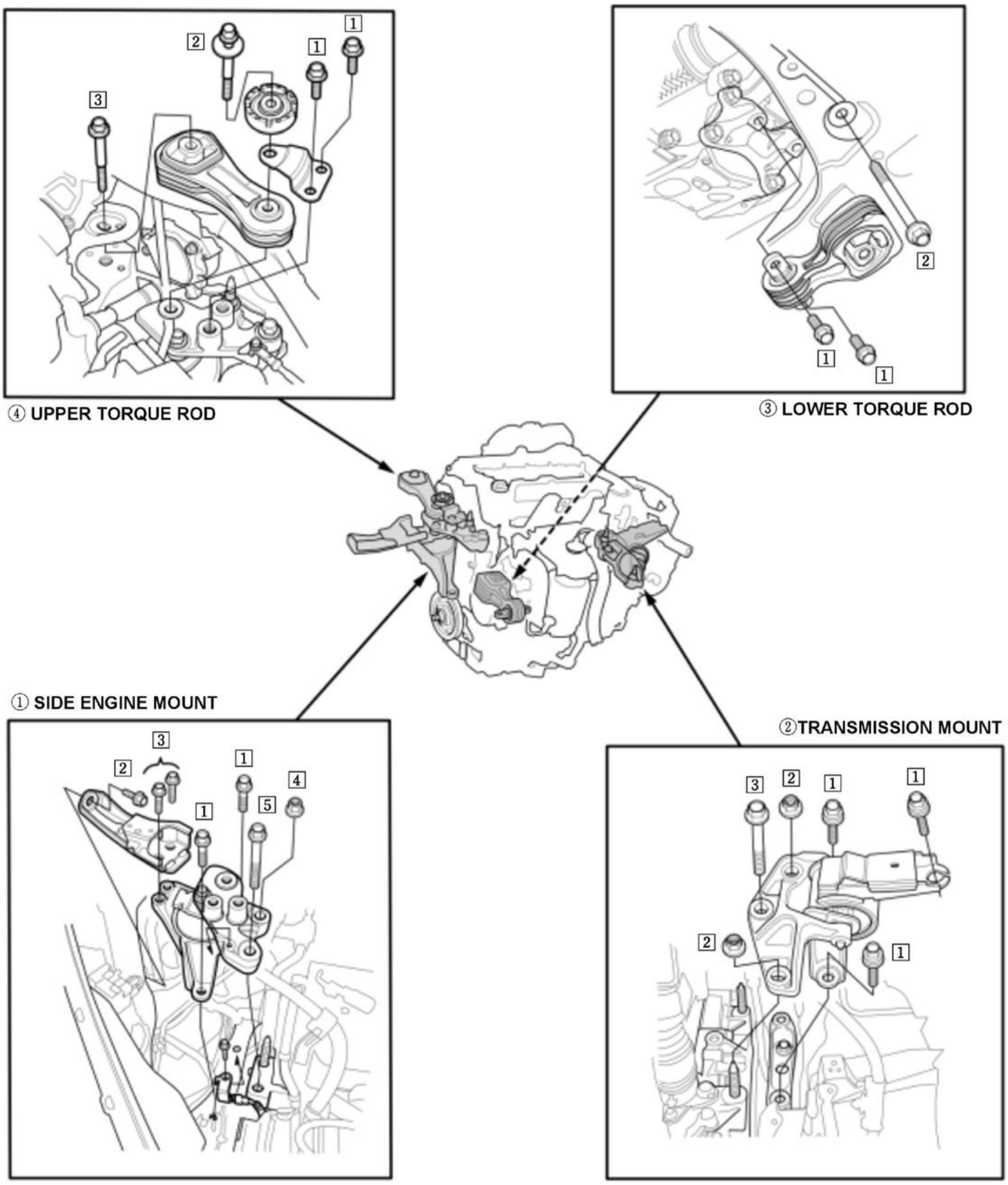
④ UPPER TORQUE ROD
1
1
2
3
③ LOWER TORQUE ROD
2
1
1
① SIDE ENGINE MOUNT
3
2
1
1
4
5
②TRANSMISSION MOUNT
3
2
1
1
2
1

Fig. 6: Identifying Side Engine Mount, Transmission Mount, Lower Torque Rod, Upper Torque Rod Components And Bolts/Nuts With Tightening Sequence
Courtesy of HONDA, U.S.A., INC.

REMOVAL AND INSTALLATION

EXHAUST PIPE AND MUFFLER REMOVAL AND INSTALLATION (1.5 L ENGINE)

Removal and Installation

NOTE:

- How to read the torque specifications .
- Use new gaskets and new self-locking nuts when reassembling.

1. Exhaust Pipe and Muffler - Remove and Install

Item		Torque
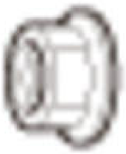	A	54 N.m (5.5 kgf.m, 40 lbf.ft)
	B	33 N.m (3.4 kgf.m, 24 lbf.ft)

2WD

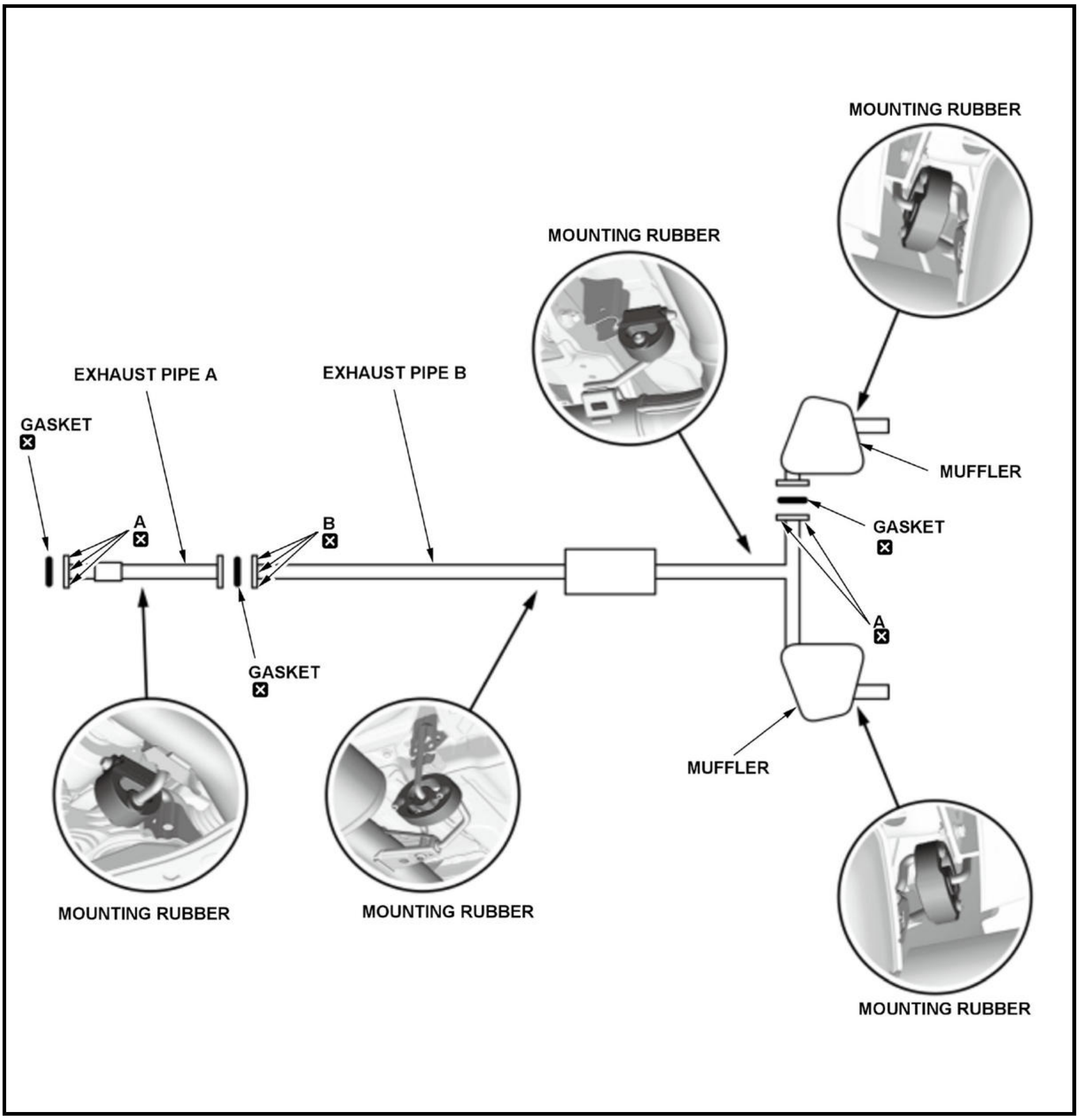
MOUNTING RUBBER
MOUNTING RUBBER
EXHAUST PIPE A
EXHAUST PIPE B
GASKET ☒
A ☒
B ☒
MUFFLER
GASKET ☒
A ☒
GASKET ☒
MUFFLER
MOUNTING RUBBER
MOUNTING RUBBER
MOUNTING RUBBER

AWD

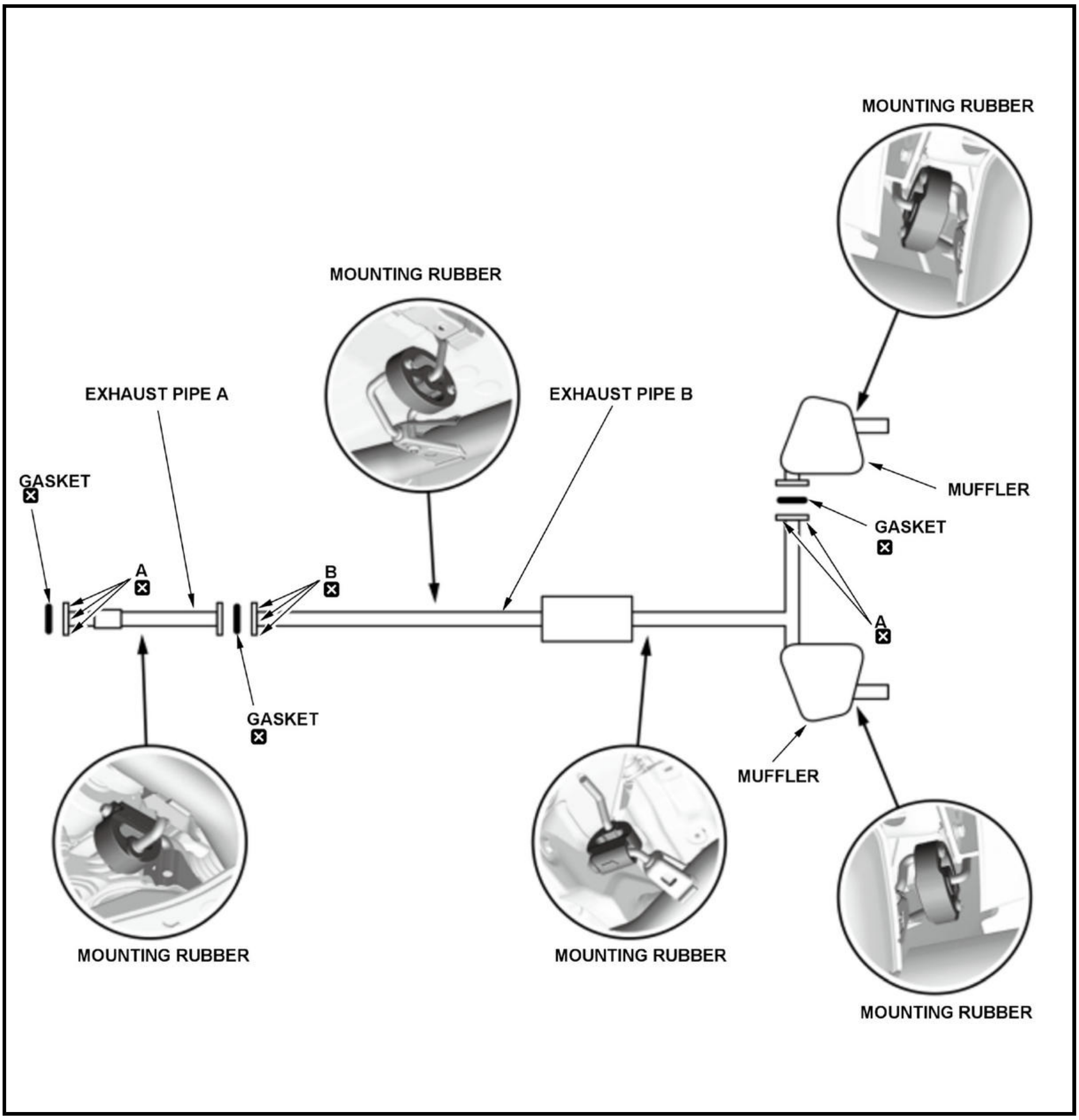
MOUNTING RUBBER
MOUNTING RUBBER
EXHAUST PIPE A
EXHAUST PIPE B
GASKET
A
B
MUFFLER
GASKET
A
GASKET
MUFFLER
MOUNTING RUBBER
MOUNTING RUBBER
MOUNTING RUBBER

2. Heat Shield - Remove and Install

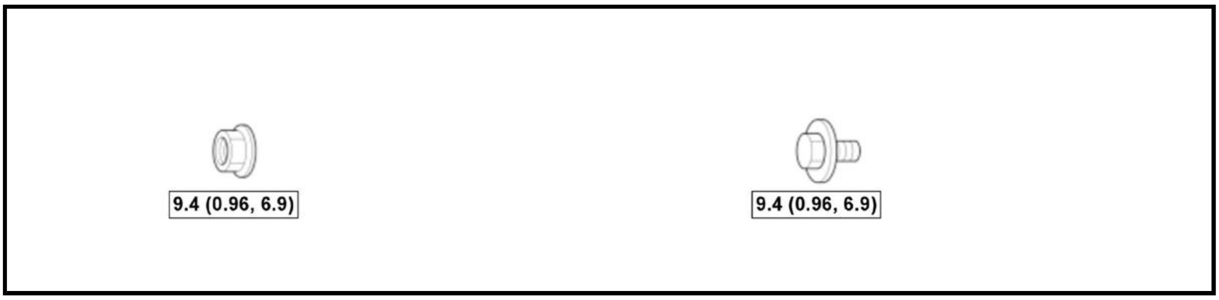
9.4 (0.96, 6.9)
9.4 (0.96, 6.9)

Applicable Heat Shield List:

	MUFFLER		
A Type	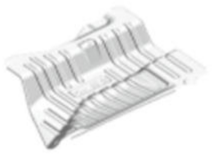		
B Type	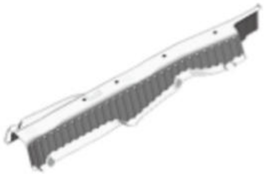	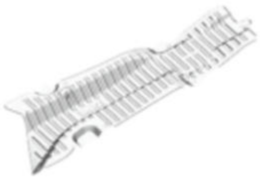	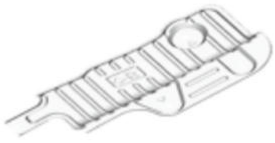

EXHAUST PIPE AND MUFFLER REMOVAL AND INSTALLATION (2.4 L ENGINE) (2017 2018 2019)

Removal and Installation

NOTE: How to read the torque specifications .

1. Exhaust Pipe and Muffler - Remove and Install

   NOTE: Use new gaskets and new self-locking nuts when reassembling.

Item		Torque
	A	54 N.m (5.5 kgf.m, 40 lbf.ft)
	B	33 N.m (3.4 kgf.m, 24 lbf.ft)

2WD

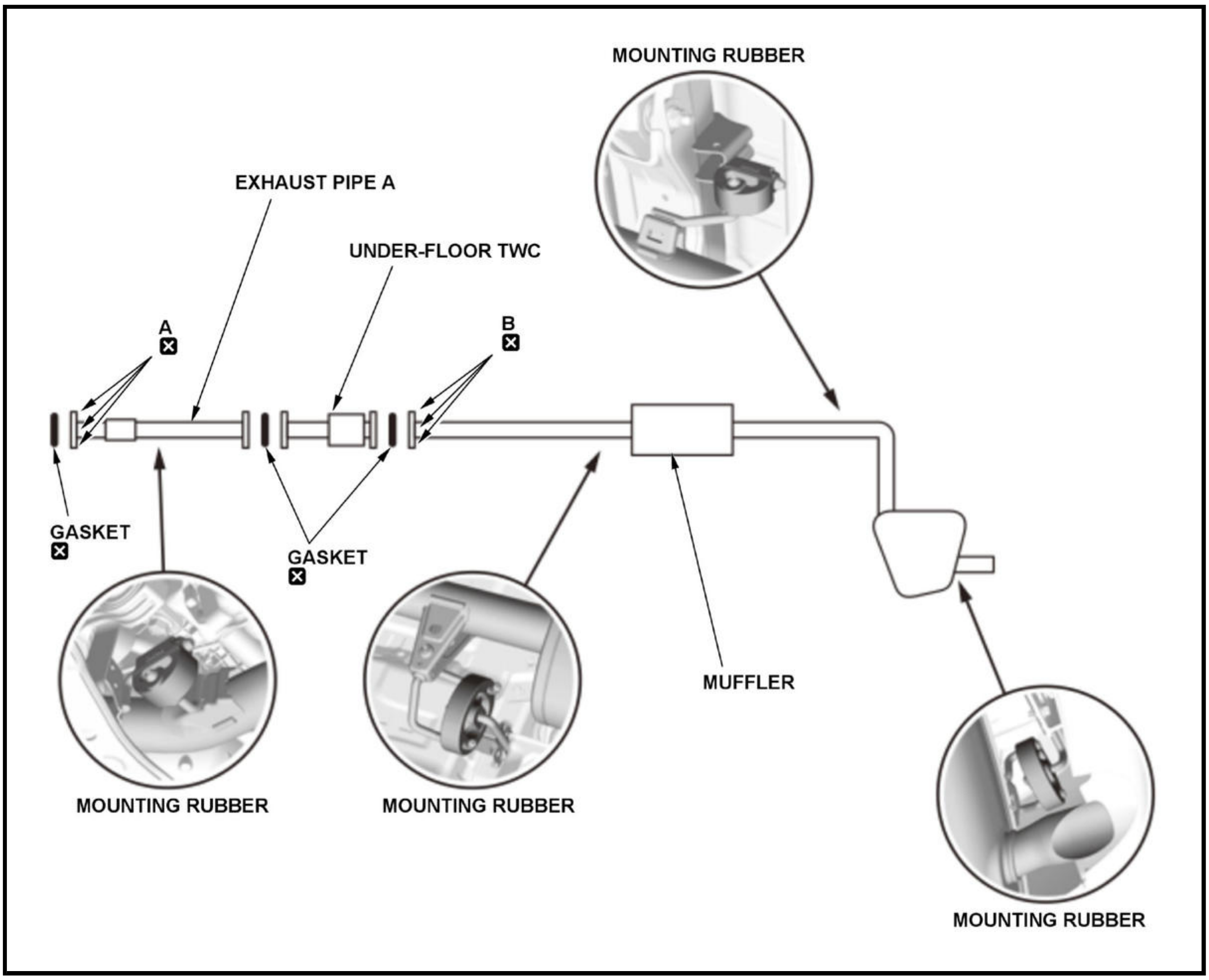
MOUNTING RUBBER
EXHAUST PIPE A
UNDER-FLOOR TWC
A
☒
B
☒
GASKET
☒
GASKET
☒
MUFFLER
MOUNTING RUBBER
MOUNTING RUBBER
MOUNTING RUBBER

AWD

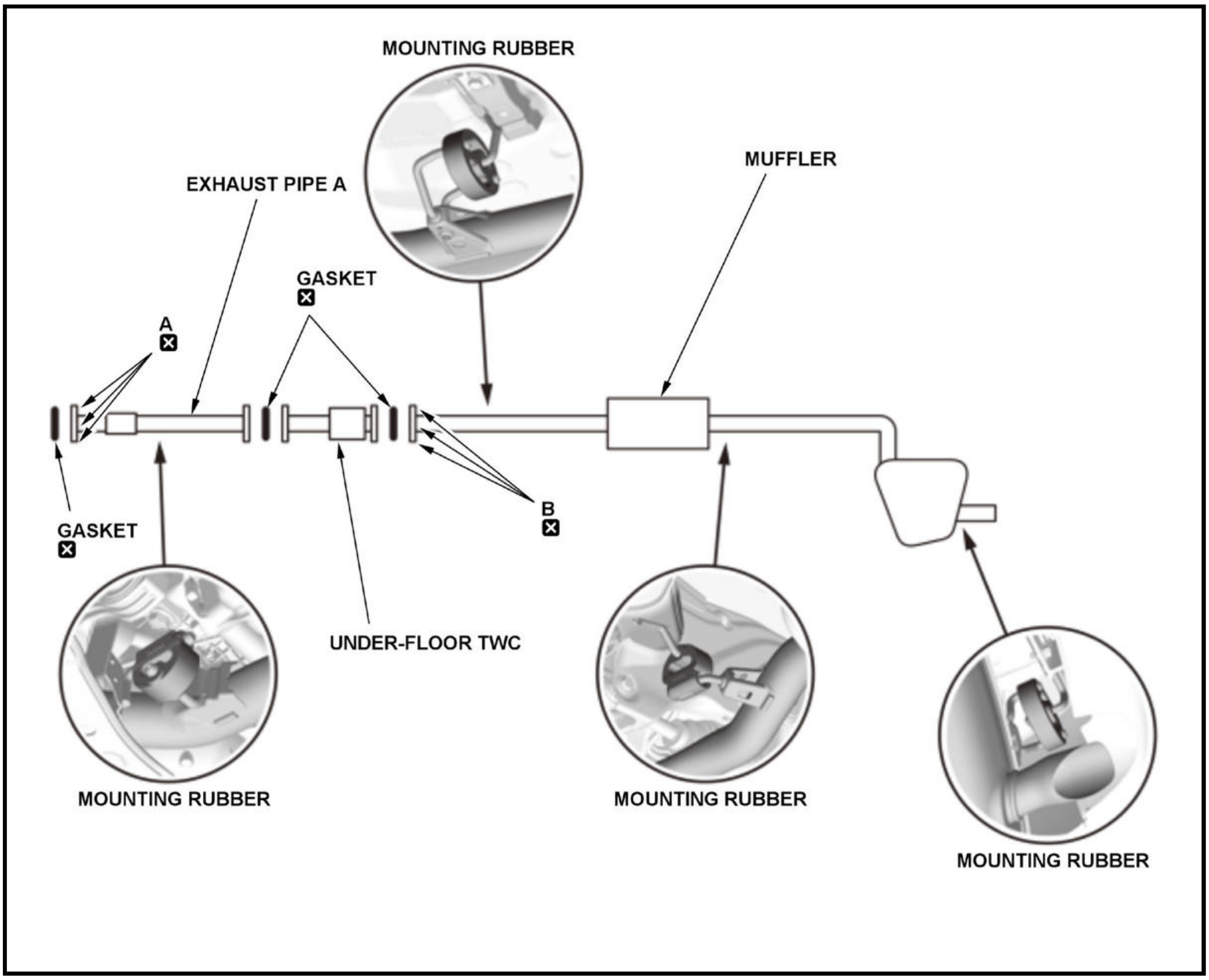
MOUNTING RUBBER
MUFFLER
EXHAUST PIPE A
GASKET
☒
A
☒
B
☒
GASKET
☒
UNDER-FLOOR TWC
MOUNTING RUBBER
MOUNTING RUBBER
MOUNTING RUBBER

2. Heat Shield - Remove and Install

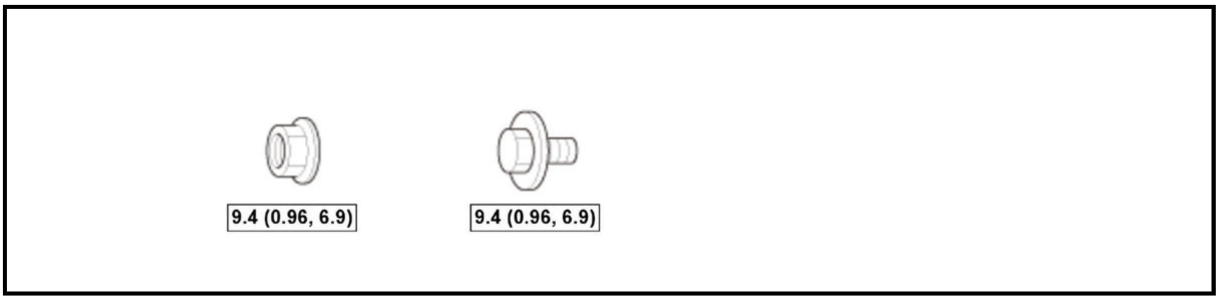

Applicable Heat Shield List:

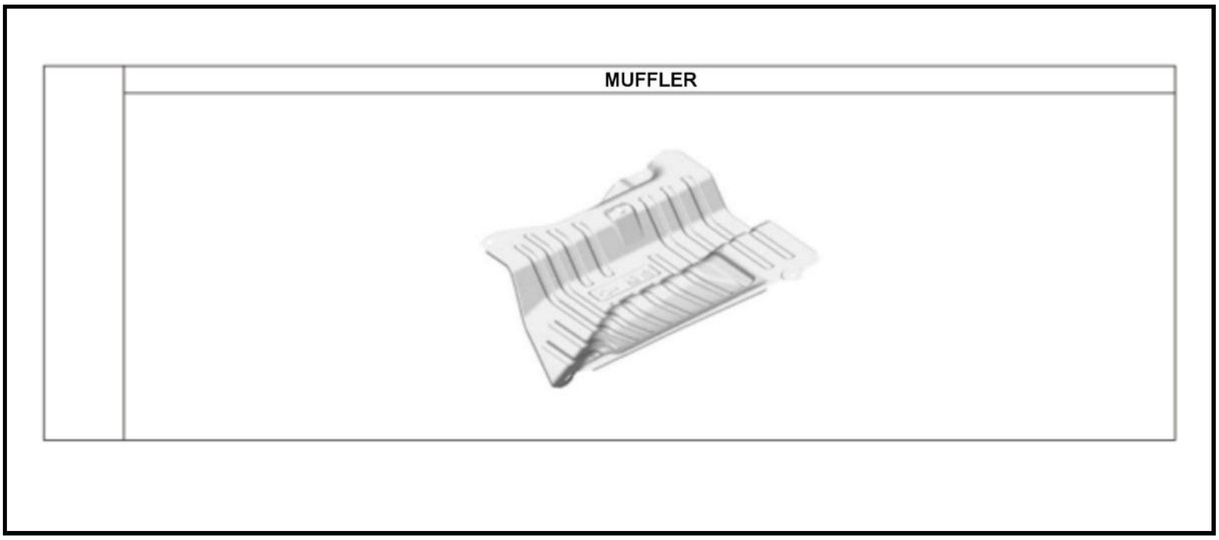

TURBOCHARGER REMOVAL AND INSTALLATION (1.5 L ENGINE)

Removal and Installation

NOTE:

- 📖 Where icon is shown, further information shown below.
- Tighten the turbocharger/bracket mounting bolts and nuts in the numbered sequence shown.

1

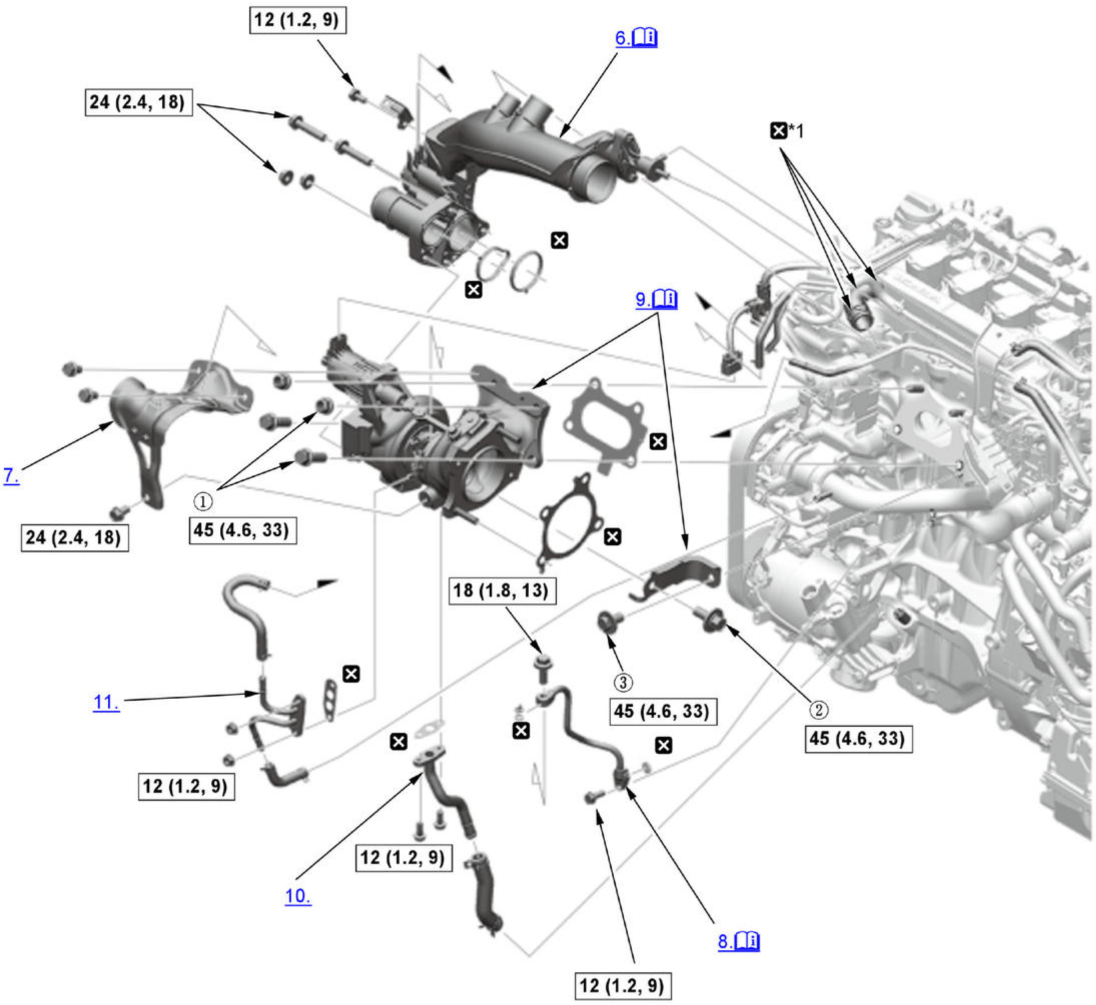
12 (1.2, 9)
6.
24 (2.4, 18)
☒*1
9.
7.
①
24 (2.4, 18)
45 (4.6, 33)
18 (1.8, 13)
③
45 (4.6, 33)
②
45 (4.6, 33)
11.
12 (1.2, 9)
12 (1.2, 9)
10.
8.
12 (1.2, 9)

Fig. 1: Tightening Turbocharger/Bracket Mounting Bolts In Sequence With Torque Specifications
Courtesy of HONDA, U.S.A., INC.

ℹ	Detailed information, notes, and precautions
☐	Torque: N.m (kgf.m, lbf.ft)
☒	Replace
*1	With break head band

1. **Engine Coolant - Drain**
2. **Intake Parts - Remove**

   NOTE: Remove the necessary part(s).

3. **Expansion Tank - Remove**
4. **A/F Sensor - Remove**
5. **TWC Assembly - Remove**
6. Turbocharger Joint - Remove

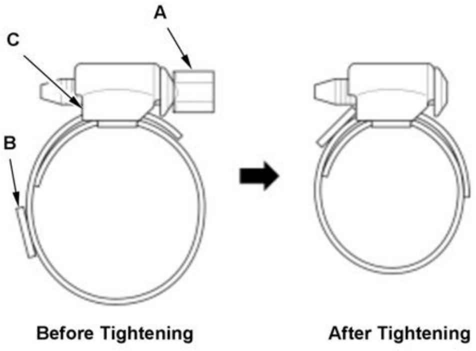	**NOTE:** (With break head band) Use commercially available cutting pliers as necessary to cut the band off the hose while avoiding damage to the hose. **Note for installation (with break head band):** When installing a new break head band, do the following procedures. 1. Tighten the break head bolt until the bolt head (A) is twisted off completely. **NOTE:** **Do not use an air tool.** 2. Make sure the stopper end (B) contacts to the housing end (C) after tightening the break head bolt.

7. Turbocharger Cover - Remove
8. Oil Feed Pipe - Remove

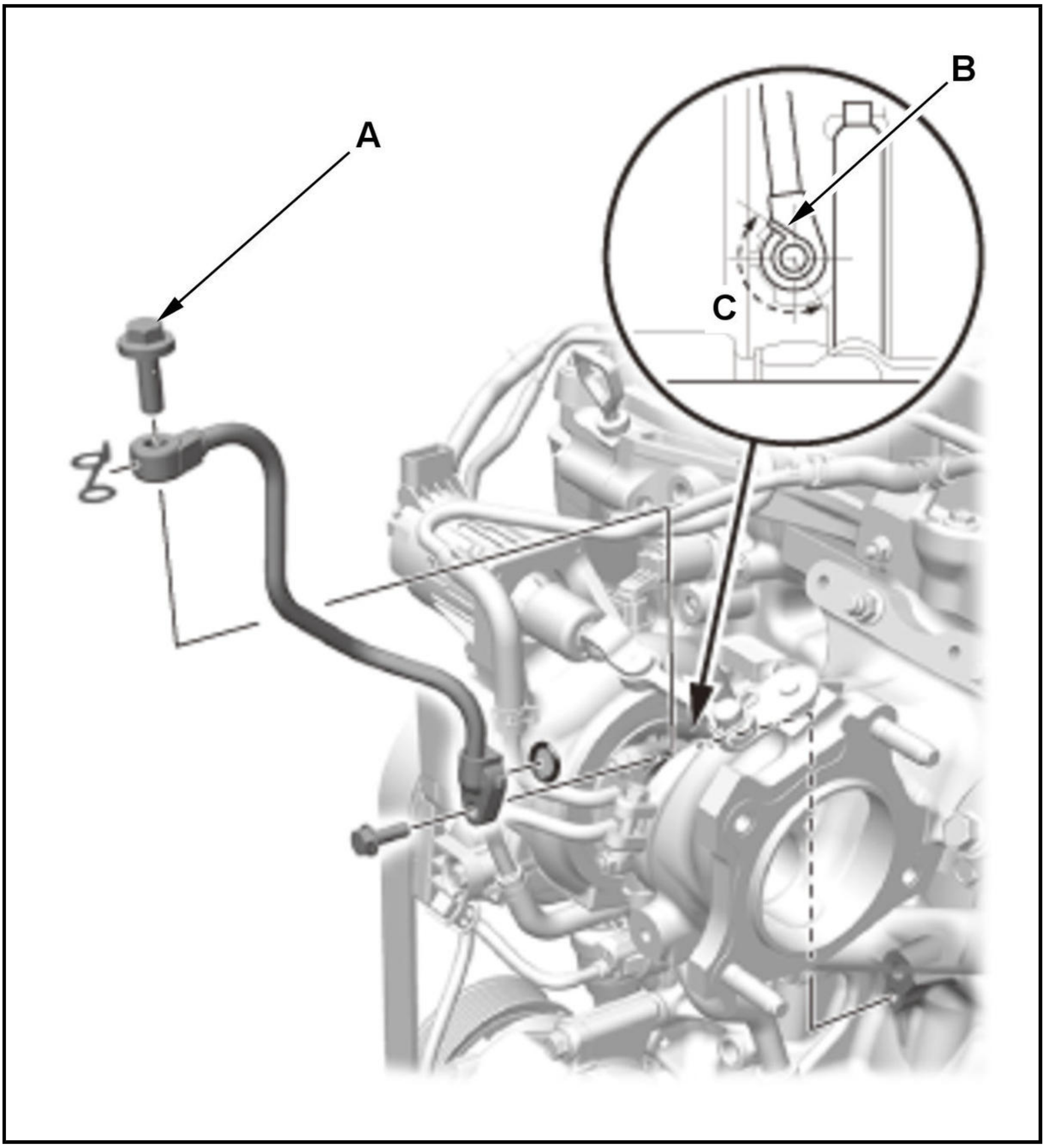

Note for installation

NOTE:

- Apply new engine oil to the threads of the oil feed pipe orifice bolt (A).
- Make sure the washer portion (B) is installed on the area (C) as shown.

9. Turbocharger and Bracket - Remove

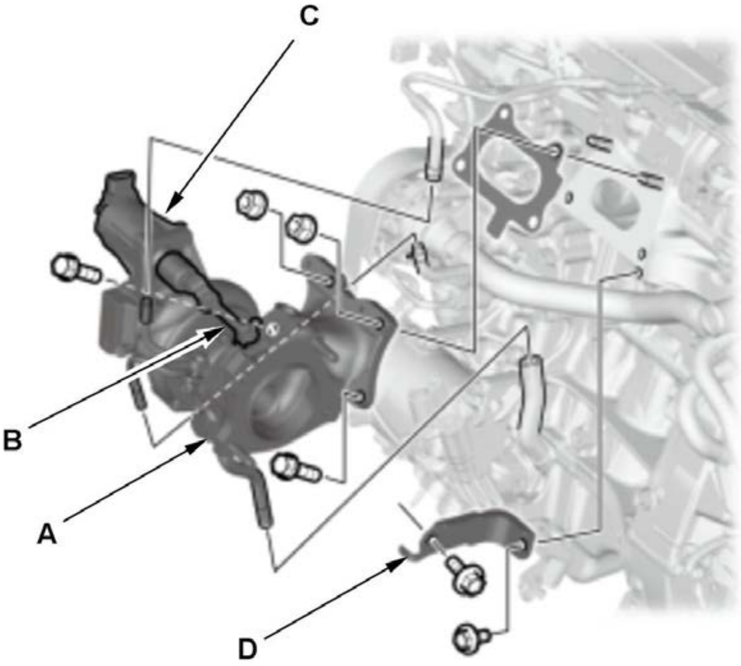	1. Remove the turbocharger (A). **NOTE:** **Do not hold the wastegate control valve rod (B) and the turbocharger wastegate control actuator (C).** 2. Remove the bracket (D).

10. Oil Return Pipe - Remove
11. Water Pipe - Remove
12. All Removed Parts - Install

1. Install the parts in the reverse order of removal.

13. Hose Band - Precaution

Note for installation

NOTE: Make sure the end of the hose band (A) is at or within the hash mark (B) on the hose band after the parts are installed.

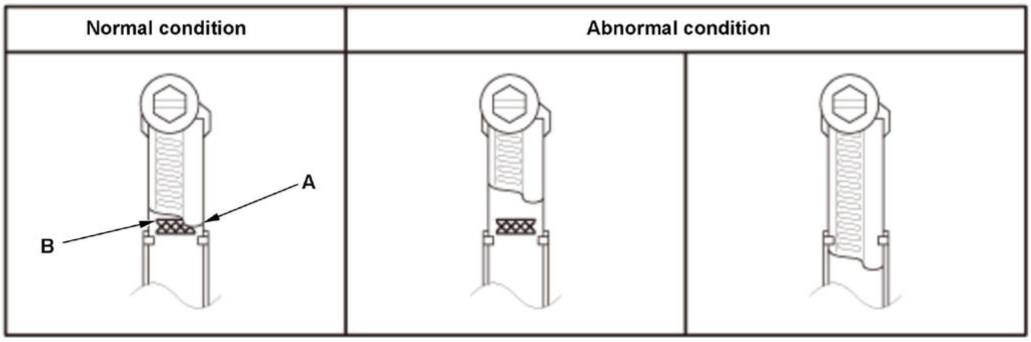

14. Engine Oil Level - Check

Procedure After Replacing Turbocharger

15. PCM - Reset
16. PCM Idle - Learn

REMOVAL AND INSTALLATION

EXHAUST PIPE AND MUFFLER REMOVAL AND INSTALLATION

Removal and Installation

NOTE: Although a numbered sequence is shown, exhaust pipe A and the muffler are two separate components. If removal or replacement of one of the components is needed, it is not necessary to remove the other.

Procedure

NOTE: **Numbered call-outs in figure pertain to list numbers in following procedure.**

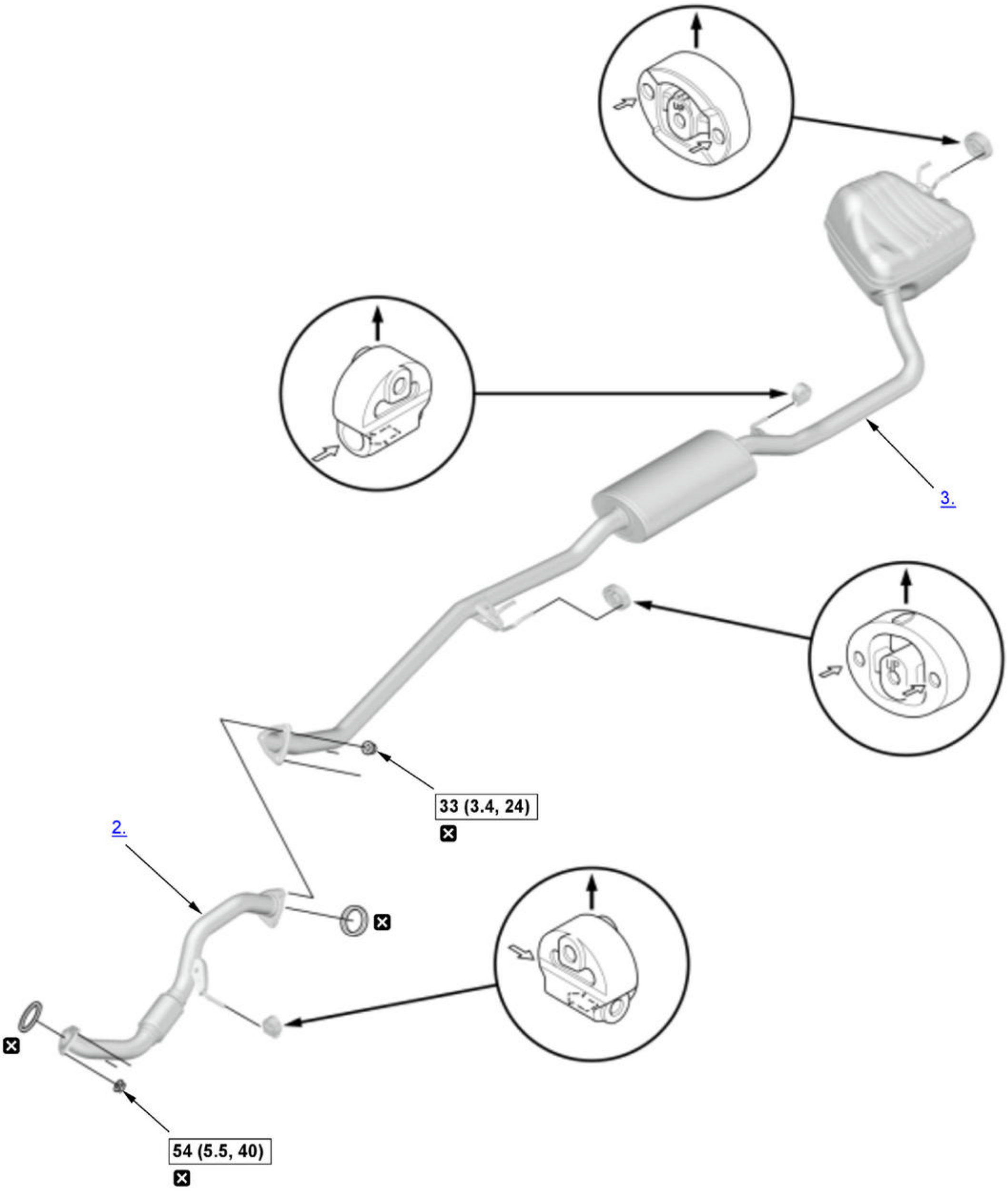

Fig. 1: Exploded View Of Exhaust Pipe And Muffler Replacement Components With Torque

Specifications
Courtesy of HONDA, U.S.A., INC.

☐	Torque: N.m (kgf.m, lbf.ft)
☒	Replace

1. **Engine Undercover - Remove**

   NOTE: Remove the necessary part(s).

2. Exhaust Pipe A - Remove
3. Muffler - Remove
4. All Removed Parts - Install

   1. Install the parts in the reverse order of removal.

INSPECTION

TURBOCHARGER BYPASS CONTROL VALVE INSPECTION (1.5 L ENGINE)

Special Tools Required

Image	Description/Tool Number
	Vacuum Pump/Gauge, 0-30 in Hg Snap-on YA4000A or equivalent, commercially available

Inspection

1. Turbocharger Bypass Control Valve - Inspect

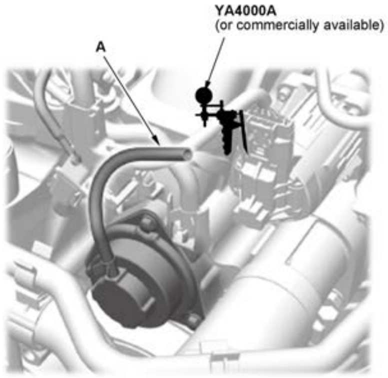	1. Disconnect the vacuum hose (A). 2. Connect the vacuum pump/gauge, 0-30 in Hg, to the vacuum hose. Apply vacuum to the turbocharger bypass control valve. Make sure the turbocharger bypass control valve moves. If the valve does not move, replace the turbocharger joint .

COMPONENT LOCATION INDEX

INTAKE AIR SYSTEM AND EXHAUST SYSTEM COMPONENT LOCATION INDEX (1.5 L ENGINE)

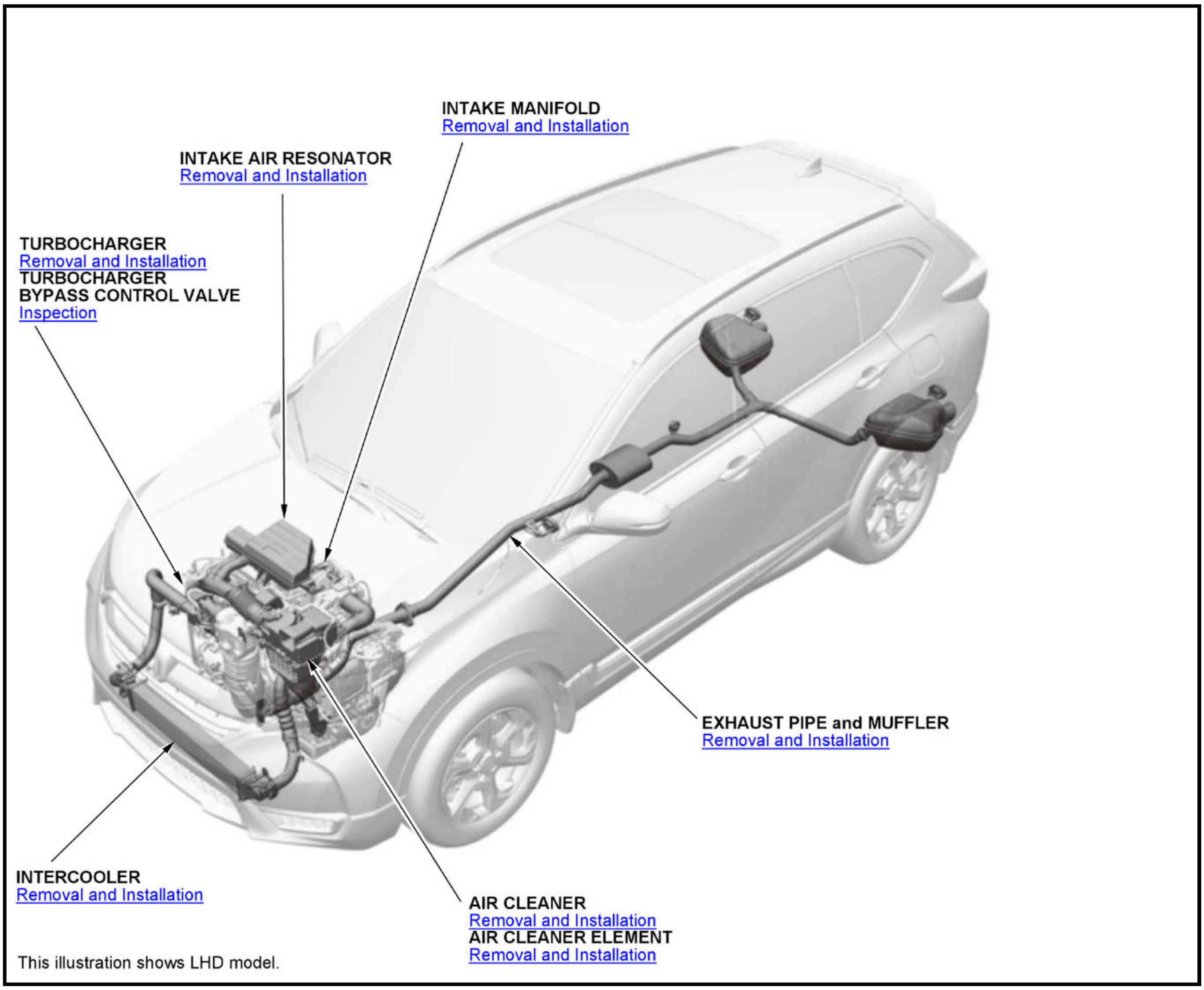
INTAKE MANIFOLD
Removal and Installation
INTAKE AIR RESONATOR
Removal and Installation
TURBOCHARGER
Removal and Installation
TURBOCHARGER
BYPASS CONTROL VALVE
Inspection
EXHAUST PIPE and MUFFLER
Removal and Installation
INTERCOOLER
Removal and Installation
AIR CLEANER
Removal and Installation
AIR CLEANER ELEMENT
Removal and Installation
This illustration shows LHD model.

SYMPTOM TROUBLESHOOTING INDEX

INTAKE AIR SYSTEM AND EXHAUST SYSTEM SYMPTOM TROUBLESHOOTING INDEX

Symptom	Diagnostic procedure	Also check for
Engine abnormal noise while fuel cut-off control	• Check for PGM-FI DTCs . • Inspect the turbocharger bypass control valve vacuum hose for squashed or damaged. • Check the turbocharger bypass control valve.	B
Engine low power	• Check for PGM-FI DTCs . • Inspect the intercooler for foreign materials or clogged. • Inspect the intake air system for clogged. • • - Air cleaner element • - Intercooler core	B

SYMPTOM TROUBLESHOOTING INDEX FOR VIEWER

ENGINE ABNORMAL NOISE WHILE FUEL CUT-OFF CONTROL

Diagnostic procedure

- Check for PGM-FI DTCs .
- Inspect the turbocharger bypass control valve vacuum hose for squashed or damaged.
- Check the turbocharger bypass control valve.

ENGINE LOW POWER

Diagnostic procedure

- Check for PGM-FI DTCs .
- Inspect the intercooler for foreign materials or clogged.
- Inspect the intake air system for clogged.
-
    - -

      Air cleaner element
    - -

      Intercooler core

2020-22 ENGINE

Fuel & Emissions Service Specifications - CR-V (Hybrid)

FUEL & EMISSIONS

Item	Measurement	Qualification	Standard or New	Service Limit
Fuel pressure regulator	Pressure with fuel pressure gauge connected	B	380-430 kPa (3.87-4.38 kgf/cm 2, 55.1-62.4 psi)	-
Engine idle	Idle speed without load	In N or P	1, 200 +/- 50 rpm	
	Idle CO	B	0.1 % max.	

REMOVAL AND INSTALLATION

FUEL TANK REMOVAL AND INSTALLATION (KA/KC)

Removal and Installation

WARNING:

Flammable - Keep Fire Away

NOTE:

- Where icon is shown, further information shown below.
- Refer to the **Fuel and Emissions Systems Service Precautions** before disconnecting the fuel line.
- Fuel may cause flammable gas leaks and may result in fire. Keep sparks, flame and cigarettes away.

1

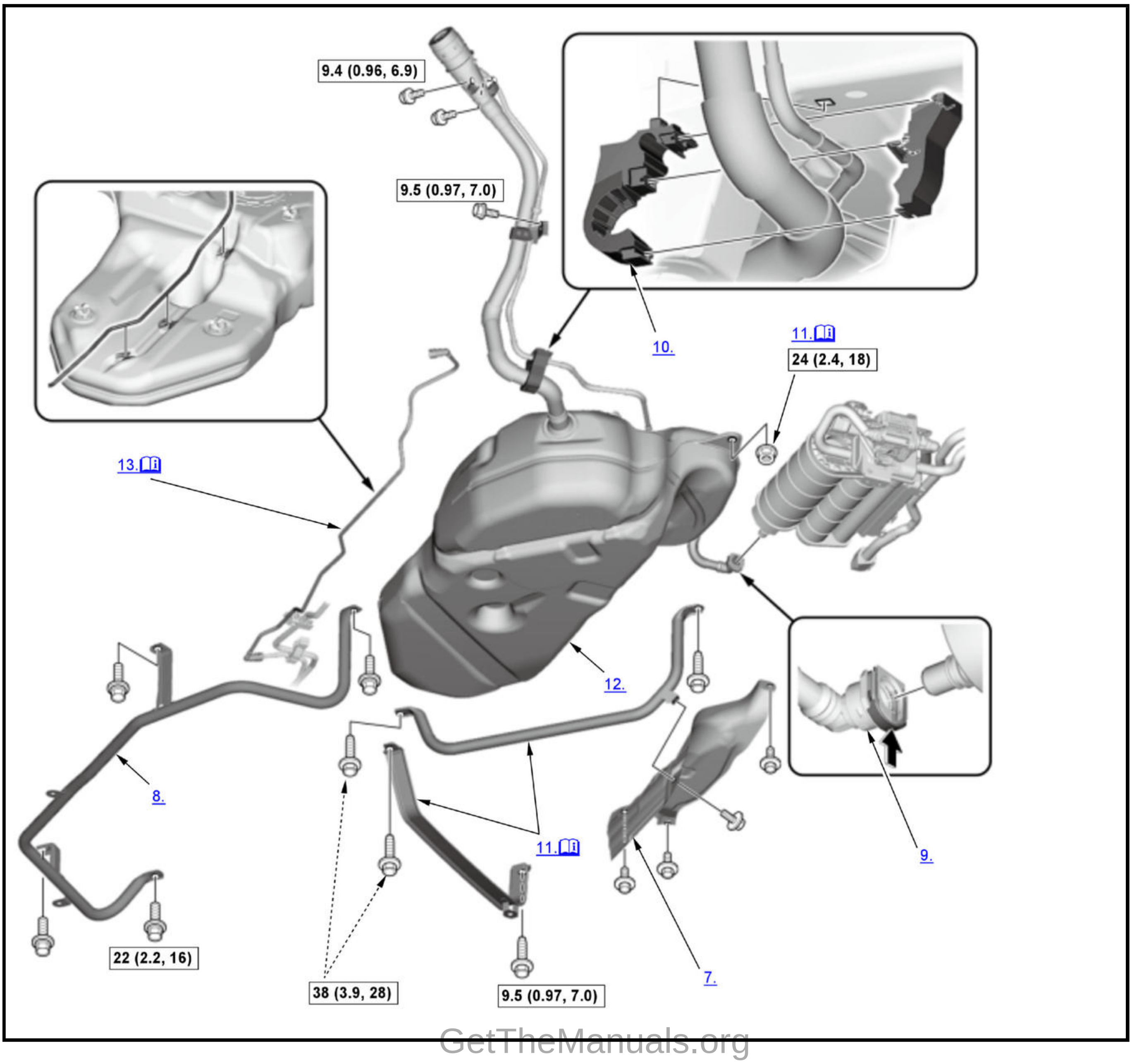
9.4 (0.96, 6.9)
9.5 (0.97, 7.0)
10.
11.
24 (2.4, 18)
13.
12.
8.
9.
11.
7.
22 (2.2, 16)
38 (3.9, 28)
9.5 (0.97, 7.0)

ℹ	Detailed information, notes and precautions
☐	Torque: N.m (kgf.m, lbf.ft)

1. Fuel Pressure - Relieve
2. Fuel Tank - Drain

1. Remove the fuel tank unit .
2. Using a hand pump, a hose, and a container suitable for fuel, draw the fuel from the fuel tank.

NOTE:

Drain the fuel tank, then reinstall the fuel tank unit without connecting the fuel tank unit connector and the quick-connect fitting.

3. Left Middle Floor Undercover - Remove
4. Propeller Shaft - Remove (AWD model)
5. Rear Inner Fender (Left Side) - Remove
6. Heat Shield - Remove
7. Fuel Tank Protector - Remove
8. Fuel Tank Guard Pipe - Remove (If Necessary)
9. EVAP Canister Line Hose - Disconnect
10. Fuel Fill Pipe Clamp - Remove
11. Fuel Tank Straps and Nut - Remove

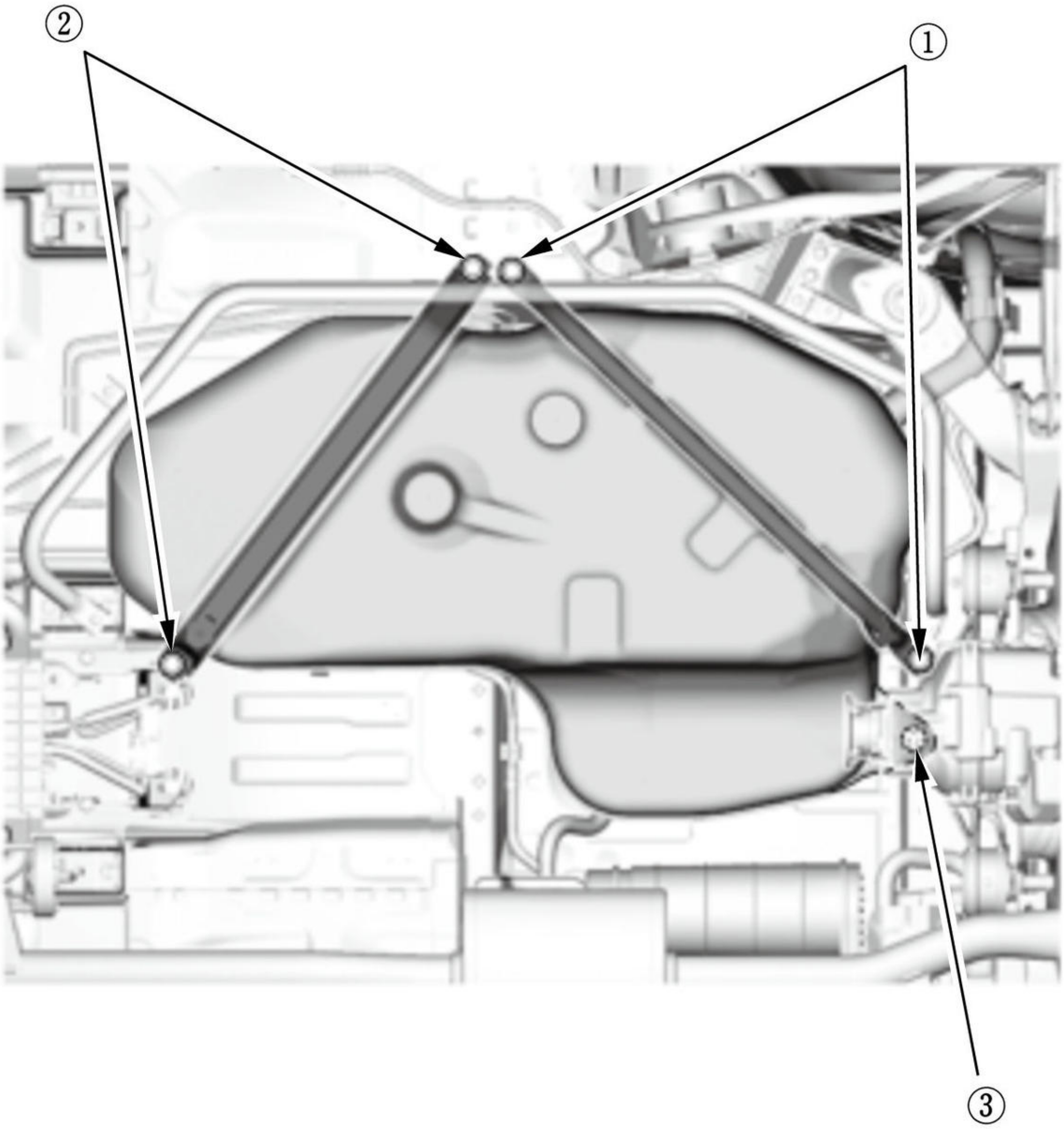

Fig. 1: Tightening Fuel Tank And Fuel Tank Straps In Sequence
Courtesy of HONDA, U.S.A., INC.

1. Place a jack or other support under the fuel tank. **Note for installation** Set the fuel tank and the fuel tank straps, and loosely install the bolts and the nut. Then tighten the bolts and nut in the numbered sequence shown in illustration.

12. Fuel Tank Assembly - Remove
13. Fuel Tube - Remove (If Necessary)

    NOTE: If necessary, refer to the following procedures.

    - Fuel Line/Quick-Connect Fitting Precautions .
    - Fuel Line Inspection .
14. All Removed Parts - Install

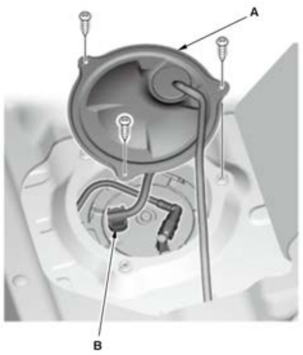	1. Install the parts in the reverse order of removal.**NOTE:** - **Check the fuel hose/tube connections** . - Before install the access panel (A), do the following fuel leak check. Connect the connector (B), then turn the vehicle to the ON mode, but do not start the engine. After the fuel pump runs for about 2 seconds, the fuel line will be pressurized. Repeat this two or three times, then check for fuel leakage.

HIGH PRESSURE FUEL PUMP REMOVAL AND INSTALLATION (1.5 L ENGINE)

Removal

WARNING:

Flammable - Keep Fire Away

NOTE: Refer to the **Fuel and Emissions Systems Service Precautions** before disconnecting the fuel line.

1. **Fuel Pressure - Relieve**
2. **Intake Air Resonator - Remove**
3. **Throttle Body - Move**

   NOTE:

   - Do not disconnect the water bypass hoses.
   - Do not bend the water bypass hoses excessively.
4. Intake Manifold Bracket - Remove

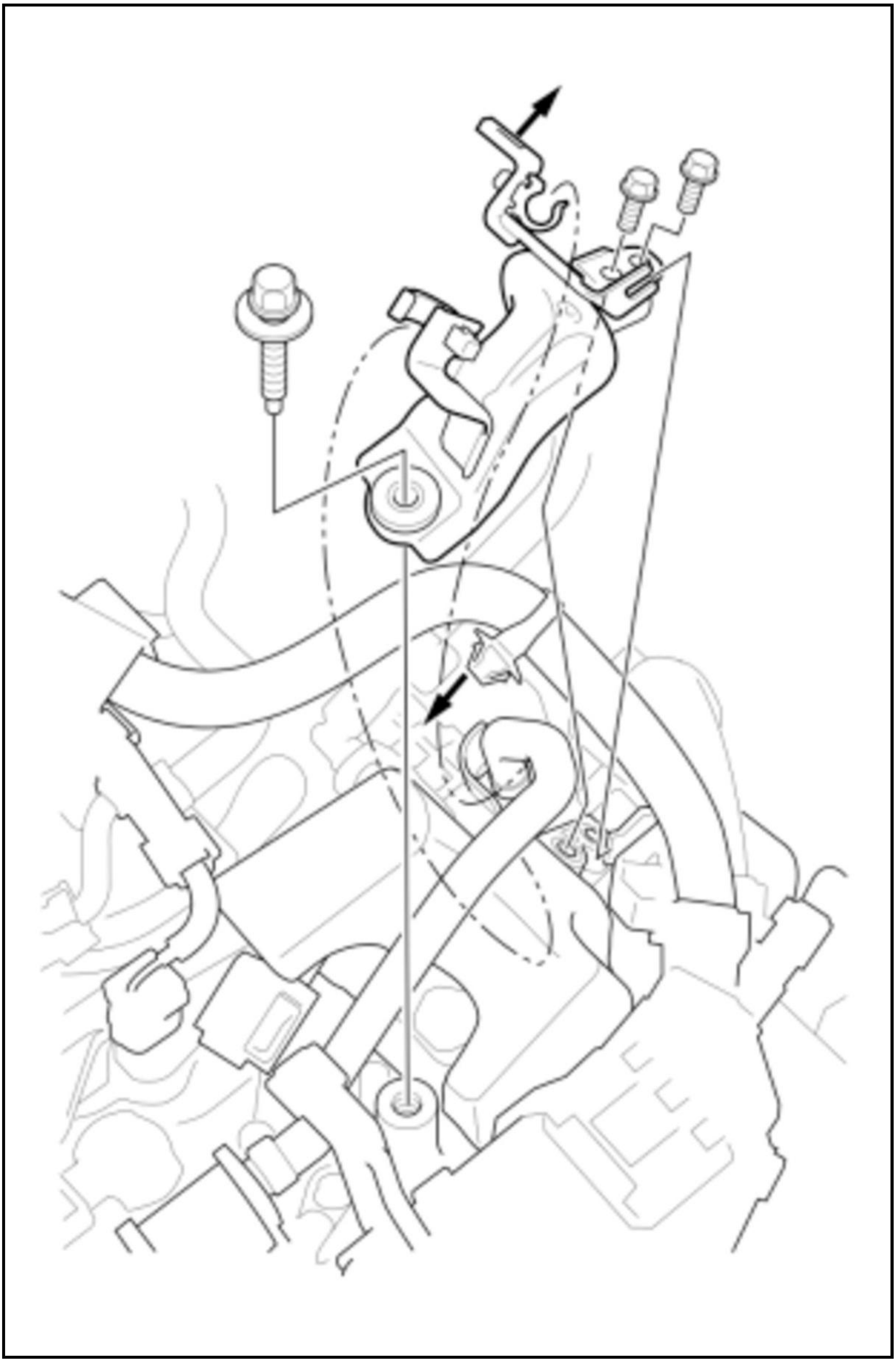

5. **Intake Manifold - Remove**

6. High Pressure Fuel Pump Cover - Remove

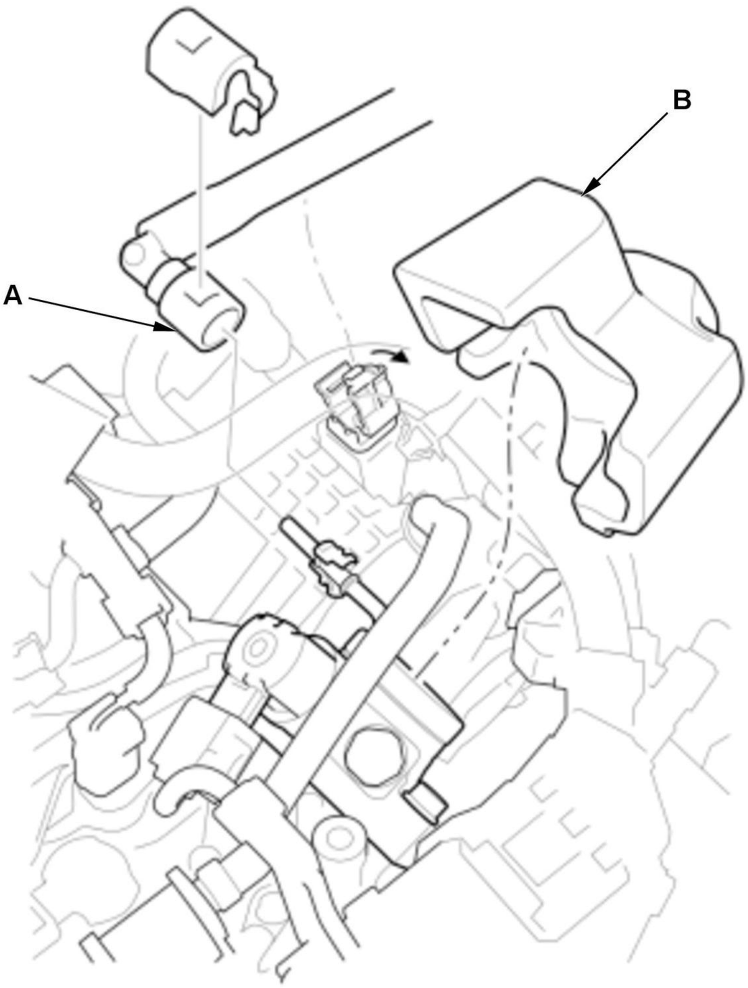	1. Disconnect the quick-connect fitting (A). 2. Remove the high pressure fuel pump cover (B).

7. Fuel Joint Pipe - Remove

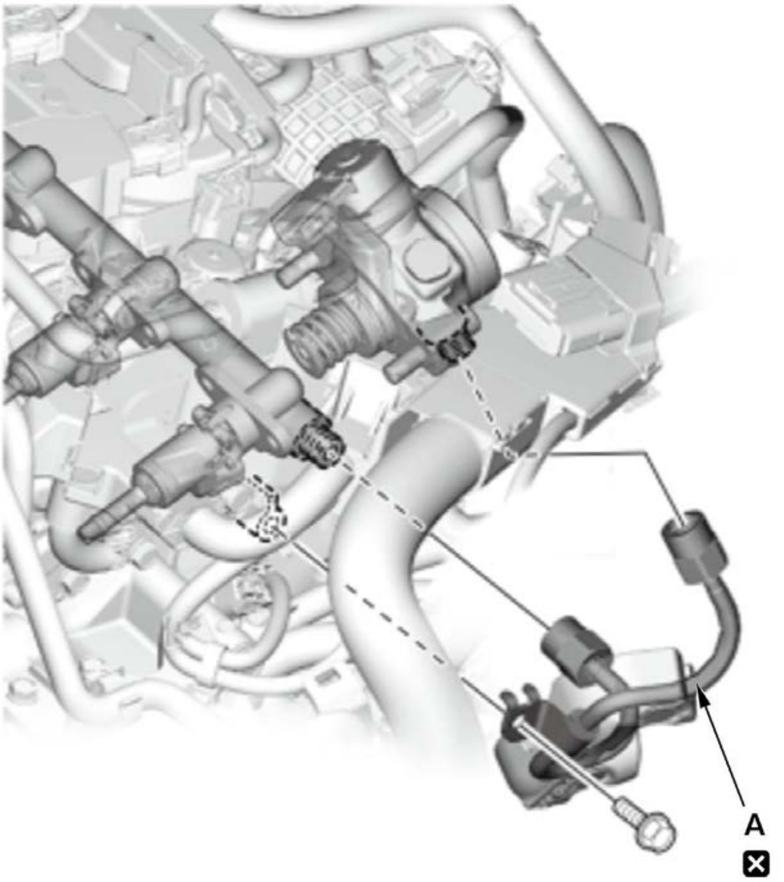	1. Remove the fuel joint pipe (A).

8. High Pressure Fuel Pump - Remove

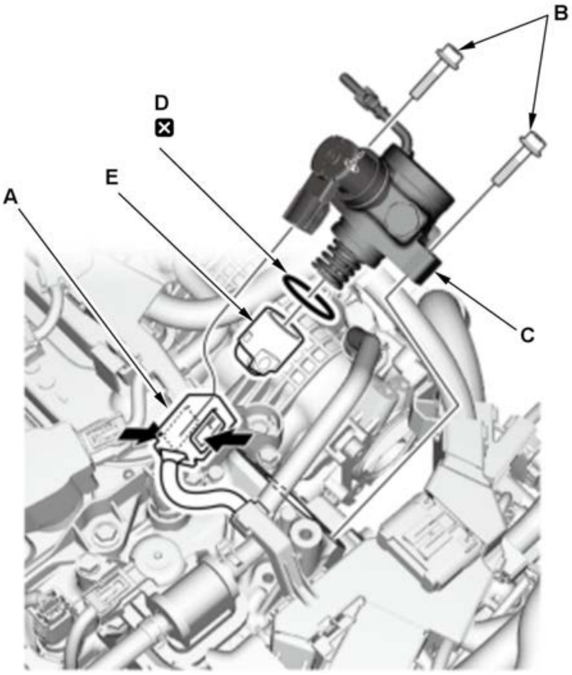	1. Disconnect the connector (A). 2. Loosen the bolts (B) alternately, and remove the high pressure fuel pump (C) with the O-ring (D), and the roller (E).

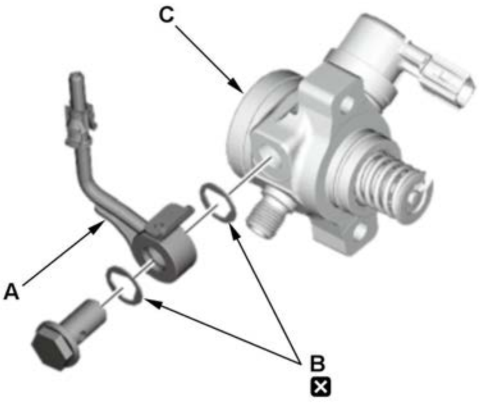	3. Remove the fuel feed pipe (A) with the sealing washers (B) from the high pressure fuel pump (C).

9. High Pressure Fuel Pump Cam - Check

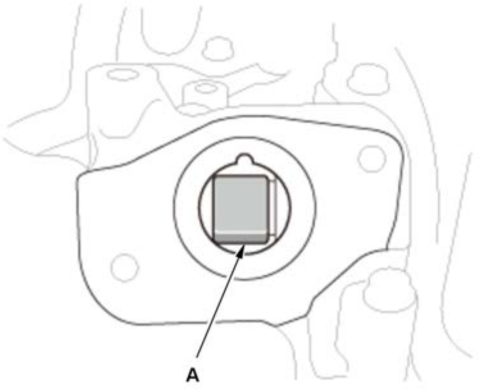	1. Rotate the crankshaft and check the high pressure fuel pump cam (A) for pits, scores, or excessive wear. If needed, **replace the intake camshaft** .

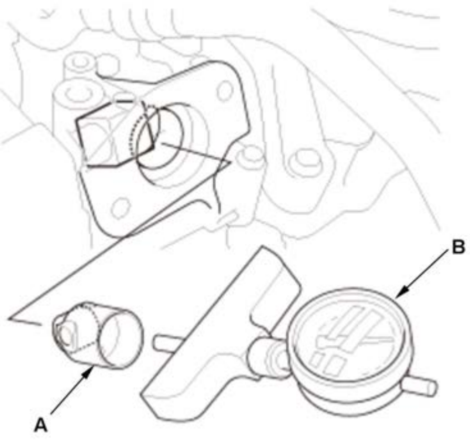	2. Set the No. 1 piston at bottom dead center (BDC). 3. Install the roller (A) to the high pressure fuel pump cam. 4. Set the gauge (B) on the roller and hold it, then set the dial to zero. 5. Rotate the crankshaft 720 deg. and measure the four cam lobes height. If the cam lobes are excessive worn, **replace the intake camshaft** .**NOTE:** The high pressure fuel pump cam has four cam lobes.**Cam Lobe Height Standard (New): 0.146 in (3.7 mm)**

Installation

WARNING:

Flammable - Keep Fire Away

NOTE:

- **How to read the torque specifications** .
- Refer to the **Fuel and Emissions Systems Service Precautions** before disconnecting the fuel line.

1. Camshaft Timing - Set

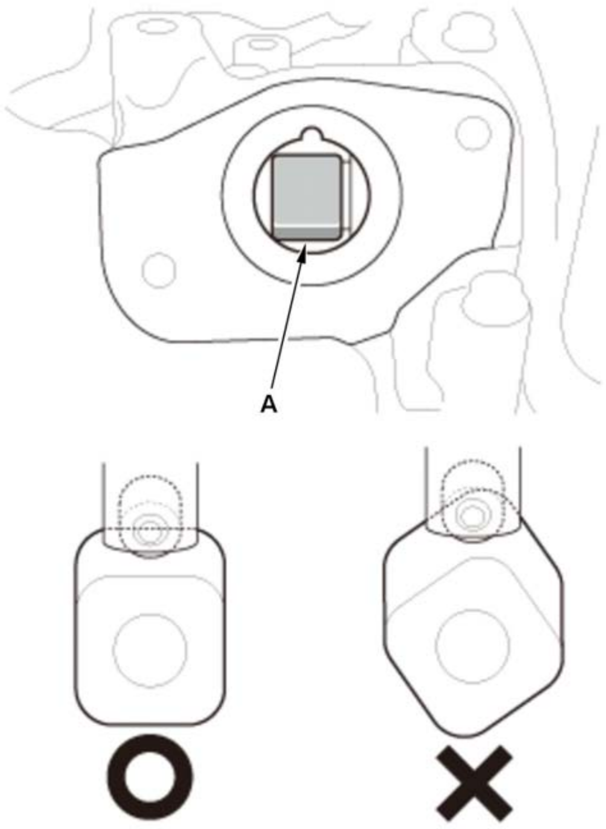	1. Check the position of the cam (A) that drives high pressure fuel pump as shown.

2. High Pressure Fuel Pump - Install

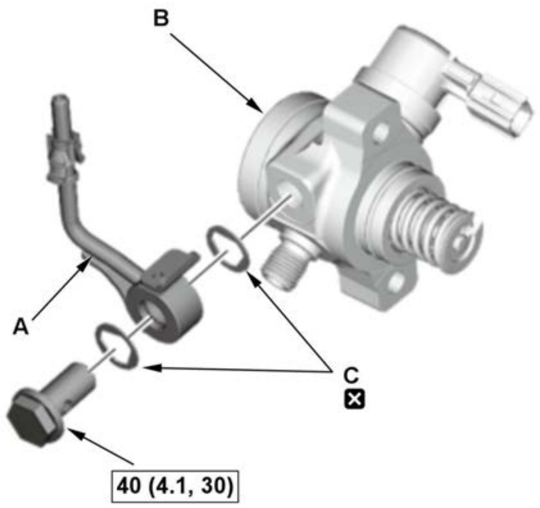	1. Install the fuel feed pipe (A) to the high pressure fuel pump (B) with new sealing washers (C).

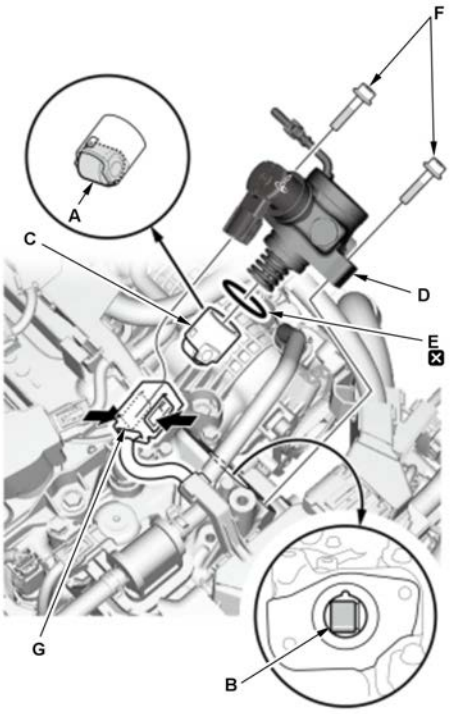

2. Coat the roller (A) and the cam (B) with clean engine oil.

3. Install the roller (C) and the high pressure fuel pump (D) with a new O-ring (E) coated with clean engine oil. Install the bolts (F) loosely by hand in an alternating pattern.

4. Connect the connector (G).

3. Fuel Joint Pipe - Install

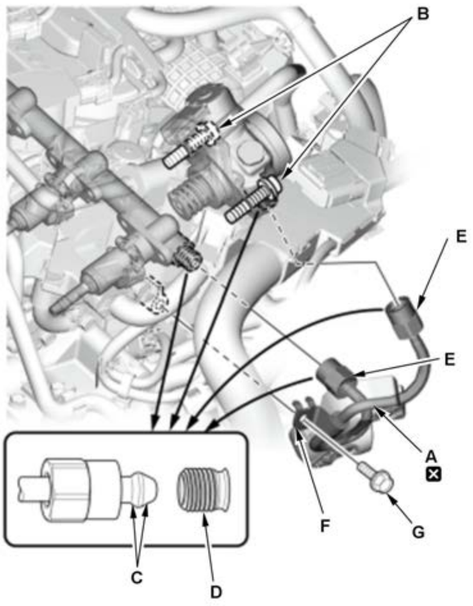

NOTE: Before you install the fuel joint pipe (A), loosen the high pressure fuel pump mounting bolts (B).

1. Lubricate the top of the new fuel joint pipe (C) and the threaded area (D) of the fuel rail and the high pressure fuel pump with polyethylene glycol of a new fuel joint pipe kit.

NOTE:

Do not reuse the fuel joint pipe.

2. Tighten the fuel joint pipe nuts (E) by hand until the end of the joint pipe is seated on the fuel rail or high pressure fuel pump.

3. Set the fuel joint pipe bracket (F) to the cylinder head, and loosely install the bolt (G).

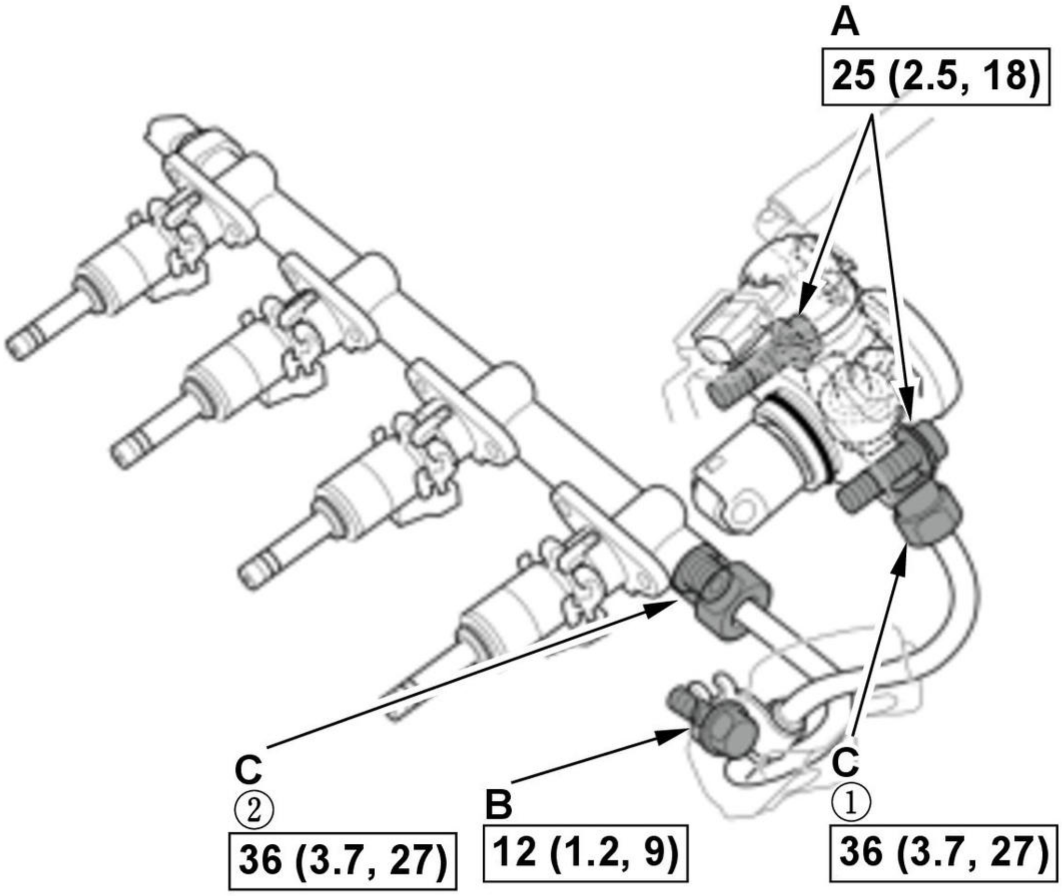

Fig. 2: Tightening Fuel Joint Pipe Nut In Sequence With Torque Specifications
Courtesy of HONDA, U.S.A., INC.

4. Tighten the high pressure fuel pump mounting bolts (A) to the specified torque.

5. Tighten the fuel joint pipe bracket mounting bolt (B) to the specified torque.

6. Tighten the fuel joint pipe nut (C) to the specified torque in the numbered sequence shown in illustration.

NOTE:

A crowfoot-type special tool increases the torque applied by the torque wrench. Refer to Service Precautions for details on how to recalculate the torque

wrench setting .

4. High Pressure Fuel Pump Cover - Install

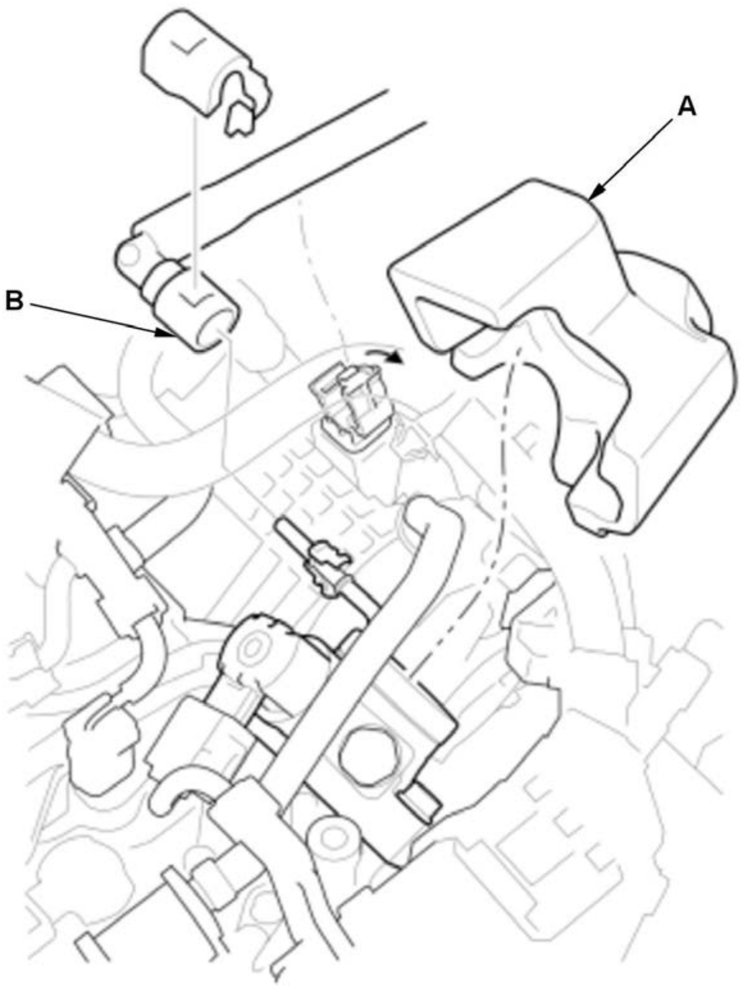	1. Install the high pressure fuel pump cover (A). **NOTE:** **The high pressure fuel pump cover will be reinstalled after the fuel leak check.** 2. Connect the quick-connect fitting (B).

5. Fuel Leak - Check

HIGH PRESSURE FUEL PUMP REMOVAL AND INSTALLATION (2.4 L ENGINE) (2017 2018 2019)

Removal

WARNING:

Flammable - Keep Fire Away

NOTE: Refer to the Fuel and Emissions Systems Service Precautions before disconnecting the fuel line.

1. Fuel Pressure - Relieve
2. Air Cleaner - Remove
3. High Pressure Fuel Pump Cover - Remove

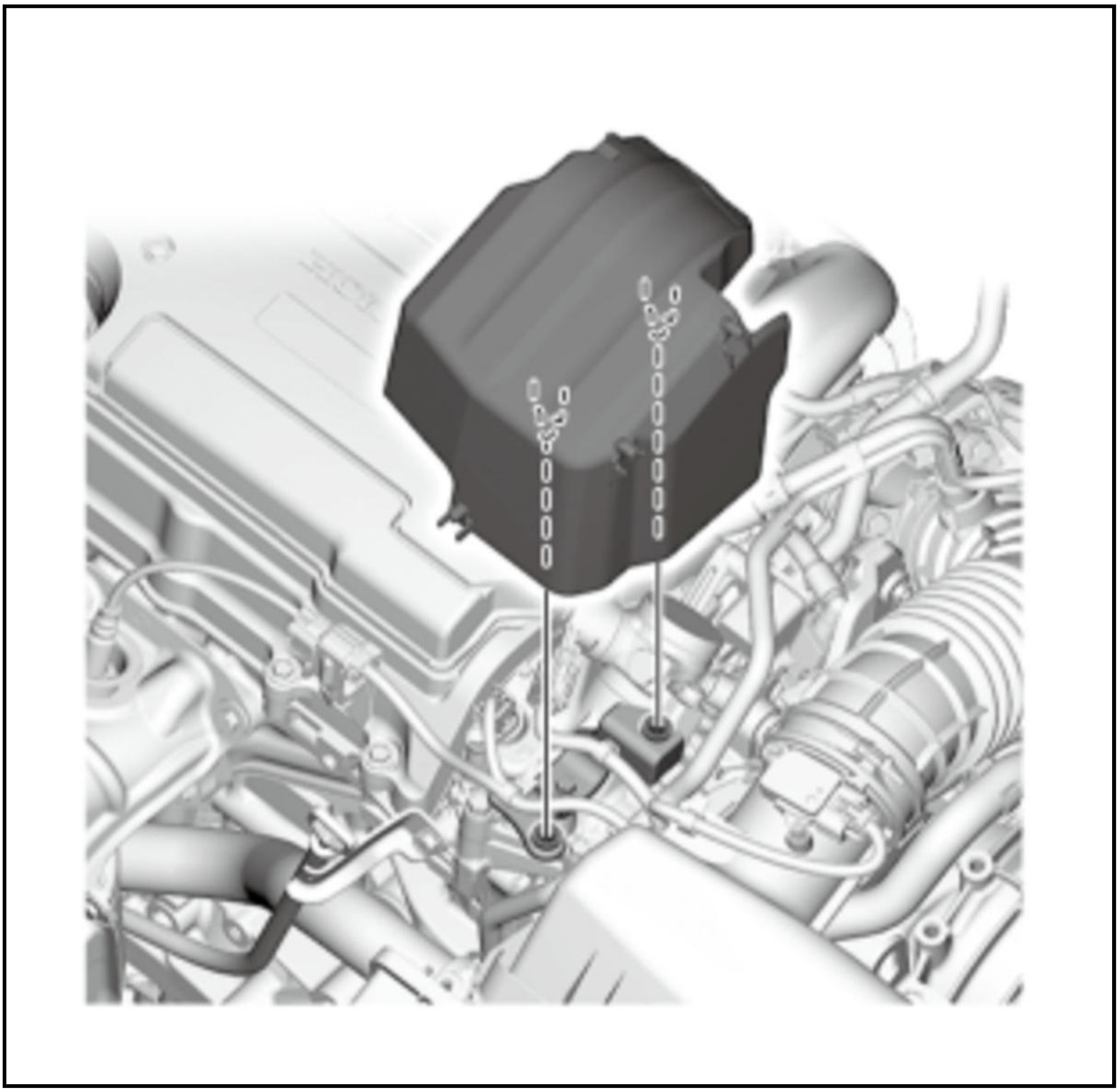

4. Fuel Bracket - Remove

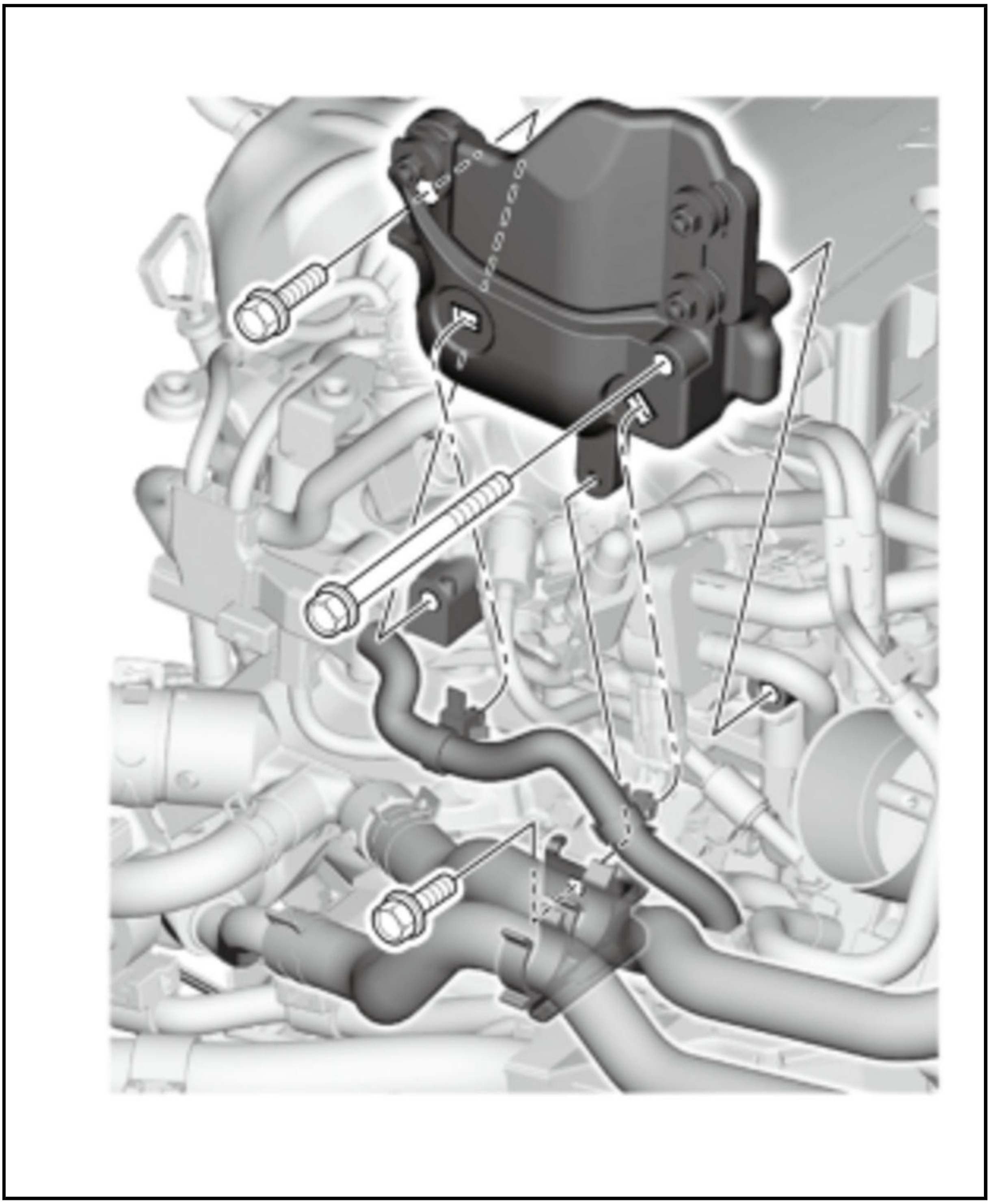

5. EVAP Canister Purge Valve - Remove
6. **Intake Manifold - Remove**
7. Fuel Joint Pipe - Remove

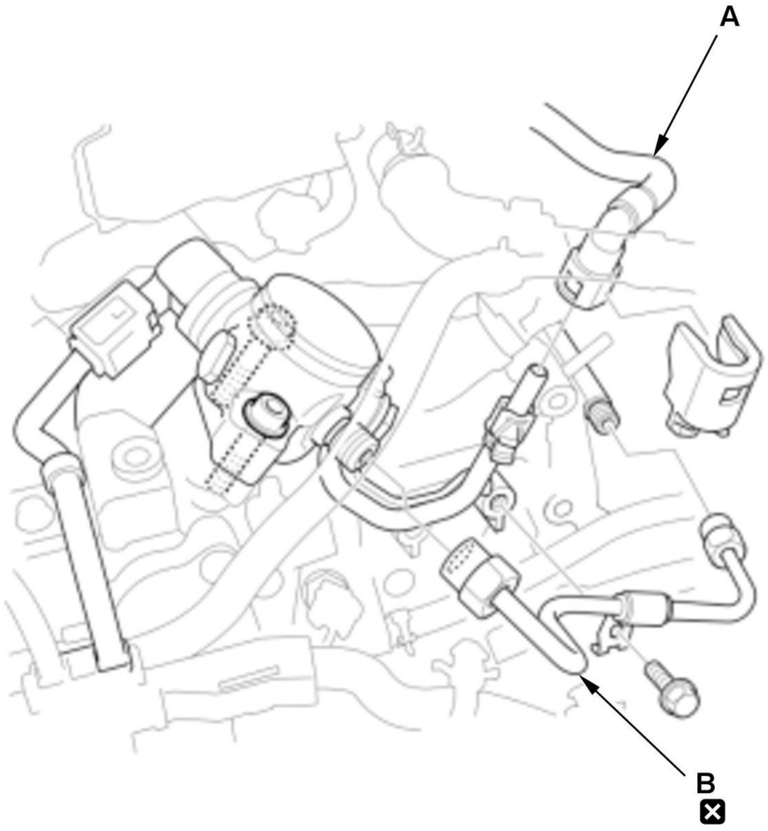	1. **Disconnect the quick-connect fitting** (A). 2. Remove the fuel joint pipe (B).

8. High Pressure Fuel Pump - Remove

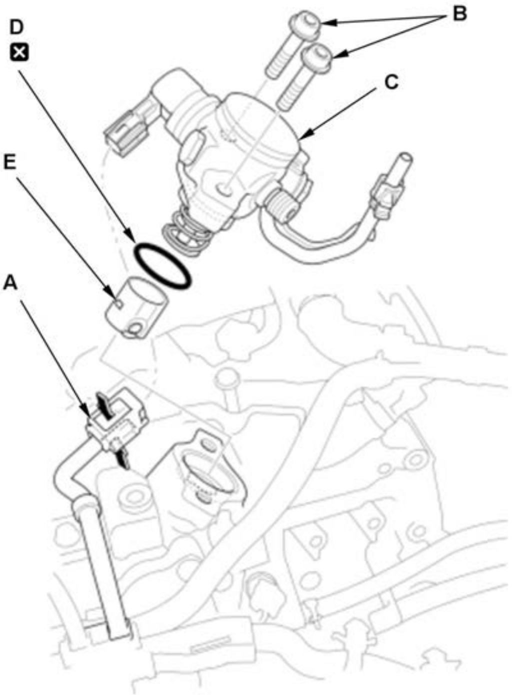	1. Disconnect the connector (A). 2. Loosen the bolts (B) alternately, and remove the high pressure fuel pump (C) with the O-ring (D), and the roller (E).

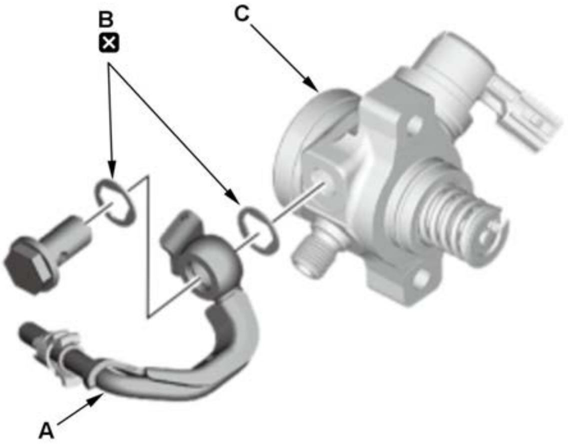	3. Remove the fuel feed pipe (A) with the sealing washers (B) from the high pressure fuel pump (C).

9. High Pressure Fuel Pump Cam - Check

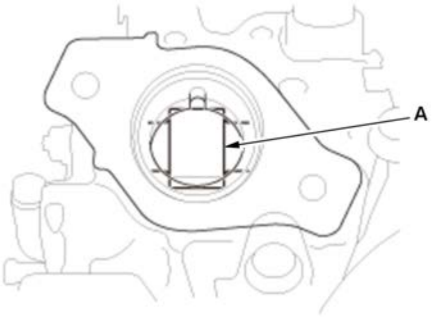	1. Rotate the crankshaft and check the high pressure fuel pump cam (A) for pits, scores, or excessive wear. If needed, replace the exhaust camshaft .

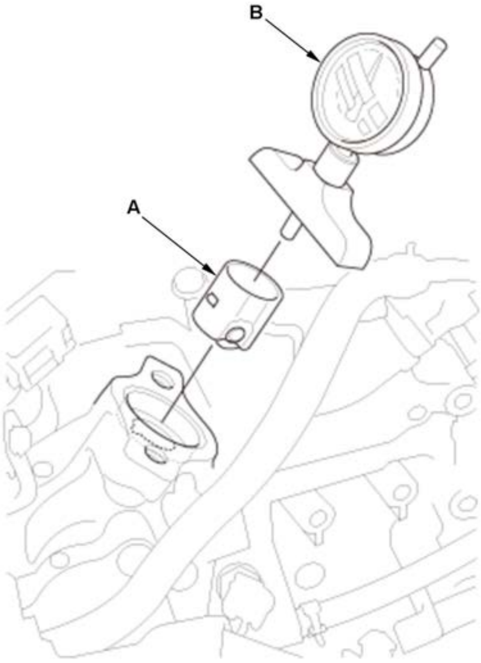	2. Set the No. 1 piston at bottom dead center (BDC). 3. Install the roller (A) to the high pressure fuel pump cam. 4. Set the gauge (B) on the roller and hold it, then set the dial to zero. 5. Rotate the crankshaft 720 deg. and measure the four cam lobes height. If the cam lobes are excessive worn, replace the exhaust camshaft **NOTE:** **The high pressure fuel pump cam has four cam lobes.Cam Lobe Height Standard (New): 4.0 mm (0.157 in)**

Installation

WARNING:

Flammable - Keep Fire Away

NOTE:

- **How to read the torque specifications** .
- Refer to the **Fuel and Emissions Systems Service Precautions** before disconnecting the fuel line.

1. Camshaft Timing - Set

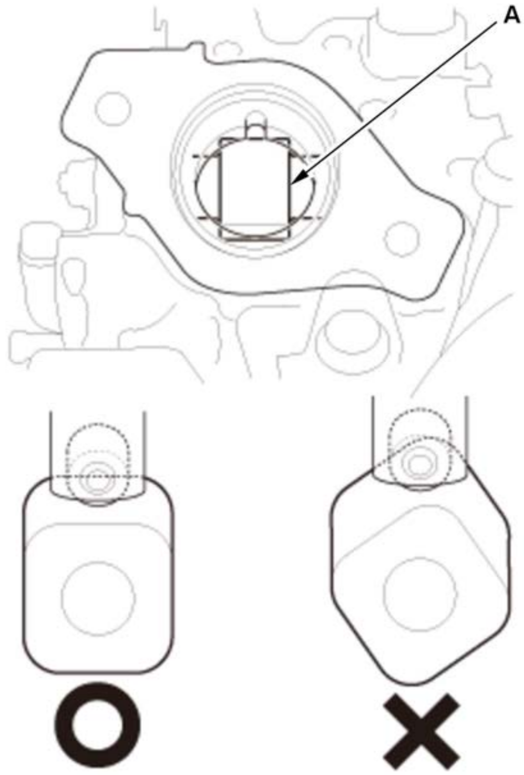	1. Check the position of the cam (A) that drives high pressure fuel pump as shown.

2. High Pressure Fuel Pump - Install

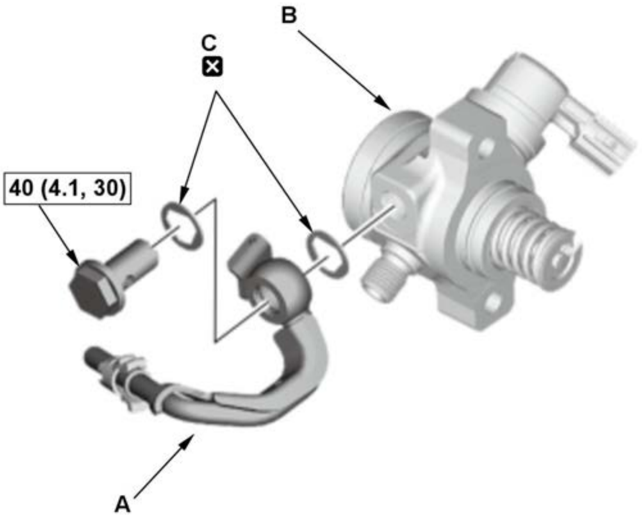	1. Install the fuel feed pipe (A) to the high pressure fuel pump (B) with new sealing washers (C).

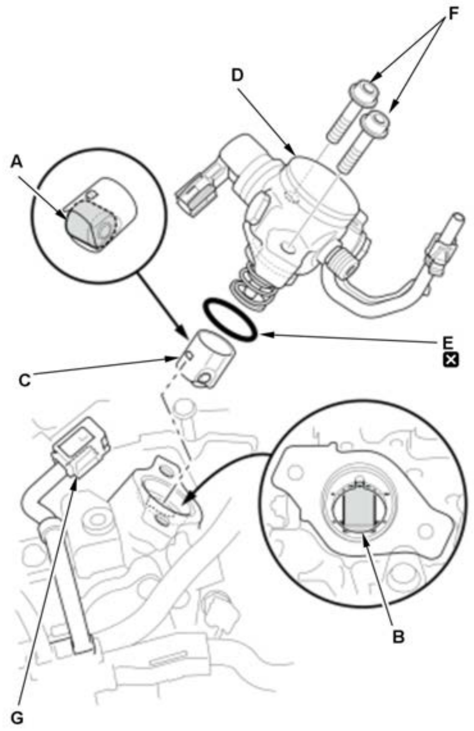

2. Coat the roller (A) and the cam (B) with clean engine oil.

3. Install the roller (C) and the high pressure fuel pump (D) with a new O-ring (E) coated with clean engine oil. Install the bolts (F) loosely by hand in an alternating pattern.

4. Connect the connector (G).

3. Fuel Joint Pipe - Install

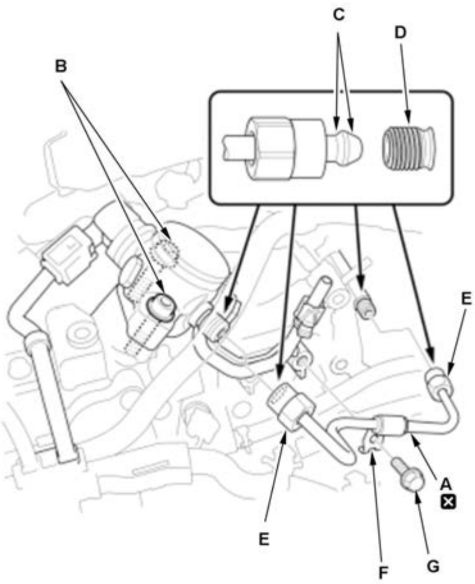

NOTE:

Before you install the fuel joint pipe (A), loosen the high pressure fuel pump mounting bolts (B).

1. Lubricate the top of the new fuel joint pipe (C) and the threaded area (D) of the fuel rail and the high pressure fuel pump with polyethylene glycol of a new fuel joint pipe kit.

NOTE:

Do not reuse the fuel joint pipe.

2. Tighten the fuel joint pipe nuts (E) by hand until the end of the joint pipe is seated on the fuel rail or high pressure fuel pump.

3. Set the fuel joint pipe bracket (F) to the cylinder head, and loosely install the bolt (G).

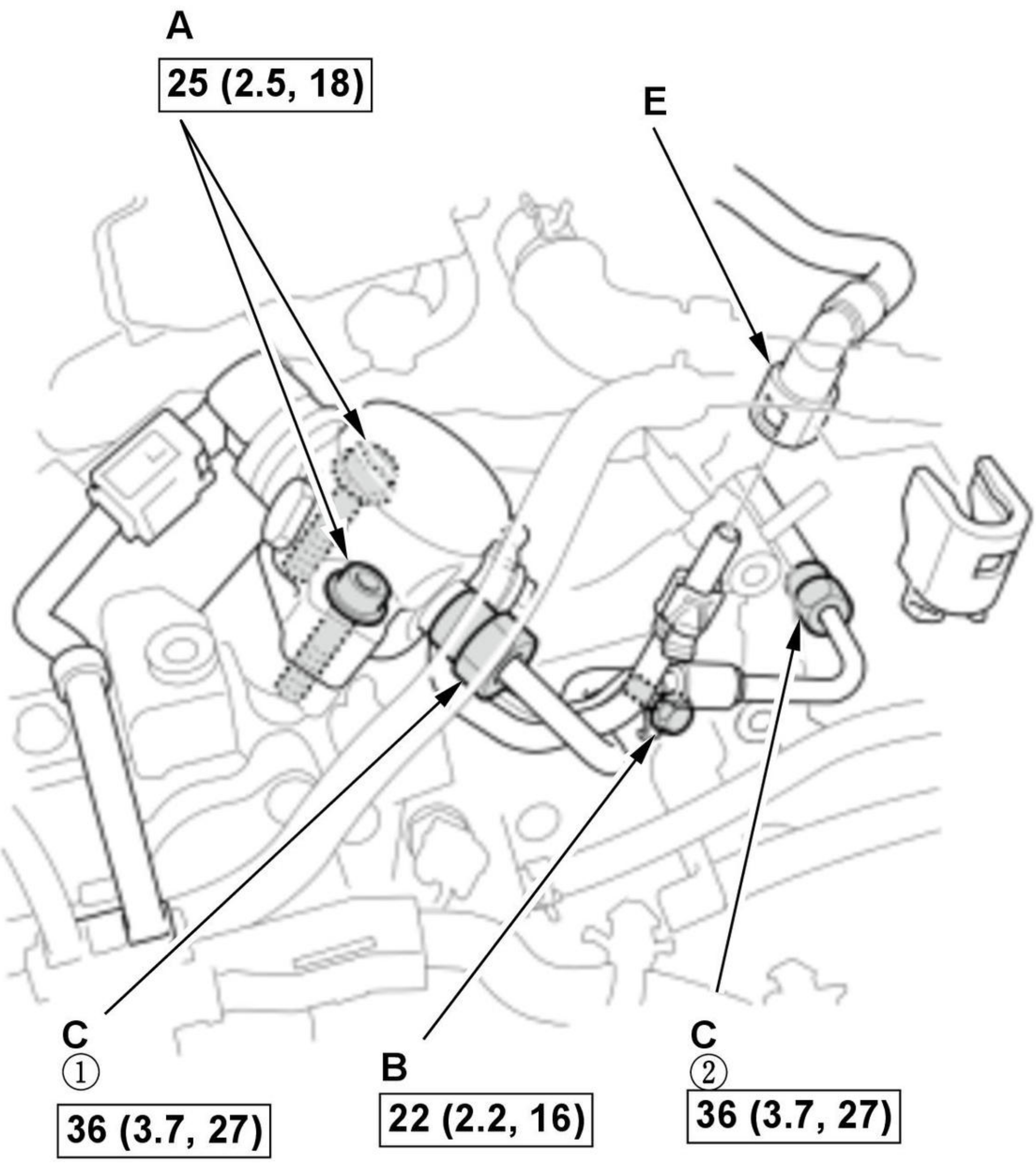

Fig. 3: Tightening Fuel Joint Pipe Nut In Sequence With Torque Specifications
Courtesy of HONDA, U.S.A., INC.

4. Tighten the high pressure fuel pump mounting bolts (A) to the specified torque.

5. Tighten the fuel joint pipe bracket mounting bolt (B) to the specified torque.

6. Tighten the fuel joint pipe nut (C) to the specified torque in the numbered sequence shown.

NOTE:

A crowfoot-type special tool increases the torque applied by the torque

wrench. Refer to Service Precautions for details on how to recalculate the torque wrench setting **.**

7. Connect the quick-connect fitting **(E).**

4. EVAP Canister Purge Valve - Install
5. Fuel Bracket - Remove

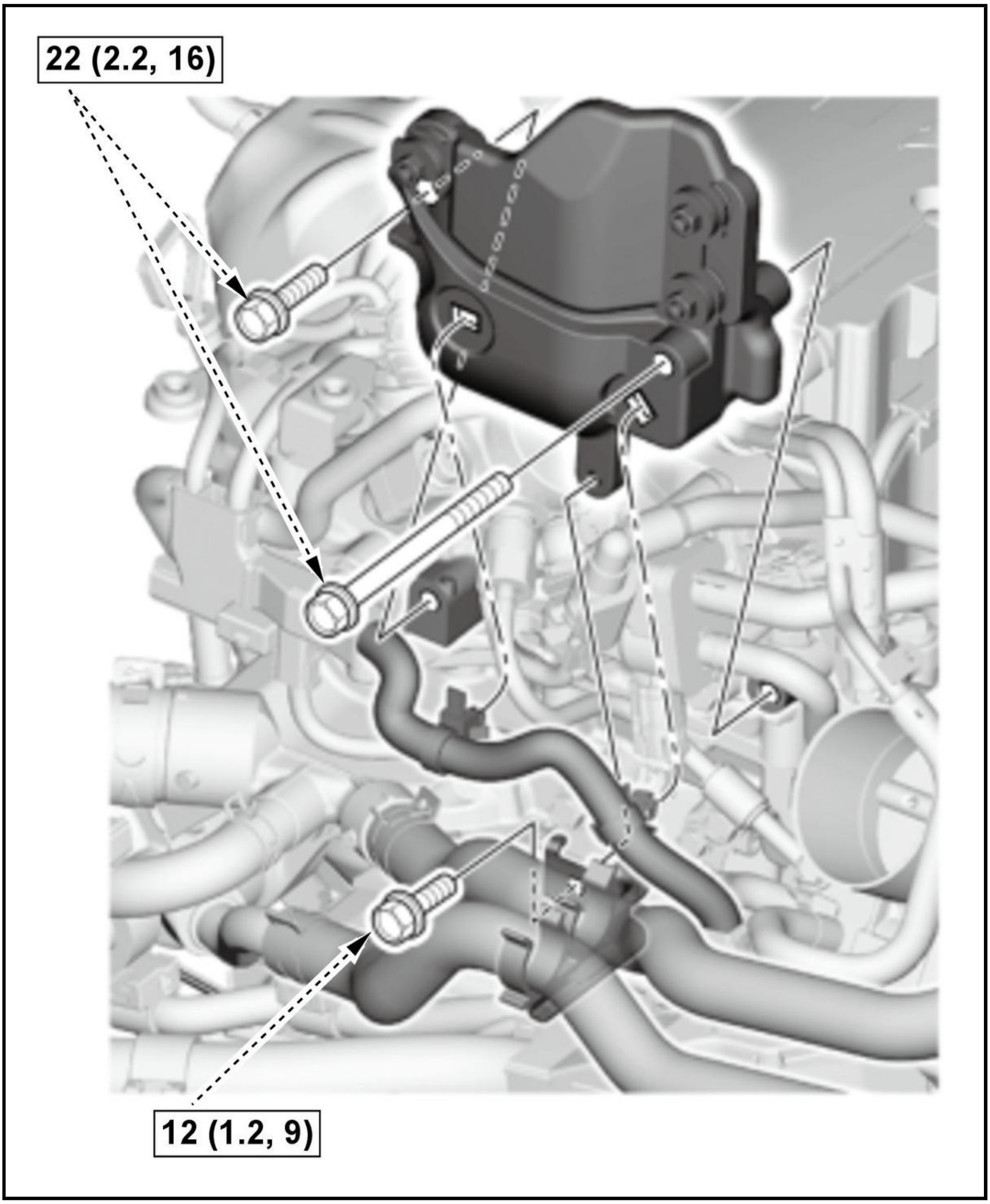

6. **Fuel Leak - Check**

MIS-FUEL INHIBIT DEVICE REMOVAL AND INSTALLATION (KA/KC)

Removal and Installation

WARNING:

Flammable - Keep Fire Away

NOTE:

- Refer to the **Fuel and Emissions Systems Service Precautions** before disconnecting the fuel line.
- Fuel may cause flammable gas leaks and may result in fire. Keep sparks, flame and cigarettes away.

1. **Fuel Fill Door Adapter - Remove**
2. Mis-Fuel Inhibit Device - Remove

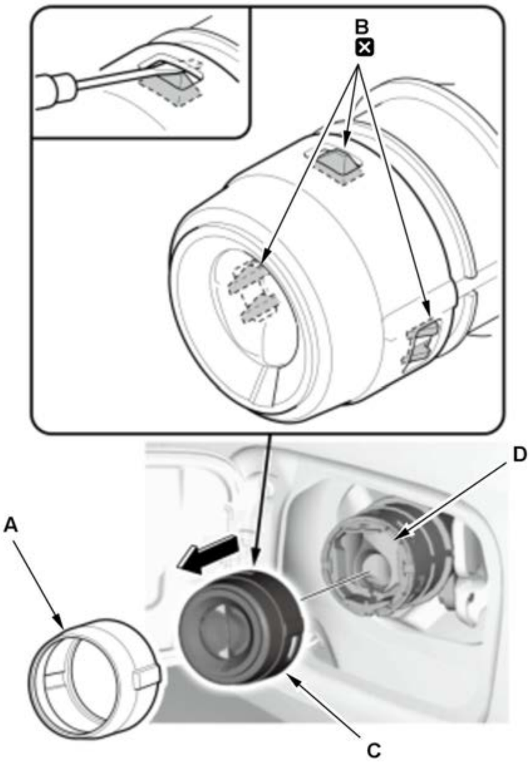	1. Pull out the rubber cover (A). 2. Insert a small tip screwdriver into the 3 lock tabs (B) and lift up to release the mis-fuel inhibit device (C). **NOTE:** - **Be careful not to damage the fuel fill pipe or the fuel fill pipe top side surface (D).** - **Never reuse the mis-fuel inhibit device.**

3. Nozzle Setting Bracket - Remove

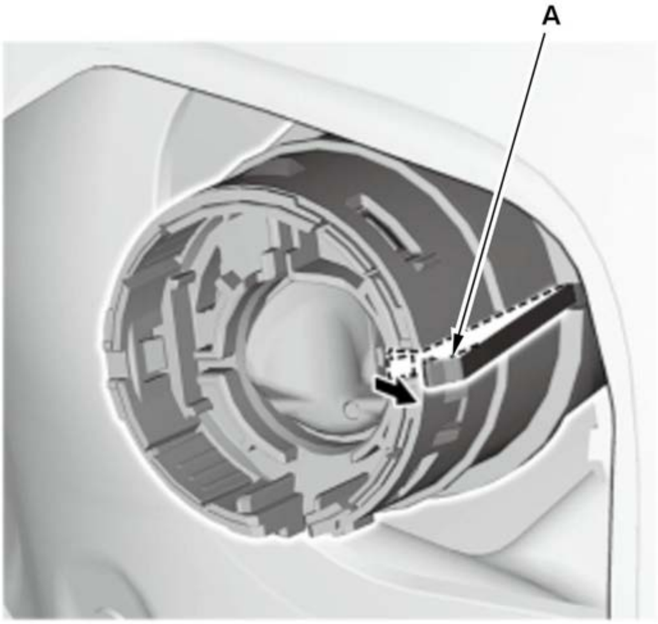	1. Disengage the retainer (A) towards the direction show.

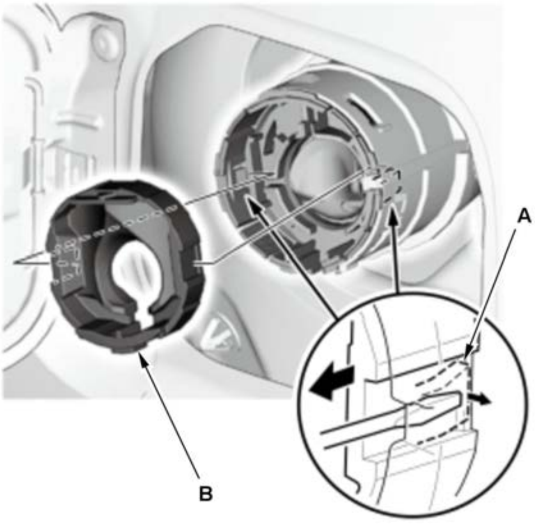 	2. Using a small tip screwdriver, insert it into the slots to disengage the tabs (A) while pulling the nozzle setting bracket (B).

4. Main Flap Unit - Remove

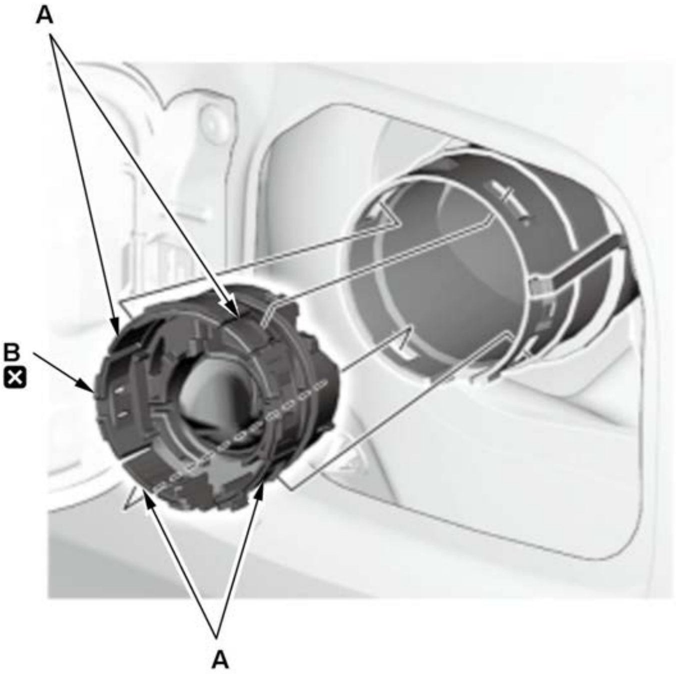 	1. Fold in the four lock tabs (A) and pull the main flap unit (B). **NOTE:** **It may be necessary to lightly pry under main flap unit. Be careful not to damage the full fill pipe.**

5. All Removed Parts - Install

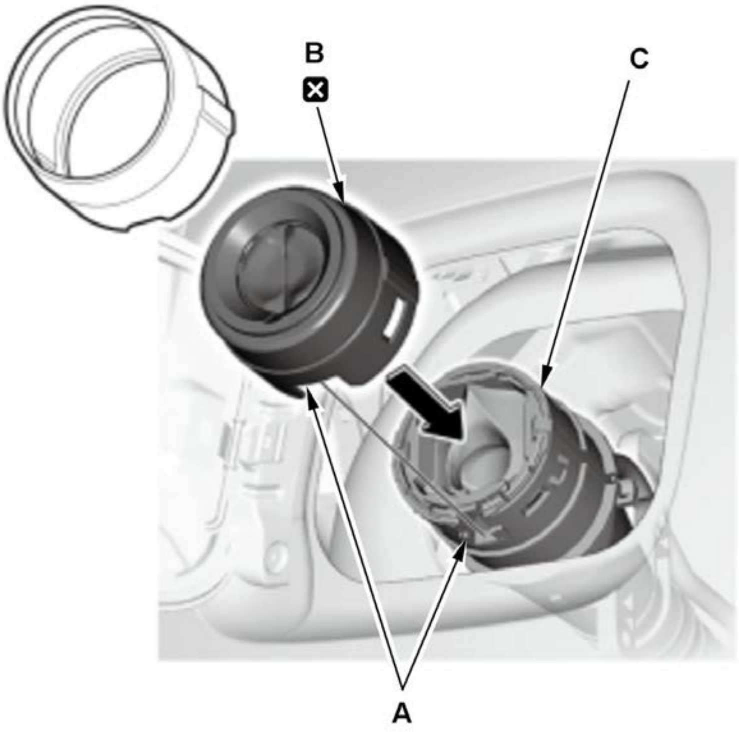

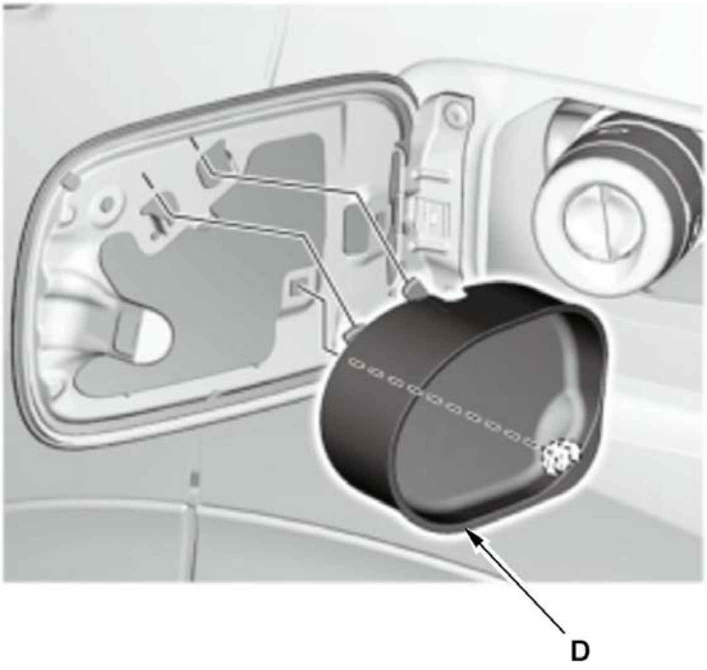

1. Install the parts in the reverse order of removal.

NOTE:

- **Align the part (A) on the mis-fuel inhibit device (B) and the fuel fill pipe (C).**
- **If needed, replace the cover (D).**

REMOVAL AND INSTALLATION

FUEL PULSATION DAMPER REMOVAL AND INSTALLATION

Removal and Installation

WARNING:

Flammable - Keep Fire Away

NOTE:

- Refer to the Fuel and Emissions Systems Service Precautions before disconnecting the fuel line.
- Fuel may cause flammable gas leaks and may result in fire. Keep sparks, flame and cigarettes away.

Procedure

NOTE: Numbered call-outs in figure pertain to list numbers in following procedure.

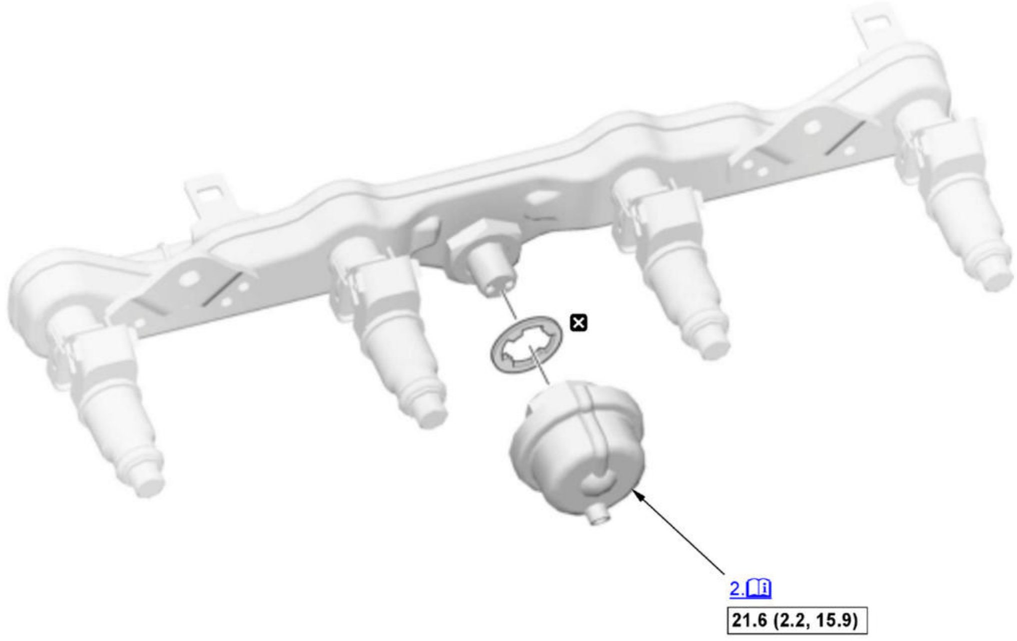

Fig. 1: Fuel Pulsation Damper Replacement Components With Torque Specifications
Courtesy of HONDA, U.S.A., INC.

☐	Torque: N.m (kgf.m, lbf.ft)
☒	Replace

1. Fuel Rail - Remove
2. Fuel Pulsation Damper - Remove

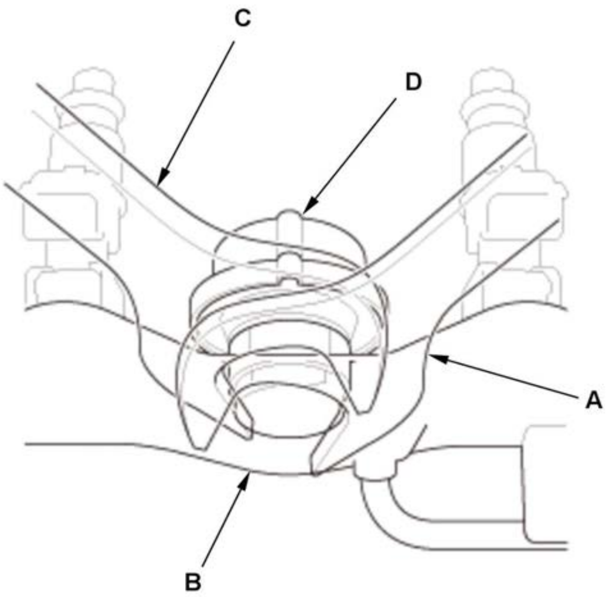 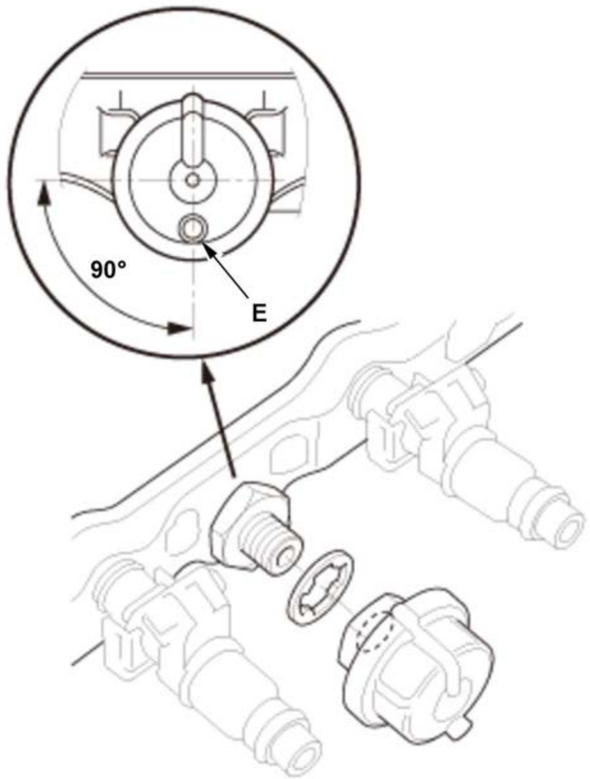	1. Place a wrench (A) on the fuel rail (B). 2. Place a wrench (C) on the fuel pulsation damper (D). 3. Fix a wrench at the fuel rail side, turn a wrench at the fuel pulsation damper side, then remove the fuel pulsation damper and the gasket. **Note for Installation** Make sure the hole of the fuel pulsation damper cap (E) is in the position of its range shown.

3. All Removed Parts - Install

1. Install the parts in the reverse order of removal.

FUEL TANK REMOVAL AND INSTALLATION

Removal and Installation

WARNING:

Flammable - Keep Fire Away

NOTE:

- Refer to the **Fuel and Emissions Systems Service Precautions** before disconnecting the fuel line.

- Fuel may cause flammable gas leaks and may result in fire. Keep sparks, flame and cigarettes away.
- Fuel tank damage may cause flammable gas leaks and may result in fire. Do not damage the fuel tank and keep sparks, flame and cigarettes away.

Procedure

NOTE: **Numbered call-outs in figure pertain to list numbers in following procedure.**

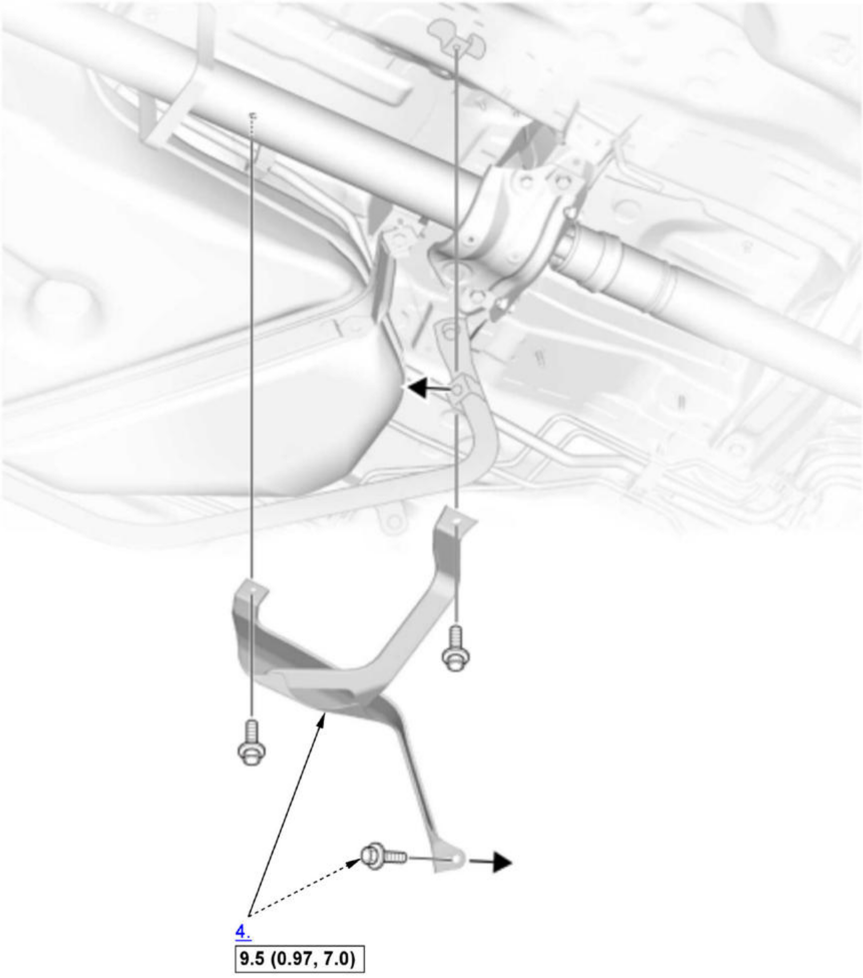

Fig. 2: Fuel Tank Replacement Components (1 Of 3)
Courtesy of HONDA, U.S.A., INC.

☐	Torque: N.m (kgf.m, lbf.ft)

NOTE: **Numbered call-outs in figure pertain to list numbers in following procedure.**

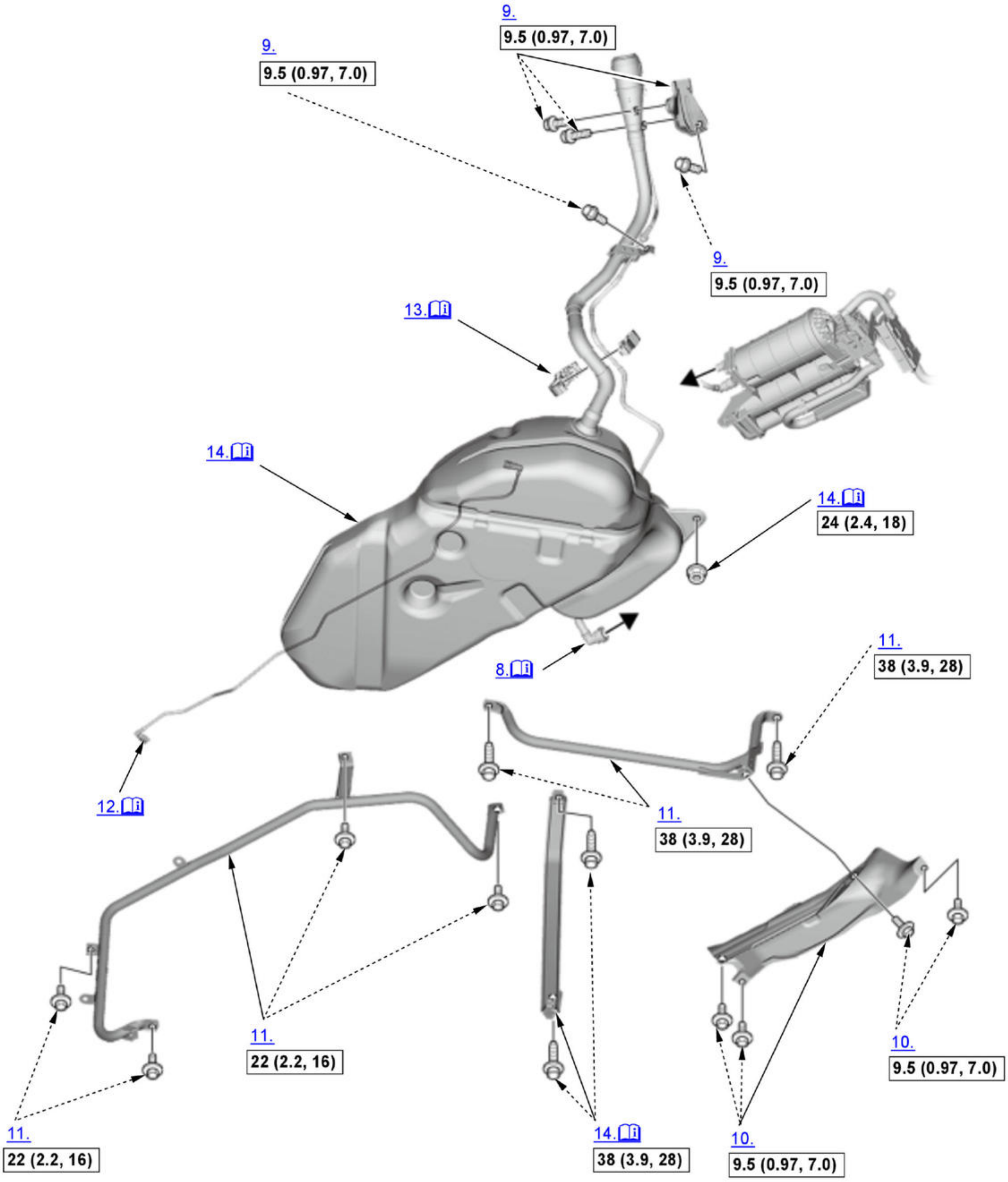
9.
9.5 (0.97, 7.0)
9.
9.5 (0.97, 7.0)
9.
9.5 (0.97, 7.0)
13.
14.
14.
24 (2.4, 18)
8.
11.
38 (3.9, 28)
12.
11.
38 (3.9, 28)
11.
22 (2.2, 16)
10.
9.5 (0.97, 7.0)
11.
22 (2.2, 16)
14.
38 (3.9, 28)
10.
9.5 (0.97, 7.0)

Fig. 3: Fuel Tank Replacement Components With Torque Specifications (2 Of 3)
Courtesy of HONDA, U.S.A., INC.

▭	Torque: N.m (kgf.m, lbf.ft)

NOTE: **Numbered call-outs in figure pertain to list numbers in following procedure.**

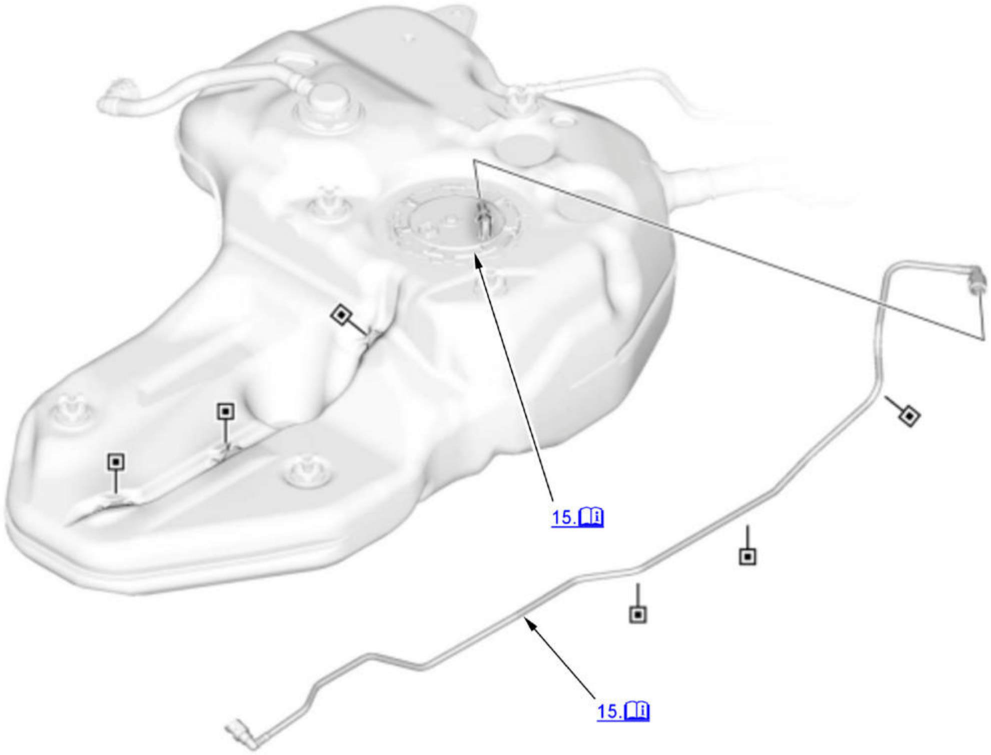

Fig. 4: Fuel Tank Replacement Components (3 Of 3)
Courtesy of HONDA, U.S.A., INC.

1. **Fuel Pressure - Relieve**
2. Fuel Tank - Drain

1. **Remove the fuel tank unit** . 2. Using a hand pump, a hose, and a container suitable for fuel, draw the fuel from the fuel tank. **NOTE:** Drain the fuel tank, then reinstall the fuel tank unit without connecting the fuel tank unit connector and the quick-connect fitting.

3. **Left Middle Floor Undercover - Remove**
4. Fuel Tank Protector (Front Side) - Remove
5. **Rear Inner Fender (Left Side) - Remove**
6. **Propeller Shaft - Remove**
7. **Heat Shield - Remove**
8. EVAP Canister Line Hose - Disconnect

   Note for Installation

   Make sure the connector is connected securely .

9. Fuel Fill Pipe Bracket - Remove
10. Fuel Tank Protector (Rear Side) - Remove

11. Fuel Tank Guard Pipe - Remove
12. Fuel Line Quick-Connect Fitting - Disconnect

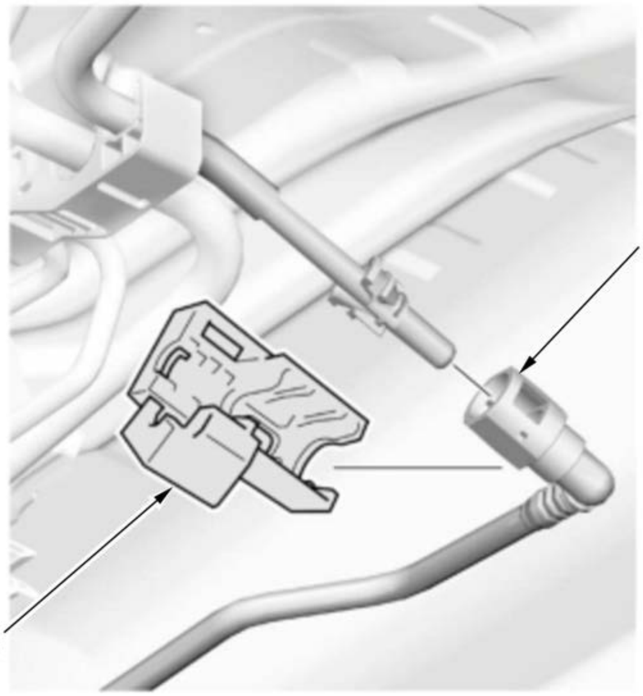	1. **Remove the quick-connect fitting cover (A)** 2. Check the fuel quick-connect fitting (B) for dirt, and clean it if needed. 3. **Disconnect the quick-connect fitting** .

13. Fuel Fill Pipe Clamp - Remove

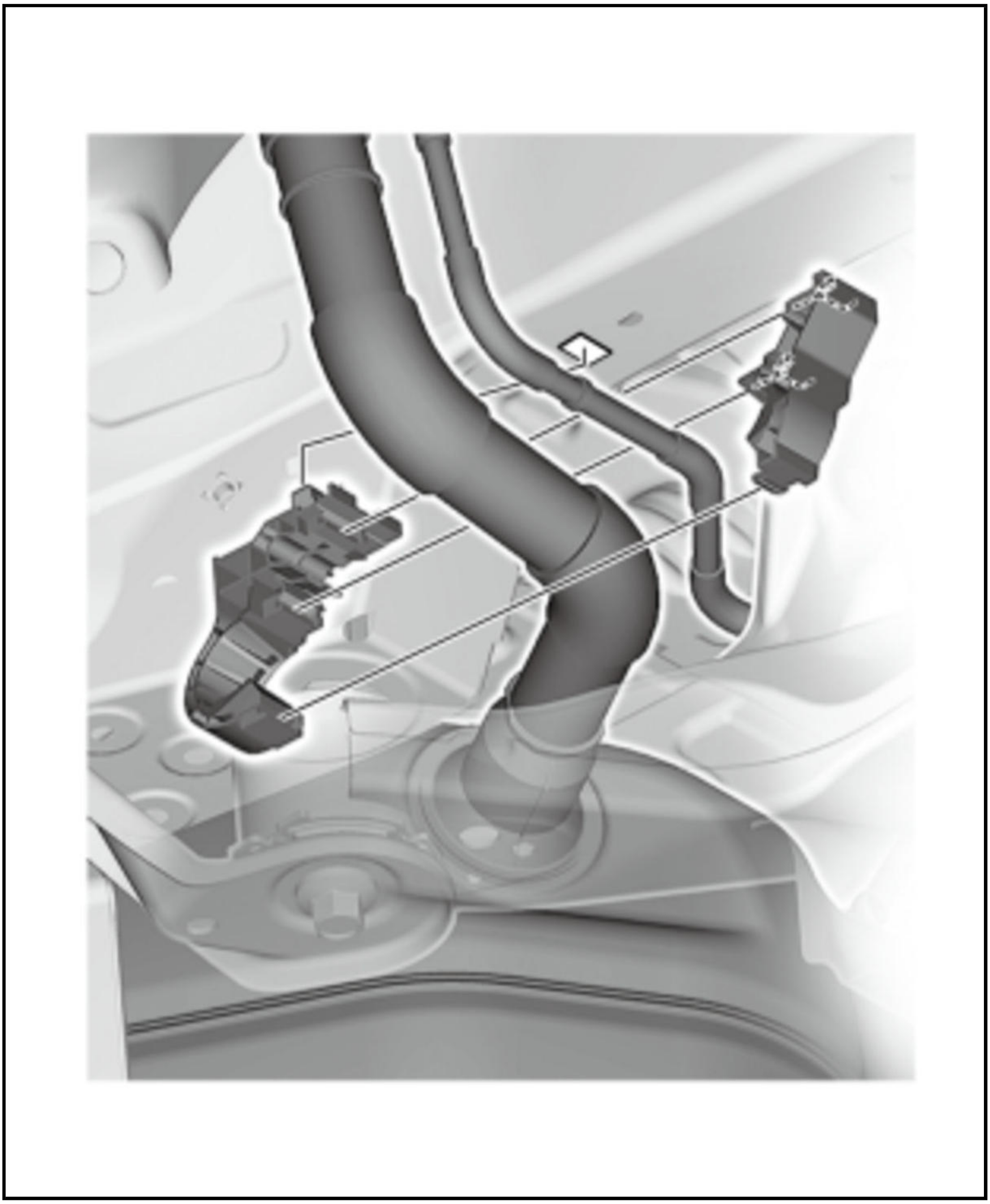

14. Fuel Tank Assembly and Fuel Tank Strap - Remove

1. Place a jack or other support under the fuel tank.

15. Fuel Feed Tube and Fuel Tank Unit - Remove (If Necessary)

NOTE: If necessary, refer to the following procedures.

- **Fuel Line/Quick-Connect Fitting Precautions** .
- **Fuel Line Inspection** .

16. All Removed Parts - Install

1. Install the parts in the reverse order of removal.

MIS-FUEL INHIBIT DEVICE REMOVAL AND INSTALLATION

Removal and Installation

WARNING:

Flammable - Keep Fire Away

NOTE:

- Refer to the **Fuel and Emissions Systems Service Precautions** before disconnecting the fuel line.
- Fuel may cause flammable gas leaks and may result in fire. Keep sparks, flame and cigarettes away.

1. **Fuel Fill Door Adapter - Remove**
2. Mis-Fuel Inhibit Device - Remove

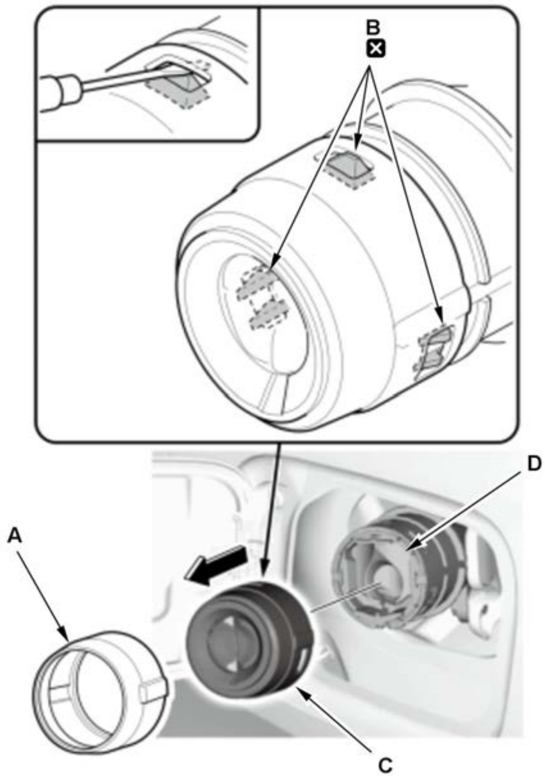	1. Pull out the rubber cover (A). 2. Insert a small tip screwdriver into the 3 lock tabs (B) and lift up to release the mis-fuel inhibit device (C). **NOTE:** - Be careful not to damage the fuel fill pipe or the fuel fill pipe top side surface (D). - Never reuse the mis-fuel inhibit device.

3. Nozzle Setting Bracket - Remove

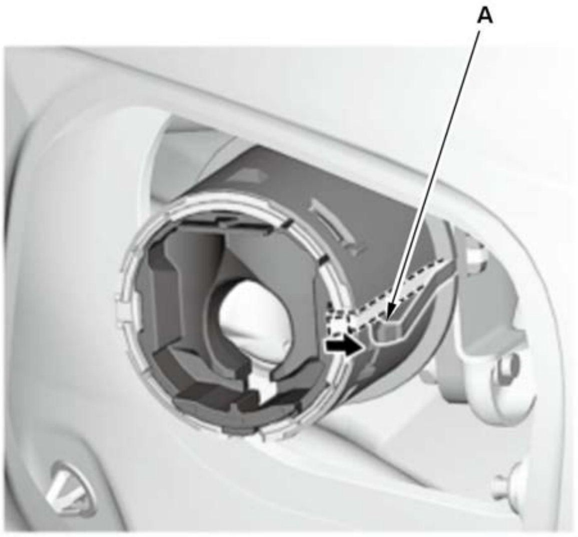

1. Disengage the retainer (A) towards the direction show.
NOTE: If the retainer is damage, **remove the fuel fill pipe bracket** and replace the retainer.

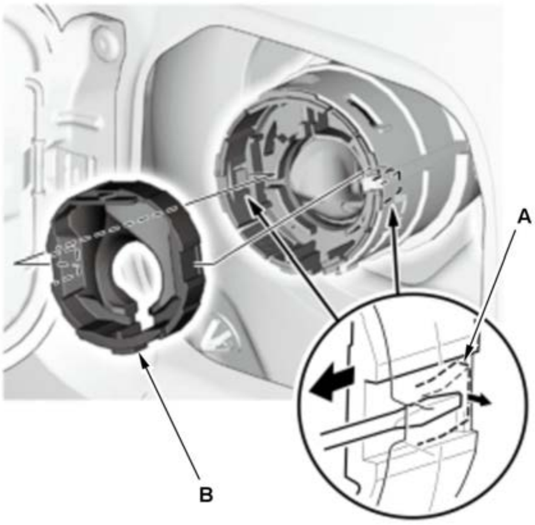

2. Using a small tip screwdriver, insert it into the slots to disengage the tabs (A) while pulling the nozzle setting bracket (B).

4. Main Flap Unit - Remove

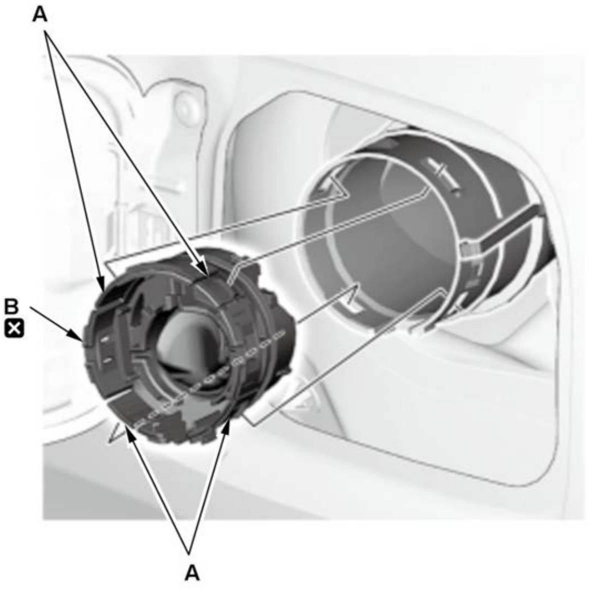

1. Fold in the four lock tabs (A) and pull the main flap unit (B).
NOTE: It may be necessary to lightly pry under main flap unit. Be careful not to damage the fuel fill pipe.

5. All Removed Parts - Install

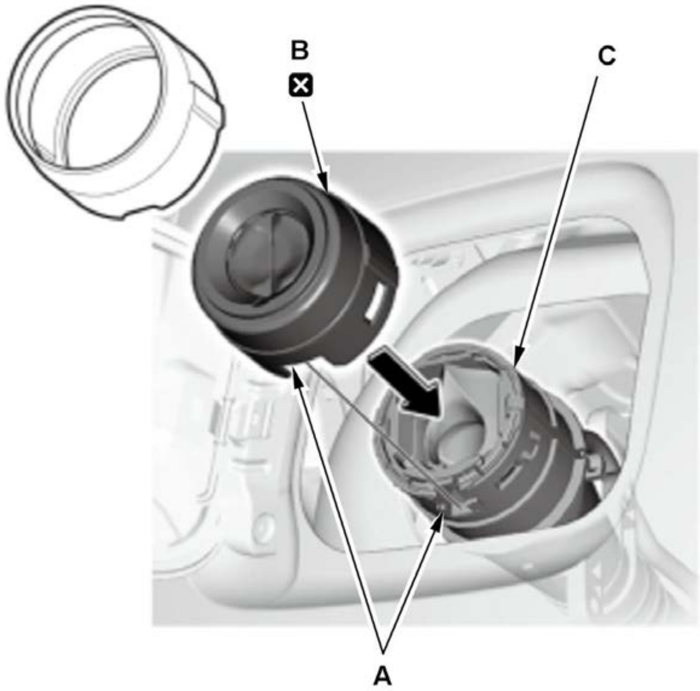

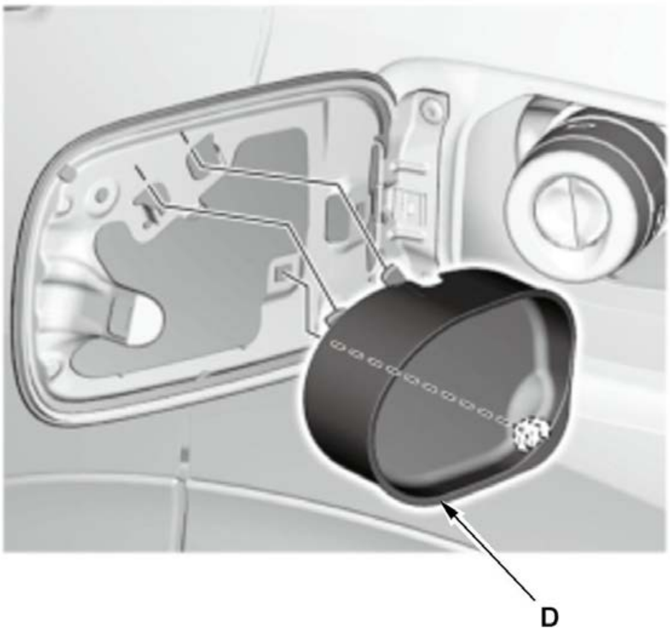

1. Install the parts in the reverse order of removal.

NOTE:

- Align the part (A) on the mis-fuel inhibit device (B) and the fuel fill pipe (C).
- If needed, replace the cover (D).

SYMPTOM TROUBLESHOOTING INDEX FOR VIEWER

FUEL OVERFLOWS DURING REFUELING (NO DTCS SET)

Diagnostic procedure

- Replace the fuel tank.

Also check for

Malfunctioning gas station filling nozzle

DESCRIPTION & OPERATION

IMPROVEMENT CONTROL IN PRACTICAL USE FUEL CONSUMPTION SYSTEM DESCRIPTION - EFFECTIVE CONTROL

Outline (ECON Mode)

The control system for improved fuel efficiency in actual traffic aims at disseminating eco-driving. It consists of an effective control system that is activated by operating the ECON switch to set the ECON ON mode. When the ECON mode is ON, the engine control system, the cruise control system*, the gear control system, and the air conditioning system work to control fuel consumption by reducing the negative effects of the driver's driving style in an attempt to improve fuel efficiency.

*: There are cases where it is not controlled depending on the vehicle model.

For locations of each component on vehicle, refer to Component Location Index

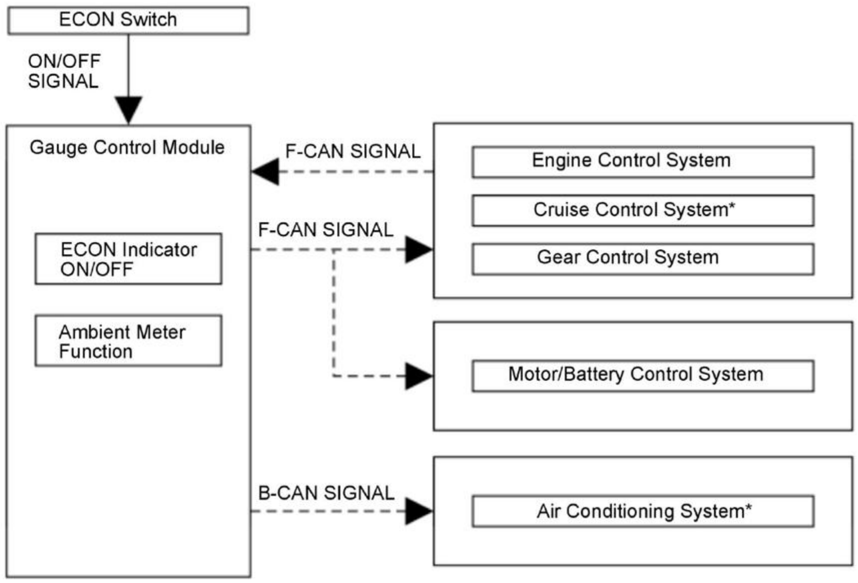
ECON Switch
ON/OFF SIGNAL
Gauge Control Module
ECON Indicator ON/OFF
Ambient Meter Function
F-CAN SIGNAL
F-CAN SIGNAL
B-CAN SIGNAL
Engine Control System
Cruise Control System*
Gear Control System
Motor/Battery Control System
Air Conditioning System*

*: There are cases where it is not controlled depending on the vehicle model.
NOTE: This illustration shows an example only. Appearance and structure of the actual parts may vary depending on the model.

Gear Control System

- Change in shift map allocation against accelerator full pedal depression
- Moderation of gear change responsiveness

Air Conditioning (A/C) System

- Switching to the recirculation mode
- Reduction in compressor operation frequency
- Lower flow rate

Ambient Meter Function

The ambient meter function evaluates the driver's driving from a fuel consumption perspective and displays its information via the ambient meter in the gauge control module.

Outline (SPORT Mode)

In the SPORT mode, a motor/battery control system, engine control system, and gear control system enhances driving force response for powerful and sporty driving. The PCM controls a gauge control module to change the colors of an ambient meter into red and it stays on during the SPORT mode.

For locations of each component on the vehicle, refer to Component Location Index.

- **Gauge control module**
- **SPORT mode switch**

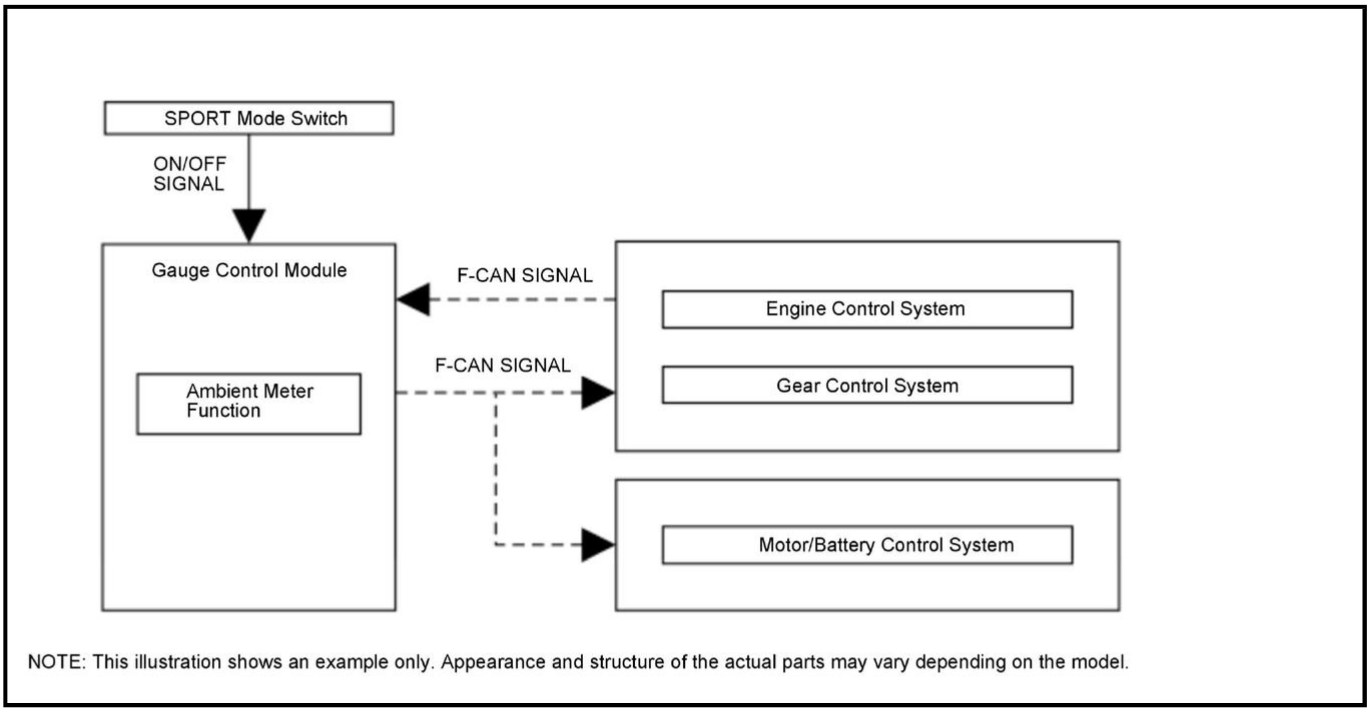
SPORT Mode Switch
ON/OFF SIGNAL
Gauge Control Module
Ambient Meter Function
F-CAN SIGNAL
F-CAN SIGNAL
Engine Control System
Gear Control System
Motor/Battery Control System

NOTE: This illustration shows an example only. Appearance and structure of the actual parts may vary depending on the model.

GENERAL INFORMATION

FUEL LINE/QUICK-CONNECT FITTING PRECAUTIONS

WARNING:

Flammable - Keep Fire Away

NOTE:

- Refer to the **Fuel and Emissions Systems Service Precautions** before disconnecting the fuel line.
- Fuel may cause flammable gas leaks and may result in fire. Keep sparks, flame and cigarettes away.
- Replace the fuel feed hose, fuel line, or the quick-connect fitting to new one if it is damaged.

When removing or installing the fuel feed hose/line, or when disconnecting or connecting the quick-connect fittings, pay attention to the following:

- No heat-resistance; Be careful not to damage them during welding or other heat-generating procedures.
- No acid-proof; Do not touch them with a shop towel that was used for wiping 12 volt battery electrolyte or something similar.
- No stress-resistance; Be careful not to bend or twist the fuel feed hose/line excessively.

Retainer Replacement

A disconnected quick-connect fitting can be reconnected, but the retainer on the mating line cannot be reused once it has been removed from the line.

NOTE: Use the same manufacturer retainer and the same size retainer when the replacing the retainer.

Location	**Manufacturer**	**Retainer color**	**Piping diameter**	**Remarks**
Fuel feed hose retainer (A)	Tokai	Green	0.2500 in (6.35 mm)	-
Fuel feed hose retainer (B)	Tokai	Blue Green	0.315 in (8.0 mm)	-
Fuel tank unit retainer (C)	Sanoh	White	0.374 in (9.5 mm)	-
Fuel feed tube retainer (D)	Sanoh	White	0.315 in (8.0 mm)	-
EVAP Canister retainer (E)	Sanoh	White	0.63 in (16 mm)	-

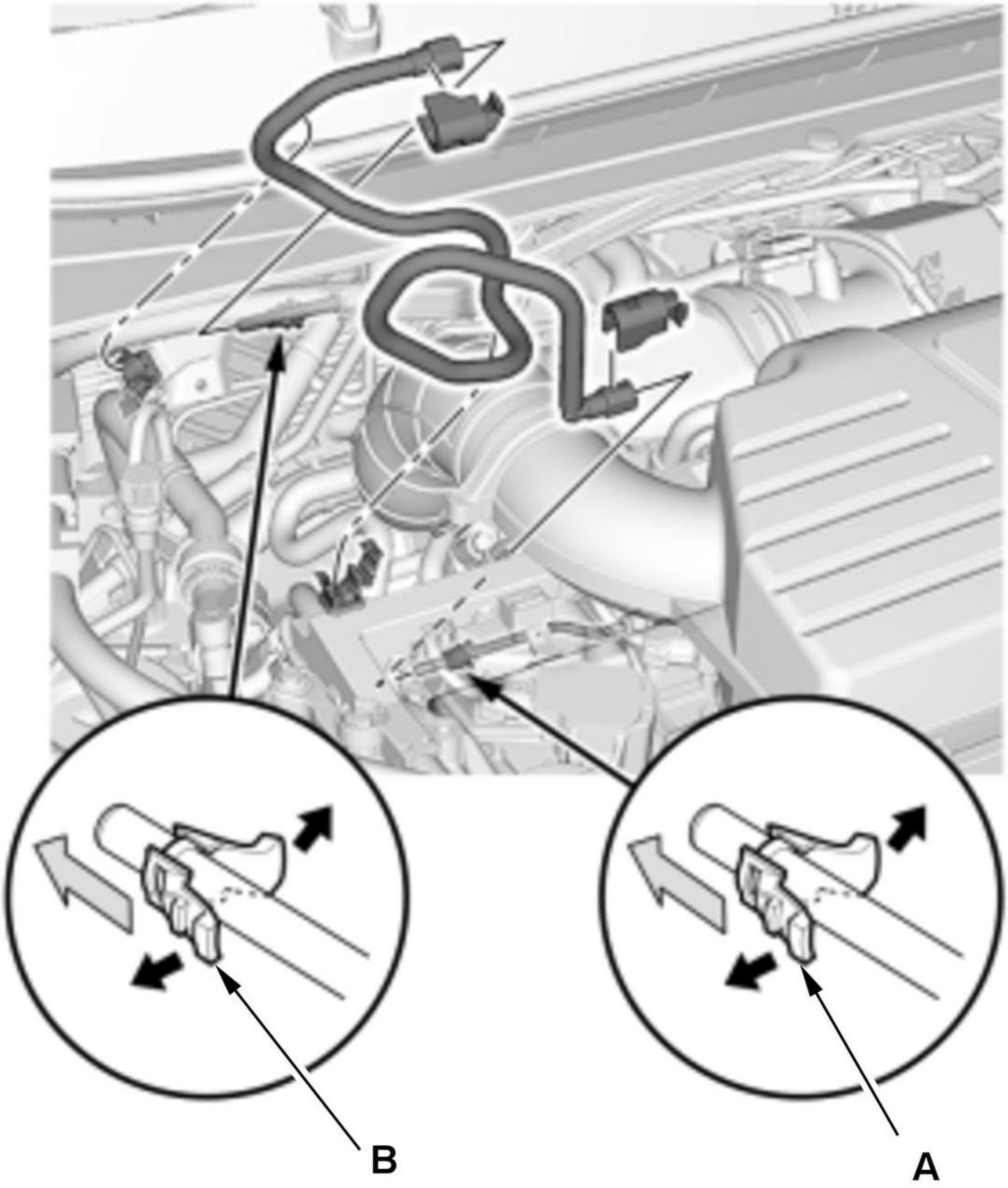
B
A

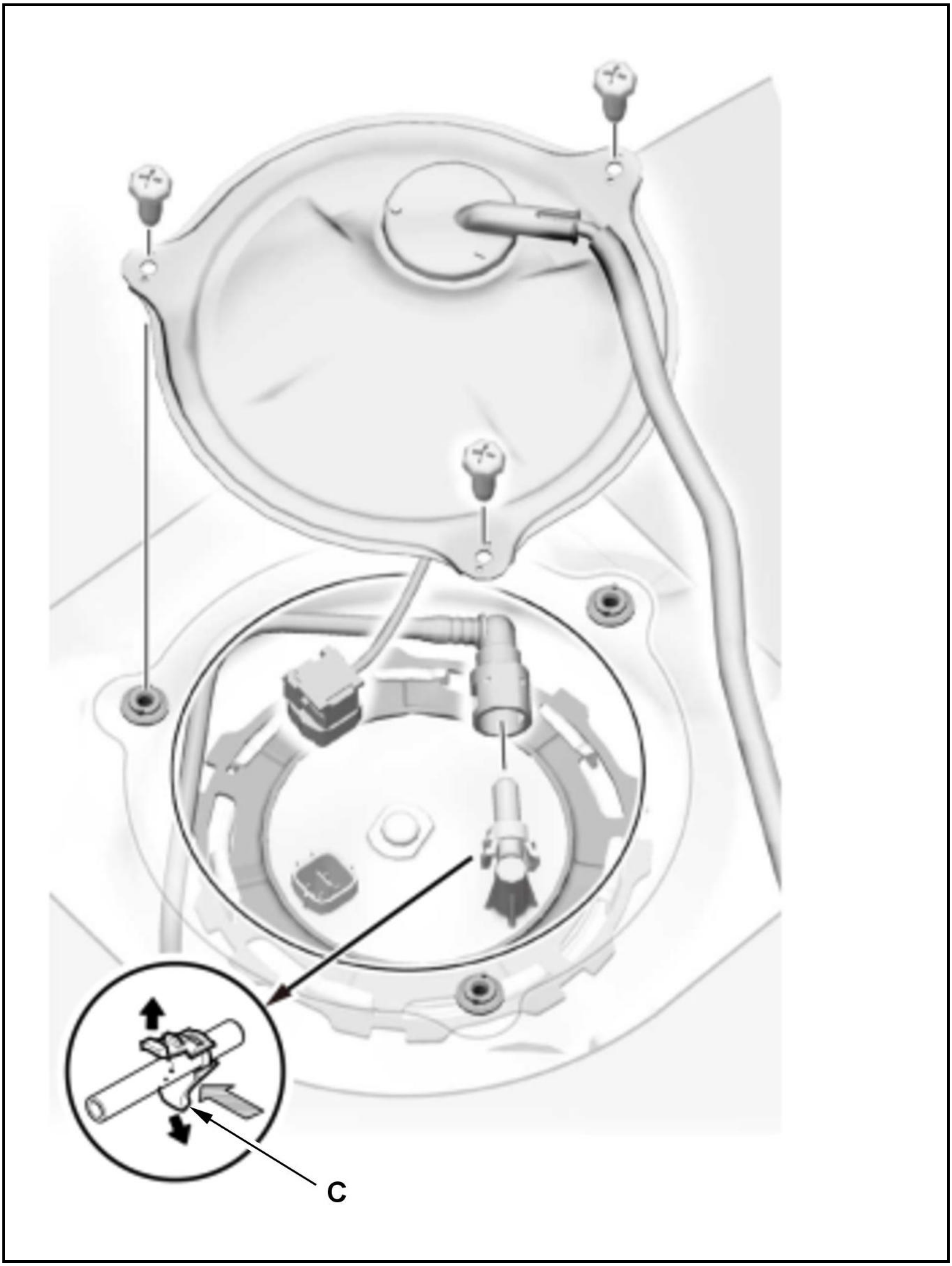
C

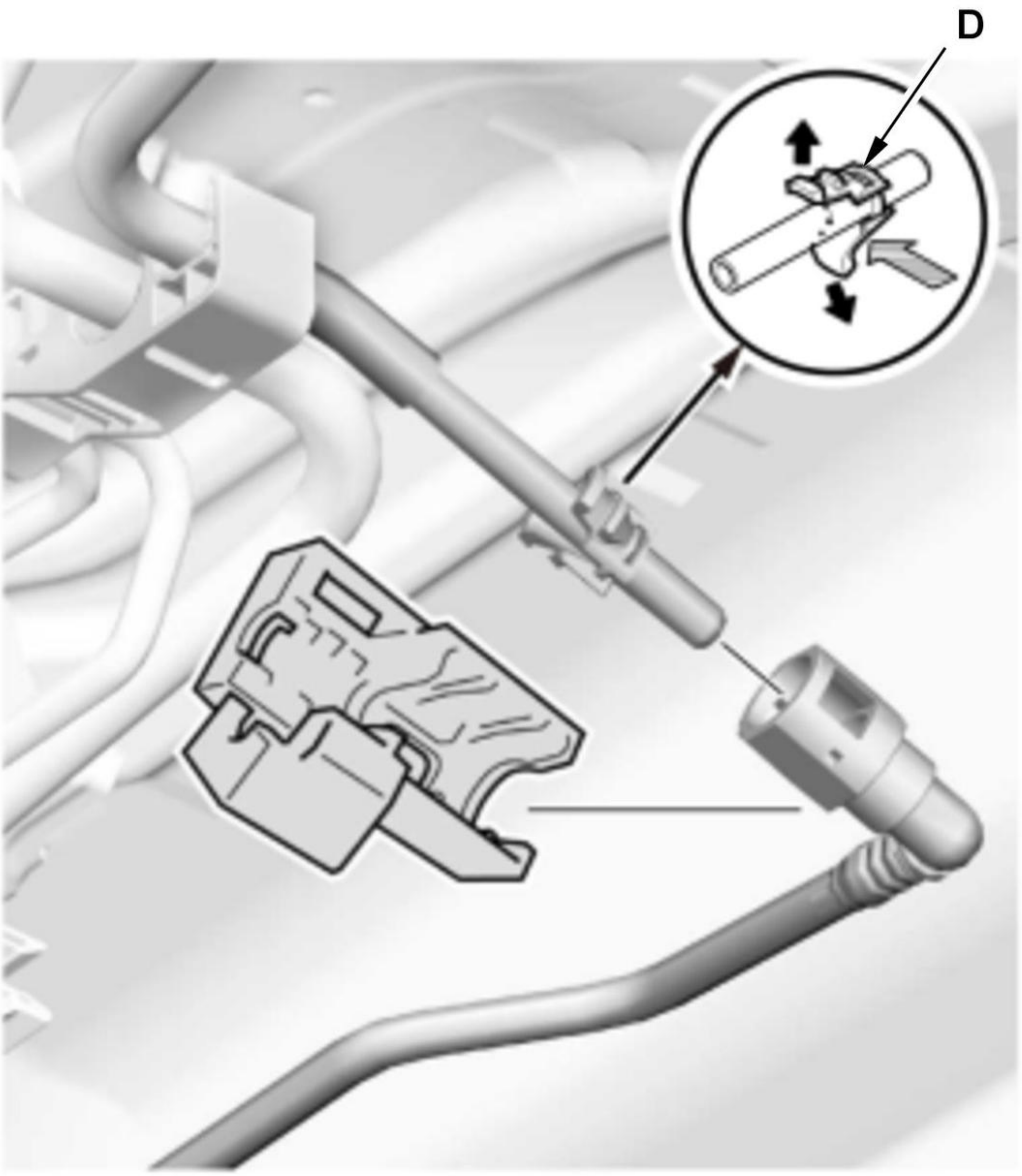
D

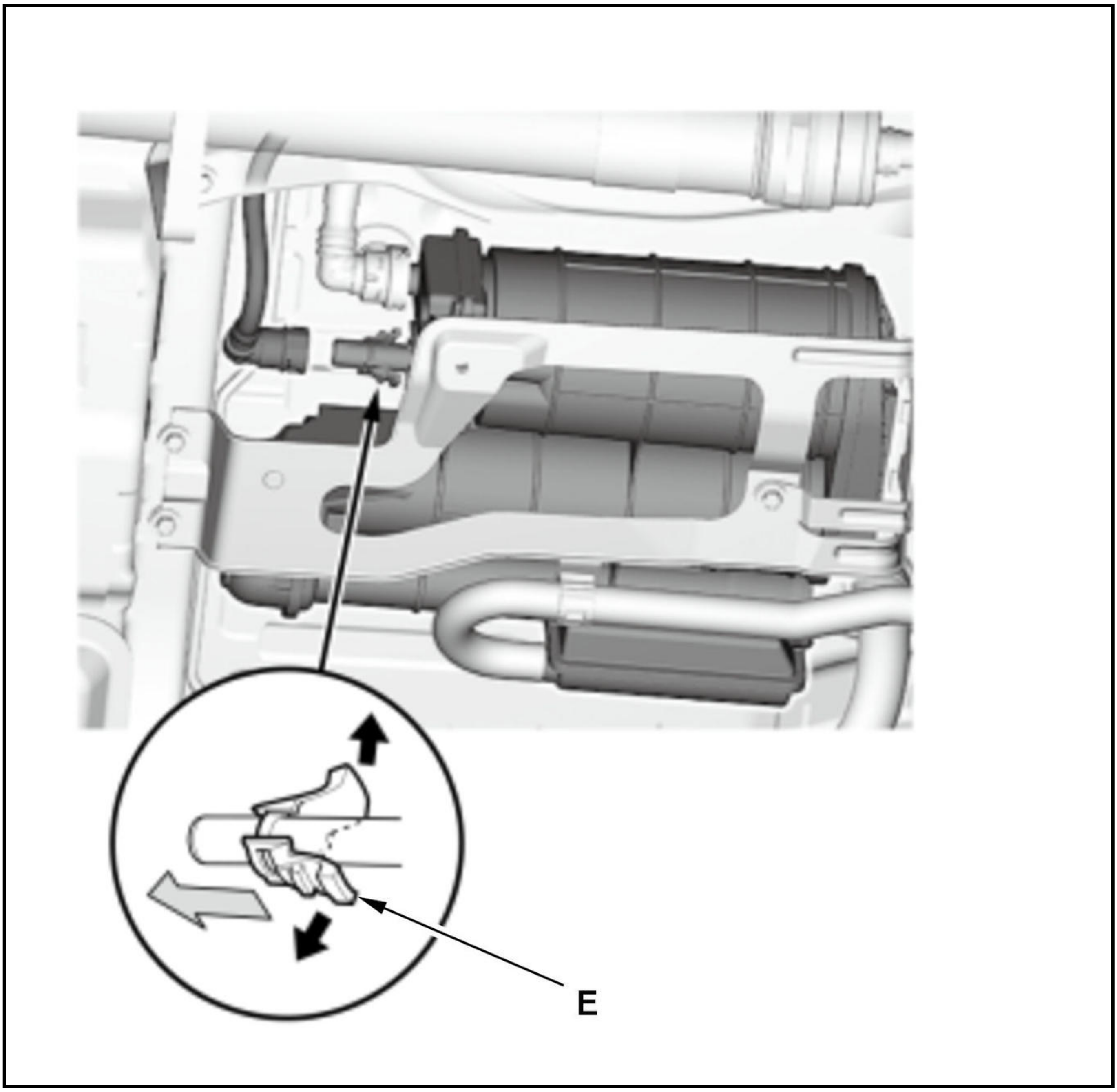

Fuel Line/Quick-Connect Fitting Removal

1. Remove the fuel line/quick-connect fitting cover (If equipped).

Type A

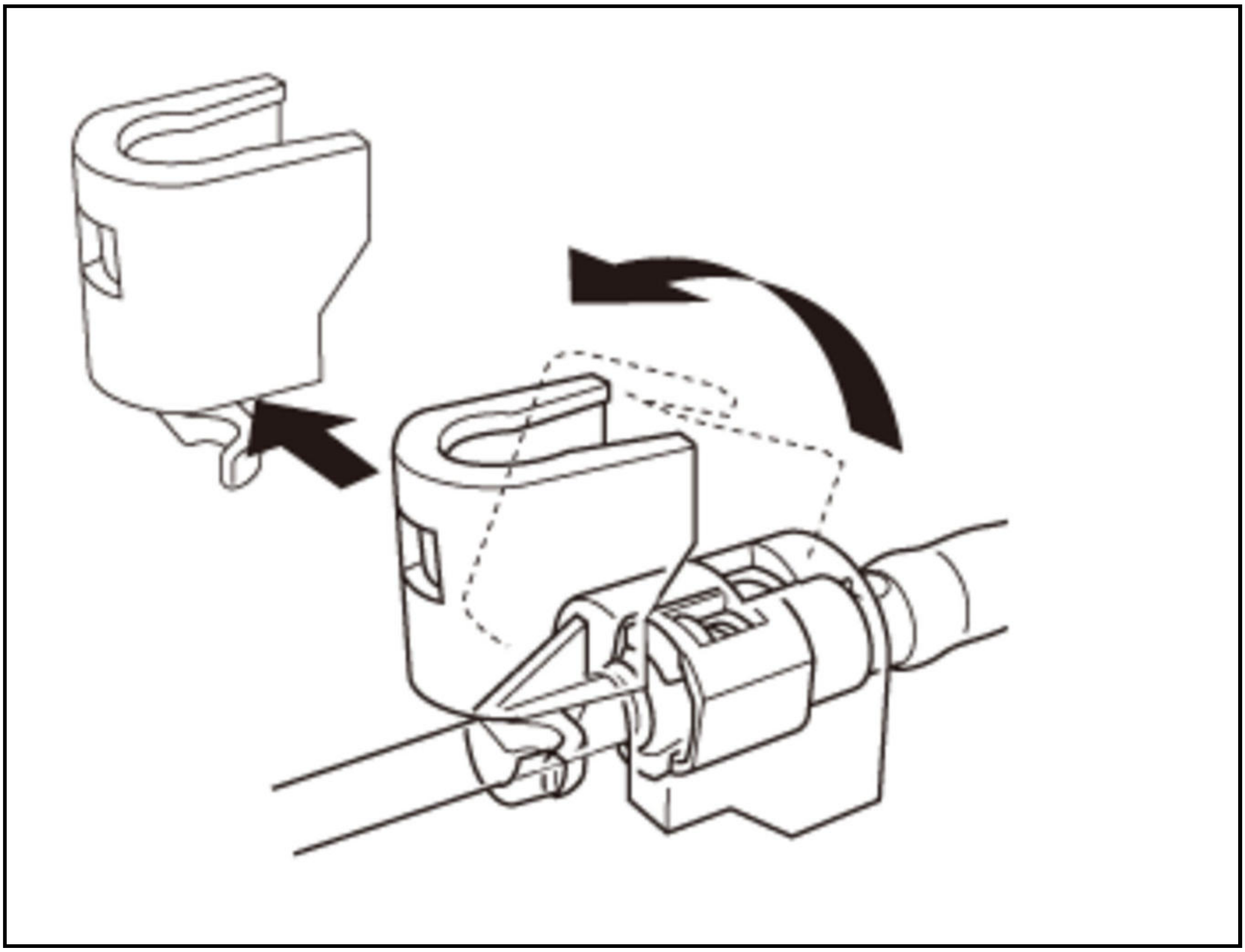

Type B

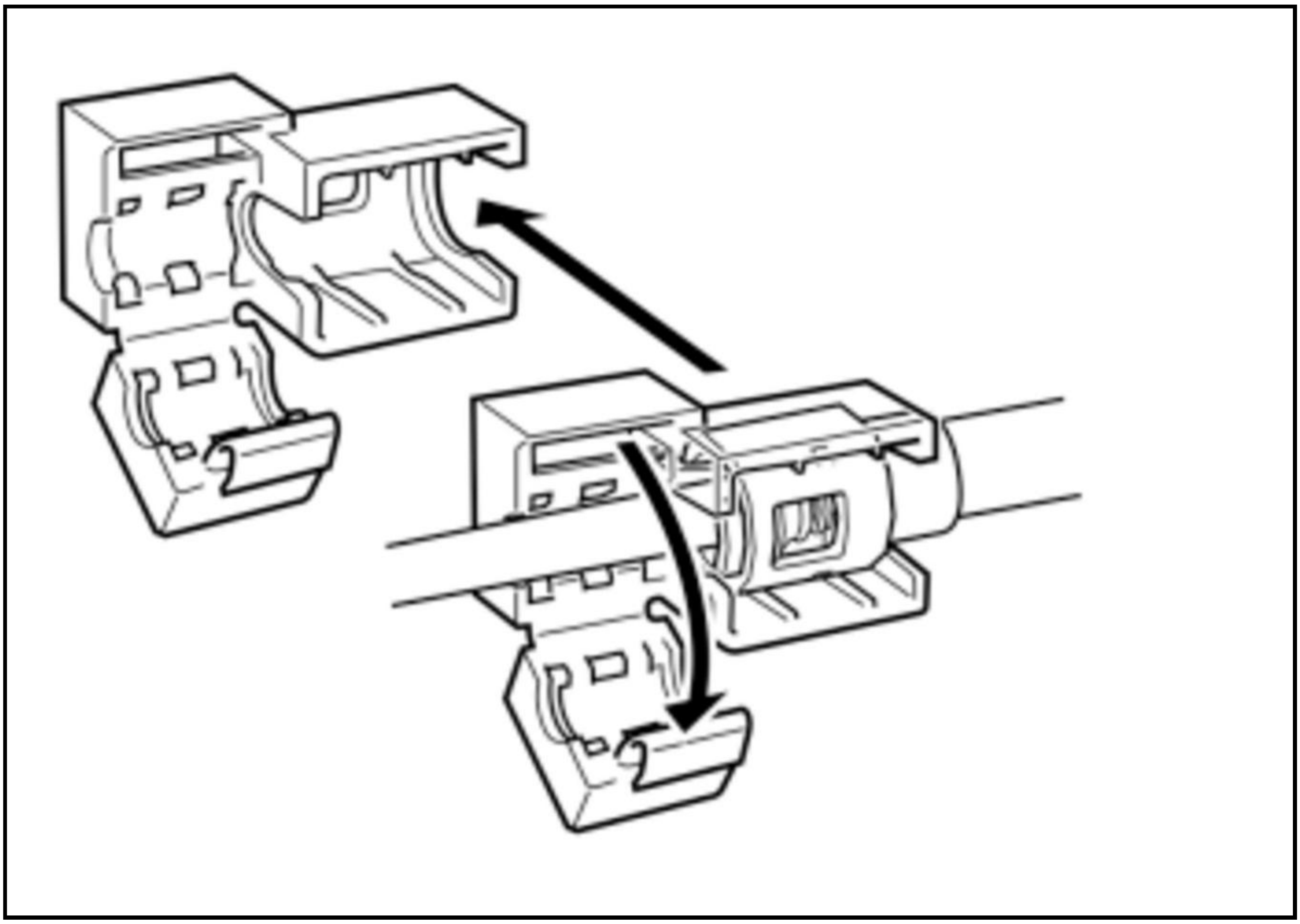

2. Check the fuel quick-connect fittings for dirt, and clean it if needed.

3. Place a rag or shop towel over the quick-connect fitting.

4. Hold the connector (A) with one hand, and squeeze the retainer tabs (B) with the other hand to release them from the locking tabs (C).

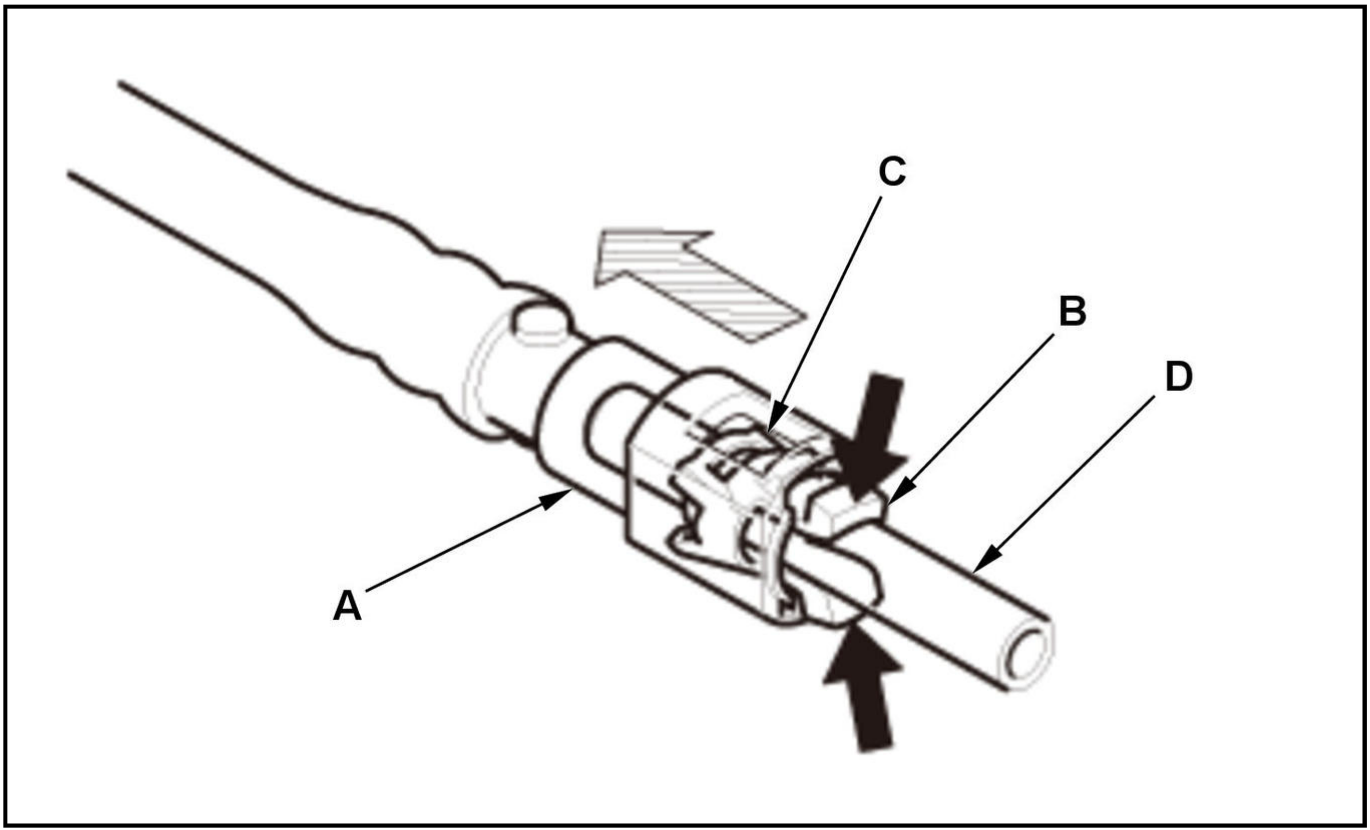

Pull the connector off.

NOTE:

- Be careful not to damage the line (D) or other parts. Do not use tools.
- If the connector does not move, keep the retainer tabs pressed down, and alternately pull and push the connector until it comes off easily.
- Do not remove the retainer from the line; once removed, the retainer must be replaced with a new one.

Check the contact area (A) of the line (B) for dirt or damage.

- If it is dirty, clean it.
- If it is rusty or damaged, replace the damaged fuel line or the damaged part.

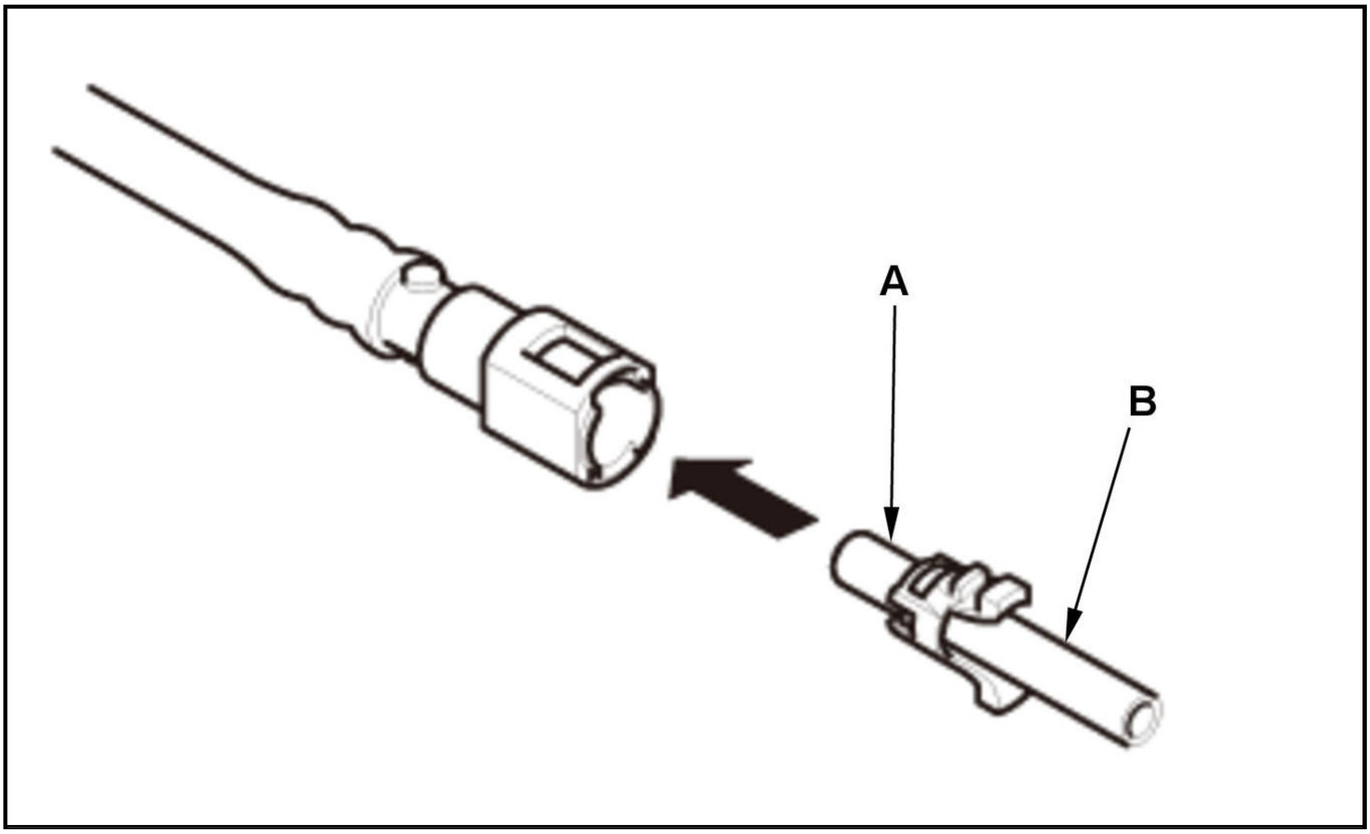

To prevent damage and keep foreign matter out, cover the disconnected connector and line ends with plastic bags (A).

NOTE:

- The retainer cannot be reused once it has been removed from the line.
- Replace the retainer when:
-
    - -

      Replacing a new part that does not include the retainer. (a fuel line, a fuel tank unit etc.)
    - -

      It has been removed from the line.
    - -

      It is damaged.

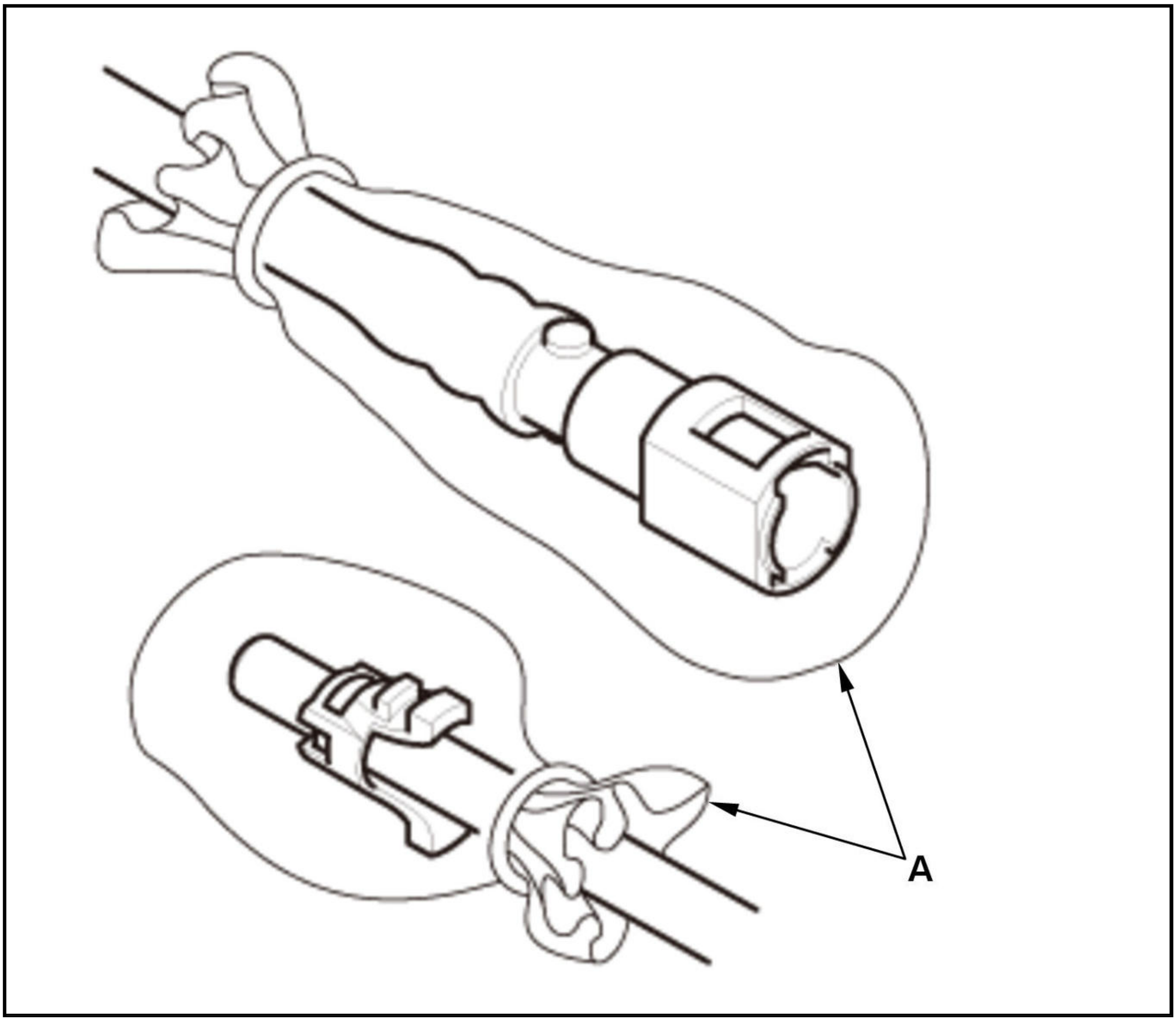

Fuel Line/Quick-Connect Fitting Installation

1. Check the contact area (A) of the line (B) for dirt or damage, and clean it if needed.

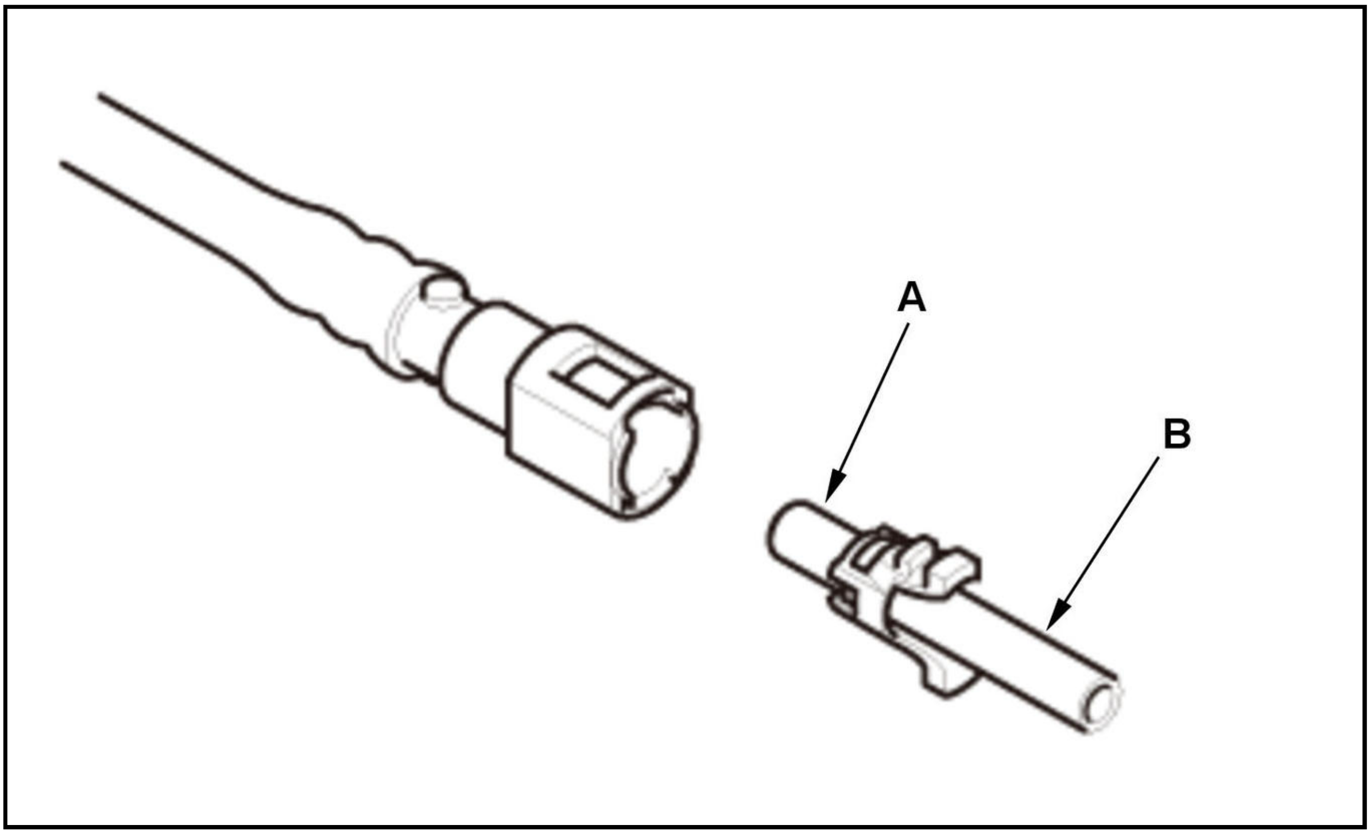

Insert a new retainer (A) into the connector (B) if the retainer is damaged, or after:

- Replacing new part which does not pack with the suitable retainer. (a fuel line, a fuel tank unit etc.)
- Removing the retainer from the line.

NOTE: Use the same manufacturer retainer and the same size retainer when the replacing the retainer.

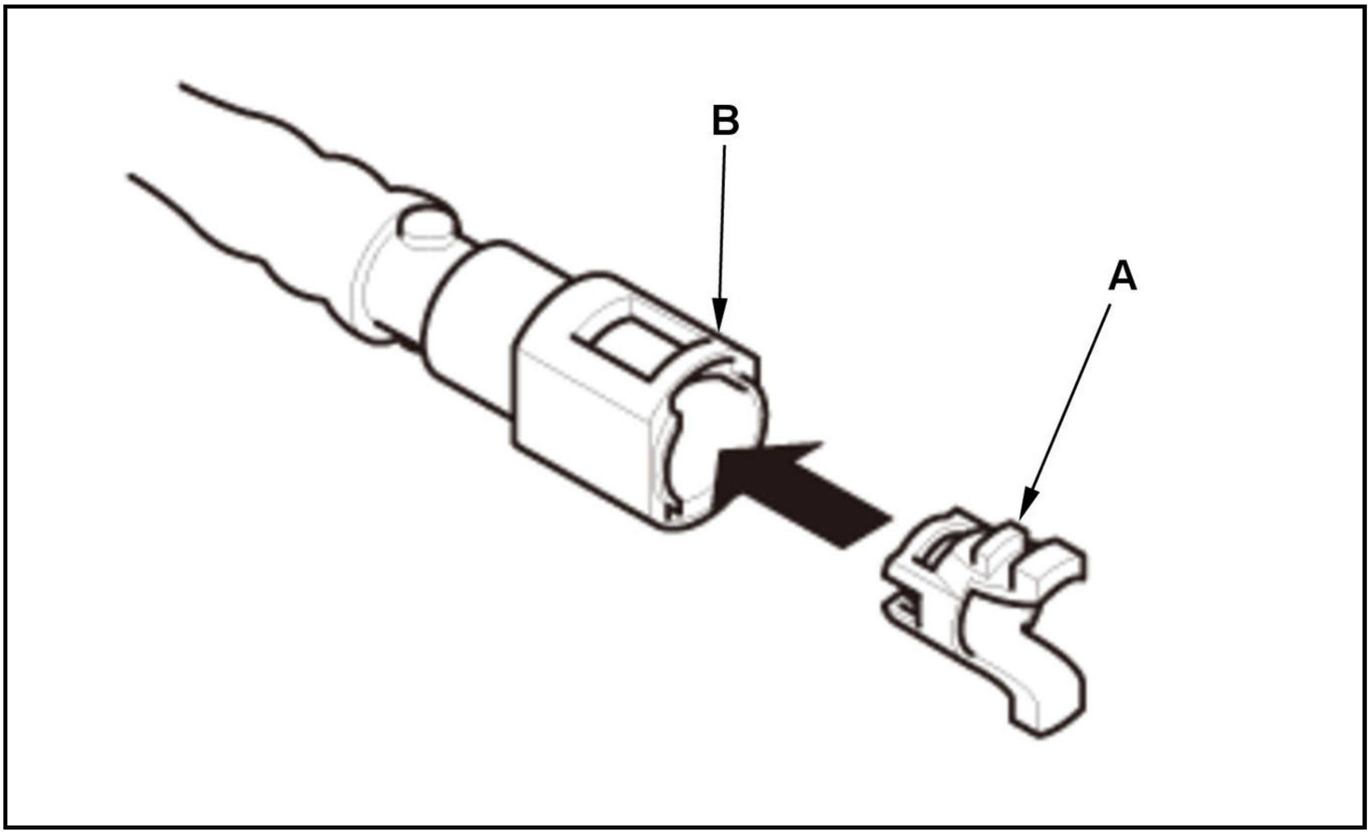

3. Before connecting a new fuel line/quick-connect fittings, remove the old retainer from the mating line.

4. Align the quick-connect fittings (A) with the line (B), and align the retainer (C) locking tabs with the connector grooves.

Connection with new retainer

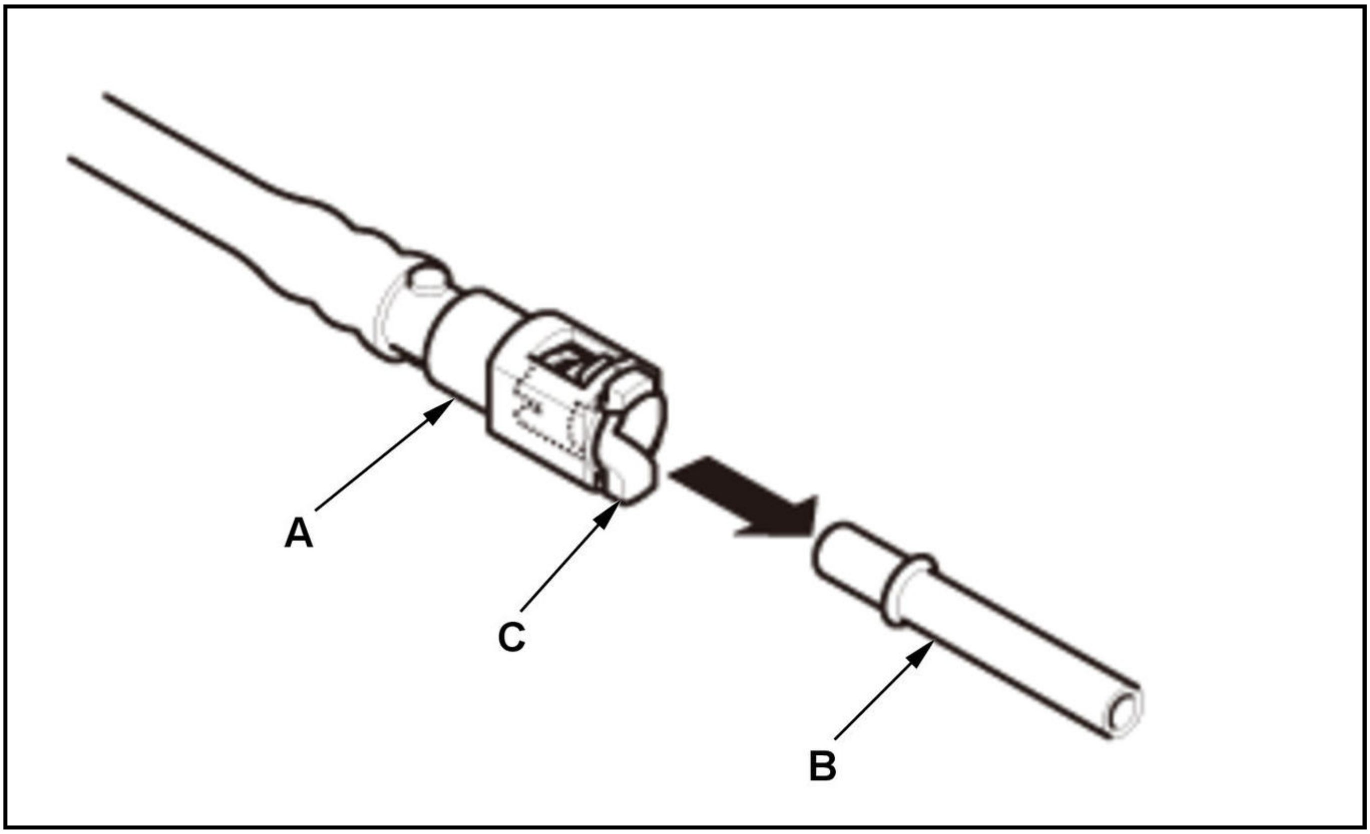

Reconnection to existing retainer

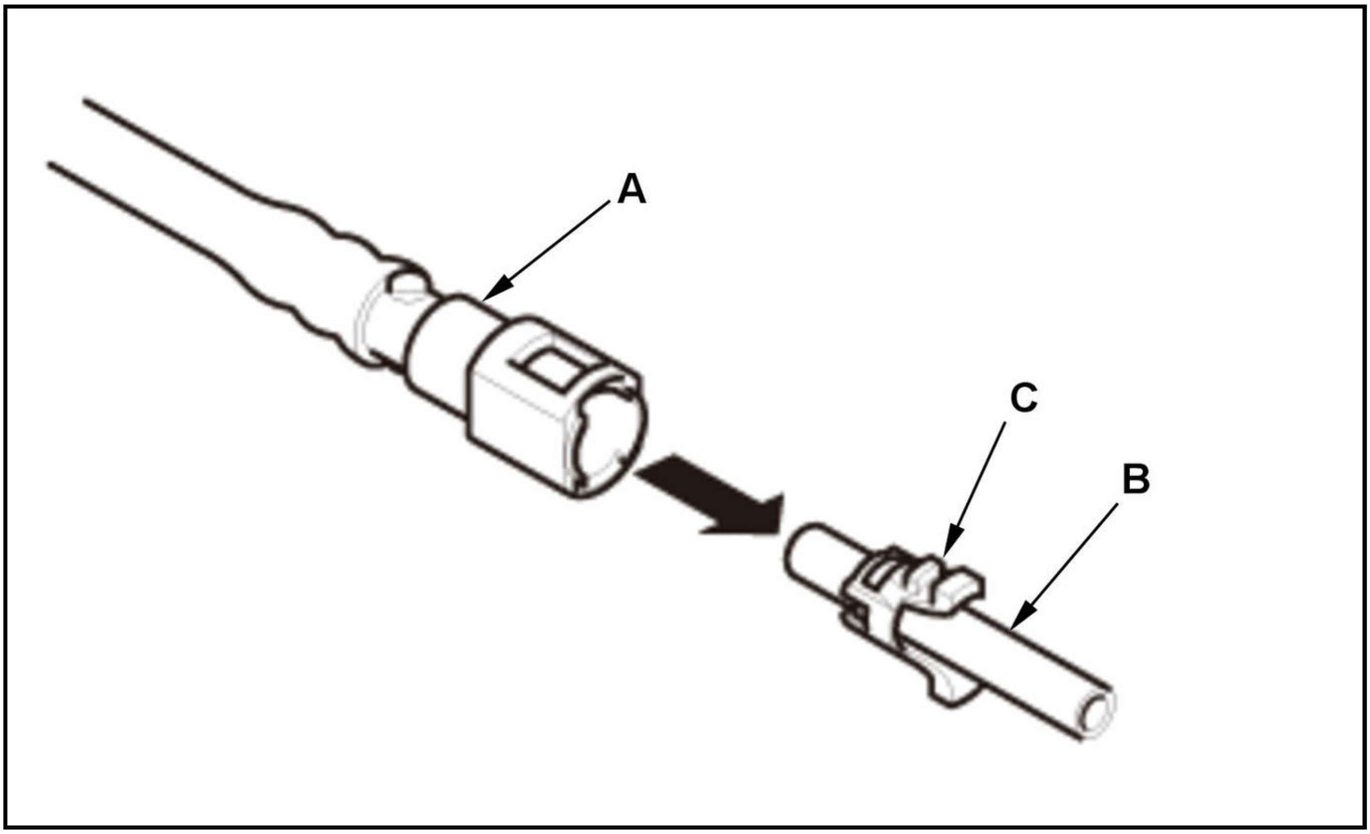

Connection to new fuel line

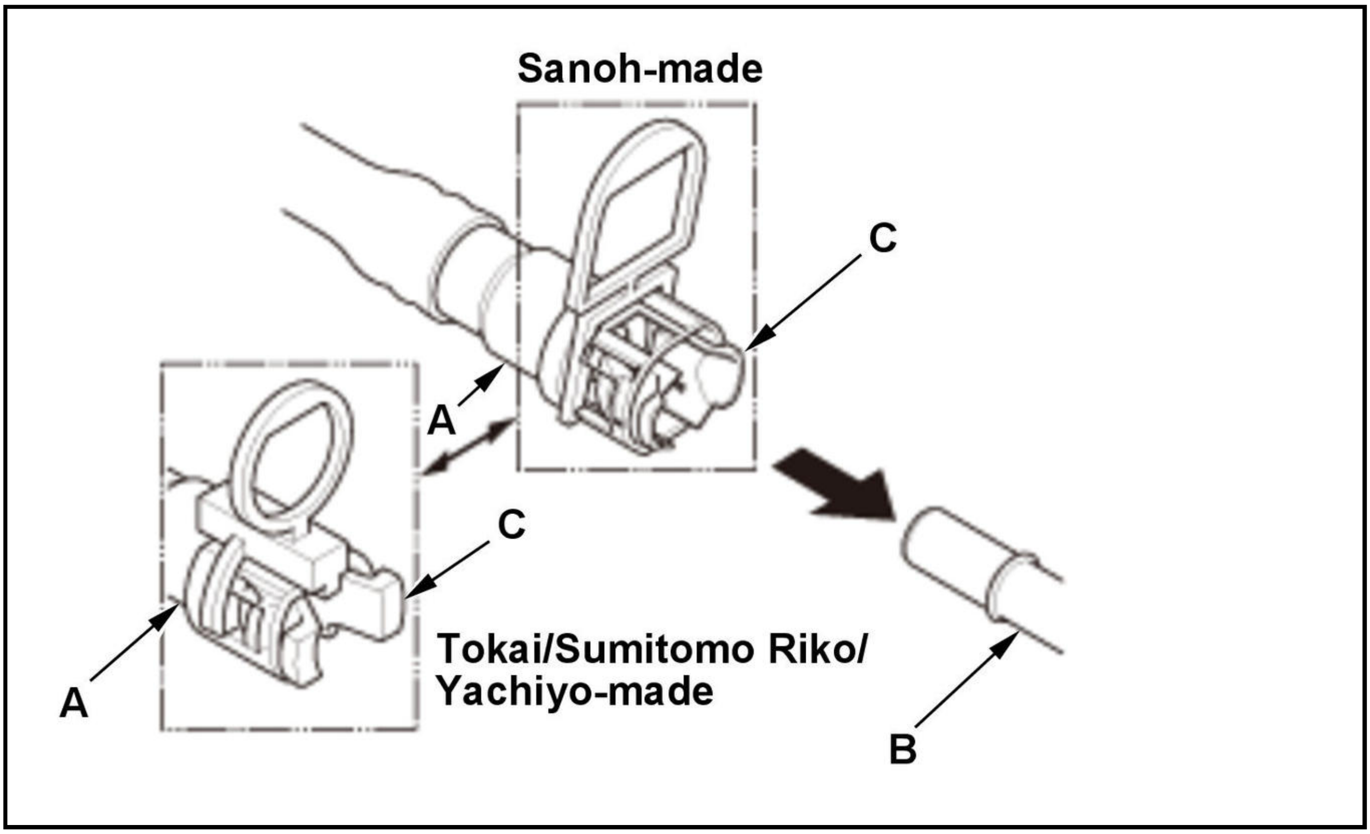

5. Press the quick-connect fittings onto the line until both retainer tabs lock with a clicking sound.

NOTE: If it is hard to connect, put a small amount of new engine oil on the line end.

6. When replacing the fuel line with a new retainer as a set, make sure you remove the ring pull upwards after you confirm the connection is secure.

NOTE: Before you remove the ring pull, make sure the fuel line connection is secure. If the connection is not secure, the ring pull could break when you try to remove it.

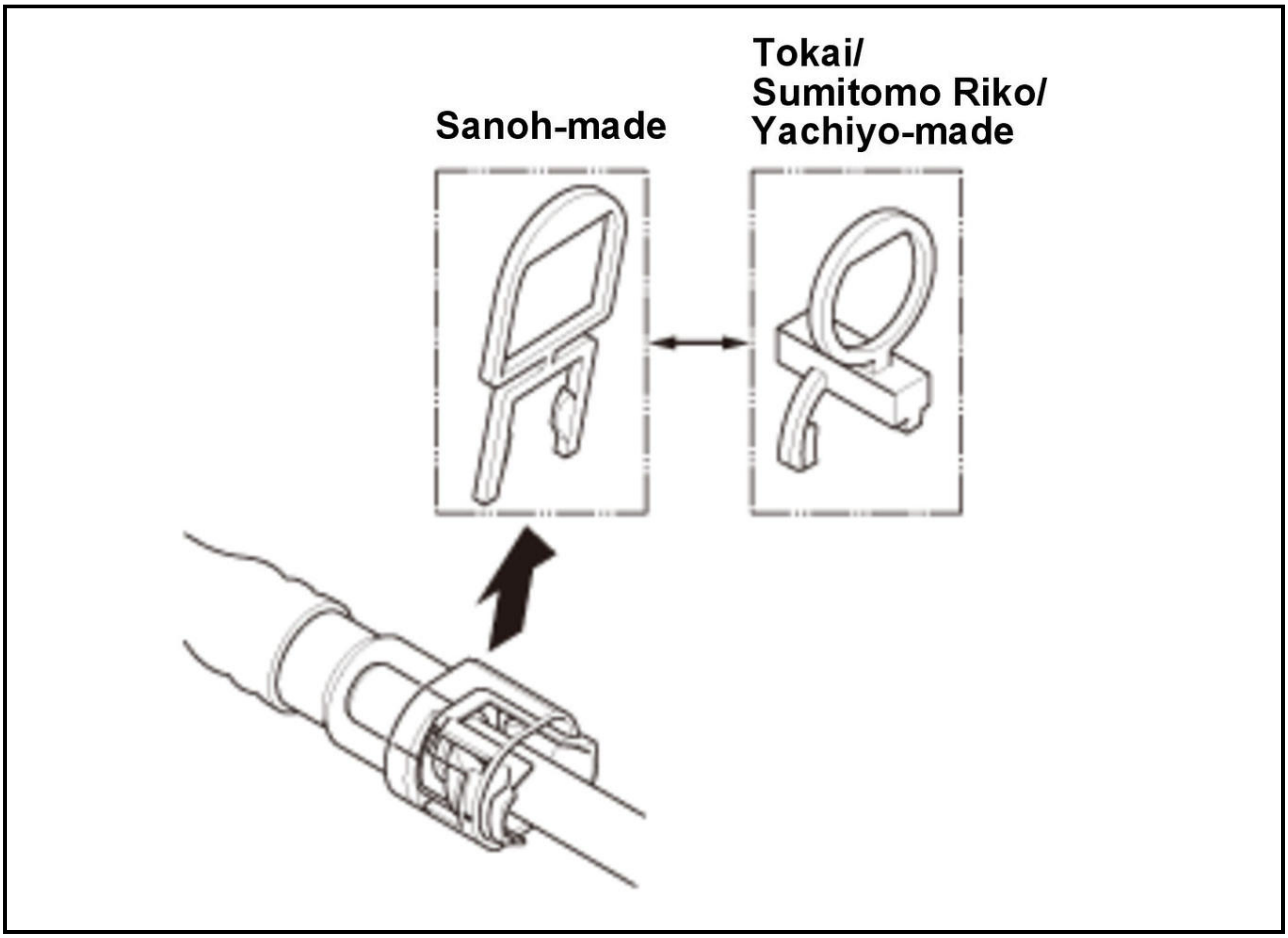
Sanoh-made
Tokai/
Sumitomo Riko/
Yachiyo-made

7. Make sure the connection is secure and the tabs are firmly locked into place; check visually and also by pulling the connector.

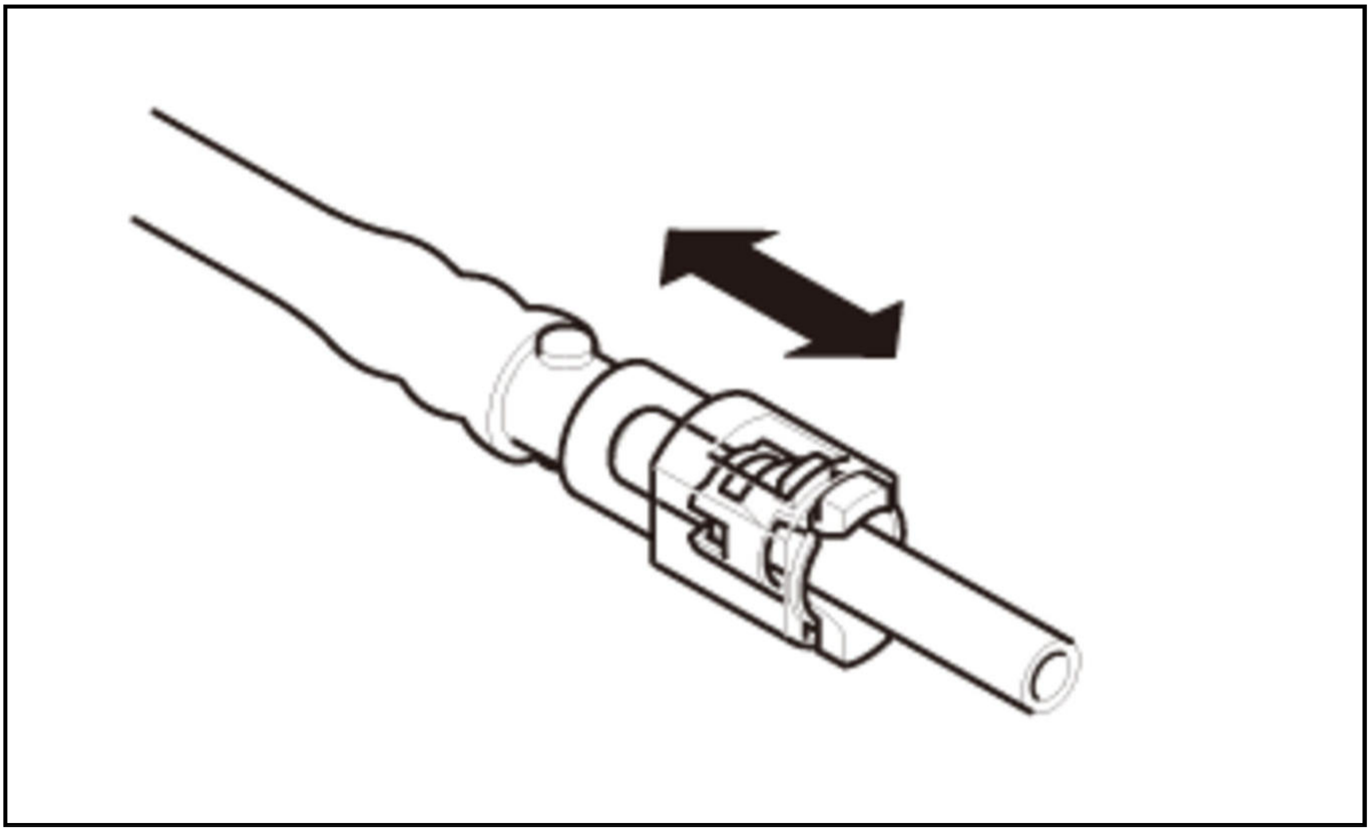

8. Turn the vehicle to the ON mode, but do not turn the vehicle to the READY TO DRIVE mode. After the fuel pump runs for about 2 seconds, the fuel line will be pressurized. Repeat this two or three times, then check for fuel leakage.

9. Set the groove of the quick-connect fitting cover on the fuel line as shown, then install it. Make sure the cover is firmly locked in place.

Type A

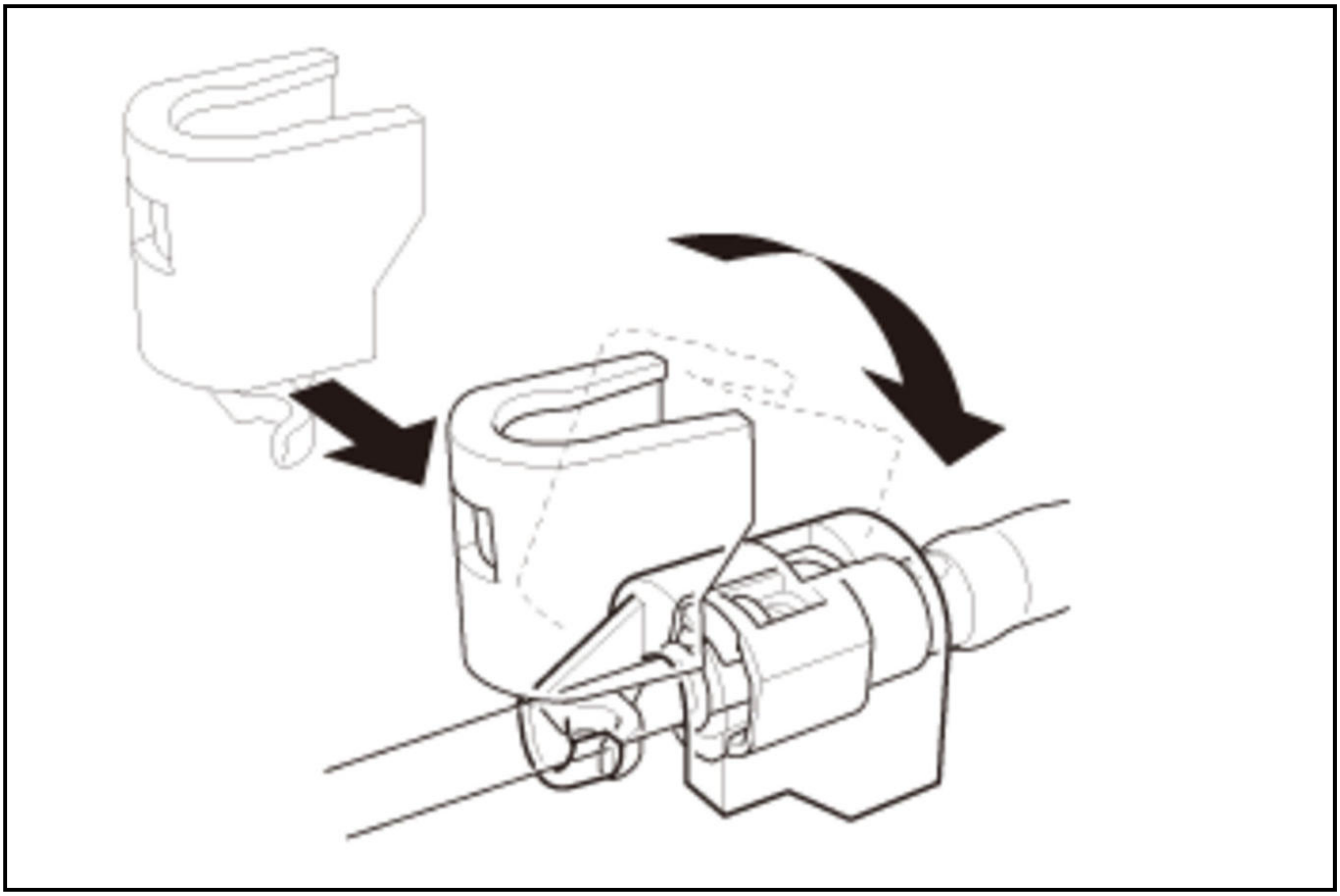

Type B

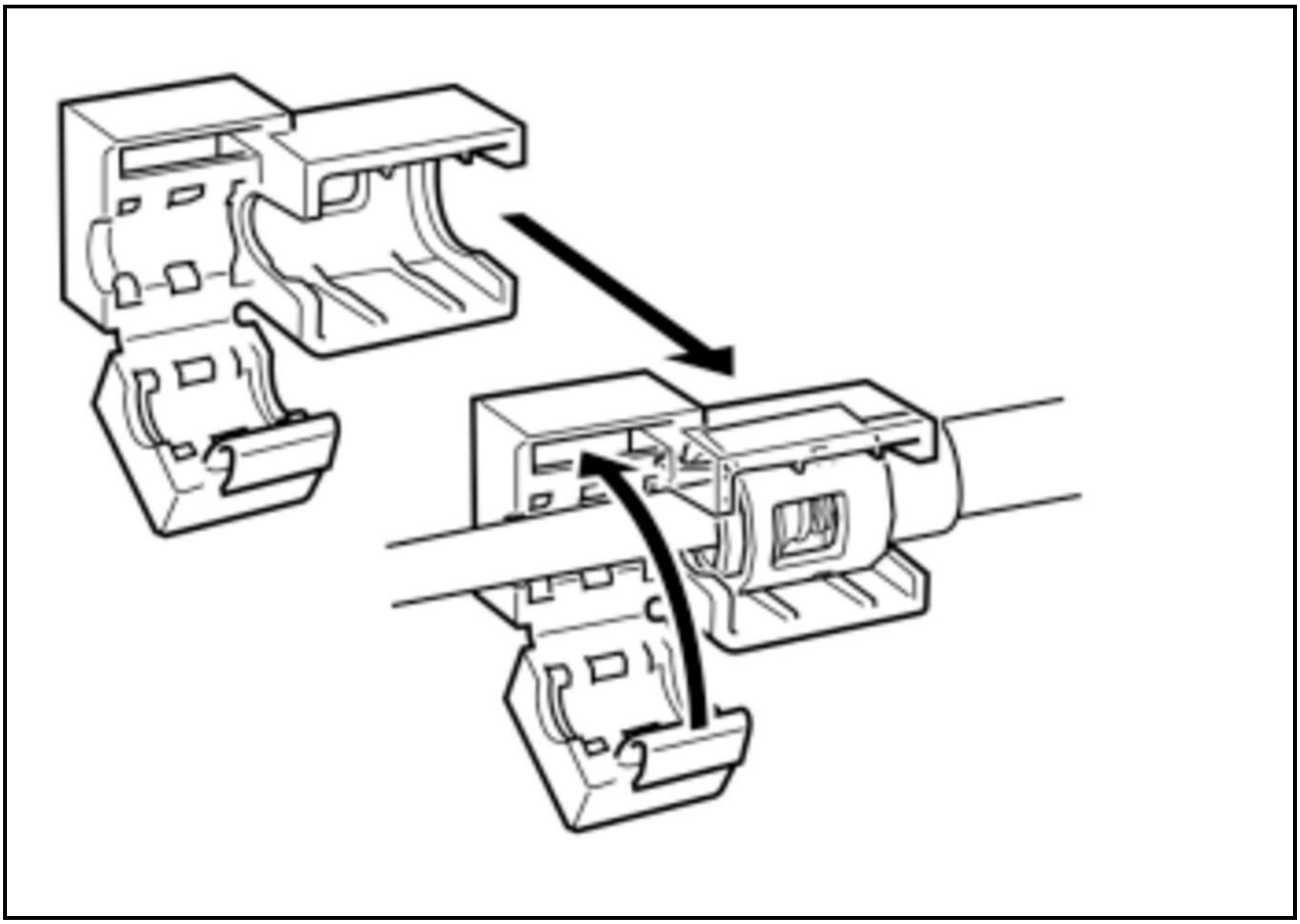

SYMPTOM TROUBLESHOOTING INDEX

FUEL AND EMISSIONS SYSTEMS SYMPTOM TROUBLESHOOTING INDEX

Symptom Troubleshooting Index

When the vehicle has one of these symptoms, check for a diagnostic trouble code (DTC) with the HDS. If there is no DTC, do the diagnostic procedure for the symptom, in the sequence listed, until you find the cause.

Symptom	Diagnostic procedure	Also check for
Engine will not start (MIL works OK, no DTCs set, generator motor works OK)	• Test the 12 volt battery . • Check the fuel pressure. • Troubleshoot the fuel pump circuit.	• Low compression • No ignition spark • Exhaust restriction • Intake air leaks • Locked up engine • Broken cam chain • Fuel contamination
Engine will not start, and HDS does not communicate with the PCM (MIL comes on and stays on, no DTCs set)	• Do the DLC circuit troubleshooting . • Do the PCM Power and Ground Circuit Troubleshooting .	B
MIL comes on and stays on, or never comes on at all, no DTCs set	Troubleshoot the MIL circuit .	B

Symptom	Diagnostic procedure	Also check for
Engine starts but stalls immediately (MIL works OK, no DTCs set, immobilizer indicator stays on or flashes)	**Check the keyless access system** .	• Low compression • Intake air leaks • Weak spark • Low fuel pressure
Engine is hard to start (MIL works OK, no DTCs set)	• **Test the 12 volt battery** . • **Check the fuel pressure**. • **Do the carbon accumulation check** .	• Low compression • Intake air leaks • Fuel contamination • Weak spark
Cold fast idle too low (MIL works OK, no DTCs set)	• **Check the idle speed.** • **Do the carbon accumulation check** .	• Incorrect valve adjustment • Intake air leaks
Cold fast idle too high (MIL works OK, no DTCs set)	**Check the idle speed.**	Intake air leaks
Idle speed fluctuates (MIL works OK, no DTCs set)	• **Check the idle speed** . • **Check the fuel pressure**. • **Do the carbon accumulation check** .	• Incorrect valve adjustment • Intake air leaks
After warming up, idle speed is below specifications without load (MIL works OK, no DTCs set)	**Do the carbon accumulation check** .	Incorrect valve timing or clearance adjustment
After warming up, idle speed is above specifications without load (MIL works OK, no DTCs set)	**Inspect the APP sensor** .	Intake air leaks
Low power (MIL works OK, no DTCs set)	• **Check the fuel pressure**. • **Check the air cleaner element** .	• Low compression • Incorrect camshaft timing • Incorrect engine oil level • Exhaust restriction • Fuel contamination
Engine stalls (MIL works OK, no DTCs set)	• **Check the fuel pressure**. • **Check the idle speed** .	• Intake air leaks • Faulty harness and sensor connections • Fuel contamination
Difficult to refuel (MIL works OK, NO DTCs set)	• Check the fuel vent tube between the EVAP canister and the fuel tank unit.	• Malfunctioning gas station filling nozzle

Symptom	Diagnostic procedure	Also check for
	- Check the fuel tank vapor recirculation tube between the fuel fill pipe and the fuel tank unit. - Insert the emergency fuel funnel into the fuel filler neck, then check the operation of the shut-off valve flap. **NOTE:** The emergency fuel funnel is stored in the trunk tool box. - **Replace the fuel tank**.	- Faulty fuel tank vapor control valve
Fuel overflows during refueling (No DTCs set)	**Replace the fuel tank**.	Malfunctioning gas station filling nozzle
HDS does not communicate with the PCM or the vehicle	**Troubleshoot the DLC circuit** .	Correct HDS software

INSPECTION

FUEL LINE INSPECTION

Inspection

WARNING:

Flammable - Keep Fire Away

NOTE:

- Refer to the **Fuel and Emissions Systems Service Precautions** before disconnecting the fuel line.
- Fuel may cause flammable gas leaks and may result in fire. Keep sparks, flame and cigarettes away.

1. Fuel Line - Inspect
    - Check the fuel system lines and hoses for damage, leaks, and deterioration. Replace any damaged parts.
    - Check all clamps, and make sure they are properly positioned and tightened.
    -
        - -

          Make sure the clamps are in the position of its range shown.
        - -

          Align the marks on the hoses and the pipes.
        - -

          There should be no clearance between the hoses and the pipes.

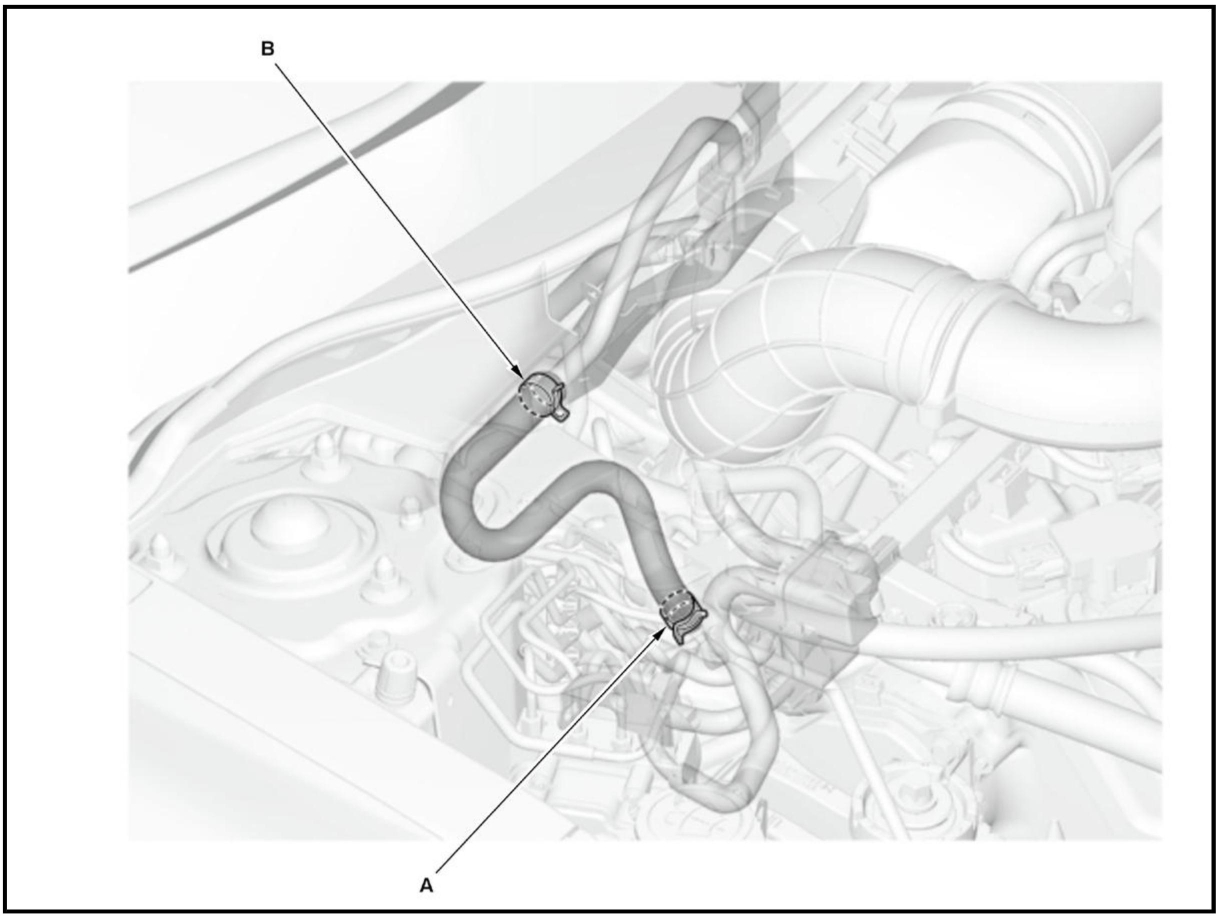
B
A

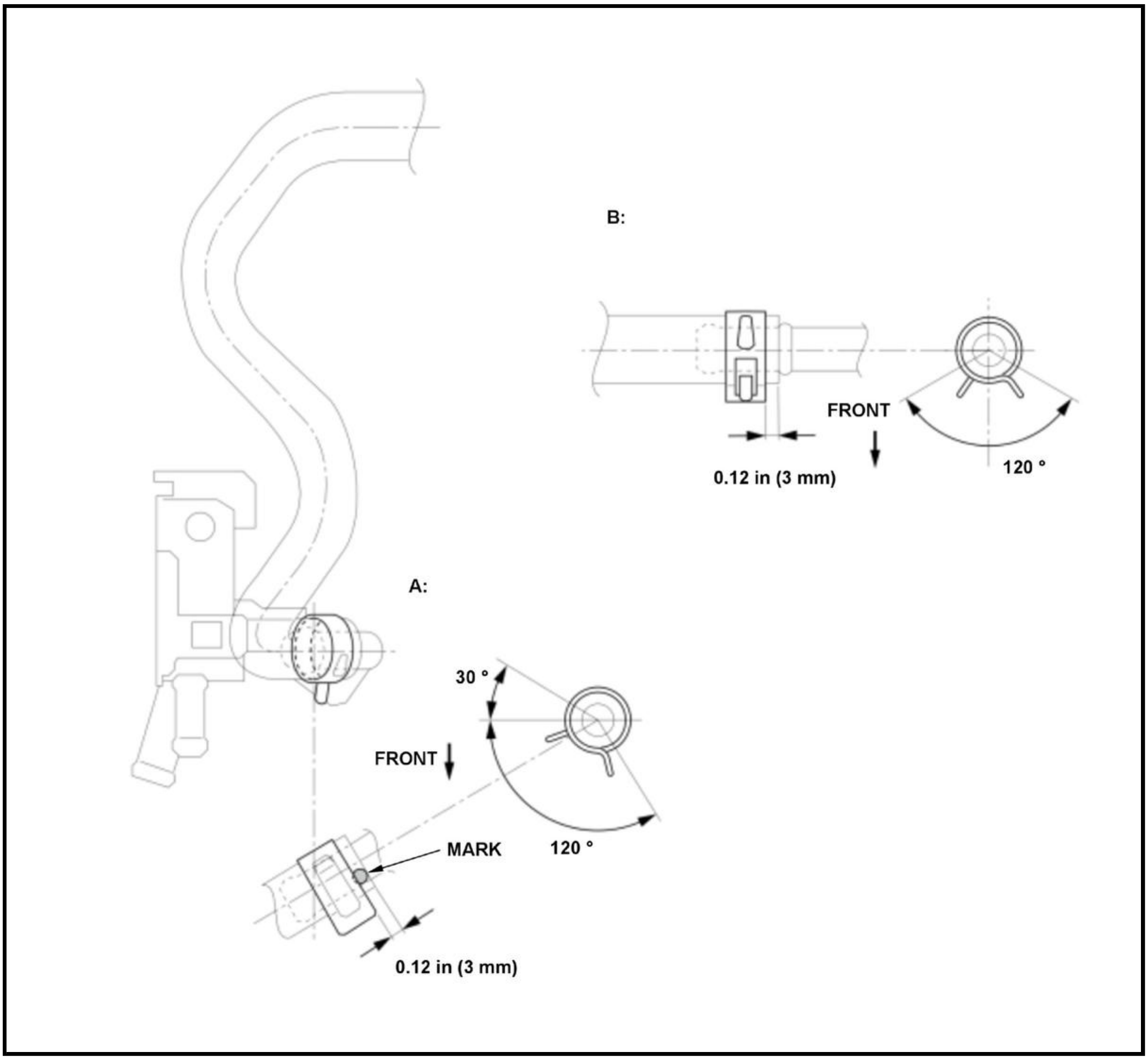
B:
FRONT
0.12 in (3 mm)
120 °
A:
30 °
FRONT
MARK
120 °
0.12 in (3 mm)

SYMPTOM TROUBLESHOOTING

FUEL AND EMISSIONS SYSTEMS SYMPTOM TROUBLESHOOTING - ENGINE STALLS-DIAGNOSTIC INTERVIEW

Engine stalls-Diagnostic interview

• Date	B	B
B	B	B
• Place	B	B
B	B	B
1. Accessories/modifications	A: No modification	B: Modified
B		
2. Situation when occurred	Booming noise, vibration occurs when deceleration, stopping, engine stalls	
B		
3. Situation when occurred	Engine stalls without vibrations as if stopped by turning off the ignition switch	
B		
4. Situation when occurred	Outside temperature, engine temperature (cold/warmed-up), engine could restart right away or not, others	

Engine stalls condition-Possible cause pattern chart from diagnostic interview

B	Conditions when the engine stalls	Possible causes
Pattern 1	Accessories/modifications	"Hard to start engine" or "engine stall" sometimes occurs due to a fault in the ignition system, intake duct, intake manifold, or exhaust system. (Intermittent failure may occur due to modification)
Pattern 2	Booming noise, vibration occurs when deceleration, stopping, engine stalls	The following intermittent failures may exist. • Intermittent failure of PGM-FI main relay 2 • Faulty fuel supply (parameter ST FUEL TRIM) • Delay of EGR function (parameter EGR) (only vehicles with EGR) • Delay of VTEC, VTC system function (parameter VTEC) (only vehicles with VTEC or VTC) • Delay of lock-up operation (parameter SLIP RATIO OF TORQ OR STARTCLUTCH) (AT, CVT vehicles)
Pattern 3	Engine stalls without vibrations as if turning off the ignition switch	The following intermittent failures may exist. • Intermittent failure of ignition coil relay • Intermittent failure of PGM-FI main relay 1 • Intermittent failure of PGM-FI subrelay • Intermittent failure of ETCS control relay

SERVICING

FUEL PRESSURE RELIEVING

Procedure

WARNING:

Flammable - Keep Fire Away

NOTE:

- Refer to the **Fuel and Emissions Systems Service Precautions** before disconnecting the fuel line.
- Fuel may cause flammable gas leaks and may result in fire. Keep sparks, flame and cigarettes away.
- Before disconnecting fuel lines or hoses, relieve pressure from the system by disabling the fuel pump and disconnecting the fuel line/quick connect fitting in the engine compartment.

1. Fuel Tank Pressure - Relieve

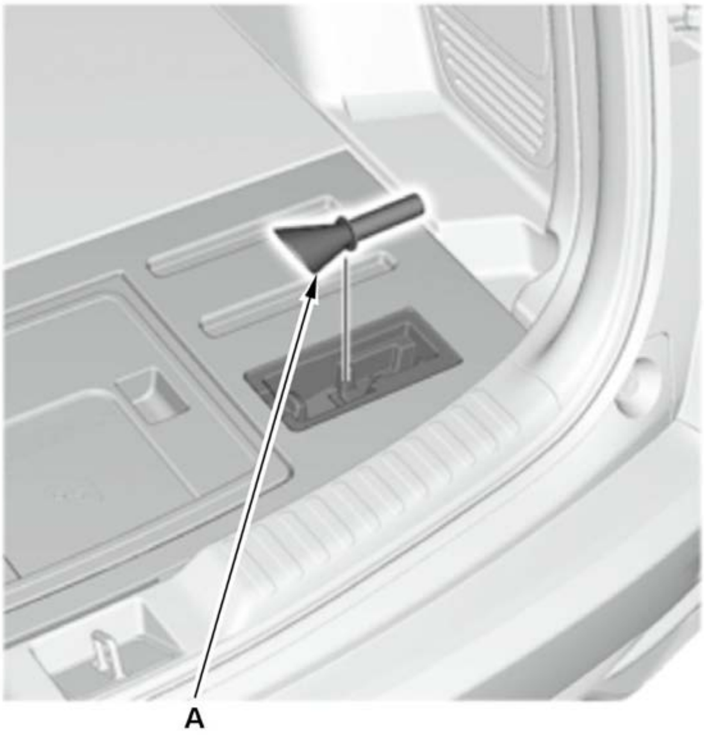	1. Remove the emergency fuel funnel (A).

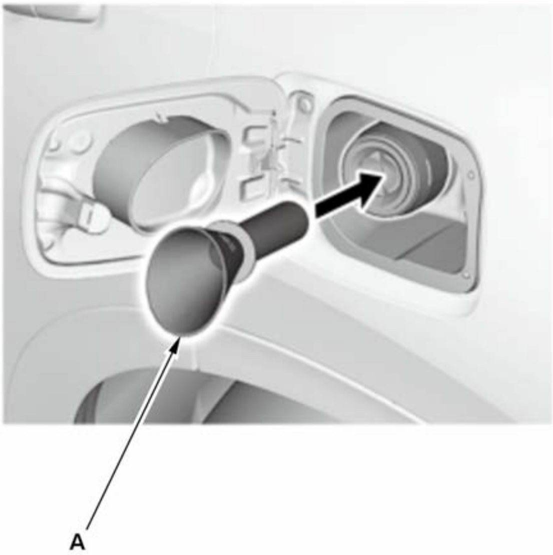	2. Insert the emergency fuel funnel (A) into the fuel filler neck to relieve the pressure in the fuel tank.

2. Fuel Pressure - Relieve

1. **Remove PGM-FI main relay 2** . 2. **Enter the maintenance mode and start the engine** . Then let it idle until it stalls. **NOTE:** If any DTCs are stored, clear and ignore them. 3. Turn the vehicle to the OFF (LOCK) mode. 4. Install PGM-FI main relay 2.

3. **12 Volt Battery Terminal - Disconnect**

FUEL TANK UNIT/FUEL FILTER REMOVAL, INSTALLATION, DISASSEMBLY, AND REASSEMBLY

Special Tools Required

Image	Description/Tool Number
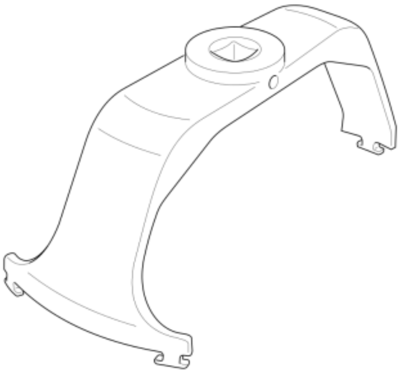	Wrench, Fuel Sender 070AA-TLA0100

Removal

WARNING:

Flammable - Keep Fire Away

NOTE:

- Refer to the **Fuel and Emissions Systems Service Precautions** before disconnecting the fuel line.
- Fuel may cause flammable gas leaks and may result in fire. Keep sparks, flame and cigarettes away.

Procedure

NOTE: **Numbered call-outs in figure pertain to list numbers in following procedure.**

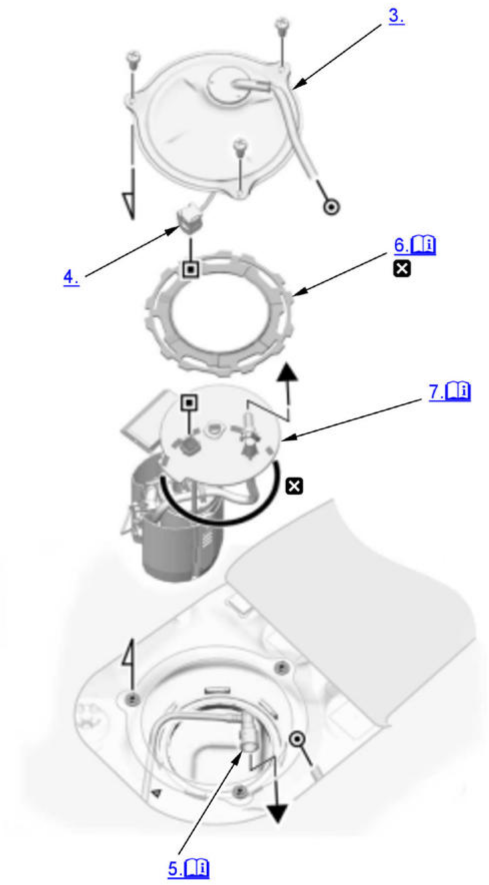

Fig. 1: Exploded View Of Fuel Tank Unit/Fuel Filter Replacement Components For Removal
Courtesy of HONDA, U.S.A., INC.

☒	Replace

1. **Fuel Pressure - Relieve**
2. **Rear Seat Cushion - Lift**
3. Fuel Tank Unit Access Panel - Remove
4. Connector (Fuel Tank Unit) - Disconnect
5. Fuel Line Quick-Connect Fitting - Disconnect

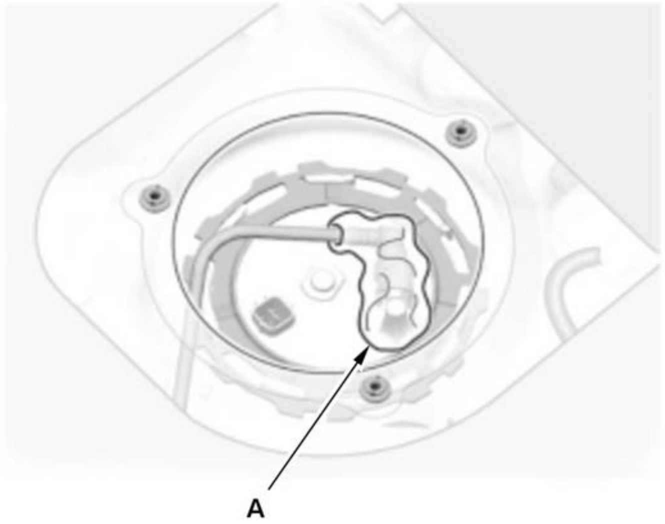	1. Place a rag or shop towel (A) over the quick-connect fitting. 2. **Disconnect the quick-connect fitting** from the fuel tank unit.

6. Fuel Tank Unit Cam Lock Ring - Unlock

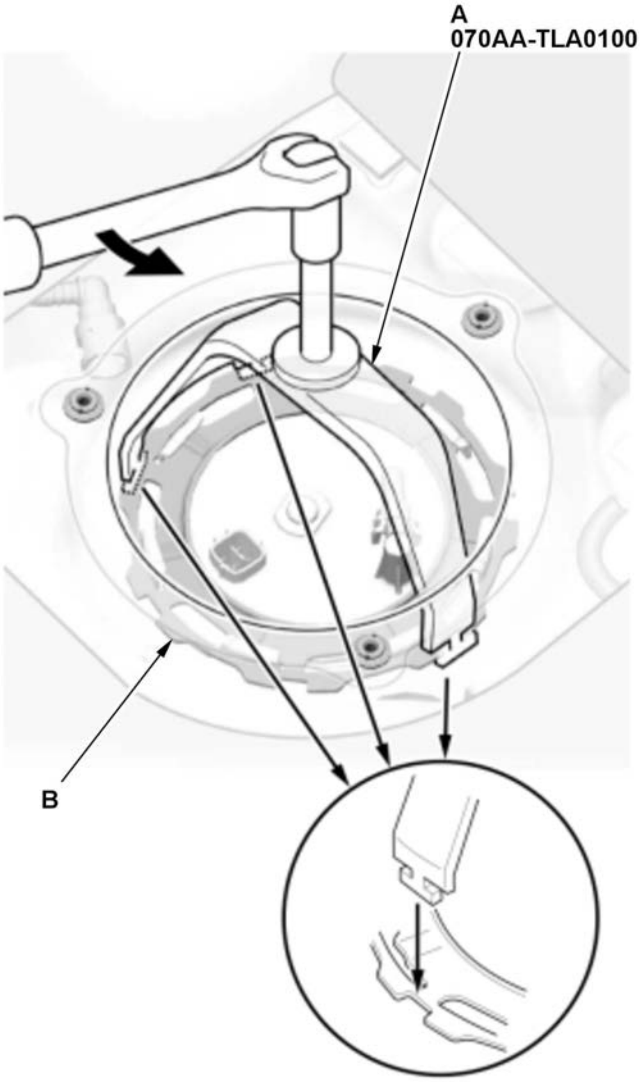	1. Set the fuel sender wrench (A) as shown. 2. Turn the fuel tank unit cam lock ring (B) counterclockwise. **NOTE:** Try to keep the fuel sender wrench from floating.

7. Fuel Tank Unit - Remove

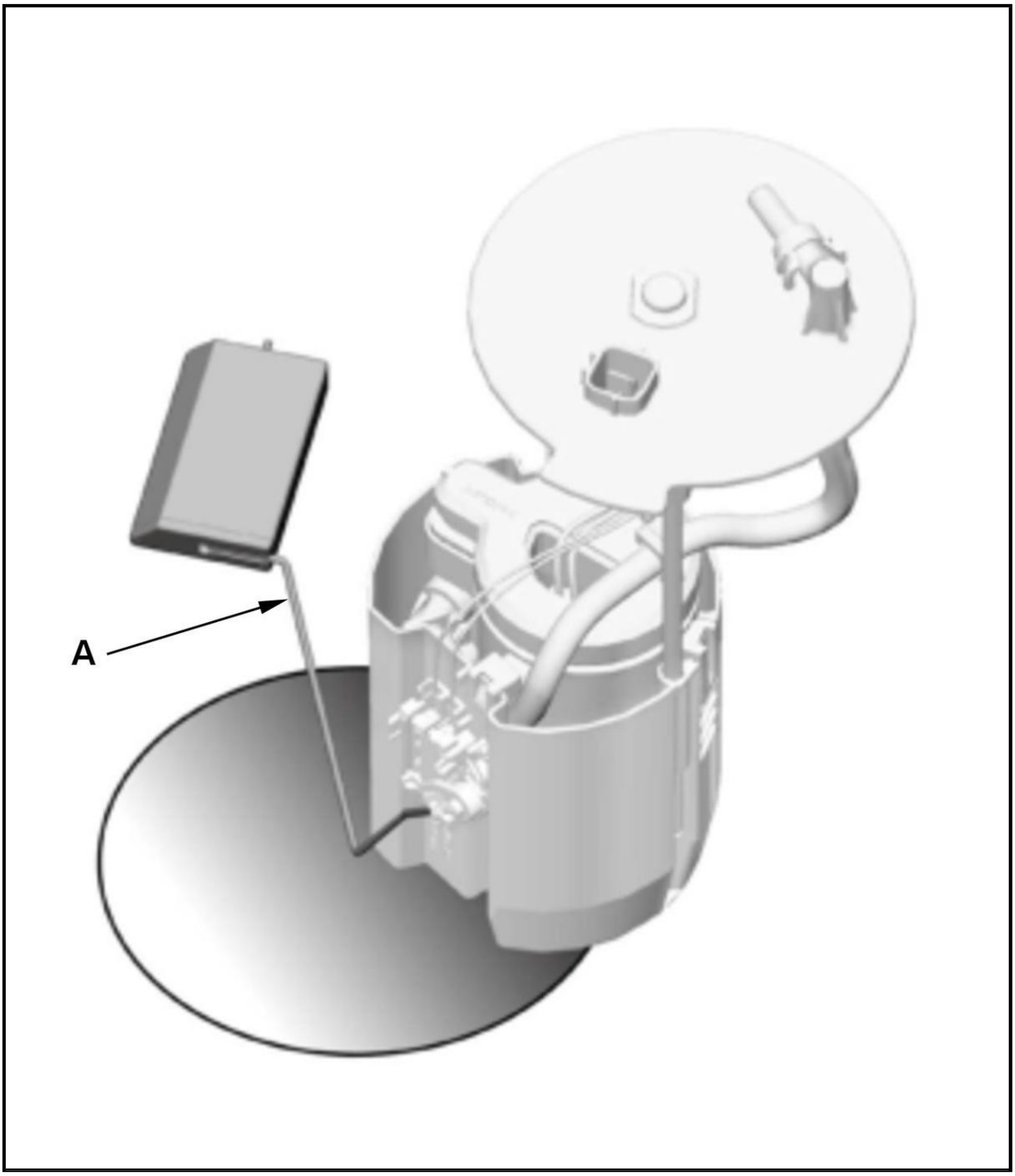

NOTE: Be careful not to bend or twist the fuel level sensor arm (A) excessively.

Installation

WARNING:

Flammable - Keep Fire Away

NOTE:

- Refer to the **Fuel and Emissions Systems Service Precautions** before disconnecting the fuel line.
- Fuel may cause flammable gas leaks and may result in fire. Keep sparks, flame and cigarettes away.

Procedure

NOTE: **Numbered call-outs in figure pertain to list numbers in following procedure.**

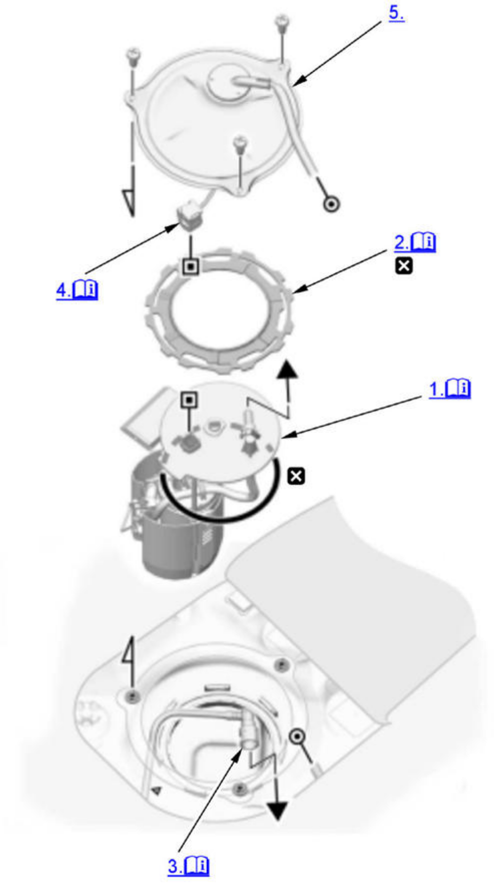

Fig. 2: Exploded View Of Fuel Tank Unit/Fuel Filter Replacement Components For Installation
Courtesy of HONDA, U.S.A., INC.

☒	Replace

1. Fuel Tank Unit - Install

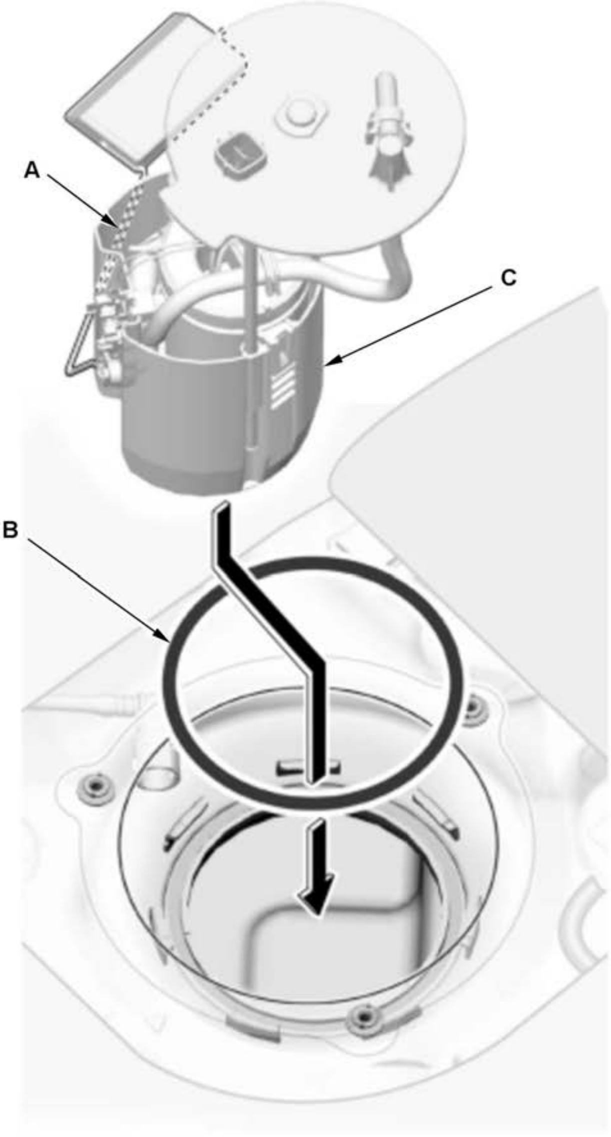	**NOTE:** - Be careful not to bend or twist the fuel level sensor arm (A) excessively. - Be careful not to damage the O-ring (B). - Do not coat the O-ring with oil. 1. Insert the fuel tank unit (C) partially into the fuel tank with the O-ring.

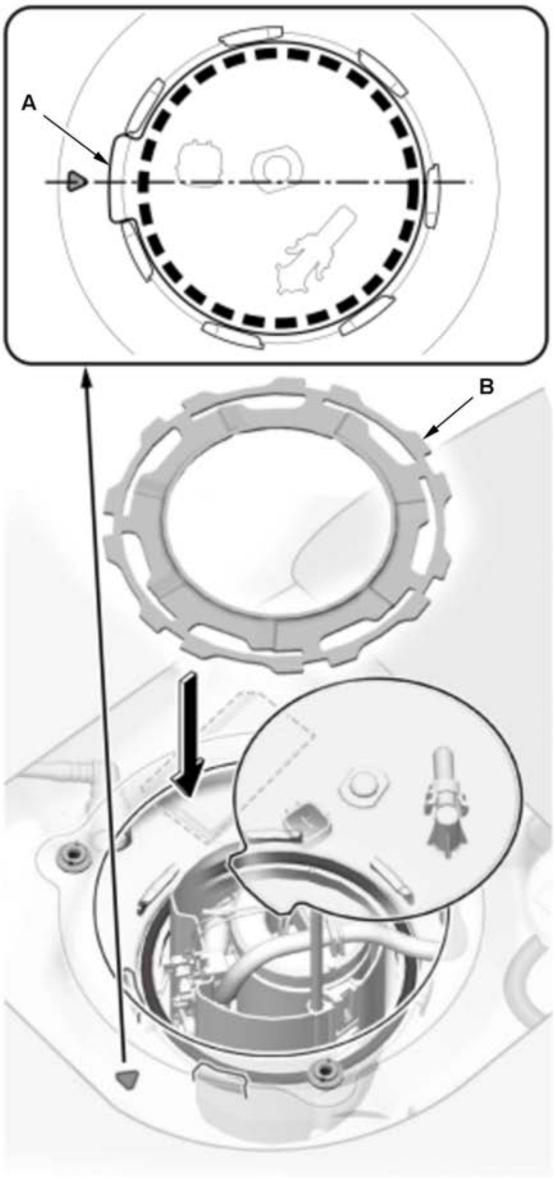	2. Align the tab (A) of the fuel tank unit as shown, and temporarily insert the fuel tank unit cam lock ring (B).

2. Fuel Tank Unit Cam Lock Ring - Lock

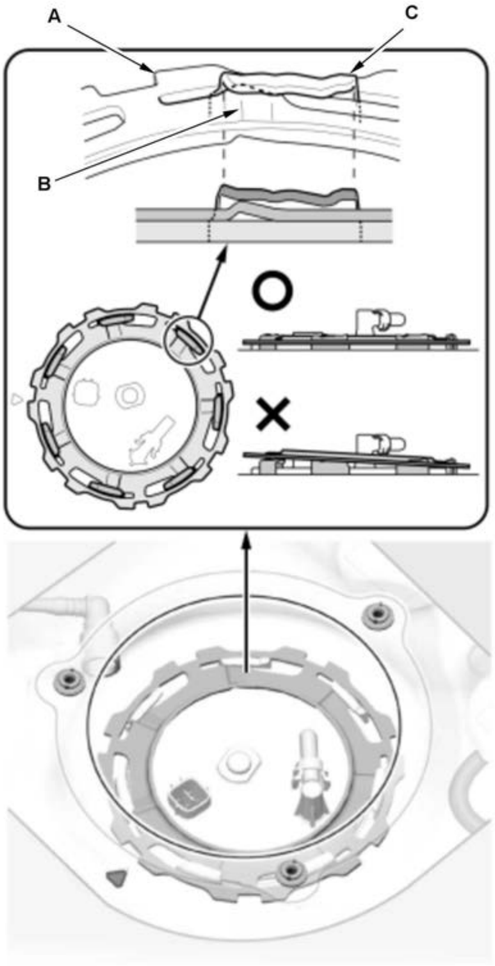	1. Rotate the fuel tank unit cam lock ring (A) and slide the fuel tank unit cam lock tabs (B) into the positioning edge (C) slightly as shown by hand. **NOTE:** Confirm the fuel cam lock ring is not floating.

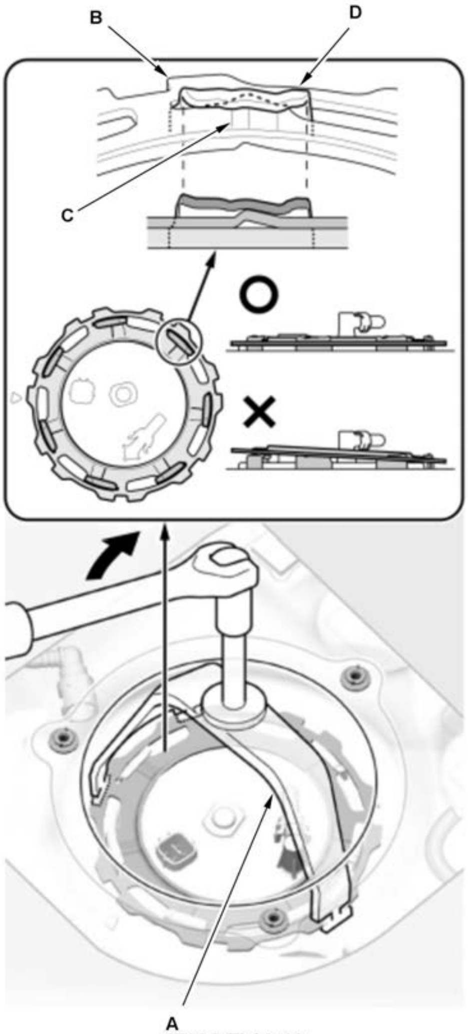 070AA-TLA0100	2. Using the fuel sender wrench (A), turn the fuel tank unit cam lock ring (B) clockwise. **NOTE:** - Try to keep the fuel sender wrench from floating. - Securely set the positioning edge (C) of the fuel tank at the fuel tank unit cam lock ring tabs (D) on the fuel tank unit cam lock ring as shown.

3. Fuel Line (Fuel Line Quick-Connect Fitting) - Connect

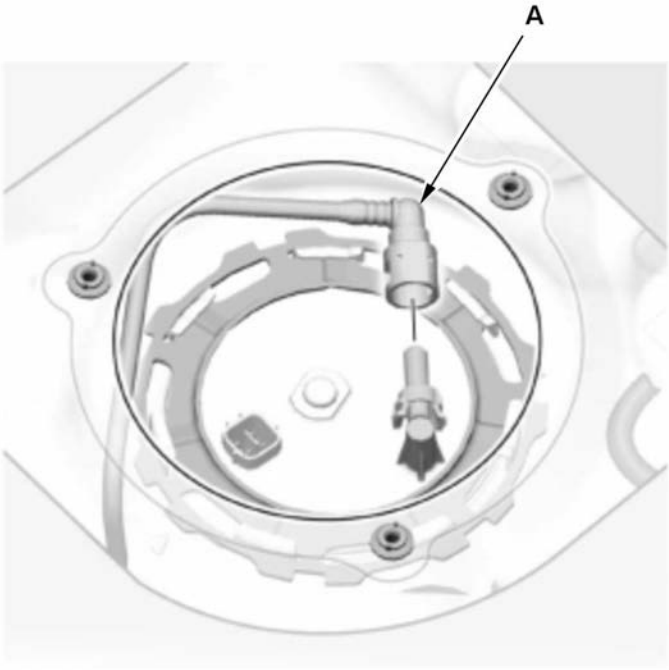	1. **Connect the quick-connect fitting** (A) to the fuel tank unit.

4. Fuel Leak - Check (Connector (Fuel Tank Unit) - Connect)

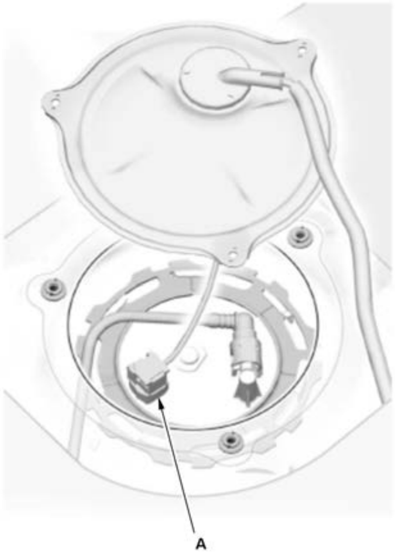 	1. Connect the fuel tank unit connector (A). 2. Turn the vehicle to the ON mode, but do not turn to the READY TO DRIVE mode. After the fuel pump runs for about 2 seconds, the fuel line will be pressurized. Repeat this two or three times, then check for fuel leakage.

5. Fuel Tank Unit Access Panel - Install
6. **Rear Seat Cushion - Install**

Disassembly and Reassembly

WARNING:

Flammable - Keep Fire Away

NOTE:

- Fuel may cause flammable gas leaks and may result in fire. Keep sparks, flame and cigarettes away.
- The fuel filter should be replaced whenever the fuel pressure drops below the specified value, after making sure that the fuel pump and the fuel pressure regulator are OK.
- When replacing the fuel filter or the fuel pressure regulator, use all the new parts supplied in the replacement kit.

Procedure

NOTE: **Numbered call-outs in figure pertain to list numbers in following procedure.**

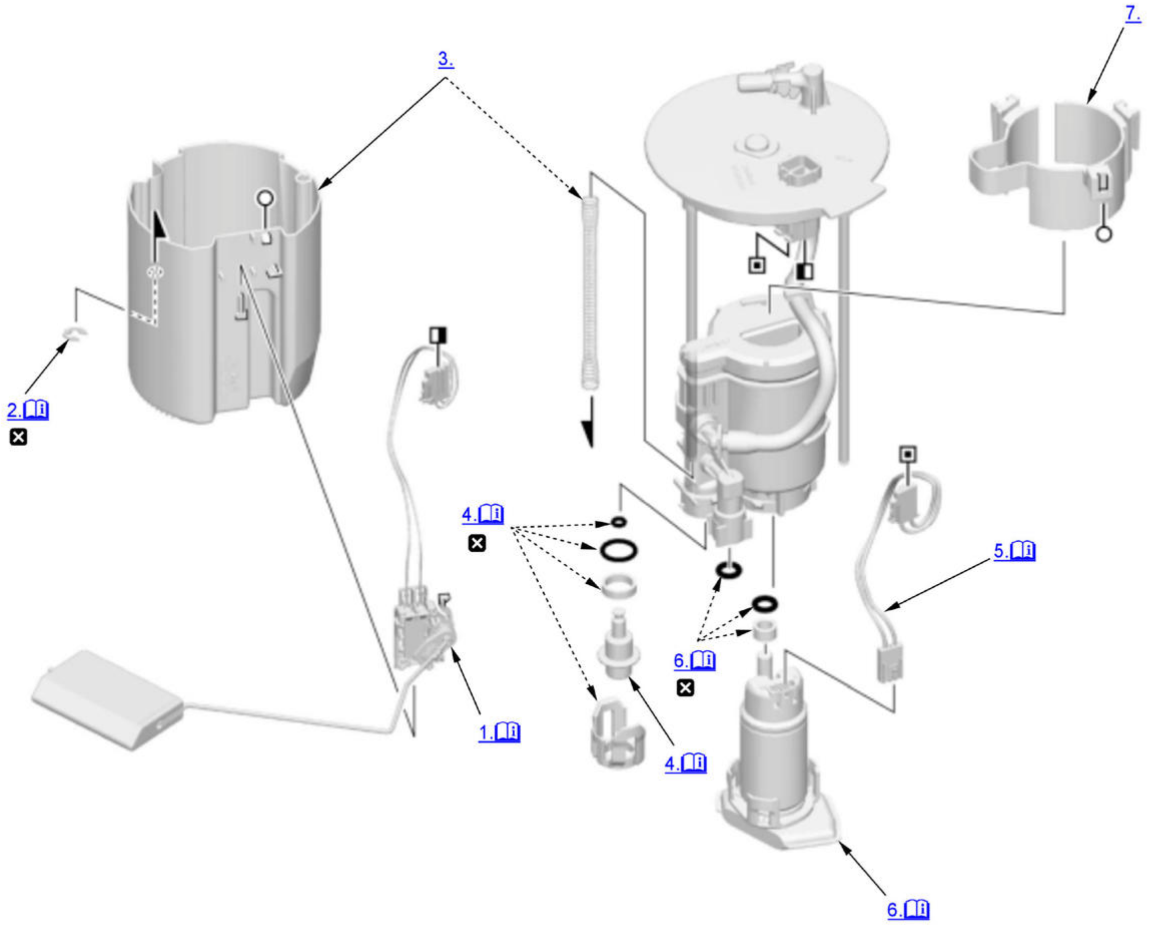

[Fig. 3: Exploded View Of Fuel Tank Unit/Fuel Filter Replacement Components For Disassembly And Reassembly](#)

Courtesy of HONDA, U.S.A., INC.

☒	Replace

1. Fuel Gauge Sending Unit - Remove

   NOTE: Be careful not to bend or twist the fuel level sensor arm excessively.

   Note for installation

   Make sure the connection is secure and the connector is firmly locked into place.

2. E-Ring - Remove

   Note for installation

   Make sure the E-ring is firmly installed.

3. Reservoir - Remove
4. Fuel Pressure Regulator - Remove

   Note for installation

   - Coat the O-rings with clean engine oil; do not use any other oil or fluid.
   - Do not pinch the O-rings during installation.

5. Fuel Pump Harness - Remove

Note for installation

When connecting the wire harness, make sure the connection is secure and the connectors are firmly locked into place.

6. Fuel Pump - Remove

   Note for installation

   - Coat the O-rings with clean engine oil; do not use any other oil or fluid.
   - Do not pinch the O-rings during installation.
7. Bracket - Remove
8. All Removed Parts - Install

   1. Install the parts in the reverse order of removal.

FUEL AND EMISSIONS SYSTEMS SERVICE PRECAUTIONS

Fuel Flow Line Disconnection

- Flammable - Keep fire away; Do not light any fires near the work area, and handle the fuel carefully. Setting fire to fuel will cause a serious accident.
- Relieve the fuel pressure before the fuel line disconnection to avoid a risk of fuel spraying from there.
- Disconnect the 12 volt battery negative terminal before the electric connector disconnection to avoid a risk of starting a fire caused by the sparks coming off the connector.
- Clean the contact area of the joint. Any dirt may cause fuel leakage by a misconnection.

Others

- Do not apply the brake fluid, engine coolant, plant-based oil, or alcohol-based oil to the O-ring. Any undesignated fluid or oil may cause material deterioration or damage.
- Follow the instructions in order to guarantee the quality of the parts and the repair.
- If the way how the hose should be installed is not shown in the procedure, install it in the same position as before removal, and make sure that the hose clamps do not interfere with surrounding parts.

TEST

FUEL PRESSURE TEST

Special Tools Required

Image	Description/Tool Number
	GAUGE, FUEL PR. 100PSI 07406-004000C

Image	Description/Tool Number
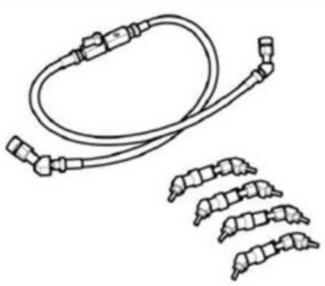	Fuel Pressure Gauge Attachment Set 07AAJ-S6MA150 or 07AAJ-S6MA151

Test

WARNING:

Flammable - Keep Fire Away

NOTE:

- **How to read the torque specifications** .
- Refer to the **Fuel and Emissions Systems Service Precautions** before disconnecting the fuel line.
- Fuel may cause flammable gas leaks and may result in fire. Keep sparks, flame and cigarettes away.

1. **Fuel Pressure - Relieve**
2. Fuel Hose Cover - Remove

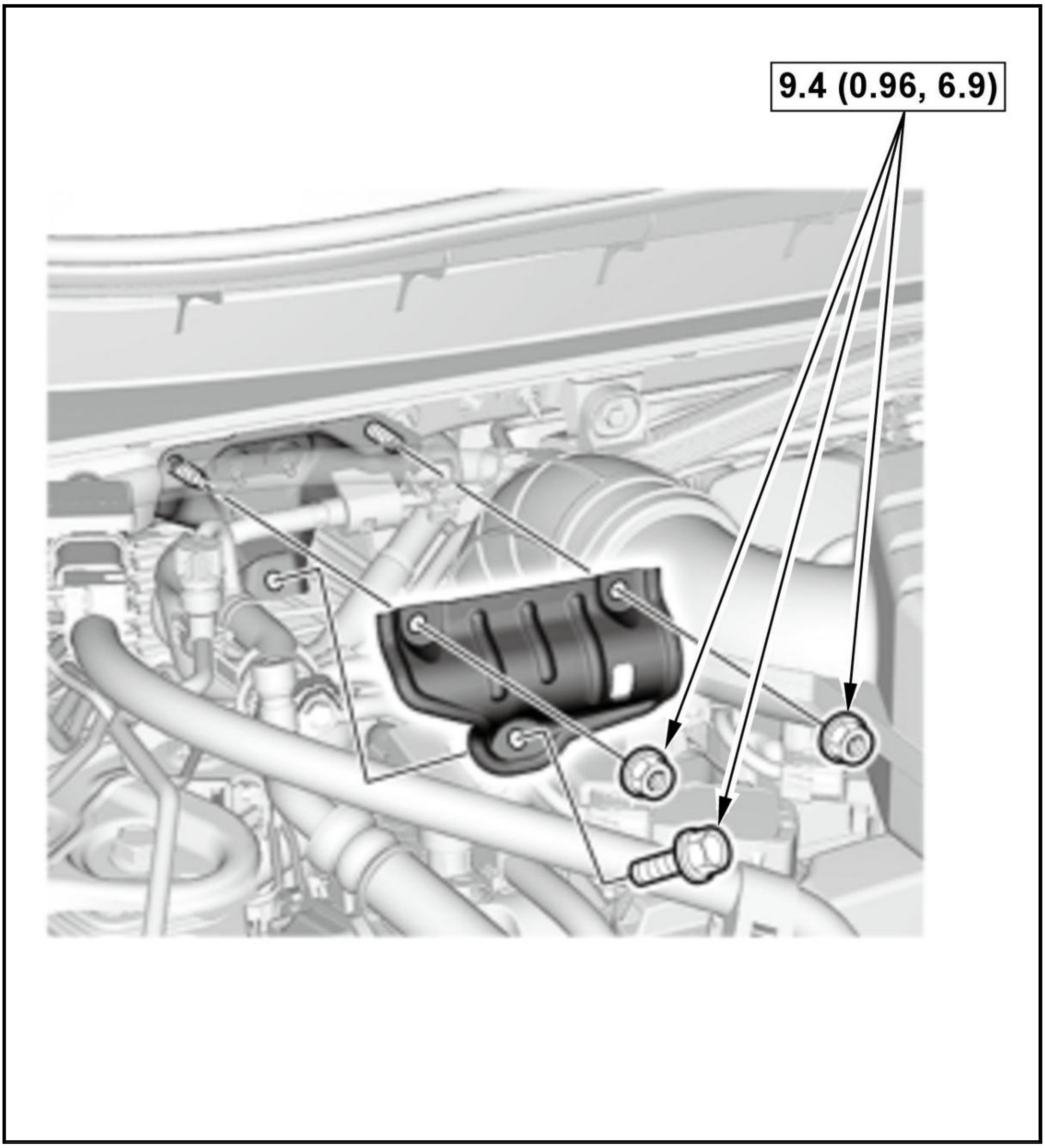

3. Fuel Line Quick-Connect Fitting - Disconnect

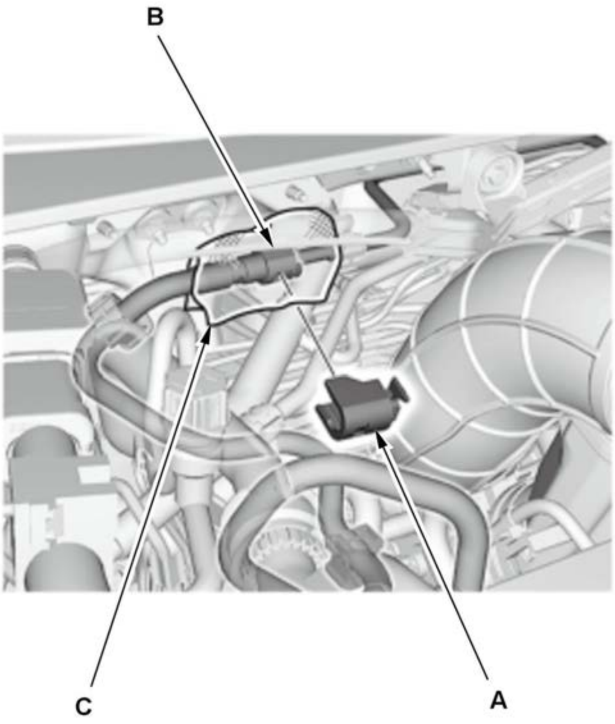

1. **Remove the quick-connect fitting cover (A)**

2. Check the fuel quick-connect fitting (B) for dirt, and clean it if needed.

3. Place a rag or shop towel (C) over the quick-connect fitting.

4. **Disconnect the quick-connect fitting**.

4. Fuel Pressure - Test

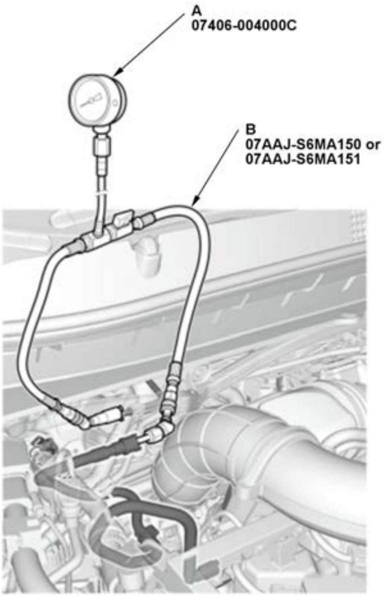

NOTE: If you were referred to this procedure from a troubleshooting procedure, test the fuel pressure under the same conditions the malfunction occurred (engine speed, load, throttle position, etc.).

1. Attach the gauge set fuel pressure (A), and the fuel pressure gauge attachment (B). Check for leaks with the gauge set attached.

2. **Enter the maintenance mode and start the engine** . Then let it idle.

- If the engine starts, go to step 3 and read the fuel pressure gauge.
- If the pump does not run, **do the fuel pump circuit troubleshooting**.

3. Read the fuel pressure gauge. The pressure should be: **380-430 kPa (3.87-4.38 kgf/cm^2 , 55.1-62.4 psi)**

- If the pressure is OK, the test is complete.
- If the pressure is out of specification, **replace the fuel pressure regulator** and **the fuel filter**, then recheck the fuel pressure.

TROUBLESHOOTING

FUEL PUMP CIRCUIT TROUBLESHOOTING

If you suspect a problem with the fuel pump, check that the fuel pump actually runs; when it is on, you will hear some noise if you listen to the fuel fill port. The fuel pump should run for 2 seconds when the vehicle is turned to ON mode. If the fuel pump does not make noise, check as follows:

1. Determine possible failure area (FI_MAIN_RLY_OUT line, others)

   -1. Turn the vehicle to the OFF (LOCK) mode.

   -2. **Remove PGM-FI main relay 2** .

   -3. Turn the vehicle to the ON mode.

   -4. Measure the voltage between test points 1 and 2.

Test condition	Vehicle ON mode
B	PGM-FI main relay 2: disconnected
Test point 1	PGM-FI main relay 2 4P socket (female terminals) No. 3: ①
Test point 2	Body ground

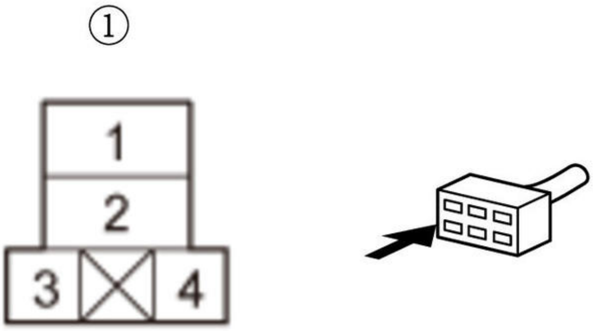

Is there battery voltage?

YES

Go to step 3.

NO

Go to step 2.

2. Open wire check (FI_MAIN_RLY_OUT line)

   -1. Turn the vehicle to the OFF (LOCK) mode.

   -2. Disconnect the following connector.

Relay circuit board connector C (18P)

   -3. Measure the resistance between test points 1 and 2.

Test condition	Vehicle OFF (LOCK) mode
	PGM-FI main relay 2: disconnected
	Relay circuit board connector C (18P): disconnected

Test point 1	Relay circuit board connector C (18P) (female terminals) No. 17: ①
Test point 2	PGM-FI main relay 2 4P socket (female terminals) No. 3: ②

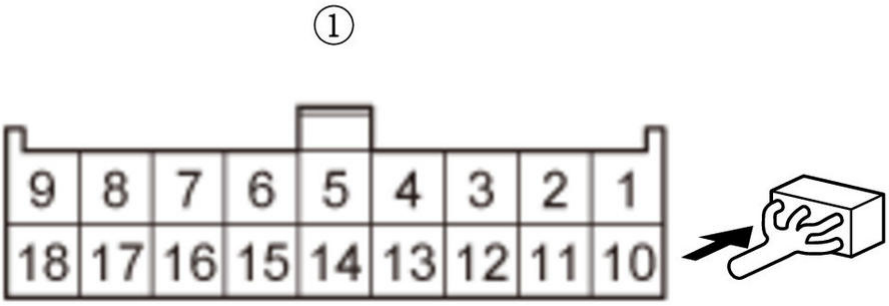

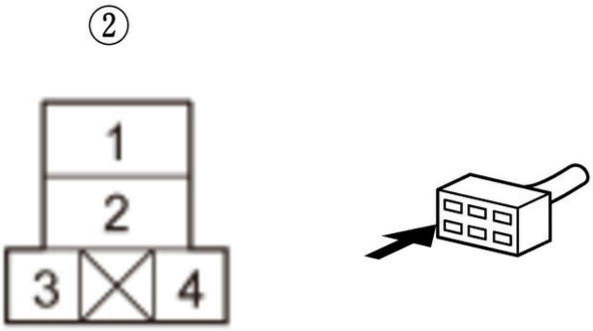

Is there 1.0 Ω or less?

YES

Remove and test the relay circuit board , and replace it if needed.

NO

Repair an open in the FI_MAIN_RLY_OUT wire between the relay circuit board and PGM-FI main relay 2.

3. Open wire check (IG1_FUEL_PUMP line)

-1. Measure the voltage between test points 1 and 2.

Test condition	Vehicle ON mode
B	PGM-FI main relay 2: disconnected

Test point 1	PGM-FI main relay 2 4P socket (female terminals) No. 1: ①
Test point 2	Body ground

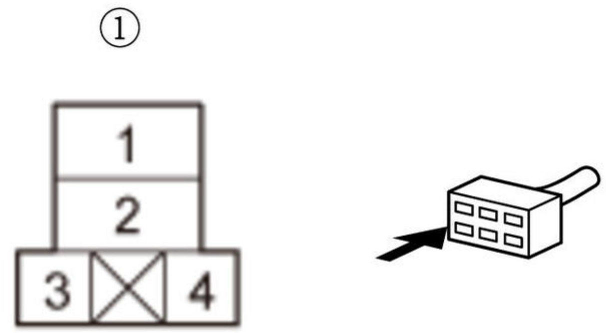

Is there battery voltage?

YES

Go to step 4.

NO

Check the **No. D8 fuse** . If the fuse is OK, repair an open in the IG1_FUEL_PUMP wire between the No. D8 fuse and PGM-FI main relay 2. If needed, **replace the under-dash fuse/relay box** .

4. Open wire check (FUEL_PUMP_RLY_CL- line)

-1. Turn the vehicle to the OFF (LOCK) mode.

-2. Jump the SCS line with the HDS, and wait more than 1 minute.

-3. Disconnect the following connector.

PCM connector A (50P)

-4. Measure the resistance between test points 1 and 2.

Test condition	Vehicle OFF (LOCK) mode
B	PGM-FI main relay 2: disconnected
B	PCM connector A (50P): disconnected
Test point 1	PGM-FI main relay 2 4P socket (female terminals) No. 4: ①
Test point 2	**PCM connector A (50P) No. 11**

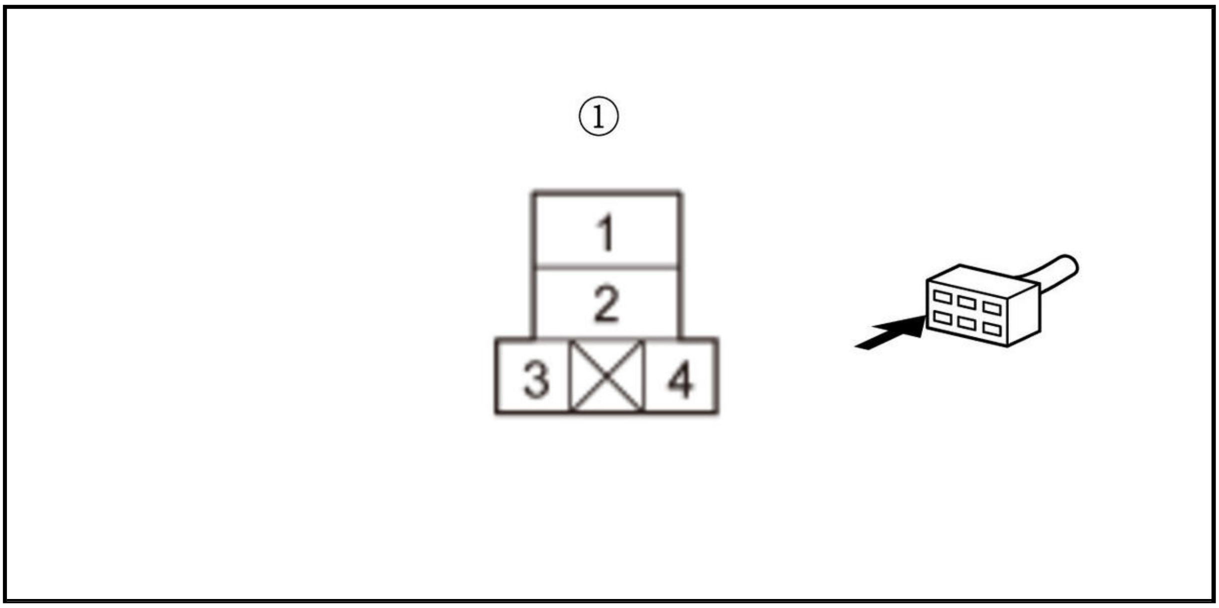

Is there 1.0 Ω or less?

YES

The FUEL_PUMP_RLY_CL- wire is OK. Go to step 5.

NO

Repair an open in the FUEL_PUMP_RLY_CL- wire between the PCM (A11) and PGM-FI main relay 2.

5. Determine possible failure area (PGM-FI main relay 2, others)

-1. **Reinstall PGM-FI main relay 2** .

-2. Connect terminals A and B with a jumper wire.

Terminal A	**PCM connector A (50P) No. 5**
Terminal B	Body ground

-3. Turn the vehicle to the ON mode.

-4. Measure the voltage between test points 1 and 2.

Test condition	Vehicle ON mode
B	PCM connector A (50P): disconnected
B	PCM connector A (50P) No. 5: jumped to body ground
Test point 1	**PCM connector A (50P) No. 11**
Test point 2	Body ground

Is there battery voltage?

YES

Go to step 6.

NO

Replace PGM-FI main relay 2.

6. PCM operation check

-1. Turn the vehicle to the OFF (LOCK) mode.

-2. **Remove PGM-FI main relay 2** .

-3. Remove the jumper wire from PCM connector A (50P).

-4. Reconnect PCM connector A (50P).

-5. Exit the SCS mode with the HDS.

-6. Turn the vehicle to the ON mode, and measure the voltage between test points 1 and 2.

Test condition	Within 2 seconds after turning vehicle to ON mode
B	PGM-FI main relay 2: disconnected
Test point 1	PGM-FI main relay 2 4P socket (female terminals) No. 3: ①
Test point 2	PGM-FI main relay 2 4P socket (female terminals) No. 4: ①

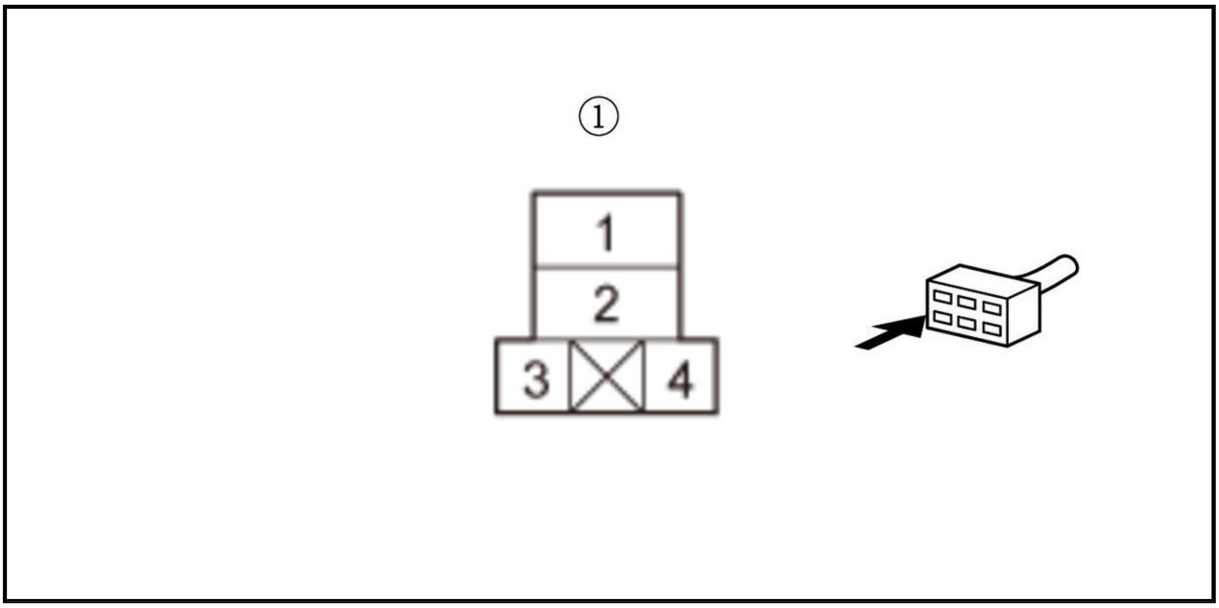

Is there battery voltage?

YES

Go to step 7.

NO

Check for any authorized service information related to the DTCs or symptoms you are troubleshooting, or **substitute a known-good PCM** .

7. Determine possible failure area (FUEL_PUMP_RLY_OUT line, GND line)

-1. Turn the vehicle to the OFF (LOCK) mode.

-2. Disconnect the following connector.

Fuel tank unit 4P connector

-3. **Reinstall PGM-FI main relay 2** .

-4. Turn the vehicle to the ON mode, and measure the voltage between test points 1 and 2.

Test condition	Within 2 seconds after turning vehicle to ON mode
B	Fuel tank unit 4P connector: disconnected
Test point 1	Fuel tank unit 4P connector (female terminals) No. 1: ①
Test point 2	Body ground

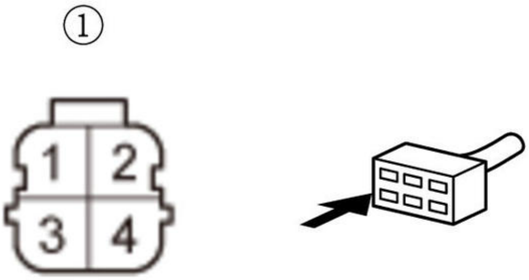

Is there battery voltage?

YES

Go to step 9.

NO

Go to step 8.

8. Open wire check (FUEL_PUMP_RLY_OUT line)

-1. Turn the vehicle to the OFF (LOCK) mode.

-2. **Remove PGM-FI main relay 2** .

-3. Connect terminals A and B with a jumper wire.

Terminal A	PGM-FI main relay 2 4P socket (female terminals) No. 1: ①
Terminal B	PGM-FI main relay 2 4P socket (female terminals) No. 2: ①

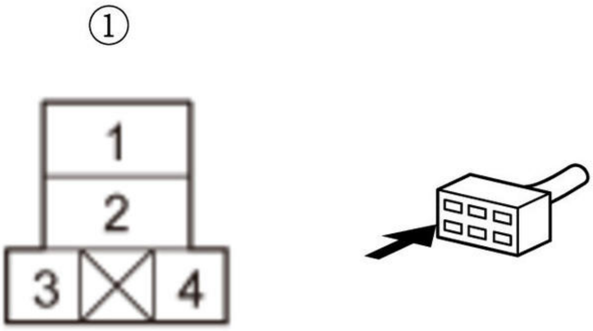

-4. Turn the vehicle to the ON mode.

-5. Measure the voltage between test points 1 and 2.

Test condition	Vehicle ON mode
B	Fuel tank unit 4P connector: disconnected
B	PGM-FI main relay 2: disconnected
B	PGM-FI main relay 2 4P socket No. 1 and No. 2: jumped
Test point 1	Fuel tank unit 4P connector (female terminals) No. 1: ①
Test point 2	Body ground

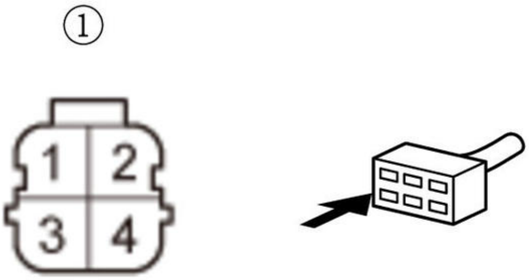

Is there battery voltage?

YES

The FUEL_PUMP_RLY_OUT wire is OK. Replace PGM-FI main relay 2.

NO

Repair an open in the FUEL_PUMP_RLY_OUT wire between PGM-FI main relay 2 and the fuel tank unit.

9. Open wire check (GND line)

-1. Turn the vehicle to the OFF (LOCK) mode.

-2. Measure the resistance between test points 1 and 2.

Test condition	Vehicle OFF (LOCK) mode

B	Fuel tank unit 4P connector: disconnected
Test point 1	Fuel tank unit 4P connector (female terminals) No. 3: ①
Test point 2	Body ground

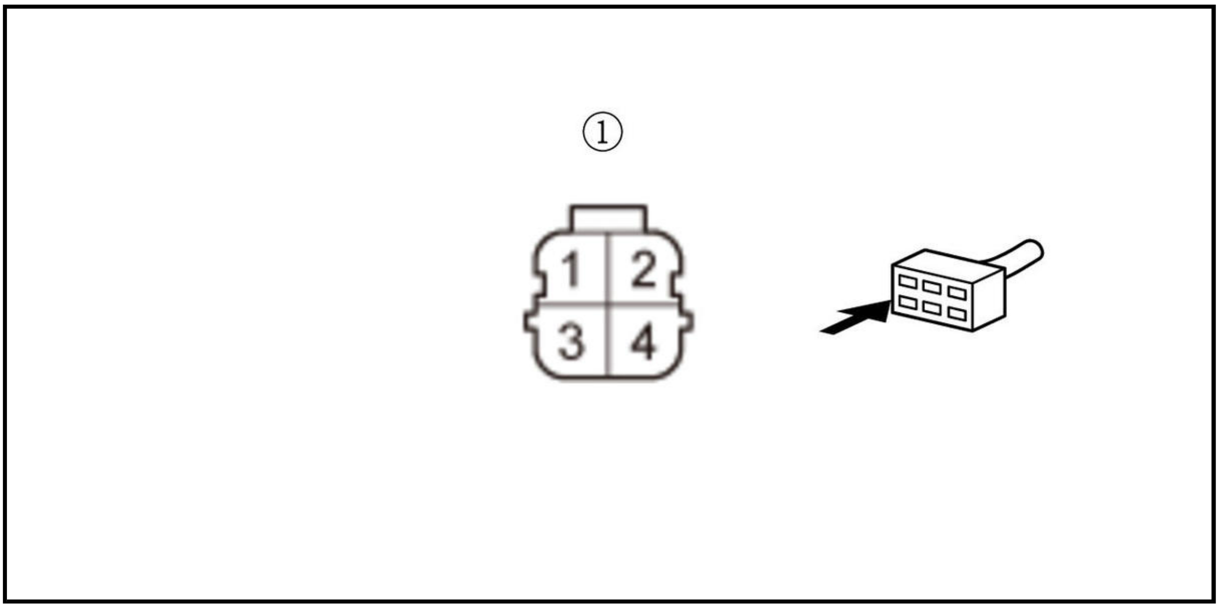

Is there 1.0 Ω or less?

YES

The GND wire is OK. **Replace the fuel pump**.

NO

Repair an open in the GND wire between the fuel tank unit and G503.

CIRCUIT DIAGRAM

FUEL AND EMISSIONS SYSTEMS CIRCUIT DIAGRAM

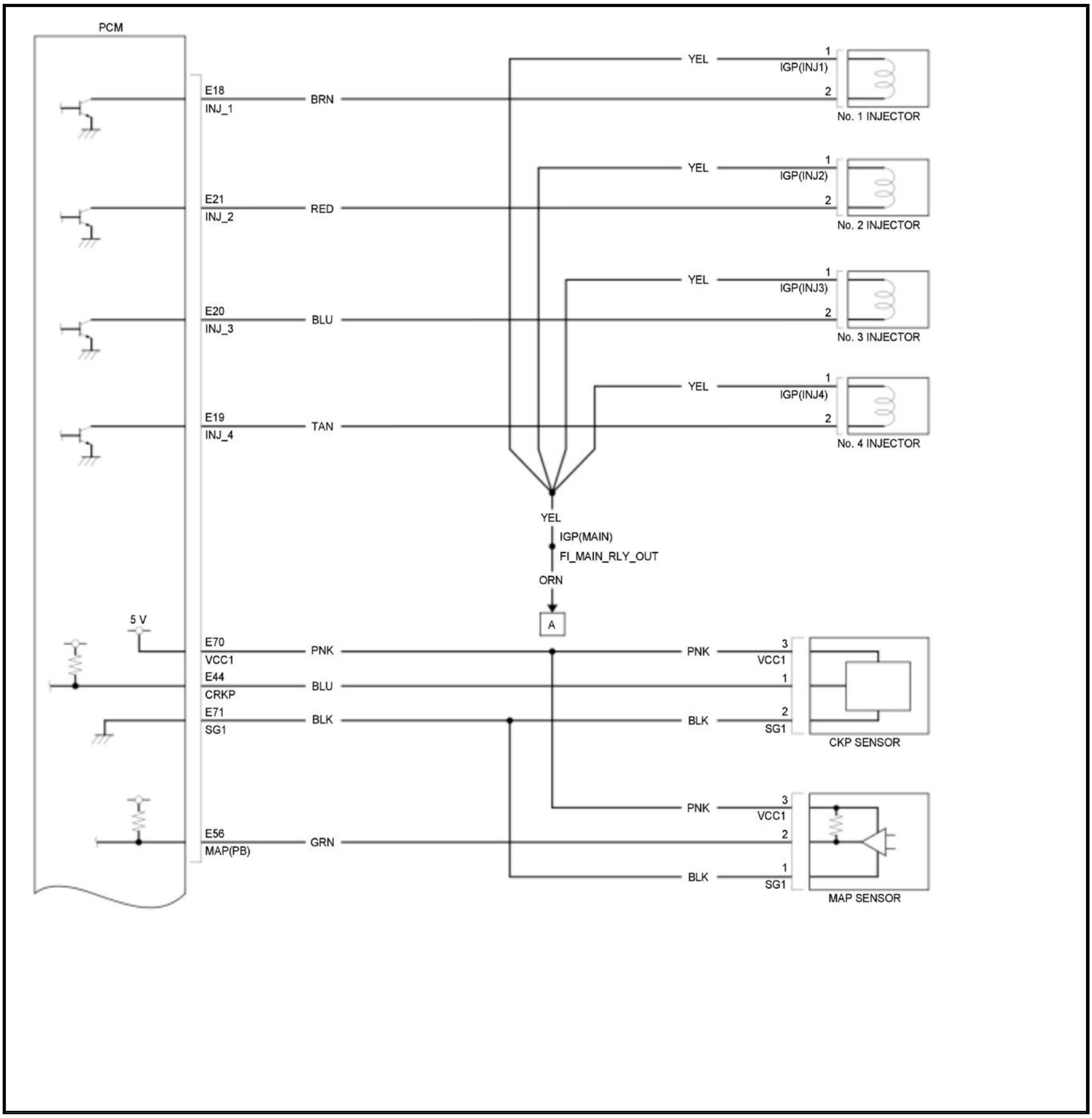
PCM
E18
INJ_1
BRN
E21
INJ_2
RED
E20
INJ_3
BLU
E19
INJ_4
TAN
YEL
1
IGP(INJ1)
2
No. 1 INJECTOR
YEL
1
IGP(INJ2)
2
No. 2 INJECTOR
YEL
1
IGP(INJ3)
2
No. 3 INJECTOR
YEL
1
IGP(INJ4)
2
No. 4 INJECTOR
YEL
IGP(MAIN)
FI_MAIN_RLY_OUT
ORN
A
5 V
E70
VCC1
PNK
E44
CRKP
BLU
E71
SG1
BLK
PNK
3
VCC1
1
BLK
2
SG1
CKP SENSOR
E56
MAP(PB)
GRN
PNK
3
VCC1
2
BLK
1
SG1
MAP SENSOR

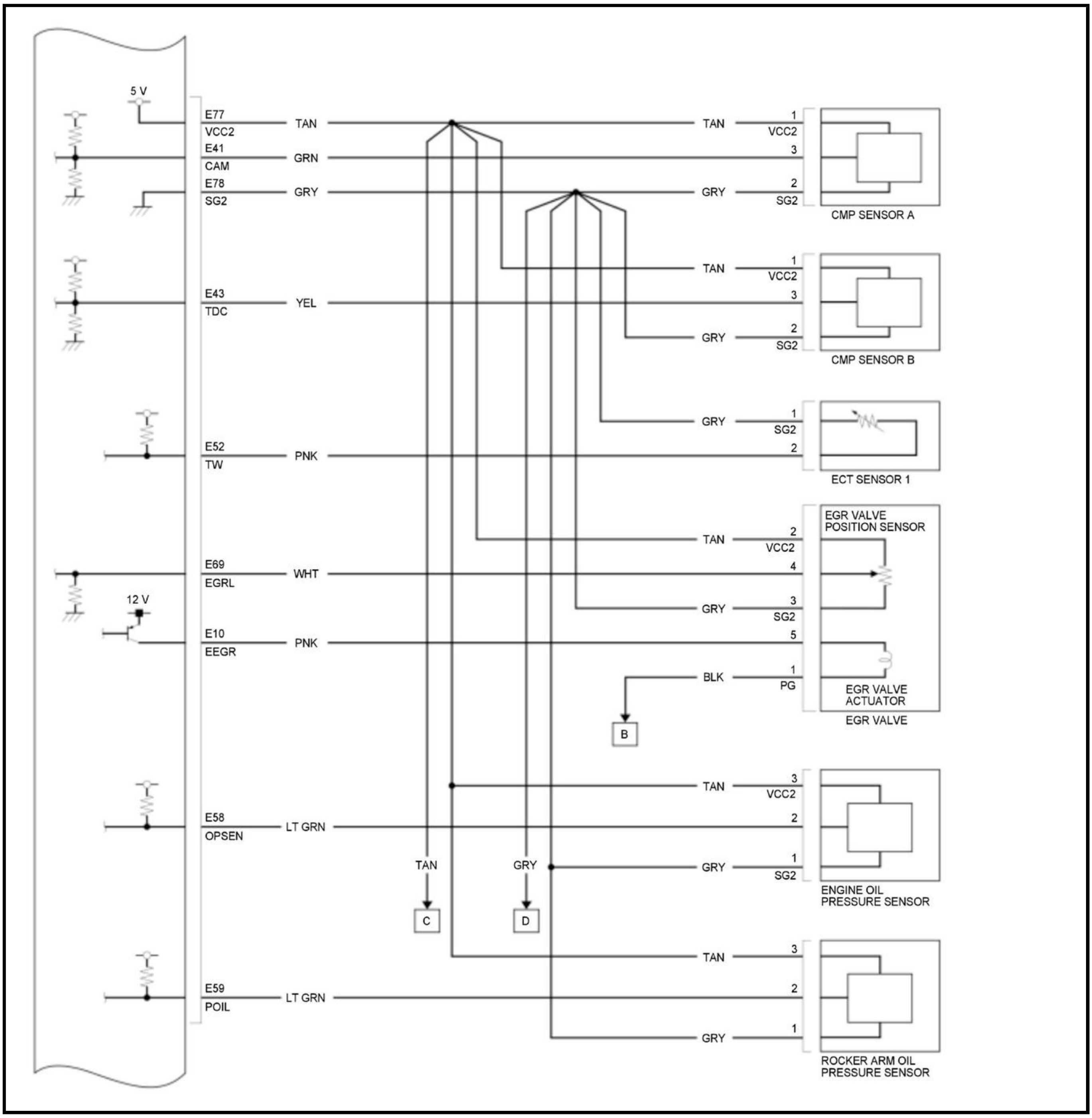

5 V
E77
VCC2
TAN
E41
CAM
GRN
E78
SG2
GRY
1
VCC2
3
2
SG2
CMP SENSOR A
E43
TDC
YEL
CMP SENSOR B
E52
TW
PNK
ECT SENSOR 1
E69
EGRL
WHT
12 V
E10
EEGR
BLK
PG
4
5
EGR VALVE POSITION SENSOR
EGR VALVE ACTUATOR
EGR VALVE
B
E58
OPSEN
LT GRN
C
D
ENGINE OIL PRESSURE SENSOR
E59
POIL
ROCKER ARM OIL PRESSURE SENSOR

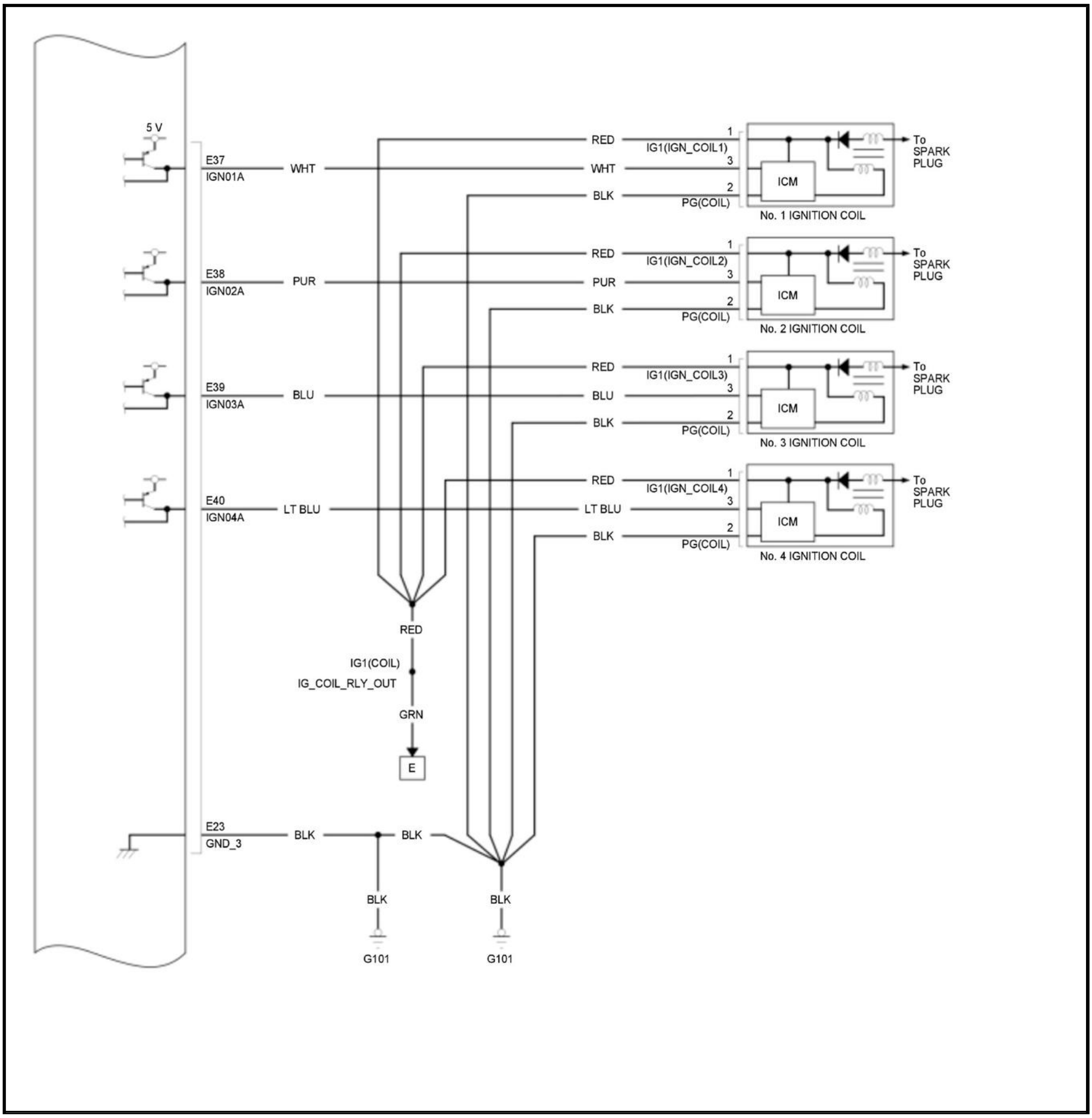
5 V
E37
IGN01A
WHT
E38
IGN02A
PUR
E39
IGN03A
BLU
E40
IGN04A
LT BLU
E23
GND_3
BLK
RED
WHT
BLK
1
IG1(IGN_COIL1)
3
2
PG(COIL)
ICM
No. 1 IGNITION COIL
RED
PUR
BLK
1
IG1(IGN_COIL2)
3
2
PG(COIL)
ICM
No. 2 IGNITION COIL
RED
BLU
BLK
1
IG1(IGN_COIL3)
3
2
PG(COIL)
ICM
No. 3 IGNITION COIL
RED
LT BLU
BLK
1
IG1(IGN_COIL4)
3
2
PG(COIL)
ICM
No. 4 IGNITION COIL
To SPARK PLUG
To SPARK PLUG
To SPARK PLUG
To SPARK PLUG
RED
IG1(COIL)
IG_COIL_RLY_OUT
GRN
E
BLK
BLK
BLK
G101
BLK
G101

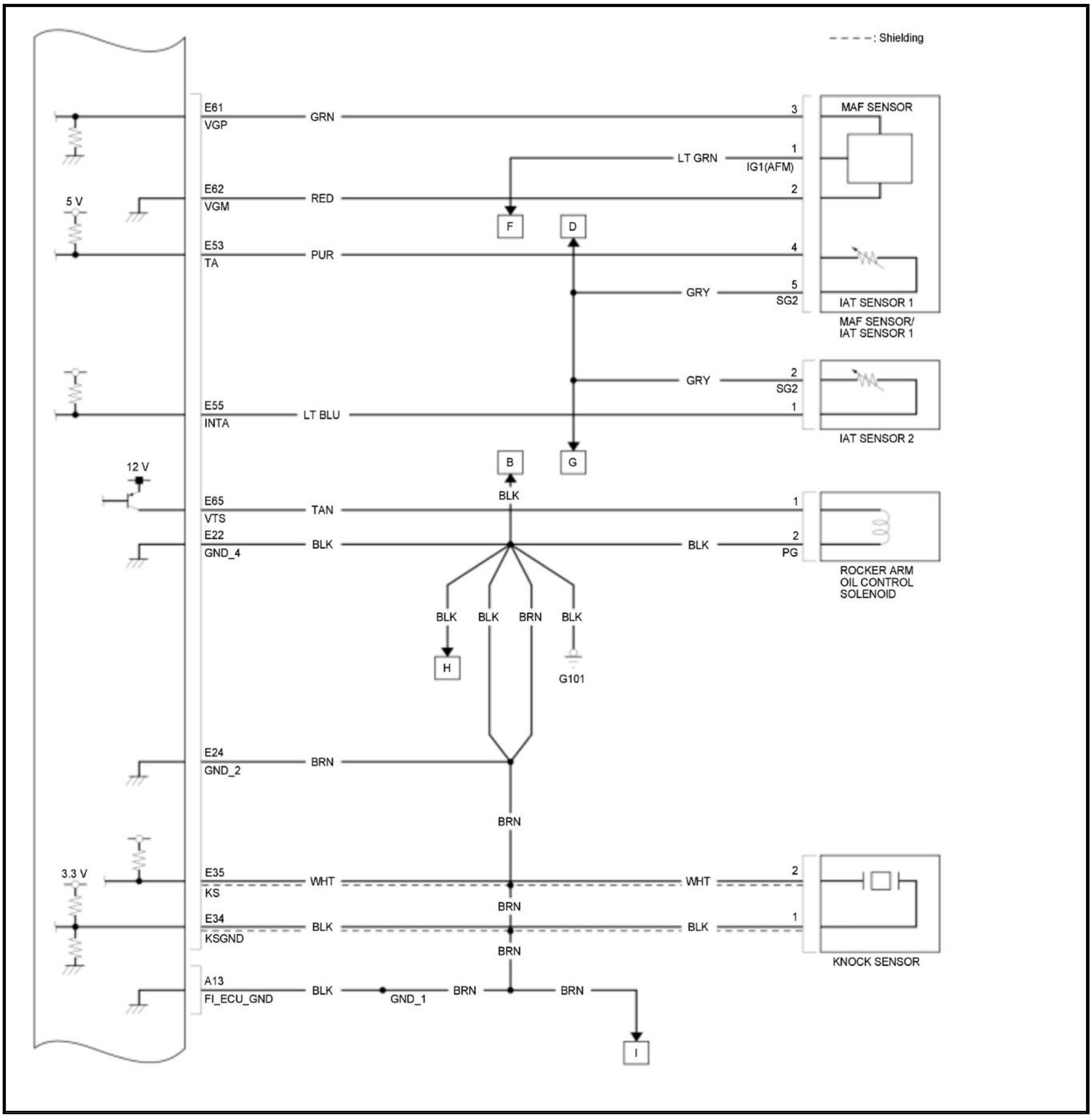
- - - -: Shielding
E61
VGP
GRN
3
MAF SENSOR
LT GRN
1
IG1(AFM)
5 V
E62
VGM
RED
2
F
D
E53
TA
PUR
4
GRY
5
SG2
IAT SENSOR 1
MAF SENSOR/
IAT SENSOR 1
GRY
2
SG2
E55
INTA
LT BLU
1
IAT SENSOR 2
B
G
12 V
BLK
E65
VTS
TAN
1
E22
GND_4
BLK
BLK
2
PG
ROCKER ARM
OIL CONTROL
SOLENOID
BLK
BLK
BRN
BLK
H
G101
E24
GND_2
BRN
BRN
3.3 V
E35
KS
WHT
WHT
2
BRN
E34
KSGND
BLK
BLK
1
BRN
KNOCK SENSOR
A13
FI_ECU_GND
BLK
GND_1
BRN
BRN
I

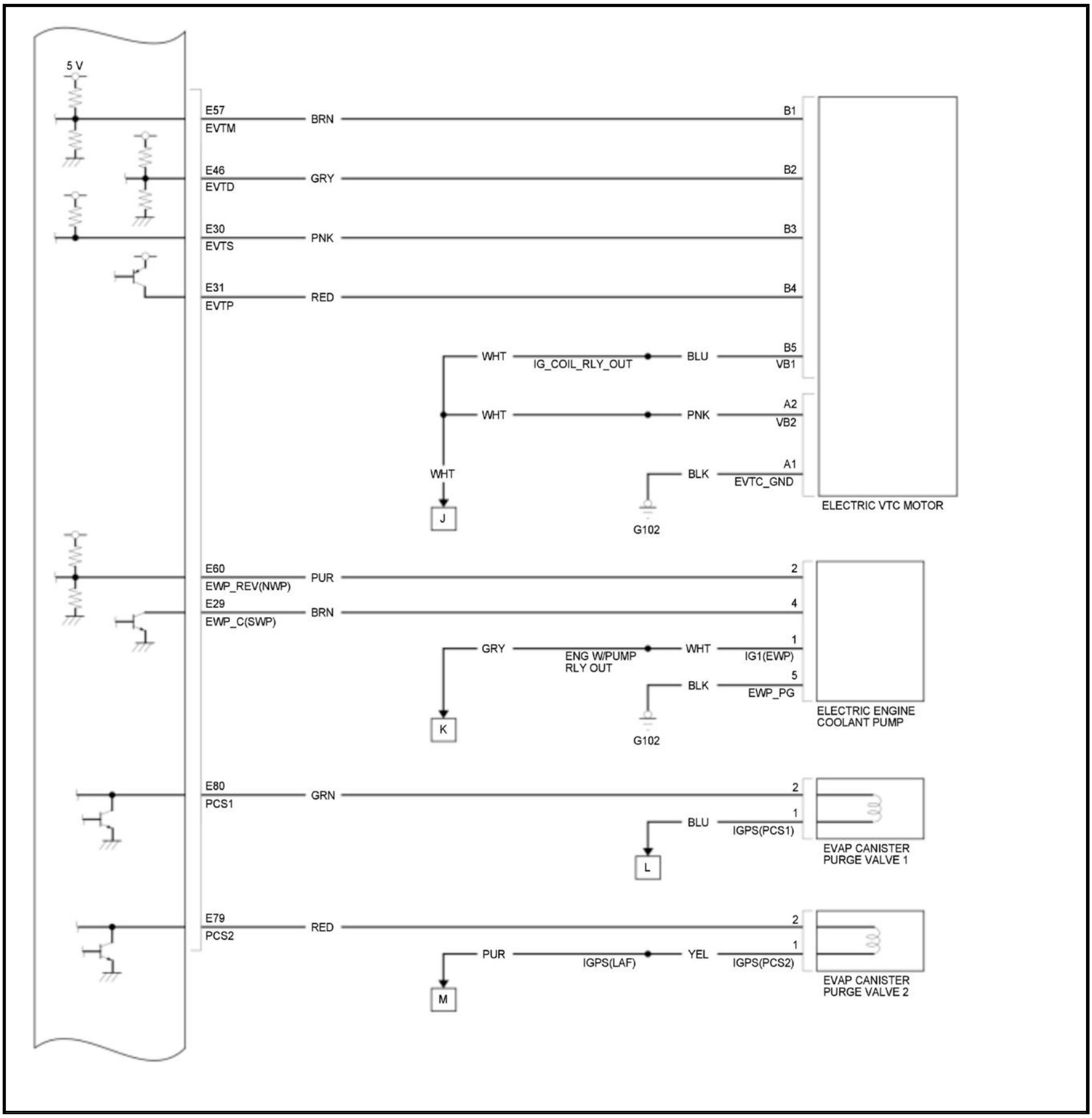
5 V
E57
EVTM
BRN
B1
E46
EVTD
GRY
B2
E30
EVTS
PNK
B3
E31
EVTP
RED
B4
WHT
IG_COIL_RLY_OUT
BLU
B5
VB1
WHT
PNK
A2
VB2
WHT
J
BLK
A1
EVTC_GND
G102
ELECTRIC VTC MOTOR
E60
EWP_REV(NWP)
PUR
2
E29
EWP_C(SWP)
BRN
4
GRY
ENG W/PUMP
RLY OUT
WHT
1
IG1(EWP)
BLK
5
EWP_PG
K
G102
ELECTRIC ENGINE
COOLANT PUMP
E80
PCS1
GRN
2
BLU
1
IGPS(PCS1)
L
EVAP CANISTER
PURGE VALVE 1
E79
PCS2
RED
2
PUR
IGPS(LAF)
YEL
1
IGPS(PCS2)
M
EVAP CANISTER
PURGE VALVE 2

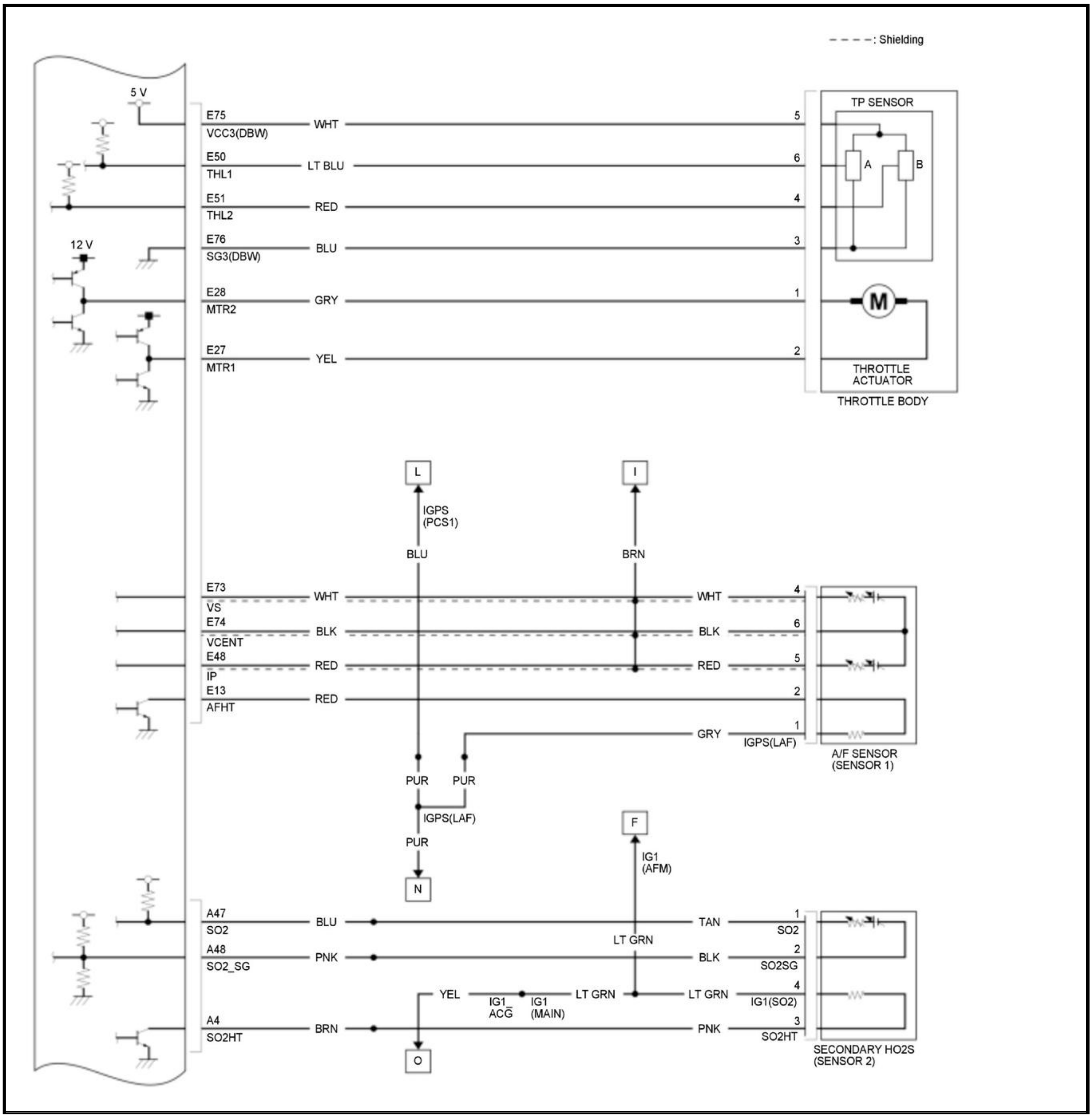
- - - -: Shielding
5 V
12 V
E75
VCC3(DBW)
WHT
E50
THL1
LT BLU
E51
THL2
RED
E76
SG3(DBW)
BLU
E28
MTR2
GRY
E27
MTR1
YEL
5
6
4
3
1
2
TP SENSOR
A
B
M
THROTTLE ACTUATOR
THROTTLE BODY
L
I
IGPS (PCS1)
BLU
BRN
E73
VS
WHT
E74
VCENT
BLK
E48
IP
RED
E13
AFHT
RED
WHT
BLK
RED
GRY
IGPS(LAF)
4
6
5
2
1
A/F SENSOR (SENSOR 1)
PUR
PUR
IGPS(LAF)
PUR
N
F
IG1 (AFM)
A47
SO2
BLU
A48
SO2_SG
PNK
A4
SO2HT
BRN
TAN
LT GRN
BLK
YEL
IG1_ ACG
IG1 (MAIN)
LT GRN
LT GRN
PNK
1
SO2
2
SO2SG
4
IG1(SO2)
3
SO2HT
O
SECONDARY HO2S (SENSOR 2)

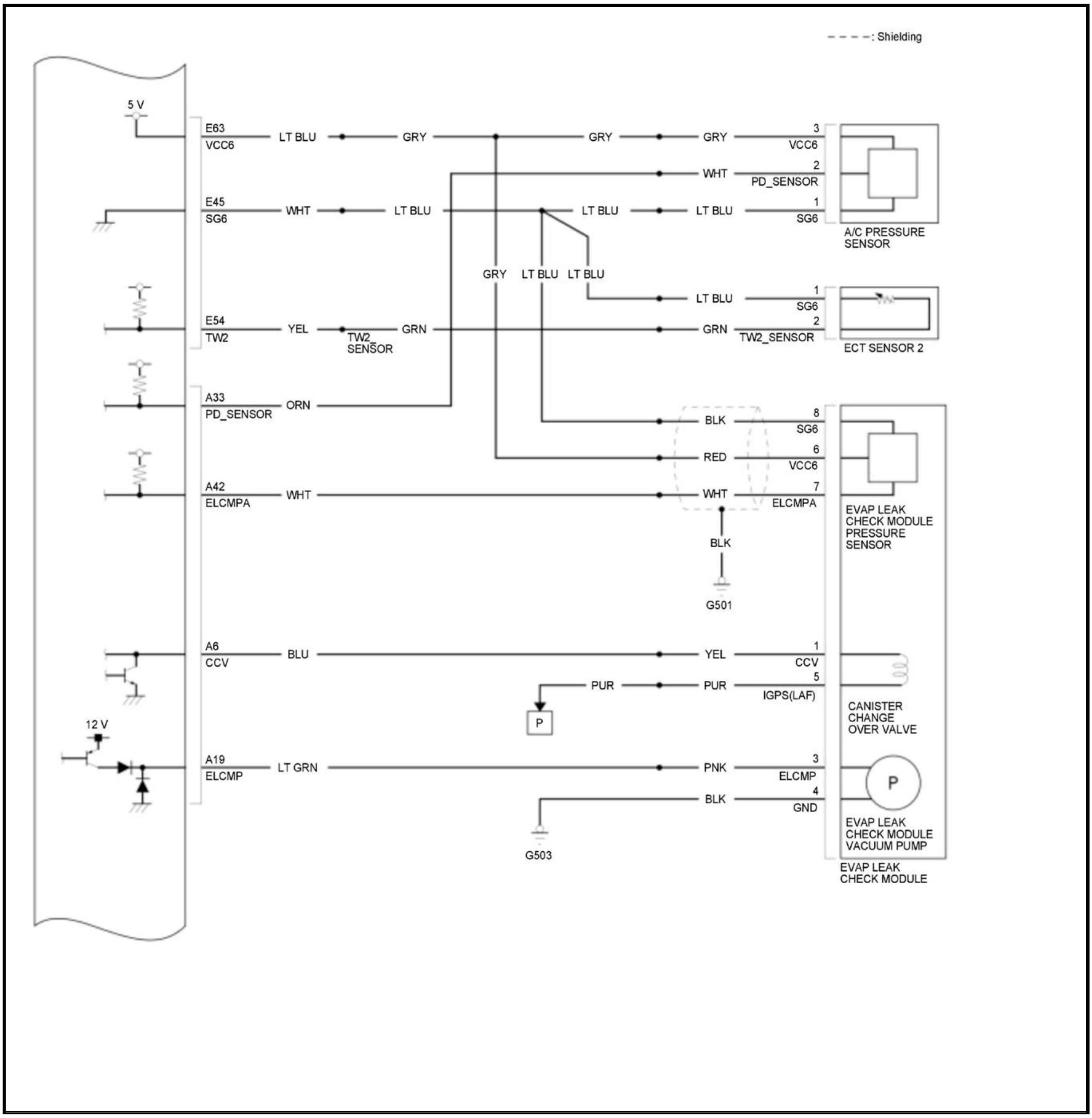
- - - -: Shielding
5 V
E63
VCC6
LT BLU
GRY
GRY
GRY
3
VCC6
WHT
2
PD_SENSOR
E45
SG6
WHT
LT BLU
LT BLU
LT BLU
1
SG6
A/C PRESSURE SENSOR
GRY
LT BLU
LT BLU
LT BLU
1
SG6
E54
TW2
YEL
TW2_ SENSOR
GRN
GRN
2
TW2_SENSOR
ECT SENSOR 2
A33
PD_SENSOR
ORN
BLK
8
SG6
RED
6
VCC6
A42
ELCMPA
WHT
WHT
7
ELCMPA
EVAP LEAK CHECK MODULE PRESSURE SENSOR
BLK
G501
A6
CCV
BLU
YEL
1
CCV
PUR
PUR
5
IGPS(LAF)
P
CANISTER CHANGE OVER VALVE
12 V
A19
ELCMP
LT GRN
PNK
3
ELCMP
P
BLK
4
GND
G503
EVAP LEAK CHECK MODULE VACUUM PUMP
EVAP LEAK CHECK MODULE

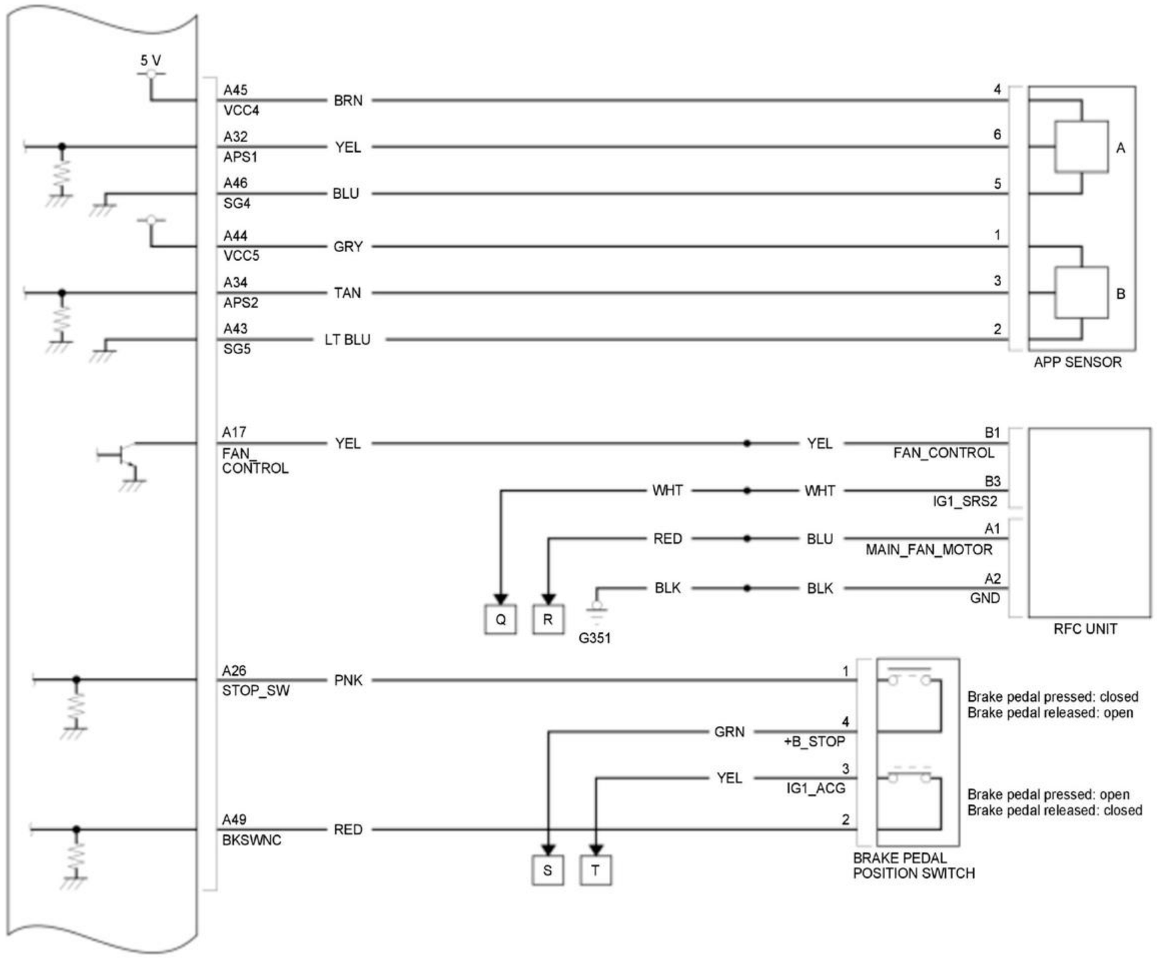

5 V
A45
VCC4
BRN
4
A32
APS1
YEL
6
A
A46
SG4
BLU
5
A44
VCC5
GRY
1
A34
APS2
TAN
3
B
A43
SG5
LT BLU
2
APP SENSOR
A17
FAN_
CONTROL
YEL
YEL
B1
FAN_CONTROL
WHT
WHT
B3
IG1_SRS2
RED
BLU
A1
MAIN_FAN_MOTOR
BLK
BLK
A2
GND
Q
R
G351
RFC UNIT
A26
STOP_SW
PNK
1
Brake pedal pressed: closed
Brake pedal released: open
GRN
4
+B_STOP
YEL
3
IG1_ACG
Brake pedal pressed: open
Brake pedal released: closed
A49
BKSWNC
RED
2
S
T
BRAKE PEDAL
POSITION SWITCH

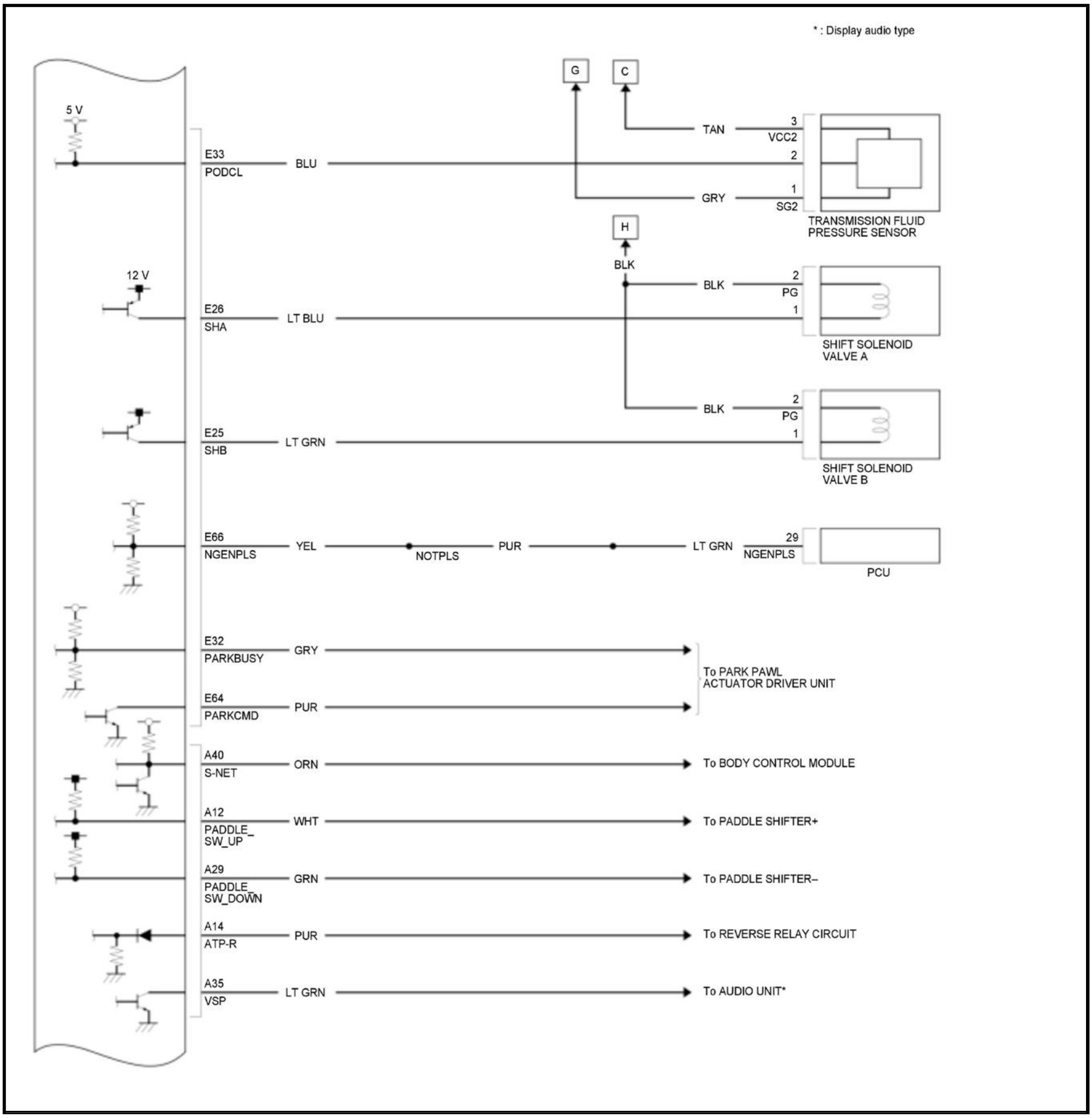
* : Display audio type
G
C
5 V
TAN
3
VCC2
E33
PODCL
BLU
2
GRY
1
SG2
TRANSMISSION FLUID PRESSURE SENSOR
H
BLK
12 V
BLK
2
PG
E26
SHA
LT BLU
1
SHIFT SOLENOID VALVE A
BLK
2
PG
E25
SHB
LT GRN
1
SHIFT SOLENOID VALVE B
E66
NGENPLS
YEL
NOTPLS
PUR
LT GRN
29
NGENPLS
PCU
E32
PARKBUSY
GRY
To PARK PAWL ACTUATOR DRIVER UNIT
E64
PARKCMD
PUR
A40
S-NET
ORN
To BODY CONTROL MODULE
A12
PADDLE_SW_UP
WHT
To PADDLE SHIFTER+
A29
PADDLE_SW_DOWN
GRN
To PADDLE SHIFTER–
A14
ATP-R
PUR
To REVERSE RELAY CIRCUIT
A35
VSP
LT GRN
To AUDIO UNIT*

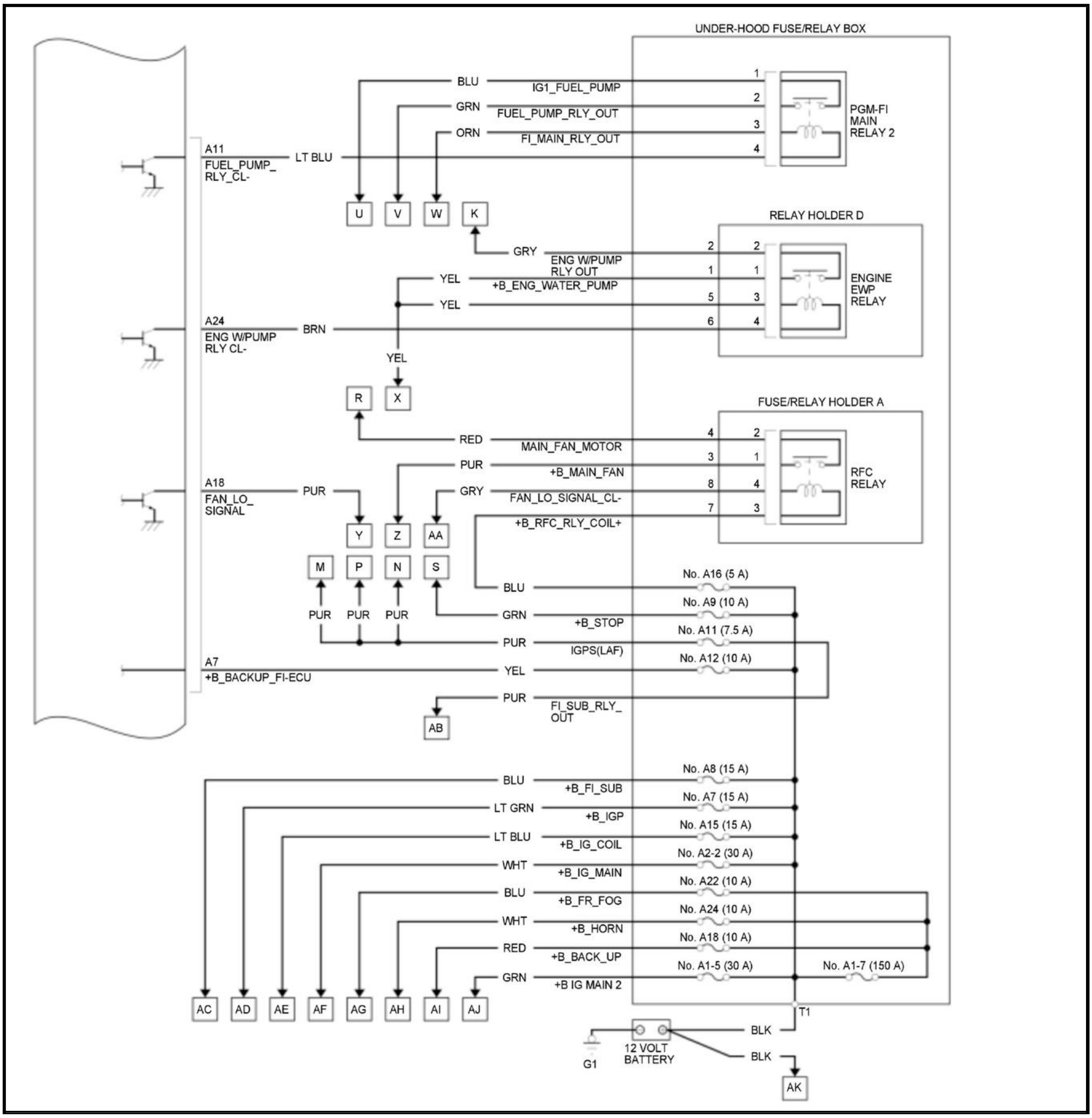
UNDER-HOOD FUSE/RELAY BOX
BLU
IG1_FUEL_PUMP
1
GRN
FUEL_PUMP_RLY_OUT
2
ORN
FI_MAIN_RLY_OUT
3
4
PGM-FI MAIN RELAY 2
A11
FUEL_PUMP_RLY_CL-
LT BLU
U
V
W
K
RELAY HOLDER D
GRY
ENG W/PUMP RLY OUT
2
2
YEL
+B_ENG_WATER_PUMP
1
1
YEL
5
3
ENGINE EWP RELAY
A24
ENG W/PUMP RLY CL-
BRN
6
4
YEL
R
X
FUSE/RELAY HOLDER A
RED
MAIN_FAN_MOTOR
4
2
PUR
+B_MAIN_FAN
3
1
RFC RELAY
A18
FAN_LO_SIGNAL
PUR
GRY
FAN_LO_SIGNAL_CL-
8
4
+B_RFC_RLY_COIL+
7
3
Y
Z
AA
M
P
N
S
BLU
No. A16 (5 A)
PUR
PUR
PUR
GRN
+B_STOP
No. A9 (10 A)
PUR
IGPS(LAF)
No. A11 (7.5 A)
A7
+B_BACKUP_FI-ECU
YEL
No. A12 (10 A)
PUR
FI_SUB_RLY_OUT
AB
BLU
+B_FI_SUB
No. A8 (15 A)
LT GRN
+B_IGP
No. A7 (15 A)
LT BLU
+B_IG_COIL
No. A15 (15 A)
WHT
+B_IG_MAIN
No. A2-2 (30 A)
BLU
+B_FR_FOG
No. A22 (10 A)
WHT
+B_HORN
No. A24 (10 A)
RED
+B_BACK_UP
No. A18 (10 A)
GRN
+B IG MAIN 2
No. A1-5 (30 A)
No. A1-7 (150 A)
AC
AD
AE
AF
AG
AH
AI
AJ
T1
BLK
BLK
12 VOLT BATTERY
G1
AK

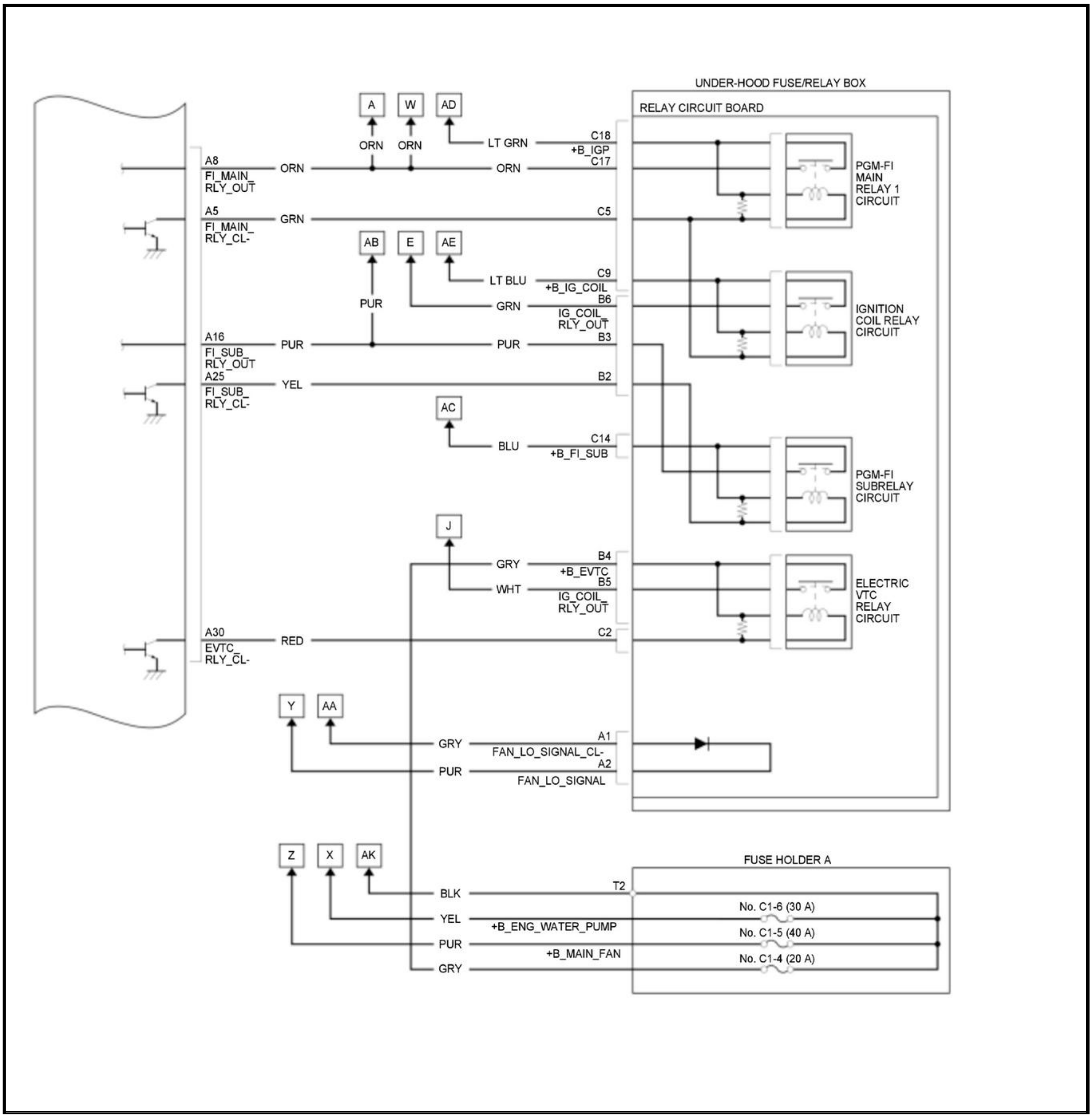
UNDER-HOOD FUSE/RELAY BOX
RELAY CIRCUIT BOARD
A
W
AD
ORN
ORN
LT GRN
C18
+B_IGP
C17
A8
FI_MAIN_
RLY_OUT
ORN
ORN
PGM-FI
MAIN
RELAY 1
CIRCUIT
A5
FI_MAIN_
RLY_CL-
GRN
C5
AB
E
AE
LT BLU
C9
+B_IG_COIL
PUR
GRN
B6
IG_COIL_
RLY_OUT
IGNITION
COIL RELAY
CIRCUIT
A16
FI_SUB_
RLY_OUT
PUR
PUR
B3
A25
FI_SUB_
RLY_CL-
YEL
B2
AC
BLU
C14
+B_FI_SUB
PGM-FI
SUBRELAY
CIRCUIT
J
GRY
B4
+B_EVTC
WHT
B5
IG_COIL_
RLY_OUT
ELECTRIC
VTC
RELAY
CIRCUIT
A30
EVTC_
RLY_CL-
RED
C2
Y
AA
GRY
A1
FAN_LO_SIGNAL_CL-
A2
PUR
FAN_LO_SIGNAL
Z
X
AK
FUSE HOLDER A
BLK
T2
YEL
+B_ENG_WATER_PUMP
No. C1-6 (30 A)
PUR
+B_MAIN_FAN
No. C1-5 (40 A)
GRY
No. C1-4 (20 A)

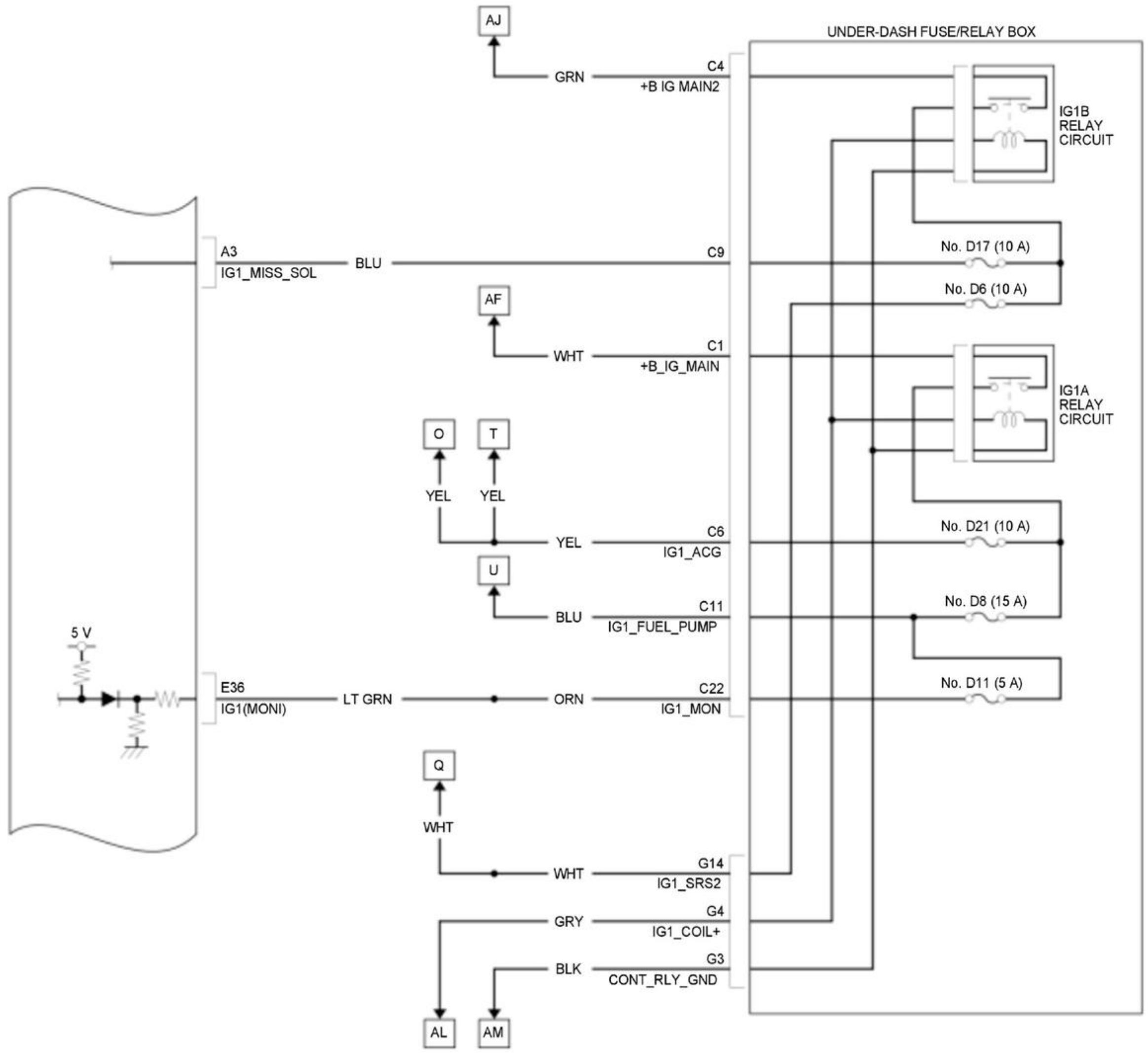
AJ
GRN
C4
+B IG MAIN2
UNDER-DASH FUSE/RELAY BOX
IG1B
RELAY
CIRCUIT
A3
IG1_MISS_SOL
BLU
C9
No. D17 (10 A)
No. D6 (10 A)
AF
WHT
C1
+B_IG_MAIN
IG1A
RELAY
CIRCUIT
O
T
YEL
YEL
YEL
C6
IG1_ACG
No. D21 (10 A)
U
BLU
C11
IG1_FUEL_PUMP
No. D8 (15 A)
5 V
E36
IG1(MONI)
LT GRN
ORN
C22
IG1_MON
No. D11 (5 A)
Q
WHT
WHT
G14
IG1_SRS2
GRY
G4
IG1_COIL+
BLK
G3
CONT_RLY_GND
AL
AM

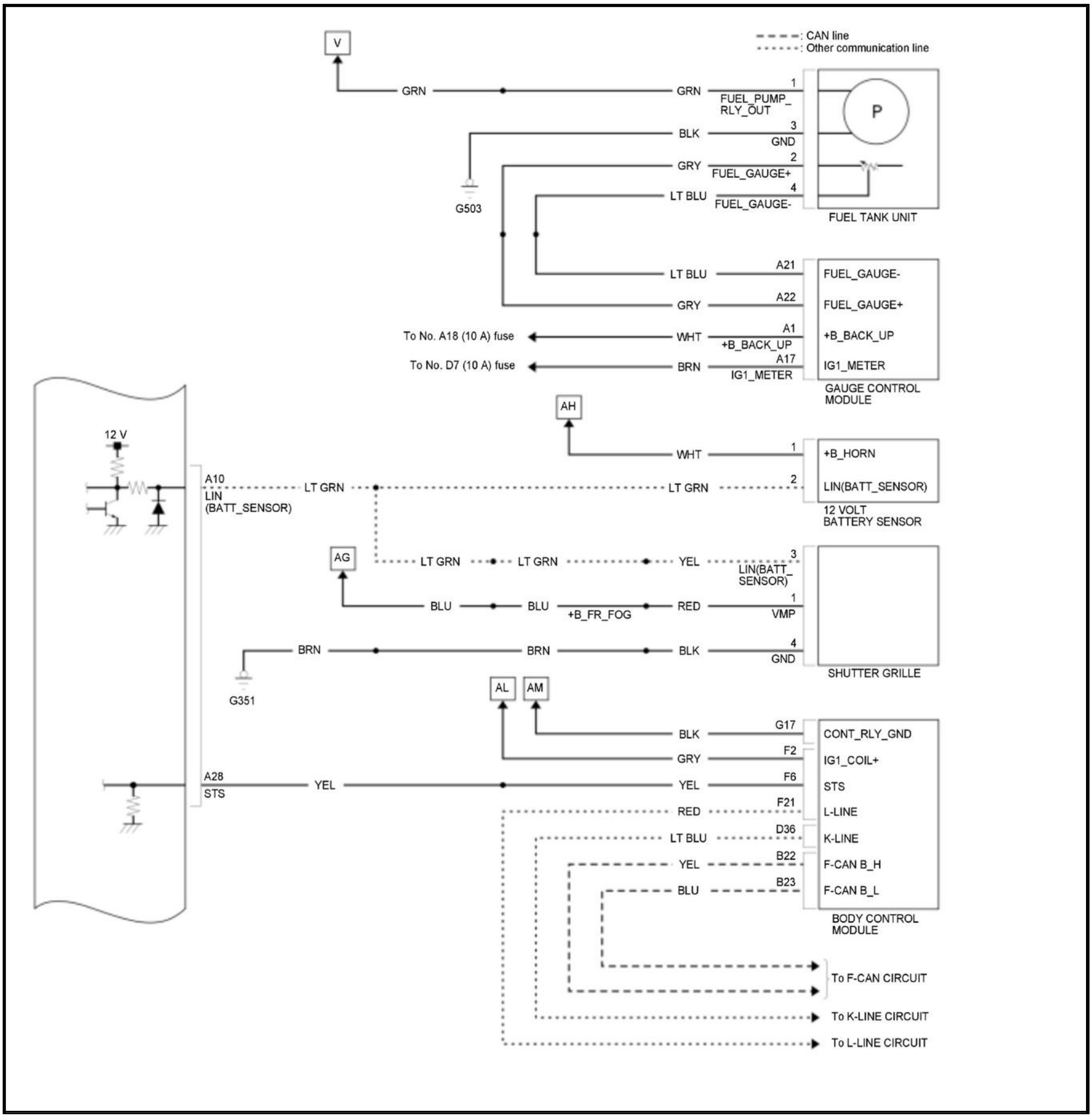
CAN line
Other communication line
V
GRN
GRN
1
FUEL_PUMP_RLY_OUT
P
BLK
3
GND
GRY
2
FUEL_GAUGE+
LT BLU
4
FUEL_GAUGE-
G503
FUEL TANK UNIT
LT BLU
A21
FUEL_GAUGE-
GRY
A22
FUEL_GAUGE+
To No. A18 (10 A) fuse
WHT
A1
+B_BACK_UP
+B_BACK_UP
To No. D7 (10 A) fuse
BRN
A17
IG1_METER
IG1_METER
GAUGE CONTROL MODULE
12 V
AH
WHT
1
+B_HORN
A10
LIN (BATT_SENSOR)
LT GRN
LT GRN
2
LIN(BATT_SENSOR)
12 VOLT BATTERY SENSOR
AG
LT GRN
LT GRN
YEL
3
LIN(BATT_SENSOR)
BLU
BLU
+B_FR_FOG
RED
1
VMP
BRN
BRN
BLK
4
GND
G351
SHUTTER GRILLE
AL
AM
BLK
G17
CONT_RLY_GND
GRY
F2
IG1_COIL+
A28
STS
YEL
YEL
F6
STS
RED
F21
L-LINE
LT BLU
D36
K-LINE
YEL
B22
F-CAN B_H
BLU
B23
F-CAN B_L
BODY CONTROL MODULE
To F-CAN CIRCUIT
To K-LINE CIRCUIT
To L-LINE CIRCUIT

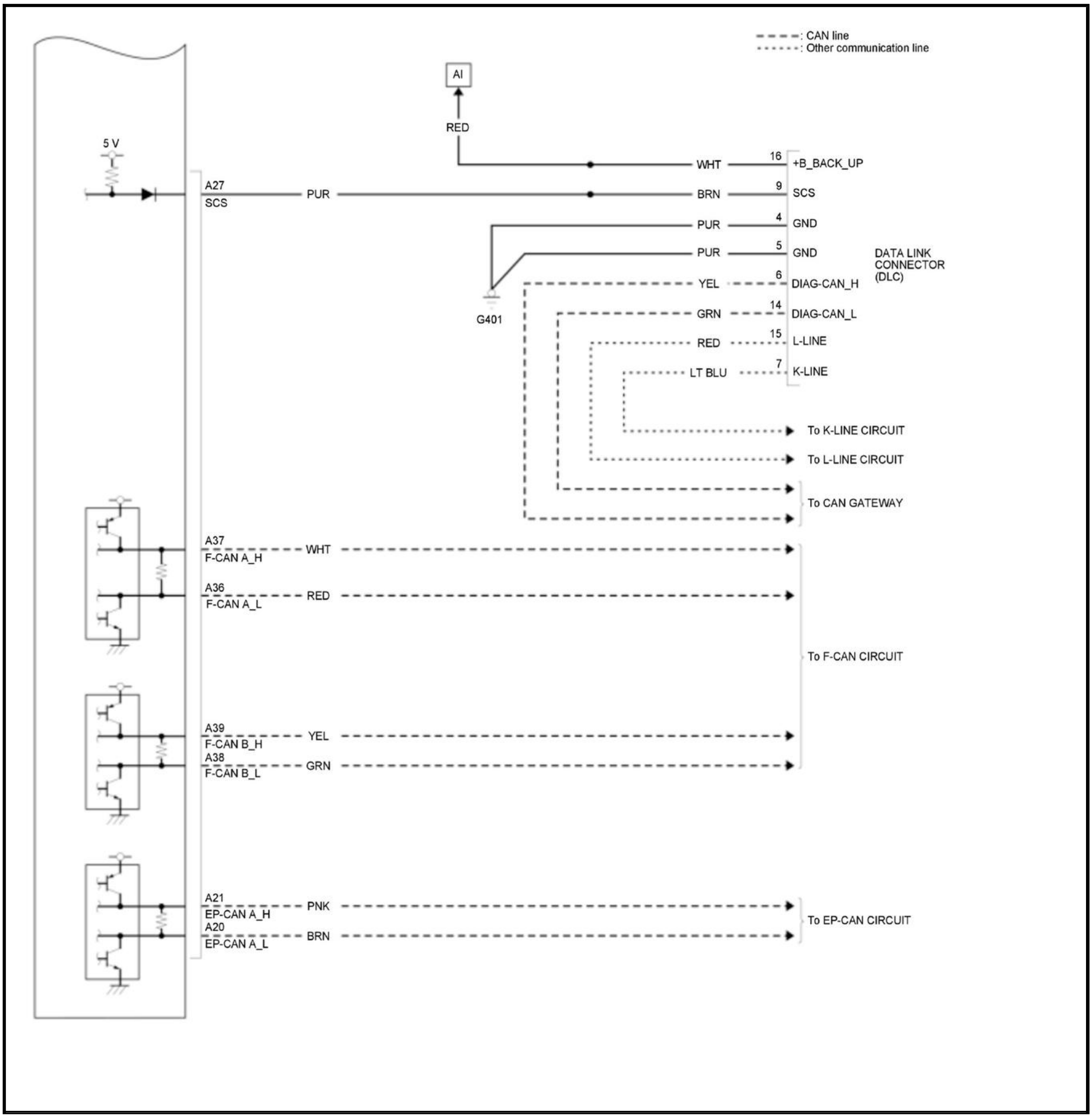

CAN line
Other communication line
AI
RED
5 V
A27
SCS
PUR
WHT
16
+B_BACK_UP
BRN
9
SCS
PUR
4
GND
PUR
5
GND
DATA LINK CONNECTOR (DLC)
YEL
6
DIAG-CAN_H
G401
GRN
14
DIAG-CAN_L
RED
15
L-LINE
LT BLU
7
K-LINE
To K-LINE CIRCUIT
To L-LINE CIRCUIT
To CAN GATEWAY
A37
F-CAN A_H
WHT
A36
F-CAN A_L
RED
To F-CAN CIRCUIT
A39
F-CAN B_H
YEL
A38
F-CAN B_L
GRN
A21
EP-CAN A_H
PNK
A20
EP-CAN A_L
BRN
To EP-CAN CIRCUIT

COMPONENT LOCATION INDEX

FUEL AND EMISSIONS SYSTEMS COMPONENT LOCATION INDEX

For relationships between signals in a system, refer to System Diagram:
· Injection Control
· Ignition Timing Control

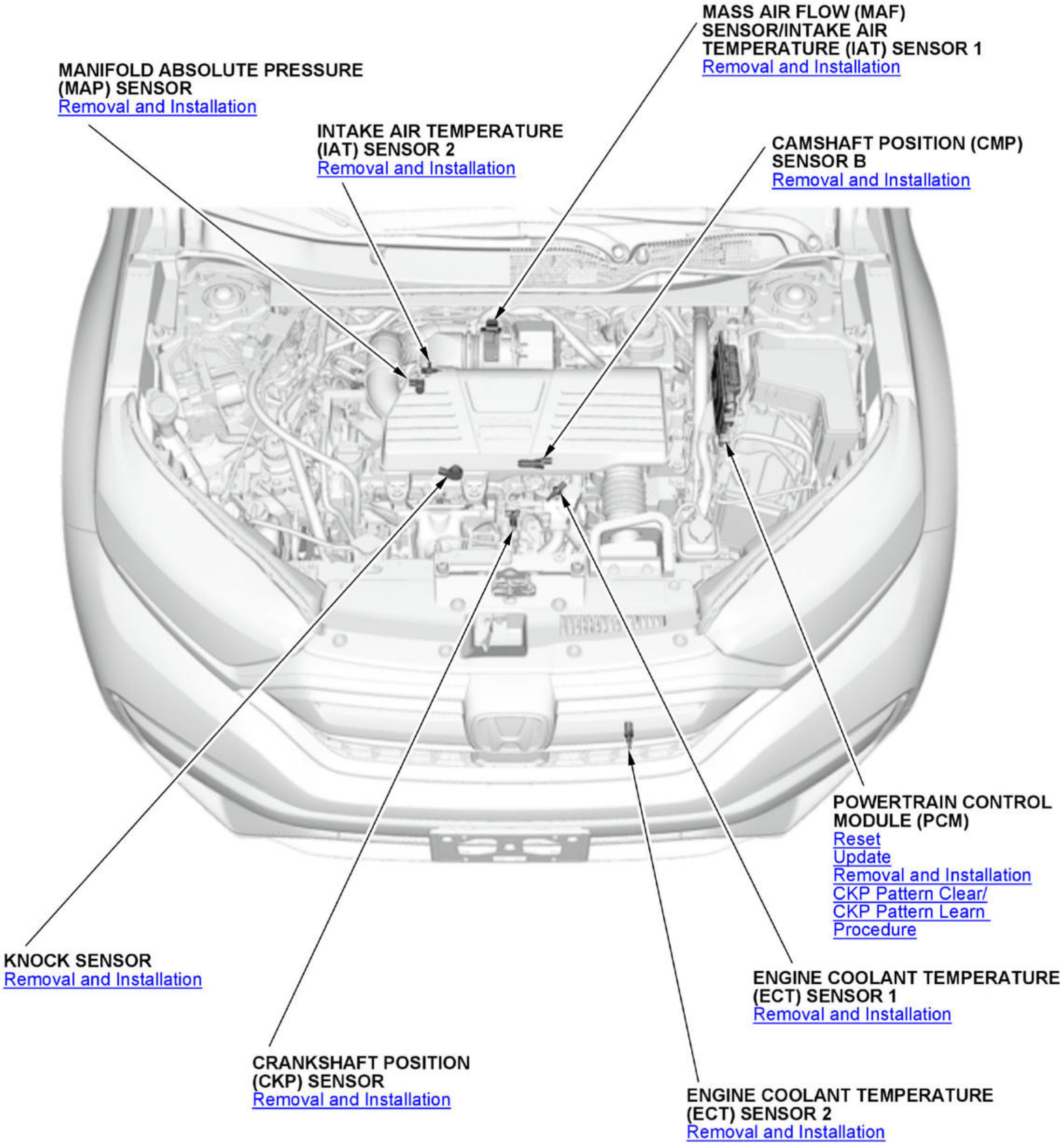
MANIFOLD ABSOLUTE PRESSURE (MAP) SENSOR
Removal and Installation
INTAKE AIR TEMPERATURE (IAT) SENSOR 2
Removal and Installation
MASS AIR FLOW (MAF) SENSOR/INTAKE AIR TEMPERATURE (IAT) SENSOR 1
Removal and Installation
CAMSHAFT POSITION (CMP) SENSOR B
Removal and Installation
POWERTRAIN CONTROL MODULE (PCM)
Reset
Update
Removal and Installation
CKP Pattern Clear/
CKP Pattern Learn Procedure
KNOCK SENSOR
Removal and Installation
ENGINE COOLANT TEMPERATURE (ECT) SENSOR 1
Removal and Installation
CRANKSHAFT POSITION (CKP) SENSOR
Removal and Installation
ENGINE COOLANT TEMPERATURE (ECT) SENSOR 2
Removal and Installation

For relationships between signals in a system, refer to System Diagram:

- · Electronic Throttle Control System
- · Injection Control
- · A/F Sensor/HO2S Feedback Air/Fuel Ratio Control
- · Ignition Timing Control
- · VTEC/VTC
- · Shutter Grille

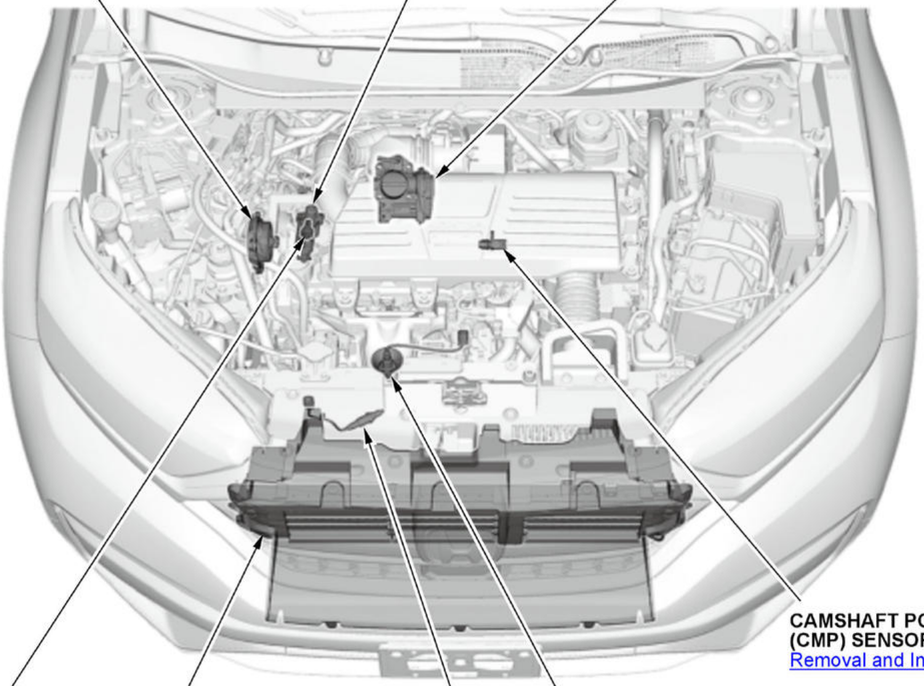

ROCKER ARM OIL CONTROL VALVE
Removal and Installation

ELECTRIC VTC MOTOR
Removal and Installation

THROTTLE BODY (THROTTLE ACTUATOR and THROTTLE POSITION (TP) SENSOR)
Carbon Accumulation Check
Removal, Installation, and Cleaning

CAMSHAFT POSITION (CMP) SENSOR A
Removal and Installation

SHUTTER GRILLE
Removal, Installation

AIR FUEL RATIO (A/F) SENSOR (SENSOR 1)
Removal and Installation

ROCKER ARM OIL PRESSURE SENSOR
Removal and Installation

SECONDARY HEATED OXYGEN SENSOR (SECONDARY HO2S) (SENSOR 2)
Removal and Installation

For relationships between signals in a system, refer to System Diagram:
- PCV System
- EGR System

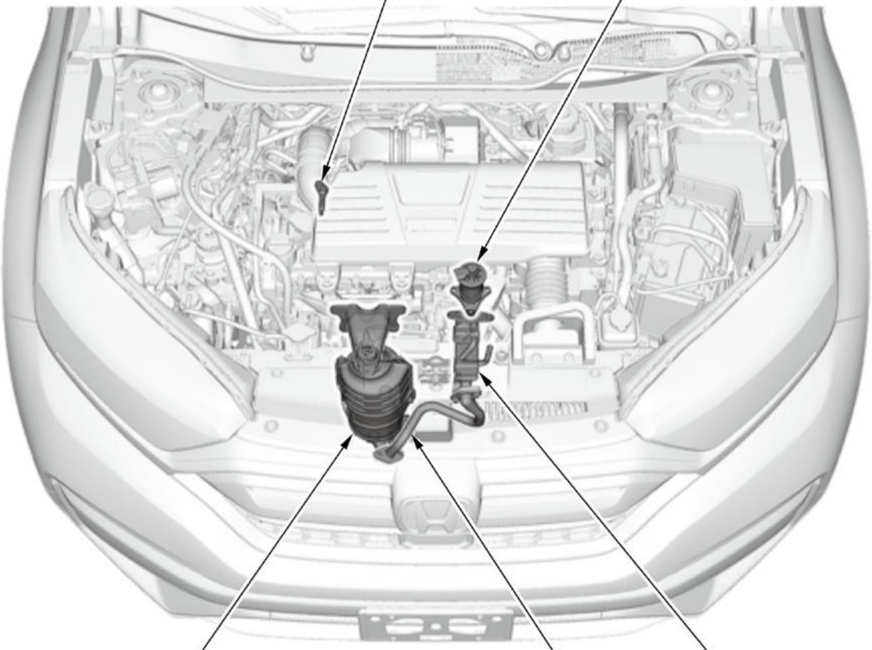

PCV VALVE
Removal, Installation, and Inspection

EXHAUST GAS RECIRCULATION (EGR) VALVE
Removal and Installation

EXHAUST GAS RECIRCULATION (EGR) COOLER
Removal and Installation

THREE WAY CATALYTIC CONVERTER (TWC)
Removal, Installation, and Inspection

EXHAUST GAS RECIRCULATION (EGR) PIPE
Removal and Installation

For relationships between signals in a system, refer to System Diagram.

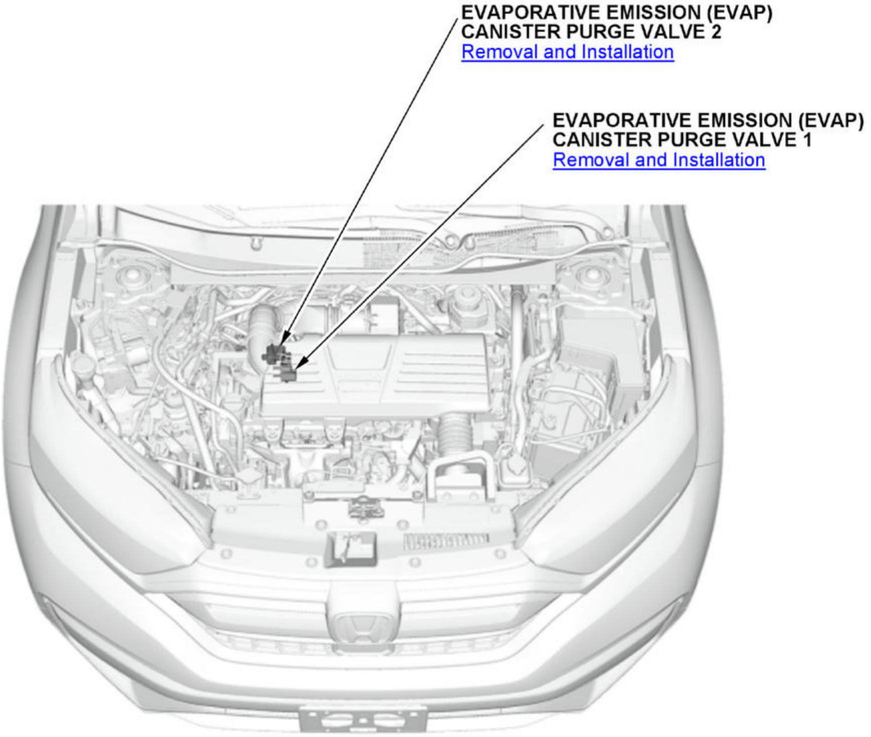
EVAPORATIVE EMISSION (EVAP) CANISTER PURGE VALVE 2
Removal and Installation
EVAPORATIVE EMISSION (EVAP) CANISTER PURGE VALVE 1
Removal and Installation

For relationships between signals in a system, refer to System Diagram.

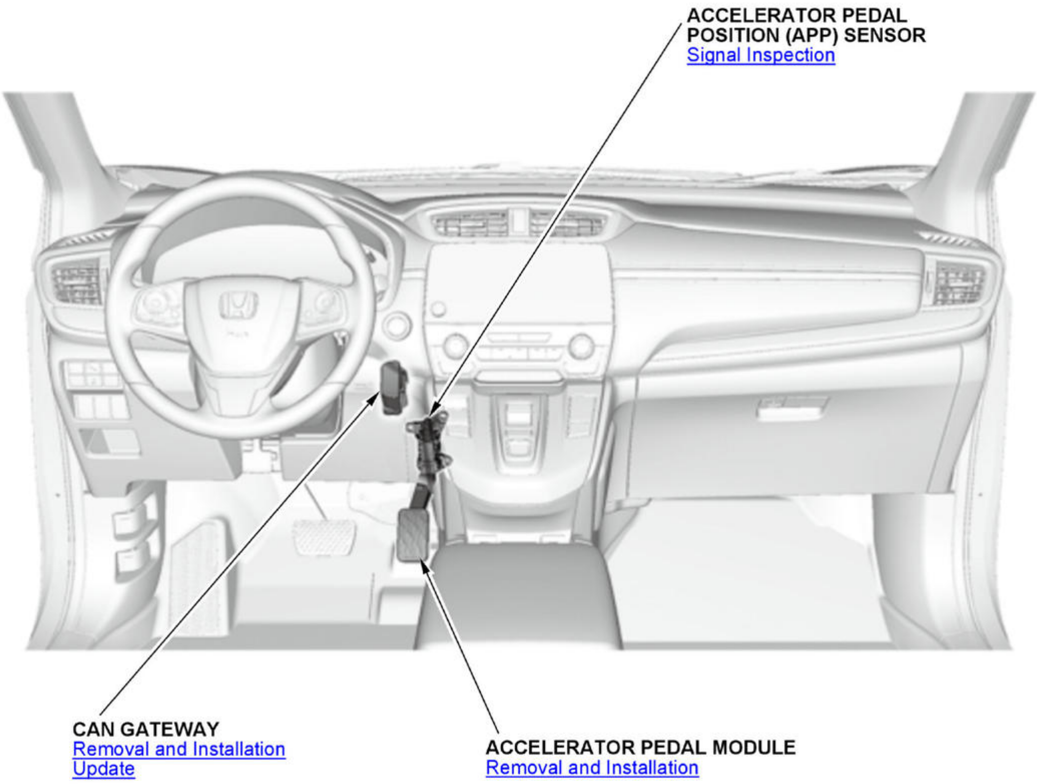
ACCELERATOR PEDAL POSITION (APP) SENSOR
Signal Inspection
CAN GATEWAY
Removal and Installation
Update
ACCELERATOR PEDAL MODULE
Removal and Installation

For relationships between signals in a system, refer to System Diagram:
- Injection Control
- EVAP System

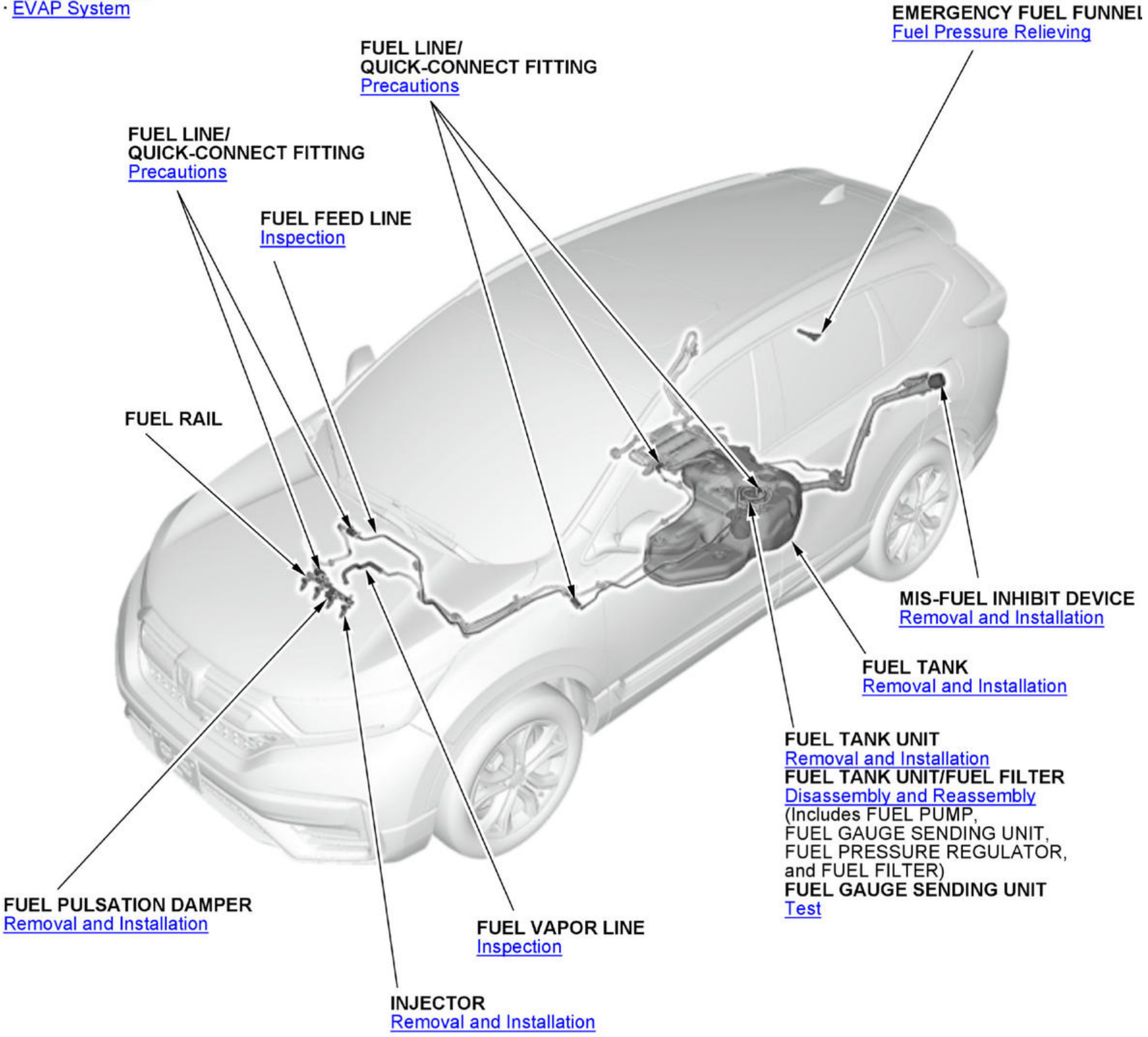
EMERGENCY FUEL FUNNEL
Fuel Pressure Relieving
FUEL LINE/
QUICK-CONNECT FITTING
Precautions
FUEL LINE/
QUICK-CONNECT FITTING
Precautions
FUEL FEED LINE
Inspection
FUEL RAIL
MIS-FUEL INHIBIT DEVICE
Removal and Installation
FUEL TANK
Removal and Installation
FUEL TANK UNIT
Removal and Installation
FUEL TANK UNIT/FUEL FILTER
Disassembly and Reassembly
(Includes FUEL PUMP,
FUEL GAUGE SENDING UNIT,
FUEL PRESSURE REGULATOR,
and FUEL FILTER)
FUEL GAUGE SENDING UNIT
Test
FUEL PULSATION DAMPER
Removal and Installation
FUEL VAPOR LINE
Inspection
INJECTOR
Removal and Installation

For relationships between signals in a system, refer to System Diagram.

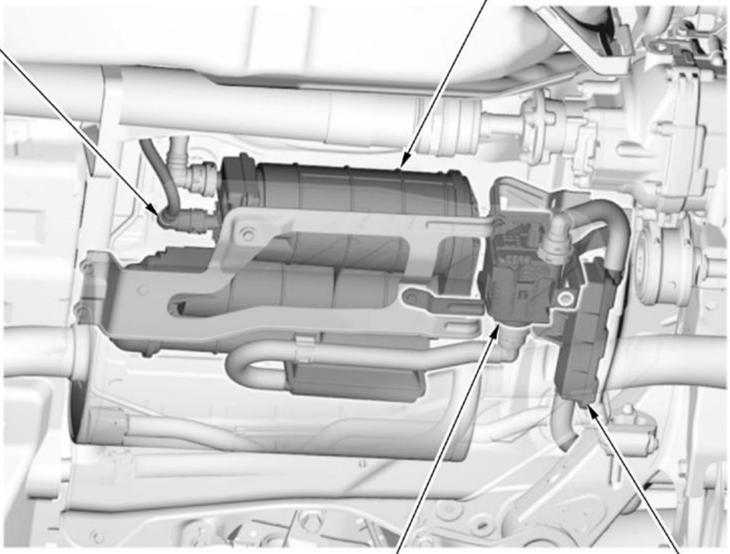
**FUEL LINE/
QUICK-CONNECT FITTING**
Precautions
**EVAPORATIVE EMISSION
(EVAP) CANISTER**
Removal and Installation
**EVAPORATIVE EMISSION
(EVAP) LEAK CHECK MODULE**
Removal and Installation
**EVAPORATIVE EMISSION
(EVAP) CANISTER FILTER**
Removal and Installation

For relationships between signals in a system, refer to System Diagram.

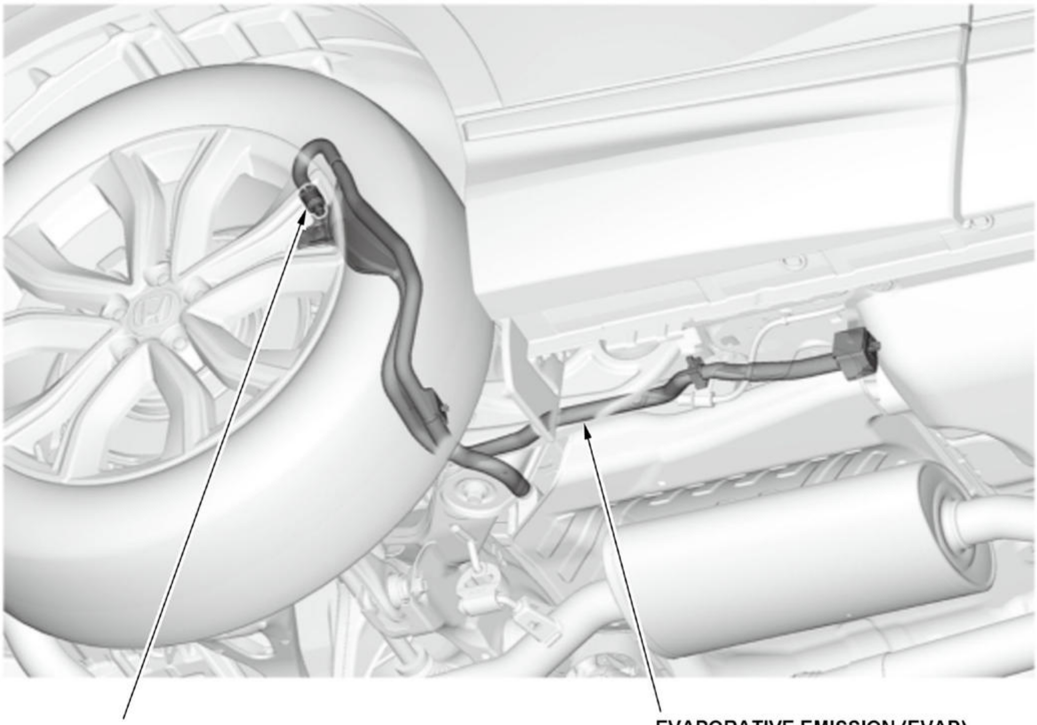

EVAPORATIVE EMISSION (EVAP) CANISTER ONE WAY VALVE
Removal and Installation

EVAPORATIVE EMISSION (EVAP) CANISTER DRAIN PIPE
Removal and Installation

DESCRIPTION AND OPERATION

FUEL SUPPLY SYSTEM DESCRIPTION

Fuel Pump

The fuel pump consists of the following components.

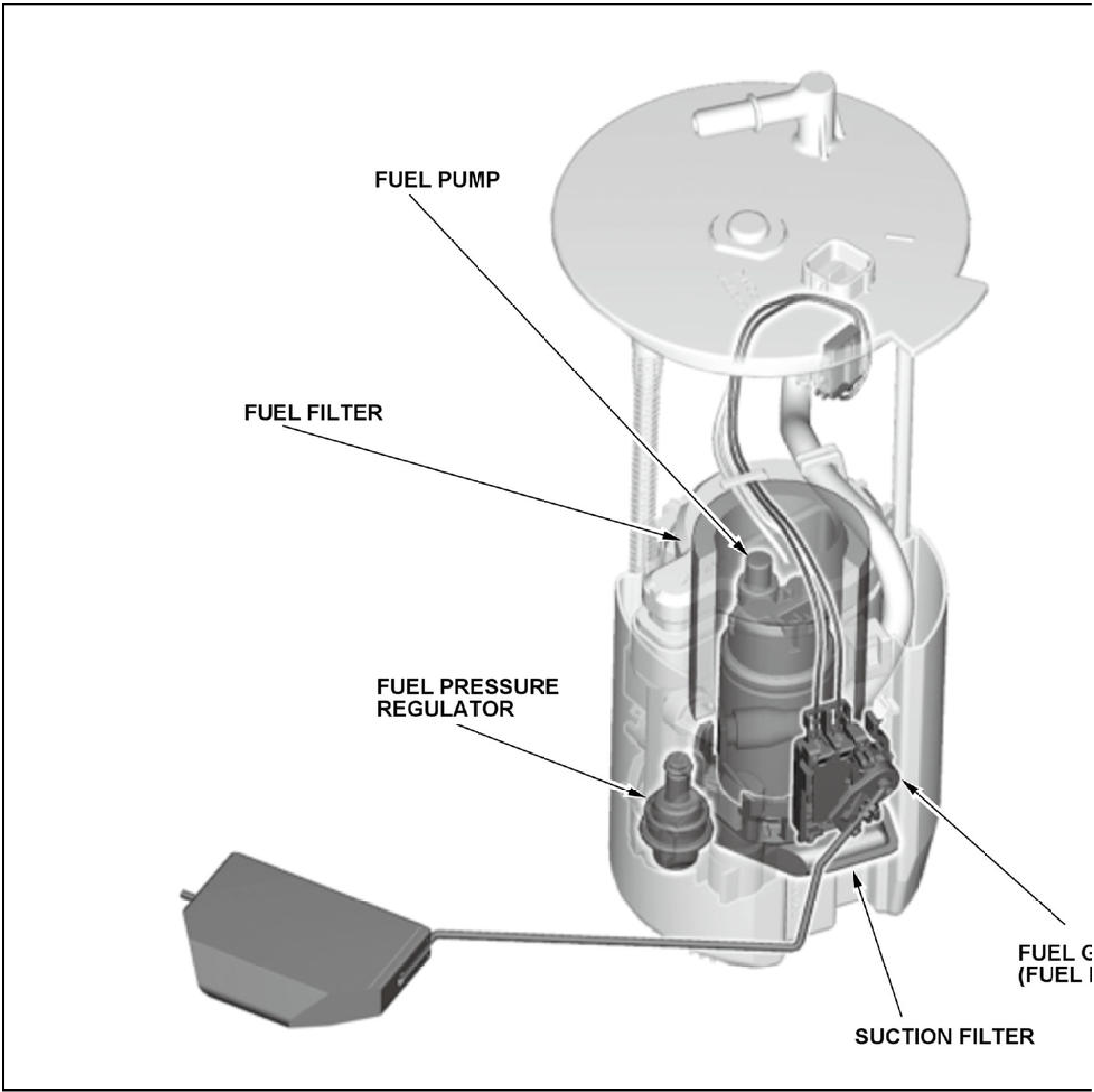
FUEL PUMP
FUEL FILTER
FUEL PRESSURE REGULATOR
FUEL G
(FUEL I
SUCTION FILTER

High Pressure Fuel Pump

Outline

The high pressure fuel pump is driven mechanically by a foursquare cam installed on the camshaft. The pump pressurizes the fuel sent from the fuel tank to high pressu and the fuel rails to the fuel injectors. The powertrain control module (PCM) controls the fuel control solenoid to obtain the optimum fuel pressure for the driving condit pressure sensor.

1.5 L engine

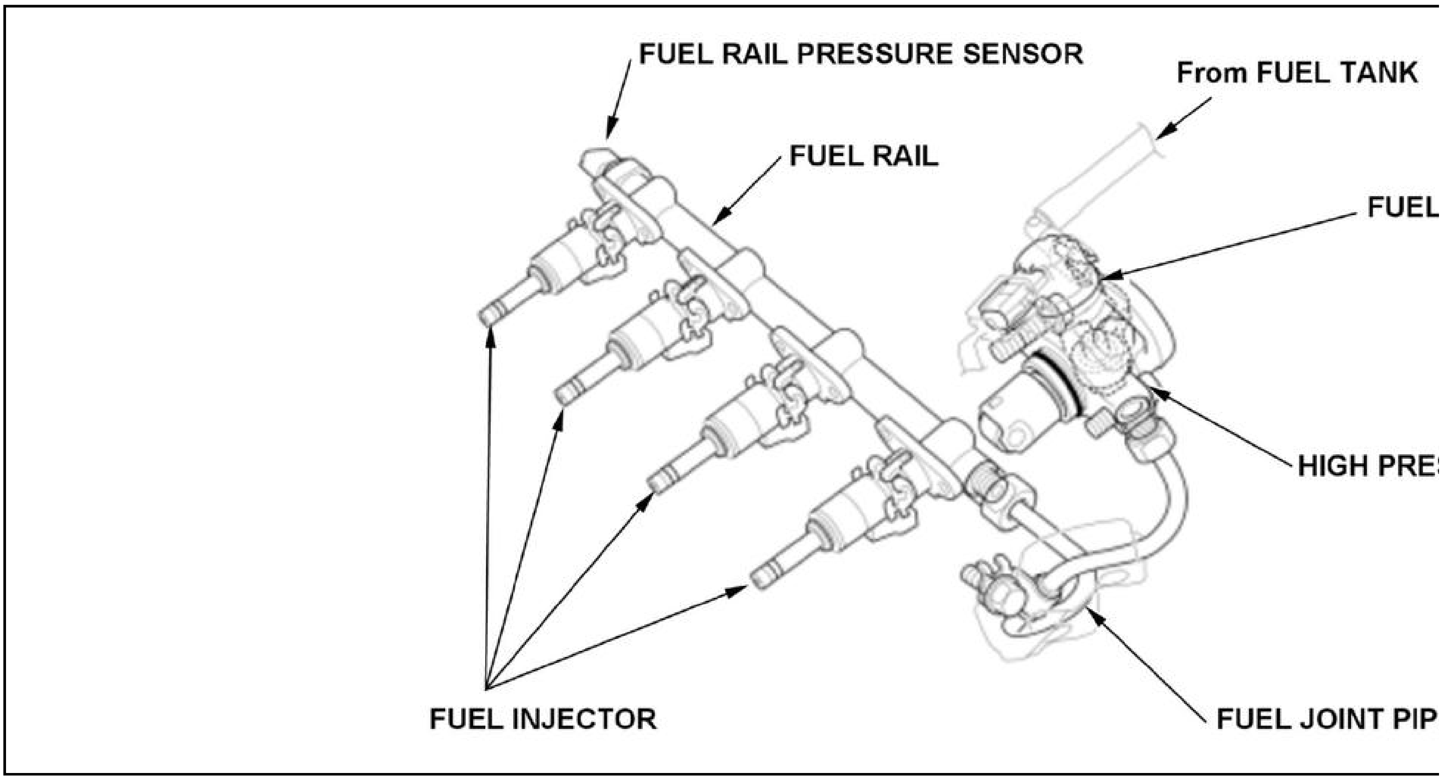
FUEL RAIL PRESSURE SENSOR
From FUEL TANK
FUEL RAIL
FUEL
HIGH PRES
FUEL INJECTOR
FUEL JOINT PIP

2.4 L engine

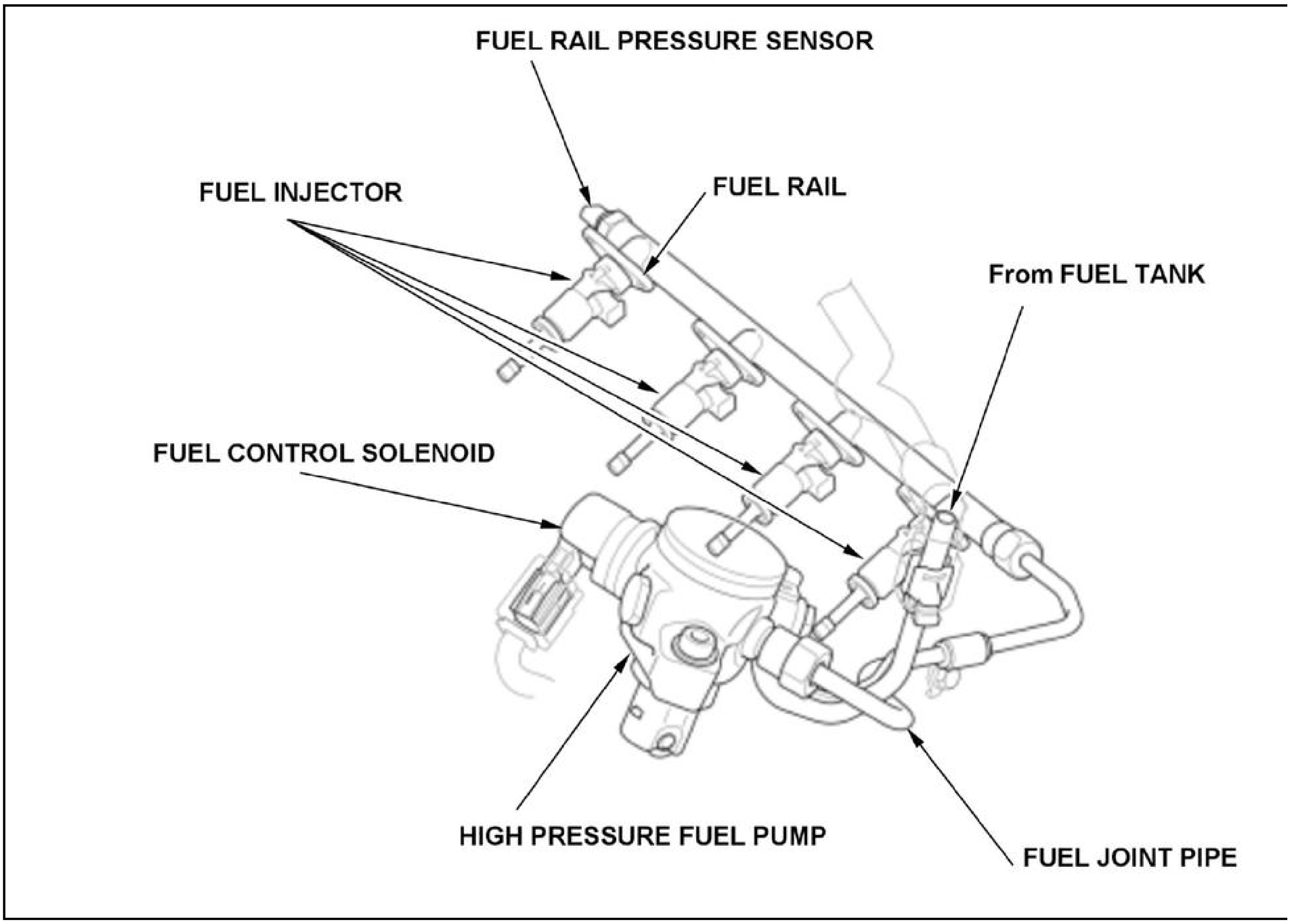
FUEL RAIL PRESSURE SENSOR
FUEL INJECTOR
FUEL RAIL
From FUEL TANK
FUEL CONTROL SOLENOID
HIGH PRESSURE FUEL PUMP
FUEL JOINT PIPE

Construction

The high pressure fuel pump is composed of the pulsation damper, the suction valve, the fuel control solenoid, the suction valve spring, the piston, the pressure check va

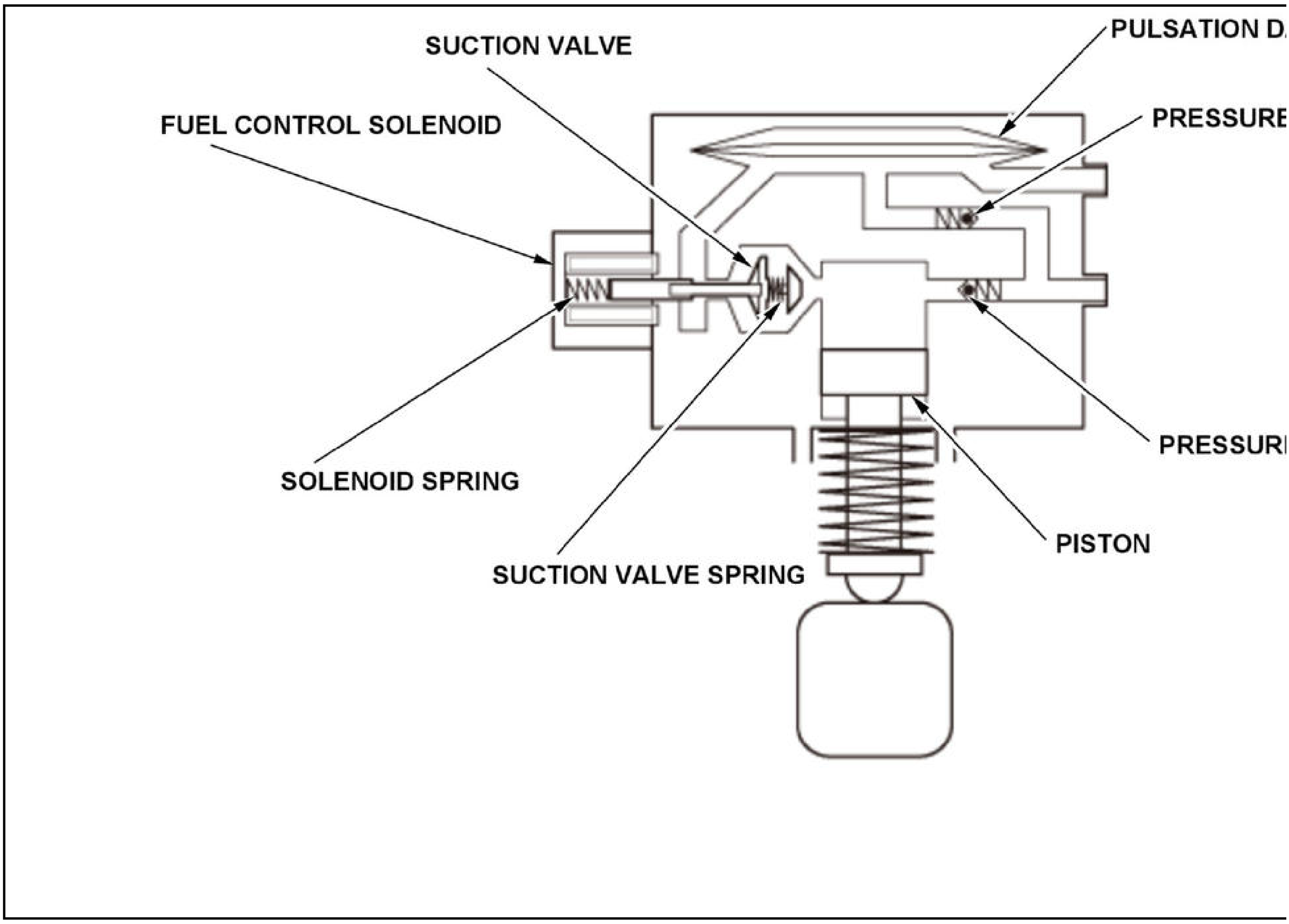
PULSATION D
SUCTION VALVE
FUEL CONTROL SOLENOID
PRESSURE
SOLENOID SPRING
PRESSURE
PISTON
SUCTION VALVE SPRING

Operation

Suction: The piston is moved down by the rotation of the cam of the camshaft, and the fuel from the fuel tank passes through the suction valve and is drawn into the pre

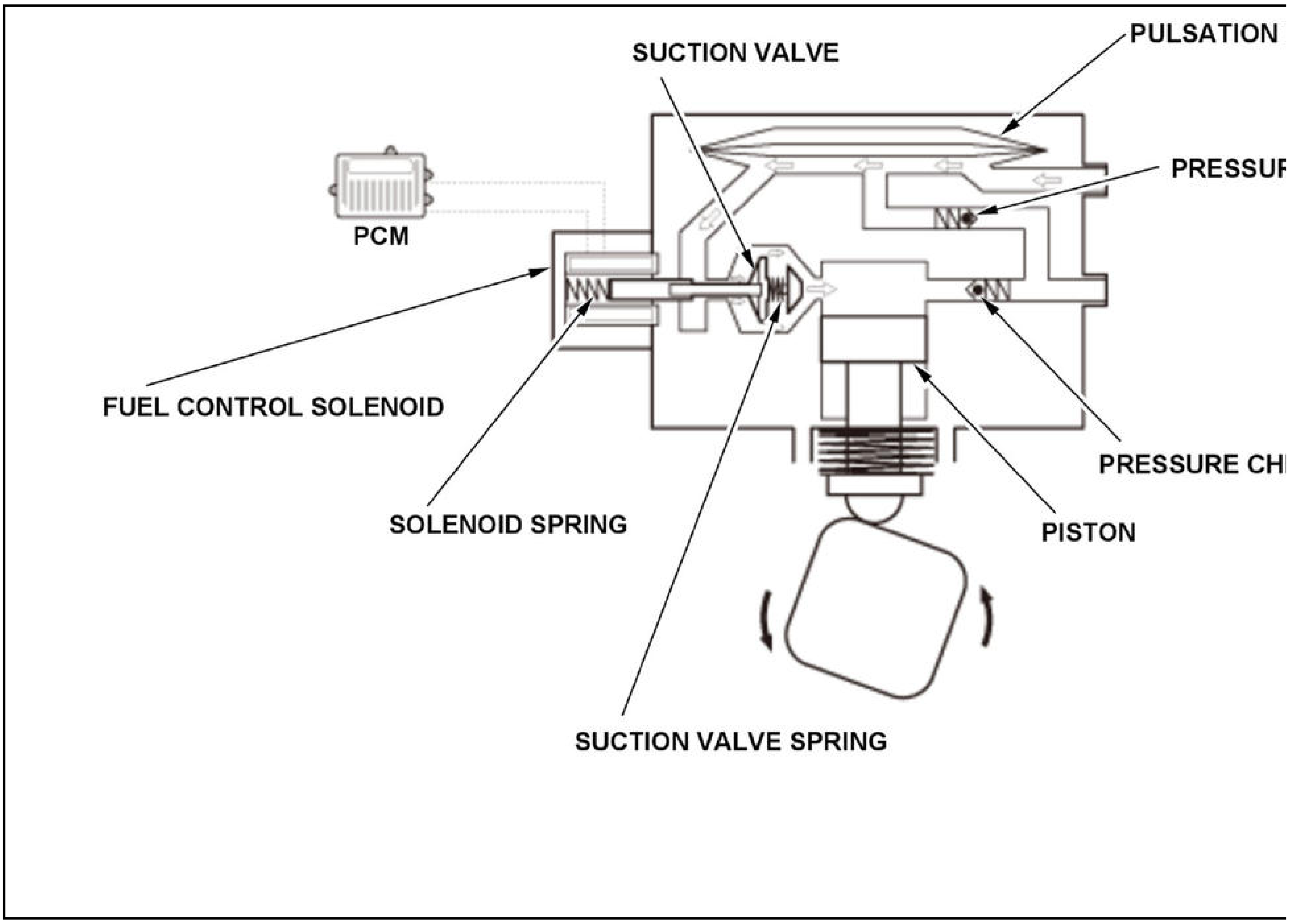
SUCTION VALVE
PULSATION
PRESSUR
PCM
FUEL CONTROL SOLENOID
SOLENOID SPRING
PRESSURE CH
PISTON
SUCTION VALVE SPRING

Pressure adjustment: The piston is pushed up by the cam because of the rotation of the camshaft, and the fuel drawn in is returned from the suction valve. The pulsation caused by the piston displacement, and performs mixing of the fuel sent under pressure from the fuel tank.

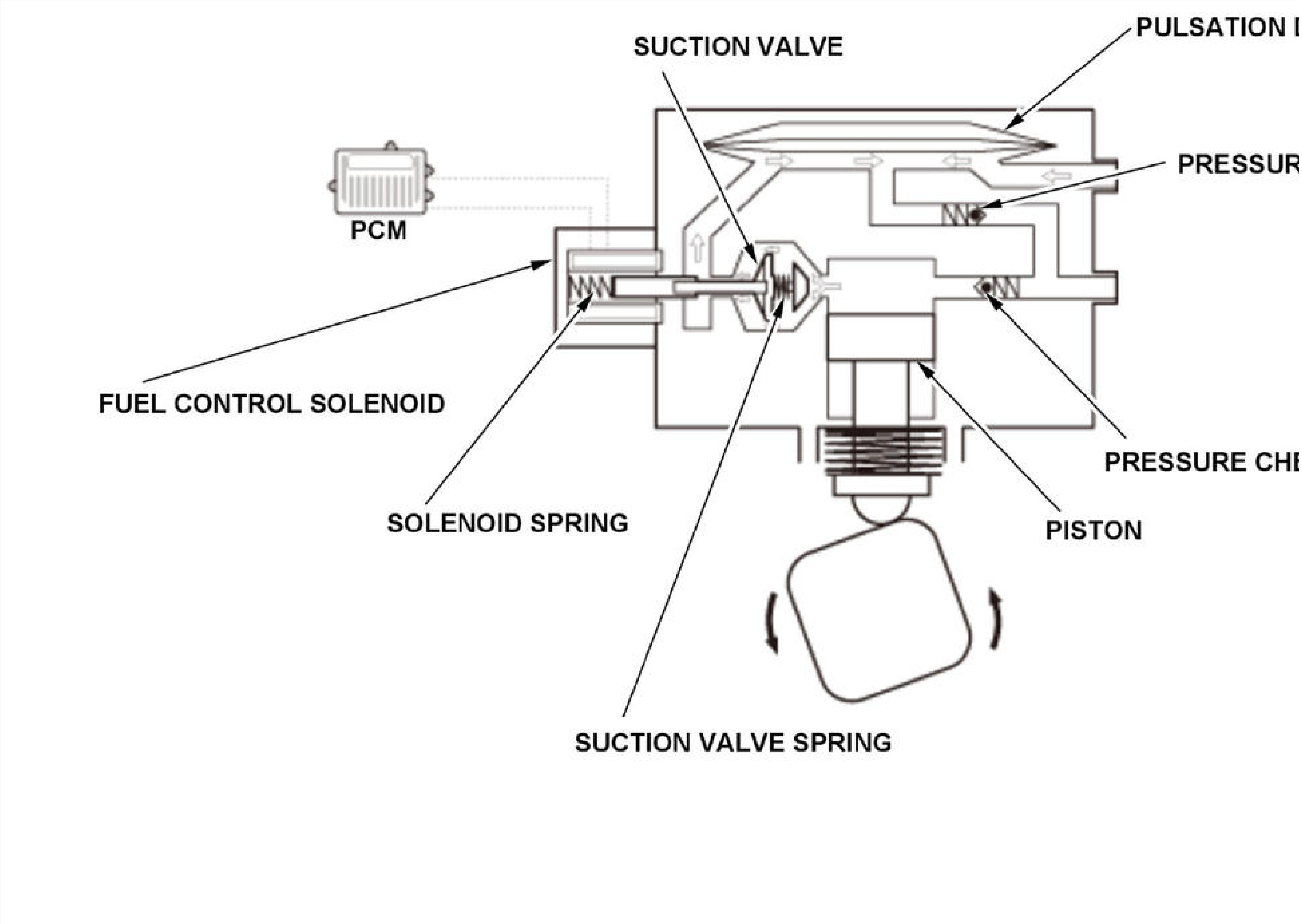
PULSATION I
SUCTION VALVE
PRESSUR
PCM
FUEL CONTROL SOLENOID
SOLENOID SPRING
PRESSURE CHI
PISTON
SUCTION VALVE SPRING

Compression: The PCM uses the signal from the fuel rail pressure sensor to control the fuel control solenoid to match the driving conditions; it also closes the suction va the pressurized fuel passes through the pressure check valve, and is then supplied as high pressure fuel to the injectors. When the camshaft rotates further and the piston closes, the PCM switches the fuel control solenoid OFF, the suction valve opens, and fuel is drawn in again.

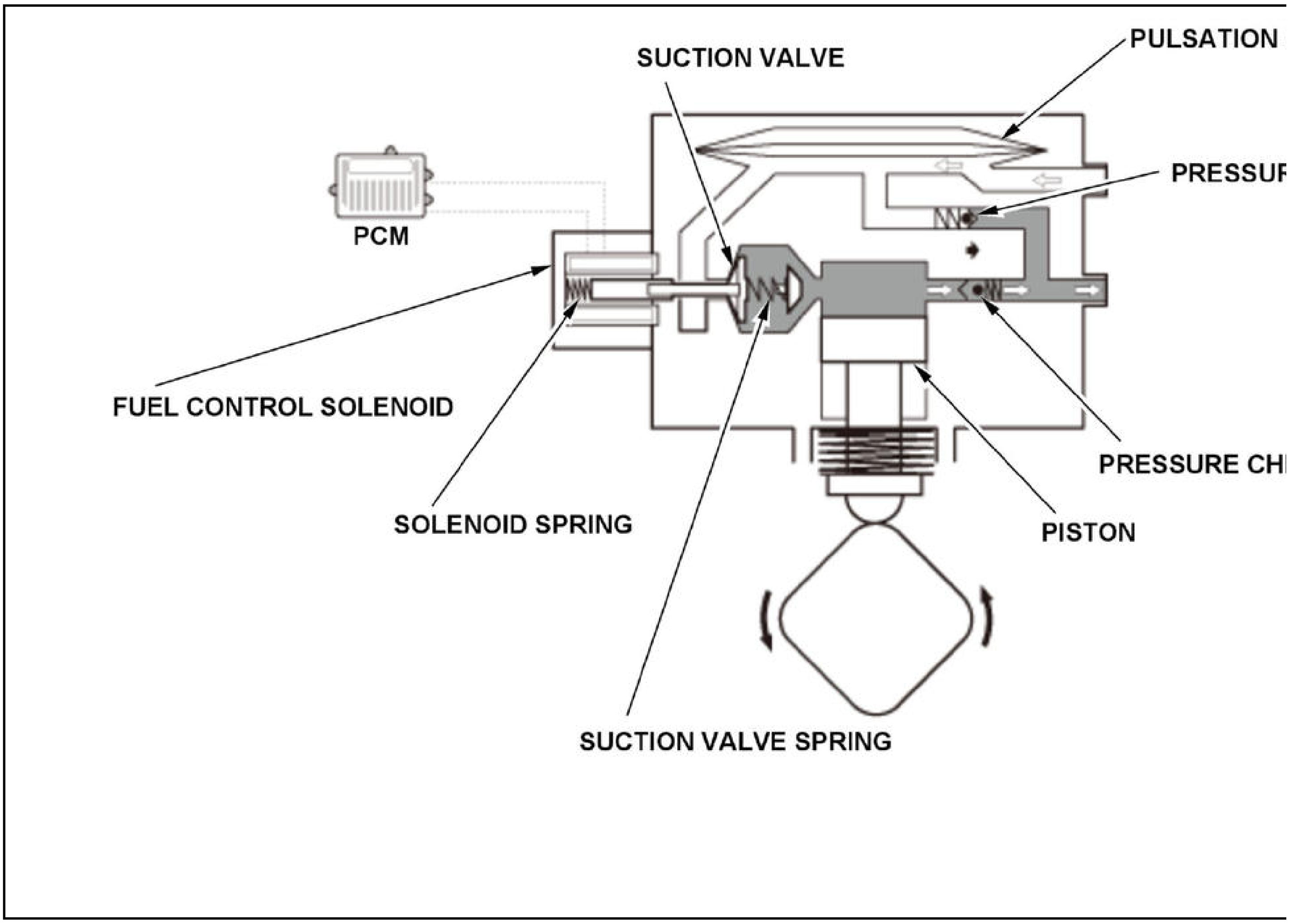
SUCTION VALVE
PULSATION
PRESSUR
PCM
FUEL CONTROL SOLENOID
SOLENOID SPRING
PRESSURE CH
PISTON
SUCTION VALVE SPRING

Returnless Fuel System

The returnless fuel system incorporates the fuel pressure regulator into the fuel pump to remove the fuel return pipe and other parts. The fuel pressure regulator keeps th fuel line is no longer routed into the engine compartment, this prevents fuel temperature rise and evaporation of gas in the fuel tank.

For locations of each component on vehicle, refer to Component Location Index

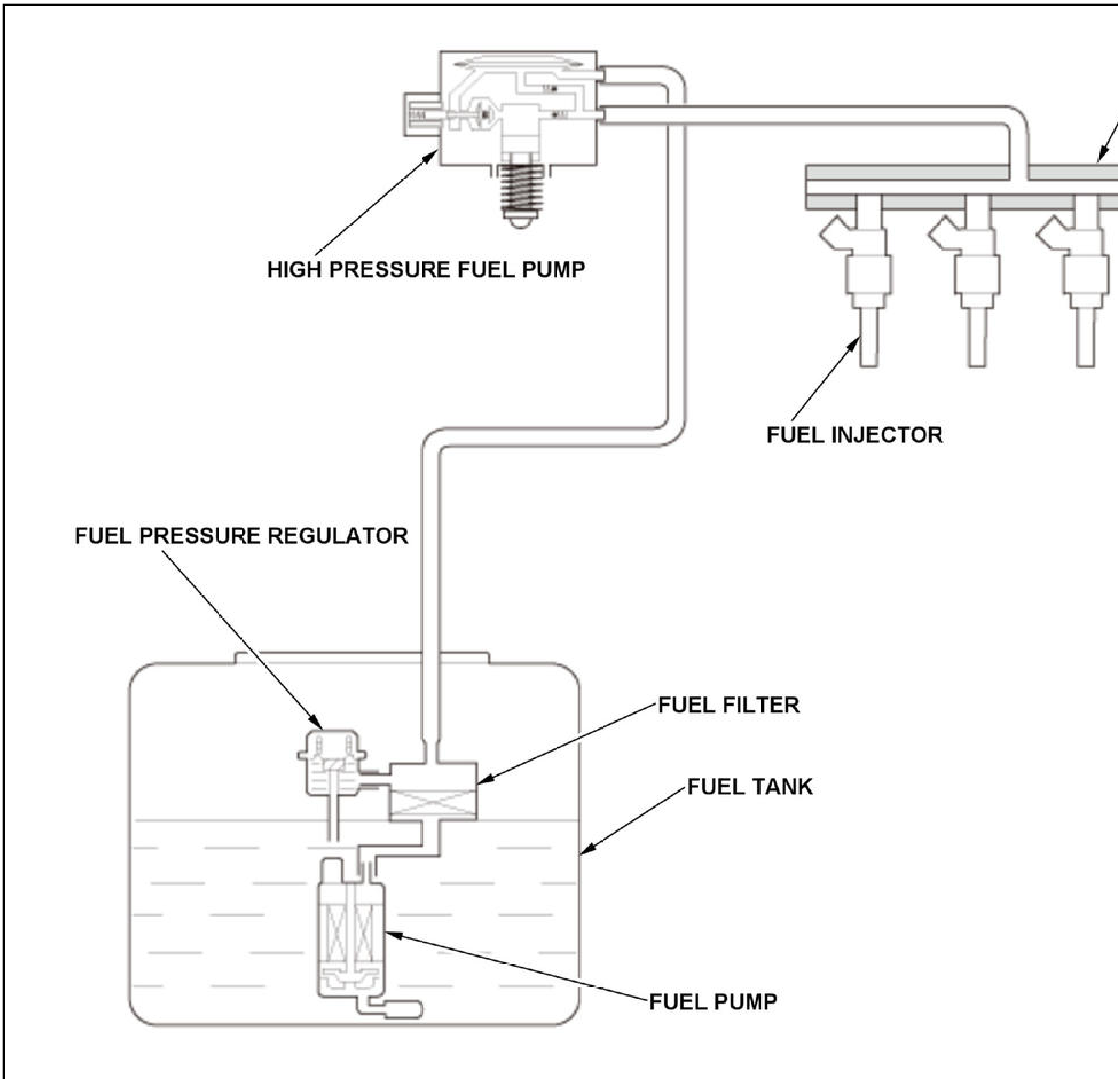
HIGH PRESSURE FUEL PUMP
FUEL INJECTOR
FUEL PRESSURE REGULATOR
FUEL FILTER
FUEL TANK
FUEL PUMP

The illustration is a typical example.

IMPROVEMENT CONTROL IN PRACTICAL USE FUEL CONSUMPTION SYSTEM DESCRIPTION

Outline

The control system for improved fuel economy in actual traffic aims at disseminating eco-driving. It consists of an effective control system that is activated by operating mode. When the ECON mode is ON, the engine control system, the cruise control system*, the transmission control system, and the air conditioning system work to co negative effects of the driver's driving style in an attempt to improve fuel economy.

*: There are cases where it is not controlled depending on the vehicle model.

For locations of each component on vehicle, refer to Component Location Index

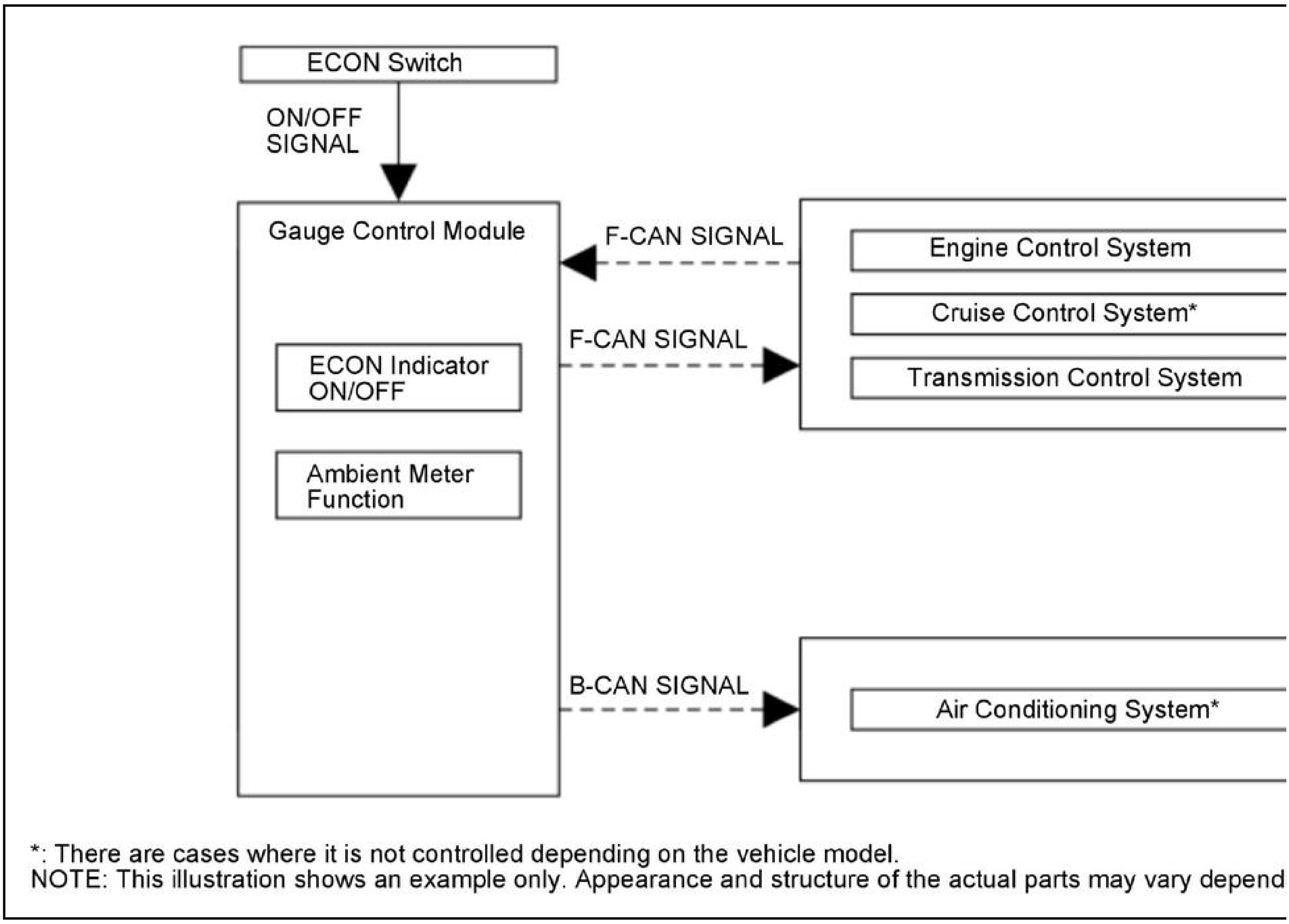
ECON Switch
ON/OFF SIGNAL
Gauge Control Module
ECON Indicator ON/OFF
Ambient Meter Function
F-CAN SIGNAL
F-CAN SIGNAL
B-CAN SIGNAL
Engine Control System
Cruise Control System*
Transmission Control System
Air Conditioning System*

*: There are cases where it is not controlled depending on the vehicle model.
NOTE: This illustration shows an example only. Appearance and structure of the actual parts may vary depend

Change of ETCS system control

The opening of the throttle valve is changed by response of the accelerator pedal.

Transmission Control System

- Change in shift map allocation against accelerator full pedal depression
- Moderation of gear change responsiveness

Air Conditioning (A/C) System

- Switching to the recirculation mode
- Reduction in compressor operation frequency
- Lower flow rate

Ambient Meter Function

The ambient meter function evaluates the driver's driving from a fuel consumption perspective and displays its information via the ambient meter in the gauge control m

TROUBLESHOOTING

FUEL PUMP CIRCUIT TROUBLESHOOTING (1.5 L ENGINE)

Fuel Pump Circuit Troubleshooting

If you suspect a problem with the fuel pump, check that the fuel pump actually runs; when it is on, you will hear some noise if you listen to the fuel fill port. The fuel pu vehicle is turned to ON mode. If the fuel pump does not make noise, check as follows:

1. Determine possible failure area (FI MAIN RLY OUT line, others)

   -1. Turn the vehicle to the OFF (LOCK) mode.

   -2. Remove PGM-FI main relay 2 .

   -3. Turn the vehicle to the ON mode.

   -4. Measure the voltage between test points 1 and 2.

Test condition	Vehicle ON mode
B	PGM-FI main relay 2: disconnected
Test point 1	PGM-FI main relay 2 4P socket (female terminals) No. 3: ①
Test point 2	Body ground

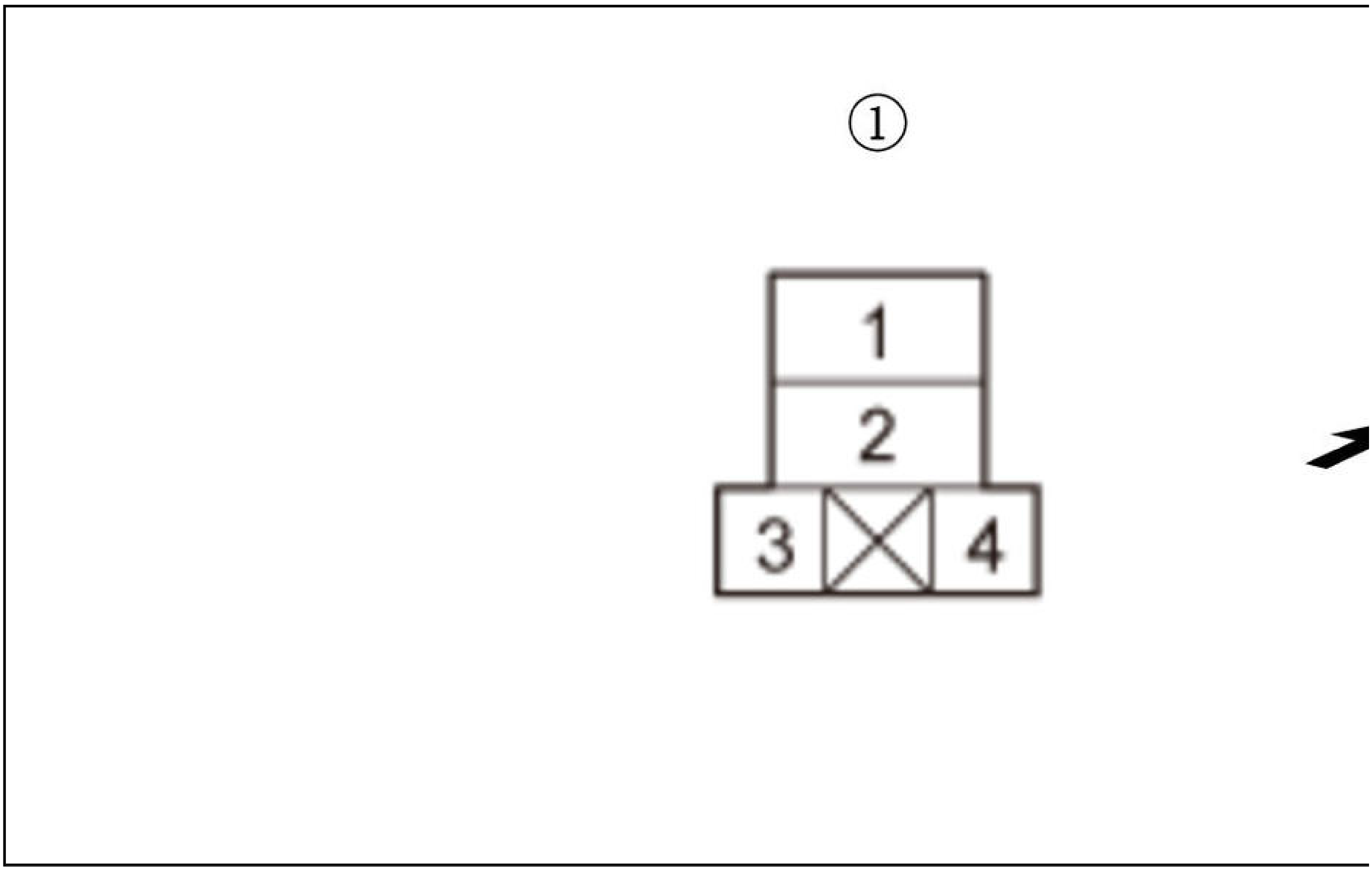

Is there battery voltage?

YES

Go to step 3.

NO

Go to step 2.

2. Open wire check (FI MAIN RLY OUT line)

-1. Turn the vehicle to the OFF (LOCK) mode.

-2. Disconnect the following connector.

Relay circuit board connector C (18P)

-3. Check for continuity between test points 1 and 2.

Test condition	Vehicle OFF (LOCK) mode PGM-FI main relay 2: disconnected Relay circuit board connector C (18P): disconnected
Test point 1	Relay circuit board connector C (18P) (female terminals) No. 17: ①
Test point 2	PGM-FI main relay 2 4P socket (female terminals) No. 3: ②

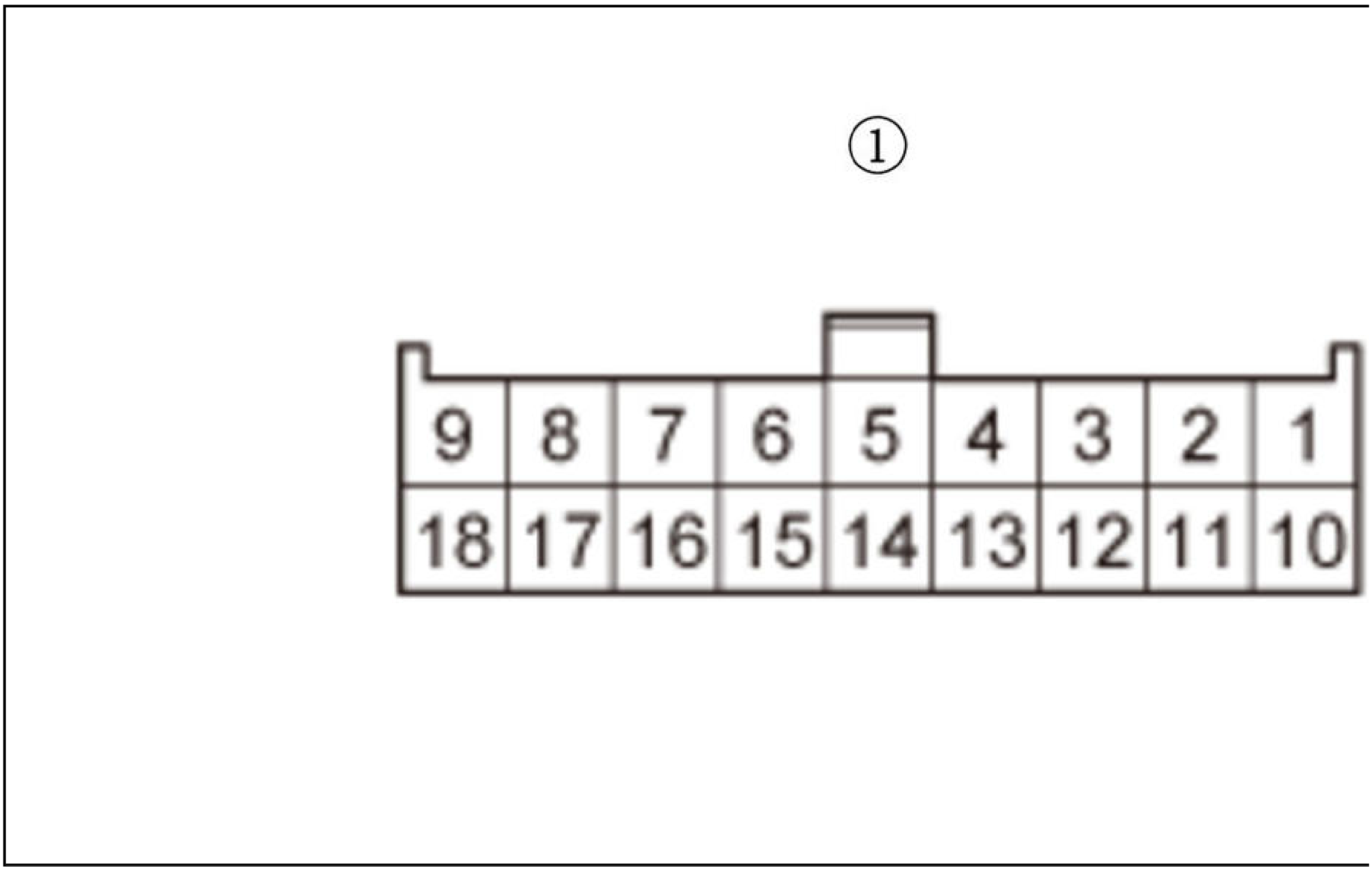
①
9
8
7
6
5
4
3
2
1
18
17
16
15
14
13
12
11
10

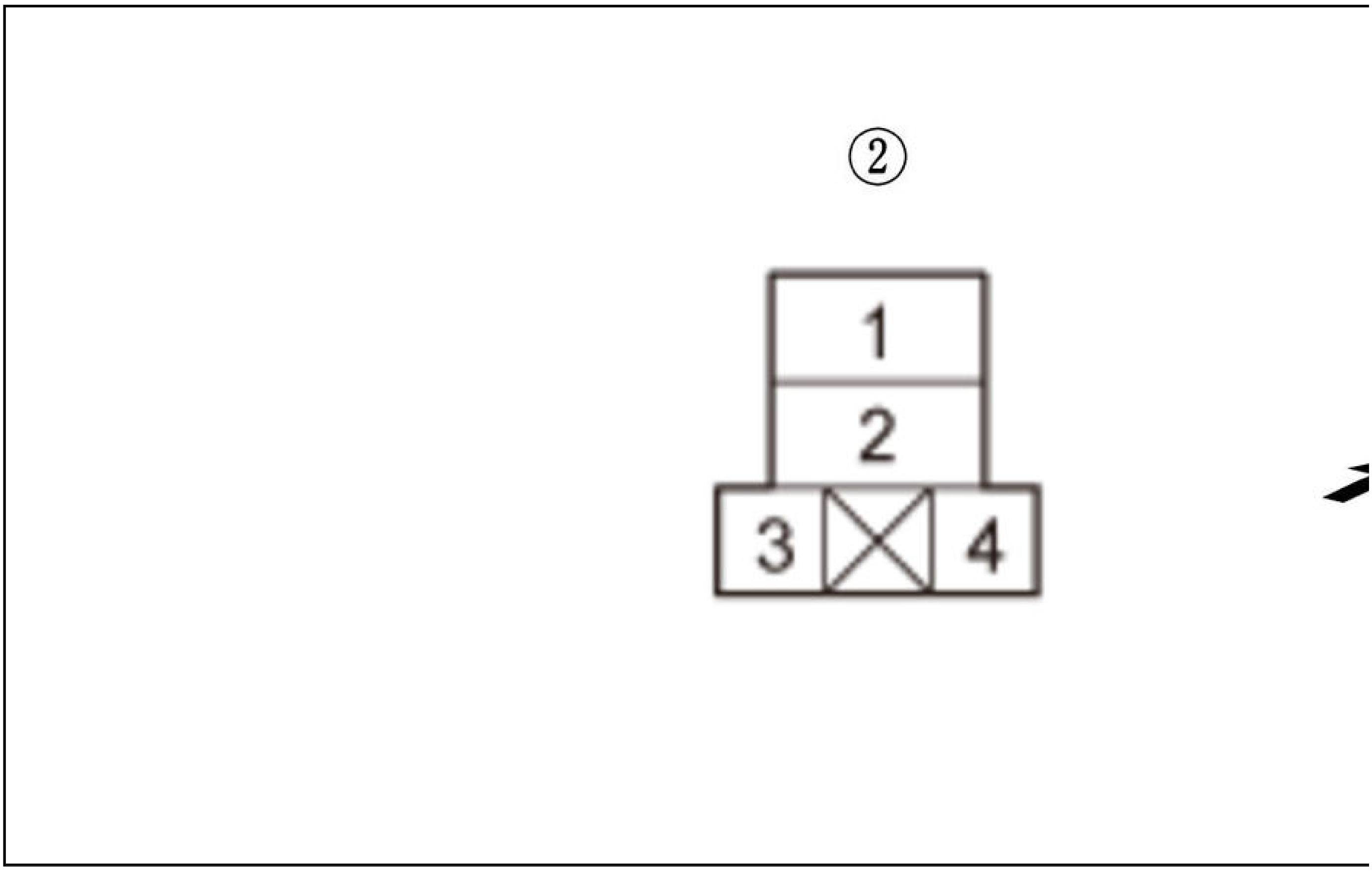

Is there continuity?

YES

Remove and test the relay circuit board , and replace it if needed.

NO

Repair an open in the FI MAIN RLY OUT wire between the relay circuit board and PGM-FI main relay 2.

3. Open wire check (IG1 FUEL PUMP line)

-1. Measure the voltage between test points 1 and 2.

Test condition	Vehicle ON mode
B	PGM-FI main relay 2: disconnected
Test point 1	PGM-FI main relay 2 4P socket (female terminals) No. 1: ①
Test point 2	Body ground

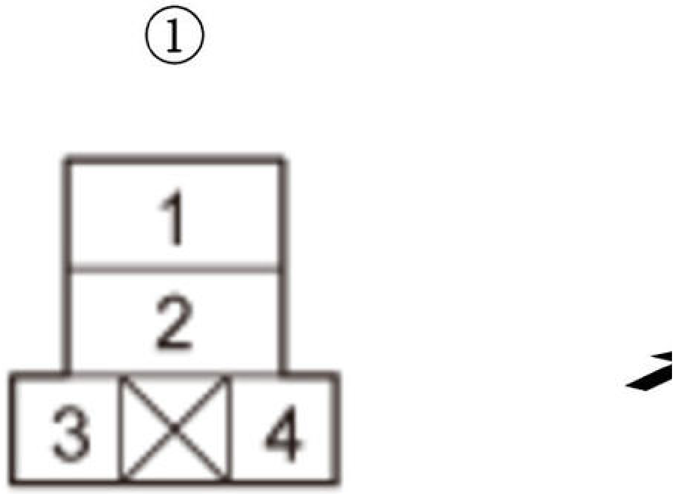

Is there battery voltage?

YES

Go to step 4.

NO

Check the No. D8 (15 A) fuse in the under-dash fuse/relay box. If the fuse is OK, repair an open in the IG1 FUEL PUMP wire between the No. D8 (15 A) fuse an **the under-dash fuse/relay box** .

4. Open wire check (FUEL PUMP RLY CL- line)

-1. Turn the vehicle to the OFF (LOCK) mode.

-2. Jump the SCS line with the HDS, and wait more than 1 minute.

-3. Disconnect the following connector.

PCM connector A (50P)

-4. Check for continuity between test points 1 and 2.

Test condition	Vehicle OFF (LOCK) mode
B	PGM-FI main relay 2: disconnected
B	PCM connector A (50P): disconnected

Test point 1	PGM-FI main relay 2 4P socket (female terminals) No. 4: ①
Test point 2	**PCM connector A (50P) No. 11**

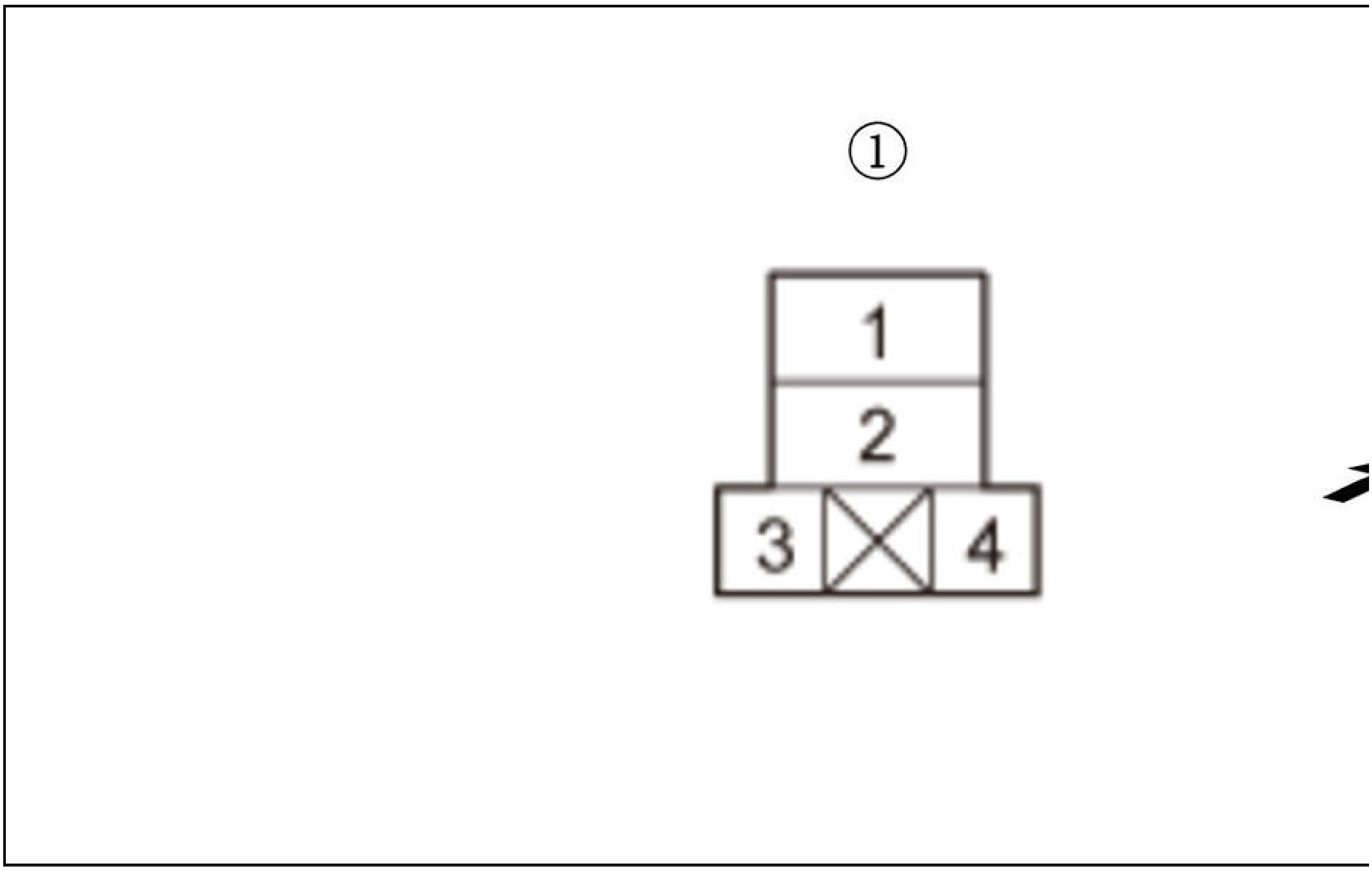

Is there continuity?

YES

The FUEL PUMP RLY CL- wire is OK. Go to step 5.

NO

Repair an open in the FUEL PUMP RLY CL- wire between the PCM (A11) and PGM-FI main relay 2.

5. Determine possible failure area (PGM-FI main relay 2, others)

-1. Reinstall PGM-FI main relay 2.

-2. Connect terminals A and B with a jumper wire.

Terminal A	**PCM connector A (50P) No. 5**
Terminal B	Body ground

-3. Turn the vehicle to the ON mode.

-4. Measure the voltage between test points 1 and 2.

Test condition	Vehicle ON mode
B	PCM connector A (50P): disconnected
B	PCM connector A (50P) No. 5: jumped to body ground
Test point 1	**PCM connector A (50P) No. 11**
Test point 2	Body ground

Is there battery voltage?

YES

Go to step 6.

NO

Replace PGM-FI main relay 2.

6. PCM operation check

-1. Turn the vehicle to the OFF (LOCK) mode.

-2. **Remove PGM-FI main relay 2** .

-3. Remove the jumper wire from PCM connector A (50P).

-4. Reconnect PCM connector A (50P).

-5. Exit the SCS mode with the HDS.

-6. Turn the vehicle to the ON mode, and measure the voltage between test points 1 and 2.

Test condition	Within 2 seconds after turning vehicle to ON mode
B	PGM-FI main relay 2: disconnected
Test point 1	PGM-FI main relay 2 4P socket (female terminals) No. 3: ①
Test point 2	PGM-FI main relay 2 4P socket (female terminals) No. 4: ①

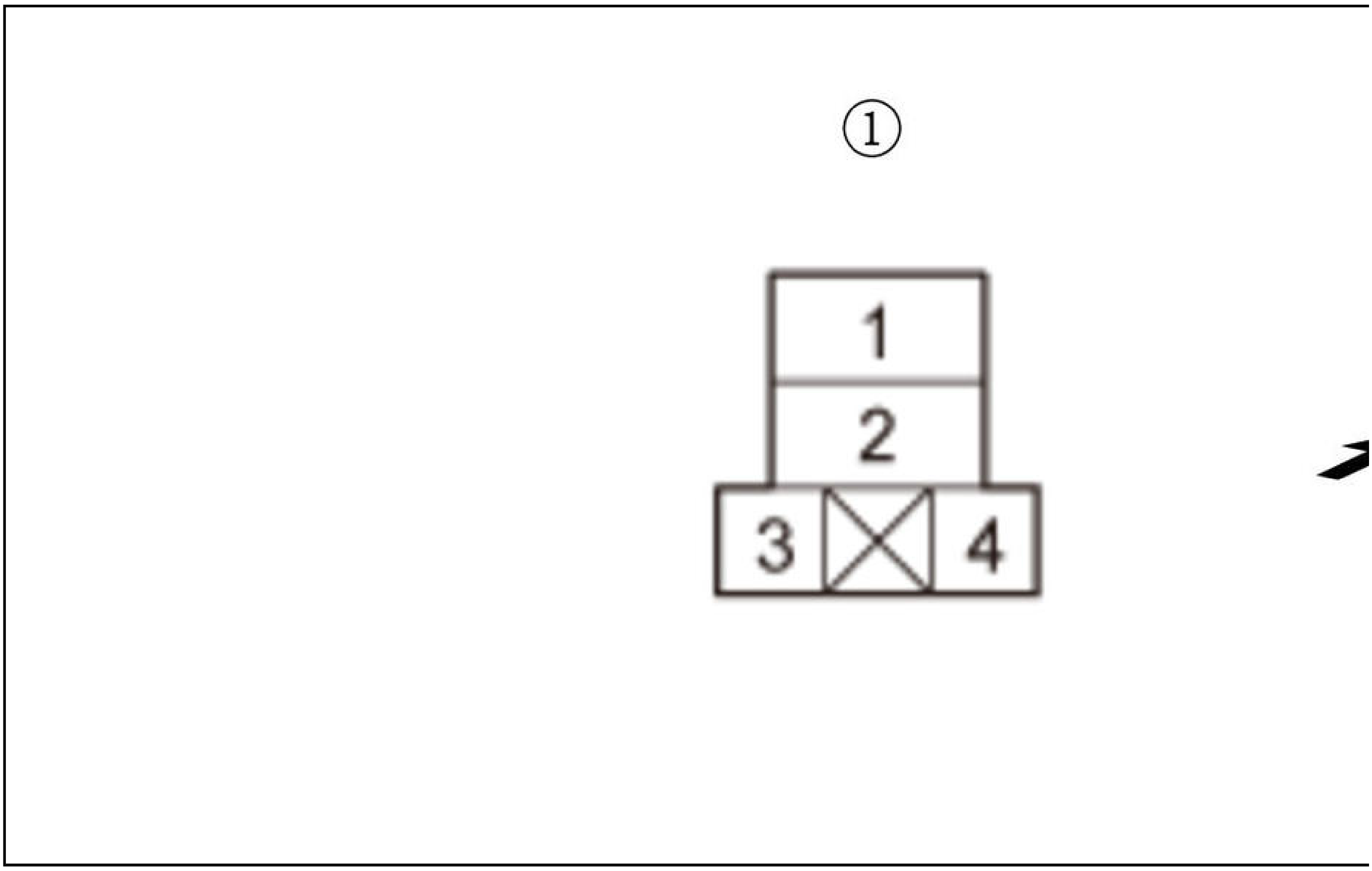

Is there battery voltage?

YES

Go to step 7.

NO

Check for any authorized service information related to the DTCs or symptoms you are troubleshooting, or **substitute a known-good PCM** , then recheck. If the was substituted, **replace the original PCM** .

7. Determine possible failure area (FUEL PUMP RLY OUT line, GND line)

-1. Turn the vehicle to the OFF (LOCK) mode.

-2. Disconnect the following connector.

Fuel tank unit 4P connector

-3. Reinstall PGM-FI main relay 2.

-4. Turn the vehicle to the ON mode, and measure the voltage between test points 1 and 2.

Test condition	Within 2 seconds after turning vehicle to ON mode
B	Fuel tank unit 4P connector: disconnected
Test point 1	Fuel tank unit 4P connector (female terminals) No. 1: ①
Test point 2	Body ground

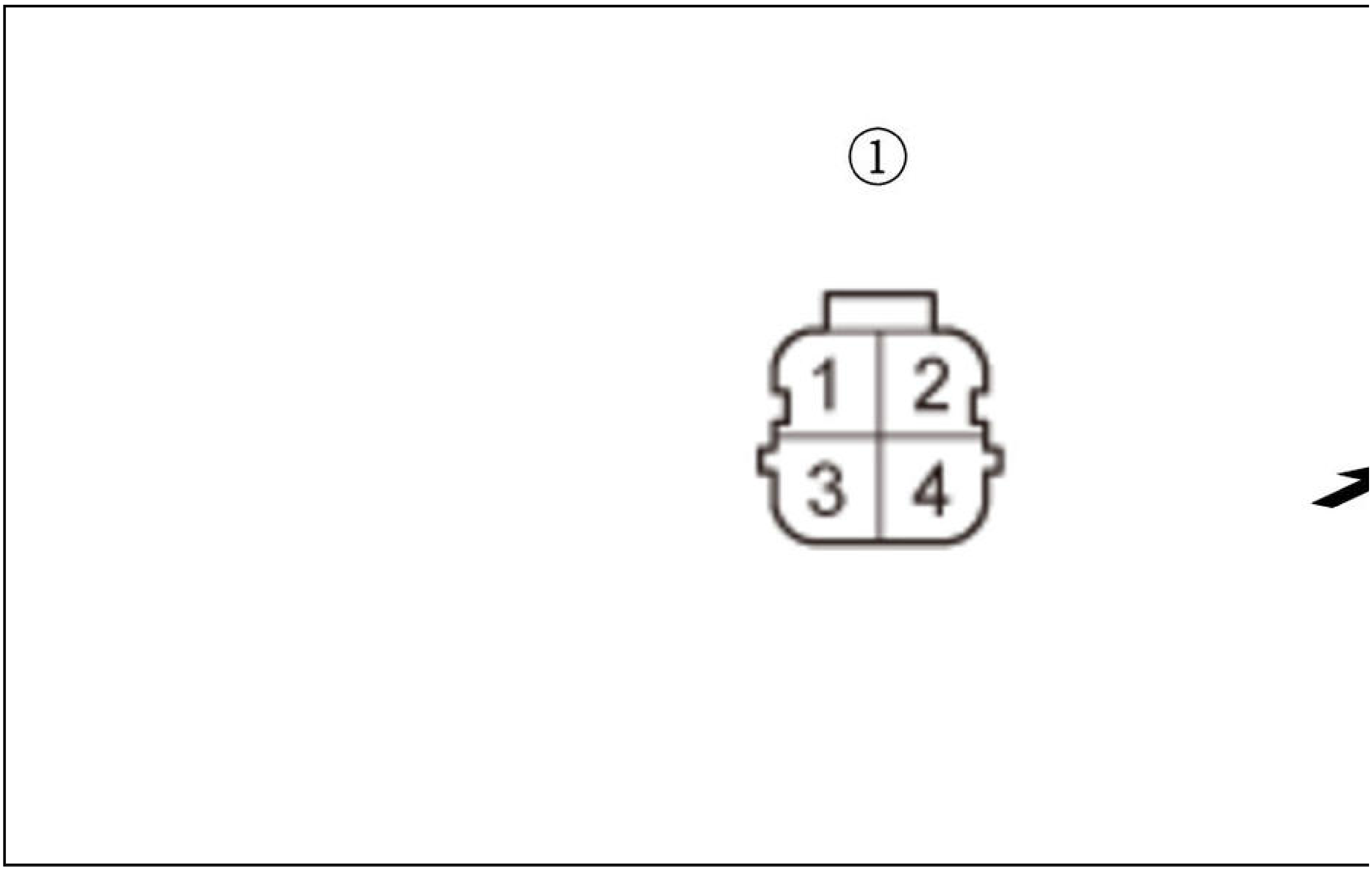

Is there battery voltage?

YES

Go to step 9.

NO

Go to step 8.

8. Open wire check (FUEL PUMP RLY OUT line)

-1. Turn the vehicle to the OFF (LOCK) mode.

-2. Remove PGM-FI main relay 2.

-3. Connect terminals A and B with a jumper wire.

Terminal A	PGM-FI main relay 2 4P socket (female terminals) No. 1: ①
Terminal B	PGM-FI main relay 2 4P socket (female terminals) No. 2: ①

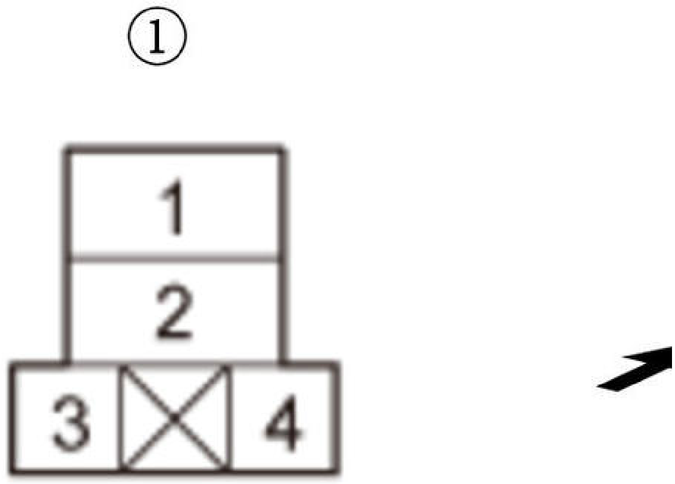

-4. Turn the vehicle to the ON mode.

-5. Measure the voltage between test points 1 and 2.

Test condition	Vehicle ON mode
B	Fuel tank unit 4P connector: disconnected
B	PGM-FI main relay 2 :disconnected
B	PGM-FI main relay 2 4P socket No. 1 and No. 2: jumped
Test point 1	Fuel tank unit 4P connector (female terminals) No. 1: ①
Test point 2	Body ground

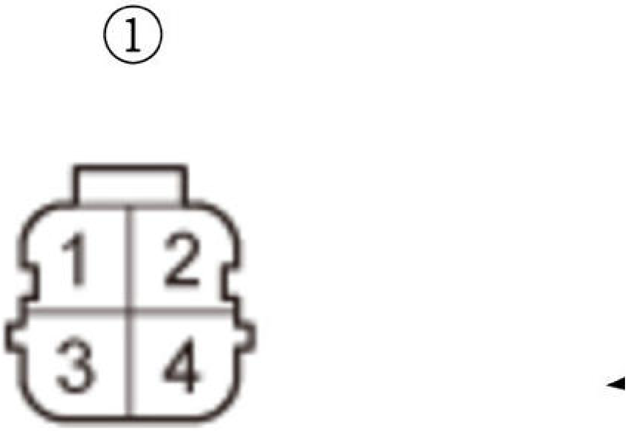

Is there battery voltage?

YES

The FUEL PUMP RLY OUT wire is OK. Replace PGM-FI main relay 2.

NO

Repair an open in the FUEL PUMP RLY OUT wire between PGM-FI main relay 2 and the fuel tank unit.

9. Open wire check (GND line)

    -1. Turn the vehicle to the OFF (LOCK) mode.

    -2. Check for continuity between test points 1 and 2.

Test condition	Vehicle OFF (LOCK) mode
B	Fuel tank unit 4P connector: disconnected
Test point 1	Fuel tank unit 4P connector (female terminals) No. 3: ①
Test point 2	Body ground

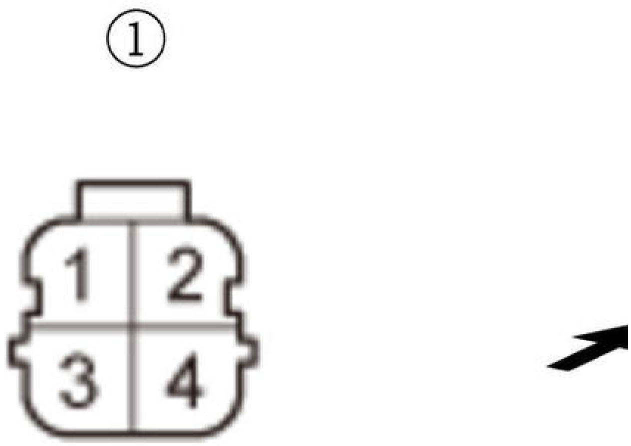

Is there continuity?

YES

The GND wire is OK. **Replace the fuel pump**.

NO

Repair an open in the GND wire between the fuel tank unit and G503.

FUEL PUMP CIRCUIT TROUBLESHOOTING (2.4 L ENGINE) (2017 2018 2019)

Fuel Pump Circuit Troubleshooting

If you suspect a problem with the fuel pump, check that the fuel pump actually runs; when it is on, you will hear some noise if you listen to the fuel fill port. The fuel pu vehicle is turned to ON mode. If the fuel pump does not make noise, check as follows:

1. Determine possible failure area (FI MAIN RLY OUT line, others)

    -1. Turn the vehicle to the OFF (LOCK) mode.

    -2. **Remove PGM-FI main relay 2** .

    -3. Turn the vehicle to the ON mode.

    -4. Measure the voltage between test points 1 and 2.

Test condition	Vehicle ON mode
B	PGM-FI main relay 2: disconnected

Test point 1	PGM-FI main relay 2 4P socket (female terminals) No. 3: ①
Test point 2	Body ground

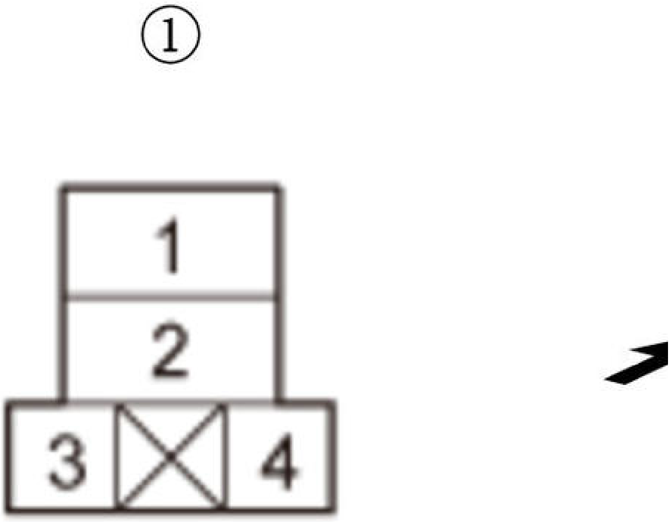

Is there battery voltage?

YES

Go to step 3.

NO

Go to step 2.

2. Open wire check (FI MAIN RLY OUT line)

-1. Turn the vehicle to the OFF (LOCK) mode.

-2. Disconnect the following connector.

Relay circuit board connector C (18P)

-3. Check for continuity between test points 1 and 2.

Test condition	Vehicle OFF (LOCK) mode PGM-FI main relay 2: disconnected Relay circuit board connector C (18P): disconnected
Test point 1	Relay circuit board connector C (18P) (female terminals) No. 17: ①
Test point 2	PGM-FI main relay 2 4P socket (female terminals) No. 3: ②

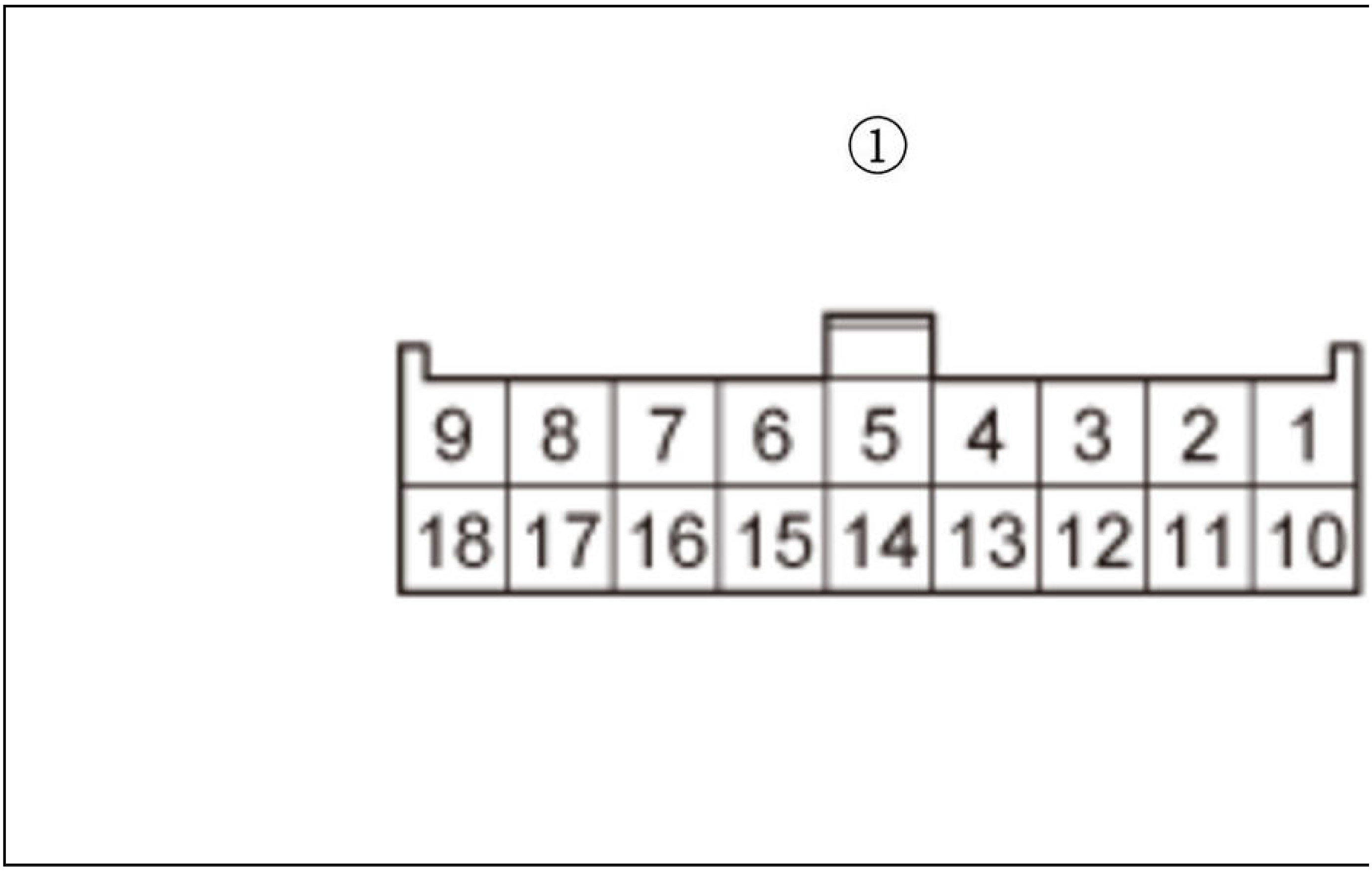
①
9
8
7
6
5
4
3
2
1
18
17
16
15
14
13
12
11
10

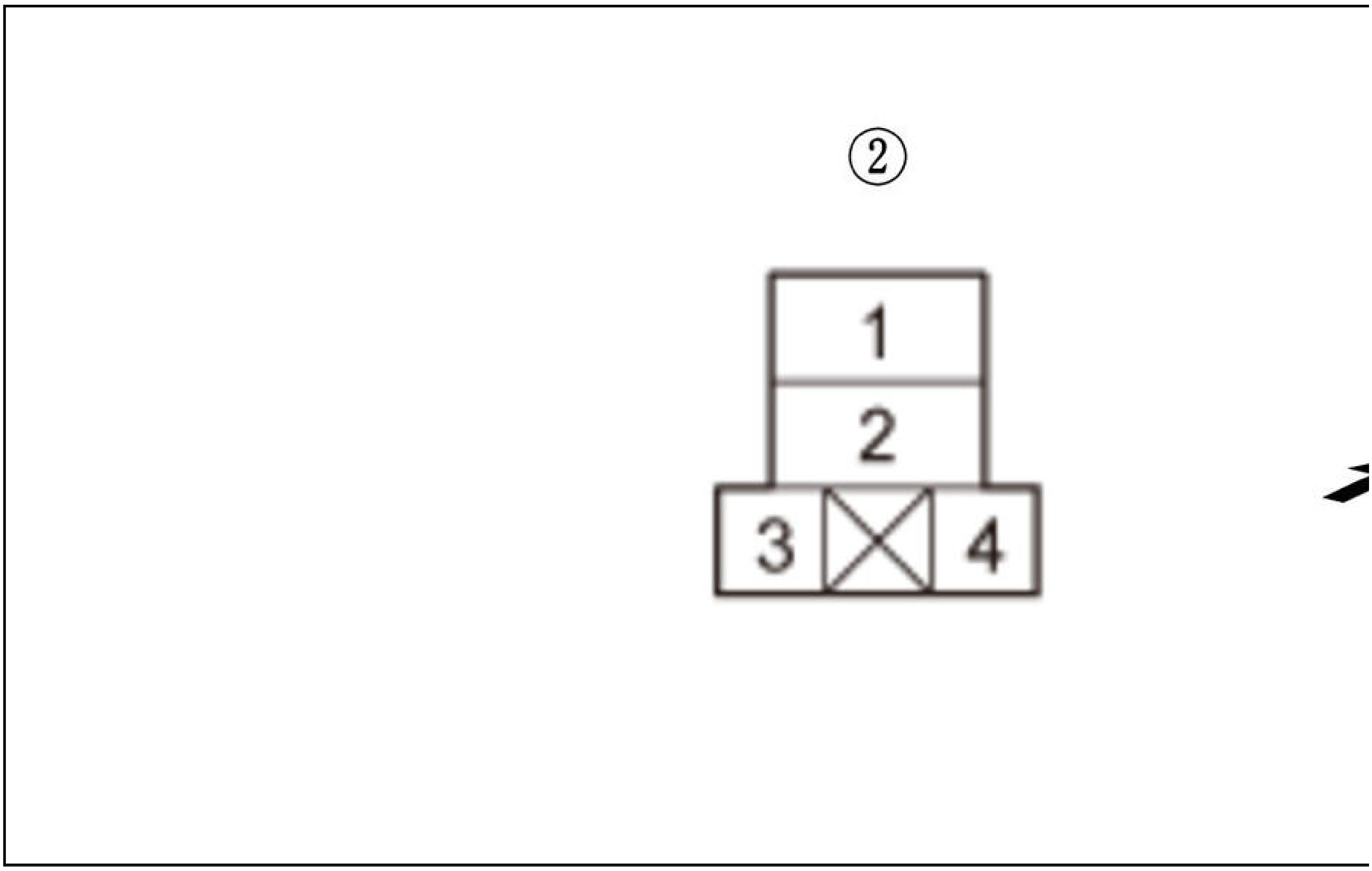

Is there continuity?

YES

Remove and test the relay circuit board , and replace it if needed.

NO

Repair an open in the FI MAIN RLY OUT wire between the relay circuit board and PGM-FI main relay 2.

3. Open wire check (IG1 FUEL PUMP line)

-1. Measure the voltage between test points 1 and 2.

Test condition	Vehicle ON mode
B	PGM-FI main relay 2: disconnected
Test point 1	PGM-FI main relay 2 4P socket (female terminals) No. 1: ①
Test point 2	Body ground

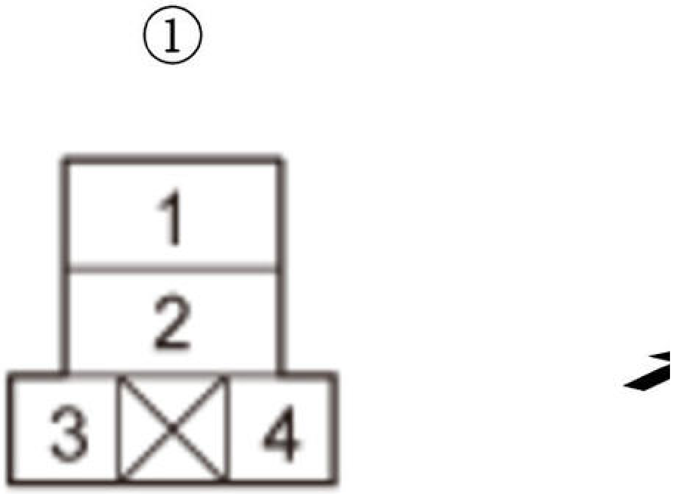

Is there battery voltage?

YES

Go to step 4.

NO

Check the No. D8 (15 A) fuse in the under-dash fuse/relay box. If the fuse is OK, repair an open in the IG1 FUEL PUMP wire between the No. D8 (15 A) fuse an
the under-dash fuse/relay box .

4. Open wire check (FUEL PUMP RLY CL- line)

-1. Turn the vehicle to the OFF (LOCK) mode.

-2. Jump the SCS line with the HDS, and wait more than 1 minute.

-3. Disconnect the following connector.

PCM connector A (51P)

-4. Check for continuity between test points 1 and 2.

Test condition	Vehicle OFF (LOCK) mode
B	PGM-FI main relay 2: disconnected
B	PCM connector A (51P): disconnected

Test point 1	PGM-FI main relay 2 4P socket (female terminals) No. 4: ①
Test point 2	**PCM connector A (51P) No. 14**

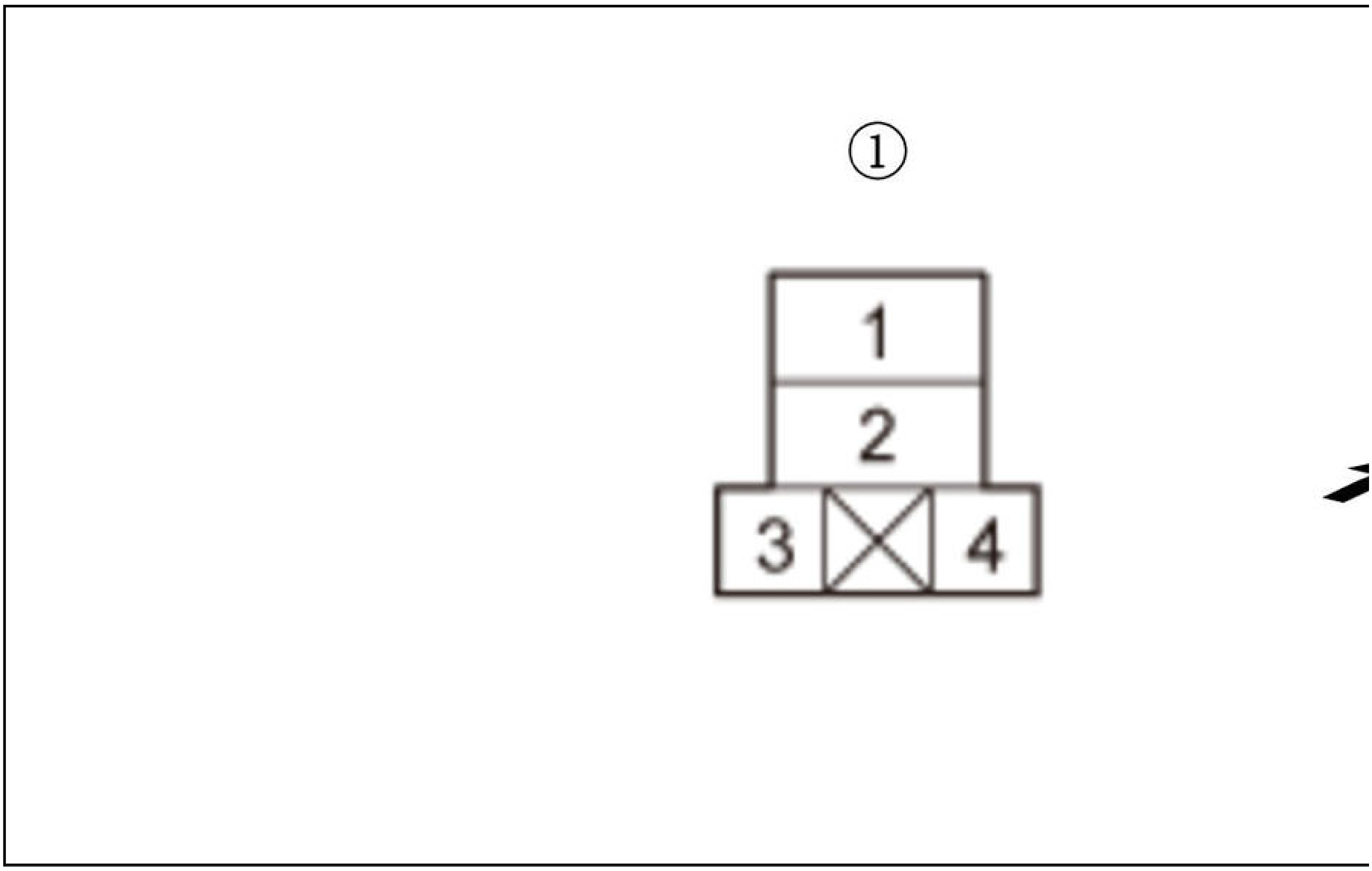

Is there continuity?

YES

The FUEL PUMP RLY CL- wire is OK. Go to step 5.

NO

Repair an open in the FUEL PUMP RLY CL- wire between the PCM (A14) and PGM-FI main relay 2.

5. Determine possible failure area (PGM-FI main relay 2, others)

-1. Reinstall PGM-FI main relay 2.

-2. Connect terminals A and B with a jumper wire.

Terminal A	**PCM connector A (51P) No. 3**
Terminal B	Body ground

-3. Turn the vehicle to the ON mode.

-4. Measure the voltage between test points 1 and 2.

Test condition	Vehicle ON mode
B	PCM connector A (51P): disconnected
B	PCM connector A (51P) No. 3: jumped to body ground
Test point 1	**PCM connector A (51P) No. 14**
Test point 2	Body ground

Is there battery voltage?

YES

Go to step 6.

NO

Replace PGM-FI main relay 2.

6. PCM operation check

-1. Turn the vehicle to the OFF (LOCK) mode.

-2. **Remove PGM-FI main relay 2** .

-3. Remove the jumper wire from PCM connector A (50P).

-4. Reconnect PCM connector A (51P).

-5. Exit the SCS mode with the HDS.

-6. Turn the vehicle to the ON mode, and measure the voltage between test points 1 and 2.

Test condition	Within 2 seconds after turning vehicle to ON mode
B	PGM-FI main relay 2: disconnected
Test point 1	PGM-FI main relay 2 4P socket (female terminals) No. 3: ①
Test point 2	PGM-FI main relay 2 4P socket (female terminals) No. 4: ①

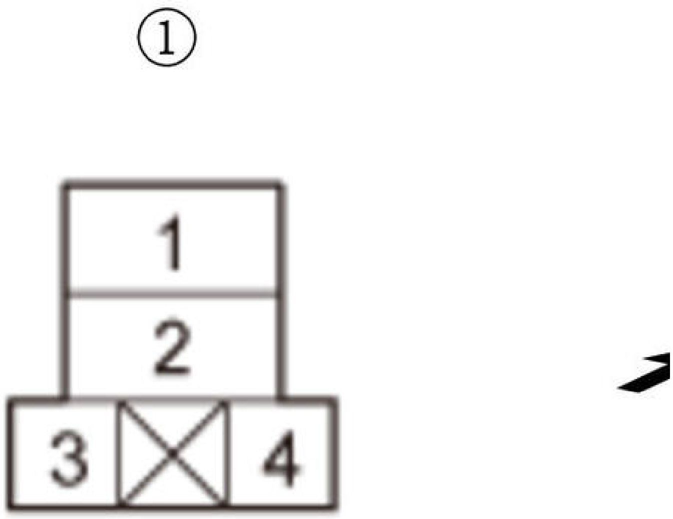

Is there battery voltage?

YES

Go to step 7.

NO

Check for any authorized service information related to the DTCs or symptoms you are troubleshooting, or **substitute a known-good PCM** , then recheck. If the was substituted, **replace the original PCM** .

7. Determine possible failure area (FUEL PUMP RLY OUT line, GND line)

-1. Turn the vehicle to the OFF (LOCK) mode.

-2. Disconnect the following connector.

Fuel tank unit 4P connector

-3. Reinstall PGM-FI main relay 2.

-4. Turn the vehicle to the ON mode, and measure the voltage between test points 1 and 2.

Test condition	Within 2 seconds after turning vehicle to ON mode
B	Fuel tank unit 4P connector: disconnected
Test point 1	Fuel tank unit 4P connector (female terminals) No. 1: ①
Test point 2	Body ground

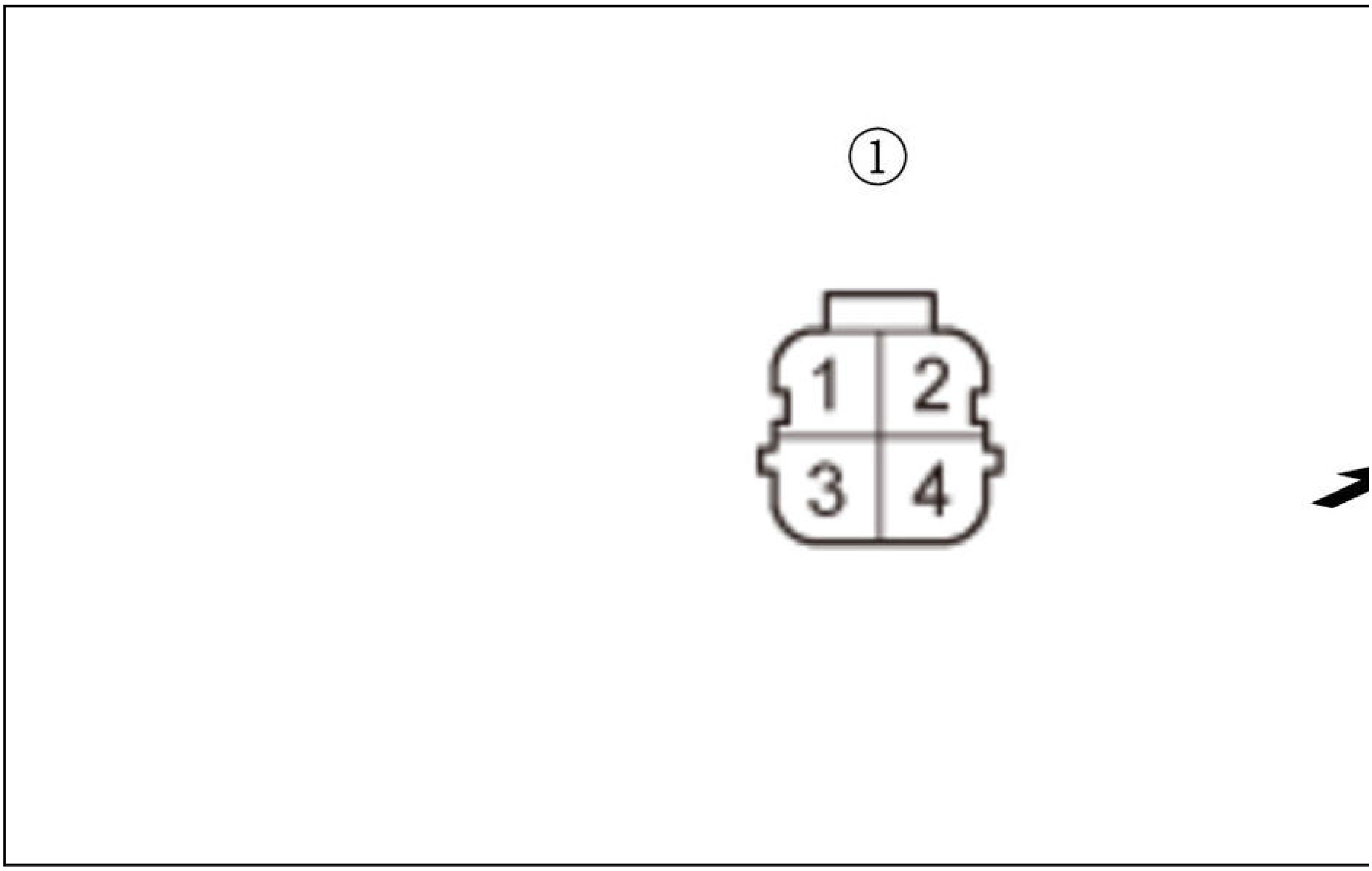

Is there battery voltage?

YES

Go to step 9.

NO

Go to step 8.

8. Open wire check (FUEL PUMP RLY OUT line)

-1. Turn the vehicle to the OFF (LOCK) mode.

-2. **Remove PGM-FI main relay 2** .

-3. Connect terminals A and B with a jumper wire.

Terminal A	PGM-FI main relay 2 4P socket (female terminals) No. 1: ①
Terminal B	PGM-FI main relay 2 4P socket (female terminals) No. 2: ①

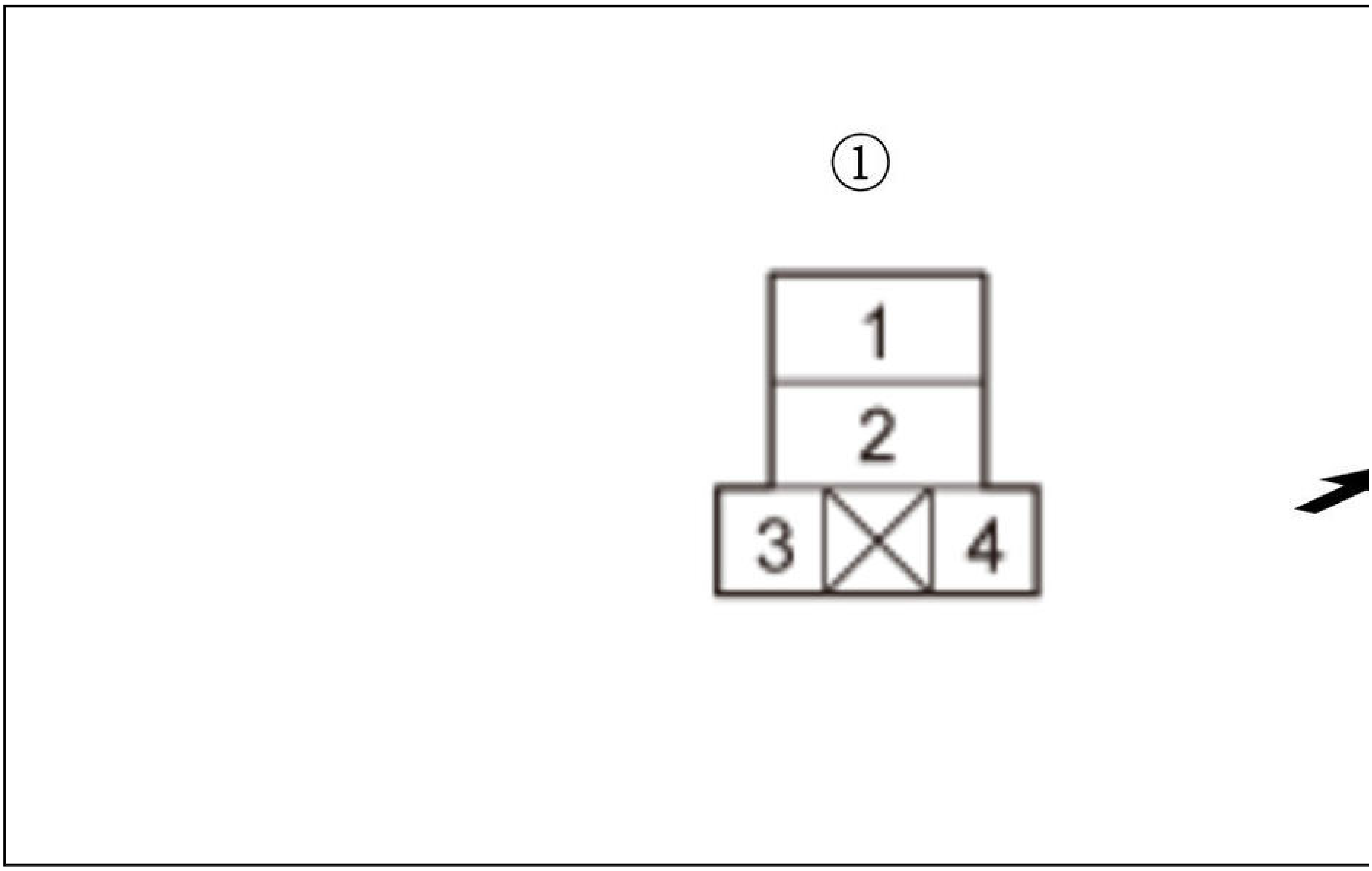

-4. Turn the vehicle to the ON mode.

-5. Measure the voltage between test points 1 and 2.

Test condition	Vehicle ON mode
B	Fuel tank unit 4P connector: disconnected
B	PGM-FI main relay 2 :disconnected
B	PGM-FI main relay 2 4P socket No. 1 and No. 2: jumped
Test point 1	Fuel tank unit 4P connector (female terminals) No. 1: ①
Test point 2	Body ground

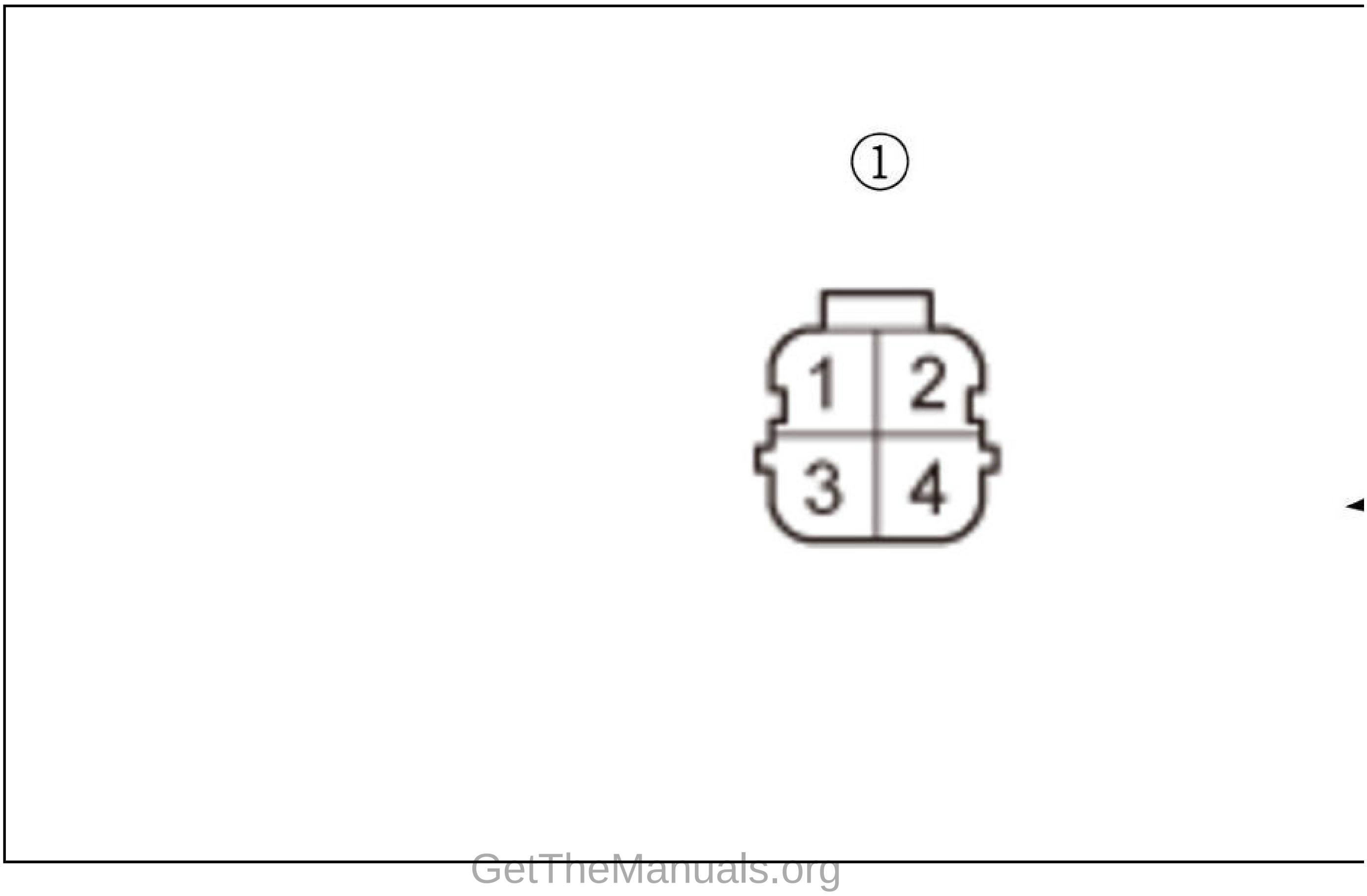

Is there battery voltage?

YES

The FUEL PUMP RLY OUT wire is OK. Replace PGM-FI main relay 2.

NO

Repair an open in the FUEL PUMP RLY OUT wire between PGM-FI main relay 2 and the fuel tank unit.

9. Open wire check (GND line)

   -1. Turn the vehicle to the OFF (LOCK) mode.

   -2. Check for continuity between test points 1 and 2.

Test condition	Vehicle OFF (LOCK) mode
B	Fuel tank unit 4P connector: disconnected
Test point 1	Fuel tank unit 4P connector (female terminals) No. 3: ①
Test point 2	Body ground

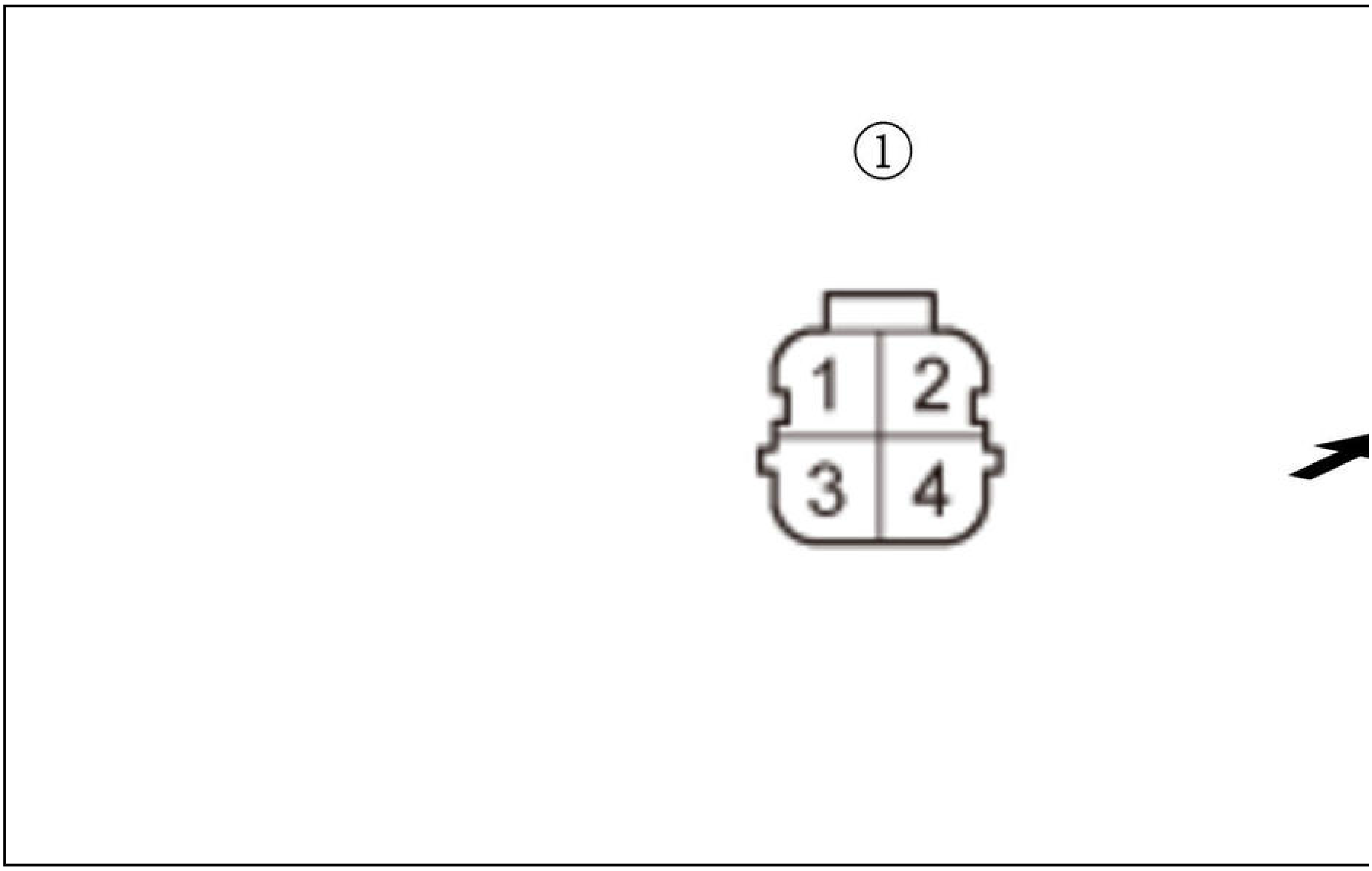

Is there continuity?

YES

The GND wire is OK. **Replace the fuel pump**.

NO

Repair an open in the GND wire between the fuel tank unit and G503.

REPAIR PROCEDURES AND TEST

FUEL PRESSURE RELIEVING

Procedure

WARNING:

Flammable - Keep Fire Away

NOTE:

- Refer to the **Fuel and Emissions Systems Service Precautions** before disconnecting the fuel line.
- Fuel may cause flammable gas leaks and may result in fire. Keep sparks, flame and cigarettes away.
- Before disconnecting fuel lines or hoses, relieve pressure from the system by disabling the fuel pump and disconnecting the fuel line/quick connect fitting in the e

1. Fuel Tank Pressure - Relieve (Mexico models)

1. Remove the fuel fill cap to relieve the pressure in the fuel tank.

2. Fuel Tank Pressure - Relieve (USA and Canada models)

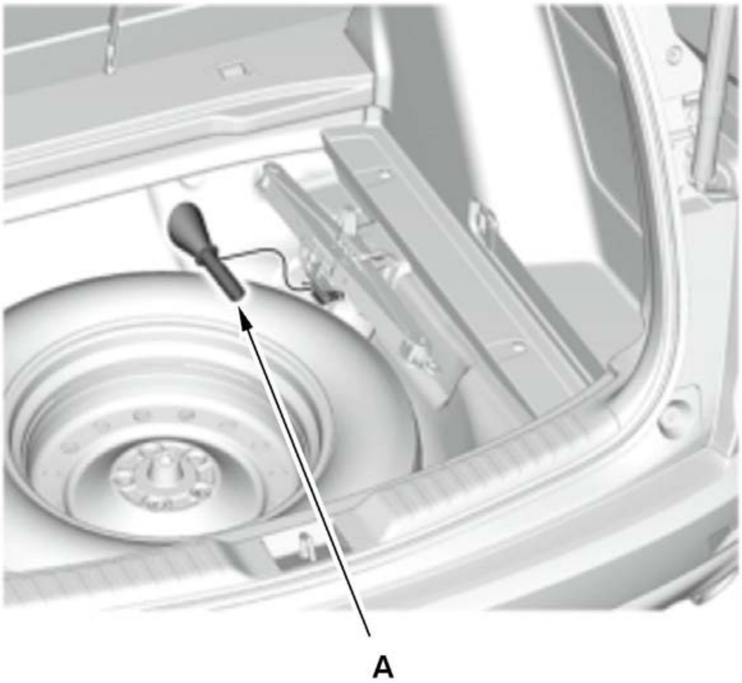	1. Lift up cargo lid. Remove the emergency fuel funnel (
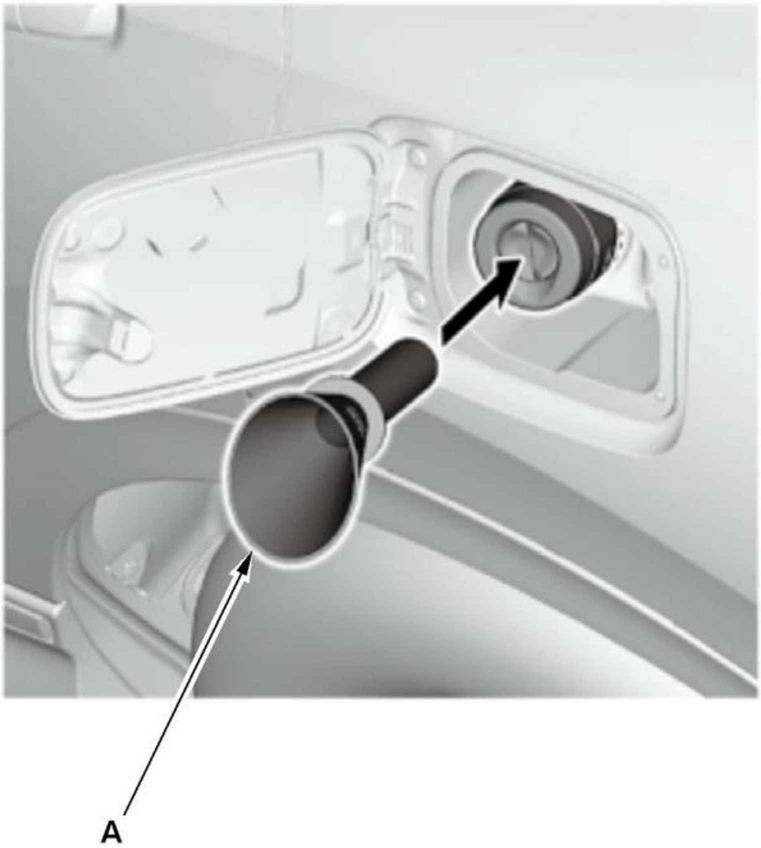	2. Insert the emergency fuel funnel (A) into the fuel filler

3. Fuel Pump - Stop (with HDS)

1. Turn the vehicle to the ON mode, but do not start the engine.

2. **Connect the HDS**

3. From the INSPECTION MENU of the HDS, select Fuel Pump OFF, then start the engine, and let it idle until it stalls.

NOTE:

- Do not allow the engine to idle above 1, 000 rpm or the PCM will continue to operate the fuel pump.
- A Pending or Confirmed DTC may be set during this procedure. Check for DTCs, and clear them as needed.

4. Turn the vehicle to the OFF (LOCK) mode.

4. Fuel Pressure - Relieve (without HDS)

1. **Remove PGM-FI main relay 2** .
2. Start the engine, and let it idle until it stalls.

NOTE: If any DTCs are stored, clear and ignore them.

3. Turn the vehicle to the OFF (LOCK) mode.

4. Install PGM-FI main relay 2.

5. **12 Volt Battery Terminal - Disconnect**

FUEL TANK UNIT/FUEL FILTER REMOVAL, INSTALLATION, DISASSEMBLY, AND REASSEMBLY

Special Tools Required

Image	Description/Tool Number
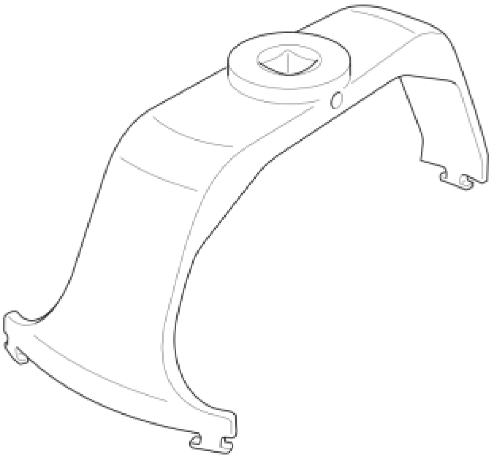	Wrench, Fuel Sender 070AA-TLA0100

Removal

WARNING:

Flammable - Keep Fire Away

NOTE:

- ℹ Where icon is shown for further information continue to the information below.
- Refer to the **Fuel and Emissions Systems Service Precautions** before disconnecting the fuel line.
- Fuel may cause flammable gas leaks and may result in fire. Keep sparks, flame and cigarettes away.

1

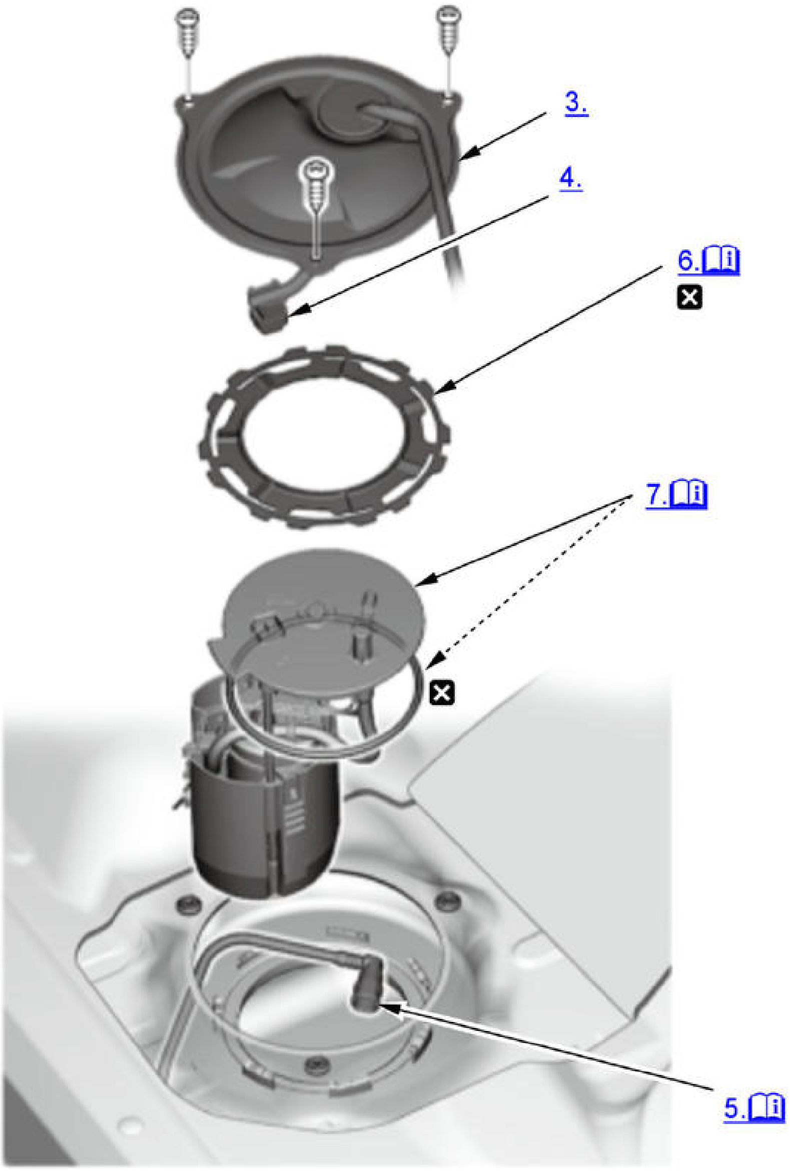

ℹ	Detailed information, notes, and precautions
☒	Replace

1. **Fuel Pressure - Relieve**
2. **Rear Seat Cushion - Lift**
3. Fuel Tank Unit Access Panel - Remove
4. Connector (Fuel Tank Unit) - Disconnect
5. Fuel Line Quick-Connect Fitting - Disconnect

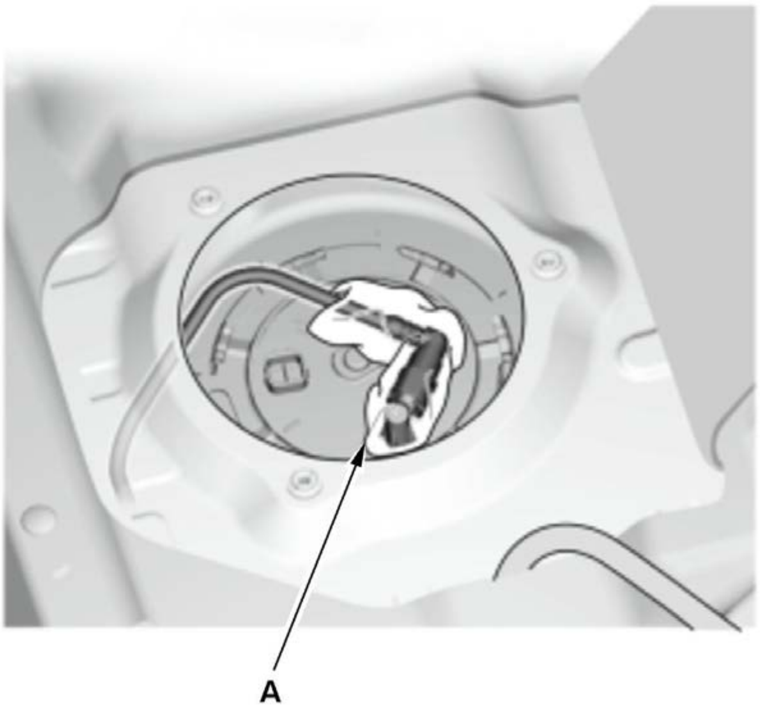	1. Place a rag or shop towel (A) over the quick-connect fi 2. **Disconnect the quick-connect fitting** from the fuel tank unit.

6. Fuel Tank Unit Cam Lock Ring - Unlock

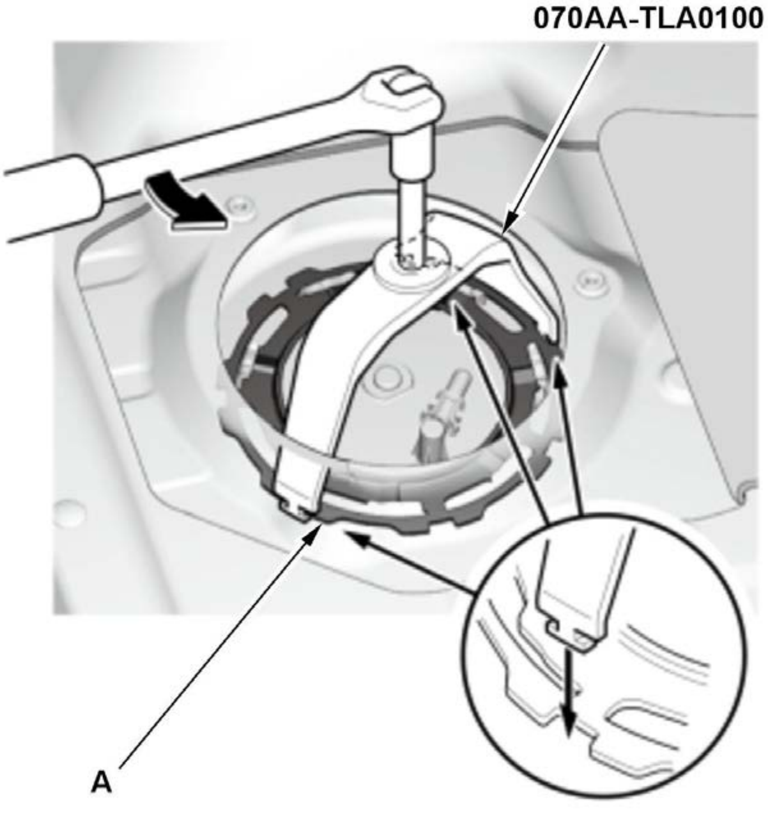	1. Set the fuel sender wrench as shown. 2. Turn the fuel tank unit cam lock ring (A) counterclockv **NOTE:** Try to keep the fuel sender wrench from floating

7. Fuel Tank Unit - Remove

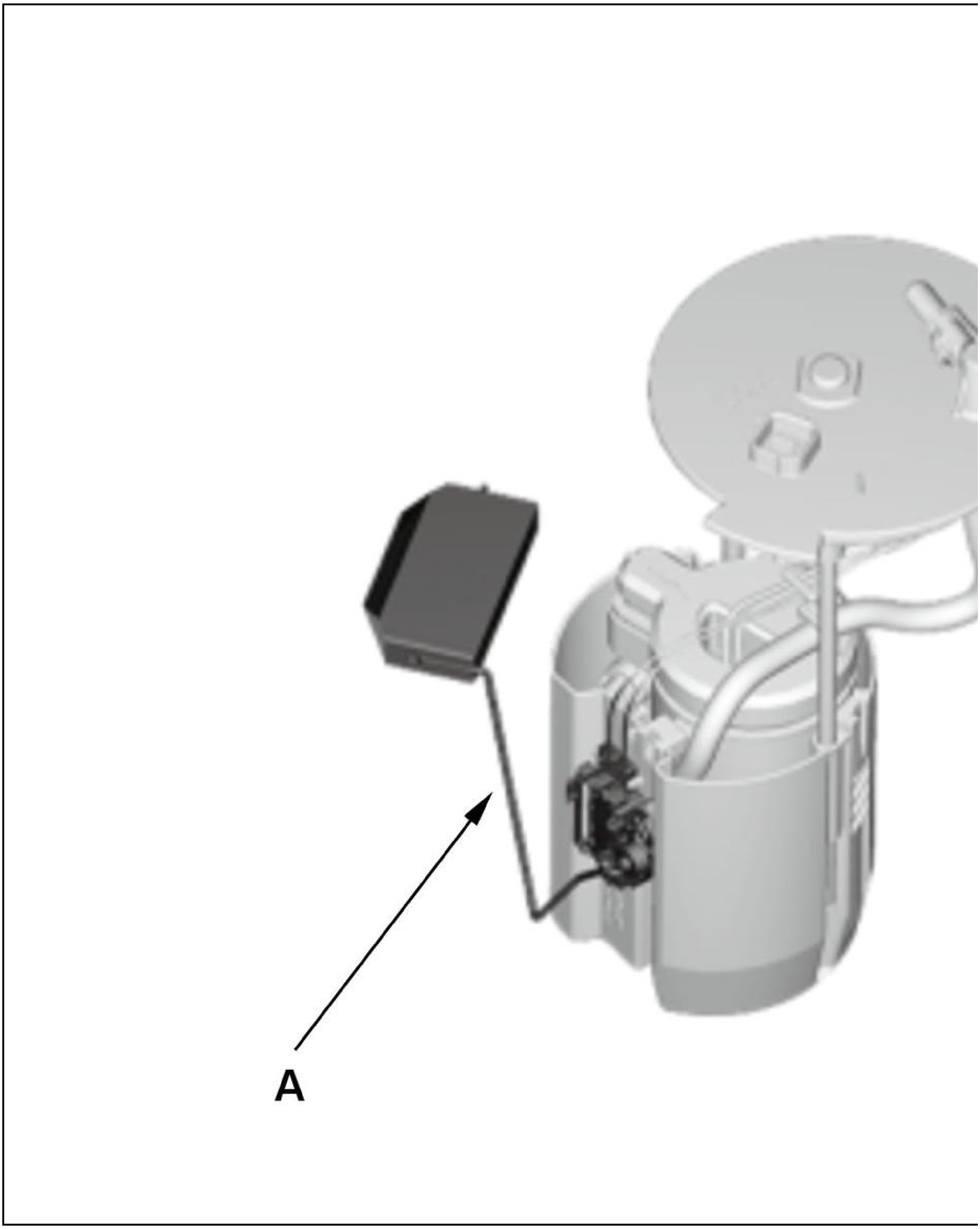

NOTE: Be careful not to bend or twist the fuel level sensor arm (A) excessively.

Installation

WARNING:

Flammable - Keep Fire Away

NOTE:

- 📖 Where icon is shown for further information continue to the information below.
- Refer to the **Fuel and Emissions Systems Service Precautions** before disconnecting the fuel line.
- Fuel may cause flammable gas leaks and may result in fire. Keep sparks, flame and cigarettes away.

1

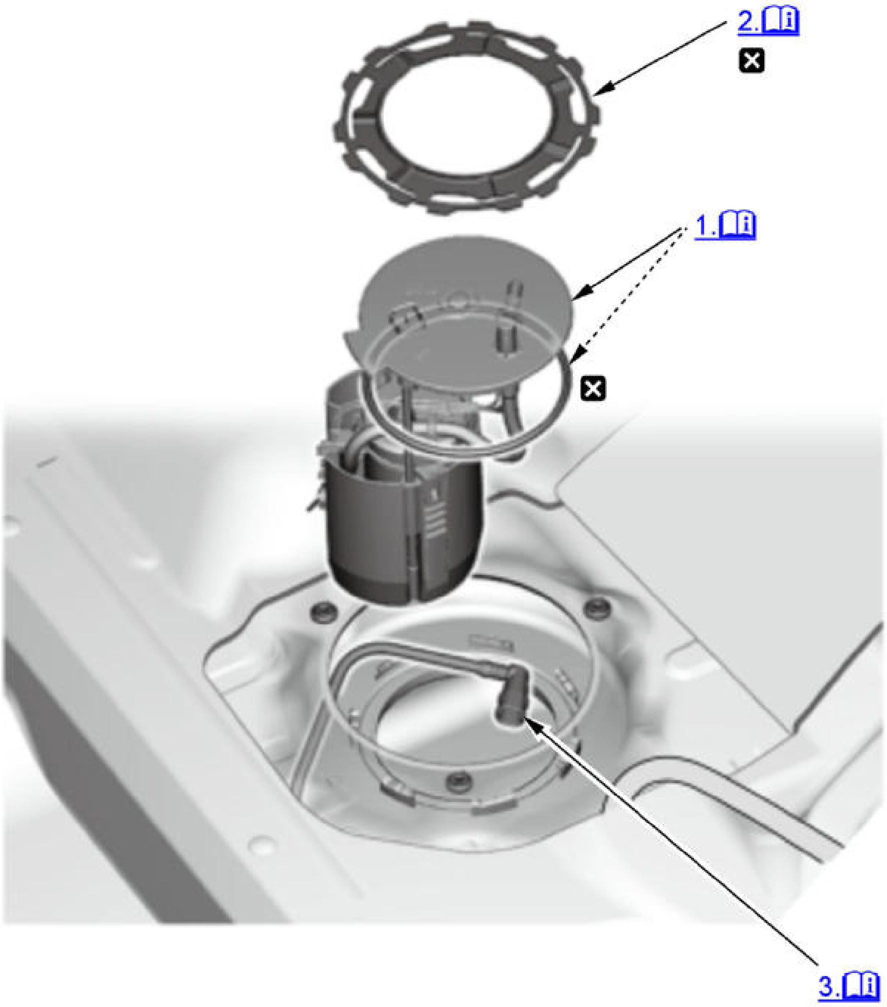

ℹ	Detailed information, notes, and precautions
☒	Replace

1. Fuel Tank Unit - Install

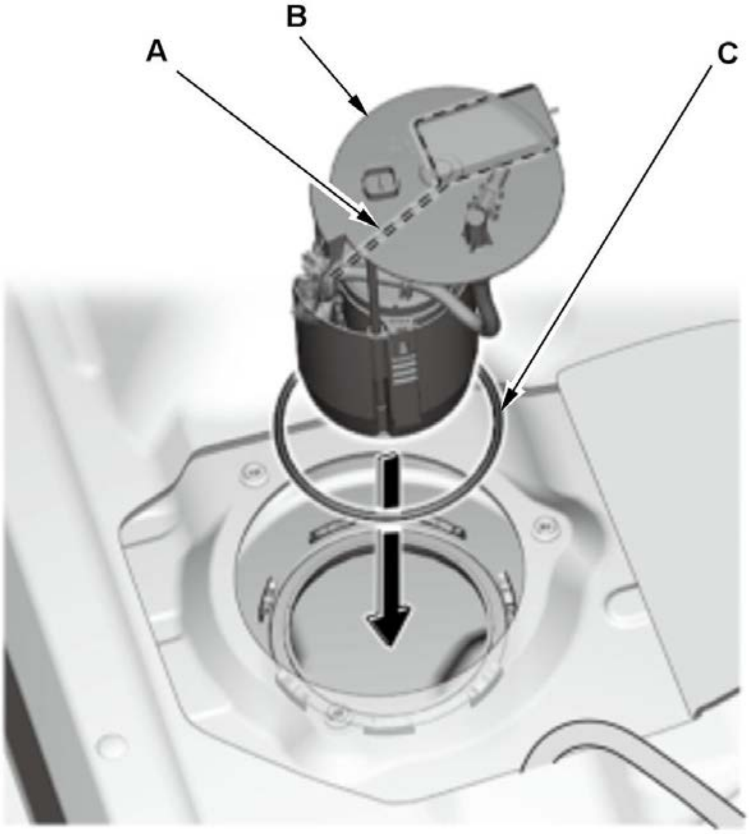	**NOTE:** Be careful not to bend or twist the fuel level sens 1. Insert the fuel tank unit (B) partially into the fuel tank • Be careful not to damage the new O-ring. • Do not coat the base gasket with oil.
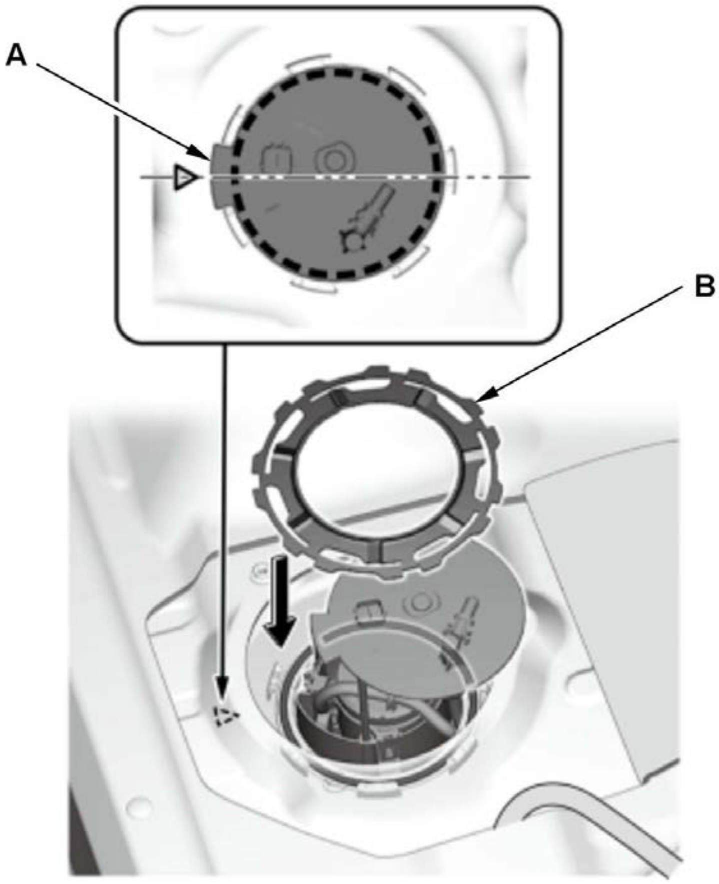	2. Align the tab (A) of the fuel tank unit as shown, and te lock ring (B).

2. Fuel Tank Unit Cam Lock Ring - Lock

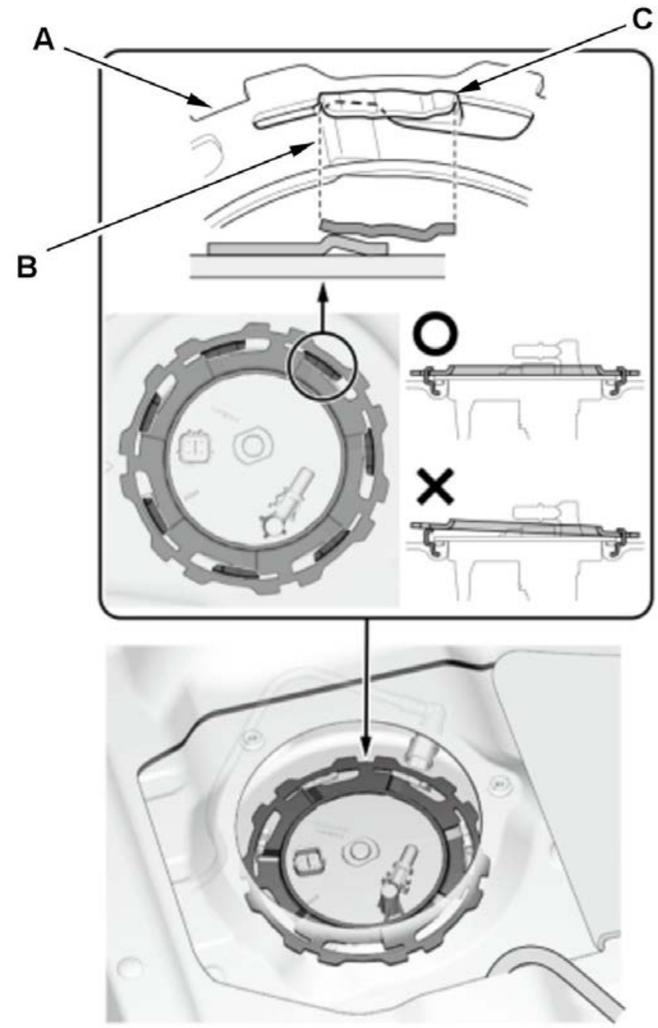	1. Rotate the fuel tank unit cam lock ring (A) and slide th positioning edge (C) slightly as shown by hand. **NOTE:** Confirm the fuel cam lock ring is not floating.

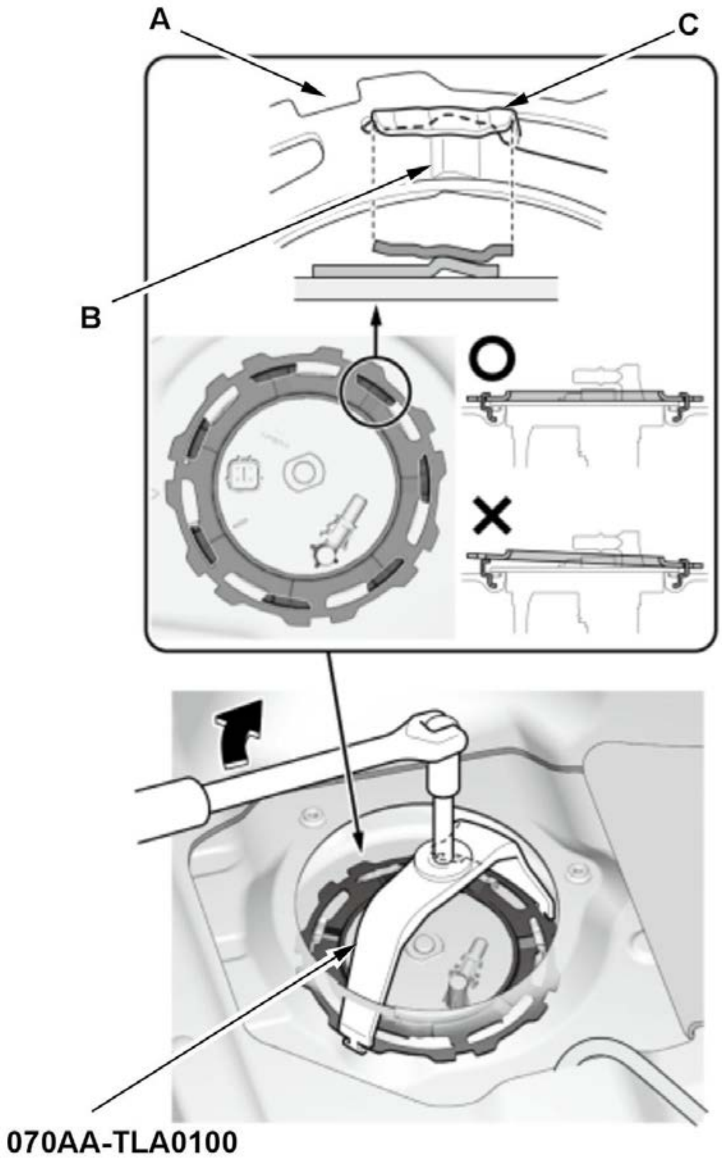	2. Using the fuel sender wrench, turn the fuel tank unit ca **NOTE:** - Try to keep the fuel sender wrench from floating. - Securely set the positioning edge (B) of the fuel tar on the fuel tank unit cam lock ring as shown.

3. Fuel Line Quick-Connect Fitting - Connect

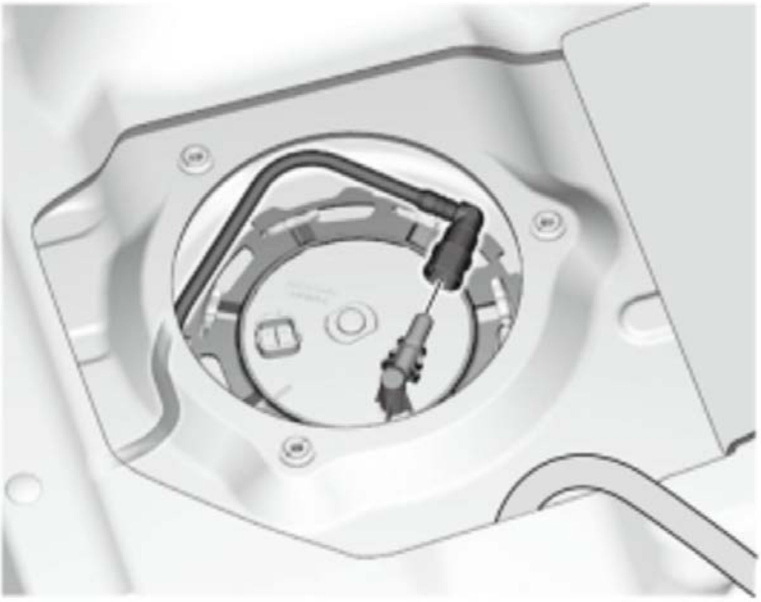	1. **Connect the quick-connect fitting (A)** to the fuel tank

4. Fuel Leak - Check

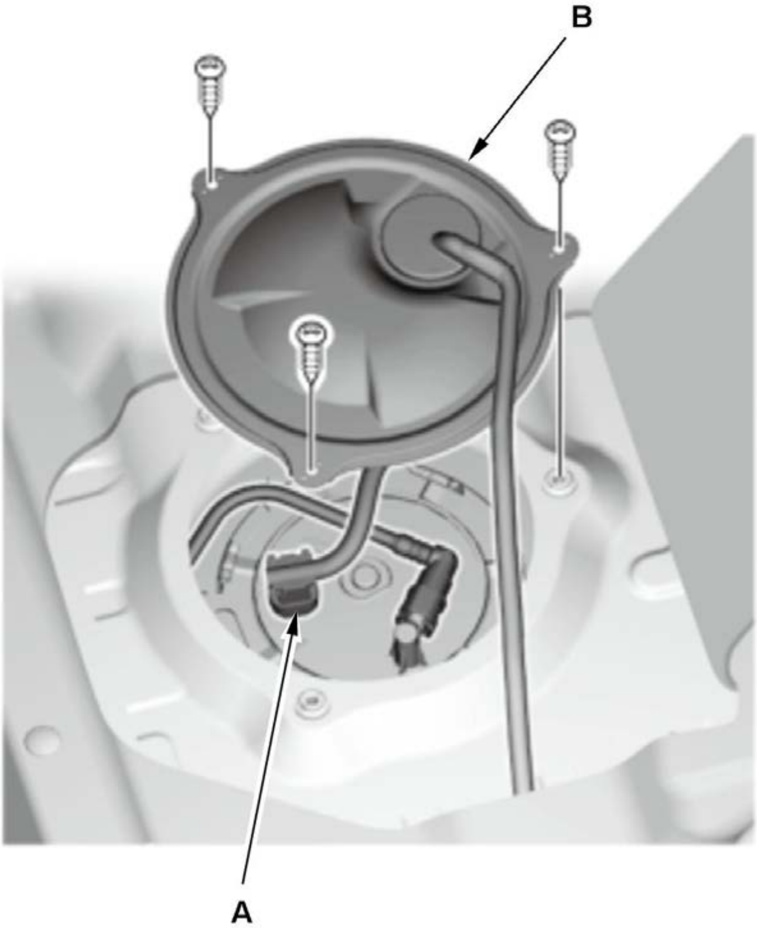	1. Connect the fuel tank unit connector (A). 2. Turn the vehicle to the ON mode, but do not start the e seconds, the fuel line will be pressurized. Repeat this two 3. Install the access panel (B) to the floor.

Disassembly and Reassembly

WARNING:

Flammable - Keep Fire Away

NOTE:

- ℹ Where icon is shown for further information continue to the information below.
- Fuel may cause flammable gas leaks and may result in fire. Keep sparks, flame and cigarettes away.
- The fuel filter should be replaced whenever the fuel pressure drops below the specified value, after making sure that the fuel pump and the fuel pressure regulator

1

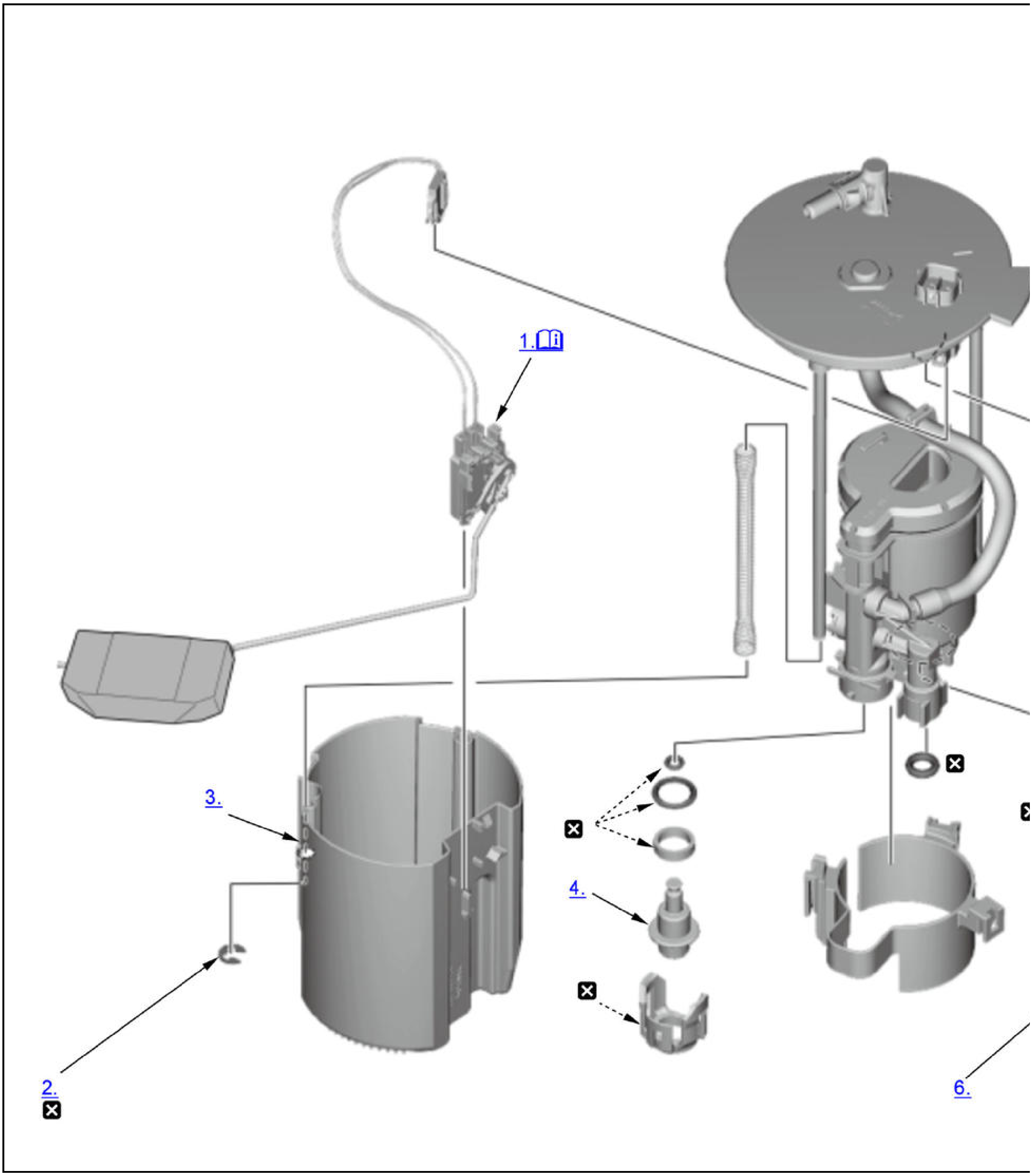

ℹ	Detailed information, notes, and precautions
☒	Replace

1. Fuel Gauge Sending Unit - Remove

   NOTE: Be careful not to bend or twist the fuel level sensor arm excessively.

2. E-Ring - Remove

3. Reservoir - Remove
4. Fuel Pressure Regulator - Remove
5. Fuel Pump Harness - Remove
6. Fuel Pump - Remove
7. All Removed Parts - Install

> 1. Install the parts in the reverse order of removal.
> **NOTE:**
> - Coat the O-rings with clean engine oil; do not use any other oil or fluid.
> - Do not pinch the O-rings during installation.
> - When installing the fuel level sensor unit, make sure the connection is secure and the connector is firmly locked into place. Be careful not to bend or twist i
> - When connecting the wire harness, make sure the connection is secure and the connectors are firmly locked into place.
> - Use all the new parts supplied in the replacement kit.

FUEL AND EMISSIONS SYSTEMS SERVICE PRECAUTIONS

Fuel Flow Line Disconnection

- Flammable - Keep fire away; Make no fires around the work area, and handle the fuel very carefully. Catching a fire to fuel will cause a serious accident.
- Relieve the fuel pressure before the fuel line disconnection to avoid a risk for fuel blowing from there.
- Disconnect the 12 volt battery negative terminal before the electric connector disconnection to reduce the risk of a fire caused by sparks coming off the connector
- Clean the contact area of the joint. Any dirt may cause fuel leakage by a misconnection.

Others

- Do not apply the brake fluid, engine coolant, plant-based oil, or alcohol-based oil to the O-ring. An undesignated fluid or oil may affect material deterioration or d
- Follow the instructions, or you will not be able to take a quality guarantee for the parts.

TEST

FUEL GAUGE SENDING UNIT TEST

Test

WARNING:

Flammable - Keep Fire Away

NOTE: Refer to the **Fuel and Emissions Systems Service Precautions** before disconnecting the fuel line.

1. **HDS - Connect**
2. DTC - Check

> 1. Check for DTCs with the HDS. If any of the following DTCs are indicated, troubleshoot the indicated DTCs.
> **NOTE:** If the PGM-FI system's DTC and the body electrical system's DTC are indicated at the same time, troubleshoot the PGM-FI system's DTC first.
> - PGM-FI system: P0462, P0463
> - Body electrical system: B1175, B1176

3. **Rear Seat Cushion - Lift**
4. **Fuel Tank Unit - Remove**
5. Fuel Gauge Sending Unit - Test

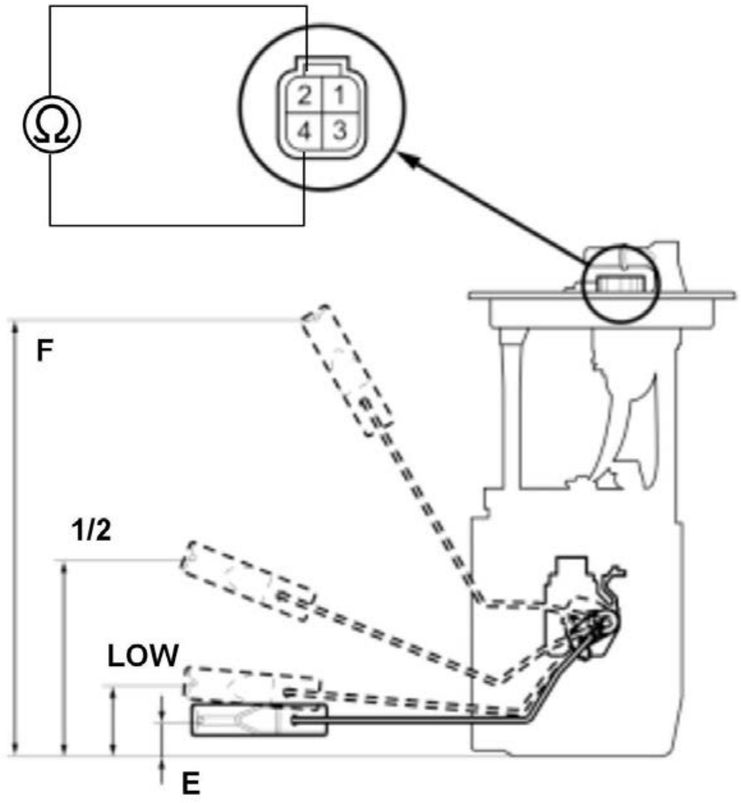

1. Measure the resistance between fuel tank unit 4P conne
the float at E (EMPTY), LOW (LOW FUEL INDICATOI
the following readings, **replace the fuel tank unit**.

USA and Canada models

Except USA and Canada models

2. Reconnect the fuel tank unit connector.

3. Remove the No. A18 (10 A) fuse in the under-hood fus
under-dash fuse/relay box for at least 10 seconds, then rei

4. Turn the vehicle to the ON mode.

5. Check that the pointer of the fuel gauge indicates F wit

- If the pointer of the fuel gauge does not indicate F,
- If the gauge is OK, the test is complete.

NOTE:

- The pointer of the fuel gauge returns to the bottom
the ACCESSORY or OFF (LOCK) mode, regardle
- Remove the No. A18 (10 A) fuse in the under-hood
the under-dash fuse/relay box for at least 10 second
take up to 20 minutes for the fuel gauge to indicate

Resistance(Ω)	19 to21	190.6 to 200.6	464.5 to 644.1

Float Position	F8.657 in(219.9 mm)	1/24.118 in(104.6 mm)	LOW1.331 in(33.8 mm)

Float Position	F8.815 in(223.9 mm)	1/23.929 in(99.8 mm)	LOW1.39 in(35.3 mm)
Resistance(Ω)	19 to21	193 to 203	464.4 to 656.6

FUEL PRESSURE TEST (1.5 L ENGINE)

Special Tools Required

Image	Description/Tool Number
	GAUGE, FUEL PR. 100PSI 07406-004000C

Image	Description/Tool Number
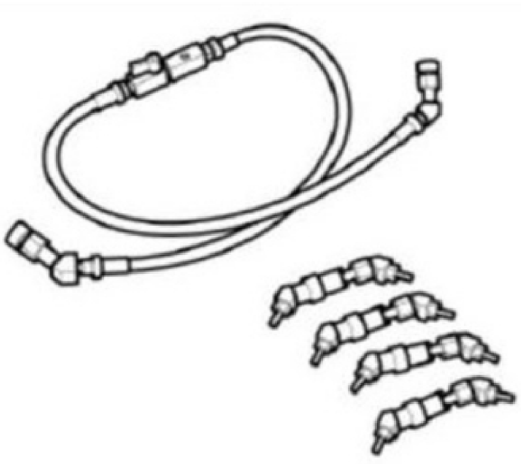	Fuel Pressure Gauge Attachment Set 07AAJ-S6MA150 or 07A

Test

WARNING:

Flammable - Keep Fire Away

NOTE:

- **How to read the torque specifications** .
- Refer to the **Fuel and Emissions Systems Service Precautions** before disconnecting the fuel line.
- Fuel may cause flammable gas leaks and may result in fire. Keep sparks, flame and cigarettes away.

1. **Fuel Pressure - Relieve**
2. Fuel Hose Cover - Remove

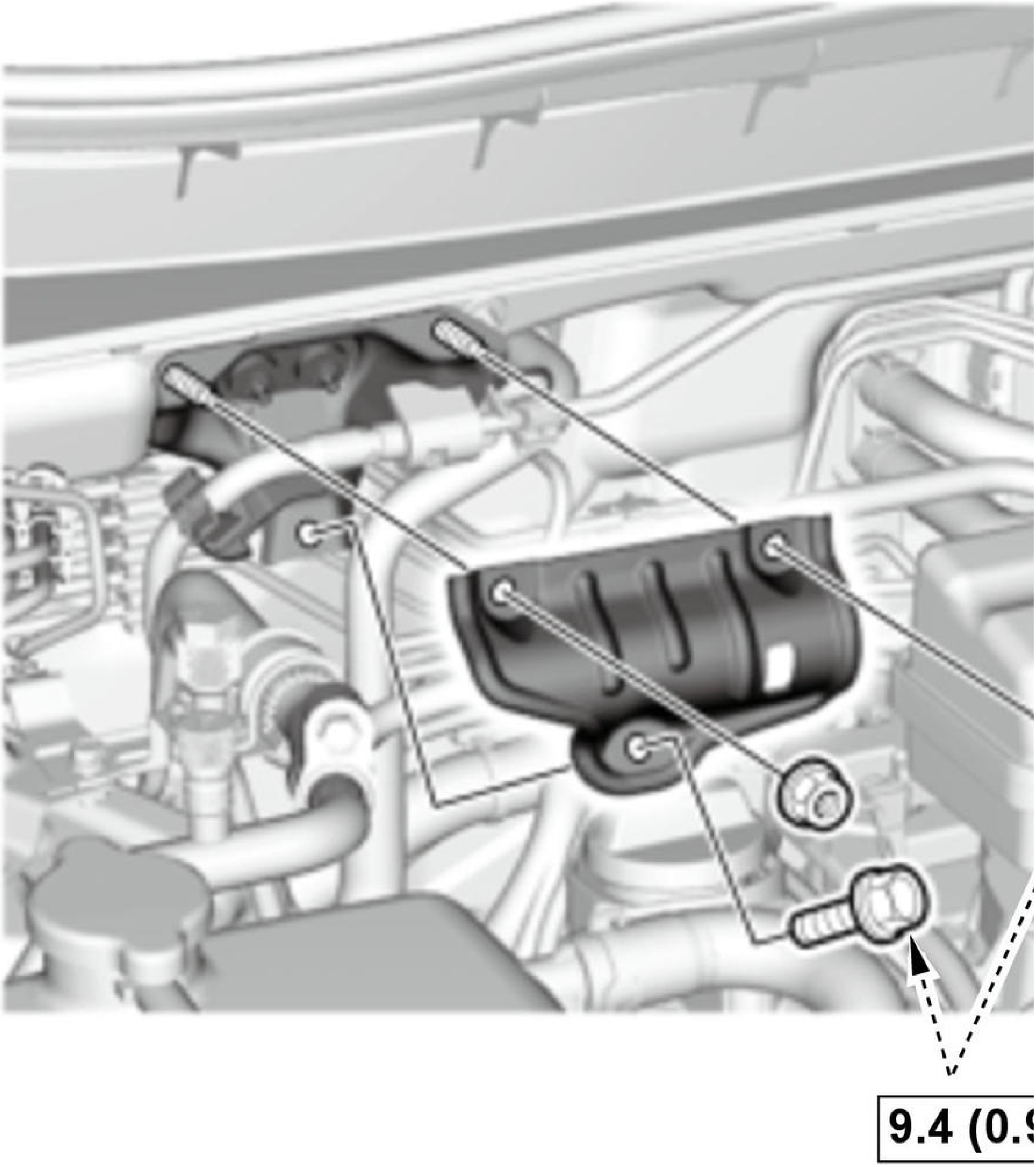

NOTE: This illustration shows an example only. Appearance and structure of the actual parts may depending on the model.

depending on the model.

3. Fuel Line - Disconnect

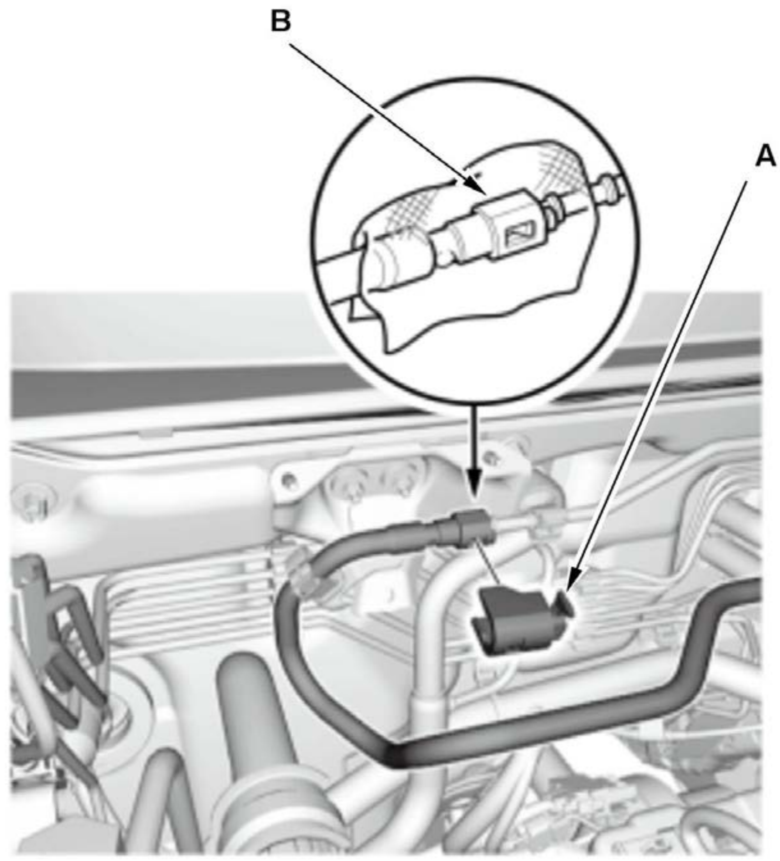 NOTE: This illustration shows an example only. Appearance and structure of the actual parts may vary depending on the model.	1. **Remove the quick-connect fitting cover (A)** 2. Check the fuel quick-connect fitting (B) for dirt, and cl 3. Place a rag or shop towel over the quick-connect fitting .

4. Fuel Pressure - Test

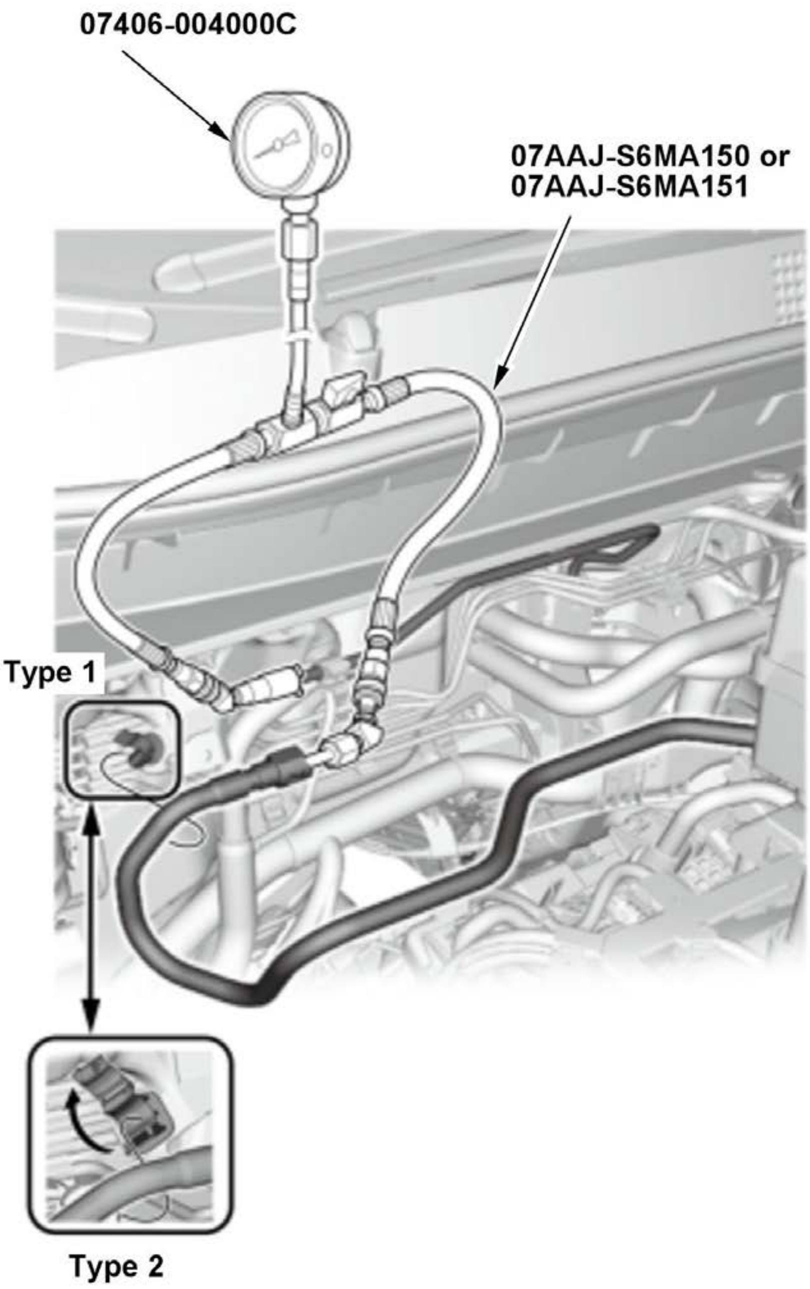 07406-004000C 07AAJ-S6MA150 or 07AAJ-S6MA151 Type 1 Type 2	**NOTE:** If you were referred to this procedure from a trou under the same conditions the malfunction occurred (engi 1. Attach the fuel pressure gauge set. Check for leaks witl 2. Start the engine, and let it idle. - If the engine starts, go to step 3 and read the fuel pı - If the pump does not run, **do the fuel pump circuit** 3. Read the fuel pressure gauge. The pressure should be: **psi)** - If the pressure is OK, the test is complete. - If the pressure is out of specification, **replace the f** then recheck the fuel pressure.

FUEL PRESSURE TEST (2.4 L ENGINE) (2017 2018 2019)

Special Tools Required

Image	Description/Tool Number
	GAUGE, FUEL PR. 100PSI 07406-004000C
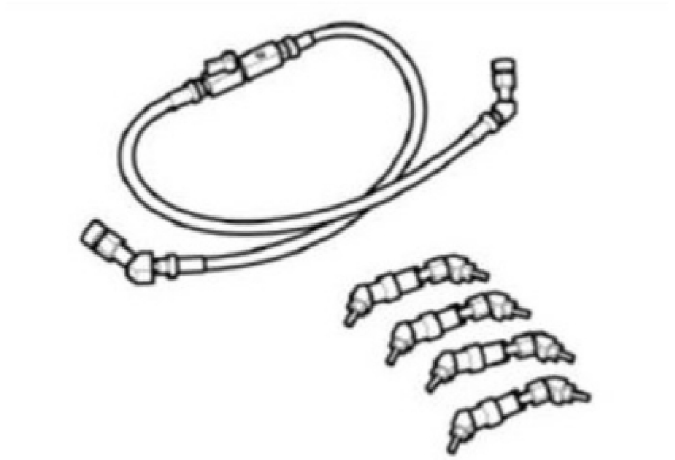	Fuel Pressure Gauge Attachment Set 07AAJ-S6MA150 or 07A

Test

WARNING:

Flammable - Keep Fire Away

NOTE:

- **How to read the torque specifications** .
- Refer to the **Fuel and Emissions Systems Service Precautions** before disconnecting the fuel line.
- Fuel may cause flammable gas leaks and may result in fire. Keep sparks, flame and cigarettes away.

1. **Fuel Pressure - Relieve**
2. Fuel Hose Cover - Remove

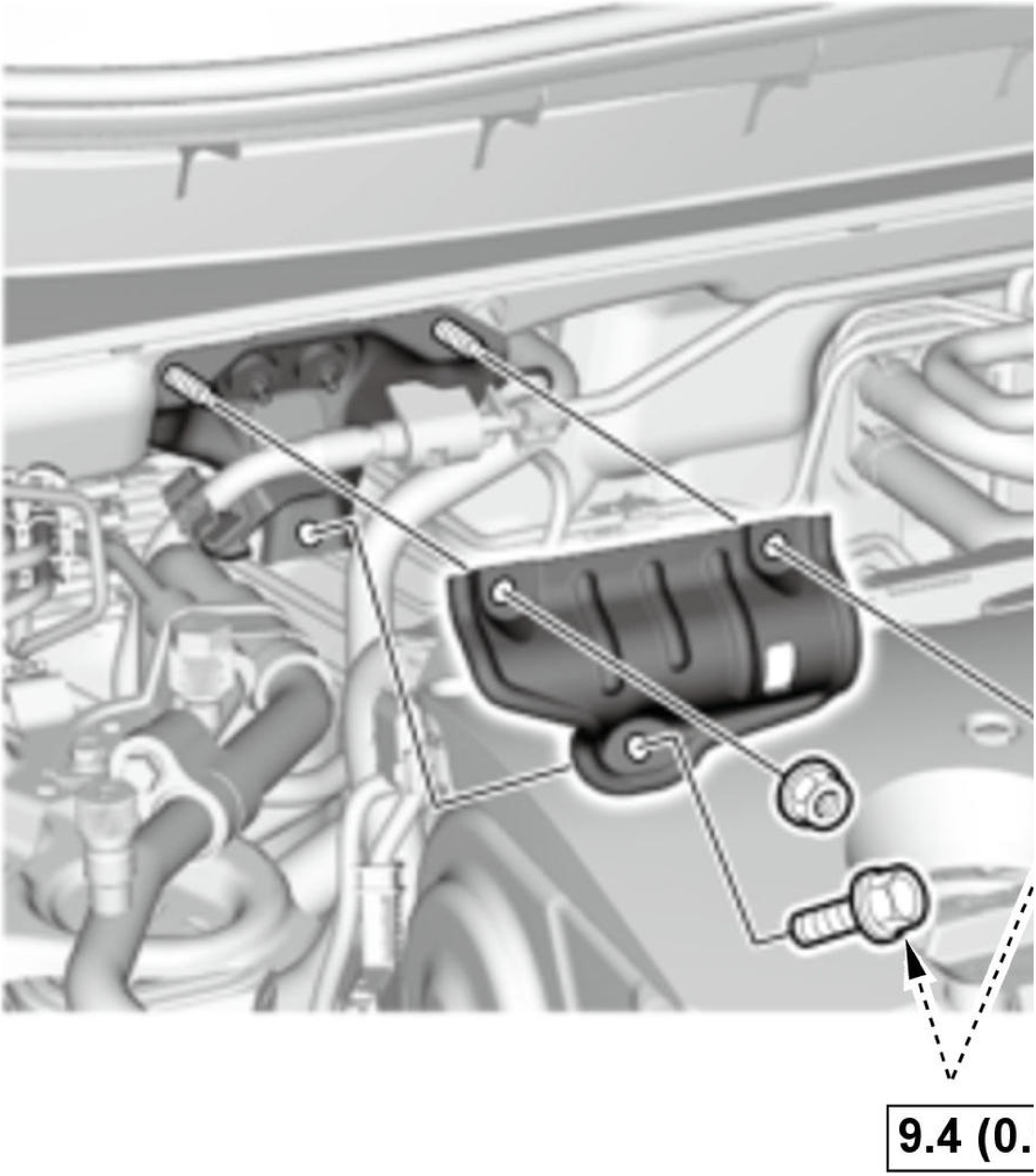

NOTE: This illustration shows an example only. Appearance and structure of the actual parts may depending on the model.

depending on the model.

3. Fuel Line - Disconnect

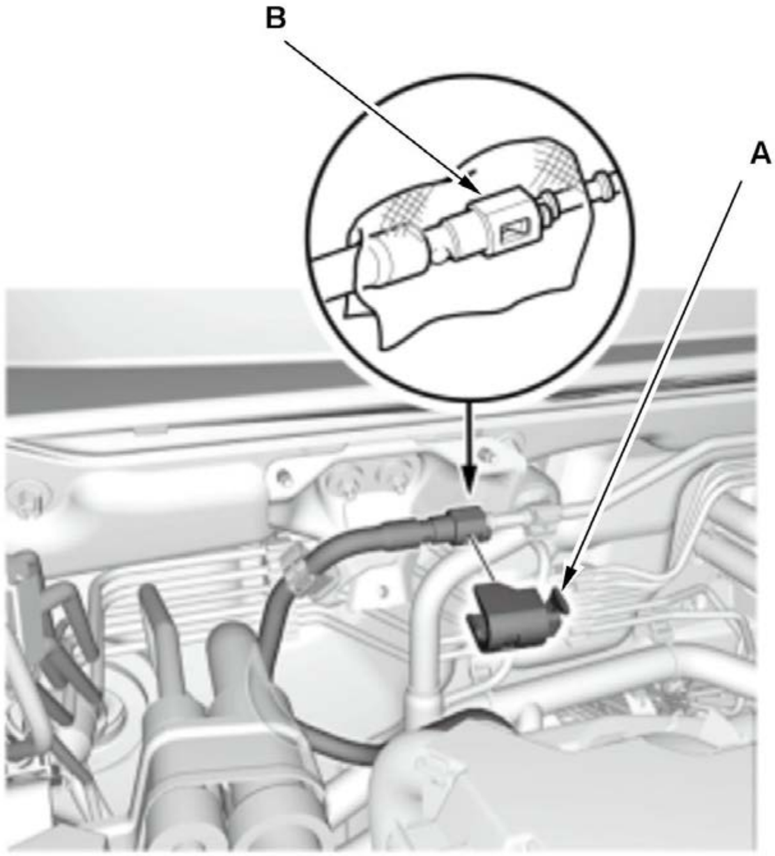 NOTE: This illustration shows an example only. Appearance and structure of the actual parts may vary depending on the model.	1. **Remove the quick-connect fitting cover (A)** 2. Check the fuel quick-connect fitting (B) for dirt, and cl 3. Place a rag or shop towel over the quick-connect fitting .

4. Fuel Pressure - Test

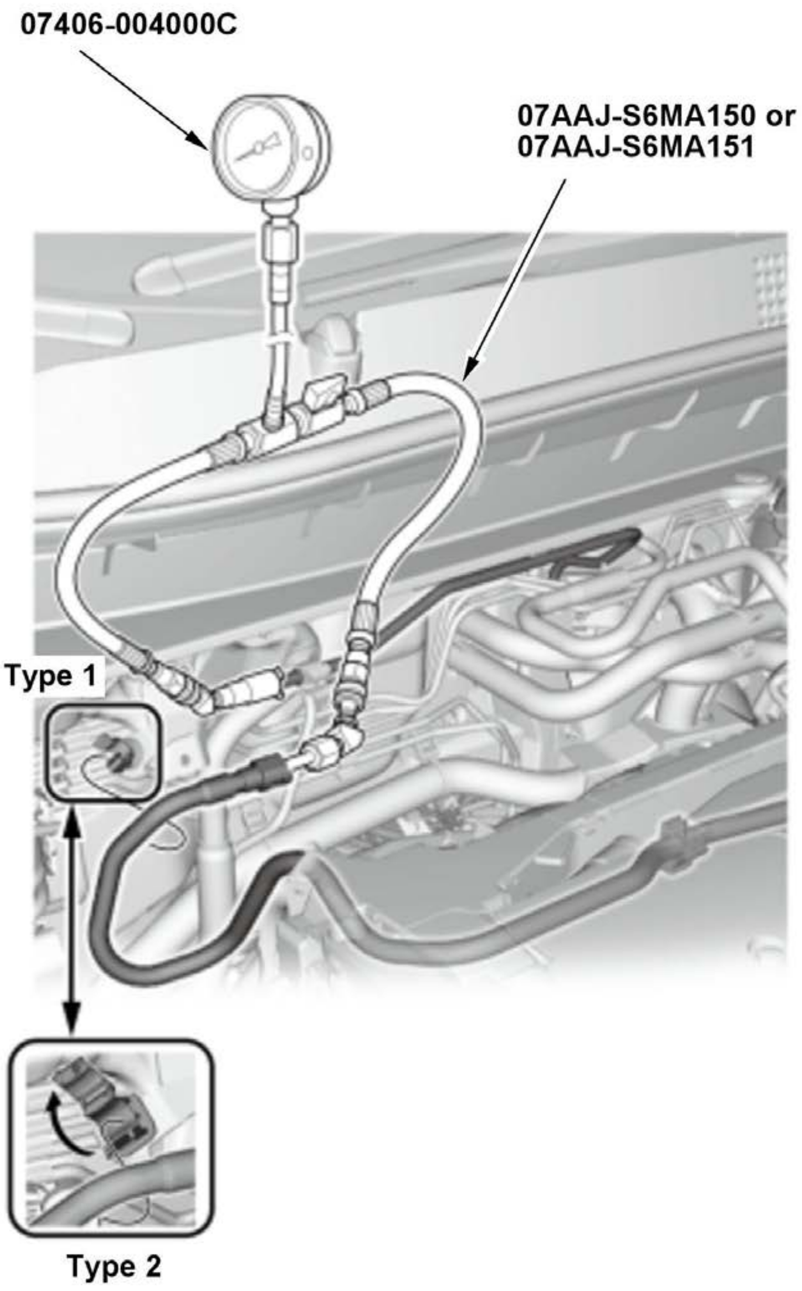 07406-004000C 07AAJ-S6MA150 or 07AAJ-S6MA151 Type 1 Type 2	**NOTE:** If you were referred to this procedure from a trou under the same conditions the malfunction occurred (engi 1. Attach the fuel pressure gauge set. Check for leaks witl 2. Start the engine, and let it idle. - If the engine starts, go to step 3 and read the fuel pı - If the pump does not run, **do the fuel pump circui** 3. Read the fuel pressure gauge. The pressure should be: : **psi)** - If the pressure is OK, the test is complete. - If the pressure is out of specification, **replace the f** then recheck the fuel pressure.

LOW FUEL INDICATOR TEST

Test

1. Low Fuel Indicator - Test

1. **Do the gauge control module self-diagnostic function** .
   - If the low fuel indicator flashes, go to step 2.
   - If the low fuel indicator does not flash, **replace the gauge control module** .

2. Check for body electrical system DTCs.
   - If any DTCs are indicated, do the indicated DTC's troubleshooting.
   - If no DTCs are indicated, go to step 3.

3. **Do the fuel gauge sending unit test**.

INSPECTION

FUEL LINE INSPECTION (1.5 L ENGINE)

Inspection

WARNING:

Flammable - Keep Fire Away

NOTE:

- **How to read the torque specifications** .

- Refer to the **Fuel and Emissions Systems Service Precautions** before disconnecting the fuel line.
- Fuel may cause flammable gas leaks and may result in fire. Keep sparks, flame and cigarettes away.

1. Fuel Line - Inspect
    - Check the fuel system lines and hoses for damage, leaks, and deterioration. Replace any damaged parts.
    - Check all clamps, and make sure they are properly positioned and tightened.
    -
        - Make sure the clamps is in the position of its range shown.
        - Align the marks on the hoses and the pipes.
        - There should be no clearance between the hoses and the pipes.

USA and Canada models

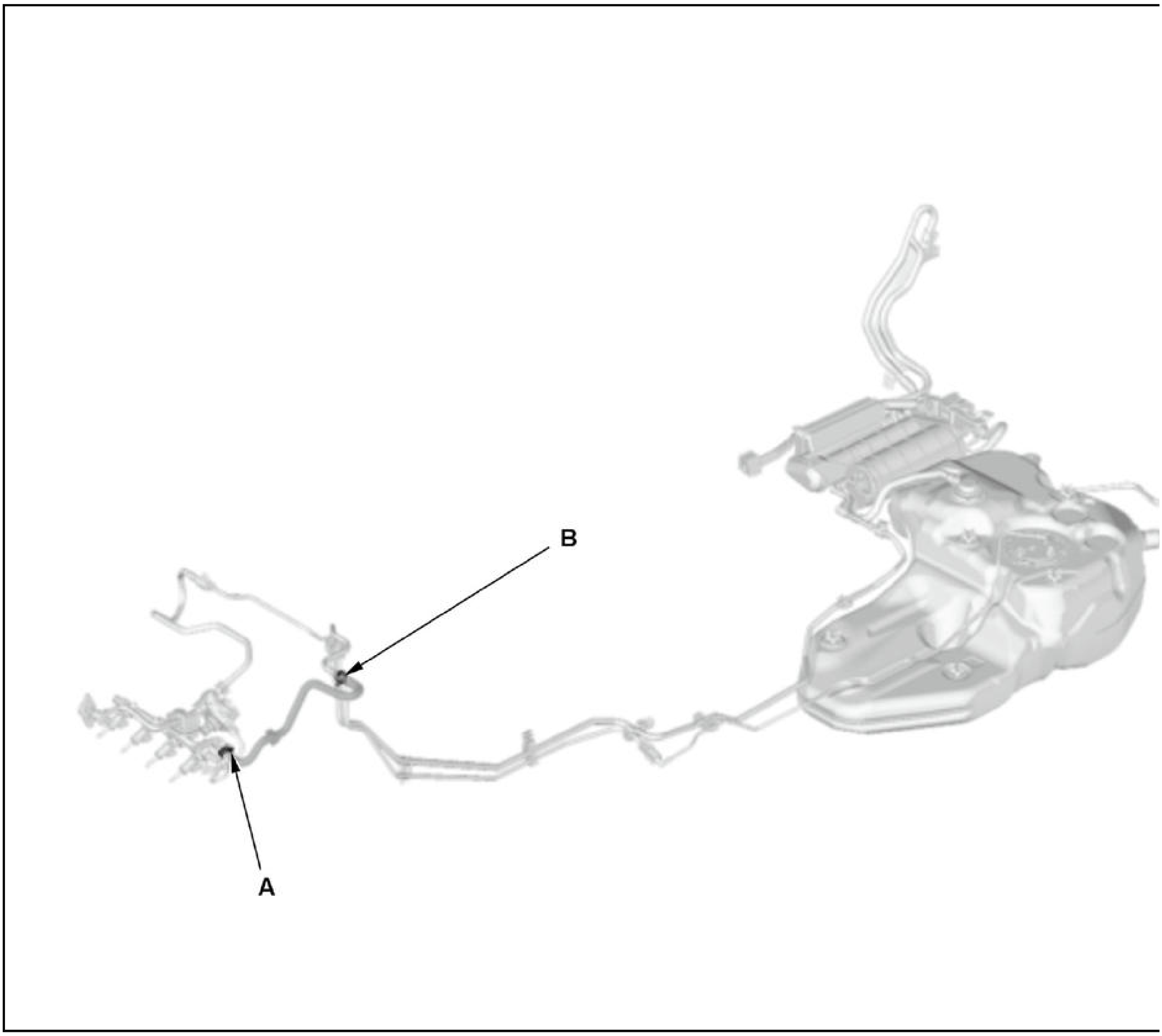

USA and Canada models

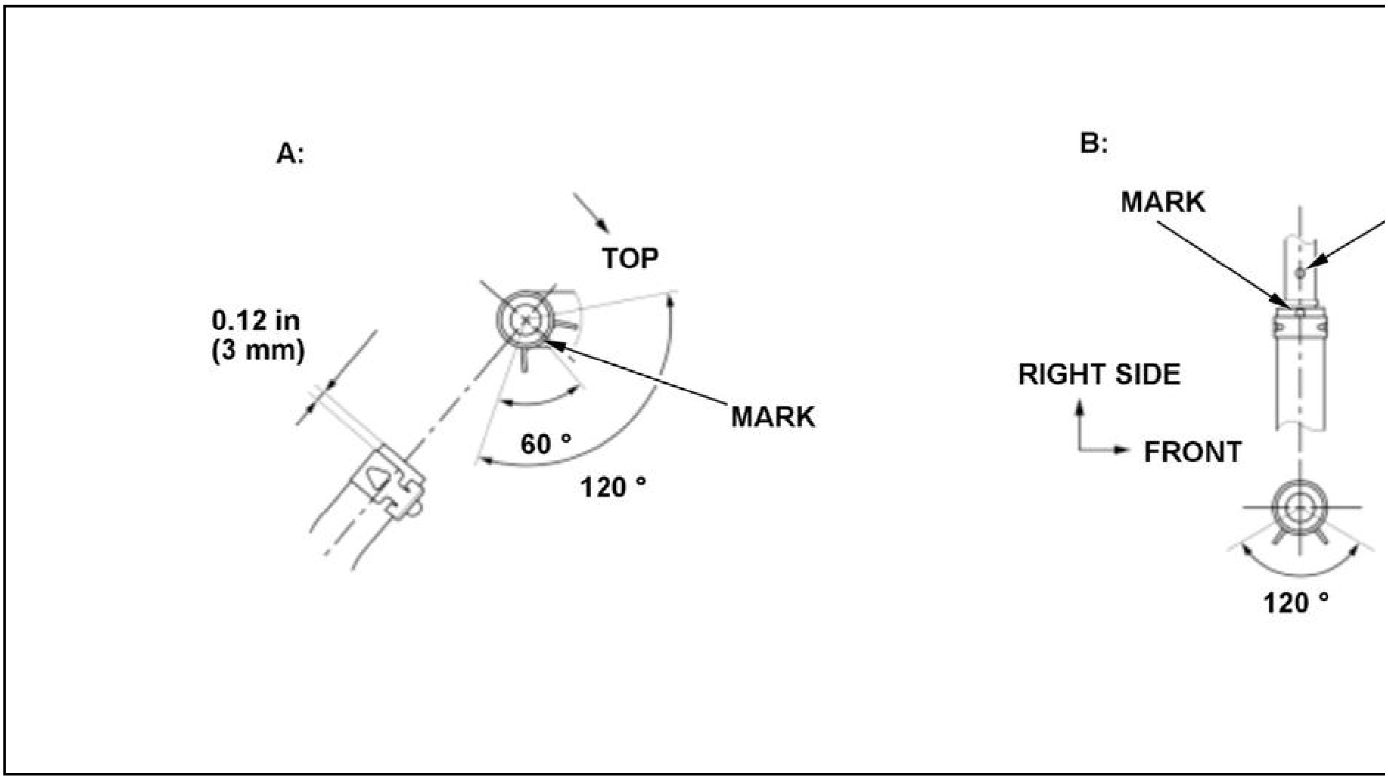
A:
TOP
0.12 in
(3 mm)
MARK
60 °
120 °
B:
MARK
RIGHT SIDE
FRONT
120 °

Mexico models

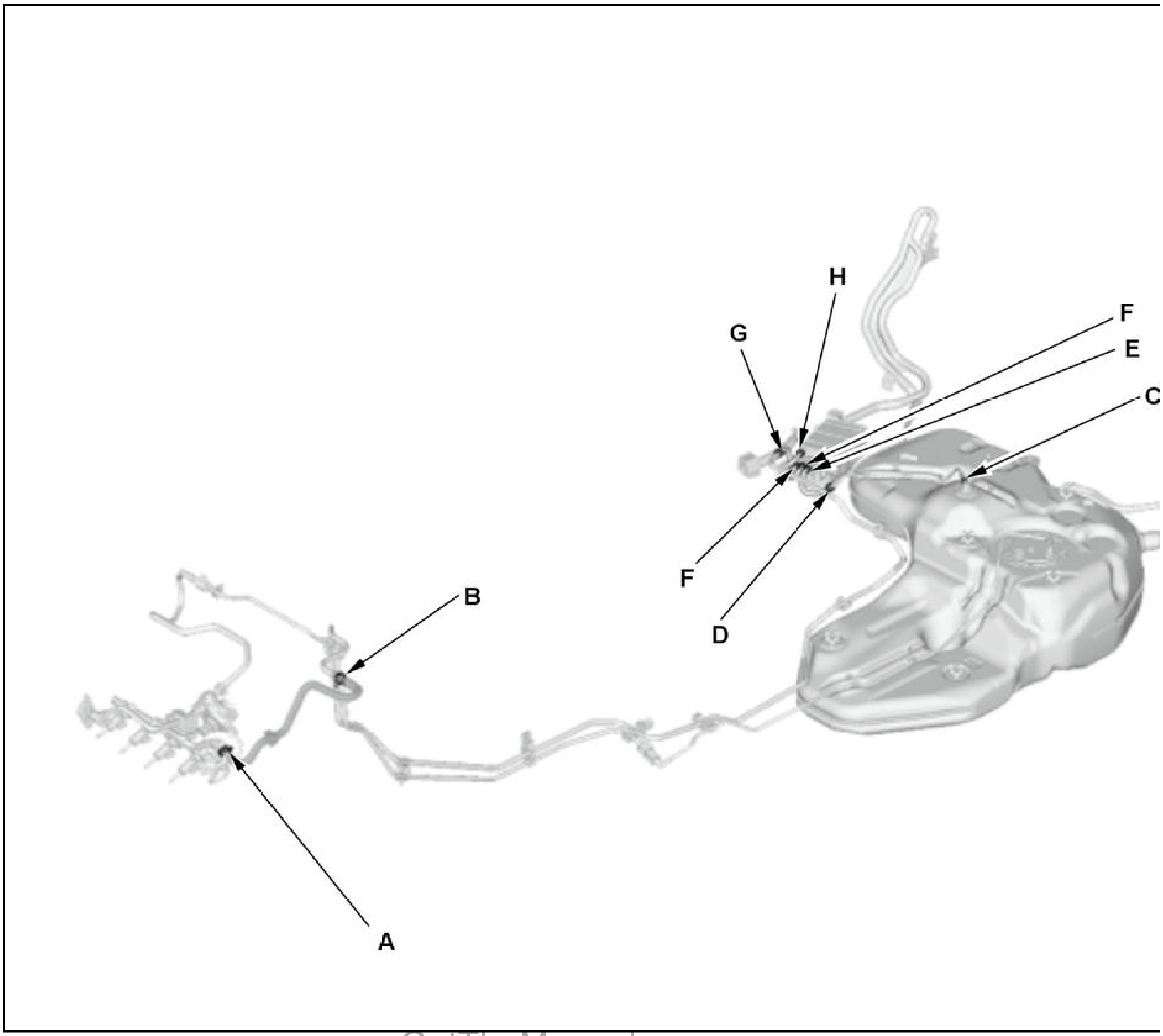

Mexico models

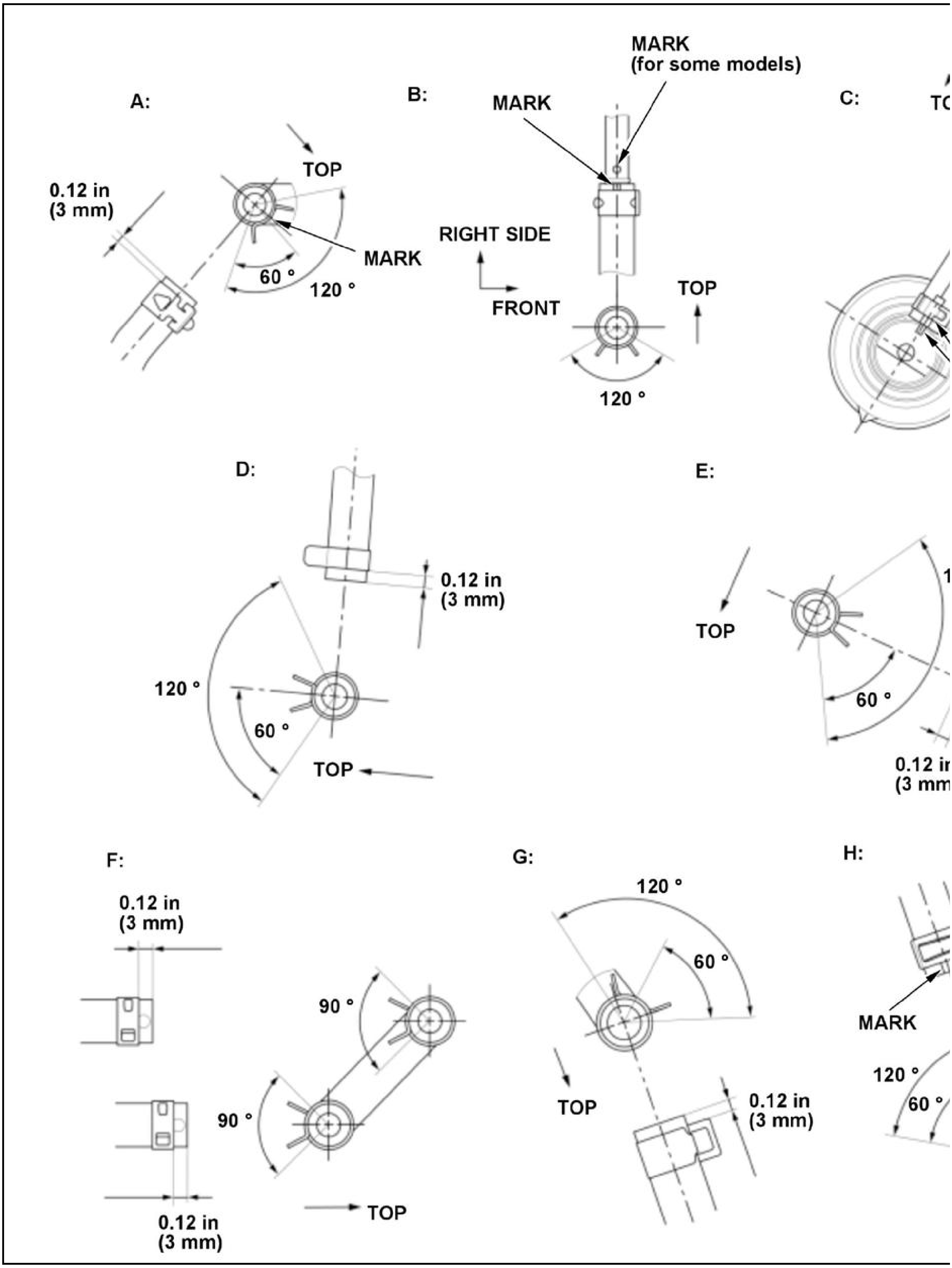
A:
TOP
0.12 in
(3 mm)
MARK
60 °
120 °
B:
MARK
MARK
(for some models)
RIGHT SIDE
FRONT
TOP
120 °
C:
D:
0.12 in
(3 mm)
120 °
60 °
TOP
E:
TOP
60 °
F:
0.12 in
(3 mm)
90 °
90 °
0.12 in
(3 mm)
TOP
G:
120 °
60 °
TOP
0.12 in
(3 mm)
H:
MARK
120 °
60 °

Fuel Leak Check

2. Intake Air Resonator - Remove
3. Throttle Body - Move

NOTE:

- Do not disconnect the water bypass hoses.

- Do not bend the water bypass hoses excessively.

4. Intake Manifold Bracket - Remove

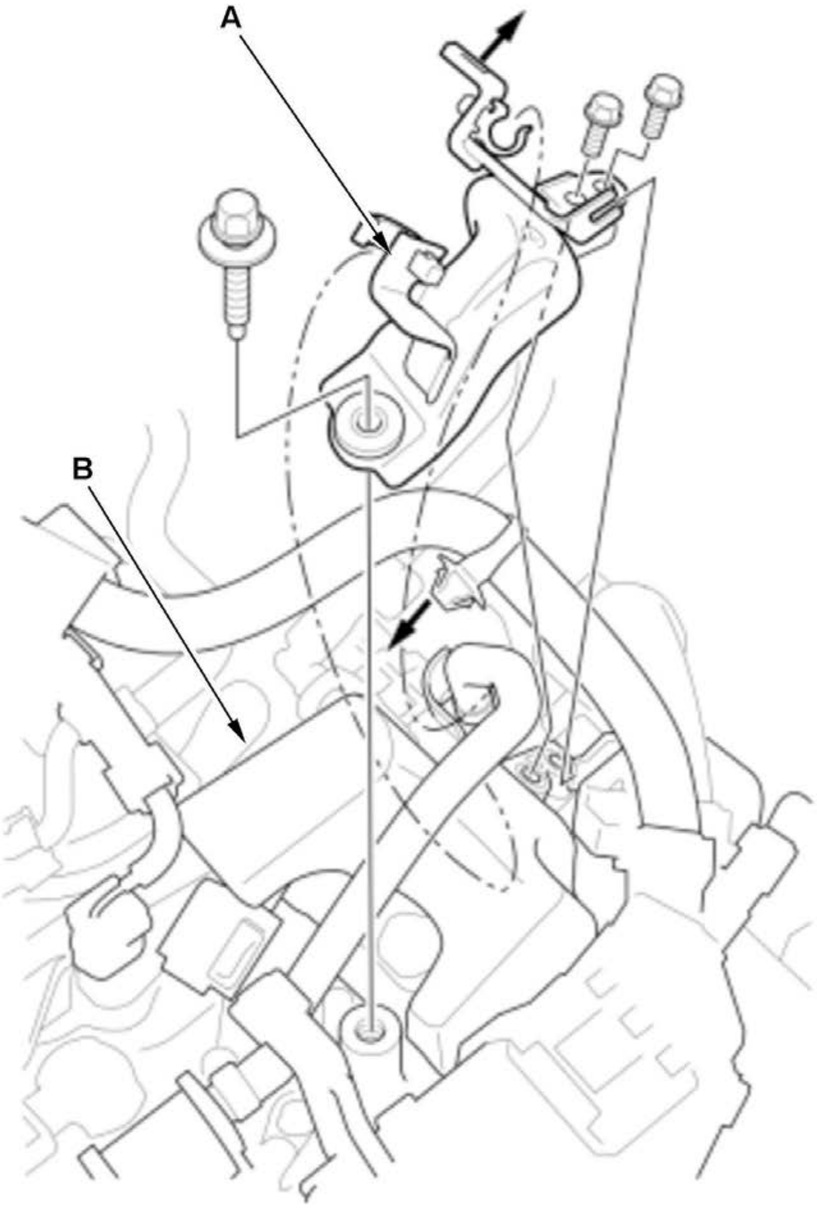	1. Remove the intake manifold bracket (A). 2. Move the high pressure fuel pump cover (B). **NOTE:** Do not disconnect the quick-connect fitting.

5. **Intake Manifold - Remove**
6. Fuel Leak - Check

   1. Apply Red Check Spray to the joint of the injectors (A), the fuel rail (B), and the high pressure fuel pump (C). Set the probe of the leak detector (Snap-on Com

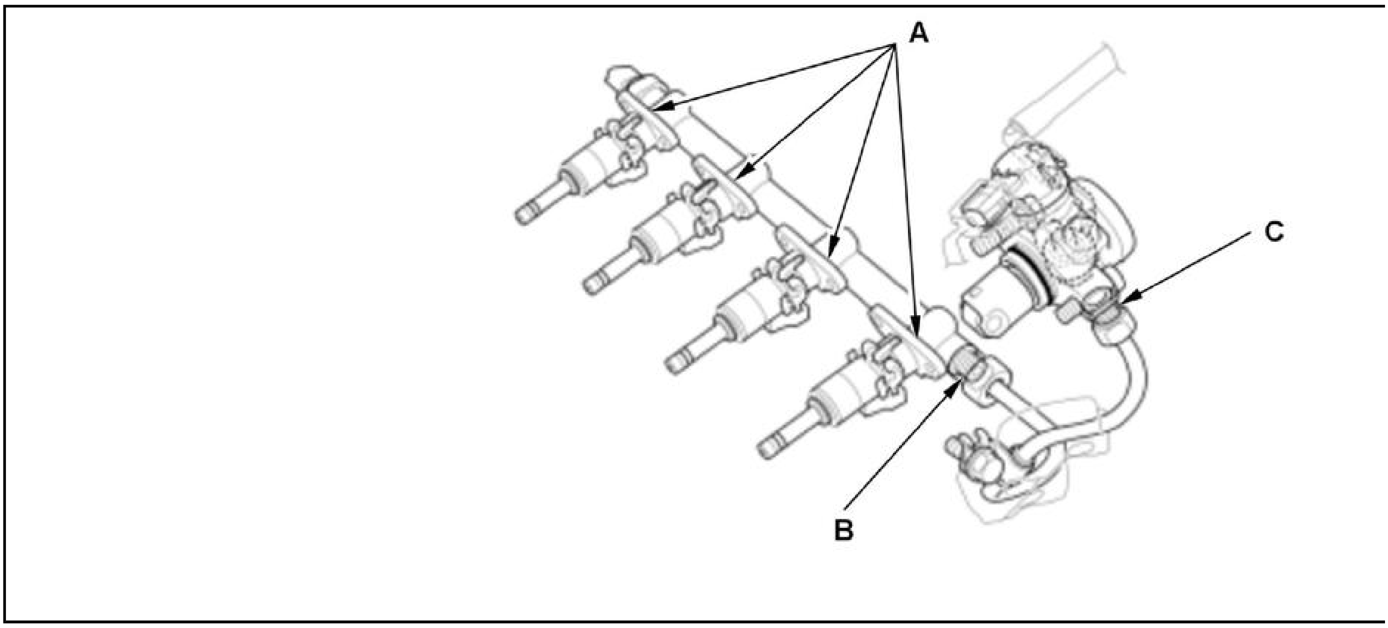

2. **Install the intake manifold** and the **throttle body** with the gaskets that had use on them.

3. Turn the vehicle to the ON mode, but do not operate the starter. After the fuel pump runs for about 2 seconds, the low pressure fuel line will be pressurized. Rep fuel leakage.

4. Start the engine. Hold the engine speed at 4, 000 rpm for 1 minute, and stop the engine.

5. **Move the throttle body** , then **remove the intake manifold** .

NOTE:

- Do not disconnect the water bypass hoses.
- Do not bend the water bypass hoses excessively.

6. Check for fuel leakage to joint of the injectors, the fuel rail, and the high pressure fuel pump.

7. **Intake Manifold - Install**
8. Intake Manifold Bracket - Install

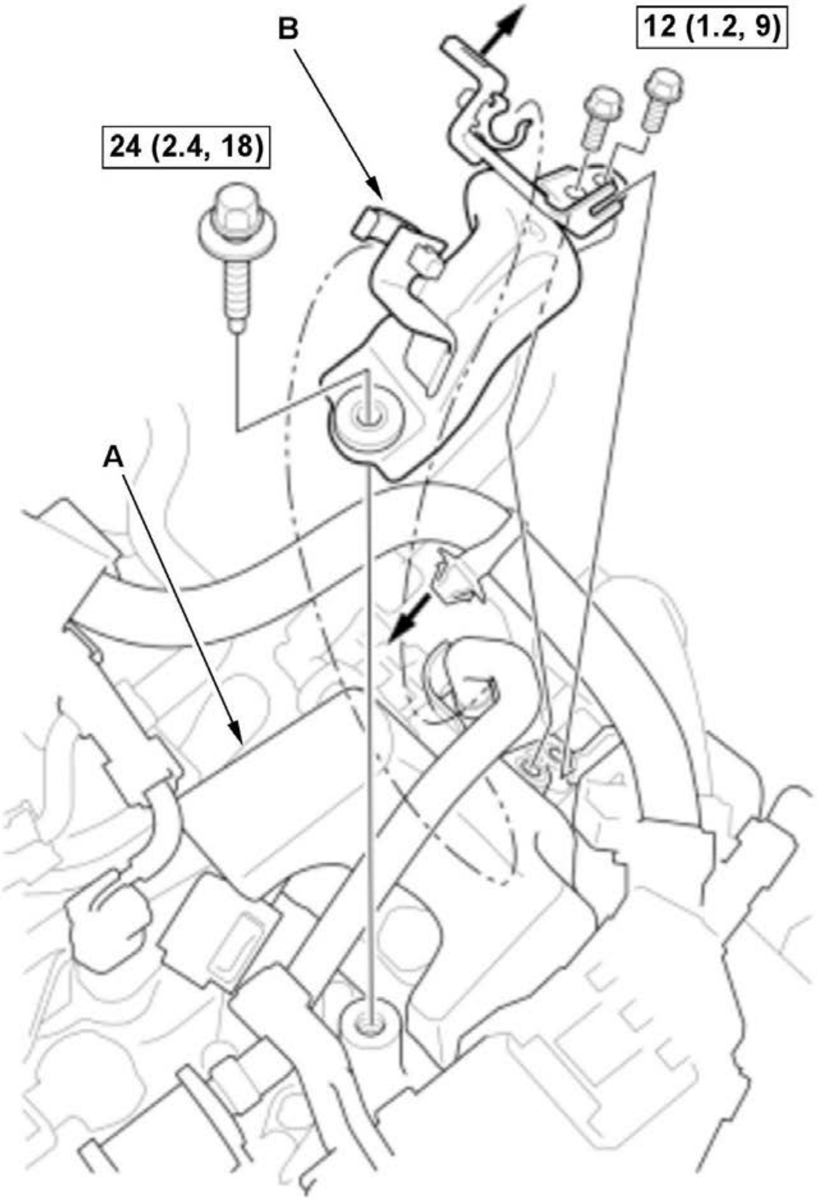	1. Set the high pressure fuel pump cover (A). 2. Install the intake manifold bracket (B).

9. **Throttle Body - Install**
10. **Intake Air Resonator - Install**

FUEL LINE INSPECTION (2.4 L ENGINE) (2017 2018 2019)

Inspection

WARNING:

Flammable - Keep Fire Away

NOTE:

- Refer to the **Fuel and Emissions Systems Service Precautions** before disconnecting the fuel line.
- Fuel may cause flammable gas leaks and may result in fire. Keep sparks, flame and cigarettes away.

1. Fuel Line - Inspect
   - Check the fuel system lines and hoses for damage, leaks, and deterioration. Replace any damaged parts.
   - Check all clamps, and make sure they are properly positioned and tightened.
   -
     - Make sure the clamps is in the position of its range shown.
     - Align the marks on the hoses and the pipes.
     - There should be no clearance between the hoses and the pipes.

USA models

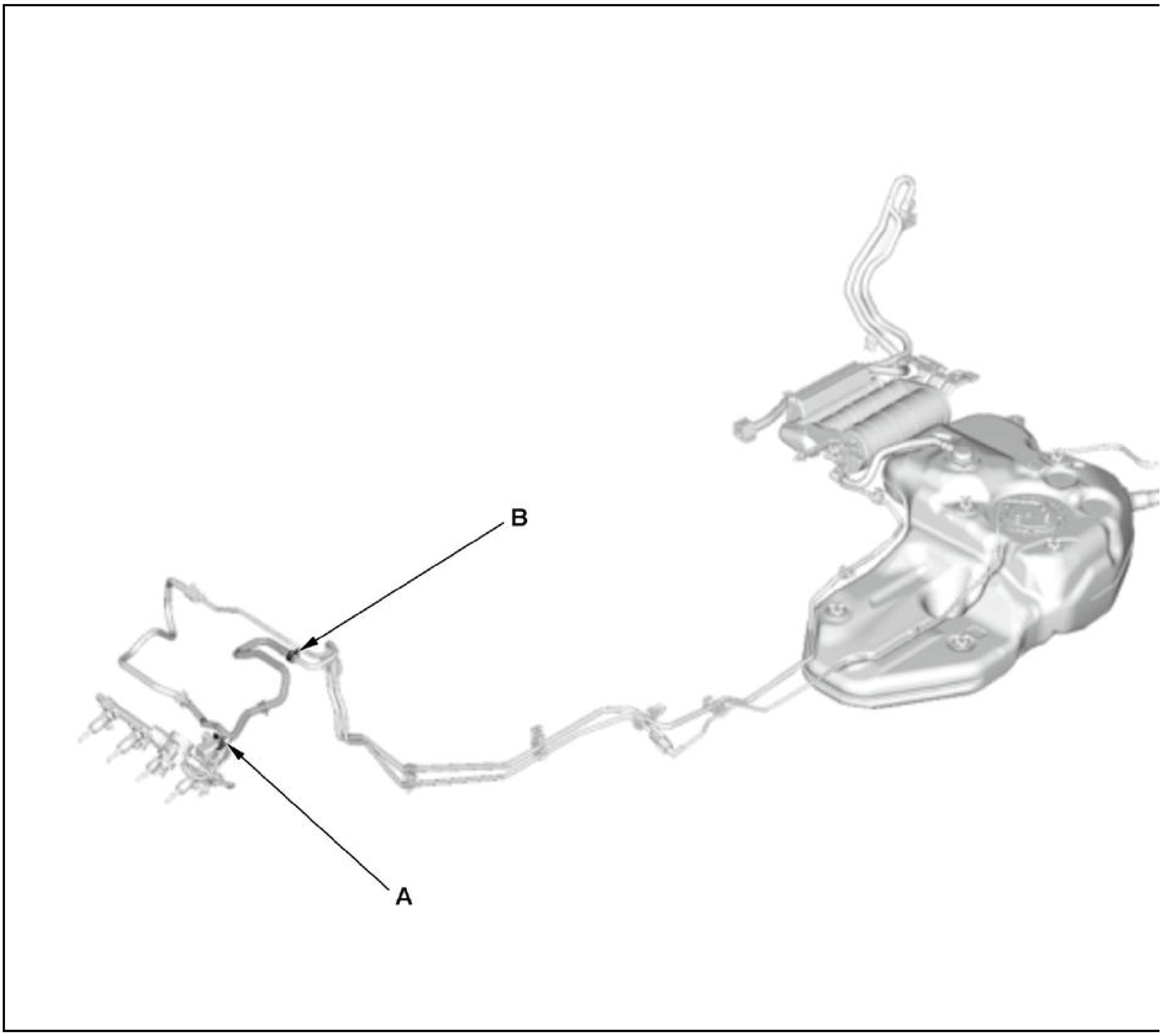

USA models

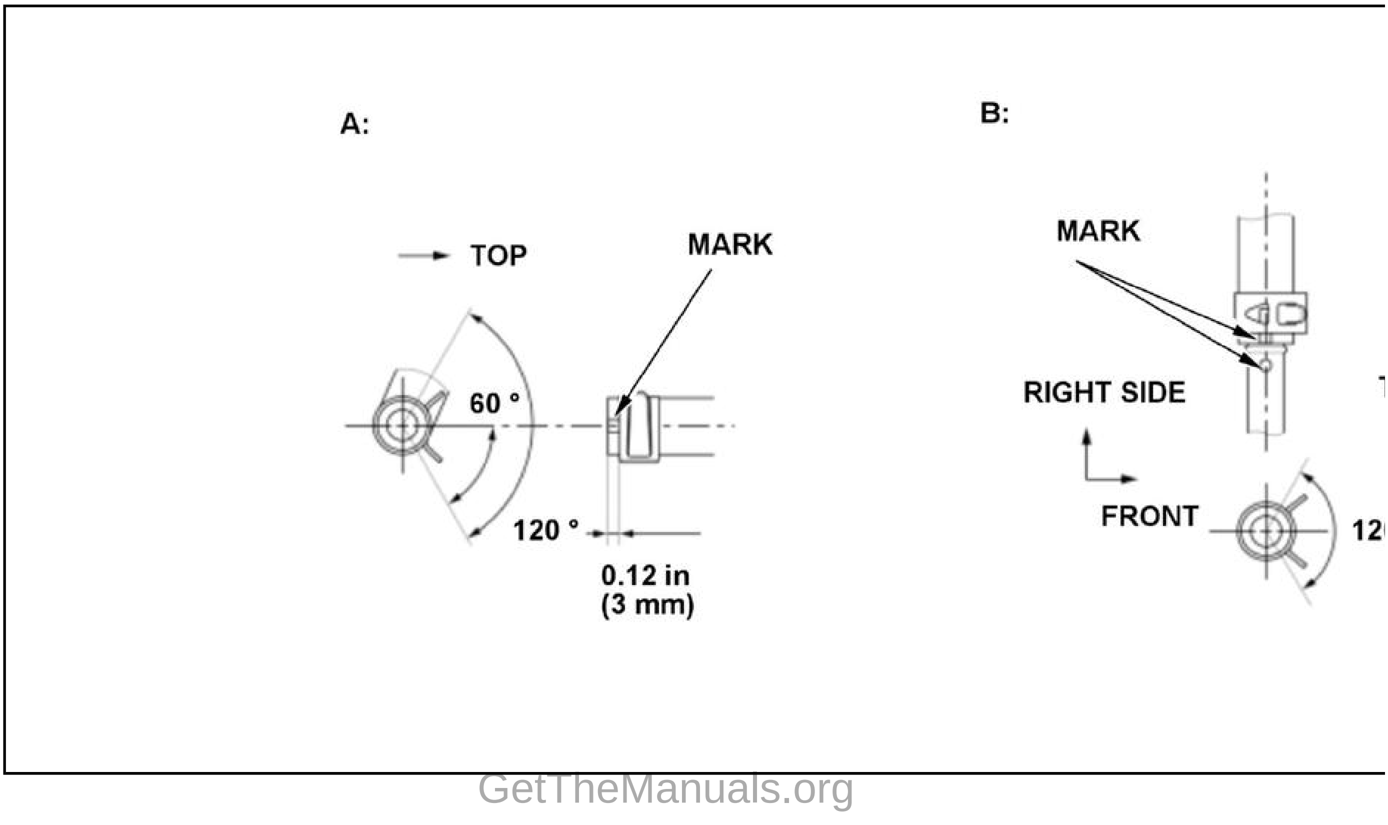
A:
TOP
MARK
60 °
120 °
0.12 in
(3 mm)
B:
MARK
RIGHT SIDE
FRONT

Mexico models

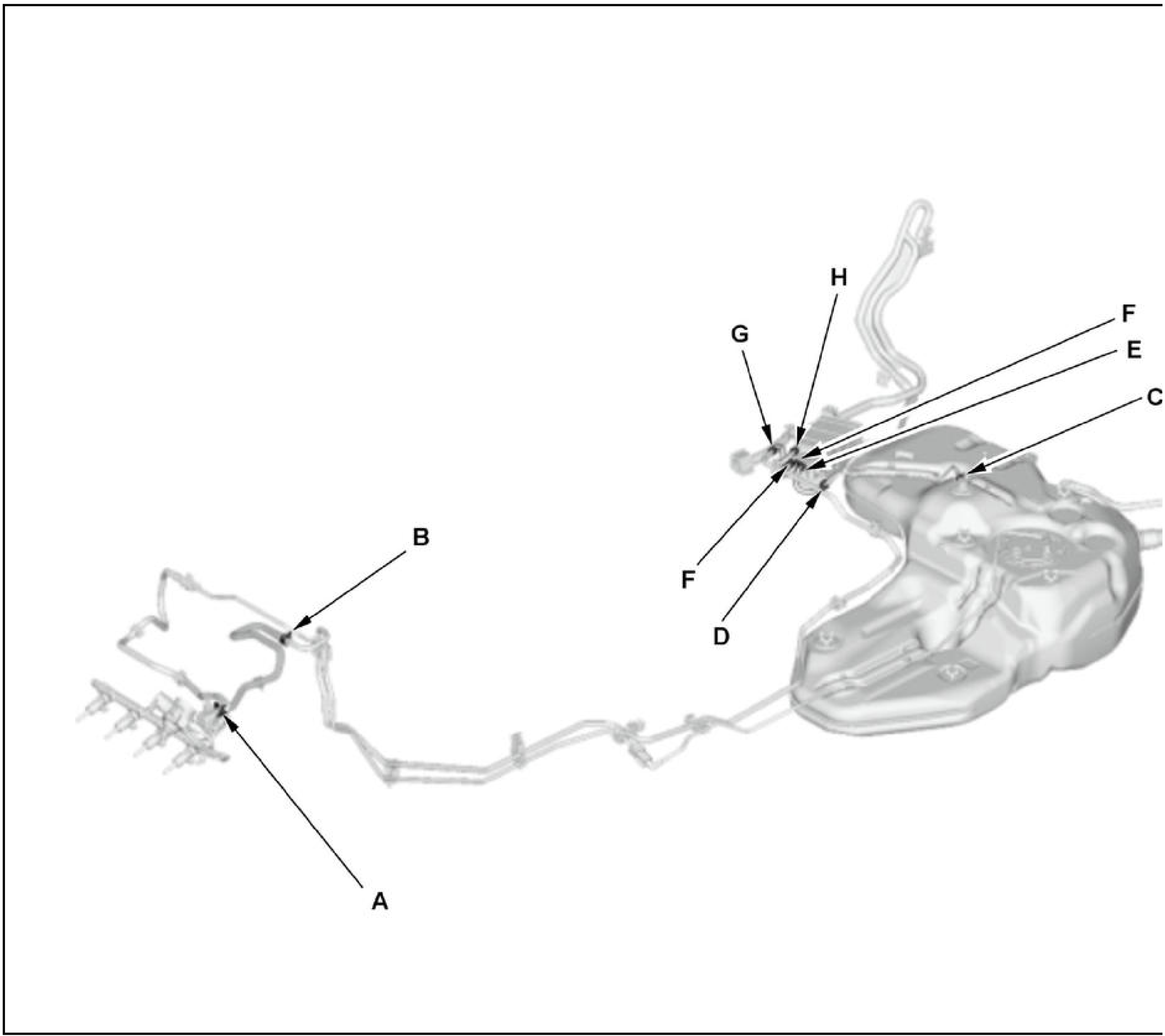

Mexico models

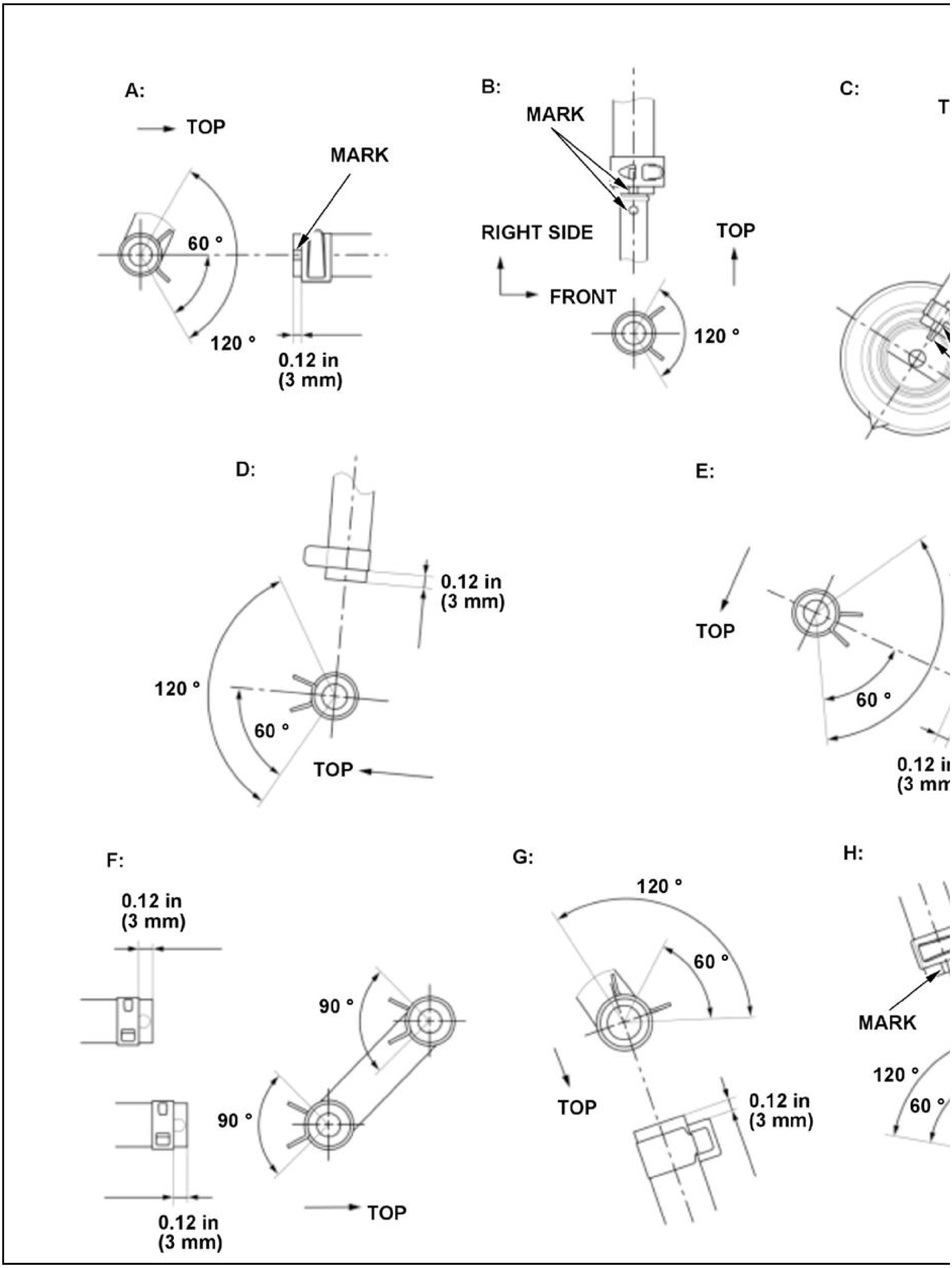
A:
TOP
MARK
60 °
120 °
0.12 in
(3 mm)
B:
MARK
RIGHT SIDE
FRONT
TOP
120 °
C:
T
D:
0.12 in
(3 mm)
120 °
60 °
TOP
E:
TOP
60 °
0.12 i
(3 mm
F:
0.12 in
(3 mm)
90 °
90 °
0.12 in
(3 mm)
TOP
G:
120 °
60 °
TOP
0.12 in
(3 mm)
H:
MARK
120 °
60 °

Fuel Leak Check

2. High Pressure Fuel Pump Cover - Remove

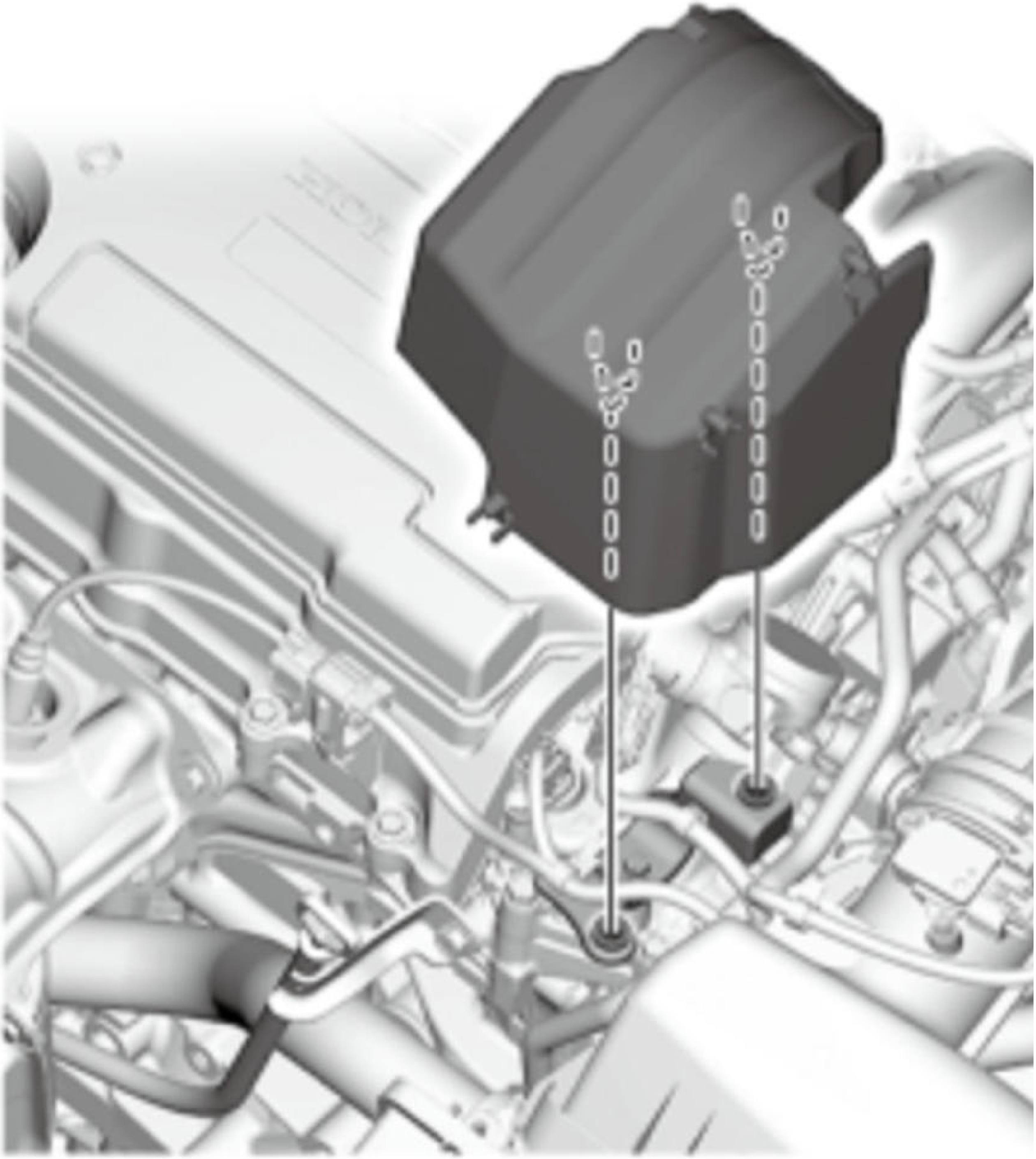

3. [Air Cleaner - Remove](#)
4. [Throttle Body - Move](#)

NOTE:

- Do not disconnect the water bypass hoses.
- Do not bend the water bypass hoses excessively.

5. **Intake Manifold - Remove**
6. Fuel Leak - Check

<table>
<tr>
<td>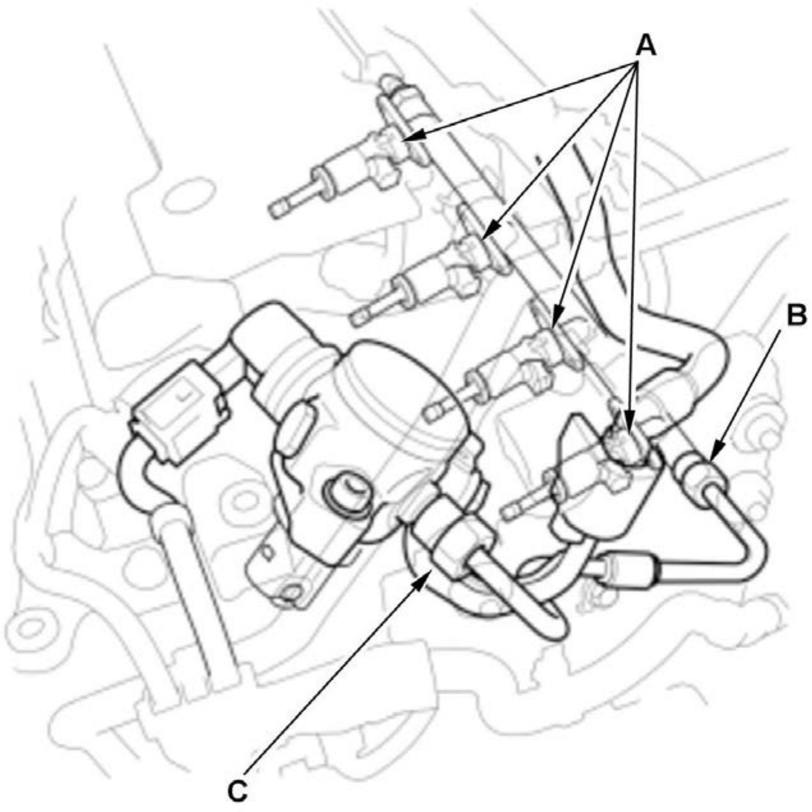
</td>
<td>1. Apply Red Check Spray to the joint of the injectors (A
pump (C). Set the probe of the leak detector (Snap-on Co

2. Install the intake manifold

with the gaskets that had use on them.

3. Turn the vehicle to the ON mode, but do not operate th
seconds, the low pressure fuel line will be pressurized. R
fuel leakage.

4. Start the engine. Hold the engine speed at 4, 000 rpm f

5. Move the throttle body and the throttle body , then r

NOTE:
• Do not disconnect the water bypass hoses.
• Do not bend the water bypass hoses excessively.

6. Check for fuel leakage to joint of the injectors, the fuel</td>
</tr>
</table>

7. **Intake Manifold - Install**
8. **Throttle Body - Install**
9. **Air Cleaner - Install**
10. High Pressure Fuel Pump Cover - Install

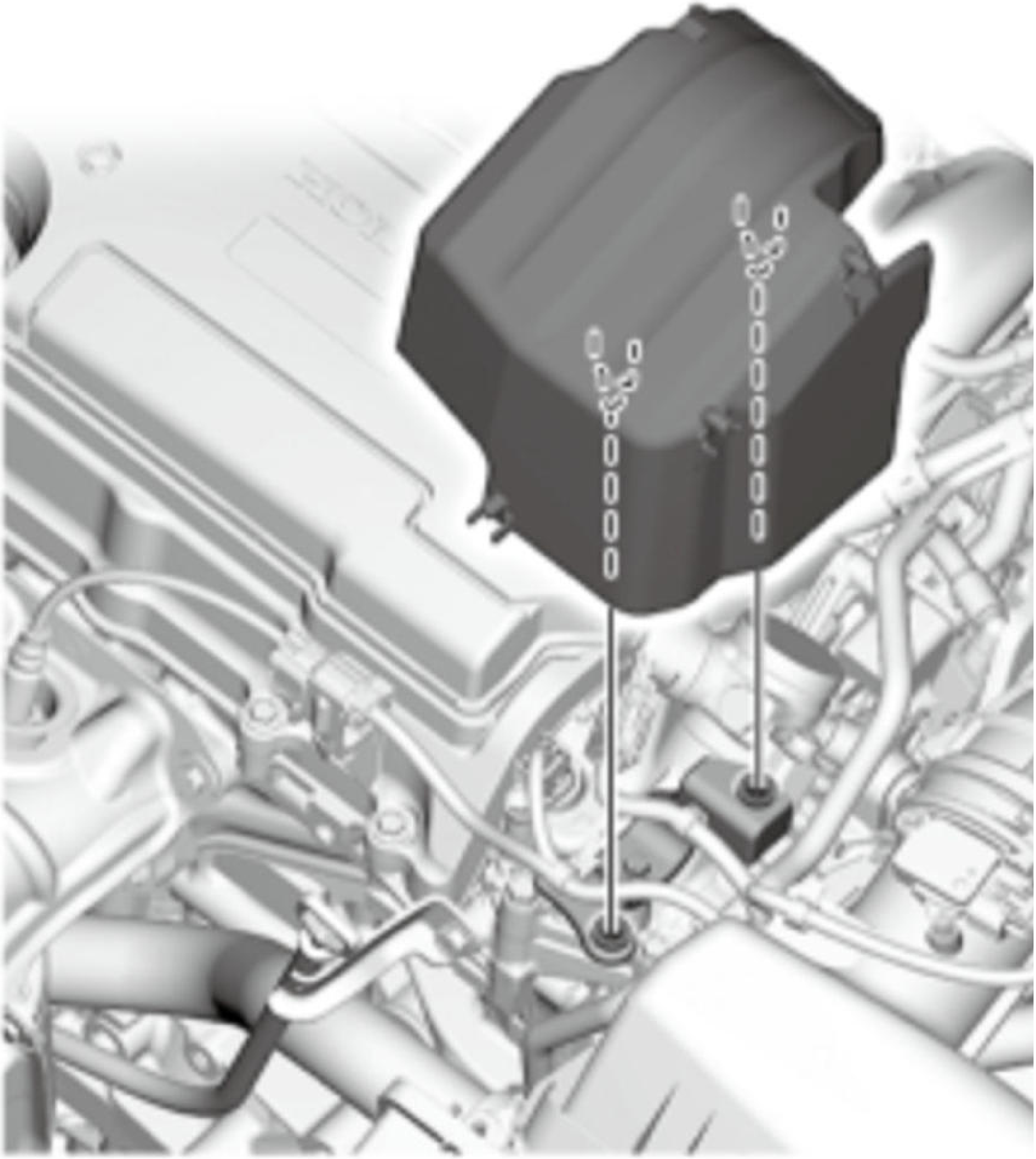

DTC TROUBLESHOOTING INDEX

FUEL AND EMISSIONS SYSTEMS DTC TROUBLESHOOTING INDEX (2.4 L ENGINE) (2017)

DTC Troubleshooting Index

DTC(MIL indication *1)	Two Driver Cycle Detection	Detection Item
P0010 (56)	---	Variable Valve Timing Control (VTC) Oil Control Solenoid Valve Malfunction
P0011 (56)	o	Variable Valve Timing Control (VTC) System Malfunction
P0069 (13) *2	o	Barometric Pressure (BARO) Sensor Circuit Range/Performance Problem
P006A (50) *2	o	Mass Air Flow (MAF) Sensor Circuit Range/Performance Problem
P0087 (197)	---	Fuel Rail Pressure Too Low
P0088 (197)	---	Fuel Rail Pressure Too High
P0102 (50)	---	Mass Air Flow (MAF) Sensor Circuit Low Voltage
P0103 (50)	---	Mass Air Flow (MAF) Sensor Circuit High Voltage
P0107 (3)	---	Manifold Absolute Pressure (MAP) Sensor Circuit Low Voltage
P0108 (3)	---	Manifold Absolute Pressure (MAP) Sensor Circuit High Voltage
P0111 (10)	o	Intake Air Temperature (IAT) Sensor Circuit Range/Performance Problem
P0112 (10)	o	Intake Air Temperature (IAT) Sensor Circuit Low Voltage
P0113 (10)	o	Intake Air Temperature (IAT) Sensor Circuit High Voltage
P0116 (86)	o	Engine Coolant Temperature (ECT) Sensor 1 Circuit Range/Performance Problem
P0117 (6)	---	Engine Coolant Temperature (ECT) Sensor 1 Circuit Low Voltage
P0118 (6)	---	Engine Coolant Temperature (ECT) Sensor 1 Circuit High Voltage
P011A (86) *2	o	Engine Coolant Temperature (ECT) Sensor 1 Circuit Range/Performance Problem
P011B (102) *2	o	Intake Air Temperature (IAT) Sensor 1 Circuit Range/Performance Problem
P0122 (7)	---	Throttle Position (TP) Sensor A Circuit Low Voltage
P0123 (7)	---	Throttle Position (TP) Sensor A Circuit High Voltage
P0125 (86)	o	Engine Coolant Temperature (ECT) Sensor 1 Malfunction/Slow Response
P0128 (87) *2	o	Cooling System Malfunction
P0133 (61)	o	Air Fuel Ratio (A/F) Sensor (Sensor 1) Malfunction/Slow Response
P0134 (41)	o	Air Fuel Ratio (A/F) Sensor (Sensor 1) Heater System Malfunction
P0135 (41)	o	Air Fuel Ratio (A/F) Sensor (Sensor 1) Heater Circuit Malfunction
P0137 (63)	o	Secondary Heated Oxygen Sensor (Secondary HO2S (Sensor 2)) Circuit Low Voltage
P0138 (63)	o	Secondary Heated Oxygen Sensor (Secondary HO2S (Sensor 2)) Circuit High Voltage
P0139 (63)	o	Secondary Heated Oxygen Sensor (Secondary HO2S (Sensor 2)) Slow Response
P0141 (65)	o	Secondary Heated Oxygen Sensor (Secondary HO2S (Sensor 2)) Heater Circuit Malfunctio

NOTE: The above DTCs are indicated when the PGM-FI system is selected with the HDS. Some automatic transmission DTCs cause the MIL to come on. If the MIL i FI system, select the A/T system, and check for automatic transmission DTCs.*1: These DTCs are indicated by a blinking MIL when the SCS line is jumped with the H blink when the SCS line is jumped; these DTCs are shown in the gauge display.

*2: USA models

*3: AWD

DTC(MIL indication *1)	Two Driver Cycle Detection	Detection Item
P0171 (45)	o	Fuel System Too Lean
P0172 (45)	o	Fuel System Too Rich
P0192 (95)	---	Fuel Rail Pressure Sensor Circuit Low Voltage
P0193 (95)	---	Fuel Rail Pressure Sensor Circuit High Voltage
P0201 (16)	---	No. 1 Cylinder Injector Circuit Malfunction
P0202 (16)	---	No. 2 Cylinder Injector Circuit Malfunction
P0203 (16)	---	No. 3 Cylinder Injector Circuit Malfunction
P0204 (16)	---	No. 4 Cylinder Injector Circuit Malfunction
P0222 (7)	---	Throttle Position (TP) Sensor B Circuit Low Voltage
P0223 (7)	---	Throttle Position (TP) Sensor B Circuit High Voltage
P0300 (211) and any combination of the following: P0301 (71) P0302 (72) P0303 (73) P0304 (74)	o	Random Misfire Detected
P0301 (71)	o	No. 1 Cylinder Misfire Detected
P0302 (72)	o	No. 2 Cylinder Misfire Detected
P0303 (73)	o	No. 3 Cylinder Misfire Detected
P0304 (74)	o	No. 4 Cylinder Misfire Detected
P0326 (23)	o	Knock Sensor Malfunction
P0327 (23)	o	Knock Sensor Circuit Low Voltage
P0328 (23)	o	Knock Sensor Circuit High Voltage
P0335 (4)	---	Crankshaft Position (CKP) Sensor No Signal
P0339 (4)	---	Crankshaft Position (CKP) Sensor Circuit Intermittent Interruption
P0340 (57)	o	Camshaft Position (CMP) Sensor A No Signal
P0341 (57)	o	Camshaft Position (CMP) Sensor A and Crankshaft Position (CKP) Sensor Incorrect Phase
P0344 (57)	o	Camshaft Position (CMP) Sensor A Circuit Intermittent Interruption
P0351 (71)	---	No. 1 Cylinder Ignition Coil Circuit Malfunction
P0352 (72)	---	No. 2 Cylinder Ignition Coil Circuit Malfunction
P0353 (73)	---	No. 3 Cylinder Ignition Coil Circuit Malfunction
P0354 (74)	---	No. 4 Cylinder Ignition Coil Circuit Malfunction
P0365 (8)	---	Camshaft Position (CMP) Sensor B No Signal
P0369 (8)	---	Camshaft Position (CMP) Sensor B Circuit Intermittent Interruption
P0420 (67)	o	Catalyst System Efficiency Below Threshold
P0441 (90) *2	o	Evaporative Emission (EVAP) System Purge Flow Malfunction
P0443 (92)	o	Evaporative Emission (EVAP) Canister Purge Valve Circuit Malfunction
P0451 (91) *2	o	Fuel Tank Pressure (FTP) Sensor Circuit Range/Performance Problem
P0452 (91) *2	o	Fuel Tank Pressure (FTP) Sensor Circuit Low Voltage

DTC(MIL indication *1)	Two Driver Cycle Detection	Detection Item
P0453 (91) *2	o	Fuel Tank Pressure (FTP) Sensor Circuit High Voltage

NOTE: The above DTCs are indicated when the PGM-FI system is selected with the HDS. Some automatic transmission DTCs cause the MIL to come on. If the MIL i FI system, select the A/T system, and check for automatic transmission DTCs.*1: These DTCs are indicated by a blinking MIL when the SCS line is jumped with the H blink when the SCS line is jumped; these DTCs are shown in the gauge display.

*2: USA models

*3: AWD

DTC(MIL indication *1)	Two Drive Cycle Detection	Detection Item
P0455 (90) *2	o	Evaporative Emission (EVAP) System Large Leak Detected
P0456 (90) *2	o	Evaporative Emission (EVAP) System Very Small Leak Detected
P0461 *2	---	Fuel Level Sensor (Fuel Gauge Sending Unit) Circuit Range/Performance Problem
P0462 *2	o	Fuel Level Sensor (Fuel Gauge Sending Unit) Circuit Low Voltage
P0463 *2	o	Fuel Level Sensor (Fuel Gauge Sending Unit) Circuit High Voltage
P0498 (117) *2	o	Evaporative Emission (EVAP) Canister Vent Shut Valve Circuit Low Voltage
P0499 (117) *2	o	Evaporative Emission (EVAP) Canister Vent Shut Valve Circuit High Voltage
P04DF (92) *2	o	Evaporative Emission (EVAP) System High Purge Flow Detected
P04F1 (90) *2	o	Evaporative Emission (EVAP) System Low Purge Flow Detected
P0506 (14) *2	o	Idle Control System RPM Lower than Expected
P0507 (14) *2	o	Idle Control System RPM Higher than Expected
P050A (167) *2	o	Cold Start Idle Air Control System Performance Problem
P050D (167) *2	o	Cold Start Idle Speed Problem
P0532	o	A/C Pressure Sensor Circuit Low Voltage
P0533	o	A/C Pressure Sensor Circuit High Voltage
P0562	---	Charging System Low Voltage
P0563	o	Powertrain Control Module (PCM) Power Source Circuit Unexpected Voltage
P0571	o	Brake Pedal Position Switch Circuit Malfunction
P059F	---	Shutter Grille Assembly (Upper) Malfunction
P05A0	---	Shutter Grille Assembly (Upper) Malfunction
P05A3	---	Shutter Grille Actuator (Upper) Malfunction
P05A8	---	Shutter Grille Actuator (Upper) Malfunction
P05AE	---	Shutter Grille Assembly (Lower) Malfunction
P05AF	---	Shutter Grille Assembly (Lower) Malfunction
P05B2	---	Shutter Grille Actuator (Lower) Malfunction
P05B7	---	Shutter Grille Actuator (Lower) Malfunction
P05C0	---	Shutter Grille Actuator (Upper) Temperature Malfunction
P05C1	---	Shutter Grille Actuator (Lower) Temperature Malfunction
P0602 (196)	---	Powertrain Control Module (PCM) Programming Error
P0607 (131)	---	Powertrain Control Module (PCM) Internal Circuit Malfunction
P060A (131)	---	Powertrain Control Module (PCM) Internal Control Module Malfunction
P0615	o	Starter Cut Relay Diagnosis Circuit Malfunction
P0616	---	Starter Cut Relay Diagnosis Circuit Low Voltage
P0617	---	Starter Cut Relay Diagnosis Circuit High Voltage
P062B (131)	---	Powertrain Control Module (PCM) Internal Circuit Malfunction
P062F (131)	---	Powertrain Control Module (PCM) Internal Control Module Keep Alive Memory (KAM) E

NOTE: The above DTCs are indicated when the PGM-FI system is selected with the HDS. Some automatic transmission DTCs cause the MIL to come on. If the MIL i FI system, select the A/T system, and check for automatic transmission DTCs.*1: These DTCs are indicated by a blinking MIL when the SCS line is jumped with the H blink when the SCS line is jumped; these DTCs are shown in the gauge display.

*2: USA models

*3: AWD

DTC(MIL indication *1)	Two Driver Cycle Detection	Detection Item
P0630 (139)	---	VIN Not Programmed or Mismatch
P0641 (133)	---	Sensor Reference Voltage A Malfunction
P0651 (134)	---	Sensor Reference Voltage B Malfunction
P065A	---	ACG No Charging Malfunction
P0685 (135)	o	Powertrain Control Module (PCM) Power Control Circuit/Internal Circuit Malfunction
P06A8 (131)	---	Internal VCC Power Malfunction
P0703	o	Brake Pedal Position Switch (NC) Malfunction
P1009 (56)	---	Variable Valve Timing Control (VTC) Advance Malfunction
P1172 (61) *2	o	Air Fuel Ratio (A/F) Sensor (Sensor 1) Circuit Out of Range High
P1454 (91) *2	o	Fuel Tank Pressure (FTP) Sensor Circuit Range/Performance Problem
P1458 (91) *2	o	Fuel Tank Pressure (FTP) Sensor Circuit Range/Performance Problem
P1549	---	Charging System High Voltage
P154A	---	Battery Sensor Internal Failure
P1658 (40)	---	Electronic Throttle Control System (ETCS) Control Relay ON Malfunction
P1659 (40)	---	Electronic Throttle Control System (ETCS) Control Relay OFF Malfunction
P1683 (40)	---	Throttle Valve Default Position Spring Performance Problem
P1684 (40)	---	Throttle Valve Return Spring Performance Problem
P16BB	---	Alternator B Terminal Circuit Low Voltage
P16E2	---	PGM-FI-ACG LIN Communication Error

DTC(MIL indication *1)	Two Driver Cycle Detection	Detection Item
P16E3	---	PGM-FI-Battery Sensor LIN Communication Error
P16E4	---	ACG High-temperature
P16E8	---	PGM-FI-Shutter Grille LIN Communication Error
P16F0 (131)	---	Powertrain Control Module (PCM) Internal Circuit Malfunction (Starter Control Circuit Ma
P16F2 (131)	---	Powertrain Control Module (PCM) Internal Circuit Malfunction (Starter Control Circuit Ma
P16F3	---	Starter Cut Relay 1 Control Circuit Low Voltage
P16F4	---	Starter Cut Relay 2 Control Circuit Low Voltage
P16F5	---	Starter Cut Relay 1 Control Circuit High Voltage
P16F6	---	Starter Cut Relay 2 Control Circuit High Voltage
P16F9 (131)	---	Powertrain Control Module (PCM) Internal Circuit Malfunction (Starter Control Circuit Ma
P16FA (131)	---	Powertrain Control Module (PCM) Internal Circuit Malfunction (Starter Control Circuit Ma
P2073 (5) *2	o	Manifold Absolute Pressure (MAP) Sensor Signal Higher Than Expected
P2074 (5) *2	o	Manifold Absolute Pressure (MAP) Sensor Signal Lower Than Expected
P2096 (45) *2	o	Post Catalyst Fuel Trim System Too Lean
P2097 (45) *2	o	Post Catalyst Fuel Trim System Too Rich
P2101 (40)	---	Electronic Throttle Control System (ETCS) Malfunction
P2108 (40)	---	Throttle Actuator Control Module Performance

NOTE: The above DTCs are indicated when the PGM-FI system is selected with the HDS. Some automatic transmission DTCs cause the MIL to come on. If the MIL i FI system, select the A/T system, and check for automatic transmission DTCs.*1: These DTCs are indicated by a blinking MIL when the SCS line is jumped with the H blink when the SCS line is jumped; these DTCs are shown in the gauge display.

*2: USA models

*3: AWD

DTC(MIL indication *1)	Two Driver Cycle Detection	Detection Item
P2118 (40)	---	Throttle Actuator Current Range/Performance Problem
P2119 (40)	---	Throttle Actuator Control Throttle Body Range/Performance
P2122 (37)	---	Accelerator Pedal Position (APP) Sensor A (Throttle Position (TP) Sensor D) Circuit Low
P2123 (37)	---	Accelerator Pedal Position (APP) Sensor A (Throttle Position (TP) Sensor D) Circuit High
P2127 (37)	---	Accelerator Pedal Position (APP) Sensor B (Throttle Position (TP) Sensor E) Circuit Low
P2128 (37)	---	Accelerator Pedal Position (APP) Sensor B (Throttle Position (TP) Sensor E) Circuit High
P2135 (7)	---	Throttle Position (TP) Sensor A/B Incorrect Voltage Correlation
P2138 (37)	---	Accelerator Pedal Position (APP) Sensor A/B (Throttle Position (TP) Sensor D/E) Incorrect
P2176 (40)	---	Throttle Actuator Control System Idle Position Not Learned
P2183 (192) *2	o	Engine Coolant Temperature (ECT) Sensor 2 Circuit Range/Performance Problem
P2184 (192)	o	Engine Coolant Temperature (ECT) Sensor 2 Circuit Low Voltage
P2185 (192)	o	Engine Coolant Temperature (ECT) Sensor 2 Circuit High Voltage
P2195 (48) *2	o	Air Fuel Ratio (A/F) Sensor (Sensor 1) Signal Stuck Lean
P219A (45) *2	o	Air-Fuel Ratio Variation of Cylinder
P2227 (13)	o	Barometric Pressure (BARO) Sensor Circuit Out of Range High
P2228 (13)	o	Barometric Pressure (BARO) Sensor Circuit Low Voltage
P2229 (13)	o	Barometric Pressure (BARO) Sensor Circuit High Voltage
P2237 (48)	o	Air Fuel Ratio (A/F) Sensor (Sensor 1) AFS Circuit High Voltage
P2238 (48)	o	Air Fuel Ratio (A/F) Sensor (Sensor 1) AFS+ Circuit Low Voltage
P2252 (48)	o	Air Fuel Ratio (A/F) Sensor (Sensor 1) AFS- Circuit Low Voltage
P2270 (63)	o	Secondary Heated Oxygen Sensor (Secondary HO2S (Sensor 2)) Circuit Signal Stuck Lean
P2422 (117) *2	o	Evaporative Emission (EVAP) Canister Vent Shut Valve Stuck Closed Malfunction
P2610 (132)	o	Powertrain Control Module (PCM) Ignition Off Internal Timer Malfunction
P2623 (197)	---	High Pressure Fuel Pump Spill Valve Malfunction
P2646 (22) *2	o	Rocker Arm Oil Pressure Switch Circuit Low Voltage
P2647 (22) *2	o	Rocker Arm Oil Pressure Switch Circuit High Voltage
P2648 (21)	---	Rocker Arm Oil Control Solenoid A Circuit Low Voltage
P2649 (21)	---	Rocker Arm Oil Control Solenoid A Circuit High Voltage
P2A00 (61)	o	Air Fuel Ratio (A/F) Sensor (Sensor 1) Circuit Range/Performance Problem
U0029 (126)	---	F-CAN Malfunction (BUS-OFF (Powertrain Control Module (PCM)))
U0114 *3	---	F-CAN Malfunction (Powertrain Control Module (PCM)-AWD Control Unit)

NOTE: The above DTCs are indicated when the PGM-FI system is selected with the HDS. Some automatic transmission DTCs cause the MIL to come on. If the MIL i FI system, select the A/T system, and check for automatic transmission DTCs.*1: These DTCs are indicated by a blinking MIL when the SCS line is jumped with the H blink when the SCS line is jumped; these DTCs are shown in the gauge display.

*2: USA models

*3: AWD

DTC(MIL indication *1)	Two Driver Cycle Detection	Detection Item
U0122	---	F-CAN Malfunction (Powertrain Control Module (PCM)-VSA Modulator-Control Unit)
U0128	---	F-CAN Malfunction (Powertrain Control Module (PCM)-Electric Parking Brake Control U
U0129	---	F-CAN Malfunction (Powertrain Control Module (PCM)-Electric Brake Booster)
U0131	---	F-CAN Malfunction (Powertrain Control Module (PCM)-EPS Control Unit)
U0155 (126)	---	F-CAN Malfunction (Powertrain Control Module (PCM)-Gauge Control Module)

NOTE: The above DTCs are indicated when the PGM-FI system is selected with the HDS. Some automatic transmission DTCs cause the MIL to come on. If the MIL i FI system, select the A/T system, and check for automatic transmission DTCs.*1: These DTCs are indicated by a blinking MIL when the SCS line is jumped with the H blink when the SCS line is jumped; these DTCs are shown in the gauge display.

*2: USA models

*3: AWD

CIRCUIT DIAGRAM

FUEL AND EMISSIONS SYSTEMS CIRCUIT DIAGRAM (1.5 L ENGINE)

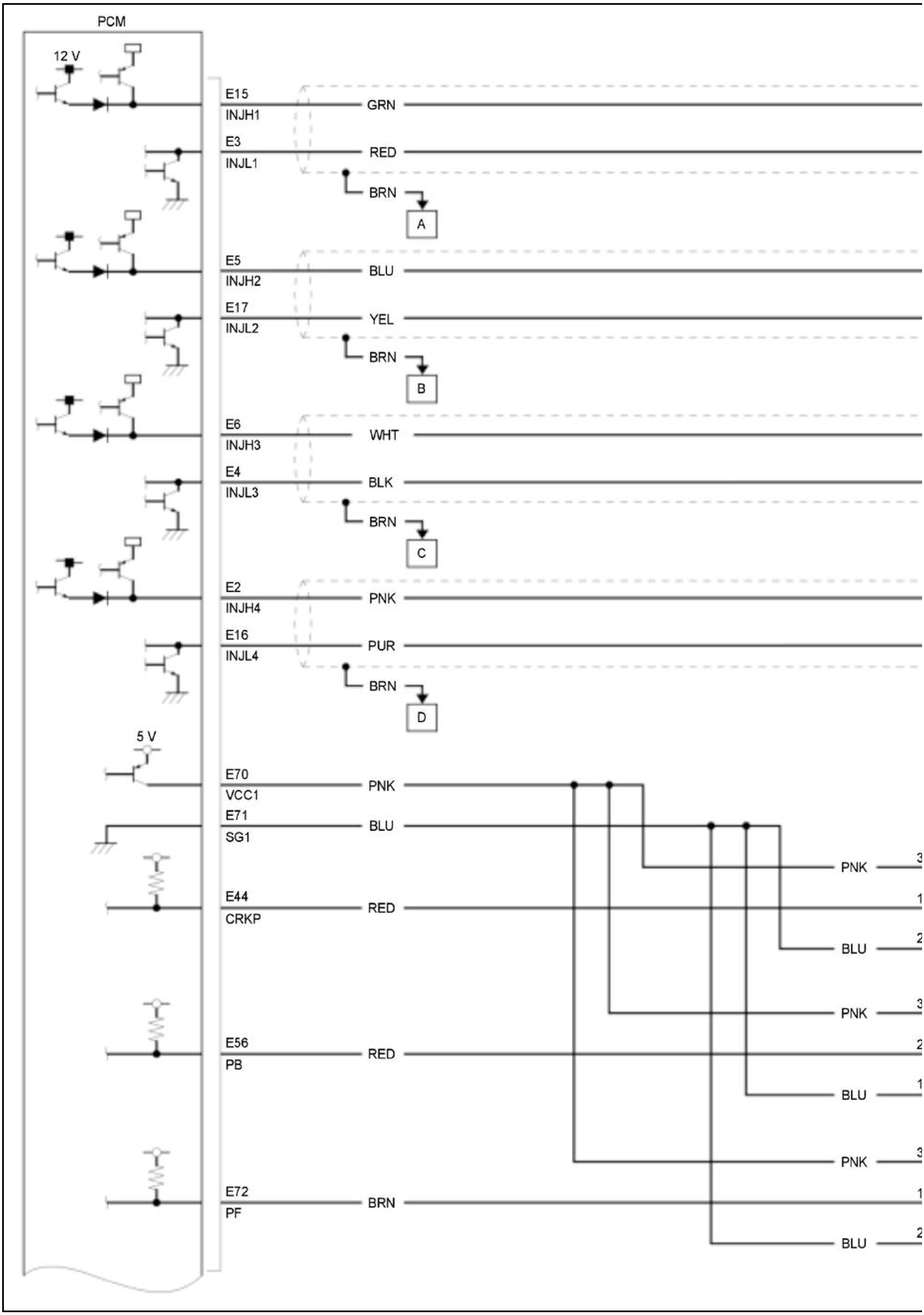
PCM
12 V
E15
INJH1
GRN
E3
INJL1
RED
BRN
A
E5
INJH2
BLU
E17
INJL2
YEL
BRN
B
E6
INJH3
WHT
E4
INJL3
BLK
BRN
C
E2
INJH4
PNK
E16
INJL4
PUR
BRN
D
5 V
E70
VCC1
PNK
E71
SG1
BLU
PNK
3
E44
CRKP
RED
1
BLU
2
PNK
3
E56
PB
RED
2
BLU
1
PNK
3
E72
PF
BRN
1
BLU
2

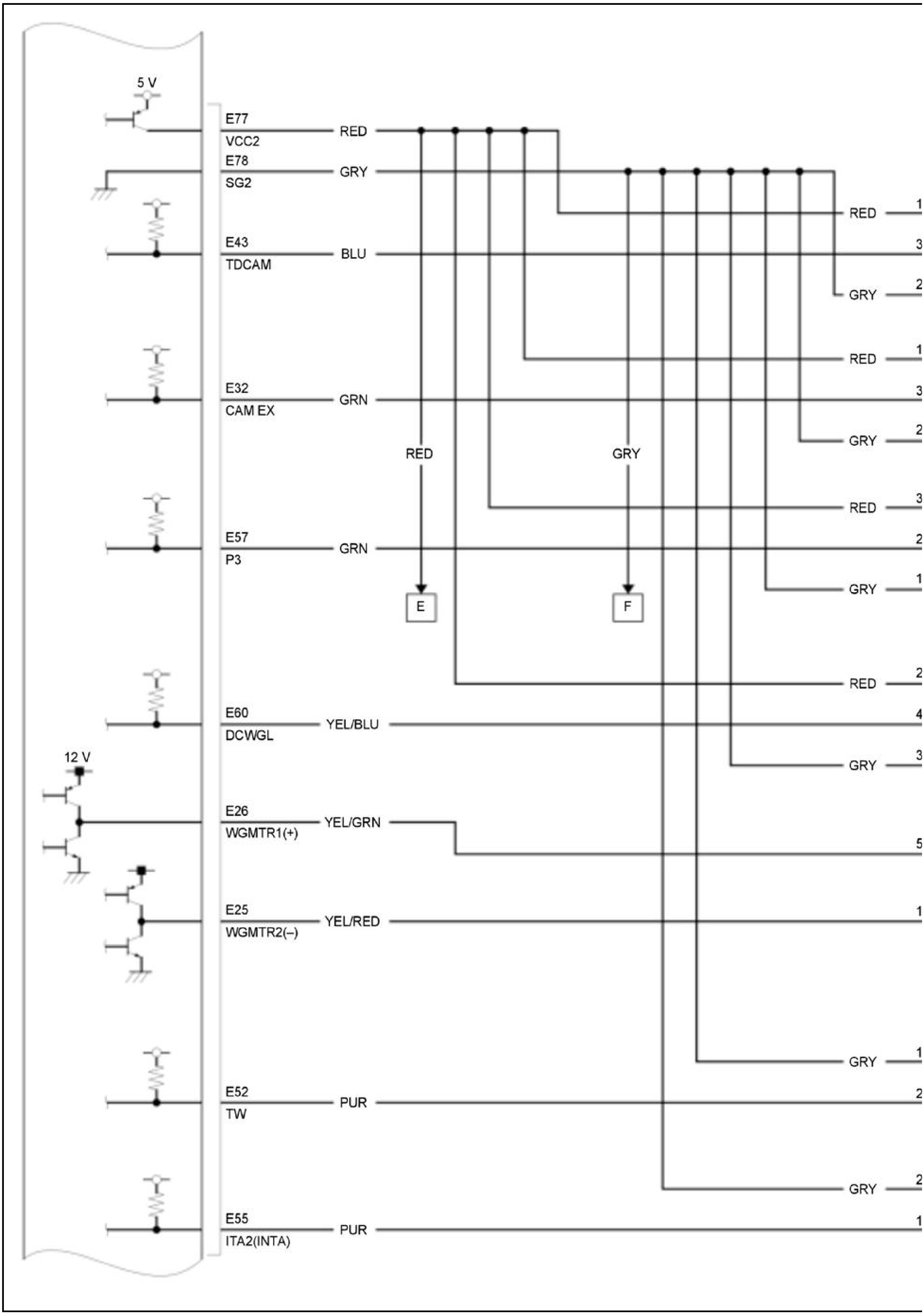
5 V
E77
VCC2
RED
E78
SG2
GRY
RED
1
E43
TDCAM
BLU
3
GRY
2
RED
1
E32
CAM EX
GRN
3
GRY
2
RED
GRY
RED
3
E57
P3
GRN
2
GRY
1
E
F
RED
2
E60
DCWGL
YEL/BLU
4
GRY
3
12 V
E26
WGMTR1(+)
YEL/GRN
5
E25
WGMTR2(–)
YEL/RED
1
GRY
1
E52
TW
PUR
2
GRY
2
E55
ITA2(INTA)
PUR
1

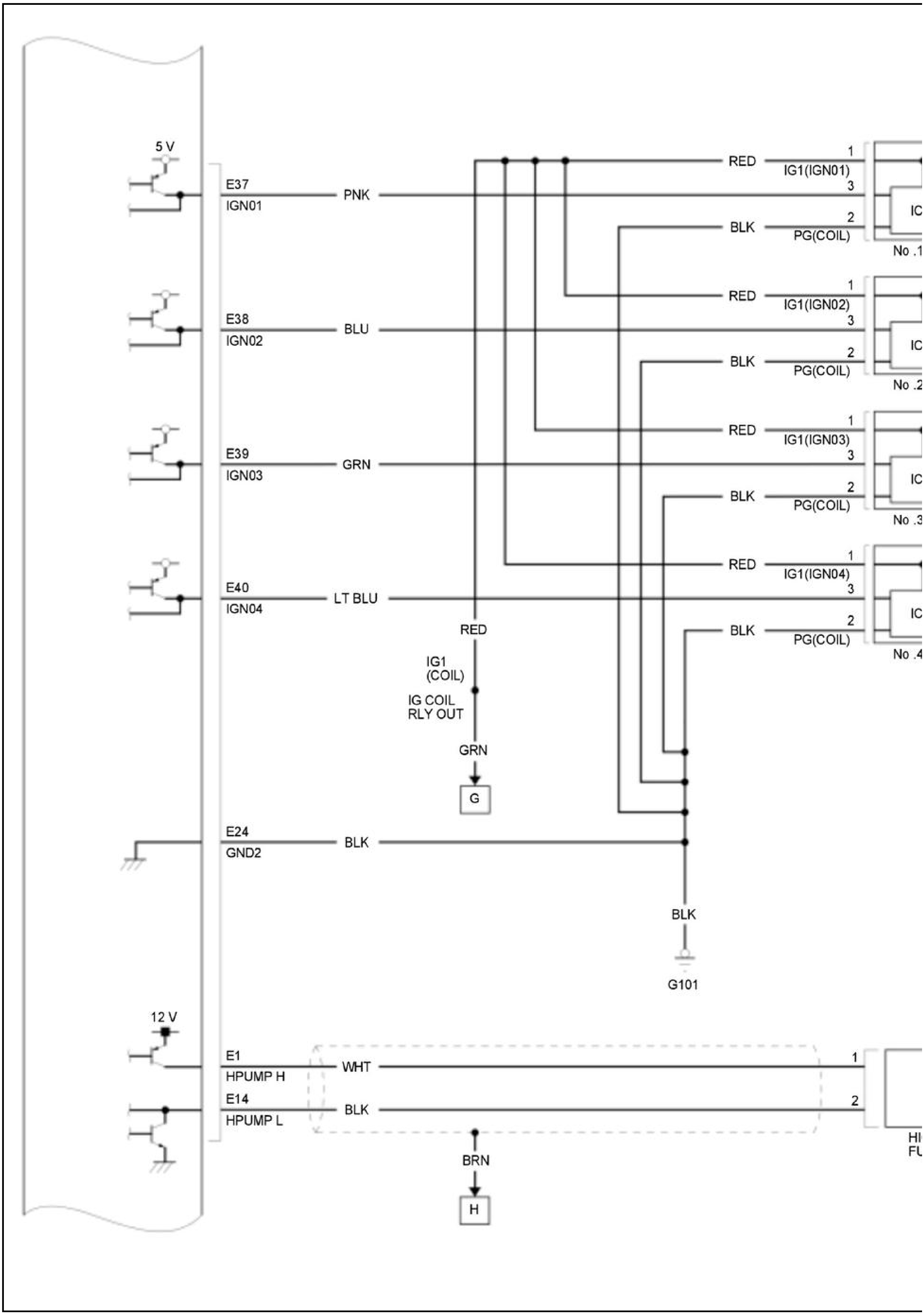
5 V
E37
IGN01
PNK
E38
IGN02
BLU
E39
IGN03
GRN
E40
IGN04
LT BLU
RED
1
IG1(IGN01)
3
BLK
2
PG(COIL)
RED
1
IG1(IGN02)
3
BLK
2
PG(COIL)
RED
1
IG1(IGN03)
3
BLK
2
PG(COIL)
RED
1
IG1(IGN04)
3
BLK
2
PG(COIL)
RED
IG1
(COIL)
IG COIL
RLY OUT
GRN
G
E24
GND2
BLK
BLK
G101
12 V
E1
HPUMP H
WHT
E14
HPUMP L
BLK
1
2
BRN
H

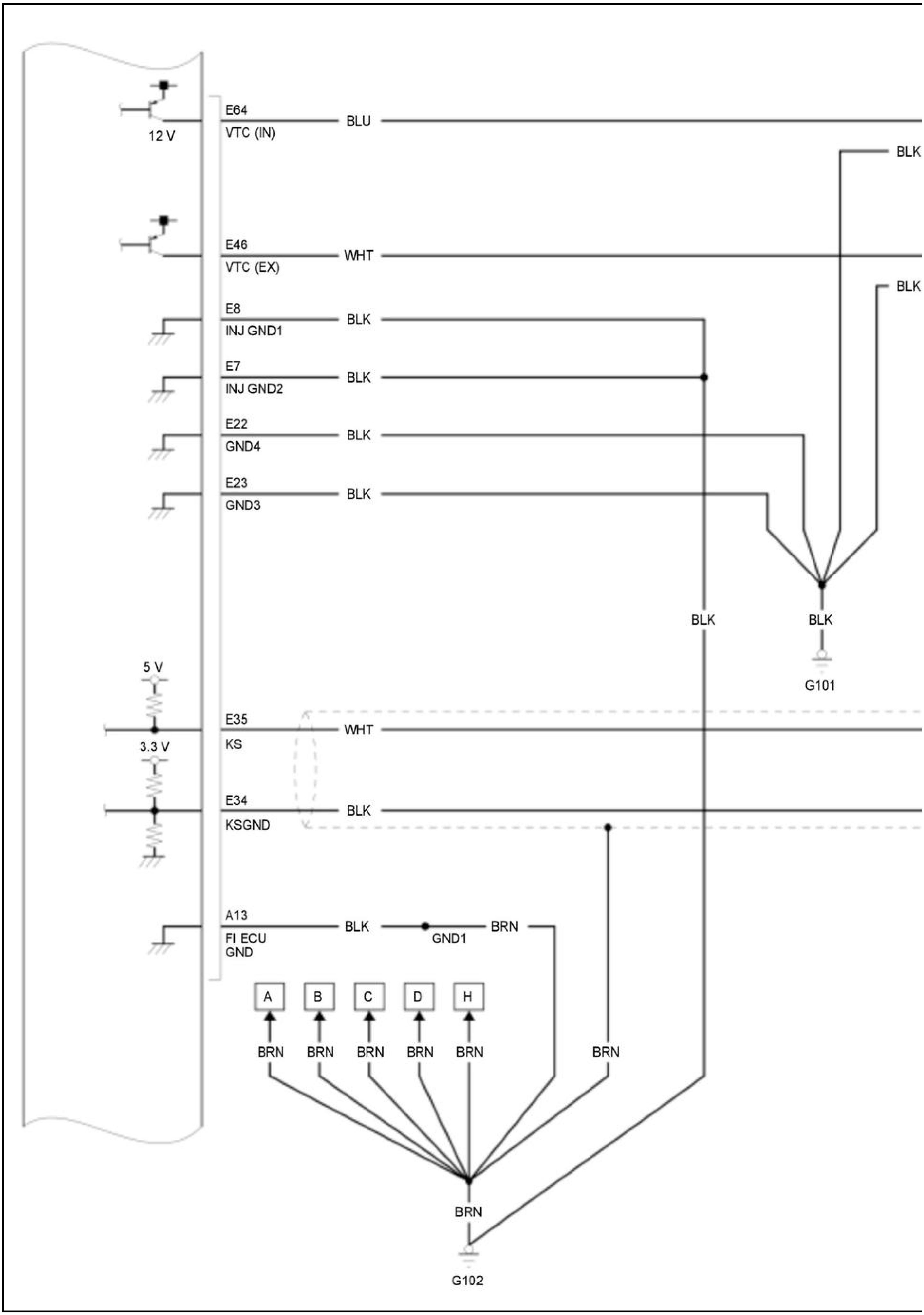
E64
VTC (IN)
BLU
12 V
BLK
E46
VTC (EX)
WHT
BLK
E8
INJ GND1
BLK
E7
INJ GND2
BLK
E22
GND4
BLK
E23
GND3
BLK
BLK
BLK
G101
5 V
E35
KS
WHT
3.3 V
E34
KSGND
BLK
A13
FI ECU
GND
BLK
GND1
BRN
A
B
C
D
H
BRN
BRN
BRN
BRN
BRN
BRN
BRN
G102

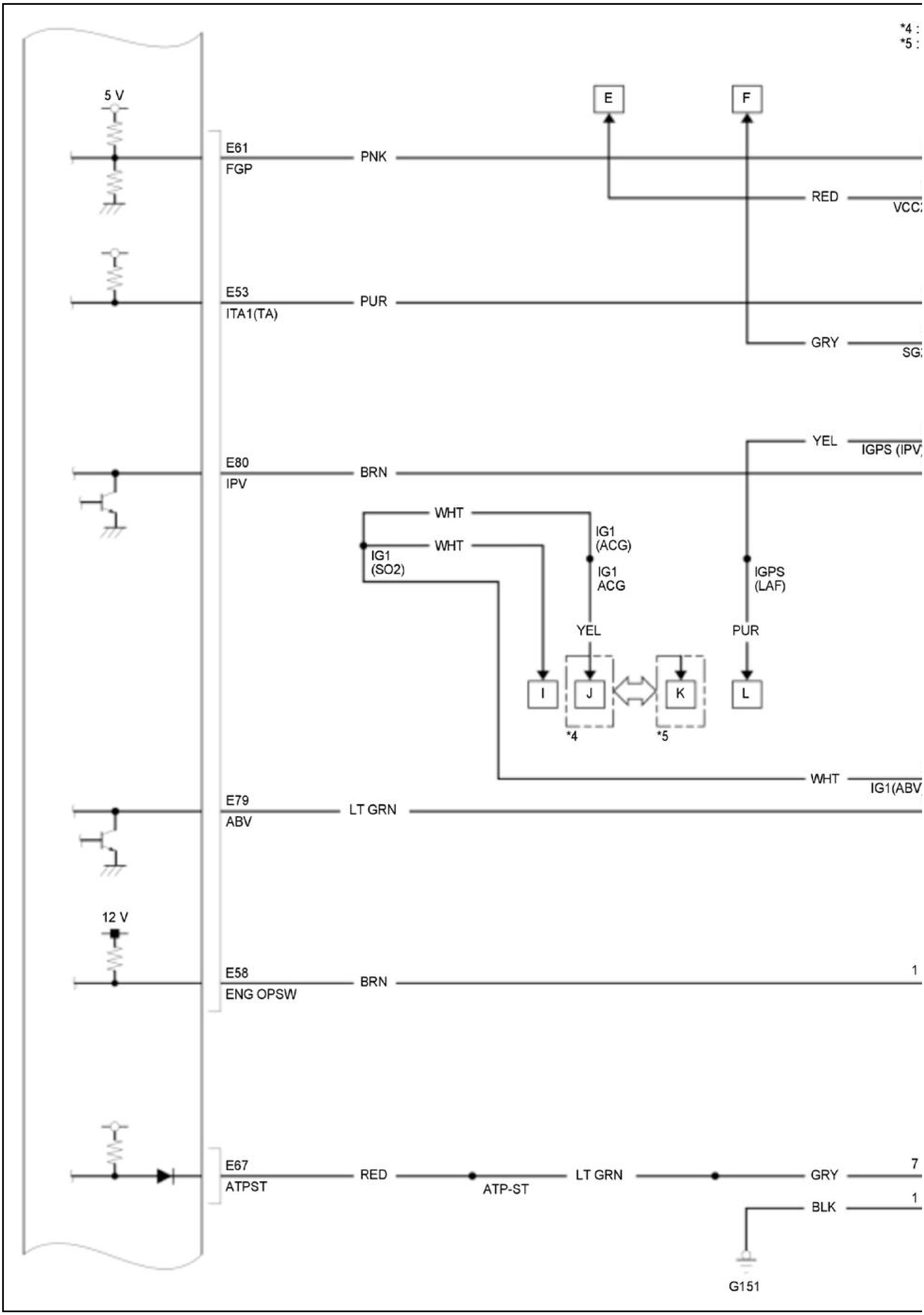
*4 :
*5 :
5 V
E
F
E61
FGP
PNK
RED
VCC
E53
ITA1(TA)
PUR
GRY
SG
YEL
IGPS (IPV
E80
IPV
BRN
WHT
WHT
IG1
(ACG)
IG1
(SO2)
IG1
ACG
IGPS
(LAF)
YEL
PUR
I
J
K
L
*4
*5
WHT
IG1(ABV
E79
ABV
LT GRN
12 V
E58
ENG OPSW
BRN
1
E67
ATPST
RED
ATP-ST
LT GRN
GRY
7
BLK
1
G151

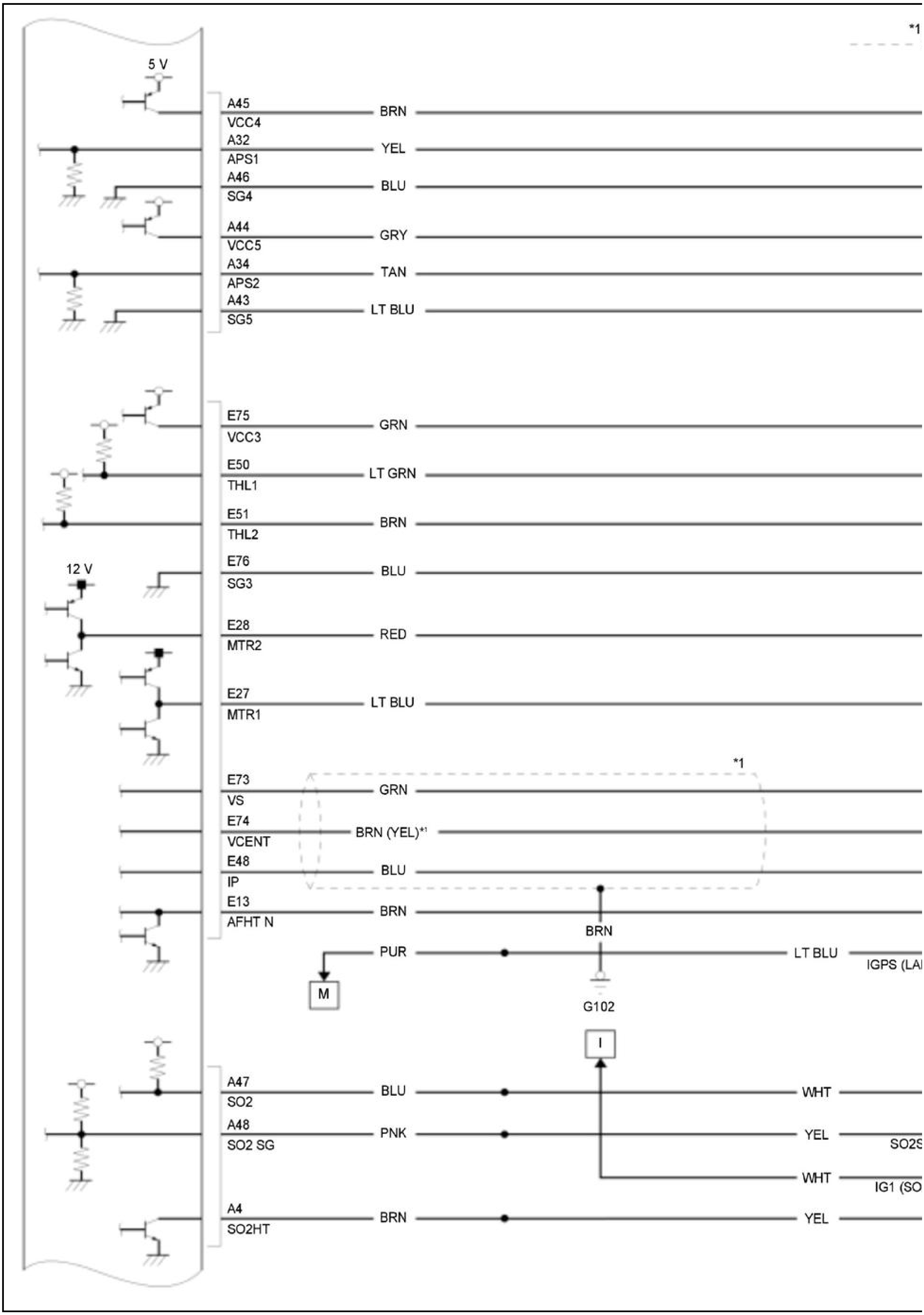
*1
5 V
A45
VCC4
BRN
A32
APS1
YEL
A46
SG4
BLU
A44
VCC5
GRY
A34
APS2
TAN
A43
SG5
LT BLU
E75
VCC3
GRN
E50
THL1
LT GRN
E51
THL2
BRN
12 V
E76
SG3
BLU
E28
MTR2
RED
E27
MTR1
LT BLU
*1
E73
VS
GRN
E74
VCENT
BRN (YEL)*1
E48
IP
BLU
E13
AFHT N
BRN
BRN
PUR
LT BLU
IGPS (LA
M
G102
I
A47
SO2
BLU
WHT
A48
SO2 SG
PNK
YEL
SO2S
WHT
IG1 (SO
A4
SO2HT
BRN
YEL

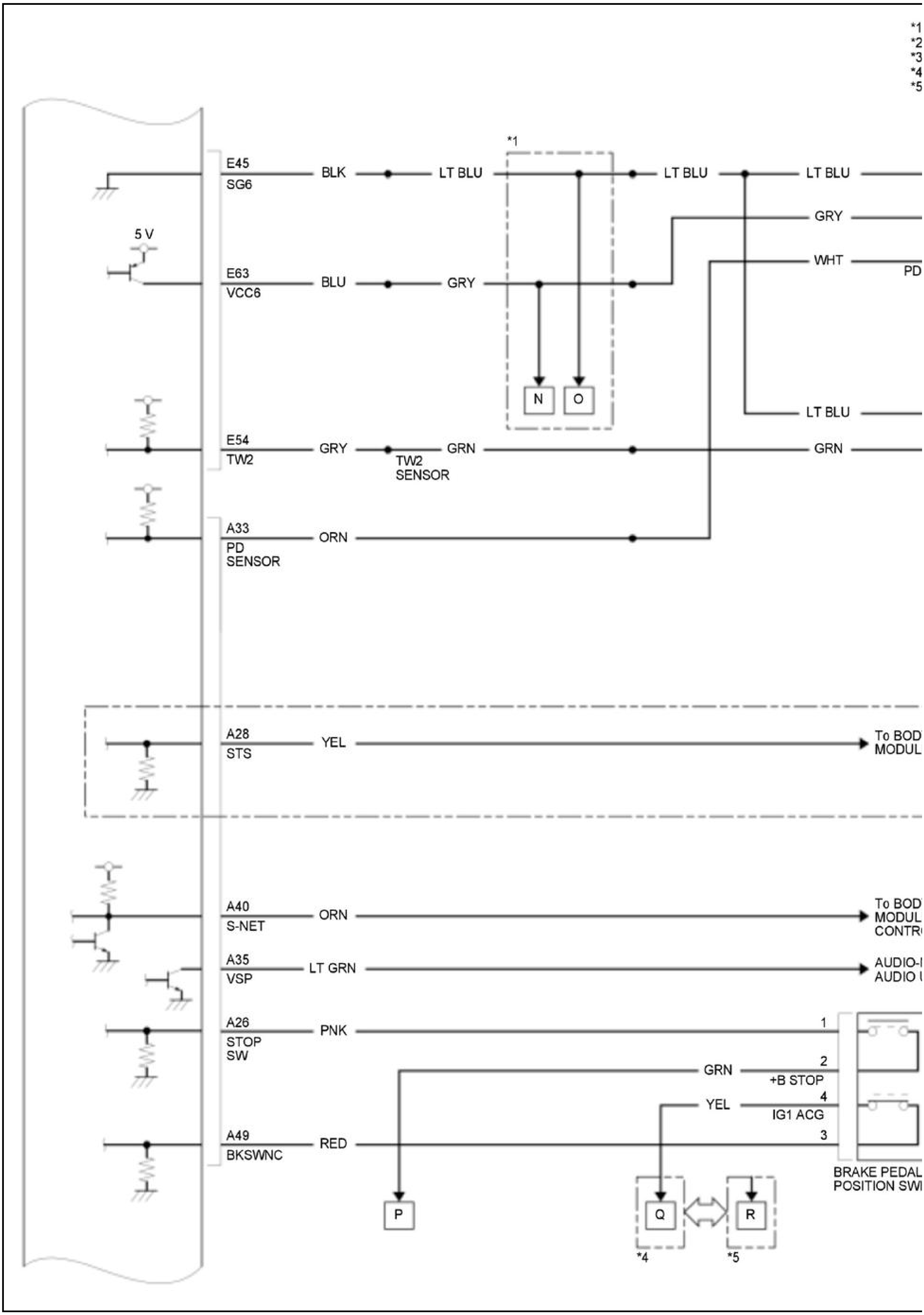
*1
*2
*3
*4
*5
*1
E45
SG6
BLK
LT BLU
LT BLU
LT BLU
GRY
WHT
PD
5 V
E63
VCC6
BLU
GRY
N
O
LT BLU
E54
TW2
GRY
GRN
TW2
SENSOR
GRN
A33
PD
SENSOR
ORN
A28
STS
YEL
To BOD
MODUL
A40
S-NET
ORN
To BOD
MODUL
CONTR
A35
VSP
LT GRN
AUDIO-
AUDIO
A26
STOP
SW
PNK
1
GRN
2
+B STOP
YEL
4
IG1 ACG
A49
BKSWNC
RED
3
BRAKE PEDAL
POSITION SWI
P
Q
R
*4
*5

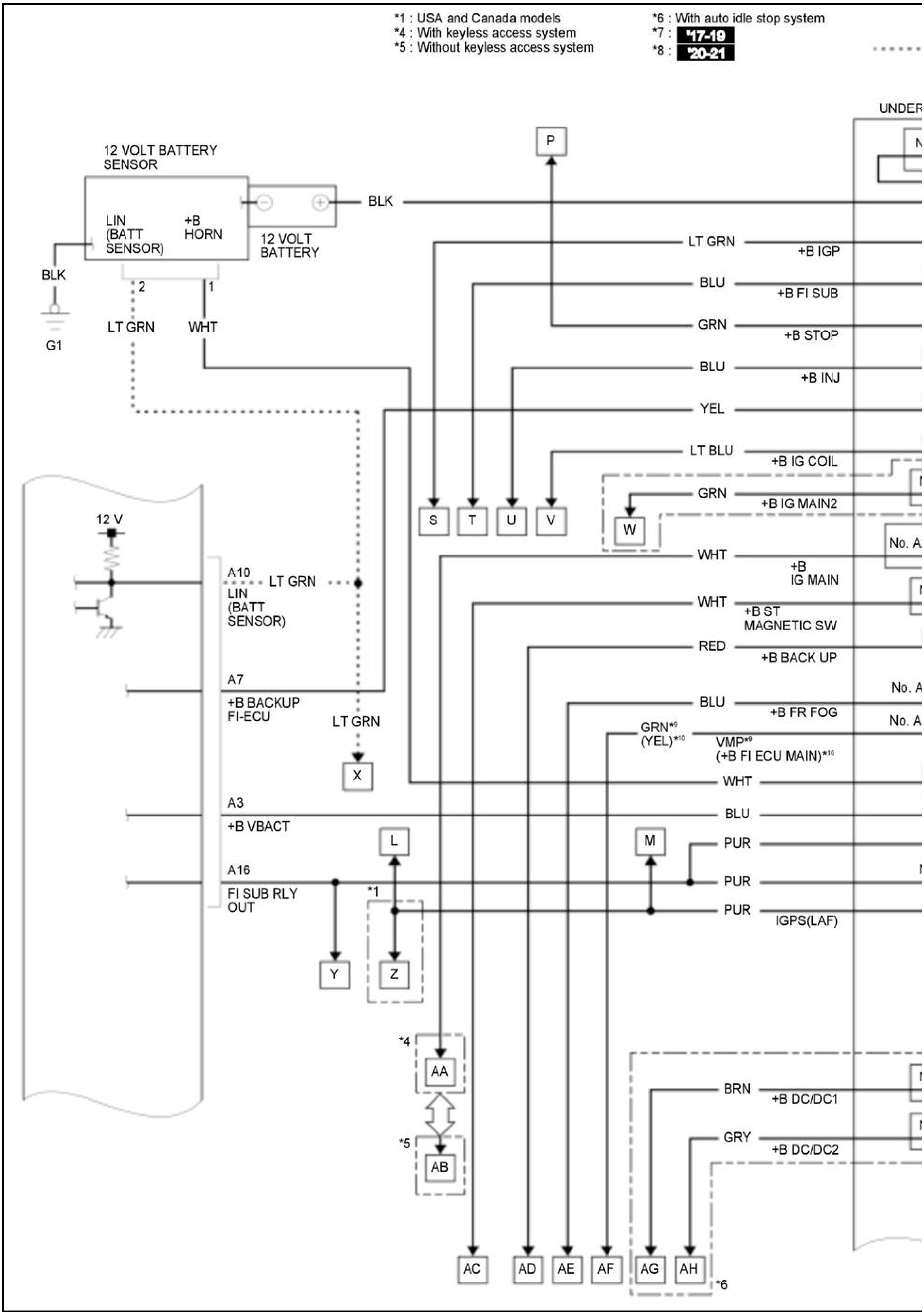

*1 : USA and Canada models
*4 : With keyless access system
*5 : Without keyless access system
*6 : With auto idle stop system
*7 : '17-19
*8 : '20-21

UNDER
12 VOLT BATTERY SENSOR
LIN (BATT SENSOR)
+B HORN
12 VOLT BATTERY
BLK
G1
2
1
LT GRN
WHT
P
LT GRN
+B IGP
BLU
+B FI SUB
GRN
+B STOP
BLU
+B INJ
YEL
LT BLU
+B IG COIL
GRN
+B IG MAIN2
S
T
U
V
W
WHT
+B IG MAIN
No. A
WHT
+B ST MAGNETIC SW
RED
+B BACK UP
BLU
+B FR FOG
GRN*9 (YEL)*10
VMP*9 (+B FI ECU MAIN)*10
WHT
BLU
PUR
PUR
PUR
IGPS(LAF)
12 V
A10
LT GRN
LIN (BATT SENSOR)
A7
+B BACKUP FI-ECU
LT GRN
X
A3
+B VBACT
L
M
A16
FI SUB RLY OUT
*1
Y
Z
*4
AA
*5
AB
BRN
+B DC/DC1
GRY
+B DC/DC2
AC
AD
AE
AF
AG
AH
*6

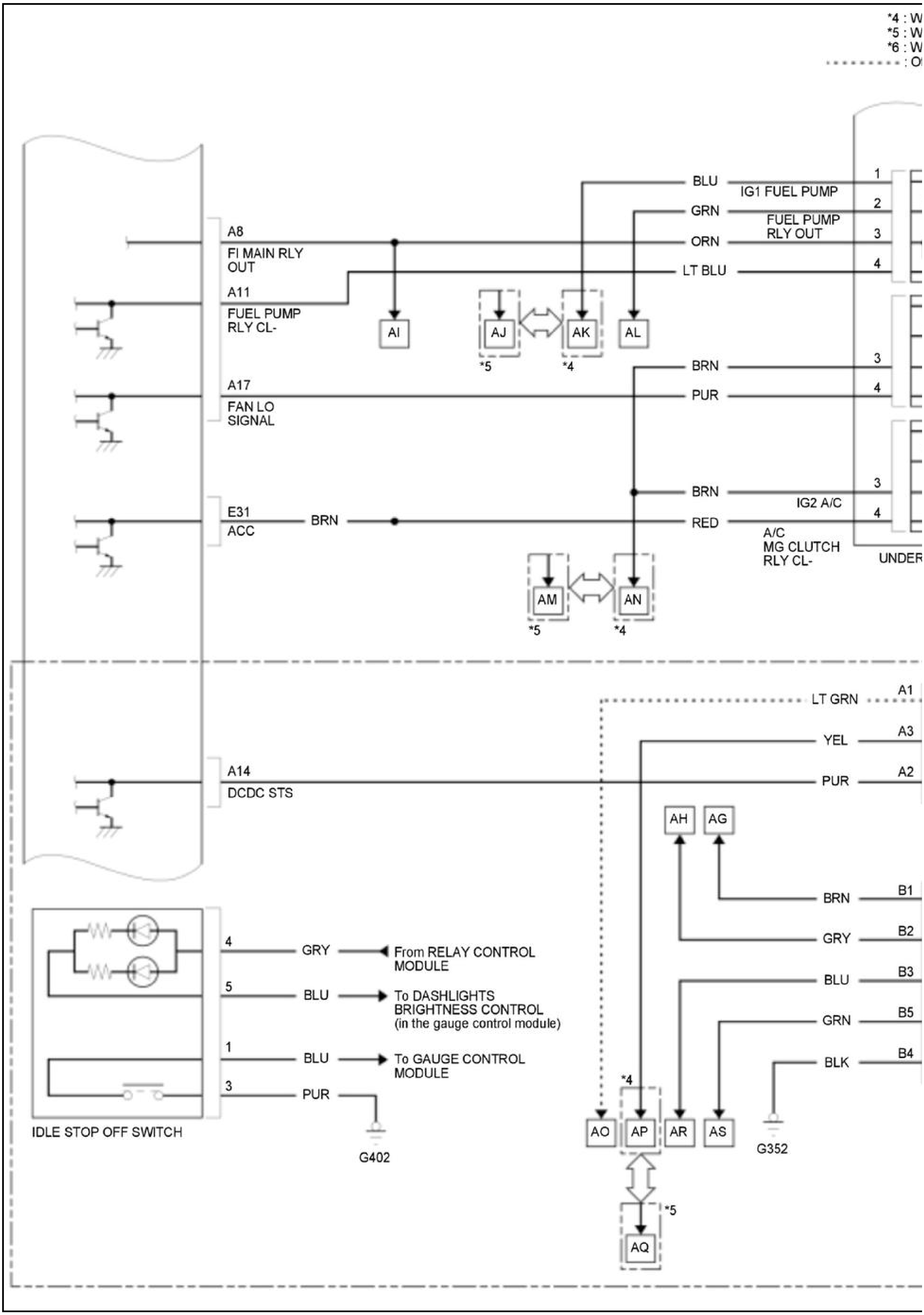
*4 : W
*5 : W
*6 : W
: O
A8
FI MAIN RLY OUT
A11
FUEL PUMP RLY CL-
A17
FAN LO SIGNAL
E31
ACC
BRN
BLU
GRN
ORN
LT BLU
IG1 FUEL PUMP
FUEL PUMP RLY OUT
1
2
3
4
AI
AJ
AK
AL
*5
*4
BRN
PUR
3
4
BRN
RED
IG2 A/C
A/C MG CLUTCH RLY CL-
3
4
UNDER
AM
AN
*5
*4
LT GRN
A1
YEL
A3
A14
DCDC STS
PUR
A2
AH
AG
BRN
B1
GRY
B2
BLU
B3
GRN
B5
BLK
B4
4
GRY
From RELAY CONTROL MODULE
5
BLU
To DASHLIGHTS BRIGHTNESS CONTROL (in the gauge control module)
1
BLU
To GAUGE CONTROL MODULE
3
PUR
IDLE STOP OFF SWITCH
G402
*4
AO
AP
AR
AS
G352
*5
AQ

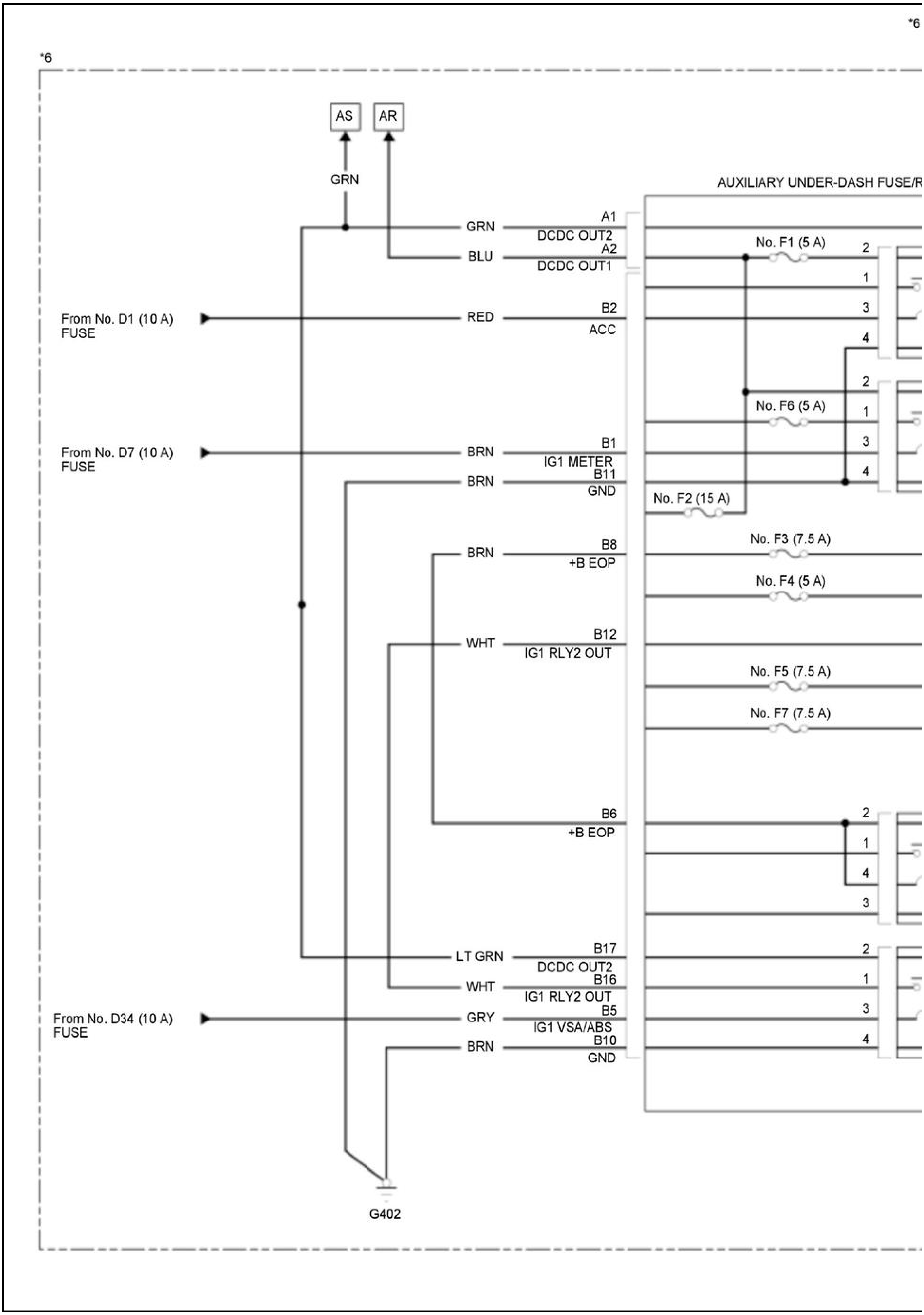
*6
*6
AS
AR
GRN
AUXILIARY UNDER-DASH FUSE/R
GRN
A1
DCDC OUT2
BLU
A2
DCDC OUT1
No. F1 (5 A)
2
1
From No. D1 (10 A) FUSE
RED
B2
ACC
3
4
2
No. F6 (5 A)
1
From No. D7 (10 A) FUSE
BRN
B1
IG1 METER
3
BRN
B11
GND
4
No. F2 (15 A)
BRN
B8
+B EOP
No. F3 (7.5 A)
No. F4 (5 A)
WHT
B12
IG1 RLY2 OUT
No. F5 (7.5 A)
No. F7 (7.5 A)
B6
+B EOP
2
1
4
3
LT GRN
B17
DCDC OUT2
2
WHT
B16
IG1 RLY2 OUT
1
From No. D34 (10 A) FUSE
GRY
B5
IG1 VSA/ABS
3
BRN
B10
GND
4
G402

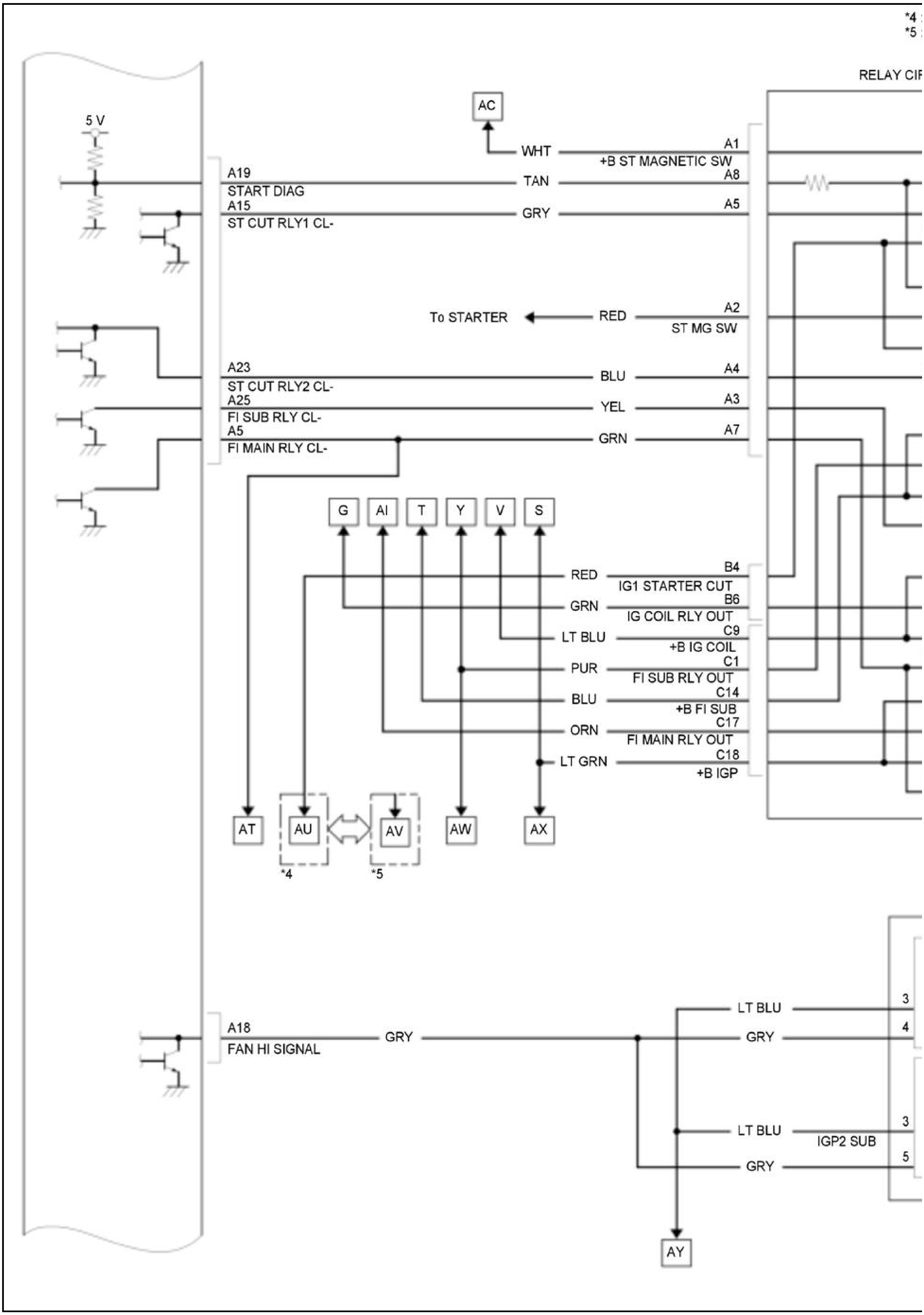
*4
*5
RELAY CIR
5 V
AC
WHT
A1
+B ST MAGNETIC SW
A19
START DIAG
TAN
A8
A15
ST CUT RLY1 CL-
GRY
A5
To STARTER
RED
A2
ST MG SW
A23
ST CUT RLY2 CL-
BLU
A4
A25
FI SUB RLY CL-
YEL
A3
A5
FI MAIN RLY CL-
GRN
A7
G
AI
T
Y
V
S
RED
B4
IG1 STARTER CUT
GRN
B6
IG COIL RLY OUT
LT BLU
C9
+B IG COIL
PUR
C1
FI SUB RLY OUT
BLU
C14
+B FI SUB
ORN
C17
FI MAIN RLY OUT
LT GRN
C18
+B IGP
AT
AU
AV
AW
AX
*4
*5
A18
FAN HI SIGNAL
GRY
LT BLU
3
GRY
4
LT BLU
3
IGP2 SUB
GRY
5
AY

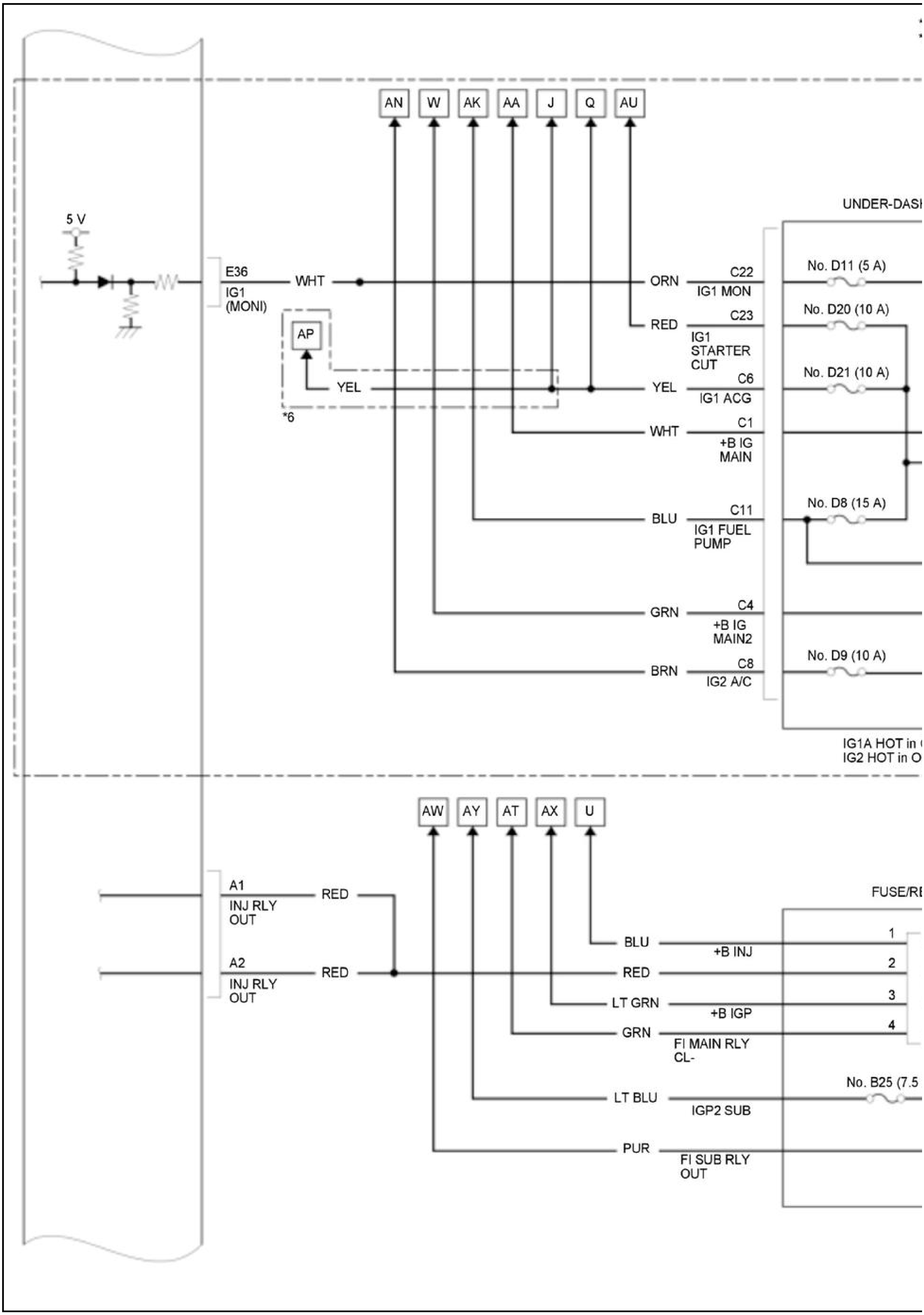
AN
W
AK
AA
J
Q
AU
UNDER-DASI
5 V
E36
IG1
(MONI)
WHT
ORN
C22
IG1 MON
No. D11 (5 A)
RED
C23
IG1
STARTER
CUT
No. D20 (10 A)
AP
YEL
YEL
C6
IG1 ACG
No. D21 (10 A)
*6
WHT
C1
+B IG
MAIN
BLU
C11
IG1 FUEL
PUMP
No. D8 (15 A)
GRN
C4
+B IG
MAIN2
BRN
C8
IG2 A/C
No. D9 (10 A)
IG1A HOT in
IG2 HOT in O
AW
AY
AT
AX
U
A1
INJ RLY
OUT
RED
FUSE/RE
BLU
+B INJ
1
A2
INJ RLY
OUT
RED
RED
2
LT GRN
+B IGP
3
GRN
FI MAIN RLY
CL-
4
No. B25 (7.5
LT BLU
IGP2 SUB
PUR
FI SUB RLY
OUT

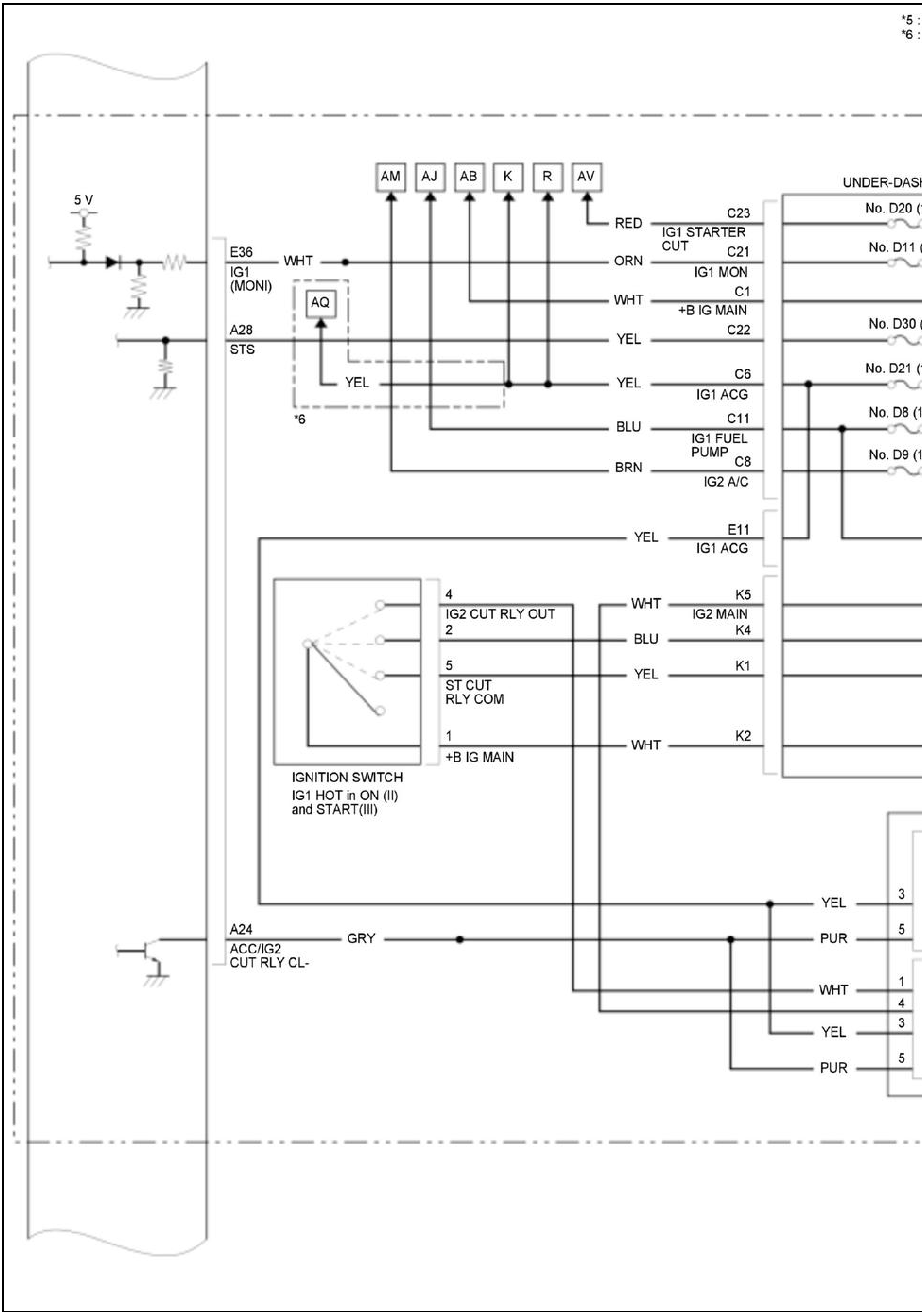
*5 :
*6 :
5 V
AM
AJ
AB
K
R
AV
UNDER-DASH
E36
IG1
(MONI)
WHT
A28
STS
AQ
YEL
*6
RED
C23
IG1 STARTER
CUT
ORN
C21
IG1 MON
WHT
C1
+B IG MAIN
YEL
C22
YEL
C6
IG1 ACG
BLU
C11
IG1 FUEL
PUMP
BRN
C8
IG2 A/C
No. D20 (
No. D11 (
No. D30 (
No. D21 (
No. D8 (1
No. D9 (1
YEL
E11
IG1 ACG
4
IG2 CUT RLY OUT
2
5
ST CUT
RLY COM
1
+B IG MAIN
WHT
K5
IG2 MAIN
BLU
K4
YEL
K1
WHT
K2
IGNITION SWITCH
IG1 HOT in ON (II)
and START(III)
A24
ACC/IG2
CUT RLY CL-
GRY
YEL
3
PUR
5
WHT
1
4
YEL
3
PUR
5

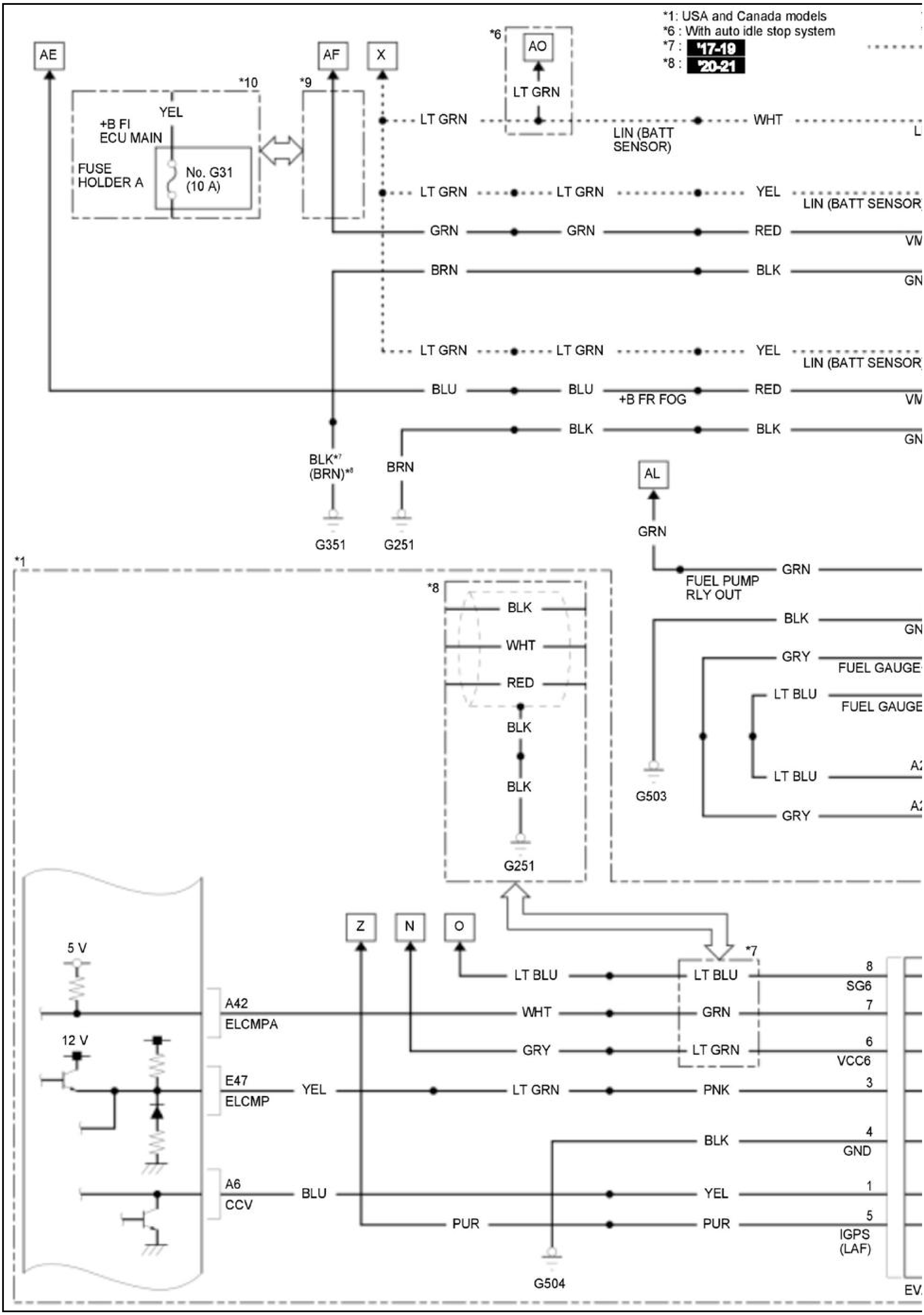
*1: USA and Canada models
*6 : With auto idle stop system
*7 : '17-19
*8 : '20-21

AE
AF
X
AO
*6
*10
*9
LT GRN
YEL
+B FI
ECU MAIN
FUSE
HOLDER A
No. G31
(10 A)
LT GRN
LIN (BATT
SENSOR)
WHT
LT GRN
LT GRN
YEL
LIN (BATT SENSOR
GRN
GRN
RED
VM
BRN
BLK
GN
LT GRN
LT GRN
YEL
LIN (BATT SENSOR
BLU
BLU
+B FR FOG
RED
VM
BLK
BLK
GN
BLK*7
(BRN)*8
BRN
G351
G251
AL
GRN
*1
*8
FUEL PUMP
RLY OUT
GRN
BLK
WHT
RED
BLK
BLK
G251
BLK
GN
GRY
FUEL GAUGE
LT BLU
FUEL GAUGE
G503
LT BLU
GRY
Z
N
O
*7
5 V
12 V
A42
ELCMPA
E47
ELCMP
A6
CCV
YEL
BLU
LT BLU
WHT
GRY
LT GRN
PUR
LT BLU
GRN
LT GRN
PNK
BLK
YEL
PUR
8
SG6
7
6
VCC6
3
4
GND
1
5
IGPS
(LAF)
G504
EV

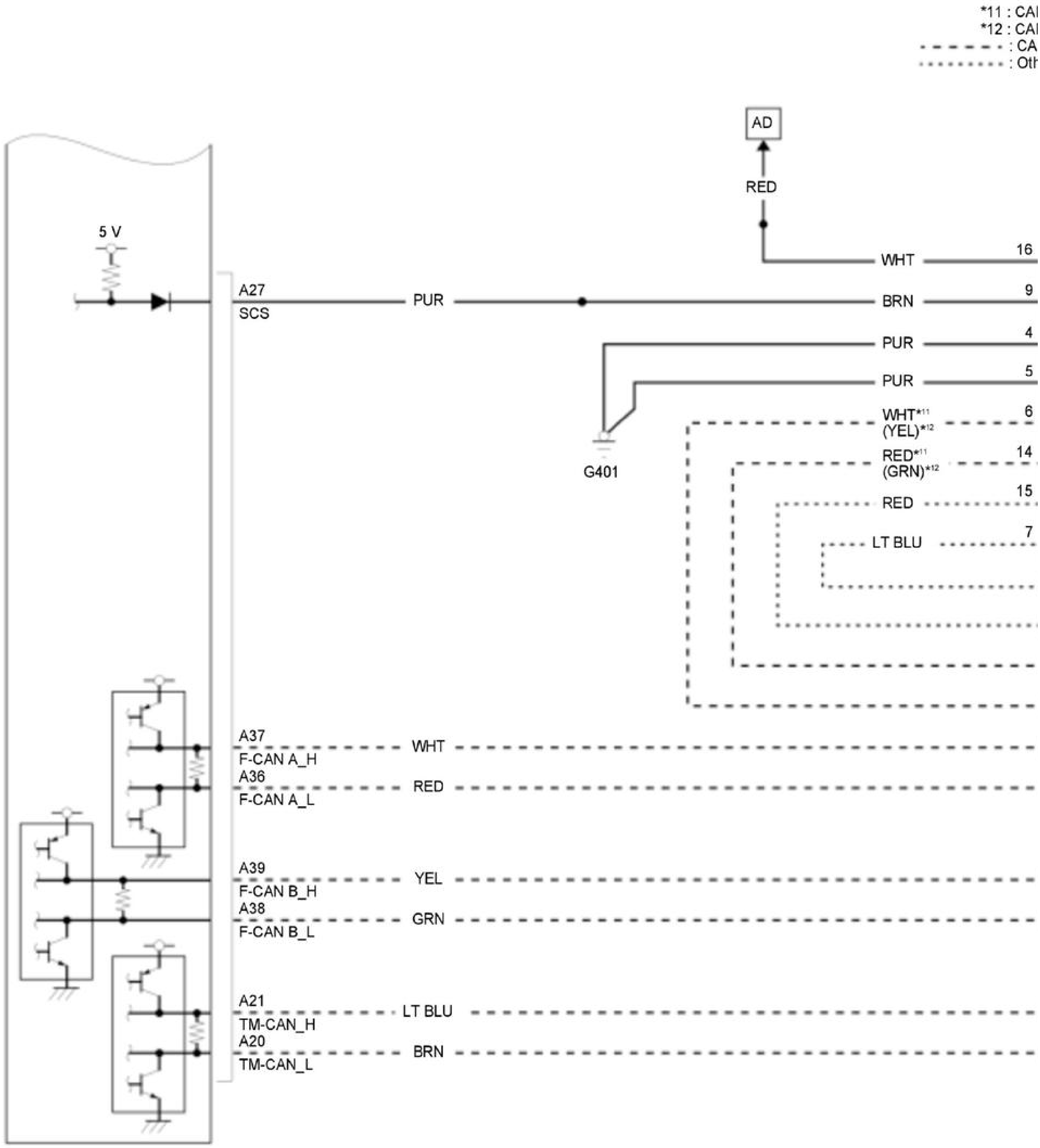*11 : CA
*12 : CA
: CA
: Oth
AD
RED
5 V
A27
SCS
PUR
WHT
16
BRN
9
PUR
4
PUR
5
WHT*11
(YEL)*12
6
RED*11
(GRN)*12
14
G401
RED
15
LT BLU
7
A37
F-CAN A_H
WHT
A36
F-CAN A_L
RED
A39
F-CAN B_H
YEL
A38
F-CAN B_L
GRN
A21
TM-CAN_H
LT BLU
A20
TM-CAN_L
BRN

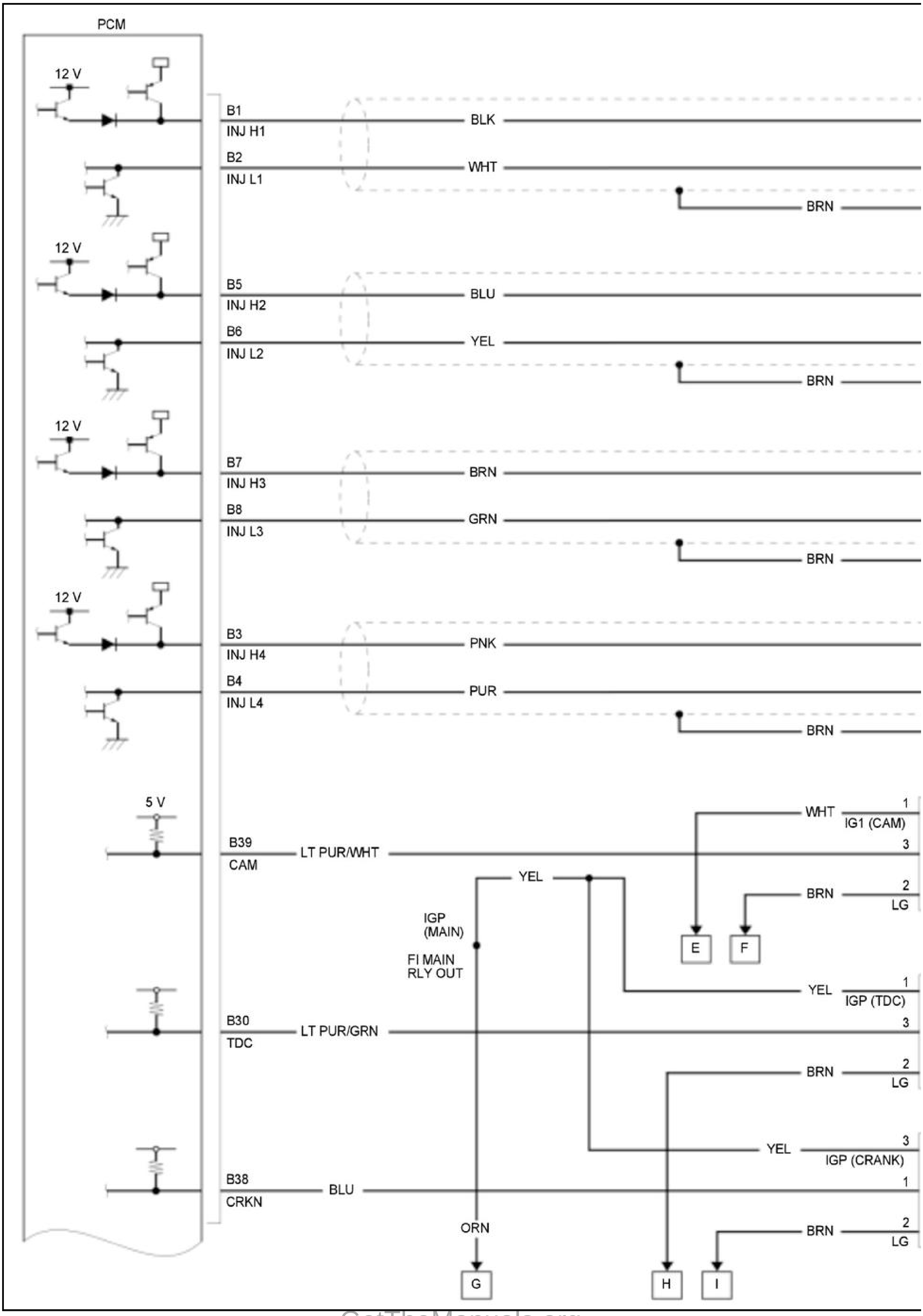
PCM
12 V
B1
INJ H1
BLK
B2
INJ L1
WHT
BRN
12 V
B5
INJ H2
BLU
B6
INJ L2
YEL
BRN
12 V
B7
INJ H3
BRN
B8
INJ L3
GRN
BRN
12 V
B3
INJ H4
PNK
B4
INJ L4
PUR
BRN
5 V
B39
CAM
LT PUR/WHT
WHT
1
IG1 (CAM)
3
YEL
BRN
2
LG
IGP
(MAIN)
FI MAIN
RLY OUT
E
F
YEL
1
IGP (TDC)
B30
TDC
LT PUR/GRN
3
BRN
2
LG
YEL
3
IGP (CRANK)
B38
CRKN
BLU
1
ORN
BRN
2
LG
G
H
I

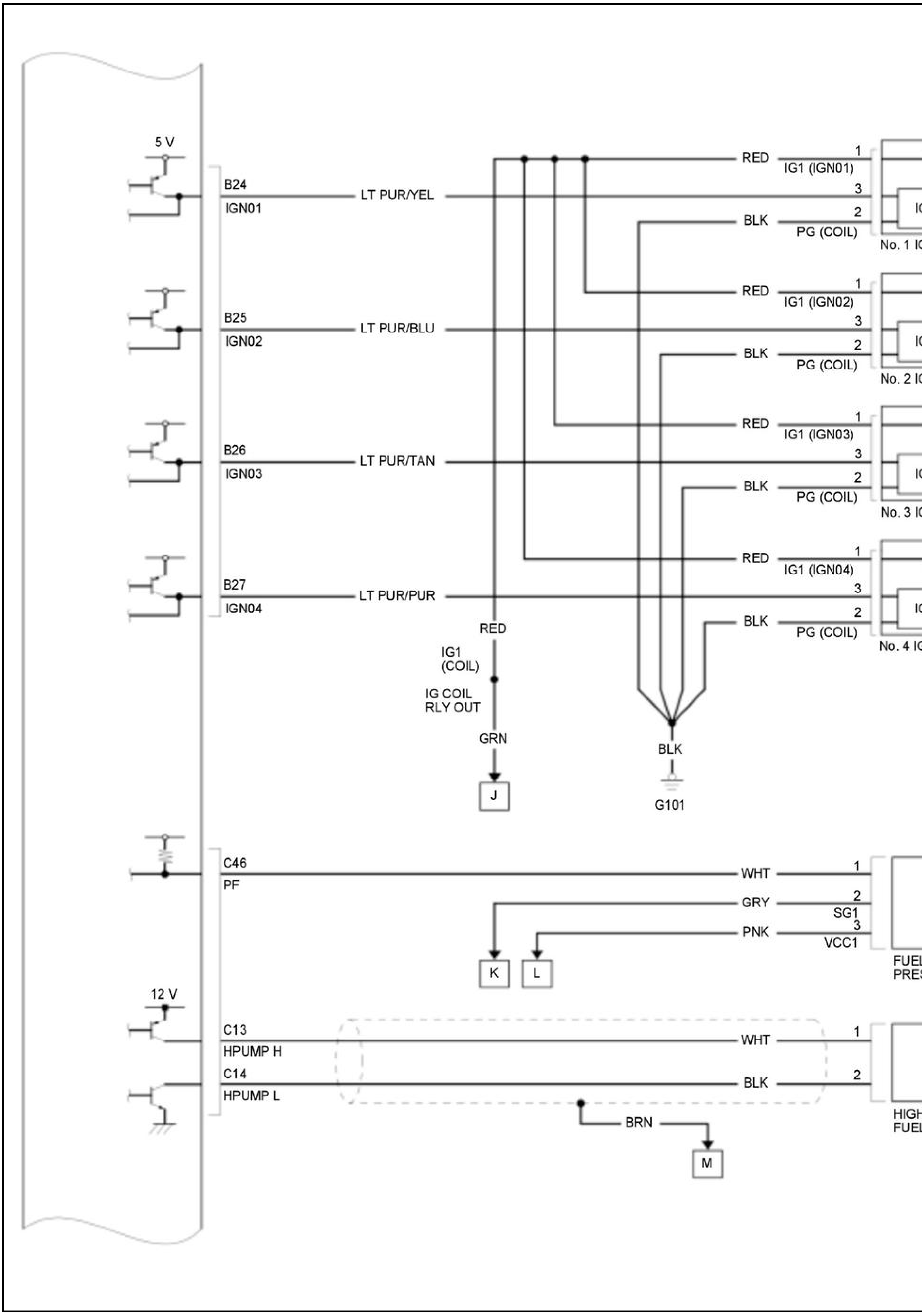
5 V
B24
IGN01
LT PUR/YEL
RED
IG1 (IGN01)
1
3
BLK
2
PG (COIL)
No. 1 I
B25
IGN02
LT PUR/BLU
RED
IG1 (IGN02)
1
3
BLK
2
PG (COIL)
No. 2 I
B26
IGN03
LT PUR/TAN
RED
IG1 (IGN03)
1
3
BLK
2
PG (COIL)
No. 3 I
B27
IGN04
LT PUR/PUR
RED
IG1 (IGN04)
1
3
BLK
2
PG (COIL)
No. 4 I
RED
IG1
(COIL)
IG COIL
RLY OUT
GRN
J
BLK
G101
C46
PF
WHT
1
GRY
2
SG1
PNK
3
VCC1
K
L
FUEL
PRES
12 V
C13
HPUMP H
WHT
1
C14
HPUMP L
BLK
2
BRN
M
HIGH
FUEL

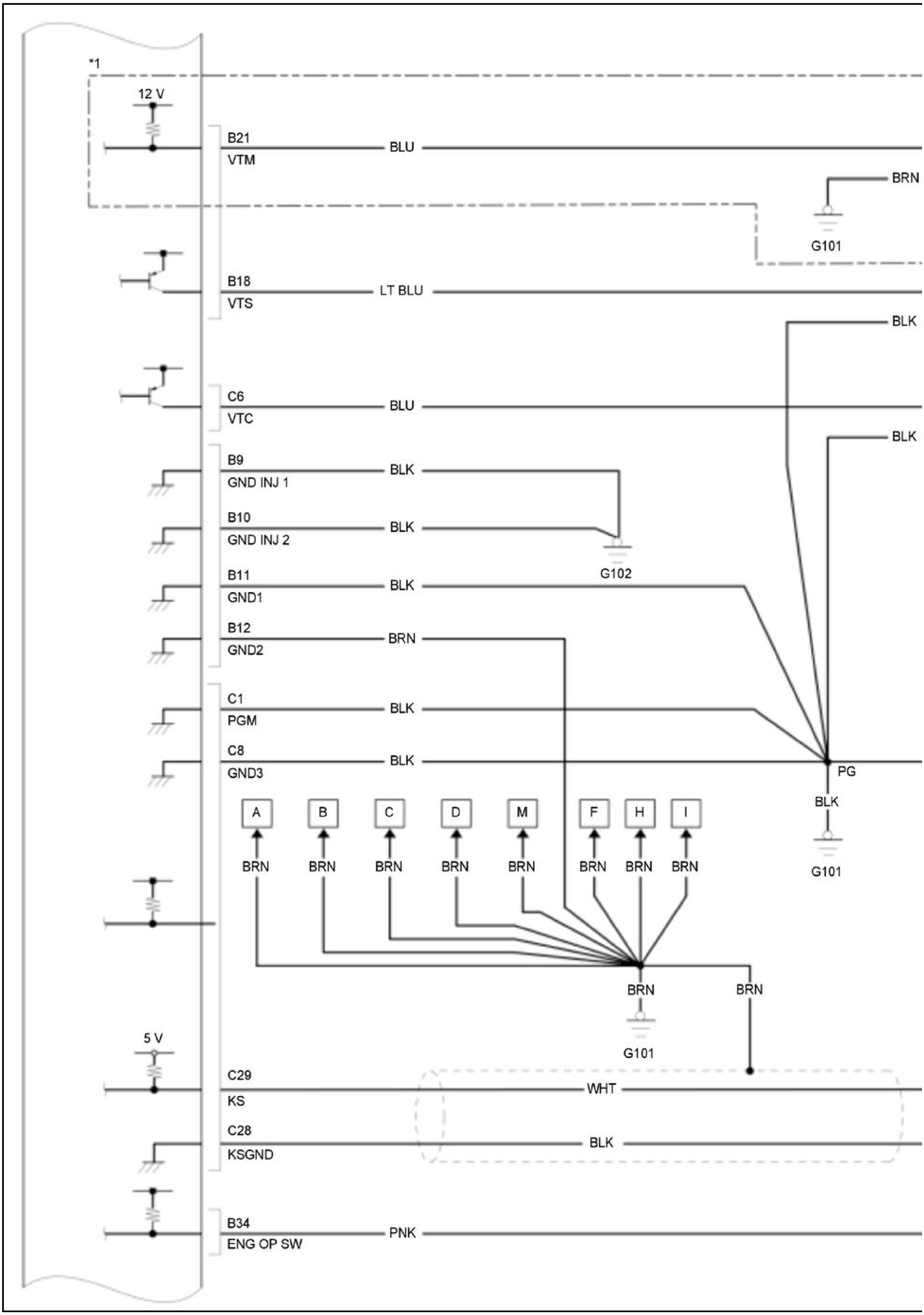
*1
12 V
B21
VTM
BLU
BRN
G101
B18
VTS
LT BLU
BLK
C6
VTC
BLU
BLK
B9
GND INJ 1
BLK
B10
GND INJ 2
BLK
G102
B11
GND1
BLK
B12
GND2
BRN
C1
PGM
BLK
C8
GND3
BLK
PG
BLK
G101
A
B
C
D
M
F
H
I
BRN
BRN
BRN
BRN
BRN
BRN
BRN
BRN
BRN
BRN
G101
5 V
C29
KS
WHT
C28
KSGND
BLK
B34
ENG OP SW
PNK

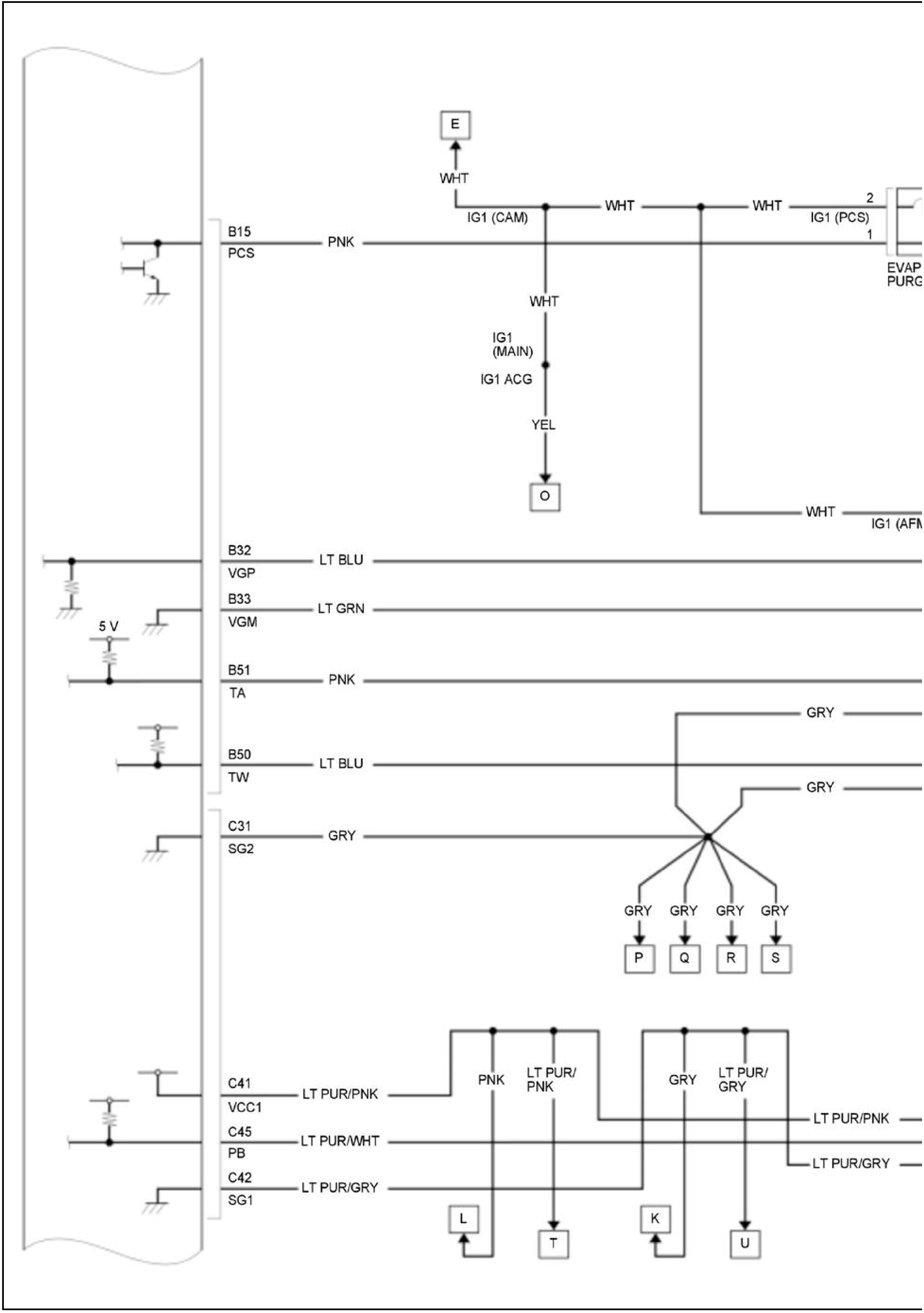
E
WHT
IG1 (CAM)
WHT
WHT
2
IG1 (PCS)
1
EVAP
PURG
B15
PCS
PNK
WHT
IG1
(MAIN)
IG1 ACG
YEL
O
WHT
IG1 (AFM
B32
VGP
LT BLU
B33
VGM
LT GRN
5 V
B51
TA
PNK
GRY
B50
TW
LT BLU
GRY
C31
SG2
GRY
GRY
GRY
GRY
GRY
P
Q
R
S
PNK
LT PUR/
PNK
GRY
LT PUR/
GRY
C41
VCC1
LT PUR/PNK
LT PUR/PNK
C45
PB
LT PUR/WHT
LT PUR/GRY
C42
SG1
LT PUR/GRY
L
T
K
U

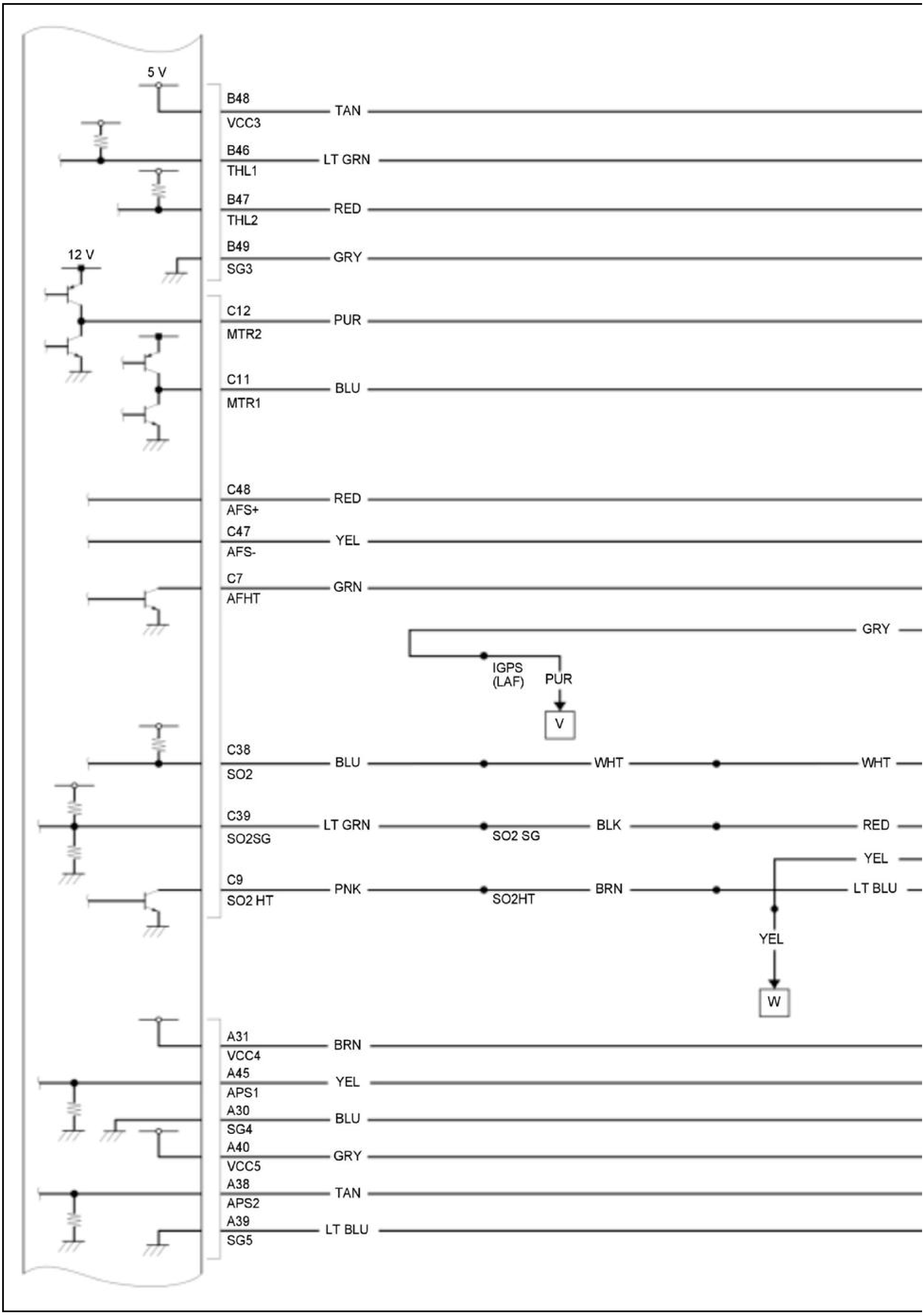
5 V
B48
VCC3
TAN
B46
THL1
LT GRN
B47
THL2
RED
B49
SG3
GRY
12 V
C12
MTR2
PUR
C11
MTR1
BLU
C48
AFS+
RED
C47
AFS-
YEL
C7
AFHT
GRN
GRY
IGPS
(LAF)
PUR
V
C38
SO2
BLU
WHT
WHT
C39
SO2SG
LT GRN
SO2 SG
BLK
RED
YEL
C9
SO2 HT
PNK
SO2HT
BRN
LT BLU
YEL
W
A31
VCC4
BRN
A45
APS1
YEL
A30
SG4
BLU
A40
VCC5
GRY
A38
APS2
TAN
A39
SG5
LT BLU

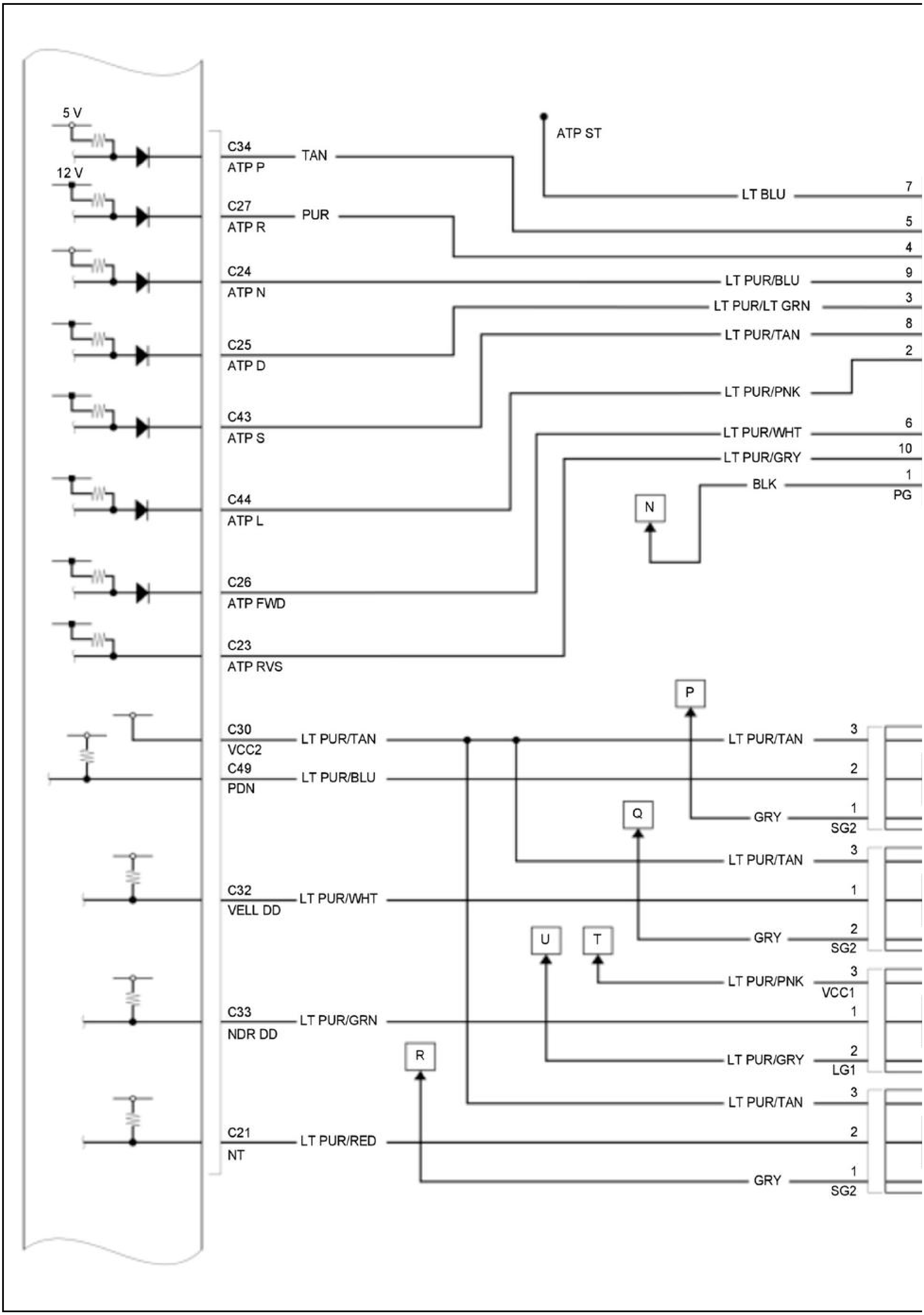
5 V
12 V
C34
ATP P
TAN
ATP ST
LT BLU
7
5
C27
ATP R
PUR
4
C24
ATP N
LT PUR/BLU
9
LT PUR/LT GRN
3
LT PUR/TAN
8
C25
ATP D
2
LT PUR/PNK
C43
ATP S
LT PUR/WHT
6
LT PUR/GRY
10
BLK
1
PG
N
C44
ATP L
C26
ATP FWD
C23
ATP RVS
P
C30
VCC2
LT PUR/TAN
LT PUR/TAN
3
C49
PDN
LT PUR/BLU
2
GRY
1
SG2
Q
LT PUR/TAN
3
C32
VELL DD
LT PUR/WHT
1
GRY
2
SG2
U
T
LT PUR/PNK
3
VCC1
C33
NDR DD
LT PUR/GRN
1
LT PUR/GRY
2
LG1
R
LT PUR/TAN
3
C21
NT
LT PUR/RED
2
GRY
1
SG2

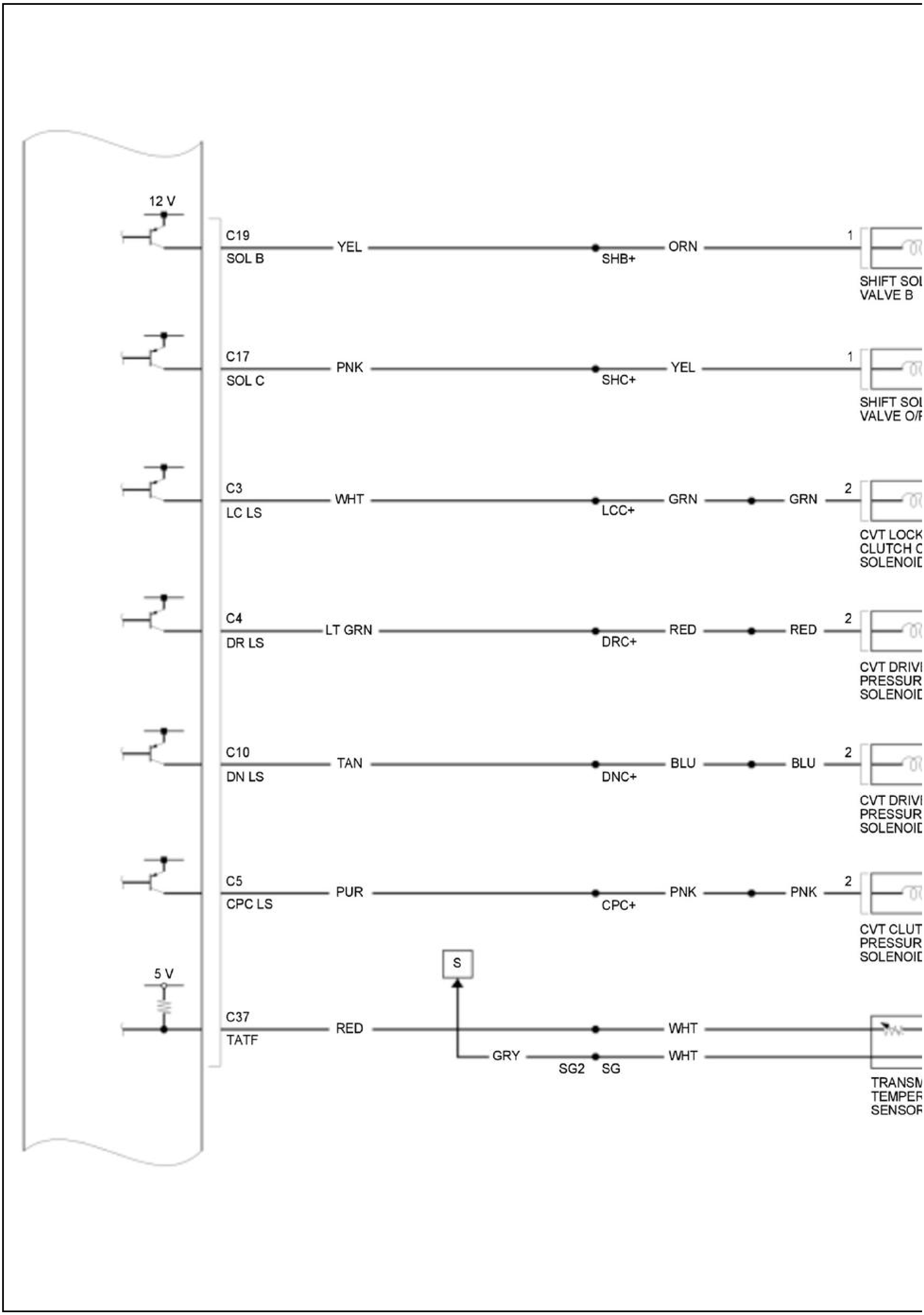
12 V
C19
SOL B
YEL
SHB+
ORN
1
SHIFT SO
VALVE B
C17
SOL C
PNK
SHC+
YEL
1
SHIFT SO
VALVE O/
C3
LC LS
WHT
LCC+
GRN
GRN
2
CVT LOCK
CLUTCH
SOLENOI
C4
DR LS
LT GRN
DRC+
RED
RED
2
CVT DRIV
PRESSUR
SOLENOI
C10
DN LS
TAN
DNC+
BLU
BLU
2
CVT DRIV
PRESSUR
SOLENOI
C5
CPC LS
PUR
CPC+
PNK
PNK
2
CVT CLUT
PRESSUR
SOLENOI
5 V
S
C37
TATF
RED
WHT
GRY
SG2
SG
WHT
TRANSM
TEMPER
SENSOR

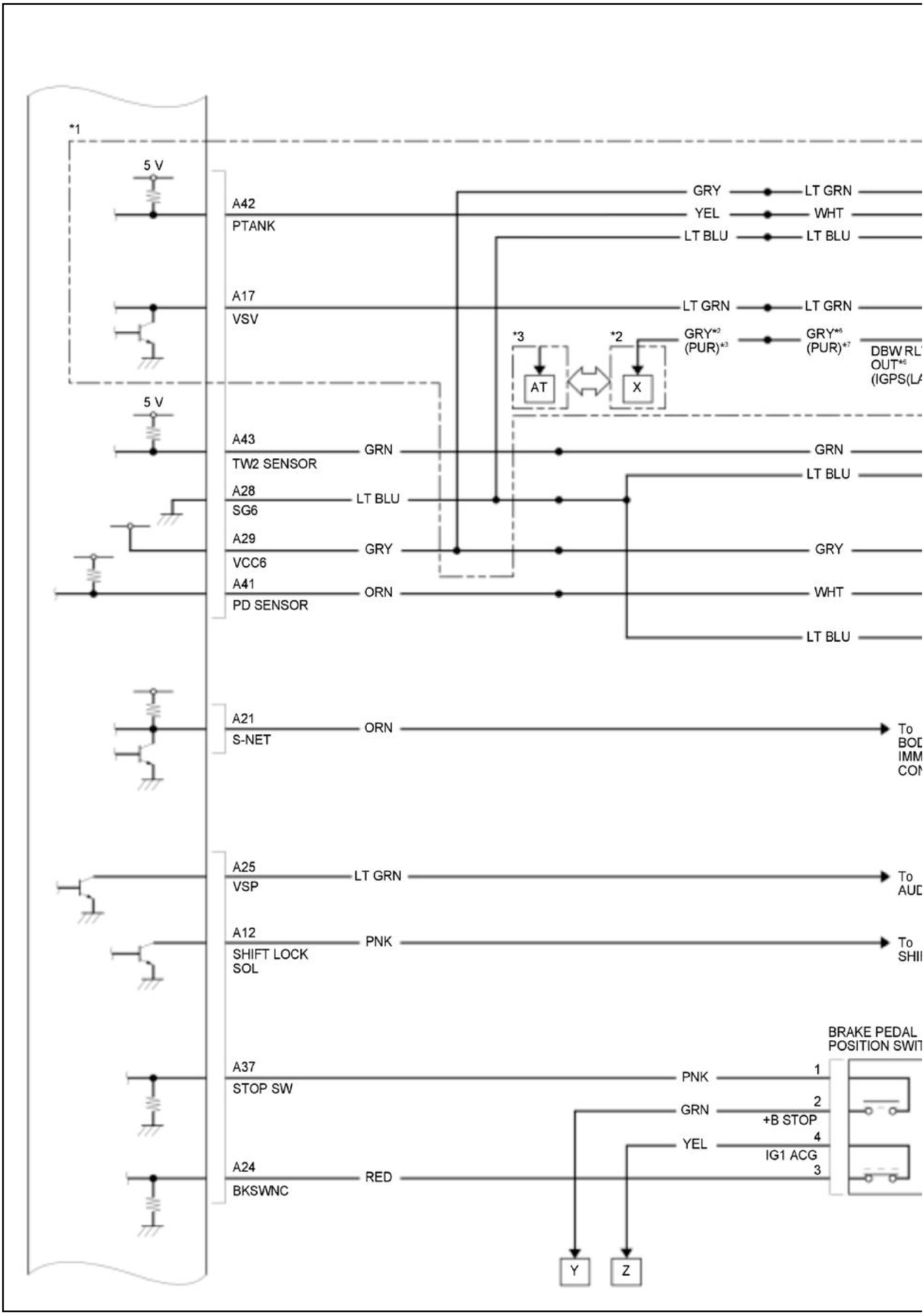
*1
5 V
A42
PTANK
GRY
LT GRN
YEL
WHT
LT BLU
LT BLU
A17
VSV
LT GRN
LT GRN
*3
*2
GRY*2
(PUR)*3
GRY*6
(PUR)*7
DBW RL
OUT*6
(IGPS(L
AT
X
5 V
A43
TW2 SENSOR
GRN
GRN
A28
SG6
LT BLU
LT BLU
A29
VCC6
GRY
GRY
A41
PD SENSOR
ORN
WHT
LT BLU
A21
S-NET
ORN
To
BOD
IMM
CON
A25
VSP
LT GRN
To
AUD
A12
SHIFT LOCK
SOL
PNK
To
SHI
BRAKE PEDAL
POSITION SWIT
A37
STOP SW
PNK
1
GRN
2
+B STOP
YEL
4
IG1 ACG
A24
BKSWNC
RED
3
Y
Z

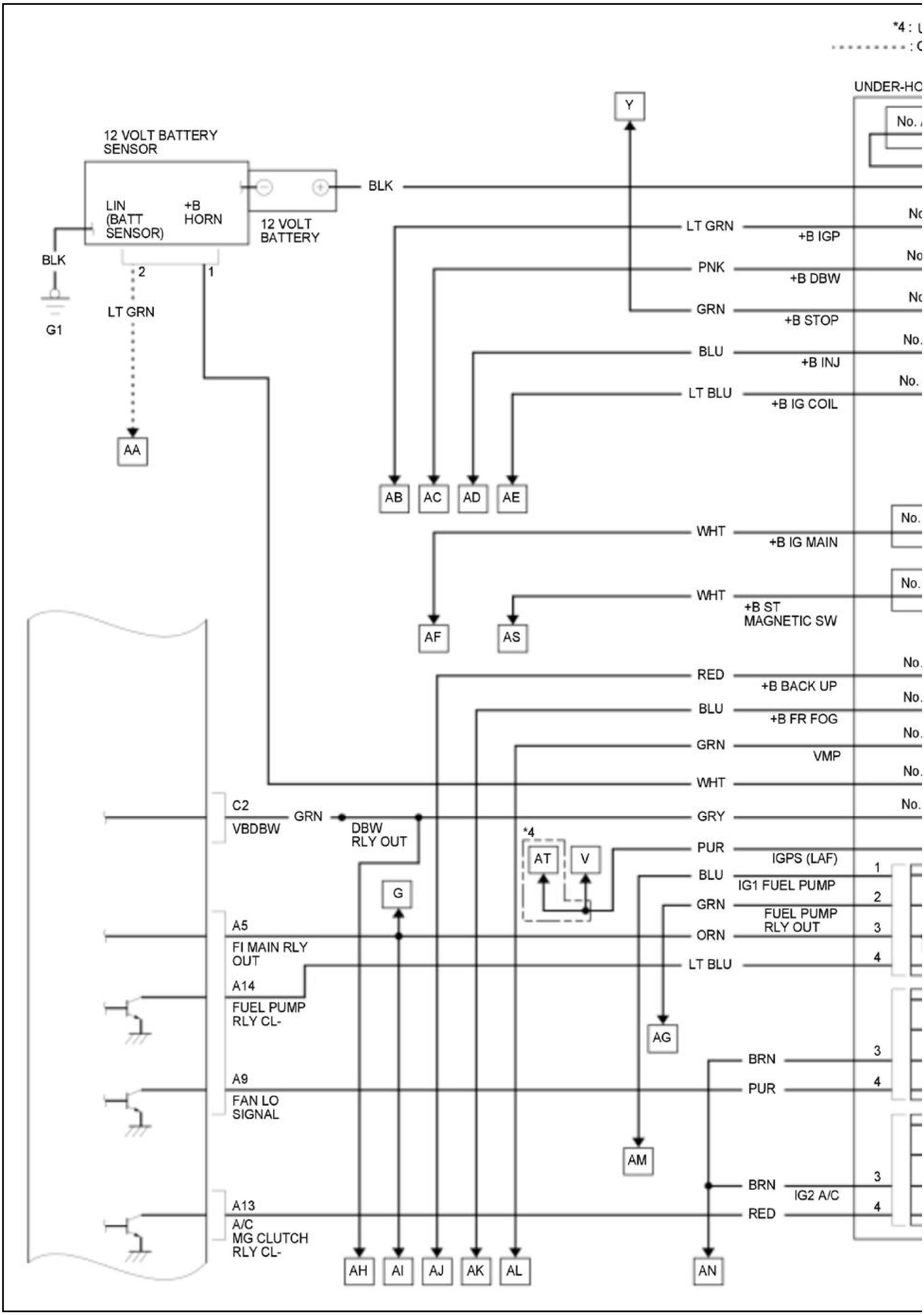
*4 :
:
UNDER-HO
No.
Y
12 VOLT BATTERY SENSOR
LIN (BATT SENSOR)
+B HORN
12 VOLT BATTERY
BLK
BLK
G1
2
1
LT GRN
AA
LT GRN
+B IGP
PNK
+B DBW
GRN
+B STOP
BLU
+B INJ
LT BLU
+B IG COIL
AB
AC
AD
AE
WHT
+B IG MAIN
WHT
+B ST MAGNETIC SW
AF
AS
RED
+B BACK UP
BLU
+B FR FOG
GRN
VMP
WHT
C2
VBDBW
GRN
DBW RLY OUT
GRY
*4
AT
V
PUR
IGPS (LAF)
BLU
IG1 FUEL PUMP
GRN
FUEL PUMP RLY OUT
ORN
LT BLU
1
2
3
4
G
A5
FI MAIN RLY OUT
A14
FUEL PUMP RLY CL-
AG
BRN
PUR
3
4
A9
FAN LO SIGNAL
AM
BRN
IG2 A/C
RED
3
4
A13
A/C MG CLUTCH RLY CL-
AH
AI
AJ
AK
AL
AN

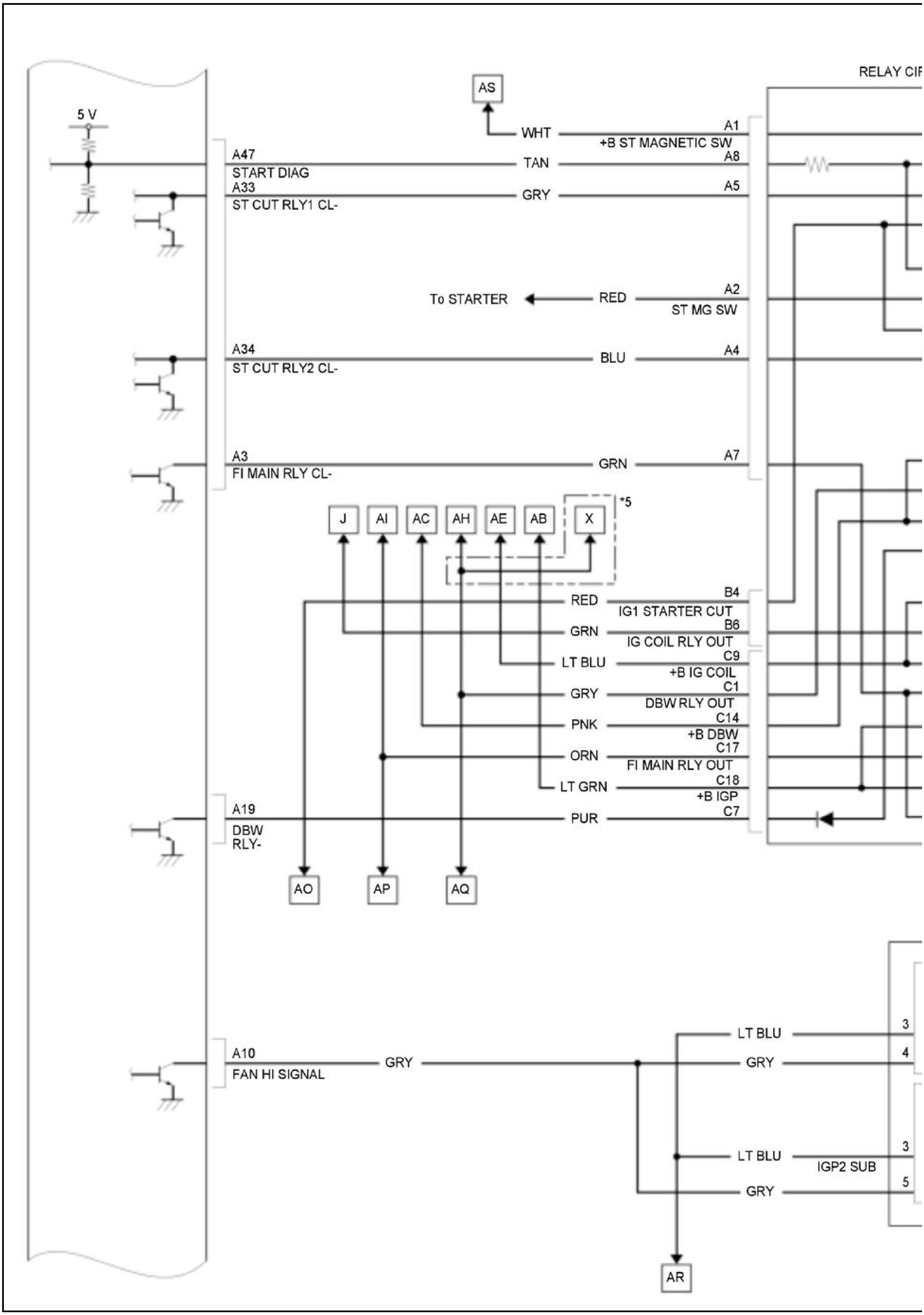
RELAY CIR
AS
5 V
WHT
A1
+B ST MAGNETIC SW
A47
START DIAG
TAN
A8
A33
ST CUT RLY1 CL-
GRY
A5
To STARTER
RED
A2
ST MG SW
A34
ST CUT RLY2 CL-
BLU
A4
A3
FI MAIN RLY CL-
GRN
A7
J
AI
AC
AH
AE
AB
X
*5
RED
B4
IG1 STARTER CUT
GRN
B6
IG COIL RLY OUT
LT BLU
C9
+B IG COIL
GRY
C1
DBW RLY OUT
PNK
C14
+B DBW
ORN
C17
FI MAIN RLY OUT
LT GRN
C18
+B IGP
A19
DBW
RLY-
PUR
C7
AO
AP
AQ
LT BLU
3
A10
FAN HI SIGNAL
GRY
GRY
4
LT BLU
3
IGP2 SUB
GRY
5
AR

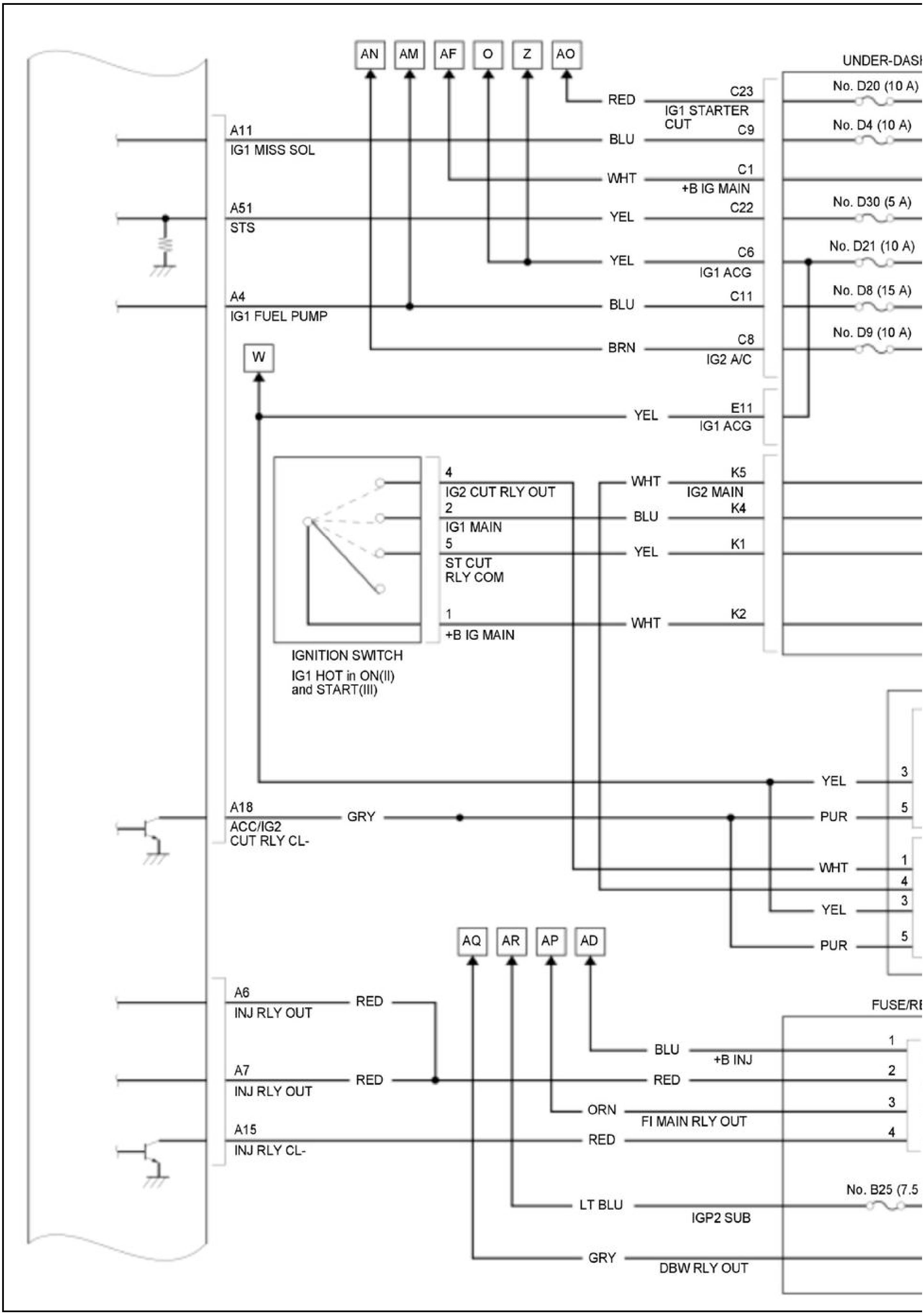
AN
AM
AF
O
Z
AO
UNDER-DASI
No. D20 (10 A)
RED
C23
IG1 STARTER CUT
A11
IG1 MISS SOL
BLU
C9
No. D4 (10 A)
WHT
C1
+B IG MAIN
A51
STS
YEL
C22
No. D30 (5 A)
YEL
C6
IG1 ACG
No. D21 (10 A)
A4
IG1 FUEL PUMP
BLU
C11
No. D8 (15 A)
BRN
C8
IG2 A/C
No. D9 (10 A)
W
YEL
E11
IG1 ACG
4
IG2 CUT RLY OUT
WHT
K5
IG2 MAIN
2
IG1 MAIN
BLU
K4
5
ST CUT RLY COM
YEL
K1
1
+B IG MAIN
WHT
K2
IGNITION SWITCH
IG1 HOT in ON(II) and START(III)
YEL
3
A18
ACC/IG2 CUT RLY CL-
GRY
PUR
5
WHT
1
4
YEL
3
PUR
5
AQ
AR
AP
AD
FUSE/RE
A6
INJ RLY OUT
RED
BLU
+B INJ
1
A7
INJ RLY OUT
RED
RED
2
ORN
FI MAIN RLY OUT
3
A15
INJ RLY CL-
RED
4
No. B25 (7.5
LT BLU
IGP2 SUB
GRY
DBW RLY OUT

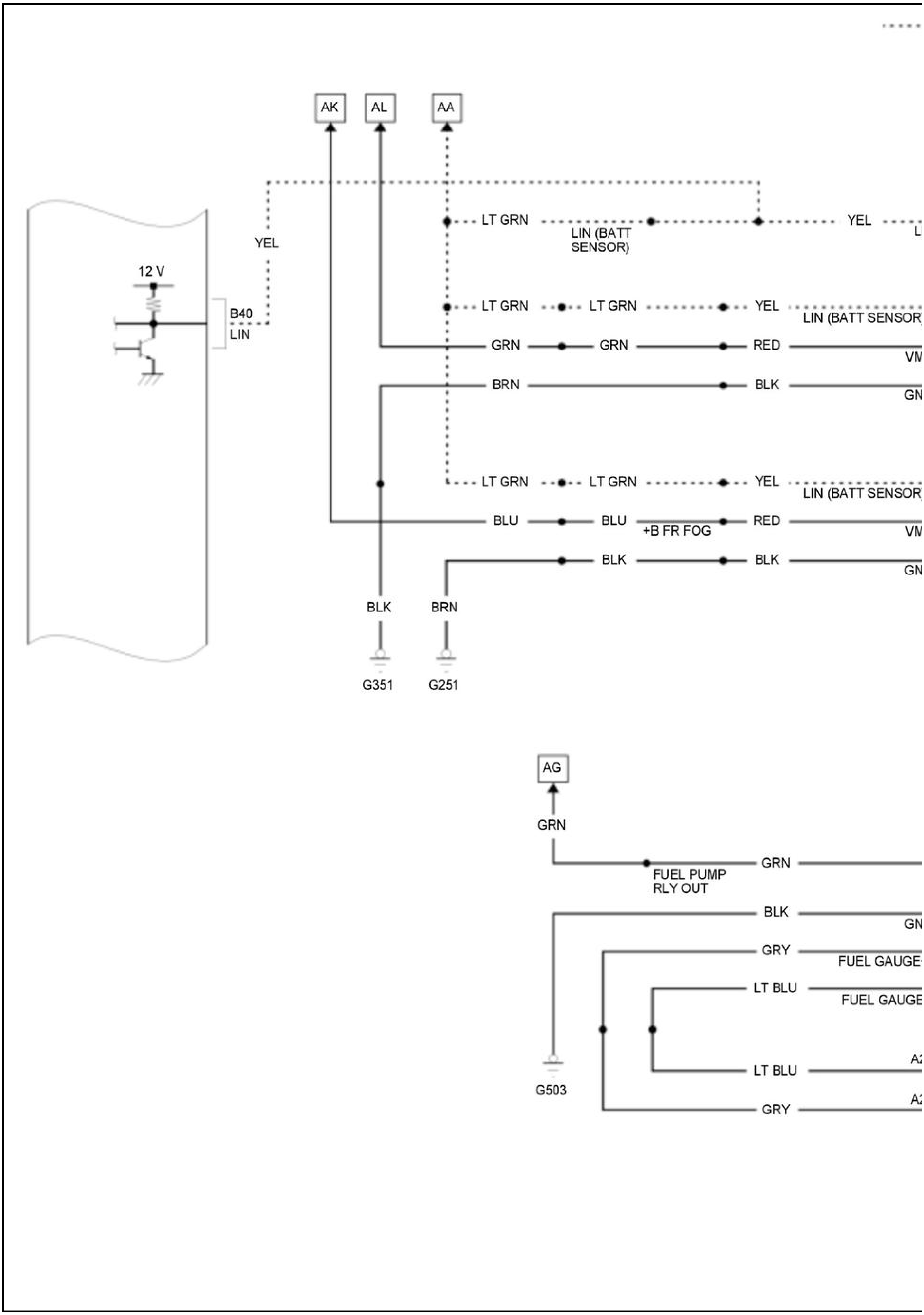
AK
AL
AA
YEL
12 V
B40
LIN
LT GRN
LIN (BATT SENSOR)
YEL
L
LT GRN
LT GRN
YEL
LIN (BATT SENSOR
GRN
GRN
RED
VM
BRN
BLK
GN
LT GRN
LT GRN
YEL
LIN (BATT SENSOR
BLU
BLU
+B FR FOG
RED
VM
BLK
BLK
GN
BLK
BRN
G351
G251
AG
GRN
GRN
FUEL PUMP RLY OUT
BLK
GN
GRY
FUEL GAUGE
LT BLU
FUEL GAUGE
LT BLU
A
G503
GRY
A

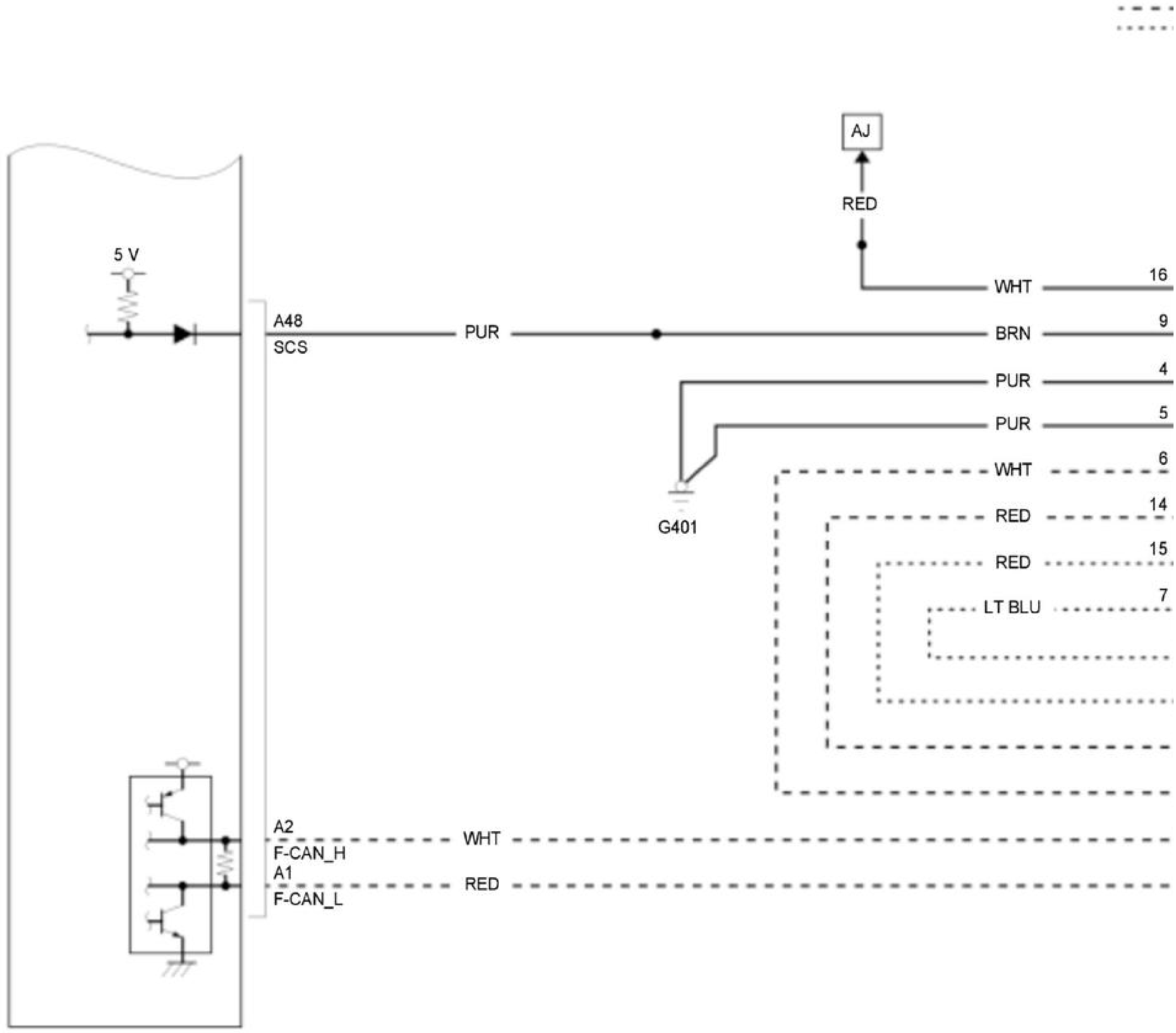

AJ
RED
5 V
A48
SCS
PUR
WHT
16
BRN
9
PUR
4
PUR
5
WHT
6
G401
RED
14
RED
15
LT BLU
7
A2
F-CAN_H
WHT
A1
F-CAN_L
RED

GENERAL INFORMATION

FUEL LINE/QUICK-CONNECT FITTING PRECAUTIONS

WARNING:

Flammable - Keep Fire Away

NOTE:

- Refer to the **Fuel and Emissions Systems Service Precautions** before disconnecting the fuel line.
- Replace the fuel feed hose, fuel line, or the quick-connect fitting to new one if it is damaged.

When removing or installing the fuel feed hose/line, or when disconnecting or connecting the quick-connect fittings, pay attention to the following:

- No heat-resistance; Be careful not to damage them during welding or other heat-generating procedures.
- Not acid-proof; Do not touch them with a shop towel that was used for wiping 12 volt battery electrolyte or something similar.
- No stress-resistance; Be careful not to bend or twist the fuel feed hose/line excessively.

Retainer Replacement

A disconnected quick-connect fitting can be reconnected, but the retainer on the mating line cannot be reused once it has been removed from the line.

NOTE: Use the same manufacturer retainer and the same size retainer when the replacing the retainer.

Location	Manufacturer	Retainer color	Piping diameter	Remarks
Fuel feed hose (A)	Tokai	Blue Green	0.315 in (8.0 mm)	B
Fuel feed hose (B)	Tokai	Green	0.2500 in (6.35 mm)	B
Fuel tank unit (C)	Sanoh	White	0.374 in (9.5 mm)	B
Fuel feed hose (D)	Sanoh	White	0.315 in (8.0 mm)	B
EVAP canister (E)	Sanoh	White	0.472 in (12 mm)	USA and Canada mod
EVAP leak check module (F)	Yachiyo	Yellow	0.75 in (19 mm)	1.5 L engine (USA an

1.5 L engine

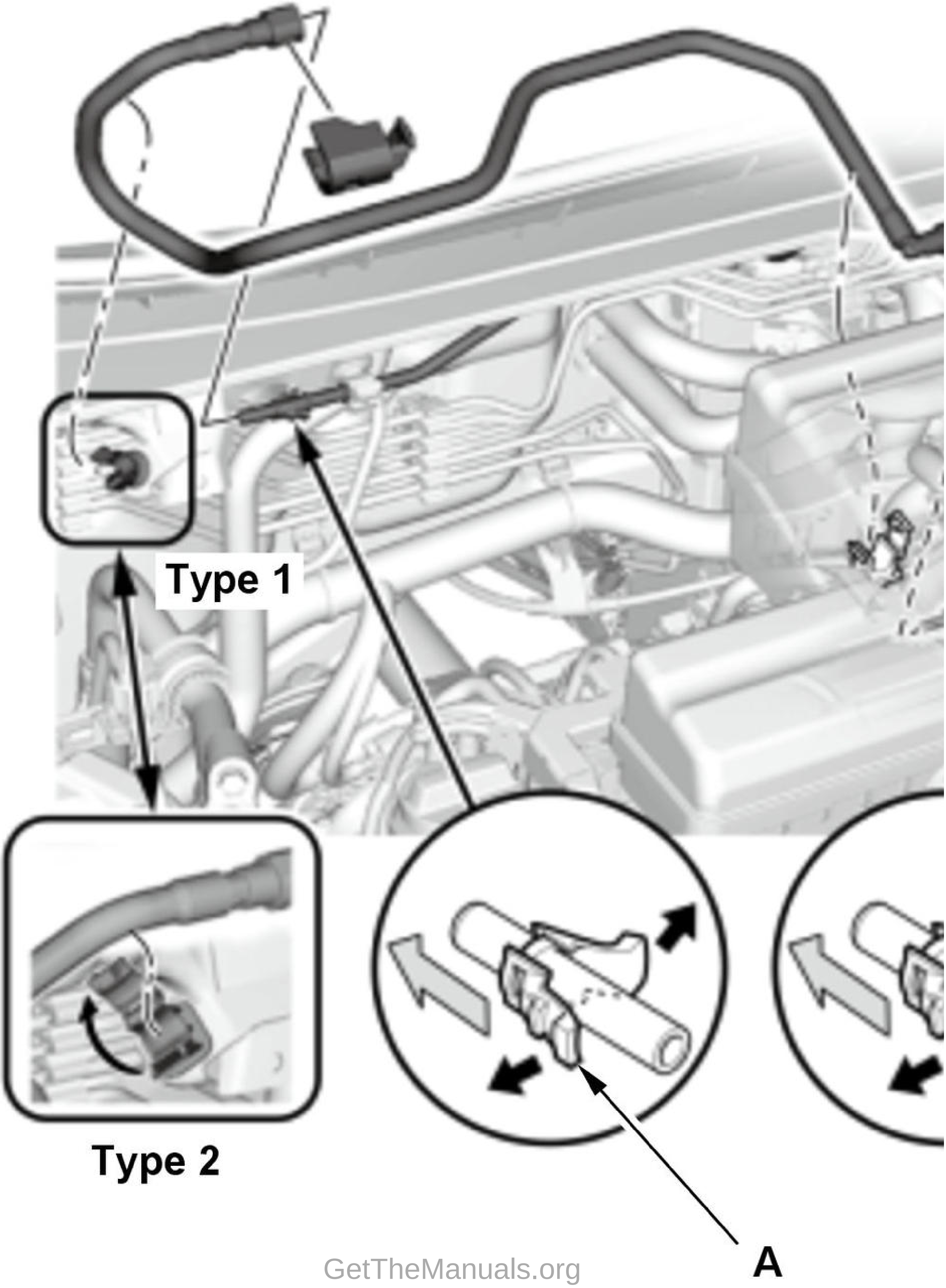
Type 1
Type 2
A

2.4 L engine

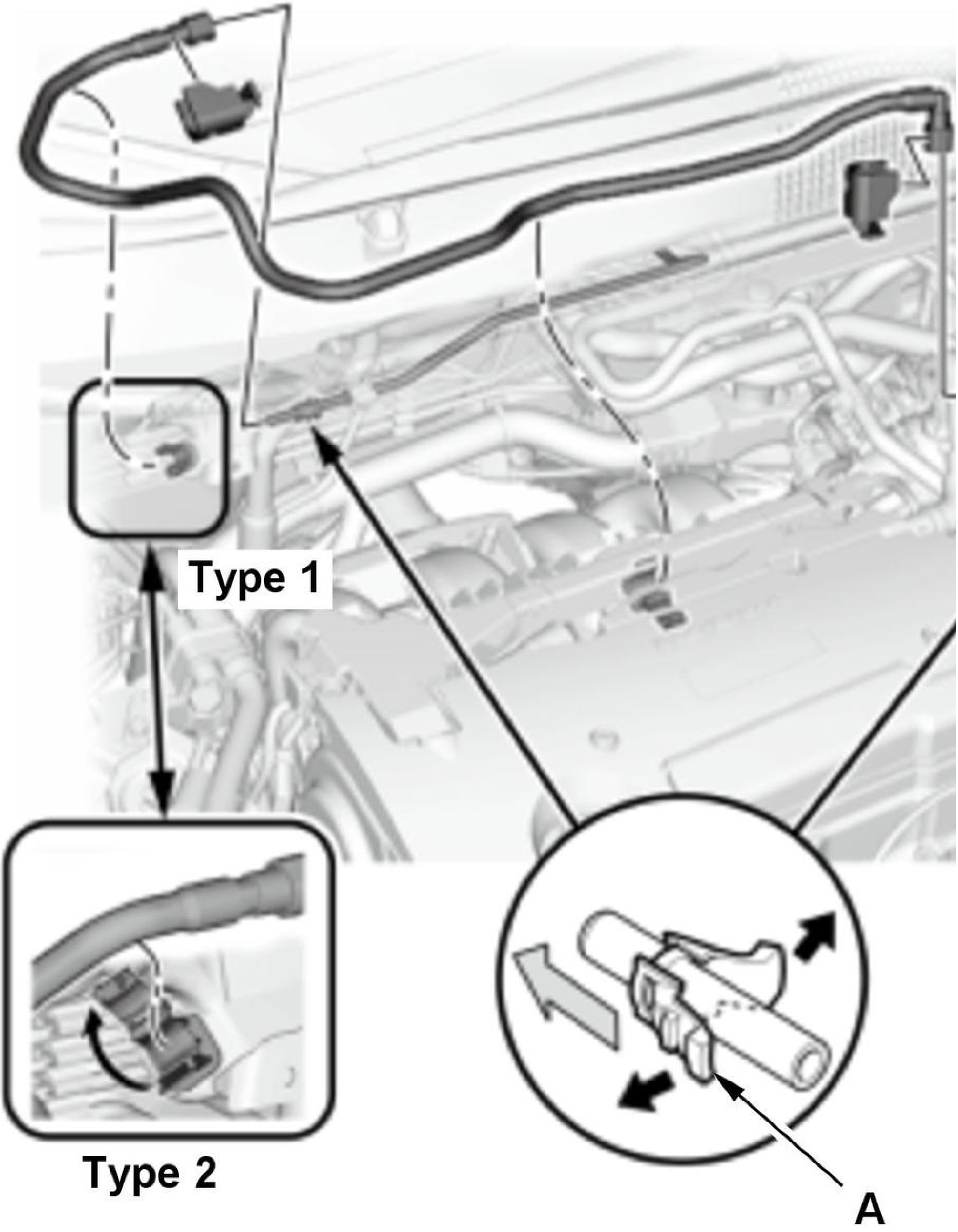
Type 1
Type 2
A

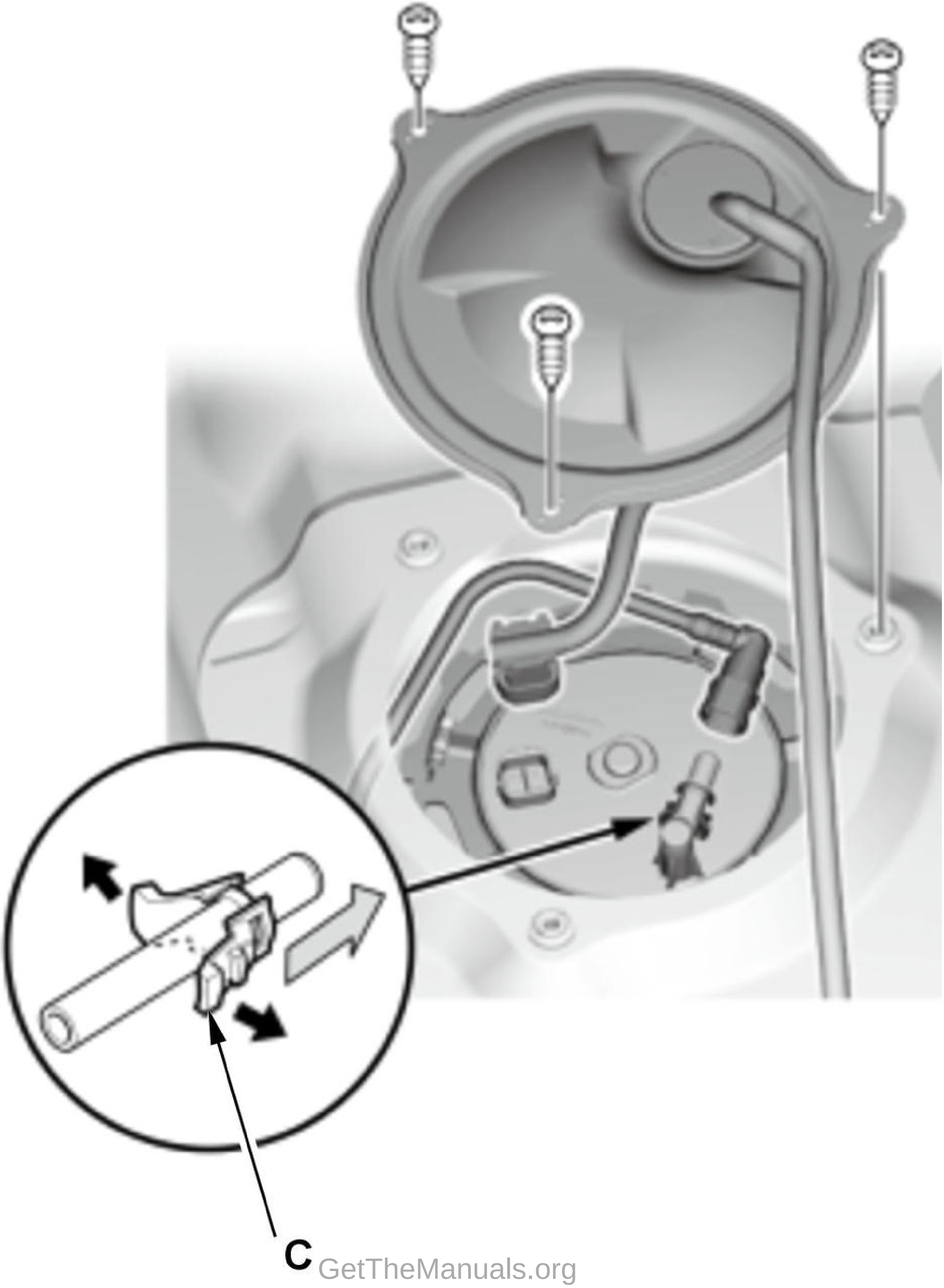
C

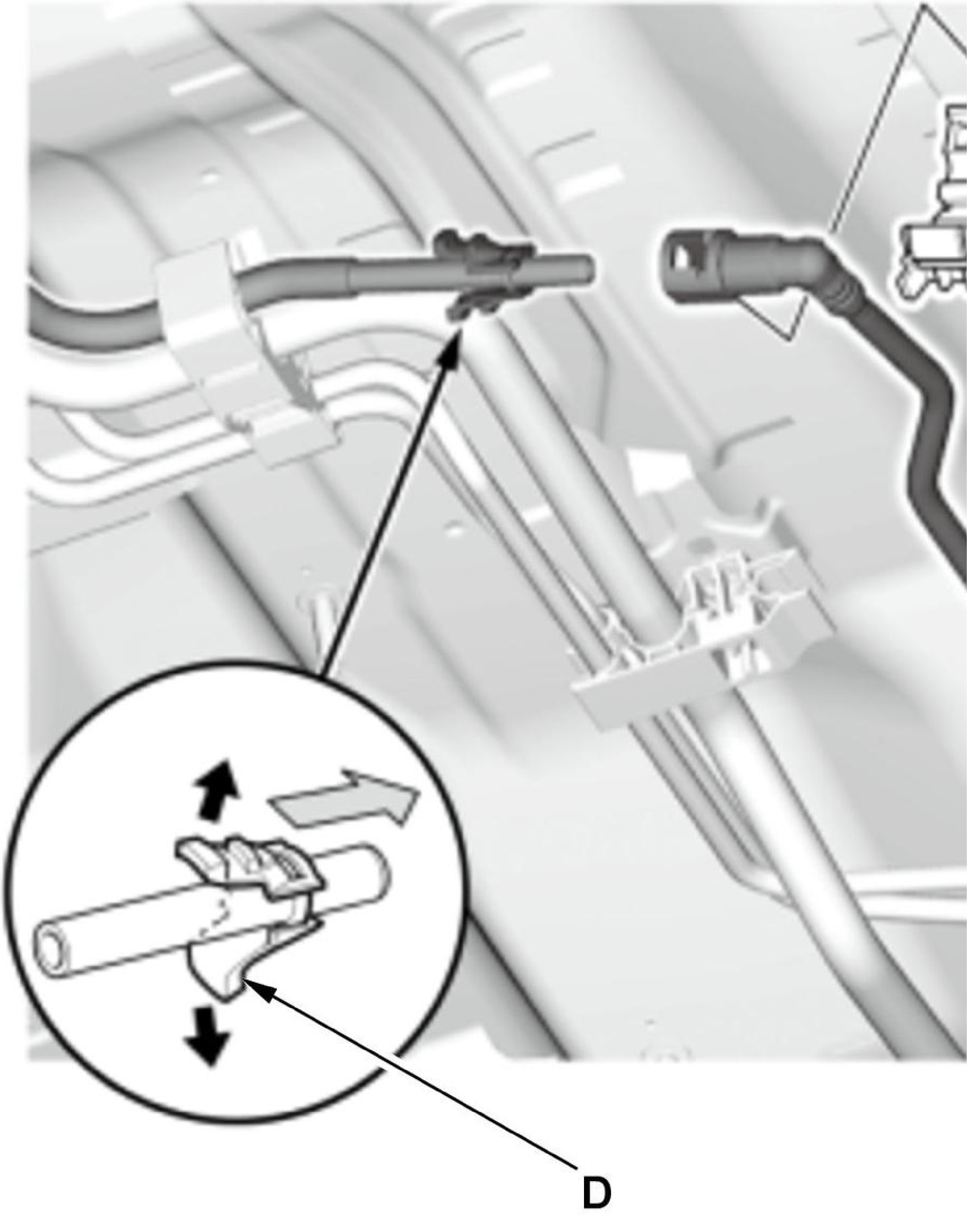
D

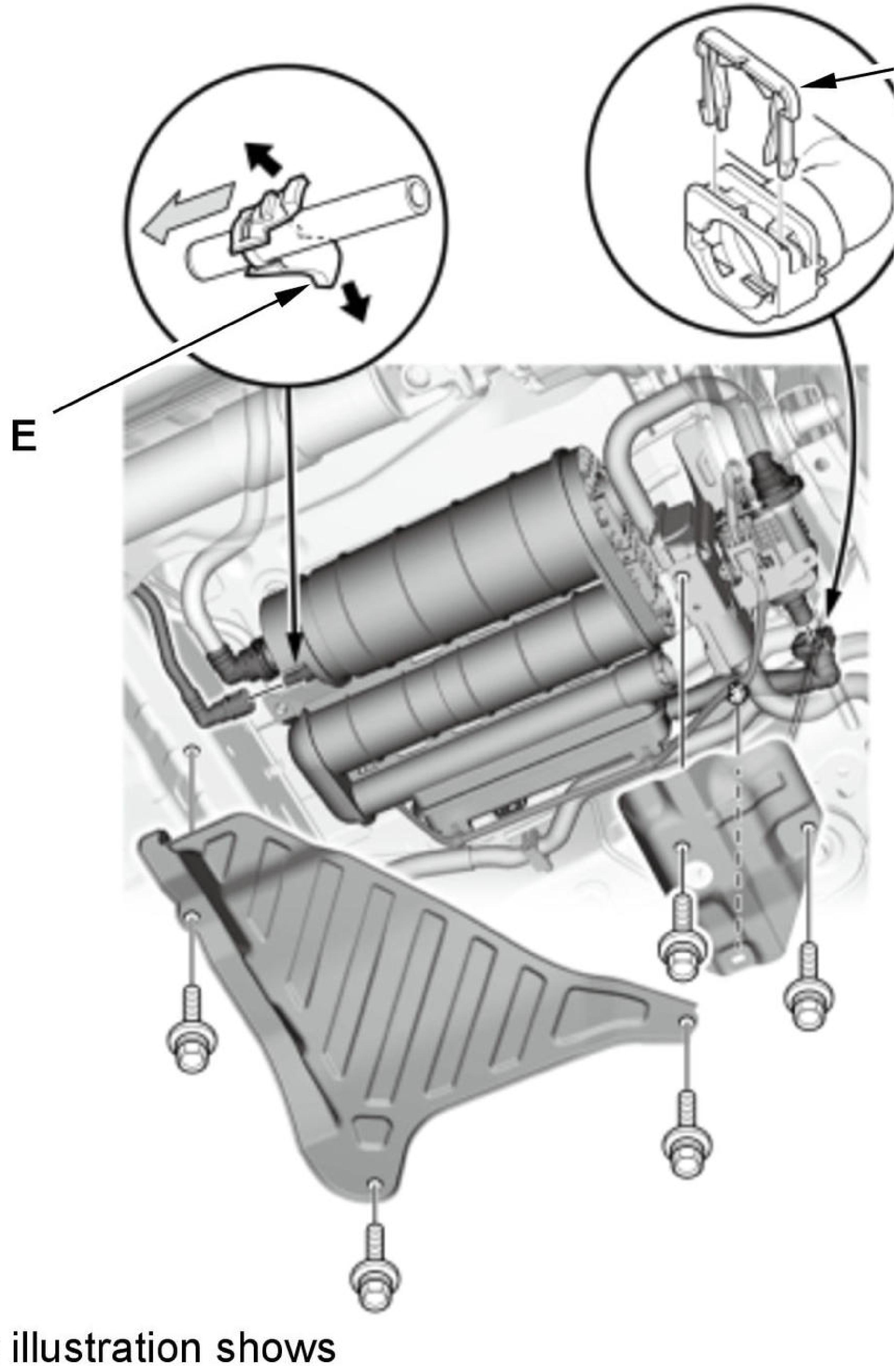

The illustration shows
1.5 L engine (USA and Canada models).

Fuel Line/Quick-Connect Fitting Removal

1. Remove the fuel line/quick-connect fitting cover (If equipped).

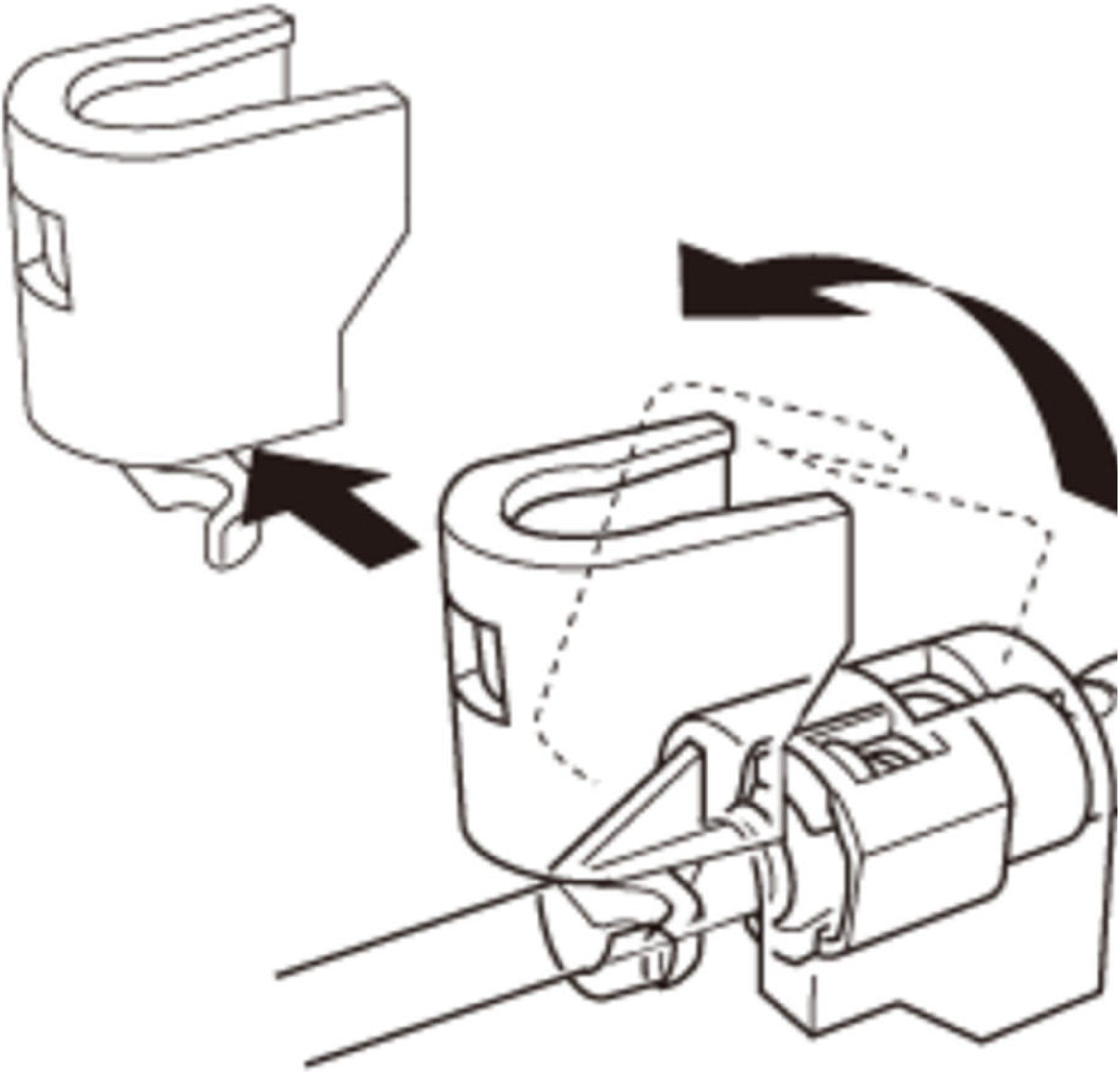

2. Check the fuel quick-connect fittings for dirt, and clean it if needed.

3. Place a rag or shop towel over the quick-connect fitting.

4. Hold the connector (A) with one hand, and squeeze the retainer tabs (B) with the other hand to release them from the locking tabs (C).

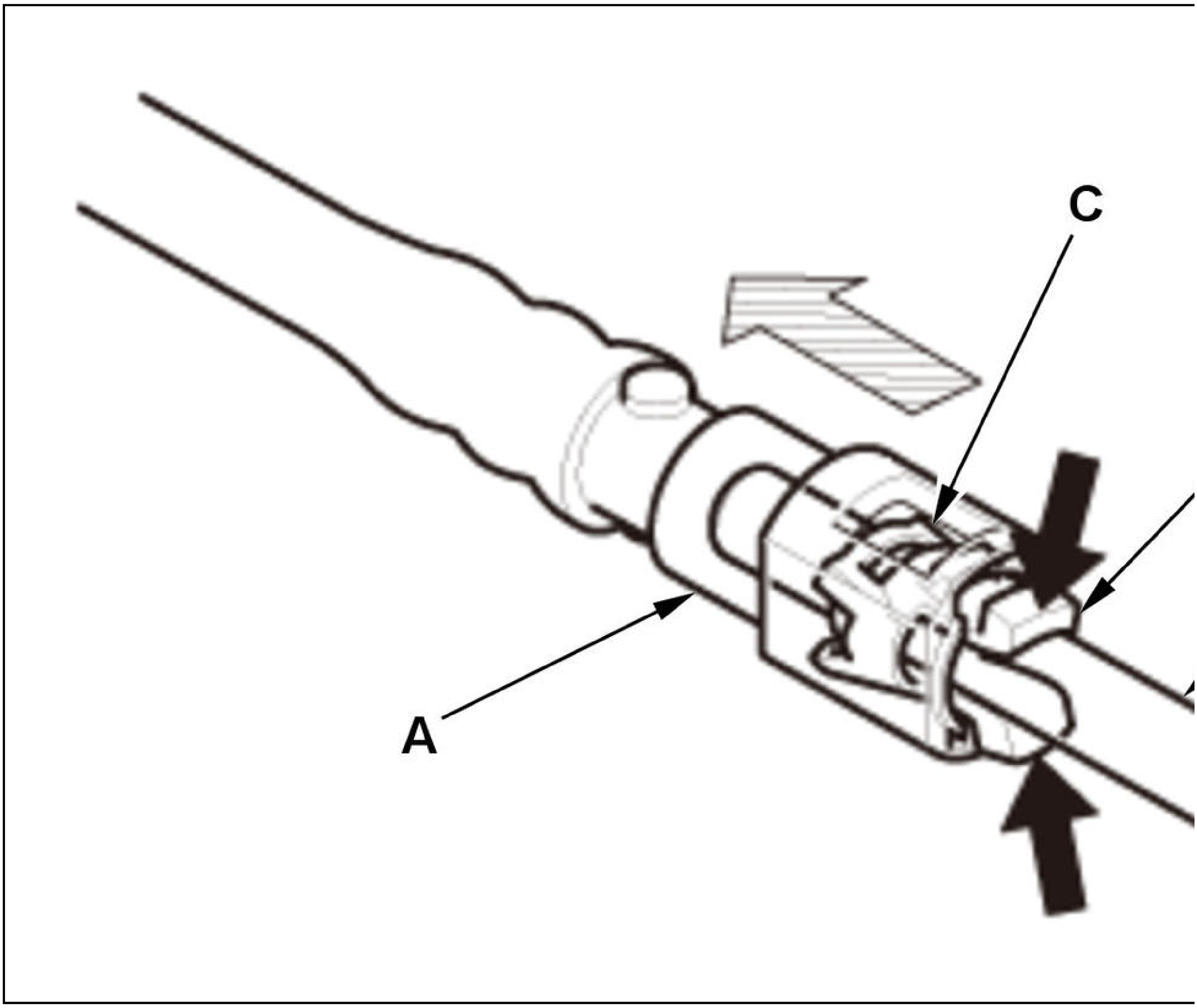

5. Pull the connector off.

NOTE:

- Be careful not to damage the line (D) or other parts. Do not use tools.
- If the connector does not move, keep the retainer tabs pressed down, and alternately pull and push the connector until it comes off easily.
- Do not remove the retainer from the line; once removed, the retainer must be replaced with a new one.

6. Check the contact area (A) of the line (B) for dirt or damage.

- If it is dirty, clean it.
- If it is rusty or damaged, replace the damaged fuel line or the damaged part.

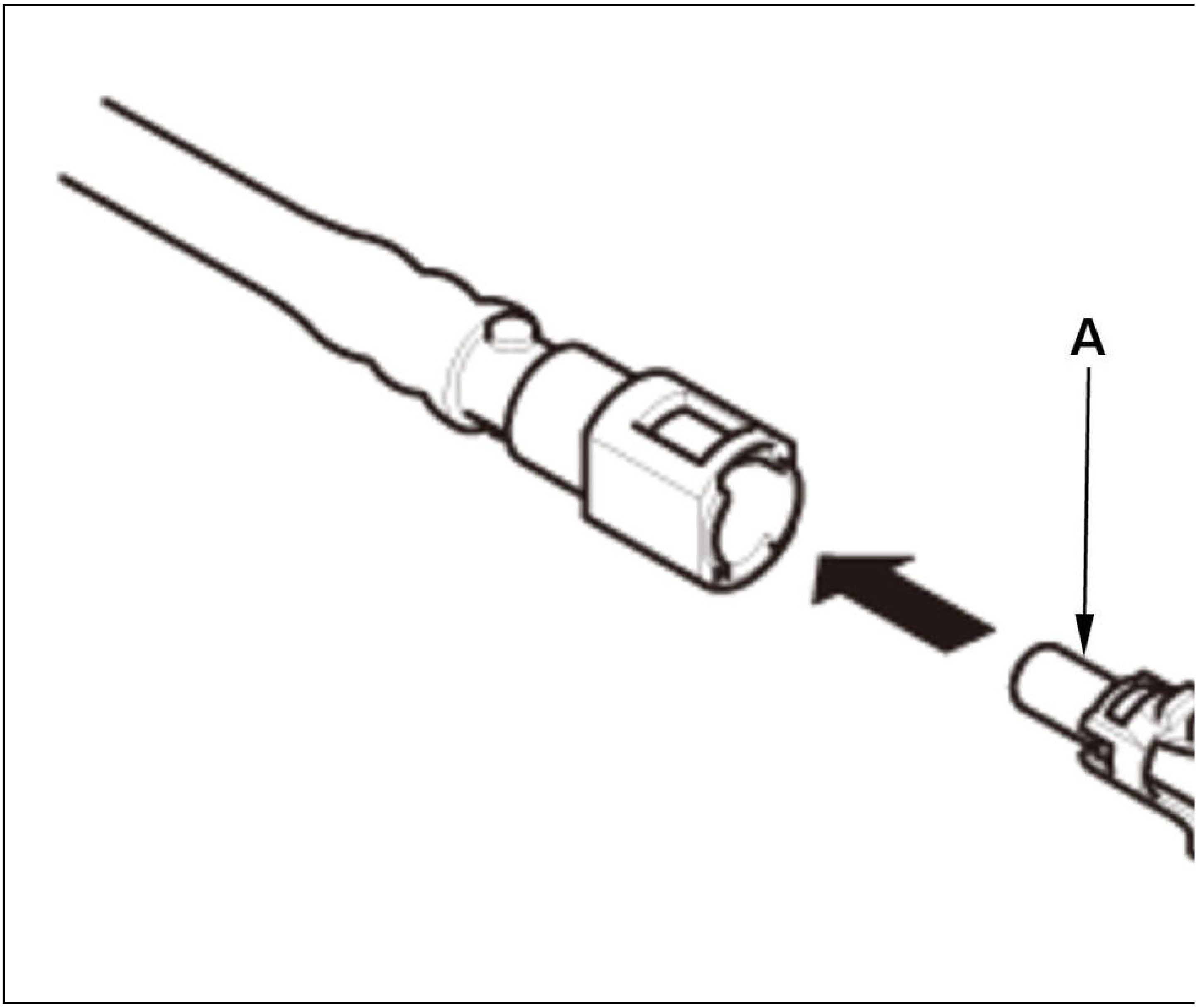

7. To prevent damage and keep foreign matter out, cover the disconnected connector and line ends with plastic bags (A).

NOTE:

- The retainer cannot be reused once it has been removed from the line.
- Replace the retainer when:
-
    - replacing a new part that does not include the retainer. (a fuel line, a fuel tank unit etc.)
    - it has been removed from the line.
    - it is damaged.

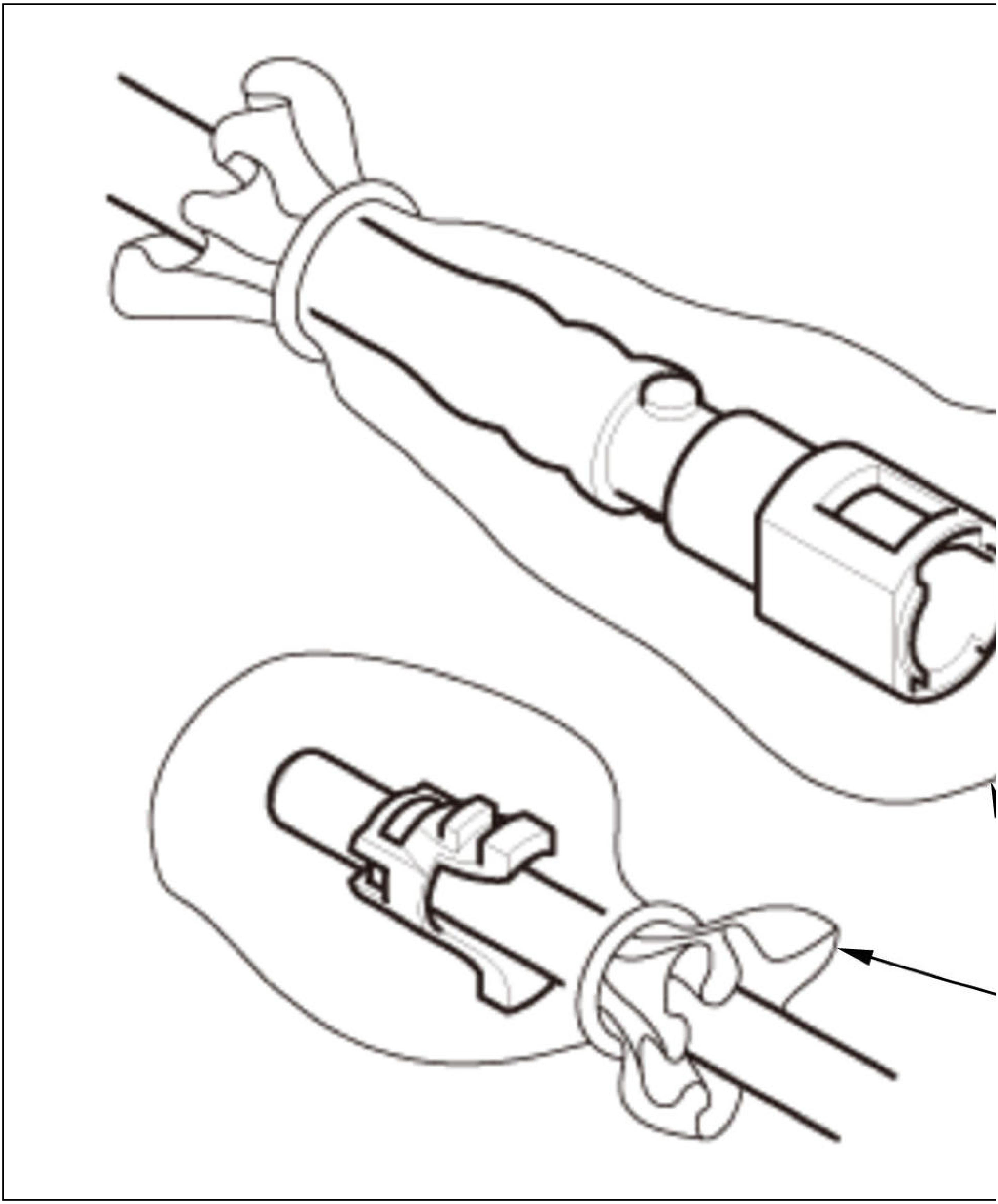

Fuel Line/Quick-Connect Fitting Installation

1. Check the contact area (A) of the line (B) for dirt or damage, and clean it if needed.

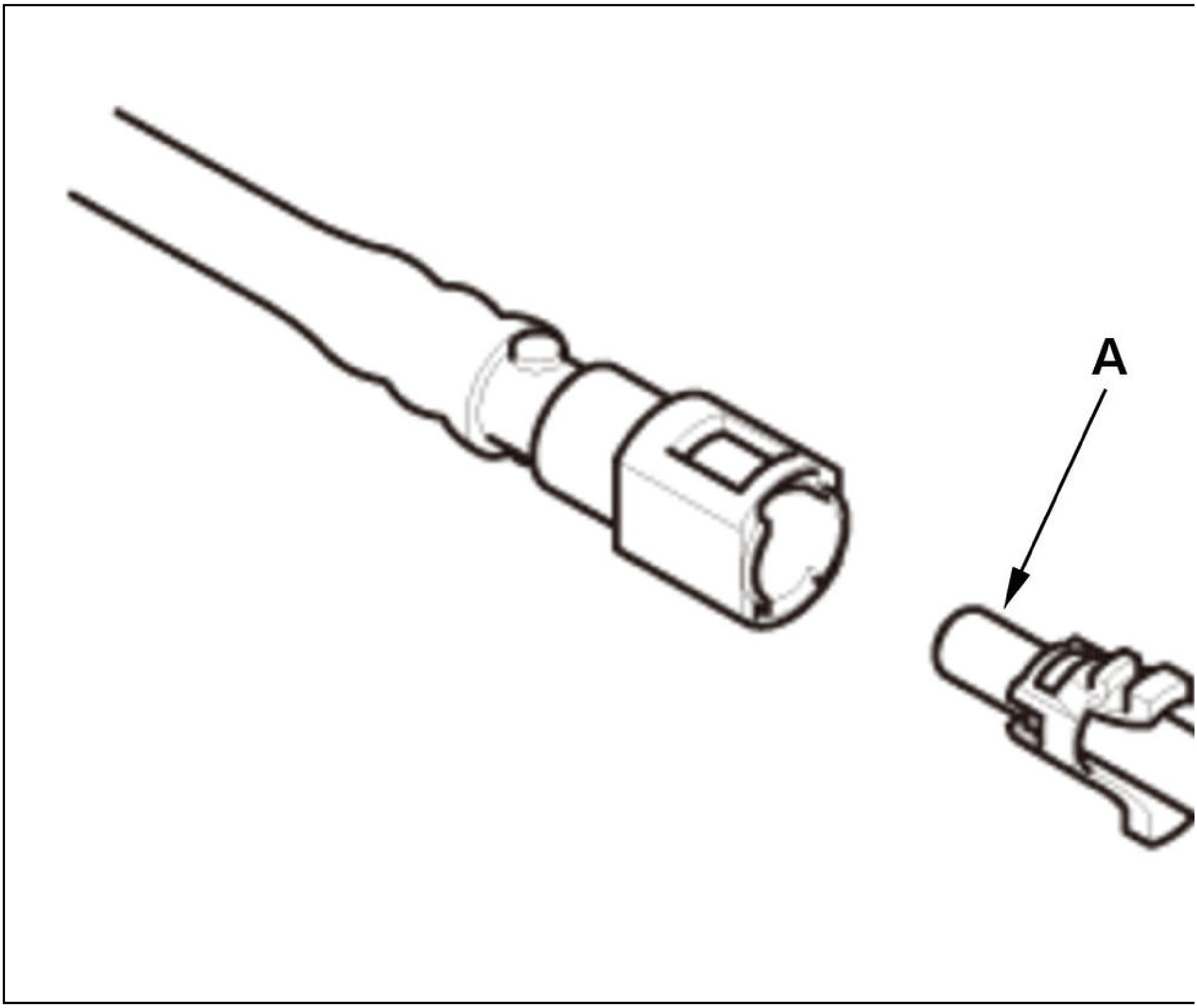

2. Insert a new retainer (A) into the connector (B) if the retainer is damaged, or after:

- replacing new part which does not pack with the suitable retainer. (a fuel line, a fuel tank unit etc.)
- removing the retainer from the line.

NOTE: Use the same manufacturer retainer and the same size retainer when the replacing the retainer.

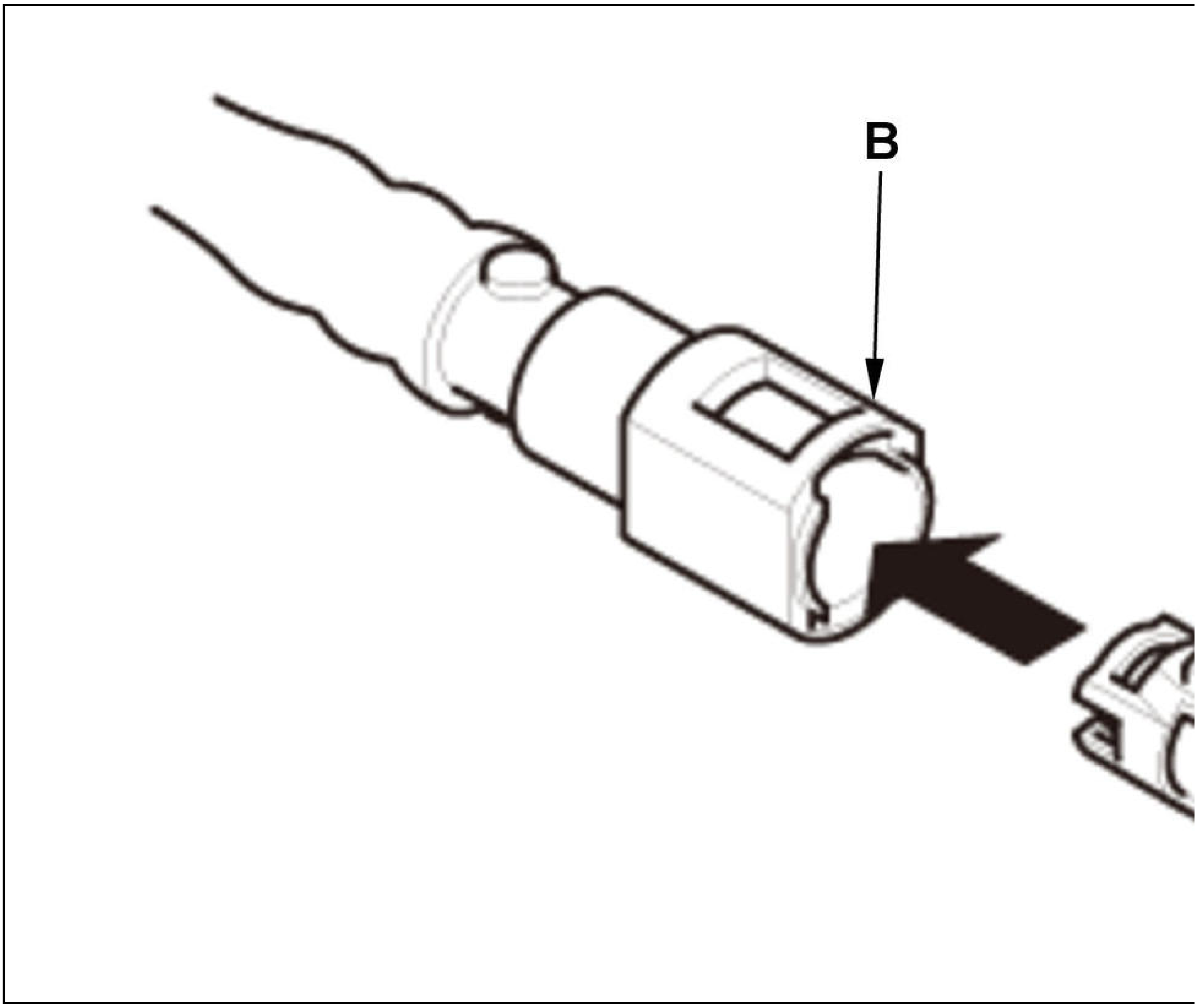

3. Before connecting a new fuel line/quick-connect fittings, remove the old retainer from the mating line.

4. Align the quick-connect fittings (A) with the line (B), and align the retainer (C) locking tabs with the connector grooves.

Connection with new retainer

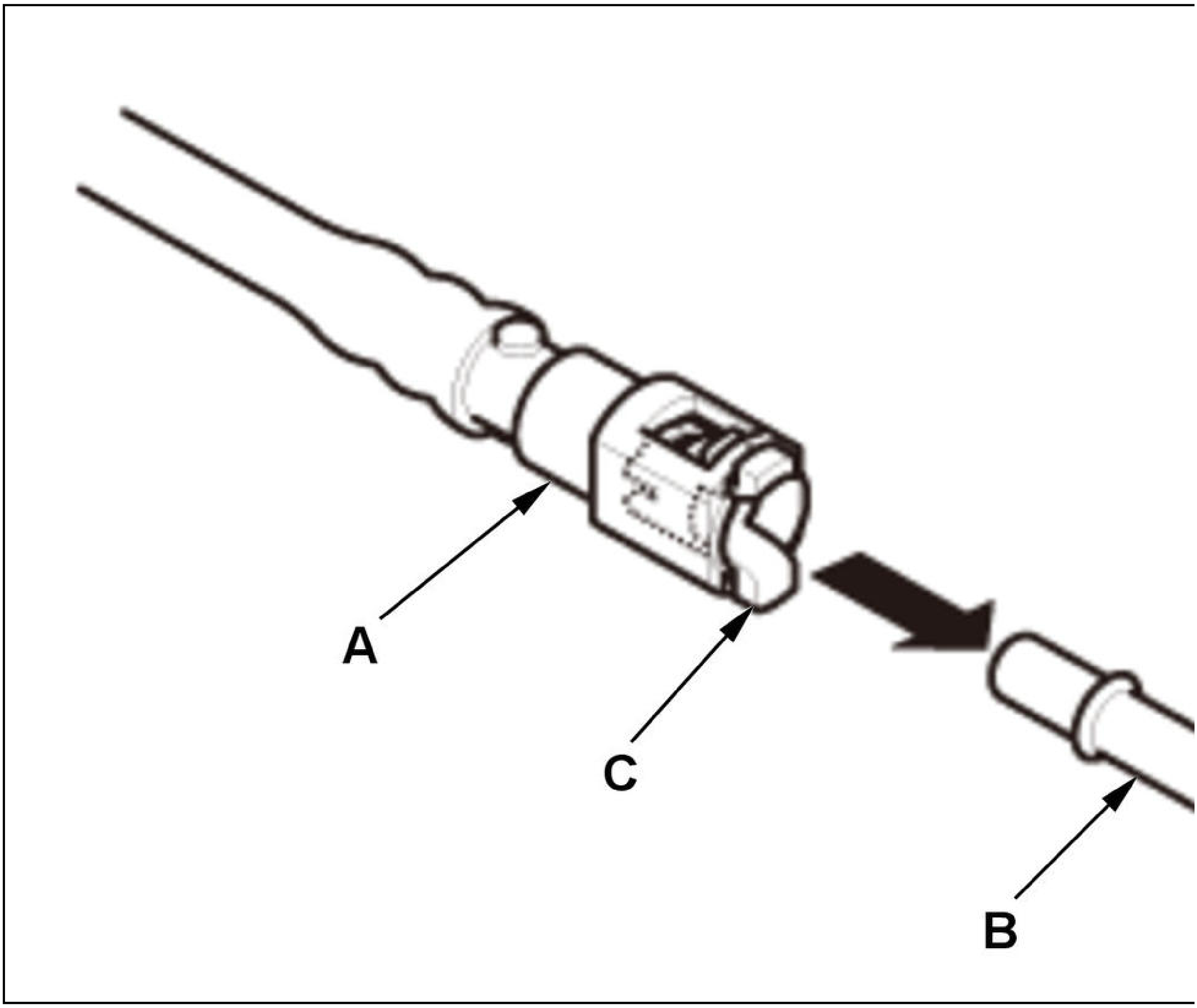

Reconnection to existing retainer

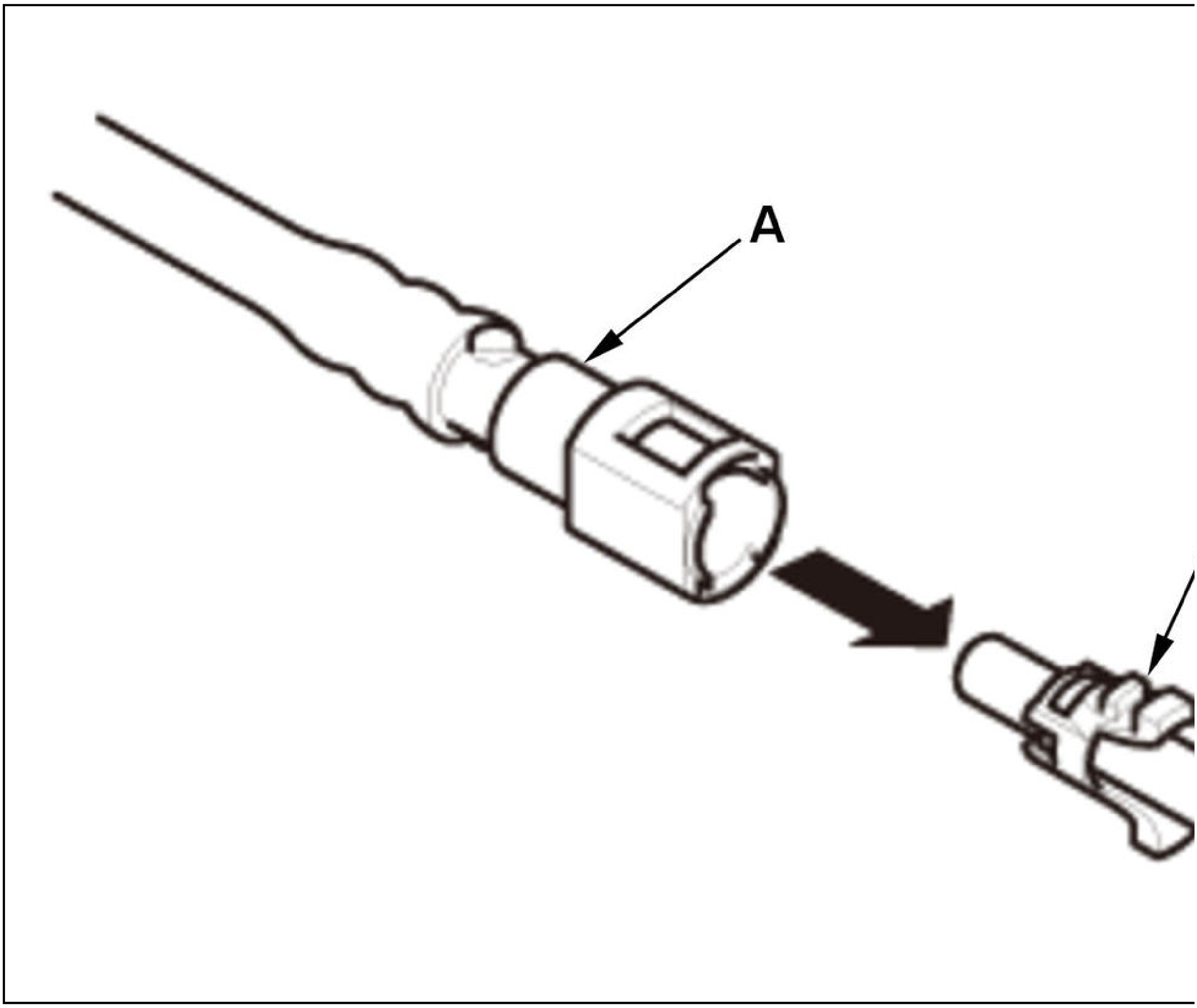

Connection to new fuel line

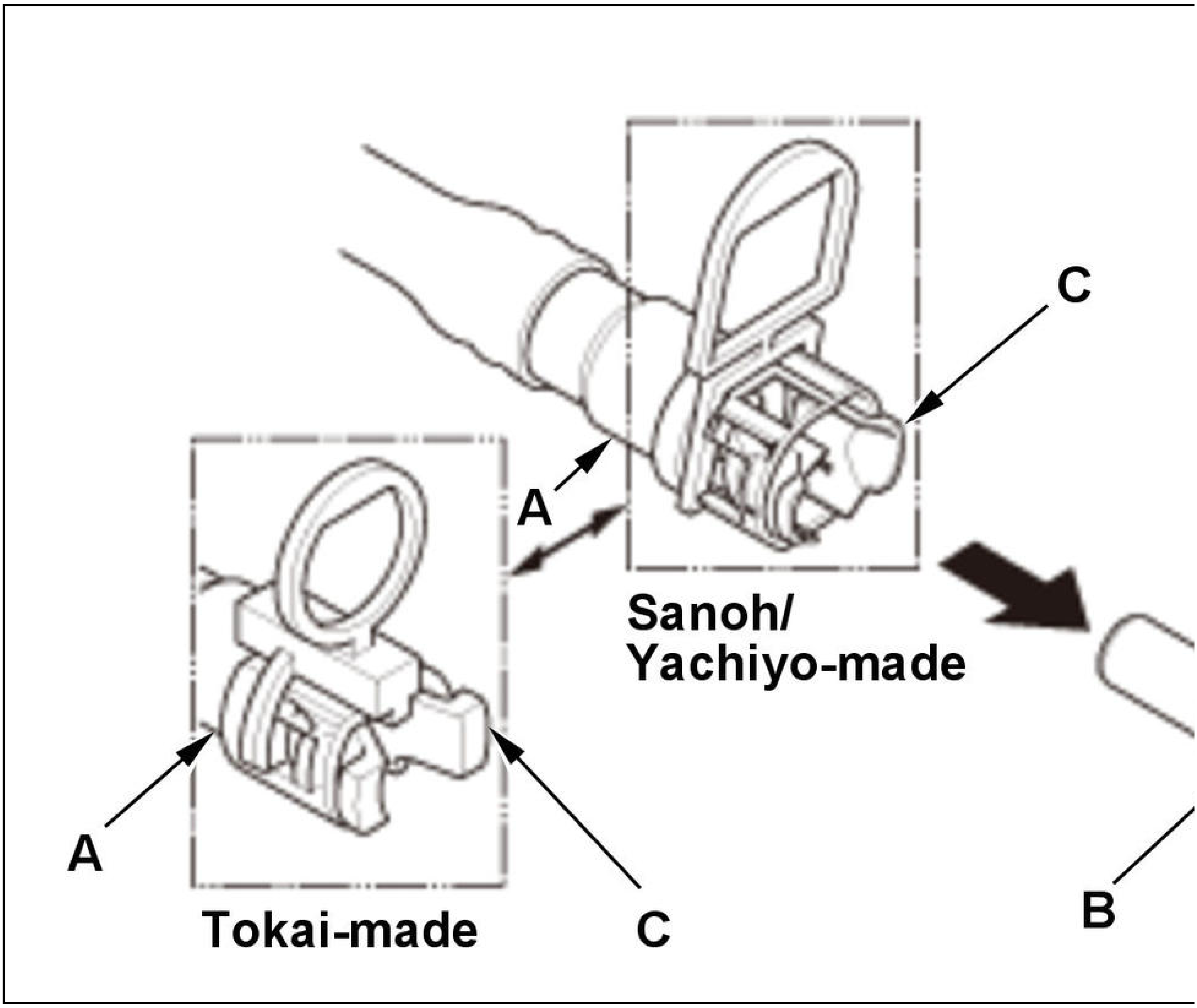

5. Press the quick-connect fittings onto the line until both retainer tabs lock with a clicking sound.

NOTE: If it is hard to connect, put a small amount of new engine oil on the line end.

6. When replacing the fuel line with a new retainer as a set, make sure you remove the ring pull upwards after you confirm the connection is secure.

NOTE: Before you remove the ring pull, make sure the fuel line connection is secure. If the connection is not secure, the ring pull could break when you try to remove

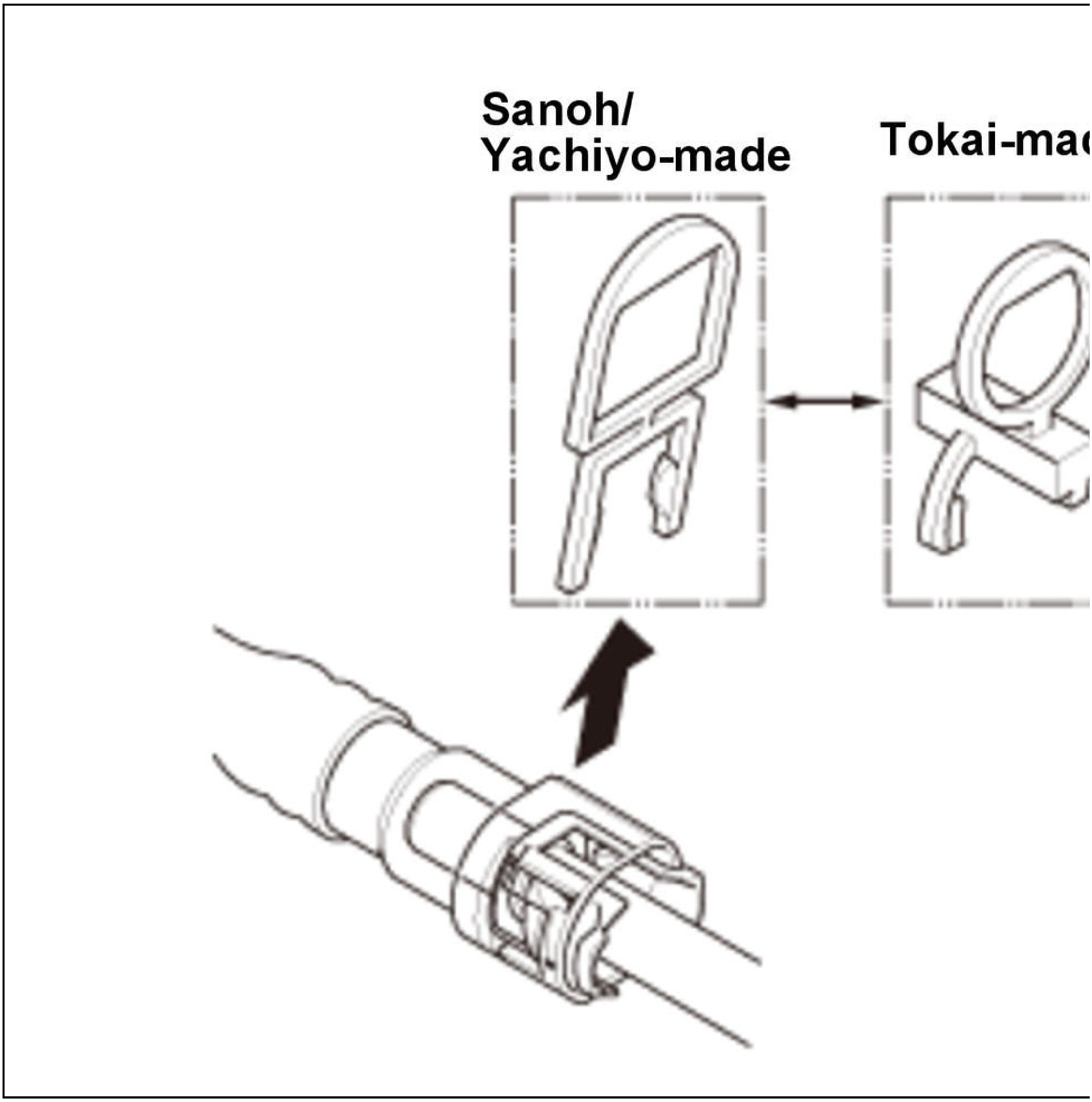
Sanoh/
Yachiyo-made
Tokai-mac

7. Make sure the connection is secure and the tabs are firmly locked into place; check visually and also by pulling the connector.

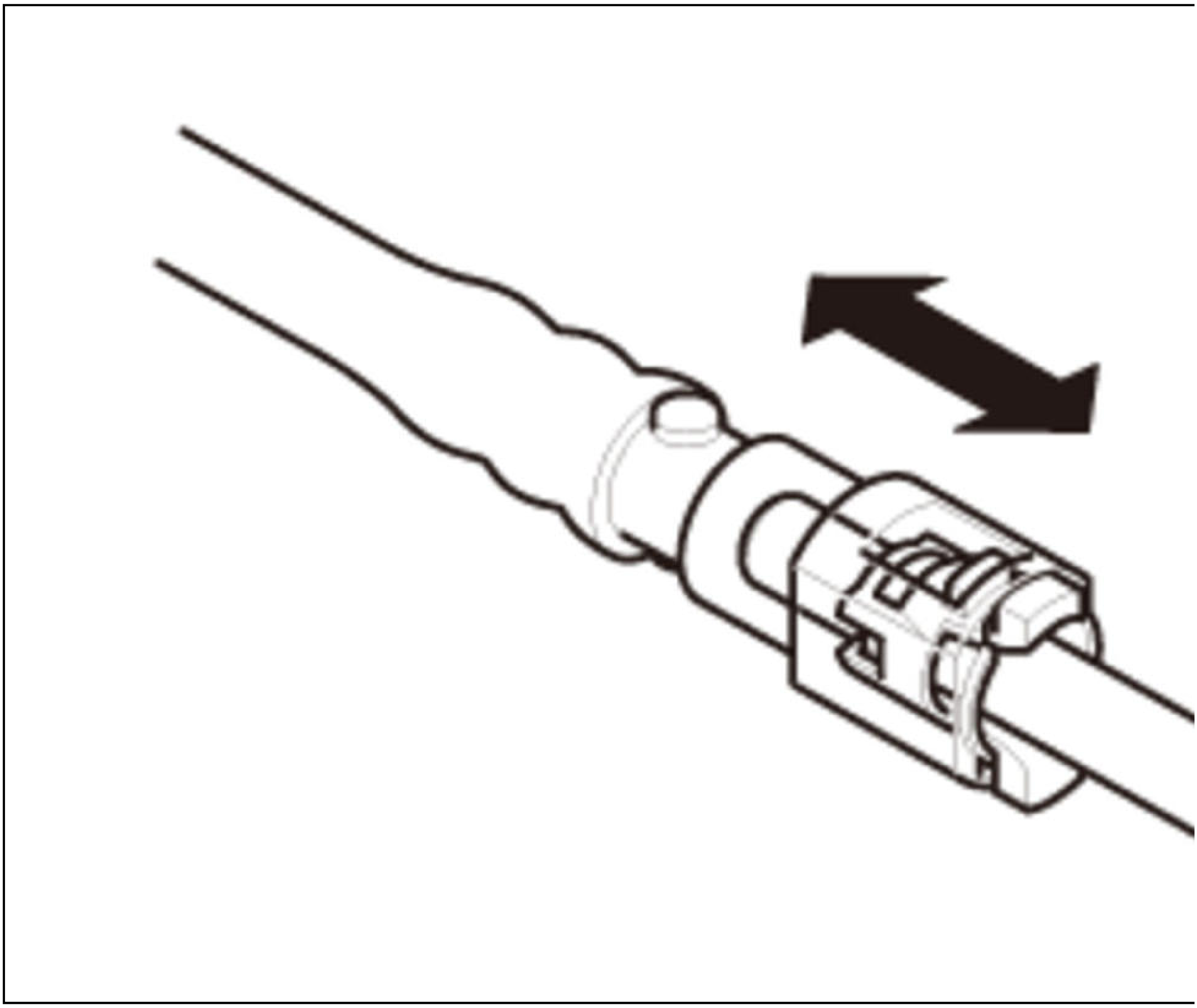

8. Turn the vehicle to the ON mode, but do not start the engine. After the fuel pump runs for about 2 seconds, the fuel line will be pressurized. Repeat this two or three ti

9. Set the groove of the quick-connect fitting cover on the fuel line as shown, then install it. Make sure the cover is firmly locked in place.

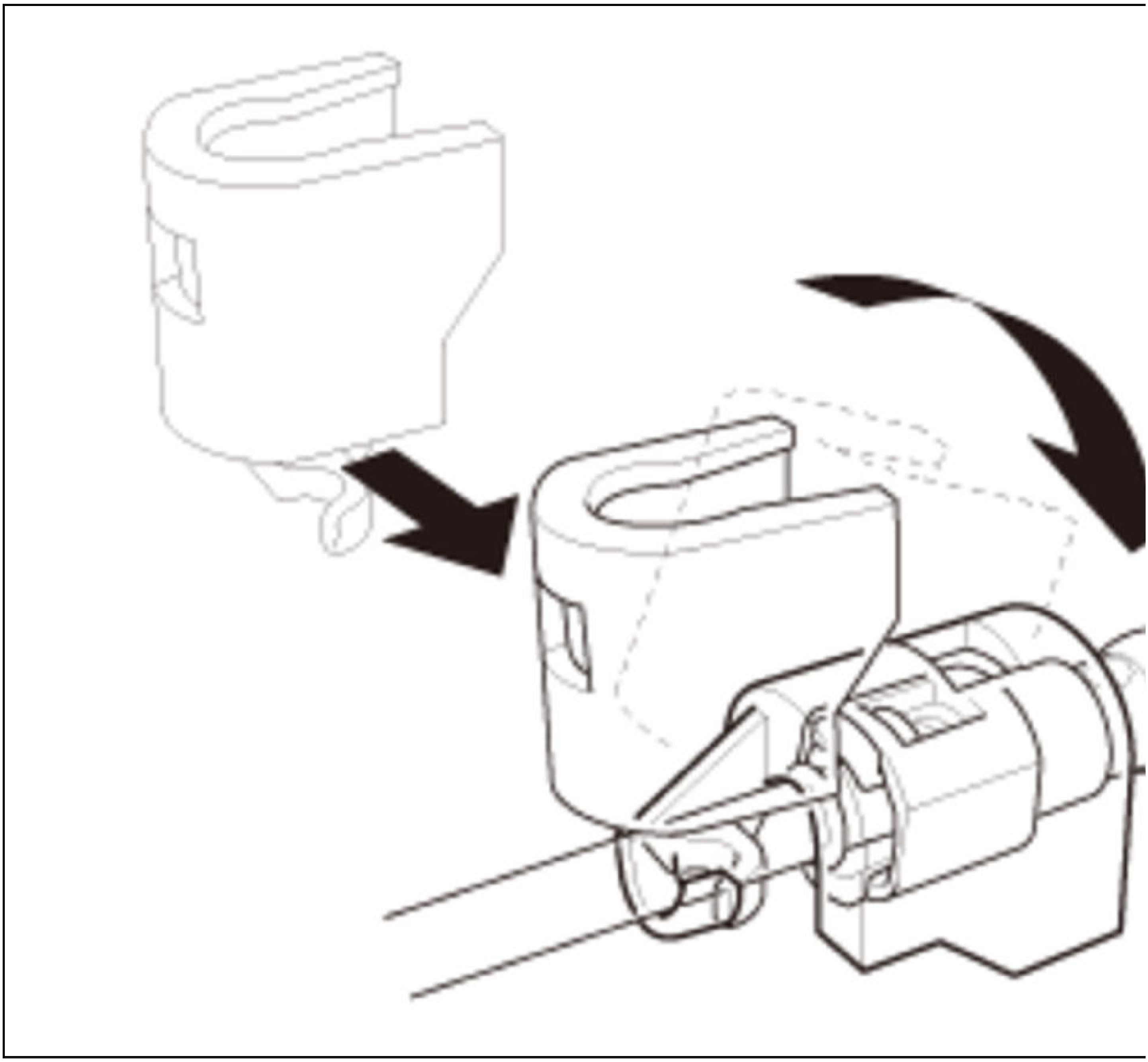

COMPONENT LOCATION INDEX

FUEL AND EMISSIONS SYSTEMS COMPONENT LOCATION INDEX (2.4 L ENGINE)

1.5 L engine

For relationships between signals in a system, refer to System Diagram:
- Injection Control
- A/F Sensor/HO2S Feedback Air/Fuel Ratio Control
- Ignition Timing Control
- Electronic Throttle Control System
- VTC

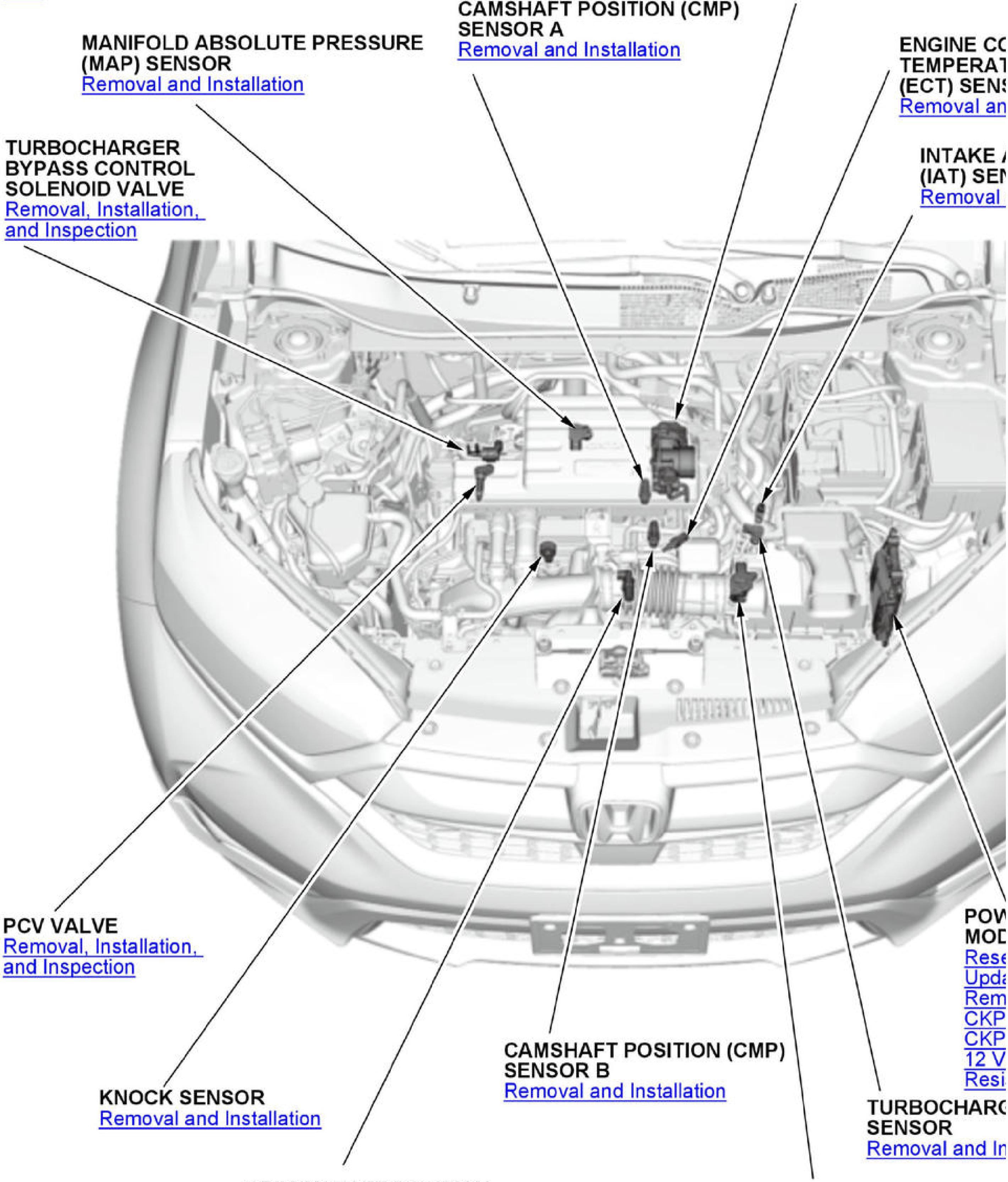

THROTTLE BODY (THROTTLE ACTUATO THROTTLE POSITION (
Test and Cleaning
Removal and Installatior

CAMSHAFT POSITION (CMP) SENSOR A
Removal and Installation

MANIFOLD ABSOLUTE PRESSURE (MAP) SENSOR
Removal and Installation

ENGINE CC TEMPERAT (ECT) SENS
Removal an

TURBOCHARGER BYPASS CONTROL SOLENOID VALVE
Removal, Installation, and Inspection

INTAKE / (IAT) SEN
Removal

PCV VALVE
Removal, Installation, and Inspection

POW MOD
Rese
Upda
Rem
CKP
CKP
12 V
Resi

CAMSHAFT POSITION (CMP) SENSOR B
Removal and Installation

KNOCK SENSOR
Removal and Installation

TURBOCHARG SENSOR
Removal and In

CRANKSHAFT POSITION (CKP) SENSOR
Removal and Installation

MASS AIR FLOW (MA SENSOR/INTAKE AIR TEMPERATURE (IAT) SENSOR 1
Removal and Installati

1.5 L engine

For relationships between signals in a system, refer to System Diagram:

- Injection Control
- A/F Sensor/HO2S Feedback Air/Fuel Ratio Control
- Ignition Timing Control
- VTC
- Shutter Grille

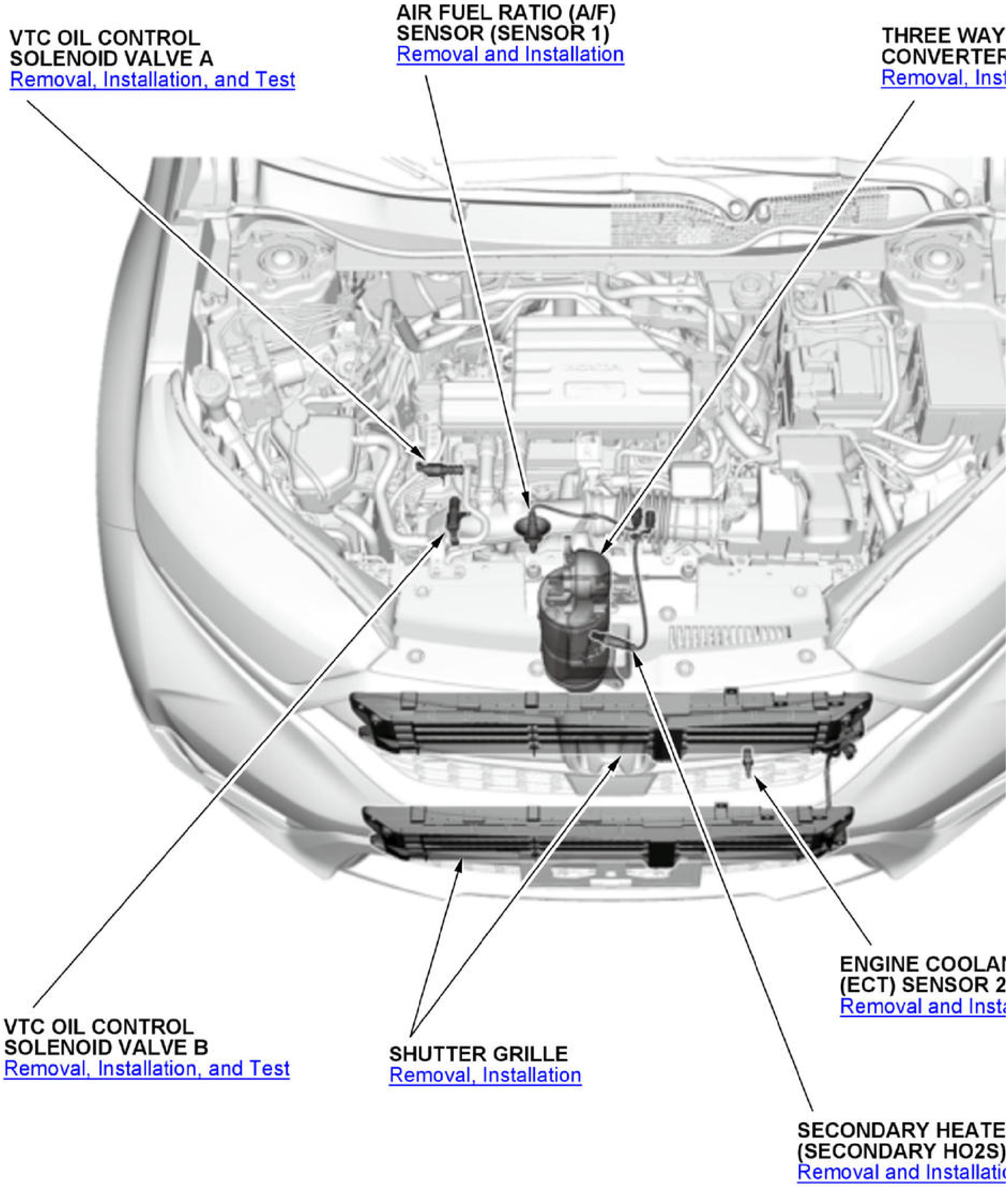
VTC OIL CONTROL SOLENOID VALVE A
Removal, Installation, and Test
AIR FUEL RATIO (A/F) SENSOR (SENSOR 1)
Removal and Installation
THREE WAY CONVERTER
Removal, Inst
ENGINE COOLAN
(ECT) SENSOR 2
Removal and Insta
VTC OIL CONTROL SOLENOID VALVE B
Removal, Installation, and Test
SHUTTER GRILLE
Removal, Installation
SECONDARY HEATE
(SECONDARY HO2S)
Removal and Installatio

For relationships between signals in a system, refer to System Diagram:

- Injection Control
- A/F Sensor/HO2S Feedback Air/Fuel Ratio Control
- Ignition Timing Control
- Electronic Throttle Control System
- VTEC/VTC

MANIFOLD ABS
(MAP) SENSOR
Removal and Inst

CAMSH
SENSO
Removal

PCV VALVE
Removal, Installation, and Inspection

CAMSHAFT POSITION (CMP) SENSOR A
Removal and Installation

MASS A
SENSO
TEMPER
Removal

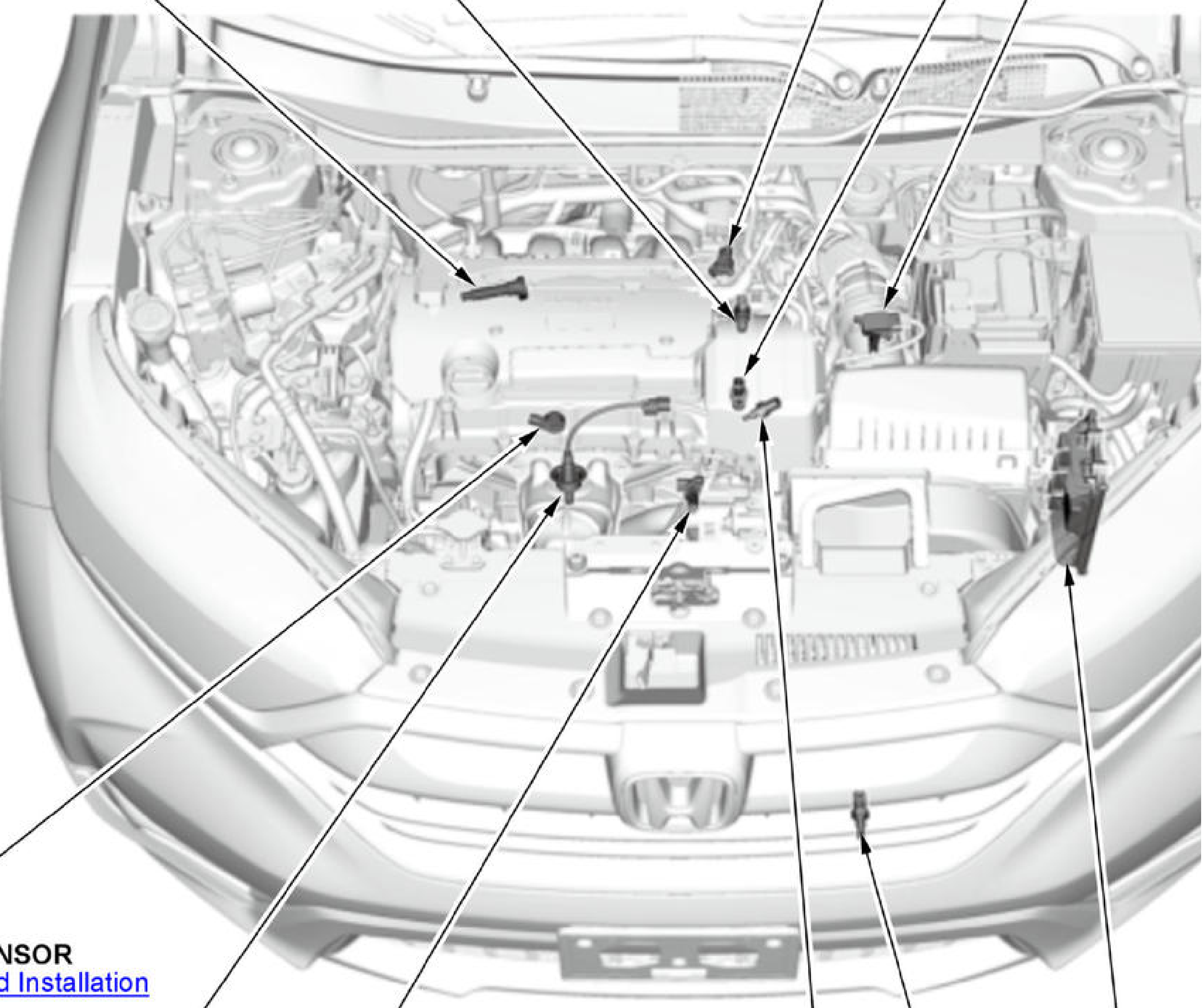

KNOCK SENSOR
Removal and Installation

POWERT
MODULE
Reset
Update
Removal
CKP Patte
CKP Patte

CRANKSHAFT POSITION (CKP) SENSOR
Removal and Installation

AIR FUEL RATIO (A/F) SENSOR (SENSOR 1)
Removal and Installation

ENGINE COOLANT
(ECT) SENSOR 2
Removal and Install

ENGINE COOLANT TEMPERATUR
(ECT) SENSOR 1
Removal and Installation

2.4 L engine

For relationships between signals in a system, refer to System Diagram:

- Injection Control
- A/F Sensor/HO2S Feedback Air/Fuel Ratio Control
- Ignition Timing Control
- VTEC/VTC
- Shutter Grille

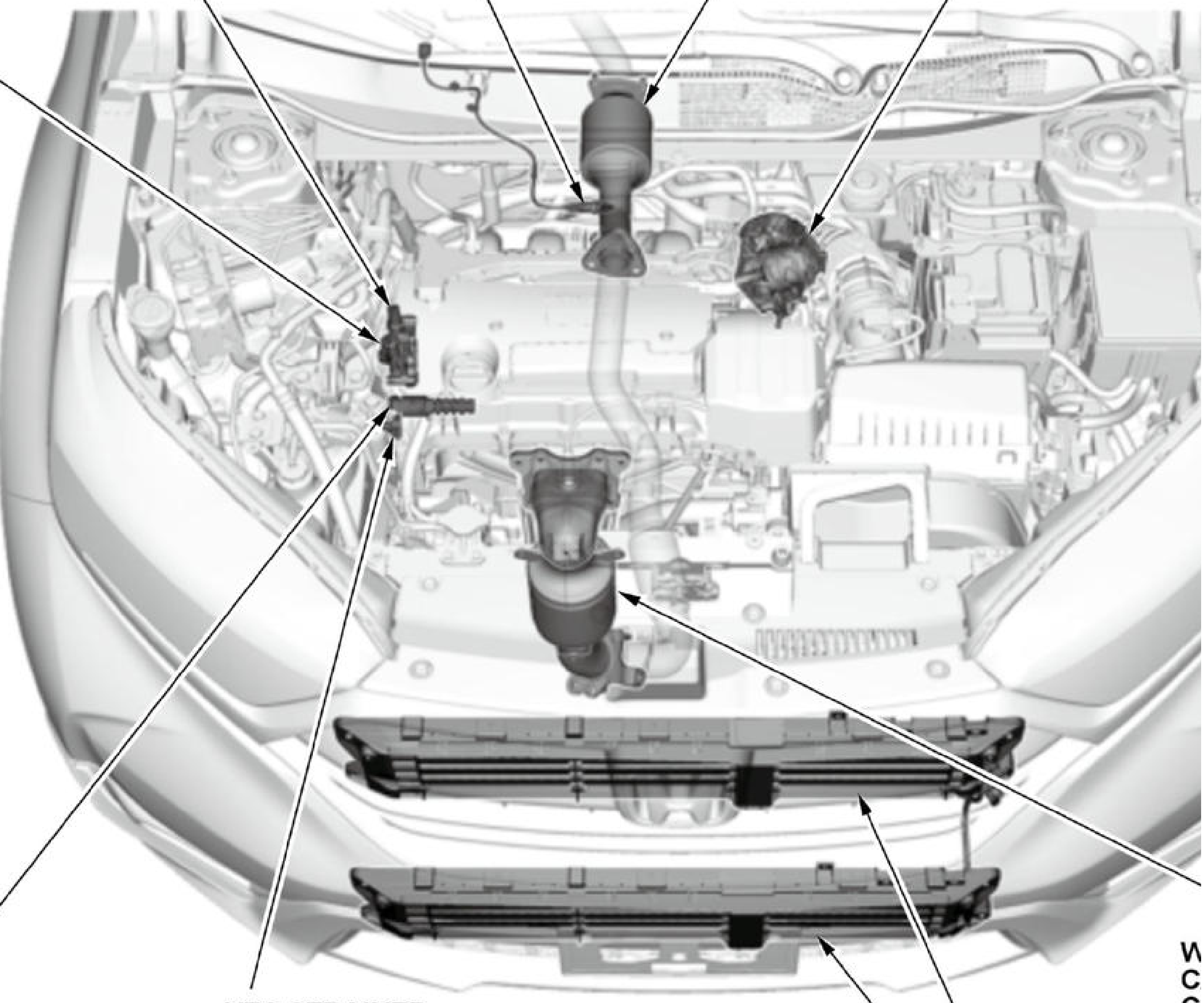

ROCKER ARM OIL PRESSURE SWITCH (USA and Canada models)
Removal and Installation

SECONDARY HEATED OXYGEN SENSOR (SECONDARY HO2S) (SENSOR 2)
Removal and Installation

UNDER-FLOOR THREI CATALYTIC CONVERT (UNDER-FLOOR TWC)
Removal, Installation, and Inspection

THROTTLE I (THROTTLE THROTTLE I
Test and Cle
Removal and

ROCKER ARM OIL CONTROL VALVE
Removal and Installation

W C C
R
a

VTC STRAINER
Removal and Installation

VTC OIL CONTROL SOLENOID VALVE
Removal, Installation, and Test

SHUTTER GRII
Removal, Install

For relationships between signals in a system, refer to System Diagram:

- Electronic Throttle Control System
- Communication Systems
- Auto Idle Stop Systems (with auto idle stop system)

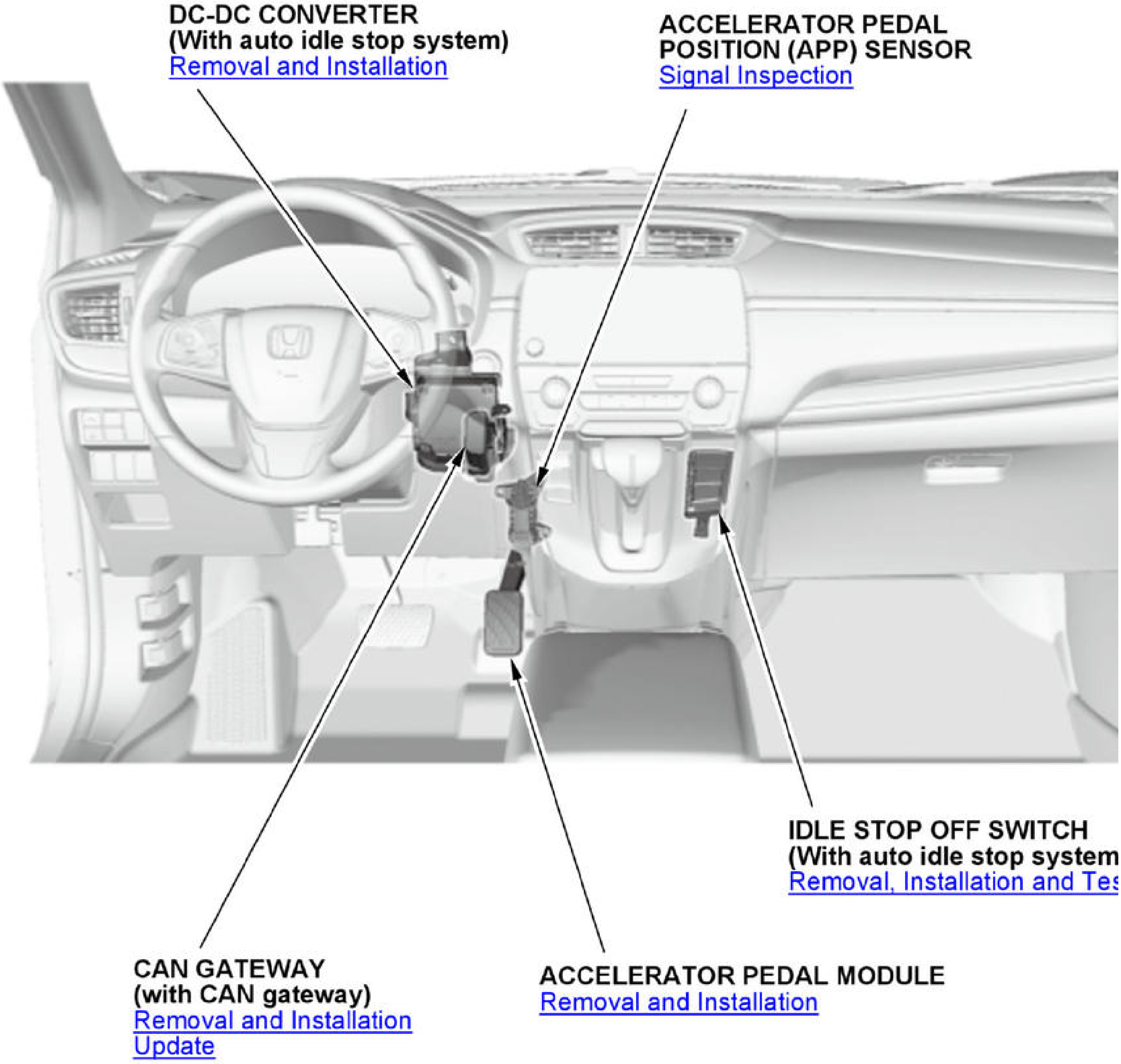
DC-DC CONVERTER
(With auto idle stop system)
Removal and Installation
ACCELERATOR PEDAL POSITION (APP) SENSOR
Signal Inspection
IDLE STOP OFF SWITCH
(With auto idle stop system
Removal, Installation and Tes
CAN GATEWAY
(with CAN gateway)
Removal and Installation
Update
ACCELERATOR PEDAL MODULE
Removal and Installation

1.5 L engine (USA and Canada models)

For relationships between signals in a system, refer to System Diagram:

- Injection Control
- Returnless Fuel System
- EVAP System

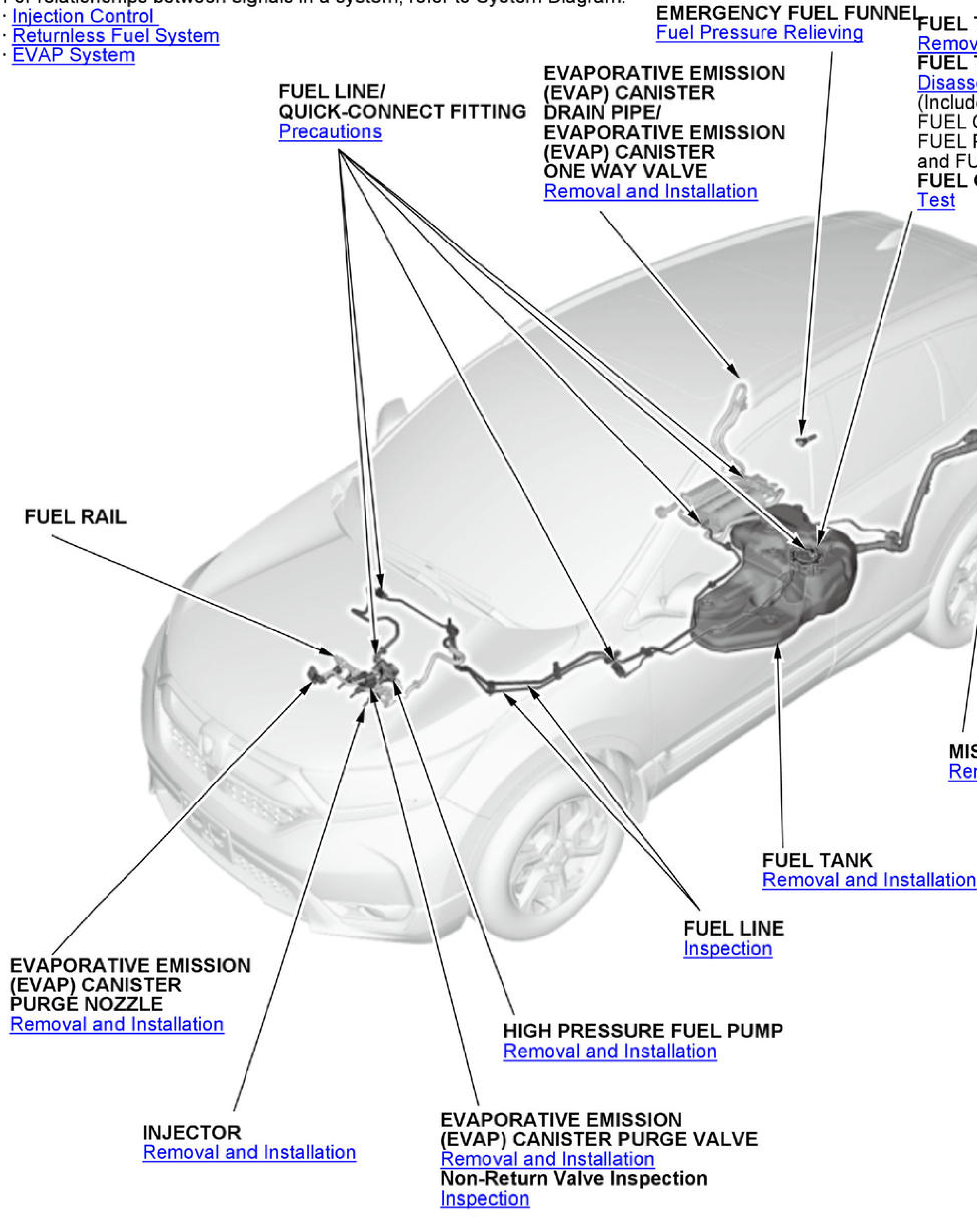
EMERGENCY FUEL FUNNEL
Fuel Pressure Relieving
FUEL
Remov
FUEL
Disass
(Includ
FUEL
FUEL
and FU
FUEL
Test
FUEL LINE/
QUICK-CONNECT FITTING
Precautions
EVAPORATIVE EMISSION
(EVAP) CANISTER
DRAIN PIPE/
EVAPORATIVE EMISSION
(EVAP) CANISTER
ONE WAY VALVE
Removal and Installation
FUEL RAIL
MIS
Rer
FUEL TANK
Removal and Installation
FUEL LINE
Inspection
EVAPORATIVE EMISSION
(EVAP) CANISTER
PURGE NOZZLE
Removal and Installation
HIGH PRESSURE FUEL PUMP
Removal and Installation
INJECTOR
Removal and Installation
EVAPORATIVE EMISSION
(EVAP) CANISTER PURGE VALVE
Removal and Installation
Non-Return Valve Inspection
Inspection

1.5 L engine (Mexico models)

For relationships between signals in a system, refer to System Diagram:
- Injection Control
- Returnless Fuel System
- EVAP System

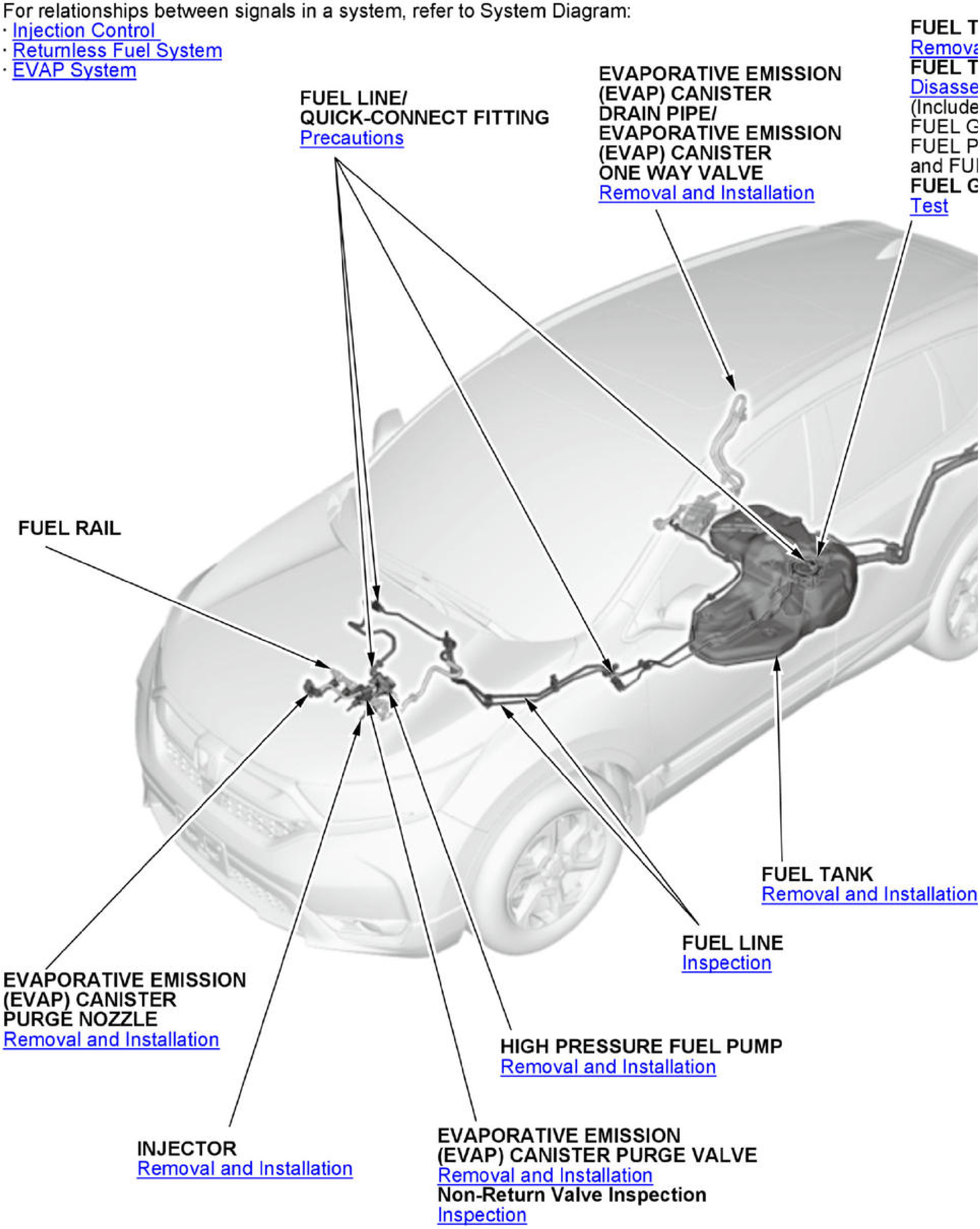
FUEL LINE/ QUICK-CONNECT FITTING
Precautions
EVAPORATIVE EMISSION (EVAP) CANISTER DRAIN PIPE/ EVAPORATIVE EMISSION (EVAP) CANISTER ONE WAY VALVE
Removal and Installation
FUEL T
Remova
FUEL T
Disasse
(Include
FUEL G
FUEL P
and FUI
FUEL G
Test
FUEL RAIL
FUEL TANK
Removal and Installation
FUEL LINE
Inspection
EVAPORATIVE EMISSION (EVAP) CANISTER PURGE NOZZLE
Removal and Installation
HIGH PRESSURE FUEL PUMP
Removal and Installation
INJECTOR
Removal and Installation
EVAPORATIVE EMISSION (EVAP) CANISTER PURGE VALVE
Removal and Installation
Non-Return Valve Inspection
Inspection

2.4 L engine (USA models)

For relationships between signals in a system, refer to System Diagram:

- Injection Control
- Returnless Fuel System
- EVAP System

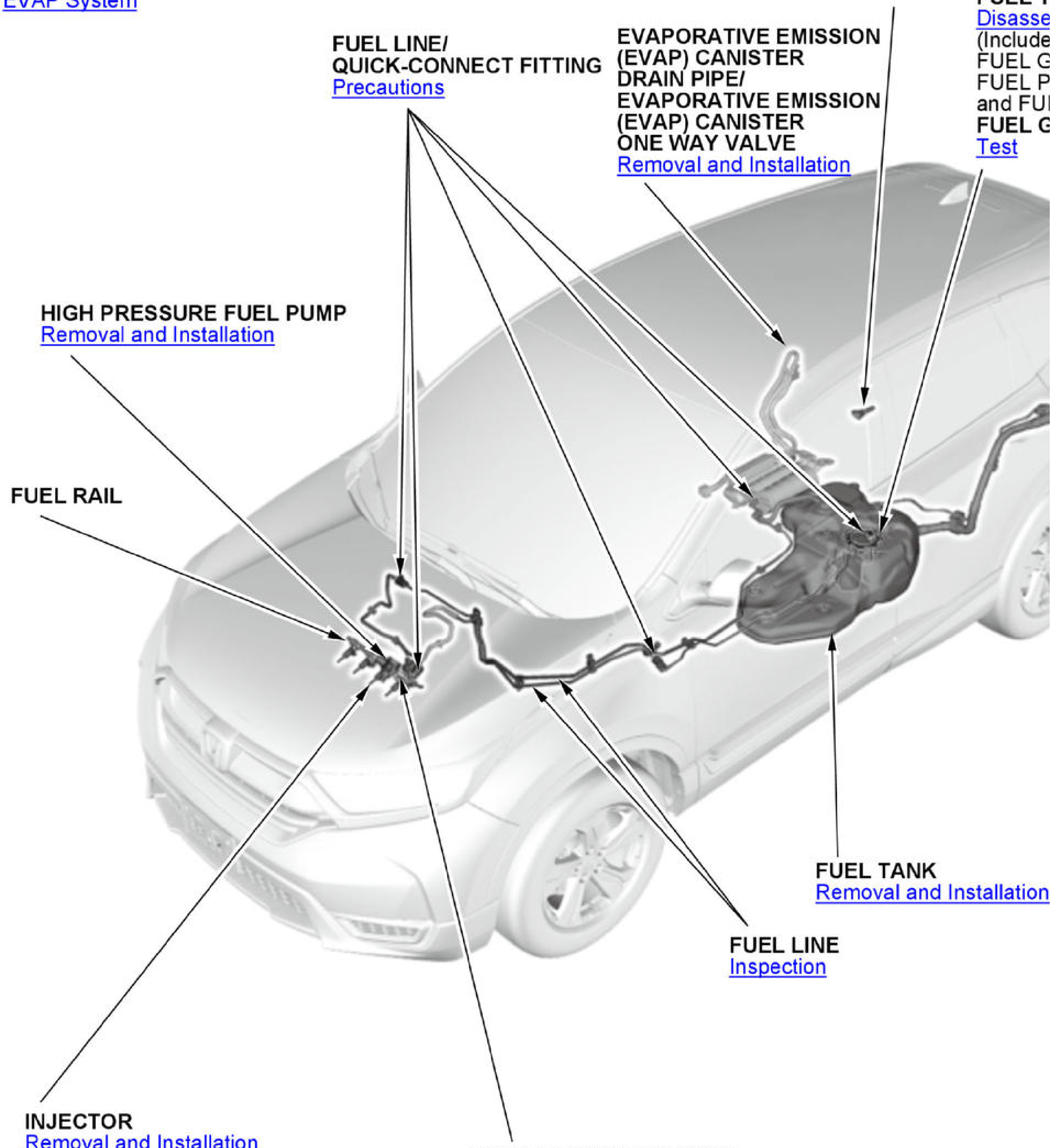

EMERGENCY FUEL FUNNEL
Fuel Pressure Relieving

FUEL T
Remova
FUEL T
Disasse
(Include
FUEL G
FUEL P
and FUI
FUEL G
Test

FUEL LINE/ QUICK-CONNECT FITTING
Precautions

EVAPORATIVE EMISSION (EVAP) CANISTER DRAIN PIPE/ EVAPORATIVE EMISSION (EVAP) CANISTER ONE WAY VALVE
Removal and Installation

HIGH PRESSURE FUEL PUMP
Removal and Installation

FUEL RAIL

FUEL TANK
Removal and Installation

FUEL LINE
Inspection

INJECTOR
Removal and Installation

EVAPORATIVE EMISSION (EVAP) CANISTER PURGE VALVE
Removal and Installation

2.4 L engine (Mexico models)

For relationships between signals in a system, refer to System Diagram:
- Injection Control
- Returnless Fuel System
- EVAP System

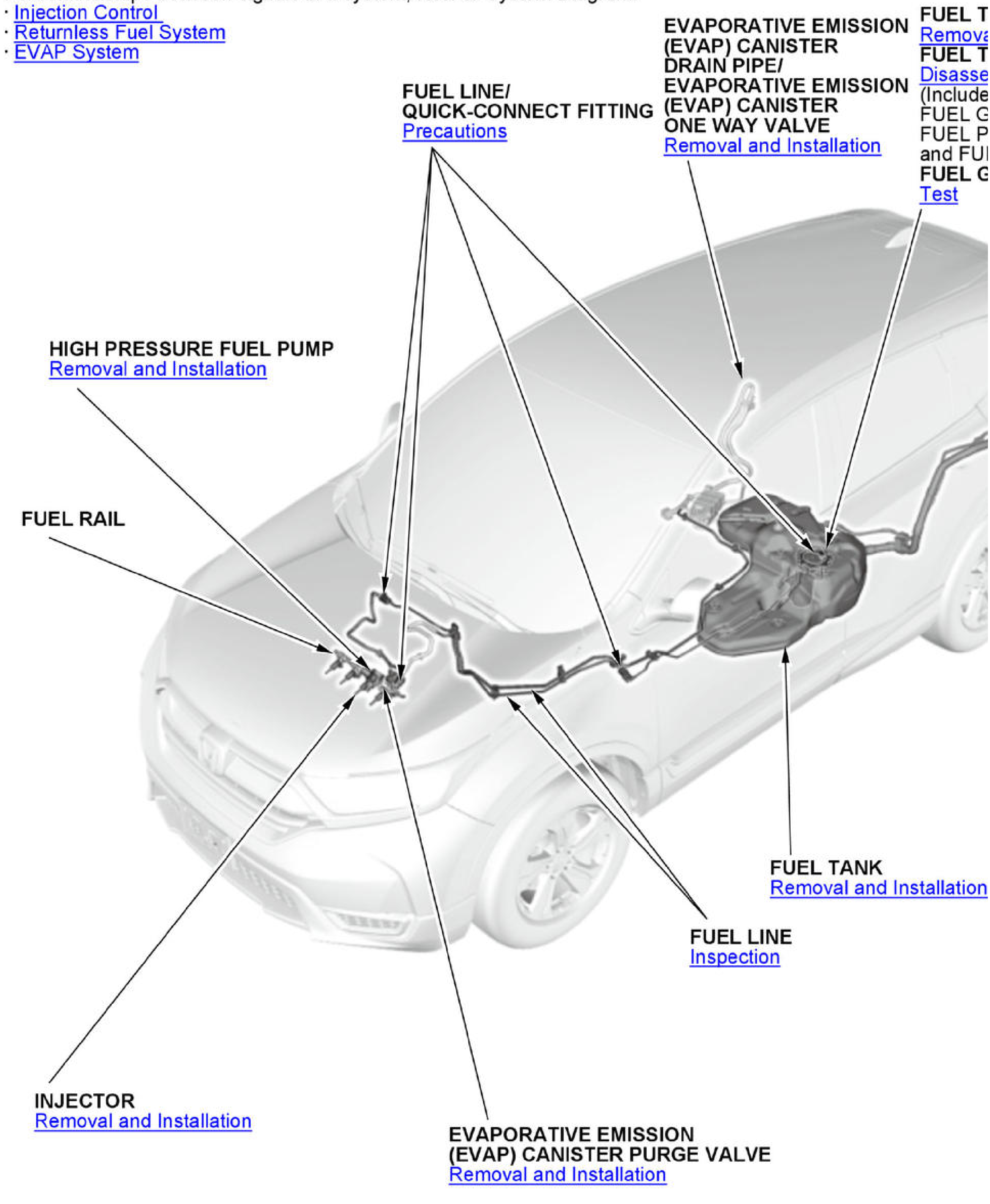
FUEL LINE/
QUICK-CONNECT FITTING
Precautions
EVAPORATIVE EMISSION
(EVAP) CANISTER
DRAIN PIPE/
EVAPORATIVE EMISSION
(EVAP) CANISTER
ONE WAY VALVE
Removal and Installation
FUEL T
Remova
FUEL T
Disasse
(Include
FUEL G
FUEL P
and FUI
FUEL G
Test
HIGH PRESSURE FUEL PUMP
Removal and Installation
FUEL RAIL
FUEL TANK
Removal and Installation
FUEL LINE
Inspection
INJECTOR
Removal and Installation
EVAPORATIVE EMISSION
(EVAP) CANISTER PURGE VALVE
Removal and Installation

1.5 L engine (USA and Canada models)

For relationships between signals in a system, refer to System Diagram.

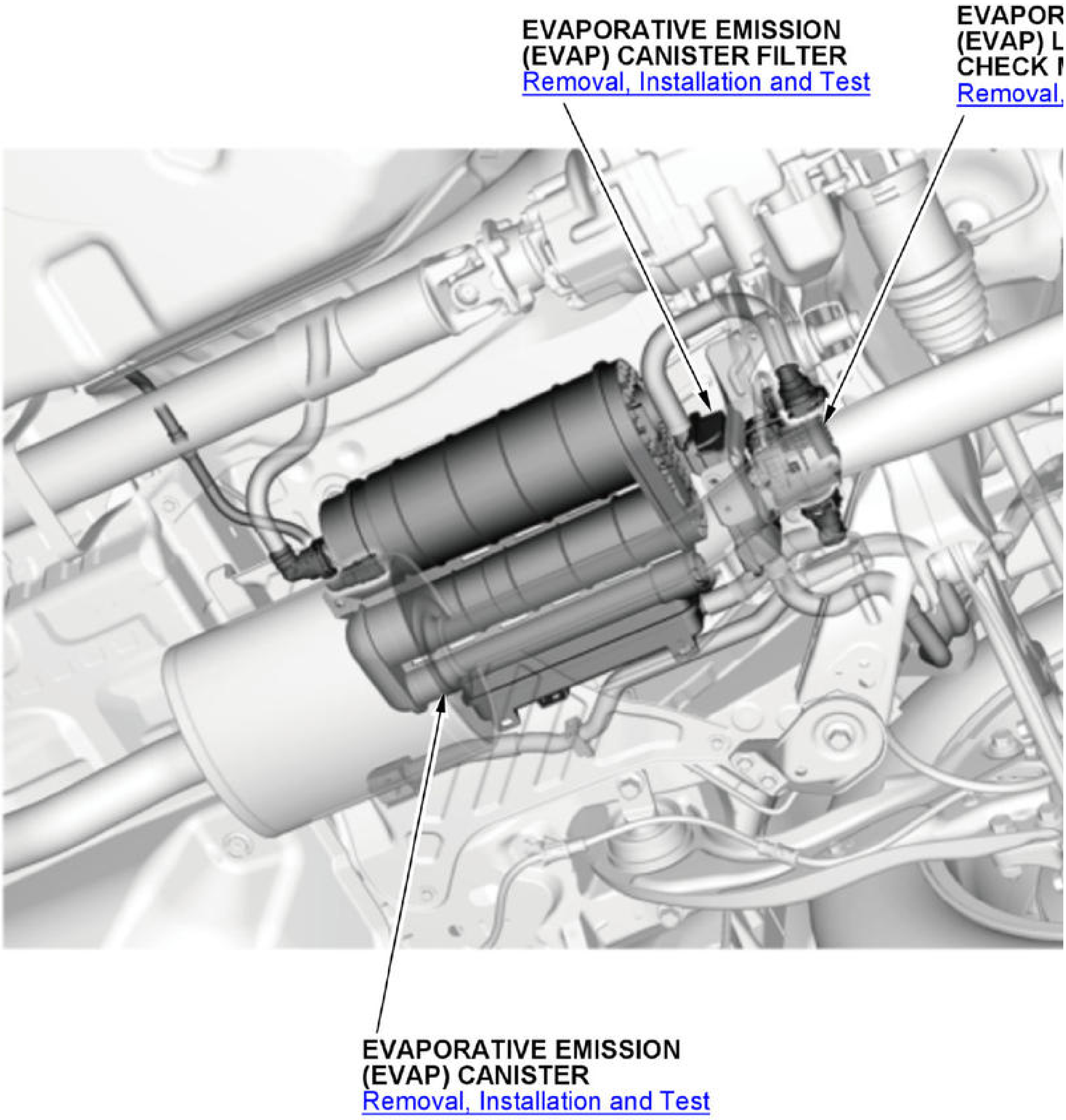
EVAPORATIVE EMISSION (EVAP) CANISTER FILTER
Removal, Installation and Test
EVAPOR
(EVAP) L
CHECK
Removal,
EVAPORATIVE EMISSION (EVAP) CANISTER
Removal, Installation and Test

2.4 L engine (USA models)

For relationships between signals in a system, refer to System Diagram.

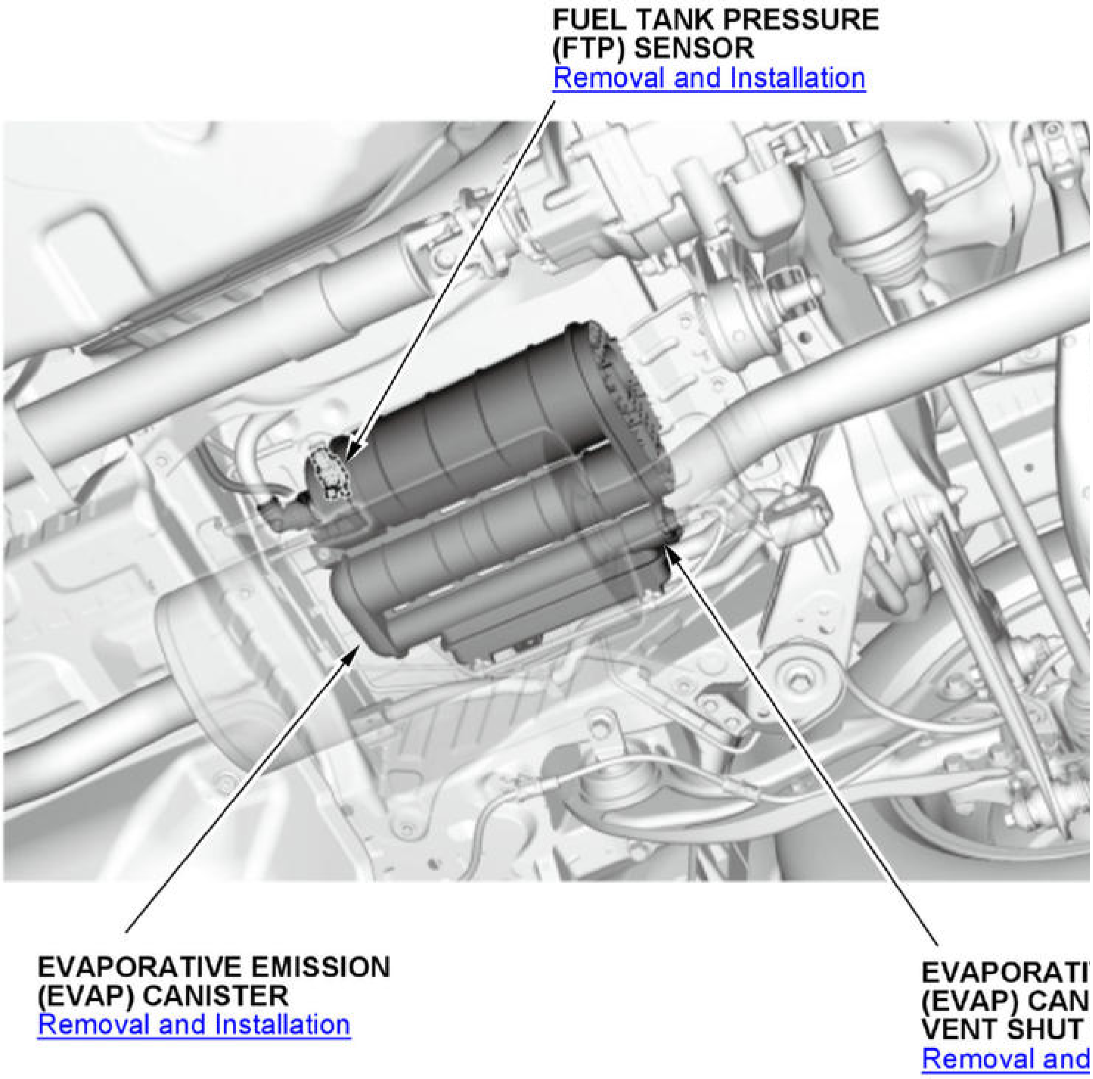
FUEL TANK PRESSURE
(FTP) SENSOR
Removal and Installation
EVAPORATIVE EMISSION
(EVAP) CANISTER
Removal and Installation
EVAPORATI
(EVAP) CAN
VENT SHUT
Removal and

Mexico models

For relationships between signals in a system, refer to System Diagram.

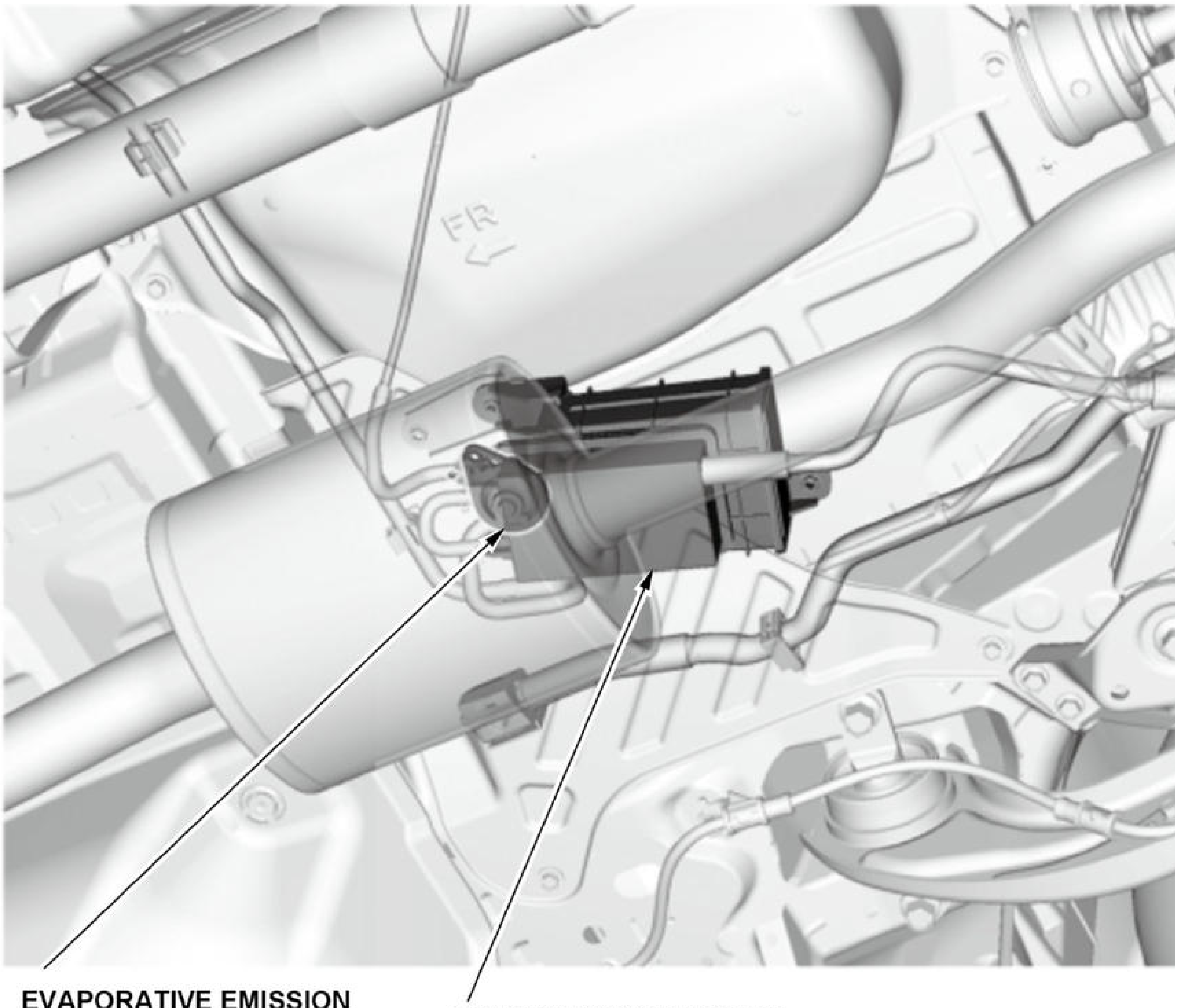
FR
EVAPORATIVE EMISSION (EVAP) TWO WAY VALVE
Removal, Installation, and Test
EVAPORATIVE EMISSION (EVAP) CANISTER
Removal, Installation, and Test

SYMPTOM TROUBLESHOOTING

FUEL AND EMISSIONS SYSTEMS SYMPTOM TROUBLESHOOTING

Engine stalls - Diagnostic interview

Engine stalls - Diagnostic interview

- Date	B	B
B	B	B
- Place	B	B
B	B	B
1. Accessories/modifications	A: No modification	B: Modified
B		
2. Situation when occurred	Booming noise, vibration occurs when deceleration, stopping, engine stalls	
B		
3. Situation when occurred	Engine stalls without vibrations as if stopped by turning off the ignition switch	
B	B	
4. Situation when occurred	Outside temperature, engine temperature (cold/warmed-up), engine could restart right away or not, others	

Engine stalls condition - Possible cause pattern chart from diagnostic interview

B	Conditions when the engine stalls	Possible causes
Pattern 1	Accessories/modifications	"Hard to start engine" or "engine stall" sometimes occurs due to a fa duct, intake manifold, or exhaust system.(Intermittent failure may oc
Pattern 2	Booming noise, vibration occurs when deceleration, stopping, engine stalls	The following intermittent failures may exist. • Intermittent failure of PGM-FI main relay 2 • Faulty fuel supply (parameter ST FUEL TRIM) • Delay of VTEC, VTC system function (parameter VTEC) (onl • Delay of lock-up operation (parameter SLIP RATIO OF TORC
Pattern 3	Engine stalls without vibrations as if turning off the ignition switch	The following intermittent failures may exist. • Intermittent failure of ignition coil relay • Intermittent failure of PGM-FI main relay 1 • Intermittent failure of PGM-FI subrelay • Intermittent failure of ETCS control relay

Engine stalls (1.5 L Engine)

Engine stalls

Special Tools Required

Vacuum Pump/Gauge, 0-30 inHg Snap-on YA4000A or equivalent, commercially available

NOTE:

- Before beginning this troubleshooting, do a customer diagnostic interview.
-
  - When the symptom cannot be duplicated, you can do the troubleshooting using the on-board snapshot information in this procedure . Refer to the dia total mileage, and compare the total mileage which is estimated from the interview when a failure occurred and the parameter (total mileage) in the on-boar when the failure occurred corresponds with the date on which the on-board snapshot information was recorded. If it doesn't, the on-board snapshot informat
- Before beginning this troubleshooting:
-
  - Make sure the 12 volt battery is fully charged.
  - Make sure the fuel tank is at least 1/4 full.
  - Make sure the engine oil level is correct.
- After the troubleshooting, reset the PCM with the HDS to erase the on-board snapshot information recorded on the PCM.

1. DTC check

   -1. Turn the vehicle to the ON mode.

   -2. Check for Pending or Confirmed DTCs with the HDS.

DTC Description	**Confirmed DTC**
B	B

   DTC (PGM-FI)

   Are any Pending or Confirmed DTCs indicated?

   YES

   Go to the indicated DTCs troubleshooting.

   NO

   Go to step 2.

   NOTE: If the HDS does not communicate with the vehicle, go to the PCM power and ground circuit troubleshooting .

2. Body electrical system DTC check

   -1. Check for body electrical system DTCs with the HDS.

DTC Description	**DTC**
B	B

   DTC (Body Control Module)

   Are any DTCs indicated?

   YES

   Go to the troubleshooting for body electrical system DTC(s) .

   NO

   Go to step 3.

3. Problem verification:

   Set the HDS to record a SNAPSHOT of following parameters for 30 seconds.

- ENGINE SPEED
- MAF SENSOR
- ECT SENSOR 1
- BATTERY
- CKP NO PULSE
- CKP NOISE
- FUEL PRESSURE CONVERTED FROM PF SENSOR
- FUEL PRESSURE DIRECT INJECTION SYSTEM
- AF FB (ST FUEL TRIM)
- EVAP PC DUTY
- MISFIRE
- A/C CLUTCH
- PNP SWITCH
- SLIP RATIO OF TORQ OR STARTCLUTCH

Data List

-2. Begin the snapshot, then start the engine and let it idle without load (in P or N).

Did the engine stall?

YES

Go to step 5 (diagnosis by parameter (MAF SENSOR)).

NO

Go to step 4.

4. On-board snapshot check

-1. Check for a record of Engine Stall 2 in the on-board snapshot with the HDS.

On-board Snapshot

Is there an Engine Stall 2 record in the on-board snapshot?

YES

Go to step 5 (diagnosis by parameter (MAF SENSOR)).

NO

Go to step 17 (fuel system troubleshooting).

NOTE: If an engine stall on-board snapshot was not found, the snapshot may have been lost due to low 12 volt battery voltage or because of 12 volt battery disco

5. On-board snapshot check (MAF SENSOR):

NOTE: Use the on-board snapshot in the case of an intermittent failure, or use the snapshot in the case of reproducible failure.

-1. Check for a record of Engine Stall 2 in the on-board snapshot or the recorded snapshot with the HDS.

On-board Snapshot

-2. Select the MAF SENSOR and ENGINE SPEED in the configuration list.

Check the recorded snapshot or on-board snapshot parameters at the time of the engine stall, then compare the MAF SENSOR pattern from the charts, and determ

Pattern	Symptom (Diagnosis by parameter)	Additio
Pattern 1	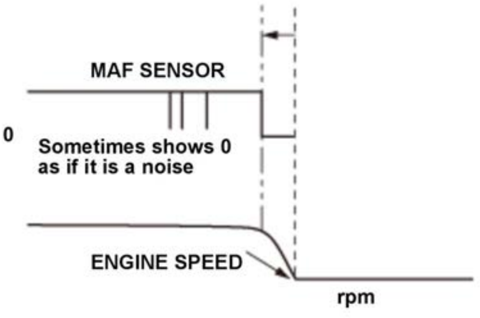 Poor connection of MAF SENSOR	If the eng shows "0 faulty M. noise in t

Pattern	Symptom (Diagnosis by parameter)	Additior
Pattern 2	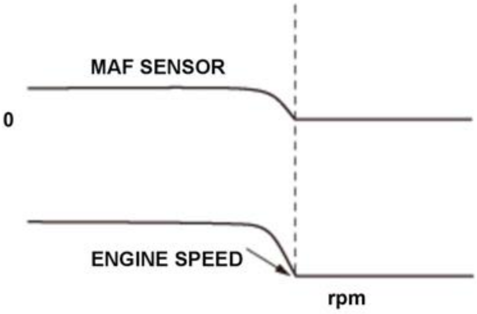 MAF SENSOR normal	When th SPEED,

Which pattern is indicated?

Pattern 1

Check MAF sensor/IAT sensor 1 for loose terminals or poor connections. If the terminals and connections are OK, **substitute a known-good MAF sensor/IAT s**

Pattern 2

Go to step 6 (diagnosis by parameter (ECT SENSOR 1)).

6. On-board snapshot check (ECT SENSOR 1):

NOTE: Use the on-board snapshot in the case of an intermittent failure, or use the snapshot in the case of a reproducible failure.

-1. Check for a record of Engine Stall 2 in the on-board snapshot or the recorded snapshot with the HDS.

On-board Snapshot

-2. Select the ECT SENSOR 1 and ENGINE SPEED in the configuration list.

Check the recorded snapshot or on-board snapshot parameters at the time of the engine stall, then compare ECT SENSOR 1 pattern from the charts, and determin

Pattern	Symptom (Diagnosis by parameter)	Additior
Pattern 1	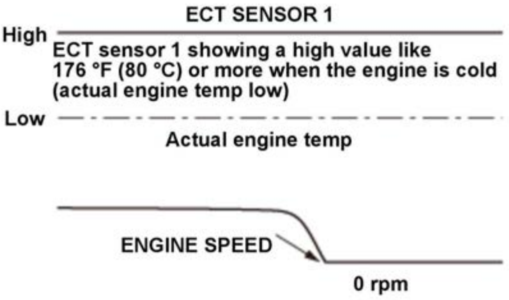 ECT SENSOR 1 high	When EC deg.C) or sensor 1 PCM ma operation
Pattern 2	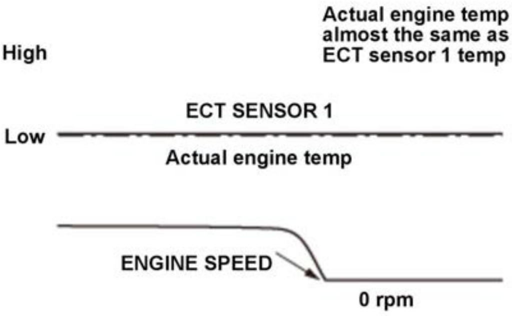 ECT SENSOR 1 normal	If actual ECT sens

Which pattern is indicated?

Pattern 1

Check for a short in the ECT sensor 1 circuit and a failure in ECT sensor 1.

Pattern 2

Go to step 7.

7. ECT sensor 1 check

-1. Turn the vehicle to the OFF (LOCK) mode.

-2. Let the engine cool for 24 hours.

-3. Measure the ambient temperature of the engine with the thermometer.

-4. Turn the vehicle to the ON mode, but do not start the engine.

-5. Check the parameter(s) below with the HDS.

Signal	Current conditions
	Values
ECT SENSOR 1	B
ECT SENSOR 2	B

Are the values of ECT SENSOR 1, ECT SENSOR 2, and the ambient temperature almost the same?

YES

Go to step 8 (diagnosis by parameter (BATTERY)).

NO

If the value of ECT SENSOR 1 is much higher (or lower) than that of ECT SENSOR 2 and the ambient temperature, check for the ECT sensor 1 circuit and a fail

8. On-board snapshot check (BATTERY):

NOTE: Use the on-board snapshot in the case of an intermittent failure, or use the snapshot in the case of a reproducible failure.

-1. Check for a record of Engine Stall 2 in the on-board snapshot or the recorded snapshot with the HDS.

On-board Snapshot

Select the BATTERY and ENGINE SPEED in the configuration list.

Check the recorded snapshot or on-board snapshot parameters at the time of the engine stall, then compare the BATTERY pattern from the charts, and determine t

Pattern	Symptom (Diagnosis by parameter)	Additio
Pattern 1	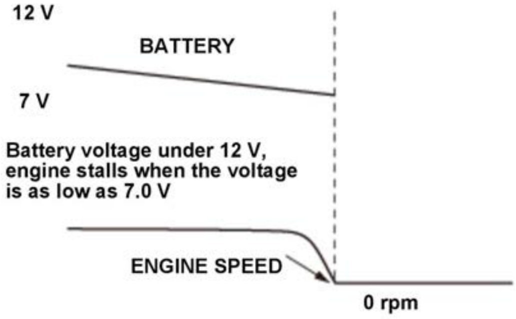 BATTERY voltage low	• Wl lov cau • Fo (fu
Pattern 2	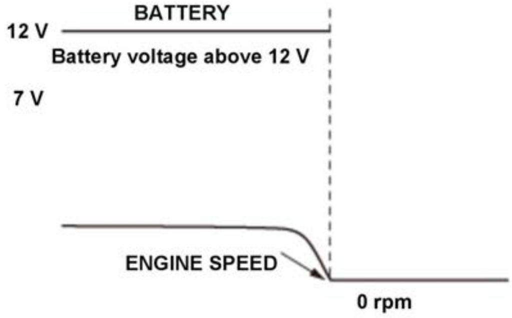 BATTERY voltage normal	If the BA engine st

Which pattern is indicated?

Pattern 1

Test the 12 volt battery , and check the 12 volt battery cables and terminals.

Pattern 2

Go to step 9 (diagnosis by parameter (CKP NO PULSE)).

9. On-board snapshot check (CKP NO PULSE):

   NOTE: Use the on-board snapshot in the case of an intermittent failure, or use the snapshot in the case of a reproducible failure.

   -1. Check for a record of Engine Stall 2 in the on-board snapshot or the recorded snapshot with the HDS.

   On-board Snapshot

   -2. Select the CKP NO PULSE and ENGINE SPEED in the configuration list.

   Check the recorded snapshot or on-board snapshot parameters at the time of the engine stall, then compare the CKP NO PULSE pattern from the charts, and deter

Pattern	**Symptom (Diagnosis by parameter)**	**Addition**
Pattern 1	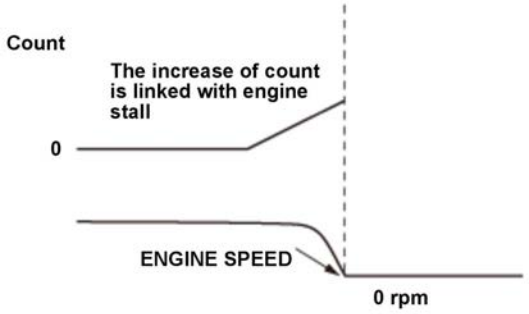 Count is continuously up	When C receiving
Pattern 2	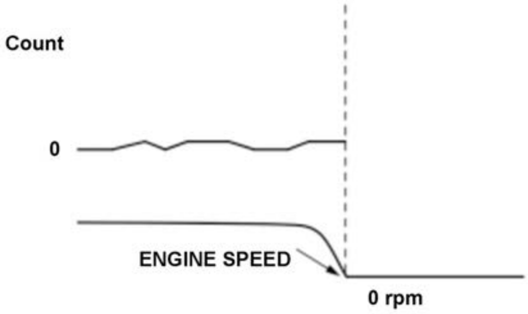 Count is continuously not up	B

   Which pattern is indicated?

   Pattern 1

   Go to the troubleshooting for DTC P0335 .

   Pattern 2

   Go to step 10 (diagnosis by parameter (CKP NOISE)).

10. On-board snapshot check (CKP NOISE):

    NOTE: Use the on-board snapshot in the case of an intermittent failure, or use the snapshot in the case of a reproducible failure.

    -1. Check for a record of Engine Stall 2 in the on-board snapshot or the recorded snapshot with the HDS.

    On-board Snapshot

    -2. Select the CKP NOISE and ENGINE SPEED in the configuration list.

    Check the recorded snapshot or on-board snapshot parameters at the time of the engine stall, then compare the CKP NOISE pattern from these charts, and determi

Pattern	Symptom (Diagnosis by parameter)	Additio
Pattern 1	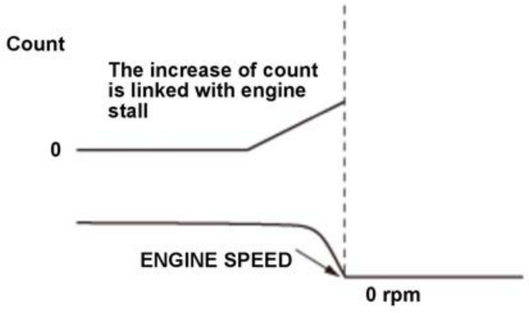 Count is continuously up	When CI receiving signal.
Pattern 2	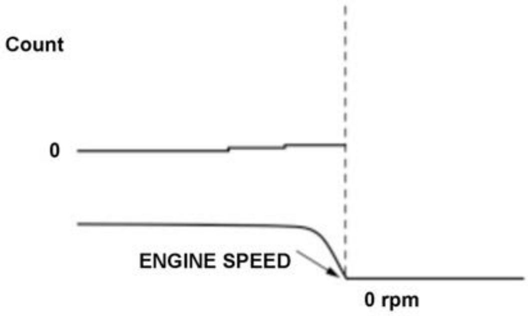 Count is continuously not up	B

Which pattern is indicated?

Pattern 1

Go to the troubleshooting for DTC P0339 .

Pattern 2

Go to step 11 (diagnosis by parameter (FUEL PRESSURE CONVERTED FROM PF SENSOR and FUEL PRESSURE DIRECT INJECTION SYSTEM)).

11. On-board snapshot or snapshot check (FUEL PRESSURE CONVERTED FROM PF SENSOR and FUEL PRESSURE DIRECT INJECTION SYSTEM):

NOTE: Use the on-board snapshot in the case of an intermittent failure, or use the snapshot in the case of a reproducible failure.

-1. Check for a record of Engine Stall 2 in the on-board snapshot or the recorded snapshot with the HDS.

On-board Snapshot

Select the FUEL PRESSURE CONVERTED FROM PF SENSOR, FUEL PRESSURE DIRECT INJECTION SYSTEM, and ENGINE SPEED in the configuratio

Check the recorded snapshot or on-board snapshot parameters at the time of the engine stall, then compare the FUEL PRESSURE CONVERTED FROM PF SEN INJECTION SYSTEM patterns from these charts, and determine the problem.

Pattern	Symptom (Diagnosis by parameter)	Additio
Pattern 1	FUEL PRESSURE CONVERTED FROM PF SENSOR drops to almost 0 kPa before engine stalls 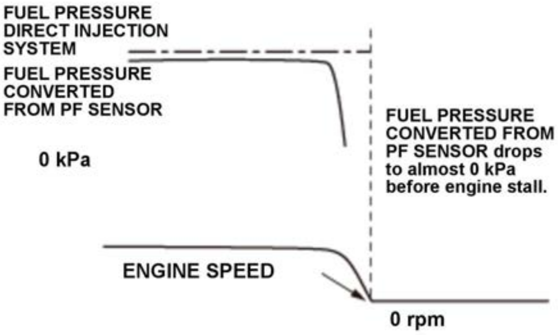	If the FU SENSOR the engin - Fu - Fu - Sp - Fu - Fu - Hi

Pattern	Symptom (Diagnosis by parameter)	Addition
Pattern 2	Normal when the FUEL PRESSURE CONVERTED FROM PF SENSOR is nearly the same as the FUEL PRESSURE 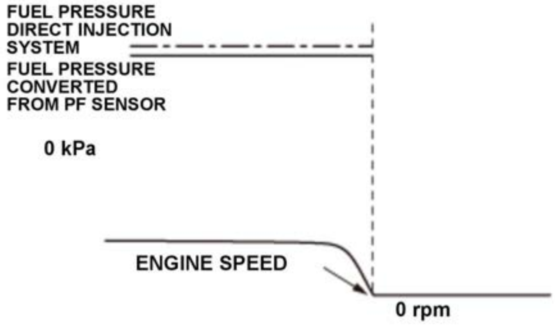 DIRECT INJECTION SYSTEM.	If the FU SENSOR PRESSU engine st

Which pattern is indicated?

Pattern 1

Go to the troubleshooting for DTC P0087 .

Pattern 2

Go to step 12 (diagnosis by parameter (AF FB (ST FUEL TRIM))).

12. On-board snapshot check (AF FB (ST FUEL TRIM)):

NOTE: Use the on-board snapshot in the case of an intermittent failure, or use the snapshot in the case of a reproducible failure.

-1. Check for a record of Engine Stall 2 in the on-board snapshot or the recorded snapshot with the HDS.

On-board Snapshot

-2. Select the AF FB (ST FUEL TRIM), EVAP PC DUTY, and ENGINE SPEED in the configuration list.

Check the recorded snapshot or on-board snapshot parameters at the time of the engine stall, then compare the AF FB (ST FUEL TRIM) pattern from the charts, a

Pattern	Symptom (Diagnosis by parameter)	Addition
Pattern 1	Engine stalls while AF FB (ST FUEL TRIM) value increases 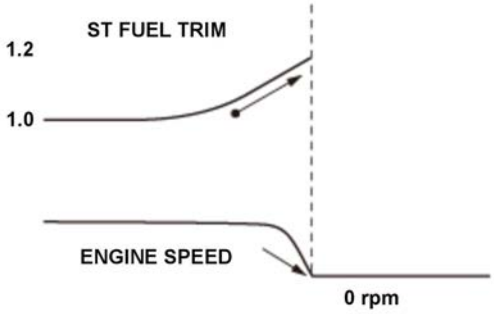	If the AF the engin
Pattern 2	Normal when the engine stalls when AF FB (ST FUEL TRIM) is around 1.0 (center value) 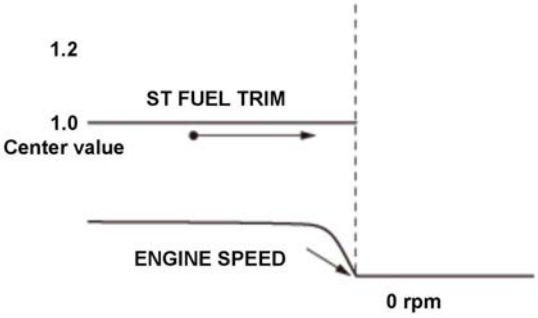	The fuel AF FB (

Pattern	Symptom (Diagnosis by parameter)	Additior
Pattern 3	Engine stalls when AF FB (ST FUEL TRIM) is around 0.8 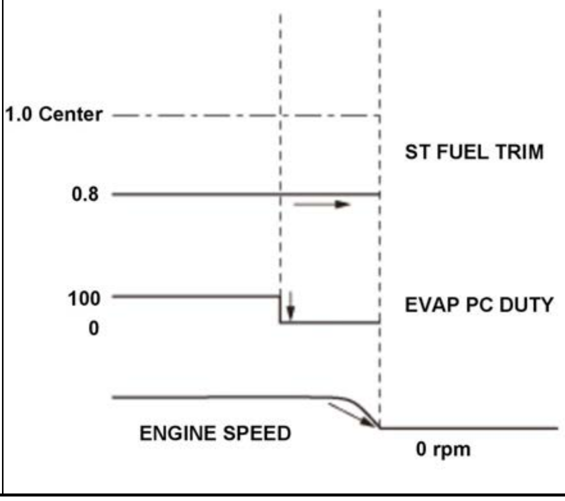 	When th around 0 purge val 0 %). If t toward 1

Pattern	Symptom (Diagnosis by parameter)	Additior
Pattern 4	Normal when the engine stalls with AF FB (ST FUEL TRIM) is around 1.0 (center value) 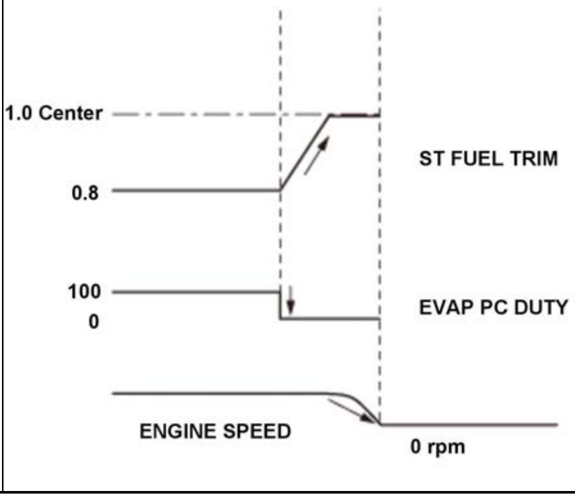 	When th around 0 purge val 0 %). If t 1.0, the F

Which pattern is indicated?

1. Pattern 1

   Diagnostic procedure:

   - Check the fuel pump operation sound.
   - **Go to the fuel pressure test**.
   - **Go to the fuel pump circuit troubleshooting**.
   - **Test the relay circuit board (PGM-FI main relay 1 circuit)** .
   - **Test PGM-FI main relay 2** .
   - Check the following fuses:
   -
     - No. A7 (15 A) fuse (in the under-hood fuse/relay box)
     - No. D8 (15 A) fuse (in the under-dash fuse/relay box)

   Pattern 3

   Check the EVAP canister purge valve for leaks.

   Pattern 2 and 4

   Go to step 13 (diagnosis by parameter (MISFIRE)).

13. On-board snapshot check (MISFIRE):

NOTE: Use the on-board snapshot in the case of an intermittent failure, or use the snapshot in the case of a reproducible failure.

-1. Check for a record of Engine Stall 2 in the on-board snapshot or the recorded snapshot with the HDS.

On-board Snapshot

-2. Select the MISFIRE and ENGINE SPEED in the configuration list.

Check the recorded snapshot or on-board snapshot parameters at the time of the engine stall, then compare those snapshots to the MISFIRE pattern from the chart

Pattern	Symptom (Diagnosis by parameter)	Addition
Pattern 1	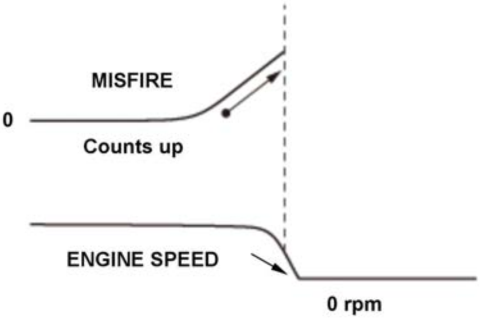 Engine stalls after MISFIRE counts go up	When en the engin
Pattern 2	Normal when engine stalls with MISFIRE count remaining constant 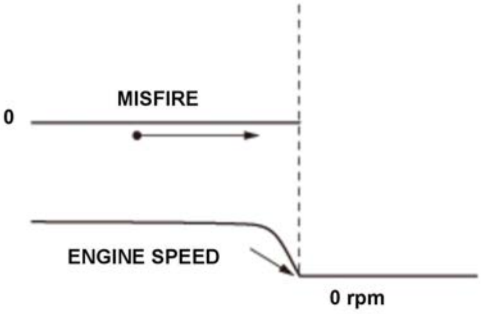	If the MI engine st

Which pattern is indicated?

Pattern 1

Diagnostic procedure:

- If misfire counts go up without storing misfire DTC P0300 - P0304, **go to the troubleshooting for DTC P0300 - P0304** .
- If the misfire count reaches the malfunction threshold, DTC P0300 - P0304 is stored. **Go to the troubleshooting for DTC P0300 - P0304** .

Pattern 2

Go to step 14 (diagnosis by parameter (A/C CLUTCH)).

14. On-board snapshot check (A/C CLUTCH):

NOTE: Use the on-board snapshot in the case of an intermittent failure, or use the snapshot in the case of a reproducible failure.

-1. Check for a record of Engine Stall 2 in the on-board snapshot or the recorded snapshot with the HDS.

-2. Select the A/C CLUTCH and ENGINE SPEED in the configuration list.

Check the recorded snapshot or on-board snapshot parameters at the time of the engine stall, then compare the A/C CLUTCH pattern from the charts, and determi

Pattern	Symptom (Diagnosis by parameter)	Addition
Pattern 1	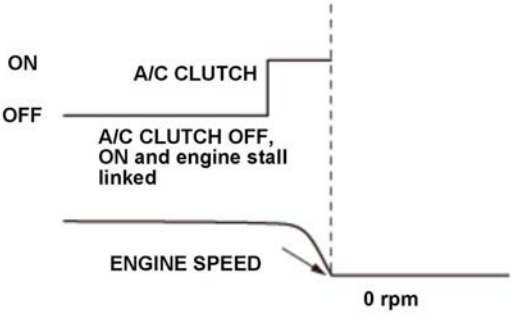 Engine stalls when A/C CLUTCH is ON.	If the eng compress by excess

Pattern	Symptom (Diagnosis by parameter)	Additio
Pattern 2	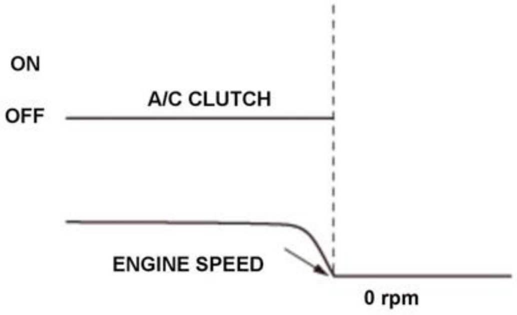 Engine stalls during A/C CLUTCH is OFF.	If the eng compress cause of

Which pattern is indicated?

Pattern 1

Diagnostic procedure:

- Check for over-charge A/C refrigerant.
- Check for charging with the wrong refrigerant.
- Check for drag of the A/C compressor and A/C compressor clutch.

Pattern 2

Go to step 15 (diagnosis by parameter (PNP SWITCH)).

15. On-board snapshot check (PNP SWITCH):

NOTE: Use the on-board snapshot in the case of an intermittent failure, or use the snapshot in the case of a reproducible failure.

-1. Check for a record of Engine Stall 2 in the on-board snapshot or the recorded snapshot with the HDS.

On-board Snapshot

-2. Select the PNP SWITCH and ENGINE SPEED in the configuration list.

Check the recorded snapshot or on-board snapshot parameters at the time of the engine stall, then compare the PNP SWITCH pattern from the charts, and determi

Pattern	Symptom (Diagnosis by parameter)	Additio
Pattern 1	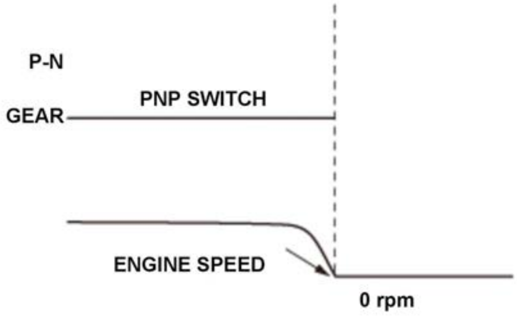 Transmission is in-gear condition	In-gear c Engine st also is a
Pattern 2	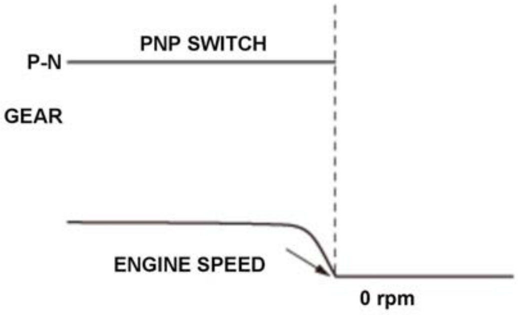 Transmission is N or P condition	N or P co engine st Transmis

Which pattern is indicated?

Pattern 1

Go to step 16 (diagnosis by parameter (SLIP RATIO OF TORQ OR STARTCLUTCH)).

Pattern 2

Go to step 17 (fuel system troubleshooting).

16. On-board snapshot check (SLIP RATIO OF TORQ OR STARTCLUTCH):

    NOTE: Use the on-board snapshot in the case of an intermittent failure, or use the snapshot in the case of a reproducible failure.

    -1. Check for a record of Engine Stall 2 in the on-board snapshot or the recorded snapshot with the HDS.

    On-board Snapshot

    -2. Select the SLIP RATIO OF TORQ OR STARTCLUTCH, ENGINE SPEED, and VEHICLE SPEED in the configuration list.

    Check the recorded snapshot or on-board snapshot parameters at the time of the engine stall, then compare the SLIP RATIO OF TORQ OR STARTCLUTCH patt problem.

Pattern	**Symptom (diagnosis by parameter)**	**Additio**
Pattern 1	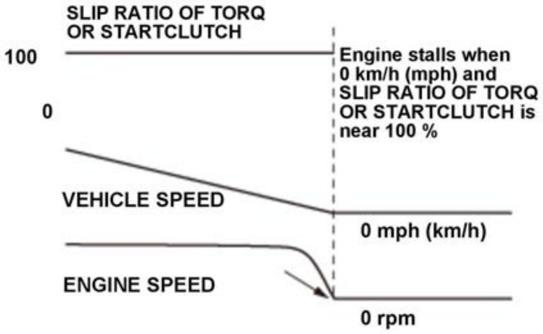 Engine stall caused by lock-up	When en STARTC stopping.
Pattern 2	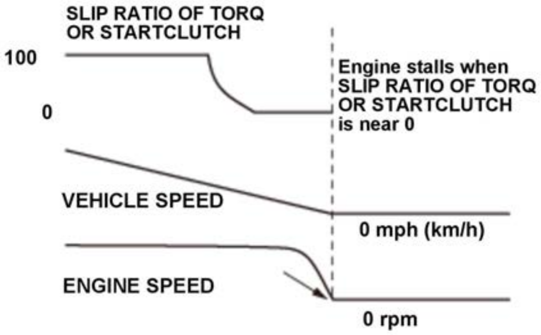 Lock-up normal	Lock-up RATIO C the midd

    Which pattern is indicated?

    Pattern 1

    Go to the DCT systems symptom troubleshooting index for torque converter clutch does not disengage; engine stalls easily .

    Pattern 2

    Go to step 17 (fuel system troubleshooting).

17. Fuel pressure check (low pressure side)

    -1. **Do the fuel pressure test**.

    Is the fuel pressure OK?

    YES

    Go to step 18 (ignition system troubleshooting).

    NO

    Check for following parts:

    - **Fuel pump circuit**
    - **Fuel pressure regulator**
    - **Fuel filter**

18. Spark plug visual check

    -1. Turn the vehicle to the OFF (LOCK) mode.

-2. **Remove the spark plugs** .

-3. **Check the condition of the spark plug electrodes** .

NOTE: Make sure the spark plugs are the correct part number for the vehicle. If the plugs are aftermarket or they are not the correct part number, replace all of th

Is the electrode damaged or wet?

1. YES (wet)

   Check the following conditions. If those conditions do not apply, go to step 19.

   - In very cold conditions, multiple very short trips can cause the spark plug to foul. If this is the case, drive the vehicle a longer distance and recheck.
   - Incorrect or poor quality fuel can cause a wet spark plug. Replace the fuel and recheck.

   YES (damaged)

   Replace the damaged spark plugs , determine the cause of the spark plug damage.

   NO

   Go to step 19.

19. Determine possible failure area (ignition system, others)

-1. Turn the vehicle to the OFF (LOCK) mode.

-2. Fit a spark plug to the ignition coil and ground it to the engine.

-3. Turn the vehicle to the ON mode.

-4. Select ALL INJECTORS STOP in the INSPECTION MENU with the HDS, and stop fuel injection from the injector.

ALL INJECTORS STOP

Crank the engine and watch for spark at the spark plugs.

Do the spark plugs sparkΩ

YES

Select PCM reset in the PGM-FI INSPECTION MENU to cancel ALL INJECTORS STOP with the HDS, then go to step 21 (engine compression troubleshooting

NO

Go to step 20.

20. Ignition coil power circuit check

-1. Turn the vehicle to the OFF (LOCK) mode.

-2. Disconnect the following connector(s).

Ignition coil(s) 3P connector from the problem cylinder

-3. Turn the vehicle to the ON mode.

-4. Measure the voltage between test points 1 and 2.

Test condition	Vehicle ON mode
B	Ignition coil 3P connector (problem cylinder): disconnected
Test point 1	Ignition coil 3P connector (female terminal) No. 1: ①
Test point 2	Body ground

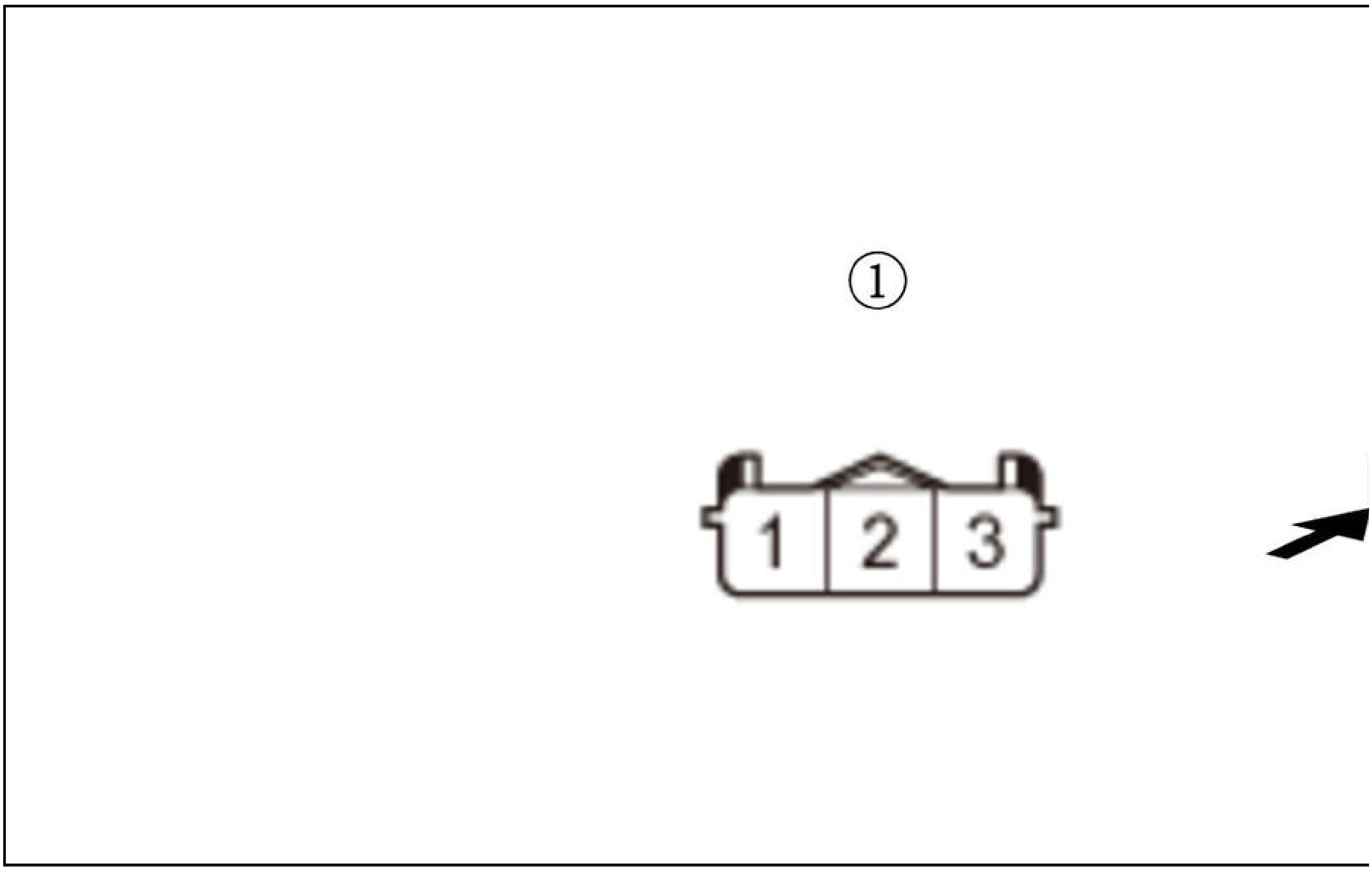

Is there battery voltage?

YES

The ignition coil power circuit is OK. **Replace the ignition coil(s)** .

NO

Repair an open in the IG COIL RLY OUT/IG1(COIL)/IG1(IGN) wire between the relay circuit board and the ignition coil.

21. Engine compression check

-1. **Do an engine compression inspection** .

Is the engine compression OK?

YES

Go to step 22 (EVAP canister purge valve check).

NO

Check for wear or damage to these parts:

- Incorrect valve clearance
- Confirmation of cam timing
- Oil pressure relief valve
- Damage or worn cam lobes
- Damage or worn valve and seats
- Damage cylinder head gasket
- Damage or worn piston rings
- Damage or worn piston and cylinder bore

22. EVAP canister purge valve check

-1. Turn the vehicle to the OFF (LOCK) mode.

-2. Disconnect the following connector.

EVAP canister purge valve 2P connector

-3. **Remove the EVAP canister purge valve** with its vacuum hose connected.

-4. Disconnect the vacuum hose (purge line) (A) from the EVAP canister purge valve (B) in the engine compartment, and connect a vacuum pump/gauge, 0-30 inHg

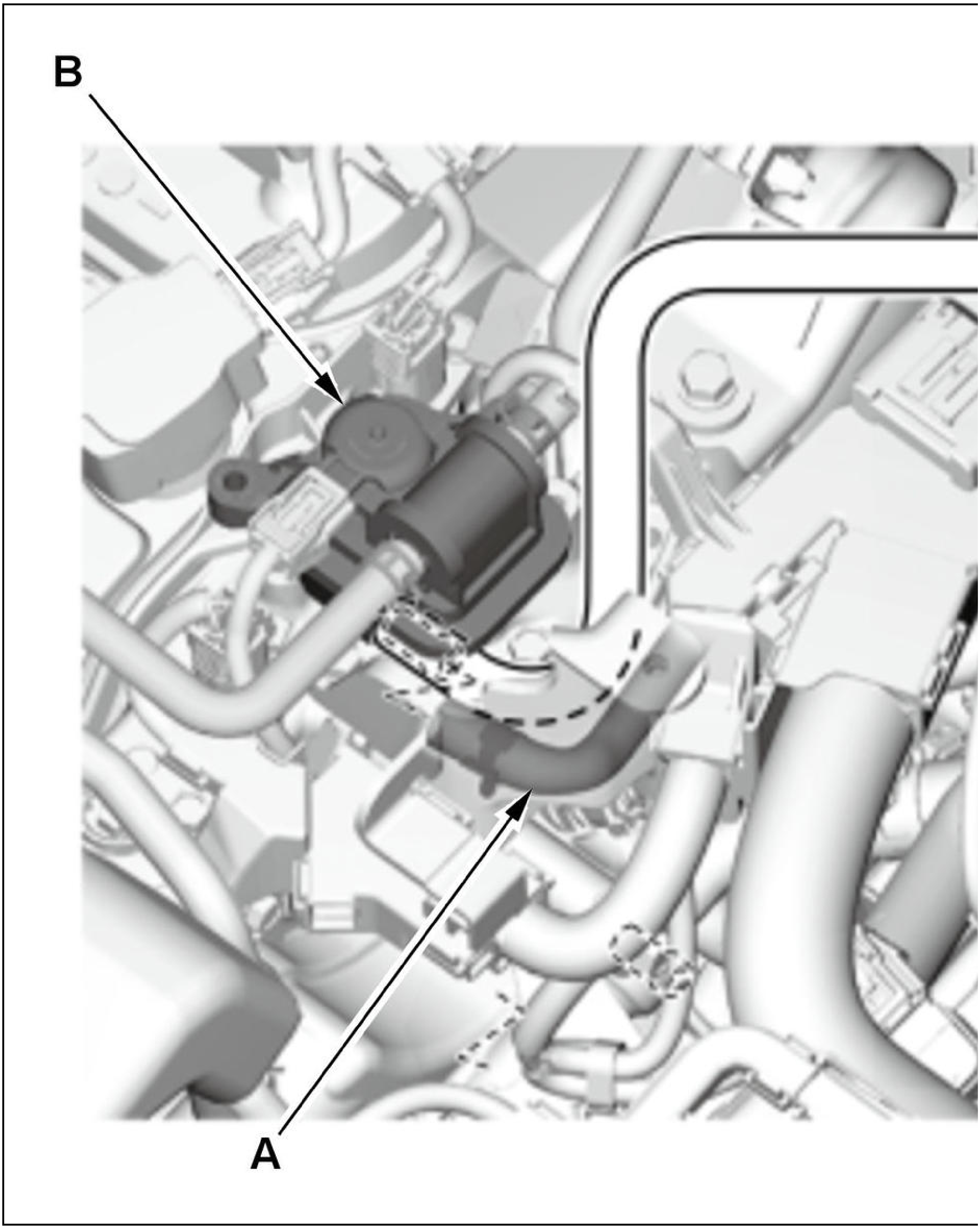

-5. Start the engine.

Does the vacuum pump indicate vacuum?

YES

When the climate is warm, fuel vapor from the canister line to the fuel tank enters intake manifold, enriching mixture (excessively rich), causing the engine to stal
canister purge valve .

NO (Reproducible failure)

Go to step 23 (fuse check).

NO (Intermittent failure)

Go to step 24 (relay check).

23. Fuse check

-1. Turn the vehicle to the OFF (LOCK) mode.

-2. Check the following fuses.

Fuse	No. A7 (15 A) to relay circuit board (PGM-FI main relay 1 circuit)
	No. A15 (15 A) to relay circuit board (ignition coil relay circuit)
	No. A8 (15 A) to relay circuit board (PGM-FI subrelay circuit)
	No. A10 (20 A) to injector relay
Location	Under-hood fuse/relay box

Fuse	No. D8 (15 A) to PGM-FI main relay 2
Location	Under-dash fuse/relay box

Are the fuses OK?

YES

Go to step 24 (relay check).

NO

Replace the blown fuse(s).

24. Relay check

-1. Turn the vehicle to the OFF (LOCK) mode.

Test the following relays:

NOTE: In situations where the failure is difficult to reproduce, the following relays may have an intermittent failure.

- **Relay circuit board (includes PGM-FI main relay 1 circuit, ignition coil relay circuit, PGM-FI subrelay circuit)**
- **PGM-FI main relay 2**
- **Injector relay**

Are the relay circuit board and the relays OK?

YES

Go to step 25 (power and ground terminal check).

NO

Replace any damaged relay(s).

25. Power and ground terminal check:

Check the corrosion and looseness at the following terminals:

- 12 volt battery terminals
- Ground cable terminals between the engine and the body ground, and the transmission and the body ground
- Engine wire harness ground (G101, G102)

Are the terminals OK?

YES

Go to step 26 (connector terminal check).

NO

Repair any terminal(s) as needed.

26. Connector terminal check:

Check the foreign objects clogged and corrosion at the following connector terminals:

- **PCM connectors**
-
    - FI MAIN RLY OUT, FI MAIN RLY CL-
    - FUEL PUMP RLY CL-
    - INJ RLY OUT
    - FI SUB RLY OUT, FI SUB RLY CL-, +B VBACT
    - GND2, FI ECU GND, GND3, GND4, INJ GND1, INJ GND2
    - INJH1, INJL1, INJH2, INJL2, INJH3, INJL3, INJH4, INJL4
    - IGN01, IGN02, IGN03, IGN04
    - HPUMP H, HPUMP L
    - TDCAM
    - CRKP
    - PB

        - FGP
        - TW
        - IPV
        - MTR1, MTR2, THL1, THL2
    - CMP sensor A
    - CKP sensor
    - Ignition coils
    - Injectors
    - High pressure fuel pump
    - ECT sensor 1
    - MAF sensor/IAT sensor 1
    - MAP sensor
    - Throttle body
    - EVAP canister purge valve
    - Fuel tank unit

    Are the terminals OK?

    YES

    Go to the diagnostic interview for engine stalls.

    NO

    Repair any terminal(s) as needed.

Engine stalls (2.4 L Engine) (2017 2018 2019)

Engine stalls

Special Tools Required

Vacuum Pump/Gauge, 0-30 inHg Snap-on YA4000A or equivalent, commercially available

NOTE:

- Before beginning this troubleshooting, do a customer diagnostic interview.
-
    - When the symptom cannot be duplicated, you can do the troubleshooting using the on-board snapshot information in this procedure . Refer to the dia total mileage, and compare the total mileage which is estimated from the interview when a failure occurred and the parameter (total mileage) in the on-boar when the failure occurred corresponds with the date on which the on-board snapshot information was recorded. If it doesn't, the on-board snapshot informat
- Before beginning this troubleshooting:
-
    - Make sure the 12 volt battery is fully charged.
    - Make sure the fuel tank is at least 1/4 full.
    - Make sure the engine oil level is correct.
- After the troubleshooting, reset the PCM with the HDS to erase the on-board snapshot information recorded on the PCM.

1. DTC check

    -1. Turn the vehicle to the ON mode.

    -2. Check for Pending or Confirmed DTCs with the HDS.

DTC Description	Confirmed DTC
B	B

    DTC (PGM-FI)

    Are any Pending or Confirmed DTCs indicated?

    YES

    Go to the indicated DTC's troubleshooting.

    NO

    Go to step 2.

    NOTE: If the HDS does not communicate with the vehicle, go to the PCM power and ground circuit troubleshooting .

2. Body electrical system DTC check

    -1. Check for body electrical system DTCs with the HDS.

DTC Description	DTC
B	B

    DTC (Body Control Module)

    Are any DTCs indicated?

    YES

Go to the troubleshooting for body electrical system DTC(s) .

NO

Go to step 3.

3. Problem verification:

   Set the HDS to record a HIGH-SPEED SNAPSHOT of following parameters for 30 seconds.

   - ENGINE SPEED
   - MAF SENSOR
   - ECT SENSOR 1
   - BATTERY
   - CKP NO PULSE
   - CKP NOISE
   - FUEL PRESSURE CONVERTED FROM PF SENSOR
   - FUEL PRESSURE DIRECT INJECTION SYSTEM
   - AF FB (ST FUEL TRIM)
   - EVAP PC DUTY
   - MISFIRE
   - A/C CLUTCH
   - PNP SWITCH
   - SLIP RATIO OF TORQ OR STARTCLUTCH

   Data List

   -2. Begin the snapshot, then start the engine and let it idle without load (in P or N).

   Did the engine stall?

   YES

   Go to step 5 (diagnosis by parameter (MAF SENSOR)).

   NO

   Go to step 4.

4. On-board snapshot check

   -1. Check for a record of Engine Stall 2 in the on-board snapshot with the HDS.

   On-board Snapshot

   Is there an Engine Stall 2 record in the on-board snapshot?

   YES

   Go to step 5 (diagnosis by parameter (MAF SENSOR)).

   NO

   Go to step 17 (fuel system troubleshooting).

   NOTE: If an engine stall on-board snapshot was not found, the snapshot may have been lost due to low battery voltage or because of battery disconnection or rep

5. On-board snapshot check (MAF SENSOR):

   NOTE: Use the on-board snapshot in the case of an intermittent failure, or use the snapshot in the case of reproducible failure.

   -1. Check for a record of Engine Stall 2 in the on-board snapshot or the recorded snapshot with the HDS.

   On-board Snapshot

   -2. Select the MAF SENSOR and ENGINE SPEED in the configuration list.

   Check the recorded snapshot or on-board snapshot parameters at the time of the engine stall, then compare the MAF SENSOR pattern from the charts, and determ

Pattern	Symptom (Diagnosis by parameter)	Addition
Pattern 1	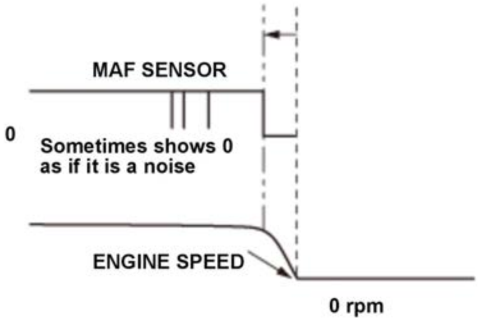 Poor connection of MAF SENSOR	If the eng shows "0 faulty M. noise in t
Pattern 2	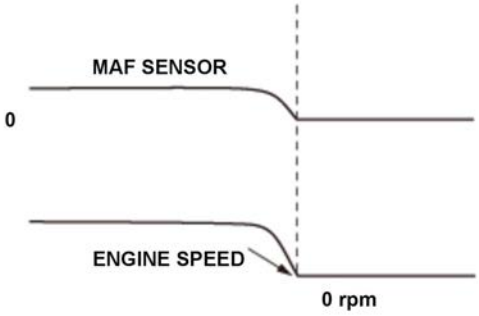 MAF SENSOR normal	When the SPEED,

Which pattern is indicated?

Pattern 1

Check the MAF sensor/IAT sensor for loose terminals or poor connections. If the terminals and connections are OK, **substitute a known-good MAF sensor/IAT**

Pattern 2

The MAF sensor/IAT sensor is OK. Go to step 6 (diagnosis by parameter (ECT SENSOR 1)).

6. On-board snapshot check (ECT SENSOR 1):

NOTE: Use the on-board snapshot in the case of an intermittent failure, or use the snapshot in the case of a reproducible failure.

-1. Check for a record of Engine Stall 2 in the on-board snapshot or the recorded snapshot with the HDS.

On-board Snapshot

-2. Select the ECT SENSOR 1 and ENGINE SPEED in the configuration list.

Check the recorded snapshot or on-board snapshot parameters at the time of the engine stall, then compare ECT SENSOR 1 pattern from the charts, and determin

Pattern	Symptom (Diagnosis by parameter)	Addition
Pattern 1	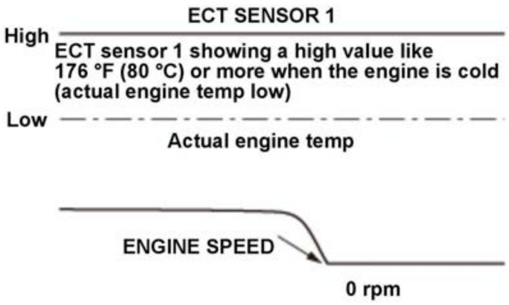 ECT SENSOR 1 high	When EC deg.C) or sensor 1 PCM ma operation

Pattern	Symptom (Diagnosis by parameter)	Addition
Pattern 2	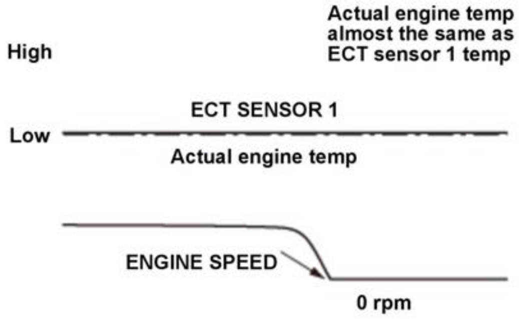 ECT SENSOR 1 normal	If actual ECT sen

Which pattern is indicated?

Pattern 1

Check for a short in the ECT sensor 1 circuit and a failure in ECT sensor 1.

Pattern 2

Go to step 7.

7. ECT sensor 1 check

-1. Turn the vehicle to the OFF (LOCK) mode.

-2. Let the engine cool for 24 hours.

-3. Measure the ambient temperature of the engine with the thermometer.

-4. Turn the vehicle to the ON mode, but do not start the engine.

-5. Check the parameter(s) below with the HDS.

Signal	Current conditions
	Values
ECT SENSOR 1	B
ECT SENSOR 2	B

Are the values of ECT SENSOR 1, ECT SENSOR 2, and the ambient temperature almost the same?

YES

ECT sensor 1 is OK. Go to step 8 (diagnosis by parameter (BATTERY)).

NO

If the value of ECT SENSOR 1 is much higher (or lower) than that of ECT SENSOR 2, and the ambient temperature, check for the ECT sensor 1 circuit and a fail

8. On-board snapshot check (BATTERY):

NOTE: Use the on-board snapshot in the case of an intermittent failure, or use the snapshot in the case of a reproducible failure.

-1. Check for a record of Engine Stall 2 in the on-board snapshot or the recorded snapshot with the HDS.

On-board Snapshot

Select the BATTERY and ENGINE SPEED in the configuration list.

Check the recorded snapshot or on-board snapshot parameters at the time of the engine stall, then compare the BATTERY pattern from the charts, and determine t

Pattern	Symptom (Diagnosis by parameter)	Addition
Pattern 1	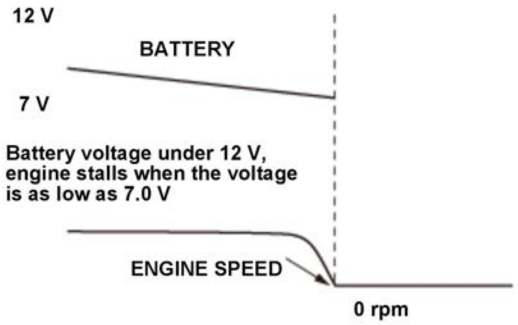 BATTERY voltage low	- Wl lov cau - Fo (fu

Pattern	Symptom (Diagnosis by parameter)	Additior
Pattern 2	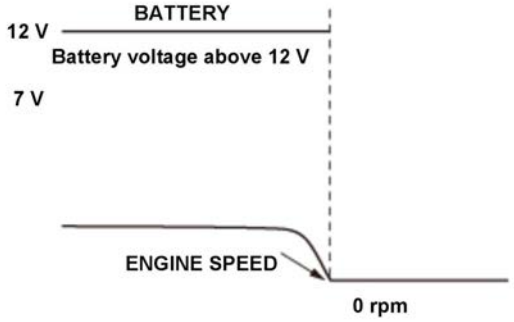 BATTERY voltage normal	If the BA engine st

Which pattern is indicated?

Pattern 1

Test the 12 volt battery , and check the 12 volt battery cables and terminals.

Pattern 2

The 12 volt battery is OK. Go to step 9 (diagnosis by parameter (CKP NO PULSE)).

9. On-board snapshot check (CKP NO PULSE):

NOTE: Use the on-board snapshot in the case of an intermittent failure, or use the snapshot in the case of a reproducible failure.

-1. Check for a record of Engine Stall 2 in the on-board snapshot or the recorded snapshot with the HDS.

On-board Snapshot

-2. Select the CKP NO PULSE and ENGINE SPEED in the configuration list.

Check the recorded snapshot or on-board snapshot parameters at the time of the engine stall, then compare the CKP NO PULSE pattern from the charts, and deter

Pattern	Symptom (Diagnosis by parameter)	Additior
Pattern 1	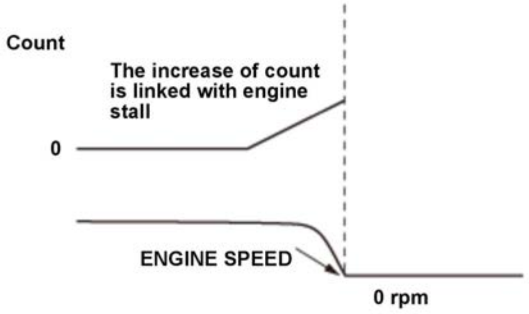 Count is continuously up	When CF receiving
Pattern 2	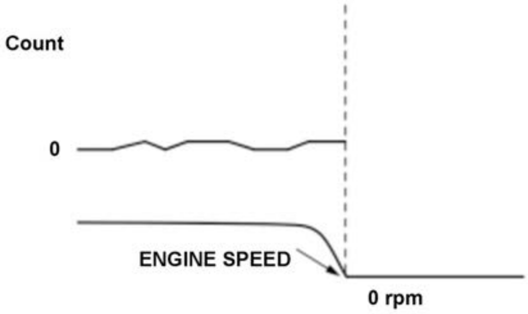 Count is continuously not up	B

Which pattern is indicated?

Pattern 1

Go to the troubleshooting for DTC P0335 .

Pattern 2

Go to step 10 (diagnosis by parameter (CKP NOISE)).

10. On-board snapshot check (CKP NOISE):

    NOTE: Use the on-board snapshot in the case of an intermittent failure, or use the snapshot in the case of a reproducible failure.

    -1. Check for a record of Engine Stall 2 in the on-board snapshot or the recorded snapshot with the HDS.

    On-board Snapshot

    -2. Select the CKP NOISE and ENGINE SPEED in the configuration list.

    Check the recorded snapshot or on-board snapshot parameters at the time of the engine stall, then compare the CKP NOISE pattern from these charts, and determi

Pattern	**Symptom (Diagnosis by parameter)**	**Additio**
Pattern 1	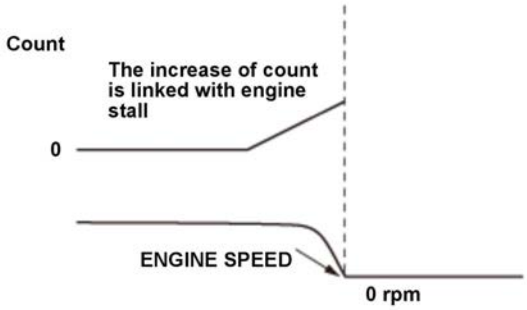 Count is continuously up	When Cł receiving signal.
Pattern 2	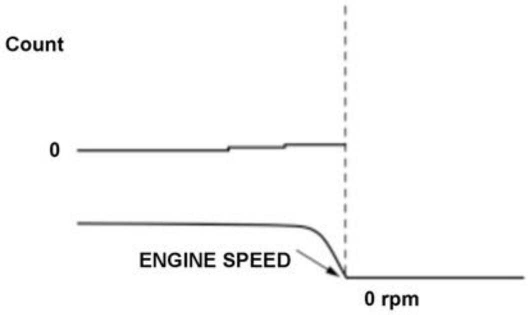 Count is continuously not up	B

Which pattern is indicated?

Pattern 1

Go to the troubleshooting for DTC P0339 .

Pattern 2

The CKP sensor is OK. Go to step 11 (diagnosis by parameter (FUEL PRESSURE CONVERTED FROM PF SENSOR and FUEL PRESSURE DIRECT INJECT

11. On-board snapshot or snapshot check (FUEL PRESSURE CONVERTED FROM PF SENSOR and FUEL PRESSURE DIRECT INJECTION SYSTEM):

    NOTE: Use the on-board snapshot in the case of an intermittent failure, or use the snapshot in the case of a reproducible failure.

    -1. Check for a record of Engine Stall 2 in the on-board snapshot or the recorded snapshot with the HDS.

    On-board Snapshot

    Select the FUEL PRESSURE CONVERTED FROM PF SENSOR, FUEL PRESSURE DIRECT INJECTION SYSTEM, and ENGINE SPEED in the configuratio

    Check the recorded snapshot or on-board snapshot parameters at the time of the engine stall, then compare the FUEL PRESSURE CONVERTED FROM PF SEN INJECTION SYSTEM patterns from these charts, and determine the problem.

Pattern	Symptom (Diagnosis by parameter)	Addition
Pattern 1	FUEL PRESSURE CONVERTED FROM PF SENSOR drops to almost 0 kPa before engine stalls 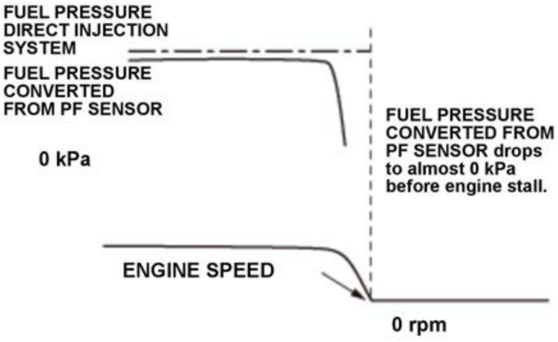 	If the FU SENSOR the engin • Fu • Fu • Sp • Fu • Fu • Hi
Pattern 2	Normal when the FUEL PRESSURE CONVERTED FROM PF SENSOR is nearly the same as the FUEL PRESSURE DIRECT INJECTION SYSTEM. 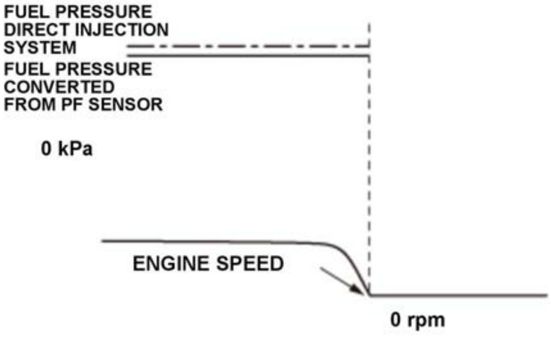 	If the FU SENSOR PRESSU engine st

Which pattern is indicated?

Pattern 1

Go to the troubleshooting for DTC P0087 .

Pattern 2

The fuel pressure is OK. Go to step 12 (diagnosis by parameter (AF FB (ST FUEL TRIM))).

12. On-board snapshot check (AF FB (ST FUEL TRIM)):

    NOTE: Use the on-board snapshot in the case of an intermittent failure, or use the snapshot in the case of a reproducible failure.

    -1. Check for a record of Engine Stall 2 in the on-board snapshot or the recorded snapshot with the HDS.

    On-board Snapshot

    -2. Select the AF FB (ST FUEL TRIM), EVAP PC DUTY, and ENGINE SPEED in the configuration list.

    Check the recorded snapshot or on-board snapshot parameters at the time of the engine Stall, then compare the AF FB (ST FUEL TRIM) pattern from the charts,

Pattern	Symptom (Diagnosis by parameter)	Addition
Pattern 1	Engine stalls while AF FB (ST FUEL TRIM) value increases 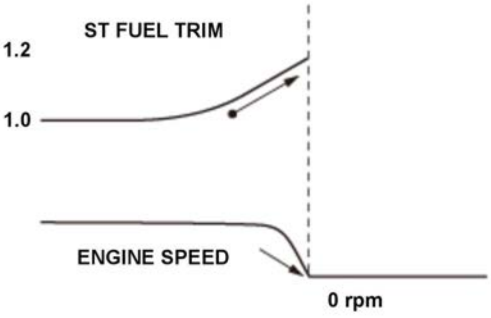 	If the AF the engin

Pattern	Symptom (Diagnosis by parameter)	Additio
Pattern 2	Normal when the engine stalls when AF FB (ST FUEL TRIM) is around 1.0 (center value) 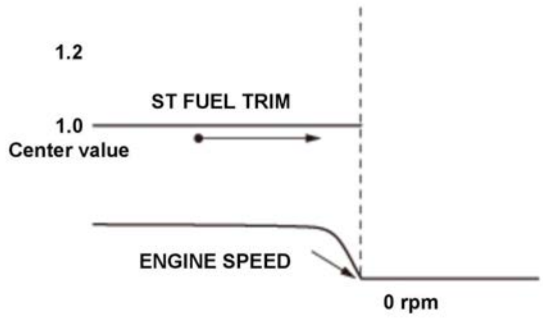 	The fuel AF FB (

Pattern	Symptom (Diagnosis by parameter)	Additio
Pattern 3	Engine stalls when AF FB (ST FUEL TRIM) is around 0.8 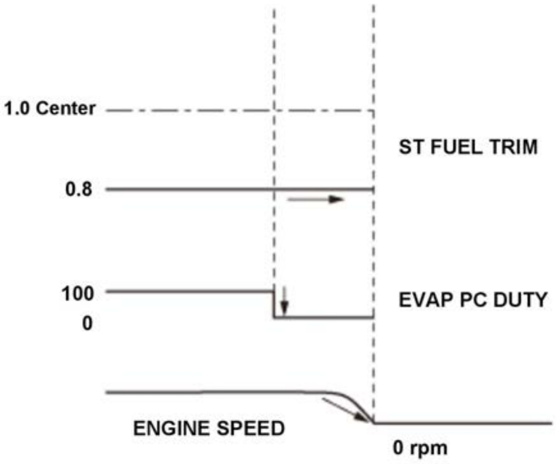 	When th around 0 solenoid DUTY is not move
Pattern 4	Normal when the engine stalls with AF FB (ST FUEL TRIM) is around 1.0 (center value) 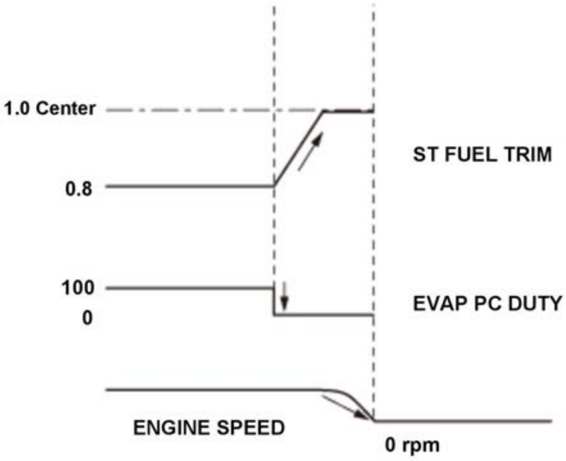 	When th around 0 solenoid DUTY is moves to

Which pattern is indicated?

1. Pattern 1

   Diagnostic procedure:

   - Check the fuel pump operation sound.
   - **Go to the fuel pressure test**.
   - **Go to the fuel pump circuit troubleshooting**.
   - **Test the relay circuit board (PGM-FI main relay 1 circuit)** .
   - **Test PGM-FI main relay 2** .
   - Check the following fuses:
   -
     - No. A7 (15 A) fuse (in the under-hood fuse/relay box)
     - No. D8 (15 A) fuse (in the under-dash fuse/relay box)

   Pattern 3

Check the PCS for leaks.

Pattern 2 and 4

Go to step 13 (diagnosis by parameter (MISFIRE)).

13. On-board snapshot check (MISFIRE):

NOTE: Use the on-board snapshot in the case of an intermittent failure, or use the snapshot in the case of a reproducible failure.

-1. Check for a record of Engine Stall 2 in the on-board snapshot or the recorded snapshot with the HDS.

On-board Snapshot

-2. Select the MISFIRE and ENGINE SPEED in the configuration list.

Check the recorded snapshot or on-board snapshot parameters at the time of the engine stall, then compare those snapshots to the MISFIRE pattern from the chart

Pattern	**Symptom (Diagnosis by parameter)**	**Additio**
Pattern 1	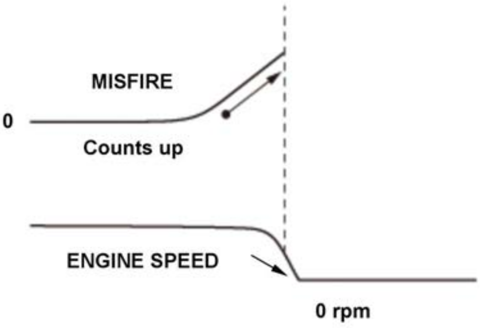 Engine stalls after MISFIRE counts go up	When en the engi
Pattern 2	Normal when engine stalls with MISFIRE count remaining constant 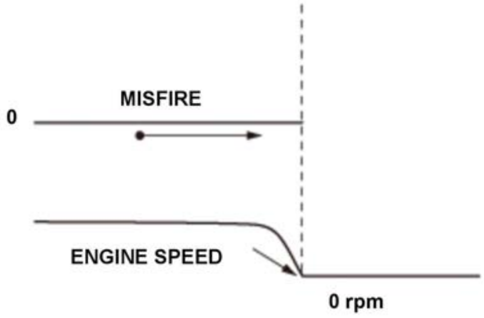	If the MI engine st

Which pattern is indicated?

Pattern 1

Diagnostic procedure:

- If misfire counts go up without storing misfire DTC P0300-P0304, **go to the troubleshooting for DTC P0300-P0304** .
- If the misfire count reaches the malfunction threshold, DTC P0300-P0304 is stored. **Go to the troubleshooting for DTC P0300-P0304** .

Pattern 2

Go to step 14 (diagnosis by parameter (A/C CLUTCH)).

14. On-board snapshot check (A/C CLUTCH):

NOTE: Use the on-board snapshot in the case of an intermittent failure, or use the snapshot in the case of a reproducible failure.

-1. Check for a record of Engine Stall 2 in the on-board snapshot or the recorded snapshot with the HDS.

On-board Snapshot

-2. Select the A/C CLUTCH and ENGINE SPEED in the configuration list.

Check the recorded snapshot or on-board snapshot parameters at the time of the engine stall, then compare the A/C CLUTCH pattern from the charts, and determi

Pattern	Symptom (Diagnosis by parameter)	Addition
Pattern 1	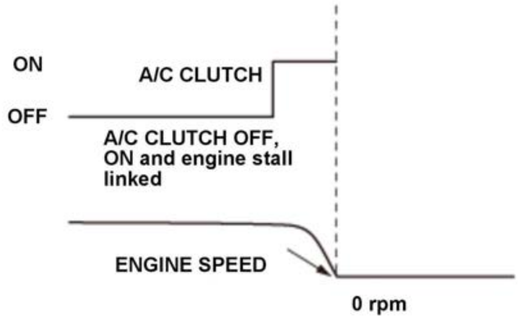 Engine stalls when A/C CLUTCH is ON.	If the eng compress by excess
Pattern 2	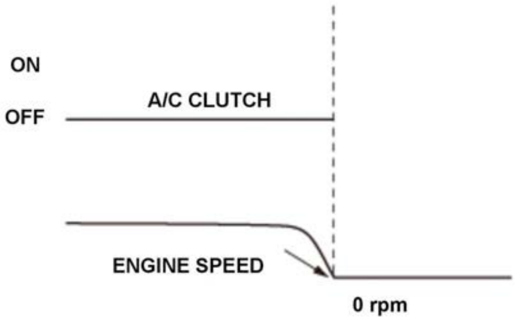 Engine stalls during A/C CLUTCH is OFF.	If the eng compress cause of

Which pattern is indicated?

Pattern 1

Diagnostic procedure:

- Check for over-charge A/C refrigerant.
- Check for charging with the wrong refrigerant.
- Check for drag of the A/C compressor and A/C compressor clutch.

Pattern 2

Go to step 15 (diagnosis by parameter (PNP SWITCH)).

15. On-board snapshot check (PNP SWITCH):

NOTE: Use the on-board snapshot in the case of an intermittent failure, or use the snapshot in the case of a reproducible failure.

-1. Check for a record of Engine Stall 2 in the on-board snapshot or the recorded snapshot with the HDS.

On-board Snapshot

-2. Select the PNP SWITCH and ENGINE SPEED in the configuration list.

Check the recorded snapshot or on-board snapshot parameters at the time of the engine stall, then compare the PNP SWITCH pattern from the charts, and determi

Pattern	Symptom (Diagnosis by parameter)	Addition
Pattern 1	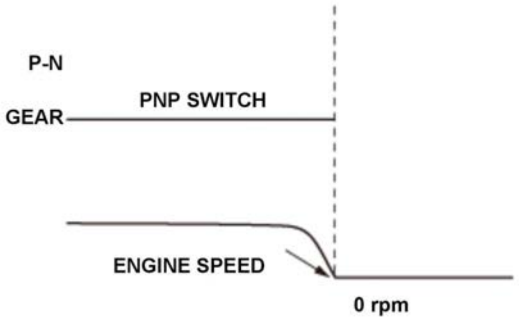 CVT is in-gear condition	In-gear c Engine st factor)

Pattern	Symptom (Diagnosis by parameter)	Additior
Pattern 2	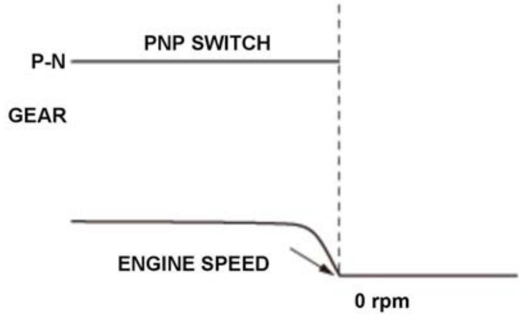 CVT is N or P condition	N or P co engine st CVT is n

Which pattern is indicated?

Pattern 1

Go to step 16 (diagnosis by parameter (SLIP RATIO OF TORQ OR STARTCLUTCH)).

Pattern 2

Go to step 17 (fuel system troubleshooting).

16. On-board snapshot check (SLIP RATIO OF TORQ OR STARTCLUTCH):

    NOTE: Use the on-board snapshot in the case of an intermittent failure, or use the snapshot in the case of a reproducible failure.

    -1. Check for a record of Engine Stall 2 in the on-board snapshot or the recorded snapshot with the HDS.

    On-board Snapshot

    -2. Select the SLIP RATIO OF TORQ OR STARTCLUTCH, ENGINE SPEED, and VEHICLE SPEED in the configuration list.

    Check the recorded snapshot or on-board snapshot parameters at the time of the engine stall, then compare the SLIP RATIO OF TORQ OR STARTCLUTCH patt problem.

Pattern	Symptom (diagnosis by parameter)	Additior
Pattern 1	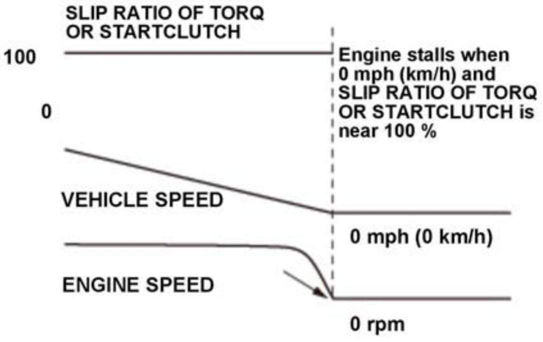 Engine stall caused by lock up	When en STARTC stopping,
Pattern 2	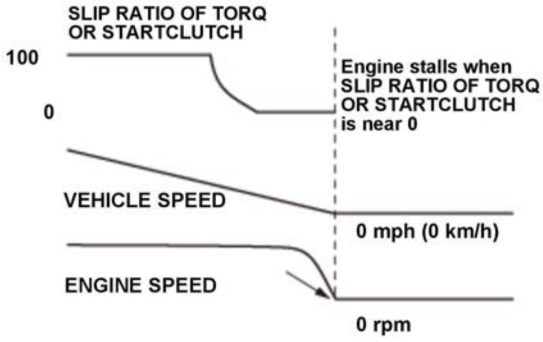 Lock up normal	Lock up RATIO C the midd

Which pattern is indicated?

Pattern 1

Go to the automatic transmission systems symptom troubleshooting index for torque converter clutch does not disengage .

Pattern 2

Go to step 17 (fuel system troubleshooting).

17. Fuel pressure check (low pressure side)

-1. Do the fuel pressure test.

Is the fuel pressure OK?

YES

Go to step 18 (ignition system troubleshooting).

NO

Check for following parts:

- Fuel pump circuit
- Fuel pressure regulator
- Fuel filter

18. Spark plug visual check

-1. Turn the vehicle to the OFF (LOCK) mode.

-2. Remove the spark plugs .

-3. Check the condition of the spark plug electrodes.

NOTE: Make sure the spark plugs are the correct part number for the vehicle. If the plugs are aftermarket or they are not the correct part number, replace all of th

Is the electrode damaged or wet?

1. YES (wet)

   Check the following conditions. If those conditions do not apply, go to step 19.

   - In very cold conditions, multiple very short trips can cause the spark plug to foul. If this is the case, drive the vehicle a longer distance and recheck.
   - Incorrect or poor quality fuel can cause a wet spark plug. Replace the fuel and recheck.

   YES (damaged)

   Replace the damaged spark plugs , determine the cause of the spark plug damage.

   NO

   Go to step 19.

19. Determine possible failure area (ignition system, others)

-1. Turn the vehicle to the OFF (LOCK) mode.

-2. Fit a spark plug to the ignition coil and ground it to the engine.

-3. Turn the vehicle to the ON mode.

-4. Select ALL INJECTORS in the INSPECTION MENU with the HDS, and stop fuel injection from the injector.

ALL INJECTORS STOP

Crank the engine and watch for spark at the spark plugs.

Do the spark plugs sparkΩ

YES

The ignition system is OK. Select PCM reset in the PGM-FI INSPECTION MENU to cancel ALL INJECTORS with the HDS, then go to step 21 (engine compre

NO

Go to step 20.

20. Ignition coil power circuit check

-1. Turn the vehicle to the OFF (LOCK) mode.

-2. Disconnect the following connector(s).

Ignition coil(s) 3P connector from the problem cylinder

-3. Turn the vehicle to the ON mode.

-4. Measure the voltage between test points 1 and 2.

Test condition	Vehicle ON mode
B	Ignition coil 3P connector (problem cylinder): disconnected

Test point 1	Ignition coil 3P connector (female terminal) No. 1: ①

Test point 2	Body ground

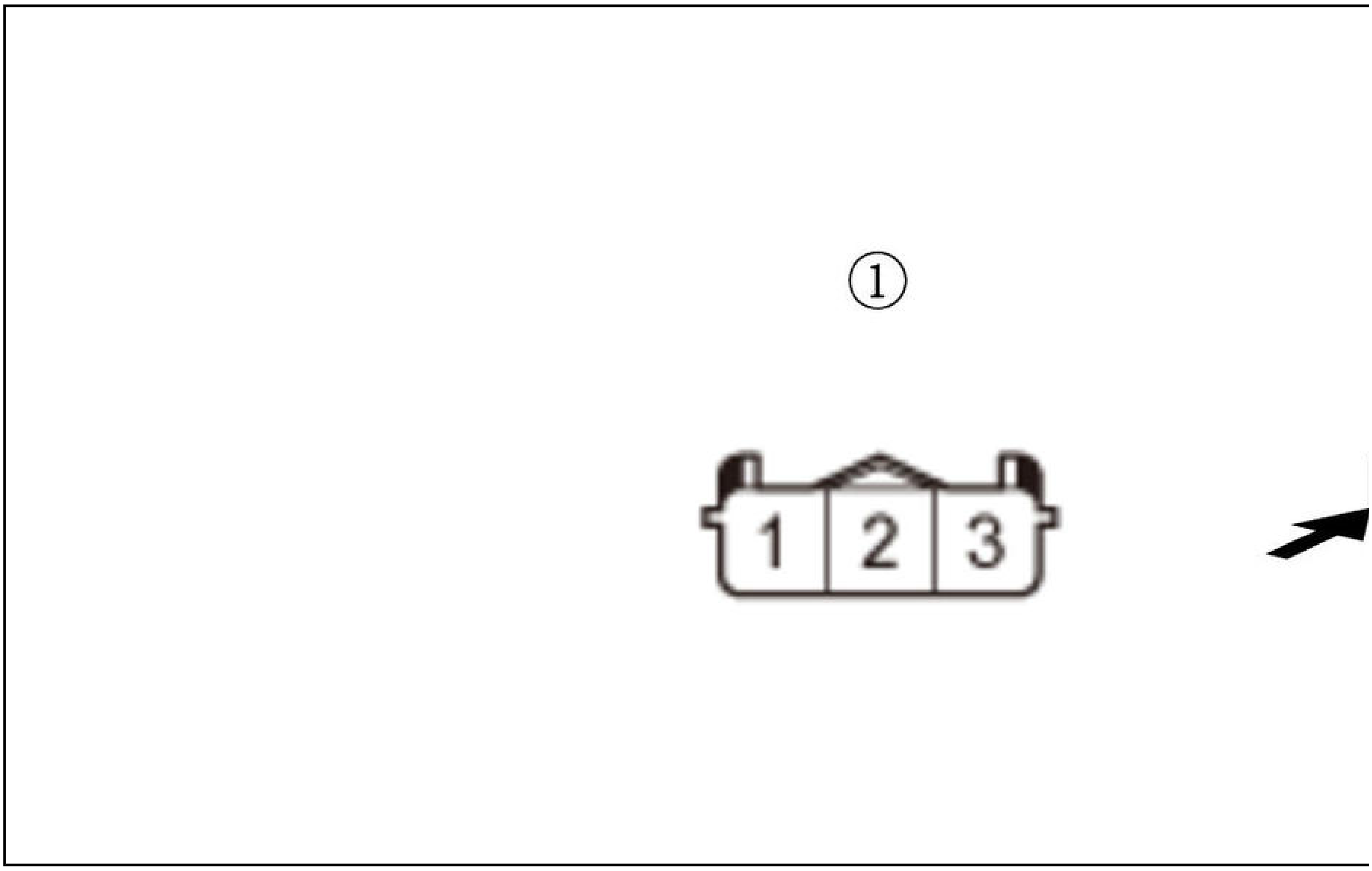

Is there battery voltage?

YES

The ignition coil power circuit is OK. **Replace the ignition coil(s)** .

NO

Repair an open in the IG COIL RLY OUT/IG1(COIL)/IG1(IGN) wire between the relay circuit board and the ignition coil.

21. Engine compression check

-1. **Do an engine compression inspection** .

Is the engine compression OK?

YES

Go to step 22 (EVAP canister purge valve check).

NO

Check for wear or damage to these parts:

- Incorrect valve clearance
- Confirmation of cam timing
- Oil pressure relief valve
- Damage or worn cam lobes
- Damage or worn valve and seats
- Damage cylinder head gasket
- Damage or worn piston rings
- Damage or worn piston and cylinder bore

22. EVAP canister purge valve check

-1. Turn the vehicle to the OFF (LOCK) mode.

-2. Remove the high pressure fuel pump cover and the fuel bracket.

-3. Disconnect the following connector.

EVAP canister purge valve 2P connector

-4. Disconnect the vacuum hose (A) from the EVAP canister purge valve (B) in the engine compartment, and connect a vacuum pump/gauge, 0-30 inHg (C) to the

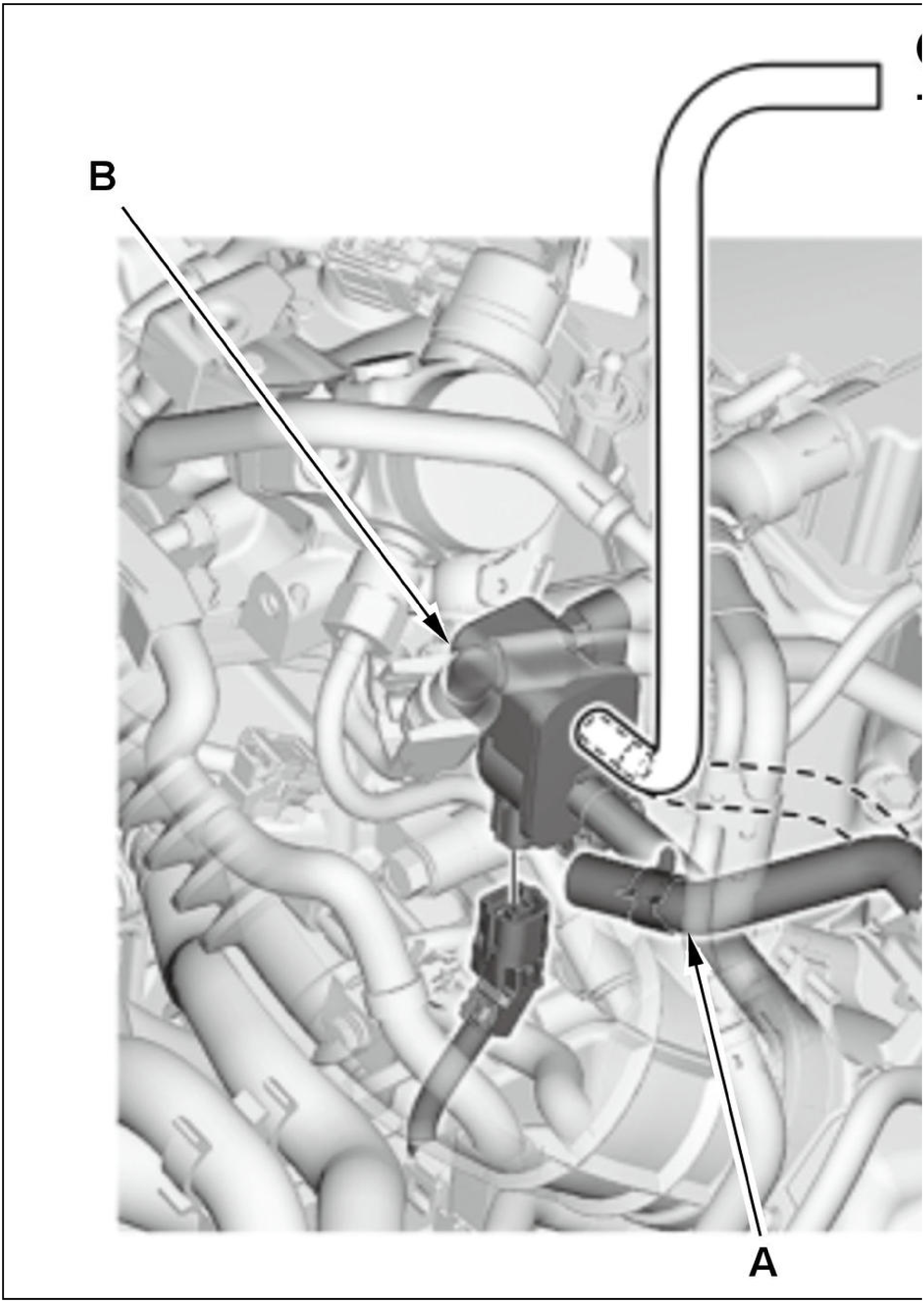

-5. Start the engine.

Does the vacuum pump indicate vacuum?

YES

When the climate is warm, fuel vapor from the canister line to the fuel tank enters intake manifold, enriching mixture (excessively rich), causing the engine to stal
canister purge valve .

NO (Reproducible failure)

Go to step 23 (fuse check).

NO (Intermittent failure)

Go to step 24 (relay check).

23. Fuse check

-1. Check the following fuses.

Fuse	No. A7 (15 A) to relay circuit board (PGM-FI main relay 1 circuit)
	No. A15 (15 A) to relay circuit board (ignition coil relay circuit)
	No. A8 (15 A) to relay circuit board (PGM-FI subrelay circuit)
	No. A10 (20 A) to injector relay
Location	Under-hood fuse/relay box

Fuse	No. D8 (15 A) to PGM-FI main relay 2
Location	Under-dash fuse/relay box

Are the fuses OK?

YES

The fuses are OK. Go to step 24 (relay check).

NO

Replace the blown fuse(s).

24. Relay check

-1. Turn the vehicle to the OFF (LOCK) mode.

Test the following relays:

NOTE: In situations where the failure is difficult to reproduce, the following relays may have an intermittent failure.

- **Relay circuit board (includes PGM-FI main relay 1 circuit, ignition coil relay circuit, PGM-FI subrelay circuit)**
- **PGM-FI main relay 2**
- **Injector relay**

Are the relay circuit board and the relays OK?

YES

Go to step 25 (power and ground terminal check).

NO

Replace any damaged relays.

25. Power and ground terminal check:

Check the corrosion and looseness at the following terminals:

- 12 volt battery terminals
- Ground cable terminals between the engine and the body ground, and the transmission and the body ground
- Engine wire harness ground (G101)

Are the terminals OK?

YES

Go to step 26 (connector terminal check).

NO

Repair any terminal(s) as needed.

26. Connector terminal check:

Check the foreign objects clogged and corrosion at the following connector terminals:

- **PCM connectors**
-
    - FI MAIN RLY OUT, FI MAIN RLY CL
    - VBDBW, DBW RLY
    - IG1 FUEL PUMP, FUEL PUMP RLY CL
    - INJ RLY OUT, INJ RLY CL
    - GND1, GND2, GND3, PGM, GND INJ1, GND INJ2
    - INJ H1, INJ L1, INJ H2, INJ L2, INJ H3, INJ L3, INJ H4, INJ L4

        - IGN01, IGN02, IGN03, IGN04
        - HPUMP H, HPUMP L
        - CAM
        - TDC
        - CRKN
        - PB
        - VGP, VGM
        - TW
        - PCS
        - MTR1, MTR2, THL1, THL2
    - CMP sensor A
    - CMP sensor B
    - CKP sensor
    - Ignition coils
    - Injectors
    - High pressure fuel pump
    - ECT sensor
    - MAF sensor
    - MAP sensor
    - Throttle body
    - EVAP canister purge valve
    - Fuel tank unit

Are the terminals OK?

YES

Go to the diagnostic interview for engine stalls.

NO

Repair any terminal(s) as needed.

Engine will not start, engine starts but stalls immediately, or engine is hard to start (1.5 L Engine)

Engine will not start, engine starts but stalls immediately, or engine is hard to start

Special Tools Required

Vacuum Pump/Gauge, 0-30 inHg Snap-on YA4000A or equivalent, commercially available

NOTE:

- Before beginning this troubleshooting, do a customer diagnostic interview.
-
    - When the symptom cannot be duplicated, you can do the troubleshooting using the on-board snapshot information in this procedure . Refer to the dia total mileage, and compare the total mileage which is estimated from the interview when a failure occurred and the parameter (total mileage) in the on-boar when the failure occurred corresponds with the date on which the on-board snapshot information was recorded. If it doesn't, the on-board snapshot informat
- Before beginning this troubleshooting:
-
    - Make sure the 12 volt battery is fully charged.
    - Make sure the fuel tank is at least 1/4 full.
    - Make sure the engine oil level is correct.
- After the troubleshooting, reset the PCM with the HDS to erase the on-board snapshot information recorded on the PCM.

1. DTC check

   -1. Turn the vehicle to the ON mode.

   -2. Check for Pending or Confirmed DTCs with the HDS.

DTC Description	Confirmed DTC
B	B

   DTC (PGM-FI)

   Are any Pending or Confirmed DTCs indicated?

   YES

   Go to the indicated DTCs troubleshooting.

   NO

   Go to step 2.

   NOTE: If the HDS does not communicate with the vehicle, go to the PCM power and ground circuit troubleshooting .

2. Body electrical system DTC check

   -1. Check for body electrical system DTCs with the HDS.

DTC Description	DTC
B	B

DTC (Body Control Module)

Are any DTCs indicated?

YES

Go to the troubleshooting for body electrical system DTC(s) .

NO

Go to step 3.

3. Immobilizer check

   -1. **Check the Immobilizer status log** .

   NOTE: When a status log count is found, it means the immobilizer system has kept the engine from starting in the past. The number of status log count shows ho starting in the past. If the immobilizer system has no status log count, the system is normal.

   Were any status log counts found?

   YES

   Check for probable cause of the status log .

   NO

   Go to step 4.

4. Problem verification (snapshot sampling):

   Set the HDS to record a SNAPSHOT of following parameters for 30 seconds.

   - IMMOBILIZER
   - ENGINE SPEED
   - BATTERY
   - ECT SENSOR 1
   - MAP SENSOR (HI RES)
   - MAF SENSOR
   - FUEL PRESSURE CONVERTED FROM PF SENSOR
   - FUEL PRESSURE DIRECT INJECTION SYSTEM
   - CMP B NO PULSE
   - CMP B NOISE
   - CKP NO PULSE
   - CKP NOISE

   Data List

   -2. Begin the snapshot, then try to start the engine.

   Is the engine hard to start?

   YES

   Go to step 6 (diagnosis by parameter troubleshooting).

   NO

   Go to step 5.

5. On-board snapshot check (Engine will not start)

   -1. Check the record of Hard to Start Engine in the on-board snapshot with the HDS.

   On-board Snapshot

   Is the Hard to Start Engine in the on-board snapshot recorded?

   YES

   Go to step 6 (diagnosis by parameter troubleshooting).

   NO

   Go to step 18 (fuel system troubleshooting).

   NOTE: In case of the following conditions, the on-board snapshot cannot be recorded.

   - The vehicle is turned to the OFF (LOCK) mode after starting the engine.
   - **Vehicle condition not in the on-board snapshot recoding zone of Hard to start engine** .
   - Low or dead 12 volt battery
   - Replacing the 12 volt battery

6. On-board snapshot or snapshot check (IMMOBILIZER):

NOTE: Use the on-board snapshot in the case of an intermittent failure, or use the snapshot in the case of a reproducible failure.

-1. Select the Hard to Start Engine in the on-board snapshot or snapshot with the HDS.

On-board Snapshot

Select the IMMOBILIZER and ENGINE SPEED in the configuration list.

Compare the snapshot parameters observed while the engine was cranking, to those in the chart below, to determine the problem.

Pattern	Symptom (Diagnosis by parameter)	Additior
Pattern 1	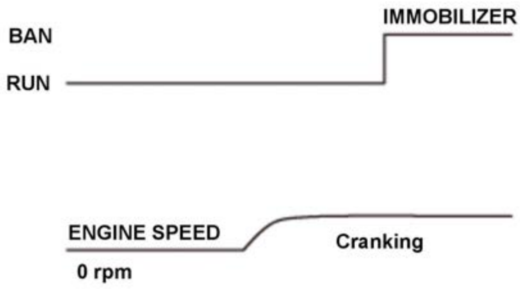 IMMOBILIZER inhibit IMMOBILIZER inhibit 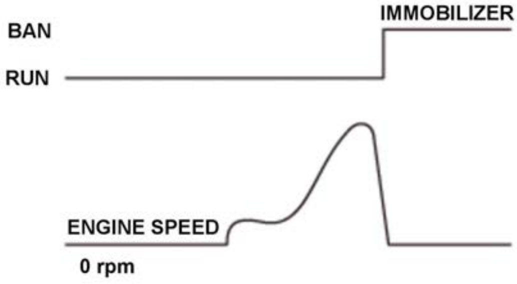	When IM cranking IMMOB - Nc

Pattern	Symptom (Diagnosis by parameter)	Additior
Pattern 2	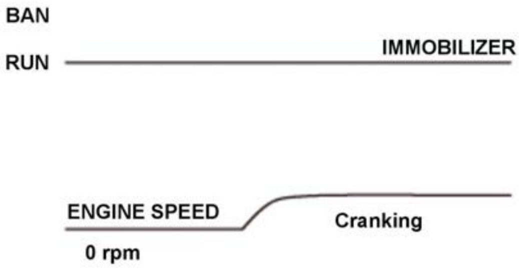 IMMOBILIZER permit Normal IMMOBILIZER permit Normal	IMMOB indicates

Pattern	Symptom (Diagnosis by parameter)	Addition
	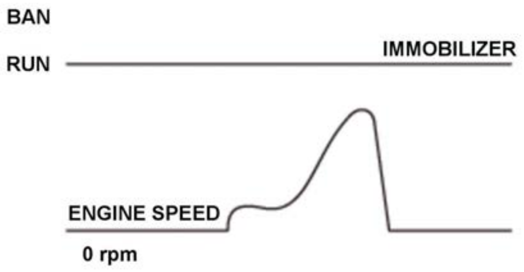	

Which pattern is indicated?

Pattern 1

The immobilizer system has a failure. **Go to the immobilizer System Check** .

Pattern 2

Go to step 7 (diagnosis by parameter (ENGINE SPEED)).

7. On-board snapshot or snapshot check (ENGINE SPEED):

NOTE: Use the on-board snapshot in the case of an intermittent failure, or use the snapshot in the case of a reproducible failure.

-1. Select the Hard to Start Engine in the on-board snapshot or snapshot with the HDS.

On-board Snapshot

-2. Select the ENGINE SPEED pattern chart in the configuration list.

Check the recorded snapshot parameters while the engine is cranking, then compare the pattern from the chart, and determine the problem.

Pattern	Symptom (Diagnosis by parameter)	Addition
Pattern 1	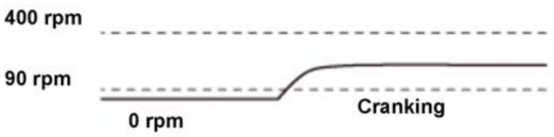 ENGINE SPEED when cranking is normal	B
Pattern 2	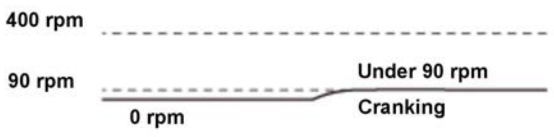 ENGINE SPEED when cranking is low	When EN 12 volt b considere

Which pattern is indicated?

Pattern 1

Go to step 8 (diagnosis by parameter (BATTERY)).

Pattern 2

Diagnostic procedure:

- Test the 12 volt battery .
- Check the 12 volt battery cables and the connections.
- Check the starter .
- Check for engine friction.

8. On-board snapshot or snapshot check (BATTERY):

NOTE: Use the on-board snapshot in the case of an intermittent failure, or use the snapshot in the case of a reproducible failure.

-1. Select the Hard to Start Engine in the on-board snapshot or snapshot with the HDS.

On-board Snapshot

Select the BATTERY and ENGINE SPEED in the configuration list.

Check the recorded snapshot parameters while the engine is cranking, then compare the BATTERY pattern from the chart, and determine the problem.

Pattern	Symptom (Diagnosis by parameter)	Addition
Pattern 1	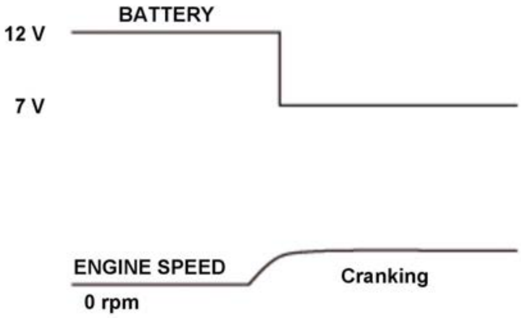 BATTERY voltage low when cranking	• Wl too en • Th rec
Pattern 2	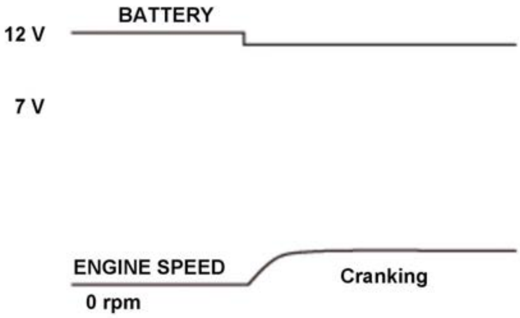 BATTERY voltage normal when cranking	To start t

Which pattern is indicated?

Pattern 1

Diagnostic procedure:

- Test the 12 volt battery .
- Check the 12 volt battery cables and the connections.

Pattern 2

Go to step 9 (diagnosis by parameter (ECT SENSOR 1)).

9. On-board snapshot or snapshot check (ECT SENSOR 1):

NOTE: Use the on-board snapshot in the case of an intermittent failure, or use the snapshot in the case of a reproducible failure.

-1. Select the Hard to Start Engine in the on-board snapshot or snapshot with the HDS.

On-board Snapshot

-2. Select the ECT SENSOR 1 and ENGINE SPEED in the configuration list.

Check the recorded snapshot parameters while the engine is cranking, then compare the ECT SENSOR 1 pattern from the chart, and determine the problem.

Pattern	Symptom (Diagnosis by parameter)	Additio
Pattern 1	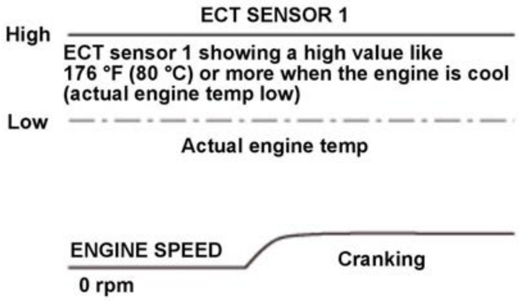 ECT SENSOR 1 high when cranking	When EC deg.C) o low), EC compens warmed (not a fa
Pattern 2	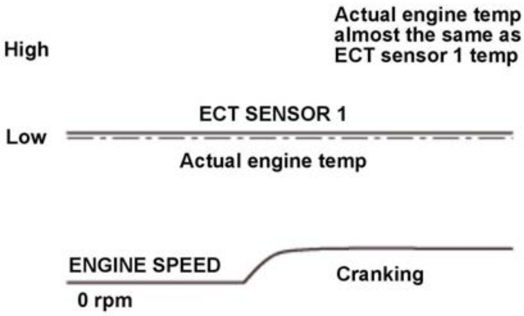 ECT SENSOR 1 normal when cranking	If actual indicated sensor 1

Which pattern is indicated?

Pattern 1

Check for a short in the ECT sensor 1 circuit and a failure in ECT sensor 1.

Pattern 2

Go to step 10.

10. ECT sensor 1 check

-1. Turn the vehicle to the OFF (LOCK) mode.

-2. Let the engine cool for 24 hours.

-3. Measure the ambient temperature of the engine with the thermometer.

-4. Turn the vehicle to the ON mode, but do not start the engine.

-5. Check the parameter(s) below with the HDS.

Signal	Current conditions
	Values
ECT SENSOR 1	B
ECT SENSOR 2	B

Are the values of ECT SENSOR 1, ECT SENSOR 2, and the ambient temperature almost the same?

YES

Go to step 11 (diagnosis by parameter (MAP SENSOR (HI RES))).

NO

If the value of ECT SENSOR 1 is much higher (or lower) than that of ECT SENSOR 2 and the ambient temperature, check for the ECT sensor 1 circuit and a fail

11. On-board snapshot or snapshot check (MAP SENSOR (HI RES)):

NOTE: Use the on-board snapshot in the case of an intermittent failure, or use the snapshot in the case of a reproducible failure.

-1. Select the Hard to Start Engine in the on-board snapshot or snapshot with the HDS.

On-board Snapshot

-2. Select the MAP SENSOR (HI RES) and ENGINE SPEED in the configuration list.

Check the recorded snapshot parameters while the engine is cranking, then compare the MAP SENSOR (HI RES) pattern to the pattern from the chart below, and

Pattern	Symptom (Diagnosis by parameter)	Addition
Pattern 1	MAP SENSOR detects no change of pressure when cranking 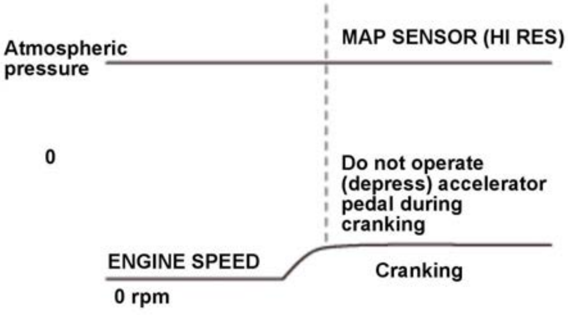	When M when cra be clogg fuel injec signal wh
Pattern 2	Normal when MAP SENSOR detects vacuum when cranking 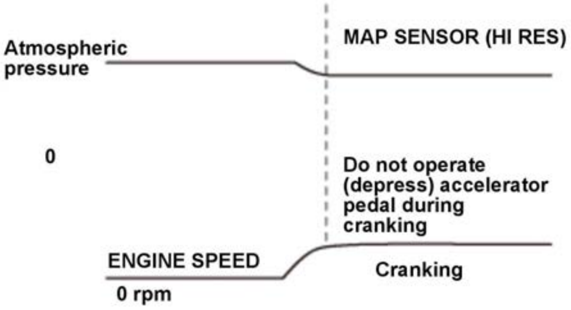	When M cranking pressure

Which pattern is indicated?

Pattern 1

Check the pressure measurement port of the MAP sensor for clogging, foreign objects, etc.

Pattern 2

Go to step 12 (diagnosis by parameter (MAF SENSOR)).

12. On- board snapshot or snapshot check (MAF SENSOR):

NOTE: Use the on-board snapshot in the case of an intermittent failure, or use the snapshot in the case of a reproducible failure.

-1. Select the Hard to Start Engine in the on-board snapshot or the snapshot with the HDS.

On-board Snapshot

-2. Select the MAF SENSOR and ENGINE SPEED in the configuration list.

Check the recorded snapshot parameters while the engine is cranking, then compare the MAF SENSOR pattern from the chart, and determine the problem.

Pattern	Symptom (Diagnosis by parameter)	Addition
Pattern 1	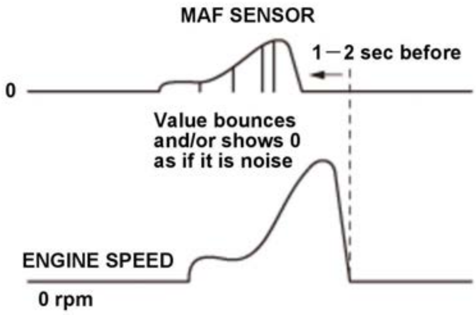 Poor connection of MAF SENSOR	Complet indicates becomes there may connecto

Pattern	Symptom (Diagnosis by parameter)	Addition
Pattern 2	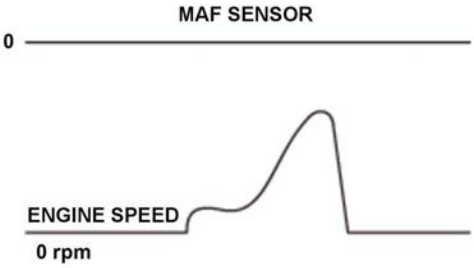 MAF SENSOR output incorrect	When M after star port may a poor co

Pattern	Symptom (Diagnosis by parameter)	Addition
Pattern 3	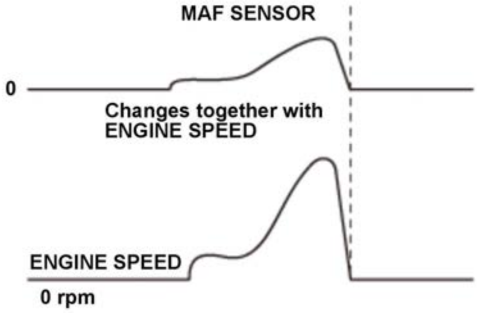 MAF SENSOR Normal	When M ENGINE MAF ser

Which pattern is indicated?

Pattern 1 and 2

Check for poor connections or loose terminals at MAF sensor/IAT sensor 1.

Pattern 3

Go to step 13 (diagnosis by parameter (FUEL PRESSURE CONVERTED FROM PF SENSOR and FUEL PRESSURE DIRECT INJECTION SYSTEM)).

13. On-board snapshot or snapshot check (FUEL PRESSURE CONVERTED FROM PF SENSOR and FUEL PRESSURE DIRECT INJECTION SYSTEM):

NOTE: Use the on-board snapshot in the case of an intermittent failure, or use the snapshot in the case of a reproducible failure.

-1. Select the Hard to Start Engine in the on-board snapshot or snapshot with the HDS.

On-board Snapshot

Select the FUEL PRESSURE CONVERTED FROM PF SENSOR, the FUEL PRESSURE DIRECT INJECTION SYSTEM, and ENGINE SPEED in the configu

Check the recorded snapshot or on-board snapshot parameters while the engine is cranking, then compare the FUEL PRESSURE CONVERTED FROM PF SENS INJECTION SYSTEM patterns from the chart, and determine the problem.

Pattern	Symptom (Diagnosis by parameter)	Addition
Pattern 1	The FUEL PRESSURE CONVERTED FROM PF SENSOR is low (almost 0 kPa) when cranking 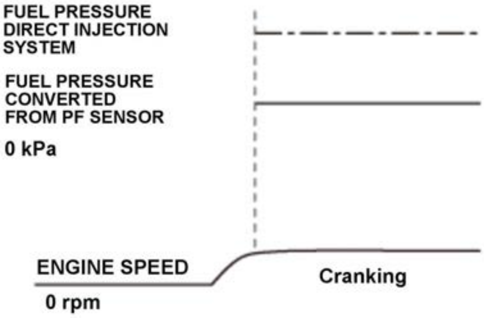	If the FU SENSOR may exis • Fu • Fu • Sp • Fu • Fu • Hi

Pattern	Symptom (Diagnosis by parameter)	Addition
Pattern 2	Normal when the FUEL PRESSURE CONVERTED FROM PF SENSOR follows the FUEL PRESSURE DIRECT 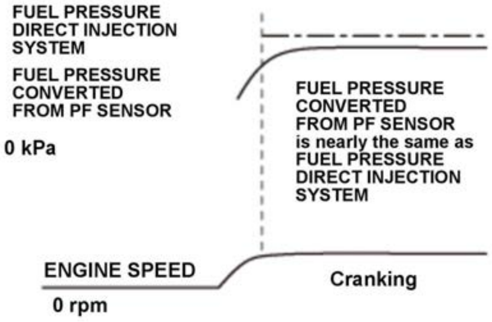 INJECTION SYSTEM when cranking	If the FU SENSOR PRESSU cranking Fuel pres

Which pattern is indicated?

Pattern 1

Go to the troubleshooting for DTC P0087 .

Pattern 2

Go to step 14 (diagnosis by parameter (CMP B NO PULSE)).

14. On-board snapshot or snapshot check (CMP B NO PULSE):

NOTE: Use the on-board snapshot in the case of an intermittent failure, or use the snapshot in the case of a reproducible failure.

-1. Select the Hard to Start Engine in the on-board snapshot or snapshot with the HDS.

On-board Snapshot

-2. Select the CMP B NO PULSE and ENGINE SPEED in the configuration list.

Check the recorded snapshot parameters while the engine is cranking, then compare the CMP B NO PULSE pattern from the chart, and determine the problem.

Pattern	Symptom (Diagnosis by parameter)	Addition
Pattern 1	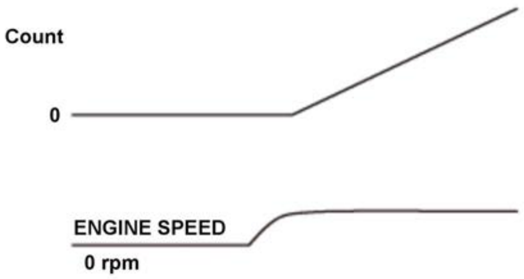 Count is continuously up	When C cranking is not rec be ignite
Pattern 2	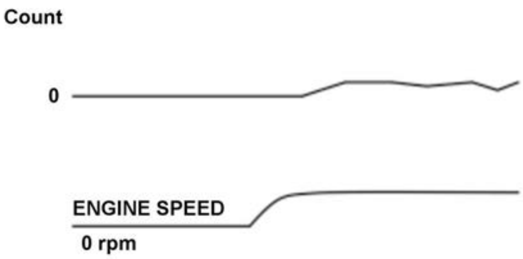 Count is continuously not up	Count is

Which pattern is indicated?

Pattern 1

Go to the troubleshooting for DTC P0340 . If the CMP B NO PULSE count reaches the malfunction threshold, DTC P0340 will set. Check for poor connection

Pattern 2

Go to step 15 (diagnosis by parameter (CMP B NOISE)).

15. On-board snapshot or snapshot check (CMP B NOISE):

    NOTE: Use the on-board snapshot in the case of an intermittent failure, or use the snapshot in the case of a reproducible failure.

    -1. Select the Hard to Start Engine in the on-board snapshot or snapshot with the HDS.

    On-board Snapshot

    -2. Select the CMP B NOISE and ENGINE SPEED in the configuration list.

    Check the recorded snapshot parameters while the engine is cranking, then compare the CMP B NOISE pattern from the chart, and determine the problem.

Pattern	**Symptom (Diagnosis by parameter)**	**Additio**
Pattern 1	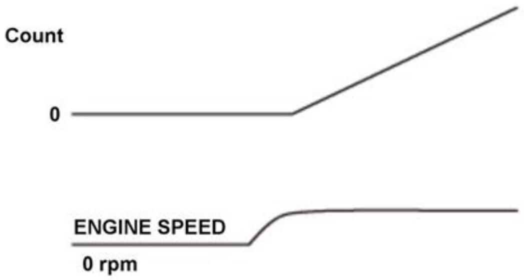 Count is continuously up	When C there is n has noise ignited a
Pattern 2	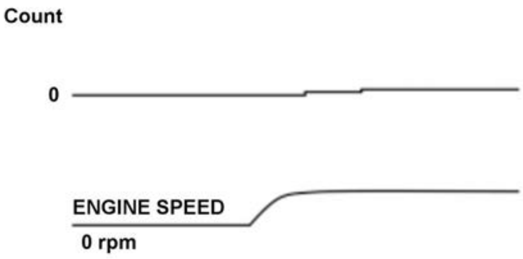 Count is continuously not up	Count is

Which pattern is indicated?

Pattern 1

Go to the troubleshooting for DTC P0344 . If the CMP B NOISE count reaches the malfunction threshold, DTC P0344 will set. Check for poor connections an

Pattern 2

Go to step 16 (diagnosis by parameter (CKP NO PULSE)).

16. On-board snapshot or snapshot check (CKP NO PULSE):

    NOTE: Use the on-board snapshot in the case of an intermittent failure, or use the snapshot in the case of a reproducible failure.

    -1. Select the Hard to Start Engine in the on-board snapshot or snapshot with the HDS.

    On-board Snapshot

    -2. Select the CKP NO PULSE and ENGINE SPEED in the configuration list.

    Check the recorded snapshot parameters while the engine is cranking, then compare the CKP NO PULSE pattern from the chart, and determine the problem.

Pattern	Symptom (Diagnosis by parameter)	Addition
Pattern 1	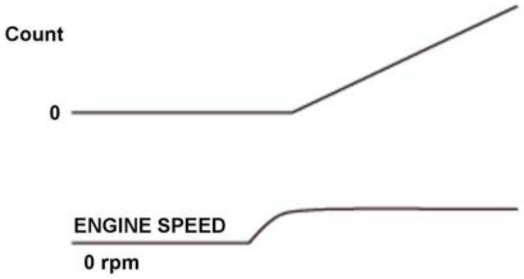 Count is continuously up	When th cranking pulse.
Pattern 2	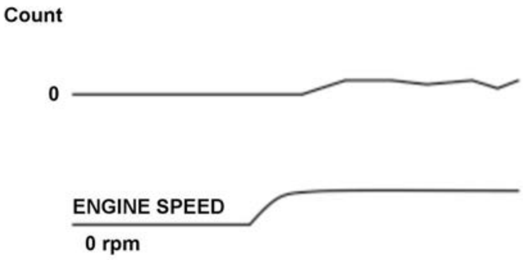 Count is continuously not up	Count is

Which pattern is indicated?

Pattern 1

Go to the troubleshooting for DTC P0335 . If the CKP NO PULSE count reaches the malfunction threshold, DTC P0335 will set. Check for poor connections a

Pattern 2

Go to step 17 (diagnosis by parameter (CKP NOISE)).

17. On-board snapshot or snapshot check (CKP NOISE):

NOTE: Use the on-board snapshot in the case of an intermittent failure, or use the snapshot in the case of a reproducible failure.

-1. Select the Hard to Start Engine in the on-board snapshot or snapshot with the HDS.

On-board Snapshot

-2. Select the CKP NOISE and ENGINE SPEED in the configuration list.

Check the recorded snapshot parameters while the engine is cranking, then compare the CKP NOISE pattern from the chart, and determine the problem.

Pattern	Symptom (Diagnosis by parameter)	Addition
Pattern 1	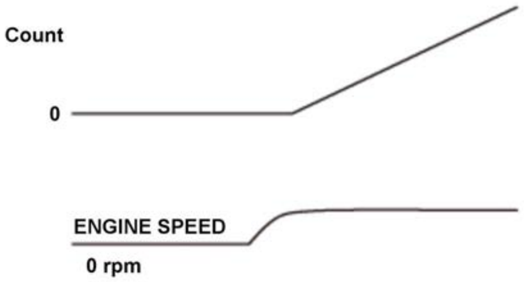 Count is continuously up	When th cranking pulse.

Pattern	Symptom (Diagnosis by parameter)	Addition
Pattern 2	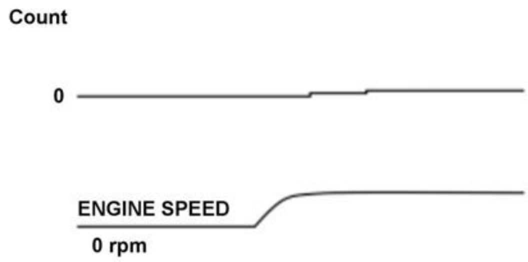 Count is continuously not up	Count is

Which pattern is indicated?

Pattern 1

Go to the troubleshooting for DTC P0339 . If the CKP NOISE count reaches the malfunction threshold, DTC P0339 will set. Check for poor connections and lc check for aftermarket accessories.

Pattern 2

Go to step 18 (fuel system troubleshooting).

18. Fuel pressure check (low pressure side)

-1. **Do the fuel pressure test**.

Is the fuel pressure OK?

YES

Go to step 19 (ignition system troubleshooting).

NO

Check the following parts:

- **Fuel pump circuit**
- **Fuel pressure regulator**
- **Fuel filter**

19. Spark plug visual check

-1. Turn the vehicle to the OFF (LOCK) mode.

-2. **Remove the spark plugs** .

-3. Check the condition of the spark plug electrodes.

NOTE: Make sure the spark plugs are the correct part number for the vehicle. If the plugs are aftermarket or they are not the correct part number, replace all of th

Is the electrode damage or wet?

1. YES (wet)

   Check the following conditions. If those conditions do not apply, go to step 20.

   - In very cold conditions, multiple very short trips can cause the spark plug to foul. If this is the case, drive the vehicle a longer distance and recheck.
   - Incorrect or poor quality fuel can cause a wet spark plug. Replace the fuel and recheck.

   YES (damaged)

   Replace the damaged spark plug(s) , determine the cause of the spark plug damage.

   NO

   Go to step 20.

20. Determine possible failure area (ignition system, others)

-1. Turn the vehicle to the OFF (LOCK) mode.

-2. Fit a spark plug to the ignition coil and ground it to the engine.

-3. Turn the vehicle to the ON mode.

-4. Select ALL INJECTORS STOP in the INSPECTION MENU with the HDS, and stop fuel injection from the injector.

ALL INJECTORS STOP

Crank the engine and watch for spark at the spark plug.

Does the spark plug sparkΩ

YES

Select PCM reset in the PGM-FI INSPECTION MENU to cancel ALL INJECTORS STOP with the HDS, then go to step 22 (engine compression troubleshooting

NO

Go to step 21.

21. Ignition coil power circuit check

-1. Turn the vehicle to the OFF (LOCK) mode.

-2. Disconnect the following connector(s).

Ignition coil(s) 3P connector from the problem cylinder

-3. Turn the vehicle to the ON mode.

-4. Measure the voltage between test points 1 and 2.

Test condition	Vehicle ON mode
B	Ignition coil 3P connector: disconnected
Test point 1	Ignition coil 3P connector (female terminal) No. 1: ①
Test point 2	Body ground

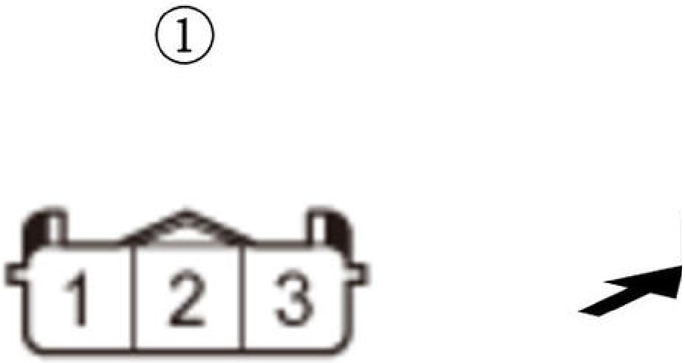

Is there battery voltage?

YES

The ignition coil power circuit is OK. **Replace the ignition coil(s)** .

NO

Repair an open in the IG COIL RLY OUT/IG1(COIL)/IG1(IGN) wire between the ignition coil relay circuit and the ignition coil.

22. Engine compression check

-1. **Do an engine compression inspection** .

Is engine compression OK?

YES

Go to step 23 (EVAP canister purge valve check).

NO

Check for wear or damage to these parts:

- Incorrect valve clearance
- Confirmation of cam timing
- Oil pressure relief valve
- Damage or worn cam lobes
- Damage or worn valve and seats
- Damage cylinder head gasket
- Damage or worn piston rings
- Damage or worn piston and cylinder bore

23. EVAP canister purge valve check

-1. Turn the vehicle to the OFF (LOCK) mode.

-2. Disconnect the following connector.

EVAP canister purge valve 2P connector

-3. **Remove the EVAP canister purge valve** with its vacuum hose connected.

-4. Disconnect the vacuum hose (purge line) (A) from the EVAP canister purge valve (B) in the engine compartment, and connect a vacuum pump/gauge, 0-30 inI

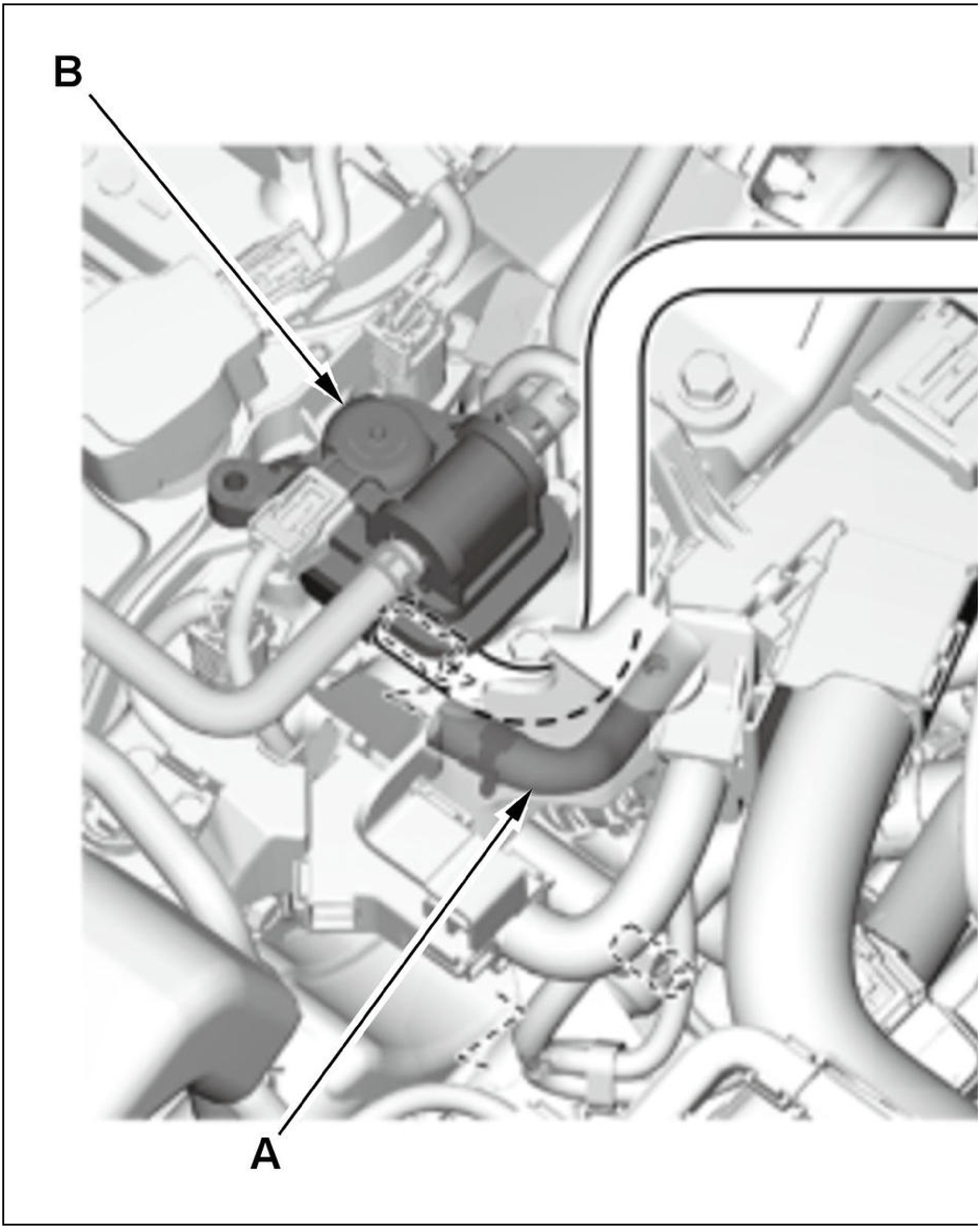

-5. Start the engine.

Does the vacuum pump indicate vacuum?

YES

Replace the EVAP canister purge valve .

NO (Reproducible failure)

Go to step 24 (fuse check).

NO (Intermittent failure)

Go to step 25 (relay check).

24. Fuse check

-1. Turn the vehicle to the OFF (LOCK) mode.

-2. Check the following fuses.

Fuse	No. A7 (15 A) to relay circuit board (PGM-FI main relay 1 circuit) No. A15 (15 A) to relay circuit board (ignition coil relay circuit) No. A8 (15 A) to relay circuit board (PGM-FI subrelay circuit) No. A10 (20 A) to injector relay
Location	Under-hood fuse/relay box

Fuse	No. D8 (15 A) to PGM-FI main relay 2
Location	Under-dash fuse/relay box

Are the fuses OK?

YES

Go to step 25 (relay check).

NO

Replace the blown fuse(s).

25. Relay check

-1. Turn the vehicle to the OFF (LOCK) mode.

Test the following relays:

NOTE: In situations where the failure is difficult to reproduce, the following relays may have an intermittent failure.

- **Relay circuit board (includes PGM-FI main relay 1 circuit, ignition coil relay circuit, PGM-FI subrelay circuit)**
- **PGM-FI main relay 2**
- **Injector relay**

Are the relay circuit board and the relays OK?

YES

Go to step 26 (power and ground terminal check).

NO

Replace any damaged relays.

26. Power and ground terminal check:

Check the corrosion and looseness at the following terminals:

- 12 volt battery terminals
- Ground cable terminals between the engine and the body ground, and the transmission and the body ground
- Engine wire harness ground (G101, G102)

Are the terminals OK?

YES

Go to step 27 (connector terminal check).

NO

Repair any terminal(s) as needed.

27. Connector terminal check:

Check the foreign objects clogged and corrosion at the following connector terminals:

- **PCM connectors**
-
    - FI MAIN RLY OUT, FI MAIN RLY CL
    - FUEL PUMP RLY CL
    - INJ RLY OUT
    - FI SUB RLY OUT, FI SUB RLY CL-, +B VBACT
    - GND2, FI ECU GND, GND3, GND4, INJ GND1, INJ GND2
    - INJH1, INJL1, INJH2, INJL2, INJH3, INJL3, INJH4, INJL4
    - IGN01, IGN02, IGN03, IGN04
    - HPUMP H, HPUMP L
    - TDCAM
    - CRKP
    - PB
    - FGP

    - TW
    - IPV
    - MTR1, MTR2, THL1, THL2
- CMP sensor A
- CKP sensor
- Ignition coils
- Injectors
- High pressure fuel pump
- ECT sensor 1
- MAF sensor/IAT sensor 1
- MAP sensor
- Throttle body
- EVAP canister purge valve
- Fuel tank unit

Are the terminals OK?

YES

Go to the diagnostic interview for hard to start engine.

NO

Repair any terminal(s) as needed.

Engine will not start, engine starts but stalls immediately, or engine is hard to start (2.4 L Engine) (2017 2018 2019)

Engine will not start, engine starts but stalls immediately, or engine is hard to start

Special Tools Required

Vacuum Pump/Gauge, 0-30 inHg Snap-on YA4000A or equivalent, commercially available

NOTE:

- Before beginning this troubleshooting, **do a customer diagnostic interview**.
-
    - When the symptom cannot be duplicated, **you can do the troubleshooting using the on-board snapshot information in this procedure** . Refer to the dia
total mileage, and compare the total mileage which is estimated from the interview when a failure occurred and the parameter (total mileage) in the on-boar
when the failure occurred corresponds with the date on which the on-board snapshot information was recorded. If it doesn't, the on-board snapshot informat
- Before beginning this troubleshooting:
-
    - Make sure the 12 volt battery is fully charged.
    - Make sure the fuel tank is at least 1/4 full.
    - Make sure the engine oil level is correct.
- After the troubleshooting, **reset the PCM with the HDS** to erase the on-board snapshot information recorded on the PCM.

1. DTC check

-1. Turn the vehicle to the ON mode.

-2. Check for Pending or Confirmed DTCs with the HDS.

DTC Description	Confirmed DTC
B	B

DTC (PGM-FI)

Are any Pending or Confirmed DTCs indicated?

YES

Go to the indicated DTC's troubleshooting.

NO

Go to step 2.

NOTE: If the HDS does not communicate with the vehicle, **go to the PCM power and ground circuit troubleshooting** .

2. Body electrical system DTC check

-1. Check for body electrical system DTCs with the HDS.

DTC Description	DTC
B	B

DTC (Body Control Module)

Are any DTCs indicated?

YES

Go to the troubleshooting for body electrical system DTC(s) .

NO

Go to step 3.

3. Immobilizer system check

-1. **Check the immobilizer status log** .

NOTE: When a status log count is found, it means the immobilizer system has kept the engine from starting in the past. The number of status log count shows ho starting in the past. If the immobilizer system has no status log count, the system is normal.

Were any status log counts found?

YES

Check for probable cause of the status log .

NO

Go to step 4.

4. Problem verification (snapshot sampling):

Set the HDS to record a HIGH-SPEED SNAPSHOT of following parameters for 30 seconds.

- IMMOBILIZER
- ENGINE SPEED
- BATTERY
- ECT SENSOR 1
- MAP SENSOR
- MAF SENSOR
- FUEL PRESSURE CONVERTED FROM PF SENSOR
- FUEL PRESSURE DIRECT INJECTION SYSTEM
- CMP B NO PULSE
- CMP B NOISE
- CKP NO PULSE
- CKP NOISE

Data List

-2. Begin the snapshot, then try to start the engine.

Is the engine hard to start?

YES

Go to step 6 (diagnosis by parameter troubleshooting).

NO

Go to step 5.

5. On-board snapshot check (Engine will not start)

-1. Check the record of Hard to Start Engine in the on-board snapshot with the HDS.

On-board Snapshot

Is the Hard to Start Engine in the on-board snapshot recorded?

YES

Go to step 6 (diagnosis by parameter troubleshooting).

NO

Go to step 18 (fuel system troubleshooting).

NOTE: In case of the following conditions, the on-board snapshot cannot be recorded.

- The vehicle is turned to the OFF (LOCK) mode after starting the engine.
- **Vehicle condition not in the on-board snapshot recoding zone of Hard to start engine** .
- Low or dead 12 volt battery
- Replacing the 12 volt battery

6. On-board snapshot or snapshot check (IMMOBILIZER):

NOTE: Use the on-board snapshot in the case of an intermittent failure, or use the snapshot in the case of a reproducible failure.

-1. Select the Hard to Start Engine in the on-board snapshot or snapshot with the HDS.

On-board Snapshot

Select the IMMOBILIZER and ENGINE SPEED in the configuration list.

Compare the snapshot parameters observed while the engine was cranking, to those in the chart below, to determine the problem.

Pattern	Symptom (Diagnosis by parameter)	Additior
Pattern 1	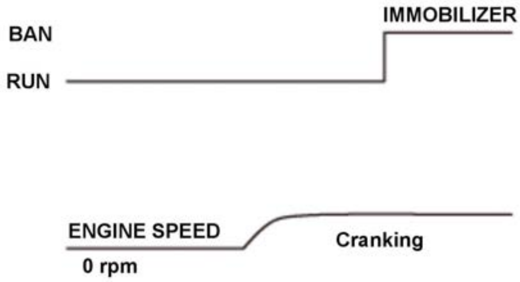 IMMOBILIZER inhibit IMMOBILIZER inhibit 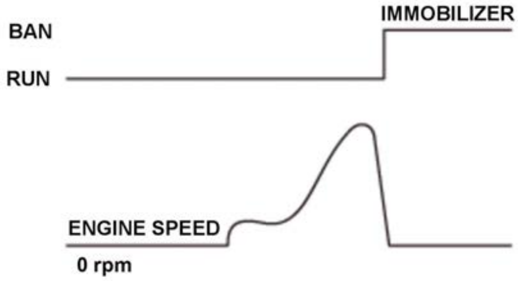	When IM cranking IMMOB • Nc

Pattern	Symptom (Diagnosis by parameter)	Additior
Pattern 2	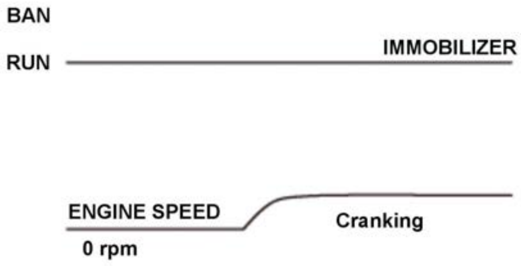 IMMOBILIZER permit Normal IMMOBILIZER permit Normal 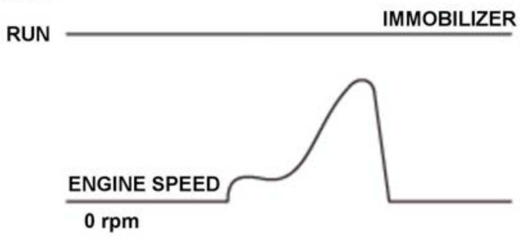	IMMOB indicates

Which pattern is indicated?

Pattern 1

The immobilizer system has a failure. **Go to the immobilizer System Check** .

Pattern 2

The immobilizer system is OK. Go to step 7 (diagnosis by parameter (ENGINE SPEED)).

7. On-board snapshot or snapshot check (ENGINE SPEED):

   NOTE: Use the on-board snapshot in the case of an intermittent failure, or use the snapshot in the case of a reproducible failure.

   -1. Select the Hard to Start Engine in the on-board snapshot or snapshot with the HDS.

   On-board Snapshot

   -2. Select the ENGINE SPEED pattern chart in the configuration list.

   Check the recorded snapshot parameters while the engine is cranking, then compare the pattern from the chart, and determine the problem.

Pattern	Symptom (Diagnosis by parameter)	Addition
Pattern 1	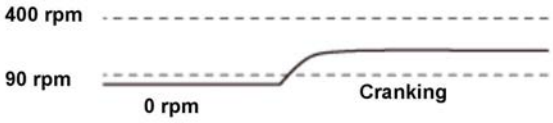 ENGINE SPEED when cranking is normal	B
Pattern 2	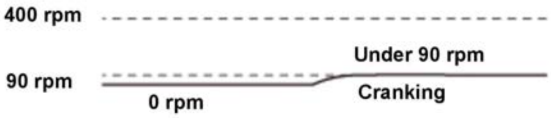 ENGINE SPEED when cranking is low	When EN 12 volt b considere

   Which pattern is indicated?

   Pattern 1

   The engine cranking speed is OK. Go to step 8 (diagnosis by parameter (BATTERY)).

   Pattern 2

   Diagnostic procedure:

   - **Test the 12 volt battery** .
   - Check the 12 volt battery cables and the connections.
   - **Check the starter** .
   - Check for engine friction.

8. On-board snapshot or snapshot check (BATTERY):

   NOTE: Use the on-board snapshot in the case of an intermittent failure, or use the snapshot in the case of a reproducible failure.

   -1. Select the Hard to Start Engine in the on-board snapshot or snapshot with the HDS.

   On-board Snapshot

   Select the BATTERY and ENGINE SPEED in the configuration list.

   Check the recorded snapshot parameters while the engine is cranking, then compare the BATTERY pattern from the chart, and determine the problem.

Pattern	Symptom (Diagnosis by parameter)	Additio
Pattern 1	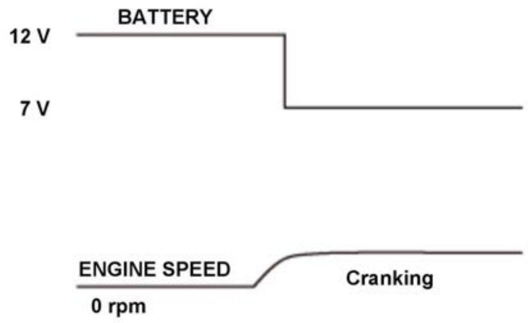 BATTERY voltage low when cranking	• W to en • Th re
Pattern 2	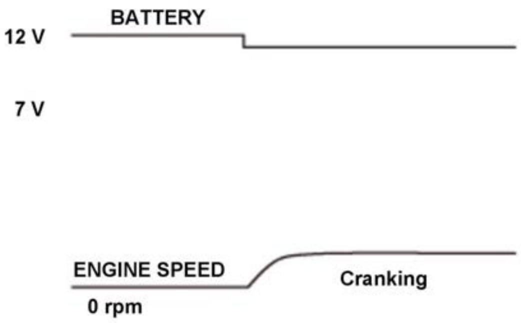 BATTERY voltage normal when cranking	To start t

Which pattern is indicated?

Pattern 1

Diagnostic procedure:

- Test the 12 volt battery .
- Check the 12 volt battery cables and the connections.

Pattern 2

The 12 volt battery is OK. Go to step 9 (diagnosis by parameter (ECT SENSOR 1)).

9. On-board snapshot or snapshot check (ECT SENSOR 1):

NOTE: Use the on-board snapshot in the case of an intermittent failure, or use the snapshot in the case of a reproducible failure.

-1. Select the Hard to Start Engine in the on-board snapshot or snapshot with the HDS.

On-board Snapshot

-2. Select the ECT SENSOR 1 and ENGINE SPEED in the configuration list.

Check the recorded snapshot parameters while the engine is cranking, then compare the ECT SENSOR 1 pattern from the chart, and determine the problem.

Pattern	Symptom (Diagnosis by parameter)	Additio
Pattern 1	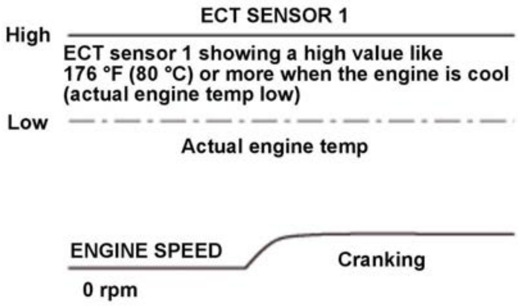 ECT SENSOR 1 high when cranking	When EC deg.C) o low), EC compens warmed (not a fa

Pattern	Symptom (Diagnosis by parameter)	Additior
Pattern 2	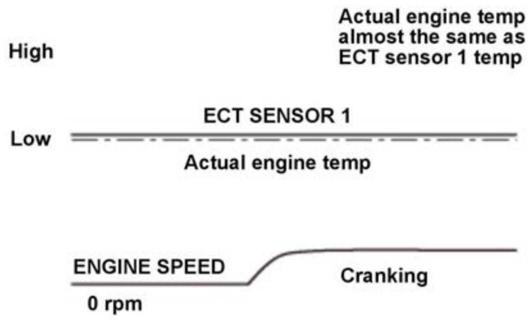 ECT SENSOR 1 normal when cranking	If actual indicated sensor 1

Which pattern is indicated?

Pattern 1

Check for a short in the ECT sensor 1 circuit and a failure in ECT sensor 1.

Pattern 2

Go to step 10.

10. ECT sensor 1 check

    -1. Turn the vehicle to the OFF (LOCK) mode.

    -2. Let the engine cool for 24 hours.

    -3. Measure the ambient temperature of the engine with the thermometer.

    -4. Turn the vehicle to the ON mode, but do not start the engine.

    -5. Check the parameter(s) below with the HDS.

	Current conditions
Signal	**Values**
ECT SENSOR 1	B
ECT SENSOR 2	B

    Are the values of ECT SENSOR 1, ECT SENSOR 2, and the ambient temperature almost the same?

    YES

    ECT sensor 1 is OK. Go to step 11 (diagnosis by parameter (MAP SENSOR)).

    NO

    If the value of ECT SENSOR 1 is much higher (or lower) than that of ECT SENSOR 2, and the ambient temperature, check for the ECT sensor 1 circuit and a fail

11. On-board snapshot or snapshot check (MAP SENSOR):

    NOTE: Use the on-board snapshot in the case of an intermittent failure, or use the snapshot in the case of a reproducible failure.

    -1. Select the Hard to Start Engine in the on-board snapshot or snapshot with the HDS.

    On-board Snapshot

    -2. Select the MAP SENSOR and ENGINE SPEED in the configuration list.

    Check the recorded snapshot parameters while the engine is cranking, then compare the MAP SENSOR pattern to the pattern from the chart below, and determine

Pattern	Symptom (Diagnosis by parameter)	Additior
Pattern 1	MAP SENSOR detects no change of pressure when cranking 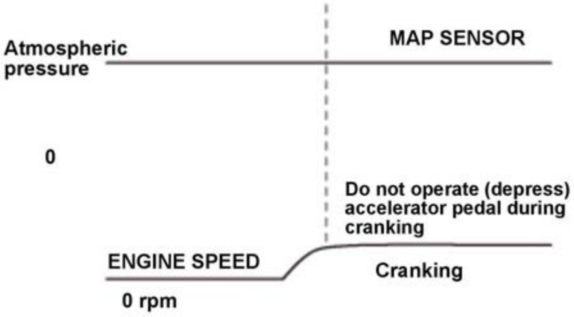 	When M when cra be clogg fuel injec signal wl
Pattern 2	Normal when MAP SENSOR detects vacuum when cranking 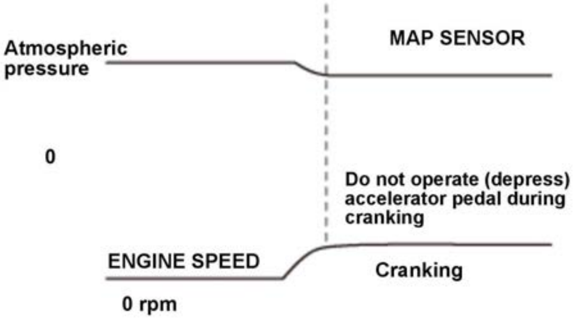 	When M cranking pressure

Which pattern is indicated?

Pattern 1

Check the pressure measurement port of the MAP sensor for clogging, foreign objects, etc.

Pattern 2

The MAP sensor is OK. Go to step 12 (diagnosis by parameter (MAF SENSOR)).

12. On-board snapshot or snapshot check (MAF SENSOR):

NOTE: Use the on-board snapshot in the case of an intermittent failure, or use the snapshot in the case of a reproducible failure.

-1. Select the Hard to Start Engine in the on-board snapshot or snapshot with the HDS.

On-board Snapshot

-2. Select the MAF SENSOR and ENGINE SPEED in the configuration list.

Check the recorded snapshot parameters while the engine is cranking, then compare the MAF SENSOR pattern from the chart, and determine the problem.

Pattern	Symptom (Diagnosis by parameter)	Additior
Pattern 1	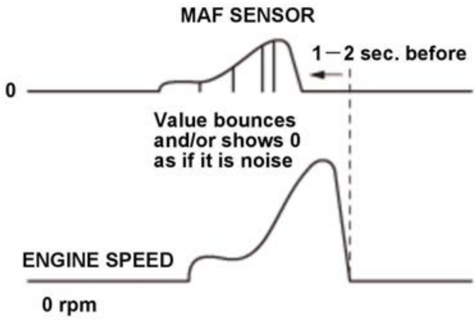 Poor connection of MAF SENSOR	Complet indicates becomes there ma connecto

Pattern	Symptom (Diagnosis by parameter)	Addition
Pattern 2	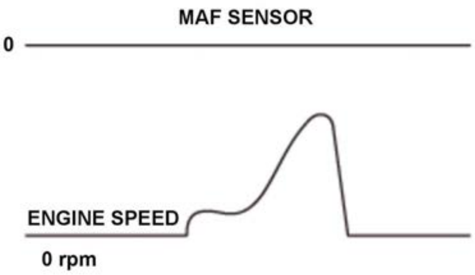 MAF SENSOR output incorrect	When M after star port may a poor co

Pattern	Symptom (Diagnosis by parameter)	Addition
Pattern 3	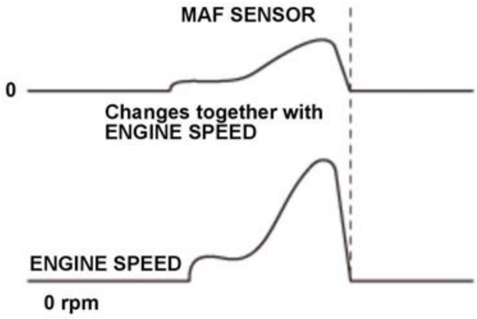 MAF SENSOR Normal	When M ENGINE MAF ser

Which pattern is indicated?

Pattern 1 and 2

Check for loose terminals or a poor connection at the MAF sensor/IAT sensor.

Pattern 3

The MAF sensor/IAT sensor is OK. Go to step 13 (diagnosis by parameter (FUEL PRESSURE CONVERTED FROM PF SENSOR and FUEL PRESSURE DIRE

13. On-board snapshot or snapshot check (FUEL PRESSURE CONVERTED FROM PF SENSOR and FUEL PRESSURE DIRECT INJECTION SYSTEM):

NOTE: Use the on-board snapshot in the case of an intermittent failure, or use the snapshot in the case of a reproducible failure.

-1. Select the Hard to Start Engine in the on-board snapshot or snapshot with the HDS.

On-board Snapshot

Select the FUEL PRESSURE CONVERTED FROM PF SENSOR, the FUEL PRESSURE DIRECT INJECTION SYSTEM, and ENGINE SPEED in the configu

Check the recorded snapshot or on-board snapshot parameters while the engine is cranking, then compare the FUEL PRESSURE CONVERTED FROM PF SENS INJECTION SYSTEM patterns from the chart, and determine the problem.

Pattern	Symptom (Diagnosis by parameter)	Addition
Pattern 1	The FUEL PRESSURE CONVERTED FROM PF SENSOR is low (almost 0 kPa) when cranking 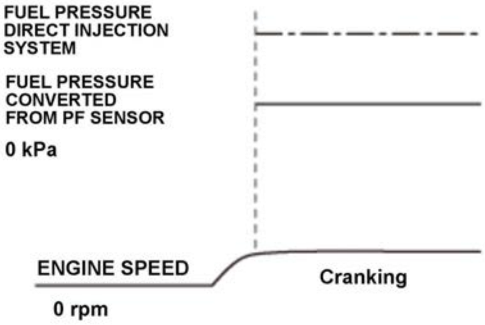	If the FU SENSOF may exis - Fu - Fu - Sp - Fu - Fu - Hi

Pattern	Symptom (Diagnosis by parameter)	Addition
Pattern 2	Normal when the FUEL PRESSURE CONVERTED FROM PF SENSOR follows the FUEL PRESSURE DIRECT 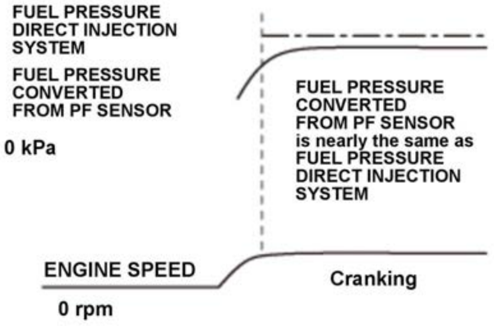 INJECTION SYSTEM when cranking	If the FU SENSOR PRESSU cranking Fuel pres

Which pattern is indicated?

Pattern 1

Go to the troubleshooting for DTC P0087 .

Pattern 2

The fuel pressure is OK. Go to step 14 (diagnosis by parameter (CMP B NO PULSE)).

14. On-board snapshot or snapshot check (CMP B NO PULSE):

NOTE: Use the on-board snapshot in the case of an intermittent failure, or use the snapshot in the case of a reproducible failure.

-1. Select the Hard to Start Engine in the on-board snapshot or snapshot with the HDS.

On-board Snapshot

-2. Select the CMP B NO PULSE and ENGINE SPEED in the configuration list.

Check the recorded snapshot parameters while the engine is cranking, then compare the CMP B NO PULSE pattern from the chart, and determine the problem.

Pattern	Symptom (Diagnosis by parameter)	Addition
Pattern 1	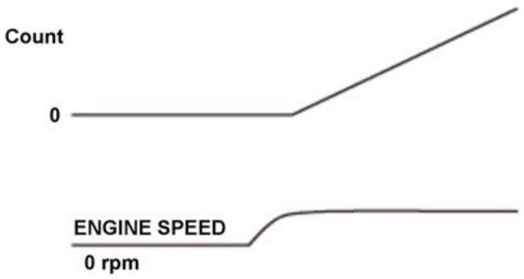 Count is continuously up	When C cranking is not rec be ignite
Pattern 2	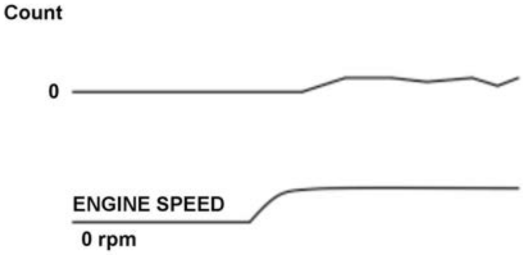 Count is continuously not up	Count is

Which pattern is indicated?

Pattern 1

Go to the troubleshooting for DTC P0365 . If the CMP B NO PULSE count reaches the malfunction threshold, DTC P0365 will set. Check for poor connection

Pattern 2

Go to step 15 (diagnosis by parameter (CMP B NOISE)).

15. On-board snapshot or snapshot check (CMP B NOISE):

    NOTE: Use the on-board snapshot in the case of an intermittent failure, or use the snapshot in the case of a reproducible failure.

    -1. Select the Hard to Start Engine in the on-board snapshot or snapshot with the HDS.

    On-board Snapshot

    -2. Select the CMP B NOISE and ENGINE SPEED in the configuration list.

    Check the recorded snapshot parameters while the engine is cranking, then compare the CMP B NOISE pattern from the chart, and determine the problem.

Pattern	**Symptom (Diagnosis by parameter)**	**Additior**
Pattern 1	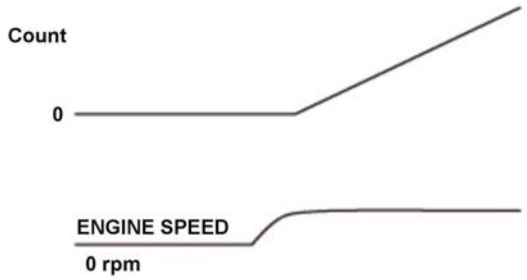 Count is continuously up	When C there is n has noise ignited a
Pattern 2	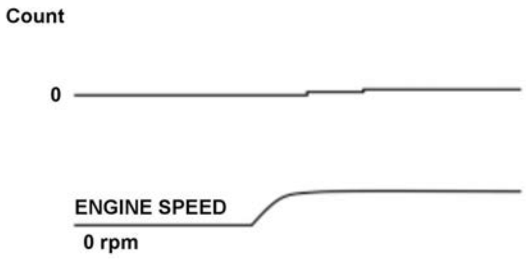 Count is continuously not up	Count is

    Which pattern is indicated?

    Pattern 1

    Go to the troubleshooting for DTC P0369 . If the CMP B NOISE count reaches the malfunction threshold, DTC P0369 will set. Check for poor connections an

    Pattern 2

    CMP sensor B is OK. Go to step 16 (diagnosis by parameter (CKP NO PULSE)).

16. On-board snapshot or snapshot check (CKP NO PULSE):

    NOTE: Use the on-board snapshot in the case of an intermittent failure, or use the snapshot in the case of a reproducible failure.

    -1. Select the Hard to Start Engine in the on-board snapshot or snapshot with the HDS.

    On-board Snapshot

    -2. Select the CKP NO PULSE and ENGINE SPEED in the configuration list.

    Check the recorded snapshot parameters while the engine is cranking, then compare the CKP NO PULSE pattern from the chart, and determine the problem.

Pattern	Symptom (Diagnosis by parameter)	Addition
Pattern 1	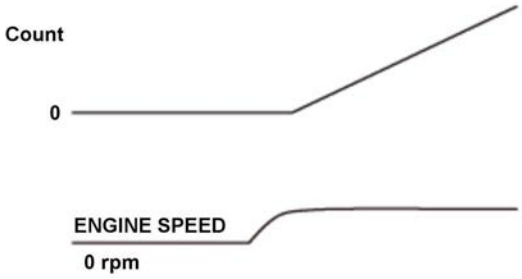 Count is continuously up	When th cranking pulse.
Pattern 2	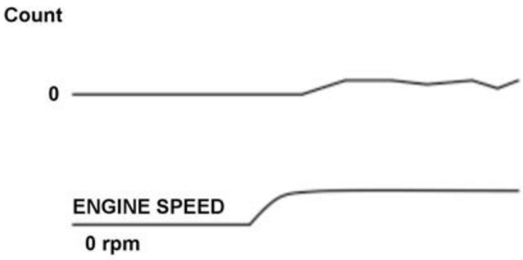 Count is continuously not up	Count is

Which pattern is indicated?

Pattern 1

Go to the troubleshooting for DTC P0335 . If the CKP NO PULSE count reaches the malfunction threshold, DTC P0335 will set. Check for poor connections a

Pattern 2

Go to step 17 (diagnosis by parameter (CKP NOISE)).

17. On-board snapshot or snapshot check (CKP NOISE):

NOTE: Use the on-board snapshot in the case of an intermittent failure, or use the snapshot in the case of a reproducible failure.

-1. Select the Hard to Start Engine in the on-board snapshot or snapshot with the HDS.

On-board Snapshot

-2. Select the CKP NOISE and ENGINE SPEED in the configuration list.

Check the recorded snapshot parameters while the engine is cranking, then compare the CKP NOISE pattern from the chart, and determine the problem.

Pattern	Symptom (Diagnosis by parameter)	Addition
Pattern 1	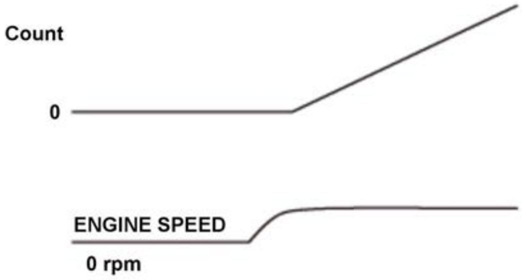 Count is continuously up	When th cranking pulse.

Pattern	Symptom (Diagnosis by parameter)	Additior
Pattern 2	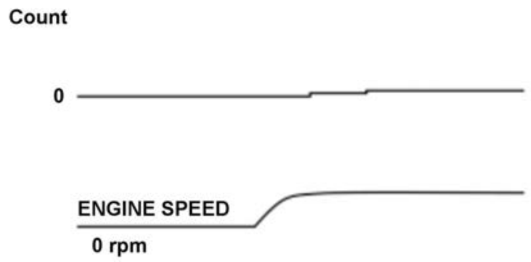 Count is continuously not up	Count is

Which pattern is indicated?

Pattern 1

Go to the troubleshooting for DTC P0339 . If the CKP NOISE count reaches the malfunction threshold, DTC P0339 will set. Check for poor connections and l check for aftermarket accessories.

Pattern 2 (Intermittent failure)

The CKP sensor is OK. Go to step 18 (fuel system troubleshooting).

18. Fuel pressure check (low pressure side)

-1. **Do the fuel pressure test**.

Is the fuel pressure OK?

YES

Go to step 19.

NO

Check the following parts:

- **Fuel pump circuit**
- **Fuel pressure regulator**
- **Fuel filter**

19. Spark plug visual check

-1. Turn the vehicle to the OFF (LOCK) mode.

-2. **Remove the spark plugs** .

-3. Check the condition of the spark plug electrodes.

NOTE: Make sure the spark plugs are the correct part number for the vehicle. If the plugs are aftermarket or they are not the correct part number, replace all of th

Is the electrode damage or wet?

1. YES (wet)

   Check the following conditions. If those conditions do not apply, go to step 20.

   - In very cold conditions, multiple very short trips can cause the spark plug to foul. If this is the case, drive the vehicle a longer distance and recheck.
   - Incorrect or poor quality fuel can cause a wet spark plug. Replace the fuel and recheck.

   YES (damaged)

   Replace the damaged spark plugs , determine the cause of the spark plug damage.

   NO

   Go to step 20.

20. Determine possible failure area (ignition system, others)

-1. Turn the vehicle to the OFF (LOCK) mode.

-2. Fit a spark plug to the ignition coil and ground it to the engine.

-3. Turn the vehicle to the ON mode.

-4. Select ALL INJECTORS STOP in the INSPECTION MENU with the HDS, and stop fuel injection from the injector.

ALL INJECTORS STOP

Crank the engine and watch for spark at the spark plug.

Does the spark plug sparkΩ

YES

The ignition system is OK. Select PCM reset in the PGM-FI INSPECTION MENU to cancel ALL INJECTORS STOP with the HDS, then go to step 22 (engine c

NO

Go to step 21.

21. Ignition coil power circuit check

-1. Turn the vehicle to the OFF (LOCK) mode.

-2. Disconnect the following connector(s).

Ignition coil(s) 3P connector from the problem cylinder

-3. Turn the vehicle to the ON mode.

-4. Measure the voltage between test points 1 and 2.

Test condition	Vehicle ON mode
B	Ignition coil 3P connector: disconnected
Test point 1	Ignition coil 3P connector (female terminal) No. 1: ①

Test point 2	Body ground

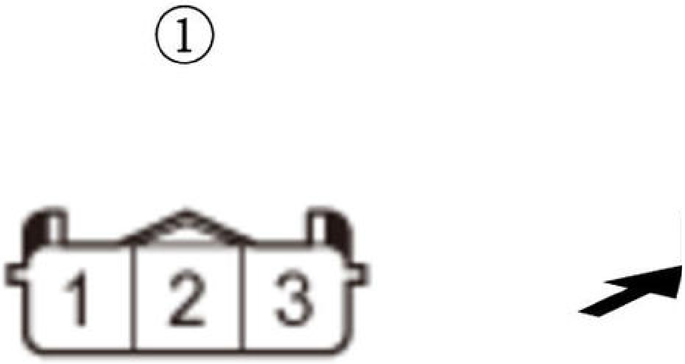

Is there battery voltage?

YES

The ignition coil power circuit is OK. **Replace the ignition coil(s)** .

NO

Repair an open in the IG COIL RLY OUT/IG1(COIL)/IG1(IGN) wire between the ignition coil relay circuit and the ignition coil.

22. Engine compression check

-1. Do an engine compression inspection.

Is engine compression OK?

YES

Go to step 23 (EVAP canister purge valve check).

NO

Check for wear or damage to these parts:

- Incorrect valve clearance
- Confirmation of cam timing
- Oil pressure relief valve
- Damage or worn cam lobes
- Damage or worn valve and seats
- Damage cylinder head gasket
- Damage or worn piston rings
- Damage or worn piston and cylinder bore

23. EVAP canister purge valve check

-1. Turn the vehicle to the OFF (LOCK) mode.

-2. Remove the high pressure fuel pump cover and the fuel bracket.

-3. Disconnect the following connector.

EVAP canister purge valve 2P connector

-4. Disconnect the vacuum hose (A) from the EVAP canister purge valve (B) in the engine compartment, and connect the vacuum pump/gauge, 0-30 inHg (C) to t

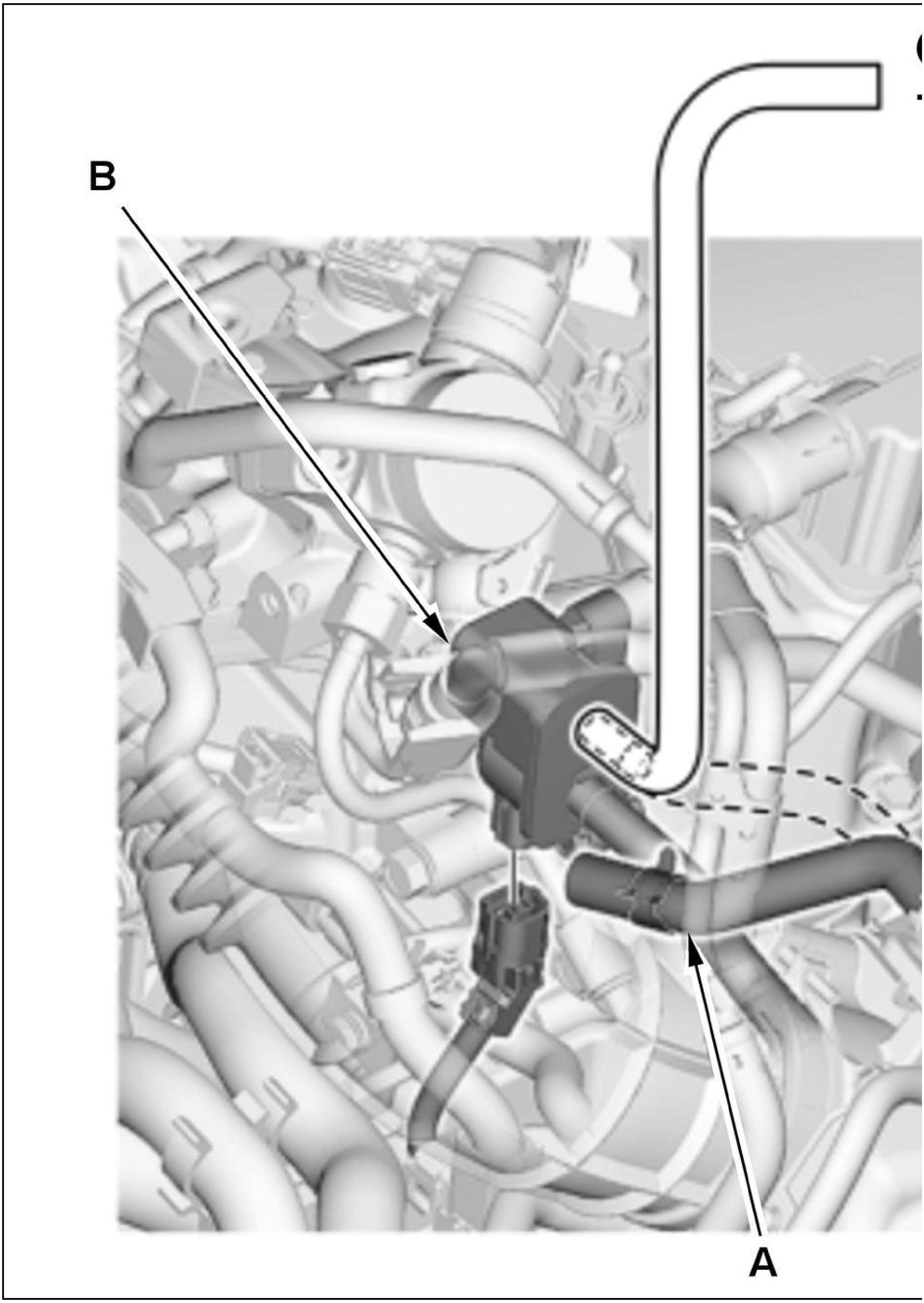

-5. Start the engine.

Does the vacuum pump indicate vacuum?

YES

Replace the EVAP canister purge valve .

NO (Reproducible failure)

Go to step 24 (fuse check).

NO (Intermittent failure)

Go to step 25 (relay check).

24. Fuse check

-1. Check the following fuses.

Fuse	No. A7 (15 A) to relay circuit board (PGM-FI main relay 1 circuit) No. A15 (15 A) to relay circuit board (ignition coil relay circuit) No. A8 (15 A) to relay circuit board (PGM-FI subrelay circuit) No. A10 (20 A) to injector relay
Location	Under-hood fuse/relay box

Fuse	No. D8 (15 A) to PGM-FI main relay 2
Location	Under-dash fuse/relay box

Are the fuses OK?

YES

The fuses are OK. Go to step 25 (relay check).

NO

Replace the blown fuse(s).

25. Relay check:

Test the following relays:

NOTE: In case the failure is not reproduced, the following relays may have an intermittent failure.

- Relay circuit board (includes PGM-FI main relay 1 circuit, ignition coil relay circuit, PGM-FI subrelay circuit)
- PGM-FI main relay 2
- Injector relay

Are the relay circuit board and the relays OK?

YES

Go to step 26 (power and ground terminal check).

NO

Replace any damaged relays.

26. Power and ground terminal check:

Check the corrosion and looseness at the following terminals:

- 12 volt battery terminals
- Ground cable terminals between the engine and the body ground, and the transmission and the body ground
- Engine wire harness ground (G101, G102)

Are the terminals OK?

YES

Go to step 27 (connector terminal check).

NO

Repair any terminal(s) as needed.

27. Connector terminal check:

Check the foreign objects clogged and corrosion at the following connector terminals:

- PCM connectors
-
    - FI MAIN RLY OUT, FI MAIN RLY CL-
    - VBDBW, DBW RLY-
    - IG1 FUEL PUMP, FUEL PUMP RLY CL-
    - INJ RLY OUT, INJ RLY CL-
    - GND1, GND2, GND3, PGM, GND INJ1, GND INJ2
    - INJ H1, INJ L1, INJ H2, INJ L2, INJ H3, INJ L3, INJ H4, INJ L4
    - IGN01, IGN02, IGN03, IGN04
    - HPUMP H, HPUMP L
    - CAM

    - TDC
    - CRKN
    - PB
    - VGP, VGM
    - TW
    - PCS
    - MTR1, MTR2, THL1, THL2
- CMP sensor A
- CMP sensor B
- CKP sensor
- Ignition coils
- Injectors
- High pressure fuel pump
- ECT sensor
- MAF sensor
- MAP sensor
- Throttle body
- EVAP canister purge valve
- Fuel tank unit

Are the terminals OK?

YES

Go to the diagnostic interview for hard to start engine.

NO

Repair any terminal(s) as needed.

Hard to start engine - Diagnostic interview

Hard to start engine-Diagnostic interview

• Date	
• Place	
• How often does it occur?	() times/day
1. Weather when occurred	A: Warm (temp:) B: Sunny C: Cloudy D: Rainy
2. Situation when occurred	A: After an overnight parking, () nights B: Tends to occur about 3 hours after stopping engine C: Parking hours irrelevant
3. Weather when occurred • Fuel when occurred	A: Cold (temp:) : Filled () months before occurrence
4. Use of specified fuel	A: Used specified fuel only B: Used ethanol-mixed fuel C: Gasoline additive
5. How the starter motor turned when the problem occurred B • Cranking operation B • Cranking (Without keyless access system)	A: Starter motor turned weaker than usual B: Spinning of starter motor irrelevant A: Keep cranking until the engine starts B: Stop cranking after several seconds: () sec A: Turn on starter motor immediately after turning the ignition sw B: Turn on starter motor several seconds after turning the ignition confirming that the check engine indicator goes off)
6. Ground where occurred • Fuel level when occurred	A: Level, B: Downhill, C: Uphill A: Full, B: Half full, C: Only a little
7. Aftermarket accessory	A: Modified, B: No modification

Hard-to start condition - Possible cause pattern chart from diagnostic interview

B	Conditions when hard-to-start occurred	Possible causes
Pattern 1	• When in warm climate • Tends to occur about 3 hours after stopping engine	Check for the EVAP canister purge valve.
Pattern 2	Weather when occurred: Windy	When wind is blowing into the exhaust system, the exhaust gas can chamber and/or intake manifold, causing long crank times.
Pattern 3	• Weather when occurred: Cold • Fuel filled two months before occurrence	• If summer fuel is used during cold weather, long crank times r • When using fuel that is more than a couple months old (stale f with fresh fuel.
Pattern 4	• Use of non-specified fuel • Ethanol mixed, use of additive	• When ethanol fuel or fuel other than specified is mixed, engin • Poor fuel quality may cause a hard-to-start condition.

Pattern 5	• Immediately crank after turning the vehicle to the ON mode • Starter motor spins weaker than usual	• There may be a delay until the fuel pump can generate sufficie pressure when starting. • When the battery is weak, it takes a long time until the fuel pu prescribed level, causing slow start in some cases.
Pattern 6	• Vehicle parked on an uphill or downhill slope • When fuel level is low	When the vehicle is parked on an uphill or downhill slope, and the fu cannot pickup and pressurize the fuel properly, causing a hard-to-sta
Pattern 7	• Check for modification in ignition system, intake duct, intake manifold, exhaust system • Inspect amount of oil/fluid/gas (engine oil, ATF, A/C refrigerant)	Hard-to-start engine or engine stall may occur due to modified igniti manifold, exhaust system, use of non-specified engine oil or ATF, or ATF (temporary failure may occur due to modification).

SYMPTOM TROUBLESHOOTING INDEX

FUEL AND EMISSIONS SYSTEMS SYMPTOM TROUBLESHOOTING INDEX (KA/KC)

Symptom Troubleshooting Index

When the vehicle has one of these symptoms, check for a diagnostic trouble code (DTC) with the HDS. If there is no DTC, do the diagnostic procedure for the symptom cause.

Symptom	Diagnostic procedure	Also cl
Engine will not start (MIL works OK, no DTCs set)	• Troubleshoot the engine will not start, engine starts but stalls immediately, or engine is hard to start. • Do the CVT system symptom troubleshooting .	B
Engine will not start and HDS does not communicate with the PCM(MIL comes on and stays on, no DTCs set)	PCM power and ground circuit troubleshooting .	B
MIL comes on and stays on, or never comes on at all, no DTCs set	Troubleshoot the MIL circuit .	B
Engine will not start (MIL works OK, no DTCs set, security indicator stays on or flashes)	• Without keyless access system: Check the immobilizer system . • With keyless access system: Check the keyless access system .	B
Engine starts but stalls immediately (MIL works OK, no DTCs set, security indicator stays on or flashes)	• Without keyless access system: Check the immobilizer system . • With keyless access system: Check the keyless access system .	B
Engine is hard to start (MIL works OK, no DTCs set)	• Troubleshoot the engine will not start, engine starts but stalls immediately, or engine is hard to start. • Do the CVT system symptom troubleshooting .	B
Cold fast idle too low (MIL works OK, no DTCs set)	• Do the PCM idle learn procedure . • Check the idle speed . • Do the carbon accumulation check .	B
Cold fast idle too high (MIL works OK, no DTCs set)	• Do the PCM idle learn procedure . • Check the idle speed .	Intake
Idle speed fluctuates (MIL works OK, no DTCs set)	• Do the PCM idle learn procedure . • Check the idle speed . • Check the fuel pressure. • Do the carbon accumulation check . • Troubleshoot the A/C signal circuit . • Check the A/C refrigerant amount . **NOTE:** Turning the A/C to ON under the conditions that the A/C refrigerant amount is out of specification (excessive or too little) may cause the idle speed fluctuation.	• I • I
After warming up, idle speed is below specifications without load (MIL works OK, no DTCs set)	Do the carbon accumulation check .	Incorre adjustn
After warming up, idle speed is above specifications without load (MIL works OK, no DTCs set)	Inspect the APP sensor .	Intake

Symptom	Diagnostic procedure	Also cl
Low power (MIL works OK, no DTCs set)	• Check the fuel pressure. • Check the air cleaner element .	• I • I • I • F • F • I s
Engine stalls (MIL works OK, no DTCs set)	Troubleshoot the engine stalls.	B
Difficult to refuel (MIL works OK, NO DTCs set)	• Check the fuel vent tube between the EVAP canister and the fuel tank unit. • Check the fuel tank vapor recirculation tube between the fuel fill pipe and the fuel tank unit.	Malfun

Symptom	Diagnostic procedure	Also cl
	- Insert the emergency fuel funnel into the fuel filler neck, then check the operation of the shut-off valve flap. **NOTE:** The emergency fuel funnel is stored in the trunk tool box. - **Replace the fuel tank** .	
Fuel overflows during refueling (No DTCs set)	**Replace the fuel tank** .	Malfun
HDS does not communicate with the PCM or the vehicle	**Troubleshoot the DLC circuit** .	Correc

SYMPTOM TROUBLESHOOTING INDEX FOR VIEWER

FUEL OVERFLOWS DURING REFUELING (NO DTCS SET) (KA/KC)

Diagnostic procedure

- **Replace the fuel tank** .

Also check for

Malfunctioning gas station filling nozzle

INSPECTION

IGNITION TIMING INSPECTION (1.5 L ENGINE)

Inspection

1. HDS - Connect
2. DTC - Check

   NOTE: If a DTC is present, diagnose and repair the cause before continuing with this inspection.

3. Engine - Warm Up

1. Start the engine. Hold the engine speed at 3, 000 rpm with no load (in P or N) until the cooling fan comes on, then let it idle.

4. Idle Speed - Check
5. SCS - Short

1. Turn the vehicle to the OFF (LOCK) mode. 2. Jump the SCS line with the HDS.

6. Ignition Timing - Inspect

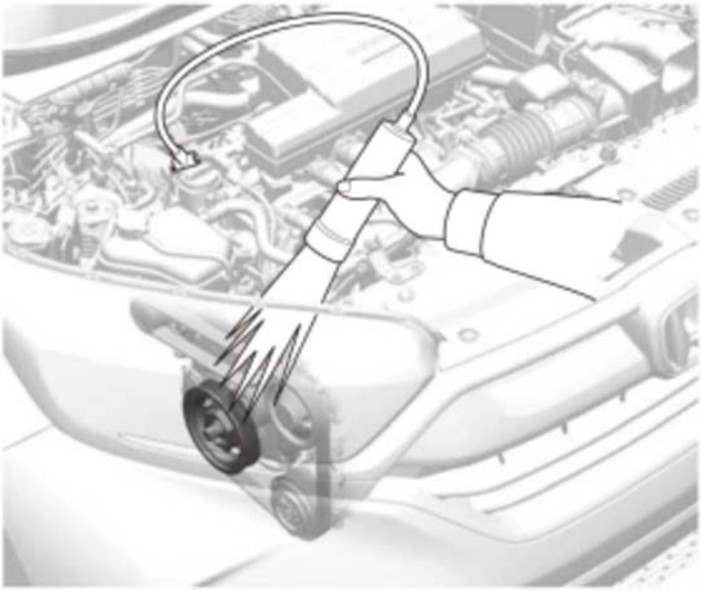	1. Start the engine. 2. Connect the timing light to the service loop (white tape).

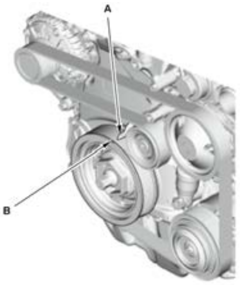	3. Aim the light toward the pointer (A) on the cam chain case. Check the ignition timing under a no load condition (headlights, blower fan, rear window defogger, and air conditioner are turned off). **Ignition Timing** 4. If the ignition timing differs from the specification, check the camshaft timing . If the camshaft timing is OK, update the PCM if it does not have the latest software, or substitute a known-good PCM , then recheck. If the system works properly, and the PCM was substituted, replace the original PCM .	5. Disconnect the HDS and the timing light.

4 +/-2 deg. BTDC (RED mark (B)) at idle in P or N

IGNITION TIMING INSPECTION (2.4 L ENGINE) (2017 2018 2019)

Inspection

1. HDS DLC - Connect
2. DTC - Check

NOTE: If a DTC is present, diagnose and repair the cause before continuing with this inspection.

3. Engine - Warm Up

1. Start the engine. Hold the engine speed at 3, 000 min -1 (rpm) with no load (in P or N) until the radiator fan comes on, then let it idle.

4. Idle Speed - Check
5. SCS - Short

1. Turn the vehicle to the OFF (LOCK) mode. 2. Jump the SCS line with the HDS, and wait more than 1 minute.

6. Ignition Timing - Inspect

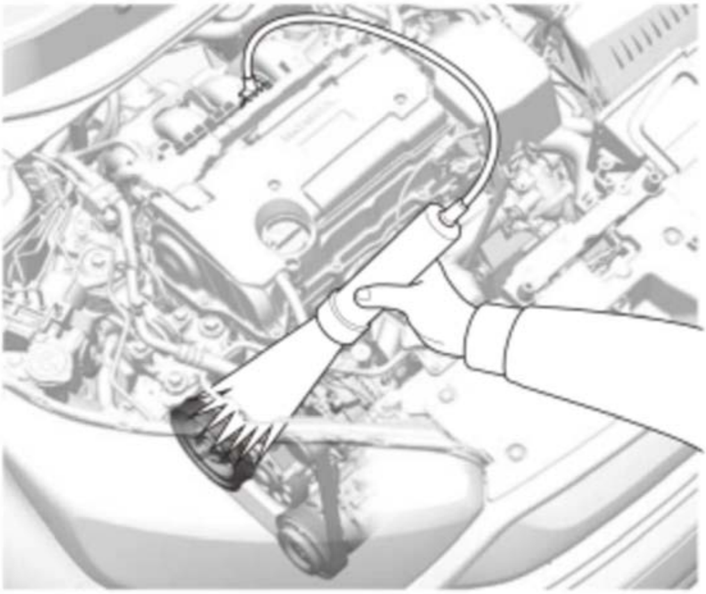	1. Start the engine. 2. Connect the timing light to the service loop (white tape).

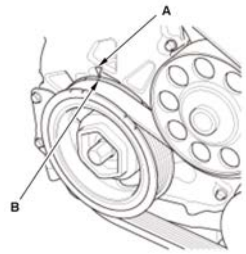	3. Aim the light toward the pointer (A) on the cam chain case. Check the ignition timing under a no load condition (headlights, blower fan, rear window defogger, and air conditioner are turned off). 4. If the ignition timing differs from the specification, **check the camshaft timing** . If the camshaft timing is OK, **update the PCM** if it does not have the latest software, or **substitute a known-good PCM** , then recheck. If the system works properly, and the PCM was substituted, **replace the original PCM** . 5. Disconnect the HDS and the timing light.

Ignition Timing
8 +/-2 deg. BTDC (RED mark (B)) at idle in P or N

SPARK PLUG INSPECTION (1.5 L ENGINE)

Inspection

1. **Ignition Coil and Spark Plug - Remove**
2. Spark Plug - Inspect

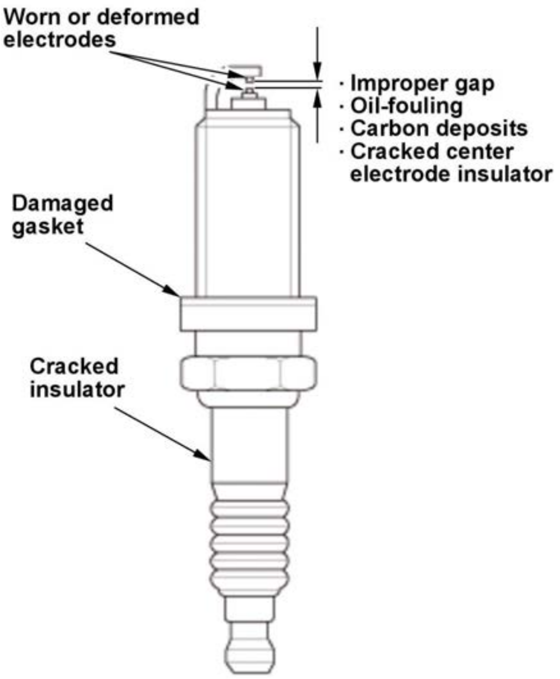 Worn or deformed electrodes · Improper gap · Oil-fouling · Carbon deposits · Cracked center electrode insulator Damaged gasket Cracked insulator	1. Inspect the electrodes and the ceramic insulator. • Burned or worn electrodes may be caused by these conditions: • • - Advanced ignition timing • - Loose spark plug • - Plug heat range too hot • - Insufficient cooling • Fouled plugs may be caused by these conditions: • • - Retarded ignition timing • - Oil in combustion chamber • - Incorrect spark plug gap

	- - Plug heat range too cold - - Excessive idling/low speed running - - Clogged air cleaner element - - Deteriorated ignition coils

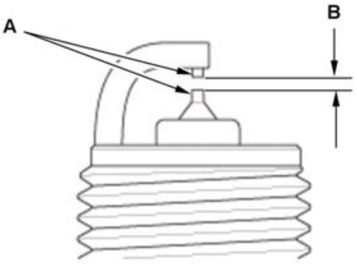	2. Replace the plug at the specified interval, or if the center electrodes (A) is rounded, or if the spark plug gap (B) is out of specification. **NOTE:** - **Do not adjust the gap of iridium tip plugs.** - **Do not use plug cleaner.**

Electrode Gap	
Standard (New):	
B	**0.70-0.75 mm (0.0276-0.0295 in)**

3. All Removed Parts - Install

1. Install the parts in the reverse order of removal.

SPARK PLUG INSPECTION (2.4 L ENGINE) (2017 2018 2019)

Inspection

1. Ignition Coil and Spark Plug - Remove
2. Spark Plug - Inspect

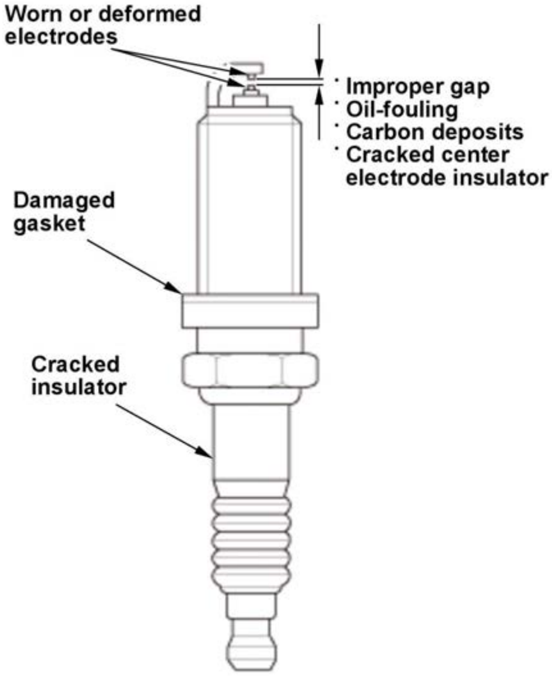
Worn or deformed electrodes
· Improper gap
· Oil-fouling
· Carbon deposits
· Cracked center electrode insulator
Damaged gasket
Cracked insulator

1. Inspect the electrodes and the ceramic insulator.

- Burned or worn electrodes may be caused by these conditions:
-
  - -

    Advanced ignition timing
  - -

    Loose spark plug
  - -

    Plug heat range too hot
  - -

    Insufficient cooling
- Fouled plugs may be caused by these conditions:
-
  - -

    Retarded ignition timing
  - -

    Oil in combustion chamber
  - -

    Incorrect spark plug gap
  - -

    Plug heat range too cold
  - -

    Excessive idling/low speed running
  - -

    Clogged air cleaner element
  - -

    Deteriorated ignition coils

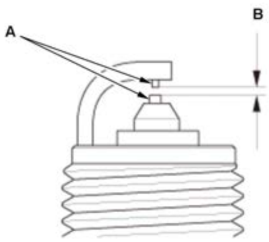 	2. Replace the plug at the specified interval, or if the center electrodes (A) is rounded, or if the spark plug gap (B) is out of specification, or if the spark plug electrode is dirty or contaminated. Use only the spark plugs listed. **NOTE:** - **Do not adjust the gap of iridium tip plugs.** - **Do not use plug cleaner.**

Electrode Gap	
Standard (New):	**1.0-1.1 mm (0.039-0.043 in)**

3. All Removed Parts - Install

1. Install the parts in the reverse order of removal.

COMPONENT LOCATION INDEX

IGNITION SYSTEM COMPONENT LOCATION INDEX (1.5 L ENGINE)

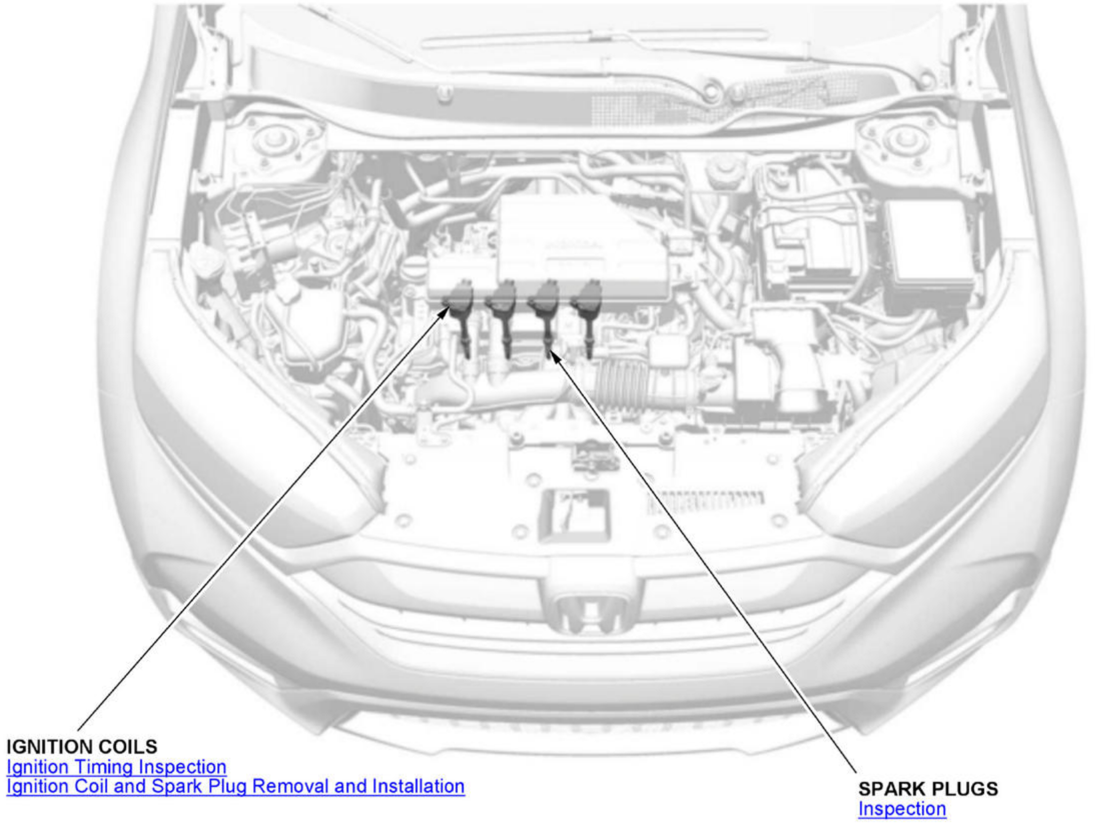
IGNITION COILS
Ignition Timing Inspection
Ignition Coil and Spark Plug Removal and Installation
SPARK PLUGS
Inspection

IGNITION SYSTEM COMPONENT LOCATION INDEX (2.4 L ENGINE) (2017 2018 2019)

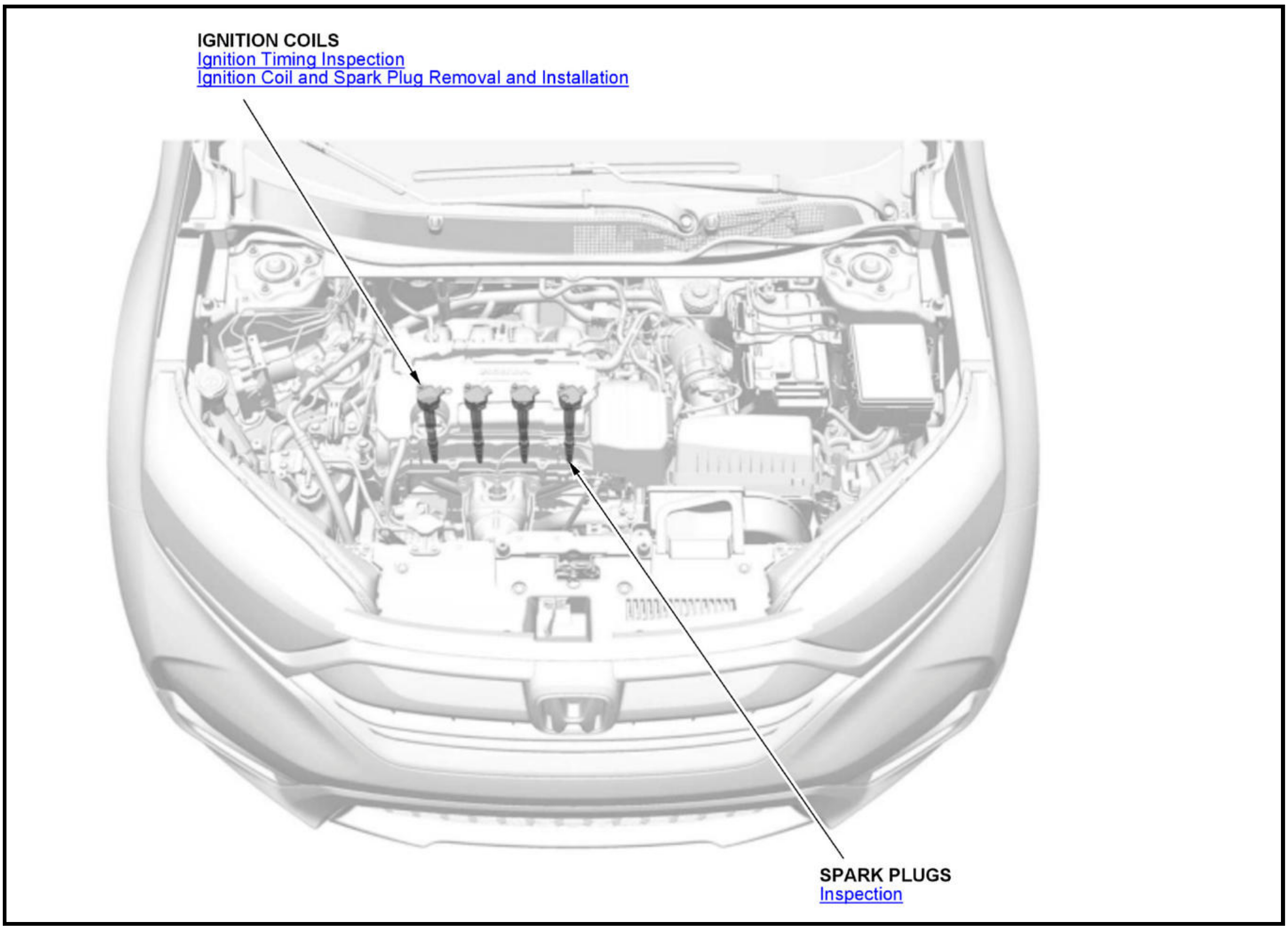
IGNITION COILS
Ignition Timing Inspection
Ignition Coil and Spark Plug Removal and Installation
SPARK PLUGS
Inspection

REMOVAL AND INSTALLATION

IGNITION COIL AND SPARK PLUG REMOVAL AND INSTALLATION (1.5 L ENGINE)

Removal and Installation

1

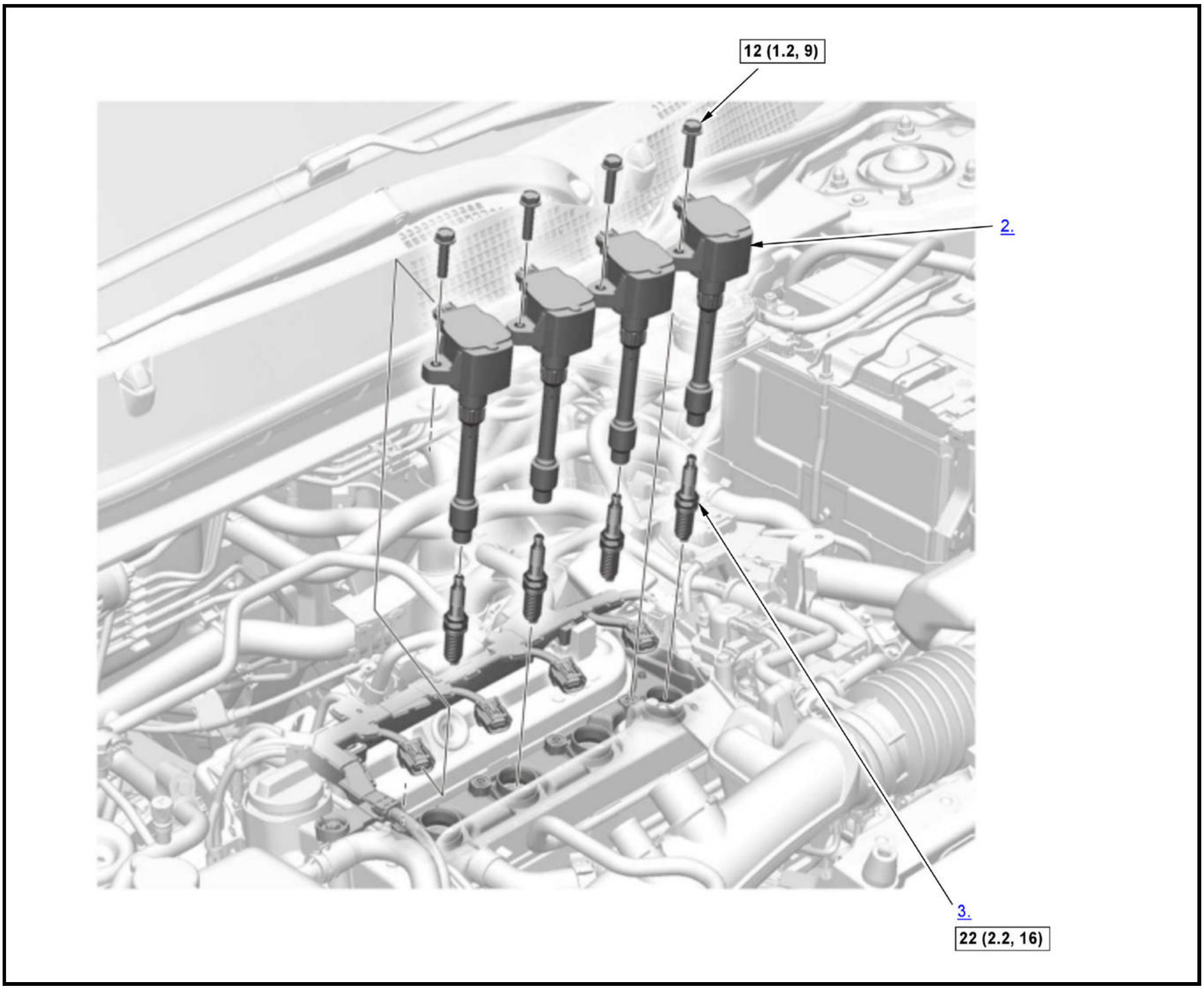

☐	Torque: N.m (kgf.m, lbf.ft)

1. Resonator - Remove

   NOTE: Remove the necessary part(s).

2. Ignition Coil - Remove
3. Spark Plug - Remove
4. All Removed Parts - Install

1. Install the parts in the reverse order of removal.

NOTE:

When installing the spark plugs, apply a small amount of anti-seize compound to the spark plug threads, and screw the spark plugs into the cylinder head, finger-tight, then tighten the spark plugs to the specified torque.

5. Maintenance Minder - Reset (With Maintenance Minder System)

1. If the Maintenance Minder required to replace the spark plugs, reset the Maintenance Minder with the gauge (see "Resetting the Maintenance Minder").

IGNITION COIL AND SPARK PLUG REMOVAL AND INSTALLATION (2.4 L ENGINE) (2017 2018 2019)

Removal and Installation

1

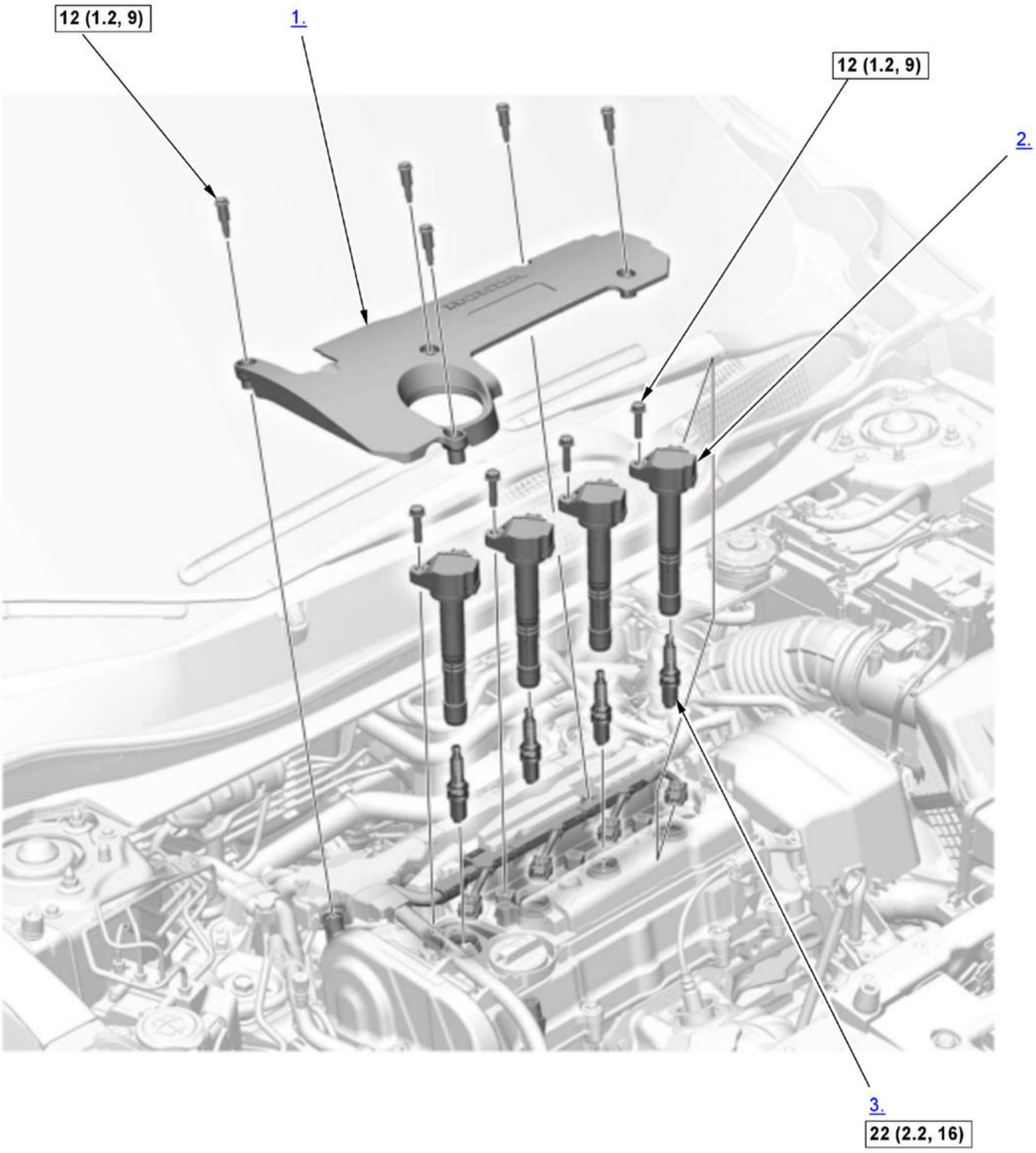

☐	Torque: N.m (kgf.m, lbf.ft)

1. Engine Cover - Remove
2. Ignition Coil - Remove
3. Spark Plug - Remove
4. All Removed Parts - Install

> 1. Install the parts in the reverse order of removal.
>
> **NOTE:**
>
> **When installing the spark plugs, apply a small amount of anti-seize compound to the spark plug**

threads, and screw the spark plugs into the cylinder head, finger-tight, then tighten the spark plugs to the specified torque.

5. Maintenance Minder - Reset (With Maintenance Minder System)

1. If the Maintenance Minder required to replace the spark plugs, **reset the Maintenance Minder with the gauge** (see "Resetting the Maintenance Minder").

REMOVAL, INSTALLATION & INSPECTION

IGNITION COIL AND SPARK PLUG REMOVAL, INSTALLATION, AND INSPECTION

Removal and Installation

Procedure

NOTE: **Numbered call-outs in figure pertain to list numbers in following procedure.**

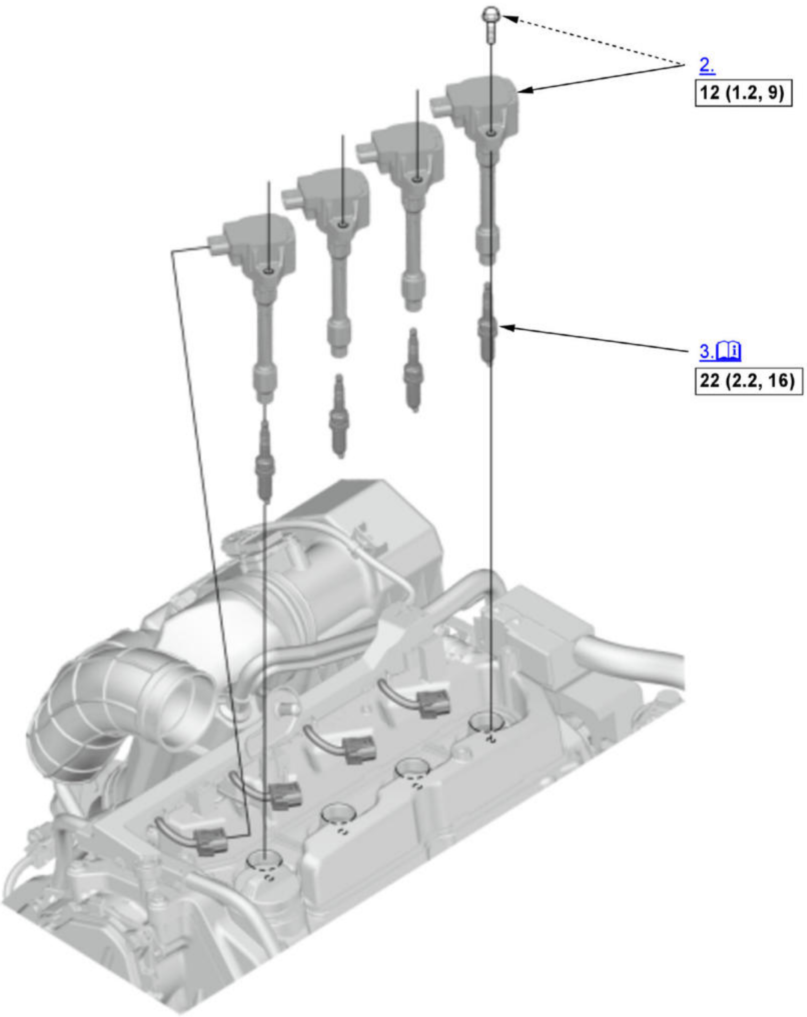

Fig. 1: Ignition Coil And Spark Plug Replacement Components With Torque Specifications
Courtesy of HONDA, U.S.A., INC.

▭	Torque: N.m (kgf.m, lbf.ft)

1. Intake Air Resonator - Remove
2. Ignition Coil - Remove
3. Spark Plug - Remove

Note for installation

Screw the spark plugs into the cylinder head, finger-tight, then tighten the spark plugs to the specified torque.

4. All Removed Parts - Install

1. Install the parts in the reverse order of removal.

5. Maintenance Minder - Reset (With Maintenance Minder System)

1. If the Maintenance Minder required to replace the spark plugs, **reset the Maintenance Minder with the gauge** (see "Resetting the Maintenance Minder").

Inspection

1. Spark Plug - Inspect

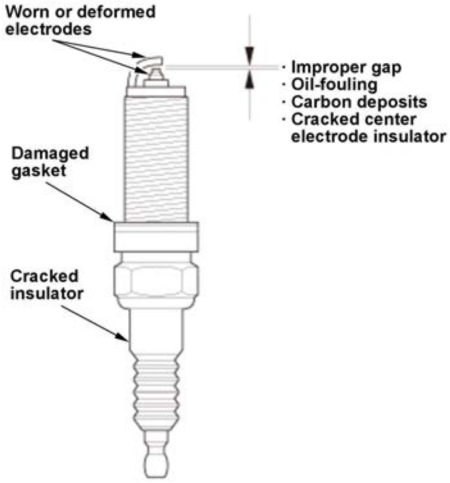

NOTE:

- Do not adjust the spark plug gap, because the electrode may be damaged.
- Replace the spark plug according to the maintenance schedule.
- Replace the spark plug with a spark plug from another cylinder if abnormality is suspected, and confirm the change in circumstances.
- Measure the iridium plug gap with the plug gap gauge (wire type).
- Do not use a wire brush or scrape the iridium electrode since this will damage the electrode.

1. Inspect the electrodes and the ceramic insulator.

- Burned or worn electrodes may be caused by these conditions:
-
    - Advanced ignition timing
    - Loose spark plug
    - Plug heat range too hot
    - Insufficient cooling
- Fouled plugs may be caused by these conditions:
-
    - Retarded ignition timing
    - Oil in combustion chamber
    - Incorrect spark plug gap
    - Plug heat range too cold
    - Excessive idling/low speed running
    - Clogged air cleaner element
    - Deteriorated ignition coils

Electrode Gap (New)	
Standard (New):	**1.0-1.1 mm (0.039-0.043 in)**

INSPECTION

IGNITION TIMING INSPECTION

Inspection

NOTE: If a DTC is present, diagnose and repair the cause before continuing with this inspection.

1. HDS - Connect
2. Engine - Warm Up

1. Enter the maintenance mode, then start the engine . Hold the engine speed at 3000 RPM with no load (P or N) until the cooling fan(s) comes on, then let it idle.

3. Idle Speed - Check
4. SCS - Short

1. Jump the SCS line with the HDS.

5. Ignition Timing - Inspect

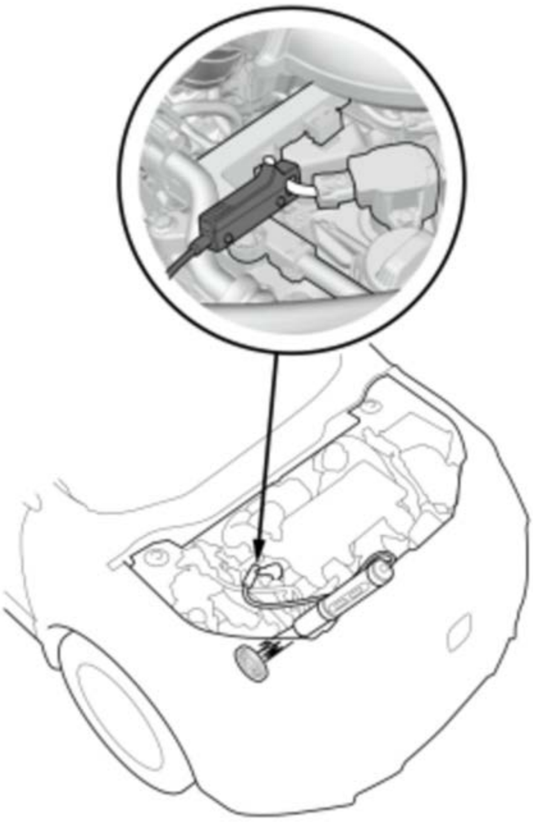	1. Enter the maintenance mode, then start the engine . 2. Connect the timing light to the No. 1 ignition coil harness (white tape).

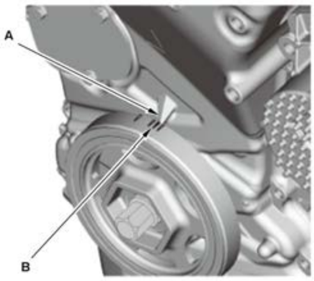	3. Aim the light toward the pointer (A) on the oil pump. Check the ignition timing under a no load condition (headlights, blower fan, rear window defogger, and air conditioner are turned off). 4. If the ignition timing differs from the specification, check the camshaft timing . If the camshaft timing is OK, update the PCM if it does not have the latest software, or substitute a known-good PCM , then recheck. If the system works properly, and the PCM was substituted, replace the original PCM 5. Exit the SCS mode with the HDS.

	6. Disconnect the HDS and the timing light.

Ignition Timing
20+/-2B° BTDC (RED mark (B)) at idle in P or N

COMPONENT LOCATION INDEX

IGNITION SYSTEM COMPONENT LOCATION INDEX

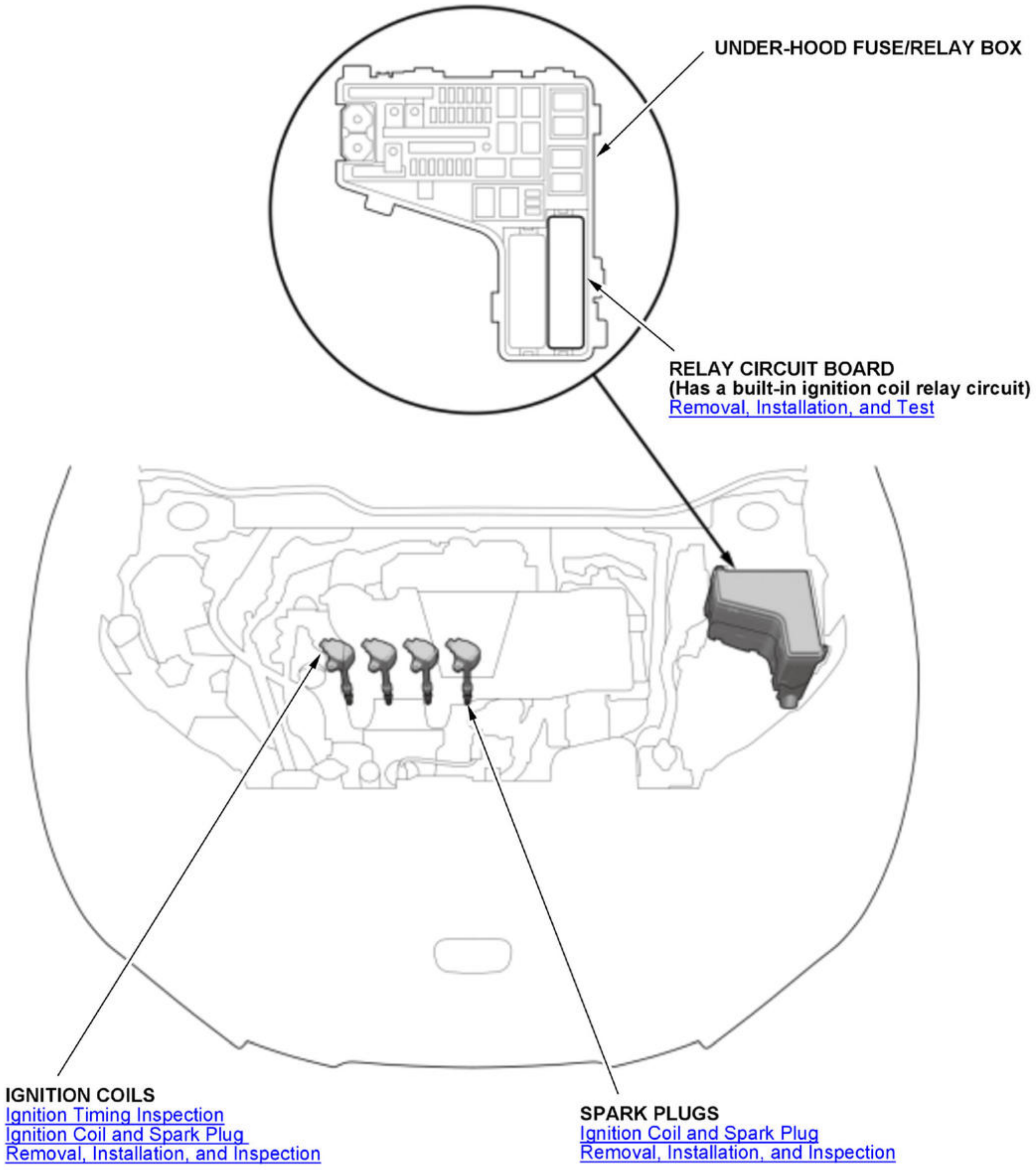
UNDER-HOOD FUSE/RELAY BOX
RELAY CIRCUIT BOARD
(Has a built-in ignition coil relay circuit)
Removal, Installation, and Test
IGNITION COILS
Ignition Timing Inspection
Ignition Coil and Spark Plug
Removal, Installation, and Inspection
SPARK PLUGS
Ignition Coil and Spark Plug
Removal, Installation, and Inspection

Intake System / Exhaust System - Components Location - CR-V (Hybrid)

COMPONENT LOCATION INDEX

INTAKE AIR SYSTEM AND EXHAUST SYSTEM COMPONENT LOCATION INDEX

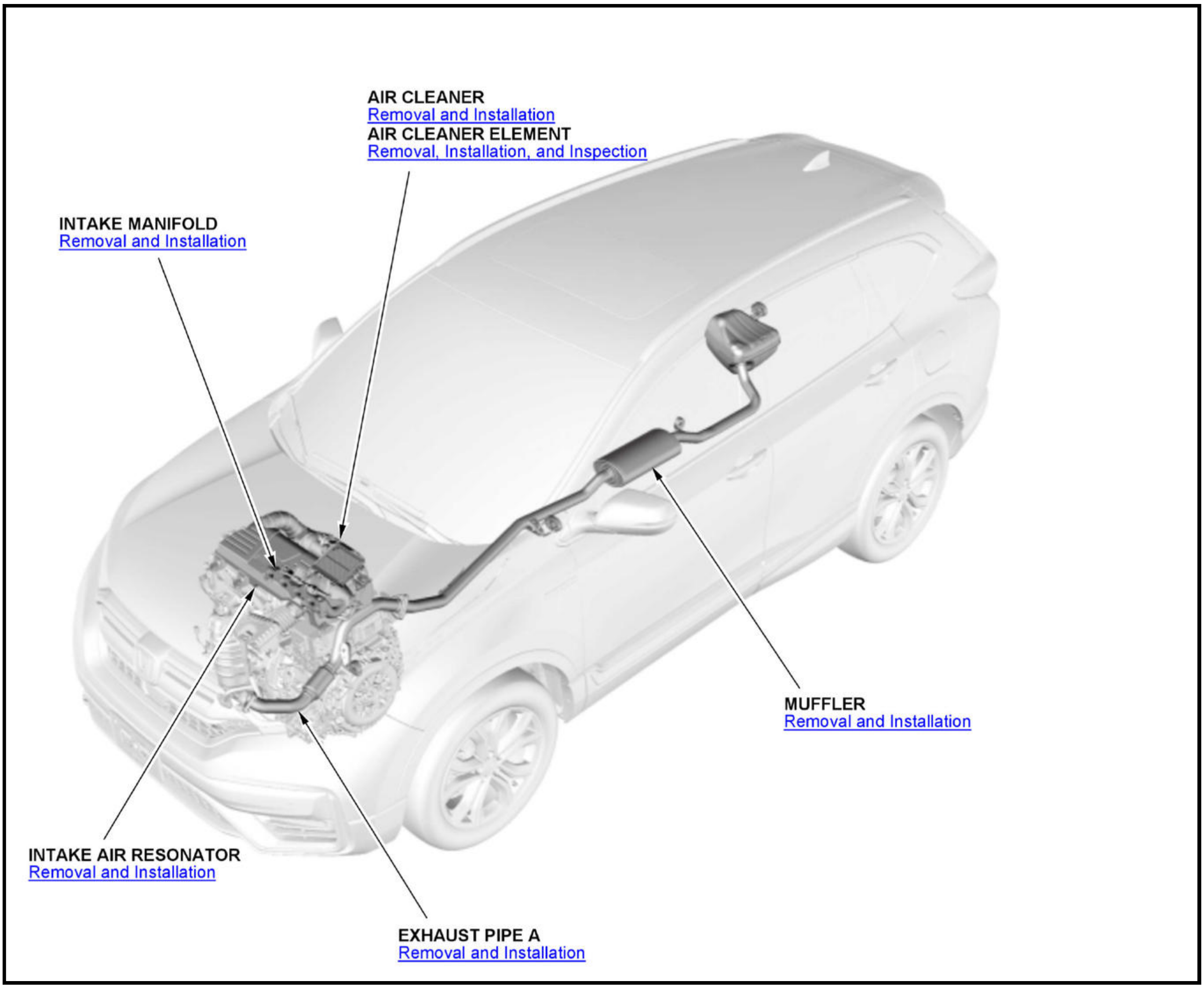
AIR CLEANER
Removal and Installation
AIR CLEANER ELEMENT
Removal, Installation, and Inspection
INTAKE MANIFOLD
Removal and Installation
MUFFLER
Removal and Installation
INTAKE AIR RESONATOR
Removal and Installation
EXHAUST PIPE A
Removal and Installation

REMOVAL & INSTALLATION TEST

ENGINE OIL PRESSURE SWITCH REMOVAL, INSTALLATION, AND TEST (1.5 L ENGINE)

Removal

NOTE: ℹ Where icon is shown, further information shown below.

1

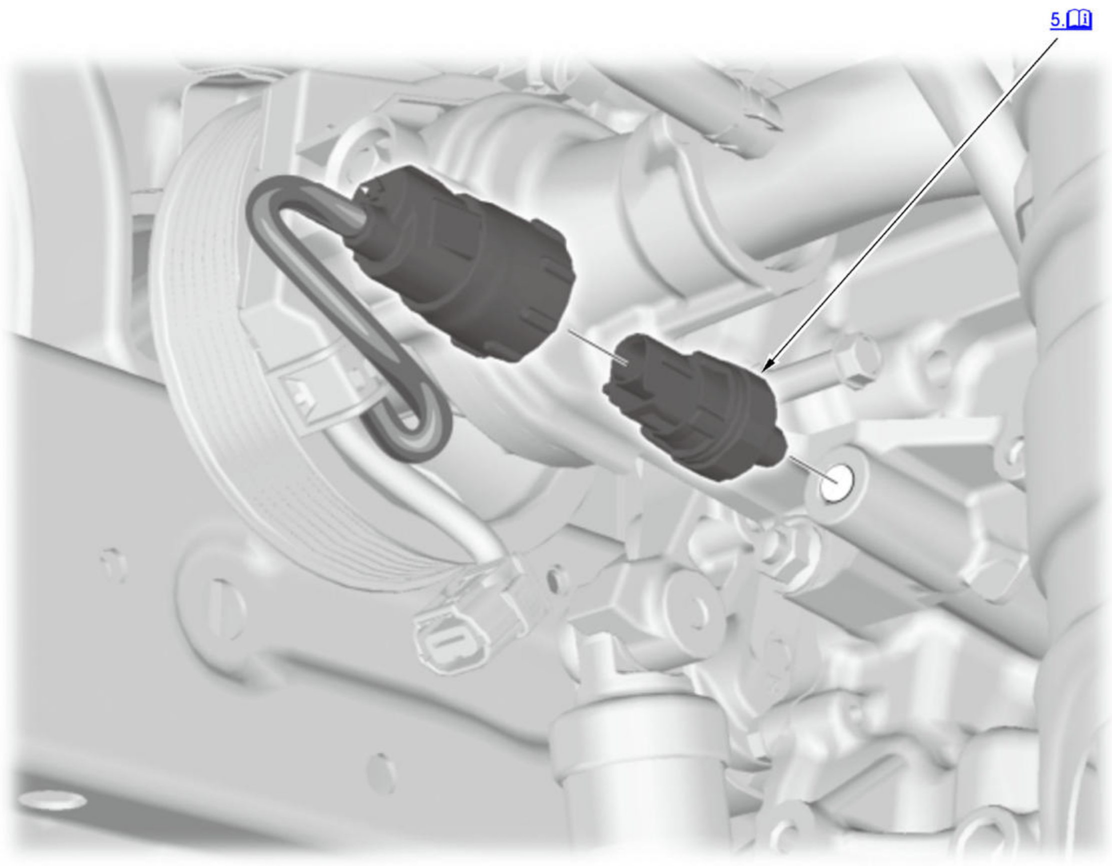

ℹ	Detailed information, notes, and precautions

1. **Right Front Wheel - Remove**
2. **Engine Undercover - Remove**
3. **Drive Belt - Remove**
4. **A/C Compressor - Move**

   NOTE:

   - Do not disconnect the suction hose and the discharge hose.
   - Do not bend the suction hose and the discharge hose excessively.
   - Hang the A/C compressor with a wire tie.

5. Oil Pressure Switch - Remove

NOTE: Remove any old liquid gasket from the oil pressure switch and the oil pressure switch mounting hole.

Installation

NOTE: ⓘ Where icon is shown, further information shown below.

1

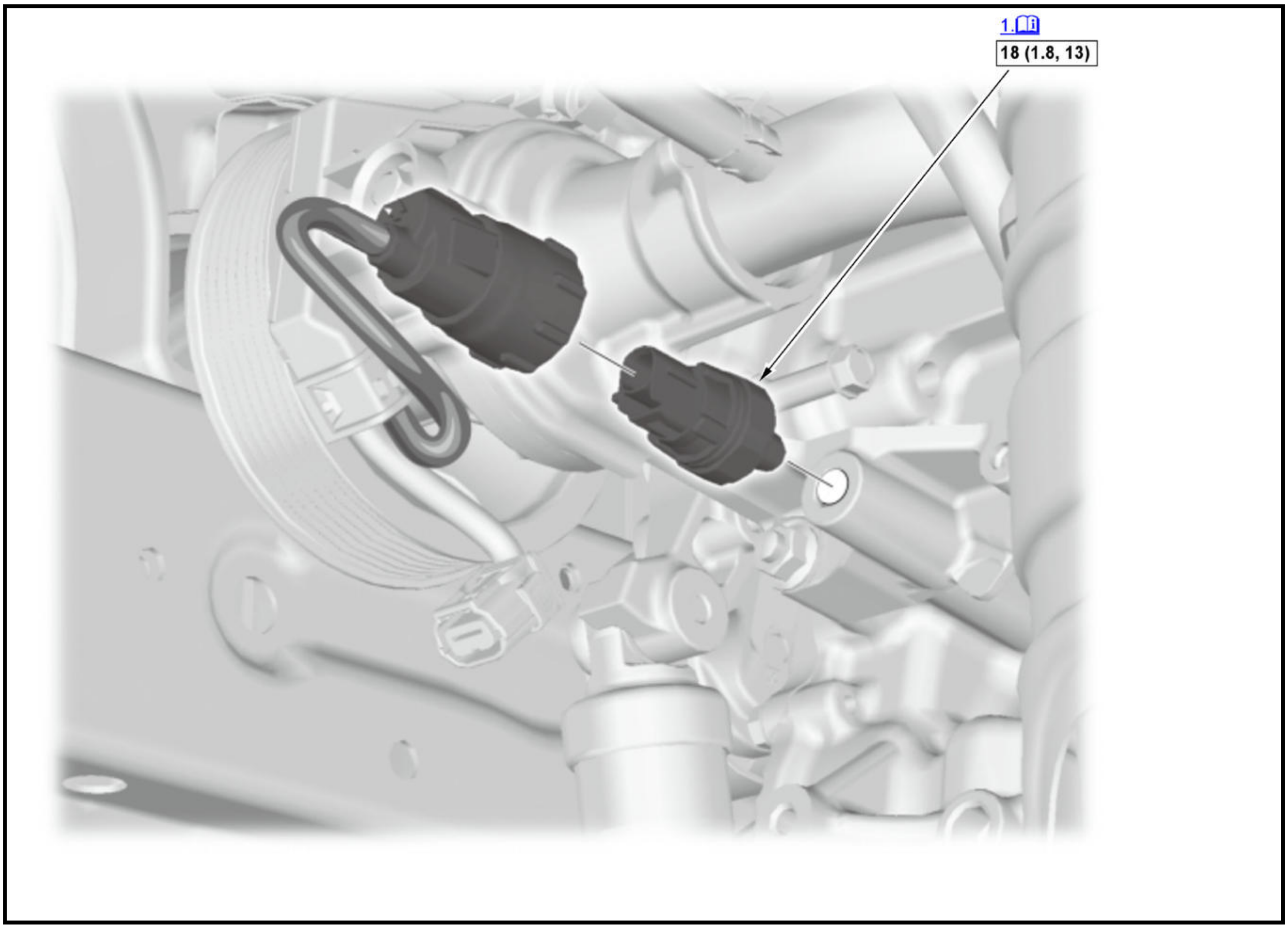

ⓘ	Detailed information, notes, and precautions
☐	Torque: N.m (kgf.m, lbf.ft)

1. Oil Pressure Switch - Install

1. Apply liquid gasket (P/N 08718-0003, 08718-0004, or 087180009) to the oil pressure switch threads. Install the component within 5 minutes of applying the liquid gasket.

NOTE:

- **Using too much liquid gasket may cause**

- **liquid gasket to enter the oil passage or the end of the oil pressure switch.**
- **If too much time has passed after applying the liquid gasket, remove the old liquid gasket and residue, then reapply new liquid gasket.**

2. Install the oil pressure switch.

2. A/C Compressor - Install
3. Drive Belt - Install
4. Engine Undercover - Install
5. Right Front Wheel - Install

Test

1. Right Front Wheel - Remove
2. Engine Undercover - Remove
3. Oil Pressure Switch - Test

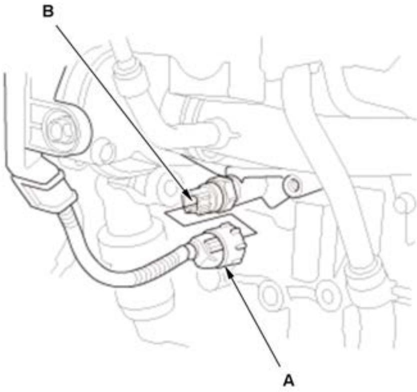	1. Disconnect the connector (A). 2. Check for continuity between the oil pressure switch terminal (B) and the engine (ground). There should be continuity with the engine stopped. There should be no continuity with the engine running.

4. All Removed Parts - Install

1. Install the parts in the reverse order of removal.

ENGINE OIL PRESSURE SWITCH REMOVAL, INSTALLATION, AND TEST (2.4 L ENGINE) (2017 2018 2019)

Removal

NOTE: ℹ Where icon is shown, further information shown below.

1

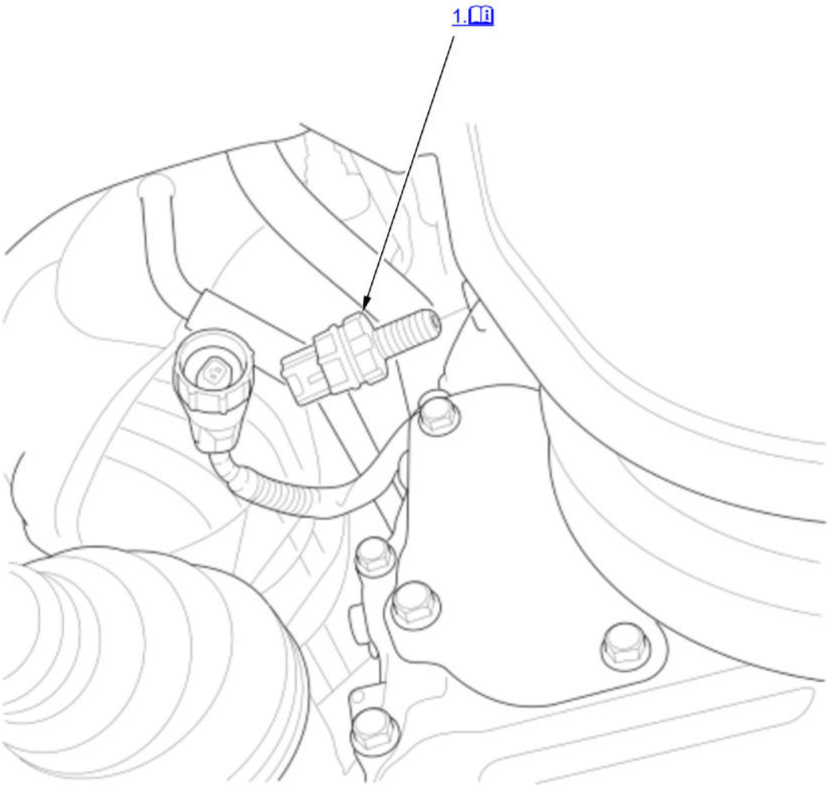

ℹ	Detailed information, notes, and precautions

1. Oil Pressure Switch - Remove

NOTE: Remove any old liquid gasket from the oil pressure switch and the switch mounting hole.

Installation

NOTE: ℹ Where icon is shown, further information shown below.

1

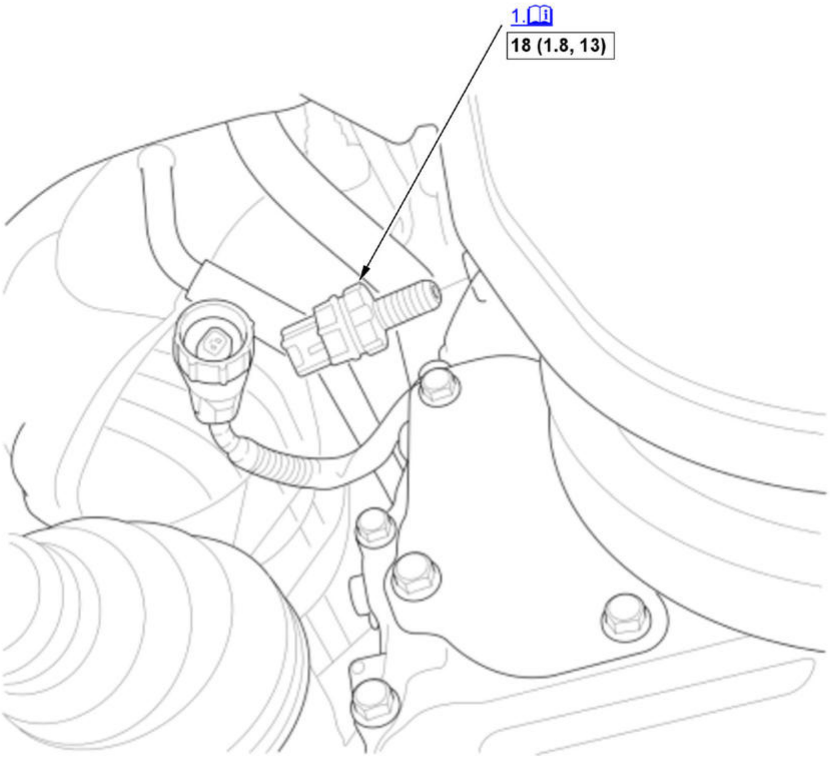

ℹ	Detailed information, notes, and precautions
☐	Torque: N.m (kgf.m, lbf.ft)

1. Oil Pressure Switch - Install

1. Apply liquid gasket (P/N 08718-0003, 08718-0004, or 08718- 0009) to the oil pressure switch threads. Install the component within 5 minutes of applying the liquid gasket.

NOTE:

- **Using too much liquid gasket may cause liquid gasket to enter the oil passage or the end of the oil pressure switch.**

- **If too much time has passed after applying the liquid gasket, remove the old liquid gasket and residue, then reapply new liquid gasket.**

2. Install the oil pressure switch.

Test

1. Oil Pressure Switch - Test

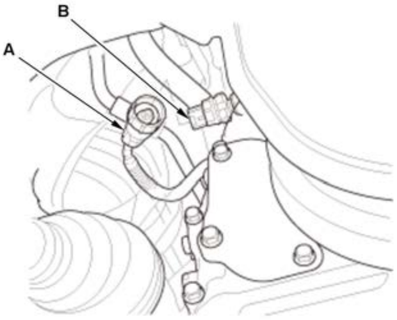	1. Disconnect the connector (A). 2. Check for continuity between the oil pressure switch terminal (B) and the engine (ground). There should be continuity with the engine stopped. There should be no continuity with the engine running. 3. Connect the connector.

REMOVAL AND INSTALLATION

ENGINE OIL FILTER/OIL FILTER FEED PIPE REMOVAL AND INSTALLATION (1.5 L ENGINE)

Special Tools Required

Image	Description/Tool Number
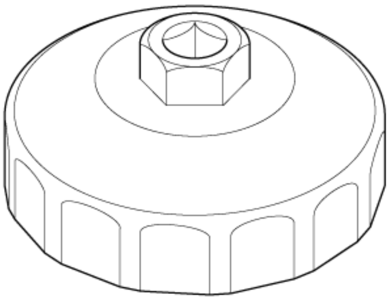	Oil Filter Wrench 07AAA-PLCA100

Removal

NOTE: 🕮ⅰ Where icon is shown, further information shown below.

1

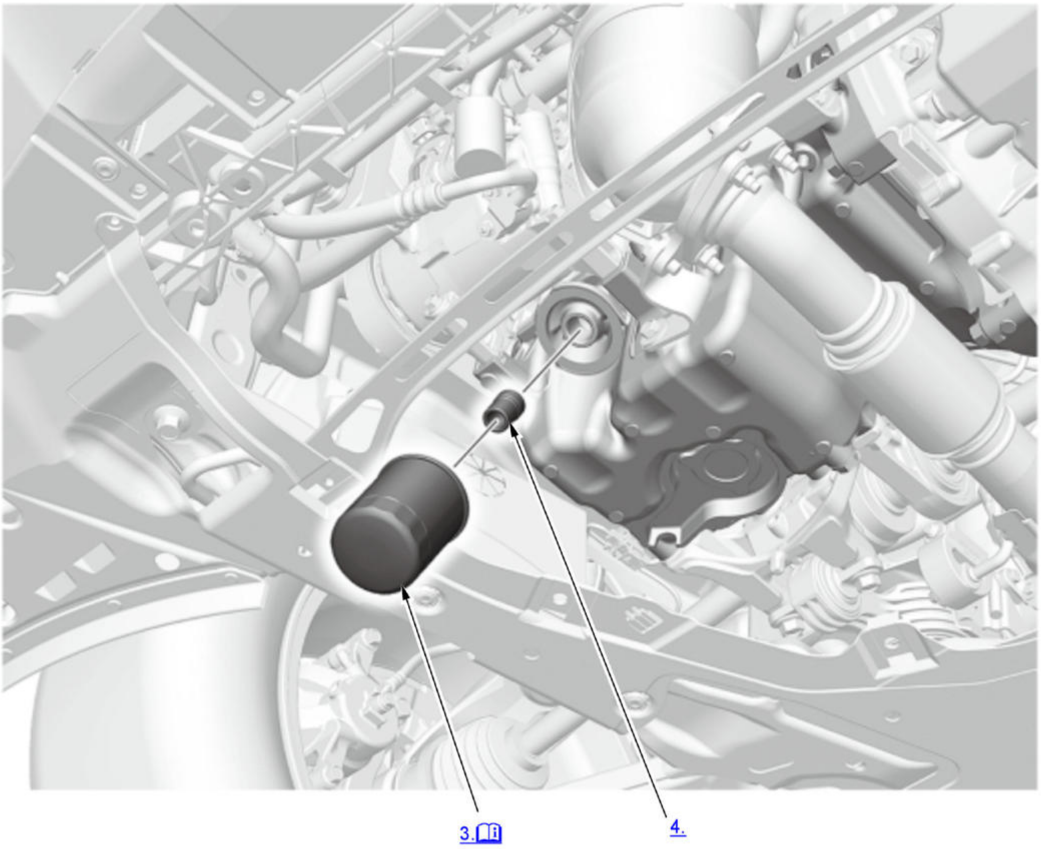

🕮ⅰ	Detailed information, notes, and precautions

1. **Vehicle - Lift**
2. **Engine Undercover Lid - Remove**
3. Oil Filter - Remove

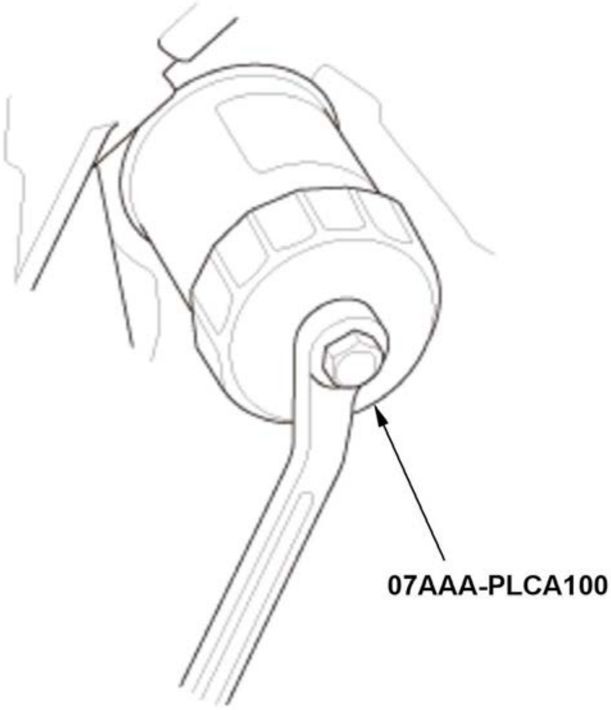	1. Remove the oil filter with the oil filter wrench.

4. Oil Filter Feed Pipe - Remove

Installation

NOTE: ℹ Where icon is shown, further information shown below.

1

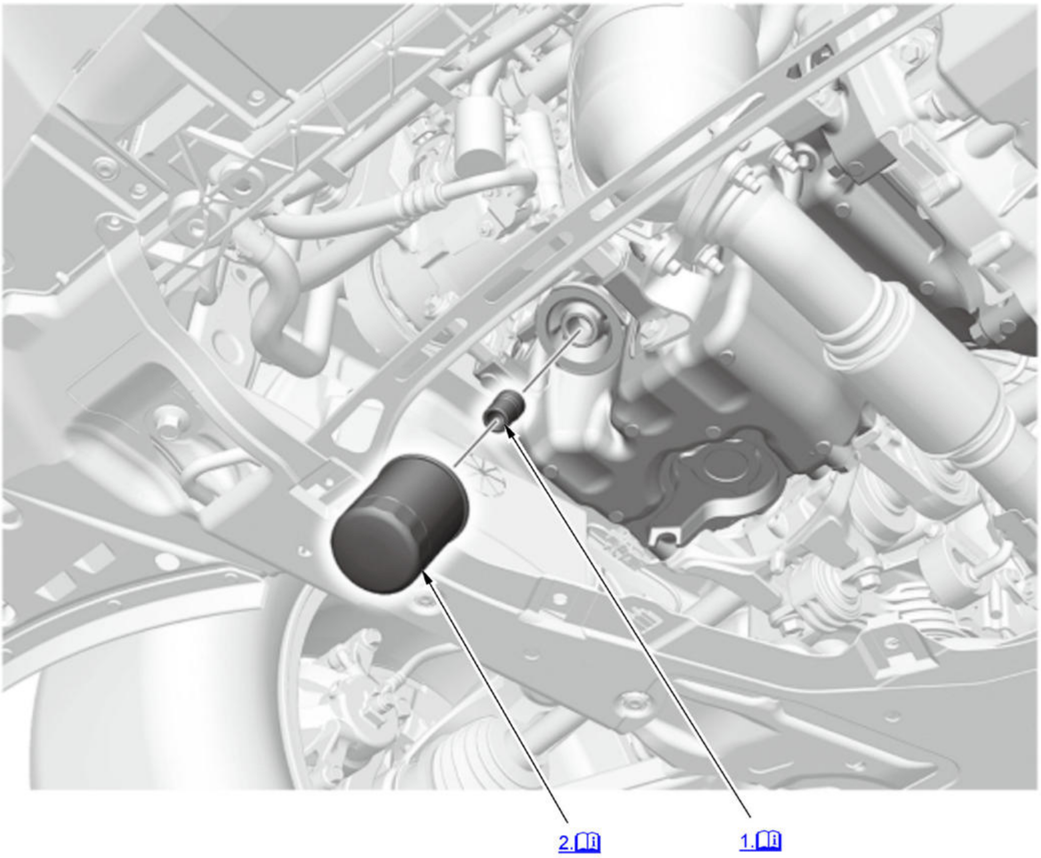

ℹ	Detailed information, notes, and precautions

1. Oil Filter Feed Pipe - Install

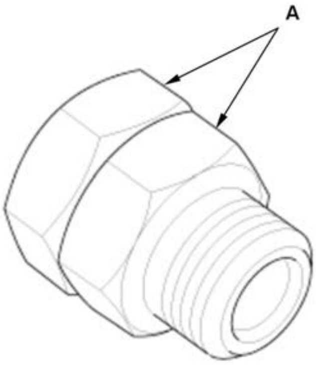	1. Install the two 20 x 1.5 mm nuts (A) onto the oil filter feed pipe. Hold one nut with a wrench, then use a second wrench to tighten the other nut. 2. Apply new engine oil to the oil filter feed pipe threads.

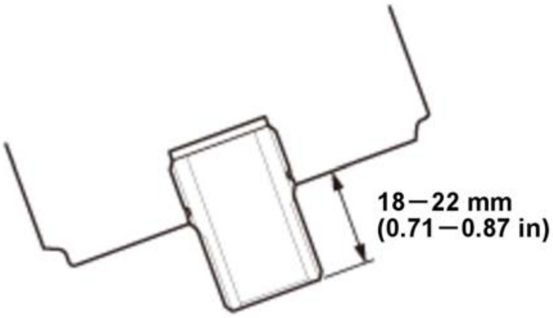

3. Install the oil filter feed pipe in its specified height range shown.

4. Remove the nuts from the oil filter feed pipe.

2. Oil Filter - Install

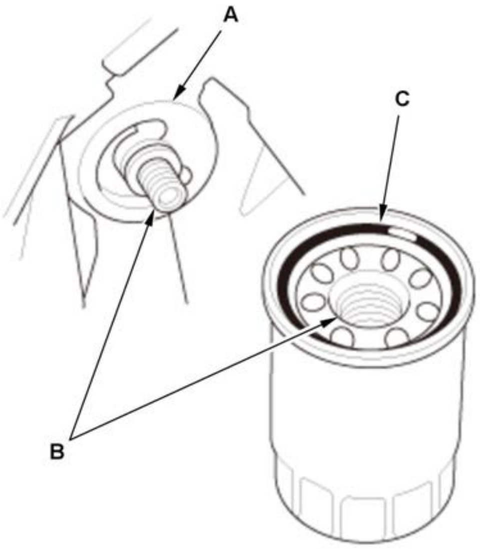

1. Inspect the oil filter to make sure the rubber seal is not stuck to the oil filter seating surface (A) of the oil pan.

2. Inspect the threads (B) and the rubber seal (C) on the new oil filter.

3. Clean the oil filter seating surface of the oil pan.

4. Apply a light coat of new engine oil to the oil filter rubber seal.

NOTE:

Use only filters with a built-in bypass system.

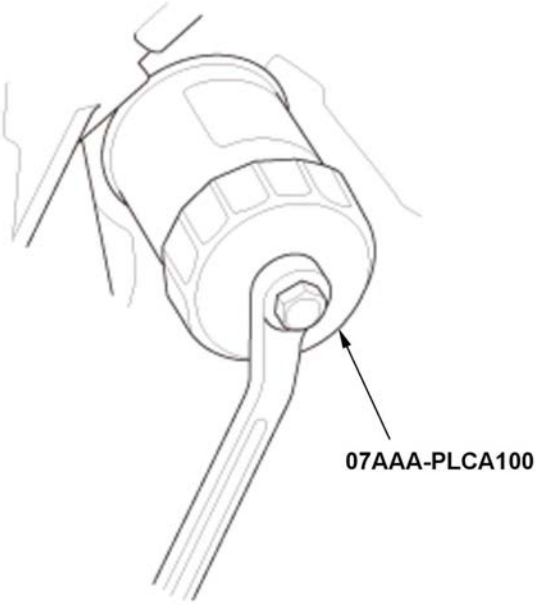

5. Install the oil filter by hand.

6. After the rubber seal seats, tighten the oil filter clockwise with the oil filter wrench.

Tightening Torque:	**12 N.m (1.2 kgf.m, 9 lbf.ft)**

Tighten:	**3/4 Turn Clockwise**

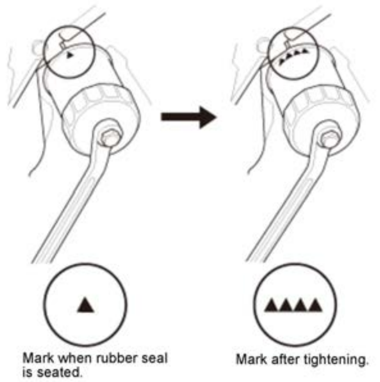	7. If four numbers or marks (1 to 4 or Δ to ΔΔΔΔ) are printed around the outside of the oil filter, use the following procedure to tighten the oil filter. - Spin the filter on until its seal lightly seats against the oil pan, and note which number or mark is at the bottom. - Tighten the filter by turning it clockwise three numbers or marks from the one you noted. For example, if mark Δ is at the bottom when the seal is lightly seated, tighten the oil filter until the mark ΔΔΔΔ comes around to the bottom.

Number or Mark when rubber seal is seated	1 or Δ	2 or ΔΔ	3 or ΔΔΔ	4 or ΔΔΔΔ
Number or Mark after tightening	4 or ΔΔΔΔ	1 or Δ	2 or ΔΔ	3 or ΔΔΔ

3. Oil Filter After Install - Check

1. After installation, **fill the engine with engine oil to the specified level** , run the engine for more than 3 minutes, then check for oil leakage.

4. **Engine Undercover Lid - Install**
5. Maintenance Minder - Reset (With Maintenance Minder System)

1. USA models: If the Maintenance Minder required to replace the oil filter, **reset the Maintenance Minder with the gauge**

(see "Resetting the Maintenance Minder").

2. Canada models: If the Maintenance Minder required to replace the oil filter, **reset the Maintenance Minder with the gauge**

(see "Resetting the Maintenance Minder"). If the Maintenance Minder did not require to replace the oil filter, **reset the Maintenance Minder with the HDS** (see "Resetting the Individual Maintenance Items").

6. Engine Oil Monitor - Reset (Without Maintenance Minder System)

ENGINE OIL FILTER/OIL FILTER FEED PIPE REMOVAL AND INSTALLATION (2.4 L ENGINE) (2017 2018 2019)

Special Tools Required

Image	Description/Tool Number
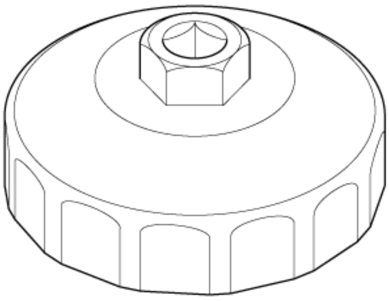	Oil Filter Wrench 07AAA-PLCA100

Removal

NOTE: 🕮i Where icon is shown, further information shown below.

1

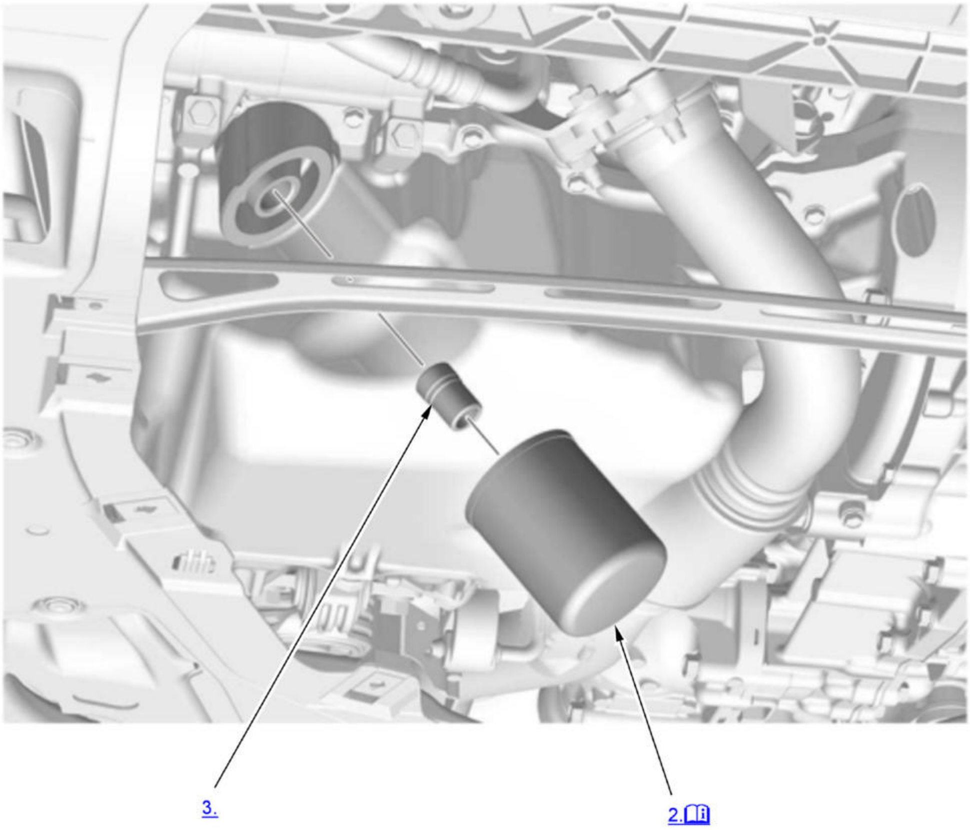

🕮i	Detailed information, notes, and precautions

1. **Engine Undercover Lid - Remove**
2. Oil Filter - Remove

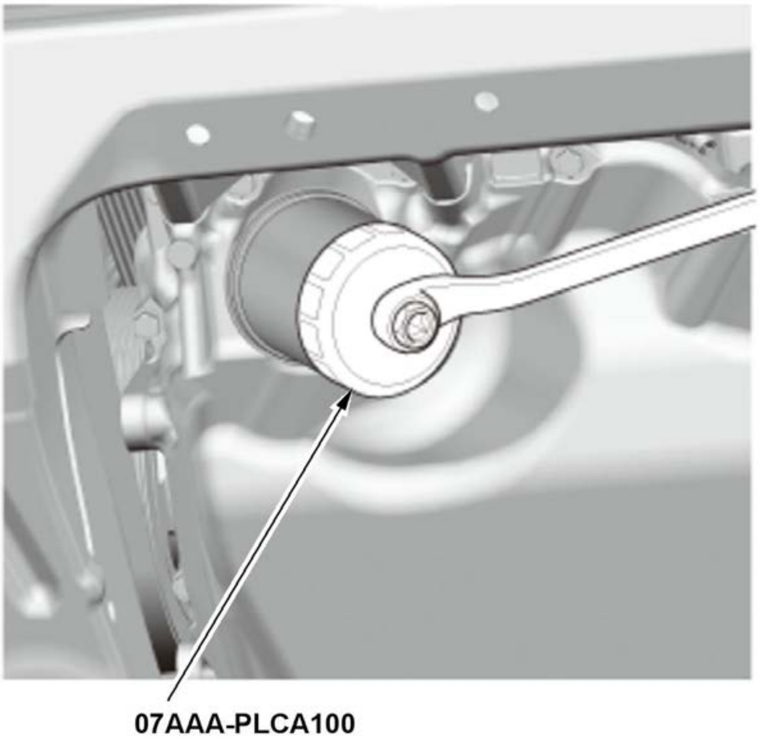 07AAA-PLCA100	1. Remove the oil filter with the oil filter wrench.

3. Oil Filter Feed Pipe - Remove

Installation

NOTE: 🕮 Where icon is shown, further information shown below.

1

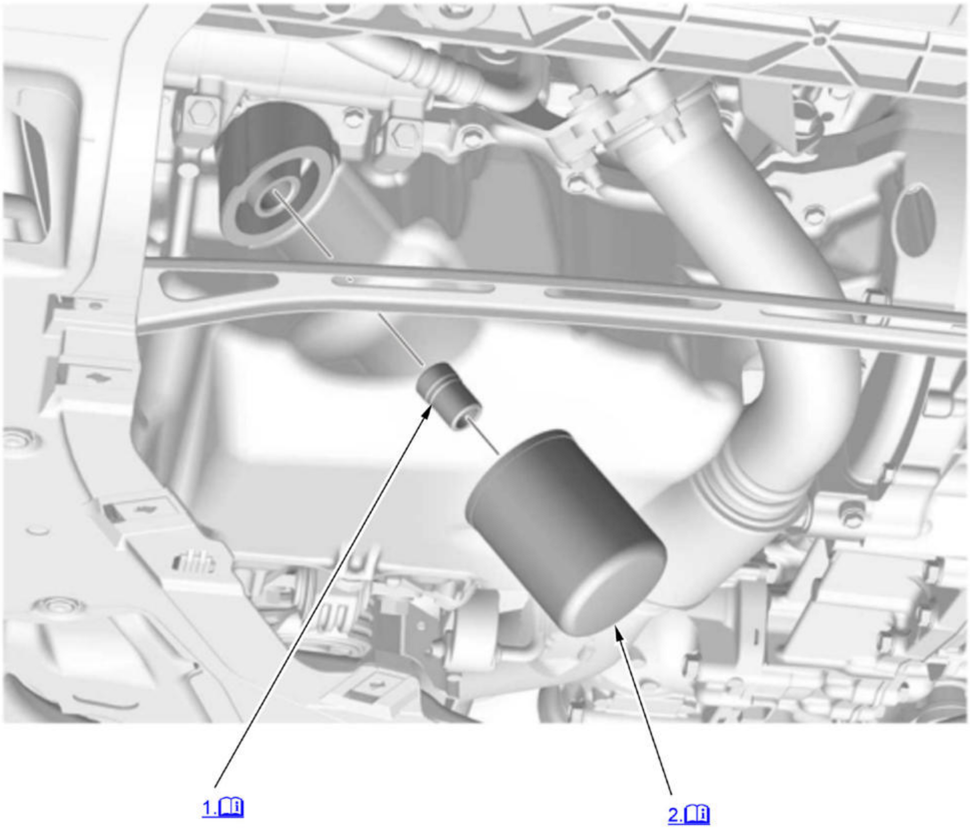

ℹ	Detailed information, notes, and precautions

1. Oil Filter Feed Pipe - Install

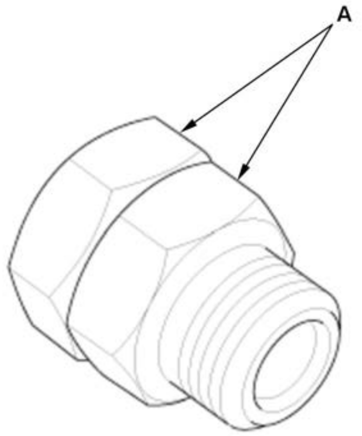	1. Install the two 20 x 1.5 mm nuts (A) onto the oil filter feed pipe. Hold the nut with a wrench, then tighten the other nut.

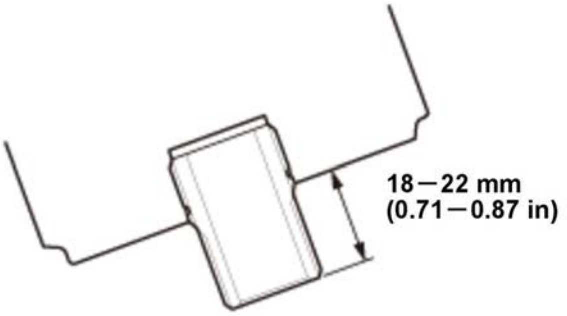	2. Install the oil filter feed pipe in its specified height range shown. 3. Remove the nuts from the oil filter feed pipe.

2. Oil Filter - Install

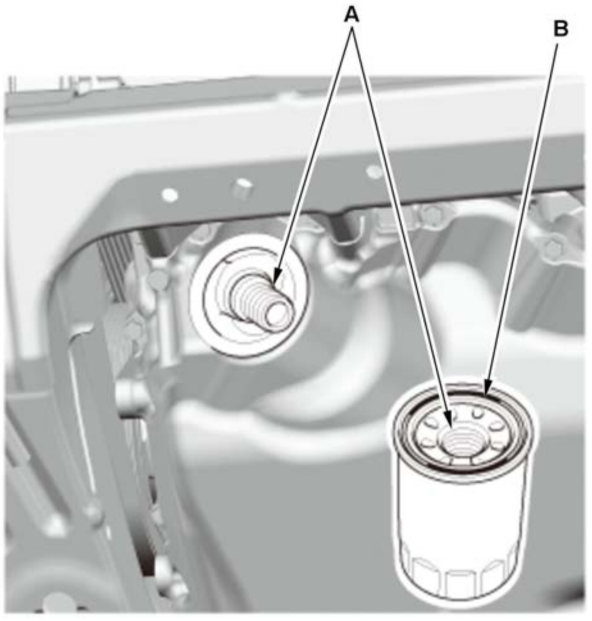	1. Inspect the filter to make sure the rubber seal is not stuck to the oil filter seating surface of the engine. 2. Inspect the threads (A) and the rubber seal (B) on the new filter. 3. Clean the seat on the oil pan. 4. Apply a light coat of new engine oil to the oil filter rubber seal. **NOTE:** **Use only filters with a built-in bypass system.**

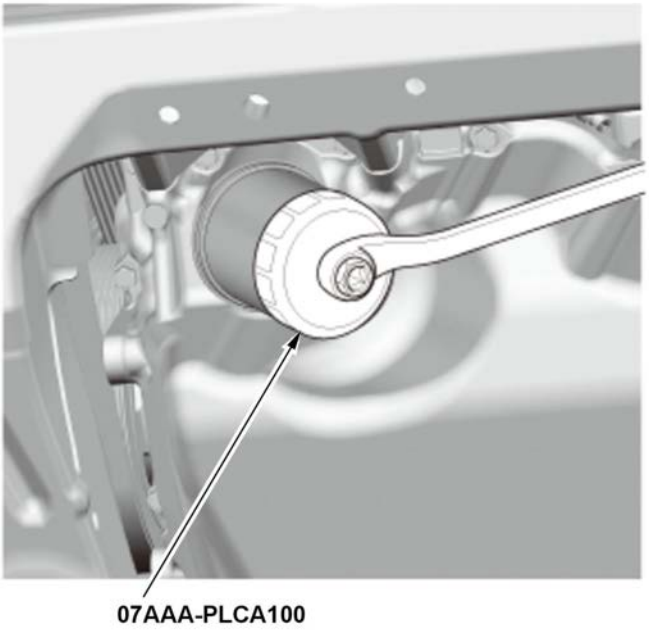

5. Install the oil filter by hand.

6. After the rubber seal seats, tighten the oil filter clockwise with the oil filter wrench.

Tighten:	**3/4 Turn Clockwise**
Tightening Torque:	**12 N.m (1.2 kgf.m, 9 lbf.ft)**

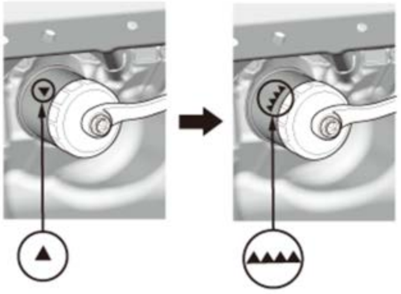
Mark when rubber seal is seated.

Mark after tightening.

7. If four numbers or marks (1 to 4 or Δ to ΔΔΔΔ) are printed around the outside of the filter, use the following procedure to tighten the filter.

- Spin the filter on until its seal lightly seats against the oil pan, and note which number or mark is at the bottom.
- Tighten the filter by turning it clockwise three numbers or marks from the one you noted. For example, if mark Δ is at the bottom when the seal is lightly seated, tighten the filter until the mark ΔΔΔΔ comes around to the bottom.

Number or Mark when rubber seal is seated	1 or Δ	2 or Δ Δ	3 or Δ Δ Δ	4 or Δ Δ Δ Δ
Number or Mark after tightening	4 or Δ Δ Δ Δ	1 or Δ	2 or Δ Δ	3 or Δ Δ Δ

3. **Engine Undercover Lid - Install**
4. Engine Oil Filter After Install - Check

1. After installation, **fill the engine with engine oil to the specified level** , run the engine for more than 3 minutes, then check for oil leakage.

5. Maintenance Minder - Reset (With Maintenance Minder System)

1. USA models: If the Maintenance Minder required to replace the oil filter, **reset the Maintenance Minder with the gauge**

(see "Resetting the Maintenance Minder").

2. Canada models: If the Maintenance Minder required to replace the oil filter, **reset the Maintenance Minder with the gauge**

(see "Resetting the Maintenance Minder"). If the Maintenance Minder did not require to replace the oil filter, **reset the Maintenance Minder with the HDS** (see "Resetting the Individual Maintenance Items").

ENGINE OIL PUMP REMOVAL AND INSTALLATION 2.4 L ENGINE) (2017 2018 2019)

Removal

NOTE: ℹ Where icon is shown, further information shown below.

1

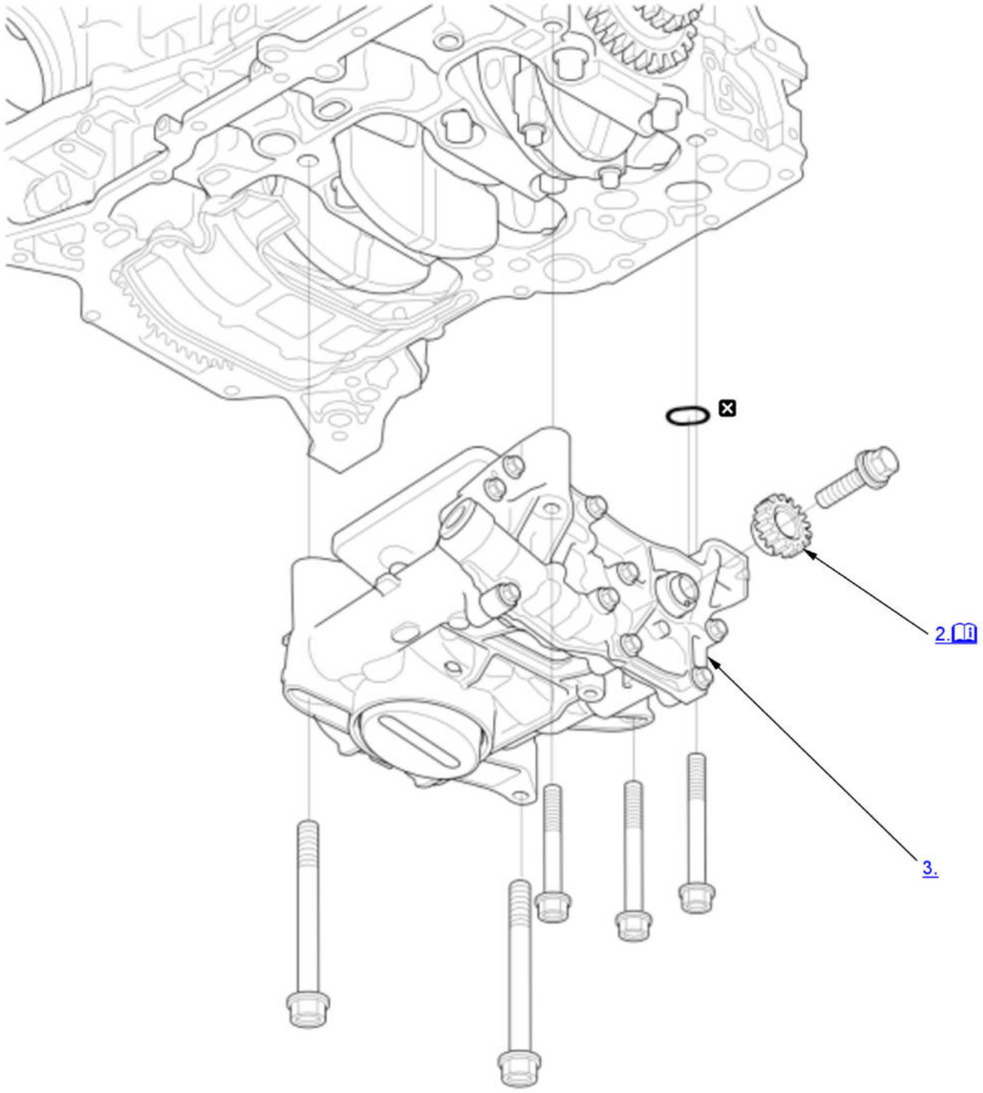

ℹ	Detailed information, notes, and precautions

✖	Replace

1. **Oil Pump Chain - Remove**
2. Oil Pump Sprocket - Remove

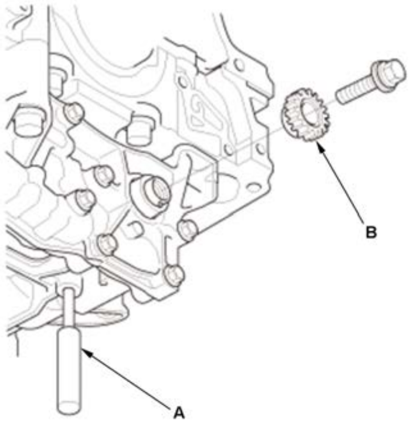	1. To hold the front balancer shaft, insert a 6 mm long pin punch (A) (Snap-on PPC108LA or equivalent) into the maintenance hole in the balancer shaft holder and through the front balancer shaft. 2. Remove the oil pump sprocket (B).

3. Oil Pump - Remove

Installation

NOTE: ℹ Where icon is shown, further information shown below.

1

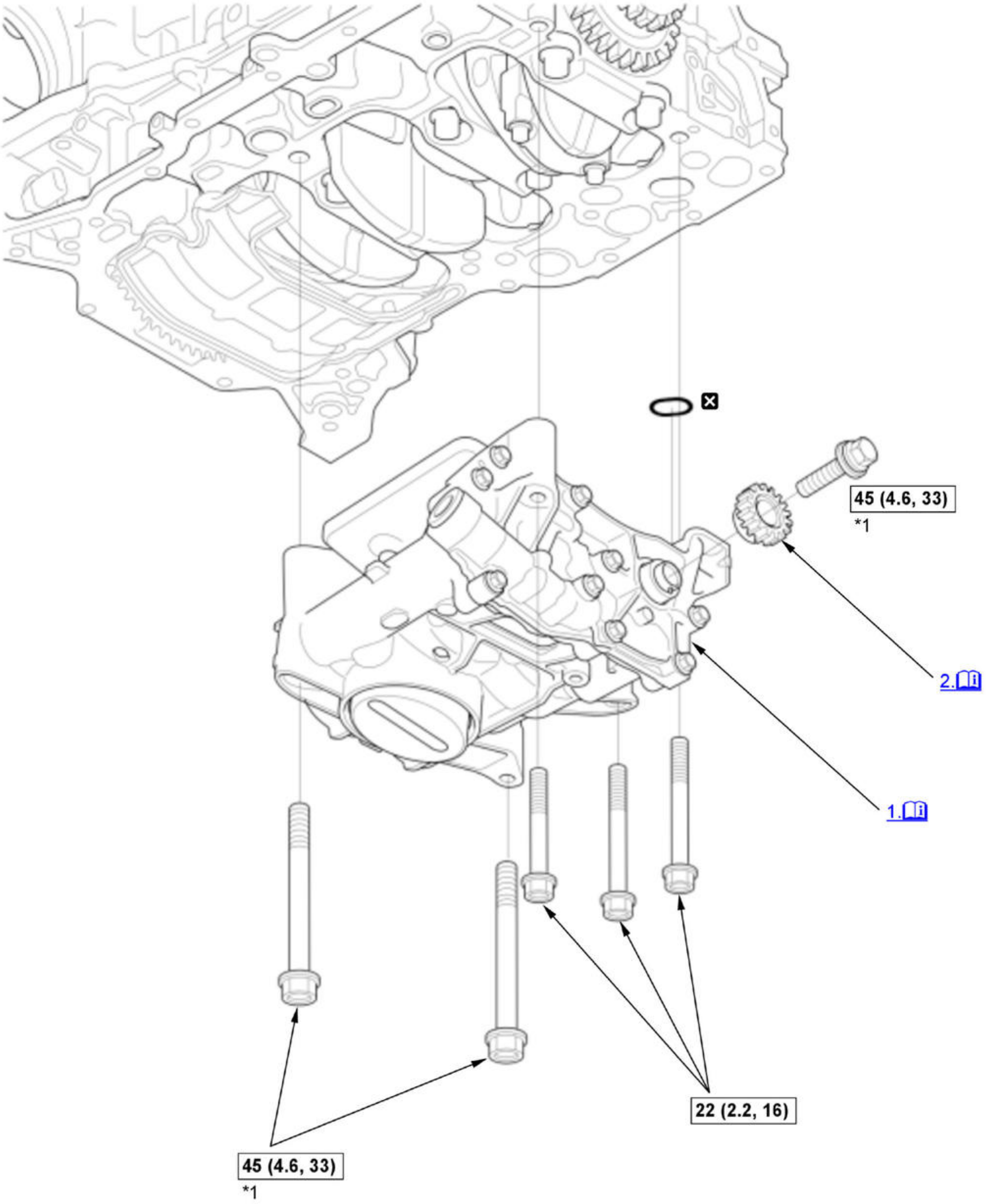
45 (4.6, 33)
*1
2.
1.
22 (2.2, 16)
45 (4.6, 33)
*1

📖	Detailed information, notes, and precautions
▭	Torque: N.m (kgf.m, lbf.ft)
☒	Replace
*1	Apply new engine oil to the bolt threads.

1. Oil Pump - Install

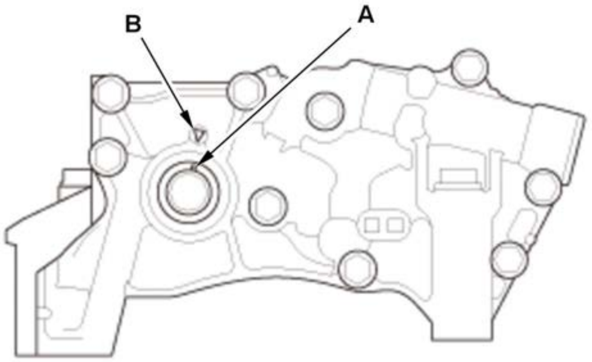	1. Align the dowel pin (A) on the rear balancer shaft with the mark (B) on the oil pump.

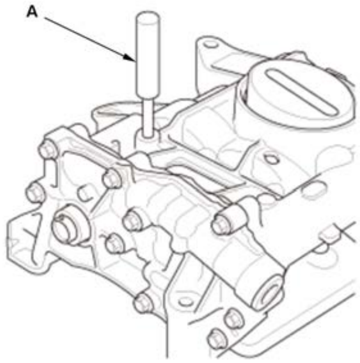	2. To hold the front balancer shaft, insert a 6 mm long pin punch (A) (Snap-on PPC108LA or equivalent) into the maintenance hole in the balancer shaft holder and through the front balancer shaft.

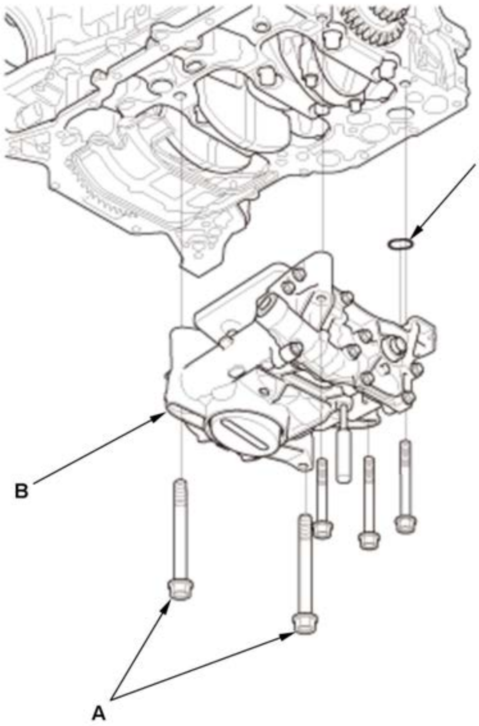	3. Apply new engine oil to the threads of the oil pump mounting bolts (A), then loosely install the oil pump (B) with a new O-ring (C). 4. Tighten the oil pump mounting bolts.

2. Oil Pump Sprocket - Install

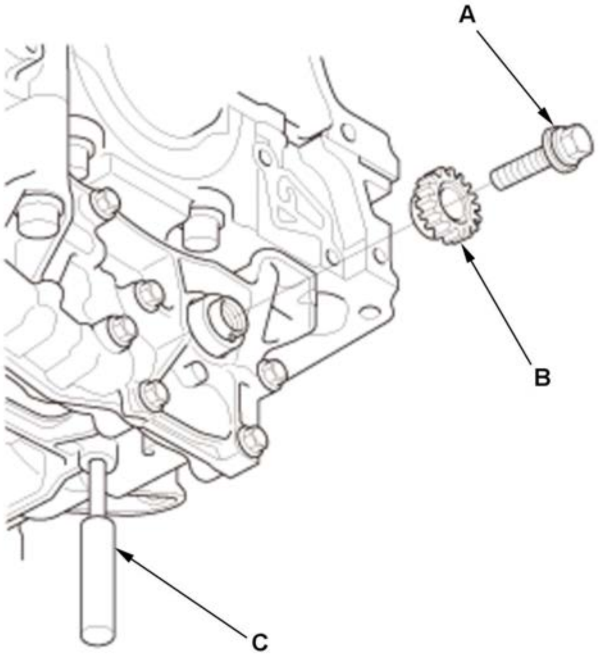	1. Apply new engine oil to the threads of the oil pump sprocket mounting bolt (A). 2. Install the oil pump sprocket (B). 3. Remove the 6 mm long pin punch (C).

3. Oil Pump Chain - Install

ENGINE OIL/AIR SEPARATOR REMOVAL AND INSTALLATION (2.4 L ENGINE) (2017 2018 2019)

Removal and Installation

1

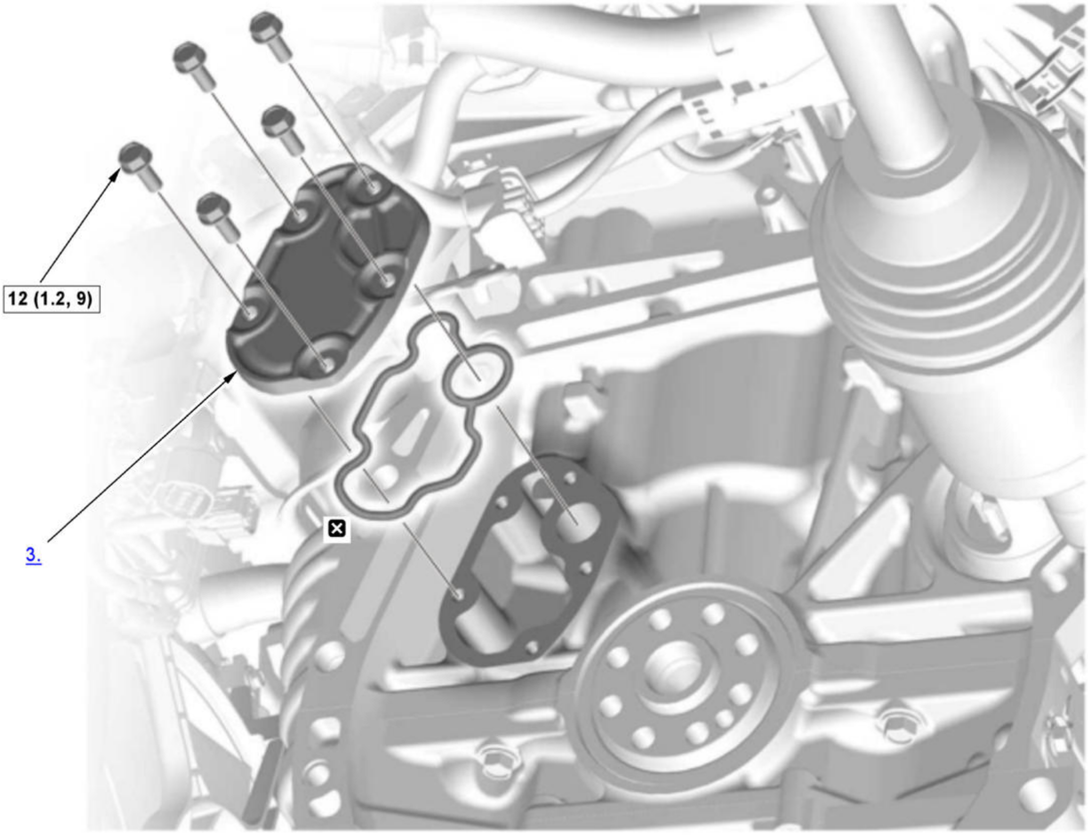

▭	Torque: N.m (kgf.m, lbf.ft)
☒	Replace

1. **Transmission - Remove**
2. **Drive Plate - Remove**
3. Oil/Air Separator - Remove
4. All Removed Parts - Install

1. Install the parts in the reverse order of removal.

OVERHAUL

ENGINE OIL PUMP OVERHAUL (2.4 L ENGINE) (2017 2018 2019)

Disassembly

1

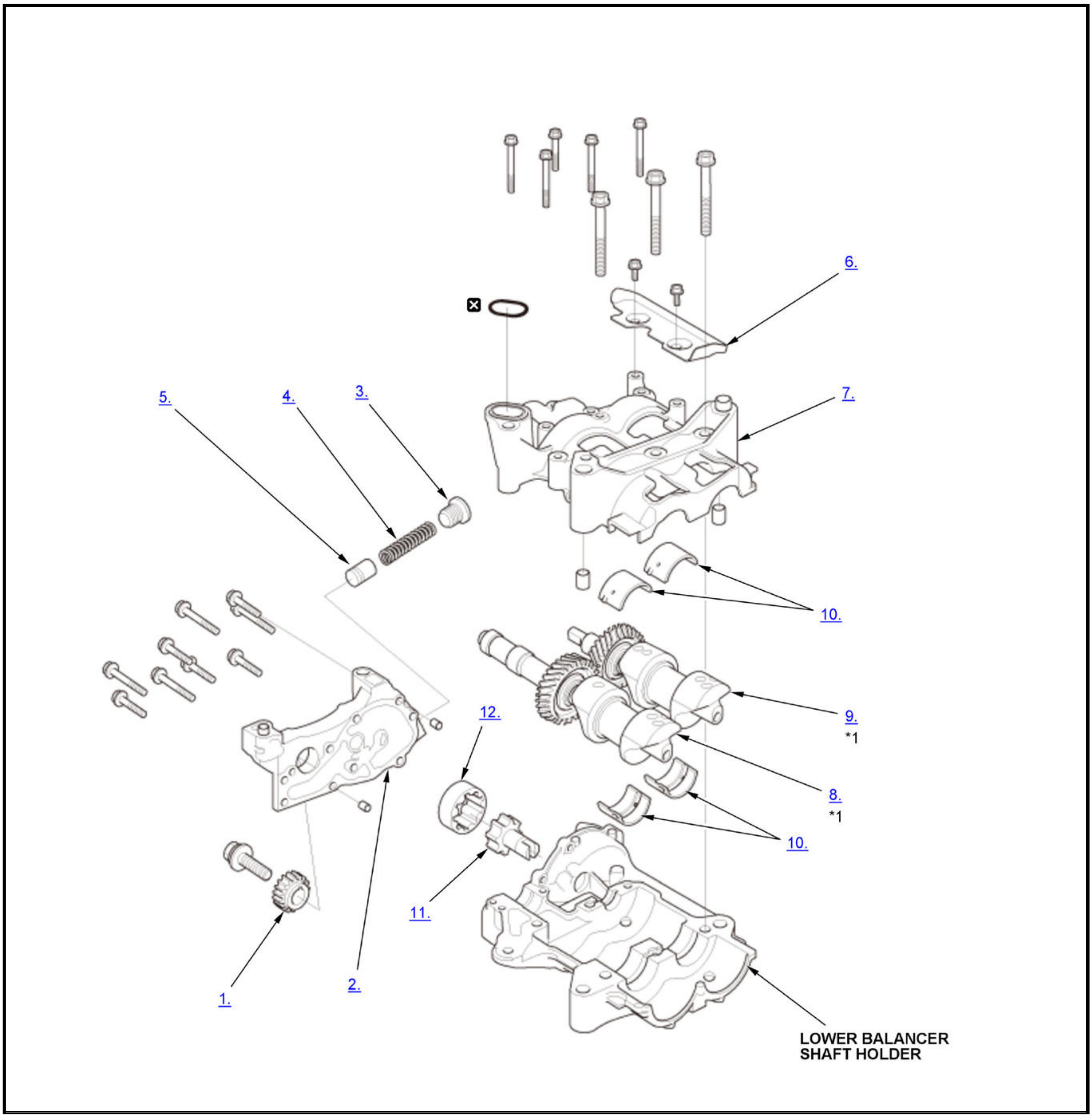
☒
6.
5.
4.
3.
7.
10.
12.
9.
*1
8.
*1
10.
11.
1.
2.
LOWER BALANCER SHAFT HOLDER

☒	Replace
*1	These parts have inspection items.

1. **Oil Pump Sprocket - Remove**
2. Oil Pump Housing - Remove
3. Sealing Bolt - Remove
4. Spring - Remove
5. Relief Valve - Remove
6. Baffle Plate - Remove
7. Upper Balancer Shaft Holder - Remove
8. Front Balancer Shaft - Remove
9. Rear Balancer Shaft - Remove
10. Balancer Shaft Bearing - Remove
11. Inner Rotor - Remove

12. Outer Rotor - Remove

Reassembly

NOTE: ℹ Where icon is shown, further information shown below.

1

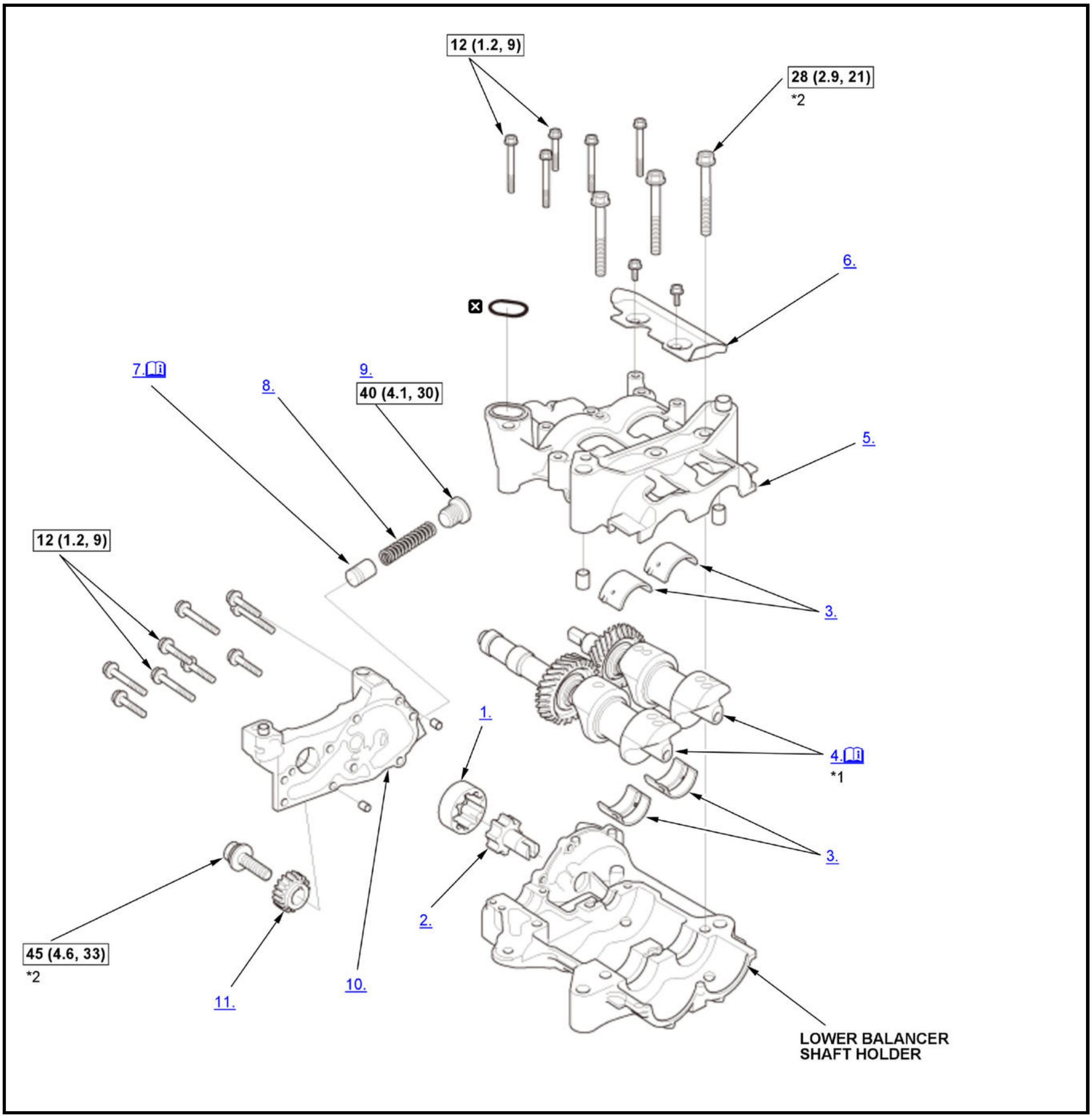
12 (1.2, 9)
28 (2.9, 21)
*2
6.
☒
7. ℹ
8.
9.
40 (4.1, 30)
5.
12 (1.2, 9)
3.
1.
4. ℹ
*1
3.
2.
45 (4.6, 33)
*2
11.
10.
LOWER BALANCER SHAFT HOLDER

ℹ	Detailed information, notes, and precautions
☐	Torque: N.m (kgf.m, lbf.ft)
☒	Replace
*1	These parts have inspection items.
*2	Apply new engine oil to the bolt threads.

1. Outer Rotor - Install
2. Inner Rotor - Install
3. Balancer Shaft Bearing - Install
4. Front Balancer Shaft and Rear Balancer Shaft - Install

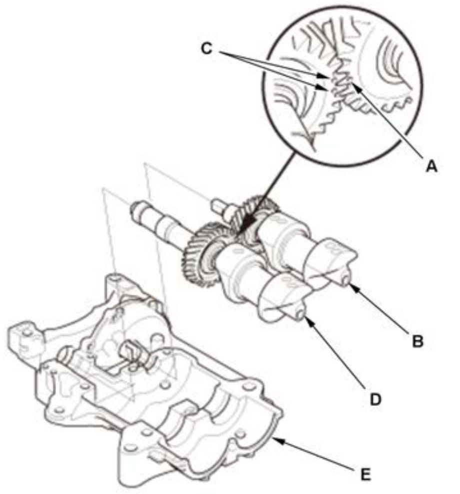	1. Align the punch mark (A) on the rear balancer shaft (B) in the center of the two punch marks (C) on the front balancer shaft (D), then install the balancer shafts on the lower balancer shaft holder (E).

5. Upper Balancer Shaft Holder - Install
6. Baffle Plate - Install
7. Relief Valve - Install

   NOTE: Valve must slide freely in housing bore. Replace the oil pump as assembly if scored.

8. Spring - Install
9. Sealing Bolt - Install
10. Oil Pump Housing - Install
11. **Oil Pump Sprocket - Install**

Inspection

Balancer Shaft

1. Oil Pump Balancer Shaft End Play - Inspect

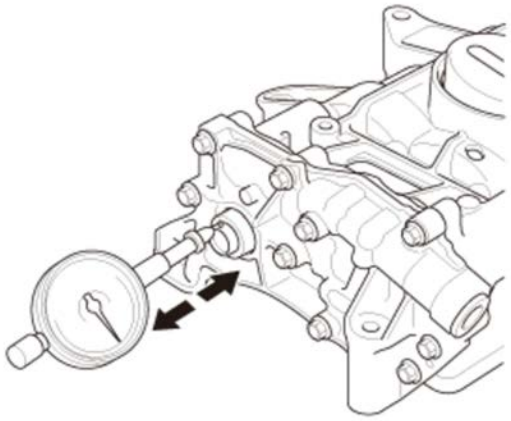	1. Zero the dial indicator against the end of the front balancer shaft, then push the front balancer shaft back and forth and read the end play.

Balancer Shaft End Play	
Standard (New):	**0.070-0.120 mm (0.00276-0.00472 in)**

Service Limit:	**0.135 mm (0.00531 in)**

2. Oil Pump Housing - Remove
3. Baffle Plate - Remove
4. Upper Balancer Shaft Holder - Remove
5. Front Balancer Shaft and Rear Balancer Shaft - Remove
6. Balancer Shaft Bearing Half - Remove
7. Oil Pump Balancer Shaft - Inspect

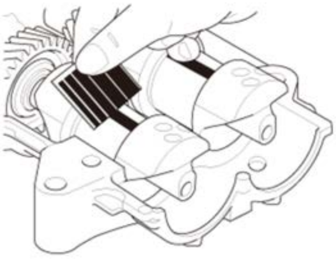

1. Clean both balancer shaft No. 1 and No. 2 journals and the bearing halves with a clean shop towel, then place both balancer shafts into the balancer shaft holder.

2. Place one strip of plastigage across each No. 1 and No. 2 journal.

3. Reinstall the bearings and the upper balancer shaft holder, then tighten the bolts.

NOTE:

Do not rotate the balancer shafts during inspection.

4. Remove the upper balancer shaft holder and the bearings again, and measure the widest part with the plastigage. If the balancer shaft No. 1 and No. 2 journals oil clearance is out-of-tolerance, install new bearings, and recheck. If it is still out-of-tolerance, replace the balancer shafts.

No. 1 Journal Oil Clearance:	
Standard (New):	**0.050-0.082 mm (0.00197-0.00323 in)**
Service Limit:	**0.100 mm (0.00394 in)**
No. 2 Journal Oil Clearance:	
Standard (New):	**0.060-0.120 mm (0.00236-0.00472 in)**
Service Limit:	**0.150 mm (0.00591 in)**

8. All Removed Parts - Install

1. Install the parts in the reverse order of removal.

REMOVAL AND INSTALLATION

ENGINE OIL FILTER/OIL FILTER FEED PIPE REMOVAL AND INSTALLATION

Special Tools Required

Image	Description/Tool Number
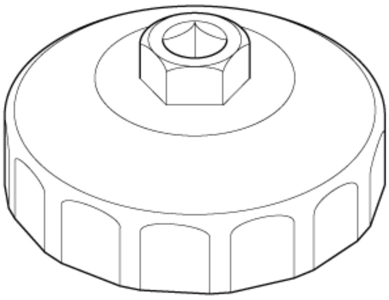	Oil Filter Wrench 07AAA-PLCA100

Removal

Procedure

NOTE: Numbered call-outs in figure pertain to list numbers in following procedure.

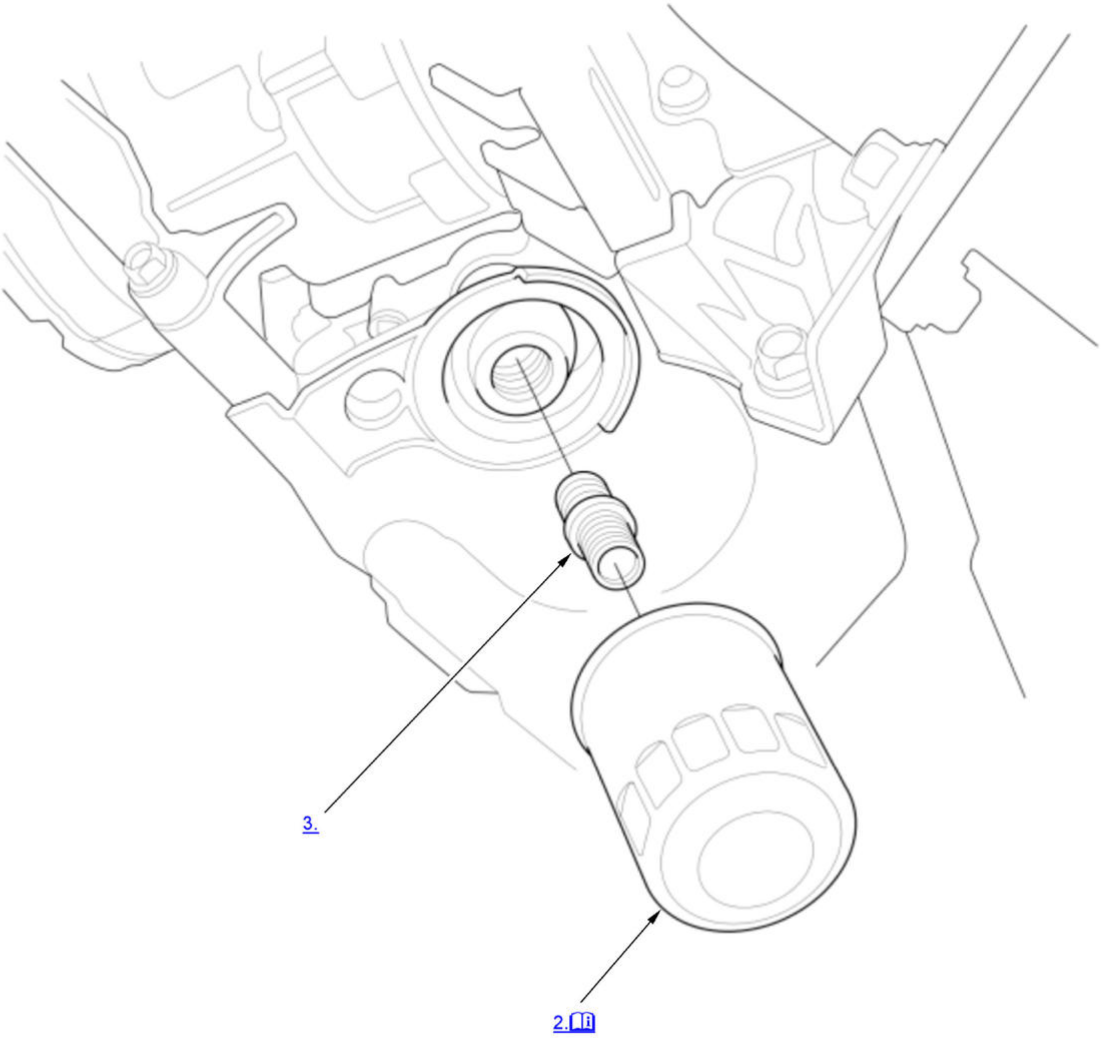

Fig. 1: Engine Oil Filter/Oil Filter Feed Pipe Replacement Components
Courtesy of HONDA, U.S.A., INC.

1. Engine Undercover Lid - Remove
2. Engine Oil Filter - Remove

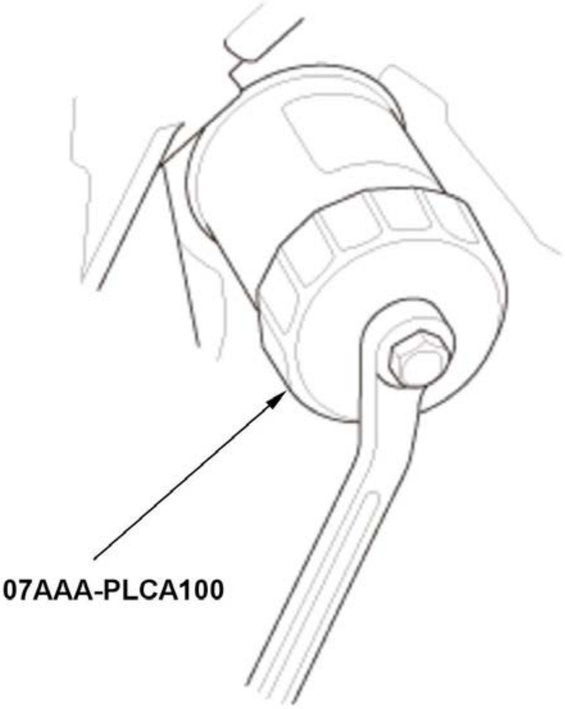	1. Remove the oil filter with the oil filter wrench.

3. Oil Filter Feed Pipe - Remove

Installation

Procedure

NOTE: **Numbered call-outs in figure pertain to list numbers in following procedure.**

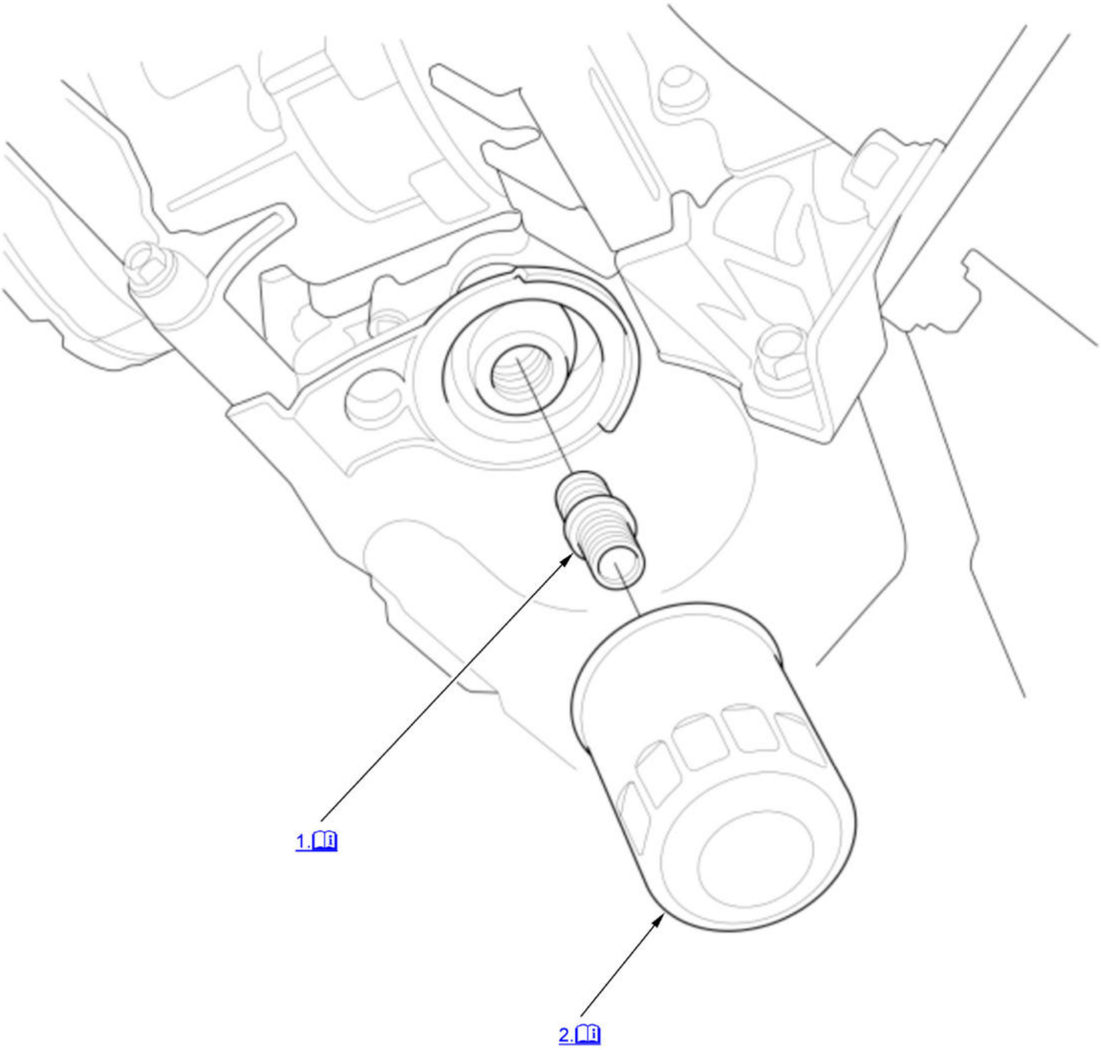

Fig. 2: Engine Oil Filter/Oil Filter Feed Pipe Replacement Components
Courtesy of HONDA, U.S.A., INC.

1. Oil Filter Feed Pipe - Install

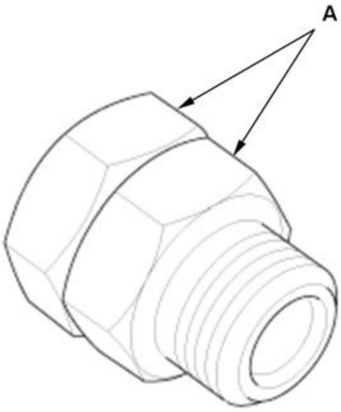	1. Install the two 20 x 1.5 mm nuts (A) onto the oil filter feed pipe. Hold the nut with a wrench, then tighten the other nut. 2. Apply new engine oil to the oil filter feed pipe threads.

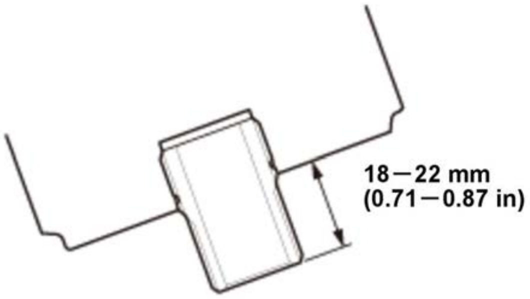

3. Make sure the oil filter feed pipe installed height is in its specified range shown.

4. Remove the nuts from the oil filter feed pipe.

2. Engine Oil Filter - Install

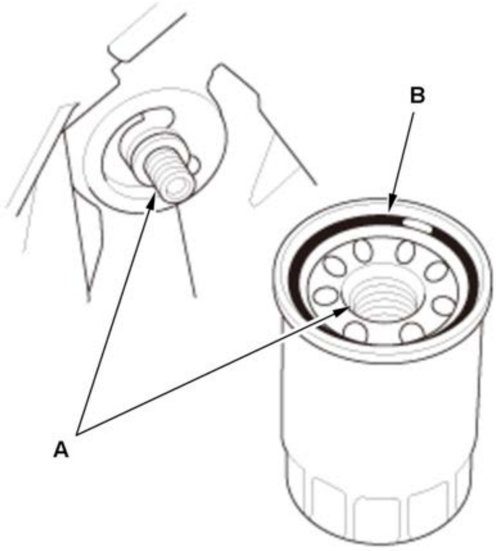

1. Inspect the oil filter to make sure the rubber seal is not stuck to the oil filter seating surface of the engine.

2. Inspect the threads (A) and the rubber seal (B) on the new filter.

3. Clean the seat on the oil pan.

4. Apply a light coat of new engine oil to the oil filter rubber seal.

NOTE: Use only filters with a built-in bypass system.

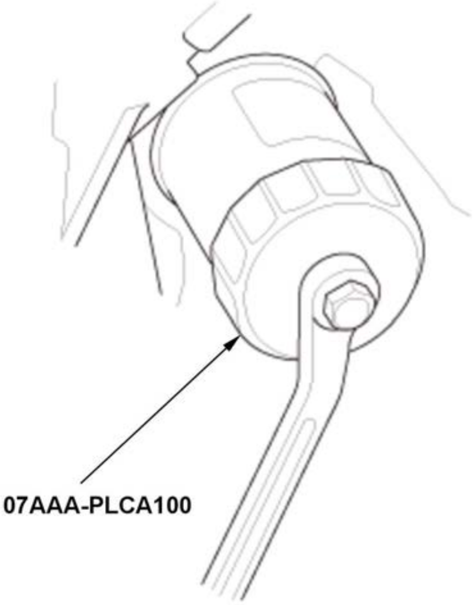

5. Install the oil filter by hand.

6. After the rubber seal seats, tighten the oil filter clockwise with the oil filter wrench.

Tighten:	**3/4 Turn Clockwise**
Tightening Torque:	**12 N.m (1.2 kgf.m, 9 lbf.ft)**

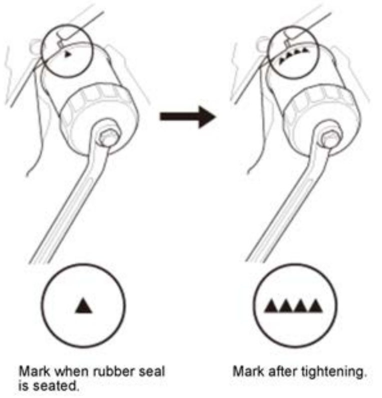

7. If four numbers or marks (1 to 4 or ↓ to ↓↓↓↓) are printed around the outside of the filter, use the following procedure to tighten the filter:

- Spin the filter on until its seal lightly seats against the oil pan, and note which number or mark is at the bottom.
- Tighten the filter by turning it clockwise three numbers or marks from the one you noted. For example, if mark ↓ is at the bottom when the seal is lightly seated, tighten the filter until the mark ↓↓↓↓ comes around to the bottom.

Number or Mark when rubber seal is seated	1 or ↓	2 or ↓↓	3 or ↓↓↓	4 or ↓↓↓↓
Number or Mark after tightening	4 or ↓↓↓↓	1 or ↓	2 or ↓↓	3 or ↓↓↓

3. Engine Oil Filter After Install - Check

1. After installation, **enter the maintenance mode, then start the engine** . Run the engine for more than 3 minutes, then **check the oil level** and the oil leakage.

4. **Engine Undercover Lid - Install**
5. Maintenance Minder - Reset

1. USA models: If the Maintenance Minder requires the oil filter to be replaced, **reset the Maintenance Minder with the gauge** (see "Resetting the Maintenance Minder").

2. Canada models: If the Maintenance Minder requires the oil filter to be replaced, **reset the Maintenance Minder with the gauge** (see "Resetting the Maintenance Minder"). If the Maintenance Minder did not require the oil filter to be replaced, **reset the Maintenance Minder with the HDS** (see "Resetting the Individual Maintenance Items").

REPLACEMENT

ENGINE OIL REPLACEMENT (1.5 L ENGINE)

Replacement

NOTE: How to read the torque specifications .

1. Engine - Warm Up

1. Start the engine. Hold the engine speed at 3, 000 rpm with no load (in P or N) until the cooling fan comes on, then turn off the engine.

2. Vehicle - Lift
3. Engine Undercover Lid - Remove
4. Engine Oil - Drain

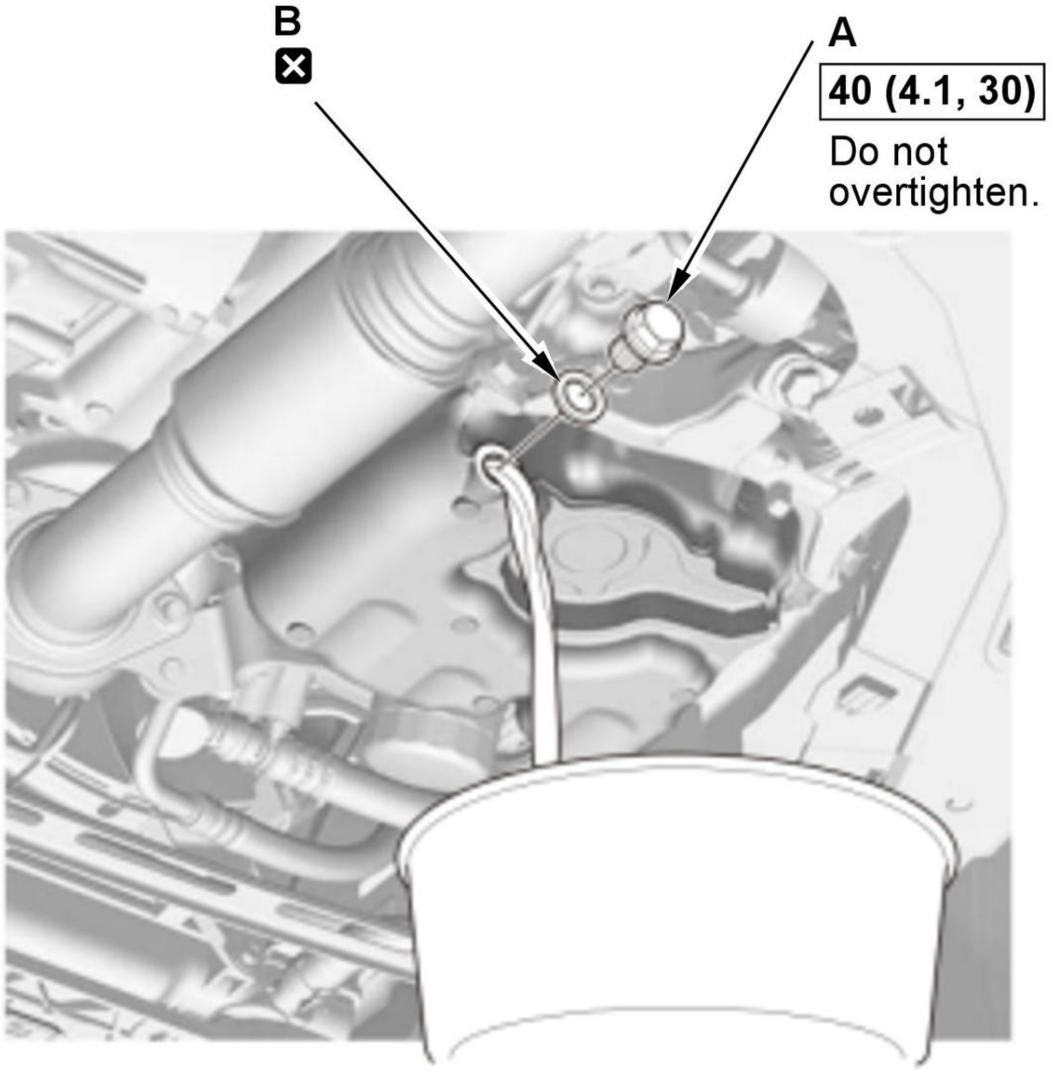

Fig. 1: Engine Oil Drain Bolt With Torque Specifications
Courtesy of HONDA, U.S.A., INC.

B	1. Remove the drain bolt (A), and drain the engine oil. 2. Reinstall the drain bolt with a new washer (B) and torque to specification.

5. Engine Oil - Refill

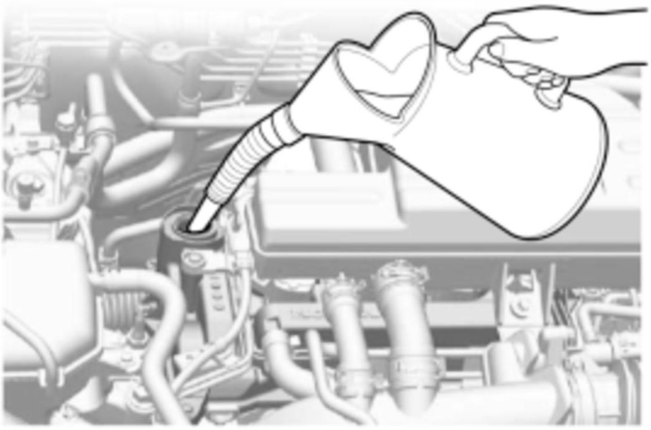	1. Refill the engine with the recommended engine oil .

After Engine Overhaul:	**4.0 L (4.2 US qt)**

Capacity	
At Oil Change:	**3.2 L (3.4 US qt)**
At Oil Change including Filter:	**3.5 L (3.7 US qt)**

6. Engine Oil Level - Check

1. Run the engine for more than 3 minutes, then **check the engine oil level** and the oil leakage.

7. **Engine Undercover Lid - Install**
8. Maintenance Minder - Reset (With Maintenance Minder System)

1. If the Maintenance Minder required to replace the engine oil, **reset the Maintenance Minder with the gauge** (see "Resetting the Maintenance Minder"). If the Maintenance Minder did not require to replace the engine oil, **reset the Maintenance Minder with the HDS** (see "Resetting the Individual Maintenance Items").

9. Engine Oil Monitor - Reset (Without Maintenance Minder System)

ENGINE OIL REPLACEMENT (2.4 L ENGINE) (2017 2018 2019)

Replacement

NOTE: **How to read the torque specifications** .

1. Engine - Warm Up

1. Allow the engine to reach operating temperature (fan comes on at least twice).

2. **Vehicle - Lift**
3. **Engine Undercover Lid - Remove**

4. Engine Oil - Drain

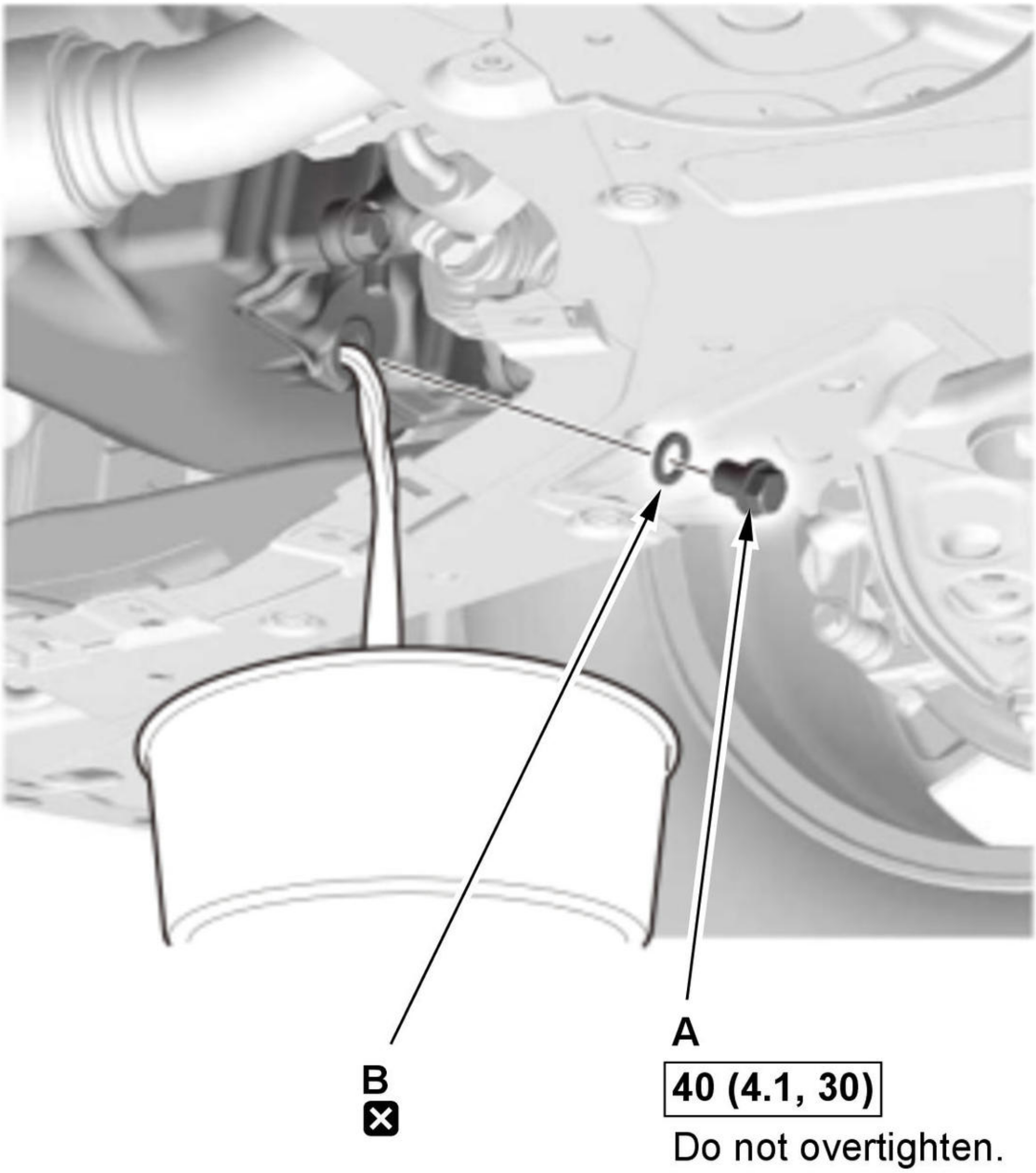
A
40 (4.1, 30)
Do not overtighten.
B
☒

Fig. 2: Engine Oil Drain Bolt With Torque Specifications
Courtesy of HONDA, U.S.A., INC.

B	1. Remove the drain bolt (A), and drain the engine oil. 2. Reinstall the drain bolt with a new washer (B) and torque to specification.

5. Engine Oil - Refill

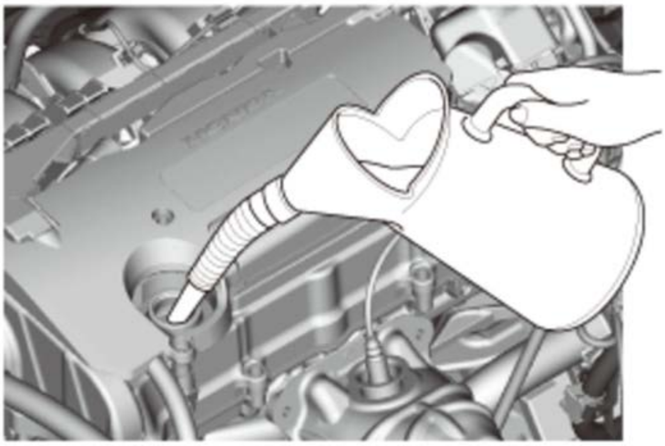	1. Refill the engine with **the recommended engine oil** .

After Engine Overhaul:	**5.4 L (5.7 US qt)**

Capacity	
At Oil Change:	**4.2 L (4.4 US qt)**
At Oil Change including Filter:	**4.4 L (4.6 US qt)**

6. Engine Oil Level - Check

1. Run the engine for more than 3 minutes, then **check the oil level** and the oil leakage.

7. All Removed Parts - Install

1. Install the parts in the reverse order of removal.

8. Maintenance Minder - Reset (With Maintenance Minder System)

1. If the Maintenance Minder required to replace the engine oil, **reset the Maintenance Minder with the gauge** (see "Resetting the Maintenance Minder"). If the Maintenance Minder did not require to replace the engine oil, **reset the Maintenance Minder with the HDS** (see "Resetting the Individual Maintenance Items").

PULLEY END CRANKSHAFT OIL SEAL REPLACEMENT - IN CAR (2.4 L ENGINE) (2017 2018 2019)

Special Tools Required

Image	Description/Tool Number
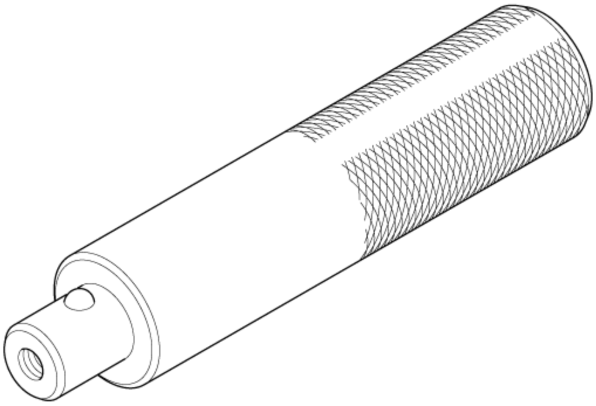	Driver Handle, 15 x 135L 07749-0010000

Image	Description/Tool Number
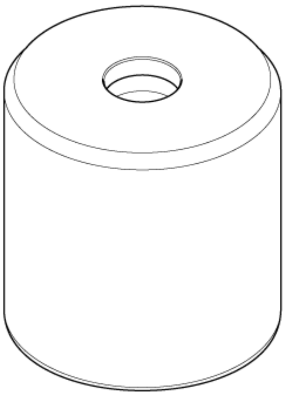	Hub Dis/Assembly Tool, 42 mm 07GAF-SD40200

Replacement

NOTE: ℹ Where icon is shown, further information shown below.

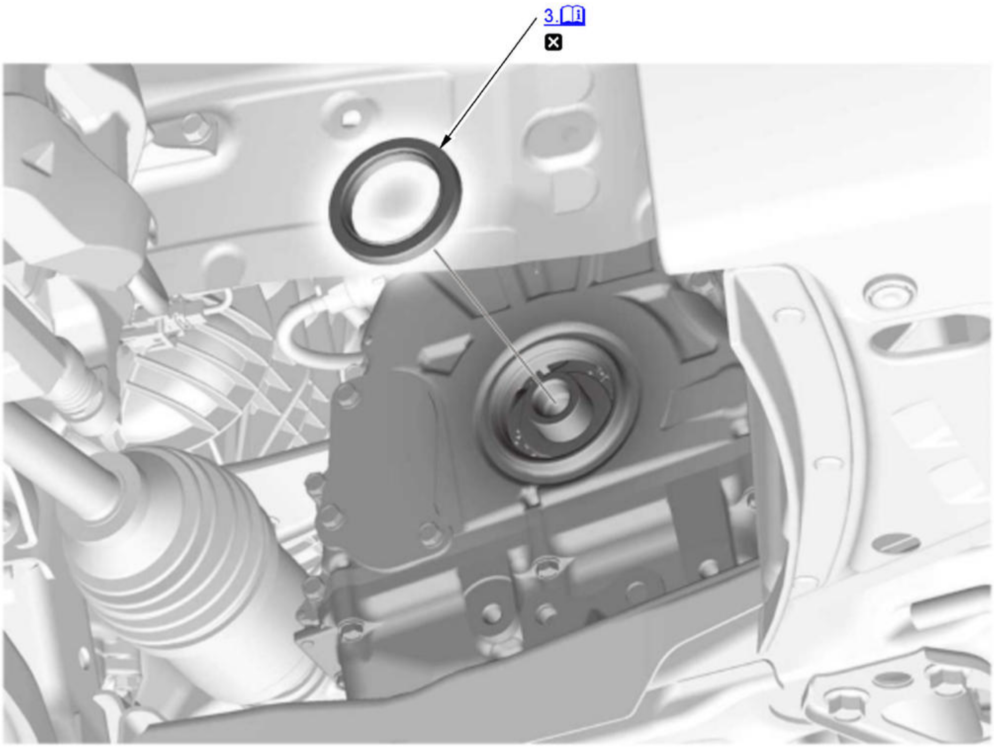

ℹ	Detailed information, notes, and precautions
☒	Replace

1. Crankshaft Pulley - Remove
2. Pulley End Crankshaft Oil Seal - Remove
3. Pulley End Crankshaft Oil Seal - Install

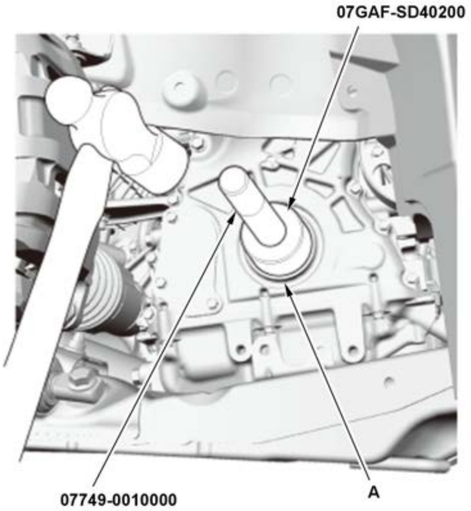

1. Clean and dry the crankshaft oil seal housing.

2. Apply a light coat of new engine oil to the lip of the pulley end crankshaft oil seal.

3. Using the driver handle, 15 x 135L and the hub dis/assembly tool, 42 mm, drive in the new pulley end crankshaft oil seal (A) squarely into the chain case to the specified installed height.

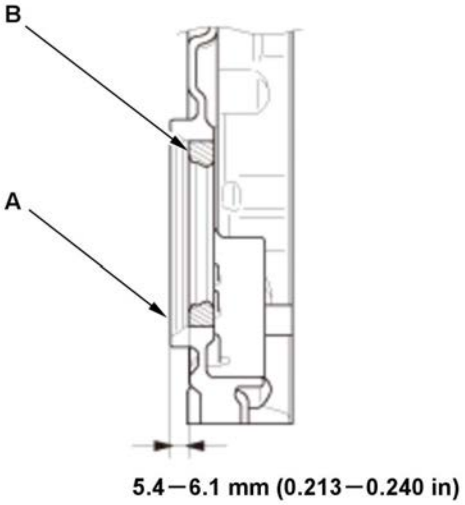

4. Measure the distance between the chain case surface (A) and the oil seal (B).

5. Clean the excess oil off the crankshaft, and check that the oil seal lip is not distorted.

Oil Seal Installed Height:
5.4-6.1 mm (0.213-0.240 in)

4. All Removed Parts - Install

1. Install the parts in the reverse order of removal.

DESCRIPTION & OPERATION

ENGINE LUBRICATION SYSTEM DESCRIPTION (1.5 L ENGINE)

Hydraulic Circuit

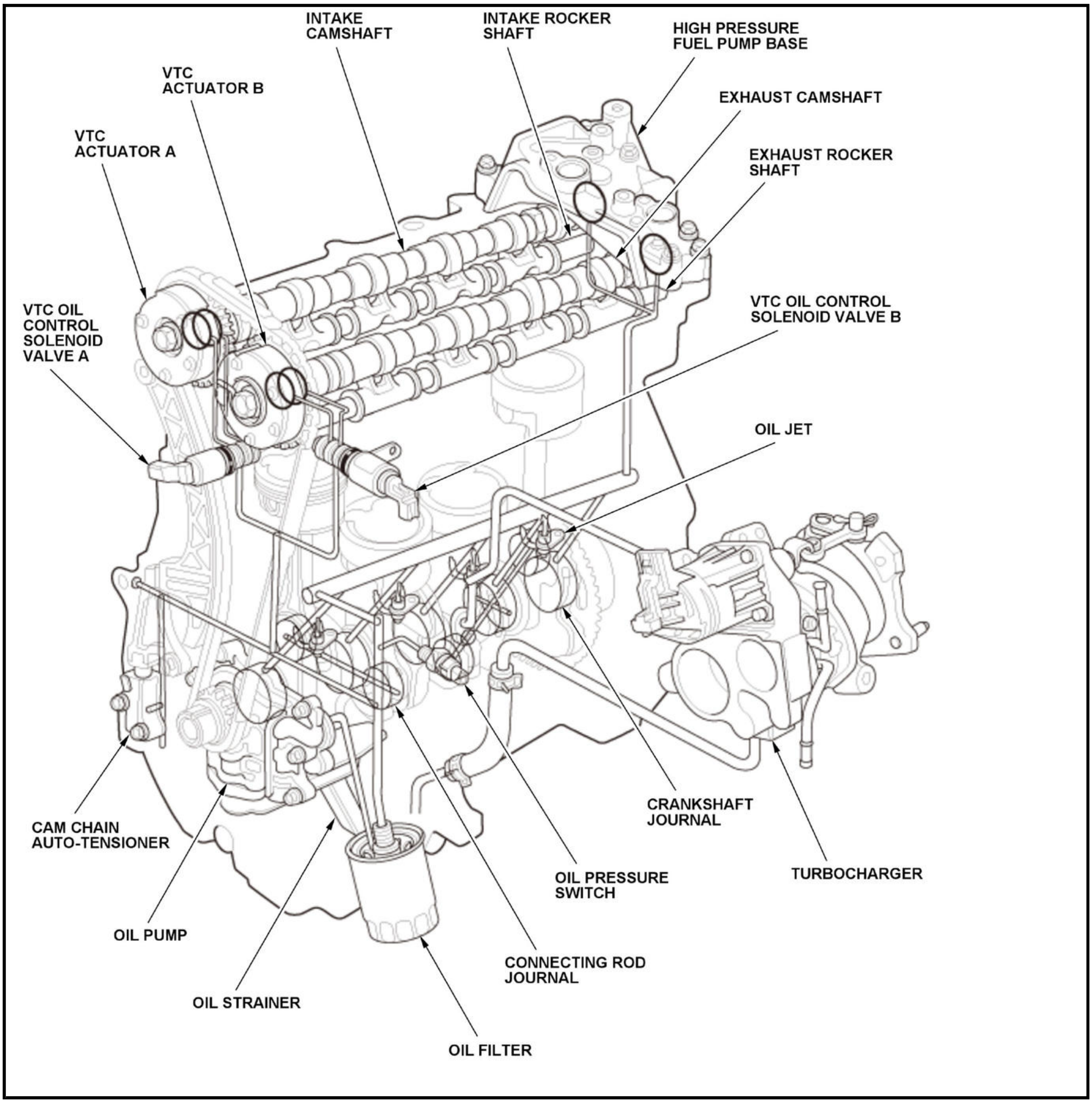
INTAKE CAMSHAFT
INTAKE ROCKER SHAFT
HIGH PRESSURE FUEL PUMP BASE
VTC ACTUATOR B
EXHAUST CAMSHAFT
VTC ACTUATOR A
EXHAUST ROCKER SHAFT
VTC OIL CONTROL SOLENOID VALVE A
VTC OIL CONTROL SOLENOID VALVE B
OIL JET
CRANKSHAFT JOURNAL
CAM CHAIN AUTO-TENSIONER
TURBOCHARGER
OIL PRESSURE SWITCH
OIL PUMP
CONNECTING ROD JOURNAL
OIL STRAINER
OIL FILTER

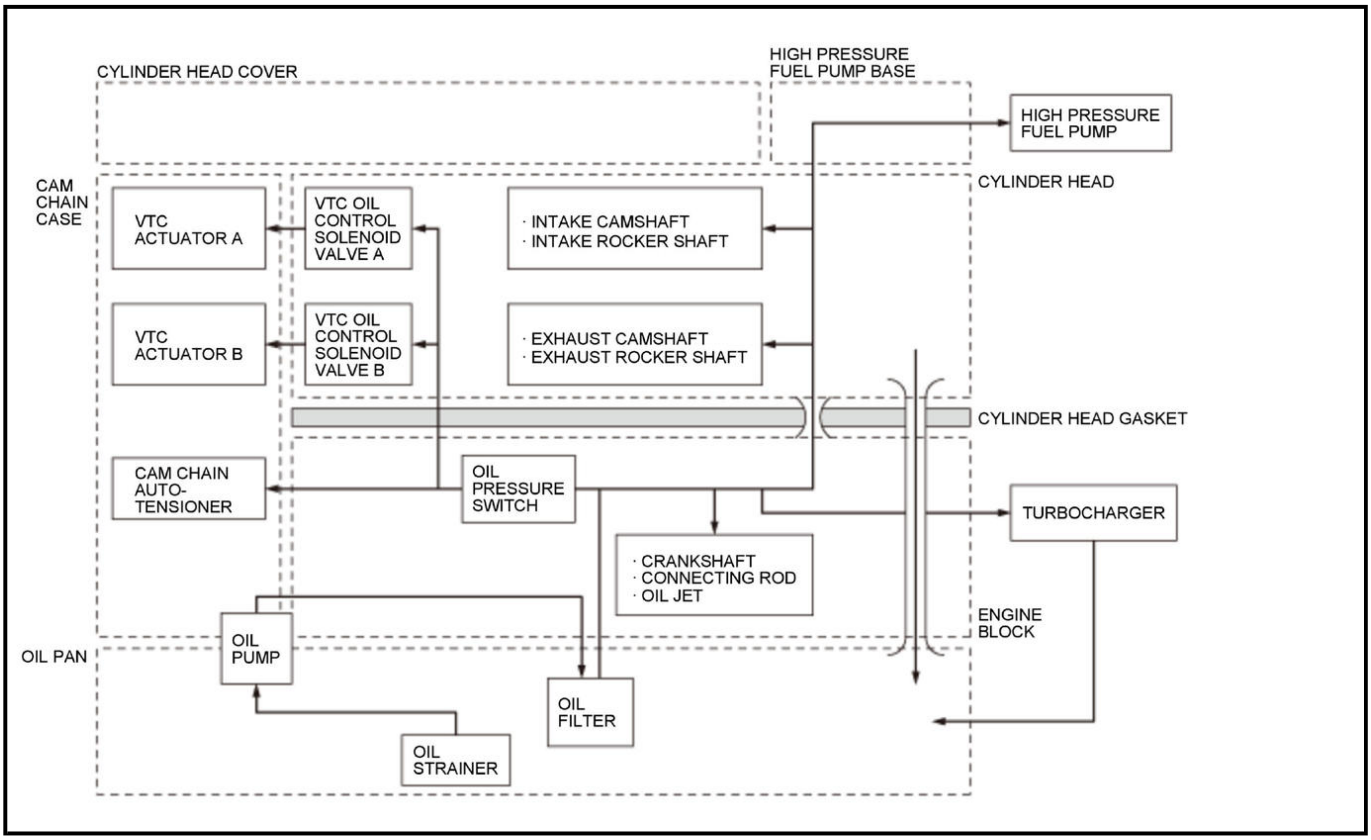
CYLINDER HEAD COVER
HIGH PRESSURE FUEL PUMP BASE
HIGH PRESSURE FUEL PUMP
CAM CHAIN CASE
CYLINDER HEAD
VTC ACTUATOR A
VTC OIL CONTROL SOLENOID VALVE A
· INTAKE CAMSHAFT
· INTAKE ROCKER SHAFT
VTC ACTUATOR B
VTC OIL CONTROL SOLENOID VALVE B
· EXHAUST CAMSHAFT
· EXHAUST ROCKER SHAFT
CYLINDER HEAD GASKET
CAM CHAIN AUTO-TENSIONER
OIL PRESSURE SWITCH
TURBOCHARGER
· CRANKSHAFT
· CONNECTING ROD
· OIL JET
ENGINE BLOCK
OIL PAN
OIL PUMP
OIL FILTER
OIL STRAINER

Engine Oil Monitor System

General Description

The engine oil monitor system shows a driver when the engine oil and/or the engine oil filter should be replaced by indicating a caution on the gauge control module which means the period of time when they should be replaced.

- Item A: Replace engine oil.
- Item B: Replace engine oil and engine oil filter.

The engine oil monitor system helps keep the engine in good condition. The PCM calculates a current driving condition, an engine load, and an appropriate engine oil replacement period, then, according to the result of the calculations, it displays a caution on the gauge control module .

NOTE: The illustration shows an image.

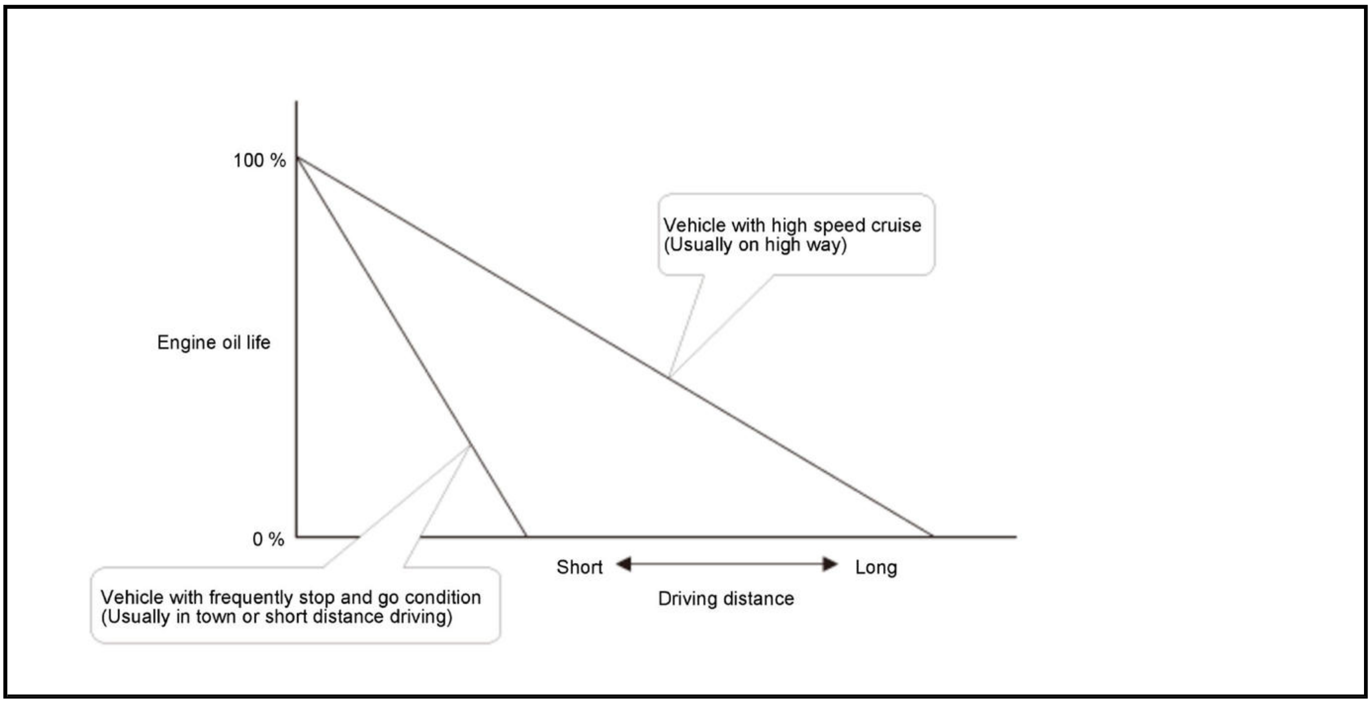

Fail-Safe Action

If the PCM stores engine system DTC (s), it will not be able to properly calculate the current driving condition because of the fail-safe action. Instead, the PCM calculates a temporary driving condition in theory and results in a replacement period earlier than normal with a caution display on the gauge control module .

ENGINE LUBRICATION SYSTEM DESCRIPTION (2.4 L ENGINE) (2017 2018 2019)

Overview

The lubrication method is a pressurized circulation type and it employs the full-flow filtering system. In the full-flow filtering system, all the oil supplied to the engine by the oil pump normally passes through the oil filter. It has excellent cleaning action.

Hydraulic Circuit

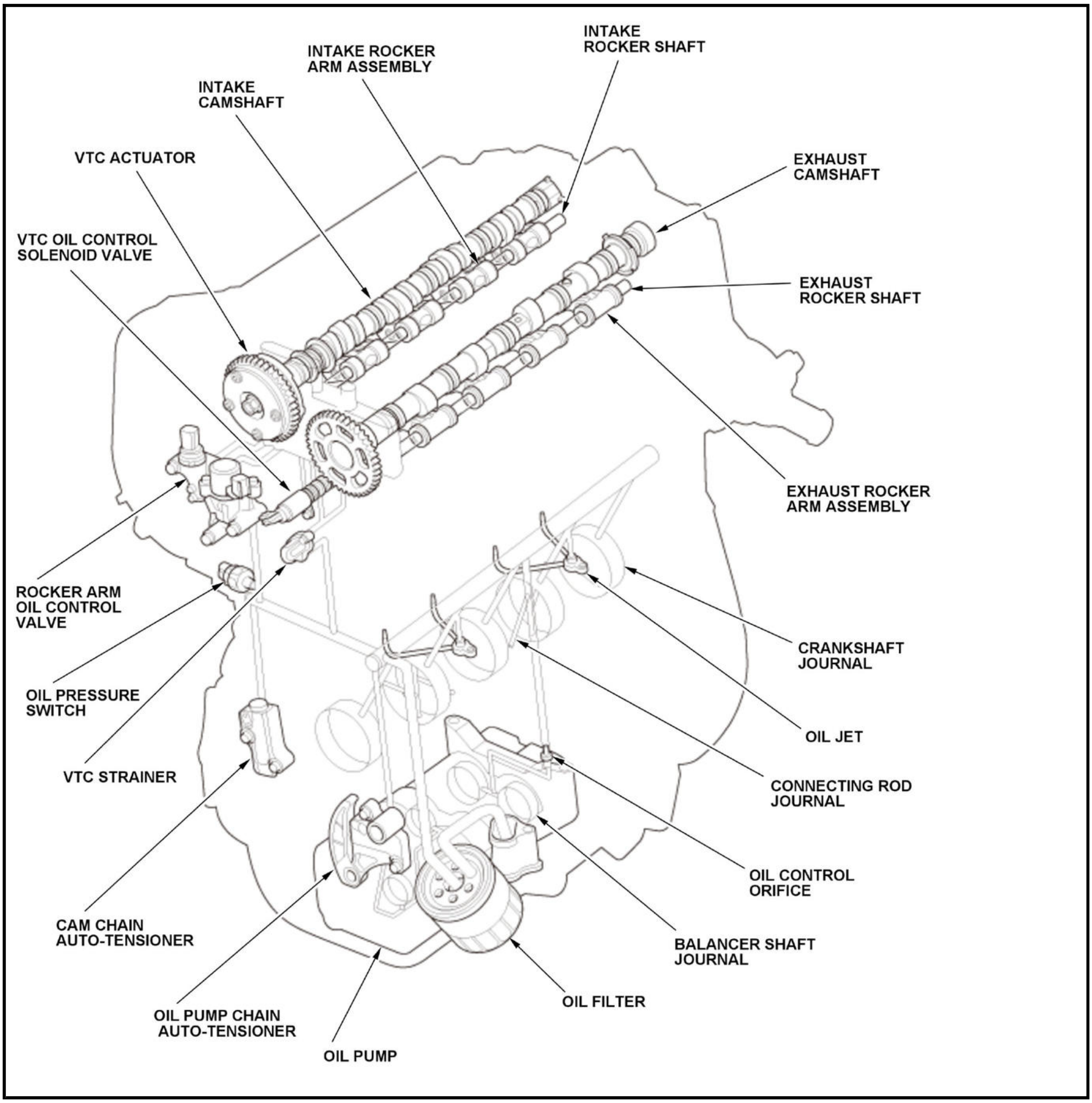
INTAKE ROCKER SHAFT
INTAKE ROCKER ARM ASSEMBLY
INTAKE CAMSHAFT
VTC ACTUATOR
EXHAUST CAMSHAFT
VTC OIL CONTROL SOLENOID VALVE
EXHAUST ROCKER SHAFT
EXHAUST ROCKER ARM ASSEMBLY
ROCKER ARM OIL CONTROL VALVE
CRANKSHAFT JOURNAL
OIL PRESSURE SWITCH
OIL JET
VTC STRAINER
CONNECTING ROD JOURNAL
OIL CONTROL ORIFICE
CAM CHAIN AUTO-TENSIONER
BALANCER SHAFT JOURNAL
OIL FILTER
OIL PUMP CHAIN AUTO-TENSIONER
OIL PUMP

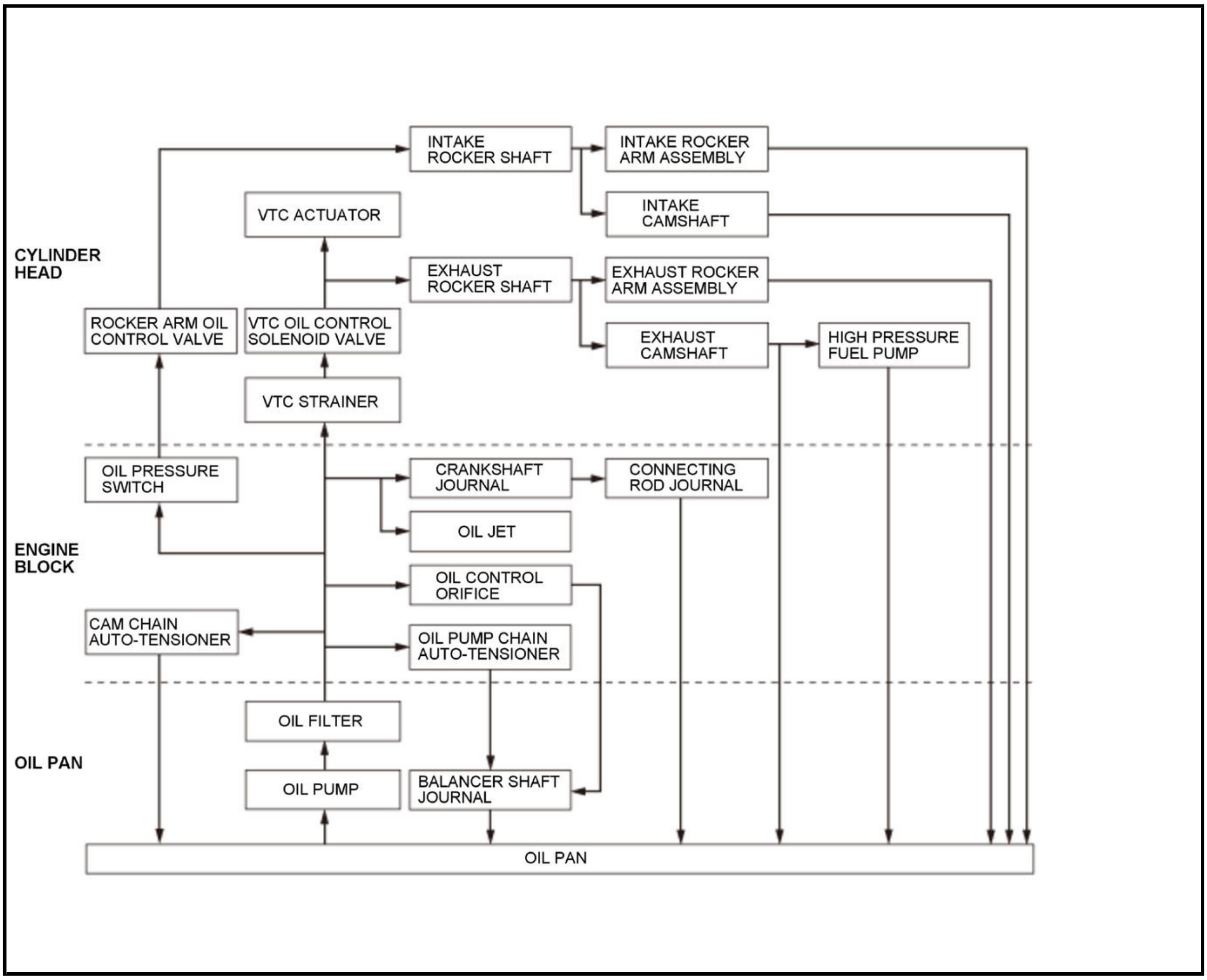
CYLINDER HEAD
ENGINE BLOCK
OIL PAN
INTAKE ROCKER SHAFT
INTAKE ROCKER ARM ASSEMBLY
VTC ACTUATOR
INTAKE CAMSHAFT
EXHAUST ROCKER SHAFT
EXHAUST ROCKER ARM ASSEMBLY
ROCKER ARM OIL CONTROL VALVE
VTC OIL CONTROL SOLENOID VALVE
EXHAUST CAMSHAFT
HIGH PRESSURE FUEL PUMP
VTC STRAINER
OIL PRESSURE SWITCH
CRANKSHAFT JOURNAL
CONNECTING ROD JOURNAL
OIL JET
OIL CONTROL ORIFICE
CAM CHAIN AUTO-TENSIONER
OIL PUMP CHAIN AUTO-TENSIONER
OIL FILTER
OIL PUMP
BALANCER SHAFT JOURNAL
OIL PAN

CHECK

ENGINE OIL LEVEL CHECK (1.5 L ENGINE)

Check

1. Engine Oil Level - Check

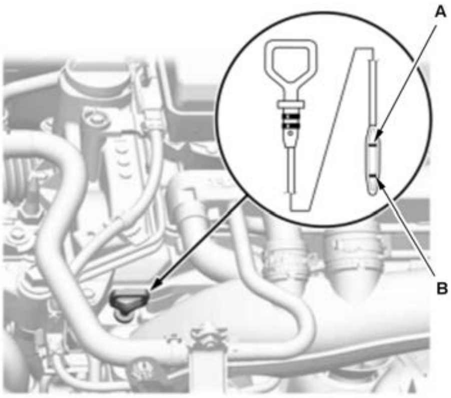	1. Park the vehicle on level ground, and start the engine. Hold the engine speed at 3, 000 rpm with no load (in P or N) until the cooling fan comes on, then turn off the engine, and wait more than 3 minutes. 2. Remove the dipstick, and wipe off the dipstick, then reinstall the dipstick. 3. Remove the dipstick, and check the engine oil level. It should be between the upper mark (A) and the lower mark (B). 4. If the engine oil level is near or below the lower mark check for oil leaks, and add the engine oil to bring it to the upper mark.

ENGINE OIL LEVEL CHECK (2.4 L ENGINE) (2017 2018 2019)

Check

1. Engine Oil Level - Check

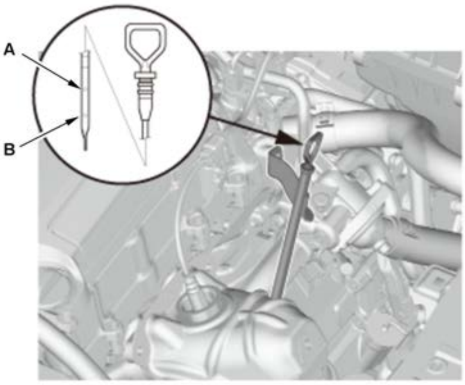	1. Park the vehicle on level ground, and start the engine. Hold the engine speed at 3, 000 rpm with no load (in P or N) until the radiator fan comes on, then turn off the engine, and wait more than 3 minutes. 2. Remove the dipstick, and wipe off the dipstick, then reinstall the dipstick. 3. Remove the dipstick. 4. Check the engine oil level. It should be between the upper mark (A) and the lower mark (B). 5. If the engine oil level is near or below the lower mark check for oil leaks, and **add the engine oil** to bring it to the upper mark.

TEST

ENGINE OIL PRESSURE TEST (1.5 L ENGINE)

Special Tools Required

Image	Description/Tool Number
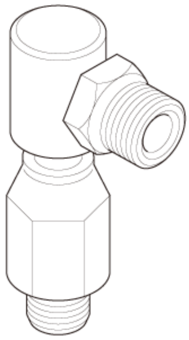	Oil Pressure Gauge Attachment PT1/8 07510-MA70000
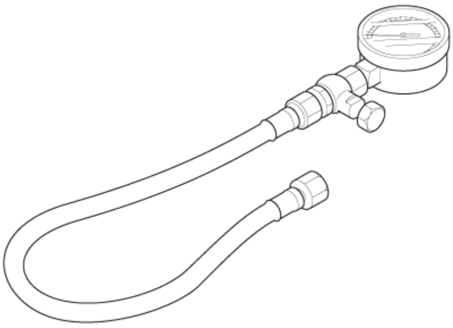	Oil Pressure Gauge 07506-3000001

Test

If the low oil pressure indicator stays on with the engine running, **check the engine oil level**. If the oil level is correct, go to the next procedure.

1. Oil Pressure Switch - Remove
2. Oil Pressure Gauge - Install

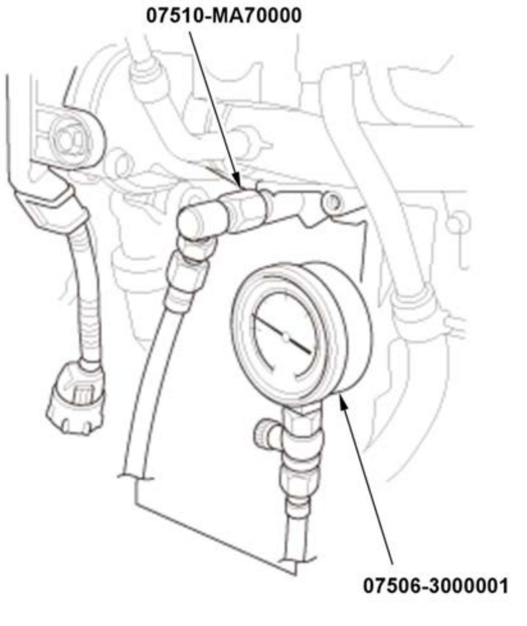	1. Install the oil pressure gauge attachment PT1/8 and the oil pressure gauge to the oil pressure switch mounting hole.

3. A/C Compressor - Install
4. Drive Belt - Install
5. Engine Oil Pressure - Test

2. Allow the engine to reach operating temperature (cooling fan comes on at least twice). The pressure should be:

Engine Oil Temperature:	**176 deg. F (80 deg. C)**

Engine Oil Pressure:

At Idle:	**90 kPa (0.92 kgf/cm 2, 13.1 psi) min.**
At 3, 000 rpm:	**280 kPa (2.86 kgf/cm 2, 40.6 psi) min.**

3. If the oil pressure is not within specifications, inspect these items:

- Oil filter blocked or plugged.
- Oil strainer blocked or plugged.
- Inspect the oil pump relief valve.

4. Remove the oil pressure gauge attachment PT1/8 and the oil pressure gauge.

6. All Removed Parts - Install

1. Install the parts in the reverse order of removal.

ENGINE OIL PRESSURE TEST (2.4 L ENGINE) (2017 2018 2019)

Test

If the low oil pressure indicator stays on with the engine running, check the engine oil level. If the oil level is correct.

1. Oil Pressure Switch - Remove
2. Engine Oil Pressure - Test

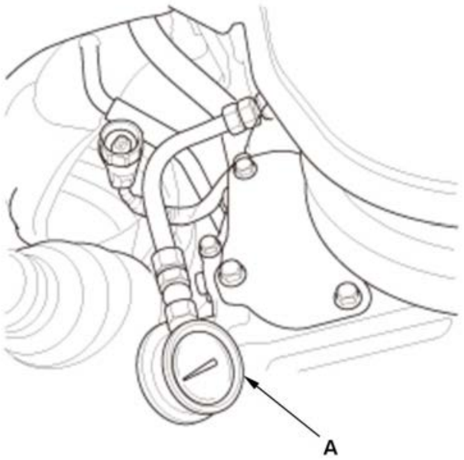

1. Install the oil pressure gauge (A).

2. Start the engine. Shut it off immediately if the gauge registers no oil pressure. Repair the problem before continuing.

3. Allow the engine to reach operating temperature (fan comes on at least twice). The pressure should be:

4. If oil pressure is out of specifications, inspect these items:

- Oil filter blocked or plugged.
- Oil strainer blocked or plugged.
- **Inspect the oil pressure relief valve** .

Engine Oil Temperature:	**176 deg. F (80 deg. C)**
Engine Oil Pressure:	B
At Idle:	**70 kPa (0.71 kgf/cm 2, 10.1 psi)**
At 3, 000 min -1 (rpm):	**300 kPa (3.06 kgf/cm 2, 43.5 psi)**

3. Oil Pressure Gauge and Oil Pressure Gauge Attachment - Remove
4. All Removed Parts - Install

1. Install the parts in the reverse order of removal.

CIRCUIT DIAGRAM

ENGINE LUBRICATION CIRCUIT DIAGRAM (1.5 L ENGINE (WITH AUTO IDLE STOP SYSTEM)) (2020 2021)

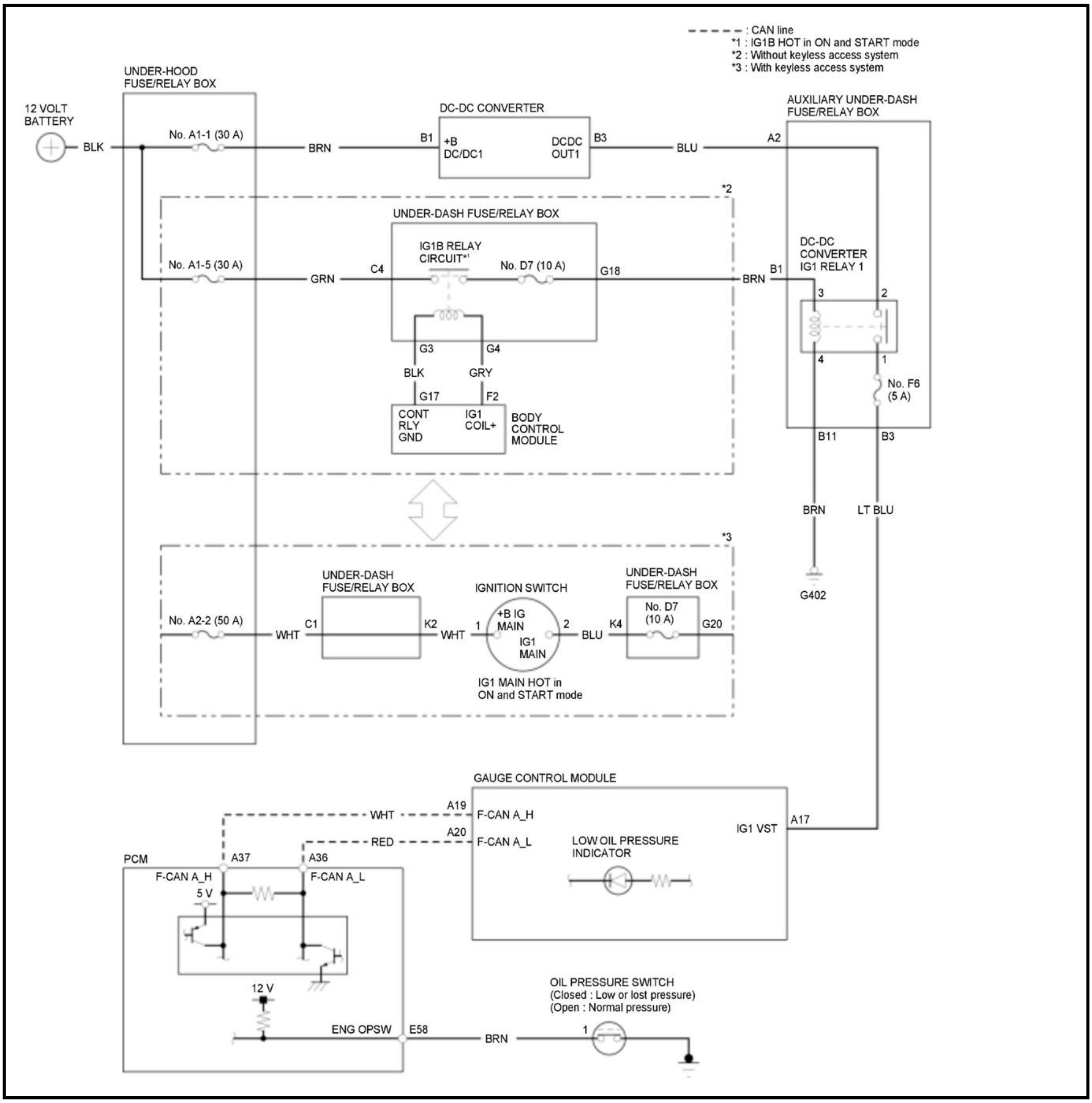

- - - - - : CAN line
*1 : IG1B HOT in ON and START mode
*2 : Without keyless access system
*3 : With keyless access system
12 VOLT BATTERY
BLK
UNDER-HOOD FUSE/RELAY BOX
No. A1-1 (30 A)
BRN
DC-DC CONVERTER
B1
+B DC/DC1
DCDC OUT1
B3
BLU
AUXILIARY UNDER-DASH FUSE/RELAY BOX
A2
*2
UNDER-DASH FUSE/RELAY BOX
IG1B RELAY CIRCUIT*1
No. A1-5 (30 A)
GRN
C4
No. D7 (10 A)
G18
BRN
B1
DC-DC CONVERTER IG1 RELAY 1
3
2
4
1
No. F6 (5 A)
G3
G4
BLK
GRY
G17
F2
CONT RLY GND
IG1 COIL+
BODY CONTROL MODULE
B11
B3
BRN
LT BLU
G402
*3
UNDER-DASH FUSE/RELAY BOX
IGNITION SWITCH
UNDER-DASH FUSE/RELAY BOX
No. A2-2 (50 A)
WHT
C1
K2
WHT
1
+B IG MAIN
IG1 MAIN
2
BLU
K4
No. D7 (10 A)
G20
IG1 MAIN HOT in ON and START mode
GAUGE CONTROL MODULE
WHT
A19
F-CAN A_H
RED
A20
F-CAN A_L
IG1 VST
A17
LOW OIL PRESSURE INDICATOR
PCM
A37
A36
F-CAN A_H
F-CAN A_L
5 V
12 V
ENG OPSW
E58
BRN
OIL PRESSURE SWITCH
(Closed : Low or lost pressure)
(Open : Normal pressure)
1

ENGINE LUBRICATION CIRCUIT DIAGRAM (1.5 L ENGINE (WITHOUT AUTO IDLE STOP SYSTEM)) (2020 2021)

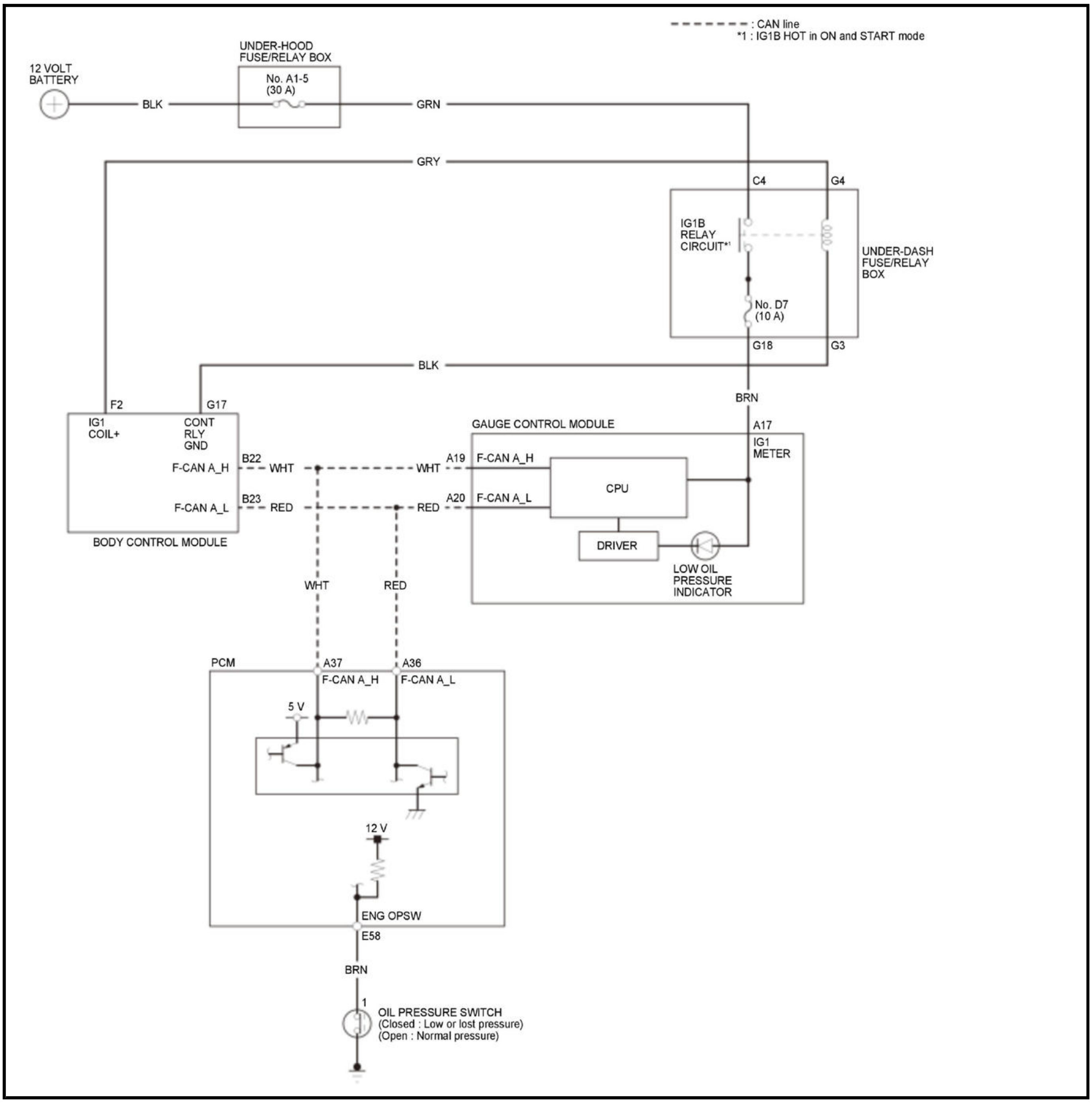
: CAN line
*1 : IG1B HOT in ON and START mode
12 VOLT BATTERY
BLK
UNDER-HOOD FUSE/RELAY BOX
No. A1-5 (30 A)
GRN
GRY
C4
G4
IG1B RELAY CIRCUIT*1
UNDER-DASH FUSE/RELAY BOX
No. D7 (10 A)
G18
G3
BLK
BRN
F2
G17
IG1 COIL+
CONT RLY GND
F-CAN A_H
F-CAN A_L
B22
B23
WHT
RED
BODY CONTROL MODULE
GAUGE CONTROL MODULE
A17
IG1 METER
A19
A20
F-CAN A_H
F-CAN A_L
CPU
DRIVER
LOW OIL PRESSURE INDICATOR
WHT
RED
PCM
A37
A36
F-CAN A_H
F-CAN A_L
5 V
12 V
ENG OPSW
E58
BRN
1
OIL PRESSURE SWITCH
(Closed : Low or lost pressure)
(Open : Normal pressure)

ENGINE LUBRICATION CIRCUIT DIAGRAM (2.4 L ENGINE) (2017 2018 2019)

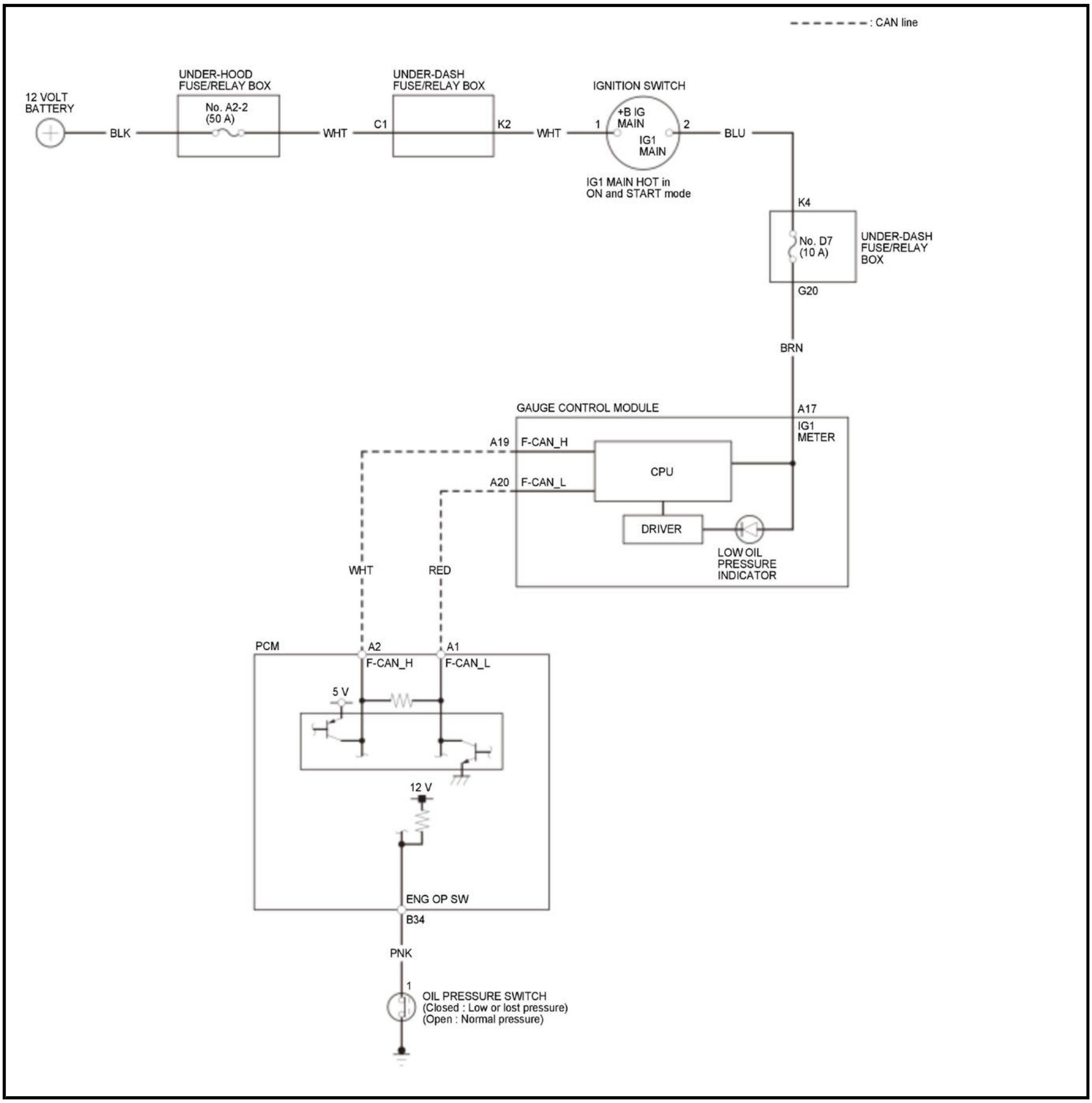
: CAN line
12 VOLT BATTERY
BLK
UNDER-HOOD FUSE/RELAY BOX
No. A2-2 (50 A)
WHT
C1
UNDER-DASH FUSE/RELAY BOX
K2
WHT
IGNITION SWITCH
1
+B IG MAIN
IG1 MAIN
2
BLU
IG1 MAIN HOT in ON and START mode
K4
No. D7 (10 A)
UNDER-DASH FUSE/RELAY BOX
G20
BRN
GAUGE CONTROL MODULE
A17
IG1 METER
A19
F-CAN_H
A20
F-CAN_L
CPU
DRIVER
LOW OIL PRESSURE INDICATOR
WHT
RED
PCM
A2
F-CAN_H
A1
F-CAN_L
5 V
12 V
ENG OP SW
B34
PNK
1
OIL PRESSURE SWITCH (Closed : Low or lost pressure) (Open : Normal pressure)

COMPONENT LOCATION INDEX

ENGINE LUBRICATION SYSTEM COMPONENT LOCATION INDEX (1.5 L ENGINE)

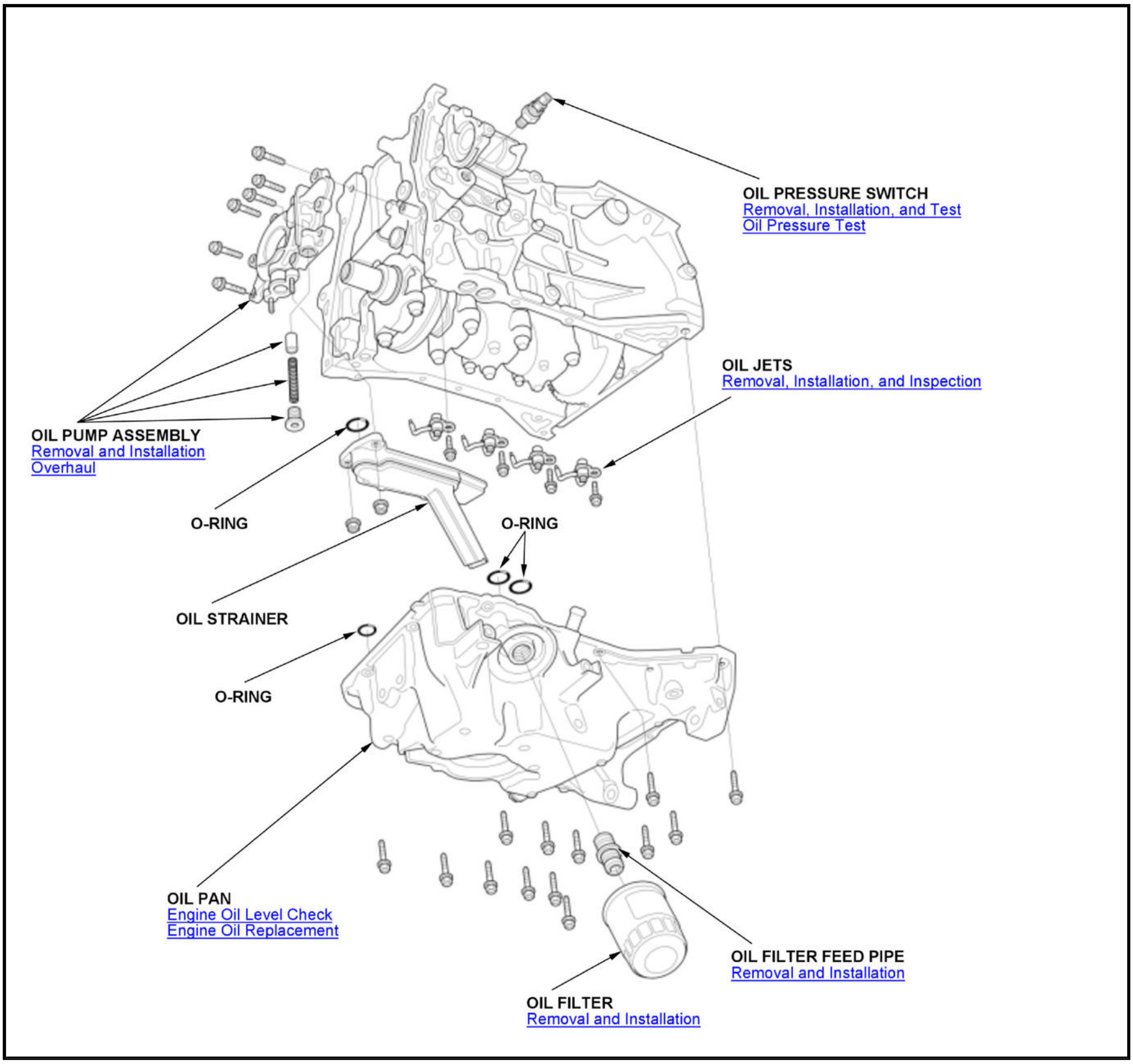
OIL PRESSURE SWITCH
Removal, Installation, and Test
Oil Pressure Test
OIL JETS
Removal, Installation, and Inspection
OIL PUMP ASSEMBLY
Removal and Installation
Overhaul
O-RING
O-RING
OIL STRAINER
O-RING
OIL PAN
Engine Oil Level Check
Engine Oil Replacement
OIL FILTER FEED PIPE
Removal and Installation
OIL FILTER
Removal and Installation

ENGINE LUBRICATION SYSTEM COMPONENT LOCATION INDEX (2.4 L ENGINE) (2017 2018 2019)

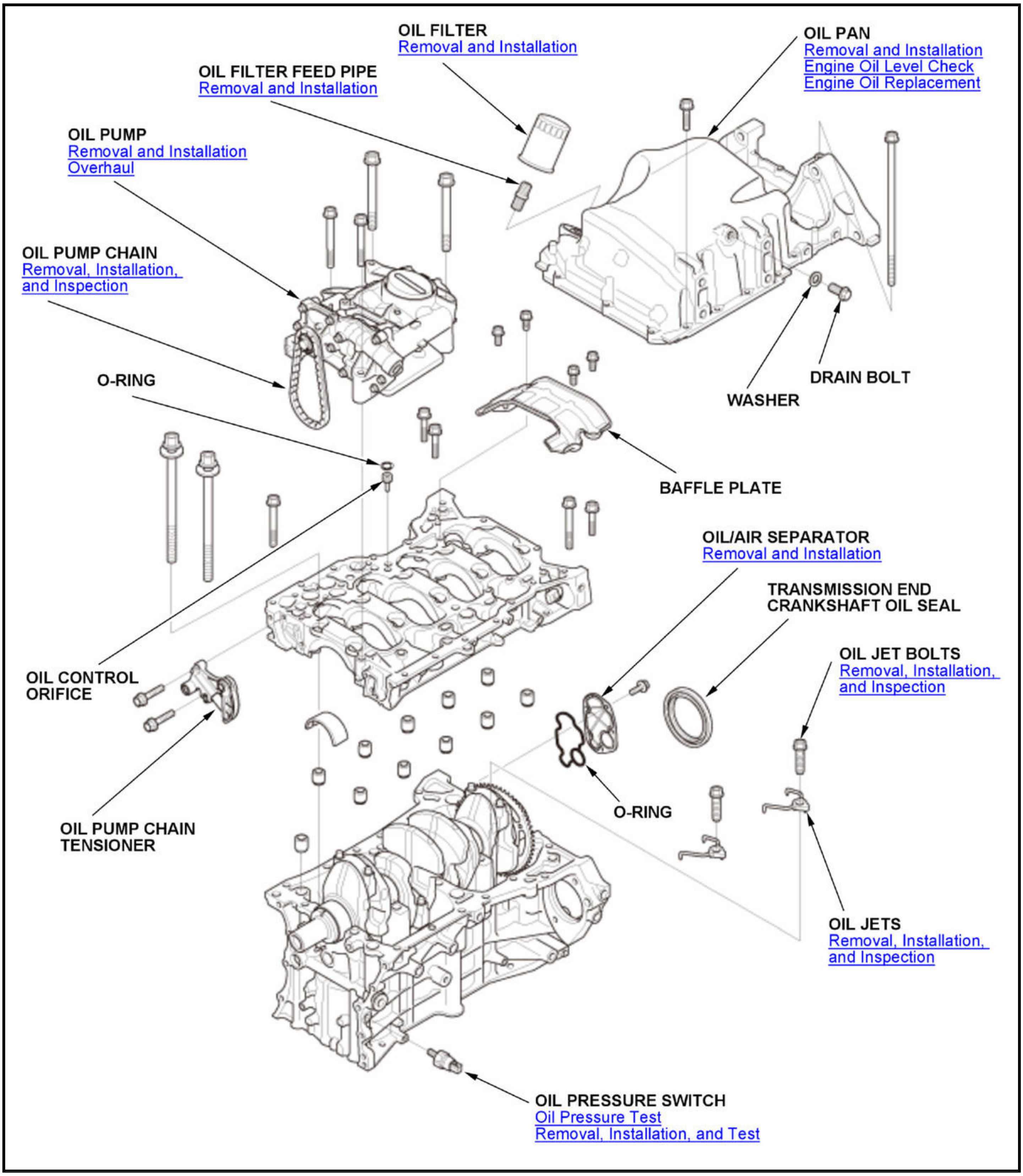
OIL FILTER
Removal and Installation
OIL PAN
Removal and Installation
Engine Oil Level Check
Engine Oil Replacement
OIL FILTER FEED PIPE
Removal and Installation
OIL PUMP
Removal and Installation
Overhaul
OIL PUMP CHAIN
Removal, Installation, and Inspection
O-RING
DRAIN BOLT
WASHER
BAFFLE PLATE
OIL/AIR SEPARATOR
Removal and Installation
TRANSMISSION END CRANKSHAFT OIL SEAL
OIL JET BOLTS
Removal, Installation, and Inspection
OIL CONTROL ORIFICE
O-RING
OIL PUMP CHAIN TENSIONER
OIL JETS
Removal, Installation, and Inspection
OIL PRESSURE SWITCH
Oil Pressure Test
Removal, Installation, and Test

SYMPTOM TROUBLESHOOTING

ENGINE LUBRICATION SYSTEM SYMPTOM TROUBLESHOOTING - LOW OIL PRESSURE INDICATOR DOES NOT COME ON WITH THE VEHICLE IN THE ON MODE

Low oil pressure indicator does not come on with the vehicle in the ON mode

1. Gauge control module test

   -1. Connect the HDS to the DLC .

-2. **Check for DTCs** . If a DTC is present, diagnose, and repair the cause before continuing with this test.

DTC (PGM-FI)

-3. Check the parameter (s) below with the HDS.

Signal	Threshold		Current conditions	
	Values	**Unit**	**Values**	**Unit**
OIL PRESSURE SWITCH	ON	B	B	B

Do the current condition (s) match the threshold?

YES

Replace the gauge control module .

NO

Go to step 2.

2. Oil pressure switch test

-1. Turn the vehicle to the OFF (LOCK) mode.

-2. **Check the oil pressure switch** .

Is the oil pressure switch OK?

YES (1.5 L engine)

Go to step 3.

YES (2.4 L engine)

Go to step 4.

NO

Replace the oil pressure switch .

3. Open wire check (ENG OPSW line)

-1. Turn the vehicle to the OFF (LOCK) mode.

-2. Jump the SCS line with the HDS, and wait more than 1 minute.

NOTE: This step must be done to protect the PCM from damage.

-3. Disconnect the following connectors.

PCM connector E (80P)
Oil pressure switch 1P connector

-4. Check for continuity between test points 1 and 2.

Test condition	Vehicle OFF (LOCK) mode
	PCM connector E (80P): disconnected
	Oil pressure switch 1P connector: disconnected
Test point 1	**PCM connector E (80P) No. 58**

Test point 2	Oil pressure switch 1P connector (female terminals) No. 1: ①
B	

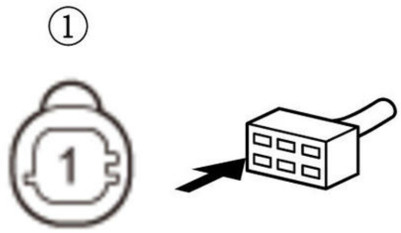

Is there continuity?

YES

Check for any authorized service information related to the DTCs or symptoms you are troubleshooting, or **substitute a known-good PCM** , then recheck. If the PCM was substituted, and the symptom/indication goes away, **replace the original PCM** .

NO

Repair an open in the ENG OPSW wire between the oil pressure switch and the PCM.

4. Open wire check (ENG OP SW line)

-1. Turn the vehicle to the OFF (LOCK) mode.

-2. Jump the SCS line with the HDS, and wait more than 1 minute.

NOTE: This step must be done to protect the PCM from damage.

-3. Disconnect the following connectors.

PCM connector B (51P)

Oil pressure switch 1P connector

-4. Check for continuity between test points 1 and 2.

Test condition	Vehicle OFF (LOCK) mode
	PCM connector B (51P): disconnected
	Oil pressure switch 1P connector: disconnected
Test point 1	**PCM connector B (51P) No. 34**
Test point 2	Oil pressure switch 1P connector (female terminals) No. 1: ①
B	

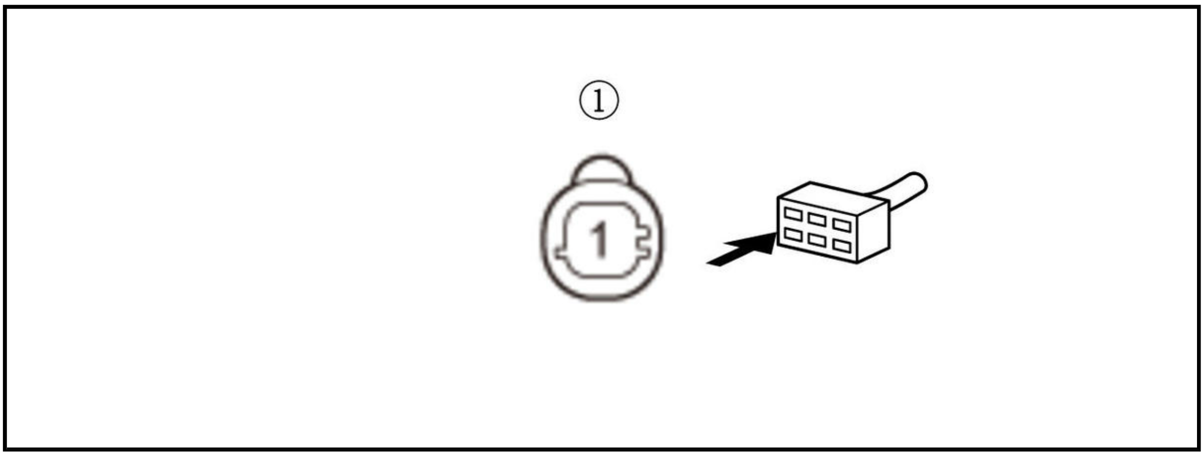

Is there continuity?

YES

Check for any authorized service information related to the DTCs or symptoms you are troubleshooting, or **substitute a known-good PCM** , then recheck. If the PCM was substituted, and the symptom/indication goes away, **replace the original PCM** .

NO

Repair an open in the ENG OP SW wire between the oil pressure switch and the PCM.

ENGINE LUBRICATION SYSTEM SYMPTOM TROUBLESHOOTING - LOW OIL PRESSURE INDICATOR STAYS ON

Low oil pressure indicator stays on

1. Gauge control module test

-1. **Connect the HDS to the DLC** .

-2. **Check for DTCs** . If a DTC is present, diagnose, and repair the cause before continuing with this test.

DTC (PGM-FI)

-3. Start the engine, and check the parameter (s) below with the HDS.

Signal	Threshold		Current conditions	
	Values	Unit	Values	Unit
OIL PRESSURE SWITCH	OFF	B	B	B

Do the current condition (s) match the threshold?

YES

Replace the gauge control module .

NO

Go to step 2.

2. Oil pressure switch test

-1. Turn the vehicle to the OFF (LOCK) mode.

-2. **Check the oil pressure switch** .

Is the oil pressure switch OK?

YES (1.5 L engine)

Go to step 3.

YES (2.4 L engine)

Go to step 4.

NO

Do the oil pressure test. If the oil pressure is OK, replace the oil pressure switch .

3. Shorted wire check (ENG OPSW line)

-1. Turn the vehicle to the OFF (LOCK) mode.

-2. Jump the SCS line with the HDS, and wait more than 1 minute.

NOTE: This step must be done to protect the PCM from damage.

-3. Disconnect the following connectors.

PCM connector E (80P)
Oil pressure switch 1P connector

-4. Check for continuity between test points 1 and 2.

Test condition	Vehicle OFF (LOCK) mode
	PCM connector E (80P) : disconnected
	Oil pressure switch 1P connector: disconnected
Test point 1	Oil pressure switch 1P connector (female terminals) No. 1: ①
Test point 2	Body ground
B	

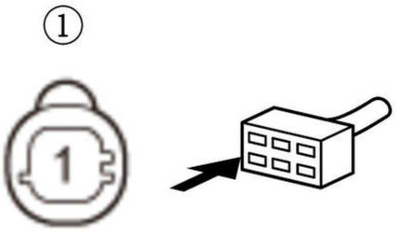

Is there continuity?

YES

Repair a short to ground in the ENG OPSW wire between the oil pressure switch and the PCM.

NO

Check for any authorized service information related to the DTCs or symptoms you are troubleshooting, or **substitute a known-good PCM** , then recheck. If the PCM was substituted, and the symptom/indication goes away, **replace the original PCM** .

4. Shorted wire check (ENG OP SW line)

-1. Turn the vehicle to the OFF (LOCK) mode.

-2. Jump the SCS line with the HDS, and wait more than 1 minute.

NOTE: This step must be done to protect the PCM from damage.

-3. Disconnect the following connectors.

PCM connector B (51P)
Oil pressure switch 1P connector

-4. Check for continuity between test points 1 and 2.

Test condition	Vehicle OFF (LOCK) mode
	PCM connector B (51P): disconnected
	Oil pressure switch 1P connector: disconnected
Test point 1	Oil pressure switch 1P connector (female terminals) No. 1: ①
Test point 2	Body ground
B	

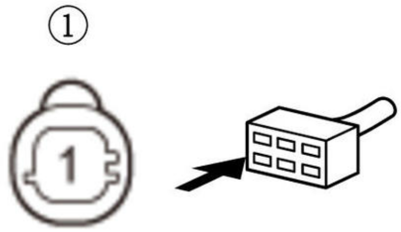

Is there continuity?

YES

Repair a short to ground in the ENG OP SW wire between the oil pressure switch and the PCM.

NO

Check for any authorized service information related to the DTCs or symptoms you are troubleshooting, or **substitute a known-good PCM** , then recheck. If the PCM was substituted, and the symptom/indication goes away, **replace the original PCM** .

SYMPTOM TROUBLESHOOTING INDEX

ENGINE LUBRICATION SYSTEM SYMPTOM TROUBLESHOOTING INDEX

Symptom	Diagnostic procedure	Also check for
Excessive engine oil consumption	• Check for oil leaks. • Check for worn valve guide (s); or worn valve seal (s) . • Check for a damaged or worn piston ring (s) . • Check for damaged or worn engine internal parts (cylinder wall, pistons, etc.) .	Check the maintenance records as engine oil that is worn out burns off at a higher rate
Low oil pressure indicator does not come on with the vehicle in the ON mode	Do the symptom troubleshooting for low oil pressure indicator does not come on with the vehicle in the ON mode.	An open in the wire between the PCM and the oil pressure switch
Low oil pressure indicator stays on	• Check the engine oil level. • Do the symptom troubleshooting for low oil pressure indicator stays on.	A wire shorted to ground between the PCM and the oil pressure switch

REMOVAL & INSTALLATION INSPECTION

ENGINE OIL JET REMOVAL, INSTALLATION, AND INSPECTION (1.5 L ENGINE)

Removal and Installation

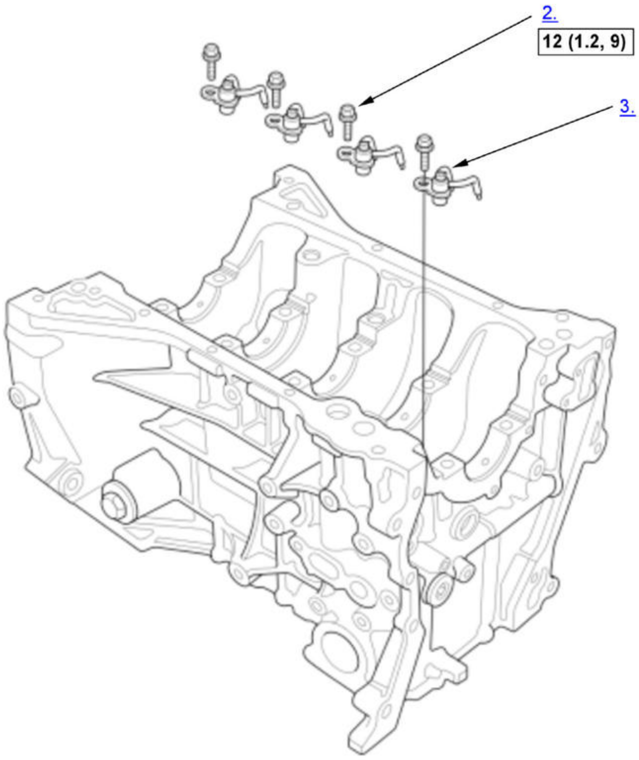

Fig. 3: Engine Oil Jet Bolt With Torque Specifications
Courtesy of HONDA, U.S.A., INC.

□	Torque: N.m (kgf.m, lbf.ft)

1. Crankshaft - Remove

2. Oil Jet Bolt - Remove
3. Oil Jet - Remove
4. All Removed Parts - Install

1. Install the parts in the reverse order of removal.

Inspection

1. Oil Jet - Inspect

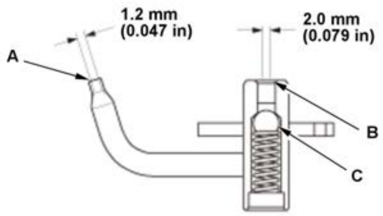	1. Make sure that a 1.0 mm (1/32 in) diameter pin will go through the nozzle hole (A) (1.2 mm (0.047 in) diameter). **NOTE:** Replace the oil jet, if the nozzle is damaged or bent. 2. Make sure that a 1.8 mm (1/16 in) diameter pin will go through the oil intake (B) (2.0 mm (0.079 in) diameter), and the check ball (C) moves smoothly and has a stroke of about 2.0 mm (0.079 in). **NOTE:** Be careful not to damage the check ball.

ENGINE OIL PUMP CHAIN REMOVAL, INSTALLATION, AND INSPECTION (2.4 L ENGINE) (2017 2018 2019)

Special Tools Required

Image	Description/Tool Number
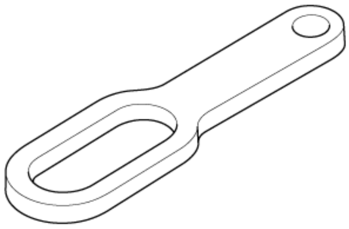	Universal Lifting Eyelet 07AAK-SNAA120
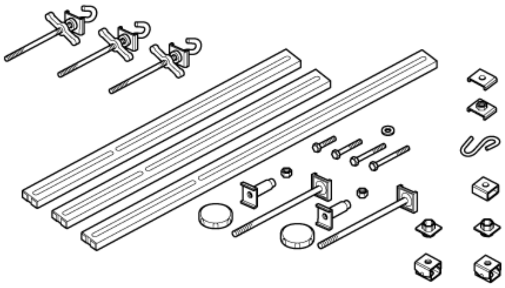	Engine Support Hanger, A and Reds AAR-T1256*

*: Available through the Honda Tool and Equipment Program 888-424-6857.

Removal

1. **Cam Chain - Remove**
2. Universal Lifting Eyelet - Attach

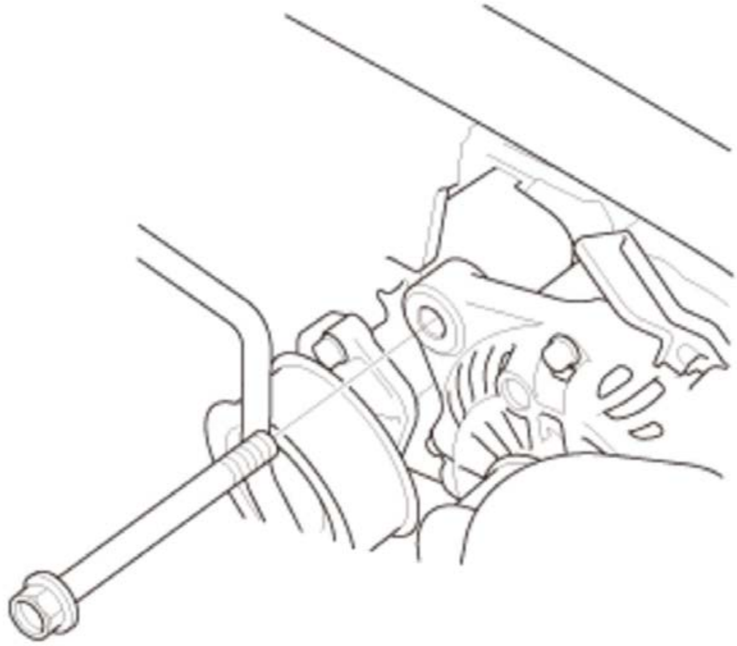	1. Remove the alternator mounting bolt.

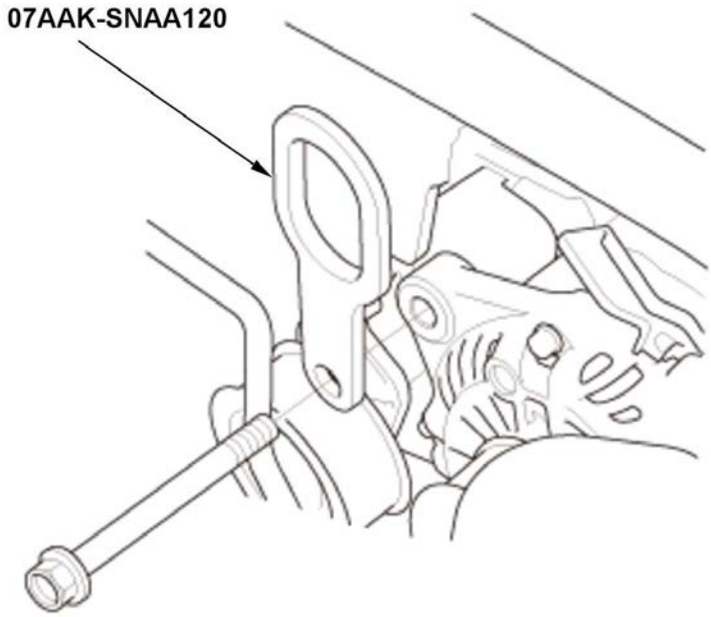	2. Attach the universal lifting eyelet to the alternator.

3. **Center Cowl Cover - Remove**
4. **Front Bulkhead Cover - Remove**
5. **Radiator Cap Base - Move**

   NOTE: Do not disconnect the hose.

6. Engine Support Hanger - Install

   1. Install the engine support hanger as shown.

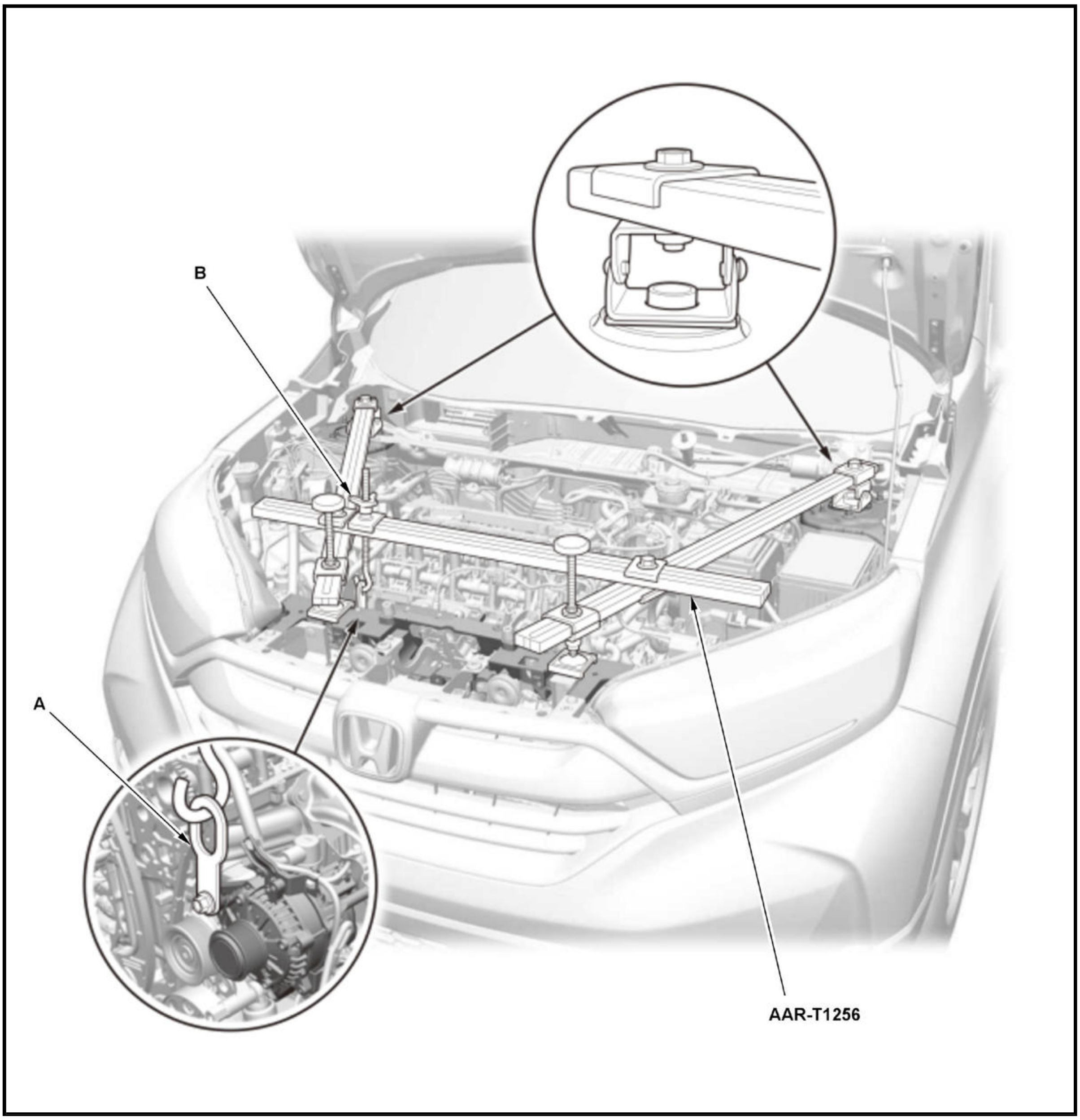

2. Attach the hook to the slotted hole in the universal lifting eyelet (A).

3. Tighten the wing nut (B) by hand, and lift and support the engine/transmission.

NOTE:

- Be careful when working around the windshield.
- Be careful not to damage the hood opener cable when installing the engine support hanger at the front bulkhead.

7. **Oil Pan - Remove**
8. Oil Pump Chain Tensioner - Remove

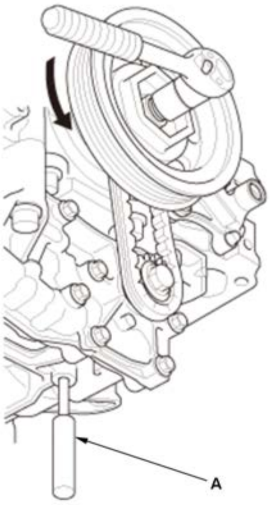

1. Loosely install the crankshaft pulley.

2. To hold the front balancer shaft, insert a 6 mm long pin punch (A) (Snap-on PPC108LA or equivalent) into the maintenance hole in the balancer shaft holder and through the front balancer shaft.

3. Turn the crankshaft counterclockwise to compress the oil pump chain.

4. Remove the crankshaft pulley.

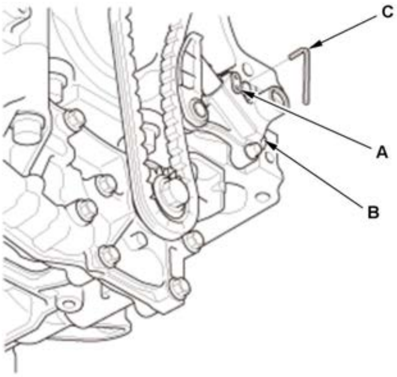

5. Align the holes on the lock (A) and the oil pump chain auto-tensioner (B), then insert a 2.0 mm (5/64 in) diameter pin (C) into the holes. Turn the crankshaft clockwise to secure the pin.

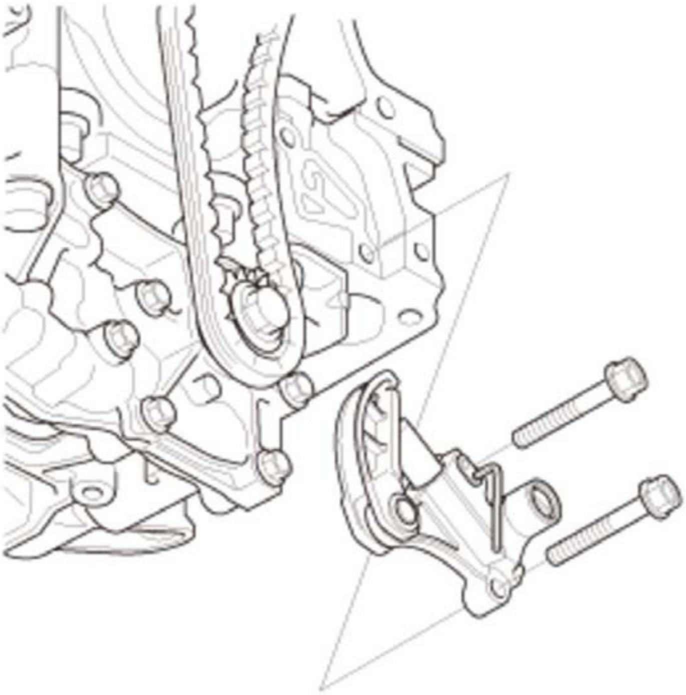

6. Remove the oil pump chain auto-tensioner.

9. Oil Pump Chain - Remove

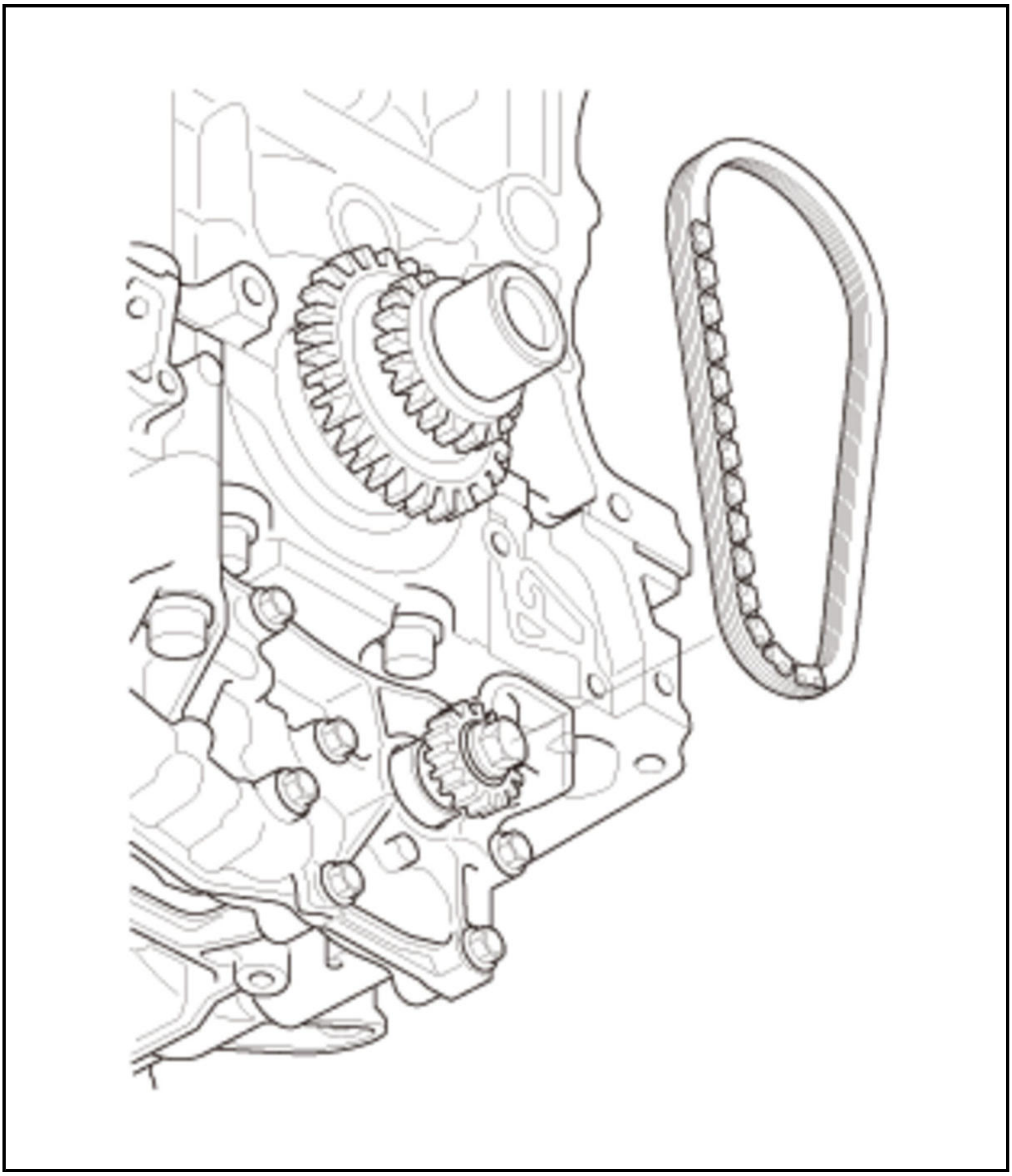

Installation

NOTE: **How to read the torque specifications** .

1. Oil Pump Chain - Install

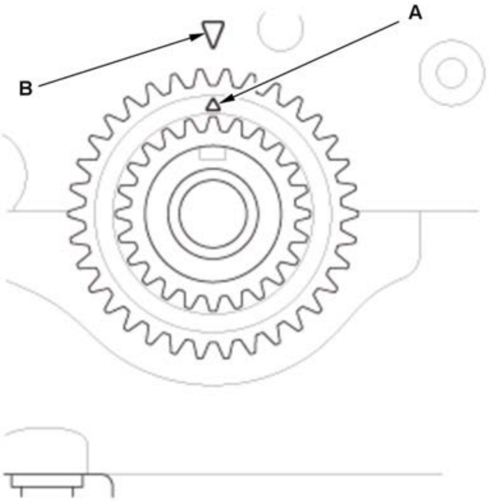	1. Set the crankshaft to top dead center (TDC). Align the TDC mark (A) on the crankshaft sprocket with the pointer (B) on the engine block.
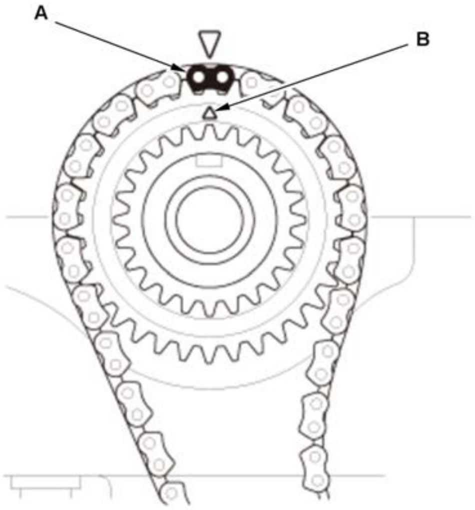	2. Install the oil pump chain on the crankshaft sprocket with the colored link plate (A) aligned with the TDC mark (B) on the crankshaft sprocket.
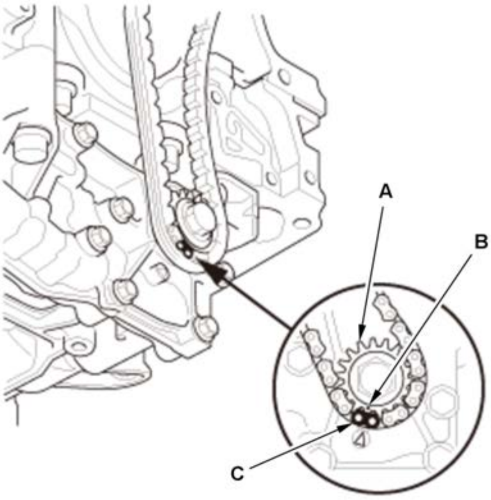	3. Set the oil pump chain on the oil pump chain sprocket (A) with the punch mark (B) aligned with the center of the two colored link plate (C).

2. Oil Pump Chain Auto-Tensioner - Install

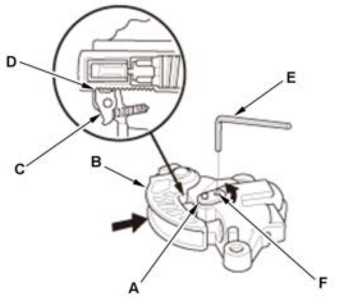	1. Turn the plate (A) counterclockwise, to release the lock, then push the oil pump chain arm (B), and set the first cam (C) to the first edge of the rack (D). Insert a 2.0 mm (5/64 in) diameter pin (E) into the hole (F). **NOTE:** If the oil pump chain auto-tensioner is not set up as described, the oil pump chain auto-tensioner will become damaged.

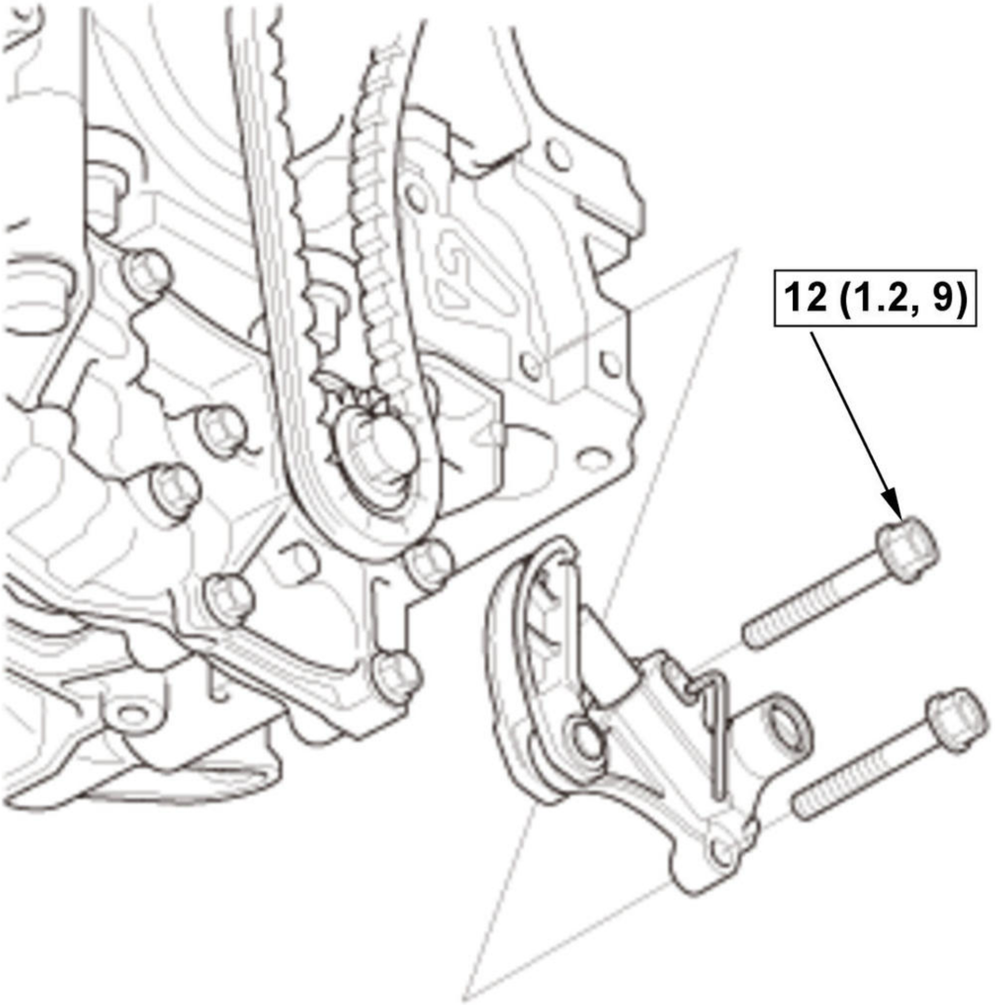

Fig. 4: Oil Pump Chain Auto-Tensioner With Torque Specifications
Courtesy of HONDA, U.S.A., INC.

B	2. Install the oil pump chain auto-tensioner.

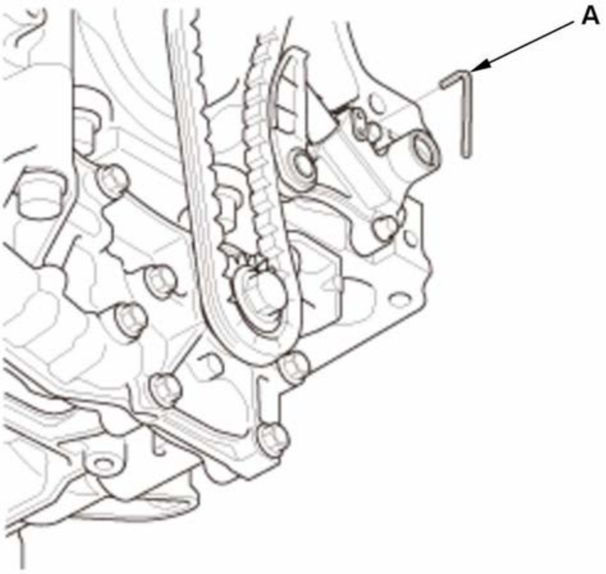	3. Remove the pin (A) from the oil pump chain auto-tensioner.

3. **Oil Pan - Install**
4. Engine - Support

1. Lift and support the engine with a jack and a wood block under the oil pan.

5. Engine Support Hanger and Universal Lifting Eyelet - Remove
6. **Radiator Cap Base - Install**
7. **Front Bulkhead Cover - Install**
8. **Center Cowl Cover - Install**
9. Alternator Mounting Bolt - Install

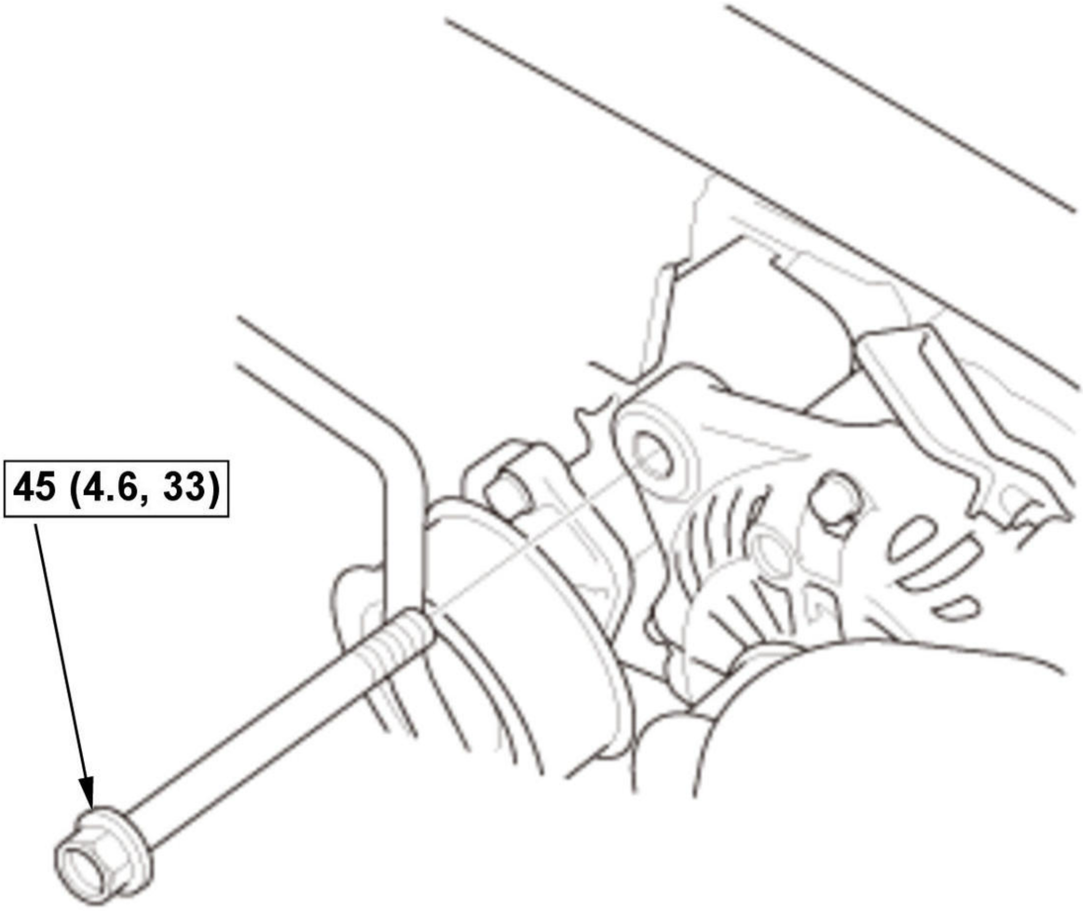

Fig. 5: Alternator Mounting Bolt Torque Specifications
Courtesy of HONDA, U.S.A., INC.

10. Cam Chain - Install

Inspection

1. Cam Chain Case - Remove
2. Oil Pump Chain - Inspect

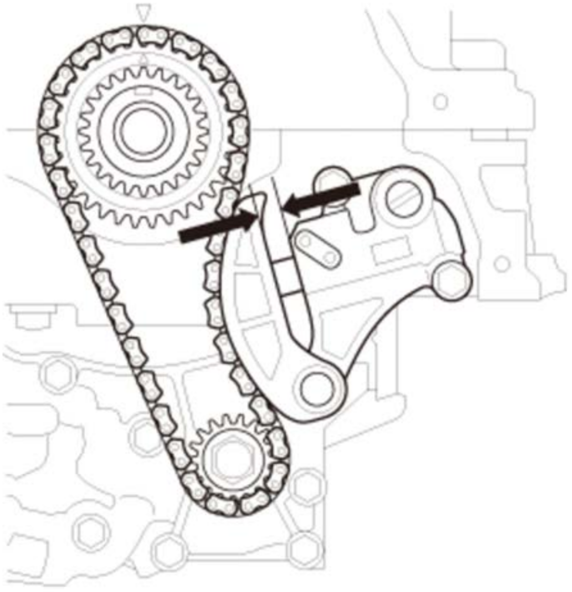	1. Measure the oil pump chain rod length. If the length is over the service limit, replace the oil pump chain.

Oil Pump Chain Auto-Tensioner Rod Length	
Service Limit:	**10.4 mm (0.409 in)**

3. All Removed Parts - Install

1. Install the parts in the reverse order of removal.

SYMPTOM TROUBLESHOOTING INDEX FOR VIEWER

EXCESSIVE ENGINE OIL CONSUMPTION

Diagnostic procedure

- Check for oil leaks.
- Check for worn valve guide (s); or worn valve seal (s) .
- Check for a damaged or worn piston ring (s) .
- Check for damaged or worn engine internal parts (cylinder wall, pistons, etc.) .

Also check for

Check the maintenance records as engine oil that is worn out burns off at a higher rate

LOW OIL PRESSURE INDICATOR DOES NOT COME ON WITH THE VEHICLE IN THE ON MODE

Diagnostic procedure

- Do the symptom troubleshooting for low oil pressure indicator does not come on with the vehicle in the ON mode.

Also check for

An open in the wire between the PCM and the oil pressure switch

LOW OIL PRESSURE INDICATOR STAYS ON

Diagnostic procedure

- **Check the engine oil level**.
- **Do the symptom troubleshooting for low oil pressure indicator stays on**.

Also check for

A wire shorted to ground between the PCM and the oil pressure switch

SYMPTOM TROUBLESHOOTING INDEX FOR VIEWER

EXCESSIVE ENGINE OIL CONSUMPTION

Diagnostic procedure

- Check for oil leaks.
- Check for worn valve guide(s) or worn valve seal(s) .
- Check for a damaged or worn piston ring(s) .
- Check for damaged or worn engine internal parts (cylinder wall, pistons, etc.) .

Also check for

Check the maintenance records as engine oil that is worn out burns off at a higher rate

LOW OIL PRESSURE INDICATOR DOES NOT COME ON WITH THE VEHICLE IN THE ON MODE

Diagnostic procedure

- Do the symptom troubleshooting for Low oil pressure indicator does not come on with the vehicle in the ON mode.

Also check for

An open in the wire between the PCM and the engine oil pressure sensor

LOW OIL PRESSURE INDICATOR STAYS ON

Diagnostic procedure

- Check the engine oil level.
- Do the symptom troubleshooting for Low oil pressure indicator stays on.

Also check for

A wire shorted to ground between the PCM and the engine oil pressure sensor

DESCRIPTION & OPERATION

ENGINE LUBRICATION SYSTEM DESCRIPTION - HYDRAULIC CIRCUIT

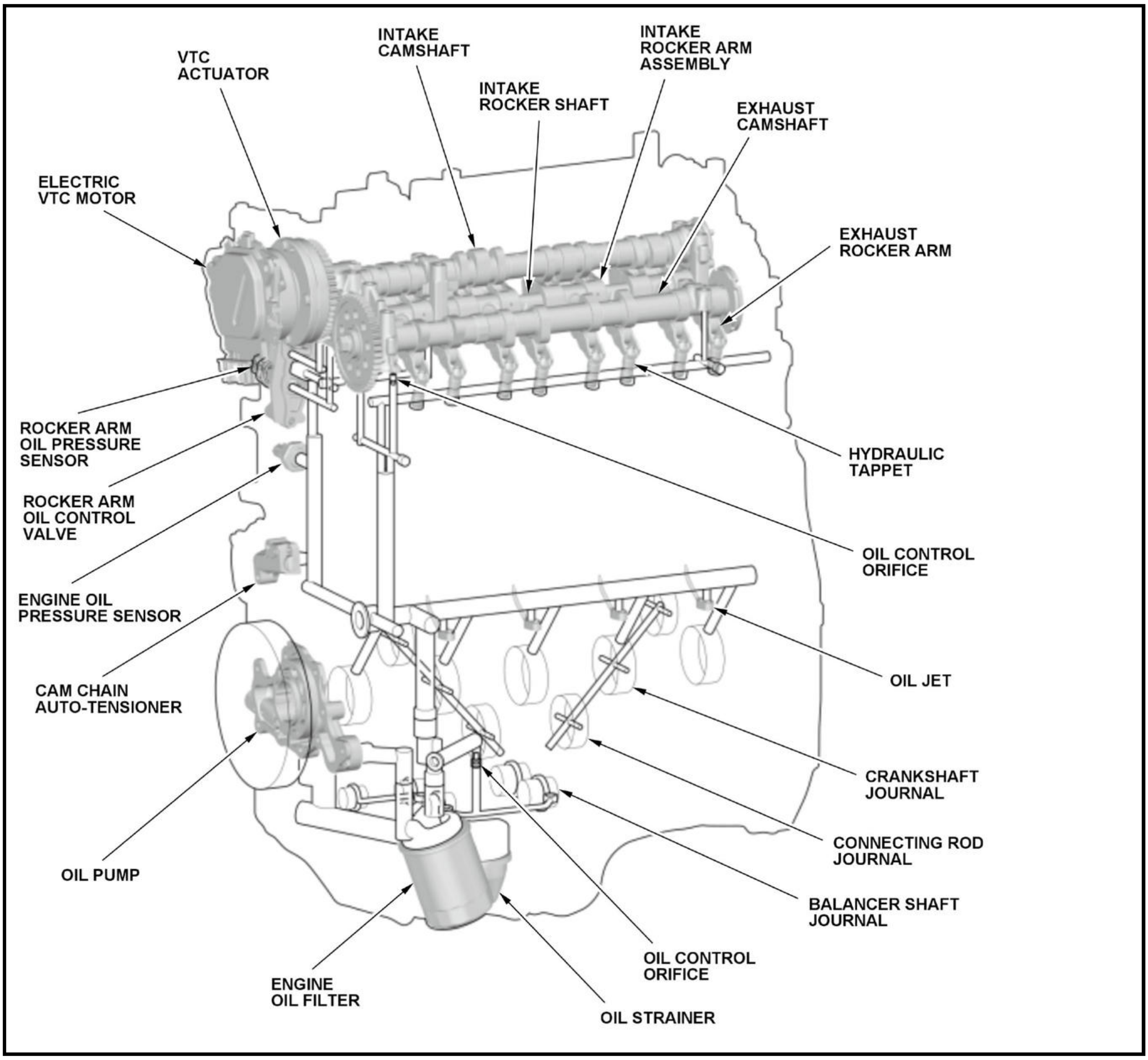
VTC ACTUATOR
INTAKE CAMSHAFT
INTAKE ROCKER SHAFT
INTAKE ROCKER ARM ASSEMBLY
EXHAUST CAMSHAFT
ELECTRIC VTC MOTOR
EXHAUST ROCKER ARM
ROCKER ARM OIL PRESSURE SENSOR
ROCKER ARM OIL CONTROL VALVE
HYDRAULIC TAPPET
OIL CONTROL ORIFICE
ENGINE OIL PRESSURE SENSOR
CAM CHAIN AUTO-TENSIONER
OIL JET
CRANKSHAFT JOURNAL
CONNECTING ROD JOURNAL
OIL PUMP
BALANCER SHAFT JOURNAL
OIL CONTROL ORIFICE
ENGINE OIL FILTER
OIL STRAINER

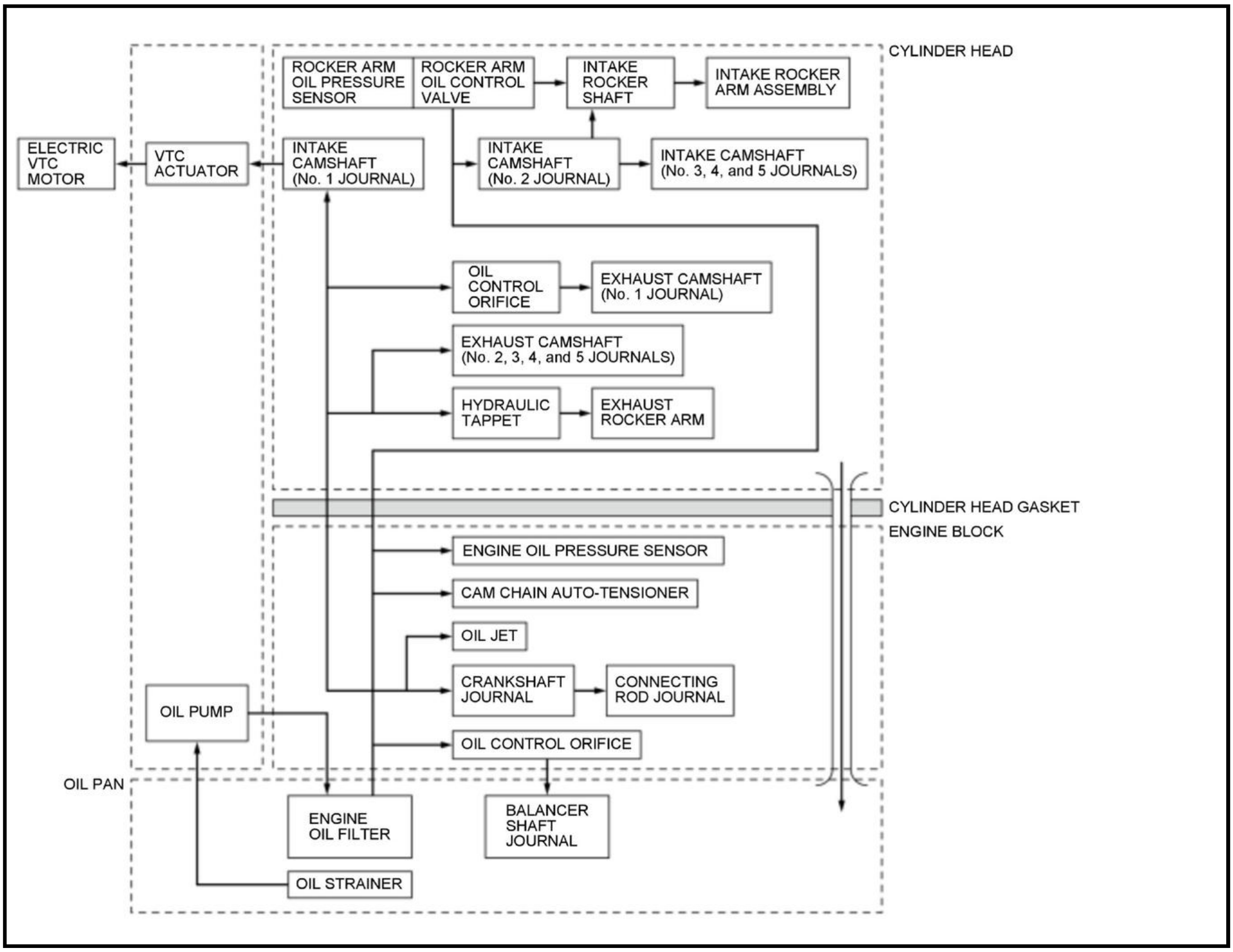
CYLINDER HEAD
ROCKER ARM OIL PRESSURE SENSOR
ROCKER ARM OIL CONTROL VALVE
INTAKE ROCKER SHAFT
INTAKE ROCKER ARM ASSEMBLY
ELECTRIC VTC MOTOR
VTC ACTUATOR
INTAKE CAMSHAFT (No. 1 JOURNAL)
INTAKE CAMSHAFT (No. 2 JOURNAL)
INTAKE CAMSHAFT (No. 3, 4, and 5 JOURNALS)
OIL CONTROL ORIFICE
EXHAUST CAMSHAFT (No. 1 JOURNAL)
EXHAUST CAMSHAFT (No. 2, 3, 4, and 5 JOURNALS)
HYDRAULIC TAPPET
EXHAUST ROCKER ARM
CYLINDER HEAD GASKET
ENGINE BLOCK
ENGINE OIL PRESSURE SENSOR
CAM CHAIN AUTO-TENSIONER
OIL JET
CRANKSHAFT JOURNAL
CONNECTING ROD JOURNAL
OIL PUMP
OIL CONTROL ORIFICE
OIL PAN
ENGINE OIL FILTER
BALANCER SHAFT JOURNAL
OIL STRAINER

SYMPTOM TROUBLESHOOTING INDEX

ENGINE LUBRICATION SYSTEM SYMPTOM TROUBLESHOOTING INDEX

Symptom	Diagnostic procedure	Also check for
Excessive engine oil consumption	• Check for oil leaks. • Check for worn valve guide(s) or worn valve seal(s) . • Check for a damaged or worn piston ring(s) . • Check for damaged or worn engine internal parts (cylinder wall, pistons, etc.) .	Check the maintenance records as engine oil that is worn out burns off at a higher rate
Low oil pressure indicator does not come on with the vehicle in the ON mode	Do the symptom troubleshooting for Low oil pressure indicator does not come on with the vehicle in the ON mode.	An open in the wire between the PCM and the engine oil pressure sensor
Low oil pressure indicator stays on	• Check the engine oil level. • Do the symptom troubleshooting for Low oil pressure indicator stays on.	A wire shorted to ground between the PCM and the engine oil pressure sensor

ENGINE LUBRICATION SYSTEM SYMPTOM TROUBLESHOOTING

LOW OIL PRESSURE INDICATOR DOES NOT COME ON WITH THE VEHICLE IN THE ON MODE

1. DTC check

-1. Connect the HDS to the DLC .

-2. Check for DTCs with the HDS.

DTC Description	Confirmed DTC	Pending DTC
B	B	B

DTC (PGM-FI)

Is there any DTC indicated?

YES

Go to the indicated DTC's troubleshooting .

NO

Go to step 2.

2. Gauge control module check

-1. Do the gauge control module self-diagnostic function .

Is the gauge control module OK?

YES

Replace the engine oil pressure sensor .

NO

Replace the gauge control module .

LOW OIL PRESSURE INDICATOR STAYS ON

1. Engine oil level check

-1. Connect the HDS to the DLC .

-2. Check for DTCs with the HDS.

DTC Description	Confirmed DTC	Pending DTC
B	B	B

DTC (PGM-FI)

-3. Turn the vehicle to the OFF (LOCK) mode.

-4. Check the engine oil level.

Is the engine oil level normal?

YES

Go to step 3.

NO

Add engine oil to the normal level, then go to step 2.

2. Low oil pressure indicator check

   -1. **Enter the maintenance mode, then start the engine** .

   Does the low oil pressure indicator go off?

   YES

   Check the following items:

   - Check for oil leaks.
   - **Check for worn valve guide(s)** or **worn valve seal(s)** .
   - **Check for damaged or worn piston ring(s)** .
   - **Check for damaged or worn engine internal parts (cylinder wall, pistons, etc.)** .

   NO

   Go to step 3.

3. Oil pressure test

   -1. **Do the oil pressure test**.

   Does the oil pressure OK?

   YES

   Go to step 4.

   NO

   Check the following items. If its does not blocked or plugged, **replace the oil pump** .

   - Oil filter blocked or plugged.
   - Oil strainer blocked or plugged.

4. Determine possible failure area (gauge control module, others)

   -1. Turn the vehicle to the OFF (LOCK) mode.

   -2. Turn the vehicle to the ON mode, and check the parameter(s) below with the HDS.

Signal	Threshold		Current conditions	
	Values	Unit	Values	Unit
ROCKER ARM OIL PRESSURE SENSOR	Lower than 19.0	kPa	B	B
	Lower than 0.194	kgf/cm^2		
	Lower than 2.76	psi		

Do the current condition(s) match the threshold?

YES

Go to step 6.

NO

Go to step 5.

5. Gauge control module check

-1. Turn the vehicle to the OFF (LOCK) mode.

-2. Jump the SCS line with the HDS, and wait more than 1 minute.

NOTE: This step must be done to protect the PCM from damage.

SCS Short

-3. Disconnect the following connector.

PCM connector E (80P)

-4. Turn the vehicle to the ON mode.

Does the low oil pressure indicator go off?

YES

Check for any authorized service information related to the DTCs or symptoms you are troubleshooting, or **substitute a known-good PCM** , then recheck. If the symptom/indication goes away with a known-good PCM, **replace the original PCM** .

NO

Replace the gauge control module .

6. Engine oil pressure sensor check

-1. Check the parameter(s) below with the HDS.

Signal	Threshold		Current conditions	
	Values	Unit	Values	Unit
MAP SENSOR	Lower than 19.9	kPa	B	B
	Lower than 0.203	kgf/cm^2		
	Lower than 2.89	psi		
BARO SENSOR	Lower than 19.9	kPa	B	B
	Lower than 0.203	kgf/cm^2		
	Lower than 2.89	psi		

Do the current condition(s) match the threshold?

YES

Replace the engine oil pressure sensor .

NO

Check for any authorized service information related to the DTCs or symptoms you are troubleshooting, or **substitute a known-good PCM** , then recheck. If the symptom/indication goes away with a known-good PCM, **replace the original PCM** .

SERVICING

ENGINE OIL LEVEL CHECK AND REPLACEMENT

Check

1. Engine Oil Level - Check

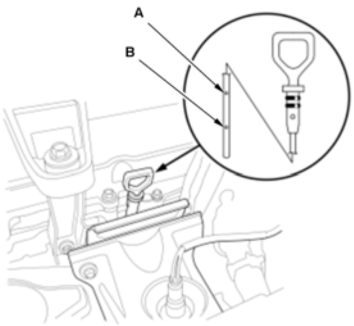	1. Park the vehicle on level ground, and **enter the maintenance mode, then start the engine** . Hold the engine speed at 3000 RPM with no load (in P or N) until the cooling fan(s) comes on, then turn the vehicle to the OFF (LOCK) mode, and wait more than 3 minutes. 2. Remove the dipstick, and wipe off the dipstick, then reinstall the dipstick. 3. Remove the dipstick. 4. Check the engine oil level. It should be between the upper mark (A) and the lower mark (B). 5. If the engine oil level is near or below the lower mark check for oil leaks, and add the engine oil to bring it to the upper mark.

Replacement

NOTE: **How to read the torque specifications** .

1. Engine - Warm Up

1. **Enter the maintenance mode, then start the engine** . Allow the engine to reach operating temperature (fan comes on at least twice).

2. **Vehicle - Lift**
3. Engine Oil - Drain

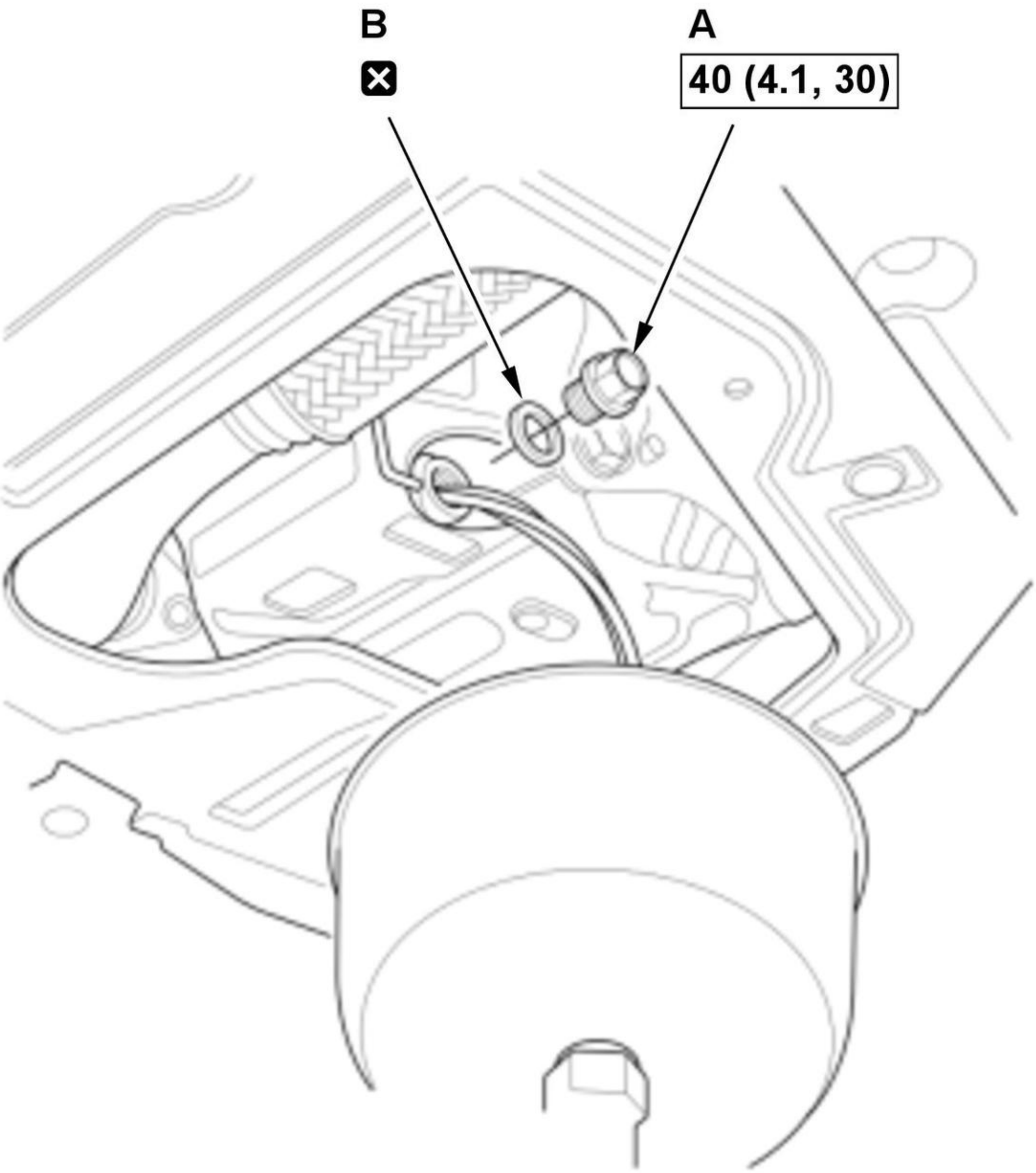

Fig. 1: Engine Oil Drain Plug Components With Torque Specifications
Courtesy of HONDA, U.S.A., INC.

1. Remove the drain bolt (A), and drain the engine oil.

2. Reinstall the drain bolt with a new washer (B) and torque to specification.

4. Engine Oil - Refill

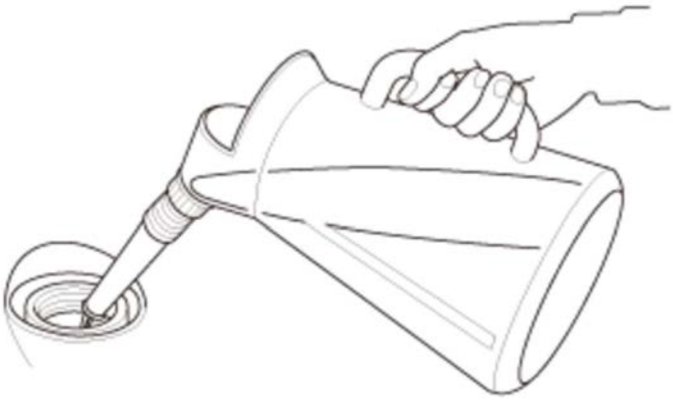	1. **Refill the engine with the recommended engine oil** .

Capacity	
At Oil Change:	**3.5 L (3.7 US qt)**
At Oil Change including Filter:	**3.8 L (4.0 US qt)**
After Engine Overhaul:	**4.5 L (4.8 US qt)**

5. Engine Oil Level - Check

1. **Enter the maintenance mode, then start the engine** . Run the engine for more than 3 minutes, then check the oil level and the oil leakage.

6. Maintenance Minder - Reset

1. If the Maintenance Minder required to replace the engine oil, **reset the Maintenance Minder with the gauge** (see "Resetting the Maintenance Minder"). If the Maintenance Minder did not require to replace the engine oil, **reset the Maintenance Minder with the HDS** (see "Resetting the Individual Maintenance Items").

TEST

ENGINE OIL PRESSURE TEST

Test

NOTE:

- A Pending or Confirmed DTC may be set during this procedure. Check for DTCs, and clear them as needed.
- If the low oil pressure indicator stays on with the engine running, **check the engine oil level**. If the oil level is correct:

1. **Engine Oil Pressure Sensor - Remove**
2. Engine Oil Pressure - Test

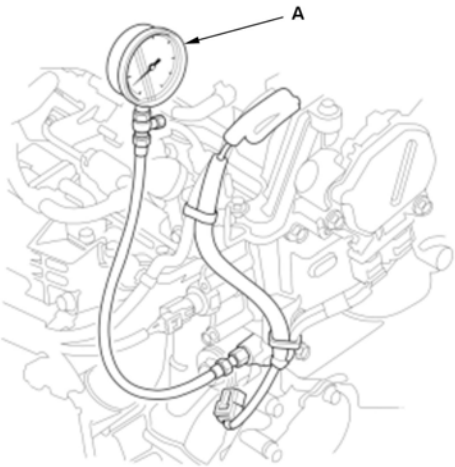 	1. Install an oil pressure gauge (A). 2. **Enter the maintenance mode, then start the engine** . Shut it off immediately if the gauge registers no oil pressure. Repair the problem before continuing. 3. Warm up the engine by raising the engine speed around 3000 min^{-1} (RPM) until the cooling fan(s) comes on. The pressure should be: 4. If oil pressure is out of specifications, inspect these items: • Oil filter blocked or plugged. • Oil strainer blocked or plugged. 5. Remove the oil pressure gauge.

Engine Oil Temperature:	**176B°F (80B°C)**
Engine Oil Pressure:	
At Idle (1200 RPM):	**168.7 kPa (1.720 kgf/cm^2 , 24.46 psi) min.**
At 2000 RPM:	**217.7 kPa (2.220 kgf/cm^2 , 31.58 psi)**

3. All Removed Parts - Install

1. Install the parts in the reverse order of removal.

CIRCUIT DIAGRAM

ENGINE LUBRICATION CIRCUIT DIAGRAM

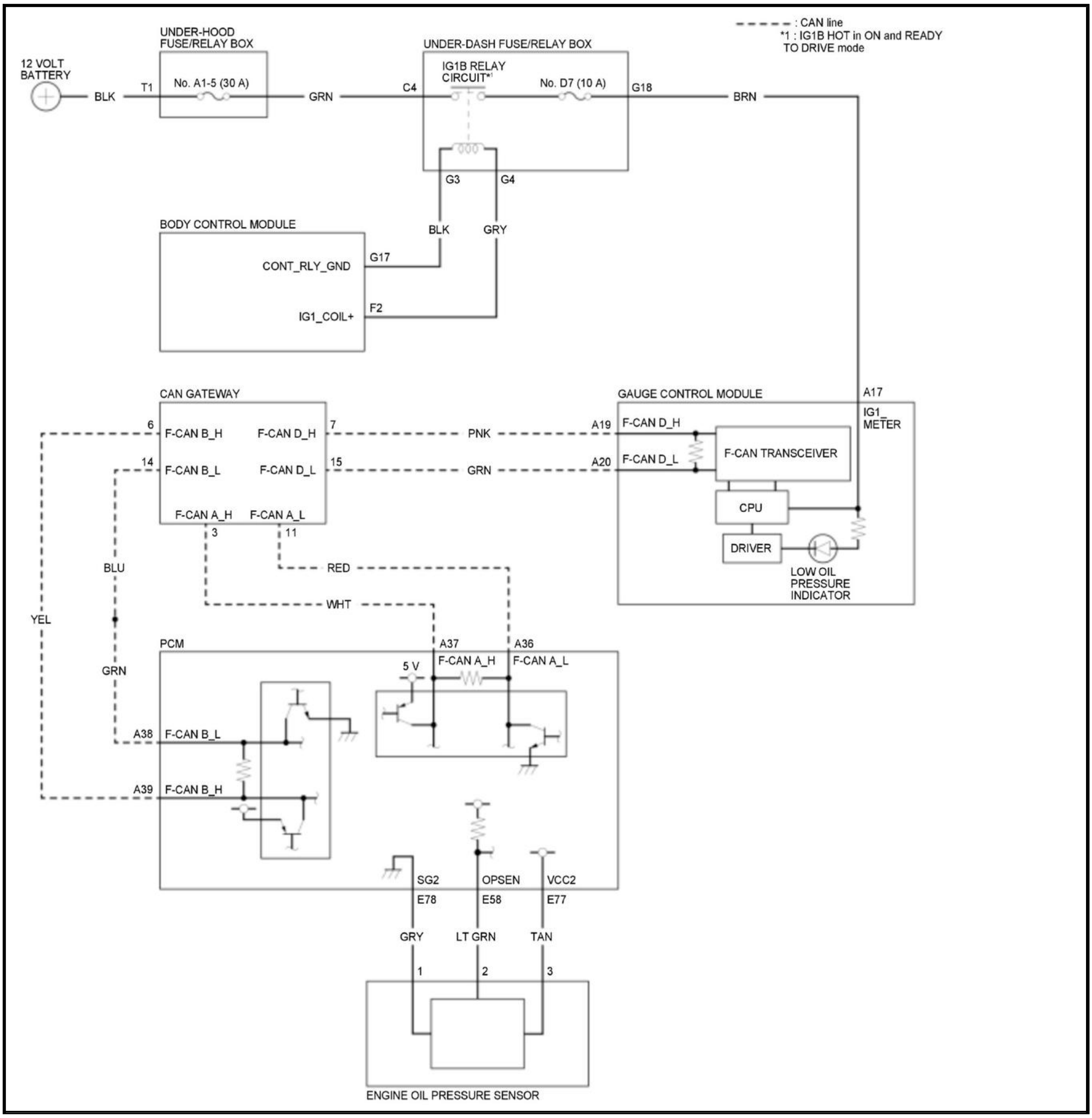
CAN line
*1 : IG1B HOT in ON and READY TO DRIVE mode
12 VOLT BATTERY
BLK
UNDER-HOOD FUSE/RELAY BOX
T1
No. A1-5 (30 A)
GRN
UNDER-DASH FUSE/RELAY BOX
C4
IG1B RELAY CIRCUIT*1
No. D7 (10 A)
G18
BRN
G3
G4
BLK
GRY
BODY CONTROL MODULE
CONT_RLY_GND
G17
IG1_COIL+
F2
CAN GATEWAY
6
F-CAN B_H
F-CAN D_H
7
PNK
14
F-CAN B_L
F-CAN D_L
15
GRN
F-CAN A_H
F-CAN A_L
3
11
RED
WHT
BLU
YEL
GAUGE CONTROL MODULE
A17
IG1_ METER
A19
F-CAN D_H
A20
F-CAN D_L
F-CAN TRANSCEIVER
CPU
DRIVER
LOW OIL PRESSURE INDICATOR
PCM
A37
F-CAN A_H
A36
F-CAN A_L
5 V
GRN
A38
F-CAN B_L
A39
F-CAN B_H
SG2
E78
OPSEN
E58
VCC2
E77
GRY
LT GRN
TAN
1
2
3
ENGINE OIL PRESSURE SENSOR

COMPONENT LOCATION INDEX

ENGINE LUBRICATION SYSTEM COMPONENT LOCATION INDEX

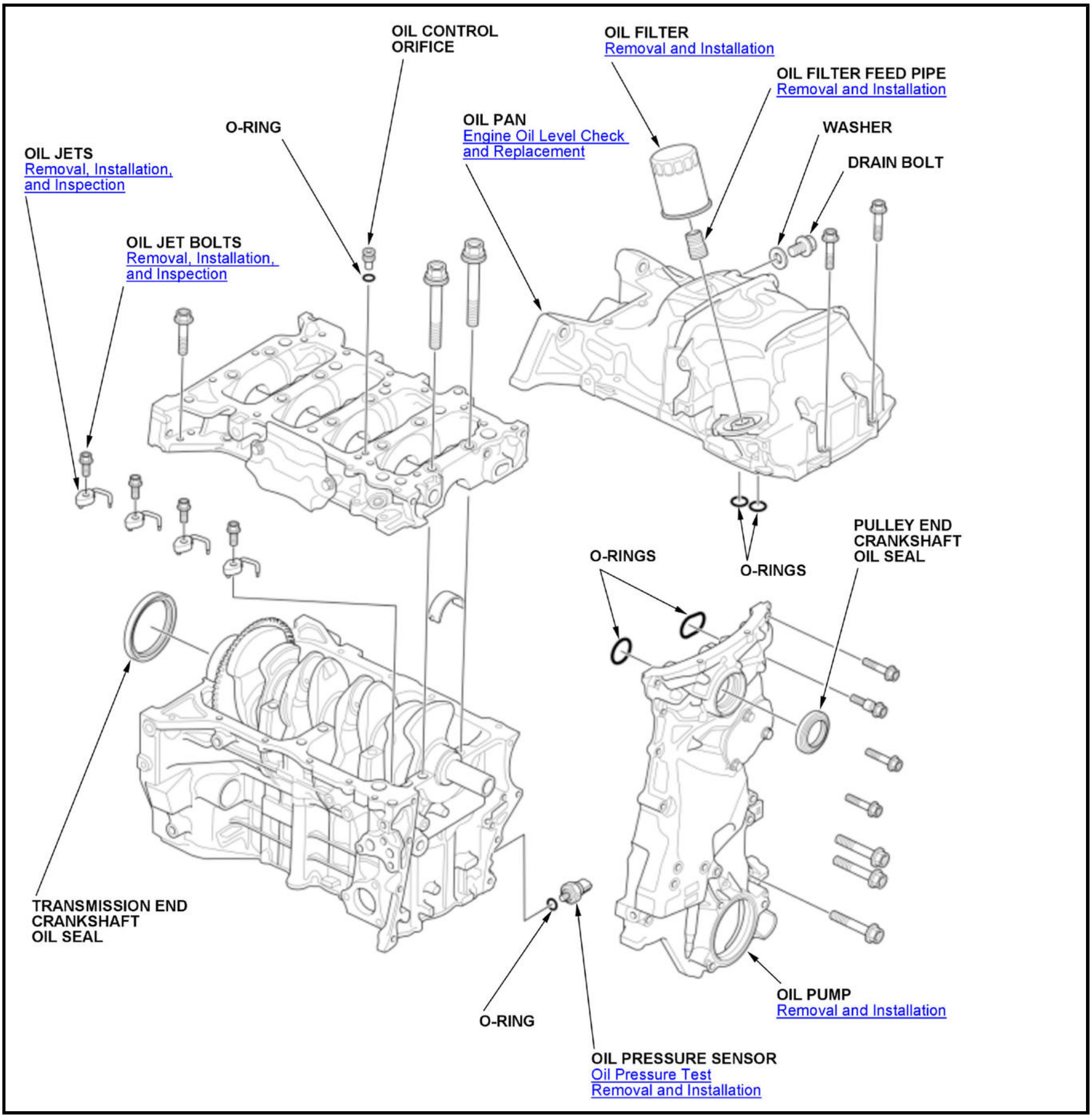
OIL CONTROL ORIFICE
OIL FILTER
Removal and Installation
OIL FILTER FEED PIPE
Removal and Installation
WASHER
DRAIN BOLT
O-RING
OIL PAN
Engine Oil Level Check and Replacement
OIL JETS
Removal, Installation, and Inspection
OIL JET BOLTS
Removal, Installation, and Inspection
PULLEY END CRANKSHAFT OIL SEAL
O-RINGS
O-RINGS
TRANSMISSION END CRANKSHAFT OIL SEAL
OIL PUMP
Removal and Installation
O-RING
OIL PRESSURE SENSOR
Oil Pressure Test
Removal and Installation

ADVANCED DIAGNOSTICS

DTC P0010 (1.5 L ENGINE)

DTC P0010: Variable Valve Timing Control (VTC) Oil Control Solenoid Valve A Malfunction

General Description

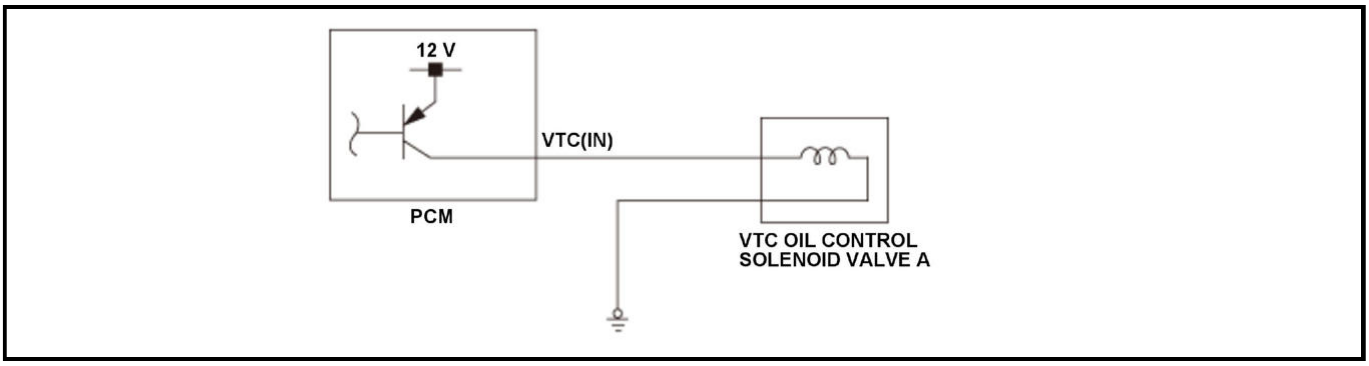

The variable valve timing control (VTC) system consists of the VTC actuator A, the VTC oil control solenoid valve A, various sensors, and the powertrain control module (PCM). The PCM controls the VTC oil control solenoid valve A by duty cycle and supplies hydraulic pressure to the advance chamber or the retard chamber in the actuator so the valve timing is optimized depending on the driving conditions (engine load, engine speed, and vehicle speed). If the difference between the VTC oil control solenoid valve A commanded current and the actual current is a specified current for a specified time, the PCM detects a malfunction and stores a DTC.

Monitor Execution, Sequence, Duration, DTC Type

Execution	Continuous
Sequence	None
Duration	5 seconds or more
DTC Type	One drive cycle, MIL on

Enable Conditions

Condition	B
State of the engine	Running

Malfunction Threshold

The difference between the VTC oil control solenoid valve A commanded current and the actual current is more than 0.20 A for at least 5 seconds.

Possible Cause

NOTE: The causes shown may not be a complete list of all potential problems, and it is possible that there may be other causes.

- VTC oil control solenoid valve A VTC (IN) line short to ground
- VTC oil control solenoid valve A VTC (IN) line open
- VTC oil control solenoid valve A failure
- PCM internal circuit failure

Confirmation Procedure

Operating Condition

- Start the engine. Hold the engine speed [ENGINE SPEED] at 3, 000 rpm without load (in P or N) until the radiator fan comes on.
- Drive the vehicle at a steady speed between 25 - 75 mph (40 - 120 km/h) for at least 5 seconds.
- Drive the vehicle in this manner only if the traffic regulations and ambient conditions allow.

[ ]: HDS Parameter

With the HDS

Select the VTC TEST in the INSPECTION MENU with the HDS, then select the IN-VTC.

Diagnosis Details

Conditions for setting the DTC

When a malfunction is detected, the MIL comes on and a Pending DTC, a Confirmed DTC, and the freeze data are stored in the PCM memory.

Conditions for clearing the DTC

The MIL is cleared if the malfunction does not return in three consecutive trips in which the diagnostic runs. The MIL, the Pending DTC, the Confirmed DTC, and the freeze data can be cleared with the scan tool Clear command or by disconnecting the 12 volt battery.

DTC P0010 (2.4 L ENGINE) (2017 2018 2019)

DTC P0010: Variable Valve Timing Control (VTC) Oil Control Solenoid Valve Malfunction

General Description

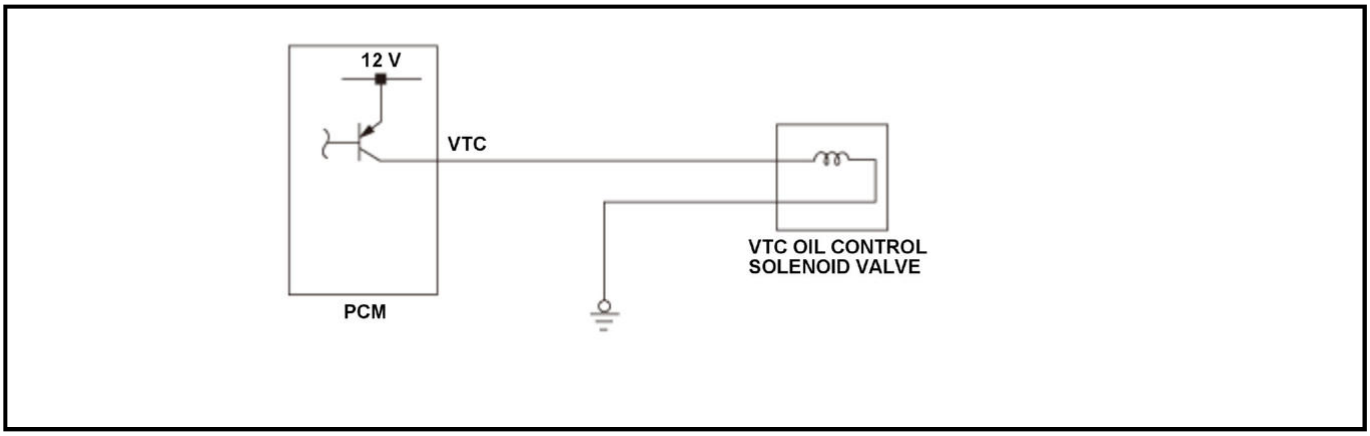

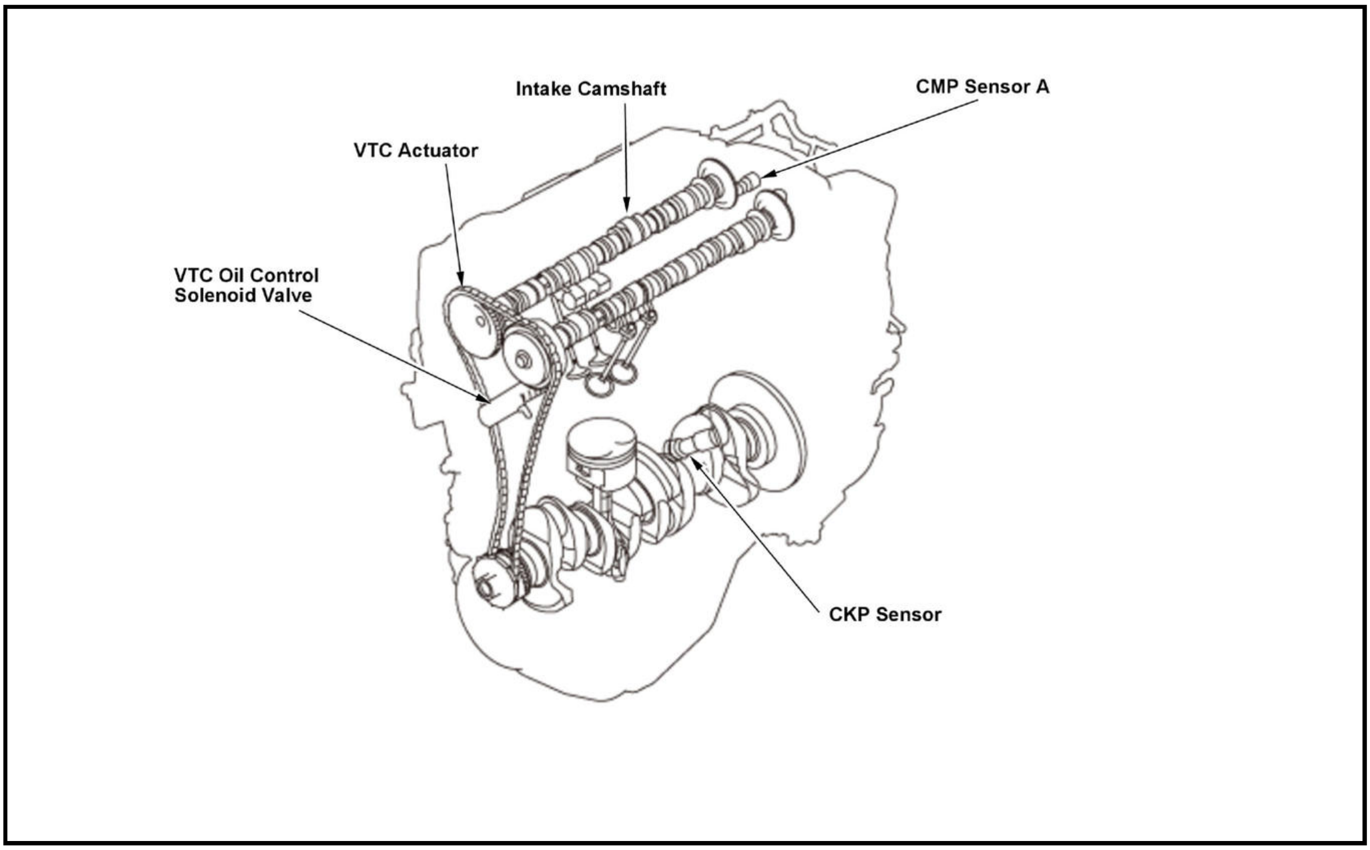

The variable valve timing control (VTC) consists of the VTC actuator, the VTC oil control solenoid valve, various sensors, and the powertrain control module (PCM). The PCM controls the VTC oil control solenoid valve by duty cycle and supplies hydraulic pressure to the advance chamber or the retard chamber in the actuator so the valve timing is optimized depending on the driving conditions (engine load, engine speed, and vehicle speed). If the current compared to the output duty cycle is out of a set value, the PCM detects a malfunction and stores a DTC.

Monitor Execution, Sequence, Duration, DTC Type

Execution	Continuous
Sequence	None
Duration	5 seconds or more

DTC Type	One drive cycle, MIL on

Enable Conditions

Condition	B
State of the engine	Running

Malfunction Threshold

One of these conditions is met:

- Output duty is 40 % or more and the VTC current is 200 mA or less for at least 5 seconds.
- Output duty is 5 % or less and the VTC current is 800 mA or more for at least 5 seconds.

Possible Cause

NOTE: The causes shown may not be a complete list of all potential problems, and it is possible that there may be other causes.

- VTC oil control solenoid valve VTC line short to ground

- VTC oil control solenoid valve VTC line open
- VTC oil control solenoid valve abnormal
- PCM internal circuit failure

Confirmation Procedure

Operating Condition

- Start the engine. Hold the engine speed [ENGINE SPEED] at 3, 000 rpm without load (in P or N) until the radiator fan comes on, then let it idle.
- Drive the vehicle at a steady speed between 25 - 75 mph (40 - 120 km/h) for at least 5 seconds.
- Drive the vehicle in this manner only if the traffic regulations and ambient conditions allow.

[ ]: HDS Parameter

With the HDS

Do the VTC TEST in the INSPECTION MENU with the HDS.

Diagnosis Details

Conditions for setting the DTC

When a malfunction is detected, the MIL comes on and a Pending DTC, a Confirmed DTC, and the freeze data are stored in the PCM memory.

Conditions for clearing the DTC

The MIL is cleared if the malfunction does not return in three consecutive trips in which the diagnostic runs. The MIL, the Pending DTC, the Confirmed DTC, and the freeze data can be cleared with the scan tool Clear command or by disconnecting the 12 volt battery.

DTC P0011 (1.5 L ENGINE)

DTC P0011: Variable Valve Timing Control (VTC) A System Malfunction

General Description

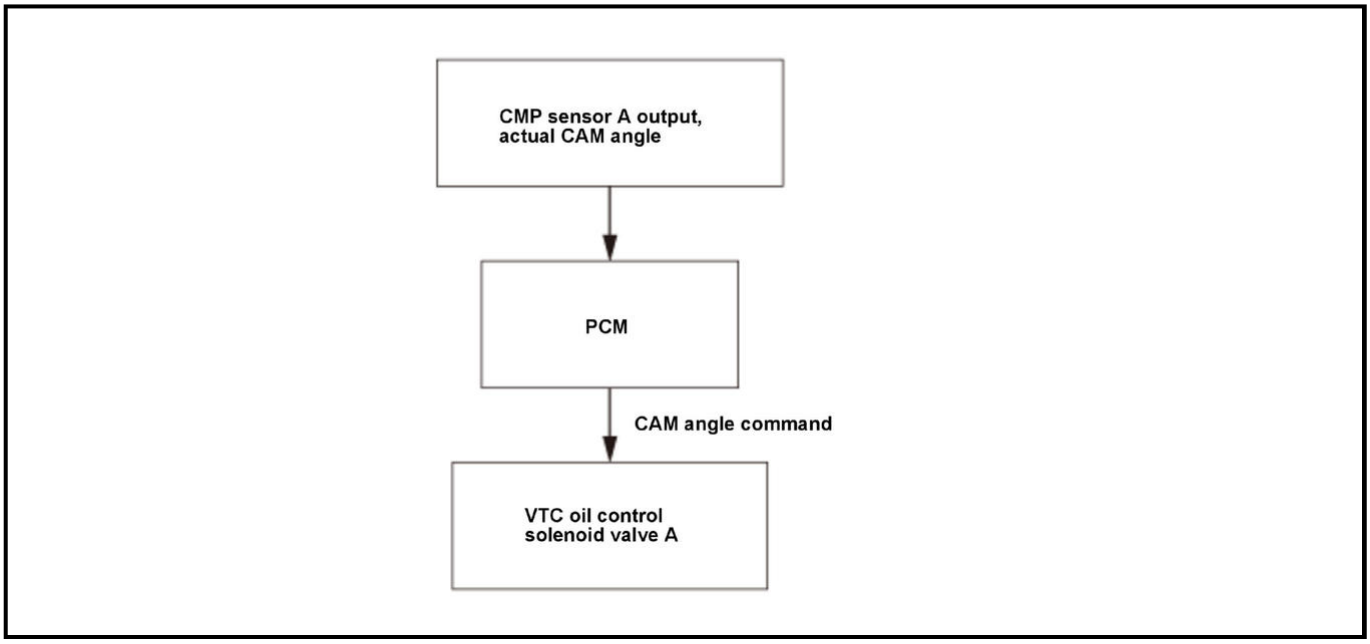
CMP sensor A output, actual CAM angle
PCM
CAM angle command
VTC oil control solenoid valve A

The variable valve timing control (VTC) system controls the phase of the intake camshaft and exhaust camshaft. It uses oil pressure to operate the VTC actuator A/B so the valve timing is optimized depending on driving conditions. The powertrain control module (PCM) monitors the phase control command and the actual phase of the intake camshaft by using camshaft position (CMP) sensor A. If the phase difference between them is excessive for a certain time period, the PCM detects a malfunction and stores a DTC.

Monitor Execution, Sequence, Duration, DTC Type

Execution	Continuous
Sequence	None
Duration	15.0 seconds or more
DTC Type	Two drive cycles, MIL on

Enable Conditions

Either one of the conditions is met:

Case 1:

Condition		Minimum	Maximum
Elapsed time after starting the engine		10.0 seconds	-
Engine coolant temperature [ECT SENSOR 1]	23 deg. F (-5 deg. C)*	158 deg. F (70 deg. C)	-
	-13 deg. F (-25 deg. C)*	185 deg. F (85 deg. C)	
Engine speed [ENGINE SPEED]	203 deg. F (95 deg. C)**	800 rpm	-
	225 deg. F (107 deg. C)**	1, 600 rpm	
12 volt battery voltage [BATTERY]		10.5 V	-

Case 2:

Condition		Minimum	Maximum
Engine coolant temperature [ECT SENSOR 1]	23 deg. F (-5 deg. C)*	23 deg. (-5 deg. CF)	-
	-13 deg. F (-25 deg. C)*	113 deg. F (45 deg. C)	
Engine speed [ENGINE SPEED]	203 deg. F (95 deg. C)**	800 rpm	-
	225 deg. F (107 deg. C)**	1, 600 rpm	
Elapsed CMP sensor A count after starting the engine	25 deg. F (-4 deg. C)*	0 time	-
	-13 deg. F (-25 deg. C)*	23, 500 times	
12 volt battery voltage [BATTERY]		10.5 V	-

*: Depending on initial engine coolant temperature [ECT SENSOR 1].**: Depending on engine coolant temperature [ECT SENSOR 1].[ ]: HDS Parameter

Malfunction Threshold

The phase difference between the phase control command and the actual phase of the intake camshaft is 20.0 deg. or more for at least 15 seconds.

Possible Cause

NOTE: The causes shown may not be a complete list of all potential problems, and it is possible that there may be other causes.

- VTC actuator A stuck
- VTC actuator A response delay
- VTC oil control solenoid valve A stuck
- VTC oil control solenoid valve A response delay
- VTC oil control solenoid valve A downstream short

Confirmation Procedure

Operating Condition

- Start the engine. Hold the engine speed [ENGINE SPEED] at 3, 000 rpm without load (in P or N) until the radiator fan comes on.
- Drive the vehicle at a steady speed between 25 - 75 mph (40 - 120 km/h) for at least 15 seconds.

- Drive the vehicle in this manner only if the traffic regulations and ambient conditions allow.

[ ]: HDS Parameter

With the HDS

Select the VTC TEST in the INSPECTION MENU with the HDS, then select the IN-VTC.

Diagnosis Details

Conditions for setting the DTC

When a malfunction is detected during the first drive cycle, a Pending DTC is stored in the PCM memory. If the malfunction returns in the next (second) drive cycle, the MIL comes on and a Confirmed DTC and the freeze data are stored.

Conditions for clearing the DTC

The MIL is cleared if the malfunction does not return in three consecutive trips in which the diagnostic runs. The MIL, the Pending DTC, the Confirmed DTC, and the freeze data can be cleared with the scan tool Clear command or by disconnecting the 12 volt battery.

DTC P0011 (2.4 L ENGINE) (2017 2018 2019)

DTC P0011: Variable Valve Timing Control (VTC) System Malfunction

General Description

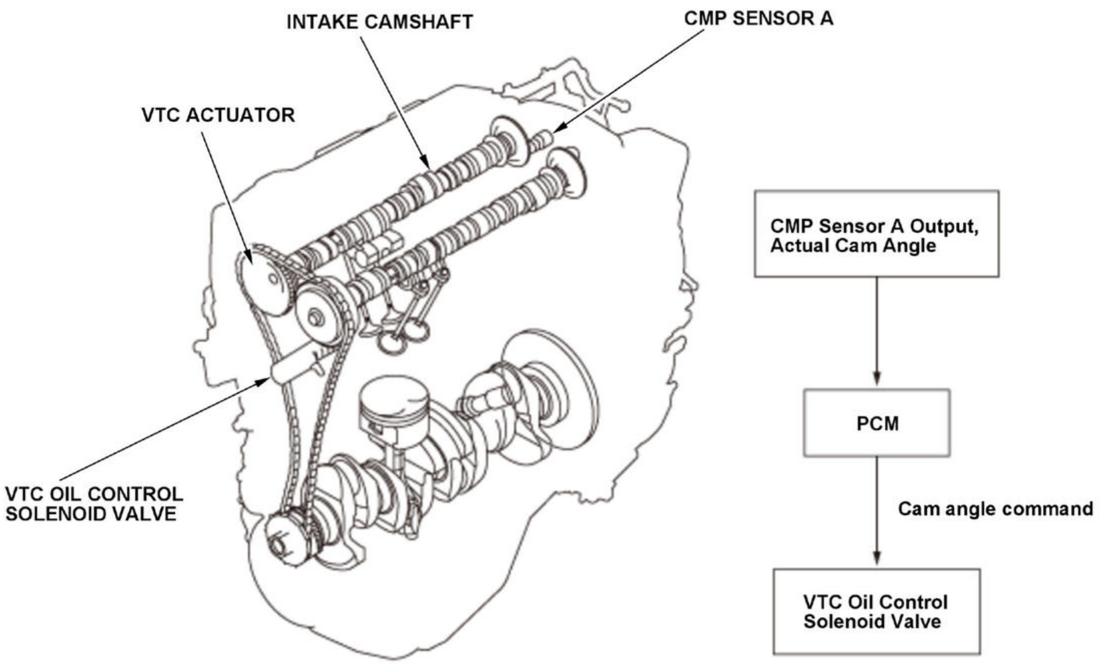
INTAKE CAMSHAFT
CMP SENSOR A
VTC ACTUATOR
CMP Sensor A Output, Actual Cam Angle
PCM
Cam angle command
VTC OIL CONTROL SOLENOID VALVE
VTC Oil Control Solenoid Valve

The variable valve timing control (VTC) system controls the phase of the intake camshaft. It uses oil pressure to operate the VTC actuator so the valve timing is optimized depending on driving conditions. The powertrain control module (PCM) monitors the phase control command and the actual timing of the camshaft by using camshaft position (CMP) sensor A. If the phase difference between them is excessive for a certain time period, the PCM detects a malfunction and stores a DTC.

Monitor Execution, Sequence, Duration, DTC Type

Execution	Continuous
Sequence	None
Duration	15 seconds or more
DTC Type	Two drive cycles, MIL on

Enable Conditions

Either one of the conditions is met:

Case 1:

Condition		Minimum	Maximum
Elapsed time after starting the engine		10 seconds	-
Engine coolant temperature [ECT SENSOR 1]	23 deg. F (-5 deg. C)*	158 deg. F (70 deg. C)	-
	-13 deg. F (-25 deg. C)*	185 deg. F (85 deg. C)	

Condition		Minimum	Maximum
Engine speed [ENGINE SPEED]	194 deg. F (90 deg. C)**	900 rpm	-
	225 deg. F (107 deg.	1, 500 rpm	

Condition		Minimum	Maximum
	C)**		
12 volt battery voltage [BATTERY]		10.5 V	-

Case 2:

Condition		Minimum	Maximum
Engine coolant temperature [ECT SENSOR 1]	23 deg. F (-5 deg. C)*	23 deg. F (-5 deg. C)	-
	-13 deg. F (-25 deg. C)*	113 deg. F (45 deg. C)	
12 volt battery voltage [BATTERY]		10.5 V	-
Elapsed TDC count after starting the engine	25 deg. F (-4 deg. C)*	0 time	-
	-13 deg. F (-25 deg. C)*	23, 500 times	

*: Depending on initial engine coolant temperature [ECT SENSOR 1].

**: Depending on engine coolant temperature [ECT SENSOR 1].

[ ]: HDS Parameter

Malfunction Threshold

The timing difference between the timing control command and the actual timing of the camshaft is 20.0 deg. or more for at least 15 seconds.

Possible Cause

NOTE: The causes shown may not be a complete list of all potential problems, and it is possible that there may be other causes.

- VTC actuator stuck
- VTC actuator response delay
- VTC oil control solenoid valve stuck
- VTC oil control solenoid valve response delay
- VTC oil control solenoid valve down stream short

Confirmation Procedure

Operating Condition

- Start the engine. Hold the engine speed [ENGINE SPEED] at 3, 000 rpm without load (in P or N) until the radiator fan comes on, then let it idle.
- Drive the vehicle at a steady speed between 25 - 75 mph (40 - 120 km/h) for at least 15 seconds.

- Drive the vehicle in this manner only if the traffic regulations and ambient conditions allow.

With the HDS

Do the VTC TEST in the INSPECTION MENU with the HDS.

Diagnosis Details

Conditions for setting the DTC

When a malfunction is detected during the first drive cycle, a Pending DTC is stored in the PCM memory. If the malfunction returns in the next (second) drive cycle, the MIL comes on and a Confirmed DTC and the freeze data are stored.

Conditions for clearing the DTC

The MIL is cleared if the malfunction does not return in three consecutive trips in which the diagnostic runs. The MIL, the Pending DTC, the Confirmed DTC, and the freeze data can be cleared with the scan tool Clear command or by disconnecting the 12 volt battery.

DTC P0013 (1.5 L ENGINE)

DTC P0013: Variable Valve Timing Control (VTC) Oil Control Solenoid Valve B Malfunction

General Description

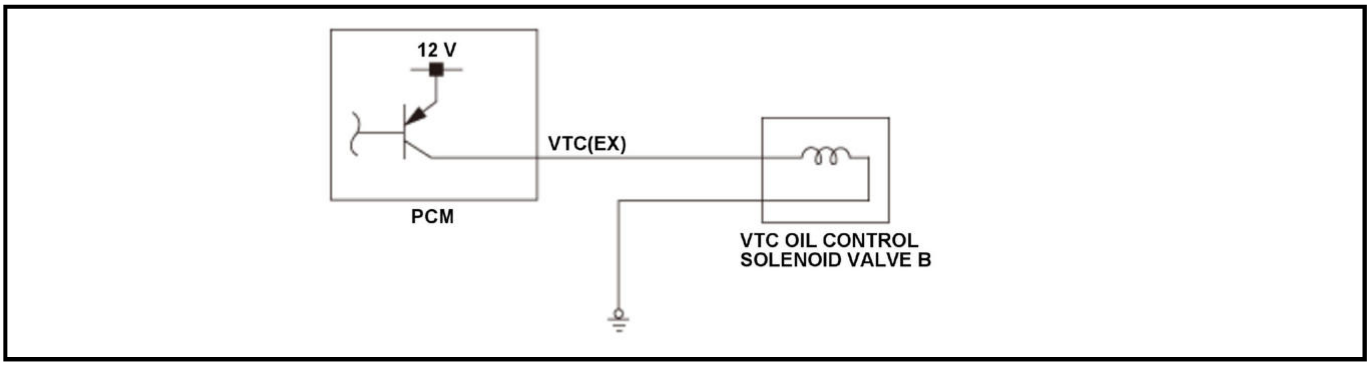

The variable valve timing control (VTC) system consists of the VTC actuator B, the VTC oil control solenoid valve B, various sensors, and the powertrain control module (PCM). The PCM controls the VTC oil control solenoid valve B by duty cycle and supplies hydraulic pressure to the advance chamber or the retard chamber in the actuator so the valve timing is optimized depending on the driving conditions (engine load, engine speed, and vehicle speed). If the difference between the VTC oil control solenoid valve B commanded current and the actual current is a specified current for a specified time, the PCM detects a malfunction and stores a DTC.

Monitor Execution, Sequence, Duration, DTC Type

Execution	Continuous
Sequence	None
Duration	5 seconds or more
DTC Type	One drive cycle, MIL on

Enable Conditions

Condition	B
State of the engine	Running

Malfunction Threshold

The difference between the VTC oil control solenoid valve B commanded current and the actual current is more than 0.20 A for at least 5 seconds.

Possible Cause

NOTE: The causes shown may not be a complete list of all potential problems, and it is possible that there may be other causes.

- VTC oil control solenoid valve B VTC (EX) line short to ground
- VTC oil control solenoid valve B VTC (EX) line open
- VTC oil control solenoid valve B failure
- PCM internal circuit failure

Confirmation Procedure

Operating Condition

- Start the engine. Hold the engine speed [ENGINE SPEED] at 3, 000 rpm without load (in P or N) until the radiator fan comes on, then let it idle.
- Drive the vehicle at a steady speed between 25 - 75 mph (40 - 120 km/h) for at least 5 seconds.
- Drive the vehicle in this manner only if the traffic regulations and ambient conditions allow.

[ ]: HDS Parameter

With the HDS

Select the VTC TEST in the INSPECTION MENU with the HDS, then select the EX-VTC.

Diagnosis Details

Conditions for setting the DTC

When a malfunction is detected, the MIL comes on and a Pending DTC, a Confirmed DTC, and the freeze data are stored in the PCM memory.

Conditions for clearing the DTC

The MIL is cleared if the malfunction does not return in three consecutive trips in which the diagnostic runs. The MIL, the Pending DTC, the Confirmed DTC, and the freeze data can be cleared with the scan tool Clear command or by disconnecting the 12 volt battery.

DTC P0014 (1.5 L ENGINE)

DTC P0014: Variable Valve Timing Control (VTC) B System Malfunction

General Description

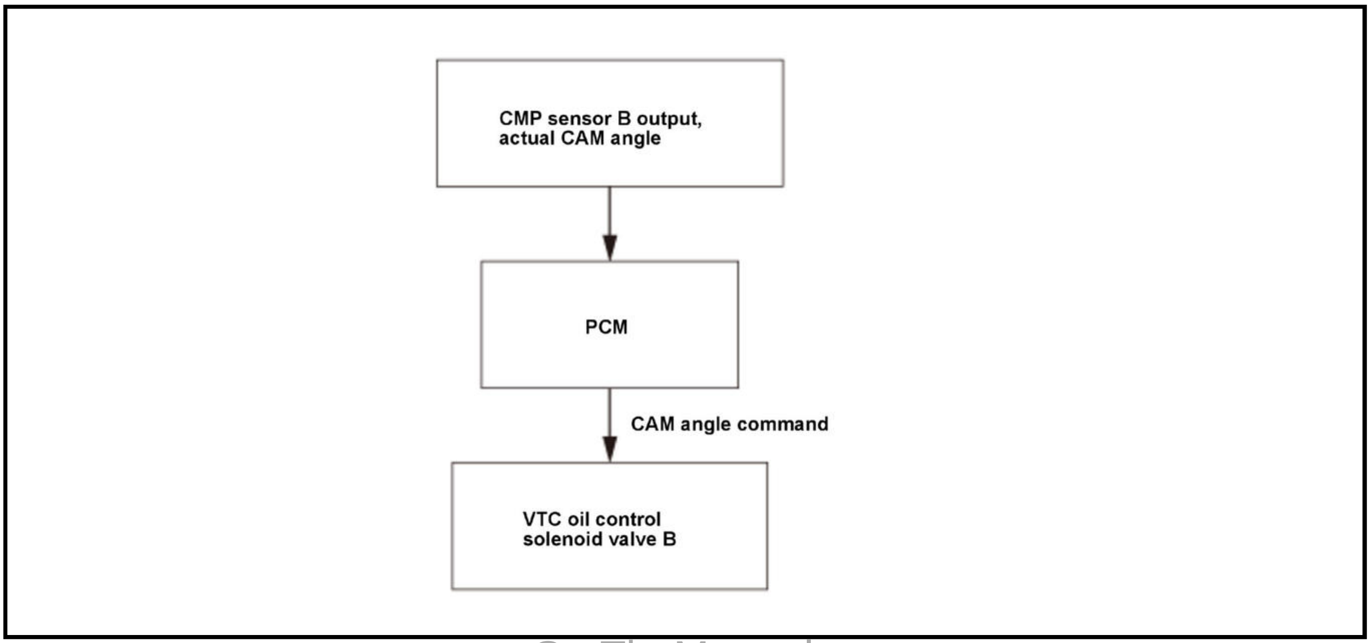
CMP sensor B output, actual CAM angle
PCM
CAM angle command
VTC oil control solenoid valve B

The variable valve timing control (VTC) system controls the phase of the intake camshaft and exhaust camshaft. It uses oil pressure to operate the VTC actuator A/B so the valve timing is optimized depending on driving conditions. The powertrain control module (PCM) monitors the phase control command and the actual phase of the exhaust camshaft by using camshaft position (CMP) sensor B. If the phase difference between them is excessive for a certain time period, the PCM detects a malfunction and stores a DTC.

Monitor Execution, Sequence, Duration, DTC Type

Execution	Continuous
Sequence	None
Duration	10.0 seconds or more
DTC Type	Two drive cycles, MIL on

Enable Conditions

Either one of the conditions is met:

Case 1:

Condition		Minimum	Maximum
Elapsed time after starting the engine		10.0 seconds	-
Engine coolant temperature [ECT SENSOR 1]	23 deg. F (-5 deg. C)*	158 deg. F (70 deg. C)	-
	-13 deg. F (-25 deg. C)*	185 deg. F (85 deg. C)	
Engine speed [ENGINE SPEED]	203 deg. F (95 deg. C)**	800 rpm	-
	225 deg. F (107 deg. C)**	1, 600 rpm	
12 volt battery voltage [BATTERY]		10.5 V	-

Case 2:

Condition		Minimum	Maximum
Engine coolant temperature [ECT SENSOR 1]	23 deg. F (-5 deg. C)*	23 deg. F (-5 deg. C)	-
	-13 deg. F (-25 deg. C)*	113 deg. F (45 deg. C)	
Engine speed [ENGINE SPEED]	203 deg. F (95 deg. C)**	800 rpm	-
	225 deg. F (107 deg. C)**	1, 600 rpm	
Elapsed CMP sensor B count after starting the engine	25 deg. F (-4 deg. C)*	0 time	-
	-13 deg. F (-25 deg. C)*	23, 500 times	
12 volt battery voltage [BATTERY]		10.5 V	-

*: Depending on initial engine coolant temperature [ECT SENSOR 1].**: Depending on engine coolant temperature [ECT SENSOR 1].[ ]: HDS Parameter

Malfunction Threshold

The phase difference between the phase control command and the actual phase of the exhaust camshaft is 15.0 deg. or more for at least 10.0 seconds.

Possible Cause

NOTE: The causes shown may not be a complete list of all potential problems, and it is possible that there may be other causes.

- VTC actuator B stuck
- VTC actuator B response delay
- VTC oil control solenoid valve B stuck
- VTC oil control solenoid valve B response delay
- VTC oil control solenoid valve B downstream short
- VTC actuator B failure (return spring cut)
- VTC system abnormal low oil pressure

Confirmation Procedure

Operating Condition

- Start the engine. Hold the engine speed [ENGINE SPEED] at 3, 000 rpm without load (in P or N) until the radiator fan comes on.
- Drive the vehicle at a steady speed between 25 - 75 mph (40 - 120 km/h) for at least 10.0 seconds.

- Drive the vehicle in this manner only if the traffic regulations and ambient conditions allow.

[ ]: HDS Parameter

With the HDS

Select the VTC TEST in the INSPECTION MENU with the HDS, then select the EX-VTC.

Diagnosis Details

Conditions for setting the DTC

When a malfunction is detected during the first drive cycle, a Pending DTC is stored in the PCM memory. If the malfunction returns in the next (second) drive cycle, the MIL comes on and a Confirmed DTC and the freeze data are stored.

Conditions for clearing the DTC

The MIL is cleared if the malfunction does not return in three consecutive trips in which the diagnostic runs. The MIL, the Pending DTC, the Confirmed DTC, and the freeze data can be cleared with the scan tool Clear command or by disconnecting the 12 volt battery.

DTC P0034 (1.5 L ENGINE)

DTC P0034: Turbocharger Bypass Control Solenoid Valve Circuit Low Voltage

General Description

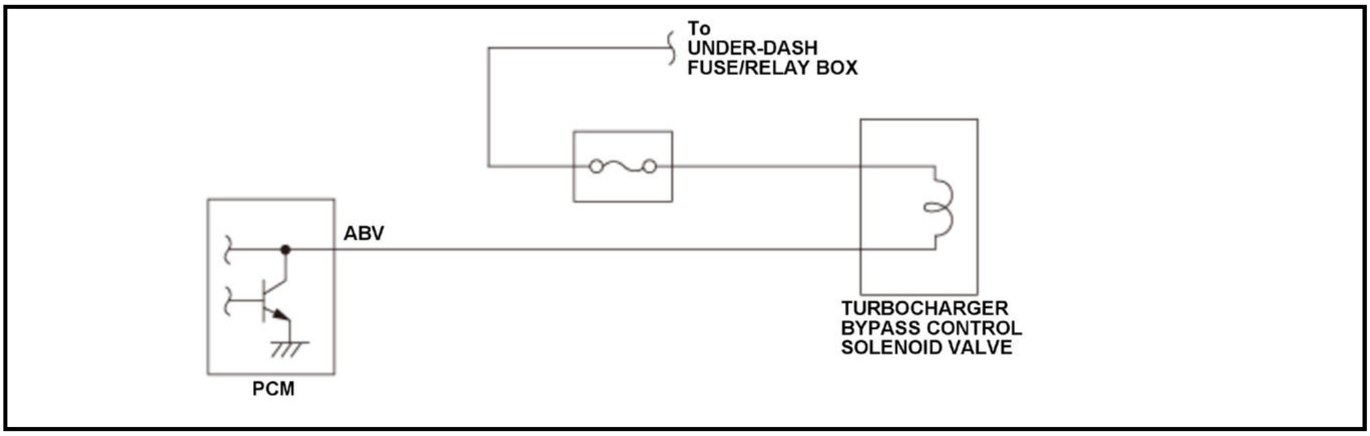

The turbocharger bypass control solenoid valve is activated by the powertrain control module (PCM) to control the turbocharger bypass control solenoid valve timing to improve boost response during acceleration immediately after deceleration and boost pressure decrease during deceleration. The turbocharger bypass control solenoid valve is normally closed (negative pressure side). If the return signal is CLOSE for a specified duration when the PCM outputs an OPEN signal to the turbocharger bypass control solenoid valve, the PCM detects a malfunction and stores a DTC.

Monitor Execution, Sequence, Duration, DTC Type

Execution	Continuous
Sequence	None
Duration	1 second or more
DTC Type	Two drive cycles, MIL on

Enable Conditions

Condition	Minimum	Maximum
12 volt battery voltage [BATTERY]	10.0 V	-
State of the engine	Running	

[ ]: HDS Parameter

Malfunction Threshold

The return signal is CLOSE for at least 1 second when the PCM outputs an OPEN signal to the turbocharger bypass control solenoid valve.

Possible Cause

NOTE: The causes shown may not be a complete list of all potential problems, and it is possible that there may be other causes.

- Turbocharger bypass control solenoid valve ABV line short to ground
- PCM internal circuit failure

Confirmation Procedure

Operating Condition

Start the engine, and let it idle for at least 1 second.

With the HDS

Do the ABV TEST in the INSPECTION MENU with the HDS.

Diagnosis Details

Conditions for setting the DTC

When a malfunction is detected during the first drive cycle, a Pending DTC is stored in the PCM memory. If the malfunction returns in the next (second) drive cycle, the MIL comes on and a Confirmed DTC and the freeze data are stored.

Conditions for clearing the DTC

The MIL is cleared if the malfunction does not return in three consecutive trips in which the diagnostic runs. The MIL, the Pending DTC, the Confirmed DTC, and the freeze data can be cleared with the scan tool Clear command or by disconnecting the 12 volt battery.

DTC P0035 (1.5 L ENGINE)

DTC P0035: Turbocharger Bypass Control Solenoid Valve Circuit High Voltage

General Description

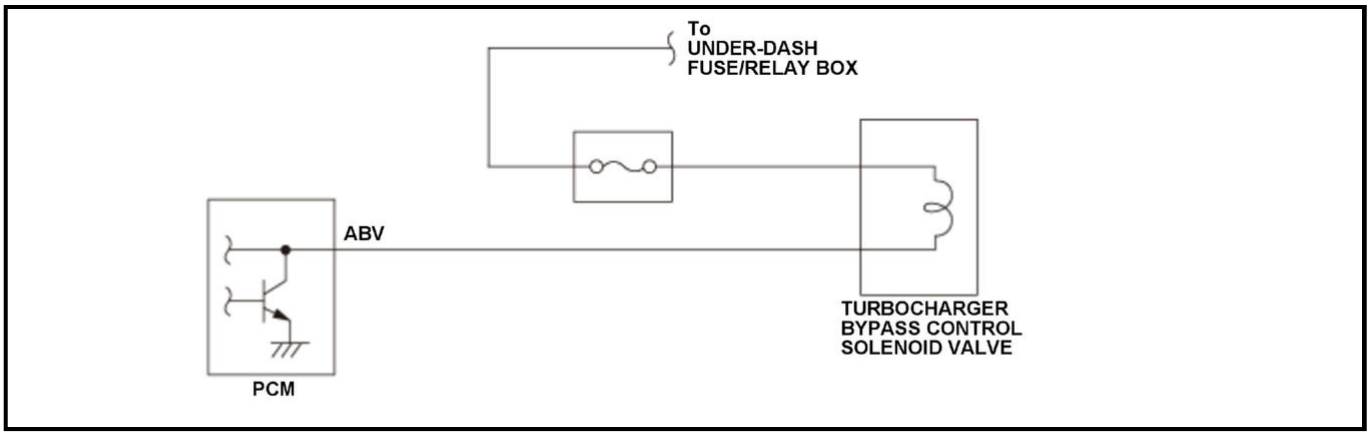

The turbocharger bypass control solenoid valve is activated by the powertrain control module (PCM) to control the turbocharger bypass control solenoid valve timing to improve boost response during acceleration immediately after deceleration and boost pressure decrease during deceleration. The turbocharger bypass control solenoid valve is normally closed (negative pressure side). If the return signal is OPEN for a specified duration when the PCM outputs a CLOSE signal to the turbocharger bypass control solenoid valve, the PCM detects a malfunction and stores a DTC.

Monitor Execution, Sequence, Duration, DTC Type

Execution	Continuous
Sequence	None
Duration	1 second or more
DTC Type	Two drive cycles, MIL on

Enable Conditions

Condition	Minimum	Maximum
12 volt battery voltage [BATTERY]	10.0 V	-
State of the engine	Running	

[ ]: HDS Parameter

Malfunction Threshold

The return signal is OPEN for at least 1 second when the PCM outputs a CLOSE signal to the turbocharger bypass control solenoid valve.

Possible Cause

NOTE: The causes shown may not be a complete list of all potential problems, and it is possible that there may be other causes.

- Turbocharger bypass control solenoid valve ABV line open
- Turbocharger bypass control solenoid valve failure
- PCM internal circuit failure

Confirmation Procedure

Operating Condition

Start the engine, and let it idle for at least 1 second.

With the HDS

Do the ABV TEST in the INSPECTION MENU with the HDS.

Diagnosis Details

Conditions for setting the DTC

When a malfunction is detected during the first drive cycle, a Pending DTC is stored in the PCM memory. If the malfunction returns in the next (second) drive cycle, the MIL comes on and a Confirmed DTC and the freeze data are stored.

Conditions for clearing the DTC

The MIL is cleared if the malfunction does not return in three consecutive trips in which the diagnostic runs. The MIL, the Pending DTC, the Confirmed DTC, and the freeze data can be cleared with the scan tool Clear command or by disconnecting the 12 volt battery.

DTC P003A (1.5 L ENGINE)

DTC P003A: Turbocharger Wastegate Control Actuator Position Exceeded Learning Limit

General Description

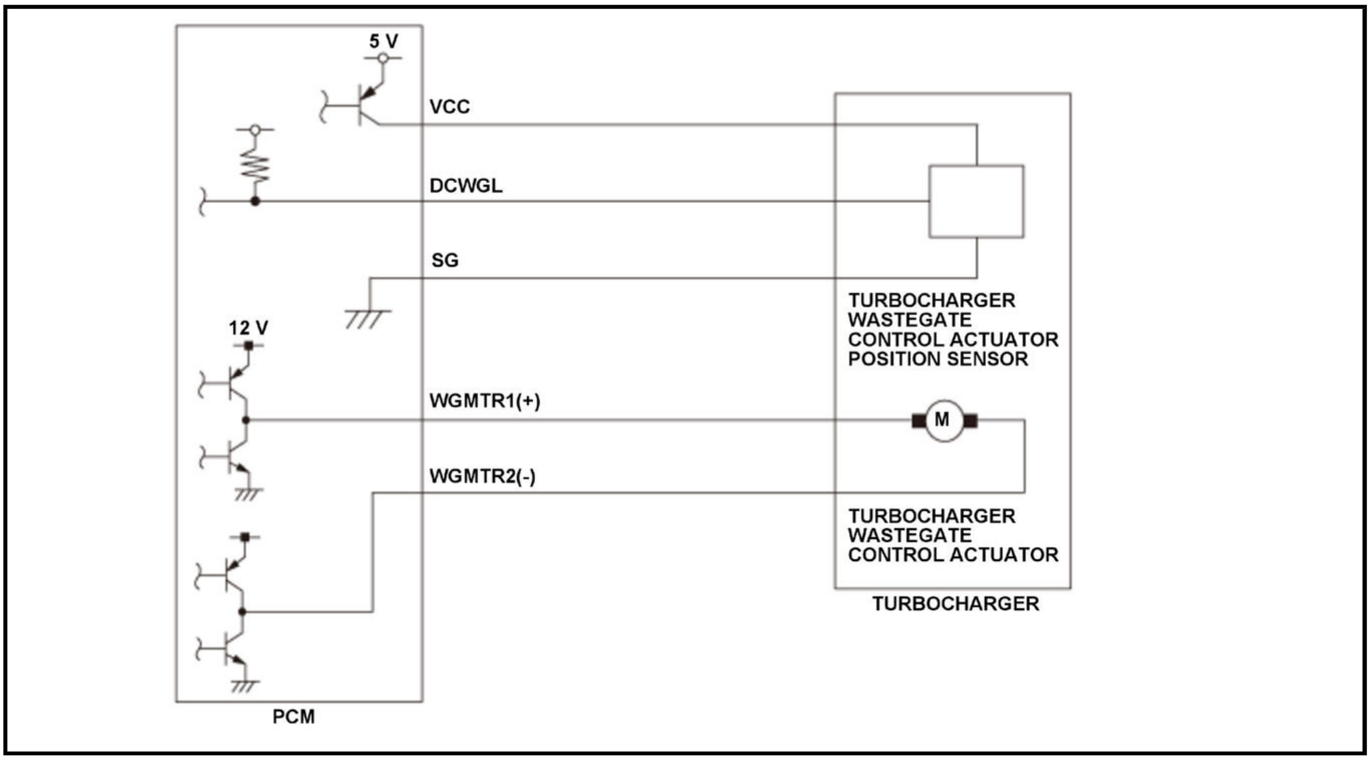
5 V
VCC
DCWGL
SG
12 V
WGMTR1(+)
WGMTR2(-)
M
TURBOCHARGER WASTEGATE CONTROL ACTUATOR POSITION SENSOR
TURBOCHARGER WASTEGATE CONTROL ACTUATOR
TURBOCHARGER
PCM

The powertrain control module (PCM) adjusts the boost pressure by controlling the turbocharger wastegate control actuator of the turbocharger. Boost pressure becomes higher by fully closing the turbocharger wastegate control valve driven by the turbocharger wastegate control actuator. The turbocharger wastegate control valve position is detected by the turbocharger wastegate control actuator position sensor and the signal is input to the PCM for target position feedback control. The turbocharger wastegate control actuator position sensor value when the turbocharger wastegate control valve is fully closed is stored as fully closed learning value. Target and actual positions are represented by the relative value from the fully closed position. The PCM sets a target position, and outputs a drive signal to the driver IC and drives the turbocharger wastegate control actuator to be equal to the target position. If the turbocharger wastegate control actuator position sensor value is out of normal range for a specified time when the turbocharger wastegate control valve is in fully closed position, the PCM detects a malfunction and stores a DTC.

Monitor Execution, Sequence, Duration, DTC Type

Execution	Continuous
Sequence	None
Duration	2 seconds or more
DTC Type	One drive cycle, MIL on

Enable Conditions

Condition	Minimum	Maximum
Engine coolant temperature[ECT SENSOR 1]	156 deg. F (69 deg. C)	-
12 volt battery voltage [BATTERY]	10.0 V	-
Vehicle	ON mode	

[ ]: HDS Parameter

Malfunction Threshold

Either of the conditions is met for at least 2 seconds:

- The turbocharger wastegate control actuator position sensor value is -3.45 mm (-0.14 in) or less, or 2.03 mm (0.08 in) or more when the turbocharger wastegate control valve is in fully closed condition.
- The difference between the target position and the actual position is 0.1 mm (0.004 in) or more when the turbocharger wastegate control valve is in fully closed condition.

Possible Cause

NOTE: The causes shown may not be a complete list of all potential problems, and it is possible that there may be other causes.

- Turbocharger wastegate control actuator failure
- Turbocharger wastegate control actuator position sensor failure

Confirmation Procedure

Operating Condition

Start the engine. Hold the engine speed [ENGINE SPEED] at 3, 000 rpm without load (in P or N) until the radiator fan comes on.

[ ]: HDS Parameter

With the HDS

Select the Electric Waste Gate in the INSPECTION MENU with the HDS.

Diagnosis Details

Conditions for setting the DTC

When a malfunction is detected, the MIL comes on and a Pending DTC, a Confirmed DTC, and the freeze data are stored in the PCM memory.

Conditions for clearing the DTC

The MIL is cleared if the malfunction does not return in three consecutive trips in which the diagnostic runs. The MIL, the Pending DTC, the Confirmed DTC, and the freeze data can be cleared with the scan tool Clear command or by disconnecting the 12 volt battery.

DTC P0045 (1.5 L ENGINE)

DTC P0045: Turbocharger Wastegate Control Actuator Circuit Malfunction

General Description

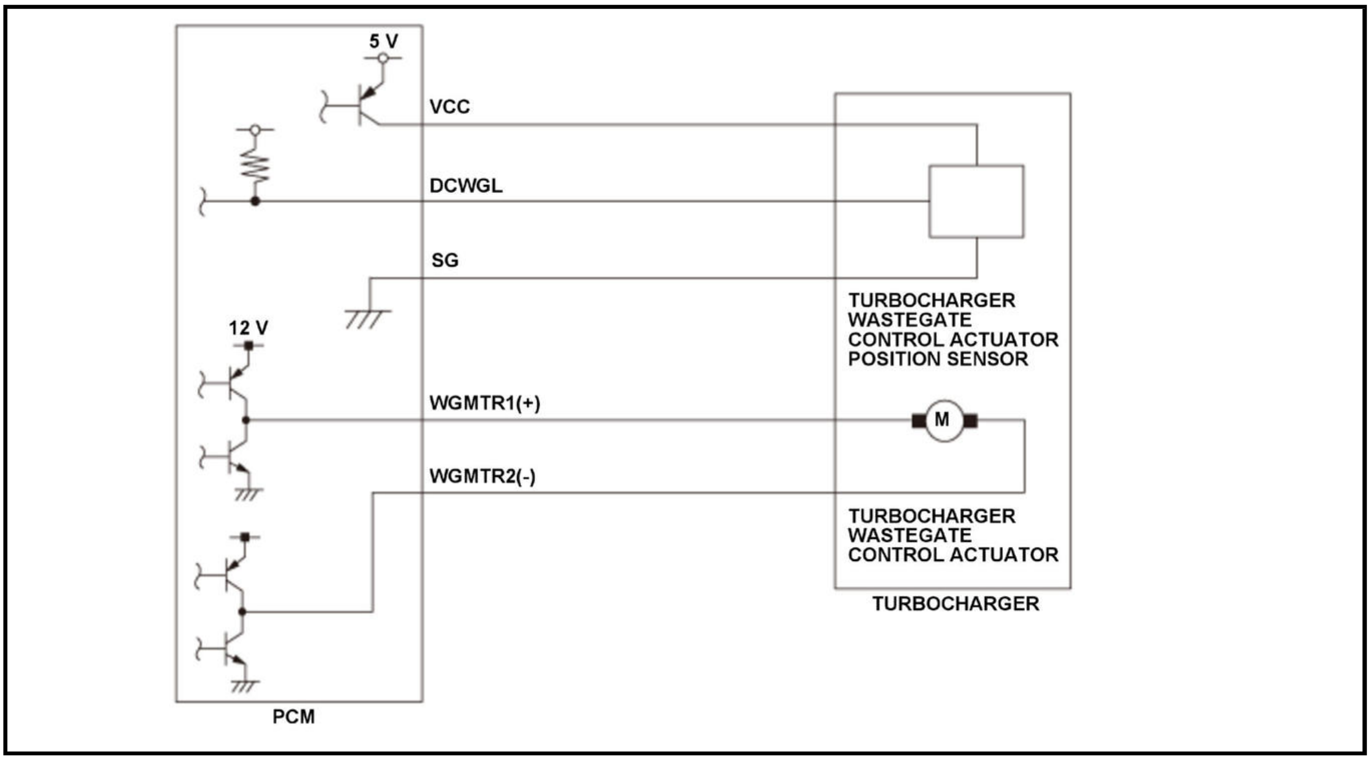
5 V
VCC
DCWGL
SG
12 V
WGMTR1(+)
WGMTR2(-)
M
TURBOCHARGER WASTEGATE CONTROL ACTUATOR POSITION SENSOR
TURBOCHARGER WASTEGATE CONTROL ACTUATOR
TURBOCHARGER
PCM

The powertrain control module (PCM) adjusts the boost pressure by controlling the turbocharger wastegate control actuator of the turbocharger. Boost pressure becomes higher by fully closing the turbocharger wastegate control valve driven by the turbocharger wastegate control actuator. The turbocharger wastegate control valve position is detected by the turbocharger wastegate control actuator position sensor and the signal is input to the PCM for target position feedback control. The turbocharger wastegate control actuator position sensor value when the turbocharger wastegate control valve is fully closed is stored as fully closed learning value. Target and actual positions are represented by the relative value from the fully closed position. The PCM sets a target position, and outputs a drive signal to the driver IC and drives the turbocharger wastegate control actuator to be equal to the target position. If the turbocharger wastegate control actuator current is out of normal range for a specified time, the PCM detects a malfunction and stores a DTC.

Monitor Execution, Sequence, Duration, DTC Type

Execution	Continuous
Sequence	None
Duration	2 seconds or more
DTC Type	One drive cycle, MIL on

Enable Conditions

Condition	Minimum	Maximum
12 volt battery voltage [BATTERY]	10.0 V	-
Vehicle	ON mode	

[ ]: HDS Parameter

Malfunction Threshold

Either of the conditions is met for at least 2 seconds:

- The turbocharger wastegate control actuator current is 9 A or more.
- The turbocharger wastegate control actuator current is 0.7 A or less when the turbocharger wastegate control actuator is in control.

Possible Cause

NOTE: The causes shown may not be a complete list of all potential problems, and it is possible that there may be other causes.

- Turbocharger wastegate control actuator WGMTR1 (+) line open
- Turbocharger wastegate control actuator WGMTR2 (-) line open
- Turbocharger wastegate control actuator WGMTR1 (+) line short to ground
- Turbocharger wastegate control actuator WGMTR2 (-) line short to ground
- Turbocharger wastegate control actuator WGMTR1 (+) line short to turbocharger wastegate control actuator WGMTR2 (-) line
- Turbocharger wastegate control actuator driver failure
- Turbocharger wastegate control actuator failure

Confirmation Procedure

Operating Condition

Start the engine. Hold the engine speed [ENGINE SPEED] at 3, 000 rpm without load (in P or N) until the radiator fan comes on.

[ ]: HDS Parameter

With the HDS

Select the Electric Waste Gate in the INSPECTION MENU with the HDS.

Diagnosis Details

Conditions for setting the DTC

When a malfunction is detected, the MIL comes on and a Pending DTC, a Confirmed DTC, and the freeze data are stored in the PCM memory.

Conditions for clearing the DTC

The MIL is cleared if the malfunction does not return in three consecutive trips in which the diagnostic runs. The MIL, the Pending DTC, the Confirmed DTC, and the freeze data can be cleared with the scan tool Clear command or by disconnecting the 12 volt battery.

DTC P0046 (1.5 L ENGINE)

DTC P0046: Turbocharger Wastegate Control Actuator Circuit Range/Performance Problem

General Description

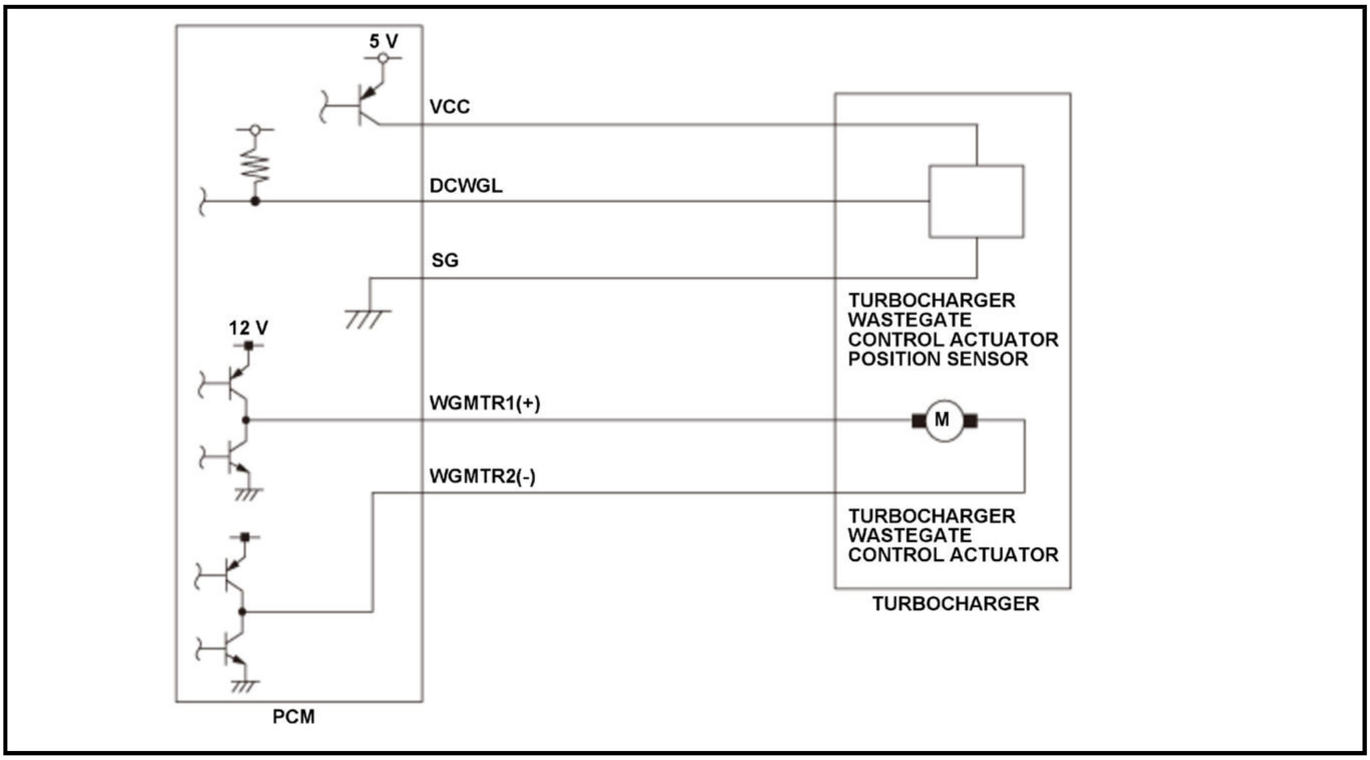
5 V
VCC
DCWGL
SG
12 V
WGMTR1(+)
WGMTR2(-)
M
TURBOCHARGER WASTEGATE CONTROL ACTUATOR POSITION SENSOR
TURBOCHARGER WASTEGATE CONTROL ACTUATOR
TURBOCHARGER
PCM

The powertrain control module (PCM) adjusts the boost pressure by controlling the turbocharger wastegate control actuator of the turbocharger. Boost pressure becomes higher by fully closing the turbocharger wastegate control valve driven by the turbocharger wastegate control actuator. The turbocharger wastegate control valve position is detected by the turbocharger wastegate control actuator position sensor and the signal is input to the PCM for target position feedback control. The turbocharger wastegate control actuator position sensor value when the turbocharger wastegate control valve is fully closed is stored as fully closed learning value. Target and actual positions are represented by the relative value from the fully closed position. The PCM sets a target position, and outputs a drive signal to the driver IC and drives the turbocharger wastegate control actuator to be equal to the target position. If the difference of the turbocharger wastegate control valve between the target position and the actual position is a specified value for a specified time, the PCM detects a malfunction and stores a DTC.

Monitor Execution, Sequence, Duration, DTC Type

Execution	Continuous
Sequence	None
Duration	2 seconds or more
DTC Type	One drive cycle, MIL on

Enable Conditions

Condition	Minimum	Maximum
Engine coolant temperature[ECT SENSOR 1]	156 deg. F (69 deg. C)	-
12 volt battery voltage [BATTERY]	10.0 V	-
Vehicle	ON mode	

[ ]: HDS Parameter

Malfunction Threshold

The difference of the turbocharger wastegate control valve between the target position and the actual position is 0.8 mm (0.03 in) or more for at least 2 seconds.

Possible Cause

NOTE: The causes shown may not be a complete list of all potential problems, and it is possible that there may be other causes.

- Turbocharger wastegate control actuator failure
- Turbocharger wastegate control actuator position sensor failure

Confirmation Procedure

Operating Condition

Start the engine. Hold the engine speed [ENGINE SPEED] at 3, 000 rpm without load (in P or N) until the radiator fan comes on.

[ ]: HDS Parameter

With the HDS

Select the Electric Waste Gate in the INSPECTION MENU with the HDS.

Diagnosis Details

Conditions for setting the DTC

When a malfunction is detected, the MIL comes on and a Pending DTC, a Confirmed DTC, and the freeze data are stored in the PCM memory.

Conditions for clearing the DTC

The MIL is cleared if the malfunction does not return in three consecutive trips in which the diagnostic runs. The MIL, the Pending DTC, the Confirmed DTC, and the freeze data can be cleared with the scan tool Clear command or by disconnecting the 12 volt battery.

DTC P0069 (1.5 L ENGINE)

DTC P0069: Barometric Pressure (BARO) Sensor Circuit Range/Performance Problem

General Description

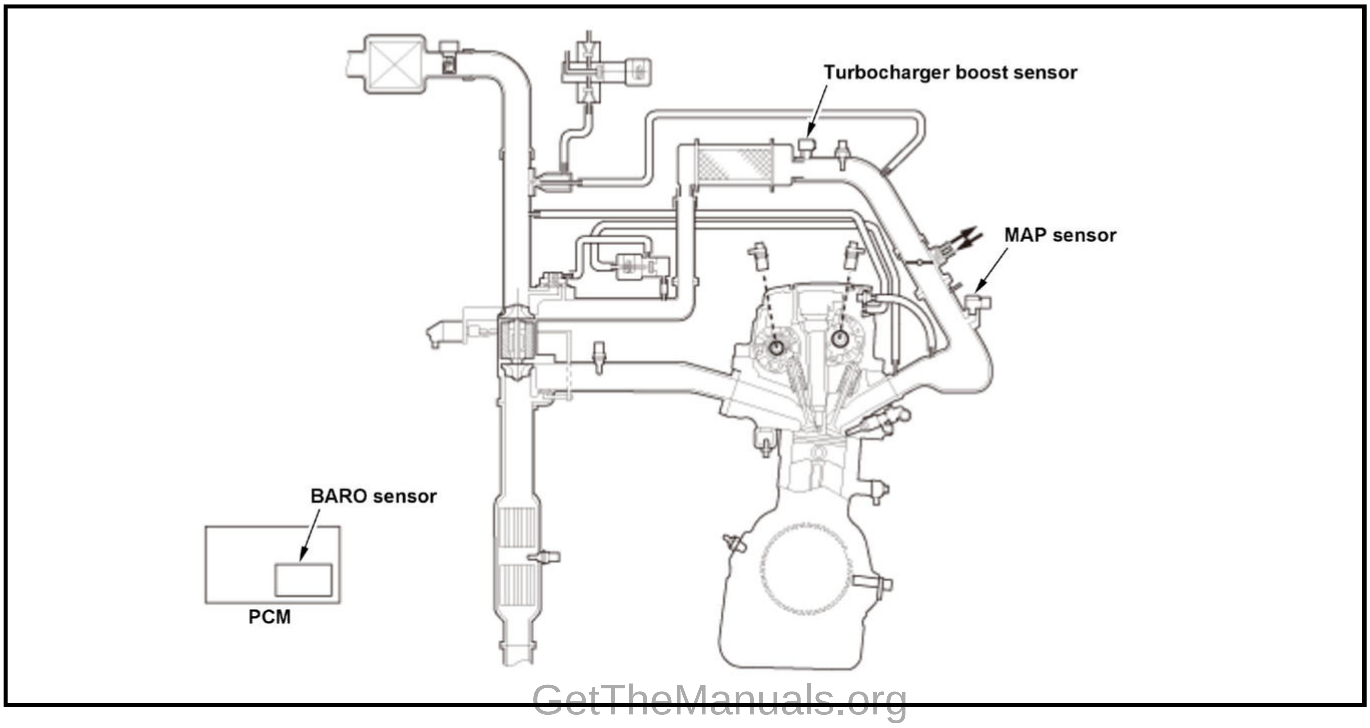

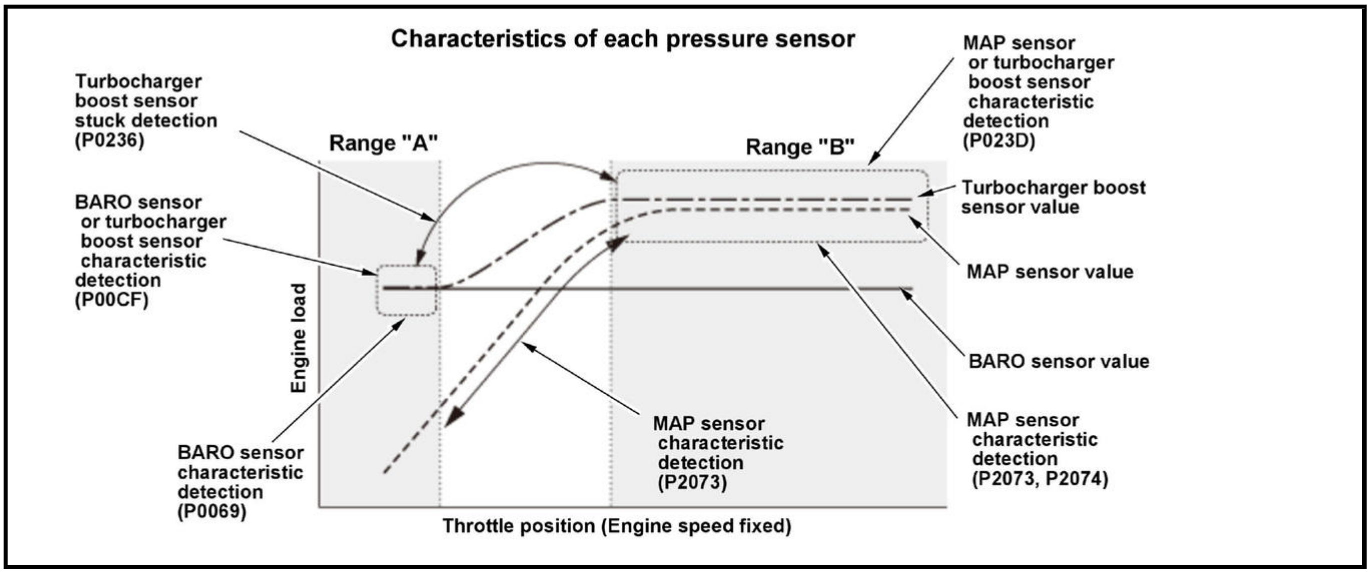
Characteristics of each pressure sensor
Turbocharger boost sensor stuck detection (P0236)
Range "A"
Range "B"
MAP sensor or turbocharger boost sensor characteristic detection (P023D)
Turbocharger boost sensor value
BARO sensor or turbocharger boost sensor characteristic detection (P00CF)
MAP sensor value
BARO sensor value
Engine load
BARO sensor characteristic detection (P0069)
MAP sensor characteristic detection (P2073)
MAP sensor characteristic detection (P2073, P2074)
Throttle position (Engine speed fixed)

The barometric pressure (BARO) sensor, the manifold absolute pressure (MAP) sensor, and the turbocharger boost sensor are equipped to the vehicle to detect air pressure conditions to the engine. The BARO sensor value and the turbocharger boost sensor value shows similar value at range "A" such as in idle conditions, and the turbocharger boost sensor value and MAP sensor value shows similar value at range "B" such as in high throttle position.

Malfunction determinations are done by the powertrain control module (PCM) in two ranges by comparing the pressure sensor values.

- At range "A": BARO sensor or turbocharger boost sensor is abnormal if the difference of the two pressure sensor values are specified or more (P00CF)
- At range "B": Turbocharger boost sensor or MAP sensor is abnormal if the difference of the two pressure sensor values are specified or more (P023D)
- Range "A" determined as abnormal and range "B" determined as normal: BARO sensor abnormal (P0069)
- Both ranges "A" and "B" determined as abnormal: Turbocharger boost sensor abnormal (P0236)
- Turbocharger boost sensor or MAP sensor values do not change when throttle position is transited from ranges "A" to "B": Determined as turbocharger boost sensor output stuck (P0236) or MAP sensor output stuck (P2073 or P2074)

Monitor Execution, Sequence, Duration, DTC Type

Execution	Once per driving cycle
Sequence	None
Duration	6.0 seconds or more
DTC Type	Two drive cycles, MIL on

Enable Conditions

Condition		Minimum	Maximum
Elapsed time after starting the engine		3.0 seconds	-
Engine speed [ENGINE SPEED]		1, 700 rpm	-
Throttle position	2, 000 rpm	36.3 deg.	-
	4, 000 rpm	42.2 deg.	-
Intake air amount		-	7.0 g/second (0.24 oz/second)

[ ]: HDS Parameter

Malfunction Threshold

Both range "A" (P00CF) and range "B" (P023D) determinations must be completed. The PCM stores DTC P0069 if range "A" determination (P00CF) is determined as abnormal and range "B" determination (P023D) is determined as normal. Determination at range A: Comparison of BARO sensor value and turbocharger boost sensor value. Determination at range B: Comparison of MAP sensor value and turbocharger boost sensor value.

Possible Cause

NOTE: The causes shown may not be a complete list of all potential problems, and it is possible that there may be other causes.

- BARO sensor failure

Confirmation Procedure

Operating Condition

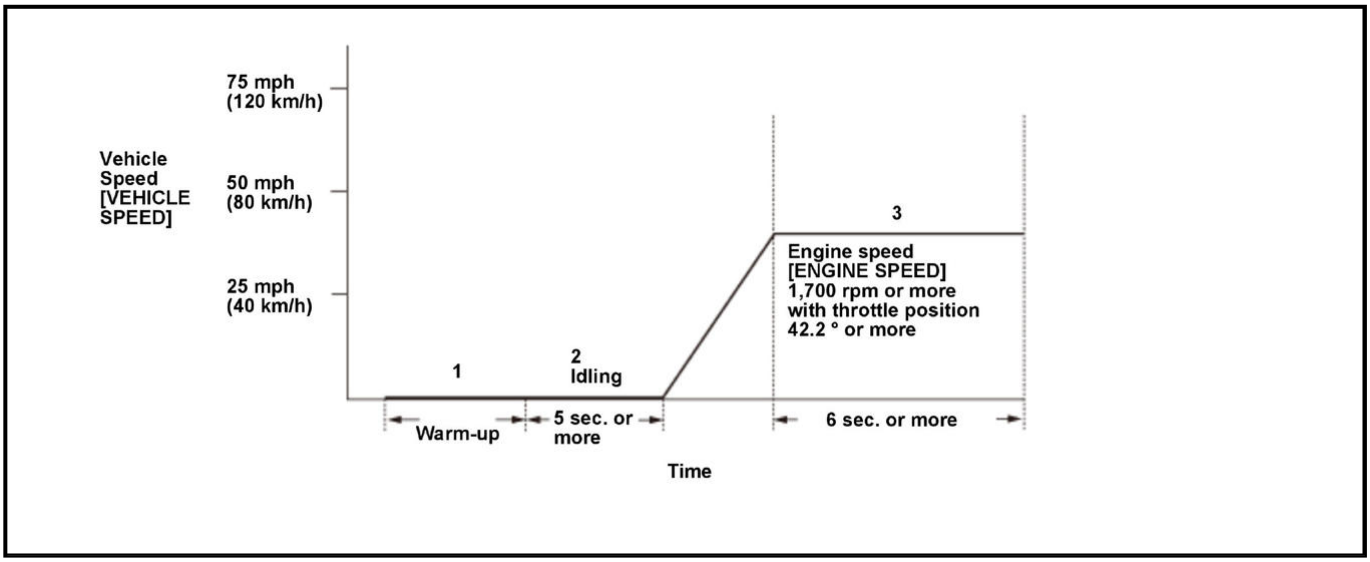

- Start the engine. Hold the engine speed [ENGINE SPEED] at 3, 000 rpm without load (in P or N) until the radiator fan comes on.
- Let the engine idle for at least 5 seconds.
- Drive the vehicle at engine speed [ENGINE SPEED] 1, 700 rpm or more with throttle position 42.2 deg. or more for at least 6 seconds.

- Drive the vehicle in this manner only if the traffic regulations and ambient conditions allow.

With the HDS

None.

Diagnosis Details

Conditions for setting the DTC

When a malfunction is detected during the first drive cycle, a Pending DTC is stored in the PCM memory. If the malfunction returns in the next (second) drive cycle, the MIL comes on and a Confirmed DTC and the freeze data are stored.

Conditions for clearing the DTC

The MIL is cleared if the malfunction does not return in three consecutive trips in which the diagnostic runs. The MIL, the Pending DTC, the Confirmed DTC, and the freeze data can be cleared with the scan tool Clear

command or by disconnecting the 12 volt battery.

DTC P0069 (2.4 L ENGINE) (2017 2018 2019)

DTC P0069: Barometric Pressure (BARO) Sensor Circuit Range/Performance Problem

General Description

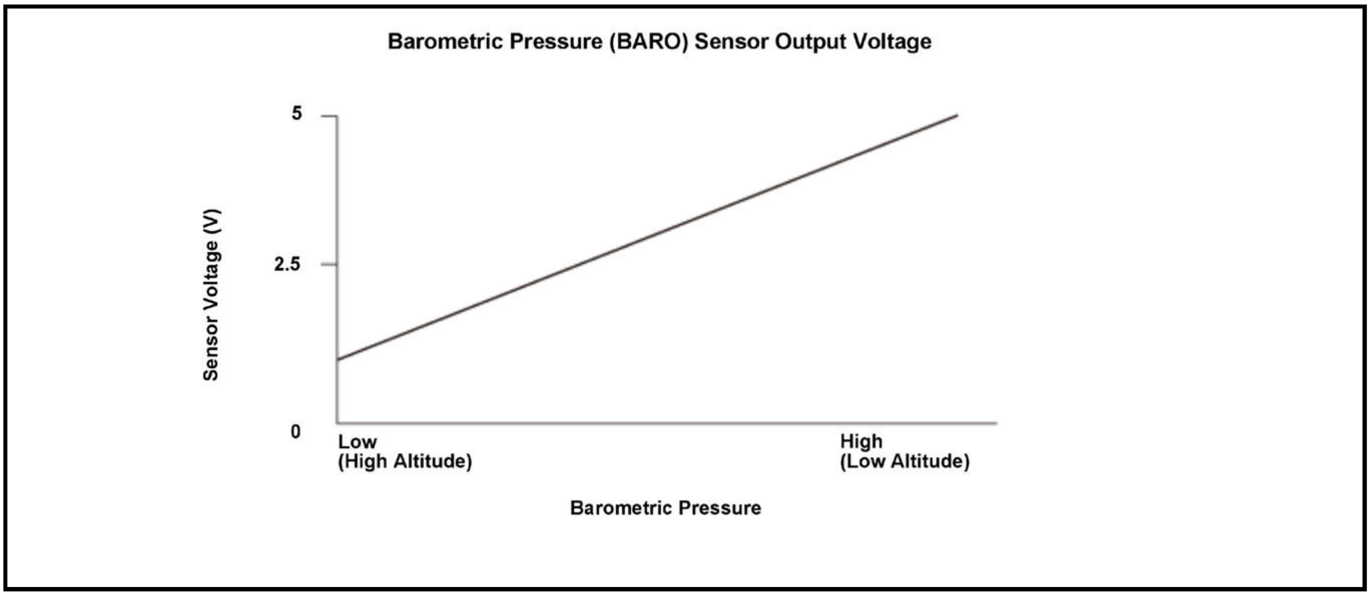

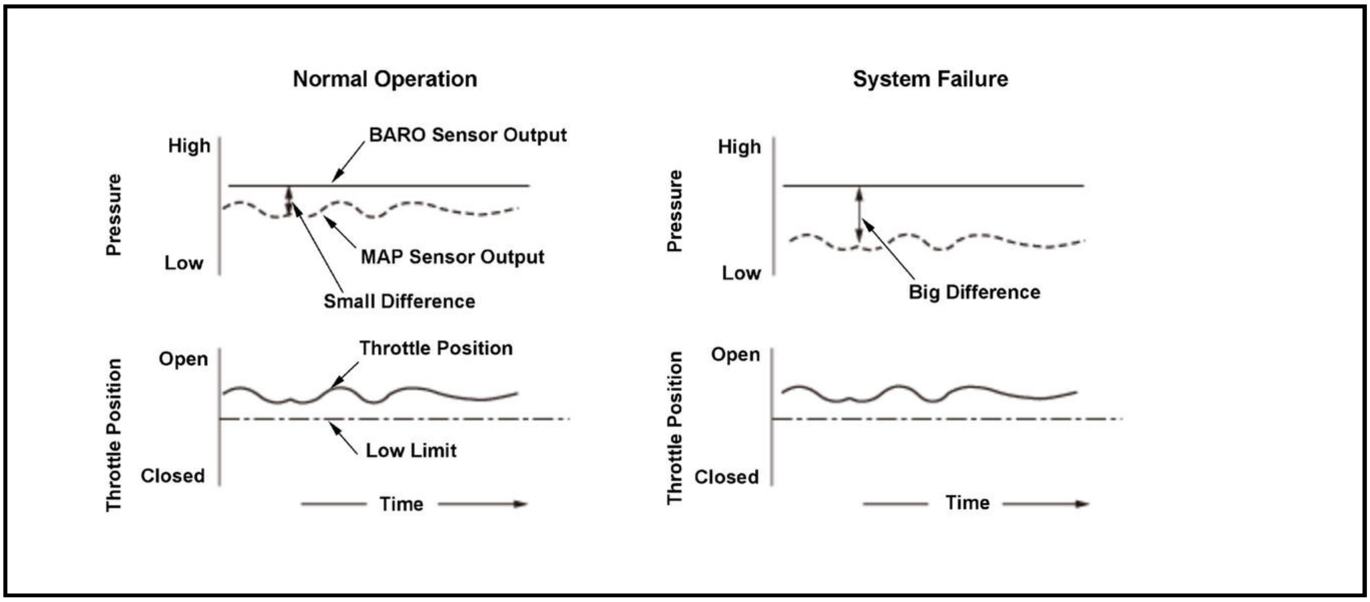

The barometric pressure (BARO) sensor is built into the powertrain control module (PCM) and monitors atmospheric pressure. When the throttle valve is wide open, the manifold absolute pressure (MAP) sensor output is nearly equal to the BARO sensor output. If the throttle position is beyond a value stored in the PCM that is used to detect "wide-open throttle", and if the difference between the MAP sensor output and the BARO sensor output is equal to or greater than a set value, the PCM detects a malfunction in the BARO sensor output and stores a DTC.

Monitor Execution, Sequence, Duration, DTC Type

Execution	Once per driving cycle
Sequence	None
Duration	2.5 seconds or more
DTC Type	Two drive cycles, MIL on

Enable Conditions

Condition		Minimum	Maximum
Throttle position	1, 000 rpm	12.0 deg.	-
	4, 000 rpm	31.5 deg.	-

Malfunction Threshold

The difference between the BARO sensor output and the MAP sensor output is 28 kPa (204 mmHg, 8.1 inHg) or more for at least 2.5 seconds.

Possible Cause

NOTE: The causes shown may not be a complete list of all potential problems, and it is possible that there may be other causes.

- BARO sensor failure
- Air cleaner element clogged

Confirmation Procedure

Operating Condition

- Start the engine. Hold the engine speed [ENGINE SPEED] at 3, 000 rpm without load (in P or N) until the radiator fan comes on.
- Drive the vehicle under Enable Conditions (see "Throttle position") for at least 2.5 seconds.
- Drive the vehicle in this manner only if the traffic regulations and ambient conditions allow.

[ ]: HDS Parameter

With the HDS

None.

Diagnosis Details

Conditions for setting the DTC

When a malfunction is detected during the first drive cycle, a Pending DTC is stored in the PCM memory. If the malfunction returns in the next (second) drive cycle, the MIL comes on and a Confirmed DTC and the freeze data are stored.

Conditions for clearing the DTC

The MIL is cleared if the malfunction does not return in three consecutive trips in which the diagnostic runs. The MIL, the Pending DTC, the Confirmed DTC, and the freeze data can be cleared with the scan tool Clear command or by disconnecting the 12 volt battery.

DTC P006A (1.5 L ENGINE)

DTC P006A: Mass Air flow (MAF) Sensor Circuit Range/Performance Problem

General Description

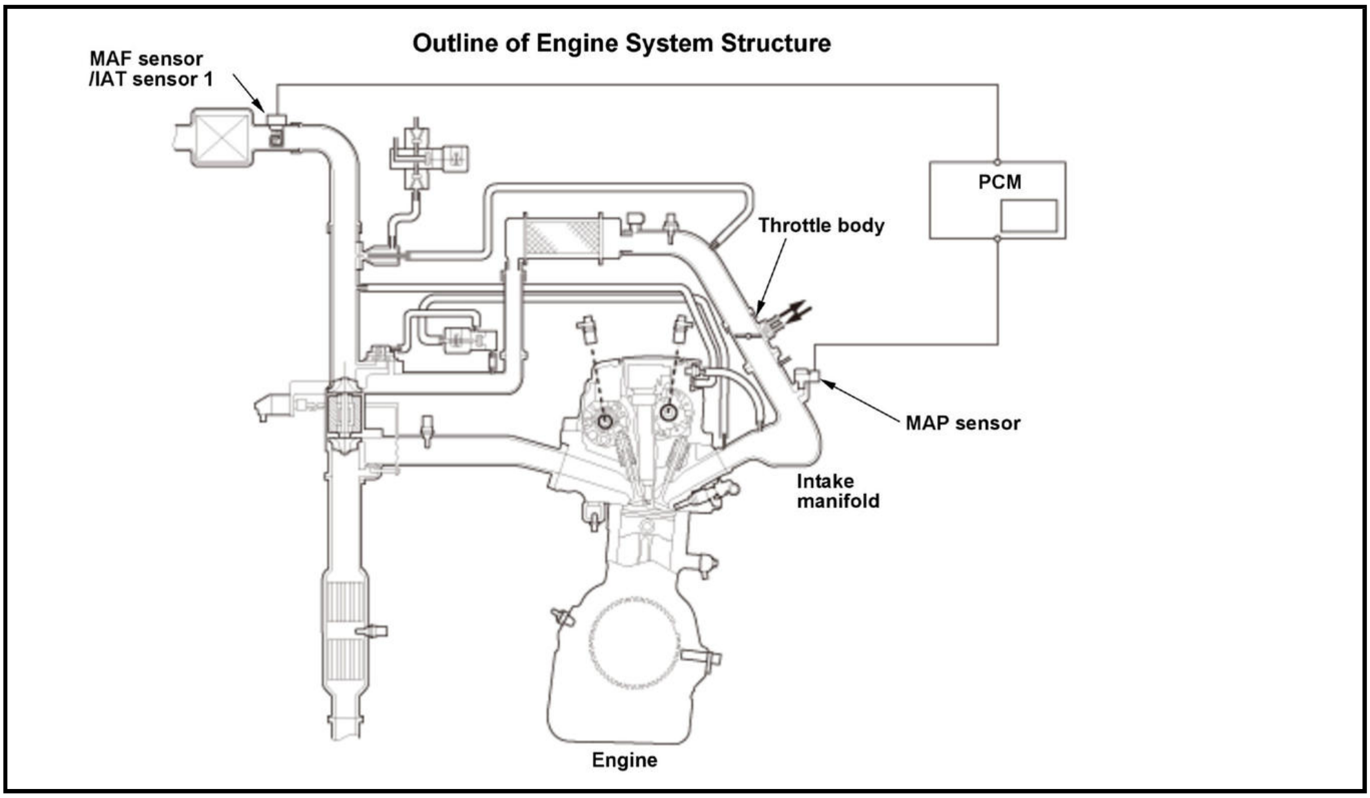
Outline of Engine System Structure
MAF sensor /IAT sensor 1
PCM
Throttle body
MAP sensor
Intake manifold
Engine

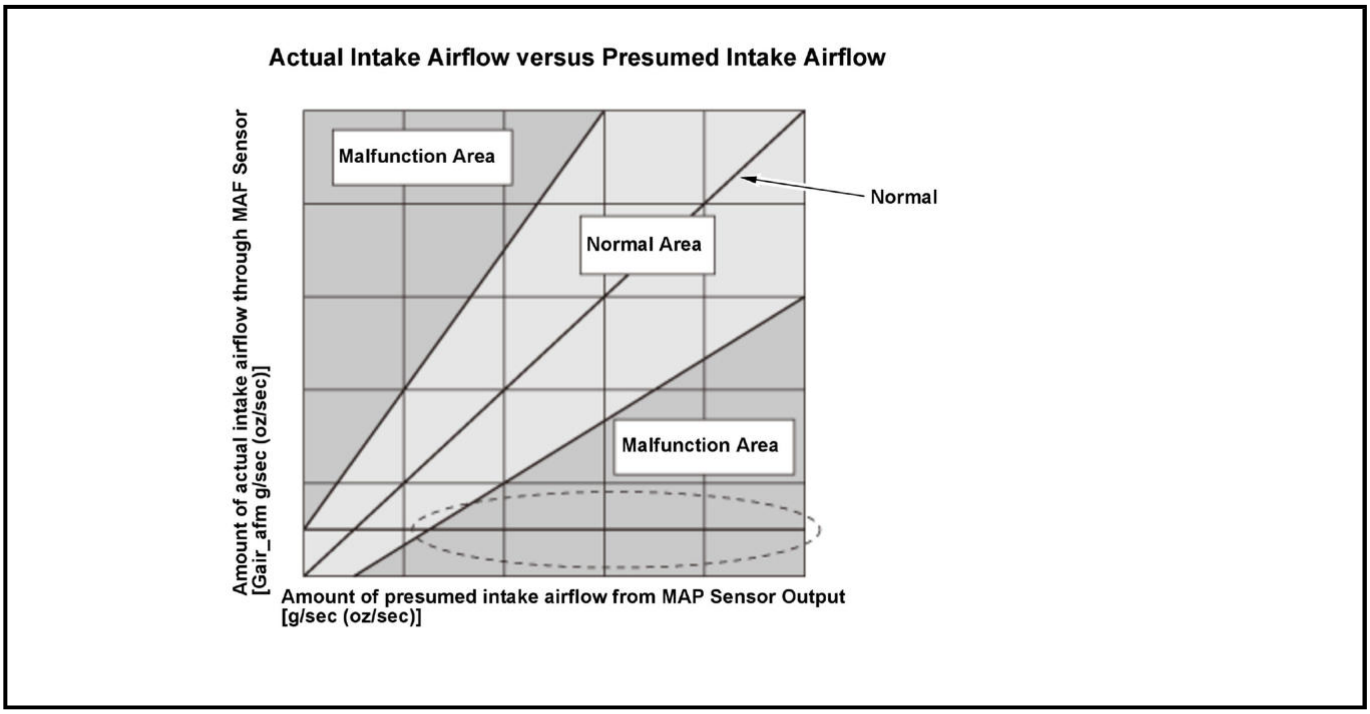

The mass airflow (MAF) sensor directly measures the amount of intake airflow into the engine, and the powertrain control module (PCM) controls the fuel injection based on the measured value. The manifold absolute pressure (MAP) sensor measures the intake manifold pressure, and the PCM calculates the amount of intake airflow from the MAP sensor output and the engine revolutions. The PCM compares the MAF sensor output (amount of intake airflow) and the amount of intake airflow calculated from MAP sensor output. If their difference is too large (in the malfunction area), the PCM detects a malfunction and stores a DTC.

Monitor Execution, Sequence, Duration, DTC Type

Execution	Once per driving cycle
Sequence	None
Duration	5.0 seconds or more
DTC Type	Two drive cycles, MIL on

Enable Conditions

Condition	Minimum	Maximum
Elapsed time after starting the engine	3.0 seconds	-
Engine coolant temperature [ECT SENSOR 1]	156 deg. F (69 deg. C)	-
Engine speed [ENGINE SPEED]	530 rpm	6, 500 rpm

[ ]: HDS Parameter

Malfunction Threshold

The difference between the amount of intake air measured by the MAF sensor and the amount of intake air calculated from the MAP sensor output is out of the normal area for at least 5.0 seconds.

Possible Cause

NOTE: The causes shown may not be a complete list of all potential problems, and it is possible that there may be other causes.

- Intake air duct misinstalled
- Intake air duct damage
- Evaporative emission (EVAP) canister hose misinstalled
- Intake manifold damage
- MAP sensor misinstalled
- Positive crankcase ventilation (PCV) hose misinstalled
- Air cleaner element damage
- Air cleaner element clogged
- MAF sensor element damage

Confirmation Procedure

Operating Condition

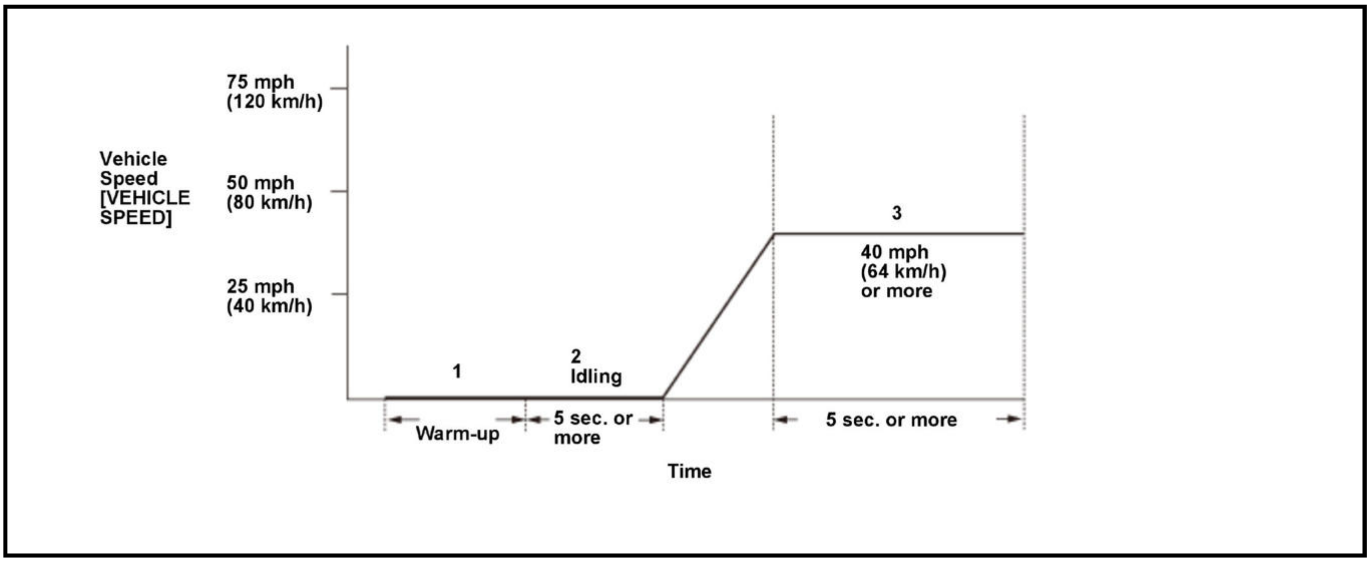

- Enter the maintenance mode, then start the engine. Hold the engine speed [ENGINE SPEED] at 3, 000 rpm without load (in P or N) until the radiator fan comes on.
- Let the engine idle for at least 5 seconds.

- Drive the vehicle at a steady speed of 40 mph (64 km/h) or more for at least 5 seconds.
- When freeze data or the on-board snapshot is stored, drive the vehicle under those conditions instead of Driving Pattern step 3.
- When you have difficulty duplicating the DTC because of road conditions and traffic situations, repeat the driving pattern several times.
- Drive the vehicle in this manner only if the traffic regulations and ambient conditions allow.

With the HDS

None.

Diagnosis Details

Conditions for setting the DTC

When a malfunction is detected during the first drive cycle, a Pending DTC is stored in the PCM memory. If the malfunction returns in the next (second) drive cycle, the MIL comes on and a Confirmed DTC, the freeze data, and the on-board snapshot are stored.

Conditions for clearing the DTC

The MIL is cleared if the malfunction does not return in three consecutive trips in which the diagnostic runs. The MIL, the Pending DTC, the Confirmed DTC, the freeze data, and the on-board snapshot can be cleared with the scan tool Clear command or by disconnecting the 12 volt battery.

DTC P006A (2.4 L ENGINE) (2017 2018 2019)

DTC P006A: Mass Air flow (MAF) Sensor Circuit Range/Performance Problem

General Description

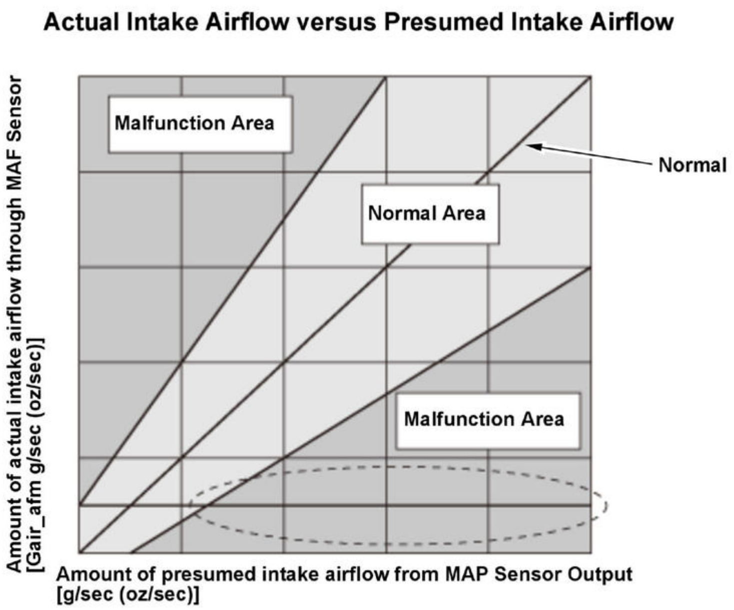

The mass airflow (MAF) sensor directly measures the amount of intake airflow into the engine, and the powertrain control module (PCM) controls the fuel injection based on the measured value. The manifold absolute pressure (MAP) sensor measures the intake manifold pressure, and the PCM calculates the amount of intake airflow from the MAP sensor output and the engine revolutions. The PCM compares the MAF sensor output (amount of intake airflow) and the amount of intake airflow calculated from MAP sensor output. If their difference is too large (in the malfunction area), the PCM detects a malfunction and stores a DTC.

Monitor Execution, Sequence, Duration, DTC Type

Execution	Once per driving cycle
Sequence	None
Duration	5.0 seconds or more
DTC Type	Two drive cycles, MIL on

Enable Conditions

Condition	Minimum	Maximum
Elapsed time after starting the engine	3.0 seconds	-
Engine coolant temperature [ECT SENSOR 1]	156 deg. F (69 deg. C)	-
Engine speed [ENGINE SPEED]	500 rpm	6, 800 rpm

[ ]: HDS Parameter

Malfunction Threshold

The difference between the amount of intake air measured by the MAF sensor and the amount of intake air calculated from the MAP sensor output is out of the normal area for at least 5.0 seconds.

Possible Cause

NOTE: The causes shown may not be a complete list of all potential problems, and it is possible that there may be other causes.

- Intake air duct misinstalled
- Intake air duct damage
- Evaporative emission (EVAP) canister hose misinstalled
- Intake manifold damage
- MAP sensor misinstalled
- Positive crankcase ventilation (PCV) hose misinstalled
- Air cleaner element damage
- Air cleaner element clogged
- MAF sensor element damage

Confirmation Procedure

Operating Condition

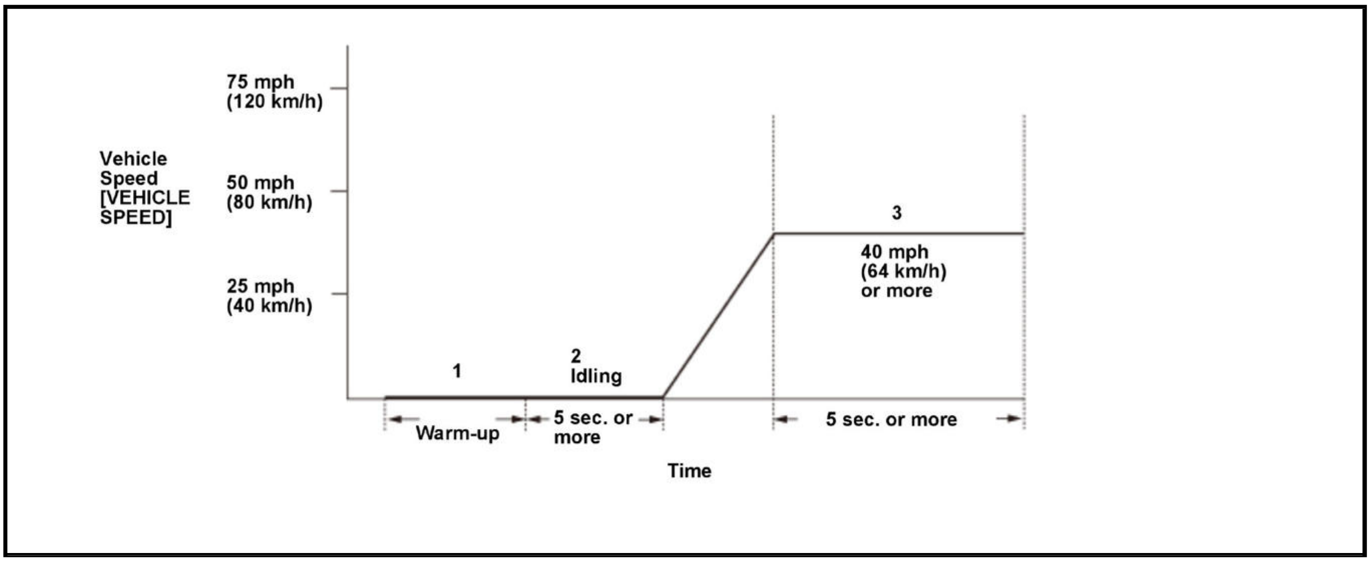

- Start the engine. Hold the engine speed [ENGINE SPEED] at 3, 000 rpm without load (in P or N) until the radiator fan comes on.
- Let the engine idle for at least 5 seconds.
- Drive the vehicle at a steady speed of 40 mph (64 km/h) or more for at least 5 seconds.

- When freeze data is stored, drive the vehicle under those conditions instead of Driving Pattern step 3.
- When you have difficulty duplicating the DTC because of road conditions and traffic situations, repeat the driving pattern several times.
- Drive the vehicle in this manner only if the traffic regulations and ambient conditions allow.

With the HDS

None.

Diagnosis Details

Conditions for setting the DTC

When a malfunction is detected during the first drive cycle, a Pending DTC is stored in the PCM memory. If the malfunction returns in the next (second) drive cycle, the MIL comes on and a Confirmed DTC and the freeze data are stored.

Conditions for clearing the DTC

The MIL is cleared if the malfunction does not return in three consecutive trips in which the diagnostic runs. The MIL, the Pending DTC, the Confirmed DTC, and the freeze data can be cleared with the scan tool Clear command or by disconnecting the 12 volt battery.

DTC P006E (1.5 L ENGINE)

DTC P006E: Turbocharger Power Supply Circuit Malfunction

General Description

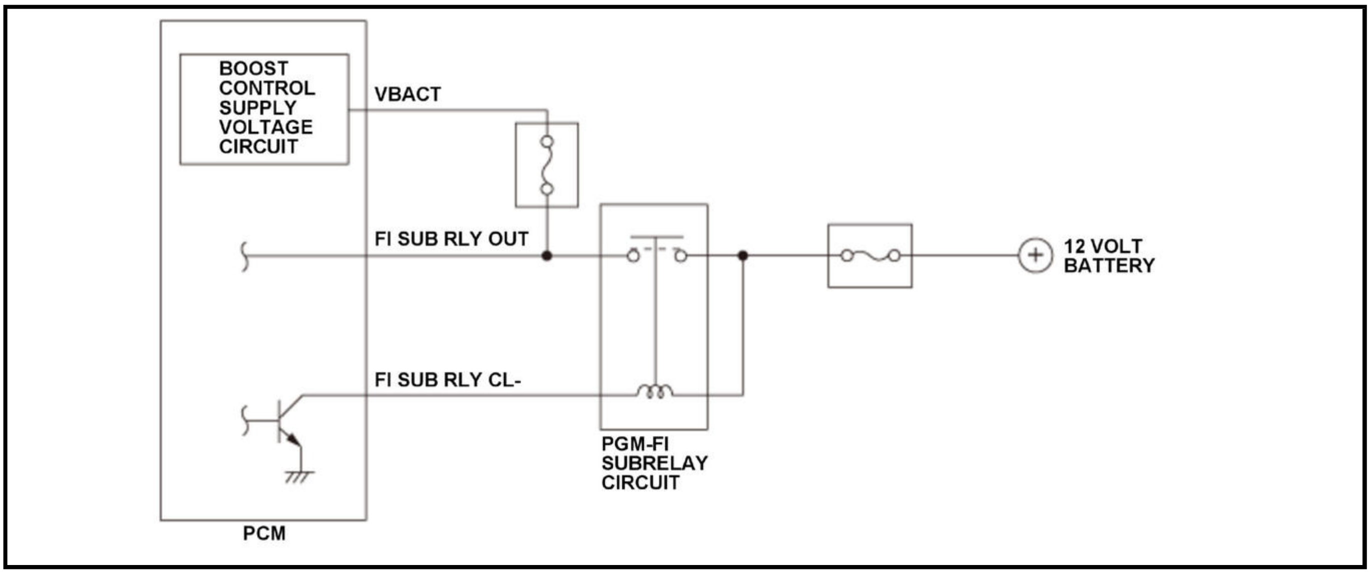

The powertrain control module (PCM) adjusts the boost pressure by controlling the turbocharger wastegate control actuator of the turbocharger. Boost pressure becomes higher by fully closing the turbocharger wastegate control valve driven by the turbocharger wastegate control actuator. The turbocharger wastegate control valve position is detected by the turbocharger wastegate control actuator position sensor and the signal is input to the PCM for target position feedback control. The turbocharger wastegate control actuator position sensor value when the turbocharger wastegate control valve is fully closed is stored as fully closed learning value. Target and actual positions are represented by the relative value from the fully closed position. The PCM sets a target position, and outputs a drive signal to the driver IC and drives the turbocharger wastegate control actuator to be equal to the target position. The power necessary to drive the turbocharger wastegate control actuator is provided to the PCM via PGM-FI subrelay circuit from the 12 volt battery. The boost control supply voltage circuit in the PCM monitors whether the power is properly supplied to the turbocharger wastegate control actuator. If the boost control supply voltage circuit voltage is a specified value for a specified time, the PCM detects a malfunction and stores a DTC.

Monitor Execution, Sequence, Duration, DTC Type

Execution	Continuous
Sequence	None
Duration	2 seconds or more
DTC Type	One drive cycle, MIL on

Enable Conditions

Condition	Minimum	Maximum
12 volt battery voltage [BATTERY]	10.0 V	-
Vehicle	ON mode	

[ ]: HDS Parameter

Malfunction Threshold

The PCM supplied voltage via PGM-FI subrelay circuit from the 12 volt battery is 1 V or less for at least 2 seconds.

Possible Cause

NOTE: The causes shown may not be a complete list of all potential problems, and it is possible that there may be other causes.

- PCM internal circuit failure (boost control supply voltage circuit)

- PGM-FI subrelay circuit failure
- PGM-FI subrelay circuit VBACT line open
- PGM-FI subrelay circuit FI SUB RLY OUT line open
- PGM-FI subrelay circuit FI SUB RLY CL- line open

Diagnosis Details

Conditions for setting the DTC

When a malfunction is detected, the MIL comes on and a Pending DTC, a Confirmed DTC, and the freeze data are stored in the PCM memory.

Conditions for clearing the DTC

The MIL is cleared if the malfunction does not return in three consecutive trips in which the diagnostic runs. The MIL, the Pending DTC, the Confirmed DTC, and the freeze data can be cleared with the scan tool Clear command or by disconnecting the 12 volt battery.

DTC P0087 (1.5 L ENGINE)

DTC P0087: Fuel Rail Pressure Too Low

General Description

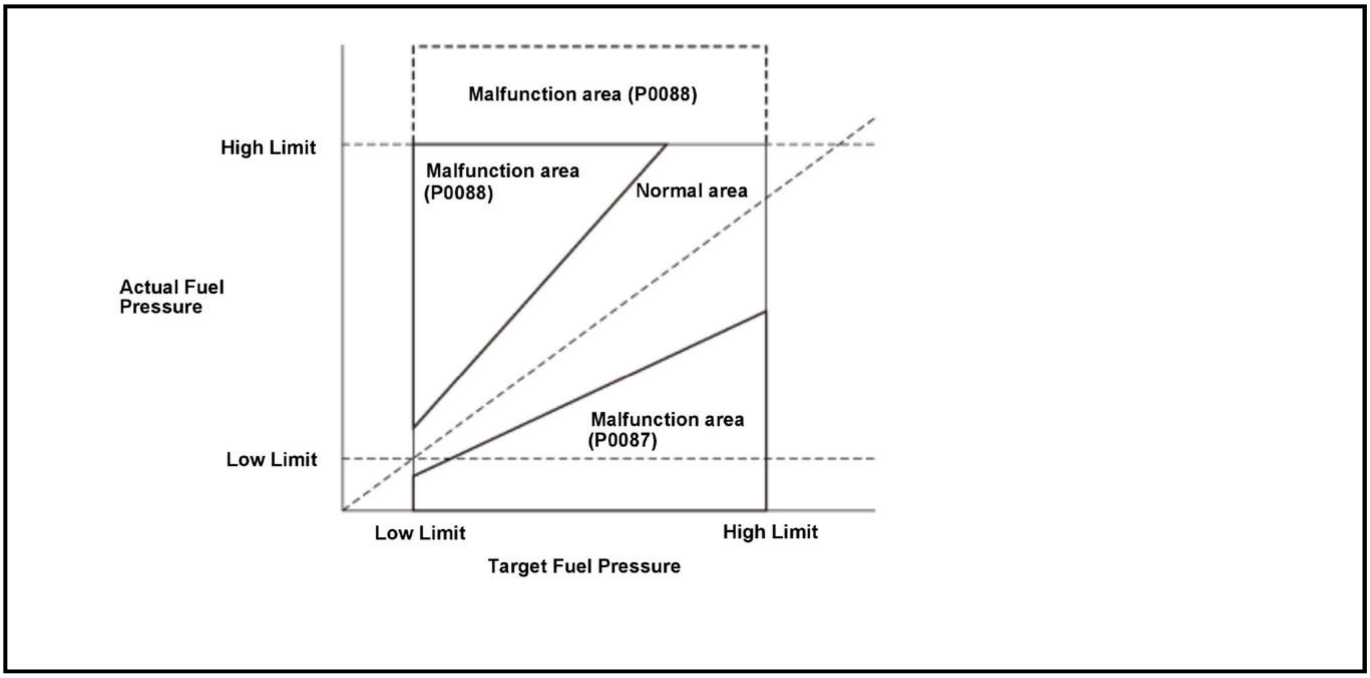

The powertrain control module (PCM) controls fuel pressure delivered by the high pressure fuel pump. If the actual fuel pressure deviates from the target fuel pressure for a set time, the PCM detects a malfunction.

Monitor Execution, Sequence, Duration, DTC Type

Execution	Once per driving cycle
Sequence	None
Duration	4.0 seconds or more
DTC Type	One drive cycle, MIL on

Enable Conditions

Condition	Minimum	Maximum
Elapsed time after returning from fuel cut	3.0 seconds	-
State of the engine	Running	
Other	Other than initial engine start	

Malfunction Threshold

Either of these condition is met for at least 4 seconds:

- The actual fuel pressure is 800 kPa (8.15 kgf/cm 2, 116 psi) or less when target fuel pressure is 2, 500 kPa (25.49 kgf/cm 2, 362.6 psi).
- The actual fuel pressure is 11, 500 kPa (117.26 kgf/cm 2, 1, 667.9 psi) or less when target fuel pressure is 15, 000 kPa (152.96 kgf/cm 2, 2, 175.6 psi).

Possible Cause

NOTE: The causes shown may not be a complete list of all potential problems, and it is possible that there may be other causes

- Fuel pump low flow
- Fuel line clogged
- Fuel filter clogged
- Fuel injector stuck open
- High pressure fuel pump failure
- Fuel rail pressure sensor range/performance problem

Confirmation Procedure

Operating Condition

- Start the engine.
- Drive the vehicle repeated acceleration and deceleration.

- When freeze data is stored, drive the vehicle under those conditions instead of Driving Pattern step 2.
- Drive the vehicle in this manner only if the traffic regulations and ambient conditions allow.

With the HDS

Select the DI Fuel Pressure Test in the INSPECTION MENU with the HDS.

Diagnosis Details

Conditions for setting the DTC

When a malfunction is detected, the MIL comes on and a Pending DTC, a Confirmed DTC, and the freeze data are stored in the PCM memory.

Conditions for clearing the DTC

The MIL is cleared if the malfunction does not return in three consecutive trips in which the diagnostic runs. The MIL, the Pending DTC, the Confirmed DTC, and the freeze data can be cleared with the scan tool Clear command or by disconnecting the 12 volt battery.

DTC P0087 (2.4 L ENGINE) (2017 2018 2019)

DTC P0087: Fuel Rail Pressure Too Low

General Description

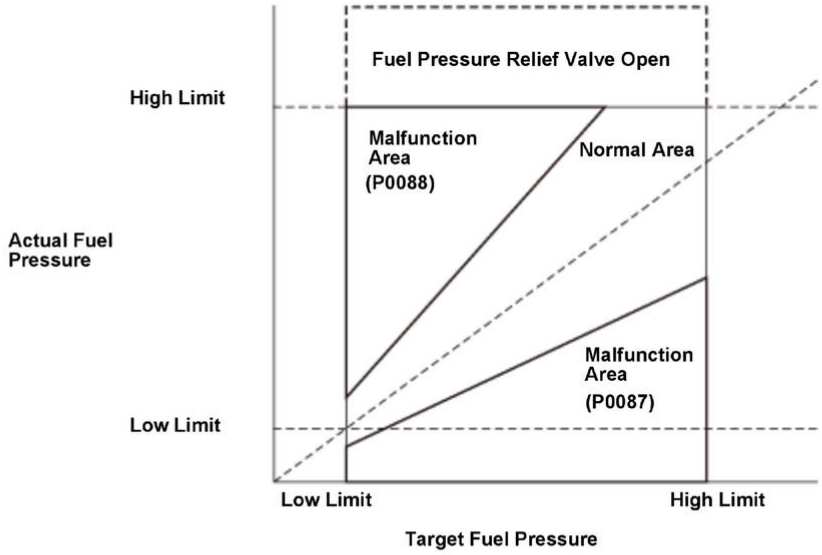

The powertrain control module (PCM) controls fuel pressure delivered by the high pressure fuel pump. If the actual fuel pressure deviates from the target fuel pressure for a set time, the PCM detects a malfunction. The DTC is also stored when the fuel pressure relief valve is opened to protect the fuel hose when the fuel reaches an abnormally high pressure.

Monitor Execution, Sequence, Duration, DTC Type

Execution	Once per driving cycle
Sequence	None
Duration	6.0 seconds or more
DTC Type	One drive cycle, MIL on

Enable Conditions

Condition	Minimum	Maximum
Elapsed time after returning from fuel cut	3.0 seconds	-

Malfunction Threshold

Either of these condition is met for at least 6.0 seconds:

- The actual fuel pressure is 0.5 MPa (5.0 kgf/cm 2, 72.5 psi) or less when target fuel pressure is 3.5 MPa (35.7 kgf/cm 2, 508 psi).
- The actual fuel pressure is 11 MPa (112 kgf/cm 2, 1, 595 psi) or less when target fuel pressure is 15 MPa (153 kgf/cm 2, 2, 176 psi).

Possible Cause

NOTE: The causes shown may not be a complete list of all potential problems, and it is possible that there may be other causes

- Low pressure fuel pump low flow
- Low pressure fuel line clogged

- Fuel filter clogged
- Fuel injector stuck open
- Spill valve stuck
- Fuel pressure sensor range/performance problem

Confirmation Procedure

Operating Condition

- Start the engine.
- Drive the vehicle repeated acceleration and deceleration.

- When freeze data is stored, drive the vehicle under those conditions instead of Driving Pattern step 2.
- Drive the vehicle in this manner only if the traffic regulations and ambient conditions allow.

With the HDS

Do the DI FUEL PRESSURE TEST in the INSPECTION MENU with the HDS.

Diagnosis Details

Conditions for setting the DTC

When a malfunction is detected, the MIL comes on and a Pending DTC, a Confirmed DTC, and the freeze data are stored in the PCM memory.

Conditions for clearing the DTC

The MIL is cleared if the malfunction does not return in three consecutive trips in which the diagnostic runs. The MIL, the Pending DTC, the Confirmed DTC, and the freeze data can be cleared with the scan tool Clear command or by disconnecting the 12 volt battery.

DTC P0088 (1.5 L ENGINE)

DTC P0088: Fuel Rail Pressure Too High

General Description

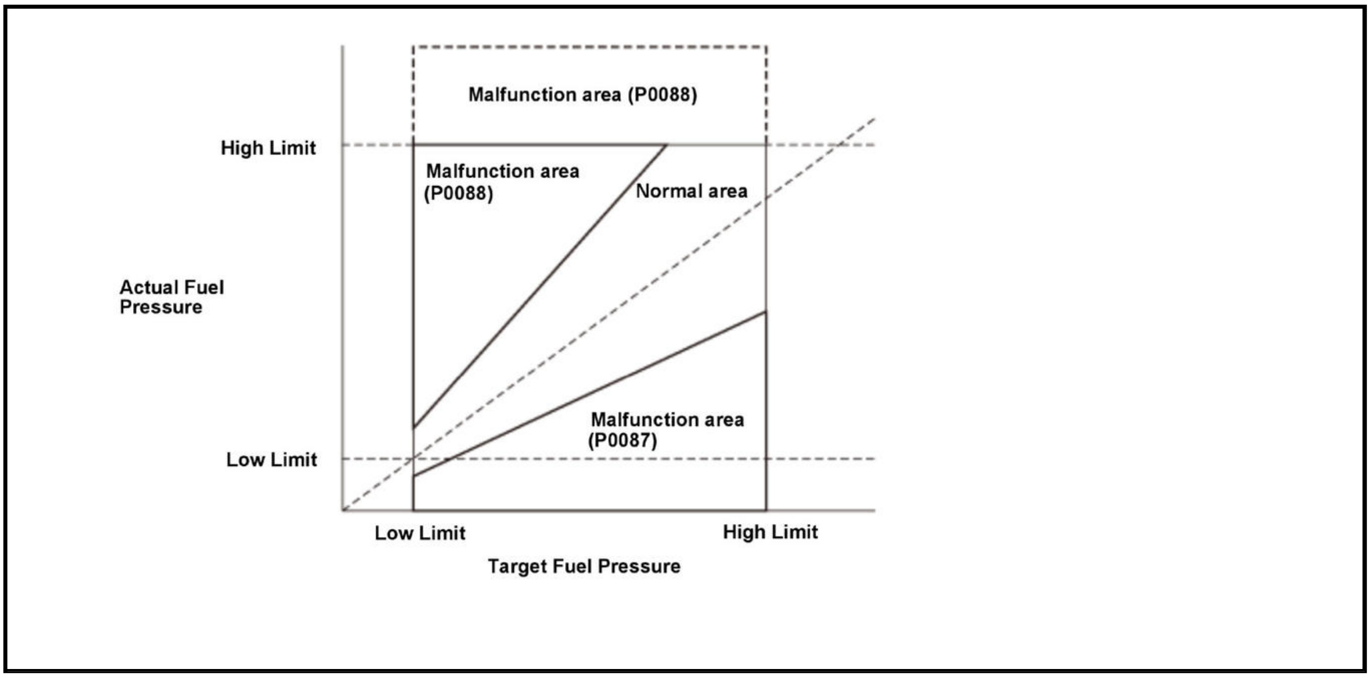

The powertrain control module (PCM) controls fuel pressure delivered by the high pressure fuel pump. If the actual fuel pressure deviates from the target fuel pressure for a set time, the PCM detects a malfunction. The DTC is also stored when the pressure relief valve is opened to protect the fuel hose when the fuel reaches an abnormally high pressure.

Monitor Execution, Sequence, Duration, DTC Type

Execution	Once per driving cycle
Sequence	None
Duration	4.0 seconds or more
DTC Type	One drive cycle, MIL on

Enable Conditions

Condition	Minimum	Maximum
Elapsed time after returning from fuel cut	3.0 seconds	-
State of the engine	Running	
Other	Other than initial engine start	

Malfunction Threshold

Either of these condition is met:

- The actual fuel pressure is 7, 750 kPa (79.03 kgf/cm 2, 1, 124.1 psi) or more for at least 4.0 seconds when target fuel pressure is 2, 500 kPa (25.49 kgf/cm 2, 362.6 psi).
- The actual fuel pressure is 20, 250 kPa (206.5 kgf/cm 2, 2, 937.1 psi) or more for at least 4.0 seconds when target fuel pressure is 15, 000 kPa (152.96 kgf/cm 2, 2, 175.6 psi).
- The actual fuel pressure is 23, 000 kPa (234.5 kgf/cm 2, 3, 335.9 psi) or more.

Possible Cause

NOTE: The causes shown may not be a complete list of all potential problems, and it is possible that there may be other causes

- High pressure fuel pump failure
- Fuel rail pressure sensor range/performance problem

Confirmation Procedure

Operating Condition

- Start the engine.
- Drive the vehicle repeated acceleration and deceleration.

- When freeze data is stored, drive the vehicle under those conditions instead of Driving Pattern step 2.
- Drive the vehicle in this manner only if the traffic regulations and ambient conditions allow.

With the HDS

Select the DI Fuel Pressure Test in the INSPECTION MENU with the HDS.

Diagnosis Details

Conditions for setting the DTC

When a malfunction is detected, the MIL comes on and a Pending DTC, a Confirmed DTC, and the freeze data are stored in the PCM memory.

Conditions for clearing the DTC

The MIL is cleared if the malfunction does not return in three consecutive trips in which the diagnostic runs. The MIL, the Pending DTC, the Confirmed DTC, and the freeze data can be cleared with the scan tool Clear command or by disconnecting the 12 volt battery.

DTC P0088 (2.4 L ENGINE) (2017 2018 2019)

DTC P0088: Fuel Rail Pressure Too High

General Description

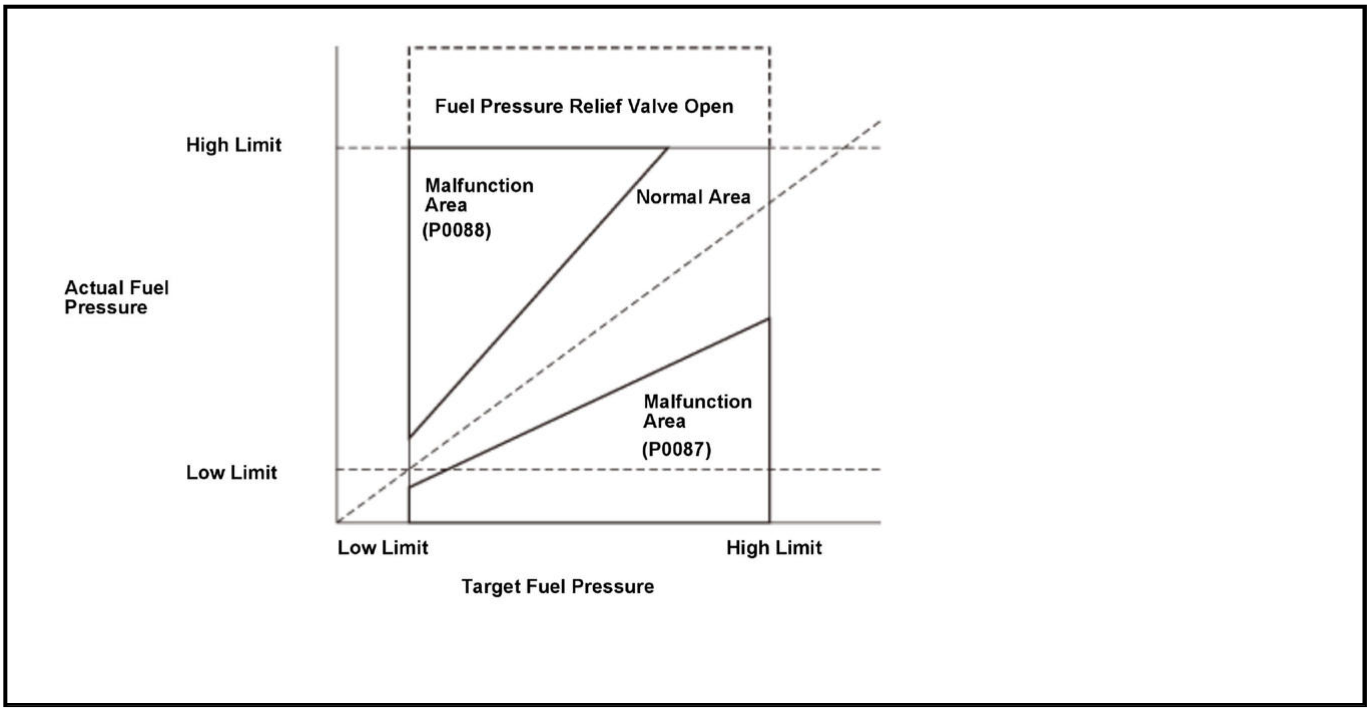

The powertrain control module (PCM) controls fuel pressure delivered by the high pressure fuel pump. If the actual fuel pressure deviates from the target fuel pressure for a set time, the PCM detects a malfunction. The DTC is also stored when the fuel pressure relief valve is opened to protect the fuel hose when the fuel reaches an abnormally high pressure.

Monitor Execution, Sequence, Duration, DTC Type

Execution	Once per driving cycle
Sequence	None
Duration	6.0 seconds or more
DTC Type	One drive cycle, MIL on

Enable Conditions

Condition	Minimum	Maximum
Elapsed time after returning from fuel cut	3.0 seconds	-

Malfunction Threshold

Either of these condition is met:

- The actual fuel pressure is 11.75 MPa (120 kgf/cm 2, 1, 705 psi) or more for at least 6.0 seconds when target fuel pressure is 3.5 MPa (35.7 kgf/cm 2, 508 psi).
- The actual fuel pressure is 23.25 MPa (238 kgf/cm 2, 3, 373 psi) or more for at least 6.0 seconds when target fuel pressure is 15 MPa (153 kgf/cm 2, 2, 176 psi).
- The actual fuel pressure is 23 MPa (235 kgf/cm 2, 3, 336 psi) or more.

Possible Cause

NOTE: The causes shown may not be a complete list of all potential problems, and it is possible that there may be other causes

- Spill valve stuck
- Fuel pressure sensor range/performance problem

Confirmation Procedure

Operating Condition

- Start the engine.
- Drive the vehicle repeated acceleration and deceleration.

- When freeze data is stored, drive the vehicle under those conditions instead of Driving Pattern step 2.
- Drive the vehicle in this manner only if the traffic regulations and ambient conditions allow.

With the HDS

Do the DI FUEL PRESSURE TEST in the INSPECTION MENU with the HDS.

Diagnosis Details

Conditions for setting the DTC

When a malfunction is detected, the MIL comes on and a Pending DTC, a Confirmed DTC, and the freeze data are stored in the PCM memory.

Conditions for clearing the DTC

The MIL is cleared if the malfunction does not return in three consecutive trips in which the diagnostic runs. The MIL, the Pending DTC, the Confirmed DTC, and the freeze data can be cleared with the scan tool Clear command or by disconnecting the 12 volt battery.

DTC P0096 (1.5 L ENGINE)

DTC P0096: Intake Air Temperature (IAT) Sensor 2 Circuit Range/Performance Problem

General Description

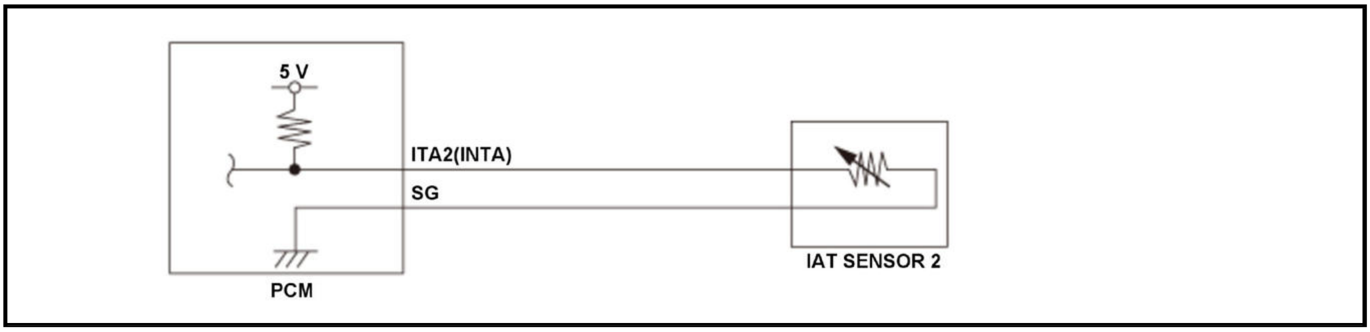

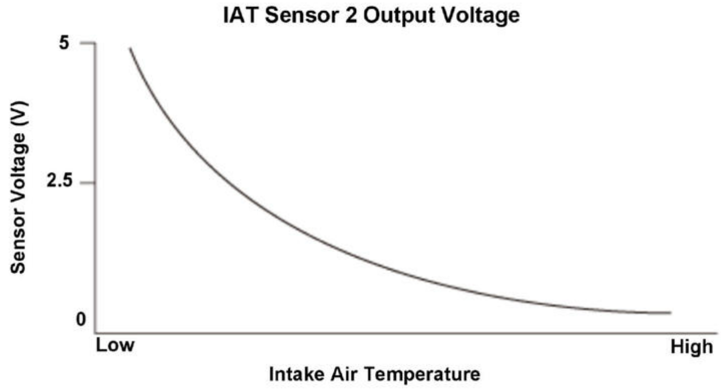

Intake air temperature (IAT) sensor 2 is a thermistor that detects intake air temperature, and it is used for air/fuel ratio feedback control to compensate for the atmospheric density fluctuations that accompany changes in intake air temperature. IAT sensor 2 resistance varies depending on temperature. The output voltage and the sensor resistance increase as the intake air temperature decreases. Conversely, the output voltage and the sensor resistance decrease as the intake air temperature increases. If the intake air temperature is a specified value for a specified time, the powertrain control module (PCM) detects a malfunction and stores a DTC.

Monitor Execution, Sequence, Duration, DTC Type

Execution	Continuous
Sequence	None
Duration	3.0 seconds or more
DTC Type	Two drive cycles, MIL on

Enable Conditions

Condition	B
Vehicle	ON mode

Malfunction Threshold

The intake air temperature [IAT Sensor (2)] is 285 deg. F (141 deg. C) or more for at least 3.0 seconds.

[ ]: HDS Parameter

Possible Cause

NOTE: The causes shown may not be a complete list of all potential problems, and it is possible that there may be other causes.

- IAT sensor 2 failure (range/performance problem)
- PCM internal circuit failure

Diagnosis Details

Conditions for setting the DTC

When a malfunction is detected during the first drive cycle, a Pending DTC is stored in the PCM memory. If the malfunction returns in the next (second) drive cycle, the MIL comes on and a Confirmed DTC and the freeze data are stored.

Conditions for clearing the DTC

The MIL is cleared if the malfunction does not return in three consecutive trips in which the diagnostic runs. The MIL, the Pending DTC, the Confirmed DTC, and the freeze data can be cleared with the scan tool Clear command or by disconnecting the 12 volt battery.

DTC P0097, P0098 (1.5 L ENGINE)

DTC P0097: Intake Air Temperature (IAT) Sensor 2 Circuit Low Voltage **DTC P0098:** Intake Air Temperature (IAT) Sensor 2 Circuit High Voltage

General Description

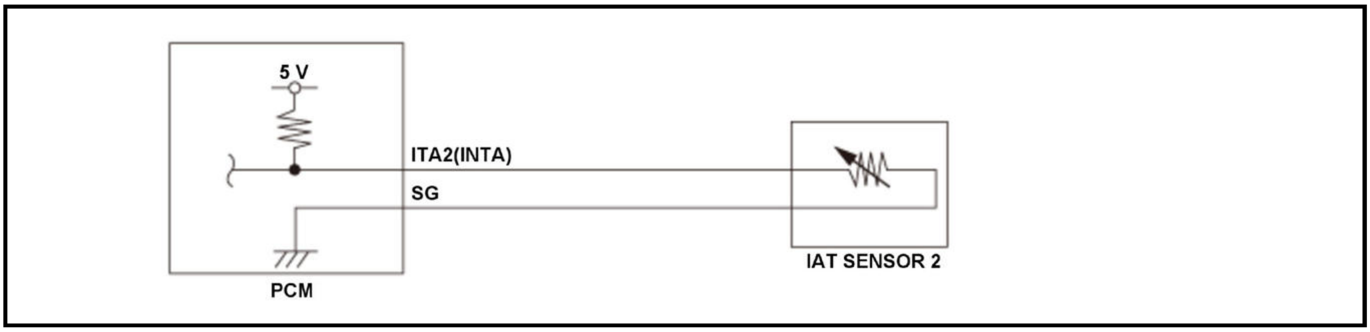

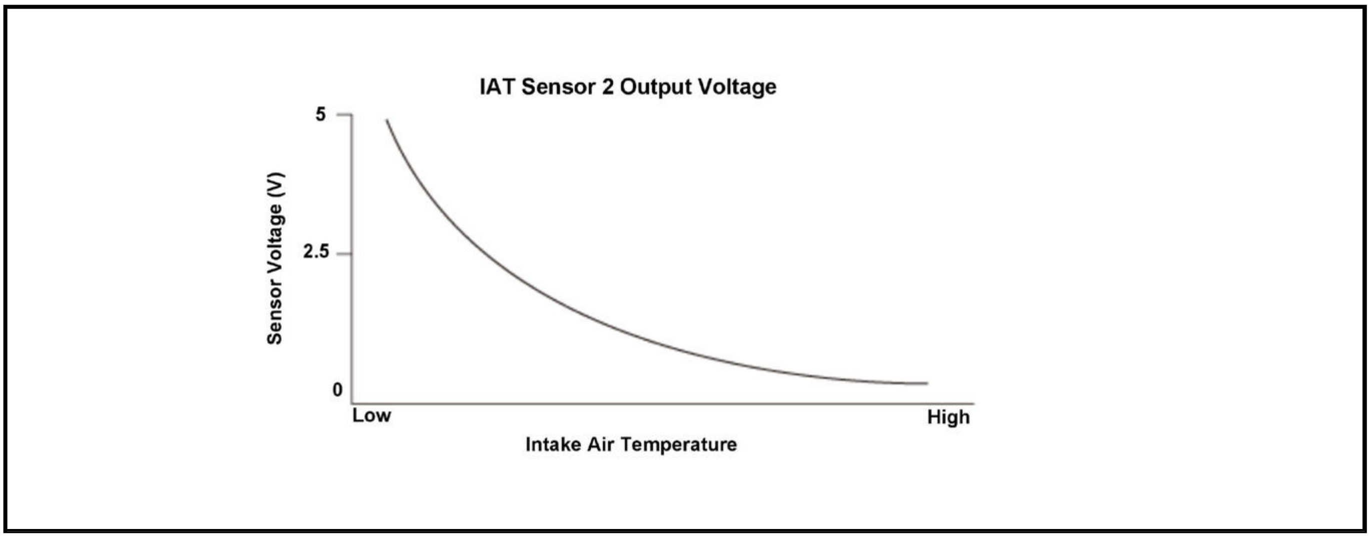

Intake air temperature (IAT) sensor 2 is a thermistor that detects intake air temperature, and it is used for air/fuel ratio feedback control to compensate for the atmospheric density fluctuations that accompany changes in intake air temperature. IAT sensor 2 resistance varies depending on temperature. The output voltage and the sensor resistance increase as the intake air temperature decreases. Conversely, the output voltage and the sensor resistance decrease as the intake air temperature increases. If the IAT sensor 2 output voltage is specified value, the PCM detects a malfunction and stores a DTC.

Monitor Execution, Sequence, Duration, DTC Type

Execution	Continuous
Sequence	None
Duration	2.0 seconds or more
DTC Type	Two drive cycles, MIL on

Enable Conditions

Condition	B
Vehicle	ON mode

Malfunction Threshold

DTC: P0097

The IAT sensor 2 output voltage [IAT Sensor (2)] is 0.08 V or less for at least 2.0 seconds.

DTC: P0098

The IAT sensor 2 output voltage [IAT Sensor (2)] is 4.92 V or more for at least 2.0 seconds.

[ ]: HDS Parameter

Possible Cause

NOTE: The causes shown may not be a complete list of all potential problems, and it is possible that there may be other causes.

DTC: P0097

- IAT sensor 2 ITA2 (INTA) line short to ground

DTC: P0098

- IAT sensor 2 ITA2 (INTA) line open
- IAT sensor 2 SG line open

Common

- IAT sensor 2 failure
- PCM internal circuit failure

Diagnosis Details

Conditions for setting the DTC

When a malfunction is detected during the first drive cycle, a Pending DTC is stored in the PCM memory. If the malfunction returns in the next (second) drive cycle, the MIL comes on and a Confirmed DTC and the freeze data are stored.

Conditions for clearing the DTC

The MIL is cleared if the malfunction does not return in three consecutive trips in which the diagnostic runs. The MIL, the Pending DTC, the Confirmed DTC, and the freeze data can be cleared with the scan tool Clear command or by disconnecting the 12 volt battery.

DTC P00CF (1.5 L ENGINE)

DTC P00CF: Turbocharger Boost Sensor/BARO Sensor Incorrect Correlation

General Description

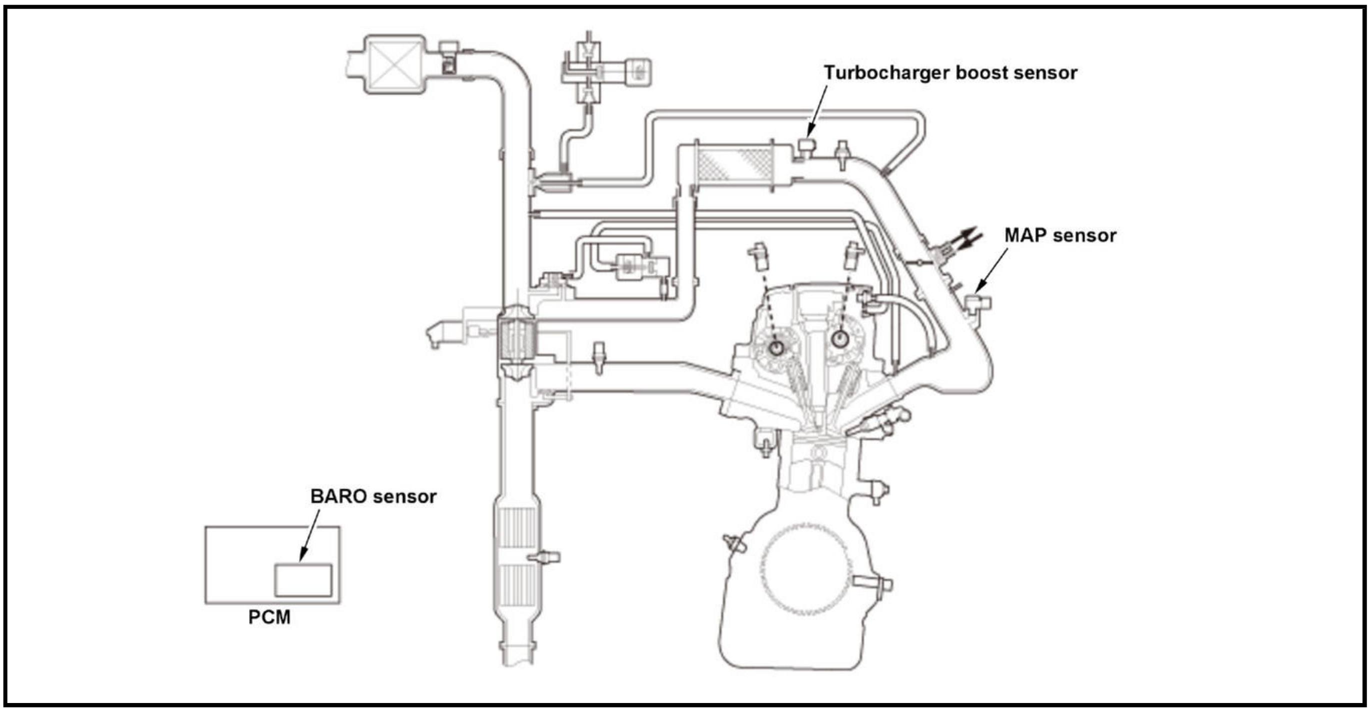

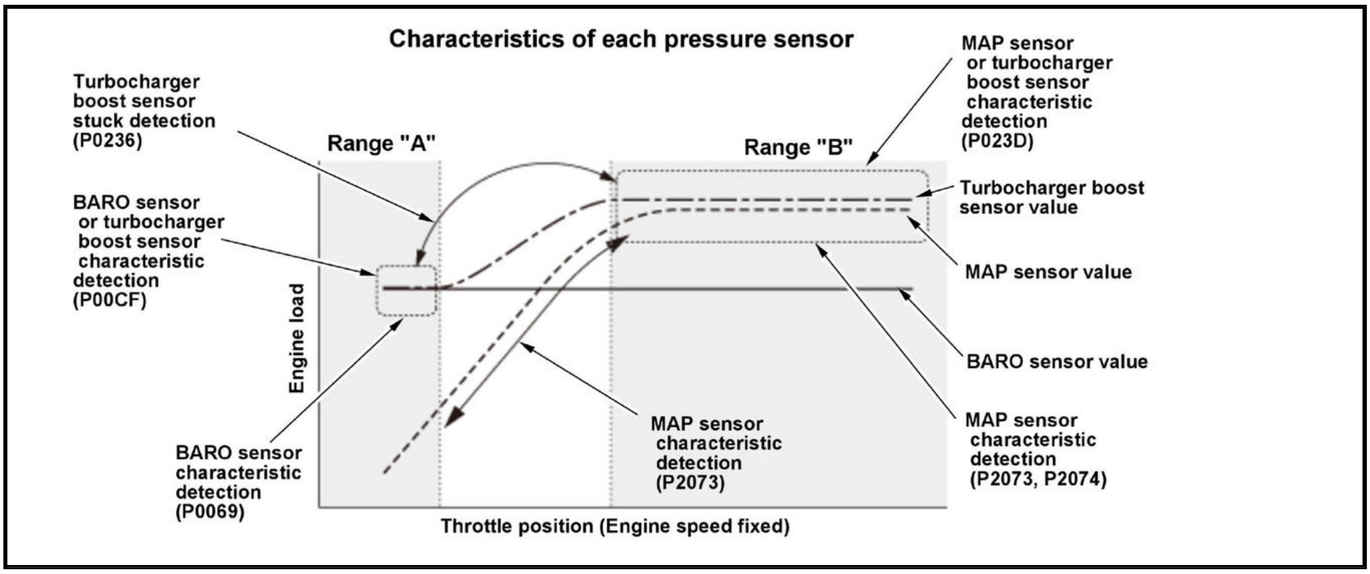

The barometric pressure (BARO) sensor, the manifold absolute pressure (MAP) sensor, and the turbocharger boost sensor are equipped to the vehicle to detect air pressure conditions to the engine. The BARO sensor value and the turbocharger boost sensor value shows similar value at range "A" such as in idle conditions, and the turbocharger boost sensor value and MAP sensor value shows similar value at range "B" such as in high throttle position.

Malfunction determinations are done by the powertrain control module (PCM) in two ranges by comparing the pressure sensor values.

- At range "A": BARO sensor or turbocharger boost sensor is abnormal if the difference of the two pressure sensor values are specified or more (P00CF)
- At range "B": Turbocharger boost sensor or MAP sensor is abnormal if the difference of the two pressure sensor values are specified or more (P023D)
- Range "A" determined as abnormal and range "B" determined as normal: BARO sensor abnormal (P0069)
- Both ranges "A" and "B" determined as abnormal: Turbocharger boost sensor abnormal (P0236)
- Turbocharger boost sensor or MAP sensor values do not change when throttle position is transited from ranges "A" to "B": Determined as turbocharger boost sensor output stuck (P0236) or MAP sensor output stuck (P2073 or P2074)

Monitor Execution, Sequence, Duration, DTC Type

Execution	Once per driving cycle
Sequence	None
Duration	5 seconds or more
DTC Type	Two drive cycles, MIL on

Enable Conditions

Condition	Minimum	Maximum
Engine time after starting the engine	3 seconds	-
Engine speed [ENGINE SPEED]	530 rpm	-
Intake air amount	-	7.0 g/second (0.24 oz/second)
Other	At idle	

[ ]: HDS Parameter

Malfunction Threshold

The difference between the BARO sensor value and the turbocharger boost sensor value is 27 kPa (200 mmHg, 7.9 inHg) or more for at least 5.0 seconds.

Possible Cause

NOTE: The causes shown may not be a complete list of all potential problems, and it is possible that there may be other causes.

- BARO sensor output range/performance problem
- Turbocharger boost sensor output range/performance problem

Confirmation Procedure

Operating Condition

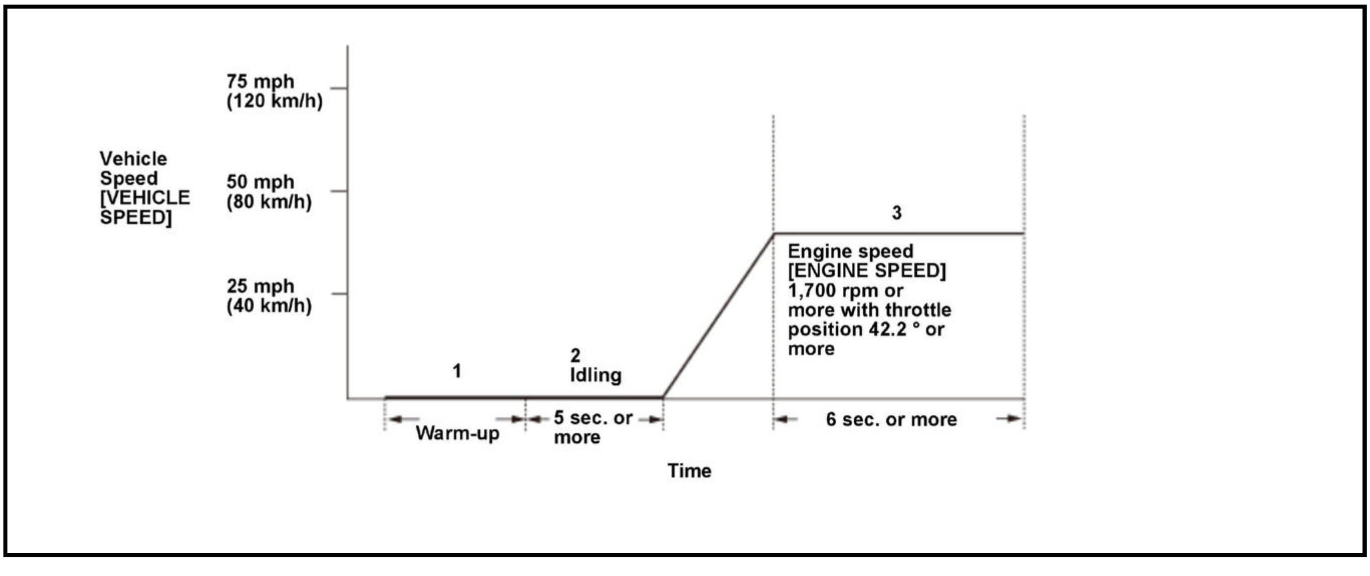

- Enter the maintenance mode, then start the engine. Hold the engine speed [ENGINE SPEED] at 3, 000 rpm without load (in P or N) until the radiator fan comes on.
- Let the engine idle for at least 7 seconds.

- Drive the vehicle at engine speed [ENGINE SPEED] 1, 700 rpm or more with throttle position 42.2 deg. or more for at least 4 seconds.
- Drive the vehicle in this manner only if the traffic regulations and ambient conditions allow.

With the HDS

None.

Diagnosis Details

Conditions for setting the DTC

When a malfunction is detected during the first drive cycle, a Pending DTC is stored in the PCM memory. If the malfunction returns in the next (second) drive cycle, the MIL comes on and a Confirmed DTC, the freeze data, and the on-board snapshot are stored.

Conditions for clearing the DTC

The MIL is cleared if the malfunction does not return in three consecutive trips in which the diagnostic runs. The MIL, the Pending DTC, the Confirmed DTC, the freeze data, and the on-board snapshot can be cleared with the scan tool Clear command or by disconnecting the 12 volt battery.

DTC P00FE (1.5 L ENGINE) (2020 2021)

DTC P00FE: Evaporative Emission (EVAP) Vent Line Blockage

General Description

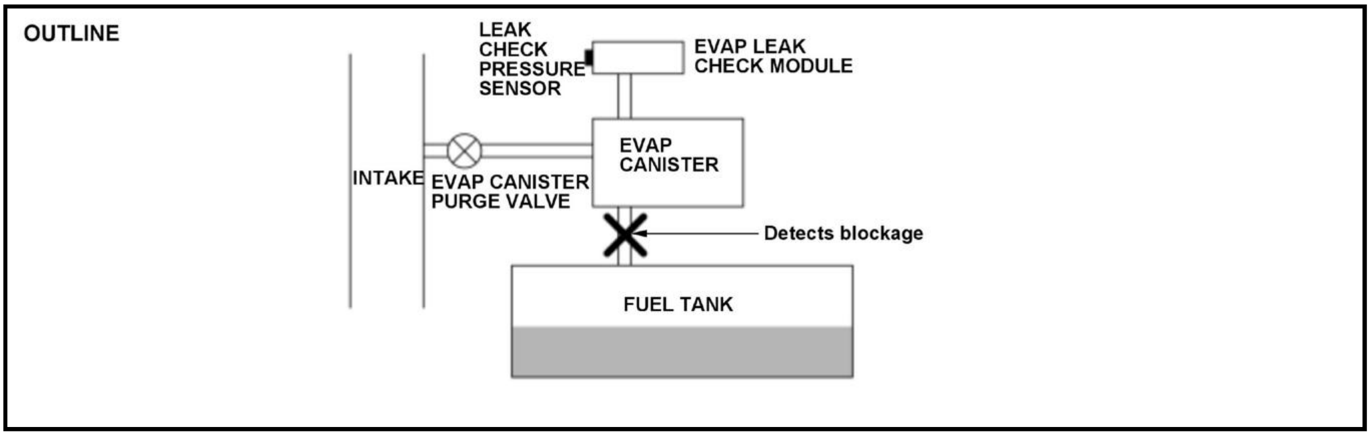
OUTLINE
LEAK CHECK PRESSURE SENSOR
EVAP LEAK CHECK MODULE
EVAP CANISTER
INTAKE
EVAP CANISTER PURGE VALVE
Detects blockage
FUEL TANK

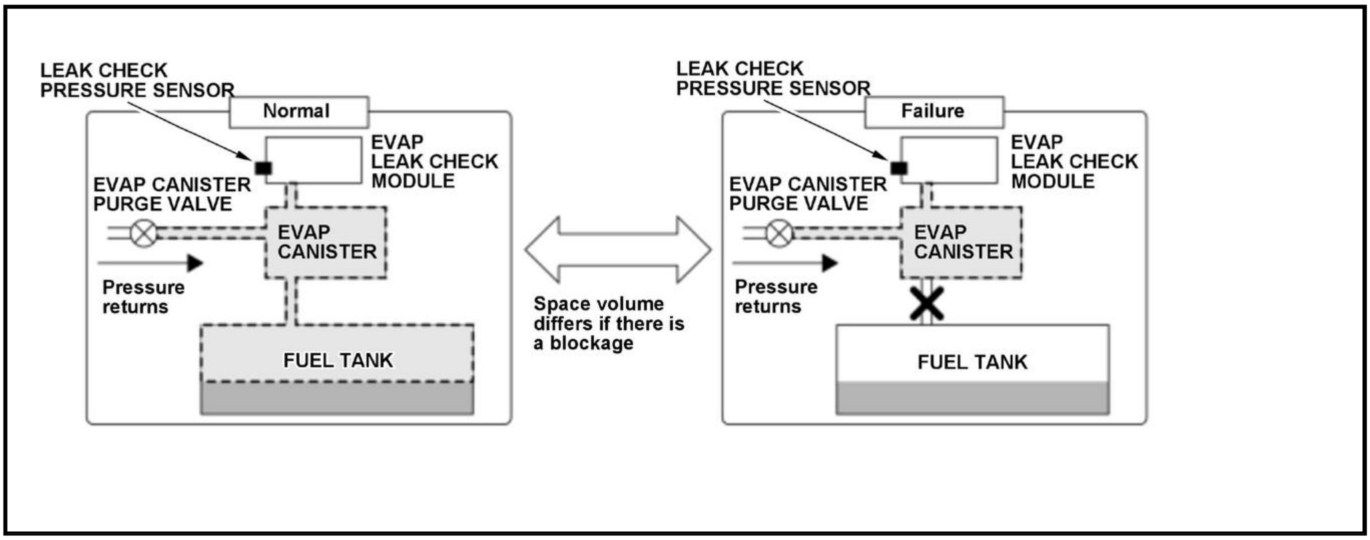
LEAK CHECK PRESSURE SENSOR
Normal
EVAP LEAK CHECK MODULE
EVAP CANISTER PURGE VALVE
EVAP CANISTER
Pressure returns
FUEL TANK
Space volume differs if there is a blockage
LEAK CHECK PRESSURE SENSOR
Failure
EVAP LEAK CHECK MODULE
EVAP CANISTER PURGE VALVE
EVAP CANISTER
Pressure returns
FUEL TANK

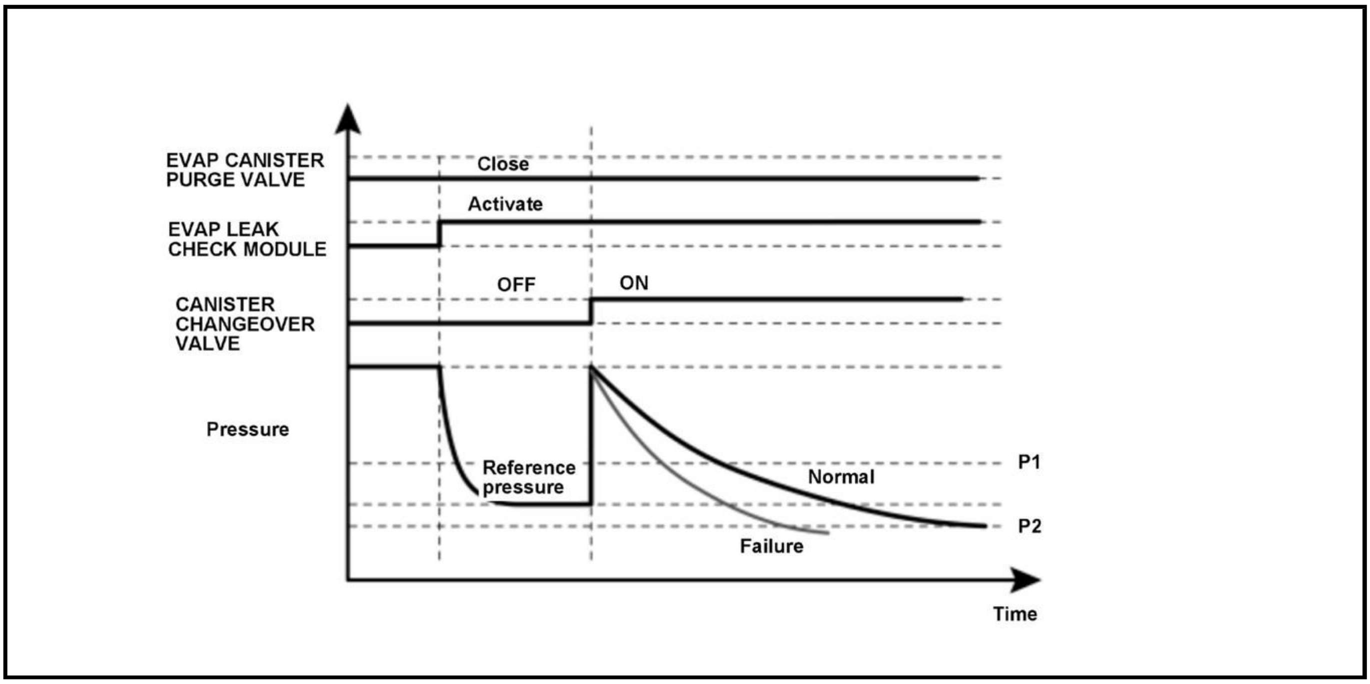

Vent blockage is determined by the change in the internal pressure of the tank. The PCM detects a blockage of the vent line by estimating the volume of space in the evaporative emission (EVAP) system. The evaporative space volume is estimated from the pressure behavior when the EVAP canister purge valve is closed and when the pressure is reduced by the EVAP leak check module, the presence or absence of a blockage is determined. If the estimated volume is large, it is determined to be normal and when it estimated small, the PCM detects a malfunction and stores a DTC.

Monitor Execution, Sequence, Duration, DTC Type

Execution	Once per driving cycle
Sequence	None
Duration	18 minutes 10 seconds or more
DTC Type	Two drive cycles, MIL on

Enable Conditions

Condition	Minimum	Maximum
Soak duration	5 hours	-
PCM wake up engine coolant temperature [ECT Sensor 2]	40.0 deg. F (4.4 deg. C)	95 deg. F (35 deg. C)
Barometric pressure[Baro Sensor]	76 kPa (22.5 inHg, 569 mmHg)	-
Driving time before soak	10 minutes	-
Vehicle speed before soak[VEHICLE SPEED]	25 mph (40 km/h) (For 5 minutes or more)	-
Drive distance after refueling	7 miles (10 km)	-
12 volt battery voltage [Battery]	10.5 V	-
Average fuel level [Fuel Level (Average)]	-	85 %

[ ]: HDS Parameter

Malfunction Threshold

When the calculated volume of space in the EVAP system is 10.7 L (2.83 US gal) or less.

Possible Cause

NOTE: The causes shown may not be a complete list of all potential problems, and it is possible that there may be other causes.

- EVAP vent line blockage
- Vent shut float blockage

Confirmation Procedure

Operating Condition

- With an average fuel level of 85 % or less, drive the vehicle at least 10 minutes and run for 7 miles (10 km) or more. In the driving, make the vehicle at a steady speed 25 mph (40 km/h) or more for at least 5 minutes.
- Turn the vehicle to the OFF (LOCK) mode, and wait for at least 5 hours.
- PCM wake up, and wait at least 18 minutes 10 seconds.

- When you have difficulty duplicating the DTC because of road conditions and traffic situations, repeat the driving pattern several times.
- Drive the vehicle in this manner only if the traffic regulations and ambient conditions allow.

Diagnosis Details

Conditions for setting the DTC

When a malfunction is detected during the first drive cycle, a Pending DTC is stored in the PCM memory. If the malfunction returns in the next (second) drive cycle, the MIL comes on and a Confirmed DTC and the freeze data are stored.

Conditions for clearing the DTC

The MIL is cleared if the malfunction does not return in three consecutive trips in which the diagnostic runs. The MIL, the Pending DTC, the Confirmed DTC, and the freeze data can be cleared with the scan tool clear command or by disconnecting the 12 volt battery.

DTC P0100 (1.5 L ENGINE)

DTC P0100: Mass Air Flow (MAF) Sensor Circuit Malfunction

General Description

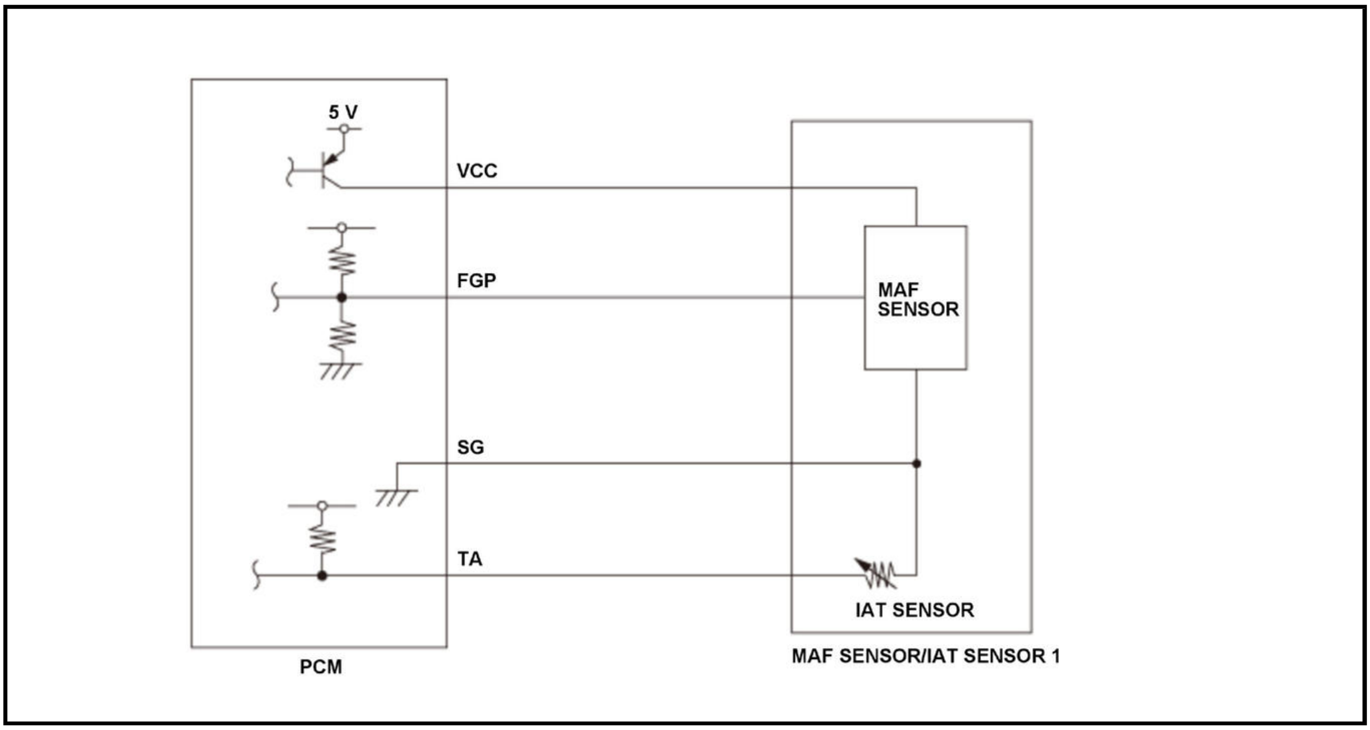

The mass airflow (MAF) sensor is attached to the intake air passage, and it measures the amount of intake airflow. The MAF sensor is a chip type airflow meter. The airflow cools the electrically heated chip that is mounted in the air passage. The powertrain control module (PCM) determines the amount of intake airflow by detecting the frequency. If the MAF sensor input frequency is a set value, the PCM detects a malfunction and stores a DTC.

Monitor Execution, Sequence, Duration, DTC Type

Execution	Continuous
Sequence	None
Duration	2.0 seconds or more
DTC Type	One drive cycle, MIL on

Enable Conditions

Condition	B
Vehicle	ON mode

Malfunction Threshold

The MAF sensor input frequency [MAF SENSOR] is less than 488 Hz for at least 2.0 seconds.

[ ]: HDS Parameter

Possible Cause

NOTE: The causes shown may not be a complete list of all potential problems, and it is possible that there may be other causes.

- MAF sensor FGP line short to ground
- MAF sensor FGP line open
- MAF sensor FGP line short to power
- MAF sensor VCC line open
- MAF sensor VCC line short to ground
- MAF sensor SG line open

- MAF sensor failure
- PCM internal circuit failure

Diagnosis Details

Conditions for setting the DTC

When a malfunction is detected, the MIL comes on and a Pending DTC, a Confirmed DTC, and the freeze data are stored in the PCM memory.

Conditions for clearing the DTC

The MIL is cleared if the malfunction does not return in three consecutive trips in which the diagnostic runs. The MIL, the Pending DTC, the Confirmed DTC, and the freeze data can be cleared with the scan tool Clear command or by disconnecting the 12 volt battery.

DTC P0101 (1.5 L ENGINE) (2017)

DTC P0101: Mass Air Flow (MAF) Sensor Circuit Range/Performance Problem (Out of Range)

General Description

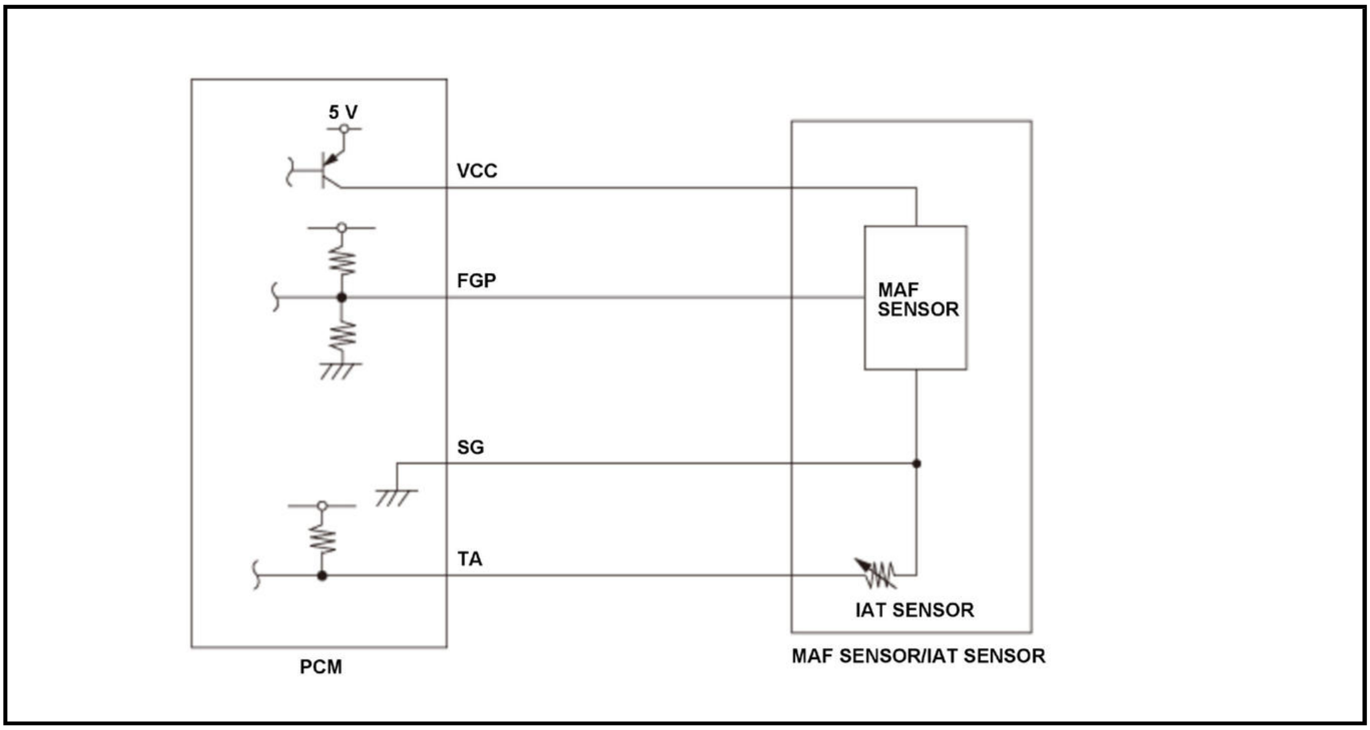

The mass airflow (MAF) sensor is attached to the intake air passage, and it measures the amount of intake airflow. The MAF sensor is a chip type airflow meter. The airflow cools the electrically heated chip that is mounted in the air passage. The powertrain control module (PCM) determines the amount of intake airflow by detecting the frequency. If the MAF sensor input frequency is out of range, the PCM detects a malfunction and stores a DTC.

Monitor Execution, Sequence, Duration, DTC Type

Execution	Continuous
Sequence	None
Duration	3.0 seconds or more
DTC Type	One drive cycle, MIL on

Enable Conditions

Condition	B
Vehicle	ON mode

Malfunction Threshold

The MAF sensor input frequency [MAF SENSOR] is out of range from 520 to 10, 000 Hz for at least 3.0 seconds.

[ ]: HDS Parameter

Possible Cause

NOTE: The causes shown may not be a complete list of all potential problems, and it is possible that there may be other causes.

- MAF sensor failure

Diagnosis Details

Conditions for setting the DTC

When a malfunction is detected, the MIL comes on and a Pending DTC, a Confirmed DTC, and the freeze data are stored in the PCM memory.

Conditions for clearing the DTC

The MIL is cleared if the malfunction does not return in three consecutive trips in which the diagnostic runs. The MIL, the Pending DTC, the Confirmed DTC, and the freeze data can be cleared with the scan tool Clear command or by disconnecting the 12 volt battery.

DTC P0101 (1.5 L ENGINE) (2018 2019 2020 2021)

DTC P0101: Mass Air Flow (MAF) Sensor Circuit Range/Performance Problem (Out of Range)

General Description

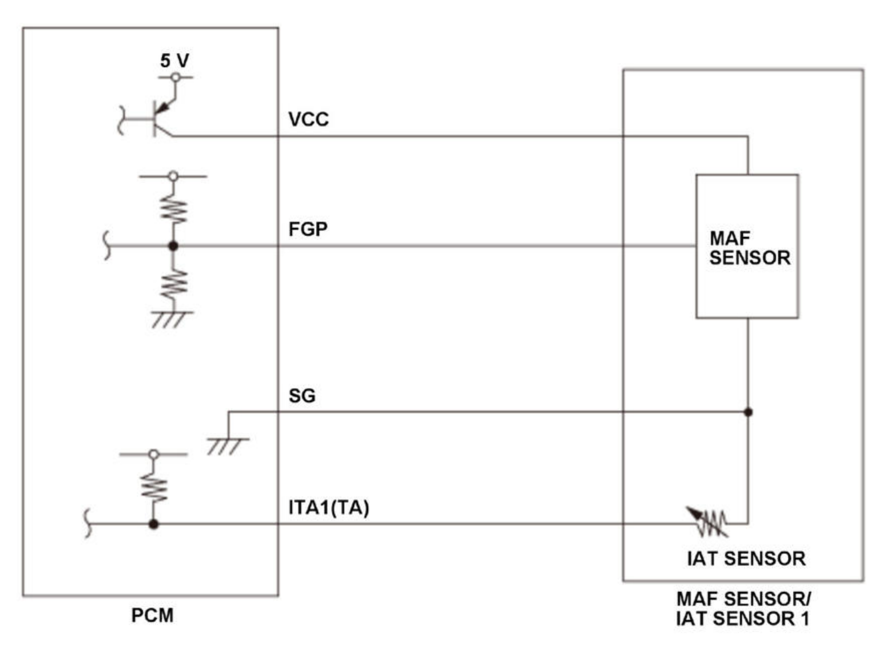

The mass air flow (MAF) sensor is attached to the intake air passage, and it measures the amount of intake air flow. The MAF sensor is a chip type air flow meter. The air flow cools the electrically heated chip that is mounted in the air passage. The powertrain control module (PCM) determines the amount of intake air flow by detecting the frequency. If the MAF sensor input frequency is out of range, the PCM detects a malfunction and stores a DTC.

Monitor Execution, Sequence, Duration, DTC Type

Execution	Continuous
Sequence	None
Duration	3.0 seconds or more
DTC Type	Two drive cycles, MIL on

Enable Conditions

Condition	B
Vehicle	ON mode

Malfunction Threshold

The MAF sensor input frequency [MAF SENSOR] is out of range from 520 to 10, 000 Hz for at least 3.0 seconds.

[ ]: HDS Parameter

Possible Cause

NOTE: The causes shown may not be a complete list of all potential problems, and it is possible that there may be other causes.

- MAF sensor failure

Diagnosis Details

Conditions for setting the DTC

When a malfunction is detected during the first drive cycle, a Pending DTC is stored in the PCM memory. If the malfunction returns in the next (second) drive cycle, the MIL comes on and a Confirmed DTC, the freeze data, and the on-board snapshot are stored.

Conditions for clearing the DTC

The MIL is cleared if the malfunction does not return in three consecutive trips in which the diagnostic runs. The MIL, the Pending DTC, the Confirmed DTC, the freeze data, and the on-board snapshot can be cleared with the scan tool Clear command or by disconnecting the 12 volt battery.

DTC P0101 (2.4 L ENGINE) (2018 2019)

DTC P0101: Mass Air Flow (MAF) Sensor Circuit Range/Performance Problem (Out of Range)

General Description

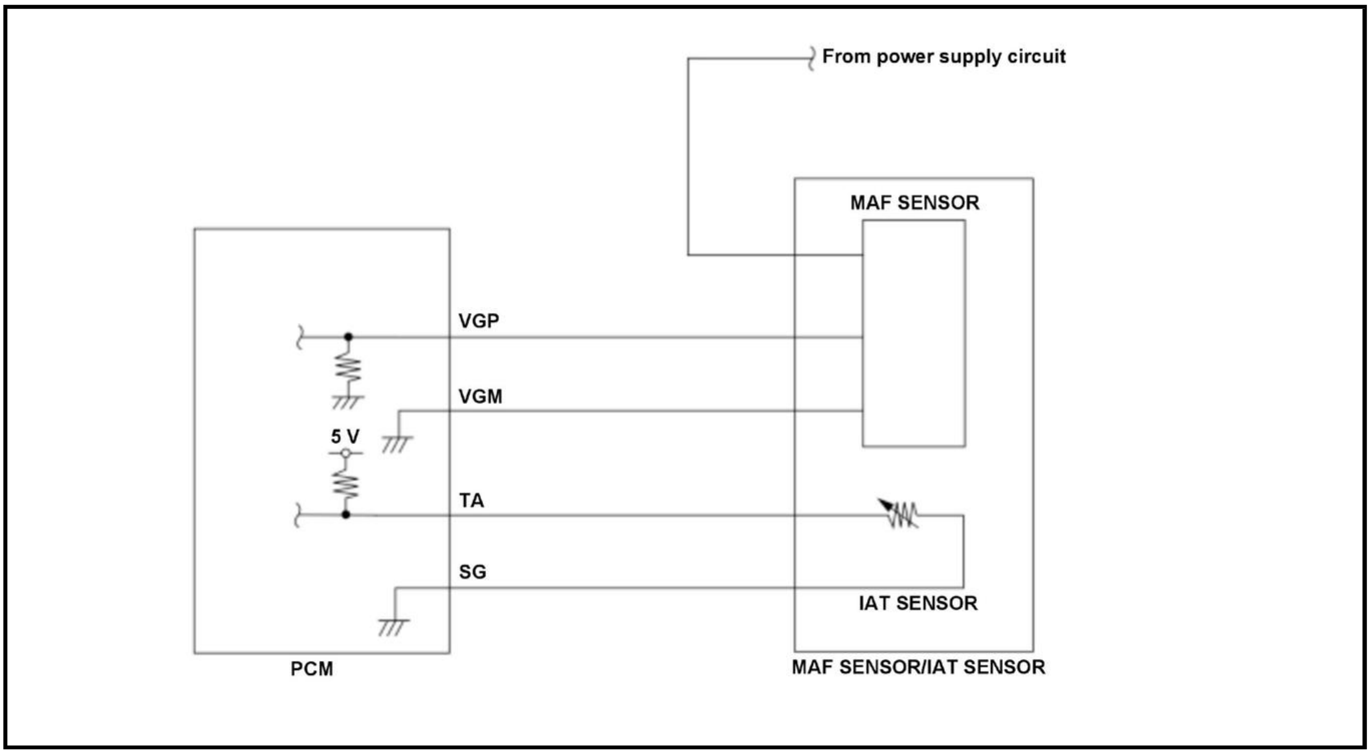

The mass air flow (MAF) sensor is attached to the intake air passage, and it measures the amount of intake air flow. The MAF sensor is a chip type air flow meter. The air flow cools the electrically heated chip that is mounted in the air passage. The powertrain control module (PCM) determines the amount of intake air flow by detecting the frequency. If the MAF sensor input frequency is out of range, the PCM detects a malfunction and stores a DTC.

Monitor Execution, Sequence, Duration, DTC Type

Execution	Continuous
Sequence	None
Duration	6.0 seconds or more
DTC Type	One drive cycle, MIL on

Enable Conditions

Condition	B
Vehicle	ON mode

Malfunction Threshold

The MAF sensor output voltage [MAF SENSOR] is 0.59 V or less, or 4.89 V or more for at least 6.0 seconds.

[ ]: HDS Parameter

Possible Cause

NOTE: The causes shown may not be a complete list of all potential problems, and it is possible that there may be other causes.

- MAF sensor failure

Diagnosis Details

Conditions for setting the DTC

When a malfunction is detected, the MIL comes on and a Pending DTC, a Confirmed DTC, and the freeze data are stored in the PCM memory.

Conditions for clearing the DTC

The MIL is cleared if the malfunction does not return in three consecutive trips in which the diagnostic runs. The MIL, the Pending DTC, the Confirmed DTC, and the freeze data can be cleared with the scan tool Clear command or by disconnecting the 12 volt battery.

DTC P0102, P0103 (2.4 L ENGINE) (2017 2018 2019)

DTC P0102: Mass Air flow (MAF) Sensor Circuit Low Voltage **DTC P0103:** Mass Air flow (MAF) Sensor Circuit High Voltage

General Description

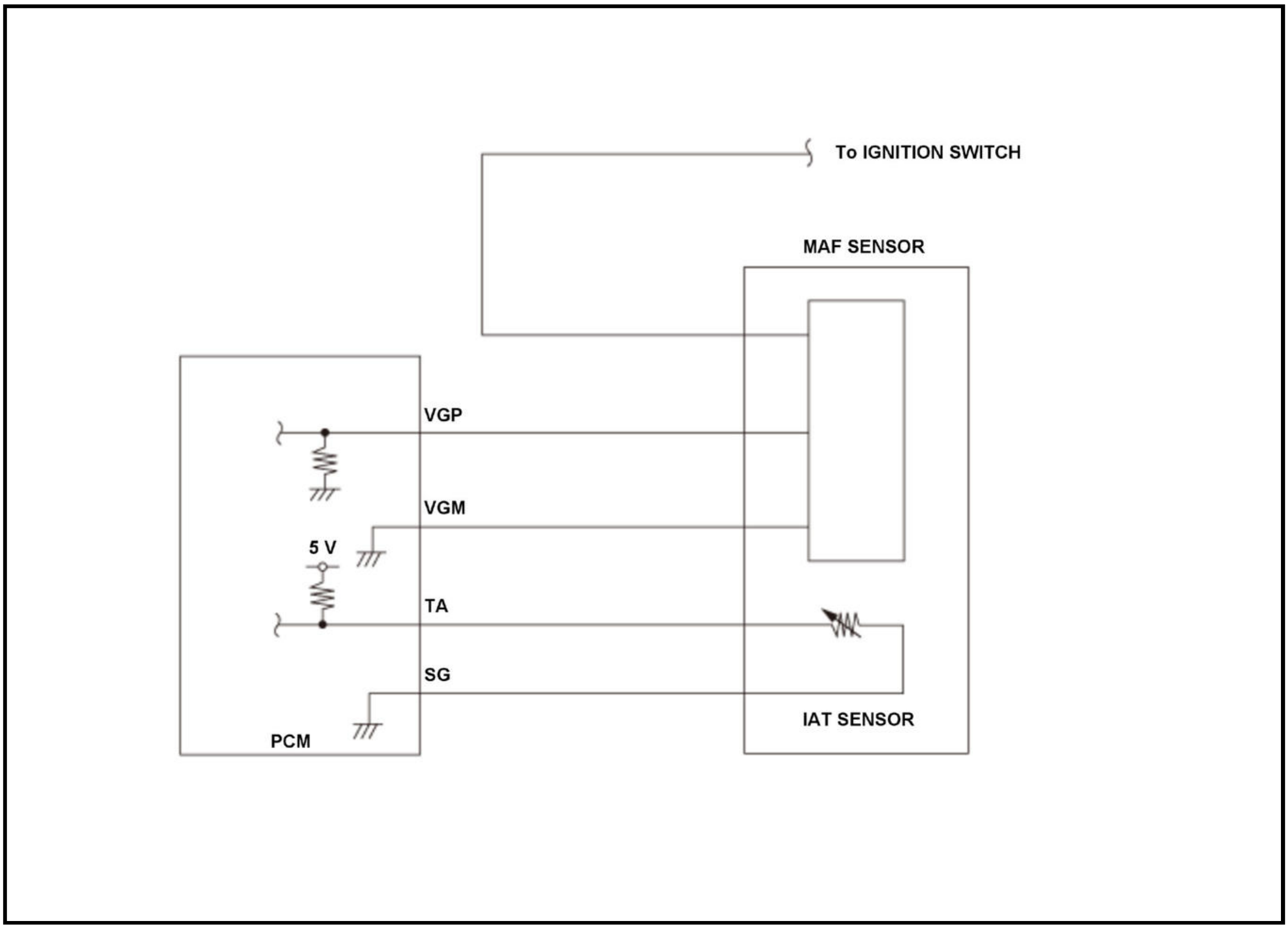

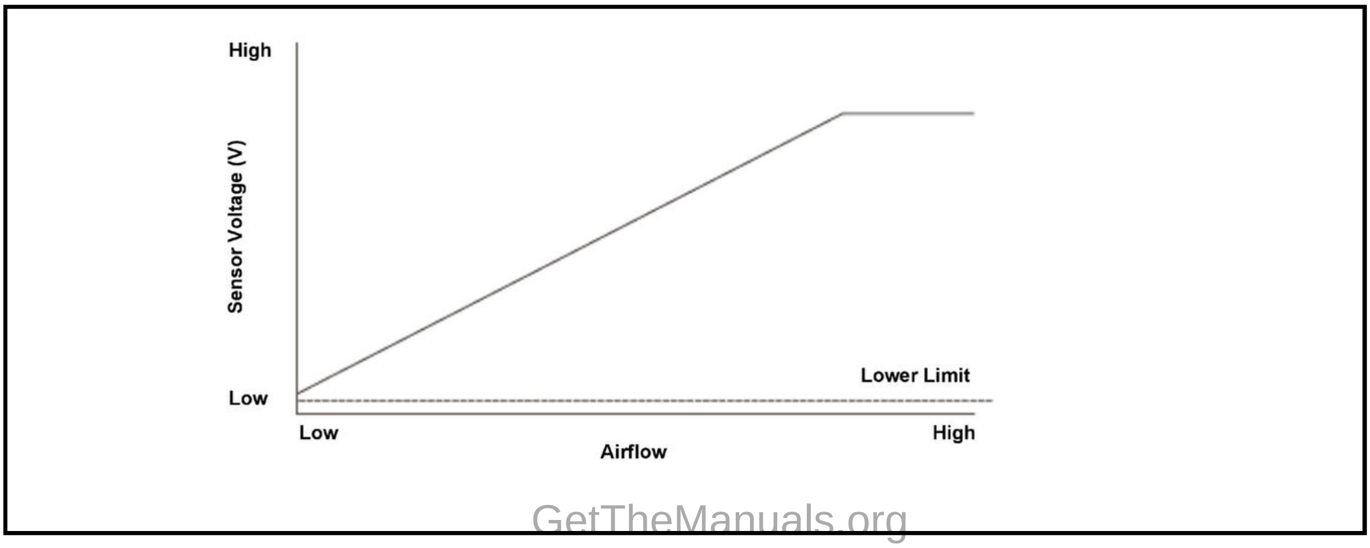

The mass airflow (MAF) sensor is attached to the intake air passage, and it measures the amount of intake airflow. The MAF sensor is a hot wire airflow meter. The airflow cools the electrically heated wire that is mounted in the air passage. The powertrain control module (PCM) determines the amount of intake airflow by detecting the current that is required to keep the hot wire at a constant temperature. The lower limit of the MAF sensor output is specified. If the output is below that limit, the PCM detects a malfunction and stores a DTC.

Monitor Execution, Sequence, Duration, DTC Type

Execution	Continuous
Sequence	None
Duration	2.0 seconds or more
DTC Type	One drive cycle, MIL on

Enable Conditions

Condition	B
Vehicle	ON mode

Malfunction Threshold

DTC: P0102

The MAF sensor output voltage [MAF SENSOR] is 0.10 V or less for at least 2.0 seconds.

DTC: P0103

The MAF sensor output voltage [MAF SENSOR] is 4.89 V or more for at least 2.0 seconds.

[ ]: HDS Parameter

Possible Cause

NOTE: The causes shown may not be a complete list of all potential problems, and it is possible that there may be other causes.

DTC: P0102

- MAF sensor VGP line short to ground
- MAF sensor VGP line open
- MAF sensor power supply line open

DTC: P0103

- MAF sensor VGM line open

Common

- MAF sensor failure
- PCM internal circuit failure

Diagnosis Details

Conditions for setting the DTC

When a malfunction is detected, the MIL comes on and a Pending DTC, a Confirmed DTC, and the freeze data are stored in the PCM memory.

Conditions for clearing the DTC

The MIL is cleared if the malfunction does not return in three consecutive trips in which the diagnostic runs. The MIL, the Pending DTC, the Confirmed DTC, and the freeze data can be cleared with the scan tool Clear command or by disconnecting the 12 volt battery.

DTC P0105 (2.4 L ENGINE) (2018 2019)

DTC P0105: Manifold Absolute Pressure (MAP) Sensor Out of Range

General Description

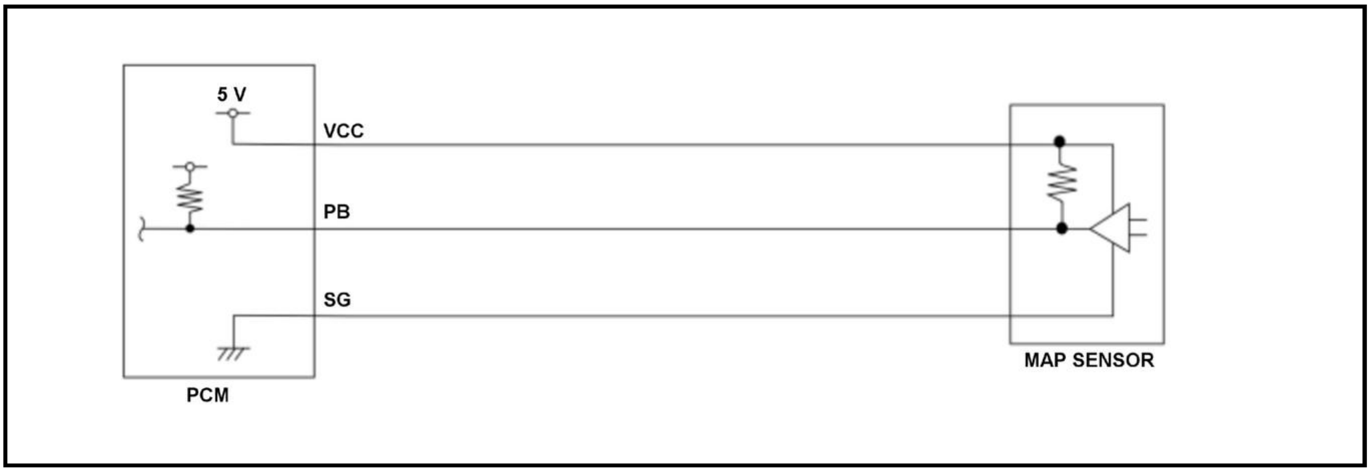

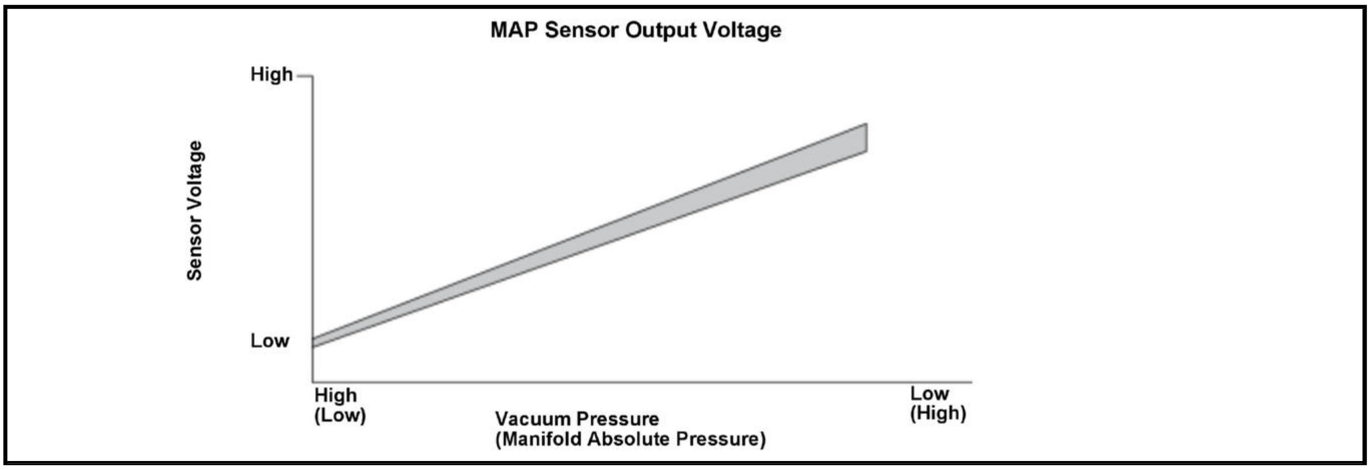

The manifold absolute pressure (MAP) sensor measures the pressure or vacuum in the manifold. This measurement is converted into an electrical signal which the powertrain control module (PCM) uses to monitor the engine. The MAP sensor outputs low signal voltage at high vacuum (throttle valve closed) and high signal voltage at low vacuum (throttle valve wide open). If the signal voltage from the MAP sensor falls below or exceeds a set value for a specified time, the PCM detects a malfunction and stores a DTC.

Monitor Execution, Sequence, Duration, DTC Type

Execution	Continuous
Sequence	None
Duration	6 seconds or more
DTC Type	Two drive cycles, MIL on

Enable Conditions

Condition	B
Vehicle	ON mode

Malfunction Threshold

The MAP sensor output voltage [MAP SENSOR] is 0.23 V or less, or 3.39 V or more for at least 6 seconds.

[ ]: HDS Parameter

Possible Cause

NOTE: The causes shown may not be a complete list of all potential problems, and it is possible that there may be other causes.

- MAP sensor failure
- PCM internal circuit failure

Diagnosis Details

Conditions for setting the DTC

When a malfunction is detected during the first drive cycle, a Pending DTC is stored in the PCM memory. If the malfunction returns in the next (second) drive cycle, the MIL comes on and a Confirmed DTC, the freeze data, and the on-board snapshot are stored.

Conditions for clearing the DTC

The MIL is cleared if the malfunction does not return in three consecutive trips in which the diagnostic runs. The MIL, the Pending DTC, the Confirmed DTC, the freeze data, and the on-board snapshot can be cleared with the scan tool Clear command or by disconnecting the 12 volt battery.

DTC P0107, P0108 (1.5 L ENGINE)

DTC P0107: Manifold Absolute Pressure (MAP) Sensor Circuit Low Voltage **DTC P0108:** Manifold Absolute Pressure (MAP) Sensor Circuit High Voltage

General Description

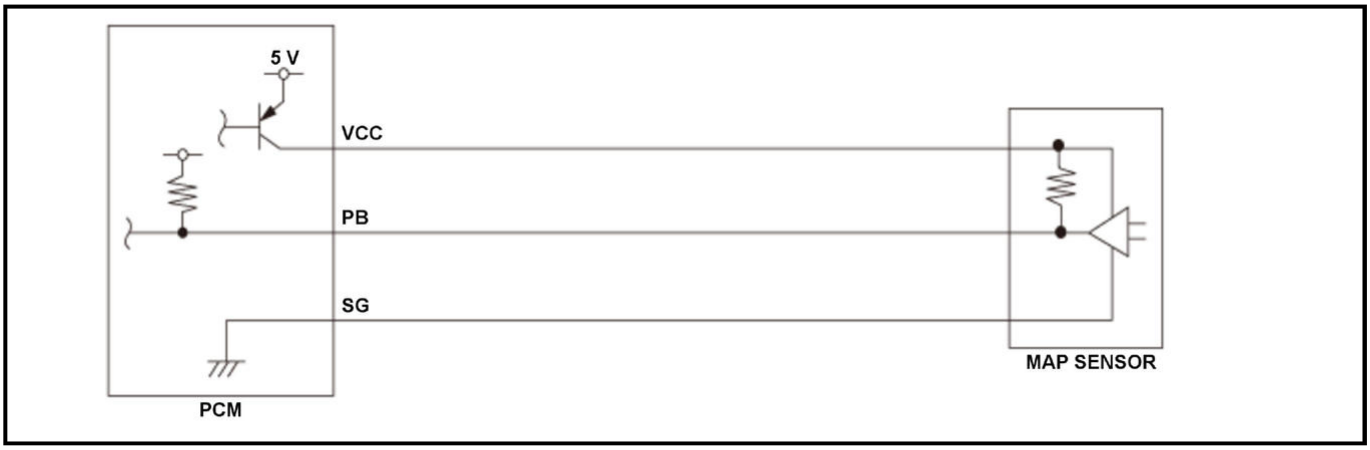

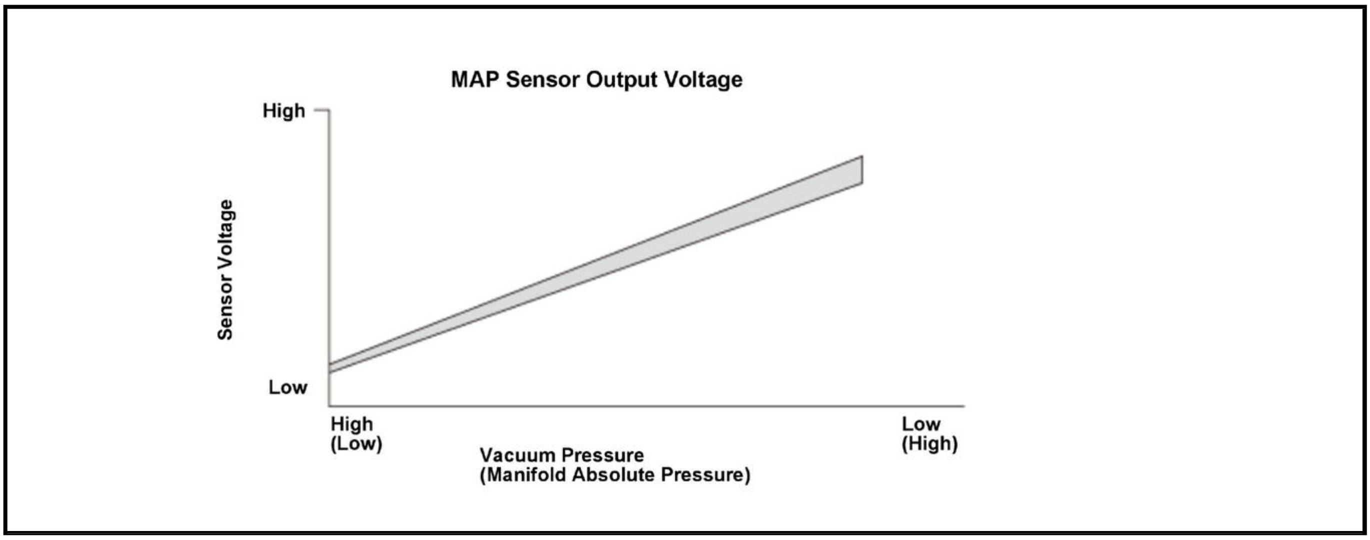

The manifold absolute pressure (MAP) sensor measures the pressure or vacuum in the manifold. This measurement is converted into an electrical signal which the powertrain control module (PCM) uses to monitor the engine. The MAP sensor outputs low signal voltage at high vacuum (throttle valve closed) and high signal voltage at low vacuum (throttle valve wide open). If the signal voltage from the MAP sensor falls below or exceeds a set value for a specified time, the PCM detects a malfunction and stores a DTC.

Monitor Execution, Sequence, Duration, DTC Type

Execution	Continuous
Sequence	None
Duration	2.0 seconds or more
DTC Type	One drive cycle, MIL on

Enable Conditions

Condition	B
Vehicle	ON mode

Malfunction Threshold

DTC: P0107

The MAP sensor output voltage [MAP SENSOR] is 0.23 V or less for at least 2.0 seconds.

DTC: P0108

The MAP sensor output voltage [MAP SENSOR] is 4.49 V or more for at least 2.0 seconds.

[ ]: HDS Parameter

Possible Cause

NOTE: The causes shown may not be a complete list of all potential problems, and it is possible that there may be other causes.

DTC: P0107

- MAP sensor PB line short to ground
- MAP sensor VCC line open

DTC: P0108

- MAP sensor PB line open
- MAP sensor SG line open

Common

- MAP sensor failure
- PCM internal circuit failure

Diagnosis Details

Conditions for setting the DTC

When a malfunction is detected, the MIL comes on and a Pending DTC, a Confirmed DTC, and the freeze data are stored in the PCM memory.

Conditions for clearing the DTC

The MIL is cleared if the malfunction does not return in three consecutive trips in which the diagnostic runs. The MIL, the Pending DTC, the Confirmed DTC, and the freeze data can be cleared with the scan tool Clear command or by disconnecting the 12 volt battery.

DTC P0107, P0108 (2.4 L ENGINE) (2017 2018 2019)

DTC P0107: Manifold Absolute Pressure (MAP) Sensor Circuit Low Voltage **DTC P0108:** Manifold Absolute Pressure (MAP) Sensor Circuit High Voltage

General Description

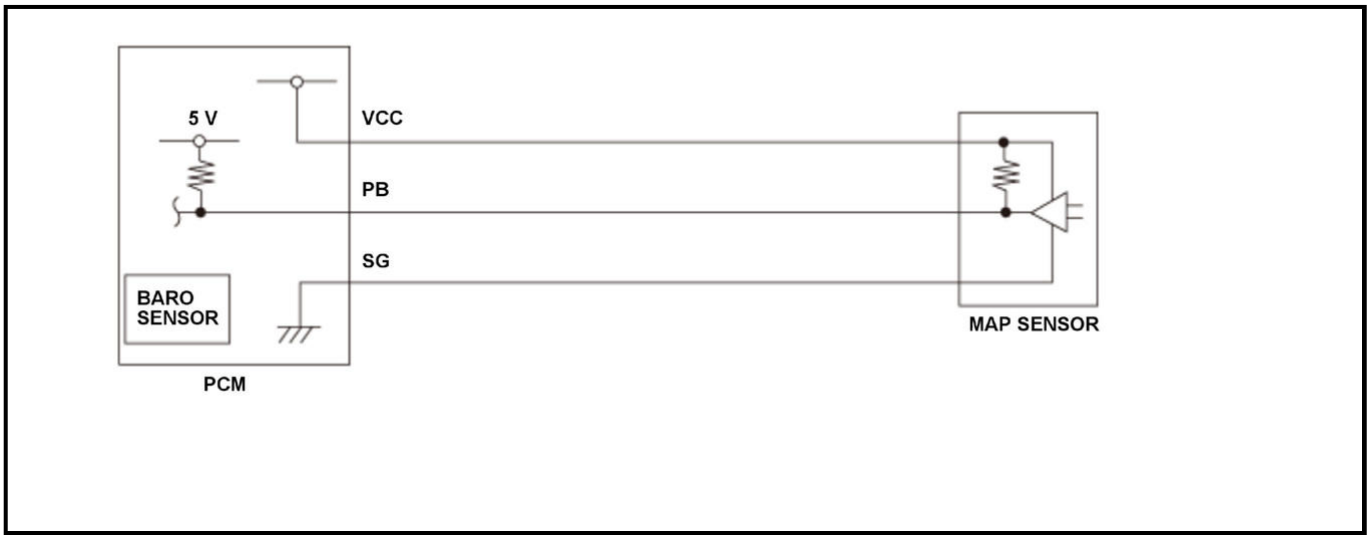

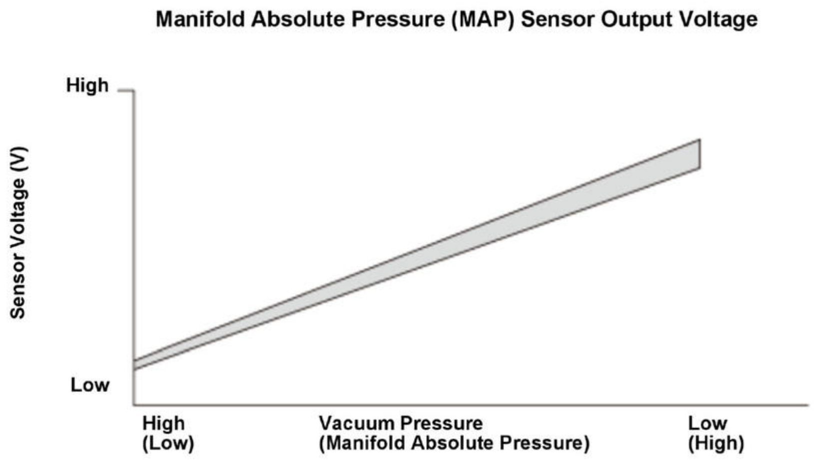

The manifold absolute pressure (MAP) sensor measures the pressure or vacuum in the manifold. This measurement is converted into an electrical signal which the powertrain control module (PCM) uses to monitor the engine. The MAP sensor outputs low signal voltage at high vacuum (throttle valve closed) and high signal voltage at low vacuum (throttle valve wide open). If the signal voltage from the MAP sensor falls below a set value for a specified time, the PCM detects a malfunction and stores a DTC.

Monitor Execution, Sequence, Duration, DTC Type

Execution	Continuous
Sequence	None
Duration	2 seconds or more

DTC Type	One drive cycle, MIL on

Enable Conditions

Condition	B
Vehicle	ON mode

Malfunction Threshold

DTC: P0107

The MAP sensor output voltage [MAP SENSOR] is 0.23 V or less for at least 2.0 seconds.

DTC: P0108

The MAP sensor output voltage [MAP SENSOR] is 4.49 V or more for at least 2.0 seconds.

[ ]: HDS Parameter

Possible Cause

NOTE: The causes shown may not be a complete list of all potential problems, and it is possible that there may be other causes.

DTC: P0107

- MAP sensor PB line short to ground
- MAP sensor VCC line open

DTC: P0108

- MAP sensor PB line open
- MAP sensor SG line open

Common

- MAP sensor failure
- PCM internal circuit failure

Diagnosis Details

Conditions for setting the DTC

When a malfunction is detected, the MIL comes on and a Pending DTC, a Confirmed DTC, and the freeze data are stored in the PCM memory.

Conditions for clearing the DTC

The MIL is cleared if the malfunction does not return in three consecutive trips in which the diagnostic runs. The MIL, the Pending DTC, the Confirmed DTC, and the freeze data can be cleared with the scan tool Clear command or by disconnecting the 12 volt battery.

DTC P0111 (1.5 L ENGINE)

DTC P0111: Intake Air Temperature (IAT) Sensor 1 Circuit Range/Performance Problem

General Description

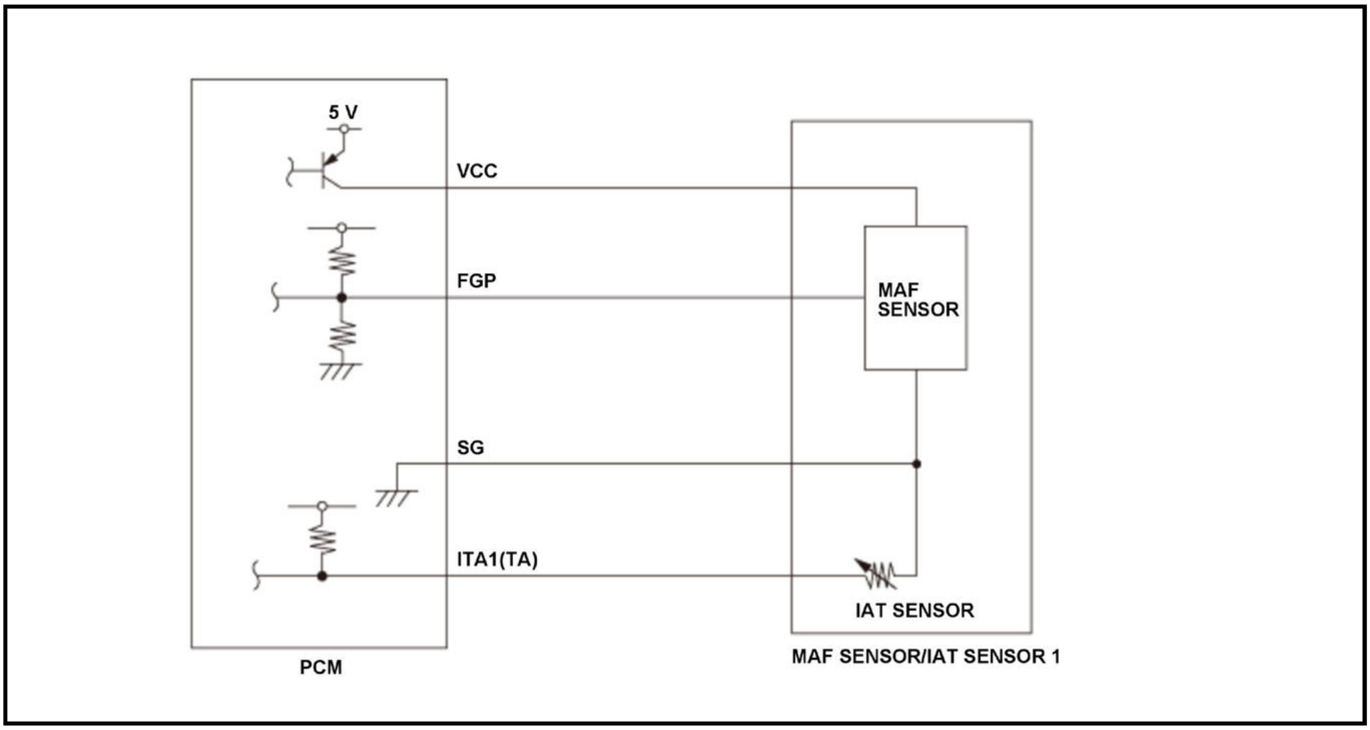

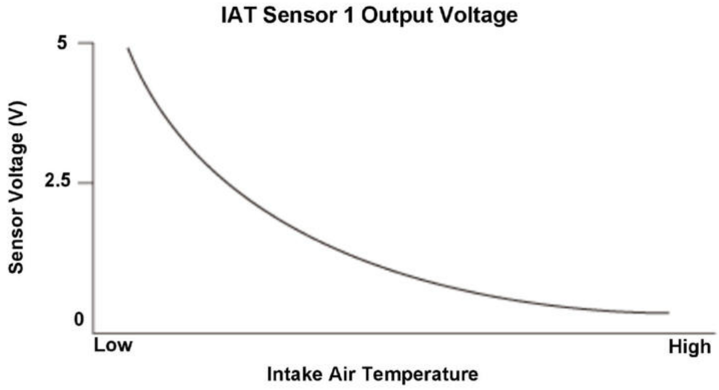

Intake air temperature (IAT) sensor 1 is a thermistor that detects intake air temperature, and it is used for air/fuel ratio feedback control to compensate for the atmospheric density fluctuations that accompany changes in intake air temperature. IAT sensor 1 resistance varies depending on temperature. The output voltage and the sensor resistance increase as the intake air temperature decreases. Conversely, the output voltage and the sensor resistance decrease as the intake air temperature increases. If the intake air temperature is a specified value for a specified time, the powertrain control module (PCM) detects a malfunction and stores a DTC.

Monitor Execution, Sequence, Duration, DTC Type

Execution	Continuous
Sequence	None
Duration	3.0 seconds or more

DTC Type	Two drive cycles, MIL on

Enable Conditions

Condition	B
Vehicle	ON mode

Malfunction Threshold

The intake air temperature [IAT Sensor (1)] is 285 deg. F (141 deg. C) or more for at least 3.0 seconds.

[ ]: HDS Parameter

Possible Cause

NOTE: The causes shown may not be a complete list of all potential problems, and it is possible that there may be other causes.

- IAT sensor 1 failure (range/performance problem)
- PCM internal circuit failure

Diagnosis Details

Conditions for setting the DTC

When a malfunction is detected during the first drive cycle, a Pending DTC is stored in the PCM memory. If the malfunction returns in the next (second) drive cycle, the MIL comes on and a Confirmed DTC and the freeze data are stored.

Conditions for clearing the DTC

The MIL is cleared if the malfunction does not return in three consecutive trips in which the diagnostic runs. The MIL, the Pending DTC, the Confirmed DTC, and the freeze data can be cleared with the scan tool Clear command or by disconnecting the 12 volt battery.

DTC P0111 (2.4 L ENGINE) (2017)

DTC P0111: Intake Air Temperature (IAT) Sensor Circuit Range/Performance Problem

General Description

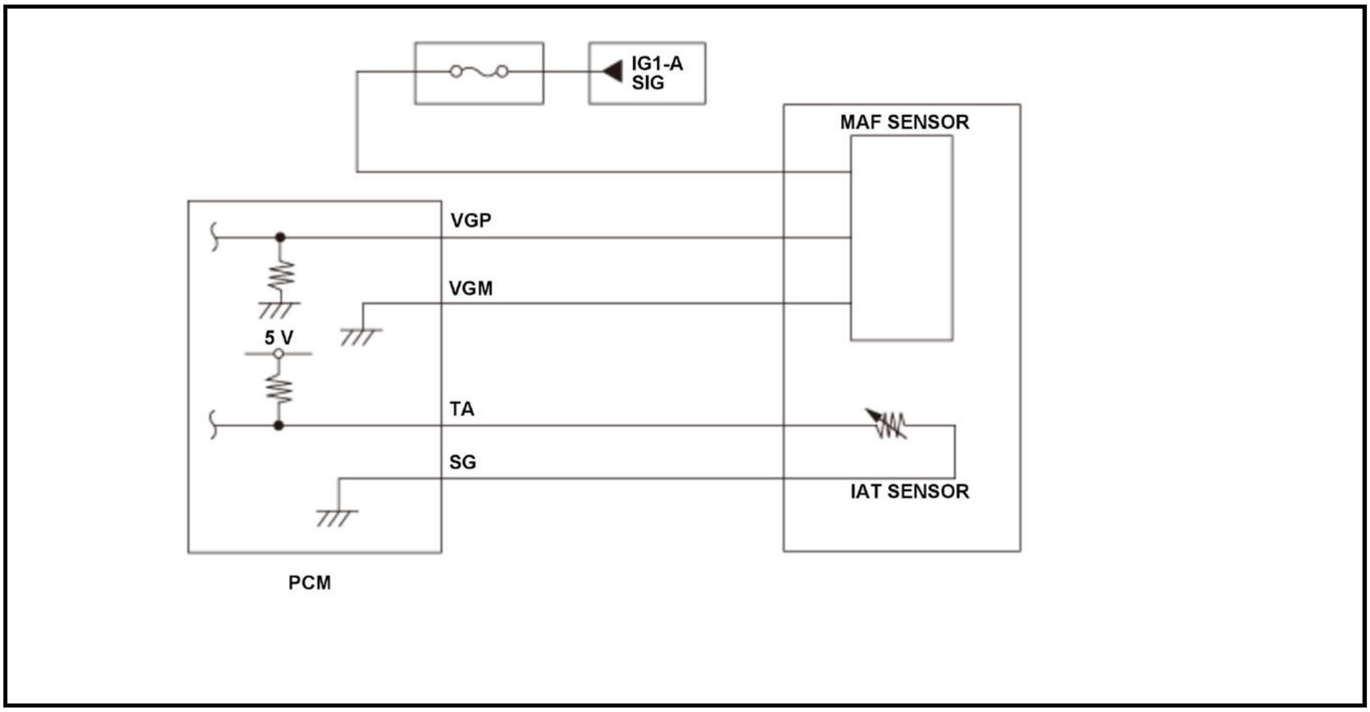

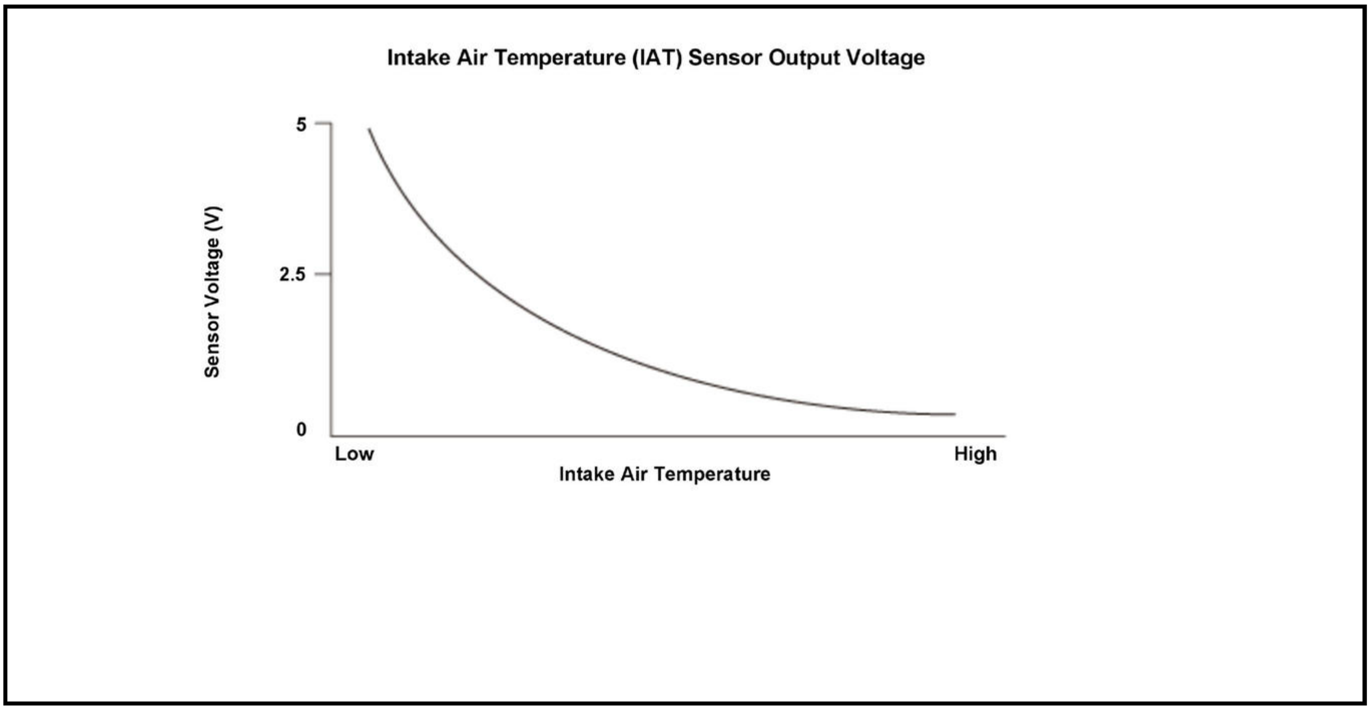

Intake air temperature (IAT) sensor is a thermistor that detects intake air temperature, and it is used for air/fuel ratio feedback control to compensate for the atmospheric density fluctuations that accompany changes in intake air temperature. IAT sensor resistance varies depending on temperature. The output voltage and the sensor resistance increase as the intake air temperature decreases. Conversely, the output voltage and the sensor resistance decrease as the intake air temperature increases. If the IAT sensor output voltage is in between a specified range, the powertrain control module (PCM) detects a malfunction and stores a DTC.

Monitor Execution, Sequence, Duration, DTC Type

Execution	Continuous
Sequence	None
Duration	2.0 seconds or more
DTC Type	Two drive cycles, MIL on

Enable Conditions

Condition	B
Vehicle	ON mode

Malfunction Threshold

The IAT sensor output voltage [IAT SENSOR] is in between 0.08 - 0.20 V for at least 2.0 seconds.

[ ]: HDS Parameter

Possible Cause

NOTE: The causes shown may not be a complete list of all potential problems, and it is possible that there may be other causes.

- IAT sensor range/performance failure
- PCM internal circuit failure

Diagnosis Details

Conditions for setting the DTC

When a malfunction is detected during the first drive cycle, a Pending DTC is stored in the PCM memory. If the malfunction returns in the next (second) drive cycle, the MIL comes on and a Confirmed DTC and the freeze data are stored.

Conditions for clearing the DTC

The MIL is cleared if the malfunction does not return in three consecutive trips in which the diagnostic runs. The MIL, the Pending DTC, the Confirmed DTC, and the freeze data can be cleared with the scan tool Clear command or by disconnecting the 12 volt battery.

DTC P0111 (2.4 L ENGINE) (2018 2019)

DTC P0111: Intake Air Temperature (IAT) Sensor Circuit Range/Performance Problem

General Description

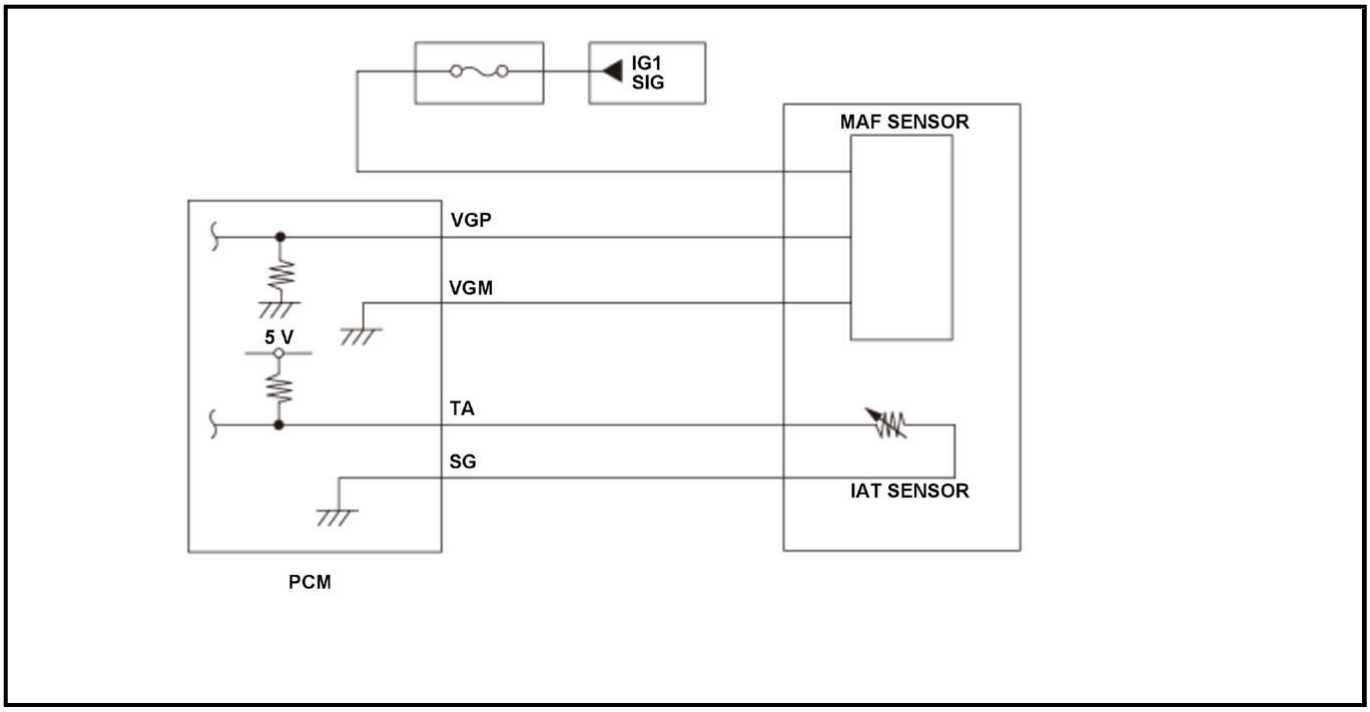

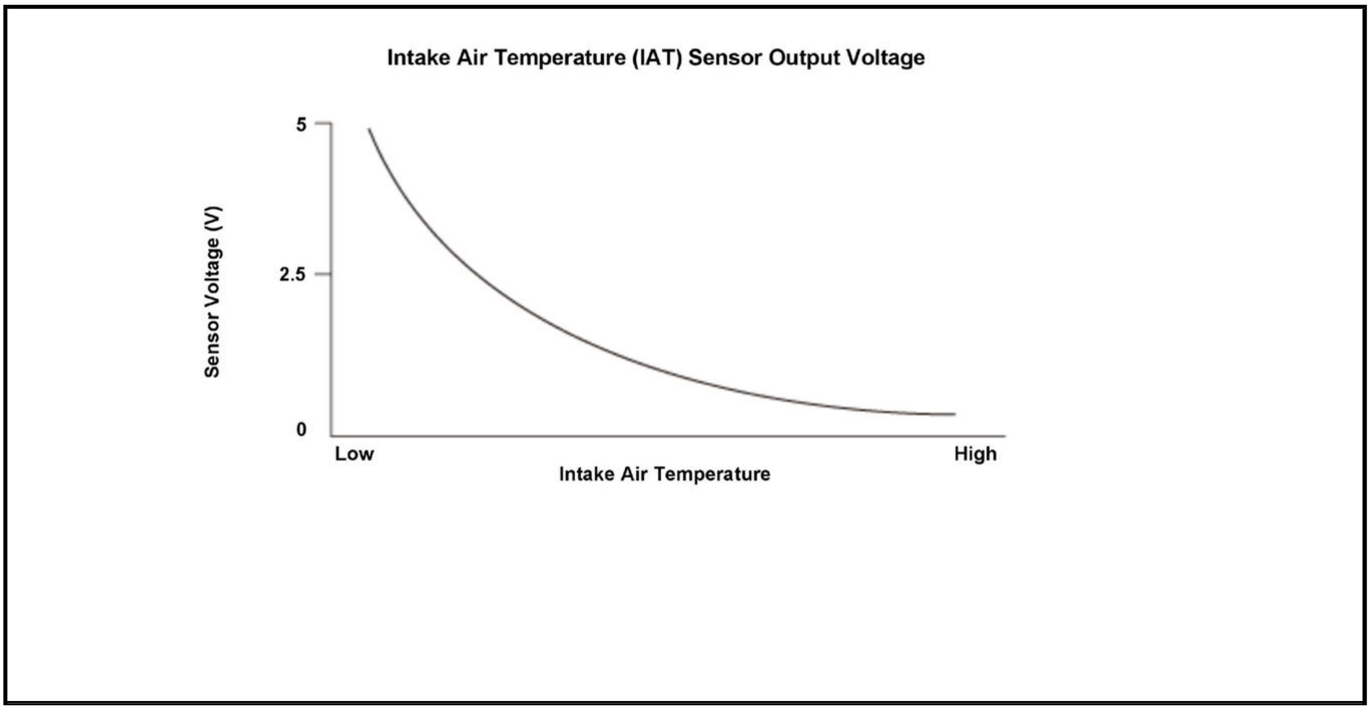

Intake air temperature (IAT) sensor is a thermistor that detects intake air temperature, and it is used for air/fuel ratio feedback control to compensate for the atmospheric density fluctuations that accompany changes in intake air temperature. IAT sensor resistance varies depending on temperature. The output voltage and the sensor resistance increase as the intake air temperature decreases. Conversely, the output voltage and the sensor resistance decrease as the intake air temperature increases. If the IAT sensor output voltage is in between a specified range, the powertrain control module (PCM) detects a malfunction and stores a DTC.

Monitor Execution, Sequence, Duration, DTC Type

Execution	Continuous
Sequence	None
Duration	2.0 seconds or more
DTC Type	Two drive cycles, MIL on

Enable Conditions

Condition	B
Vehicle	ON mode

Malfunction Threshold

The IAT sensor output voltage [IAT SENSOR] is in between 0.26 - 4.92 V for at least 6.0 seconds.

[ ]: HDS Parameter

Possible Cause

NOTE: The causes shown may not be a complete list of all potential problems, and it is possible that there may be other causes.

- IAT sensor range/performance failure
- PCM internal circuit failure

Diagnosis Details

Conditions for setting the DTC

When a malfunction is detected during the first drive cycle, a Pending DTC is stored in the PCM memory. If the malfunction returns in the next (second) drive cycle, the MIL comes on and a Confirmed DTC and the freeze data are stored.

Conditions for clearing the DTC

The MIL is cleared if the malfunction does not return in three consecutive trips in which the diagnostic runs. The MIL, the Pending DTC, the Confirmed DTC, and the freeze data can be cleared with the scan tool Clear command or by disconnecting the 12 volt battery.

DTC P0112, P0113 (1.5 L ENGINE)

DTC P0112: Intake Air Temperature (IAT) Sensor 1 Circuit Low Voltage **DTC P0113:** Intake Air Temperature (IAT) Sensor 1 Circuit High Voltage

General Description

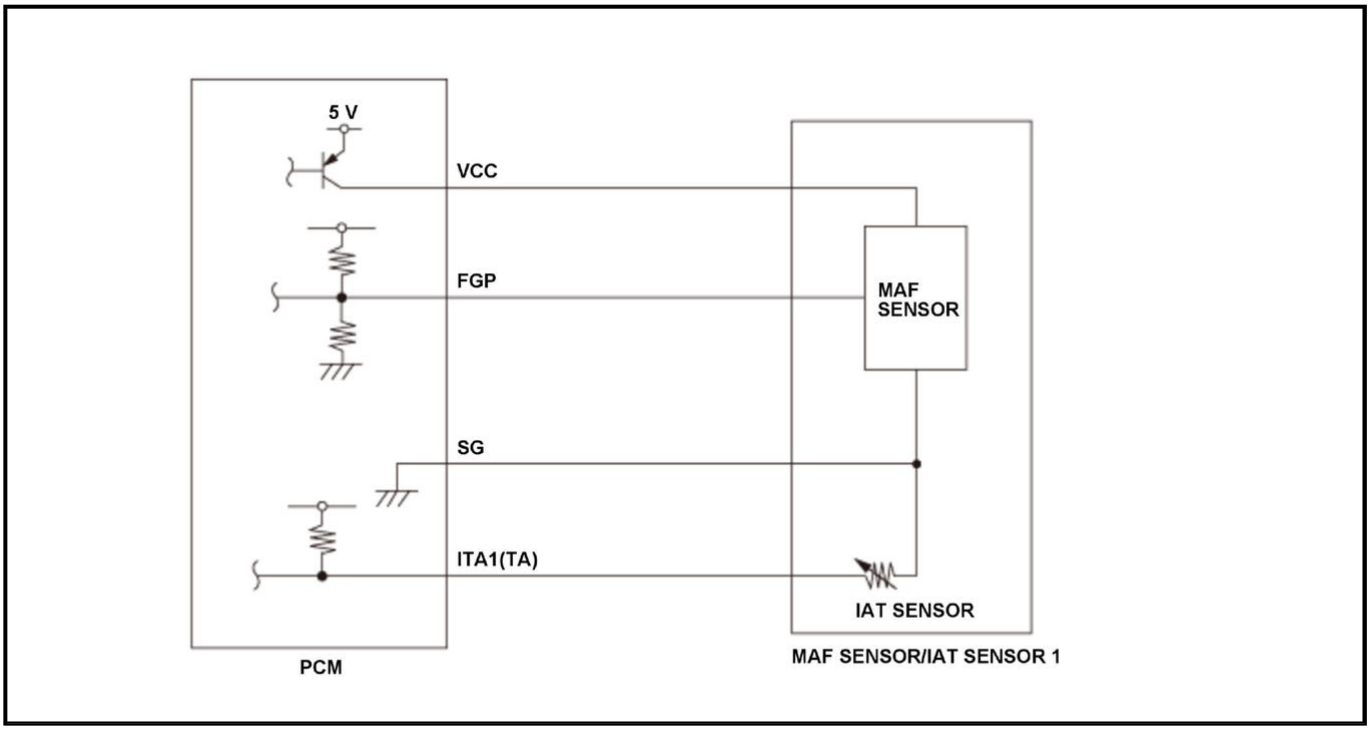

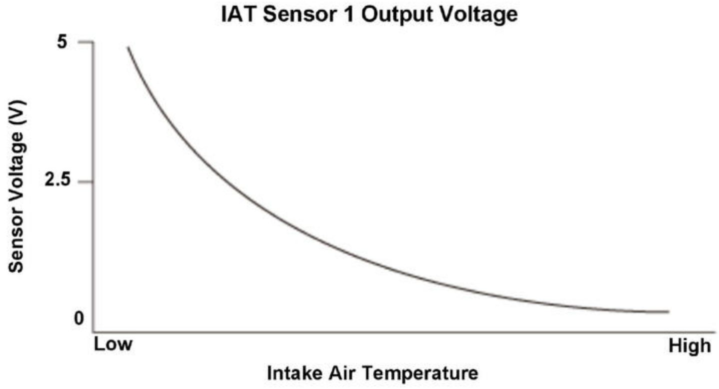

Intake air temperature (IAT) sensor 1 is a thermistor that detects intake air temperature, and it is used for air/fuel ratio feedback control to compensate for the atmospheric density fluctuations that accompany changes in intake air temperature. IAT sensor 1 resistance varies depending on temperature. The output voltage and the sensor resistance increase as the intake air temperature decreases. Conversely, the output voltage and the sensor resistance decrease as the intake air temperature increases. If the IAT sensor 1 output voltage is excessively low or high, the powertrain control module (PCM) detects a malfunction and stores a DTC.

Monitor Execution, Sequence, Duration, DTC Type

Execution	Continuous
Sequence	None

Duration	2.0 seconds or more
DTC Type	Two drive cycles, MIL on

Enable Conditions

Condition	B
Vehicle	ON mode

Malfunction Threshold

DTC: P0112

The IAT sensor 1 output voltage [IAT SENSOR (1)] is 0.08 V or less for at least 2.0 seconds.

DTC: P0113

The IAT sensor 1 output voltage [IAT SENSOR (1)] is 4.92 V or more for at least 2.0 seconds.

[ ]: HDS Parameter

Possible Cause

NOTE: The causes shown may not be a complete list of all potential problems, and it is possible that there may be other causes.

DTC: P0112

- IAT sensor 1 ITA1 (TA) line short to ground

DTC: P0113

- IAT sensor 1 ITA1 (TA) line open
- IAT sensor 1 SG line open

Common

- IAT sensor 1 failure
- PCM internal circuit failure

Diagnosis Details

Conditions for setting the DTC

When a malfunction is detected during the first drive cycle, a Pending DTC is stored in the PCM memory. If the malfunction returns in the next (second) drive cycle, the MIL comes on and a Confirmed DTC and the freeze data are stored.

Conditions for clearing the DTC

The MIL is cleared if the malfunction does not return in three consecutive trips in which the diagnostic runs. The MIL, the Pending DTC, the Confirmed DTC, and the freeze data can be cleared with the scan tool Clear command or by disconnecting the 12 volt battery.

DTC P0112, P0113 (2.4 L ENGINE) (2017 2018 2019)

DTC P0112: Intake Air Temperature (IAT) Sensor Circuit Low Voltage **DTC P0113:** Intake Air Temperature (IAT) Sensor Circuit High Voltage

General Description

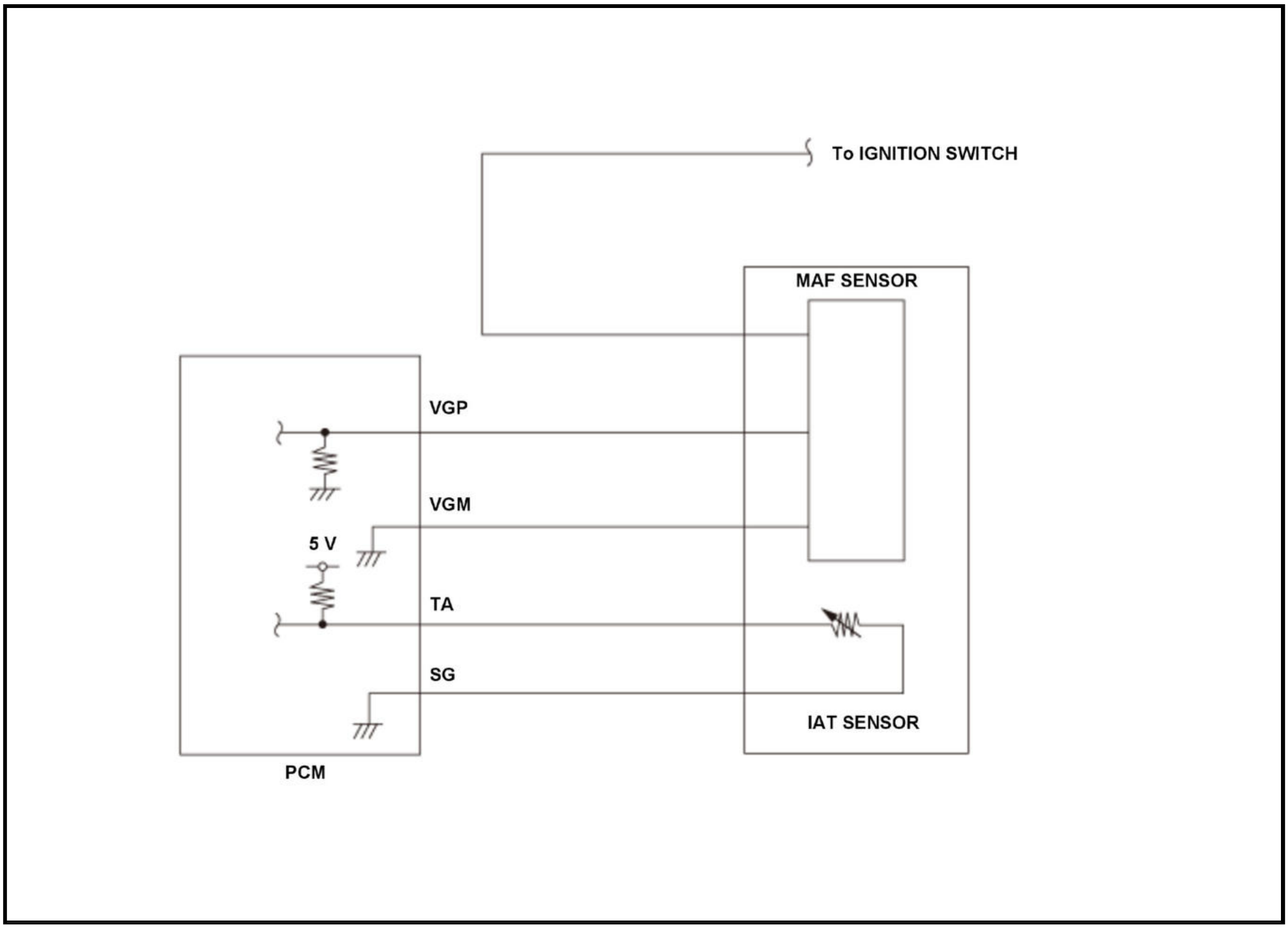

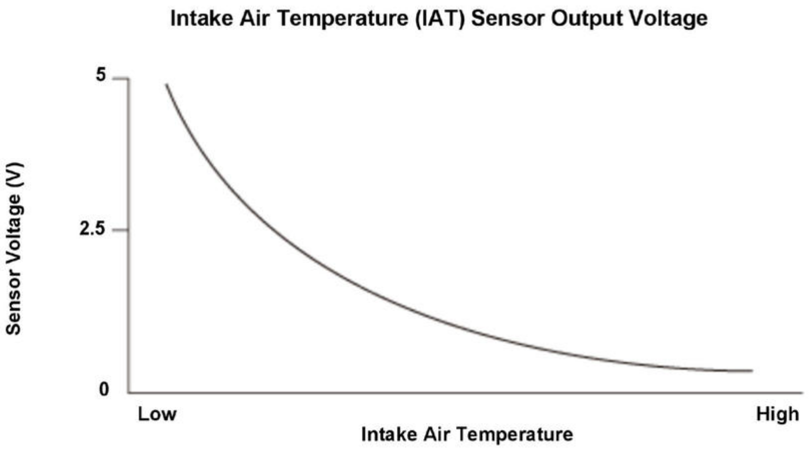

The intake air temperature (IAT) sensor is a thermistor that detects intake air temperature, and it is used for air/fuel ratio feedback control to compensate for the atmospheric density fluctuations that accompany changes in intake air temperature. The IAT sensor resistance varies depending on temperature. The output voltage and the sensor resistance increase as the intake air temperature decreases. Conversely, the output voltage and the sensor resistance decrease as the intake air temperature increases. If the IAT sensor output voltage is excessively low, the powertrain control module (PCM) detects a malfunction and stores a DTC.

Monitor Execution, Sequence, Duration, DTC Type

Execution	Continuous
Sequence	None
Duration	2.0 seconds or more
DTC Type	Two drive cycles, MIL on

Enable Conditions

Condition	B
Vehicle	ON mode

Malfunction Threshold

DTC: P0112

The IAT sensor output voltage [IAT SENSOR] is 0.08 V or less for at least 2.0 seconds.

DTC: P0113

The IAT sensor output voltage [IAT SENSOR] is 4.92 V or more for at least 2.0 seconds.

[ ]: HDS Parameter

Possible Cause

NOTE: The causes shown may not be a complete list of all potential problems, and it is possible that there may be other causes.

DTC: P0112

- IAT sensor ITA (TA) line short to ground

DTC: P0113

- IAT sensor ITA (TA) line open
- IAT sensor SG line open

Common

- IAT sensor failure
- PCM internal circuit failure

Diagnosis Details

Conditions for setting the DTC

When a malfunction is detected during the first drive cycle, a Pending DTC is stored in the PCM memory. If the malfunction returns in the next (second) drive cycle, the MIL comes on and a Confirmed DTC and the freeze data are stored.

Conditions for clearing the DTC

The MIL is cleared if the malfunction does not return in three consecutive trips in which the diagnostic runs. The MIL, the Pending DTC, the Confirmed DTC, and the freeze data can be cleared with the scan tool Clear command or by disconnecting the 12 volt battery.

DTC P0115 (1.5 L ENGINE) (2018 2019 2020 2021)

DTC P0115: Engine Coolant Temperature (ECT) Sensor 1 Out of Range

General Description

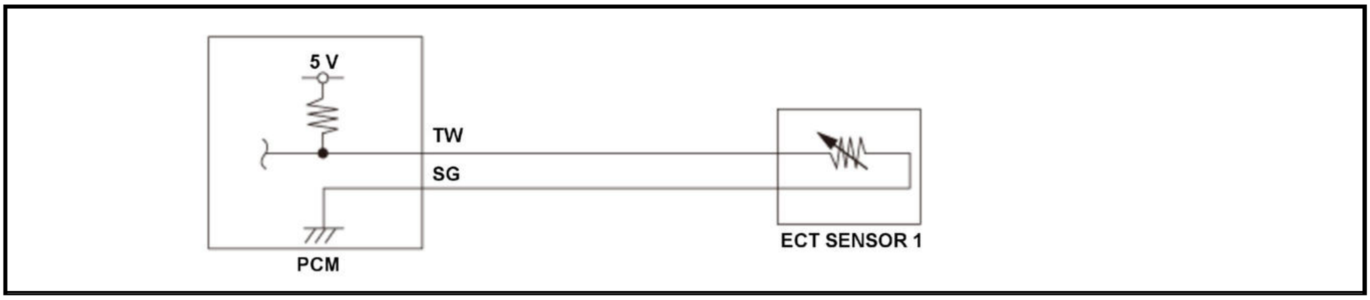

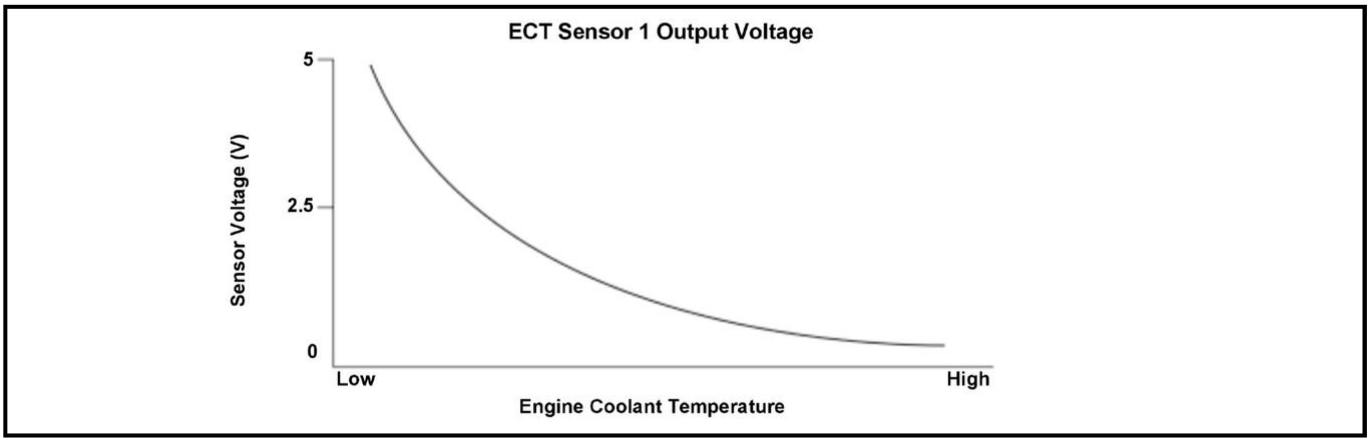

Engine coolant temperature (ECT) sensor 1 is used for air/fuel ratio feedback control, ignition timing control, idle speed control, and other functions. The ECT sensor 1 resistance varies depending on the engine coolant temperature. As the engine coolant cools, the ECT sensor 1 resistance increases, and the powertrain control module (PCM) detects a high signal voltage. As the engine coolant warms, the ECT sensor 1 resistance decreases, and the PCM detects a low signal voltage. If the ECT sensor 1 output voltage is a set value, the PCM detects a malfunction and stores a DTC.

Monitor Execution, Sequence, Duration, DTC Type

Execution	Continuous
Sequence	None
Duration	6.0 seconds or more
DTC Type	Two drive cycles, MIL on

Enable Conditions

Condition	B
Vehicle	ON mode

Malfunction Threshold

The ECT sensor 1 output voltage [ECT SENSOR 1] is 0.14 V or less, or 4.99 V or more for at least 6.0 seconds.

[ ]: HDS Parameter

Possible Cause

NOTE: The causes shown may not be a complete list of all potential problems, and it is possible that there may be other causes.

- ECT sensor 1 failure
- PCM internal circuit failure

Diagnosis Details

Conditions for setting the DTC

When a malfunction is detected during the first drive cycle, a Pending DTC is stored in the PCM memory. If the malfunction returns in the next (second) drive cycle, the MIL comes on and a Confirmed DTC, the freeze data, and the on-board snapshot are stored.

Conditions for clearing the DTC

The MIL is cleared if the malfunction does not return in three consecutive trips in which the diagnostic runs. The MIL, the Pending DTC, the Confirmed DTC, the freeze data, and the on-board snapshot can be cleared with the scan tool Clear command or by disconnecting the 12 volt battery.

DTC P0115 (2.4 L ENGINE) (2018 2019)

DTC P0115: Engine Coolant Temperature (ECT) Sensor 1 Out of Range

General Description

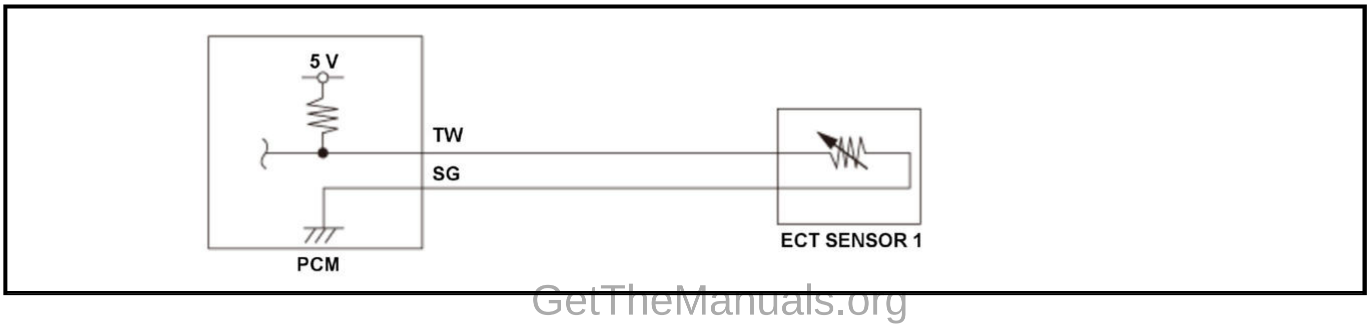

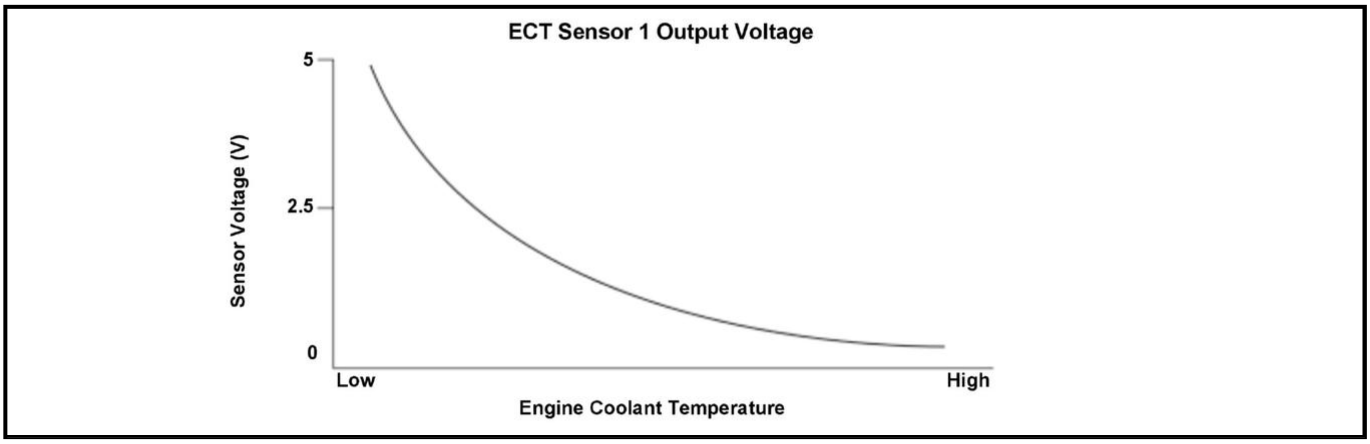

Engine coolant temperature (ECT) sensor 1 is used for air/fuel ratio feedback control, ignition timing control, idle speed control, and other functions. The ECT sensor 1 resistance varies depending on the engine coolant temperature. As the engine coolant cools, the ECT sensor 1 resistance increases, and the powertrain control module (PCM) detects a high signal voltage. As the engine coolant warms, the ECT sensor 1 resistance decreases, and the PCM detects a low signal voltage. If the ECT sensor 1 output voltage is a set value, the PCM detects a malfunction and stores a DTC.

Monitor Execution, Sequence, Duration, DTC Type

Execution	Continuous
Sequence	None
Duration	6.0 seconds or more
DTC Type	Two drive cycles, MIL on

Enable Conditions

Condition	B
Vehicle	ON mode

Malfunction Threshold

The ECT sensor 1 output voltage [ECT SENSOR 1] is 0.14 V or less, or 4.92 V or more for at least 6.0 seconds.

[ ]: HDS Parameter

Possible Cause

NOTE: The causes shown may not be a complete list of all potential problems, and it is possible that there may be other causes.

- ECT sensor 1 failure
- PCM internal circuit failure

Diagnosis Details

Conditions for setting the DTC

When a malfunction is detected during the first drive cycle, a Pending DTC is stored in the PCM memory. If the malfunction returns in the next (second) drive cycle, the MIL comes on and a Confirmed DTC, the freeze data, and the on-board snapshot are stored.

Conditions for clearing the DTC

The MIL is cleared if the malfunction does not return in three consecutive trips in which the diagnostic runs. The MIL, the Pending DTC, the Confirmed DTC, the freeze data, and the on-board snapshot can be cleared with the scan tool Clear command or by disconnecting the 12 volt battery.

DTC P0116 (1.5 L ENGINE)

DTC P0116: Engine Coolant Temperature (ECT) Sensor 1 Circuit Range/Performance Problem

General Description

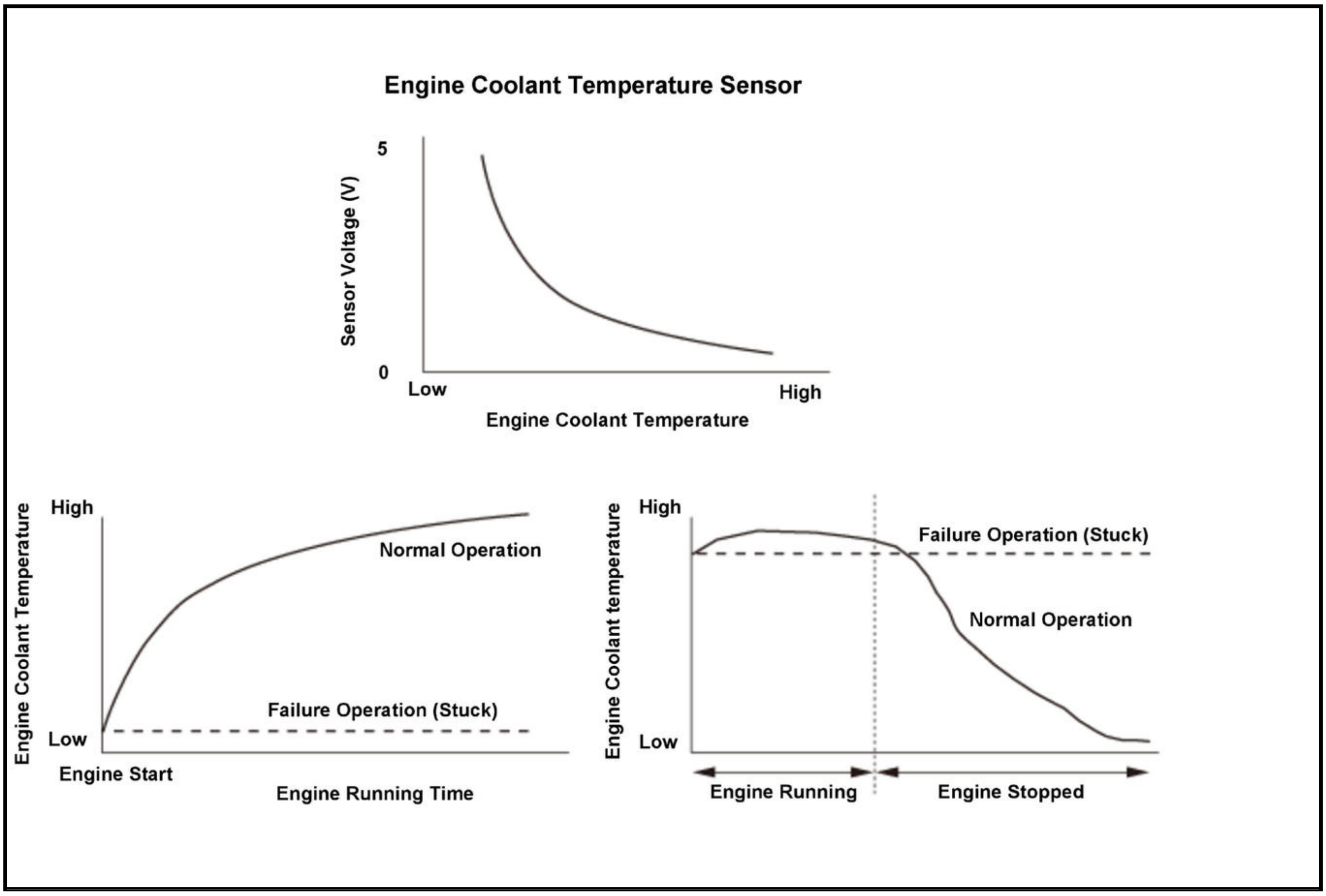

The powertrain control module (PCM) supplies voltage to the engine coolant temperature signal circuit (about 5 V) through a pull-up resistor. As the engine coolant cools, the engine coolant temperature (ECT) sensor 1 resistance increases, and the PCM detects a high signal voltage. As the engine coolant warms, the ECT sensor 1 resistance decreases, and the PCM detects a low signal voltage. If the ECT sensor 1 output voltage does not reach a set temperature after starting the engine and driving a set time, or when the difference between the ECT sensor 1 output voltage while driving and the output voltage of ECT sensor 1 after the engine has been stopped a certain length of time does not change a certain amount, the PCM detects a malfunction and stores a DTC.

Monitor Execution, Sequence, Duration, DTC Type

Execution	Once per driving cycle
Sequence	None
Duration	42.0 minutes or more
DTC Type	Two drive cycles, MIL on

Enable Conditions

Condition	Minimum	Maximum
Engine time after starting the engine	10.0 seconds	-
Fuel feedback	Other than during fuel cut-off operation	

Condition	Minimum	Maximum
Other	With a completely cooled engine (one that has been off for at least 6 hours): Judgment is made after the engine has run for at least 42.0 minutes or been driven at least 5 miles (7 km), turn the vehicle to the OFF (LOCK) mode and wait for at least 10.0 seconds, then start and run again for at least 10.0 seconds.	
	With a partially cooled engine (one that has been off for less than 6 hours): Judgment is made after the engine has run for at least 42.0 minutes or been driven at least 5 miles (7 km), turn the vehicle to the OFF (LOCK) mode and wait for at least 6 hours then start and run again for at least 10.0 seconds.	

Malfunction Threshold

Malfunction determination 1:

With a completely cooled engine (one that has been off for at least 6 hours):

When the change in coolant temperature after 42.0 minutes or more of running time or 5 miles (7 km) or more of driving distance is 18 deg. F (10 deg. C) or less, a malfunction is detected.

Malfunction determination 2:

With a partially cooled engine (one that has been off for less than 6 hours):

When the difference between the coolant temperature after 42.0 minutes or more of running time or 5 miles (7 km) or more of driving distance the coolant temperature after the engine has been off for 6 hours and then run for 10.0 seconds is 18 deg. F (10 deg. C) or less, a malfunction is detected.

Possible Cause

NOTE: The causes shown may not be a complete list of all potential problems, and it is possible that there may be other causes.

- ECT sensor 1 failure

Confirmation Procedure

Operating Condition

With a completely cooled engine (one that has been off for at least 6 hours).

- Start the engine, and let it idle for at least 42.0 minutes or drive for at least 5 miles (7 km).
- Turn the vehicle to the OFF (LOCK) mode for 10.0 seconds, then restart the engine and let it idle for at least 10.0 seconds.

With a partially cooled engine (one that has been off for less than 6 hours).

- Start the engine, and let it idle for at least 42.0 minutes or drive for at least 5 miles (7 km).
- Turn the vehicle to the OFF (LOCK) mode for 6 hours then restart the engine and let it idle for at least 10.0 seconds.

- Drive the vehicle in this manner only if the traffic regulations and ambient conditions allow.

With the HDS

None.

Diagnosis Details

Conditions for setting the DTC

When a malfunction is detected during the first drive cycle, a Pending DTC is stored in the PCM memory. If the malfunction returns in the next (second) drive cycle, the MIL comes on and a Confirmed DTC and the freeze data are stored.

Conditions for clearing the DTC

The MIL is cleared if the malfunction does not return in three consecutive trips in which the diagnostic runs. The MIL, the Pending DTC, the Confirmed DTC, and the freeze data can be cleared with the scan tool Clear command or by disconnecting the 12 volt battery.

DTC P0116 (2.4 L ENGINE) (2017 2018 2019)

DTC P0116: Engine Coolant Temperature (ECT) Sensor 1 Circuit Range/Performance Problem

General Description

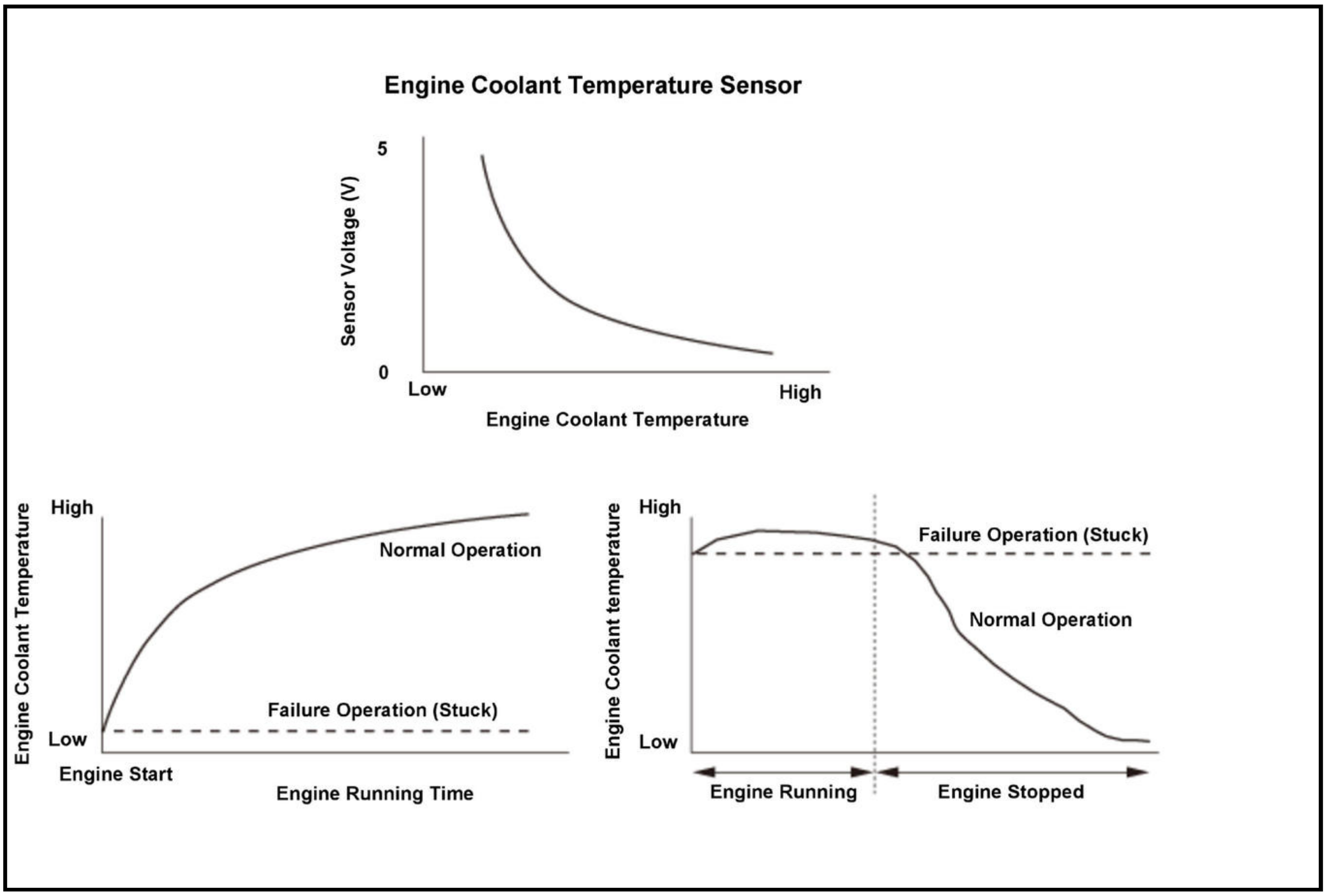

The powertrain control module (PCM) supplies voltage to the engine coolant temperature signal circuit (about 5 V) through a pull-up resistor. As the engine coolant cools, the engine coolant temperature (ECT) sensor 1 resistance increases, and the PCM detects a high signal voltage. As the engine coolant warms, the ECT sensor 1 resistance decreases, and the PCM detects a low signal voltage. If the ECT sensor 1 output voltage does not reach a set temperature after starting the engine and driving a set time, or when the difference between the ECT sensor 1 output voltage while driving and the output voltage of ECT sensor 1 after the engine has been stopped a certain length of time does not change a certain amount, the PCM detects a malfunction and stores a DTC.

Monitor Execution, Sequence, Duration, DTC Type

Execution	Once per driving cycle
Sequence	None
Duration	42.0 minutes or more

DTC Type	Two drive cycles, MIL on

Enable Conditions

Condition	Minimum	Maximum
Engine time after starting the engine	10.0 seconds	-
Fuel feedback	Other than during fuel cut-off operation	
Other	With a completely cooled engine (one that has been off for at least 6 hours): Judgment is made after the engine has run for at least 42.0 minutes or been driven at least 7 km (5 miles), turn the vehicle to the OFF (LOCK) mode and wait for at least 10.0 seconds, then start and run again for at least 10.0 seconds.	
	With a partially cooled engine (one that has been off for less than 6 hours): Judgment is made after the engine has run for at least 42.0 minutes or been driven at least 7 km (5 miles), turn the vehicle to the OFF (LOCK) mode and wait for at least 6 hours then start and run again for at least 10.0 seconds.	

Malfunction Threshold

Malfunction determination 1:

With a completely cooled engine (one that has been off for at least 6 hours):

When the change in coolant temperature after 42.0 minutes or more of running time or 7 km (5 miles) or more of driving distance is 18 deg. F (10 deg. C) or less, a malfunction is detected.

Malfunction determination 2:

With a partially cooled engine (one that has been off for less than 6 hours):

When the difference between the coolant temperature after 42.0 minutes or more of running time or 7 km (5 miles) or more of driving distance the coolant temperature after the engine has been off for 6 hours and then run for 10.0 seconds is 18 deg. F (10 deg. C) or less, a malfunction is detected.

Possible Cause

NOTE: The causes shown may not be a complete list of all potential problems, and it is possible that there may be other causes.

- ECT sensor 1 failure

Confirmation Procedure

Operating Condition

With a completely cooled engine (one that has been off for at least 6 hours).

- Start the engine, and let it idle for at least 42.0 minutes or drive for at least 7 km (5 miles).
- Turn the vehicle to the OFF (LOCK) mode for 10.0 seconds, then restart the engine and let it idle for at least 10.0 seconds.

With a partially cooled engine (one that has been off for less than 6 hours).

- Start the engine, and let it idle for at least 42.0 minutes or drive for at least 7 km (5 miles).
- Turn the vehicle to the OFF (LOCK) mode for 6 hours then restart the engine and let it idle for at least 10.0 seconds.

- Drive the vehicle in this manner only if the traffic regulations and ambient conditions allow.

With the HDS

None.

Diagnosis Details

Conditions for setting the DTC

When a malfunction is detected during the first drive cycle, a Pending DTC is stored in the PCM memory. If the malfunction returns in the next (second) drive cycle, the MIL comes on and a Confirmed DTC and the freeze data are stored.

Conditions for clearing the DTC

The MIL is cleared if the malfunction does not return in three consecutive trips in which the diagnostic runs. The MIL, the Pending DTC, the Confirmed DTC, and the freeze data can be cleared with the scan tool Clear command or by disconnecting the 12 volt battery.

DTC P0117, P0118 (1.5 L ENGINE)

DTC P0117: Engine Coolant Temperature (ECT) Sensor 1 Circuit Low Voltage **DTC P0118:** Engine Coolant Temperature (ECT) Sensor 1 Circuit High Voltage

General Description

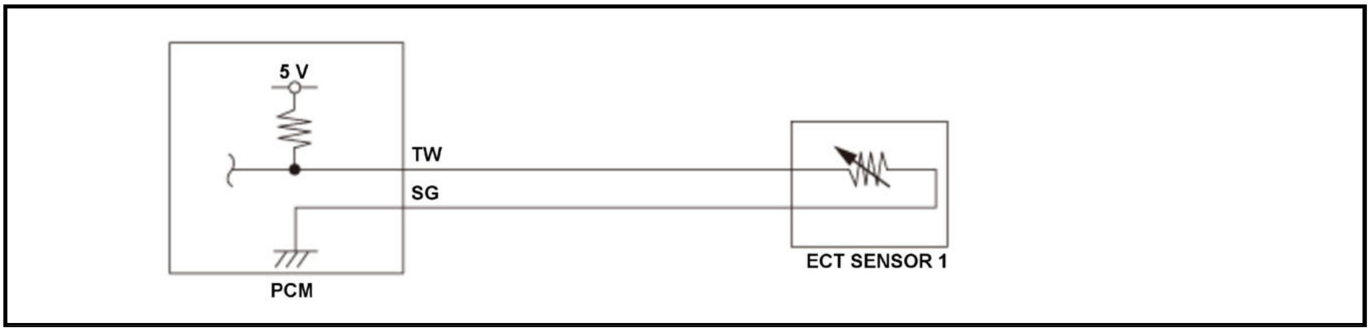

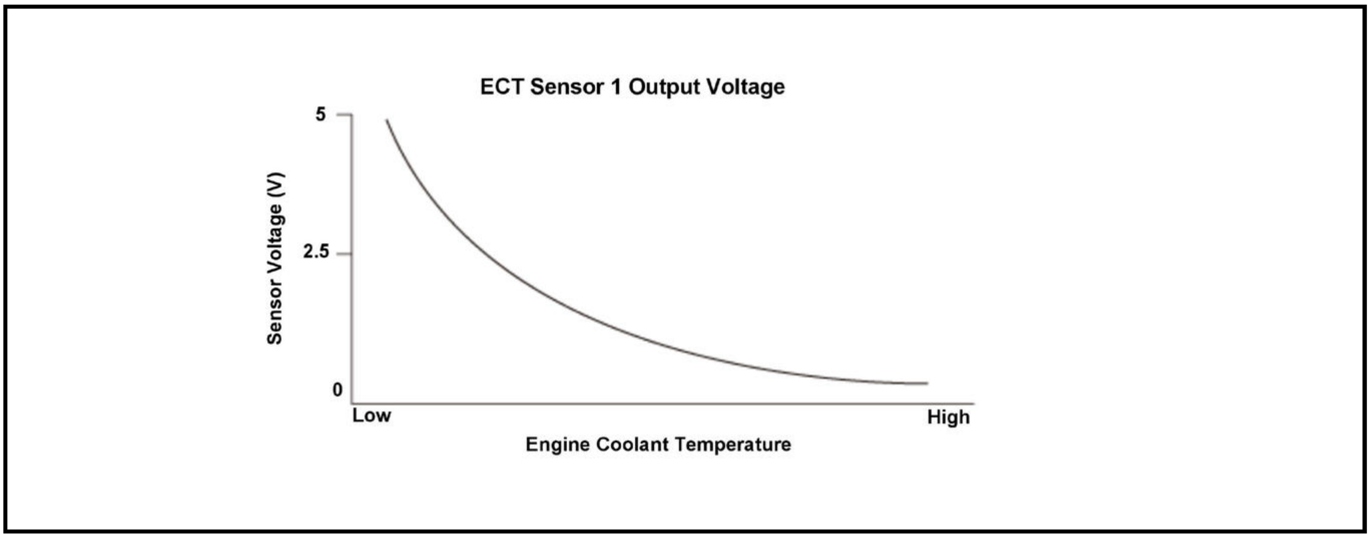

Engine coolant temperature (ECT) sensor 1 is used for air/fuel ratio feedback control, ignition timing control, idle speed control, and other functions. ECT sensor 1 resistance varies depending on the engine coolant temperature. As the engine coolant cools, ECT sensor 1 resistance increases, and the powertrain control module (PCM) detects a high signal voltage. As the engine coolant warms, ECT sensor 1 resistance decreases, and the PCM detects a low signal voltage. If the ECT sensor 1 output voltage is a set value, the PCM detects a malfunction and stores a DTC.

Monitor Execution, Sequence, Duration, DTC Type

Execution	Continuous
Sequence	None
Duration	2 seconds or more
DTC Type	One drive cycle, MIL on

Enable Conditions

Condition	B
Vehicle	ON mode

Malfunction Threshold

DTC: P0117

The ECT sensor 1 output voltage [ECT SENSOR 1] is 0.08 V or less for at least 2 seconds.

DTC: P0118

The ECT sensor 1 output voltage [ECT SENSOR 1] is 4.92 V or more for at least 2 seconds.

[ ]: HDS Parameter

Possible Cause

NOTE: The causes shown may not be a complete list of all potential problems, and it is possible that there may be other causes.

DTC: P0117

- ECT sensor 1 TW line short to ground

DTC: P0118

- ECT sensor 1 TW line open
- ECT sensor 1 SG line open

Common

- ECT sensor 1 failure
- PCM internal circuit failure

Diagnosis Details

Conditions for setting the DTC

When a malfunction is detected, the MIL comes on and a Pending DTC, a Confirmed DTC, and the freeze data are stored in the PCM memory.

Conditions for clearing the DTC

The MIL is cleared if the malfunction does not return in three consecutive trips in which the diagnostic runs. The MIL, the Pending DTC, the Confirmed DTC, and the freeze data can be cleared with the scan tool Clear command or by disconnecting the 12 volt battery.

DTC P0117, P0118 (2.4 L ENGINE) (2017 2018 2019)

DTC P0117: Engine Coolant Temperature (ECT) Sensor 1 Circuit Low Voltage **DTC P0118:** Engine Coolant Temperature (ECT) Sensor 1 Circuit High Voltage

General Description

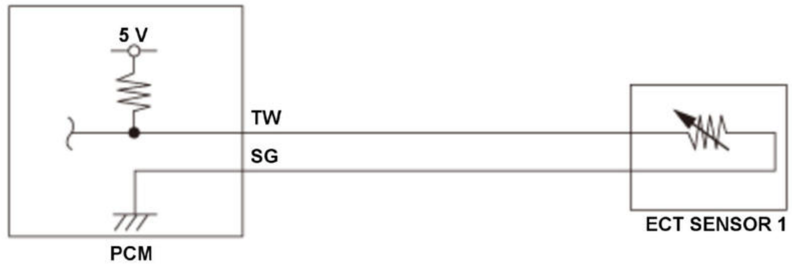

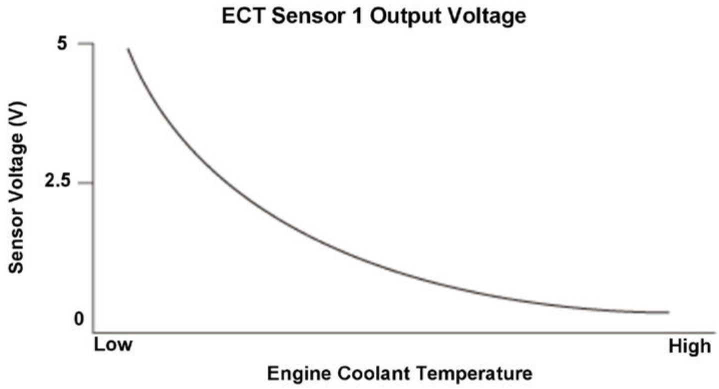

Engine coolant temperature (ECT) sensor 1 is used for air/fuel ratio feedback control, ignition timing control, idle speed control, and other functions. ECT sensor 1 resistance varies depending on the engine coolant temperature. As the engine coolant cools, ECT sensor 1 resistance increases, and the powertrain control module (PCM) detects a high signal voltage. As the engine coolant warms, ECT sensor 1 resistance decreases, and the PCM detects a low signal voltage. If the ECT sensor 1 output voltage is a set value, the PCM detects a malfunction and stores a DTC.

Monitor Execution, Sequence, Duration, DTC Type

Execution	Continuous
Sequence	None
Duration	2 seconds or more
DTC Type	One drive cycle, MIL on

Enable Conditions

Condition	B
Vehicle	ON mode

Malfunction Threshold

DTC: P0117

The ECT sensor 1 output voltage [ECT SENSOR 1] is 0.08 V or less for at least 2 seconds.

DTC: P0118

The ECT sensor 1 output voltage [ECT SENSOR 1] is 4.92 V or more for at least 2 seconds.

[ ]: HDS Parameter

Possible Cause

NOTE: The causes shown may not be a complete list of all potential problems, and it is possible that there may be other causes.

DTC: P0117

- ECT sensor 1 TW line short to ground

DTC: P0118

- ECT sensor 1 TW line open
- ECT sensor 1 SG line open

Common

- ECT sensor 1 failure
- PCM internal circuit failure

Diagnosis Details

Conditions for setting the DTC

When a malfunction is detected, the MIL comes on and a Pending DTC, a Confirmed DTC, and the freeze data are stored in the PCM memory.

Conditions for clearing the DTC

The MIL is cleared if the malfunction does not return in three consecutive trips in which the diagnostic runs. The MIL, the Pending DTC, the Confirmed DTC, and the freeze data can be cleared with the scan tool Clear command or by disconnecting the 12 volt battery.

DTC P011A (1.5 L ENGINE)

DTC P011A: Engine Coolant Temperature (ECT) Sensor 1 Circuit Range/Performance Problem

General Description

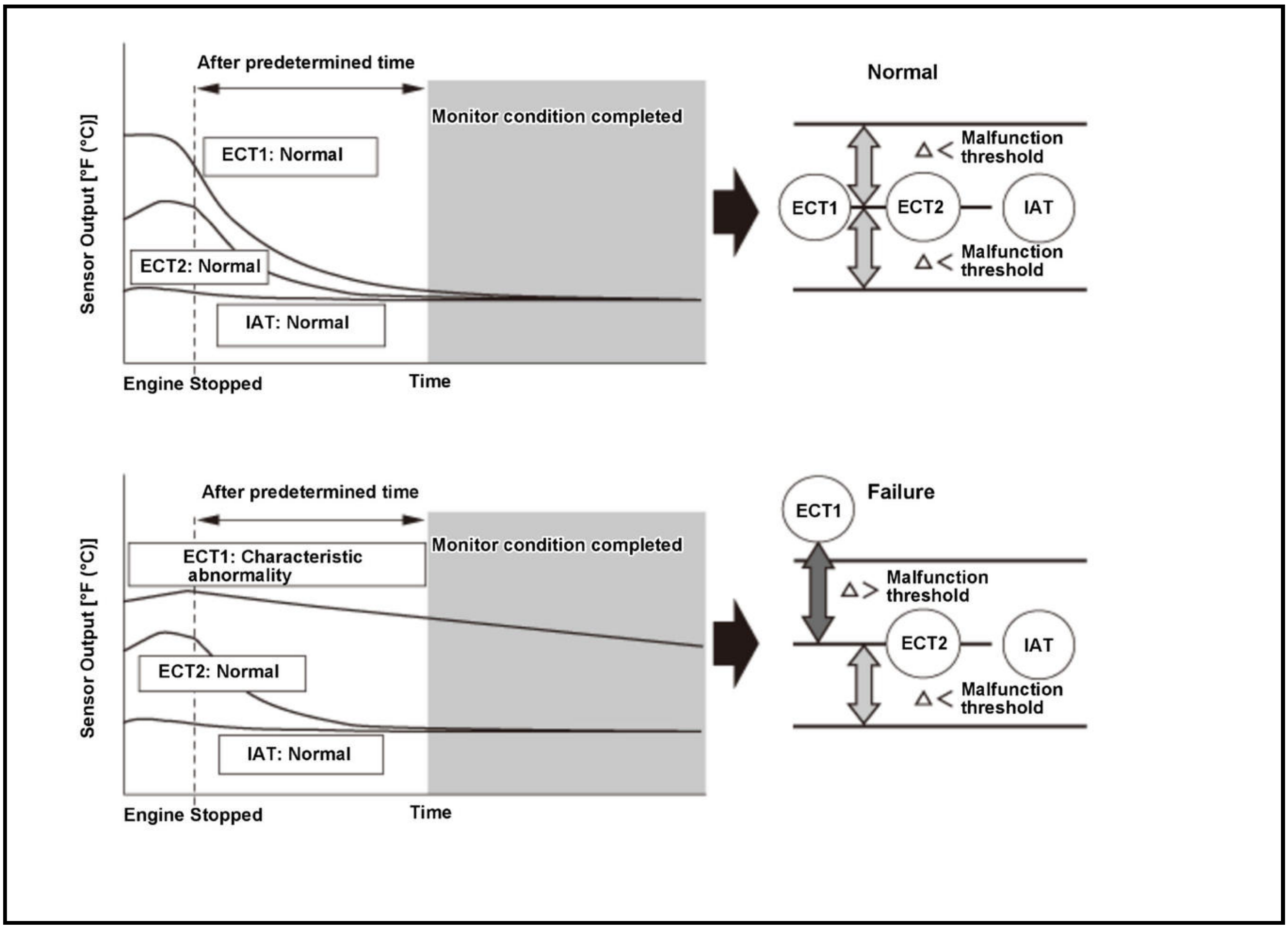
After predetermined time
Monitor condition completed
Sensor Output [°F (°C)]
ECT1: Normal
ECT2: Normal
IAT: Normal
Engine Stopped
Time
Normal
ECT1
ECT2
IAT
Δ< Malfunction threshold
Δ< Malfunction threshold
After predetermined time
Monitor condition completed
Sensor Output [°F (°C)]
ECT1: Characteristic abnormality
ECT2: Normal
IAT: Normal
Engine Stopped
Time
Failure
ECT1
Δ> Malfunction threshold
ECT2
IAT
Δ< Malfunction threshold

Two engine coolant temperature (ECT) sensors and one intake air temperature (IAT) sensor are used by the powertrain control module (PCM). When the engine is stopped and enough time has passed, the temperature of the engine will equalize to ambient temperature. ECT sensor 1 and IAT sensor are compared to ECT sensor 2, and if an inappropriate temperature is read, the PCM detects a malfunction in the corresponding sensor and stores a DTC.

Monitor Execution, Sequence, Duration, DTC Type

Execution	Once per driving cycle
Sequence	None
Duration	10 seconds or more
DTC Type	Two drive cycles, MIL on

Enable Conditions

Condition	Minimum	Maximum
Engine off time	6 hours	-

Malfunction Threshold

A malfunction is detected if the following conditions are present after the engine has stopped and the vehicle condition has been turned to the OFF (LOCK) mode for at least 6 hours before restarting the engine:

Temperature difference between each sensor values		Malfunction judgment		
ECT1* - ECT2**	IAT*** - ECT2**	ECT sensor 1	IAT sensor	ECT sensor 2
Higher than 57 deg. F (32 deg. C)	Higher than 57 deg. F (32 deg. C)	Normal	Normal	Failure

Temperature difference between each sensor values		Malfunction judgment		
ECT1* - ECT2*	**IAT*** - ECT2****	**ECT sensor 1**	**IAT sensor**	**ECT sensor 2**
	From -43 deg. F (-24 deg. C) to 57 deg. F (32 deg. C)	Failure	Normal	Normal
	Lower than -43 deg. F (-24 deg. C)	Failure	Failure	Normal
From -43 deg. F (-24 deg. C) to 57 deg. F (32 deg. C)	Higher than 57 deg. F (32 deg. C)	Normal	Failure	Normal
	From -43 deg. F (-24 deg. C) to 57 deg. F (32 deg. C)	Normal	Normal	Normal
	From -44 deg. F (-25 deg. C) to -108 deg. F (-60 deg. C)	Normal	Failure Suspended****	Normal
	Lower than -108 deg. F (-60 deg. C)	Normal	Failure	Normal
Lower than -43 deg. F (-24 deg. C)	Higher than 32 deg. C (57 deg. F)	Failure	Failure	Normal
	From -43 deg. F (-24 deg. C) to 57 deg. F (32 deg. C)	Failure	Normal	Normal
	Lower than -43 deg. F (-24 deg. C)	Normal	Normal	Failure

*: [ECT SENSOR 1]

**: [ECT SENSOR 2]

***: [IAT SENSOR (1)]

****: Malfunction judgment is suspended because the cooled air introduced after engine start lowers the intake air temperature; the ambient temperature condition does not stay equal.

[ ]: HDS Parameter

Possible Cause

NOTE: The causes shown may not be a complete list of all potential problems, and it is possible that there may be other causes.

- ECT sensor 1 failure
- ECT sensor 2 failure
- IAT sensor failure
- Engine block heater attachment (non-genuine part)

Confirmation Procedure

Operating Condition

- Turn the vehicle to the OFF (LOCK) mode, and wait at least 6 hours.
- Start the engine, and let it idle for at least 10 seconds.

- Do not use an engine block heater because the engine coolant temperature will not stay equal during engine stop.

- When freeze data is stored, test the vehicle under an ambient temperature close to the intake air temperature in the freeze data.
- When an ambient temperature extremely changes, malfunction judgment may not execute. Avoid extreme temperature changing condition after or before engine start. (When the vehicle is parked in the garage, open the garage door to introduce outside air; then start the engine.)

With the HDS

None.

Diagnosis Details

Conditions for setting the DTC

When a malfunction is detected during the first drive cycle, a Pending DTC is stored in the PCM memory. If the malfunction returns in the next (second) drive cycle, the MIL comes on and a Confirmed DTC and the freeze data are stored.

Conditions for clearing the DTC

The MIL is cleared if the malfunction does not return in three consecutive trips in which the diagnostic runs. The MIL, the Pending DTC, the Confirmed DTC, and the freeze data can be cleared with the scan tool Clear command or by disconnecting the 12 volt battery.

DTC P011A (2.4 L ENGINE) (2017 2018 2019)

DTC P011A: Engine Coolant Temperature (ECT) Sensor 1 Circuit Range/Performance Problem

General Description

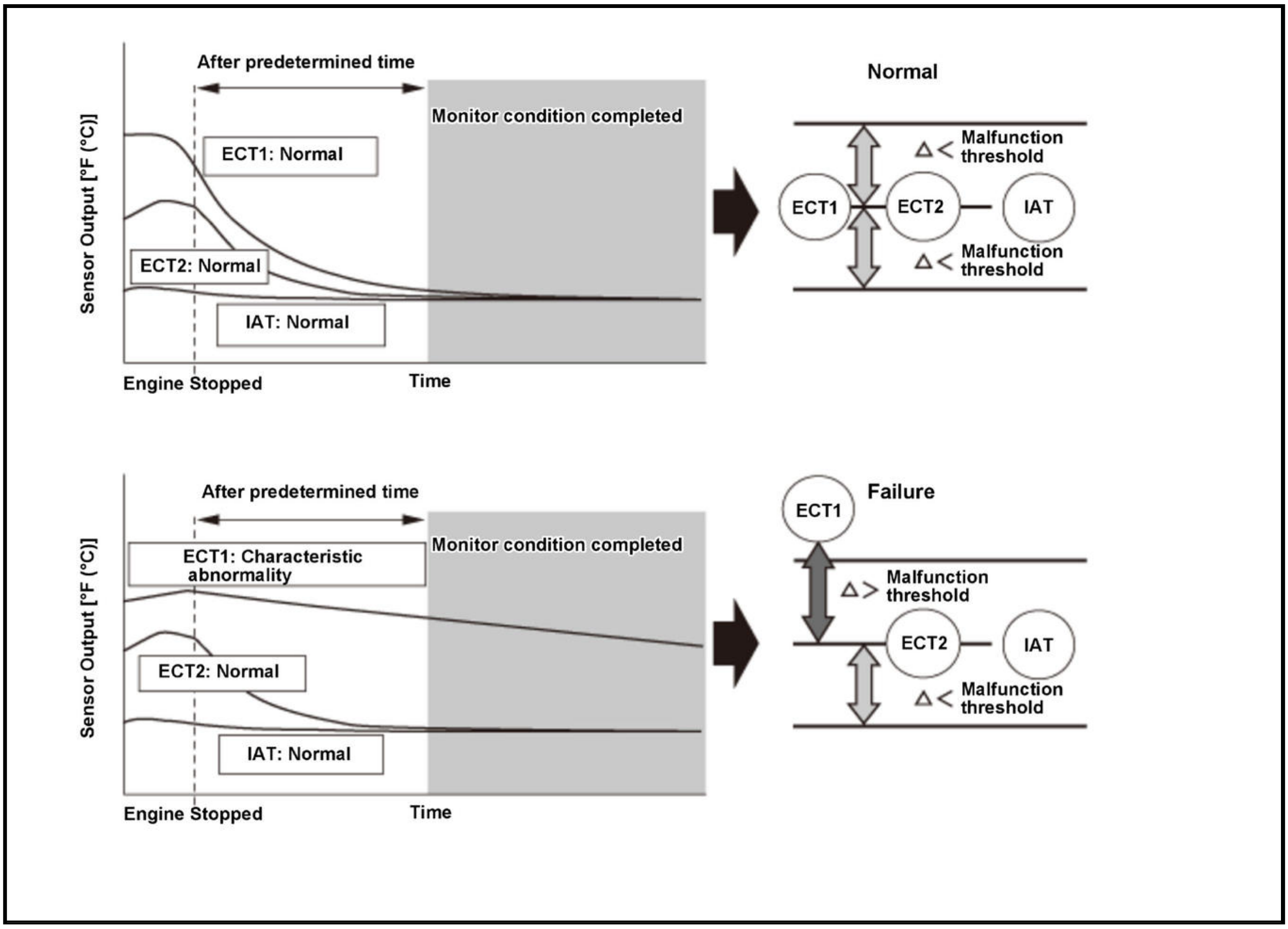

After predetermined time
Monitor condition completed
Sensor Output [°F (°C)]
ECT1: Normal
ECT2: Normal
IAT: Normal
Engine Stopped
Time
Normal
Malfunction threshold
ECT1
ECT2
IAT
Malfunction threshold
After predetermined time
Monitor condition completed
Sensor Output [°F (°C)]
ECT1: Characteristic abnormality
ECT2: Normal
IAT: Normal
Engine Stopped
Time
ECT1
Failure
Malfunction threshold
ECT2
IAT
Malfunction threshold

Two engine coolant temperature (ECT) sensors and one intake air temperature (IAT) sensor are used by the powertrain control module (PCM). When the engine is stopped and enough time has passed, the temperature of the engine will equalize to ambient temperature. ECT sensor 1 and IAT sensor are compared to ECT sensor 2, and if an inappropriate temperature is read, the PCM detects a malfunction in the corresponding sensor and stores a DTC.

Monitor Execution, Sequence, Duration, DTC Type

Execution	Once per driving cycle
Sequence	None
Duration	10 seconds or more
DTC Type	Two drive cycles, MIL on

Enable Conditions

Condition	Minimum	Maximum
Engine off time	6 hours	-

Malfunction Threshold

A malfunction is detected if the following conditions are present after the engine has stopped and the vehicle condition has been turned to the OFF (LOCK) mode for at least 6 hours before restarting the engine:

Temperature difference between each sensor values		Malfunction judgment		
ECT1* - ECT2**	IAT*** - ECT2**	ECT sensor 1	IAT sensor	ECT sensor 2
Higher than 57 deg. F (32 deg. C)	Higher than 57 deg. F (32 deg. C)	Normal	Normal	Failure
	From -43 deg. F (-24 deg. C) to 57 deg. F (32 deg. C)	Failure	Normal	Normal
	Lower than -43 deg. F (-24 deg. C)	Failure	Failure	Normal
From -43 deg. F (-24 deg. C) to 57 deg. F (32 deg. C)	Higher than 57 deg. F (32 deg. C)	Normal	Failure	Normal
	From -43 deg. F (-24 deg. C) to 57 deg. F (32 deg. C)	Normal	Normal	Normal
	From -44 deg. F (-25 deg. C) to -108 deg. F (-60 deg. C)	Normal	Failure Suspended****	Normal
	Lower than -108 deg. F (-60 deg. C)	Normal	Failure	Normal
Lower than -43 deg. F (-24 deg. C)	Higher than 57 deg. F (32 deg. C)	Failure	Failure	Normal
	From -43 deg. F (-24 deg. C) to 57 deg. F (32 deg. C)	Failure	Normal	Normal
	Lower than -43 deg. F (-24 deg. C)	Normal	Normal	Failure

*: [ECT SENSOR 1]

**: [ECT SENSOR 2]

***: [IAT SENSOR (1)]

****: Malfunction judgment is suspended because the cooled air introduced after engine start lowers the intake air temperature; the ambient temperature condition does not stay equal.

[ ]: HDS Parameter

Possible Cause

NOTE: The causes shown may not be a complete list of all potential problems, and it is possible that there may be other causes.

- ECT sensor 1 failure
- ECT sensor 2 failure
- IAT sensor failure
- Engine block heater attachment (non-genuine part)

Confirmation Procedure

Operating Condition

- Turn the vehicle to the OFF (LOCK) mode, and wait at least 6 hours.
- Start the engine, and let it idle for at least 10 seconds.

- Do not use an engine block heater because the engine coolant temperature will not stay equal during engine stop.
- When freeze data is stored, test the vehicle under an ambient temperature close to the intake air temperature in the freeze data.
- When an ambient temperature extremely changes, malfunction judgment may not execute. Avoid extreme temperature changing condition after or before engine start. (When the vehicle is parked in the garage, open the garage door to introduce outside air; then start the engine.)

With the HDS

None.

Diagnosis Details

Conditions for setting the DTC

When a malfunction is detected during the first drive cycle, a Pending DTC is stored in the PCM memory. If the malfunction returns in the next (second) drive cycle, the MIL comes on and a Confirmed DTC and the freeze data are stored.

Conditions for clearing the DTC

The MIL is cleared if the malfunction does not return in three consecutive trips in which the diagnostic runs. The MIL, the Pending DTC, the Confirmed DTC, and the freeze data can be cleared with the scan tool Clear command or by disconnecting the 12 volt battery.

DTC P011B (1.5 L ENGINE)

DTC P011B: Intake Air Temperature (IAT) Sensor 1 Circuit Range/Performance Problem

General Description

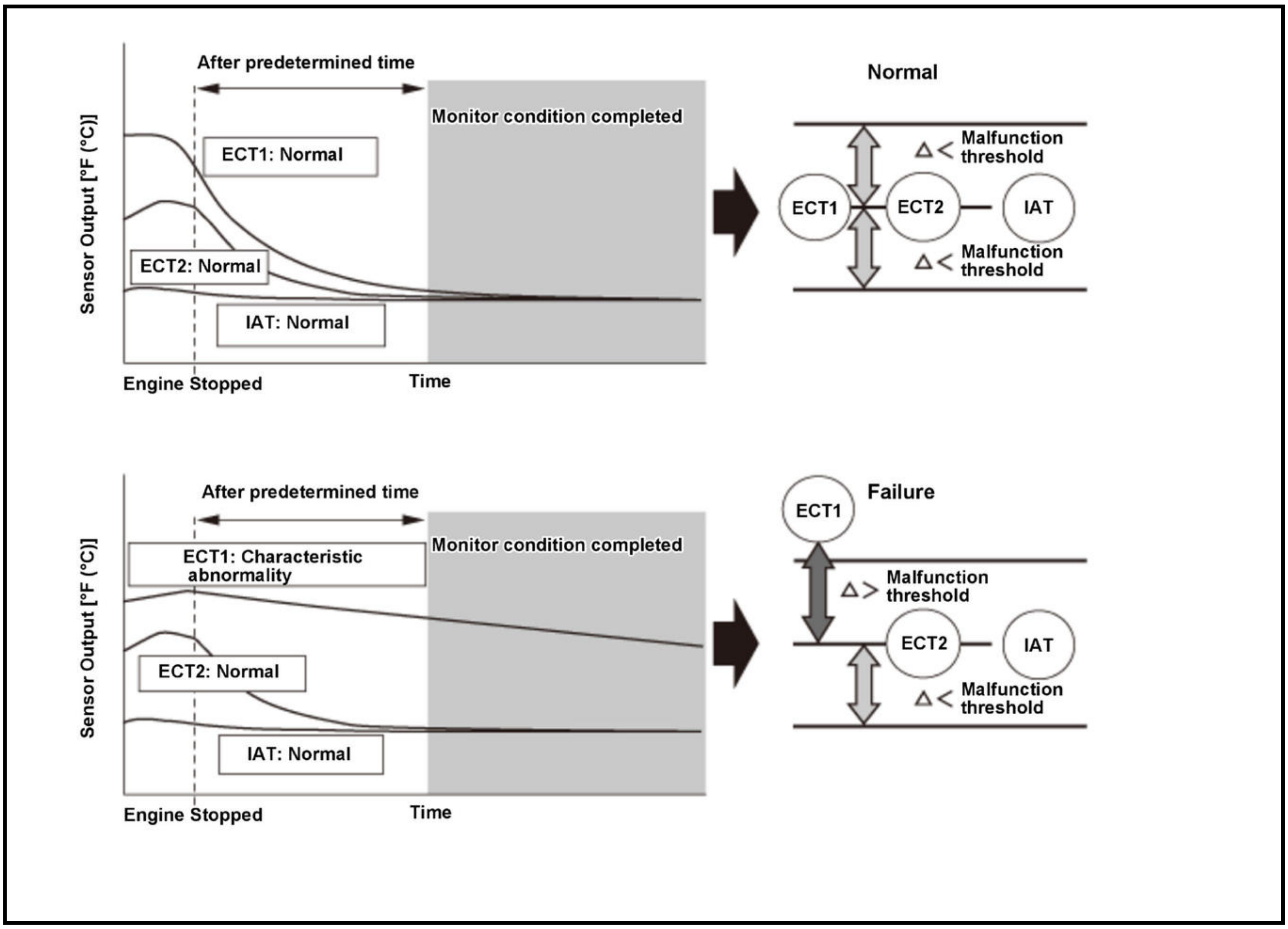
After predetermined time
Monitor condition completed
Sensor Output [°F (°C)]
ECT1: Normal
ECT2: Normal
IAT: Normal
Engine Stopped
Time
Normal
ECT1
ECT2
IAT
Δ< Malfunction threshold
Δ< Malfunction threshold
After predetermined time
Monitor condition completed
Sensor Output [°F (°C)]
ECT1: Characteristic abnormality
ECT2: Normal
IAT: Normal
Engine Stopped
Time
Failure
ECT1
Δ> Malfunction threshold
ECT2
IAT
Δ< Malfunction threshold

Two engine coolant temperature (ECT) sensors and one intake air temperature (IAT) sensor are used by the powertrain control module (PCM). When the engine is stopped and enough time has passed, the temperature of the engine will equalize to ambient temperature. ECT sensor 1 and IAT sensor are compared to ECT sensor 2, and if an inappropriate temperature is read, the PCM detects a malfunction in the corresponding sensor and stores a DTC.

Monitor Execution, Sequence, Duration, DTC Type

Execution	Once per driving cycle
Sequence	None
Duration	10 seconds or more
DTC Type	Two drive cycles, MIL on

Enable Conditions

Condition	Minimum	Maximum
Engine off time	6 hours	-

Malfunction Threshold

A malfunction is detected if the following conditions are present after the engine has stopped and the vehicle condition has been turned to the OFF (LOCK) mode for at least 6 hours before restarting the engine:

Temperature difference between each sensor values		Malfunction judgment		
ECT1* - ECT2**	IAT*** - ECT2**	ECT sensor 1	IAT sensor	ECT sensor 2
Higher than 57 deg. F (32 deg. C)	Higher than 57 deg. F (32 deg. C)	Normal	Normal	Failure

Temperature difference between each sensor values		Malfunction judgment		
ECT1* - ECT2**	**IAT*** - ECT2****	**ECT sensor 1**	**IAT sensor**	**ECT sensor 2**
	From -43 deg. F (-24 deg. C) to 57 deg. F (32 deg. C)	Failure	Normal	Normal
	Lower than -43 deg. F (-24 deg. C)	Failure	Failure	Normal
From -43 deg. F (-24 deg. C) to 57 deg. F (32 deg. C)	Higher than 57 deg. F (32 deg. C)	Normal	Failure	Normal
	From -43 deg. F (-24 deg. C) to 57 deg. F (32 deg. C)	Normal	Normal	Normal
	From -44 deg. F (-25 deg. C) to -108 deg. F (-60 deg. C)	Normal	Failure	Normal
			Suspended****	
	Lower than -108 deg. F (-60 deg. C)	Normal	Failure	Normal
Lower than -43 deg. F (-24 deg. C)	Higher than 57 deg. F (32 deg. C)	Failure	Failure	Normal
	From -43 deg. F (-24 deg. C) to 57 deg. F (32 deg. C)	Failure	Normal	Normal
	Lower than -43 deg. F (-24 deg. C)	Normal	Normal	Failure

*: [ECT SENSOR 1]

**: [ECT SENSOR 2]

***: [IAT SENSOR (1)]

****: Malfunction judgment is suspended because the cooled air introduced after engine start lowers the intake air temperature; the ambient temperature condition does not stay equal.

[ ]: HDS Parameter

Possible Cause

NOTE: The causes shown may not be a complete list of all potential problems, and it is possible that there may be other causes.

- ECT sensor 1 failure
- ECT sensor 2 failure
- IAT sensor failure
- Engine block heater attachment (non-genuine part)

Confirmation Procedure

Operating Condition

- Turn the vehicle to the OFF (LOCK) mode, and wait at least 6 hours.
- Start the engine, and let it idle for at least 10 seconds.

- Do not use an engine block heater because the engine coolant temperature will not stay equal during engine stop.

- When freeze data is stored, test the vehicle under an ambient temperature close to the intake air temperature in the freeze data.
- When an ambient temperature extremely changes, malfunction judgment may not execute. Avoid extreme temperature changing condition after or before engine start. (When the vehicle is parked in the garage, open the garage door to introduce outside air; then start the engine.)

With the HDS

None.

Diagnosis Details

Conditions for setting the DTC

When a malfunction is detected during the first drive cycle, a Pending DTC is stored in the PCM memory. If the malfunction returns in the next (second) drive cycle, the MIL comes on and a Confirmed DTC and the freeze data are stored.

Conditions for clearing the DTC

The MIL is cleared if the malfunction does not return in three consecutive trips in which the diagnostic runs. The MIL, the Pending DTC, the Confirmed DTC, and the freeze data can be cleared with the scan tool Clear command or by disconnecting the 12 volt battery.

DTC P011B (2.4 L ENGINE) (2017 2018 2019)

DTC P011B: Intake Air Temperature (IAT) Sensor Circuit Range/Performance Problem

General Description

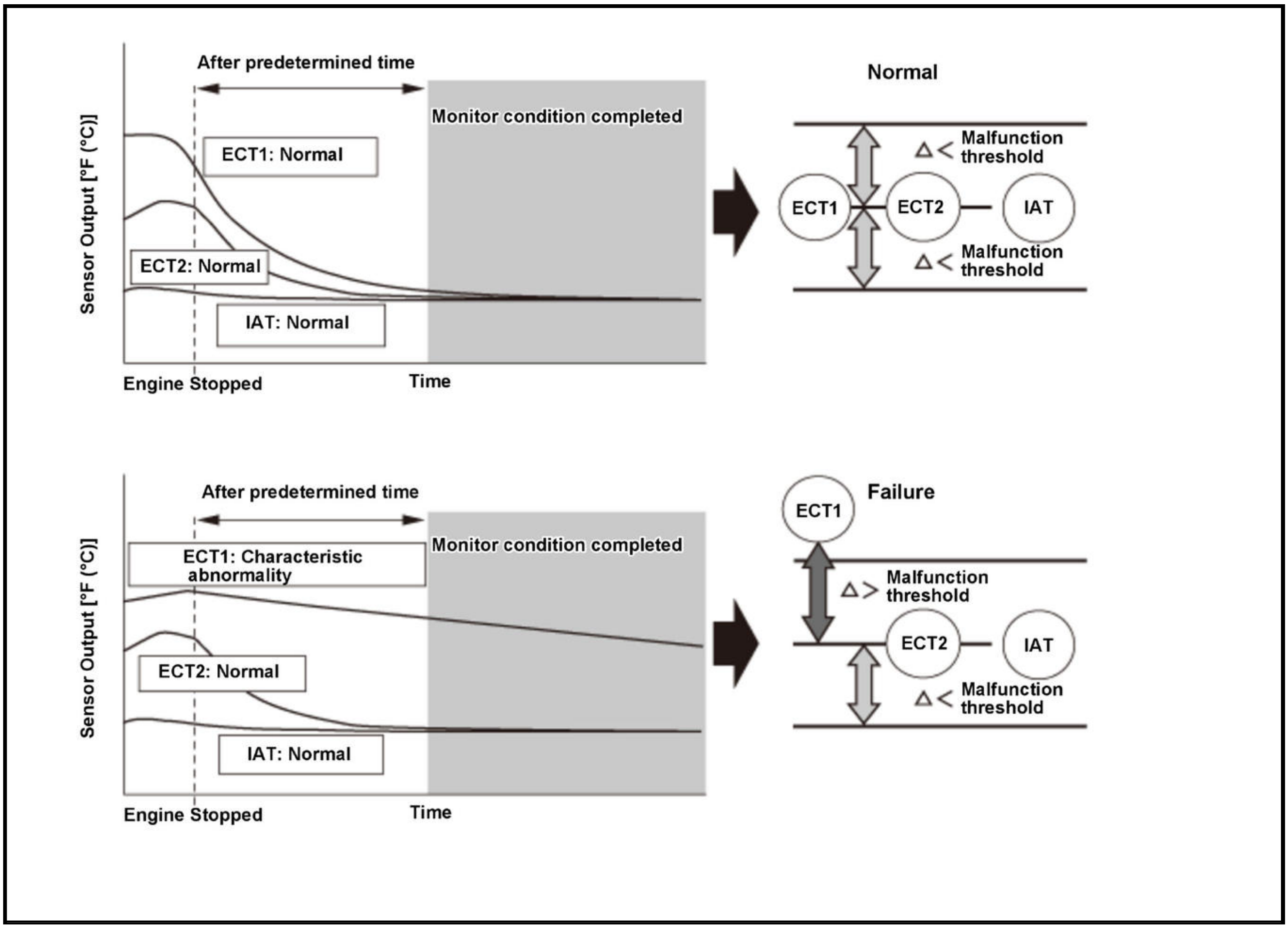
After predetermined time
Monitor condition completed
ECT1: Normal
ECT2: Normal
IAT: Normal
Sensor Output [°F (°C)]
Engine Stopped
Time
Normal
Malfunction threshold
ECT1
ECT2
IAT
Malfunction threshold
After predetermined time
Monitor condition completed
ECT1: Characteristic abnormality
ECT2: Normal
IAT: Normal
Sensor Output [°F (°C)]
Engine Stopped
Time
ECT1
Failure
Malfunction threshold
ECT2
IAT
Malfunction threshold

Two engine coolant temperature (ECT) sensors and one intake air temperature (IAT) sensor are used by the powertrain control module (PCM). When the engine is stopped and enough time has passed, the temperature of the engine will equalize to ambient temperature. ECT sensor 1 and IAT sensor are compared to ECT sensor 2, and if an inappropriate temperature is read, the PCM detects a malfunction in the corresponding sensor and stores a DTC.

Monitor Execution, Sequence, Duration, DTC Type

Execution	Once per driving cycle
Sequence	None
Duration	10 seconds or more
DTC Type	Two drive cycles, MIL on

Enable Conditions

Condition	Minimum	Maximum
Engine off time	6 hours	-

Malfunction Threshold

A malfunction is detected if the following conditions are present after the engine has stopped and the vehicle condition has been turned to the OFF (LOCK) mode for at least 6 hours before restarting the engine:

Temperature difference between each sensor values		Malfunction judgment		
ECT1* - ECT2**	**IAT*** - ECT2****	**ECT sensor 1**	**IAT sensor**	**ECT sensor 2**
Higher than 57 deg. F (32 deg. C)	Higher than 57 deg. F (32 deg. C)	Normal	Normal	Failure
	From -43 deg. F (-24 deg. C) to 57 deg. F (32 deg. C)	Failure	Normal	Normal
	Lower than -43 deg. F (-24 deg. C)	Failure	Failure	Normal
From -43 deg. F (-24 deg. C) to 57 deg. F (32 deg. C)	Higher than 57 deg. F (32 deg. C)	Normal	Failure	Normal
	From -43 deg. F (-24 deg. C) to 57 deg. F (32 deg. C)	Normal	Normal	Normal
	From -44 deg. F (-25 deg. C) to -108 deg. F (-60 deg. C)	Normal	Failure	Normal
			Suspended****	
	Lower than -108 deg. F (-60 deg. C)	Normal	Failure	Normal
Lower than -43 deg. F (-24 deg. C)	Higher than 57 deg. F (32 deg. C)	Failure	Failure	Normal
	From -43 deg. F (-24 deg. C) to 57 deg. F (32 deg. C)	Failure	Normal	Normal
	Lower than -43 deg. F (-24 deg. C)	Normal	Normal	Failure

*: [ECT SENSOR 1]

**: [ECT SENSOR 2]

***: [IAT SENSOR (1)]

****: Malfunction judgment is suspended because the cooled air introduced after engine start lowers the intake air temperature; the ambient temperature condition does not stay equal.

[ ]: HDS Parameter

Possible Cause

NOTE: The causes shown may not be a complete list of all potential problems, and it is possible that there may be other causes.

- ECT sensor 1 failure
- ECT sensor 2 failure
- IAT sensor failure
- Engine block heater attachment (non-genuine part)

Confirmation Procedure

Operating Condition

- Turn the vehicle to the OFF (LOCK) mode, and wait at least 6 hours.
- Start the engine, and let it idle for at least 10 seconds.

- Do not use an engine block heater because the engine coolant temperature will not stay equal during engine stop.
- When freeze data is stored, test the vehicle under an ambient temperature close to the intake air temperature in the freeze data.
- When an ambient temperature extremely changes, malfunction judgment may not execute. Avoid extreme temperature changing condition after or before engine start. (When the vehicle is parked in the garage, open the garage door to introduce outside air; then start the engine.)

With the HDS

None.

Diagnosis Details

Conditions for setting the DTC

When a malfunction is detected during the first drive cycle, a Pending DTC is stored in the PCM memory. If the malfunction returns in the next (second) drive cycle, the MIL comes on and a Confirmed DTC and the freeze data are stored.

Conditions for clearing the DTC

The MIL is cleared if the malfunction does not return in three consecutive trips in which the diagnostic runs. The MIL, the Pending DTC, the Confirmed DTC, and the freeze data can be cleared with the scan tool Clear command or by disconnecting the 12 volt battery.

DTC P0121 (1.5 L ENGINE) (2018 2019 2020 2021)

DTC P0121: Throttle Position (TP) Sensor A Out of Range

General Description

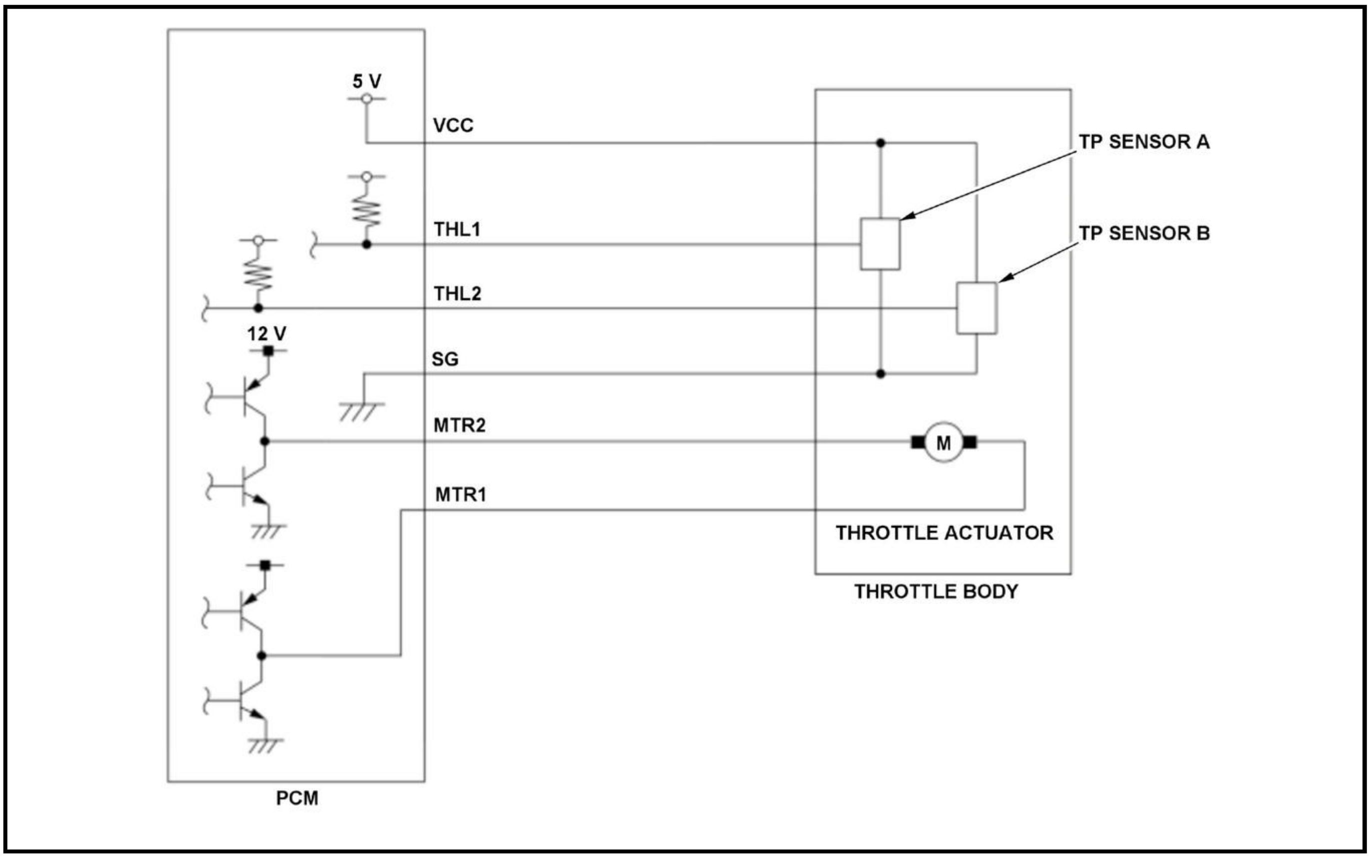

The electronic throttle control system controls the throttle valve opening. The system includes the throttle actuator, the throttle valve, throttle position (TP) sensors A and B, the electronic throttle control system (ETCS) control relay, the accelerator pedal position (APP) sensor, and the powertrain control module (PCM). TP sensor A is a semiconductor type, and it is attached to the throttle body and shaft to determine throttle valve position. The throttle valve position signal from TP sensor A is transmitted to the PCM for target position feedback control. If the signal from TP sensor A is a fixed value for a set time, the PCM detects a TP sensor A malfunction and stores a DTC.

Monitor Execution, Sequence, Duration, DTC Type

Execution	Continuous
Sequence	None
Duration	6.0 seconds or more
DTC Type	Two drive cycles, MIL on

Enable Conditions

Condition	B
Vehicle	ON mode

Malfunction Threshold

The TP sensor A output voltage [TP SENSOR A] is 0.38 V or less, or 4.5 V or more for at least 6.0 seconds.

[ ]: HDS Parameter

Possible Cause

NOTE: The causes shown may not be a complete list of all potential problems, and it is possible that there may be other causes.

- Throttle body internal failure (TP sensor A)
- PCM internal circuit failure

Diagnosis Details

Conditions for setting the DTC

When a malfunction is detected during the first drive cycle, a Pending DTC is stored in the PCM memory. If the malfunction returns in the next (second) drive cycle, the MIL comes on and a Confirmed DTC, the freeze data, and the on-board snapshot are stored.

Conditions for clearing the DTC

The MIL is cleared if the malfunction does not return in three consecutive trips in which the diagnostic runs. The MIL, the Pending DTC, the Confirmed DTC, the freeze data, and the on-board snapshot can be cleared with the scan tool Clear command or by disconnecting the 12 volt battery.

DTC P0121 (2.4 L ENGINE) (2018 2019)

DTC P0121: Throttle Position (TP) Sensor A Out of Range

General Description

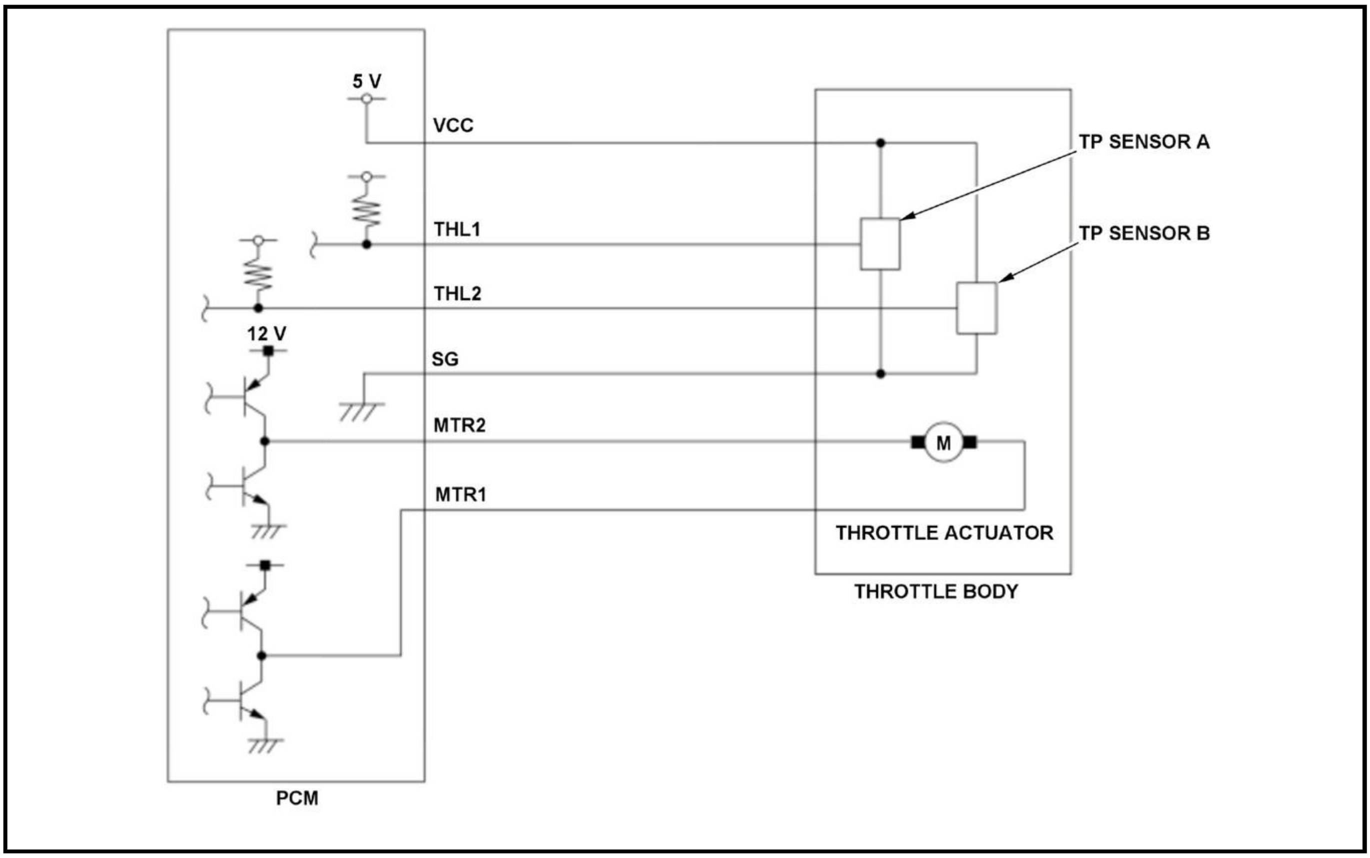

The electronic throttle control system controls the throttle valve opening. The system includes the throttle actuator, the throttle valve, throttle position (TP) sensors A and B, the electronic throttle control system (ETCS) control relay, the accelerator pedal position (APP) sensor, and the powertrain control module (PCM). TP sensor A is a semiconductor type, and it is attached to the throttle body and shaft to determine throttle valve position. The throttle valve position signal from TP sensor A is transmitted to the PCM for target position feedback control. If the signal from TP sensor A is a fixed value for a set time, the PCM detects a TP sensor A malfunction and stores a DTC.

Monitor Execution, Sequence, Duration, DTC Type

Execution	Continuous
Sequence	None
Duration	6.0 seconds or more

DTC Type	Two drive cycles, MIL on

Enable Conditions

Condition	B
Vehicle	ON mode

Malfunction Threshold

The TP sensor A output voltage [TP SENSOR A] is 0.39 V or less, or 4.5 V or more for at least 6.0 seconds.

[ ]: HDS Parameter

Possible Cause

NOTE: The causes shown may not be a complete list of all potential problems, and it is possible that there may be other causes.

- Throttle body internal failure (TP sensor A)
- PCM internal circuit failure

Diagnosis Details

Conditions for setting the DTC

When a malfunction is detected during the first drive cycle, a Pending DTC is stored in the PCM memory. If the malfunction returns in the next (second) drive cycle, the MIL comes on and a Confirmed DTC, the freeze data, and the on-board snapshot are stored.

Conditions for clearing the DTC

The MIL is cleared if the malfunction does not return in three consecutive trips in which the diagnostic runs. The MIL, the Pending DTC, the Confirmed DTC, the freeze data, and the on-board snapshot can be cleared with the scan tool Clear command or by disconnecting the 12 volt battery.

DTC P0122, P0123 (1.5 L ENGINE)

DTC P0122: Throttle Position (TP) Sensor A Circuit Low Voltage **DTC P0123:** Throttle Position (TP) Sensor A Circuit High Voltage

General Description

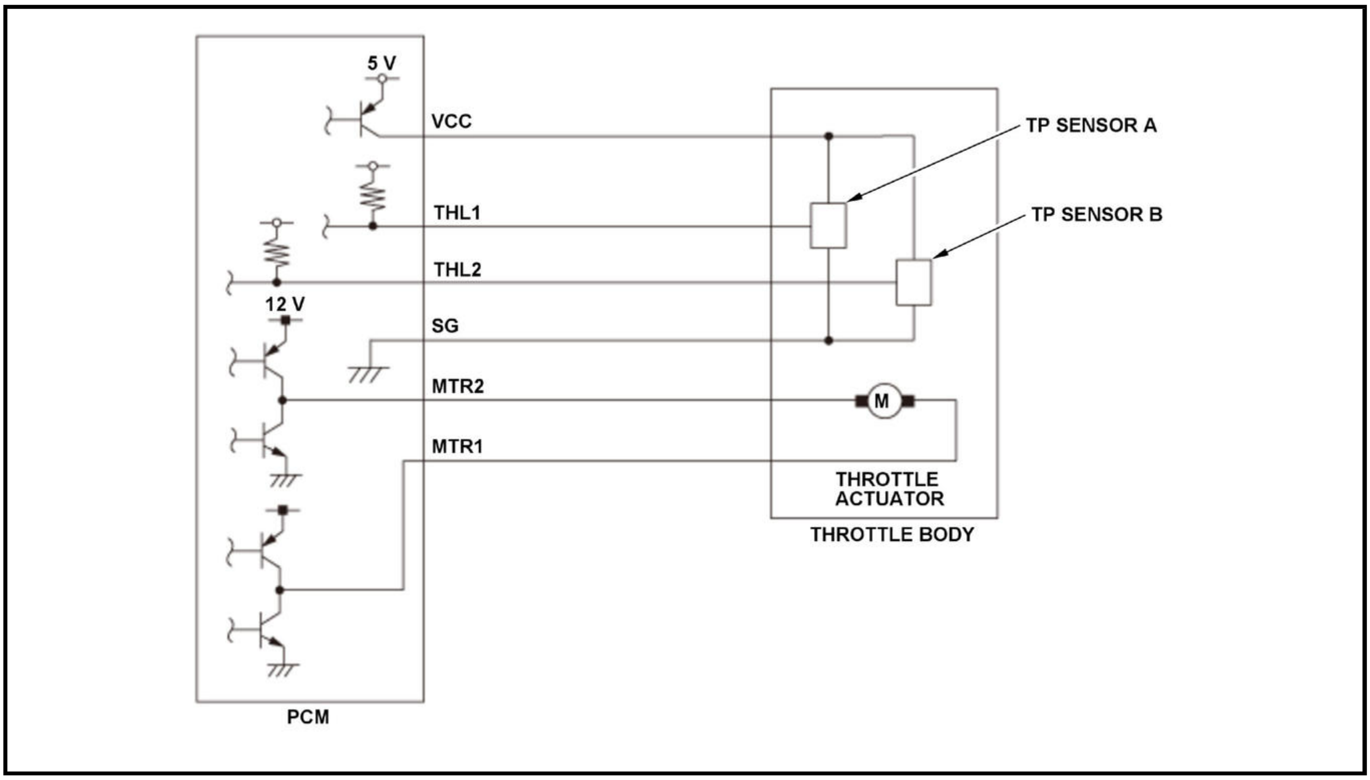

The electronic throttle control system controls the throttle valve opening. The system includes the throttle actuator, the throttle valve, throttle position (TP) sensors A and B, the electronic throttle control system (ETCS) control relay, the accelerator pedal position (APP) sensor, and the powertrain control module (PCM). TP sensor A is a semiconductor type, and it is attached to the throttle body and shaft to determine throttle valve position. The throttle valve position signal from TP sensor A is transmitted to the PCM for target position feedback control. If the signal from TP sensor A is a fixed value for a set time, the PCM detects a TP sensor A malfunction and stores a DTC.

Monitor Execution, Sequence, Duration, DTC Type

Execution	Continuous
Sequence	None
Duration	200 milliseconds or more
DTC Type	One drive cycle, MIL on

Enable Conditions

Condition	B
Vehicle	ON mode

Malfunction Threshold

DTC: P0122

The TP sensor A output voltage [TP SENSOR A] is 0.3 V or less for at least 200 milliseconds.

DTC: P0123

The TP sensor A output voltage [TP SENSOR A] is 4.8 V or more for at least 200 milliseconds.

[ ]: HDS Parameter

Possible Cause

NOTE: The causes shown may not be a complete list of all potential problems, and it is possible that there may be other causes.

DTC: P0122

- TP sensor A THL1 line short to ground
- TP sensor A VCC line open

DTC: P0123

- TP sensor A THL1 line open
- TP sensor A SG line open

Common

- TP sensor A failure
- PCM internal circuit failure

Diagnosis Details

Conditions for setting the DTC

When a malfunction is detected, the MIL comes on and a Pending DTC, a Confirmed DTC, and the freeze data are stored in the PCM memory.

Conditions for clearing the DTC

The MIL is cleared if the malfunction does not return in three consecutive trips in which the diagnostic runs. The MIL, the Pending DTC, the Confirmed DTC, and the freeze data can be cleared with the scan tool Clear command or by disconnecting the 12 volt battery.

DTC P0122, P0123 (2.4 L ENGINE) (2017 2018 2019)

DTC P0122: Throttle Position (TP) Sensor A Circuit Low Voltage **DTC P0123:** Throttle Position (TP) Sensor A Circuit High Voltage

General Description

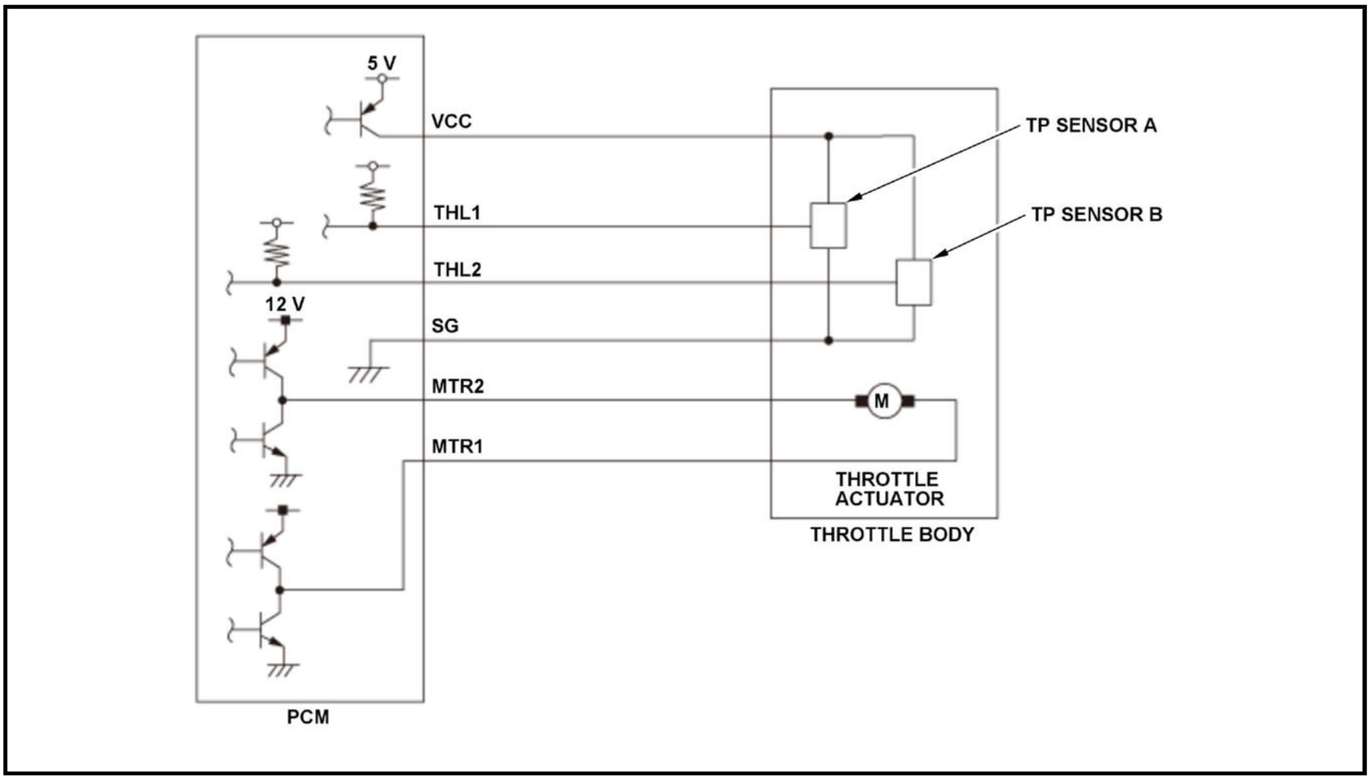

The electronic throttle control system controls the throttle valve opening. The system includes the throttle actuator, the throttle valve, throttle position (TP) sensors A and B, the electronic throttle control system (ETCS) control relay, the accelerator pedal position (APP) sensor, and the powertrain control module (PCM). TP sensor A is a semiconductor type, and it is attached to the throttle body and shaft to determine throttle valve position. The throttle valve position signal from TP sensor A is transmitted to the PCM for target position feedback control. If the signal from TP sensor A is a fixed value for a set time, the PCM detects a TP sensor A malfunction and stores a DTC.

Monitor Execution, Sequence, Duration, DTC Type

Execution	Continuous
Sequence	None
Duration	200 milliseconds or more
DTC Type	One drive cycle, MIL on

Enable Conditions

Condition	B
Vehicle	ON mode

Malfunction Threshold

DTC: P0122

The TP sensor A output voltage [TP SENSOR A] is 0.3 V or less for at least 200 milliseconds.

DTC: P0123

The TP sensor A output voltage [TP SENSOR A] is 4.8 V or more for at least 200 milliseconds.

[ ]: HDS Parameter

Possible Cause

NOTE: The causes shown may not be a complete list of all potential problems, and it is possible that there may be other causes.

DTC: P0122

- TP sensor A THL1 line short to ground
- TP sensor A VCC line open

DTC: P0123

- TP sensor A THL1 line open
- TP sensor A SG line open

Common

- TP sensor A failure
- PCM internal circuit failure

Diagnosis Details

Conditions for setting the DTC

When a malfunction is detected, the MIL comes on and a Pending DTC, a Confirmed DTC, and the freeze data are stored in the PCM memory.

Conditions for clearing the DTC

The MIL is cleared if the malfunction does not return in three consecutive trips in which the diagnostic runs. The MIL, the Pending DTC, the Confirmed DTC, and the freeze data can be cleared with the scan tool Clear command or by disconnecting the 12 volt battery.

DTC P0125 (1.5 L ENGINE)

DTC P0125: Engine Coolant Temperature (ECT) Sensor 1 Malfunction/Slow Response

General Description

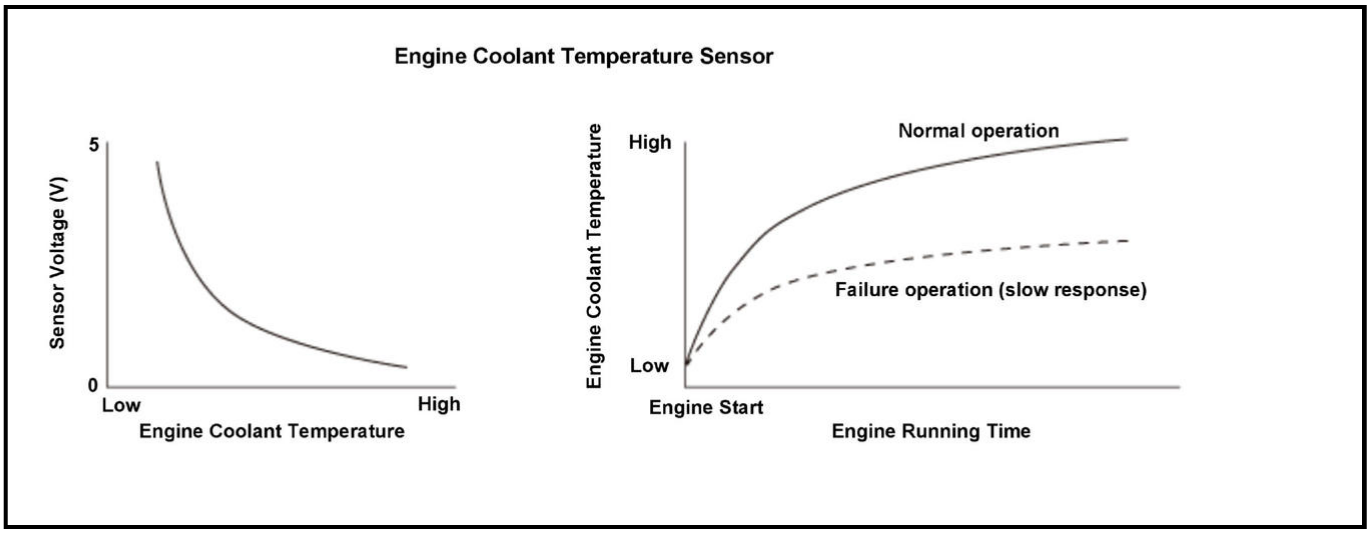

The powertrain control module (PCM) supplies voltage to the engine coolant temperature signal circuit (about 5 V) through a pull-up resistor. As the engine coolant cools, the engine coolant temperature (ECT) sensor 1 resistance increases, and the PCM detects a high signal voltage. As the engine coolant warms, the ECT sensor 1 resistance decreases, and the PCM detects a low signal voltage. If the ECT sensor 1 output voltage does not reach a specified temperature at which closed loop control for stoichiometric air/fuel ratio starts within a set time, depending on the initial engine coolant temperature after starting the engine, the PCM detects a malfunction and stores a DTC.

Monitor Execution, Sequence, Duration, DTC Type

Execution	Once per driving cycle
Sequence	None
Duration	20 minutes or less
DTC Type	Two drive cycles, MIL on

Enable Conditions

Condition	Minimum	Maximum
Initial engine coolant temperature [ECT SENSOR 1]	-	0 deg. F (-18 deg. C)
Fuel feedback	Other than during fuel cut-off operation	

[ ]: HDS Parameter

Malfunction Threshold

The engine running time before the engine coolant temperature [ECT SENSOR 1] reaches 0 deg. F (-18 deg. C), based on the initial engine coolant temperatures [ECT SENSOR 1], is as follows:

Initial engine coolant temperature [ECT SENSOR 1]	Engine running time
-54 deg. F (-48 deg. C)	5 minutes or more
-35 deg. F (-37 deg. C)	5 minutes or more
0 deg. F (-18 deg. C)	1 minute or more

[ ]: HDS Parameter

Possible Cause

NOTE: The causes shown may not be a complete list of all potential problems, and it is possible that there may be other causes.

- ECT sensor 1 failure
- Thermostat stuck open

Confirmation Procedure

Operating Condition

- Start the engine under Enable Conditions (see "Initial engine coolant temperature [ECT SENSOR 1]").
- Let the engine idle for at least 20 minutes.

[ ]: HDS Parameter

With the HDS

None.

Diagnosis Details

Conditions for setting the DTC

When a malfunction is detected during the first drive cycle with the engine coolant temperature and intake air temperature at engine start-up within the specified temperature range, a Pending DTC is stored in the PCM memory. If the malfunction returns in the next (second) drive cycle with the engine coolant temperature and intake air temperature at engine start-up within the specified temperature range, the MIL comes on and a Confirmed DTC and the freeze data are stored.

Conditions for clearing the DTC

The MIL is cleared if the malfunction does not return in three consecutive trips in which the diagnostic runs. The MIL, the Pending DTC, the Confirmed DTC, and the freeze data can be cleared with the scan tool Clear command or by disconnecting the 12 volt battery.

DTC P0125 (2.4 L ENGINE) (2017 2018 2019)

DTC P0125: Engine Coolant Temperature (ECT) Sensor 1 Malfunction/Slow Response

General Description

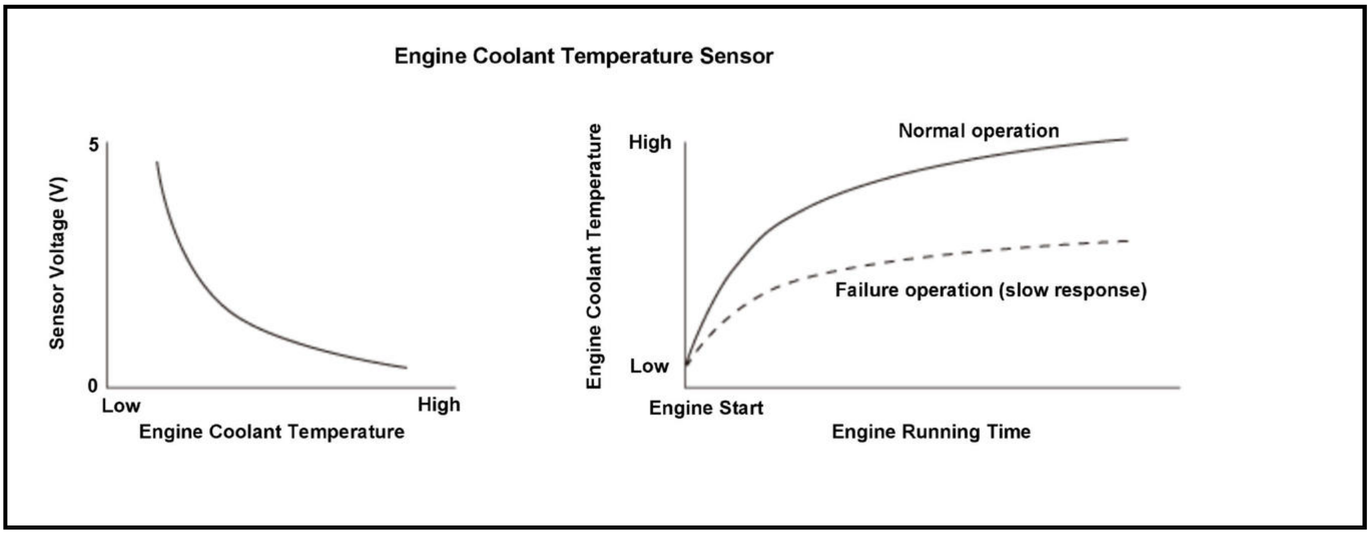

The powertrain control module (PCM) supplies voltage to the engine coolant temperature signal circuit (about 5 V) through a pull-up resistor. As the engine coolant cools, the engine coolant temperature (ECT) sensor 1 resistance increases, and the PCM detects a high signal voltage. As the engine coolant warms, the ECT sensor 1 resistance decreases, and the PCM detects a low signal voltage. If the ECT sensor 1 output voltage does not reach a specified temperature at which closed loop control for stoichiometric air/fuel ratio starts within a set time, depending on the initial engine coolant temperature after starting the engine, the PCM detects a malfunction and stores a DTC.

Monitor Execution, Sequence, Duration, DTC Type

Execution	Once per driving cycle
Sequence	None
Duration	20 minutes or less
DTC Type	Two drive cycles, MIL on

Enable Conditions

Condition	Minimum	Maximum
Initial engine coolant temperature [ECT SENSOR 1]	-	0 deg. F (-18 deg. C)
Fuel feedback	Other than during fuel cut-off operation	

[ ]: HDS Parameter

Malfunction Threshold

The engine running time before the engine coolant temperature [ECT SENSOR 1] reaches 0 deg. F (-18 deg. C), based on the initial engine coolant temperatures [ECT SENSOR 1], is as follows:

Initial engine coolant temperature [ECT SENSOR 1]	Engine running time
-54 deg. F (-48 deg. C)	5 minutes or more
-36 deg. F (-38 deg. C)	5 minutes or more
0 deg. F (-18 deg. C)	1 minute or more

[ ]: HDS Parameter

Possible Cause

NOTE: The causes shown may not be a complete list of all potential problems, and it is possible that there may be other causes.

- ECT sensor 1 failure
- Thermostat stuck open

Confirmation Procedure

Operating Condition

- Start the engine under Enable Conditions (see "Initial engine coolant temperature [ECT SENSOR 1]").
- Let the engine idle for at least 20 minutes.

[ ]: HDS Parameter

With the HDS

None.

Diagnosis Details

Conditions for setting the DTC

When a malfunction is detected during the first drive cycle with the engine coolant temperature and intake air temperature at engine start-up within the specified temperature range, a Pending DTC is stored in the PCM memory. If the malfunction returns in the next (second) drive cycle with the engine coolant temperature and intake air temperature at engine start-up within the specified temperature range, the MIL comes on and a Confirmed DTC and the freeze data are stored.

Conditions for clearing the DTC

The MIL is cleared if the malfunction does not return in three consecutive trips in which the diagnostic runs. The MIL, the Pending DTC, the Confirmed DTC, and the freeze data can be cleared with the scan tool Clear command or by disconnecting the 12 volt battery.

DTC P0128 (1.5 L ENGINE)

DTC P0128: Cooling System Malfunction

General Description

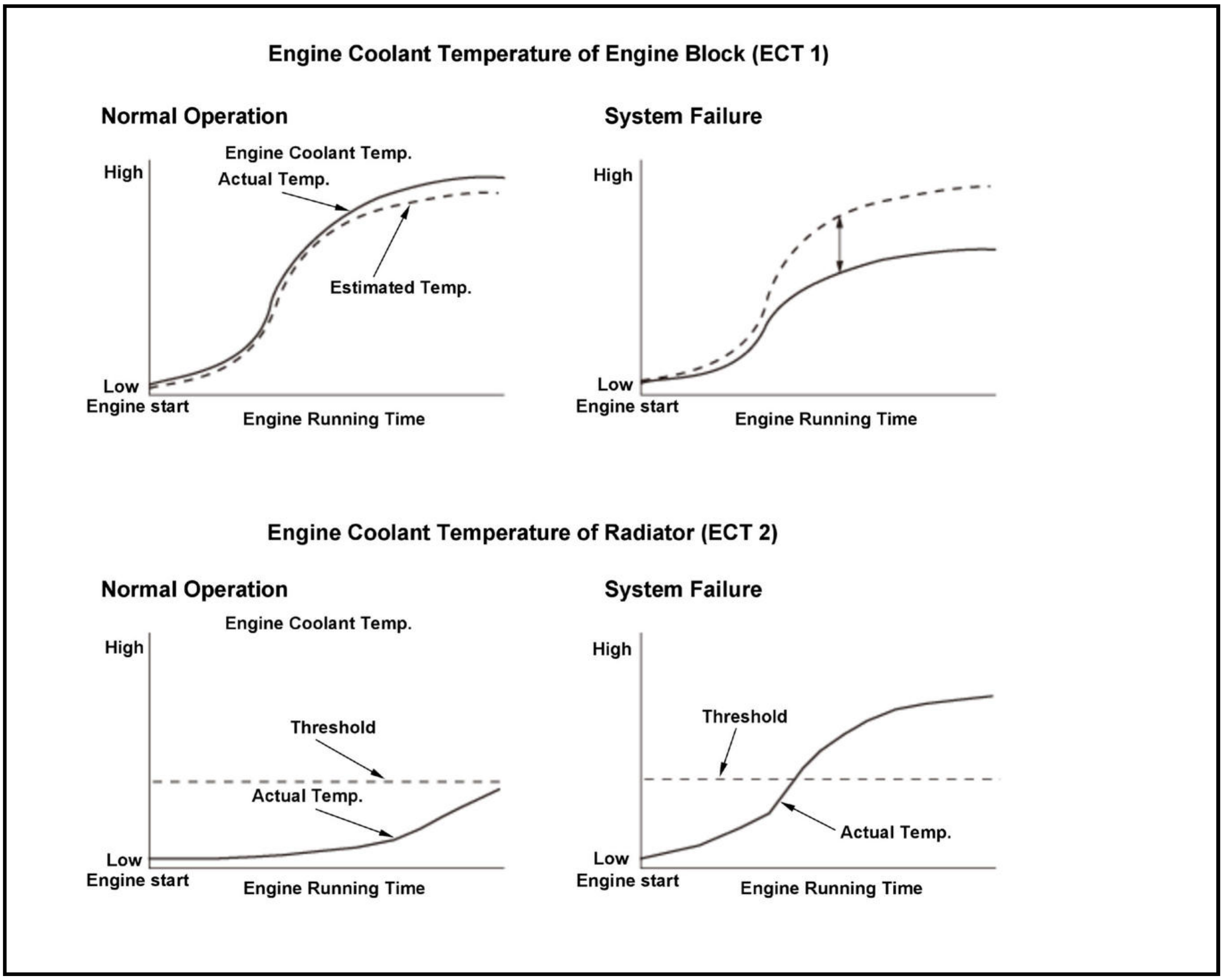

The thermostat is closed when the engine coolant temperature is low, and it stops the circulation of engine coolant to speed engine warm up. When the engine coolant temperature increases, the thermostat opens and circulates engine coolant to control its temperature. When the engine coolant temperature decreases, the opening area of the thermostat is reduced to regulate the engine coolant temperature. If the thermostat sticks open, engine warm up is delayed, and exhaust emissions are adversely affected. The powertrain control module (PCM) measures the rise in the coolant temperature after the engine starts at the engine block and at the radiator, and it estimates the characteristics of the engine coolant temperature by calculations based on those two temperatures and the driving conditions. When ECT 2 immediately increases from the starting value, it is defined as the thermostat stuck open. When ECT 1 does not reach a specified value at a certain condition, it is defined as a thermostat malfunction.

Monitor Execution, Sequence, Duration, DTC Type

Execution	Once per driving cycle
Sequence	None
Duration	Depending on the driving conditions
DTC Type	Two drive cycles, MIL on

Enable Conditions

Condition	Minimum	Maximum
Engine off time	6 hours	-
Estimated initial outside air temperature	20 deg. F (-7 deg. C)	-

Condition	Minimum	Maximum
Initial engine coolant temperature (ECT 1) [ECT SENSOR 1]	-	123 deg. F (50 deg. C)
The difference between initial intake air temperature [IAT Sensor (1)] and current intake air temperature [IAT Sensor (1)]	-	3 deg. F (2 deg. C)*
		7 deg. F (4 deg. C)**

*: Intake air temperature decrease judgment when there is no driving record of 25 mph (40 km/h) in this drive cycle.**: Intake air temperature decrease judgment when there is a driving record of 25 mph (40 km/h) in this drive cycle.[ ]: HDS Parameter

Malfunction Threshold

Malfunction determination 1:

The difference between the current engine coolant temperature at the radiator (ECT 2) [ECT SENSOR 2] and the initial engine coolant temperature at the radiator (ECT 2) [ECT SENSOR 2] is at least 11 deg. F (6 deg. C) when either of these condition is met:

- When the estimated engine coolant temperature [EST ECT1] reached to 162 deg. F (72 deg. C).
- When the estimated engine coolant temperature [EST ECT1] changed 40 deg. F (22 deg. C).

Malfunction determination 2:

The estimated engine coolant temperature [EST ECT1] reaches to 158 deg. F (70 deg. C) before the actual engine coolant temperature at the engine (ECT 1) [ECT SENSOR 1] reaches to 70 deg. C (158 deg. F).

Possible Cause

NOTE: The causes shown may not be a complete list of all potential problems, and it is possible that there may be other causes.

- Thermostat failure
- Engine coolant temperature (ECT) sensor 1 failure
- Intake air temperature (IAT) sensor failure
- Manifold absolute pressure (MAP) sensor failure
- Crankshaft position (CKP) sensor failure
- Barometric pressure (BARO) sensor failure
- Ignition system failure
- Fuel supply system failure
- Radiator fan failure
- Hood opened

Confirmation Procedure

Operating Condition

- Start the engine under Enable Conditions (see "Engine off time", "Estimated initial outside air temperature", "Initial engine coolant temperature (ECT 1) [ECT SENSOR 1]", and "The difference between initial intake air temperature [IAT Sensor (1)] and current intake air temperature [IAT Sensor (1)]").
- Drive the vehicle at a speed between 15 - 75 mph (24 - 120 km/h) for at least 30 minutes.

- Drive the vehicle in this manner only if the traffic regulations and ambient conditions allow.

With the HDS

None.

Diagnosis Details

Conditions for setting the DTC

When a malfunction is detected during the first drive cycle with the engine coolant temperature and intake air temperature at engine start-up within the specified temperature range, a Pending DTC is stored in the PCM memory. If the malfunction returns in the next (second) drive cycle with the engine coolant temperature and intake air temperature at engine start-up within the specified temperature range, the MIL comes on and a Confirmed DTC, the freeze data, and the on-board snapshot are stored.

Conditions for clearing the DTC

The MIL is cleared if the malfunction does not return in three consecutive trips in which the diagnostic runs. The MIL, the Pending DTC, the Confirmed DTC, the freeze data, and the on-board snapshot can be cleared with the scan tool Clear command or by disconnecting the 12 volt battery.

DTC P0128 (2.4 L ENGINE) (2017 2018 2019)

DTC P0128: Cooling System Malfunction

General Description

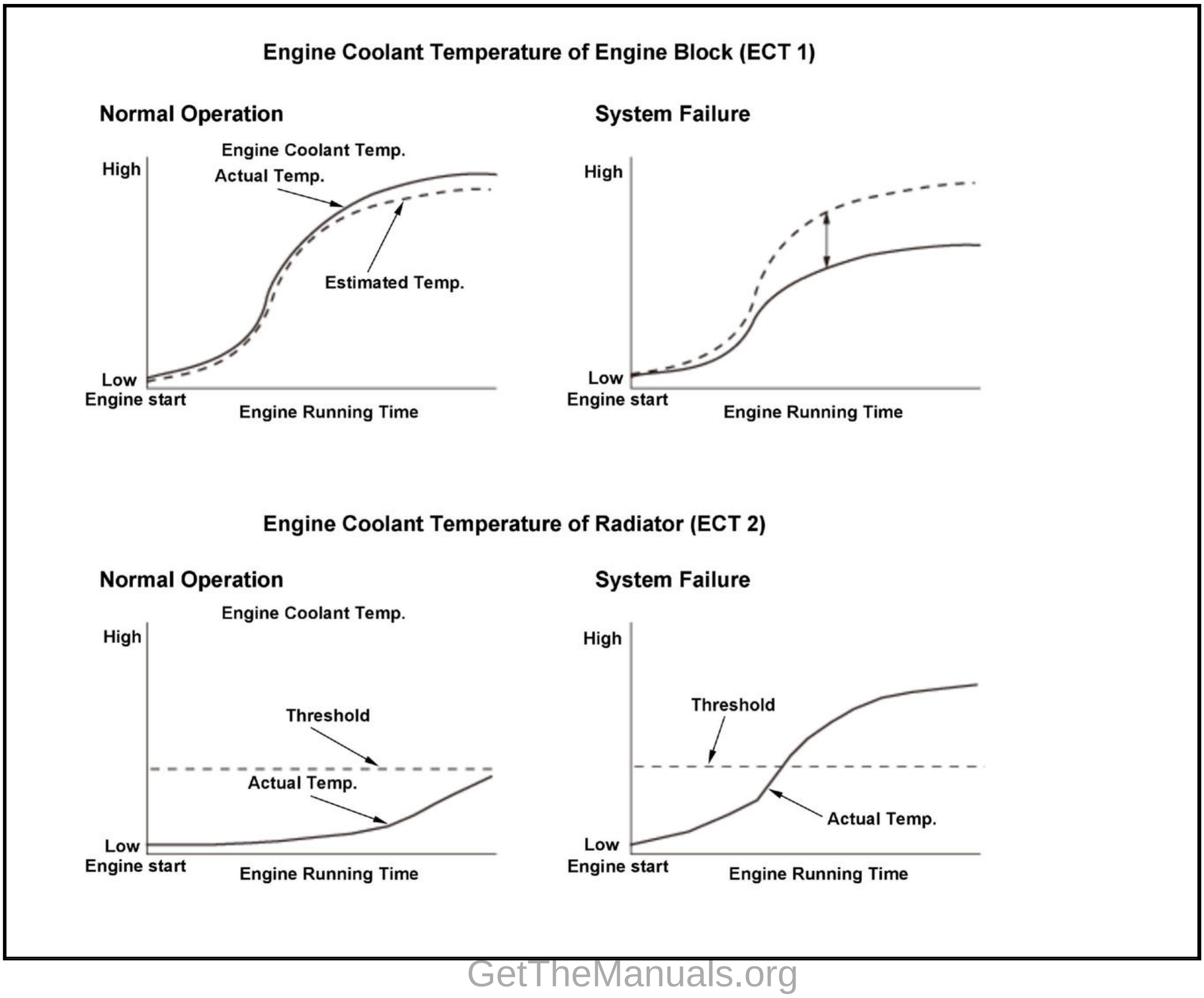

The thermostat is closed when the engine coolant temperature is low, and it stops the circulation of engine coolant to speed engine warm up. When the engine coolant temperature increases, the thermostat opens and circulates engine coolant to control its temperature. When the engine coolant temperature decreases, the opening area of the thermostat is reduced to regulate the engine coolant temperature. If the thermostat sticks open, engine warm up is delayed, and exhaust emissions are adversely affected. The powertrain control module (PCM) measures the rise in the coolant temperature after the engine starts at the engine block and at the radiator, and it estimates the characteristics of the engine coolant temperature by calculations based on those two temperatures and the driving conditions. When ECT 2 immediately increases from the starting value, it is defined as the thermostat stuck open. When ECT 1 does not reach a specified value at a certain condition, it is defined as a thermostat malfunction.

Monitor Execution, Sequence, Duration, DTC Type

Execution	Once per driving cycle
Sequence	None
Duration	Depending on the driving conditions
DTC Type	Two drive cycles, MIL on
OBD Status	PASSED/FAILED/NOT COMPLETED (STILL TESTING)

Enable Conditions

Condition	Minimum	Maximum
Engine off time	6 hours	-
Initial intake air temperature [IAT SENSOR (1)]	20 deg. F (-7 deg. C)	123 deg. F (50 deg. C)
Initial engine coolant temperature (ECT 2) [ECT SENSOR 2]	20 deg. F (-7 deg. C)	123 deg. F (50 deg. C)
The difference between initial intake air temperature [IAT SENSOR (1)] and current intake air temperature [IAT SENSOR (1)]	-	35 deg. F (2 deg. C)*
		39 deg. F (4 deg. C)**

*: Intake air temperature decrease judgment when there is no driving record of 25 mph (40 km/h) in this drive cycle.

**: Intake air temperature decrease judgment when there is a driving record of 25 mph (40 km/h) in this drive cycle.

[ ]: HDS Parameter

Malfunction Threshold

Malfunction determination 1:

The difference between the current engine coolant temperature at the radiator (ECT 2) [ECT SENSOR 2] and the initial engine coolant temperature at the radiator (ECT 2) [ECT SENSOR 2] is at least 43 deg. F (6 deg. C) when either of these condition is met:

- When the estimated engine coolant temperature [EST ECT1] reached to 164 deg. F (74 deg. C).
- When the estimated engine coolant temperature [EST ECT1] changed 68 deg. F (20 deg. C).

Malfunction determination 2:

The estimated engine coolant temperature [EST ECT1] reaches to 158 deg. F (70 deg. C) before the actual engine coolant temperature at the engine (ECT 1) [ECT SENSOR 1] reaches to 158 deg. F (70 deg. C).

Possible Cause

NOTE: The causes shown may not be a complete list of all potential problems, and it is possible that there may be other causes.

- Thermostat failure
- Engine coolant temperature (ECT) sensor 1 failure
- Intake air temperature (IAT) sensor failure
- Manifold absolute pressure (MAP) sensor failure
- Crankshaft position (CKP) sensor failure
- Barometric pressure (BARO) sensor failure
- Ignition system failure
- Fuel supply system failure
- Radiator fan failure
- Hood opened

Confirmation Procedure

Operating Condition

- Start the engine under Enable Conditions (see "Engine off time", "Initial intake air temperature [IAT SENSOR (1)]", "Initial engine coolant temperature (ECT 2) [ECT SENSOR 2]", and "The difference between initial intake air temperature [IAT SENSOR (1)] and current intake air temperature [IAT SENSOR (1)]").
- Drive the vehicle at a speed between 15 - 75 mph (24 - 120 km/h) for at least 30 minutes.
- Drive the vehicle in this manner only if the traffic regulations and ambient conditions allow.

With the HDS

None.

Diagnosis Details

Conditions for setting the DTC

When a malfunction is detected during the first drive cycle with the engine coolant temperature and intake air temperature at engine start-up within the specified temperature range, a Pending DTC is stored in the PCM memory. If the malfunction returns in the next (second) drive cycle with the engine coolant temperature and intake air temperature at engine start-up within the specified temperature range, the MIL comes on and a Confirmed DTC and the freeze data are stored.

Conditions for clearing the DTC

The MIL is cleared if the malfunction does not return in three consecutive trips in which the diagnostic runs. The MIL, the Pending DTC, the Confirmed DTC, and the freeze data can be cleared with the scan tool Clear command or by disconnecting the 12 volt battery.

DTC P0130 (1.5 L ENGINE) (2018 2019 2020 2021)

DTC P0130: Air/Fuel Ratio (A/F) Sensor (Sensor 1) Out of Range

General Description

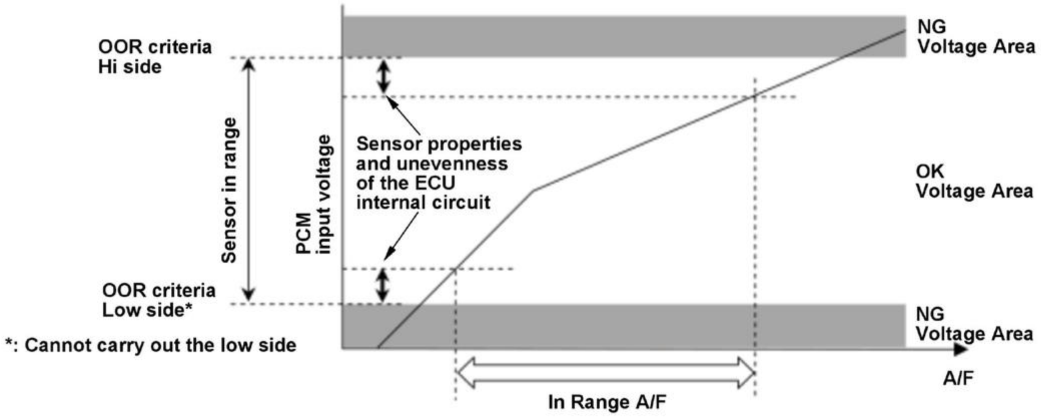
OOR criteria
Hi side
Sensor in range
PCM
input voltage
Sensor properties
and unevenness
of the ECU
internal circuit
OOR criteria
Low side*
*: Cannot carry out the low side
NG
Voltage Area
OK
Voltage Area
NG
Voltage Area
A/F
In Range A/F

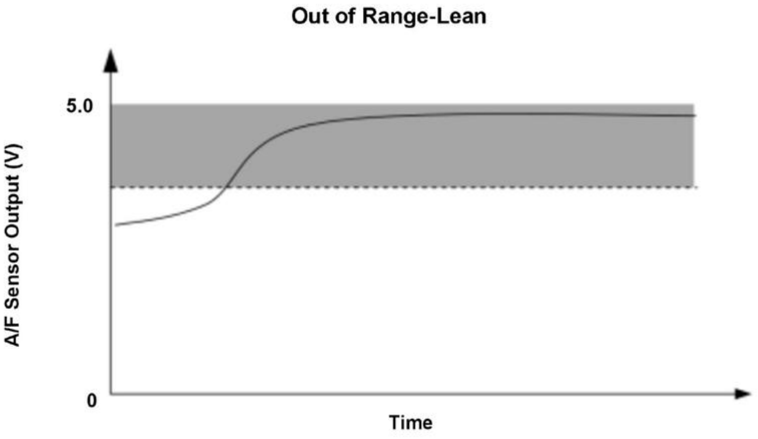

If a malfunction causes the air/fuel ratio (A/F) sensor (sensor 1) signal to the powertrain control module (PCM) to deviate from the normal control area, the A/F sensor (sensor 1) may still become active after the engine starts, but the air/fuel feedback does not start normally and the emissions deteriorate. When the A/F sensor (sensor 1) output is out of the normal area, and this condition continues after the A/F sensor (sensor 1) is active, the PCM detects a malfunction and stores a DTC.

Monitor Execution, Sequence, Duration, DTC Type

Execution	Continuous
Sequence	None
Duration	7.0 seconds or more
DTC Type	Two drive cycles, MIL on

Enable Conditions

Condition	B
State of the engine	Running

Malfunction Threshold

A malfunction is detected when the rear A/F sensor (bank 1, sensor 1) output voltage is 4.64 V or more.

Possible Cause

NOTE: The causes shown may not be a complete list of all potential problems, and it is possible that there may be other causes.

- A/F sensor (sensor 1) failure

Confirmation Procedure

Operating Condition

- Start the engine. Hold the engine speed [ENGINE SPEED] at 3, 000 rpm without load (in P or N) until the radiator fan comes on, then let it idle.
- Air/fuel ratio feedback is started while idling, hold for at least 7 seconds.

[ ]: HDS Parameter

With the HDS

None.

Diagnosis Details

Conditions for setting the DTC

When a malfunction is detected during the first drive cycle, a Pending DTC is stored in the PCM memory. If the malfunction returns in the next (second) drive cycle, the MIL comes on and a Confirmed DTC, the freeze data, and the on-board snapshot are stored.

Conditions for clearing the DTC

The MIL is cleared if the malfunction does not return in three consecutive trips in which the diagnostic runs. The MIL, the Pending DTC, the Confirmed DTC, the freeze data, and the on-board snapshot can be cleared with the scan tool Clear command or by disconnecting the 12 volt battery.

DTC P0130 (2.4 L ENGINE) (2018 2019)

DTC P0130: Air/Fuel Ratio (A/F) Sensor (Sensor 1) Out of Range

General Description

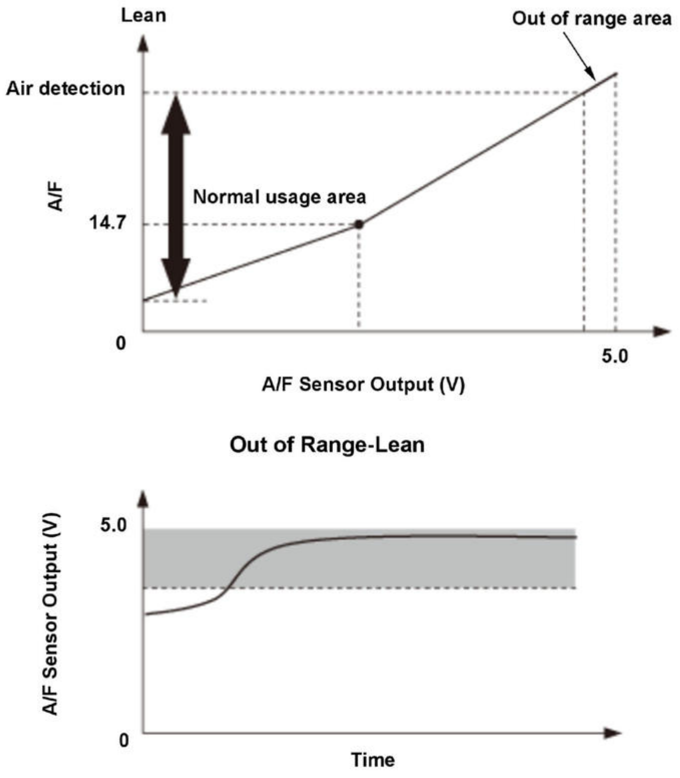

If a malfunction causes the air/fuel ratio (A/F) sensor (sensor 1) signal to the powertrain control module (PCM) to deviate from the normal control area, the A/F sensor (sensor 1) may still become active after the engine starts, but the air/fuel feedback does not start normally and the emissions deteriorate. When the A/F sensor (sensor 1) output is out of the normal area, and this condition continues after the A/F sensor (sensor 1) is active, the PCM detects a malfunction and stores a DTC.

Monitor Execution, Sequence, Duration, DTC Type

Execution	Continuous
Sequence	None
Duration	7.0 seconds or more
DTC Type	Two drive cycles, MIL on

Enable Conditions

Condition	B
State of the engine	Running

Malfunction Threshold

A malfunction is detected when the rear A/F sensor (sensor 1) output voltage is 4.90 V or more.

Possible Cause

NOTE: The causes shown may not be a complete list of all potential problems, and it is possible that there may be other causes.

- A/F sensor (sensor 1) failure

Confirmation Procedure

Operating Condition

- Start the engine. Hold the engine speed [ENGINE SPEED] at 3, 000 rpm without load (in P or N) until the radiator fan comes on, then let it idle.
- Air/fuel ratio feedback is started while idling, hold for at least 7 seconds.

[ ]: HDS Parameter

With the HDS

None.

Diagnosis Details

Conditions for setting the DTC

When a malfunction is detected during the first drive cycle, a Pending DTC is stored in the PCM memory. If the malfunction returns in the next (second) drive cycle, the MIL comes on and a Confirmed DTC, the freeze data, and the on-board snapshot are stored.

Conditions for clearing the DTC

The MIL is cleared if the malfunction does not return in three consecutive trips in which the diagnostic runs. The MIL, the Pending DTC, the Confirmed DTC, the freeze data, and the on-board snapshot can be cleared with the scan tool Clear command or by disconnecting the 12 volt battery.

DTC P0133 (1.5 L ENGINE)

DTC P0133: Air/Fuel Ratio (A/F) Sensor (Sensor 1) Malfunction/Slow Response

General Description

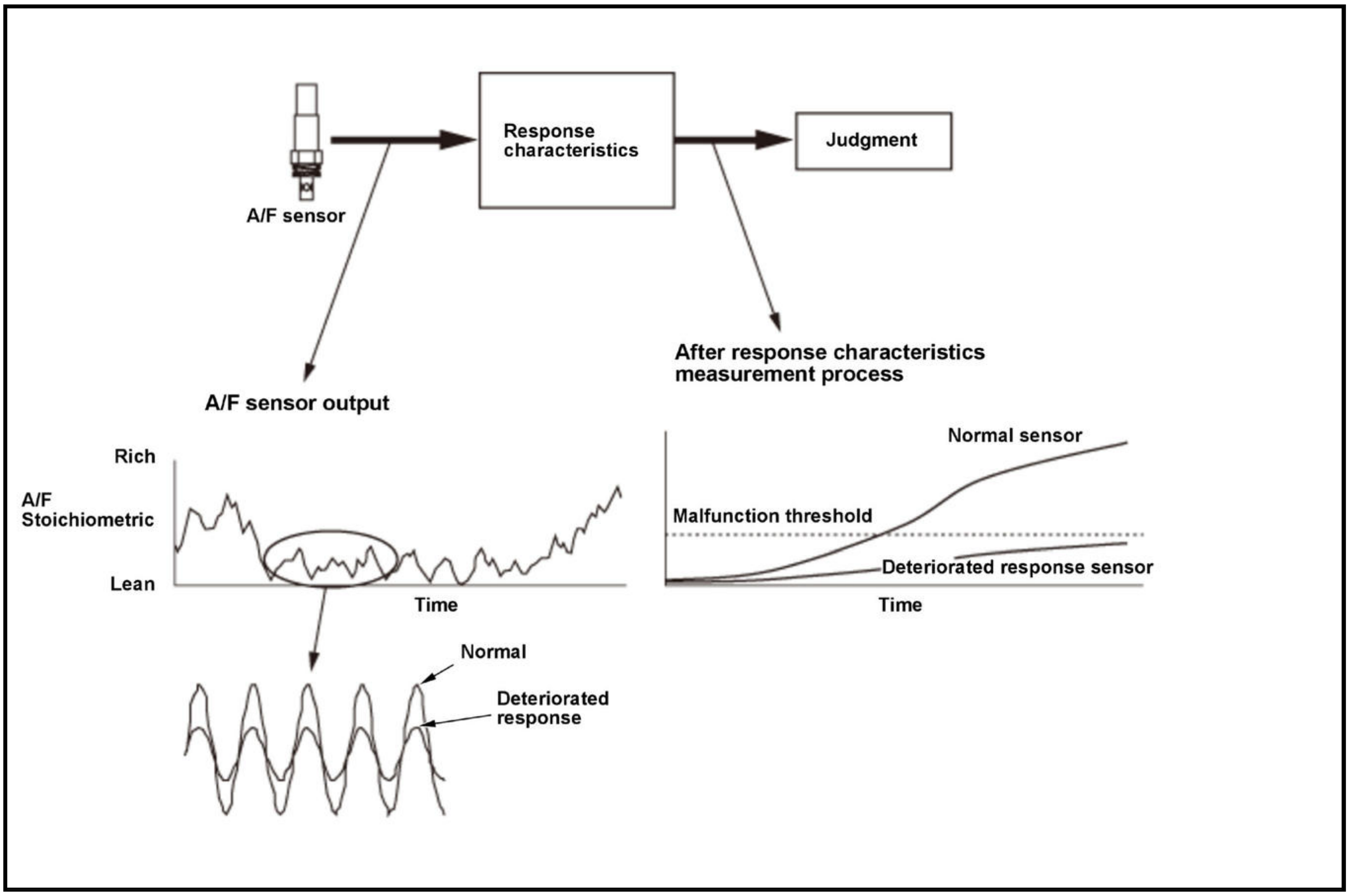

Response characteristics
Judgment
A/F sensor
After response characteristics measurement process
A/F sensor output
Rich
A/F Stoichiometric
Lean
Time
Normal sensor
Malfunction threshold
Deteriorated response sensor
Time
Normal
Deteriorated response

The air/fuel ratio (A/F) sensor (sensor 1) has a linear signal output in relation to the oxygen concentration. The powertrain control module (PCM) computes the air/fuel ratio from the A/F sensor (sensor 1) output voltage and uses fuel feedback control to improve exhaust emissions. The PCM compares the response characteristics against the A/F sensor (sensor 1) output. If the total A/F sensor (sensor 1) output is a specified value for a specified time, the PCM detects a deteriorated response and stores a DTC.

Monitor Execution, Sequence, Duration, DTC Type

Execution	Once per driving cycle
Sequence	None
Duration	9.0 seconds or more
DTC Type	Two drive cycles, MIL on

Enable Conditions

Condition		Minimum	Maximum
Elapsed time after application of power to A/F sensor heater starts		5.0 seconds	-
Engine coolant temperature [ECT SENSOR 1]		156 deg. F (69 deg. C)	-
Intake air temperature [IAT Sensor (1)]		-13 deg. F (-25 deg. C)	-
Engine speed [ENGINE SPEED]		1, 500 rpm	3, 000 rpm
Vehicle speed [VEHICLE SPEED]		26 mph (41 km/h)	-
Fuel trim		0.75	1.47
Intake air amount	1, 500 rpm	0.15 g (0.0053 oz)	0.30 g (0.0105 oz)
	2, 500 rpm	0.16 g (0.0057 oz)	0.30 g (0.0105 oz)
Fuel feedback		Closed loop at stoichiometric	
Other		Without excessive load change	

[ ]: HDS Parameter

Malfunction Threshold

The total A/F sensor (sensor 1) output value is 99 deg. or less in 9.0 seconds.

Possible Cause

NOTE: The causes shown may not be a complete list of all potential problems, and it is possible that there may be other causes.

- A/F sensor (sensor 1) deterioration

Confirmation Procedure

Operating Condition

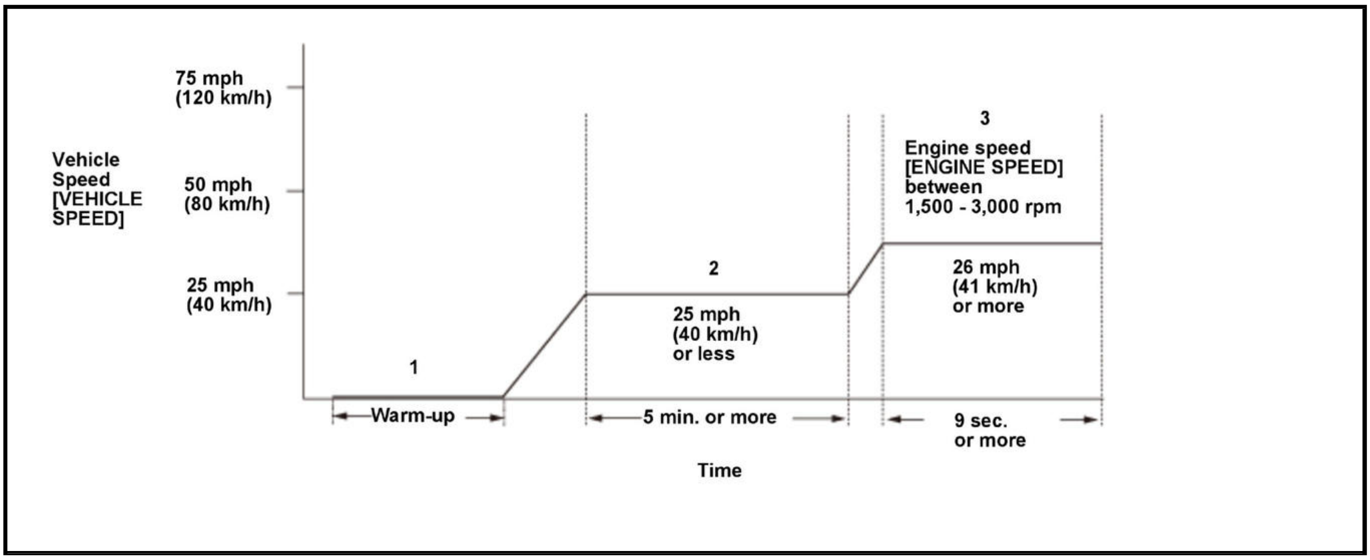

- Start the engine. Hold the engine speed [ENGINE SPEED] at 3, 000 rpm without load (in P or N) until the radiator fan comes on.
- Drive the vehicle at a steady speed of 25 mph (40 km/h) or less, for at least 5 minutes.
- Drive immediately at a steady speed of 26 mph (41 km/h) or more and engine speed [ENGINE SPEED] between 1, 500 - 3, 000 rpm for at least 9.0 seconds.

- Drive the vehicle in this manner only if the traffic regulations and ambient conditions allow.

[ ]: HDS Parameter

With the HDS

None.

Diagnosis Details

Conditions for setting the DTC

When a malfunction is detected during the first drive cycle, a Pending DTC is stored in the PCM memory. If the malfunction returns in the next (second) drive cycle, the MIL comes on and a Confirmed DTC and the freeze data are stored.

Conditions for clearing the DTC

The MIL is cleared if the malfunction does not return in three consecutive trips in which the diagnostic runs. The MIL, the Pending DTC, the Confirmed DTC, and the freeze data can be cleared with the scan tool Clear command or by disconnecting the 12 volt battery.

DTC P0133 (2.4 L ENGINE) (2017 2018 2019)

DTC P0133: Air Fuel Ratio (A/F) Sensor (Sensor 1) Malfunction/Slow Response

General Description

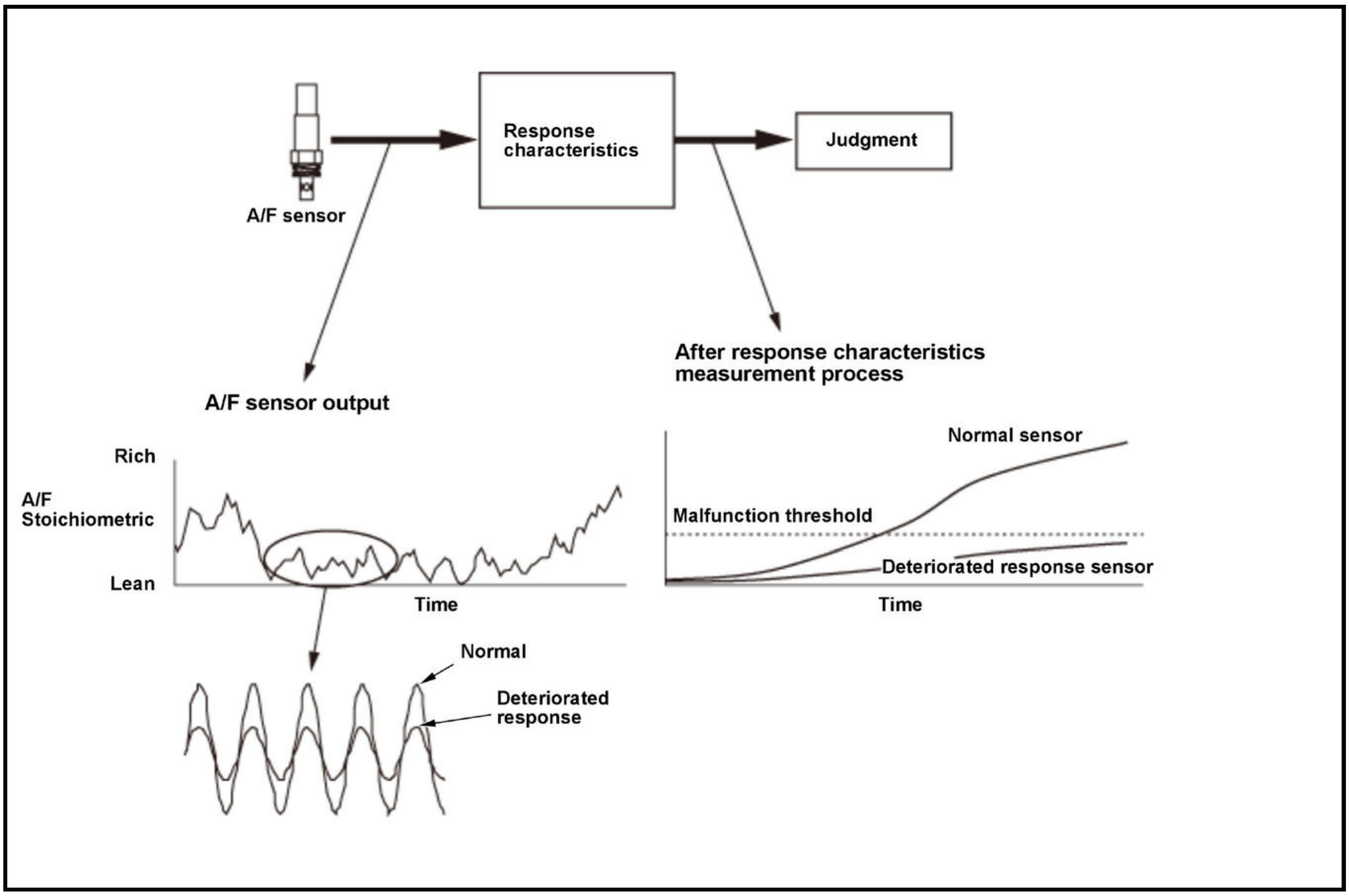
A/F sensor
Response characteristics
Judgment
A/F sensor output
After response characteristics measurement process
Rich
A/F
Stoichiometric
Lean
Time
Normal
Deteriorated response
Normal sensor
Malfunction threshold
Deteriorated response sensor
Time

The air/fuel ratio (A/F) sensor (sensor 1) has a linear signal output in relation to the oxygen concentration. The powertrain control module (PCM) computes the air/fuel ratio from the A/F sensor (sensor 1) output voltage and uses fuel feedback control to improve exhaust emissions. The PCM compares the response characteristics against the A/F sensor (sensor 1) output. If the total A/F sensor (sensor 1) output is a specified value for a specified time, the PCM detects a deteriorated response and stores a DTC.

Monitor Execution, Sequence, Duration, DTC Type

Execution	Once per driving cycle
Sequence	None
Duration	8.0 seconds or more
DTC Type	Two drive cycles, MIL on

Enable Conditions

Condition	Minimum	Maximum
Elapsed time after application of power to A/F sensor heater starts	60 seconds	-
Engine coolant temperature [ECT SENSOR 1]	156 deg. F (69 deg. C)	-
Intake air temperature [IAT SENSOR (1)]	-13 deg. F (-25 deg. C)	-
Engine speed [ENGINE SPEED]	1, 250 rpm	2, 500 rpm

[ ]: HDS Parameter

Condition		Minimum	Maximum
MAP value[MAP SENSOR]	1, 250 rpm	54 kPa (400 mmHg, 15.8 inHg)	93 kPa (700 mmHg, 27.5 inHg)
	2, 500 rpm	40 kPa (300 mmHg, 11.9 inHg)	
Vehicle speed [VEHICLE SPEED]		33 mph (52 km/h)	-
Fuel trim		0.69	1.47
Fuel feedback		Closed loop at stoichiometric	
Other		Without excessive load change	

[ ]: HDS Parameter

Malfunction Threshold

The total A/F sensor (sensor 1) output value is 32 or less in 8.0 seconds.

Possible Cause

NOTE: The causes shown may not be a complete list of all potential problems, and it is possible that there may be other causes.

- A/F sensor (sensor 1) deterioration

Confirmation Procedure

Operating Condition

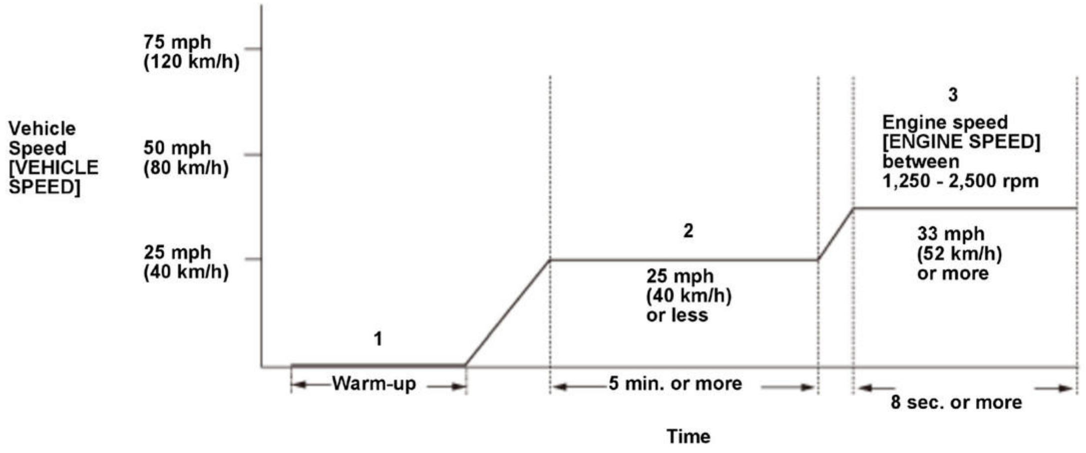

- Start the engine. Hold the engine speed [ENGINE SPEED] at 3, 000 rpm without load (in P or N) until the radiator fan comes on, then let it idle.
- Drive the vehicle at a steady speed of 25 mph (40 km/h) or less, for at least 5 minutes.
- Drive immediately at a steady speed of 33 mph (52 km/h) or more and engine speed [ENGINE SPEED] between 1, 250 - 2, 500 rpm for at least 8.0 seconds.

- Drive the vehicle in this manner only if the traffic regulations and ambient conditions allow.

With the HDS

None.

Diagnosis Details

Conditions for setting the DTC

When a malfunction is detected during the first drive cycle, a Pending DTC is stored in the PCM memory. If the malfunction returns in the next (second) drive cycle, the MIL comes on and a Confirmed DTC and the freeze data are stored.

Conditions for clearing the DTC

The MIL is cleared if the malfunction does not return in three consecutive trips in which the diagnostic runs. The MIL, the Pending DTC, the Confirmed DTC, and the freeze data can be cleared with the scan tool Clear command or by disconnecting the 12 volt battery.

DTC P0134 (1.5 L ENGINE) (2017 2018 2019 2020)

DTC P0134: Air/Fuel Ratio (A/F) Sensor (Sensor 1) Heater System Malfunction

General Description

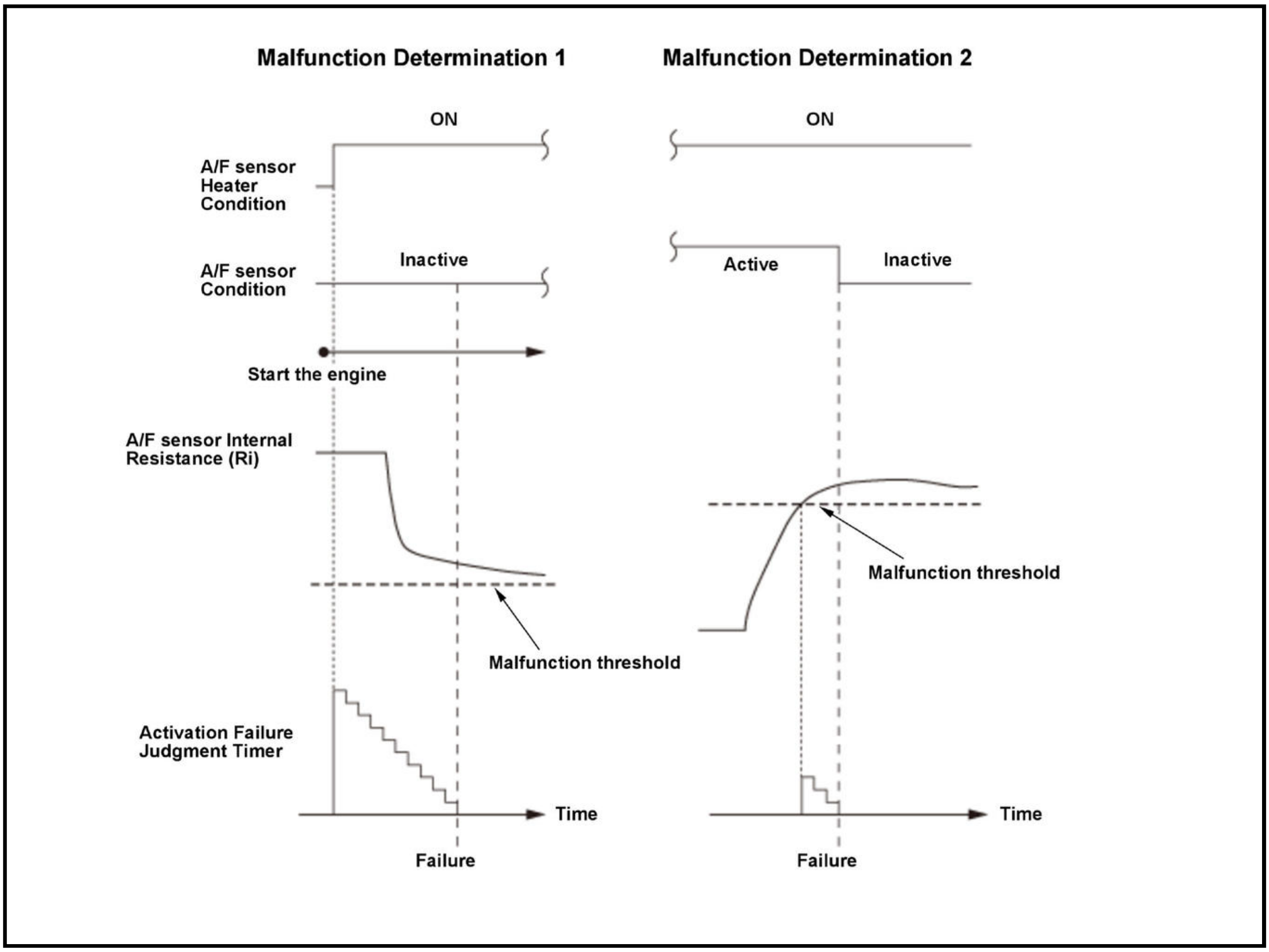

Malfunction Determination 1
Malfunction Determination 2
ON
ON
A/F sensor Heater Condition
A/F sensor Condition
Inactive
Active
Inactive
Start the engine
A/F sensor Internal Resistance (Ri)
Malfunction threshold
Malfunction threshold
Activation Failure Judgment Timer
Time
Time
Failure
Failure

The air/fuel ratio (A/F) sensor (sensor 1) is activated by warming the element with a heater and by maintaining a steady high temperature to accurately calculate the air/fuel ratio. If the heater does not properly heat the element, the A/F sensor (sensor 1) does not activate, and the exhaust emissions deteriorate. The powertrain control module (PCM) monitors the A/F sensor (sensor 1) internal resistance.

- When the A/F sensor (sensor 1) does not activate for a set time after the A/F sensor (sensor 1) heater is turned on (with high A/F sensor (sensor 1) internal resistance), a malfunction of the A/F sensor (sensor 1) heater is detected, and a DTC is stored.

- When the A/F sensor (sensor 1) heater cycles ON and OFF for a set time, and the resistance remains high when the heater is ON, a malfunction of the A/F sensor (sensor 1) heater is detected, and a DTC is stored.

Monitor Execution, Sequence, Duration, DTC Type

Execution	Continuous
Sequence	None
Duration	90 seconds or more*, 1.0 second or more**
DTC Type	Two drive cycles, MIL on

*: Malfunction determination 1**: Malfunction determination 2

Enable Conditions

Condition	Minimum	Maximum
12 volt battery voltage [BATTERY]	10.5 V	-
Fuel feedback	Other than during fuel cut-off operation	
A/F sensor (sensor 1) heater	ON	
State of engine	Running	
Other	Other than initial engine start	

[ ]: HDS Parameter

Malfunction Threshold

- Malfunction determination 1 - From start up

  The A/F sensor (sensor 1) internal resistance value [AF SENSOR IMPEDANCE] is 200 Ω or more for at least 90 seconds.

- Malfunction determination 2 - Hot

  The A/F sensor (sensor 1) internal resistance value [AF SENSOR IMPEDANCE] is 270 Ω or more for at least 1.0 second.

[ ]: HDS Parameter

Possible Cause

NOTE: The causes shown may not be a complete list of all potential problems, and it is possible that there may be other causes.

- A/F sensor (sensor 1) heater failure
- A/F sensor (sensor 1) element failure
- A/F sensor (sensor 1) VS line open

Confirmation Procedure

Operating Condition

Start the engine, and let it idle for at least 1 minute. When engine coolant temperature [ECT SENSOR 1] is less than 5 deg. F (-15 deg. C), let the engine idle for at least 7 minutes.

[ ]: HDS Parameter

With the HDS

None.

Diagnosis Details

Conditions for setting the DTC

When a malfunction is detected during the first drive cycle, a Pending DTC is stored in the PCM memory. If the malfunction returns in the next (second) drive cycle, the MIL comes on and a Confirmed DTC and the freeze data are stored.

Conditions for clearing the DTC

The MIL is cleared if the malfunction does not return in three consecutive trips in which the diagnostic runs. The MIL, the Pending DTC, the Confirmed DTC, and the freeze data can be cleared with the scan tool Clear command or by disconnecting the 12 volt battery.

DTC P0134 (1.5 L ENGINE) (2021)

DTC P0134: Air/Fuel Ratio (A/F) Sensor (Sensor 1) Heater System Malfunction

General Description

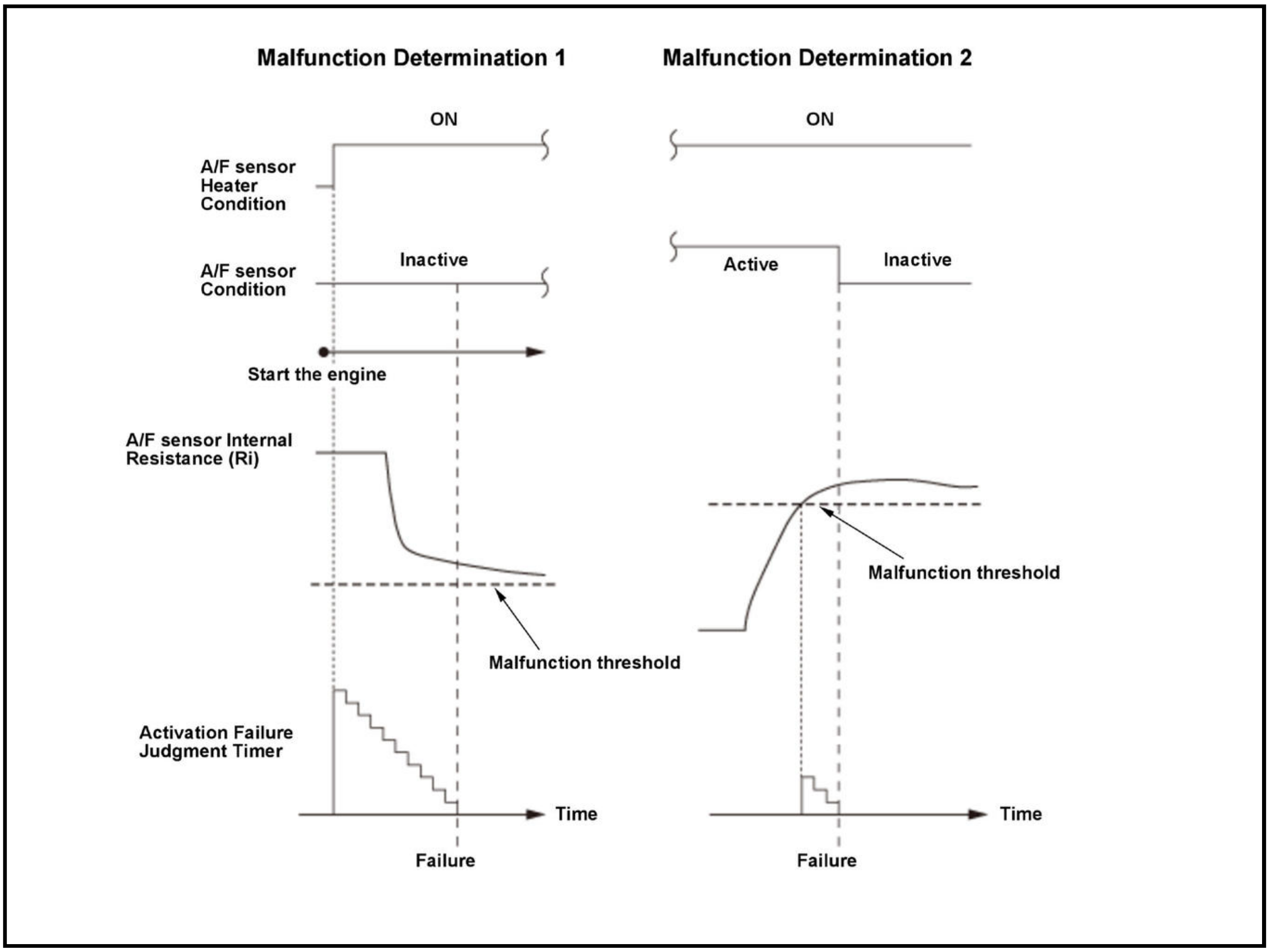
Malfunction Determination 1
Malfunction Determination 2
ON
ON
A/F sensor Heater Condition
A/F sensor Condition
Inactive
Active
Inactive
Start the engine
A/F sensor Internal Resistance (Ri)
Malfunction threshold
Malfunction threshold
Activation Failure Judgment Timer
Time
Time
Failure
Failure

The air/fuel ratio (A/F) sensor (sensor 1) is activated by warming the element with a heater and by maintaining a steady high temperature to accurately calculate the air/fuel ratio. If the heater does not properly heat the element, the A/F sensor (sensor 1) does not activate, and the exhaust emissions deteriorate. The powertrain control module (PCM) monitors the A/F sensor (sensor 1) internal resistance.

- When the A/F sensor (sensor 1) does not activate for a set time after the A/F sensor (sensor 1) heater is turned on (with high A/F sensor (sensor 1) internal resistance), a malfunction of the A/F sensor (sensor 1) heater is detected, and a DTC is stored.

- When the A/F sensor (sensor 1) heater cycles ON and OFF for a set time, and the resistance remains high when the heater is ON, a malfunction of the A/F sensor (sensor 1) heater is detected, and a DTC is stored.

Monitor Execution, Sequence, Duration, DTC Type

Execution	Continuous
Sequence	None
Duration	40 seconds or more*, 1.0 second or more**
DTC Type	Two drive cycles, MIL on

*: Malfunction determination 1**: Malfunction determination 2

Enable Conditions

Condition	Minimum	Maximum
12 volt battery voltage [BATTERY]	10.5 V	-
Fuel feedback	Other than during fuel cut-off operation	
A/F sensor (sensor 1) heater	ON	
State of engine	Running	
Other	Other than initial engine start	

[ ]: HDS Parameter

Malfunction Threshold

- Malfunction determination 1 - From start up

  The A/F sensor (sensor 1) internal resistance value [AF SENSOR IMPEDANCE] is 200 Ω or more for at least 40 seconds.

- Malfunction determination 2 - Hot

  The A/F sensor (sensor 1) internal resistance value [AF SENSOR IMPEDANCE] is 270 Ω or more for at least 1.0 second.

[ ]: HDS Parameter

Possible Cause

NOTE: The causes shown may not be a complete list of all potential problems, and it is possible that there may be other causes.

- A/F sensor (sensor 1) heater failure
- A/F sensor (sensor 1) element failure
- A/F sensor (sensor 1) VS line open

Confirmation Procedure

Operating Condition

Start the engine, and let it idle for at least 1 minute. When engine coolant temperature [ECT SENSOR 1] is less than -33 deg. F (-36 deg. C), let the engine idle for at least 7 minutes.

[ ]: HDS Parameter

With the HDS

None.

Diagnosis Details

Conditions for setting the DTC

When a malfunction is detected during the first drive cycle, a Pending DTC is stored in the PCM memory. If the malfunction returns in the next (second) drive cycle, the MIL comes on and a Confirmed DTC and the freeze data are stored.

Conditions for clearing the DTC

The MIL is cleared if the malfunction does not return in three consecutive trips in which the diagnostic runs. The MIL, the Pending DTC, the Confirmed DTC, and the freeze data can be cleared with the scan tool Clear command or by disconnecting the 12 volt battery.

DTC P0134 (2.4 L ENGINE) (2017 2018 2019)

DTC P0134: Air Fuel Ratio (A/F) Sensor (Sensor 1) Heater System Malfunction

General Description

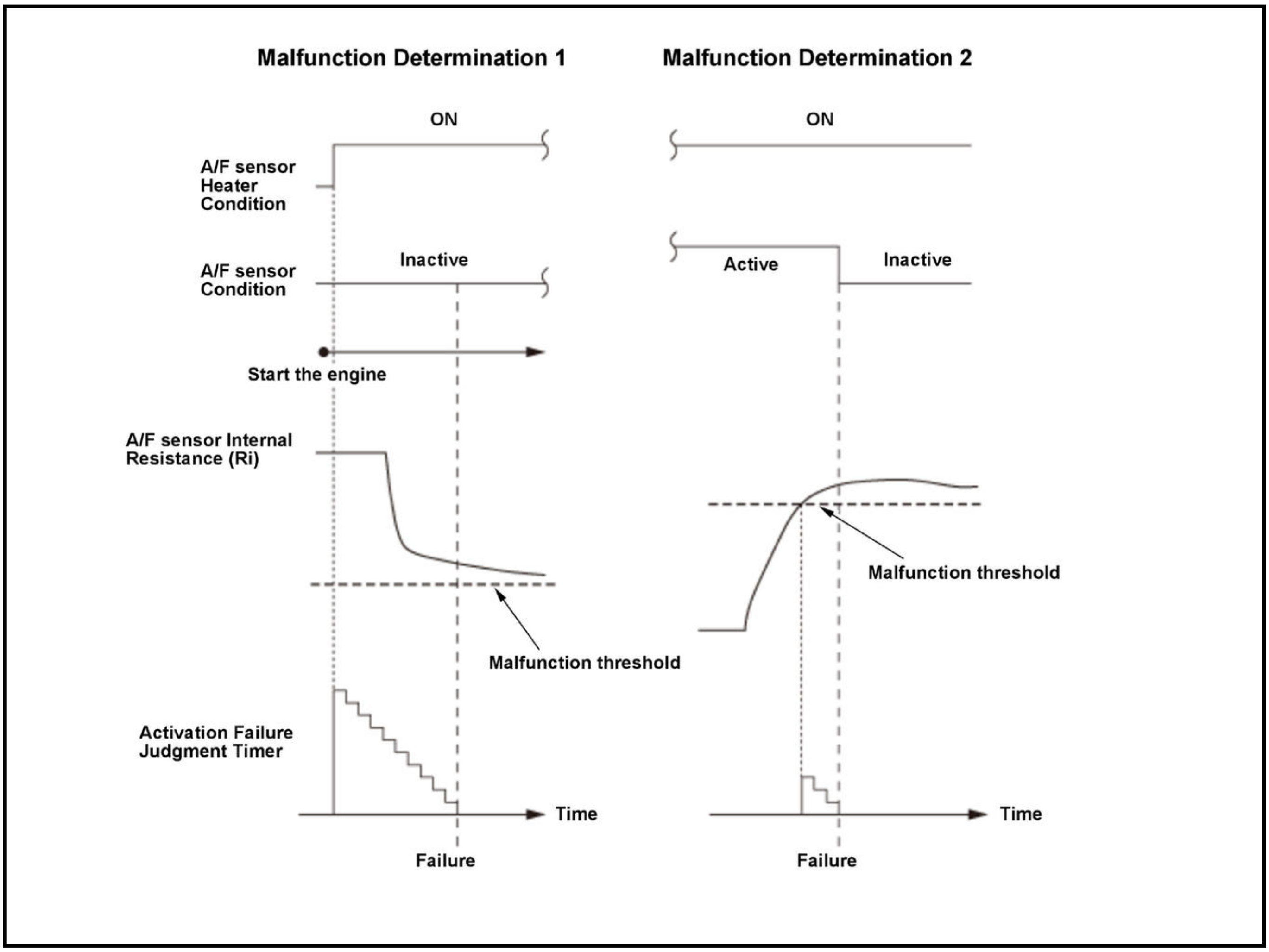
Malfunction Determination 1
Malfunction Determination 2
ON
ON
A/F sensor Heater Condition
A/F sensor Condition
Inactive
Active
Inactive
Start the engine
A/F sensor Internal Resistance (Ri)
Malfunction threshold
Malfunction threshold
Activation Failure Judgment Timer
Time
Time
Failure
Failure

The air/fuel ratio (A/F) sensor (sensor 1) is activated by warming the element with a heater and by maintaining a steady high temperature to accurately calculate the air/fuel ratio. If the heater does not properly heat the element, the A/F sensor (sensor 1) does not activate, and the exhaust emissions deteriorate. The powertrain control module (PCM) monitors the A/F sensor (sensor 1) internal resistance.

- When the A/F sensor (sensor 1) does not activate for a set time after the A/F sensor (sensor 1) heater is turned on (with high A/F sensor (sensor 1) internal resistance), a malfunction of the A/F sensor (sensor 1) heater is detected, and a DTC is stored.

- When the A/F sensor (sensor 1) heater cycles ON and OFF for a set time, and the resistance remains high when the heater is ON, a malfunction of the A/F sensor (sensor 1) heater is detected, and a DTC is stored.

Monitor Execution, Sequence, Duration, DTC Type

Execution	Continuous
Sequence	None
Duration	40 seconds or more
DTC Type	Two drive cycles, MIL on

Enable Conditions

Condition	Minimum	Maximum
12 volt battery voltage [BATTERY]	10.5 V	-
Fuel feedback	Other than during fuel cut-off operation	

[ ]: HDS Parameter

Malfunction Threshold

- Malfunction determination 1 - From start up

  The A/F sensor (sensor 1) internal resistance value [AF SENSOR IMPEDANCE] is 120 Ω or more for at least 40 seconds right after the engine starts.

- Malfunction determination 2 - Hot

  The A/F sensor (sensor 1) internal resistance value [AF SENSOR IMPEDANCE] is 250 Ω or more for at least 1.0 second.

Possible Cause

NOTE: The causes shown may not be a complete list of all potential problems, and it is possible that there may be other causes.

- A/F sensor (sensor 1) heater failure
- A/F sensor (sensor 1) element failure
- A/F sensor (sensor 1) VS line open

Confirmation Procedure

Operating Condition

Start the engine, and let it idle for at least 1 minute. When engine coolant temperature [ECT SENSOR 1] is less than 14 deg. F (-10 deg. C), let the engine idle for at least 6 minutes.

[ ]: HDS Parameter

With the HDS

None.

Diagnosis Details

Conditions for setting the DTC

When a malfunction is detected during the first drive cycle, a Pending DTC is stored in the PCM memory. If the malfunction returns in the next (second) drive cycle, the MIL comes on and a Confirmed DTC and the freeze data are stored.

Conditions for clearing the DTC

The MIL is cleared if the malfunction does not return in three consecutive trips in which the diagnostic runs. The MIL, the Pending DTC, the Confirmed DTC, and the freeze data can be cleared with the scan tool Clear command or by disconnecting the 12 volt battery.

DTC P0135 (1.5 L ENGINE)

DTC P0135: Air/Fuel Ratio (A/F) Sensor (Sensor 1) Heater Circuit Malfunction

General Description

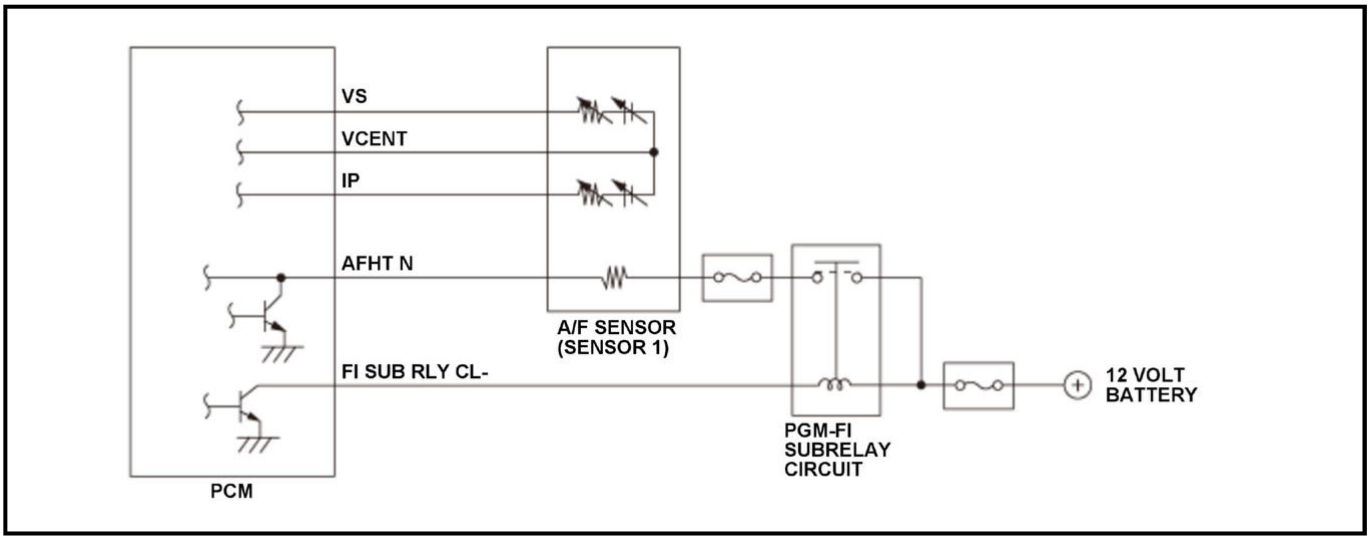

A heater for the sensor element is embedded in the air/fuel ratio (A/F) sensor (sensor 1), and it is controlled by the powertrain control module (PCM). It is activated and heats the sensor to stabilize and speed up the detection of oxygen content when the exhaust gas temperature is cold. The PCM monitors the A/F sensor (sensor 1) heater output (return check). If the return signals do not meet the command value (for heater activation) for a set time, the PCM detects a malfunction and stores a DTC.

Monitor Execution, Sequence, Duration, DTC Type

Execution	Continuous
Sequence	None
Duration	5 seconds or more
DTC Type	Two drive cycles, MIL on

Enable Conditions

Condition	Minimum	Maximum
12 volt battery voltage [BATTERY]	9.0 V	-
State of the engine	Running	
Other	During A/F sensor (sensor 1) heater operation	

[ ]: HDS Parameter

Malfunction Threshold

One of these conditions must be met for at least 5 seconds:

- No return signal HIGH is detected when the PCM output duty is less than 5 %.
- Return signal does not change when the PCM output duty 5 %* or more.

*: PCM output duty is limited to 95 % when it exceeds 95 %.

Possible Cause

NOTE: The causes shown may not be a complete list of all potential problems, and it is possible that there may be other causes.

- A/F sensor (sensor 1) AFHT N line open
- A/F sensor (sensor 1) AFHT N line short to ground
- A/F sensor (sensor 1) failure
- Electronic throttle control system (ETCS) control relay failure (includes fuse blown)

Confirmation Procedure

Operating Condition

Start the engine. Hold the engine speed [ENGINE SPEED] at 3, 000 rpm without load (in P or N) until the radiator fan comes on, then let it idle.

With the HDS

None.

Diagnosis Details

Conditions for setting the DTC

When a malfunction is detected during the first drive cycle, a Pending DTC is stored in the PCM memory. If the malfunction returns in the next (second) drive cycle, the MIL comes on and a Confirmed DTC and the freeze data are stored.

Conditions for clearing the DTC

The MIL is cleared if the malfunction does not return in three consecutive trips in which the diagnostic runs. The MIL, the Pending DTC, the Confirmed DTC, and the freeze data can be cleared with the scan tool Clear command or by disconnecting the 12 volt battery.

DTC P0135 (2.4 L ENGINE) (2017 2018 2019)

DTC P0135: Air Fuel Ratio (A/F) Sensor (Sensor 1) Heater Circuit Malfunction

General Description

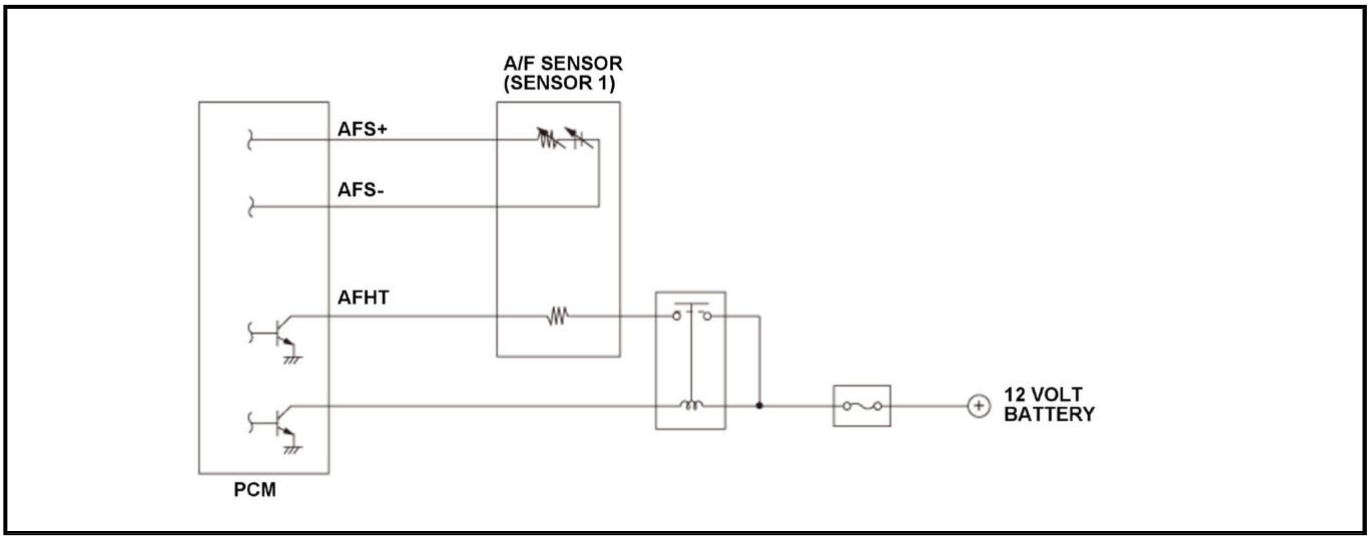

A heater for the sensor element is embedded in the air/fuel ratio (A/F) sensor (sensor 1), and it is controlled by the powertrain control module (PCM). It is activated and heats the sensor to stabilize and speed up the detection of oxygen content when the exhaust gas temperature is cold. The PCM monitors the A/F sensor (sensor 1) heater output (return check). If the return signals do not meet the command value (for heater activation) for a set time, the PCM detects a malfunction and stores a DTC.

Monitor Execution, Sequence, Duration, DTC Type

Execution	Continuous
Sequence	None
Duration	4 seconds or more*540 milliseconds or more**
DTC Type	Two drive cycles, MIL on

*: Case 1

**: Case 2

Enable Conditions

Condition	Minimum	Maximum
Engine coolant temperature [ECT SENSOR 1]	68 deg. F (20 deg. C)	-
12 volt battery voltage [BATTERY]	10.5 V	-
State of the engine	Running	

[ ]: HDS Parameter

Malfunction Threshold

- Case 1

  The heater current is 0.8 A or less for at least 4 seconds while the heater is activated, and the heater current is 0.8 A or more for at least 4 seconds while the heater is not activated.

- Case 2

  The heater current is 15.2 A or more for at least 540 milliseconds.

Possible Cause

NOTE: The causes shown may not be a complete list of all potential problems, and it is possible that there may be other causes.

- A/F sensor (sensor 1) AFHT line open
- A/F sensor (sensor 1) AFHT line short to ground
- A/F sensor (sensor 1) power supply line open
- PGM-FI subrelay power supply line open
- A/F sensor (sensor 1) failure
- PCM internal circuit failure

Confirmation Procedure

Operating Condition

Start the engine. Hold the engine speed [ENGINE SPEED] at 3, 000 rpm without load (in P or N) until the radiator fan comes on, then let it idle.

With the HDS

None.

Diagnosis Details

Conditions for setting the DTC

When a malfunction is detected during the first drive cycle, a Pending DTC is stored in the PCM memory. If the malfunction returns in the next (second) drive cycle, the MIL comes on and a Confirmed DTC and the freeze data are stored.

Conditions for clearing the DTC

The MIL is cleared if the malfunction does not return in three consecutive trips in which the diagnostic runs. The MIL, the Pending DTC, the Confirmed DTC, and the freeze data can be cleared with the scan tool Clear command or by disconnecting the 12 volt battery.

DTC P0137 (1.5 L ENGINE)

DTC P0137: Secondary Heated Oxygen Sensor (Secondary HO2S (Sensor 2)) Circuit Low Voltage

General Description

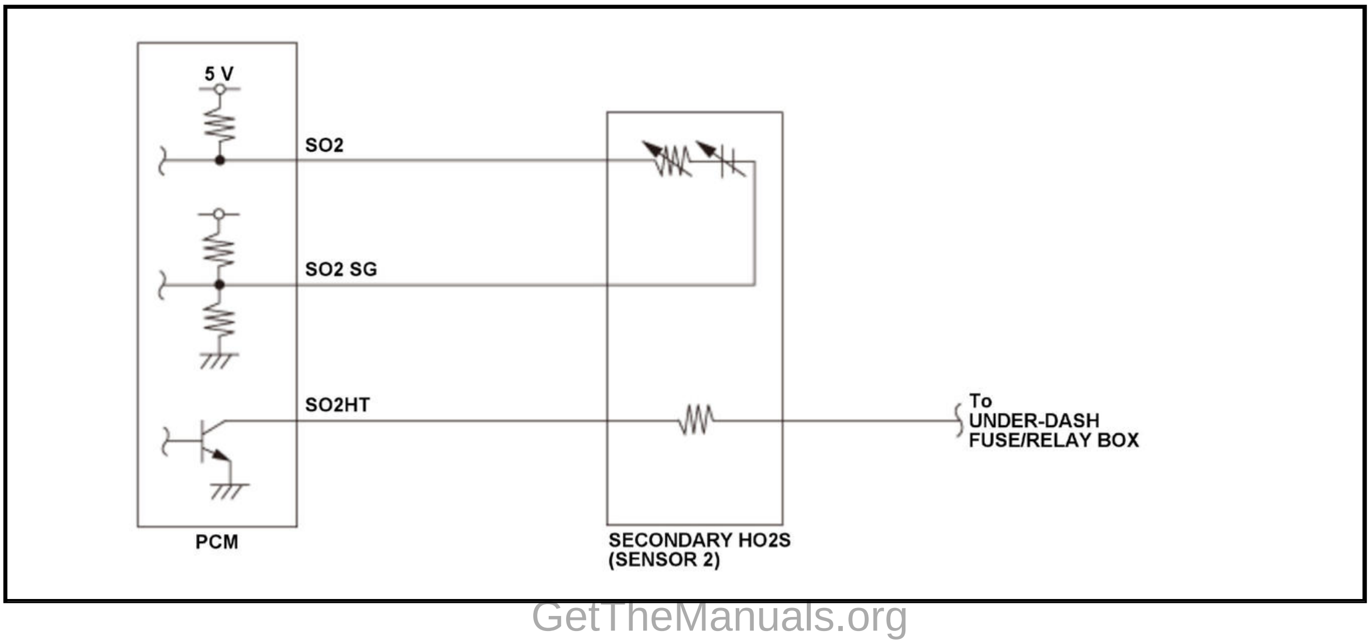

The secondary heated oxygen sensor (secondary HO2S (sensor 2)) detects the oxygen density in the exhaust gas and converts it into electrical signals. If the secondary HO2S (sensor 2) output voltage is a specified value for a set time, the powertrain control module (PCM) detects a malfunction and stores a DTC.

Monitor Execution, Sequence, Duration, DTC Type

Execution	Continuous
Sequence	None
Duration	5 seconds or more
DTC Type	Two drive cycles, MIL on

Enable Conditions

Condition	B
State of the engine	Running
Other	At least 55 seconds must be passed after the secondary HO2S (sensor 2) output voltage reaches 1.0 V or less

Malfunction Threshold

The secondary HO2S (sensor 2) output voltage [HO2S S2] is less than 0.17 V for at least 5 seconds.

[ ]: HDS Parameter

Possible Cause

NOTE: The causes shown may not be a complete list of all potential problems, and it is possible that there may be other causes.

- Secondary HO2S (sensor 2) SO2 line short to ground
- Secondary HO2S (sensor 2) SO2 SG line short to ground
- PCM internal circuit failure

Confirmation Procedure

Operating Condition

Start the engine. Hold the engine speed [ENGINE SPEED] at 3, 000 rpm without load (in P or N) until the radiator fan comes on, then let it idle.

[ ]: HDS Parameter

With the HDS

None.

Diagnosis Details

Conditions for setting the DTC

When a malfunction is detected during the first drive cycle, a Pending DTC is stored in the PCM memory. If the malfunction returns in the next (second) drive cycle, the MIL comes on and a Confirmed DTC and the freeze data are stored.

Conditions for clearing the DTC

The MIL is cleared if the malfunction does not return in three consecutive trips in which the diagnostic runs. The MIL, the Pending DTC, the Confirmed DTC, and the freeze data can be cleared with the scan tool Clear

command or by disconnecting the 12 volt battery.

DTC P0137 (2.4 L ENGINE) (2017 2018 2019)

DTC P0137: Secondary Heated Oxygen Sensor (Secondary HO2S (Sensor 2)) Circuit Low Voltage

General Description

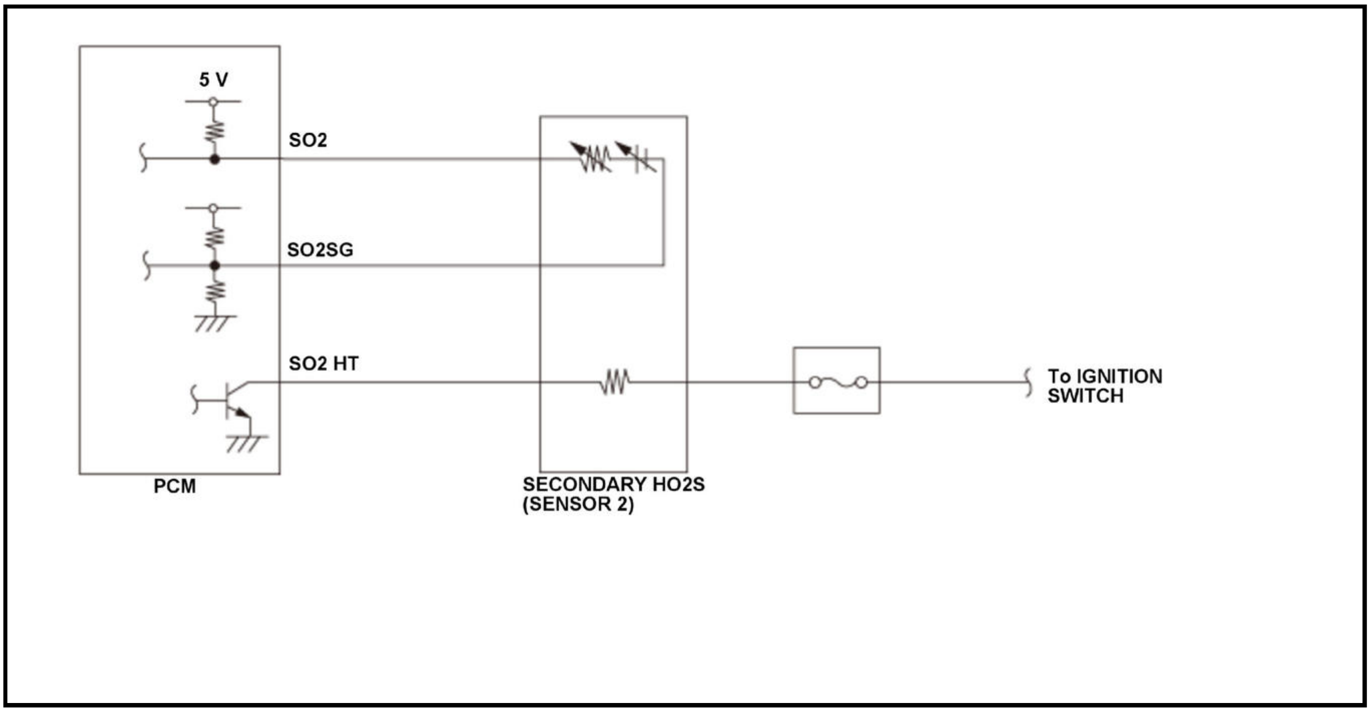

The secondary heated oxygen sensor (secondary HO2S (sensor 2)) detects the oxygen density in the exhaust gas and converts it into electrical signals. If the secondary HO2S (sensor 2) output voltage is a specified value for a set time, the powertrain control module (PCM) detects a malfunction and stores a DTC.

Monitor Execution, Sequence, Duration, DTC Type

Execution	Continuous
Sequence	None
Duration	5 seconds or more
DTC Type	Two drive cycles, MIL on

Enable Conditions

Condition	B
State of the engine	Running
Other	At least 55 seconds must be passed after the secondary HO2S (sensor 2) output voltage reaches 1.0 V or less

Malfunction Threshold

The secondary HO2S (sensor 2) output voltage [HO2S S2] is 0.12 V or less for at least 5 seconds.

[ ]: HDS Parameter

Possible Cause

NOTE: The causes shown may not be a complete list of all potential problems, and it is possible that there may be other causes.

- Secondary HO2S (sensor 2) SO2 line short to ground
- Secondary HO2S (sensor 2) SO2 SG line short to ground
- PCM internal circuit failure

Confirmation Procedure

Operating Condition

Start the engine. Hold the engine speed [ENGINE SPEED] at 3, 000 rpm without load (in P or N) until the radiator fan comes on, then let it idle.

[ ]: HDS Parameter

With the HDS

None.

Diagnosis Details

Conditions for setting the DTC

When a malfunction is detected during the first drive cycle, a Pending DTC is stored in the PCM memory. If the malfunction returns in the next (second) drive cycle, the MIL comes on and a Confirmed DTC and the freeze data are stored.

Conditions for clearing the DTC

The MIL is cleared if the malfunction does not return in three consecutive trips in which the diagnostic runs. The MIL, the Pending DTC, the Confirmed DTC, and the freeze data can be cleared with the scan tool Clear command or by disconnecting the 12 volt battery.

DTC P0138 (1.5 L ENGINE) (2017)

DTC P0138: Secondary Heated Oxygen Sensor (Secondary HO2S (Sensor 2)) Circuit High Voltage

General Description

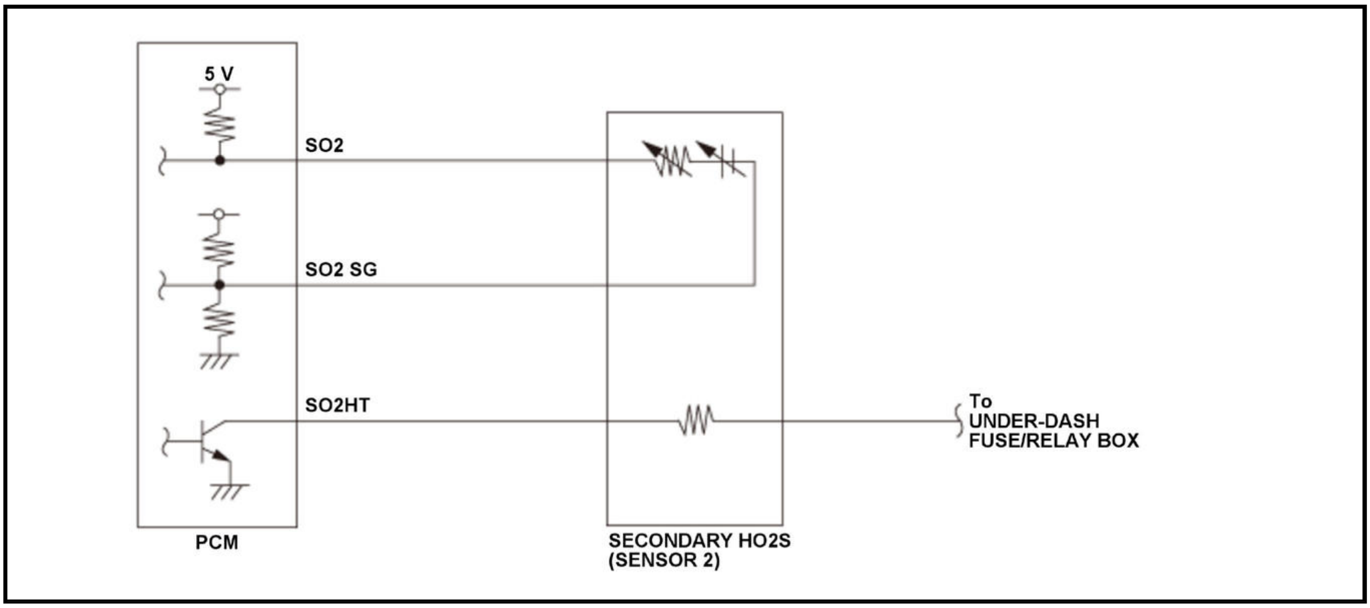

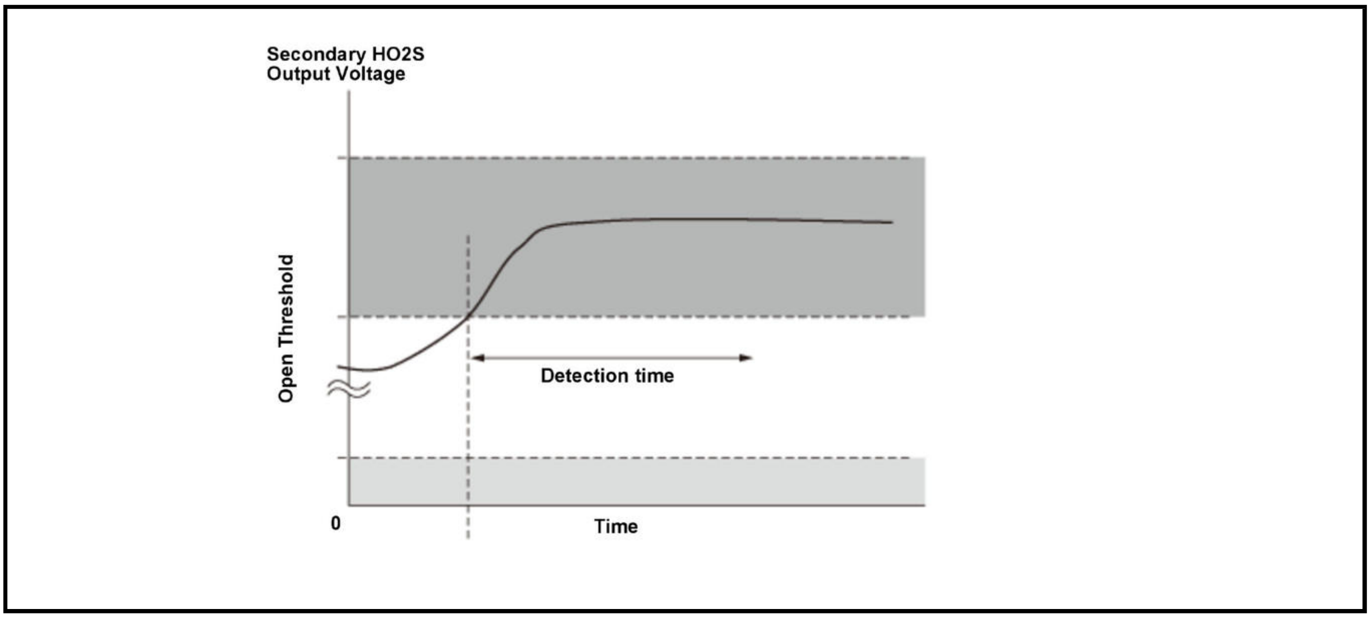

The secondary heated oxygen sensor (secondary HO2S (sensor 2)) detects the oxygen content in the exhaust gas downstream of the three way catalytic converter (TWC) during stoichiometric air/fuel ratio feedback control. The powertrain control module (PCM) controls the air/fuel ratio from the air/fuel ratio (A/F) sensor (sensor 1) output voltage to optimize the TWC efficiency. When power is applied to the secondary HO2S (sensor 2) heater, if the secondary HO2S (sensor 2) output continues to exceed the upper limit used during feedback control, the PCM detects a malfunction and stores a DTC.

Monitor Execution, Sequence, Duration, DTC Type

Execution	Continuous
Sequence	None
Duration	5.0 seconds or more
DTC Type	Two drive cycles, MIL on

Enable Conditions

Condition	Minimum	Maximum
Elapsed time that secondary HO2S activity is not monitored after starting the engine	15 seconds	-
Fuel feedback	Closed loop	

Malfunction Threshold

The secondary HO2S (sensor 2) output voltage [HO2S S2] is 1.27 V or more for at least 5 seconds.

[ ]: HDS Parameter

Possible Cause

NOTE: The causes shown may not be a complete list of all potential problems, and it is possible that there may be other causes.

- Secondary HO2S (sensor 2) internal circuit failure
- Secondary HO2S (sensor 2) output rich side stuck

Confirmation Procedure

Operating Condition

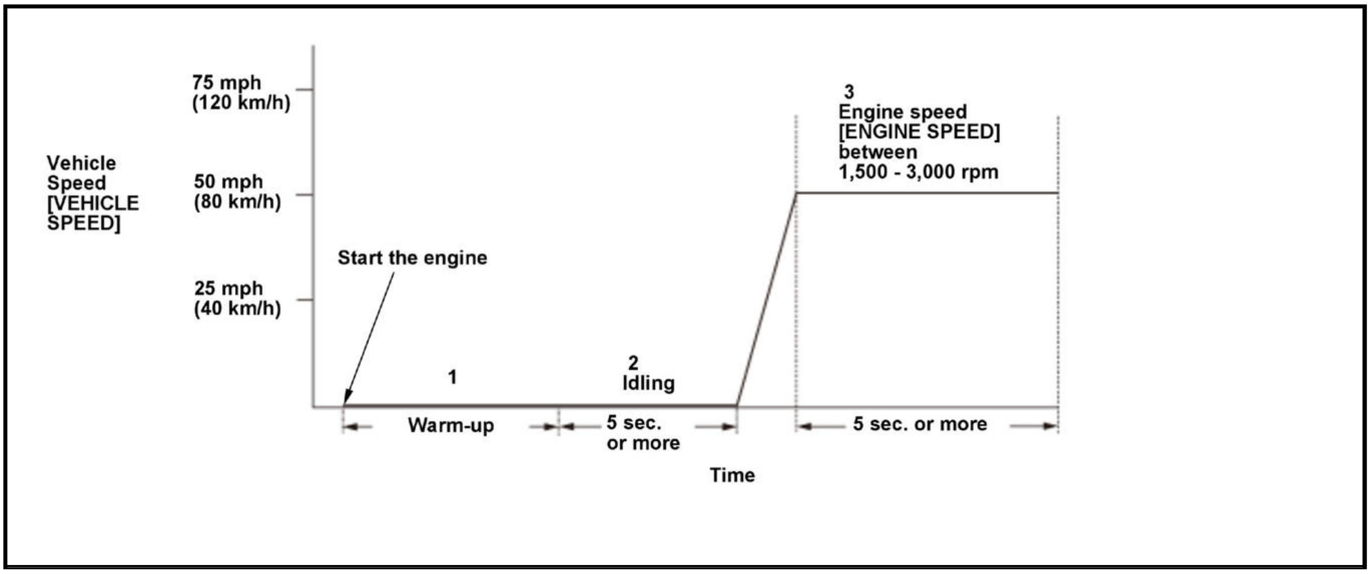

- Start the engine, and let it idle until the radiator fan comes on.
- Let the engine idle for at least 5 seconds.
- When the diagnosis does not finish at idle, drive immediately at a steady engine speed [ENGINE SPEED] between 1, 500 - 3, 000 rpm for at least 5 seconds.

- When freeze data is stored, drive the vehicle under those conditions instead of Driving Pattern step 3.
- Drive the vehicle in this manner only if the traffic regulations and ambient conditions allow.

[ ]: HDS Parameter

With the HDS

None.

Diagnosis Details

Conditions for setting the DTC

When a malfunction is detected during the first drive cycle, a Pending DTC is stored in the PCM memory. If the malfunction returns in the next (second) drive cycle, the MIL comes on and a Confirmed DTC and the freeze data are stored.

Conditions for clearing the DTC

The MIL is cleared if the malfunction does not return in three consecutive trips in which the diagnostic runs. The MIL, the Pending DTC, the Confirmed DTC, and the freeze data can be cleared with the scan tool Clear command or by disconnecting the 12 volt battery.

DTC P0138 (1.5 L ENGINE) (2018 2019 2020 2021)

DTC P0138: Secondary Heated Oxygen Sensor (Secondary HO2S (Sensor 2)) Circuit High Voltage

General Description

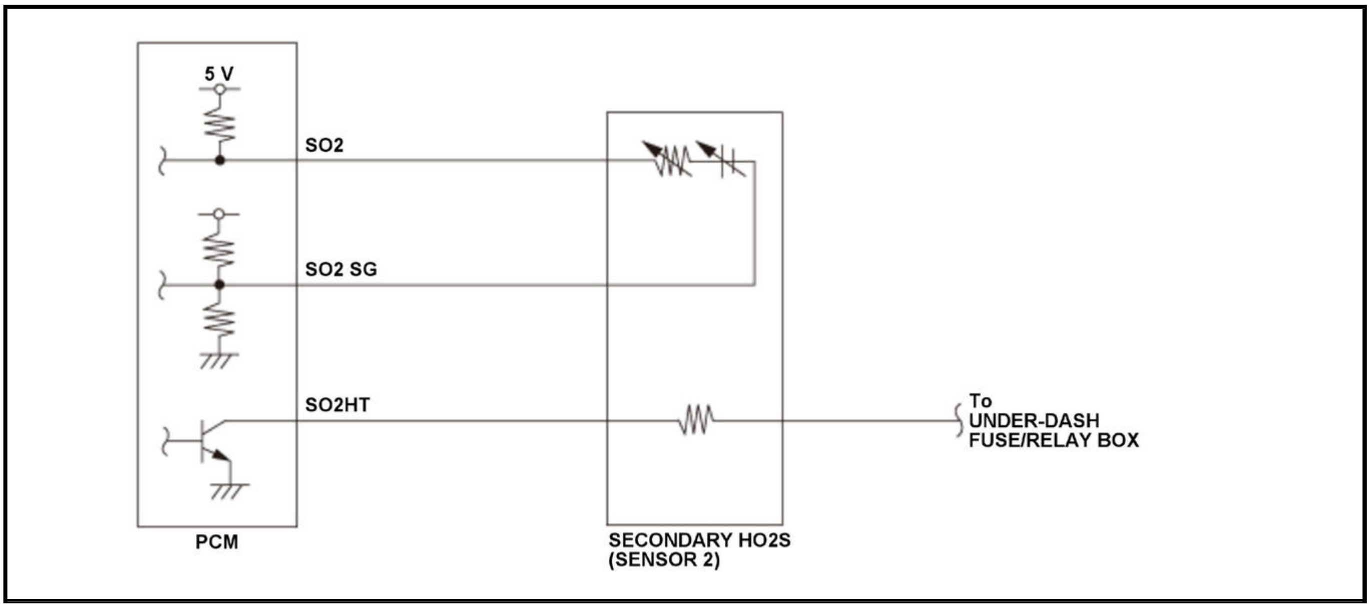

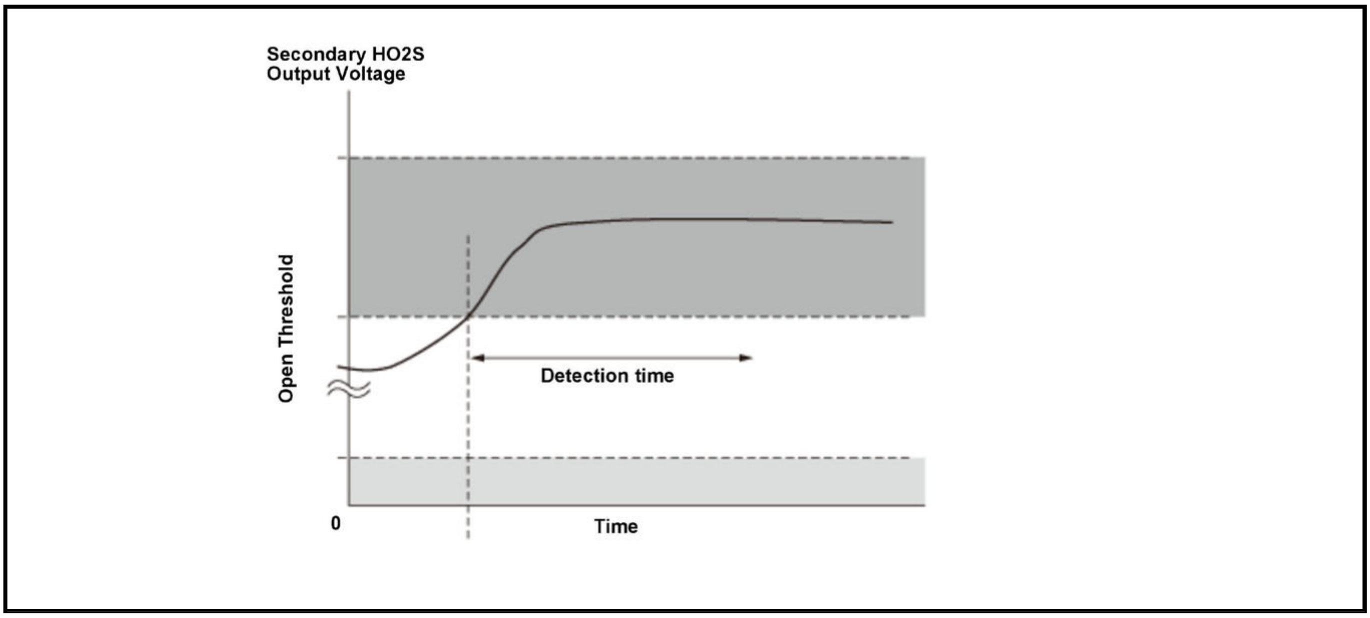

The secondary heated oxygen sensor (secondary HO2S (sensor 2)) detects the oxygen content in the exhaust gas downstream of the three way catalytic converter (TWC) during stoichiometric air/fuel ratio feedback control. The powertrain control module (PCM) controls the air/fuel ratio from the air/fuel ratio (A/F) sensor (sensor 1) output voltage to optimize the TWC efficiency. When power is applied to the secondary HO2S (sensor 2) heater, if the secondary HO2S (sensor 2) output continues to exceed the upper limit used during feedback control, the PCM detects a malfunction and stores a DTC.

Monitor Execution, Sequence, Duration, DTC Type

Execution	Continuous
Sequence	None
Duration	5.0 seconds or more
DTC Type	Two drive cycles, MIL on

Enable Conditions

Condition	Minimum	Maximum
Elapsed time that secondary HO2S activity is not monitored after starting the engine	15 seconds	-

Condition	Minimum	Maximum
Fuel feedback	Closed loop	

Malfunction Threshold

The secondary HO2S (sensor 2) output voltage [HO2S S2] is 3.27 V or more for at least 5 seconds.

[ ]: HDS Parameter

Possible Cause

NOTE: The causes shown may not be a complete list of all potential problems, and it is possible that there may be other causes.

- Secondary HO2S (sensor 2) internal circuit failure
- Secondary HO2S (sensor 2) output rich side stuck

Confirmation Procedure

Operating Condition

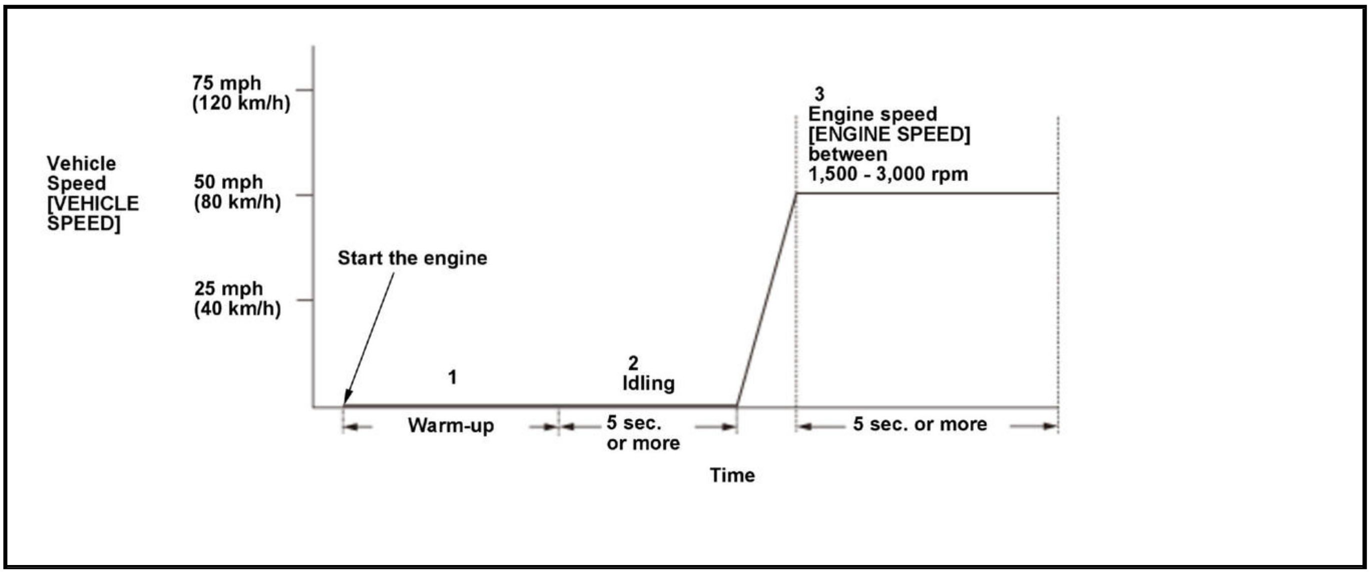

- Start the engine, and let it idle until the radiator fan comes on.
- Let the engine idle for at least 5 seconds.
- When the diagnosis does not finish at idle, drive immediately at a steady engine speed [ENGINE SPEED] between 1, 500 - 3, 000 rpm for at least 5 seconds.

- When freeze data is stored, drive the vehicle under those conditions instead of Driving Pattern step 3.
- Drive the vehicle in this manner only if the traffic regulations and ambient conditions allow.

[ ]: HDS Parameter

With the HDS

None.

Diagnosis Details

Conditions for setting the DTC

When a malfunction is detected during the first drive cycle, a Pending DTC is stored in the PCM memory. If the malfunction returns in the next (second) drive cycle, the MIL comes on and a Confirmed DTC and the

freeze data are stored.

Conditions for clearing the DTC

The MIL is cleared if the malfunction does not return in three consecutive trips in which the diagnostic runs. The MIL, the Pending DTC, the Confirmed DTC, and the freeze data can be cleared with the scan tool Clear command or by disconnecting the 12 volt battery.

DTC P0138 (2.4 L ENGINE) (2017 2018 2019)

DTC P0138: Secondary Heated Oxygen Sensor (Secondary HO2S (Sensor 2)) Circuit High Voltage

General Description

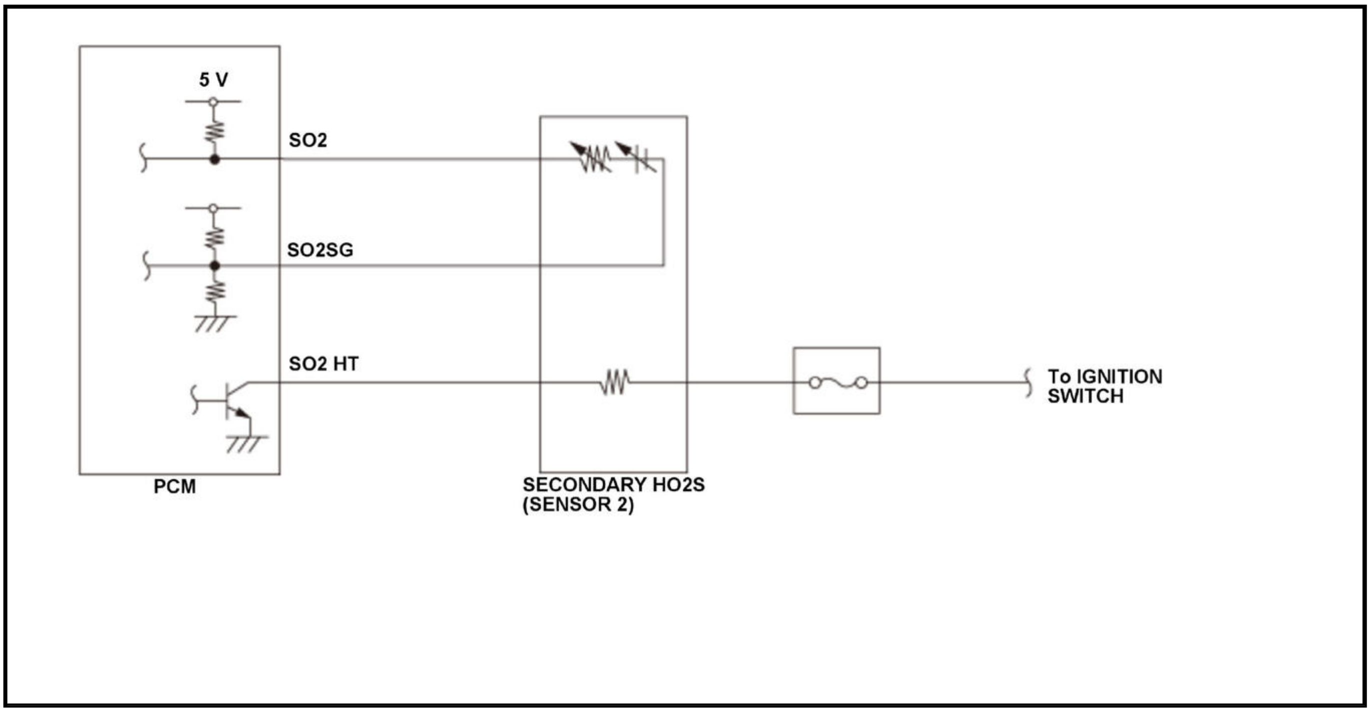

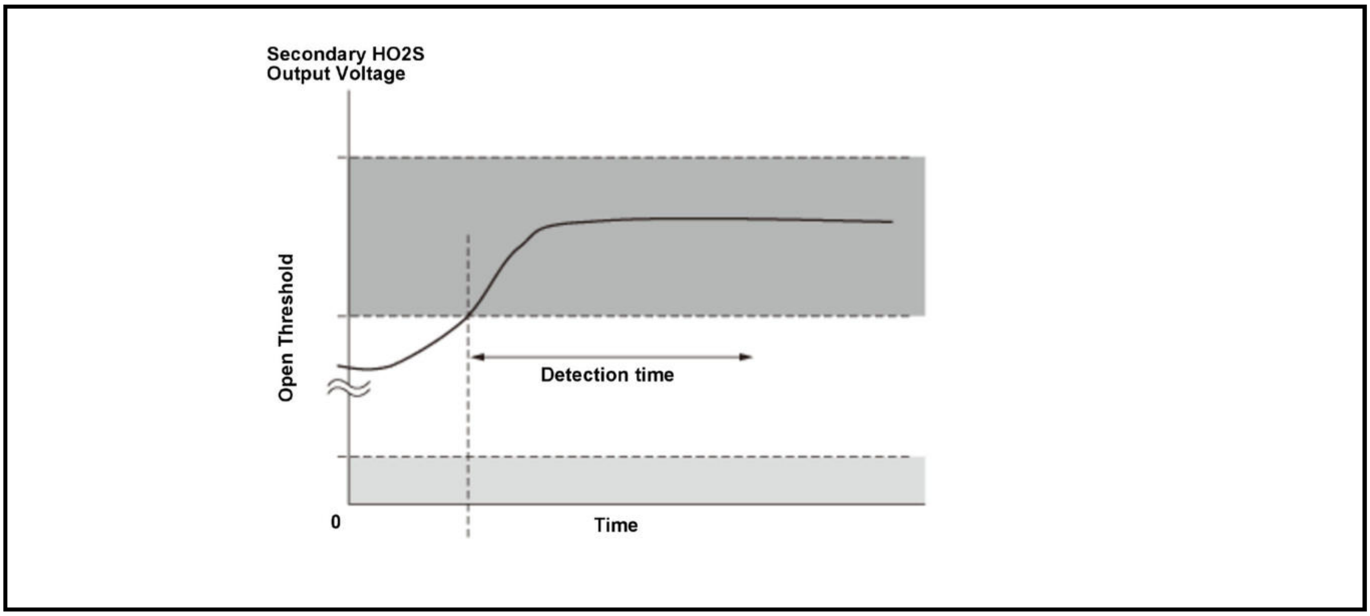

The secondary heated oxygen sensor (secondary HO2S (sensor 2)) detects the oxygen content in the exhaust gas downstream of the three way catalytic converter (TWC) during stoichiometric air/fuel ratio feedback control. The powertrain control module (PCM) controls the air/fuel ratio from the air/fuel ratio (A/F) sensor (sensor 1) output voltage to optimize the TWC efficiency. When power is applied to the secondary HO2S (sensor 2) heater, if the secondary HO2S (sensor 2) output continues to exceed the upper limit used during feedback control, the PCM detects a malfunction and stores a DTC.

Monitor Execution, Sequence, Duration, DTC Type

Execution	Continuous
Sequence	None

Duration	5.0 seconds or more
DTC Type	Two drive cycles, MIL on

Enable Conditions

Condition	Minimum	Maximum
Elapsed time that secondary HO2S activity is not monitored after starting the engine	15 seconds	-
Fuel feedback	Closed loop	

Malfunction Threshold

The secondary HO2S (sensor 2) output voltage [HO2S S2] is 1.27 V or more for at least 5 seconds.

[ ]: HDS Parameter

Possible Cause

NOTE: The causes shown may not be a complete list of all potential problems, and it is possible that there may be other causes.

- Secondary HO2S (sensor 2) internal circuit failure
- Secondary HO2S (sensor 2) output rich side stuck

Confirmation Procedure

Operating Condition

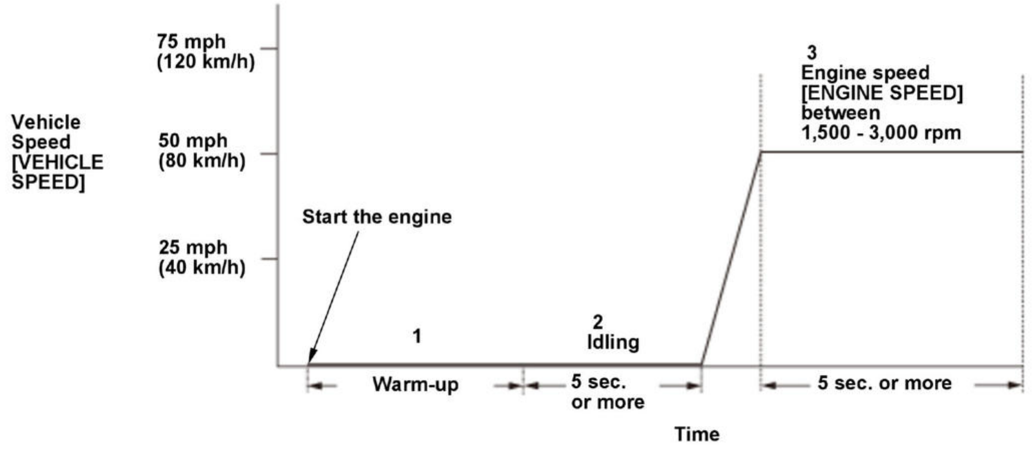

- Start the engine, and let it idle until the radiator fan comes on.
- Let the engine idle for at least 5 seconds.
- When the diagnosis does not finish at idle, drive immediately at a steady engine speed [ENGINE SPEED] between 1, 500 - 3, 000 rpm for at least 5 seconds.

- When freeze data is stored, drive the vehicle under those conditions instead of Driving Pattern step 3.
- Drive the vehicle in this manner only if the traffic regulations and ambient conditions allow.

[ ]: HDS Parameter

With the HDS

None.

Diagnosis Details

Conditions for setting the DTC

When a malfunction is detected during the first drive cycle, a Pending DTC is stored in the PCM memory. If the malfunction returns in the next (second) drive cycle, the MIL comes on and a Confirmed DTC and the freeze data are stored.

Conditions for clearing the DTC

The MIL is cleared if the malfunction does not return in three consecutive trips in which the diagnostic runs. The MIL, the Pending DTC, the Confirmed DTC, and the freeze data can be cleared with the scan tool Clear command or by disconnecting the 12 volt battery.

DTC P0139 (1.5 L ENGINE)

DTC P0139: Secondary Heated Oxygen Sensor (Secondary HO2S (Sensor 2)) Slow Response

General Description

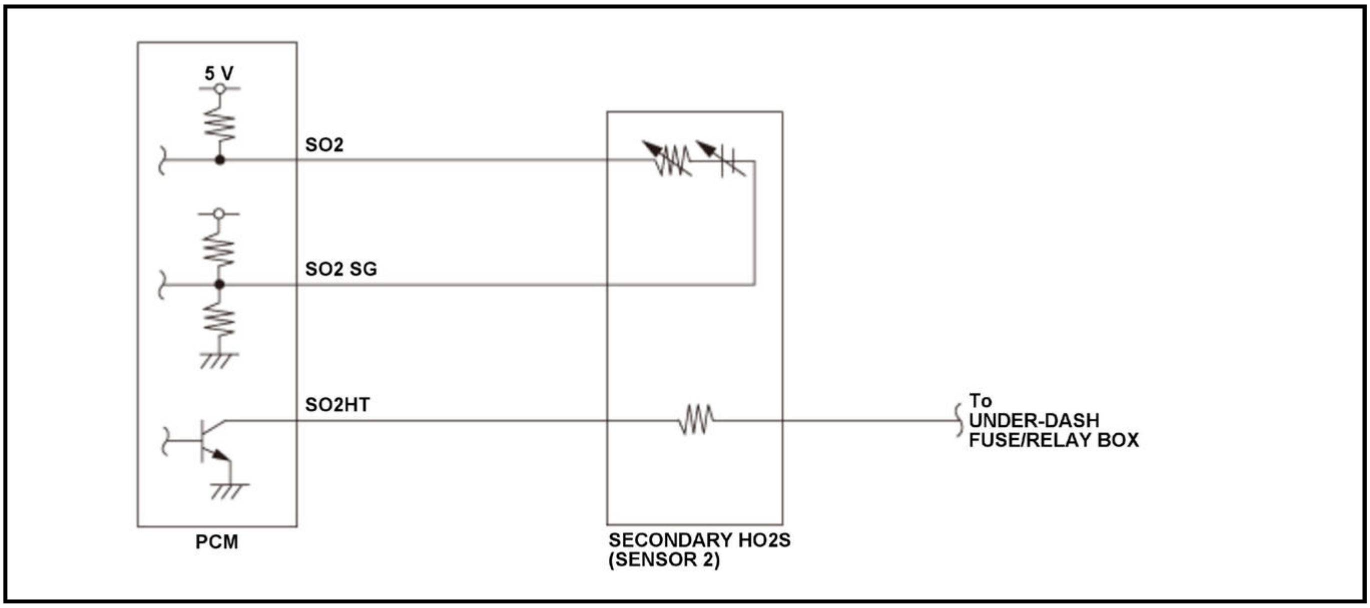

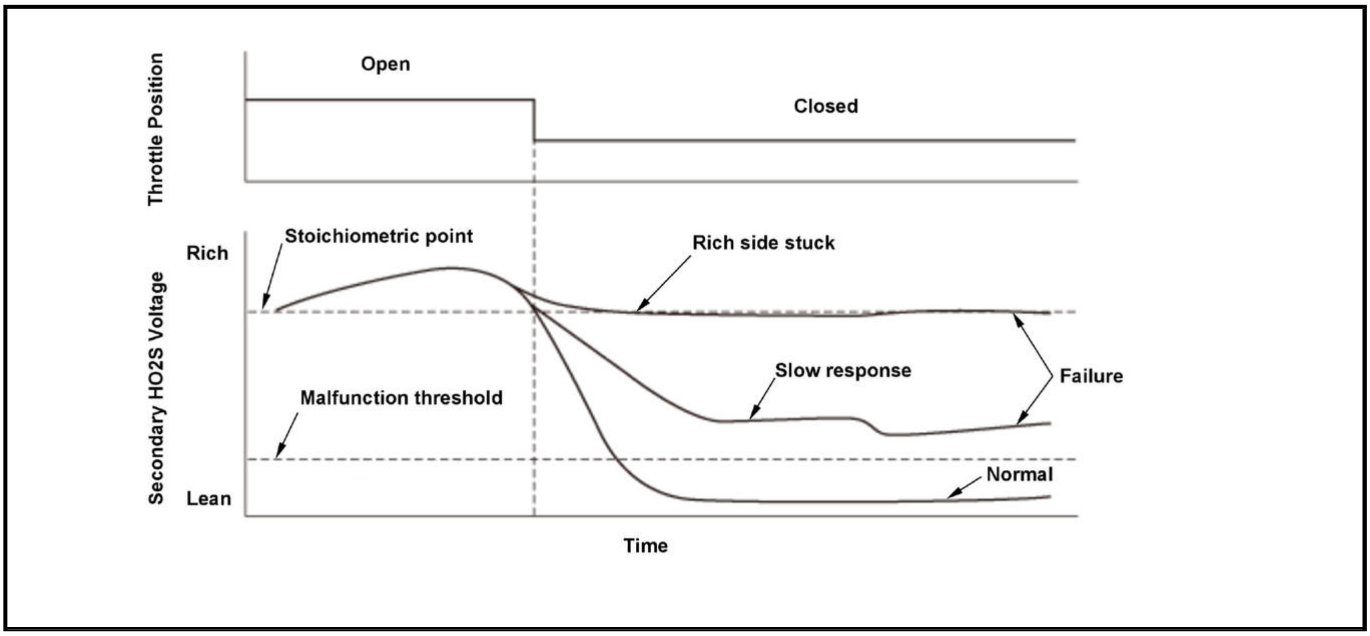

The secondary heated oxygen sensor (secondary HO2S (sensor 2)) detects the oxygen content in the exhaust gas downstream of the three way catalytic converter (TWC) during stoichiometric air/fuel ratio feedback control. The powertrain control module (PCM) controls the air/fuel ratio with the air/fuel ratio (A/F) sensor (sensor 1) output voltage to optimize the TWC's efficiency. When the secondary HO2S (sensor 2) does not change during lean air/fuel ratio when the throttle is closed, after full current is applied to the secondary HO2S (sensor 2) heater, and output remains within the specified range continuously, the PCM detects a malfunction and stores a DTC.

Monitor Execution, Sequence, Duration, DTC Type

Execution	Once per driving cycle
Sequence	P0138 is judged as OK
Duration	10 seconds or more

DTC Type	Two drive cycles, MIL on

Enable Conditions

Condition	Minimum	Maximum
Elapsed time after starting the engine	2 minutes	-
Engine coolant temperature [ECT SENSOR 1]	156 deg. F (69 deg. C)	-
Intake air temperature [IAT Sensor (1)]	-13 deg. F (-25 deg. C)	-
Engine speed [ENGINE SPEED]	-	4, 000 rpm
Secondary HO2S output voltage [HO2S S2]	0.05 V	-
Intake air amount	2 g/second (0.07 oz/second)	-
Fuel feedback	During deceleration	

[ ]: HDS Parameter

Malfunction Threshold

The secondary HO2S (sensor 2) output voltage [HO2S S2] is 0.05 V or more for at least 10 seconds.

[ ]: HDS Parameter

Possible Cause

NOTE: The causes shown may not be a complete list of all potential problems, and it is possible that there may be other causes.

- Secondary HO2S (sensor 2) responsive deterioration
- Exhaust system failure (exhaust gas leak)

Confirmation Procedure

Operating Condition

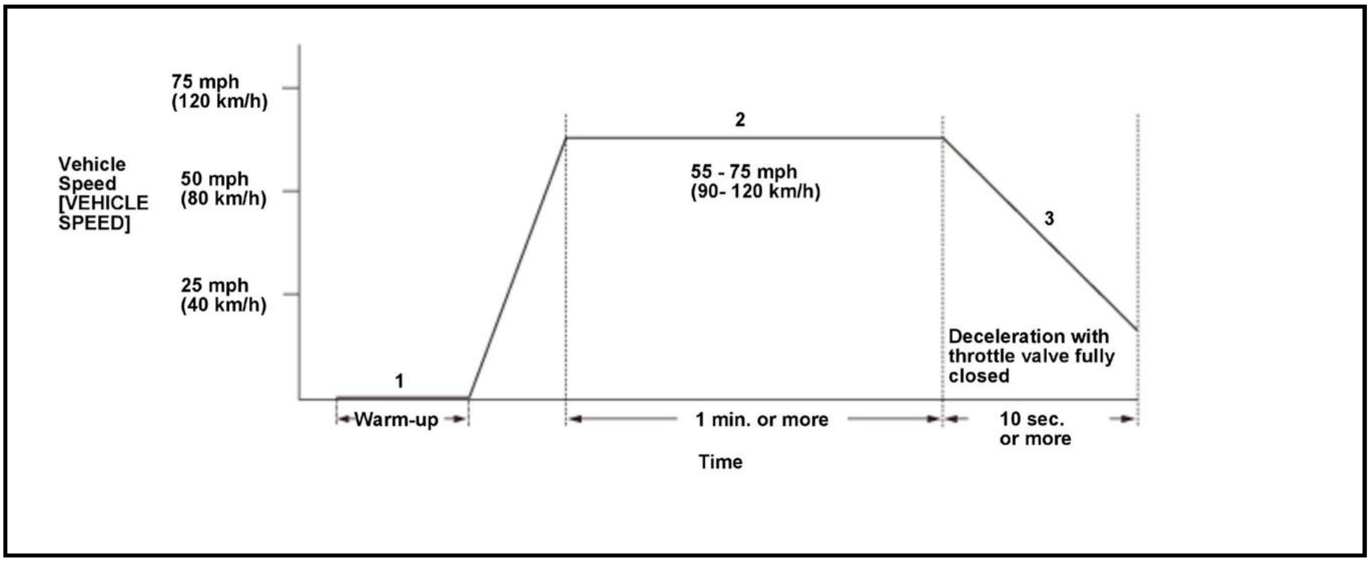

- Start the engine. Hold the engine speed [ENGINE SPEED] at 3, 000 rpm without load (in P or N) until the radiator fan comes on, then let it idle for at least 2 minute.
- Drive the vehicle at a steady speed between 55 - 75 mph (90 - 120 km/h) for at least 1 minute.
- Decelerate with the throttle valve fully closed for at least 10 seconds.

- Drive the vehicle in this manner only if the traffic regulations and ambient conditions allow.

[ ]: HDS Parameter

With the HDS

None.

Diagnosis Details

Conditions for setting the DTC

When a malfunction is detected during the first drive cycle, a Pending DTC is stored in the PCM memory. If the malfunction returns in the next (second) drive cycle, the MIL comes on and a Confirmed DTC and the freeze data are stored.

Conditions for clearing the DTC

The MIL is cleared if the malfunction does not return in three consecutive trips in which the diagnostic runs. The MIL, the Pending DTC, the Confirmed DTC, and the freeze data can be cleared with the scan tool Clear command or by disconnecting the 12 volt battery.

DTC P0139 (2.4 L ENGINE) (2017 2018 2019)

DTC P0139: Secondary Heated Oxygen Sensor (Secondary HO2S (Sensor 2)) Slow Response

General Description

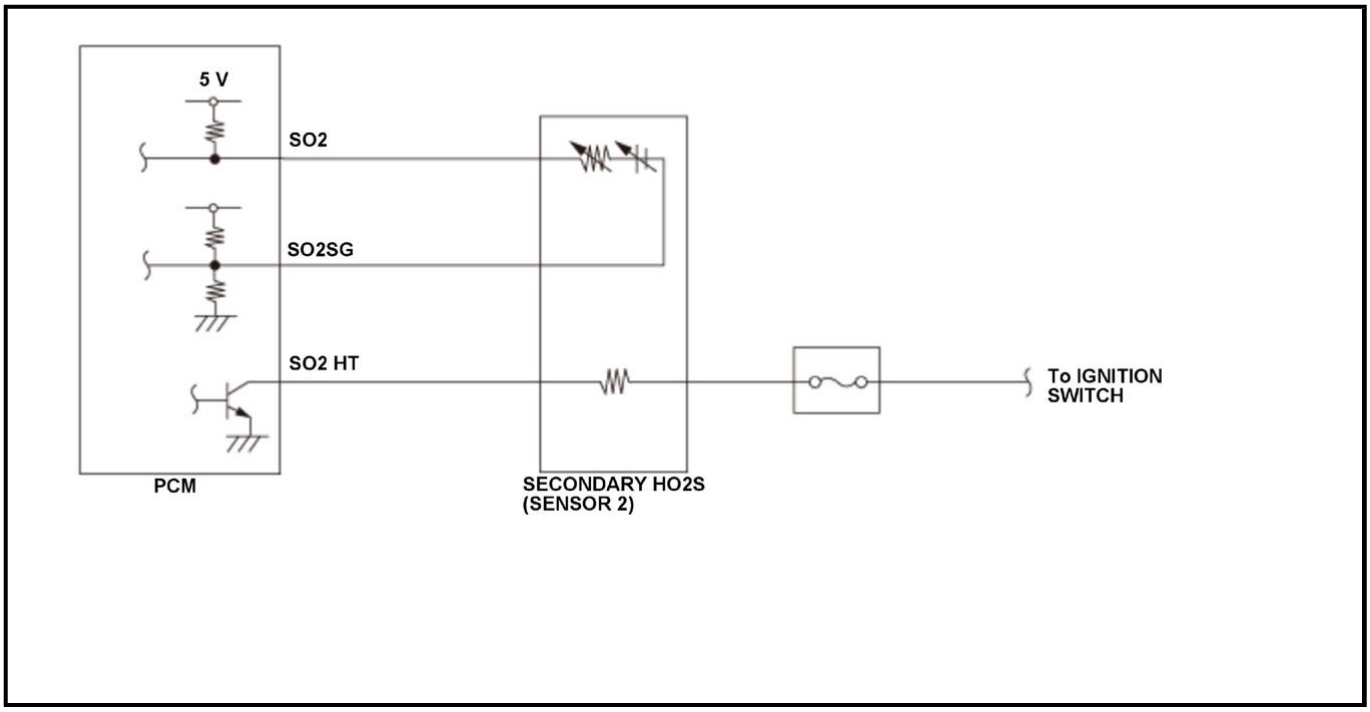

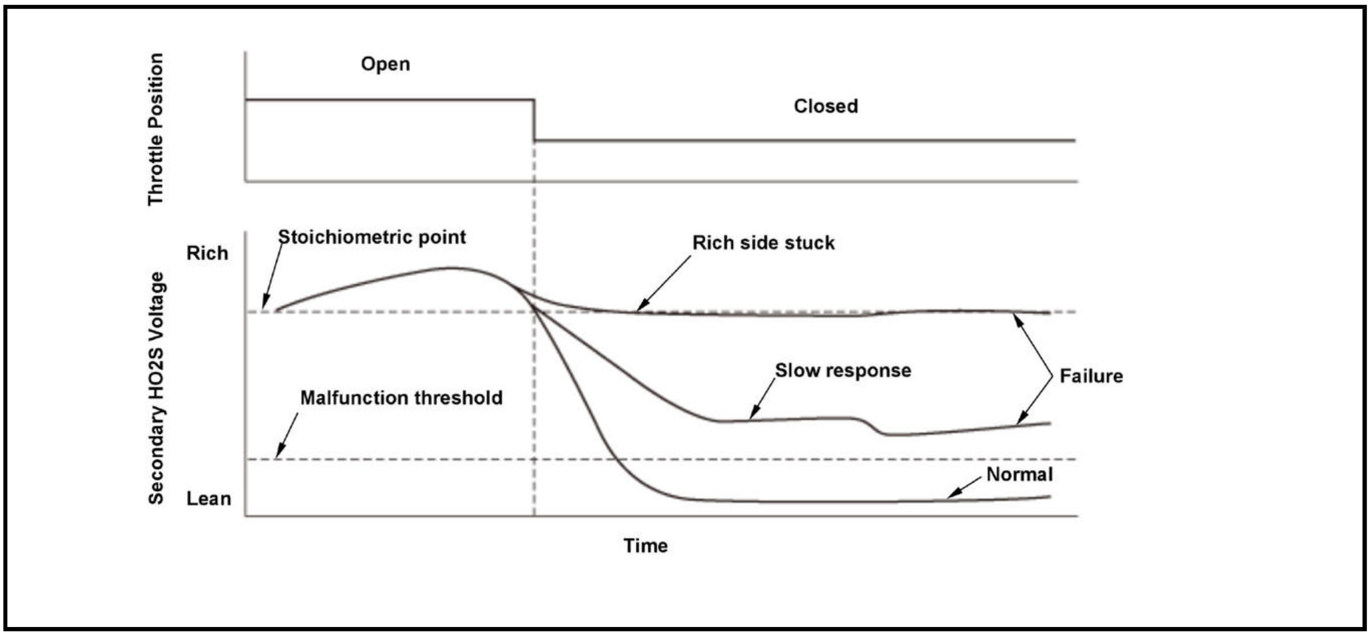

The secondary heated oxygen sensor (secondary HO2S (sensor 2)) detects the oxygen content in the exhaust gas downstream of the three way catalytic converter (TWC) during stoichiometric air/fuel ratio feedback control. The powertrain control module (PCM) controls the air/fuel ratio with the air/fuel ratio (A/F) sensor (sensor 1) output voltage to optimize the TWC's efficiency. When the secondary HO2S (sensor 2) does not change during lean air/fuel ratio when the throttle is closed, after full current is applied to the secondary HO2S (sensor 2) heater, and output remains within the specified range continuously, the PCM detects a malfunction and stores a DTC.

Monitor Execution, Sequence, Duration, DTC Type

Execution	Once per driving cycle
Sequence	P0138 is judged as OK
Duration	10 seconds or more
DTC Type	Two drive cycles, MIL on

Enable Conditions

Condition	Minimum	Maximum
Elapsed time after starting the engine	2 minutes	-
Engine coolant temperature [ECT SENSOR 1]	156 deg. F (69 deg. C)	-
Intake air temperature [IAT Sensor (1)]	-13 deg. F (-25 deg. C)	-
Engine speed [ENGINE SPEED]	-	4, 000 rpm
Secondary HO2S output voltage [HO2S S2]	0.05 V	-
Intake air amount	3 g/seconds (0.11 oz/seconds)	-
Fuel feedback	During deceleration	

[ ]: HDS Parameter

Malfunction Threshold

The secondary HO2S (sensor 2) output voltage [HO2S S2] is 0.05 V or more for at least 10 seconds.

[ ]: HDS Parameter

Possible Cause

NOTE: The causes shown may not be a complete list of all potential problems, and it is possible that there may be other causes.

- Secondary HO2S (sensor 2) responsive deterioration
- Exhaust system failure (exhaust gas leak)

Confirmation Procedure

Operating Condition

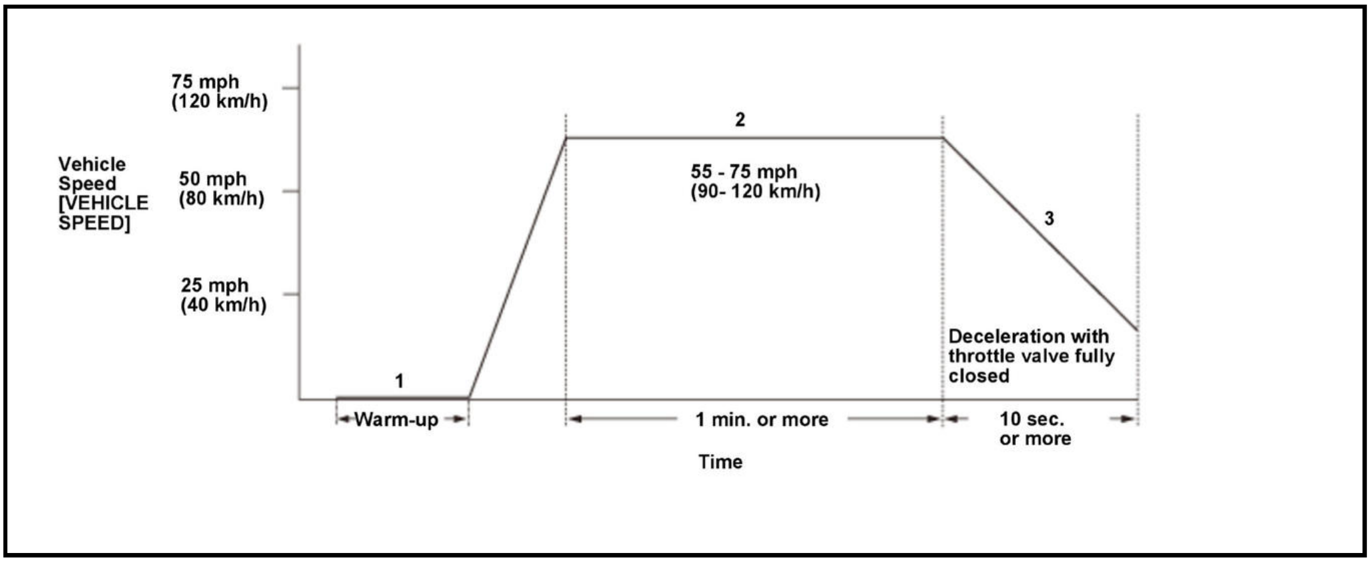

- Start the engine. Hold the engine speed [ENGINE SPEED] at 3, 000 rpm without load (in P or N) until the radiator fan comes on, then let it idle for at least 2 minute.
- Drive the vehicle at a steady speed between 55 - 75 mph (90 - 120 km/h) for at least 1 minute.
- Decelerate with the throttle valve fully closed for at least 10 seconds.

- Drive the vehicle in this manner only if the traffic regulations and ambient conditions allow.

[ ]: HDS Parameter

With the HDS

None.

Diagnosis Details

Conditions for setting the DTC

When a malfunction is detected during the first drive cycle, a Pending DTC is stored in the PCM memory. If the malfunction returns in the next (second) drive cycle, the MIL comes on and a Confirmed DTC and the freeze data are stored.

Conditions for clearing the DTC

The MIL is cleared if the malfunction does not return in three consecutive trips in which the diagnostic runs. The MIL, the Pending DTC, the Confirmed DTC, and the freeze data can be cleared with the scan tool Clear command or by disconnecting the 12 volt battery.

DTC P0141 (1.5 L ENGINE)

DTC P0141: Secondary Heated Oxygen Sensor (Secondary HO2S (Sensor 2)) Heater Circuit Malfunction

General Description

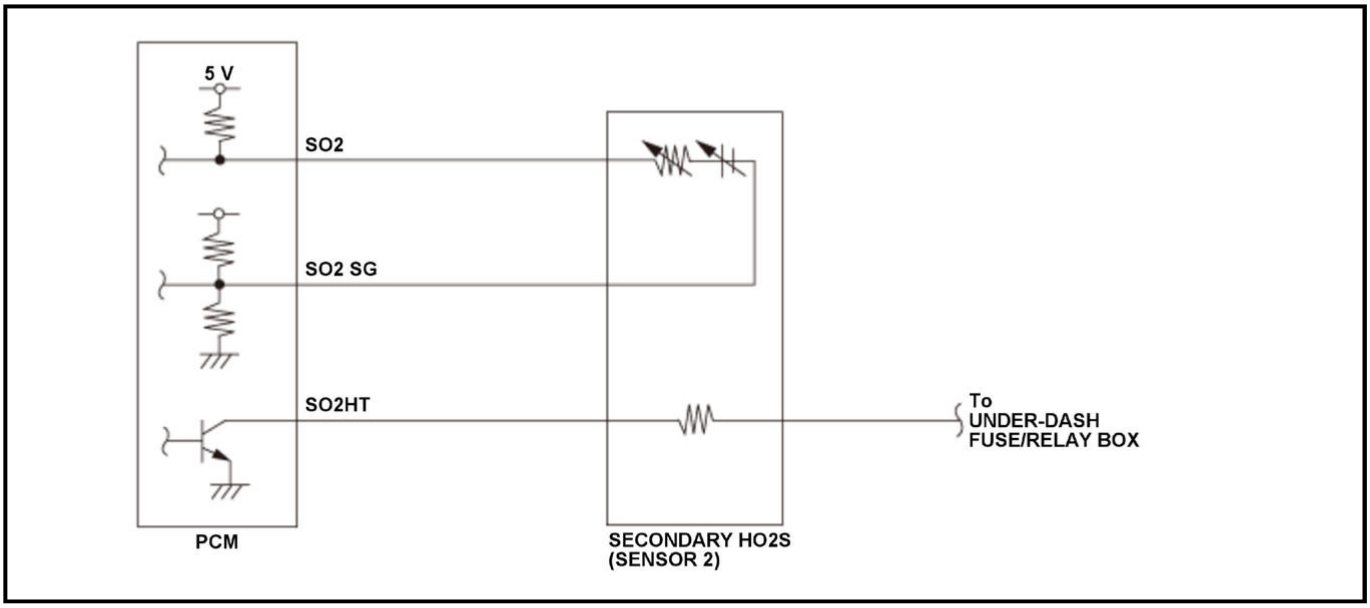

A heater for the zirconia element is embedded in the secondary heated oxygen sensor (secondary HO2S (sensor 2)), and it is controlled by the powertrain control module (PCM). When activated, it heats the sensor to stabilize and speed up the detection of oxygen content when the exhaust gas temperature is cold. If the secondary HO2S (sensor 2) heater draws other than a specified amperage, the PCM detects a malfunction and stores a DTC.

Monitor Execution, Sequence, Duration, DTC Type

Execution	Continuous
Sequence	None
Duration	5 seconds or more
DTC Type	Two drive cycles, MIL on

Enable Conditions

Condition	Minimum	Maximum
Engine coolant temperature[ECT SENSOR 1]	41 deg. F (5 deg. C)	-
12 volt battery voltage [BATTERY] (FI MAIN RLY OUT terminal of PCM)	4.67 V	-

[ ]: HDS Parameter

Malfunction Threshold

The secondary HO2S (sensor 2) heater output is 0.38 A or less, or 3.33 A or more, for at least 5.0 seconds when the heater is on.

Possible Cause

NOTE: The causes shown may not be a complete list of all potential problems, and it is possible that there may be other causes.

- Secondary HO2S (sensor 2) heater failure
- Secondary HO2S (sensor 2) SO2HT line open
- Secondary HO2S (sensor 2) SO2HT line short to ground
- Secondary HO2S (sensor 2) heater power supply line open (includes fuse blown)
- Secondary HO2S (sensor 2) heater internal circuit open
- Keyless access/TPMS control unit malfunction.
- PCM internal circuit failure

Confirmation Procedure

Operating Condition

Start the engine in a cold condition, and let it idle until the radiator fan comes on.

With the HDS

None.

Diagnosis Details

Conditions for setting the DTC

When a malfunction is detected during the first drive cycle, a Pending DTC is stored in the PCM memory. If the malfunction returns in the next (second) drive cycle, the MIL comes on and a Confirmed DTC and the freeze data are stored.

Conditions for clearing the DTC

The MIL is cleared if the malfunction does not return in three consecutive trips in which the diagnostic runs. The MIL, the Pending DTC, the Confirmed DTC, and the freeze data can be cleared with the scan tool Clear command or by disconnecting the 12 volt battery.

DTC P0141 (2.4 L ENGINE) (2017 2018 2019)

DTC P0141: Secondary Heated Oxygen Sensor (Secondary HO2S (Sensor 2)) Heater Circuit Malfunction

General Description

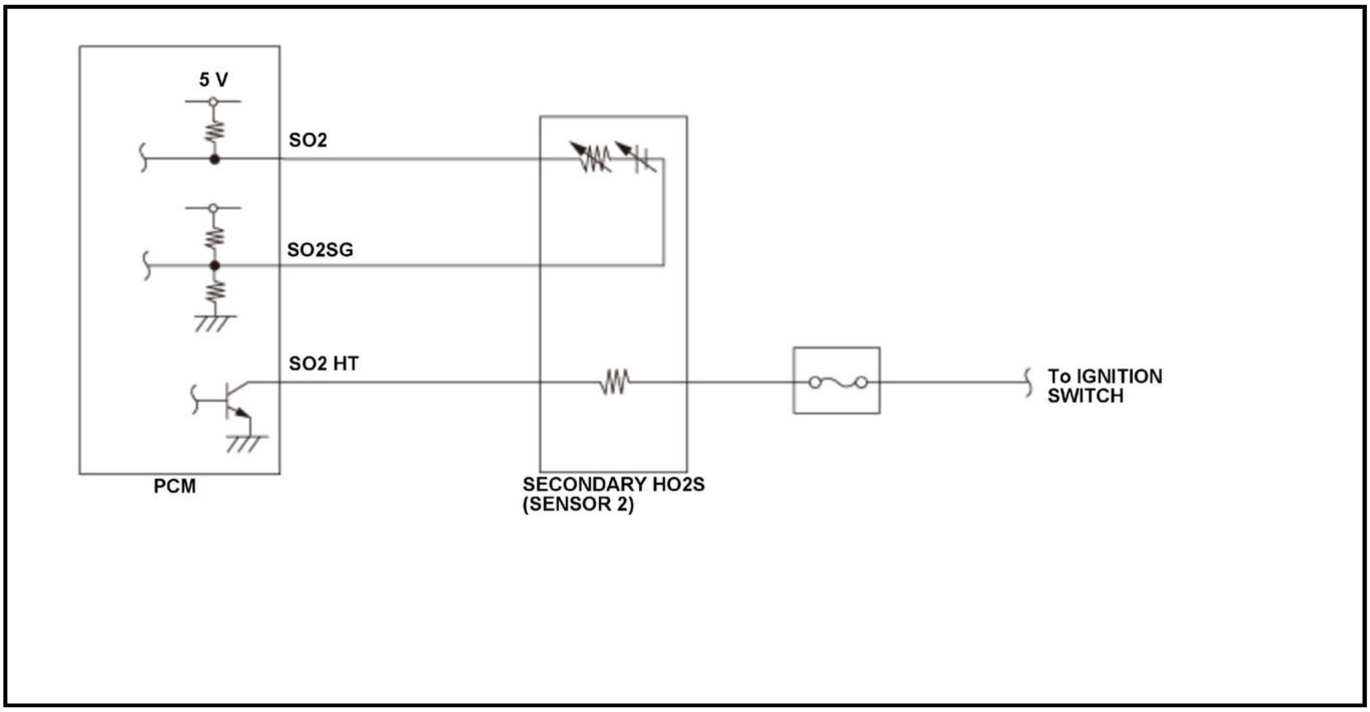

A heater for the zirconia element is embedded in the secondary heated oxygen sensor (secondary HO2S (sensor 2)), and it is controlled by the powertrain control module (PCM). When activated, it heats the sensor to stabilize and speed up the detection of oxygen content when the exhaust gas temperature is cold. If the secondary HO2S (sensor 2) heater draws other than a specified amperage, the PCM detects a malfunction and stores a DTC.

Monitor Execution, Sequence, Duration, DTC Type

Execution	Continuous
Sequence	None
Duration	5 seconds or more
DTC Type	Two drive cycles, MIL on

Enable Conditions

Condition	Minimum	Maximum
Engine coolant temperature[ECT SENSOR 1]	41 deg. F (5 deg. C)	-
12 volt battery voltage [BATTERY] (FI MAIN RLY OUT terminal of PCM)	4.67 V	-

[ ]: HDS Parameter

Malfunction Threshold

The secondary HO2S (sensor 2) heater output is 0.38 A or less, or 3.33 A or more, for at least 5.0 seconds when the heater is on.

Possible Cause

NOTE: The causes shown may not be a complete list of all potential problems, and it is possible that there may be other causes.

- Secondary HO2S (sensor 2) heater failure
- Secondary HO2S (sensor 2) SO2HT line open
- Secondary HO2S (sensor 2) SO2HT line short to ground

- Secondary HO2S (sensor 2) heater power supply line open (includes fuse blown)
- Secondary HO2S (sensor 2) heater internal circuit open
- Poor ignition switch
- Keyless access control unit malfunction.
- PCM internal circuit failure

Confirmation Procedure

Operating Condition

Start the engine in a cold condition, and let it idle until the radiator fan comes on.

With the HDS

None.

Diagnosis Details

Conditions for setting the DTC

When a malfunction is detected during the first drive cycle, a Pending DTC is stored in the PCM memory. If the malfunction returns in the next (second) drive cycle, the MIL comes on and a Confirmed DTC and the freeze data are stored.

Conditions for clearing the DTC

The MIL is cleared if the malfunction does not return in three consecutive trips in which the diagnostic runs. The MIL, the Pending DTC, the Confirmed DTC, and the freeze data can be cleared with the scan tool Clear command or by disconnecting the 12 volt battery.

DTC P0171 (1.5 L ENGINE)

DTC P0171: Fuel System Too Lean

General Description

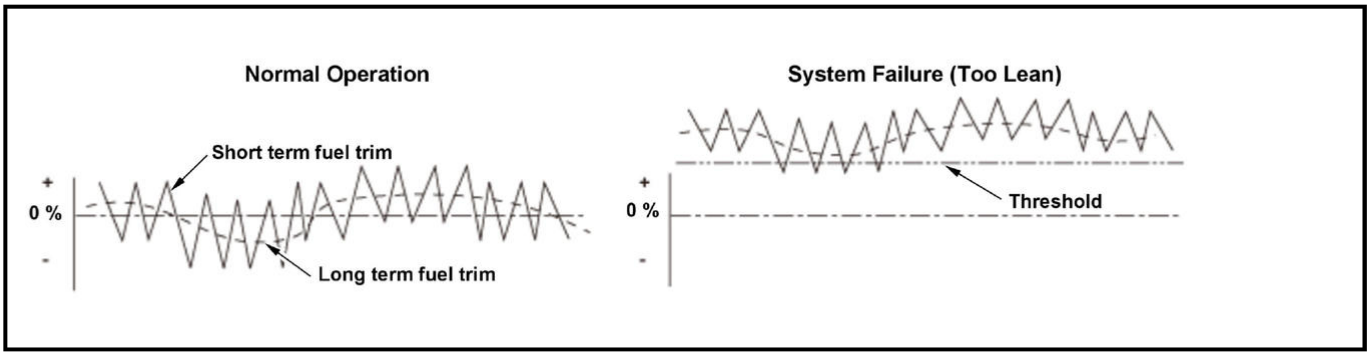

The powertrain control module (PCM) detects the oxygen content in the exhaust gas from the air/fuel ratio (A/F) sensor (sensor 1) signal voltage, and it uses fuel feedback control to maintain the optimal air/fuel ratio. The air/fuel ratio coefficient for correcting the amount of injected fuel is the short term fuel trim. The PCM varies short term fuel trim continuously to keep the air/fuel ratio close to the stoichiometric ratio for all driving conditions. Long term fuel trim is computed from short term fuel trim and is used to regulate long term deviation from the stoichiometric air/fuel ratio, which occurs when fuel metering components deteriorate with age or system failures occur. In addition, long term fuel trim is stored in the PCM memory and is used to determine when fuel metering components malfunction. When long term fuel trim is higher than normal, which is about 1 (0 %), the amount of injected fuel must be increased, and when lower than normal, it must be decreased. If long term fuel trim is normal (too lean) or more, the PCM detects a malfunction in the fuel metering components and stores a DTC.

Monitor Execution, Sequence, Duration, DTC Type

Execution	Once per driving cycle*
Sequence	None
Duration	Every 3.0 seconds
DTC Type	Two drive cycles, MIL on

*: The malfunction judgment is cleared when it is judged as normal under the same driving conditions in which the malfunction is detected.

Enable Conditions

Condition	Minimum	Maximum
Engine coolant temperature [ECT SENSOR 1]	156 deg. F (69 deg. C)	-
Intake air temperature [IAT Sensor (1)]	18 deg. F (-7.6 deg. C)	-
Engine speed [ENGINE SPEED]	530 rpm	4, 000 rpm
MAP value [MAP SENSOR]	16 kPa (120 mmHg, 4.8 inHg)	-
Fuel feedback	Closed loop	
Monitoring priority	P0133, P0420	

[ ]: HDS Parameter

Malfunction Threshold

Long term fuel trim is 1.33 (+33 %) or more.

Possible Cause

NOTE: The causes shown may not be a complete list of all potential problems, and it is possible that there may be other causes.

- Fuel pump failure
- Fuel injector failure
- Fuel pressure regulator failure
- Fuel line failure
- Fuel supply system failure
- Mass air flow (MAF) sensor range/performance problem
- Manifold absolute pressure (MAP) sensor range/performance problem
- A/F sensor (sensor 1) failure
- Secondary HO2S (sensor 2) failure
- Vacuum hose mis installed
- Throttle body air leak
- Intake manifold air leak
- EVAP canister purge valve failure

Confirmation Procedure

Operating Condition

- Start the engine. Hold the engine speed [ENGINE SPEED] at 3, 000 rpm without load (in P or N) until the radiator fan comes on.

- Drive at a steady speed between 15 - 75 mph (25 - 120 km/h) for at least 15 minutes, and watch the long term fuel trim. If the long term fuel trim stays at about 1, the vehicle is OK or it is a very minor problem. If a significant fault is still present, the long term fuel trim will move up or down while driving.
- When freeze data is stored, drive the vehicle under those conditions instead of Driving Pattern step 2.
- After clearing the DTC by disconnecting the 12 volt battery or using the scan tool, drive at steady speed between 15 - 55 mph (25 - 88 km/h) for at least 40 minutes to allow time for long term fuel trim to recover.
- Drive the vehicle in this manner only if the traffic regulations and ambient conditions allow.

[ ]: HDS Parameter

With the HDS

None.

Diagnosis Details

Conditions for setting the DTC

When a malfunction is detected during the first drive cycle, a Pending DTC is stored in the PCM memory. If the malfunction returns in the next (second) drive cycle, the MIL comes on and a Confirmed DTC and the freeze data are stored.

Conditions for clearing the DTC

The MIL is cleared if the malfunction does not return in three consecutive drive cycles in which the engine conditions are similar to the first time the malfunction was detected. The MIL, the Pending DTC, the Confirmed DTC, and the freeze data can be cleared with the scan tool Clear command or by disconnecting the 12 volt battery.

DTC P0171 (2.4 L ENGINE) (2017 2018 2019)

DTC P0171: Fuel System Too Lean

General Description

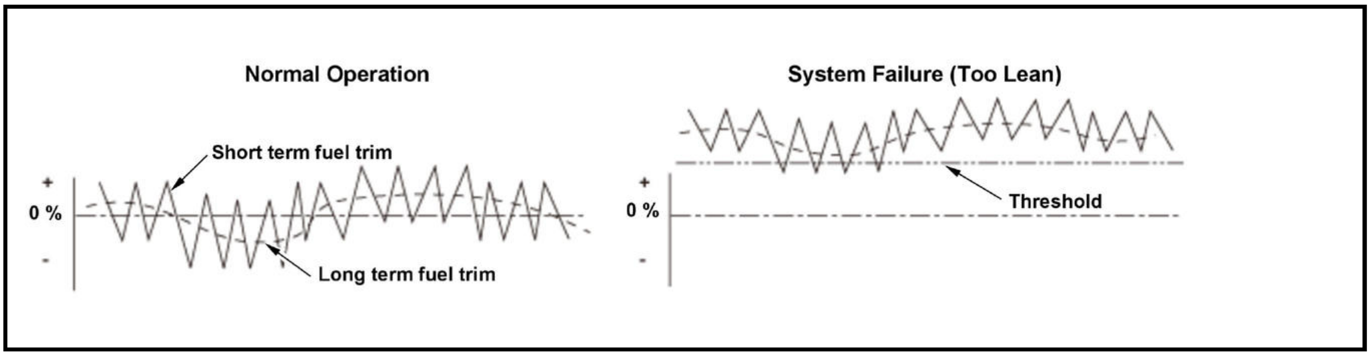

The powertrain control module (PCM) detects the oxygen content in the exhaust gas from the air/fuel ratio (A/F) sensor (sensor 1) signal voltage, and it uses fuel feedback control to maintain the optimal air/fuel ratio. The air/fuel ratio coefficient for correcting the amount of injected fuel is the short term fuel trim. The PCM varies short term fuel trim continuously to keep the air/fuel ratio close to the stoichiometric ratio for all driving conditions. Long term fuel trim is computed from short term fuel trim and is used to regulate long term deviation from the stoichiometric air/fuel ratio, which occurs when fuel metering components deteriorate with age or system failures occur. In addition, long term fuel trim is stored in the PCM memory and is used to determine when fuel metering components malfunction. When long term fuel trim is higher than normal, which is about 1 (0 %), the amount of injected fuel must be increased, and when lower than normal, it must be decreased. If long term fuel trim is normal (too lean) or more, the PCM detects a malfunction in the fuel metering components and stores a DTC.

Monitor Execution, Sequence, Duration, DTC Type

Execution	Once per driving cycle*
Sequence	None
Duration	Every 3.0 seconds
DTC Type	Two drive cycles, MIL on

*: The malfunction judgment is cleared when it is judged as normal under the same driving conditions in which the malfunction is detected.

Enable Conditions

Condition	Minimum	Maximum
Engine coolant temperature [ECT SENSOR 1]	156 deg. F (69 deg. C)	-
Intake air temperature [IAT Sensor (1)]	19 deg. F (-7 deg. C)	-
Engine speed [ENGINE SPEED]	500 rpm	4, 000 rpm
MAP value [MAP SENSOR]	16 kPa (120 mmHg, 4.8 inHg)	-
Fuel feedback	Closed loop	
Monitoring priority	P0133, P0420	

[ ]: HDS Parameter

Malfunction Threshold

Long term fuel trim is 1.33 (+33 %) or more.

Possible Cause

NOTE: The causes shown may not be a complete list of all potential problems, and it is possible that there may be other causes.

- Fuel pump failure
- Injector failure
- Fuel pressure regulator failure
- Fuel line failure
- Fuel supply system failure
- Mass airflow (MAF) sensor range/performance problem
- Manifold absolute pressure (MAP) sensor range/performance problem
- A/F sensor (sensor 1) failure

Confirmation Procedure

Operating Condition

- Start the engine. Hold the engine speed [ENGINE SPEED] at 3, 000 rpm without load (in P or N) until the radiator fan comes on.
- Drive at a steady speed between 15 - 75 mph (25 - 120 km/h) for at least 15 minutes, and watch the long term fuel trim. If the long term fuel trim stays at about 1, the vehicle is OK or it is a very minor problem. If a significant fault is still present, the long term fuel trim will move up or down while driving.
- When freeze data is stored, drive the vehicle under those conditions instead of Driving Pattern step 2.
- After clearing the DTC by disconnecting the 12 volt battery or using the scan tool, drive at steady speed between 15 - 55 mph (25 - 88 km/h) for at least 40 minutes to allow time for long term fuel trim to

recover.

- Drive the vehicle in this manner only if the traffic regulations and ambient conditions allow.

[ ]: HDS Parameter

With the HDS

None.

Diagnosis Details

Conditions for setting the DTC

When a malfunction is detected during the first drive cycle, a Pending DTC is stored in the PCM memory. If the malfunction returns in the next (second) drive cycle, the MIL comes on and a Confirmed DTC and the freeze data are stored.

Conditions for clearing the DTC

The MIL is cleared if the malfunction does not return in three consecutive drive cycles in which the engine conditions are similar to the first time the malfunction was detected. The MIL, the Pending DTC, the Confirmed DTC, and the freeze data can be cleared with the scan tool Clear command or by disconnecting the 12 volt battery.

DTC P0172 (1.5 L ENGINE)

DTC P0172: Fuel System Too Rich

General Description

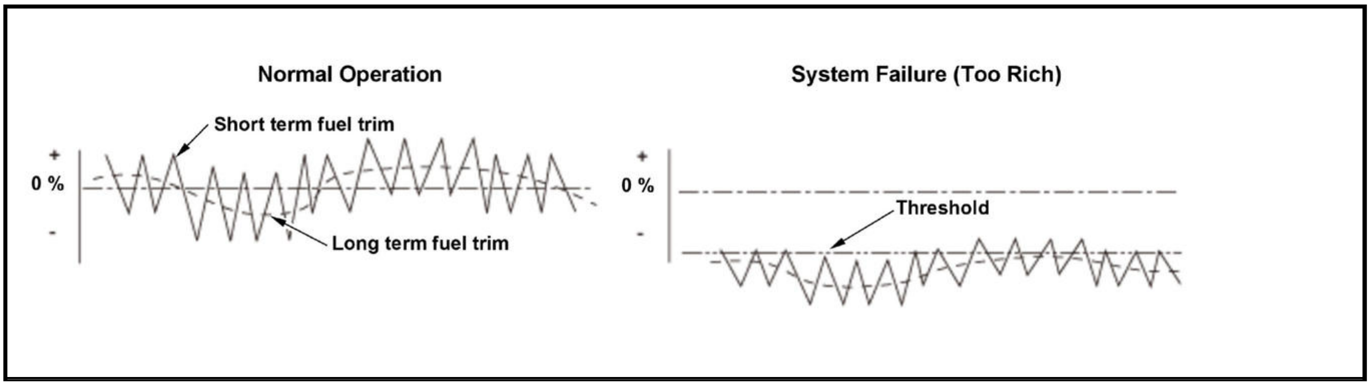

The powertrain control module (PCM) detects the oxygen content in the exhaust gas from the air/fuel ratio (A/F) sensor (sensor 1) signal voltage, and it uses fuel feedback control to maintain the optimal air/fuel ratio. The air/fuel ratio coefficient for correcting the amount of injected fuel is the short term fuel trim. The PCM varies short term fuel trim continuously to keep the air/fuel ratio close to the stoichiometric ratio for all driving conditions. Long term fuel trim is computed from short term fuel trim and is used to regulate long term deviation from the stoichiometric air/fuel ratio, which occurs when fuel metering components deteriorate with age or system failures occur. In addition, long term fuel trim is stored in the PCM memory and is used to determine when fuel metering components malfunction. When long term fuel trim is higher than normal, which is about 1 (0 %), the amount of injected fuel must be increased, and when lower than normal, it must be decreased. If long term fuel trim is normal (too rich) or less, the PCM detects a malfunction in the fuel metering components and stores a DTC.

Monitor Execution, Sequence, Duration, DTC Type

Execution	Once per driving cycle*
Sequence	None
Duration	20 seconds or more

DTC Type	Two drive cycles, MIL on

*: The malfunction judgment is cleared when it is judged as normal under the same driving conditions in which the malfunction is detected.

Enable Conditions

Condition	Minimum	Maximum
Engine coolant temperature [ECT SENSOR 1]	156 deg. F (69 deg. C)	-
Intake air temperature [IAT Sensor (1)]	18 deg. F (-7.6 deg. C)	-
Engine speed [ENGINE SPEED]	530 rpm	4, 000 rpm
MAP value [MAP SENSOR]	16 kPa (120 mmHg, 4.8 inHg)	-
Fuel feedback	Closed loop	
Monitoring priority	P0133, P0420	

[ ]: HDS Parameter

Malfunction Threshold

Long term fuel trim is 0.79 (-21 %) or less.

Possible Cause

NOTE: The causes shown may not be a complete list of all potential problems, and it is possible that there may be other causes.

- Fuel pump failure
- Fuel injector failure
- Fuel pressure regulator failure
- Fuel line failure
- Fuel supply system failure
- Mass air flow (MAF) sensor range/performance problem
- Manifold absolute pressure (MAP) sensor range/performance problem
- A/F sensor (sensor 1) failure
- Secondary HO2S (sensor 2) failure
- Vacuum hose mis installed
- Throttle body air leak
- Intake manifold air leak
- EVAP canister purge valve failure

Confirmation Procedure

Operating Condition

- Start the engine. Hold the engine speed [ENGINE SPEED] at 3, 000 rpm without load (in P or N) until the radiator fan comes on.
- Drive at a steady speed between 15 - 75 mph (25 - 120 km/h) for at least 15 minutes, and watch the long term fuel trim. If the long term fuel trim stays at about 1.0, the vehicle is OK or it is a very minor problem. If a significant fault is still present, the long term fuel trim will move up or down while driving.

- When freeze data is stored, drive the vehicle under those conditions instead of Driving Pattern step 2.

- After clearing the DTC by disconnecting the 12 volt battery or using the scan tool, drive at steady speed between 15 - 55 mph (25 - 88 km/h) for at least 40 minutes to allow time for long term fuel trim to recover.
- Drive the vehicle in this manner only if the traffic regulations and ambient conditions allow.

[ ]: HDS Parameter

With the HDS

None.

Diagnosis Details

Conditions for setting the DTC

When a malfunction is detected during the first drive cycle, a Pending DTC is stored in the PCM memory. If the malfunction returns in the next (second) drive cycle, the MIL comes on and a Confirmed DTC and the freeze data are stored.

Conditions for clearing the DTC

The MIL is cleared if the malfunction does not return in three consecutive drive cycles in which the engine conditions are similar to the first time the malfunction was detected. The MIL, the Pending DTC, the Confirmed DTC, and the freeze data can be cleared with the scan tool Clear command or by disconnecting the 12 volt battery.

DTC P0172 (2.4 L ENGINE) (2017 2018 2019)

DTC P0172: Fuel System Too Rich

General Description

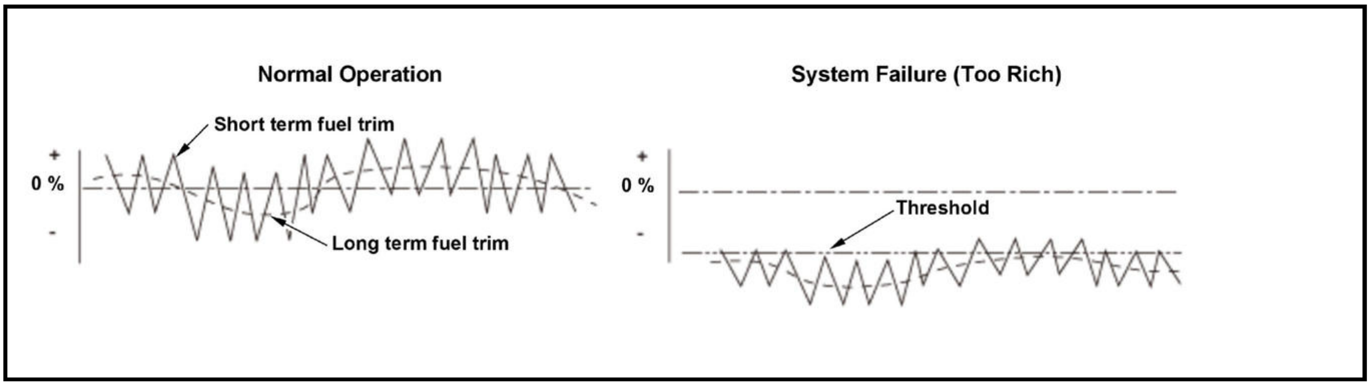

The powertrain control module (PCM) detects the oxygen content in the exhaust gas from the air/fuel ratio (A/F) sensor (sensor 1) signal voltage, and it uses fuel feedback control to maintain the optimal air/fuel ratio. The air/fuel ratio coefficient for correcting the amount of injected fuel is the short term fuel trim. The PCM varies short term fuel trim continuously to keep the air/fuel ratio close to the stoichiometric ratio for all driving conditions. Long term fuel trim is computed from short term fuel trim and is used to regulate long term deviation from the stoichiometric air/fuel ratio, which occurs when fuel metering components deteriorate with age or system failures occur. In addition, long term fuel trim is stored in the PCM memory and is used to determine when fuel metering components malfunction. When long term fuel trim is higher than normal, which is about 1 (0 %), the amount of injected fuel must be increased, and when lower than normal, it must be decreased. If long term fuel trim is normal (too rich) or less, the PCM detects a malfunction in the fuel metering components and stores a DTC.

Monitor Execution, Sequence, Duration, DTC Type

Execution	Once per driving cycle*

Sequence	None
Duration	20 seconds or more
DTC Type	Two drive cycles, MIL on

*: The malfunction judgment is cleared when it is judged as normal under the same driving conditions in which the malfunction is detected.

Enable Conditions

Condition	Minimum	Maximum
Engine coolant temperature [ECT SENSOR 1]	156 deg. F (69 deg. C)	-
Intake air temperature [IAT Sensor (1)]	19 deg. F (-7 deg. C)	-
Engine speed [ENGINE SPEED]	500 rpm	4, 000 rpm
MAP value [MAP SENSOR]	16 kPa (120 mmHg, 4.8 inHg)	-
Fuel feedback	Closed loop	
Monitoring priority	P0133, P0420	

[ ]: HDS Parameter

Malfunction Threshold

Long term fuel trim is 0.79 (-21 %) or less.

Possible Cause

NOTE: The causes shown may not be a complete list of all potential problems, and it is possible that there may be other causes.

- Fuel pump failure
- Injector failure
- Fuel pressure regulator failure
- Fuel line failure
- Fuel supply system failure
- Mass airflow (MAF) sensor range/performance problem
- Manifold absolute pressure (MAP) sensor range/performance problem
- A/F sensor (sensor 1) failure

Confirmation Procedure

Operating Condition

- Start the engine. Hold the engine speed [ENGINE SPEED] at 3, 000 rpm without load (in P or N) until the radiator fan comes on.
- Drive at a steady speed between 15 - 75 mph (25 - 120 km/h) for at least 15 minutes, and watch the long term fuel trim. If the long term fuel trim stays at about 1.0, the vehicle is OK or it is a very minor problem. If a significant fault is still present, the long term fuel trim will move up or down while driving.
- When freeze data is stored, drive the vehicle under those conditions instead of Driving Pattern step 2.
- After clearing the DTC by disconnecting the 12 volt battery or using the scan tool, drive at steady speed between 15 - 55 mph (25 - 88 km/h) for at least 40 minutes to allow time for long term fuel trim to recover.
- Drive the vehicle in this manner only if the traffic regulations and ambient conditions allow.

[ ]: HDS Parameter

With the HDS

None.

Diagnosis Details

Conditions for setting the DTC

When a malfunction is detected during the first drive cycle, a Pending DTC is stored in the PCM memory. If the malfunction returns in the next (second) drive cycle, the MIL comes on and a Confirmed DTC and the freeze data are stored.

Conditions for clearing the DTC

The MIL is cleared if the malfunction does not return in three consecutive drive cycles in which the engine conditions are similar to the first time the malfunction was detected. The MIL, the Pending DTC, the Confirmed DTC, and the freeze data can be cleared with the scan tool Clear command or by disconnecting the 12 volt battery.

DTC P0191 (2.4 L ENGINE) (2018 2019)

DTC P0191: Fuel Rail Pressure Sensor Out of Range

General Description

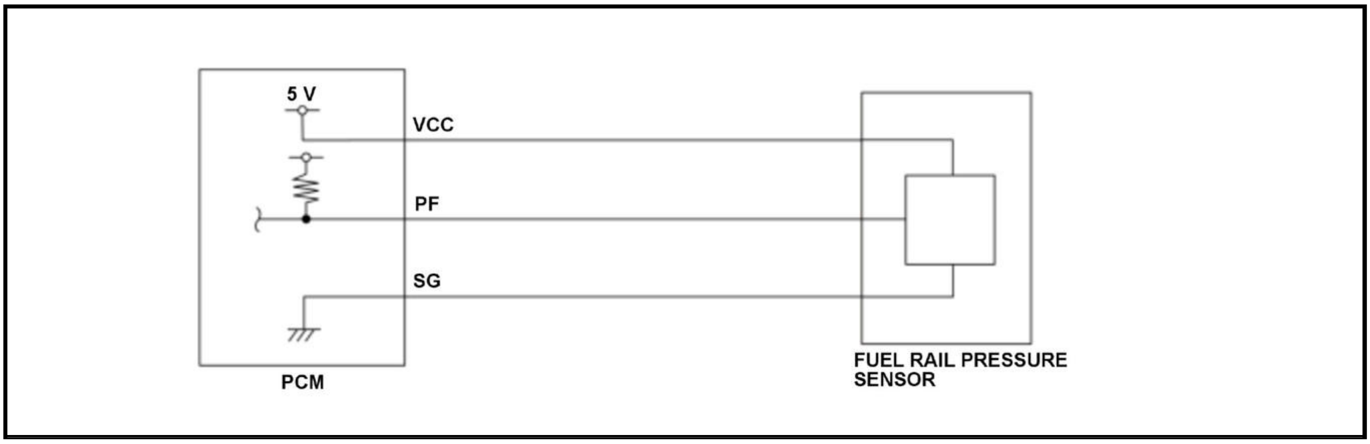

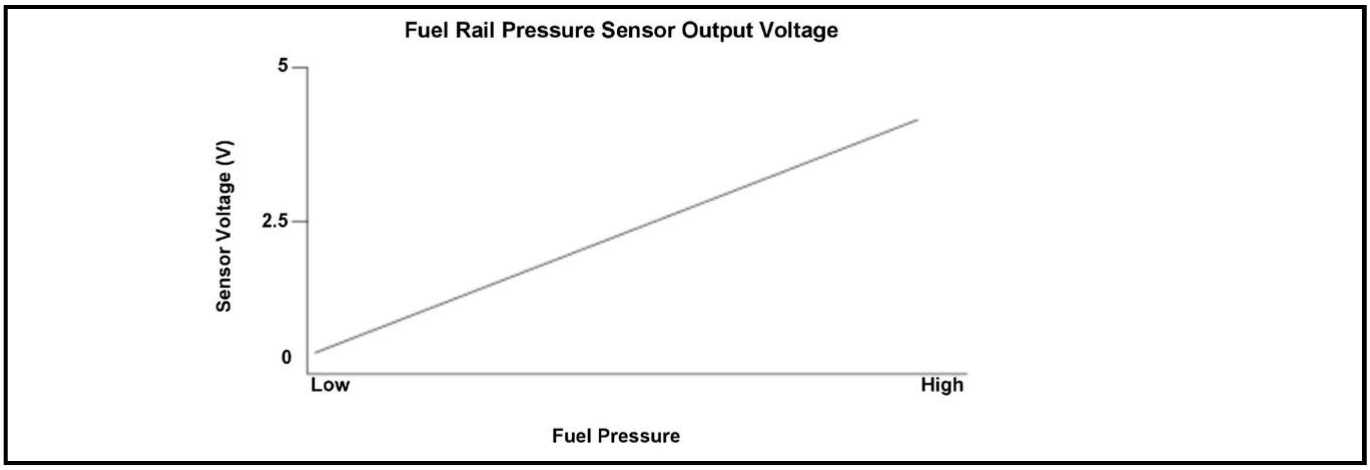

The fuel rail pressure sensor senses fuel pressure and converts it into electrical signals. The powertrain control module (PCM) adjusts to a specified fuel pressure by controlling the high pressure fuel pump solenoid based on the fuel rail pressure sensor output signal. The fuel rail pressure sensor outputs low signal voltage at low fuel pressure and high signal voltage at high fuel pressure. If the fuel rail pressure sensor output voltage is out of a specified range for predetermined time, the PCM detects a malfunction and stores a DTC.

Monitor Execution, Sequence, Duration, DTC Type

Execution	Continuous
Sequence	None
Duration	6 seconds or more
DTC Type	Two drive cycles, MIL on

Enable Conditions

Condition	B
Vehicle	ON mode

Malfunction Threshold

The fuel rail pressure sensor output voltage [FUEL PRESSURE CONVERTED FROM PF SENSOR] is 0.22 V or less, or 4.89 V or more for at least 6 seconds.

[ ]: HDS Parameter

Possible Cause

NOTE: The causes shown may not be a complete list of all potential problems, and it is possible that there may be other causes.

- Fuel rail pressure sensor failure
- PCM internal circuit failure

Diagnosis Details

Conditions for setting the DTC

When a malfunction is detected during the first drive cycle, a Pending DTC is stored in the PCM memory. If the malfunction returns in the next (second) drive cycle, the MIL comes on and a Confirmed DTC, the freeze data, and the on-board snapshot are stored.

Conditions for clearing the DTC

The MIL is cleared if the malfunction does not return in three consecutive trips in which the diagnostic runs. The MIL, the Pending DTC, the Confirmed DTC, the freeze data, and the on-board snapshot can be cleared with the scan tool Clear command.

DTC P0192, P0193 (1.5 L ENGINE)

DTC P0192: Fuel Rail Pressure Sensor Circuit Low Voltage **DTC P0193:** Fuel Rail Pressure Sensor Circuit High Voltage

General Description

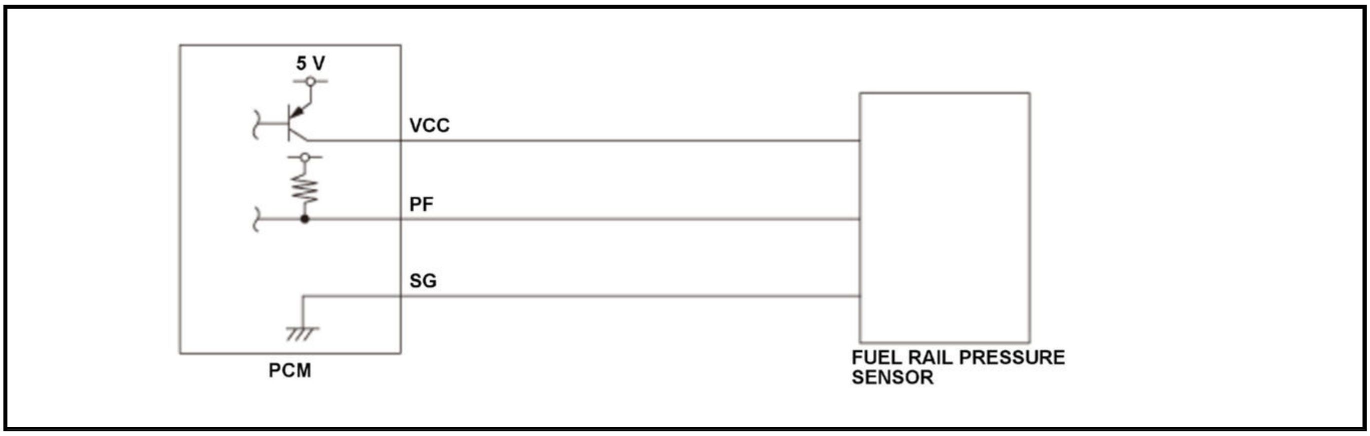

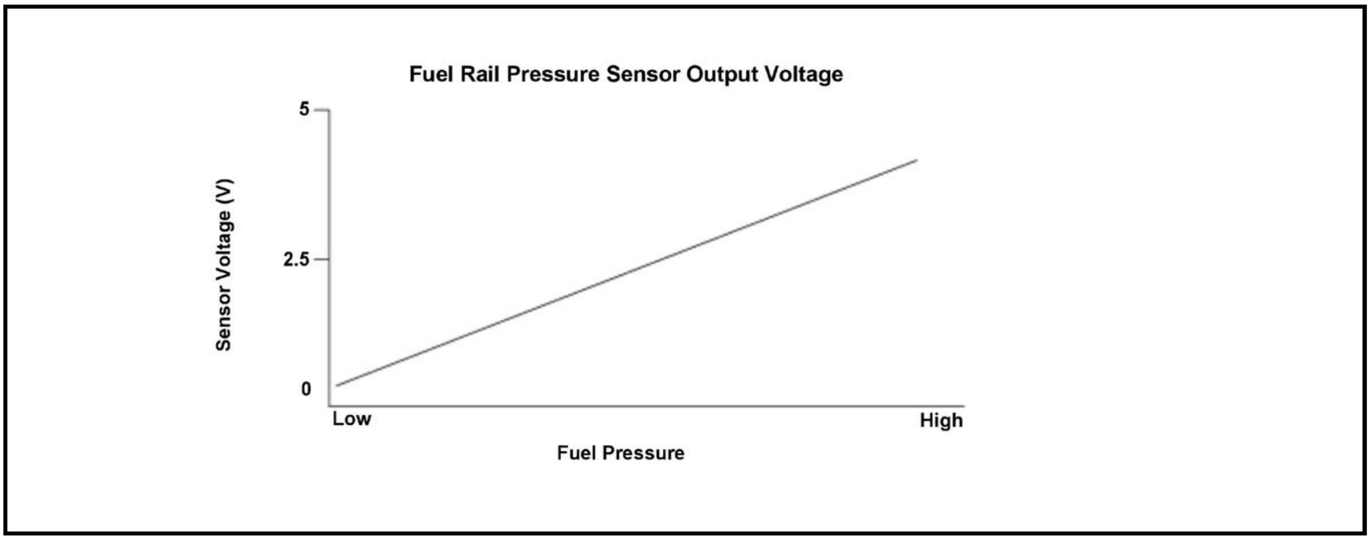

The fuel rail pressure sensor senses fuel pressure and converts it into electrical signals. The powertrain control module (PCM) adjusts to a specified fuel pressure by controlling the high pressure fuel pump solenoid based on the fuel rail pressure sensor output signal. The fuel rail pressure sensor outputs low signal voltage at low fuel pressure and high signal voltage at high fuel pressure. If the fuel rail pressure sensor output voltage is out of a specified range for predetermined time, the PCM detects a malfunction and stores a DTC.

Monitor Execution, Sequence, Duration, DTC Type

Execution	Continuous
Sequence	None
Duration	1.5 seconds or more
DTC Type	One drive cycle, MIL on

Enable Conditions

Condition	B
Vehicle	ON mode

Malfunction Threshold

DTC: P0192

The fuel rail pressure sensor output voltage [FUEL PRESSURE CONVERTED FROM PF SENSOR] is 0.31 V or less for at least 1.5 seconds.

DTC: P0193

The fuel rail pressure sensor output voltage [FUEL PRESSURE CONVERTED FROM PF SENSOR] is 4.89 V or more for at least 1.5 seconds.

[ ]: HDS Parameter

Possible Cause

NOTE: The causes shown may not be a complete list of all potential problems, and it is possible that there may be other causes.

DTC: P0192

- Fuel rail pressure sensor VCC line open
- Fuel rail pressure sensor PF line short to ground

DTC: P0193

- Fuel rail pressure sensor SG line open
- Fuel rail pressure sensor PF line open

Common

- Fuel rail pressure sensor failure
- PCM internal circuit failure

Diagnosis Details

Conditions for setting the DTC

When a malfunction is detected, the MIL comes on and a Pending DTC, a Confirmed DTC, and the freeze data are stored in the PCM memory.

Conditions for clearing the DTC

The MIL is cleared if the malfunction does not return in three consecutive trips in which the diagnostic runs. The MIL, the Pending DTC, the Confirmed DTC, and the freeze data can be cleared with the scan tool Clear command.

DTC P0192, P0193 (2.4 L ENGINE) (2017 2018 2019)

DTC P0192: Fuel Rail Pressure Sensor Circuit Low Voltage **DTC P0193:** Fuel Rail Pressure Sensor Circuit High Voltage

General Description

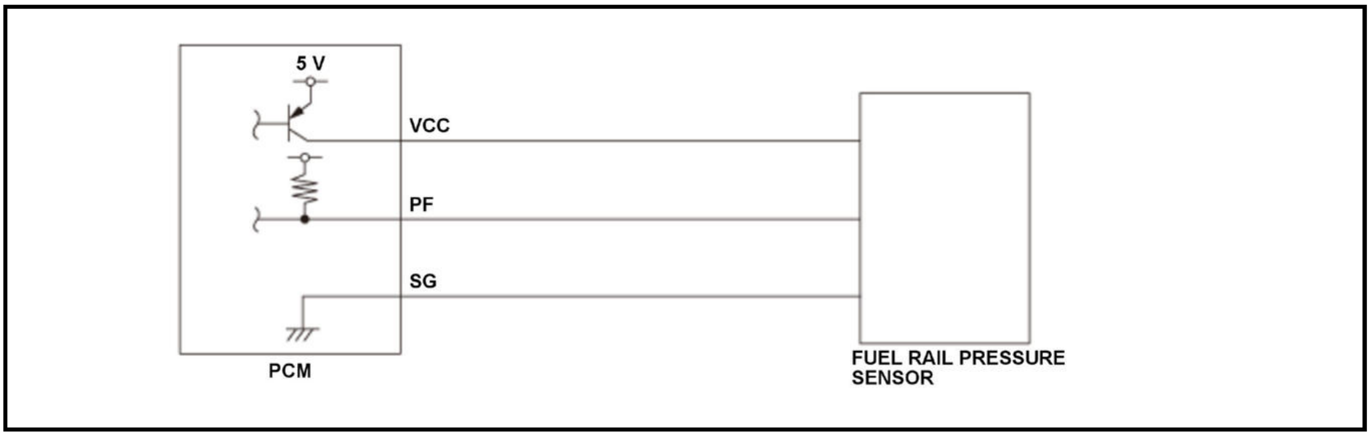

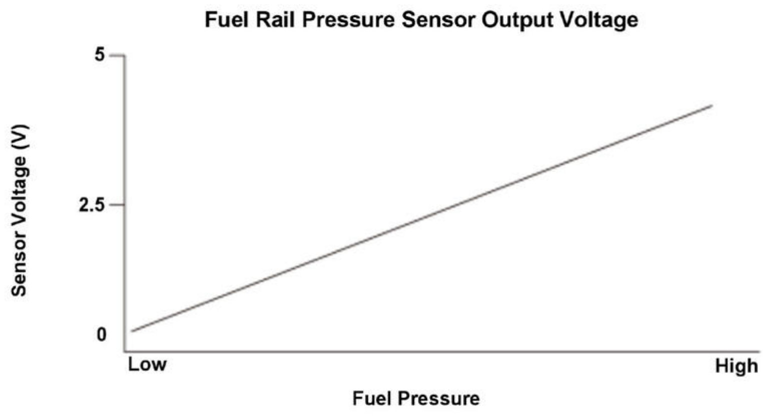

The fuel rail pressure sensor senses fuel pressure and converts it into electrical signals. The powertrain control module (PCM) adjusts to a specified fuel pressure by controlling the high pressure fuel pump solenoid based on the fuel rail pressure sensor output signal. The fuel rail pressure sensor outputs low signal voltage at low fuel pressure and high signal voltage at high fuel pressure. If the fuel rail pressure sensor output voltage is out of a specified range for predetermined time, the PCM detects a malfunction and stores a DTC.

Monitor Execution, Sequence, Duration, DTC Type

Execution	Continuous
Sequence	None
Duration	1.5 seconds or more
DTC Type	One drive cycle, MIL on

Enable Conditions

Condition	B
Vehicle	ON mode

Malfunction Threshold

DTC: P0192

The fuel rail pressure sensor output voltage [FUEL PRESSURE CONVERTED FROM PF SENSOR] is 0.31 V or less for at least 1.5 seconds.

DTC: P0193

The fuel rail pressure sensor output voltage [FUEL PRESSURE CONVERTED FROM PF SENSOR] is 4.89 V or more for at least 1.5 seconds.

[ ]: HDS Parameter

Possible Cause

NOTE: The causes shown may not be a complete list of all potential problems, and it is possible that there may be other causes.

DTC: P0192

- Fuel rail pressure sensor VCC line open
- Fuel rail pressure sensor PF line short to ground

DTC: P0193

- Fuel rail pressure sensor SG line open
- Fuel rail pressure sensor PF line open

Common

- Fuel rail pressure sensor failure
- PCM internal circuit failure

Diagnosis Details

Conditions for setting the DTC

When a malfunction is detected, the MIL comes on and a Pending DTC, a Confirmed DTC, and the freeze data are stored in the PCM memory.

Conditions for clearing the DTC

The MIL is cleared if the malfunction does not return in three consecutive trips in which the diagnostic runs. The MIL, the Pending DTC, the Confirmed DTC, and the freeze data can be cleared with the scan tool Clear command.

DTC P0201, P0202, P0203, P0204 (1.5 L ENGINE)

DTC P0201: No. 1 Cylinder Injector Circuit Malfunction **DTC P0202:** No. 2 Cylinder Injector Circuit Malfunction **DTC P0203:** No. 3 Cylinder Injector Circuit Malfunction **DTC P0204:** No. 4 Cylinder Injector Circuit Malfunction

General Description

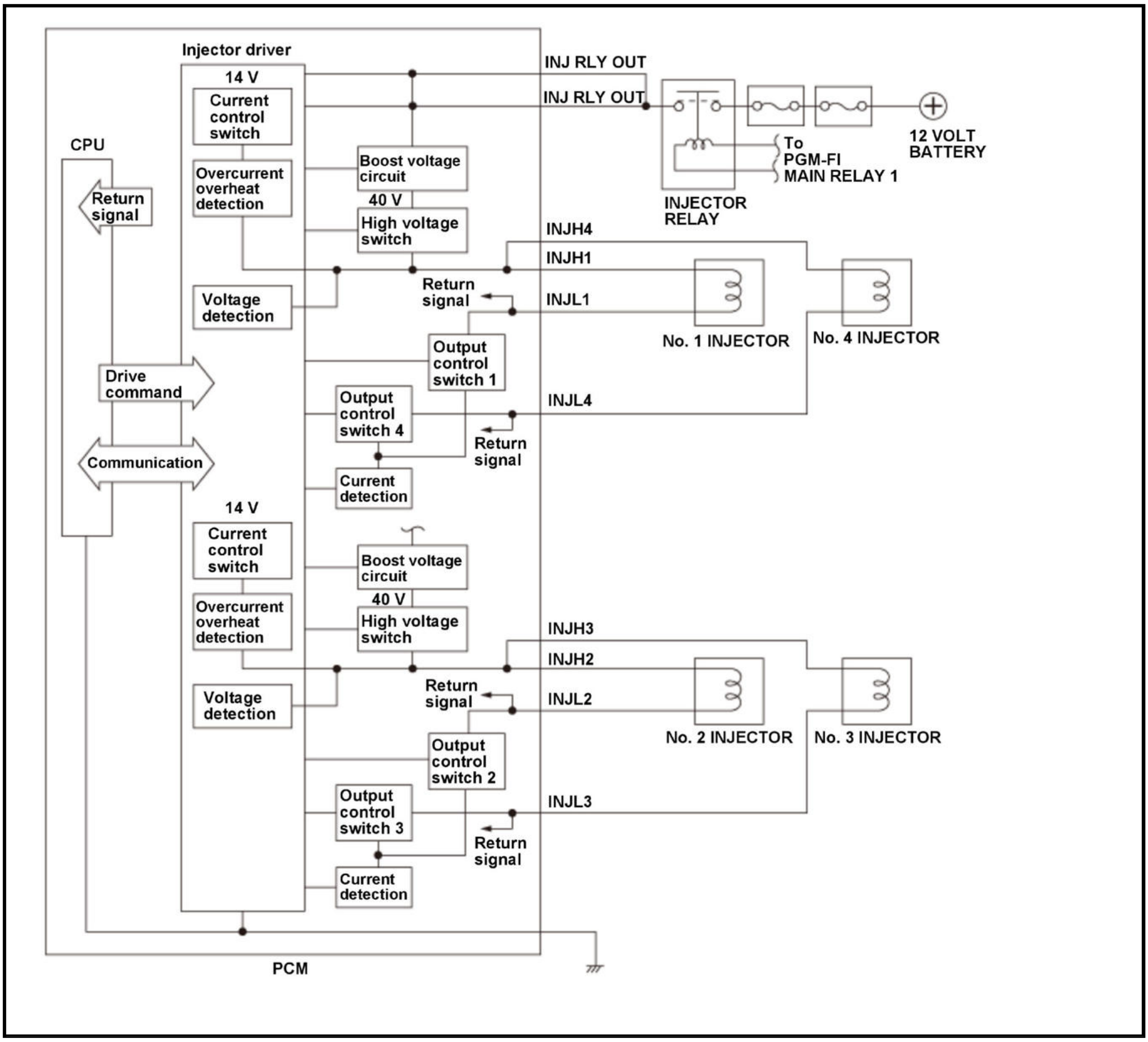
Injector driver
14 V
Current control switch
Overcurrent overheat detection
Voltage detection
CPU
Return signal
Drive command
Communication
Boost voltage circuit
40 V
High voltage switch
Return signal
Output control switch 1
Output control switch 4
Current detection
Return signal
14 V
Current control switch
Overcurrent overheat detection
Voltage detection
Boost voltage circuit
40 V
High voltage switch
Return signal
Output control switch 2
Output control switch 3
Current detection
Return signal
PCM
INJ RLY OUT
INJ RLY OUT
INJECTOR RELAY
To PGM-FI MAIN RELAY 1
12 VOLT BATTERY
INJH4
INJH1
INJL1
INJL4
No. 1 INJECTOR
No. 4 INJECTOR
INJH3
INJH2
INJL2
INJL3
No. 2 INJECTOR
No. 3 INJECTOR

The injector supplies fuel to the engine and is controlled by the powertrain control module (PCM) ON/OFF command. In the PCM, the injector driver receives a drive commands from the CPU and drives the injector. The CPU monitors injector currents and return signal from the injector driver to monitor a terminal voltage of PCM. If the monitored conditions are abnormal for a specified time, the PCM detects a malfunction and stores a DTC.

Monitor Execution, Sequence, Duration, DTC Type

Execution	Continuous
Sequence	None
Duration	-

DTC Type	One drive cycle, MIL on

Enable Conditions

Condition	Minimum	Maximum
12 volt battery voltage [BATTERY]	10 V	-
State of the engine	Running	

Condition	Minimum	Maximum
Crankshaft position (CKP) sensor	Normal	
Camshaft position (CMP) sensor	Normal	

[ ]: HDS Parameter

Malfunction Threshold

Either of the conditions occurs at least 30 times (counts once per engine cycle):

- Symptom: Injector current not flowing

  The injector current is 0.2 A to 1 A or less*.

- Symptom: Injector over current

  The injector current is 12 A to 20 A or more*.

- Symptom: PCM terminal (to injector) short to ground

  The PCM terminal (to injector) voltage is 1 V to 1.3 V or less*.

- Symptom: PCM terminal (to injector) short to power

  The PCM terminal (to injector) voltage is 4.6 V to 5 V or more*.

- Symptom: Return signal abnormal

  The return signal does not change.

*: Varies with driving condition.

Possible Cause

NOTE: The causes shown may not be a complete list of all potential problems, and it is possible that there may be other causes.

DTC: P0201

- No. 1 injector failure
- No. 1 injector line open
- No. 1 injector line short to ground
- No. 1 injector line short to power
- No. 4 injector line short to ground

DTC: P0202

- No. 2 injector failure
- No. 2 injector line open
- No. 2 injector line short to ground
- No. 2 injector line short to power
- No. 3 injector line short to ground

DTC: P0203

- No. 3 injector failure
- No. 3 injector line open
- No. 3 injector line short to ground
- No. 3 injector line short to power
- No. 2 injector line short to ground

DTC: P0204

- No. 4 injector failure
- No. 4 injector line open
- No. 4 injector line short to ground
- No. 4 injector line short to power
- No. 1 injector line short to ground

Common

- Injector relay failure
- PCM internal circuit failure (injector driver power supply line open)
- High pressure fuel pump failure

Diagnosis Details

Conditions for setting the DTC

When a malfunction is detected, the MIL comes on and a Pending DTC, a Confirmed DTC, and the freeze data are stored in the PCM memory.

Conditions for clearing the DTC

The MIL is cleared if the malfunction does not return in three consecutive trips in which the diagnostic runs. The MIL, the Pending DTC, the Confirmed DTC, and the freeze data can be cleared with the scan tool Clear command.

DTC P0201, P0202, P0203, P0204 (2.4 L ENGINE) (2017 2018 2019)

DTC P0201: No. 1 Cylinder Injector Circuit Malfunction **DTC P0202:** No. 2 Cylinder Injector Circuit Malfunction **DTC P0203:** No. 3 Cylinder Injector Circuit Malfunction **DTC P0204:** No. 4 Cylinder Injector Circuit Malfunction

General Description

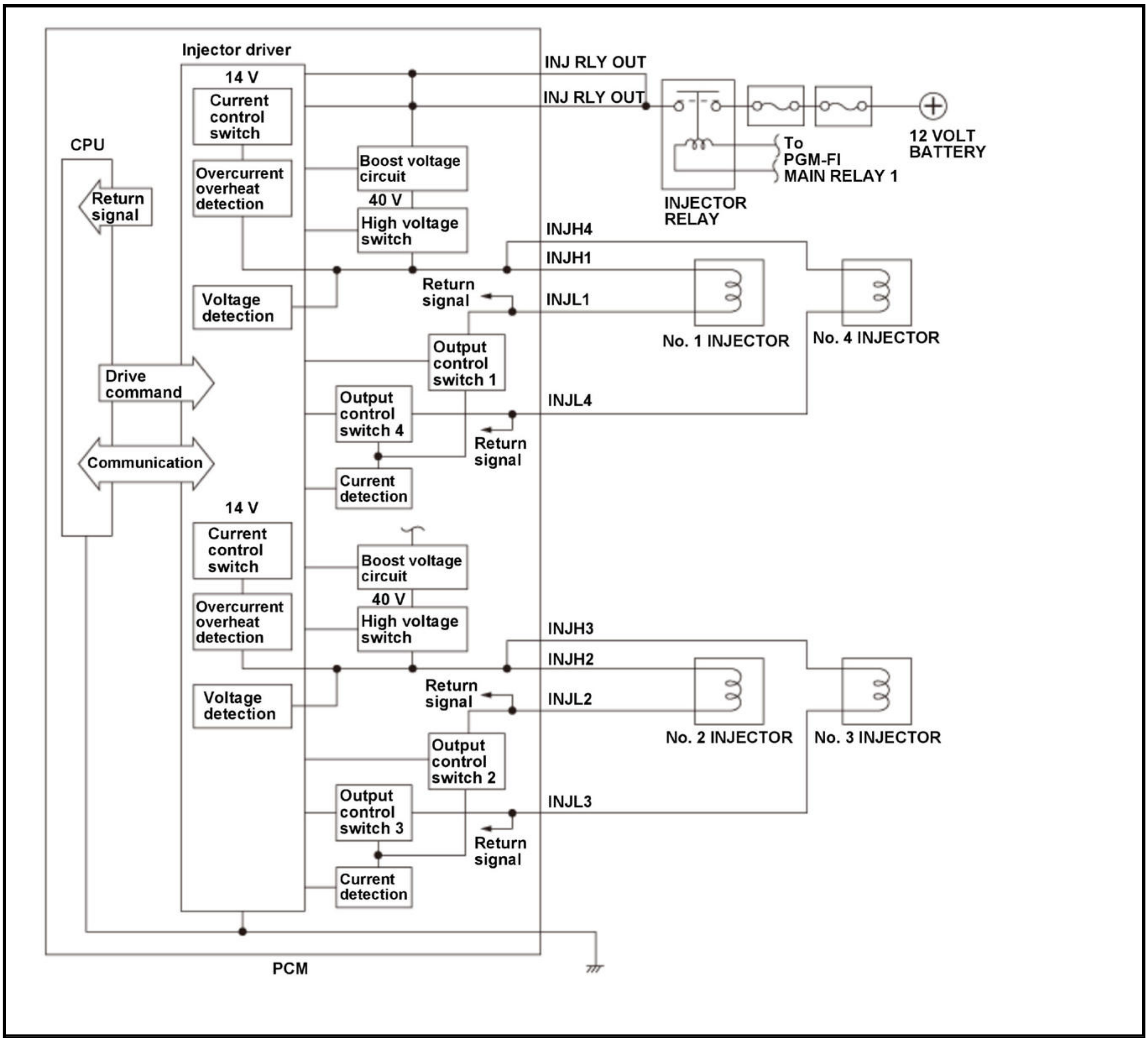
Injector driver
14 V
Current control switch
Overcurrent overheat detection
Voltage detection
Boost voltage circuit
40 V
High voltage switch
Return signal
Output control switch 1
Output control switch 4
Current detection
CPU
Return signal
Drive command
Communication
INJ RLY OUT
INJ RLY OUT
INJECTOR RELAY
To PGM-FI MAIN RELAY 1
12 VOLT BATTERY
INJH4
INJH1
INJL1
INJL4
No. 1 INJECTOR
No. 4 INJECTOR
14 V
Current control switch
Overcurrent overheat detection
Voltage detection
Boost voltage circuit
40 V
High voltage switch
Return signal
Output control switch 2
Output control switch 3
Current detection
INJH3
INJH2
INJL2
INJL3
No. 2 INJECTOR
No. 3 INJECTOR
PCM

The injector supplies fuel to the engine and is controlled by the powertrain control module (PCM) ON/OFF command. In the PCM, the injector driver receives a drive commands from the CPU and drives the injector. The CPU monitors injector currents and return signal from the injector driver to monitor a terminal voltage of PCM. If the monitored conditions are abnormal for a specified time, the PCM detects a malfunction and stores a DTC.

Monitor Execution, Sequence, Duration, DTC Type

Execution	Continuous
Sequence	None
Duration	-

DTC Type	One drive cycle, MIL on

Enable Conditions

Condition	Minimum	Maximum
12 volt battery voltage [BATTERY]	10 V	-
State of the engine	Running	

Condition	Minimum	Maximum
Crankshaft position (CKP) sensor	Normal	
Camshaft position (CMP) sensor	Normal	
Other	Other than during fuel cut-off operation	

[ ]: HDS Parameter

Malfunction Threshold

Either of the conditions occurs at least 30 times (counts once per engine cycle):

- Symptom: Injector current not flowing

  The injector current is 0.2 A to 1 A or less*.

- Symptom: Injector over current

  The injector current is 12 A to 20 A or more*.

- Symptom: PCM terminal (to injector) short to ground

  The PCM terminal (to injector) voltage is 1 V to 1.3 V or less*.

- Symptom: PCM terminal (to injector) short to power

  The PCM terminal (to injector) voltage is 4.6 V to 5 V or more*.

- Symptom: Return signal abnormal

  The return signal does not change.

*: Varies with driving condition.

Possible Cause

NOTE: The causes shown may not be a complete list of all potential problems, and it is possible that there may be other causes.

DTC: P0201

- No. 1 injector failure
- No. 1 injector line open
- No. 1 injector line short to ground
- No. 1 injector line short to power
- No. 4 injector line short to ground

DTC: P0202

- No. 2 injector failure
- No. 2 injector line open
- No. 2 injector line short to ground
- No. 2 injector line short to power
- No. 3 injector line short to ground

DTC: P0203

- No. 3 injector failure
- No. 3 injector line open
- No. 3 injector line short to ground
- No. 3 injector line short to power
- No. 2 injector line short to ground

DTC: P0204

- No. 4 injector failure
- No. 4 injector line open
- No. 4 injector line short to ground
- No. 4 injector line short to power
- No. 1 injector line short to ground

Common

- Injector relay failure
- PCM internal circuit failure (injector driver power supply line open)
- High pressure fuel pump failure

Diagnosis Details

Conditions for setting the DTC

When a malfunction is detected, the MIL comes on and a Pending DTC, a Confirmed DTC, and the freeze data are stored in the PCM memory.

Conditions for clearing the DTC

The MIL is cleared if the malfunction does not return in three consecutive trips in which the diagnostic runs. The MIL, the Pending DTC, the Confirmed DTC, and the freeze data can be cleared with the scan tool Clear command.

DTC P0221 (1.5 L ENGINE) (2018 2019 2020 2021)

DTC P0221: Throttle Position (TP) Sensor B Out of Range

General Description

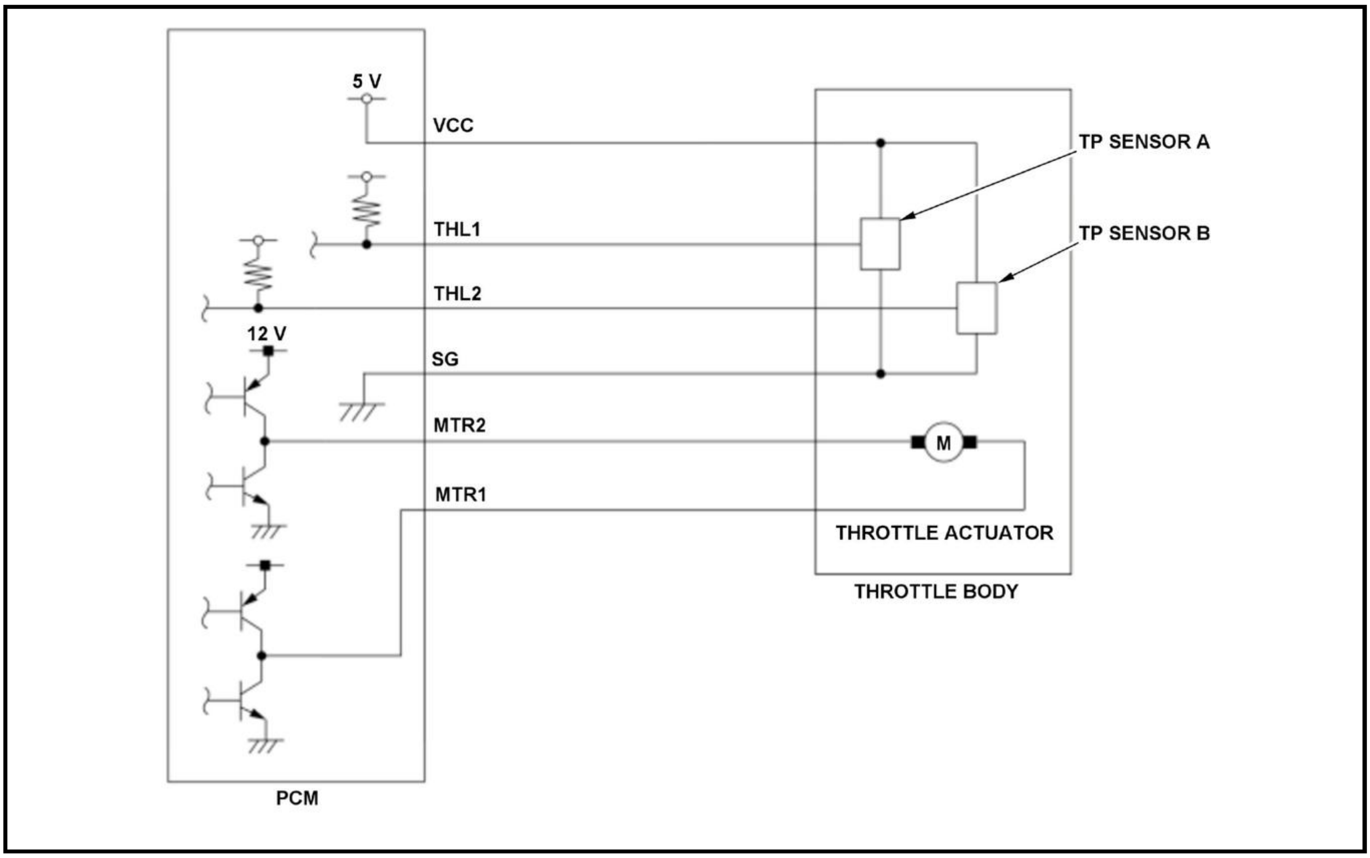

The electronic throttle control system controls the throttle valve opening. The system includes the throttle actuator, the throttle valve, throttle position (TP) sensors A and B, the electronic throttle control system (ETCS) control relay, the accelerator pedal position (APP) sensor, and the powertrain control module (PCM). TP sensor B is a semiconductor type, and it is attached to the throttle body and shaft to determine throttle valve position. The throttle valve position signal from TP sensor B is transmitted to the PCM for target position feedback control. If the signal from TP sensor B is a fixed value for a set time, the PCM detects a TP sensor B malfunction and stores a DTC.

Monitor Execution, Sequence, Duration, DTC Type

Execution	Continuous
Sequence	None
Duration	6.0 seconds or more
DTC Type	Two drive cycles, MIL on

Enable Conditions

Condition	B
Vehicle	ON mode

Malfunction Threshold

The TP sensor B output voltage [TP SENSOR B] is 0.48 V or less, or 4.61 V or more for at least 6.0 seconds.

[ ]: HDS Parameter

Possible Cause

NOTE: The causes shown may not be a complete list of all potential problems, and it is possible that there may be other causes.

- Throttle body internal failure (TP sensor B)
- PCM internal circuit failure

Diagnosis Details

Conditions for setting the DTC

When a malfunction is detected during the first drive cycle, a Pending DTC is stored in the PCM memory. If the malfunction returns in the next (second) drive cycle, the MIL comes on and a Confirmed DTC, the freeze data, and the on-board snapshot are stored.

Conditions for clearing the DTC

The MIL is cleared if the malfunction does not return in three consecutive trips in which the diagnostic runs. The MIL, the Pending DTC, the Confirmed DTC, the freeze data, and the on-board snapshot can be cleared with the scan tool Clear command or by disconnecting the 12 volt battery.

DTC P0221 (2.4 L ENGINE) (2018 2019)

DTC P0221: Throttle Position (TP) Sensor B Out of Range

General Description

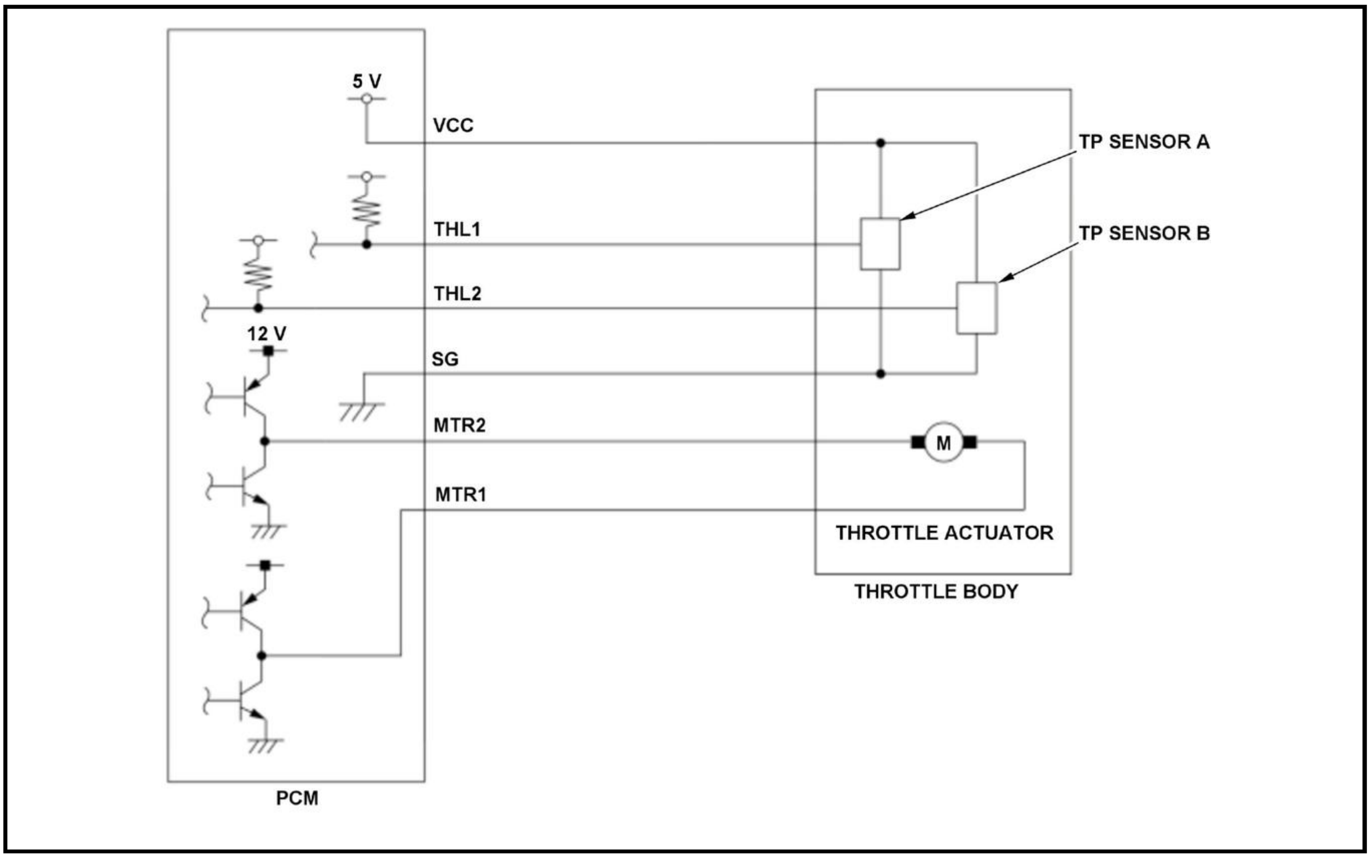

The electronic throttle control system controls the throttle valve opening. The system includes the throttle actuator, the throttle valve, throttle position (TP) sensors A and B, the electronic throttle control system (ETCS) control relay, the accelerator pedal position (APP) sensor, and the powertrain control module (PCM). TP sensor B is a semiconductor type, and it is attached to the throttle body and shaft to determine throttle valve position. The throttle valve position signal from TP sensor B is transmitted to the PCM for target position feedback control. If the signal from TP sensor B is a fixed value for a set time, the PCM detects a TP sensor B malfunction and stores a DTC.

Monitor Execution, Sequence, Duration, DTC Type

Execution	Continuous
Sequence	None
Duration	6.0 seconds or more

DTC Type	Two drive cycles, MIL on

Enable Conditions

Condition	B
Vehicle	ON mode

Malfunction Threshold

The TP sensor B output voltage [TP SENSOR B] is 1.24 V or less, or 4.73 V or more for at least 6.0 seconds.

[ ]: HDS Parameter

Possible Cause

NOTE: The causes shown may not be a complete list of all potential problems, and it is possible that there may be other causes.

- Throttle body internal failure (TP sensor B)
- PCM internal circuit failure

Diagnosis Details

Conditions for setting the DTC

When a malfunction is detected during the first drive cycle, a Pending DTC is stored in the PCM memory. If the malfunction returns in the next (second) drive cycle, the MIL comes on and a Confirmed DTC, the freeze data, and the on-board snapshot are stored.

Conditions for clearing the DTC

The MIL is cleared if the malfunction does not return in three consecutive trips in which the diagnostic runs. The MIL, the Pending DTC, the Confirmed DTC, the freeze data, and the on-board snapshot can be cleared with the scan tool Clear command or by disconnecting the 12 volt battery.

DTC P0222, P0223 (1.5 L ENGINE)

DTC P0222: Throttle Position (TP) Sensor B Circuit Low Voltage **DTC P0223:** Throttle Position (TP) Sensor B Circuit High Voltage

General Description

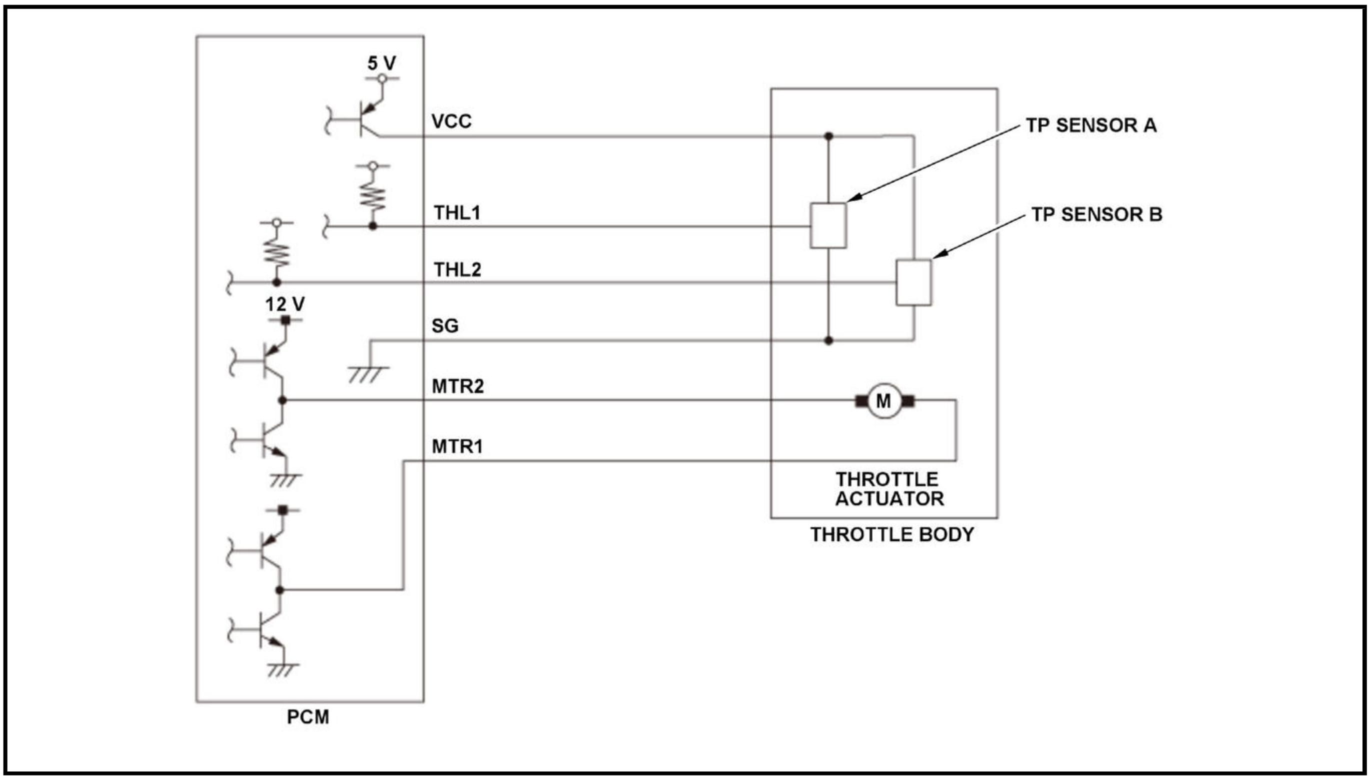

The electronic throttle control system controls the throttle valve opening. The system includes the throttle actuator, the throttle valve, throttle position (TP) sensors A and B, the electronic throttle control system (ETCS) control relay, the accelerator pedal position (APP) sensor, and the powertrain control module (PCM). TP sensor B is a semiconductor type, and it is attached to the throttle body and shaft to determine throttle valve position. The throttle valve position signal from TP sensor B is transmitted to the PCM for target position feedback control. If the signal from TP sensor B is a fixed value for a set time, the PCM detects a TP sensor B malfunction and stores a DTC.

Monitor Execution, Sequence, Duration, DTC Type

Execution	Continuous
Sequence	None
Duration	200 milliseconds or more
DTC Type	One drive cycle, MIL on

Enable Conditions

Condition	B
Vehicle	ON mode

Malfunction Threshold

DTC: P0222

The TP sensor B output voltage [TP SENSOR B] is 0.3 V or less for at least 200 milliseconds.

DTC: P0223

The TP sensor B output voltage [TP SENSOR B] is 4.8 V or more for at least 200 milliseconds.

[ ]: HDS Parameter

Possible Cause

NOTE: The causes shown may not be a complete list of all potential problems, and it is possible that there may be other causes.

DTC: P0222

- TP sensor B THL2 line short to ground
- TP sensor B VCC line open

DTC: P0223

- TP sensor B THL2 line open
- TP sensor B SG line open

Common

- TP sensor B failure
- PCM internal circuit failure

Diagnosis Details

Conditions for setting the DTC

When a malfunction is detected, the MIL comes on and a Pending DTC, a Confirmed DTC, and the freeze data are stored in the PCM memory.

Conditions for clearing the DTC

The MIL is cleared if the malfunction does not return in three consecutive trips in which the diagnostic runs. The MIL, the Pending DTC, the Confirmed DTC, and the freeze data can be cleared with the scan tool Clear command or by disconnecting the 12 volt battery.

DTC P0222, P0223 (2.4 L ENGINE) (2017 2018 2019)

DTC P0222: Throttle Position (TP) Sensor B Circuit Low Voltage **DTC P0223:** Throttle Position (TP) Sensor B Circuit High Voltage

General Description

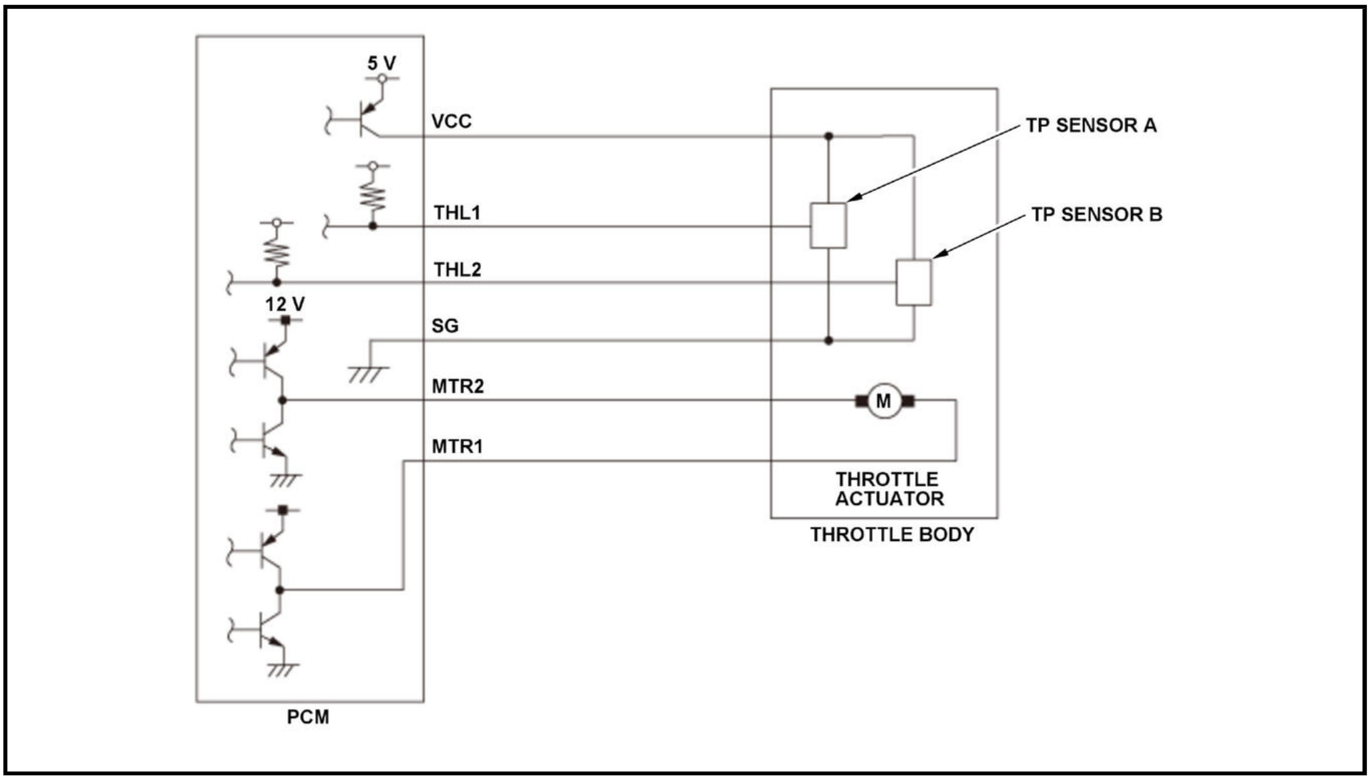

The electronic throttle control system controls the throttle valve opening. The system includes the throttle actuator, the throttle valve, throttle position (TP) sensors A and B, the electronic throttle control system (ETCS) control relay, the accelerator pedal position (APP) sensor, and the powertrain control module (PCM). TP sensor B is a semiconductor type, and it is attached to the throttle body and shaft to determine throttle valve position. The throttle valve position signal from TP sensor B is transmitted to the PCM for target position feedback control. If the signal from TP sensor B is a fixed value for a set time, the PCM detects a TP sensor B malfunction and stores a DTC.

Monitor Execution, Sequence, Duration, DTC Type

Execution	Continuous
Sequence	None
Duration	200 milliseconds or more
DTC Type	One drive cycle, MIL on

Enable Conditions

Condition	B
Vehicle	ON mode

Malfunction Threshold

DTC: P0222

The TP sensor B output voltage [TP SENSOR B] is 0.3 V or less for at least 200 milliseconds.

DTC: P0223

The TP sensor B output voltage [TP SENSOR B] is 4.8 V or more for at least 200 milliseconds.

[ ]: HDS Parameter

Possible Cause

NOTE: The causes shown may not be a complete list of all potential problems, and it is possible that there may be other causes.

DTC: P0222

- TP sensor B THL2 line short to ground
- TP sensor B VCC line open

DTC: P0223

- TP sensor B THL2 line open
- TP sensor B SG line open

Common

- TP sensor B failure
- PCM internal circuit failure

Diagnosis Details

Conditions for setting the DTC

When a malfunction is detected, the MIL comes on and a Pending DTC, a Confirmed DTC, and the freeze data are stored in the PCM memory.

Conditions for clearing the DTC

The MIL is cleared if the malfunction does not return in three consecutive trips in which the diagnostic runs. The MIL, the Pending DTC, the Confirmed DTC, and the freeze data can be cleared with the scan tool Clear command or by disconnecting the 12 volt battery.

DTC P0234 (1.5 L ENGINE)

DTC P0234: Turbocharger Overboost Problem

General Description

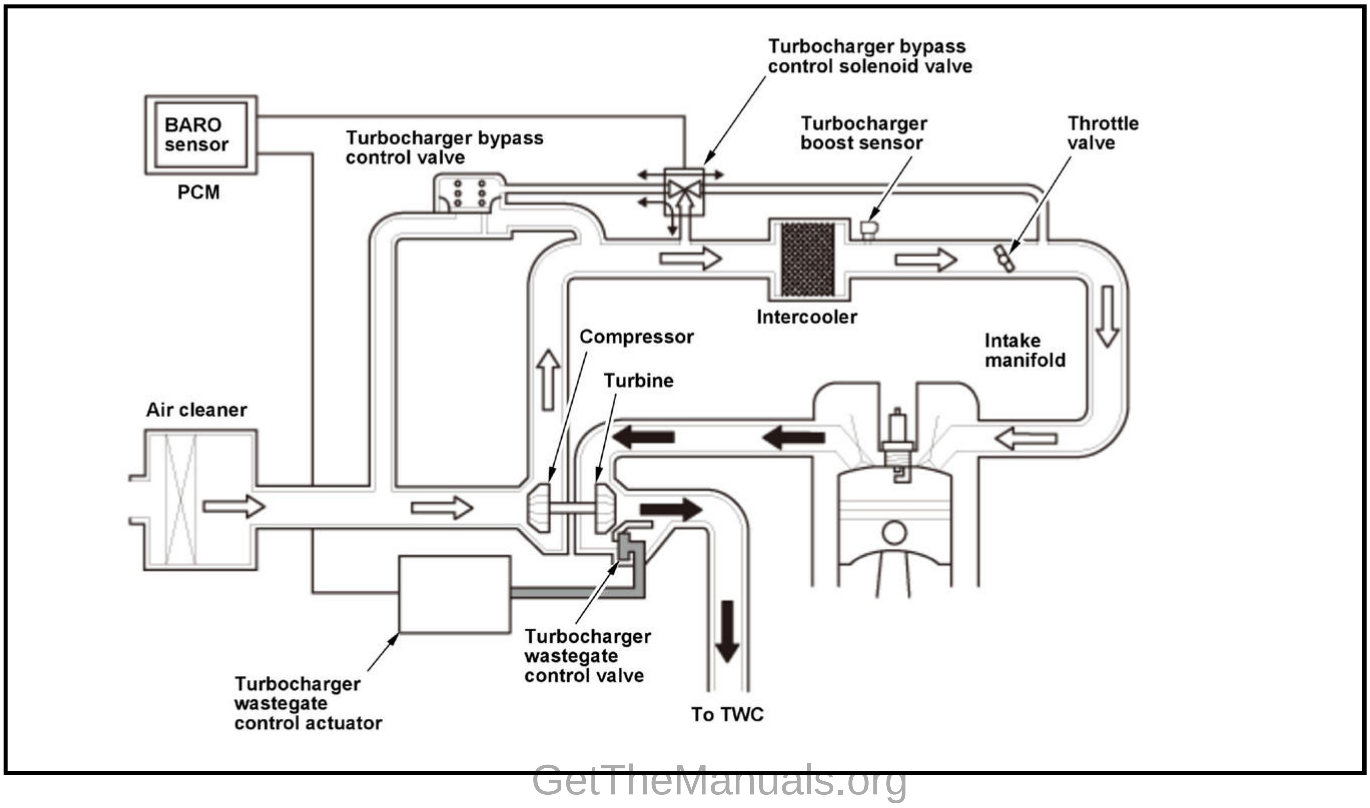
Turbocharger bypass control solenoid valve
BARO sensor
PCM
Turbocharger bypass control valve
Turbocharger boost sensor
Throttle valve
Intercooler
Compressor
Turbine
Intake manifold
Air cleaner
Turbocharger wastegate control valve
Turbocharger wastegate control actuator
To TWC

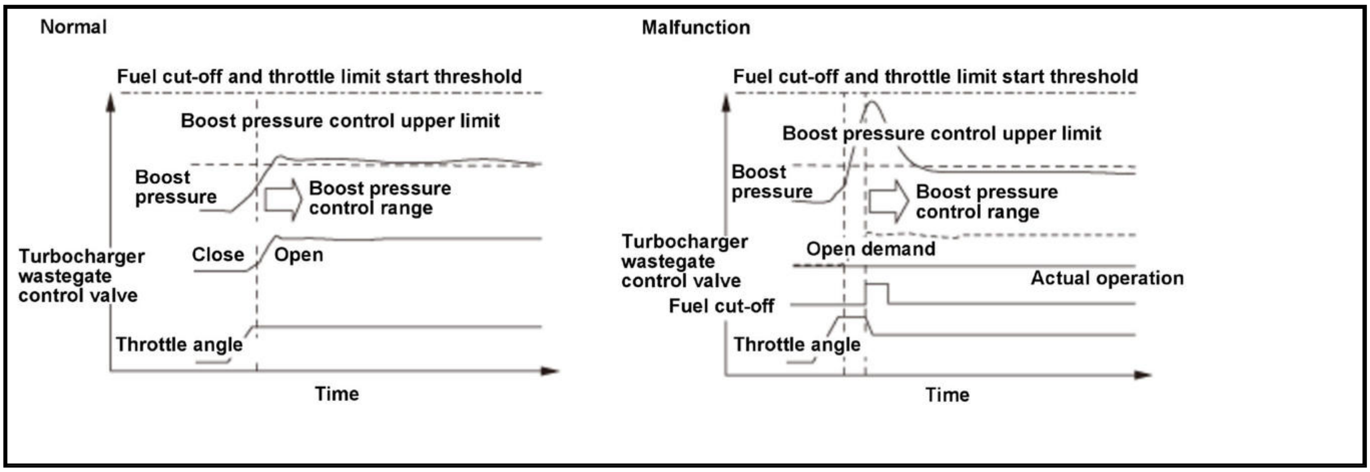

The powertrain control module (PCM) controls the turbocharger boost pressure so that the boost pressure to the engine does not exceed the set upper pressure limit. When the boost pressure increases abnormally, a malfunction of the turbocharger control system is determined and fuel cut and throttle restriction control is done to protect the powertrain.

Monitor Execution, Sequence, Duration, DTC Type

Execution	Continuous
Sequence	None
Duration	1.0 second or more
DTC Type	One drive cycle, MIL on

Enable Conditions

Condition	Minimum	Maximum
Engine coolant temperature [ECT SENSOR 1]	156 deg. F (69 deg. C)	-
Engine speed [ENGINE SPEED]	1, 000 rpm	-
Other	No change of boost pressure upper limit	

[ ]: HDS Parameter

Malfunction Threshold

Either one of conditions is met for at least 1 second, and fuel cut-off is operated for engine protection.

- The boost pressure is 148 - 300 kPa (1, 109 - 2, 250 mmHg, 43.7 - 88.6 inHg) or more*
- The intake air pressure is 216 - 305 kPa (1, 614 - 2, 291 mmHg, 63.8 - 90.1 inHg) or more*

*: Varies with driving conditions.

Possible Cause

NOTE: The causes shown may not be a complete list of all potential problems, and it is possible that there may be other causes

- Turbocharger wastegate control valve stuck close failure
- Turbocharger wastegate control actuator stuck close failure
- Turbocharger wastegate control valve bypass clogged
- PCM internal circuit failure (BARO sensor)
- Turbocharger boost sensor internal failure

Confirmation Procedure

Operating Condition

- Start the engine. Hold the engine speed [ENGINE SPEED] at 3, 000 rpm without load (in P or N) until the radiator fan comes on.
- Drive at engine speed [ENGINE SPEED] at 1, 200 rpm or more for at least 1 second.
- Drive the vehicle in this manner only if the traffic regulations and ambient conditions allow.

[ ]: HDS Parameter

With the HDS

None.

Diagnosis Details

Conditions for setting the DTC

When a malfunction is detected, the MIL comes on and a Pending DTC, a Confirmed DTC, and the freeze data are stored in the PCM memory.

Conditions for clearing the DTC

The MIL is cleared if the malfunction does not return in three consecutive trips in which the diagnostic runs. The MIL, the Pending DTC, the Confirmed DTC, and the freeze data can be cleared with the scan tool Clear command or by disconnecting the 12 volt battery.

DTC P0235 (1.5 L ENGINE) (2018 2019 2020 2021)

DTC P0235: Turbocharger Boost Sensor Out of Range

General Description

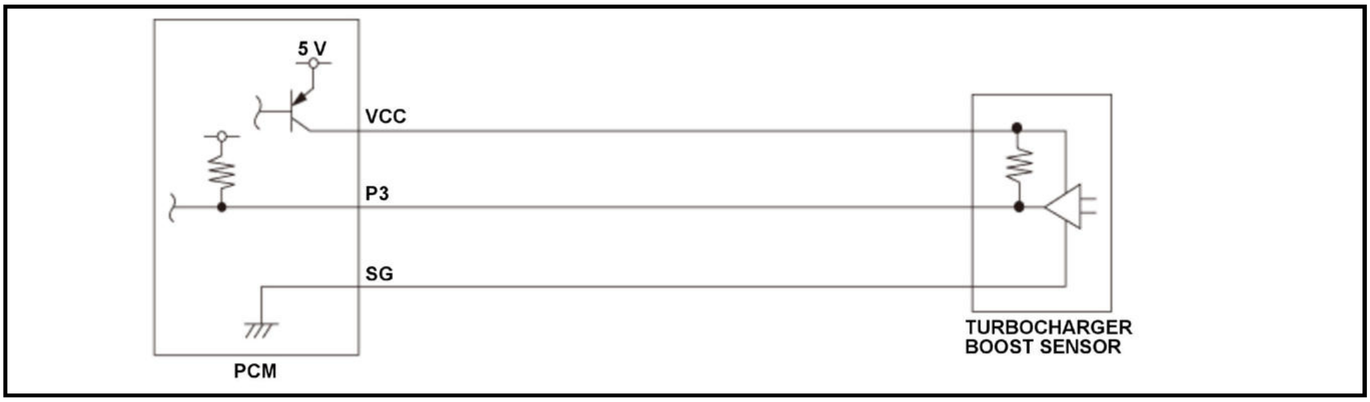

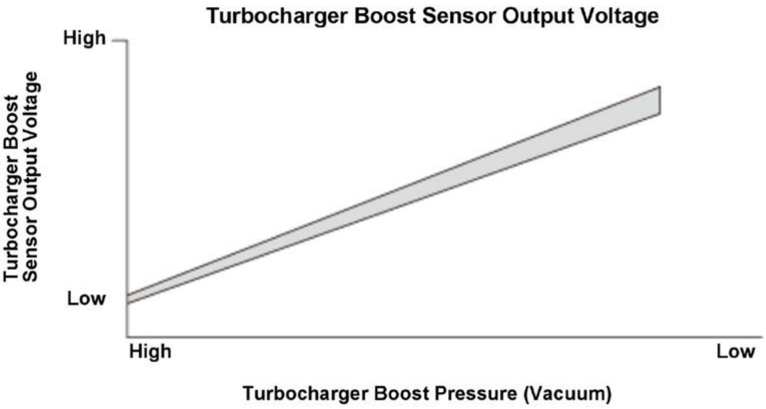

The turbocharger boost sensor senses turbocharger boost pressure (vacuum) and converts it into electrical signals. The turbocharger boost sensor outputs low signal voltage at high-vacuum (throttle valve closed) and high signal voltage at low-vacuum (throttle valve wide open). If the signal voltage from the turbocharger boost sensor is a set value, the powertrain control module (PCM) detects a malfunction and stores a DTC.

Monitor Execution, Sequence, Duration, DTC Type

Execution	Continuous
Sequence	None
Duration	6 seconds or more
DTC Type	Two drive cycles, MIL on

Enable Conditions

Condition	B
Vehicle	ON mode

Malfunction Threshold

The turbocharger boost sensor output voltage [TC BOOST PRESSURE SENSOR] is 0.37 V or less for at least 6 seconds.

[ ]: HDS Parameter

Possible Cause

NOTE: The causes shown may not be a complete list of all potential problems, and it is possible that there may be other causes.

- Turbocharger boost sensor failure
- PCM internal circuit failure

Diagnosis Details

Conditions for setting the DTC

When a malfunction is detected during the first drive cycle, a Pending DTC is stored in the PCM memory. If the malfunction returns in the next (second) drive cycle, the MIL comes on and a Confirmed DTC and the freeze data are stored.

Conditions for clearing the DTC

The MIL is cleared if the malfunction does not return in three consecutive trips in which the diagnostic runs. The MIL, the Pending DTC, the Confirmed DTC, and the freeze data can be cleared with the scan tool Clear command or by disconnecting the 12 volt battery.

DTC P0236 (1.5 L ENGINE)

DTC P0236: Turbocharger Boost Sensor Circuit Range/Performance Problem

General Description

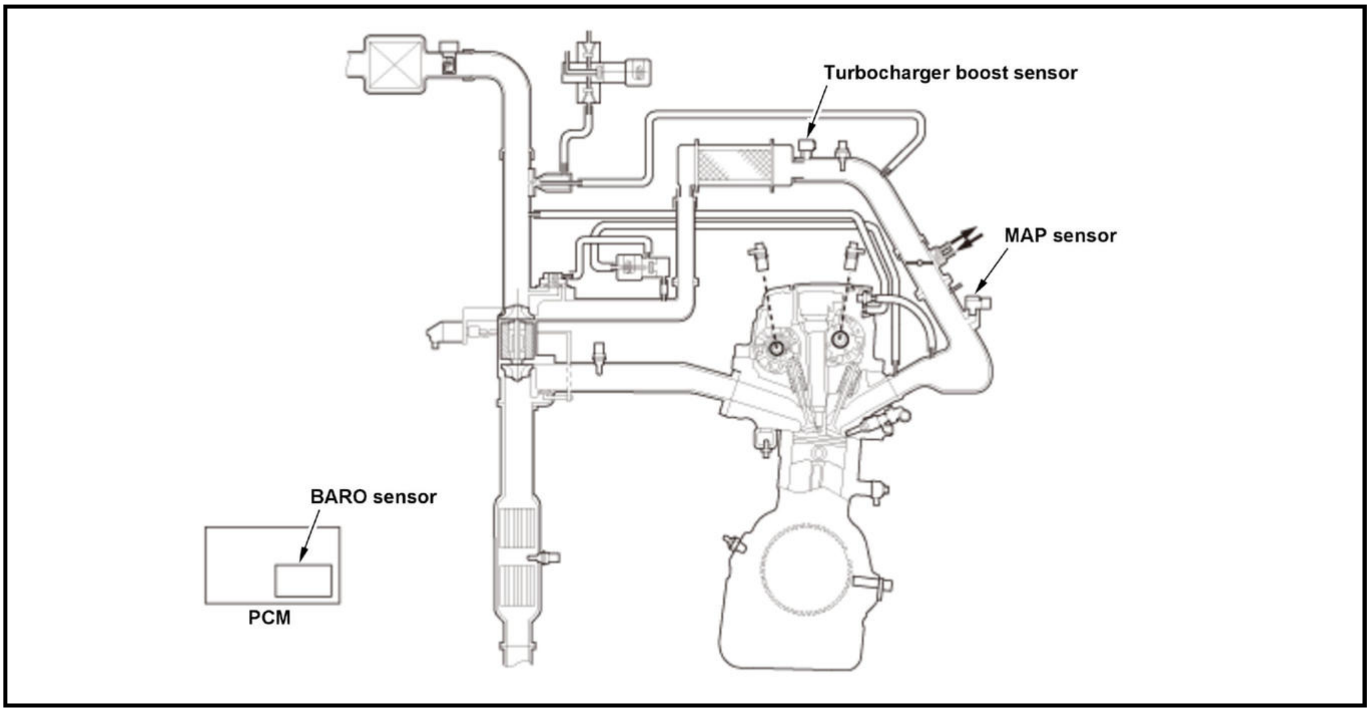

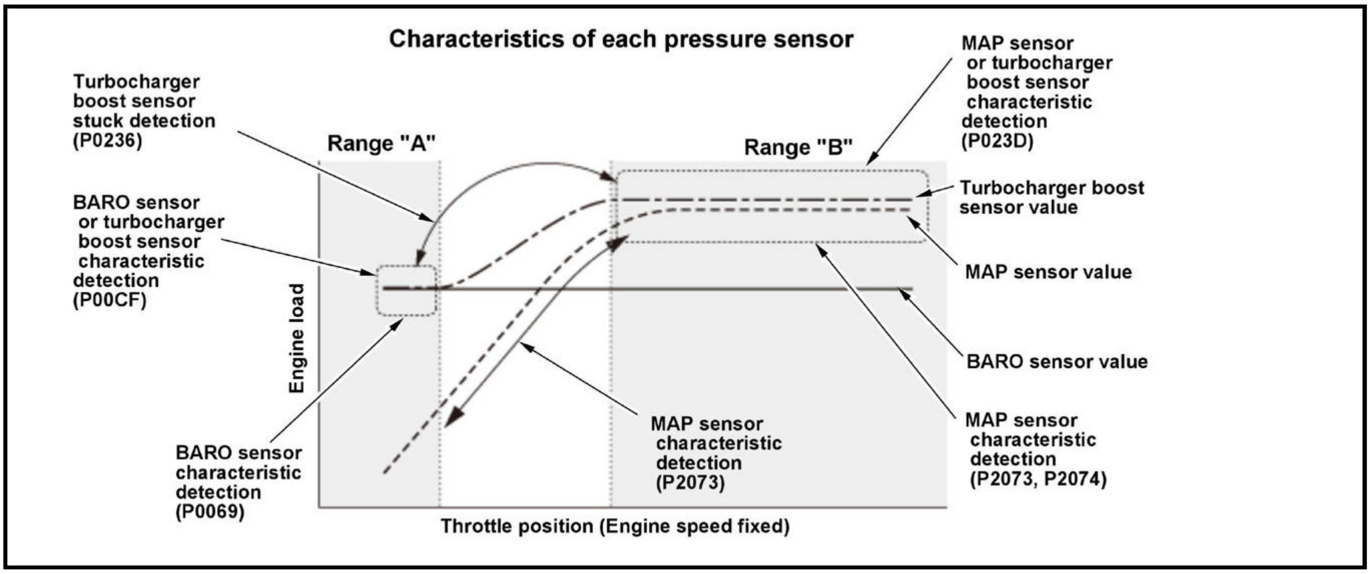

The barometric pressure (BARO) sensor, the manifold absolute pressure (MAP) sensor, and the turbocharger boost sensor are equipped to the vehicle to detect air pressure conditions to the engine. The BARO sensor value and the turbocharger boost sensor value shows similar value at range "A" such as in idle conditions, and the turbocharger boost sensor value and MAP sensor value shows similar value at range "B" such as in high throttle position.

Malfunction determinations are done by the powertrain control module (PCM) in two ranges by comparing the pressure sensor values.

- At range "A": BARO sensor or turbocharger boost sensor is abnormal if the difference of the two pressure sensor values are specified or more (P00CF)

- At range "B": Turbocharger boost sensor or MAP sensor is abnormal if the difference of the two pressure sensor values are specified or more (P023D)
- Range "A" determined as abnormal and range "B" determined as normal: BARO sensor abnormal (P0069)
- Both ranges "A" and "B" determined as abnormal: Turbocharger boost sensor abnormal (P0236)
- Turbocharger boost sensor or MAP sensor values do not change when throttle position is transited from ranges "A" to "B": Determined as turbocharger boost sensor output stuck (P0236) or MAP sensor output stuck (P2073 or P2074)

Monitor Execution, Sequence, Duration, DTC Type

Execution	Once per driving cycle
Sequence	None
Duration	6.0 seconds or more
DTC Type	Two drive cycles, MIL on

Enable Conditions

Condition		Minimum	Maximum
Elapsed time after starting the engine		3.0 seconds	-
Engine speed [ENGINE SPEED]		1, 700 rpm	-
Throttle position	2, 000 rpm	36.3 deg.	-
	4, 000 rpm	42.2 deg.	-
Intake air amount		-	7.0 g/second (0.24 oz/second)

[ ]: HDS Parameter

Malfunction Threshold

Both range "A" (P00CF) and range "B" (P023D) determinations must be completed. The PCM stores DTC P0236 if either conditions occur:

- Range "A" determination (P00CF) and range "B" determination (P023D) are determined as abnormal.
- The variation of the turbocharger boost sensor value measured during range "A" determination and range "B" determination is 0.7 kPa (5 mmHg, 0.2 inHg) or less when range "A" determination and range "B" determination are determined as normal and the difference of the BARO sensor value measured during range "A" determination and range "B" determination is 5.4 kPa (40 mmHg, 1.6 inHg) or less.

Possible Cause

NOTE: The causes shown may not be a complete list of all potential problems, and it is possible that there may be other causes.

- Turbocharger boost sensor output range/performance problem
- Turbocharger boost sensor output stuck

Confirmation Procedure

Operating Condition

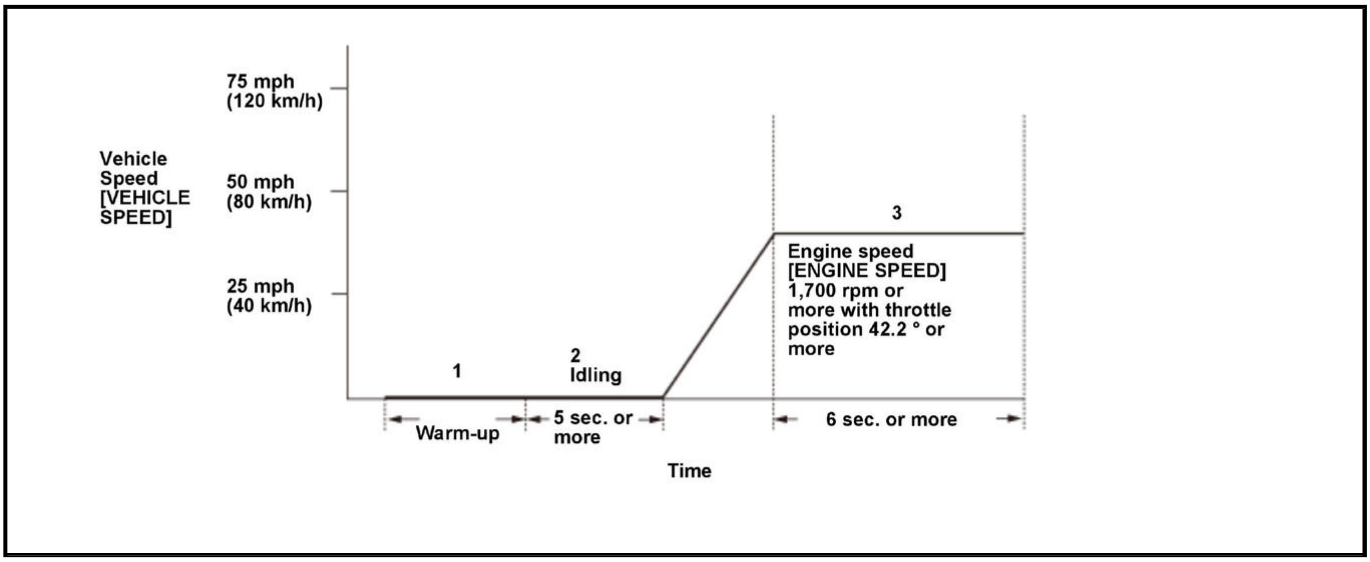

- Start the engine. Hold the engine speed [ENGINE SPEED] at 3, 000 rpm without load (in P or N) until the radiator fan comes on.
- Let the engine idle for at least 5 seconds.
- Drive the vehicle at engine speed [ENGINE SPEED] 1, 700 rpm or more with throttle position 42.2 deg. or more for at least 6 seconds.

- Drive the vehicle in this manner only if the traffic regulations and ambient conditions allow.

With the HDS

None.

Diagnosis Details

Conditions for setting the DTC

When a malfunction is detected during the first drive cycle, a Pending DTC is stored in the PCM memory. If the malfunction returns in the next (second) drive cycle, the MIL comes on and a Confirmed DTC and the freeze data are stored.

Conditions for clearing the DTC

The MIL is cleared if the malfunction does not return in three consecutive trips in which the diagnostic runs. The MIL, the Pending DTC, the Confirmed DTC, and the freeze data can be cleared with the scan tool Clear command or by disconnecting the 12 volt battery.

DTC P0237, P0238 (1.5 L ENGINE)

DTC P0237: Turbocharger Boost Sensor Circuit Low Voltage **DTC P0238:** Turbocharger Boost Sensor Circuit High Voltage

General Description

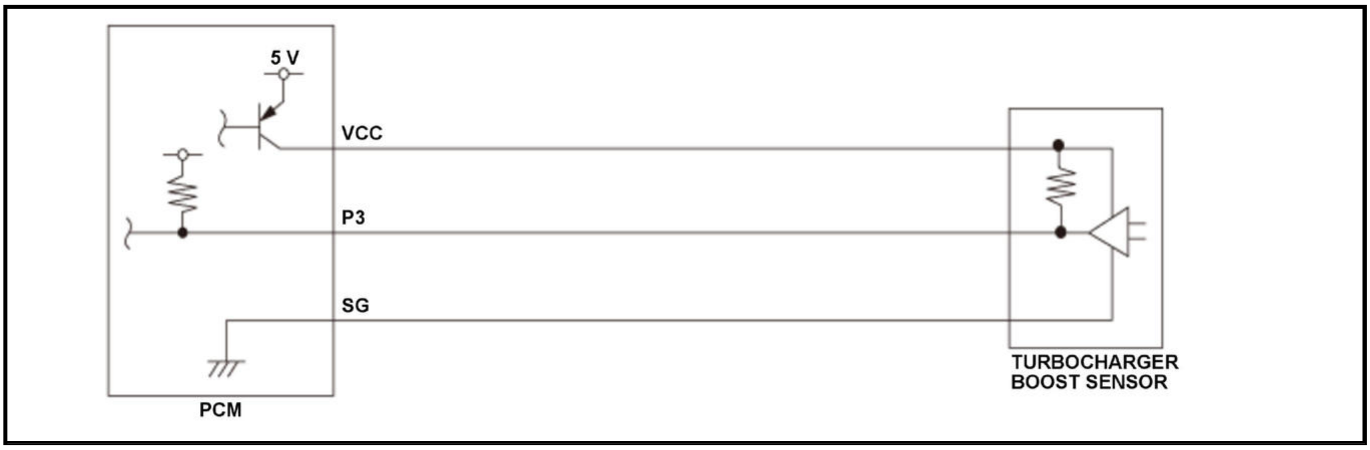

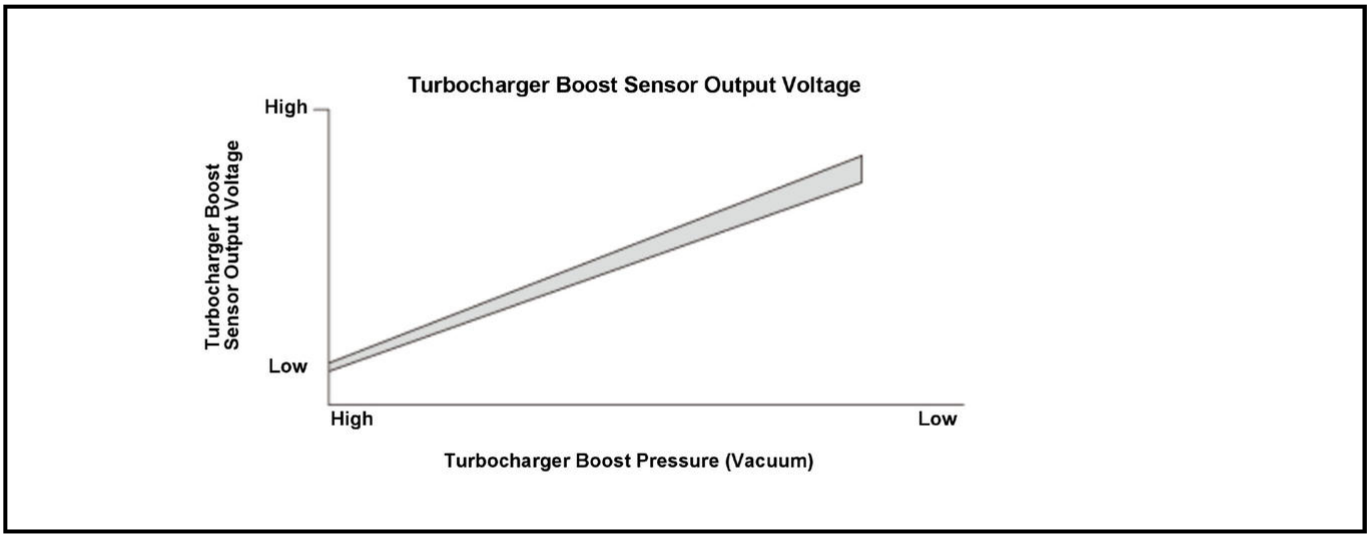

The turbocharger boost sensor senses turbocharger boost pressure (vacuum) and converts it into electrical signals. The turbocharger boost sensor outputs low signal voltage at high-vacuum (throttle valve closed) and high signal voltage at low-vacuum (throttle valve wide open). If the signal voltage from the turbocharger boost sensor is a set value, the powertrain control module (PCM) detects a malfunction and stores a DTC.

Monitor Execution, Sequence, Duration, DTC Type

Execution	Continuous
Sequence	None
Duration	2 seconds or more
DTC Type	One drive cycle, MIL on

Enable Conditions

Condition	B
Vehicle	ON mode

Malfunction Threshold

DTC: P0237

The turbocharger boost sensor output voltage [TC BOOST PRESSURE SENSOR] is 0.23 V or less for at least 2 seconds.

DTC: P0238

The turbocharger boost sensor output voltage [TC BOOST PRESSURE SENSOR] is 4.49 V or more for at least 2 seconds.

[ ]: HDS Parameter

Possible Cause

NOTE: The causes shown may not be a complete list of all potential problems, and it is possible that there may be other causes.

DTC: P0237

- Turbocharger boost sensor P3 line short to ground
- Turbocharger boost sensor VCC line open

DTC: P0238

- Turbocharger boost sensor P3 line open
- Turbocharger boost sensor SG line open

Common

- Turbocharger boost sensor failure
- PCM internal circuit failure

Diagnosis Details

Conditions for setting the DTC

When a malfunction is detected, the MIL comes on and a Pending DTC, a Confirmed DTC, and the freeze data are stored in the PCM memory.

Conditions for clearing the DTC

The MIL is cleared if the malfunction does not return in three consecutive trips in which the diagnostic runs. The MIL, the Pending DTC, the Confirmed DTC, and the freeze data can be cleared with the scan tool Clear command or by disconnecting the 12 volt battery.

DTC P023D (1.5 L ENGINE)

DTC P023D: Turbocharger Boost Sensor/Manifold Absolute Pressure (MAP) Sensor Incorrect Correlation

General Description

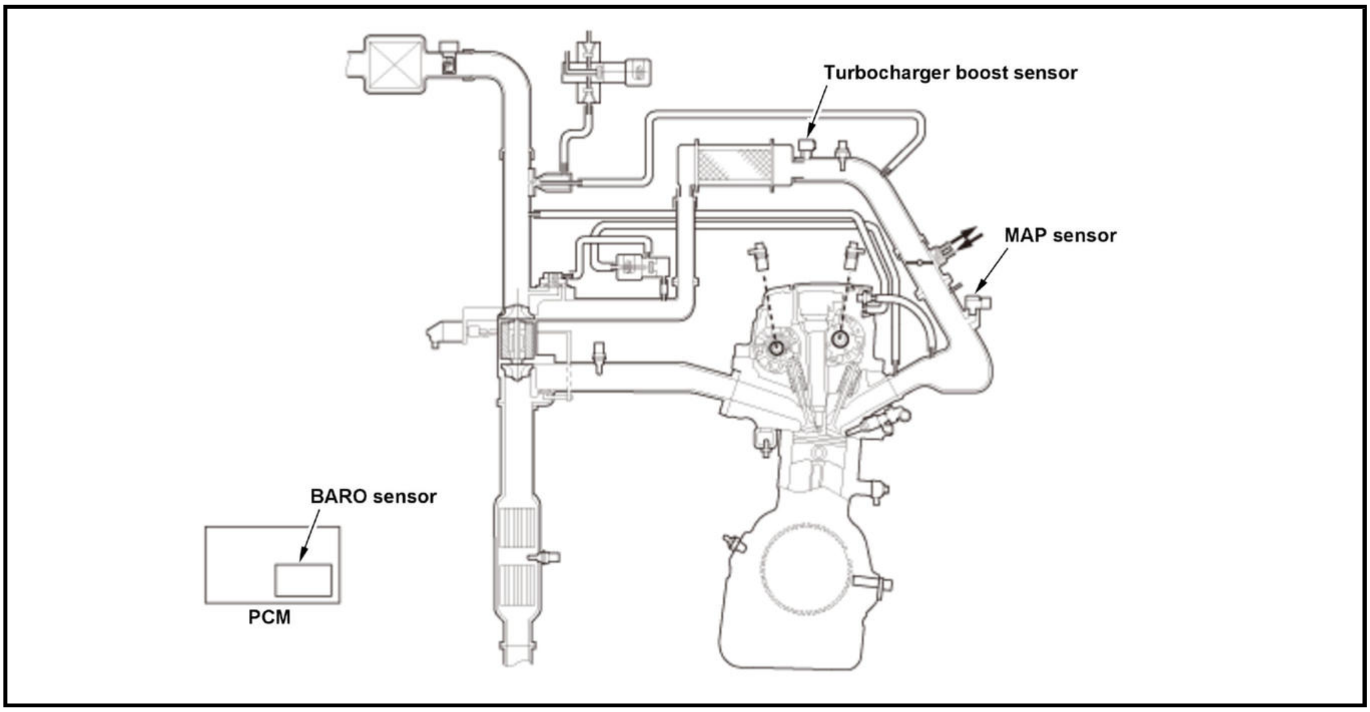

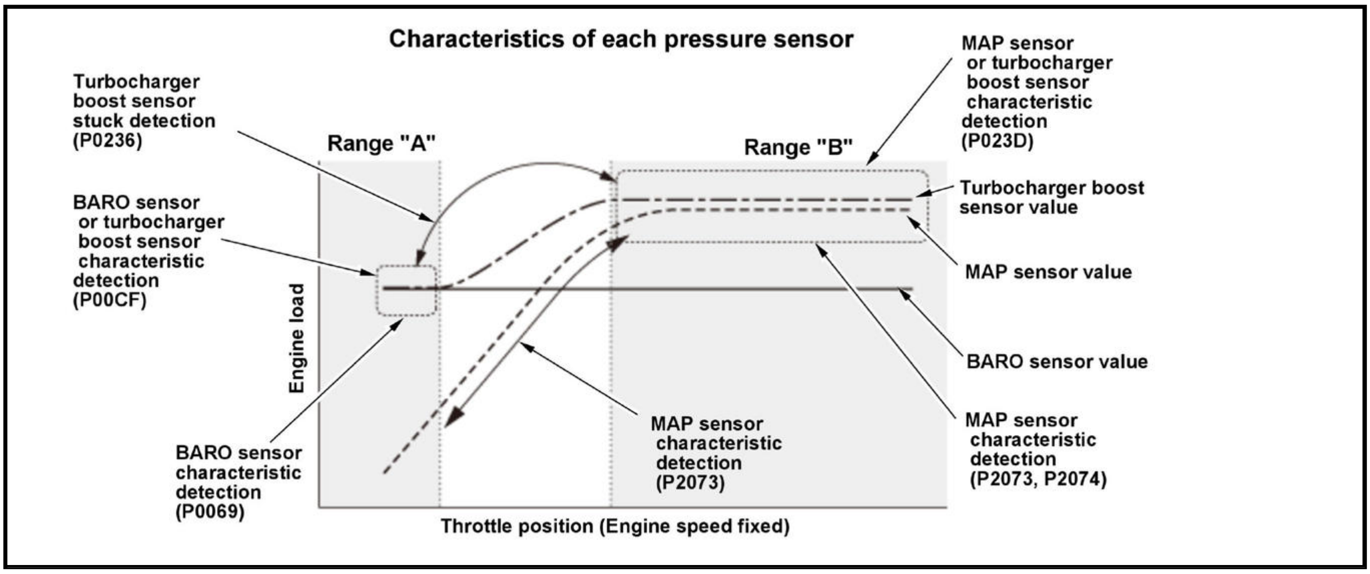

The barometric pressure (BARO) sensor, the manifold absolute pressure (MAP) sensor, and the turbocharger boost sensor are equipped to the vehicle to detect air pressure conditions to the engine. The BARO sensor value and the turbocharger boost sensor value shows similar value at range "A" such as in idle conditions, and the turbocharger boost sensor value and MAP sensor value shows similar value at range "B" such as in high throttle position.

Malfunction determinations are done by the powertrain control module (PCM) in two ranges by comparing the pressure sensor values.

- At range "A": BARO sensor or turbocharger boost sensor is abnormal if the difference of the two pressure sensor values are specified or more (P00CF)
- At range "B": Turbocharger boost sensor or MAP sensor is abnormal if the difference of the two pressure sensor values are specified or more (P023D)
- Range "A" determined as abnormal and range "B" determined as normal: BARO sensor abnormal (P0069)
- Both ranges "A" and "B" determined as abnormal: Turbocharger boost sensor abnormal (P0236)
- Turbocharger boost sensor or MAP sensor values do not change when throttle position is transited from ranges "A" to "B": Determined as turbocharger boost sensor output stuck (P0236) or MAP sensor output stuck (P2073 or P2074)

Monitor Execution, Sequence, Duration, DTC Type

Execution	Once per driving cycle
Sequence	None
Duration	6.0 seconds or more
DTC Type	Two drive cycles, MIL on

Enable Conditions

Condition		Minimum	Maximum
Engine speed [ENGINE SPEED]		1, 700 rpm	-
Throttle position	2, 000 rpm	36.3 deg.	-
	4, 000 rpm	42.2 deg.	-

[ ]: HDS Parameter

Malfunction Threshold

The difference between the MAP sensor value and the turbocharger boost pressure value is 27 kPa (200 mmHg, 7.9 inHg) or more.

Possible Cause

NOTE: The causes shown may not be a complete list of all potential problems, and it is possible that there may be other causes.

- MAP sensor output range/performance problem
- Turbocharger boost sensor output range/performance problem

Confirmation Procedure

Operating Condition

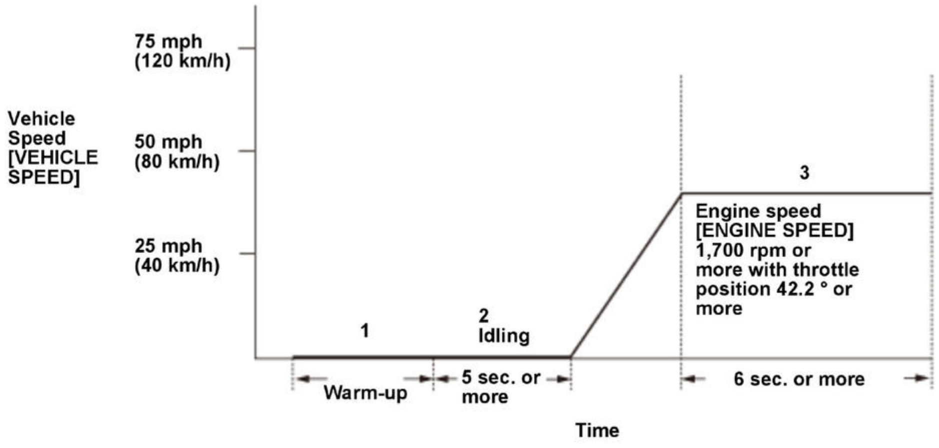

- Start the engine. Hold the engine speed [ENGINE SPEED] at 3, 000 rpm without load (in P or N) until the radiator fan comes on.
- Let the engine idle for at least 5 seconds.
- Drive the vehicle at engine speed [ENGINE SPEED] 1, 700 rpm or more with throttle position 42.2 deg. or more for at least 6 seconds.

- Drive the vehicle in this manner only if the traffic regulations and ambient conditions allow.

With the HDS

None.

Diagnosis Details

Conditions for setting the DTC

When a malfunction is detected during the first drive cycle, a Pending DTC is stored in the PCM memory. If the malfunction returns in the next (second) drive cycle, the MIL comes on and a Confirmed DTC and the freeze data are stored.

Conditions for clearing the DTC

The MIL is cleared if the malfunction does not return in three consecutive trips in which the diagnostic runs. The MIL, the Pending DTC, the Confirmed DTC, and the freeze data can be cleared with the scan tool Clear command or by disconnecting the 12 volt battery.

DTC P027E (1.5 L ENGINE) (2020 2021)

DTC P027E: Cold Start Air Fuel Ratio Control System Command Lean

General Description

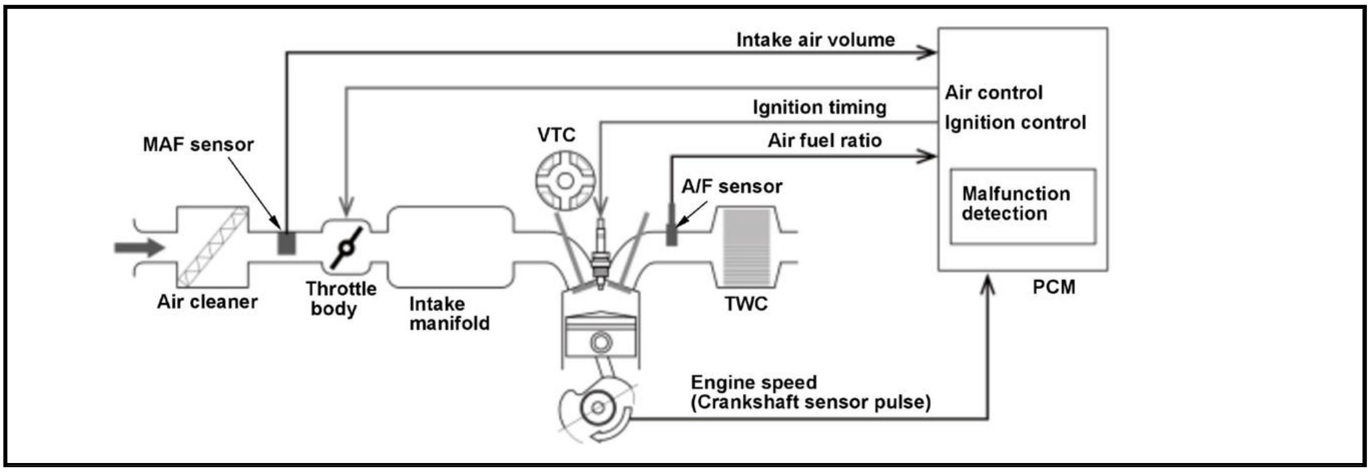
Intake air volume
Air control
Ignition control
Ignition timing
Air fuel ratio
MAF sensor
VTC
A/F sensor
Malfunction detection
Air cleaner
Throttle body
Intake manifold
TWC
PCM
Engine speed
(Crankshaft sensor pulse)

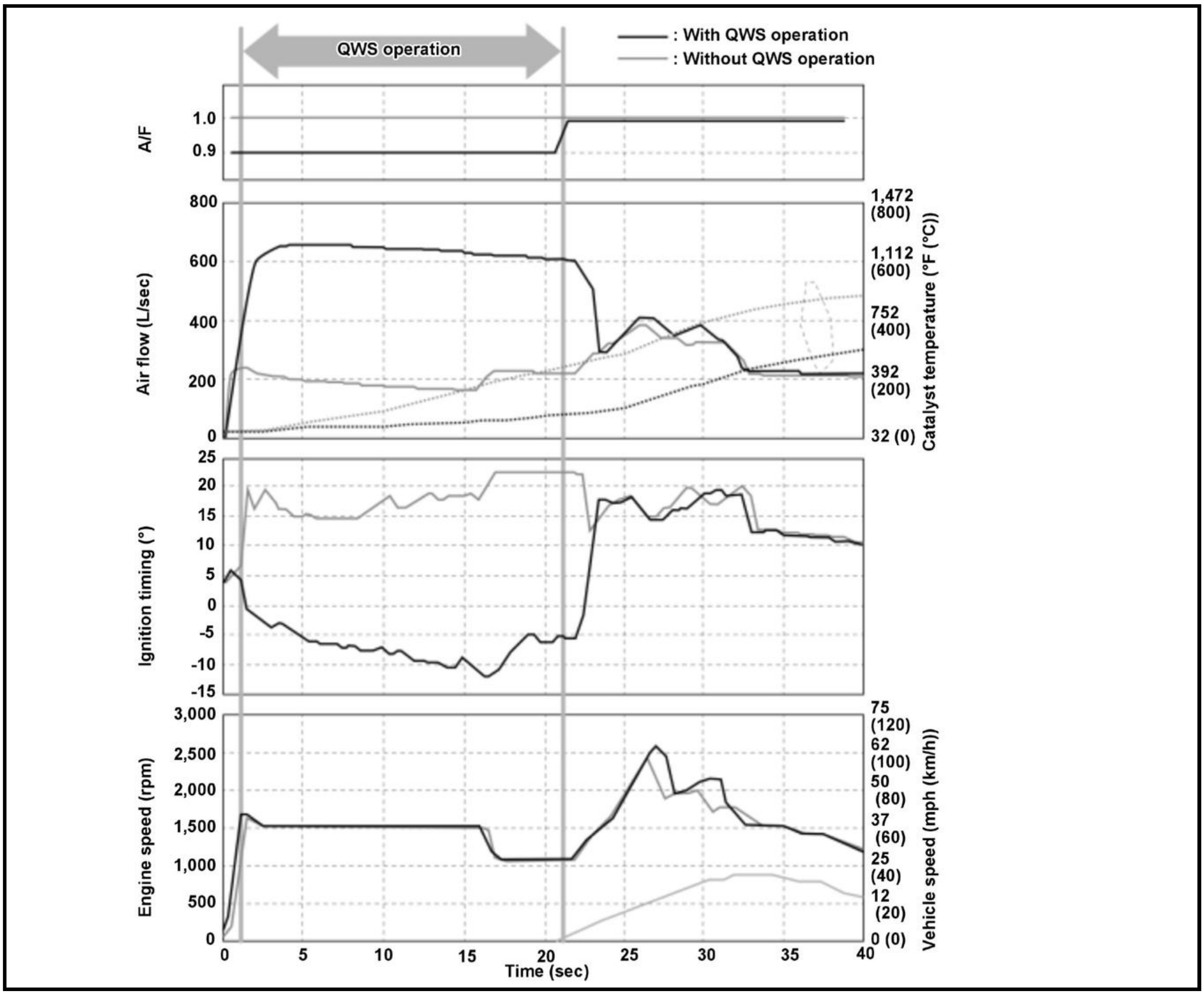

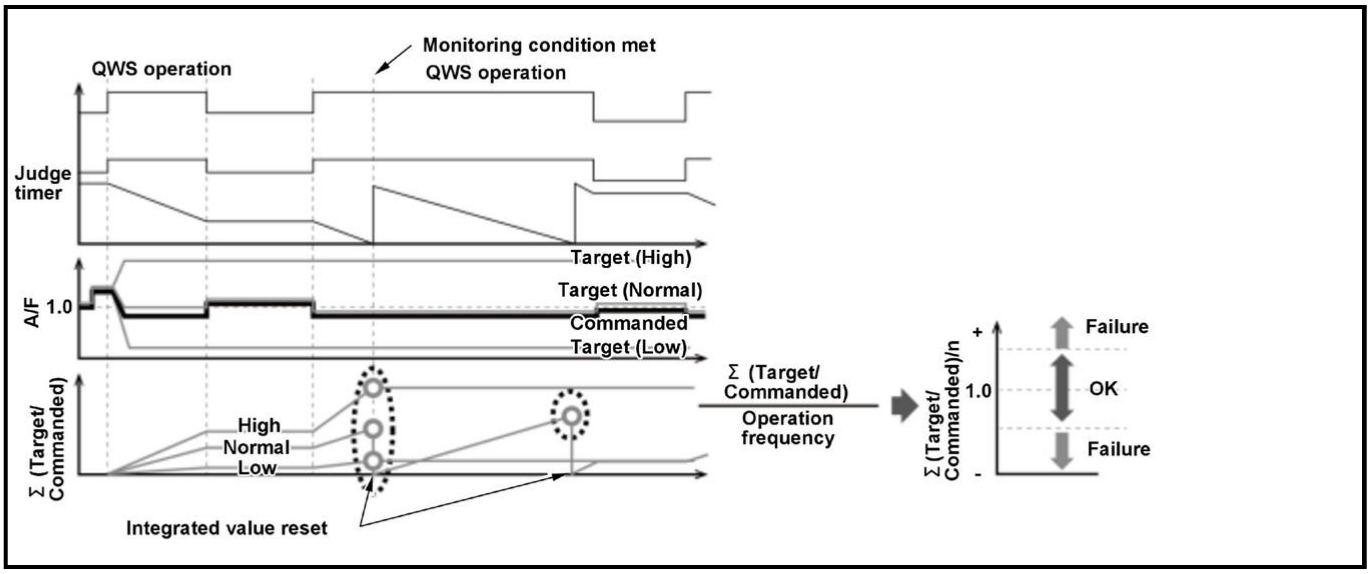
QWS operation
Monitoring condition met
QWS operation
Judge timer
Target (High)
Target (Normal)
A/F
1.0
Commanded
Target (Low)
Σ (Target/ Commanded)
High
Normal
Low
Integrated value reset
Σ (Target/ Commanded)
Operation frequency
Σ (Target/ Commanded)/n
+
1.0
-
Failure
OK
Failure

The cold start emission reduction strategy controls air fuel ratio to lean when the engine is started at cold condition to lower the emission while the catalyst is not warmed up enough. If the commanded air fuel ratio is too lean or too rich compared to the target air fuel ratio, the powertrain control module (PCM) detects a malfunction and stores a DTC.

Monitor Execution, Sequence, Duration, DTC Type

Execution	Continuous
Sequence	None

Duration	10 seconds or more
DTC Type	Two drive cycles, MIL on

Enable Conditions

Condition	Minimum	Maximum
Duration of quick warm-up system operation after engine start-up	-	40 seconds
Engine coolant temperature [ECT SENSOR 1]	50 deg. F (10 deg. C)	122 deg. F (50 deg. C)
Throttle valve	Fully closed	
Accelerator pedal position	Released	
Other	Vehicle stopped	

[ ]: HDS Parameter

Malfunction Threshold

The ratio of commanded air fuel ratio by target air fuel ratio is 0.87 or less.

Possible Cause

NOTE: The causes shown may not be a complete list of all potential problems, and it is possible that there may be other causes.

- PCM internal circuit failure

Confirmation Procedure

Operating Condition

- Leave the vehicle until the engine coolant temperature [ECT SENSOR 1] lowers to 122 deg. F (50 deg. C) or less.
- Start the engine, and let it idle for at least 10 seconds.

Diagnosis Details

Conditions for setting the DTC

When a malfunction is detected during the first drive cycle, a Pending DTC is stored in the PCM memory. If the malfunction returns in the next (second) drive cycle, the MIL comes on and a Confirmed DTC and the freeze data are stored.

Conditions for clearing the DTC

The MIL is cleared if the malfunction does not return in three consecutive trips in which the diagnostic runs. The MIL, the Pending DTC, the Confirmed DTC, and the freeze data can be cleared with the scan tool Clear command or by disconnecting the 12 volt battery.

DTC P027F (1.5 L ENGINE) (2020 2021)

DTC P027F: Cold Start Air Fuel Ratio Control System Command Rich

General Description

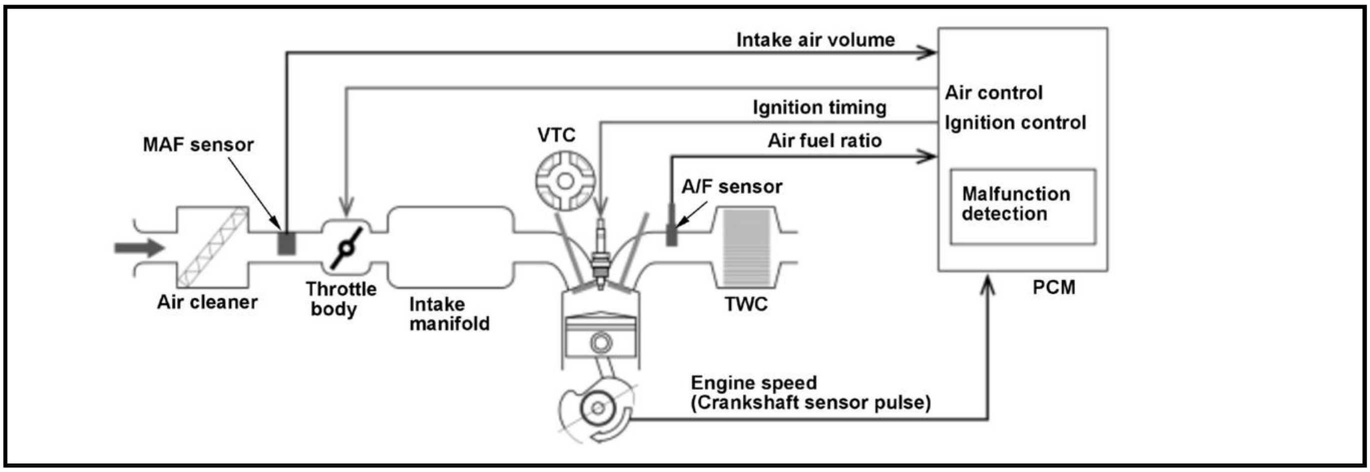

Intake air volume
Air control
Ignition timing
Ignition control
Air fuel ratio
MAF sensor
VTC
A/F sensor
Malfunction detection
Air cleaner
Throttle body
Intake manifold
TWC
PCM
Engine speed (Crankshaft sensor pulse)

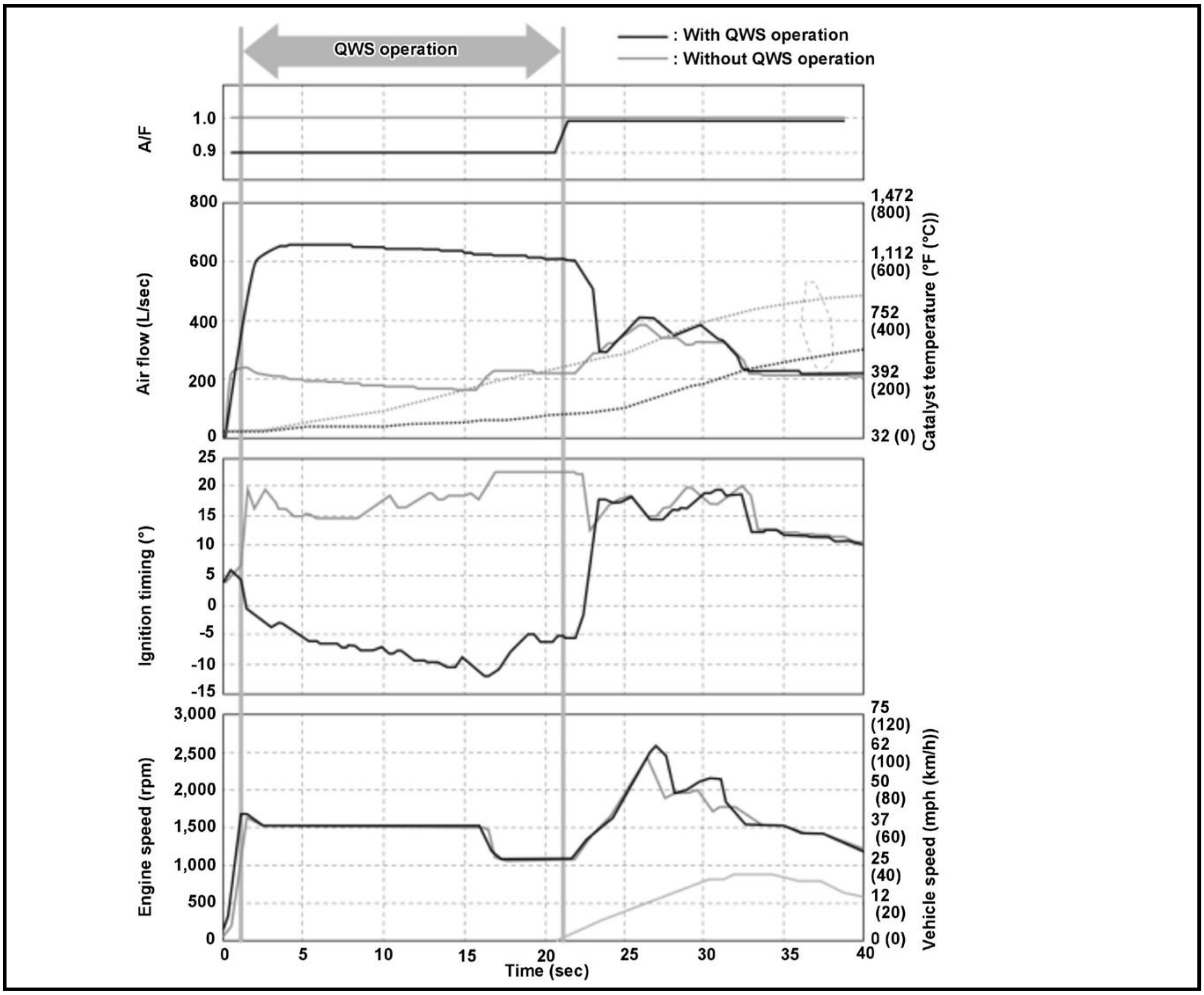

QWS operation
: With QWS operation
: Without QWS operation
A/F
1.0
0.9
Air flow (L/sec)
800
600
400
200
0
1,472 (800)
1,112 (600)
752 (400)
392 (200)
32 (0)
Catalyst temperature (°F (°C))
Ignition timing (°)
25
20
15
10
5
0
-5
-10
-15
Engine speed (rpm)
3,000
2,500
2,000
1,500
1,000
500
0
75 (120)
62 (100)
50 (80)
37 (60)
25 (40)
12 (20)
0 (0)
Vehicle speed (mph (km/h))
0
5
10
15
20
25
30
35
40
Time (sec)

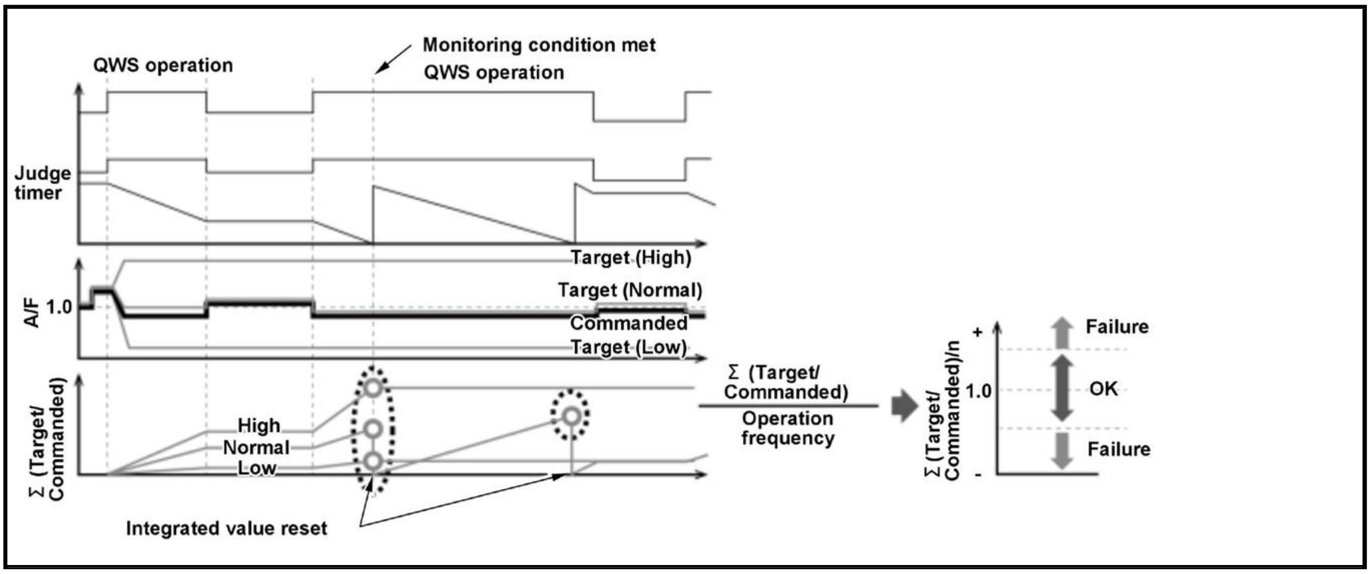
QWS operation
Monitoring condition met
QWS operation
Judge timer
A/F
1.0
Target (High)
Target (Normal)
Commanded
Target (Low)
Σ (Target/ Commanded)
High
Normal
Low
Integrated value reset
Σ (Target/ Commanded)
Operation frequency
Σ (Target/ Commanded)/n
+
1.0
-
Failure
OK
Failure

The cold start emission reduction strategy controls air fuel ratio to lean when the engine is started at cold condition to lower the emission while the catalyst is not warmed up enough. If the commanded air fuel ratio is too lean or too rich compared to the target air fuel ratio, the powertrain control module (PCM) detects a malfunction and stores a DTC.

Monitor Execution, Sequence, Duration, DTC Type

Execution	Continuous
Sequence	None
Duration	10 seconds or more
DTC Type	Two drive cycles, MIL on

Enable Conditions

Condition	Minimum	Maximum
Duration of quick warm-up system operation after engine start-up	-	40 seconds
Engine coolant temperature [ECT SENSOR 1]	50 deg. F (10 deg. C)	122 deg. F (50 deg. C)
Throttle valve	Fully closed	
Accelerator pedal position	Released	
Other	Vehicle stopped	

[ ]: HDS Parameter

Malfunction Threshold

The ratio of commanded air fuel ratio by target air fuel ratio is 1.29 or more.

Possible Cause

NOTE: The causes shown may not be a complete list of all potential problems, and it is possible that there may be other causes.

- PCM internal circuit failure

Confirmation Procedure

Operating Condition

- Leave the vehicle until the engine coolant temperature [ECT SENSOR 1] lowers to 122 deg. F (50 deg. C) or less.
- Start the engine, and let it idle for at least 10 seconds.

Diagnosis Details

Conditions for setting the DTC

When a malfunction is detected during the first drive cycle, a Pending DTC is stored in the PCM memory. If the malfunction returns in the next (second) drive cycle, the MIL comes on and a Confirmed DTC and the freeze data are stored.

Conditions for clearing the DTC

The MIL is cleared if the malfunction does not return in three consecutive trips in which the diagnostic runs. The MIL, the Pending DTC, the Confirmed DTC, and the freeze data can be cleared with the scan tool Clear command or by disconnecting the 12 volt battery.

DTC P0299 (1.5 L ENGINE)

DTC P0299: Turbocharger Underboost Problem

General Description

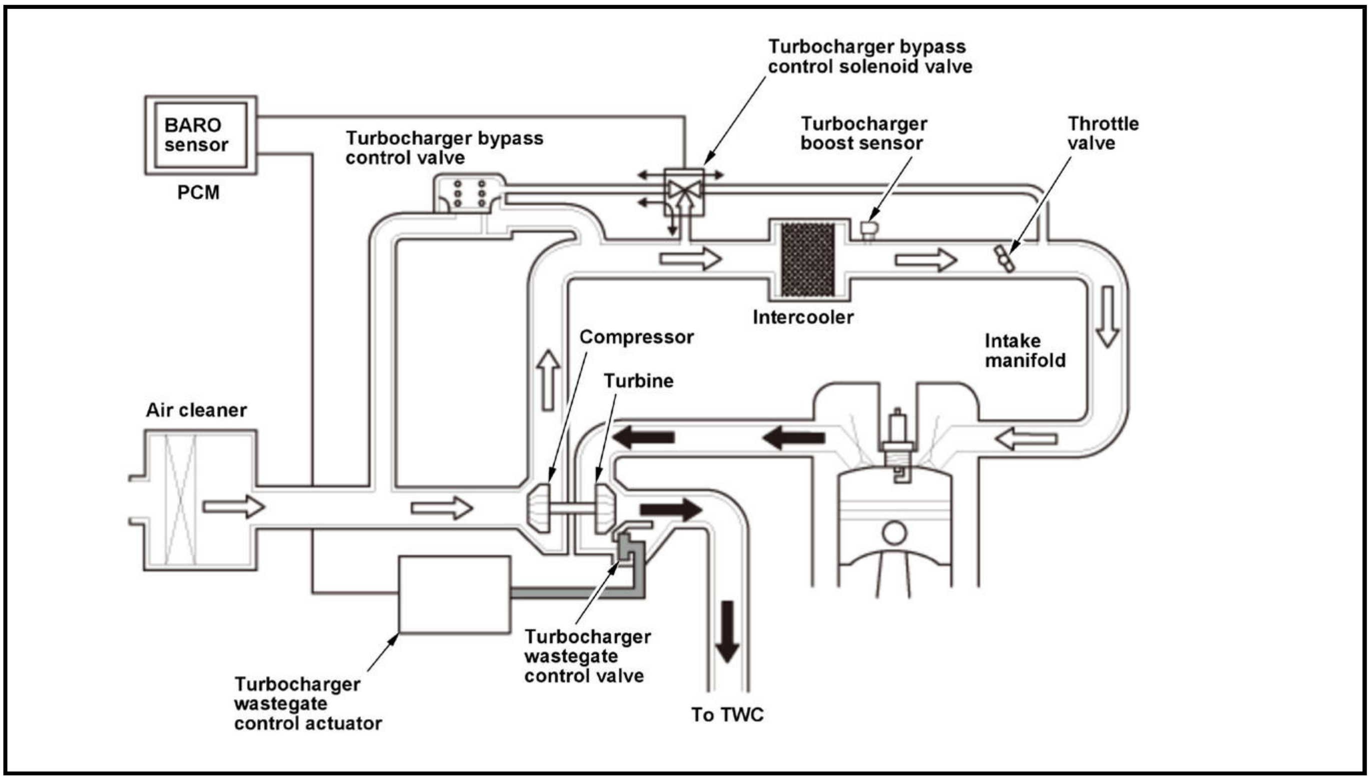
Turbocharger bypass control solenoid valve
BARO sensor
PCM
Turbocharger bypass control valve
Turbocharger boost sensor
Throttle valve
Intercooler
Compressor
Turbine
Intake manifold
Air cleaner
Turbocharger wastegate control valve
Turbocharger wastegate control actuator
To TWC

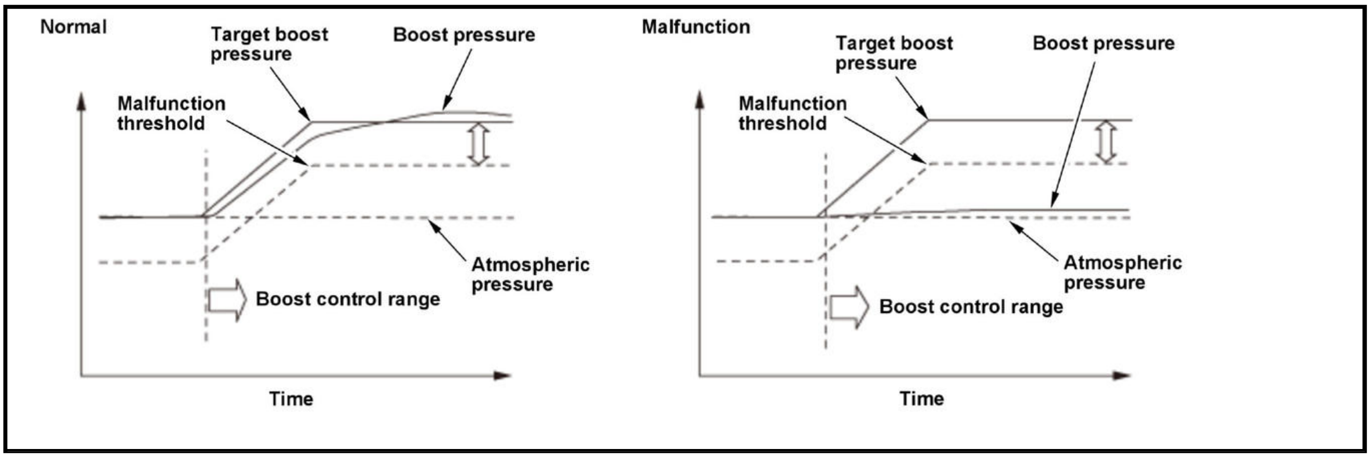

The powertrain control module (PCM) controls the turbocharger control system to control boost pressure. When the difference between the target boost pressure and actual boost pressure is at a specified value for a predetermined time, the PCM detects a malfunction and stores a DTC.

Monitor Execution, Sequence, Duration, DTC Type

Execution	Continuous
Sequence	None
Duration	6.0 seconds or more
DTC Type	One drive cycle, MIL on

Enable Conditions

Condition	Minimum	Maximum
Engine coolant temperature [ECT SENSOR 1]	156 deg. F (69 deg. C)	-
Engine speed [ENGINE SPEED]	3, 000 rpm	-
Other	No change of boost pressure upper limit	

[ ]: HDS Parameter

Malfunction Threshold

The difference between the target boost pressure and actual boost pressure is 3.6 kPa (27 mmHg, 1.06 inHg) or more for at least 6 seconds.

Possible Cause

NOTE: The causes shown may not be a complete list of all potential problems, and it is possible that there may be other causes

- Turbocharger wastegate control valve stuck open failure
- Turbocharger bypass control valve open/close failure
- Turbine damage or seizure
- Exhaust pipe clogged
- Air cleaner element clogged
- Air tube between compressor and intercooler damage/leakage
- Turbocharger boost sensor range/performance problem
- BARO sensor range/performance problem

Confirmation Procedure

Operating Condition

- Start the engine. Hold the engine speed [ENGINE SPEED] at 3, 000 rpm without load (in P or N) until the radiator fan comes on.
- Drive the vehicle at an engine speed [ENGINE SPEED] at 3, 000 rpm or more for at least 6.0 seconds.
- Drive the vehicle in this manner only if the traffic regulations and ambient conditions allow.

With the HDS

None.

Diagnosis Details

Conditions for setting the DTC

When a malfunction is detected, the MIL comes on and a Pending DTC, a Confirmed DTC, and the freeze data are stored in the PCM memory.

Conditions for clearing the DTC

The MIL is cleared if the malfunction does not return in three consecutive trips in which the diagnostic runs. The MIL, the Pending DTC, the Confirmed DTC, and the freeze data can be cleared with the scan tool Clear command or by disconnecting the 12 volt battery.

DTC P0300, P0301, P0302, P0303, P0304 (1.5 L ENGINE) (2017 2018)

DTC P0300: Random Misfire Detected **DTC P0301:** No. 1 Cylinder Misfire Detected **DTC P0302:** No. 2 Cylinder Misfire Detected **DTC P0303:** No. 3 Cylinder Misfire Detected **DTC P0304:** No. 4 Cylinder Misfire Detected

General Description

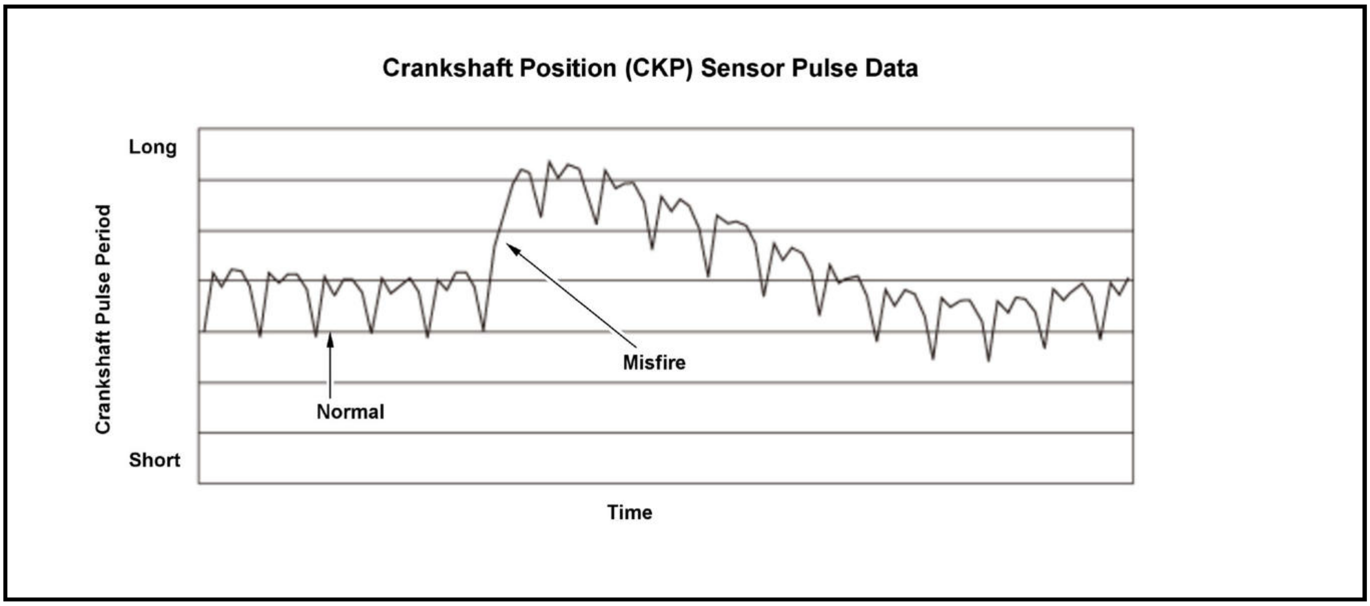

The crankshaft vibrates slightly when each cylinder fires. If a misfire occurs, the crankshaft rotation speed changes rapidly. The powertrain control module (PCM) monitors the crankshaft rotation speed based on the output pulses from the crankshaft position (CKP) sensor. By monitoring changes in the crankshaft rotation speed, the PCM counts the number of misfires and determines which cylinder is misfiring.

- P0300: If more than one DTC from P0301 through P0304 has been stored while misfires in multiple cylinders are detected, a malfunction is detected and a DTC is stored.
- P0301, P0302, P0303, P0304: If a misfire is detected, a DTC is stored.

There are two types of misfire detection:

- Type 1: When the number of misfires per 200 engine revolutions reaches the level that can damage the three way catalyst (TWC), a DTC is stored and the MIL blinks.
- Type 2: When the number of misfires per 1, 000 engine revolutions reaches the level that affects exhaust emissions but not severe enough to immediately damage the catalyst, a DTC is stored and the MIL comes on.

Monitor Execution, Sequence, Duration, DTC Type

Execution		Continuous
Sequence		None
Duration	Type 1	Per 200 revolutions
	Type 2	Per 1, 000 revolutions
DTC Type		Two drive cycles, MIL on

Enable Conditions

Condition		Minimum	Maximum
Elapsed time after monitor finishing condition except immediate starting the engine		1.0 second	-
Engine coolant temperature [ECT SENSOR 1]		None, unless the initial engine coolant temperature [ECT SENSOR 1] is 14 deg. F (-10 deg. C) or less, in which case the monitor will not run until the engine coolant temperature [ECT SENSOR 1] reaches 68 deg. F (20 deg. C)	
Engine speed [ENGINE SPEED]		480 rpm	6, 500 rpm
MAP value [MAP SENSOR]*	500 rpm	28 kPa (205 mmHg, 8.1 inHg)	-
	2, 500 rpm	24 kPa (170 mmHg, 6.9 inHg)	-
Fuel feedback		Other than during fuel cut-off operation	
Other		Test-drive on a flat road to avoid misdetection	

*: Varies with driving conditions.[ ]: HDS Parameter

Malfunction Threshold

The number of misfires versus engine revolutions is equal to or greater than the values in the table.

Misfire Type	The number of engine revolutions	The number of misfires
Misfire Type 1 (Severe)	Per 200 revolutions	17 - 89 times**
Misfire Type 2 (Light)	Per 1, 000 revolutions	77 times

**: Depending on engine speed and load.

Possible Cause

NOTE: The causes shown may not be a complete list of all potential problems, and it is possible that there may be other causes.

- Ignition system failure
- Fuel supply system failure
- Intake air system failure

Confirmation Procedure

Operating Condition

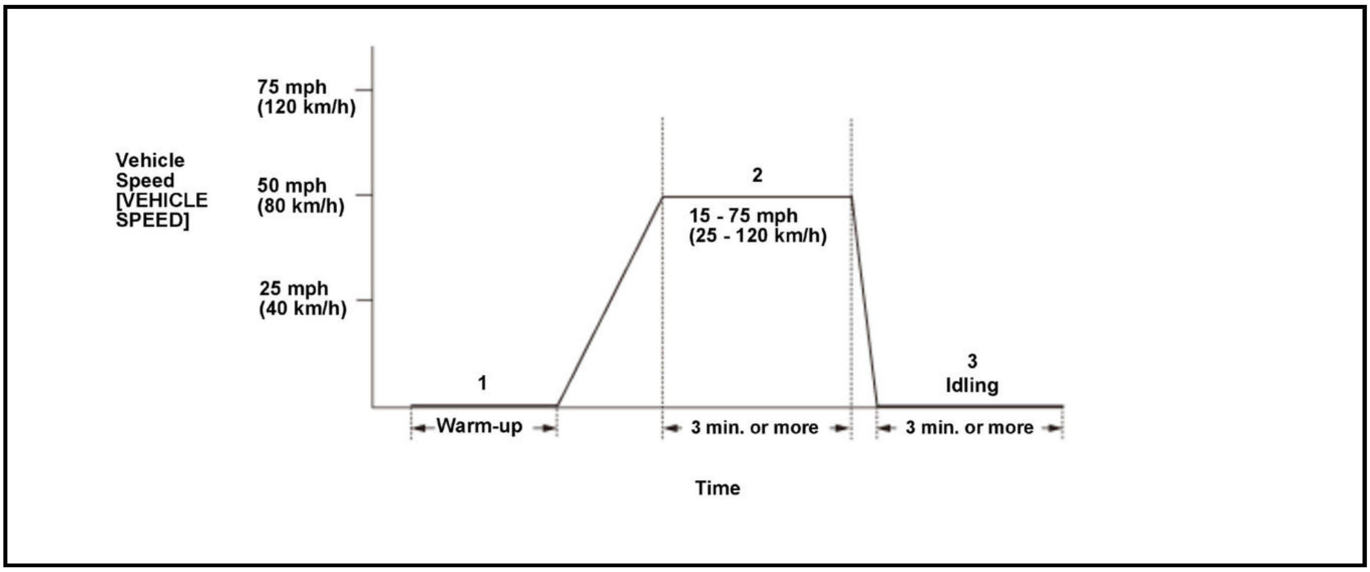

- Start the engine. Hold the engine speed [ENGINE SPEED] at 3, 000 rpm without load (in P or N) until the radiator fan comes on.
- Drive the vehicle at a speed between 15 - 75 mph (25 - 120 km/h) for at least 3 minutes.
- Stop the vehicle, and let the engine idle for at least 3 minutes.

- When freeze data is stored, drive the vehicle under those conditions instead of Driving Pattern step 2 or 3.
- When you have difficulty duplicating the DTC because of road conditions and traffic situations, repeat the driving pattern several times.
- Drive the vehicle in this manner only if the traffic regulations and ambient conditions allow.

With the HDS

None.

Diagnosis Details

Conditions for setting the DTC

Misfire Type 1:

- If a type 1 misfire (catalyst damaging) occurs once, the MIL blinks once per second, a Pending DTC is stored, and the high rpm fuel injection stop system activates. The fuel injection stops, at high rpm only, on the cylinder that has the highest misfire counts. The MIL then continues to blink and the fuel injection stays off at high rpm, until the drive is completed.
- If a type 1 misfire occurs during a second drive cycle, the MIL and fuel injection behave the same and a Confirmed DTC is stored.
- After a type 1 misfire has been detected during two drive cycles, the MIL comes on and stays on beginning with the third drive cycle, unless the Pending DTC has been cleared by the PCM***. Even if the MIL is on, it will start blinking if a type 1 misfire occurs.
- If the malfunction returns in the next (second) drive cycle, the MIL comes on and a Confirmed DTC and the freeze data are stored.

Misfire Type 2:

- If a type 2 misfire (emission-related but not severe enough to immediately damage the catalyst) occurs, a Pending DTC is stored, but the MIL does not come on or blink. If a type 2 misfire occurs during a second drive cycle, the MIL comes on and stays on unless the Pending DTC has been cleared by the PCM***.

*** The Pending DTC is erased if either of these conditions is met:

- The vehicle is operated at least once under the same driving conditions as the first misfire detection, and no misfire is detected.
- 80 drive cycles, regardless of driving conditions, are completed with no misfire detected.

Conditions for clearing the DTC

The MIL is cleared if the malfunction does not return in three consecutive drive cycles in which the engine conditions are similar to the first time the malfunction was detected. The MIL, the Pending DTC, the Confirmed DTC, and the freeze data can be cleared with the scan tool Clear command or by disconnecting the 12 volt battery.

DTC P0300, P0301, P0302, P0303, P0304 (1.5 L ENGINE) (2019 2020 2021)

DTC P0300: Random Misfire Detected **DTC P0301:** No. 1 Cylinder Misfire Detected **DTC P0302:** No. 2 Cylinder Misfire Detected **DTC P0303:** No. 3 Cylinder Misfire Detected **DTC P0304:** No. 4 Cylinder Misfire Detected

General Description

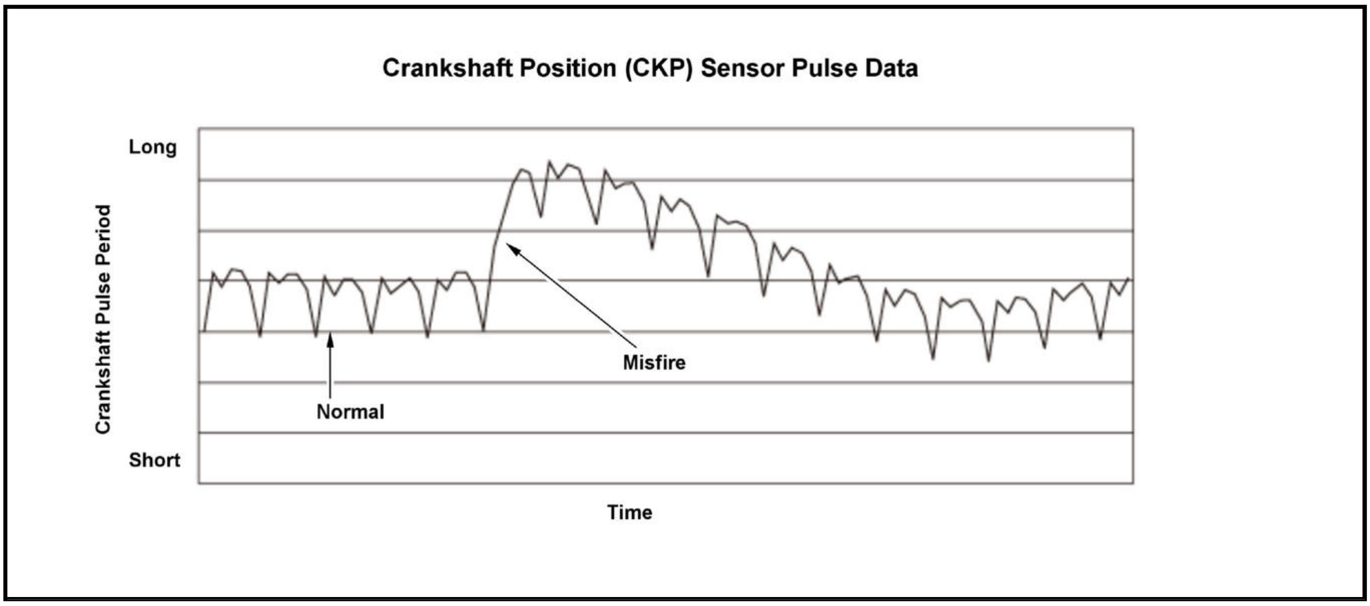

The crankshaft vibrates slightly when each cylinder fires. If a misfire occurs, the crankshaft rotation speed changes rapidly. The powertrain control module (PCM) monitors the crankshaft rotation speed based on the output pulses from the crankshaft position (CKP) sensor. By monitoring changes in the crankshaft rotation speed, the PCM counts the number of misfires and determines which cylinder is misfiring.

- P0300: If more than one DTC from P0301 through P0304 has been stored while misfires in multiple cylinders are detected, a malfunction is detected and a DTC is stored.
- P0301, P0302, P0303, P0304: If a misfire is detected, a DTC is stored.

There are two types of misfire detection:

- Type 1: When the number of misfires per 200 engine revolutions reaches the level that can damage the three way catalyst (TWC), a DTC is stored and the MIL blinks.
- Type 2: When the number of misfires per 1, 000 engine revolutions reaches the level that affects exhaust emissions but not severe enough to immediately damage the catalyst, a DTC is stored and the MIL comes on.

Monitor Execution, Sequence, Duration, DTC Type

Execution		Continuous
Sequence		None
Duration	Type 1	Per 200 revolutions
	Type 2	Per 1, 000 revolutions
DTC Type		Two drive cycles, MIL on

Enable Conditions

Condition		Minimum	Maximum
Elapsed time after monitor finishing condition except immediate starting the engine		1.0 second	-
Engine coolant temperature [ECT SENSOR 1]		None, unless the initial engine coolant temperature [ECT SENSOR 1] is 14 deg. F (-10 deg. C) or less, in which case the monitor will not run until the engine coolant temperature [ECT SENSOR 1] reaches 68 deg. F (20 deg. C)	
Engine speed [ENGINE SPEED]		480 rpm	6, 500 rpm
MAP value [MAP SENSOR]*	500 rpm	26 kPa (190 mmHg, 7.5 inHg)	-
	2, 500 rpm	24 kPa (180 mmHg, 7.1 inHg)	-
Fuel feedback		Other than during fuel cut-off operation	
Other		Test-drive on a flat road to avoid misdetection	

*: Varies with driving conditions.[ ]: HDS Parameter

Malfunction Threshold

The number of misfires versus engine revolutions is equal to or greater than the values in the table.

Misfire Type	The number of engine revolutions	The number of misfires
Misfire Type 1 (Severe)	Per 200 revolutions	20 - 89 times**
Misfire Type 2 (Light)	Per 1, 000 revolutions	77 times

**: Depending on engine speed and load.

Possible Cause

NOTE: The causes shown may not be a complete list of all potential problems, and it is possible that there may be other causes.

- Ignition system failure
- Fuel supply system failure
- Intake air system failure

Confirmation Procedure

Operating Condition

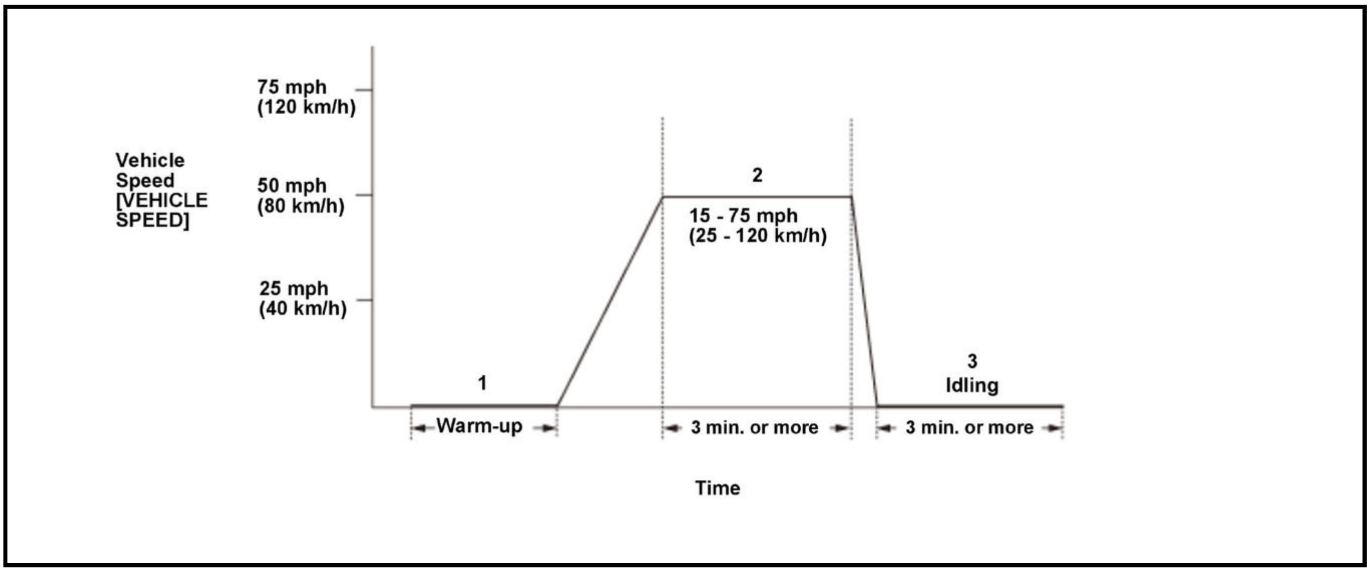

- Start the engine. Hold the engine speed [ENGINE SPEED] at 3, 000 rpm without load (in P or N) until the radiator fan comes on.
- Drive the vehicle at a speed between 15 - 75 mph (25 - 120 km/h) for at least 3 minutes.
- Stop the vehicle, and let the engine idle for at least 3 minutes.

- When freeze data is stored, drive the vehicle under those conditions instead of Driving Pattern step 2 or 3.
- When you have difficulty duplicating the DTC because of road conditions and traffic situations, repeat the driving pattern several times.
- Drive the vehicle in this manner only if the traffic regulations and ambient conditions allow.

With the HDS

None.

Diagnosis Details

Conditions for setting the DTC

Misfire Type 1:

- If a type 1 misfire (catalyst damaging) occurs once, the MIL blinks once per second, a Pending DTC is stored, and the high rpm fuel injection stop system activates. The fuel injection stops, at high rpm only, on the cylinder that has the highest misfire counts. The MIL then continues to blink and the fuel injection stays off at high rpm, until the drive is completed.
- If a type 1 misfire occurs during a second drive cycle, the MIL and fuel injection behave the same and a Confirmed DTC is stored.
- After a type 1 misfire has been detected during two drive cycles, the MIL comes on and stays on beginning with the third drive cycle, unless the Pending DTC has been cleared by the PCM***. Even if the MIL is on, it will start blinking if a type 1 misfire occurs.
- If the malfunction returns in the next (second) drive cycle, the MIL comes on and a Confirmed DTC and the freeze data are stored.

Misfire Type 2:

- If a type 2 misfire (emission-related but not severe enough to immediately damage the catalyst) occurs, a Pending DTC is stored, but the MIL does not come on or blink. If a type 2 misfire occurs during a second drive cycle, the MIL comes on and stays on unless the Pending DTC has been cleared by the PCM***.

*** The Pending DTC is erased if either of these conditions is met:

- The vehicle is operated at least once under the same driving conditions as the first misfire detection, and no misfire is detected.
- 80 drive cycles, regardless of driving conditions, are completed with no misfire detected.

Conditions for clearing the DTC

The MIL is cleared if the malfunction does not return in three consecutive drive cycles in which the engine conditions are similar to the first time the malfunction was detected. The MIL, the Pending DTC, the Confirmed DTC, and the freeze data can be cleared with the scan tool Clear command or by disconnecting the 12 volt battery.

DTC P0300, P0301, P0302, P0303, P0304 (2.4 L ENGINE) (2017 2018 2019)

DTC P0300: Random Misfire Detected **DTC P0301:** No. 1 Cylinder Misfire Detected **DTC P0302:** No. 2 Cylinder Misfire Detected **DTC P0303:** No. 3 Cylinder Misfire Detected **DTC P0304:** No. 4 Cylinder Misfire Detected

General Description

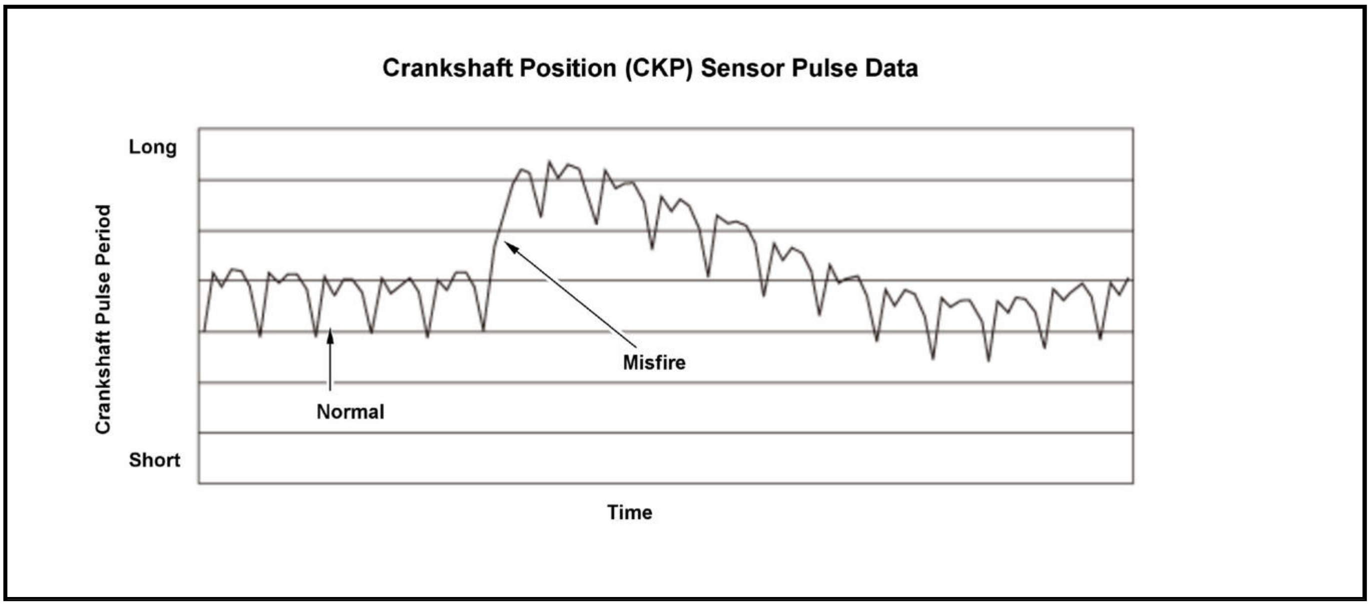

The crankshaft vibrates slightly when each cylinder fires. If a misfire occurs, the crankshaft rotation speed changes rapidly. The powertrain control module (PCM) monitors the crankshaft rotation speed based on the output pulses from the crankshaft position (CKP) sensor. By monitoring changes in the crankshaft rotation speed, the PCM counts the number of misfires and determines which cylinder is misfiring.

- P0300: If more than one DTC from P0301 through P0304 has been stored while misfires in multiple cylinders are detected, a malfunction is detected and a DTC is stored.
- P0301, P0302, P0303, P0304: If a misfire is detected, a DTC is stored.

There are two types of misfire detection:

- Type 1: When the number of misfires per 200 engine revolutions reaches the level that can damage the three way catalyst (TWC), a DTC is stored and the MIL blinks.
- Type 2: When the number of misfires per 1, 000 engine revolutions reaches the level that affects exhaust emissions but not severe enough to immediately damage the catalyst, a DTC is stored and the MIL comes on.

Monitor Execution, Sequence, Duration, DTC Type

Execution	Continuous
Sequence	None

Duration	Type 1	Per 200 revolutions
	Type 2	Per 1, 000 revolutions
DTC Type		Two drive cycles, MIL on

Enable Conditions

Condition		Minimum	Maximum
Elapsed time after monitor finishing condition except immediate starting the engine		1.0 second	-
Engine coolant temperature [ECT SENSOR 1]		None, unless the initial engine coolant temperature is -10 deg. C (14 deg. F) or less, in which case the monitor will not run until the engine coolant temperature reaches 20 deg. C (68 deg. F)	
Engine speed [ENGINE SPEED]		450 rpm	6, 800 rpm
MAP value [MAP SENSOR]*	500 rpm**	23 kPa (172 mmHg, 6.8 inHg)	-
	2, 750 rpm**	21 kPa (152 mmHg, 6.0 inHg)	-
	500 rpm***	30 kPa (225 mmHg, 8.9 inHg)	-
	2, 500 rpm***	22 kPa (158 mmHg, 6.3 inHg)	-
Fuel feedback		Other than during fuel cut-off operation	
Other		Test-drive on a flat road to avoid misdetection	

*: Varies with driving conditions.

**: Rocker arm oil control solenoid: OFF

***: Rocker arm oil control solenoid: ON

[ ]: HDS Parameter

Malfunction Threshold

The number of misfires versus engine revolutions is equal to or greater than the values in the table.

Misfire Type	The number of engine revolutions	The number of misfires
Misfire Type 1 (Severe)	Per 200 revolutions	17 - 89 times****
Misfire Type 2 (Light)	Per 1, 000 revolutions	61 times

****: Depending on engine speed and load.

Possible Cause

NOTE: The causes shown may not be a complete list of all potential problems, and it is possible that there may be other causes.

- Ignition system failure
- Fuel supply system failure
- Intake air system failure

Confirmation Procedure

Operating Condition

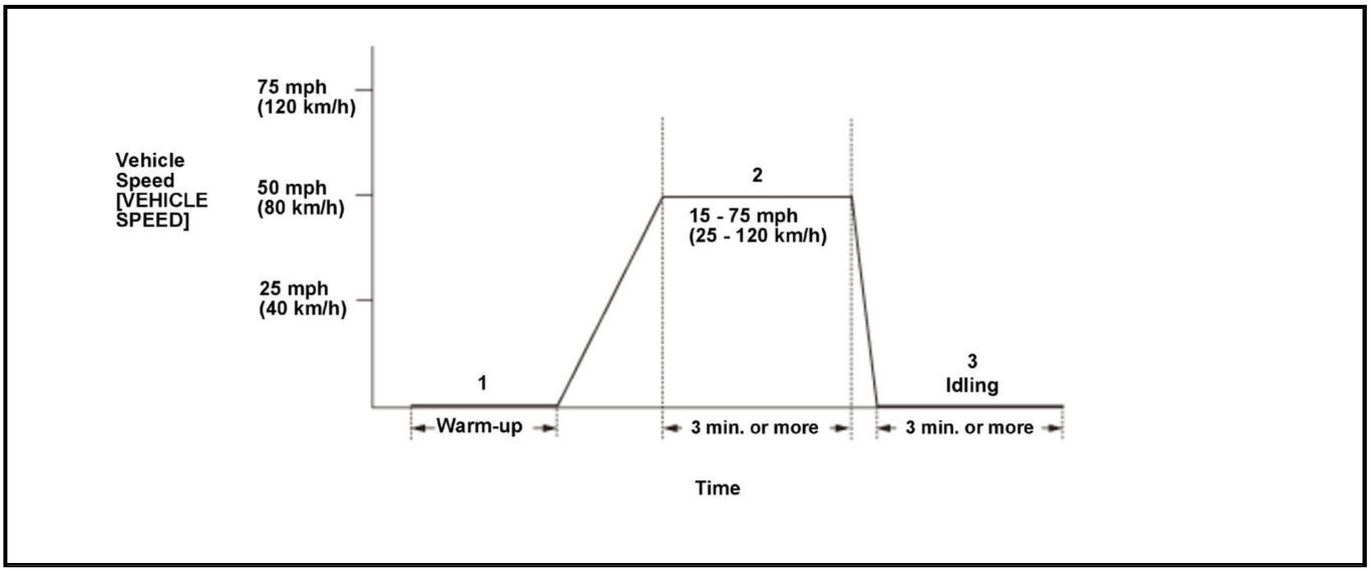

- Start the engine. Hold the engine speed [ENGINE SPEED] at 3, 000 rpm without load (in P or N) until the radiator fan comes on.
- Drive the vehicle at a speed between 15 - 75 mph (25 - 120 km/h) for at least 3 minutes.
- Stop the vehicle, and let the engine idle for at least 3 minutes.

- When freeze data is stored, drive the vehicle under those conditions instead of Driving Pattern step 2 or 3.
- When you have difficulty duplicating the DTC because of road conditions and traffic situations, repeat the driving pattern several times.
- Drive the vehicle in this manner only if the traffic regulations and ambient conditions allow.

With the HDS

None.

Diagnosis Details

Conditions for setting the DTC

Misfire Type 1:

- If a type 1 misfire (catalyst damaging) occurs once, the MIL blinks once per second, a Pending DTC is stored, and the high rpm fuel injection stop system activates. The fuel injection stops, at high rpm only, on the cylinder that has the highest misfire counts. The MIL then continues to blink and the fuel injection stays off at high rpm, until the drive is completed.
- If a type 1 misfire occurs during a second drive cycle, the MIL and fuel injection behave the same and a Confirmed DTC is stored.
- After a type 1 misfire has been detected during two drive cycles, the MIL comes on and stays on beginning with the third drive cycle, unless the Pending DTC has been cleared by the PCM***. Even if the MIL is on, it will start blinking if a type 1 misfire occurs.
- If the malfunction returns in the next (second) drive cycle, the MIL comes on and a Confirmed DTC and the freeze data are stored.

Misfire Type 2:

- If a type 2 misfire (emission-related but not severe enough to immediately damage the catalyst) occurs, a Pending DTC is stored, but the MIL does not come on or blink. If a type 2 misfire occurs during a second drive cycle, the MIL comes on and stays on unless the Pending DTC has been cleared by the PCM***.

***** The Pending DTC is erased if either of these conditions is met:

- The vehicle is operated at least once under the same driving conditions as the first misfire detection, and no misfire is detected.
- 80 drive cycles, regardless of driving conditions, are completed with no misfire detected.

Conditions for clearing the DTC

The MIL is cleared if the malfunction does not return in three consecutive drive cycles in which the engine conditions are similar to the first time the malfunction was detected. The MIL, the Pending DTC, the Confirmed DTC, and the freeze data can be cleared with the scan tool Clear command or by disconnecting the 12 volt battery.

DTC P0326 (1.5 L ENGINE)

DTC P0326: Knock Sensor Malfunction

General Description

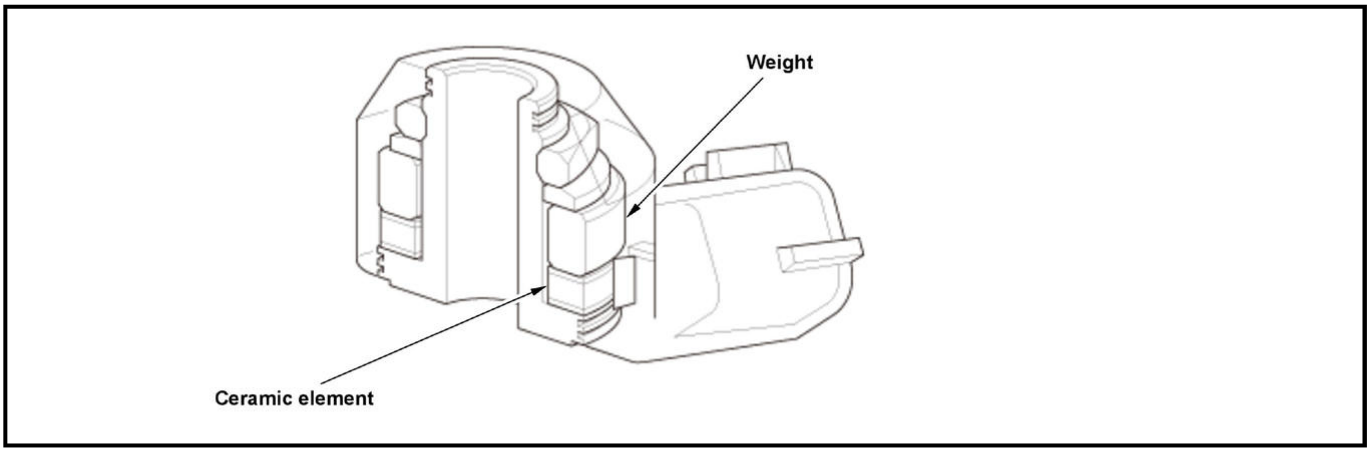

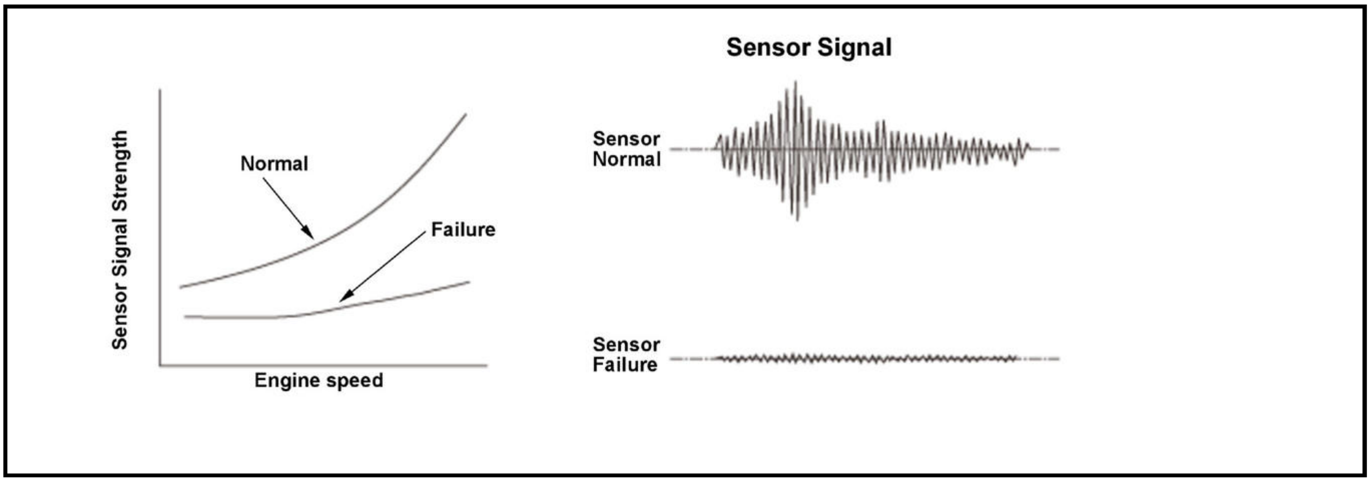

A nonresonant type of knock sensor is used, and it is mounted on the cylinder block to detect engine knocking. Vibration from engine combustion causes the torus-shaped weight to compress the ceramic element in the nonresonant knock sensor, and converts it into electrical signals. The powertrain control module (PCM) controls the ignition timing according to the electrical signal level. If the signal level from the knock sensor drops for a set time because of a poor connection at the knock sensor, or a bad sensor, the PCM detects a malfunction and stores a DTC.

Monitor Execution, Sequence, Duration, DTC Type

Execution	Once per driving cycle
Sequence	None
Duration	5.0 seconds or more
DTC Type	Two drive cycles, MIL on

Enable Conditions

Condition	Minimum	Maximum
Elapsed time after starting the engine	5.0 seconds	-
Engine speed [ENGINE SPEED]	2, 000 rpm	-

[ ]: HDS Parameter

Malfunction Threshold

Either one of the conditions is met for at least 5.0 seconds.

- The knock sensor output signal strength is 60 or less at the engine speed [ENGINE SPEED] of 1, 250 rpm*.
- The knock sensor output signal strength is 111 or less at the engine speed [ENGINE SPEED] of 2, 500 rpm*.

*: Depending on engine speed and load.

[ ]: HDS Parameter

Possible Cause

NOTE: The causes shown may not be a complete list of all potential problems, and it is possible that there may be other causes.

- Knock sensor mis installed
- Knock sensor failure

Confirmation Procedure

Operating Condition

- Start the engine. Hold the engine speed [ENGINE SPEED] at 3, 000 rpm without load (in P or N) until the radiator fan comes on.
- Drive the vehicle at an engine speed [ENGINE SPEED] 2, 000 rpm or more for at least 5 seconds.

- Drive the vehicle in this manner only if the traffic regulations and ambient conditions allow.

[ ]: HDS Parameter

With the HDS

None.

Diagnosis Details

Conditions for setting the DTC

When a malfunction is detected during the first drive cycle, a Pending DTC is stored in the PCM memory. If the malfunction returns in the next (second) drive cycle, the MIL comes on and a Confirmed DTC and the freeze data are stored.

Conditions for clearing the DTC

The MIL is cleared if the malfunction does not return in three consecutive trips in which the diagnostic runs. The MIL, the Pending DTC, the Confirmed DTC, and the freeze data can be cleared with the scan tool Clear

command or by disconnecting the 12 volt battery.

DTC P0326 (2.4 L ENGINE) (2017 2018 2019)

DTC P0326: Knock Sensor Malfunction

General Description

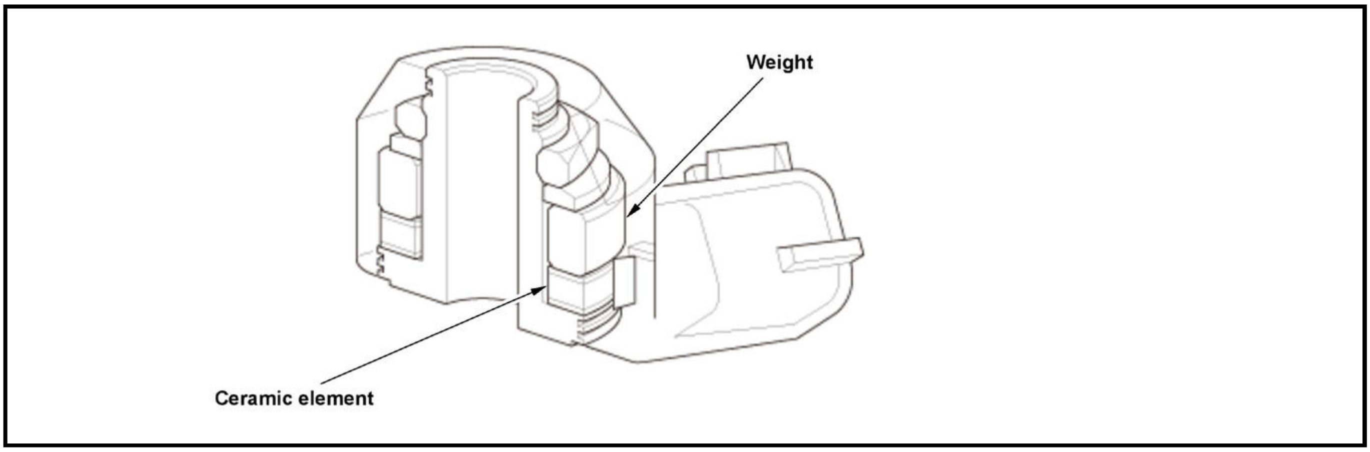

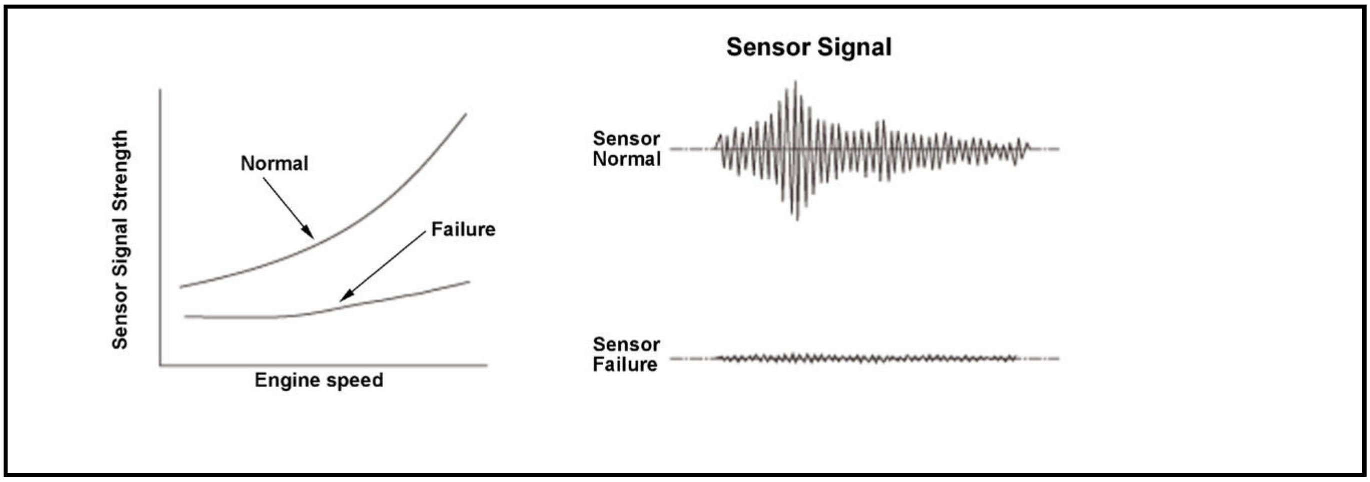

A nonresonant type of knock sensor is used, and it is mounted on the cylinder block to detect engine knocking. Vibration from engine combustion causes the torus-shaped weight to compress the ceramic element in the nonresonant knock sensor, and converts it into electrical signals. The powertrain control module (PCM) controls the ignition timing according to the electrical signal level. If the signal level from the knock sensor drops for a set time because of a poor connection at the knock sensor, or a bad sensor, the PCM detects a malfunction and stores a DTC.

Monitor Execution, Sequence, Duration, DTC Type

Execution	Once per driving cycle
Sequence	None
Duration	5.0 seconds or more
DTC Type	Two drive cycles, MIL on

Enable Conditions

Condition	Minimum	Maximum
Elapsed time after starting the engine	5.0 seconds	-
Engine speed [ENGINE SPEED]	1, 500 rpm	-

[ ]: HDS Parameter

Malfunction Threshold

Either one of the conditions is met for at least 5.0 seconds.

- The knock sensor output signal strength is 60 or less at the engine speed [ENGINE SPEED] of 1, 500 rpm.
- The knock sensor output signal strength is 111 or less at the engine speed [ENGINE SPEED] of 3, 000 rpm.

Possible Cause

NOTE: The causes shown may not be a complete list of all potential problems, and it is possible that there may be other causes.

- Knock sensor mis installed
- Knock sensor failure

Confirmation Procedure

Operating Condition

- Start the engine. Hold the engine speed [ENGINE SPEED] at 3, 000 rpm without load (in P or N) until the radiator fan comes on.
- Drive the vehicle at an engine speed [ENGINE SPEED] 1, 500 rpm or more for at least 5 seconds.
- Drive the vehicle in this manner only if the traffic regulations and ambient conditions allow.

[ ]: HDS Parameter

With the HDS

None.

Diagnosis Details

Conditions for setting the DTC

When a malfunction is detected during the first drive cycle, a Pending DTC is stored in the PCM memory. If the malfunction returns in the next (second) drive cycle, the MIL comes on and a Confirmed DTC and the freeze data are stored.

Conditions for clearing the DTC

The MIL is cleared if the malfunction does not return in three consecutive trips in which the diagnostic runs. The MIL, the Pending DTC, the Confirmed DTC, and the freeze data can be cleared with the scan tool Clear command or by disconnecting the 12 volt battery.

DTC P0327, P0328 (1.5 L ENGINE)

DTC P0327: Knock Sensor Circuit Low Voltage **DTC P0328:** Knock Sensor Circuit High Voltage

General Description

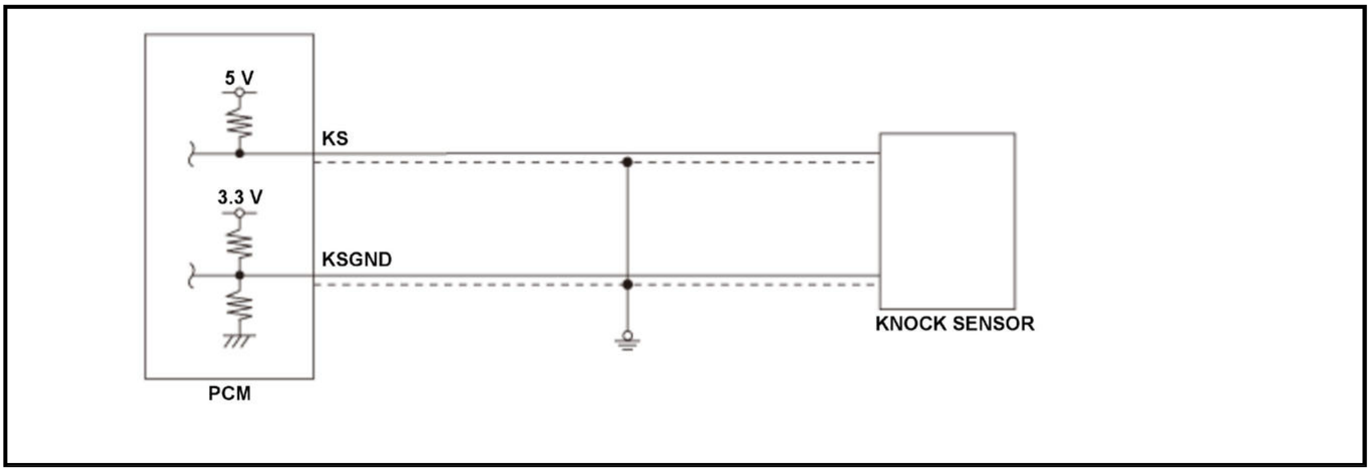

The knock sensor is mounted on the engine block and detects engine knocking. The vibrations caused by the knocking are converted into electrical signals through the piezo ceramic element. The powertrain control module (PCM) controls the ignition timing based on the electrical signal. If the signal from the knock sensor is a specified voltage for a set time, the PCM detects a malfunction and stores a DTC.

Monitor Execution, Sequence, Duration, DTC Type

Execution	Continuous
Sequence	None
Duration	2 seconds or more
DTC Type	Two drive cycles, MIL on

Enable Conditions

Condition	B
Vehicle	ON mode

Malfunction Threshold

DTC: P0327

The knock sensor output voltage is 0.50 V or less for at least 2 seconds.

DTC: P0328

The knock sensor output voltage is 4.50 V or more for at least 2 seconds.

Possible Cause

NOTE: The causes shown may not be a complete list of all potential problems, and it is possible that there may be other causes.

DTC: P0327

- Knock sensor KS line short to ground

DTC: P0328

- Knock sensor KS line open
- Knock sensor KSGND line open

Common

- Knock sensor failure

- PCM internal circuit failure

Diagnosis Details

Conditions for setting the DTC

When a malfunction is detected during the first drive cycle, a Pending DTC is stored in the PCM memory. If the malfunction returns in the next (second) drive cycle, the MIL comes on and a Confirmed DTC and the freeze data are stored.

Conditions for clearing the DTC

The MIL is cleared if the malfunction does not return in three consecutive trips in which the diagnostic runs. The MIL, the Pending DTC, the Confirmed DTC, and the freeze data can be cleared with the scan tool Clear command or by disconnecting the 12 volt battery.

DTC P0327, P0328 (2.4 L ENGINE) (2017 2018 2019)

DTC P0327: Knock Sensor Circuit Low Voltage **DTC P0328:** Knock Sensor Circuit High Voltage

General Description

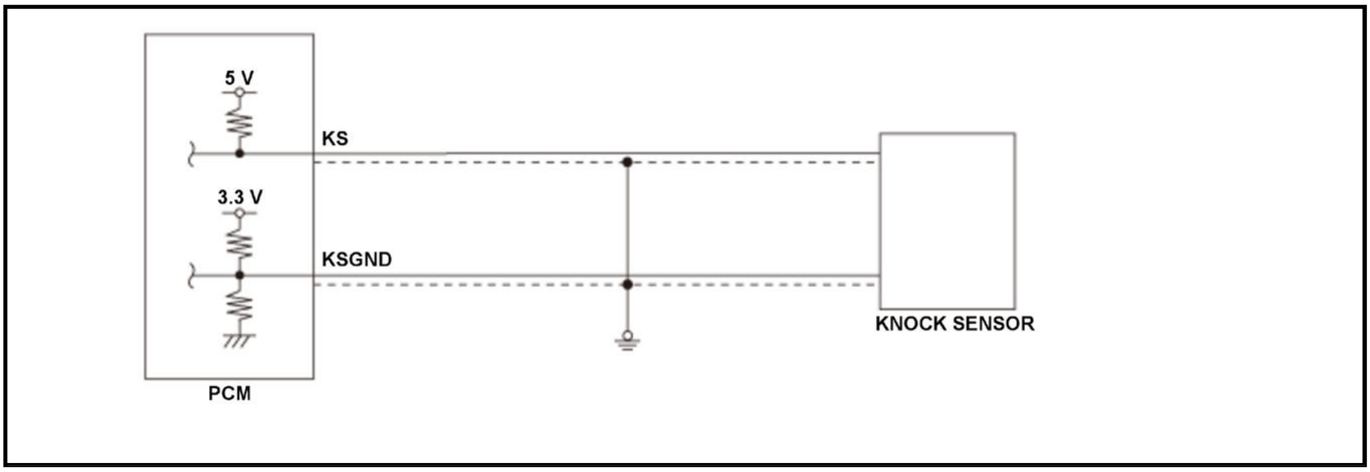

The knock sensor is mounted on the engine block and detects engine knocking. The vibrations caused by the knocking are converted into electrical signals through the piezo ceramic element. The powertrain control module (PCM) controls the ignition timing based on the electrical signal. If the signal from the knock sensor is a specified voltage for a set time, the PCM detects a malfunction and stores a DTC.

Monitor Execution, Sequence, Duration, DTC Type

Execution	Continuous
Sequence	None
Duration	2 seconds or more
DTC Type	Two drive cycles, MIL on

Enable Conditions

Condition	B
Vehicle	ON mode

Malfunction Threshold

DTC: P0327

The knock sensor output voltage is 0.20 V or less for at least 2 seconds.

DTC: P0328

The knock sensor output voltage is 4.50 V or more for at least 2 seconds.

Possible Cause

NOTE: The causes shown may not be a complete list of all potential problems, and it is possible that there may be other causes.

DTC: P0327

- Knock sensor KS line short to ground

DTC: P0328

- Knock sensor KS line open
- Knock sensor KSGND line open

Common

- Knock sensor failure
- PCM internal circuit failure

Diagnosis Details

Conditions for setting the DTC

When a malfunction is detected during the first drive cycle, a Pending DTC is stored in the PCM memory. If the malfunction returns in the next (second) drive cycle, the MIL comes on and a Confirmed DTC and the freeze data are stored.

Conditions for clearing the DTC

The MIL is cleared if the malfunction does not return in three consecutive trips in which the diagnostic runs. The MIL, the Pending DTC, the Confirmed DTC, and the freeze data can be cleared with the scan tool Clear command or by disconnecting the 12 volt battery.

DTC P0335 (1.5 L ENGINE)

DTC P0335: Crankshaft Position (CKP) Sensor No Signal

General Description

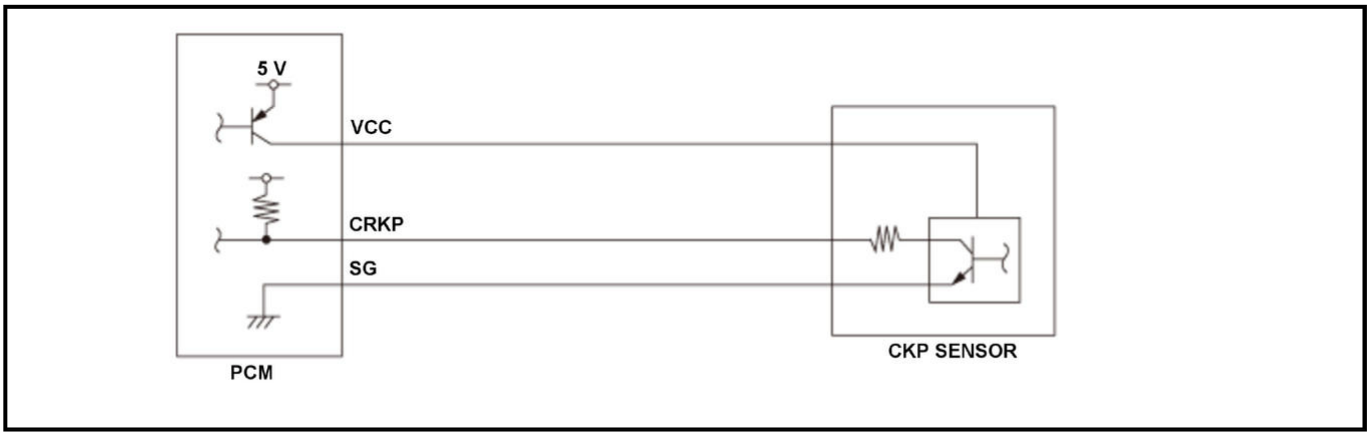

The crankshaft position (CKP) sensor detects injection/ignition timing for each cylinder and engine speed. The CKP sensor consists of a rotor and a semiconductor that detects rotor position. When the engine starts, the rotor turns and the magnetic flux in the semiconductor device changes. The changes of magnetic flux are converted into pulsing signals to the powertrain control module (PCM). If no pulsing signals from the CKP sensor are detected, the PCM detects a malfunction and stores a DTC.

Monitor Execution, Sequence, Duration, DTC Type

Execution	Continuous
Sequence	None
Duration	2 seconds or more (when the engine speed is 750 min -1 (rpm))
DTC Type	One drive cycle, MIL on

Enable Conditions

Condition	B
State of the engine	Running

Malfunction Threshold

No input signals from the CKP sensor are detected while signals from the camshaft position (CMP) sensor are detected at least 75 times.

Possible Cause

NOTE: The causes shown may not be a complete list of all potential problems, and it is possible that there may be other causes.

- CKP sensor CRKP line open
- CKP sensor CRKP line short to ground
- CKP sensor VCC line open
- CKP sensor SG line open
- CKP sensor failure
- PCM internal circuit failure

Diagnosis Details

Conditions for setting the DTC

When a malfunction is detected, the MIL comes on and a Pending DTC, a Confirmed DTC, and the freeze data are stored in the PCM memory.

Conditions for clearing the DTC

The MIL is cleared if the malfunction does not return in three consecutive trips in which the diagnostic runs. The MIL, the Pending DTC, the Confirmed DTC, and the freeze data can be cleared with the scan tool Clear command or by disconnecting the 12 volt battery.

DTC P0335 (2.4 L ENGINE) (2017 2018 2019)

DTC P0335: Crankshaft Position (CKP) Sensor No Signal

General Description

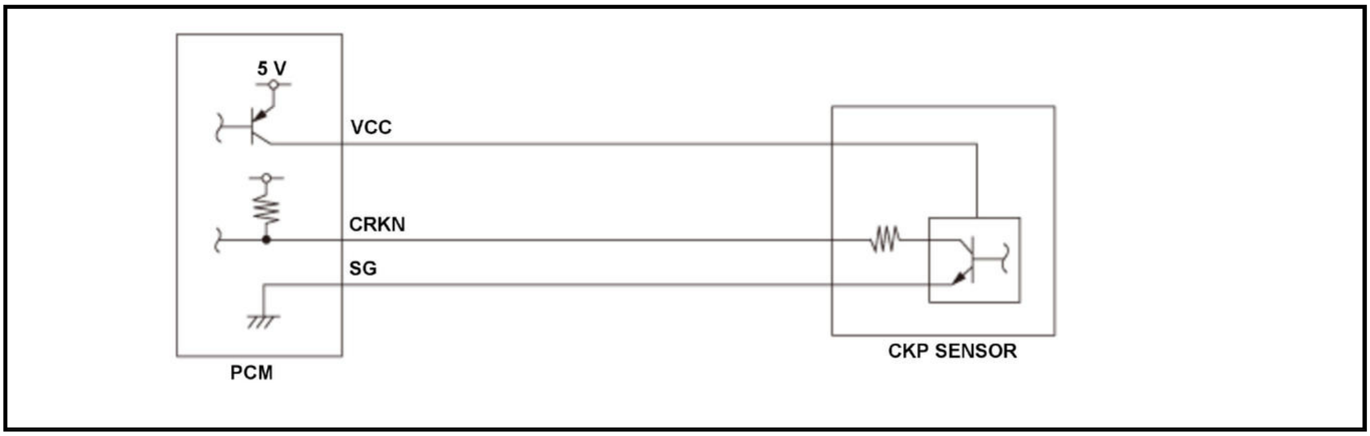

The crankshaft position (CKP) sensor detects injection/ignition timing for each cylinder and engine speed. The CKP sensor consists of a rotor and a semiconductor that detects rotor position. When the engine starts, the rotor turns and the magnetic flux in the semiconductor device changes. The changes of magnetic flux are converted into pulsing signals to the powertrain control module (PCM). If no pulsing signals from the CKP sensor are detected, the PCM detects a malfunction and stores a DTC.

Monitor Execution, Sequence, Duration, DTC Type

Execution	Continuous
Sequence	None
Duration	2 seconds or more (when the engine speed is 750 min -1 (rpm))
DTC Type	One drive cycle, MIL on

Enable Conditions

Condition	B
State of the engine	Running

Malfunction Threshold

No input signals from the CKP sensor are detected while signals from the camshaft position (CMP) sensor are detected at least 75 times.

Possible Cause

NOTE: The causes shown may not be a complete list of all potential problems, and it is possible that there may be other causes.

- CKP sensor CRKN line open
- CKP sensor CRKN line short to ground
- CKP sensor VCC line open
- CKP sensor SG line open
- CKP sensor failure
- PCM internal circuit failure

Diagnosis Details

Conditions for setting the DTC

When a malfunction is detected, the MIL comes on and a Pending DTC, a Confirmed DTC, and the freeze data are stored in the PCM memory.

Conditions for clearing the DTC

The MIL is cleared if the malfunction does not return in three consecutive trips in which the diagnostic runs. The MIL, the Pending DTC, the Confirmed DTC, and the freeze data can be cleared with the scan tool Clear command or by disconnecting the 12 volt battery.

DTC P0339 (1.5 L ENGINE)

DTC P0339: Crankshaft Position (CKP) Sensor Circuit Intermittent Interruption

General Description

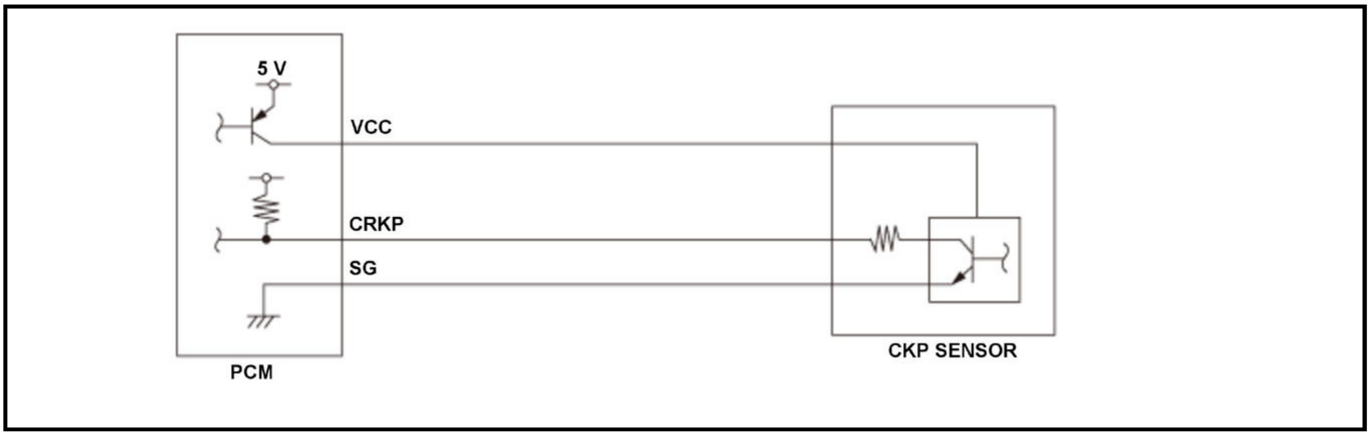

The crankshaft position (CKP) sensor detects injection/ignition timing for each cylinder and engine speed. The CKP sensor consists of a rotor and a semiconductor that detects rotor position. When the engine starts, the rotor turns and the magnetic flux in the semiconductor device changes. The changes of magnetic flux are converted into pulsing signals to the powertrain control module (PCM). If abnormal amount of pulsing signals from the CKP sensor are detected, the PCM detects a malfunction and stores a DTC.

Monitor Execution, Sequence, Duration, DTC Type

Execution	Continuous
Sequence	None
Duration	-
DTC Type	One drive cycle, MIL on

Enable Conditions

Condition	Minimum	Maximum
Engine speed [ENGINE SPEED]	400 min -1 (rpm)	-

[ ]: HDS Parameter

Malfunction Threshold

Other than 58 pulses are detected during intervals between reference pulses for each crank revolution. This condition has been detected at least 30 times.

Possible Cause

NOTE: The causes shown may not be a complete list of all potential problems, and it is possible that there may be other causes.

- CKP sensor CRKP line electrical noise overlapped
- CKP sensor rotor chipped
- CKP sensor failure

- PCM internal circuit failure

Diagnosis Details

Conditions for setting the DTC

When a malfunction is detected, the MIL comes on and a Pending DTC, a Confirmed DTC, and the freeze data are stored in the PCM memory.

Conditions for clearing the DTC

The MIL is cleared if the malfunction does not return in three consecutive trips in which the diagnostic runs. The MIL, the Pending DTC, the Confirmed DTC, and the freeze data can be cleared with the scan tool Clear command or by disconnecting the 12 volt battery.

DTC P0339 (2.4 L ENGINE) (2017 2018 2019)

DTC P0339: Crankshaft Position (CKP) Sensor Circuit Intermittent Interruption

General Description

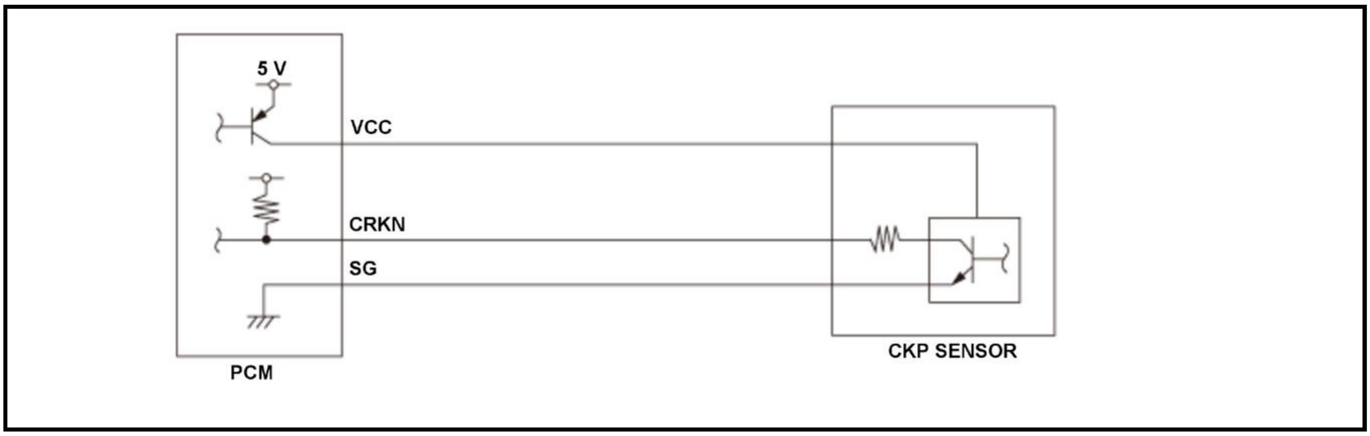

The crankshaft position (CKP) sensor detects injection/ignition timing for each cylinder and engine speed. The CKP sensor consists of a rotor and a semiconductor that detects rotor position. When the engine starts, the rotor turns and the magnetic flux in the semiconductor device changes. The changes of magnetic flux are converted into pulsing signals to the powertrain control module (PCM). If abnormal amount of pulsing signals from the CKP sensor are detected, the PCM detects a malfunction and stores a DTC.

Monitor Execution, Sequence, Duration, DTC Type

Execution	Continuous
Sequence	None
Duration	-
DTC Type	One drive cycle, MIL on

Enable Conditions

Condition	Minimum	Maximum
Engine speed [ENGINE SPEED]	400 rpm	-

[ ]: HDS Parameter

Malfunction Threshold

Other than 58 pulses are detected during intervals between reference pulses for each crank revolution. This condition has been detected at least 30 times.

Possible Cause

NOTE: The causes shown may not be a complete list of all potential problems, and it is possible that there may be other causes.

- CKP sensor CRKN line electrical noise overlapped
- CKP sensor rotor chipped
- CKP sensor failure
- PCM internal circuit failure

Diagnosis Details

Conditions for setting the DTC

When a malfunction is detected, the MIL comes on and a Pending DTC, a Confirmed DTC, and the freeze data are stored in the PCM memory.

Conditions for clearing the DTC

The MIL is cleared if the malfunction does not return in three consecutive trips in which the diagnostic runs. The MIL, the Pending DTC, the Confirmed DTC, and the freeze data can be cleared with the scan tool Clear command or by disconnecting the 12 volt battery.

DTC P0340 (1.5 L ENGINE)

DTC P0340: Camshaft Position (CMP) Sensor A No Signal

General Description

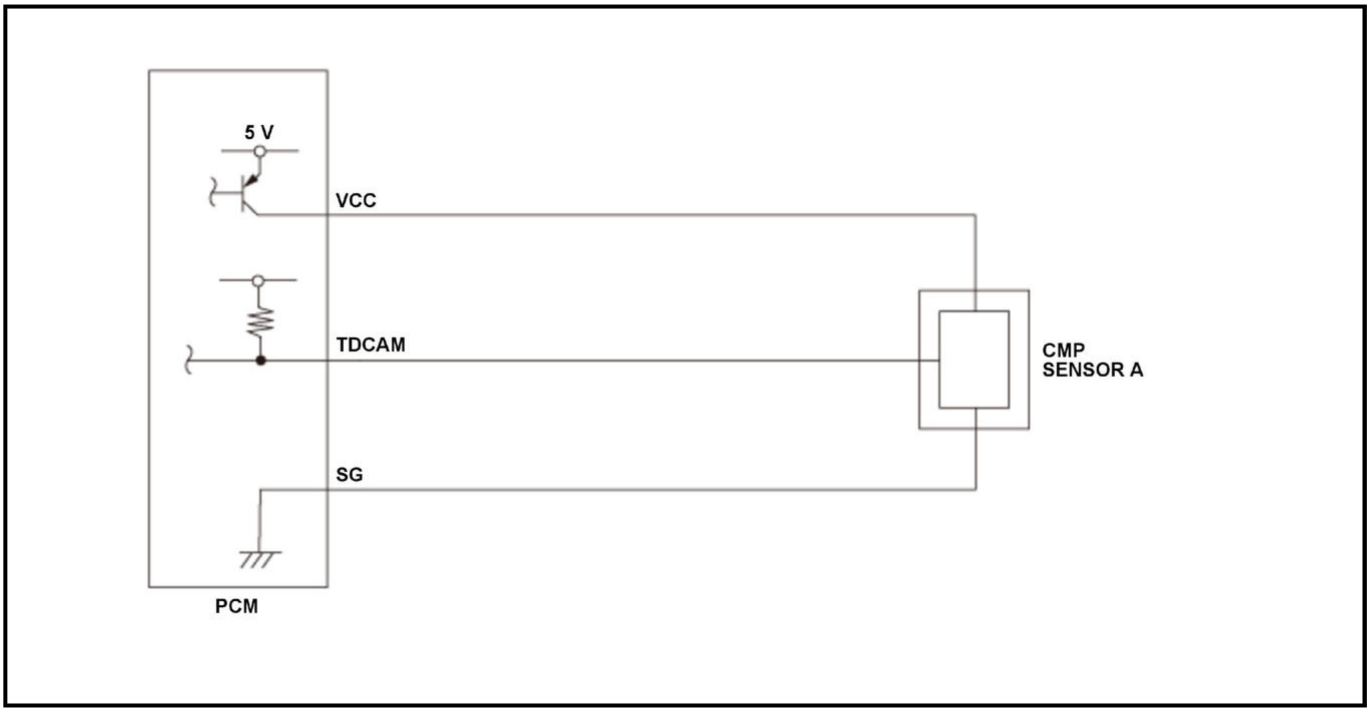

Camshaft position (CMP) sensor A consists of a rotor and a semiconductor that detects rotor position and intake camshaft timing. When the rotor turns after starting the engine, the changes of magnetic flux in the semiconductor are converted into pulsing signals to the powertrain control module (PCM). CMP sensor A also detects the top dead center of each cylinder for fuel injection. The PCM determines the camshaft position according to the signals from the crankshaft position (CKP) sensor and CMP sensor A. If no pulsing signals from CMP sensor A are detected, the PCM detects a malfunction and stores a DTC.

Monitor Execution, Sequence, Duration, DTC Type

Execution	Continuous
Sequence	None
Duration	2 seconds or more (when the engine speed is 750 min -1 (rpm))
DTC Type	One drive cycle, MIL on

Enable Conditions

Condition	B
State of the engine	Running

Malfunction Threshold

No input signals from CMP sensor A are detected while signals from the CKP sensor are detected at least 300 times.

Possible Cause

NOTE: The causes shown may not be a complete list of all potential problems, and it is possible that there may be other causes.

- CMP sensor A TDCAM line open
- CMP sensor A TDCAM line short to ground
- CMP sensor A VCC line open
- CMP sensor A SG line open
- CMP sensor A failure
- PCM internal circuit failure

Diagnosis Details

Conditions for setting the DTC

When a malfunction is detected, the MIL comes on and a Pending DTC, a Confirmed DTC, and the freeze data are stored in the PCM memory.

Conditions for clearing the DTC

The MIL is cleared if the malfunction does not return in three consecutive trips in which the diagnostic runs. The MIL, the Pending DTC, the Confirmed DTC, and the freeze data can be cleared with the scan tool Clear command or by disconnecting the 12 volt battery.

DTC P0340 (2.4 L ENGINE) (2017 2018 2019)

DTC P0340: Camshaft Position (CMP) Sensor A No Signal

General Description

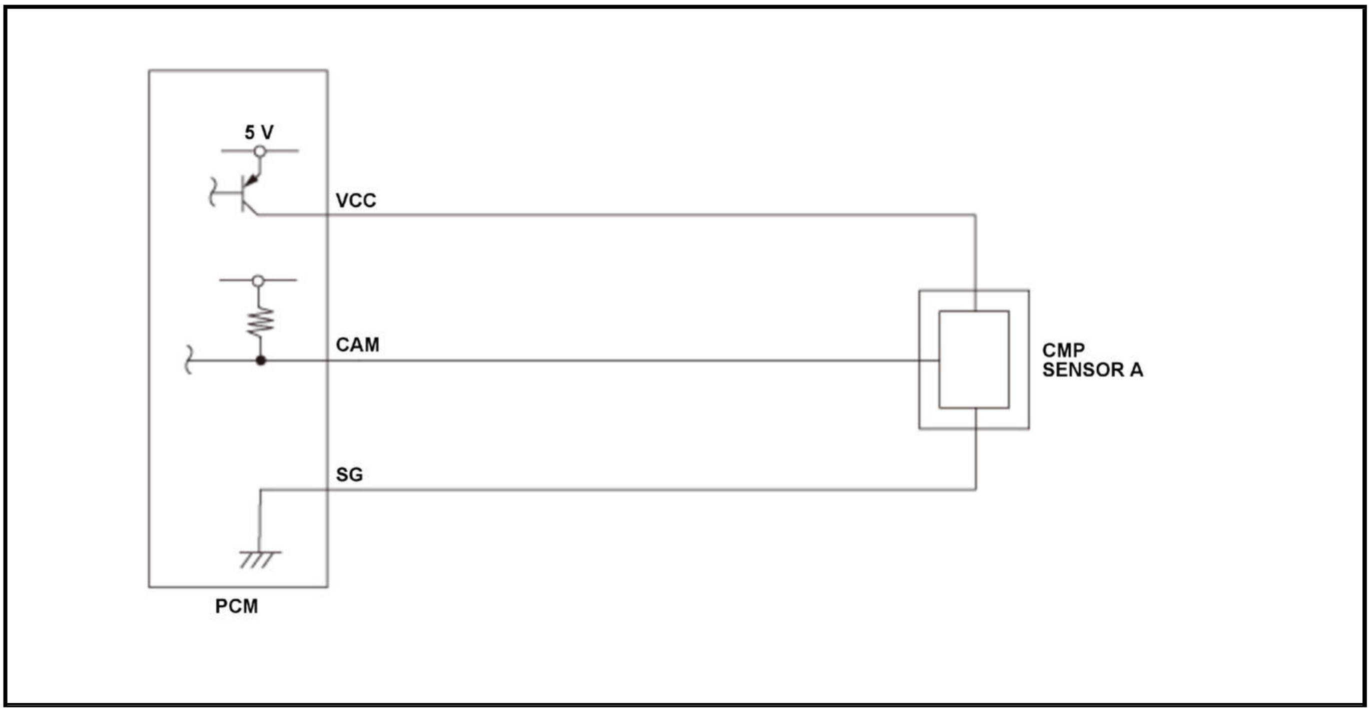

Camshaft position (CMP) sensor A consists of a rotor and a semiconductor that detects rotor position and intake camshaft timing. When the rotor turns after starting the engine, the changes of magnetic flux in the semiconductor are converted into pulsing signals to the powertrain control module (PCM). CMP sensor A also detects the top dead center of each cylinder for fuel injection. The PCM determines the camshaft position according to the signals from the crankshaft position (CKP) sensor and CMP sensor A. If no pulsing signals from CMP sensor A are detected, the PCM detects a malfunction and stores a DTC.

Monitor Execution, Sequence, Duration, DTC Type

Execution	Continuous
Sequence	None
Duration	2 seconds or more (when the engine speed is 750 min -1 (rpm))
DTC Type	Two drive cycles, MIL on

Enable Conditions

Condition	B
State of the engine	Running

Malfunction Threshold

No input signals from CMP sensor A are detected while signals from the CKP sensor are detected at least 300 times.

Possible Cause

NOTE: The causes shown may not be a complete list of all potential problems, and it is possible that there may be other causes.

- CMP sensor A CAM line open
- CMP sensor A CAM line short to ground
- CMP sensor A VCC line open
- CMP sensor A SG line open
- CMP sensor A failure
- PCM internal circuit failure

Diagnosis Details

Conditions for setting the DTC

When a malfunction is detected during the first drive cycle, a Pending DTC is stored in the PCM memory. If the malfunction returns in the next (second) drive cycle, the MIL comes on and a Confirmed DTC and the freeze data are stored.

Conditions for clearing the DTC

The MIL is cleared if the malfunction does not return in three consecutive trips in which the diagnostic runs. The MIL, the Pending DTC, the Confirmed DTC, and the freeze data can be cleared with the scan tool Clear command or by disconnecting the 12 volt battery.

DTC P0341 (1.5 L ENGINE)

DTC P0341: Camshaft Position (CMP) Sensor A and Crankshaft Position (CKP) Sensor Incorrect Phase Detected

General Description

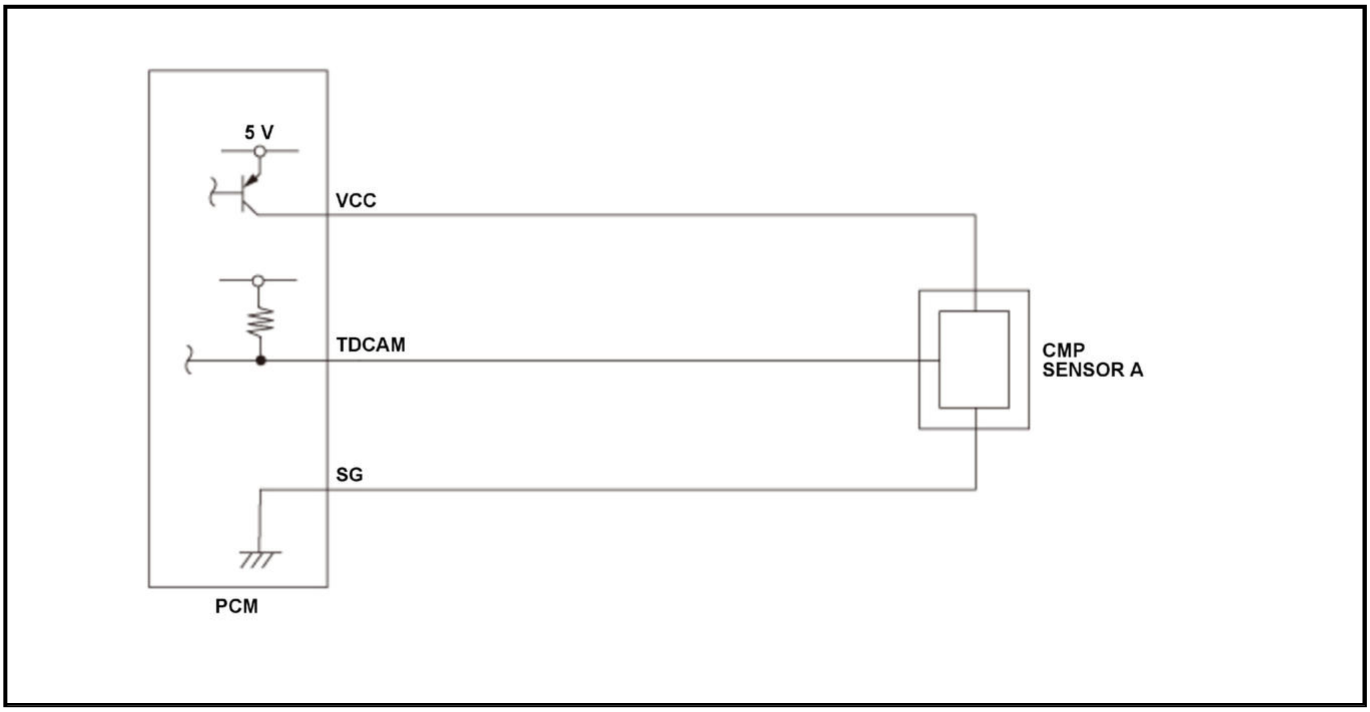

Camshaft position (CMP) sensor A detects the intake camshaft timing and sends pulsing signals to the powertrain control module (PCM). The PCM determines the advance or the retard of the intake camshaft timing according to the signals from the crankshaft position (CKP) sensor and CMP sensor A. If the intake camshaft reference phase value deviates from a set range over a specified time period while the variable valve timing control (VTC) is not activated, the PCM detects a malfunction and stores a DTC.

Monitor Execution, Sequence, Duration, DTC Type

Execution	Continuous
Sequence	None
Duration	4.0 seconds or more
DTC Type	Two drive cycles, MIL on

Enable Conditions

Condition	Minimum	Maximum
Elapse time after starting the engine	1 second	-
Engine speed [ENGINE SPEED]	500 rpm	-
Other	VTC system not operating	

[ ]: HDS Parameter

Malfunction Threshold

The difference between intake camshaft phase measured from CMP sensor A and intake camshaft standard phase value according to the CKP sensor position is 10.0 deg. or more for at least 4 seconds.

Possible Cause

NOTE: The causes shown may not be a complete list of all potential problems, and it is possible that there may be other causes.

- CMP sensor A poor installation
- CMP sensor A stuck
- CMP sensor A range/performance problem
- Cam chain poor installation
- VTC actuator A stuck
- VTC actuator A response delay

Confirmation Procedure

Operating Condition

Start the engine, and let it idle. When the diagnosis does not finish, allow the engine cool to an engine coolant temperature [ECT SENSOR 1] of ambient temperature, then restart the engine, and let it idle.

[ ]: HDS Parameter

With the HDS

None.

Diagnosis Details

Conditions for setting the DTC

When a malfunction is detected during the first drive cycle, a Pending DTC is stored in the PCM memory. If the malfunction returns in the next (second) drive cycle, the MIL comes on and a Confirmed DTC and the freeze data are stored.

Conditions for clearing the DTC

The MIL is cleared if the malfunction does not return in three consecutive trips in which the diagnostic runs. The MIL, the Pending DTC, the Confirmed DTC, and the freeze data can be cleared with the scan tool Clear command or by disconnecting the 12 volt battery.

DTC P0341 (2.4 L ENGINE) (2017 2018 2019)

DTC P0341: Camshaft Position (CMP) Sensor A and Crankshaft Position (CKP) Sensor Incorrect Phase Detected

General Description

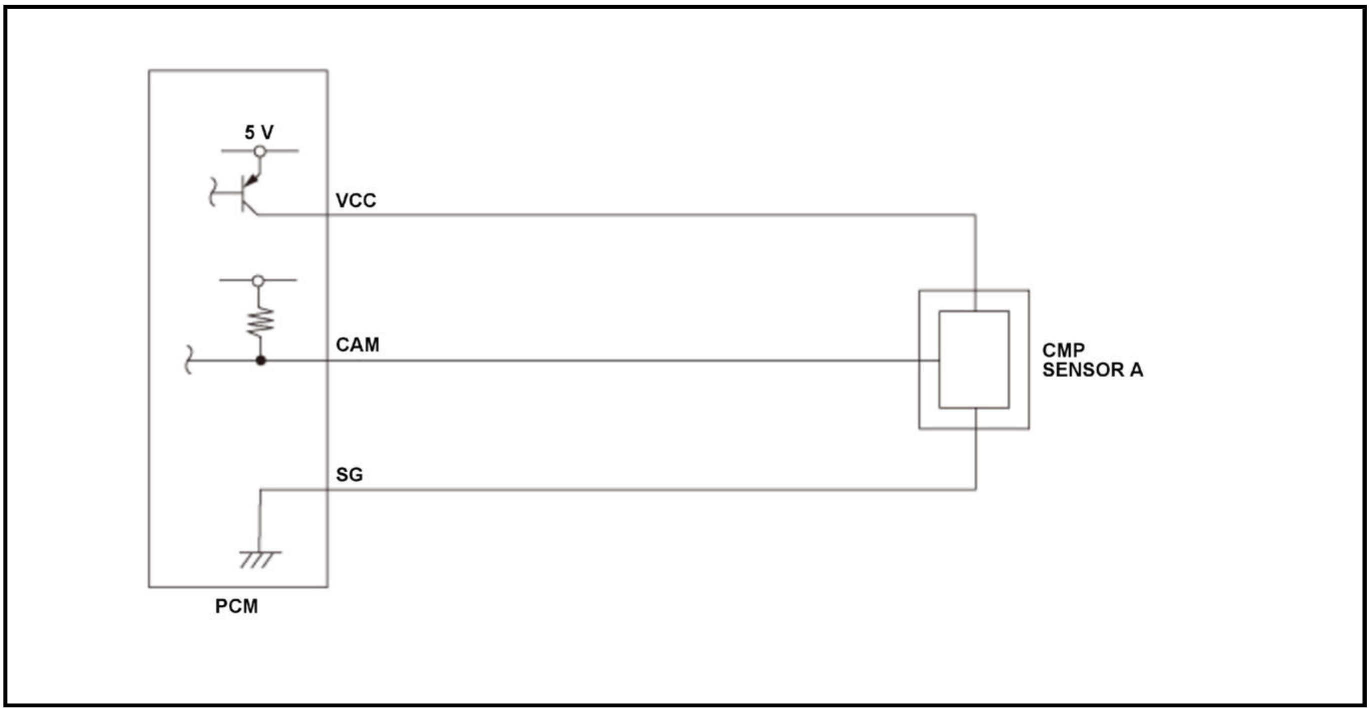

Camshaft position (CMP) sensor A detects the intake camshaft timing and sends pulsing signals to the powertrain control module (PCM). The PCM determines the advance or the retard of the intake camshaft timing according to the signals from the crankshaft position (CKP) sensor and CMP sensor A. If the intake camshaft reference phase value deviates from a set range over a specified time period while the variable valve timing control (VTC) is not activated, the PCM detects a malfunction and stores a DTC.

Monitor Execution, Sequence, Duration, DTC Type

Execution	Continuous
Sequence	None
Duration	4.0 seconds or more
DTC Type	Two drive cycles, MIL on

Enable Conditions

Condition	Minimum	Maximum
Elapse time after starting the engine	1 second	-
Engine speed [ENGINE SPEED]	500 rpm	-
Other	VTC system not operating	

[ ]: HDS Parameter

Malfunction Threshold

The measured intake camshaft phase difference between CMP sensor and CKP sensor is 10 deg. or more for at least 4.0 seconds.

Possible Cause

NOTE: The causes shown may not be a complete list of all potential problems, and it is possible that there may be other causes.

- CMP sensor A poor installation

- CMP sensor A stuck
- CMP sensor A range/performance problem
- Cam chain poor installation
- VTC actuator A stuck
- VTC actuator A response delay

Confirmation Procedure

Operating Condition

Start the engine, and let it idle. When the diagnosis does not finish, allow the engine cool to an engine coolant temperature [ECT SENSOR 1] of ambient temperature, then restart the engine, and let it idle.

[ ]: HDS Parameter

With the HDS

None.

Diagnosis Details

Conditions for setting the DTC

When a malfunction is detected during the first drive cycle, a Pending DTC is stored in the PCM memory. If the malfunction returns in the next (second) drive cycle, the MIL comes on and a Confirmed DTC and the freeze data are stored.

Conditions for clearing the DTC

The MIL is cleared if the malfunction does not return in three consecutive trips in which the diagnostic runs. The MIL, the Pending DTC, the Confirmed DTC, and the freeze data can be cleared with the scan tool Clear command or by disconnecting the 12 volt battery.

DTC P0344 (1.5 L ENGINE)

DTC P0344: Camshaft Position (CMP) Sensor A Circuit Intermittent Interruption

General Description

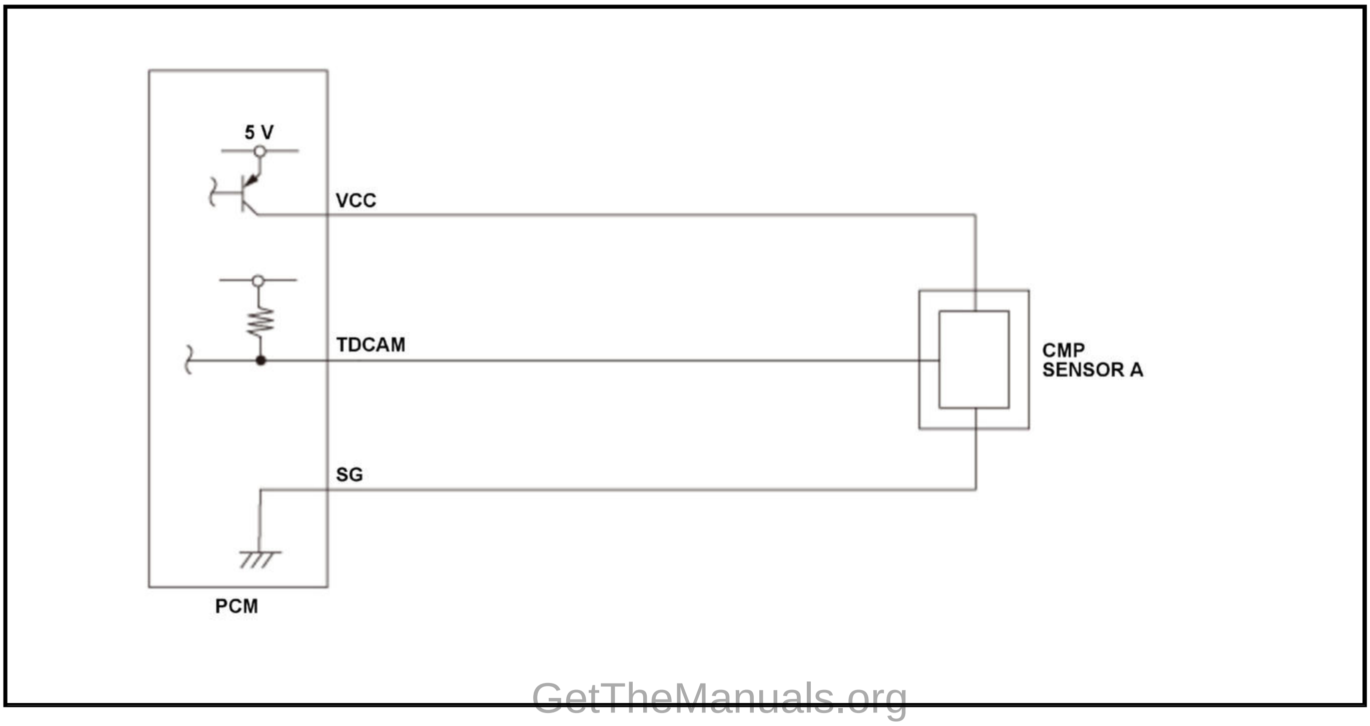

Camshaft position (CMP) sensor A consists of a rotor and a semiconductor that detects rotor position and intake camshaft timing. When the rotor turns after starting the engine, the changes of magnetic flux in the semiconductor are converted into pulsing signals to the powertrain control module (PCM). CMP sensor A also detects the top dead center of each cylinder for fuel injection. The PCM determines the camshaft position according to the signals from the crankshaft position (CKP) sensor and CMP sensor A. If abnormal amount of pulsing signals from CMP sensor A are detected, the PCM detects a malfunction and stores a DTC.

Monitor Execution, Sequence, Duration, DTC Type

Execution	Continuous
Sequence	None
Duration	-
DTC Type	One drive cycle, MIL on

Enable Conditions

Condition	Minimum	Maximum
Engine speed[ENGINE SPEED]	400 min -1 (rpm)	-

[ ]: HDS Parameter

Malfunction Threshold

Other than 6 pulses are detected during two crankshaft revolutions. This condition has been detected at least 30 times.

Possible Cause

NOTE: The causes shown may not be a complete list of all potential problems, and it is possible that there may be other causes.

- CMP sensor A TDCAM line electrical noise overlapped
- CMP sensor A rotor chipped
- CMP sensor A failure
- PCM internal circuit failure

Diagnosis Details

Conditions for setting the DTC

When a malfunction is detected, the MIL comes on and a Pending DTC, a Confirmed DTC, and the freeze data are stored in the PCM memory.

Conditions for clearing the DTC

The MIL is cleared if the malfunction does not return in three consecutive trips in which the diagnostic runs. The MIL, the Pending DTC, the Confirmed DTC, and the freeze data can be cleared with the scan tool Clear command or by disconnecting the 12 volt battery.

DTC P0344 (2.4 L ENGINE) (2017 2018 2019)

DTC P0344: Camshaft Position (CMP) Sensor A Circuit Intermittent Interruption

General Description

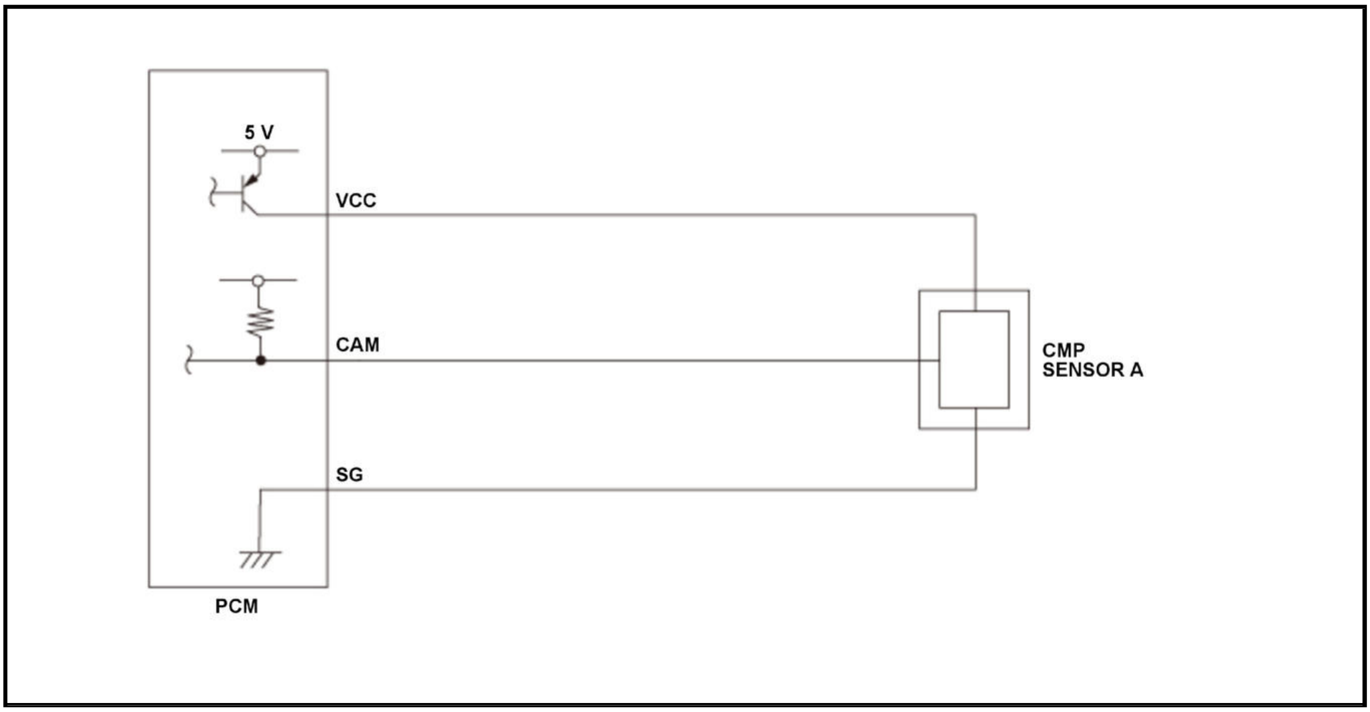

Camshaft position (CMP) sensor A consists of a rotor and a semiconductor that detects rotor position and intake camshaft timing. When the rotor turns after starting the engine, the changes of magnetic flux in the semiconductor are converted into pulsing signals to the powertrain control module (PCM). CMP sensor A also detects the top dead center of each cylinder for fuel injection. The PCM determines the camshaft position according to the signals from the crankshaft position (CKP) sensor and CMP sensor A. If abnormal amount of pulsing signals from CMP sensor A are detected, the PCM detects a malfunction and stores a DTC.

Monitor Execution, Sequence, Duration, DTC Type

Execution	Continuous
Sequence	None
Duration	-
DTC Type	Two drive cycles, MIL on

Enable Conditions

Condition	Minimum	Maximum
Engine speed[ENGINE SPEED]	400 rpm	-

[ ]: HDS Parameter

Malfunction Threshold

Other than 6 pulses are detected during two crankshaft revolutions. This condition has been detected at least 30 times.

Possible Cause

NOTE: The causes shown may not be a complete list of all potential problems, and it is possible that there may be other causes.

- CMP sensor A CAM line electrical noise overlapped
- CMP sensor A rotor chipped
- CMP sensor A failure
- PCM internal circuit failure

Diagnosis Details

Conditions for setting the DTC

When a malfunction is detected during the first drive cycle, a Pending DTC is stored in the PCM memory. If the malfunction returns in the next (second) drive cycle, the MIL comes on and a Confirmed DTC and the freeze data are stored.

Conditions for clearing the DTC

The MIL is cleared if the malfunction does not return in three consecutive trips in which the diagnostic runs. The MIL, the Pending DTC, the Confirmed DTC, and the freeze data can be cleared with the scan tool Clear command or by disconnecting the 12 volt battery.

DTC P0351, P0352, P0353, P0354 (1.5 L ENGINE)

DTC P0351: No. 1 Cylinder Ignition Coil Circuit Malfunction **DTC P0352:** No. 2 Cylinder Ignition Coil Circuit Malfunction **DTC P0353:** No. 3 Cylinder Ignition Coil Circuit Malfunction **DTC P0354:** No. 4 Cylinder Ignition Coil Circuit Malfunction

General Description

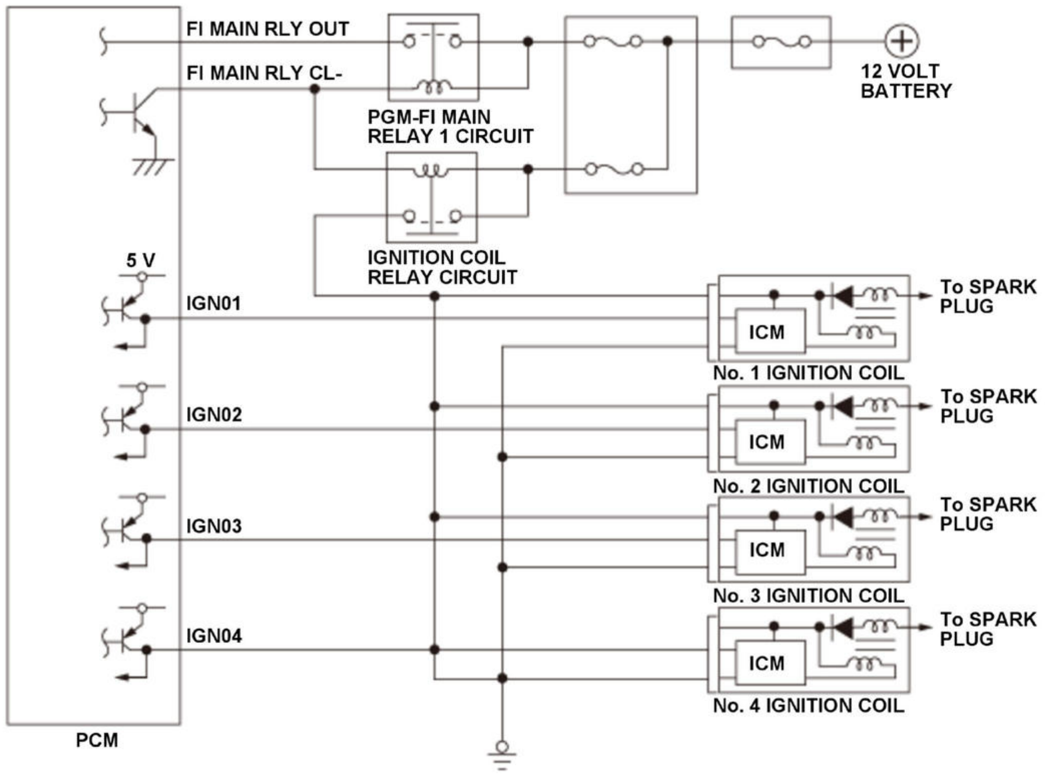
FI MAIN RLY OUT
FI MAIN RLY CL-
PGM-FI MAIN
RELAY 1 CIRCUIT
12 VOLT
BATTERY
IGNITION COIL
RELAY CIRCUIT
5 V
IGN01
IGN02
IGN03
IGN04
ICM
No. 1 IGNITION COIL
No. 2 IGNITION COIL
No. 3 IGNITION COIL
No. 4 IGNITION COIL
To SPARK
PLUG
PCM

The ignition coil is triggered at the optimum time by the powertrain control module (PCM) ON/OFF command. The PCM detects a malfunction when the engine is running and the return signal does not change for a specified time, the PCM detects a malfunction and stores a DTC.

Monitor Execution, Sequence, Duration, DTC Type

Execution	Continuous
Sequence	None

Duration	5 seconds or more (when the engine speed is 700 min -1 (rpm))
DTC Type	One drive cycle, MIL on

Enable Conditions

Condition	B
State of the engine	Running

Malfunction Threshold

The return signal does not change for at least 5 seconds when the ignition coil is triggered.

Possible Cause

NOTE: The causes shown may not be a complete list of all potential problems, and it is possible that there may be other causes.

DTC: P0351

- No. 1 ignition coil IGN01 line open
- No. 1 ignition coil IGN01 line short to ground

DTC: P0352

- No. 2 ignition coil IGN02 line open
- No. 2 ignition coil IGN02 line short to ground

DTC: P0353

- No. 3 ignition coil IGN03 line open
- No. 3 ignition coil IGN03 line short to ground

DTC: P0354

- No. 4 ignition coil IGN04 line open
- No. 4 ignition coil IGN04 line short to ground

Common

- Ignition coil power supply line open
- Ignition coil ground line open
- Ignition coil internal circuit failure
- PCM internal circuit failure

Diagnosis Details

Conditions for setting the DTC

When a malfunction is detected, the MIL comes on and a Pending DTC, a Confirmed DTC, and the freeze data are stored in the PCM memory.

Conditions for clearing the DTC

The MIL is cleared if the malfunction does not return in three consecutive trips in which the diagnostic runs. The MIL, the Pending DTC, the Confirmed DTC, and the freeze data can be cleared with the scan tool Clear command or by disconnecting the 12 volt battery.

DTC P0351, P0352, P0353, P0354 (2.4 L ENGINE) (2017 2018 2019)

DTC P0351: No. 1 Cylinder Ignition Coil Circuit Malfunction **DTC P0352:** No. 2 Cylinder Ignition Coil Circuit Malfunction **DTC P0353:** No. 3 Cylinder Ignition Coil Circuit Malfunction **DTC P0354:** No. 4 Cylinder Ignition Coil Circuit Malfunction

General Description

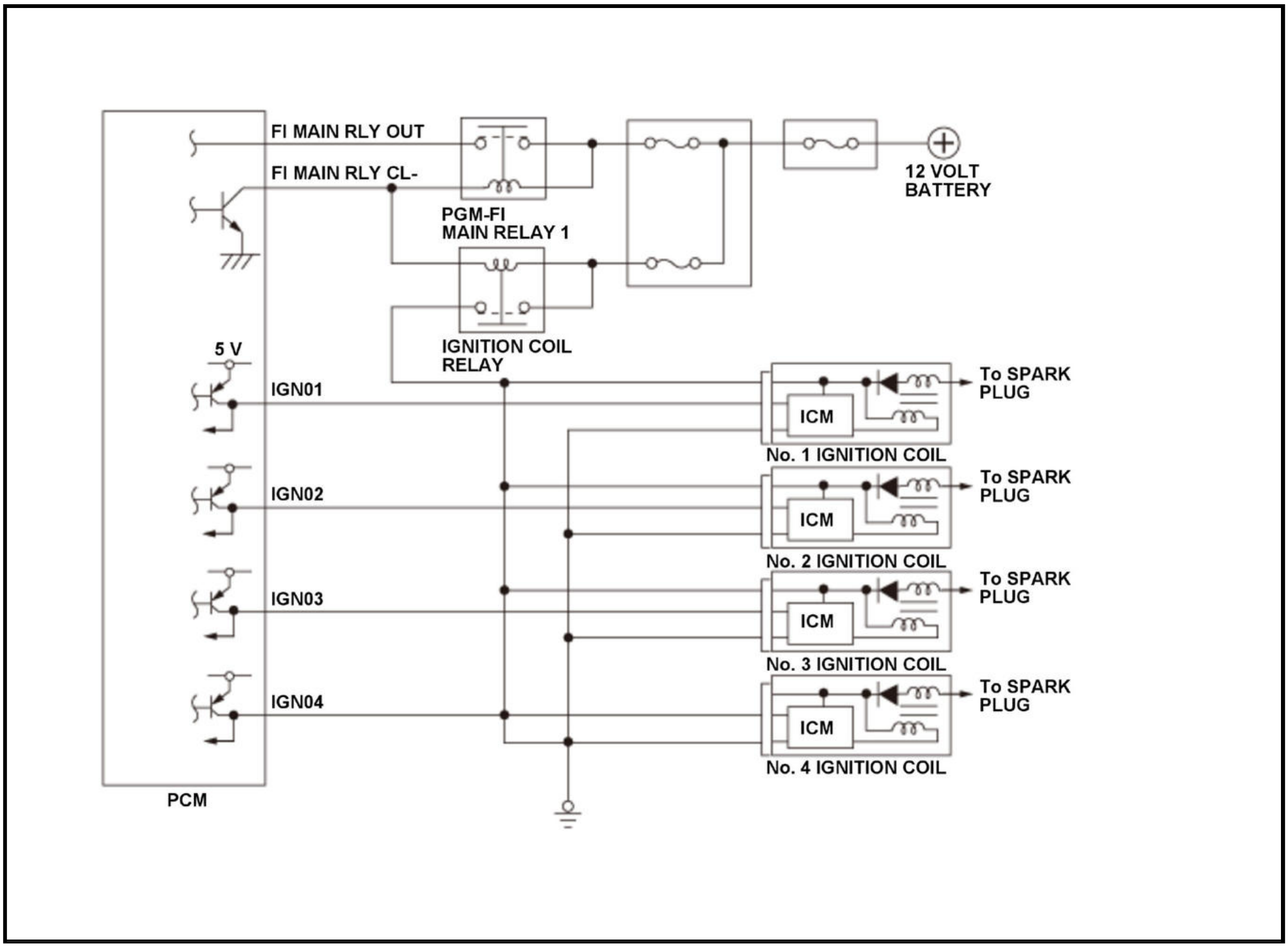
FI MAIN RLY OUT
FI MAIN RLY CL-
PGM-FI
MAIN RELAY 1
12 VOLT
BATTERY
IGNITION COIL
RELAY
5 V
IGN01
IGN02
IGN03
IGN04
ICM
No. 1 IGNITION COIL
No. 2 IGNITION COIL
No. 3 IGNITION COIL
No. 4 IGNITION COIL
To SPARK
PLUG
PCM

The ignition coil is triggered at the optimum time by the powertrain control module (PCM) ON/OFF command. The PCM detects a malfunction when the engine is running and the return signal does not change for a specified time, the PCM detects a malfunction and stores a DTC.

Monitor Execution, Sequence, Duration, DTC Type

Execution	Continuous
Sequence	None
Duration	5 seconds or more (when the engine speed is 700 min -1 (rpm))
DTC Type	One drive cycle, MIL on

Enable Conditions

Condition	B
State of the engine	Running

Malfunction Threshold

The return signal does not change for at least 5 seconds when the ignition coil is triggered.

Possible Cause

NOTE: The causes shown may not be a complete list of all potential problems, and it is possible that there may be other causes.

DTC: P0351

- No. 1 ignition coil IGN01 line open
- No. 1 ignition coil IGN01 line short to ground

DTC: P0352

- No. 2 ignition coil IGN02 line open
- No. 2 ignition coil IGN02 line short to ground

DTC: P0353

- No. 3 ignition coil IGN03 line open
- No. 3 ignition coil IGN03 line short to ground

DTC: P0354

- No. 4 ignition coil IGN04 line open
- No. 4 ignition coil IGN04 line short to ground

Common

- Ignition coil power supply line open
- Ignition coil ground line open
- Ignition coil internal circuit failure
- PCM internal circuit failure

Diagnosis Details

Conditions for setting the DTC

When a malfunction is detected, the MIL comes on and a Pending DTC, a Confirmed DTC, and the freeze data are stored in the PCM memory.

Conditions for clearing the DTC

The MIL is cleared if the malfunction does not return in three consecutive trips in which the diagnostic runs. The MIL, the Pending DTC, the Confirmed DTC, and the freeze data can be cleared with the scan tool Clear command or by disconnecting the 12 volt battery.

DTC P0365 (1.5 L ENGINE)

DTC P0365: Camshaft Position (CMP) Sensor B Circuit No Signal

General Description

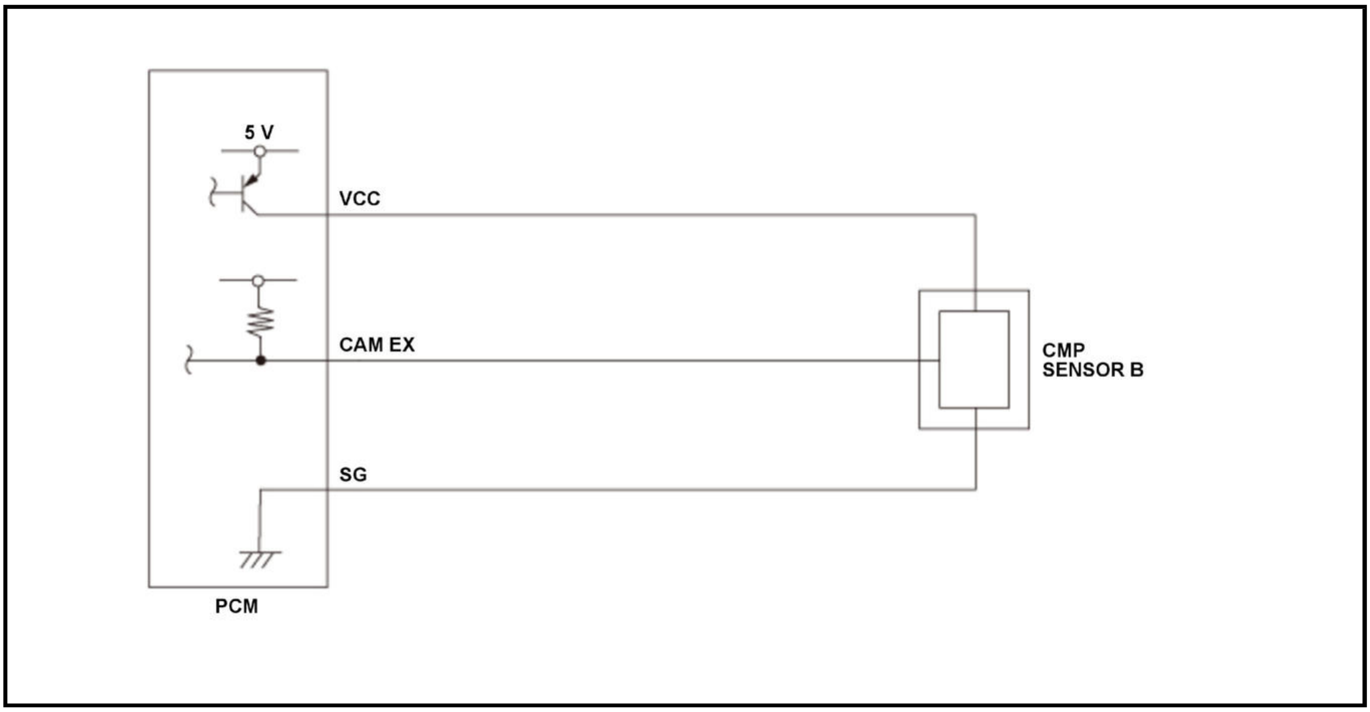

Camshaft position (CMP) sensor B consists of a rotor and a semiconductor that detects rotor position. When the rotor turns after starting the engine, the changes of magnetic flux in the semiconductor are converted into pulsing signals to the powertrain control module (PCM). The PCM determines exhaust camshaft timing position according to the pulsing signals from CMP sensor B and the crankshaft position (CKP) sensor. If no CMP sensor B pulsing signals are detected, the PCM detects a malfunction and stores a DTC.

Monitor Execution, Sequence, Duration, DTC Type

Execution	Continuous
Sequence	None
Duration	2 seconds or more (when the engine speed is 750 min -1 (rpm))
DTC Type	One drive cycle, MIL on

Enable Conditions

Condition	B
State of the engine	Running

Malfunction Threshold

No input signals from CMP sensor B are detected while signals from the CKP sensor are detected at least 50 times.

Possible Cause

NOTE: The causes shown may not be a complete list of all potential problems, and it is possible that there may be other causes.

- CMP sensor B CAM EX line open
- CMP sensor B CAM EX line short to ground
- CMP sensor B VCC line open
- CMP sensor B SG line open
- CMP sensor B failure
- PCM internal circuit failure

Diagnosis Details

Conditions for setting the DTC

When a malfunction is detected, the MIL comes on and a Pending DTC, a Confirmed DTC, and the freeze data are stored in the PCM memory.

Conditions for clearing the DTC

The MIL is cleared if the malfunction does not return in three consecutive trips in which the diagnostic runs. The MIL, the Pending DTC, the Confirmed DTC, and the freeze data can be cleared with the scan tool Clear command or by disconnecting the 12 volt battery.

DTC P0365 (2.4 L ENGINE) (2017 2018 2019)

DTC P0365: Camshaft Position (CMP) Sensor B No Signal

General Description

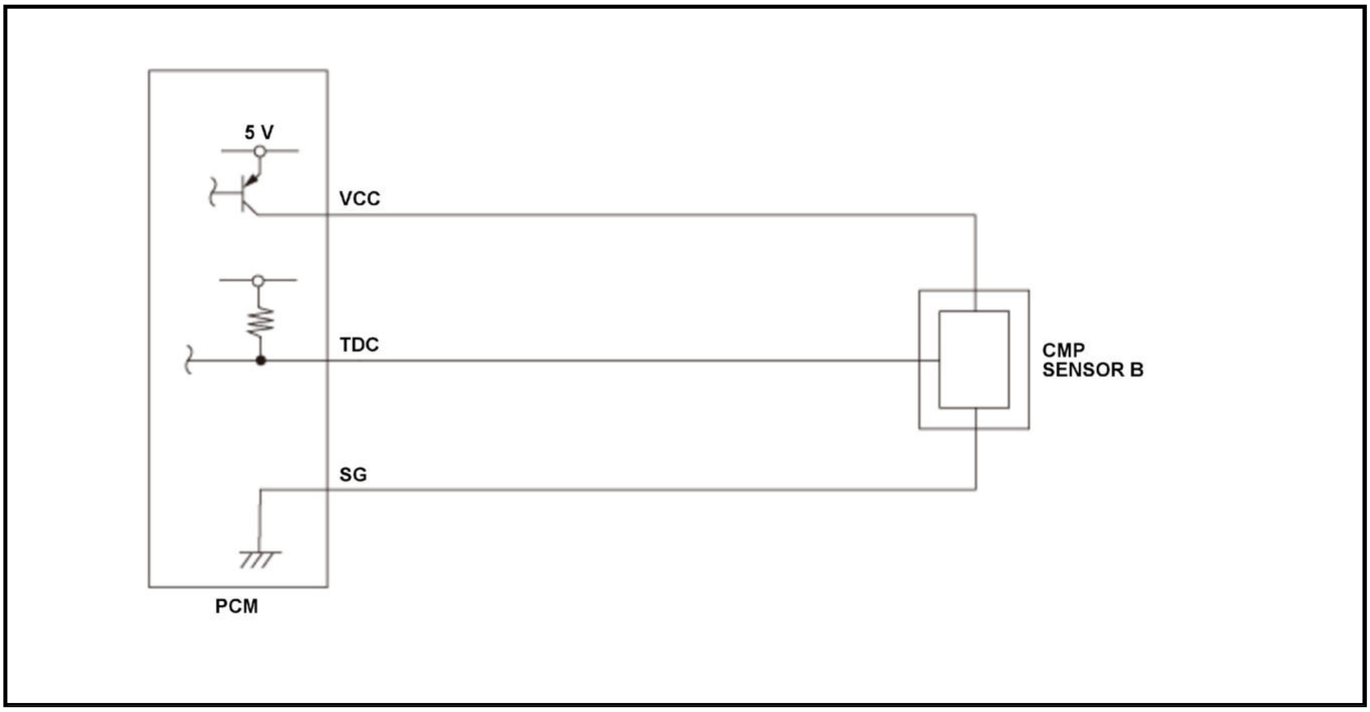

Camshaft position (CMP) sensor B consists of a rotor and a semiconductor that detects rotor position. When the rotor turns after starting the engine, the changes of magnetic flux in the semiconductor are converted into pulsing signals to the powertrain control module (PCM). The PCM determines exhaust camshaft timing position according to the pulsing signals from CMP sensor B and the crankshaft position (CKP) sensor. If no CMP sensor B pulsing signals are detected, the PCM detects a malfunction and stores a DTC.

Monitor Execution, Sequence, Duration, DTC Type

Execution	Continuous
Sequence	None
Duration	2 seconds or more (when the engine speed is 750 rpm)
DTC Type	One drive cycle, MIL on

Enable Conditions

Condition	B
State of the engine	Running

Malfunction Threshold

No input signals from CMP sensor B are detected while signals from the CKP sensor are detected at least 300 times.

Possible Cause

NOTE: The causes shown may not be a complete list of all potential problems, and it is possible that there may be other causes.

- CMP sensor B TDC line open
- CMP sensor B TDC line short to ground
- CMP sensor B VCC line open
- CMP sensor B SG line open
- CMP sensor B failure
- PCM internal circuit failure

Diagnosis Details

Conditions for setting the DTC

When a malfunction is detected, the MIL comes on and a Pending DTC, a Confirmed DTC, and the freeze data are stored in the PCM memory.

Conditions for clearing the DTC

The MIL is cleared if the malfunction does not return in three consecutive trips in which the diagnostic runs. The MIL, the Pending DTC, the Confirmed DTC, and the freeze data can be cleared with the scan tool Clear command or by disconnecting the 12 volt battery.

DTC P0366 (1.5 L ENGINE)

DTC P0366: Camshaft Position (CMP) Sensor B and Crankshaft Position (CKP) Sensor Incorrect Phase Detected

General Description

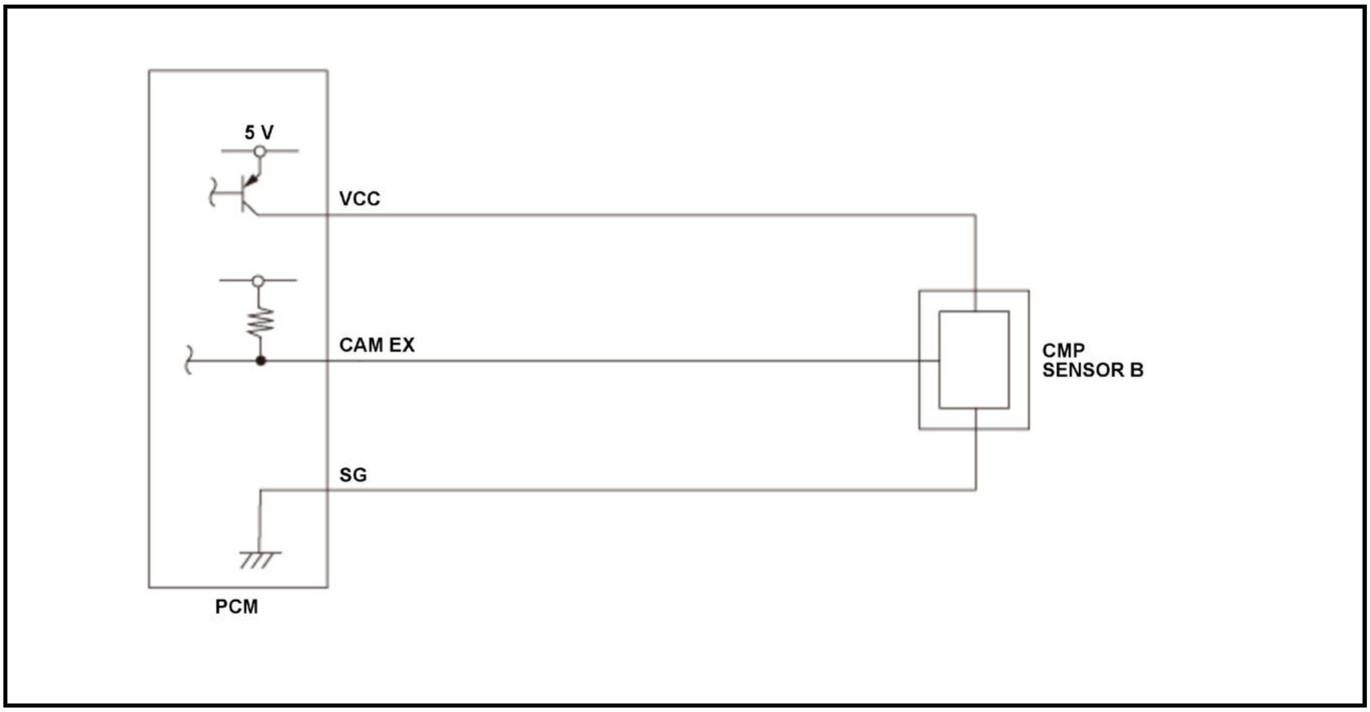

Camshaft position (CMP) sensor B detects the exhaust camshaft timing and sends pulsing signals to the powertrain control module (PCM). The PCM determines the advance or the retard of the exhaust camshaft timing according to the signals from the crankshaft position (CKP) sensor and CMP sensor B. If the exhaust camshaft reference phase value deviates from a set range over a specified time period while the variable valve timing control (VTC) is not activated, the PCM detects a malfunction and stores a DTC.

Monitor Execution, Sequence, Duration, DTC Type

Execution	Continuous
Sequence	None
Duration	4.0 seconds or more
DTC Type	Two drive cycles, MIL on

Enable Conditions

Condition	Minimum	Maximum
Elapse time after starting the engine	1.0 second	-
Engine speed [ENGINE SPEED]	500 rpm	-
Other	VTC system not operating	

[ ]: HDS Parameter

Malfunction Threshold

The difference between exhaust camshaft phase measured from CMP sensor B and exhaust camshaft standard phase value according to the CKP sensor position is 10.0 deg. or more for at least 4.0 seconds.

Possible Cause

NOTE: The causes shown may not be a complete list of all potential problems, and it is possible that there may be other causes.

- VTC actuator B stuck
- VTC actuator B phase deviation
- VTC oil control solenoid valve B stuck
- VTC actuator B failure (return spring cut)
- VTC system abnormal low oil pressure

Confirmation Procedure

Operating Condition

Start the engine, and let it idle. When the diagnosis does not finish, allow the engine cool to an engine coolant temperature [ECT SENSOR 1] of ambient temperature, then restart the engine, and let it idle.

[ ]: HDS Parameter

With the HDS

None.

Diagnosis Details

Conditions for setting the DTC

When a malfunction is detected during the first drive cycle, a Pending DTC is stored in the PCM memory. If the malfunction returns in the next (second) drive cycle, the MIL comes on and a Confirmed DTC and the

freeze data are stored.

Conditions for clearing the DTC

The MIL is cleared if the malfunction does not return in three consecutive trips in which the diagnostic runs. The MIL, the Pending DTC, the Confirmed DTC, and the freeze data can be cleared with the scan tool Clear command or by disconnecting the 12 volt battery.

DTC P0369 (1.5 L ENGINE)

DTC P0369: Camshaft Position (CMP) Sensor B Circuit Intermittent Interruption

General Description

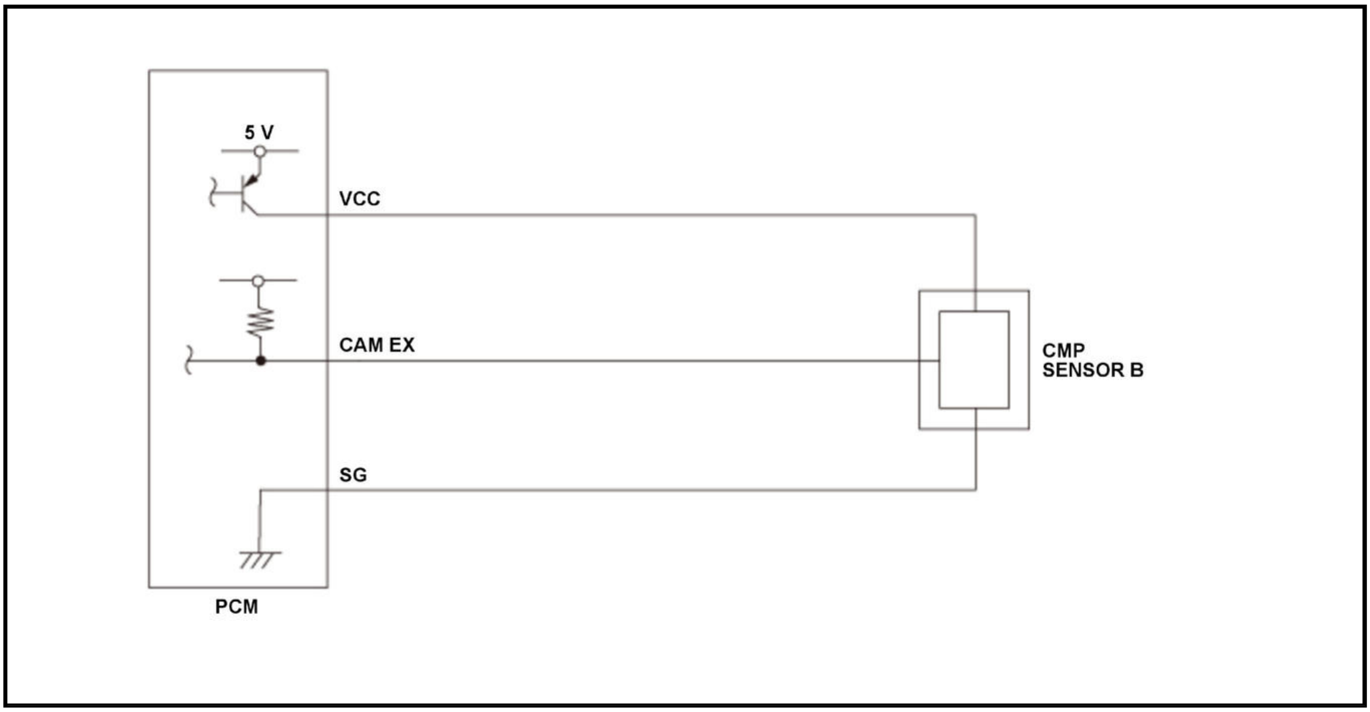

Camshaft position (CMP) sensor B consists of a rotor and a semiconductor that detects rotor position. When the rotor turns after starting the engine, the changes of magnetic flux in the semiconductor are converted into pulsing signals to the powertrain control module (PCM). The PCM determines exhaust camshaft timing position according to the pulsing signals from CMP sensor B and the crankshaft position (CKP) sensor. If abnormal amount of pulsing signals from CMP sensor B are detected, the PCM detects a malfunction and stores a DTC.

Monitor Execution, Sequence, Duration, DTC Type

Execution	Continuous
Sequence	None
Duration	-
DTC Type	One drive cycle, MIL on

Enable Conditions

Condition	Minimum	Maximum
Engine speed[ENGINE SPEED]	400 rpm	-

[ ]: HDS Parameter

Malfunction Threshold

The PCM detects abnormal pulsing signals from CMP sensor B at least 60 times.

Possible Cause

NOTE: The causes shown may not be a complete list of all potential problems, and it is possible that there may be other causes.

- CMP sensor B CAM EX line electrical noise overlapped
- CMP sensor B rotor chipped
- CMP sensor B failure
- PCM internal circuit failure

Diagnosis Details

Conditions for setting the DTC

When a malfunction is detected, the MIL comes on and a Pending DTC, a Confirmed DTC, and the freeze data are stored in the PCM memory.

Conditions for clearing the DTC

The MIL is cleared if the malfunction does not return in three consecutive trips in which the diagnostic runs. The MIL, the Pending DTC, the Confirmed DTC, and the freeze data can be cleared with the scan tool Clear command or by disconnecting the 12 volt battery.

DTC P0369 (2.4 L ENGINE) (2017 2018 2019)

DTC P0369: Camshaft Position (CMP) Sensor B Circuit Intermittent Interruption

General Description

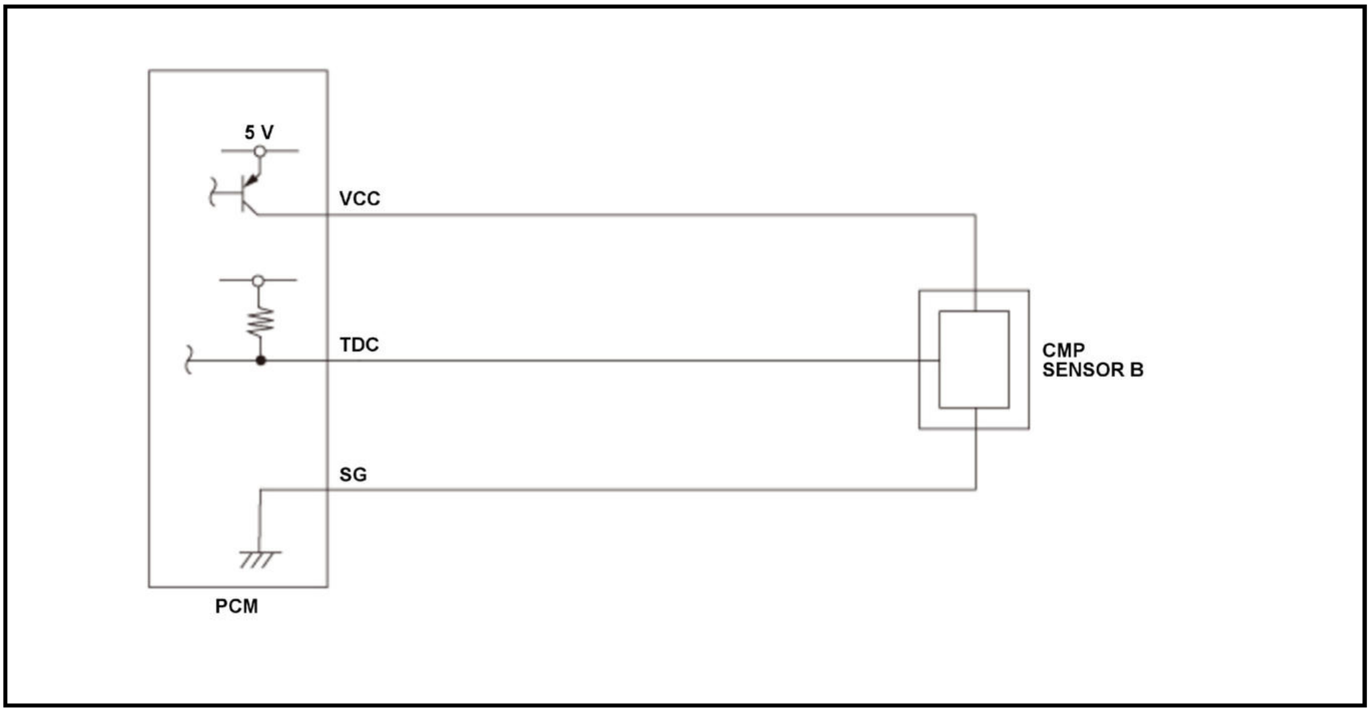

Camshaft position (CMP) sensor B consists of a rotor and a semiconductor that detects rotor position. When the rotor turns after starting the engine, the changes of magnetic flux in the semiconductor are converted into pulsing signals to the powertrain control module (PCM). The PCM determines exhaust camshaft timing position according to the pulsing signals from CMP sensor B and the crankshaft position (CKP) sensor. If abnormal amount of pulsing signals from CMP sensor B are detected, the PCM detects a malfunction and stores a DTC.

Monitor Execution, Sequence, Duration, DTC Type

Execution	Continuous
Sequence	None
Duration	-
DTC Type	One drive cycle, MIL on

Enable Conditions

Condition	Minimum	Maximum
Engine speed[ENGINE SPEED]	400 rpm	-

[ ]: HDS Parameter

Malfunction Threshold

Other than 6 CMP pulses are detected during two crankshaft revolutions. This condition has been detected at least 30 times.

Possible Cause

NOTE: The causes shown may not be a complete list of all potential problems, and it is possible that there may be other causes.

- CMP sensor B TDC line electrical noise overlapped
- CMP sensor B rotor chipped
- CMP sensor B failure
- PCM internal circuit failure

Diagnosis Details

Conditions for setting the DTC

When a malfunction is detected, the MIL comes on and a Pending DTC, a Confirmed DTC, and the freeze data are stored in the PCM memory.

Conditions for clearing the DTC

The MIL is cleared if the malfunction does not return in three consecutive trips in which the diagnostic runs. The MIL, the Pending DTC, the Confirmed DTC, and the freeze data can be cleared with the scan tool Clear command or by disconnecting the 12 volt battery.

DTC P0420 (1.5 L ENGINE)

DTC P0420: Catalyst System Efficiency Below Threshold

General Description

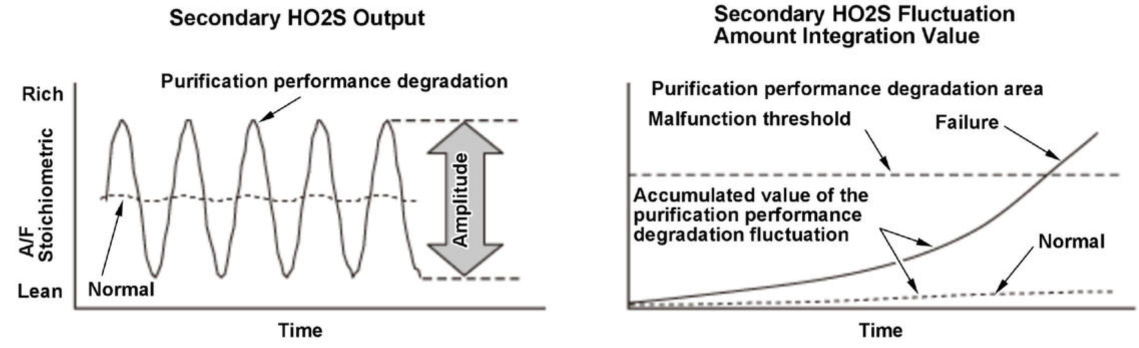

Degradation failure of catalyst is detected by monitoring amplitude of secondary HO2S output

The three way catalytic converter (TWC) converts hydrocarbons (HC), carbon monoxide (CO), and oxides of nitrogen (NOx) in the exhaust gas to water vapor, carbon dioxide (CO 2), and dinitrogen (N 2). The powertrain control module (PCM) fluctuates the air/fuel ratio temporarily to detect the performance of the TWC and measures the degree of fluctuation in the secondary heated oxygen sensor (secondary HO2S (sensor 2)) output. If the accumulated value for a set time is too great, deterioration of the performance of the catalyst is detected, the PCM detects a malfunction and stores a DTC.

Monitor Execution, Sequence, Duration, DTC Type

Execution	Once per driving cycle
Sequence	None
Duration	7.5 seconds or more
DTC Type	Two drive cycles, MIL on

Enable Conditions

Condition	Minimum	Maximum
Elapsed time that secondary HO2S activity is not monitored after starting the engine	15 seconds	-
Engine coolant temperature [ECT SENSOR 1]	156 deg. F (69 deg. C)	-
Intake air temperature [IAT Sensor (1)]	-13 deg. F (-25 deg. C)	-
Estimated TWC temperature	986 deg. F (530 deg. C)	-
Vehicle speed [VEHICLE SPEED]	26 mph (41 km/h)	-
Fuel trim	0.75	1.47
Fuel feedback	Closed loop at stoichiometric	
Monitoring priority	P0133	
Other	Has record of deceleration at least once	
	Cruise load or more	

[ ]: HDS Parameter

Malfunction Threshold

The secondary HO2S (sensor 2) fluctuation integration value is 3.0 V or more for at least 7.5 seconds.

Possible Cause

NOTE: The causes shown may not be a complete list of all potential problems, and it is possible that there may be other causes.

- TWC purification performance deterioration
- Secondary HO2S (sensor 2) line electrical noise overlapped
- Secondary HO2S (sensor 2) connector loose connection
- Exhaust system change (non-genuine part)

Confirmation Procedure

Operating Condition

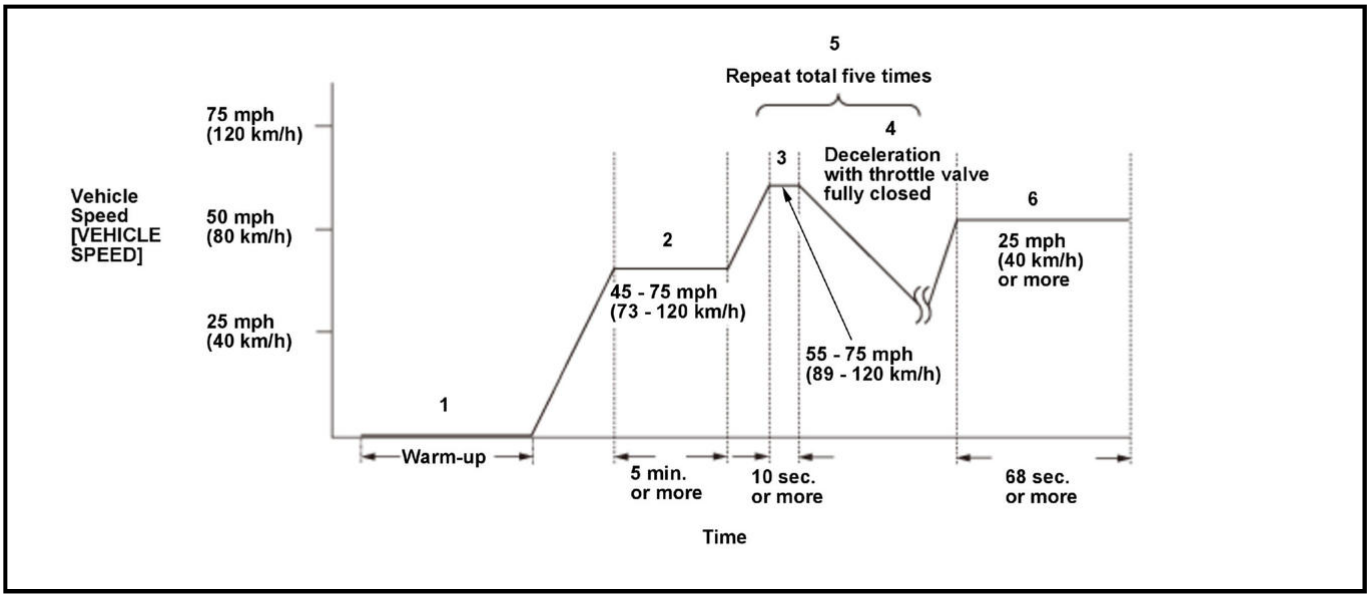

- Start the engine. Hold the engine speed [ENGINE SPEED] at 3, 000 rpm without load (in P or N) until the radiator fan comes on.
- Drive the vehicle at a speed between 45 - 75 mph (73 - 120 km/h) for at least 5 minutes, to warm up the TWC.
- Drive at a steady speed between 55 - 75 mph (89 - 120 km/h) for at least 10 seconds.
- Decelerate with the throttle valve fully closed.
- Repeat driving pattern steps 3 through 4, five times.
- Drive at steady speed 25 mph (40 km/h) or more for at least 68 seconds.

- After disconnecting the 12 volt battery, extend Driving Pattern step 6 to 4 minutes or longer.
- Drive the vehicle in this manner only if the traffic regulations and ambient conditions allow.

[ ]: HDS Parameter

With the HDS

None.

Diagnosis Details

Conditions for setting the DTC

When a malfunction is detected during the first drive cycle, a Pending DTC is stored in the PCM memory. If the malfunction returns in the next (second) drive cycle, the MIL comes on and a Confirmed DTC and the freeze data are stored.

Conditions for clearing the DTC

The MIL is cleared if the malfunction does not return in three consecutive trips in which the diagnostic runs. The MIL, the Pending DTC, the Confirmed DTC, and the freeze data can be cleared with the scan tool Clear command or by disconnecting the 12 volt battery.

DTC P0420 (2.4 L ENGINE) (2017 2018 2019)

DTC P0420: Catalyst System Efficiency Below Threshold

General Description

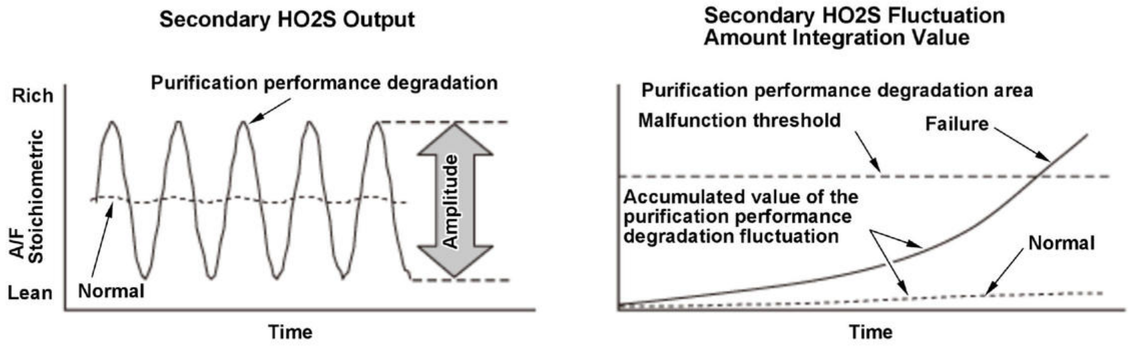

Degradation failure of catalyst is detected by monitoring amplitude of secondary HO2S output

The three way catalytic converter (TWC) converts hydrocarbons (HC), carbon monoxide (CO), and oxides of nitrogen (NOx) in the exhaust gas to water vapor, carbon dioxide (CO 2), and dinitrogen (N 2). The powertrain control module (PCM) fluctuates the air/fuel ratio temporarily to detect the performance of the TWC and measures the degree of fluctuation in the secondary heated oxygen sensor (secondary HO2S (sensor 2)) output. If the accumulated value for a set time is too great, deterioration of the performance of the catalyst is detected, the PCM detects a malfunction and stores a DTC.

Monitor Execution, Sequence, Duration, DTC Type

Execution	Once per driving cycle
Sequence	None
Duration	7.5 seconds or more
DTC Type	Two drive cycles, MIL on

Enable Conditions

Condition	Minimum	Maximum
Elapsed time that secondary HO2S activity is not monitored after starting the engine	15 seconds	-
Engine coolant temperature [ECT SENSOR 1]	156 deg. F (69 deg. C)	-
Intake air temperature [IAT Sensor (1)]	-13 deg. F (-25 deg. C)	-
Estimated TWC temperature	1, 202 deg. F (650 deg. C)	-
Vehicle speed [VEHICLE SPEED]	26 mph (41 km/h)	-
Fuel trim	0.69	1.47
Fuel feedback	Closed loop at stoichiometric	
Monitoring priority	P0133	
Other	Has record of deceleration at least once	

Condition	Minimum	Maximum
	Cruise load or more	

[ ]: HDS Parameter

Malfunction Threshold

The secondary HO2S (sensor 2) fluctuation integration value is 3.0 V or more for at least 7.5 seconds.

Possible Cause

NOTE: The causes shown may not be a complete list of all potential problems, and it is possible that there may be other causes.

- TWC purification performance deterioration
- Secondary HO2S (sensor 2) line electrical noise overlapped
- Secondary HO2S (sensor 2) connector loose connection
- Exhaust system change (non-genuine part)

Confirmation Procedure

Operating Condition

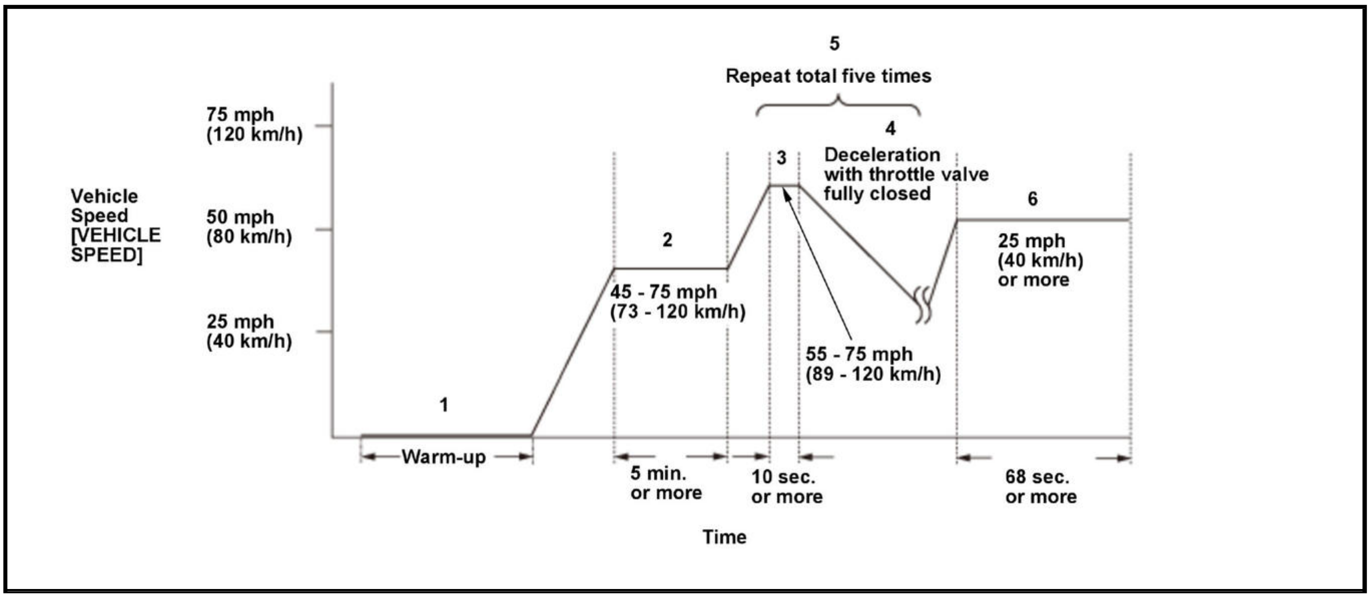

- Start the engine. Hold the engine speed [ENGINE SPEED] at 3, 000 rpm without load (in P or N) until the radiator fan comes on.
- Drive the vehicle at a speed between 45 - 75 mph (73 - 120 km/h) for at least 5 minutes, to warm up the TWC.
- Drive at a steady speed between 55 - 75 mph (89 - 120 km/h) for at least 10 seconds.
- Decelerate with the throttle valve fully closed.
- Repeat driving pattern steps 3 through 4, five times.
- Drive at steady speed 25 mph (40 km/h) or more for at least 68 seconds.

- After disconnecting the 12 volt battery, extend Driving Pattern step 6 to 4 minutes or longer.
- Drive the vehicle in this manner only if the traffic regulations and ambient conditions allow.

[ ]: HDS Parameter

With the HDS

None.

Diagnosis Details

Conditions for setting the DTC

When a malfunction is detected during the first drive cycle, a Pending DTC is stored in the PCM memory. If the malfunction returns in the next (second) drive cycle, the MIL comes on and a Confirmed DTC and the freeze data are stored.

Conditions for clearing the DTC

The MIL is cleared if the malfunction does not return in three consecutive trips in which the diagnostic runs. The MIL, the Pending DTC, the Confirmed DTC, and the freeze data can be cleared with the scan tool Clear command or by disconnecting the 12 volt battery.

DTC P043E (1.5 L ENGINE)

DTC P043E: Evaporative Emission (EVAP) Leak Check Module Standard Pressure Low

General Description

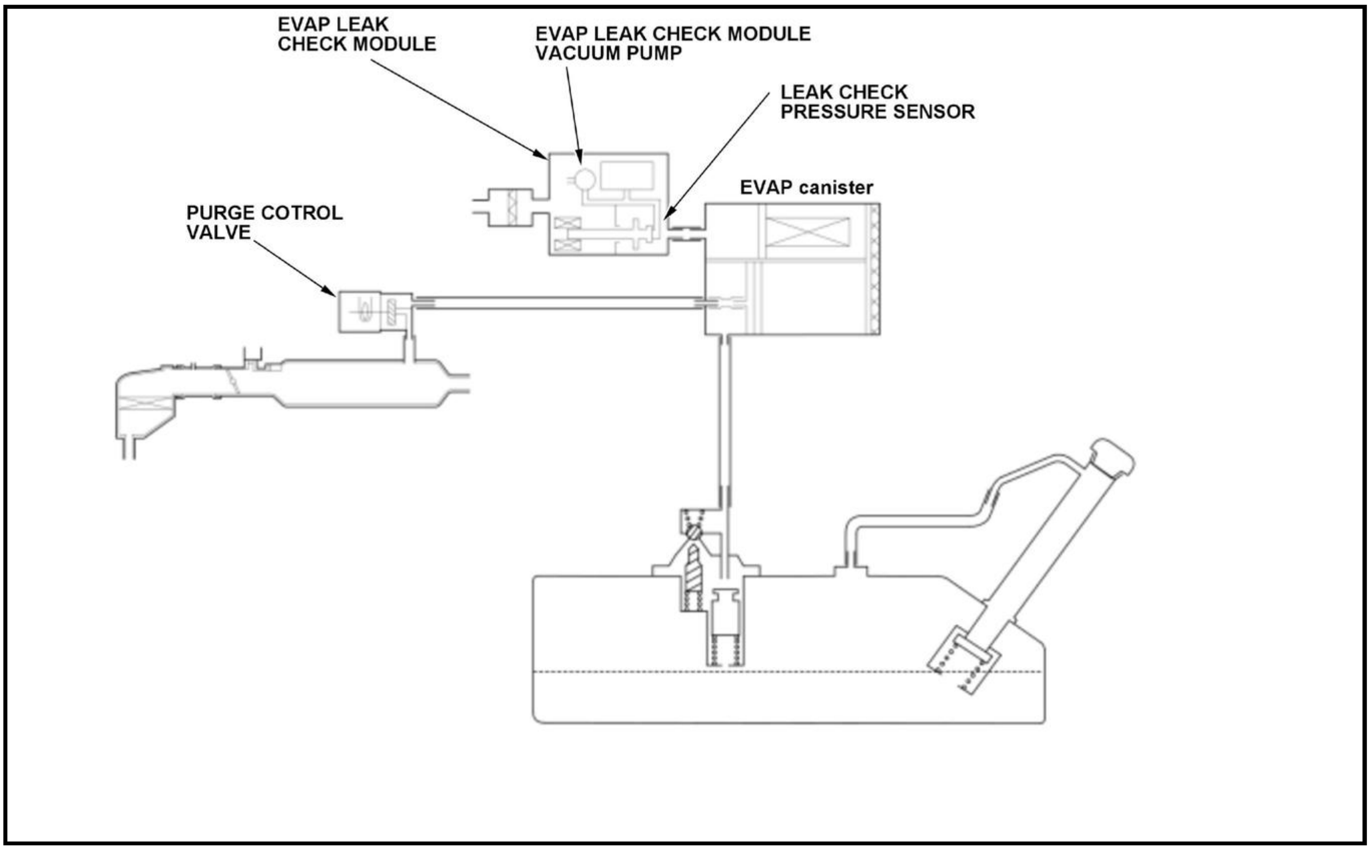
EVAP LEAK CHECK MODULE
EVAP LEAK CHECK MODULE VACUUM PUMP
LEAK CHECK PRESSURE SENSOR
EVAP canister
PURGE COTROL VALVE

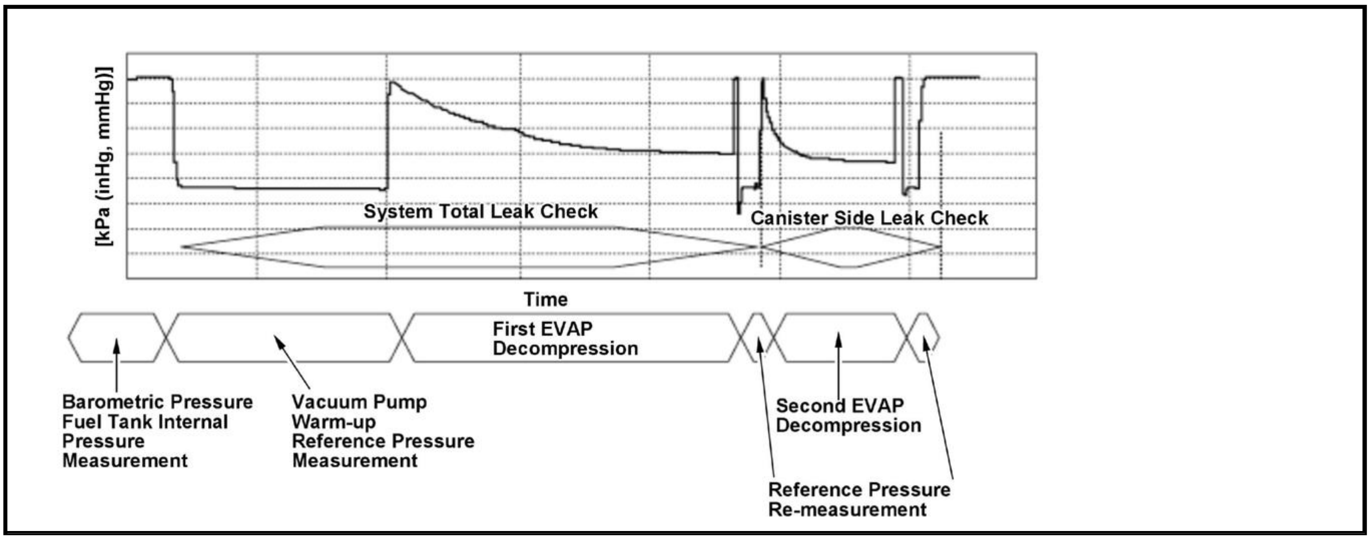

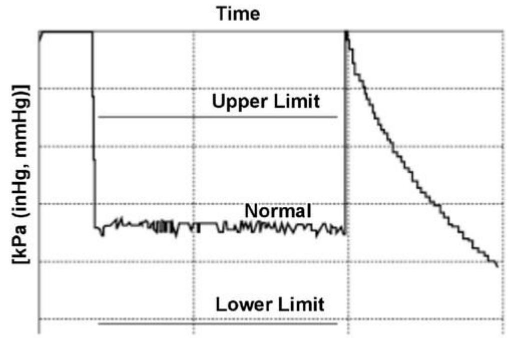

The powertrain control module (PCM) starts the evaporative emission (EVAP) system diagnosis after the vehicle has been turned to the OFF (LOCK) mode, and has met all other enable conditions (initial engine coolant temperature [ECT SENSOR 1] and off for at least 5 hours). The EVAP system diagnosis is performed by reducing pressure between the EVAP canister and the atmosphere. If pressure is reduced with the fuel vapor containment valve open, the entire EVAP system will be diagnosed, and if the fuel vapor containment valve is closed, only the EVAP canister side will be diagnosed.

A malfunction is detected and a DTC is stored when changes in the pressure are equal to or less than the prescribed value after the prescribed time of starting the system pressure reduction.

EVAP leak check module operation flow

- Reference pressure measurement : Malfunction check in the EVAP leak check module and determination of early completion of pressure reduction when normal.
- System pressure reduction : Pressure in the EVAP system is reduced to measure the ultimate pressure.
- Reference pressure re-measurement : Leak is detected by comparing with the ultimate pressure of the system pressure reduction.
- Reference value is to be measured twice considering change in the characteristics of the vacuum pump during detection.

Reference pressure is the pressure reduction by the reference orifice (#40 equivalent) in the EVAP leak check module used to check for leak by comparison with the system pressure reduction.

Monitor Execution, Sequence, Duration, DTC Type

Execution	Once per driving cycle
Sequence	None
Duration	6.5 seconds or more

DTC Type	Two drive cycles, MIL on

Enable Conditions

Condition	Minimum	Maximum
Elapsed time after turn the vehicle to the ON mode	10 minutes	-
Elapsed time after turn the vehicle to the OFF (LOCK) mode	5 hours	-
PCM wake up engine coolant temperature [ECT SENSOR 1]	40 deg. F (5 deg. C)	95 deg. F (35 deg. C)
Barometric pressure[BARO SENSOR]	76 kPa (22.5 inHg, 569 mmHg)	-
Battery voltage [BATTERY]	10.5 V	-
Other	No refueling is required	

[ ]: HDS Parameter

Malfunction Threshold

The reference pressure is -5 kPa (-1.5 inHg, -38.1 mmHg) or less.

Possible Cause

NOTE: The causes shown may not be a complete list of all potential problems, and it is possible that there may be other causes.

- Vacuum pump failure
- Vacuum pump (Motor) failure
- Control valve failure
- Reference orifice flow quantity is excessive
- Reference orifice flow quantity is too low

Confirmation Procedure

Operating Condition

- With the engine coolant temperature [ECT SENSOR 1] within the specified range, turn the vehicle to the ON mode, and wait for at least 10 minutes.
- Turn the vehicle to the OFF (LOCK) mode, and wait for at least 5 hours.
- PCM wake up, and wait at least 22 minutes, 17 seconds.

With the HDS

Do the EVAP TEST in the INSPECTION MENU with the HDS.

Diagnosis Details

Conditions for setting the DTC

When a malfunction is detected during the first drive cycle with the engine coolant temperature and intake air temperature at engine start-up within the specified temperature range, a Pending DTC is stored in the PCM memory. If the malfunction returns in the next (second) drive cycle with the engine coolant temperature and intake air temperature at engine start-up within the specified temperature range, the MIL comes on and a Confirmed DTC and the freeze data are stored. engine start-up within the specified temperature range, a Pending DTC is stored in the PCM memory.

Conditions for clearing the DTC

The MIL is cleared if the malfunction does not return in three consecutive trips in which the diagnostic runs. The MIL, the Pending DTC, the Confirmed DTC, the freeze data, and the on-board snapshot can be cleared with the scan tool Clear command or by disconnecting the 12 volt battery.

DTC P043F (1.5 L ENGINE)

DTC P043F: Evaporative Emission (EVAP) Leak Check Module Standard Pressure High

General Description

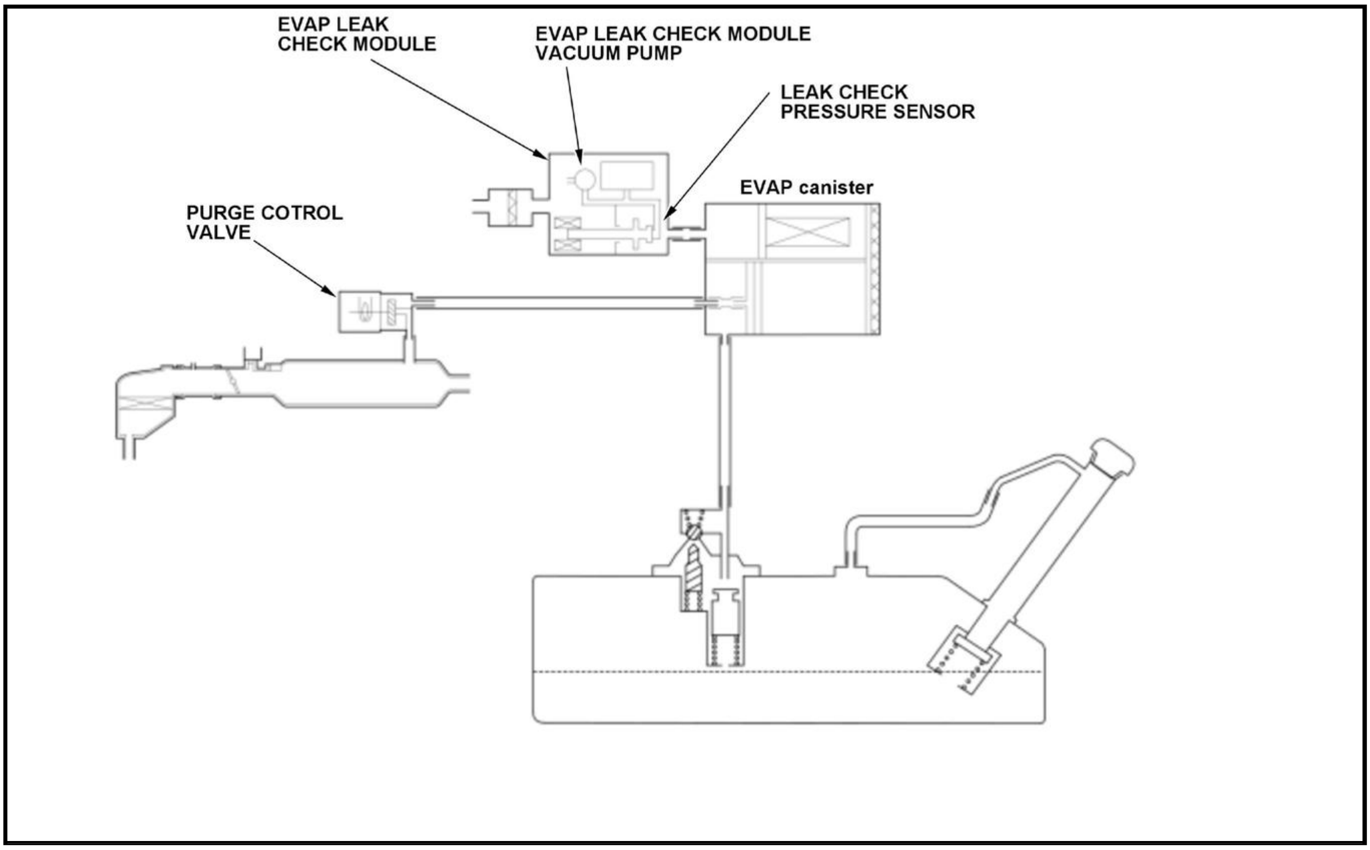
EVAP LEAK CHECK MODULE
EVAP LEAK CHECK MODULE VACUUM PUMP
LEAK CHECK PRESSURE SENSOR
EVAP canister
PURGE COTROL VALVE

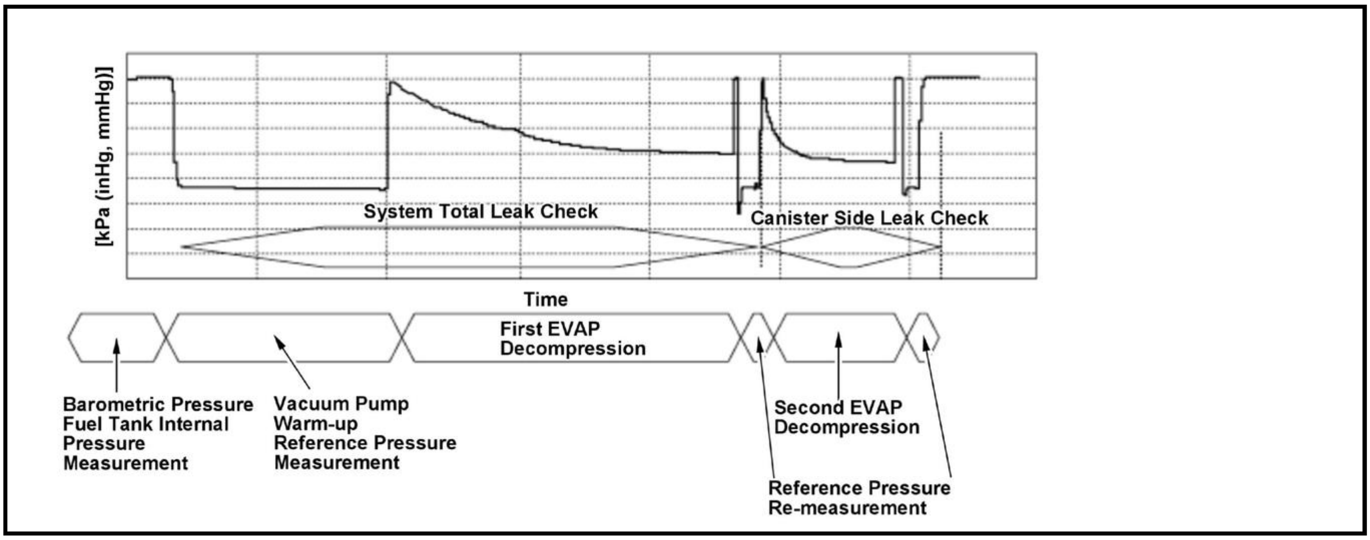

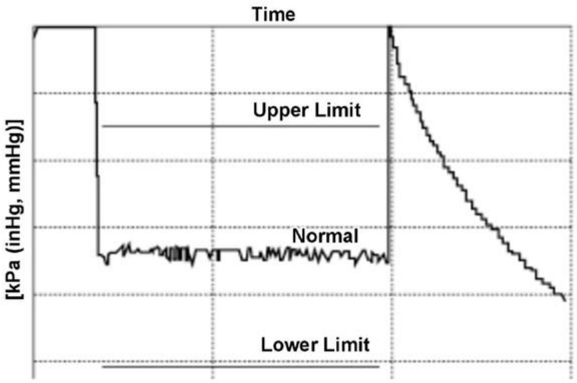

The powertrain control module (PCM) starts the evaporative emission (EVAP) system diagnosis after the vehicle has been turned to the OFF (LOCK) mode, and has met all other enable conditions (initial engine coolant temperature [ECT SENSOR 1] and off for at least 5 hours). The EVAP system diagnosis is performed by reducing pressure between the EVAP canister and the atmosphere. If pressure is reduced with the fuel vapor containment valve open, the entire EVAP system will be diagnosed, and if the fuel vapor containment valve is closed, only the EVAP canister side will be diagnosed.

A malfunction is detected and a DTC is stored when changes in the pressure are equal to or more than the prescribed value after the prescribed time of starting the system pressure reduction.

EVAP leak check module operation flow

- Reference pressure measurement : Malfunction detection in the EVAP leak check module and determination of early completion of pressure reduction when normal.
- System pressure reduction : Pressure in the EVAP system is reduced to measure the ultimate pressure.
- Reference pressure re-measurement : Leak is detected by comparing with the ultimate pressure of the system pressure reduction.
- Reference value is to be measured twice considering change in the characteristics of the vacuum pump during detection.

Reference pressure is the pressure reduction caused by the reference orifice (#40 equivalent) in the EVAP leak check module used to check for leak by comparison with the system pressure reduction.

Monitor Execution, Sequence, Duration, DTC Type

Execution	Once per driving cycle
Sequence	None
Duration	At least 6 minutes, 30 seconds but not more than 18 minutes, 45 seconds
DTC Type	Two drive cycles, MIL on

Enable Conditions

Condition	Minimum	Maximum
Elapsed time after turn the vehicle to the ON mode	10 minutes	-
Elapsed time after turn the vehicle to the OFF (LOCK) mode	5 hours	-
PCM wake up engine coolant temperature [ECT SENSOR 1]	40 deg. F (5 deg. C)	95 deg. F (35 deg. C)

Condition	Minimum	Maximum
Barometric pressure[BARO SENSOR]	76 kPa (569 mmHg, 22.5 inHg)	-

[ ]: HDS Parameter

Condition	Minimum	Maximum
Battery voltage [BATTERY]	10.5 V	-
Other	No refueling is required	

[ ]: HDS Parameter

Malfunction Threshold

The reference pressure is -0.1 kPa (-7.5 mmHg, -0.3 inHg) or more.

Possible Cause

NOTE: The causes shown may not be a complete list of all potential problems, and it is possible that there may be other causes.

- Vacuum pump failure
- Vacuum pump (Motor) failure
- Control valve failure
- Reference orifice flow quantity is excessive
- Reference orifice flow quantity is too low

Confirmation Procedure

Operating Condition

- With the engine coolant temperature [ECT SENSOR 1] within the specified range, turn the vehicle to the ON mode, and wait for at least 10 minutes.
- Turn the vehicle to the OFF (LOCK) mode, and wait for at least 5 hours.
- PCM wake up, and wait at least 18 minutes 45 seconds.

With the HDS

None.

Diagnosis Details

Conditions for setting the DTC

When a malfunction is detected during the first drive cycle with the engine coolant temperature and intake air temperature at engine start-up within the specified temperature range, a Pending DTC is stored in the PCM memory. If the malfunction returns in the next (second) drive cycle with the engine coolant temperature and intake air temperature at engine start-up within the specified temperature range, the MIL comes on and a Confirmed DTC and the freeze data are stored. Engine start-up within the specified temperature range, a Pending DTC is stored in the PCM memory.

Conditions for clearing the DTC

The MIL is cleared if the malfunction does not return in three consecutive trips in which the diagnostic runs. The MIL, the Pending DTC, the Confirmed DTC, the freeze data, and the on-board snapshot can be cleared with the scan tool Clear command or by disconnecting the 12 volt battery.

DTC P0441 (1.5 L ENGINE)

DTC P0441: Evaporative Emission (EVAP) System Purge Flow Malfunction

General Description

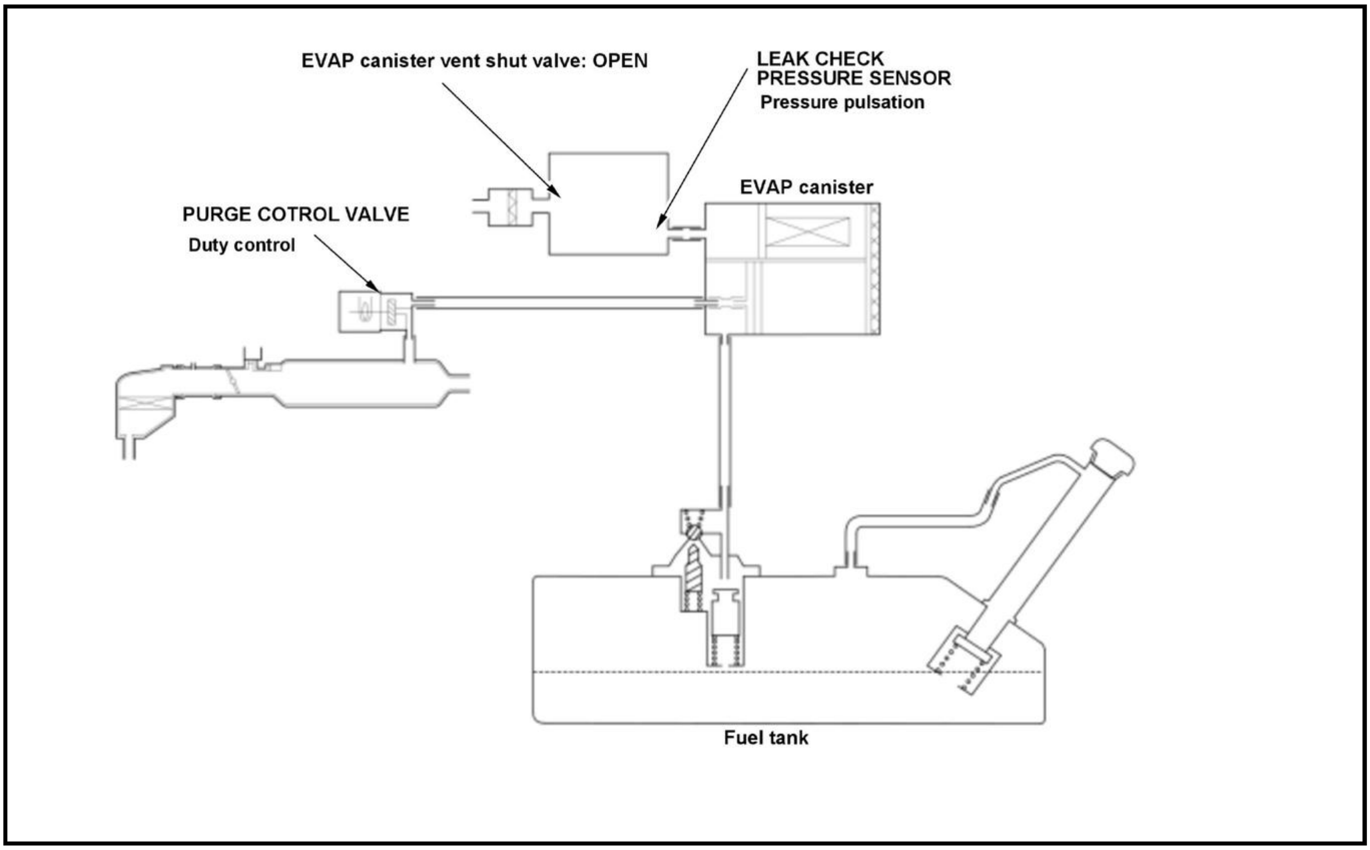
EVAP canister vent shut valve: OPEN
LEAK CHECK PRESSURE SENSOR
Pressure pulsation
PURGE COTROL VALVE
Duty control
EVAP canister
Fuel tank

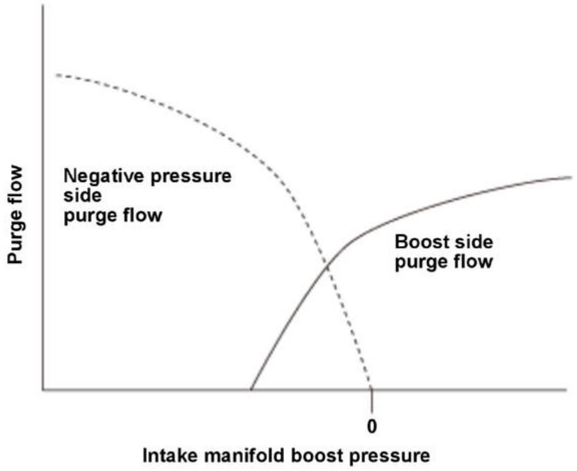

Negative side purge flow	Boost side purge flow	Purge back-flow (P2450)	Condition
Flowing	Flowing	OK	Purge line normal, EVAP canister purge valve normal
Flowing	Flowing	NG (P2450)	Non-return valve A abnormal

Negative side purge flow	Boost side purge flow	Purge back-flow (P2450)	Condition
Not flowing	Flowing	-	Negative side purge line abnormal
Flowing	Not flowing	-	Boost side purge line abnormal
Not flowing	Not flowing	-	Purge line abnormal, EVAP canister purge valve open

The fuel vapor in the fuel tank is temporarily stored in the evaporative emission (EVAP) canister and drawn into the engine through the EVAP canister purge valve. The powertrain control module (PCM) controls the amount of vapor introduced into the engine by varying the duty cycle of the EVAP canister purge valve according to the condition of the engine.

The PCM checks the purge flow conditions on both negative and boost pressure sides. If either side of the purge flow is detected as abnormal, it is determined that there is a clog or disconnection on the abnormal side of the purge line. If both sides of the purge flow are detected as abnormal, it is determined that the purge lines are abnormal or the EVAP canister purge valve is stuck opened.

Purge flow check of negative pressure side:

<STEP 1>

The EVAP canister purge valve opens normally (EVAP canister purge valve OPEN OK) and detects that the purge flow is normal when the pulse of the EVAP canister purge valve duty cycle is transmitted to the fuel tank pressure (FTP) sensor during purge flow (pulse method).

OK determination: Pulse exists (P0441 OK)

- P04F1 Purge flow OK
- P04DF EVAP canister purge valve stuck Open OK

NG determination: No pulse (P0441 NG)

- Either purge flow P04F1 abnormality or P04DF EVAP canister purge valve OPEN failure
- In this case, classify the failed part according to <STEP 2>

<STEP 2>

If there is no pulse, it is determined as either no purge flow or the EVAP canister purge valve is stuck OPEN:

When the FTP sensor fluctuates from negative pressure to atmospheric pressure after the vehicle condition is turned to the OFF (LOCK) mode: P04DF EVAP canister purge valve stuck OPEN

When there is no fluctuation of the FTP sensor: P04F1 purge flow NG

Monitor Execution, Sequence, Duration, DTC Type

Execution	Once per driving cycle
Sequence	None
Duration	9.5 seconds or more
DTC Type	Two drive cycles, MIL on

Enable Conditions

Condition	Minimum	Maximum
Low load duration time	10 seconds	-
Engine coolant temperature [ECT SENSOR 1] before EVAP purge control starts	55 deg. C (131 deg. F)	-
MAP value [MAP SENSOR]	-	81 kPa (610 mmHg, 24.0 inHg)

[ ]: HDS Parameter

Condition	Minimum	Maximum
12 volt battery voltage [BATTERY]	10.5 V	-
Fuel trim	0.75	1.47
EVAP canister purge valve duty [EVAP PC DUTY]	40 %	60 %
Fuel feedback	Closed loop at stoichiometric	

[ ]: HDS Parameter

Malfunction Threshold

The pulses detected by the FTP sensor are 30 % or less for at least 11 seconds.

Possible Cause

NOTE: The causes shown may not be a complete list of all potential problems, and it is possible that there may be other causes.

- EVAP canister purge valve closed stuck
- EVAP canister purge valve open stuck
- FTP sensor output stuck
- EVAP system line clogged
- EVAP system line misinstalled

Confirmation Procedure

Operating Condition

- Start the engine. Hold the engine speed [ENGINE SPEED] at 3, 000 rpm without load (in P or N) until the radiator fan comes on.
- Let the engine idle for at least 64 seconds.
- Drive the vehicle at high load for total of at least 11 seconds.
- Turn the vehicle to the OFF (LOCK) mode and leave the vehicle for at least 10 seconds.

With the HDS

None.

Diagnosis Details

Conditions for setting the DTC

When a malfunction is detected during the first drive cycle, a Pending DTC is stored in the PCM memory. If the malfunction returns in the next (second) drive cycle, the MIL comes on and a Confirmed DTC and the freeze data are stored.

Conditions for clearing the DTC

The MIL is cleared if the malfunction does not return in three consecutive trips in which the diagnostic runs. The MIL, the Pending DTC, the Confirmed DTC, and the freeze data can be cleared with the scan tool Clear command or by disconnecting the 12 volt battery.

DTC P0441 (2.4 L ENGINE) (2017 2018 2019)

DTC P0441: Evaporative Emission (EVAP) System Purge Flow Malfunction

General Description

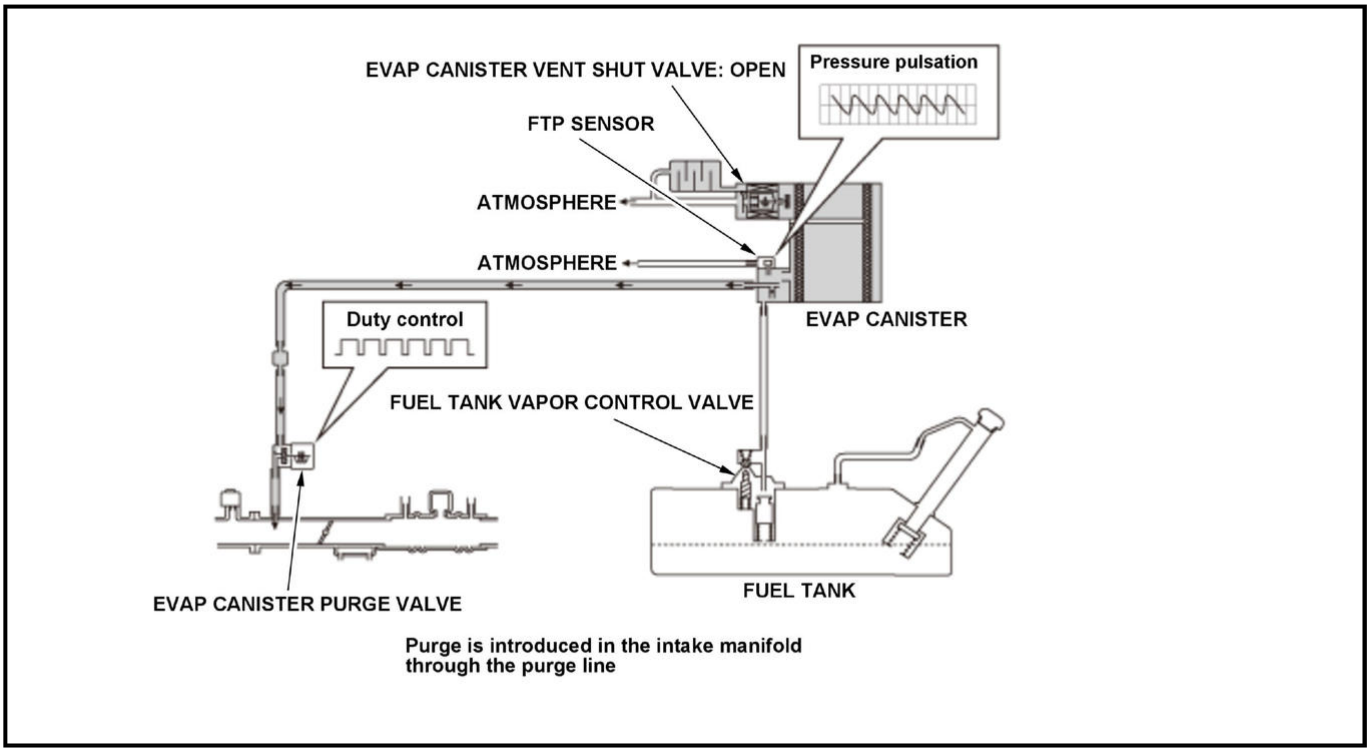
EVAP CANISTER VENT SHUT VALVE: OPEN
Pressure pulsation
FTP SENSOR
ATMOSPHERE
ATMOSPHERE
EVAP CANISTER
Duty control
FUEL TANK VAPOR CONTROL VALVE
EVAP CANISTER PURGE VALVE
FUEL TANK
Purge is introduced in the intake manifold through the purge line

The fuel vapor in the fuel tank is temporarily stored in the evaporative emission (EVAP) canister and drawn into the engine through the EVAP canister purge valve. The powertrain control module (PCM) controls the amount of vapor introduced into the engine by varying the duty cycle of the EVAP canister purge valve according to the condition of the engine.

<STEP 1>

The EVAP canister purge valve opens normally (EVAP canister purge valve OPEN OK) and detects that the purge flow is normal when the pulse of the EVAP canister purge valve duty cycle is transmitted to the fuel tank pressure (FTP) sensor during purge flow (pulse method).

OK determination: Pulse exists (P0441 OK)

- P04F1 Purge flow OK
- P04DF EVAP canister purge valve stuck Open OK

NG determination: No pulse (P0441 NG)

- Either purge flow P04F1 abnormality or P04DF EVAP canister purge valve OPEN failure.
- In this case, classify the failed part according to <STEP 2>.

<STEP 2>

If there is no pulse, it is determined as either no purge flow or the EVAP canister purge valve is stuck OPEN:

When the FTP sensor fluctuates from negative pressure to atmospheric pressure after the engine start/stop button is pressed to select the OFF mode: P04DF EVAP canister purge valve stuck OPEN

When there is no fluctuation of the FTP sensor: P04F1 purge flow NG

Monitor Execution, Sequence, Duration, DTC Type

Execution	Once per driving cycle
Sequence	None
Duration	18 seconds or more
DTC Type	Two drive cycles, MIL on

Enable Conditions

Condition	Minimum	Maximum
Low load duration time	10 seconds	-
Engine coolant temperature [ECT SENSOR 1] before EVAP purge control starts	131 deg. F (55 deg. C)	-
MAP value [MAP SENSOR]	-	-47 kPa (-350 mmHg, -13.7 inHg)
12 volt battery voltage [BATTERY]	10.5 V	-
Fuel trim	0.69	1.47
EVAP canister purge valve duty [EVAP PC DUTY]	30 %	80 %
Fuel feedback	Closed loop at stoichiometric	

[ ]: HDS Parameter

Malfunction Threshold

The pulses detected by the FTP sensor are 40 % or less for at least 18 seconds.

Possible Cause

NOTE: The causes shown may not be a complete list of all potential problems, and it is possible that there may be other causes.

- EVAP canister purge valve closed stuck
- EVAP canister purge valve open stuck
- FTP sensor output stuck
- EVAP system line clogged
- EVAP system line misinstalled

Confirmation Procedure

Operating Condition

- Start the engine. Hold the engine speed [ENGINE SPEED] at 3, 000 rpm without load (in P or N) until the radiator fan comes on.
- Let the engine idle for at least 63 seconds.
- Turn the vehicle to the OFF (LOCK) mode and leave the vehicle for at least 10 seconds.

With the HDS

None.

Diagnosis Details

Conditions for setting the DTC

When a malfunction is detected during the first drive cycle, a Pending DTC is stored in the PCM memory. If the malfunction returns in the next (second) drive cycle, the MIL comes on and a Confirmed DTC and the freeze data are stored.

Conditions for clearing the DTC

The MIL is cleared if the malfunction does not return in three consecutive trips in which the diagnostic runs. The MIL, the Pending DTC, the Confirmed DTC, and the freeze data can be cleared with the scan tool Clear command or by disconnecting the 12 volt battery.

DTC P0443 (1.5 L ENGINE)

DTC P0443: Evaporative Emission (EVAP) Canister Purge Valve Circuit Malfunction

General Description

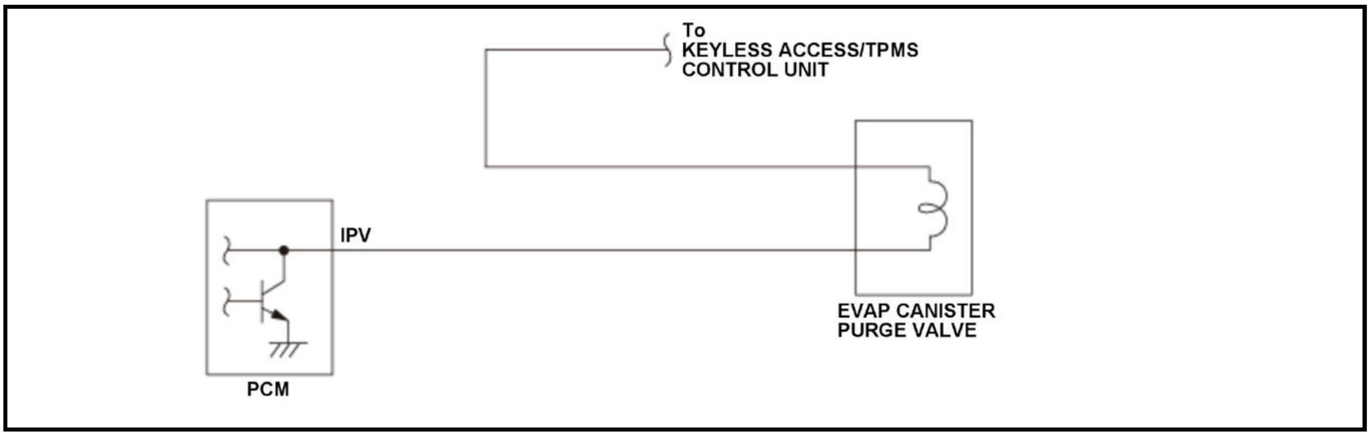

The evaporative emission (EVAP) canister purge valve is attached to the vacuum port between the intake manifold and the EVAP canister. The powertrain control module (PCM) does not turn on the EVAP canister purge valve when the engine coolant temperature is less than a specified value. The PCM adjusts the amount of fuel vapor sent to the engine by controlling the EVAP canister purge valve duty cycle. When the return signal does not change according to the EVAP canister purge valve output for a set time, the PCM detects a malfunction and stores a DTC.

Monitor Execution, Sequence, Duration, DTC Type

Execution	Continuous
Sequence	None
Duration	5 seconds or more
DTC Type	Two drive cycles, MIL on

Enable Conditions

Condition	Minimum	Maximum
12 volt battery voltage [BATTERY]	10.0 V	-
EVAP canister purge valve output duty	2 %	98 %
State of the engine	Running	

[ ]: HDS Parameter

Malfunction Threshold

The return signal does not change according to the EVAP canister purge valve output for at least 5 seconds.

Possible Cause

NOTE: The causes shown may not be a complete list of all potential problems, and it is possible that there may be other causes.

- EVAP canister purge valve IPV line open
- EVAP canister purge valve IPV line short to ground
- EVAP canister purge valve power supply line open
- PCM internal circuit failure

Confirmation Procedure

Operating Condition

Start the engine. Hold the engine speed [ENGINE SPEED] at 3, 000 rpm without load (in P or N) until the radiator fan comes on, then let it idle.

[ ]: HDS Parameter

With the HDS

None.

Diagnosis Details

Conditions for setting the DTC

When a malfunction is detected during the first drive cycle, a Pending DTC is stored in the PCM memory. If the malfunction returns in the next (second) drive cycle, the MIL comes on and a Confirmed DTC and the freeze data are stored.

Conditions for clearing the DTC

The MIL is cleared if the malfunction does not return in three consecutive trips in which the diagnostic runs. The MIL, the Pending DTC, the Confirmed DTC, and the freeze data can be cleared with the scan tool Clear command or by disconnecting the 12 volt battery.

DTC P0443 (2.4 L ENGINE) (2017 2018 2019)

DTC P0443: Evaporative Emission (EVAP) Canister Purge Valve Circuit Malfunction

General Description

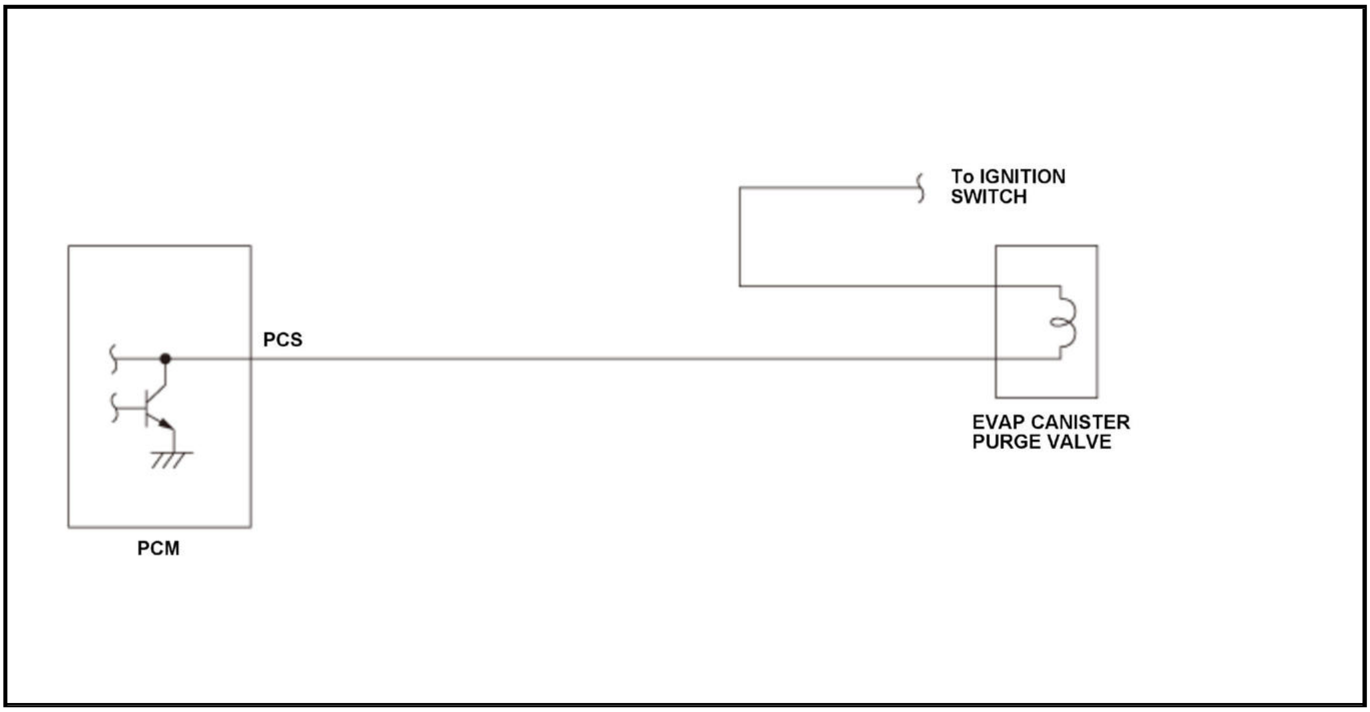

The evaporative emission (EVAP) canister purge valve is attached to the vacuum port between the intake manifold and the EVAP canister. The powertrain control module (PCM) does not turn on the EVAP canister purge valve when the engine coolant temperature is less than a specified value. The PCM adjusts the amount of fuel vapor sent to the engine by controlling the EVAP canister purge valve duty cycle. When the return signal does not change according to the EVAP canister purge valve output for a set time, the PCM detects a malfunction and stores a DTC.

Monitor Execution, Sequence, Duration, DTC Type

Execution	Continuous
Sequence	None
Duration	5 seconds or more
DTC Type	Two drive cycles, MIL on

Enable Conditions

Condition	Minimum	Maximum
12 volt battery voltage [BATTERY]	10.0 V	-
EVAP canister purge valve output duty	2 %	98 %
State of the engine	Running	

[ ]: HDS Parameter

Malfunction Threshold

The return signal does not change according to the EVAP canister purge valve output for at least 5 seconds.

Possible Cause

NOTE: The causes shown may not be a complete list of all potential problems, and it is possible that there may be other causes.

- EVAP canister purge valve PCS line open
- EVAP canister purge valve PCS line short to ground

- EVAP canister purge valve power supply line open
- PCM internal circuit failure

Confirmation Procedure

Operating Condition

Start the engine. Hold the engine speed [ENGINE SPEED] at 3, 000 rpm without load (in P or N) until the radiator fan comes on, then let it idle.

[ ]: HDS Parameter

With the HDS

None.

Diagnosis Details

Conditions for setting the DTC

When a malfunction is detected during the first drive cycle, a Pending DTC is stored in the PCM memory. If the malfunction returns in the next (second) drive cycle, the MIL comes on and a Confirmed DTC and the freeze data are stored.

Conditions for clearing the DTC

The MIL is cleared if the malfunction does not return in three consecutive trips in which the diagnostic runs. The MIL, the Pending DTC, the Confirmed DTC, and the freeze data can be cleared with the scan tool Clear command or by disconnecting the 12 volt battery.

DTC P0451 (1.5 L ENGINE)

DTC P0451: Evaporative Emission (EVAP) Leak Check Module Pressure Sensor Range/Perfomance

General Description

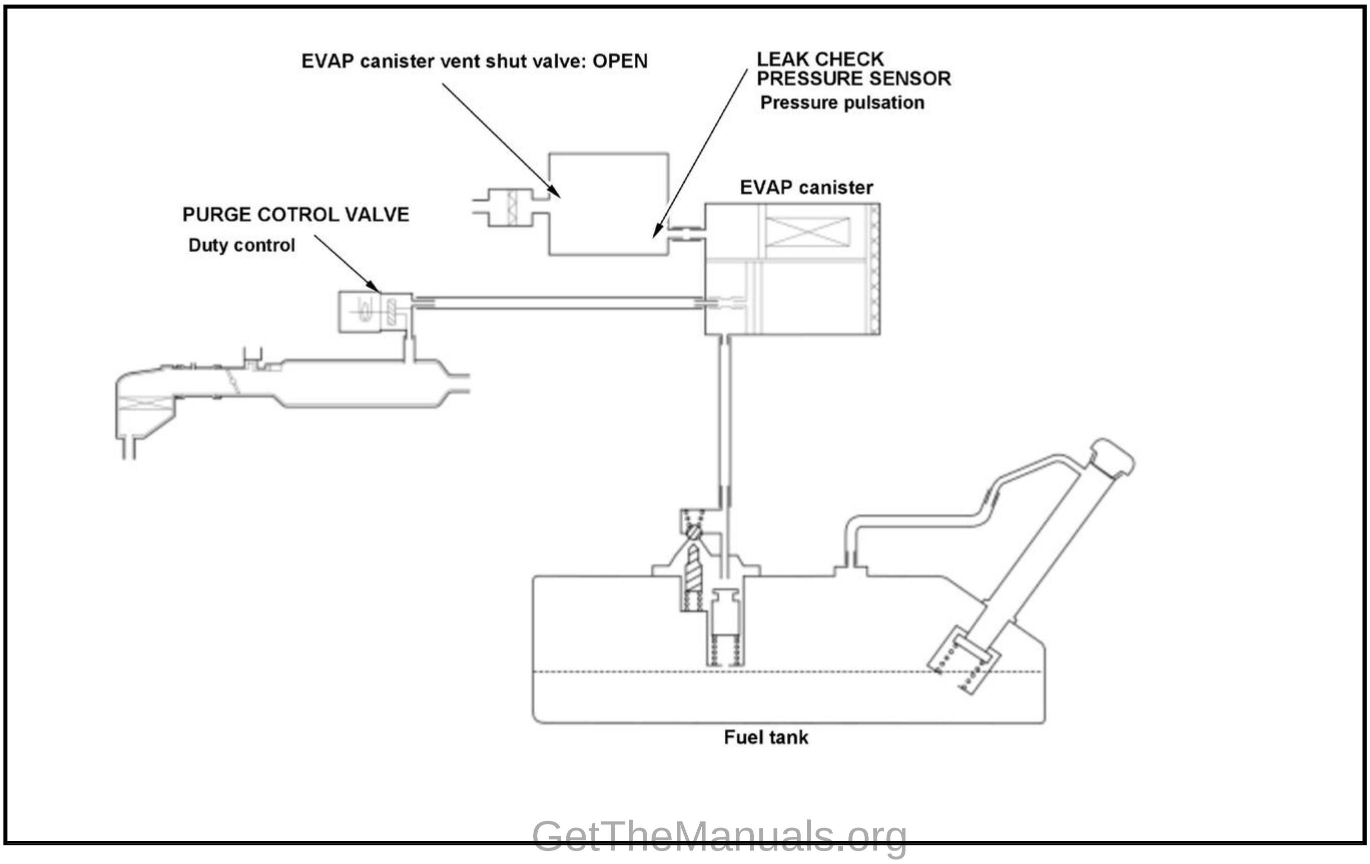
EVAP canister vent shut valve: OPEN
LEAK CHECK
PRESSURE SENSOR
Pressure pulsation
EVAP canister
PURGE COTROL VALVE
Duty control
Fuel tank

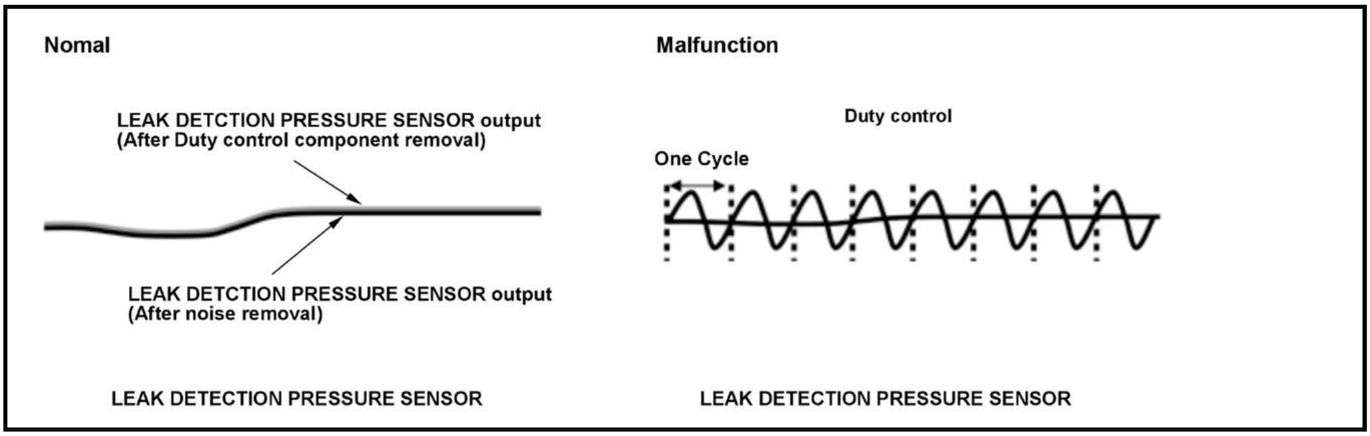
Nomal
LEAK DETCTION PRESSURE SENSOR output
(After Duty control component removal)
LEAK DETCTION PRESSURE SENSOR output
(After noise removal)
LEAK DETECTION PRESSURE SENSOR
Malfunction
Duty control
One Cycle
LEAK DETECTION PRESSURE SENSOR

The powertrain control module (PCM) monitors the leak detection pressure sensor output voltage. The leak detection pressure sensor output voltage rises as the fuel tank pressure increases. Conversely, the leak detection pressure sensor output voltage drops as the fuel tank pressure decreases. Rapid changes in the leak detection pressure sensor output voltage due to electrical noise or an intermittent open during the EVAP leak detection may cause incorrect leak detection, so abnormal output is monitored. If the leak detection pressure sensor output voltage change occurs for specified ratio within a set time, the PCM detects a malfunction and stores a DTC.

Monitor Execution, Sequence, Duration, DTC Type

Execution	Once per driving cycle

Sequence	None
Duration	31 seconds or more
DTC Type	Two drive cycles, MIL on

Enable Conditions

Condition	Minimum	Maximum
Elapsed time after starting the engine	10 seconds	-
Engine coolant temperature [ECT SENSOR 1]	131 deg. F (55 deg. C)	-
12 volt battery voltage [BATTERY]	10.5 V	-
EVAP canister purge valve duty [EVAP PC DUTY]	Other than 0 %	
Fuel feedback	During deceleration	
Other	Other than purge-cut operation	

[ ]: HDS Parameter

Malfunction Threshold

The leak detection pressure sensor output voltage change occurs for specified ratio within a set time.

Possible Cause

NOTE: The causes shown may not be a complete list of all potential problems, and it is possible that there may be other causes.

- Leak detection pressure sensor failure

Confirmation Procedure

Operating Condition

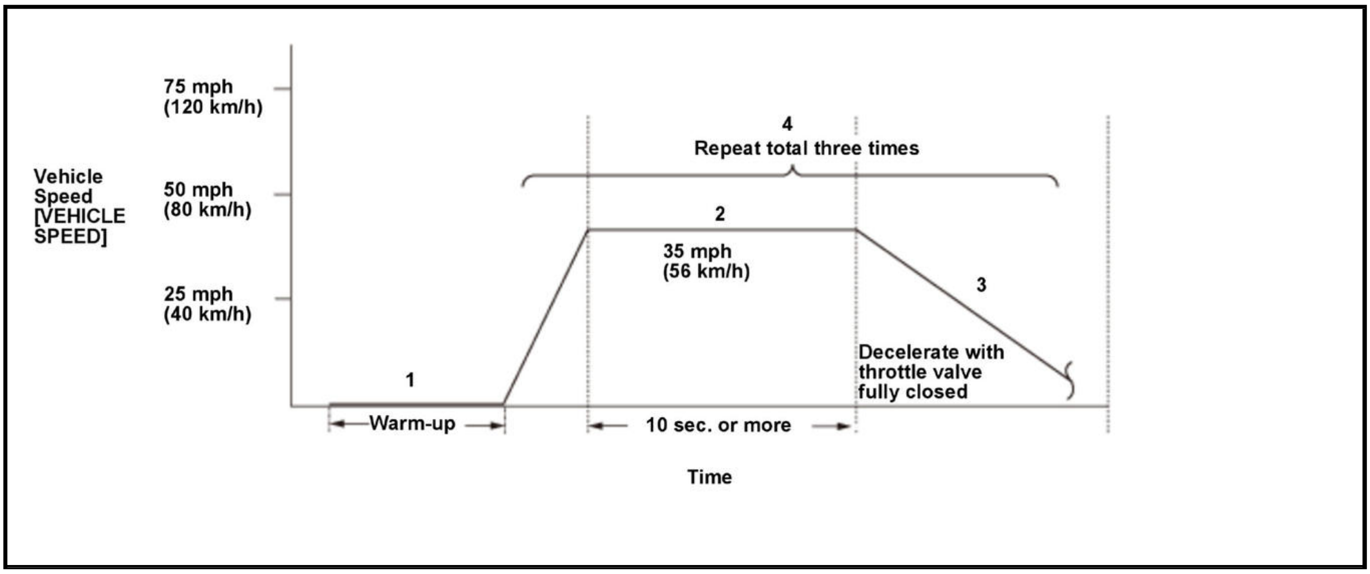

- Start the engine and let it idle until the radiator fan comes on.
- Drive the vehicle at a steady speed 35 mph (56 km/h) for at least 10 seconds.
- Decelerate with the throttle valve fully closed.
- Repeat Driving Pattern steps 2 through 3, three times.

- Drive the vehicle in this manner only if the traffic regulations and ambient conditions allow.

With the HDS

None.

Diagnosis Details

Conditions for setting the DTC

When a malfunction is detected during the first drive cycle, a Pending DTC is stored in the PCM memory. If the malfunction returns in the next (second) drive cycle, the MIL comes on and a Confirmed DTC, the freeze data, and the on-board snapshot are stored.

Conditions for clearing the DTC

The MIL is cleared if the malfunction does not return in three consecutive trips in which the diagnostic runs. The MIL, the Pending DTC, the Confirmed DTC, the freeze data, and the on-board snapshot can be cleared with the scan tool Clear command or by disconnecting the 12 volt battery.

DTC P0451 (2.4 L ENGINE) (2017 2018 2019)

DTC P0451: Fuel Tank Pressure (FTP) Sensor Circuit Range/Performance Problem

General Description

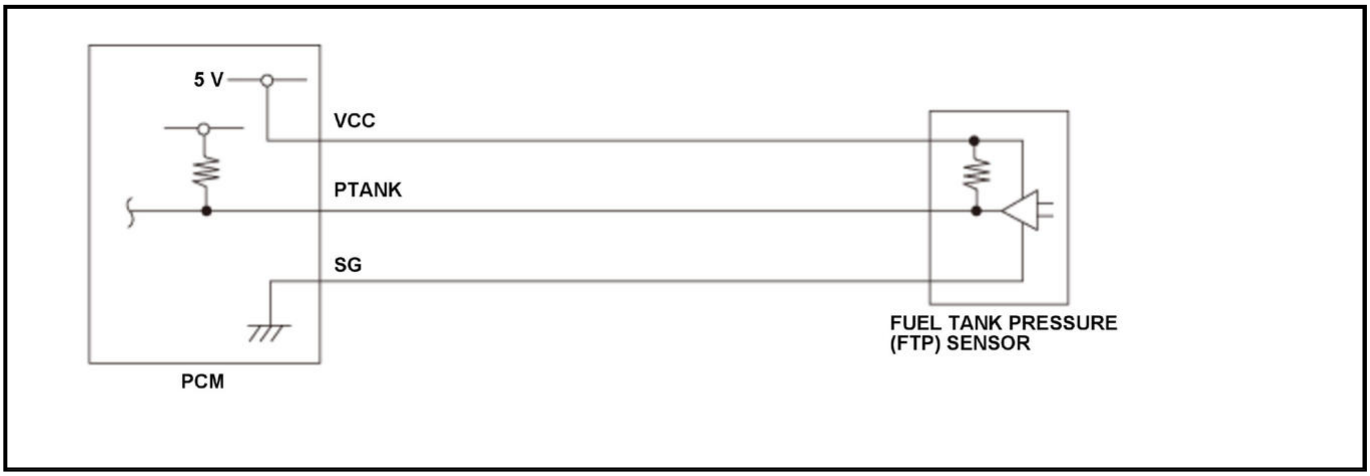

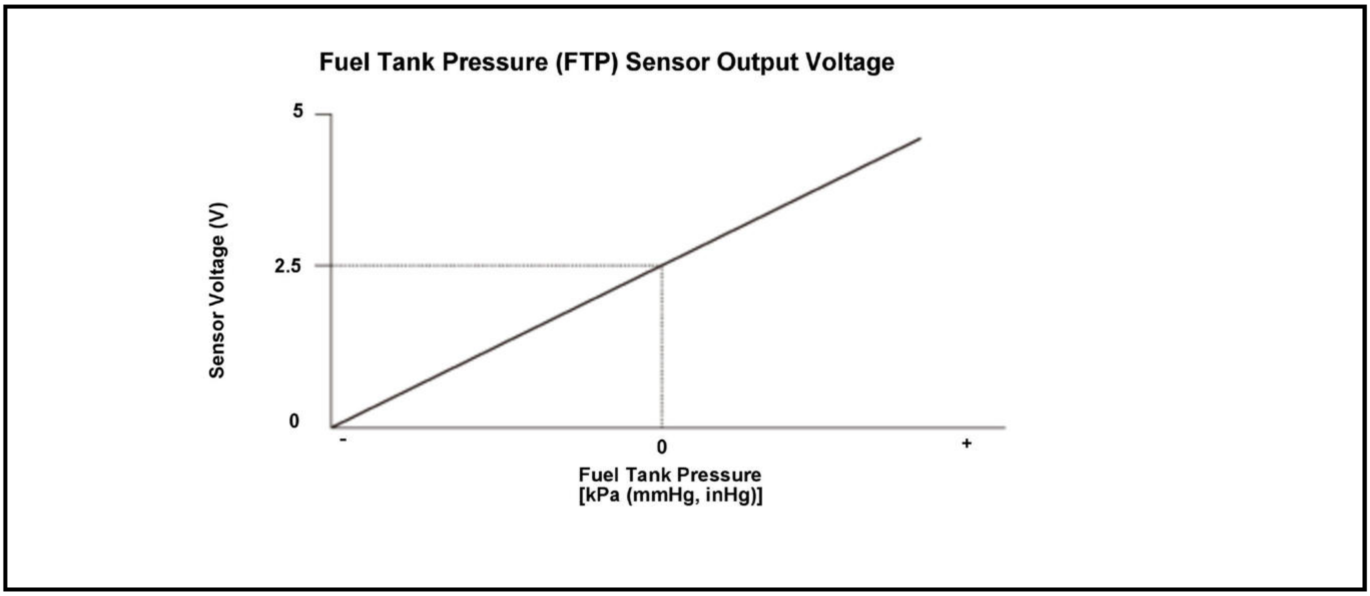

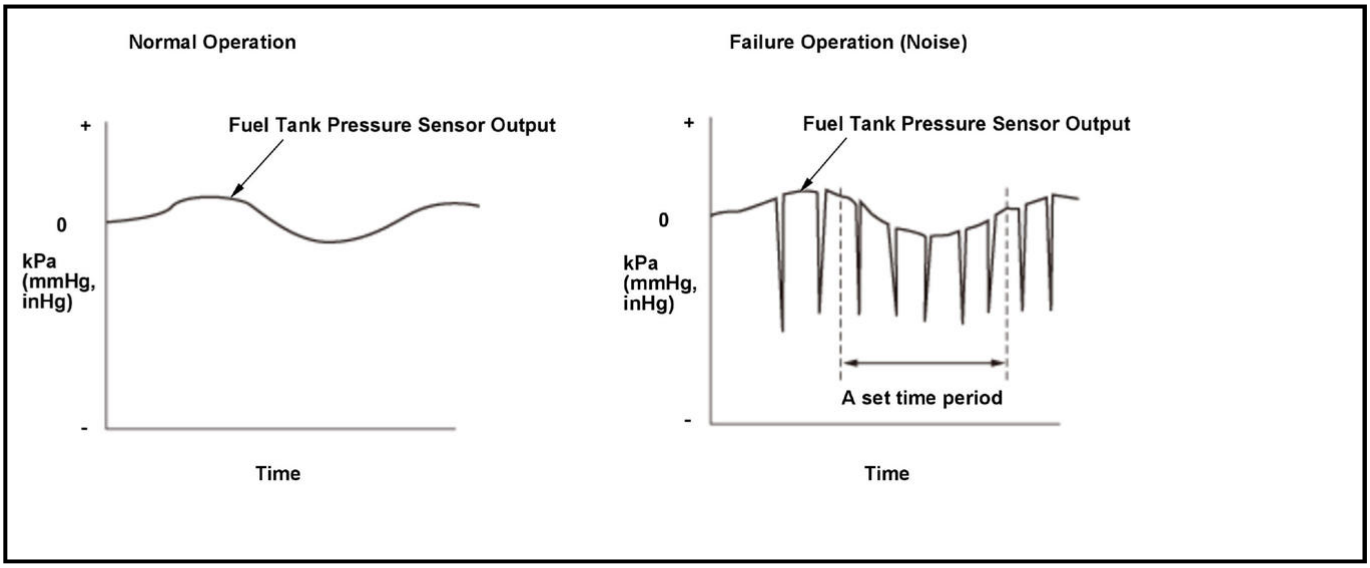

The fuel tank pressure (FTP) sensor is installed on the evaporative emission (EVAP) canister. The FTP sensor is used to detect leaks in the EVAP system. The powertrain control module (PCM) monitors the FTP sensor output voltage. The FTP sensor output voltage rises as the fuel tank pressure increases. Conversely, the FTP sensor output voltage drops as the fuel tank pressure decreases. Rapid changes in the FTP sensor output voltage due to electrical noise or an intermittent open during the EVAP leak detection may cause incorrect leak detection, so abnormal output is monitored. If the FTP sensor output voltage change occurs for specified ratio within a set time, the PCM detects a malfunction and stores a DTC.

Monitor Execution, Sequence, Duration, DTC Type

Execution	Once per driving cycle
Sequence	None
Duration	31 seconds or more
DTC Type	Two drive cycles, MIL on

Enable Conditions

Condition	Minimum	Maximum
Elapsed time after starting the engine	10 seconds	-
Engine coolant temperature [ECT SENSOR 1]	131 deg. F (55 deg. C)	-
12 volt battery voltage [BATTERY]	10.5 V	-
EVAP canister purge valve duty [EVAP PC DUTY]	Other than 0 %	
Fuel feedback	During deceleration	
Other	Other than purge-cut operation	

[ ]: HDS Parameter

Malfunction Threshold

The FTP sensor output voltage fluctuation occurs for more than 40 % within the set time at least 31 seconds.

Possible Cause

NOTE: The causes shown may not be a complete list of all potential problems, and it is possible that there may be other causes.

- FTP sensor electrical noise over lapped

Confirmation Procedure

Operating Condition

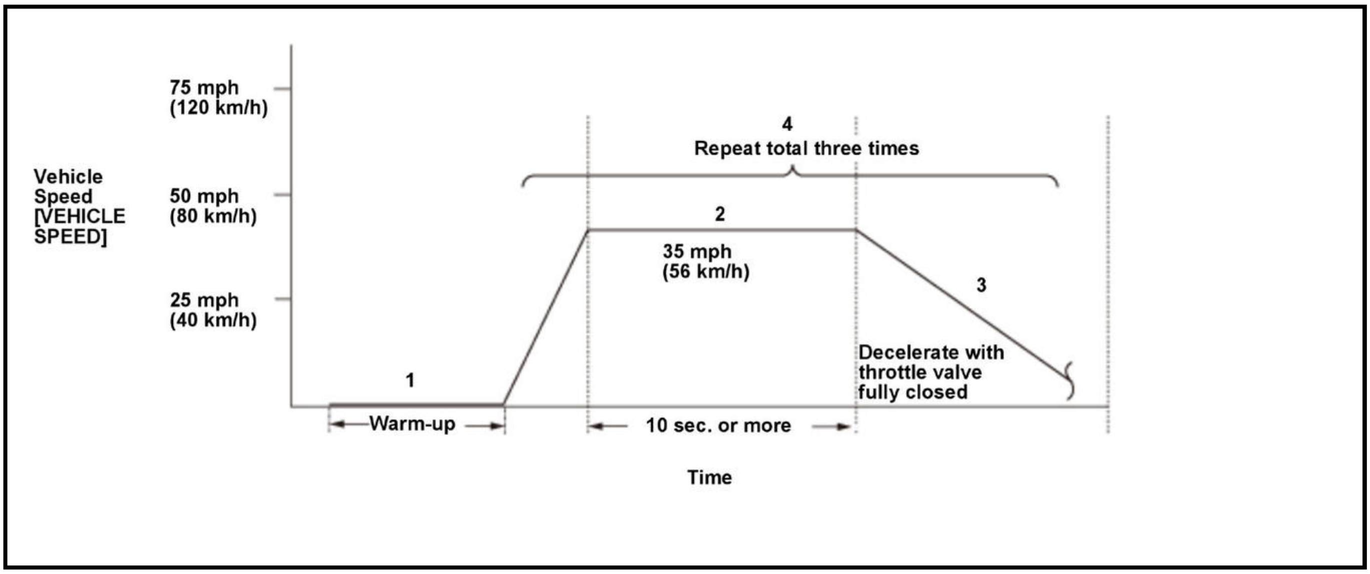

- Start the engine, and let it idle until the radiator fan comes on.
- Drive the vehicle at a steady speed 35 mph (56 km/h) for at least 10 seconds.
- Decelerate with the throttle valve fully closed.

- Repeat Driving Pattern steps 2 through 3, three times.
- Drive the vehicle in this manner only if the traffic regulations and ambient conditions allow.

With the HDS

None.

Diagnosis Details

Conditions for setting the DTC

When a malfunction is detected during the first drive cycle, a Pending DTC is stored in the PCM memory. If the malfunction returns in the next (second) drive cycle, the MIL comes on and a Confirmed DTC and the freeze data are stored.

Conditions for clearing the DTC

The MIL is cleared if the malfunction does not return in three consecutive trips in which the diagnostic runs. The MIL, the Pending DTC, the Confirmed DTC, and the freeze data can be cleared with the scan tool Clear command or by disconnecting the 12 volt battery.

ADVANCED DIAGNOSTICS

DTC P16F3 (2.4 L ENGINE) (2017 2018 2019)

DTC P16F3: Starter Cut Relay 1 Control Circuit Low Voltage

General Description

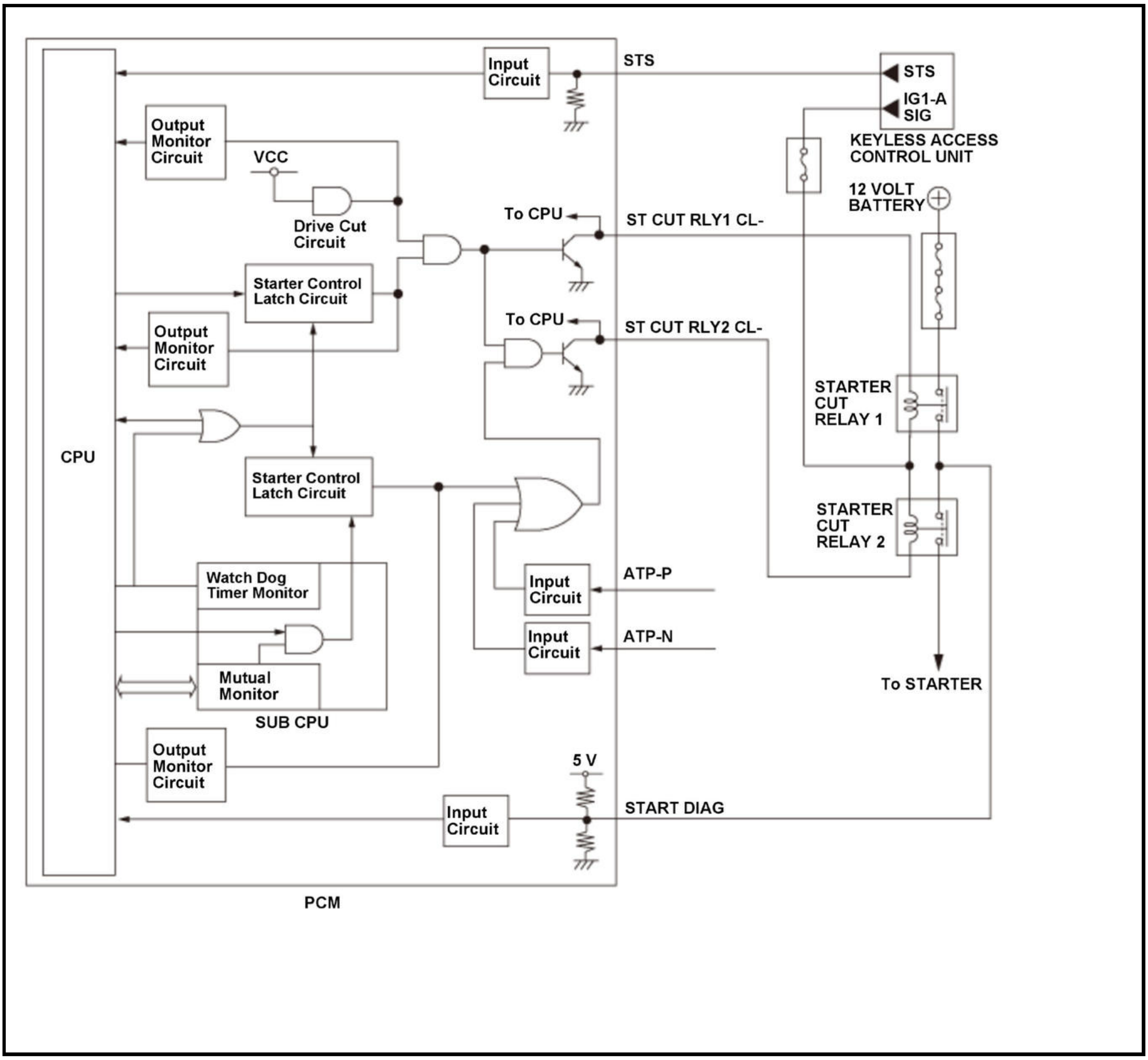
CPU
Input Circuit
STS
Output Monitor Circuit
VCC
Drive Cut Circuit
To CPU
ST CUT RLY1 CL-
Starter Control Latch Circuit
Output Monitor Circuit
To CPU
ST CUT RLY2 CL-
Starter Control Latch Circuit
Watch Dog Timer Monitor
Mutual Monitor
SUB CPU
Input Circuit
ATP-P
Input Circuit
ATP-N
Output Monitor Circuit
5 V
Input Circuit
START DIAG
PCM
STS
IG1-A SIG
KEYLESS ACCESS CONTROL UNIT
12 VOLT BATTERY
STARTER CUT RELAY 1
STARTER CUT RELAY 2
To STARTER

The starter control system prevents the starter from accidentally activating when the shift position is not in the P or N position, or when the engine is running. If the vehicle is turned mistakenly while shift position is not in P or N or while the engine is running, the powertrain control module (PCM) will stop power to the starter cut relays. In this system, two starter cut relays are connected in series (starter cut relay 1, starter cut relay 2) to prevent the starter from running continuously to a starter cut relay malfunction. To activate the starter, the starter control latch circuit and the drive cut circuit which are in the PCM are switched ON to apply power to the starter cut relays. When the starter control latch circuit ON malfunction is detected, the drive cut circuit shuts down output to the starter control latch circuit to prevent the starter from continuing to run. If the ST CUT RLY1 CL- return signal is LOW while the starter control latch circuit is OFF, the PCM detects a malfunction of the ST CUT RLY1 CL- line and stores a DTC.

Monitor Execution, Sequence, Duration, DTC Type

Execution	Continuous
Sequence	None

Duration	5 seconds or more
DTC Type	One drive cycle, MIL off

Enable Conditions

Condition	B
Vehicle	ON mode

Malfunction Threshold

The ST CUT RLY1 CL- return signal is LOW for at least 5 seconds when the starter is OFF.

Possible Cause

NOTE: The causes shown may not be a complete list of all potential problems, and it is possible that there may be other causes.

- Starter cut relay 1 ST CUT RLY1 CL- line short to ground
- Starter cut relay 1 ST CUT RLY1 CL- line open
- PCM internal circuit failure

Diagnosis Details

Conditions for setting the DTC

When a malfunction is detected, a Pending DTC, a Confirmed DTC, and the freeze data are stored in the PCM memory. The MIL does not come on.

Conditions for clearing the DTC

The Pending DTC, the Confirmed DTC, and the freeze data can be cleared with the scan tool Clear command or by disconnecting the 12 volt battery.

DTC P16F4 (1.5 L ENGINE)

DTC P16F4: Starter Cut Relay 2 Control Circuit Low Voltage

General Description

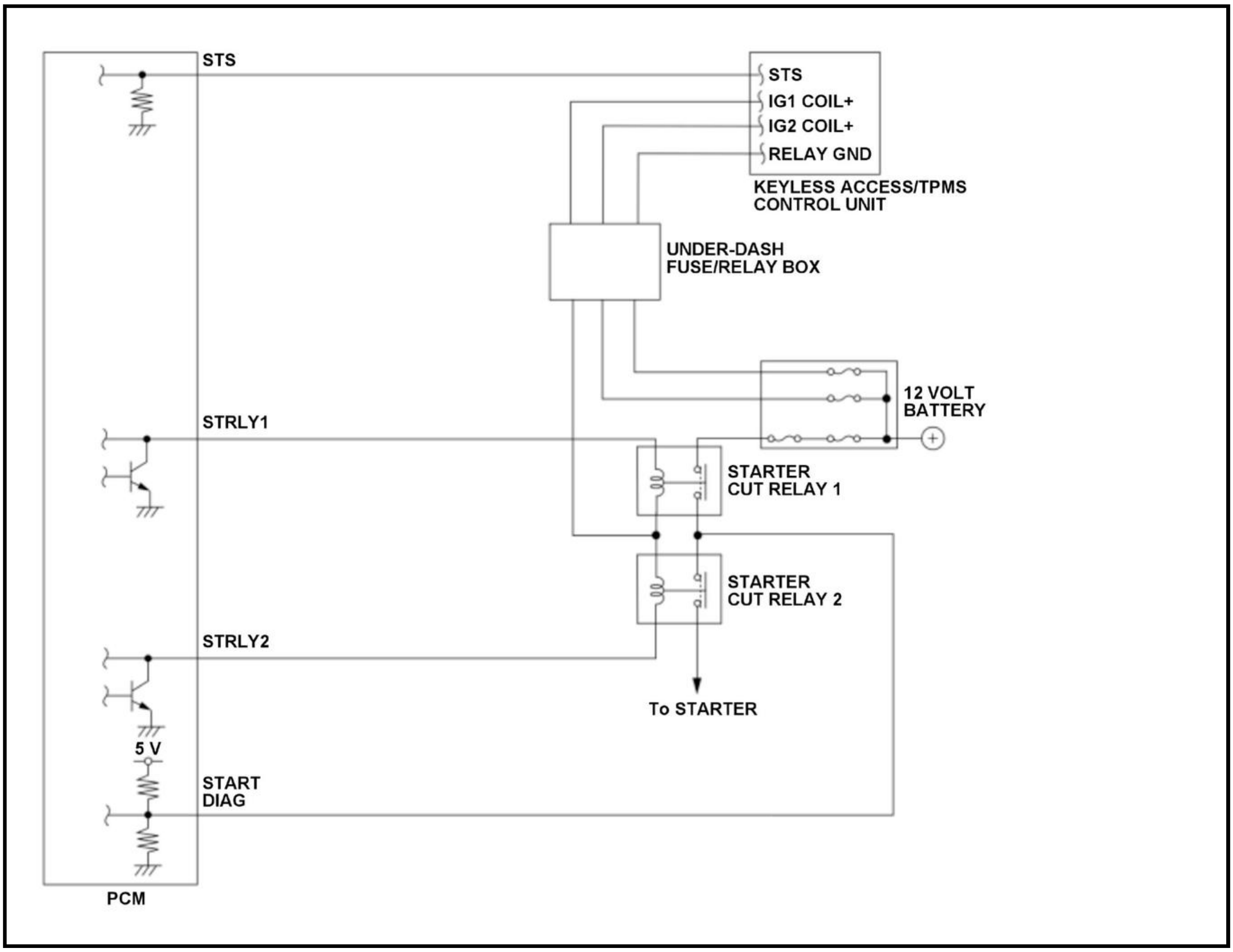
STS
STS
IG1 COIL+
IG2 COIL+
RELAY GND
KEYLESS ACCESS/TPMS CONTROL UNIT
UNDER-DASH FUSE/RELAY BOX
12 VOLT BATTERY
STRLY1
STARTER CUT RELAY 1
STARTER CUT RELAY 2
STRLY2
To STARTER
5 V
START DIAG
PCM

The starter control system prevents the starter from accidentally activating when the shift position is not in P or N position/mode, or when the engine is running. If the vehicle is turned mistakenly while shift position is not in P or N position/mode or while the engine is running, the powertrain control module (PCM) will stop power to the starter cut relays. However, cranking to return from auto idle stop does not correspond to this (if equipped). In this system, two starter cut relays are connected in series (starter cut relay 1, starter cut relay 2) to prevent the starter from running continuously due to a starter cut relays malfunction. Also a diagnosis line (START DIAG) is connected to monitor the voltage between the starter cut relay 1 and starter cut relay 2. Based on the diagnosis line signals, the PCM detects an OPEN malfunction of diagnosis line, an ON malfunction of starter cut relay 1, and an ON malfunction of starter cut relay 2. The PCM also equips with return signal circuits of starter cut relay 1 and starter cut relay 2 to detect an OFF malfunction. If the STRLY2 return signal is LOW for a specified time when the starter is OFF (STS OFF), the PCM detects an open or a short to ground of the STRLY2 and stores a DTC.

Monitor Execution, Sequence, Duration, DTC Type

Execution	Continuous
Sequence	None
Duration	5 seconds or more
DTC Type	One drive cycle, MIL off

Enable Conditions

Condition	B
Vehicle	ON mode

Malfunction Threshold

The STRLY2 return signal is LOW for at least 5 seconds when the starter is OFF (STS OFF).

Possible Cause

NOTE: The causes shown may not be a complete list of all potential problems, and it is possible that there may be other causes.

- Starter cut relay 2 STRLY2 line short to ground
- Starter cut relay 2 STRLY2 line open
- PCM internal circuit failure

Diagnosis Details

Conditions for setting the DTC

When a malfunction is detected, a Pending DTC, a Confirmed DTC, and the freeze data are stored in the PCM memory. The MIL does not come on.

Conditions for clearing the DTC

The Pending DTC, the Confirmed DTC, and the freeze data can be cleared with the scan tool Clear command or by disconnecting the 12 volt battery.

DTC P16F4 (2.4 L ENGINE) (2017 2018 2019)

DTC P16F4: Starter Cut Relay 2 Control Circuit Low Voltage

General Description

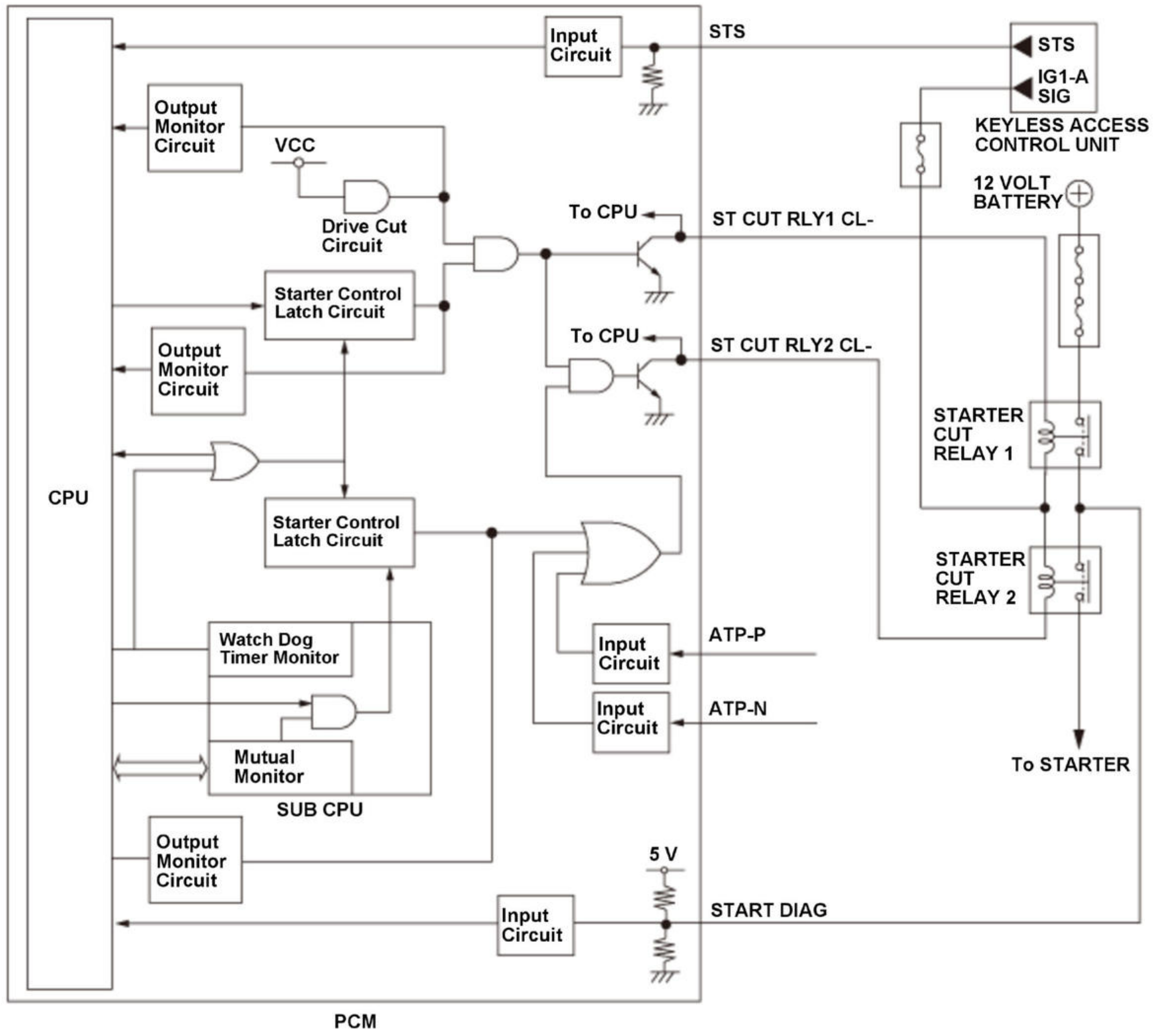
Input Circuit
STS
STS
IG1-A SIG
KEYLESS ACCESS CONTROL UNIT
Output Monitor Circuit
VCC
Drive Cut Circuit
12 VOLT BATTERY
To CPU
ST CUT RLY1 CL-
Starter Control Latch Circuit
To CPU
ST CUT RLY2 CL-
Output Monitor Circuit
STARTER CUT RELAY 1
CPU
Starter Control Latch Circuit
STARTER CUT RELAY 2
Watch Dog Timer Monitor
Input Circuit
ATP-P
Input Circuit
ATP-N
Mutual Monitor
To STARTER
SUB CPU
Output Monitor Circuit
5 V
Input Circuit
START DIAG
PCM

The starter control system prevents the starter from accidentally activating when the shift position is not in the P or N position, or when the engine is running. If the vehicle is turned mistakenly while shift position is not in P or N or while the engine is running, the powertrain control module (PCM) will stop power to the starter cut relays. In this system, two starter cut relays are connected in series (starter cut relay 1, starter cut relay 2) to prevent the starter from running continuously to a starter cut relay malfunction. To activate the starter, the starter control latch circuit and the drive cut circuit which are in the PCM are switched ON to apply power to the starter cut relays. When the starter control latch circuit ON malfunction is detected, the drive cut circuit shuts down output to the starter control latch circuit to prevent the starter from continuing to run. If the ST CUT RLY2 CL- return signal is LOW while the starter control latch circuit is OFF, the PCM detects a malfunction of the ST CUT RLY2 CL- line and stores a DTC.

Monitor Execution, Sequence, Duration, DTC Type

Execution	Continuous
Sequence	None

Duration	5 seconds or more
DTC Type	One drive cycle, MIL off

Enable Conditions

Condition	B
Vehicle	ON mode

Malfunction Threshold

The ST CUT RLY2 CL- return signal is LOW for at least 5 seconds when the starter is OFF.

Possible Cause

NOTE: The causes shown may not be a complete list of all potential problems, and it is possible that there may be other causes.

- Starter cut relay 2 ST CUT RLY2 CL- line short to ground
- Starter cut relay 2 ST CUT RLY2 CL- line open
- PCM internal circuit failure

Diagnosis Details

Conditions for setting the DTC

When a malfunction is detected, a Pending DTC, a Confirmed DTC, and the freeze data are stored in the PCM memory. The MIL does not come on.

Conditions for clearing the DTC

The Pending DTC, the Confirmed DTC, and the freeze data can be cleared with the scan tool Clear command or by disconnecting the 12 volt battery.

DTC P16F5 (1.5 L ENGINE)

DTC P16F5: Starter Cut Relay 1 Control Circuit High Voltage

General Description

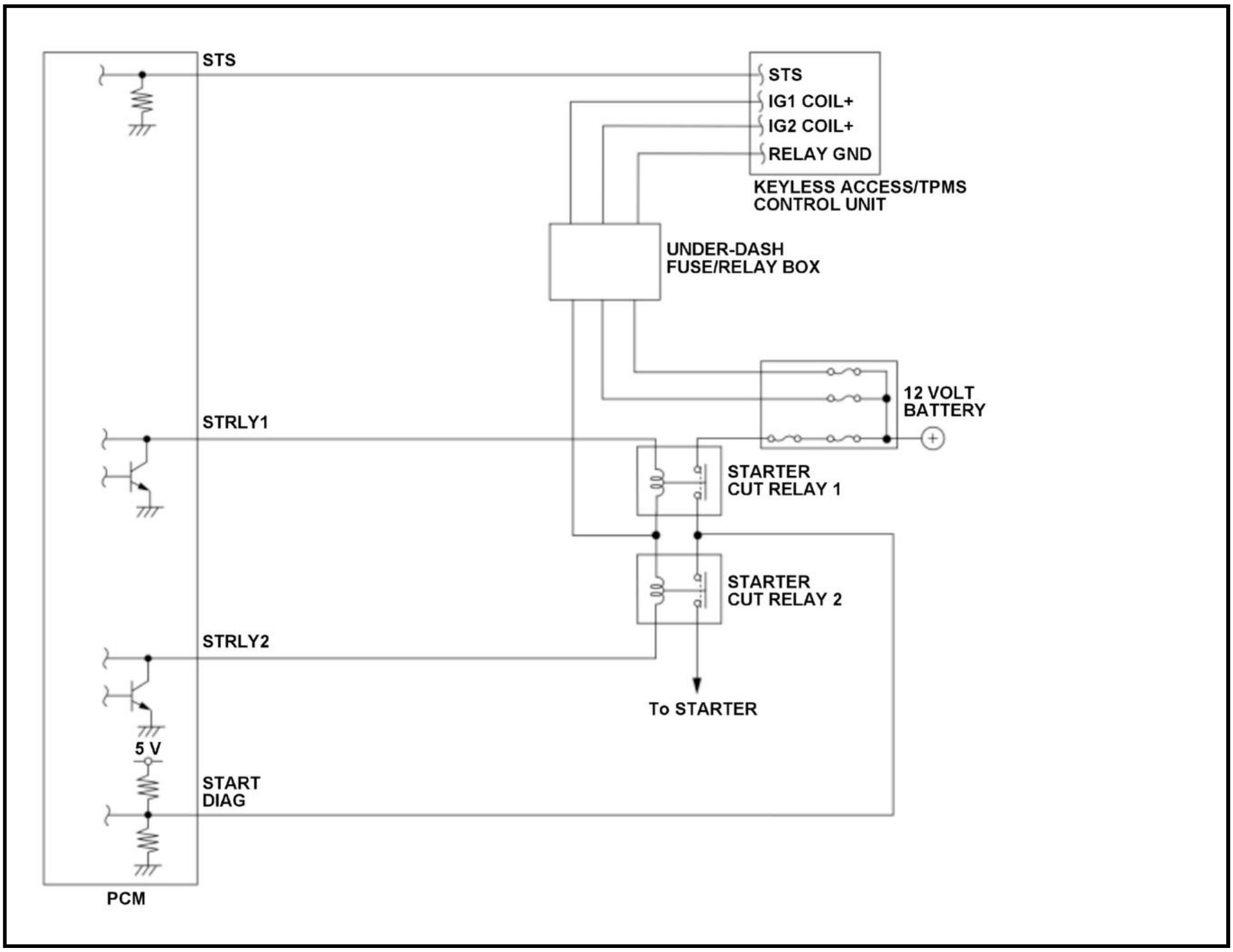
STS
STS
IG1 COIL+
IG2 COIL+
RELAY GND
KEYLESS ACCESS/TPMS CONTROL UNIT
UNDER-DASH FUSE/RELAY BOX
12 VOLT BATTERY
STRLY1
STARTER CUT RELAY 1
STARTER CUT RELAY 2
STRLY2
To STARTER
5 V
START DIAG
PCM

The starter control system prevents the starter from accidentally activating when the shift position is not in P or N position/mode, or when the engine is running. If the vehicle is turned mistakenly while shift position is not in P or N position/mode or while the engine is running, the powertrain control module (PCM) will stop power to the starter cut relays. However, cranking to return from auto idle stop does not correspond to this (if equipped). In this system, two starter cut relays are connected in series (starter cut relay 1, starter cut relay 2) to prevent the starter from running continuously due to a starter cut relays malfunction. Also a diagnosis line (START DIAG) is connected to monitor the voltage between the starter cut relay 1 and starter cut relay 2. Based on the diagnosis line signals, the PCM detects an OPEN malfunction of diagnosis line, an ON malfunction of starter cut relay 1, and an ON malfunction of starter cut relay 2. The PCM also equips with return signal circuits of starter cut relay 1 and starter cut relay 2 to detect an OFF malfunction. If the STRLY1 return signal is HIGH for a specified time when the starter is ON (STS ON), the PCM detects a short to power of the STRLY1 line and stores a DTC.

Monitor Execution, Sequence, Duration, DTC Type

Execution	Continuous
Sequence	None
Duration	0.3 seconds or more
DTC Type	One drive cycle, MIL off

Enable Conditions

Condition	B
Starter	ON

Malfunction Threshold

The STRLY1 return signal is HIGH for at least 0.3 seconds when the starter is ON (STS ON).

Possible Cause

NOTE: The causes shown may not be a complete list of all potential problems, and it is possible that there may be other causes.

- Starter cut relay 1 STRLY1 line short to power
- PCM internal circuit failure

Diagnosis Details

Conditions for setting the DTC

When a malfunction is detected, a Pending DTC, a Confirmed DTC, and the freeze data are stored in the PCM memory. The MIL does not come on.

Conditions for clearing the DTC

The Pending DTC, the Confirmed DTC, and the freeze data can be cleared with the scan tool Clear command or by disconnecting the 12 volt battery.

DTC P16F5 (2.4 L ENGINE) (2017 2018 2019)

DTC P16F5: Starter Cut Relay 1 Control Circuit High Voltage

General Description

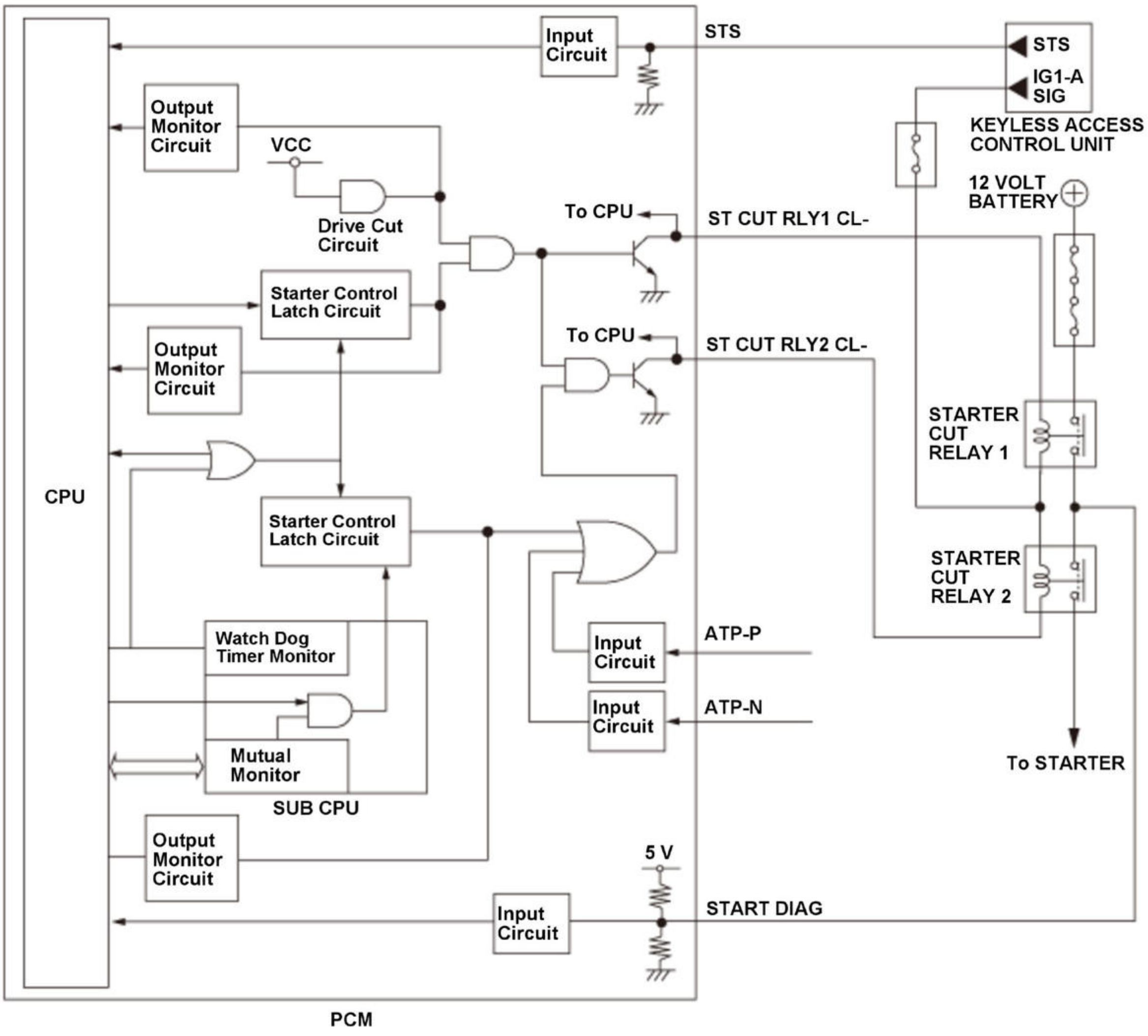
Input Circuit
STS
STS
IG1-A SIG
KEYLESS ACCESS CONTROL UNIT
Output Monitor Circuit
VCC
Drive Cut Circuit
12 VOLT BATTERY
To CPU
ST CUT RLY1 CL-
Starter Control Latch Circuit
To CPU
ST CUT RLY2 CL-
Output Monitor Circuit
STARTER CUT RELAY 1
CPU
Starter Control Latch Circuit
STARTER CUT RELAY 2
Watch Dog Timer Monitor
Input Circuit
ATP-P
Input Circuit
ATP-N
Mutual Monitor
To STARTER
SUB CPU
Output Monitor Circuit
5 V
Input Circuit
START DIAG
PCM

The starter control system prevents the starter from accidentally activating when the shift position is not in the P or N position, or when the engine is running. If the vehicle is turned mistakenly while shift position is not in P or N or while the engine is running, the powertrain control module (PCM) will stop power to the starter cut relays. In this system, two starter cut relays are connected in series (starter cut relay 1, starter cut relay 2) to prevent the starter from running continuously to a starter cut relay malfunction. To activate the starter, the starter control latch circuit and the drive cut circuit which are in the PCM are switched ON to apply power to the starter cut relays. When the starter control latch circuit ON malfunction is detected, the drive cut circuit shuts down output to the starter control latch circuit to prevent the starter from continuing to run. If the ST CUT RLY1 CL- return signal is HIGH while the starter control latch circuit is ON, the PCM detects a malfunction of the ST CUT RLY1 CL- line and stores a DTC.

Monitor Execution, Sequence, Duration, DTC Type

Execution	Continuous
Sequence	None

Duration	2 seconds or more
DTC Type	One drive cycle, MIL off

Enable Conditions

Condition	B
Vehicle	START mode

Malfunction Threshold

The ST CUT RLY1 CL- return signal is HIGH for at least 2 seconds when the starter is ON.

Possible Cause

NOTE: The causes shown may not be a complete list of all potential problems, and it is possible that there may be other causes.

- Starter cut relay 1 ST CUT RLY1 CL- line short to power
- PCM internal circuit failure

Diagnosis Details

Conditions for setting the DTC

When a malfunction is detected, a Pending DTC, a Confirmed DTC, and the freeze data are stored in the PCM memory. The MIL does not come on.

Conditions for clearing the DTC

The Pending DTC, the Confirmed DTC, and the freeze data can be cleared with the scan tool Clear command or by disconnecting the 12 volt battery.

DTC P16F6 (1.5 L ENGINE)

DTC P16F6: Starter Cut Relay 2 Control Circuit High Voltage

General Description

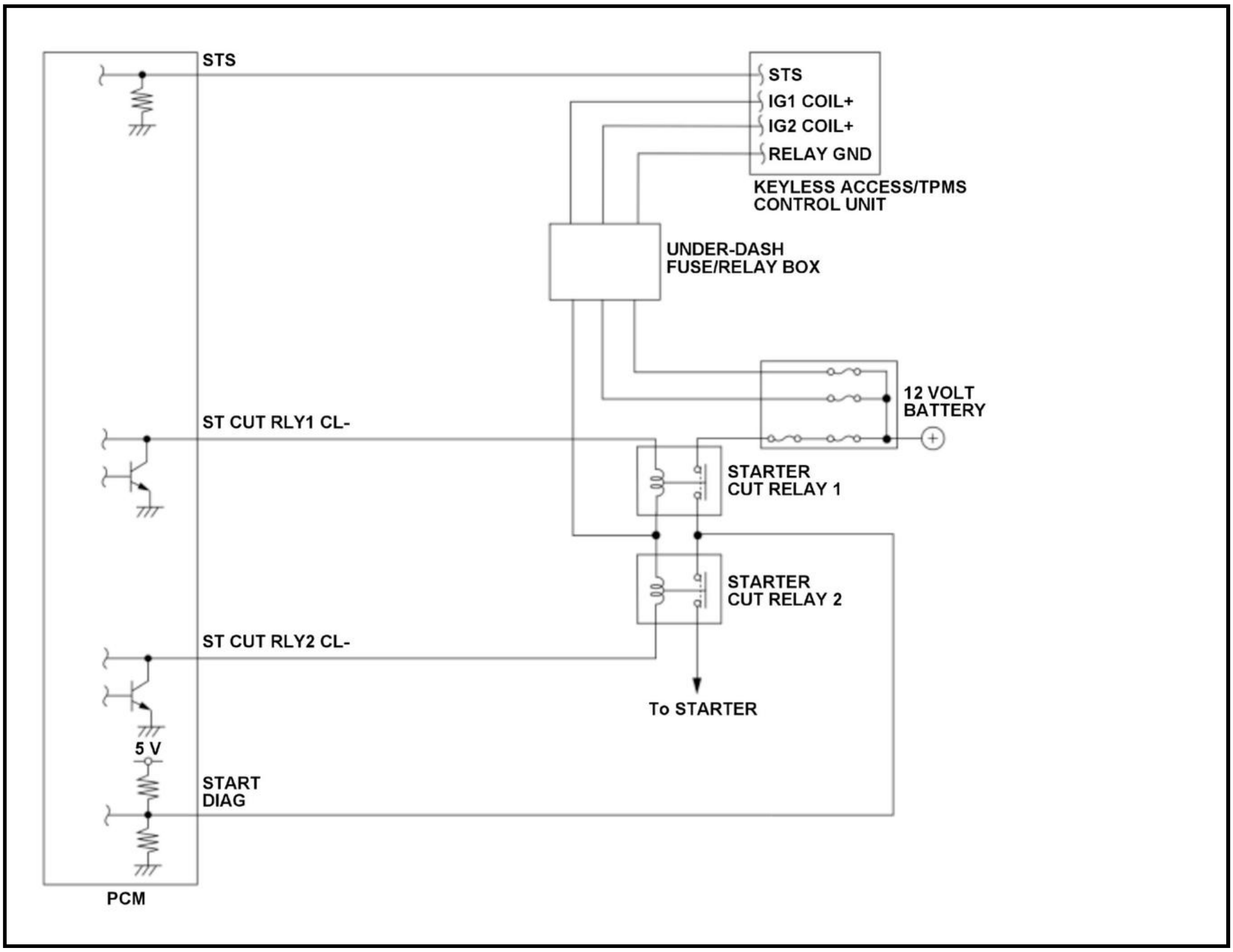

STS
STS
IG1 COIL+
IG2 COIL+
RELAY GND
KEYLESS ACCESS/TPMS CONTROL UNIT
UNDER-DASH FUSE/RELAY BOX
12 VOLT BATTERY
ST CUT RLY1 CL-
STARTER CUT RELAY 1
STARTER CUT RELAY 2
ST CUT RLY2 CL-
To STARTER
5 V
START DIAG
PCM

The starter control system prevents the starter from accidentally activating when the shift position is not in P or N position/mode, or when the engine is running. If the vehicle is turned mistakenly while shift position is not in P or N position/mode or while the engine is running, the powertrain control module (PCM) will stop power to the starter cut relays. However, cranking to return from auto idle stop does not correspond to this (if equipped). In this system, two starter cut relays are connected in series (starter cut relay 1, starter cut relay 2) to prevent the starter from running continuously due to a starter cut relays malfunction. Also a diagnosis line (START DIAG) is connected to monitor the voltage between the starter cut relay 1 and starter cut relay 2. Based on the diagnosis line signals, the PCM detects an OPEN malfunction of diagnosis line, an ON malfunction of starter cut relay 1, and an ON malfunction of starter cut relay 2. The PCM also equips with return signal circuits of starter cut relay 1 and starter cut relay 2 to detect an OFF malfunction. If the STRLY2 return signal is HIGH for a specified time when the starter is ON (STS ON), the PCM detects a short to power of the STRLY2 line and stores a DTC.

Monitor Execution, Sequence, Duration, DTC Type

Execution	Continuous
Sequence	None
Duration	0.3 seconds or more
DTC Type	One drive cycle, MIL off

Enable Conditions

Condition	B
Starter	ON

Malfunction Threshold

The STRLY2 return signal is HIGH for at least 0.3 seconds when the starter is ON (STS ON).

Possible Cause

NOTE: The causes shown may not be a complete list of all potential problems, and it is possible that there may be other causes.

- Starter cut relay 2 ST CUT RLY2 CL- line short to power
- PCM internal circuit failure

Diagnosis Details

Conditions for setting the DTC

When a malfunction is detected, a Pending DTC, a Confirmed DTC, and the freeze data are stored in the PCM memory. The MIL does not come on.

Conditions for clearing the DTC

The Pending DTC, the Confirmed DTC, and the freeze data can be cleared with the scan tool Clear command or by disconnecting the 12 volt battery.

DTC P16F6 (2.4 L ENGINE) (2017 2018 2019)

DTC P16F6: Starter Cut Relay 2 Control Circuit High Voltage

General Description

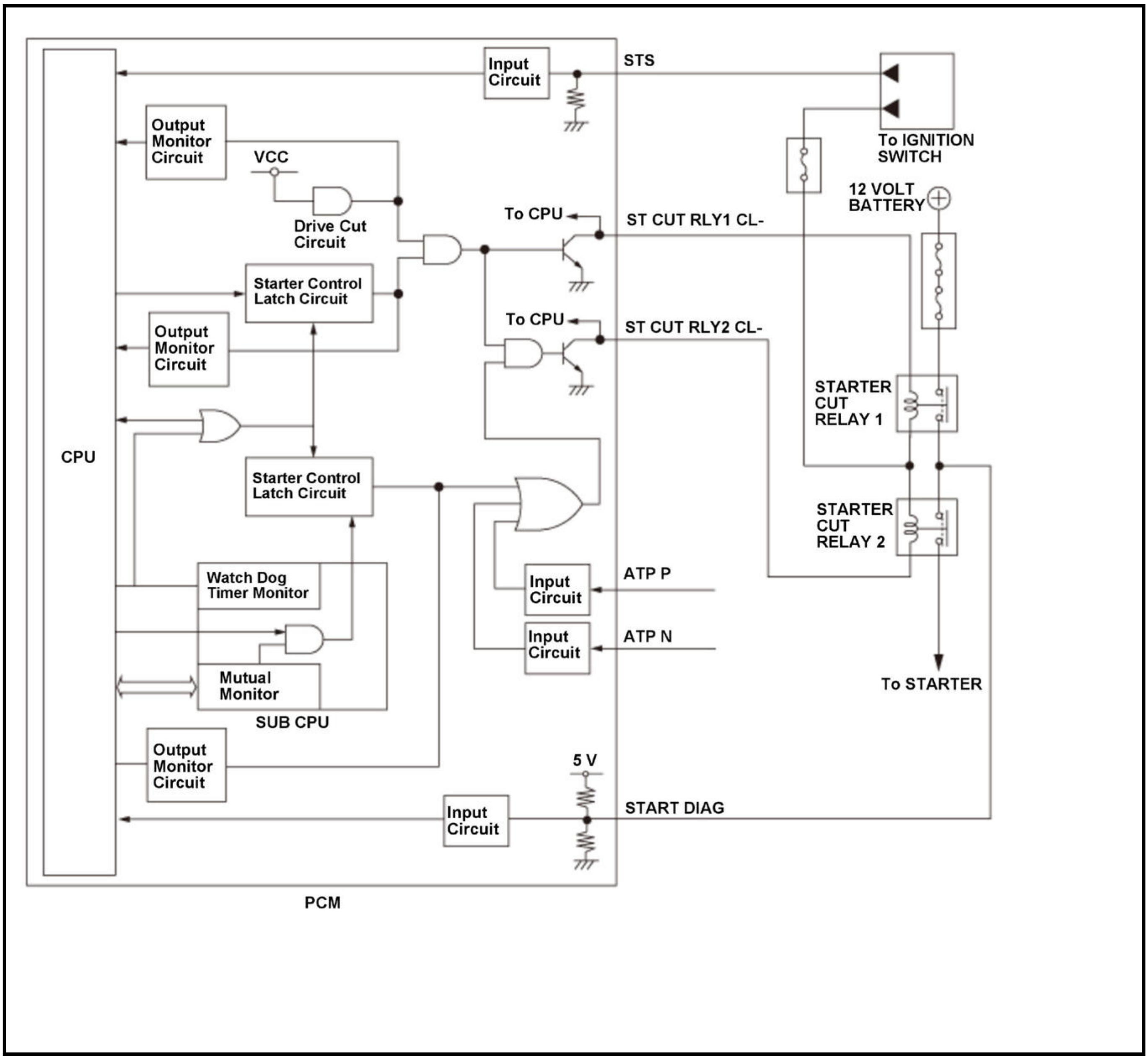
Input Circuit
STS
To IGNITION SWITCH
Output Monitor Circuit
VCC
Drive Cut Circuit
12 VOLT BATTERY
To CPU
ST CUT RLY1 CL-
Starter Control Latch Circuit
To CPU
ST CUT RLY2 CL-
Output Monitor Circuit
STARTER CUT RELAY 1
CPU
Starter Control Latch Circuit
STARTER CUT RELAY 2
Watch Dog Timer Monitor
ATP P
Input Circuit
ATP N
Input Circuit
Mutual Monitor
To STARTER
SUB CPU
Output Monitor Circuit
5 V
START DIAG
Input Circuit
PCM

The starter control system prevents the starter from accidentally activating when the shift position is not in the P or N position, or when the engine is running. If the vehicle is turned mistakenly while shift position is not in P or N or while the engine is running, the powertrain control module (PCM) will stop power to the starter cut relays. In this system, two starter cut relays are connected in series (starter cut relay 1, starter cut relay 2) to prevent the starter from running continuously to a starter cut relay malfunction. To activate the starter, the starter control latch circuit and the drive cut circuit which are in the PCM are switched ON to apply power to the starter cut relays. When the starter control latch circuit ON malfunction is detected, the drive cut circuit shuts down output to the starter control latch circuit to prevent the starter from continuing to run. If the ST CUT RLY2 CL- return signal is HIGH while the starter control latch circuit is ON, the PCM detects a malfunction of the ST CUT RLY2 CL- line and stores a DTC.

Monitor Execution, Sequence, Duration, DTC Type

Execution	Continuous
Sequence	None

Duration	2 seconds or more
DTC Type	One drive cycle, MIL off

Enable Conditions

Condition	B
Vehicle	START mode

Malfunction Threshold

The ST CUT RLY2 CL- return signal is HIGH for at least 2 seconds when the starter is ON.

Possible Cause

NOTE: The causes shown may not be a complete list of all potential problems, and it is possible that there may be other causes.

- Starter cut relay 2 circuit ST CUT RLY2 CL- line short to power
- PCM internal circuit failure

Diagnosis Details

Conditions for setting the DTC

When a malfunction is detected, a Pending DTC, a Confirmed DTC, and the freeze data are stored in the PCM memory. The MIL does not come on.

Conditions for clearing the DTC

The Pending DTC, the Confirmed DTC, and the freeze data can be cleared with the scan tool Clear command or by disconnecting the 12 volt battery.

DTC P16F9 (2.4 L ENGINE) (2017 2018 2019)

DTC P16F9: Powertrain Control Module (PCM) Internal Circuit Malfunction (Starter Control Circuit Malfunction)

General Description

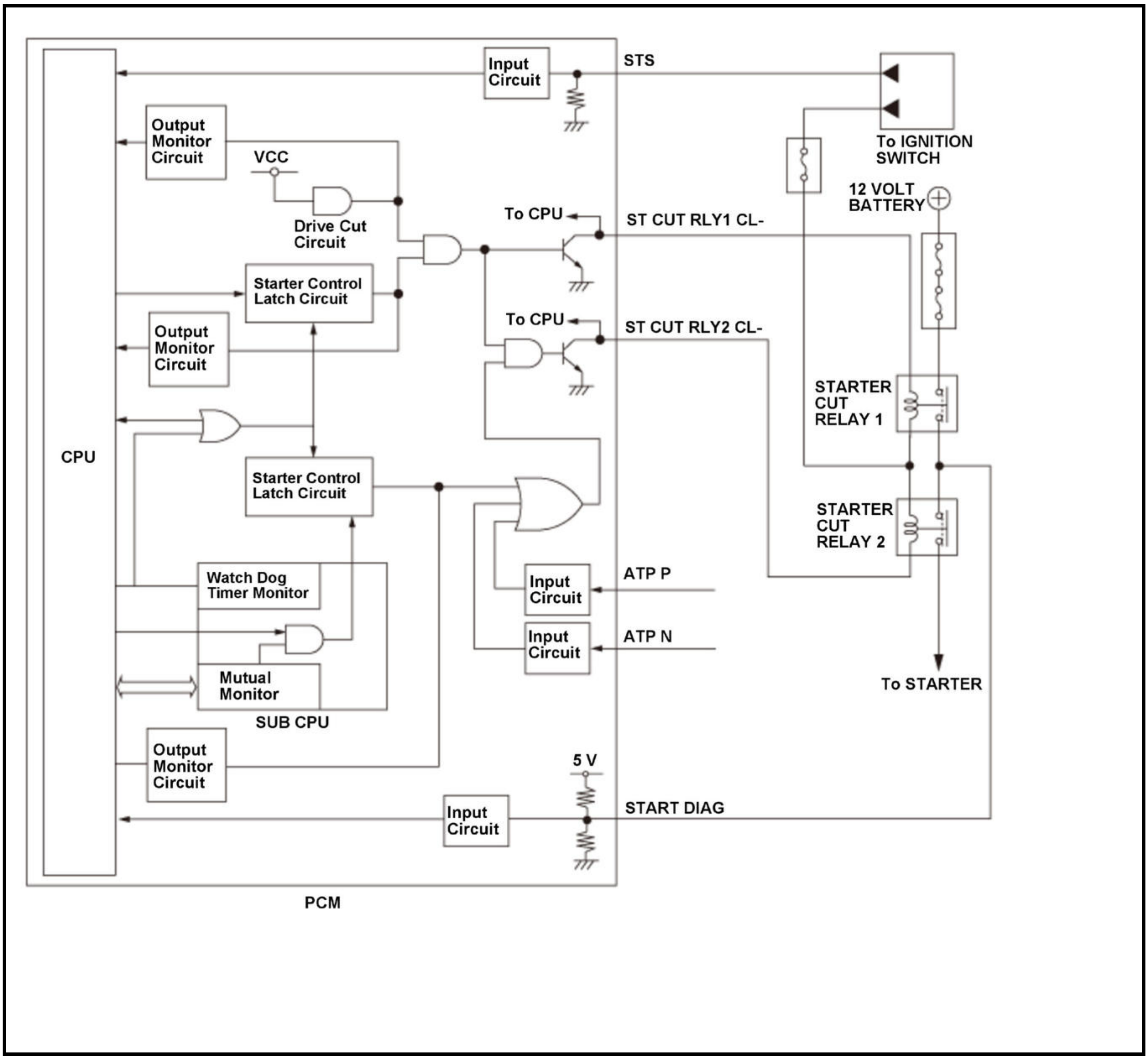

Input Circuit
STS
To IGNITION SWITCH
Output Monitor Circuit
VCC
Drive Cut Circuit
To CPU
ST CUT RLY1 CL-
12 VOLT BATTERY
Starter Control Latch Circuit
To CPU
ST CUT RLY2 CL-
Output Monitor Circuit
STARTER CUT RELAY 1
CPU
Starter Control Latch Circuit
STARTER CUT RELAY 2
Watch Dog Timer Monitor
Input Circuit
ATP P
Input Circuit
ATP N
Mutual Monitor
To STARTER
SUB CPU
Output Monitor Circuit
5 V
START DIAG
Input Circuit
PCM

The starter control system prevents the starter from accidentally activating when the shift position is not in the P or N position, or when the engine is running. If the vehicle is turned mistakenly while shift position is not in P or N or while the engine is running, the powertrain control module (PCM) will stop power to the starter cut relays. In this system, two starter cut relays are connected in series (starter cut relay 1, starter cut relay 2) to prevent the starter from running continuously to a starter cut relay malfunction. To activate the starter, the starter control latch circuit and the drive cut circuit which are in the PCM are switched ON to apply power to the starter cut relays. When the starter control latch circuit ON malfunction is detected, the drive cut circuit shuts down output to the starter control latch circuit to prevent the starter from continuing to run. If the drive cut circuit return signal is LOW when the starter is ON, the PCM detects an OFF malfunction of the drive cut circuit and stores a DTC.

Monitor Execution, Sequence, Duration, DTC Type

Execution	Continuous
Sequence	None

Duration	2.0 seconds or more
DTC Type	One drive cycle, MIL on

Enable Conditions

Condition	B
Vehicle	START mode

Malfunction Threshold

The drive cut circuit (in the PCM) returns a signal LOW to the CPU for at least 2.0 seconds.

Possible Cause

NOTE: The causes shown may not be a complete list of all potential problems, and it is possible that there may be other causes.

- Drive cut circuit OFF failure (PCM internal circuit failure)

Diagnosis Details

Conditions for setting the DTC

When a malfunction is detected, the MIL comes on and a Pending DTC, a Confirmed DTC, and the freeze data are stored in the PCM memory.

Conditions for clearing the DTC

The MIL is cleared if the malfunction does not return in three consecutive trips in which the diagnostic runs. The MIL, the Pending DTC, the Confirmed DTC, and the freeze data can be cleared with the scan tool Clear command.

DTC P16FA (2.4 L ENGINE) (2017 2018 2019)

DTC P16FA: Powertrain Control Module (PCM) Internal Circuit Malfunction (Starter Control Circuit Malfunction)

General Description

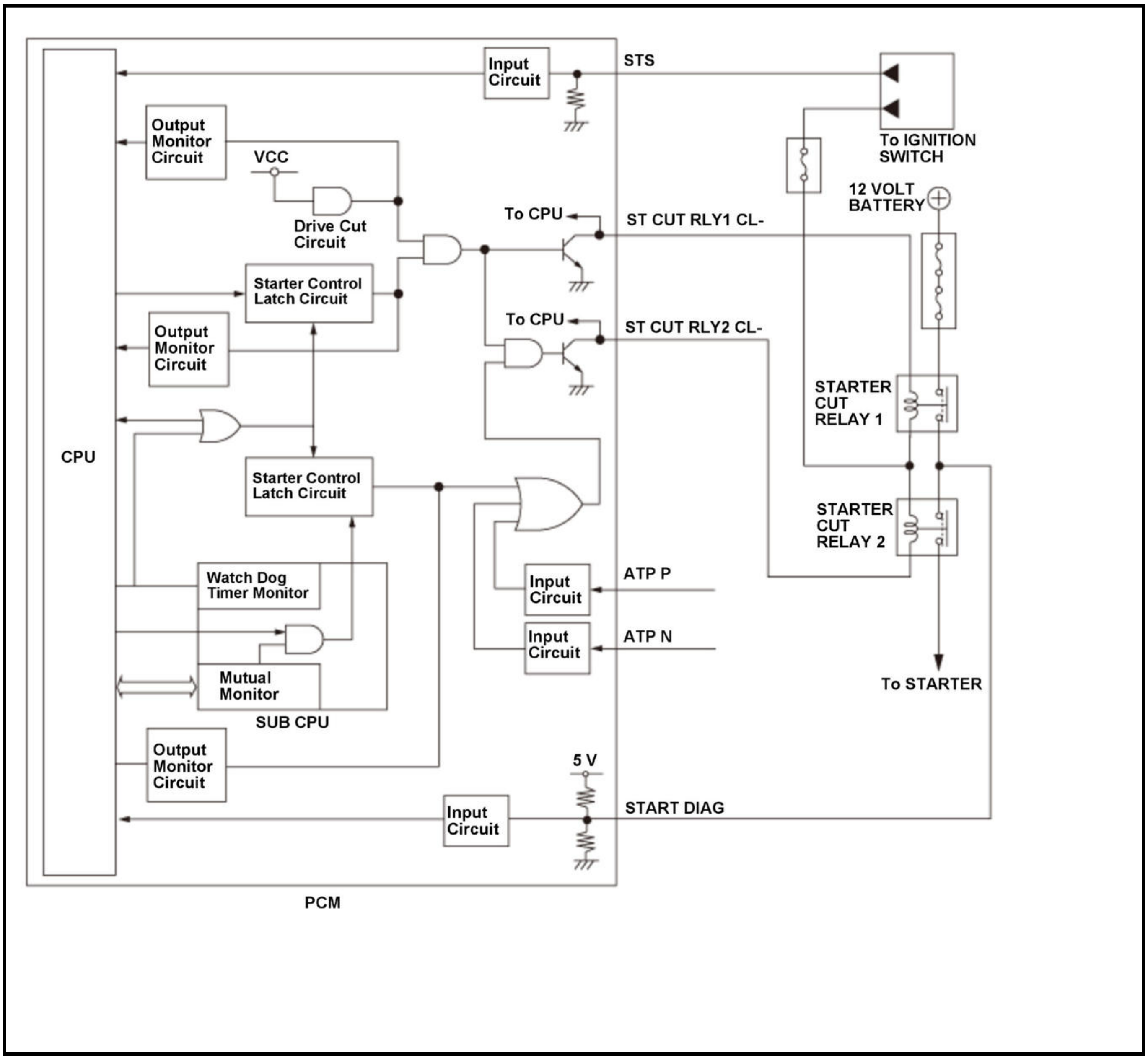
Input Circuit
STS
Output Monitor Circuit
VCC
Drive Cut Circuit
To CPU
ST CUT RLY1 CL-
Starter Control Latch Circuit
To CPU
ST CUT RLY2 CL-
Output Monitor Circuit
To IGNITION SWITCH
12 VOLT BATTERY
CPU
STARTER CUT RELAY 1
Starter Control Latch Circuit
STARTER CUT RELAY 2
Watch Dog Timer Monitor
Input Circuit
ATP P
Input Circuit
ATP N
Mutual Monitor
To STARTER
SUB CPU
Output Monitor Circuit
5 V
Input Circuit
START DIAG
PCM

The starter control system prevents the starter from accidentally activating when the shift position is not in the P or N position, or when the engine is running. If the vehicle is turned mistakenly while shift position is not in P or N or while the engine is running, the powertrain control module (PCM) will stop power to the starter cut relays. In this system, two starter cut relays are connected in series (starter cut relay 1, starter cut relay 2) to prevent the starter from running continuously to a starter cut relay malfunction. To activate the starter, the starter control latch circuit and the drive cut circuit which are in the PCM are switched ON to apply power to the starter cut relays. When the starter control latch circuit ON malfunction is detected, the drive cut circuit shuts down output to the starter control latch circuit to prevent the starter from continuing to run. If the starter control latch circuit return signal is LOW when the starter is ON, the PCM detects an OFF malfunction of the starter control latch circuit and stores a DTC.

Monitor Execution, Sequence, Duration, DTC Type

Execution	Continuous
Sequence	None

Duration	2.0 seconds or more
DTC Type	One drive cycle, MIL on

Enable Conditions

Condition	B
Vehicle	START mode

Malfunction Threshold

The starter control latch circuit (in the PCM) returns a signal LOW to the CPU for at least 2.0 seconds.

Possible Cause

NOTE: The causes shown may not be a complete list of all potential problems, and it is possible that there may be other causes.

- Starter control latch circuit OFF failure (PCM internal circuit failure)

Diagnosis Details

Conditions for setting the DTC

When a malfunction is detected, the MIL comes on and a Pending DTC, a Confirmed DTC, and the freeze data are stored in the PCM memory.

Conditions for clearing the DTC

The MIL is cleared if the malfunction does not return in three consecutive trips in which the diagnostic runs. The MIL, the Pending DTC, the Confirmed DTC, and the freeze data can be cleared with the scan tool Clear command

DTC P1717 (CVT (ECM/PCM))

DTC P1717: Transmission Range Switch ATP RVS Switch (Open or Short)

General Description

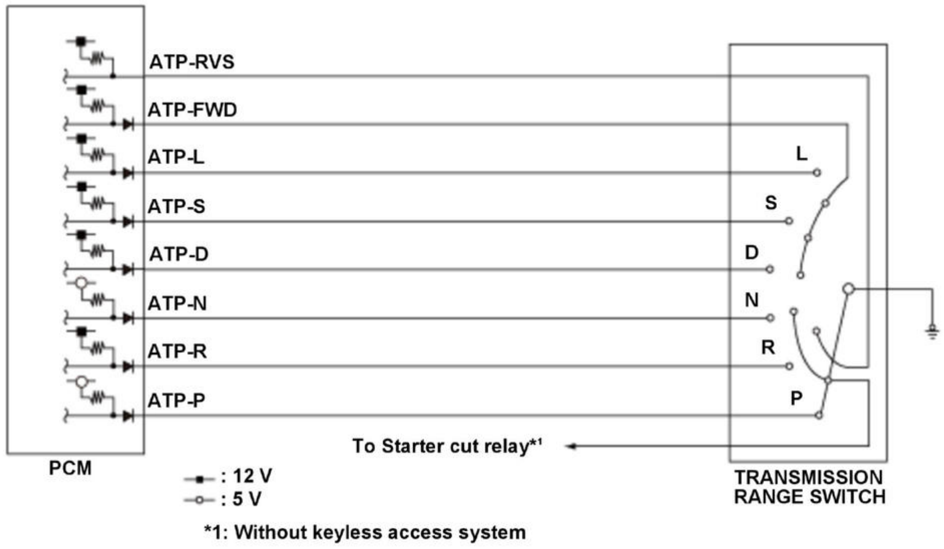
ATP-RVS
ATP-FWD
ATP-L
ATP-S
ATP-D
ATP-N
ATP-R
ATP-P
L
S
D
N
R
P
To Starter cut relay*1
PCM
■ : 12 V
○ : 5 V
*1: Without keyless access system
TRANSMISSION RANGE SWITCH

Transmission range switch contact point input matrix:

Shift lever position/mode	**Input per switch**							
	ATP-P	**ATP-R**	**ATP-N**	**ATP-D**	**ATP-S**	**ATP-L**	**ATP-FWD**	**ATP-RVS**
P	O	X	X	X	X	X	X	X
R	X	O	X	X	X	X	X	O
N	X	X	O	X	X	X	X	X
D	X	X	X	O	X	X	O	X
S	X	X	X	X	O	X	O	X
L	X	X	X	X	X	O	O	X

O: Closed X: Open

The transmission range switch is attached to a control shaft. Operating the shift lever makes the control shaft rotate via the shift cable. The shift position indicator shows which position is selected according to the Low/High signal combinations, which vary based on the control shaft rotational angle. The control shaft changes the position of the transmission range switch, activates the manual valve, and switches hydraulic pressure to shift the transmission through forward/neutral/reverse. The transmission range switch signal is used to determine the shift schedule. The voltage is high (5 V or 12 V) at the powertrain control module (PCM) input terminal when each transmission range switch position is open, and it is low (0 V) when each switch is closed. If the RVS switch is open with the shift lever in R while shifting between P, R, and N, the PCM detects an RVS switch open failure and stores a DTC.

Monitor Execution, Sequence, Duration, DTC Type

Execution	Continuous
Sequence	None
Duration	320 milliseconds or more
DTC Type	Two drive cycles, MIL off, Shift position indicator blinks

Enable Conditions

Condition	Minimum	Maximum
12 volt battery voltage [BATTERY VOLTAGE]	11 V	-

[ ]: HDS Parameter

Malfunction Threshold

No RVS signal [Reverse Switch (ATPRVS)] is detected with the shift lever in R position/mode while shifting between P, R, and N position/mode.

Possible Cause

NOTE: The causes shown may not be a complete list of all potential problems, and it is possible that there may be other causes.

- Transmission range switch ATP-RVS line open (includes connector loose connection or disconnection)
- Transmission range switch failure
- Shift cable adjustment failure
- PCM internal circuit failure

Confirmation Procedure

Operating Condition

- Start the engine.
- With the brake pedal pressed, shift to P, R position/mode, through N position/mode, then shift to R position/mode again, and wait for at least 320 milliseconds.

With the HDS

None.

Diagnosis Details

Conditions for setting the DTC

When a malfunction is detected during the first drive cycle, a Pending DTC is stored in the PCM memory. If the malfunction returns in the next (second) drive cycle, the shift position indicator blinks and a Confirmed DTC and the freeze data are stored. The MIL does not come on.

Conditions for clearing the DTC

The shift position indicator comes off by turning the vehicle to the OFF (LOCK) mode. The Pending DTC, the Confirmed DTC, and the freeze data can be cleared with the scan tool Clear command or by disconnecting the 12 volt battery.

DTC P1840 (CVT (ECM/PCM))

DTC P1840: CVT Speed Sensor Circuit Forward Rotation Range/Performance

General Description

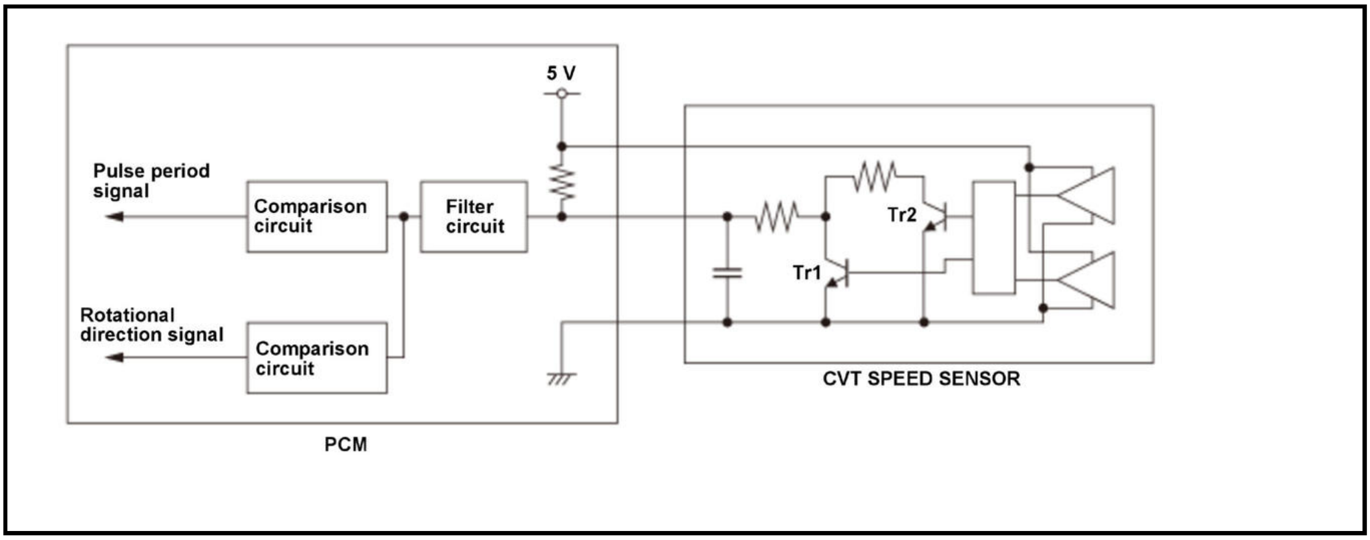
5 V
Pulse period signal
Comparison circuit
Filter circuit
Rotational direction signal
Comparison circuit
Tr2
Tr1
CVT SPEED SENSOR
PCM

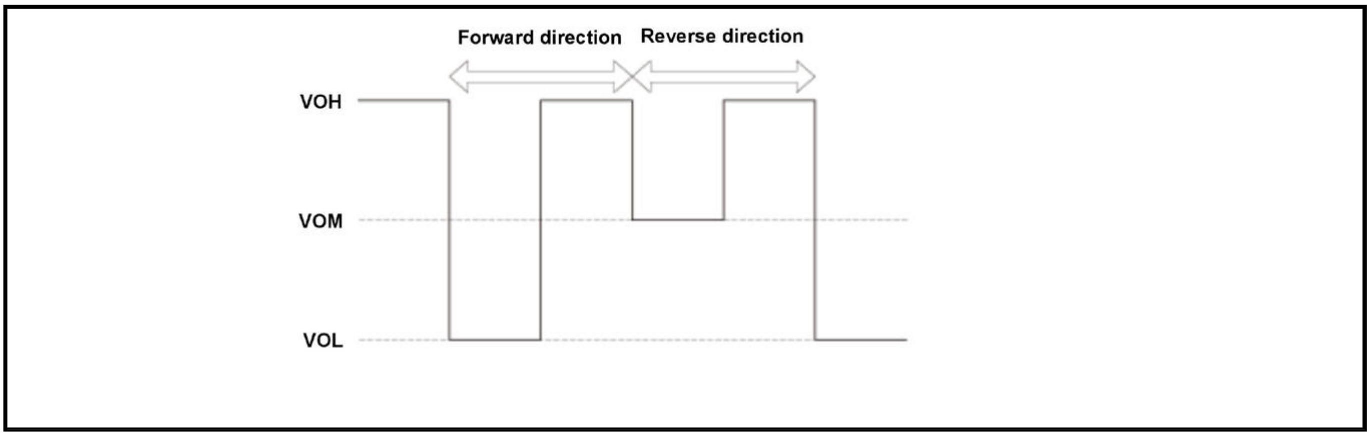

Tr1	Tr2	Pulse signal voltage level
OFF	OFF	VOH

Tr1	Tr2	Pulse signal voltage level
OFF	ON	VOM
ON	OFF	VOL

The CVT speed sensor is attached to the outside of the torque converter housing. The CVT speed sensor consists of a semiconductor to detect the position of the secondary driven gear. When the secondary driven gear rotates, the magnetic flux in the CVT speed sensor changes. The changes of magnetic flux are converted into pulsing signals to the powertrain control module (PCM). The rotational direction of the secondary driven gear is detected by the voltage level of the pulsing signals. If the driving condition and the detected voltage level of the pulsing signals do not match, the PCM detects a malfunction and stores a DTC.

Monitor Execution, Sequence, Duration, DTC Type

Execution	Continuous
Sequence	None
Duration	2 seconds or more
DTC Type	Two drive cycles, MIL off, Shift position indicator blinks

Enable Conditions

Condition	Minimum	Maximum
Elapsed time after forward clutch engage completion	3 seconds	-
Engine speed [ENGINE SPEED]	500 rpm	-
Drive pulley speed [Input Shaft (Drive Pulley) Speed rpm]	500 rpm	-
Forward clutch commanded pressure	295 kPa (3.0 kgf/cm 2, 42.7 psi)	-
Vehicle speed [VEHICLE SPEED]	19 mph (30 km/h)	-
Shift lever position/mode	D, S, L	
Drive pulley rotational direction	Forward direction	
Other	Not when the shift lever is being shifted	

[ ]: HDS Parameter

Malfunction Threshold

The CVT speed sensor outputs [Direction of Secondary-shaft Rotation] a reverse direction signal for at least 2 seconds when driving in forward position.

Possible Cause

NOTE: The causes shown may not be a complete list of all potential problems, and it is possible that there may be other causes.

- CVT speed sensor failure
- PCM internal circuit failure

Confirmation Procedure

Operating Condition

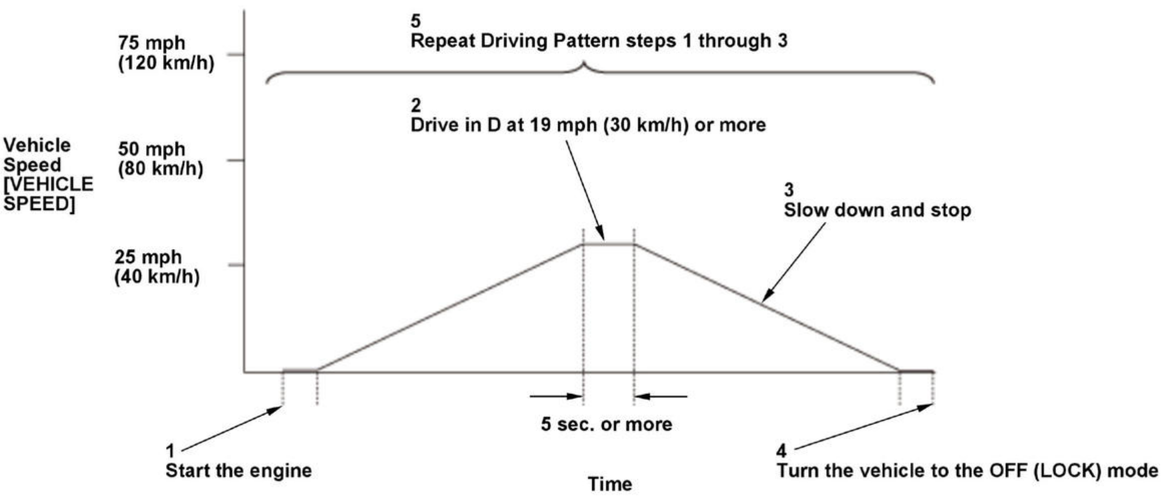

- Start the engine.
- Drive the vehicle in D position/mode at a speed of 19 mph (30 km/h) or more for at least 5 seconds.
- Slow down and stop the vehicle.
- Turn the vehicle to the OFF (LOCK) mode.
- Repeat Driving Pattern steps 1 through 3.

- Drive the vehicle in this manner only if the traffic regulations and ambient conditions allow.

With the HDS

None.

Diagnosis Details

Conditions for setting the DTC

When a malfunction is detected during the first drive cycle, a Pending DTC is stored in the PCM memory. If the malfunction returns in the next (second) drive cycle, the shift position indicator blinks and a Confirmed DTC and the freeze data are stored. The MIL does not come on.

Conditions for clearing the DTC

The shift position indicator comes off by turning the vehicle to the OFF (LOCK) mode. The Pending DTC, the Confirmed DTC, and the freeze data can be cleared with the scan tool Clear command or by disconnecting the 12 volt battery.

DTC P1841 (CVT (ECM/PCM))

DTC P1841: CVT Speed Sensor Circuit Reverse Rotation Range/Performance

General Description

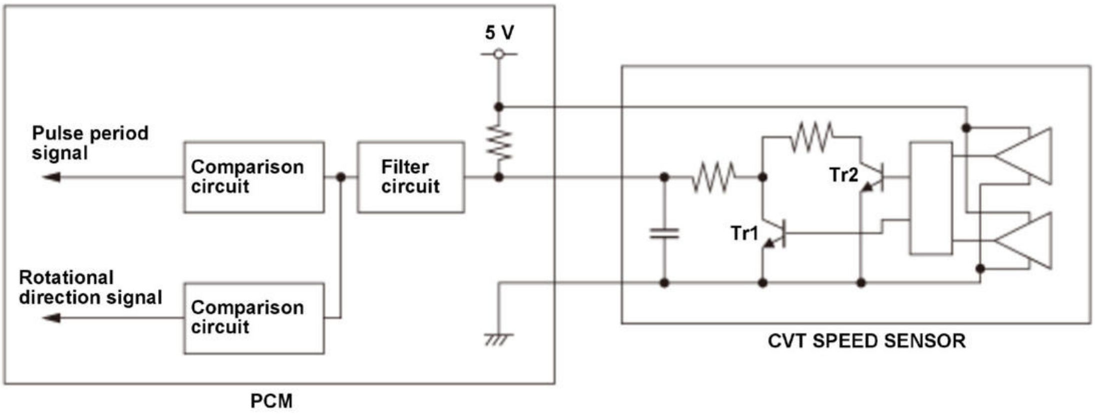
5 V
Pulse period signal
Comparison circuit
Filter circuit
Rotational direction signal
Comparison circuit
PCM
Tr2
Tr1
CVT SPEED SENSOR

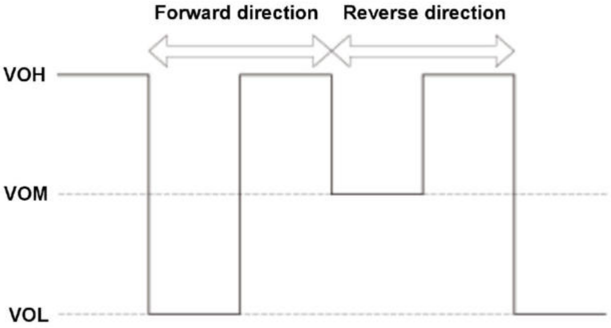

Tr1	Tr2	Pulse signal voltage level
OFF	OFF	VOH
OFF	ON	VOM
ON	OFF	VOL

The CVT speed sensor is attached to the outside of the torque converter housing. The CVT speed sensor consists of a semiconductor to detect the position of the secondary driven gear. When the secondary driven gear rotates, the magnetic flux in the CVT speed sensor changes. The changes of magnetic flux are converted into pulsing signals to the powertrain control module (PCM). The rotational direction of the secondary driven gear is detected by the voltage level of the pulsing signals. If the driving condition and the detected voltage level of the pulsing signals do not match, the PCM detects a malfunction and stores a DTC.

Monitor Execution, Sequence, Duration, DTC Type

Execution	Continuous
Sequence	None
Duration	2 seconds or more
DTC Type	Two drive cycles, MIL off, Shift position indicator blinks

Enable Conditions

Condition	Minimum	Maximum
Elapsed time reverse brake engage completion	3 seconds	-
Engine speed [ENGINE SPEED]	500 rpm	-
Drive pulley speed [Input Shaft	500 rpm	-

Condition	Minimum	Maximum
(Drive Pulley) Speed rpm]		
Reverse brake commanded pressure	295 kPa (3.0 kgf/cm 2, 42.7 psi)	-
Vehicle speed [VEHICLE SPEED]	19 mph (30 km/h)	-
Shift lever position/mode	R	
Drive pulley rotational direction	Reverse direction	
Other	Not when the shift lever is being shifted	

[ ]: HDS Parameter

Malfunction Threshold

The CVT speed sensor outputs [Direction of Secondary-shaft Rotation] a forward direction signal for at least 2 seconds when driving in reverse position.

Possible Cause

NOTE: The causes shown may not be a complete list of all potential problems, and it is possible that there may be other causes.

- CVT speed sensor failure
- PCM internal circuit failure

Confirmation Procedure

Operating Condition

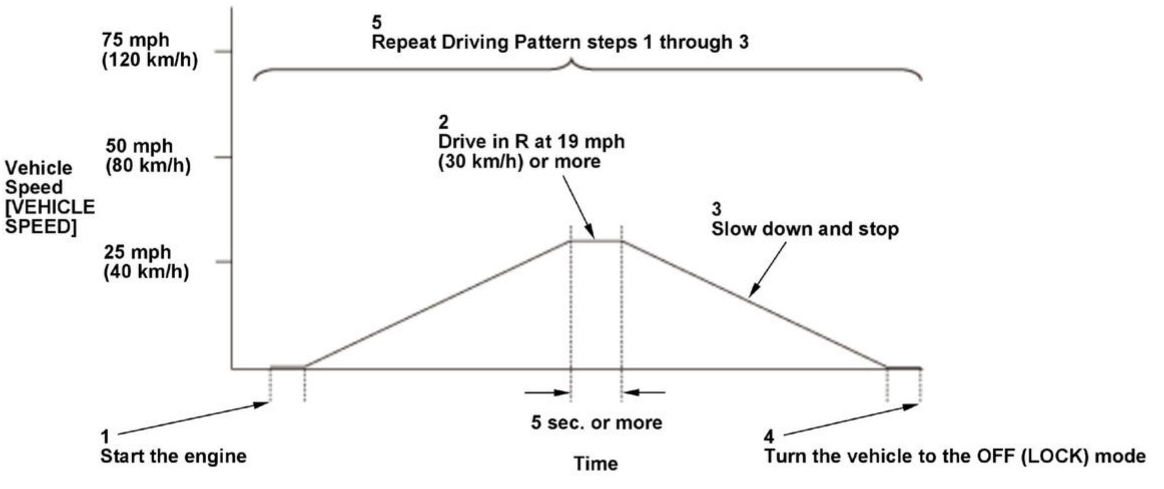

- Start the engine.
- Drive the vehicle in R position/mode at a speed of 19 mph (30 km/h) or more for at least 5 seconds.
- Slow down and stop the vehicle.
- Turn the vehicle to the OFF (LOCK) mode.
- Repeat Driving Pattern steps 1 through 3.

- To avoid risks by a reverse run, do the Driving Pattern with the vehicle raised on a lift to free the wheels and disable the VSA function if equipped.

With the HDS

None.

Diagnosis Details

Conditions for setting the DTC

When a malfunction is detected during the first drive cycle, a Pending DTC is stored in the PCM memory. If the malfunction returns in the next (second) drive cycle, the shift position indicator blinks and a Confirmed DTC and the freeze data are stored. The MIL does not come on.

Conditions for clearing the DTC

The shift position indicator comes off by turning the vehicle to the OFF (LOCK) mode. The Pending DTC, the Confirmed DTC, and the freeze data can be cleared with the scan tool Clear command or by disconnecting the 12 volt battery.

DTC P1844 (CVT (ECM/PCM))

DTC P1844: CVT Input Shaft Speed Sensor Circuit Forward Rotation Range/Performance

General Description

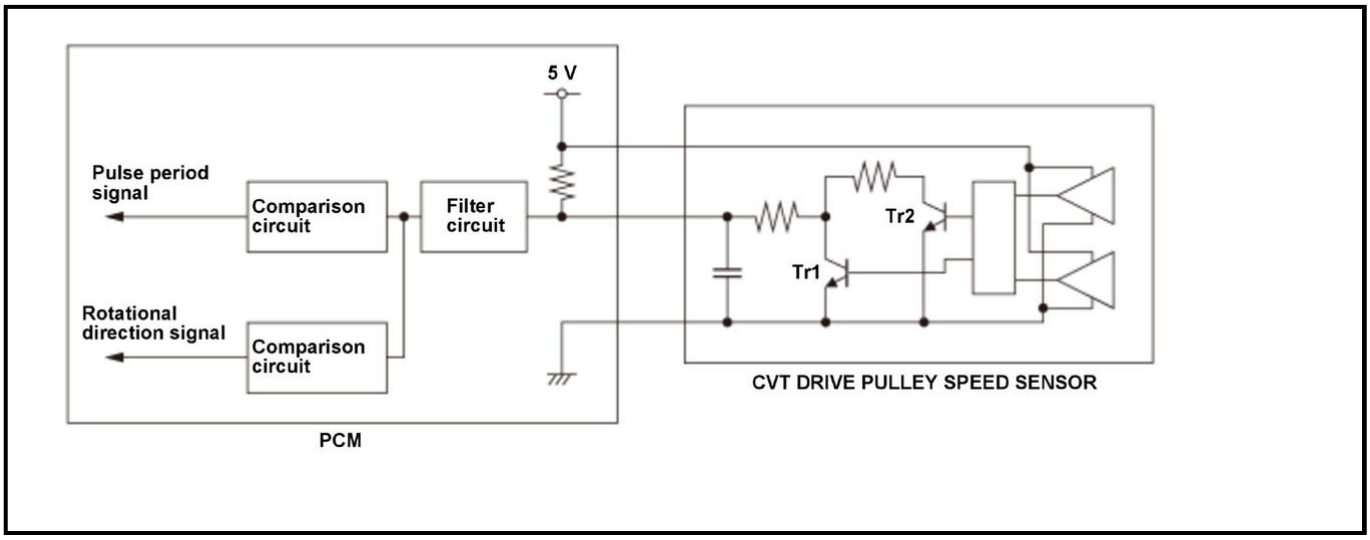
5 V
Pulse period signal
Comparison circuit
Filter circuit
Rotational direction signal
Comparison circuit
PCM
Tr2
Tr1
CVT DRIVE PULLEY SPEED SENSOR

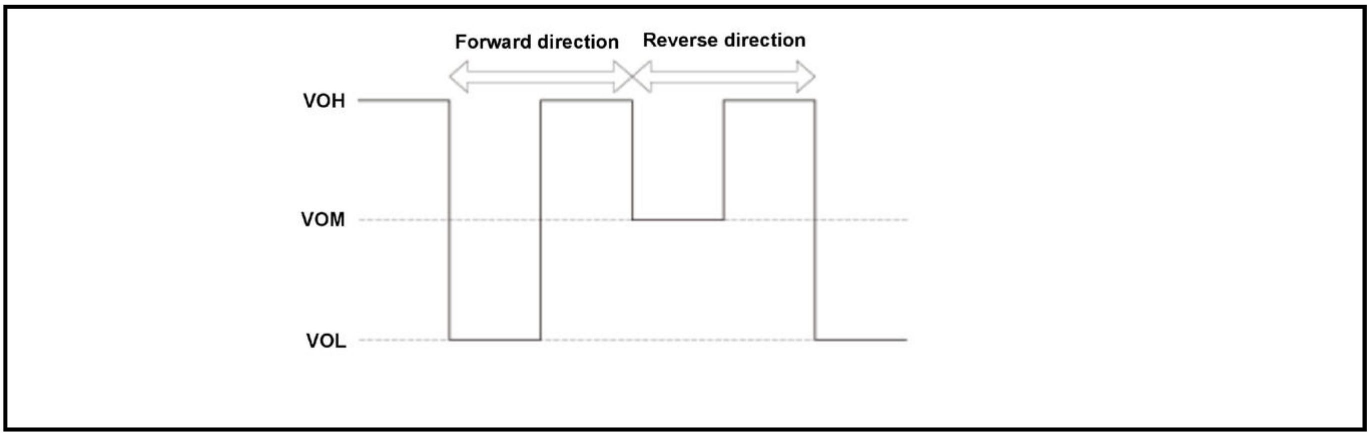

Tr1	Tr2	Pulse signal voltage level
OFF	OFF	VOH
OFF	ON	VOM

Tr1	Tr2	Pulse signal voltage level
ON	OFF	VOL

The CVT drive pulley speed sensor is attached to the outside of the end cover. The CVT drive pulley speed sensor consists of a semiconductor to detect the position of the drive pulley. When the drive pulley rotates, the magnetic flux in the CVT drive pulley speed sensor changes. The changes of magnetic flux are converted into pulsing signals to the powertrain control module (PCM). The rotational direction of the drive pulley is detected by the voltage level of the pulsing signals. If the driving condition and the detected voltage level of the pulsing signals do not match, the PCM detects a malfunction and stores a DTC.

Monitor Execution, Sequence, Duration, DTC Type

Execution	Continuous
Sequence	None
Duration	2 seconds or more
DTC Type	Two drive cycles, MIL off, Shift position indicator blinks

Enable Conditions

Condition	Minimum	Maximum
Elapsed time after forward clutch engage completion	3 seconds	-
Engine speed [ENGINE SPEED]	500 rpm	-
Forward clutch commanded pressure	295 kPa (3.0 kgf/cm 2, 42.7 psi)	-
Vehicle speed [VEHICLE SPEED]	19 mph (30 km/h)	-
Shift lever position/mode	D, S, L	
Other	Not when the shift lever is being shifted	
	Rotation speed [Secondary Shaft Speed 1 (rpm)] measured by CVT speed sensor is more than 500 rpm	
	Rotational direction [Direction of Secondary-shaft Rotation] measured by CVT speed sensor is forward direction	

[ ]: HDS Parameter

Malfunction Threshold

The CVT drive pulley speed sensor outputs [Direction of Drive Pulley Rotation] a reverse direction signal for at least 2 seconds when driving in forward position.

Possible Cause

NOTE: The causes shown may not be a complete list of all potential problems, and it is possible that there may be other causes.

- CVT drive pulley speed sensor failure
- PCM internal circuit failure

Confirmation Procedure

Operating Condition

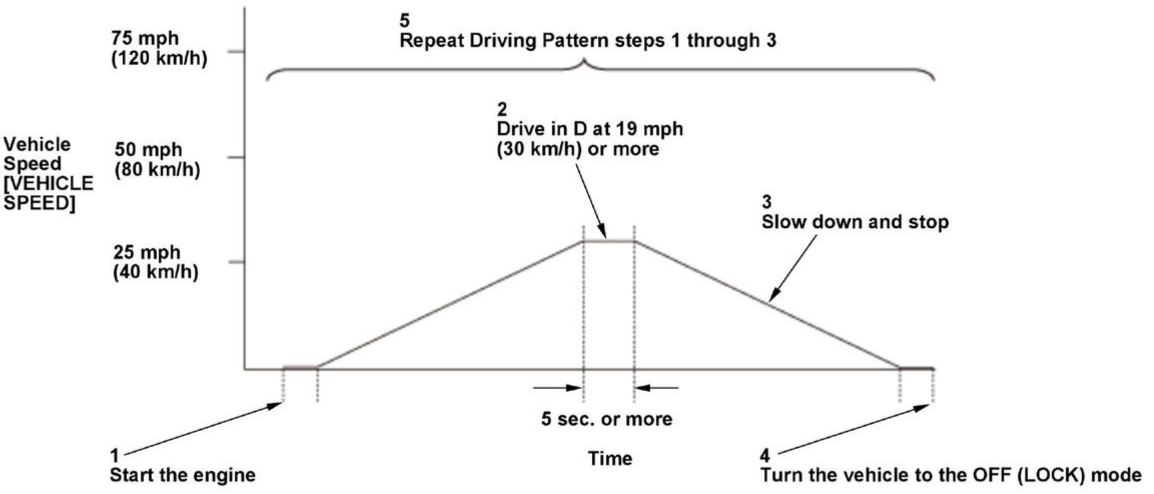

- Start the engine.
- Drive the vehicle in D position/mode at a speed of 19 mph (30 km/h) or more for at least 5 seconds.
- Slow down and stop the vehicle.
- Turn the vehicle to the OFF (LOCK) mode.
- Repeat Driving Pattern steps 1 through 3.

- Drive the vehicle in this manner only if the traffic regulations and ambient conditions allow.

With the HDS

None.

Diagnosis Details

Conditions for setting the DTC

When a malfunction is detected during the first drive cycle, a Pending DTC is stored in the PCM memory. If the malfunction returns in the next (second) drive cycle, the shift position indicator blinks and a Confirmed DTC and the freeze data are stored. The MIL does not come on.

Conditions for clearing the DTC

The shift position indicator comes off by turning the vehicle to the OFF (LOCK) mode. The Pending DTC, the Confirmed DTC, and the freeze data can be cleared with the scan tool Clear command or by disconnecting the 12 volt battery.

DTC P1845 (CVT (ECM/PCM))

DTC P1845: CVT Input Shaft Speed Sensor Circuit Reverse Rotation Range/Performance

General Description

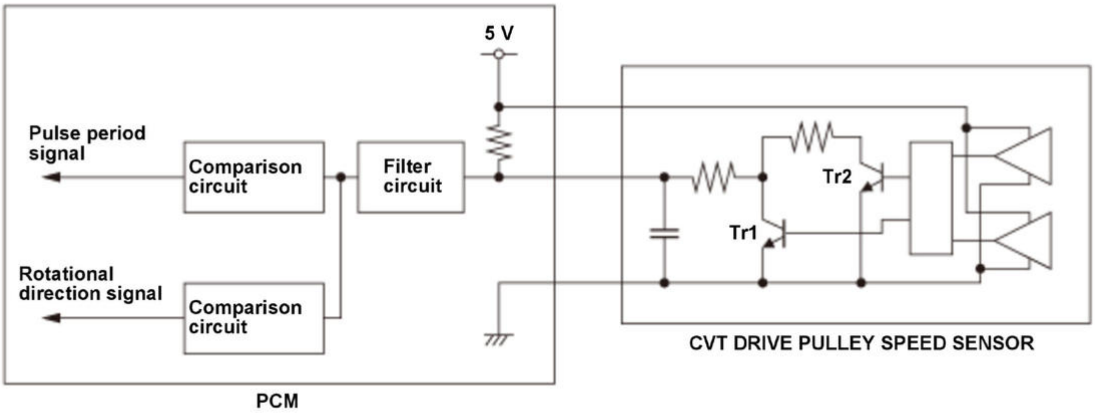
5 V
Pulse period signal
Comparison circuit
Filter circuit
Rotational direction signal
Comparison circuit
PCM
Tr2
Tr1
CVT DRIVE PULLEY SPEED SENSOR

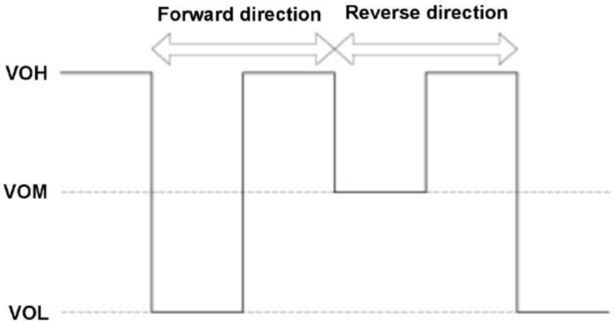

Tr1	Tr2	Pulse signal voltage level
OFF	OFF	VOH
OFF	ON	VOM
ON	OFF	VOL

The CVT drive pulley speed sensor is attached to the outside of the end cover. The CVT drive pulley speed sensor consists of a semiconductor to detect the position of the drive pulley. When the drive pulley rotates, the magnetic flux in the CVT drive pulley speed sensor changes. The changes of magnetic flux are converted into pulsing signals to the powertrain control module (PCM). The rotational direction of the drive pulley is detected by the voltage level of the pulsing signals. If the driving condition and the detected voltage level of the pulsing signals do not match, the PCM detects a malfunction and stores a DTC.

Monitor Execution, Sequence, Duration, DTC Type

Execution	Continuous
Sequence	None
Duration	2 seconds or more
DTC Type	Two drive cycles, MIL off, Shift position indicator blinks

Enable Conditions

Condition	Minimum	Maximum
Elapsed time after forward clutch engage completion	3 seconds	-
Engine speed [ENGINE SPEED]	500 rpm	-
Forward clutch commanded	295 kPa (3.0 kgf/cm 2, 42.7 psi)	-

Condition	Minimum	Maximum
pressure		
Vehicle speed [VEHICLE SPEED]	19 mph (30 km/h)	-
Shift lever position/mode	D, S, L	
Other	Not when the shift lever is being shifted	
	Rotation speed [Secondary Shaft Speed 1 (rpm)] measured by CVT speed sensor is more than 500 rpm	
	Rotational direction [Direction of Secondary-shaft Rotation] measured by CVT speed sensor is forward direction	

[ ]: HDS Parameter

Malfunction Threshold

The CVT drive pulley speed sensor outputs [Direction of Drive Pulley Rotation] a reverse direction signal for at least 2 seconds when driving in forward position.

Possible Cause

NOTE: The causes shown may not be a complete list of all potential problems, and it is possible that there may be other causes.

- CVT drive pulley speed sensor failure
- PCM internal circuit failure

Confirmation Procedure

Operating Condition

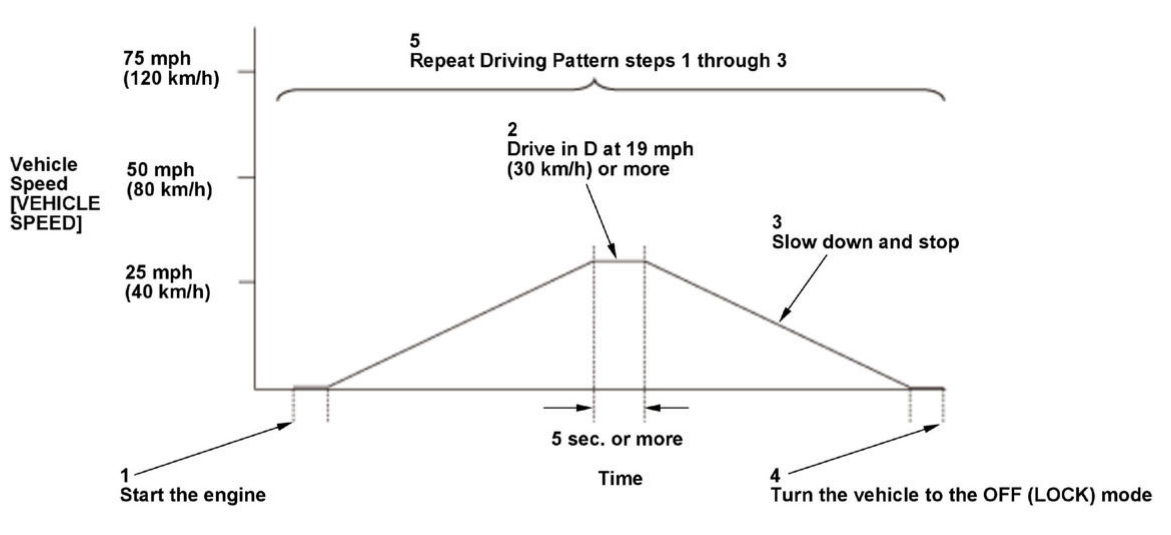

- Start the engine.
- Drive the vehicle in R position/mode at a speed of 19 mph (30 km/h) or more for at least 5 seconds.
- Slow down and stop the vehicle.
- Turn the vehicle to the OFF (LOCK) mode.
- Repeat Driving Pattern steps 1 through 3.

- Drive the vehicle in this manner only if the traffic regulations and ambient conditions allow.

With the HDS

None.

Diagnosis Details

Conditions for setting the DTC

When a malfunction is detected during the first drive cycle, a Pending DTC is stored in the PCM memory. If the malfunction returns in the next (second) drive cycle, the shift position indicator blinks and a Confirmed DTC and the freeze data are stored. The MIL does not come on.

Conditions for clearing the DTC

The shift position indicator comes off by turning the vehicle to the OFF (LOCK) mode. The Pending DTC, the Confirmed DTC, and the freeze data can be cleared with the scan tool Clear command or by disconnecting the 12 volt battery.

DTC P1890 (CVT (ECM/PCM))

DTC P1890: CVT Speed Control System

General Description

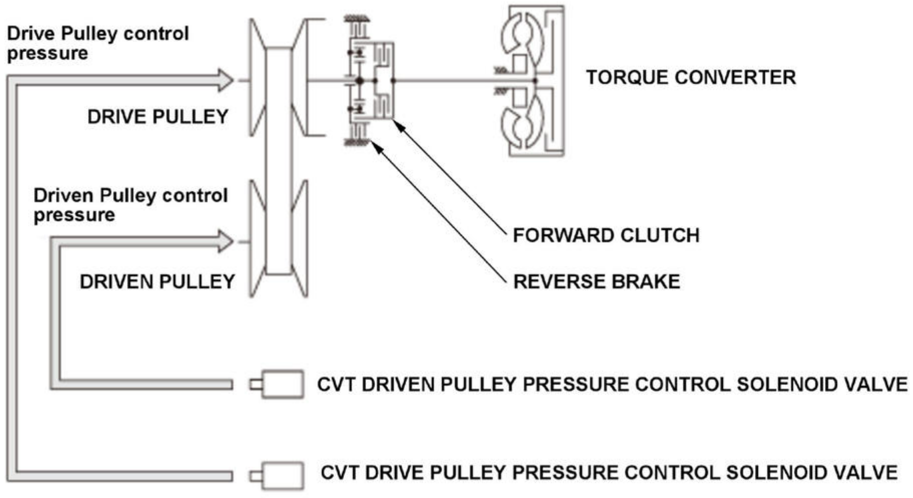
Drive Pulley control pressure
DRIVE PULLEY
Driven Pulley control pressure
DRIVEN PULLEY
TORQUE CONVERTER
FORWARD CLUTCH
REVERSE BRAKE
CVT DRIVEN PULLEY PRESSURE CONTROL SOLENOID VALVE
CVT DRIVE PULLEY PRESSURE CONTROL SOLENOID VALVE

The shift control system controls each gear position using a map stored in the powertrain control module (PCM) memory. The shift control system controls the CVT drive pulley pressure control solenoid valve and the CVT driven pulley pressure control solenoid valve based on vehicle speed and the throttle position to keep the drive pulley speed close to the target rpm. It does this by varying the hydraulic pressure applied to the drive and driven pulley and providing feedback on the difference between the target drive pulley speed and the actual drive pulley speed when driving. It supplies high hydraulic pressure to the driven pulley and enlarges the driven pulley belt diameter when shifting to a lower ratio. It supplies high hydraulic pressure to the drive pulley and enlarges the drive pulley belt diameter when shifting to a higher ratio. If the difference between the target drive pulley speed and the actual drive pulley speed falls within a certain range when in D, S, L, or R, the PCM detects a malfunction in the CVT shift function and stores a DTC.

Monitor Execution, Sequence, Duration, DTC Type

Execution	Continuous
Sequence	None
Duration	18 seconds or more
DTC Type	One drive cycle, MIL off, Shift position indicator blinks

Enable Conditions

Condition	Minimum	Maximum
Drive pulley speed [Input Shaft (Drive Pulley) Speed rpm]	576 rpm	-
Vehicle speed [VEHICLE SPEED]	9 mph (14 km/h)	-
Accelerator pedal position	4.7 deg.	-
Shift lever position/mode	D, S, L, R	

[ ]: HDS Parameter

Malfunction Threshold

The difference between the target drive pulley speed and the actual drive pulley speed [Input Shaft (Drive Pulley) Speed rpm] is 500 rpm or more for at least 18 seconds.

Possible Cause

NOTE: The causes shown may not be a complete list of all potential problems, and it is possible that there may be other causes.

- CVT shift function failure

Confirmation Procedure

Operating Condition

- Start the engine.
- Accelerate gradually to 38 mph (60 km/h) and drive at least 1 minute at 38 mph (60 km/h).
- Drive the vehicle in this manner only if the traffic regulations and ambient conditions allow.

With the HDS

None.

Diagnosis Details

Conditions for setting the DTC

When a malfunction is detected, the shift position indicator blinks and a Pending DTC, a Confirmed DTC, and the freeze data are stored in the PCM memory. The MIL does not come on.

Conditions for clearing the DTC

The shift position indicator comes off by turning the vehicle to the OFF (LOCK) mode. The Pending DTC, the Confirmed DTC, and the freeze data can be cleared with the scan tool Clear command or by disconnecting the 12 volt battery.

DTC P1898 (CVT (ECM/PCM))

DTC P1898: CVT Drive Pulley Pressure Control Valve Stuck ON or CVT Driven Pulley Pressure Control Valve Stuck OFF

General Description

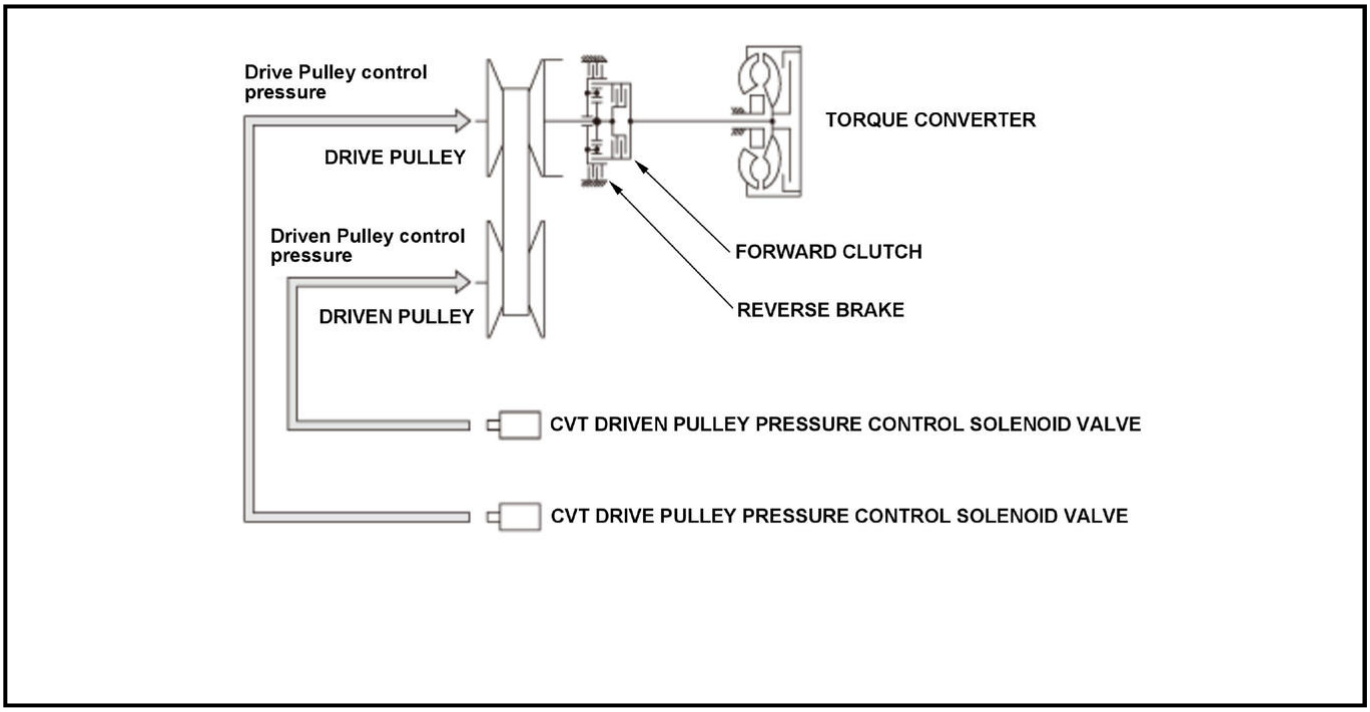
Drive Pulley control pressure
DRIVE PULLEY
Driven Pulley control pressure
DRIVEN PULLEY
TORQUE CONVERTER
FORWARD CLUTCH
REVERSE BRAKE
CVT DRIVEN PULLEY PRESSURE CONTROL SOLENOID VALVE
CVT DRIVE PULLEY PRESSURE CONTROL SOLENOID VALVE

The CVT drive pulley pressure control solenoid valve and the CVT driven pulley pressure control solenoid valve control hydraulic pressure. The CVT drive pulley pressure control solenoid valve and the CVT driven pulley pressure control solenoid valve is controlled by duty cycle output. The spool in the CVT drive pulley pressure control solenoid valve and the CVT driven pulley pressure control solenoid valve moves the valve according to the current, and produces hydraulic pressure in proportion to the current. The powertrain control module (PCM) measures the current that passes through the CVT drive pulley pressure control solenoid valve and the CVT driven pulley pressure control solenoid valve and uses feedback control to compensate for the difference between the measured current and the commanded one. To shift the transmission properly, the PCM outputs a drive/driven pulley oil pressure control signal. If the pulley ratio is out of specified range from the vehicle stopped with the forward clutch engaged to the vehicle running, the PCM detects a CVT drive pulley pressure control solenoid valve stuck ON failure or a CVT driven pulley pressure control solenoid valve stuck OFF and stores a DTC.

Monitor Execution, Sequence, Duration, DTC Type

Execution	Continuous
Sequence	None
Duration	Depending on the driving conditions
DTC Type	Two drive cycles, MIL on, Shift position indicator blinks

Enable Conditions

Condition	Minimum	Maximum
Engine speed [ENGINE SPEED]	500 rpm	-
Vehicle speed [VEHICLE SPEED]	-	3 mph (5 km/h)*
	9 mph (13 km/h)**	-
Accelerator pedal position	2.7 deg.	-
Shift lever position/mode	D	

*: Symptom 1

**: Symptom 2

[ ]: HDS Parameter

Malfunction Threshold

One of these symptoms occurs:

Symptom	Vehicle conditions	PCM detection
1	Stopped with forward clutch engaged	Pulley ratio is more than 2, or less than 3 for at least 400 milliseconds
2	Running	Pulley ratio is more than 1.8, or less than 3

Possible Cause

NOTE: The causes shown may not be a complete list of all potential problems, and it is possible that there may be other causes.

- CVT drive pulley pressure control solenoid valve stuck on
- CVT driven pulley pressure control solenoid valve stuck off

Confirmation Procedure

Operating Condition

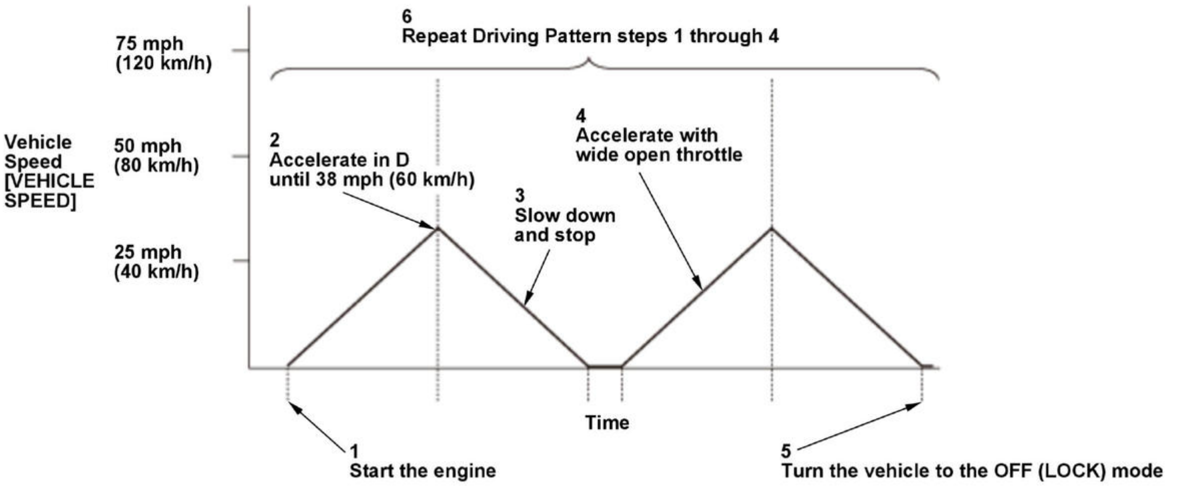

- Start the engine.
- Accelerate the vehicle in D position/mode until the speed reaches 38 mph (60 km/h).
- Slow down and stop the vehicle.
- Accelerate the vehicle with wide open throttle.
- Slow down and stop the vehicle, and turn the vehicle to the OFF (LOCK) mode.
- Repeat Driving Pattern steps 1 through 4.

- Drive the vehicle in this manner only if the traffic regulations and ambient conditions allow.

With the HDS

None.

Diagnosis Details

Conditions for setting the DTC

When a malfunction is detected during the first drive cycle, a Pending DTC is stored in the PCM memory. If the malfunction returns in the next (second) drive cycle, the MIL comes on, the shift position indicator blinks, and a Confirmed DTC and the freeze data are stored.

Conditions for clearing the DTC

The shift position indicator comes off by turning the vehicle to the OFF (LOCK) mode. The MIL is cleared if the malfunction does not return in three consecutive trips in which the diagnostic runs. The MIL, the Pending DTC, the Confirmed DTC, and the freeze data can be cleared with the scan tool Clear command or by disconnecting the 12 volt battery.

DTC P1899 (CVT (ECM/PCM))

DTC P1899: CVT Drive Pulley Pressure Control Valve Stuck OFF or CVT Driven Pulley Pressure Control Valve Stuck ON

General Description

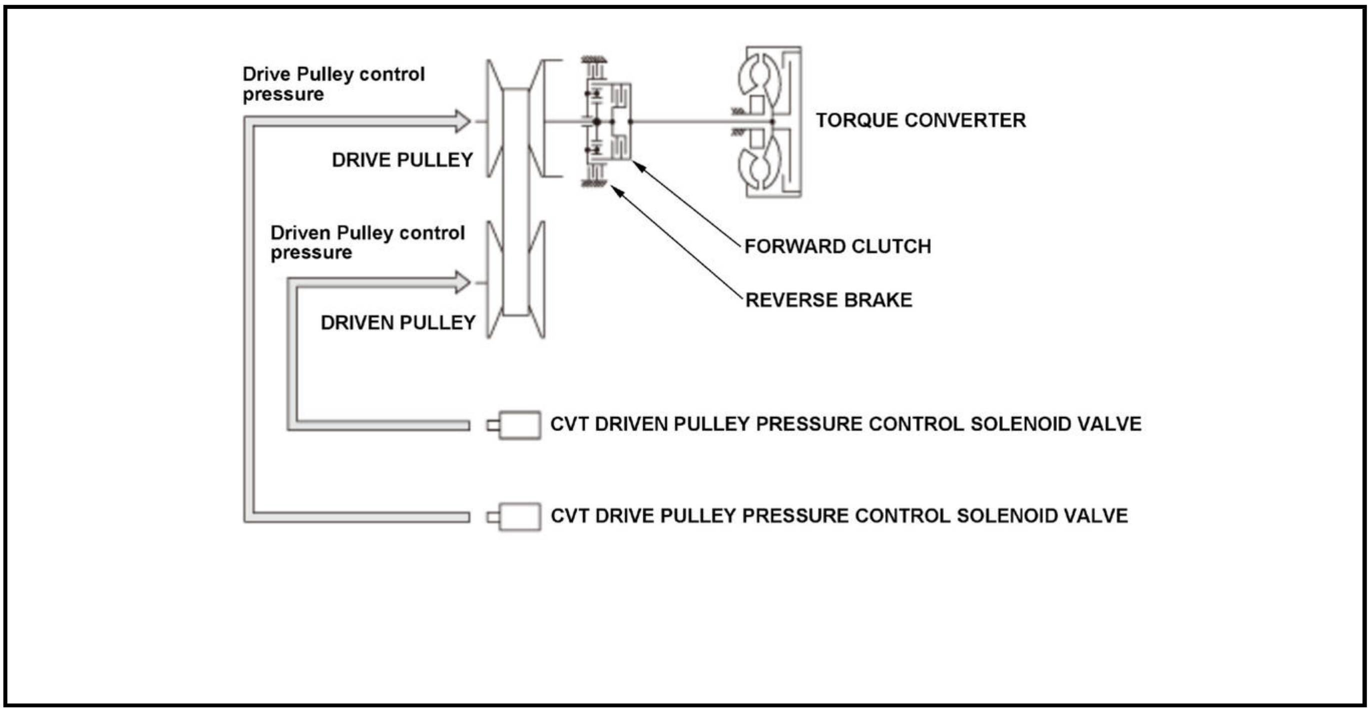
Drive Pulley control pressure
DRIVE PULLEY
Driven Pulley control pressure
DRIVEN PULLEY
TORQUE CONVERTER
FORWARD CLUTCH
REVERSE BRAKE
CVT DRIVEN PULLEY PRESSURE CONTROL SOLENOID VALVE
CVT DRIVE PULLEY PRESSURE CONTROL SOLENOID VALVE

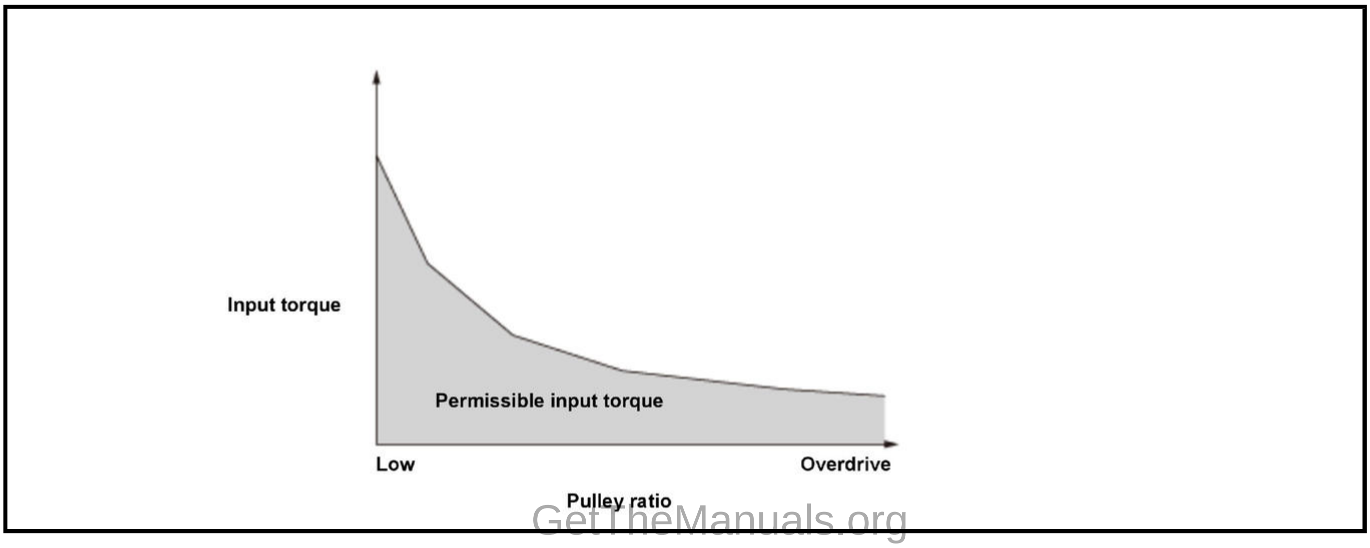

The CVT drive pulley pressure control solenoid valve and the CVT driven pulley pressure control solenoid valve control hydraulic pressure. The CVT drive pulley pressure control solenoid valve and the CVT driven pulley pressure control solenoid valve is controlled by duty cycle output. The spool in the CVT drive pulley pressure control solenoid valve and the CVT driven pulley pressure control solenoid valve moves the valve according to the current, and produces hydraulic pressure in proportion to the current. The powertrain control module (PCM) measures the current that passes through the CVT drive pulley pressure control solenoid valve and the CVT driven pulley pressure control solenoid valve and uses feedback control to compensate for the difference between the measured current and the commanded one. To shift the transmission properly, the PCM outputs a drive/driven pulley oil pressure control signal. If the pulley ratio is overdrive while the vehicle is stopped with the forward clutch engaged, and the estimated input torque when starting is a specified value or less and belt slippage does not occur when driving, the PCM detects a CVT drive pulley pressure control solenoid valve stuck OFF failure or a CVT driven pulley pressure control solenoid valve stuck ON and stores a DTC.

Monitor Execution, Sequence, Duration, DTC Type

Execution	Continuous
Sequence	None
Duration	Depending on the driving conditions
DTC Type	Two drive cycles, MIL on, Shift position indicator blinks

Enable Conditions

Condition	Minimum	Maximum
Engine speed [ENGINE SPEED]	500 rpm	-
Vehicle speed [VEHICLE SPEED]*	-	3 mph (5 km/h)
Accelerator pedal position	-	2.7 deg.*
	4 deg.**	-
Shift lever position/mode	D	

*: Symptom 1

**: Symptom 2

[ ]: HDS Parameter

Malfunction Threshold

One of these conditions occurs:

- Both Symptom 1 and Symptom 2-A occurs.
- Both Symptom 1 and Symptom 2-B occurs.

Symptom		Vehicle conditions	PCM detection
1		Stopped with forward clutch engaged	Pulley ratio is more than 0.3, or less than 0.6 for at least 2.5 seconds
2	2-A	Starting	Low input torque
	2-B	Running	Pulley ratio is more than 3.0

Possible Cause

NOTE: The causes shown may not be a complete list of all potential problems, and it is possible that there may be other causes.

- CVT drive pulley pressure control solenoid valve stuck off
- CVT driven pulley pressure control solenoid valve stuck on

Confirmation Procedure

Operating Condition

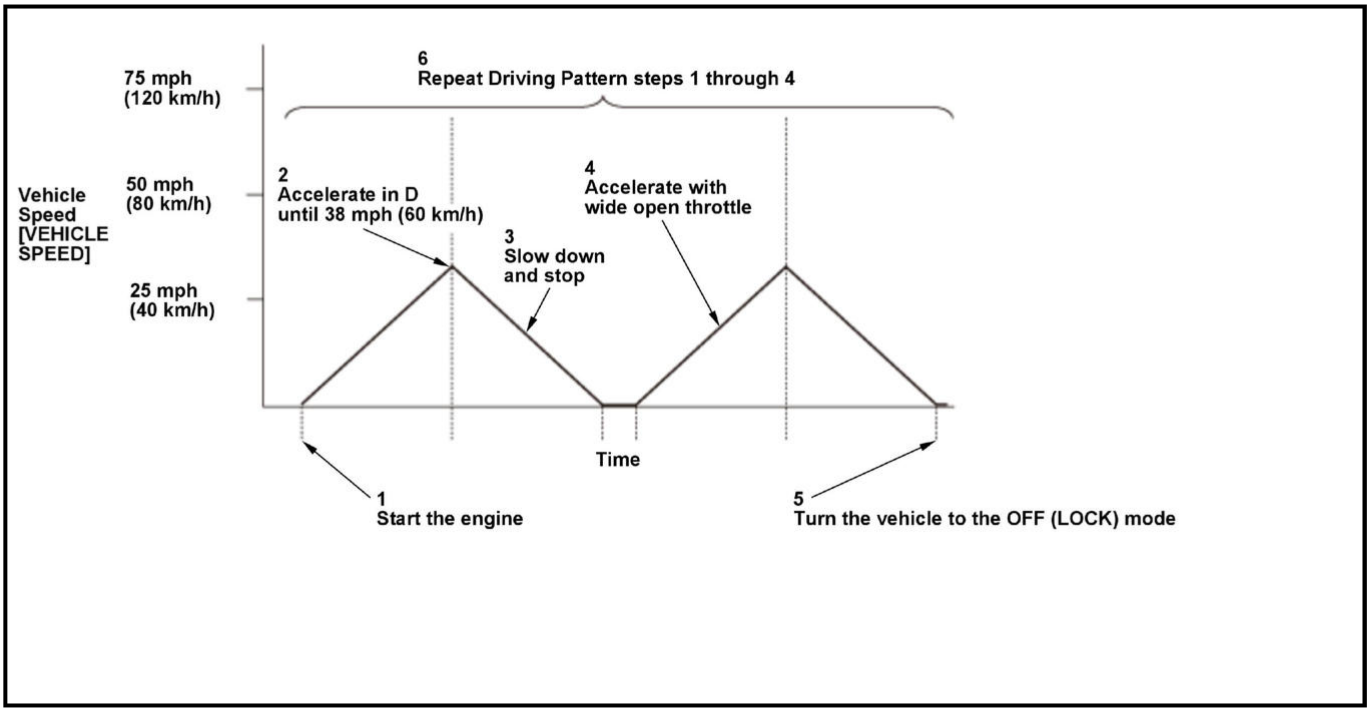

- Start the engine.
- Accelerate the vehicle in D position/mode until the speed reaches 38 mph (60 km/h).
- Slow down and stop the vehicle.
- Accelerate the vehicle with wide open throttle.
- Slow down and stop the vehicle, and turn the vehicle to the OFF (LOCK) mode.
- Repeat Driving Pattern steps 1 through 4.

- Drive the vehicle in this manner only if the traffic regulations and ambient conditions allow.

With the HDS

None.

Diagnosis Details

Conditions for setting the DTC

When a malfunction is detected during the first drive cycle, a Pending DTC is stored in the PCM memory. If the malfunction returns in the next (second) drive cycle, the MIL comes on, the shift position indicator blinks, and a Confirmed DTC and the freeze data are stored.

Conditions for clearing the DTC

The shift position indicator comes off by turning the vehicle to the OFF (LOCK) mode. The MIL is cleared if the malfunction does not return in three consecutive trips in which the diagnostic runs. The MIL, the Pending DTC, the Confirmed DTC, and the freeze data can be cleared with the scan tool Clear command or by disconnecting the 12 volt battery.

DTC P2073 (1.5 L ENGINE)

DTC P2073: Manifold Absolute Pressure (MAP) Sensor Signal Higher Than Expected

General Description

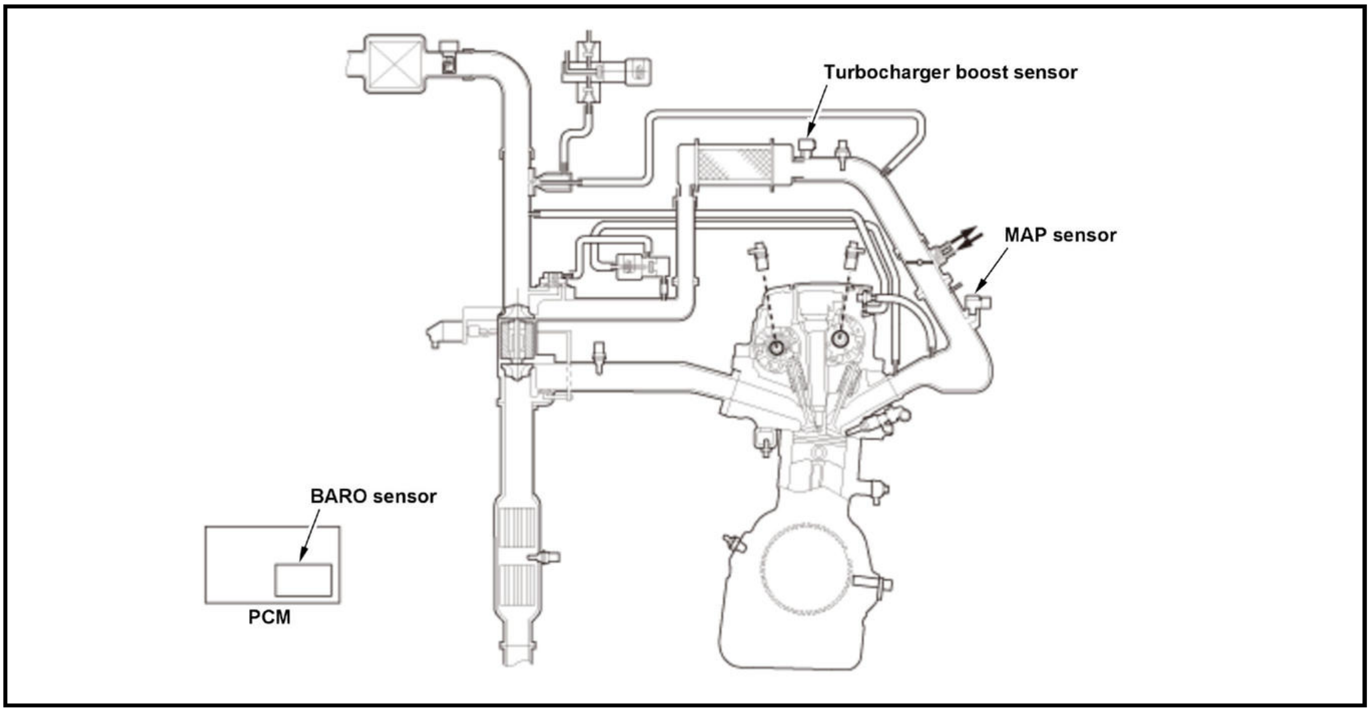

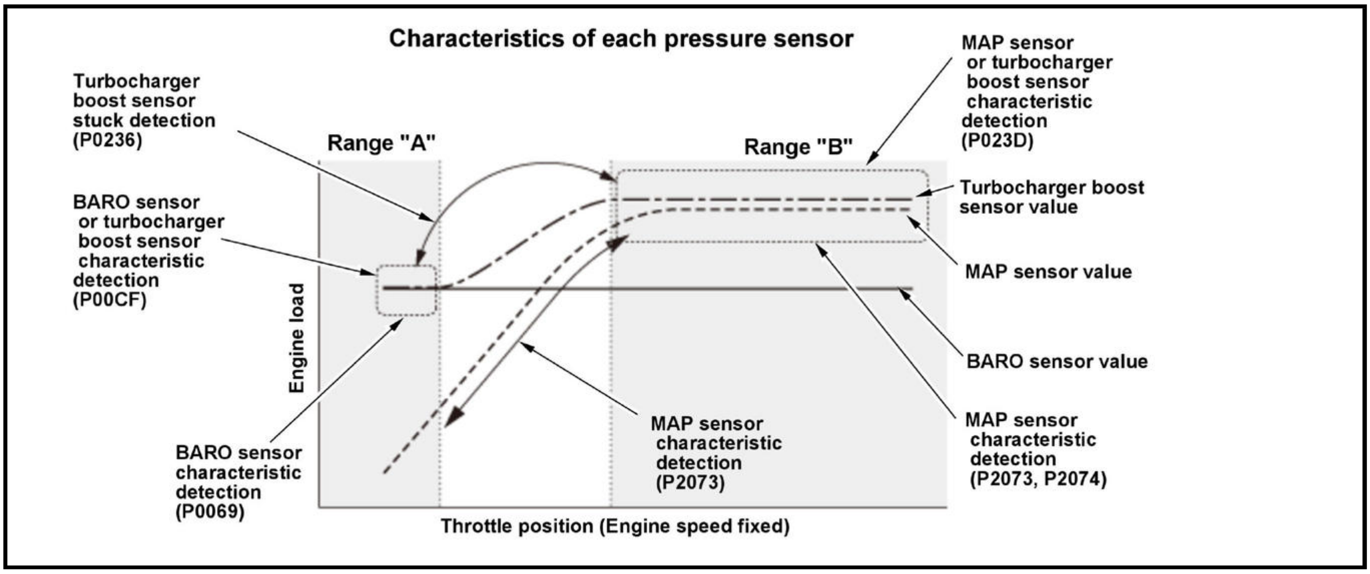

The barometric pressure (BARO) sensor, the manifold absolute pressure (MAP) sensor, and the turbocharger boost sensor are equipped to the vehicle to detect air pressure conditions to the engine. The BARO sensor value and the turbocharger boost sensor value shows similar value at range "A" such as in idle conditions, and the turbocharger boost sensor value and MAP sensor value shows similar value at range "B" such as in high throttle position.

Malfunction determinations are done by the powertrain control module (PCM) in two ranges by comparing the pressure sensor values.

- At range "A": BARO sensor or turbocharger boost sensor is abnormal if the difference of the two pressure sensor values are specified or more (P00CF)
- At range "B": Turbocharger boost sensor or MAP sensor is abnormal if the difference of the two pressure sensor values are specified or more (P023D)
- Range "A" determined as abnormal and range "B" determined as normal: BARO sensor abnormal (P0069)
- Both ranges "A" and "B" determined as abnormal: Turbocharger boost sensor abnormal (P0236)

- Turbocharger boost sensor or MAP sensor values do not change when throttle position is transited from ranges "A" to "B": Determined as turbocharger boost sensor output stuck (P0236) or MAP sensor output stuck (P2073 or P2074)

Monitor Execution, Sequence, Duration, DTC Type

Execution	Once per driving cycle
Sequence	None
Duration	6.0 seconds or more
DTC Type	Two drive cycles, MIL on

Enable Conditions

Condition		Minimum	Maximum
Elapsed time after starting the engine		3.0 seconds	-
Engine speed [ENGINE SPEED]		1, 700 rpm	-
Throttle position	2, 000 rpm	36.3 deg.	-
	4, 000 rpm	42.2 deg.	-

[ ]: HDS Parameter

Malfunction Threshold

- The variation of the MAP sensor value measured during range "A" determination and range "B" determination is 0.7 kPa (5 mmHg, 0.2 inHg) or less when range "A" determination and range "B" determination are determined as normal and the difference of the BARO sensor value measured during range "A" determination and range "B" determination is 5.4 kPa (40 mmHg, 1.6 inHg) or less.

- The MAP sensor value is higher than the turbocharger boost sensor value for 27 kPa (200 mmHg, 7.9 inHg) or more* when range "A" determination is determined as normal and range "B" determination is determined as abnormal.*: Threshold value changes depending on throttle position.

Possible Cause

NOTE: The causes shown may not be a complete list of all potential problems, and it is possible that there may be other causes.

- MAP sensor output signal high
- MAP sensor failure

Confirmation Procedure

Operating Condition

- Start the engine. Hold the engine speed [ENGINE SPEED] at 3, 000 rpm without load (in P or N) until the radiator fan comes on.
- Drive the vehicle at engine speed [ENGINE SPEED] 1, 700 rpm or more for at least 6 seconds.

- Drive the vehicle in this manner only if the traffic regulations and ambient conditions allow.

With the HDS

None.

Diagnosis Details

Conditions for setting the DTC

When a malfunction is detected during the first drive cycle, a Pending DTC is stored in the PCM memory. If the malfunction returns in the next (second) drive cycle, the MIL comes on and a Confirmed DTC and the freeze data are stored.

Conditions for clearing the DTC

The MIL is cleared if the malfunction does not return in three consecutive trips in which the diagnostic runs. The MIL, the Pending DTC, the Confirmed DTC, and the freeze data can be cleared with the scan tool Clear command or by disconnecting the 12 volt battery.

DTC P2073 (2.4 L ENGINE) (2017 2018 2019)

DTC P2073: Manifold Absolute Pressure (MAP) Sensor Signal Higher Than Expected

General Description

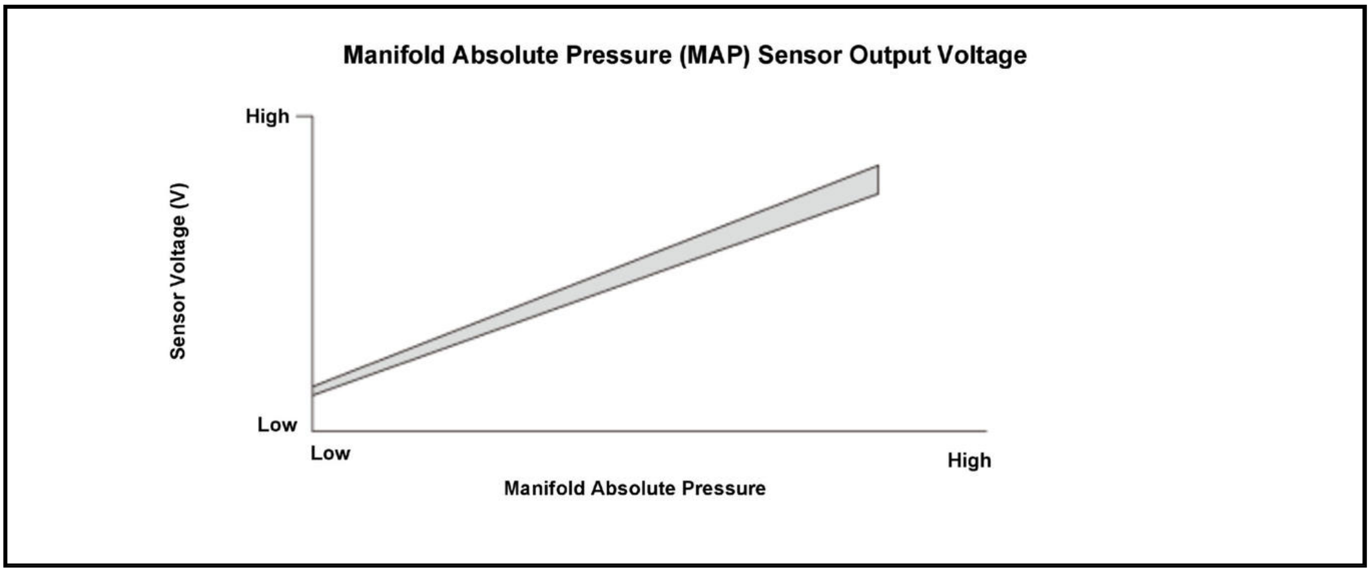

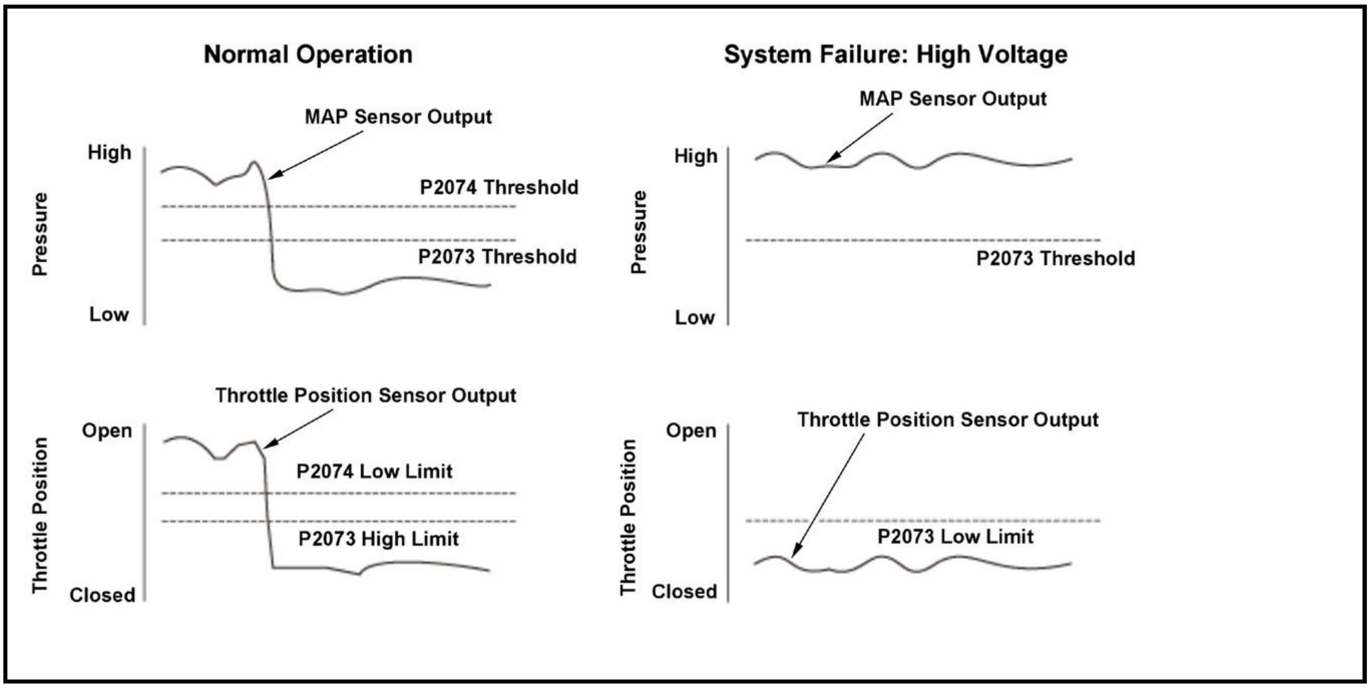

The manifold absolute pressure (MAP) sensor senses manifold absolute pressure (vacuum) and converts it into electrical signals. The MAP sensor outputs low signal voltage at high vacuum (throttle valve closed) and high signal voltage at low vacuum (throttle valve wide open). The powertrain control module (PCM) compares a predetermined MAP value at a given throttle position and manifold absolute pressure to the output voltage value of the MAP sensor. If the MAP sensor outputs high voltage during fuel cut-off operation for deceleration with the throttle valve fully closed, which should make the manifold absolute pressure lower, the PCM detects a malfunction and stores a DTC.

Monitor Execution, Sequence, Duration, DTC Type

Execution	Once per driving cycle
Sequence	None
Duration	2.0 seconds or more

DTC Type	Two drive cycles, MIL on

Enable Conditions

Condition	Minimum	Maximum
Engine coolant temperature [ECT SENSOR 1]	156 deg. F (69 deg. C)	-
Engine speed [ENGINE SPEED]	1, 400 rpm	6, 700 rpm
Vehicle speed [VEHICLE SPEED]	15 mph (24 km/h)	-
Throttle position	Fully closed	
Fuel feedback	During deceleration	

[ ]: HDS Parameter

Malfunction Threshold

The MAP sensor output [MAP SENSOR] is 37 kPa (277 mmHg, 11.0 inHg) or more for at least 2.0 seconds.

Possible Cause

NOTE: The causes shown may not be a complete list of all potential problems, and it is possible that there may be other causes.

- MAP sensor output signal high
- Evaporative emission (EVAP) canister purge valve failure
- Valve timing incorrect
- Intake air system air leak

Confirmation Procedure

Operating Condition

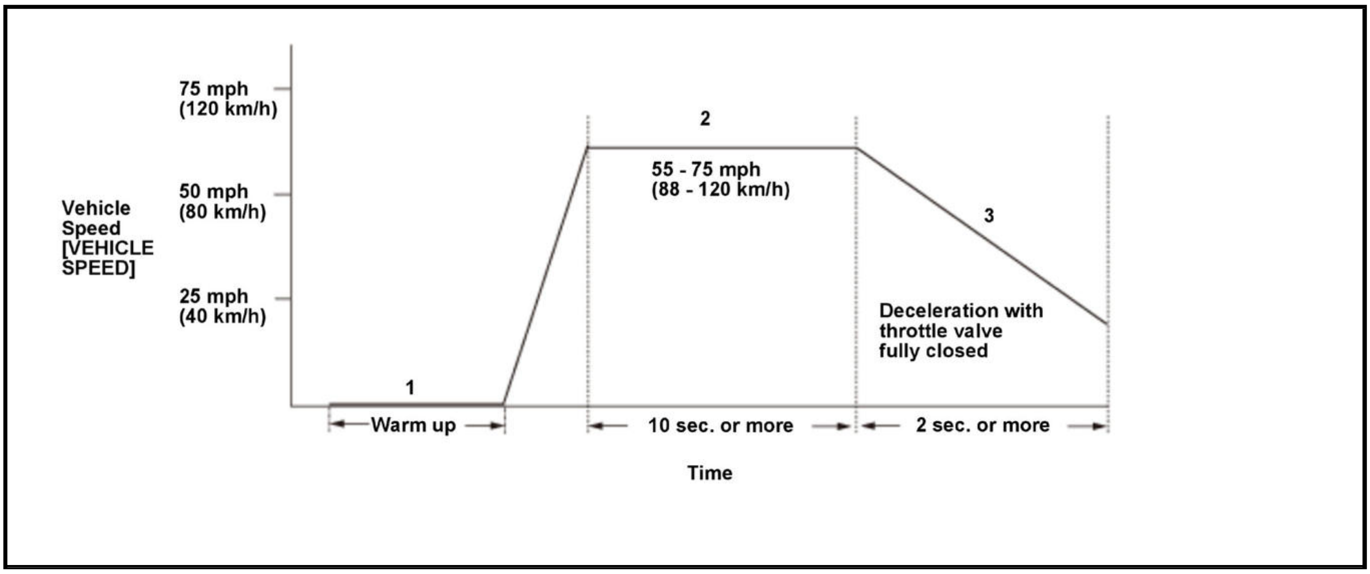

- Start the engine. Hold the engine speed [ENGINE SPEED] at 3, 000 rpm without load (in P or N) until the radiator fan comes on.
- Drive the vehicle at a steady speed between 55 - 75 mph (88 - 120 km/h) for at least 10 seconds.
- Decelerate with the throttle valve fully closed for at least 2 seconds.

- Drive the vehicle in this manner only if the traffic regulations and ambient conditions allow.

With the HDS

None.

Diagnosis Details

Conditions for setting the DTC

When a malfunction is detected during the first drive cycle, a Pending DTC is stored in the PCM memory. If the malfunction returns in the next (second) drive cycle, the MIL comes on and a Confirmed DTC and the freeze data are stored.

Conditions for clearing the DTC

The MIL is cleared if the malfunction does not return in three consecutive trips in which the diagnostic runs. The MIL, the Pending DTC, the Confirmed DTC, and the freeze data can be cleared with the scan tool Clear command or by disconnecting the 12 volt battery.

DTC P2074 (1.5 L ENGINE)

DTC P2074: Manifold Absolute Pressure (MAP) Sensor Signal Lower Than Expected

General Description

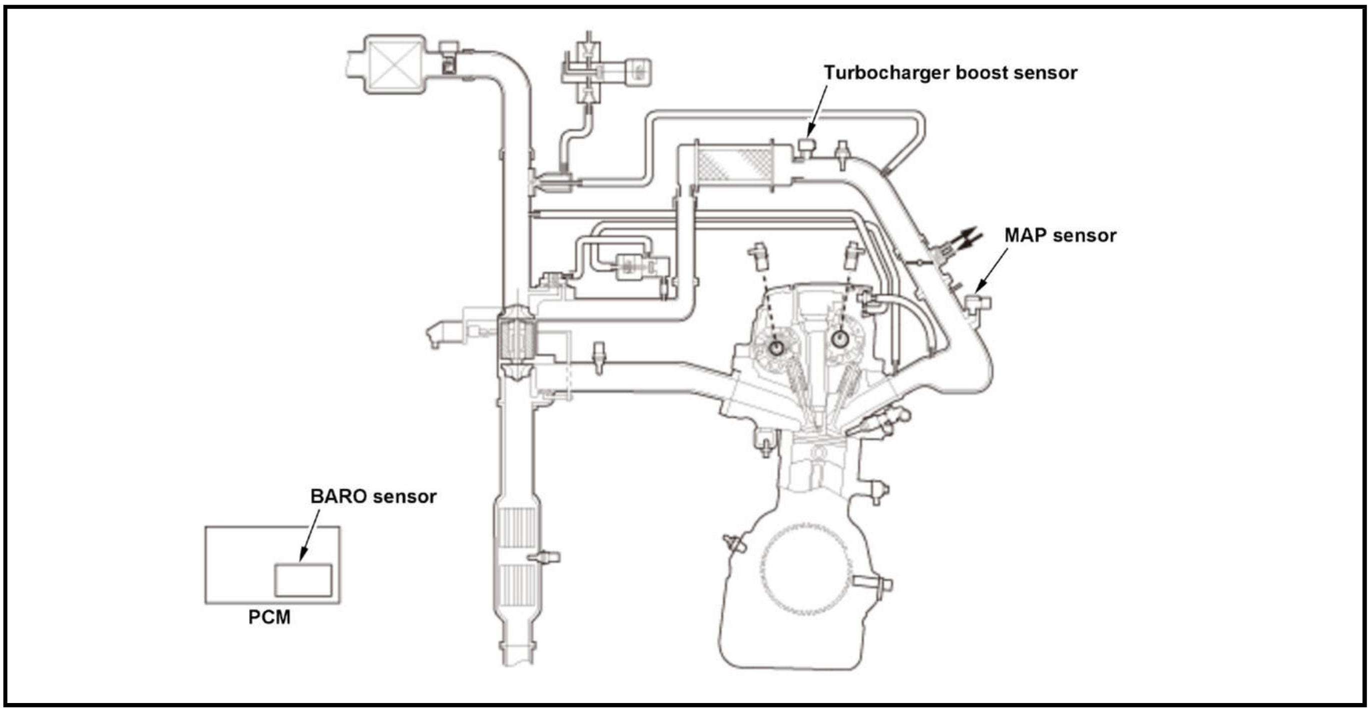

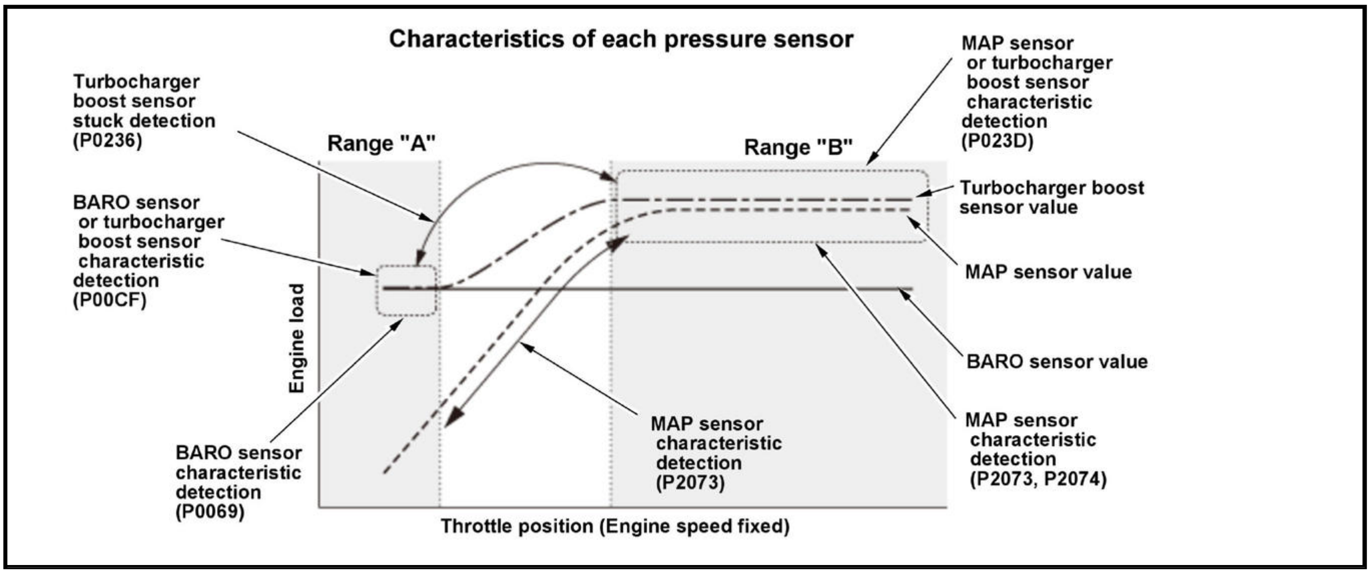

The barometric pressure (BARO) sensor, the manifold absolute pressure (MAP) sensor, and the turbocharger boost sensor are equipped to the vehicle to detect air pressure conditions to the engine. The BARO sensor value and the turbocharger boost sensor value shows similar value at range "A" such as in idle conditions, and the turbocharger boost sensor value and MAP sensor value shows similar value at range "B" such as in high throttle position.

Malfunction determinations are done by the powertrain control module (PCM) in two ranges by comparing the pressure sensor values.

- At range "A": BARO sensor or turbocharger boost sensor is abnormal if the difference of the two pressure sensor values are specified or more (P00CF)
- At range "B": Turbocharger boost sensor or MAP sensor is abnormal if the difference of the two pressure sensor values are specified or more (P023D)
- Range "A" determined as abnormal and range "B" determined as normal: BARO sensor abnormal (P0069)
- Both ranges "A" and "B" determined as abnormal: Turbocharger boost sensor abnormal (P0236)
- Turbocharger boost sensor or MAP sensor values do not change when throttle position is transited from ranges "A" to "B": Determined as turbocharger boost sensor output stuck (P0236) or MAP sensor output stuck (P2073 or P2074)

Monitor Execution, Sequence, Duration, DTC Type

Execution	Once per driving cycle
Sequence	None
Duration	6.0 seconds or more
DTC Type	Two drive cycles, MIL on

Enable Conditions

Condition		Minimum	Maximum
Elapsed time after starting the engine		3.0 seconds	-
Engine speed [ENGINE SPEED]		1, 700 rpm	-
Throttle position	2, 000 rpm	36.3 deg.	-
	4, 000 rpm	42.2 deg.	-

[ ]: HDS Parameter

Malfunction Threshold

Both range "A" (P00CF) and range "B" (P023D) determinations must be completed. The PCM stores DTC P2073 if the MAP sensor value is lower than the turbocharger boost sensor value for 27 kPa (200 mmHg, 7.9 inHg) or more* when range "A" determination is determined as normal and range "B" determination is determined as abnormal.

*: Threshold value changes depending on throttle position.

Possible Cause

NOTE: The causes shown may not be a complete list of all potential problems, and it is possible that there may be other causes.

- MAP sensor output signal low
- MAP sensor failure

Confirmation Procedure

Operating Condition

- Start the engine. Hold the engine speed [ENGINE SPEED] at 3, 000 rpm without load (in P or N) until the radiator fan comes on.
- Drive the vehicle at engine speed [ENGINE SPEED] 1, 700 rpm or more for at least 6 seconds.
- Drive the vehicle in this manner only if the traffic regulations and ambient conditions allow.

With the HDS

None.

Diagnosis Details

Conditions for setting the DTC

When a malfunction is detected during the first drive cycle, a Pending DTC is stored in the PCM memory. If the malfunction returns in the next (second) drive cycle, the MIL comes on and a Confirmed DTC and the freeze data are stored.

Conditions for clearing the DTC

The MIL is cleared if the malfunction does not return in three consecutive trips in which the diagnostic runs. The MIL, the Pending DTC, the Confirmed DTC, and the freeze data can be cleared with the scan tool Clear command or by disconnecting the 12 volt battery.

DTC P2074 (2.4 L ENGINE) (2017 2018 2019)

DTC P2074: Manifold Absolute Pressure (MAP) Sensor Signal Lower Than Expected

General Description

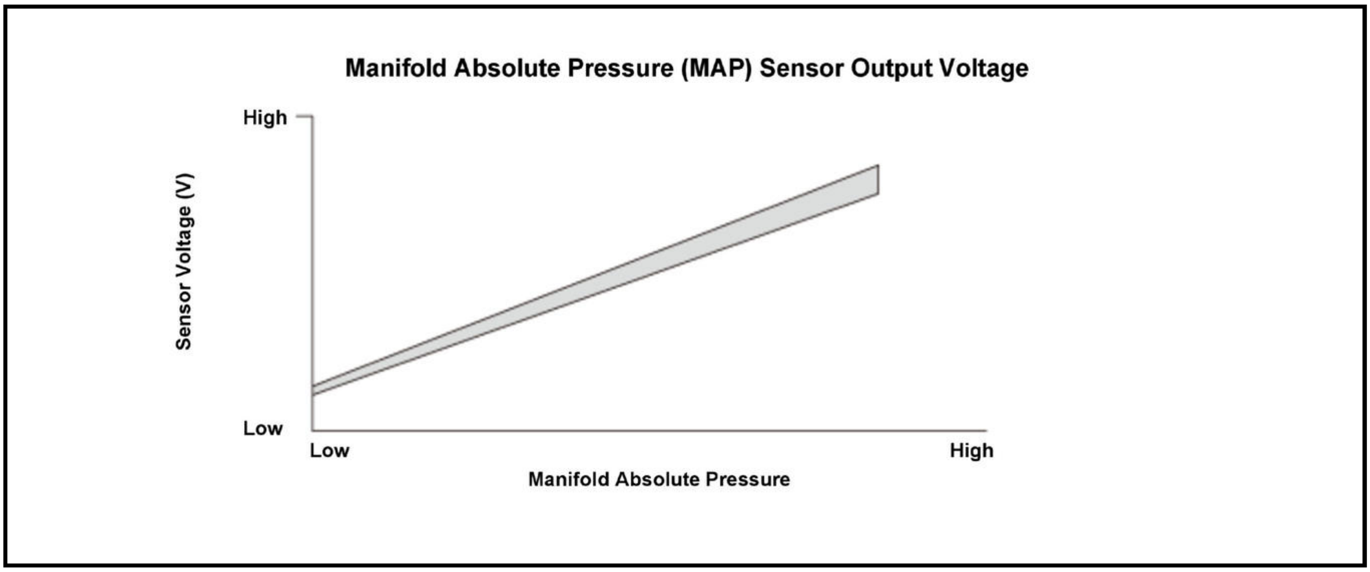

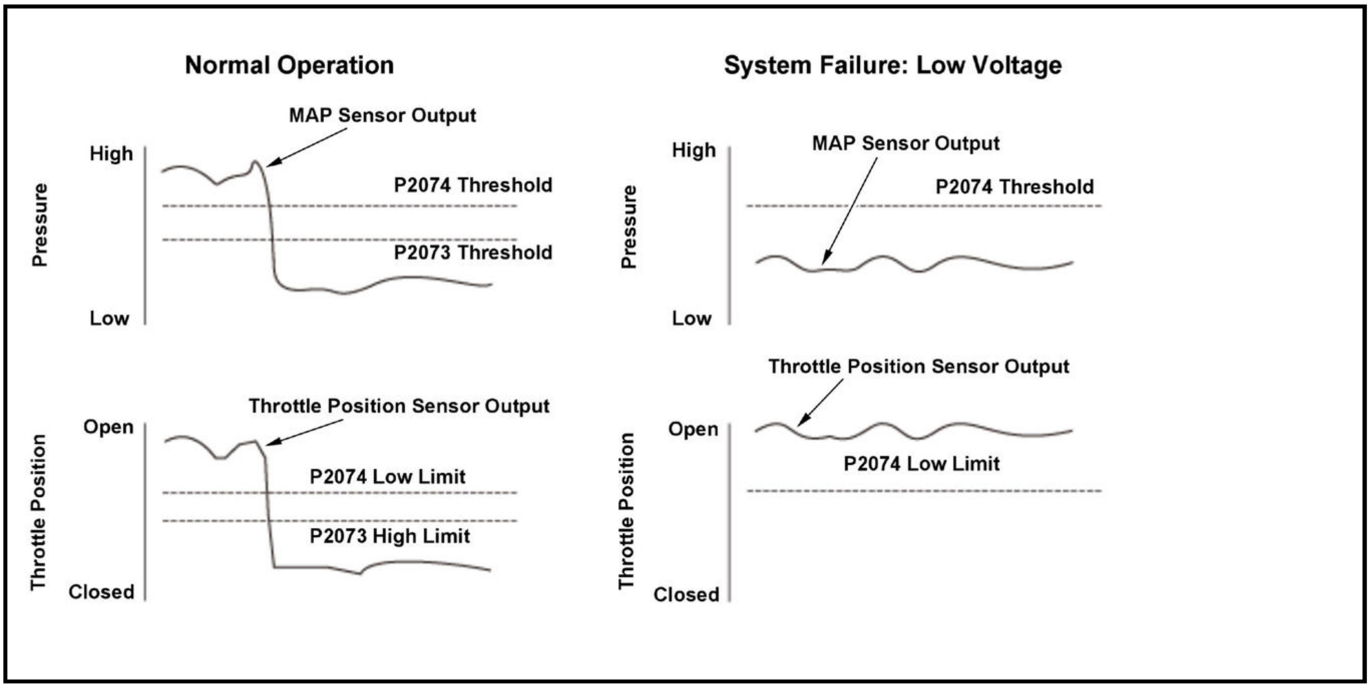

The manifold absolute pressure (MAP) sensor senses manifold absolute pressure (vacuum) and converts it into electrical signals. The MAP sensor outputs low signal voltage at high vacuum (throttle valve closed) and high signal voltage at low vacuum (throttle valve wide open). The powertrain control module (PCM) compares a predetermined MAP value at a given throttle position and manifold absolute pressure to the output voltage value of the MAP sensor. If the MAP sensor outputs lower voltage than expected, the PCM detects a malfunction and stores a DTC.

Monitor Execution, Sequence, Duration, DTC Type

Execution	Once per driving cycle

Sequence	None
Duration	2.0 seconds or more

DTC Type	Two drive cycles, MIL on

Enable Conditions

Condition		Minimum	Maximum
Engine coolant temperature [ECT SENSOR 1]		156 deg. F (69 deg. C)	-
Engine speed [ENGINE SPEED]		1, 400 rpm	-
Vehicle speed [VEHICLE SPEED]		15 mph (24 km/h)	-
Throttle position	1, 000 rpm	12.0 deg.	-
	4, 000 rpm	31.5 deg.	-
Other		Other than during fuel cut-off operation	

[ ]: HDS Parameter

Malfunction Threshold

The MAP sensor output [MAP SENSOR] is 36 kPa (277 mmHg, 10.6 inHg) or less for at least 2.0 seconds when atmospheric pressure [BARO SENSOR] is 62 kPa (460 mmHg, 18.3 inHg).

Possible Cause

NOTE: The causes shown may not be a complete list of all potential problems, and it is possible that there may be other causes.

- MAP sensor output signal low
- Intake air system clogged

Confirmation Procedure

Operating Condition

- Start the engine. Hold the engine speed [ENGINE SPEED] at 3, 000 rpm without load (in P or N) until the radiator fan comes on.
- Drive the vehicle at a speed of 15 mph (24 km/h) or more under Enable Conditions (see "Throttle position" and "Engine speed [ENGINE SPEED]") for at least 2 seconds.

- Drive the vehicle in this manner only if the traffic regulations and ambient conditions allow.

With the HDS

None.

Diagnosis Details

Conditions for setting the DTC

When a malfunction is detected during the first drive cycle, a Pending DTC is stored in the PCM memory. If the malfunction returns in the next (second) drive cycle, the MIL comes on and a Confirmed DTC and the freeze data are stored.

Conditions for clearing the DTC

The MIL is cleared if the malfunction does not return in three consecutive trips in which the diagnostic runs. The MIL, the Pending DTC, the Confirmed DTC, and the freeze data can be cleared with the scan tool Clear command or by disconnecting the 12 volt battery.

DTC P2096 (2.4 L ENGINE) (2017 2018 2019)

DTC P2096: Post Catalyst Fuel Trim System Too Lean

General Description

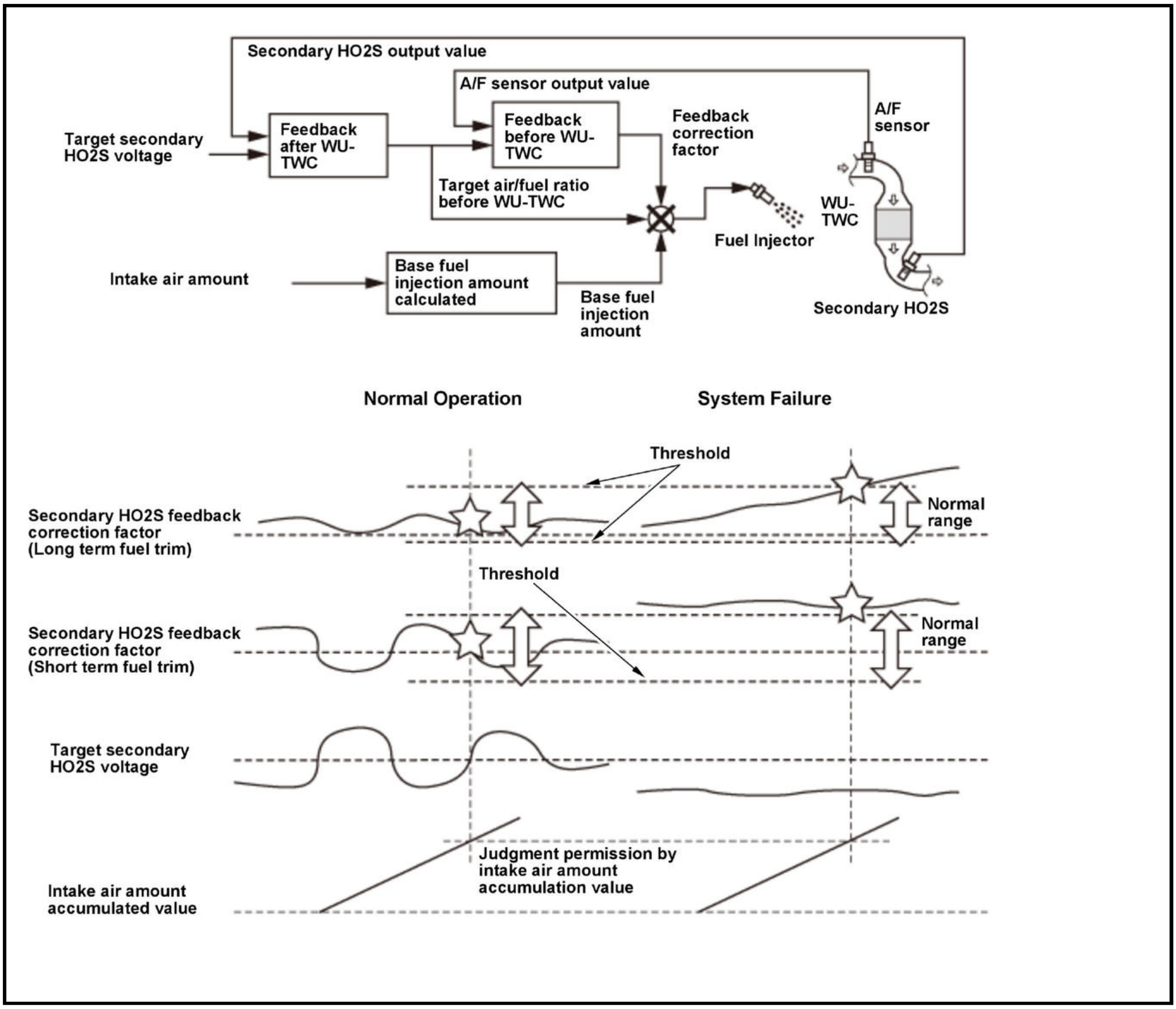

Secondary HO2S output value
A/F sensor output value
Target secondary HO2S voltage
Feedback after WU-TWC
Feedback before WU-TWC
Feedback correction factor
A/F sensor
Target air/fuel ratio before WU-TWC
Fuel Injector
WU-TWC
Intake air amount
Base fuel injection amount calculated
Base fuel injection amount
Secondary HO2S
Normal Operation
System Failure
Threshold
Secondary HO2S feedback correction factor (Long term fuel trim)
Normal range
Threshold
Secondary HO2S feedback correction factor (Short term fuel trim)
Normal range
Target secondary HO2S voltage
Judgment permission by intake air amount accumulation value
Intake air amount accumulated value

The powertrain control module (PCM) detects oxygen content in the exhaust gas by the air/fuel ratio (A/F) sensor (sensor 1), and it uses feedback control before the warm up three way catalytic converter (WU-TWC) to bring the air/fuel ratio close to the target air/fuel ratio. The target air/fuel ratio is adjusted by the secondary heated oxygen sensor (secondary HO2S (sensor 2)) output so that the air/fuel ratio in the WU-TWC is optimized. When the A/F sensor (sensor 1) cannot measure air/fuel ratio in the exhaust gas normally, a gap occurs to the actual air/fuel ratio. As a result, the gap causes a deviation in target air/fuel ratio control (after WU-TWC) which is determined by the secondary HO2S (sensor 2). If the deviation exceeds a limit, the PCM detects a malfunction and stores a DTC.

Monitor Execution, Sequence, Duration, DTC Type

Execution	Once per driving cycle*
Sequence	None
Duration	Depending on the driving conditions

DTC Type	Two drive cycles, MIL on

*: The malfunction judgment is cleared when it is judged as normal under the same driving conditions in which the malfunction is detected.

Enable Conditions

Condition	Minimum	Maximum
Engine coolant temperature [ECT SENSOR 1]	156 deg. F (69 deg. C)	-
Intake air temperature [IAT SENSOR (1)]	19 deg. F (-7 deg. C)	-
Engine speed [ENGINE SPEED]	500 rpm	4, 000 rpm
Intake air amount	0.29 oz/second (8.0 g/second)	-
Fuel feedback	Closed loop	

[ ]: HDS Parameter

Malfunction Threshold

Either of the conditions is met:

- Short term fuel trim is lower than -0.0225.
- Long term fuel trim is lower than 0.003.

Possible Cause

NOTE: The causes shown may not be a complete list of all potential problems, and it is possible that there may be other causes.

- A/F sensor (sensor 1) malfunction/slow response
- A/F sensor (sensor 1) circuit range/performance
- Fuel system too lean
- Fuel system too rich
- Secondary HO2S (sensor 2) circuit signal stuck lean
- Secondary HO2S (sensor 2) circuit high voltage
- Secondary HO2S (sensor 2) slow response
- Misfire
- Exhaust system failure (exhaust gas leak)

Confirmation Procedure

Operating Condition

- Start the engine. Hold the engine speed [ENGINE SPEED] at 3, 000 rpm without load (in P or N) until the radiator fan comes on.
- Drive at a steady speed between 15 - 75 mph (25 - 120 km/h) and engine speed [ENGINE SPEED] 4, 000 rpm or less for at least 94 seconds.

- When freeze data is stored, drive the vehicle under those conditions instead of Driving Pattern step 2.
- Drive the vehicle in this manner only if the traffic regulations and ambient conditions allow.

With the HDS

None.

Diagnosis Details

Conditions for setting the DTC

When a malfunction is detected during the first drive cycle, a Pending DTC is stored in the PCM memory. If the malfunction returns in the next (second) drive cycle, the MIL comes on and a Confirmed DTC and the freeze data are stored.

Conditions for clearing the DTC

The MIL is cleared if the malfunction does not return in three consecutive drive cycles in which the engine conditions are similar to the first time the malfunction was detected. The MIL, the Pending DTC, the Confirmed DTC, and the freeze data can be cleared with the scan tool Clear command or by disconnecting the 12 volt battery.

DTC P2096, P2097 (1.5 L ENGINE)

DTC P2096: Post Catalyst Fuel Trim System Too Lean **DTC P2097:** Post Catalyst Fuel Trim System Too Rich

General Description

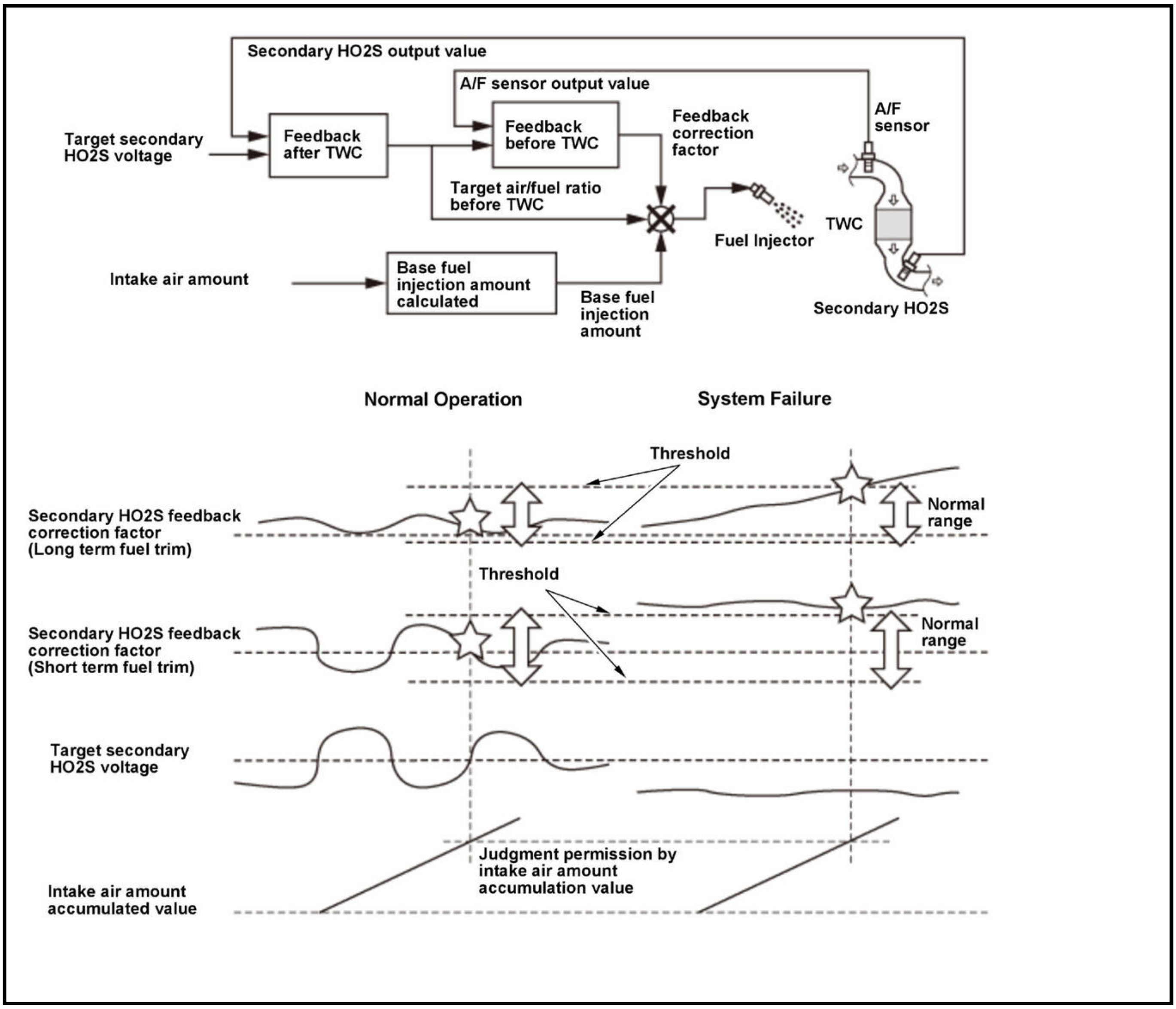
Secondary HO2S output value
A/F sensor output value
Target secondary HO2S voltage
Feedback after TWC
Feedback before TWC
Feedback correction factor
A/F sensor
Target air/fuel ratio before TWC
Fuel Injector
TWC
Intake air amount
Base fuel injection amount calculated
Base fuel injection amount
Secondary HO2S
Normal Operation
System Failure
Threshold
Secondary HO2S feedback correction factor (Long term fuel trim)
Normal range
Threshold
Secondary HO2S feedback correction factor (Short term fuel trim)
Normal range
Target secondary HO2S voltage
Judgment permission by intake air amount accumulation value
Intake air amount accumulated value

The powertrain control module (PCM) detects oxygen content in the exhaust gas by the air/fuel ratio (A/F) sensor (sensor 1), and it uses feedback control before the three way catalytic converter (TWC) to bring the air/fuel ratio close to the target air/fuel ratio. The target air/fuel ratio is adjusted by the secondary heated oxygen sensor (secondary HO2S (sensor 2)) output so that the air/fuel ratio in the TWC is optimized. When the

A/F sensor (sensor 1) cannot measure air/fuel ratio in the exhaust gas normally, a gap occurs to the actual air/fuel ratio. As a result, the gap causes a deviation in target air/fuel ratio control (after TWC) which is determined by the secondary HO2S (sensor 2). If the deviation exceeds a limit, the PCM detects a malfunction and stores a DTC.

Monitor Execution, Sequence, Duration, DTC Type

Execution	Once per driving cycle*
Sequence	None
Duration	Depending on the driving conditions
DTC Type	Two drive cycles, MIL on

*: The malfunction judgment is cleared when it is judged as normal under the same driving conditions in which the malfunction is detected.

Enable Conditions

Condition	Minimum	Maximum
Engine coolant temperature [ECT SENSOR 1]	156 deg. F (69 deg. C)	-
Intake air temperature [IAT Sensor (1)]	19 deg. F (-7 deg. C)	-
Engine speed [ENGINE SPEED]	530 rpm	4, 000 rpm
Intake air amount	9.0 g/second (0.32 oz/second)	-
Fuel feedback	Closed loop	

[ ]: HDS Parameter

Malfunction Threshold

Either of the conditions is met:

DTC: P2096

- Short term fuel trim is lower than -0.0254.
- Long term fuel trim is lower than 0.001.

DTC: P2097

- Short term fuel trim is higher than -0.007.
- Long term fuel trim is higher than 0.043.

Possible Cause

NOTE: The causes shown may not be a complete list of all potential problems, and it is possible that there may be other causes.

- A/F sensor (sensor 1) malfunction/slow response
- A/F sensor (sensor 1) circuit range/performance
- Fuel system too lean
- Fuel system too rich
- Secondary HO2S (sensor 2) circuit signal stuck lean
- Secondary HO2S (sensor 2) circuit open
- Secondary HO2S (sensor 2) slow response
- Air/fuel ratio variation between cylinders

- Misfire
- Exhaust system failure (exhaust gas leak)

Confirmation Procedure

Operating Condition

- Start the engine. Hold the engine speed [ENGINE SPEED] at 3, 000 rpm without load (in P or N) until the radiator fan comes on.
- Drive at a steady speed between 15 - 75 mph (25 - 120 km/h) and engine speed [ENGINE SPEED] 4, 000 rpm or less for at least 50 seconds.

- When freeze data or the on-board snapshot is stored, drive the vehicle under those conditions instead of Driving Pattern step 2.
- Drive the vehicle in this manner only if the traffic regulations and ambient conditions allow.

With the HDS

None.

Diagnosis Details

Conditions for setting the DTC

When a malfunction is detected during the first drive cycle, a Pending DTC is stored in the PCM memory. If the malfunction returns in the next (second) drive cycle, the MIL comes on and a Confirmed DTC, the freeze data, and the on-board snapshot are stored.

Conditions for clearing the DTC

The MIL is cleared if the malfunction does not return in three consecutive drive cycles in which the engine conditions are similar to the first time the malfunction was detected. The MIL, the Pending DTC, the Confirmed DTC, the freeze data, and the on-board snapshot can be cleared with the scan tool Clear command or by disconnecting the 12 volt battery.

DTC P2097 (2.4 L ENGINE) (2017 2018 2019)

DTC P2097: Post Catalyst Fuel Trim System Too Rich

General Description

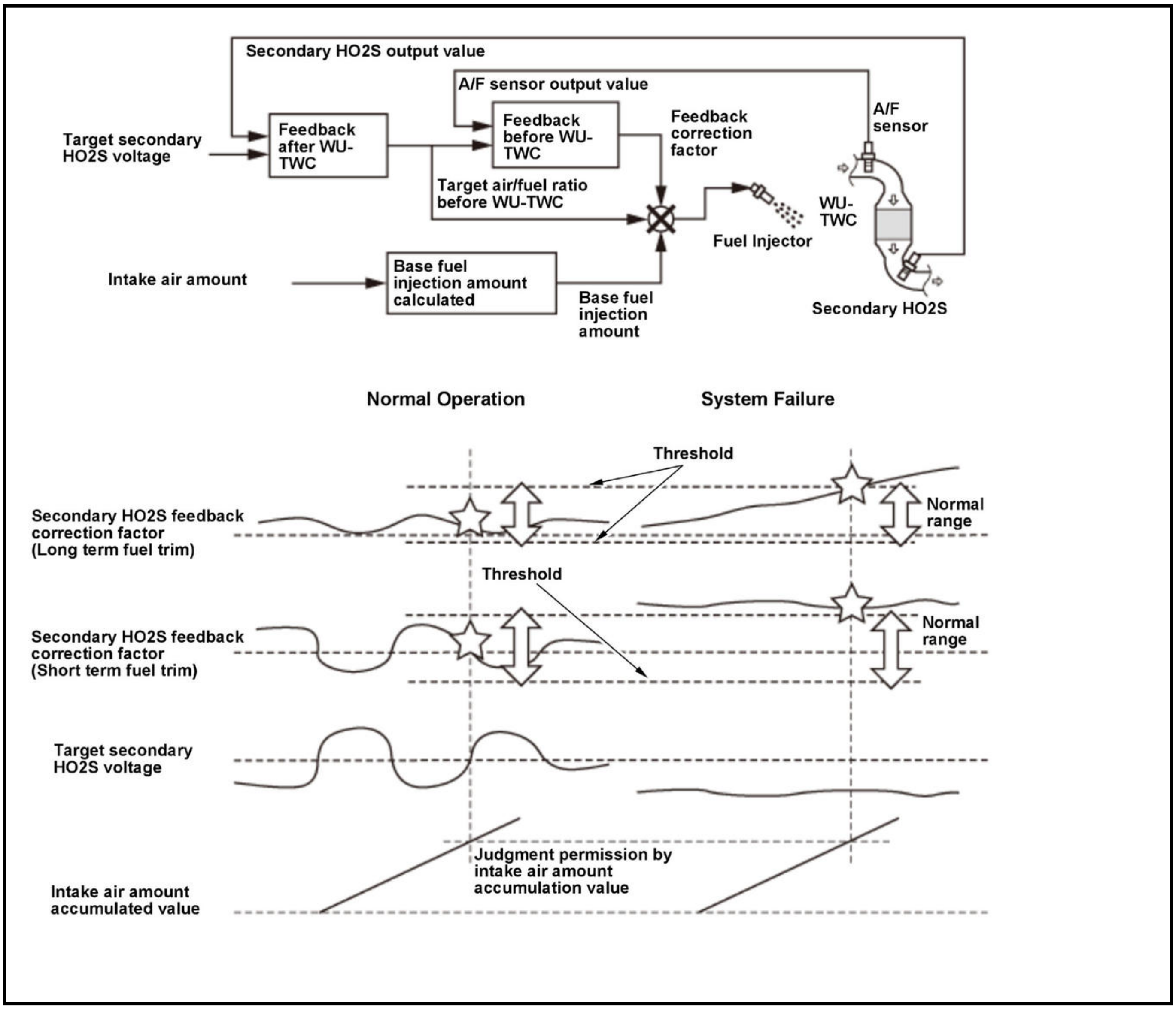
Secondary HO2S output value
A/F sensor output value
Target secondary HO2S voltage
Feedback after WU-TWC
Feedback before WU-TWC
Feedback correction factor
A/F sensor
Target air/fuel ratio before WU-TWC
WU-TWC
Fuel Injector
Intake air amount
Base fuel injection amount calculated
Base fuel injection amount
Secondary HO2S
Normal Operation
System Failure
Threshold
Secondary HO2S feedback correction factor (Long term fuel trim)
Normal range
Threshold
Secondary HO2S feedback correction factor (Short term fuel trim)
Normal range
Target secondary HO2S voltage
Judgment permission by intake air amount accumulation value
Intake air amount accumulated value

The powertrain control module (PCM) detects oxygen content in the exhaust gas by the air/fuel ratio (A/F) sensor (sensor 1), and it uses feedback control before the warm up three way catalytic converter (WU-TWC) to bring the air/fuel ratio close to the target air/fuel ratio. The target air/fuel ratio is adjusted by the secondary heated oxygen sensor (secondary HO2S (sensor 2)) output so that the air/fuel ratio in the WU-TWC is optimized. When the A/F sensor (sensor 1) cannot measure air/fuel ratio in the exhaust gas normally, a gap occurs to the actual air/fuel ratio. As a result, the gap causes a deviation in target air/fuel ratio control (after WU-TWC) which is determined by the secondary HO2S (sensor 2). If the deviation exceeds a limit, the PCM detects a malfunction and stores a DTC.

Monitor Execution, Sequence, Duration, DTC Type

Execution	Once per driving cycle*
Sequence	None
Duration	Depending on the driving conditions
DTC Type	Two drive cycles, MIL on

*: The malfunction judgment is cleared when it is judged as normal under the same driving conditions in which the malfunction is detected.

Enable Conditions

Condition	Minimum	Maximum
Engine coolant temperature [ECT SENSOR 1]	156 deg. F (69 deg. C)	-

Condition	Minimum	Maximum
Intake air temperature [IAT SENSOR (1)]	19 deg. F (-7 deg. C)	-
Engine speed [ENGINE SPEED]	500 rpm	4, 000 rpm
Intake air amount	0.29 oz/second (8.0 g/second)	-
Fuel feedback	Closed loop	

[ ]: HDS Parameter

Malfunction Threshold

Either of the conditions is met:

- Short term fuel trim is higher than -0.0155.
- Long term fuel trim is higher than 0.045.

Possible Cause

NOTE: The causes shown may not be a complete list of all potential problems, and it is possible that there may be other causes.

- A/F sensor (sensor 1) malfunction/slow response
- A/F sensor (sensor 1) circuit range/performance
- Fuel system too lean
- Fuel system too rich
- Secondary HO2S (sensor 2) circuit signal stuck lean
- Secondary HO2S (sensor 2) circuit high voltage
- Secondary HO2S (sensor 2) slow response
- Misfire
- Exhaust system failure (exhaust gas leak)

Confirmation Procedure

Operating Condition

- Start the engine. Hold the engine speed [ENGINE SPEED] at 3, 000 rpm without load (in P or N) until the radiator fan comes on.
- Drive at a steady speed between 15 - 75 mph (25 - 120 km/h) and engine speed [ENGINE SPEED] 4, 000 rpm or less for at least 94 seconds.

- When freeze data is stored, drive the vehicle under those conditions instead of Driving Pattern step 2.
- Drive the vehicle in this manner only if the traffic regulations and ambient conditions allow.

With the HDS

None.

Diagnosis Details

Conditions for setting the DTC

When a malfunction is detected during the first drive cycle, a Pending DTC is stored in the PCM memory. If the malfunction returns in the next (second) drive cycle, the MIL comes on and a Confirmed DTC and the freeze data are stored.

Conditions for clearing the DTC

The MIL is cleared if the malfunction does not return in three consecutive drive cycles in which the engine conditions are similar to the first time the malfunction was detected. The MIL, the Pending DTC, the Confirmed DTC, and the freeze data can be cleared with the scan tool Clear command or by disconnecting the 12 volt battery.

DTC P2101 (1.5 L ENGINE)

DTC P2101: Electronic Throttle Control System (ETCS) Malfunction

General Description

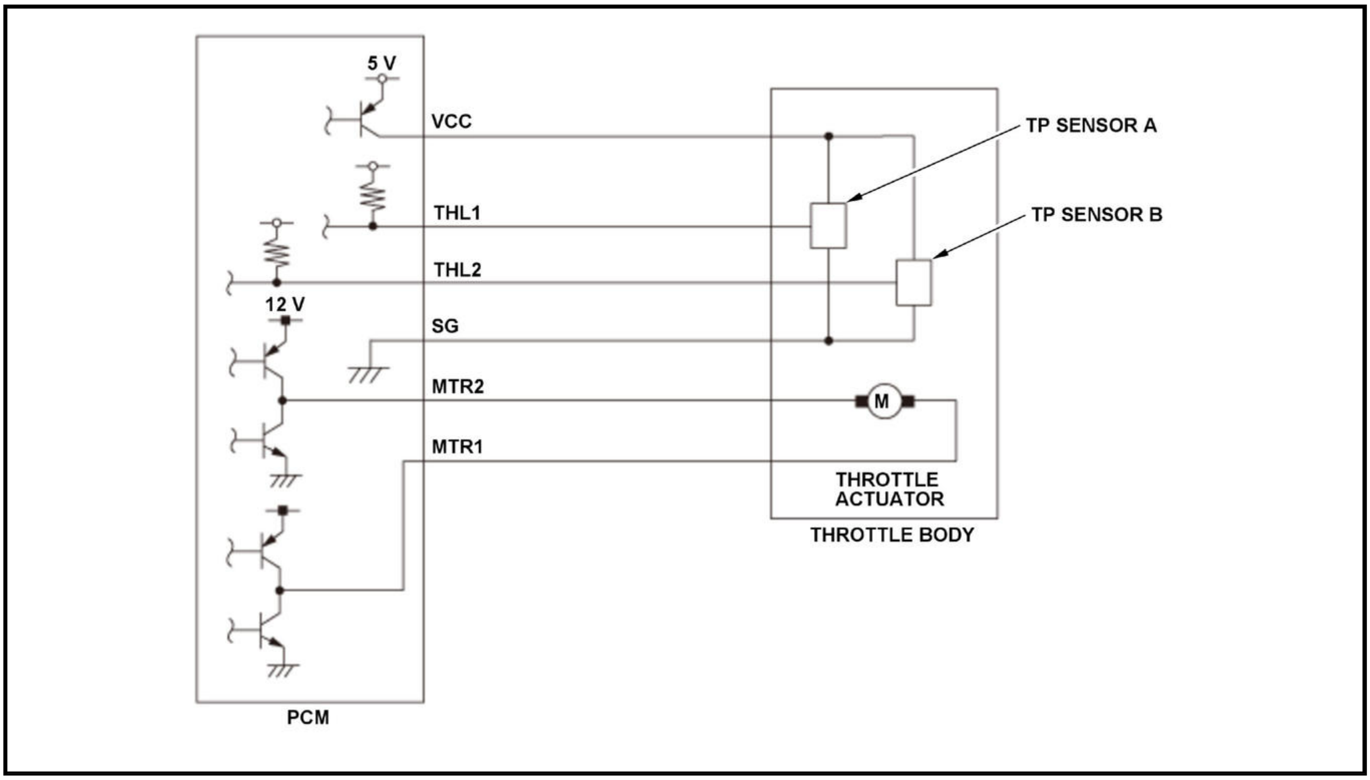

The electronic throttle control system controls the throttle valve opening. The system includes the throttle actuator, the throttle valve, throttle position (TP) sensors A and B, the electronic throttle control system (ETCS) control relay, the accelerator pedal position (APP) sensor A/B, and the powertrain control module (PCM). When the accelerator pedal is pressed, the APP sensor A/B detects the accelerator pedal opening value. The accelerator pedal opening value is converted to a signal in the APP sensor A/B and transmitted to the PCM to compute the target position. The PCM determines the throttle valve target position according to the signal received and operates the throttle actuator to move the throttle valve to the target position. The actual throttle valve position is determined by TP sensor A (installed in the throttle body). The PCM compares the throttle valve target opening angle and the actual throttle valve opening angle from TP sensor A, and when the difference exceeds the specification, the PCM detects the malfunction of the electronic throttle control system and stores a DTC.

Monitor Execution, Sequence, Duration, DTC Type

Execution	Continuous
Sequence	None
Duration	250 milliseconds or more*, 500 milliseconds or more**
DTC Type	One drive cycle, MIL on

*: Throttle valve closed direction

**: Throttle valve open direction

Enable Conditions

Condition	Minimum	Maximum
12 volt battery voltage [BATTERY]	6.0 V	-
Vehicle	ON mode	

[ ]: HDS Parameter

Malfunction Threshold

One of the conditions in this table is met for at least 250 milliseconds* (500 milliseconds**).

Throttle valve target position	Difference between throttle valve target position and actual throttle valve position
2 deg.	4 deg. or more
6 deg.	5.4 deg. or more
10 deg.	5.7 deg. or more
15 deg.	6 deg. or more
90 deg.	6 deg. or more

Possible Cause

NOTE: The causes shown may not be a complete list of all potential problems, and it is possible that there may be other causes.

- PCM internal circuit failure
- Throttle actuator MTR1 line failure
- Throttle actuator MTR2 line failure
- Throttle body internal failure

Diagnosis Details

Conditions for setting the DTC

When a malfunction is detected, the MIL comes on and a Pending DTC, a Confirmed DTC, and the freeze data are stored in the PCM memory.

Conditions for clearing the DTC

The MIL is cleared if the malfunction does not return in three consecutive trips in which the diagnostic runs. The MIL, the Pending DTC, the Confirmed DTC, and the freeze data can be cleared with the scan tool Clear command or by disconnecting the 12 volt battery.

DTC P2101 (2.4 L ENGINE) (2017 2018 2019)

DTC P2101: (Electronic Throttle Control System (ETCS) Malfunction

General Description

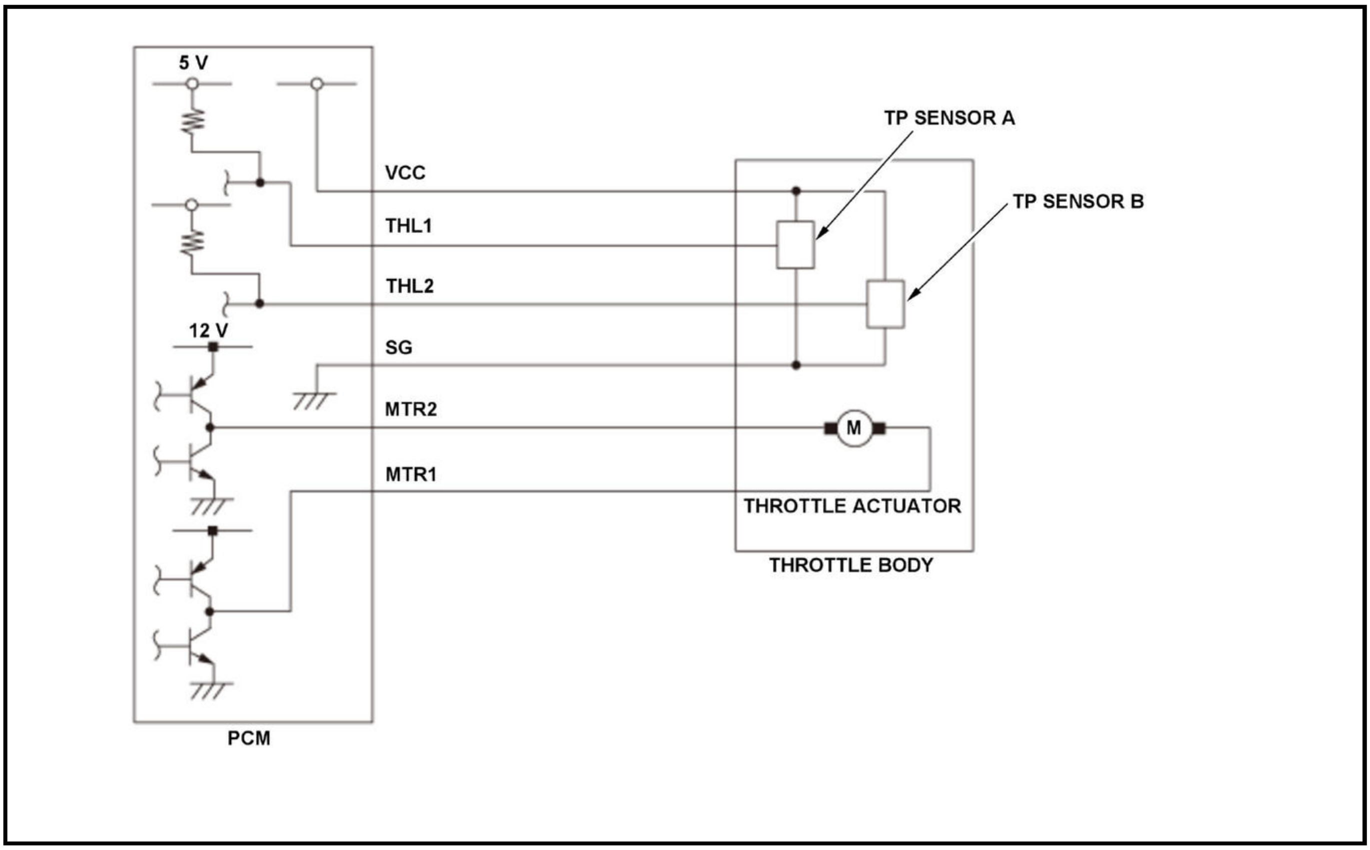

The electronic throttle control system controls the throttle valve opening. The system includes the throttle actuator, the throttle valve, throttle position (TP) sensors A and B, the electronic throttle control system (ETCS) control relay, the accelerator pedal position (APP) sensor, and the powertrain control module (PCM). When the accelerator pedal is pressed, the APP sensor detects the accelerator pedal opening value. The accelerator pedal opening value is converted to a signal in the APP sensor and transmitted to the PCM to compute the target position. The PCM determines the throttle valve target position according to the signal received and operates the throttle actuator to move the throttle valve to the target position. The actual throttle valve position is determined by TP sensor A (installed in the throttle body). The PCM compares the throttle valve target opening angle and the actual throttle valve opening angle from TP sensor A, and when the difference exceeds the specification, the PCM detects the malfunction of the electronic throttle control system and stores a DTC.

Monitor Execution, Sequence, Duration, DTC Type

Execution	Continuous
Sequence	None
Duration	250 milliseconds or more* 500 milliseconds or more**
DTC Type	One drive cycle, MIL on

*: Throttle valve closed direction

**: Throttle valve open direction

Enable Conditions

Condition	Minimum	Maximum
12 volt battery voltage [BATTERY]	6.0 V	-
Vehicle	ON mode	

[ ]: HDS Parameter

Malfunction Threshold

One of the conditions in this table is met for at least 250* (500)**milliseconds.

Throttle valve target position	Difference between throttle valve target position and actual throttle valve position
2 deg.	4 deg. or more
6 deg.	5.4 deg. or more
10 deg.	5.7 deg. or more
15 deg.	6 deg. or more
90 deg.	6 deg. or more

Possible Cause

NOTE: The causes shown may not be a complete list of all potential problems, and it is possible that there may be other causes.

- Throttle actuator MTR1 line failure
- Throttle actuator MTR2 line failure
- Throttle actuator failure
- TP sensor A/B failure
- Throttle body failure
- PCM failure

Diagnosis Details

Conditions for setting the DTC

When a malfunction is detected, the MIL comes on and a Pending DTC, a Confirmed DTC, and the freeze data are stored in the PCM memory.

Conditions for clearing the DTC

The MIL is cleared if the malfunction does not return in three consecutive trips in which the diagnostic runs. The MIL, the Pending DTC, the Confirmed DTC, and the freeze data can be cleared with the scan tool Clear command or by disconnecting the 12 volt battery.

DTC P2108 (1.5 L ENGINE)

DTC P2108: Throttle Actuator Control Module Performance

General Description

This fault code is a general (specified by SAE) DTC that is stored at the time the following DTC codes (P1658, P1659) are detected.

Monitor Execution, Sequence, Duration, DTC Type

Refer to the specific DTC information. (P1658, P1659)

Enable Conditions

Refer to the specific DTC information. (P1658, P1659)

Malfunction Threshold

P1658 and/or P1659 is stored.

Possible Cause

Refer to the specific DTC information. (P1658, P1659)

Diagnosis Details

Conditions for setting the DTC

The DTC is stored at the same time when DTC P1658 or P1659 is stored. Refer to the specific DTC information.

Conditions for clearing the DTC

The DTC is cleared at the same time when DTC P1658 and P1659 are cleared. Refer to the specific DTC information.

DTC P2108 (2.4 L ENGINE) (2017 2018 2019)

DTC P2108: Throttle Actuator Control Module Performance

General Description

This fault code is a general (specified by SAE) DTC that is stored at the time the following DTC codes (P1658, P1659) are detected.

Monitor Execution, Sequence, Duration, DTC Type

Refer to the specific DTC information. (P1658, P1659)

Enable Conditions

Refer to the specific DTC information. (P1658, P1659)

Malfunction Threshold

P1658 and/or P1659 is stored.

Possible Cause

Refer to the specific DTC information. (P1658, P1659)

Diagnosis Details

Conditions for setting the DTC

The DTC is stored at the same time when DTC P1658 or P1659 is stored. Refer to the specific DTC information.

Conditions for clearing the DTC

The DTC is cleared at the same time when DTC P1658 and P1659 are cleared. Refer to the specific DTC information.

DTC P2118 (1.5 L ENGINE)

DTC P2118: Throttle Actuator Current Range/Performance Problem

General Description

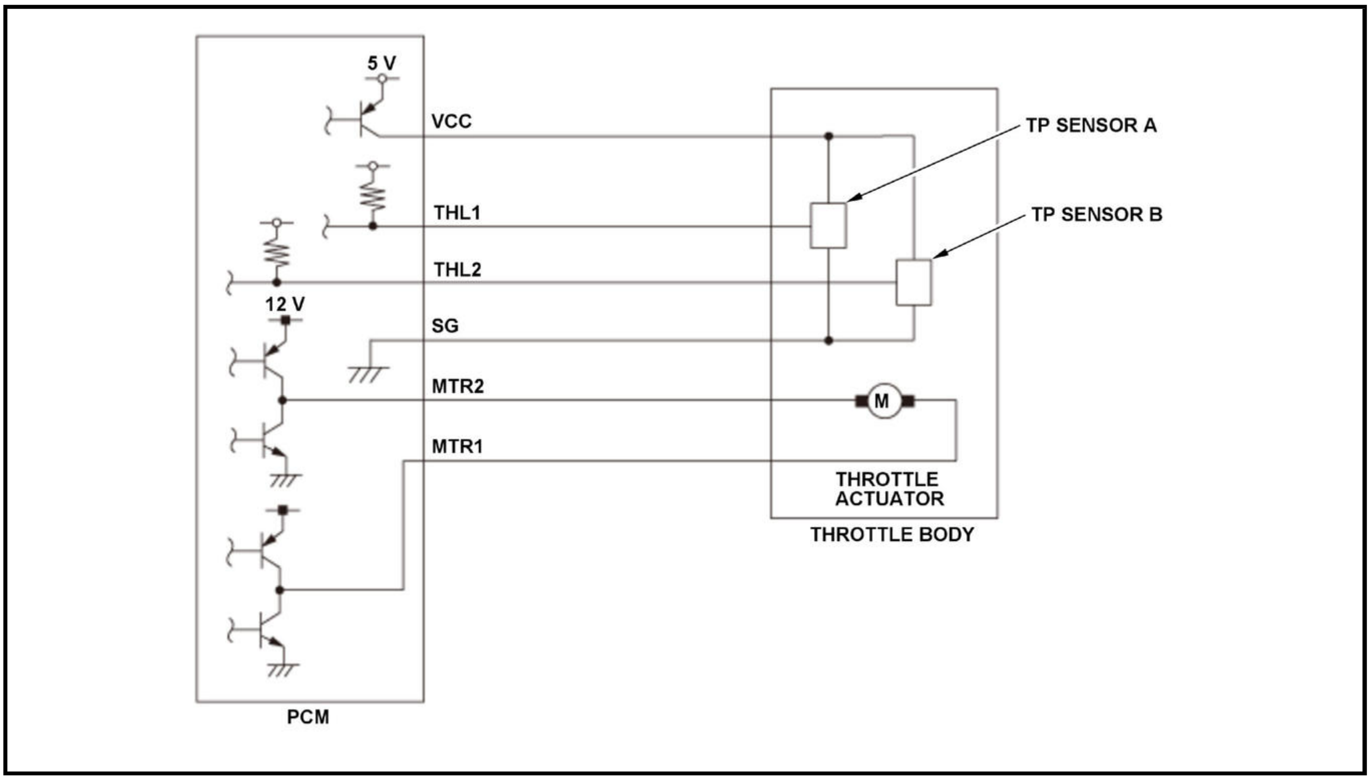

The electronic throttle control system controls the throttle valve opening. The system includes the throttle actuator, the throttle valve, throttle position (TP) sensors A and B, the electronic throttle control system (ETCS) control relay, the accelerator pedal position (APP) sensor A/B, and the powertrain control module (PCM). When the accelerator pedal is pressed, the APP sensor A/B detects the accelerator pedal opening value. The accelerator pedal opening value is converted to a signal in the APP sensor A/B and transmitted to the PCM to compute the target position. The PCM determines the throttle valve target position according to the signal received and operates the throttle actuator to move the throttle valve to the target position. The actual throttle valve position is determined by TP sensor A (installed in the throttle body). When the output current to the throttle valve actuator exceeds the specification for a set time, the PCM detects a malfunction of the electronic throttle control system and stores a DTC.

Monitor Execution, Sequence, Duration, DTC Type

Execution	Continuous
Sequence	None
Duration	200 milliseconds or more
DTC Type	One drive cycle, MIL on

Enable Conditions

Condition	Minimum	Maximum
12 volt battery voltage [BATTERY]	6.0 V	-
Vehicle	ON mode	

[ ]: HDS Parameter

Malfunction Threshold

The current flow to the throttle actuator is 9 A or more for at least 200 milliseconds.

Possible Cause

NOTE: The causes shown may not be a complete list of all potential problems, and it is possible that there may be other causes.

- PCM internal circuit failure
- Throttle actuator MTR1 line short
- Throttle actuator MTR2 line short
- Throttle actuator MTR1 line short to throttle actuator MTR2 line
- Throttle body internal failure

Confirmation Procedure

Operating Condition

- Turn the vehicle to the ON mode.
- Slowly press the accelerator pedal to the floor.

With the HDS

None.

Diagnosis Details

Conditions for setting the DTC

When a malfunction is detected, the MIL comes on and a Pending DTC, a Confirmed DTC, and the freeze data are stored in the PCM memory.

Conditions for clearing the DTC

The MIL is cleared if the malfunction does not return in three consecutive trips in which the diagnostic runs. The MIL, the Pending DTC, the Confirmed DTC, and the freeze data can be cleared with the scan tool Clear command or by disconnecting the 12 volt battery.

DTC P2118 (2.4 L ENGINE) (2017 2018 2019)

DTC P2118: Throttle Actuator Current Range/Performance Problem

General Description

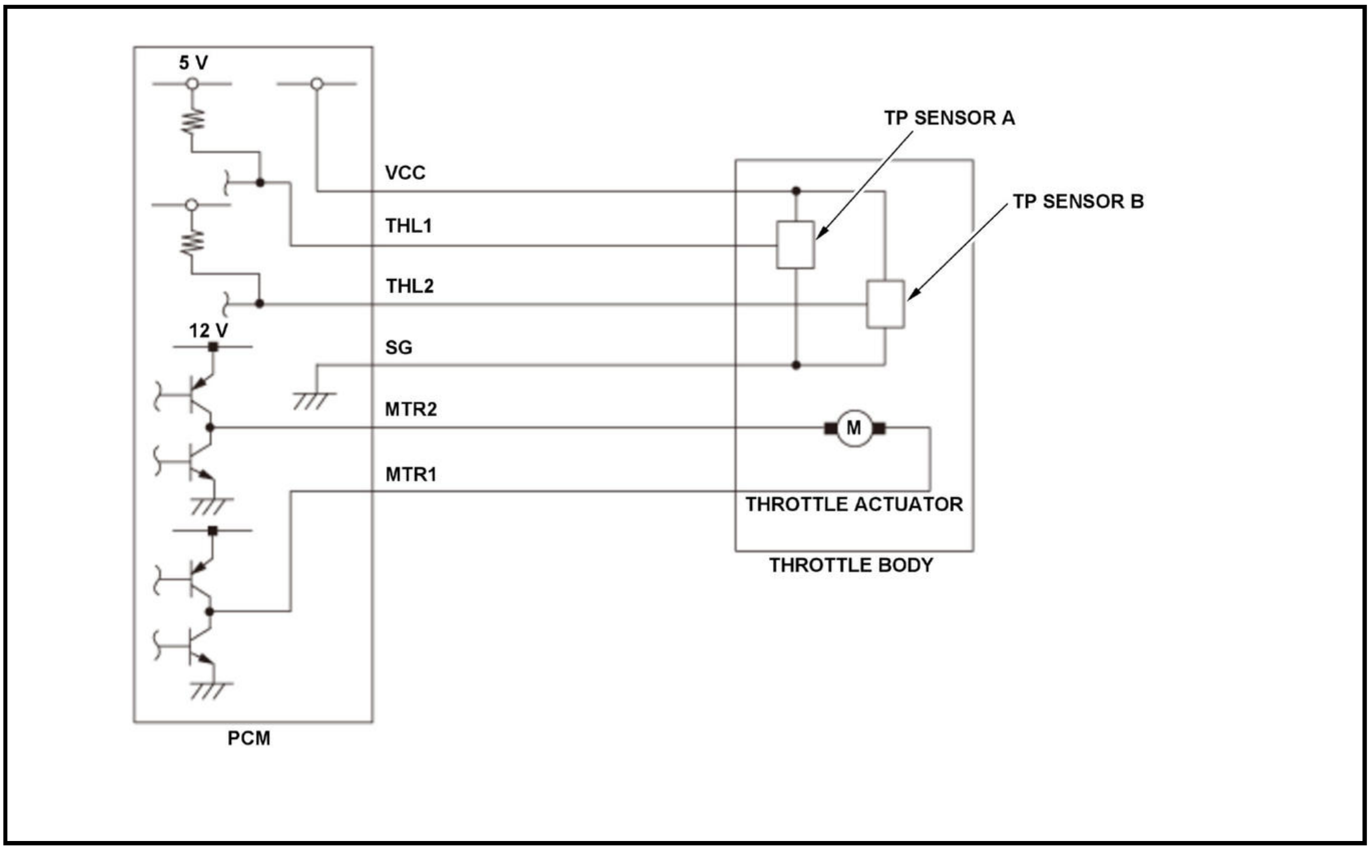

The electronic throttle control system controls the throttle valve opening. The system includes the throttle actuator, the throttle valve, throttle position (TP) sensors A and B, the electronic throttle control system (ETCS) control relay, the accelerator pedal position (APP) sensor, and the powertrain control module (PCM). When the accelerator pedal is pressed, the APP sensor detects the accelerator pedal opening value. The accelerator pedal opening value is converted to a signal in the APP sensor and transmitted to the PCM to compute the target position. The PCM determines the throttle valve target position according to the signal received and operates the throttle actuator to move the throttle valve to the target position. The actual throttle valve position is determined by TP sensor A (installed in the throttle body). When the output current to the throttle valve actuator exceeds the specification for a set time, the PCM detects a malfunction of the electronic throttle control system and stores a DTC.

Monitor Execution, Sequence, Duration, DTC Type

Execution	Continuous
Sequence	None
Duration	200 milliseconds or more
DTC Type	One drive cycle, MIL on

Enable Conditions

Condition	Minimum	Maximum
12 volt battery voltage [BATTERY]	6.0 V	-
Vehicle	ON mode	

[ ]: HDS Parameter

Malfunction Threshold

The current flow to the throttle actuator is 11 A or more for at least 200 milliseconds.

Possible Cause

NOTE: The causes shown may not be a complete list of all potential problems, and it is possible that there may be other causes.

- Throttle actuator MTR1 line failure
- Throttle actuator MTR2 line failure
- Throttle actuator internal circuit short
- PCM internal circuit failure

Diagnosis Details

Conditions for setting the DTC

When a malfunction is detected, the MIL comes on and a Pending DTC, a Confirmed DTC, and the freeze data are stored in the PCM memory.

Conditions for clearing the DTC

The MIL is cleared if the malfunction does not return in three consecutive trips in which the diagnostic runs. The MIL, the Pending DTC, the Confirmed DTC, and the freeze data can be cleared with the scan tool Clear command or by disconnecting the 12 volt battery.

DTC P2119 (1.5 L ENGINE)

DTC P2119: Throttle Actuator Control Throttle Body Range/Performance

General Description

This fault code is a general (specified by SAE) DTC that is stored at the time the following DTC codes (P1683, P1684) are detected.

Monitor Execution, Sequence, Duration, DTC Type

Refer to the specific DTC information. (P1683, P1684)

Enable Conditions

Refer to the specific DTC information. (P1683, P1684)

Malfunction Threshold

P1683 and/or P1684 is stored.

Possible Cause

Refer to the specific DTC information. (P1683, P1684)

Diagnosis Details

Conditions for setting the DTC

The DTC is stored at the same time when DTC P1683 or P1684 is stored. Refer to the specific DTC information.

Conditions for clearing the DTC

The DTC is cleared at the same time when DTC P1683 and P1684 are cleared. Refer to the specific DTC information.

DTC P2119 (2.4 L ENGINE) (2017 2018 2019)

DTC P2119: Throttle Actuator Control Throttle Body Range/Performance

General Description

This fault code is a general (specified by SAE) DTC that is stored at the time the following DTC codes (P1683, P1684) are detected.

Monitor Execution, Sequence, Duration, DTC Type

Refer to the specific DTC information. (P1683, P1684)

Enable Conditions

Refer to the specific DTC information. (P1683, P1684)

Malfunction Threshold

P1683 and/or P1684 is stored.

Possible Cause

Refer to the specific DTC information. (P1683, P1684)

Diagnosis Details

Conditions for setting the DTC

The DTC is stored at the same time when DTC P1683 or P1684 is stored. Refer to the specific DTC information.

Conditions for clearing the DTC

The DTC is cleared at the same time when DTC P1683 and P1684 are cleared. Refer to the specific DTC information.

DTC P2121 (1.5 L ENGINE) (2018 2019 2020 2021)

DTC P2121: Accelerator Pedal Position (APP) Sensor A (Throttle Position (TP) Sensor D) Out of Range

General Description

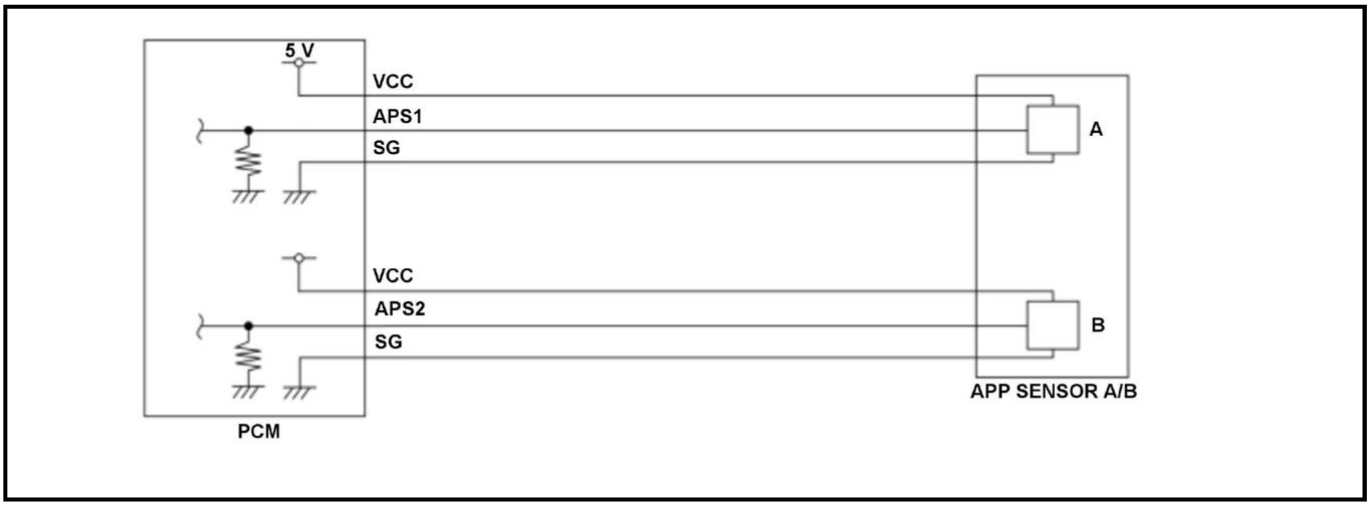

Accelerator pedal position (APP) sensor A is a part of the electronic throttle control system. It is used to convert the position of the accelerator pedal into electrical signals. Based on these signals, the powertrain control module (PCM) controls the throttle actuator so that the throttle position agrees with the accelerator pedal position. If the signal voltage from APP sensor A is a set value, the PCM detects a malfunction and stores a DTC.

Monitor Execution, Sequence, Duration, DTC Type

Execution	Continuous
Sequence	None
Duration	6.0 seconds or more
DTC Type	Two drive cycles, MIL on

Enable Conditions

Condition	B
Vehicle	ON mode

Malfunction Threshold

The APP sensor A output voltage [APP SENSOR A] is 0.69 V or less, or 4.99 V or more for at least 6.0 seconds.

[ ]: HDS Parameter

Possible Cause

NOTE: The causes shown may not be a complete list of all potential problems, and it is possible that there may be other causes.

- APP sensor A failure
- PCM internal circuit failure

Diagnosis Details

Conditions for setting the DTC

When a malfunction is detected during the first drive cycle, a Pending DTC is stored in the PCM memory. If the malfunction returns in the next (second) drive cycle, the MIL comes on and a Confirmed DTC, the freeze data, and the on-board snapshot are stored.

Conditions for clearing the DTC

The MIL is cleared if the malfunction does not return in three consecutive trips in which the diagnostic runs. The MIL, the Pending DTC, the Confirmed DTC, the freeze data, and the on-board snapshot can be cleared with the scan tool Clear command or by disconnecting the 12 volt battery.

DTC P2121 (2.4 L ENGINE) (2018 2019)

DTC P2121: Accelerator Pedal Position (APP) Sensor A (Throttle Position (TP) Sensor D) Out of Range

General Description

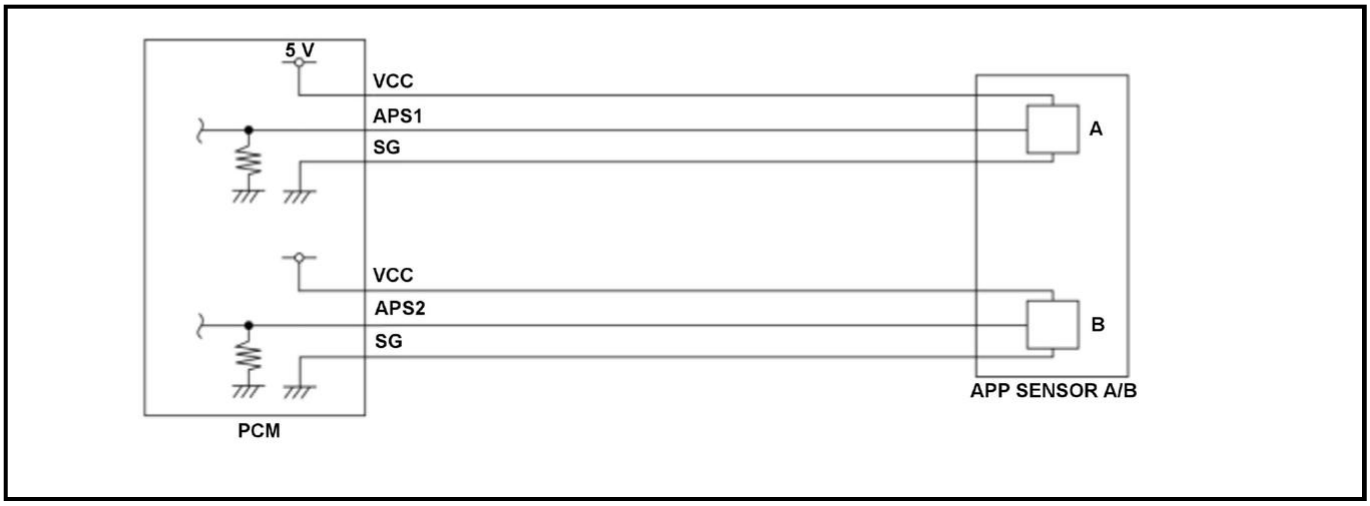

Accelerator pedal position (APP) sensor A is a part of the electronic throttle control system. It is used to convert the position of the accelerator pedal into electrical signals. Based on these signals, the powertrain control module (PCM) controls the throttle actuator so that the throttle position agrees with the accelerator pedal position. If the signal voltage from APP sensor A is a set value, the PCM detects a malfunction and stores a DTC.

Monitor Execution, Sequence, Duration, DTC Type

Execution	Continuous
Sequence	None
Duration	6.0 seconds or more
DTC Type	Two drive cycles, MIL on

Enable Conditions

Condition	B
Vehicle	ON mode

Malfunction Threshold

The APP sensor A output voltage [APP SENSOR A] is 0.66 V or less, or 4.9 V or more for at least 6.0 seconds.

[ ]: HDS Parameter

Possible Cause

NOTE: The causes shown may not be a complete list of all potential problems, and it is possible that there may be other causes.

- APP sensor A failure
- PCM internal circuit failure

Diagnosis Details

Conditions for setting the DTC

When a malfunction is detected during the first drive cycle, a Pending DTC is stored in the PCM memory. If the malfunction returns in the next (second) drive cycle, the MIL comes on and a Confirmed DTC, the freeze data, and the on-board snapshot are stored.

Conditions for clearing the DTC

The MIL is cleared if the malfunction does not return in three consecutive trips in which the diagnostic runs. The MIL, the Pending DTC, the Confirmed DTC, the freeze data, and the on-board snapshot can be cleared with the scan tool Clear command or by disconnecting the 12 volt battery.

DTC P2122, P2123 (1.5 L ENGINE)

DTC P2122: Accelerator Pedal Position (APP) Sensor A (Throttle Position (TP) Sensor D) Circuit Low Voltage **DTC P2123:** Accelerator Pedal Position (APP) Sensor A (Throttle Position (TP) Sensor D) Circuit High Voltage

General Description

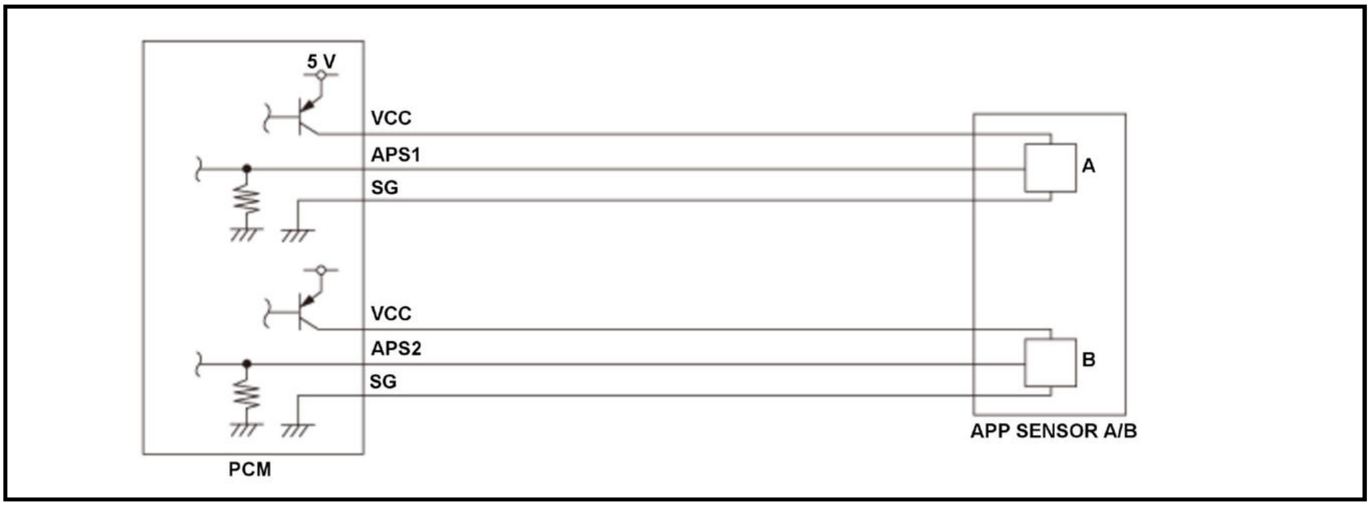

Accelerator pedal position (APP) sensor A is a part of the electronic throttle control system. It is used to convert the position of the accelerator pedal into electrical signals. Based on these signals, the powertrain control module (PCM) controls the throttle actuator so that the throttle position agrees with the accelerator pedal position. If the signal voltage from APP sensor A is a set value, the PCM detects a malfunction and stores a DTC.

Monitor Execution, Sequence, Duration, DTC Type

Execution	Continuous
Sequence	None
Duration	200 milliseconds or more
DTC Type	One drive cycle, MIL on

Enable Conditions

Condition	B
Vehicle	ON mode

Malfunction Threshold

DTC: P2122

The APP sensor A output voltage [APP SENSOR A] is 0.2 V or less for at least 200 milliseconds.

DTC: P2123

The APP sensor A output voltage [APP SENSOR A] is 4.9 V or more for at least 200 milliseconds.

[ ]: HDS Parameter

Possible Cause

NOTE: The causes shown may not be a complete list of all potential problems, and it is possible that there may be other causes.

DTC: P2122

- APP sensor A APS1 line open
- APP sensor A APS1 line short to ground
- APP sensor A VCC line open

DTC: P2123

- APP sensor A APS1 line short to APP sensor A VCC line
- APP sensor A SG line open

Common

- APP sensor A failure
- PCM internal circuit failure

Diagnosis Details

Conditions for setting the DTC

When a malfunction is detected, the MIL comes on and a Pending DTC, a Confirmed DTC, and the freeze data are stored in the PCM memory.

Conditions for clearing the DTC

The MIL is cleared if the malfunction does not return in three consecutive trips in which the diagnostic runs. The MIL, the Pending DTC, the Confirmed DTC, and the freeze data can be cleared with the scan tool Clear command or by disconnecting the 12 volt battery.

DTC P2122, P2123 (2.4 L ENGINE) (2017 2018 2019)

DTC P2122: APP Sensor A (TP Sensor D) Circuit Low Voltage **DTC P2123:** APP Sensor A (TP Sensor D) Circuit High Voltage

General Description

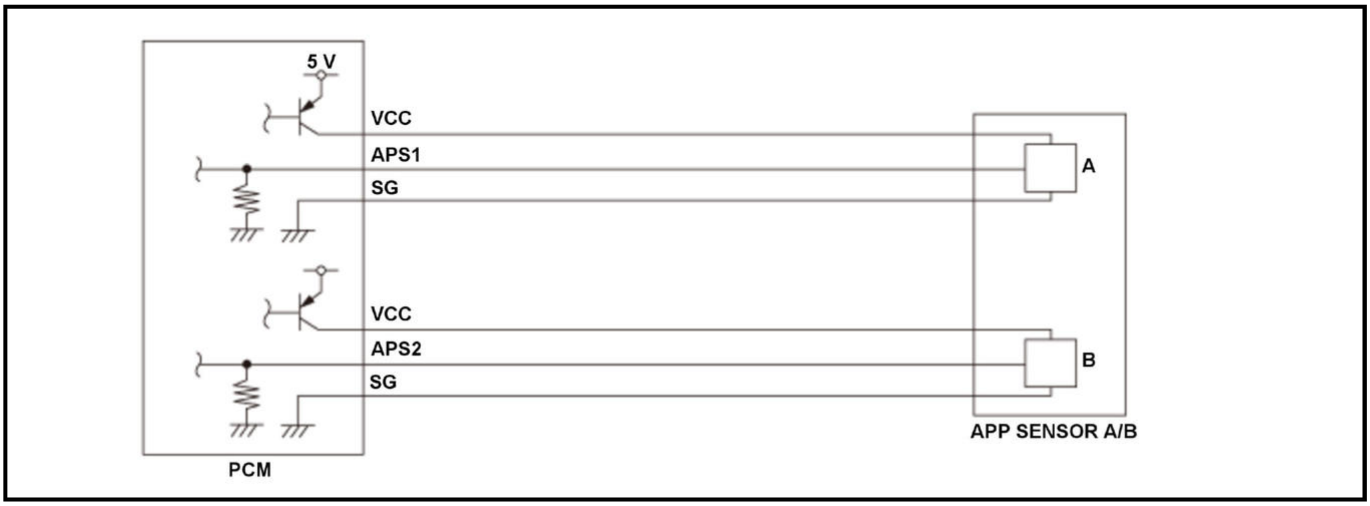

Accelerator pedal position (APP) sensor A is a part of the electronic throttle control system. It is used to convert the position of the accelerator pedal into electrical signals. Based on these signals, the powertrain control module (PCM) controls the throttle actuator so that the throttle position agrees with the accelerator pedal position. If the signal voltage from APP sensor A is a set value, the PCM detects a malfunction and stores a DTC.

Monitor Execution, Sequence, Duration, DTC Type

Execution	Continuous
Sequence	None
Duration	200 milliseconds or more
DTC Type	One drive cycle, MIL on

Enable Conditions

Condition	B
Vehicle	ON mode

Malfunction Threshold

DTC: P2122

The APP sensor A output voltage [APP SENSOR A] is 0.2 V or less for at least 200 milliseconds.

DTC: P2123

The APP sensor A output voltage [APP SENSOR A] is 4.9 V or more for at least 200 milliseconds.

[ ]: HDS Parameter

Possible Cause

NOTE: The causes shown may not be a complete list of all potential problems, and it is possible that there may be other causes.

DTC: P2122

- APP sensor A APS1 line open
- APP sensor A APS1 line short to ground
- APP sensor A VCC line open

DTC: P2123

- APP sensor A APS1 line short to APP sensor A VCC line
- APP sensor A SG line open

Common

- APP sensor A failure
- PCM internal circuit failure

Diagnosis Details

Conditions for setting the DTC

When a malfunction is detected, the MIL comes on and a Pending DTC, a Confirmed DTC, and the freeze data are stored in the PCM memory.

Conditions for clearing the DTC

The MIL is cleared if the malfunction does not return in three consecutive trips in which the diagnostic runs. The MIL, the Pending DTC, the Confirmed DTC, and the freeze data can be cleared with the scan tool Clear command or by disconnecting the 12 volt battery.

DTC P2126 (1.5 L ENGINE) (2018 2019 2020 2021)

DTC P2126: Accelerator Pedal Position (APP) Sensor B (Throttle Position (TP) Sensor E) Out of Range

General Description

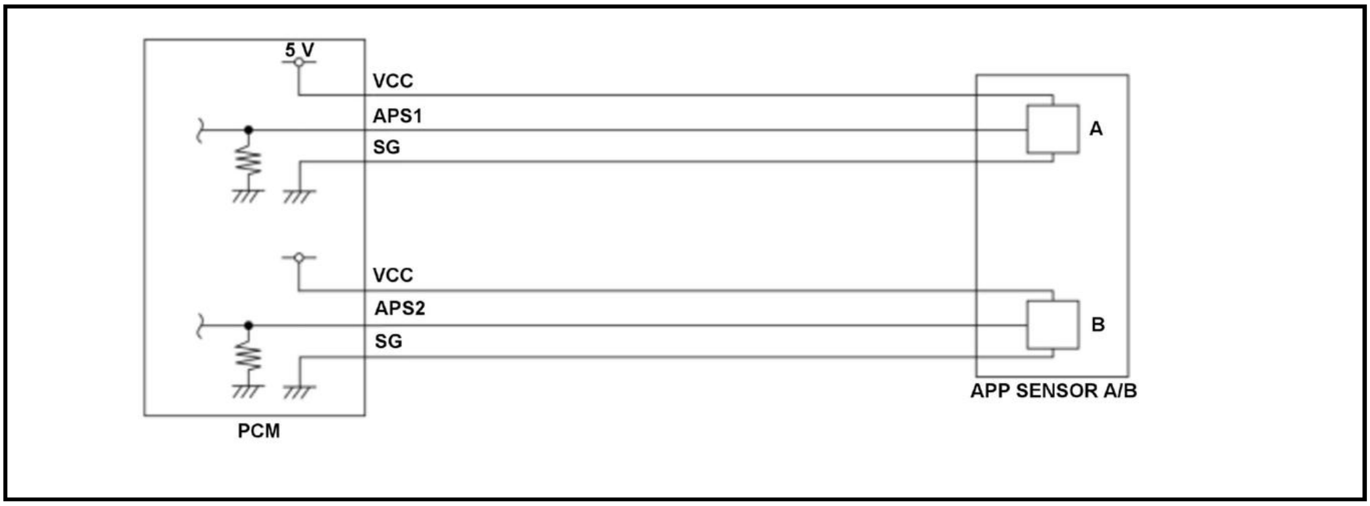

Accelerator pedal position (APP) sensor B is a part of the electronic throttle control system. It is used to convert the position of the accelerator pedal into electrical signals. Based on these signals, the powertrain control module (PCM) controls the throttle actuator so that the throttle position agrees with the accelerator pedal position. If the signal voltage from APP sensor B is a set value, the PCM detects a malfunction and stores a DTC.

Monitor Execution, Sequence, Duration, DTC Type

Execution	Continuous
Sequence	None
Duration	6.0 seconds or more
DTC Type	Two drive cycles, MIL on

Enable Conditions

Condition	B
Vehicle	ON mode

Malfunction Threshold

The APP sensor B output voltage [APP SENSOR B] is 0.19 V or less, or 2.62 V or more for at least 6.0 seconds.

[ ]: HDS Parameter

Possible Cause

NOTE: The causes shown may not be a complete list of all potential problems, and it is possible that there may be other causes.

- APP sensor B failure
- PCM internal circuit failure

Diagnosis Details

Conditions for setting the DTC

When a malfunction is detected during the first drive cycle, a Pending DTC is stored in the PCM memory. If the malfunction returns in the next (second) drive cycle, the MIL comes on and a Confirmed DTC, the freeze data, and the on-board snapshot are stored.

Conditions for clearing the DTC

The MIL is cleared if the malfunction does not return in three consecutive trips in which the diagnostic runs. The MIL, the Pending DTC, the Confirmed DTC, the freeze data, and the on-board snapshot can be cleared with the scan tool Clear command or by disconnecting the 12 volt battery.

DTC P2126 (2.4 L ENGINE) (2018 2019)

DTC P2126: Accelerator Pedal Position (APP) Sensor B (Throttle Position (TP) Sensor E) Out of Range

General Description

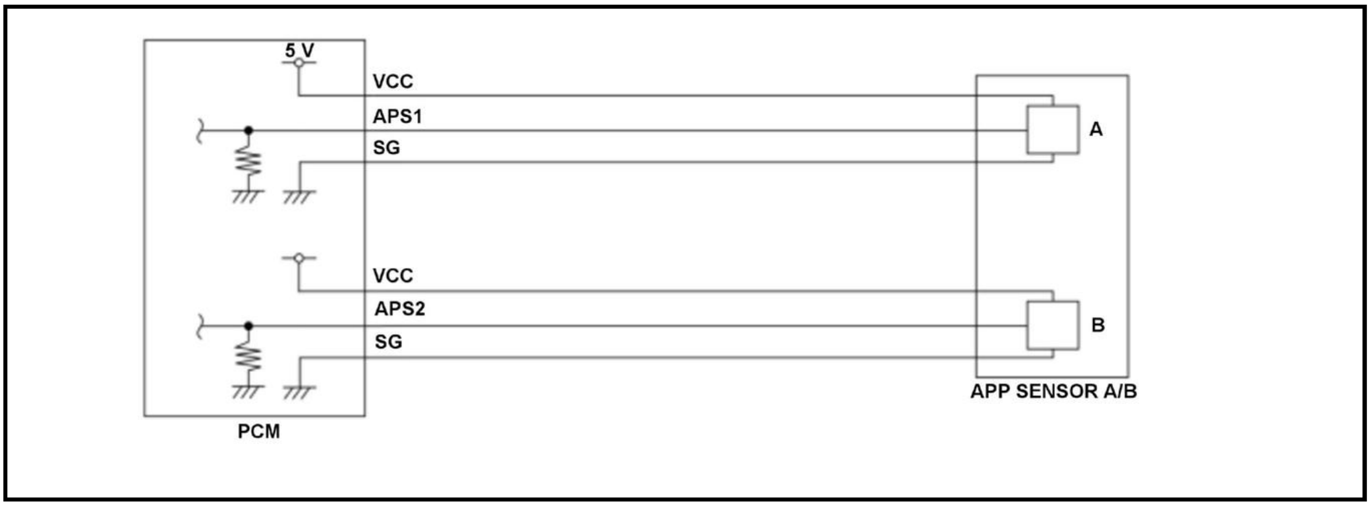

Accelerator pedal position (APP) sensor B is a part of the electronic throttle control system. It is used to convert the position of the accelerator pedal into electrical signals. Based on these signals, the powertrain control module (PCM) controls the throttle actuator so that the throttle position agrees with the accelerator pedal position. If the signal voltage from APP sensor B is a set value, the PCM detects a malfunction and stores a DTC.

Monitor Execution, Sequence, Duration, DTC Type

Execution	Continuous
Sequence	None
Duration	6.0 seconds or more
DTC Type	Two drive cycles, MIL on

Enable Conditions

Condition	B
Vehicle	ON mode

Malfunction Threshold

The APP sensor B output voltage [APP SENSOR B] is 0.22 V or less, or 2.54 V or more for at least 6.0 seconds.

[ ]: HDS Parameter

Possible Cause

NOTE: The causes shown may not be a complete list of all potential problems, and it is possible that there may be other causes.

- APP sensor B failure
- PCM internal circuit failure

Diagnosis Details

Conditions for setting the DTC

When a malfunction is detected during the first drive cycle, a Pending DTC is stored in the PCM memory. If the malfunction returns in the next (second) drive cycle, the MIL comes on and a Confirmed DTC, the freeze data, and the on-board snapshot are stored.

Conditions for clearing the DTC

The MIL is cleared if the malfunction does not return in three consecutive trips in which the diagnostic runs. The MIL, the Pending DTC, the Confirmed DTC, the freeze data, and the on-board snapshot can be cleared with the scan tool Clear command or by disconnecting the 12 volt battery.

DTC P2127, P2128 (1.5 L ENGINE)

DTC P2127: Accelerator Pedal Position (APP) Sensor B (Throttle Position (TP) Sensor E) Circuit Low Voltage
DTC P2128: Accelerator Pedal Position (APP) Sensor B (Throttle Position (TP) Sensor E) Circuit High Voltage

General Description

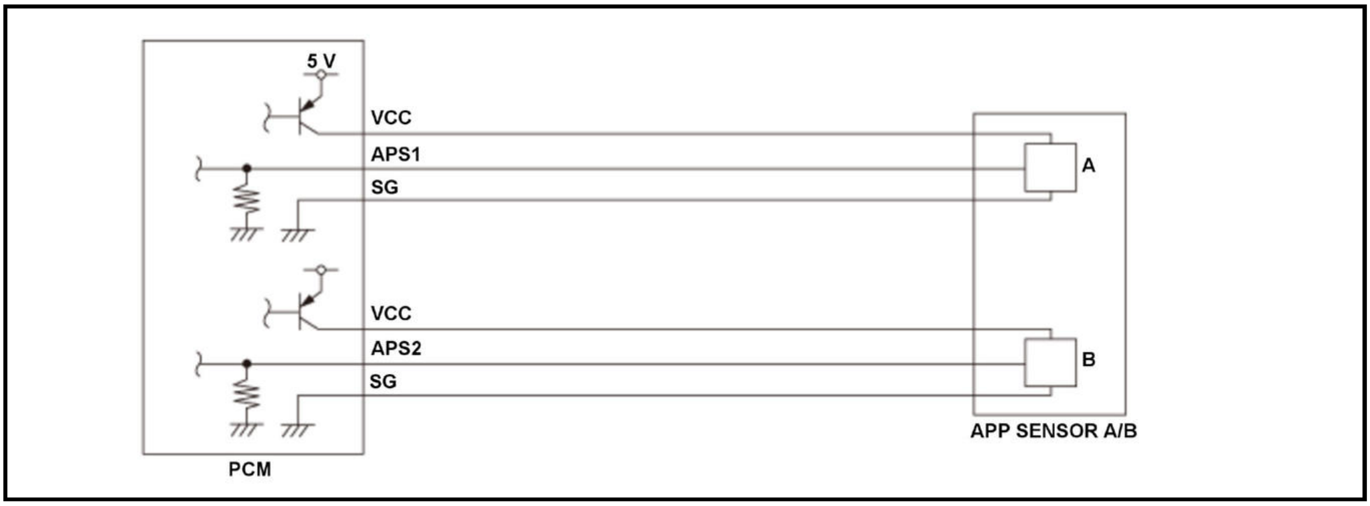

Accelerator pedal position (APP) sensor B is a part of the electronic throttle control system. It is used to convert the position of the accelerator pedal into electrical signals. Based on these signals, the powertrain control module (PCM) controls the throttle actuator so that the throttle position agrees with the accelerator pedal position. If the signal voltage from APP sensor B is a set value, the PCM detects a malfunction and stores a DTC.

Monitor Execution, Sequence, Duration, DTC Type

Execution	Continuous
Sequence	None
Duration	200 milliseconds or more
DTC Type	One drive cycle, MIL on

Enable Conditions

Condition	B
Vehicle	ON mode

Malfunction Threshold

DTC: P2127

The APP sensor B output voltage [APP SENSOR B] is 0.2 V or less for at least 200 milliseconds.

DTC: P2128

The APP sensor B output voltage [APP SENSOR B] is 4.0 V or more for at least 200 milliseconds.

[ ]: HDS Parameter

Possible Cause

NOTE: The causes shown may not be a complete list of all potential problems, and it is possible that there may be other causes.

DTC: P2127

- APP sensor B APS2 line open
- APP sensor B APS2 line short to ground
- APP sensor B VCC line open

DTC: P2128

- APP sensor B APS2 line short to APP sensor B VCC line
- APP sensor B SG line open

Common

- APP sensor B failure
- PCM internal circuit failure

Diagnosis Details

Conditions for setting the DTC

When a malfunction is detected, the MIL comes on and a Pending DTC, a Confirmed DTC, and the freeze data are stored in the PCM memory.

Conditions for clearing the DTC

The MIL is cleared if the malfunction does not return in three consecutive trips in which the diagnostic runs. The MIL, the Pending DTC, the Confirmed DTC, and the freeze data can be cleared with the scan tool Clear command or by disconnecting the 12 volt battery.

DTC P2127, P2128 (2.4 L ENGINE) (2017 2018 2019)

DTC P2127: Accelerator pedal position (APP) Sensor B (Throttle Position (TP) Sensor E) Circuit Low Voltage
DTC P2128: Accelerator pedal position (APP) Sensor B (Throttle Position (TP) Sensor E) Circuit High Voltage

General Description

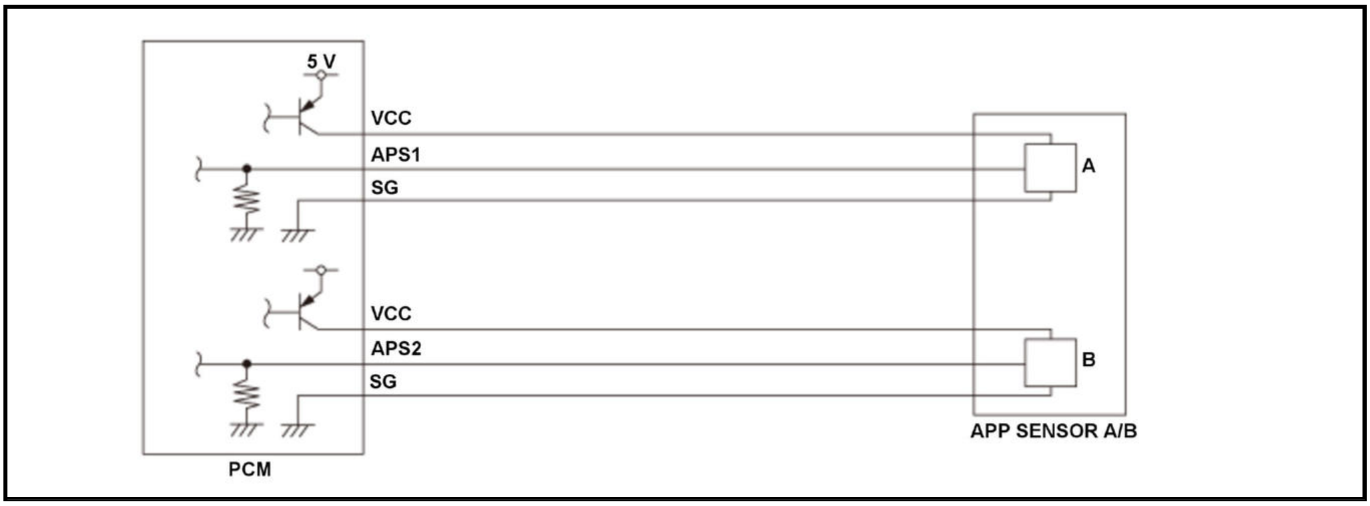

Accelerator pedal position (APP) sensor B is a part of the electronic throttle control system. It is used to convert the position of the accelerator pedal into electrical signals. Based on these signals, the powertrain control module (PCM) controls the throttle actuator so that the throttle position agrees with the accelerator pedal position. If the signal voltage from APP sensor B is a set value, the PCM detects a malfunction and stores a DTC.

Monitor Execution, Sequence, Duration, DTC Type

Execution	Continuous
Sequence	None
Duration	200 milliseconds or more
DTC Type	One drive cycle, MIL on

Enable Conditions

Condition	B
Vehicle	ON mode

Malfunction Threshold

DTC: P2127

The APP sensor B output voltage [APP SENSOR B] is 0.2 V or less for at least 200 milliseconds.

DTC: P2128

The APP sensor B output voltage [APP SENSOR B] is 4.0 V or more for at least 200 milliseconds.

[ ]: HDS Parameter

Possible Cause

NOTE: The causes shown may not be a complete list of all potential problems, and it is possible that there may be other causes.

DTC: P2127

- APP sensor B APS2 line open
- APP sensor B APS2 line short to ground
- APP sensor B VCC line open

DTC: P2128

- APP sensor B APS2 line short to APP sensor B VCC line
- APP sensor B SG line open

Common

- APP sensor B failure
- PCM internal circuit failure

Diagnosis Details

Conditions for setting the DTC

When a malfunction is detected, the MIL comes on and a Pending DTC, a Confirmed DTC, and the freeze data are stored in the PCM memory.

Conditions for clearing the DTC

The MIL is cleared if the malfunction does not return in three consecutive trips in which the diagnostic runs. The MIL, the Pending DTC, the Confirmed DTC, and the freeze data can be cleared with the scan tool Clear command or by disconnecting the 12 volt battery.

DTC P2135 (1.5 L ENGINE)

DTC P2135: Throttle Position (TP) Sensor A/B Incorrect Voltage Correlation

General Description

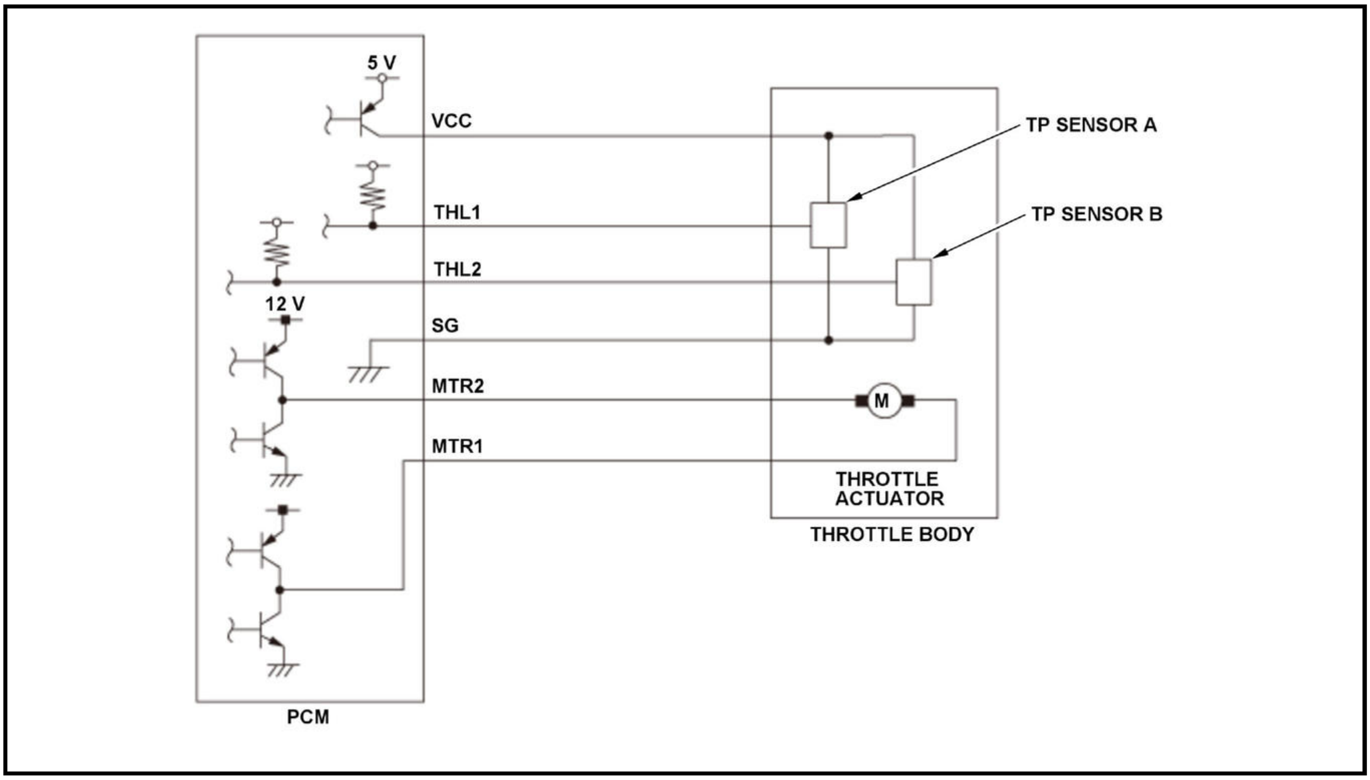
5 V
VCC
THL1
THL2
12 V
SG
MTR2
MTR1
PCM
TP SENSOR A
TP SENSOR B
M
THROTTLE ACTUATOR
THROTTLE BODY

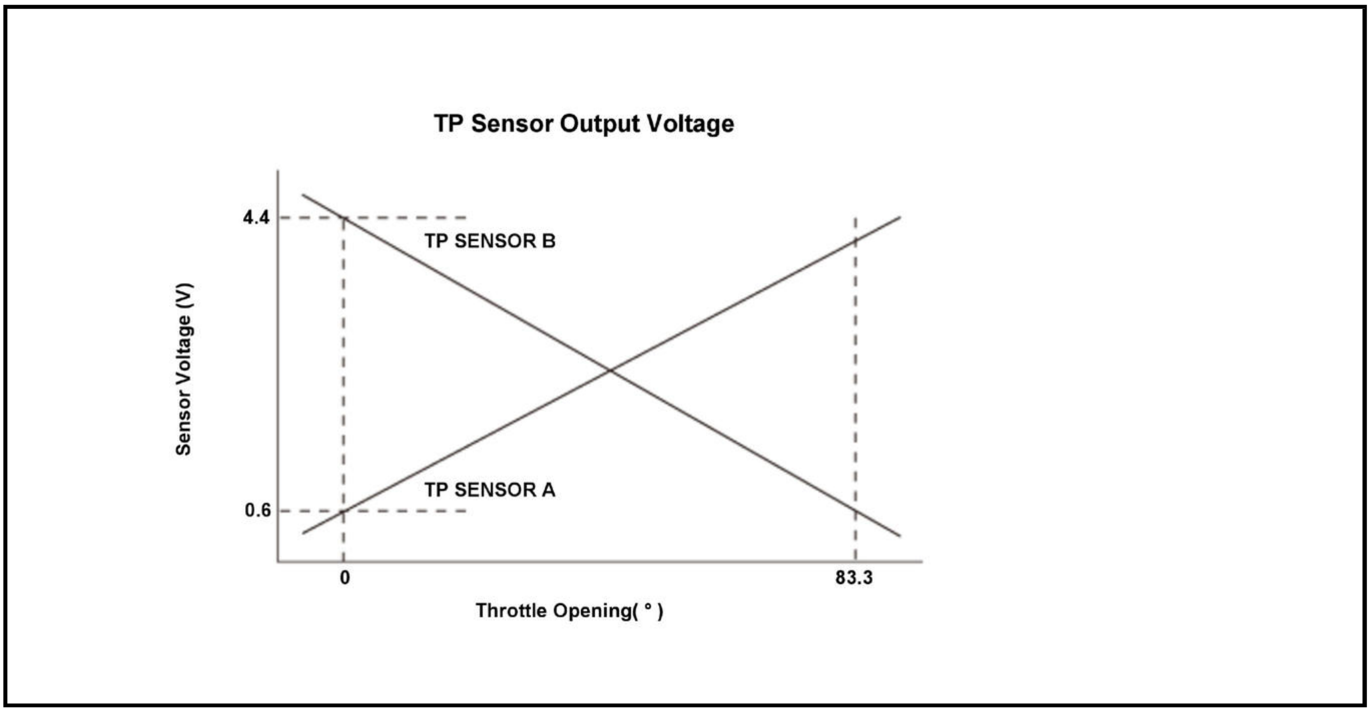

The electronic throttle control system controls the throttle valve opening. The system includes the throttle actuator, the throttle valve, throttle position (TP) sensors A and B, the electronic throttle control system (ETCS) control relay, the accelerator pedal position (APP) sensor A/B, and the powertrain control module (PCM). When the accelerator pedal is pressed, the APP sensor A/B detects the accelerator pedal opening value. The accelerator pedal opening value is converted to a signal in the APP sensor A/B and transmitted to the PCM to compute the target position. The PCM then operates the throttle actuator to move the throttle valve to the target position. The actual throttle valve position is determined by TP sensor A (installed in the throttle body). The PCM adds the TP sensor A and TP sensor B values, and compares the addition value with 5 V. If the deviation exceeds a certain value for a specified time, the PCM detects a malfunction in the relationship between TP sensor A and TP sensor B, and stores a DTC.

Monitor Execution, Sequence, Duration, DTC Type

Execution	Continuous
Sequence	None
Duration	200 milliseconds or more
DTC Type	One drive cycle, MIL on

Enable Conditions

Condition	B
Vehicle	ON mode

Malfunction Threshold

The deviation between 5 V and addition value of TP sensor A and TP sensor B exceeds the threshold value which depends on TP sensor B voltage for at least 200 milliseconds as shown in the following graph.

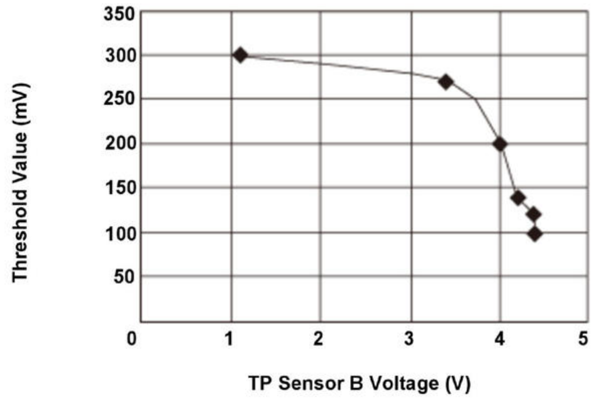

Possible Cause

NOTE: The causes shown may not be a complete list of all potential problems, and it is possible that there may be other causes.

- TP sensor A THL1 line short to TP sensor B THL2 line
- TP sensor A failure
- TP sensor B failure
- PCM internal circuit failure

Diagnosis Details

Conditions for setting the DTC

When a malfunction is detected, the MIL comes on and a Pending DTC, a Confirmed DTC, and the freeze data are stored in the PCM memory.

Conditions for clearing the DTC

The MIL is cleared if the malfunction does not return in three consecutive trips in which the diagnostic runs. The MIL, the Pending DTC, the Confirmed DTC, and the freeze data can be cleared with the scan tool Clear command or by disconnecting the 12 volt battery.

DTC P2135 (2.4 L ENGINE) (2017 2018 2019)

DTC P2135: Throttle Position (TP) Sensor A/B Incorrect Voltage Correlation

General Description

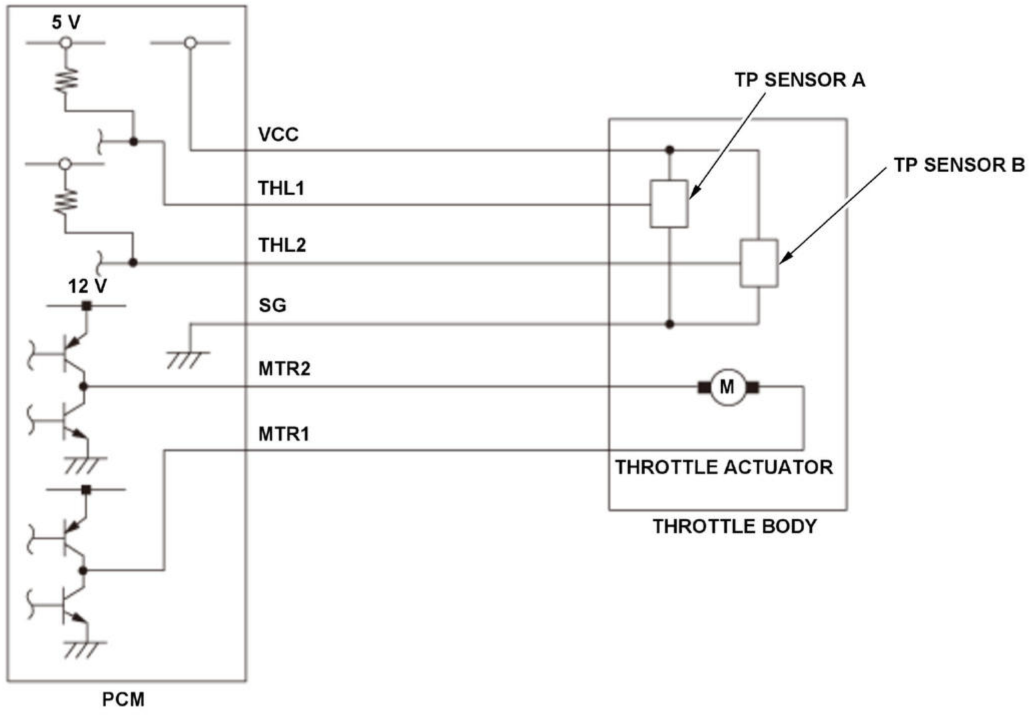

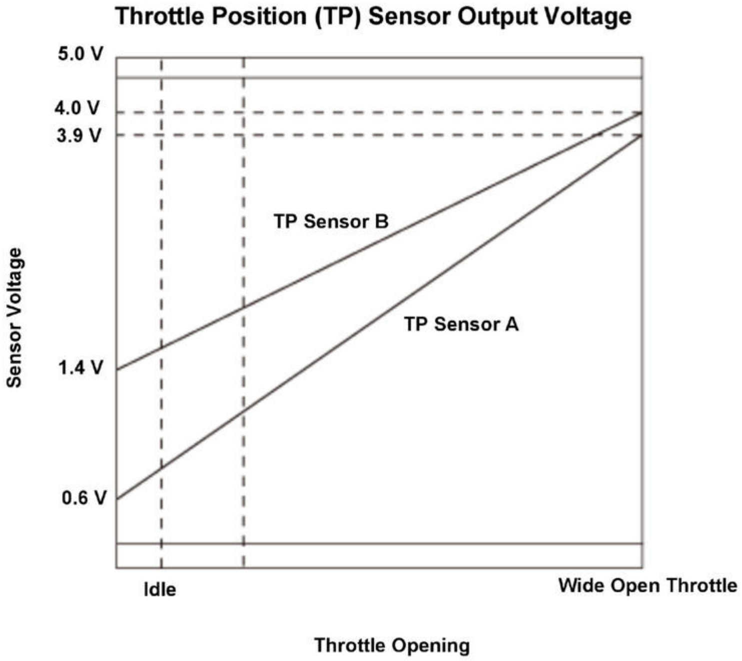

The electronic throttle control system controls the throttle valve opening. The system includes the throttle actuator, the throttle valve, throttle position (TP) sensors A and B, the electronic throttle control system (ETCS) control relay, the accelerator pedal position (APP) sensor, and the powertrain control module (PCM). When the accelerator pedal is pressed, the APP sensor detects the accelerator pedal opening value. The accelerator pedal opening value is converted to a signal in the APP sensor and transmitted to the PCM to compute the target position. The PCM then operates the throttle actuator to move the throttle valve to the target position. The actual throttle valve position is determined by TP sensor A (installed in the throttle body). The PCM compares the voltages and the throttle valve positions of TP sensor A and TP sensor B. If the difference of the throttle valve positions is a certain value for a set time, the PCM detects a malfunction in the relationship between TP sensor A and TP sensor B, and stores a DTC.

Monitor Execution, Sequence, Duration, DTC Type

Execution	Continuous
Sequence	None
Duration	200 milliseconds or more
DTC Type	One drive cycle, MIL on

Enable Conditions

Condition	Minimum	Maximum
TP sensor B voltage [TP SENSOR B]	-	2.3 V
Vehicle	ON mode	
Other	After the throttle valve fully closed position registration is completed	

[ ]: HDS Parameter

Malfunction Threshold

The throttle valve position difference between TP sensor A and TP sensor B which depends on the throttle valve position of TP sensor A exceeds the value shown in the table for at least 200 milliseconds.

Throttle valve position determined by TP sensor A	Difference between TP sensor A and TP sensor B
0 deg.	1.8 deg. or more

Throttle valve position determined by TP sensor A	Difference between TP sensor A and TP sensor B
83.3 deg.	14.7 deg. or more

Possible Cause

NOTE: The causes shown may not be a complete list of all potential problems, and it is possible that there may be other causes.

- TP sensor A/B failure
- TP sensor A THL1 line short to TP sensor B THL2 line
- PCM internal circuit failure

Confirmation Procedure

Operating Condition

- Turn the vehicle to the ON mode.
- Operate the accelerator pedal.

With the HDS

Do the ETCS TEST in the INSPECTION MENU with the HDS.

Diagnosis Details

Conditions for setting the DTC

When a malfunction is detected, the MIL comes on and a Pending DTC, a Confirmed DTC, and the freeze data are stored in the PCM memory.

Conditions for clearing the DTC

The MIL is cleared if the malfunction does not return in three consecutive trips in which the diagnostic runs. The MIL, the Pending DTC, the Confirmed DTC, and the freeze data can be cleared with the scan tool Clear command or by disconnecting the 12 volt battery.

DTC P2138 (1.5 L ENGINE)

DTC P2138: Accelerator Pedal Position (APP) Sensor A/B (Throttle Position (TP) Sensor D/E) Incorrect Voltage Correlation

General Description

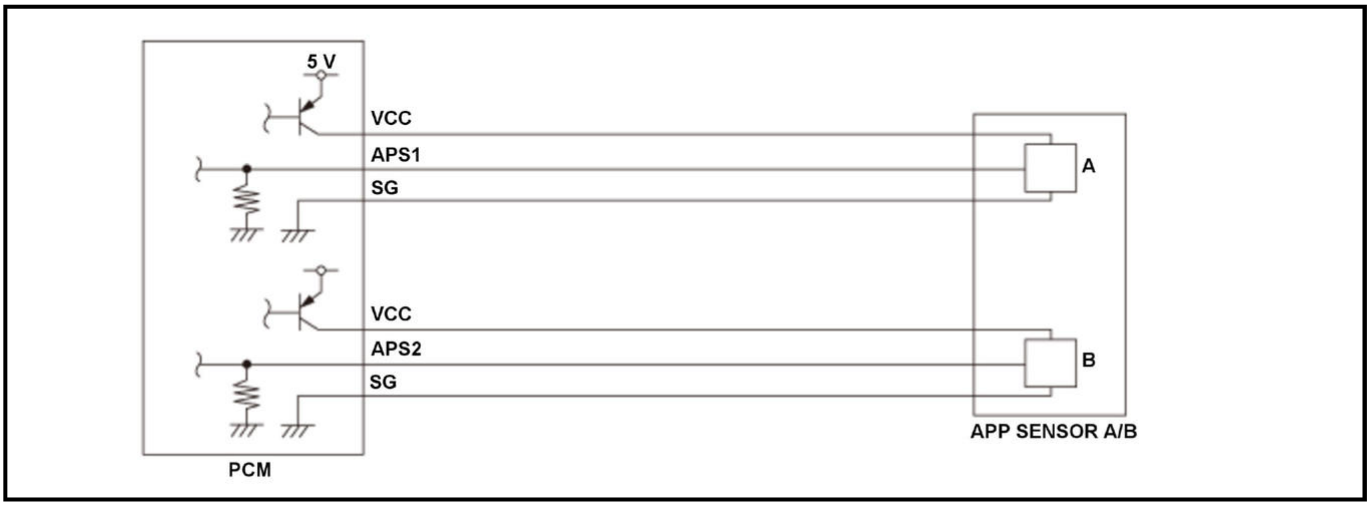

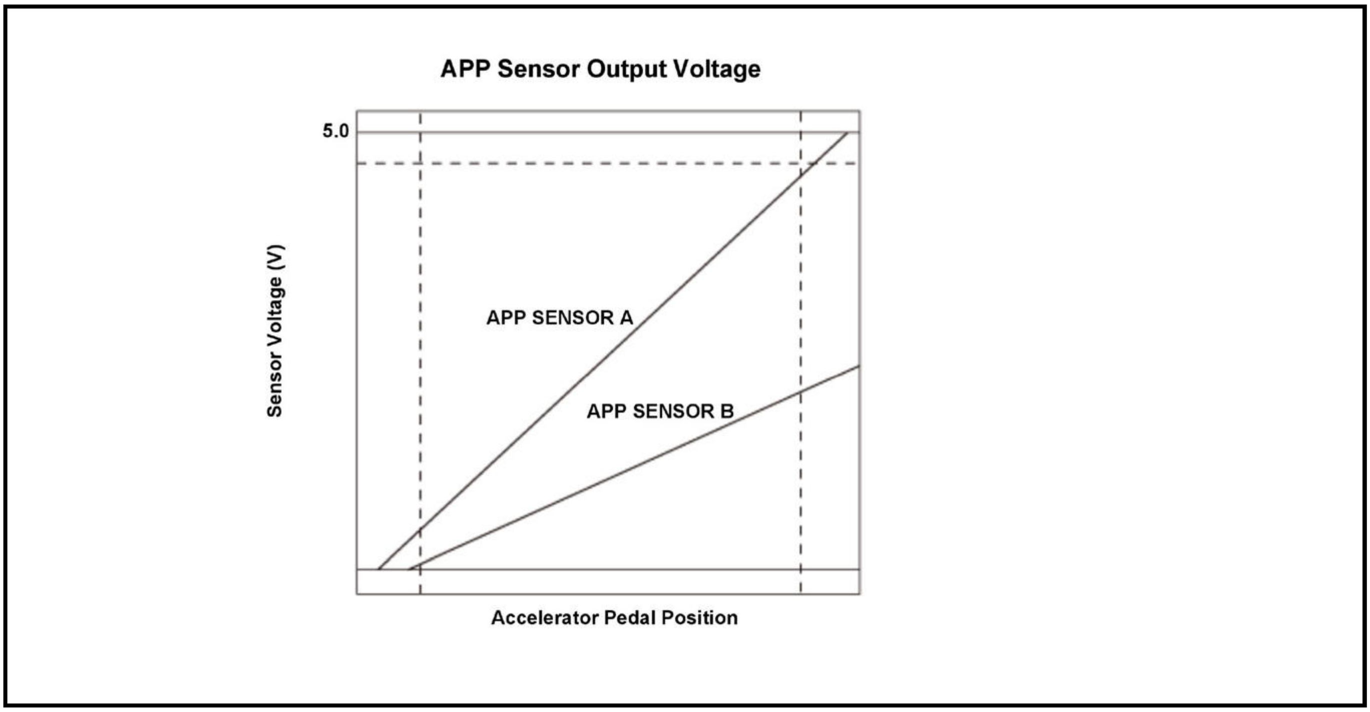

Accelerator pedal position (APP) sensor A and accelerator pedal position (APP) sensor B are potentiometers. They are installed on the accelerator pedal. When the accelerator pedal is pressed, APP sensors A and B detect the accelerator pedal opening value. The accelerator pedal opening value is converted to a signal in APP sensors A and B and transmitted to the powertrain control module (PCM) to compute the target position. APP sensor A is the primary control, and APP sensor B is a back-up of APP sensor A in case it malfunctions. Both sensors compare their output voltage to each other for malfunction detection. When the voltage difference of APP sensor B is out of a fixed range for a set time, the PCM detects a malfunction and stores a DTC.

Monitor Execution, Sequence, Duration, DTC Type

Execution	Continuous
Sequence	None
Duration	300 milliseconds or more

DTC Type	One drive cycle, MIL on

Enable Conditions

Condition	B
Vehicle	ON mode

Malfunction Threshold

One of these conditions is met for at least 300 milliseconds:

- The APP sensor B voltage [APP SENSOR B] is 0 V or less, or 0.37 V or more when APP sensor A voltage [APP SENSOR A] is 0.37 V.
- The APP sensor B voltage [APP SENSOR B] is 2.31 V or less, or 2.69 V or more when APP sensor A voltage [APP SENSOR A] is 5.0 V.

[ ]: HDS Parameter

Possible Cause

NOTE: The causes shown may not be a complete list of all potential problems, and it is possible that there may be other causes.

- APP sensor A/B failure
- APP sensor A APS1 line short to APP sensor B APS2 line
- PCM internal circuit failure

Diagnosis Details

Conditions for setting the DTC

When a malfunction is detected, the MIL comes on and a Pending DTC, a Confirmed DTC, and the freeze data are stored in the PCM memory.

Conditions for clearing the DTC

The MIL is cleared if the malfunction does not return in three consecutive trips in which the diagnostic runs. The MIL, the Pending DTC, the Confirmed DTC, and the freeze data can be cleared with the scan tool Clear command or by disconnecting the 12 volt battery.

DTC P2138 (2.4 L ENGINE) (2017 2018 2019)

DTC P2138: Accelerator pedal position (APP) Sensor A/B (Throttle Position (TP) Sensor D/E) Incorrect Voltage Correlation

General Description

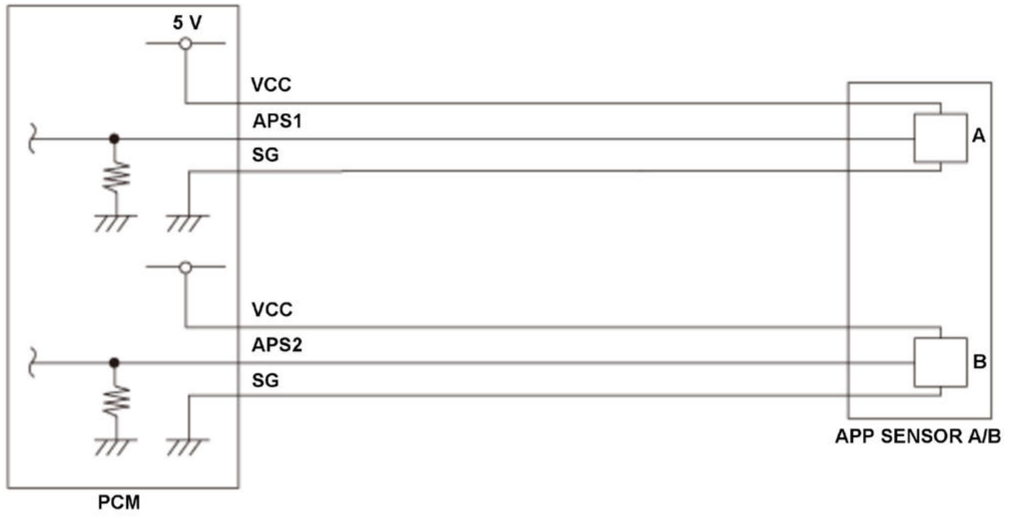

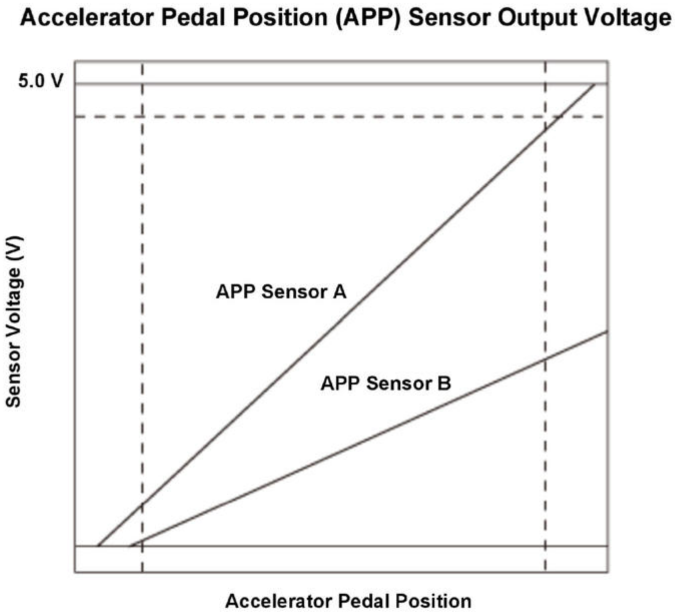

Accelerator pedal position (APP) sensor A and accelerator pedal position (APP) sensor B are potentiometers. They are installed on the accelerator pedal. When the accelerator pedal is pressed, APP sensors A and B detect the accelerator pedal opening value. The accelerator pedal opening value is converted to a signal in APP sensors A and B and transmitted to the powertrain control module (PCM) to compute the target position. APP sensor A is the primary control, and APP sensor B is a back-up of APP sensor A in case it malfunctions. Both sensors compare their output voltage to each other for malfunction detection. When the voltage difference of APP sensor B is out of a fixed range for a set time, the PCM detects a malfunction and stores a DTC.

Monitor Execution, Sequence, Duration, DTC Type

Execution	Continuous
Sequence	None
Duration	300 milliseconds or more

DTC Type	One drive cycle, MIL on

Enable Conditions

Condition	B
Vehicle	ON mode

Malfunction Threshold

One of these conditions is met for at least 300 milliseconds:

- The APP sensor B voltage [APP SENSOR B] is 0 V or less, or 0.37 V or more when the APP sensor A voltage [APP SENSOR A] is 0.37 V.
- The APP sensor B voltage [APP SENSOR B] is 2.31 V or less, or 2.69 V or more when the APP sensor A voltage [APP SENSOR A] is 5.0 V.

[ ]: HDS Parameter

Possible Cause

NOTE: The causes shown may not be a complete list of all potential problems, and it is possible that there may be other causes.

- APP sensor failure
- APP sensor A APS1 line short to APP sensor B APS2 line
- PCM internal circuit failure

Diagnosis Details

Conditions for setting the DTC

When a malfunction is detected, the MIL comes on and a Pending DTC, a Confirmed DTC, and the freeze data are stored in the PCM memory.

Conditions for clearing the DTC

The MIL is cleared if the malfunction does not return in three consecutive trips in which the diagnostic runs. The MIL, the Pending DTC, the Confirmed DTC, and the freeze data can be cleared with the scan tool Clear command or by disconnecting the 12 volt battery.

DTC P2148 (1.5 L ENGINE)

DTC P2148: Injector Power Supply Circuit Malfunction

General Description

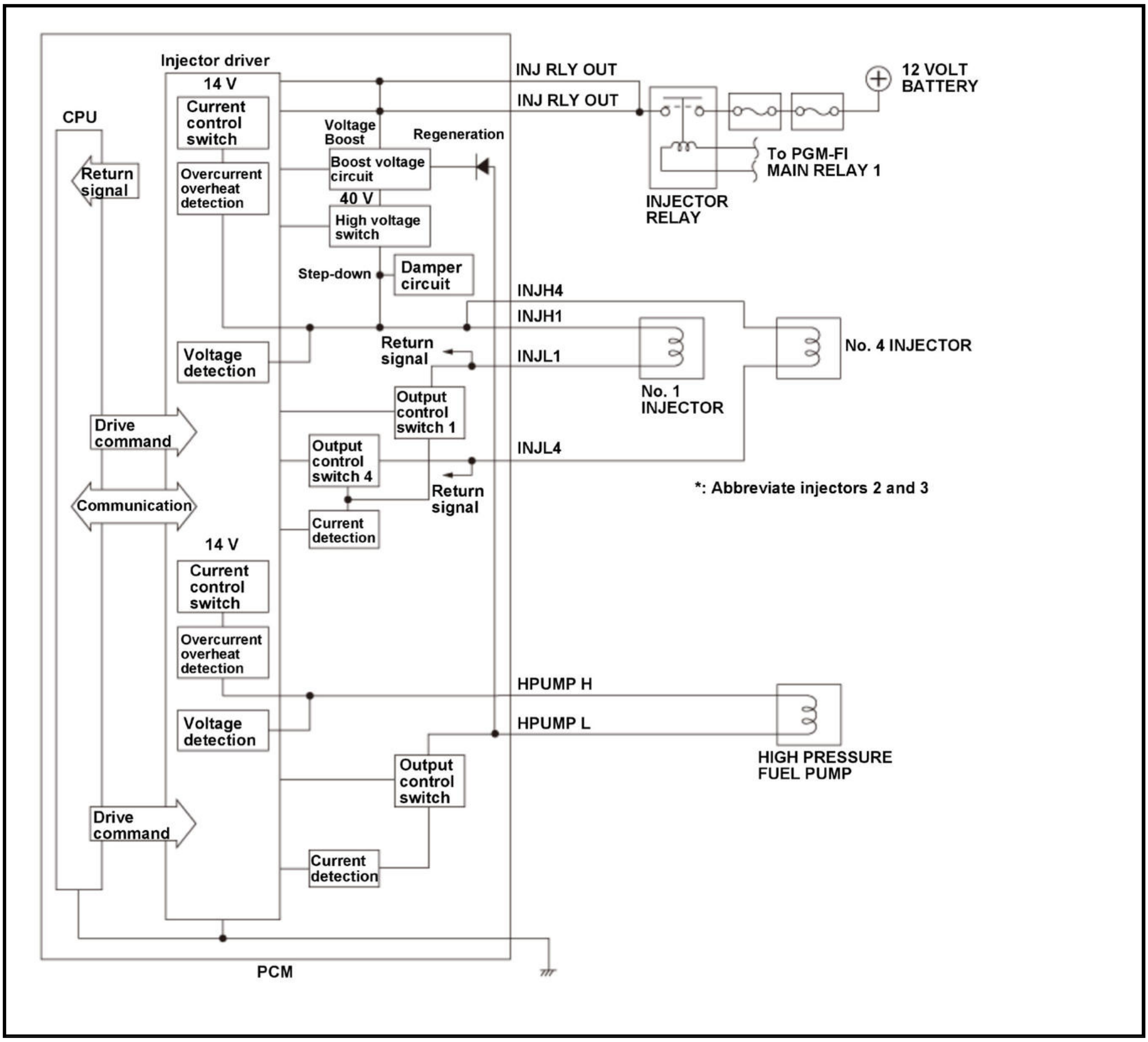
Injector driver
14 V
CPU
Current control switch
Overcurrent overheat detection
Return signal
Voltage Boost
Regeneration
Boost voltage circuit
40 V
High voltage switch
Step-down
Damper circuit
INJ RLY OUT
INJ RLY OUT
12 VOLT BATTERY
To PGM-FI MAIN RELAY 1
INJECTOR RELAY
INJH4
INJH1
INJL1
INJL4
Return signal
No. 1 INJECTOR
No. 4 INJECTOR
*: Abbreviate injectors 2 and 3
Voltage detection
Output control switch 1
Output control switch 4
Return signal
Drive command
Communication
Current detection
14 V
Current control switch
Overcurrent overheat detection
Voltage detection
HPUMP H
HPUMP L
HIGH PRESSURE FUEL PUMP
Output control switch
Drive command
Current detection
PCM

The powertrain control module (PCM) uses main CPU power and regenerative energy generated from the high pressure fuel pump to supply the boost voltage for the direct injector. The damper circuit built into the PCM lowers the voltage when the boosted voltage is too high. If the boosted voltage is a specified voltage for a specified time, the PCM detects a malfunction and stores a DTC.

Monitor Execution, Sequence, Duration, DTC Type

Execution	Continuous
Sequence	None
Duration	0.03 seconds or more
DTC Type	Two drive cycles, MIL on

Enable Conditions

Condition	B
Vehicle	ON mode

Malfunction Threshold

The boosted voltage is 54 V or more for at least 0.03 seconds.

Possible Cause

NOTE: The causes shown may not be a complete list of all potential problems, and it is possible that there may be other causes.

- PCM internal circuit failure

Diagnosis Details

Conditions for setting the DTC

When a malfunction is detected during the first drive cycle, a Pending DTC is stored in the PCM memory. If the malfunction returns in the next (second) drive cycle, the MIL comes on and a Confirmed DTC and the freeze data are stored.

Conditions for clearing the DTC

The MIL is cleared if the malfunction does not return in three consecutive trips in which the diagnostic runs. The MIL, the Pending DTC, the Confirmed DTC, and the freeze data can be cleared with the scan tool Clear command or by disconnecting the 12 volt battery.

DTC P2175 (1.5 L ENGINE) (2020 2021)

DTC P2175: Throttle Actuator Control System Low Air Flow Detected

General Description

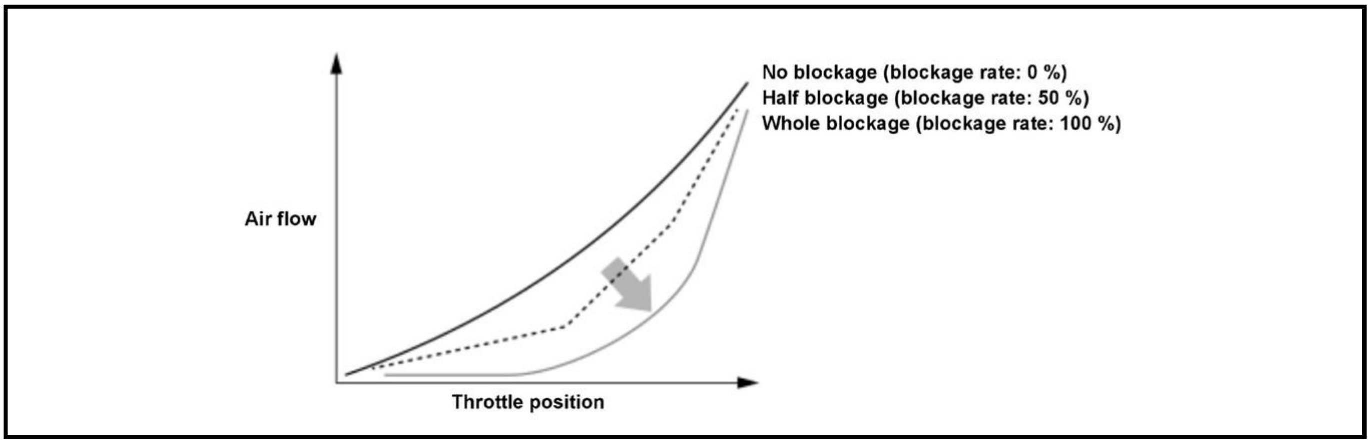

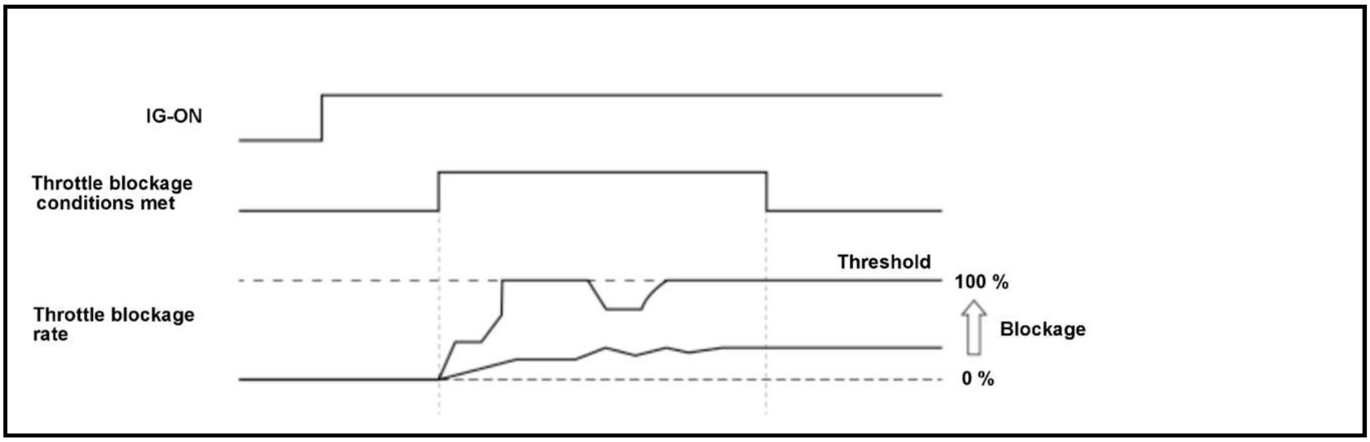

When the throttle body blockage occurs, the air flow decreases compared to a predetermined value per throttle position. From this characteristic, the powertrain control module (PCM) presumes a blockage of the throttle body. If the throttle body blockage rate reaches 100 % of the predetermined threshold, a malfunction is detected and a DTC is stored.

Monitor Execution, Sequence, Duration, DTC Type

Execution	Continuous

Sequence	None
Duration	0.5 second or more
DTC Type	Two drive cycles, MIL on

Enable Conditions

Condition	B
Other	At idle

Malfunction Threshold

The throttle body blockage rate is 1.0 or more.

Possible Cause

NOTE: The causes shown may not be a complete list of all potential problems, and it is possible that there may be other causes.

- Throttle body blockage
- Air cleaner blocked

Confirmation Procedure

Operating Condition

- Start the engine. Hold the engine speed [Engine Speed] at 3, 000 rpm without load (in P or N) until the radiator fan comes on.
- Turn the vehicle to the OFF (LOCK) mode.
- Start the engine and let it idle for at least 1 minute.
- Repeat Driving Pattern steps 2 through 3, 20 times.
- Start the engine and let it idle for at least 10 minutes.

Diagnosis Details

Conditions for setting the DTC

When a malfunction is detected during the first drive cycle, a Pending DTC is stored in the PCM memory. If the malfunction returns in the next (second) drive cycle, the MIL comes on and a Confirmed DTC and the freeze data are stored.

Conditions for clearing the DTC

The MIL is cleared if the malfunction does not return in three consecutive trips in which the diagnostic runs. The MIL, the Pending DTC, the Confirmed DTC, and the freeze data can be cleared with the scan tool Clear command or by disconnecting the 12 volt battery.

DTC P2176 (1.5 L ENGINE)

DTC P2176: Throttle Actuator Control System Idle Position Not Learned

General Description

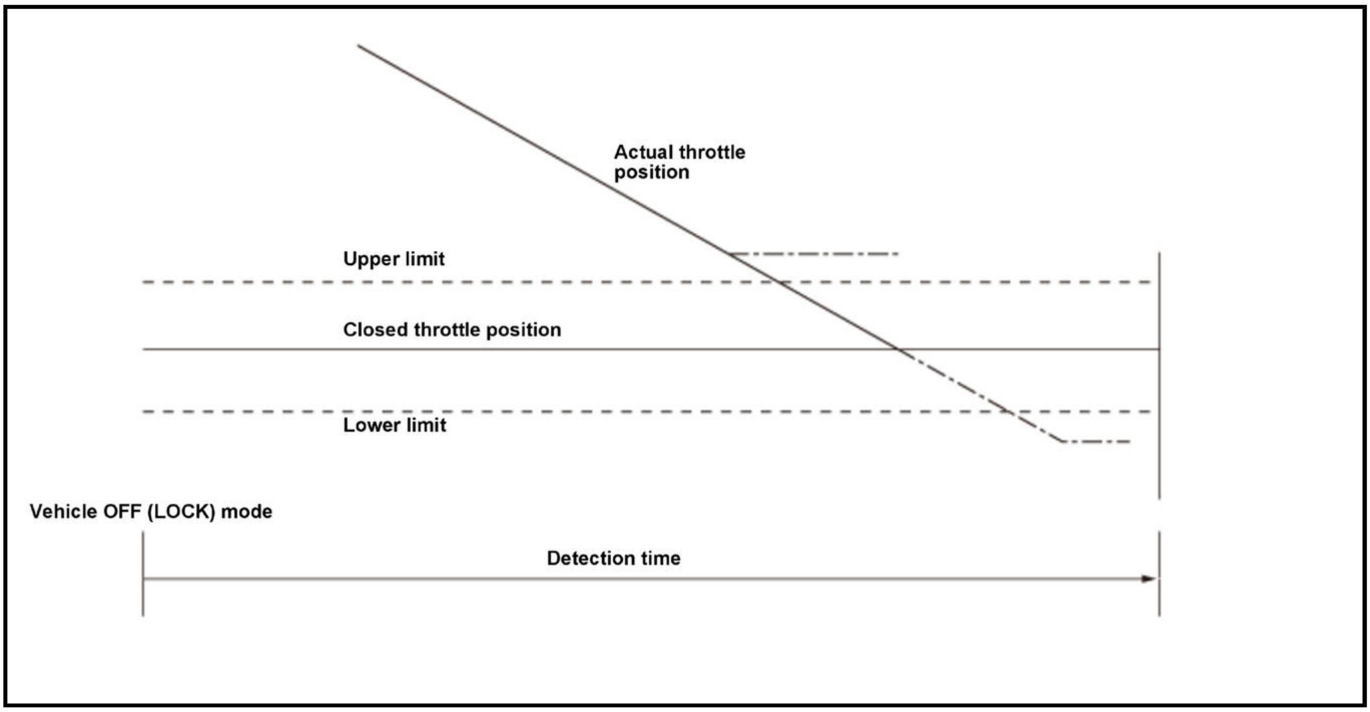

The electronic throttle control system controls the throttle valve opening. The system includes the throttle actuator, the throttle valve, throttle position (TP) sensors A and B, the electronic throttle control system (ETCS) control relay, the accelerator pedal position (APP) sensor A/B, and the powertrain control module (PCM). When the accelerator pedal is pressed, the APP sensor A/B detects the accelerator pedal opening value. The accelerator pedal opening value is converted to a signal in the APP sensor A/B and transmitted to the PCM to compute the target position. The PCM determines the throttle valve target position according to the signal received and operates the throttle actuator to move the throttle valve to the target position. The actual throttle valve position is determined by TP sensors A and B (installed in the throttle body). The PCM transmits a signal to the throttle actuator and moves the throttle valve to the fully closed position to register the throttle valve fully closed position after the vehicle is turned to the OFF (LOCK) mode. When the registration of the throttle valve fully closed position is not completed within a predetermined time after the vehicle is turned to the OFF (LOCK) mode, also the registered value is out of predetermined range, the PCM detects a malfunction in the electronic throttle control system and stores a DTC.

Monitor Execution, Sequence, Duration, DTC Type

Execution	Once per driving cycle
Sequence	None
Duration	2.0 seconds or more
DTC Type	One drive cycle, MIL on

Enable Conditions

Condition	Minimum	Maximum
12 volt battery voltage [BATTERY]	6.0 V	-
Vehicle	OFF (LOCK) mode	

[ ]: HDS Parameter

Malfunction Threshold

One of these conditions is met, when the registration of the throttle valve fully closed position is not completed for at least 2.0 seconds after the vehicle condition is turned to the OFF (LOCK) mode:

- The registered value of the throttle valve fully closed position is more than 1.02 V, or less than 0.49 V.*

- The registered value of the throttle valve fully closed position is more than 4.51 V, or less than 3.98 V.**

*: TP sensor A [TP SENSOR A]

**: TP sensor B [TP SENSOR B]

[ ]: HDS Parameter

Possible Cause

NOTE: The causes shown may not be a complete list of all potential problems, and it is possible that there may be other causes.

- PCM internal circuit failure
- Throttle actuator MTR1 line failure
- Throttle actuator MTR2 line failure
- Throttle body internal failure

Diagnosis Details

Conditions for setting the DTC

When a malfunction is detected, the MIL comes on and a Pending DTC, a Confirmed DTC, and the freeze data are stored in the PCM memory.

Conditions for clearing the DTC

The MIL is cleared if the malfunction does not return in three consecutive trips in which the diagnostic runs. The MIL, the Pending DTC, the Confirmed DTC, and the freeze data can be cleared with the scan tool Clear command or by disconnecting the 12 volt battery.

DTC P2176 (2.4 L ENGINE) (2017 2018 2019)

DTC P2176: Throttle Actuator Control System Idle Position Not Learned

General Description

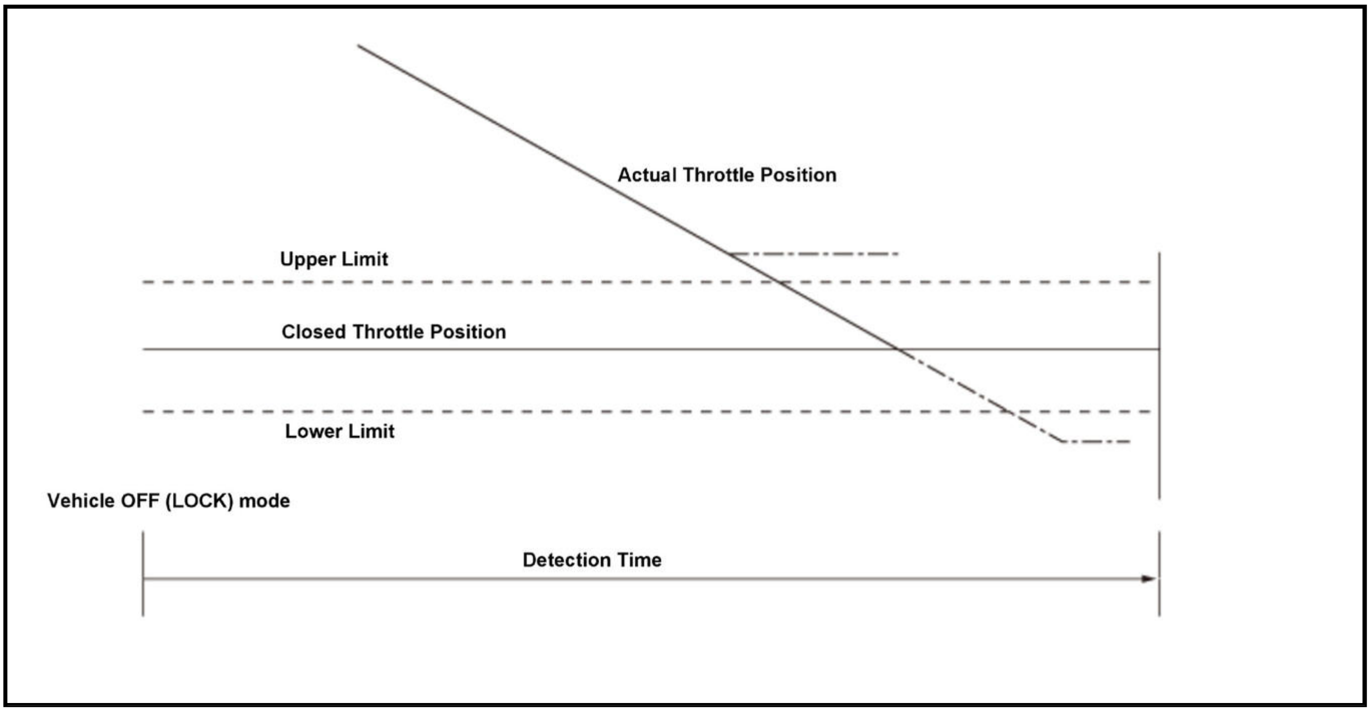
Actual Throttle Position
Upper Limit
Closed Throttle Position
Lower Limit
Vehicle OFF (LOCK) mode
Detection Time

The electronic throttle control system controls the throttle valve opening. The system includes the throttle actuator, the throttle valve, throttle position (TP) sensors A and B, the electronic throttle control system (ETCS) control relay, the accelerator pedal position (APP) sensor, and the powertrain control module (PCM). When the accelerator pedal is pressed, the APP sensor detects the accelerator pedal opening value. The accelerator pedal opening value is converted to a signal in the APP sensor and transmitted to the PCM to compute the target position. The PCM determines the throttle valve target position according to the signal received and operates the throttle actuator to move the throttle valve to the target position. The actual throttle valve position is determined by TP sensors A and B (installed in the throttle body). The PCM transmits a signal to the throttle actuator and moves the throttle valve to the fully closed position to register the throttle valve fully closed position after the vehicle condition is turned to the OFF (LOCK) mode. When the registration of the throttle valve fully closed position is not completed within a predetermined time or the registered value is out of predetermined range after the vehicle condition is turned to the OFF (LOCK) mode, the PCM detects a malfunction in the electronic throttle control system and stores a DTC.

Monitor Execution, Sequence, Duration, DTC Type

Execution	Once per driving cycle
Sequence	None
Duration	2.0 seconds or more
DTC Type	One drive cycle, MIL on

Enable Conditions

Condition	Minimum	Maximum
12 volt battery voltage [BATTERY]	6.0 V	-
Vehicle	OFF mode	

[ ]: HDS Parameter

Malfunction Threshold

One of these conditions is met for at least 2.0 seconds:

- The registration of the throttle valve fully closed position is not completed within a predetermined time after the vehicle condition is turned to the OFF (LOCK) mode.
- The registered value of the throttle valve fully closed position is 0.74* (1.61)** V or more, or 0.49* (1.37)** V or less.

*: TP sensor A [TP SENSOR A]

**: TP sensor B [TP SENSOR B]

Possible Cause

NOTE: The causes shown may not be a complete list of all potential problems, and it is possible that there may be other causes.

- Throttle actuator MTR1 line failure
- Throttle actuator MTR2 line failure
- Throttle actuator failure
- TP sensor A/B failure
- Throttle body failure
- PCM failure

Diagnosis Details

Conditions for setting the DTC

When a malfunction is detected, the MIL comes on and a Pending DTC, a Confirmed DTC, and the freeze data are stored in the PCM memory.

Conditions for clearing the DTC

The MIL is cleared if the malfunction does not return in three consecutive trips in which the diagnostic runs. The MIL, the Pending DTC, the Confirmed DTC, and the freeze data can be cleared with the scan tool Clear command or by disconnecting the 12 volt battery.

DTC P2182 (1.5 L ENGINE) (2018 2019 2020 2021)

DTC P2182: Engine Coolant Temperature (ECT) Sensor 2 Out of Range

General Description

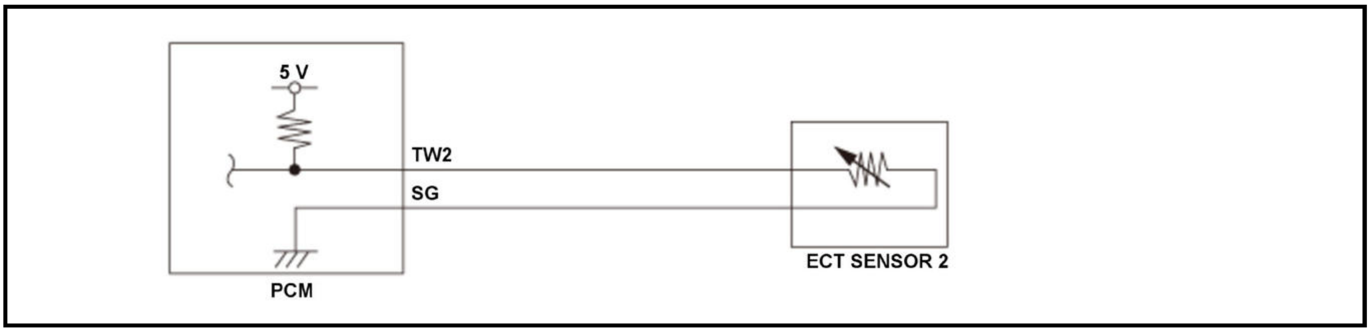

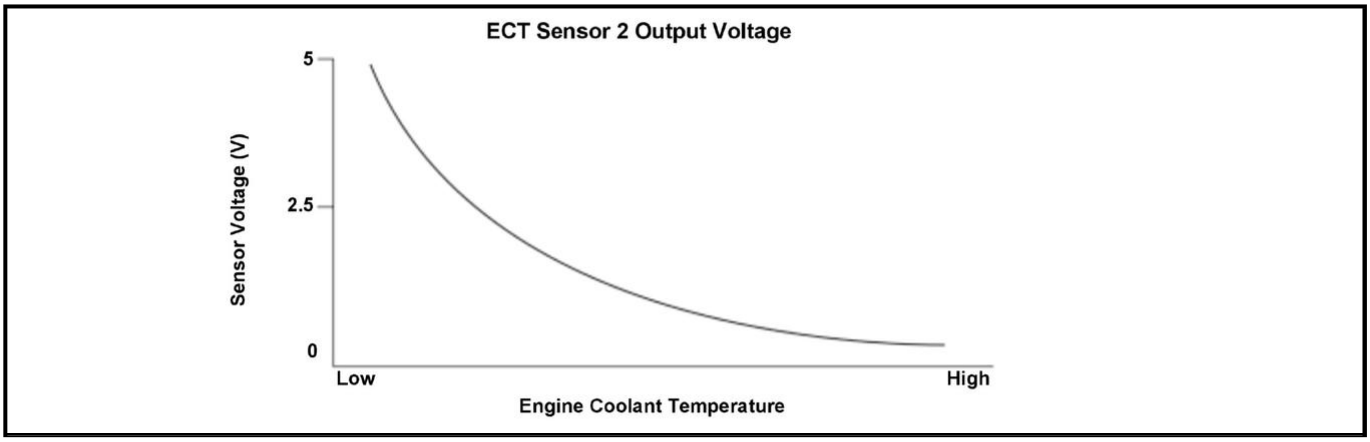

Engine coolant temperature (ECT) sensor 2 is a thermistor attached to the radiator. The powertrain control module (PCM) applies voltage (about 5 V) to the TW2 signal circuit through a pull-up resistor. As the engine coolant temperature cools, the ECT sensor 2 resistance increases, and the PCM detects a high signal voltage. As the engine coolant warms, the ECT sensor 2 resistance decreases, and the PCM detects a low signal voltage. If the ECT sensor 2 output voltage is a set value, the PCM detects a malfunction and stores a DTC.

Monitor Execution, Sequence, Duration, DTC Type

Execution	Continuous
Sequence	None
Duration	6.0 seconds or more
DTC Type	Two drive cycles, MIL on

Enable Conditions

Condition	B
Vehicle	ON mode

Malfunction Threshold

The ECT sensor 2 output voltage [ECT SENSOR 2] is 0.14 V or less, or 4.99 V or more for at least 6.0 seconds.

[ ]: HDS Parameter

Possible Cause

NOTE: The causes shown may not be a complete list of all potential problems, and it is possible that there may be other causes.

- ECT sensor 2 failure
- PCM internal circuit failure

Diagnosis Details

Conditions for setting the DTC

When a malfunction is detected during the first drive cycle, a Pending DTC is stored in the PCM memory. If the malfunction returns in the next (second) drive cycle, the MIL comes on and a Confirmed DTC, the freeze data, and the on-board snapshot are stored.

Conditions for clearing the DTC

The MIL is cleared if the malfunction does not return in three consecutive trips in which the diagnostic runs. The MIL, the Pending DTC, the Confirmed DTC, the freeze data, and the on-board snapshot can be cleared with the scan tool Clear command or by disconnecting the 12 volt battery.

DTC P2182 (2.4 L ENGINE) (2018 2019)

DTC P2182: Engine Coolant Temperature (ECT) Sensor 2 Out of Range

General Description

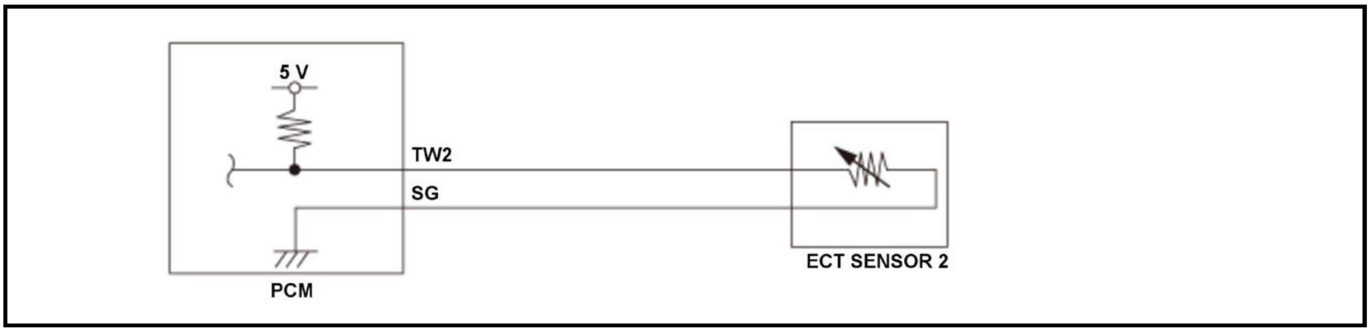

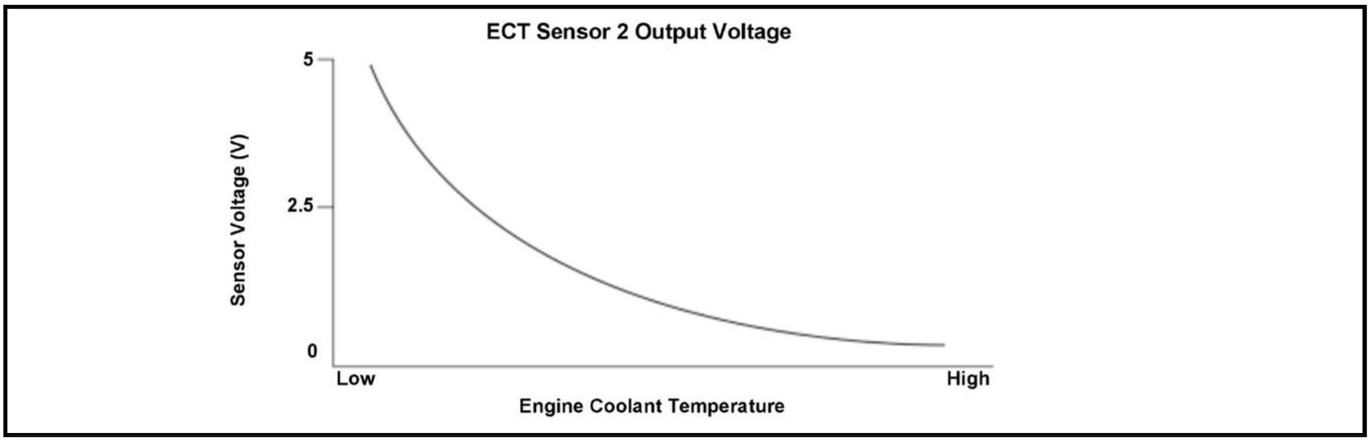

Engine coolant temperature (ECT) sensor 2 is a thermistor attached to the radiator. The powertrain control module (PCM) applies voltage (about 5 V) to the TW2 signal circuit through a pull-up resistor. As the engine coolant temperature cools, the ECT sensor 2 resistance increases, and the PCM detects a high signal voltage. As the engine coolant warms, the ECT sensor 2 resistance decreases, and the PCM detects a low signal voltage. If the ECT sensor 2 output voltage is a set value, the PCM detects a malfunction and stores a DTC.

Monitor Execution, Sequence, Duration, DTC Type

Execution	Continuous
Sequence	None
Duration	6.0 seconds or more
DTC Type	Two drive cycles, MIL on

Enable Conditions

Condition	B
Vehicle	ON mode

Malfunction Threshold

The ECT sensor 2 output voltage [ECT SENSOR 2] is 0.14 V or less, or 4.92 V or more for at least 6.0 seconds.

[ ]: HDS Parameter

Possible Cause

NOTE: The causes shown may not be a complete list of all potential problems, and it is possible that there may be other causes.

- ECT sensor 2 failure
- PCM internal circuit failure

Diagnosis Details

Conditions for setting the DTC

When a malfunction is detected during the first drive cycle, a Pending DTC is stored in the PCM memory. If the malfunction returns in the next (second) drive cycle, the MIL comes on and a Confirmed DTC, the freeze data, and the on-board snapshot are stored.

Conditions for clearing the DTC

The MIL is cleared if the malfunction does not return in three consecutive trips in which the diagnostic runs. The MIL, the Pending DTC, the Confirmed DTC, the freeze data, and the on-board snapshot can be cleared with the scan tool Clear command or by disconnecting the 12 volt battery.

DTC P2183 (1.5 L ENGINE)

DTC P2183: Engine Coolant Temperature (ECT) Sensor 2 Circuit Range/Performance Problem

General Description

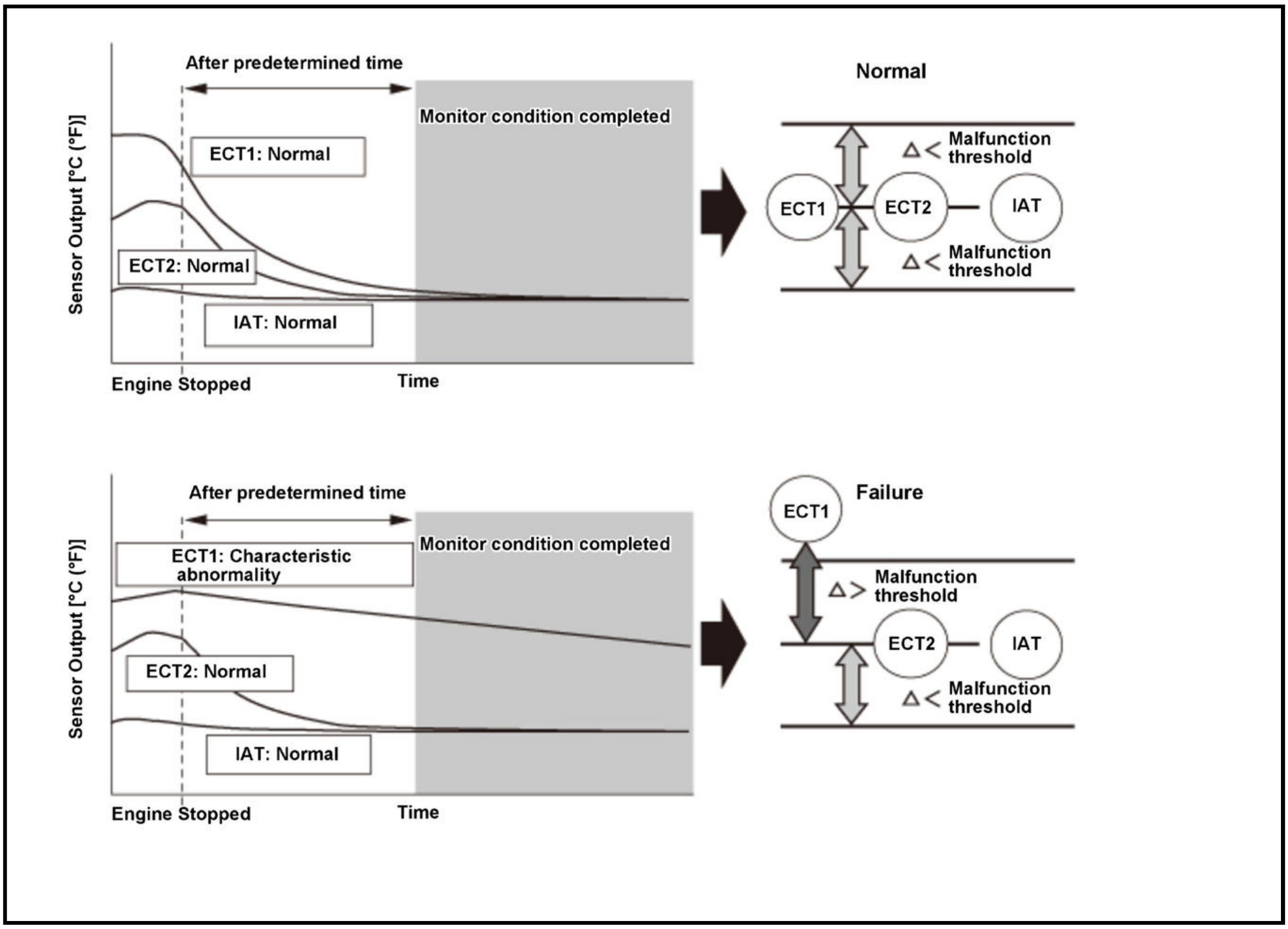
After predetermined time
Monitor condition completed
Sensor Output [°C (°F)]
ECT1: Normal
ECT2: Normal
IAT: Normal
Engine Stopped
Time
Normal
ECT1
ECT2
IAT
Δ< Malfunction threshold
Δ< Malfunction threshold
After predetermined time
Monitor condition completed
ECT1: Characteristic abnormality
ECT2: Normal
IAT: Normal
Sensor Output [°C (°F)]
Engine Stopped
Time
Failure
ECT1
Δ> Malfunction threshold
ECT2
IAT
Δ< Malfunction threshold

Two engine coolant temperature (ECT) sensors and one intake air temperature (IAT) sensor are used by the powertrain control module (PCM). When the engine is stopped and enough time has passed, the temperature of the engine will equalize to ambient temperature. ECT sensor 1 and IAT sensor are compared to ECT sensor 2, and if an inappropriate temperature is read, the PCM detects a malfunction in the corresponding sensor and stores a DTC.

Monitor Execution, Sequence, Duration, DTC Type

Execution	Once per driving cycle
Sequence	None
Duration	10 seconds or more
DTC Type	Two drive cycles, MIL on

*: After the system is activated

**: After the engine is started

Enable Conditions

Condition	Minimum	Maximum
Engine off time	6 hours	-

Malfunction Threshold

A malfunction is detected if the following conditions are present after the engine has stopped and the vehicle condition has been turned to the OFF (LOCK) mode, for at least 6 hours before restarting the engine:

Temperature difference between each sensor values		Malfunction judgment		
ECT1* - ECT2**	**IAT*** - ECT2****	**ECT sensor 1**	**IAT sensor**	**ECT sensor 2**
Higher than 32 deg. C (57 deg. F)	Higher than 57 deg. F (32 deg. C)	Normal	Normal	Failure
	From -43 deg. F (-24 deg. C) to 57 deg. F (32 deg. C)	Failure	Normal	Normal
	Lower than -43 deg. F (-24 deg. C)	Failure	Failure	Normal
From -24 deg. C (-43 deg. F) to 32 deg. C (57 deg. F)	Higher than 57 deg. F (32 deg. C)	Normal	Failure	Normal
	From -43 deg. F (-24 deg. C) to 57 deg. F (32 deg. C)	Normal	Normal	Normal
	From -44 deg. F (-25 deg. C) to -108 deg. F (-60 deg. C)	Normal	Failure	Normal
			Suspended****	
	Lower than -108 deg. F (-60 deg. C)	Normal	Failure	Normal
Lower than -24 deg. C (-43 deg. F)	Higher than 57 deg. F (32 deg. C)	Failure	Failure	Normal
	From -43 deg. F (-24 deg. C) to 57 deg. F (32 deg. C)	Failure	Normal	Normal
	Lower than -43 deg. F (-24 deg. C)	Normal	Normal	Failure

*: [ECT SENSOR 1]

**: [ECT SENSOR 2]

***: [IAT Sensor (1)]

****: Malfunction judgment is suspended because the cooled air introduced after engine start lowers the intake air temperature; the ambient temperature condition does not stay equal.

Possible Cause

NOTE: The causes shown may not be a complete list of all potential problems, and it is possible that there may be other causes.

- ECT sensor 1 failure
- ECT sensor 2 failure
- IAT sensor failure
- Engine block heater attachment (non-genuine part)

Confirmation Procedure

Operating Condition

- Turn the vehicle to the OFF (LOCK) mode, and wait at least 6 hours.
- Enter the maintenance mode, then start the engine and let it idle for at least 10 seconds.

- Do not use an engine block heater because the engine coolant temperature will not stay equal during engine stop.

- When freeze data or the on-board snapshot is stored, test the vehicle under an ambient temperature close to the intake air temperature in the freeze data or the on-board snapshot.

With the HDS

None.

Diagnosis Details

Conditions for setting the DTC

When a malfunction is detected during the first drive cycle, a Pending DTC is stored in the PCM memory. If the malfunction returns in the next (second) drive cycle, the MIL comes on and a Confirmed DTC, the freeze data, and the on-board snapshot are stored.

Conditions for clearing the DTC

The MIL is cleared if the malfunction does not return in three consecutive trips in which the diagnostic runs. The MIL, the Pending DTC, the Confirmed DTC, the freeze data, and the on-board snapshot can be cleared with the scan tool Clear command or by disconnecting the 12 volt battery.

DTC P2183 (2.4 L ENGINE) (2017 2018 2019)

DTC P2183: Engine Coolant Temperature (ECT) Sensor 2 Circuit Range/Performance Problem

General Description

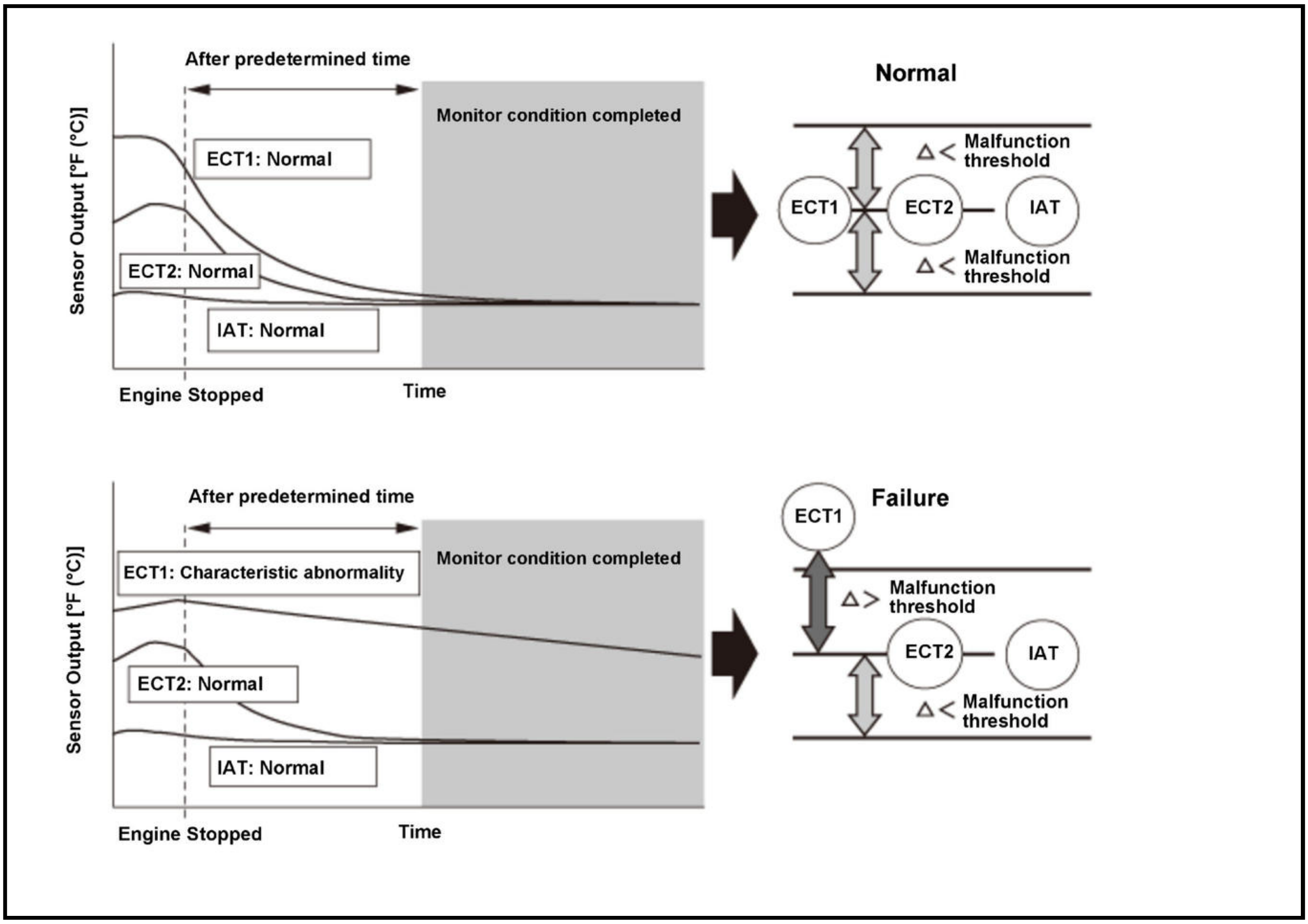
After predetermined time
Monitor condition completed
Sensor Output [°F (°C)]
ECT1: Normal
ECT2: Normal
IAT: Normal
Engine Stopped
Time
Normal
ECT1
ECT2
IAT
Δ< Malfunction threshold
Δ< Malfunction threshold
After predetermined time
Monitor condition completed
Sensor Output [°F (°C)]
ECT1: Characteristic abnormality
ECT2: Normal
IAT: Normal
Engine Stopped
Time
Failure
ECT1
Δ> Malfunction threshold
ECT2
IAT
Δ< Malfunction threshold

Two engine coolant temperature (ECT) sensors and one intake air temperature (IAT) sensor are used by the powertrain control module (PCM). When the engine is stopped and enough time has passed, the temperature of the engine will equalize to ambient temperature. ECT sensor 1 and IAT sensor are compared to ECT sensor 2, and if an inappropriate temperature is read, the PCM detects a malfunction in the corresponding sensor and stores a DTC.

Monitor Execution, Sequence, Duration, DTC Type

Execution	Once per driving cycle
Sequence	None
Duration	10 seconds or more
DTC Type	Two drive cycles, MIL on
OBD Status	PASSED/FAILED/NOT COMPLETED (STILL TESTING)

Enable Conditions

Condition	Minimum	Maximum
Engine off time	6 hours	-

Malfunction Threshold

A malfunction is detected if the following conditions are present after the engine has stopped and the vehicle condition has been turned to the OFF (LOCK) mode for at least 6 hours before restarting the engine:

Temperature difference between each sensor values		Malfunction judgment		
ECT1* - ECT2**	IAT*** - ECT2**	ECT sensor 1	IAT sensor	ECT sensor 2
Higher than 57 deg. F (32 deg. C)	Higher than 57 deg. F (32 deg. C)	Normal	Normal	Failure
	From -43 deg. F (-24 deg. C) to 57 deg. F (32 deg. C)	Failure	Normal	Normal
	Lower than -43 deg. F (-24 deg. C)	Failure	Failure	Normal
From -43 deg. F (-24 deg. C) to 57 deg. F (32 deg. C)	Higher than 57 deg. F (32 deg. C)	Normal	Failure	Normal
	From -43 deg. F (-24 deg. C) to 57 deg. F (32 deg. C)	Normal	Normal	Normal
	From -44 deg. F (-25 deg. C) to -108 deg. F (-60 deg. C)	Normal	Failure	Normal
			Suspended****	
	Lower than -108 deg. F (-60 deg. C)	Normal	Failure	Normal
Lower than -43 deg. F (-24 deg. C)	Higher than 57 deg. F (32 deg. C)	Failure	Failure	Normal
	From -43 deg. F (-24 deg. C) to 57 deg. F (32 deg. C)	Failure	Normal	Normal
	Lower than -43 deg. F (-24 deg. C)	Normal	Normal	Failure

*: [ECT SENSOR 1]

**: [ECT SENSOR 2]

***: [IAT SENSOR (1)]

****: Malfunction judgment is suspended because the cooled air introduced after engine start lowers the intake air temperature; the ambient temperature condition does not stay equal.

[ ]: HDS Parameter

Possible Cause

NOTE: The causes shown may not be a complete list of all potential problems, and it is possible that there may be other causes.

- ECT sensor 1 failure
- ECT sensor 2 failure
- IAT sensor failure
- Engine block heater attachment (non-genuine part)

Confirmation Procedure

With the HDS

None.

Operating Condition

- Turn the vehicle to the OFF (LOCK) mode, and wait at least 6 hours.
- Start the engine, and let it idle for at least 10 seconds.

- Do not use an engine block heater because the engine coolant temperature will not stay equal during engine stop.
- When freeze data is stored, test the vehicle under an ambient temperature close to the intake air temperature in the freeze data.
- When an ambient temperature extremely changes, malfunction judgment may not execute. Avoid extreme temperature changing condition after or before engine start. (When the vehicle is parked in the garage, open the shutter to introduce outside air; then start the engine.)

Diagnosis Details

Conditions for setting the DTC

When a malfunction is detected during the first drive cycle, a Pending DTC is stored in the PCM memory. If the malfunction returns in the next (second) drive cycle, the MIL comes on and a Confirmed DTC and the freeze data are stored.

Conditions for clearing the DTC

The MIL is cleared if the malfunction does not return in three consecutive trips in which the diagnostic runs. The MIL, the Pending DTC, the Confirmed DTC, and the freeze data can be cleared with the scan tool Clear command or by disconnecting the 12 volt battery.

DTC P2184, P2185 (1.5 L ENGINE)

DTC P2184: Engine coolant temperature (ECT) Sensor 2 Circuit Low Voltage **DTC P2185:** Engine coolant temperature ECT Sensor 2 Circuit High Voltage

General Description

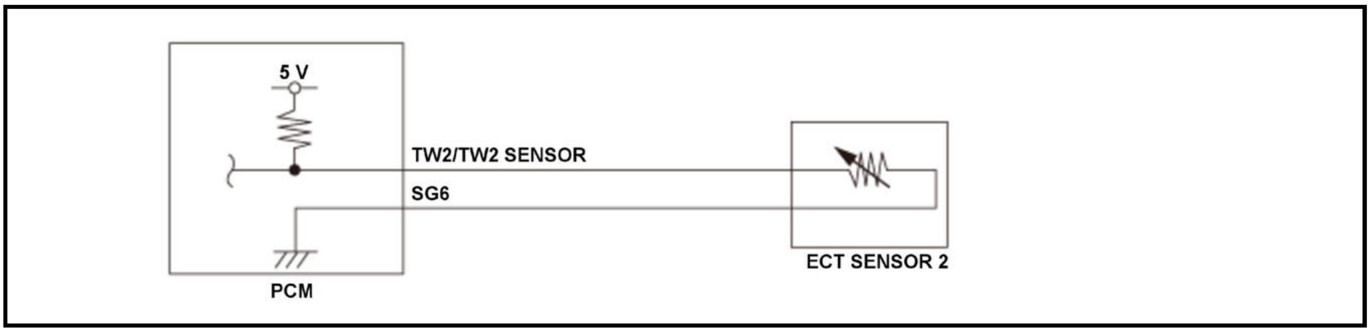

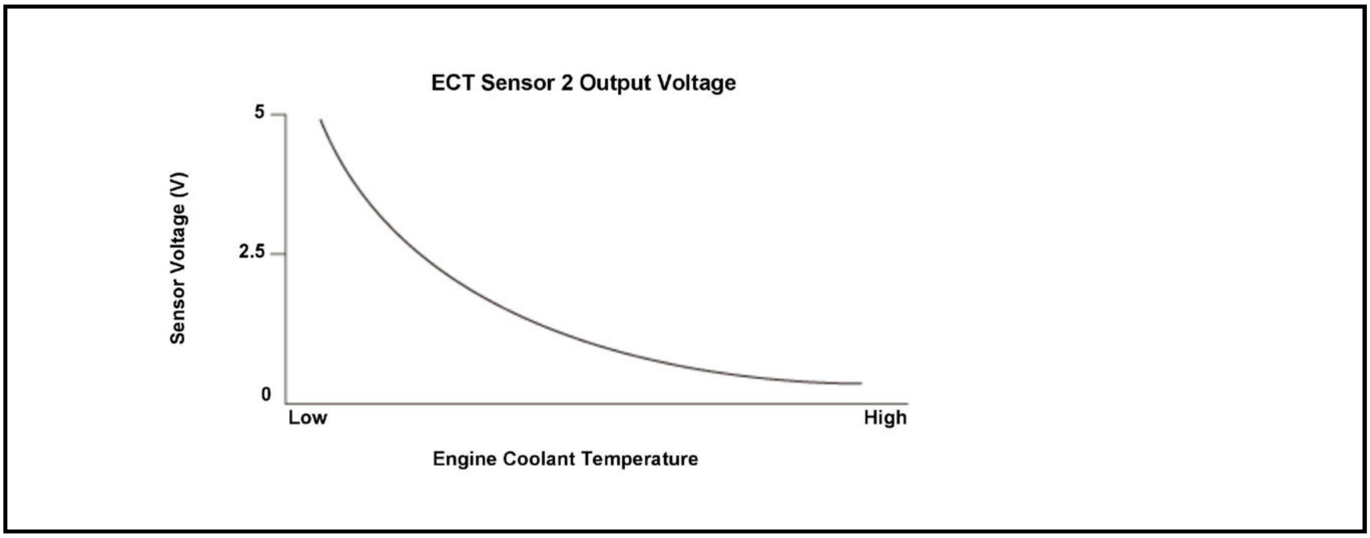

Engine coolant temperature (ECT) sensor 2 is a thermistor attached to the radiator. The powertrain control module (PCM) applies voltage (about 5 V) to the TW2 signal circuit through a pull-up resistor. As the engine coolant temperature cools, ECT sensor 2 resistance increases, and the PCM detects a high signal voltage. As the engine coolant warms, the sensor resistance decreases, and the PCM detects a low signal voltage. If the ECT sensor 2 output voltage is a set value when the engine coolant temperature is high or low, the PCM detects a malfunction and stores a DTC.

Monitor Execution, Sequence, Duration, DTC Type

Execution	Continuous
Sequence	None
Duration	2 seconds or more
DTC Type	Two drive cycles, MIL on

Enable Conditions

Condition	B
Vehicle	ON mode

Malfunction Threshold

DTC: P2184

The ECT sensor 2 output voltage [ECT SENSOR 2] is 0.08 V or less for at least 2 seconds.

DTC: P2185

The ECT sensor 2 output voltage [ECT SENSOR 2] is 4.92 V or more for at least 2 seconds.

[ ]: HDS Parameter

Possible Cause

NOTE: The causes shown may not be a complete list of all potential problems, and it is possible that there may be other causes.

DTC: P2184

- ECT sensor 2 TW2/TW2 SENSOR line short to ground

DTC: P2185

- ECT sensor 2 TW2/TW2 SENSOR line open
- ECT sensor 2 SG6 line open

Common

- ECT sensor 2 failure
- PCM internal circuit failure

Diagnosis Details

Conditions for setting the DTC

When a malfunction is detected during the first drive cycle, a Pending DTC is stored in the PCM memory. If the malfunction returns in the next (second) drive cycle, the MIL comes on and a Confirmed DTC and the freeze data are stored.

Conditions for clearing the DTC

The MIL is cleared if the malfunction does not return in three consecutive trips in which the diagnostic runs. The MIL, the Pending DTC, the Confirmed DTC, and the freeze data can be cleared with the scan tool Clear command or by disconnecting the 12 volt battery.

DTC P2184, P2185 (2.4 L ENGINE) (2017 2018 2019)

DTC P2184: Engine Coolant Temperature (ECT) Sensor 2 Circuit Low Voltage **DTC P2185:** Engine Coolant Temperature (ECT) Sensor 2 Circuit High Voltage

General Description

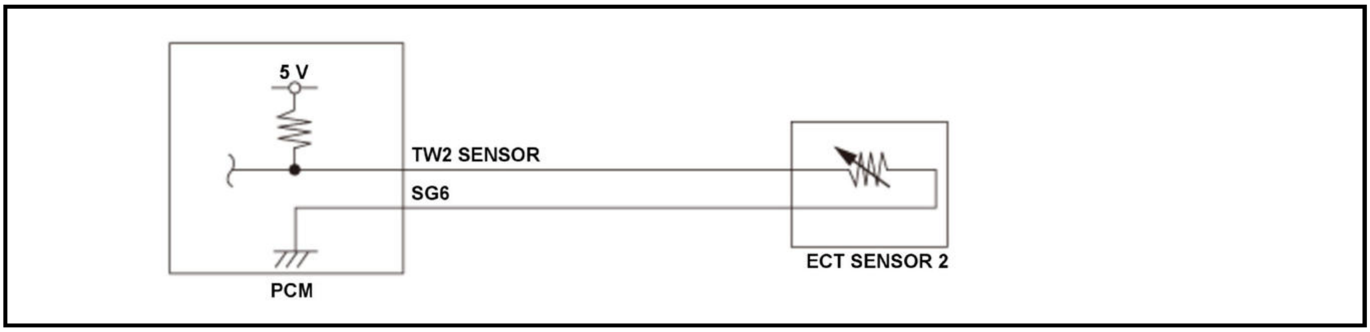

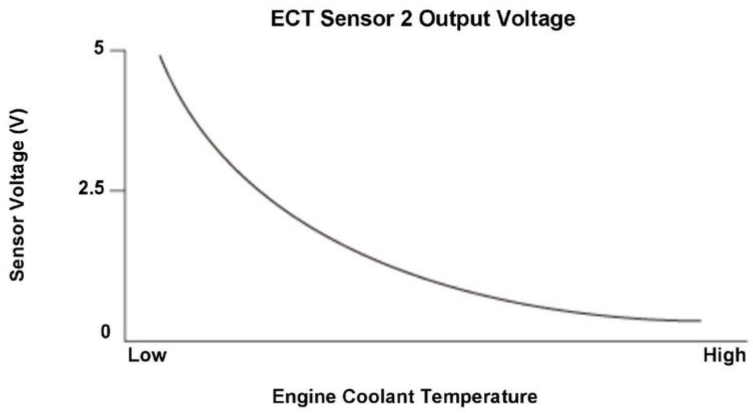

Engine coolant temperature (ECT) sensor 2 is a thermistor attached to the radiator. The powertrain control module (PCM) applies voltage (about 5 V) to the TW2 signal circuit through a pull-up resistor. As the engine coolant temperature cools, ECT sensor 2 resistance increases, and the PCM detects a high signal voltage. As the engine coolant warms, the sensor resistance decreases, and the PCM detects a low signal voltage. If the ECT sensor 2 output voltage is a set value when the engine coolant temperature is high or low, the PCM detects a malfunction and stores a DTC.

Monitor Execution, Sequence, Duration, DTC Type

Execution	Continuous
Sequence	None
Duration	2 seconds or more
DTC Type	Two drive cycles, MIL on

Enable Conditions

Condition	B
Vehicle	ON mode

Malfunction Threshold

DTC: P2184

The ECT sensor 2 output voltage [ECT SENSOR 2] is 0.08 V or less for at least 2 seconds.

DTC: P2185

The ECT sensor 2 output voltage [ECT SENSOR 2] is 4.92 V or more for at least 2 seconds.

[ ]: HDS Parameter

Possible Cause

NOTE: The causes shown may not be a complete list of all potential problems, and it is possible that there may be other causes.

DTC: P2184

- ECT sensor 2 TW2 SENSOR line short to ground

DTC: P2185

- ECT sensor 2 TW2 SENSOR line open
- ECT sensor 2 SG6 line open

Common

- ECT sensor 2 failure
- PCM internal circuit failure

Diagnosis Details

Conditions for setting the DTC

When a malfunction is detected during the first drive cycle, a Pending DTC is stored in the PCM memory. If the malfunction returns in the next (second) drive cycle, the MIL comes on and a Confirmed DTC and the freeze data are stored.

Conditions for clearing the DTC

The MIL is cleared if the malfunction does not return in three consecutive trips in which the diagnostic runs. The MIL, the Pending DTC, the Confirmed DTC, and the freeze data can be cleared with the scan tool Clear command or by disconnecting the 12 volt battery.

DTC P2187 (1.5 L ENGINE)

DTC P2187: Fuel System Too Lean at Idle

General Description

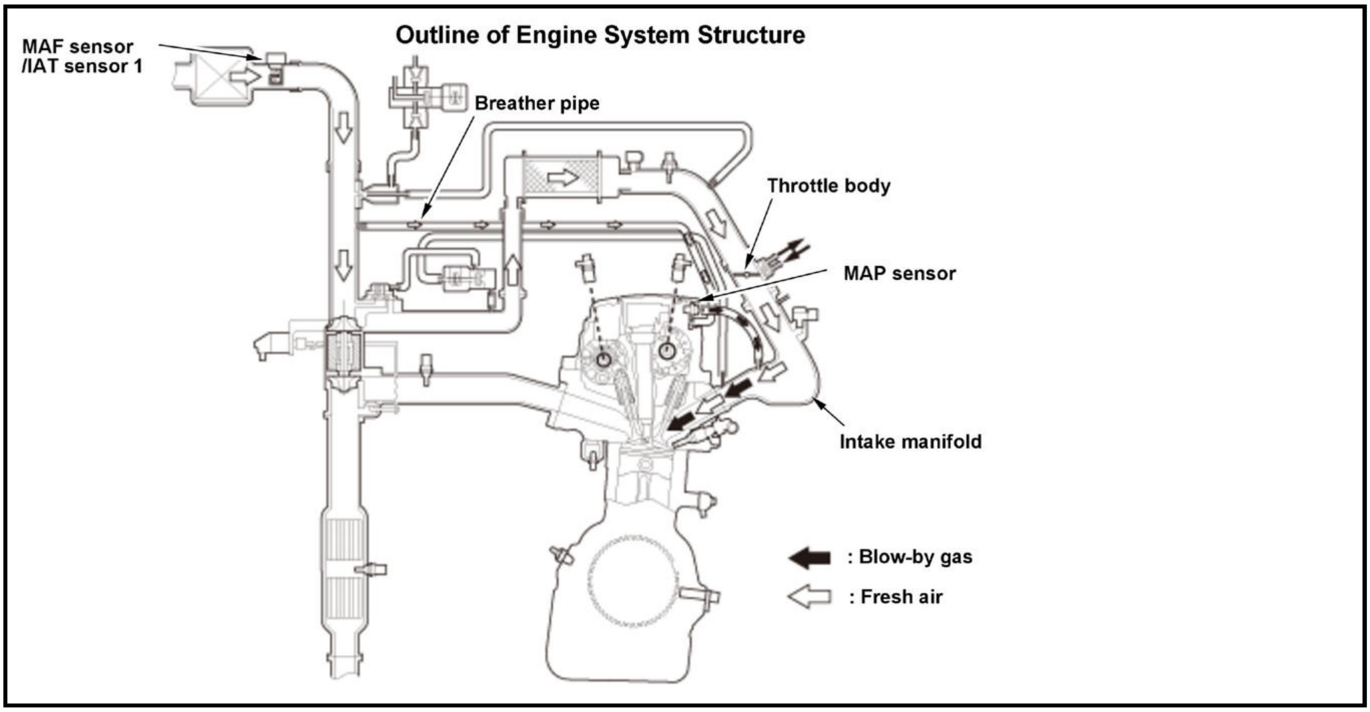
Outline of Engine System Structure
MAF sensor /IAT sensor 1
Breather pipe
Throttle body
MAP sensor
Intake manifold
: Blow-by gas
: Fresh air

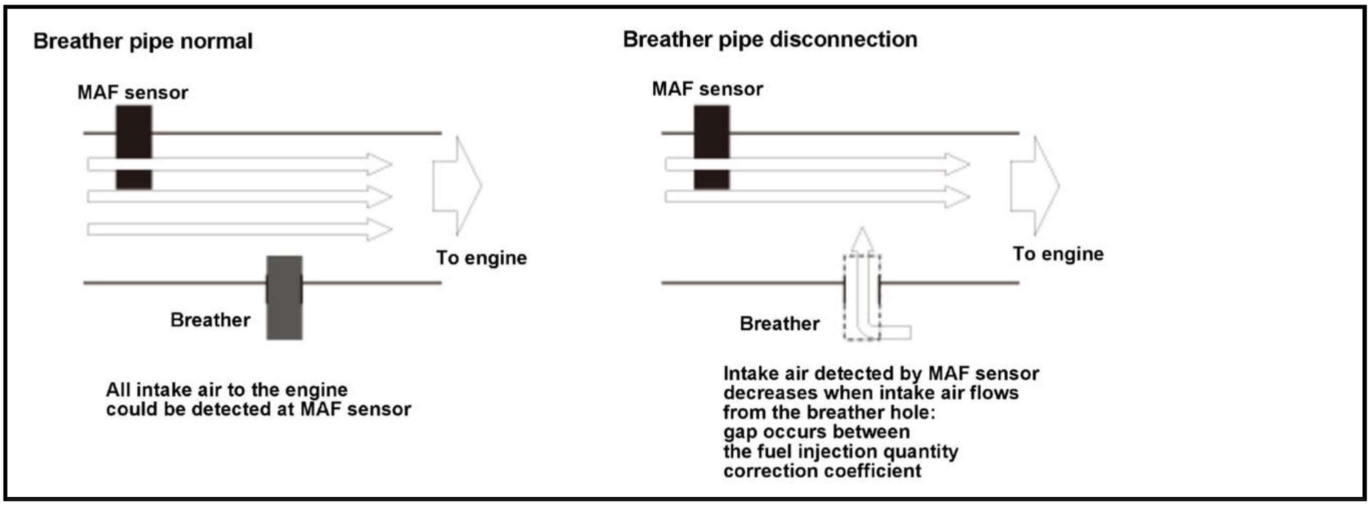
Breather pipe normal
MAF sensor
To engine
Breather
All intake air to the engine could be detected at MAF sensor
Breather pipe disconnection
MAF sensor
To engine
Breather
Intake air detected by MAF sensor decreases when intake air flows from the breather hole: gap occurs between the fuel injection quantity correction coefficient

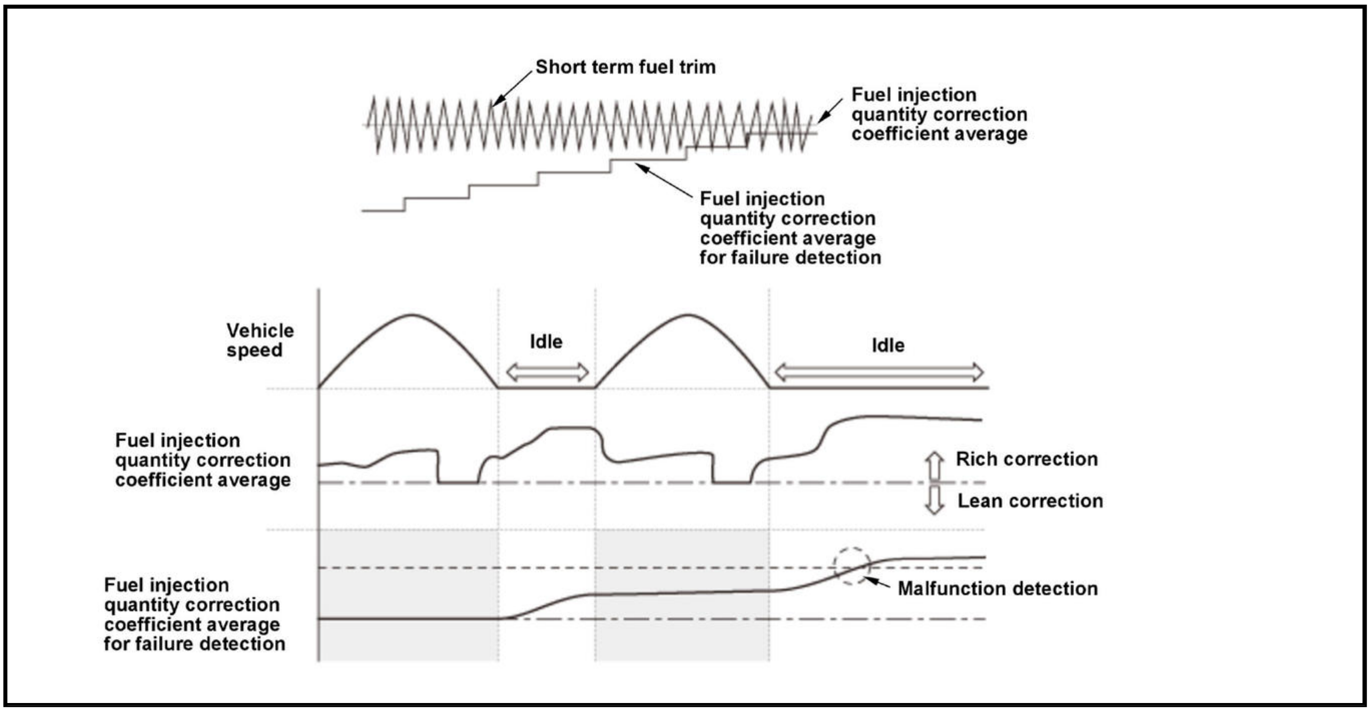

The powertrain control module (PCM) detects the oxygen content in the exhaust gas from the air/fuel ratio (A/F) sensor (sensor 1) signal voltage, and it uses fuel feedback control to maintain the optimal air/fuel ratio. The air/fuel ratio coefficient for correcting the amount of injected fuel is the short term fuel trim. The PCM varies short term fuel trim continuously to keep the air/fuel ratio close to the stoichiometric ratio for all driving conditions. In case the breather pipe is disconnected, air amount at the mass airflow (MAF) sensor decreases and basic fuel amount decreases; as a result, fuel injection quantity correction coefficient becomes larger to compensate the gap. This condition could be seen prominently at low load which the intake air amount is small. The detection of breather pipe disconnection is done by monitoring the gap which is determined by fuel injection quantity correction coefficient average during idle and continuously updating fuel injection quantity correction coefficient. If the fuel injection quantity correction coefficient exceeds a threshold value, the PCM detects a malfunction and stores a DTC. The purge is stopped by fuel injection quantity correction coefficient to exclude the influence of purging during the detection.

Monitor Execution, Sequence, Duration, DTC Type

Execution	Once per driving cycle*
Sequence	None
Duration	Every 7.0 seconds
DTC Type	Two drive cycles, MIL on

*: The malfunction judgment is cleared when it is judged as normal under the same driving conditions in which the malfunction is detected.

Enable Conditions

Condition	Minimum	Maximum
Engine coolant temperature [ECT SENSOR 1]	156 deg. F (69 deg. C)	-
Intake air temperature [IAT Sensor (1)]	18 deg. F (-7 deg. C)	-
MAP value [MAP SENSOR]	16 kPa (120 mmHg, 4.7 inHg)	-
Intake air amount	-	4.0 g/second (0.14 oz/second)
Fuel feedback	Closed loop	

[ ]: HDS Parameter

Malfunction Threshold

Long term fuel trim is 1.33 (+33 %) or more.

Possible Cause

NOTE: The causes shown may not be a complete list of all potential problems, and it is possible that there may be other causes.

- Fuel pump failure
- Fuel injector failure
- Fuel pressure regulator failure
- Fuel line failure
- Fuel supply system failure
- MAF sensor range/performance problem
- Manifold absolute pressure (MAP) sensor range/performance problem
- A/F sensor (sensor 1) failure
- Secondary HO2S (sensor 2) failure
- Vacuum hose misinstalled
- Throttle body air leak
- Intake manifold air leak
- EVAP canister purge valve failure
- Breather pipe disconnection

Confirmation Procedure

Operating Condition

- Start the engine. Hold the engine speed [ENGINE SPEED] at 3, 000 rpm without load (in P or N) until the radiator fan comes on.
- Drive at a steady speed between 15 - 75 mph (25 - 120 km/h) for at least 15 minutes, and watch the long term fuel trim. If the long term fuel trim stays at about 1.0, the vehicle is OK or it is a very minor problem. If a significant fault is still present, the long term fuel trim will move up or down while driving.
- When freeze data is stored, drive the vehicle under those conditions instead of Driving Pattern step 2.
- After clearing the DTC by disconnecting the 12 volt battery or using the scan tool, drive at steady speed between 15 - 55 mph (25 - 88 km/h) for at least 40 minutes to allow time for long term fuel trim to recover.
- Drive the vehicle in this manner only if the traffic regulations and ambient conditions allow.

With the HDS

None.

Diagnosis Details

Conditions for setting the DTC

When a malfunction is detected during the first drive cycle, a Pending DTC is stored in the PCM memory. If the malfunction returns in the next (second) drive cycle, the MIL comes on and a Confirmed DTC and the freeze data are stored.

Conditions for clearing the DTC

The MIL is cleared if the malfunction does not return in three consecutive drive cycles in which the engine conditions are similar to the first time the malfunction was detected. The MIL, the Pending DTC, the Confirmed DTC, and the freeze data can be cleared with the scan tool Clear command or by disconnecting the 12 volt battery.

DTC P2195 (1.5 L ENGINE)

DTC P2195: Air Fuel Ratio (A/F) Sensor (Sensor 1) Signal Stuck Lean

General Description

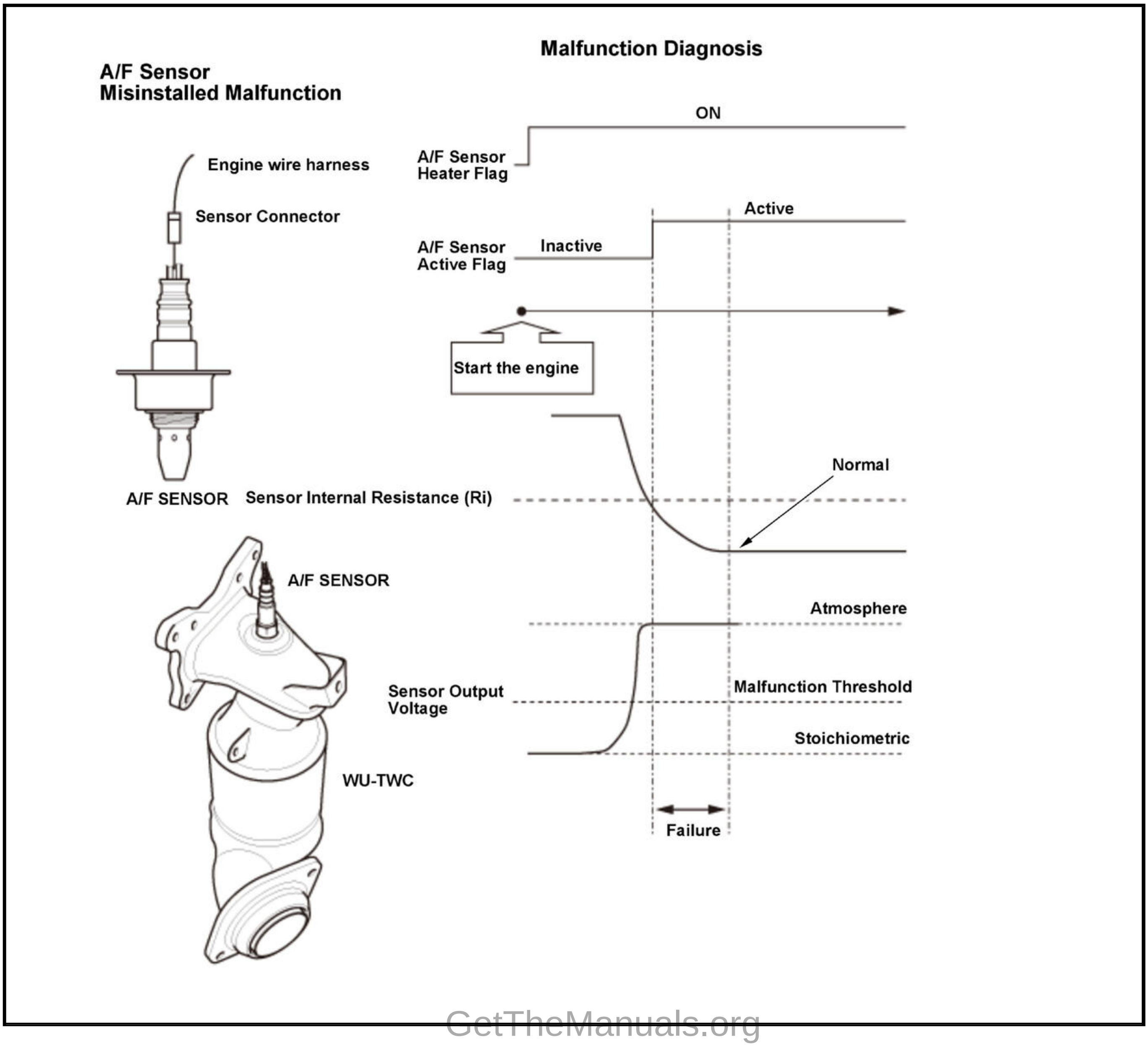
A/F Sensor
Misinstalled Malfunction
Malfunction Diagnosis
ON
Engine wire harness
A/F Sensor
Heater Flag
Sensor Connector
Active
A/F Sensor
Active Flag
Inactive
Start the engine
Normal
A/F SENSOR
Sensor Internal Resistance (Ri)
A/F SENSOR
Atmosphere
Sensor Output
Voltage
Malfunction Threshold
Stoichiometric
WU-TWC
Failure

When the air/fuel ratio (A/F) sensor (sensor 1) is properly connected to the engine wire harness, but it is not installed in the exhaust pipe, the feedback is not done properly even if the A/F sensor (sensor 1) is active after starting the engine. Thus, the exhaust emissions increase. When the A/F sensor (sensor 1) output stays out of the normal range after the A/F sensor (sensor 1) becomes active, the powertrain control module (PCM) detects that the A/F sensor (sensor 1) is not properly installed and stores a DTC.

Monitor Execution, Sequence, Duration, DTC Type

Execution	Once per driving cycle
Sequence	None
Duration	7.0 seconds or more
DTC Type	Two drive cycles, MIL on

Enable Conditions

Condition	B
Fuel feedback	Other than during fuel cut-off operation

Malfunction Threshold

The A/F sensor (sensor 1) output voltage is 3.67 V or more for at least 7.0 seconds.

Possible Cause

NOTE: The causes shown may not be a complete list of all potential problems, and it is possible that there may be other causes.

- A/F sensor (sensor 1) heater failure
- A/F sensor (sensor 1) element failure
- Out of fuel

Confirmation Procedure

Operating Condition

Start the engine, and let it idle for at least 2 minutes.

With the HDS

None.

Diagnosis Details

Conditions for setting the DTC

When a malfunction is detected during the first drive cycle, a Pending DTC is stored in the PCM memory. If the malfunction returns in the next (second) drive cycle, the MIL comes on and a Confirmed DTC and the freeze data are stored.

Conditions for clearing the DTC

The MIL is cleared if the malfunction does not return in three consecutive trips in which the diagnostic runs. The MIL, the Pending DTC, the Confirmed DTC, and the freeze data can be cleared with the scan tool Clear command or by disconnecting the 12 volt battery.

DTC P2195 (2.4 L ENGINE) (2017 2018 2019)

DTC P2195: Air Fuel Ratio (A/F) Sensor (Sensor 1) Signal Stuck Lean

General Description

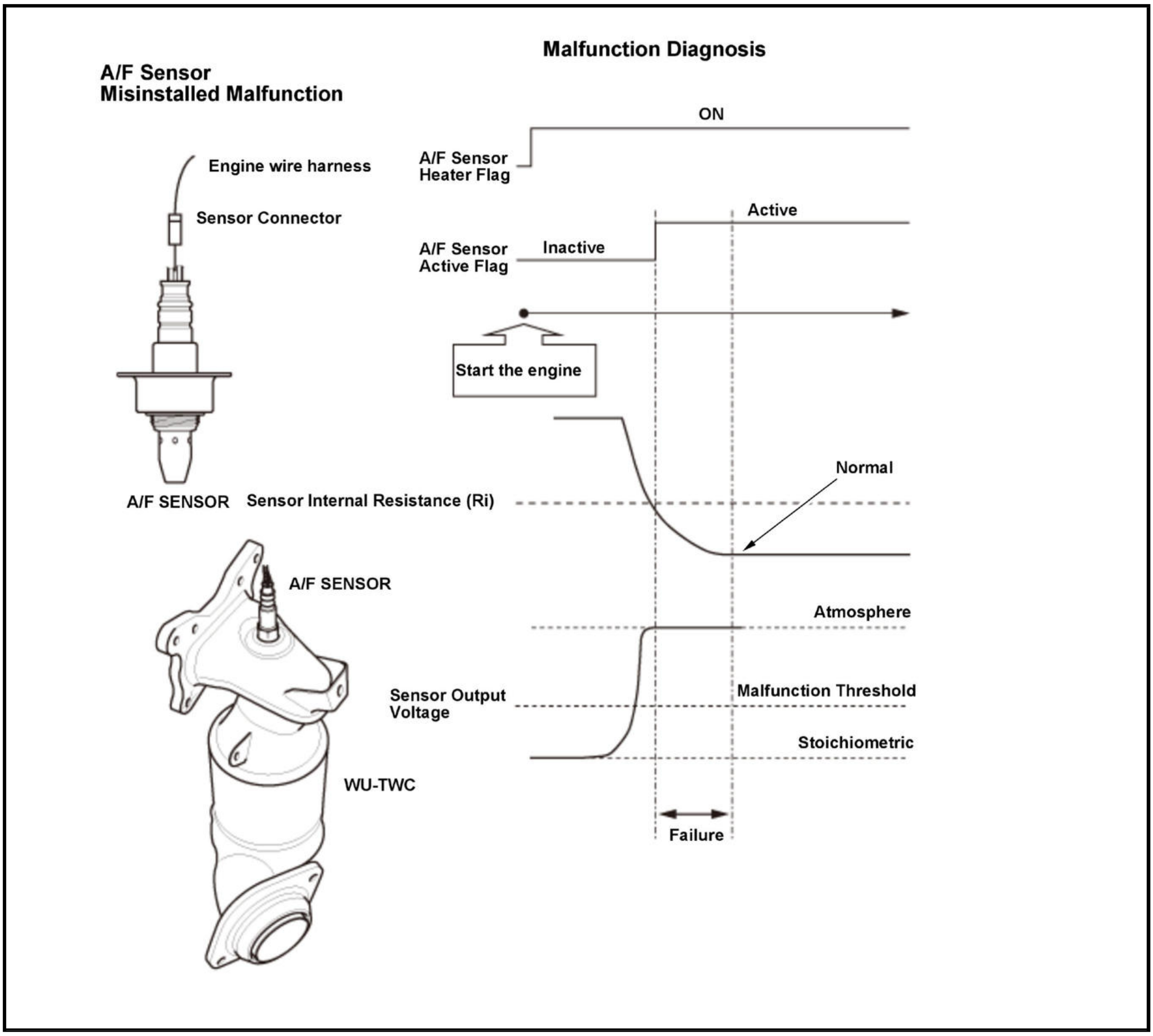

A/F Sensor
Misinstalled Malfunction
Engine wire harness
Sensor Connector
A/F SENSOR
A/F SENSOR
WU-TWC
Malfunction Diagnosis
ON
A/F Sensor Heater Flag
Active
Inactive
A/F Sensor Active Flag
Start the engine
Normal
Sensor Internal Resistance (Ri)
Atmosphere
Sensor Output Voltage
Malfunction Threshold
Stoichiometric
Failure

When the air/fuel ratio (A/F) sensor (sensor 1) is properly connected to the engine wire harness, but it is not installed in the exhaust pipe, the feedback is not done properly even if the A/F sensor (sensor 1) is active after starting the engine. Thus, the exhaust emissions increase. When the A/F sensor (sensor 1) output stays out of the normal range after the A/F sensor (sensor 1) becomes active, the powertrain control module (PCM) detects that the A/F sensor (sensor 1) is not properly installed and stores a DTC.

Monitor Execution, Sequence, Duration, DTC Type

Execution	Once per driving cycle
Sequence	None
Duration	7.0 seconds or more
DTC Type	Two drive cycles, MIL on

Enable Conditions

Condition	B
Fuel feedback	Other than during fuel cut-off operation

Malfunction Threshold

The A/F sensor (sensor 1) output voltage is 3.67 V or more for at least 7.0 seconds.

Possible Cause

NOTE: The causes shown may not be a complete list of all potential problems, and it is possible that there may be other causes.

- A/F sensor (sensor 1) heater failure
- A/F sensor (sensor 1) element failure
- Out of fuel

Confirmation Procedure

Operating Condition

Start the engine, and let it idle for at least 2 minutes.

With the HDS

None.

Diagnosis Details

Conditions for setting the DTC

When a malfunction is detected during the first drive cycle, a Pending DTC is stored in the PCM memory. If the malfunction returns in the next (second) drive cycle, the MIL comes on and a Confirmed DTC and the freeze data are stored.

Conditions for clearing the DTC

The MIL is cleared if the malfunction does not return in three consecutive trips in which the diagnostic runs. The MIL, the Pending DTC, the Confirmed DTC, and the freeze data can be cleared with the scan tool Clear command or by disconnecting the 12 volt battery.

DTC P2199 (1.5 L ENGINE)

DTC P2199: Intake Air Temperature (IAT) Sensor 1-2 Incorrect Correlation

General Description

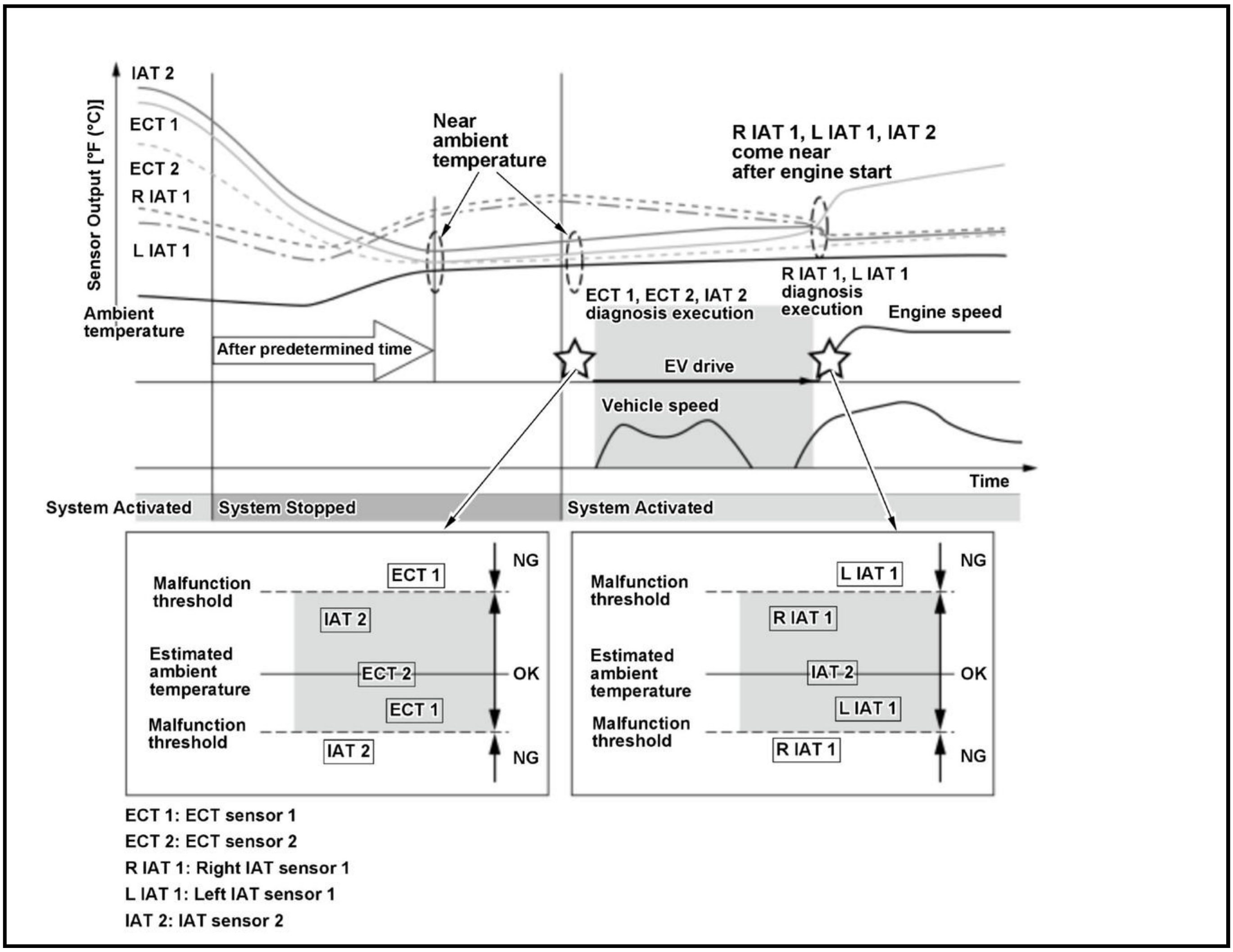
IAT 2
ECT 1
ECT 2
R IAT 1
L IAT 1
Sensor Output [°F (°C)]
Ambient temperature
Near ambient temperature
R IAT 1, L IAT 1, IAT 2 come near after engine start
ECT 1, ECT 2, IAT 2 diagnosis execution
R IAT 1, L IAT 1 diagnosis execution
Engine speed
After predetermined time
EV drive
Vehicle speed
Time
System Activated
System Stopped
System Activated
Malfunction threshold
Estimated ambient temperature
Malfunction threshold
ECT 1
IAT 2
ECT 2
ECT 1
IAT 2
NG
OK
NG
Malfunction threshold
Estimated ambient temperature
Malfunction threshold
L IAT 1
R IAT 1
IAT 2
L IAT 1
R IAT 1
NG
OK
NG
ECT 1: ECT sensor 1
ECT 2: ECT sensor 2
R IAT 1: Right IAT sensor 1
L IAT 1: Left IAT sensor 1
IAT 2: IAT sensor 2

Two engine coolant temperature (ECT) sensors and three intake air temperature (IAT) sensors are used by the powertrain control module (PCM). When the engine is stopped and enough time has passed, the temperatures at ECT sensor 1, ECT sensor 2, and IAT sensor 2 will equalize to ambient temperature. In addition, since right IAT sensor 1, left IAT sensor 1, IAT sensor 2 are located on the same intake airflow route, shows a close temperature value after the engine is started. Utilizing these characteristics, ECT sensor 1 and IAT sensor 2 are compared to ECT sensor 2 when the system is activated after the vehicle has been left for certain duration. If it is determined as normal, right IAT sensor 1 and left IAT sensor 1 are compared to IAT sensor 2 when the engine is started. If their correlations are abnormal, the PCM detects a malfunction and stores a DTC.

Monitor Execution, Sequence, Duration, DTC Type

Execution	Once per driving cycle
Sequence	None
Duration	1 second or more*, 10 seconds or less**
DTC Type	Two drive cycles, MIL on

*: After the system is activated

**: After the engine is started

Enable Conditions

Condition	Minimum	Maximum
Engine off time	6 hours	-

Malfunction Threshold

A malfunction is detected if the following conditions are present when the system is activated after the vehicle has been left for at least 6 hours:

Temperature difference between each sensor values		**Malfunction judgment**		
ECT 1* - ECT 2**	**IAT 2*** - ECT 2****	**ECT sensor 1**	**IAT sensor 2**	**ECT sensor 2**
Higher than 57 deg. F (32 deg. C)	Higher than 57 deg. F (32 deg. C)	Normal	Normal	Failure
	From -43 deg. F (-24 deg. C) to 57 deg. F (32 deg. C)	Failure	Normal	Normal
	Lower than -43 deg. F (-24 deg. C)	Failure	Failure	Normal
From -43 deg. F (-24 deg. C) to 57 deg. F (32 deg. C)	Higher than 57 deg. F (32 deg. C)	Normal	Failure	Normal
	From -43 deg. F (-24 deg. C) to 57 deg. F (32 deg. C)	Normal	Normal	Normal
	Lower than -43 deg. F (-24 deg. C)	Normal	Failure	Normal
Lower than -43 deg. F (-24 deg. C)	Higher than 57 deg. F (32 deg. C)	Failure	Failure	Normal
	From -43 deg. F (-24 deg. C) to 57 deg. F (32 deg. C)	Failure	Normal	Normal
	Lower than -43 deg. F (-24 deg. C)	Normal	Normal	Failure

A malfunction is detected if the following conditions are present after IAT sensor 2 is determined as normal and 10 seconds after the engine is started:

Temperature difference between each sensor values	**Malfunction judgment**
R IAT 1** - IAT 2*****	**Right IAT sensor 1**
Higher than 57 deg. F (32 deg. C)	Failure
From -43 deg. F (-24 deg. C) to 57 deg. F (32 deg. C)	Normal
Lower than -43 deg. F (-24 deg. C)	Failure

Temperature difference between each sensor values	**Malfunction judgment**
L IAT 1*** - IAT 2*****	**Left IAT sensor 1**
Higher than 57 deg. F (32 deg. C)	Failure
From -43 deg. F (-24 deg. C) to 57 deg. F (32 deg. C)	Normal
Lower than -43 deg. F (-24 deg. C)	Failure

*: [ECT SENSOR 1]

**: [ECT SENSOR 2]

***: [IAT SENSOR 2]

****: [IAT Sensor (1)]

*****: [IAT Sensor Bank2]

[ ]: HDS Parameter

Possible Cause

NOTE: The causes shown may not be a complete list of all potential problems, and it is possible that there may be other causes.

- ECT sensor 1 failure
- ECT sensor 2 failure
- Right IAT sensor 1 failure
- Left IAT sensor 1 failure
- IAT sensor 2 failure
- Engine block heater attachment (non-genuine part)

Confirmation Procedure

Operating Condition

- Turn the vehicle to the OFF (LOCK) mode, and wait at least 6 hours.
- Enter the maintenance mode, then start the engine and let it idle for at least 10 seconds.

- Do not use an engine block heater because the engine coolant temperature will not stay equal during engine stop.
- When freeze data or the on-board snapshot is stored, test the vehicle under an ambient temperature close to the intake air temperature in the freeze data or the on-board snapshot.

With the HDS

None.

Diagnosis Details

Conditions for setting the DTC

When a malfunction is detected during the first drive cycle, a Pending DTC is stored in the PCM memory. If the malfunction returns in the next (second) drive cycle, the MIL comes on and a Confirmed DTC, the freeze data, and the on-board snapshot are stored.

Conditions for clearing the DTC

The MIL is cleared if the malfunction does not return in three consecutive trips in which the diagnostic runs. The MIL, the Pending DTC, the Confirmed DTC, the freeze data, and the on-board snapshot can be cleared with the scan tool Clear command or by disconnecting the 12 volt battery.

DTC P219A (2.4 L ENGINE) (2017 2018 2019)

DTC P219A: Air-Fuel Ratio Variation of Cylinder

General Description

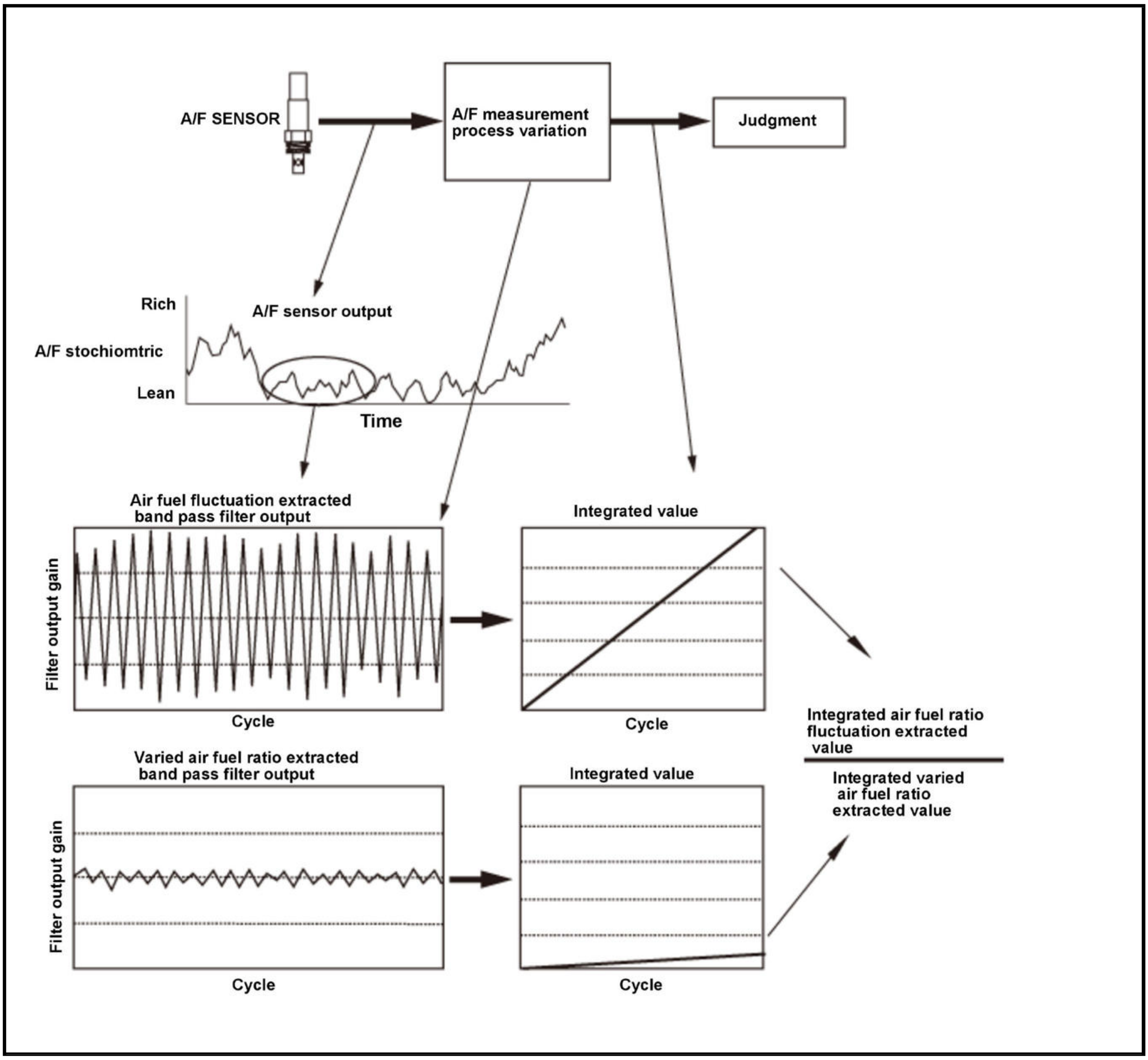
A/F SENSOR
A/F measurement process variation
Judgment
Rich
A/F sensor output
A/F stochiomtric
Lean
Time
Air fuel fluctuation extracted band pass filter output
Filter output gain
Cycle
Integrated value
Cycle
Integrated air fuel ratio fluctuation extracted value
Integrated varied air fuel ratio extracted value
Varied air fuel ratio extracted band pass filter output
Filter output gain
Cycle
Integrated value
Cycle

The powertrain control module (PCM) measures the air/fuel ratio by the signal from the air/fuel ratio (A/F) sensor (sensor 1). If the air/fuel ratio varies between the cylinders, the signal from the A/F sensor (sensor 1) fluctuates while all cylinders complete the combustion cycle (two engine revolutions as one cycle). The PCM varies the engine air/fuel ratio at a specified frequency to measure the dispersion between the cylinders, and obtained air/fuel ratio fluctuation are filtered to extract the value. If the ratio between the integrated filtered output and the integrated varied air fuel ratio is a set value or more, the PCM detects a malfunction and stores a DTC.

Monitor Execution, Sequence, Duration, DTC Type

Execution	Once per driving cycle
Sequence	None
Duration	At least 6.1 seconds, but not more than 9.3 seconds

DTC Type	Two drive cycles, MIL on

Enable Conditions

Condition	Minimum	Maximum
Engine coolant temperature [ECT SENSOR 1]	156 deg. F (69 deg. C)	-

Condition		Minimum	Maximum
Engine speed [ENGINE SPEED]		-	2, 500 rpm
Intake air amount	1, 000 rpm	0.013 oz (0.37 g)	0.017 oz (0.50 g)
	1, 800 rpm	0.008 oz (0.22 g)	0.020 oz (0.57 g)

[ ]: HDS Parameter

Malfunction Threshold

The integrated A/F sensor (sensor 1) output variation value is 5.61 or more in 9.3 seconds.

Possible Cause

NOTE: The causes shown may not be a complete list of all potential problems, and it is possible that there may be other causes.

- Fuel injector failure
- Engine compression abnormal
- Valve clearance incorrect

Confirmation Procedure

Operating Condition

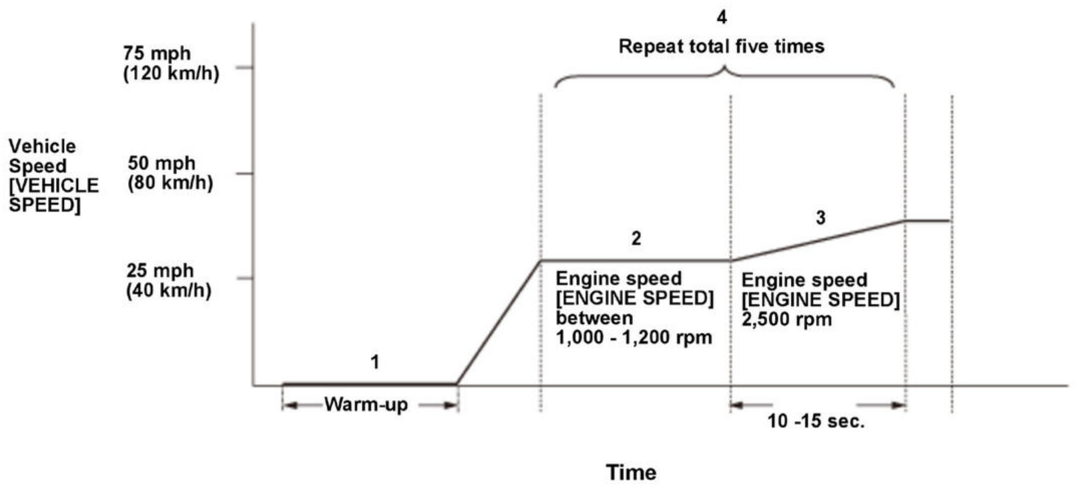

- Start the engine. Hold the engine speed [ENGINE SPEED] at 3, 000 rpm without load (in P or N) until the radiator fan comes on.
- Drive the vehicle in 4th gear at a steady engine speed [ENGINE SPEED] 1, 000 - 1, 200 rpm.
- Take 10 - 15 seconds to accelerate up to engine speed [ENGINE SPEED] 2, 500 rpm.
- When the diagnosis does not finish, repeat driving pattern steps 2 through 3, five times.

- Drive the vehicle in this manner only if the traffic regulations and ambient conditions allow.

With the HDS

None.

Diagnosis Details

Conditions for setting the DTC

When a malfunction is detected during the first drive cycle, a Pending DTC is stored in the PCM memory. If the malfunction returns in the next (second) drive cycle, the MIL comes on and a Confirmed DTC and the freeze data are stored.

Conditions for clearing the DTC

The MIL is cleared if the malfunction does not return in three consecutive drive cycles in which the engine conditions are similar to the first time the malfunction was detected. The MIL, the Pending DTC, the Confirmed DTC, and the freeze data can be cleared with the scan tool Clear command or by disconnecting the 12 volt battery.

DTC P219C, P219D, P219E, P219F (1.5 L ENGINE)

DTC P219C: No. 1 Cylinder Air-Fuel Ratio Variation **DTC P219D:** No. 2 Cylinder Air-Fuel Ratio Variation **DTC P219E:** No. 3 Cylinder Air-Fuel Ratio Variation **DTC P219F:** No. 4 Cylinder Air-Fuel Ratio Variation

General Description

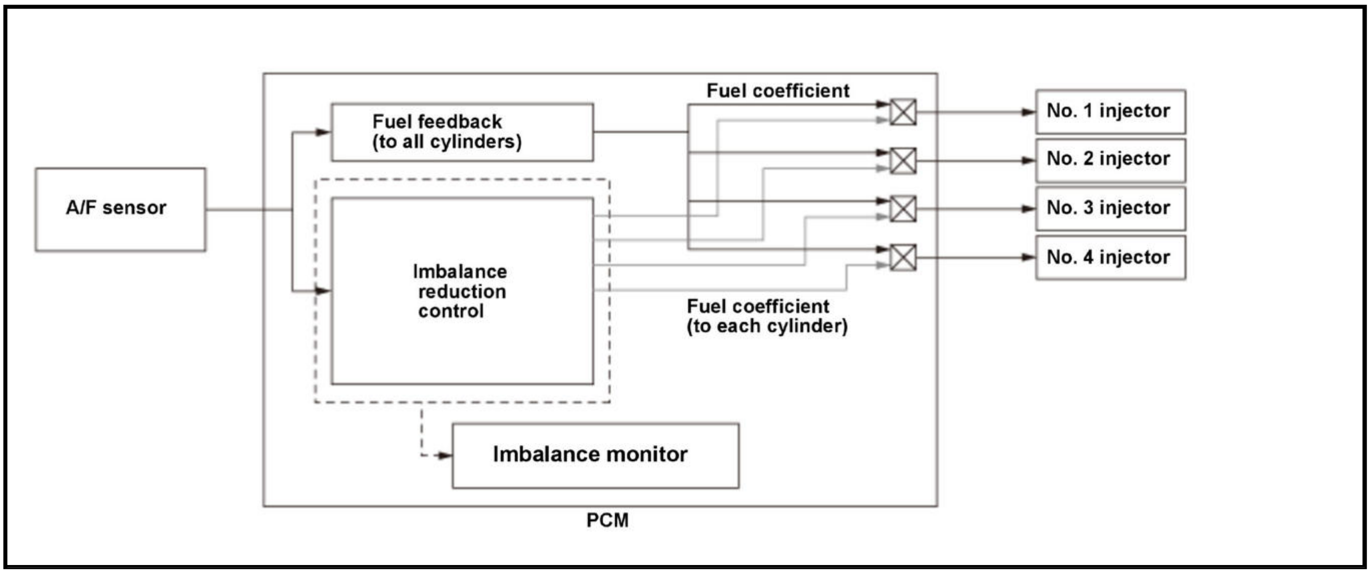
Fuel coefficient
Fuel feedback
(to all cylinders)
A/F sensor
Imbalance
reduction
control
Fuel coefficient
(to each cylinder)
No. 1 injector
No. 2 injector
No. 3 injector
No. 4 injector
Imbalance monitor
PCM

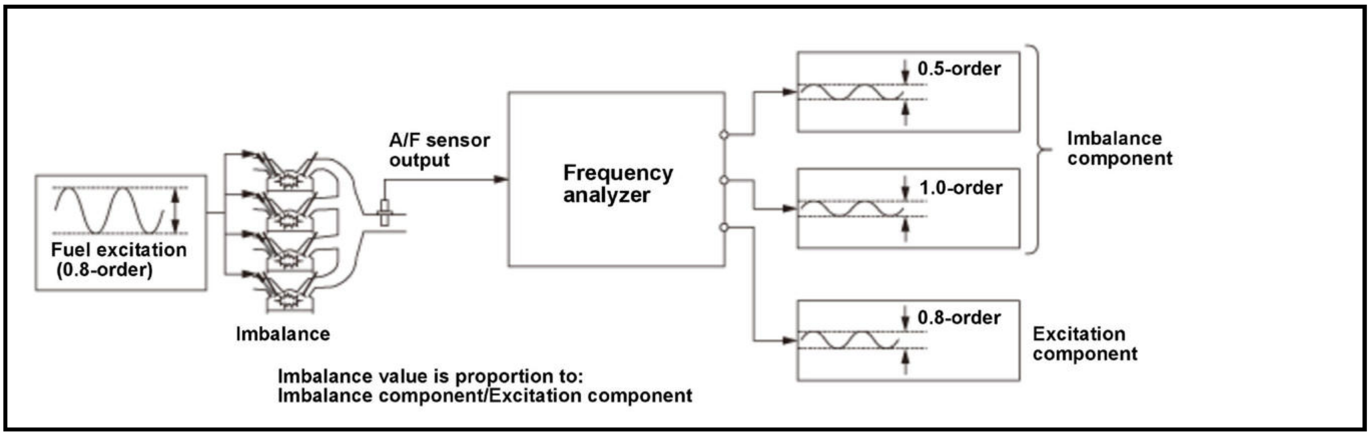
Fuel excitation
(0.8-order)
Imbalance
A/F sensor
output
Frequency
analyzer
0.5-order
1.0-order
0.8-order
Imbalance
component
Excitation
component
Imbalance value is proportion to:
Imbalance component/Excitation component

The powertrain control module (PCM) detects the imbalance amount from the sizes of the 0.5-order and 1.0-order components compared to 0.8-order excitation input by the fuel injection to determine the air/fuel ratio variation between the cylinder. The obtained components are used to learn the fuel coefficient of each cylinder and performs the imbalance reduction control. If it is not possible to suppress the variation even if the imbalance reduction control is performed; resulting the imbalance amount is large and the fuel coefficient is a specified value or more, the PCM detects as imbalance failure.

- When the imbalance amount is a specified value (about 10 %) or less:
-

    - -

      Fuel coefficient of each cylinder is higher than the threshold value: Failure on corresponding cylinder

-
    - -

      Fuel coefficient of each cylinder is lower than the threshold value: Pass

- When the imbalance amount is a specified value (about 10 %) or more:
-
    - -

      Performs imbalance reduction control and fuel coefficient is higher than the threshold value: failure on corresponding cylinder

-
    - -

      Performs imbalance reduction control and fuel coefficient of each cylinder is lower than the threshold value: re-performs imbalance reduction control for a specified time and re-determines the failure by the fuel coefficient of each cylinder. If the imbalance amount is a specified value or less after imbalance reduction control is performed for a specified time, the determination is suspended. If the imbalance amount is a specified value or more after imbalance reduction control is performed for a specified time, the imbalance reduction control is performed again and if the fuel coefficient of each cylinder is higher than a specified value, the PCM detects the failure on corresponding cylinder.

Monitor Execution, Sequence, Duration, DTC Type

Execution	Once per driving cycle
Sequence	None
Duration	-
DTC Type	Two drive cycles, MIL on

Enable Conditions

Condition	Minimum	Maximum
Engine coolant temperature [ECT SENSOR 1]	156 deg. F (69 deg. C)	-
Intake air temperature [IAT Sensor (1)]	-13 deg. F (-25 deg. C)	-
Engine speed [ENGINE SPEED]	1, 350 rpm	3, 400 rpm
Engine speed variation during 1 cycle	-	80 rpm
Fuel trim	0.75	1.47
Intake air amount variation	-	0.05 g (0.001 oz)
Fuel feedback	Closed loop at stoichiometric	
Monitoring priority	P0133, P0420	

[ ]: HDS Parameter

Malfunction Threshold

Fuel correction coefficient of each cylinder is 0.83 or less, or 1.15 or more.

Possible Cause

NOTE: The causes shown may not be a complete list of all potential problems, and it is possible that there may be other causes.

- Fuel injector failure
- Fuel rail clogged
- Intake manifold air leak/clogged
- Cam lift failure
- Ignition system failure
- Engine compression abnormal
- Valve clearance incorrect

Confirmation Procedure

Operating Condition

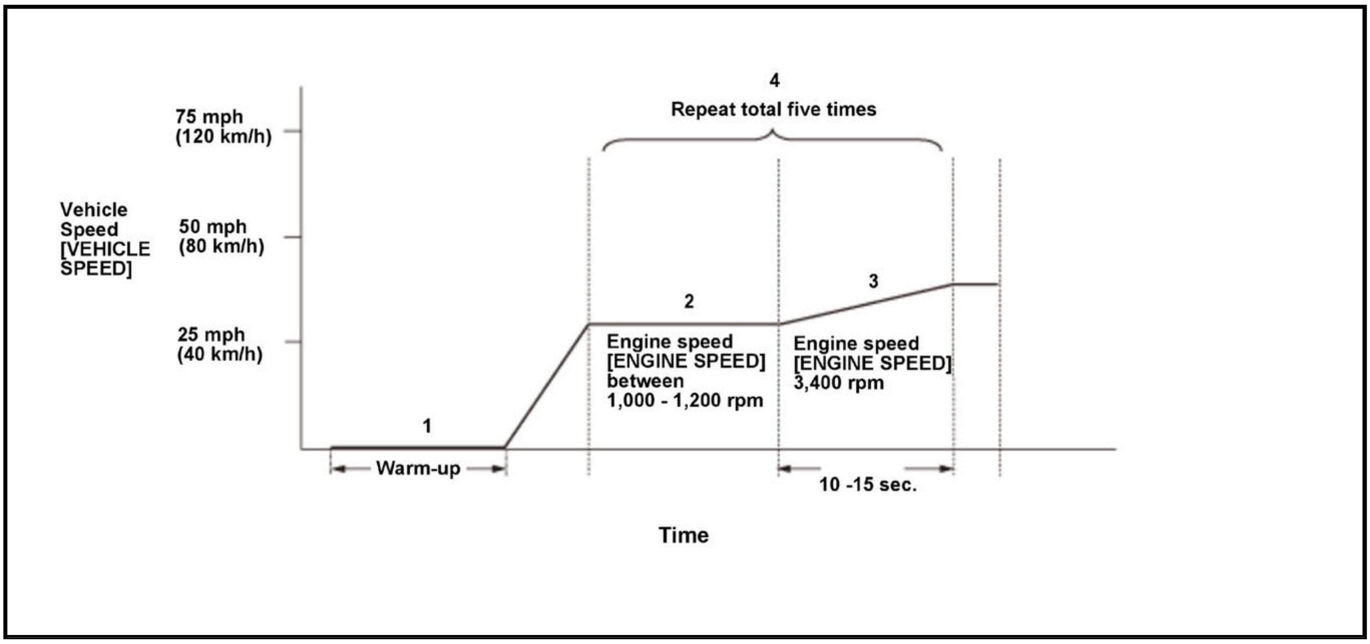

- Start the engine. Hold the engine speed [ENGINE SPEED] at 3, 000 rpm without load (in P or N) until the radiator fan comes on.
- Drive the vehicle in 4th gear at a steady engine speed [ENGINE SPEED] 1, 000 - 1, 200 rpm.
- Take 10 - 15 seconds to accelerate up to engine speed [ENGINE SPEED] 3, 400 rpm.
- When the diagnosis does not finish, repeat Driving Pattern steps 2 through 3, five times.

- Drive the vehicle in this manner only if the traffic regulations and ambient conditions allow.

With the HDS

None.

Diagnosis Details

Conditions for setting the DTC

When a malfunction is detected during the first drive cycle, a Pending DTC is stored in the PCM memory. If the malfunction returns in the next (second) drive cycle, the MIL comes on and a Confirmed DTC and the freeze data are stored.

Conditions for clearing the DTC

The MIL is cleared if the malfunction does not return in three consecutive drive cycles in which the engine conditions are similar to the first time the malfunction was detected. The MIL, the Pending DTC, the Confirmed DTC, and the freeze data can be cleared with the scan tool Clear command or by disconnecting the 12 volt battery.

DTC P2226 (1.5 L ENGINE)

DTC P2226: Barometric Pressure (BARO) Sensor Circuit Malfunction

General Description

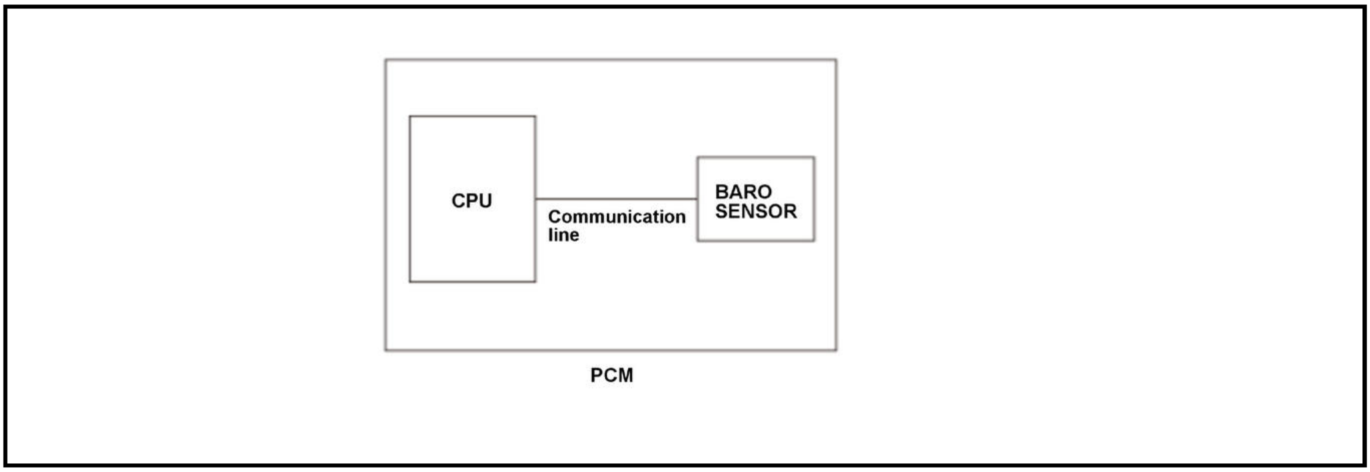

The barometric pressure (BARO) sensor is built into the powertrain control module (PCM), and it monitors atmospheric pressure. The BARO sensor output voltage is converted to A/D in the sensor inside, and transmitted to a CPU by serial communication. When the signal is not sent from the BARO sensor or when the signal sent from the BARO sensor is abnormal and this condition continues for a specified time, the PCM detects a malfunction and stores a DTC.

Monitor Execution, Sequence, Duration, DTC Type

Execution	Continuous
Sequence	None
Duration	2.0 seconds or more
DTC Type	Two drive cycles, MIL on

Enable Conditions

Condition	B
Vehicle	ON mode

Malfunction Threshold

One of these conditions is met at least 2.0 seconds:

- The PCM does not receive signals.
- The signal sent from the BARO sensor is abnormal.

Possible Cause

NOTE: The causes shown may not be a complete list of all potential problems, and it is possible that there may be other causes.

- BARO sensor failure

- PCM internal circuit failure

Diagnosis Details

Conditions for setting the DTC

When a malfunction is detected during the first drive cycle, a Pending DTC is stored in the PCM memory. If the malfunction returns in the next (second) drive cycle, the MIL comes on and a Confirmed DTC and the freeze data are stored.

Conditions for clearing the DTC

The MIL is cleared if the malfunction does not return in three consecutive trips in which the diagnostic runs. The MIL, the Pending DTC, the Confirmed DTC, and the freeze data can be cleared with the scan tool Clear command or by disconnecting the 12 volt battery.

DTC P2227 (2.4 L ENGINE) (2017 2018 2019)

DTC P2227: Barometric Pressure (BARO) Sensor Circuit Out of Range High

General Description

The barometric pressure (BARO) sensor is built into the power control module (PCM), and it monitors atmospheric pressure. The monitoring function checks the signal of the BARO sensor for implausible values by means of diverse criteria. If the difference between measured ambient pressure and the reference pressure is a specified value, the PCM detects a malfunction and stores a DTC.

Monitor Execution, Sequence, Duration, DTC Type

Execution	Continuous
Sequence	None
Duration	2 seconds or more
DTC Type	Tow drive cycle, MIL on

Enable Conditions

Condition	B
Vehicle	ON mode
Other	Short to power or short to ground errors are not received from BARO sensor

Malfunction Threshold

Either of the conditions occurs:

- Difference between measured ambient pressure and the maximum reference pressure is greater than 2.5 kPa (19 mmHg, 0.8 inHg).
- Difference between the minimum reference pressure and the measured ambient pressure is greater than 2.5 kPa (19 mmHg, 0.8 inHg).

Possible Cause

NOTE: The causes shown may not be a complete list of all potential problems, and it is possible that there may be other causes.

- PCM internal circuit failure

Diagnosis Details

Conditions for setting the DTC

When a malfunction is detected, the MIL comes on and a Pending DTC, a Confirmed DTC, and the freeze data are stored in the PCM memory.

Conditions for clearing the DTC

The MIL is cleared if the malfunction does not return in three consecutive trips in which the diagnostic runs. The MIL, the Pending DTC, the Confirmed DTC, and the freeze data can be cleared with the scan tool Clear command.

DTC P2228, P2229 (1.5 L ENGINE)

DTC P2228: Barometric Pressure (BARO) Sensor Circuit Low Voltage **DTC P2229:** Barometric Pressure (BARO) Sensor Circuit High Voltage

General Description

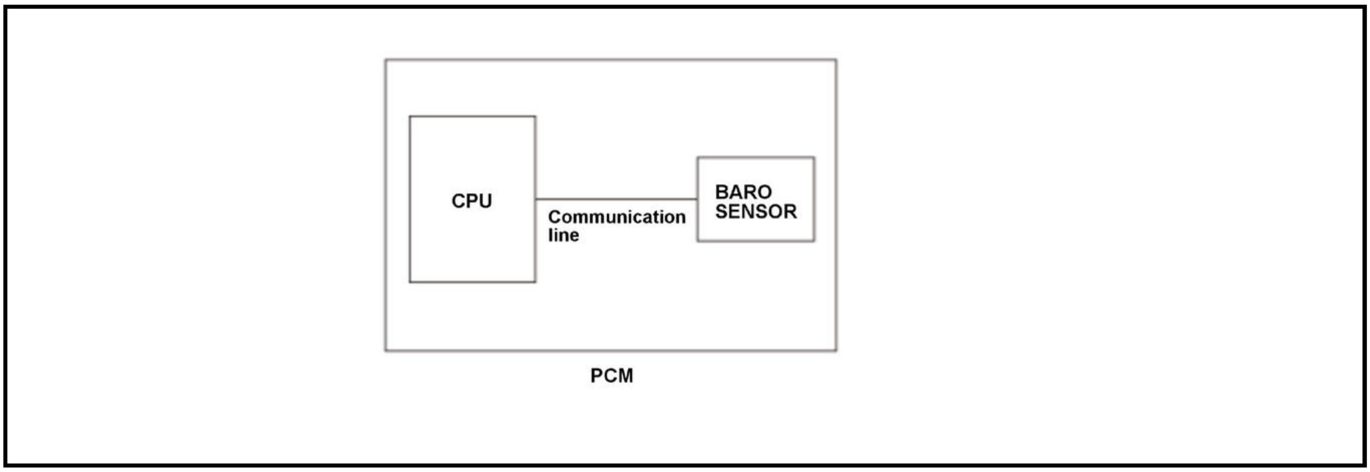

The barometric pressure (BARO) sensor is built into the powertrain control module (PCM), and it monitors atmospheric pressure. The BARO sensor output voltage is converted to A/D in the sensor inside, and transmitted to a CPU by serial communication. If the atmospheric pressure value sent from the BARO sensor is abnormal, the PCM detects a malfunction and stores a DTC.

Monitor Execution, Sequence, Duration, DTC Type

Execution	Continuous
Sequence	None
Duration	2.0 seconds or more
DTC Type	Two drive cycles, MIL on

Enable Conditions

Condition	B
Vehicle	ON mode

Malfunction Threshold

DTC: P2228

The BARO sensor output value [Baro Sensor] is 44 kPa (336 mmHg, 13.2 inHg) or less for at least 2.0 seconds.

DTC: P2229

The BARO sensor output value [Baro Sensor] is 116 kPa (865 mmHg, 34.1 inHg) or more for at least 2.0 seconds.

[ ]: HDS Parameter

Possible Cause

NOTE: The causes shown may not be a complete list of all potential problems, and it is possible that there may be other causes.

- BARO sensor failure
- PCM internal circuit failure

Diagnosis Details

Conditions for setting the DTC

When a malfunction is detected during the first drive cycle, a Pending DTC is stored in the PCM memory. If the malfunction returns in the next (second) drive cycle, the MIL comes on and a Confirmed DTC and the freeze data are stored.

Conditions for clearing the DTC

The MIL is cleared if the malfunction does not return in three consecutive trips in which the diagnostic runs. The MIL, the Pending DTC, the Confirmed DTC, and the freeze data can be cleared with the scan tool Clear command or by disconnecting the 12 volt battery.

DTC P2228, P2229 (2.4 L ENGINE) (2017 2018 2019)

DTC P2228: Barometric Pressure (BARO) Sensor Circuit Low Voltage **DTC P2229:** Barometric Pressure (BARO) Sensor Circuit High Voltage

General Description

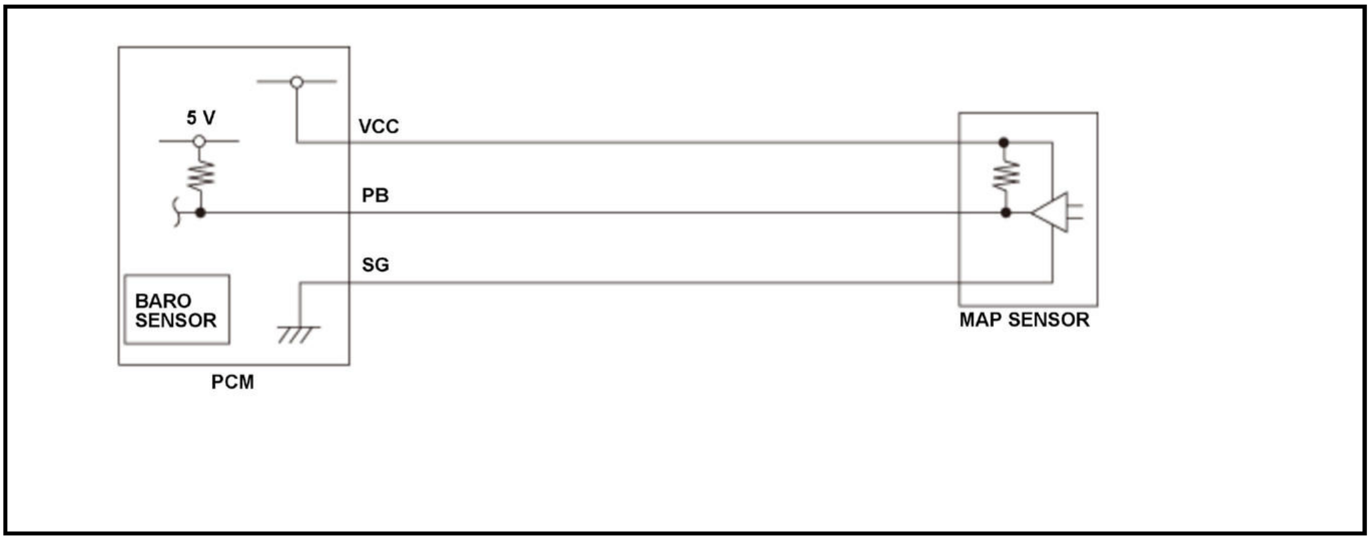

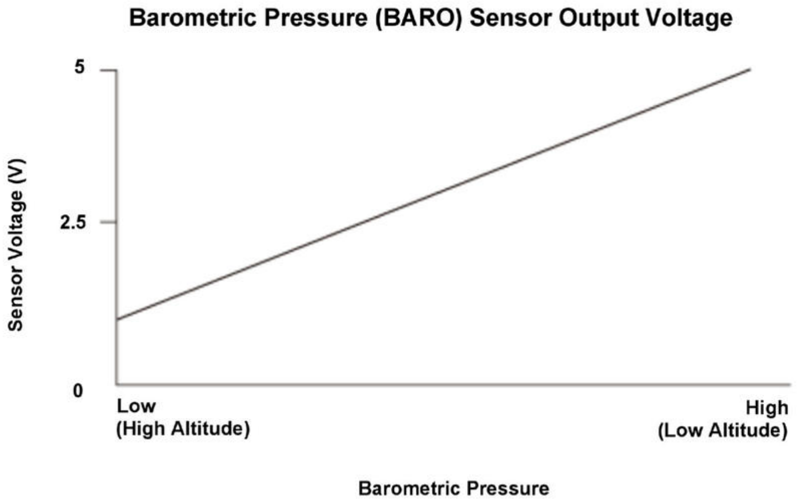

The barometric pressure (BARO) sensor is built into the powertrain control module (PCM), and it monitors atmospheric pressure. The PCM estimates appropriate intake airflow from the manifold absolute pressure (MAP) sensor output voltage and the BARO sensor output voltage. If the BARO sensor output voltage is a specified value, the PCM detects a malfunction and stores a DTC.

Monitor Execution, Sequence, Duration, DTC Type

Execution	Continuous
Sequence	None
Duration	2.0 seconds or more
DTC Type	Two drive cycles, MIL on

Enable Conditions

Condition	B
Vehicle	ON mode

Malfunction Threshold

DTC: P2228

The BARO sensor output voltage [BARO SENSOR] is 1.31 V or less for at least 2.0 seconds.

DTC: P2229

The BARO sensor output voltage [BARO SENSOR] is 4.49 V or more for at least 2.0 seconds.

[ ]: HDS Parameter

Possible Cause

NOTE: The causes shown may not be a complete list of all potential problems, and it is possible that there may be other causes.

- BARO sensor failure
- PCM internal circuit failure

Diagnosis Details

Conditions for setting the DTC

When a malfunction is detected during the first drive cycle, a Pending DTC is stored in the PCM memory. If the malfunction returns in the next (second) drive cycle, the MIL comes on and a Confirmed DTC and the freeze data are stored.

Conditions for clearing the DTC

The MIL is cleared if the malfunction does not return in three consecutive trips in which the diagnostic runs. The MIL, the Pending DTC, the Confirmed DTC, and the freeze data can be cleared with the scan tool Clear command or by disconnecting the 12 volt battery.

DTC P2237 (1.5 L ENGINE)

DTC P2237: Air/Fuel Ratio A/F Sensor (Sensor 1) IP Circuit High Voltage

General Description

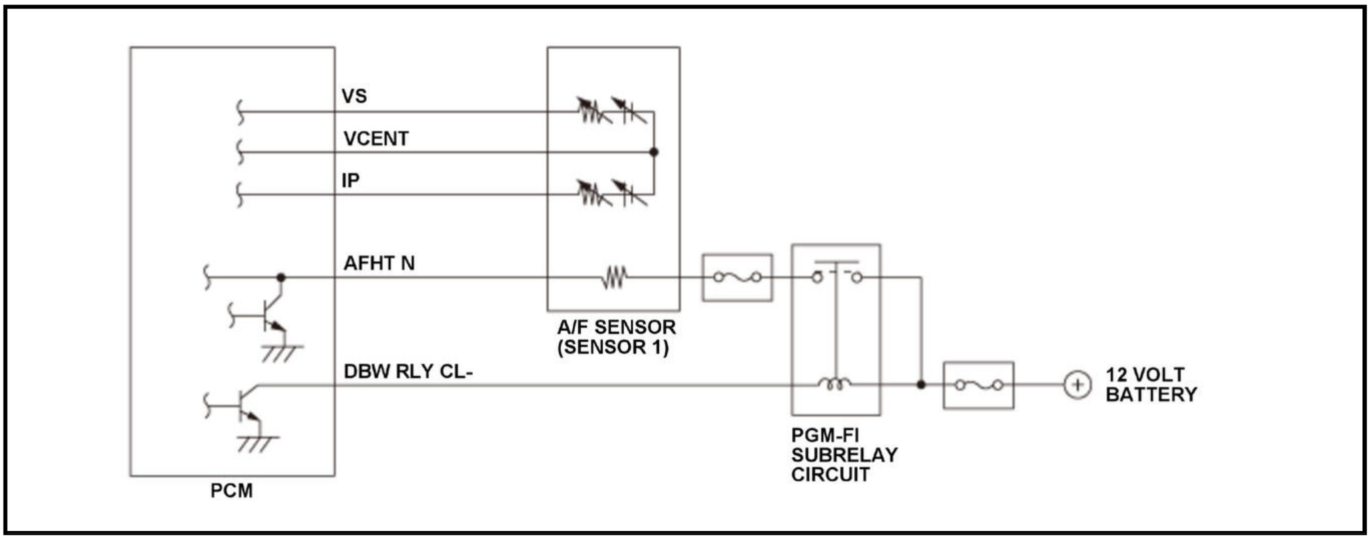

The air/fuel ratio (A/F) sensor (sensor 1) is installed in the exhaust manifold and detects oxygen content in the exhaust gas. The A/F sensor (sensor 1) transmits a signal to the powertrain control module (PCM), and the PCM controls fuel injection duration by comparing the target air/fuel ratio with the A/F sensor (sensor 1) signal. If the IP terminal voltage is within a specified range when the A/F sensor (sensor 1) pump cell voltage is excessively high, the PCM detects a malfunction and stores a DTC.

Monitor Execution, Sequence, Duration, DTC Type

Execution	Continuous
Sequence	None
Duration	15 seconds or more
DTC Type	Two drive cycles, MIL on

Enable Conditions

Condition	Minimum	Maximum
12 volt battery voltage [BATTERY]	9.0 V	-
State of the engine	Running	

[ ]: HDS Parameter

Malfunction Threshold

The IP terminal voltage is between 2.18 V to 2.41 V for at least 15 seconds.

Possible Cause

NOTE: The causes shown may not be a complete list of all potential problems, and it is possible that there may be other causes.

- A/F sensor (sensor 1) failure
- A/F sensor (sensor 1) IP line open
- PCM internal circuit failure

Confirmation Procedure

Operating Condition

- Start the engine. Hold the engine speed [ENGINE SPEED] at 3, 000 rpm without load (in P or N) until the radiator fan comes on.
- Let the engine idle for at least 2 minutes.

[ ]: HDS Parameter

With the HDS

None.

Diagnosis Details

Conditions for setting the DTC

When a malfunction is detected during the first drive cycle, a Pending DTC is stored in the PCM memory. If the malfunction returns in the next (second) drive cycle, the MIL comes on and a Confirmed DTC and the freeze data are stored.

Conditions for clearing the DTC

The MIL is cleared if the malfunction does not return in three consecutive trips in which the diagnostic runs. The MIL, the Pending DTC, the Confirmed DTC, and the freeze data can be cleared with the scan tool Clear command or by disconnecting the 12 volt battery.

DTC P2237 (2.4 L ENGINE) (2017 2018 2019)

DTC P2237: Air Fuel Ratio (A/F) Sensor (Sensor 1) AFS Circuit High Voltage

General Description

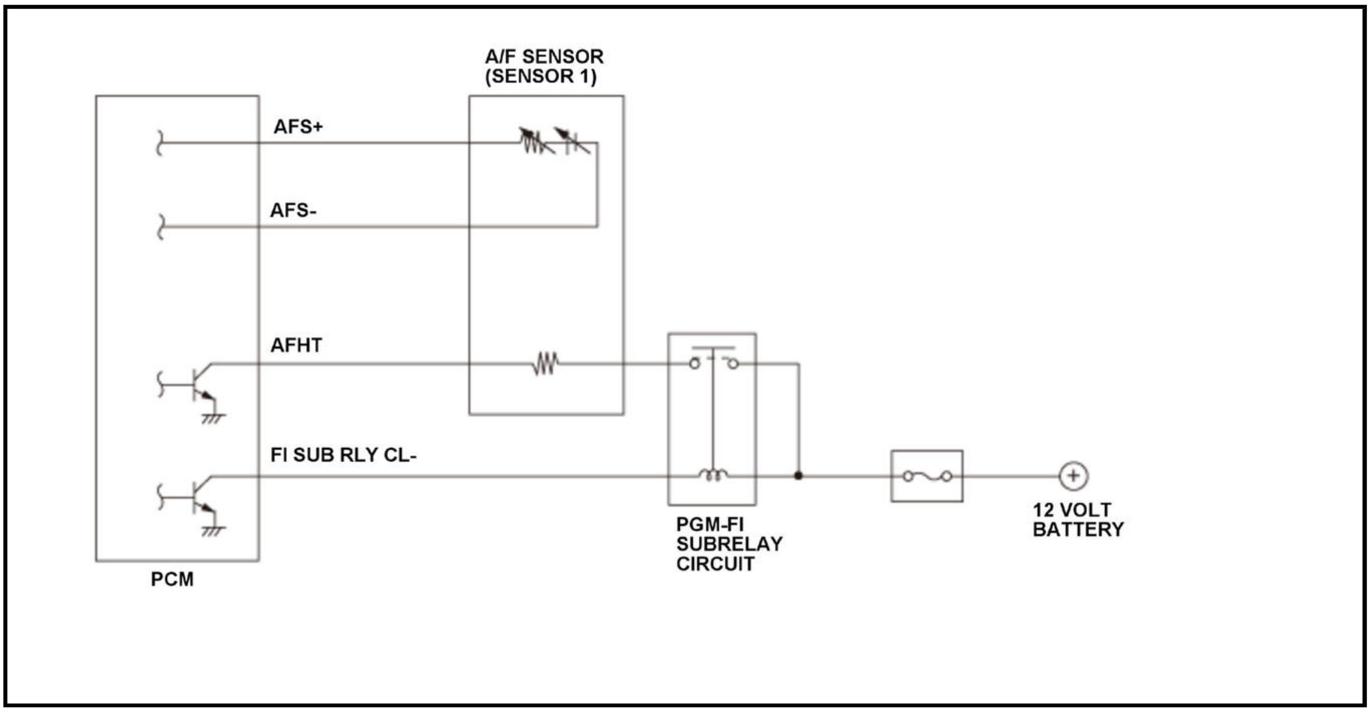

The air/fuel ratio (A/F) sensor (sensor 1) is installed in the exhaust manifold and detects oxygen content in the exhaust gas. The A/F sensor (sensor 1) transmits a signal to the powertrain control module (PCM), and the PCM controls fuel injection duration by comparing the target air/fuel ratio with the A/F sensor (sensor 1) signal. If the IP terminal voltage is within a specified range when the A/F sensor (sensor 1) pump cell voltage is excessively high, the PCM detects a malfunction and stores a DTC.

Monitor Execution, Sequence, Duration, DTC Type

Execution	Continuous
Sequence	None
Duration	15 seconds or more
DTC Type	Two drive cycles, MIL on

Enable Conditions

Condition	Minimum	Maximum
12 volt battery voltage [BATTERY]	9.0 V	-
State of the engine	Running	

[ ]: HDS Parameter

Malfunction Threshold

The IP terminal voltage is between 2.18 V to 2.41 V for at least 15 seconds.

Possible Cause

NOTE: The causes shown may not be a complete list of all potential problems, and it is possible that there may be other causes.

- A/F sensor (sensor 1) failure
- A/F sensor (sensor 1) IP line open
- PCM internal circuit failure

Confirmation Procedure

Operating Condition

- Start the engine. Hold the engine speed [ENGINE SPEED] at 3, 000 rpm without load (in P or N) until the radiator fan comes on.
- Let the engine idle for at least 2 minutes.

[ ]: HDS Parameter

With the HDS

None.

Diagnosis Details

Conditions for setting the DTC

When a malfunction is detected during the first drive cycle, a Pending DTC is stored in the PCM memory. If the malfunction returns in the next (second) drive cycle, the MIL comes on and a Confirmed DTC and the freeze data are stored.

Conditions for clearing the DTC

The MIL is cleared if the malfunction does not return in three consecutive trips in which the diagnostic runs. The MIL, the Pending DTC, the Confirmed DTC, and the freeze data can be cleared with the scan tool Clear command or by disconnecting the 12 volt battery.

DTC P2238 (1.5 L ENGINE)

DTC P2238: Air/Fuel Ratio (A/F) Sensor (Sensor 1) IP Circuit Low Voltage

General Description

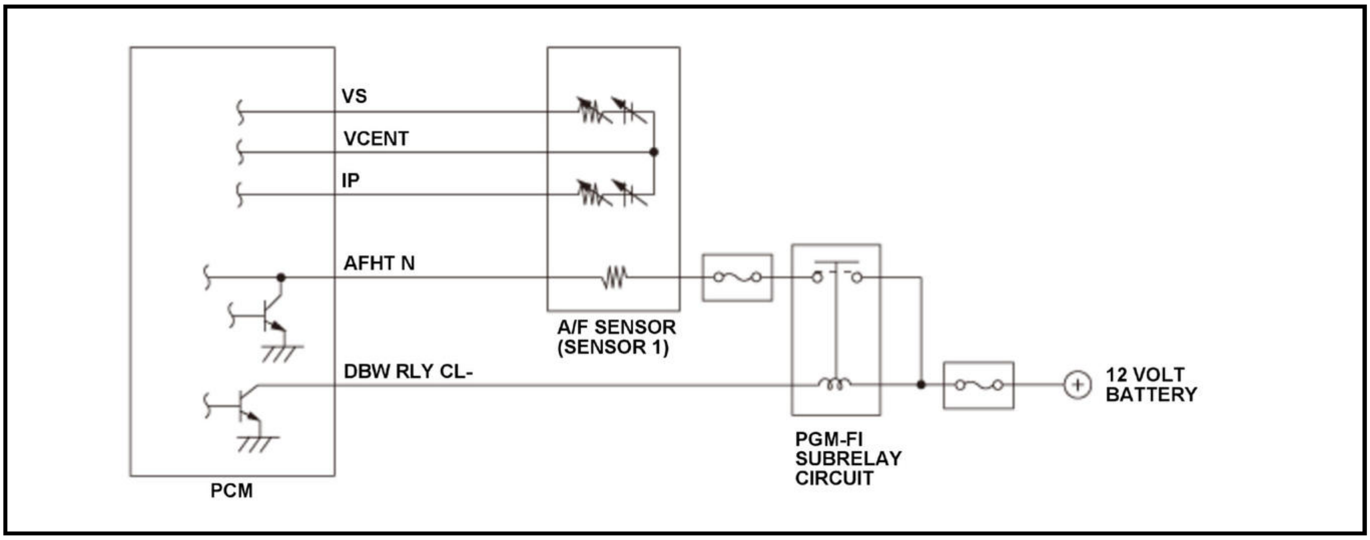

The air/fuel ratio (A/F) sensor (sensor 1) is installed in the exhaust manifold and detects oxygen content in the exhaust gas. The A/F sensor (sensor 1) transmits a signal to the powertrain control module (PCM), and the PCM controls fuel injection duration by comparing the target air/fuel ratio with the A/F sensor (sensor 1) signal. If the IP terminal voltage is a specified voltage when the self-diagnosis function in the PCM detects an abnormal condition, the PCM detects a malfunction and stores a DTC.

Monitor Execution, Sequence, Duration, DTC Type

Execution	Continuous
Sequence	None
Duration	5 seconds or more

DTC Type	Two drive cycles, MIL on

Enable Conditions

Condition	Minimum	Maximum
12 volt battery voltage [BATTERY]	9.0 V	-
State of the engine	Running	

[ ]: HDS Parameter

Malfunction Threshold

One of these symptoms occurs:

- When the element temperature is low before the sensor becomes active:

  The IP terminal voltage is 2.0 V or less for at least 5 seconds after the self-diagnosis function in the PCM detects low voltage abnormal for 0.5 seconds.

- When the element temperature is high before the sensor becomes active:

  The IP terminal voltage is 2.0 V or less for at least 5 seconds after the self-diagnosis function in the PCM detects short circuit for three times and the heater is stopped for 5 seconds.

Possible Cause

NOTE: The causes shown may not be a complete list of all potential problems, and it is possible that there may be other causes.

- A/F sensor (sensor 1) IP line short to ground
- A/F sensor (sensor 1) failure
- PCM internal circuit failure

Confirmation Procedure

Operating Condition

- Start the engine. Hold the engine speed [ENGINE SPEED] at 3, 000 rpm without load (in P or N) until the radiator fan comes on.
- Let the engine idle for at least 2 minutes.

[ ]: HDS Parameter

With the HDS

None.

Diagnosis Details

Conditions for setting the DTC

When a malfunction is detected during the first drive cycle, a Pending DTC is stored in the PCM memory. If the malfunction returns in the next (second) drive cycle, the MIL comes on and a Confirmed DTC and the freeze data are stored.

Conditions for clearing the DTC

The MIL is cleared if the malfunction does not return in three consecutive trips in which the diagnostic runs. The MIL, the Pending DTC, the Confirmed DTC, and the freeze data can be cleared with the scan tool Clear command or by disconnecting the 12 volt battery.

DTC P2238 (2.4 L ENGINE) (2017 2018 2019)

DTC P2238: Air Fuel Ratio (A/F) Sensor (Sensor 1) AFS+ Circuit Low Voltage

General Description

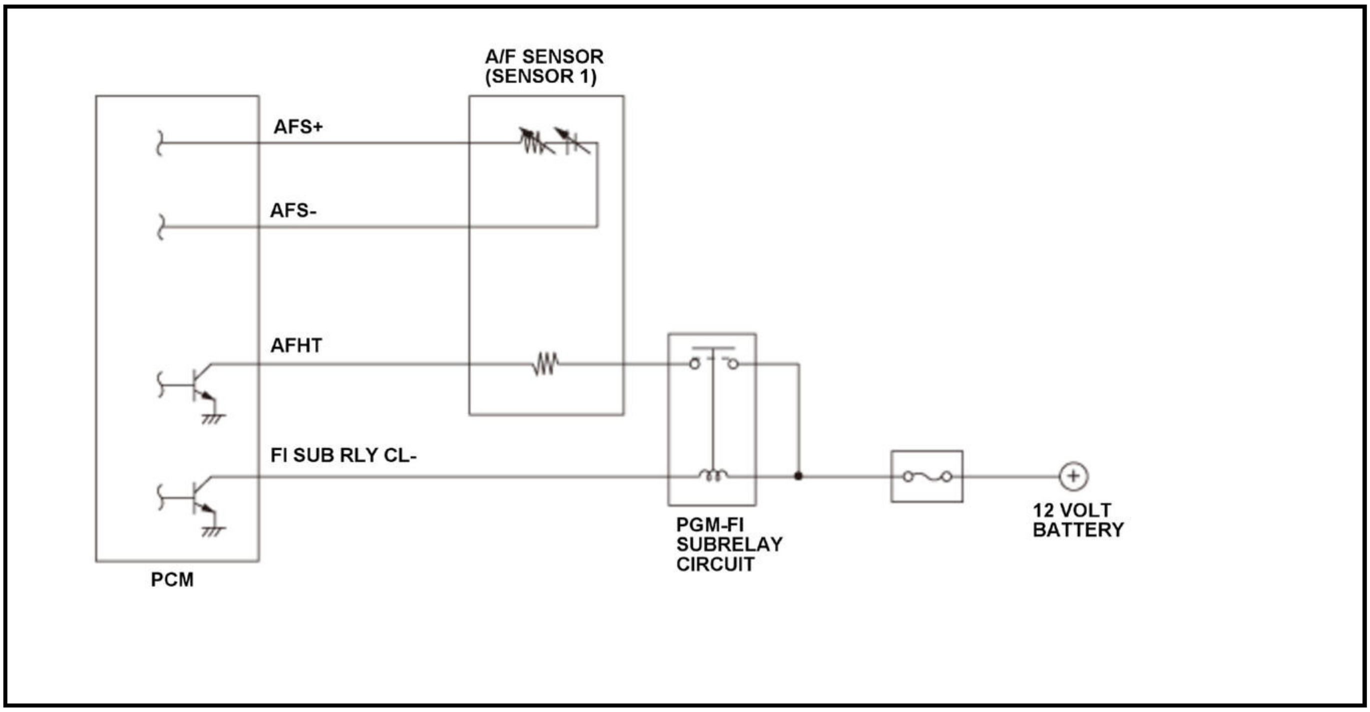

The air/fuel ratio (A/F) sensor (sensor 1) is installed in the exhaust system and detects oxygen content in the exhaust gas. The A/F sensor (sensor 1) transmits a signal to the powertrain control module (PCM). A heater for the sensor element is embedded in the A/F sensor (sensor 1). It heats the sensor to stabilize and speed up the detection of oxygen content. The increase in current through the heater levels off as the voltage applied to the electrode reaches a certain range because the amount of oxygen that goes through the diffusion layer is limited. The current is proportional to the oxygen content in the exhaust gas, so the air/fuel ratio is detected by the measurement of the current. The PCM compares the set target air/fuel ratio to the detected air/fuel ratio and adjusts the fuel injection duration. If the A/F sensor (sensor 1) voltage is low, the air/fuel ratio is lean, and the PCM uses air/fuel ratio feedback control to issue a Rich command. If the A/F sensor (sensor 1) voltage is high, the air/fuel ratio is rich, and the PCM uses air/fuel ratio feedback control to issue a Lean command. If the element is not activated or the PCM terminal voltage is a set value for a set time when power is applied to the A/F sensor (sensor 1) heater, a malfunction is detected and a DTC is stored.

Monitor Execution, Sequence, Duration, DTC Type

Execution	Continuous
Sequence	None
Duration	4 seconds or more
DTC Type	Two drive cycles, MIL on

Enable Conditions

Condition	Minimum	Maximum
12 volt battery voltage [BATTERY]	10.5 V	-
State of the engine	Running	

[ ]: HDS Parameter

Malfunction Threshold

The AFS+ terminal voltage is 0.40 V or less for at least 4 seconds.

Possible Cause

NOTE: The causes shown may not be a complete list of all potential problems, and it is possible that there may be other causes.

- A/F sensor (sensor 1) AFS+ line short to ground
- A/F sensor (sensor 1) failure
- PCM internal circuit failure

Confirmation Procedure

Operating Condition

Start the engine. Hold the engine speed [ENGINE SPEED] at 3, 000 rpm without load (in P or N) until the radiator fan comes on, then let it idle.

With the HDS

None.

Diagnosis Details

Conditions for setting the DTC

When a malfunction is detected during the first drive cycle, a Pending DTC is stored in the PCM memory. If the malfunction returns in the next (second) drive cycle, the MIL comes on and a Confirmed DTC and the freeze data are stored.

Conditions for clearing the DTC

The MIL is cleared if the malfunction does not return in three consecutive trips in which the diagnostic runs. The MIL, the Pending DTC, the Confirmed DTC, and the freeze data can be cleared with the scan tool Clear command or by disconnecting the 12 volt battery.

DTC P2243 (1.5 L ENGINE)

DTC P2243: Air/Fuel Ratio (A/F) Sensor (Sensor 1) VCENT Circuit High Voltage

General Description

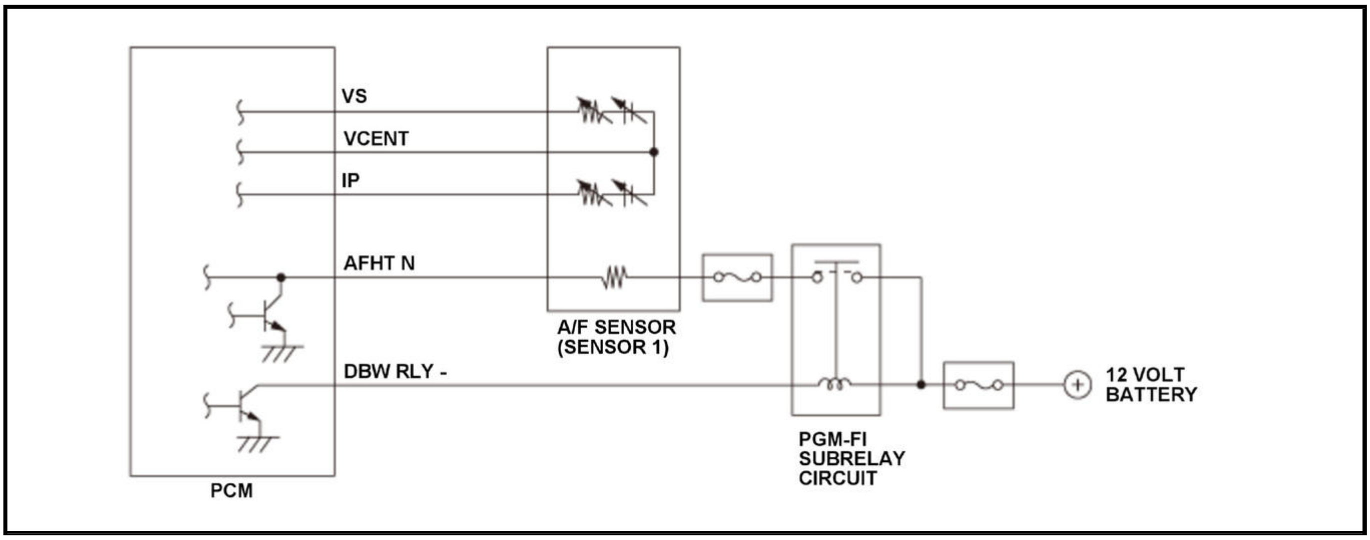

The air/fuel ratio (A/F) sensor (sensor 1) is installed in the exhaust manifold and detects oxygen content in the exhaust gas. The A/F sensor (sensor 1) transmits a signal to the powertrain control module (PCM), and the PCM controls fuel injection duration by comparing the target air/fuel ratio with the A/F sensor (sensor 1) signal. If the A/F sensor (sensor 1) element resistance is a specified value for a set time, the PCM detects a malfunction and stores a DTC.

Monitor Execution, Sequence, Duration, DTC Type

Execution	Continuous
Sequence	None
Duration	5 seconds or more*, 38 seconds or more**
DTC Type	Two drive cycles, MIL on

*: After the sensor becomes active

**: Before the sensor becomes active

Enable Conditions

Condition	Minimum	Maximum
12 volt battery voltage [BATTERY]	9.0 V	-
State of the engine	Running	

[ ]: HDS Parameter

Malfunction Threshold

One of these symptoms occurs:

- The A/F sensor (sensor 1) element resistance is more than 270 Ω for at least 38 seconds**.
- The A/F sensor (sensor 1) element resistance is 270 Ω or less and the self-diagnosis function in the PCM judges as an occurrence of open circuit for at least 5 seconds*.

*: After the sensor becomes active

**: Before the sensor becomes active

Possible Cause

NOTE: The causes shown may not be a complete list of all potential problems, and it is possible that there may be other causes.

- A/F sensor (sensor 1) failure
- A/F sensor (sensor 1) VCENT line open
- PCM internal circuit failure

Confirmation Procedure

Operating Condition

- Start the engine. Hold the engine speed [ENGINE SPEED] at 3, 000 rpm without load (in P or N) until the radiator fan comes on.
- Let the engine idle for at least 2 minutes.

[ ]: HDS Parameter

With the HDS

None.

Diagnosis Details

Conditions for setting the DTC

When a malfunction is detected during the first drive cycle, a Pending DTC is stored in the PCM memory. If the malfunction returns in the next (second) drive cycle, the MIL comes on and a Confirmed DTC and the freeze data are stored.

Conditions for clearing the DTC

The MIL is cleared if the malfunction does not return in three consecutive trips in which the diagnostic runs. The MIL, the Pending DTC, the Confirmed DTC, and the freeze data can be cleared with the scan tool Clear command or by disconnecting the 12 volt battery.

DTC P2245 (1.5 L ENGINE)

DTC P2245: Air/Fuel Ratio (A/F) Sensor (Sensor 1) VCENT Circuit Low Voltage

General Description

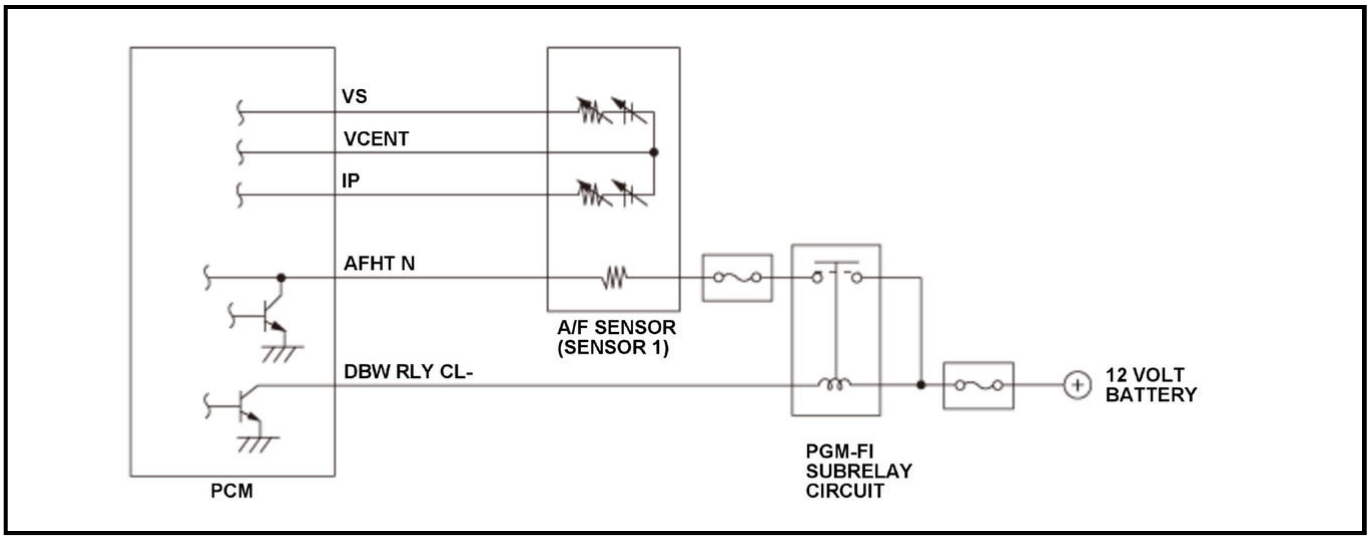

The air/fuel ratio (A/F) sensor (sensor 1) is installed in the exhaust manifold and detects oxygen content in the exhaust gas. The A/F sensor (sensor 1) transmits a signal to the powertrain control module (PCM), and the PCM controls fuel injection duration by comparing the target air/fuel ratio with the A/F sensor (sensor 1) signal. When the self-diagnosis function in the PCM detects a short circuit failure, the heater stops, and if the condition continues for a specified time, the PCM detects VCENT line short to ground and stores a DTC.

Monitor Execution, Sequence, Duration, DTC Type

Execution	Continuous
Sequence	None
Duration	5 seconds or more
DTC Type	Two drive cycles, MIL on

Enable Conditions

Condition	Minimum	Maximum
12 volt battery voltage [BATTERY]	9.0 V	-
State of the engine	Running	

[ ]: HDS Parameter

Malfunction Threshold

The PCM detects VCENT line short to ground after the self-diagnosis function in the PCM judges as an occurrence of short circuit for at least 5 seconds.

Possible Cause

NOTE: The causes shown may not be a complete list of all potential problems, and it is possible that there may be other causes.

- A/F sensor (sensor 1) failure
- A/F sensor (sensor 1) VCENT line short to ground
- PCM internal circuit failure

Confirmation Procedure

Operating Condition

- Start the engine. Hold the engine speed [ENGINE SPEED] at 3, 000 rpm without load (in P or N) until the radiator fan comes on.
- Let the engine idle for at least 2 minutes.

[ ]: HDS Parameter

With the HDS

None.

Diagnosis Details

Conditions for setting the DTC

When a malfunction is detected during the first drive cycle, a Pending DTC is stored in the PCM memory. If the malfunction returns in the next (second) drive cycle, the MIL comes on and a Confirmed DTC and the freeze data are stored.

Conditions for clearing the DTC

The MIL is cleared if the malfunction does not return in three consecutive trips in which the diagnostic runs. The MIL, the Pending DTC, the Confirmed DTC, and the freeze data can be cleared with the scan tool Clear command or by disconnecting the 12 volt battery.

DTC P2251 (1.5 L ENGINE)

DTC P2251: Air/Fuel Ratio (A/F) Sensor (Sensor 1) VS Circuit High Voltagege

General Description

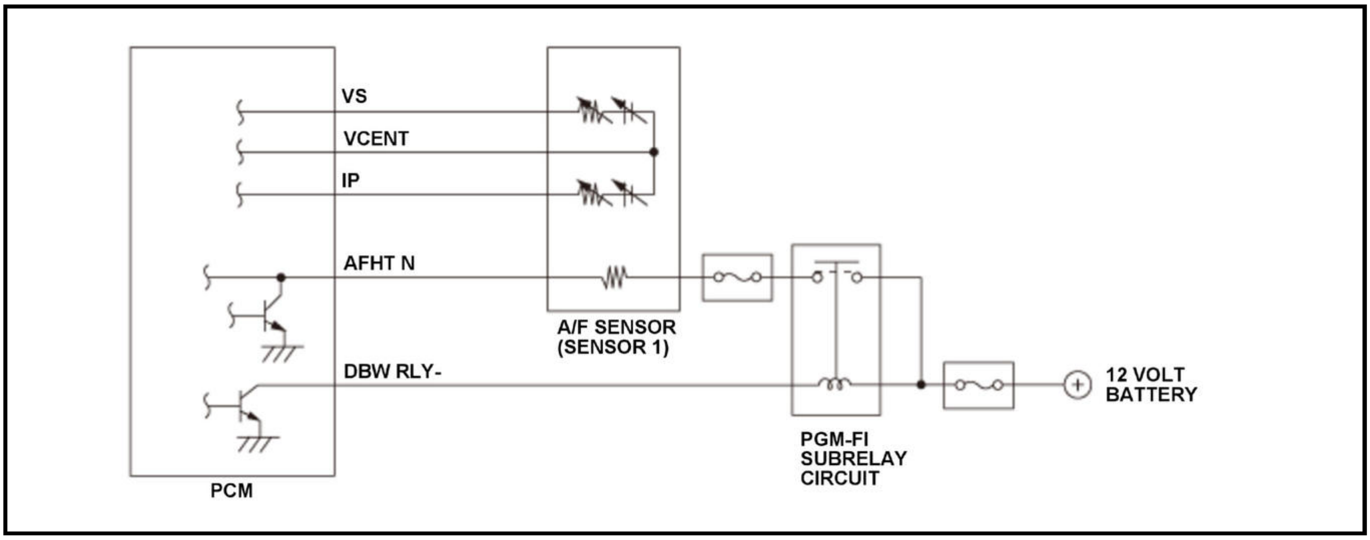

The air/fuel ratio (A/F) sensor (sensor 1) is installed in the exhaust manifold and detects oxygen content in the exhaust gas. The A/F sensor (sensor 1) transmits a signal to the powertrain control module (PCM), and the PCM controls fuel injection duration by comparing the target air/fuel ratio with the A/F sensor (sensor 1) signal. When the VS voltage is a specified value for a set time, the PCM detects a malfunction and stores a DTC.

Monitor Execution, Sequence, Duration, DTC Type

Execution	Continuous
Sequence	None
Duration	38 seconds or more
DTC Type	Two drive cycles, MIL on

Enable Conditions

Condition	Minimum	Maximum
12 volt battery voltage [BATTERY]	9.0 V	-
State of the engine	Running	

[ ]: HDS Parameter

Malfunction Threshold

The VS terminal voltage is 3.7 V or more for at least 38 seconds.

Possible Cause

NOTE: The causes shown may not be a complete list of all potential problems, and it is possible that there may be other causes.

- A/F sensor (sensor 1) failure
- A/F sensor (sensor 1) VS line open
- PCM internal circuit failure

Confirmation Procedure

Operating Condition

- Start the engine. Hold the engine speed [ENGINE SPEED] at 3, 000 rpm without load (in P or N) until the radiator fan comes on.
- Let the engine idle for at least 2 minutes.

[ ]: HDS Parameter

With the HDS

None.

Diagnosis Details

Conditions for setting the DTC

When a malfunction is detected during the first drive cycle, a Pending DTC is stored in the PCM memory. If the malfunction returns in the next (second) drive cycle, the MIL comes on and a Confirmed DTC and the freeze data are stored.

Conditions for clearing the DTC

The MIL is cleared if the malfunction does not return in three consecutive trips in which the diagnostic runs. The MIL, the Pending DTC, the Confirmed DTC, and the freeze data can be cleared with the scan tool Clear command or by disconnecting the 12 volt battery.

DTC P2252 (1.5 L ENGINE)

DTC P2252: Air/Fuel Ratio (A/F) Sensor (Sensor 1) VS Circuit Low Voltage

General Description

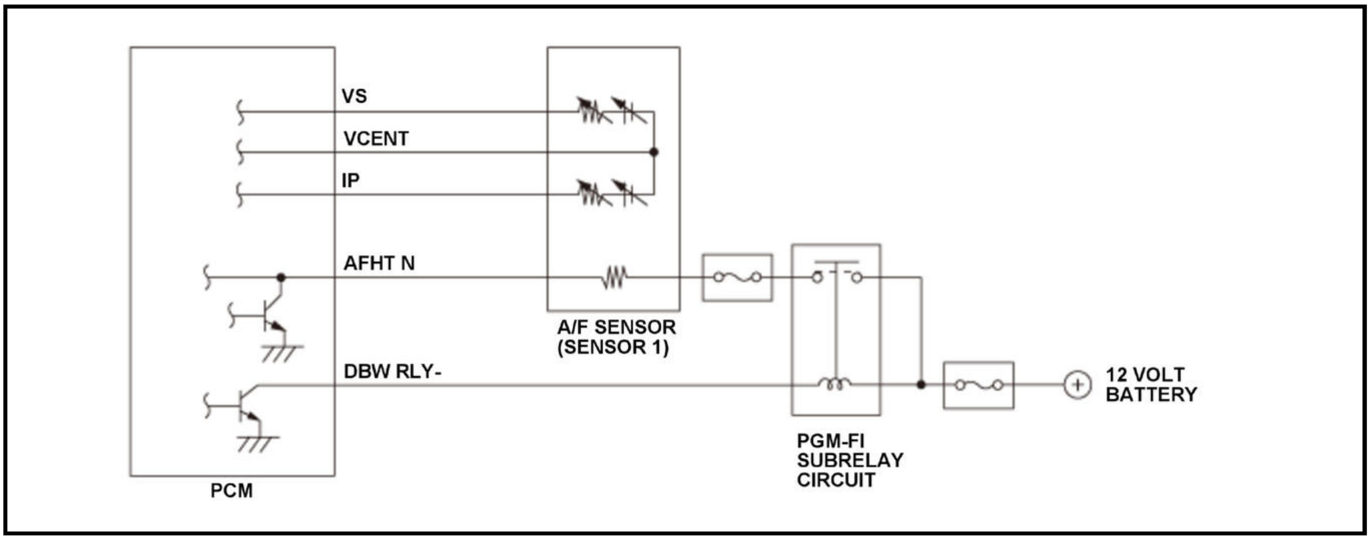

The air/fuel ratio (A/F) sensor (sensor 1) is installed in the exhaust manifold and detects oxygen content in the exhaust gas. The A/F sensor (sensor 1) transmits a signal to the powertrain control module (PCM), and the PCM controls fuel injection duration by comparing the target air/fuel ratio with the A/F sensor (sensor 1) signal. When the self-diagnosis function in the PCM detects a short circuit failure, the heater stops, and if the condition continues for a specified time, or if the VS terminal voltage is a specified value after a current is applied to the pump cell for a specified time, the PCM detects VS line short to ground and stores a DTC.

Monitor Execution, Sequence, Duration, DTC Type

Execution	Continuous
Sequence	None

Duration	5 seconds or more
DTC Type	Two drive cycles, MIL on

Enable Conditions

Condition	Minimum	Maximum
12 volt battery voltage [BATTERY]	9.0 V	-
State of the engine	Running	

[ ]: HDS Parameter

Malfunction Threshold

One of these symptoms occurs:

- The PCM detects VS line short to ground after the self-diagnosis function in the PCM judges as an occurrence of short circuit for at least 5 seconds.
- The VS terminal voltage is 2.6 V or less after a current is applied to the sensor pump cell for at least 0.5 seconds.

Possible Cause

NOTE: The causes shown may not be a complete list of all potential problems, and it is possible that there may be other causes.

- A/F sensor (sensor 1) VS line short to ground
- A/F sensor (sensor 1) failure
- PCM internal circuit failure

Confirmation Procedure

Operating Condition

- Start the engine. Hold the engine speed [ENGINE SPEED] at 3, 000 rpm without load (in P or N) until the radiator fan comes on.
- Let the engine idle for at least 2 minutes.

[ ]: HDS Parameter

With the HDS

None.

Diagnosis Details

Conditions for setting the DTC

When a malfunction is detected during the first drive cycle, a Pending DTC is stored in the PCM memory. If the malfunction returns in the next (second) drive cycle, the MIL comes on and a Confirmed DTC and the freeze data are stored.

Conditions for clearing the DTC

The MIL is cleared if the malfunction does not return in three consecutive trips in which the diagnostic runs. The MIL, the Pending DTC, the Confirmed DTC, and the freeze data can be cleared with the scan tool Clear command or by disconnecting the 12 volt battery.

DTC P2252 (2.4 L ENGINE) (2017 2018 2019)

DTC P2252: Air Fuel Ratio (A/F) Sensor (Sensor 1) AFS- Circuit Low Voltage

General Description

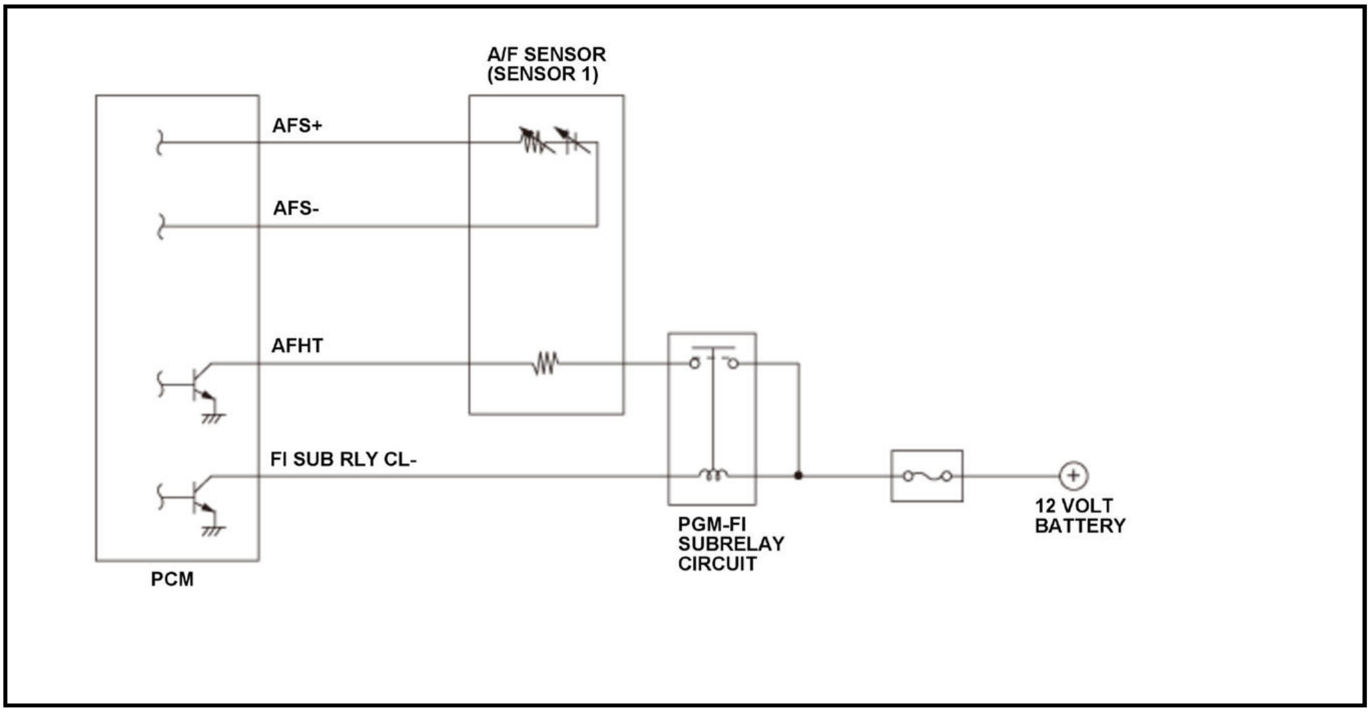

The air/fuel ratio (A/F) sensor (sensor 1) is installed in the exhaust system and detects oxygen content in the exhaust gas. The A/F sensor (sensor 1) transmits a signal to the powertrain control module (PCM). A heater for the sensor element is embedded in the A/F sensor (sensor 1). It heats the sensor to stabilize and speed up the detection of oxygen content. The increase in current through the heater levels off as the voltage applied to the electrode reaches a certain range because the amount of oxygen that goes through the diffusion layer is limited. The current is proportional to the oxygen content in the exhaust gas, so the air/fuel ratio is detected by the measurement of the current. The PCM compares the set target air/fuel ratio to the detected air/fuel ratio and adjusts the fuel injection duration. If the A/F sensor (sensor 1) voltage is low, the air/fuel ratio is lean, and the PCM uses air/fuel ratio feedback control to issue a Rich command. If the A/F sensor (sensor 1) voltage is high, the air/fuel ratio is rich, and the PCM uses air/fuel ratio feedback control to issue a Lean command. If the element is not activated or the PCM terminal voltage is a set value for a set time when power is applied to the A/F sensor (sensor 1) heater, a malfunction is detected and a DTC is stored.

Monitor Execution, Sequence, Duration, DTC Type

Execution	Continuous
Sequence	None
Duration	4 seconds or more
DTC Type	Two drive cycles, MIL on

Enable Conditions

Condition	Minimum	Maximum
12 volt battery voltage [BATTERY]	10.5 V	-
State of the engine	Running	

[ ]: HDS Parameter

Malfunction Threshold

The AFS- terminal voltage is 0.40 V or less for at least 4 seconds.

Possible Cause

NOTE: The causes shown may not be a complete list of all potential problems, and it is possible that there may be other causes.

- A/F sensor (sensor 1) AFS- line open
- A/F sensor (sensor 1) failure
- PCM internal circuit failure

Confirmation Procedure

Operating Condition

Start the engine. Hold the engine speed [ENGINE SPEED] at 3, 000 rpm without load (in P or N) until the radiator fan comes on, then let it idle.

With the HDS

None.

Diagnosis Details

Conditions for setting the DTC

When a malfunction is detected during the first drive cycle, a Pending DTC is stored in the PCM memory. If the malfunction returns in the next (second) drive cycle, the MIL comes on and a Confirmed DTC and the freeze data are stored.

Conditions for clearing the DTC

The MIL is cleared if the malfunction does not return in three consecutive trips in which the diagnostic runs. The MIL, the Pending DTC, the Confirmed DTC, and the freeze data can be cleared with the scan tool Clear command or by disconnecting the 12 volt battery.

DTC P2270 (1.5 L ENGINE)

DTC P2270: Secondary Heated Oxygen Sensor (Secondary HO2S (Sensor 2)) Circuit Signal Stuck Lean

General Description

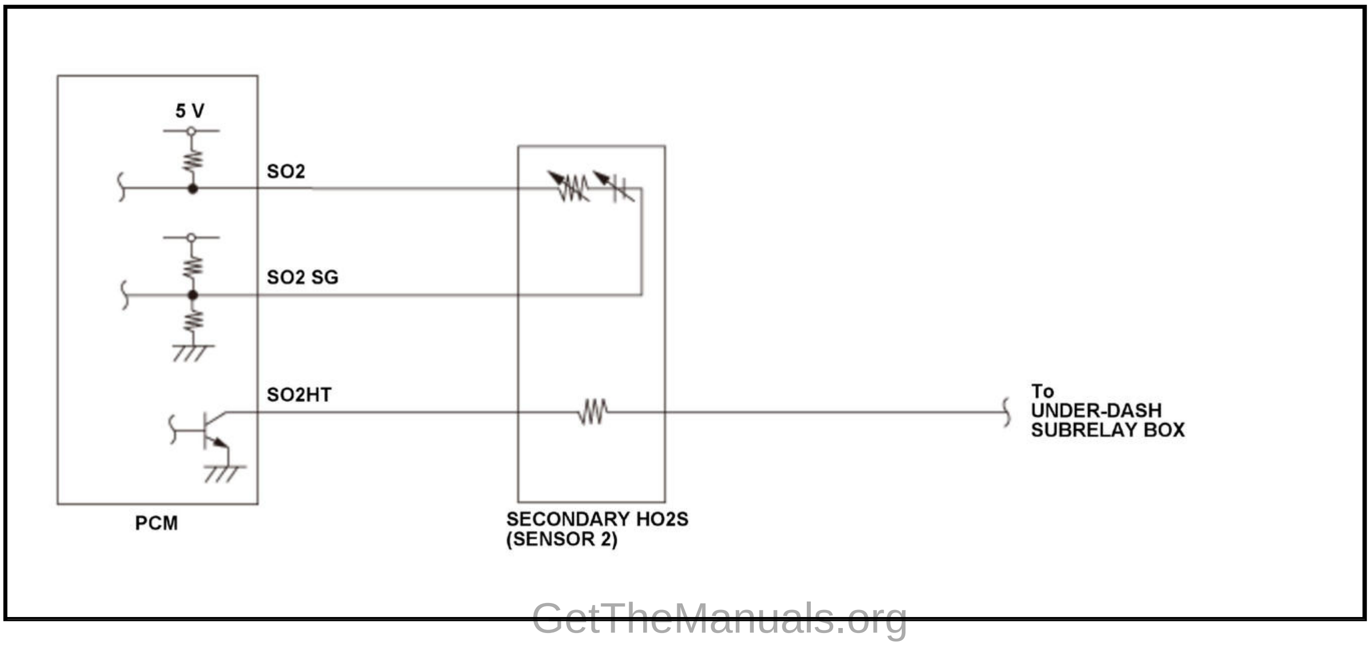

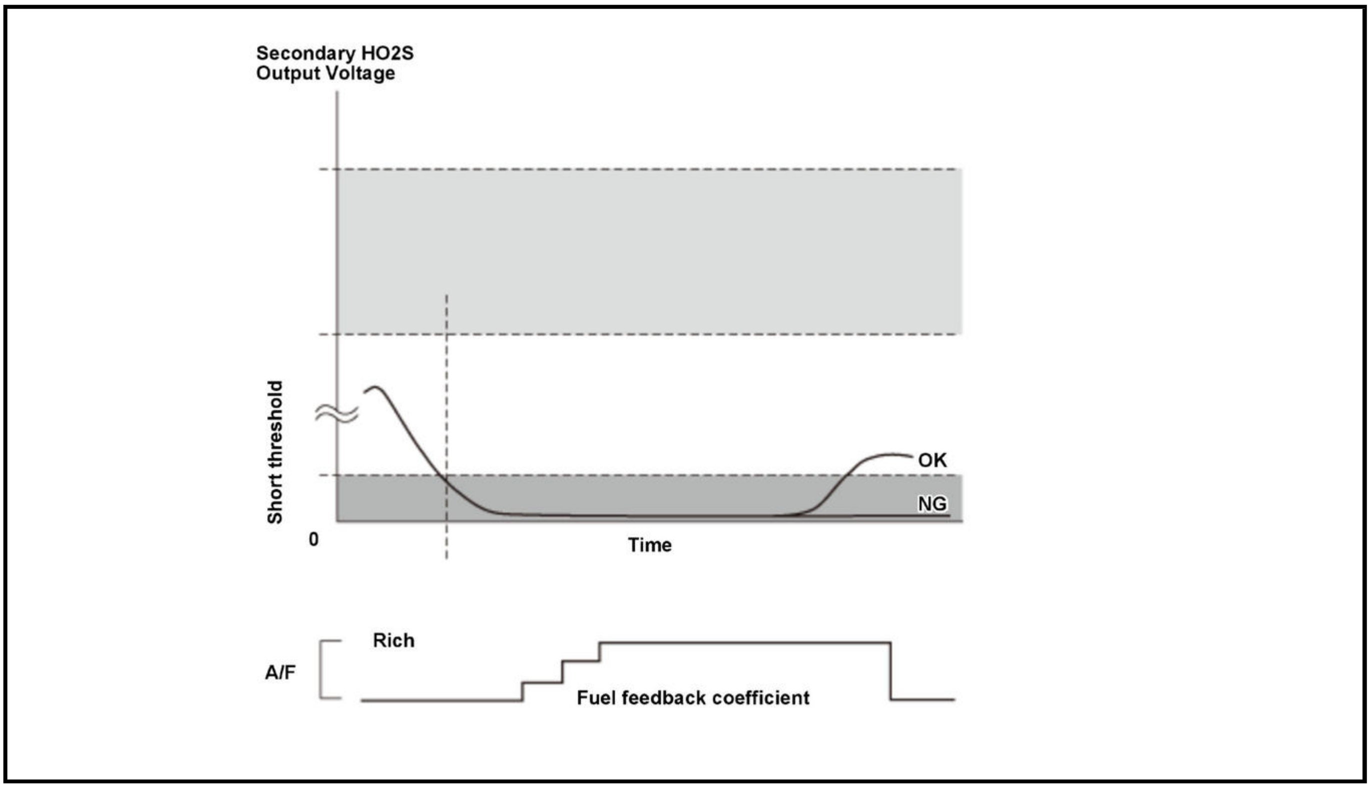

The secondary heated oxygen sensor (secondary HO2S (sensor 2)) detects the oxygen content in the exhaust gas downstream of the three way catalytic converter (TWC) during stoichiometric air/fuel ratio feedback control. The powertrain control module (PCM) controls the air/fuel ratio from the air/fuel ratio (A/F) sensor (sensor 1) output voltage to optimize the TWC efficiency. When power is applied to the secondary HO2S (sensor 2) heater, if the secondary HO2S (sensor 2) output continues to be low (lean) during feedback control, the PCM detects a malfunction and stores a DTC.

Monitor Execution, Sequence, Duration, DTC Type

Execution	Continuous
Sequence	None
Duration	30.0 seconds or more
DTC Type	Two drive cycles, MIL on

Enable Conditions

Condition	Minimum	Maximum
Elapsed time that secondary HO2S activity is not monitored after starting the engine	15 seconds	-
Engine coolant temperature [ECT SENSOR 1]	156 deg. F (69 deg. C)	-
Intake air temperature [IAT Sensor (1)]	-13 deg. F (-25 deg. C)	-
Fuel trim	0.75	1.47
Fuel feedback	Closed loop	
Other	Cruise load or more	

[ ]: HDS Parameter

Malfunction Threshold

The secondary HO2S (sensor 2) output voltage [HO2S S2] is 0.05 V or less for at least 30.0 seconds.

[ ]: HDS Parameter

Possible Cause

NOTE: The causes shown may not be a complete list of all potential problems, and it is possible that there may be other causes.

- Secondary HO2S (sensor 2) lean side stuck

Confirmation Procedure

Operating Condition

- Start the engine, and let it idle until the radiator fan comes on.
- Drive immediately at a steady engine speed [ENGINE SPEED] between 1, 500 - 3, 000 rpm for at least 30 seconds.

- When freeze data is stored, drive the vehicle under those conditions instead of Driving Pattern step 2.
- Drive the vehicle in this manner only if the traffic regulations and ambient conditions allow.

[ ]: HDS Parameter

With the HDS

None.

Diagnosis Details

Conditions for setting the DTC

When a malfunction is detected during the first drive cycle, a Pending DTC is stored in the PCM memory. If the malfunction returns in the next (second) drive cycle, the MIL comes on and a Confirmed DTC and the freeze data are stored.

Conditions for clearing the DTC

The MIL is cleared if the malfunction does not return in three consecutive trips in which the diagnostic runs. The MIL, the Pending DTC, the Confirmed DTC, and the freeze data can be cleared with the scan tool Clear command or by disconnecting the 12 volt battery.

DTC P2270 (2.4 L ENGINE) (2017 2018 2019)

DTC P2270: Secondary Heated Oxygen Sensor (Secondary HO2S (Sensor 2)) Circuit Signal Stuck Lean

General Description

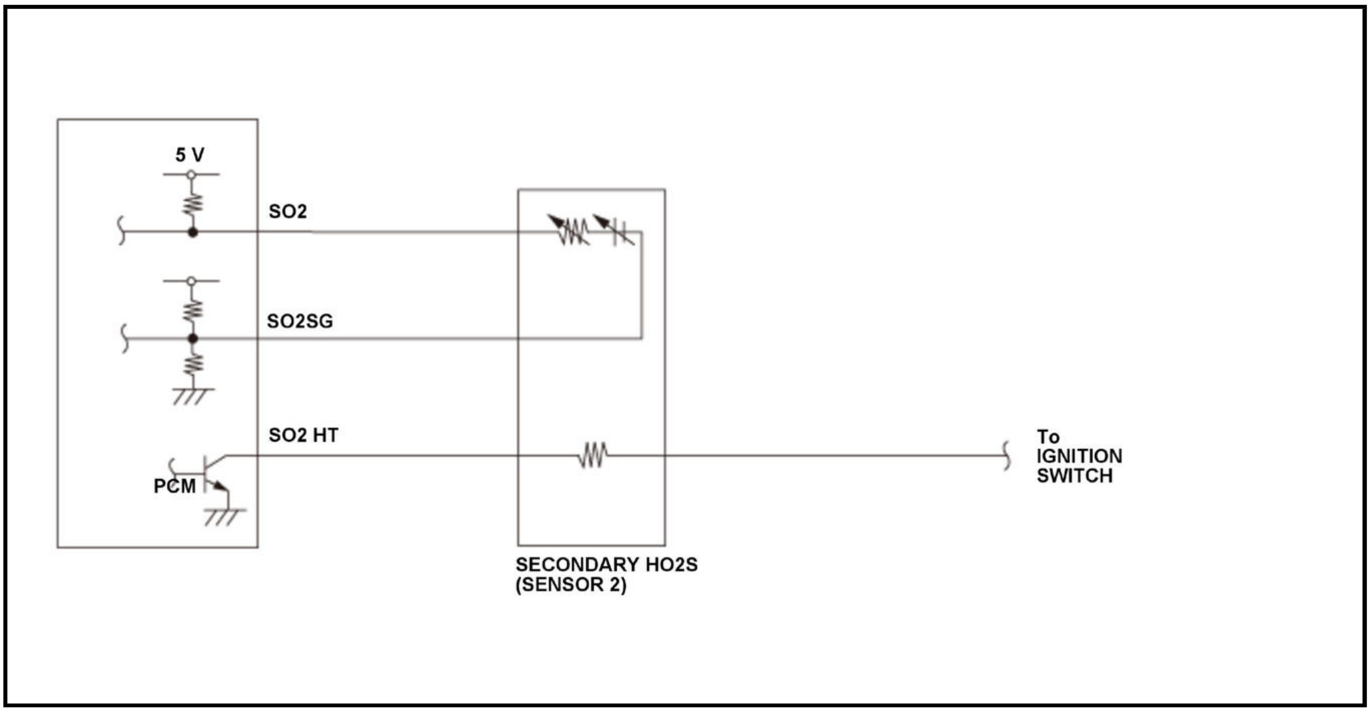

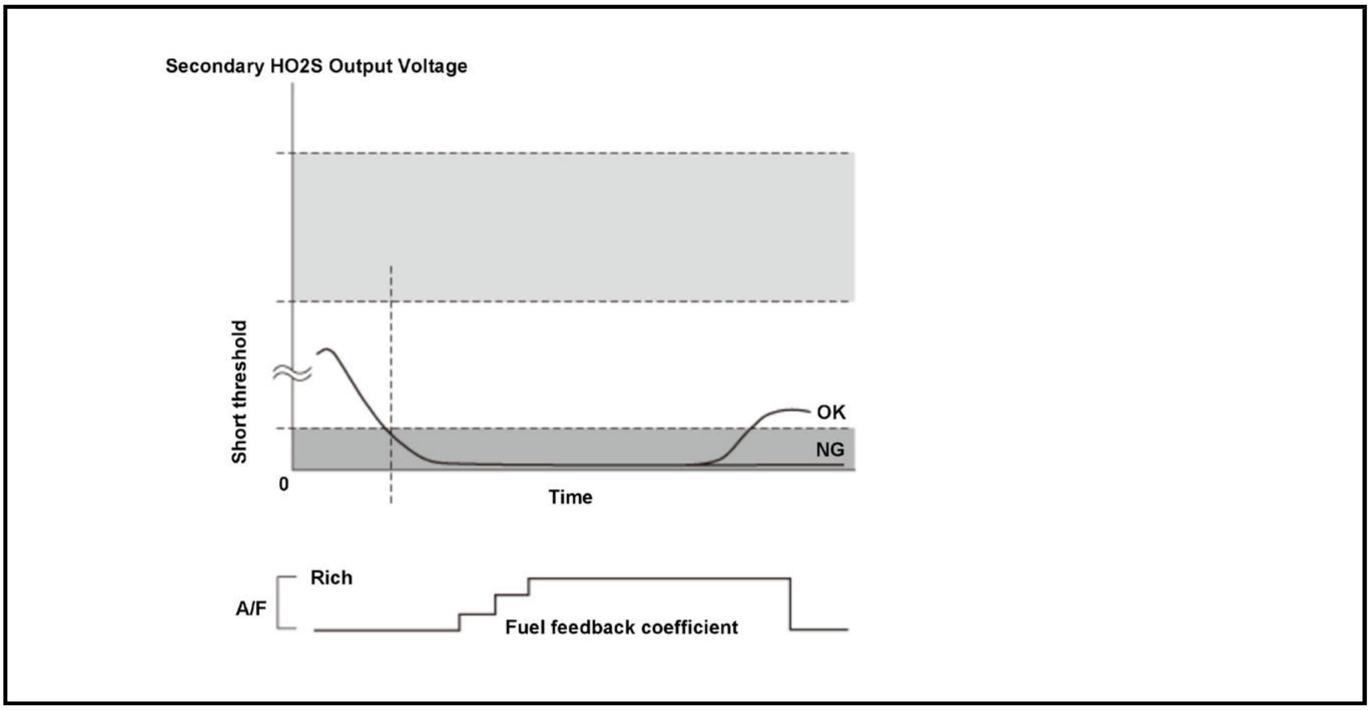

The secondary heated oxygen sensor (secondary HO2S (sensor 2)) detects the oxygen content in the exhaust gas downstream of the warm up three way catalytic converter (WU-TWC) during stoichiometric air/fuel ratio feedback control. The powertrain control module (PCM) controls the air/fuel ratio from the air/fuel ratio (A/F) sensor (sensor 1) output voltage so that the WU-TWC efficiency is optimized. When power is applied to the secondary HO2S (sensor 2) heater, if the secondary HO2S (sensor 2) output continues to be low (lean) during feedback control, the PCM detects a malfunction and stores a DTC.

Monitor Execution, Sequence, Duration, DTC Type

Execution	Continuous
Sequence	None
Duration	30 seconds or more
DTC Type	Two drive cycles, MIL on

Enable Conditions

Condition	Minimum	Maximum
Elapsed time that secondary HO2S activity is not monitored after starting the engine	15 seconds	-
Engine coolant temperature[ECT SENSOR 1]	156 deg. F (69 deg. C)	-
Intake air temperature [IAT SENSOR (1)]	-13 deg. F (-25 deg. C)	-
Fuel trim	0.69	1.47
Fuel feedback	Closed loop	
Other	Cruise load or more	

[ ]: HDS Parameter

Malfunction Threshold

The secondary HO2S (sensor 2) output voltage [HO2S S2] is 0.05 V or less for at least 30 seconds.

Possible Cause

NOTE: The causes shown may not be a complete list of all potential problems, and it is possible that there may be other causes.

- Secondary HO2S (sensor 2) lean stuck

Confirmation Procedure

Operating Condition

- Start the engine, and let it idle until the radiator fan comes on.
- Drive immediately at a steady engine speed [ENGINE SPEED] between 1, 500 - 3, 000 rpm for at least 30 seconds.

- When freeze data is stored, drive the vehicle under those conditions instead of Driving Pattern step 2.
- Drive the vehicle in this manner only if the traffic regulations and ambient conditions allow.

With the HDS

None.

Diagnosis Details

Conditions for setting the DTC

When a malfunction is detected during the first drive cycle, a Pending DTC is stored in the PCM memory. If the malfunction returns in the next (second) drive cycle, the MIL comes on and a Confirmed DTC and the freeze data are stored.

Conditions for clearing the DTC

The MIL is cleared if the malfunction does not return in three consecutive trips in which the diagnostic runs. The MIL, the Pending DTC, the Confirmed DTC, and the freeze data can be cleared with the scan tool Clear command or by disconnecting the 12 volt battery.

DTC P2279 (1.5 L ENGINE) (2017 2018)

DTC P2279: Intake Air System Leak

General Description

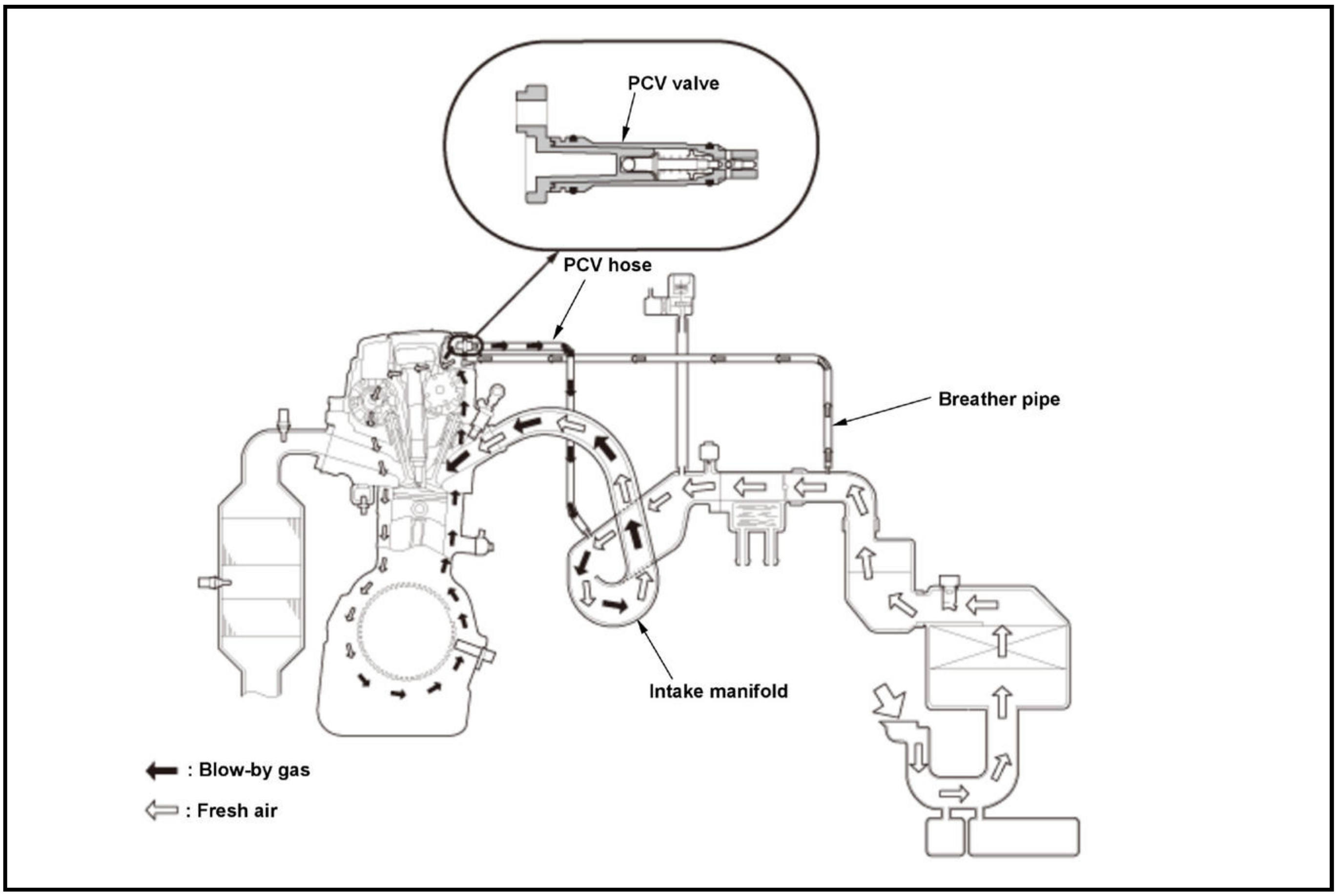

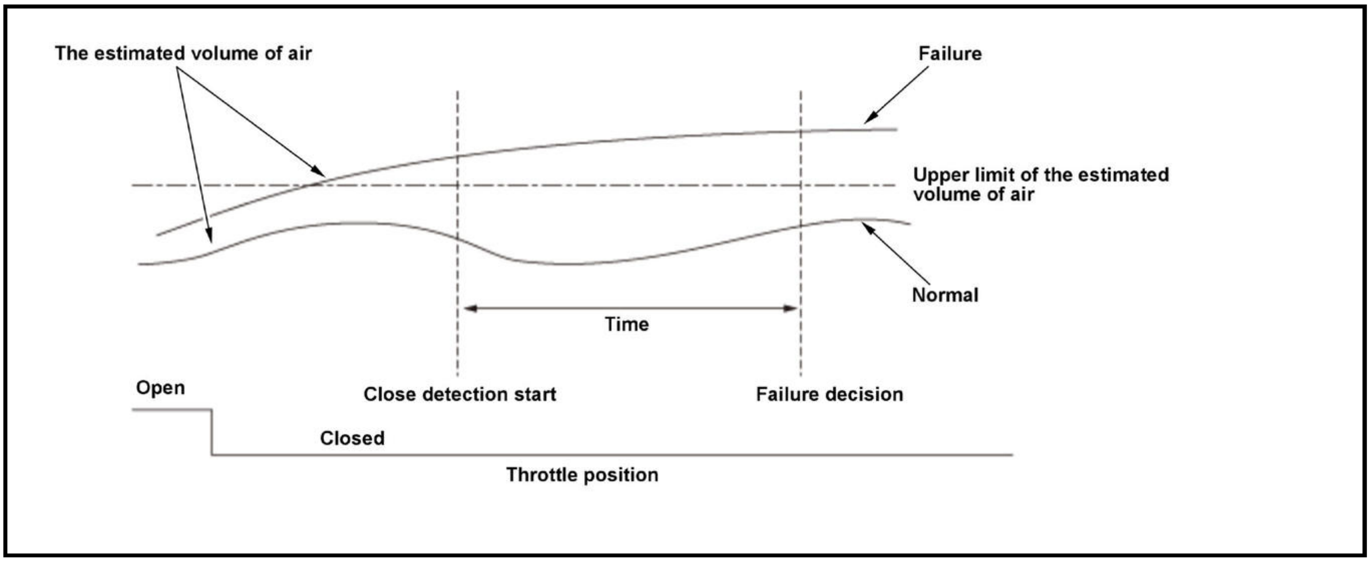

The positive crankcase ventilation (PCV) system reduces hydrocarbon (HC) emissions. The PCV system recirculates unburned air/fuel mixture (blow-by vapor) into the intake manifold so that it is drawn into the engine and burned, thus reducing HC. If the PCV hose comes off at idle with the throttle closed, the amount of air supplied to the engine is considerably more than the amount of air the idle control system supplies. The powertrain control module (PCM) estimates the amount of air supplied to the engine while the throttle valve is fully closed, and if the estimated amount is more than the upper limit, it detects a malfunction and stores a DTC.

Monitor Execution, Sequence, Duration, DTC Type

Execution	Once per driving cycle
Sequence	None
Duration	22 seconds or more

DTC Type	Two drive cycles, MIL on

Enable Conditions

Condition	Minimum	Maximum
Elapsed time after starting the engine	15 seconds	-
Engine coolant temperature [ECT SENSOR 1]	156 deg. F (69 deg. C)	-
Intake air temperature [IAT Sensor (1)]	19 deg. F (-7 deg. C)	-
12 volt battery voltage [BATTERY]	10.5 V	-
Fuel trim	0.75	1.47
Fuel feedback	Closed loop	
Other	At idle	

[ ]: HDS Parameter

Malfunction Threshold

The estimated volume of intake air is 120 L/min (126.8 US qt/min, 105.6 lmp qt/min) - 160 L/min (169.1 US qt/min, 140.8 lmp qt/min) or more.*

*: Depends on engine speed and load

Possible Cause

NOTE: The causes shown may not be a complete list of all potential problems, and it is possible that there may be other causes.

- Vacuum hose fall
- Throttle body air leak
- Intake manifold air leak
- Evaporative emission (EVAP) canister purge valve failure
- Valve timing incorrect

Confirmation Procedure

Operating Condition

- Enter the maintenance mode, then start the engine. Hold the engine speed [ENGINE SPEED] at 3, 000 rpm without load (in P or N) until the radiator fan comes on.
- Let the engine idle for at least 22 seconds.

With the HDS

None.

Diagnosis Details

Conditions for setting the DTC

When a malfunction is detected during the first drive cycle, a Pending DTC is stored in the PCM memory. If the malfunction returns in the next (second) drive cycle, the MIL comes on and a Confirmed DTC, the freeze data, and the on-board snapshot are stored.

Conditions for clearing the DTC

The MIL is cleared if the malfunction does not return in three consecutive trips in which the diagnostic runs. The MIL, the Pending DTC, the Confirmed DTC, the freeze data, and the on-board snapshot can be cleared with the scan tool Clear command or by disconnecting the 12 volt battery.

DTC P2279 (1.5 L ENGINE) (2019)

DTC P2279: Intake Air System Leak

General Description

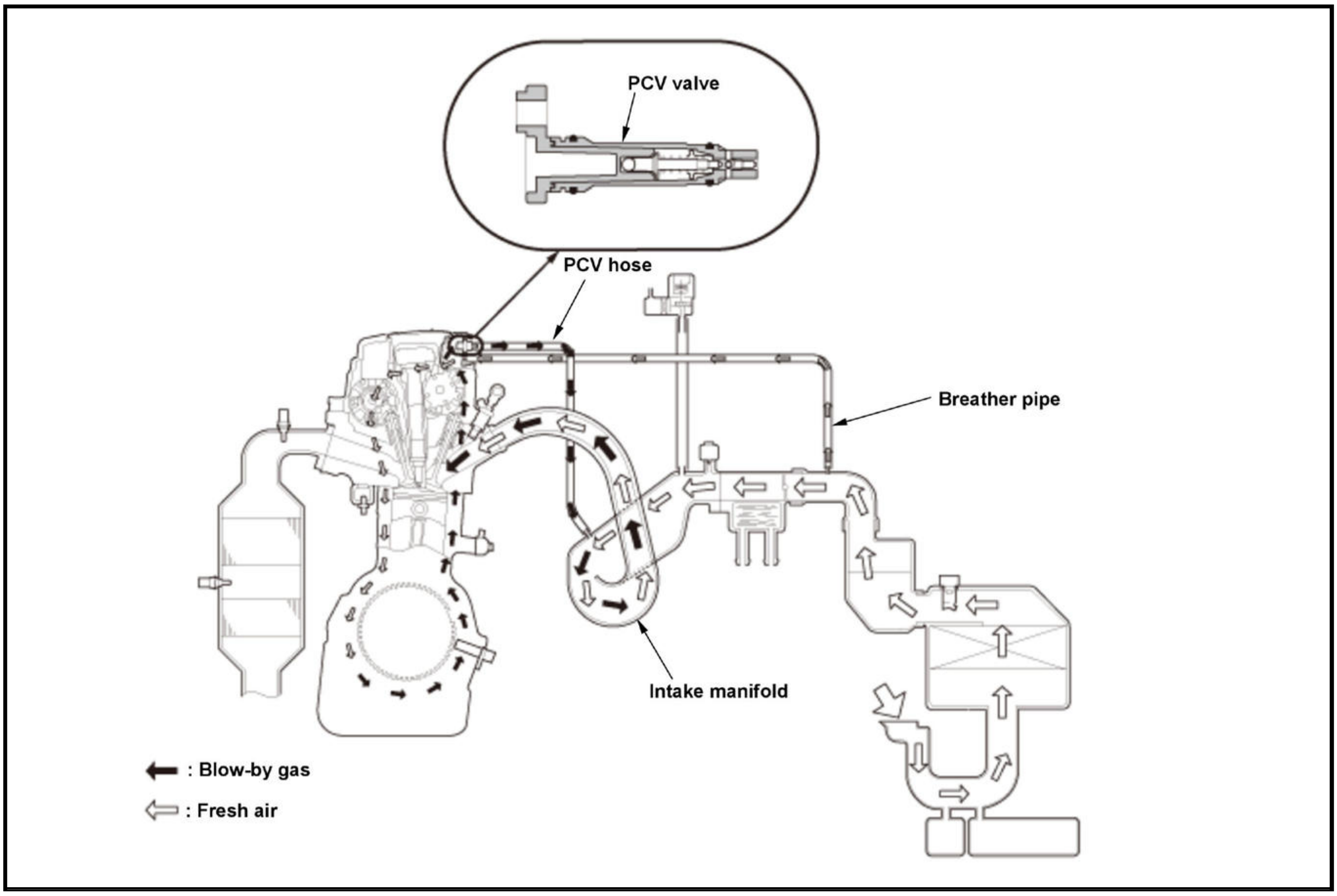

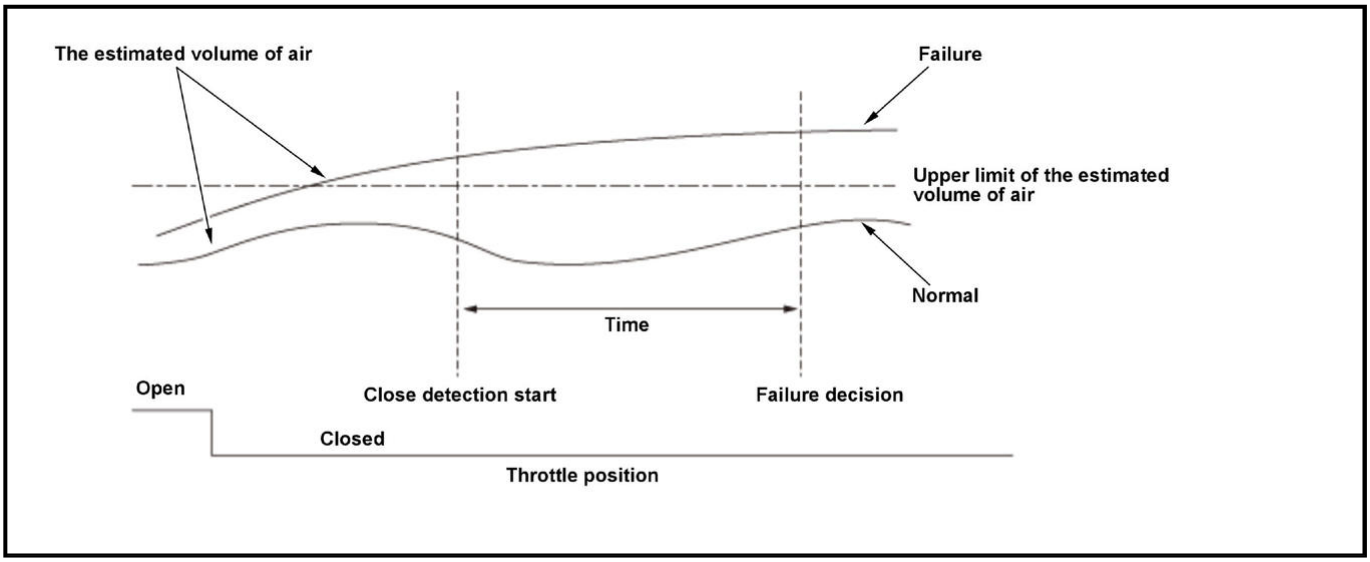

The positive crankcase ventilation (PCV) system reduces hydrocarbon (HC) emissions. The PCV system recirculates unburned air/fuel mixture (blow-by vapor) into the intake manifold so that it is drawn into the engine and burned, thus reducing HC. If the PCV hose comes off at idle with the throttle closed, the amount of air supplied to the engine is considerably more than the amount of air the idle control system supplies. The powertrain control module (PCM) estimates the amount of air supplied to the engine while the throttle valve is fully closed, and if the estimated amount is more than the upper limit, it detects a malfunction and stores a DTC.

Monitor Execution, Sequence, Duration, DTC Type

Execution	Once per driving cycle
Sequence	None
Duration	22 seconds or more
DTC Type	Two drive cycles, MIL on

Enable Conditions

Condition	Minimum	Maximum
Elapsed time after starting the engine	2 seconds	-
Engine coolant temperature [ECT SENSOR 1]	156 deg. F (69 deg. C)	-
Intake air temperature [IAT Sensor (1)]	19 deg. F (-7 deg. C)	-
12 volt battery voltage [BATTERY]	10.5 V	-
Fuel trim	0.75	1.47
Fuel feedback	Closed loop	
Other	At idle	

[ ]: HDS Parameter

Malfunction Threshold

The estimated volume of intake air is 110 L/min (116.2 US qt/min, 96.8 lmp qt/min) - 3276.7 L/min (3462.5 US qt/min, 2883.1 lmp qt/min) or more.*

*: Depends on engine speed and load

Possible Cause

NOTE: The causes shown may not be a complete list of all potential problems, and it is possible that there may be other causes.

- Vacuum hose fall
- Throttle body air leak
- Intake manifold air leak
- Evaporative emission (EVAP) canister purge valve failure
- Valve timing incorrect

Confirmation Procedure

Operating Condition

- Enter the maintenance mode, then start the engine. Hold the engine speed [ENGINE SPEED] at 3, 000 rpm without load (in P or N) until the radiator fan comes on.
- Let the engine idle for at least 22 seconds.

With the HDS

None.

Diagnosis Details

Conditions for setting the DTC

When a malfunction is detected during the first drive cycle, a Pending DTC is stored in the PCM memory. If the malfunction returns in the next (second) drive cycle, the MIL comes on and a Confirmed DTC, the freeze data, and the on-board snapshot are stored.

Conditions for clearing the DTC

The MIL is cleared if the malfunction does not return in three consecutive trips in which the diagnostic runs. The MIL, the Pending DTC, the Confirmed DTC, the freeze data, and the on-board snapshot can be cleared with the scan tool Clear command or by disconnecting the 12 volt battery.

DTC P2279 (1.5 L ENGINE) (2020 2021)

DTC P2279: Intake Air System Leak

General Description

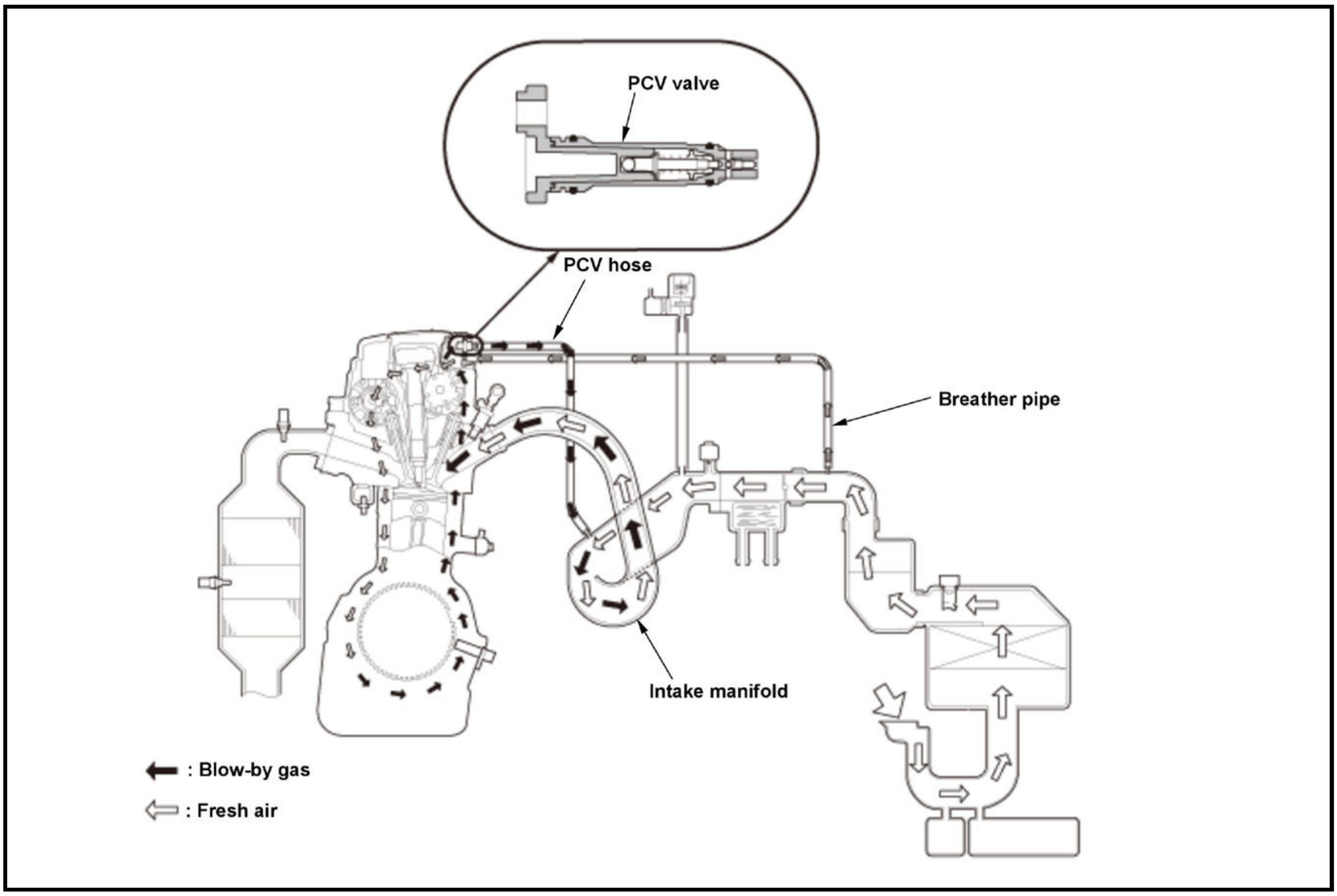

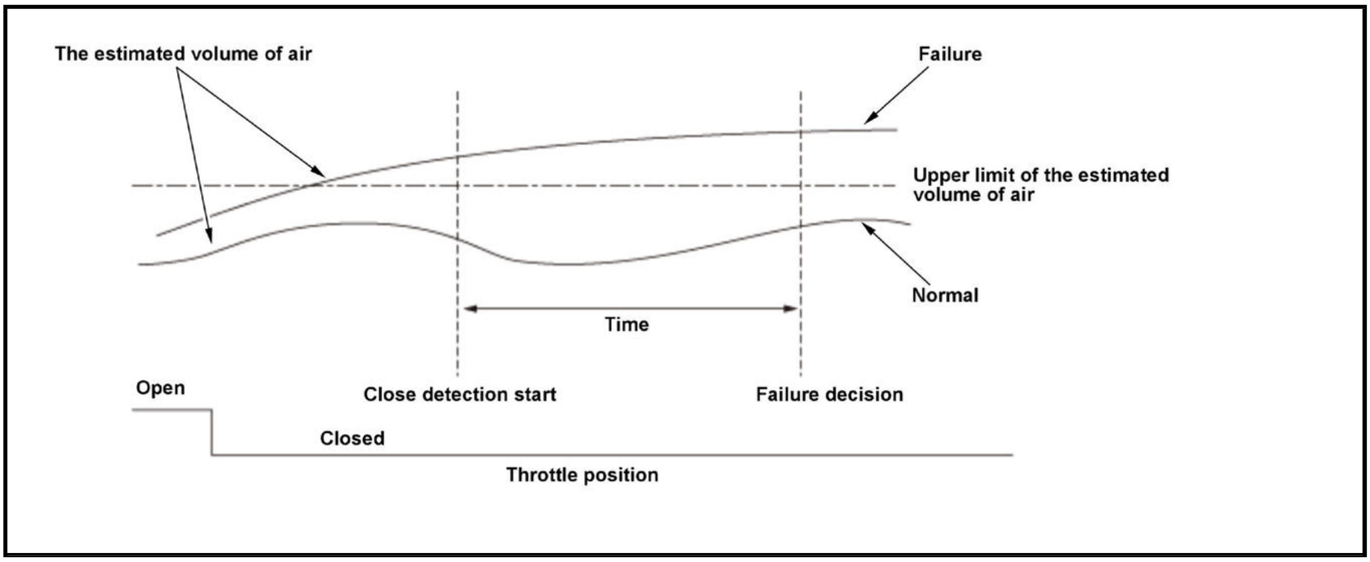

The positive crankcase ventilation (PCV) system reduces hydrocarbon (HC) emissions. The PCV system recirculates unburned air/fuel mixture (blow-by vapor) into the intake manifold so that it is drawn into the engine and burned, thus reducing HC. If the PCV hose comes off at idle with the throttle closed, the amount of air supplied to the engine is considerably more than the amount of air the idle control system supplies. The powertrain control module (PCM) estimates the amount of air supplied to the engine while the throttle valve is fully closed, and if the estimated amount is more than the upper limit, it detects a malfunction and stores a DTC.

Monitor Execution, Sequence, Duration, DTC Type

Execution	Once per driving cycle
Sequence	None
Duration	22 seconds or more
DTC Type	Two drive cycles, MIL on

Enable Conditions

Condition	Minimum	Maximum
Elapsed time after starting the engine	2 seconds	-
Engine coolant temperature [ECT SENSOR 1]	156 deg. F (69 deg. C)	-
Intake air temperature [IAT Sensor (1)]	19 deg. F (-7 deg. C)	-
12 volt battery voltage [BATTERY]	10.5 V	-
Fuel trim	0.75	1.47
Fuel feedback	Closed loop	
Other	At idle	

[ ]: HDS Parameter

Malfunction Threshold

The estimated volume of intake air is 120 L/min (126.8 US qt/min, 105.6 lmp qt/min) - 3276.7 L/min (3462.5 US qt/min, 2883.1 lmp qt/min) or more.*

*: Depends on engine speed and load

Possible Cause

NOTE: The causes shown may not be a complete list of all potential problems, and it is possible that there may be other causes.

- Vacuum hose fall
- Throttle body air leak
- Intake manifold air leak
- Evaporative emission (EVAP) canister purge valve failure
- Valve timing incorrect

Confirmation Procedure

Operating Condition

- Enter the maintenance mode, then start the engine. Hold the engine speed [ENGINE SPEED] at 3, 000 rpm without load (in P or N) until the radiator fan comes on.
- Let the engine idle for at least 22 seconds.

With the HDS

None.

Diagnosis Details

Conditions for setting the DTC

When a malfunction is detected during the first drive cycle, a Pending DTC is stored in the PCM memory. If the malfunction returns in the next (second) drive cycle, the MIL comes on and a Confirmed DTC, the freeze data, and the on-board snapshot are stored.

Conditions for clearing the DTC

The MIL is cleared if the malfunction does not return in three consecutive trips in which the diagnostic runs. The MIL, the Pending DTC, the Confirmed DTC, the freeze data, and the on-board snapshot can be cleared with the scan tool Clear command or by disconnecting the 12 volt battery.

DTC P2401, P2402 (1.5 L ENGINE)

DTC P2401: Evaporative Emission (EVAP) Leak Check Pump Control Circuit Low Voltage **DTC P2402:** Evaporative Emission (EVAP) Leak Check Pump Control Circuit High Voltage

General Description

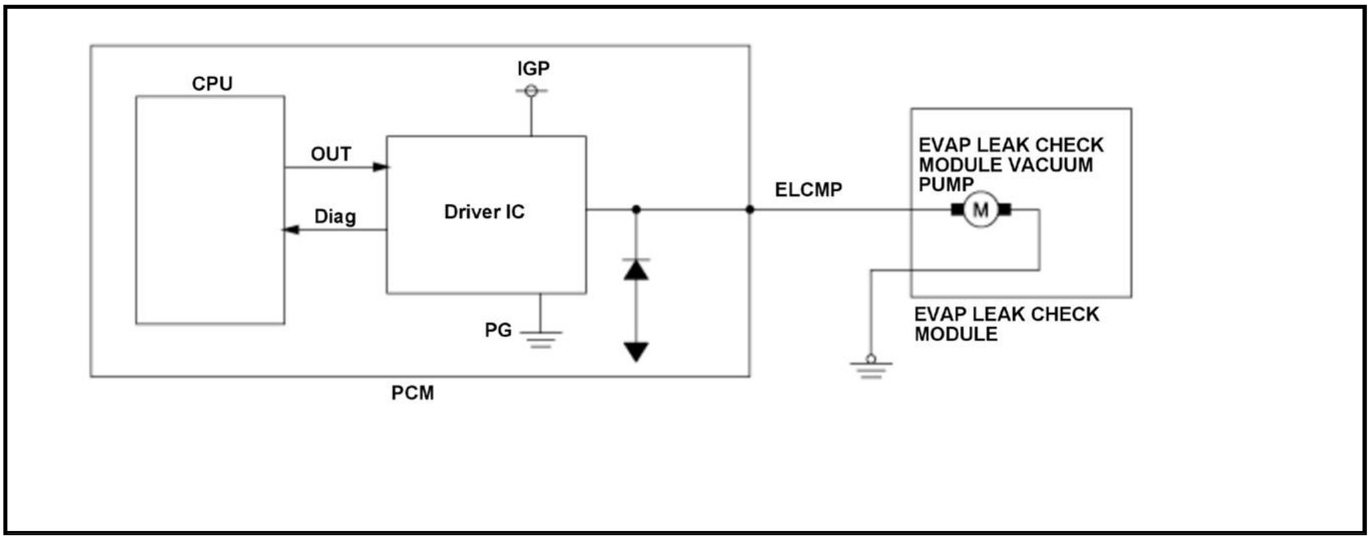

The evap leak check module vacuum pump is installed in the evap leak check module to create negative pressure in the EVAP passage when performing the evap leak check. The vacuum pump is normally non-energized and inactive. It is only activated when performing the evap leak check. The powertrain control module (PCM) detects a malfunction and stores a DTC when the diagnostic signal of the driver IC of the PCM internal circuit is low continuously for the prescribed time though operation signal is output to the evap leak check module vacuum pump.

Monitor Execution, Sequence, Duration, DTC Type

Execution	Continuous
Sequence	None
Duration	2.0 seconds or more
DTC Type	Two drive cycles, MIL on

Enable Conditions

Condition	Minimum	Maximum
Battery voltage [BATTERY]	10 V	-

[ ]: HDS Parameter

Malfunction Threshold

DTC: P2401

When the diagnostic signal of the driver IC of the PCM internal circuit is low continuously for 2.0 seconds or more while the operation signal is output to the evap leak check module vacuum pump.

DTC: P2402

When the diagnostic signal of the driver IC of the PCM internal circuit is high continuously for 2.0 seconds or more while the operation signal is output to the evap leak check module vacuum pump.

Possible Cause

NOTE: The causes shown may not be a complete list of all potential problems, and it is possible that there may be other causes.

DTC: P2401

- EVAP leak check module VMOTOR line short
- PCM internal circuit failure

DTC: P2402

- EVAP LEAK CHECK MODULE ELCMP line open
- EVAP LEAK CHECK MODULE ground line open
- EVAP LEAK CHECK MODULE ELCMP line short to power
- EVAP LEAK CHECK MODULE ground line short to power
- PCM internal circuit failure

Confirmation Procedure

Operating Condition

Turn the vehicle to the ON mode.

With the HDS

Select the EVAP TEST in the INSPECTION MENU, then select the FUNCTION TEST with the HDS.

Diagnosis Details

Conditions for setting the DTC

When a malfunction is detected during the first drive cycle, a Pending DTC is stored in the PCM memory. If the malfunction returns in the next (second) drive cycle, the MIL comes on and a Confirmed DTC and the freeze data are stored.

Conditions for clearing the DTC

The MIL is cleared if the malfunction does not return in three consecutive trips in which the diagnostic runs. The MIL, the Pending DTC, the Confirmed DTC, and the freeze data can be cleared with the scan tool Clear command or by disconnecting the 12 volt battery.

DTC P2422 (2.4 L ENGINE) (2017 2018 2019)

DTC P2422: Evaporative Emission (EVAP) Canister Vent Shut Valve Stuck Closed Malfunction

General Description

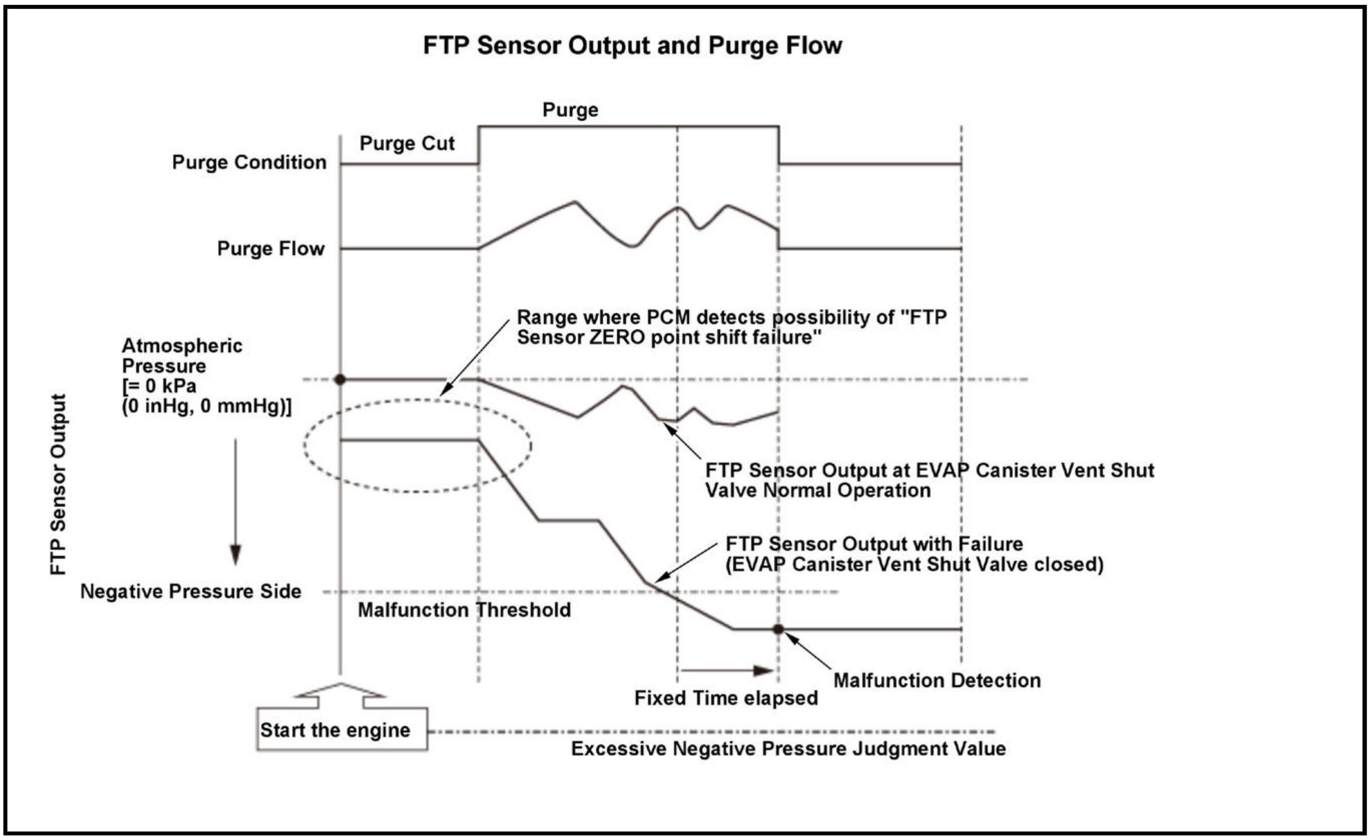
FTP Sensor Output and Purge Flow
Purge
Purge Cut
Purge Condition
Purge Flow
Range where PCM detects possibility of "FTP Sensor ZERO point shift failure"
Atmospheric Pressure [= 0 kPa (0 inHg, 0 mmHg)]
FTP Sensor Output
FTP Sensor Output at EVAP Canister Vent Shut Valve Normal Operation
FTP Sensor Output with Failure (EVAP Canister Vent Shut Valve closed)
Negative Pressure Side
Malfunction Threshold
Malfunction Detection
Fixed Time elapsed
Start the engine
Excessive Negative Pressure Judgment Value

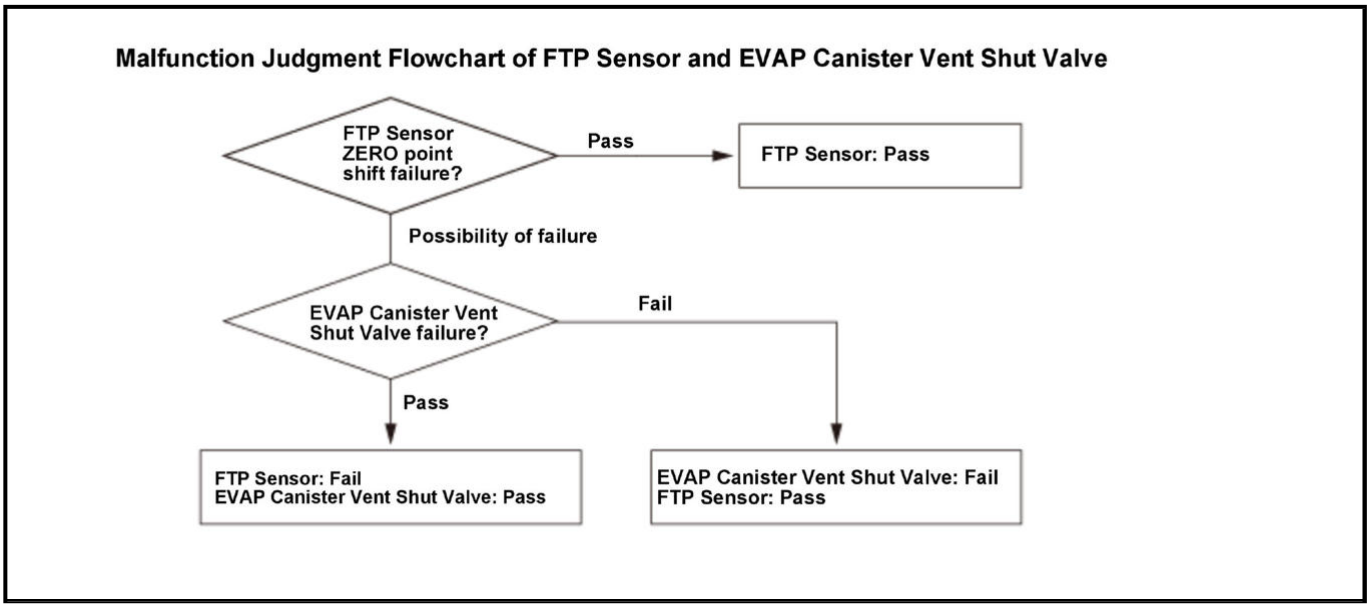
Malfunction Judgment Flowchart of FTP Sensor and EVAP Canister Vent Shut Valve

FTP Sensor ZERO point shift failure?
Pass
FTP Sensor: Pass
Possibility of failure
EVAP Canister Vent Shut Valve failure?
Fail
Pass
FTP Sensor: Fail
EVAP Canister Vent Shut Valve: Pass
EVAP Canister Vent Shut Valve: Fail
FTP Sensor: Pass

The fuel tank pressure (FTP) sensor output is near atmospheric pressure (0 kPa (0 inHg, 0 mmHg)) before purge starts since the evaporative emission (EVAP) canister vent shut valve is normally open (to the atmosphere). The sensor indicates a negative pressure value (vacuum) while purging. When the FTP sensor indicates vacuum after the engine starts, an FTP sensor zero point shift failure or an EVAP canister vent shut valve stuck closed can occur. To prevent these failures, the powertrain control module (PCM) monitors the FTP sensor output after purge starts. The PCM detects a malfunction of the EVAP canister vent shut valve if the output indicates excessive vacuum. However, if the fuel tank internal pressure is below the specified value (excessive vacuum is detected) when starting the engine, the malfunction detection should be done as follows because it is difficult to distinguish between FTP sensor range problem (P1454) and an EVAP canister vent shut valve stuck closed problem (P2422).

- If neither Pending DTCs (P1454 nor P2422) are stored, both Pending DTCs are stored when excessive vacuum is detected at engine start.
- If both Pending DTCs (P1454 and P2422) are stored and excessive vacuum is detected, both Confirmed DTCs are stored.
- If either Pending DTC (P1454 or P2422) is stored and excessive vacuum is detected, the PCM stores the Confirmed DTC which the Pending DTC is stored.

Monitor Execution, Sequence, Duration, DTC Type

Execution	Once per driving cycle
Sequence**	P0452, P0453 are judged as OK
Duration	1.04*, 8.0** seconds or more
DTC Type	Two drive cycles, MIL on

*: Elapsed time after the FTP sensor output exceeds the malfunction threshold.

**: Excessive negative pressure is detected.

Enable Conditions

Condition	Minimum	Maximum
Elapsed time after starting the engine**	10 seconds	-
Engine coolant temperature [ECT SENSOR 1]***	131 deg. F (55 deg. C)	-
12 volt battery voltage [BATTERY]*	10.5 V	-
Fuel feedback	Closed loop	

Condition	Minimum	Maximum
Other**	The EVAP canister vent shut valve is open	
	The EVAP canister purge valve is closed (the system is not purging)	

***: Condition to start the purge control

[ ]: HDS Parameter

Malfunction Threshold

The output from the FTP sensor [FTP SENSOR] is -4 kPa (-1.0 inHg, -25 mmHg)*, -2 kPa (-0.4 inHg, -10 mmHg)** or less for at least 1.04*, 8.0** seconds.

Possible Cause

NOTE: The causes shown may not be a complete list of all potential problems, and it is possible that there may be other causes.

- EVAP canister vent shut valve closed stuck
- EVAP canister drain tube clogged

Confirmation Procedure

Operating Condition

- Start the engine, and let it idle until the radiator fan comes on.
- When the diagnosis does not finish at idle, drive at 30 - 75 mph (48 - 120 km/h) at EVAP canister purge valve duty [EVAP PC DUTY] 20 % or more.

- Drive the vehicle in this manner only if the traffic regulations and ambient conditions allow.

With the HDS

None.

Diagnosis Details

Conditions for setting the DTC

When a malfunction is detected during the first drive cycle, a Pending DTC is stored in the PCM memory. If the malfunction returns in the next (second) drive cycle, the MIL comes on and a Confirmed DTC and the freeze data are stored.

Conditions for clearing the DTC

The MIL is cleared if the malfunction does not return in three consecutive trips in which the diagnostic runs. The MIL, the Pending DTC, the Confirmed DTC, and the freeze data can be cleared with the scan tool Clear command or by disconnecting the 12 volt battery.

DTC P2450 (1.5 L ENGINE)

DTC P2450: Evaporative Emission (EVAP) System Purge Line Non-return Valve A Stuck Open

General Description

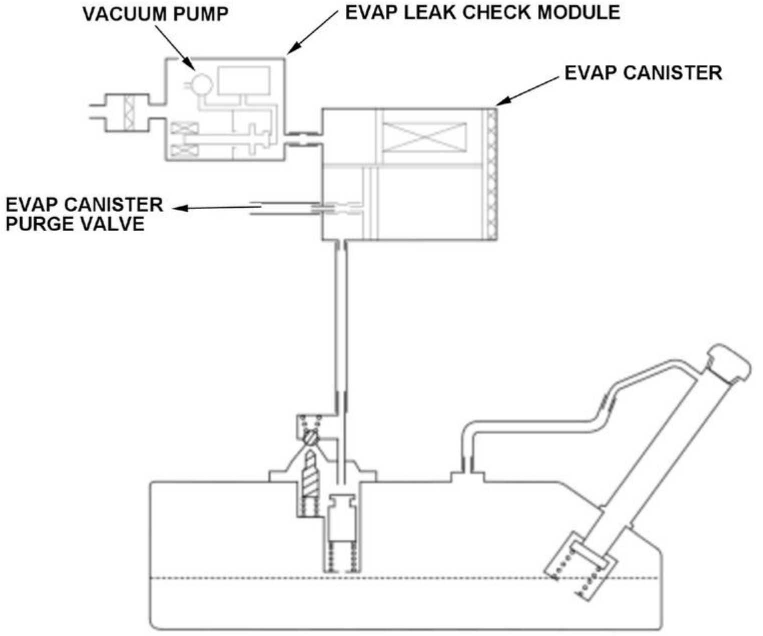
VACUUM PUMP
EVAP LEAK CHECK MODULE
EVAP CANISTER
EVAP CANISTER PURGE VALVE

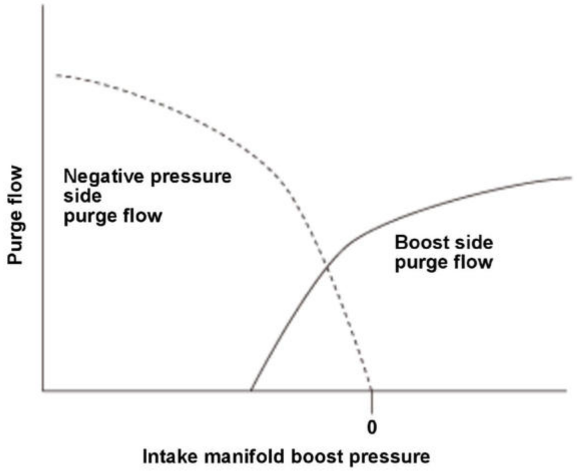

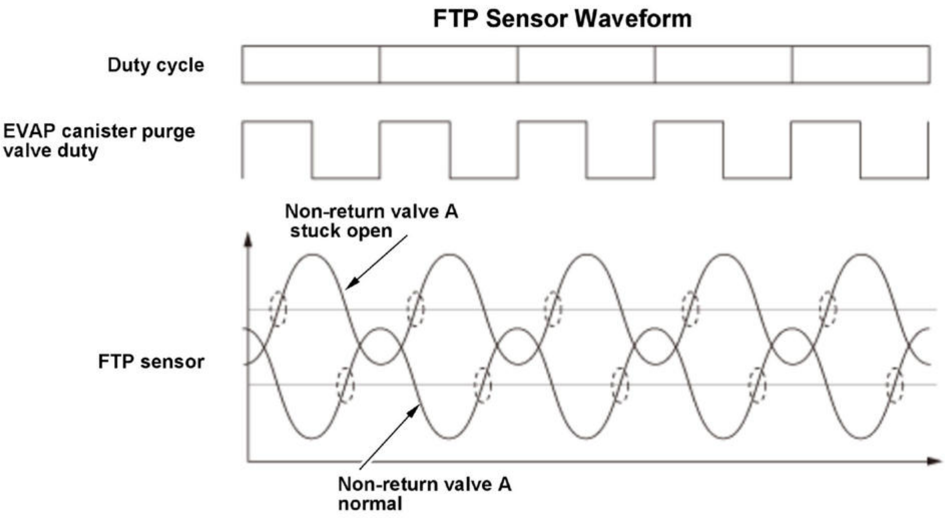

Negative side purge flow	Boost side purge flow	Purge back-flow (P2450)	Condition
Flowing	Flowing	OK	Purge line normal, EVAP canister purge valve

Negative side purge flow	Boost side purge flow	Purge back-flow (P2450)	Condition
			normal
Flowing	Flowing	NG (P2450)	Non-return valve A abnormal
Not flowing	Flowing	-	Negative side purge line abnormal
Flowing	Not flowing	-	Boost side purge line abnormal
Not flowing	Not flowing	-	Purge line abnormal, EVAP canister purge valve open

The fuel vapor in the fuel tank is temporarily stored in the evaporative emission (EVAP) canister and drawn into the engine through the EVAP canister purge valve. The powertrain control module (PCM) controls the amount of vapor introduced into the engine by varying the duty cycle of the EVAP canister purge valve according to the condition of the engine.

The PCM checks the purge flow conditions on both negative and boost pressure sides. If either side of the purge flow is detected as abnormal, it is determined that there is a clog or disconnection on the abnormal side of the purge line. If both sides of the purge flow are detected as abnormal, it is determined that the purge lines are abnormal or the EVAP canister purge valve is stuck opened.

If non-return valve A is stuck opened, the boost pressure flows back to the fuel tank when purge controlled in boost condition. At the time, the FTP sensor pulse waveform shows opposite phase to the usual phase. The PCM detects a malfunction by calculating the phase time difference, and stores a DTC.

Monitor Execution, Sequence, Duration, DTC Type

Execution	Once per driving cycle
Sequence	None
Duration	-
DTC Type	Two drive cycles, MIL on

Enable Conditions

Condition	Minimum	Maximum
Low load duration time	10 seconds	-

[ ]: HDS Parameter

Condition	Minimum	Maximum
Engine coolant temperature [ECT SENSOR 1] before EVAP purge control starts	131 deg. F (55 deg. C)	-
MAP value [MAP SENSOR]	-	81 kPa (610 mmHg, 24.0 inHg)
12 volt battery voltage [BATTERY]	10.5 V	-
Fuel trim	0.75	1.47
EVAP canister purge valve duty [EVAP PC DUTY]	30 %	80 %
Fuel feedback	Closed loop at stoichiometric	

[ ]: HDS Parameter

Malfunction Threshold

The FTP sensor pulse phase time difference is 20 milliseconds or more.

Possible Cause

NOTE: The causes shown may not be a complete list of all potential problems, and it is possible that there may be other causes.

- Non-return valve A open stuck

Confirmation Procedure

Operating Condition

- Start the engine. Hold the engine speed [ENGINE SPEED] at 3, 000 rpm without load (in P or N) until the radiator fan comes on.
- Let the engine idle for at least 64 seconds.
- Drive the vehicle at high load for total of at least 11 seconds.
- Turn the vehicle to the OFF (LOCK) mode and leave the vehicle for at least 10 seconds.

With the HDS

Select the EVAP TEST in the INSPECTION MENU, then select the FUNCTION TEST with the HDS.

Diagnosis Details

Conditions for setting the DTC

When a malfunction is detected during the first drive cycle, a Pending DTC is stored in the PCM memory. If the malfunction returns in the next (second) drive cycle, the MIL comes on and a Confirmed DTC and the freeze data are stored.

Conditions for clearing the DTC

The MIL is cleared if the malfunction does not return in three consecutive trips in which the diagnostic runs. The MIL, the Pending DTC, the Confirmed DTC, and the freeze data can be cleared with the scan tool Clear command or by disconnecting the 12 volt battery.

DTC P24B8 (1.5 L ENGINE) (2020 2021)

DTC P24B8: Evaporative Emission (EVAP) Leak Check Module Absolute Pressure Sensor Out of Range

General Description

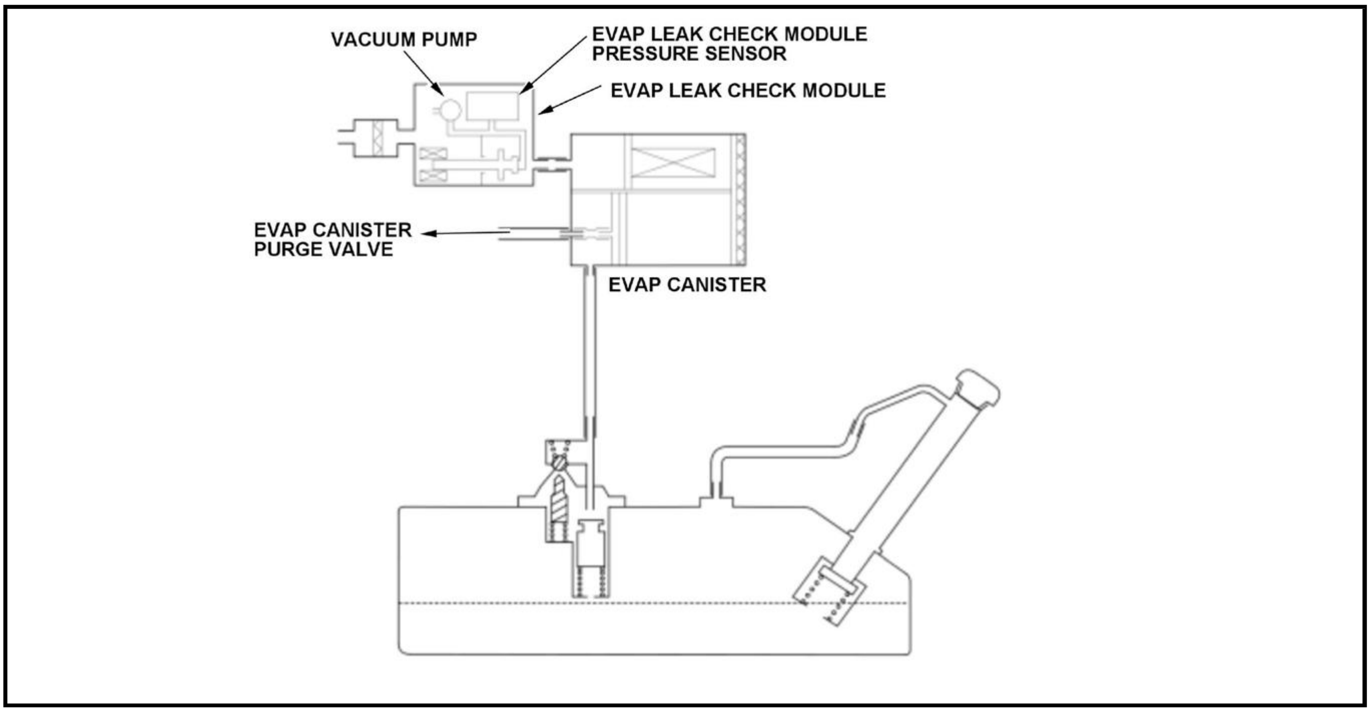
VACUUM PUMP
EVAP LEAK CHECK MODULE PRESSURE SENSOR
EVAP LEAK CHECK MODULE
EVAP CANISTER PURGE VALVE
EVAP CANISTER

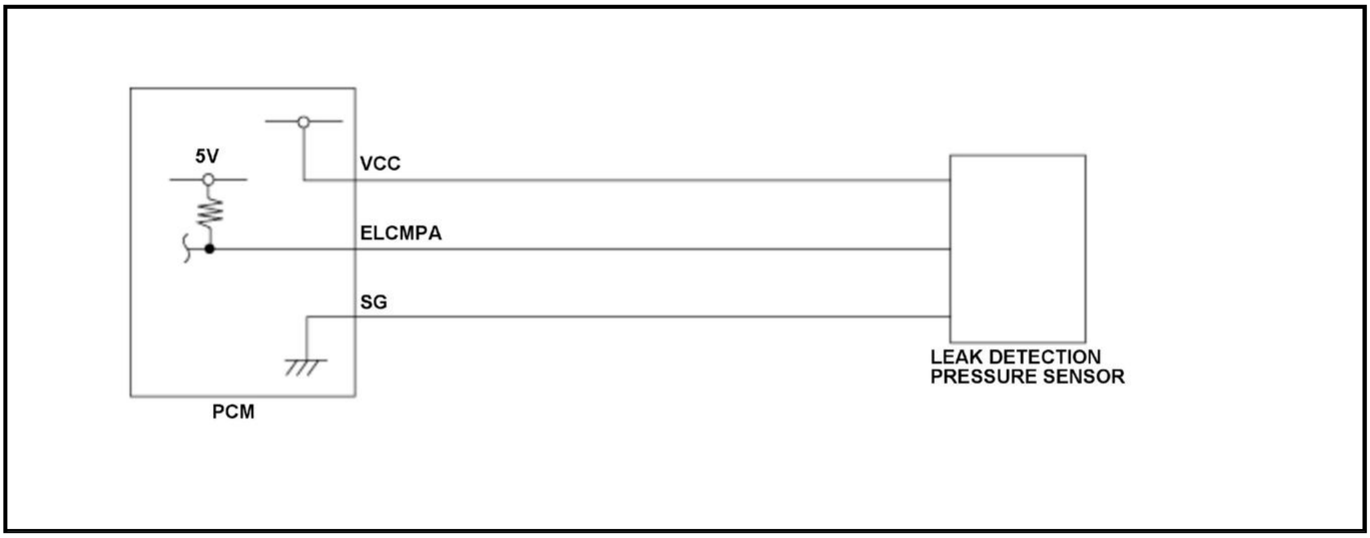
5V
VCC
ELCMPA
SG
PCM
LEAK DETECTION PRESSURE SENSOR

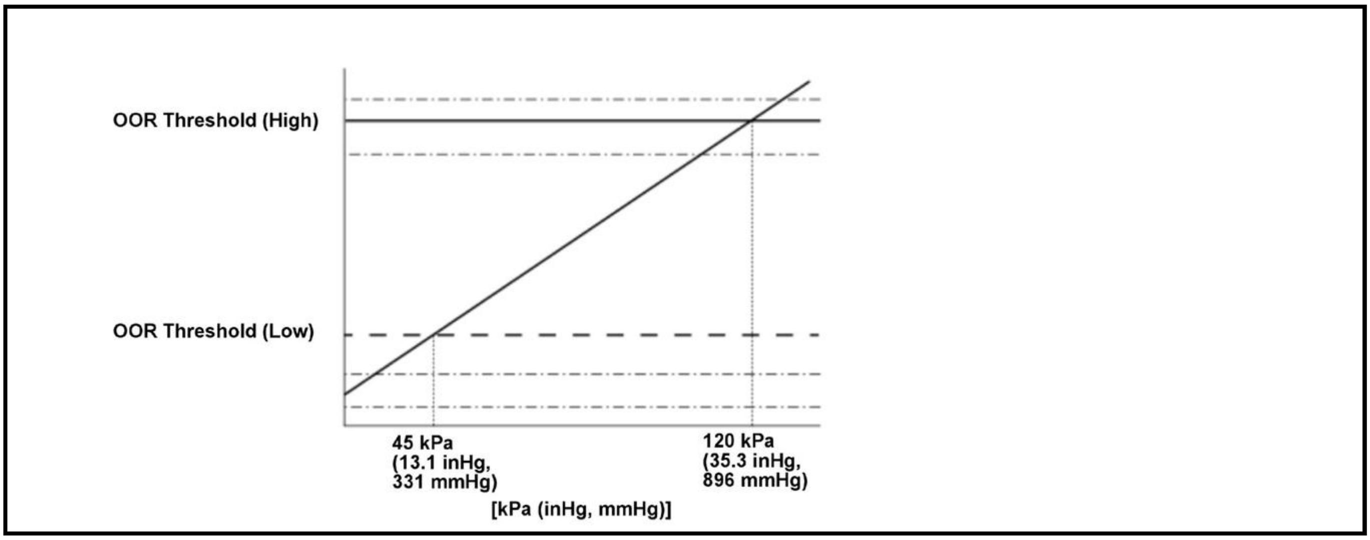

The evaporative emission (EVAP) leak check module pressure sensor is a sensor used for leak detection of the fuel tank. The limit of the EVAP leak check module pressure sensor output is specified. If the output is exceed that limit, the powertrain control module (PCM) detects a malfunction and stores a DTC.

Monitor Execution, Sequence, Duration, DTC Type

Execution	Once per driving cycle
Sequence	None
Duration	6 seconds or more
DTC Type	Two drive cycles, MIL on

Enable Conditions

Condition	B
Vehicle	ON mode

Malfunction Threshold

The leak check pressure sensor output level is 45 kPa (13.1 inHg, 331 mmHg) or less, or 120 kPa (35.3 inHg, 896 mmHg) or more for at least 6 seconds.

Possible Cause

NOTE: The causes shown may not be a complete list of all potential problems, and it is possible that there may be other causes.

- Leak check pressure sensor ELCMPA line short to power
- Leak check pressure sensor ELCMPA line open
- Leak check pressure sensor ELCMPA line short to ground
- Leak check pressure sensor SG line open
- Leak check pressure sensor VCC line open
- Leak check pressure sensor out of range

Confirmation Procedure

Operating Condition

Turn the vehicle to the ON mode, and wait for at least 6 seconds.

Diagnosis Details

Conditions for setting the DTC

When a malfunction is detected during the first drive cycle, a Pending DTC is stored in the PCM memory. If the malfunction returns in the next (second) drive cycle, the MIL comes on and a Confirmed DTC and the freeze data are stored.

Conditions for clearing the DTC

The MIL is cleared if the malfunction does not return in three consecutive trips in which the diagnostic runs. The MIL, the Pending DTC, the Confirmed DTC, and the freeze data can be cleared with the scan tool Clear command or by disconnecting the 12 volt battery.

DTC P24B9 (1.5 L ENGINE)

DTC P24B9: Evaporative Emission (EVAP) Leak Check Module Absolute Pressure Sensor Range/Performance Problem

General Description

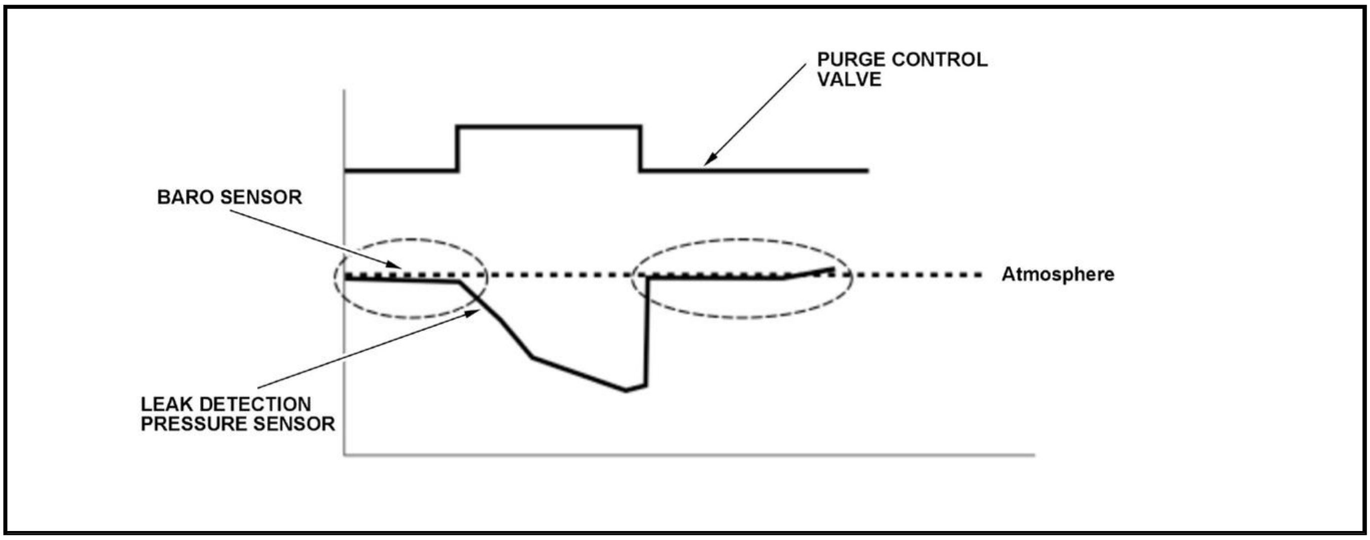

The fuel vapor in the fuel tank is temporarily stored in the evaporative emission (EVAP) canister and drawn into the engine through the EVAP canister purge valve. The powertrain control module (PCM) controls the amount of vapor introduced into the engine by varying the duty cycle of the EVAP canister purge valve according to the condition of the engine.

The PCM checks the purge flow conditions on both negative and boost pressure sides. If either side of the purge flow is detected as abnormal, it is determined that there is a clog or disconnection on the abnormal side of the purge line. If both sides of the purge flow are detected as abnormal, it is determined that the purge lines are abnormal or the EVAP canister purge valve is stuck opened.

If non-return valve A is stuck opened, the boost pressure flows back to the fuel tank when purge controlled in boost condition. At the time, the FTP sensor pulse waveform shows opposite phase to the usual phase. The PCM detects a malfunction by calculating the phase time difference, and stores a DTC.

Monitor Execution, Sequence, Duration, DTC Type

Execution	Once per driving cycle
Sequence	None
Duration	4 seconds or more
DTC Type	Two drive cycles, MIL on

Enable Conditions

Condition	Minimum	Maximum
Elapsed time after the engine start.	10 seconds	-
Leak detection sensor - BARO sensor value	-	17 kPa (125 mmHg, 4.9 inHg)

Malfunction Threshold

When a difference in pressure of the leak detection sensor and the BARO sensor became more than 17 kPa (125 mmHg, 4.9 inHg).

Possible Cause

NOTE: The causes shown may not be a complete list of all potential problems, and it is possible that there may be other causes.

- BARO sensor range/performance problem
- Leak detection module absolute pressure sensor range/performance problem

- Purge control solenoid failure
- Air cleaner element clogged
- Valve timing incorrect
- Throttle body air leak
- Intake manifold air leak

Confirmation Procedure

Operating Condition

- Start the engine. Hold the engine speed [ENGINE SPEED] at 3, 000 rpm without load (in P or N) until the radiator fan comes on.
- Let the engine idle for at least 18 seconds.
- Decelerate with the throttle valve fully closed for at least 8 seconds.

- Drive the vehicle in this manner only if the traffic regulations and ambient conditions allow.

With the HDS

Select the EVAP TEST in the INSPECTION MENU, then select the FUNCTION TEST with the HDS.

Diagnosis Details

Conditions for setting the DTC

When a malfunction is detected during the first drive cycle, a Pending DTC is stored in the PCM memory. If the malfunction returns in the next (second) drive cycle, the MIL comes on and a Confirmed DTC and the freeze data are stored.

Conditions for clearing the DTC

The MIL is cleared if the malfunction does not return in three consecutive trips in which the diagnostic runs. The MIL, the Pending DTC, the Confirmed DTC, and the freeze data can be cleared with the scan tool Clear command or by disconnecting the 12 volt battery.

DTC P24BA, P24BB (1.5 L ENGINE) (2017)

DTC P24BA: Evaporative Emission (EVAP) Leak Check Module Absolute Pressure Sensor Circuit Low Voltage **DTC P24BB:** Evaporative Emission (EVAP) Leak Check Module Absolute Pressure Sensor Circuit High Voltage

General Description

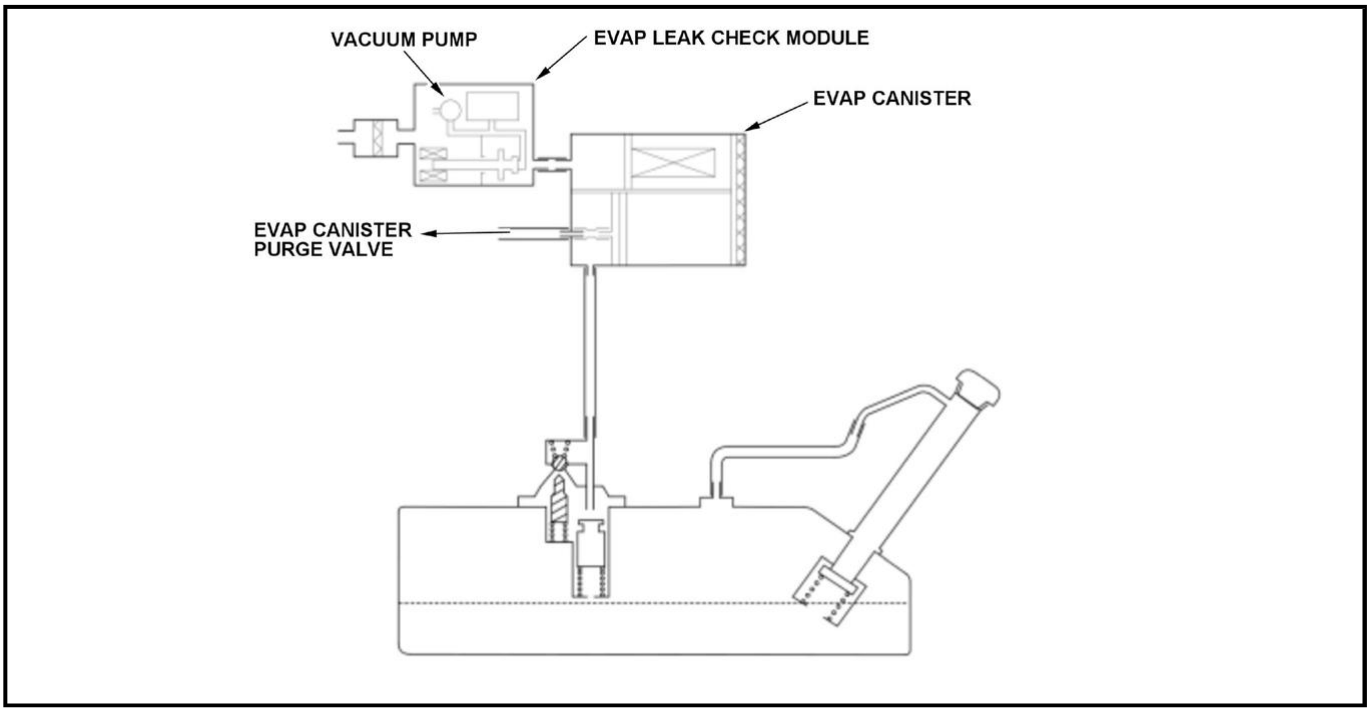
VACUUM PUMP
EVAP LEAK CHECK MODULE
EVAP CANISTER
EVAP CANISTER PURGE VALVE

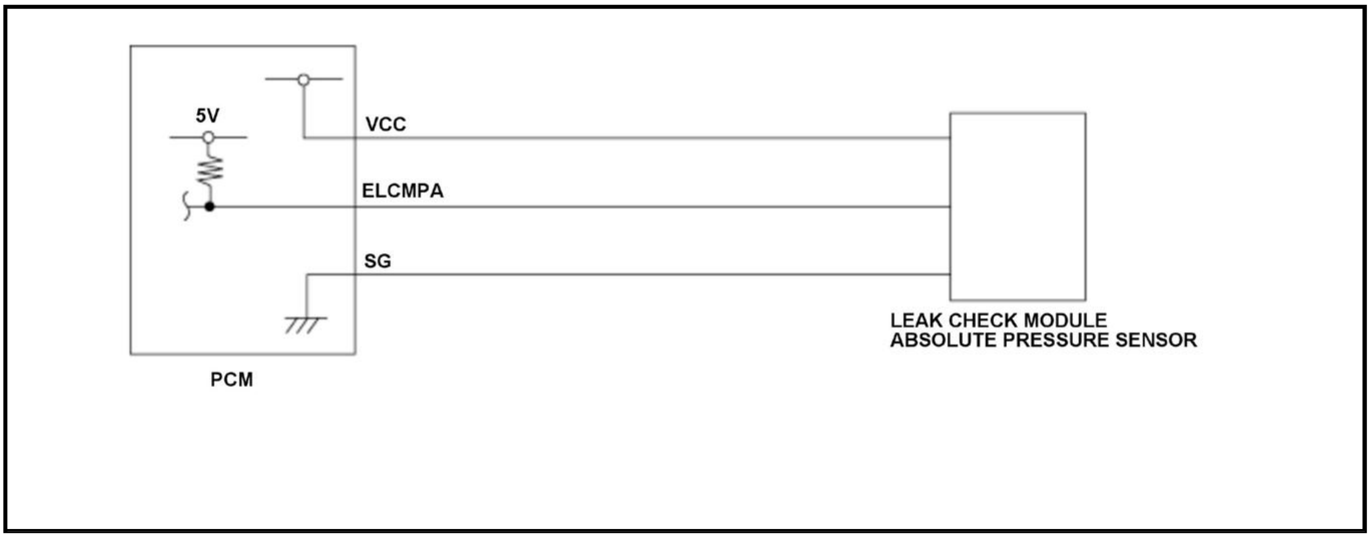
5V
VCC
ELCMPA
SG
PCM
LEAK CHECK MODULE ABSOLUTE PRESSURE SENSOR

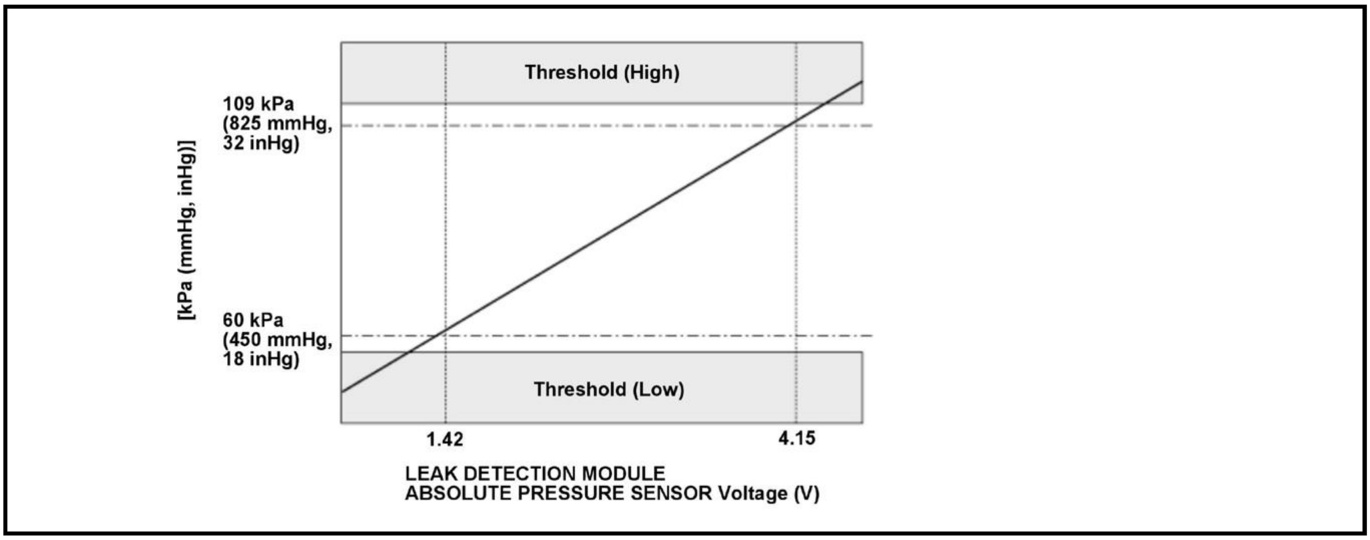

The barometric pressure (BARO) sensor, and leak check sensor all measure barometric pressure when the engine is stopped. The sensor outputs are compared to detect malfunction. If the BARO sensor and the leak check sensor are within an acceptable range of each other, then conditions are normal. If the BARO sensor and the leak check sensor are out of range, then the out of range sensor is judged as abnormal. When a DTC is set, use these values to determine the abnormal sensor. If any of these values are out of range, the powertrain control module (PCM) detects a malfunction and stores a DTC.

Monitor Execution, Sequence, Duration, DTC Type

Execution	Once per driving cycle
Sequence	None
Duration	3 seconds or more
DTC Type	Two drive cycles, MIL on

Enable Conditions

Condition	B
Vehicle	ON mode

Malfunction Threshold

DTC: P24BA

The leak check module absolute pressure sensor output level is 50 kPa (380 mmHg, 15 inHg) or less for at least 3 seconds.

DTC: P24BB

The leak check module absolute pressure sensor output level is 119 kPa (899 mmHg, 35 inHg) or more for at least 3 seconds.

Possible Cause

NOTE: The causes shown may not be a complete list of all potential problems, and it is possible that there may be other causes.

- Leak check module absolute pressure sensor ELCMP line short to power
- Leak check module absolute pressure sensor ELCMP line open
- Leak check module absolute pressure sensor ELCMP line short to ground
- Leak check module absolute pressure sensor SG line open
- Leak check module absolute pressure sensor VCC line open
- Leak check module absolute pressure sensor out of range

Confirmation Procedure

Operating Condition

Turn the vehicle to the ON mode, and wait for at least 3 seconds.

With the HDS

None.

Diagnosis Details

Conditions for setting the DTC

When a malfunction is detected during the first drive cycle, a Pending DTC is stored in the PCM memory. If the malfunction returns in the next (second) drive cycle, the MIL comes on and a Confirmed DTC and the freeze data are stored.

Conditions for clearing the DTC

The MIL is cleared if the malfunction does not return in three consecutive trips in which the diagnostic runs. The MIL, the Pending DTC, the Confirmed DTC, and the freeze data can be cleared with the scan tool Clear command or by disconnecting the 12 volt battery.

DTC P24BA, P24BB (1.5 L ENGINE) (2018 2019)

DTC P24BA: Evaporative Emission (EVAP) Leak Check Module Absolute Pressure Sensor Circuit Low Voltage **DTC P24BB:** Evaporative Emission (EVAP) Leak Check Module Absolute Pressure Sensor Circuit High Voltage

General Description

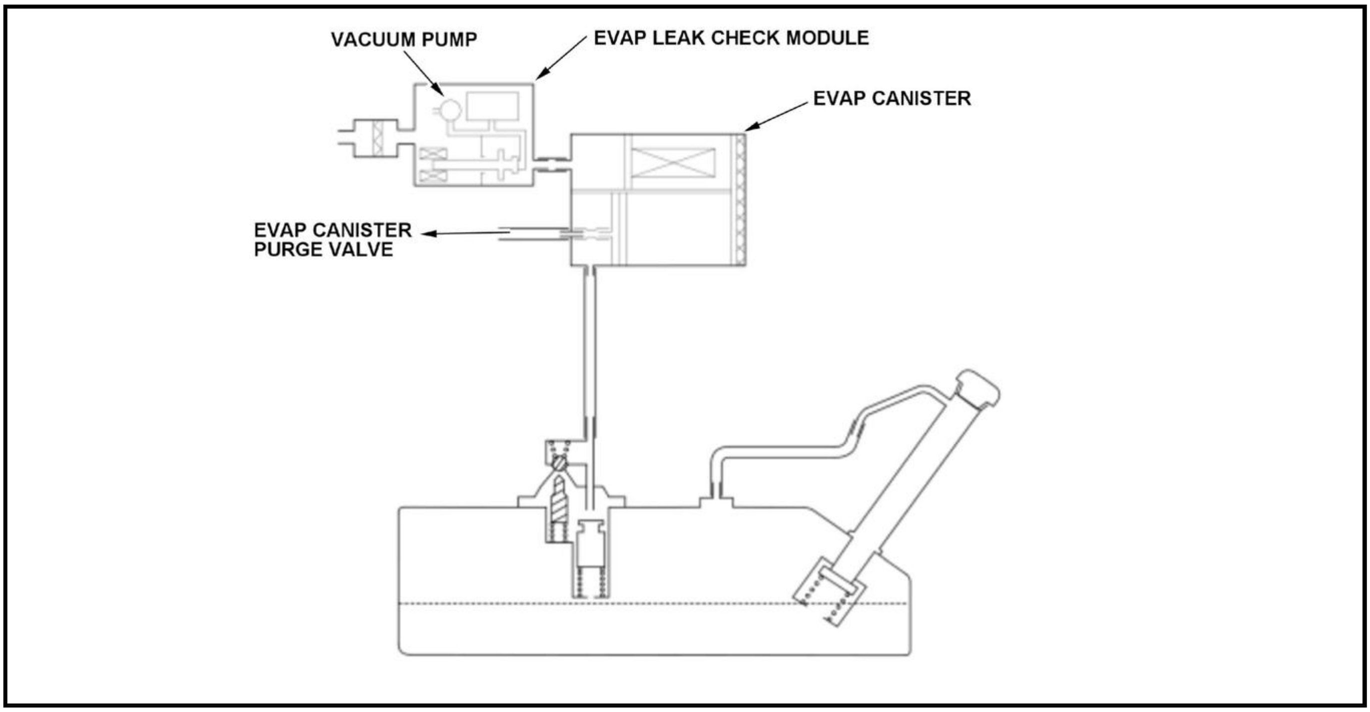
VACUUM PUMP
EVAP LEAK CHECK MODULE
EVAP CANISTER
EVAP CANISTER PURGE VALVE

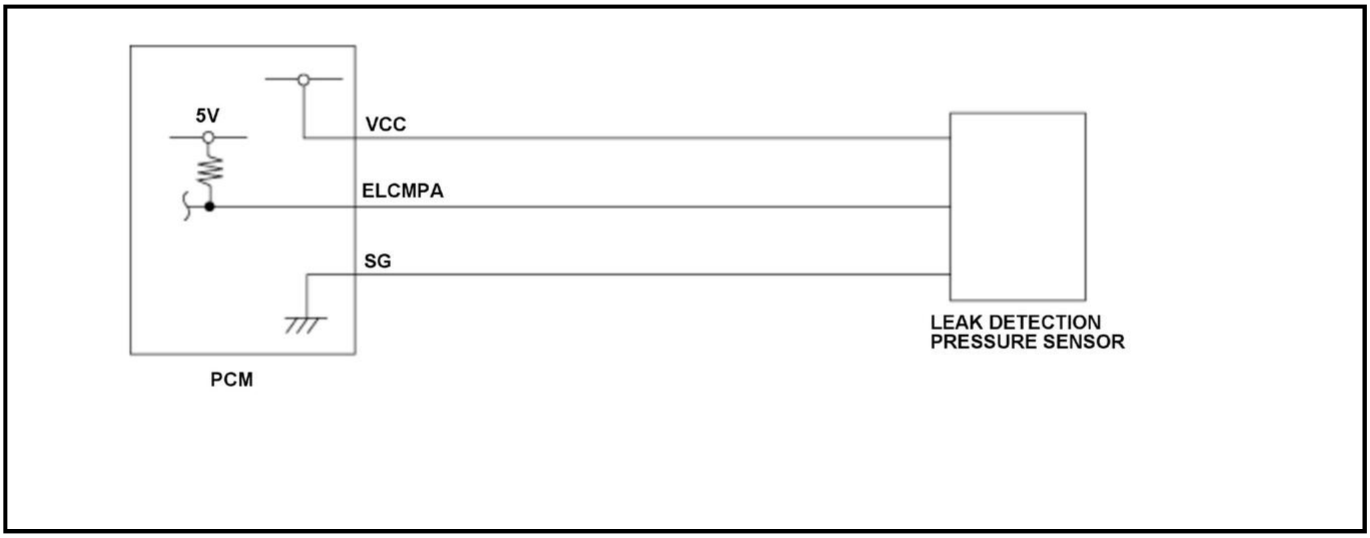
5V
VCC
ELCMPA
SG
PCM
LEAK DETECTION PRESSURE SENSOR

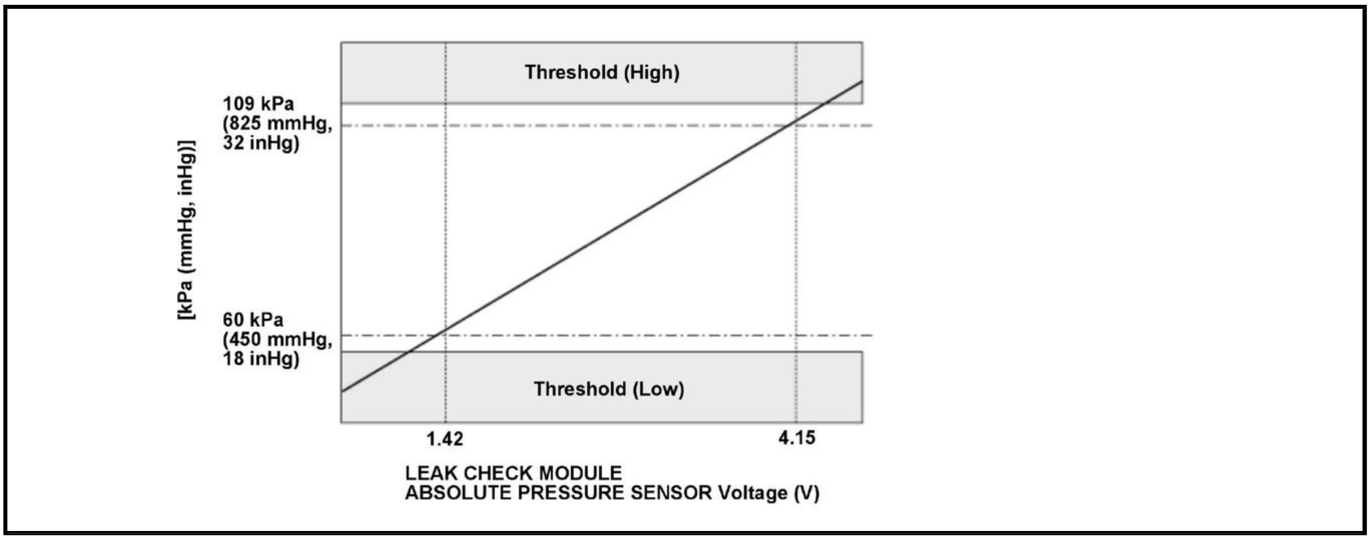

The barometric pressure (BARO) sensor, and leak check sensor all measure barometric pressure when the engine is stopped. The sensor outputs are compared to detect malfunction. If the BARO sensor and the leak check sensor are within an acceptable range of each other, then conditions are normal. If the BARO sensor and the leak check sensor are out of range, then the out of range sensor is judged as abnormal. When a DTC is set, use these values to determine the abnormal sensor. If any of these values are out of range, the powertrain control module (PCM) detects a malfunction and stores a DTC.

Monitor Execution, Sequence, Duration, DTC Type

Execution	Once per driving cycle
Sequence	None
Duration	3 seconds or more
DTC Type	Two drive cycles, MIL on

Enable Conditions

Condition	B
Vehicle	ON mode

Malfunction Threshold

DTC: P24BA

The leak detection module absolute pressure sensor output level is 44 kPa (331 mmHg, 13 inHg) or less for at least 3 seconds.

DTC: P24BB

The leak detection module absolute pressure sensor output level is 114 kPa (856 mmHg, 33 inHg) or more for at least 3 seconds.

Possible Cause

NOTE: The causes shown may not be a complete list of all potential problems, and it is possible that there may be other causes.

- Leak detection module absolute pressure sensor ELCMP line short to power
- Leak detection module absolute pressure sensor ELCMP line open
- Leak detection module absolute pressure sensor ELCMP line short to ground
- Leak detection module absolute pressure sensor SG line open
- Leak detection module absolute pressure sensor VCC line open

- Leak detection module absolute pressure sensor out of range

Confirmation Procedure

Operating Condition

Turn the vehicle to the ON mode, and wait for at least 3 seconds.

With the HDS

None.

Diagnosis Details

Conditions for setting the DTC

When a malfunction is detected during the first drive cycle, a Pending DTC is stored in the PCM memory. If the malfunction returns in the next (second) drive cycle, the MIL comes on and a Confirmed DTC and the freeze data are stored.

Conditions for clearing the DTC

The MIL is cleared if the malfunction does not return in three consecutive trips in which the diagnostic runs. The MIL, the Pending DTC, the Confirmed DTC, and the freeze data can be cleared with the scan tool Clear command or by disconnecting the 12 volt battery.

DTC P24BA, P24BB (1.5 L ENGINE) (2020 2021)

DTC P24BA: Evaporative Emission (EVAP) Leak Check Module Absolute Pressure Sensor Circuit Low Voltage **DTC P24BB:** Evaporative Emission (EVAP) Leak Check Module Absolute Pressure Sensor Circuit High Voltage

General Description

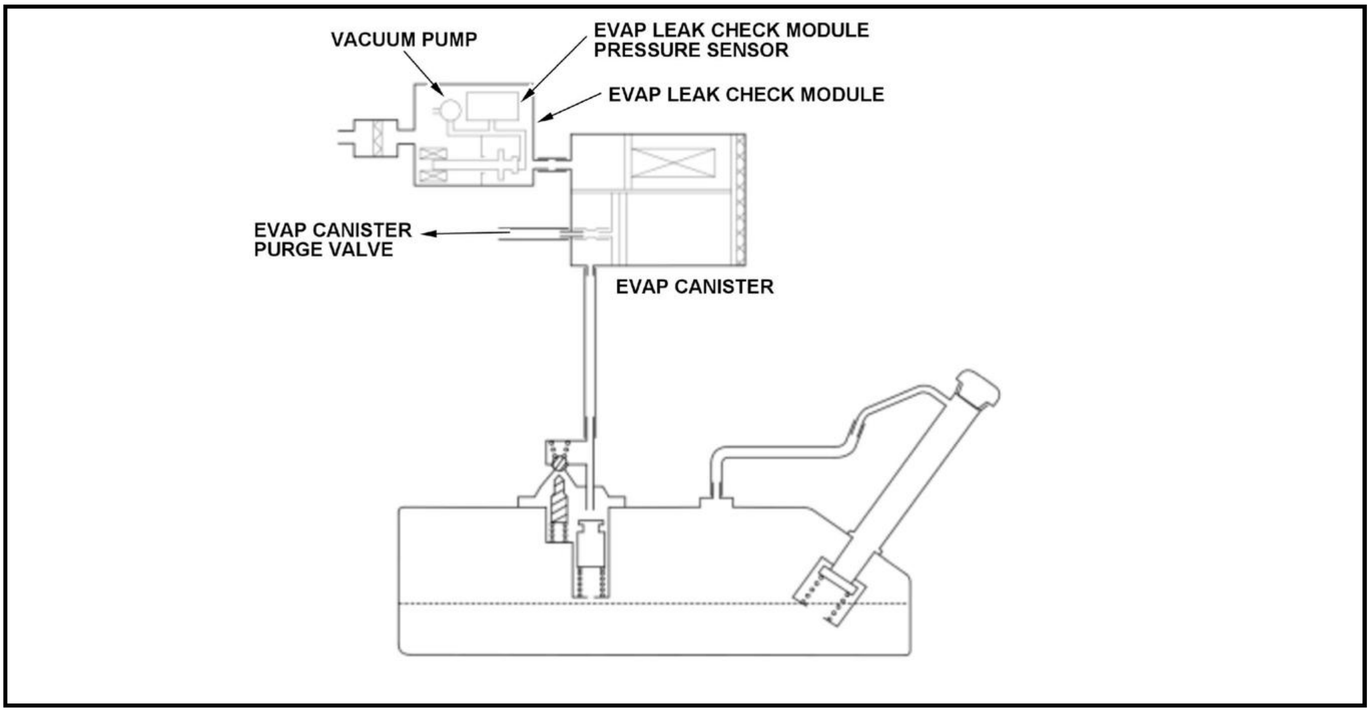
VACUUM PUMP
EVAP LEAK CHECK MODULE PRESSURE SENSOR
EVAP LEAK CHECK MODULE
EVAP CANISTER PURGE VALVE
EVAP CANISTER

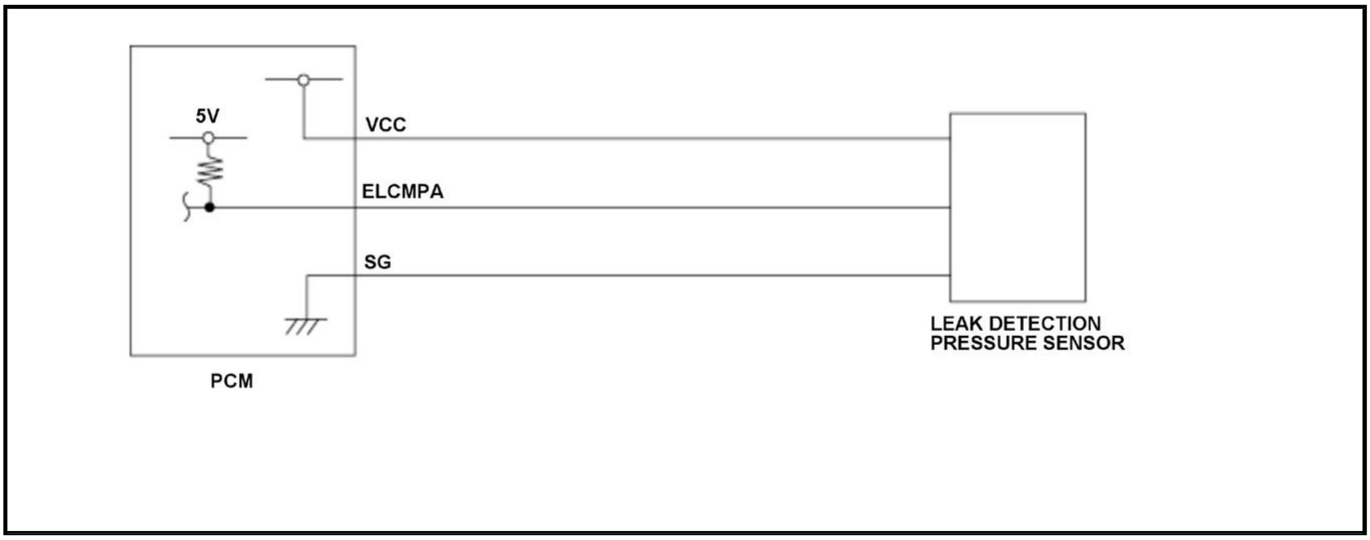

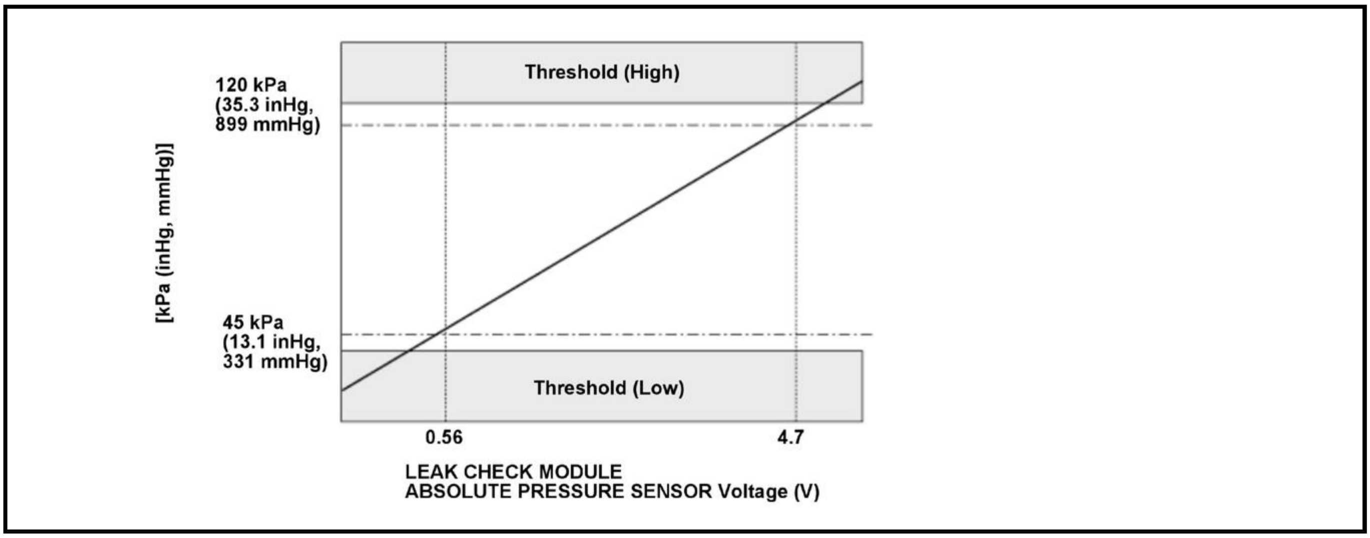

The barometric pressure (BARO) sensor, and leak check sensor all measure barometric pressure when the engine is stopped. The sensor outputs are compared to detect malfunction. If the BARO sensor and the leak check sensor are within an acceptable range of each other, then conditions are normal. If the BARO sensor and the leak check sensor are out of range, then the out of range sensor is judged as abnormal. When a DTC is set, use these values to determine the abnormal sensor. If any of these values are out of range, the powertrain control module (PCM) detects a malfunction and stores a DTC.

Monitor Execution, Sequence, Duration, DTC Type

Execution	Once per driving cycle
Sequence	None
Duration	3 seconds or more
DTC Type	Two drive cycles, MIL on

Enable Conditions

Condition	B
Vehicle	ON mode

Malfunction Threshold

DTC: P24BA

The leak detection module absolute pressure sensor output level is 45 kPa (13.1 inHg, 331 mmHg) or less for at least 3 seconds.

DTC: P24BB

The leak detection module absolute pressure sensor output level is 120 kPa (35.3 inHg, 899 mmHg) or more for at least 3 seconds.

Possible Cause

NOTE: The causes shown may not be a complete list of all potential problems, and it is possible that there may be other causes.

- Leak detection module absolute pressure sensor ELCMPA line short to power
- Leak detection module absolute pressure sensor ELCMPA line open
- Leak detection module absolute pressure sensor ELCMPA line short to ground
- Leak detection module absolute pressure sensor SG line open
- Leak detection module absolute pressure sensor VCC line open
- Leak detection module absolute pressure sensor out of range

Confirmation Procedure

Operating Condition

Turn the vehicle to the ON mode, and wait for at least 3 seconds.

With the HDS

None.

Diagnosis Details

Conditions for setting the DTC

When a malfunction is detected during the first drive cycle, a Pending DTC is stored in the PCM memory. If the malfunction returns in the next (second) drive cycle, the MIL comes on and a Confirmed DTC and the freeze data are stored.

Conditions for clearing the DTC

The MIL is cleared if the malfunction does not return in three consecutive trips in which the diagnostic runs. The MIL, the Pending DTC, the Confirmed DTC, and the freeze data can be cleared with the scan tool Clear command or by disconnecting the 12 volt battery.

DTC P24BE (1.5 L ENGINE)

DTC P24BE: Canister Change Over Valve Control Circuit Low Voltage

General Description

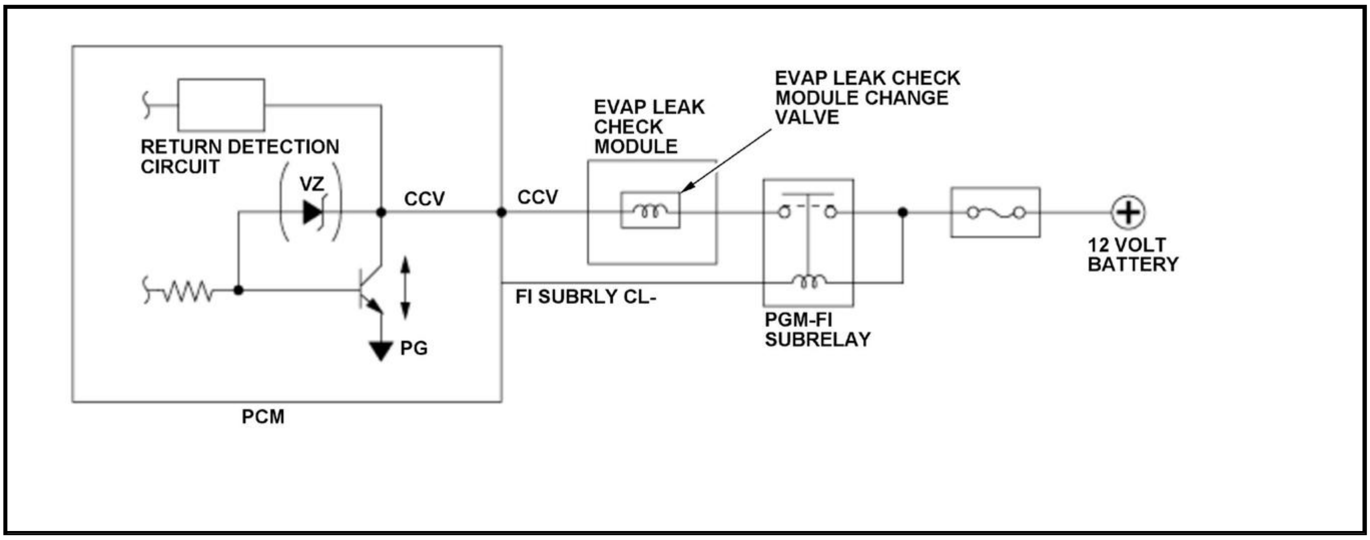

The evap leak check module change valve is installed in the evap leak check module and used to seal up the EVAP passage when performing the evap leak check. The evap leak check module change valve is normally open (open to the atmosphere) and only closed (sealed) when performing the evap leak check. The powertrain control module (PCM) detects a malfunction and stores a DTC when the close signal is returned continuously for the prescribed time or more though close signal is not output to the evap leak check module change valve.

Monitor Execution, Sequence, Duration, DTC Type

Execution	Once per driving cycle
Sequence	None
Duration	2.0 seconds or more
DTC Type	Two drive cycles, MIL on

Enable Conditions

Condition	Minimum	Maximum
12 Volt Battery voltage [BATTERY]	10.0 V	-

[ ]: HDS Parameter

Malfunction Threshold

When close signal is returned continuously for 2.0 seconds or more though close signal is not output to the EVAP leak check module change valve.

Possible Cause

NOTE: The causes shown may not be a complete list of all potential problems, and it is possible that there may be other causes.

- EVAP leak check module CCV line open
- EVAP leak check module power supply line open
- EVAP leak check module internal circuit open
- EVAP leak check module CCV line short
- EVAP leak check module power supply line short to ground
- PCM internal circuit failure

Confirmation Procedure

Operating Condition

Turn the vehicle to the ON mode.

With the HDS

Select the EVAP TEST in the INSPECTION MENU, then select the FUNCTION TEST with the HDS.

Diagnosis Details

Conditions for setting the DTC

When a malfunction is detected during the first drive cycle, a Pending DTC is stored in the PCM memory. If the malfunction returns in the next (second) drive cycle, the MIL comes on and a Confirmed DTC and the freeze data are stored.

Conditions for clearing the DTC

The MIL is cleared if the malfunction does not return in three consecutive trips in which the diagnostic runs. The MIL, the Pending DTC, the Confirmed DTC, and the freeze data can be cleared with the scan tool Clear command or by disconnecting the 12 volt battery.

DTC P24BF (1.5 L ENGINE)

DTC P24BF: Canister Change Over Valve Control Circuit High Voltage

General Description

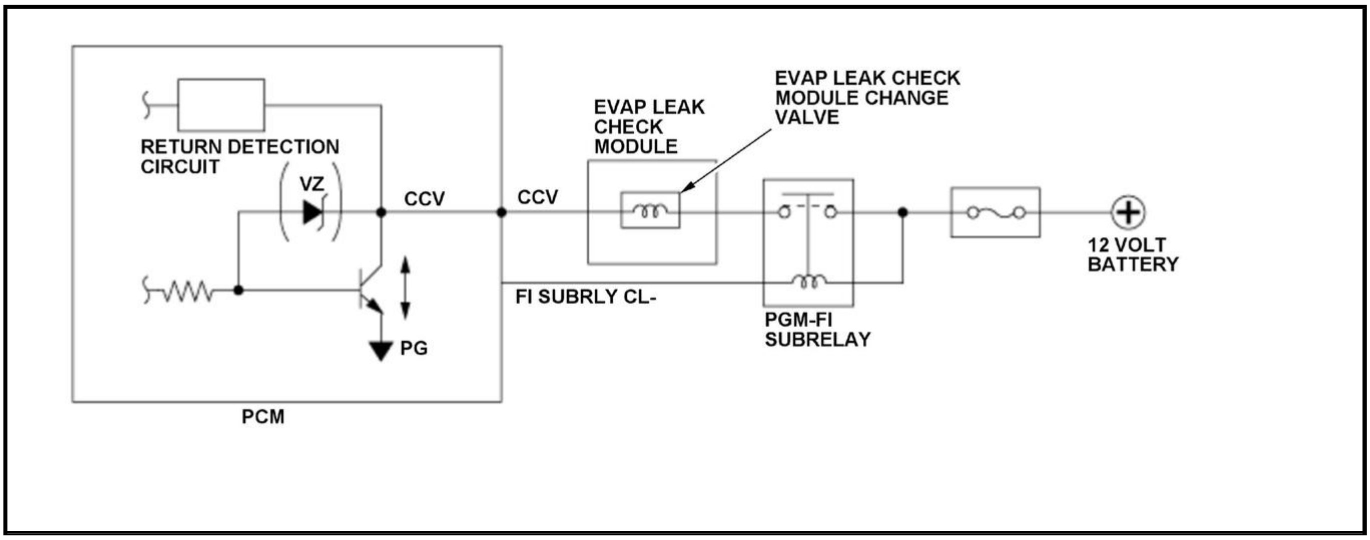

The evap leak check module change valve is installed in the evap leak check module and used to seal up the EVAP passage when performing the evap leak check. The evap leak check module change valve is normally open (open to the atmosphere) and only closed (sealed) when performing the evap leak check. The powertrain control module (PCM) detects a malfunction and stores a DTC when the close signal is returned continuously for the prescribed time or more though close signal is not output to the evap leak check module change valve.

Monitor Execution, Sequence, Duration, DTC Type

Execution	Once per driving cycle
Sequence	None
Duration	2.0 seconds or more
DTC Type	Two drive cycles, MIL on

Enable Conditions

Condition	Minimum	Maximum
Battery voltage [BATTERY]	10.0 V	-

[ ]: HDS Parameter

Malfunction Threshold

When open signal is returned continuously for 2.0 seconds or more though close signal is output to the EVAP leak check module change valve.

Possible Cause

NOTE: The causes shown may not be a complete list of all potential problems, and it is possible that there may be other causes.

- EVAP LEAK CHECK MODULE CCV line short to power
- EVAP leak check module change valve internal circuit leak
- PCM internal circuit failure

Confirmation Procedure

Operating Condition

Turn the vehicle to the ON mode.

With the HDS

Select the EVAP TEST in the INSPECTION MENU, then select the FUNCTION TEST with the HDS.

Diagnosis Details

Conditions for setting the DTC

When a malfunction is detected during the first drive cycle, a Pending DTC is stored in the PCM memory. If the malfunction returns in the next (second) drive cycle, the MIL comes on and a Confirmed DTC and the freeze data are stored.

Conditions for clearing the DTC

The MIL is cleared if the malfunction does not return in three consecutive trips in which the diagnostic runs. The MIL, the Pending DTC, the Confirmed DTC, and the freeze data can be cleared with the scan tool Clear command or by disconnecting the 12 volt battery.

DTC P24C0 (1.5 L ENGINE)

DTC P24C0: Canister Change Over Valve Close Malfunction

General Description

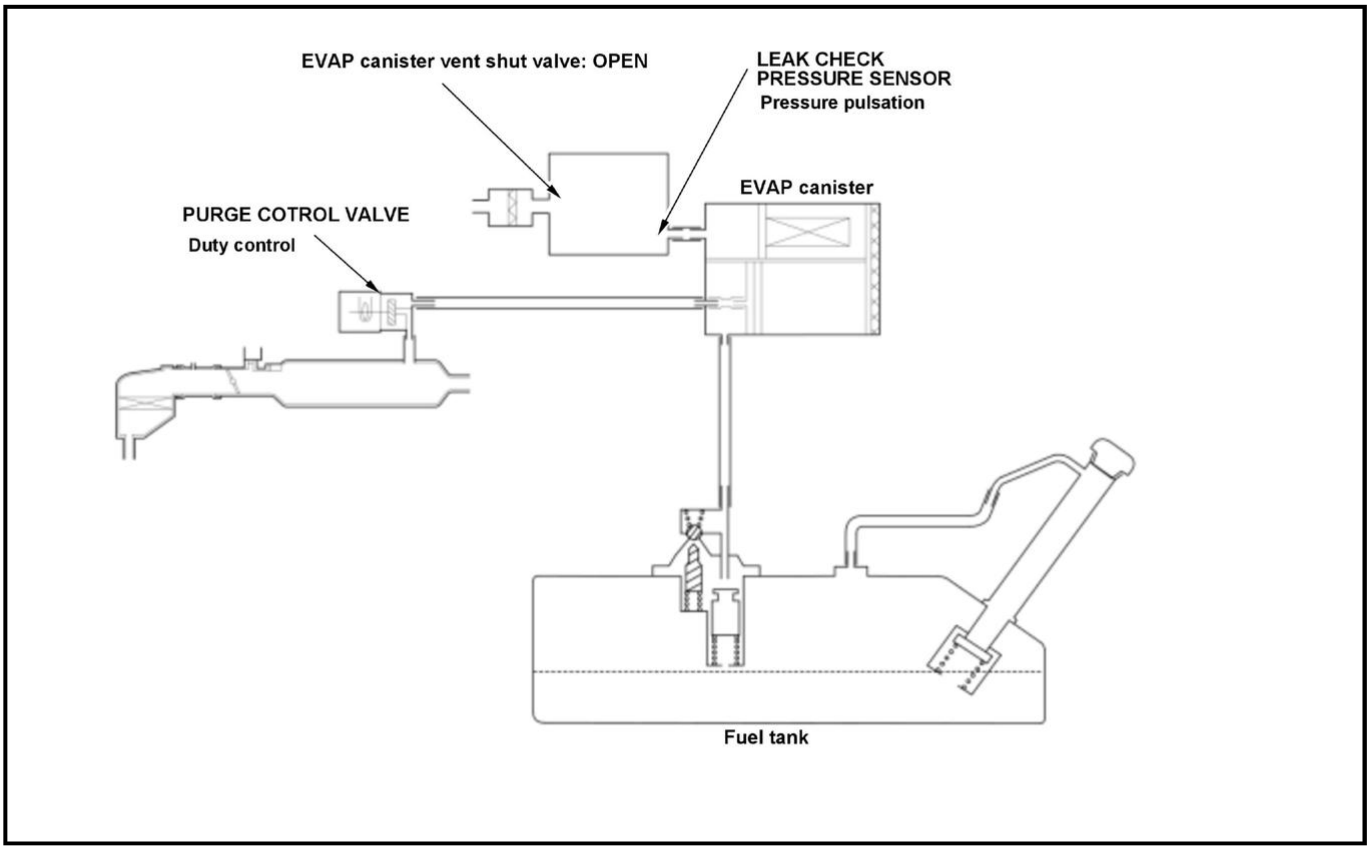
EVAP canister vent shut valve: OPEN
LEAK CHECK PRESSURE SENSOR
Pressure pulsation
EVAP canister
PURGE COTROL VALVE
Duty control
Fuel tank

Relative pressure calculated from evap leak check module the pressure sensor is smaller than the failure determination value, if the state has continued for a predetermined time, the powertrain control module (PCM) detects a malfunction and stores a DTC.

Relative pressure which is calculated from the pressure sensor in the ELCM failure determination value or more, the integrated purge flow rate reaches a predetermined amount, properly determined.

Monitor Execution, Sequence, Duration, DTC Type

Execution	Once per driving cycle
Sequence	None
Duration	-
DTC Type	Two drive cycles, MIL on

Enable Conditions

Condition	Minimum	Maximum
Low load duration time	1 seconds	-
Engine coolant temperature [ECT SENSOR 1] before EVAP purge control starts	131 deg. F (55 deg. C)	-
Evap leak check module pressure sensor	-4.4 kPa (-33.6 mmHg, -1.2 inHg)	-
12 volt battery voltage [BATTERY]	10.5 V	-

[ ]: HDS Parameter

Malfunction Threshold

The evap leak check module pressure sensor in the 1 second or more the pressure reduction is -4.4 kPa (-33.6 mmHg, -1.2 inHg) or less.

Possible Cause

NOTE: The causes shown may not be a complete list of all potential problems, and it is possible that there may be other causes.

- Control valve failure
- Dust filter closed

Confirmation Procedure

Operating Condition

- Let it engine idle until the radiator fan comes on.
- Drive immediately at a steady speed between 30 - 75 mph (48 - 120 km/h).

- Drive the vehicle in this manner only if the traffic regulations and ambient conditions allow.

With the HDS

None.

Diagnosis Details

Conditions for setting the DTC

When a malfunction is detected during the first drive cycle, a Pending DTC is stored in the PCM memory. If the malfunction returns in the next (second) drive cycle, the MIL comes on and a Confirmed DTC and the freeze data are stored.

Conditions for clearing the DTC

The MIL is cleared if the malfunction does not return in three consecutive trips in which the diagnostic runs. The MIL, the Pending DTC, the Confirmed DTC, and the freeze data can be cleared with the scan tool Clear command or by disconnecting the 12 volt battery.

DTC P24C1 (1.5 L ENGINE)

DTC P24C1: Canister Change Over Valve Stuck Close

General Description

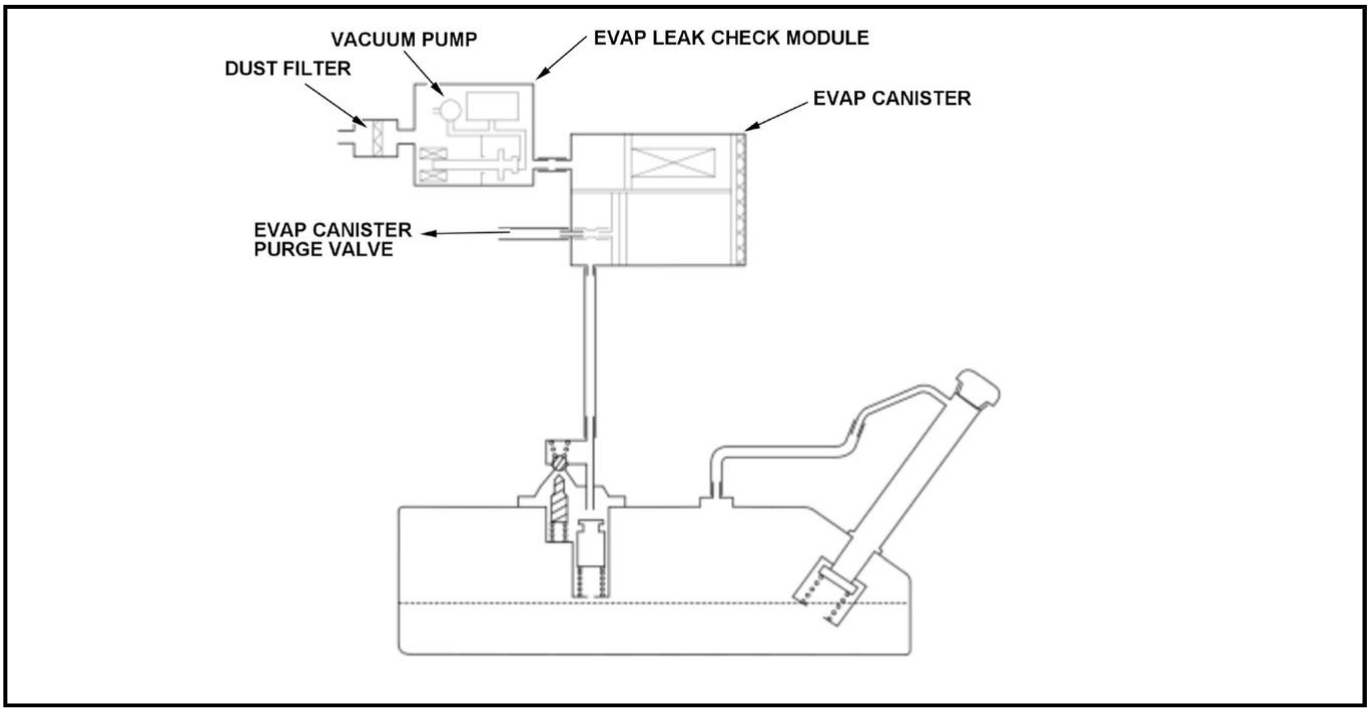
VACUUM PUMP
EVAP LEAK CHECK MODULE
DUST FILTER
EVAP CANISTER
EVAP CANISTER PURGE VALVE

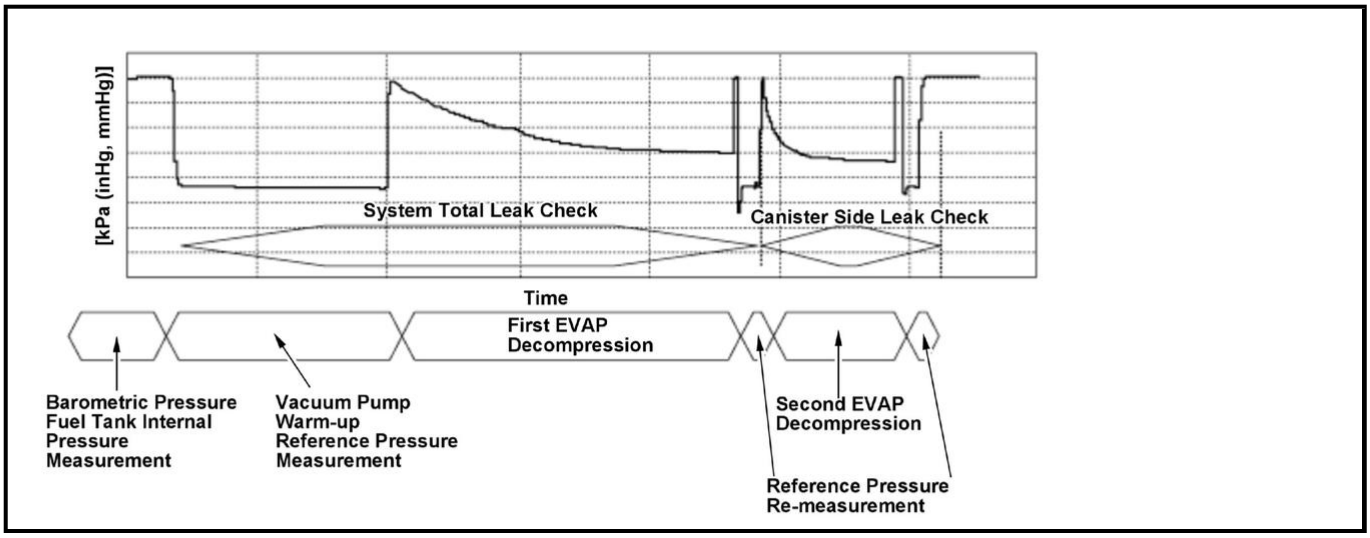

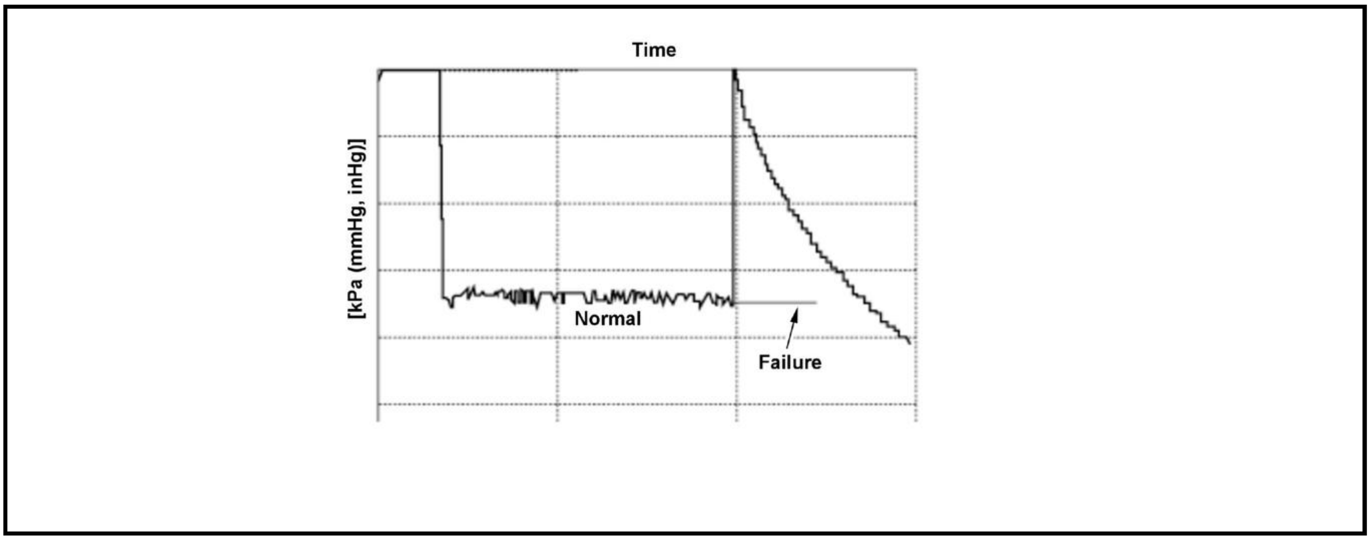

The powertrain control module (PCM) starts the evaporative emission (EVAP) system diagnosis after the vehicle has been turned to the OFF (LOCK) mode, and has met all other enable conditions (initial engine coolant temperature [ECT SENSOR 1] and off for at least 5 hours). The EVAP system diagnosis is performed by reducing pressure between the EVAP canister and the atmosphere. If pressure is reduced with the fuel vapor containment valve open, the entire EVAP system will be diagnosed, and if the fuel vapor containment valve is closed, only the EVAP canister side will be diagnosed.

A malfunction is detected and a DTC is stored when the max and min values of the pressure measurements within the prescribed time during reference pressure measurement is equal to or more than the prescribed value.

EVAP leak detection module operation flow

- Reference pressure measurement : Malfunction detection in the EVAP leak check module and determination of early completion of pressure reduction when normal.
- System pressure reduction : Pressure in the EVAP system is reduced to measure the ultimate pressure.
- Reference pressure re-measurement : Leak is detected by comparing with the ultimate pressure of the system pressure reduction.
- Reference value is to be measured twice considering change in the characteristics of the vacuum pump during detection.

Monitor Execution, Sequence, Duration, DTC Type

Execution	Once per driving cycle
Sequence	None
Duration	At least 6 minutes, 40 seconds but not more than 18 minutes, 55 seconds
DTC Type	Two drive cycles, MIL on

Enable Conditions

Condition	Minimum	Maximum
Elapsed time after turn the vehicle to the ON mode	10 minutes	-
Elapsed time after turn the vehicle to the OFF (LOCK) mode	5 hours	-
Barometric pressure[BARO SENSOR]	76 kPa (569 mmHg, 22.5 inHg)	-
Battery voltage [BATTERY]	10.5 V	-

[ ]: HDS Parameter

Malfunction Threshold

When the change in the pressure 6 minutes, 40 seconds after starting the system pressure reduction is 0.3 kPa (2.3 mmHg, 0.09 inHg) or less.

Possible Cause

- Vacuum pump failure
- Vacuum pump (Motor) failure
- Control valve failure
- Reference orifice flow quantity is excessive

Confirmation Procedure

Operating Condition

- With the engine coolant temperature [ECT SENSOR 1] within the specified range, turn the vehicle to the ON mode, and wait for at least 10 minutes.
- Turn the vehicle to the OFF (LOCK) mode, and wait for at least 5 hours.
- PCM wake up, and wait at least 18 minutes, 55 seconds.

With the HDS

Select the EVAP TEST in the INSPECTION MENU, then select the FUNCTION TEST with the HDS.

Diagnosis Details

Conditions for setting the DTC

When a malfunction is detected during the first drive cycle, a Pending DTC is stored in the PCM memory. If the malfunction returns in the next (second) drive cycle, the MIL comes on and a Confirmed DTC and the freeze data are stored.

Conditions for clearing the DTC

The MIL is cleared if the malfunction does not return in three consecutive trips in which the diagnostic runs. The MIL, the Pending DTC, the Confirmed DTC, and the freeze data can be cleared with the scan tool Clear command or by disconnecting the 12 volt battery.

DTC P2563 (1.5 L ENGINE) (2018 2019 2020 2021)

DTC P2563: Turbocharger Wastegate Control Actuator Position Sensor Out of Range

General Description

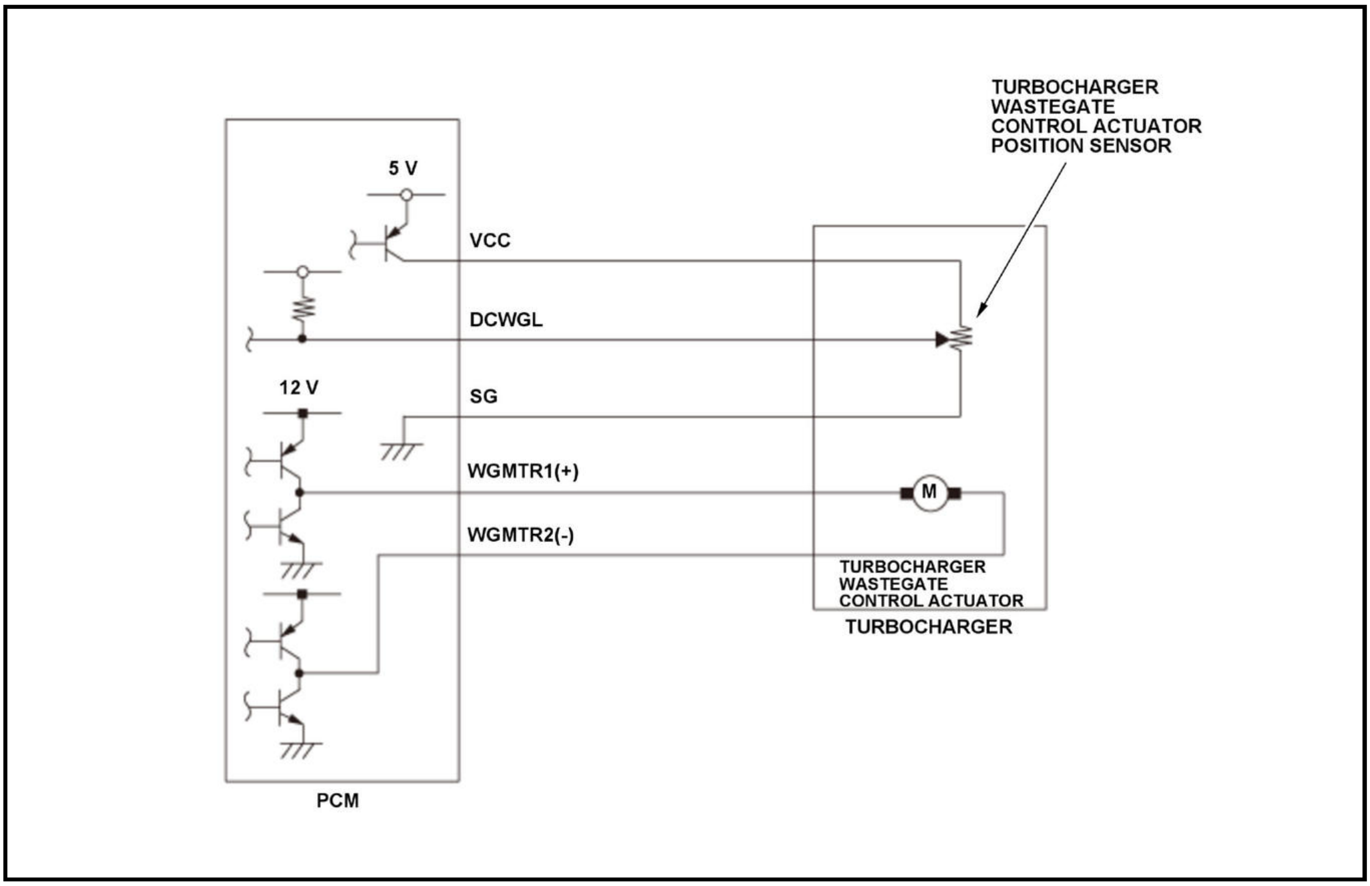
TURBOCHARGER
WASTEGATE
CONTROL ACTUATOR
POSITION SENSOR
5 V
VCC
DCWGL
12 V
SG
WGMTR1(+)
M
WGMTR2(-)
TURBOCHARGER
WASTEGATE
CONTROL ACTUATOR
TURBOCHARGER
PCM

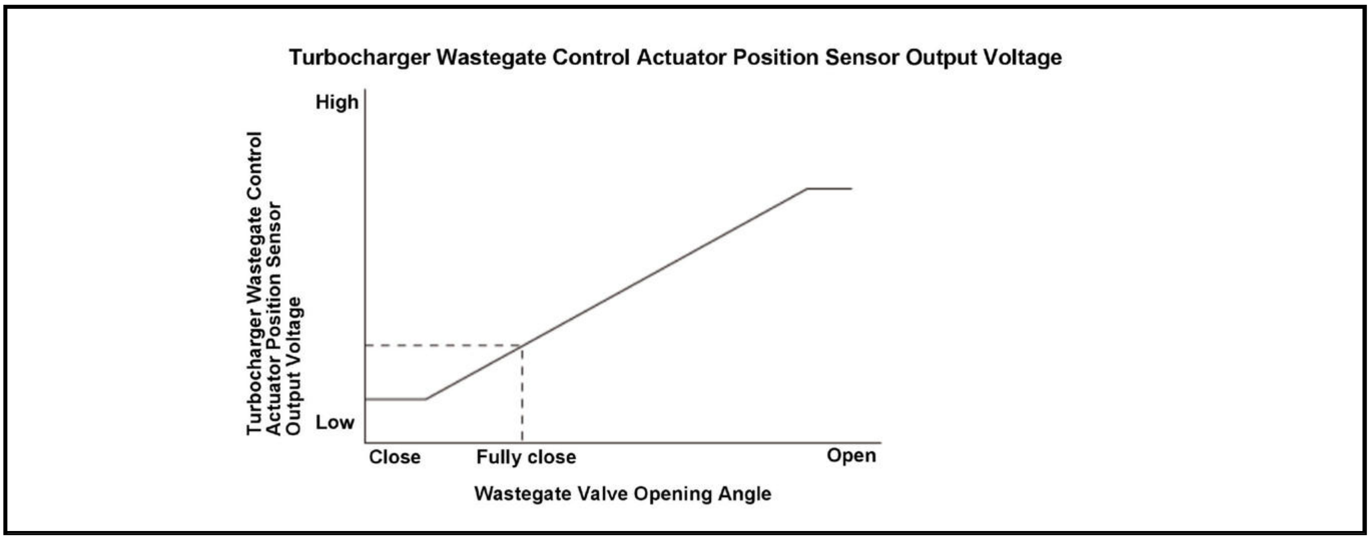

The powertrain control module (PCM) adjusts the boost pressure by controlling the turbocharger wastegate control actuator of the turbocharger. Boost pressure becomes higher by fully closing the turbocharger wastegate control valve driven by the turbocharger wastegate control actuator. The turbocharger wastegate control valve position is detected by the turbocharger wastegate control actuator position sensor and the signal is input to the PCM for target position feedback control. The turbocharger wastegate control actuator position sensor value when the turbocharger wastegate control valve is fully closed is stored as fully closed learning value. Target and actual positions are represented by the relative value from the fully closed position. The PCM sets a target position, and outputs a drive signal to the driver IC and drives the turbocharger wastegate control actuator to be equal to the target position. If the turbocharger wastegate control actuator position sensor output voltage is a set value for a specified time, the PCM detects a malfunction and stores a DTC.

Monitor Execution, Sequence, Duration, DTC Type

Execution	Continuous
Sequence	None
Duration	6 seconds or more
DTC Type	Two drive cycles, MIL on

Enable Conditions

Condition	B
Vehicle	ON mode

Malfunction Threshold

The turbocharger wastegate control actuator position sensor output voltage [EWG VOLTAGE FROM LIFT SENSOR] is 0.31 V or less, or 4.78 V or more for at least 6 seconds.

[ ]: HDS Parameter

Possible Cause

NOTE: The causes shown may not be a complete list of all potential problems, and it is possible that there may be other causes.

- Turbocharger wastegate control actuator position sensor DCWGL line open
- Turbocharger wastegate control actuator position sensor SG line open
- Turbocharger wastegate control actuator position sensor failure

Diagnosis Details

Conditions for setting the DTC

When a malfunction is detected during the first drive cycle, a Pending DTC is stored in the PCM memory. If the malfunction returns in the next (second) drive cycle, the MIL comes on and a Confirmed DTC and the freeze data are stored.

Conditions for clearing the DTC

The MIL is cleared if the malfunction does not return in three consecutive trips in which the diagnostic runs. The MIL, the Pending DTC, the Confirmed DTC, and the freeze data can be cleared with the scan tool Clear command or by disconnecting the 12 volt battery.

DTC P2564, P2565 (1.5 L ENGINE)

DTC P2564: Turbocharger Wastegate Control Actuator Position Sensor Circuit Low Voltage **DTC P2565:** Turbocharger Wastegate Control Actuator Position Sensor Circuit High Voltage

General Description

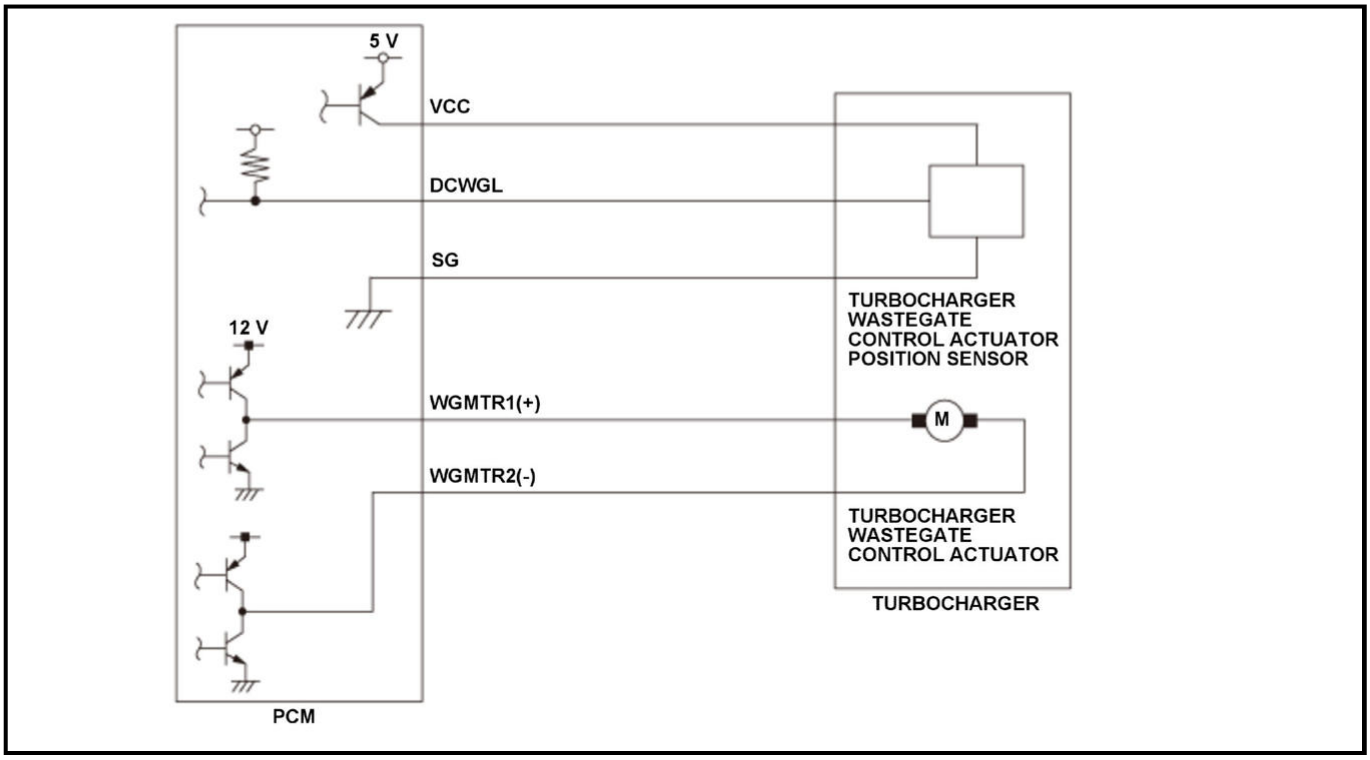
5 V
VCC
DCWGL
SG
12 V
TURBOCHARGER WASTEGATE CONTROL ACTUATOR POSITION SENSOR
WGMTR1(+)
M
WGMTR2(-)
TURBOCHARGER WASTEGATE CONTROL ACTUATOR
TURBOCHARGER
PCM

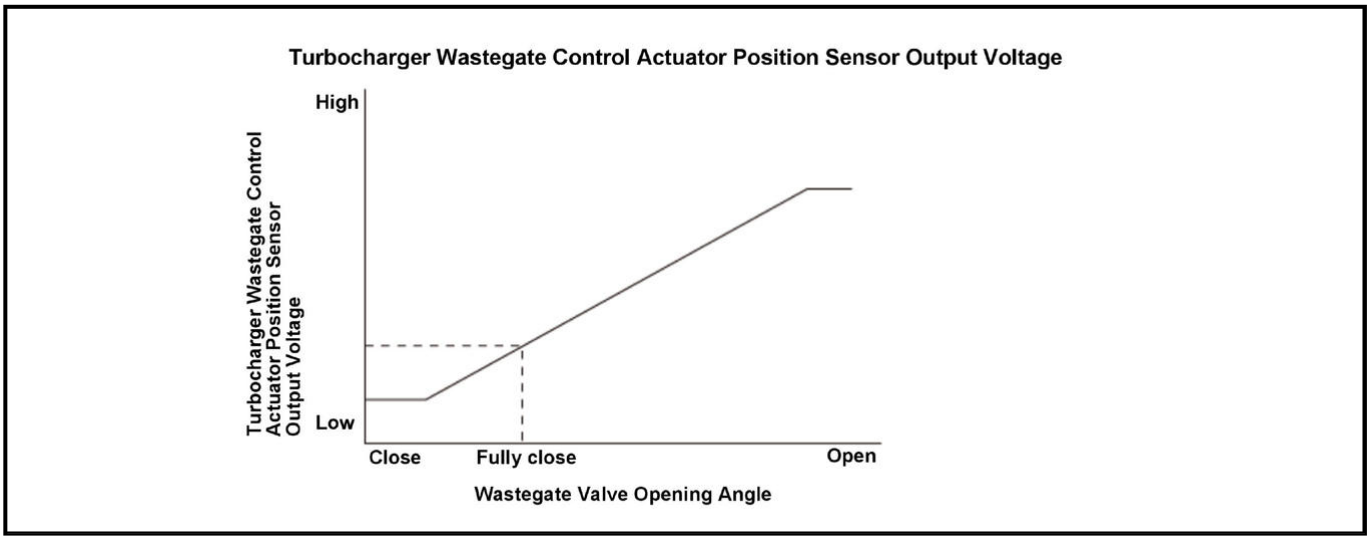

The powertrain control module (PCM) adjusts the boost pressure by controlling the turbocharger wastegate control actuator of the turbocharger. Boost pressure becomes higher by fully closing the turbocharger wastegate control valve driven by the turbocharger wastegate control actuator. The turbocharger wastegate control valve position is detected by the turbocharger wastegate control actuator position sensor and the signal is input to the PCM for target position feedback control. The turbocharger wastegate control actuator position sensor value when the turbocharger wastegate control valve is fully closed is stored as fully closed learning value. Target and actual positions are represented by the relative value from the fully closed position. The PCM sets a target position, and outputs a drive signal to the driver IC and drives the turbocharger wastegate control actuator to be equal to the target position. If the turbocharger wastegate control actuator position sensor output voltage is out of normal range for a specified time, the PCM detects a malfunction and stores a DTC.

Monitor Execution, Sequence, Duration, DTC Type

Execution	Continuous
Sequence	None
Duration	2 seconds or more
DTC Type	One drive cycle, MIL on

Enable Conditions

Condition	B
Vehicle	ON mode

Malfunction Threshold

DTC: P2564

The turbocharger wastegate control actuator position sensor output voltage [EWG VOLTAGE FROM LIFT SENSOR] is 0.16 V or less for at least 2 seconds.

DTC: P2565

The turbocharger wastegate control actuator position sensor output voltage [EWG VOLTAGE FROM LIFT SENSOR] is 4.87 V or more for at least 2 seconds.

[ ]: HDS Parameter

Possible Cause

NOTE: The causes shown may not be a complete list of all potential problems, and it is possible that there may be other causes.

DTC: P2564

- Turbocharger wastegate control actuator position sensor DCWGL line short to ground
- Turbocharger wastegate control actuator position sensor VCC line open

DTC: P2565

- Turbocharger wastegate control actuator position sensor DCWGL line open
- Turbocharger wastegate control actuator position sensor SG line open

Common

- Turbocharger wastegate control actuator position sensor failure

Diagnosis Details

Conditions for setting the DTC

When a malfunction is detected, the MIL comes on and a Pending DTC, a Confirmed DTC, and the freeze data are stored in the PCM memory.

Conditions for clearing the DTC

The MIL is cleared if the malfunction does not return in three consecutive trips in which the diagnostic runs. The MIL, the Pending DTC, the Confirmed DTC, and the freeze data can be cleared with the scan tool Clear command or by disconnecting the 12 volt battery.

DTC P2610 (1.5 L ENGINE)

DTC P2610: Powertrain Control Module (PCM) Ignition Off Internal Timer Malfunction

General Description

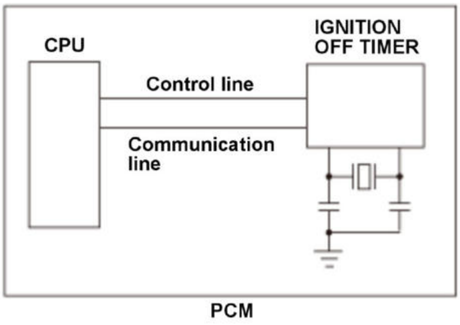

The powertrain control module (PCM) has a built-in ignition off timer that measures the duration from ignition off to the next ignition on. The measured duration is used for evaporative emission (EVAP) leak check and temperature assumption of the catalytic converter. The CPU in the PCM accesses the ignition off timer when reading the measured duration. If the access process to the ignition off timer fails, or an abnormality is found in the read data, the PCM detects a malfunction and stores a DTC.

Monitor Execution, Sequence, Duration, DTC Type

Execution	Continuous
Sequence	None
Duration	10 seconds or more
DTC Type	Two drive cycles, MIL on

Enable Conditions

Condition	B
Vehicle*	ON mode

*: Excludes after the 12 volt battery is reconnected.

Malfunction Threshold

The access process to the ignition off timer fails, or an abnormality is found in the read data for at least 10 seconds.

Possible Cause

NOTE: The causes shown may not be a complete list of all potential problems, and it is possible that there may be other causes.

- PCM internal circuit failure

Diagnosis Details

Conditions for setting the DTC

When a malfunction is detected during the first drive cycle, a Pending DTC is stored in the PCM memory. If the malfunction returns in the next (second) drive cycle, the MIL comes on and a Confirmed DTC and the freeze data are stored.

Conditions for clearing the DTC

The MIL is cleared if the malfunction does not return in three consecutive trips in which the diagnostic runs. The MIL, the Pending DTC, the Confirmed DTC, and the freeze data can be cleared with the scan tool Clear command or by disconnecting the 12 volt battery.

DTC P2610 (2.4 L ENGINE) (2017 2018 2019)

DTC P2610: Powertrain Control Module (PCM) Ignition Off Internal Timer Malfunction

General Description

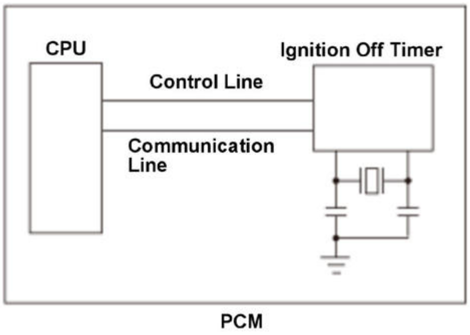

The powertrain control module (PCM) has a built-in ignition off timer that measures the duration from ignition off to the next ignition on. The measured duration is used for evaporative emission (EVAP) leak check and temperature assumption of the catalytic converter. The CPU in the PCM accesses the ignition off timer when reading the measured duration. If the access process fails, a malfunction is detected and a DTC is stored. When an abnormality is found in the read data, the PCM detects a malfunction and stores a DTC.

Monitor Execution, Sequence, Duration, DTC Type

Execution	Continuous
Sequence	None
Duration	10 seconds or more
DTC Type	Two drive cycles, MIL on
OBD Status	PASSED/FAILED/NOT COMPLETED (STILL TESTING)

Enable Conditions

Condition	B
Vehicle*	ON mode

*: Excludes after the 12 volt battery is reconnected.

Malfunction Threshold

The access process to the ignition off timer fails, or a malfunction is found in the read data for at least 10 seconds.

Possible Cause

NOTE: The causes shown may not be a complete list of all potential problems, and it is possible that there may be other causes.

- PCM internal circuit failure

Diagnosis Details

Conditions for setting the DTC

When a malfunction is detected during the first drive cycle, a Pending DTC is stored in the PCM memory. If the malfunction returns in the next (second) drive cycle, the MIL comes on and a Confirmed DTC and the freeze data are stored.

Conditions for clearing the DTC

The MIL is cleared if the malfunction does not return in three consecutive trips in which the diagnostic runs. The MIL, the Pending DTC, the Confirmed DTC, and the freeze data can be cleared with the scan tool Clear command or by disconnecting the 12 volt battery.

DTC P2623 (1.5 L ENGINE)

DTC P2623: High Pressure Fuel Pump Spill Valve Malfunction

General Description

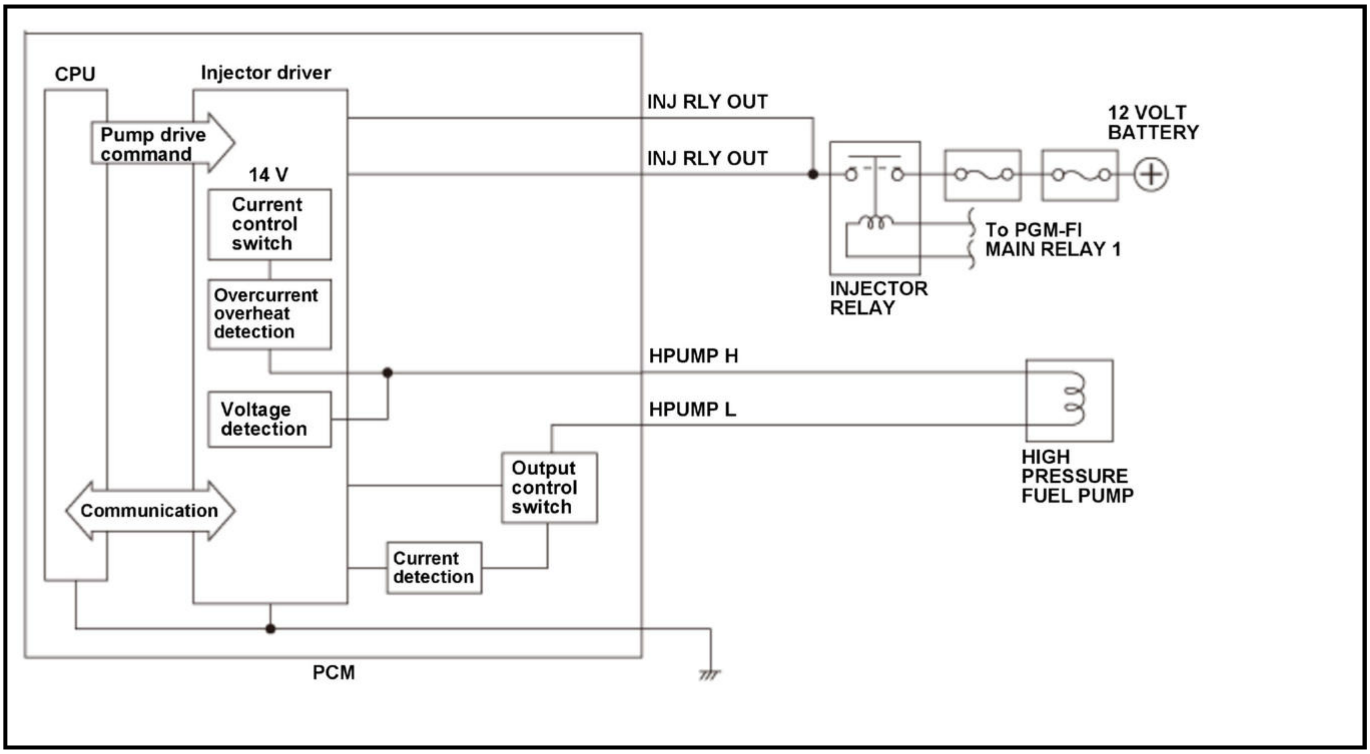
CPU
Injector driver
Pump drive command
14 V
Current control switch
Overcurrent overheat detection
Voltage detection
Communication
Output control switch
Current detection
PCM
INJ RLY OUT
INJ RLY OUT
INJECTOR RELAY
12 VOLT BATTERY
To PGM-FI MAIN RELAY 1
HPUMP H
HPUMP L
HIGH PRESSURE FUEL PUMP

The fuel pressure is adjusted by high pressure fuel pump output ON/OFF which is controlled by the powertrain control module (PCM). In the PCM, the injector driver receives drive commands from the CPU and drives the high pressure fuel pump. The CPU monitors high pressure fuel pump currents and return signal from the injector driver to monitor a terminal voltage of PCM. If the monitored conditions are abnormal for a specified time, the PCM detects a malfunction and stores a DTC.

Monitor Execution, Sequence, Duration, DTC Type

Execution	Continuous
Sequence	None
Duration	-
DTC Type	One drive cycle, MIL on

Enable Conditions

Condition	Minimum	Maximum
12 volt battery voltage [BATTERY]	10 V	-
Vehicle	ON mode	

[ ]: HDS Parameter

Malfunction Threshold

Either of the conditions occurs at least 100 times (counts 4 times per engine cycle):

- Symptom: High pressure fuel pump current not flowing

  The pump solenoid current is 0.4 A to 1.5 A or less*.

- Symptom: High pressure fuel pump overcurrent

  The pump solenoid current is 19.7 A to 30.5 A or more*.

- Symptom: PCM terminal (to high pressure fuel pump) short to ground

  The PCM terminal (to high pressure fuel pump) voltage is 1.8 V to 2.2 V or less*.

- Symptom: PCM terminal (to high pressure fuel pump) short to power

  The PCM terminal (to high pressure fuel pump) voltage is (12 volt battery voltage - 3.2) V to (12 volt battery voltage - 2.2) V or more*.

*: Varies with driving condition.

Possible Cause

NOTE: The causes shown may not be a complete list of all potential problems, and it is possible that there may be other causes.

- High pressure fuel pump failure
- High pressure fuel pump HPUMP H line open
- High pressure fuel pump HPUMP H line short to ground
- High pressure fuel pump HPUMP H line short to power
- High pressure fuel pump HPUMP L line open
- High pressure fuel pump HPUMP L line short to ground
- High pressure fuel pump HPUMP L line short to power
- Injector relay failure
- PCM internal circuit failure (injector driver power supply line open)

Diagnosis Details

Conditions for setting the DTC

When a malfunction is detected, the MIL comes on and a Pending DTC, a Confirmed DTC, and the freeze data are stored in the PCM memory.

Conditions for clearing the DTC

The MIL is cleared if the malfunction does not return in three consecutive trips in which the diagnostic runs. The MIL, the Pending DTC, the Confirmed DTC, and the freeze data can be cleared with the scan tool Clear command.

DTC P2623 (2.4 L ENGINE) (2017 2018 2019)

DTC P2623: High Pressure Fuel Pump Spill Valve Malfunction

General Description

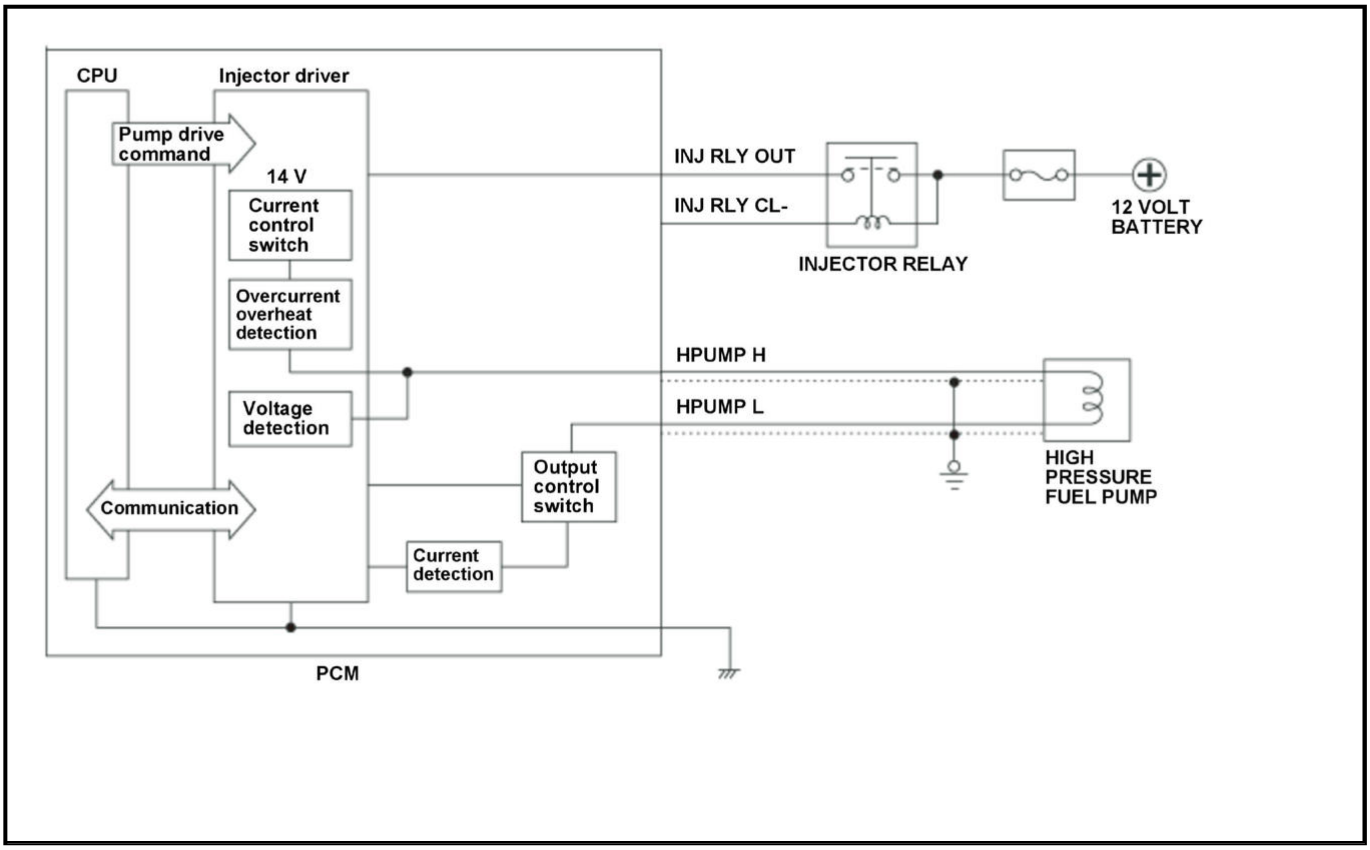
CPU
Injector driver
Pump drive command
14 V
Current control switch
Overcurrent overheat detection
Voltage detection
Communication
Output control switch
Current detection
PCM
INJ RLY OUT
INJ RLY CL-
INJECTOR RELAY
12 VOLT BATTERY
HPUMP H
HPUMP L
HIGH PRESSURE FUEL PUMP

The fuel pressure is adjusted by high pressure fuel pump output ON/OFF which is controlled by the powertrain control module (PCM). In the PCM, the injector driver receives drive commands from the CPU and drives the high pressure fuel pump. Also, the injector driver monitors pump solenoid current and voltage, and transmits results to the CPU. If the monitored pump solenoid currents or voltages are abnormal for a specified time, the PCM detects a malfunction and stores a DTC.

Monitor Execution, Sequence, Duration, DTC Type

Execution	Continuous
Sequence	None
Duration	-
DTC Type	One drive cycle, MIL on

Enable Conditions

Condition	Minimum	Maximum
12 volt battery voltage [BATTERY]	10 V	-
Vehicle	ON mode	

[ ]: HDS Parameter

Malfunction Threshold

Either of the conditions occurs at least 100 times (counts 4 times per engine cycle).

- Symptom: High pressure fuel pump current not flowing

  The pump solenoid current is 0.2 - 1 A* or less.

- Symptom: High pressure fuel pump overcurrent

  The pump solenoid current is 12 - 20 A* or more.

- Symptom: PCM terminal (to high pressure fuel pump) short to ground

  The PCM terminal (to high pressure fuel pump) voltage is 1 - 1.3 V* or less.

- Symptom: PCM terminal (to high pressure fuel pump) short to power

  The PCM terminal (to high pressure fuel pump) voltage is 4.6 - 5 V* or more.

*: Varies with driving condition.

Possible Cause

NOTE: The causes shown may not be a complete list of all potential problems, and it is possible that there may be other causes.

- High pressure fuel pump failure
- High pressure fuel pump HPUMP H line open
- High pressure fuel pump HPUMP L line open
- High pressure fuel pump HPUMP H line short to ground
- High pressure fuel pump HPUMP L line short to ground
- High pressure fuel pump HPUMP H line short to power
- High pressure fuel pump HPUMP L line short to power
- Injector relay failure
- PCM internal circuit failure (injector driver power supply line open)

Diagnosis Details

Conditions for setting the DTC

When a malfunction is detected, the MIL comes on and a Pending DTC, a Confirmed DTC, and the freeze data are stored in the PCM memory.

Conditions for clearing the DTC

The MIL is cleared if the malfunction does not return in three consecutive trips in which the diagnostic runs. The MIL, the Pending DTC, the Confirmed DTC, and the freeze data can be cleared with the scan tool Clear command or by disconnecting the 12 volt battery.

DTC P2646 (2.4 L ENGINE) (2017 2018 2019)

DTC P2646: Rocker Arm Oil Pressure Switch Circuit Low Voltage

General Description

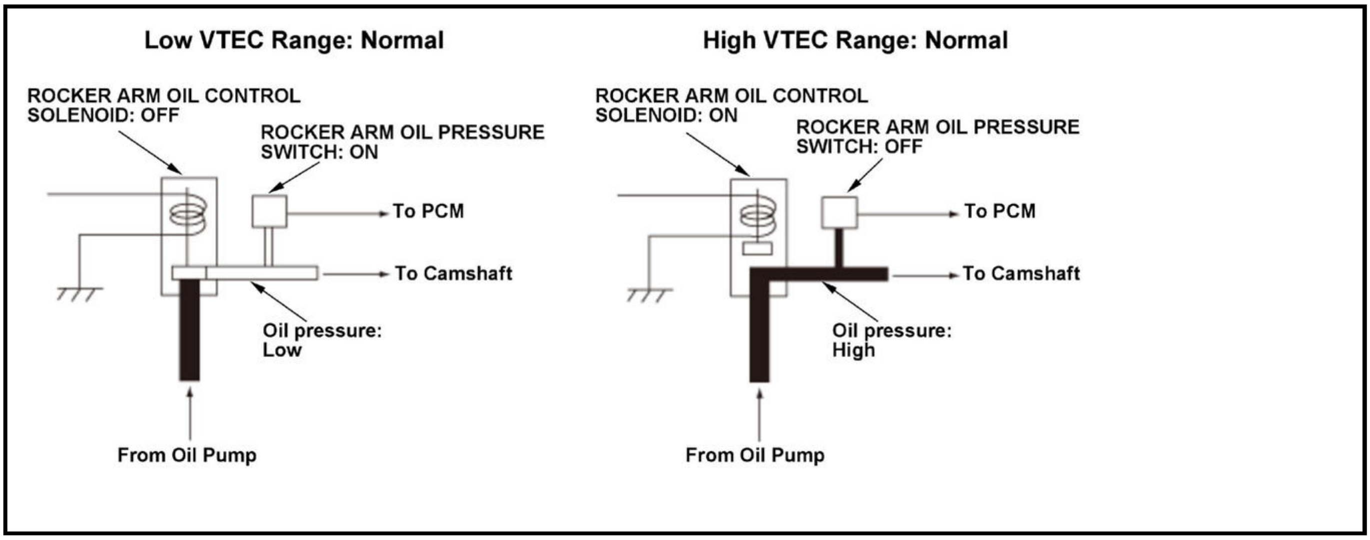
Low VTEC Range: Normal
ROCKER ARM OIL CONTROL SOLENOID: OFF
ROCKER ARM OIL PRESSURE SWITCH: ON
To PCM
To Camshaft
Oil pressure: Low
From Oil Pump
High VTEC Range: Normal
ROCKER ARM OIL CONTROL SOLENOID: ON
ROCKER ARM OIL PRESSURE SWITCH: OFF
To PCM
To Camshaft
Oil pressure: High
From Oil Pump

Logic Decision	Rocker Arm Oil Pressure Switch	
	'ON'	'OFF'
Rocker Arm Oil Control Solenoid Command 'ON'	Failure	Normal
Rocker Arm Oil Control Solenoid Command 'OFF'	Normal	Failure

The VTEC system activates the rocker arm oil control solenoid with a command from the powertrain control module (PCM), and it charges/discharges the hydraulic circuit of the VTEC mechanism that switches valve timing between Low and High. The PCM monitors oil pressure in the hydraulic circuit of the VTEC mechanism using the rocker arm oil pressure switch downstream of the rocker arm oil control solenoid. If there is a difference between the oil pressure condition in the hydraulic circuit determined by the PCM command and the oil pressure condition determined by the status of the rocker arm oil pressure switch, the system is considered faulty, and a DTC is stored.

Monitor Execution, Sequence, Duration, DTC Type

Execution	Once per driving cycle
Sequence	None
Duration	7 seconds or more
DTC Type	Two drive cycles, MIL on
OBD Status	PASSED/FAILED/NOT COMPLETED (STILL TESTING)

Enable Conditions

Condition	Minimum	Maximum
Engine coolant temperature [ECT SENSOR 1]	140 deg. F (60 deg. C)	-
Engine speed [ENGINE SPEED]*	4, 900 rpm	-
Vehicle speed [VEHICLE SPEED]	7 mph (10 km/h)	-
12 volt battery voltage [BATTERY]	10.5 V	-

Condition	Minimum	Maximum
Shift lever position	Other than P or N	

*: Variable that is depending on the engine load.

[ ]: HDS Parameter

Malfunction Threshold

When the rocker arm oil control solenoid is ON, the rocker arm oil pressure switch remains ON.

Possible Cause

NOTE: The causes shown may not be a complete list of all potential problems, and it is possible that there may be other causes.

- Rocker arm oil control solenoid failure
- Rocker arm oil control solenoid VTS line open
- Rocker arm oil control solenoid VTS line short
- Rocker arm oil pressure switch failure
- Rocker arm oil pressure switch VTM line open
- Rocker arm oil pressure switch VTM line short
- Oil passage clogged

Confirmation Procedure

Operating Condition

- Start the engine. Hold the engine speed [ENGINE SPEED] at 3, 000 rpm without load (in P or N) until the radiator fan comes on.
- Drive the vehicle at an engine speed [ENGINE SPEED] 4, 900 rpm or more for at least 7 seconds.

- Drive the vehicle in this manner only if the traffic regulations and ambient conditions allow.

With the HDS

Do the VTEC TEST in the INSPECTION MENU with the HDS.

Diagnosis Details

Conditions for setting the DTC

When a malfunction is detected during the first drive cycle, a Pending DTC is stored in the PCM memory. If the malfunction returns in the next (second) drive cycle, the MIL comes on and a Confirmed DTC and the freeze data are stored.

Conditions for clearing the DTC

The MIL is cleared if the malfunction does not return in three consecutive trips in which the diagnostic runs. The MIL, the Pending DTC, the Confirmed DTC, and the freeze data can be cleared with the scan tool Clear command or by disconnecting the 12 volt battery.

DTC P2647 (2.4 L ENGINE) (2017 2018 2019)

DTC P2647: Rocker Arm Oil Pressure Switch Circuit High Voltage

General Description

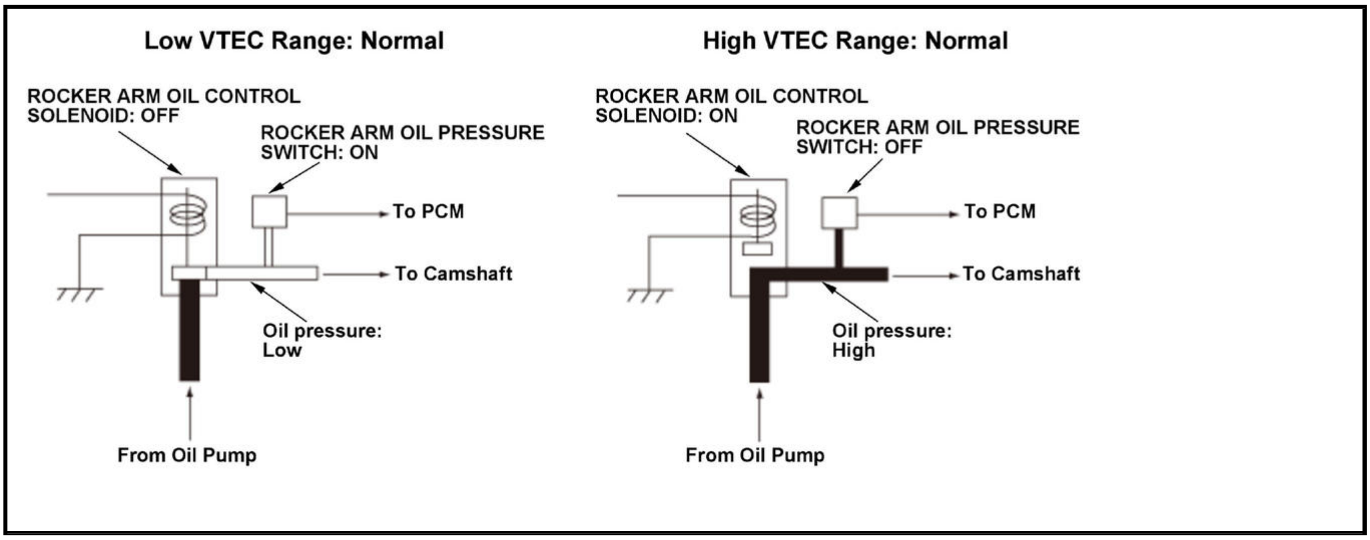
Low VTEC Range: Normal
ROCKER ARM OIL CONTROL SOLENOID: OFF
ROCKER ARM OIL PRESSURE SWITCH: ON
To PCM
To Camshaft
Oil pressure: Low
From Oil Pump
High VTEC Range: Normal
ROCKER ARM OIL CONTROL SOLENOID: ON
ROCKER ARM OIL PRESSURE SWITCH: OFF
To PCM
To Camshaft
Oil pressure: High
From Oil Pump

Logic Decision	Rocker Arm Oil Pressure Switch	
	'ON'	'OFF'
Rocker Arm Oil Control Solenoid Command 'ON'	Failure	Normal
Rocker Arm Oil Control Solenoid Command 'OFF'	Normal	Failure

The VTEC system activates the rocker arm oil control solenoid with a command from the powertrain control module (PCM), and it charges/discharges the hydraulic circuit of the VTEC mechanism that switches valve timing between Low and High. The PCM monitors oil pressure in the hydraulic circuit of the VTEC mechanism using the rocker arm oil pressure switch downstream of the rocker arm oil control solenoid. If there is a difference between the oil pressure condition in the hydraulic circuit determined by the PCM command and the oil pressure condition determined by the status of the rocker arm oil pressure switch, the system is considered faulty, and a DTC is stored.

Monitor Execution, Sequence, Duration, DTC Type

Execution	Once per driving cycle
Sequence	None
Duration	7 seconds or more
DTC Type	Two drive cycles, MIL on

Enable Conditions

Condition	Minimum	Maximum
12 volt battery voltage [BATTERY]	10.5 V	-
Other	At idle	

[ ]: HDS Parameter

Malfunction Threshold

When the rocker arm oil control solenoid is OFF, the rocker arm oil pressure switch remains OFF.

Possible Cause

NOTE: The causes shown may not be a complete list of all potential problems, and it is possible that there may be other causes.

- Rocker arm oil control solenoid failure

- Rocker arm oil control solenoid VTS line open
- Rocker arm oil control solenoid VTS line short
- Rocker arm oil pressure switch failure
- Rocker arm oil pressure switch VTM line open
- Rocker arm oil pressure switch VTM line short
- Oil passage clogged

Confirmation Procedure

Operating Condition

Start the engine, and let it idle for at least 7 seconds.

With the HDS

Do the VTEC TEST in the INSPECTION MENU with the HDS.

Diagnosis Details

Conditions for setting the DTC

When a malfunction is detected during the first drive cycle, a Pending DTC is stored in the PCM memory. If the malfunction returns in the next (second) drive cycle, the MIL comes on and a Confirmed DTC and the freeze data are stored.

Conditions for clearing the DTC

The MIL is cleared if the malfunction does not return in three consecutive trips in which the diagnostic runs. The MIL, the Pending DTC, the Confirmed DTC, and the freeze data can be cleared with the scan tool Clear command or by disconnecting the 12 volt battery.

DTC P2648 (2.4 L ENGINE) (2017 2018 2019)

DTC P2648: Rocker Arm Oil Control Solenoid A Circuit Low Voltage

General Description

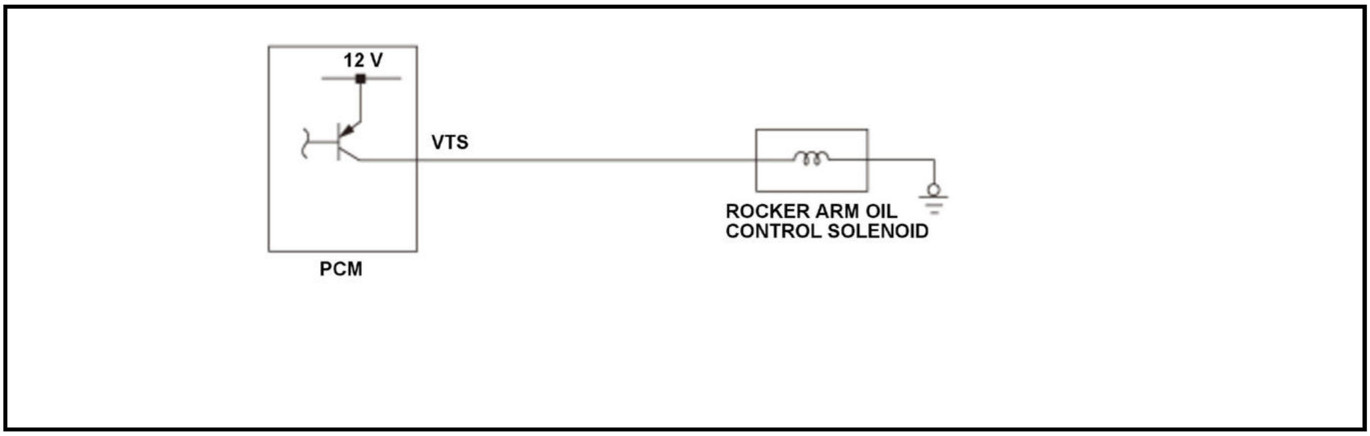

The VTEC system activates the rocker arm oil control solenoid by a command from the powertrain control module (PCM), and it charges/discharges the hydraulic circuit of the VTEC mechanism that switches valve timing between low and high. If the return signal is OFF (low) when the PCM outputs the ON (high) signal to the rocker arm oil control solenoid, the PCM detects a malfunction and stores a DTC.

Monitor Execution, Sequence, Duration, DTC Type

Execution	Continuous

Sequence	None
Duration	2.0 seconds or more
DTC Type	One drive cycle, MIL on

Enable Conditions

Condition	Minimum	Maximum
12 volt battery voltage [BATTERY]	10.0 V	-

[ ]: HDS Parameter

Malfunction Threshold

The return signal is OFF (low) for at least 2.0 seconds when the PCM outputs the ON (high) signal to the rocker arm oil control solenoid.

Possible Cause

NOTE: The causes shown may not be a complete list of all potential problems, and it is possible that there may be other causes.

- Rocker arm oil control solenoid VTS line short to ground
- Rocker arm oil control solenoid failure
- PCM internal circuit failure

Confirmation Procedure

Operating Condition

- Start the engine. Hold the engine speed [ENGINE SPEED] at 3, 000 rpm without load (in P or N) until the radiator fan comes on, then let it idle.
- Drive immediately at a steady engine speed [ENGINE SPEED] 4, 800 - 5, 000 rpm or more for at least 2 seconds.

- Drive the vehicle in this manner only if the traffic regulations and ambient conditions allow.

With the HDS

Do the VTEC TEST in the INSPECTION MENU with the HDS.

Diagnosis Details

Conditions for setting the DTC

When a malfunction is detected, the MIL comes on and a Pending DTC, a Confirmed DTC, and the freeze data are stored in the PCM memory.

Conditions for clearing the DTC

The MIL is cleared if the malfunction does not return in three consecutive trips in which the diagnostic runs. The MIL, the Pending DTC, the Confirmed DTC, and the freeze data can be cleared with the scan tool Clear command or by disconnecting the 12 volt battery.

DTC P2649 (2.4 L ENGINE) (2017 2018 2019)

DTC P2649: Rocker Arm Oil Control Solenoid A Circuit High Voltage

General Description

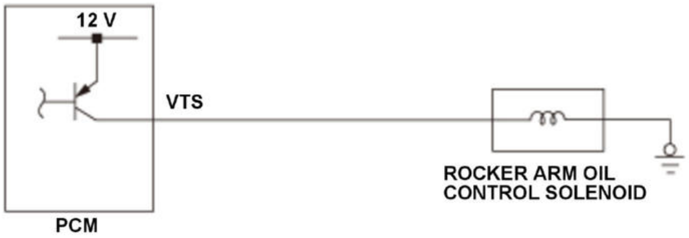

The VTEC system activates the rocker arm oil control solenoid by a command from the powertrain control module (PCM), and it charges/discharges the hydraulic circuit of the VTEC mechanism that switches valve timing between low and high. If the return signal is ON (high) when the PCM outputs the OFF (low) signal to the rocker arm oil control solenoid, the PCM detects a malfunction and stores a DTC.

Monitor Execution, Sequence, Duration, DTC Type

Execution	Continuous
Sequence	None
Duration	2.0 seconds or more
DTC Type	One drive cycle, MIL on

Enable Conditions

Condition	Minimum	Maximum
12 volt battery voltage [BATTERY]	10.0 V	-
State of the engine	Running	

[ ]: HDS Parameter

Malfunction Threshold

The return signal is ON (high) for at least 2.0 seconds when the PCM outputs the OFF (low) signal to the rocker arm oil control solenoid.

Possible Cause

NOTE: The causes shown may not be a complete list of all potential problems, and it is possible that there may be other causes.

- Rocker arm oil control solenoid VTS line open
- Rocker arm oil control solenoid failure
- Rocker arm oil control solenoid ground line open
- PCM internal circuit failure

Confirmation Procedure

Operating Condition

Start the engine, and let it idle for at least 2 seconds.

With the HDS

None.

Diagnosis Details

Conditions for setting the DTC

When a malfunction is detected, the MIL comes on and a Pending DTC, a Confirmed DTC, and the freeze data are stored in the PCM memory.

Conditions for clearing the DTC

The MIL is cleared if the malfunction does not return in three consecutive trips in which the diagnostic runs. The MIL, the Pending DTC, the Confirmed DTC, and the freeze data can be cleared with the scan tool Clear command or by disconnecting the 12 volt battery.

DTC P2715 (CVT (ECM/PCM))

DTC P2715: Pressure Control Solenoid D Stuck On

General Description

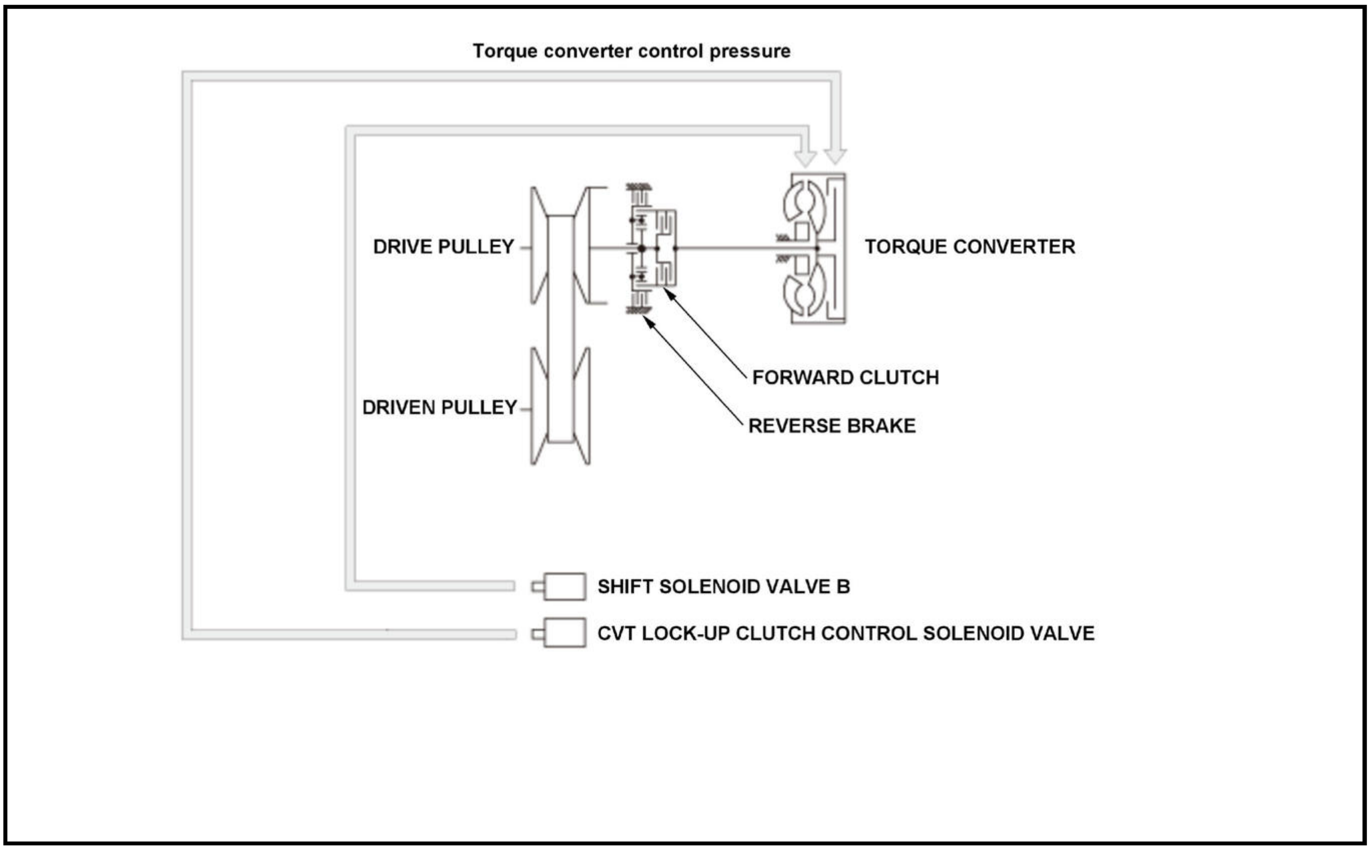
Torque converter control pressure
DRIVE PULLEY
TORQUE CONVERTER
FORWARD CLUTCH
DRIVEN PULLEY
REVERSE BRAKE
SHIFT SOLENOID VALVE B
CVT LOCK-UP CLUTCH CONTROL SOLENOID VALVE

The CVT lock-up clutch control solenoid valve controls hydraulic pressure to the torque converter clutch. The CVT lock-up clutch control solenoid valve is controlled by duty cycle output. The spool in the CVT lock-up clutch control solenoid valve moves the valve according to the current, and produces hydraulic pressure in proportion to the current. To supply proper torque converter clutch oil pressure, the powertrain control module (PCM) outputs a CVT lock-up clutch control solenoid valve oil pressure control signal. If the torque converter clutch is judged as stuck ON, the PCM detects a CVT lock-up clutch control solenoid valve stuck ON malfunction and stores a DTC.

Monitor Execution, Sequence, Duration, DTC Type

Execution	Continuous

Sequence	None
Duration	Depending on the driving conditions
DTC Type* 1	Two drive cycles, MIL on, Shift position indicator blinks
DTC Type* 2	Two drive cycles, MIL off, Shift position indicator blinks

*1: KA model

*2: Except KA models

Enable Conditions

Condition	Minimum	Maximum
Engine speed [ENGINE SPEED]	500 rpm	-
Vehicle speed [VEHICLE SPEED]*	-	13 mph (21 km/h)
Acceleration**	-	0.98 m/s 2 (3.2 ft/s 2)
Throttle position	4 deg.	42 deg.
Accelerator pedal position variation	-	13 deg./1 second
Shift lever position/mode	D, S, L	

*: Symptom 1

**: Symptom 2

[ ]: HDS Parameter

Malfunction Threshold

Symptom 2 occurs after Symptom 1 occurs:

- Symptom 1: Actual torque converter slip rate is more than 99 %, or less than 130 % for at least 600 milliseconds when target torque converter slip rate is less than 97 %.
- Symptom 2: Actual torque converter slip rate is more than 99 %, or less than 130 % for at least 1 second.

Possible Cause

NOTE: The causes shown may not be a complete list of all potential problems, and it is possible that there may be other causes.

- CVT lock-up clutch control solenoid valve stuck on

Confirmation Procedure

Operating Condition

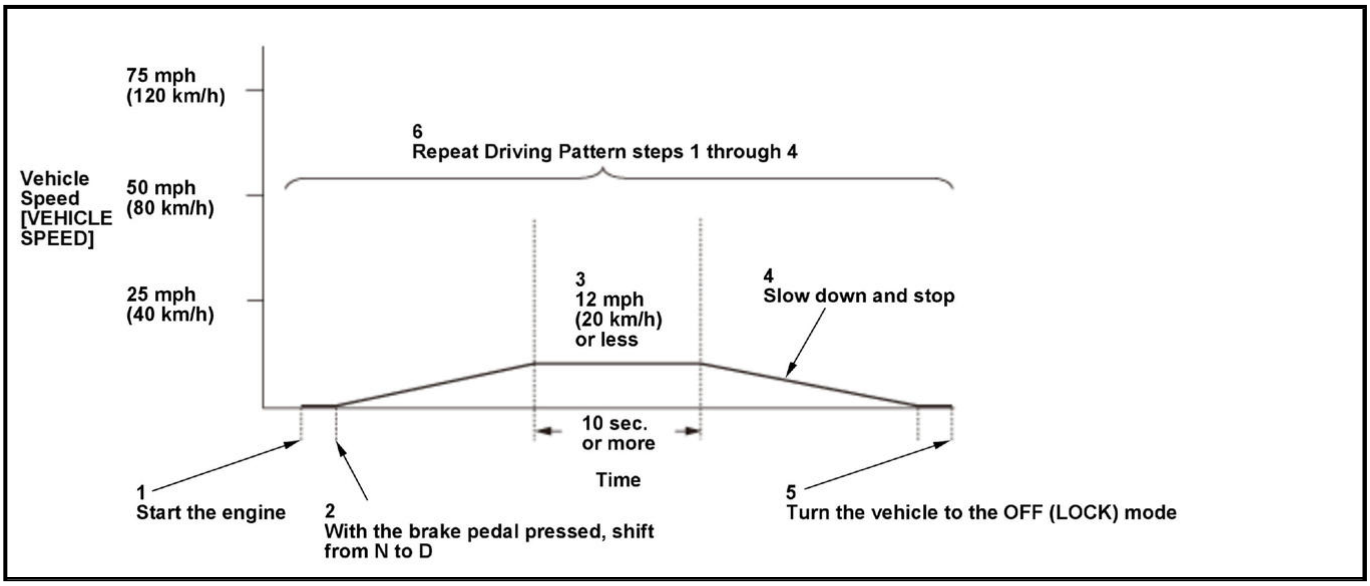

- Start the engine.
- With the brake pedal pressed, place the shift lever from N to D position/mode.
- Drive the vehicle at 12 mph (20 km/h) or less for at least 10 seconds.
- Slow down and stop the vehicle.
- Turn the vehicle to the OFF (LOCK) mode.
- Repeat Driving Pattern steps 1 through 4.

- Drive the vehicle in this manner only if the traffic regulations and ambient conditions allow.

With the HDS

None.

Diagnosis Details* 1

Conditions for setting the DTC

When a malfunction is detected during the first drive cycle, a Pending DTC is stored in the PCM memory. If the malfunction returns in the next (second) drive cycle, the MIL comes on, the shift position indicator blinks, and a Confirmed DTC and the freeze data are stored.

Conditions for clearing the DTC

The shift position indicator comes off by turning the vehicle to the OFF (LOCK) mode. The MIL is cleared if the malfunction does not return in three consecutive trips in which the diagnostic runs. The MIL, the Pending DTC, the Confirmed DTC, and the freeze data can be cleared with the scan tool Clear command or by disconnecting the 12 volt battery.

Diagnosis Details* 2

Conditions for setting the DTC

When a malfunction is detected during the first drive cycle, a Pending DTC is stored in the PCM memory. If the malfunction returns in the next (second) drive cycle, the shift position indicator blinks and a Confirmed DTC and the freeze data are stored. The MIL does not come on.

Conditions for clearing the DTC

The shift position indicator comes off by turning the vehicle to the OFF (LOCK) mode. The Pending DTC, the Confirmed DTC, and the freeze data can be cleared with the scan tool Clear command or by disconnecting the 12 volt battery.

DTC P2720 (CVT (ECM/PCM))

DTC P2720: Pressure Control Solenoid D Control Circuit Low

General Description

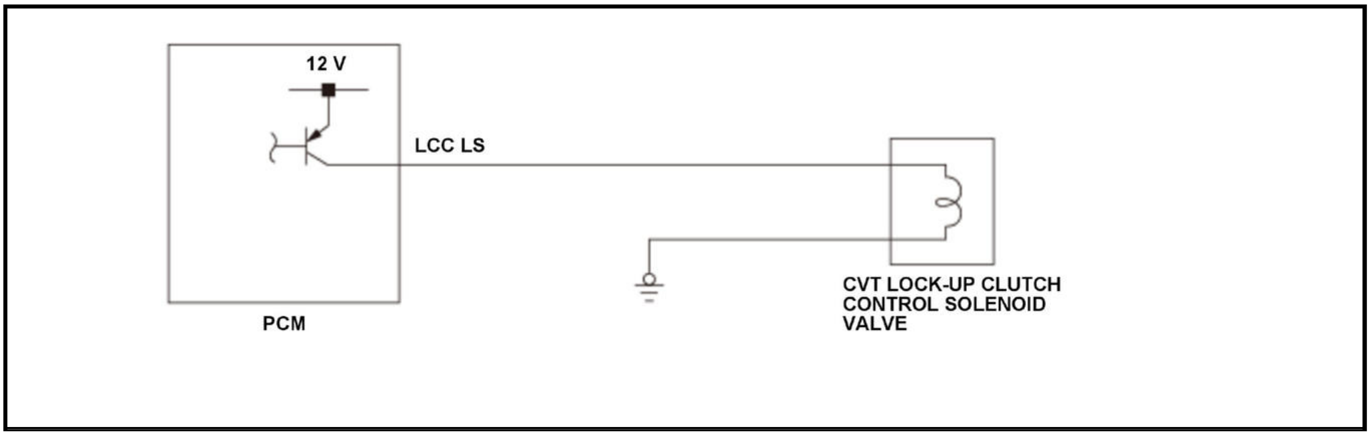

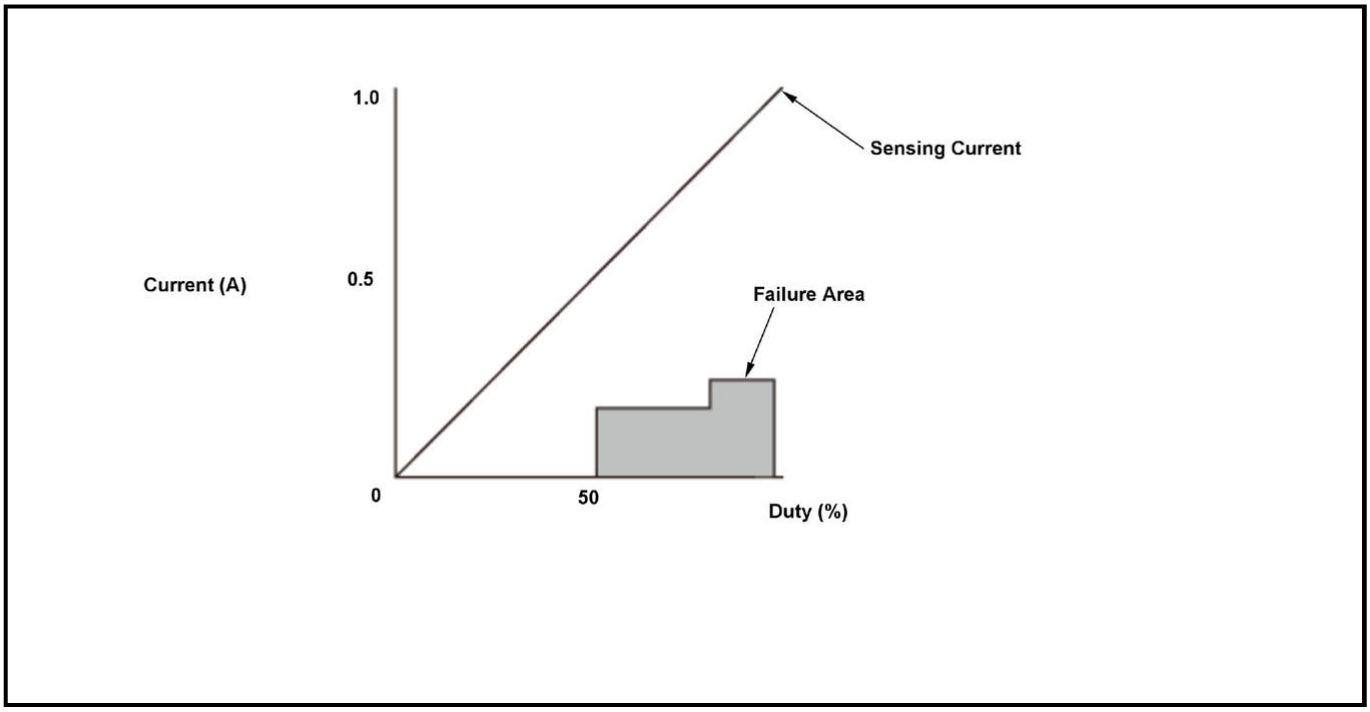

The CVT lock-up clutch control solenoid valve controls hydraulic pressure to the torque converter clutch. The CVT lock-up clutch control solenoid valve is controlled by duty cycle output. The spool in the CVT lock-up clutch control solenoid valve moves the valve according to the current, and produces hydraulic pressure in proportion to the current. The powertrain control module (PCM) measures the current that passes through the CVT lock-up clutch control solenoid valve and uses feedback control to compensate for the difference between the measured current and the commanded one. If the measured current is not equal to the duty cycle command, the PCM detects a malfunction (open, short to ground) and stores a DTC.

Monitor Execution, Sequence, Duration, DTC Type

Execution	Continuous
Sequence	None
Duration	1 second or more
DTC Type* 1	Two drive cycles, MIL on, Shift position indicator blinks
DTC Type* 2	Two drive cycles, MIL off, Shift position indicator blinks

*1: KA model

*2: Except KA models

Enable Conditions

Condition	Minimum	Maximum
12 volt battery voltage [BATTERY VOLTAGE]	10.0 V	-

[ ]: HDS Parameter

Malfunction Threshold

The measured current for the PCM's command value is as specified here for at least 1 second.

Duty (%)	Current (A)	Failure mode
56.5 - 90.2	Less than 0.19	Low Input
More than 90.2	Less than 0.27	Low Input

Possible Cause

NOTE: The causes shown may not be a complete list of all potential problems, and it is possible that there may be other causes.

- CVT lock-up clutch control solenoid valve LCC LS line open (includes connector loose connection or disconnection)
- CVT lock-up clutch control solenoid valve LCC LS line short to ground
- CVT lock-up clutch control solenoid valve power supply line failure (includes fuse blown)
- CVT lock-up clutch control solenoid valve internal circuit short
- CVT lock-up clutch control solenoid valve internal circuit open
- PCM internal circuit failure

Confirmation Procedure

Operating Condition

Start the engine, and wait for at least 1 second.

With the HDS

None.

Diagnosis Details* 1

Conditions for setting the DTC

When a malfunction is detected during the first drive cycle, a Pending DTC is stored in the PCM memory. If the malfunction returns in the next (second) drive cycle, the MIL comes on, the shift position indicator blinks, and a Confirmed DTC and the freeze data are stored.

Conditions for clearing the DTC

The shift position indicator comes off by turning the vehicle to the OFF (LOCK) mode. The MIL is cleared if the malfunction does not return in three consecutive trips in which the diagnostic runs. The MIL, the Pending DTC, the Confirmed DTC, and the freeze data can be cleared with the scan tool Clear command or by disconnecting the 12 volt battery.

Diagnosis Details* 2

Conditions for setting the DTC

When a malfunction is detected during the first drive cycle, a Pending DTC is stored in the PCM memory. If the malfunction returns in the next (second) drive cycle, the shift position indicator blinks and a Confirmed DTC and the freeze data are stored. The MIL does not come on.

Conditions for clearing the DTC

The shift position indicator comes off by turning the vehicle to the OFF (LOCK) mode. The Pending DTC, the Confirmed DTC, and the freeze data can be cleared with the scan tool Clear command or by disconnecting the 12 volt battery.

DTC P2721 (CVT (ECM/PCM))

DTC P2721: Pressure Control Solenoid D Control Circuit High

General Description

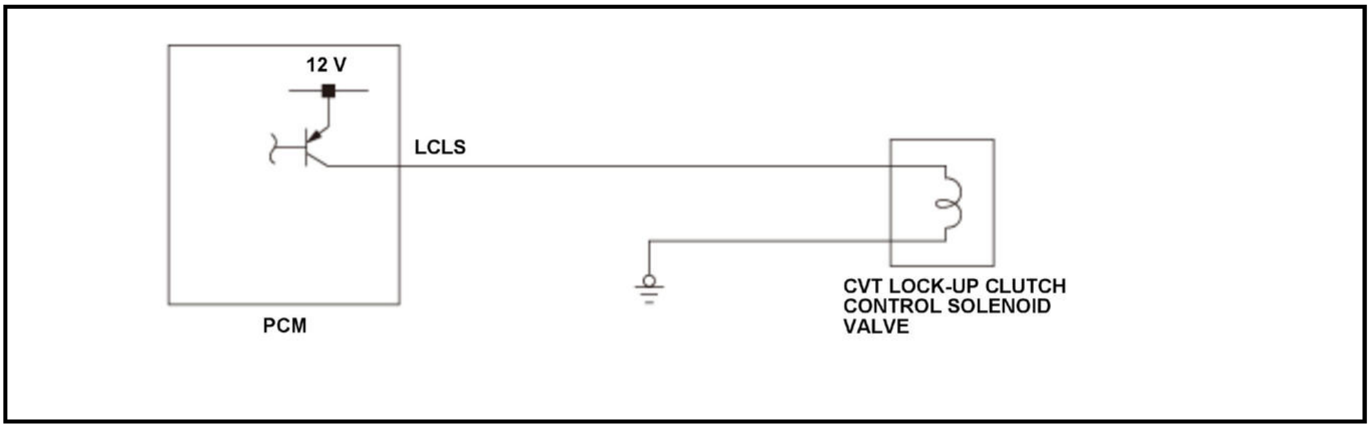

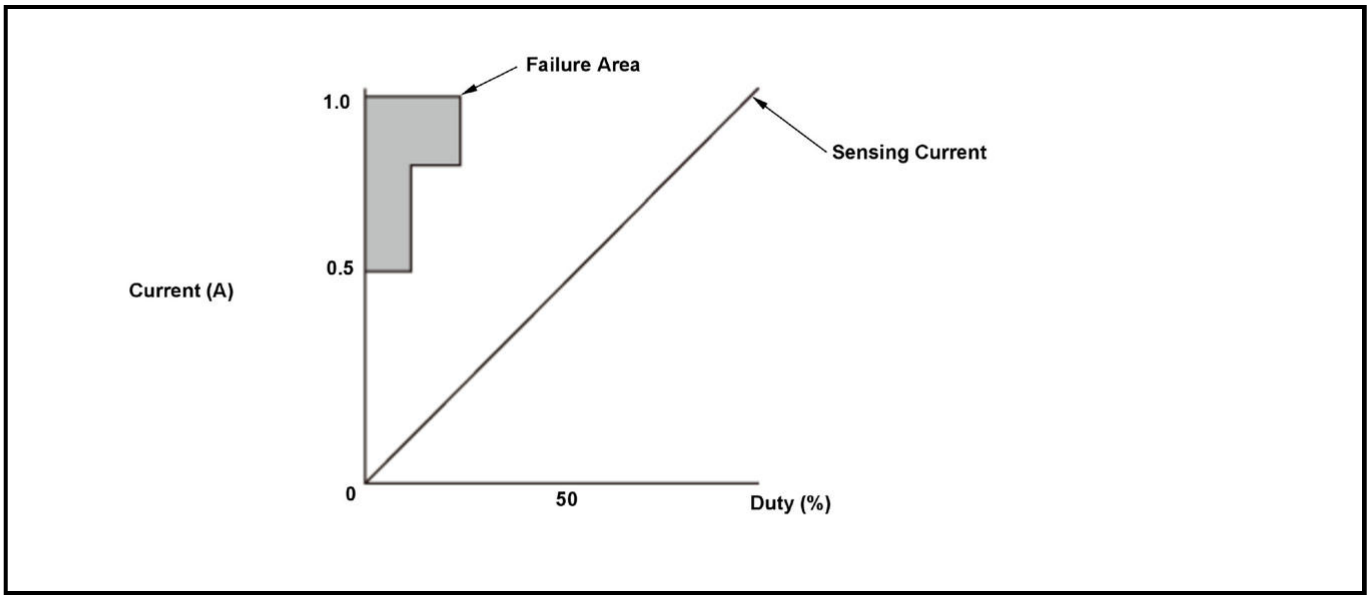

The CVT lock-up clutch control solenoid valve controls hydraulic pressure to the torque converter clutch. The CVT lock-up clutch control solenoid valve is controlled by duty cycle output. The spool in the CVT lock-up clutch control solenoid valve moves the valve according to the current, and produces hydraulic pressure in proportion to the current. The powertrain control module (PCM) measures the current that passes through the CVT lock-up clutch control solenoid valve and uses feedback control to compensate for the difference between the measured current and the commanded one. If the measured current is not equal to the duty cycle command, the PCM detects a malfunction (CVT lock-up clutch control solenoid valve failure, PCM failure) and stores a DTC.

Monitor Execution, Sequence, Duration, DTC Type

Execution	Continuous
Sequence	None
Duration	1 second or more
DTC Type* 1	Two drive cycles, MIL on, Shift position indicator blinks
DTC Type* 2	Two drive cycles, MIL off, Shift position indicator blinks

*1: KA model

*2: Except KA models

Enable Conditions

Condition	Minimum	Maximum
12 volt battery voltage [BATTERY VOLTAGE]	10.0 V	-

[ ]: HDS Parameter

Malfunction Threshold

The measured current for the PCM's command value is as specified here for at least 1 second.

Duty (%)	Current (A)	Failure mode
Less than 13.7	More than 0.58	High Input
13.7 - 21.1	More than 0.89	High Input

Possible Cause

NOTE: The causes shown may not be a complete list of all potential problems, and it is possible that there may be other causes.

- PCM GND1 line open
- PCM GND2 line open
- CVT lock-up clutch control solenoid valve internal circuit short
- PCM internal circuit failure

Confirmation Procedure

Operating Condition

Start the engine, and wait for at least 1 second.

With the HDS

None.

Diagnosis Details* 1

Conditions for setting the DTC

When a malfunction is detected during the first drive cycle, a Pending DTC is stored in the PCM memory. If the malfunction returns in the next (second) drive cycle, the MIL comes on, the shift position indicator blinks, and a Confirmed DTC and the freeze data are stored.

Conditions for clearing the DTC

The shift position indicator comes off by turning the vehicle to the OFF (LOCK) mode. The MIL is cleared if the malfunction does not return in three consecutive trips in which the diagnostic runs. The MIL, the Pending DTC, the Confirmed DTC, and the freeze data can be cleared with the scan tool Clear command or by disconnecting the 12 volt battery.

Diagnosis Details* 2

Conditions for setting the DTC

When a malfunction is detected during the first drive cycle, a Pending DTC is stored in the PCM memory. If the malfunction returns in the next (second) drive cycle, the shift position indicator blinks and a Confirmed DTC and the freeze data are stored. The MIL does not come on.

Conditions for clearing the DTC

The shift position indicator comes off by turning the vehicle to the OFF (LOCK) mode. The Pending DTC, the Confirmed DTC, and the freeze data can be cleared with the scan tool Clear command or by disconnecting the 12 volt battery.

DTC P2817 (CVT (ECM/PCM))

DTC P2817: Shift Solenoid Valve O/P (Pressure Control Solenoid H) Stuck Off

General Description

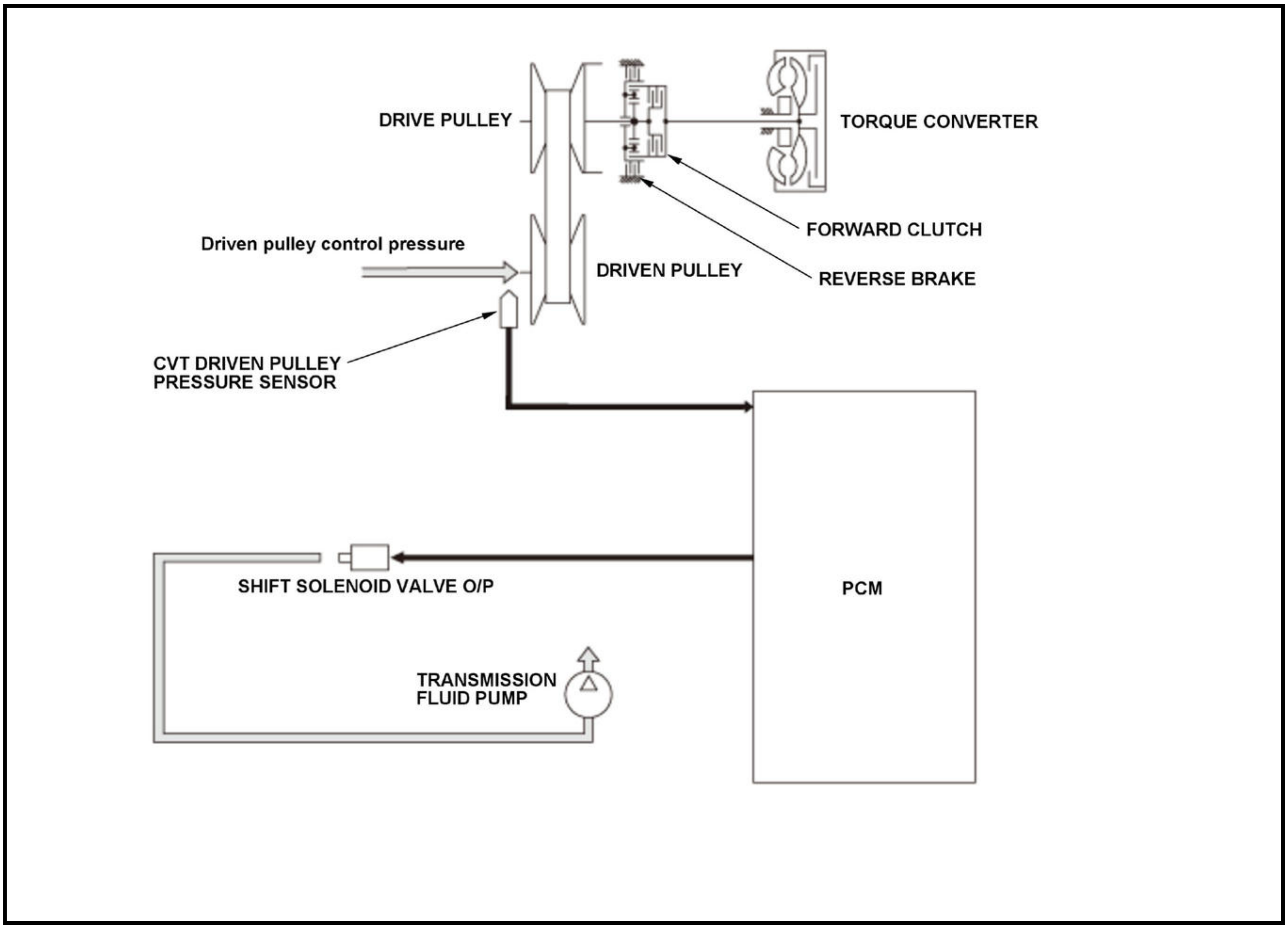
DRIVE PULLEY
TORQUE CONVERTER
FORWARD CLUTCH
Driven pulley control pressure
DRIVEN PULLEY
REVERSE BRAKE
CVT DRIVEN PULLEY PRESSURE SENSOR
SHIFT SOLENOID VALVE O/P
PCM
TRANSMISSION FLUID PUMP

Transmission fluid pump volume changes by shift solenoid valve O/P ON/OFF control

Transmission fluid pump volume	Shift Solenoid Valve O/P
High	OFF
Low	ON

The shift solenoid valve O/P controls the drain circuit close/open commanded by the powertrain control module (PCM) ON/OFF commands. The transmission fluid pump volume is changed by switching the shift solenoid valve O/P ON/OFF control. The PCM commands the driver circuit to turn on the shift solenoid valve O/P. The PCM temporarily increases the driven pulley pressure up to target value. As the commanded driven pulley pressure reaches the target value, the PCM monitors the driven pulley pressure when the shift solenoid valve O/P is ON and OFF. If the driven pulley pressure does not change, the PCM detects a shift solenoid valve O/P stuck OFF malfunction and stores a DTC.

Monitor Execution, Sequence, Duration, DTC Type

Execution	Once per driving cycle
Sequence	None
Duration	10 seconds or less
DTC Type	Two drive cycles, MIL off, Shift position indicator blinks

Enable Conditions

Condition	Minimum	Maximum
Engine speed [ENGINE SPEED]	700 rpm	750 rpm
Transmission fluid temperature [CVTF TEMPERATURE]	248 deg. F (120 deg. C)	-
Vehicle speed [VEHICLE SPEED]	-	1 mph (3 km/h)
Shift lever position/mode	D	
Other	Accelerator pedal released	
	Brake pedal pressed	

[ ]: HDS Parameter

Malfunction Threshold

Judgments 1 and 2 are executed sequentially, and if the driven pulley pressure does not change when the shift solenoid valve O/P is ON and OFF.

Judgment	Shift solenoid valve O/P	Commanded driven pulley pressure	Driven pulley pressure	Detection time
1	OFF	About 1, 961 kPa (20.0 kgf/cm 2, 284 psi)	About 1, 961 kPa (20.0 kgf/cm 2, 284 psi)	5.0 seconds
2	ON	About 1, 961 kPa (20.0 kgf/cm 2, 284 psi)	About 1, 961 kPa (20.0 kgf/cm 2, 284 psi)	5.0 seconds

Possible Cause

NOTE: The causes shown may not be a complete list of all potential problems, and it is possible that there may be other causes.

- Shift solenoid valve O/P stuck off

Confirmation Procedure

Operating Condition

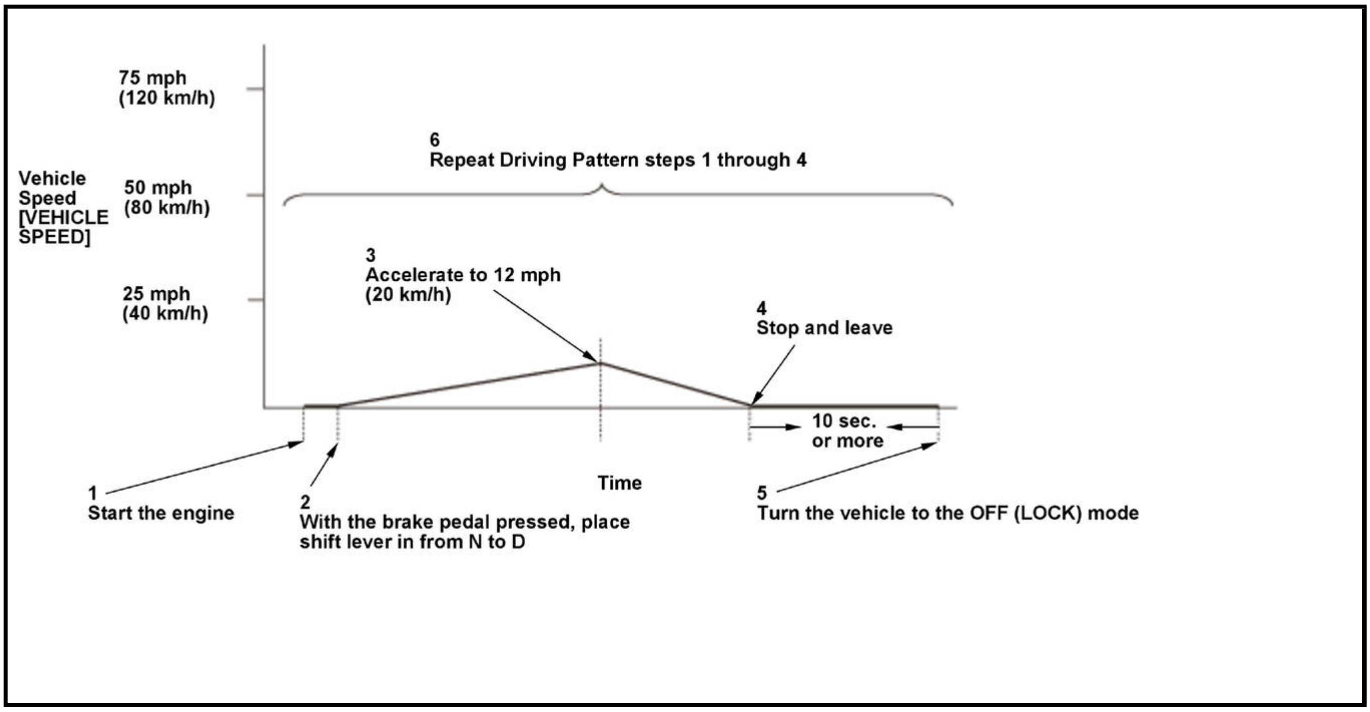

- Start the engine.
- With the brake pedal pressed, place the shift lever from N to D position/mode.
- Accelerate the vehicle to 12 mph (20 km/h).
- Stop and leave the vehicle for at least 10 seconds.
- Turn the vehicle to the OFF (LOCK) mode.
- Repeat Driving Pattern steps 1 through 4.

- Drive the vehicle in this manner only if the traffic regulations and ambient conditions allow.

With the HDS

None.

Diagnosis Details

Conditions for setting the DTC

When a malfunction is detected during the first drive cycle, a Pending DTC is stored in the PCM memory. If the malfunction returns in the next (second) drive cycle, the shift position indicator blinks and a Confirmed DTC and the freeze data are stored. The MIL does not come on.

Conditions for clearing the DTC

The shift position indicator comes off by turning the vehicle to the OFF (LOCK) mode. The Pending DTC, the Confirmed DTC, and the freeze data can be cleared with the scan tool Clear command or by disconnecting the 12 volt battery.

DTC P2818 (CVT (ECM/PCM))

DTC P2818: Shift Solenoid Valve O/P (Pressure Control Solenoid H) Stuck On

General Description

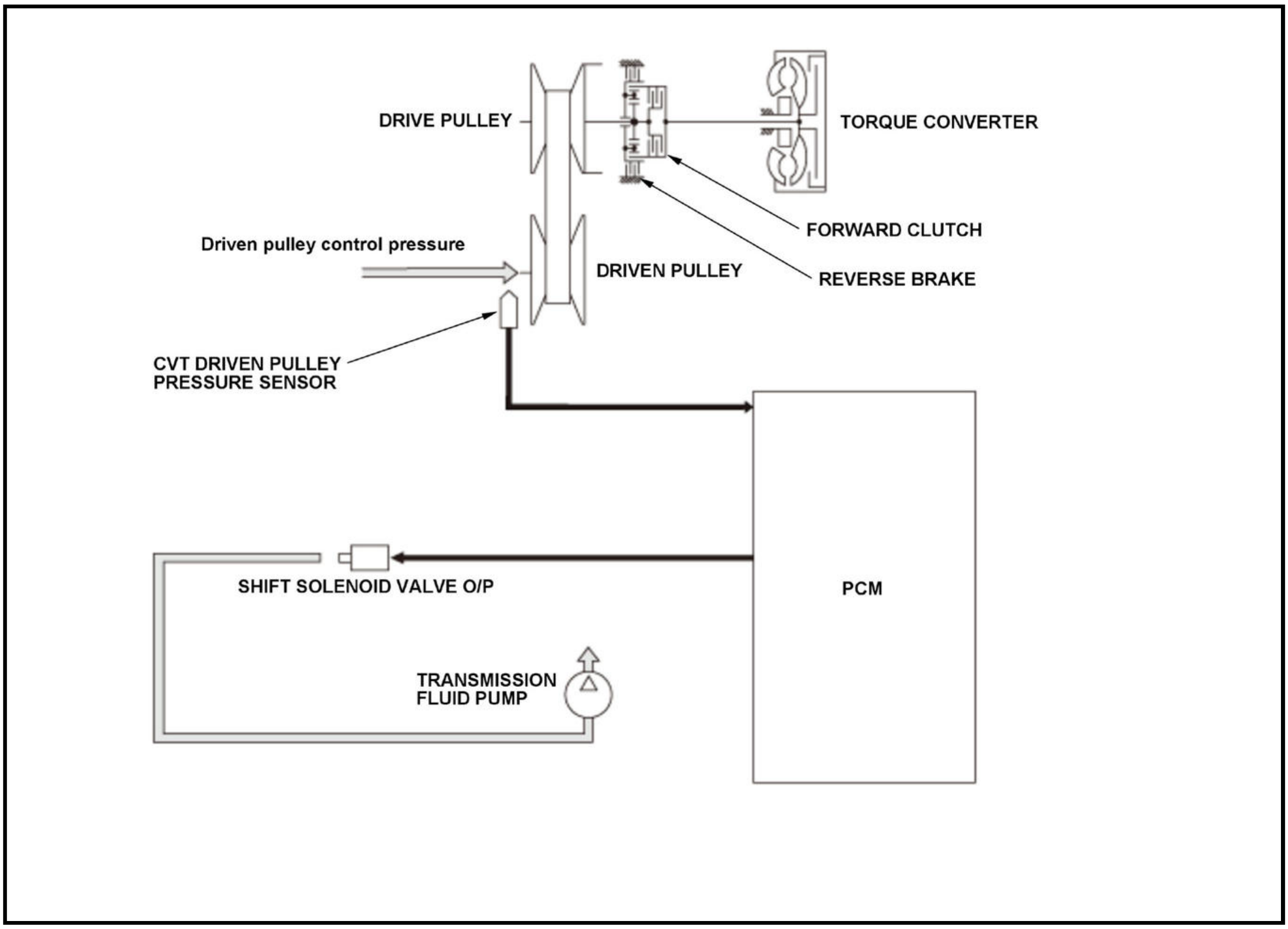
DRIVE PULLEY
TORQUE CONVERTER
FORWARD CLUTCH
Driven pulley control pressure
DRIVEN PULLEY
REVERSE BRAKE
CVT DRIVEN PULLEY
PRESSURE SENSOR
SHIFT SOLENOID VALVE O/P
PCM
TRANSMISSION
FLUID PUMP

Transmission fluid pump volume changes by shift solenoid valve O/P ON/OFF control

Transmission fluid pump volume	Shift Solenoid Valve O/P
High	OFF
Low	ON

The shift solenoid valve O/P controls the drain circuit close/open commanded by the powertrain control module (PCM) ON/OFF commands. The transmission fluid pump volume is changed by switching the shift solenoid valve O/P ON/OFF control. The PCM commands the driver circuit to turn on the shift solenoid valve O/P. The PCM temporarily increases the driven pulley pressure up to target value. As the commanded driven pulley pressure reaches the target value, the PCM monitors the driven pulley pressure when the shift solenoid valve O/P is ON and OFF. If the driven pulley pressure does not change, or the pulley ratio is at a specified value when decelerated to a stop, the PCM detects a shift solenoid valve O/P stuck ON malfunction and stores a DTC.

Monitor Execution, Sequence, Duration, DTC Type

Execution	Once per driving cycle
Sequence	None
Duration	10 seconds or less
DTC Type	Two drive cycles, MIL off, Shift position indicator blinks

Enable Conditions

Condition	Minimum	Maximum
Engine speed [ENGINE SPEED]*	700 rpm	740 rpm
Transmission fluid temperature [CVTF TEMPERATURE]	248 deg. F (120 deg. C)*	-
	194 deg. F (90 deg. C)**	-

Condition	Minimum	Maximum
Vehicle speed [VEHICLE SPEED]*	-	1 mph (3 km/h)
Acceleration**	-11.1 ft/s 2 (-3.4 m/s 2)	-7.6 ft/s 2 (-2.3 m/s 2)
Shift lever position/mode	D	
Other	Accelerator pedal released*	
	Brake pedal pressed	

*: Symptom 1

**: Symptom 2

[ ]: HDS Parameter

Malfunction Threshold

One of these symptoms occurs:

Symptom 1: Judgments 1 and 2 are executed sequentially, and if the driven pulley pressure does not change when the shift solenoid valve O/P is ON and OFF.

Judgment	Shift solenoid valve O/P	Commanded driven pulley pressure	Driven pulley pressure	Detection time
1	OFF	About 1, 961 kPa (20.0 kgf/cm 2, 284 psi)	About 1, 177 kPa (12.0 kgf/cm 2, 171 psi)	5.0 seconds
2	ON	About 1, 961 kPa (20.0 kgf/cm 2, 284 psi)	About 1, 177 kPa (12.0 kgf/cm 2, 171 psi)	5.0 seconds

Symptom 2: The pulley ratio is less than 2.0 when the vehicle is stopped.

Possible Cause

NOTE: The causes shown may not be a complete list of all potential problems, and it is possible that there may be other causes.

- Shift solenoid valve O/P stuck on

Confirmation Procedure

Operating Condition

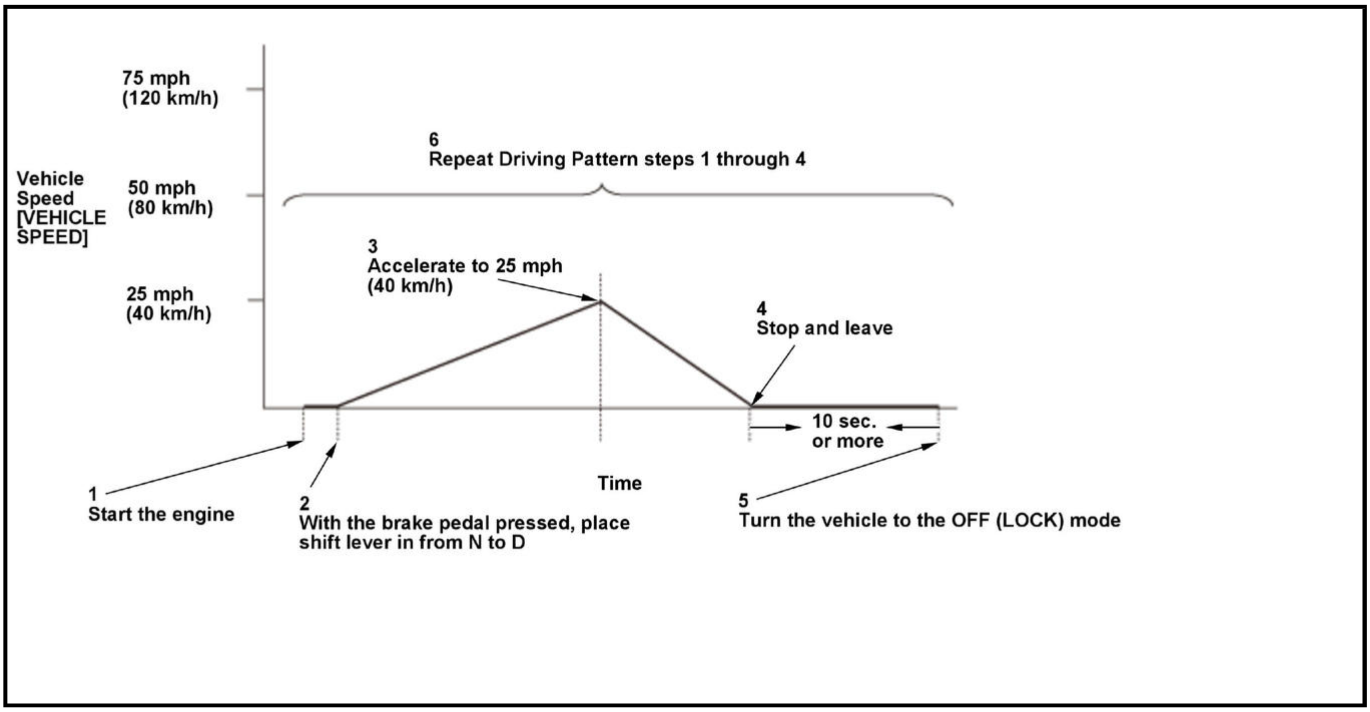

- Start the engine.
- With the brake pedal pressed, place the shift lever from N to D.
- Accelerate the vehicle to 25 mph (40 km/h).
- Stop and leave the vehicle for at least 10 seconds.
- Turn the vehicle to the OFF (LOCK) mode.
- Repeat Driving Pattern steps 1 through 4.

- Drive the vehicle in this manner only if the traffic regulations and ambient conditions allow.

With the HDS

None.

Diagnosis Details

Conditions for setting the DTC

When a malfunction is detected during the first drive cycle, a Pending DTC is stored in the PCM memory. If the malfunction returns in the next (second) drive cycle, the shift position indicator blinks and a Confirmed DTC and the freeze data are stored. The MIL does not come on.

Conditions for clearing the DTC

The shift position indicator comes off by turning the vehicle to the OFF (LOCK) mode. The Pending DTC, the Confirmed DTC, and the freeze data can be cleared with the scan tool Clear command or by disconnecting the 12 volt battery.

DTC P281D (CVT (ECM/PCM))

DTC P281D: Shift Solenoid Valve O/P (Pressure Control Solenoid H) Control Circuit Low

General Description

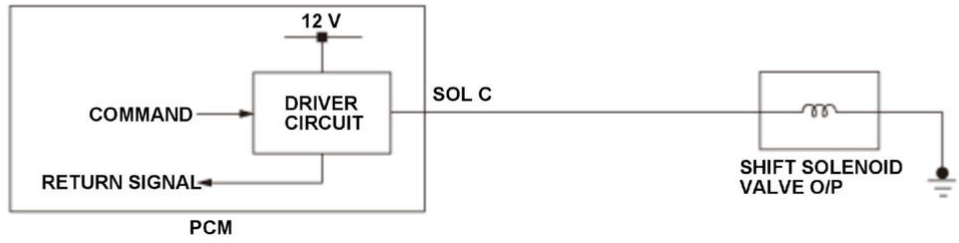

Transmission fluid pump volume changes by shift solenoid valve O/P ON/OFF control

Transmission fluid pump volume	Shift Solenoid Valve O/P
High	OFF
Low	ON

The shift solenoid valve O/P controls the drain circuit close/open commanded by the powertrain control module (PCM) ON/OFF commands. The transmission fluid pump volume is changed by switching the shift solenoid valve O/P ON/OFF control. The PCM commands the driver circuit to turn on the shift solenoid valve O/P. The circuit diagnoses malfunctions such as a circuit short or open, and sends back a return signal during the PCM's command. When the return signal does not match the PCM command to turn ON the shift solenoid valve O/P, the PCM detects a malfunction and stores a DTC.

Monitor Execution, Sequence, Duration, DTC Type

Execution	Continuous
Sequence	None
Duration	1 second or more
DTC Type	One drive cycle, MIL off, Shift position indicator blinks

Enable Conditions

Condition	Minimum	Maximum
12 volt battery voltage [BATTERY VOLTAGE]	10.0 V	-

[ ]: HDS Parameter

Malfunction Threshold

The return signal does not match the command to turn ON shift solenoid valve O/P for at least 1 second.

Possible Cause

NOTE: The causes shown may not be a complete list of all potential problems, and it is possible that there may be other causes.

- Shift solenoid valve O/P SOL C line short to ground
- Shift solenoid valve O/P internal circuit short
- PCM internal circuit failure

Confirmation Procedure

Operating Condition

- Start the engine.
- With the brake pedal pressed, place the shift lever in P position/mode for at least 30 seconds.

With the HDS

Select the Shift Solenoid Valve O/P Test in the Miscellaneous Test Menu, and check that the shift solenoid valve O/P operates with the HDS.

Diagnosis Details

Conditions for setting the DTC

When a malfunction is detected, the shift position indicator blinks and a Pending DTC, a Confirmed DTC, and the freeze data are stored in the PCM memory. The MIL does not come on.

Conditions for clearing the DTC

The shift position indicator comes off by turning the vehicle to the OFF (LOCK) mode. The Pending DTC, the Confirmed DTC, and the freeze data can be cleared with the scan tool Clear command or by disconnecting the 12 volt battery.

DTC P281E (CVT (ECM/PCM))

DTC P281E: Shift Solenoid Valve O/P (Pressure Control Solenoid H) Control Circuit High

General Description

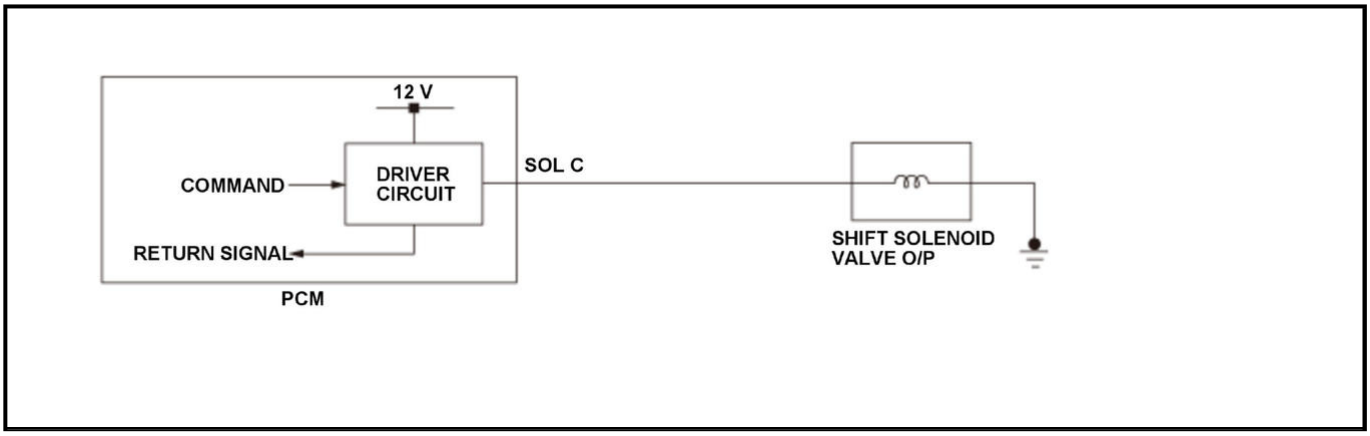

Transmission fluid pump volume changes by shift solenoid valve O/P ON/OFF control

Transmission fluid pump volume	Shift Solenoid Valve O/P
High	OFF
Low	ON

The shift solenoid valve O/P controls the drain circuit close/open commanded by the powertrain control module (PCM) ON/OFF commands. The transmission fluid pump volume is changed by switching the shift solenoid valve O/P ON/OFF control. The PCM commands the driver circuit to turn on the shift solenoid valve O/P. The circuit diagnoses malfunctions such as a circuit short or open, and sends back a return signal during the PCM's command. When the return signal does not match the PCM command to turn OFF the shift solenoid valve O/P, the PCM detects a malfunction and stores a DTC.

Monitor Execution, Sequence, Duration, DTC Type

Execution	Continuous
Sequence	None
Duration	1 second or more

DTC Type	One drive cycle, MIL off, Shift position indicator blinks

Malfunction Threshold

The return signal does not match the command to turn OFF shift solenoid valve O/P for at least 1 second.

Possible Cause

NOTE: The causes shown may not be a complete list of all potential problems, and it is possible that there may be other causes.

- Shift solenoid valve O/P SOL C line open (includes connector loose connection or disconnection)
- Shift solenoid valve O/P internal circuit open
- PCM internal circuit failure

Confirmation Procedure

Operating Condition

- Start the engine.
- Shift to P position/mode, and wait for at least 1 second.

With the HDS

Select the Shift Solenoid Valve O/P Test in the Miscellaneous Test Menu, and check that the shift solenoid valve O/P operates with the HDS.

Diagnosis Details

Conditions for setting the DTC

When a malfunction is detected, the shift position indicator blinks and a Pending DTC, a Confirmed DTC, and the freeze data are stored in the PCM memory. The MIL does not come on.

Conditions for clearing the DTC

The shift position indicator comes off by turning the vehicle to the OFF (LOCK) mode. The Pending DTC, the Confirmed DTC, and the freeze data can be cleared with the scan tool Clear command or by disconnecting the 12 volt battery.

DTC P2A00 (1.5 L ENGINE)

DTC P2A00: Air/Fuel ratio A/F Sensor (Sensor 1) Circuit Range/Performance Problem

General Description

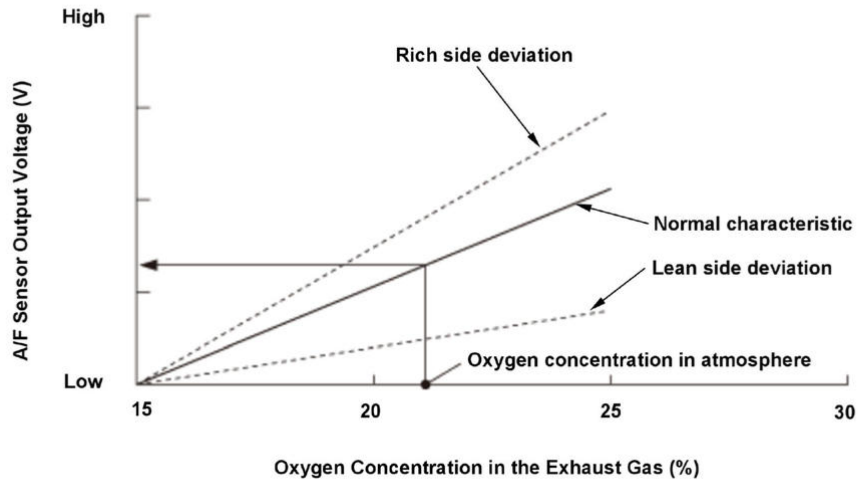

The air/fuel ratio (A/F) sensor (sensor 1) has a linear signal output in relation to the oxygen concentration. The powertrain control module (PCM) computes the air/fuel ratio from the A/F sensor (sensor 1) output voltage and uses fuel feedback control to improve exhaust emissions. The PCM monitors the A/F sensor (sensor 1) output voltage during deceleration with the throttle fully closed, and if the output voltage deviates greatly from normal oxygen concentration levels, it detects a malfunction and stores a DTC.

NOTE: Output to the scan tool exhibits a relationship between the A/F sensor (sensor 1) output and oxygen concentration, which is opposite to the characteristic shown in the graph. That is, a deviation toward the rich side increases the output voltage and one toward the lean side decreases the output voltage, as the stoichiometric ratio is 0.

Monitor Execution, Sequence, Duration, DTC Type

Execution	Once per driving cycle
Sequence	None
Duration	5 seconds or more
DTC Type	Two drive cycles, MIL on

Enable Conditions

Condition	Minimum	Maximum
Elapsed time after starting the engine	5 seconds	-
Engine coolant temperature [ECT SENSOR 1]	156 deg. F (69 deg. C)	-
Intake air temperature [IAT Sensor (1)]	-13 deg. F (-25 deg. C)	-
Engine speed [ENGINE SPEED]	500 rpm	2, 700 rpm
Vehicle speed [VEHICLE SPEED]	30 mph (48 km/h)	-
Fuel feedback	During deceleration with throttle fully closed	

[ ]: HDS Parameter

Malfunction Threshold

The A/F sensor (sensor 1) output voltage is 2.55 V or less, or 4.11 V or more.

Possible Cause

NOTE: The causes shown may not be a complete list of all potential problems, and it is possible that there may be other causes.

- A/F sensor (sensor 1) failure

Confirmation Procedure

Operating Condition

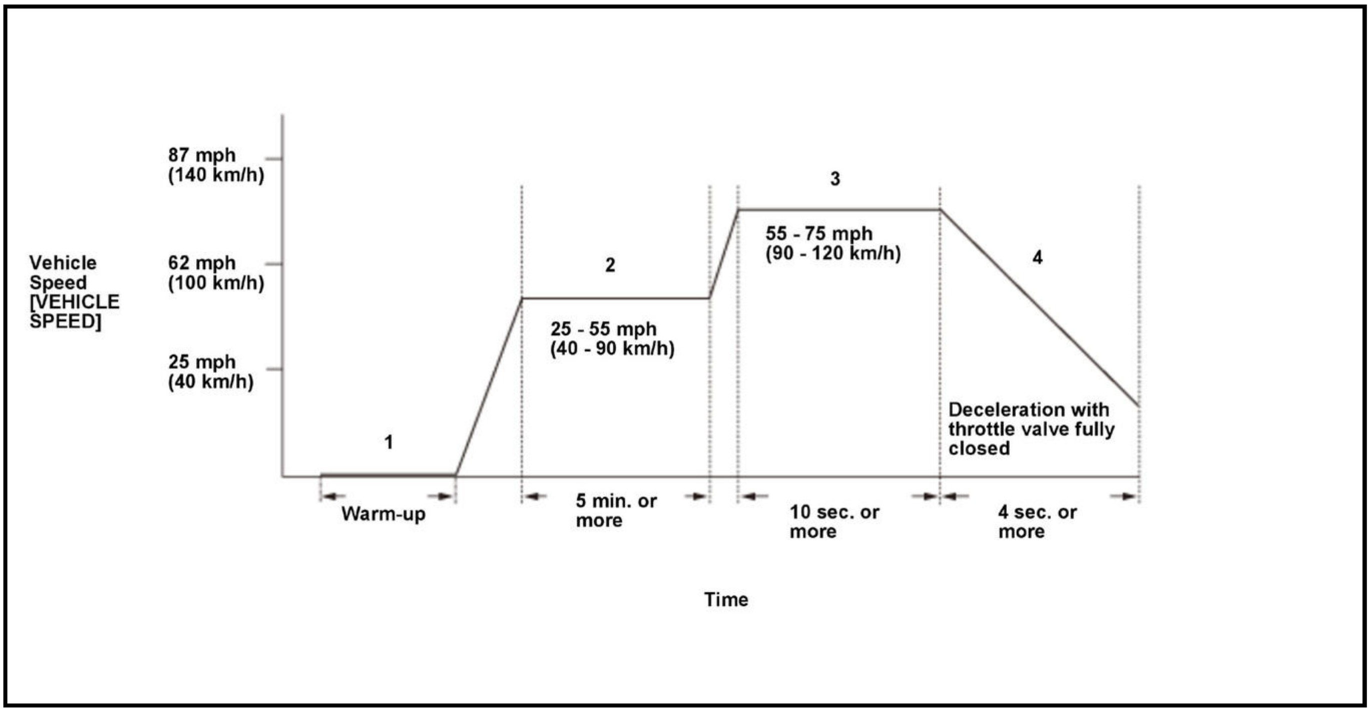

- Start the engine. Hold the engine speed [ENGINE SPEED] at 3, 000rpm without load (in P or N) until the radiator fan comes on.
- Drive the vehicle at a speed between 25 - 56 mph (40 - 90 km/h) for at least 5 minutes.
- Drive immediately at a steady speed between 56 - 75 mph (90 - 120 km/h) for at least 10 seconds.
- Decelerate with the throttle valve fully closed for at least 4 seconds.

- Drive the vehicle in this manner only if the traffic regulations and ambient conditions allow.

[ ]: HDS Parameter

With the HDS

None.

Diagnosis Details

Conditions for setting the DTC

When a malfunction is detected during the first drive cycle, a Pending DTC is stored in the PCM memory. If the malfunction returns in the next (second) drive cycle, the MIL comes on and a Confirmed DTC and the freeze data are stored.

Conditions for clearing the DTC

The MIL is cleared if the malfunction does not return in three consecutive trips in which the diagnostic runs. The MIL, the Pending DTC, the Confirmed DTC, and the freeze data can be cleared with the scan tool Clear command or by disconnecting the 12 volt battery.

DTC P2A00 (2.4 L ENGINE) (2017 2018 2019)

DTC P2A00: Air/Fuel ratio (A/F) Sensor (Sensor 1) Circuit Range/Performance Problem

General Description

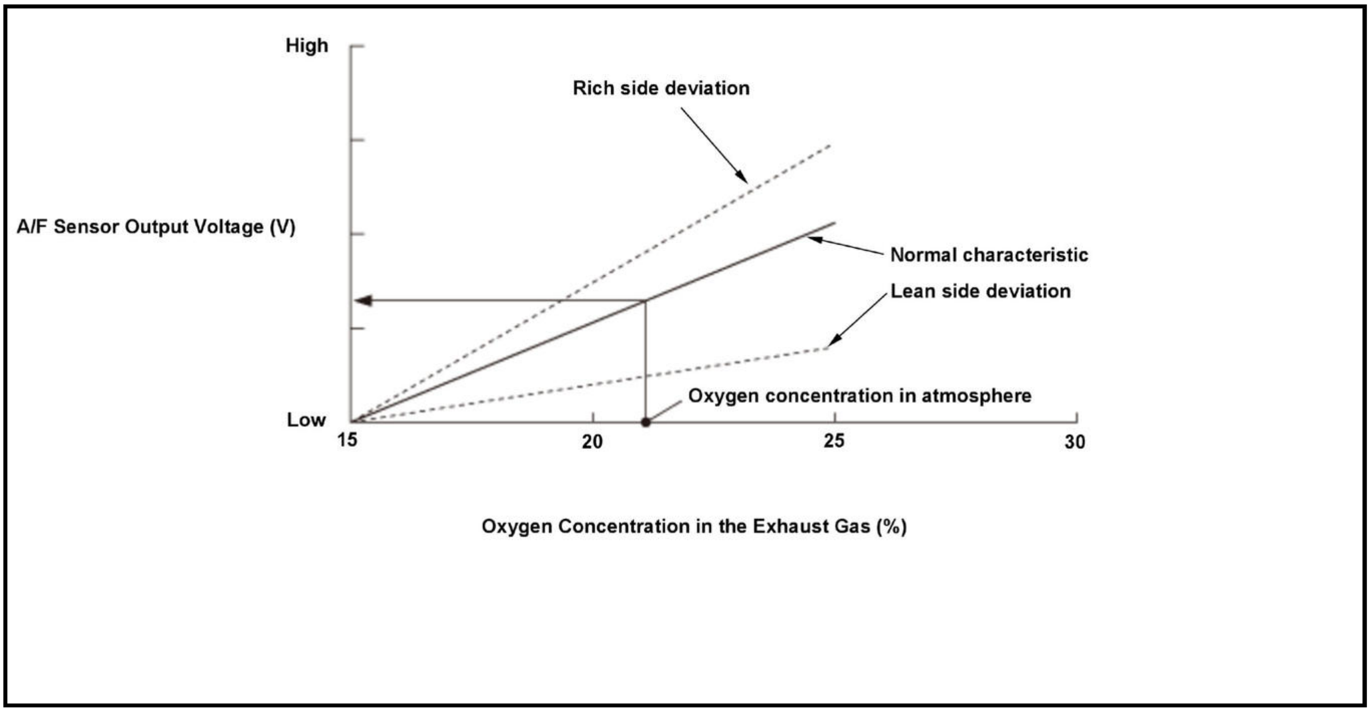

The air/fuel ratio (A/F) sensor (sensor 1) has a linear signal output in relation to the oxygen concentration. The powertrain control module (PCM) computes the air/fuel ratio from the A/F sensor (sensor 1) output voltage and uses fuel feedback control to improve exhaust emissions. The PCM monitors the A/F sensor (sensor 1) output voltage during deceleration with the throttle fully closed, and if the output voltage deviates greatly from normal oxygen concentration levels, it detects a malfunction and stores a DTC.

NOTE: Output to the scan tool exhibits a relationship between the A/F sensor (sensor 1) output and oxygen concentration, which is opposite to the characteristic shown in the graph. That is, a deviation toward the rich side increases the output voltage and one toward the lean side decreases the output voltage, as the stoichiometric ratio is 0.

Monitor Execution, Sequence, Duration, DTC Type

Execution	Once per driving cycle
Sequence	None
Duration	4.5 seconds or more
DTC Type	Two drive cycles, MIL on
OBD Status	PASSED/FAILED/EXECUTING/OUT OF (TEST) CONDITION

Enable Conditions

Condition	Minimum	Maximum
Elapsed time after starting the engine	60 seconds	-
Engine coolant temperature [ECT SENSOR 1]	156 deg. F (69 deg. C)	-
Intake air temperature [IAT SENSOR (1)]	-13 deg. F (-25 deg. C)	-
Engine speed [ENGINE SPEED]	500 rpm	4, 000 rpm

Condition	Minimum	Maximum
Vehicle speed [VEHICLE SPEED]	19 mph (30 km/h)	-

Malfunction Threshold

The A/F sensor (sensor 1) output voltage is 3.0 V or less, or 4.80 V or more.

Possible Cause

NOTE: The causes shown may not be a complete list of all potential problems, and it is possible that there may be other causes.

- A/F sensor (sensor 1) deterioration

Confirmation Procedure

Operating Condition

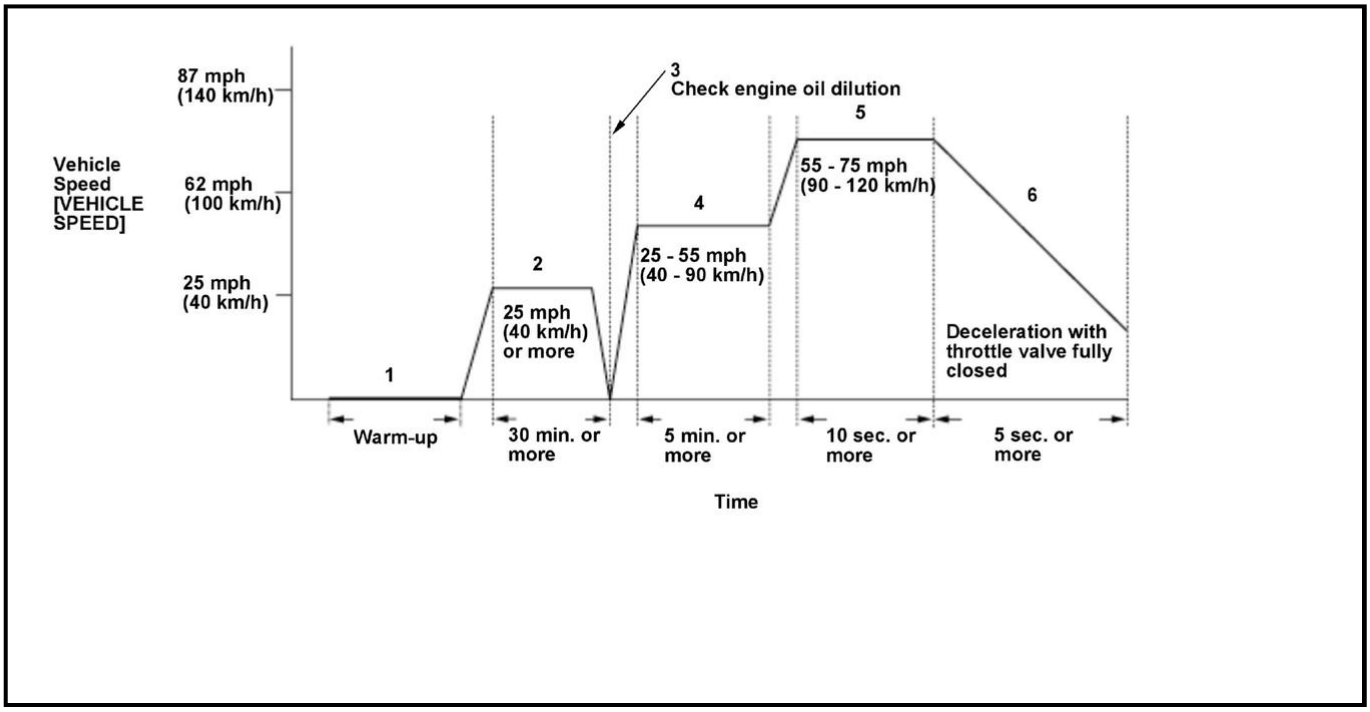

- Start the engine. Hold the engine speed [ENGINE SPEED] at 3, 000 rpm without load (in P or N) until the radiator fan comes on, then let it idle.
- Drive the vehicle at 25 mph (40 km/h) or more for at least 30 minutes.
- Check the engine oil dilution with a scan tool. If it stays at a specific condition (the HDS parameter [ENGINE OIL DILUTION INFLUENCED RATE] is not 0 (no unit)), drive the vehicle additionally at 25 mph (40 km/h) or more.
- Drive the vehicle at a speed between 25 - 55 mph (40 - 90 km/h) for at least 5 minutes.
- Drive at a steady speed between 55 - 75 mph (90 - 120 km/h) for 10 seconds, then decelerate (with throttle fully closed) for 5 seconds or more.
- Decelerate with the throttle valve fully closed for at least 5 seconds.

- If the EVAP monitor runs instead of the HO2S monitor, turn the engine off, then restart it, and the HO2S monitor will restart.
- Drive the vehicle in this manner only if the traffic regulations and ambient conditions allow.

With the HDS

None.

Diagnosis Details

Conditions for setting the DTC

When a malfunction is detected during the first drive cycle, a Pending DTC is stored in the PCM memory. If the malfunction returns in the next (second) drive cycle, the MIL comes on and a Confirmed DTC and the freeze data are stored.

Conditions for clearing the DTC

The MIL is cleared if the malfunction does not return in three consecutive trips in which the diagnostic runs. The MIL, the Pending DTC, the Confirmed DTC, and the freeze data can be cleared with the scan tool Clear command or by disconnecting the 12 volt battery.

DTC P2A01 (1.5 L ENGINE) (2018 2019 2020 2021)

DTC P2A01: Secondary Heated Oxygen Sensor (Secondary HO2S) (Sensor 2) Circuit Range/Performance Problem

General Description

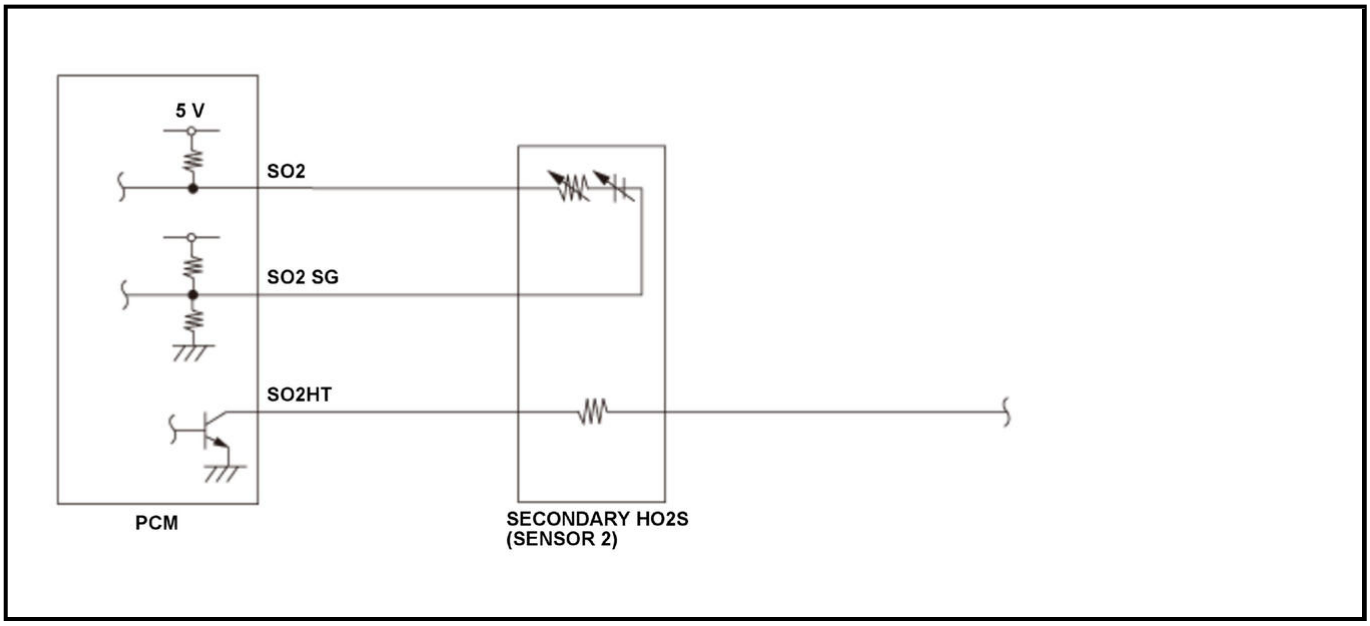

The secondary heated oxygen sensor (secondary HO2S (sensor 2)) detects the oxygen density in the exhaust gas and converts it into electrical signals. If the secondary HO2S (sensor 2) output voltage is a set value for a specified time, the powertrain control module (PCM) detects a malfunction and stores a DTC.

Monitor Execution, Sequence, Duration, DTC Type

Execution	Continuous
Sequence	None
Duration	6 seconds or more
DTC Type	Two drive cycles, MIL on

Enable Conditions

Condition	Minimum	Maximum
Secondary HO2S (sensor 2) output voltage [HO2S S2]	-	1.0 V
State of the engine	Running	

[ ]: HDS Parameter

Malfunction Threshold

The secondary HO2S (sensor 2) output voltage [HO2S S2] is 1.54 V or less for at least 6 seconds after the secondary HO2S (sensor 2) is judged that it is normally activated (1.0 V or less as a value).

[ ]: HDS Parameter

Possible Cause

NOTE: The causes shown may not be a complete list of all potential problems, and it is possible that there may be other causes.

- Secondary HO2S (sensor 2) failure
- PCM internal circuit failure

Confirmation Procedure

Operating Condition

Start the engine. Hold the engine speed [ENGINE SPEED] at 3, 000 min -1 (rpm) without load (in P or N) until the radiator fan comes on.

With the HDS

None.

Diagnosis Details

Conditions for setting the DTC

When a malfunction is detected during the first drive cycle, a Pending DTC is stored in the PCM memory. If the malfunction returns in the next (second) drive cycle, the MIL comes on and a Confirmed DTC, the freeze data, and the on-board snapshot are stored.

Conditions for clearing the DTC

The MIL is cleared if the malfunction does not return in three consecutive trips in which the diagnostic runs. The MIL, the Pending DTC, the Confirmed DTC, the freeze data, and the on-board snapshot can be cleared with the scan tool Clear command or by disconnecting the 12 volt battery.

DTC P2DE0 (1.5 L ENGINE) (2020 2021)

DTC P2DE0: Cold Start Air Fuel Ratio Control System Lean

General Description

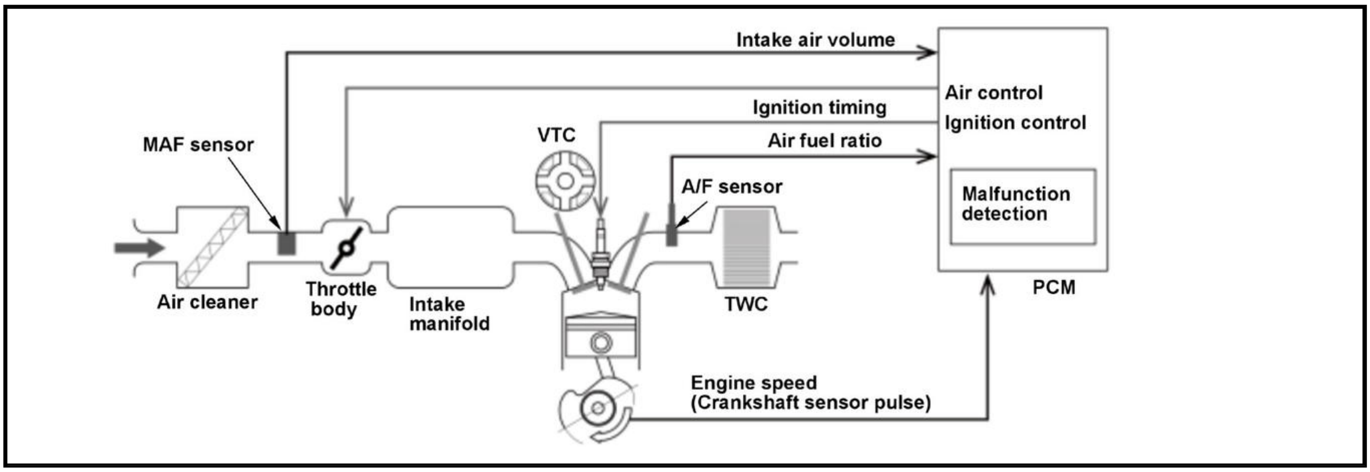
Intake air volume
Air control
Ignition timing
Ignition control
Air fuel ratio
MAF sensor
VTC
A/F sensor
Malfunction detection
Air cleaner
Throttle body
Intake manifold
TWC
PCM
Engine speed
(Crankshaft sensor pulse)

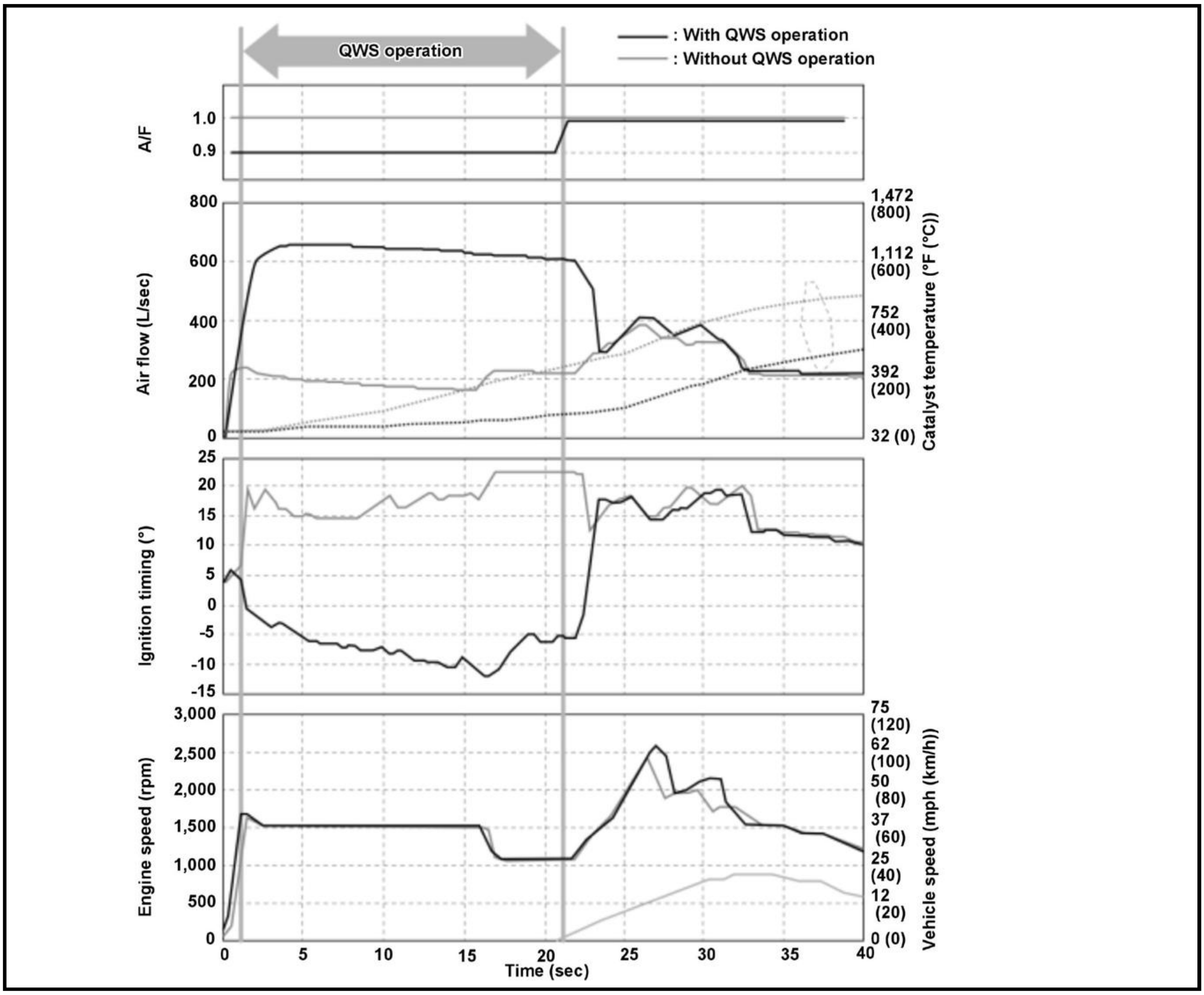
QWS operation
: With QWS operation
: Without QWS operation
A/F
1.0
0.9
Air flow (L/sec)
800
600
400
200
0
1,472 (800)
1,112 (600)
752 (400)
392 (200)
32 (0)
Catalyst temperature (°F (°C))
Ignition timing (°)
25
20
15
10
5
0
-5
-10
-15
Engine speed (rpm)
3,000
2,500
2,000
1,500
1,000
500
0
75 (120)
62 (100)
50 (80)
37 (60)
25 (40)
12 (20)
0 (0)
Vehicle speed (mph (km/h))
0
5
10
15
20
25
30
35
40
Time (sec)

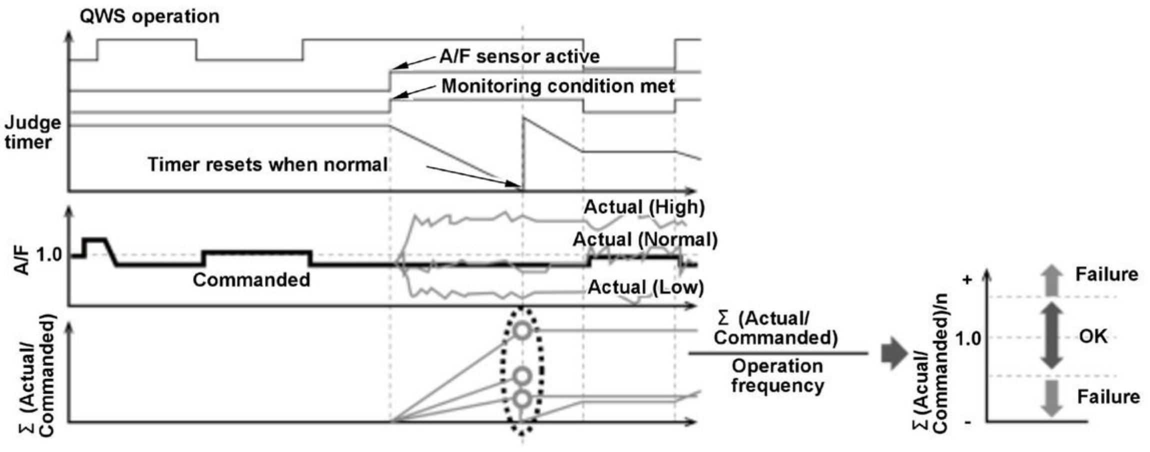
QWS operation
A/F sensor active
Monitoring condition met
Judge timer
Timer resets when normal
Actual (High)
Actual (Normal)
A/F
1.0
Commanded
Actual (Low)
Σ (Actual/ Commanded)
Σ (Actual/ Commanded)
Operation frequency
Σ (Acual/ Commanded)/n
+
1.0
-
Failure
OK
Failure

The cold start emission reduction strategy controls air fuel ratio to lean when the engine is started at cold condition to lower the emission while the catalyst is not warmed up enough. If the actual air fuel ratio is too lean or too rich compared to the commanded air fuel ratio, the powertrain control module (PCM) detects a malfunction and stores a DTC.

Monitor Execution, Sequence, Duration, DTC Type

Execution	Continuous
Sequence	None
Duration	10 seconds or more
DTC Type	Two drive cycles, MIL on

Enable Conditions

Condition	Minimum	Maximum
Duration of quick warm-up system operation after engine start-up	-	40 seconds
Engine coolant temperature [ECT SENSOR 1]	50 deg. F (10 deg. C)	122 deg. F (50 deg. C)
Throttle valve	Fully closed	
Accelerator pedal position	Released	
A/F sensor	Active	
Other	Vehicle stopped	

[ ]: HDS Parameter

Malfunction Threshold

The ratio of actual air fuel ratio by commanded air fuel ratio is 0.87 or less.

Possible Cause

NOTE: The causes shown may not be a complete list of all potential problems, and it is possible that there may be other causes.

- Intake air duct breakage
- Intake air duct misinstalled
- Air cleaner breakage

- Air cleaner damage
- Air cleaner clogged
- Throttle body clogged
- Intake air system clogged
- Mass airflow (MAF) sensor failure
- Intake air temperature (IAT) sensor failure
- Engine coolant temperature (ECT) sensor 1 failure
- Air fuel ratio too rich
- Air fuel ratio to lean
- Ignition system failure

Confirmation Procedure

Operating Condition

- Leave the vehicle until the engine coolant temperature [ECT SENSOR 1] lowers to 122 deg. F (50 deg. C) or less.
- Start the engine, and let it idle for at least 10 seconds.

Diagnosis Details

Conditions for setting the DTC

When a malfunction is detected during the first drive cycle, a Pending DTC is stored in the PCM memory. If the malfunction returns in the next (second) drive cycle, the MIL comes on and a Confirmed DTC and the freeze data are stored.

Conditions for clearing the DTC

The MIL is cleared if the malfunction does not return in three consecutive trips in which the diagnostic runs. The MIL, the Pending DTC, the Confirmed DTC, and the freeze data can be cleared with the scan tool Clear command or by disconnecting the 12 volt battery.

DTC P2DE1 (1.5 L ENGINE) (2020 2021)

DTC P2DE1: Cold Start Air Fuel Ratio Control System Rich

General Description

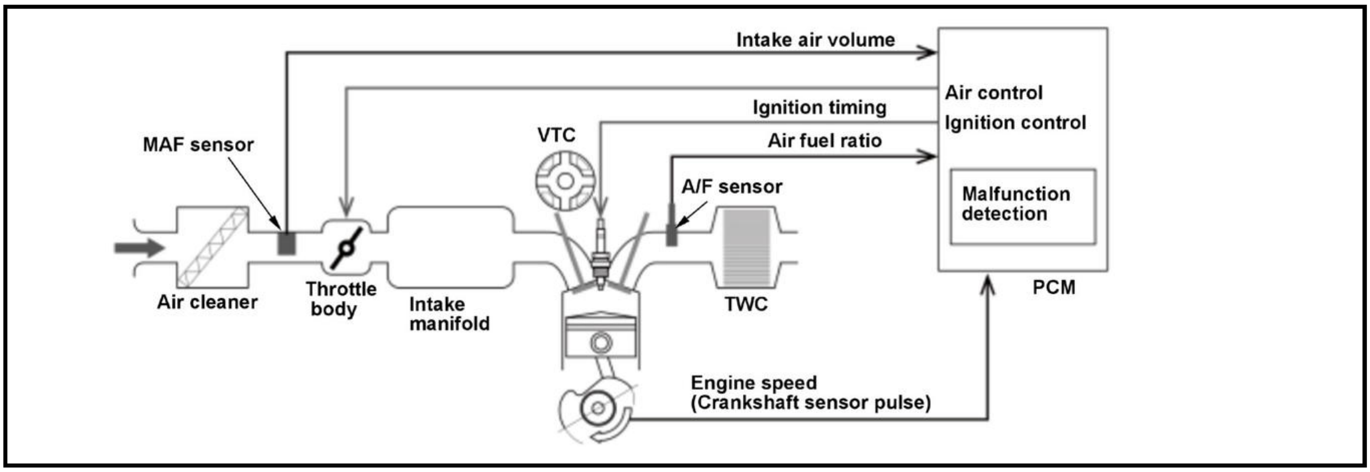
Intake air volume
Air control
Ignition control
Ignition timing
Air fuel ratio
MAF sensor
VTC
A/F sensor
Malfunction detection
PCM
Air cleaner
Throttle body
Intake manifold
TWC
Engine speed (Crankshaft sensor pulse)

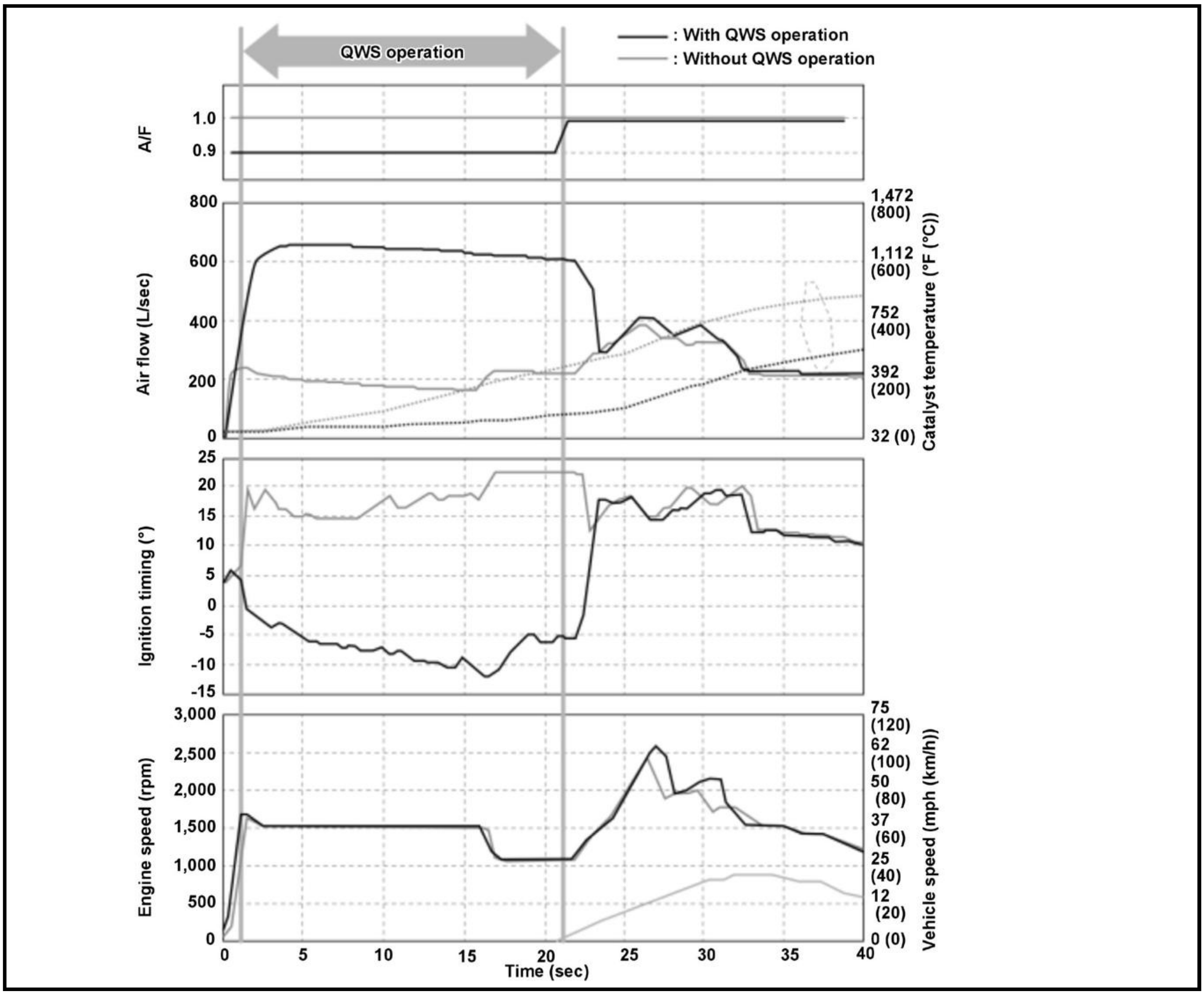

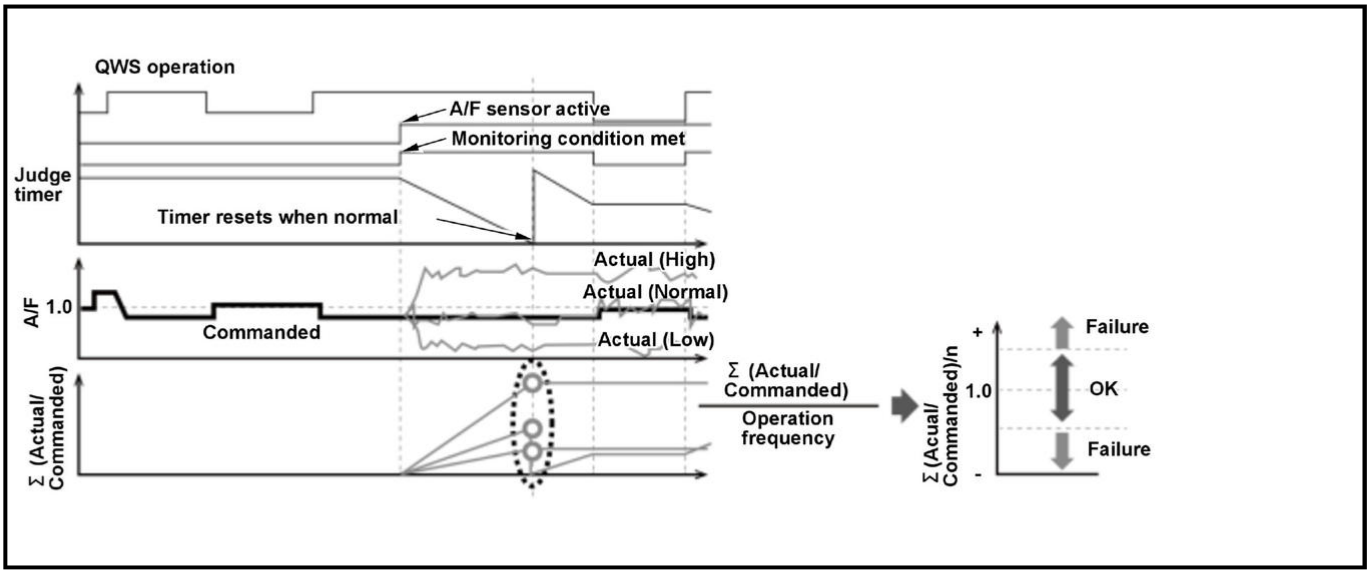
QWS operation
A/F sensor active
Monitoring condition met
Judge timer
Timer resets when normal
A/F
1.0
Commanded
Actual (High)
Actual (Normal)
Actual (Low)
Σ (Actual/ Commanded)
Σ (Actual/ Commanded)
Operation frequency
Σ (Acual/ Commanded)/n
+
1.0
-
Failure
OK
Failure

The cold start emission reduction strategy controls air fuel ratio to lean when the engine is started at cold condition to lower the emission while the catalyst is not warmed up enough. If the actual air fuel ratio is too lean or too rich compared to the commanded air fuel ratio, the powertrain control module (PCM) detects a malfunction and stores a DTC.

Monitor Execution, Sequence, Duration, DTC Type

Execution	Continuous
Sequence	None

Duration	10 seconds or more
DTC Type	Two drive cycles, MIL on

Enable Conditions

Condition	Minimum	Maximum
Duration of quick warm-up system operation after engine start-up	-	40 seconds
Engine coolant temperature [ECT SENSOR 1]	50 deg. F (10 deg. C)	122 deg. F (50 deg. C)
Throttle valve	Fully closed	
Accelerator pedal position	Released	
A/F sensor	Active	
Other	Vehicle stopped	

[ ]: HDS Parameter

Malfunction Threshold

The ratio of actual air fuel ratio by commanded air fuel ratio is 1.29 or more.

Possible Cause

NOTE: The causes shown may not be a complete list of all potential problems, and it is possible that there may be other causes.

- Intake air duct breakage
- Intake air duct misinstalled
- Air cleaner breakage
- Air cleaner damage
- Air cleaner clogged
- Throttle body clogged
- Intake air system clogged
- Mass airflow (MAF) sensor failure
- Intake air temperature (IAT) sensor failure
- Engine coolant temperature (ECT) sensor 1 failure
- Air fuel ratio too rich
- Air fuel ratio to lean
- Ignition system failure

Confirmation Procedure

Operating Condition

- Leave the vehicle until the engine coolant temperature [ECT SENSOR 1] lowers to 122 deg. F (50 deg. C) or less.
- Start the engine, and let it idle for at least 10 seconds.

Diagnosis Details

Conditions for setting the DTC

When a malfunction is detected during the first drive cycle, a Pending DTC is stored in the PCM memory. If the malfunction returns in the next (second) drive cycle, the MIL comes on and a Confirmed DTC and the freeze data are stored.

Conditions for clearing the DTC

The MIL is cleared if the malfunction does not return in three consecutive trips in which the diagnostic runs. The MIL, the Pending DTC, the Confirmed DTC, and the freeze data can be cleared with the scan tool Clear command or by disconnecting the 12 volt battery.

DTC U0029 (1.5 L ENGINE)

DTC U0029: F-CAN Malfunction (BUS-OFF (Powertrain Control Module (PCM)))

General Description

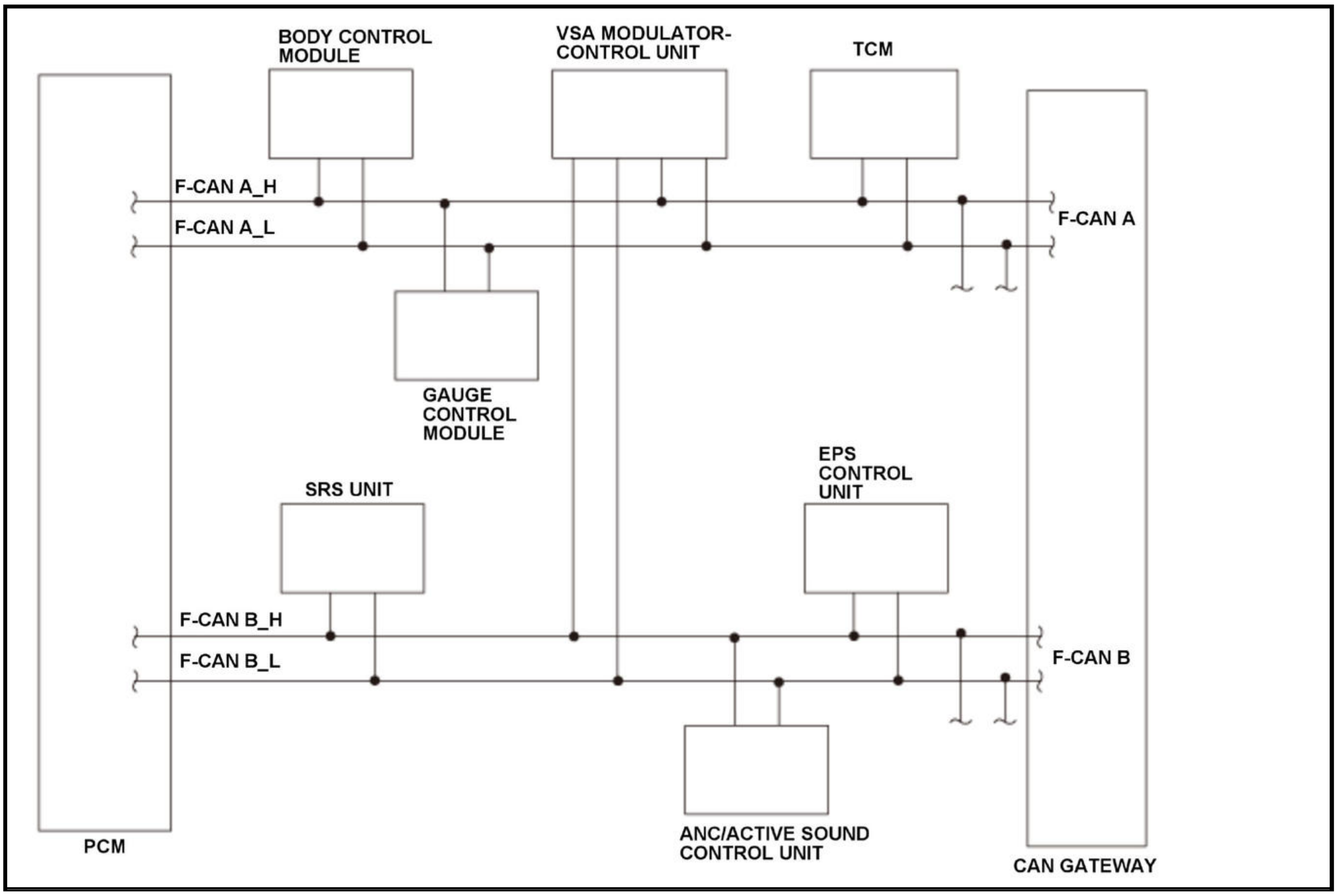
BODY CONTROL MODULE
VSA MODULATOR-CONTROL UNIT
TCM
F-CAN A_H
F-CAN A_L
F-CAN A
GAUGE CONTROL MODULE
EPS CONTROL UNIT
SRS UNIT
F-CAN B_H
F-CAN B_L
F-CAN B
PCM
ANC/ACTIVE SOUND CONTROL UNIT
CAN GATEWAY

The controller area network (CAN) transmits/receives pulsing signals to/from the control modules simultaneously by using F-CAN A and B signal lines. When the powertrain control module (PCM) cannot send the signals via the F-CAN lines for a set time, the PCM detects a malfunction and stores a DTC.

Monitor Execution, Sequence, Duration, DTC Type

Execution	Continuous
Sequence	None
Duration	1 second or more
DTC Type	One drive cycle, MIL on

Enable Conditions

Condition	Minimum	Maximum
Elapsed time after the vehicle condition is turned to the ON mode	3 seconds	-
12 volt battery voltage [BATTERY]	10.0 V	-

[ ]: HDS Parameter

Malfunction Threshold

The PCM cannot send any signals via the F-CAN A lines for at least 1 second.

Possible Cause

NOTE: The causes shown may not be a complete list of all potential problems, and it is possible that there may be other causes.

- F-CAN circuit F-CAN A H line open
- F-CAN circuit F-CAN A L line open
- F-CAN circuit F-CAN A H line short to ground
- F-CAN circuit F-CAN A L line short to ground
- PCM internal circuit failure

Diagnosis Details

Conditions for setting the DTC

When a malfunction is detected, the MIL comes on and a Pending DTC, a Confirmed DTC, and the freeze data are stored in the PCM memory.

Conditions for clearing the DTC

The MIL is cleared if the malfunction does not return in three consecutive trips in which the diagnostic runs. The MIL, the Pending DTC, the Confirmed DTC, and the freeze data can be cleared with the scan tool Clear command or by disconnecting the 12 volt battery.

DTC U0029 (2.4 L ENGINE) (2017 2018 2019)

DTC U0029: F-CAN Malfunction (BUS-OFF (Powertrain Control Module (PCM)))

General Description

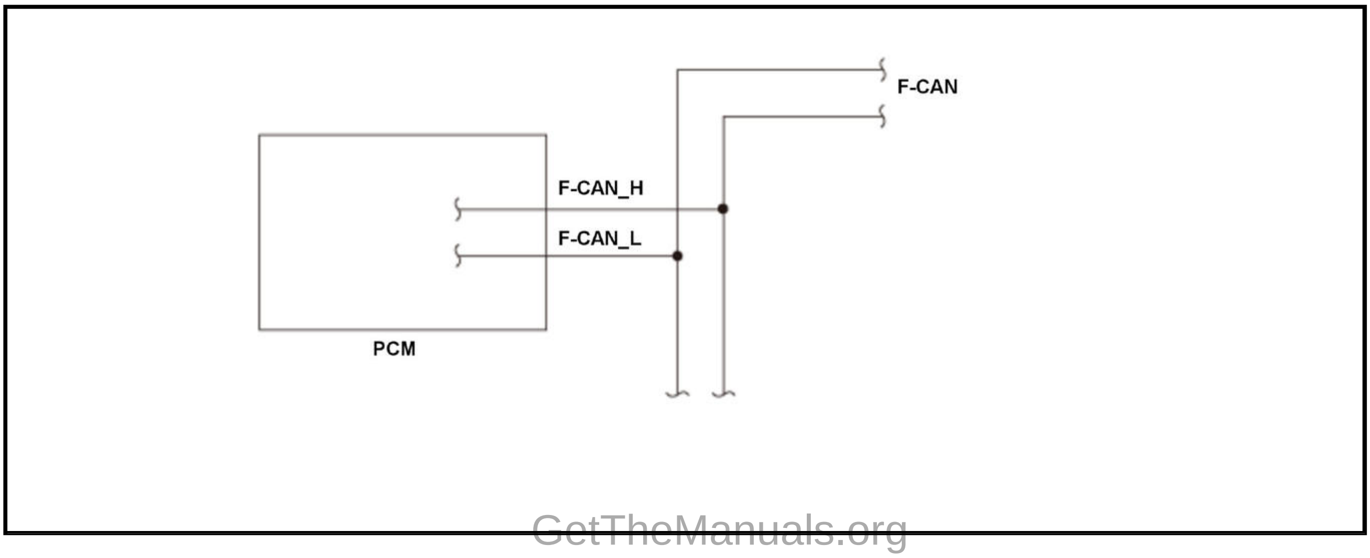

The controller area network (CAN) transmits/receives pulsing signals to/from the control modules simultaneously by using two signal lines (F-CAN H and F-CAN L). When the powertrain control module (PCM) does not receive the signals via the F-CAN lines for a set time, the PCM detects a malfunction and stores a DTC.

Monitor Execution, Sequence, Duration, DTC Type

Execution	Continuous
Sequence	None
Duration	1 second or more
DTC Type	One drive cycle, MIL on

Enable Conditions

Condition	Minimum	Maximum
Elapsed time after the vehicle condition is turned to the ON mode	3 seconds	-
12 volt battery voltage [BATTERY]	10.0 V	-

[ ]: HDS Parameter

Malfunction Threshold

The PCM does not receive any signals via the F-CAN lines for at least 1 second.

Possible Cause

NOTE: The causes shown may not be a complete list of all potential problems, and it is possible that there may be other causes.

- F-CAN circuit F-CAN H line open
- F-CAN circuit F-CAN L line open
- F-CAN circuit F-CAN H line short to ground
- F-CAN circuit F-CAN L line short to ground
- PCM internal circuit failure

Diagnosis Details

Conditions for setting the DTC

When a malfunction is detected, the MIL comes on and a Pending DTC, a Confirmed DTC, and the freeze data are stored in the PCM memory.

Conditions for clearing the DTC

The MIL is cleared if the malfunction does not return in three consecutive trips in which the diagnostic runs. The MIL, the Pending DTC, the Confirmed DTC, and the freeze data can be cleared with the scan tool Clear command or by disconnecting the 12 volt battery.

DTC U0038 (1.5 L ENGINE)

DTC U0038: PT-CAN Malfunction (TCM ECU BUS-OFF)

General Description

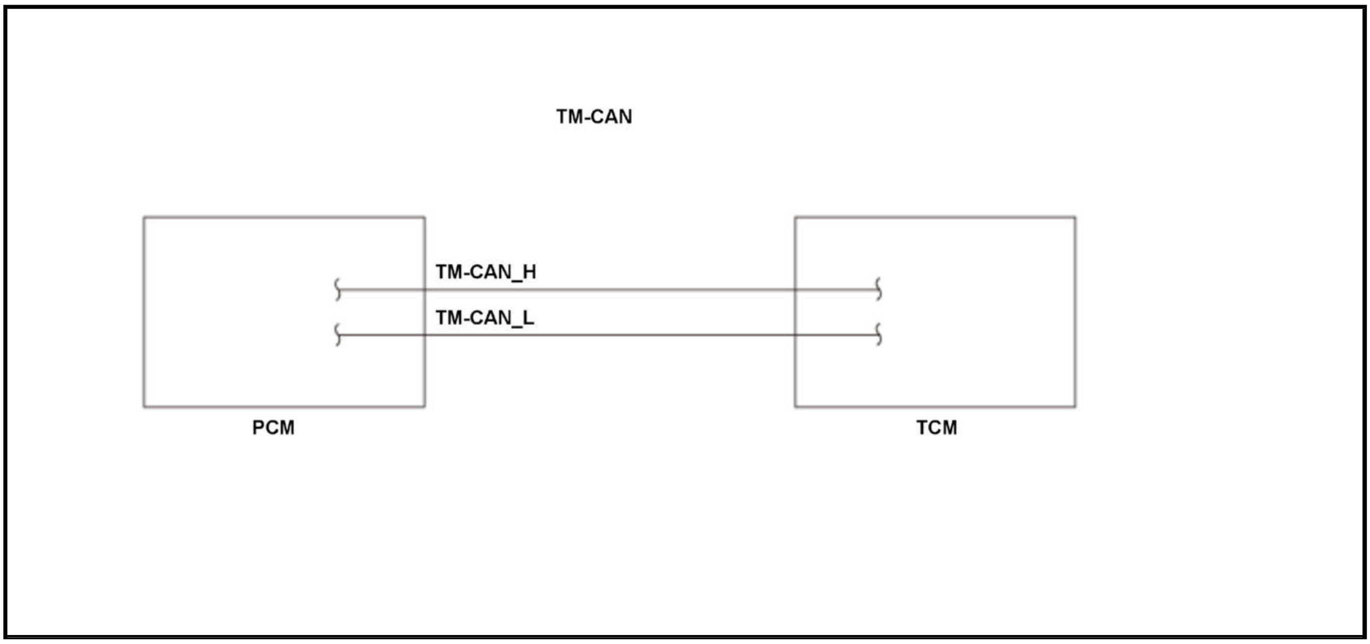

The controller area network (CAN) transmits/receives pulse signals to/from the control modules simultaneously by using two signal lines (TM-CAN H and TM-CAN L). When the information is not sent from the transmission control module (TCM) unit via the TM-CAN lines and this condition continues for a specified time or when the information sent from the TCM unit is abnormal and this condition continues for a specified cycle, the powertrain control module (PCM) detects a malfunction and stores a DTC.

Monitor Execution, Sequence, Duration, DTC Type

Execution	Continuous
Sequence	None
Duration	1 seconds or more
DTC Type	One drive cycle, MIL on

Enable Conditions

Condition	Minimum	Maximum
Elapsed time after the vehicle condition is turned to the ON mode	3 seconds	-
12 volt battery voltage [BATTERY]	10.0 V	-

[ ]: HDS Parameter

Malfunction Threshold

One of these conditions is met:

- The PCM does not receive any signals via the TM-CAN lines for at least 1 seconds.
- The information sent from the TCM unit is abnormal at least 20 times.

Possible Cause

NOTE: The causes shown may not be a complete list of all potential problems, and it is possible that there may be other causes.

- TCM failure (include fuse fall-outs)
- TM-CAN circuit TM-CAN H line open

- TM-CAN circuit TM-CAN L line open
- TM-CAN circuit TM-CAN H line short to ground
- TM-CAN circuit TM-CAN L line short to ground
- PCM internal circuit failure

Diagnosis Details

Conditions for setting the DTC

When a malfunction is detected, the MIL comes on and a Pending DTC, a Confirmed DTC, and the freeze data are stored in the PCM memory.

Conditions for clearing the DTC

The MIL is cleared if the malfunction does not return in three consecutive trips in which the diagnostic runs. The MIL, the Pending DTC, the Confirmed DTC, and the freeze data can be cleared with the scan tool Clear command or by disconnecting the 12 volt battery.

DTC U0047 (1.5 L ENGINE)

DTC U0047: F-CAN Malfunction For The Second Channel (BUS-OFF (Powertrain Control Module (PCM)))

General Description

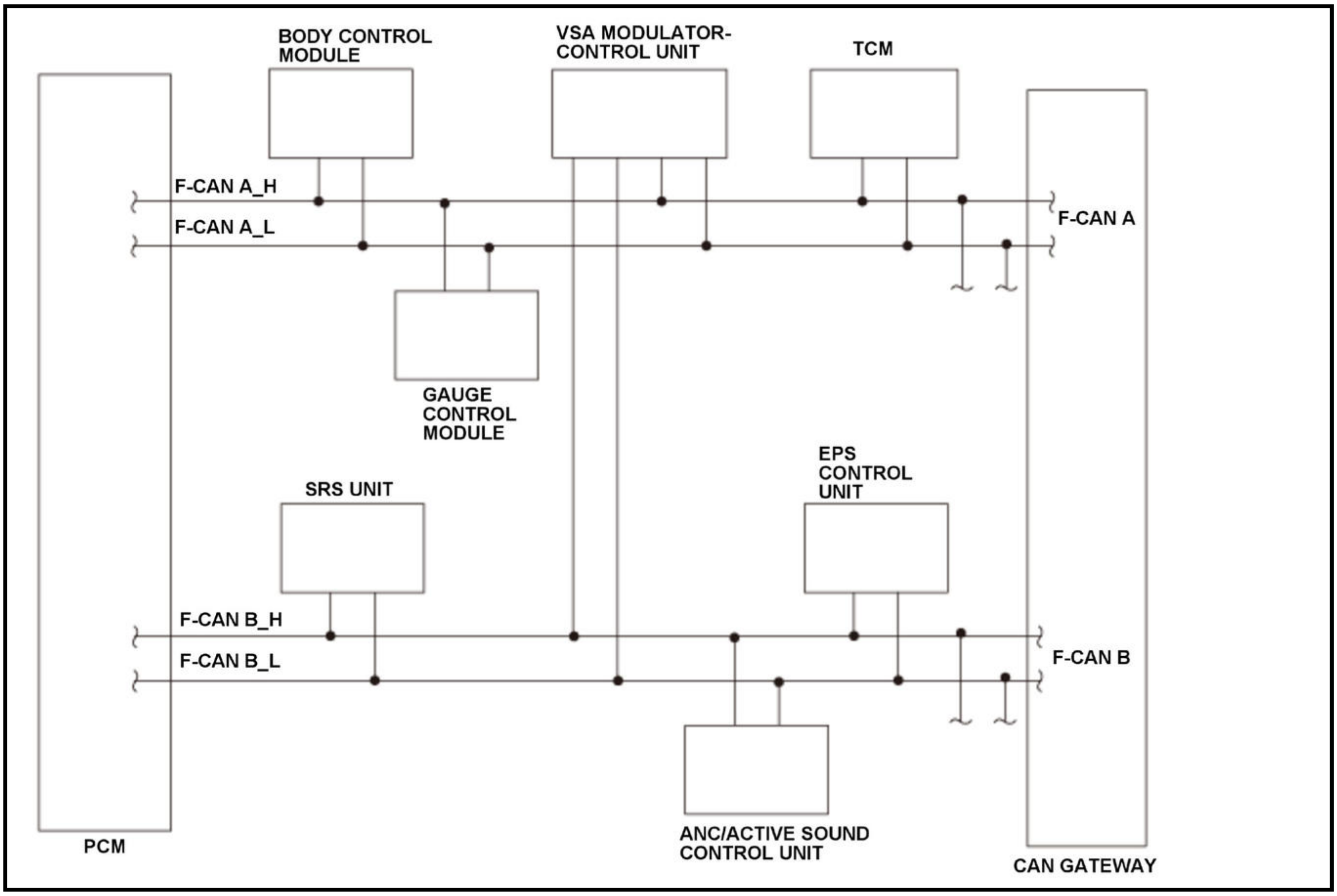
BODY CONTROL MODULE
VSA MODULATOR-CONTROL UNIT
TCM
F-CAN A_H
F-CAN A_L
F-CAN A
GAUGE CONTROL MODULE
SRS UNIT
EPS CONTROL UNIT
F-CAN B_H
F-CAN B_L
F-CAN B
PCM
ANC/ACTIVE SOUND CONTROL UNIT
CAN GATEWAY

The controller area network (CAN) transmits/receives pulsing signals to/from the control modules simultaneously by using F-CAN A and B signal lines. When the powertrain control module (PCM) does not receive the signals via the F-CAN lines for a set time, the PCM detects a malfunction and stores a DTC.

Monitor Execution, Sequence, Duration, DTC Type

Execution	Continuous

Sequence	None
Duration	1 second or more
DTC Type	One drive cycle, MIL off

Enable Conditions

Condition	Minimum	Maximum
12 volt battery voltage [BATTERY]	10.0 V	-

[ ]: HDS Parameter

Possible Cause

NOTE: The causes shown may not be a complete list of all potential problems, and it is possible that there may be other causes.

- F-CAN circuit F-CAN B H line open
- F-CAN circuit F-CAN B L line open
- F-CAN circuit F-CAN B H line short to ground
- F-CAN circuit F-CAN B L line short to ground
- PCM internal circuit failure

Diagnosis Details

Conditions for setting the DTC

When a malfunction is detected, a Pending DTC, a Confirmed DTC, and the freeze data are stored in the PCM memory. The MIL does not come on.

Conditions for clearing the DTC

The Pending DTC, the Confirmed DTC, and the freeze data can be cleared with the scan tool Clear command or by disconnecting the 12 volt battery.

DTC U0101 (1.5 L ENGINE)

DTC U0101: F-CAN Malfunction (Powertrain Control Module (PCM)-transmission control module (TCM))

General Description

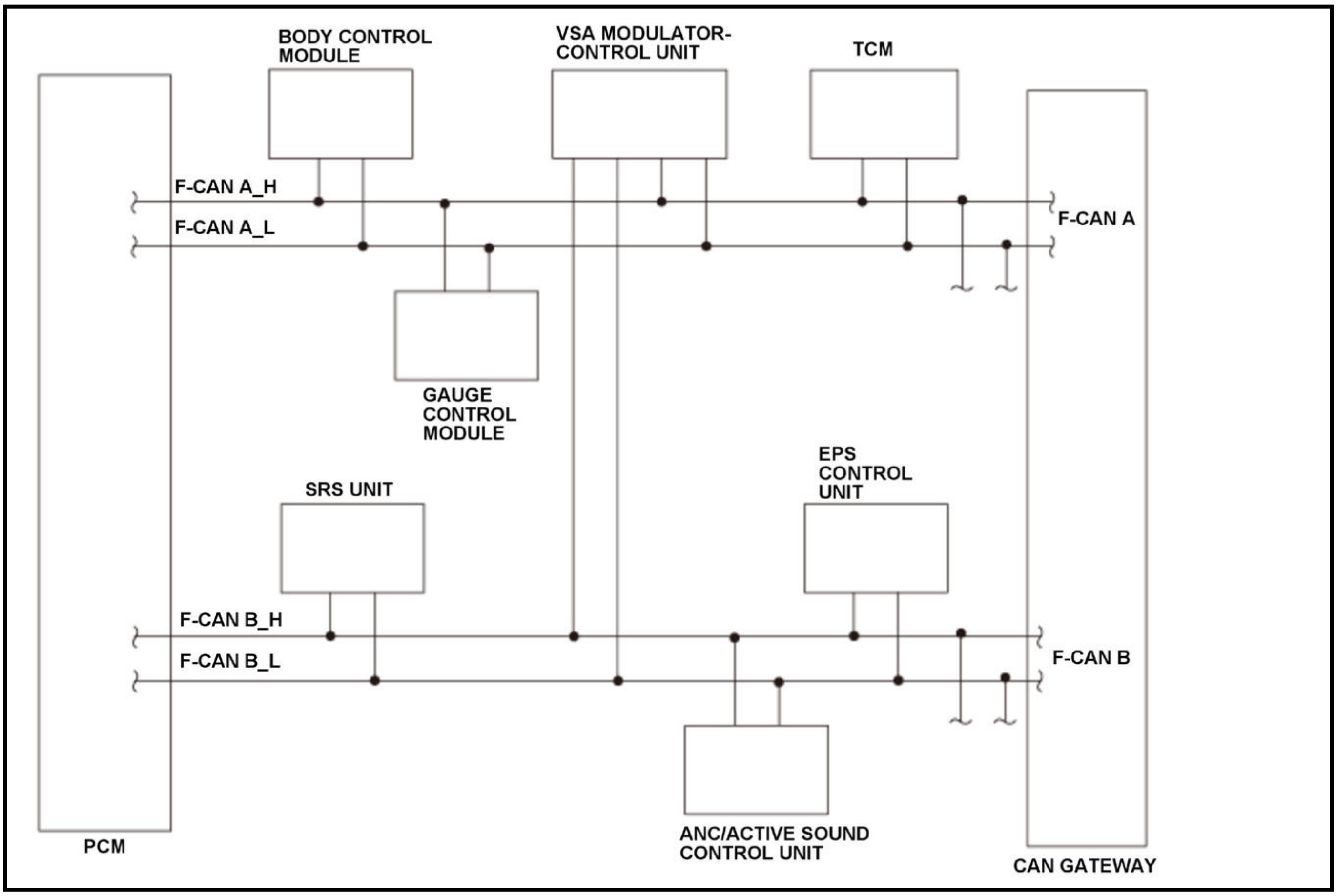
BODY CONTROL MODULE
VSA MODULATOR-CONTROL UNIT
TCM
F-CAN A_H
F-CAN A_L
F-CAN A
GAUGE CONTROL MODULE
SRS UNIT
EPS CONTROL UNIT
F-CAN B_H
F-CAN B_L
F-CAN B
ANC/ACTIVE SOUND CONTROL UNIT
PCM
CAN GATEWAY

The controller area network (CAN) transmits/receives pulsing signals to/from the control modules simultaneously by using F-CAN A and B signal lines. When the information is not sent from the transmission control module (TCM) unit via the F-CAN lines and this condition continues for a specified time or when the information sent from the TCM unit is abnormal and this condition continues for a specified cycle, the powertrain control module (PCM) detects a malfunction and stores a DTC.

Monitor Execution, Sequence, Duration, DTC Type

Execution	Continuous
Sequence	None
Duration	1.5 seconds or more
DTC Type	One drive cycle, MIL on

Enable Conditions

Condition	Minimum	Maximum
Elapsed time after the vehicle condition is turned to the ON mode	3 seconds	-
12 volt battery voltage [BATTERY]	10.0 V	-

[ ]: HDS Parameter

Malfunction Threshold

One of these conditions is met:

- The PCM does not receive any signals via the F-CAN lines unit for at least 1.5 seconds.
- The information sent from the TCM unit is abnormal at least 20 times.

Possible Cause

NOTE: The causes shown may not be a complete list of all potential problems, and it is possible that there may be other causes.

- TCM failure (include fuse fall-outs)
- F-CAN circuit F-CAN A H line open
- F-CAN circuit F-CAN A L line open
- F-CAN circuit F-CAN A H line short to ground
- F-CAN circuit F-CAN A L line short to ground
- F-CAN circuit F-CAN B H line open
- F-CAN circuit F-CAN B L line open
- F-CAN circuit F-CAN B H line short to ground
- F-CAN circuit F-CAN B L line short to ground
- PCM internal circuit failure

Diagnosis Details

Conditions for setting the DTC

When a malfunction is detected the, MIL comes on and a Pending DTC, a Confirmed DTC, and the freeze data are stored in the PCM memory.

Conditions for clearing the DTC

The Pending DTC, the Confirmed DTC, and the freeze data can be cleared with the scan tool Clear command or by disconnecting the 12 volt battery.

DTC U0104 (1.5 L ENGINE)

DTC U0104: F-CAN Malfunction (Powertrain Control Module (PCM)-Driving Support System Control Unit)

General Description

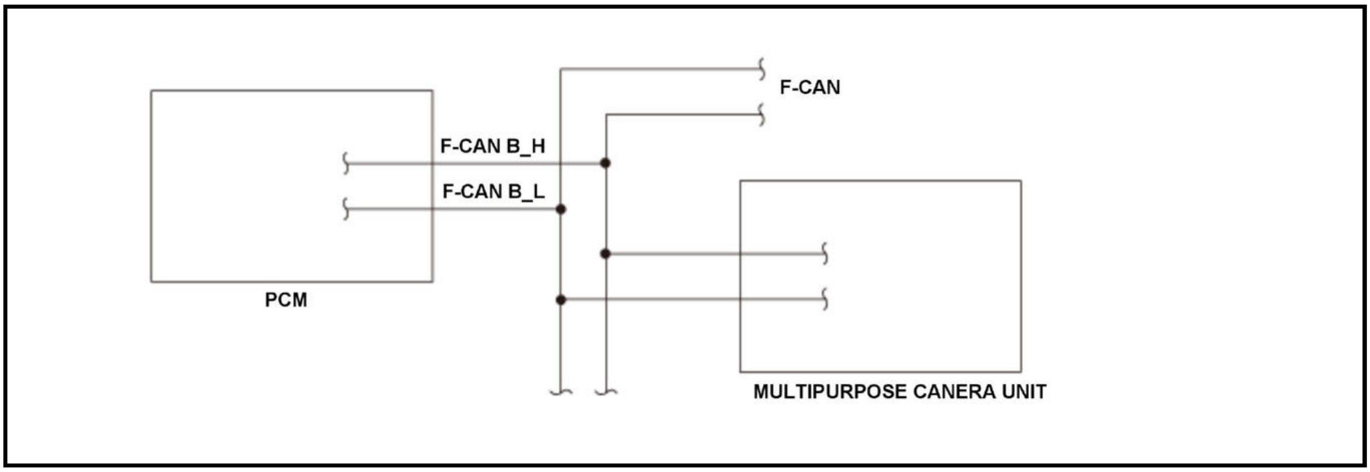

The controller area network (CAN) transmits/receives pulsing signals to/from the control modules simultaneously by using two signal lines (F-CAN B H and F-CAN B L). When the information is not sent from the multipurpose camera unit via the F-CAN lines and this condition continues for a specified time or when the information sent from the multipurpose camera unit is abnormal and this condition continues for a specified cycle, the powertrain control module (PCM) detects a malfunction and stores a DTC.

Monitor Execution, Sequence, Duration, DTC Type

Execution	Continuous

Sequence	None
Duration	1 second or more
DTC Type	One drive cycle, MIL off

Enable Conditions

Condition	Minimum	Maximum
Elapsed time after the vehicle condition is turned to the ON mode	3 seconds	-
12 volt battery voltage [BATTERY]	10.0 V	-

[ ]: HDS Parameter

Malfunction Threshold

One of these conditions is met:

- The PCM does not receive any signals via the F-CAN lines for at least 1 second.
- The information sent from the multipurpose camera unit is abnormal at least 20 times.

Possible Cause

NOTE: The causes shown may not be a complete list of all potential problems, and it is possible that there may be other causes.

- multipurpose camera unit failure (include fuse fall-outs)
- F-CAN circuit F-CAN B H line open
- F-CAN circuit F-CAN B L line open
- F-CAN circuit F-CAN B H line short to ground
- F-CAN circuit F-CAN B L line short to ground
- PCM internal circuit failure

Diagnosis Details

Conditions for setting the DTC

When a malfunction is detected, a Pending DTC, a Confirmed DTC, and the freeze data are stored in the PCM memory. The MIL does not come on.

Conditions for clearing the DTC

The Pending DTC, the Confirmed DTC, and the freeze data can be cleared with the scan tool Clear command or by disconnecting the 12 volt battery.

DTC U0114 (1.5 L ENGINE)

DTC U0114: F-CAN Malfunction (Powertrain Control Module (PCM)-AWD Control Unit)

General Description

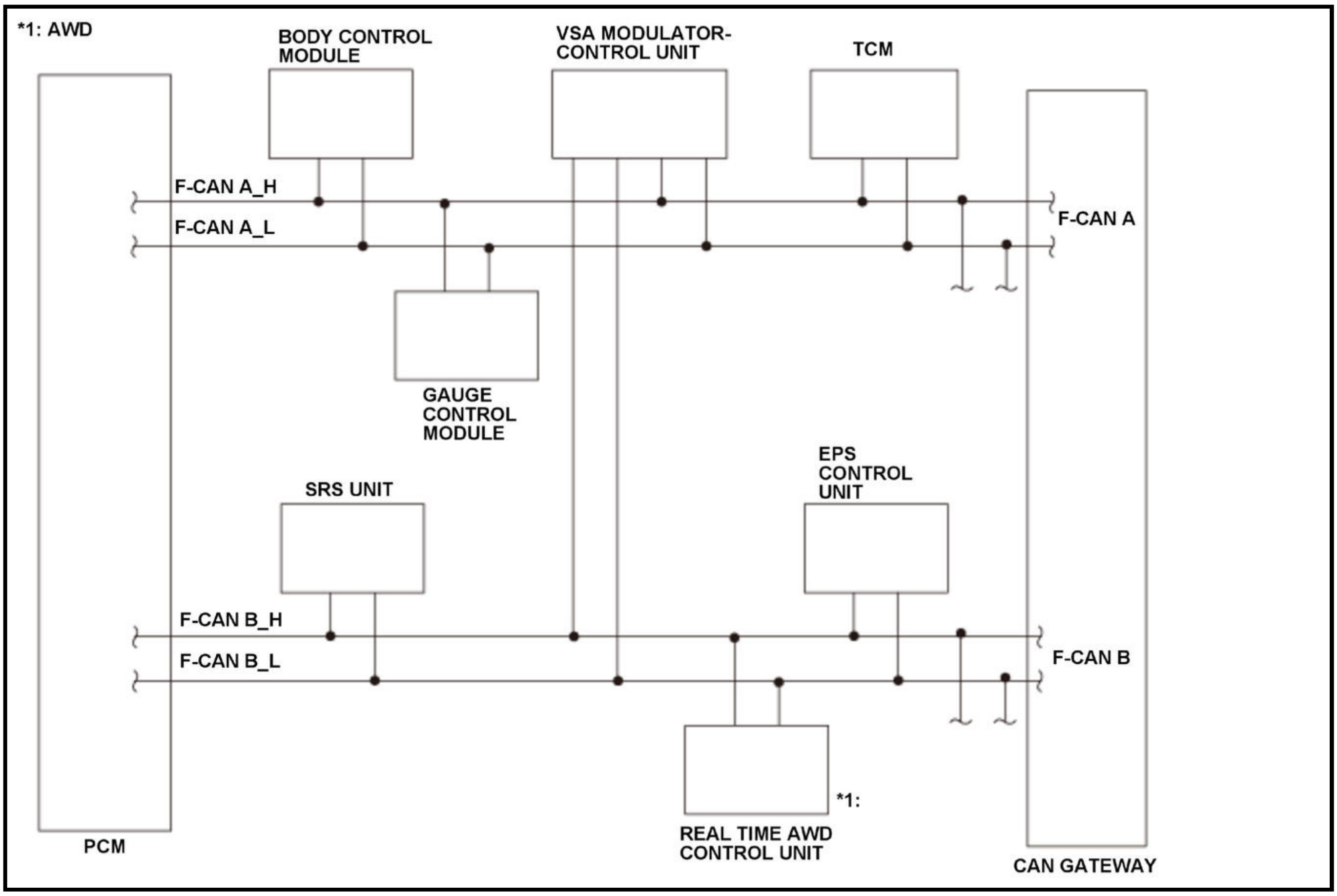
*1: AWD
BODY CONTROL MODULE
VSA MODULATOR-CONTROL UNIT
TCM
F-CAN A_H
F-CAN A_L
F-CAN A
GAUGE CONTROL MODULE
SRS UNIT
EPS CONTROL UNIT
F-CAN B_H
F-CAN B_L
F-CAN B
*1:
REAL TIME AWD CONTROL UNIT
PCM
CAN GATEWAY

The controller area network (CAN) transmits/receives pulsing signals to/from the control modules simultaneously by using F-CAN B signal lines. When the powertrain control module (PCM) does not receive the signals from the AWD control unit via the F-CAN lines for a set time, the PCM detects a malfunction and stores a DTC.

Monitor Execution, Sequence, Duration, DTC Type

Execution	Continuous
Sequence	None
Duration	1.5 second or more
DTC Type	One drive cycle, MIL off

Enable Conditions

Condition	Minimum	Maximum
Battery voltage [BATTERY]	10.0 V	-

[ ]: HDS Parameter

Malfunction Threshold

- The PCM does not receive any signals via the F-CAN lines unit for at least 1.5 seconds.
- The information sent from the real time AWD control unit is abnormal at least 20 times.

Possible Cause

NOTE: The causes shown may not be a complete list of all potential problems, and it is possible that there may be other causes.

- AWD control unit failure (include fuse fall-outs)
- F-CAN circuit F-CAN B H line open

- F-CAN circuit F-CAN B L line open
- F-CAN circuit F-CAN B H line short to ground
- F-CAN circuit F-CAN B L line short to ground
- PCM internal circuit failure

Diagnosis Details

Conditions for setting the DTC

When a malfunction is detected, a Pending DTC, a Confirmed DTC, and the freeze data are stored in the PCM memory. The MIL does not come on.

Conditions for clearing the DTC

The Pending DTC, the Confirmed DTC, and the freeze data can be cleared with the scan tool Clear command or by disconnecting the 12 volt battery.

DTC U0114 (2.4 L ENGINE) (2017 2018 2019)

DTC U0114: F-CAN Malfunction (Powertrain Control Module (PCM)-AWD Control Unit)

General Description

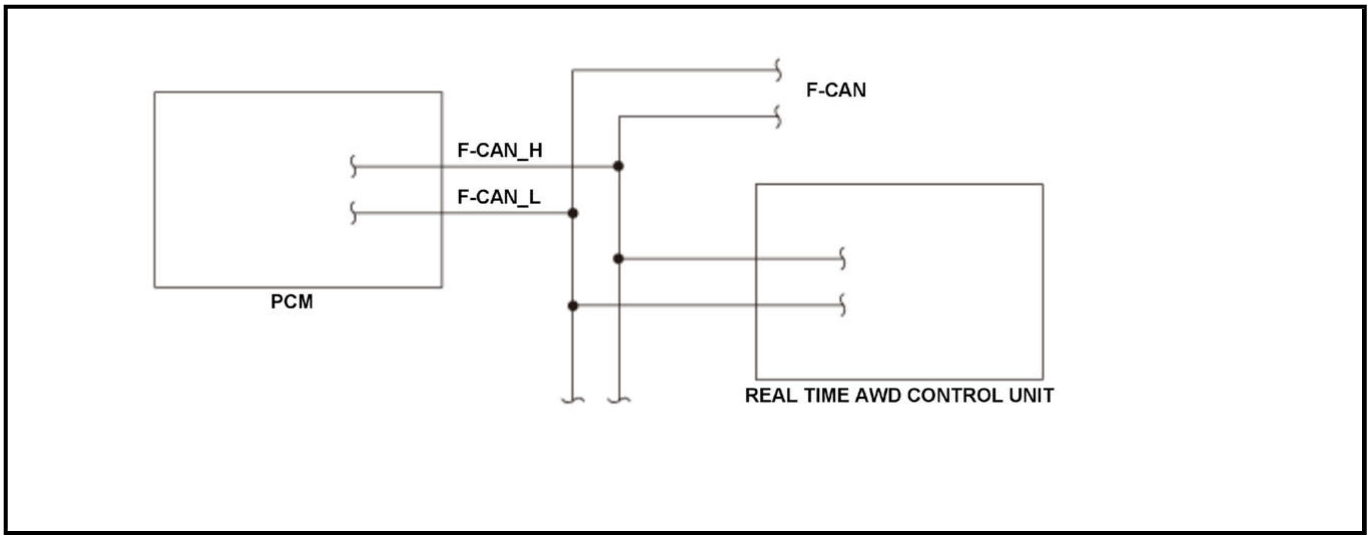

The controller area network (CAN) transmits/receives pulsing signals to/from the control modules simultaneously by using two signal lines (F-CAN H and F-CAN L). When the powertrain control module (PCM) does not receive signals from the real time AWD control unit via the F-CAN lines for a set time, the PCM detects a malfunction and stores a DTC.

Monitor Execution, Sequence, Duration, DTC Type

Execution	Continuous
Sequence	None
Duration	1 second or more
DTC Type	One drive cycle, MIL off

Enable Conditions

Condition	Minimum	Maximum
12 volt battery voltage [BATTERY]	10.0 V	-

[ ]: HDS Parameter

Malfunction Threshold

The PCM does not receive any signals via the F-CAN lines for at least 1 second.

Possible Cause

NOTE: The causes shown may not be a complete list of all potential problems, and it is possible that there may be other causes.

- F-CAN circuit F-CAN H line open
- F-CAN circuit F-CAN L line open
- F-CAN circuit F-CAN H line short to ground
- F-CAN circuit F-CAN L line short to ground
- Real time AWD control unit failure (include fuse blown)
- PCM internal circuit failure

Diagnosis Details

Conditions for setting the DTC

When a malfunction is detected, a Pending DTC, a Confirmed DTC, and the freeze data are stored in the PCM memory. The MIL does not come on.

Conditions for clearing the DTC

The Pending DTC, the Confirmed DTC, and the freeze data can be cleared with the scan tool Clear command or by disconnecting the 12 volt battery.

DTC U0122 (1.5 L ENGINE)

DTC U0122: F-CAN Malfunction (Powertrain Control Module (PCM)-VSA Modulator-Control Unit)

General Description

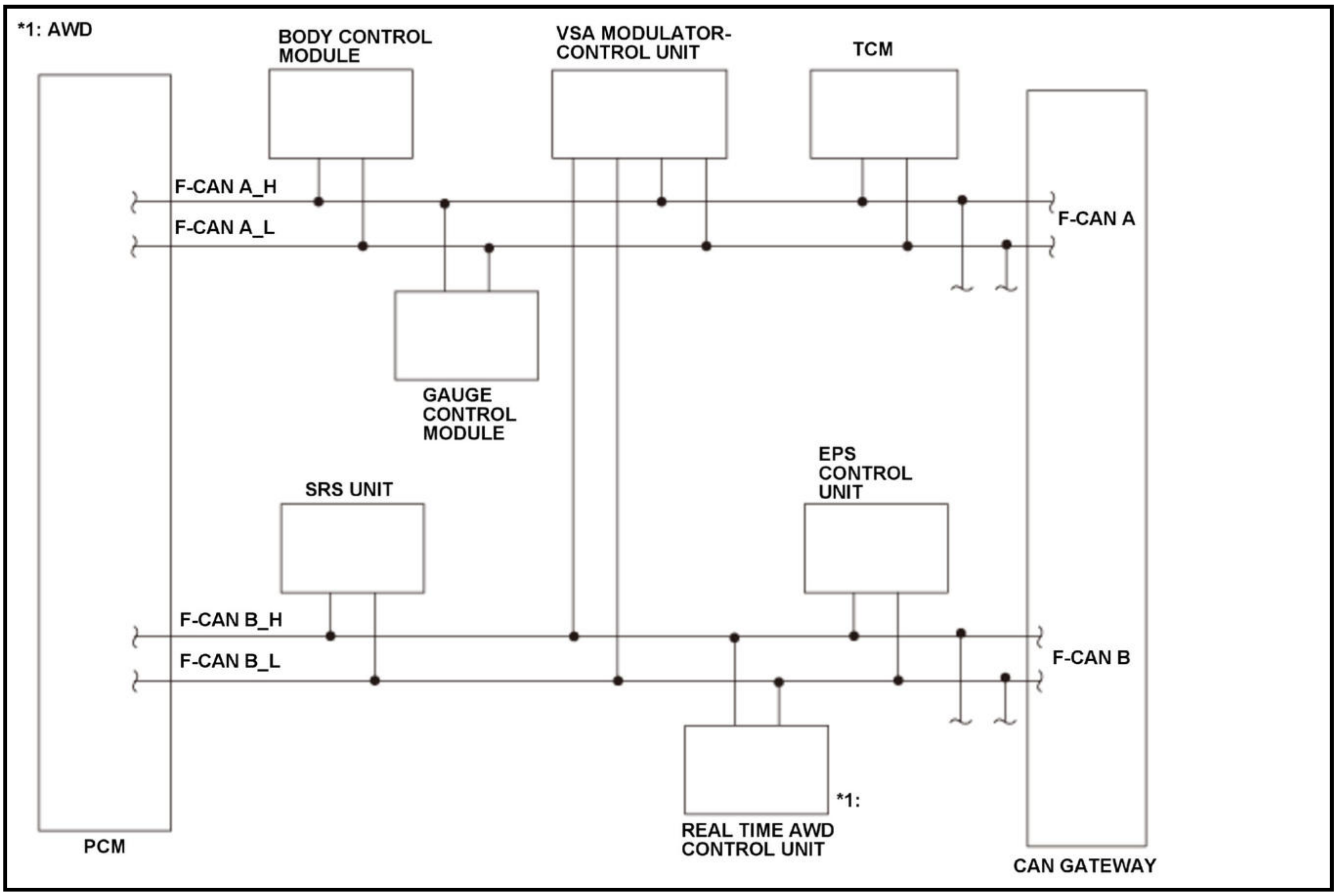
*1: AWD
BODY CONTROL MODULE
VSA MODULATOR-CONTROL UNIT
TCM
F-CAN A_H
F-CAN A_L
F-CAN A
GAUGE CONTROL MODULE
SRS UNIT
EPS CONTROL UNIT
F-CAN B_H
F-CAN B_L
F-CAN B
*1:
REAL TIME AWD CONTROL UNIT
PCM
CAN GATEWAY

The controller area network (CAN) transmits/receives pulsing signals to/from the control modules simultaneously by using F-CAN A and B signal lines. When the information is not sent from the VSA modulator-control unit via the F-CAN lines and this condition continues for a specified time or when the information sent from the VSA modulator-control unit is abnormal and this condition continues for a specified cycle, the powertrain control module (PCM) detects a malfunction and stores a DTC.

Monitor Execution, Sequence, Duration, DTC Type

Execution	Continuous
Sequence	None
Duration	1.5 seconds or more
DTC Type	One drive cycle, MIL off

Enable Conditions

Condition	Minimum	Maximum
Elapsed time after the vehicle condition is turned to the ON mode	3 seconds	-
12 volt battery voltage [BATTERY]	10.0 V	-

[ ]: HDS Parameter

Malfunction Threshold

One of these conditions is met:

- The PCM does not receive any signals via the F-CAN lines for at least 1.5 seconds.
- The information sent from the VSA modulator-control unit is abnormal at least 20 times.

Possible Cause

NOTE: The causes shown may not be a complete list of all potential problems, and it is possible that there may be other causes.

- VSA modulator-control unit failure (include fuse fall-outs)
- F-CAN circuit F-CAN A H line open
- F-CAN circuit F-CAN A L line open
- F-CAN circuit F-CAN A H line short to ground
- F-CAN circuit F-CAN A L line short to ground
- F-CAN circuit F-CAN B H line open
- F-CAN circuit F-CAN B L line open
- F-CAN circuit F-CAN B H line short to ground
- F-CAN circuit F-CAN B L line short to ground
- PCM internal circuit failure

Diagnosis Details

Conditions for setting the DTC

When a malfunction is detected, a Pending DTC, a Confirmed DTC, and the freeze data are stored in the PCM memory. The MIL does not come on.

Conditions for clearing the DTC

The Pending DTC, the Confirmed DTC, and the freeze data can be cleared with the scan tool Clear command or by disconnecting the 12 volt battery.

DTC U0122 (2.4 L ENGINE) (2017 2018 2019)

DTC U0122: F-CAN Malfunction (Powertrain Control Module (PCM)-VSA Modulator-Control Unit)

General Description

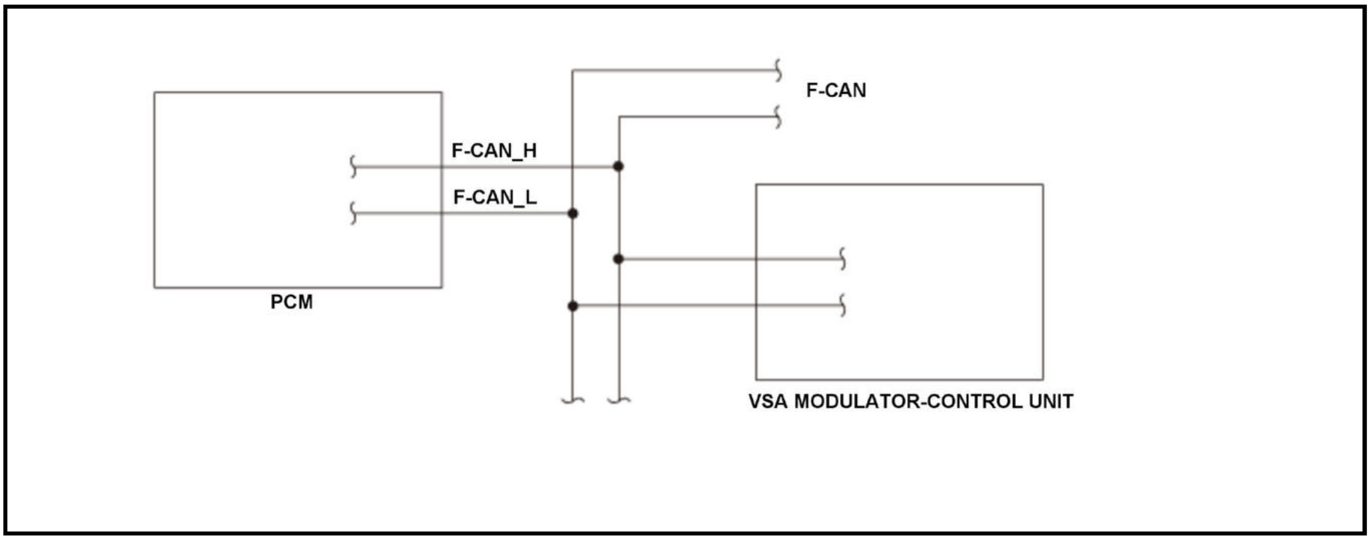

The controller area network (CAN) transmits/receives pulsing signals to/from the control modules simultaneously by using two signal lines (F-CAN H and F-CAN L). When the information is not sent from the VSA modulator-control unit via the F-CAN lines and this condition continues for a specified time or when the information sent from the VSA modulator-control unit is abnormal and this condition continues for a specified cycle, the powertrain control module (PCM) detects a malfunction and stores a DTC.

Monitor Execution, Sequence, Duration, DTC Type

Execution	Continuous
Sequence	None
Duration	1 second or more
DTC Type	One drive cycle, MIL off

Enable Conditions

Condition	Minimum	Maximum
Elapsed time after the vehicle condition is turned to the ON mode	3 seconds	-
12 volt battery voltage [BATTERY]	10.0 V	-

[ ]: HDS Parameter

Malfunction Threshold

One of these conditions is met:

- The PCM does not receive any signals via the F-CAN lines for at least 1 second.
- The information sent from the VSA modulator-control unit is abnormal at least 20 times.

Possible Cause

NOTE: The causes shown may not be a complete list of all potential problems, and it is possible that there may be other causes.

- F-CAN circuit F-CAN H line open
- F-CAN circuit F-CAN L line open
- F-CAN circuit F-CAN H line short to ground
- F-CAN circuit F-CAN L line short to ground
- VSA modulator-control unit failure (include fuse blown)
- PCM internal circuit failure

Diagnosis Details

Conditions for setting the DTC

When a malfunction is detected, a Pending DTC, a Confirmed DTC, and the freeze data are stored in the PCM memory. The MIL does not come on.

Conditions for clearing the DTC

The Pending DTC, the Confirmed DTC, and the freeze data can be cleared with the scan tool Clear command or by disconnecting the 12 volt battery.

DTC U0128 (1.5 L ENGINE)

DTC U0128: F-CAN Malfunction (Powertrain Control Module (PCM)-Electric Parking Brake Control Unit)

General Description

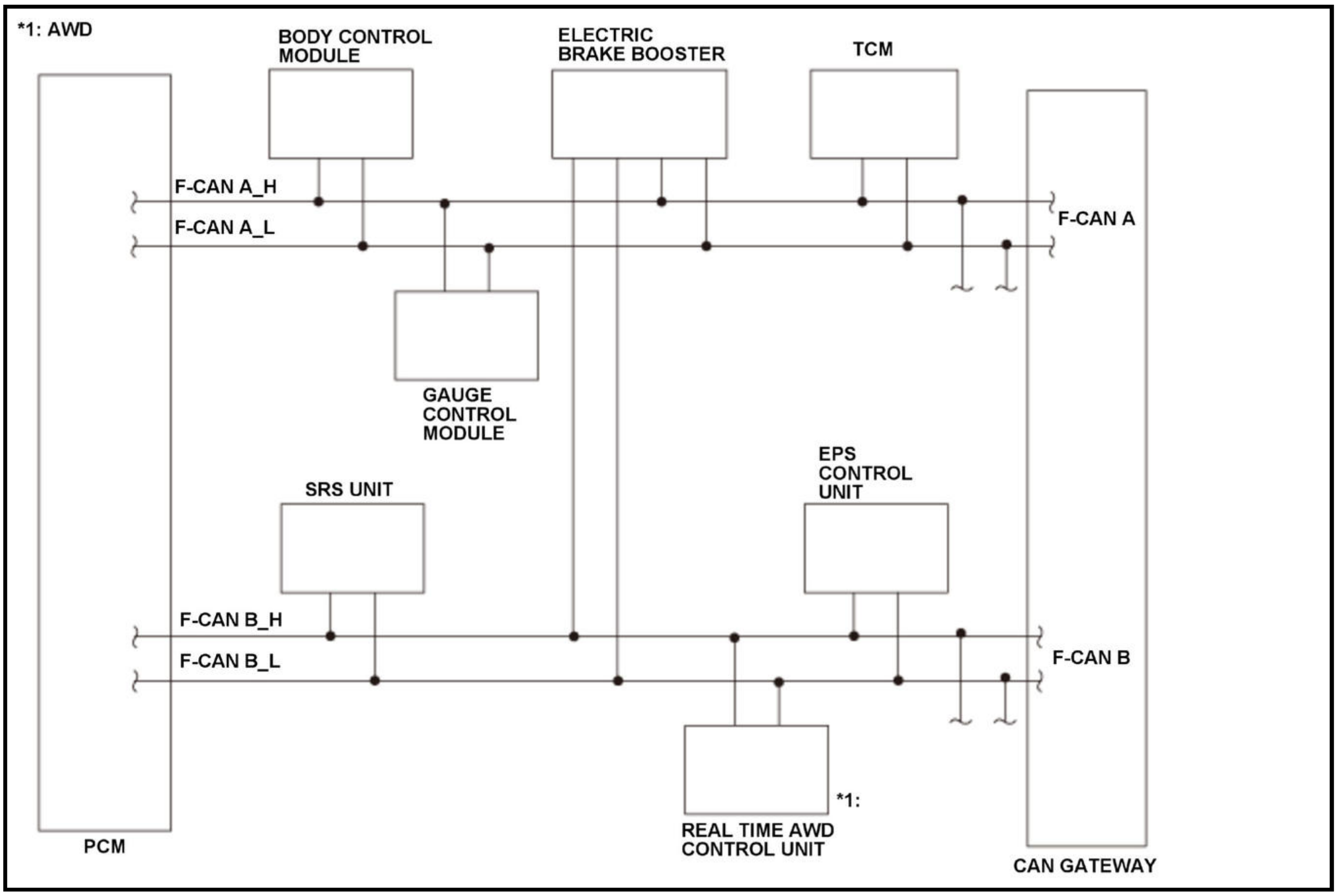
*1: AWD
BODY CONTROL MODULE
ELECTRIC BRAKE BOOSTER
TCM
F-CAN A_H
F-CAN A_L
F-CAN A
GAUGE CONTROL MODULE
EPS CONTROL UNIT
SRS UNIT
F-CAN B_H
F-CAN B_L
F-CAN B
*1:
REAL TIME AWD CONTROL UNIT
PCM
CAN GATEWAY

The controller area network (CAN) transmits/receives pulsing signals to/from the control modules simultaneously by using F-CAN A and B signal lines. When the powertrain control module (PCM) does not receive the signals from the electric brake booster via the F-CAN lines for a set time, the PCM detects a malfunction and stores a DTC.

Monitor Execution, Sequence, Duration, DTC Type

Execution	Continuous
Sequence	None
Duration	1 second or more
DTC Type	One drive cycle, MIL off

Enable Conditions

Condition	Minimum	Maximum
12 volt battery voltage [BATTERY]	10.0 V	-

[ ]: HDS Parameter

Malfunction Threshold

The PCM does not receive any signals via the F-CAN lines for at least 1 second.

Possible Cause

NOTE: The causes shown may not be a complete list of all potential problems, and it is possible that there may be other causes.

- F-CAN circuit F-CAN A H line short to ground
- F-CAN circuit F-CAN A L line short to ground

- F-CAN circuit F-CAN A H line open
- F-CAN circuit F-CAN A L line open
- F-CAN circuit F-CAN B H line short to ground
- F-CAN circuit F-CAN B L line short to ground
- F-CAN circuit F-CAN B H line open
- F-CAN circuit F-CAN B L line open
- Electric parking brake control unit failure (include fuse fall-outs)
- PCM internal circuit failure

Diagnosis Details

Conditions for setting the DTC

When a malfunction is detected, a Pending DTC, a Confirmed DTC, the freeze data, and the on-board snapshot are stored in the PCM memory. The MIL does not come on.

Conditions for clearing the DTC

The Pending DTC, the Confirmed DTC, the freeze data, and the on-board snapshot can be cleared with the scan tool Clear command or by disconnecting the 12 volt battery.

DTC U0128 (2.4 L ENGINE) (2017 2018 2019)

DTC U0128: F-CAN Malfunction (Powertrain Control Module (PCM)-Electric Parking Brake Control Unit)

General Description

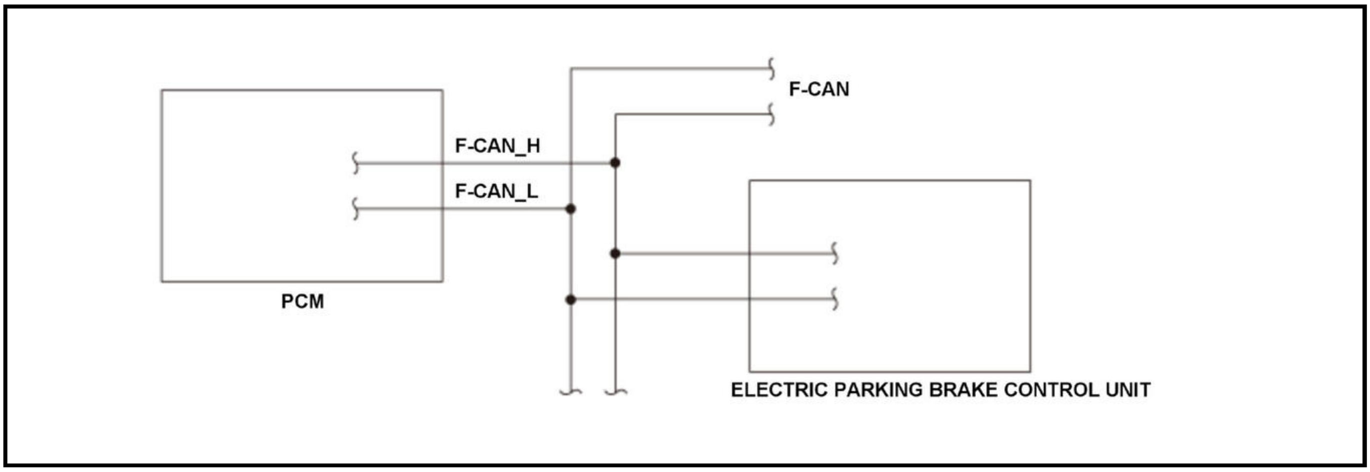

The controller area network (CAN) transmits/receives pulsing signals to/from the control modules simultaneously by using two signal lines (F-CAN H and F-CAN L). When the powertrain control module (PCM) does not receive the signals from the electric parking brake control unit via the F-CAN lines for a set time, the PCM detects a malfunction and stores a DTC.

Monitor Execution, Sequence, Duration, DTC Type

Execution	Continuous
Sequence	None
Duration	1 second or more
DTC Type	One drive cycle, MIL off

Enable Conditions

Condition	Minimum	Maximum
12 volt battery voltage [BATTERY]	10.0 V	-

[ ]: HDS Parameter

Malfunction Threshold

The PCM does not receive any signals via the F-CAN lines for at least 1 second.

Possible Cause

NOTE: The causes shown may not be a complete list of all potential problems, and it is possible that there may be other causes.

- F-CAN circuit F-CAN H line short to ground
- F-CAN circuit F-CAN L line short to ground
- F-CAN circuit F-CAN H line open
- F-CAN circuit F-CAN L line open
- Electric parking brake control unit failure (include fuse fall-outs)
- PCM internal circuit failure

Diagnosis Details

Conditions for setting the DTC

When a malfunction is detected, a Pending DTC, a Confirmed DTC, the freeze data, and the on-board snapshot are stored in the PCM memory. The MIL does not come on.

Conditions for clearing the DTC

The Pending DTC, the Confirmed DTC, the freeze data, and the on-board snapshot can be cleared with the scan tool Clear command or by disconnecting the 12 volt battery.

DTC U0129 (1.5 L ENGINE)

DTC U0129: F-CAN Malfunction (Powertrain Control Module (PCM)-Electric Brake Booster)

General Description

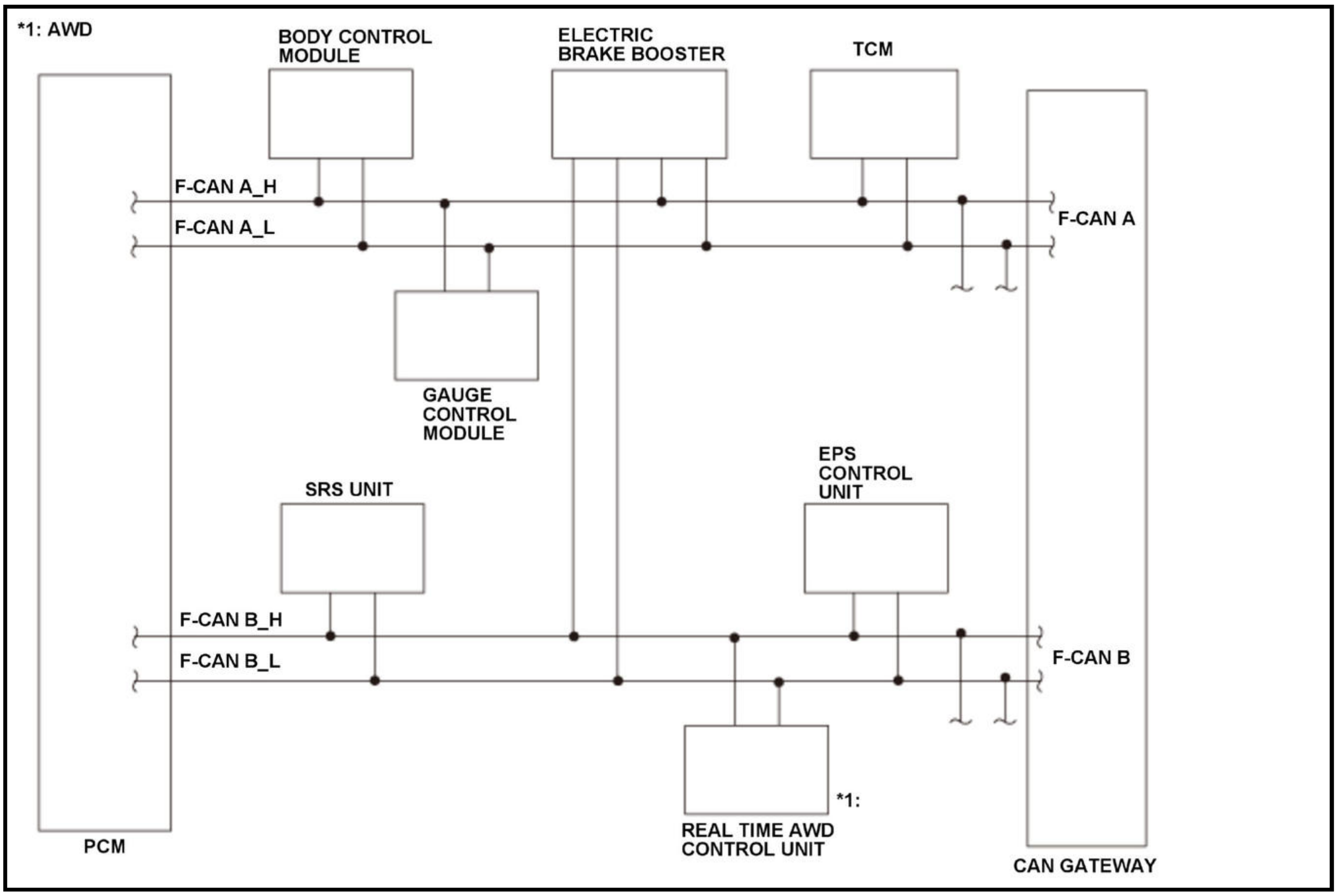
*1: AWD
BODY CONTROL MODULE
ELECTRIC BRAKE BOOSTER
TCM
F-CAN A_H
F-CAN A_L
F-CAN A
GAUGE CONTROL MODULE
SRS UNIT
EPS CONTROL UNIT
F-CAN B_H
F-CAN B_L
F-CAN B
*1:
REAL TIME AWD CONTROL UNIT
PCM
CAN GATEWAY

The controller area network (CAN) transmits/receives pulsing signals to/from the control modules simultaneously by using F-CAN A and B signal lines. If there is an abnormality in the electric brake booster system information transmitted from the electric brake booster via the F-CAN line for a specified duration, the powertrain control module (PCM) detects a malfunction and stores a DTC.

Monitor Execution, Sequence, Duration, DTC Type

Execution	Continuous
Sequence	None
Duration	1.5 seconds or more
DTC Type	One drive cycle, MIL off

Enable Conditions

Condition	Minimum	Maximum
Elapsed time after the vehicle condition is turned to the ON mode	3 seconds	-
12 volt battery voltage [BATTERY]	10.0 V	-
Vehicle	ON mode	

[ ]: HDS Parameter

Malfunction Threshold

- There is an abnormality in the electric brake booster system information transmitted from the electric brake booster for at least 1.5 seconds.
- The information sent from the electric brake booster is abnormal at least 20 times.

Possible Cause

NOTE: The causes shown may not be a complete list of all potential problems, and it is possible that there may be other causes.

- Precision all wheel steer control unit failure
- F-CAN circuit F-CAN A H line open
- F-CAN circuit F-CAN A L line open
- F-CAN circuit F-CAN A H line short to ground
- F-CAN circuit F-CAN A L line short to ground
- F-CAN circuit F-CAN B H line open
- F-CAN circuit F-CAN B L line open
- F-CAN circuit F-CAN B H line short to ground
- F-CAN circuit F-CAN B L line short to ground
- Electric brake booster failure
- CAN gateway internal failure (include fuse fall-outs)
- PCM internal circuit failure

Diagnosis Details

Conditions for setting the DTC

When a malfunction is detected, a Pending DTC, a Confirmed DTC, and the freeze data are stored in the PCM memory. The MIL does not come on.

Conditions for clearing the DTC

The Pending DTC, the Confirmed DTC, and the freeze data can be cleared with the scan tool Clear command or by disconnecting the 12 volt battery.

DTC U0129 (2.4 L ENGINE) (2017 2018 2019)

DTC U0129: F-CAN Malfunction (Powertrain Control Module (PCM)-Electric Brake Booster)

General Description

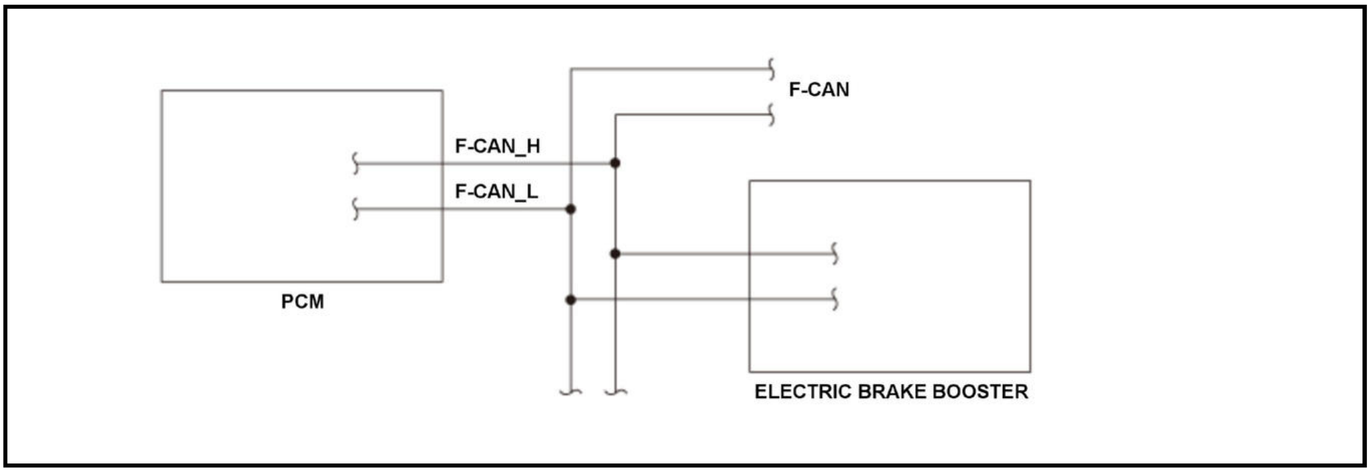

The controller area network (CAN) transmits/receives pulsing signals to/from the control modules simultaneously by using F-CAN signal lines. If there is an abnormality in the electric brake booster information transmitted from the electric brake booster via the F-CAN line for a specified duration, the powertrain control module (PCM) detects a malfunction and stores a DTC.

Monitor Execution, Sequence, Duration, DTC Type

Execution	Continuous
Sequence	None
Duration	1.5 seconds or more
DTC Type	One drive cycle, MIL off

Enable Conditions

Condition	Minimum	Maximum
Elapsed time after the vehicle condition is turned to the ON mode	3 seconds	-
12 volt battery voltage [BATTERY]	10.0 V	-
Vehicle	ON mode	

[ ]: HDS Parameter

Malfunction Threshold

- There is an abnormality in the electric brake booster system information transmitted from the electric brake booster for at least 1.5 seconds.
- The information sent from the electric brake booster is abnormal at least 20 times.

Possible Cause

NOTE: The causes shown may not be a complete list of all potential problems, and it is possible that there may be other causes.

- F-CAN circuit F-CAN H line open
- F-CAN circuit F-CAN L line open
- F-CAN circuit F-CAN H line short to ground
- F-CAN circuit F-CAN L line short to ground
- Electric brake booster failure
- PCM internal circuit failure

Diagnosis Details

Conditions for setting the DTC

When a malfunction is detected, a Pending DTC, a Confirmed DTC, and the freeze data are stored in the PCM memory. The MIL does not come on.

Conditions for clearing the DTC

The Pending DTC, the Confirmed DTC, and the freeze data can be cleared with the scan tool Clear command or by disconnecting the 12 volt battery.

DTC U0131 (1.5 L ENGINE)

DTC U0131: F-CAN Malfunction (Powertrain Control Module (PCM)-EPS Control Unit)

General Description

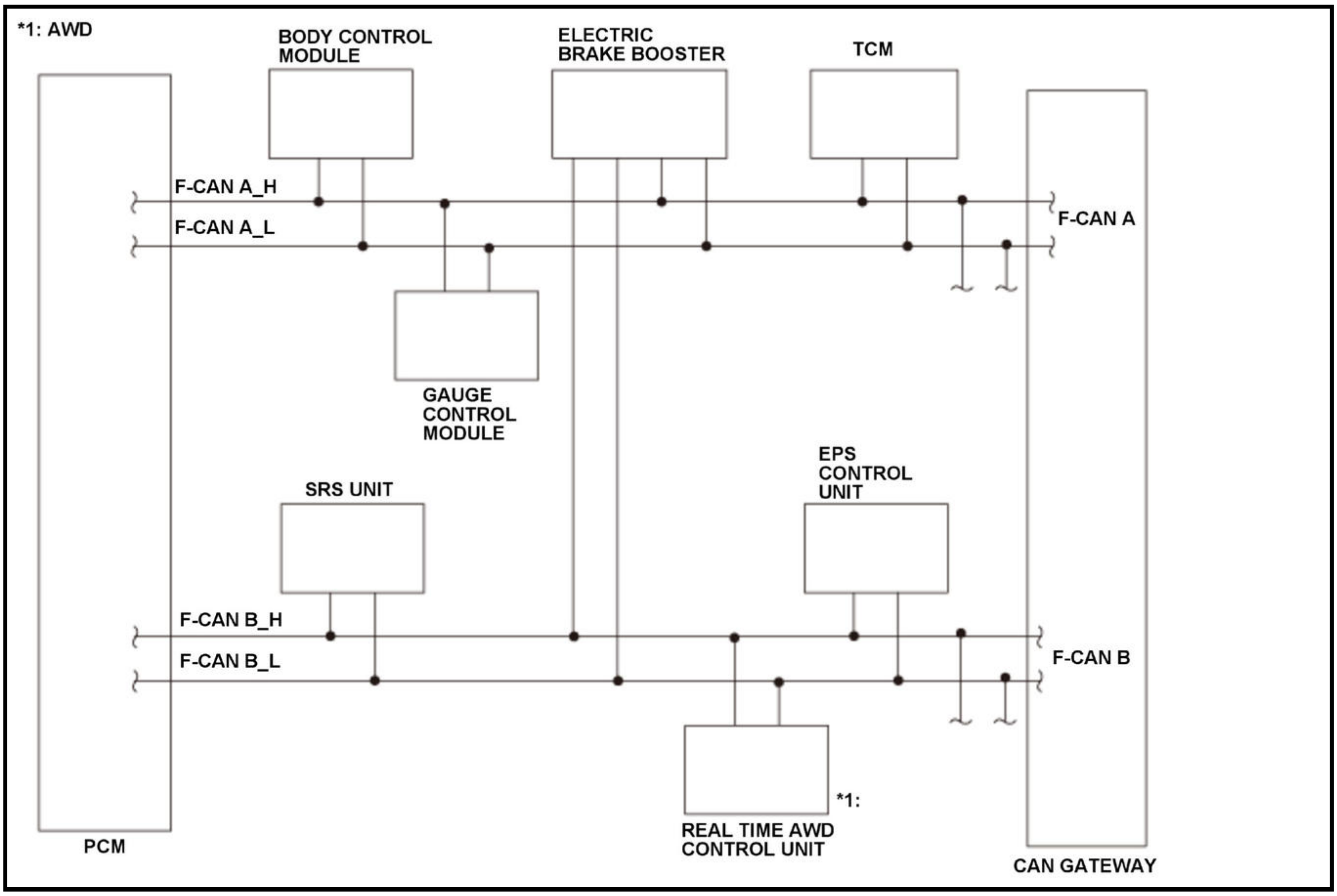
*1: AWD
BODY CONTROL MODULE
ELECTRIC BRAKE BOOSTER
TCM
F-CAN A_H
F-CAN A_L
F-CAN A
GAUGE CONTROL MODULE
SRS UNIT
EPS CONTROL UNIT
F-CAN B_H
F-CAN B_L
F-CAN B
*1:
REAL TIME AWD CONTROL UNIT
PCM
CAN GATEWAY

The controller area network (CAN) transmits/receives pulsing signals to/from the control modules simultaneously by using F-CAN B signal line. When the information is not sent from the electrical power steering (EPS) control unit via the F-CAN lines and this condition continues for a specified time or when the information sent from the EPS control unit is abnormal and this condition continues for a specified cycle, the powertrain control module (PCM) detects a malfunction and stores a DTC.

Monitor Execution, Sequence, Duration, DTC Type

Execution	Continuous
Sequence	None
Duration	1.5 seconds or more
DTC Type	One drive cycle, MIL off

Enable Conditions

Condition	Minimum	Maximum
Elapsed time after the vehicle condition is turned to the ON mode	3 seconds	-
12 volt battery voltage [BATTERY]	10.0 V	-

[ ]: HDS Parameter

Malfunction Threshold

One of these conditions is met:

- The PCM does not receive any signals via the F-CAN lines for at least 1.5 seconds.
- The information sent from the EPS control unit is abnormal at least 20 times.

Possible Cause

NOTE: The causes shown may not be a complete list of all potential problems, and it is possible that there may be other causes.

- F-CAN circuit F-CAN B H line open
- F-CAN circuit F-CAN B L line open
- F-CAN circuit F-CAN B H line short to ground
- F-CAN circuit F-CAN B L line short to ground
- EPS control unit failure (include fuse fall-outs)
- PCM internal circuit failure

Diagnosis Details

Conditions for setting the DTC

When a malfunction is detected, a Pending DTC, a Confirmed DTC, and the freeze data are stored in the PCM memory. The MIL does not come on.

Conditions for clearing the DTC

The Pending DTC, the Confirmed DTC, and the freeze data can be cleared with the scan tool Clear command or by disconnecting the 12 volt battery.

DTC U0131 (2.4 L ENGINE) (2017 2018 2019)

DTC U0131: F-CAN Malfunction (Powertrain Control Module (PCM)-EPS Control Unit)

General Description

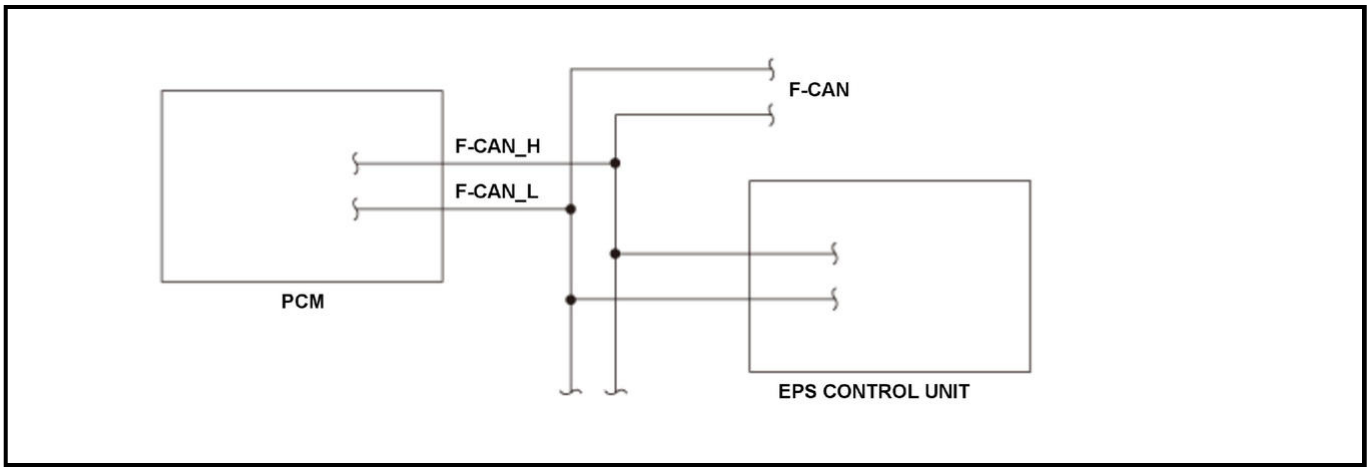

The controller area network (CAN) transmits/receives pulsing signals to/from the control modules simultaneously by using two signal lines (F-CAN H and F-CAN L). When the powertrain control module (PCM) does not receive the signals from the electrical power steering (EPS) control unit via the F-CAN lines for a set time, the PCM detects a malfunction and stores a DTC

Monitor Execution, Sequence, Duration, DTC Type

Execution	Continuous
Sequence	None
Duration	1.5 seconds or more
DTC Type	One drive cycle, MIL off

Enable Conditions

Condition	Minimum	Maximum
Elapsed time after the vehicle condition is turned to the ON mode	3 seconds	-
12 volt battery voltage [BATTERY]	10.0 V	-

[ ]: HDS Parameter

Malfunction Threshold

One of these conditions is met:

- The PCM does not receive any signals via the F-CAN lines for at least 1.5 seconds.
- The information sent from the EPS control unit is abnormal at least 20 times.

Possible Cause

NOTE: The causes shown may not be a complete list of all potential problems, and it is possible that there may be other causes.

- F-CAN circuit F-CAN H line open
- F-CAN circuit F-CAN L line open
- F-CAN circuit F-CAN H line short to ground
- F-CAN circuit F-CAN L line short to ground
- EPS control unit failure (include fuse fall-outs)
- PCM internal circuit failure

Diagnosis Details

Conditions for setting the DTC

When a malfunction is detected, a Pending DTC, a Confirmed DTC, and the freeze data are stored in the PCM memory. The MIL does not come on.

Conditions for clearing the DTC

The Pending DTC, the Confirmed DTC, and the freeze data can be cleared with the scan tool Clear command or by disconnecting the 12 volt battery.

DTC U0146 (1.5 L ENGINE) (2020 2021)

DTC U0146: F-CAN Malfunction (Powertrain Control Module (PCM)-CAN Gateway)

General Description

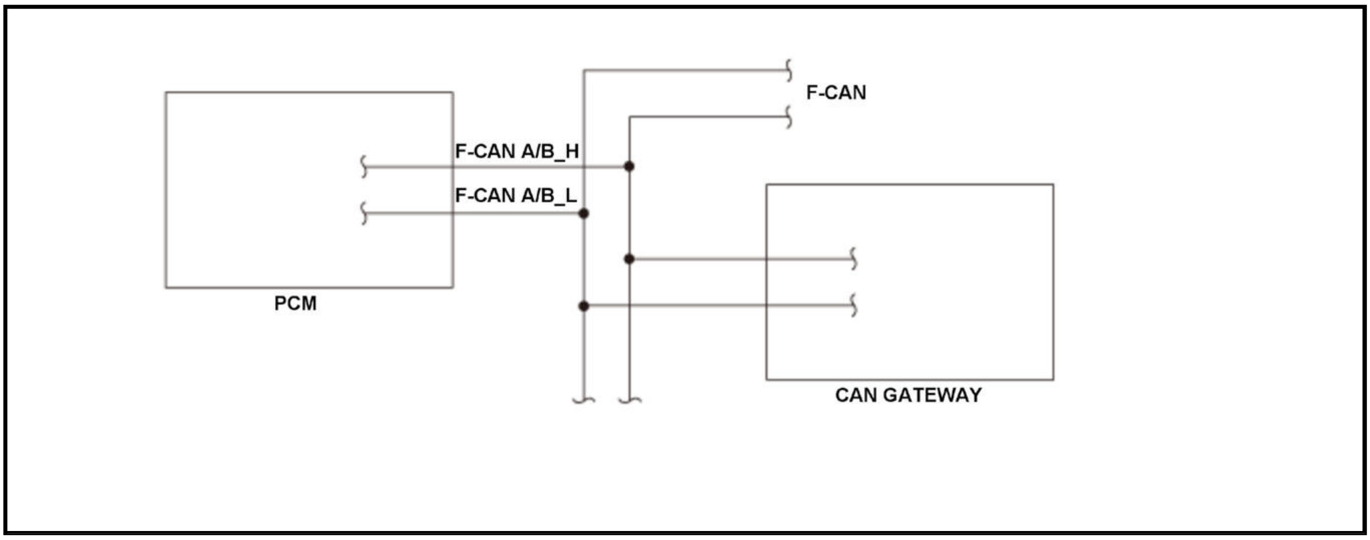

The controller area network (CAN) transmits/receives pulsing signals to/from the control modules simultaneously by using two signal lines (H line and L line). When the information is not sent from the CAN gateway via the F-CAN lines and this condition continues for a specified time or when the information sent from the CAN gateway is abnormal and this condition continues for a specified cycle, the powertrain control module (PCM) detects a malfunction and stores a DTC.

Monitor Execution, Sequence, Duration, DTC Type

Execution	Continuous
Sequence	None
Duration	1 second or more
DTC Type	One drive cycle, MIL on

Enable Conditions

Condition	Minimum	Maximum
Elapsed time after the vehicle condition is turned to the ON mode	3 seconds	-
12 volt battery voltage [Battery]	10.0 V	-

[ ]: HDS Parameter

Malfunction Threshold

One of these conditions is met:

- The PCM does not receive any signals via the F-CAN lines for at least 1 second.
- The information sent from the CAN gateway is abnormal at least 20 times.

Possible Cause

NOTE: The causes shown may not be a complete list of all potential problems, and it is possible that there may be other causes.

- CAN gateway failure
- F-CAN circuit F-CAN A H line open
- F-CAN circuit F-CAN A L line open
- F-CAN circuit F-CAN A H line short to ground
- F-CAN circuit F-CAN A L line short to ground

- F-CAN circuit F-CAN B H line open
- F-CAN circuit F-CAN B L line open
- F-CAN circuit F-CAN B H line short to ground
- F-CAN circuit F-CAN B L line short to ground
- PCM internal circuit failure

Diagnosis Details

Conditions for setting the DTC

When a malfunction is detected, the MIL comes on and a Pending DTC, a Confirmed DTC, and the freeze data are stored in the PCM memory.

Conditions for clearing the DTC

The MIL is cleared if the malfunction does not return in three consecutive trips in which the diagnostic runs. The MIL, the Pending DTC, the Confirmed DTC, and the freeze data can be cleared with the scan tool Clear command or by disconnecting the 12 volt battery.

DTC U0151 (1.5 L ENGINE)

DTC U0151: F-CAN Malfunction (Powertrain Control Module (PCM)-SRS Unit)

General Description

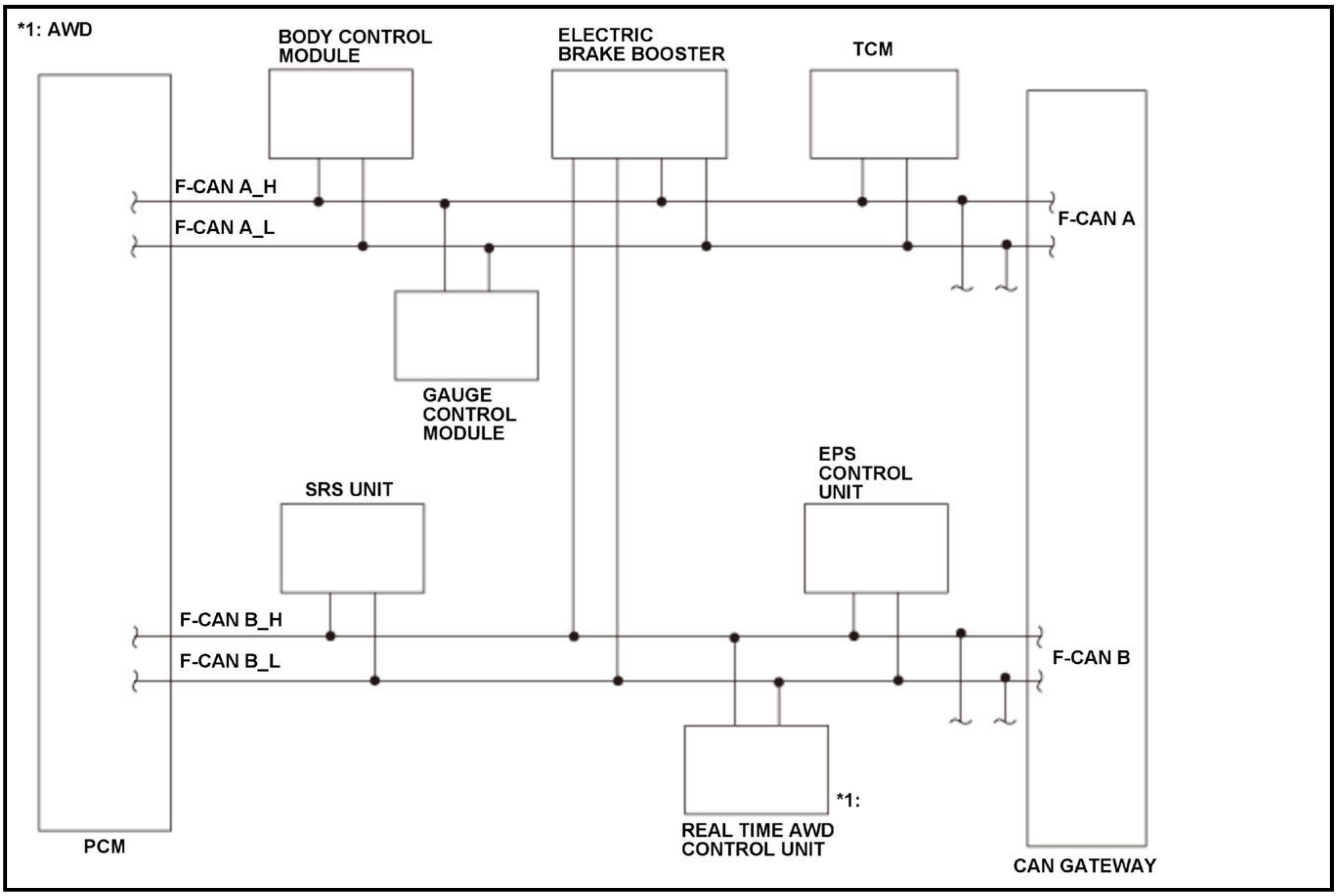
*1: AWD
BODY CONTROL MODULE
ELECTRIC BRAKE BOOSTER
TCM
F-CAN A_H
F-CAN A_L
F-CAN A
GAUGE CONTROL MODULE
SRS UNIT
EPS CONTROL UNIT
F-CAN B_H
F-CAN B_L
F-CAN B
*1:
REAL TIME AWD CONTROL UNIT
PCM
CAN GATEWAY

The controller area network (CAN) transmits/receives pulsing signals to/from the control modules simultaneously by using F-CAN B signal line. When the information is not sent from the SRS unit via the F-CAN lines and this condition continues for a specified time or when the information sent from the SRS unit is abnormal and this condition continues for a specified cycle, the powertrain control module (PCM) detects a malfunction and stores a DTC.

Monitor Execution, Sequence, Duration, DTC Type

Execution	Continuous
Sequence	None
Duration	1.5 seconds or more
DTC Type	One drive cycle, MIL off

Enable Conditions

Condition	Minimum	Maximum
Elapsed time after the vehicle condition is turned to the ON mode	3 seconds	-
12 volt battery voltage [BATTERY]	10.0 V	-

[ ]: HDS Parameter

Malfunction Threshold

One of these conditions is met:

- The PCM does not receive any signals via the F-CAN lines for at least 1.5 seconds.
- The information sent from the SRS unit is abnormal at least 20 times.

Possible Cause

NOTE: The causes shown may not be a complete list of all potential problems, and it is possible that there may be other causes.

- F-CAN circuit F-CAN B H line open
- F-CAN circuit F-CAN B L line open
- F-CAN circuit F-CAN B H line short to ground
- F-CAN circuit F-CAN B L line short to ground
- SRS unit failure (include fuse fall-outs)
- PCM internal circuit failure

Diagnosis Details

Conditions for setting the DTC

When a malfunction is detected, a Pending DTC, a Confirmed DTC, and the freeze data are stored in the PCM memory. The MIL does not come on.

Conditions for clearing the DTC

The Pending DTC, the Confirmed DTC, and the freeze data can be cleared with the scan tool Clear command or by disconnecting the 12 volt battery.

DTC U0155 (1.5 L ENGINE)

DTC U0155: F-CAN Malfunction (Powertrain Control Module (PCM)-Gauge Control Module)

General Description

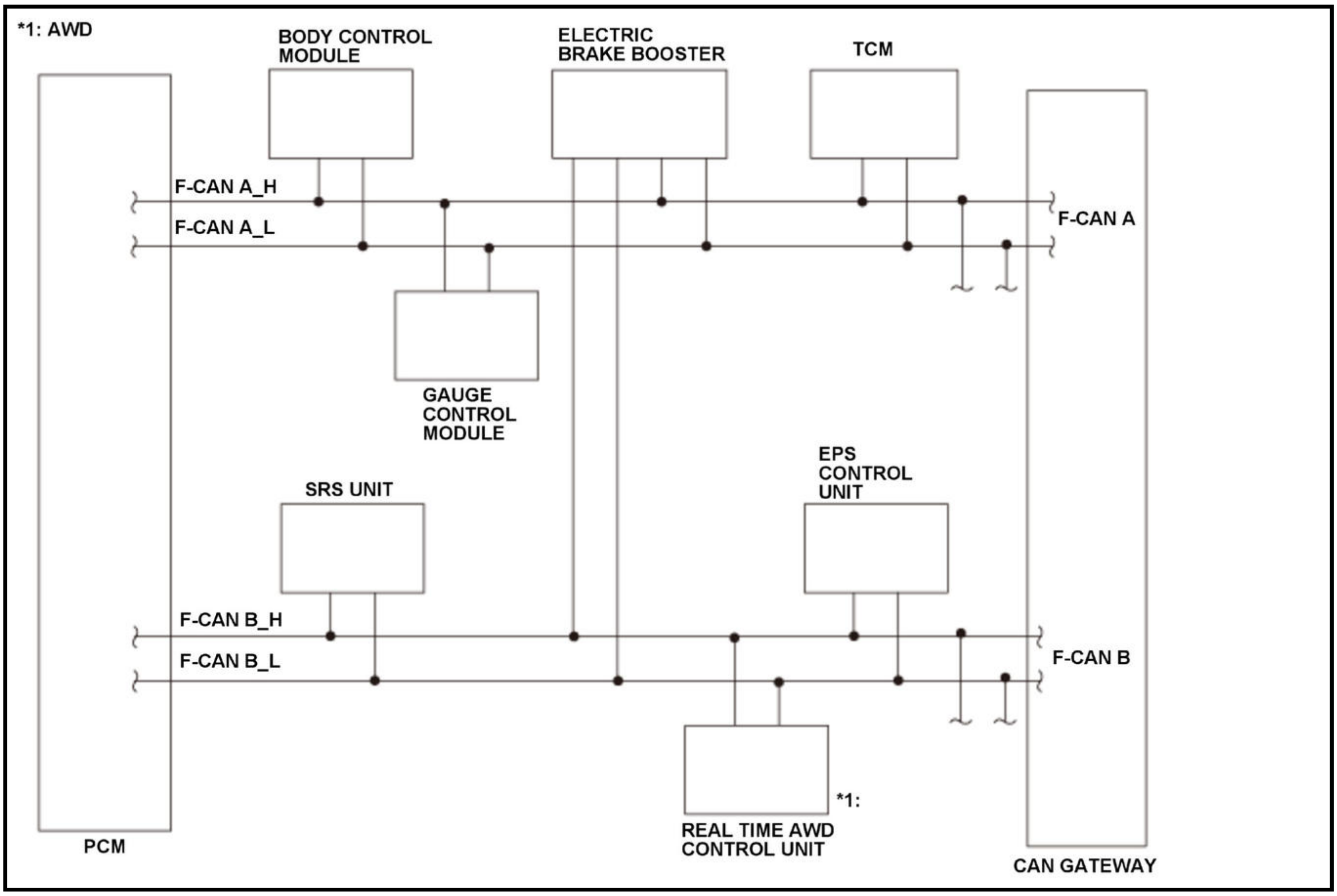
*1: AWD
BODY CONTROL MODULE
ELECTRIC BRAKE BOOSTER
TCM
F-CAN A_H
F-CAN A_L
F-CAN A
GAUGE CONTROL MODULE
SRS UNIT
EPS CONTROL UNIT
F-CAN B_H
F-CAN B_L
F-CAN B
*1:
REAL TIME AWD CONTROL UNIT
PCM
CAN GATEWAY

The controller area network (CAN) transmits/receives pulsing signals to/from the control modules simultaneously by using F-CAN A signal lines. When the information is not sent from the gauge control module via the F-CAN lines and this condition continues for a specified time or when the information sent from the gauge control module is abnormal and this condition continues for a specified cycle, the powertrain control module (PCM) detects a malfunction and stores a DTC.

Monitor Execution, Sequence, Duration, DTC Type

Execution	Continuous
Sequence	None
Duration	1.5 seconds or more
DTC Type	One drive cycle, MIL on

Enable Conditions

Condition	Minimum	Maximum
Elapsed time after the vehicle condition is turned to the ON mode	3 seconds	-
12 volt battery voltage [BATTERY]	10.0 V	-

[ ]: HDS Parameter

Malfunction Threshold

One of these conditions is met:

- The PCM does not receive any signals via the F-CAN lines for at least 1.5 seconds.
- The information sent from the gauge control module is abnormal at least 20 times.

Possible Cause

NOTE: The causes shown may not be a complete list of all potential problems, and it is possible that there may be other causes.

- F-CAN circuit F-CAN A H line open
- F-CAN circuit F-CAN A L line open
- F-CAN circuit F-CAN A H line short to ground
- F-CAN circuit F-CAN A L line short to ground
- Gauge control module failure (include fuse fall-outs)
- PCM internal circuit failure

Diagnosis Details

Conditions for setting the DTC

When a malfunction is detected, the MIL comes on and a Pending DTC, a Confirmed DTC, and the freeze data are stored in the PCM memory.

Conditions for clearing the DTC

The MIL is cleared if the malfunction does not return in three consecutive trips in which the diagnostic runs. The MIL, the Pending DTC, the Confirmed DTC, and the freeze data can be cleared with the scan tool Clear command or by disconnecting the 12 volt battery.

DTC U0155 (2.4 L ENGINE) (2017 2018 2019)

DTC U0155: F-CAN Malfunction (Powertrain Control Module (PCM)-Gauge Control Module)

General Description

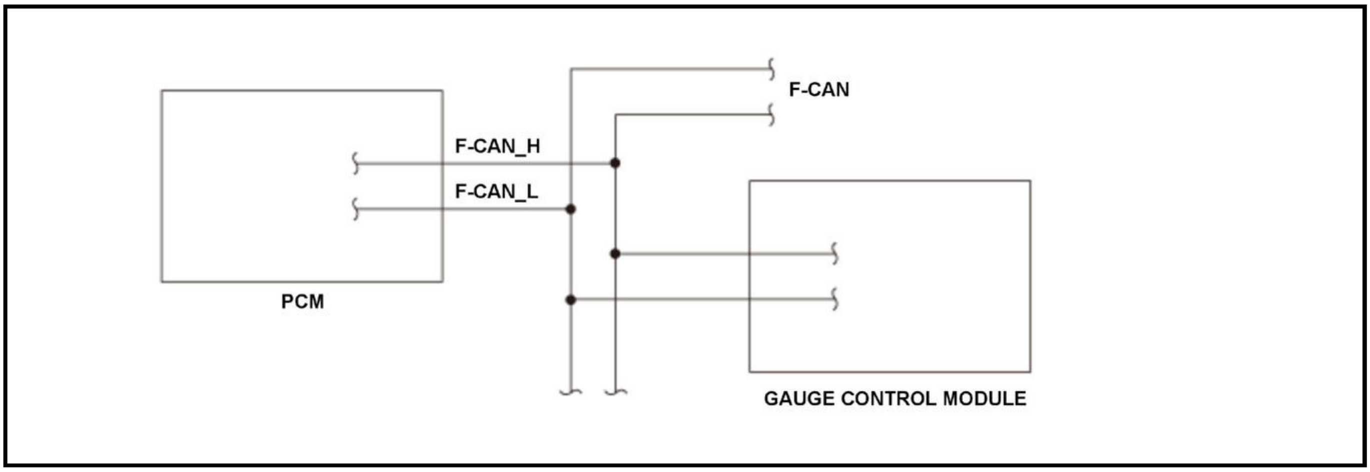

The controller area network (CAN) transmits/receives pulsing signals to/from the control modules simultaneously by using two signal lines (F-CAN H and F-CAN L). When the powertrain control module (PCM) does not receive the signals from the gauge control module via the F-CAN lines for a set time, the PCM detects a malfunction and stores a DTC.

Monitor Execution, Sequence, Duration, DTC Type

Execution	Continuous
Sequence	None
Duration	1.5 seconds or more
DTC Type	One drive cycle, MIL on

Enable Conditions

Condition	Minimum	Maximum
Elapsed time after the vehicle condition is turned to the ON mode	3 seconds	-
12 volt battery voltage [BATTERY]	10.0 V	-

[ ]: HDS Parameter

Malfunction Threshold

One of these conditions is met:

- The PCM does not receive any signals via the F-CAN lines for at least 1.5 seconds.
- The information sent from the gauge control module is abnormal at least 20 times.

Possible Cause

NOTE: The causes shown may not be a complete list of all potential problems, and it is possible that there may be other causes.

- F-CAN circuit F-CAN H line open
- F-CAN circuit F-CAN L line open
- F-CAN circuit F-CAN H line short to ground
- F-CAN circuit F-CAN L line short to ground
- Gauge control module failure (include fuse fall-outs)
- PCM internal circuit failure

Diagnosis Details

Conditions for setting the DTC

When a malfunction is detected, the MIL comes on and a Pending DTC, a Confirmed DTC, and the freeze data are stored in the PCM memory.

Conditions for clearing the DTC

The MIL is cleared if the malfunction does not return in three consecutive trips in which the diagnostic runs. The MIL, the Pending DTC, the Confirmed DTC, and the freeze data can be cleared with the scan tool Clear command or by disconnecting the 12 volt battery.

DTC U0301 (1.5 L ENGINE)

DTC U0301: PGM-FI System and Transmission System Program Version Mismatch

General Description

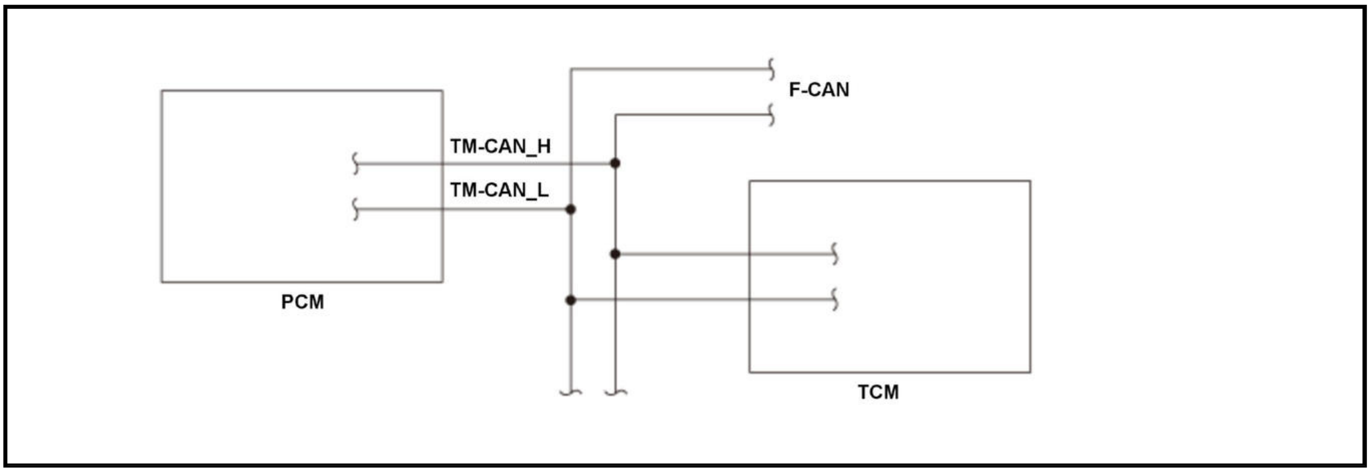

The controller area network (CAN) uses two signal lines. TM-CAN H and TM-CAN L, and it receives and transmits multiple signals simultaneously to/from multiple control modules. When the software version in the powertrain control module (PCM) and the transmission control module (TCM) are mismatched for a set time, the PCM detects a malfunction and stores a DTC.

Monitor Execution, Sequence, Duration, DTC Type

Execution	Continuous
Sequence	None
Duration	1 second or more
DTC Type	One drive cycle, MIL on

Enable Conditions

Condition	B
Vehicle	ON mode

Malfunction Threshold

The software version in the PCM and the TCM are mismatched for at least 1 second.

Possible Cause

NOTE: The causes shown may not be a complete list of all potential problems, and it is possible that there may be other causes.

- PCM software data not updated

Diagnosis Details

Conditions for setting the DTC

When a malfunction is detected, the MIL comes on and a Pending DTC, a Confirmed DTC, and the freeze data are stored in the PCM memory.

Conditions for clearing the DTC

The MIL is cleared if the malfunction does not return in three consecutive trips in which the diagnostic runs. The MIL, the Pending DTC, the Confirmed DTC, and the freeze data can be cleared with the scan tool Clear command or by disconnecting the 12 volt battery.

DTC U129E (1.5 L ENGINE)

DTC U129E: F-CAN Malfunction (Powertrain Control Module (PCM)-Power Control Unit (PCU))

General Description

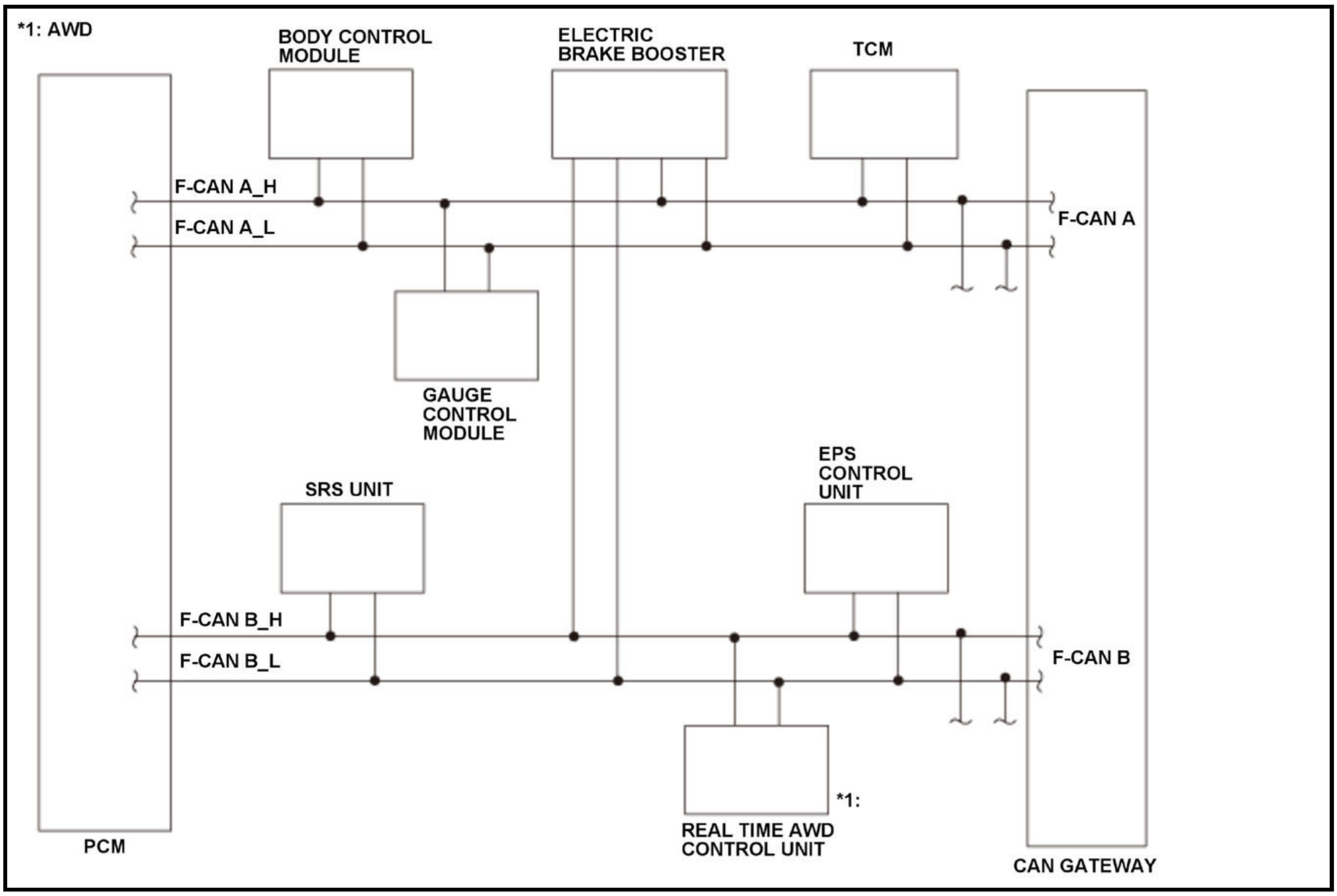
*1: AWD
BODY CONTROL MODULE
ELECTRIC BRAKE BOOSTER
TCM
F-CAN A_H
F-CAN A_L
F-CAN A
GAUGE CONTROL MODULE
SRS UNIT
EPS CONTROL UNIT
F-CAN B_H
F-CAN B_L
F-CAN B
*1:
REAL TIME AWD CONTROL UNIT
PCM
CAN GATEWAY

The controller area network (CAN) transmits/receives pulsing signals to/from the control modules simultaneously by using F-CAN A signal lines. When the information is not sent from the body control module via the F-CAN lines and this condition continues for a specified time or when the information sent from the body control module is abnormal and this condition continues for a specified cycle, the powertrain control module (PCM) detects a malfunction and stores a DTC.

Monitor Execution, Sequence, Duration, DTC Type

Execution	Continuous
Sequence	None
Duration	1.5 seconds or more
DTC Type	One drive cycle, MIL off

Enable Conditions

Condition	Minimum	Maximum
Elapsed time after the vehicle condition is turned to the ON mode	3 seconds	-
12 volt battery voltage [BATTERY]	10.0 V	-

[ ]: HDS Parameter

Malfunction Threshold

One of these conditions is met:

- The PCM does not receive any signals via the F-CAN lines for at least 1.5 seconds.

- The information sent from the body control module is abnormal at least 20 times.

Possible Cause

NOTE: The causes shown may not be a complete list of all potential problems, and it is possible that there may be other causes.

- F-CAN circuit F-CAN A H line open
- F-CAN circuit F-CAN A L line open
- F-CAN circuit F-CAN A H line short to ground
- F-CAN circuit F-CAN A L line short to ground
- Body control module failure (include fuse fall-outs)
- PCM internal circuit failure

Diagnosis Details

Conditions for setting the DTC

When a malfunction is detected, a Pending DTC, a Confirmed DTC, and the freeze data are stored in the PCM memory. The MIL does not come on.

Conditions for clearing the DTC

The Pending DTC, the Confirmed DTC, and the freeze data can be cleared with the scan tool Clear command or by disconnecting the 12 volt battery.

ADVANCED DIAGNOSTICS

DTC P0010

DTC P0010: Variable Valve Timing Control (VTC) Malfunction

General Description

This fault code is a general (specified by SAE) DTC that is stored at the time the following DTC codes (P100A, P100B, P100C) are detected.

DTC P0011

DTC P0011: Variable Valve Timing Control (VTC) System Malfunction

General Description

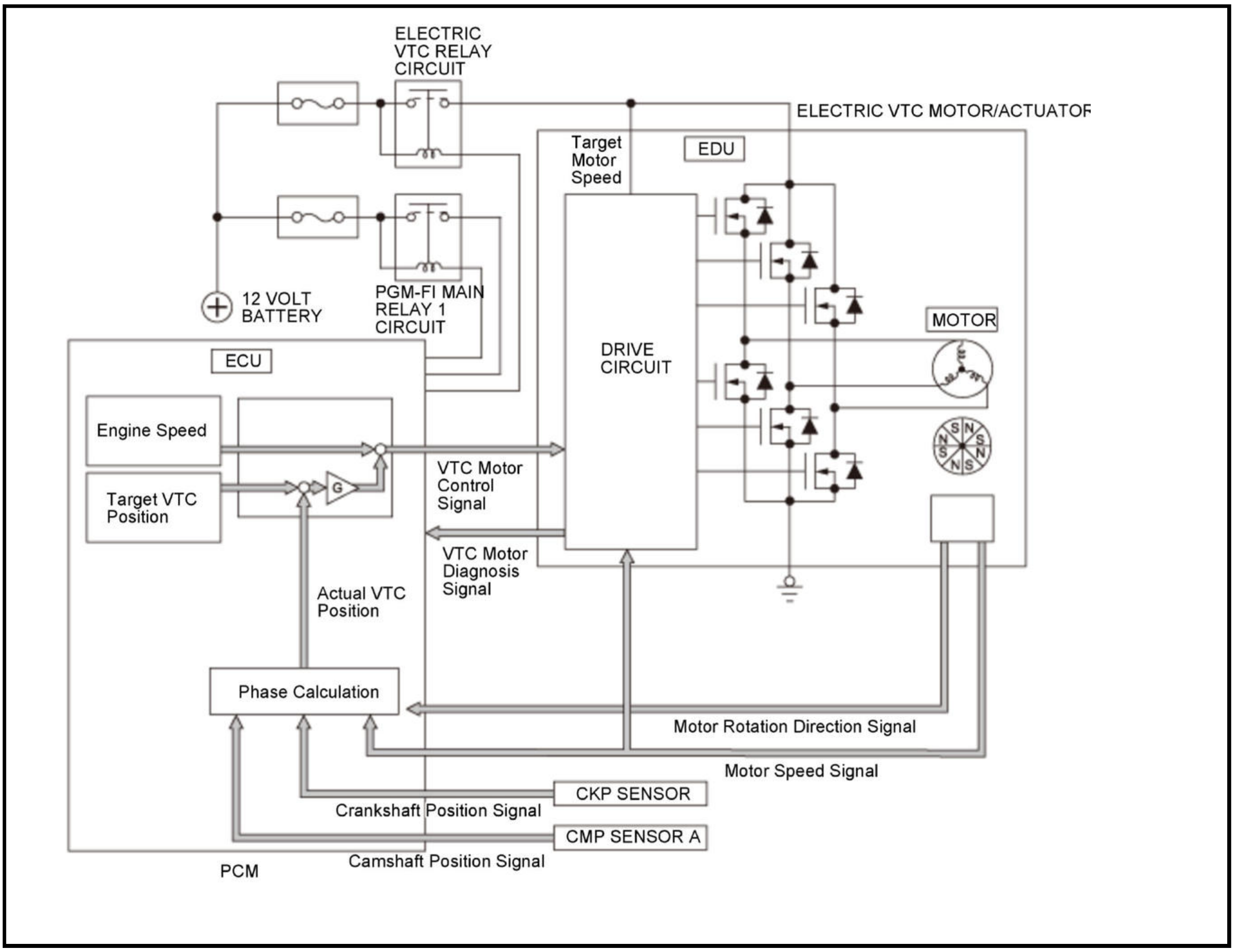
ELECTRIC VTC RELAY CIRCUIT
ELECTRIC VTC MOTOR/ACTUATOR
Target Motor Speed
EDU
12 VOLT BATTERY
PGM-FI MAIN RELAY 1 CIRCUIT
DRIVE CIRCUIT
MOTOR
ECU
Engine Speed
Target VTC Position
G
VTC Motor Control Signal
VTC Motor Diagnosis Signal
Actual VTC Position
S
N
Phase Calculation
Motor Rotation Direction Signal
Motor Speed Signal
CKP SENSOR
Crankshaft Position Signal
CMP SENSOR A
Camshaft Position Signal
PCM

The variable valve timing control (VTC) system controls the phase of the intake camshaft. It uses motor to operate the VTC actuator so the valve timing is optimized depending on driving conditions. The powertrain control module (PCM) monitors the phase control command and the actual timing of the camshaft by using camshaft position (CMP) sensor A. If the phase difference between them is excessive for a certain time period, the PCM detects a malfunction and stores a DTC.

Monitor Execution, Sequence, Duration, DTC Type

Execution	Continuous
Sequence	None
Duration	15 seconds or more
DTC Type	Two drive cycles, MIL on

Enable Conditions

Condition	Minimum	Maximum
Engine coolant temperature [ECT Sensor 1]	-	269.4 deg.F (131.9 deg.C)
Engine speed [Engine Speed]	500 rpm	-
12 volt battery voltage [Battery]	10.5 V	-

[ ]: HDS Parameter

Condition	Minimum	Maximum
VTC operating voltage	6 V	-

[ ]: HDS Parameter

Malfunction Threshold

The timing difference between the timing control command and the actual timing of the camshaft is 15 deg. or more for at least 15 seconds.

Possible Cause

NOTE: The causes shown may not be a complete list of all potential problems, and it is possible that there may be other causes.

- VTC actuator stuck
- VTC actuator response delay
- VTC actuator (EDU) internal circuit failure
- VTC motor stuck
- VTC motor failure

Confirmation Procedure

Operating Condition

- Enter the maintenance mode, then start the engine. Hold the engine speed [Engine Speed] at 3, 000 rpm without load (in P or N) until the radiator fan comes on, then let it idle.
- Drive the vehicle at a steady speed between 25 - 75 mph (40 - 120 km/h) for at least 15 seconds.
- Drive the vehicle in this manner only if the traffic regulations and ambient conditions allow.

With the HDS

Select the VTC TEST in the Function Test Menu with the HDS.

Diagnosis Details

Conditions for setting the DTC

When a malfunction is detected during the first drive cycle, a Pending DTC is stored in the PCM memory. If the malfunction returns in the next (second) drive cycle, the MIL comes on and a Confirmed DTC and the freeze data are stored.

Conditions for clearing the DTC

The MIL is cleared if the malfunction does not return in three consecutive trips in which the diagnostic runs. The MIL, the Pending DTC, the Confirmed DTC, and the freeze data can be cleared with the scan tool Clear command or by disconnecting the 12 volt battery.

DTC P0069

DTC P0069: Barometric Pressure (BARO) Sensor Circuit Range/Performance Problem

General Description

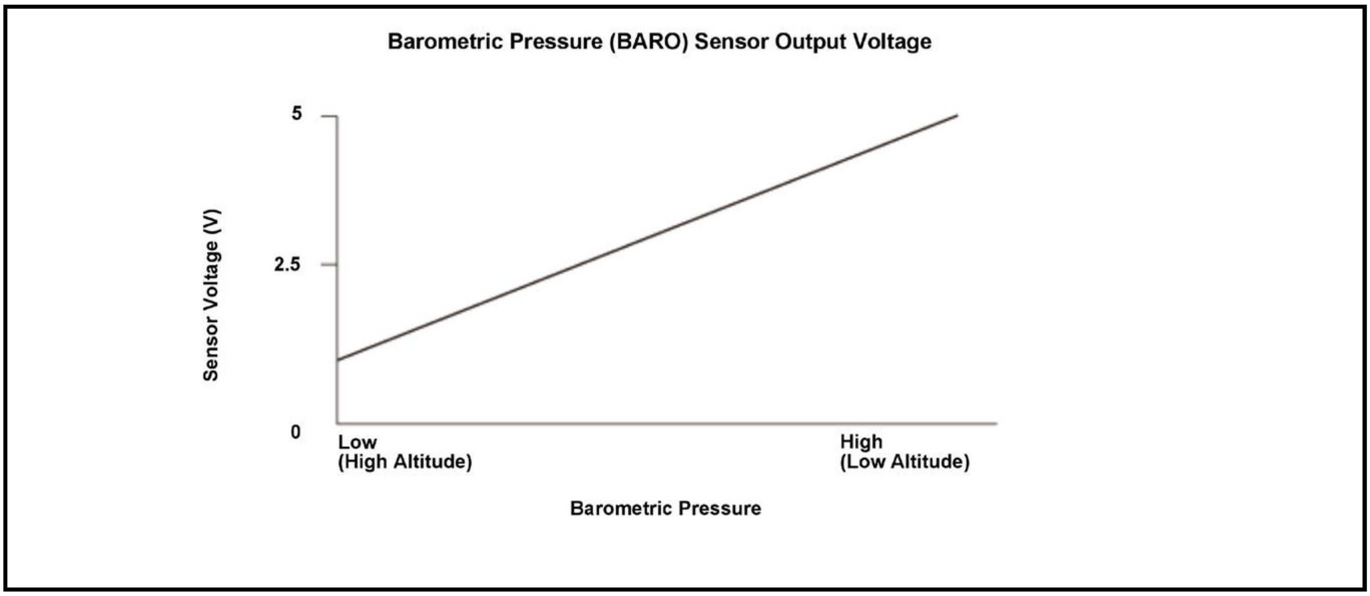

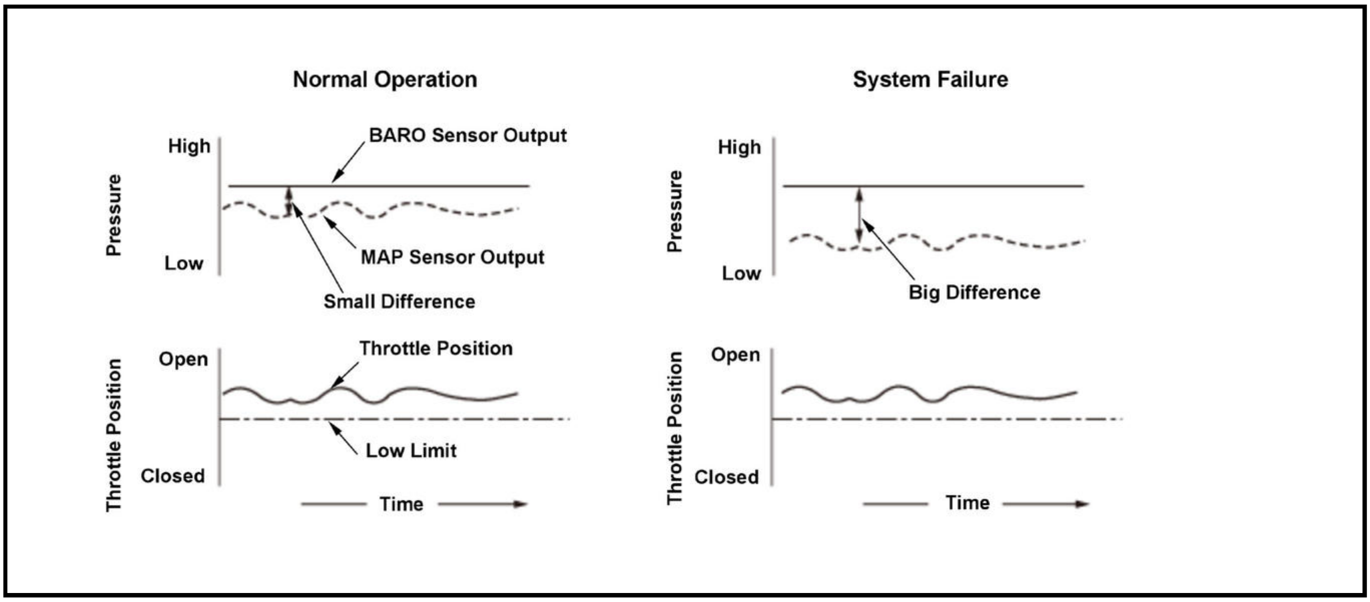

The barometric pressure (BARO) sensor is built into the powertrain control module (PCM) and monitors atmospheric pressure. When the throttle valve is wide open, the manifold absolute pressure (MAP) sensor output is nearly equal to the BARO sensor output. If the throttle position is beyond a value stored in the PCM that is used to detect "wide-open throttle", and if the difference between the MAP sensor output and the BARO sensor output is equal to or greater than a set value, the PCM detects a malfunction in the BARO sensor output and stores a DTC.

Monitor Execution, Sequence, Duration, DTC Type

Execution	Once per driving cycle
Sequence	None
Duration	2.5 seconds or more
DTC Type	Two drive cycles, MIL on

Enable Conditions

Condition		Minimum	Maximum
Throttle position	1, 200 rpm	14.1 deg.	-
	4, 000 rpm	29.6 deg.	-

Malfunction Threshold

The difference between the BARO sensor output and the MAP sensor output is 28 kPa (8.1 inHg, 204 mmHg) or more for at least 2.5 seconds.

Possible Cause

NOTE: The causes shown may not be a complete list of all potential problems, and it is possible that there may be other causes.

- BARO sensor failure
- Air cleaner element clogged

Confirmation Procedure

Operating Condition

- Start the engine. Hold the engine speed [ENGINE SPEED] at 3, 000 rpm without load (in P or N) until the radiator fan comes on.
- Drive the vehicle under Enable Conditions (see "Throttle position") for at least 2.5 seconds.
- Drive the vehicle in this manner only if the traffic regulations and ambient conditions allow.

[ ]: HDS Parameter

With the HDS

None.

Diagnosis Details

Conditions for setting the DTC

When a malfunction is detected during the first drive cycle, a Pending DTC is stored in the PCM memory. If the malfunction returns in the next (second) drive cycle, the MIL comes on and a Confirmed DTC and the freeze data are stored.

Conditions for clearing the DTC

The MIL is cleared if the malfunction does not return in three consecutive trips in which the diagnostic runs. The MIL, the Pending DTC, the Confirmed DTC, and the freeze data can be cleared with the scan tool Clear command or by disconnecting the 12 volt battery.

DTC P006A

DTC P006A: Mass Airflow (MAF) Sensor Circuit Range/Performance Problem

General Description

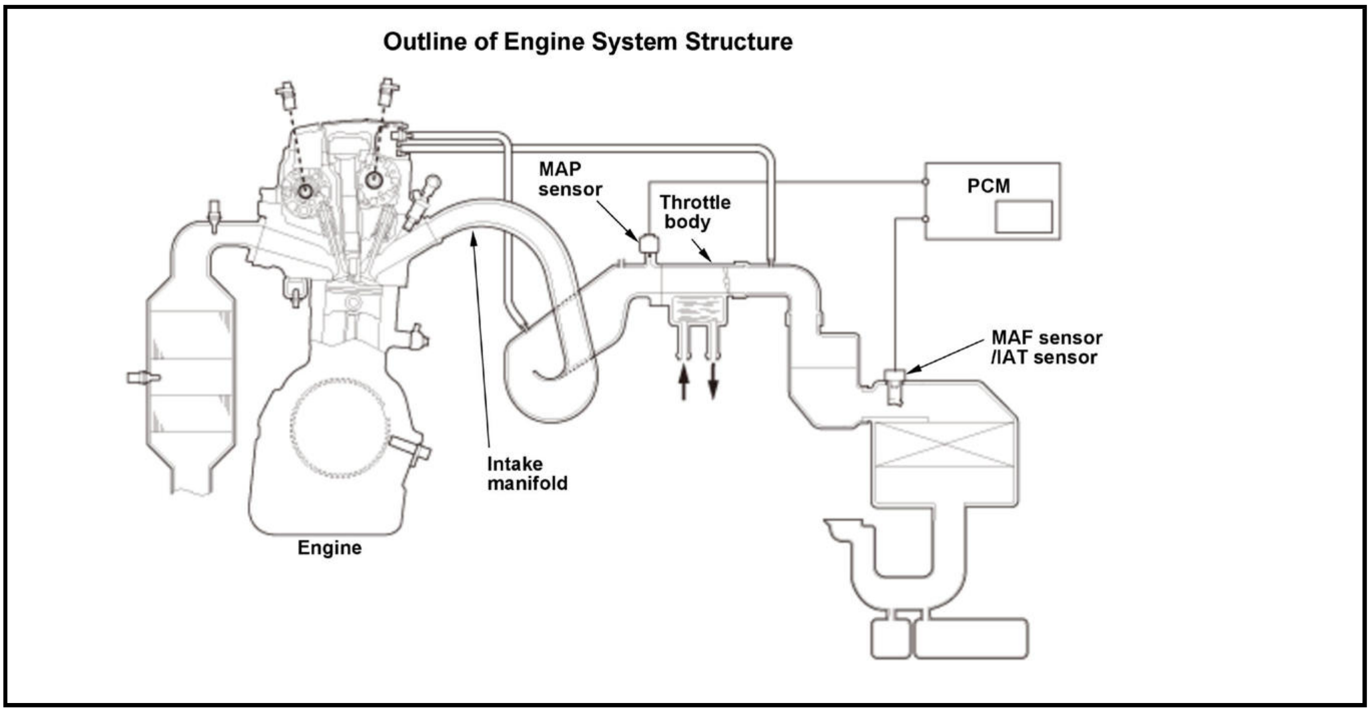
Outline of Engine System Structure
MAP sensor
Throttle body
PCM
MAF sensor /IAT sensor
Intake manifold
Engine

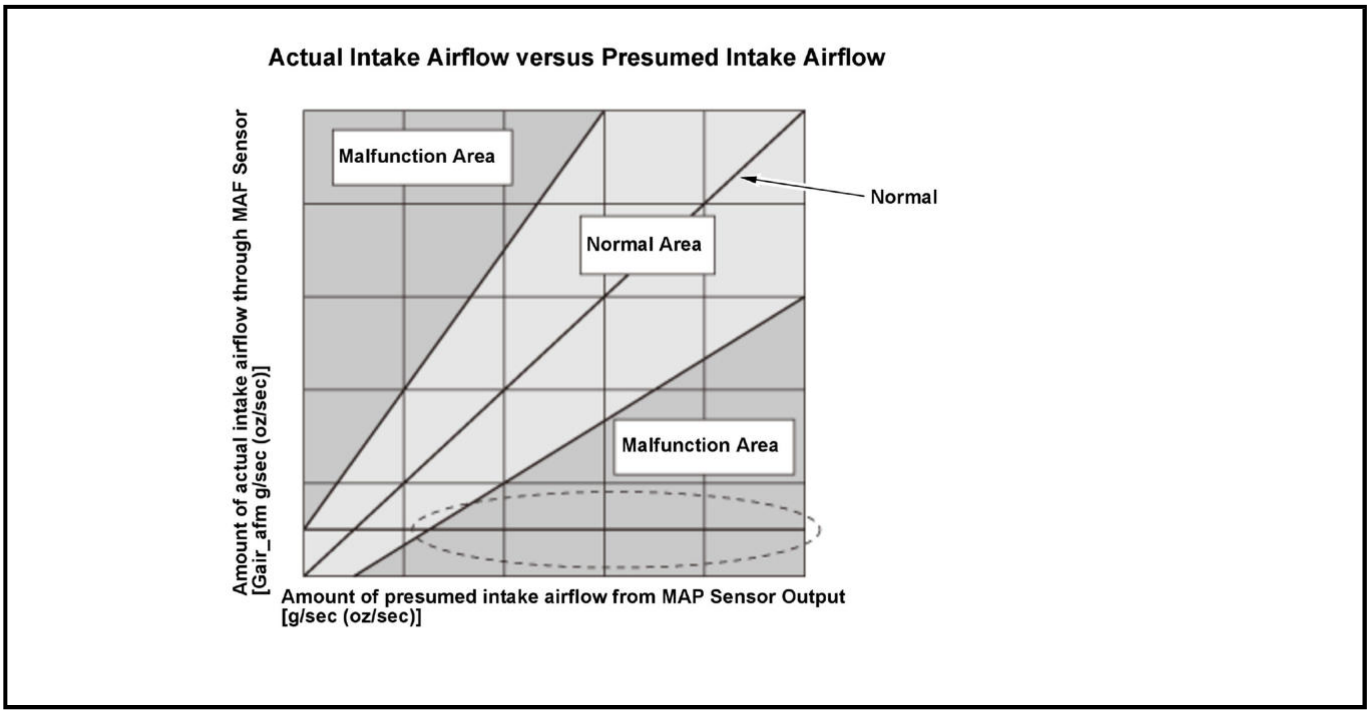

The mass airflow (MAF) sensor directly measures the amount of intake airflow into the engine, and the powertrain control module (PCM) controls the fuel injection based on the measured value. The manifold absolute pressure (MAP) sensor measures the intake manifold pressure, and the PCM calculates the amount of intake airflow from the MAP sensor output and the engine revolutions. The PCM compares the MAF sensor output (amount of intake airflow) and the amount of intake airflow calculated from MAP sensor output. If their difference is too large (in the malfunction area), the PCM detects a malfunction and stores a DTC.

Monitor Execution, Sequence, Duration, DTC Type

Execution	Once per driving cycle
Sequence	None
Duration	5.0 seconds or more
DTC Type	Two drive cycles, MIL on

Enable Conditions

Condition	Minimum	Maximum
Elapsed time after starting the engine	3.0 seconds	-
Engine coolant temperature [ECT Sensor 1]	155.9 deg.F (68.8 deg.C)	-
Engine speed [Engine Speed]	1, 100 rpm	6, 000 rpm

[ ]: HDS Parameter

Malfunction Threshold

The difference between the amount of intake air measured by the MAF sensor and the amount of intake air calculated from the MAP sensor output is out of the normal area for at least 5.0 seconds.

Possible Cause

NOTE: The causes shown may not be a complete list of all potential problems, and it is possible that there may be other causes.

- Intake air duct improper assembly
- Intake air duct damage
- Evaporative emission (EVAP) canister hose improper assembly
- Intake manifold damage
- MAP sensor improper assembly
- Positive crankcase ventilation (PCV) hose improper assembly
- Air cleaner element damage
- Air cleaner element clogged
- MAF sensor element damage

Confirmation Procedure

Operating Condition

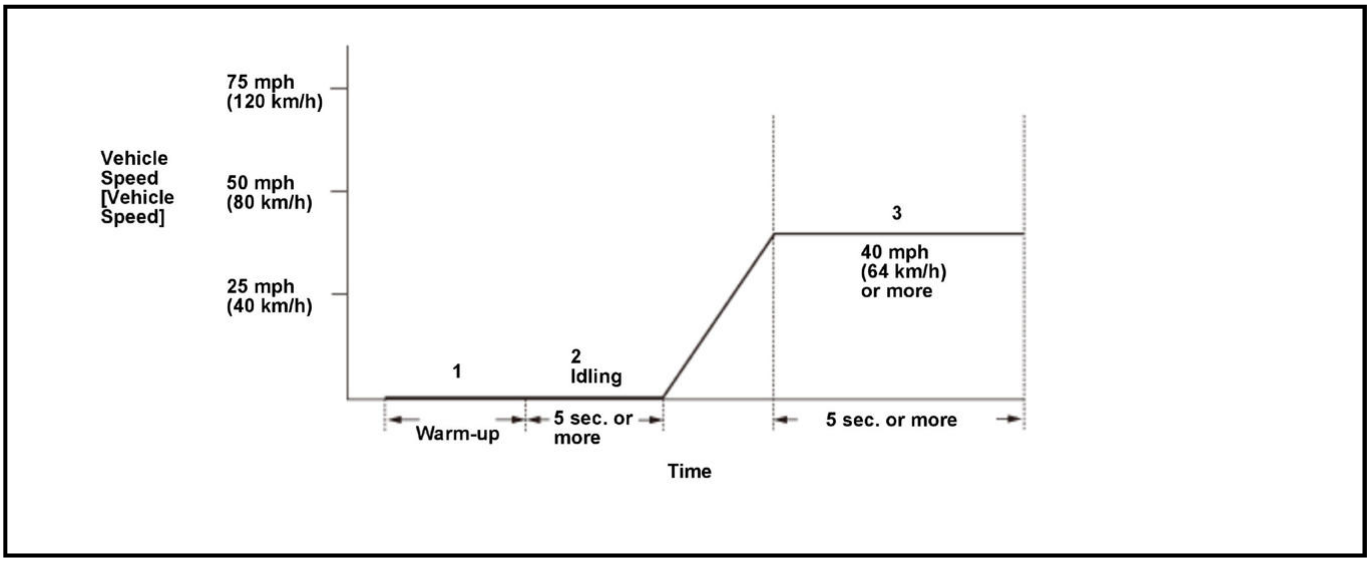

- Start the engine. Hold the engine speed [Engine Speed] at 3, 000 rpm without load (in P or N) until the radiator fan comes on.
- Let the engine idle for at least 5 seconds.
- Drive the vehicle at a steady speed of 40 mph (64 km/h) or more for at least 5 seconds.

- When freeze data or the on-board snapshot is stored, drive the vehicle under those conditions instead of Driving Pattern step 3.
- When you have difficulty duplicating the DTC because of road conditions and traffic situations, repeat the driving pattern several times.
- Drive the vehicle in this manner only if the traffic regulations and ambient conditions allow.

With the HDS

None.

Diagnosis Details

Conditions for setting the DTC

When a malfunction is detected during the first drive cycle, a Pending DTC is stored in the PCM memory. If the malfunction returns in the next (second) drive cycle, the MIL comes on and a Confirmed DTC, the freeze data, and the on-board snapshot are stored.

Conditions for clearing the DTC

The MIL is cleared if the malfunction does not return in three consecutive trips in which the diagnostic runs. The MIL, the Pending DTC, the Confirmed DTC, the freeze data, and the on-board snapshot can be cleared with the scan tool Clear command or by disconnecting the 12 volt battery.

DTC P0096

DTC P0096: Intake Air Temperature (IAT) Sensor 2 Circuit Range/Performance Problem

General Description

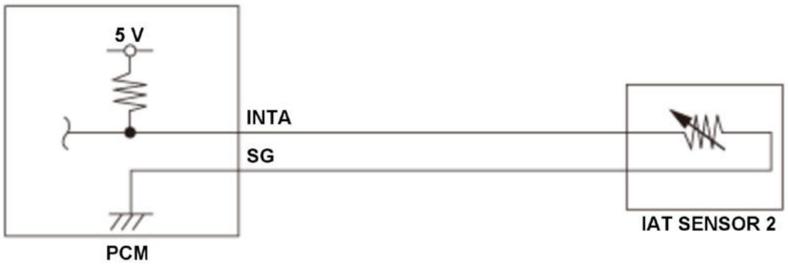

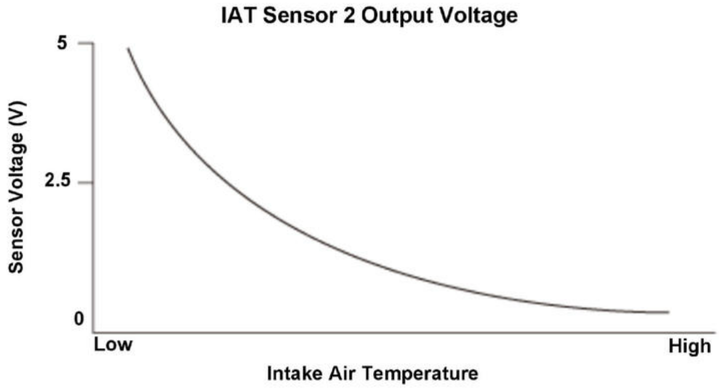

Intake air temperature (IAT) sensor 2 is a thermistor that detects intake air temperature, and it is used for air/fuel ratio feedback control to compensate for the atmospheric density fluctuations that accompany changes in intake air temperature. IAT sensor 2 resistance varies depending on temperature. The output voltage and the sensor resistance increase as the intake air temperature decreases. Conversely, the output voltage and the sensor resistance decrease as the intake air temperature increases. If the intake air temperature is a specified value for a specified time, the powertrain control module (PCM) detects a malfunction and stores a DTC.

Monitor Execution, Sequence, Duration, DTC Type

Execution	Continuous
Sequence	None
Duration	6.0 seconds or more
DTC Type	Two drive cycles, MIL on

Enable Conditions

Condition	B
Vehicle	ON mode

Malfunction Threshold

The IAT sensor 2 output voltage [IAT Sensor (2) Voltage] is 0.21 V or less for at least 6.0 seconds.

[ ]: HDS Parameter

Possible Cause

NOTE: The causes shown may not be a complete list of all potential problems, and it is possible that there may be other causes.

- IAT sensor 2 failure (range/performance problem)
- PCM internal circuit failure

Diagnosis Details

Conditions for setting the DTC

When a malfunction is detected during the first drive cycle, a Pending DTC is stored in the PCM memory. If the malfunction returns in the next (second) drive cycle, the MIL comes on and a Confirmed DTC and the freeze data are stored.

Conditions for clearing the DTC

The MIL is cleared if the malfunction does not return in three consecutive trips in which the diagnostic runs. The MIL, the Pending DTC, the Confirmed DTC, and the freeze data can be cleared with the scan tool Clear command or by disconnecting the 12 volt battery.

DTC P0097, P0098

DTC P0097: Intake Air Temperature (IAT) Sensor 2 Circuit Low Voltage

DTC P0098: Intake Air Temperature (IAT) Sensor 2 Circuit High Voltage

General Description

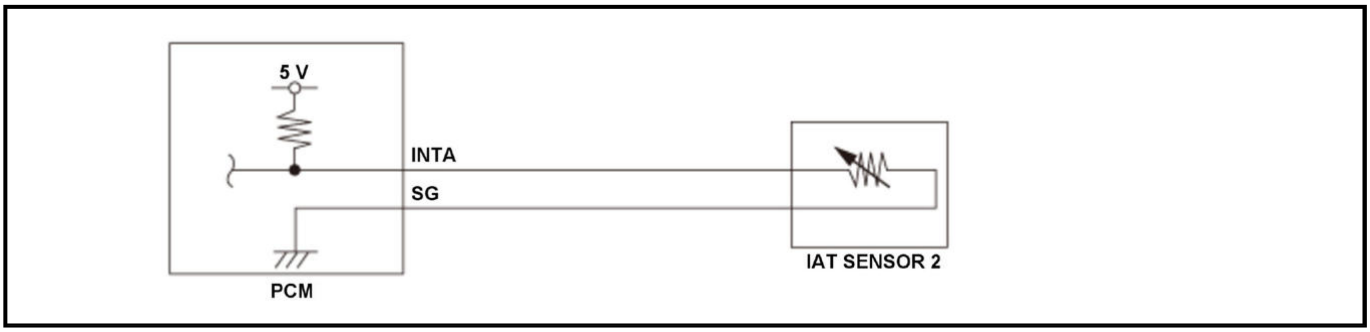

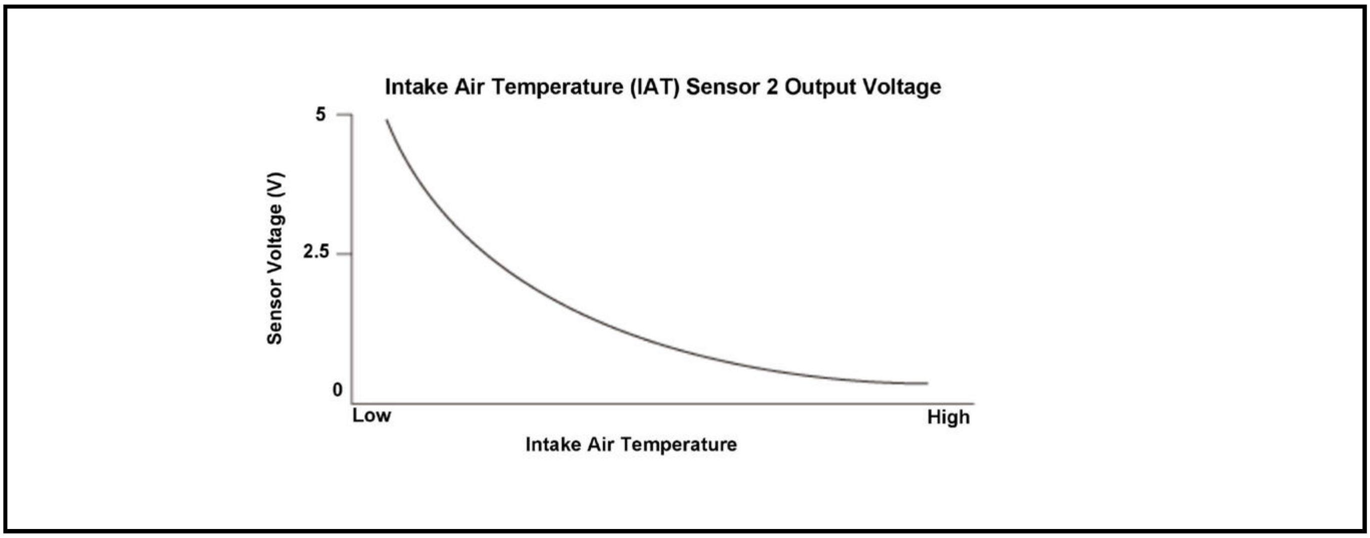

Intake air temperature (IAT) sensor 2 is a thermistor that detects intake air temperature, and it is used for air/fuel ratio feedback control to compensate for the atmospheric density fluctuations that accompany changes in intake air temperature. IAT sensor 2 resistance varies depending on temperature. The output voltage and the sensor resistance increase as the intake air temperature decreases. Conversely, the output voltage and the sensor resistance decrease as the intake air temperature increases. If the IAT sensor 2 output voltage is specified value, the powertrain control module (PCM) detects a malfunction and stores a DTC.

Monitor Execution, Sequence, Duration, DTC Type

Execution	Continuous
Sequence	None
Duration	2.0 seconds or more
DTC Type	Two drive cycles, MIL on

Enable Conditions

Condition	B
Vehicle	ON mode

Malfunction Threshold

DTC: P0097

The IAT sensor 2 output voltage [IAT Sensor (2) Voltage] is 0.08 V or less for at least 2.0 seconds.

DTC: P0098

The IAT sensor 2 output voltage [IAT Sensor (2) Voltage] is 4.92 V or more for at least 2.0 seconds.

[ ]: HDS Parameter

Possible Cause

NOTE: The causes shown may not be a complete list of all potential problems, and it is possible that there may be other causes.

DTC: P0097

- IAT sensor 2 INTA line short to ground

DTC: P0098

- IAT sensor 2 INTA line open
- IAT sensor 2 SG line open

Common

- IAT sensor 2 failure
- PCM internal circuit failure

Diagnosis Details

Conditions for setting the DTC

When a malfunction is detected during the first drive cycle, a Pending DTC is stored in the PCM memory. If the malfunction returns in the next (second) drive cycle, the MIL comes on and a Confirmed DTC and the freeze data are stored.

Conditions for clearing the DTC

The MIL is cleared if the malfunction does not return in three consecutive trips in which the diagnostic runs. The MIL, the Pending DTC, the Confirmed DTC, and the freeze data can be cleared with the scan tool Clear command or by disconnecting the 12 volt battery.

DTC P00FE

DTC P00FE: Evaporative Emission (EVAP) Vent Line Blockage

General Description

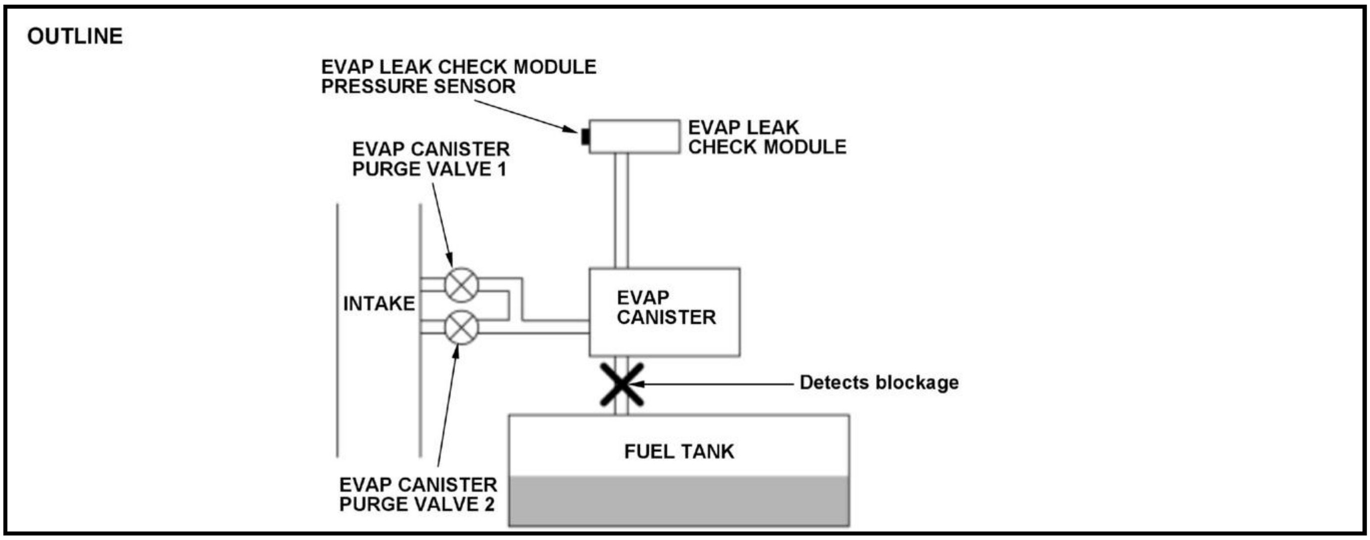
OUTLINE
EVAP LEAK CHECK MODULE PRESSURE SENSOR
EVAP LEAK CHECK MODULE
EVAP CANISTER PURGE VALVE 1
INTAKE
EVAP CANISTER
Detects blockage
FUEL TANK
EVAP CANISTER PURGE VALVE 2

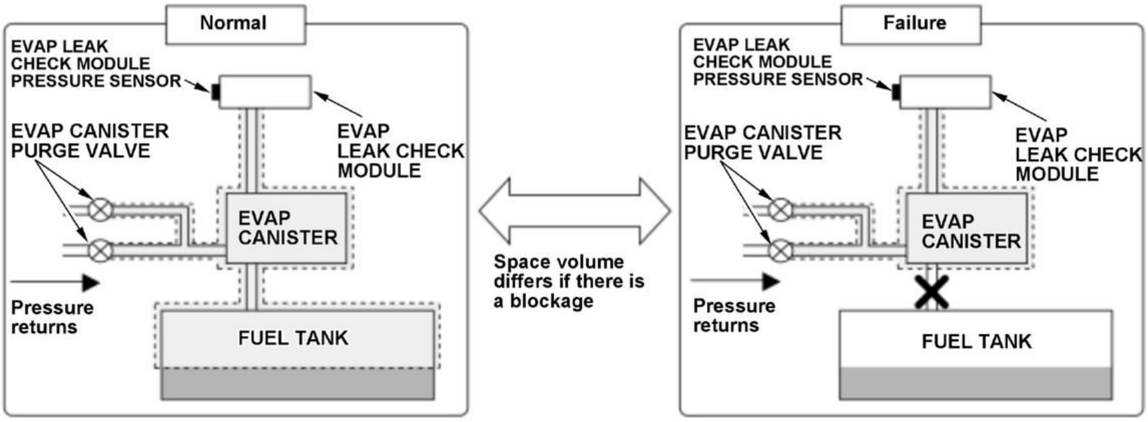
Normal
EVAP LEAK CHECK MODULE PRESSURE SENSOR
EVAP CANISTER PURGE VALVE
EVAP LEAK CHECK MODULE
EVAP CANISTER
Pressure returns
FUEL TANK
Space volume differs if there is a blockage
Failure
EVAP LEAK CHECK MODULE PRESSURE SENSOR
EVAP CANISTER PURGE VALVE
EVAP LEAK CHECK MODULE
EVAP CANISTER
Pressure returns
FUEL TANK

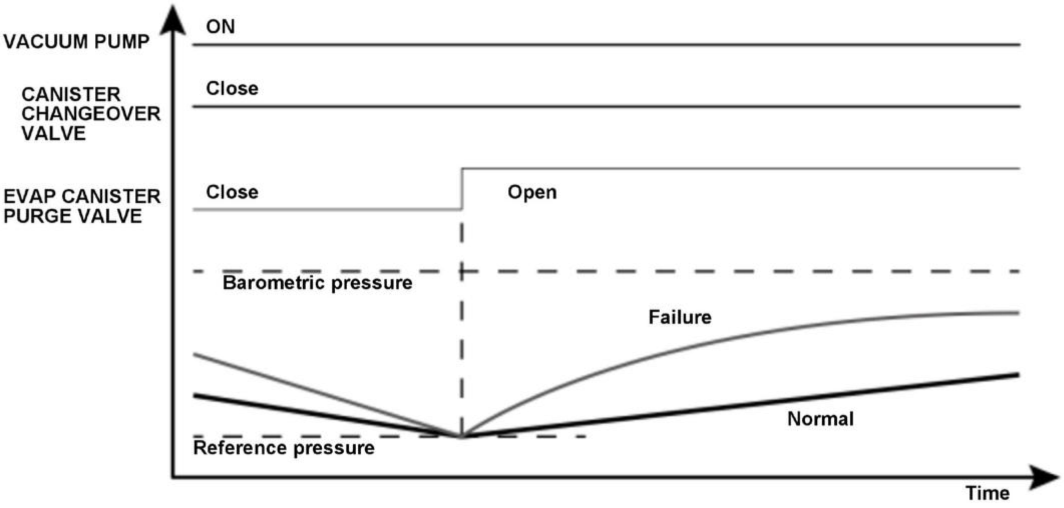

VENT blockage is determined by the change in the tank internal pressure. If there is a pressure change in the tank, the PCM determines as normal. If there is no pressure change, there is a possibility that the VENT blockage failure or the pressure in the tank is not applied.The PCM detects a blockage of vent line by estimating the volume of space in the evaporative emission (EVAP) system. If the volume of space is large, the EVAP leak check module is closed and decompressed by purge. If the volume of space is small, the PCM detects a malfunction and stores a DTC.

Monitor Execution, Sequence, Duration, DTC Type

Execution	Once per driving cycle
Sequence	None
Duration	18 minutes 40 seconds or more
DTC Type	Two drive cycles, MIL on

Enable Conditions

Condition	Minimum	Maximum
Soak duration	5 hours	-
Elapsed time after the vehicle condition is turned to the ON mode	10 minutes	-
PCM wake up engine coolant temperature [ECT Sensor 1]	40.0 deg.F (5 deg.C)	95 deg.F (35 deg.C)
Barometric pressure[Baro Sensor]	76 kPa (22.5 inHg, 569 mmHg)	-
Drive distance after refueling	7 miles (10 km)	-
12 volt battery voltage [Battery]	10.5 V	-
Average fuel level [Fuel Level(Average)]	-	85 %

[ ]: HDS Parameter

Malfunction Threshold

When the calculated volume of space in the EVAP system is 6.8 L (1.8 US gal) or less.

Possible Cause

NOTE: The causes shown may not be a complete list of all potential problems, and it is possible that there may be other causes.

- EVAP vent line blockage
- Vent shut float blockage

Confirmation Procedure

Operating Condition

- Average fuel level [Fuel Level(Average)] of 85 % or less, turn the vehicle to the ON mode, and wait for at least 10 minutes. Drive the vehicle at 7 miles (10 km/h) or more after refueling.
- Turn the vehicle to the OFF (LOCK) mode, and wait for at least 5 hours.
- PCM wake up, and wait at least 18 minutes 40 seconds.

- When you have difficulty duplicating the DTC because of road conditions and traffic situations, repeat the driving pattern several times.
- Drive the vehicle in this manner only if the traffic regulations and ambient conditions allow.

Diagnosis Details

Conditions for setting the DTC

When a malfunction is detected during the first drive cycle, a Pending DTC is stored in the PCM memory. If the malfunction returns in the next (second) drive cycle, the MIL comes on and a Confirmed DTC and the freeze data are stored.

Conditions for clearing the DTC

The MIL is cleared if the malfunction does not return in three consecutive trips in which the diagnostic runs. The MIL, the Pending DTC, the Confirmed DTC, and the freeze data can be cleared with the scan tool clear command or by disconnecting the 12 volt battery.

DTC P0101

DTC P0101: Mass Airflow (MAF) Sensor Circuit Range/Performance Problem (Out of Range)

General Description

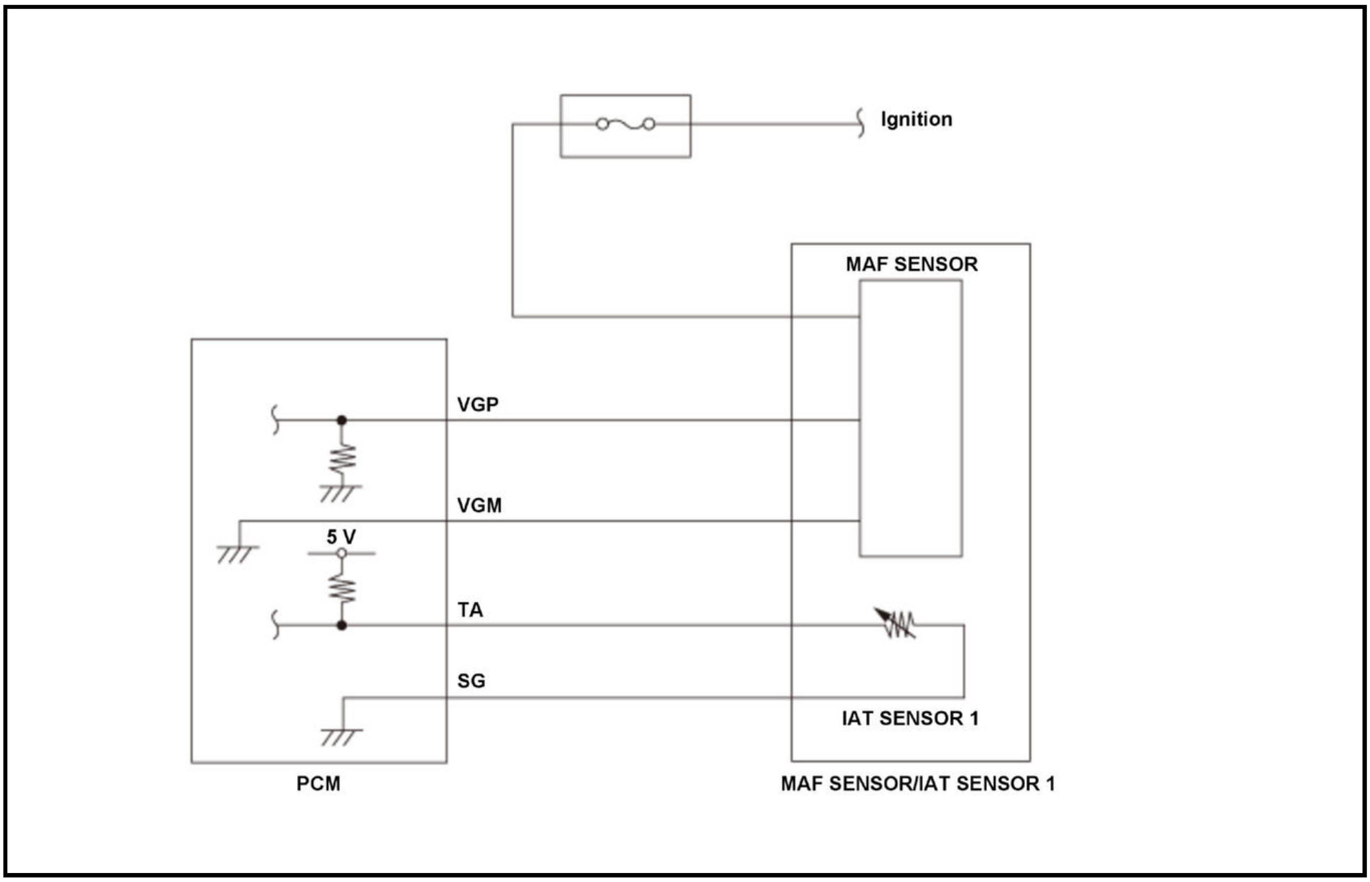

The mass airflow (MAF) sensor is attached to the intake air passage, and it measures the amount of intake airflow. The MAF sensor is a hot wire airflow meter. The airflow cools the electrically heated wire that is mounted in the air passage. The powertrain control module (PCM) determines the amount of intake airflow by detecting the current that is required to keep the hot wire at a constant temperature. The lower or the upper limit of the MAF sensor output is specified. If the output is below that limit, the PCM detects a malfunction and stores a DTC.

Monitor Execution, Sequence, Duration, DTC Type

Execution	Continuous
Sequence	None
Duration	6.0 seconds or more
DTC Type	Two drive cycles, MIL on

Enable Conditions

Condition	B
Vehicle	ON mode

Malfunction Threshold

The MAF sensor output voltage [MAF Sensor Voltage] is 0.14 V or less for at least 6.0 seconds.

[ ]: HDS Parameter

Possible Cause

NOTE: The causes shown may not be a complete list of all potential problems, and it is possible that there may be other causes.

- MAF sensor failure
- PCM internal circuit failure

Diagnosis Details

Conditions for setting the DTC

When a malfunction is detected during the first drive cycle, a Pending DTC is stored in the PCM memory. If the malfunction returns in the next (second) drive cycle, the MIL comes on and a Confirmed DTC, the freeze data, and the on-board snapshot are stored.

Conditions for clearing the DTC

The MIL is cleared if the malfunction does not return in three consecutive trips in which the diagnostic runs. The MIL, the Pending DTC, the Confirmed DTC, the freeze data, and the on-board snapshot can be cleared with the scan tool Clear command or by disconnecting the 12 volt battery.

DTC P0102, P0103

DTC P0102: Mass Airflow (MAF) Sensor Circuit Low Voltage

DTC P0103: Mass Airflow (MAF) Sensor Circuit High Voltage

General Description

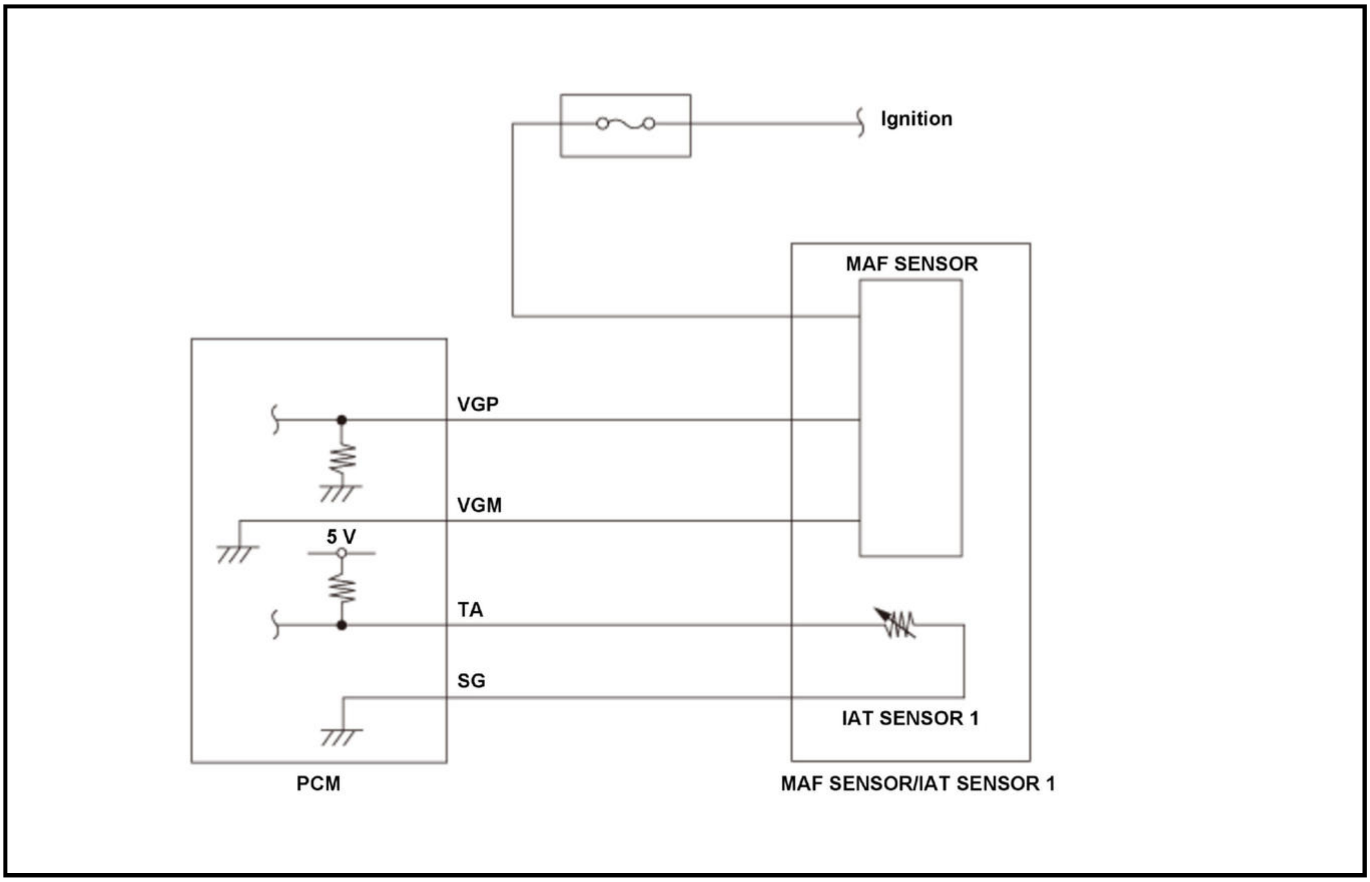

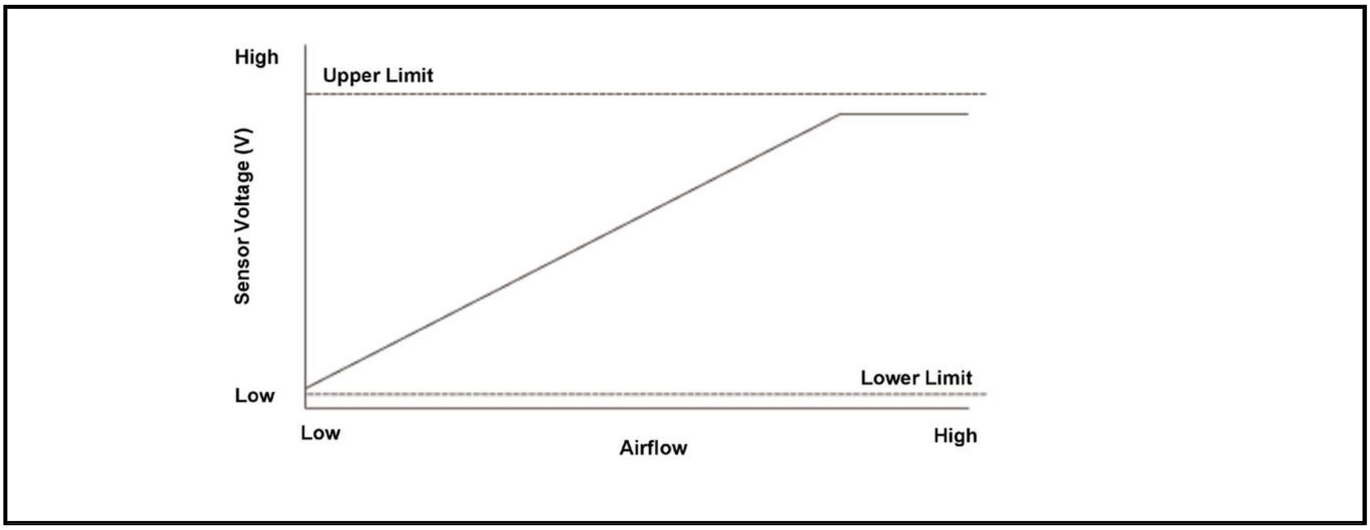

The mass airflow (MAF) sensor is attached to the intake air passage, and it measures the amount of intake airflow. The MAF sensor is a hot wire airflow meter. The airflow cools the electrically heated wire that is mounted in the air passage. The powertrain control module (PCM) determines the amount of intake airflow by detecting the current that is required to keep the hot wire at a constant temperature. The lower or the upper limit of the MAF sensor output is specified. If the output is below or above that limit, the PCM detects a malfunction and stores a DTC.

Monitor Execution, Sequence, Duration, DTC Type

Execution	Continuous
Sequence	None
Duration	2.0 seconds or more
DTC Type	One drive cycle, MIL on

Enable Conditions

Condition	B
Vehicle	ON mode

Malfunction Threshold

DTC: P0102

The MAF sensor output voltage [MAF Sensor Voltage] is 0.10 V or less for at least 2.0 seconds.

DTC: P0103

The MAF sensor output voltage [MAF Sensor Voltage] is 4.89 V or more for at least 2.0 seconds.

[ ]: HDS Parameter

Possible Cause

NOTE: The causes shown may not be a complete list of all potential problems, and it is possible that there may be other causes.

DTC: P0102

- MAF sensor VGP line short to ground
- MAF sensor VGP line open
- MAF sensor power supply line open

DTC: P0103

- MAF sensor VGM line open

Common

- MAF sensor failure
- PCM internal circuit failure

Diagnosis Details

Conditions for setting the DTC

When a malfunction is detected, the MIL comes on and a Pending DTC, a Confirmed DTC, and the freeze data are stored in the PCM memory.

Conditions for clearing the DTC

The MIL is cleared if the malfunction does not return in three consecutive trips in which the diagnostic runs. The MIL, the Pending DTC, the Confirmed DTC, and the freeze data can be cleared with the scan tool Clear command or by disconnecting the 12 volt battery.

DTC P0105

DTC P0105: Manifold Absolute Pressure (MAP) Sensor Out of Range

General Description

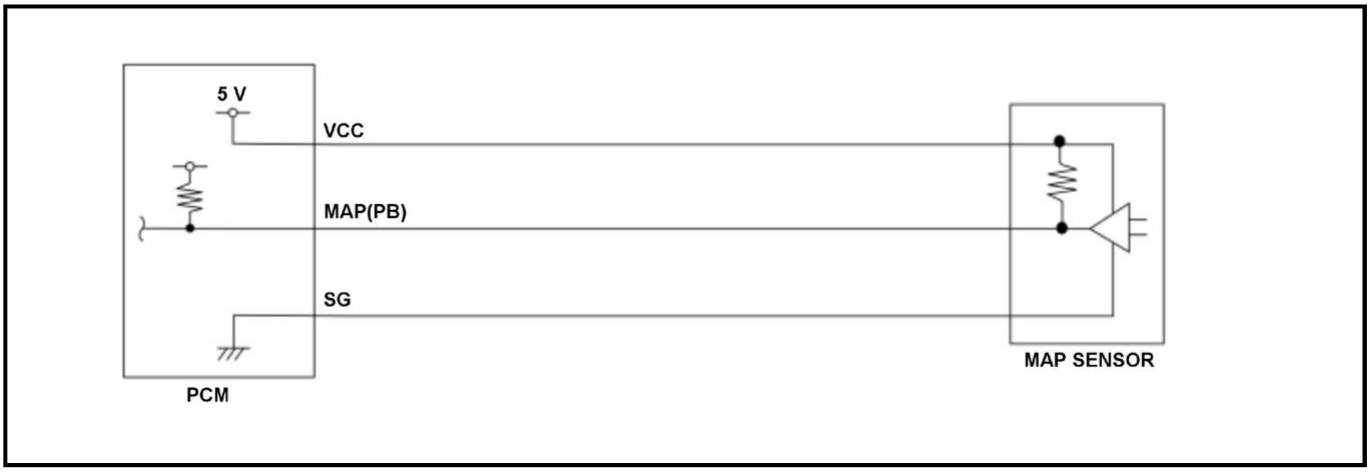

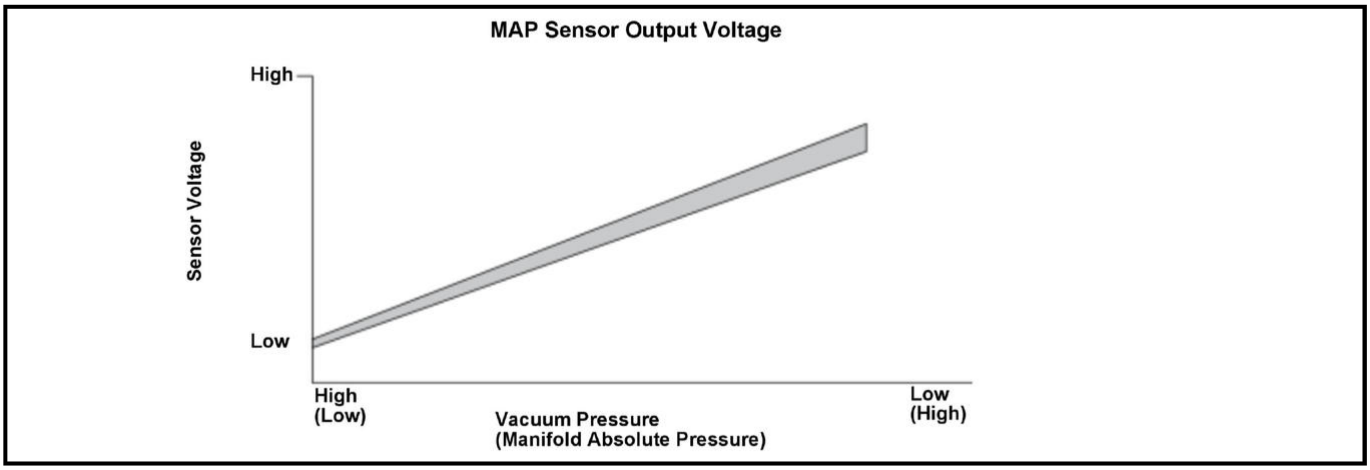

The manifold absolute pressure (MAP) sensor measures the pressure or vacuum in the manifold. This measurement is converted into an electrical signal which the powertrain control module (PCM) uses to monitor the engine. The MAP sensor outputs low signal voltage at high vacuum (throttle valve closed) and high signal voltage at low vacuum (throttle valve wide open). If the signal voltage from the MAP sensor is a set value for a specified time, the PCM detects a malfunction and stores a DTC.

Monitor Execution, Sequence, Duration, DTC Type

Execution	Continuous
Sequence	None
Duration	6 seconds or more
DTC Type	Two drive cycles, MIL on

Enable Conditions

Condition	B
Vehicle	ON mode

Malfunction Threshold

The MAP sensor output voltage [MAP Sensor Voltage] is 3.29 V or more for at least 6 seconds.

[ ]: HDS Parameter

Possible Cause

NOTE: The causes shown may not be a complete list of all potential problems, and it is possible that there may be other causes.

- MAP sensor failure
- PCM internal circuit failure

Diagnosis Details

Conditions for setting the DTC

When a malfunction is detected during the first drive cycle, a Pending DTC is stored in the PCM memory. If the malfunction returns in the next (second) drive cycle, the MIL comes on and a Confirmed DTC, the freeze data, and the on-board snapshot are stored.

Conditions for clearing the DTC

The MIL is cleared if the malfunction does not return in three consecutive trips in which the diagnostic runs. The MIL, the Pending DTC, the Confirmed DTC, the freeze data, and the on-board snapshot can be cleared with the scan tool Clear command or by disconnecting the 12 volt battery.

DTC P0106

DTC P0106: Manifold Absolute Pressure (MAP) Sensor Range/Performance Problem

General Description

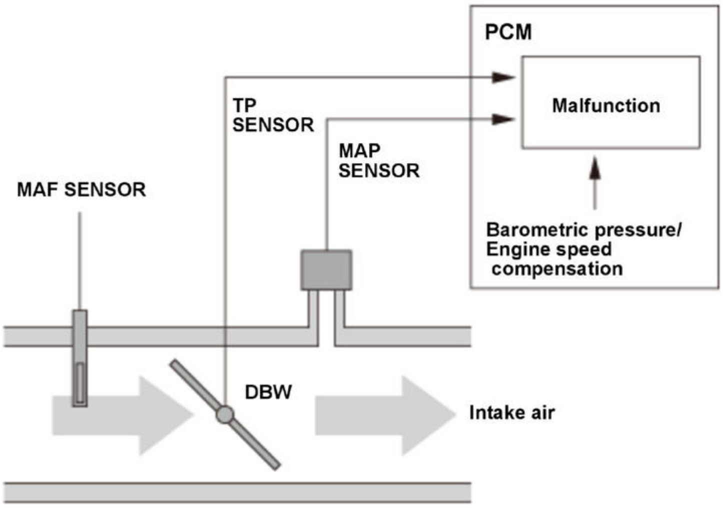
PCM
Malfunction
TP SENSOR
MAP SENSOR
MAF SENSOR
Barometric pressure/ Engine speed compensation
DBW
Intake air

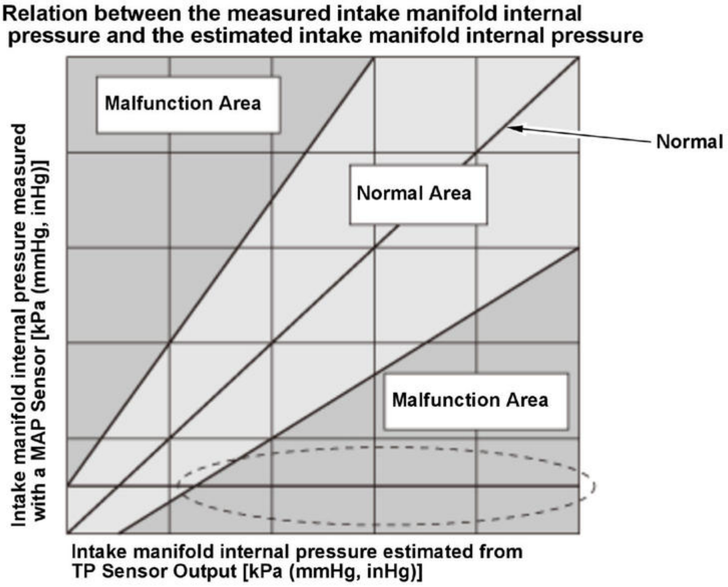

The amount of intake air is adjusted by the opening angle of the throttle valve, and the pressure inside the intake manifold is measured with the manifold absolute pressure (MAP) sensor. When the throttle valve is opened fully for quick acceleration, the intake manifold pressure suddenly drops to near atmospheric pressure, and the MAP sensor output reads near atmospheric pressure. The powertrain control module (PCM) compares the intake manifold internal pressure estimated from the output value of the MAP sensor (intake manifold inside pressure), the throttle position (TP) sensor, the barometric pressure (BARO) sensor output, and the engine speed. When the deviation is large (when it is in a malfunction area), the PCM detects a malfunction and stores a DTC.

Monitor Execution, Sequence, Duration, DTC Type

Execution	Once per driving cycle
Sequence	None
Duration	5.0 seconds or more
DTC Type	Two drive cycles, MIL on

Enable Conditions

Condition	Minimum	Maximum
Engine coolant temperature [ECT SENSOR 1]	156 deg.F (69 deg.C)	-
Engine speed [ENGINE SPEED]	1, 100 rpm	5, 500 rpm

[ ]: HDS Parameter

Malfunction Threshold

The difference between the amount of intake air manifold pressure measured by the MAP sensor and the amount of intake air calculated from the TP sensor output is out of the normal area for at least 5.0 seconds.

Possible Cause

NOTE: The causes shown may not be a complete list of all potential problems, and it is possible that there may be other causes.

- MAP sensor output signal low
- MAP sensor output signal high
- Intake air system clogged
- Evaporative emission (EVAP) canister purge valve failure
- Intake air system air leak
- Valve timing incorrect

Confirmation Procedure

Operating Condition

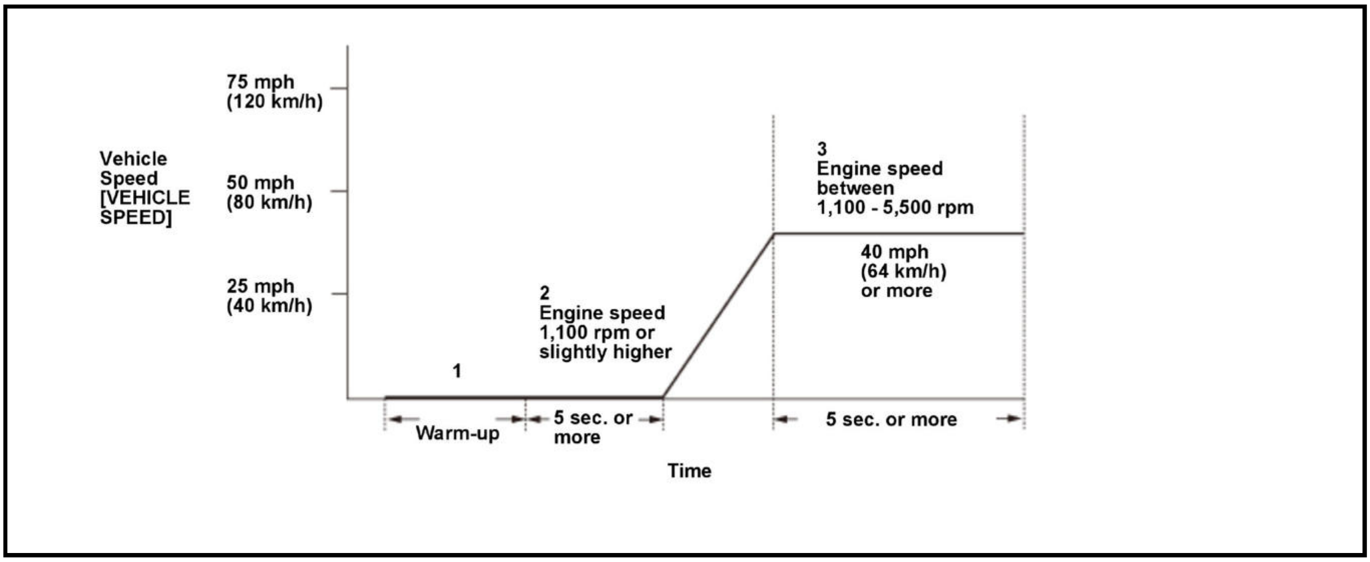

- Enter the maintenance mode, then start the engine. Hold the engine speed [Engine Speed] at 3, 000 rpm without load (in P or N) until the radiator fan comes on, then let it idle.
- Hold the engine speed [Engine Speed] at 1, 100 rpm or slightly higher without load (in P or N) for at least 5 seconds.
- Drive the vehicle at a steady speed of 40 mph (64 km/h) or more and engine speed [Engine Speed] between 1, 100 - 5, 500 rpm for at least 5 seconds.

- When freeze data is stored, drive the vehicle under those conditions instead of Driving Pattern step 3.
- When you have difficulty duplicating the DTC because of road conditions and traffic situations, repeat the driving pattern several times.

- Drive the vehicle in this manner only if the traffic regulations and ambient conditions allow.

With the HDS

None.

Diagnosis Details

Conditions for setting the DTC

When a malfunction is detected during the first drive cycle, a Pending DTC is stored in the PCM memory. If the malfunction returns in the next (second) drive cycle, the MIL comes on and a Confirmed DTC and the freeze data are stored.

Conditions for clearing the DTC

The MIL is cleared if the malfunction does not return in three consecutive trips in which the diagnostic runs. The MIL, the Pending DTC, the Confirmed DTC, and the freeze data can be cleared with the scan tool Clear command or by disconnecting the 12 volt battery.

DTC P0107, P0108

DTC P0107: Manifold Absolute Pressure (MAP) Sensor Circuit Low Voltage

DTC P0108: Manifold Absolute Pressure (MAP) Sensor Circuit High Voltage

General Description

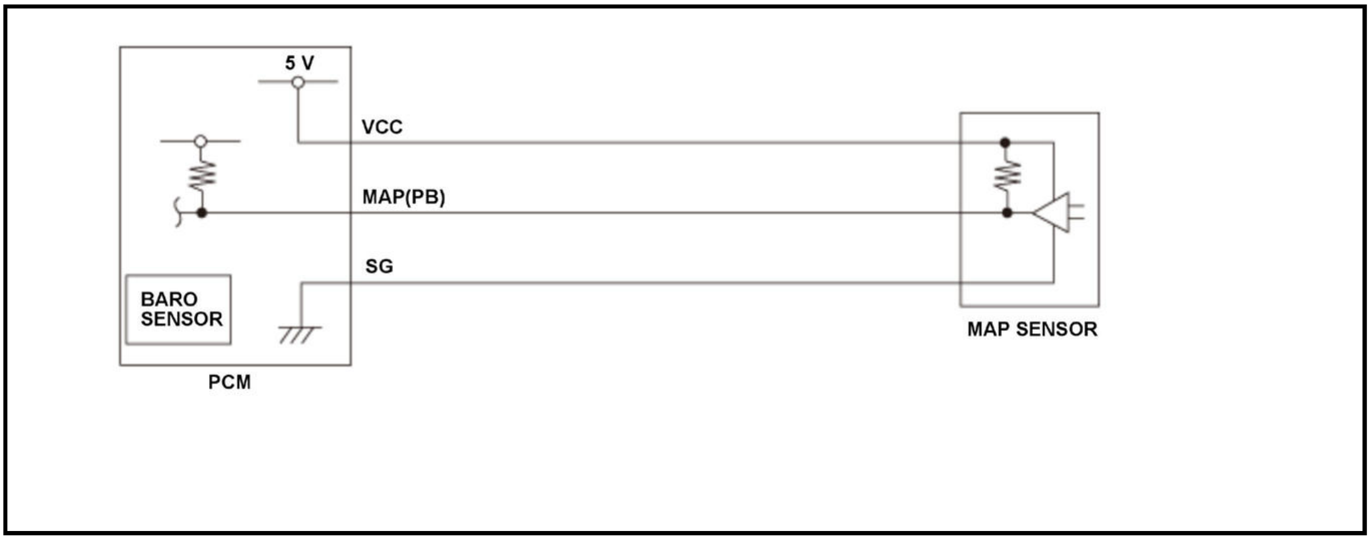

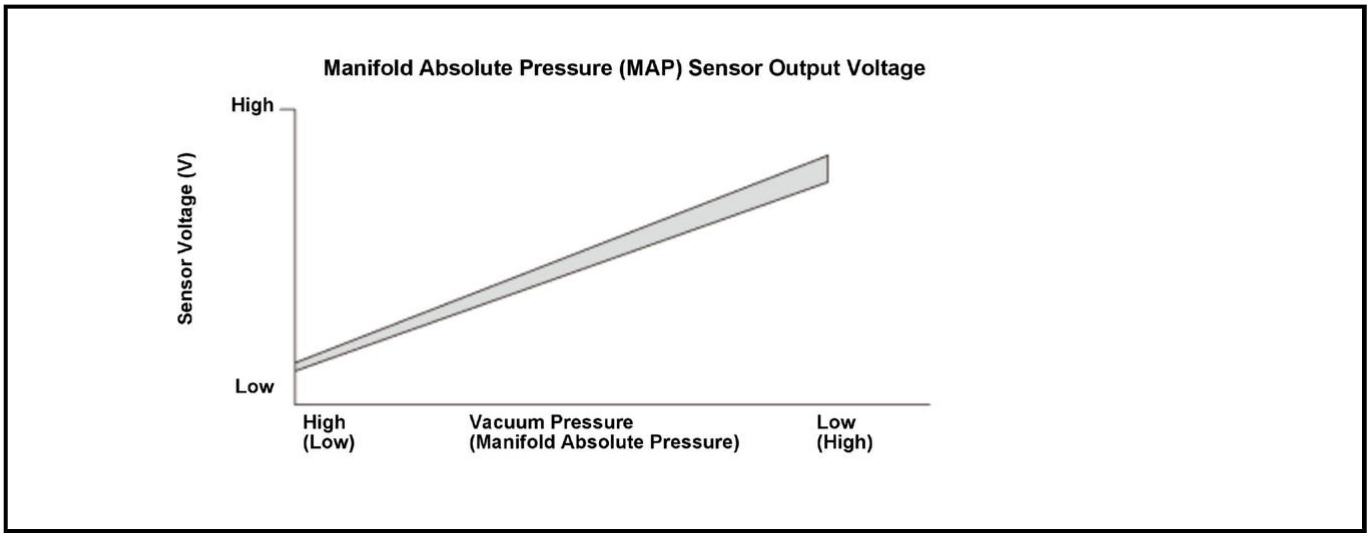

The manifold absolute pressure (MAP) sensor measures the pressure or vacuum in the manifold. This measurement is converted into an electrical signal which the powertrain control module (PCM) uses to monitor the engine. The MAP sensor outputs low signal voltage at high vacuum (throttle valve closed) and high signal voltage at low vacuum (throttle valve wide open). If the signal voltage from the MAP sensor falls below or exceeds a set value for a specified time, the PCM detects a malfunction and stores a DTC.

Monitor Execution, Sequence, Duration, DTC Type

Execution	Continuous
Sequence	None
Duration	2 seconds or more
DTC Type	One drive cycle, MIL on

Enable Conditions

Condition	B
Vehicle	ON mode

Malfunction Threshold

DTC: P0107

The MAP sensor output voltage [MAP Sensor Voltage] is 0.23 V or less for at least 2 seconds.

DTC: P0108

The MAP sensor output voltage [MAP Sensor Voltage] is 4.49 V or more for at least 2 seconds.

[ ]: HDS Parameter

Possible Cause

NOTE: The causes shown may not be a complete list of all potential problems, and it is possible that there may be other causes.

DTC: P0107

- MAP sensor VCC line open
- MAP sensor MAP(PB) line short to ground

DTC: P0108

- MAP sensor MAP(PB) line open
- MAP sensor SG line open

Common

- MAP sensor failure
- PCM internal circuit failure

Diagnosis Details

Conditions for setting the DTC

When a malfunction is detected, the MIL comes on and a Pending DTC, a Confirmed DTC, and the freeze data are stored in the PCM memory.

Conditions for clearing the DTC

The MIL is cleared if the malfunction does not return in three consecutive trips in which the diagnostic runs. The MIL, the Pending DTC, the Confirmed DTC, and the freeze data can be cleared with the scan tool Clear command or by disconnecting the 12 volt battery.

DTC P0111

DTC P0111: Intake Air Temperature (IAT) Sensor 1 Circuit Range/Performance Problem

General Description

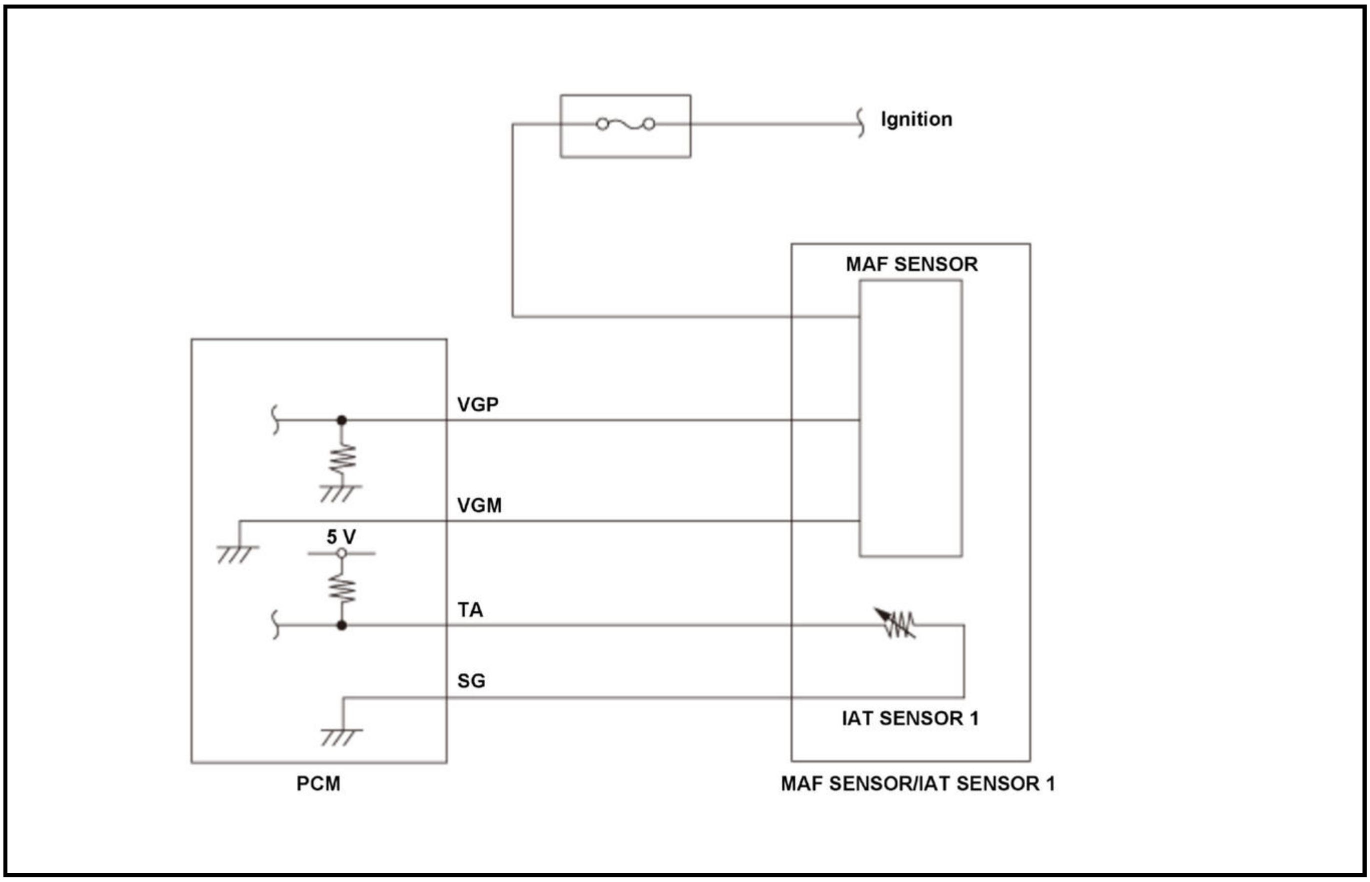

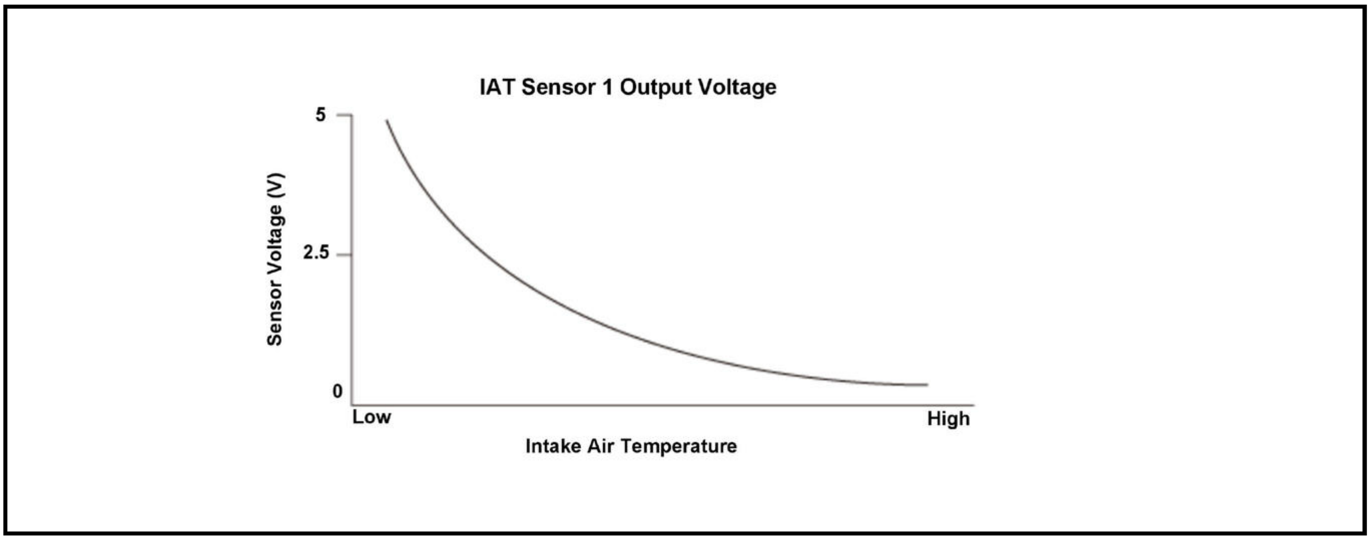

Intake air temperature (IAT) sensor 1 is a thermistor that detects intake air temperature, and it is used for air/fuel ratio feedback control to compensate for the atmospheric density fluctuations that accompany changes in intake air temperature. IAT sensor 1 resistance varies depending on temperature. The output voltage and the sensor resistance increase as the intake air temperature decreases. Conversely, the output voltage and the sensor resistance decrease as the intake air temperature increases. If the IAT sensor 1 output voltage is excessively low, the powertrain control module (PCM) detects a malfunction and stores a DTC.

Monitor Execution, Sequence, Duration, DTC Type

Execution	Continuous
Sequence	None
Duration	6.0 seconds or more
DTC Type	Two drive cycles, MIL on

Enable Conditions

Condition	B
Vehicle	ON mode

Malfunction Threshold

The IAT sensor 1 output voltage [IAT Sensor (1) Voltage] is 0.28 V or less for at least 6.0 seconds.

[ ]: HDS Parameter

Possible Cause

NOTE: The causes shown may not be a complete list of all potential problems, and it is possible that there may be other causes.

- IAT sensor 1 failure (range/performance problem)
- PCM internal circuit failure

Diagnosis Details

Conditions for setting the DTC

When a malfunction is detected during the first drive cycle, a Pending DTC is stored in the PCM memory. If the malfunction returns in the next (second) drive cycle, the MIL comes on and a Confirmed DTC, the freeze data, and the on-board snapshot are stored.

Conditions for clearing the DTC

The MIL is cleared if the malfunction does not return in three consecutive trips in which the diagnostic runs. The MIL, the Pending DTC, the Confirmed DTC, the freeze data, and the on-board snapshot can be cleared with the scan tool Clear command or by disconnecting the 12 volt battery.

DTC P0112, P0113

DTC P0112: Intake Air Temperature (IAT) Sensor 1 Circuit Low Voltage

DTC P0113: Intake Air Temperature (IAT) Sensor 1 Circuit High Voltage

General Description

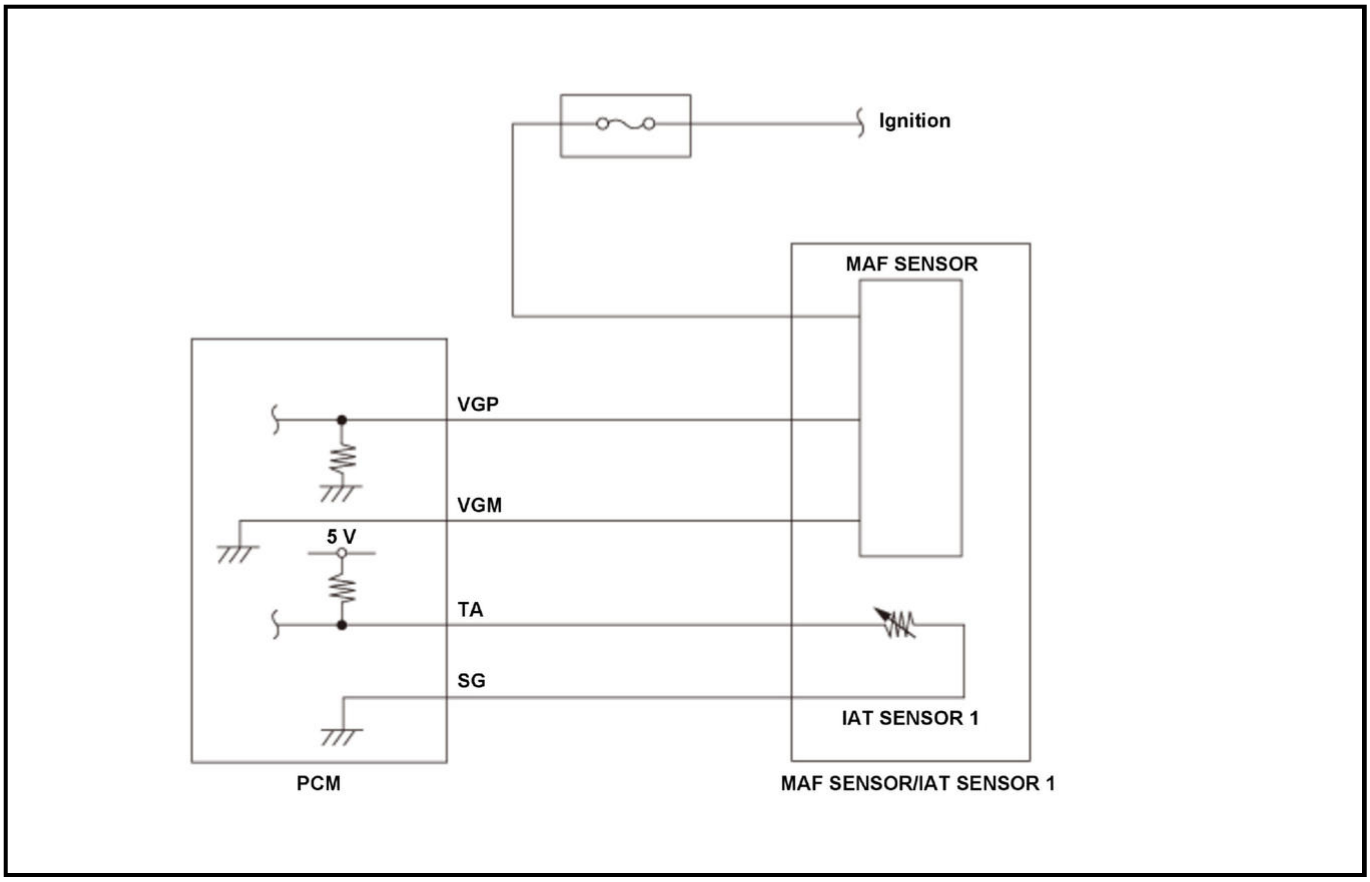

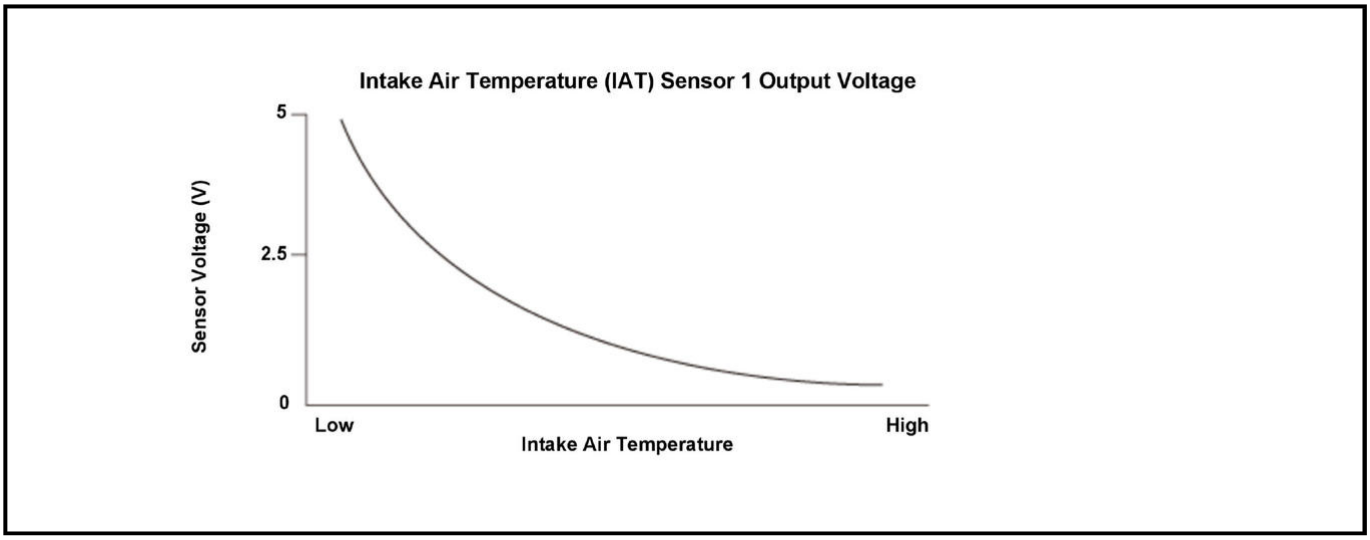

Intake air temperature (IAT) sensor 1 is a thermistor that detects intake air temperature, and it is used for air/fuel ratio feedback control to compensate for the atmospheric density fluctuations that accompany changes in intake air temperature. IAT sensor 1 resistance varies depending on temperature. The output voltage and the sensor resistance increase as the intake air temperature decreases. Conversely, the output voltage and the sensor resistance decrease as the intake air temperature increases. If the IAT sensor 1 output voltage is excessively low or high, the powertrain control module (PCM) detects a malfunction and stores a DTC.

Monitor Execution, Sequence, Duration, DTC Type

Execution	Continuous
Sequence	None
Duration	2.0 seconds or more
DTC Type	Two drive cycles, MIL on

Enable Conditions

Condition	B
Vehicle	ON mode

Malfunction Threshold

DTC: P0112

The IAT sensor 1 output voltage [IAT Sensor (1) Voltage] is 0.08 V or less for at least 2.0 seconds.

DTC: P0113

The IAT sensor 1 output voltage [IAT Sensor (1) Voltage] is 4.92 V or more for at least 2.0 seconds.

[ ]: HDS Parameter

Possible Cause

NOTE: The causes shown may not be a complete list of all potential problems, and it is possible that there may be other causes.

DTC: P0112

- IAT sensor 1 TA line short to ground

DTC: P0113

- IAT sensor 1 TA line open
- IAT sensor 1 SG line open

Common

- IAT sensor 1 failure
- PCM internal circuit failure

Diagnosis Details

Conditions for setting the DTC

When a malfunction is detected during the first drive cycle, a Pending DTC is stored in the PCM memory. If the malfunction returns in the next (second) drive cycle, the MIL comes on and a Confirmed DTC and the freeze data are stored.

Conditions for clearing the DTC

The MIL is cleared if the malfunction does not return in three consecutive trips in which the diagnostic runs. The MIL, the Pending DTC, the Confirmed DTC, and the freeze data can be cleared with the scan tool Clear command or by disconnecting the 12 volt battery.

DTC P0115

DTC P0115: Engine Coolant Temperature (ECT) Sensor 1 Out of Range

General Description

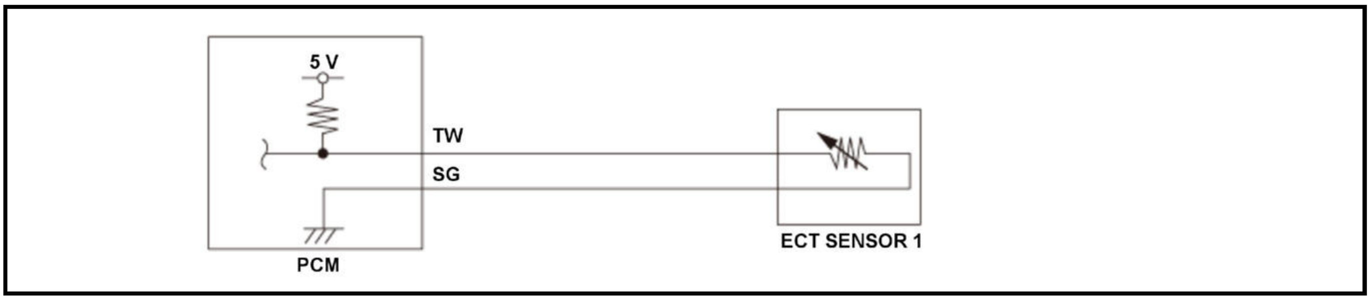

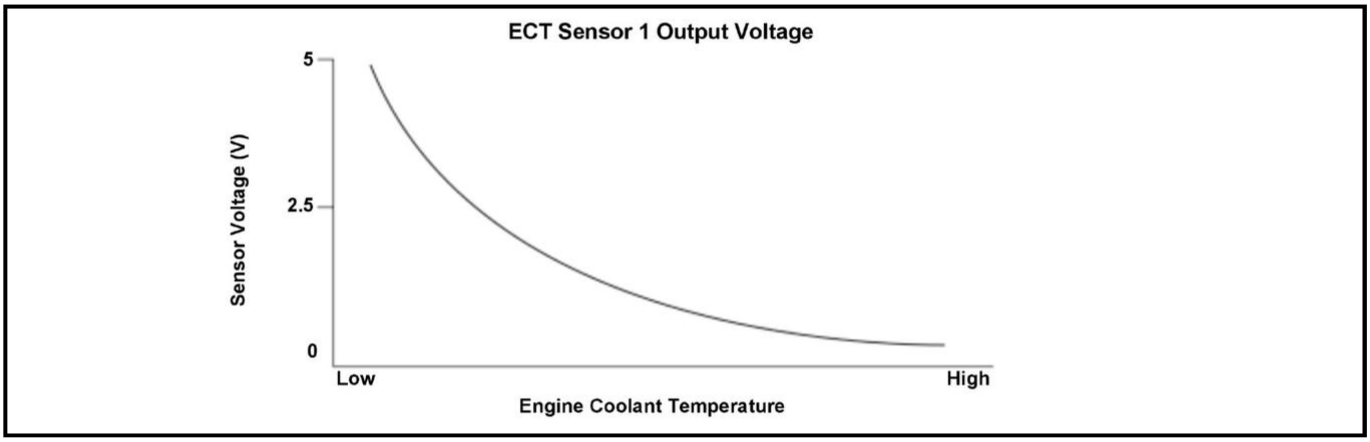

Engine coolant temperature (ECT) sensor 1 is used for air/fuel ratio feedback control, ignition timing control, idle speed control, and other functions. The ECT sensor 1 resistance varies depending on the engine coolant temperature. As the engine coolant cools, the ECT sensor 1 resistance increases, and the powertrain control module (PCM) detects a high signal voltage. As the engine coolant warms, the ECT sensor 1 resistance decreases, and the PCM detects a low signal voltage. If the ECT sensor 1 output voltage is a set value, the PCM detects a malfunction and stores a DTC.

Monitor Execution, Sequence, Duration, DTC Type

Execution	Continuous
Sequence	None
Duration	6 seconds or more
DTC Type	Two drive cycles, MIL on

Enable Conditions

Condition	B
Vehicle	ON mode

Malfunction Threshold

The ECT sensor 1 output voltage [ECT Sensor 1 Voltage] is 0.14 V or less for at least 6 seconds.

[ ]: HDS Parameter

Possible Cause

NOTE: The causes shown may not be a complete list of all potential problems, and it is possible that there may be other causes.

- ECT sensor 1 failure
- PCM internal circuit failure

Diagnosis Details

Conditions for setting the DTC

When a malfunction is detected during the first drive cycle, a Pending DTC is stored in the PCM memory. If the malfunction returns in the next (second) drive cycle, the MIL comes on and a Confirmed DTC, the freeze data, and the on-board snapshot are stored.

Conditions for clearing the DTC

The MIL is cleared if the malfunction does not return in three consecutive trips in which the diagnostic runs. The MIL, the Pending DTC, the Confirmed DTC, the freeze data, and the on-board snapshot can be cleared with the scan tool Clear command or by disconnecting the 12 volt battery.

DTC P0116

DTC P0116: Engine Coolant Temperature (ECT) Sensor 1 Circuit Range/Performance Problem

General Description

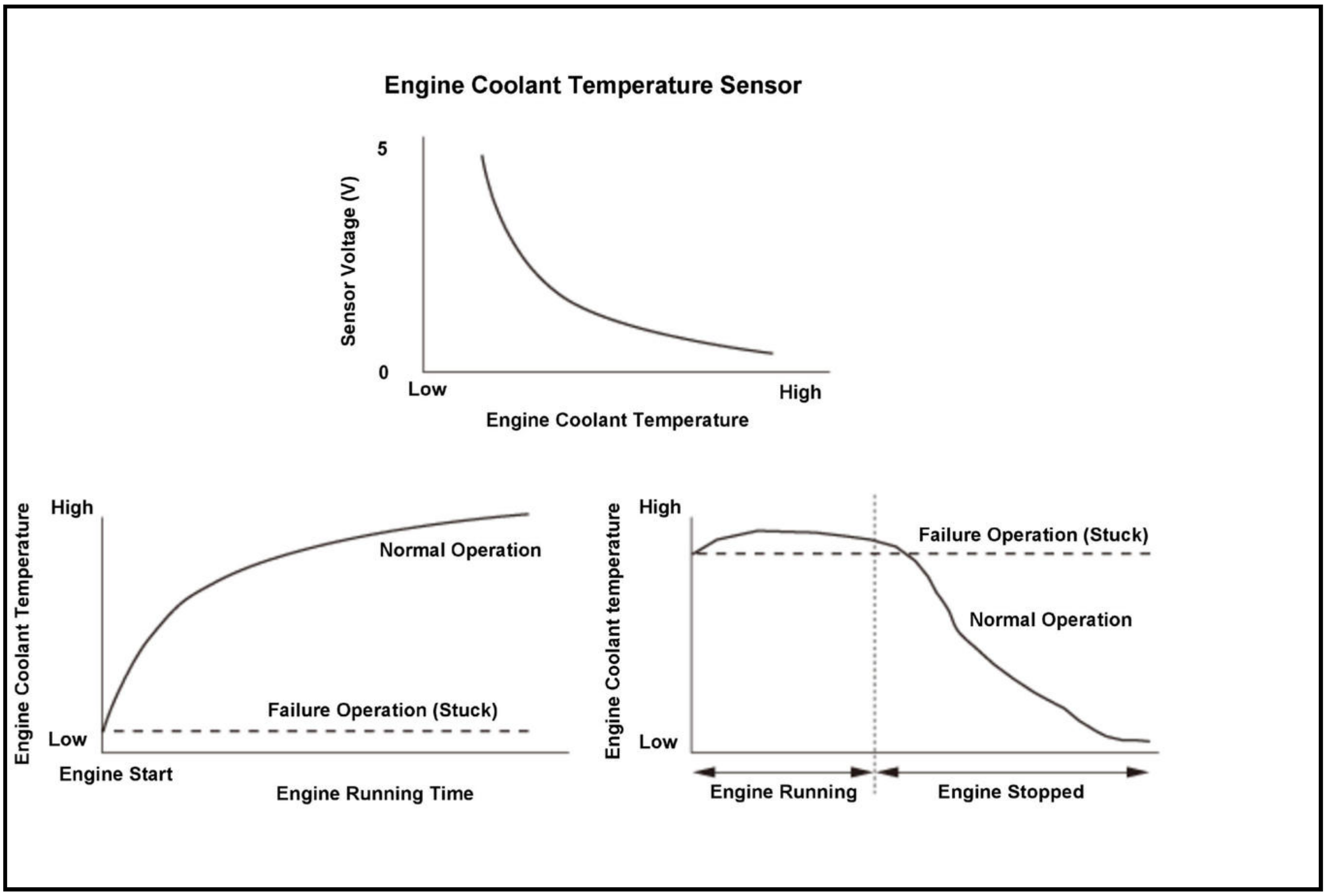

The powertrain control module (PCM) supplies voltage to the engine coolant temperature signal circuit (about 5 V) through a pull-up resistor. As the engine coolant cools, the engine coolant temperature (ECT) sensor 1 resistance increases, and the PCM detects a high signal voltage. As the engine coolant warms, the ECT sensor 1 resistance decreases, and the PCM detects a low signal voltage. If the ECT sensor 1 output voltage does not reach a set temperature after starting the engine and driving a set time, or when the difference between the ECT sensor 1 output voltage while driving and the output voltage of ECT sensor 1 after the engine has been stopped a certain length of time does not change a certain amount, the PCM detects a malfunction and stores a DTC.

Monitor Execution, Sequence, Duration, DTC Type

Execution	Once per driving cycle
Sequence	None
Duration	24 minutes or more

DTC Type	Two drive cycles, MIL on

Enable Conditions

Condition	Minimum	Maximum
Elapsed time after starting the engine	10 seconds	-
Fuel feedback	Other than during fuel cut-off operation	
Other	With a completely cooled engine (one that has been off for at least 6 hours): Judgment is made after the engine has run for at least 24 minutes or been driven at least 3 miles (4 km), turn the vehicle to the OFF (LOCK) mode and wait for at least 10 seconds, then start and run again for at least 10 seconds.	
	With a partially cooled engine (one that has been off for less than 6 hours): Judgment is made after the engine has run for at least 24 minutes or been driven at least 3 miles (4 km), turn the vehicle to the OFF (LOCK) mode and wait for at least 6 hours then start and run again for at least 10 seconds.	

Malfunction Threshold

Malfunction determination 1:

With a completely cooled engine (one that has been off for at least 6 hours):

When the change in coolant temperature after 24 minutes or more of running time or 3 miles (4 km) or more of driving distance is 18 deg.F (10 deg.C) or less, a malfunction is detected.

Malfunction determination 2:

With a partially cooled engine (one that has been off for less than 6 hours):

When the difference between the coolant temperature after 24 minutes or more of running time or 3 miles (4 km) or more of driving distance the coolant temperature after the engine has been off for 6 hours and then run for 10 seconds is 18 deg.F (10 deg.C) or less, a malfunction is detected.

Possible Cause

NOTE: The causes shown may not be a complete list of all potential problems, and it is possible that there may be other causes.

- ECT sensor 1 failure

Confirmation Procedure

Operating Condition

With a completely cooled engine (one that has been off for at least 6 hours).

- Enter the maintenance mode, then start the engine, and let it idle for at least 24 minutes or drive for at least 3 miles (4 km).
- Turn the vehicle to the OFF (LOCK) mode for 10 seconds, then restart the engine and let it idle for at least 10 seconds.

With a partially cooled engine (one that has been off for less than 6 hours).

- Enter the maintenance mode, then start the engine, and let it idle for at least 24 minutes or drive for at least 3 miles (4 km).

- Turn the vehicle to the OFF (LOCK) mode for 6 hours then restart the engine and let it idle for at least 10 seconds.
- Drive the vehicle in this manner only if the traffic regulations and ambient conditions allow.

With the HDS

None.

Diagnosis Details

Conditions for setting the DTC

When a malfunction is detected during the first drive cycle, a Pending DTC is stored in the PCM memory. If the malfunction returns in the next (second) drive cycle, the MIL comes on and a Confirmed DTC and the freeze data are stored.

Conditions for clearing the DTC

The MIL is cleared if the malfunction does not return in three consecutive trips in which the diagnostic runs. The MIL, the Pending DTC, the Confirmed DTC, and the freeze data can be cleared with the scan tool Clear command or by disconnecting the 12 volt battery.

DTC P0117, P0118

DTC P0117: Engine Coolant Temperature (ECT) Sensor 1 Circuit Low Voltage

DTC P0118: Engine Coolant Temperature (ECT) Sensor 1 Circuit High Voltage

General Description

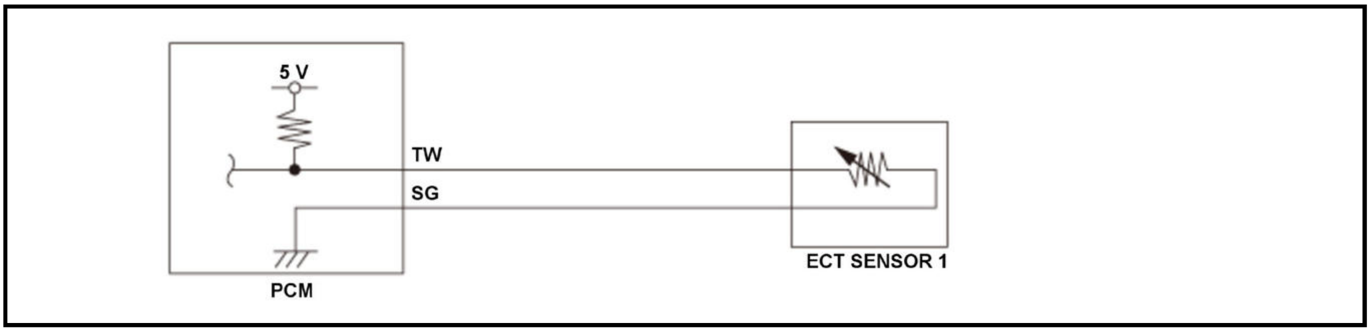

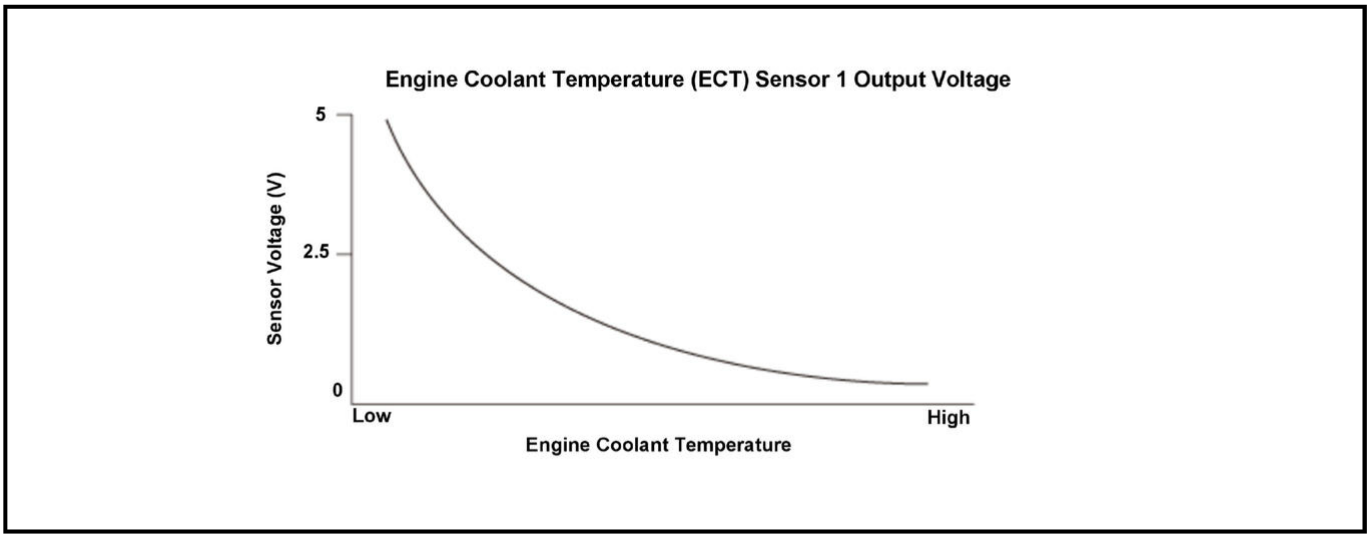

Engine coolant temperature (ECT) sensor 1 is used for air/fuel ratio feedback control, ignition timing control, idle speed control, and other functions. ECT sensor 1 resistance varies depending on the engine coolant temperature. As the engine coolant cools, ECT sensor 1 resistance increases, and the powertrain control module

(PCM) detects a high signal voltage. As the engine coolant warms, ECT sensor 1 resistance decreases, and the PCM detects a low signal voltage. If the ECT sensor 1 output voltage is a set value, the PCM detects a malfunction and stores a DTC.

Monitor Execution, Sequence, Duration, DTC Type

Execution	Continuous
Sequence	None
Duration	2 seconds or more
DTC Type	One drive cycle, MIL on

Enable Conditions

Condition	B
Vehicle	ON mode

Malfunction Threshold

DTC: P0117

The ECT sensor 1 output voltage [ECT Sensor 1 Voltage] is 0.08 V or less for at least 2 seconds.

DTC: P0118

The ECT sensor 1 output voltage [ECT Sensor 1 Voltage] is 4.92 V or more for at least 2 seconds.

[ ]: HDS Parameter

Possible Cause

NOTE: The causes shown may not be a complete list of all potential problems, and it is possible that there may be other causes.

DTC: P0117

- ECT sensor 1 TW line short to ground

DTC: P0118

- ECT sensor 1 TW line open
- ECT sensor 1 SG line open

Common

- ECT sensor 1 failure
- PCM internal circuit failure

Diagnosis Details

Conditions for setting the DTC

When a malfunction is detected, the MIL comes on and a Pending DTC, a Confirmed DTC, and the freeze data are stored in the PCM memory.

Conditions for clearing the DTC

The MIL is cleared if the malfunction does not return in three consecutive trips in which the diagnostic runs. The MIL, the Pending DTC, the Confirmed DTC, and the freeze data can be cleared with the scan tool Clear

command or by disconnecting the 12 volt battery.

DTC P011A

DTC P011A: Engine Coolant Temperature (ECT) Sensor 1 Circuit Range/Performance Problem

General Description

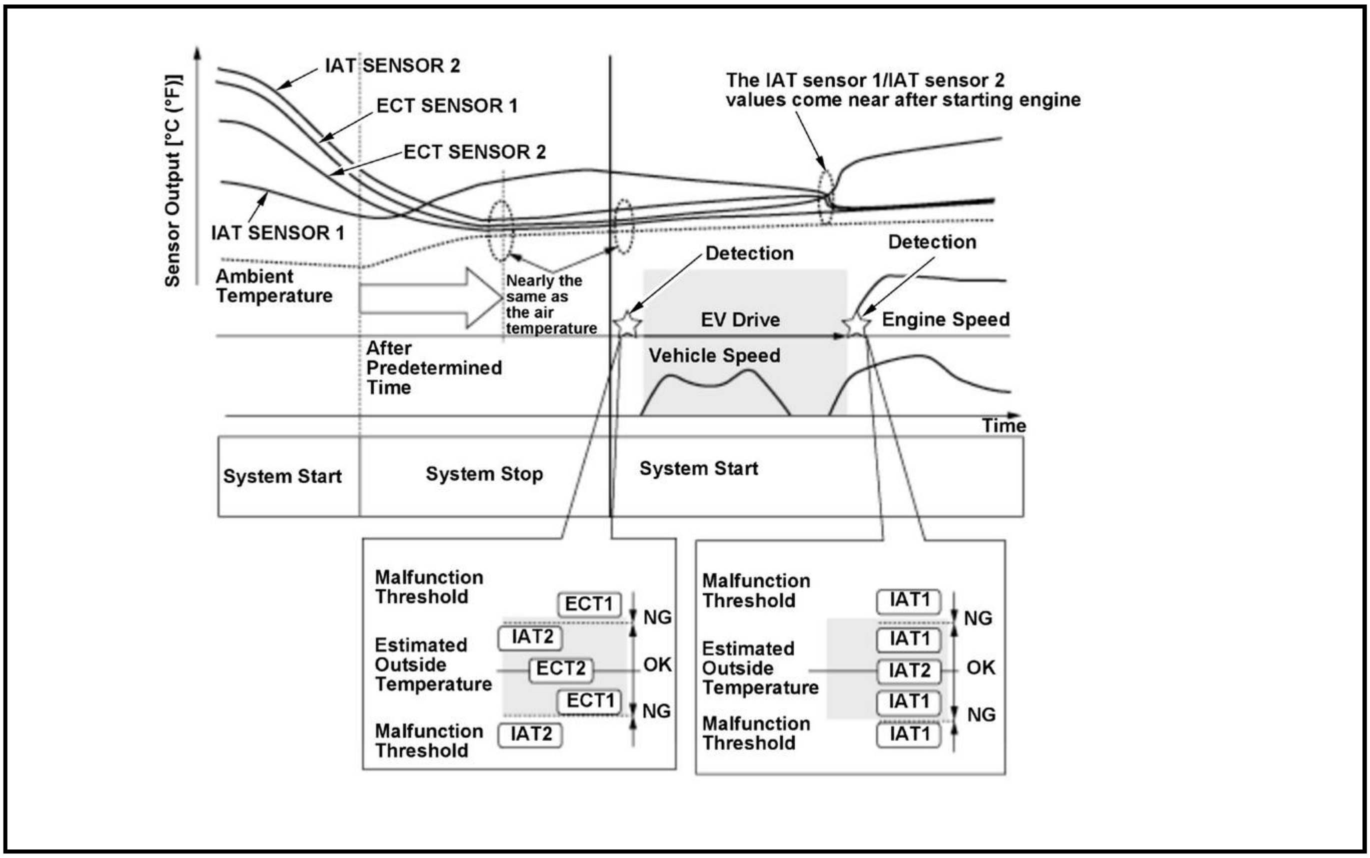
Sensor Output [°C (°F)]
IAT SENSOR 2
ECT SENSOR 1
ECT SENSOR 2
IAT SENSOR 1
Ambient Temperature
Nearly the same as the air temperature
After Predetermined Time
The IAT sensor 1/IAT sensor 2 values come near after starting engine
Detection
Detection
EV Drive
Engine Speed
Vehicle Speed
Time
System Start
System Stop
System Start
Malfunction Threshold
Estimated Outside Temperature
Malfunction Threshold
ECT1
IAT2
ECT2
ECT1
IAT2
NG
OK
NG
Malfunction Threshold
Estimated Outside Temperature
Malfunction Threshold
IAT1
IAT1
IAT2
IAT1
IAT1
NG
OK
NG

The powertrain control module (PCM) is equipped with two engine coolant temperature (ECT) sensors and two intake air temperature (IAT) sensors in order to measure engine temperature. The ECT sensor 1/ECT sensor 2 and the IAT sensor 2 temperatures are nearly the same as the air temperature after sufficient time has passed. Furthermore, the IAT sensor 1/IAT sensor 2 values equalize after starting the engine since they are located in the same air intake path. When the system is started after the prescribed time stopped, the IAT sensor 2 detects a malfunction comparing the ECT sensor 1 and ECT sensor 2. When the sensors are normal, the PCM detects a malfunction in the IAT sensor 1 and stores a DTC comparing temperatures from the IAT 1 sensor and IAT 2 sensor after starting the engine.

Monitor Execution, Sequence, Duration, DTC Type

Execution	Once per driving cycle
Sequence	None
Duration	1.0 second or more* 10 seconds or less**
DTC Type	Two drive cycles, MIL on

*: After the system is activated

**: After the engine is started

Enable Conditions

Condition	Minimum	Maximum
Engine off time	6 hours	-

Malfunction Threshold

A malfunction is detected if the following conditions are present after the engine has stopped and the vehicle condition has been turned to the OFF (LOCK) mode for at least 6 hours before restarting the engine:

Temperature difference between each sensor values		Malfunction judgment		
ECT sensor 1 - ECT sensor 2	IAT sensor 2 - ECT sensor 2	ECT sensor 1	IAT sensor 2	ECT sensor 2
Higher than 57 deg.F (32 deg.C)	Higher than 57 deg.F (32 deg.C)	Normal	Normal	Failure
	From -43 deg.F (-24 deg.C) to 57 deg.F (32 deg.C)	Failure	Normal	Normal
	Lower than -43 deg.F (-24 deg.C)	Failure	Failure	Normal
From -43 deg.F (-24 deg.C) to 57 deg.F (32 deg.C)	Higher than 57 deg.F (32 deg.C)	Normal	Failure	Normal
	From -43 deg.F (-24 deg.C) to 57 deg.F (32 deg.C)	Normal	Normal	Normal
	Lower than -43 deg.F (-24 deg.C)	Normal	Failure	Normal
Lower than -43 deg.F (-24 deg.C)	Higher than 57 deg.F (32 deg.C)	Failure	Failure	Normal
	From -43 deg.F (-24 deg.C) to 57 deg.F (32 deg.C)	Failure	Normal	Normal
	Lower than -43 deg.F (-24 deg.C)	Normal	Normal	Failure

Possible Cause

NOTE: The causes shown may not be a complete list of all potential problems, and it is possible that there may be other causes.

- ECT sensor 1 failure
- ECT sensor 2 failure
- IAT sensor 1 failure
- IAT sensor 2 failure
- Engine block heater attachment (besides a genuine part)

Confirmation Procedure

Operating Condition

- Turn the vehicle to the OFF (LOCK) mode, and wait at least 6 hours.
- Enter the maintenance mode, then start the engine, and let it idle for at least 10 seconds.

- Do not use an engine block heater because the engine coolant temperature will not stay equal during engine stop.
- When freeze data is stored, test the vehicle under an ambient temperature close to the intake air temperature in the freeze data.

Diagnosis Details

Conditions for setting the DTC

When a malfunction is detected during the first drive cycle, a Pending DTC is stored in the PCM memory. If the malfunction returns in the next (second) drive cycle, the MIL comes on and a Confirmed DTC and the freeze data are stored.

Conditions for clearing the DTC

The MIL is cleared if the malfunction does not return in three consecutive trips in which the diagnostic runs. The MIL, the Pending DTC, the Confirmed DTC, and the freeze data can be cleared with the scan tool Clear command or by disconnecting the 12 volt battery.

DTC P011B

DTC P011B: Intake Air Temperature (IAT) Sensor 1 Circuit Range/Performance Problem

General Description

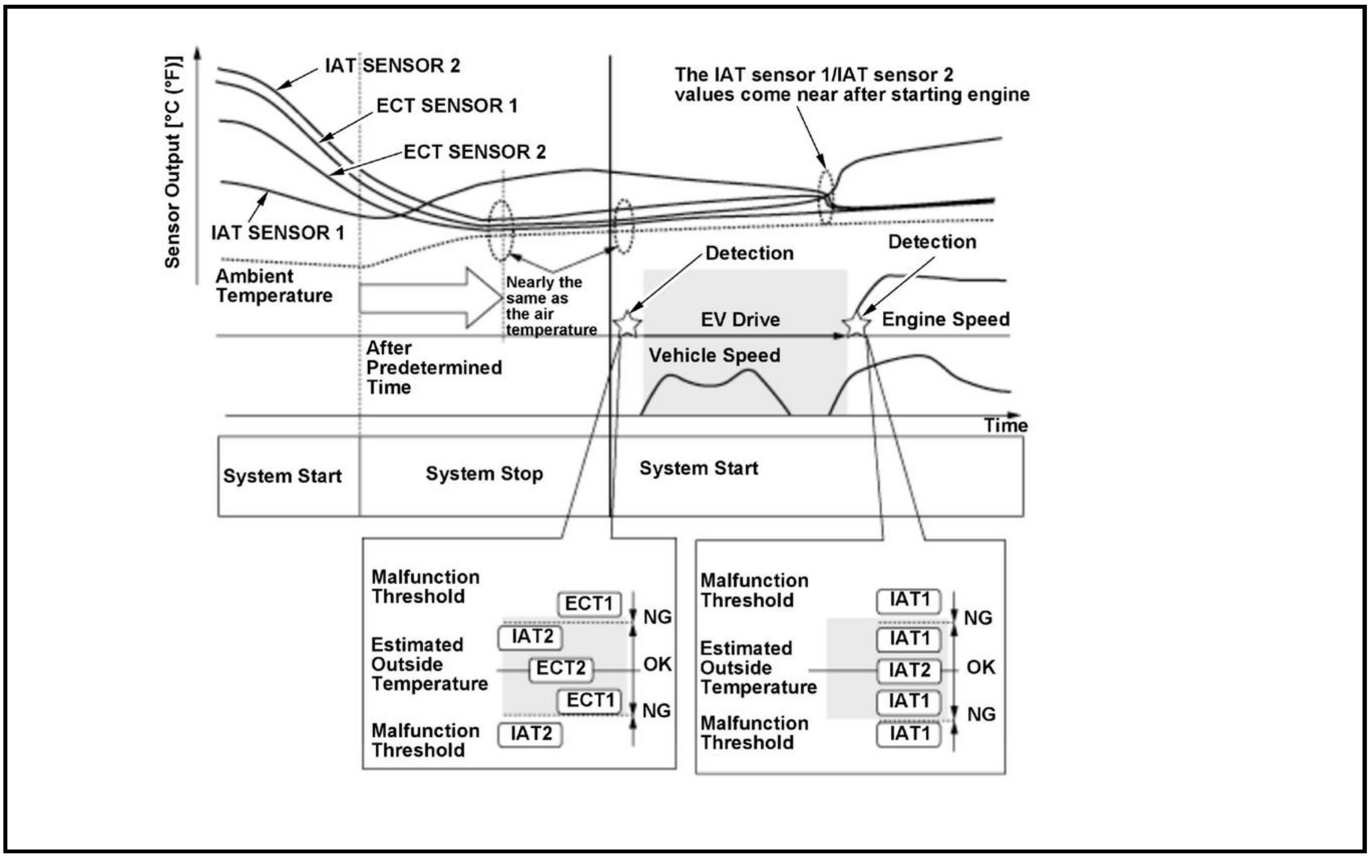

Sensor Output [°C (°F)]
IAT SENSOR 2
ECT SENSOR 1
ECT SENSOR 2
IAT SENSOR 1
Ambient Temperature
The IAT sensor 1/IAT sensor 2 values come near after starting engine
Nearly the same as the air temperature
Detection
Detection
EV Drive
Engine Speed
Vehicle Speed
After Predetermined Time
Time
System Start
System Stop
System Start
Malfunction Threshold
ECT1
NG
IAT2
Estimated Outside Temperature
ECT2
OK
ECT1
NG
Malfunction Threshold
IAT2
Malfunction Threshold
IAT1
NG
IAT1
Estimated Outside Temperature
IAT2
OK
IAT1
NG
Malfunction Threshold
IAT1

The powertrain control module (PCM) is equipped with two engine coolant temperature (ECT) sensors and two intake air temperature (IAT) sensors in order to measure engine temperature. The ECT sensor 1/ECT sensor 2 and the IAT sensor 2 temperatures are nearly the same as the air temperature after sufficient time has passed. Furthermore, the IAT sensor 1/IAT sensor 2 values equalize after starting the engine since they are located in the same air intake path. When the system is started after the prescribed time stopped, the IAT sensor 2 detects a malfunction comparing the ECT sensor 1 and ECT sensor 2. When the sensors are normal, the PCM detects a malfunction in the IAT sensor 1 and stores a DTC comparing temperatures from the IAT 1 sensor and IAT 2 sensor after starting the engine.

Monitor Execution, Sequence, Duration, DTC Type

Execution	Once per driving cycle
Sequence	None
Duration	1.0 second or more*10 seconds or less**
DTC Type	Two drive cycles, MIL on

*: After the system is activated

**: After the engine is started

Enable Conditions

Condition	Minimum	Maximum
Engine off time	6 hours	-

Malfunction Threshold

A malfunction is detected if the following conditions are present after the engine has stopped and the vehicle condition has been turned to the OFF (LOCK) mode for at least 6 hours before restarting the engine:

Temperature difference between each sensor values		Malfunction judgment		
ECT sensor 1 - ECT sensor 2	**IAT sensor 2 - ECT sensor 2**	**ECT sensor 1**	**IAT sensor 2**	**ECT sensor 2**
Higher than 57 deg.F (32 deg.C)	Higher than 57 deg.F (32 deg.C)	Normal	Normal	Failure
	From -43 deg.F (-24 deg.C) to 57 deg.F (32 deg.C)	Failure	Normal	Normal
	Lower than -43 deg.F (-24 deg.C)	Failure	Failure	Normal
From -43 deg.F (-24 deg.C) to 57 deg.F (32 deg.C)	Higher than 57 deg.F (32 deg.C)	Normal	Failure	Normal
	From -43 deg.F (-24 deg.C) to 57 deg.F (32 deg.C)	Normal	Normal	Normal
	Lower than -43 deg.F (-24 deg.C)	Normal	Failure	Normal
Lower than -43 deg.F (-24 deg.C)	Higher than 57 deg.F (32 deg.C)	Failure	Failure	Normal
	From -43 deg.F (-24 deg.C) to 57 deg.F (32 deg.C)	Failure	Normal	Normal
	Lower than -43 deg.F (-24 deg.C)	Normal	Normal	Failure

- When the IAT sensor 2 is normal 10 seconds after starting the engine, the IAT 2 sensor is used to detect malfunction in the IAT sensor 1.

Possible Cause

NOTE: The causes shown may not be a complete list of all potential problems, and it is possible that there may be other causes.

- ECT sensor 1 failure
- ECT sensor 2 failure
- IAT sensor 1 failure
- IAT sensor 2 failure
- Engine block heater attachment (besides a genuine part)

Confirmation Procedure

Operating Condition

- Turn the vehicle to the OFF (LOCK) mode, and wait at least 6 hours.
- Enter the maintenance mode, then start the engine, and let it idle for at least 10 seconds.

- Do not use an engine block heater because the engine coolant temperature will not stay equal during engine stop.
- When freeze data is stored, test the vehicle under an ambient temperature close to the intake air temperature in the freeze data.

With the HDS

None.

Diagnosis Details

Conditions for setting the DTC

When a malfunction is detected during the first drive cycle, a Pending DTC is stored in the PCM memory. If the malfunction returns in the next (second) drive cycle, the MIL comes on and a Confirmed DTC and the freeze data are stored.

Conditions for clearing the DTC

The MIL is cleared if the malfunction does not return in three consecutive trips in which the diagnostic runs. The MIL, the Pending DTC, the Confirmed DTC, and the freeze data can be cleared with the scan tool Clear command or by disconnecting the 12 volt battery.

DTC P0121

DTC P0121: Throttle Position (TP) Sensor A Out of Range

General Description

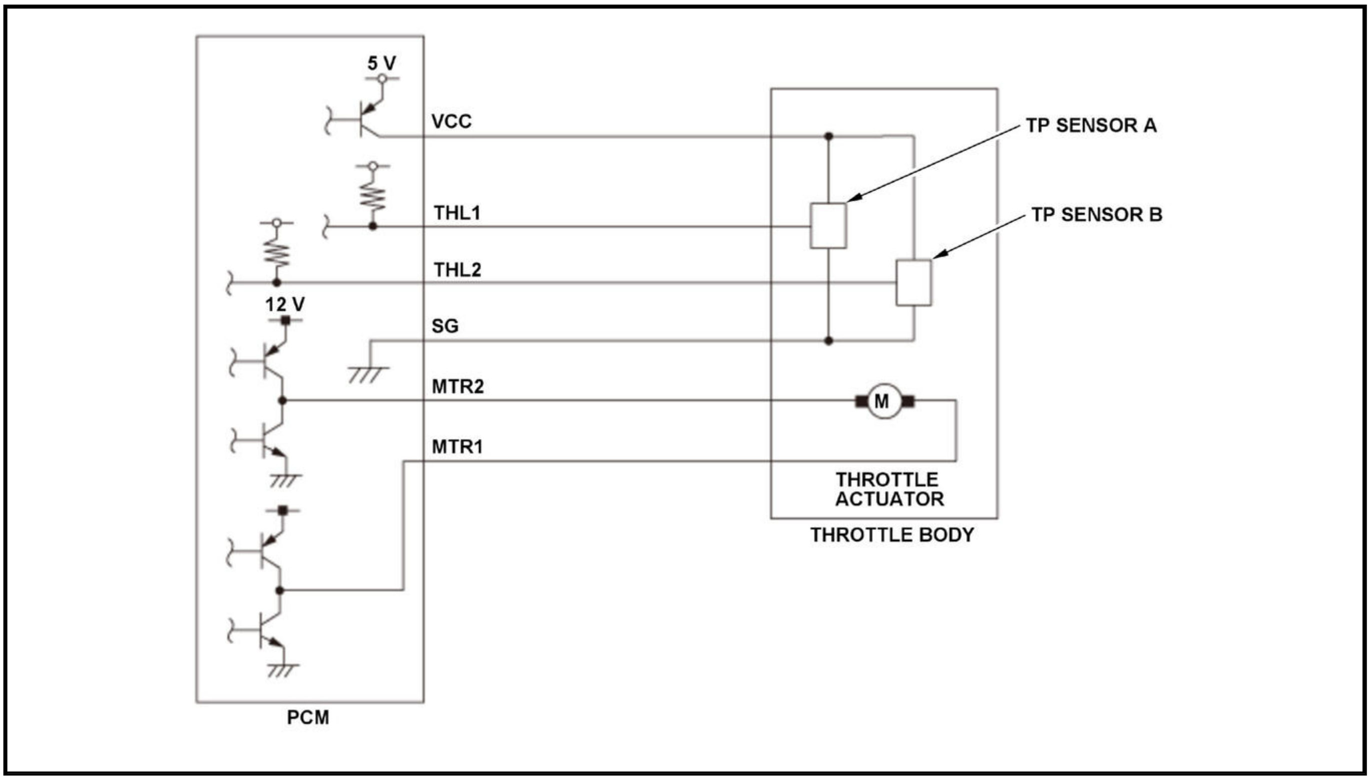

The electronic throttle control system controls the throttle valve opening. The system includes the throttle actuator, the throttle valve, throttle position (TP) sensors A and B, the PGM-FI subrelay circuit, the accelerator pedal position (APP) sensor, and the powertrain control module (PCM). TP sensor A is a semiconductor type, and it is attached to the throttle body and shaft to determine throttle valve position. The throttle valve position signal from TP sensor A is transmitted to the PCM for target position feedback control. If the signal from TP sensor A is a fixed value for a set time, the PCM detects a TP sensor A malfunction and stores a DTC.

Monitor Execution, Sequence, Duration, DTC Type

Execution	Continuous
Sequence	None
Duration	6 seconds or more
DTC Type	Two drive cycles, MIL on

Enable Conditions

Condition	B
Vehicle	ON mode

Malfunction Threshold

The TP sensor A output voltage [TP Sensor A] is 0.37 V or less, or 4.50 V or more for at least 6 seconds.

[ ]: HDS Parameter

Possible Cause

NOTE: The causes shown may not be a complete list of all potential problems, and it is possible that there may be other causes.

- Throttle body internal failure (TP sensor A)
- PCM internal circuit failure

Diagnosis Details

Conditions for setting the DTC

When a malfunction is detected during the first drive cycle, a Pending DTC is stored in the PCM memory. If the malfunction returns in the next (second) drive cycle, the MIL comes on and a Confirmed DTC, the freeze data, and the on-board snapshot are stored.

Conditions for clearing the DTC

The MIL is cleared if the malfunction does not return in three consecutive trips in which the diagnostic runs. The MIL, the Pending DTC, the Confirmed DTC, the freeze data, and the on-board snapshot can be cleared with the scan tool Clear command or by disconnecting the 12 volt battery.

DTC P0122, P0123

DTC P0122: Throttle Position (TP) Sensor A Circuit Low Voltage

DTC P0123: Throttle Position (TP) Sensor A Circuit High Voltage

General Description

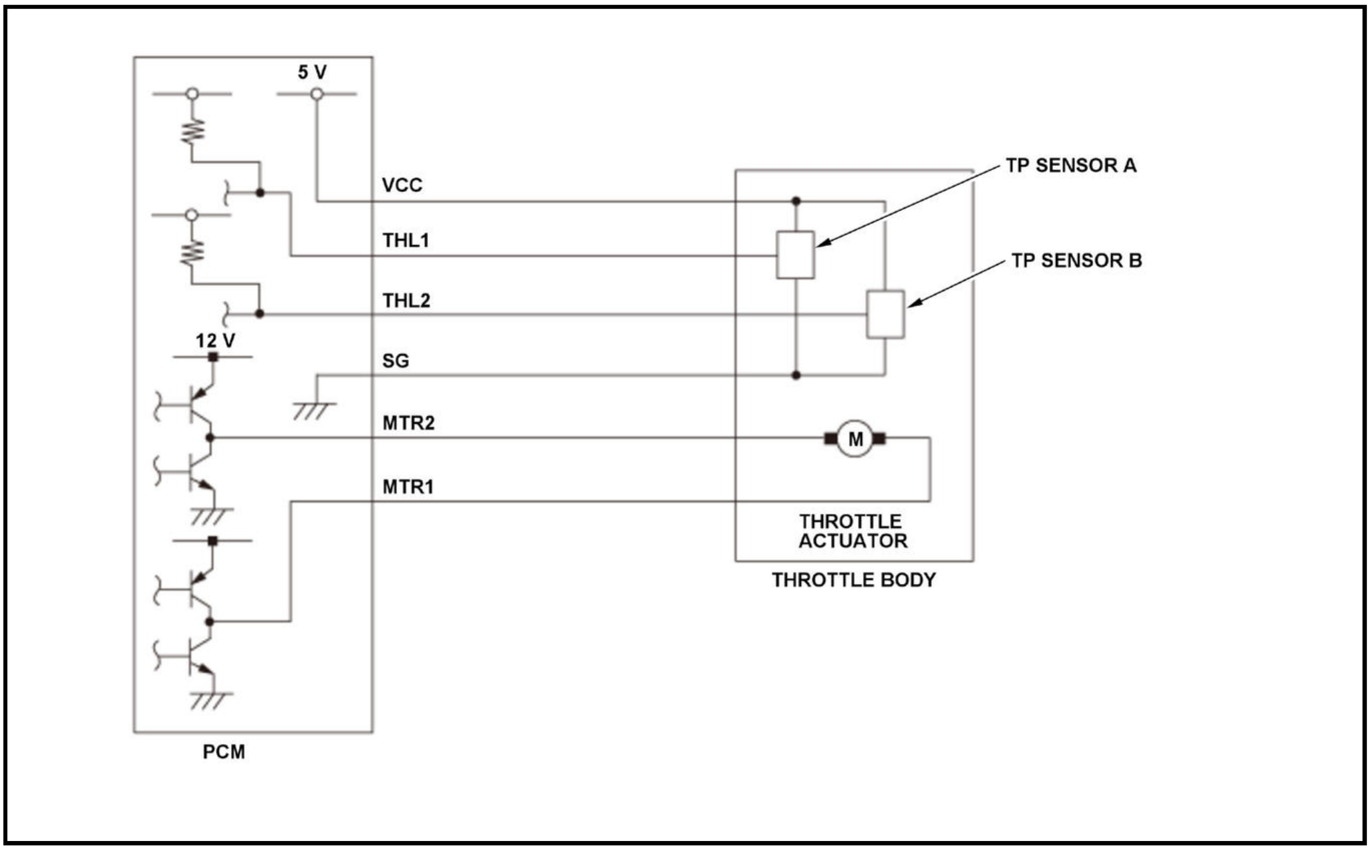

The electronic throttle control system controls the throttle valve opening. The system includes the throttle actuator, the throttle valve, throttle position (TP) sensors A and B, the PGM-FI subrelay circuit, the accelerator pedal position (APP) sensor, and the powertrain control module (PCM). TP sensor A is a semiconductor type, and it is attached to the throttle body and shaft to determine throttle valve position. The throttle valve position signal from TP sensor A is transmitted to the PCM for target position feedback control. If the signal from TP sensor A is a fixed value for a set time, the PCM detects a TP sensor A malfunction and stores a DTC.

Monitor Execution, Sequence, Duration, DTC Type

Execution	Continuous
Sequence	None
Duration	200 milliseconds or more
DTC Type	One drive cycle, MIL on

Enable Conditions

Condition	B
Vehicle	ON mode

Malfunction Threshold

DTC: P0122

The TP sensor A output voltage [TP Sensor A] is 0.3 V or less for at least 200 milliseconds.

DTC: P0123

The TP sensor A output voltage [TP Sensor A] is 4.8 V or more for at least 200 milliseconds.

[ ]: HDS Parameter

Possible Cause

NOTE: The causes shown may not be a complete list of all potential problems, and it is possible that there may be other causes.

DTC: P0122

- TP sensor A THL1 line short to ground
- TP sensor A VCC line open

DTC: P0123

- TP sensor A THL1 line open
- TP sensor A SG line open

Common

- TP sensor A failure
- PCM internal circuit failure

Diagnosis Details

Conditions for setting the DTC

When a malfunction is detected, the MIL comes on and a Pending DTC, a Confirmed DTC, and the freeze data are stored in the PCM memory.

Conditions for clearing the DTC

The MIL is cleared if the malfunction does not return in three consecutive trips in which the diagnostic runs. The MIL, the Pending DTC, the Confirmed DTC, and the freeze data can be cleared with the scan tool Clear command or by disconnecting the 12 volt battery.

DTC P0125

DTC P0125: Engine Coolant Temperature (ECT) Sensor 1 Malfunction/Slow Response

General Description

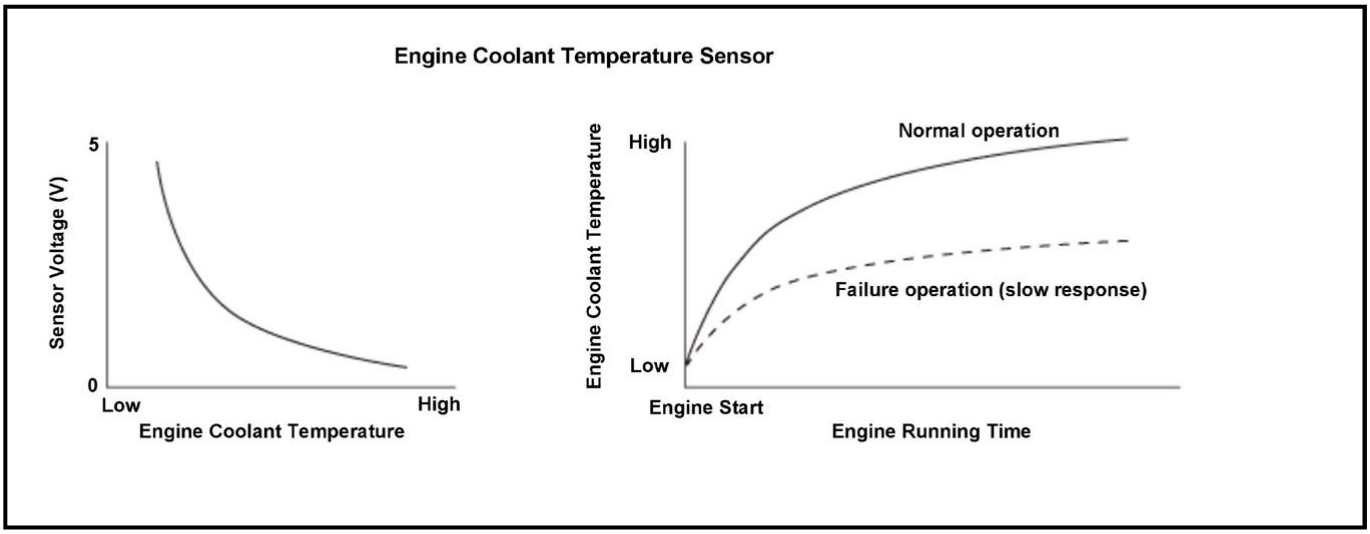

The powertrain control module (PCM) supplies voltage to the engine coolant temperature signal circuit (about 5 V) through a pull-up resistor. As the engine coolant cools, the engine coolant temperature (ECT) sensor 1 resistance increases, and the PCM detects a high signal voltage. As the engine coolant warms, the ECT sensor 1 resistance decreases, and the PCM detects a low signal voltage. If the ECT sensor 1 output voltage does not reach a specified temperature at which closed loop control for stoichiometric air/fuel ratio starts within a set time, depending on the initial engine coolant temperature after starting the engine, the PCM detects a malfunction and stores a DTC.

Monitor Execution, Sequence, Duration, DTC Type

Execution	Once per driving cycle
Sequence	None
Duration	20 minutes or less
DTC Type	Two drive cycles, MIL on

Enable Conditions

Condition	Minimum	Maximum
Initial engine coolant temperature [ECT Sensor 1]	-	0 deg.F (-18 deg.C)
Fuel feedback	Other than during fuel cut-off operation	

[ ]: HDS Parameter

Malfunction Threshold

The engine running time before the engine coolant temperature [ECT Sensor 1] reaches 0 deg.F (-18 deg.C), based on the initial engine coolant temperatures [ECT Sensor 1] is as follows:

Initial engine coolant temperature [ECT Sensor 1]	Engine running time
-55 deg.F (-48 deg.C)	5 minutes or more
-35 deg.F (-37 deg.C)	5 minutes or more
0 deg.F (-18 deg.C)	1 minutes or more

Possible Cause

NOTE: The causes shown may not be a complete list of all potential problems, and it is possible that there may be other causes.

- ECT sensor 1 failure
- Thermostat stuck open

Confirmation Procedure

Operating Condition

- Enter the maintenance mode, then start the engine under Enable Conditions (see "Initial engine coolant temperature [ECT Sensor 1]").
- Let the engine idle for at least 20 minutes.

With the HDS

None.

Diagnosis Details

Conditions for setting the DTC

When a malfunction is detected during the first drive cycle with the engine coolant temperature and intake air temperature at engine start-up within the specified temperature range, a Pending DTC is stored in the PCM memory. If the malfunction returns in the next (second) drive cycle with the engine coolant temperature and intake air temperature at engine start-up within the specified temperature range, the MIL comes on and a Confirmed DTC and the freeze data are stored.

Conditions for clearing the DTC

The MIL is cleared if the malfunction does not return in three consecutive trips in which the diagnostic runs. The MIL, the Pending DTC, the Confirmed DTC, and the freeze data can be cleared with the scan tool Clear command or by disconnecting the 12 volt battery.

DTC P0128

DTC P0128: Cooling System Malfunction

General Description

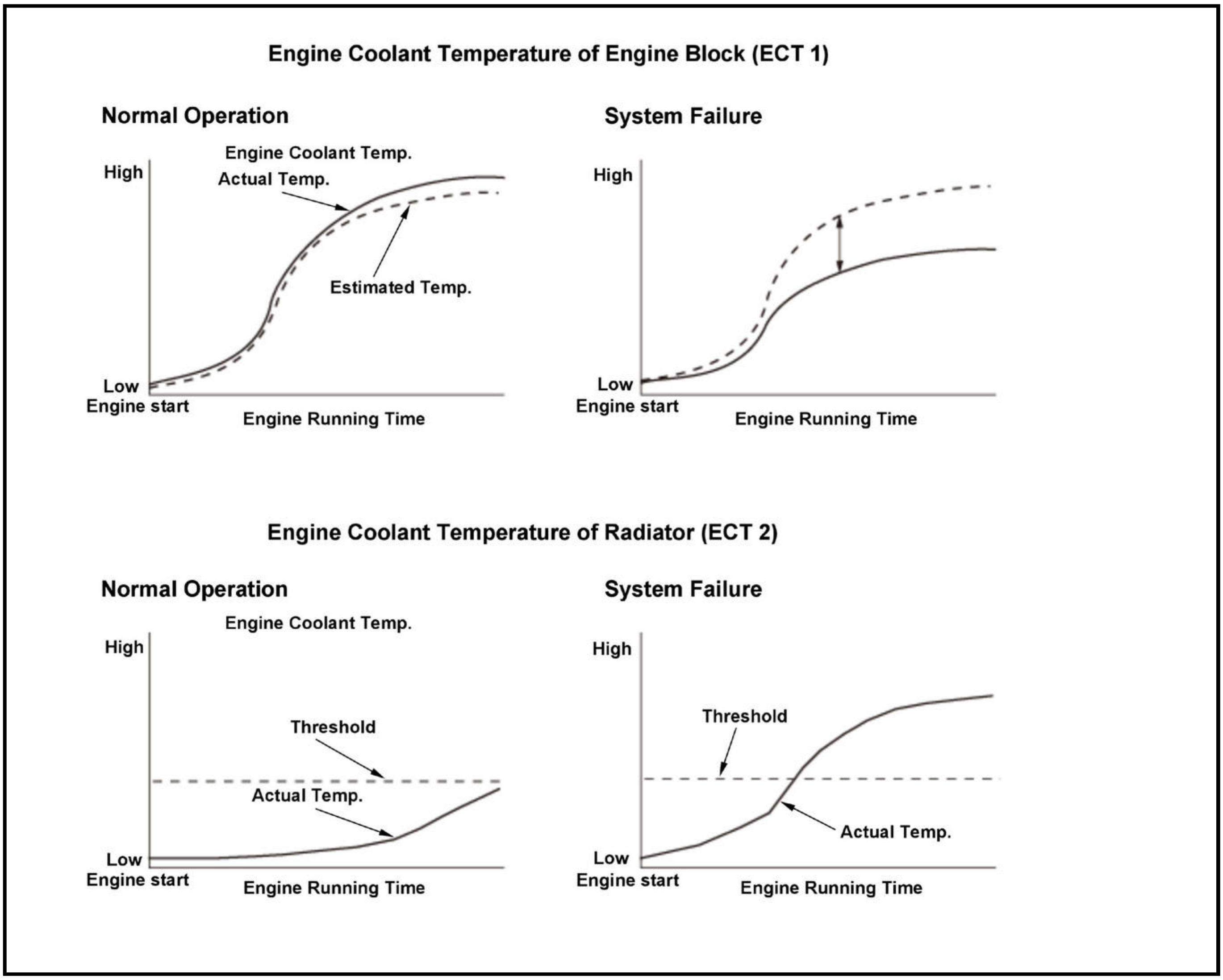

The thermostat is closed when the engine coolant temperature is low, and it stops the circulation of engine coolant to speed engine warm up. When the engine coolant temperature increases, the thermostat opens and circulates engine coolant to control its temperature. When the engine coolant temperature decreases, the opening area of the thermostat is reduced to regulate the engine coolant temperature. If the thermostat sticks open, engine warm up is delayed, and exhaust emissions are adversely affected. The powertrain control module (PCM) measures the rise in the coolant temperature after the engine starts at the engine block and at the radiator, and it estimates the characteristics of the engine coolant temperature by calculations based on those two temperatures and the driving conditions. When ECT 2 immediately increases from the starting value, it is defined as the thermostat stuck open. When ECT 1 does not reach a specified value at a certain condition, it is defined as a thermostat malfunction.

Monitor Execution, Sequence, Duration, DTC Type

Execution	Once per driving cycle
Sequence	None
Duration	Depending on the driving conditions
DTC Type	Two drive cycles, MIL on

Enable Conditions

Condition	Minimum	Maximum
Engine off time	6 hours	-
Estimated initial outside air temperature	19.9 deg.F (-6.7 deg.C)	-
Initial engine coolant temperature (ECT 1) [ECT Sensor 1]	-	123.0 deg.F (50.6 deg.C)
The difference between initial intake air temperature [IAT Sensor (1)] and current intake air temperature [IAT Sensor (1)]	-	36 deg.F (2.0 deg.C)*
		41 deg.F (5.0 deg.C)**

*: Intake air temperature decrease judgment when there is no driving record of 25 mph (40 km/h) in this drive cycle.**: Intake air temperature decrease judgment when there is a driving record of 25 mph (40 km/h) in this drive cycle.[ ]: HDS Parameter

Malfunction Threshold

Malfunction determination 1:

The difference between the current engine coolant temperature at the radiator (ECT 2) [ECT Sensor 2] and the initial engine coolant temperature at the radiator (ECT 2) [ECT Sensor 2] is at least 14.4 deg.F (8.0 deg.C) when either of these condition is met:

- When the estimated engine coolant temperature [EST ECT1] reached to 160.0 deg.F (71.1 deg.C).
- When the estimated engine coolant temperature [EST ECT1] changed 66.9 deg.F (19.4 deg.C).

Malfunction determination 2:

The estimated engine coolant temperature [EST ECT1] reaches to 158 deg.F (70 deg.C) before the actual engine coolant temperature at the engine (ECT 1) [ECT Sensor 1] reaches to 158 deg.F (70 deg.C).

Possible Cause

NOTE: The causes shown may not be a complete list of all potential problems, and it is possible that there may be other causes.

- Thermostat failure
- Engine coolant temperature (ECT) sensor 1 failure
- Intake air temperature (IAT) sensor failure
- Manifold absolute pressure (MAP) sensor failure
- Crankshaft position (CKP) sensor failure
- Barometric pressure (BARO) sensor failure
- Ignition system failure
- Fuel supply system failure
- VTEC system failure

- Radiator fan failure
- Hood opened

Confirmation Procedure

Operating Condition

- Start the engine under Enable Conditions (see "Engine off time", "Estimated initial outside air temperature", "Initial engine coolant temperature (ECT 1) [ECT Sensor 1]", and "The difference between initial intake air temperature [IAT Sensor (1)] and current intake air temperature [IAT Sensor (1)]").
- Drive the vehicle at a speed between 15 - 75 mph (24 - 120 km/h) for at least 30 minutes.
- Drive the vehicle in this manner only if the traffic regulations and ambient conditions allow.

With the HDS

None.

Diagnosis Details

Conditions for setting the DTC

When a malfunction is detected during the first drive cycle with the engine coolant temperature and intake air temperature at engine start-up within the specified temperature range, a Pending DTC is stored in the PCM memory. If the malfunction returns in the next (second) drive cycle with the engine coolant temperature and intake air temperature at engine start-up within the specified temperature range, the MIL comes on and a Confirmed DTC, and the freeze data are stored.

Conditions for clearing the DTC

The MIL is cleared if the malfunction does not return in three consecutive trips in which the diagnostic runs. The MIL, the Pending DTC, the Confirmed DTC, the freeze data, and the on-board snapshot can be cleared with the scan tool Clear command or by disconnecting the 12 volt battery.

DTC P0130

DTC P0130: Air/Fuel Ratio (A/F) Sensor (Sensor 1) Out of Range

General Description

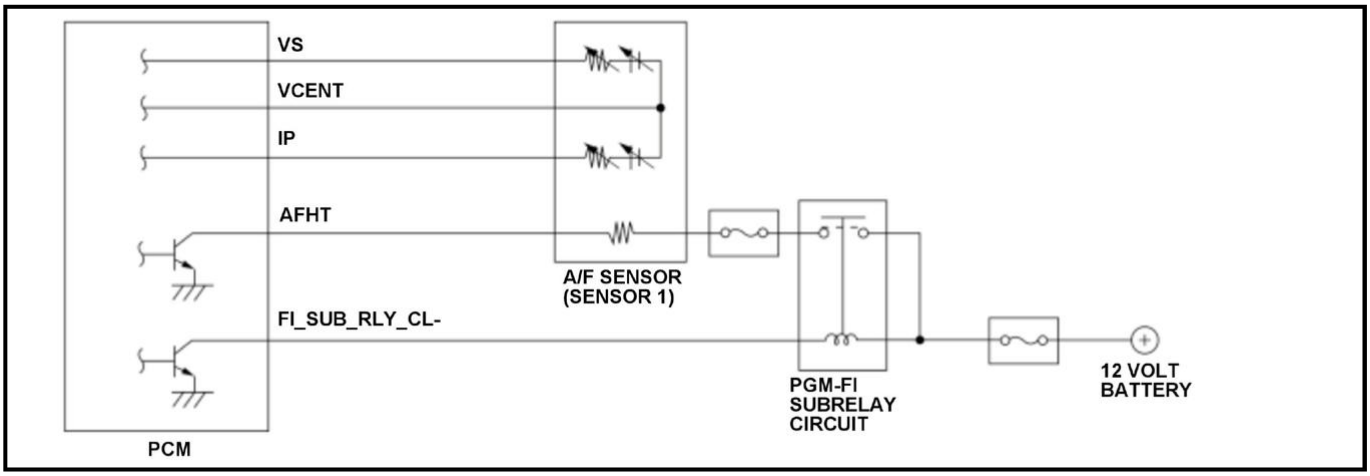

The air/fuel ratio (A/F) sensor (sensor 1) is installed in the exhaust manifold and detects oxygen content in the exhaust gas. The A/F sensor (sensor 1) transmits a signal to the powertrain control module (PCM), and the PCM controls fuel injection duration by comparing the target air/fuel ratio with the A/F sensor (sensor 1) signal. When power is applied to the A/F sensor (sensor 1) heater, if the A/F sensor (sensor 1) output voltage continues to exceed the upper limit, the PCM detects a malfunction and stores a DTC.

Monitor Execution, Sequence, Duration, DTC Type

Execution	Continuous
Sequence	None
Duration	7 seconds or more
DTC Type	Two drive cycles, MIL on

Enable Conditions

Condition	B
State of the engine	Running

Malfunction Threshold

A malfunction is detected when the A/F sensor (sensor 1) output voltage is 4.65 V or more for at least 7 seconds.

Possible Cause

NOTE: The causes shown may not be a complete list of all potential problems, and it is possible that there may be other causes.

- A/F sensor (sensor 1) failure
- PCM internal circuit failure

Diagnosis Details

Conditions for setting the DTC

When a malfunction is detected during the first drive cycle, a Pending DTC is stored in the PCM memory. If the malfunction returns in the next (second) drive cycle, the MIL comes on and a Confirmed DTC, the freeze data, and the on-board snapshot are stored.

Conditions for clearing the DTC

The MIL is cleared if the malfunction does not return in three consecutive trips in which the diagnostic runs. The MIL, the Pending DTC, the Confirmed DTC, the freeze data, and the on-board snapshot can be cleared with the scan tool Clear command or by disconnecting the 12 volt battery.

DTC P0133

DTC P0133: Air/Fuel Ratio (A/F) Sensor (Sensor 1) Malfunction/Slow Response

General Description

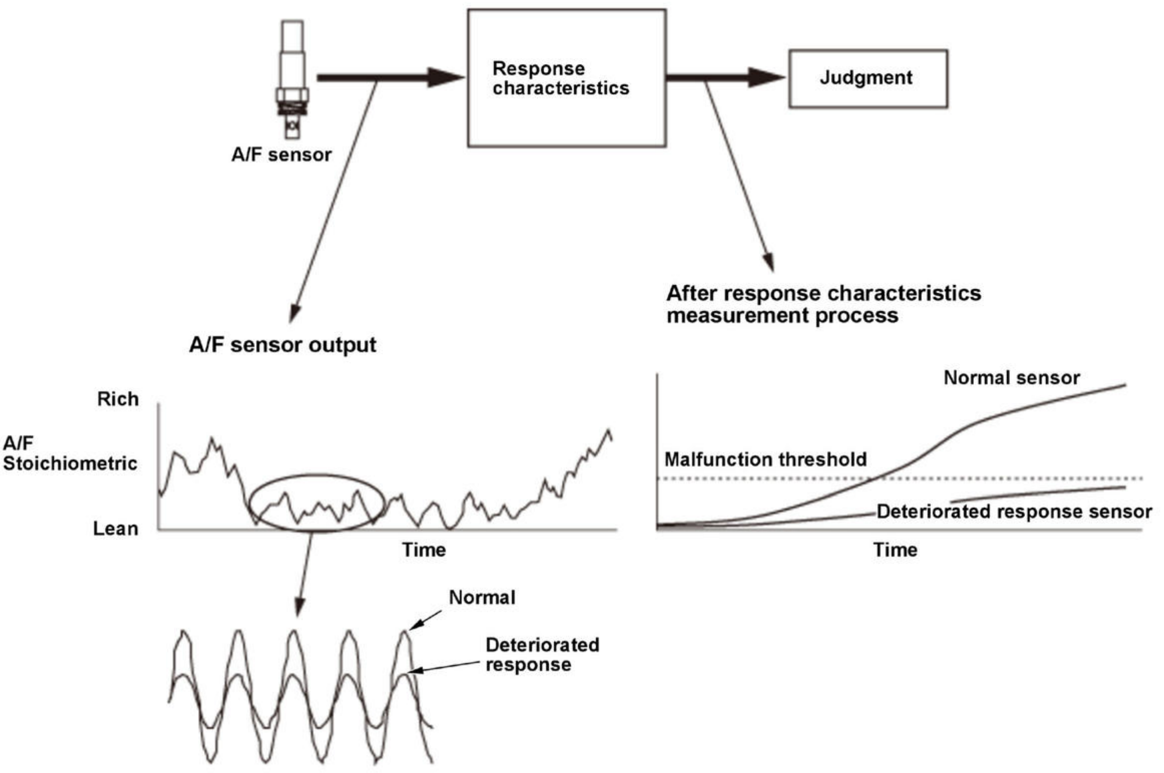

Response characteristics
Judgment
A/F sensor
After response characteristics measurement process
A/F sensor output
Rich
A/F
Stoichiometric
Lean
Time
Normal sensor
Malfunction threshold
Deteriorated response sensor
Time
Normal
Deteriorated response

The air/fuel ratio (A/F) sensor (sensor 1) has a linear signal output in relation to the oxygen concentration. The powertrain control module (PCM) computes the air/fuel ratio from the A/F sensor (sensor 1) output voltage and uses fuel feedback control to improve exhaust emissions. The PCM compares the response characteristics against the A/F sensor (sensor 1) output. If the total A/F sensor (sensor 1) output is a specified value for a specified time, the PCM detects a deteriorated response and stores a DTC.

Monitor Execution, Sequence, Duration, DTC Type

Execution	Once per driving cycle
Sequence	None
Duration	8.0 seconds or more
DTC Type	Two drive cycles, MIL on

Enable Conditions

Condition	Minimum	Maximum
Elapsed time after application of power to A/F sensor heater starts	5.0 seconds	-
Engine coolant temperature [ECT Sensor 1]	156 deg.F (69 deg.C)	-
Intake air temperature [IAT Sensor (1)]	-13 deg.F (-25 deg.C)	-
Engine speed [Engine Speed]	2, 100 rpm	3, 000 rpm
Vehicle speed [Vehicle Speed]	23 mph (37 km/h)	-
Fuel trim	0.69	1.47
Fuel feedback	Closed loop at stoichiometric	
Other	Without excessive load change	

[ ]: HDS Parameter

Malfunction Threshold

The total A/F sensor (sensor 1) output value is 0 - 0.00084* or less in 8.0 seconds.

*: Depending on engine speed and load.

Possible Cause

NOTE: The causes shown may not be a complete list of all potential problems, and it is possible that there may be other causes.

- A/F sensor (sensor 1) deterioration

Confirmation Procedure

Operating Condition

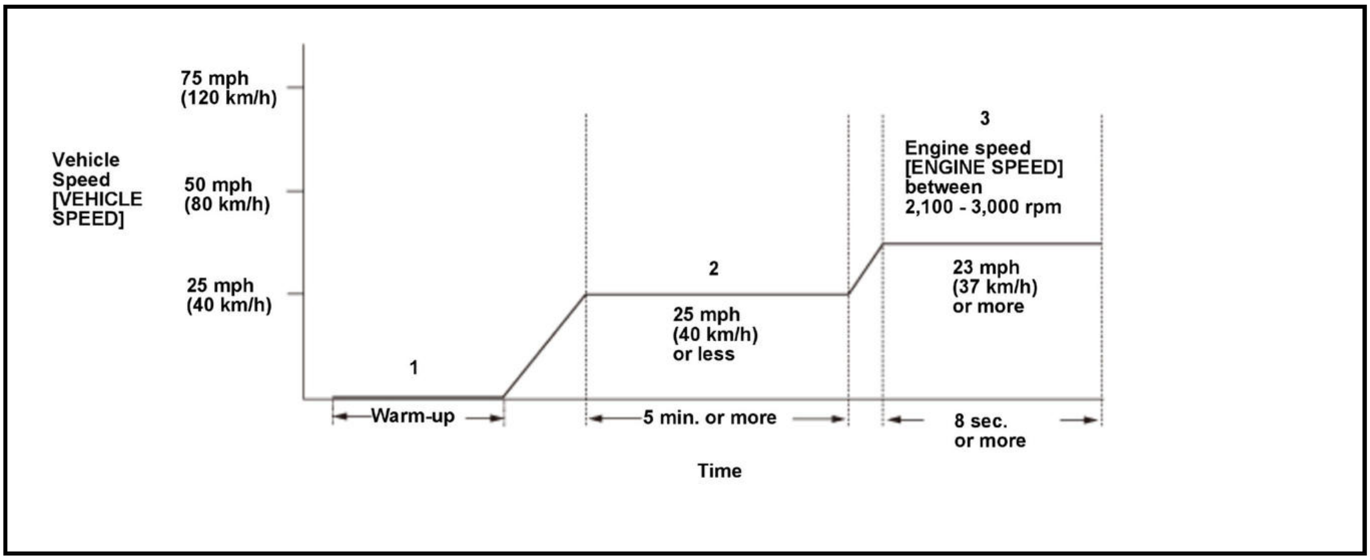

- Enter the maintenance mode, then start the engine. Hold the engine speed [Engine Speed] at 3, 000 rpm without load (in P or N) until the radiator fan comes on, then let it idle.
- Drive the vehicle at a steady speed of 25 mph (40 km/h) or less, for at least 5 minutes.
- Drive immediately at a steady speed of 23 mph (37 km/h) or more and engine speed [Engine Speed] between 2, 100 - 3, 000 rpm for at least 8 seconds.

- Drive the vehicle in this manner only if the traffic regulations and ambient conditions allow.

With the HDS

None.

Diagnosis Details

Conditions for setting the DTC

When a malfunction is detected during the first drive cycle, a Pending DTC is stored in the PCM memory. If the malfunction returns in the next (second) drive cycle, the MIL comes on and a Confirmed DTC and the freeze data are stored.

Conditions for clearing the DTC

The MIL is cleared if the malfunction does not return in three consecutive trips in which the diagnostic runs. The MIL, the Pending DTC, the Confirmed DTC, and the freeze data can be cleared with the scan tool Clear command or by disconnecting the 12 volt battery.

DTC P0134

DTC P0134: Air/Fuel Ratio (A/F) Sensor (Sensor 1) Heater System Malfunction

General Description

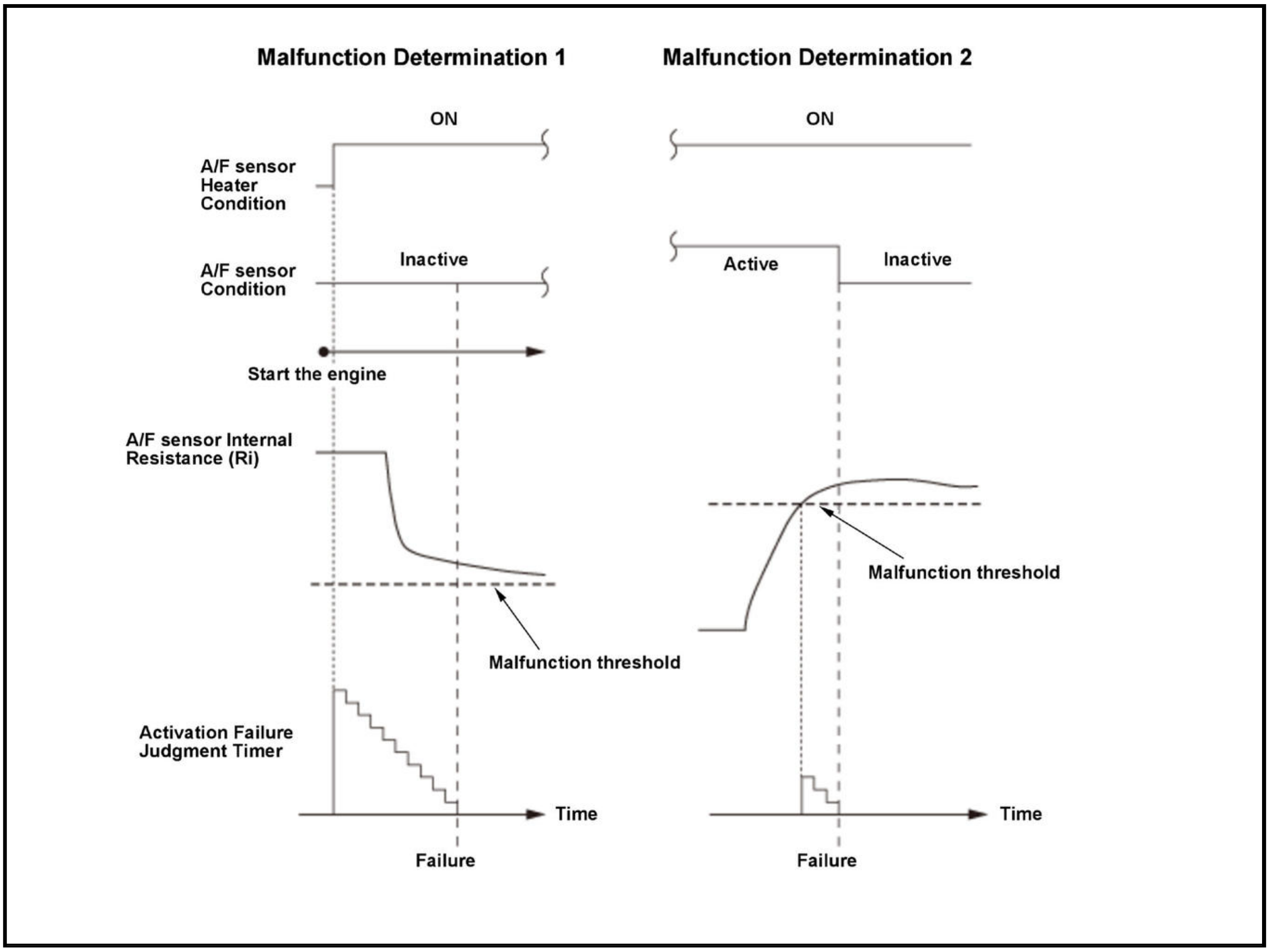

The air/fuel ratio (A/F) sensor (sensor 1) is activated by warming the element with a heater and by maintaining a steady high temperature to accurately calculate the air/fuel ratio. If the heater does not properly heat the element, the A/F sensor (sensor 1) does not activate, and the exhaust emissions deteriorate. The powertrain control module (PCM) monitors the A/F sensor (sensor 1) internal resistance.

- When the A/F sensor (sensor 1) does not activate for a set time after the A/F sensor (sensor 1) heater is turned on (with high A/F sensor (sensor 1) internal resistance), a malfunction of the A/F sensor (sensor 1) heater is detected, and a DTC is stored.
- When the A/F sensor (sensor 1) heater cycles ON and OFF for a set time, and the resistance remains high when the heater is ON, a malfunction of the A/F sensor (sensor 1) heater is detected, and a DTC is stored.

Monitor Execution, Sequence, Duration, DTC Type

Execution	Continuous
Sequence	None
Duration	90 seconds or more*, 1.0 second or more**
DTC Type	Two drive cycles, MIL on

: Malfunction determination 1

*: Malfunction determination 2

Enable Conditions

Condition	Minimum	Maximum
12 volt battery voltage [Battery]	10.5 V	-
Fuel feedback	Other than during fuel cut-off operation	

[ ]: HDS Parameter

Malfunction Threshold

- Malfunction determination 1 - From start up

  The A/F sensor (sensor 1) internal resistance value is 200 Ω or more for at least 90 seconds right after the engine starts.

- Malfunction determination 2 - Hot

  The A/F sensor (sensor 1) internal resistance value is 270 Ω or more for at least 1.0 second.

Possible Cause

NOTE: The causes shown may not be a complete list of all potential problems, and it is possible that there may be other causes.

- A/F sensor (sensor 1) VS line open
- A/F sensor (sensor 1) heater failure
- A/F sensor (sensor 1) element failure

Confirmation Procedure

Operating Condition

Enter the maintenance mode, then start the engine, and let it idle for at least 1 minute. When engine coolant temperature [ECT Sensor 1] is less than 5 deg.F (-15 deg.C), let the engine idle for at least 6 minutes.

With the HDS

None.

Diagnosis Details

Conditions for setting the DTC

When a malfunction is detected during the first drive cycle, a Pending DTC is stored in the PCM memory. If the malfunction returns in the next (second) drive cycle, the MIL comes on and a Confirmed DTC and the freeze data are stored.

Conditions for clearing the DTC

The MIL is cleared if the malfunction does not return in three consecutive trips in which the diagnostic runs. The MIL, the Pending DTC, the Confirmed DTC, and the freeze data can be cleared with the scan tool Clear command or by disconnecting the 12 volt battery.

DTC P0135

DTC P0135: Air/Fuel Ratio (A/F) Sensor (Sensor 1) Heater Circuit Malfunction

General Description

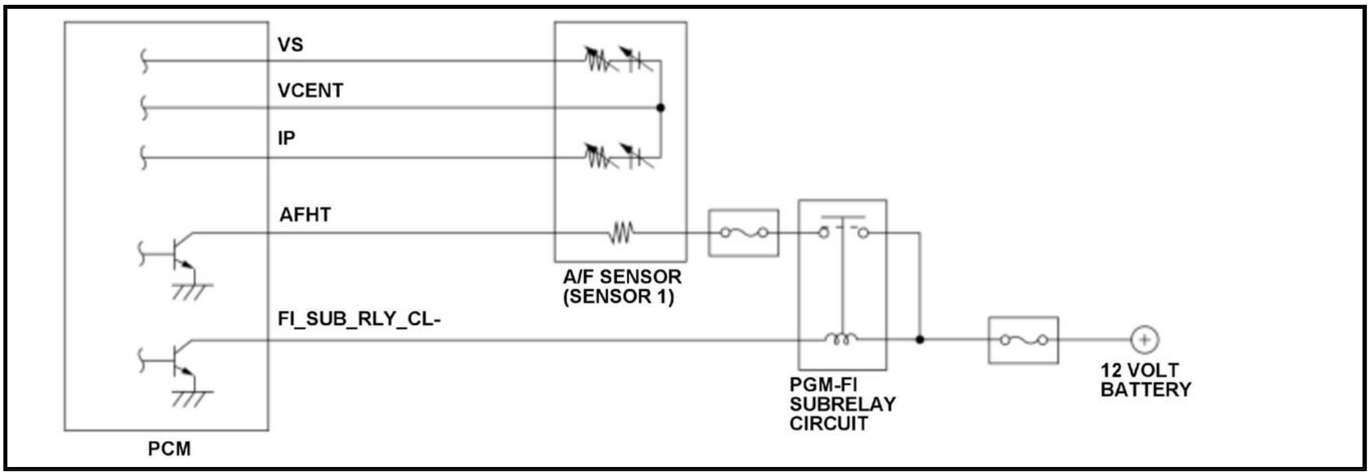

A heater for the sensor element is embedded in the air/fuel ratio (A/F) sensor (sensor 1), and it is controlled by the powertrain control module (PCM). It is activated and heats the sensor to stabilize and speed up the detection of oxygen content when the exhaust gas temperature is cold. The PCM monitors the A/F sensor (sensor 1) heater output (return check). If the return signals do not meet the command value (for heater activation) for a set time, the PCM detects a malfunction and stores a DTC.

Monitor Execution, Sequence, Duration, DTC Type

Execution	Continuous
Sequence	None
Duration	5 seconds or more
DTC Type	Two drive cycles, MIL on

Enable Conditions

Condition	Minimum	Maximum
12 volt battery voltage [Battery]	9.0 V	-
State of the engine	Running	
Other	During A/F sensor (sensor 1) heater operation	

[ ]: HDS Parameter

Malfunction Threshold

One of these conditions must be met for at least 5 seconds:

- No return signal HIGH is detected when the PCM output duty is less than 5 %.
- Return signal does not change when the PCM output duty 5 %* or more.

*: PCM output duty is limited to 95 % when it exceeds 95 %.

Possible Cause

NOTE: The causes shown may not be a complete list of all potential problems, and it is possible that there may be other causes.

- A/F sensor (sensor 1) AFHT line open
- A/F sensor (sensor 1) AFHT line short to ground
- A/F sensor (sensor 1) failure
- PGM-FI subrelay circuit failure (includes fuse blown)

Confirmation Procedure

Operating Condition

Enter the maintenance mode, then start the engine. Hold the engine speed [Engine Speed] at 3, 000 rpm without load (in P or N) until the radiator fan comes on, then let it idle.

With the HDS

None.

Diagnosis Details

Conditions for setting the DTC

When a malfunction is detected during the first drive cycle, a Pending DTC is stored in the PCM memory. If the malfunction returns in the next (second) drive cycle, the MIL comes on and a Confirmed DTC and the freeze data are stored.

Conditions for clearing the DTC

The MIL is cleared if the malfunction does not return in three consecutive trips in which the diagnostic runs. The MIL, the Pending DTC, the Confirmed DTC, and the freeze data can be cleared with the scan tool Clear command or by disconnecting the 12 volt battery.

DTC P0137

DTC P0137: Secondary Heated Oxygen Sensor (Secondary HO2S (Sensor 2)) Circuit Low Voltage

General Description

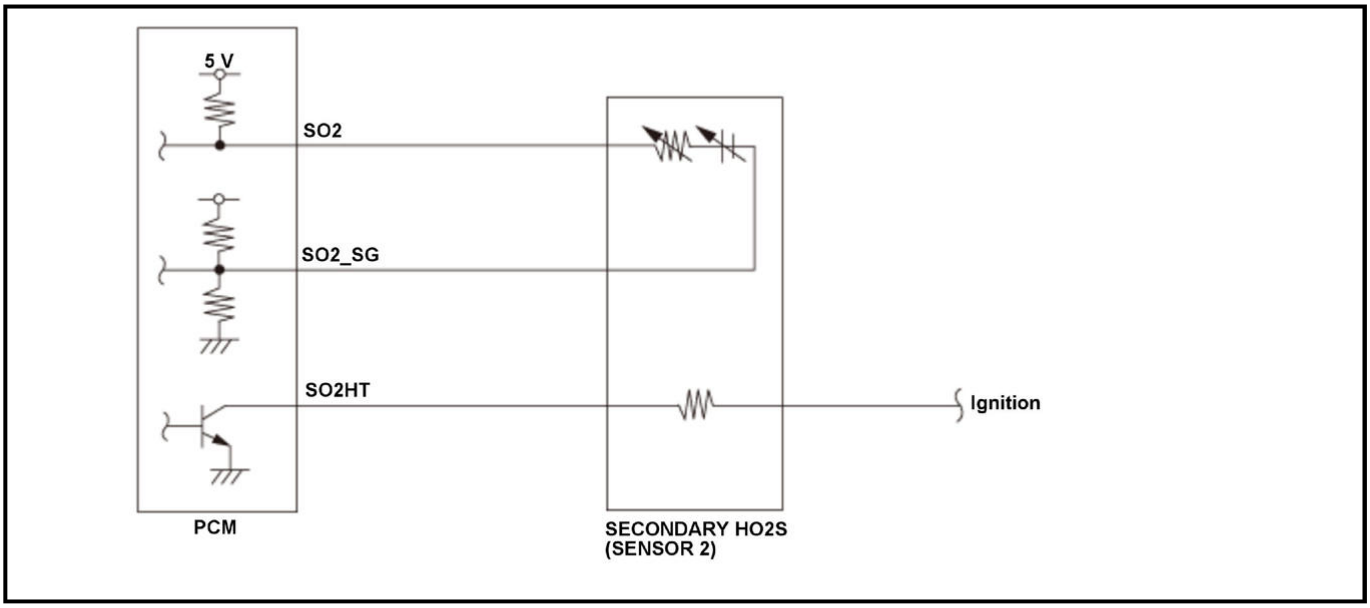

The secondary heated oxygen sensor (secondary HO2S (sensor 2)) detects the oxygen density in the exhaust gas and converts it into electrical signals. If the secondary HO2S (sensor 2) output voltage is a specified value for a set time, the powertrain control module (PCM) detects a malfunction and stores a DTC.

Monitor Execution, Sequence, Duration, DTC Type

Execution	Continuous
Sequence	None
Duration	5 seconds or more
DTC Type	Two drive cycles, MIL on

Enable Conditions

Condition	B
State of the engine	Running
Other	At least 55 seconds must be passed after the secondary HO2S (sensor 2) output voltage reaches 1.0 V or less

Malfunction Threshold

The secondary HO2S (sensor 2) output voltage [HO2S S2] is less than 0.15 V for at least 5 seconds.

[ ]: HDS Parameter

Possible Cause

NOTE: The causes shown may not be a complete list of all potential problems, and it is possible that there may be other causes.

- Secondary HO2S (sensor 2) SO2 line short to ground
- Secondary HO2S (sensor 2) SO2_SG line short to ground
- PCM internal circuit failure

Confirmation Procedure

Operating Condition

Enter the maintenance mode, then start the engine. Hold the engine speed [Engine Speed] at 3, 000 rpm without load (in P or N) until the radiator fan comes on, then let it idle.

With the HDS

None.

Diagnosis Details

Conditions for setting the DTC

When a malfunction is detected during the first drive cycle, a Pending DTC is stored in the PCM memory. If the malfunction returns in the next (second) drive cycle, the MIL comes on and a Confirmed DTC and the freeze data are stored.

Conditions for clearing the DTC

The MIL is cleared if the malfunction does not return in three consecutive trips in which the diagnostic runs. The MIL, the Pending DTC, the Confirmed DTC, and the freeze data can be cleared with the scan tool Clear command or by disconnecting the 12 volt battery.

DTC P0138

DTC P0138: Secondary Heated Oxygen Sensor (Secondary HO2S (Sensor 2)) Circuit High Voltage

General Description

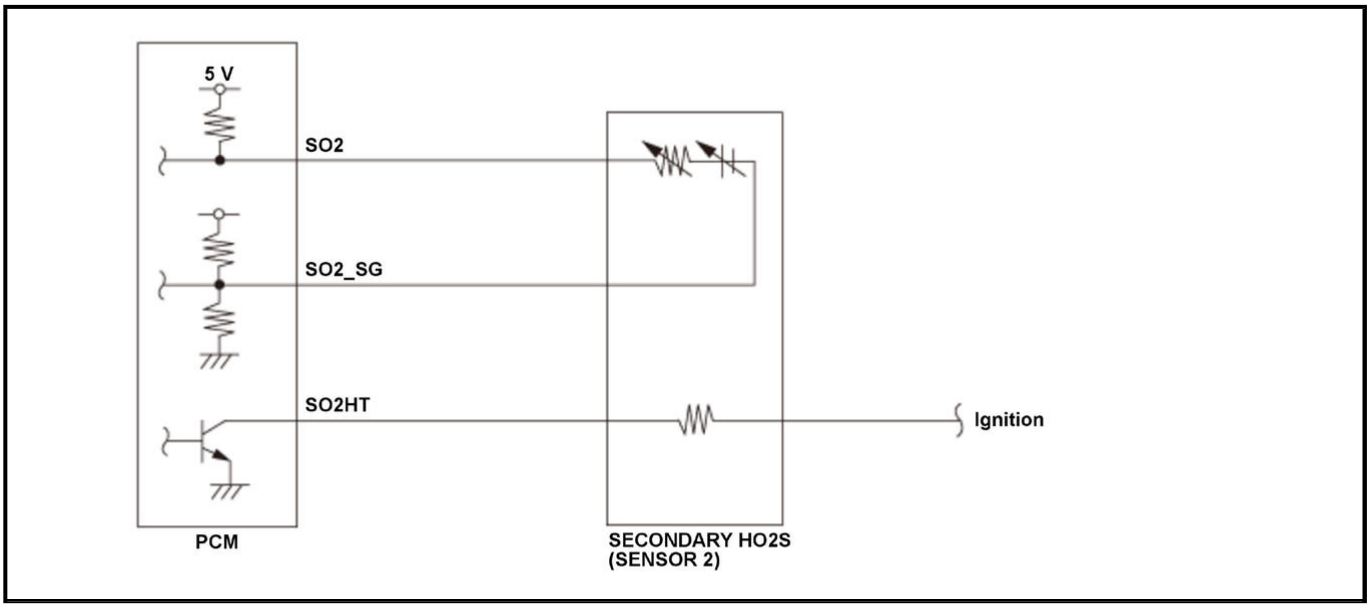

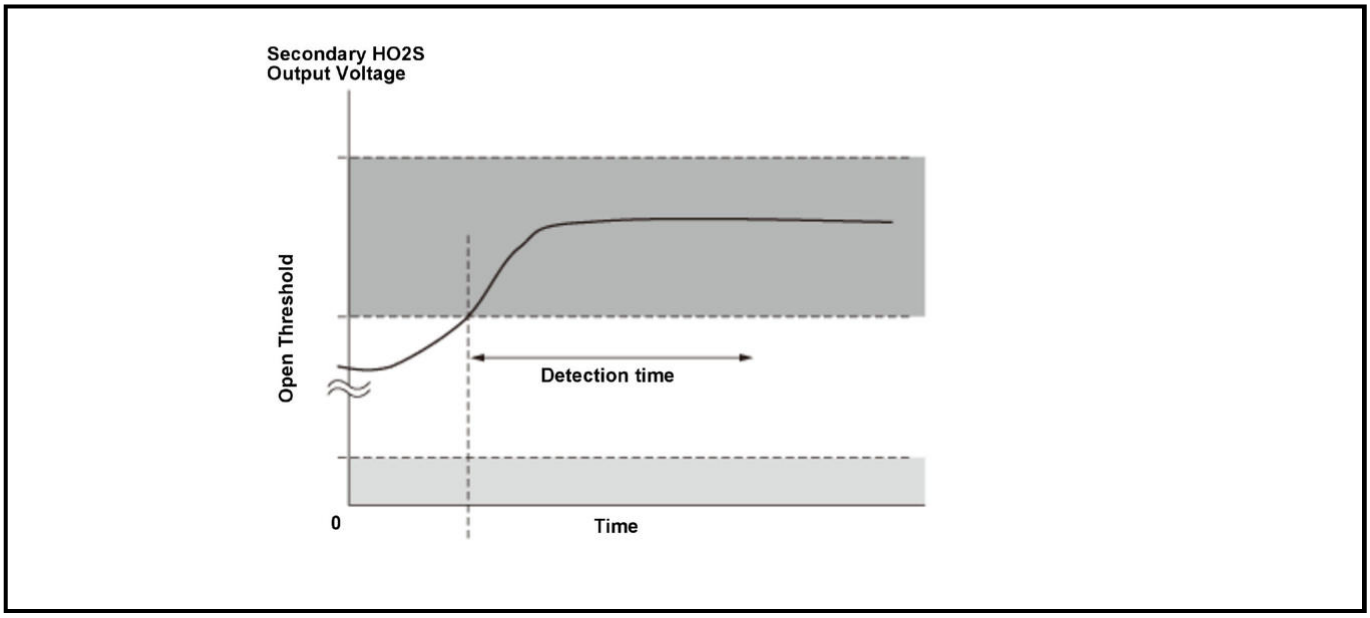

The secondary heated oxygen sensor (secondary HO2S (sensor 2)) detects the oxygen content in the exhaust gas downstream of the three way catalytic converter (TWC) during stoichiometric air/fuel ratio feedback control. The powertrain control module (PCM) controls the air/fuel ratio from the air/fuel ratio (A/F) sensor (sensor 1) output voltage so that the TWC efficiency is optimized. When power is applied to the secondary HO2S (sensor 2) heater, if the secondary HO2S (sensor 2) output voltage is high or the SO2_SG terminal voltage is high during feedback control, the PCM detects a malfunction and stores a DTC.

Monitor Execution, Sequence, Duration, DTC Type

Execution	Continuous
Sequence	None
Duration	5.0 seconds or more
DTC Type	Two drive cycles, MIL on

Enable Conditions

Condition	B
State of the engine	Running

Malfunction Threshold

Either of the condition continues for at least 5 seconds:

- The secondary HO2S (sensor 2) output voltage (voltage difference between SO2 and SO2_SG terminals) is 3.22 V or more.
- The SO2_SG terminal voltage is 3.49 V or more.

Possible Cause

NOTE: The causes shown may not be a complete list of all potential problems, and it is possible that there may be other causes.

- Secondary HO2S (sensor 2) SO2 line open
- Secondary HO2S (sensor 2) SO2 line short to power
- Secondary HO2S (sensor 2) SO2_SG line open
- Secondary HO2S (sensor 2) SO2_SG line short to power
- PCM internal circuit failure

Diagnosis Details

Conditions for setting the DTC

When a malfunction is detected during the first drive cycle, a Pending DTC is stored in the PCM memory. If the malfunction returns in the next (second) drive cycle, the MIL comes on and a Confirmed DTC and the freeze data are stored.

Conditions for clearing the DTC

The MIL is cleared if the malfunction does not return in three consecutive trips in which the diagnostic runs. The MIL, the Pending DTC, the Confirmed DTC, and the freeze data can be cleared with the scan tool Clear command or by disconnecting the 12 volt battery.

DTC P0139

DTC P0139: Secondary Heated Oxygen Sensor (Secondary HO2S (Sensor 2)) Slow Response

General Description

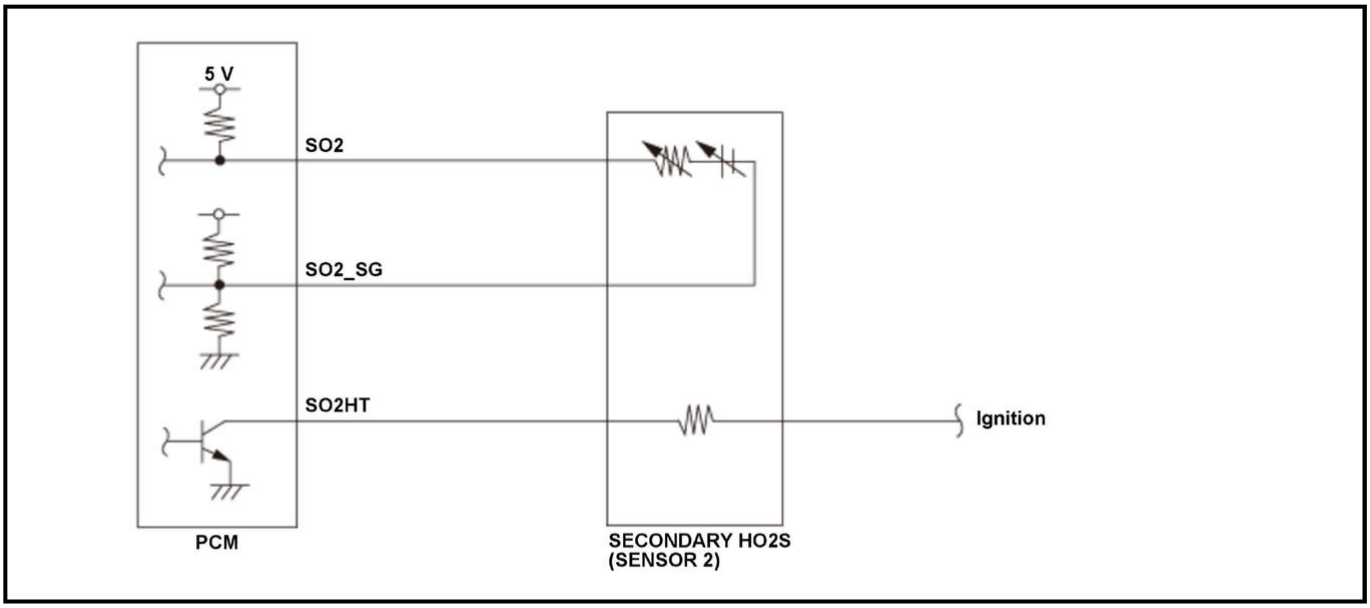

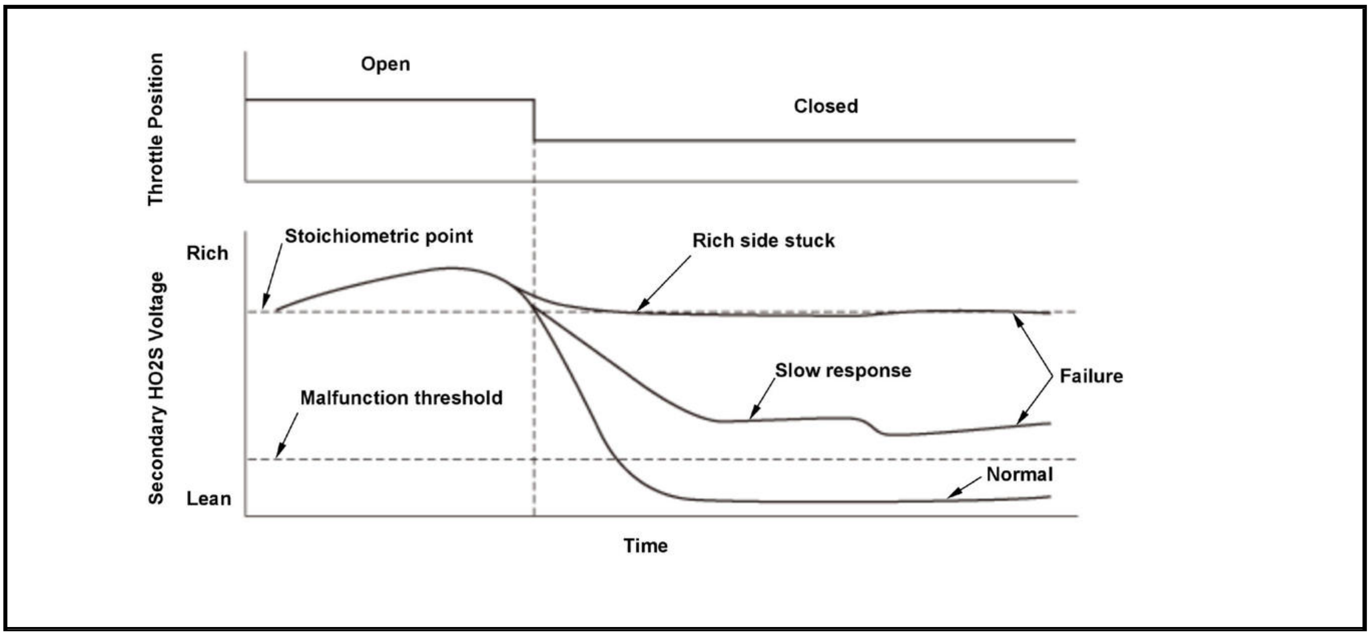

The secondary heated oxygen sensor (secondary HO2S (sensor 2)) detects the oxygen content in the exhaust gas downstream of the three way catalytic converter (TWC) during stoichiometric air/fuel ratio feedback control. The powertrain control module (PCM) controls the air/fuel ratio with the air/fuel ratio (A/F) sensor (sensor 1) output voltage to optimize the TWC's efficiency. When the secondary HO2S (sensor 2) does not change during lean air/fuel ratio when the throttle is closed, after full current is applied to the secondary HO2S (sensor 2) heater, and output remains within the specified range continuously, the PCM detects a malfunction and stores a DTC.

Monitor Execution, Sequence, Duration, DTC Type

Execution	Once per driving cycle
Sequence	P0138 is judged as OK
Duration	10 seconds or more

DTC Type	Two drive cycles, MIL on

Enable Conditions

Condition	Minimum	Maximum
Elapsed time after starting the engine	1 minute	-
Engine coolant temperature [ECT Sensor 1]	156 deg.F (69 deg.C)	-
Intake air temperature [IAT Sensor (1)]	-13 deg.F (-25 deg.C)	-
Engine speed [Engine Speed]	-	4, 000 rpm
Secondary HO2S output voltage [HO2S S2]	0.05 V	-
Intake air amount	1 g/second (0.04 oz/second)	-
Fuel feedback	During deceleration	

[ ]: HDS Parameter

Malfunction Threshold

The secondary HO2S (sensor 2) output voltage [HO2S S2] is 0.05 V or more for at least 10 seconds.

Possible Cause

NOTE: The causes shown may not be a complete list of all potential problems, and it is possible that there may be other causes.

- Secondary HO2S (sensor 2) responsive deterioration
- Exhaust system failure (exhaust gas leak)

Confirmation Procedure

Operating Condition

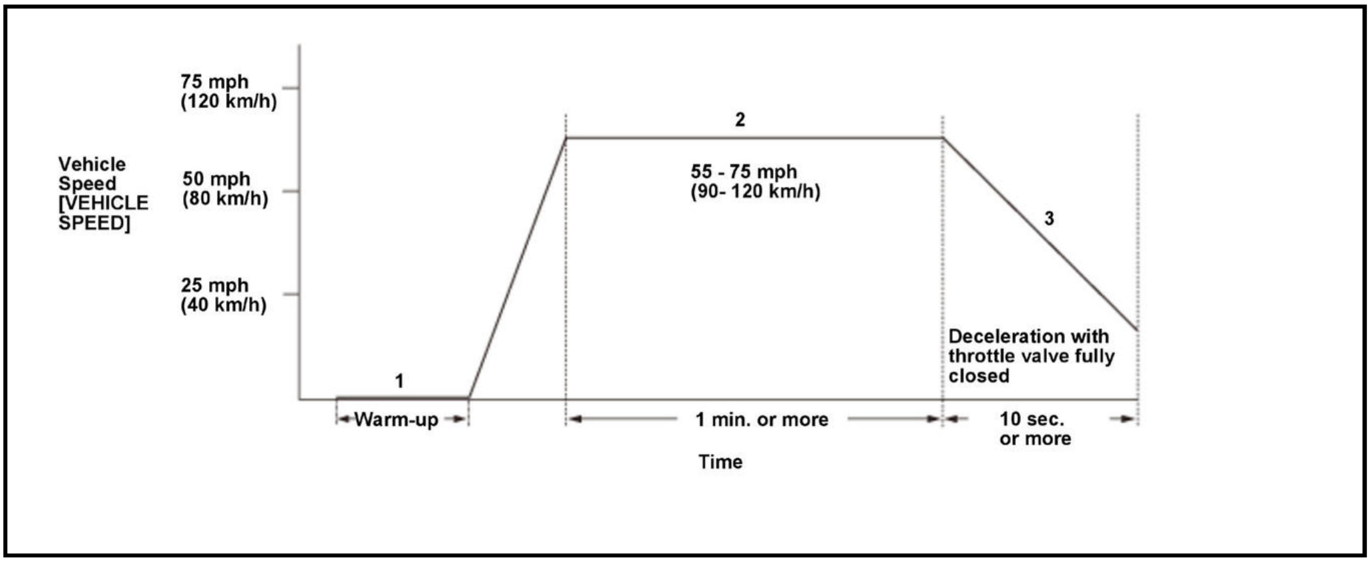

- Enter the maintenance mode, then start the engine. Hold the engine speed [Engine Speed] at 3, 000 rpm without load (in P or N) until the radiator fan comes on, then let it idle.
- Drive the vehicle at a steady speed between 55 - 75 mph (90 - 120 km/h) for at least 1 minute.
- Decelerate with the throttle valve fully closed for at least 10 seconds.

- Drive the vehicle in this manner only if the traffic regulations and ambient conditions allow.

With the HDS

None.

Diagnosis Details

Conditions for setting the DTC

When a malfunction is detected during the first drive cycle, a Pending DTC is stored in the PCM memory. If the malfunction returns in the next (second) drive cycle, the MIL comes on and a Confirmed DTC and the freeze data are stored.

Conditions for clearing the DTC

The MIL is cleared if the malfunction does not return in three consecutive trips in which the diagnostic runs. The MIL, the Pending DTC, the Confirmed DTC, and the freeze data can be cleared with the scan tool Clear command or by disconnecting the 12 volt battery.

DTC P0141

DTC P0141: Secondary Heated Oxygen Sensor (Secondary HO2S (Sensor 2)) Heater Circuit Malfunction

General Description

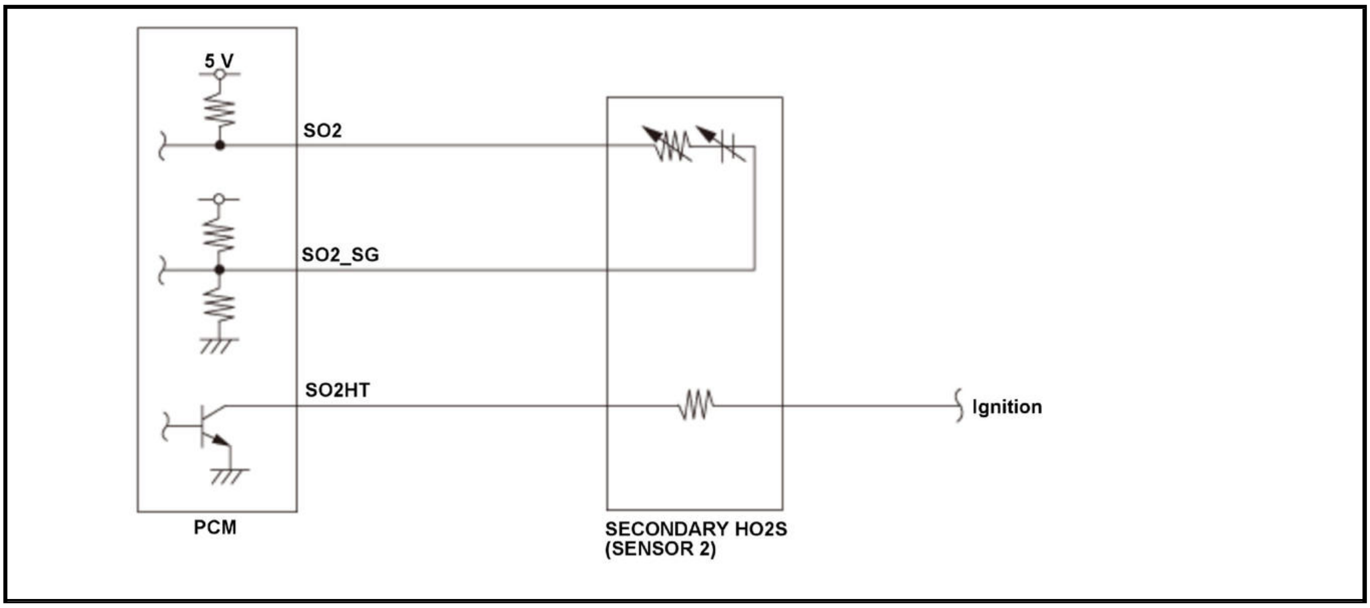

A heater for the zirconia element is embedded in the secondary heated oxygen sensor (secondary HO2S (sensor 2)), and it is controlled by the powertrain control module (PCM). When activated, it heats the sensor to stabilize and speed up the detection of oxygen content when the exhaust gas temperature is cold. If the secondary HO2S (sensor 2) heater draws other than a specified amperage, the PCM detects a malfunction and stores a DTC.

Monitor Execution, Sequence, Duration, DTC Type

Execution	Continuous
Sequence	None
Duration	5.0 seconds or more
DTC Type	Two drive cycles, MIL on

Enable Conditions

Condition	Minimum	Maximum
Engine coolant temperature [ECT Sensor 1]	41 deg.F (5 deg.C)	-
12 volt battery voltage [Battery] (FI_MAIN_RLY_OUT terminal of PCM)	4.67 V	-

[ ]: HDS Parameter

Malfunction Threshold

The secondary HO2S (sensor 2) heater output is 0.38 A or less, or 3.33 A or more, for at least 5.0 seconds when the heater is on.

Possible Cause

NOTE: The causes shown may not be a complete list of all potential problems, and it is possible that there may be other causes.

- Secondary HO2S (sensor 2) SO2HT line open
- Secondary HO2S (sensor 2) SO2HT line short to ground
- Secondary HO2S (sensor 2) heater power supply line open (includes fuse blown)
- Secondary HO2S (sensor 2) heater failure
- Body control module failure

- PCM internal circuit failure

Confirmation Procedure

Operating Condition

Enter the maintenance mode, then start the engine in a cold condition, and let it idle until the radiator fan comes on.

With the HDS

None.

Diagnosis Details

Conditions for setting the DTC

When a malfunction is detected during the first drive cycle, a Pending DTC is stored in the PCM memory. If the malfunction returns in the next (second) drive cycle, the MIL comes on and a Confirmed DTC and the freeze data are stored.

Conditions for clearing the DTC

The MIL is cleared if the malfunction does not return in three consecutive trips in which the diagnostic runs. The MIL, the Pending DTC, the Confirmed DTC, and the freeze data can be cleared with the scan tool Clear command or by disconnecting the 12 volt battery.

DTC P0171

DTC P0171: Fuel System Too Lean

General Description

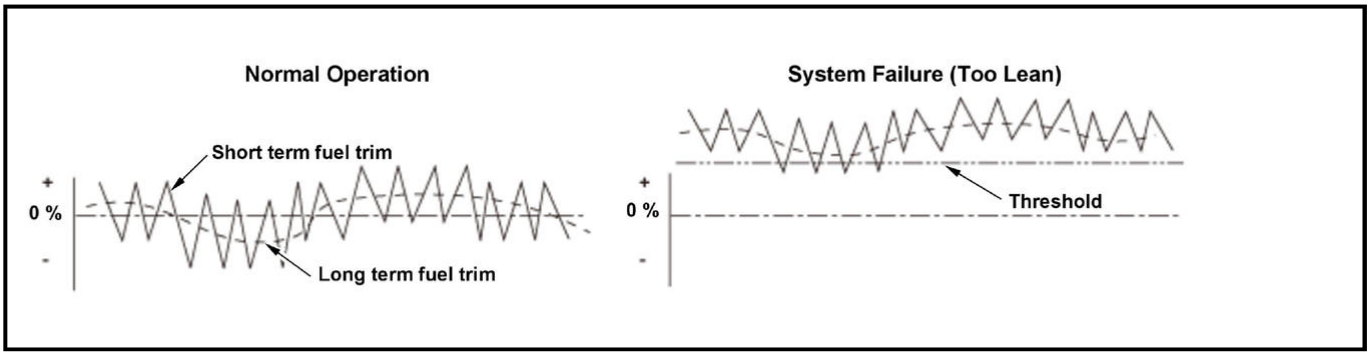

The powertrain control module (PCM) detects the oxygen content in the exhaust gas from the air/fuel ratio (A/F) sensor (sensor 1) signal voltage, and it uses fuel feedback control to maintain the optimal air/fuel ratio. The air/fuel ratio coefficient for correcting the amount of injected fuel is the short term fuel trim. The PCM varies short term fuel trim continuously to keep the air/fuel ratio close to the stoichiometric ratio for all driving conditions. Long term fuel trim is computed from short term fuel trim and is used to regulate long term deviation from the stoichiometric air/fuel ratio, which occurs when fuel metering components deteriorate with age or system failures occur. In addition, long term fuel trim is stored in the PCM memory and is used to determine when fuel metering components malfunction. When long term fuel trim is higher than normal, which is about 1.0 (0 %), the amount of injected fuel must be increased, and when lower than normal, it must be decreased. If long term fuel trim is higher than normal (too lean), the PCM detects a malfunction in the fuel metering components and stores a DTC.

Monitor Execution, Sequence, Duration, DTC Type

Execution	Once per driving cycle*

Sequence	None
Duration	Every 7.0 seconds
DTC Type	Two drive cycles, MIL on

*: The malfunction judgment is cleared when it is judged as normal under the same driving conditions in which the malfunction is detected.

Enable Conditions

Condition	Minimum	Maximum
Engine coolant temperature [ECT Sensor 1]	156 deg.F (69 deg.C)	-
Intake air temperature [IAT Sensor (1)]	19 deg.F (-7 deg.C)	-
Engine speed [Engine Speed]	1, 100 rpm	4, 000 rpm
MAP value [MAP Sensor]	21 kPa (160 mmHg, 6.3 inHg)	-
Fuel feedback	Closed loop	
Monitoring priority	P0133, P0400, P0420	

[ ]: HDS Parameter

Malfunction Threshold

Long term fuel trim is higher than 1.30 (+30 %).

Possible Cause

NOTE: The causes shown may not be a complete list of all potential problems, and it is possible that there may be other causes.

- Fuel pump failure
- Fuel injector failure
- Fuel pressure regulator failure
- Fuel line failure
- Fuel supply system failure
- Mass airflow (MAF) sensor range/performance problem
- Manifold absolute pressure (MAP) sensor range/performance problem
- A/F sensor (sensor 1) failure
- Secondary HO2S (sensor 2) failure
- Vacuum hose miss installed
- Throttle body air leak
- Intake manifold air leak
- Evaporative emission (EVAP) canister purge valve failure
- Valve timing incorrect

Confirmation Procedure

Operating Condition

- Enter the maintenance mode, then start the engine. Hold the engine speed [Engine Speed] at 3, 000 rpm without load (in P or N) until the radiator fan comes on, then let it idle.
- Drive at a steady speed between 15 - 75 mph (25 - 120 km/h) for at least 15 minutes, and watch the long term fuel trim. If the long term fuel trim stays at about 1.0, the vehicle is OK or it is a very minor

problem. If a significant fault is still present, the long term fuel trim will move up or down while driving.

- When freeze data is stored, drive the vehicle under those conditions instead of Driving Pattern step 2.
- After clearing the DTC by disconnecting the 12 volt battery or using the scan tool, drive at steady speed between 15 - 55 mph (25 - 88 km/h) for at least 40 minutes to allow time for long term fuel trim to recover.
- Drive the vehicle in this manner only if the traffic regulations and ambient conditions allow.

With the HDS

None.

Diagnosis Details

Conditions for setting the DTC

When a malfunction is detected during the first drive cycle, a Pending DTC is stored in the PCM memory. If the malfunction returns in the next (second) drive cycle, the MIL comes on and a Confirmed DTC and the freeze data are stored.

Conditions for clearing the DTC

The MIL is cleared if the malfunction does not return in three consecutive drive cycles in which the engine conditions are similar to the first time the malfunction was detected. The MIL, the Pending DTC, the Confirmed DTC, and the freeze data can be cleared with the scan tool Clear command or by disconnecting the 12 volt battery.

DTC P0172

DTC P0172: Fuel System Too Rich

General Description

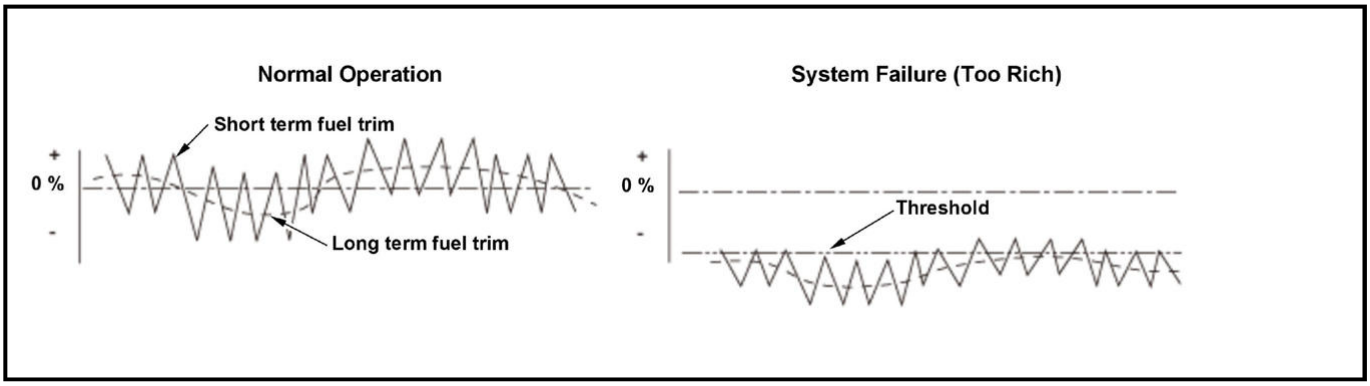

The powertrain control module (PCM) detects the oxygen content in the exhaust gas from the air/fuel ratio (A/F) sensor (sensor 1) signal voltage, and it uses fuel feedback control to maintain the optimal air/fuel ratio. The air/fuel ratio coefficient for correcting the amount of injected fuel is the short term fuel trim. The PCM varies short term fuel trim continuously to keep the air/fuel ratio close to the stoichiometric ratio for all driving conditions. Long term fuel trim is computed from short term fuel trim and is used to regulate long term deviation from the stoichiometric air/fuel ratio, which occurs when fuel metering components deteriorate with age or system failures occur. In addition, long term fuel trim is stored in the PCM memory and is used to determine when fuel metering components malfunction. When long term fuel trim is higher than normal, which is about 1.0 (0 %), the amount of injected fuel must be increased, and when lower than normal, it must be decreased. If long term fuel trim is lower than normal (too rich), the PCM detects a malfunction in the fuel metering components and stores a DTC.

Monitor Execution, Sequence, Duration, DTC Type

Execution	Once per driving cycle*
Sequence	None
Duration	20 seconds or more
DTC Type	Two drive cycles, MIL on

*: The malfunction judgment is cleared when it is judged as normal under the same driving conditions in which the malfunction is detected.

Enable Conditions

Condition	Minimum	Maximum
Engine coolant temperature [ECT Sensor 1]	156 deg.F (69 deg.C)	-
Intake air temperature [IAT Sensor (1)]	19 deg.F (-7 deg.C)	-
Engine speed [Engine Speed]	1, 100 rpm	4, 000 rpm
MAP value [MAP Sensor]	21 kPa (160 mmHg, 6.3 inHg)	-
Fuel feedback	Closed loop	
Monitoring priority	P0133, P0400, P0420	

[ ]: HDS Parameter

Malfunction Threshold

Long term fuel trim is lower than 0.79 (-21 %).

Possible Cause

NOTE: The causes shown may not be a complete list of all potential problems, and it is possible that there may be other causes.

- Fuel pump failure
- Fuel injector failure
- Fuel pressure regulator failure
- Fuel line failure
- Fuel supply system failure
- Mass airflow (MAF) sensor range/performance problem
- Manifold absolute pressure (MAP) sensor range/performance problem
- A/F sensor (sensor 1) failure
- Secondary HO2S (sensor 2) failure
- Vacuum hose miss installed
- Throttle body air leak
- Intake manifold air leak
- Evaporative emission (EVAP) canister purge valve failure
- Valve timing incorrect

Confirmation Procedure

Operating Condition

- Enter the maintenance mode, then start the engine. Hold the engine speed [Engine Speed] at 3, 000 rpm without load (in P or N) until the radiator fan comes on, then let it idle.

- Drive at a steady speed between 15 - 75 mph (25 - 120 km/h) for at least 15 minutes, and watch the long term fuel trim. If the long term fuel trim stays at about 1.0, the vehicle is OK or it is a very minor problem. If a significant fault is still present, the long term fuel trim will move up or down while driving.
- When freeze data is stored, drive the vehicle under those conditions instead of Driving Pattern step 2.
- After clearing the DTC by disconnecting the 12 volt battery or using the scan tool, drive at steady speed between 15 - 55 mph (25 - 88 km/h) for at least 40 minutes to allow time for long term fuel trim to recover.
- Drive the vehicle in this manner only if the traffic regulations and ambient conditions allow.

With the HDS

None.

Diagnosis Details

Conditions for setting the DTC

When a malfunction is detected during the first drive cycle, a Pending DTC is stored in the PCM memory. If the malfunction returns in the next (second) drive cycle, the MIL comes on and a Confirmed DTC and the freeze data are stored.

Conditions for clearing the DTC

The MIL is cleared if the malfunction does not return in three consecutive drive cycles in which the engine conditions are similar to the first time the malfunction was detected. The MIL, the Pending DTC, the Confirmed DTC, and the freeze data can be cleared with the scan tool Clear command or by disconnecting the 12 volt battery.

DTC P0201, P0202, P0203, P0204

DTC P0201: No. 1 Cylinder Injector Circuit Malfunction

DTC P0202: No. 2 Cylinder Injector Circuit Malfunction

DTC P0203: No. 3 Cylinder Injector Circuit Malfunction

DTC P0204: No. 4 Cylinder Injector Circuit Malfunction

General Description

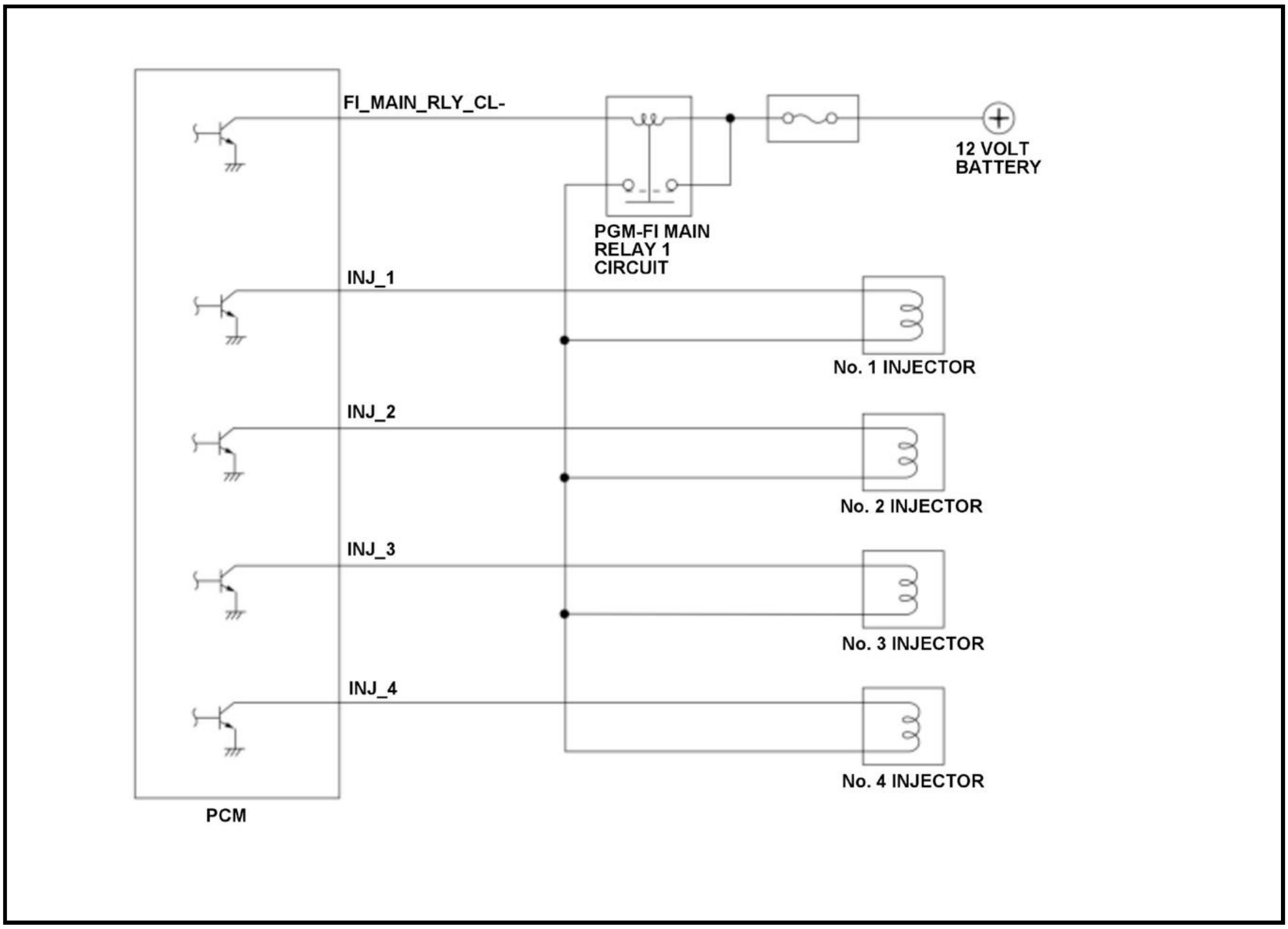
FI_MAIN_RLY_CL-
12 VOLT
BATTERY
PGM-FI MAIN
RELAY 1
CIRCUIT
INJ_1
No. 1 INJECTOR
INJ_2
No. 2 INJECTOR
INJ_3
No. 3 INJECTOR
INJ_4
No. 4 INJECTOR
PCM

The injector supplies fuel to the engine and is controlled by the powertrain control module (PCM) ON/OFF command. In the PCM, the injector driver receives a drive commands from the CPU and drives the injector. The CPU monitors a terminal voltage of PCM by the return signal circuit. If the return signal from the injector does not change for a specified time, the PCM detects a malfunction and stores a DTC.

Monitor Execution, Sequence, Duration, DTC Type

Execution	Continuous
Sequence	None
Duration	5 seconds or more (at idle)
DTC Type	One drive cycle, MIL on

Enable Conditions

Condition	Minimum	Maximum
12 volt battery voltage [Battery]	10 V	-
State of the engine	Running	
Other	Other than during fuel cut-off operation	

[ ]: HDS Parameter

Malfunction Threshold

The return signal from the injector does not change at least 30 times (counts once per engine cycle).

Possible Cause

NOTE: The causes shown may not be a complete list of all potential problems, and it is possible that there may be other causes.

P0201

- No. 1 injector INJ_1 line open
- No. 1 injector INJ_1 line short to ground
- No. 1 injector INJ_1 line short to power
- No. 1 injector power supply line open
- No. 1 injector failure

P0202

- No. 2 injector INJ_2 line open
- No. 2 injector INJ_2 line short to ground
- No. 2 injector INJ_2 line short to power
- No. 2 injector power supply line open
- No. 2 injector failure

P0203

- No. 3 injector INJ_3 line open
- No. 3 injector INJ_3 line short to ground
- No. 3 injector INJ_3 line short to power
- No. 3 injector power supply line open
- No. 3 injector failure

P0204

- No. 4 injector INJ_4 line open
- No. 4 injector INJ_4 line short to ground
- No. 4 injector INJ_4 line short to power
- No. 4 injector power supply line open
- No. 4 injector failure

Common

- PCM internal circuit failure

Diagnosis Details

Conditions for setting the DTC

When a malfunction is detected, the MIL comes on and a Pending DTC, a Confirmed DTC, and the freeze data are stored in the PCM memory.

Conditions for clearing the DTC

The MIL is cleared if the malfunction does not return in three consecutive trips in which the diagnostic runs. The MIL, the Pending DTC, the Confirmed DTC, and the freeze data can be cleared with the scan tool Clear command or by disconnecting the 12 volt battery.

DTC P0221

DTC P0221: Throttle Position (TP) Sensor B Out of Range

General Description

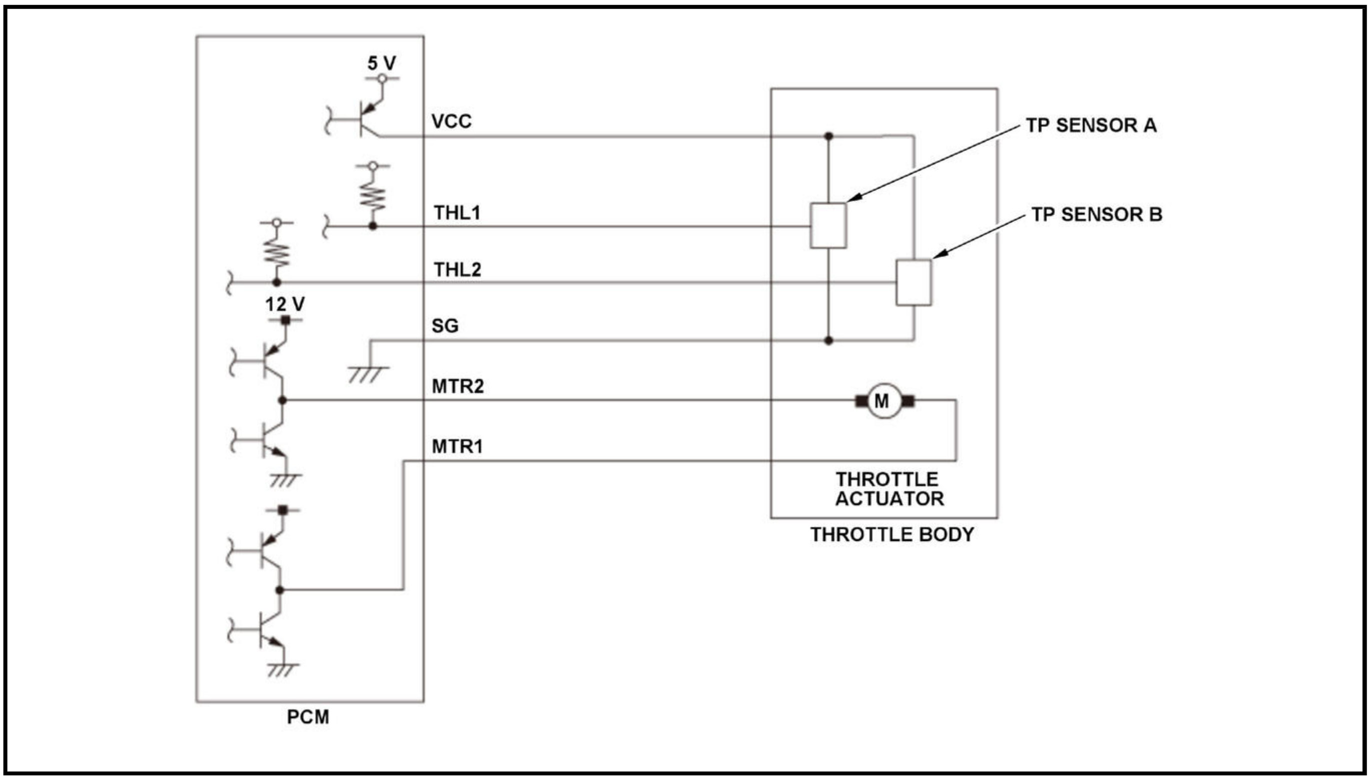

The electronic throttle control system controls the throttle valve opening. The system includes the throttle actuator, the throttle valve, throttle position (TP) sensors A and B, the PGM-FI subrelay circuit, the accelerator pedal position (APP) sensor, and the powertrain control module (PCM). TP sensor B is a semiconductor type, and it is attached to the throttle body and shaft to determine throttle valve position. The throttle valve position signal from TP sensor B is transmitted to the PCM for target position feedback control. If the signal from TP sensor B is a fixed value for a set time, the PCM detects a TP sensor B malfunction and stores a DTC.

Monitor Execution, Sequence, Duration, DTC Type

Execution	Continuous
Sequence	None
Duration	6 seconds or more
DTC Type	Two drive cycles, MIL on

Enable Conditions

Condition	B
Vehicle	ON mode

Malfunction Threshold

The TP sensor B output voltage [TP Sensor B] is 0.5 V or less, or 4.63 V or more for at least 6 seconds.

[ ]: HDS Parameter

Possible Cause

NOTE: The causes shown may not be a complete list of all potential problems, and it is possible that there may be other causes.

- Throttle body internal failure (TP sensor B)
- PCM internal circuit failure

Diagnosis Details

Conditions for setting the DTC

When a malfunction is detected during the first drive cycle, a Pending DTC is stored in the PCM memory. If the malfunction returns in the next (second) drive cycle, the MIL comes on and a Confirmed DTC, the freeze data, and the on-board snapshot are stored.

Conditions for clearing the DTC

The MIL is cleared if the malfunction does not return in three consecutive trips in which the diagnostic runs. The MIL, the Pending DTC, the Confirmed DTC, the freeze data, and the on-board snapshot can be cleared with the scan tool Clear command or by disconnecting the 12 volt battery.

DTC P0222, P0223

DTC P0222: Throttle Position (TP) Sensor B Circuit Low Voltage

DTC P0223: Throttle Position (TP) Sensor B Circuit High Voltage

General Description

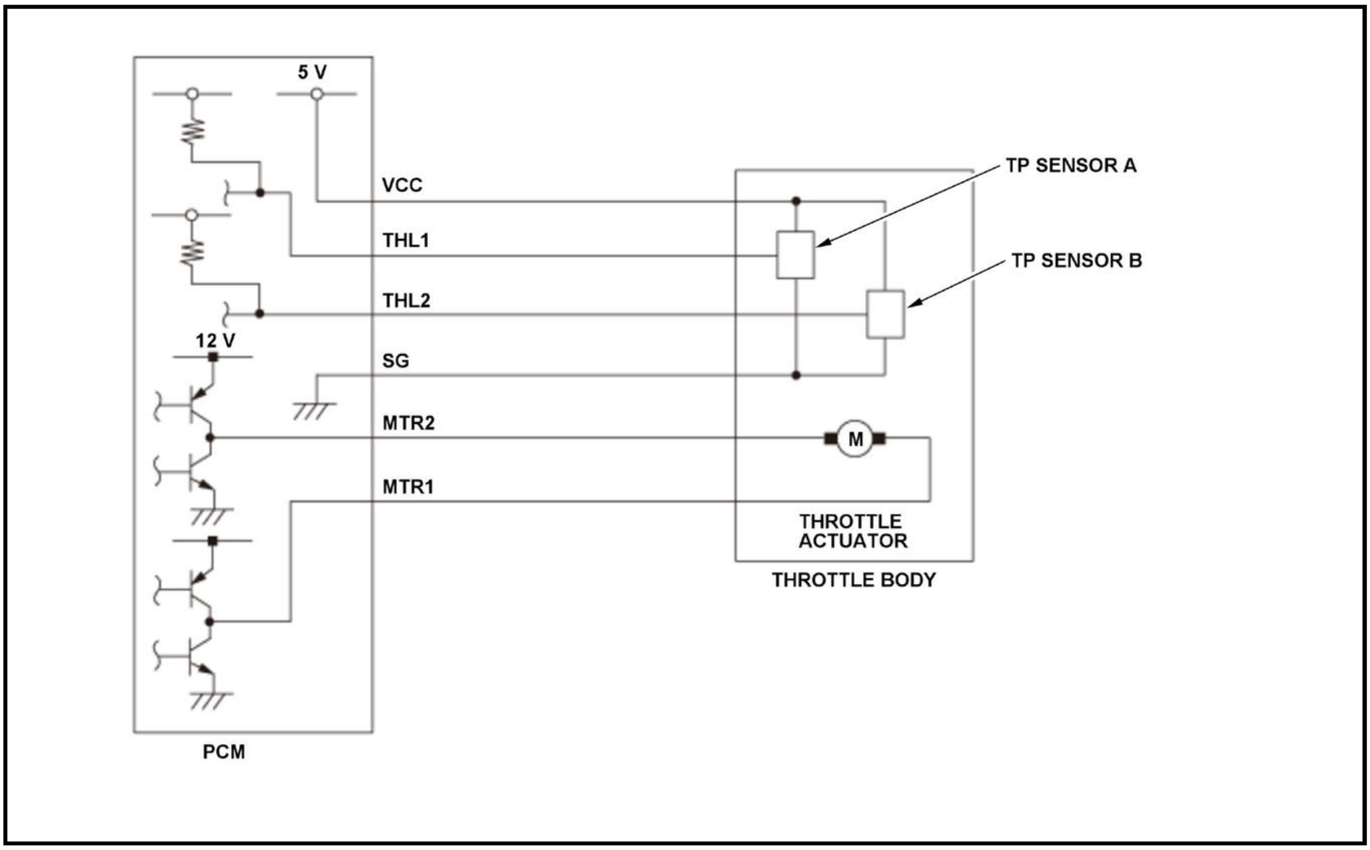

The electronic throttle control system controls the throttle valve opening. The system includes the throttle actuator, the throttle valve, throttle position (TP) sensors A and B, the PGM-FI subrelay circuit, the accelerator pedal position (APP) sensor, and the powertrain control module (PCM). TP sensor B is a semiconductor type, and it is attached to the throttle body and shaft to determine throttle valve position. The throttle valve position signal from TP sensor B is transmitted to the PCM for target position feedback control. If the signal from TP sensor B is a fixed value for a set time, the PCM detects a TP sensor B malfunction and stores a DTC.

Monitor Execution, Sequence, Duration, DTC Type

Execution	Continuous
Sequence	None
Duration	200 milliseconds or more

DTC Type	One drive cycle, MIL on

Enable Conditions

Condition	B
Vehicle	ON mode

Malfunction Threshold

DTC: P0222

The TP sensor B output voltage [TP Sensor B] is 0.3 V or less for at least 200 milliseconds.

DTC: P0223

The TP sensor B output voltage [TP Sensor B] is 4.8 V or more for at least 200 milliseconds.

[ ]: HDS Parameter

Possible Cause

NOTE: The causes shown may not be a complete list of all potential problems, and it is possible that there may be other causes.

DTC: P0222

- TP sensor B VCC line open
- TP sensor B THL2 line short to ground

DTC: P0223

- TP sensor B THL2 line open
- TP sensor B SG line open

Common

- TP sensor B failure
- PCM internal circuit failure

Diagnosis Details

Conditions for setting the DTC

When a malfunction is detected, the MIL comes on and a Pending DTC, a Confirmed DTC, and the freeze data are stored in the PCM memory.

Conditions for clearing the DTC

The MIL is cleared if the malfunction does not return in three consecutive trips in which the diagnostic runs. The MIL, the Pending DTC, the Confirmed DTC, and the freeze data can be cleared with the scan tool Clear command or by disconnecting the 12 volt battery.

DTC P027E (2021)

DTC P027E: Cold Start Air Fuel Ratio Control System Command Lean

General Description

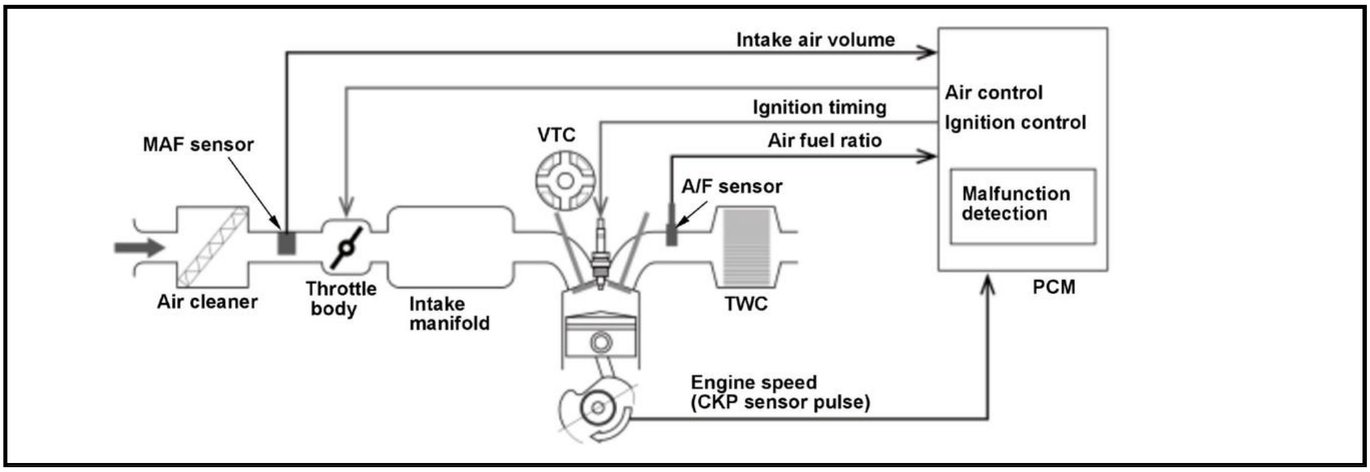
Intake air volume
Air control
Ignition timing
Ignition control
Air fuel ratio
MAF sensor
VTC
A/F sensor
Malfunction detection
Air cleaner
Throttle body
Intake manifold
TWC
PCM
Engine speed
(CKP sensor pulse)

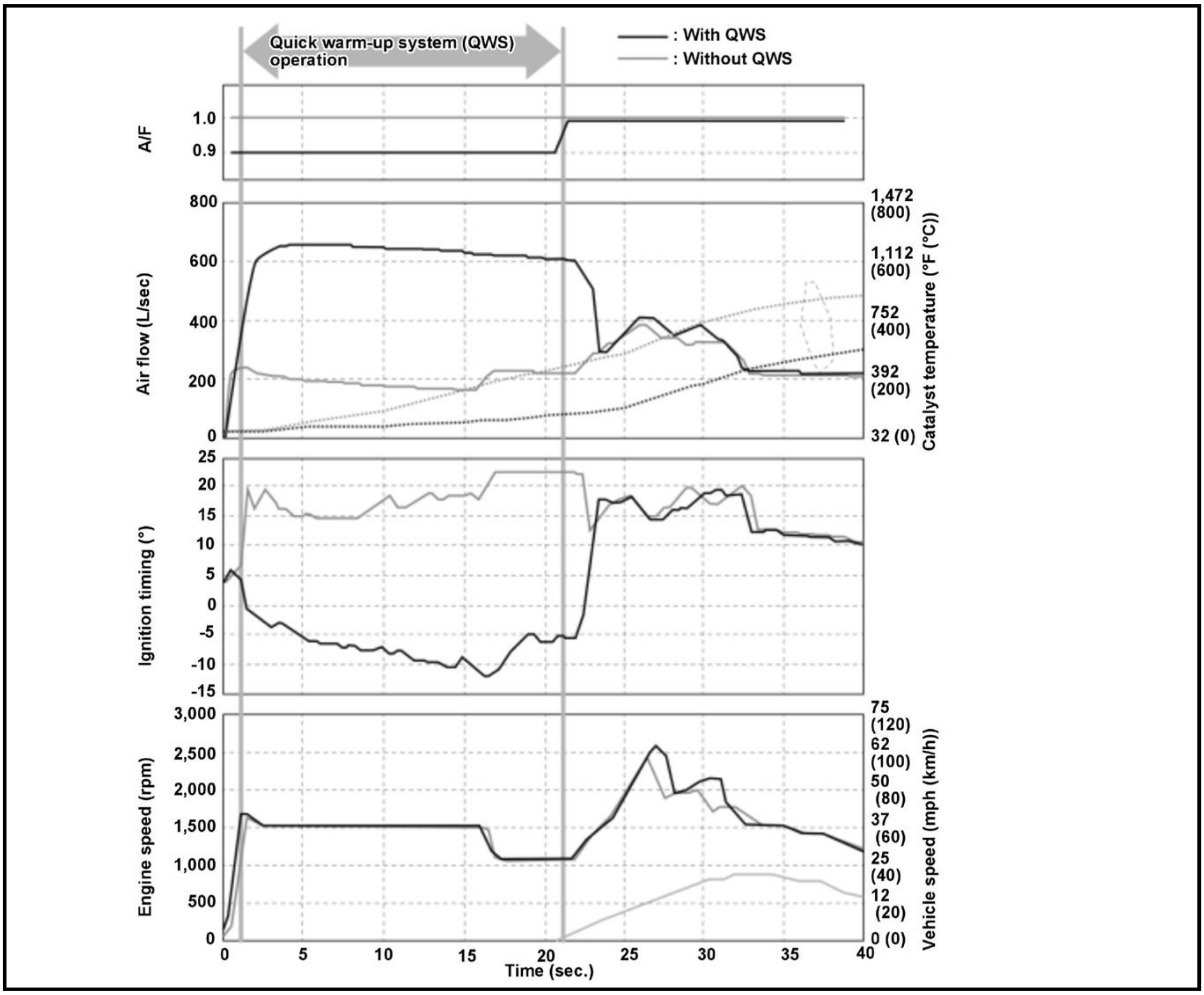
Quick warm-up system (QWS) operation
: With QWS
: Without QWS
A/F
1.0
0.9
Air flow (L/sec)
800
600
400
200
0
Catalyst temperature (°F (°C))
1,472 (800)
1,112 (600)
752 (400)
392 (200)
32 (0)
Ignition timing (°)
25
20
15
10
5
0
-5
-10
-15
Engine speed (rpm)
3,000
2,500
2,000
1,500
1,000
500
0
Vehicle speed (mph (km/h))
75 (120)
62 (100)
50 (80)
37 (60)
25 (40)
12 (20)
0 (0)
0
5
10
15
20
25
30
35
40
Time (sec.)

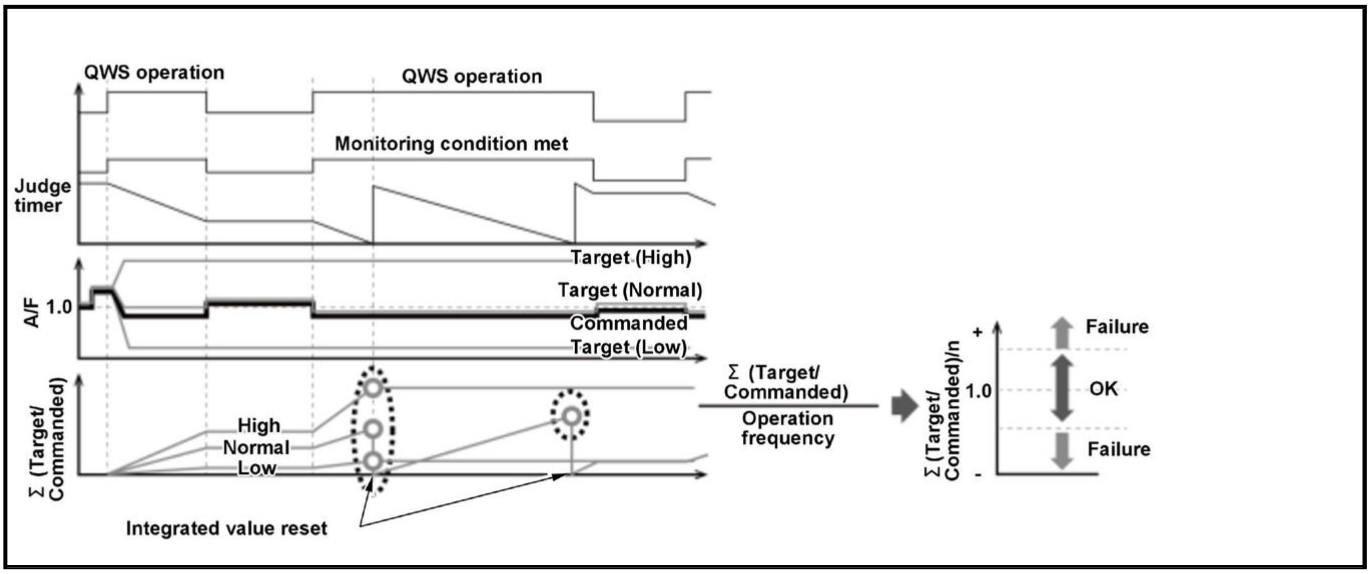
QWS operation
QWS operation
Monitoring condition met
Judge timer
Target (High)
A/F
1.0
Target (Normal)
Commanded
Target (Low)
Σ (Target/Commanded)
High
Normal
Low
Integrated value reset
Σ (Target/Commanded)
Operation frequency
Σ (Target/Commanded)/n
+
1.0
-
Failure
OK
Failure

The cold start emission reduction process controls the air fuel ratio to lean when the engine is cold to lower emissions as the catalyst is not warmed up. If the commanded air fuel ratio is too lean or too rich compared to the target air fuel ratio, the powertrain control module (PCM) detects a malfunction and stores a DTC.

Monitor Execution, Sequence, Duration, DTC Type

Execution	Continuous
Sequence	None
Duration	7 seconds or more
DTC Type	Two drive cycles, MIL on

Enable Conditions

Condition	Minimum	Maximum
Engine coolant temperature [ECT SENSOR 1]	14 deg.F (-10 deg.C)	176 deg.F (80 deg.C)
High voltage battery capacity (SOC)	20 %	-
Throttle valve	Fully closed	
Accelerator pedal position	Released	
Other	Vehicle stopped	

[ ]: HDS Parameter

Malfunction Threshold

The ratio of the commanded air fuel ratio to target air fuel ratio is 0.86 or less.

Possible Cause

NOTE: The causes shown may not be a complete list of all potential problems, and it is possible that there may be other causes.

- PCM internal circuit failure

Confirmation Procedure

Operating Condition

- Leave the vehicle to cool the engine.

- Enter the maintenance mode, then start the engine, and let it idle for at least 7 seconds.

Diagnosis Details

Conditions for setting the DTC

When a malfunction is detected during the first drive cycle, a Pending DTC is stored in the PCM memory. If the malfunction returns in the next (second) drive cycle, the MIL comes on and a Confirmed DTC and the freeze data are stored.

Conditions for clearing the DTC

The MIL is cleared if the malfunction does not return in three consecutive trips in which the diagnostic runs. The MIL, the Pending DTC, the Confirmed DTC, and the freeze data can be cleared with the scan tool Clear command or by disconnecting the 12 volt battery.

DTC P027F (2021)

DTC P027F: Cold Start Air Fuel Ratio Control System Command Rich

General Description

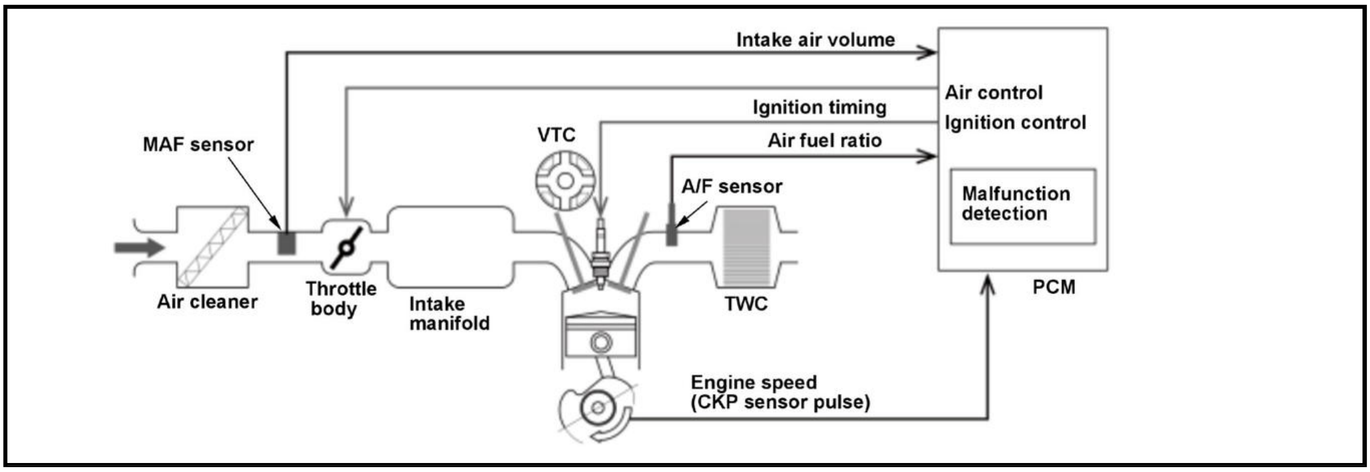
Intake air volume
Air control
Ignition timing
Ignition control
VTC
Air fuel ratio
MAF sensor
A/F sensor
Malfunction detection
Throttle body
Air cleaner
Intake manifold
TWC
PCM
Engine speed
(CKP sensor pulse)

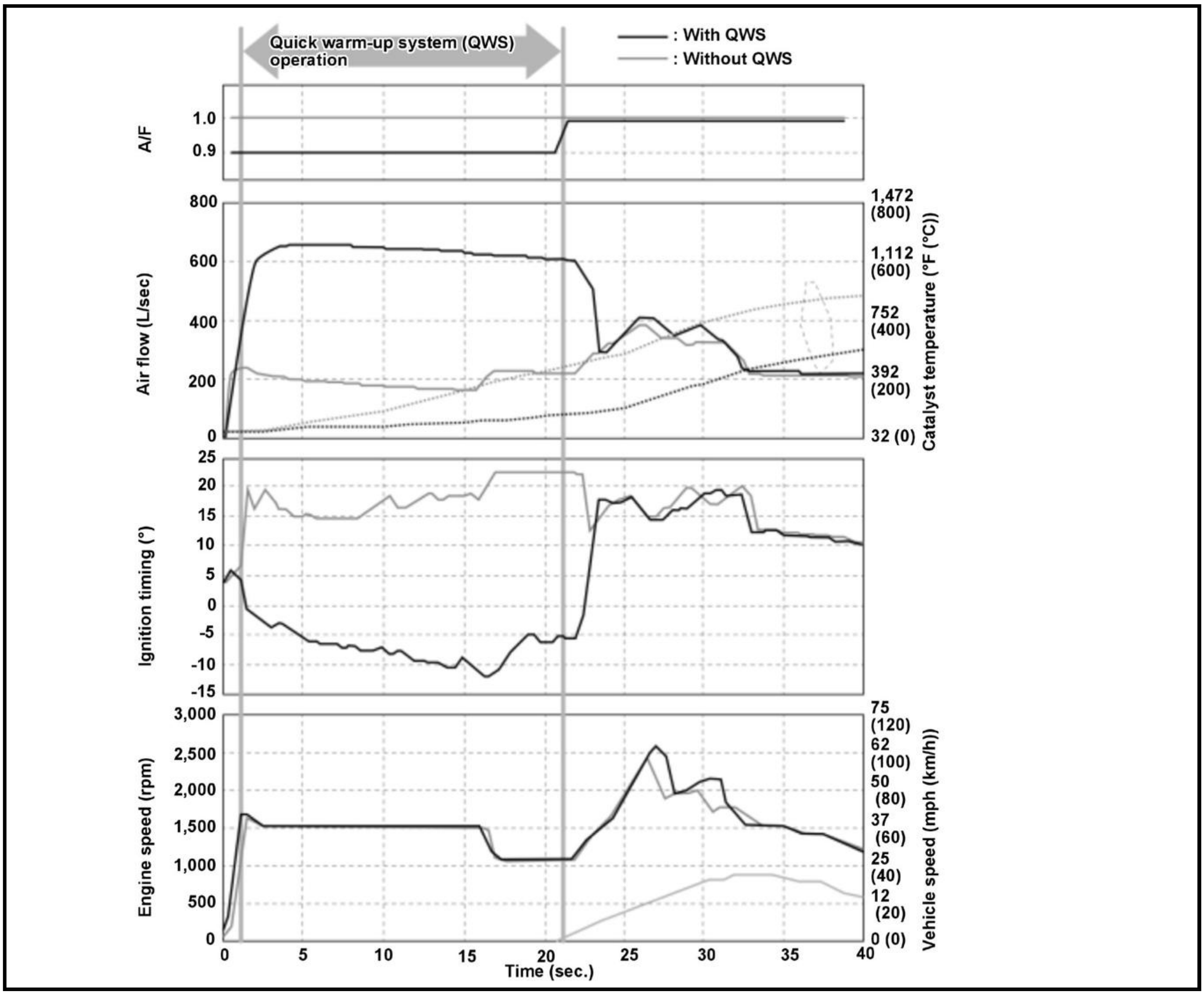

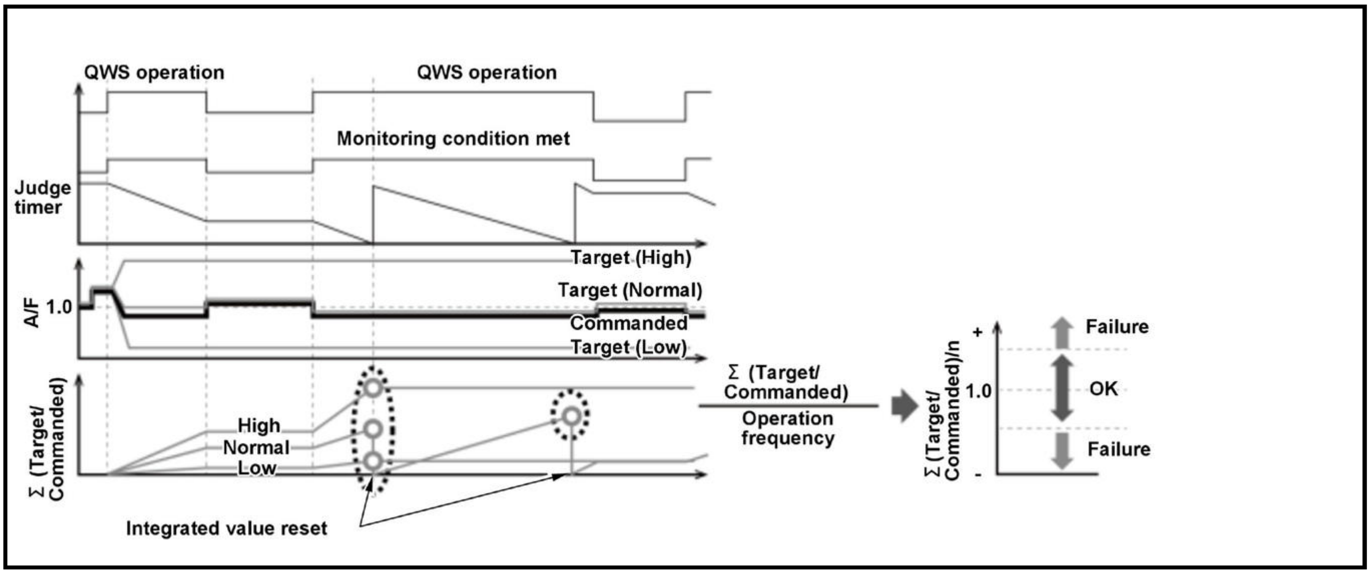

The cold start emission reduction process controls the air fuel ratio to lean when the engine is cold to lower emissions as the catalyst is not warmed up. If the commanded air fuel ratio is too lean or too rich compared to the target air fuel ratio, the powertrain control module (PCM) detects a malfunction and stores a DTC.

Monitor Execution, Sequence, Duration, DTC Type

Execution	Continuous
Sequence	None
Duration	7 seconds or more

DTC Type	Two drive cycles, MIL on

Enable Conditions

Condition	Minimum	Maximum
Engine coolant temperature [ECT SENSOR 1]	14 deg.F (-10 deg.C)	176 deg.F (80 deg.C)
High voltage battery capacity (SOC)	20 %	-
Throttle valve	Fully closed	
Accelerator pedal position	Released	
Other	Vehicle stopped	

[ ]: HDS Parameter

Malfunction Threshold

The ratio of the commanded air fuel ratio to target air fuel ratio is 1.14 or more.

Possible Cause

NOTE: The causes shown may not be a complete list of all potential problems, and it is possible that there may be other causes.

- PCM internal circuit failure

Confirmation Procedure

Operating Condition

- Leave the vehicle to cool the engine.
- Enter the maintenance mode, then start the engine, and let it idle for at least 7 seconds.

Diagnosis Details

Conditions for setting the DTC

When a malfunction is detected during the first drive cycle, a Pending DTC is stored in the PCM memory. If the malfunction returns in the next (second) drive cycle, the MIL comes on and a Confirmed DTC and the freeze data are stored.

Conditions for clearing the DTC

The MIL is cleared if the malfunction does not return in three consecutive trips in which the diagnostic runs. The MIL, the Pending DTC, the Confirmed DTC, and the freeze data can be cleared with the scan tool Clear command or by disconnecting the 12 volt battery.

DTC P0300, P0301, P0302, P0303, P0304

DTC P0300: Random Misfire Detected

DTC P0301: No. 1 Cylinder Misfire Detected

DTC P0302: No. 2 Cylinder Misfire Detected

DTC P0303: No. 3 Cylinder Misfire Detected

DTC P0304: No. 4 Cylinder Misfire Detected

General Description

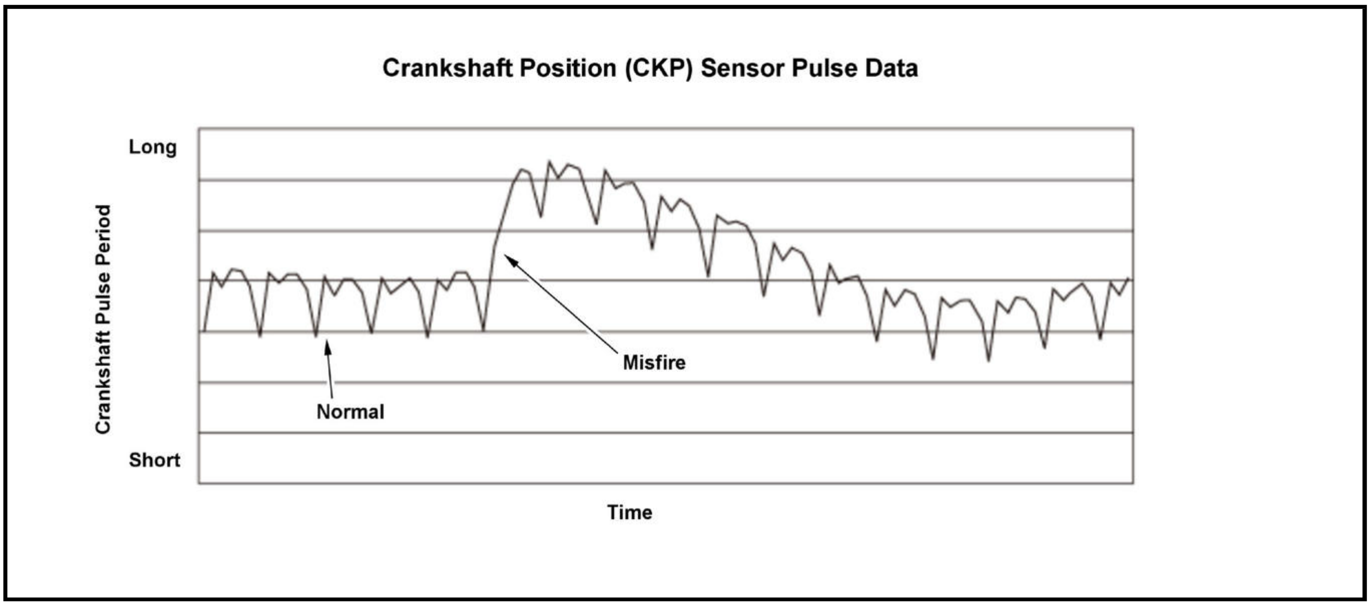

The crankshaft vibrates slightly when each cylinder fires. If a misfire occurs, the crankshaft rotation speed changes rapidly. The powertrain control module (PCM) monitors the crankshaft rotation speed based on the output pulses from the crankshaft position (CKP) sensor. By monitoring changes in the crankshaft rotation speed, the PCM counts the number of misfires and determines which cylinder is misfiring.

- P0300: If more than one DTC from P0301 through P0304 has been stored while misfires in multiple cylinders are detected, a malfunction is detected and a DTC is stored.
- P0301, P0302, P0303, P0304: If a misfire is detected on a specified cylinder, a DTC is stored.

There are two types of misfire detection:

- Type 1: When the number of misfires per 200 engine revolutions reaches the level that can damage the three way catalyst (TWC), a DTC is stored and the MIL blinks.
- Type 2: When the number of misfires per 1, 000 engine revolutions reaches the level that affects exhaust emissions but not severe enough to immediately damage the catalyst, a DTC is stored and the MIL comes on.

Monitor Execution, Sequence, Duration, DTC Type

Execution		Continuous
Sequence		None
Duration	Type 1	Per 200 revolutions
	Type 2	Per 1, 000 revolutions
DTC Type		Two drive cycles, MIL on

Enable Conditions

Condition	Minimum	Maximum
Elapsed time after monitor finishing condition except immediate starting the engine	1.0 second	-
Engine coolant temperature [ECT Sensor 1]	None, unless the initial engine coolant temperature [ECT Sensor 1] is 14 deg.F (-10 deg.C) or less, in which case the monitor will not run until the engine coolant temperature [ECT Sensor 1] reaches 68 deg.F (20 deg.C)	
Engine speed [Engine Speed]	500 rpm	6, 500 rpm

Condition		Minimum	Maximum
MAP value [MAP Sensor]*	1, 200rpm**	24.6 kPa (185.0 mmHg, 7.28 inHg)	-
	2, 750 rpm**	20.9 kPa (157.0 mmHg, 6.18 inHg)	-
	1, 200 rpm***	26.5 kPa (199.0 mmHg, 7.83 inHg)	-
	2, 500 rpm***	22.5 kPa (169.0 mmHg, 6.65 inHg)	-
Fuel feedback		Other than during fuel cut-off operation	
Other		Test-drive on a flat road to avoid misdetection	

*: Varies with driving conditions

**: Rocker arm oil control solenoid: OFF

***: Rocker arm oil control solenoid: ON

[ ]: HDS Parameter

Malfunction Threshold

The number of misfires versus engine revolutions is equal to or greater than the values in the table.

Misfire Type	The number of engine revolutions	The number of misfires
Misfire Type 1 (Severe)	Per 200 revolutions	17 - 89 times****
Misfire Type 2 (Light)	Per 1, 000 revolutions	60 times

****: Depending on engine speed and load.

Possible Cause

NOTE: The causes shown may not be a complete list of all potential problems, and it is possible that there may be other causes.

- Ignition system failure
- Fuel supply system failure
- Intake air system failure

Confirmation Procedure

Operating Condition

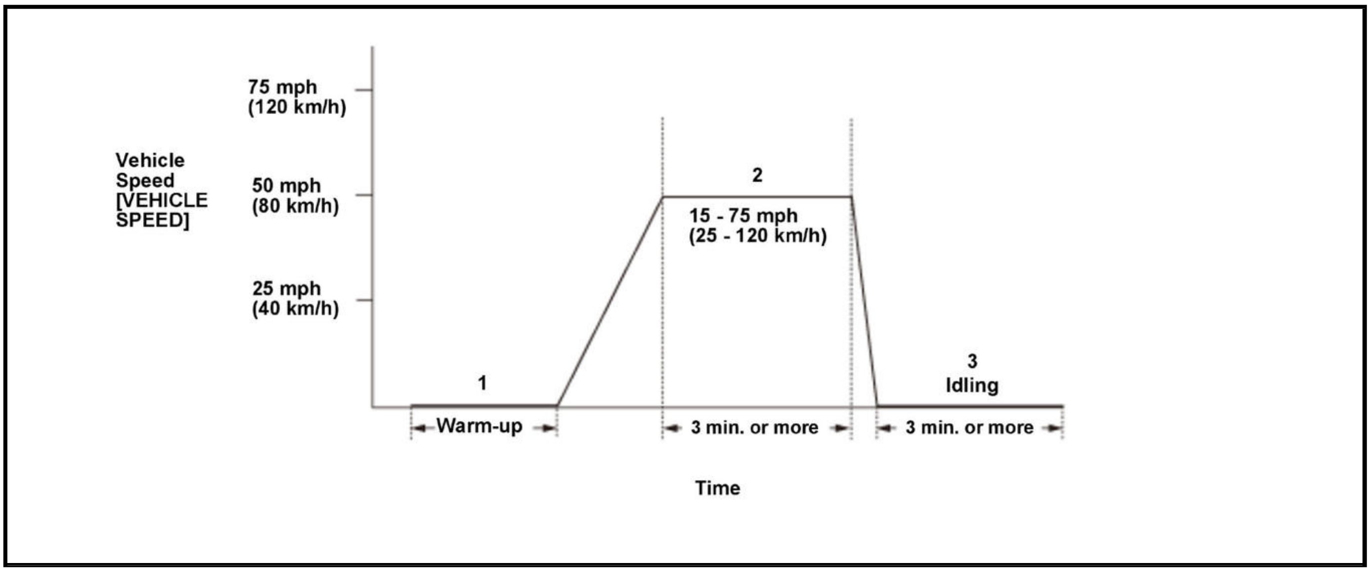

- Enter the maintenance mode, then start the engine. Hold the engine speed [Engine Speed] at 3, 000 rpm without load (in P or N) until the radiator fan comes on, then let it idle.
- Drive the vehicle at a speed between 15 - 75 mph (25 - 120 km/h) for at least 3 minutes.
- Stop the vehicle, and let the engine idle for at least 3 minutes.

- When freeze data is stored, drive the vehicle under those conditions instead of Driving Pattern step 2 or 3.
- When you have difficulty duplicating the DTC because of road conditions and traffic situations, repeat the driving pattern several times.
- Drive the vehicle in this manner only if the traffic regulations and ambient conditions allow.

With the HDS

None.

Diagnosis Details

Conditions for setting the DTC

Misfire Type 1:

- If a type 1 misfire (catalyst damaging) occurs once, the MIL blinks once per second, a Pending DTC is stored, and the high rpm fuel injection stop system activates. The fuel injection stops, at high rpm only, on the cylinder that has the highest misfire counts. The MIL then continues to blink and the fuel injection stays off at high rpm, until the drive is completed.
- If a type 1 misfire occurs during a second drive cycle, the MIL and fuel injection behave the same and a Confirmed DTC is stored.
- After a type 1 misfire has been detected during two drive cycles, the MIL comes on and stays on beginning with the third drive cycle, unless the Pending DTC has been cleared by the PCM*****. Even if the MIL is on, it will start blinking if a type 1 misfire occurs.
- If the malfunction returns in the next (second) drive cycle, the MIL comes on and a Confirmed DTC and the freeze data are stored.

Misfire Type 2:

- If a type 2 misfire (emission-related but not severe enough to immediately damage the catalyst) occurs, a Pending DTC is stored, but the MIL does not come on or blink. If a type 2 misfire occurs during a second drive cycle, the MIL comes on and stays on unless the Pending DTC has been cleared by the PCM*****.

***** The Pending DTC is erased if either of these conditions is met:

- The vehicle is operated at least once under the same driving conditions as the first misfire detection, and no misfire is detected.
- 80 drive cycles, regardless of driving conditions, are completed with no misfire detected.

Conditions for clearing the DTC

The MIL is cleared if the malfunction does not return in three consecutive drive cycles in which the engine conditions are similar to the first time the malfunction was detected. The MIL, the Pending DTC, the Confirmed DTC, and the freeze data can be cleared with the scan tool Clear command or by disconnecting the 12 volt battery.

DTC P0326

DTC P0326: Knock Sensor Malfunction

General Description

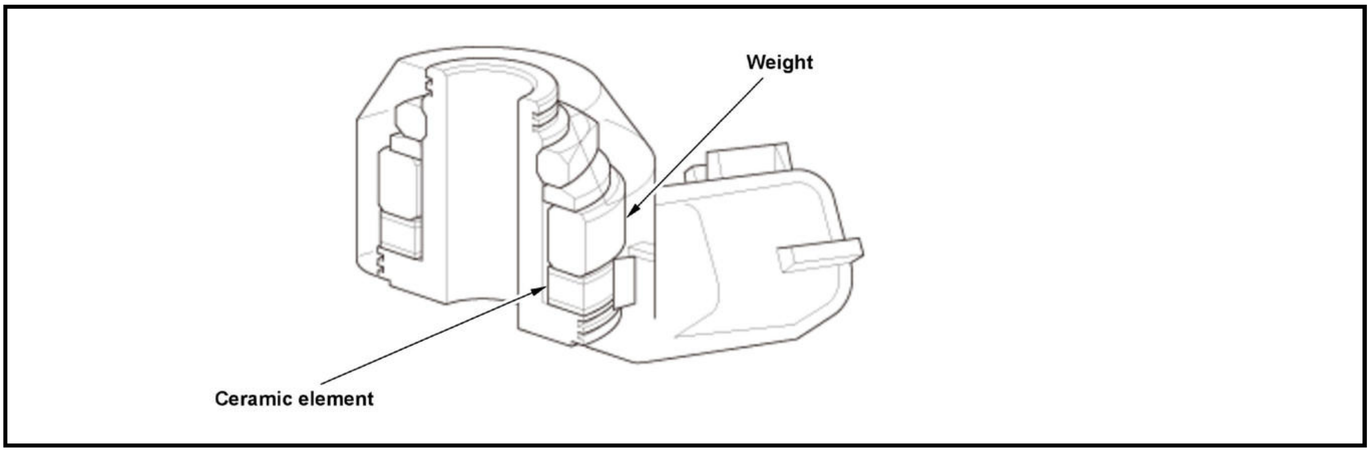

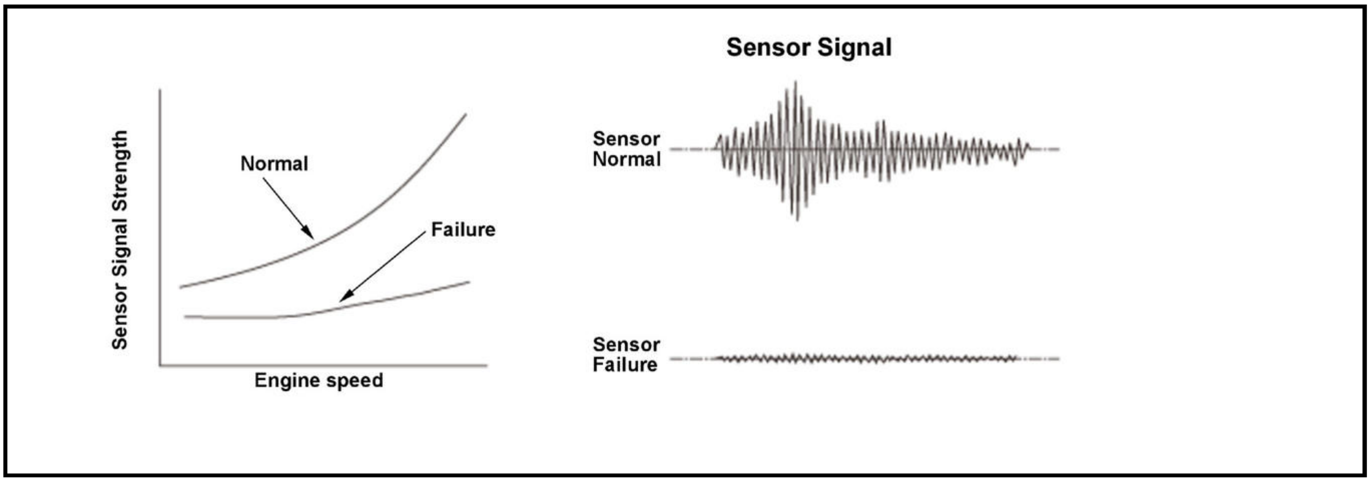

A nonresonant type of knock sensor is used, and it is mounted on the cylinder block to detect engine knocking. Vibration from engine combustion causes the torus-shaped weight to compress the ceramic element in the nonresonant knock sensor, and converts it into electrical signals. The powertrain control module (PCM) controls the ignition timing according to the electrical signal level. If the signal level from the knock sensor drops for a set time because of a poor connection at the knock sensor, or a bad sensor, the PCM detects a malfunction and stores a DTC.

Monitor Execution, Sequence, Duration, DTC Type

Execution	Once per driving cycle
Sequence	None
Duration	5.0 seconds or more
DTC Type	Two drive cycles, MIL on

Enable Conditions

Condition	Minimum	Maximum
Elapsed time after starting the engine	5.0 seconds	-
Engine speed [Engine Speed]	1, 800 rpm	-

[ ]: HDS Parameter

Malfunction Threshold

Either one of the conditions is met for at least 5.0 seconds.

- The knock sensor output signal strength is 90 or less at the engine speed [Engine Speed] of 1, 800 rpm.
- The knock sensor output signal strength is 160 or less at the engine speed [Engine Speed] of 2, 500 rpm.

Possible Cause

NOTE: The causes shown may not be a complete list of all potential problems, and it is possible that there may be other causes.

- Knock sensor miss installed
- Knock sensor failure

Confirmation Procedure

Operating Condition

- Enter the maintenance mode, then start the engine. Hold the engine speed [Engine Speed] at 3, 000 rpm without load (in P or N) until the radiator fan comes on, then let it idle.
- Drive the vehicle at an engine speed [Engine Speed] 1, 800 rpm or more for at least 5 seconds.
- Drive the vehicle in this manner only if the traffic regulations and ambient conditions allow.

With the HDS

None.

Diagnosis Details

Conditions for setting the DTC

When a malfunction is detected during the first drive cycle, a Pending DTC is stored in the PCM memory. If the malfunction returns in the next (second) drive cycle, the MIL comes on and a Confirmed DTC and the freeze data are stored.

Conditions for clearing the DTC

The MIL is cleared if the malfunction does not return in three consecutive trips in which the diagnostic runs. The MIL, the Pending DTC, the Confirmed DTC, and the freeze data can be cleared with the scan tool Clear command or by disconnecting the 12 volt battery.

DTC P0327, P0328

DTC P0327: Knock Sensor Circuit Low Voltage

DTC P0328: Knock Sensor Circuit High Voltage

General Description

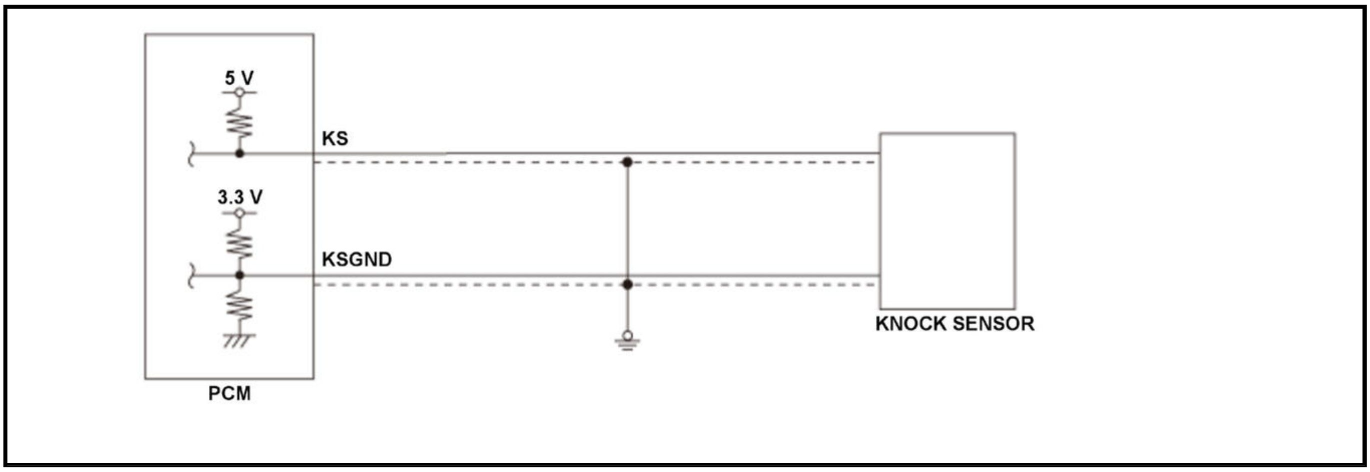

The knock sensor is mounted on the engine block and detects engine knocking. The vibrations caused by the knocking are converted into electrical signals through the piezo ceramic element. The powertrain control module (PCM) controls the ignition timing based on the electrical signal. If the signal from the knock sensor is a specified voltage for a set time, the PCM detects a malfunction and stores a DTC.

Monitor Execution, Sequence, Duration, DTC Type

Execution	Continuous
Sequence	None
Duration	2 seconds or more
DTC Type	Two drive cycles, MIL on

Enable Conditions

Condition	B
Vehicle	ON mode

Malfunction Threshold

DTC: P0327

The knock sensor output voltage is 0.50 V or less for at least 2 seconds.

DTC: P0328

The knock sensor output voltage is 4.50 V or more for at least 2 seconds.

Possible Cause

NOTE: The causes shown may not be a complete list of all potential problems, and it is possible that there may be other causes.

DTC: P0327

- Knock sensor KS line short to ground

DTC: P0328

- Knock sensor KS line open
- Knock sensor KSGND line open

Common

- Knock sensor failure

- PCM internal circuit failure

Diagnosis Details

Conditions for setting the DTC

When a malfunction is detected during the first drive cycle, a Pending DTC is stored in the PCM memory. If the malfunction returns in the next (second) drive cycle, the MIL comes on and a Confirmed DTC and the freeze data are stored.

Conditions for clearing the DTC

The MIL is cleared if the malfunction does not return in three consecutive trips in which the diagnostic runs. The MIL, the Pending DTC, the Confirmed DTC, and the freeze data can be cleared with the scan tool Clear command or by disconnecting the 12 volt battery.

DTC P032F (2021)

DTC P032F: Engine Stall

General Description

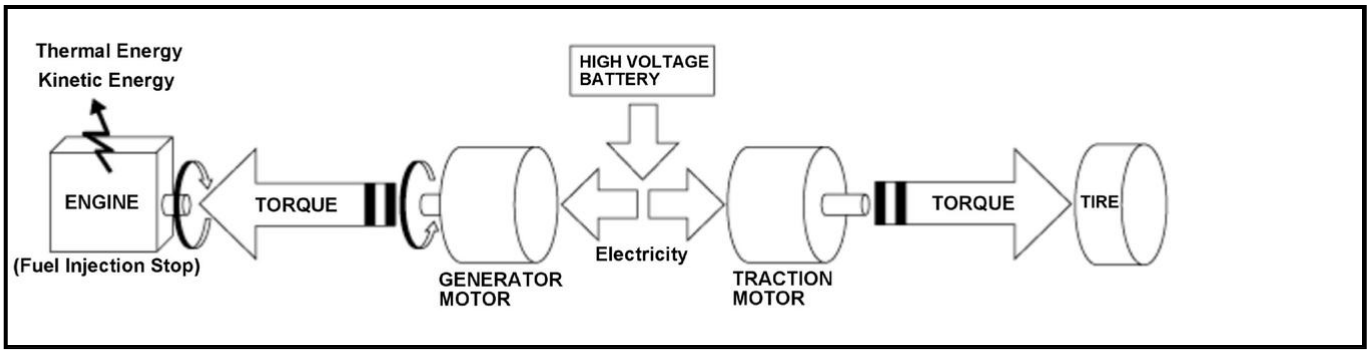
Thermal Energy
Kinetic Energy
ENGINE
(Fuel Injection Stop)
TORQUE
HIGH VOLTAGE BATTERY
GENERATOR MOTOR
Electricity
TRACTION MOTOR
TORQUE
TIRE

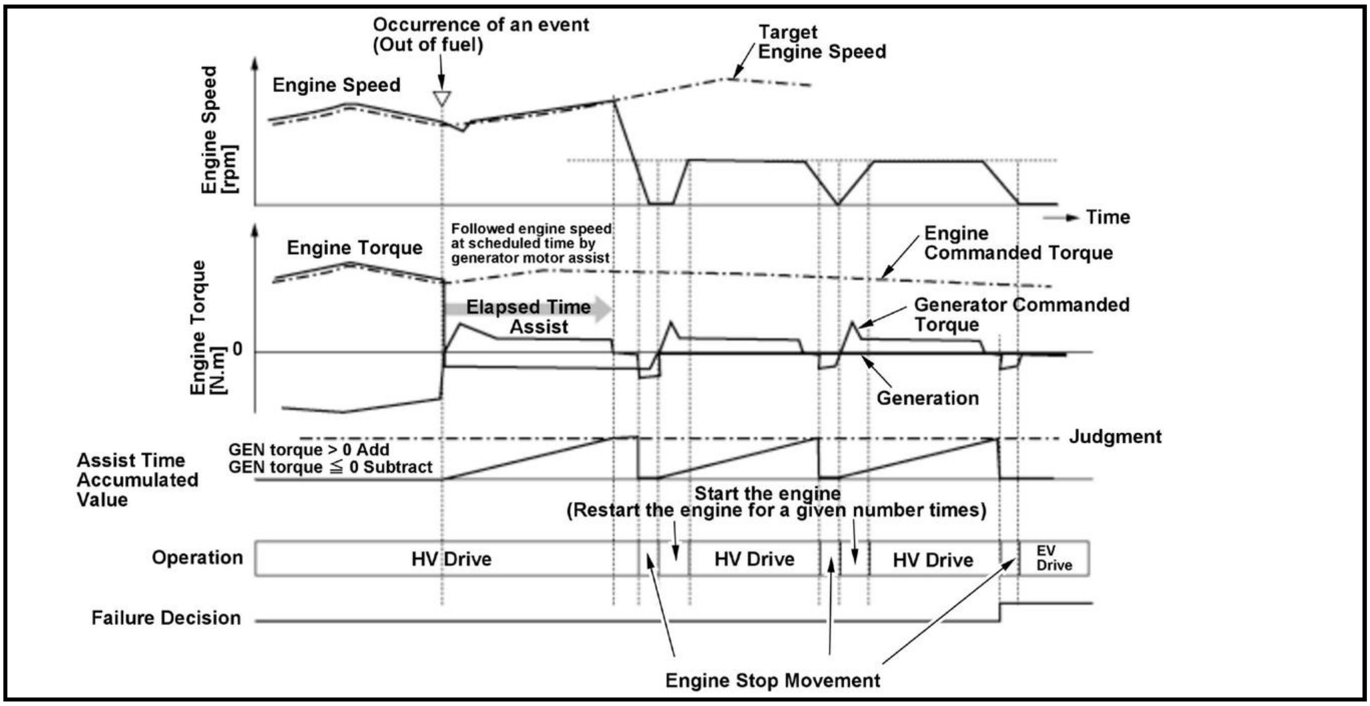

If engine speed decreases or if the engine stalls after the engine speed was maintained by the generator for a given period of time, then it determined that the engine torque is not being generated. When engine torque is still not generated after trying to restart the engine for a given number of times, the powertrain control module (PCM) detects a malfunction and stores a DTC.

Monitor Execution, Sequence, Duration, DTC Type

Execution	Continuous
Sequence	None
Duration	27 seconds or more (51 seconds or more)*
DTC Type	One drive cycle, MIL on

*: After disconnecting the 12 volt battery.

Enable Conditions

Condition	B
State of the vehicle	HV driving mode
	Engine clanking mode
Other	Other than a catalytic converter warm-up
	During fuel injection

Malfunction Threshold

When generator motor assists continues for 27 seconds (51 seconds)* or more.

Possible Cause

NOTE: The causes shown may not be a complete list of all potential problems, and it is possible that there may be other causes.

- Out of fuel
- Fuel system perfection stop
- Engine stall
- Ignition system relay failure

Confirmation Procedure

Operating Condition

Drive the vehicle for 27 seconds (51 seconds)* or more.

- Drive the vehicle in this manner only if the traffic regulations and ambient conditions allow.

Diagnosis Details

Conditions for setting the DTC

When a malfunction is detected, the MIL comes on and a Pending DTC, a Confirmed DTC, and the freeze data are stored in the PCM memory.

Conditions for clearing the DTC

The MIL is cleared if the malfunction does not return in three consecutive trips in which the diagnostic runs. The MIL, the Pending DTC, the Confirmed DTC, and the freeze data can be cleared with the scan tool Clear command or by disconnecting the 12 volt battery.

DTC P0335

DTC P0335: Crankshaft Position (CKP) Sensor No Signal

General Description

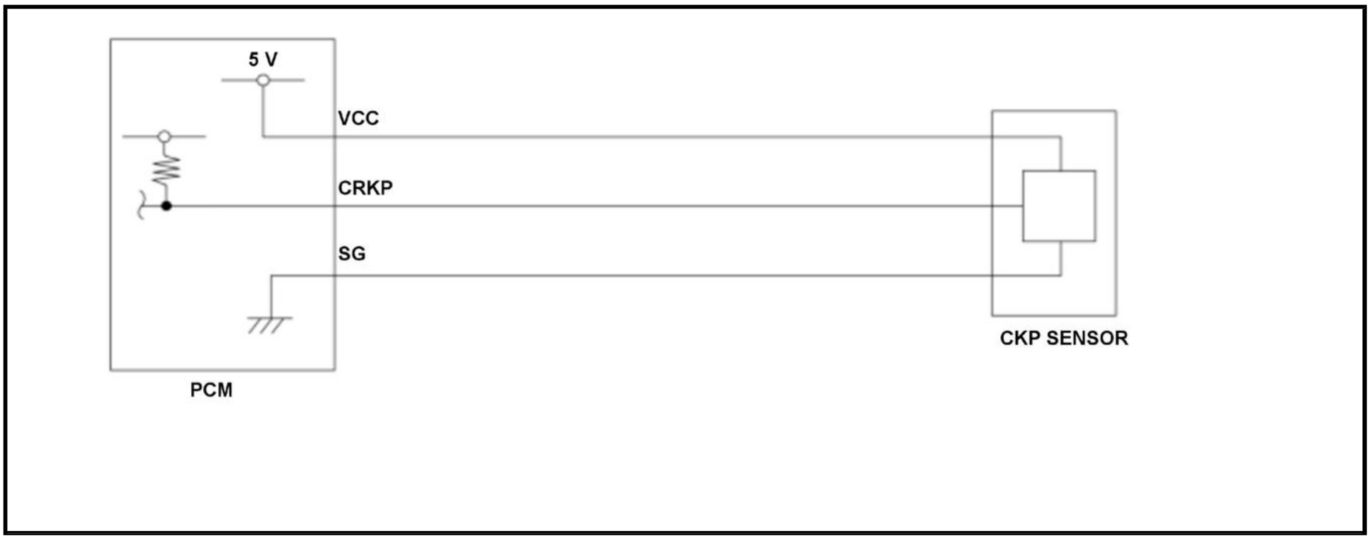

The crankshaft position (CKP) sensor detects injection/ignition timing for each cylinder and engine speed. The CKP sensor consists of a rotor and a semiconductor that detects rotor position. When the engine starts, the rotor turns and the magnetic flux in the semiconductor device changes. The changes of magnetic flux are converted into pulsing signals to the powertrain control module (PCM). If no pulsing signals from the CKP sensor are detected, the PCM detects a malfunction and stores a DTC.

Monitor Execution, Sequence, Duration, DTC Type

Execution	Continuous
Sequence	None
Duration	2 seconds or more (when the engine speed is 750 rpm)
DTC Type	One drive cycle, MIL on

Enable Conditions

Condition	B
State of the engine	Running

Malfunction Threshold

No input signals from the CKP sensor are detected while signals from the camshaft position (CMP) sensor are detected at least 75 times.

Possible Cause

NOTE: The causes shown may not be a complete list of all potential problems, and it is possible that there may be other causes.

- CKP sensor CRKP line open
- CKP sensor VCC line open
- CKP sensor SG line open
- CKP sensor CRKP line short to ground
- CKP sensor failure
- PCM internal circuit failure

Diagnosis Details

Conditions for setting the DTC

When a malfunction is detected, the MIL comes on and a Pending DTC, a Confirmed DTC, and the freeze data are stored in the PCM memory.

Conditions for clearing the DTC

The MIL is cleared if the malfunction does not return in three consecutive trips in which the diagnostic runs. The MIL, the Pending DTC, the Confirmed DTC, and the freeze data can be cleared with the scan tool Clear command or by disconnecting the 12 volt battery.

DTC P0339

DTC P0339: Crankshaft Position (CKP) Sensor Circuit Intermittent Interruption

General Description

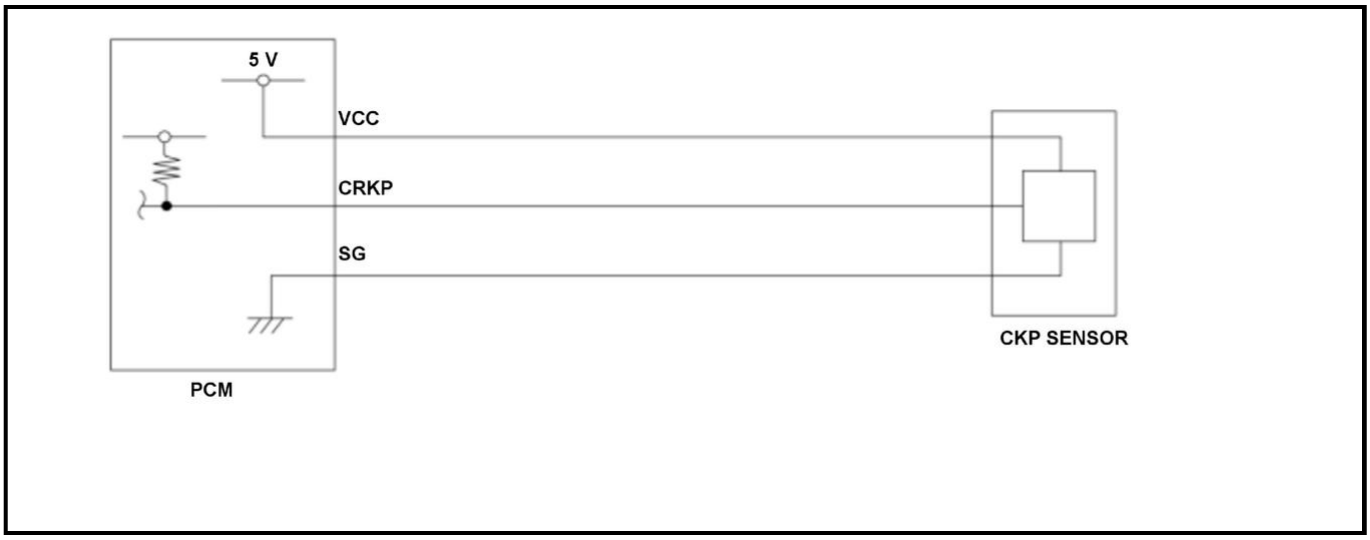

The crankshaft position (CKP) sensor detects injection/ignition timing for each cylinder and engine speed. The CKP sensor consists of a rotor and a semiconductor that detects rotor position. When the engine starts, the rotor turns and the magnetic flux in the semiconductor device changes. The changes of magnetic flux are converted into pulsing signals to the powertrain control module (PCM). If abnormal amount of pulsing signals from the CKP sensor are detected, the PCM detects a malfunction and stores a DTC.

Monitor Execution, Sequence, Duration, DTC Type

Execution	Continuous
Sequence	None
Duration	-
DTC Type	One drive cycle, MIL on

Enable Conditions

Condition	Minimum	Maximum
Engine speed [Engine Speed]	400 rpm	-

[ ]: HDS Parameter

Malfunction Threshold

Other than 58 pulses are detected during intervals between reference pulses for each crank revolution. This condition has been detected at least 30 times.

Possible Cause

NOTE: The causes shown may not be a complete list of all potential problems, and it is possible that there may be other causes.

- CKP sensor CRKP line electrical noise overlapped
- CKP sensor rotor chipped
- CKP sensor failure
- PCM internal circuit failure

Diagnosis Details

Conditions for setting the DTC

When a malfunction is detected, the MIL comes on and a Pending DTC, a Confirmed DTC, and the freeze data are stored in the PCM memory.

Conditions for clearing the DTC

The MIL is cleared if the malfunction does not return in three consecutive trips in which the diagnostic runs. The MIL, the Pending DTC, the Confirmed DTC, and the freeze data can be cleared with the scan tool Clear command or by disconnecting the 12 volt battery.

DTC P0340

DTC P0340: Camshaft Position (CMP) Sensor A No Signal

General Description

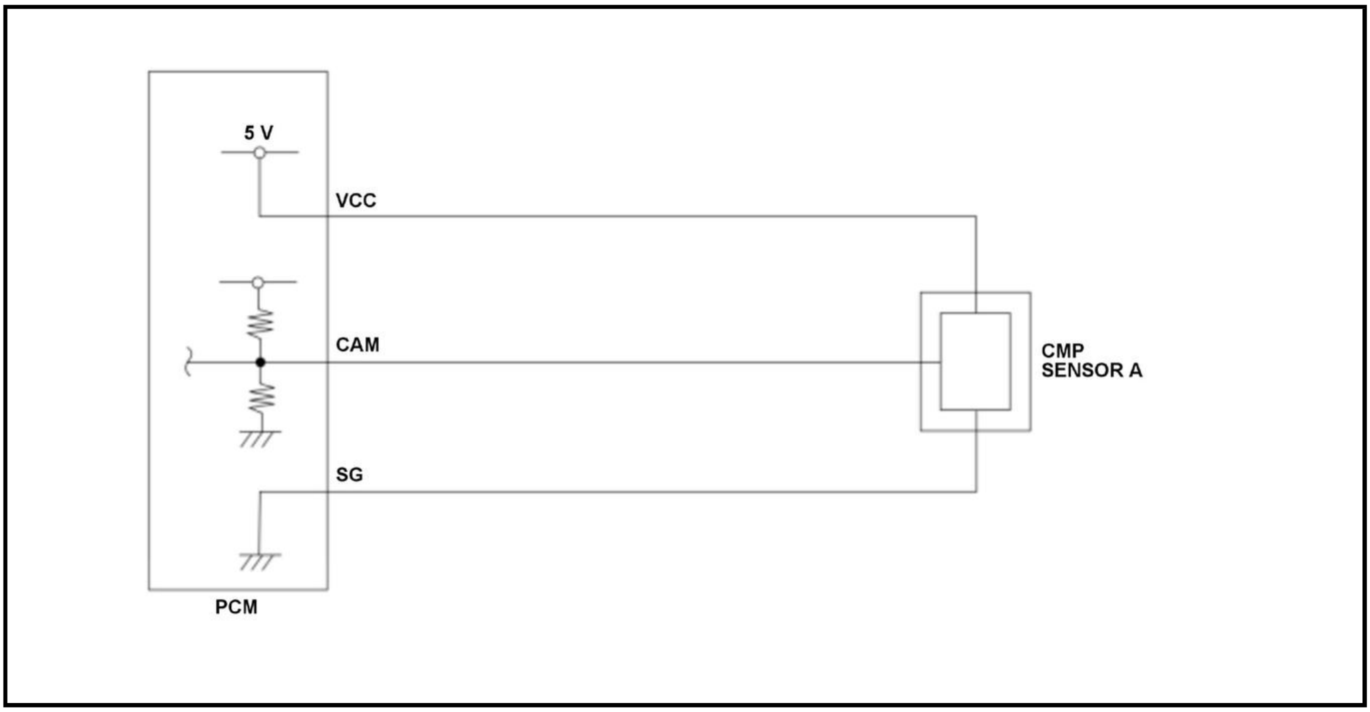

Camshaft position (CMP) sensor A detects the intake camshaft timing and sends pulsing signals to the powertrain control module (PCM). The PCM determines the advance or the retard of the camshaft timing according to the signals from the crankshaft position (CKP) sensor and CMP sensor A. If no pulsing signals are detected from CMP sensor A, the PCM detects a malfunction and stores a DTC.

Monitor Execution, Sequence, Duration, DTC Type

Execution	Continuous
Sequence	None
Duration	-
DTC Type	Two drive cycles, MIL on

Enable Conditions

Condition	B
State of the engine	Running

Malfunction Threshold

No input signals from CMP sensor A are detected at least 50 times in succession.

Possible Cause

NOTE: The causes shown may not be a complete list of all potential problems, and it is possible that there may be other causes.

- CMP sensor A CAM line open
- CMP sensor A VCC line open
- CMP sensor A SG line open
- CMP sensor A CAM line short to ground
- CMP sensor A failure
- PCM internal circuit failure

Diagnosis Details

Conditions for setting the DTC

When a malfunction is detected during the first drive cycle, a Pending DTC is stored in the PCM memory. If the malfunction returns in the next (second) drive cycle, the MIL comes on and a Confirmed DTC and the freeze data are stored.

Conditions for clearing the DTC

The MIL is cleared if the malfunction does not return in three consecutive trips in which the diagnostic runs. The MIL, the Pending DTC, the Confirmed DTC, and the freeze data can be cleared with the scan tool Clear command or by disconnecting the 12 volt battery.

DTC P0341

DTC P0341: Camshaft Position (CMP) Sensor A and Crankshaft Position (CKP) Sensor Incorrect Phase Detected

General Description

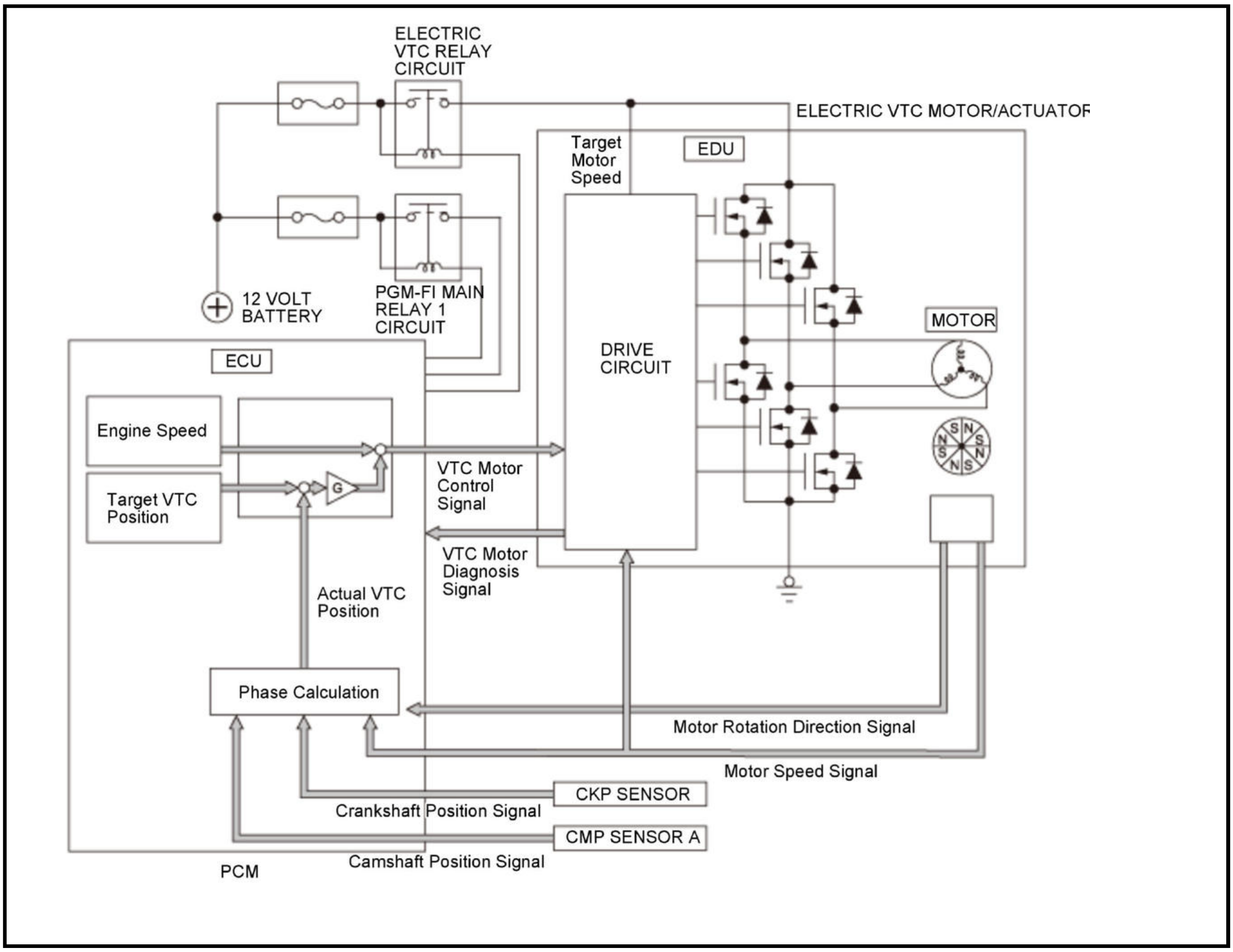
ELECTRIC VTC RELAY CIRCUIT
ELECTRIC VTC MOTOR/ACTUATOR
Target Motor Speed
EDU
12 VOLT BATTERY
PGM-FI MAIN RELAY 1 CIRCUIT
MOTOR
DRIVE CIRCUIT
ECU
Engine Speed
Target VTC Position
G
VTC Motor Control Signal
VTC Motor Diagnosis Signal
Actual VTC Position
Phase Calculation
Motor Rotation Direction Signal
Motor Speed Signal
CKP SENSOR
Crankshaft Position Signal
CMP SENSOR A
PCM
Camshaft Position Signal

The powertrain control module (PCM) detects intake camshaft phase from pulsing signal output from camshaft position (CMP) sensor A. The PCM determines the advance or the retard of the intake camshaft phase according to the signals from the crankshaft position (CKP) sensor and CMP sensor A. If the intake camshaft reference phase value deviates from a set range over a specified time period while the variable valve timing control (VTC) is not activated, the PCM detects a malfunction and stores a DTC.

Monitor Execution, Sequence, Duration, DTC Type

Execution	Continuous
Sequence	None
Duration	2.0 seconds or more
DTC Type	Two drive cycles, MIL on

Enable Conditions

Condition	Minimum	Maximum
Elapsed time after starting the engine	500 milliseconds	-

[ ]: HDS Parameter

Condition	Minimum	Maximum
Engine speed [Engine Speed]	500 rpm	-
Other	VTC system not operating	

[ ]: HDS Parameter

Malfunction Threshold

The measured intake camshaft phase difference between CMP sensor A and CKP sensor is 10.0 deg. or more for at least 2.0 seconds.

Possible Cause

NOTE: The causes shown may not be a complete list of all potential problems, and it is possible that there may be other causes.

- CMP sensor A poor installation
- CMP sensor A stuck
- CMP sensor A range/performance problem
- Cam chain poor installation
- VTC actuator stuck
- VTC actuator response delay

Confirmation Procedure

Operating Condition

Enter the maintenance mode, then start the engine, and let it idle. When the diagnosis does not finish, allow the engine cool to an engine coolant temperature of ambient temperature, then restart the engine, and let it idle.

With the HDS

Select the VTC TEST in the Function Test Menu with the HDS.

Diagnosis Details

Conditions for setting the DTC

When a malfunction is detected during the first drive cycle, a Pending DTC is stored in the PCM memory. If the malfunction returns in the next (second) drive cycle, the MIL comes on and a Confirmed DTC and the freeze data are stored.

Conditions for clearing the DTC

The MIL is cleared if the malfunction does not return in three consecutive trips in which the diagnostic runs. The MIL, the Pending DTC, the Confirmed DTC, and the freeze data can be cleared with the scan tool Clear command or by disconnecting the 12 volt battery.

DTC P0344

DTC P0344: Camshaft Position (CMP) Sensor A Circuit Intermittent Interruption

General Description

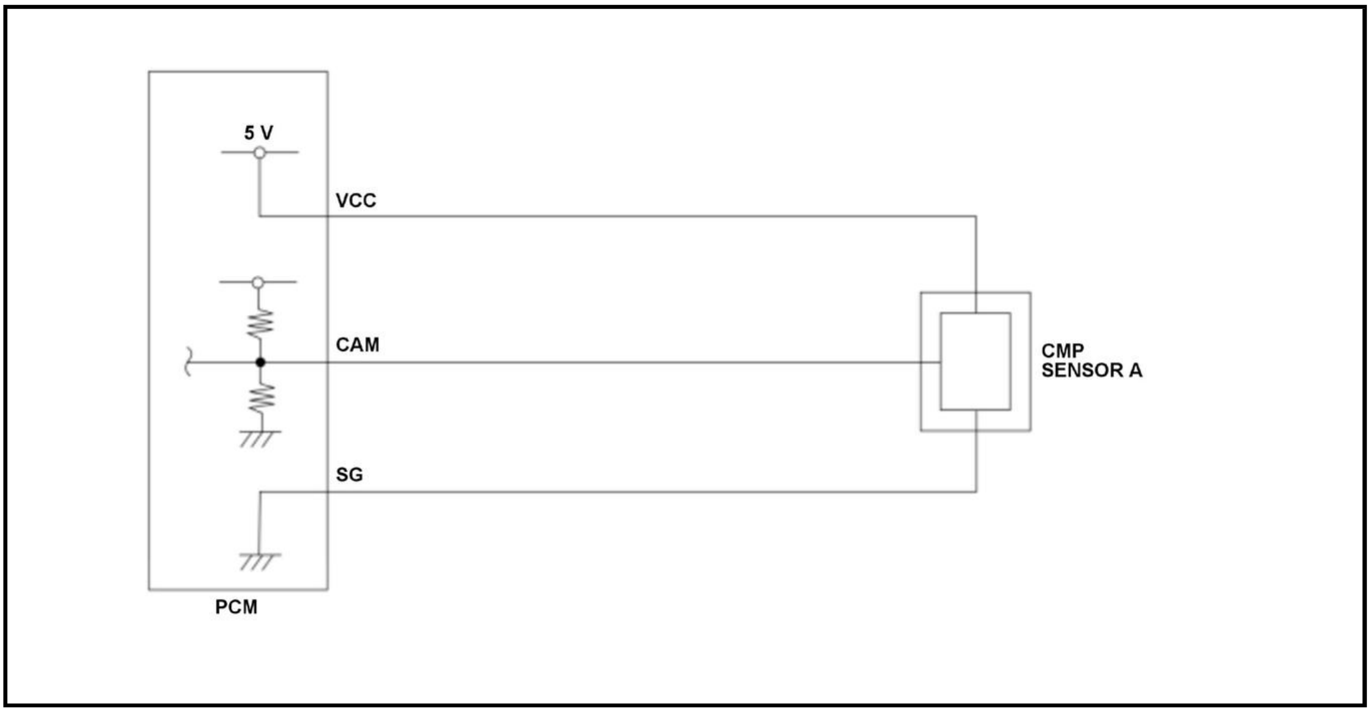

Camshaft position (CMP) sensor A detects the intake camshaft timing and sends pulsing signals to the powertrain control module (PCM). The PCM determines the advance or the retard of the camshaft timing according to the signals from the crankshaft position (CKP) sensor and CMP sensor A. If the number of pulsing signals from CMP sensor A during intervals between the CKP standard pulses is more or less than the proper number, the PCM detects a malfunction and stores a DTC.

Monitor Execution, Sequence, Duration, DTC Type

Execution	Continuous
Sequence	None
Duration	-
DTC Type	Two drive cycles, MIL on

Enable Conditions

Condition	B
State of the engine	Running

Malfunction Threshold

More or less than two CMP sensor A pulses are detected during intervals between the CKP standard pulses. This condition occurs at least 60 times.

Possible Cause

NOTE: The causes shown may not be a complete list of all potential problems, and it is possible that there may be other causes.

- CMP sensor A CAM line electrical noise overlapped
- CMP sensor A rotor chipped
- CMP sensor A failure
- PCM internal circuit failure

Diagnosis Details

Conditions for setting the DTC

When a malfunction is detected during the first drive cycle, a Pending DTC is stored in the PCM memory. If the malfunction returns in the next (second) drive cycle, the MIL comes on and a Confirmed DTC and the freeze data are stored.

Conditions for clearing the DTC

The MIL is cleared if the malfunction does not return in three consecutive trips in which the diagnostic runs. The MIL, the Pending DTC, the Confirmed DTC, and the freeze data can be cleared with the scan tool Clear command or by disconnecting the 12 volt battery.

DTC P0351, P0352, P0353, P0354

DTC P0351: No. 1 Cylinder Ignition Coil Circuit Malfunction

DTC P0352: No. 2 Cylinder Ignition Coil Circuit Malfunction

DTC P0353: No. 3 Cylinder Ignition Coil Circuit Malfunction

DTC P0354: No. 4 Cylinder Ignition Coil Circuit Malfunction

General Description

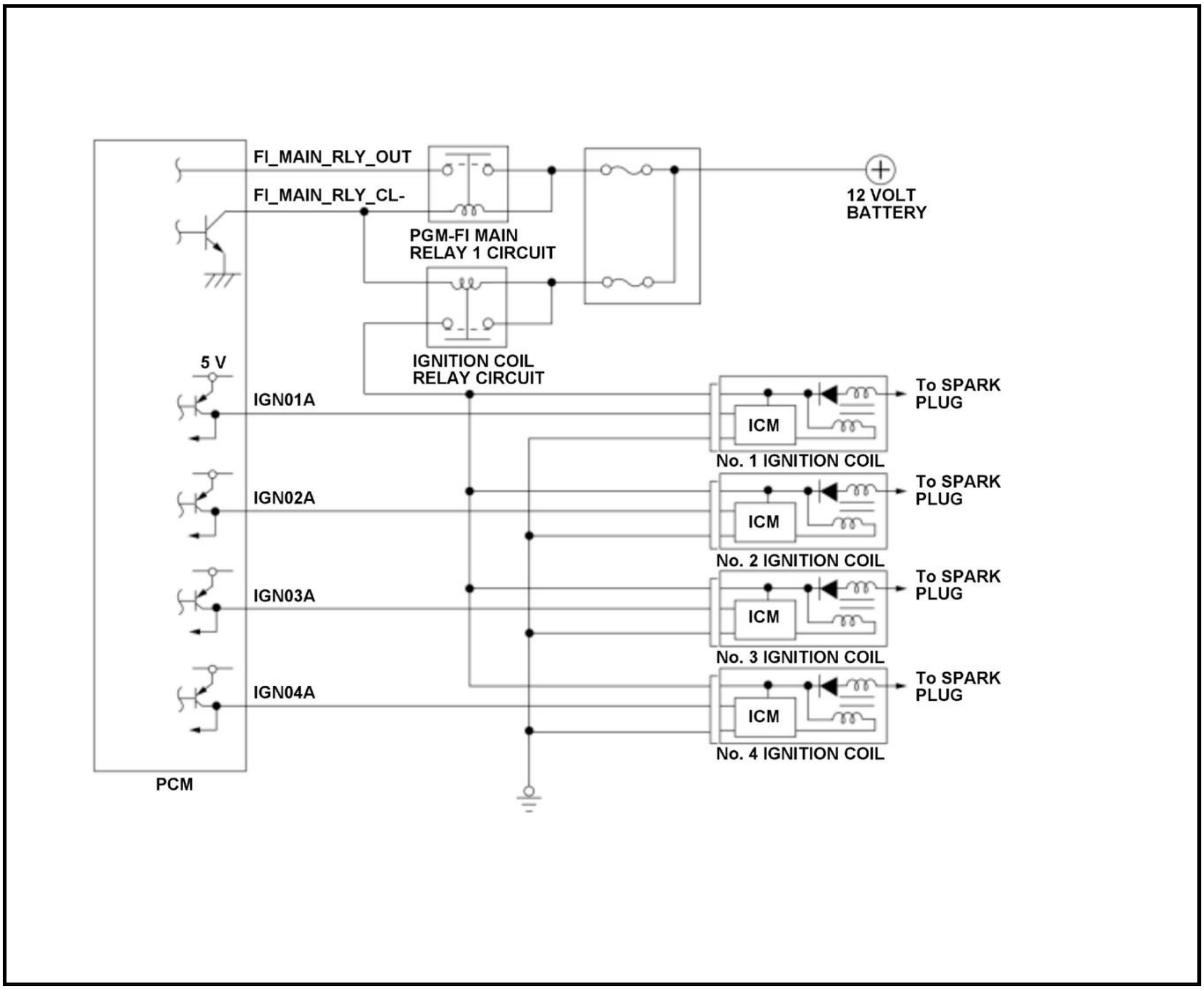
FI_MAIN_RLY_OUT
FI_MAIN_RLY_CL-
PGM-FI MAIN RELAY 1 CIRCUIT
12 VOLT BATTERY
IGNITION COIL RELAY CIRCUIT
5 V
IGN01A
IGN02A
IGN03A
IGN04A
ICM
No. 1 IGNITION COIL
No. 2 IGNITION COIL
No. 3 IGNITION COIL
No. 4 IGNITION COIL
To SPARK PLUG
PCM

The ignition coil is triggered at the optimum time by the powertrain control module (PCM) ON/OFF command. The PCM detects a malfunction when the engine is running and the return signal does not change for a specified time, the PCM detects a malfunction and stores a DTC.

Monitor Execution, Sequence, Duration, DTC Type

Execution	Continuous
Sequence	None
Duration	5 seconds or more (when the engine speed is 700 rpm)
DTC Type	One drive cycle, MIL on

Enable Conditions

Condition	B
State of the engine	Running

Malfunction Threshold

The return signal does not change for at least 5 seconds when the ignition coil is triggered.

Possible Cause

NOTE: The causes shown may not be a complete list of all potential problems, and it is possible that there may be other causes.

DTC: P0351

- No. 1 ignition coil IGN01A line open
- No. 1 ignition coil IGN01A line short to ground

DTC: P0352

- No. 2 ignition coil IGN02A line open
- No. 2 ignition coil IGN02A line short to ground

DTC: P0353

- No. 3 ignition coil IGN03A line open
- No. 3 ignition coil IGN03A line short to ground

DTC: P0354

- No. 4 ignition coil IGN04A line open
- No. 4 ignition coil IGN04A line short to ground

Common

- Ignition coil power supply line open
- Ignition coil ground line open
- Ignition coil internal circuit failure
- PCM internal circuit failure

Diagnosis Details

Conditions for setting the DTC

When a malfunction is detected, the MIL comes on and a Pending DTC, a Confirmed DTC, and the freeze data are stored in the PCM memory.

Conditions for clearing the DTC

The MIL is cleared if the malfunction does not return in three consecutive trips in which the diagnostic runs. The MIL, the Pending DTC, the Confirmed DTC, and the freeze data can be cleared with the scan tool Clear

command or by disconnecting the 12 volt battery.

DTC P0365

DTC P0365: Camshaft Position (CMP) Sensor B Circuit No Signal

General Description

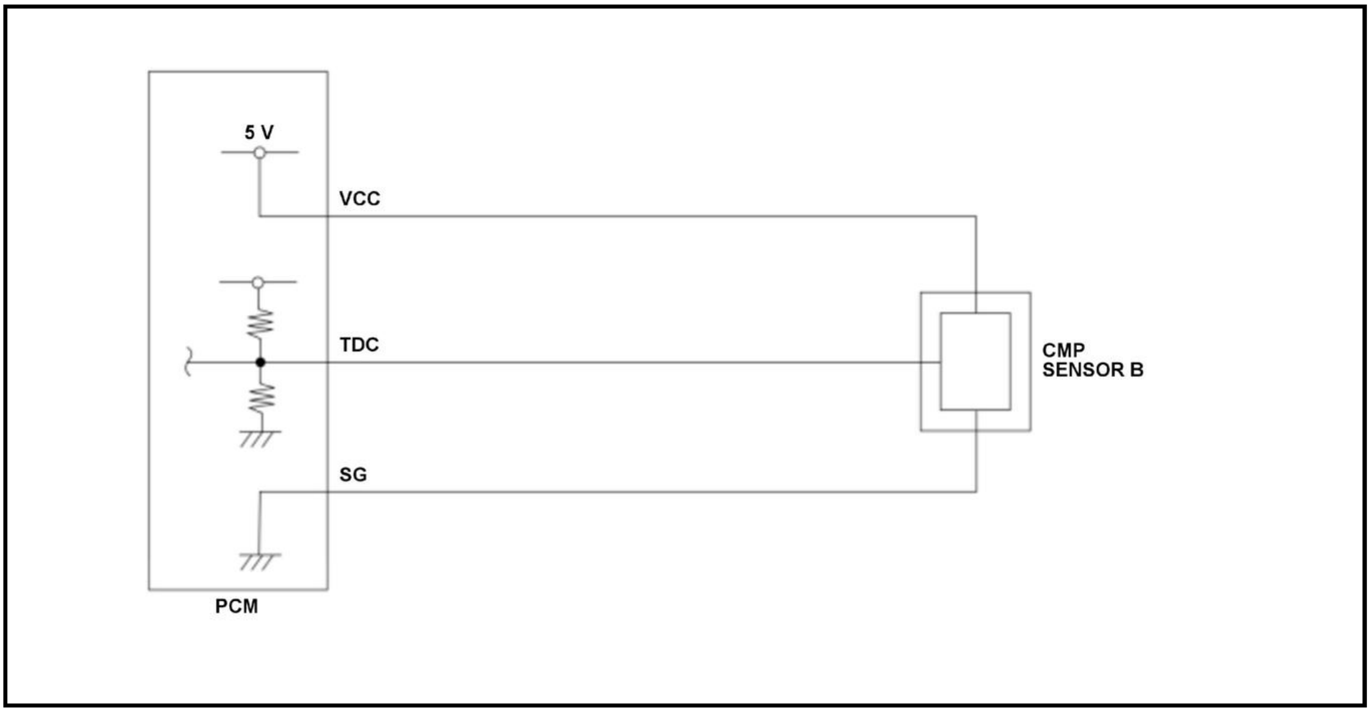

Camshaft position (CMP) sensor B consists of a rotor and a semiconductor that detects rotor position. When the rotor turns after starting the engine, the changes of magnetic flux in the semiconductor are converted into pulsing signals to the powertrain control module (PCM). CMP sensor B detects the top dead center of each cylinder for fuel injection timing. If no CMP sensor B pulsing signals are detected, the PCM detects a malfunction and stores a DTC.

Monitor Execution, Sequence, Duration, DTC Type

Execution	Continuous
Sequence	None
Duration	2 seconds or more (when the engine speed is 750 rpm)
DTC Type	One drive cycle, MIL on

Enable Conditions

Condition	B
State of the engine	Running

Malfunction Threshold

No input signals from CMP sensor B are detected while signals from the CKP sensor are detected at least 300 times.

Possible Cause

NOTE: The causes shown may not be a complete list of all potential problems, and it is possible that there may be other causes.

- CMP sensor B TDC line open

- CMP sensor B VCC line open
- CMP sensor B SG line open
- CMP sensor B TDC line short to ground
- CMP sensor B failure
- PCM internal circuit failure

Diagnosis Details

Conditions for setting the DTC

When a malfunction is detected, the MIL comes on and a Pending DTC, a Confirmed DTC, and the freeze data are stored in the PCM memory.

Conditions for clearing the DTC

The MIL is cleared if the malfunction does not return in three consecutive trips in which the diagnostic runs. The MIL, the Pending DTC, the Confirmed DTC, and the freeze data can be cleared with the scan tool Clear command or by disconnecting the 12 volt battery.

DTC P0369

DTC P0369: Camshaft Position (CMP) Sensor B Circuit Intermittent Interruption

General Description

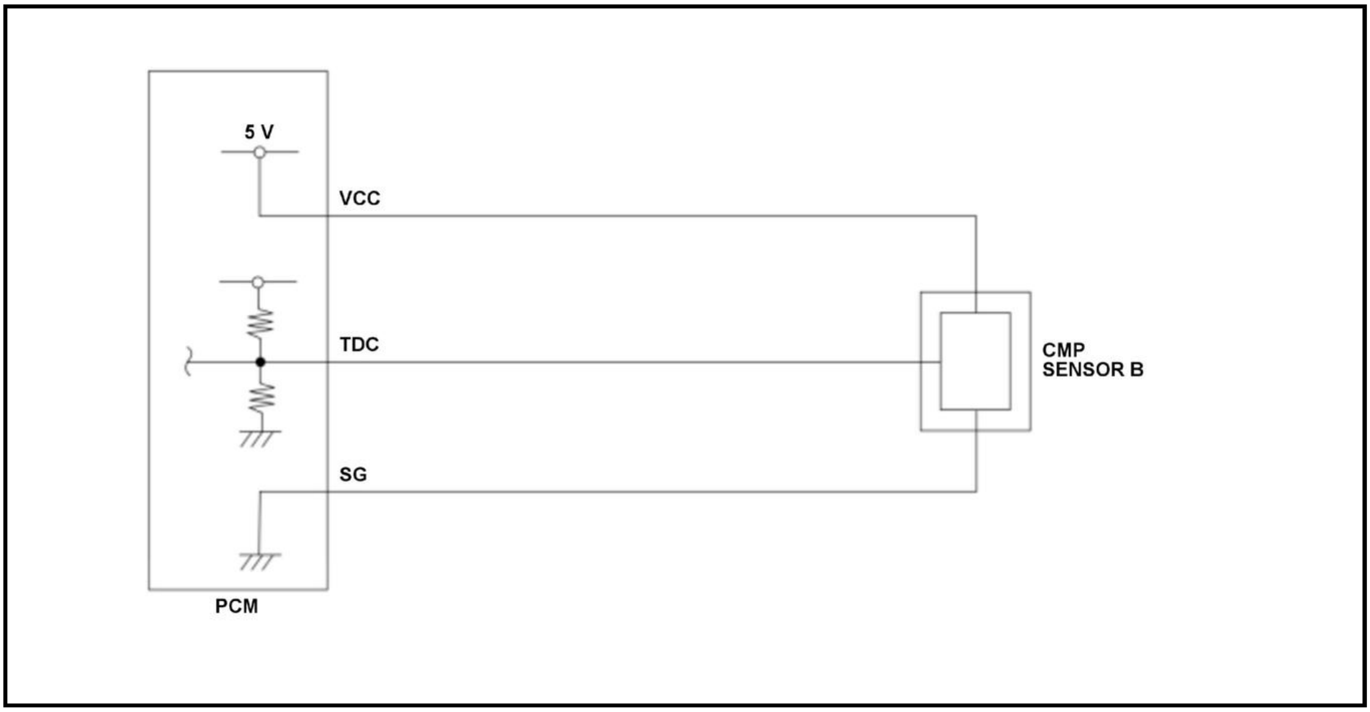

Camshaft position (CMP) sensor B consists of a rotor and a semiconductor that detects rotor position. When the rotor turns after starting the engine, the changes of magnetic flux in the semiconductor are converted into pulsing signals to the powertrain control module (PCM). CMP sensor B detects the top dead center of each cylinder for fuel injection timing. If CMP sensor B pulsing signals are detected an abnormal number of times due to noise, the PCM detects a malfunction and a stores DTC.

Monitor Execution, Sequence, Duration, DTC Type

Execution	Continuous
Sequence	None
Duration	-
DTC Type	One drive cycle, MIL on

Enable Conditions

Condition	Minimum	Maximum
Engine speed [Engine Speed]	400 rpm	-

[ ]: HDS Parameter

Malfunction Threshold

Other than 6 CMP pulses are detected during two crankshaft revolutions. This condition has been detected at least 30 times.

Possible Cause

NOTE: The causes shown may not be a complete list of all potential problems, and it is possible that there may be other causes.

- CMP sensor B TDC line electrical noise overlapped
- CMP sensor B rotor chipped
- CMP sensor B failure
- PCM internal circuit failure

Diagnosis Details

Conditions for setting the DTC

When a malfunction is detected, the MIL comes on and a Pending DTC, a Confirmed DTC, and the freeze data are stored in the PCM memory.

Conditions for clearing the DTC

The MIL is cleared if the malfunction does not return in three consecutive trips in which the diagnostic runs. The MIL, the Pending DTC, the Confirmed DTC, and the freeze data can be cleared with the scan tool Clear command or by disconnecting the 12 volt battery.

DTC P0400

DTC P0400: Exhaust Gas Recirculation (EGR) System Leak Detected

General Description

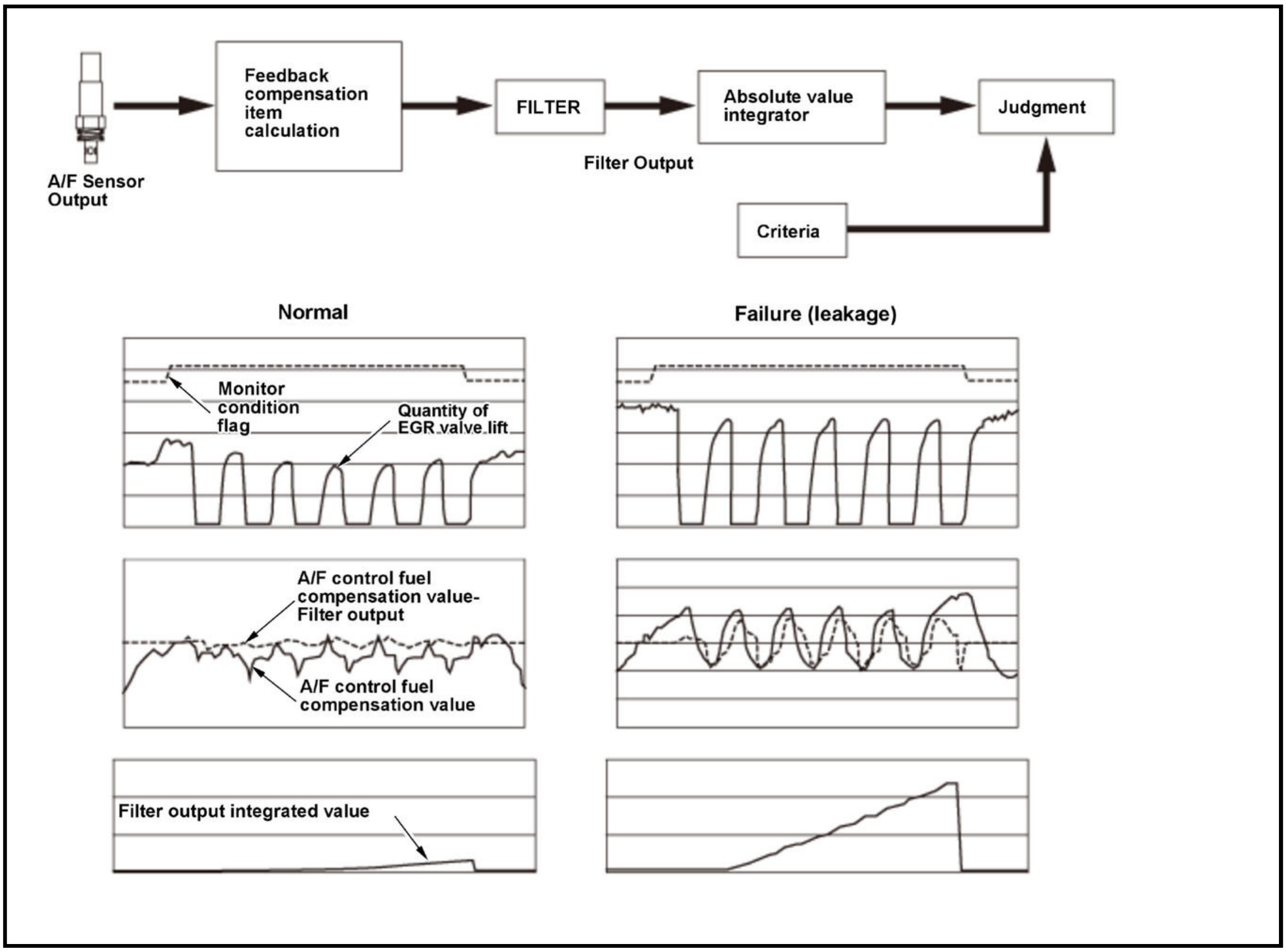
Feedback compensation item calculation
FILTER
Absolute value integrator
Judgment
A/F Sensor Output
Filter Output
Criteria
Normal
Failure (leakage)
Monitor condition flag
Quantity of EGR valve lift
A/F control fuel compensation value-Filter output
A/F control fuel compensation value
Filter output integrated value

The exhaust gas recirculation (EGR) system failure conditions include a sticking lift sensor, restricted passages, and leakage from the external piping. At any specific EGR lift value there is a corresponding air/fuel ratio compensation value. If the air/fuel ratio compensation value is greater than the corresponding EGR lift value, the powertrain control module (PCM) detects a malfunction and stores a DTC.

Monitor Execution, Sequence, Duration, DTC Type

Execution	Once per driving cycle
Sequence	P0404, P2413 are judged as OK
Duration	10 seconds or more
DTC Type	Two drive cycles, MIL on
OBD Status	PASSED/FAILED/NOT COMPLETED (STILL TESTING)

Enable Conditions

Condition	Minimum	Maximum
Engine coolant temperature [ECT SENSOR 1]	156 deg.F (69 deg.C)	-
Intake air temperature [IAT SENSOR (1)]	50 deg.F (10 deg.C)	-
Engine speed [ENGINE SPEED]	1, 750 rpm	3, 000 rpm
Vehicle speed [VEHICLE SPEED]	50 mph (80 km/h)	-
12 volt battery voltage [BATTERY]	10.5 V	-
Fuel feedback	Closed loop at stoichiometric	

Condition	Minimum	Maximum
Monitoring priority	P0133, P0420	
Other	Without excessive load change	

[ ]: HDS Parameter

Malfunction Threshold

The air/fuel ratio (A/F) sensor response parameter according to the opening and closing of the EGR is 32, 768 (LT80A) or less.

Possible Cause

NOTE: The causes shown may not be a complete list of all potential problems, and it is possible that there may be other causes.

- EGR pipe misinstalled
- EGR valve failure

Confirmation Procedure

Operating Condition

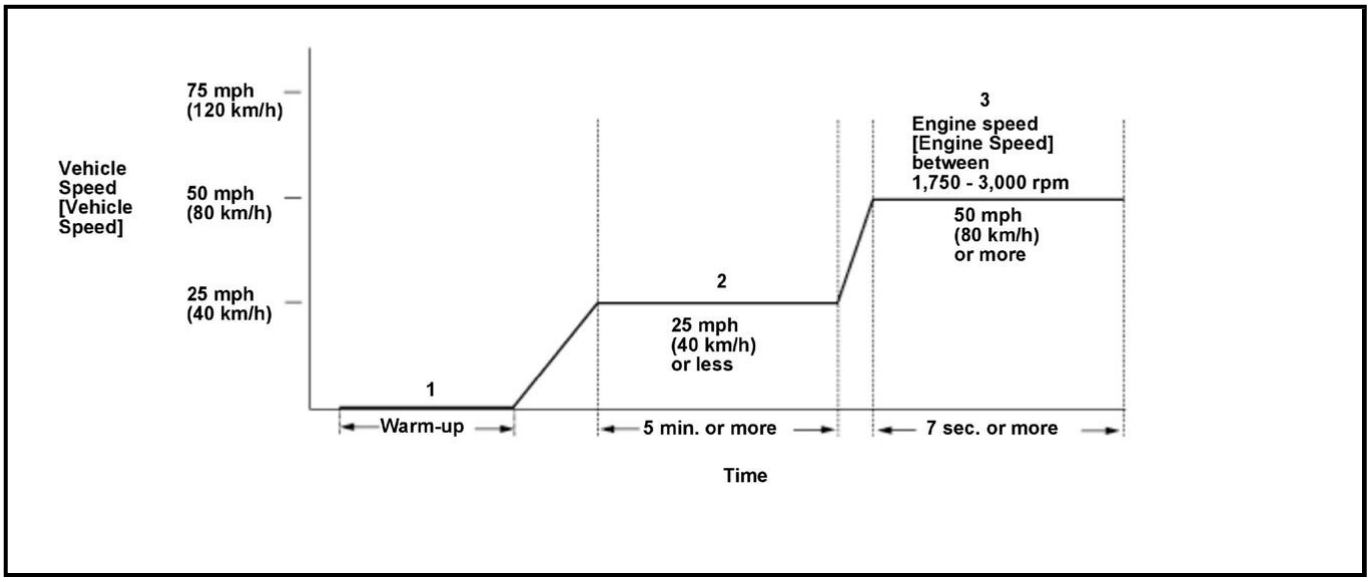

- Start the engine. Hold the engine speed [ENGINE SPEED] at 3, 000 rpm without load (in P or N) until the radiator fan comes on.
- Drive the vehicle at a steady speed of 25 mph (40 km/h) or less, for at least 5 minutes.
- Drive immediately at a steady speed of 50 mph (80 km/h) or more and engine speed [ENGINE SPEED] between 1, 750 - 3, 000 rpm for at least 7 seconds.

- Drive the vehicle in this manner only if the traffic regulations and ambient conditions allow.

With the HDS

None.

Diagnosis Details

Conditions for setting the DTC

When a malfunction is detected during the first drive cycle, a Pending DTC is stored in the PCM memory. If the malfunction returns in the next (second) drive cycle, the MIL comes on and a Confirmed DTC and the

freeze data are stored.

Conditions for clearing the DTC

The MIL is cleared if the malfunction does not return in three consecutive trips in which the diagnostic runs. The MIL, the Pending DTC, the Confirmed DTC, and the freeze data can be cleared with the scan tool Clear command or by disconnecting the 12 volt battery.

DTC P0401

DTC P0401: Exhaust Gas Recirculation (EGR) Insufficient Flow

General Description

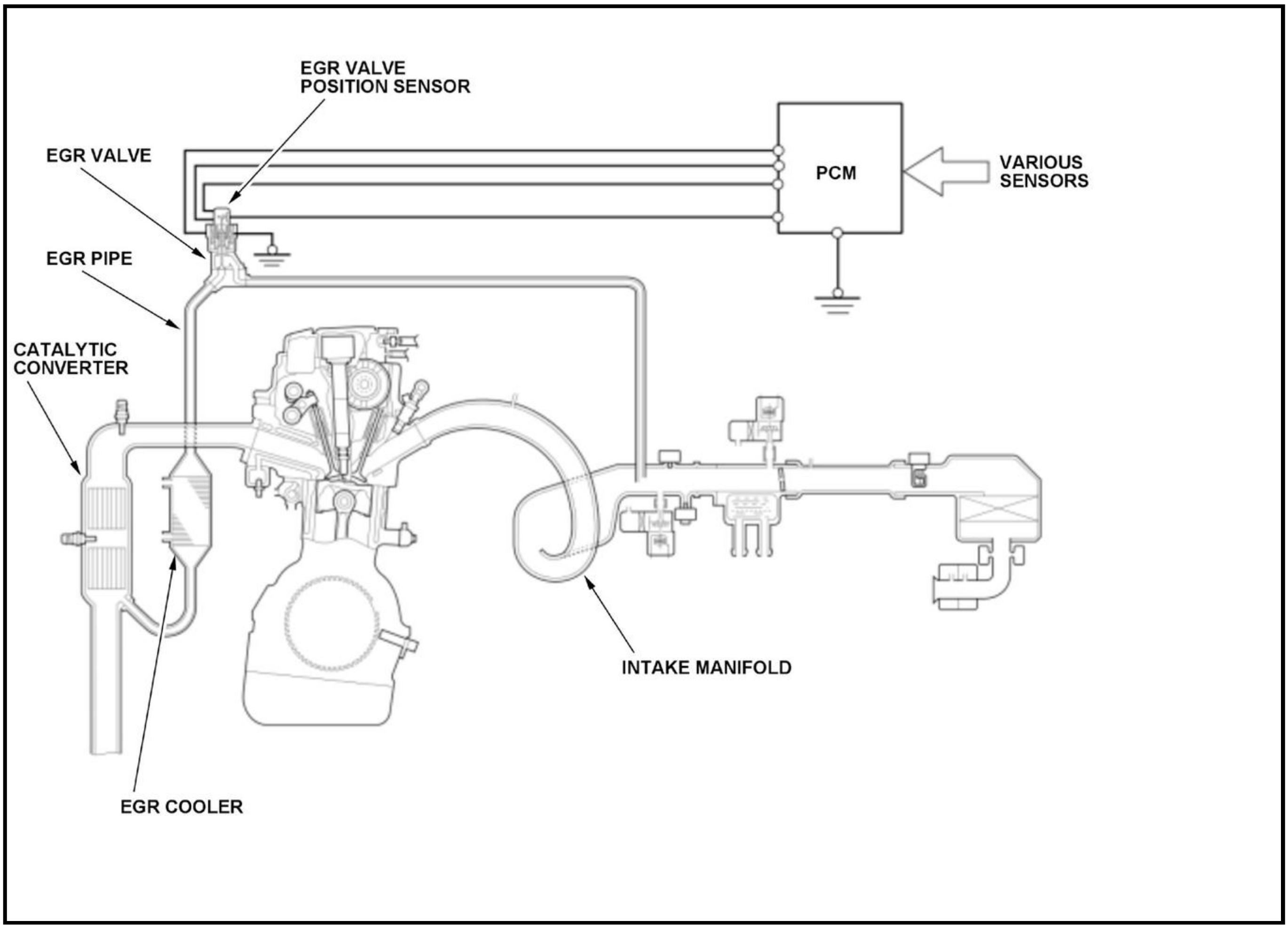
EGR VALVE POSITION SENSOR
EGR VALVE
PCM
VARIOUS SENSORS
EGR PIPE
CATALYTIC CONVERTER
INTAKE MANIFOLD
EGR COOLER

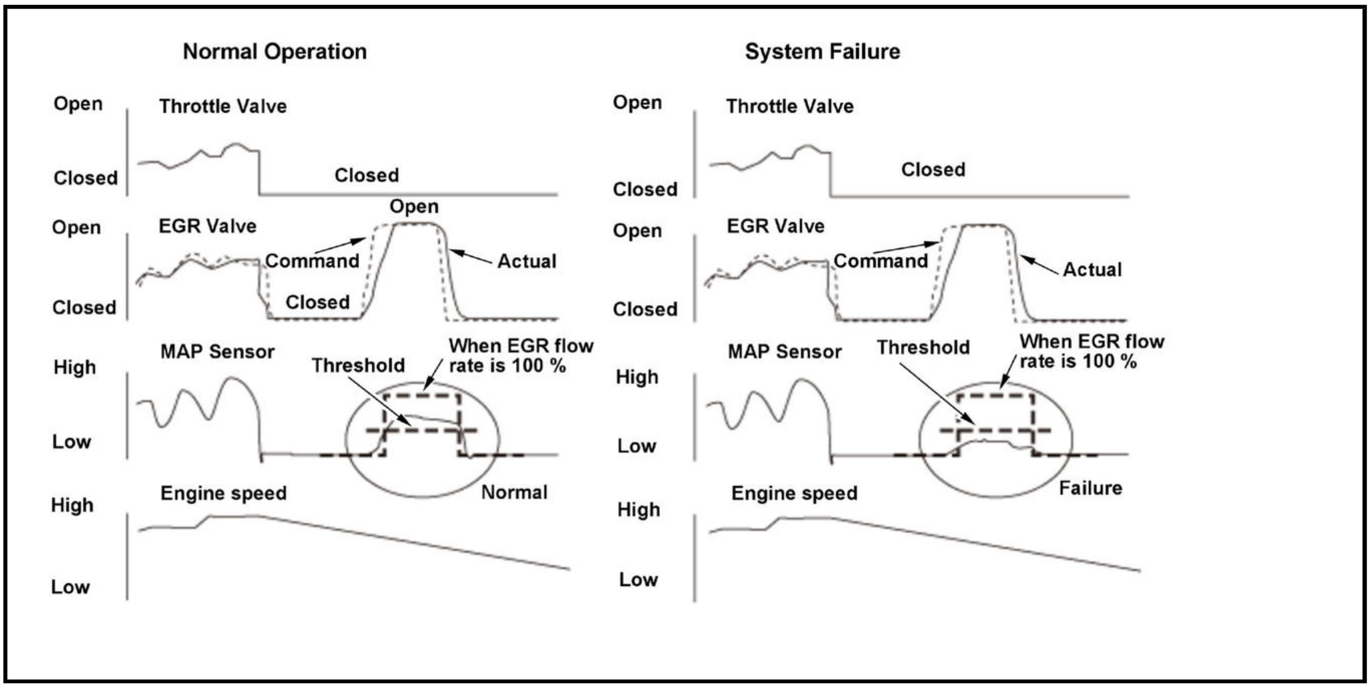

The exhaust gas recirculation (EGR) valve, which is controlled by the powertrain control module (PCM), is opened and the exhaust gas flows through the EGR valve, the intake manifold, and the EGR passage. The exhaust gas is circulated into the air/fuel mixture to lower combustion temperatures, thus reducing oxides of nitrogen (NOx) emissions. The EGR flow is inspected as follows. The EGR valve is closed during deceleration with the throttle valve fully closed. Then the PCM fully opens the EGR valve. After a set time, the PCM computes the ratio of the present EGR flow to the normal EGR flow by monitoring the fluctuation of the intake manifold pressure between when the EGR valve is fully opened and when it is fully closed. If the EGR flow rate is lower than normal, the PCM detects a malfunction and stores a DTC.

Monitor Execution, Sequence, Duration, DTC Type

Execution	Once per driving cycle
Sequence	P0404, P2413 are judged as OK
Duration	5.0 seconds or more
DTC Type	Two drive cycles, MIL on

Enable Conditions

Condition	Minimum	Maximum
Engine coolant temperature [ECT Sensor 1]	156 deg.F (69 deg.C)	-
Engine speed [Engine Speed]	1, 200 rpm	2, 500 rpm
MAP value [MAP Sensor]	14.0 kPa (105.0 mmHg, 4.14 inHg)	-
Vehicle speed [Vehicle Speed]	23 mph (37 km/h)	-
12 volt battery voltage [Battery]	10.5 V	-
Throttle position	Fully closed	
Fuel feedback	During deceleration	

[ ]: HDS Parameter

Malfunction Threshold

The ratio of the current EGR flow to the normal EGR flow is 20.0 % or less for at least 5.0 seconds.

Possible Cause

NOTE: The causes shown may not be a complete list of all potential problems, and it is possible that there may be other causes.

- EGR valve failure (valve or solenoid)
- EGR passage clogged

Confirmation Procedure

Operating Condition

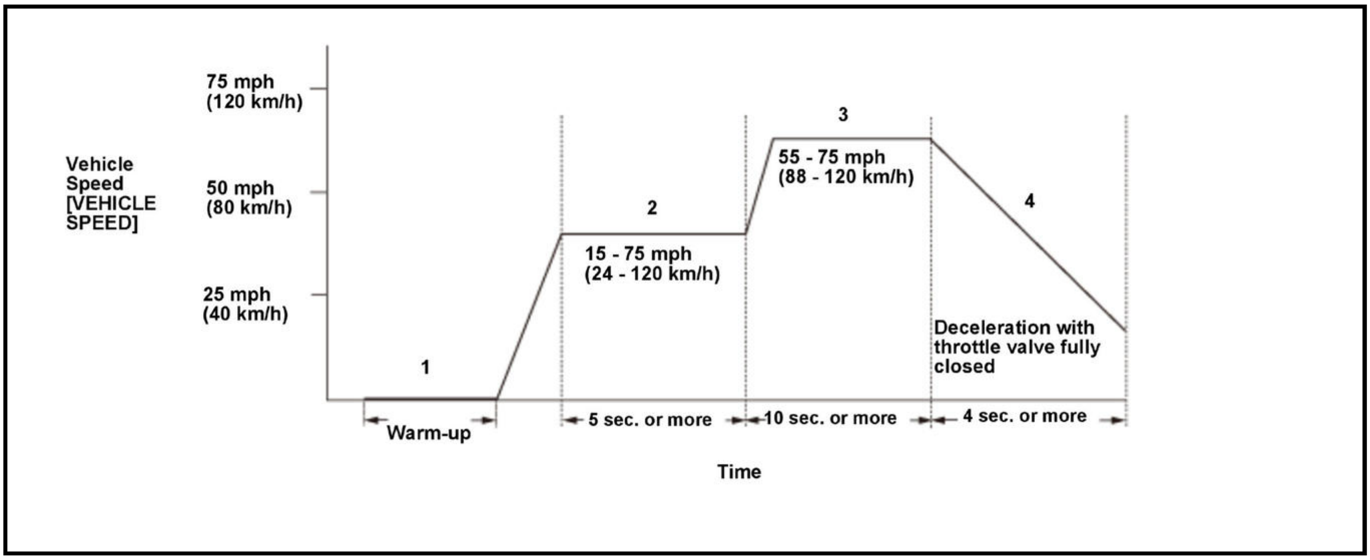

- Enter the maintenance mode, then start the engine. Hold the engine speed [Engine Speed] at 3, 000 rpm without load (in P or N) until the radiator fan comes on, then let it idle.
- Drive the vehicle at a speed between 15 - 75 mph (24 - 120 km/h) for at least 5 seconds.
- Drive at a steady speed between 55 - 75 mph (88 - 120 km/h) for at least 10 seconds.
- Decelerate with the throttle valve fully closed for at least 4 seconds.

- Drive the vehicle in this manner only if the traffic regulations and ambient conditions allow.

With the HDS

None.

Diagnosis Details

Conditions for setting the DTC

When a malfunction is detected during the first drive cycle, a Pending DTC is stored in the PCM memory. If the malfunction returns in the next (second) drive cycle, the MIL comes on and a Confirmed DTC and the freeze data are stored.

Conditions for clearing the DTC

The MIL is cleared if the malfunction does not return in three consecutive trips in which the diagnostic runs. The MIL, the Pending DTC, the Confirmed DTC, and the freeze data can be cleared with the scan tool Clear command or by disconnecting the 12 volt battery.

DTC P0404

DTC P0404: Exhaust Gas Recirculation (EGR) Valve Circuit Range/Performance Problem

General Description

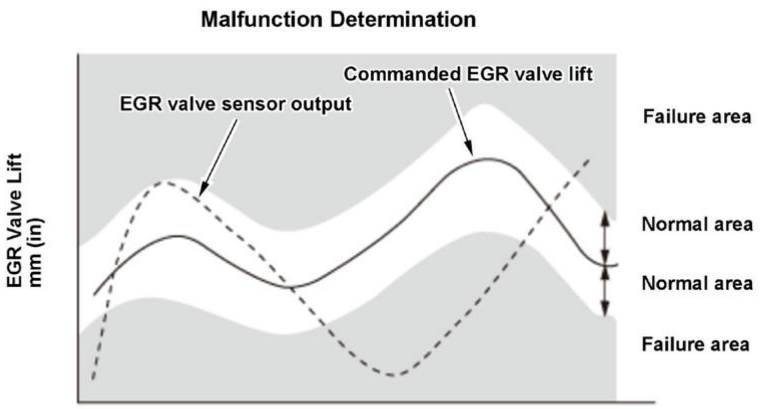

The exhaust gas recirculation (EGR) valve, which is controlled by the powertrain control module (PCM), is opened and the exhaust gas flows through the EGR valve, the intake manifold, and the EGR passage. The exhaust gas is circulated into the air/fuel mixture and the mixture is drawn into the combustion chamber to lower combustion temperatures, thus reducing oxides of nitrogen (NOx) emissions. A sensor (lift sensor) is built into the EGR valve and detects the amount of valve lift. The command value for the target valve lift is stored in the PCM so that exhaust gas recirculation can be optimized according to driving conditions. Comparing this command value with the lift sensor output signal value, the PCM controls the EGR valve to make the amount of actual valve lift equal to the command value. If the difference between the value of commanded EGR valve lift and actual EGR valve lift is a specified value or more, an abnormality in the EGR valve or the lift sensor output is determined, the PCM detects a malfunction and stores a DTC.

Monitor Execution, Sequence, Duration, DTC Type

Execution	Once per driving cycle
Sequence	None
Duration	5.0 seconds or more
DTC Type	Two drive cycles, MIL on

Enable Conditions

Condition	Minimum	Maximum
Engine speed [Engine Speed]	-	4, 500 rpm
Commanded EGR valve lift	0.0119 in (0.30 mm)	-
12 volt battery voltage [Battery]	10.5 V	-

[ ]: HDS Parameter

Malfunction Threshold

The difference between the command value of the amount of EGR valve lift in the PCM and the actual amount of valve lift is 0.0402 in (1.02 mm) or more for at least 5.0 seconds.

Possible Cause

NOTE: The causes shown may not be a complete list of all potential problems, and it is possible that there may be other causes.

- EGR valve position sensor line open
- EGR valve position sensor line short
- EGR valve response delay
- EGR valve full open stuck

- EGR valve middle stuck
- EGR valve position sensor middle stuck
- EGR valve position sensor range/performance problem

Confirmation Procedure

Operating Condition

- Enter the maintenance mode, then start the engine. Hold the engine speed [Engine Speed] at 3, 000 rpm without load (in P or N) until the radiator fan comes on, then let it idle.
- Drive the vehicle at a speed between 15 - 75 mph (24 - 120 km/h) for at least 5 seconds.
- Drive the vehicle in this manner only if the traffic regulations and ambient conditions allow.

With the HDS

Select the EGR TEST in the Function Test Menu with the HDS.

Diagnosis Details

Conditions for setting the DTC

When a malfunction is detected during the first drive cycle, a Pending DTC is stored in the PCM memory. If the malfunction returns in the next (second) drive cycle, the MIL comes on and a Confirmed DTC and the freeze data are stored.

Conditions for clearing the DTC

The MIL is cleared if the malfunction does not return in three consecutive trips in which the diagnostic runs. The MIL, the Pending DTC, the Confirmed DTC, and the freeze data can be cleared with the scan tool Clear command or by disconnecting the 12 volt battery.

DTC P0405

DTC P0405: Exhaust Gas Recirculation (EGR) Valve Circuit Range/Performance Problem

General Description

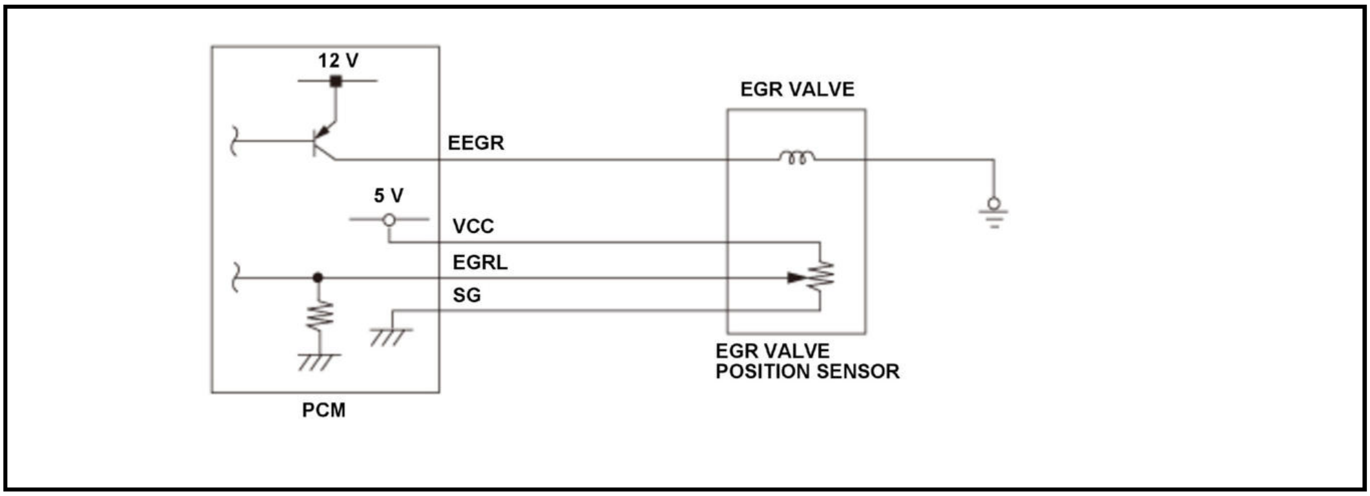

The powertrain control module (PCM) controls the exhaust gas recirculation (EGR) valve opening. The system includes the EGR actuator, the EGR valve, the EGR valve position sensor, and the PCM. The EGR valve position sensor is a semiconductor type, and it is attached to the EGR valve and shaft to determine EGR valve position. The EGR valve position signal from the EGR valve position sensor is transmitted to the PCM for target position feedback control. If the EGR valve position sensor output voltage is a specified value, the PCM detects a malfunction and stores a DTC.

Monitor Execution, Sequence, Duration, DTC Type

Execution	Continuous
Sequence	None
Duration	6 seconds or more
DTC Type	Two drive cycles, MIL on

Enable Conditions

Condition	B
State of the engine	Running

Malfunction Threshold

The EGR valve position sensor output voltage [EGR Valve Position Sensor (EGR Vls)] is 0.31 V or less for at least 6 seconds.

[ ]: HDS Parameter

Possible Cause

NOTE: The causes shown may not be a complete list of all potential problems, and it is possible that there may be other causes.

- EGR valve position sensor failure
- PCM internal circuit failure

Diagnosis Details

Conditions for setting the DTC

When a malfunction is detected during the first drive cycle, a Pending DTC is stored in the PCM memory. If the malfunction returns in the next (second) drive cycle, the MIL comes on and a Confirmed DTC and the freeze data are stored.

Conditions for clearing the DTC

The MIL is cleared if the malfunction does not return in three consecutive trips in which the diagnostic runs. The MIL, the Pending DTC, the Confirmed DTC, and the freeze data can be cleared with the scan tool Clear command or by disconnecting the 12 volt battery.

DTC P0406

DTC P0406: Exhaust Gas Recirculation (EGR) Valve Position Sensor Circuit High Voltage

General Description

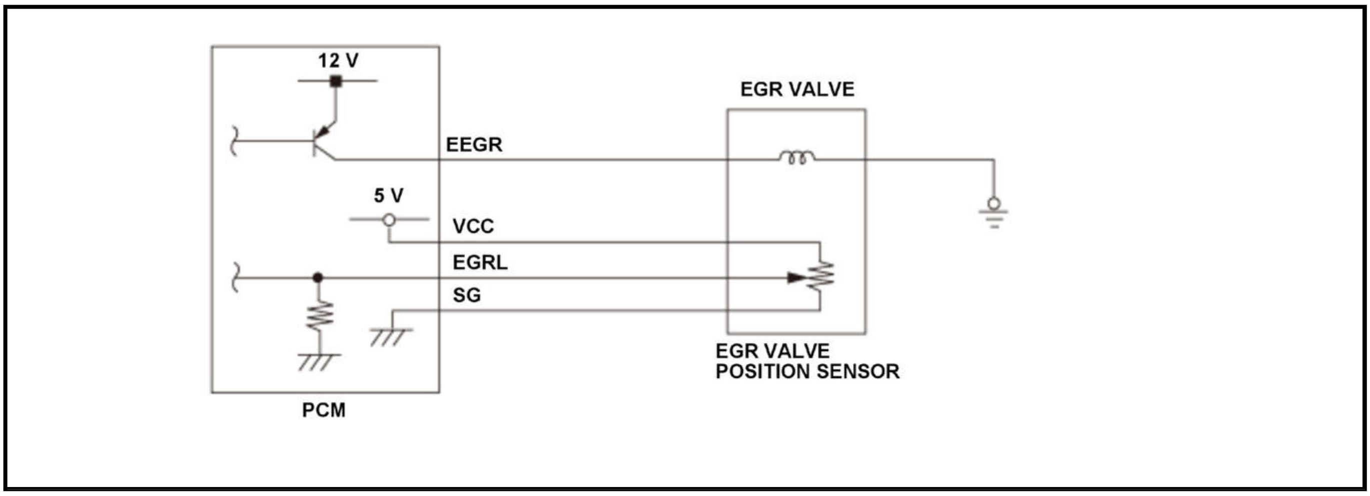

The powertrain control module (PCM) controls the exhaust gas recirculation (EGR) valve opening. The system includes the EGR actuator, the EGR valve, the EGR valve position sensor, and the PCM. The EGR valve position sensor is a semiconductor type, and it is attached to the EGR valve and shaft to determine EGR valve position. The EGR valve position signal from the EGR valve position sensor is transmitted to the PCM for target position feedback control. If the EGR valve position sensor output voltage is a specified value, the PCM detects a malfunction and stores a DTC.

Monitor Execution, Sequence, Duration, DTC Type

Execution	Continuous
Sequence	None
Duration	2 seconds or more
DTC Type	Two drive cycles, MIL on

Enable Conditions

Condition	B
State of the engine	Running

Malfunction Threshold

The EGR valve position sensor output voltage [EGR Valve Position Sensor (EGR Vls)] is 4.89 V or more for at least 2 seconds.

[ ]: HDS Parameter

Possible Cause

NOTE: The causes shown may not be a complete list of all potential problems, and it is possible that there may be other causes.

- EGR valve position sensor EGRL line short to EGR valve position sensor VCC line
- EGR valve position sensor failure
- PCM internal circuit failure

Diagnosis Details

Conditions for setting the DTC

When a malfunction is detected during the first drive cycle, a Pending DTC is stored in the PCM memory. If the malfunction returns in the next (second) drive cycle, the MIL comes on and a Confirmed DTC and the freeze data are stored.

Conditions for clearing the DTC

The MIL is cleared if the malfunction does not return in three consecutive trips in which the diagnostic runs. The MIL, the Pending DTC, the Confirmed DTC, and the freeze data can be cleared with the scan tool Clear command or by disconnecting the 12 volt battery.

DTC P0420

DTC P0420: Catalyst System Efficiency Below Threshold

General Description

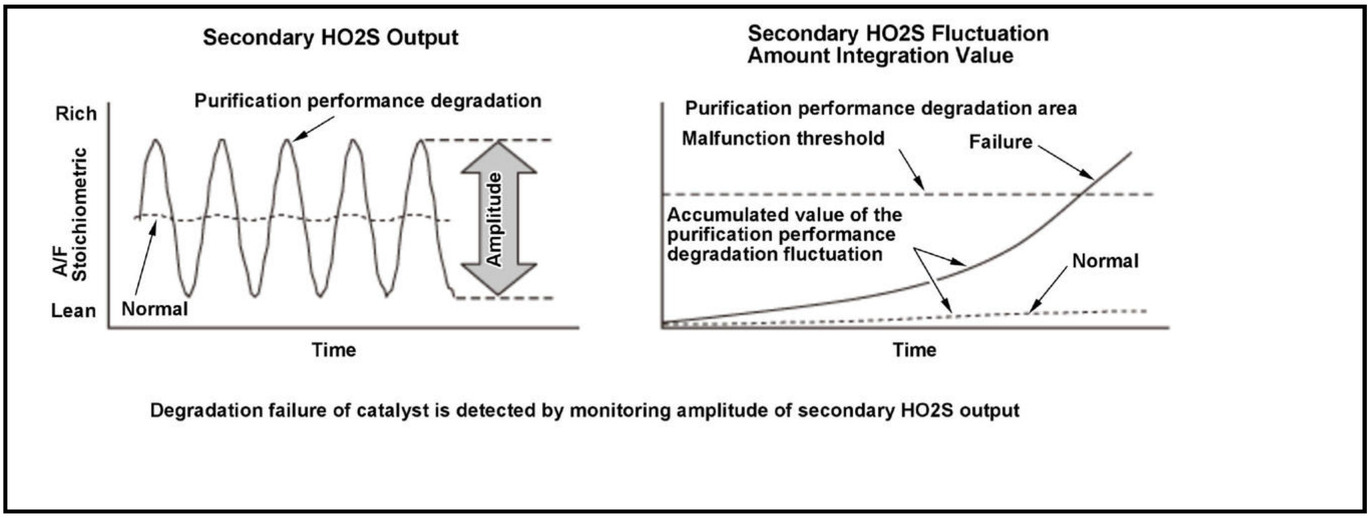

Degradation failure of catalyst is detected by monitoring amplitude of secondary HO2S output

The three way catalytic converter (TWC) converts hydrocarbons (HC), carbon monoxide (CO), and oxides of nitrogen (NOx) in the exhaust gas to water vapor, carbon dioxide (CO 2), and dinitrogen (N 2). The powertrain control module (PCM) fluctuates the air/fuel ratio temporarily to detect the performance of the TWC and measures the degree of fluctuation in the secondary heated oxygen sensor (secondary HO2S (sensor 2)) output. If the accumulated value for a set time is too great, deterioration of the performance of the catalyst is detected, the PCM detects a malfunction and stores a DTC.

Monitor Execution, Sequence, Duration, DTC Type

Execution	Once per driving cycle
Sequence	None
Duration	7.5 seconds or more
DTC Type	Two drive cycles, MIL on

Enable Conditions

Condition	Minimum	Maximum
Elapsed time that secondary HO2S activity is not monitored after starting the engine	15 seconds	-
Engine coolant temperature [ECT Sensor 1]	156 deg.F (69 deg.C)	-
Intake air temperature [IAT Sensor (1)]	-13 deg.F (-25 deg.C)	-
Estimated TWC temperature	1, 112 deg.F (600 deg.C)	-
Vehicle speed [Vehicle Speed]	30 mph (48 km/h)	-
Fuel trim	0.69	1.47
Fuel feedback	Closed loop at stoichiometric	
Monitoring priority	P0133	

Condition	Minimum	Maximum
Other	Has record of deceleration at least once	
	Cruise load or more	

[ ]: HDS Parameter

Malfunction Threshold

The secondary HO2S (sensor 2) fluctuation integration value is 3.0 V or more for at least 7.5 seconds.

Possible Cause

NOTE: The causes shown may not be a complete list of all potential problems, and it is possible that there may be other causes.

- TWC purification performance deterioration
- Secondary HO2S (sensor 2) line electrical noise overlapped
- Secondary HO2S (sensor 2) connector loose connection
- Exhaust system change (besides a genuine part)

Confirmation Procedure

Operating Condition

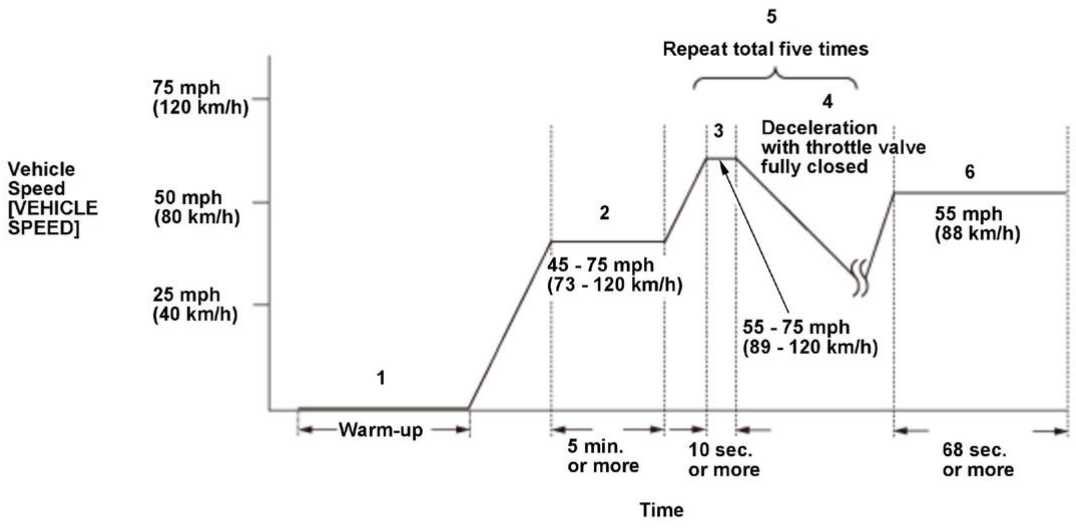

- Enter the maintenance mode, then start the engine. Hold the engine speed [Engine Speed] at 3, 000 rpm without load (in P or N) until the radiator fan comes on, then let it idle.
- Drive the vehicle at a speed between 45 - 75 mph (73 - 120 km/h) for at least 5 minutes, to warm up the TWC.
- Drive at a steady speed between 55 - 75 mph (89 - 120 km/h) for at least 10 seconds.
- Decelerate with the throttle valve fully closed.
- Repeat driving pattern steps 3 through 4, five times.
- Set a vehicle speed [Vehicle Speed] of 55 mph (88 km/h) on the cruise control or equivalent, and drive for at least 68 seconds.

- After disconnecting the 12 volt battery, extend Driving Pattern step 6 to 4 minutes or longer.
- Drive the vehicle in this manner only if the traffic regulations and ambient conditions allow.

With the HDS

None.

Diagnosis Details

Conditions for setting the DTC

When a malfunction is detected during the first drive cycle, a Pending DTC is stored in the PCM memory. If the malfunction returns in the next (second) drive cycle, the MIL comes on and a Confirmed DTC and the freeze data are stored.

Conditions for clearing the DTC

The MIL is cleared if the malfunction does not return in three consecutive trips in which the diagnostic runs. The MIL, the Pending DTC, the Confirmed DTC, and the freeze data can be cleared with the scan tool Clear command or by disconnecting the 12 volt battery.

DTC P043E

DTC P043E: Evaporative Emission (EVAP) Leak Check Module Standard Pressure Low

General Description

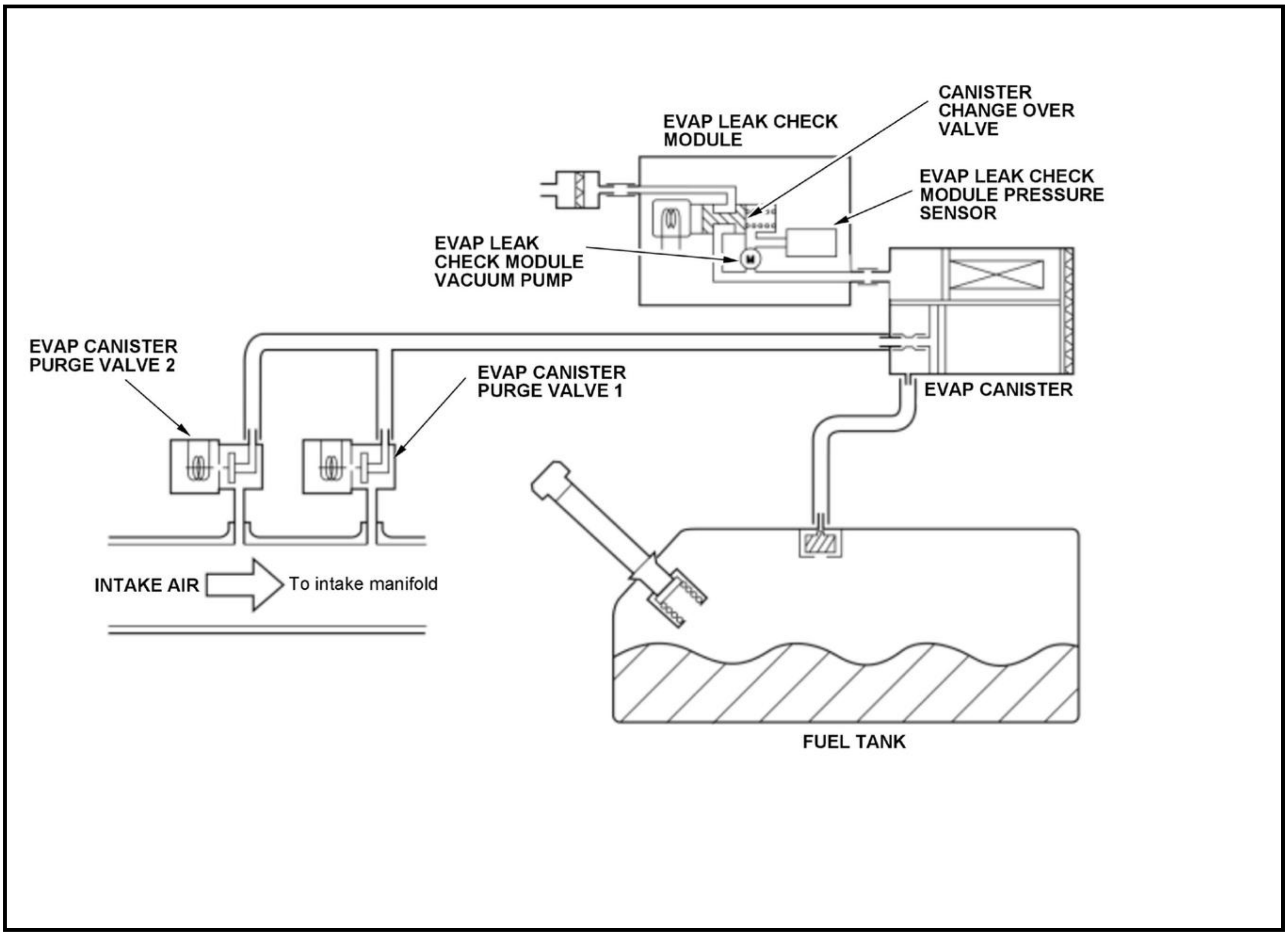
CANISTER CHANGE OVER VALVE
EVAP LEAK CHECK MODULE
EVAP LEAK CHECK MODULE PRESSURE SENSOR
EVAP LEAK CHECK MODULE VACUUM PUMP
EVAP CANISTER PURGE VALVE 2
EVAP CANISTER PURGE VALVE 1
EVAP CANISTER
INTAKE AIR
To intake manifold
FUEL TANK

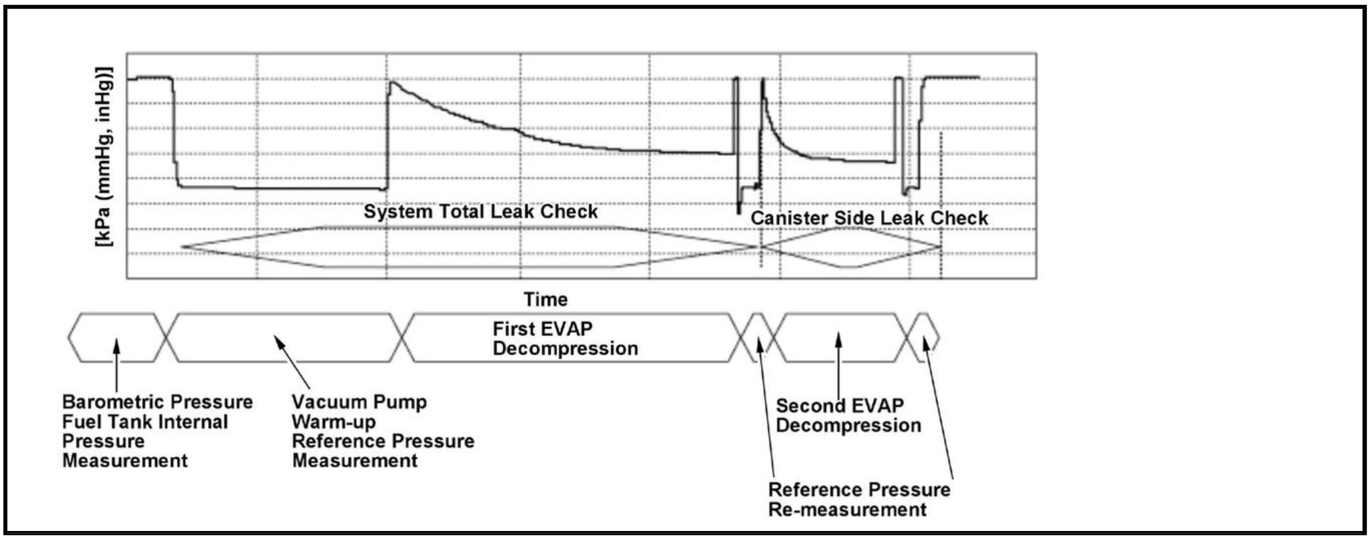

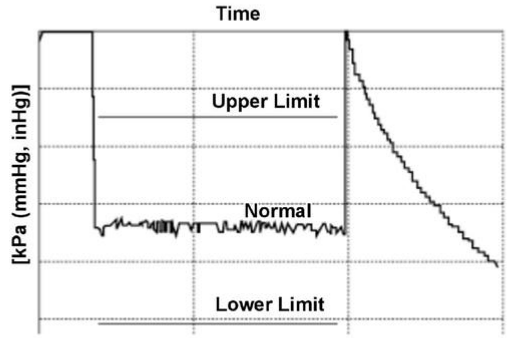

The powertrain control module (PCM) starts the evaporative emission (EVAP) system diagnosis after the vehicle has been turned to the OFF (LOCK) mode, and has met all other enable conditions (initial engine coolant temperature [ECT Sensor 1] and off for at least 5 hours). The EVAP system diagnosis is performed by reducing pressure between the EVAP canister and the atmosphere.

A malfunction is detected and a DTC is stored when changes in the pressure are equal to or less than the prescribed value after the prescribed time of starting the system pressure reduction.

EVAP leak check module operation flow

- Reference pressure measurement: Malfunction check in the EVAP leak check module and determination of early completion of pressure reduction when normal.
- System pressure reduction: Pressure in the EVAP system is reduced to measure the ultimate pressure.
- Reference pressure re-measurement: Leak is detected by comparing with the ultimate pressure of the system pressure reduction.
- Reference value is to be measured twice considering change in the characteristics of the EVAP leak check module vacuum pump during detection.

Reference pressure is the pressure reduction by the reference orifice (#40 equivalent) in the EVAP leak check module used to check for leak by comparison with the system pressure reduction.

Monitor Execution, Sequence, Duration, DTC Type

Execution	Once per driving cycle
Sequence	None
Duration	At least 6 minutes 30 seconds but not more than 18 minutes 45 seconds
DTC Type	Two drive cycles, MIL on

Enable Conditions

Condition	Minimum	Maximum
Elapsed time after the vehicle condition is turned to the READY TO DRIVE mode	10 minutes	-
Elapsed time after the vehicle condition is turned to the OFF (LOCK) mode	5 hours	-
PCM wake up engine coolant temperature [ECT SENSOR 2]	40 deg.F (5 deg.C)	95 deg.F (35 deg.C)
Barometric pressure[BARO SENSOR]	76 kPa (569 mmHg, 22.5 inHg)	-
12 volt battery voltage [BATTERY]	10.5 V	-
Other	No refueling is required	

[ ]: HDS Parameter

Malfunction Threshold

The reference pressure is -5 kPa (-38.1 mmHg, -1.5 inHg) or less.

Possible Cause

NOTE: The causes shown may not be a complete list of all potential problems, and it is possible that there may be other causes.

- EVAP leak check module vacuum pump failure
- Canister change over valve failure
- Reference orifice flow quantity is excessive
- Reference orifice flow quantity is too low

Confirmation Procedure

Operating Condition

- With the engine coolant temperature [ECT Sensor 2] within the specified range, turn the vehicle to the READY TO DRIVE mode, and wait for at least 10 minutes.
- Turn the vehicle to the OFF (LOCK) mode, and wait for at least 5 hours.
- PCM wake up, and wait at least 18 minutes 45 seconds.

With the HDS

Do the EVAP TEST in the INSPECTION MENU with the HDS.

Diagnosis Details

Conditions for setting the DTC

When a malfunction is detected during the first drive cycle with the engine coolant temperature and intake air temperature at engine start-up within the specified temperature range, a Pending DTC is stored in the PCM memory. If the malfunction returns in the next (second) drive cycle with the engine coolant temperature and intake air temperature at engine start-up within the specified temperature range, the MIL comes on and a Confirmed DTC and the freeze data are stored. Engine start-up within the specified temperature range, a Pending DTC is stored in the PCM memory.

Conditions for clearing the DTC

The MIL is cleared if the malfunction does not return in three consecutive trips in which the diagnostic runs. The MIL, the Pending DTC, the Confirmed DTC, the freeze data, and the on-board snapshot can be cleared with the scan tool Clear command or by disconnecting the 12 volt battery.

DTC P043F

DTC P043F: Evaporative Emission (EVAP) Leak Check Module Standard Pressure High

General Description

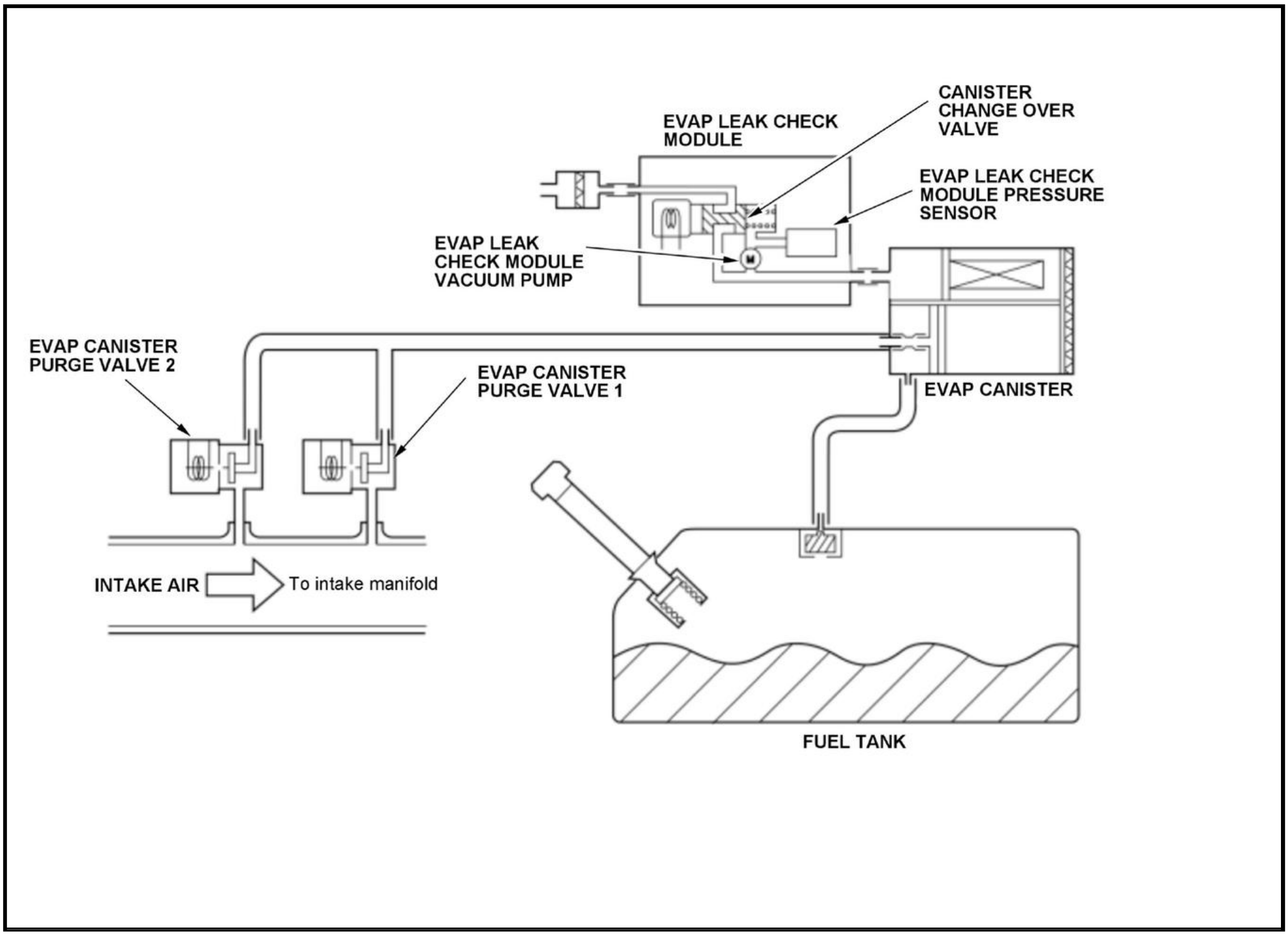
CANISTER CHANGE OVER VALVE
EVAP LEAK CHECK MODULE
EVAP LEAK CHECK MODULE PRESSURE SENSOR
EVAP LEAK CHECK MODULE VACUUM PUMP
EVAP CANISTER PURGE VALVE 2
EVAP CANISTER PURGE VALVE 1
EVAP CANISTER
INTAKE AIR
To intake manifold
FUEL TANK

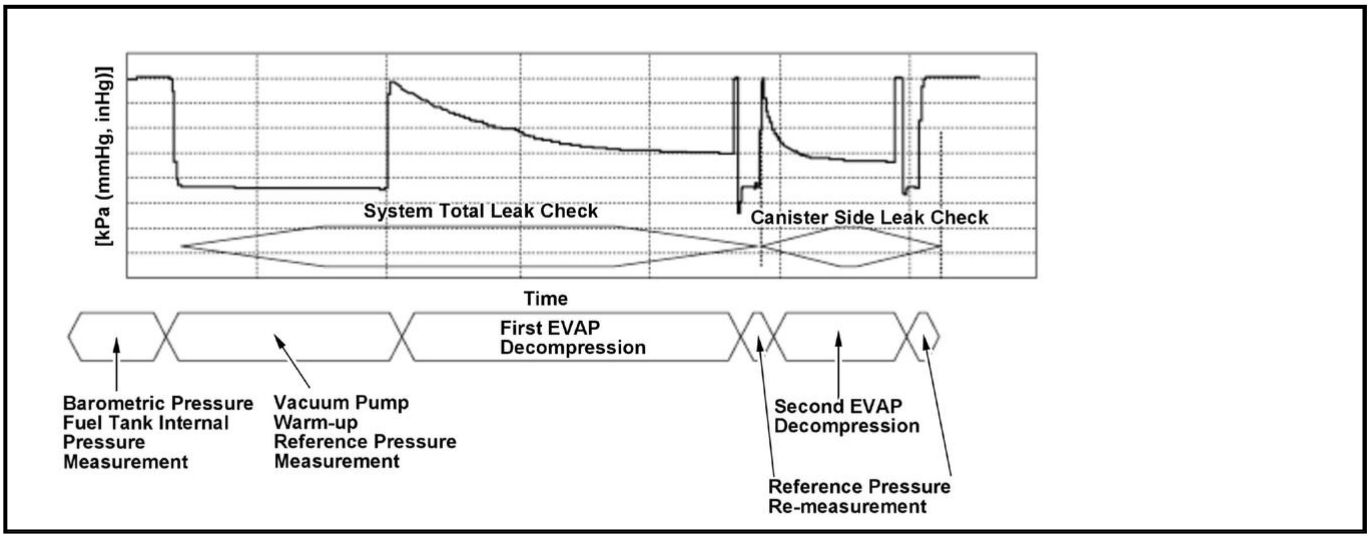

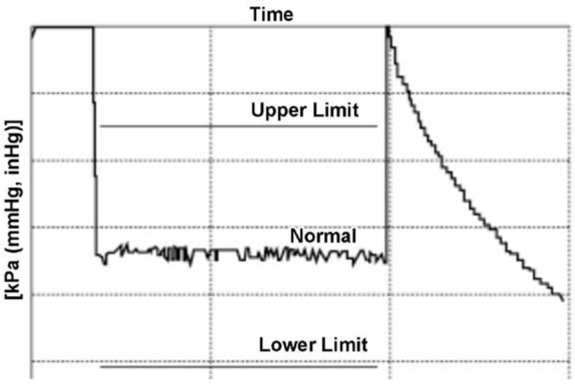

The powertrain control module (PCM) starts the evaporative emission (EVAP) system diagnosis after the vehicle has been turned to the OFF (LOCK) mode, and has met all other enable conditions (initial engine coolant temperature [ECT Sensor 1] and off for at least 5 hours). The EVAP system diagnosis is performed by reducing pressure between the EVAP canister and the atmosphere.

A malfunction is detected and a DTC is stored when changes in the pressure are equal to or more than the prescribed value after the prescribed time of starting the system pressure reduction.

EVAP leak check module operation flow

- Reference pressure measurement: Malfunction detection in the EVAP leak check module and determination of early completion of pressure reduction when normal.
- System pressure reduction: Pressure in the EVAP system is reduced to measure the ultimate pressure.
- Reference pressure re-measurement: Leak is detected by comparing with the ultimate pressure of the system pressure reduction.
- Reference value is to be measured twice considering change in the characteristics of the EVAP leak check module vacuum pump during detection.

Reference pressure is the pressure reduction caused by the reference orifice (#40 equivalent) in the EVAP leak check module used to check for leak by comparison with the system pressure reduction.

Monitor Execution, Sequence, Duration, DTC Type

Execution	Once per driving cycle
Sequence	None
Duration	At least 6 minutes 30 seconds but not more than 18 minutes 45 seconds
DTC Type	Two drive cycles, MIL on

Enable Conditions

Condition	Minimum	Maximum
Elapsed time after the vehicle condition is turned to the READY TO DRIVE mode	10 minutes	-
Elapsed time after the vehicle condition is turned to the OFF (LOCK) mode	5 hours	-
PCM wake up engine coolant temperature [ECT SENSOR 2]	40 deg.F (5 deg.C)	95 deg.F (35 deg.C)

Condition	Minimum	Maximum
Barometric pressure[BARO SENSOR]	76 kPa (569 mmHg, 22.5 inHg)	-

[ ]: HDS Parameter

Condition	Minimum	Maximum
12 volt battery voltage [BATTERY]	10.5 V	-
Other	No refueling is required	

[ ]: HDS Parameter

Malfunction Threshold

The reference pressure is -0.1 kPa (-7.5 mmHg, -0.3 inHg) or more.

Possible Cause

NOTE: The causes shown may not be a complete list of all potential problems, and it is possible that there may be other causes.

- EVAP leak check module vacuum pump failure
- Canister change over valve failure
- Reference orifice flow quantity is excessive
- Reference orifice flow quantity is too low

Confirmation Procedure

Operating Condition

- With the engine coolant temperature [ECT Sensor 2] within the specified range, turn the vehicle to the READY TO DRIVE mode, and wait for at least 10 minutes.
- Turn the vehicle to the OFF (LOCK) mode, and wait for at least 5 hours.
- PCM wake up, and wait at least 18 minutes 45 seconds.

With the HDS

None.

Diagnosis Details

Conditions for setting the DTC

When a malfunction is detected during the first drive cycle with the engine coolant temperature and intake air temperature at engine start-up within the specified temperature range, a Pending DTC is stored in the PCM memory. If the malfunction returns in the next (second) drive cycle with the engine coolant temperature and intake air temperature at engine start-up within the specified temperature range, the MIL comes on and a Confirmed DTC and the freeze data are stored. Engine start-up within the specified temperature range, a Pending DTC is stored in the PCM memory.

Conditions for clearing the DTC

The MIL is cleared if the malfunction does not return in three consecutive trips in which the diagnostic runs. The MIL, the Pending DTC, the Confirmed DTC and the freeze data can be cleared with the scan tool clear command or by disconnecting the 12 volt battery.

DTC P0441

DTC P0441: Evaporative Emission (EVAP) System Purge Flow Malfunction

General Description

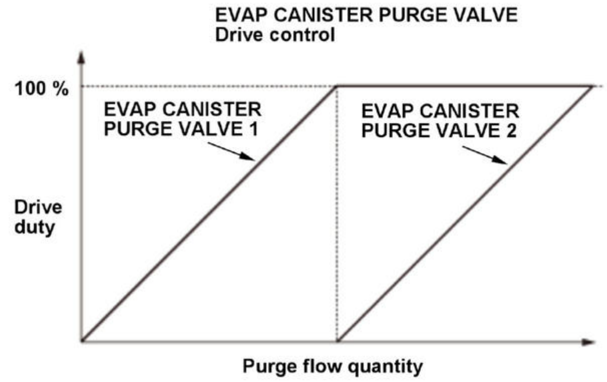

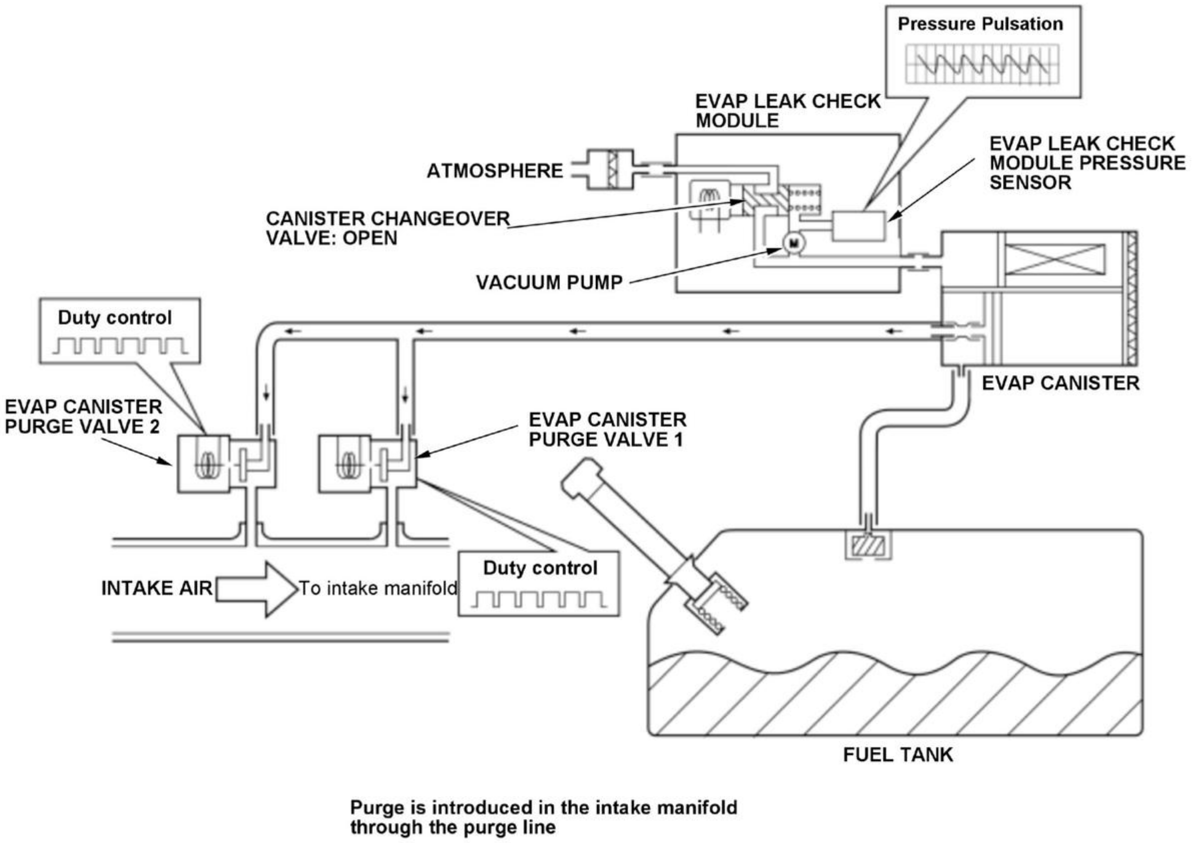
Pressure Pulsation
EVAP LEAK CHECK MODULE
ATMOSPHERE
EVAP LEAK CHECK MODULE PRESSURE SENSOR
CANISTER CHANGEOVER VALVE: OPEN
VACUUM PUMP
Duty control
EVAP CANISTER
EVAP CANISTER PURGE VALVE 2
EVAP CANISTER PURGE VALVE 1
INTAKE AIR
To intake manifold
Duty control
FUEL TANK
Purge is introduced in the intake manifold through the purge line

The fuel vapor in the fuel tank is temporarily stored in the evaporative emission (EVAP) canister and drawn into the engine through the EVAP canister purge valve. The powertrain control module (PCM) controls the amount of vapor introduced into the engine by varying the duty cycle of the EVAP canister purge valve according to the condition of the engine. The EVAP system is a system which has this EVAP canister purge valve equipped parallel and adjusts the amount of vapor by driving the EVAP canister purge valve 2 when the EVAP canister purge valve 1 is fully opened.

<STEP 1>

The EVAP canister purge valve opens normally (EVAP canister purge valve OPEN OK) and detects that the purge flow is normal when the pulse of the EVAP canister purge valve duty cycle is transmitted to the EVAP leak check module pressure sensor during purge flow (pulse method). If there are no pulsation with EVAP canister purge valve 1, it judges pulsation by switching to EVAP canister purge valve 2 drive in EVAP canister purge valve 1 drive area.

OK determination: If pulsation from EVAP canister purge valve 1 drive area and pulsation from EVAP canister purge valve 2 area (EVAP canister purge valve 1 is in fully opened driving condition) are both present. (P0441 OK/P145E OK)

- P04F1 Purge flow OK
- P04DF EVAP canister purge valve 1 stuck Open OK
- P04AE EVAP canister purge valve 2 stuck Open OK

NG determination: If pulsation from EVAP canister purge valve 1 drive area is not present but pulsation from EVAP canister purge valve 2 drive is present. (P0441 NG/P145E OK)

- Either purge flow P04F1 abnormality or P04DF EVAP canister purge valve 1 OPEN failure.
- In this case, classify the failed part according to <STEP 2>.

NG determination: If pulsation from EVAP canister purge valve 2 drive area is not present but pulsation from EVAP canister purge valve 1 drive is present. (P0441 OK/P145E NG)

- Either purge flow P04F1 abnormality or P04DF EVAP canister purge valve 1 OPEN failure.

NG determination: If pulsation from EVAP canister purge valve 1 and EVAP canister purge valve 2 drive area is not present. (P0441 NG/P145E NG)

- P04F1 Purge flow NG

<STEP 2>

If there is no pulse, it is determined as either no purge flow or the EVAP canister purge valve 1 is stuck OPEN:

When the EVAP leak check module pressure sensor fluctuates from negative pressure to atmospheric pressure after the engine stopped: P04DF EVAP canister purge valve 1 stuck OPEN

When there is no fluctuation of the EVAP leak check module pressure sensor: P04F1 purge flow NG

If there is no pulse, it is determined as either no purge flow or the EVAP canister purge valve 2 is stuck OPEN:

When the EVAP leak check module pressure sensor fluctuates from negative pressure to atmospheric pressure after the engine stopped: P04AE EVAP canister purge valve 2 stuck OPEN

When there is no fluctuation of the EVAP leak check module pressure sensor: P04F1 purge flow NG

Monitor Execution, Sequence, Duration, DTC Type

Execution	Once per driving cycle
Sequence	None
Duration	9.3 seconds or more
DTC Type	Two drive cycles, MIL on

Enable Conditions

Condition	Minimum	Maximum
Engine coolant temperature [ECT Sensor 1] before EVAP purge control starts	104 deg.F (40 deg.C)	-
MAP value [MAP Sensor (Hi Res)]	-	-9.3 kPa (-0.3 inHg, -70 mmHg)
Vehicle speed [Vehicle Speed]	-	2 mph (3 km/h)
12 volt battery voltage [Battery]	10.5 V	-
Fuel trim	0.69	1.47
EVAP canister purge valve 1 duty	25 %	90 %
EVAP canister purge valve 2 duty	-	0 %
Fuel feedback	Closed loop at stoichiometric	

[ ]: HDS Parameter

Malfunction Threshold

The pulses detected by the EVAP leak check module pressure sensor are 10 % or less for at least 9.3 seconds.

Possible Cause

NOTE: The causes shown may not be a complete list of all potential problems, and it is possible that there may be other causes.

- EVAP canister purge valve 1 middle stuck
- EVAP canister purge valve 1 open stuck
- EVAP leak check module pressure sensor stuck
- EVAP system line clogged
- EVAP system line miss installed
- EVAP canister purge valve 1 failure

Confirmation Procedure

Operating Condition

- Enter the maintenance mode, then start the engine. Hold the engine speed [Engine Speed] at 3, 000 rpm without load (in P or N) until the radiator fan comes on.
- Let the engine running for at least 30 seconds.
- Stop the engine and leave the vehicle for at least 10 seconds.

With the HDS

None.

Diagnosis Details

Conditions for setting the DTC

When a malfunction is detected during the first drive cycle, a Pending DTC is stored in the PCM memory. If the malfunction returns in the next (second) drive cycle, the MIL comes on and a Confirmed DTC and the freeze data are stored.

Conditions for clearing the DTC

The MIL is cleared if the malfunction does not return in three consecutive trips in which the diagnostic runs. The MIL, the Pending DTC, the Confirmed DTC, and the freeze data can be cleared with the scan tool Clear command or by disconnecting the 12 volt battery.

DTC P0443

DTC P0443: Evaporative Emission (EVAP) Canister Purge Valve Circuit Malfunction

General Description

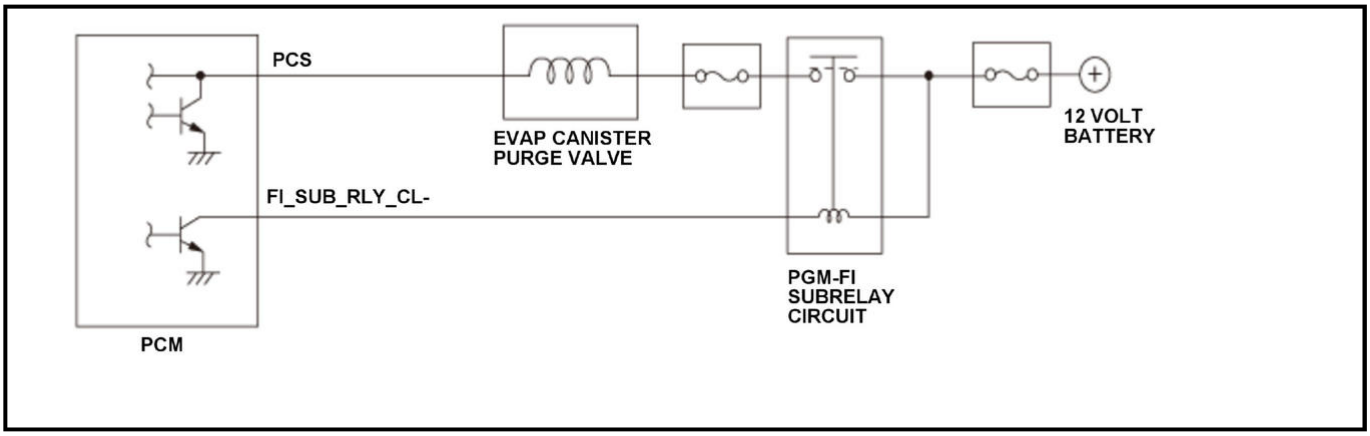

The evaporative emission (EVAP) canister purge valve is attached to the vacuum port between the intake manifold and the EVAP canister. When the engine coolant temperature is a specified value or less, or the output of the EVAP canister purge valve is not fully opened, the powertrain control module (PCM) turns off the EVAP canister purge valve. The PCM adjusts the amount of fuel vapor sent to the engine by controlling the EVAP canister purge valve and the EVAP canister purge valve duty cycle. When the return signal does not change according to the EVAP canister purge valve output for a set time, the PCM detects a malfunction and stores a DTC.

Monitor Execution, Sequence, Duration, DTC Type

Execution	Continuous
Sequence	None
Duration	1.5 seconds or more*2.0 seconds or more**, ***
DTC Type	Two drive cycles, MIL on

*: Symptom 1

**: Symptom 2

***: Symptom 3

Enable Conditions

Condition	Minimum	Maximum
12 volt battery voltage [Battery]	10.0 V	-
EVAP canister purge valve output duty*	2 %	98 %
EVAP canister purge valve output duty**	0 %	
EVAP canister purge valve output duty***	100 %	

Condition	Minimum	Maximum
State of the engine	Running	

[ ]: HDS Parameter

Malfunction Threshold

One of these symptom occurs:

- Symptom 1

  The return signal does not change according to the EVAP canister purge valve output for at least 1.5 seconds.

- Symptom 2

  When the return signal is fully opened and continues for at least 2.0 seconds while the EVAP canister purge valve output is 0 % (totally closed).

- Symptom 3

  When the return signal is fully closed and continues for at least 2.0 seconds while the EVAP canister purge valve output is 100 % (totally opened).

Possible Cause

NOTE: The causes shown may not be a complete list of all potential problems, and it is possible that there may be other causes.

- EVAP canister purge valve PCS line open
- EVAP canister purge valve PCS line short to ground
- EVAP canister purge valve power supply line open
- PCM internal circuit failure

Confirmation Procedure

Operating Condition

Enter the maintenance mode, then start the engine. Hold the engine speed [Engine Speed] at 3, 000 rpm without load (in P or N) until the radiator fan comes on, then let it idle.

With the HDS

None.

Diagnosis Details

Conditions for setting the DTC

When a malfunction is detected during the first drive cycle, a Pending DTC is stored in the PCM memory. If the malfunction returns in the next (second) drive cycle, the MIL comes on and a Confirmed DTC and the freeze data are stored.

Conditions for clearing the DTC

The MIL is cleared if the malfunction does not return in three consecutive trips in which the diagnostic runs. The MIL, the Pending DTC, the Confirmed DTC, and the freeze data can be cleared with the scan tool Clear command or by disconnecting the 12 volt battery.

DTC P0451

DTC P0451: Evaporative Emission (EVAP) Leak Check Module Pressure Sensor Range/Performance

General Description

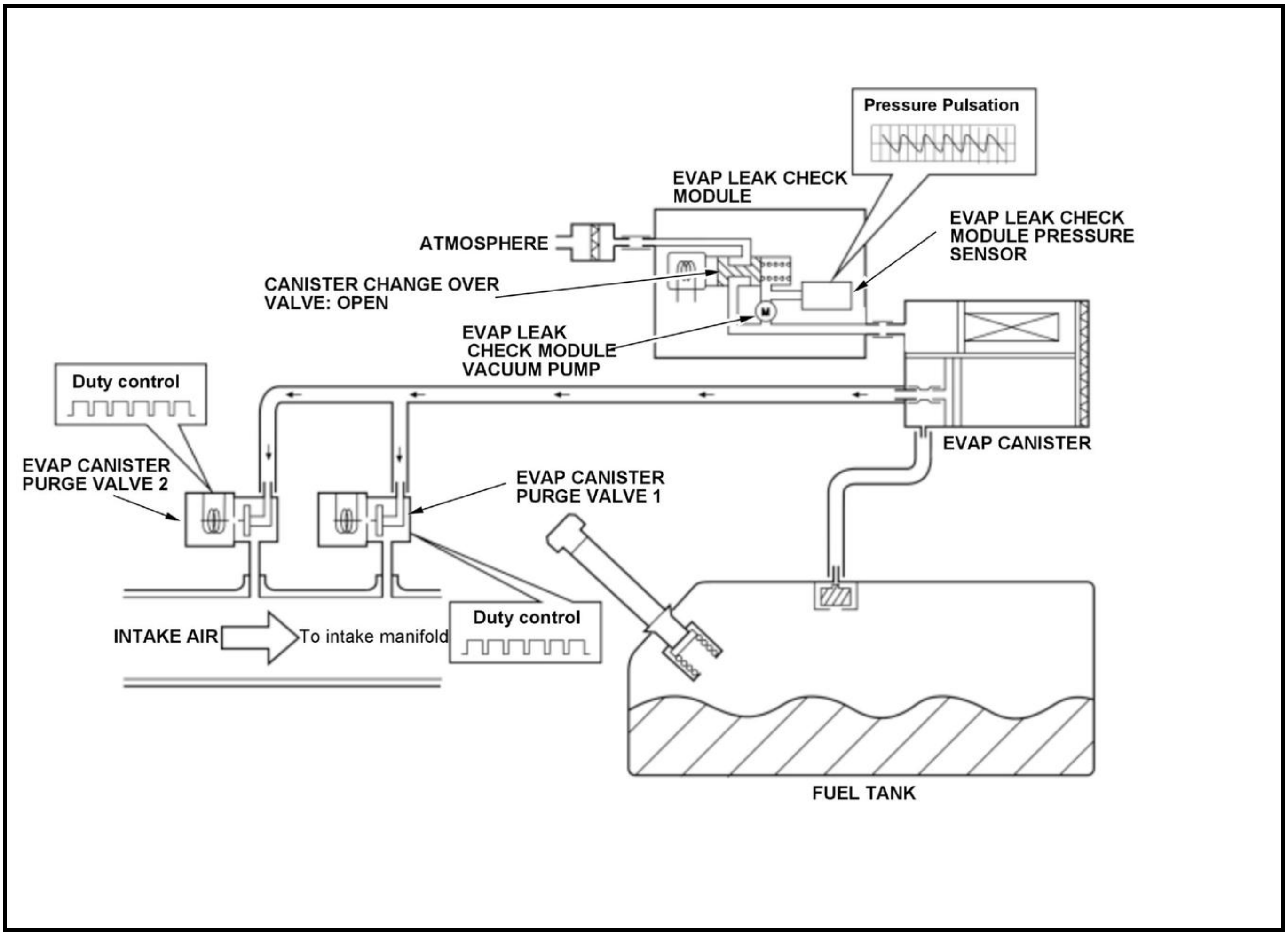

Pressure Pulsation
EVAP LEAK CHECK MODULE
EVAP LEAK CHECK MODULE PRESSURE SENSOR
ATMOSPHERE
CANISTER CHANGE OVER VALVE: OPEN
EVAP LEAK CHECK MODULE VACUUM PUMP
M
Duty control
EVAP CANISTER PURGE VALVE 2
EVAP CANISTER
EVAP CANISTER PURGE VALVE 1
INTAKE AIR
To intake manifold
Duty control
FUEL TANK

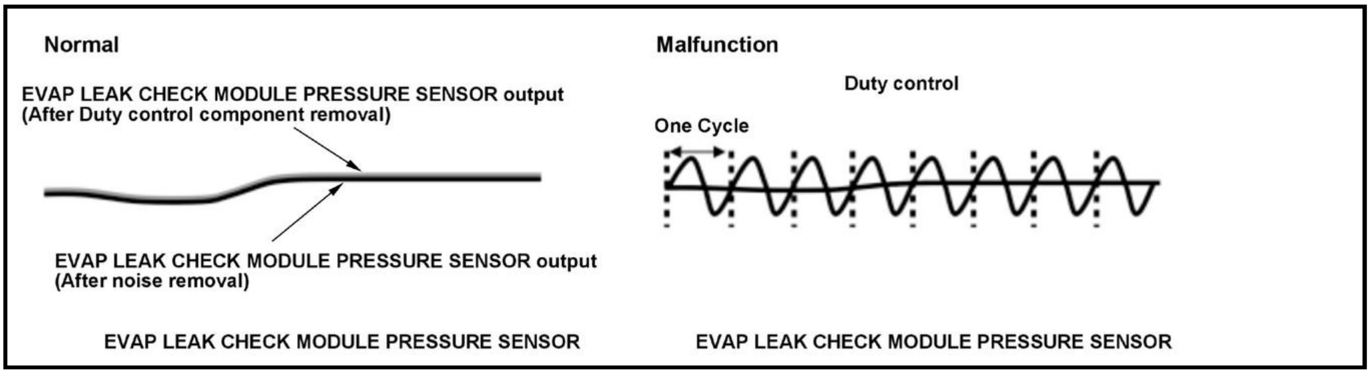

The powertrain control module (PCM) monitors the evaporative emission (EVAP) leak check module pressure sensor output voltage. The EVAP leak check module pressure sensor output voltage rises as the fuel tank pressure increases. Conversely, the EVAP leak check module pressure sensor output voltage drops as the fuel tank pressure decreases. Rapid changes in the EVAP leak check module pressure sensor output voltage due to electrical noise or an intermittent open during the EVAP leak detection may cause incorrect leak detection, so abnormal output is monitored. If the EVAP leak check module pressure sensor output voltage change occurs for specified ratio within a set time, the PCM detects a malfunction and stores a DTC.

Monitor Execution, Sequence, Duration, DTC Type

Execution	Continuous
Sequence	None

Duration	31 seconds or more
DTC Type	Two drive cycles, MIL on

Enable Conditions

Condition	Minimum	Maximum
Elapsed time after starting the engine	10 seconds	-
Engine coolant temperature [ECT Sensor 1]	104 deg.F (40 deg.C)	-
12 volt battery voltage [Battery]	10.5 V	-
EVAP canister purge valve duty [EVAP PC Duty]	0 %	
Fuel feedback	During deceleration	
Other	Purge-cut operation	

[ ]: HDS Parameter

Malfunction Threshold

The FTP sensor output voltage fluctuation occurs for more than 94 % within the set time at least 31 seconds.

Possible Cause

NOTE: The causes shown may not be a complete list of all potential problems, and it is possible that there may be other causes.

- EVAP leak check module pressure sensor ELCMPA line layer open
- EVAP leak check module pressure sensor VCC line layer open
- EVAP leak check module pressure sensor SG line layer open
- EVAP leak check module pressure sensor electrical noise over lapped
- EVAP leak check module pressure sensor internal circuit failure

Confirmation Procedure

Operating Condition

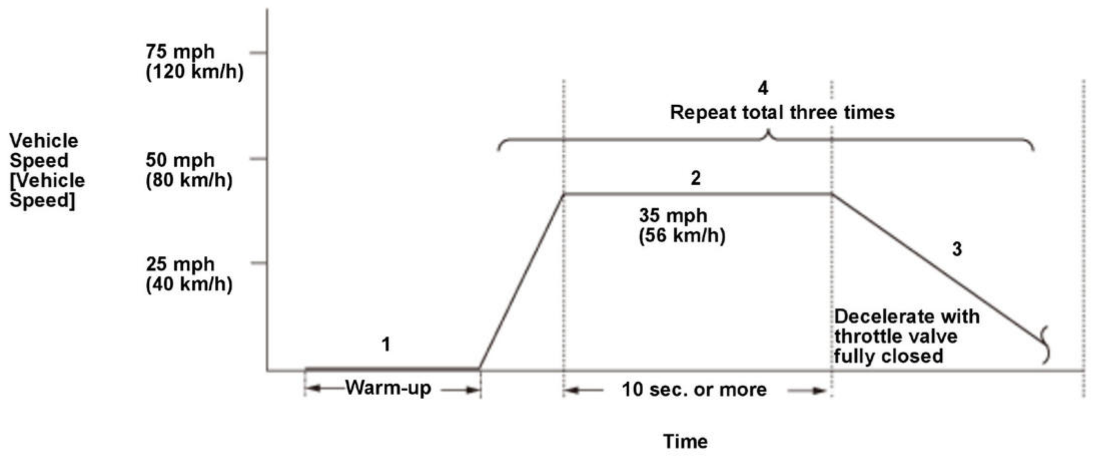

- Enter the maintenance mode, then start the engine, and let it idle until the radiator fan comes on.

- Drive the vehicle at a steady speed 56 km/h (35 mph) for at least 10 seconds.
- Decelerate with the throttle valve fully closed.
- Repeat Driving Pattern steps 2 through 3, three times.

- Drive the vehicle in this manner only if the traffic regulations and ambient conditions allow.

With the HDS

None.

Diagnosis Details

Conditions for setting the DTC

When a malfunction is detected during the first drive cycle, a Pending DTC is stored in the PCM memory. If the malfunction returns in the next (second) drive cycle, the MIL comes on and a Confirmed DTC and the freeze data are stored.

Conditions for clearing the DTC

The MIL is cleared if the malfunction does not return in three consecutive trips in which the diagnostic runs. The MIL, the Pending DTC, the Confirmed DTC, and the freeze data can be cleared with the scan tool clear command or by disconnecting the 12 volt battery.

DTC P0456

DTC P0456: Evaporative Emission (EVAP) System Very Small Leak Detected

General Description

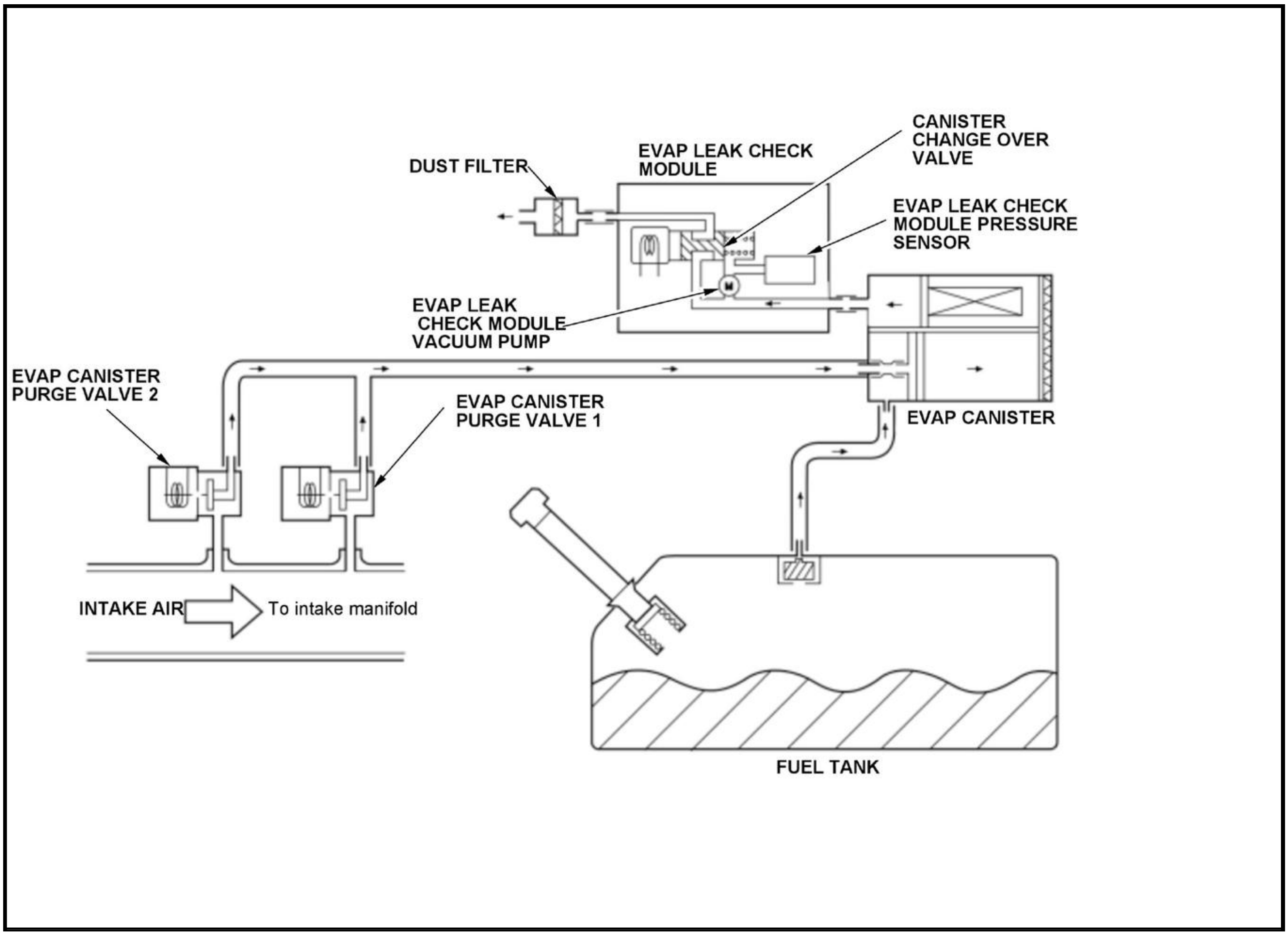
CANISTER CHANGE OVER VALVE
EVAP LEAK CHECK MODULE
DUST FILTER
EVAP LEAK CHECK MODULE PRESSURE SENSOR
EVAP LEAK CHECK MODULE VACUUM PUMP
EVAP CANISTER PURGE VALVE 2
EVAP CANISTER PURGE VALVE 1
EVAP CANISTER
INTAKE AIR
To intake manifold
FUEL TANK

The powertrain control module (PCM) starts the evaporative emission (EVAP) system diagnosis after the vehicle has been turned to the OFF (LOCK) mode, and has met all other enable conditions (initial engine coolant temperature [ECT Sensor 1] and off for at least 5 hours). The EVAP system diagnosis is performed by reducing pressure between the EVAP canister and the atmosphere.

EVAP leak check module operation flow

- Reference pressure measurement: Malfunction check in the EVAP leak check module and determination of early completion of pressure reduction when normal.
- System pressure reduction: Pressure in the EVAP system is reduced to measure the ultimate pressure.
- Reference pressure re-measurement: Leak is detected by comparing with the ultimate pressure of the system pressure reduction.
- Reference value is to be measured twice considering change in the characteristics of the EVAP leak check module vacuum pump during detection.

Reference pressure is the pressure reduction by the reference orifice (#40 equivalent) in the EVAP leak check module used to check for leak by comparison with the system pressure reduction.

Monitor Execution, Sequence, Duration, DTC Type

Execution	Once per driving cycle
Sequence	None

Duration	18 minutes 45 seconds or less
DTC Type	Two drive cycles, MIL on

Enable Conditions

Condition	Minimum	Maximum
Elapsed time after the vehicle condition is turned to the OFF (LOCK) mode	5 hours	-
PCM wake up radiator coolant temperature [ECT Sensor 2]	40.0 deg.F (4.4 deg.C)	95 deg.F (35 deg.C)
Barometric pressure [Baro Sensor]	76 kPa (569 mmHg, 22.5 inHg)	-
12 volt battery voltage [Battery]	10.5 V	-
Other	No refueling is required	

[ ]: HDS Parameter

Malfunction Threshold

When the fuel tank internal pressure is not near the barometric pressure.

Possible Cause

NOTE: The causes shown may not be a complete list of all potential problems, and it is possible that there may be other causes.

- EVAP system leak (EVAP canister purge valve from fuel tank)

Confirmation Procedure

Operating Condition

- With the radiator coolant temperature [ECT Sensor 2] within the specified range, turn the vehicle to the READY TO DRIVE mode, and wait for at least 10 minutes.
- Turn the vehicle to the OFF (LOCK) mode, and wait for at least 5 hours.
- PCM wake up, and wait at least 18 minutes 45 seconds.

With the HDS

Select the EVAP TEST in the Function Test Menu, then select EVAP Leak Check Module Test with the HDS.

Diagnosis Details

Conditions for setting the DTC

When a malfunction is detected during the first drive cycle with the engine coolant temperature and intake air temperature at engine start-up within the specified temperature range, a Pending DTC is stored in the PCM memory. If the malfunction returns in the next (second) drive cycle with the engine coolant temperature and intake air temperature at engine start-up within the specified temperature range, the MIL comes on and a Confirmed DTC and the freeze data are stored.

Conditions for clearing the DTC

The MIL is cleared if the malfunction does not return in three consecutive trips in which the diagnostic runs. The MIL, the Pending DTC, the Confirmed DTC, and the freeze data can be cleared with the scan tool clear command or by disconnecting the 12 volt battery.

DTC P0460

DTC P0460: Fuel Level Sensor (Fuel Gauge Sending Unit) Out of Range

General Description

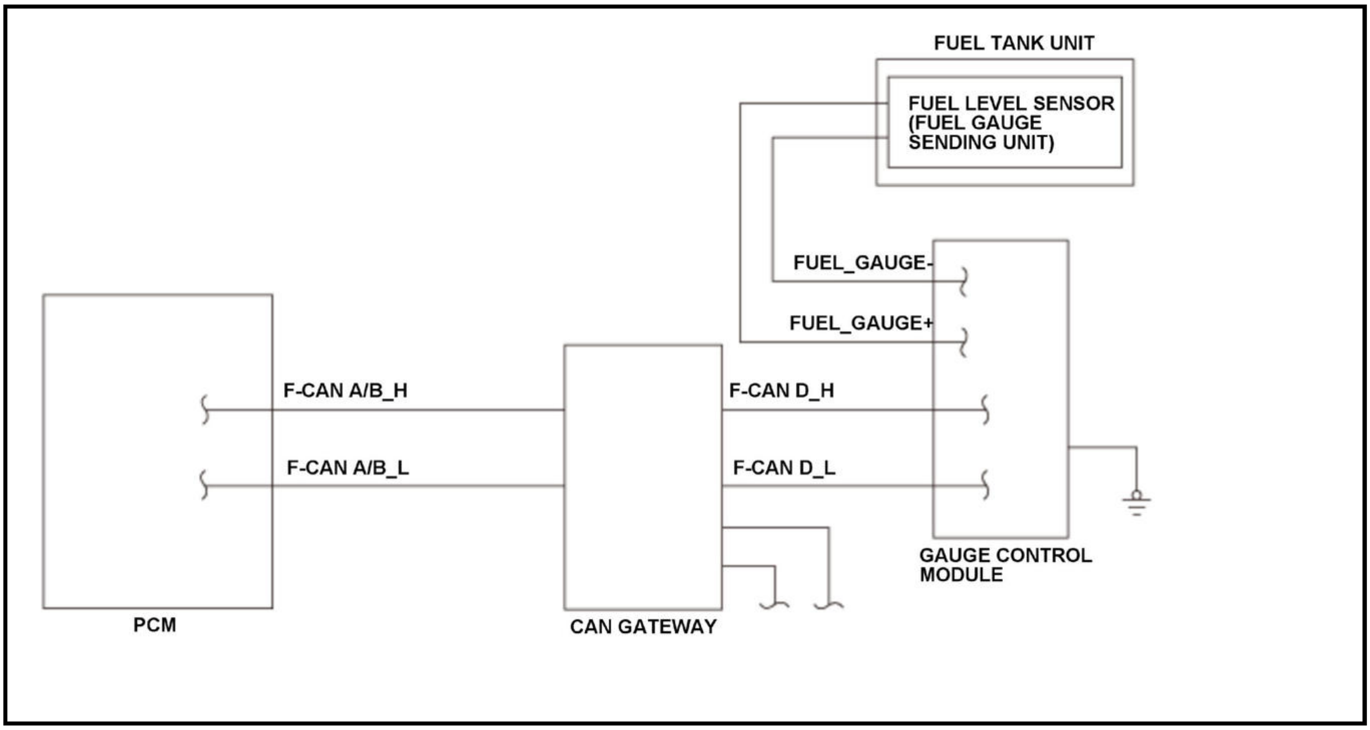

The fuel level sensor (fuel gauge sending unit) is incorporated into the fuel pump and installed in the fuel tank. Using a built-in potentiometer and float, it converts the movement of the float to electrical signals as an output that corresponds fuel level variations in the fuel tank. The fuel level, which is indicated by the gauge control module, is sent to the powertrain control module (PCM) via the controller area network (CAN). If the received voltage information from the gauge control module is out of specified range for a set time, the PCM detects a malfunction and stores a DTC.

Monitor Execution, Sequence, Duration, DTC Type

Execution	Continuous
Sequence	None
Duration	6.0 seconds or more
DTC Type	Two drive cycles, MIL on

Enable Conditions

Condition	B
Vehicle	ON mode

Malfunction Threshold

The voltage information of the circuit between the fuel level sensor (fuel gauge sending unit) and the gauge control module which the PCM received from the gauge control module is out of specified range for at least 6.0 seconds.

Possible Cause

NOTE: The causes shown may not be a complete list of all potential problems, and it is possible that there may be other causes.

- Fuel level sensor (fuel gauge sending unit) failure
- Gauge control module internal circuit failure
- PCM internal circuit failure

Diagnosis Details

Conditions for setting the DTC

When a malfunction is detected during the first drive cycle, a Pending DTC is stored in the PCM memory. If the malfunction returns in the next (second) drive cycle, a Confirmed DTC and the freeze data are stored. The MIL does not come on.

Conditions for clearing the DTC

The Pending DTC, the Confirmed DTC, and the freeze data can be cleared with the scan tool clear command or by disconnecting the 12 volt battery.

DTC P0461 (2020)

DTC P0461: Fuel Level Sensor (Fuel Gauge Sending Unit) Circuit Range/Performance Problem

General Description

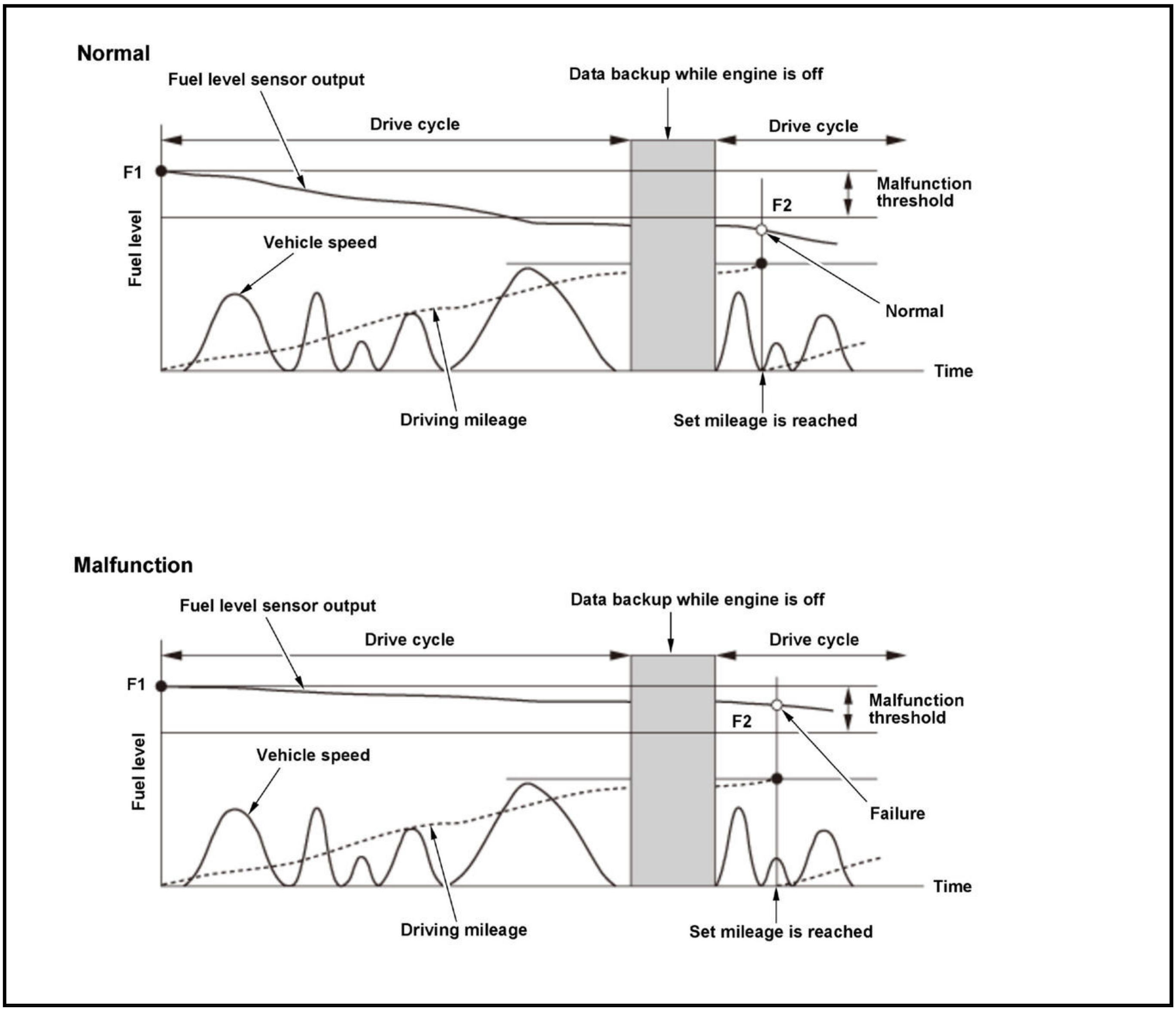
Normal
Fuel level sensor output
Data backup while engine is off
Drive cycle
Drive cycle
F1
Malfunction threshold
F2
Fuel level
Vehicle speed
Normal
Time
Driving mileage
Set mileage is reached
Malfunction
Fuel level sensor output
Data backup while engine is off
Drive cycle
Drive cycle
F1
Malfunction threshold
F2
Fuel level
Vehicle speed
Failure
Time
Driving mileage
Set mileage is reached

The fuel level sensor is incorporated with the fuel pump and installed in the fuel tank. Using a built-in potentiometer and float, it converts the movement of the float into electrical signals that correspond to the fuel level, and it indicates the amount of fuel in the fuel tank. If the powertrain control module (PCM) receives no change in the fuel level sensor output after driving for a specified number of miles, it detects a malfunction and stores a DTC.

Monitor Execution, Sequence, Duration, DTC Type

Execution	Once per driving cycle
Sequence	None
Duration	-
DTC Type	One drive cycle, MIL off

Enable Conditions

Condition	Minimum	Maximum
Mileage	125 miles (200 km)	-
Other	Test-drive on a flat road to avoid misdetection	
	No refueling is required	

Malfunction Threshold

The change in the fuel level sensor output [Fuel Level] is 3.5 % or less.

[ ]: HDS Parameter

Possible Cause

NOTE: The causes shown may not be a complete list of all potential problems, and it is possible that there may be other causes.

- Fuel gauge sending unit failure

Confirmation Procedure

Operating Condition

Drive for 125 miles (200 km) or more under Enable Conditions (see "Other") without refueling (accepts the vehicle to the OFF (LOCK) mode during the test drive).

- Drive the vehicle in this manner only if the traffic regulations and ambient conditions allow.

With the HDS

None.

Diagnosis Details

Conditions for setting the DTC

When a malfunction is detected in a certain drive cycle and a malfunction is detected in the same drive cycle, a Pending DTC, a Confirmed DTC, and the freeze data are stored in the PCM memory. The MIL does not come on.

Conditions for clearing the DTC

The Pending DTC, the Confirmed DTC, and the freeze data can be cleared with the scan tool clear command or by disconnecting the 12 volt battery.

DTC P0461 (2021)

DTC P0461: Fuel Level Sensor (Fuel Gauge Sending Unit) Circuit Range/Performance Problem

General Description

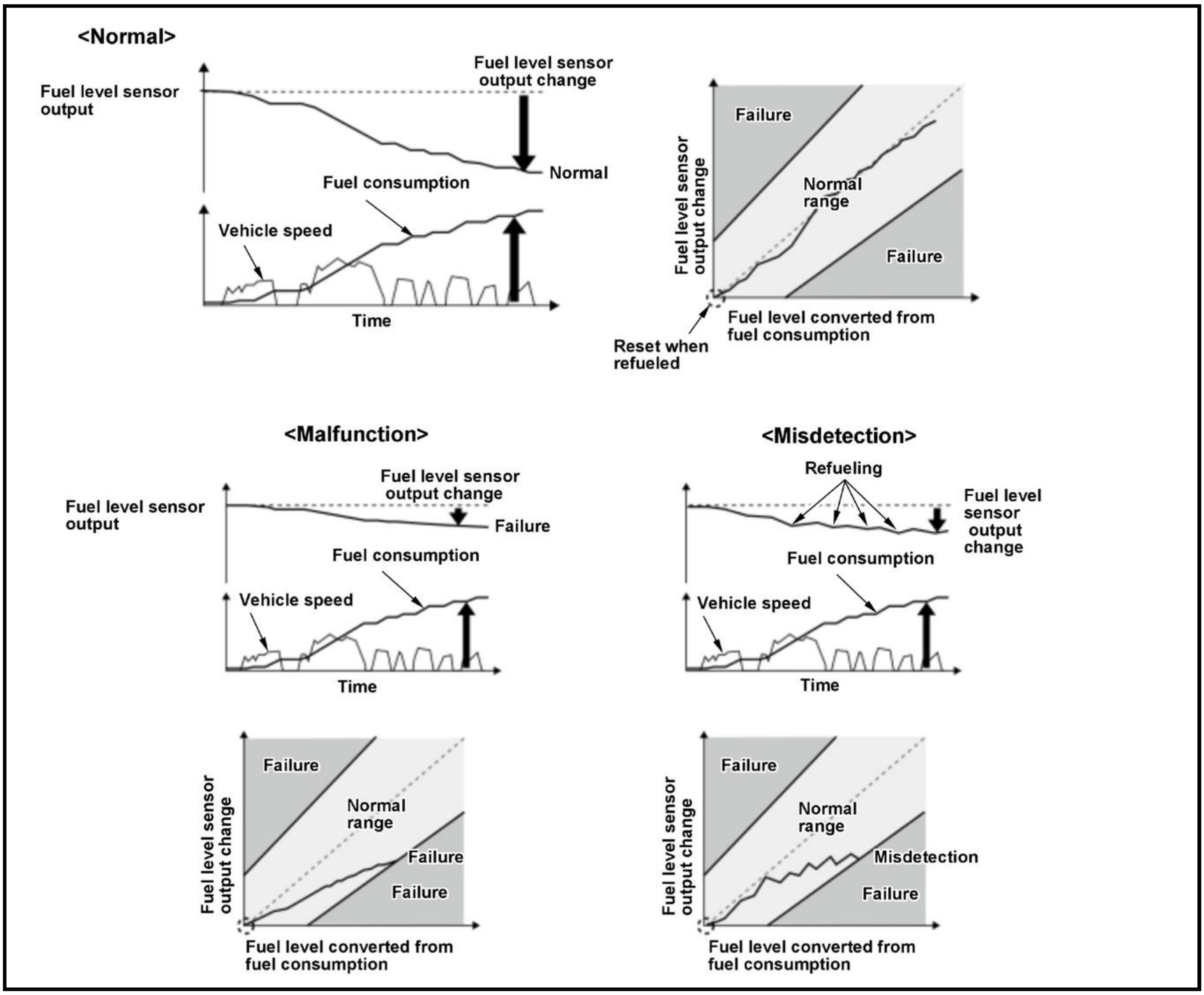
<Normal>
Fuel level sensor output
Fuel level sensor output change
Normal
Fuel consumption
Vehicle speed
Time
Failure
Fuel level sensor output change
Normal range
Failure
Fuel level converted from fuel consumption
Reset when refueled
<Malfunction>
Fuel level sensor output
Fuel level sensor output change
Failure
Fuel consumption
Vehicle speed
Time
<Misdetection>
Refueling
Fuel level sensor output change
Fuel consumption
Vehicle speed
Time
Failure
Normal range
Failure
Failure
Fuel level sensor output change
Fuel level converted from fuel consumption
Failure
Normal range
Misdetection
Failure
Fuel level sensor output change
Fuel level converted from fuel consumption

The fuel level sensor in the fuel tank measures the fuel level of the fuel tank. The powertrain control module (PCM) checks the change in the fuel level sensor output and then compares it to the calculated fuel level value. If the absolute difference between the fuel level sensor output change and the fuel consumption is a specified value for a specified duration when a certain fuel amount is consumed, the PCM detects a malfunction and stores a DTC.

Repeatedly filling the tank with less than the specified amount may lead to a mismatch in the actual fuel amount versus the calculated amount.

Monitor Execution, Sequence, Duration, DTC Type

Execution	Continuous
Sequence	None
Duration	0.1 second or more
DTC Type	Two drive cycles, MIL on

Enable Conditions

Condition	Minimum	Maximum
Elapsed time after the vehicle condition is turned to the ON mode	520 milliseconds	-
Total driving distance	31.1 miles (50.0 km)	-
Fuel consumption after refueling	17.7 L (4.7 US gal)	-

Condition	Minimum	Maximum
12 volt battery voltage [BATTERY]	10.5 V	-
Other	Test-drive on a flat road to avoid misdetection	

[ ]: HDS Parameter

Malfunction Threshold

Any of the condition occurs:

- The fuel level sensor output change is 75 % or more when the fuel level converted from the fuel consumption is 38 %.
- The fuel level sensor output change is 116 % or more when the fuel level converted from the fuel consumption is 75 %.
- The fuel level sensor output change is 1 % or less when the fuel level converted from the fuel consumption is 38 %.
- The fuel level sensor output change is 34 % or less when the fuel level converted from the fuel consumption is 75 %.

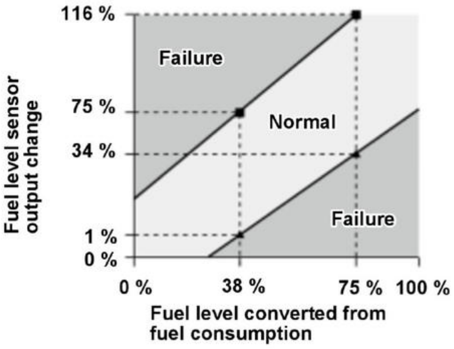

Possible Cause

NOTE:

- -

  The causes shown may not be a complete list of all potential problems, and it is possible that there may be other causes.

- -

  Refueling the tank with less than the specified amount of 5 L (1.3 US gal) four times, may lead to a mismatch in the actual fuel amount versus the calculated amount. To prevent this, make sure that the customer fills the tank with the minimum specified amount during refueling. Refer to the How to Refuel section of the owner's manual for details.

- Fuel level sensor failure

Confirmation Procedure

Operating Condition

Drive the vehicle at least 31.1 miles (50.0 km) without refueling.

- The vehicle can be turned to the OFF (LOCK) mode during the test-drive.
- Test-drive on a flat road to avoid misdetection.

- Drive the vehicle in this manner only if the traffic regulations and ambient conditions allow.

Diagnosis Details

Conditions for setting the DTC

When a malfunction is detected during the first drive cycle, a Pending DTC is stored in the PCM memory. If the malfunction returns in the next (second) drive cycle, the MIL comes on and a Confirmed DTC and the freeze data are stored.

Conditions for clearing the DTC

The MIL is cleared if the malfunction does not return in three consecutive trips in which the diagnostic runs. The MIL, the Pending DTC, the Confirmed DTC, and the freeze data can be cleared with the scan tool clear command or by disconnecting the 12 volt battery.

DTC P0462, P0463

DTC P0462: Fuel Level Sensor (Fuel Gauge Sending Unit) Circuit Low Voltage

DTC P0463: Fuel Level Sensor (Fuel Gauge Sending Unit) Circuit High Voltage

General Description

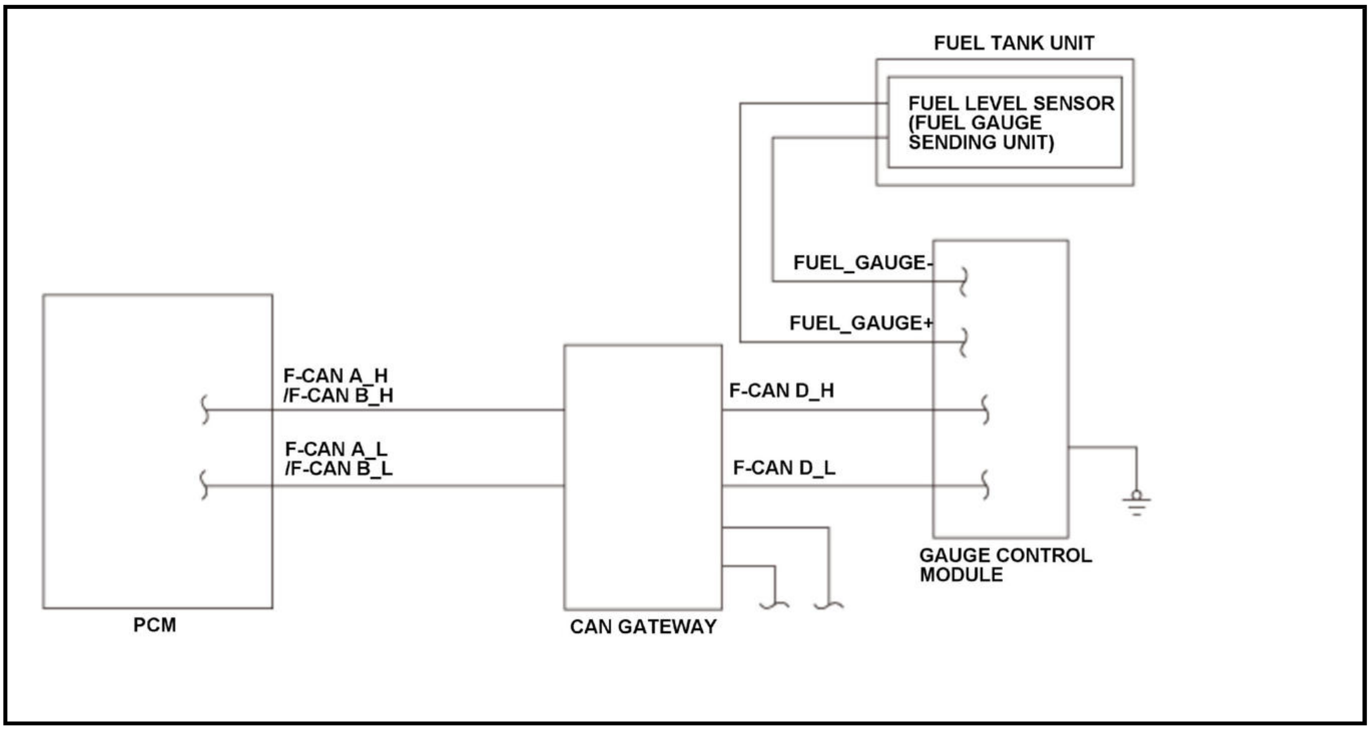

The fuel level sensor (fuel gauge sending unit) is incorporated into the fuel pump and installed in the fuel tank. Using a built-in potentiometer and float, it converts the movement of the float to electrical signals as an output that corresponds fuel level variations in the fuel tank. The fuel level, which is indicated by the gauge control module, is sent to the powertrain control module (PCM) via the controller area network (CAN). If the received voltage information from the gauge control module is high or low for a set time, the PCM detects a malfunction and stores a DTC.

Monitor Execution, Sequence, Duration, DTC Type

Execution	Continuous
Sequence	None
Duration	5 seconds or more
DTC Type	Two drive cycles, MIL on

Enable Conditions

Condition	Minimum	Maximum
12 volt battery voltage [Battery]	10.0 V	-
Vehicle	ON mode	

[ ]: HDS Parameter

Malfunction Threshold

DTC: P0462

The voltage information of the circuit between the fuel level sensor (fuel gauge sending unit) and the gauge control module which the PCM received from the gauge control module is low for at least 5 seconds.

DTC: P0463

The voltage information of the circuit between the fuel level sensor (fuel gauge sending unit) and the gauge control module which the PCM received from the gauge control module is high for at least 5 seconds.

Possible Cause

NOTE: The causes shown may not be a complete list of all potential problems, and it is possible that there may be other causes.

DTC: P0462

- Fuel level sensor (fuel gauge sending unit) FUEL_GAUGE+ line short to ground

DTC: P0463

- Fuel level sensor (fuel gauge sending unit) FUEL_GAUGE+ line open
- Fuel level sensor (fuel gauge sending unit) FUEL_GAUGE- line open

Common

- Fuel level sensor (fuel gauge sending unit) failure
- Gauge control module internal circuit failure
- PCM internal circuit failure

Diagnosis Details

Conditions for setting the DTC

When a malfunction is detected during the first drive cycle, a Pending DTC is stored in the PCM memory. If the malfunction returns in the next (second) drive cycle, the MIL comes on and a Confirmed DTC and the freeze data are stored.

Conditions for clearing the DTC

The MIL is cleared if the malfunction does not return in three consecutive trips in which the diagnostic runs. The MIL, the Pending DTC, the Confirmed DTC, and the freeze data can be cleared with the scan tool Clear command or by disconnecting the 12 volt battery.

DTC P046C

DTC P046C: Exhaust Gas Recirculation (EGR) Valve Position Sensor Out of Range

General Description

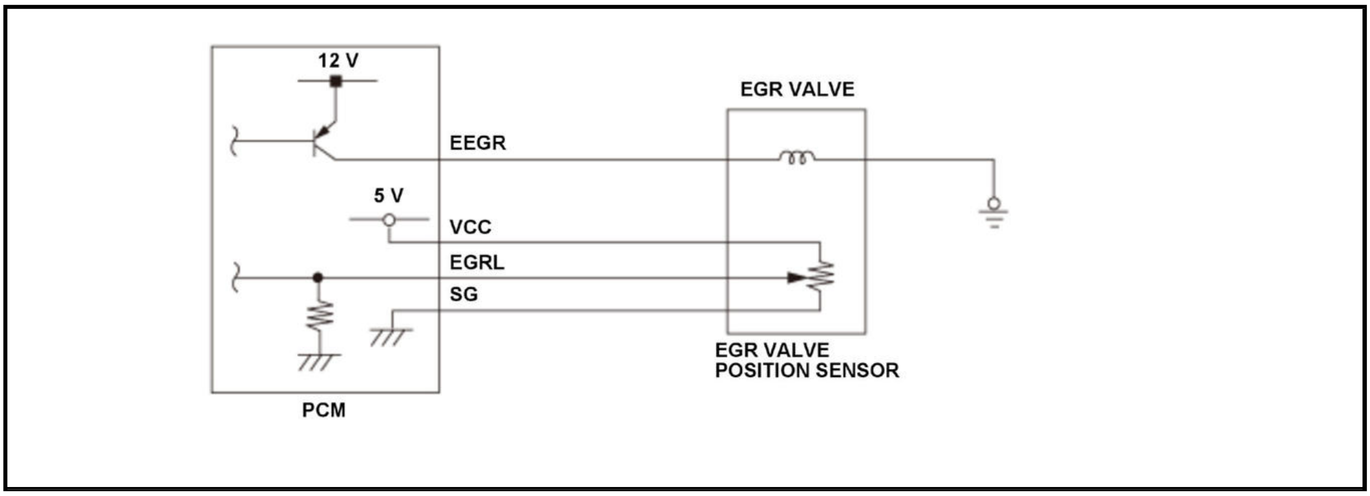

The powertrain control module (PCM) controls the exhaust gas recirculation (EGR) valve opening. The system includes the EGR actuator, the EGR valve, the EGR valve position sensor and the PCM. The EGR valve position sensor is a semiconductor type, and it is attached to the EGR valve and shaft to determine EGR valve position. The EGR valve position signal from the EGR valve position sensor is transmitted to the PCM for target position feedback control. If the EGR valve position sensor output voltage is a specified value, the PCM detects a malfunction and stores a DTC.

Monitor Execution, Sequence, Duration, DTC Type

Execution	Continuous
Sequence	None
Duration	6 seconds or more
DTC Type	Two drive cycles, MIL on

Enable Conditions

Condition	B
State of the engine	Running

Malfunction Threshold

The EGR valve position sensor output voltage [EGR valve position sensor (EGR VLS)] is 4.41 V or more for at least 6 seconds.

[ ]: HDS Parameter

Possible Cause

NOTE: The causes shown may not be a complete list of all potential problems, and it is possible that there may be other causes.

- EGR valve position sensor failure
- PCM internal circuit failure

Diagnosis Details

Conditions for setting the DTC

When a malfunction is detected during the first drive cycle, a Pending DTC is stored in the PCM memory. If the malfunction returns in the next (second) drive cycle, the MIL comes on and a Confirmed DTC, the freeze data, and the on-board snapshot are stored.

Conditions for clearing the DTC

The MIL is cleared if the malfunction does not return in three consecutive trips in which the diagnostic runs. The MIL, the Pending DTC, the Confirmed DTC, the freeze data, and the on-board snapshot can be cleared with the scan tool Clear command or by disconnecting the 12 volt battery.

DTC P0480

DTC P0480: Radiator Fan Control (RFC) System Malfunction

General Description

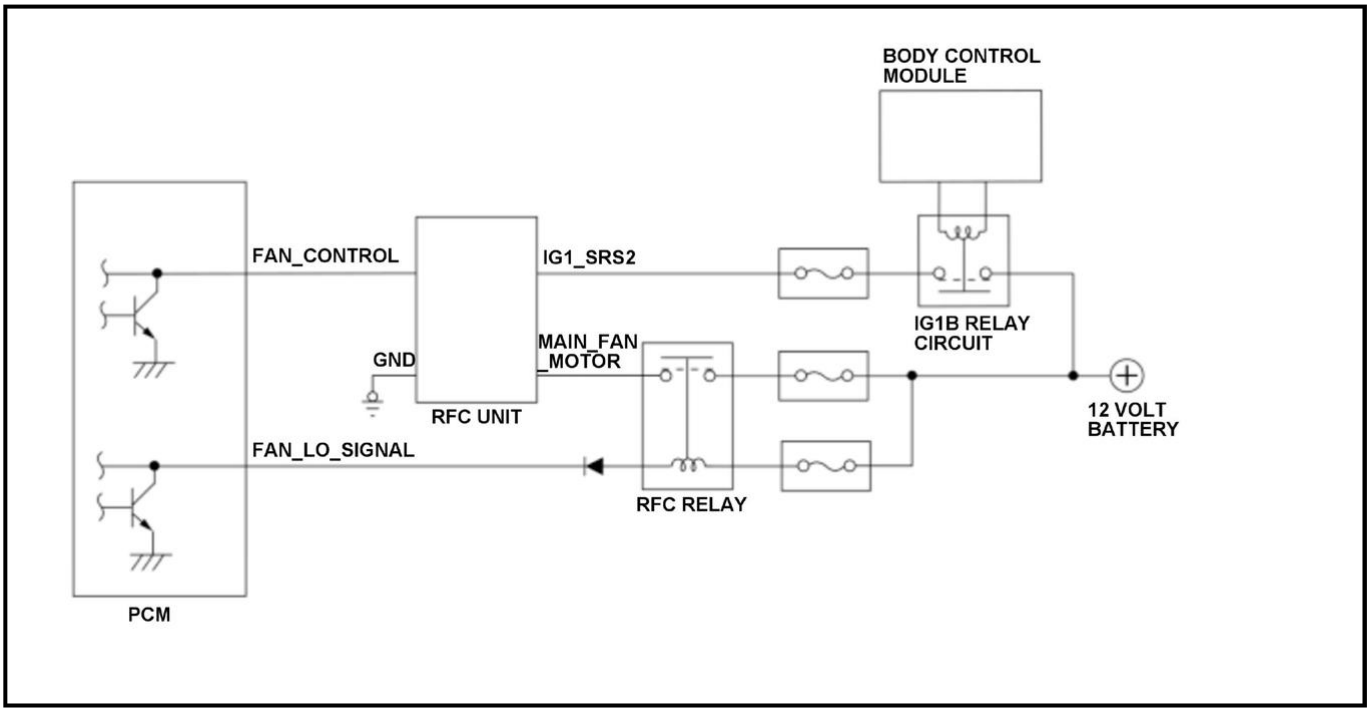

The radiator fan control (RFC) unit cools the radiator and the A/C condenser by controlling the cooling fan motor. The powertrain control module (PCM) communicates with the RFC unit using the pulse-width modulation (PWM) signal. The PCM sends drive command to the RFC unit via the FAN_CONTROL line using the PWM signal according to the condition of the vehicle. When a malfunction in the system is detected by self-diagnosis, the RFC unit makes FAN_CONTROL line signal output to GND. When the PCM cannot receive the PWM signal via the FAN_CONTROL line for a set time, the PCM detects a malfunction and stores a DTC.

Monitor Execution, Sequence, Duration, DTC Type

Execution	Continuous
Sequence	None
Duration	12 seconds or more
DTC Type	Two drive cycles, MIL off

Enable Conditions

Condition	Minimum	Maximum
Elapsed time after the PCM is activated	2 seconds	-
12 volt battery voltage [Battery]	10 V	18 V
Vehicle	ON mode	

[ ]: HDS Parameter

Malfunction Threshold

The PCM cannot receive PWM signal from the RFC unit via the FAN_CONTROL line for at least 12 seconds.

Possible Cause

NOTE: The causes shown may not be a complete list of all potential problems, and it is possible that there may be other causes.

- RFC unit MAIN_FAN_MOTOR line open
- RFC unit GND line open
- RFC unit FAN_CONTROL line open
- RFC unit FAN_CONTROL line short
- RFC relay stuck off
- RFC unit failure
- PCM failure

Confirmation Procedure

Operating Condition

None.

With the HDS

Select the RADIATOR FAN in the Function Test Menu with the HDS.

Diagnosis Details

Conditions for setting the DTC

When a malfunction is detected during the first drive cycle, a Pending DTC is stored in the PCM memory. If the malfunction returns in the next (second) drive cycle, a Confirmed DTC and the freeze data are stored. The MIL does not come on.

Conditions for clearing the DTC

The Pending DTC, the Confirmed DTC, and the freeze data can be cleared with the scan tool Clear command or by disconnecting the 12 volt battery.

DTC P049D

DTC P049D: Exhaust Gas Recirculation (EGR) Control Position Exceeded Learning Limit

General Description

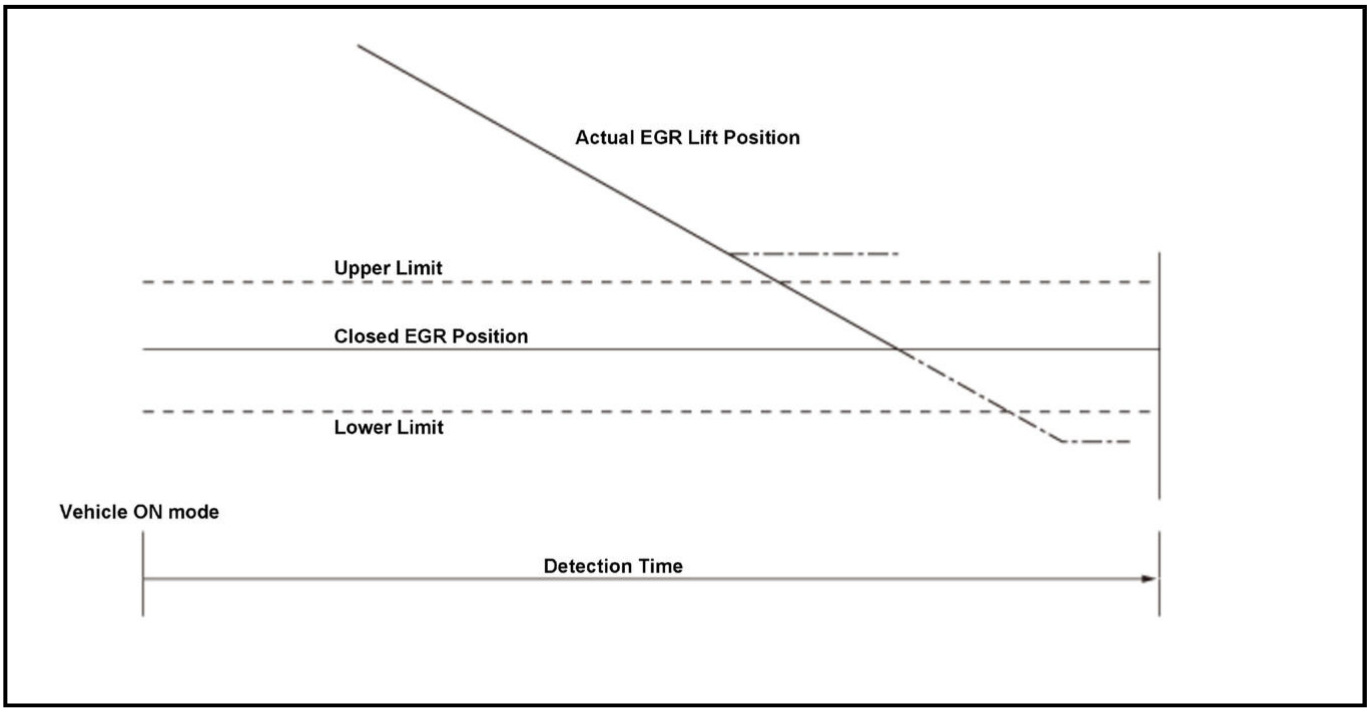

The powertrain control module (PCM) controls the exhaust gas recirculation (EGR) valve opening. The system includes the EGR actuator, the EGR valve, the EGR valve position sensor, and the PCM. The EGR valve position sensor is a semiconductor type, and it is attached to the EGR valve and shaft to determine EGR valve position. The EGR valve position signal from the EGR valve position sensor is transmitted to the PCM for target position feedback control. The PCM transmits a signal to the EGR actuator and moves the EGR valve to the fully closed position to register the EGR valve fully closed position when the vehicle is turned to the ON mode or during EGR operation is not in progress. If the registration of the EGR valve fully closed position does not complete within a predetermined time or the registered value is out of predetermined range, the PCM detects a malfunction in the EGR system and stores a DTC.

Monitor Execution, Sequence, Duration, DTC Type

Execution	Once per driving cycle
Sequence	None
Duration	-
DTC Type	Two drive cycles, MIL on

Enable Conditions

Condition	B
Vehicle	ON mode

Malfunction Threshold

The registered value is 0.093 in (2.36 mm) or more, or -0.083 in (-2.11 mm) or less after the registration of the EGR valve fully closed position is completed.

Possible Cause

NOTE: The causes shown may not be a complete list of all potential problems, and it is possible that there may be other causes.

- EGR actuator EEGR line failure
- EGR actuator ground line failure
- EGR actuator failure
- EGR valve position sensor failure

- EGR valve failure
- PCM failure

Diagnosis Details

Conditions for setting the DTC

When a malfunction is detected during the first drive cycle, a Pending DTC is stored in the PCM memory. If the malfunction returns in the next (second) drive cycle, the MIL comes on and a Confirmed DTC and the freeze data are stored.

Conditions for clearing the DTC

The MIL is cleared if the malfunction does not return in three consecutive trips in which the diagnostic runs. The MIL, the Pending DTC, the Confirmed DTC, and the freeze data can be cleared with the scan tool Clear command or by disconnecting the 12 volt battery.

DTC P04AB

DTC P04AB: Evaporative Emission (EVAP) Canister Purge Valve Circuit Malfunction 2

General Description

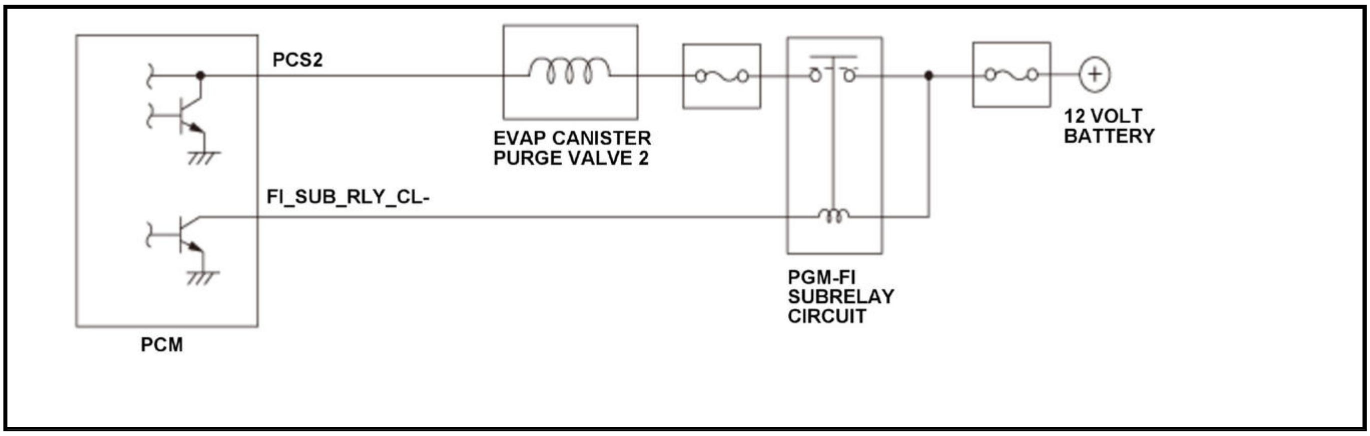

Evaporative emission (EVAP) canister purge valve 2 is attached to the vacuum port between the intake manifold and the EVAP canister. When the engine coolant temperature is a specified value or less, or the output of EVAP canister purge valve 2 is not fully opened, the powertrain control module (PCM) turns off EVAP canister purge valve 2. The PCM adjusts the amount of fuel vapor sent to the engine by controlling EVAP canister purge valve 2 and the EVAP canister purge valve 2 duty cycle. When the return signal does not change according to the EVAP canister purge valve 2 output for a set time, the PCM detects a malfunction and stores a DTC.

Monitor Execution, Sequence, Duration, DTC Type

Execution	Continuous
Sequence	None
Duration	1.5 seconds or more*2.0 seconds or more**, ***
DTC Type	Two drive cycles, MIL on
OBD Status	PASSED/FAILED/NOT COMPLETED (STILL TESTING)

*: Symptom 1

**: Symptom 2

***: Symptom 3

Enable Conditions

Condition	Minimum	Maximum
12 volt battery voltage [Battery]	10.0 V	-
EVAP canister purge valve 2 output duty*	2 %	98 %
EVAP canister purge valve 2 output duty**	0 %	
EVAP canister purge valve 2 output duty***	100 %	
State of the engine	Running	

[ ]: HDS Parameter

Malfunction Threshold

One of these symptom occurs:

- Symptom 1

  The return signal does not change according to the EVAP canister purge valve 2 output for at least 1.5 seconds.

- Symptom 2

  When the return signal is fully opened and continues for at least 2.0 seconds while the EVAP canister purge valve 2 output is 0 % (totally closed).

- Symptom 3

  When the return signal is fully closed and continues for at least 2.0 seconds while the EVAP canister purge valve 2 output is 100 % (totally opened).

Possible Cause

NOTE: The causes shown may not be a complete list of all potential problems, and it is possible that there may be other causes.

- EVAP canister purge valve 2 PCS2 line open
- EVAP canister purge valve 2 PCS2 line short to ground
- EVAP canister purge valve 2 power supply line open
- PCM internal circuit failure

Diagnosis Details

Conditions for setting the DTC

When a malfunction is detected during the first drive cycle, a Pending DTC is stored in the PCM memory. If the malfunction returns in the next (second) drive cycle, the MIL comes on and a Confirmed DTC and the freeze data are stored.

Conditions for clearing the DTC

The MIL is cleared if the malfunction does not return in three consecutive trips in which the diagnostic runs. The MIL, the Pending DTC, the Confirmed DTC, and the freeze data can be cleared with the scan tool Clear command or by disconnecting the 12 volt battery.

DTC P04AE

DTC P04AE: Evaporative Emission (EVAP) System High Purge Flow Detected 2

General Description

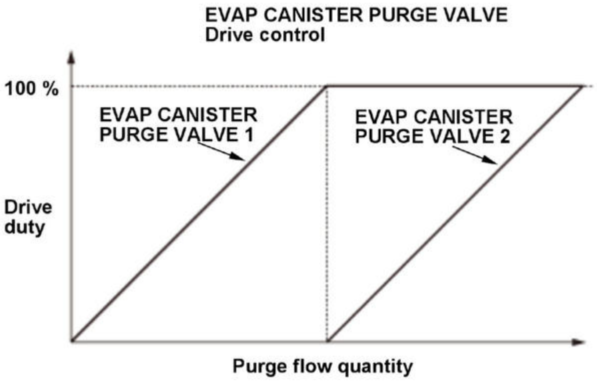

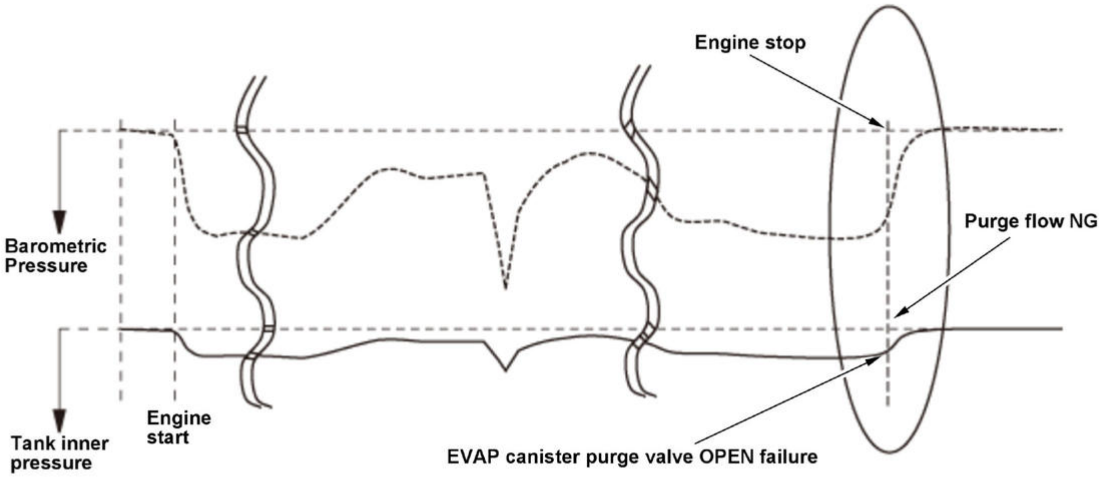

The fuel vapor in the fuel tank is temporarily stored in the evaporative emission (EVAP) canister and drawn into the engine through the EVAP canister purge valve. The powertrain control module (PCM) controls the amount of vapor introduced into the engine by varying the duty cycle of the EVAP canister purge valve according to the condition of the engine. The EVAP system is a system which has this EVAP canister purge valve equipped parallel and adjusts the amount of vapor by driving the EVAP canister purge valve 2 when the EVAP canister purge valve 1 is fully opened.

<STEP 1>

The EVAP canister purge valve opens normally (EVAP canister purge valve OPEN OK) and detects that the purge flow is normal when the pulse of the EVAP canister purge valve duty cycle is transmitted to the EVAP leak check module pressure sensor during purge flow (pulse method). If there are no pulsation with EVAP canister purge valve 1, it judges pulsation by switching to EVAP canister purge valve 2 drive in EVAP canister purge valve 1 drive area.

OK determination: If pulsation from EVAP canister purge valve 1 drive area and pulsation from EVAP canister purge valve 2 area (EVAP canister purge valve 1 is in fully opened driving condition) are both present. (P0441 OK/P145E OK)

- P04F1 Purge flow OK
- P04DF EVAP canister purge valve 1 stuck Open OK
- P04AE EVAP canister purge valve 2 stuck Open OK

NG determination: If pulsation from EVAP canister purge valve 1 drive area is not present but pulsation from EVAP canister purge valve 2 drive is present. (P0441 NG/P145E OK)

- Either purge flow P04F1 abnormality or P04DF EVAP canister purge valve 1 OPEN failure.
- In this case, classify the failed part according to <STEP 2>.

NG determination: If pulsation from EVAP canister purge valve 2 drive area is not present but pulsation from EVAP canister purge valve 1 drive is present. (P0441 OK/P145E NG)

- Either purge flow P04F1 abnormality or P04DF EVAP canister purge valve 1 OPEN failure.

NG determination: If pulsation from EVAP canister purge valve 1 and EVAP canister purge valve 2 drive area is not present. (P0441 NG/P145E NG)

- P04F1 Purge flow NG

<STEP 2>

If there is no pulse, it is determined as either no purge flow or the EVAP canister purge valve 1 is stuck OPEN:

When the EVAP leak check module pressure sensor fluctuates from negative pressure to atmospheric pressure after the engine stopped: P04DF EVAP canister purge valve 1 stuck OPEN

When there is no fluctuation of the EVAP leak check module pressure sensor: P04F1 purge flow NG

If there is no pulse, it is determined as either no purge flow or the EVAP canister purge valve 2 is stuck OPEN:

When the EVAP leak check module pressure sensor fluctuates from negative pressure to atmospheric pressure after the engine stopped: P04AE EVAP canister purge valve 2 stuck OPEN

When there is no fluctuation of the EVAP leak check module pressure sensor: P04F1 purge flow NG

Monitor Execution, Sequence, Duration, DTC Type

Execution	Once per driving cycle
Sequence	P145E is judged as NG
Duration	-
DTC Type	Two drive cycles, MIL on

Enable Conditions

Condition	Minimum	Maximum
Low load duration time	10 seconds	-
Wait for stability after the engine stopped	10 seconds	-

Condition	Minimum	Maximum
Engine coolant temperature [ECT Sensor 1] before EVAP purge control starts	104 deg.F (40 deg.C)	-

[ ]: HDS parameter

Malfunction Threshold

The output from the EVAP leak check module pressure sensor is 0.2 kPa (0.07 inHg, 2 mmHg) or more for at least 10 seconds.

Possible Cause

NOTE: The causes shown may not be a complete list of all potential problems, and it is possible that there may be other causes.

- EVAP canister purge valve 2 open stuck
- EVAP canister purge valve 2 middle stuck

Confirmation Procedure

Operating Condition

- Enter the maintenance mode, then start the engine. Hold the engine speed [Engine Speed] at 3, 000 rpm without load (in P or N) until the radiator fan comes on, then let it idle.
- Let the engine running for at least 30 seconds.
- Stopp the engine and leave the vehicle for at least 10 seconds.

With the HDS

Select the EVAP TEST in the Function Test Menu, then select EVAP Leak Check Module Test with the HDS.

Diagnosis Details

Conditions for setting the DTC

When a malfunction is detected during the first drive cycle, a Pending DTC is stored in the PCM memory. If the malfunction returns in the next (second) drive cycle, the MIL comes on and a Confirmed DTC and the freeze data are stored.

Conditions for clearing the DTC

The MIL is cleared if the malfunction does not return in three consecutive trips in which the diagnostic runs. The MIL, the Pending DTC, the Confirmed DTC, and the freeze data can be cleared with the scan tool Clear command or by disconnecting the 12 volt battery.

DTC P04DF

DTC P04DF: Evaporative Emission (EVAP) System High Purge Flow Detected

General Description

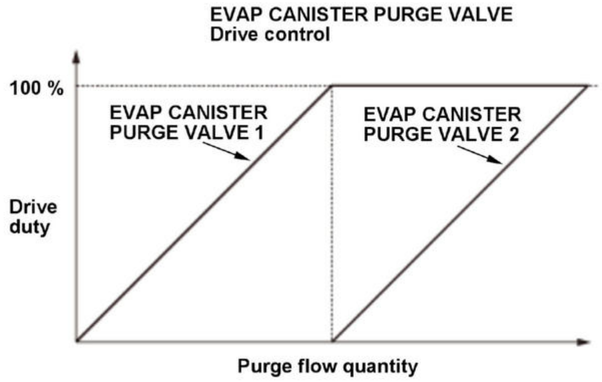

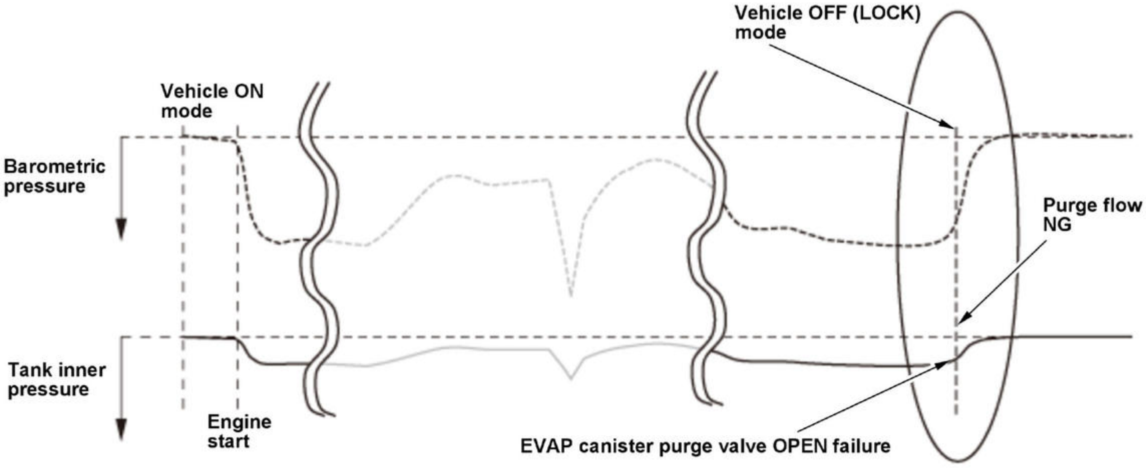

The fuel vapor in the fuel tank is temporarily stored in the evaporative emission (EVAP) canister and drawn into the engine through the EVAP canister purge valve. The powertrain control module (PCM) controls the amount of vapor introduced into the engine by varying the duty cycle of the EVAP canister purge valve according to the condition of the engine. The EVAP system is a system which has this EVAP canister purge valve equipped parallel and adjusts the amount of vapor by driving the EVAP canister purge valve 2 when the EVAP canister purge valve 1 is fully opened.

<STEP 1>

The EVAP canister purge valve opens normally (EVAP canister purge valve OPEN OK) and detects that the purge flow is normal when the pulse of the EVAP canister purge valve duty cycle is transmitted to the EVAP leak check module pressure sensor during purge flow (pulse method). If there are no pulsation with EVAP canister purge valve 1, it judges pulsation by switching to EVAP canister purge valve 2 drive in EVAP canister purge valve 1 drive area.

OK determination: If pulsation from EVAP canister purge valve 1 drive area and pulsation from EVAP canister purge valve 2 area (EVAP canister purge valve 1 is in fully opened driving condition) are both present. (P0441 OK/P145E OK)

- P04F1 Purge flow OK
- P04DF EVAP canister purge valve 1 stuck OPEN OK

- P04AE EVAP canister purge valve 2 stuck OPEN OK

NG determination: If pulsation from EVAP canister purge valve 1 drive area is not present but pulsation from EVAP canister purge valve 2 drive is present. (P0441 NG/P145E OK)

- Either purge flow P04F1 abnormality or P04DF EVAP canister purge valve 1 OPEN failure.
- In this case, classify the failed part according to <STEP 2>

NG determination: If pulsation from EVAP canister purge valve 2 drive area is not present but pulsation from EVAP canister purge valve 1 drive is present. (P0441 OK/P145E NG)

- Either purge flow P04F1 abnormality or P04DF EVAP canister purge valve 1 OPEN failure.

NG determination: If pulsation from EVAP canister purge valve 1 and EVAP canister purge valve 2 drive area is not present. (P0441 NG/P145E NG)

- P04F1 Purge flow NG

<STEP 2>

If there is no pulse, it is determined as either no purge flow or the EVAP canister purge valve 1 is stuck OPEN:

When the EVAP leak check module pressure sensor fluctuates from negative pressure to atmospheric pressure after the engine stopped: P04DF EVAP canister purge valve 1 stuck OPEN

When there is no fluctuation of the EVAP leak check module pressure sensor: P04F1 purge flow NG

If there is no pulse, it is determined as either no purge flow or the EVAP canister purge valve 2 is stuck OPEN:

When the EVAP leak check module pressure sensor fluctuates from negative pressure to atmospheric pressure after the engine stopped: P04AE EVAP canister purge valve 2 stuck OPEN

When there is no fluctuation of the EVAP leak check module pressure sensor: P04F1 purge flow NG

Monitor Execution, Sequence, Duration, DTC Type

Execution	Once per driving cycle
Sequence	P0441 is judged as NG
Duration	-
DTC Type	Two drive cycles, MIL on

Enable Conditions

Condition	Minimum	Maximum
Low load duration time	10 seconds	-
Wait for stability after the engine is stopped	10 seconds	-
Engine coolant temperature [ECT Sensor 1] before EVAP purge control starts	104 deg.F (40 deg.C)	-

[ ]: HDS Parameter

Malfunction Threshold

The output from the FTP sensor [FTP Sensor] is 0.27 kPa (2.00 mmHg, 0.079 inHg) or more.

Possible Cause

NOTE: The causes shown may not be a complete list of all potential problems, and it is possible that there may be other causes.

- EVAP canister purge valve 1 open stuck
- EVAP canister purge valve 1 middle stuck

Confirmation Procedure

Operating Condition

- Enter the maintenance mode, then start the engine. Hold the engine speed [Engine Speed] at 3, 000 rpm without load (in P or N) until the radiator fan comes on, then let it idle.
- Let the engine running for at least 30 seconds.
- Stop the engine and leave the vehicle for at least 10 seconds.

With the HDS

Select the EVAP TEST in the Function Test Menu, then select EVAP Leak Check Module Test with the HDS.

Diagnosis Details

Conditions for setting the DTC

When a malfunction is detected during the first drive cycle, a Pending DTC is stored in the PCM memory. If the malfunction returns in the next (second) drive cycle, the MIL comes on and a Confirmed DTC and the freeze data are stored.

Conditions for clearing the DTC

The MIL is cleared if the malfunction does not return in three consecutive trips in which the diagnostic runs. The MIL, the Pending DTC, the Confirmed DTC, and the freeze data can be cleared with the scan tool clear command or by disconnecting the 12 volt battery.

DTC P04E0

DTC P04E0: Evaporative Emission (EVAP) Canister Purge Valve Stuck Closed

General Description

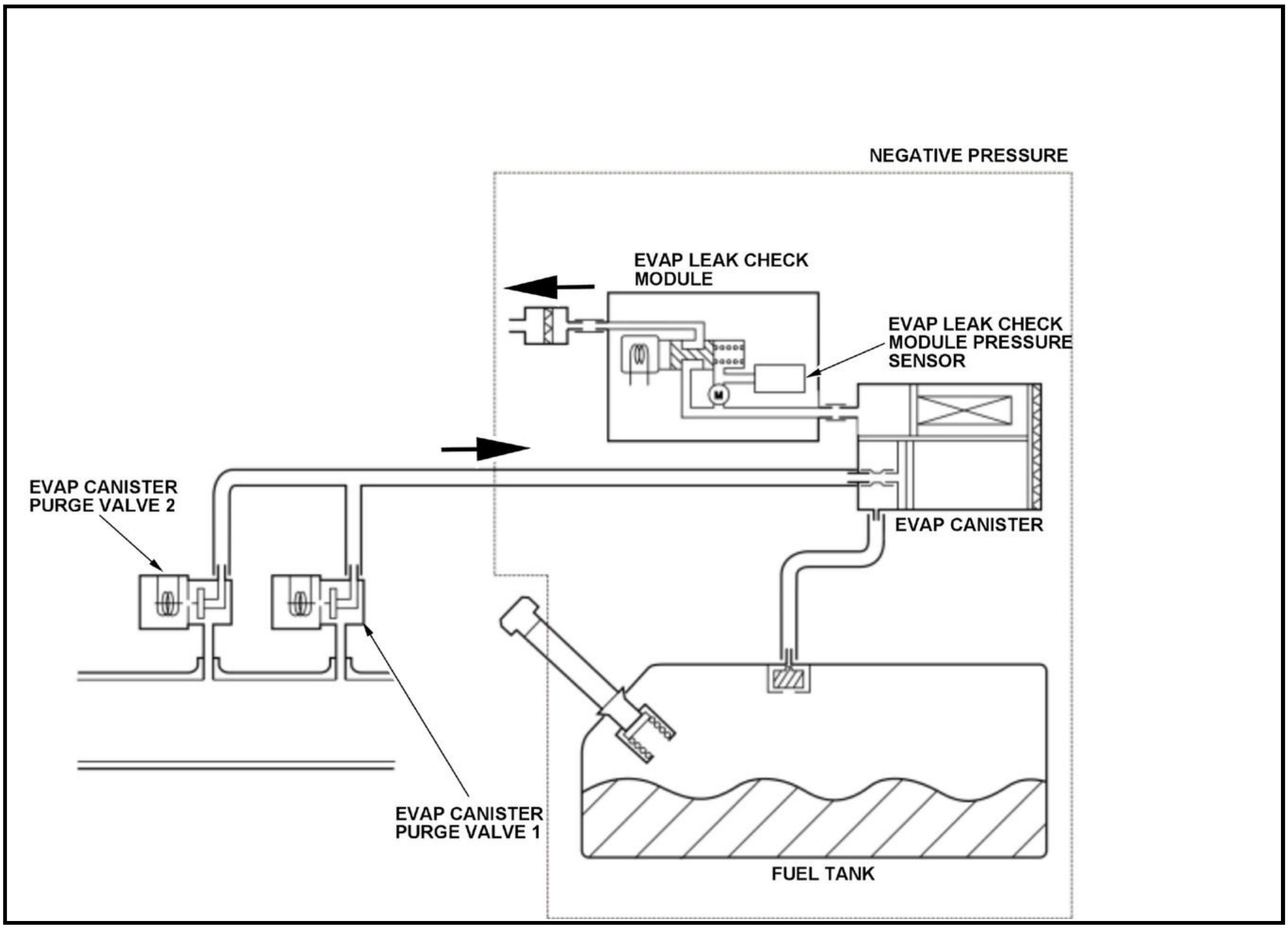
NEGATIVE PRESSURE
EVAP LEAK CHECK MODULE
EVAP LEAK CHECK MODULE PRESSURE SENSOR
EVAP CANISTER PURGE VALVE 2
EVAP CANISTER
EVAP CANISTER PURGE VALVE 1
FUEL TANK

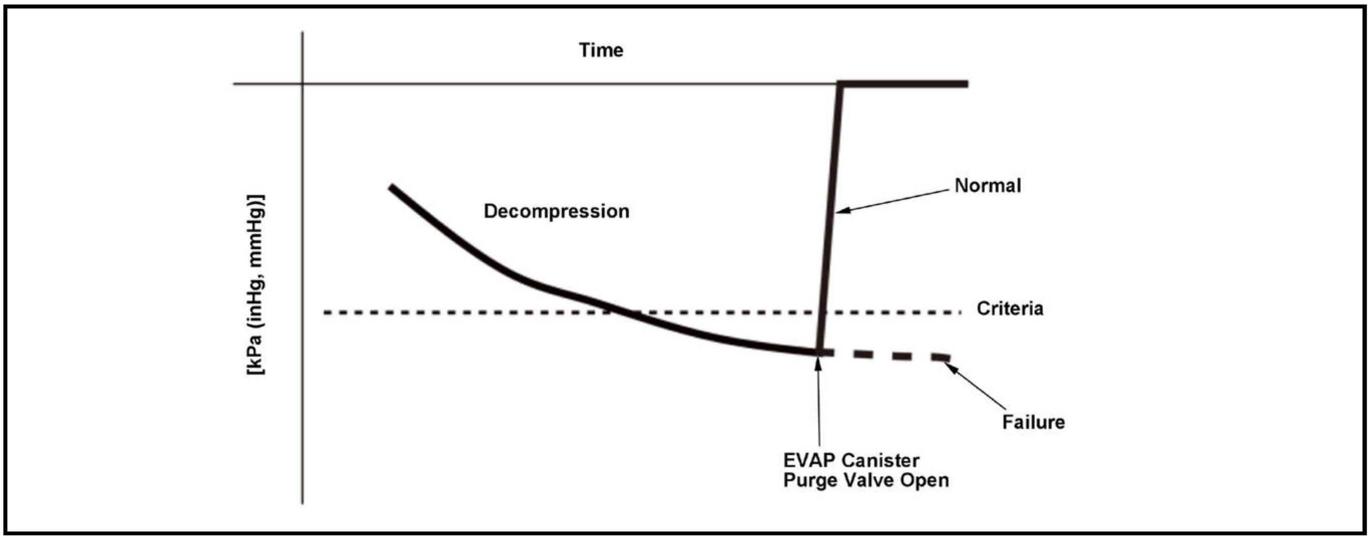

Negative pressure is created in the evaporative emission (EVAP) system by reducing the pressure in the EVAP leak check module. When the EVAP canister purge valve is opened under that state, the air is sucked in through the intake manifold to cause the EVAP system pressure to be recovered to barometric pressure. The powertrain control module (PCM) detects a malfunction and stores a DTC when the prescribed change in the pressure toward positive pressure has not occurred after a given period of time of opening the EVAP canister purge valve.

Monitor Execution, Sequence, Duration, DTC Type

Execution	Continuous
Sequence	None
Duration	18 minutes 55 seconds or more
DTC Type	Two drive cycles, MIL on

Enable Conditions

Condition	Minimum	Maximum
Elapsed time after the vehicle condition is turned to the ON mode	10 minutes	-
Elapsed time after the vehicle condition is turned to the OFF (LOCK) mode	5 hours	-
PCM wake up engine coolant temperature [ECT Sensor 2]	40 deg.F (5 deg.C)	95 deg.F (35 deg.C)
Barometric pressure[Baro Sensor]	76 kPa (22.5 inHg, 569 mmHg)	-
12 volt battery voltage [Battery]	10.5 V	-
Other	No refueling is required	

[ ]: HDS Parameter

Malfunction Threshold

When the change in the pressure is 0.3 kPa (0.11 inHg, 3 mmHg) or less toward positive pressure continuously for 18 minutes 55 seconds or more after opening the EVAP canister purge valve.

Possible Cause

NOTE: The causes shown may not be a complete list of all potential problems, and it is possible that there may be other causes.

- EVAP canister purge valve close stuck

Confirmation Procedure

Operating Condition

- With the engine coolant temperature [ECT Sensor 2] within the specified range, turn the vehicle to the ON mode, and wait for at least 10 minutes.
- Turn the vehicle to the OFF (LOCK) mode, and wait for at least 5 hours.
- PCM wake up, and wait at least 18 minutes 55 seconds.

With the HDS

Select the EVAP TEST in the Function Test Menu, then select the EVAP Purge Flow Check Test with the HDS.

Diagnosis Details

Conditions for setting the DTC

When a malfunction is detected during the first drive cycle, a Pending DTC is stored in the PCM memory. If the malfunction returns in the next (second) drive cycle, the MIL comes on and a Confirmed DTC and the freeze data are stored.

Conditions for clearing the DTC

The MIL is cleared if the malfunction does not return in three consecutive trips in which the diagnostic runs. The MIL, the Pending DTC, the Confirmed DTC, and the freeze data can be cleared with the scan tool clear command or by disconnecting the 12 volt battery.

DTC P04F1

DTC P04F1: Evaporative Emission (EVAP) System Low Purge Flow Detected

General Description

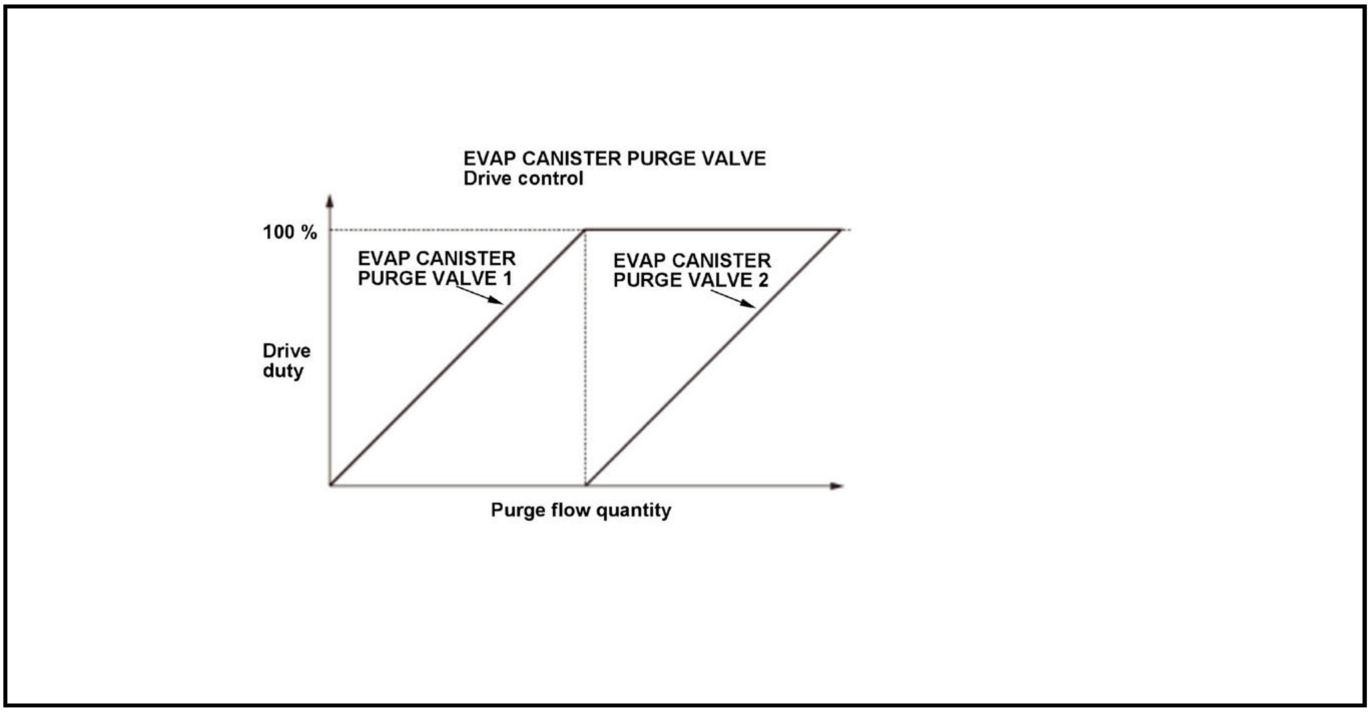

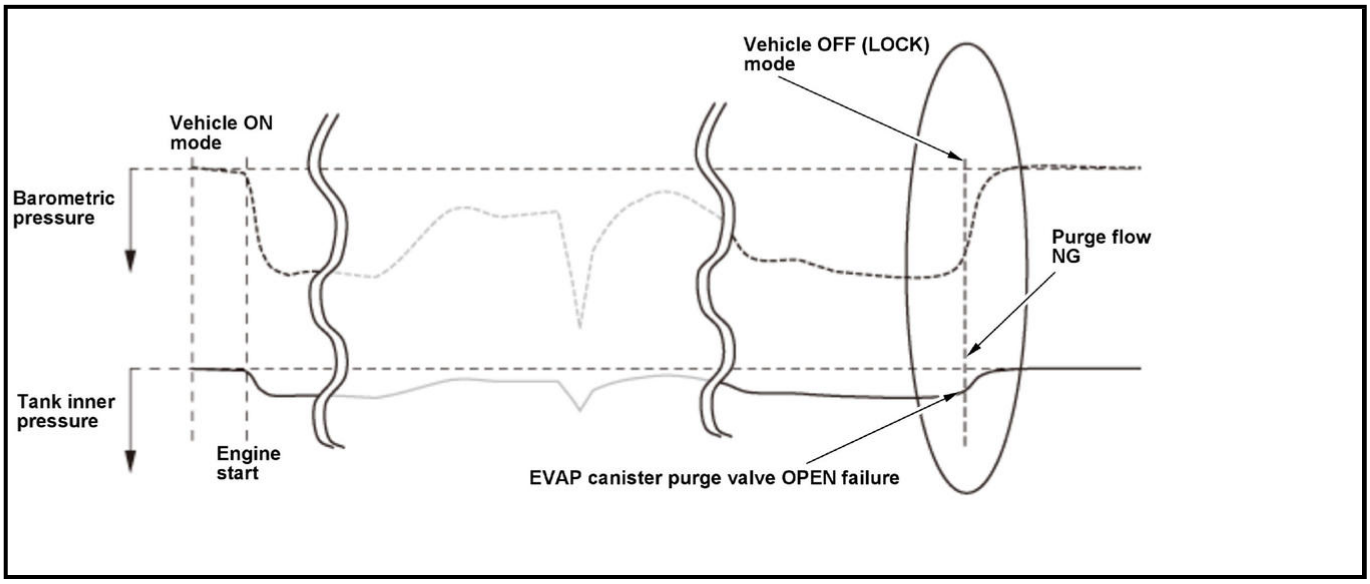

The fuel vapor in the fuel tank is temporarily stored in the evaporative emission (EVAP) canister and drawn into the engine through the EVAP canister purge valve. The powertrain control module (PCM) controls the amount of vapor introduced into the engine by varying the duty cycle of the EVAP canister purge valve according to the condition of the engine. The EVAP system is a system which has this EVAP canister purge valve equipped parallel and adjusts the amount of vapor by driving the EVAP canister purge valve 2 when the EVAP canister purge valve 1 is fully opened.

<STEP 1>

The EVAP canister purge valve opens normally (EVAP canister purge valve OPEN OK) and detects that the purge flow is normal when the pulse of the EVAP canister purge valve duty cycle is transmitted to the EVAP leak check module pressure sensor during purge flow (pulse method). If there are no pulsation with EVAP canister purge valve 1, it judges pulsation by switching to EVAP canister purge valve 2 drive in EVAP canister purge valve 1 drive area.

OK determination: If pulsation from EVAP canister purge valve 1 drive area and pulsation from EVAP canister purge valve 2 area (EVAP canister purge valve 1 is in fully opened driving condition) are both present. (P0441 OK/P145E OK)

- P04F1 Purge flow OK
- P04DF EVAP canister purge valve 1 stuck OPEN OK
- P04AE EVAP canister purge valve 2 stuck OPEN OK

NG determination: If pulsation from EVAP canister purge valve 1 drive area is not present but pulsation from EVAP canister purge valve 2 drive is present. (P0441 NG/P145E OK)

- Either purge flow P04F1 abnormality or P04DF EVAP canister purge valve 1 OPEN failure.
- In this case, classify the failed part according to <STEP 2>.

NG determination: If pulsation from EVAP canister purge valve 2 drive area is not present but pulsation from EVAP canister purge valve 1 drive is present. (P0441 OK/P145E NG)

- Either purge flow P04F1 abnormality or P04DF EVAP canister purge valve 1 OPEN failure.

NG determination: If pulsation from EVAP canister purge valve 1 and EVAP canister purge valve 2 drive area is not present. (P0441 NG/P145E NG)

- P04F1 Purge flow NG

<STEP 2>

If there is no pulse, it is determined as either no purge flow or the EVAP canister purge valve 1 is stuck OPEN:

When the EVAP leak check module pressure sensor fluctuates from negative pressure to atmospheric pressure after the engine stopped: P04DF EVAP canister purge valve 1 stuck OPEN

When there is no fluctuation of the EVAP leak check module pressure sensor: P04F1 purge flow NG

If there is no pulse, it is determined as either no purge flow or the EVAP canister purge valve 2 is stuck OPEN:

When the EVAP leak check module pressure sensor fluctuates from negative pressure to atmospheric pressure after the engine stopped: P04AE EVAP canister purge valve 2 stuck OPEN

When there is no fluctuation of the EVAP leak check module pressure sensor: P04F1 purge flow NG

Monitor Execution, Sequence, Duration, DTC Type

Execution	Once per driving cycle
Sequence	P0441 is judged as NG
Duration	-
DTC Type	Two drive cycles, MIL on

Enable Conditions

Condition	Minimum	Maximum
Low load duration time	10 seconds	-
Wait for stability after the vehicle condition is turned to the OFF (LOCK) mode	10 seconds	-
Engine coolant temperature [ECT Sensor 1] before EVAP purge control starts	104 deg.F (40 deg.C)	-

[ ]: HDS Parameter

Malfunction Threshold

The output from the FTP sensor [FTP Sensor] is less than 0.27 kPa (2.00 mmHg, 0.079 inHg).

Possible Cause

NOTE: The causes shown may not be a complete list of all potential problems, and it is possible that there may be other causes.

- EVAP canister purge valve 1 close stuck
- EVAP canister purge valve 2 close stuck
- EVAP canister purge valve 1 middle stuck
- EVAP canister purge valve 2 middle stuck
- EVAP leak check module pressure sensor stuck
- EVAP system line clogged
- EVAP system line misinstalled

Confirmation Procedure

Operating Condition

- Enter the maintenance mode, then start the engine. Hold the engine speed [Engine Speed] at 3, 000 rpm without load (in P or N) until the radiator fan comes on.
- Let the engine running for at least 30 seconds.
- Stop the engine and leave the vehicle for at least 10 seconds.

With the HDS

Select the EVAP TEST in the Function Test Menu, then select EVAP Leak Check Module Test with the HDS.

Diagnosis Details

Conditions for setting the DTC

When a malfunction is detected during the first drive cycle, a Pending DTC is stored in the PCM memory. If the malfunction returns in the next (second) drive cycle, the MIL comes on and a Confirmed DTC and the freeze data are stored.

Conditions for clearing the DTC

The MIL is cleared if the malfunction does not return in three consecutive trips in which the diagnostic runs. The MIL, the Pending DTC, the Confirmed DTC, and the freeze data can be cleared with the scan tool clear command or by disconnecting the 12 volt battery.

DTC P050A

DTC P050A: Cold Start Idle Air Control System Performance Problem

General Description

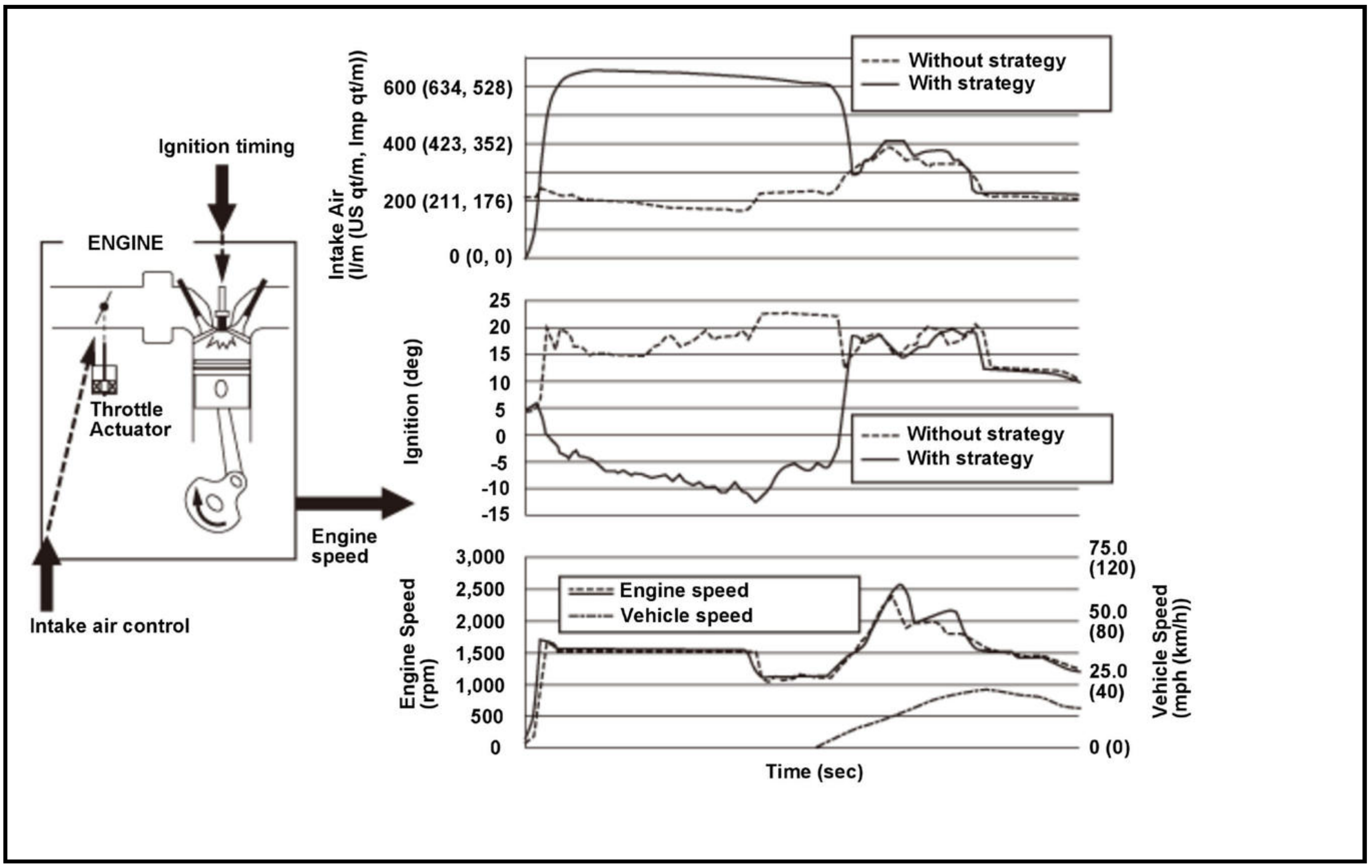

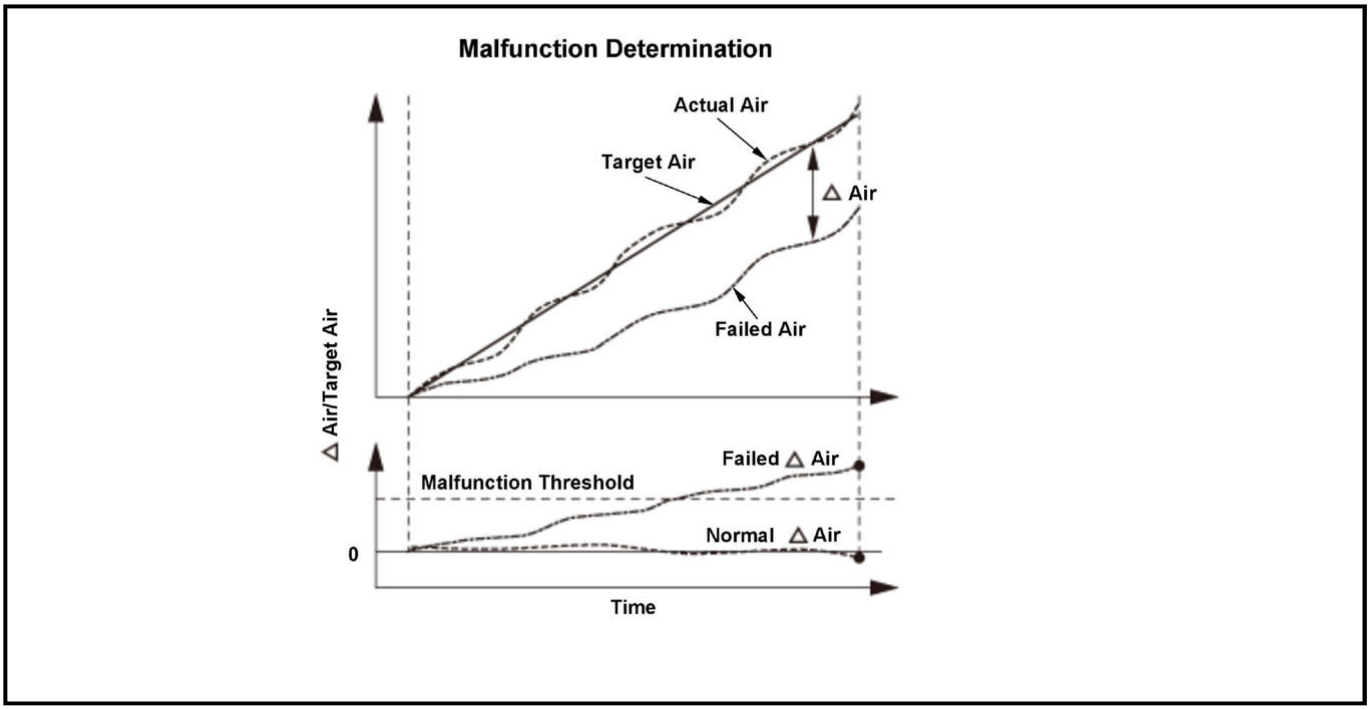

The quick warm-up system supplies additional air and retards the ignition timing when the engine is cold to activate the catalytic converter as quickly as possible. When the actual amount of air is less than the target amount, the powertrain control module (PCM) detects a malfunction and stores a DTC.

Monitor Execution, Sequence, Duration, DTC Type

Execution	Once per driving cycle
Sequence	None
Duration	10 seconds or more
DTC Type	Two drive cycles, MIL on

Enable Conditions

Condition	Minimum	Maximum
Battery module capacity	20 %	-
Engine coolant temperature [ECT Sensor 1]	14 deg.F (-10 deg.C)	176 deg.F (80 deg.C)
Throttle position	Fully closed	
Other	Vehicle stopped	

[ ]: HDS Parameter

Malfunction Threshold

The total airflow is decreased by a factor of 0.50 for at least 10 seconds.

Possible Cause

NOTE: The causes shown may not be a complete list of all potential problems, and it is possible that there may be other causes.

- Intake air duct breakage
- Intake air duct misinstalled
- Air cleaner breakage
- Air cleaner damage
- Air cleaner clogged
- Mass airflow (MAF) sensor failure
- Intake air system clogged
- Intake air temperature (IAT) sensor 1 failure

Confirmation Procedure

Operating Condition

- Allow the engine to cool to an ambient engine coolant temperature [ECT Sensor 1] of 122 deg.F (50 deg.C) or less.
- Enter the maintenance mode, then start the engine, and let it idle for at least 10 seconds.

Diagnosis Details

Conditions for setting the DTC

When a malfunction is detected during the first drive cycle with the engine coolant temperature and intake air temperature at engine start-up within the specified temperature range, a Pending DTC is stored in the PCM memory. If the malfunction returns in the next (second) drive cycle with the engine coolant temperature and intake air temperature at engine start-up within the specified temperature range, the MIL comes on and a Confirmed DTC and the freeze data are stored.

Conditions for clearing the DTC

The MIL is cleared if the malfunction does not return in three consecutive trips in which the diagnostic runs. The MIL, the Pending DTC, the Confirmed DTC and the freeze data can be cleared with the scan tool clear command or by disconnecting the 12 volt battery.

DTC P050B

DTC P050B: Cold Start Ignition Timing Control System Performance Problem

General Description

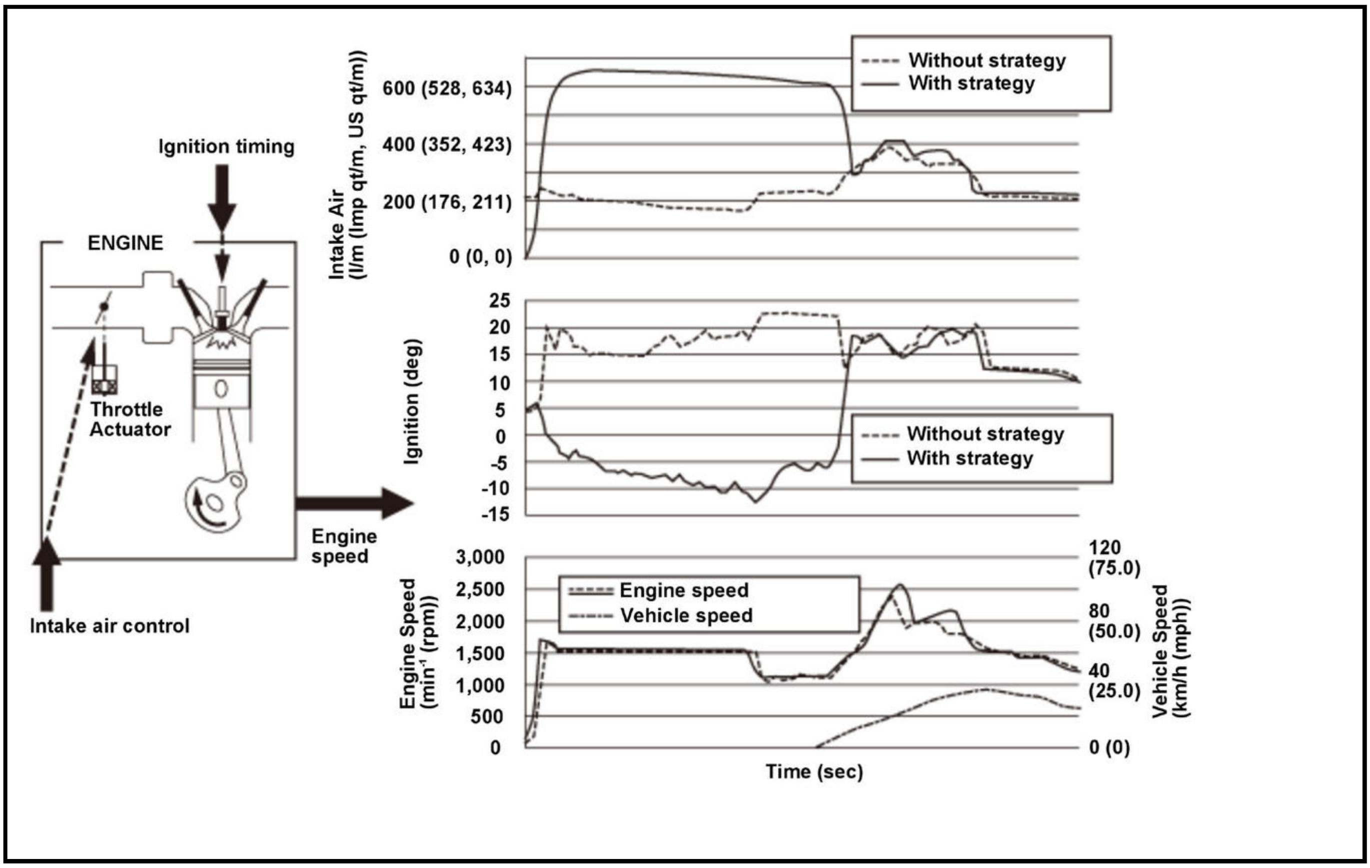

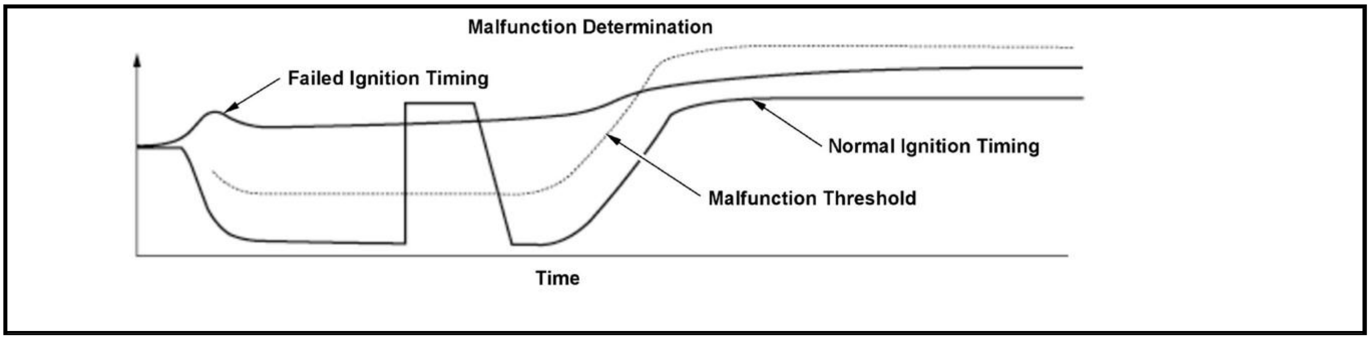

The quick warm-up system supplies additional air and retards the ignition timing when the engine is cold to activate the catalytic converter as quickly as possible. When the ignition timing is not retarded, and it continues for a specified time, the powertrain control module (PCM) detects a malfunction and stores a DTC.

Monitor Execution, Sequence, Duration, DTC Type

Execution	Once per driving cycle
Sequence	None
Duration	9.9 seconds or more
DTC Type	Two drive cycles, MIL on

Enable Conditions

Condition	Minimum	Maximum
Elapsed time after starting the engine	2.5 seconds	-
Engine coolant temperature [ECT SENSOR 1]	14 deg.F (-10 deg.C)	176 deg.F (80 deg.C)
Throttle position	Fully closed	
Other	Vehicle stopped	

[ ]: HDS Parameter

Malfunction Threshold

The ignition timing deviation is 10 deg. or more for at least 9.9 seconds.

Possible Cause

NOTE: The causes shown may not be a complete list of all potential problems, and it is possible that there may be other causes.

- Intake air duct breakage
- Intake air duct misinstalled
- Air cleaner breakage
- Air cleaner damage
- Air cleaner clogged
- Mass airflow (MAF) sensor failure
- Engine coolant temperature (ECT) sensor 1 failure
- Ignition system failure

Confirmation Procedure

Operating Condition

- Leave the vehicle until the engine coolant temperature [ECT SENSOR 1] lowers to 122 deg.F (50 deg.C) or less.
- Enter the maintenance mode, then start the engine, and let it idle for at least 10 seconds.

Diagnosis Details

Conditions for setting the DTC

When a malfunction is detected during the first drive cycle with the engine coolant temperature and intake air temperature at engine start-up within the specified temperature range, a Pending DTC is stored in the PCM memory. If the malfunction returns in the next (second) drive cycle with the engine coolant temperature and intake air temperature at engine start-up within the specified temperature range, the MIL comes on and a Confirmed DTC and the freeze data are stored.

Conditions for clearing the DTC

The MIL is cleared if the malfunction does not return in three consecutive trips in which the diagnostic runs. The MIL, the Pending DTC, the Confirmed DTC, and the freeze data can be cleared with the scan tool clear command or by disconnecting the 12 volt battery.

DTC P050D

DTC P050D: Cold Start Idle Speed Problem

General Description

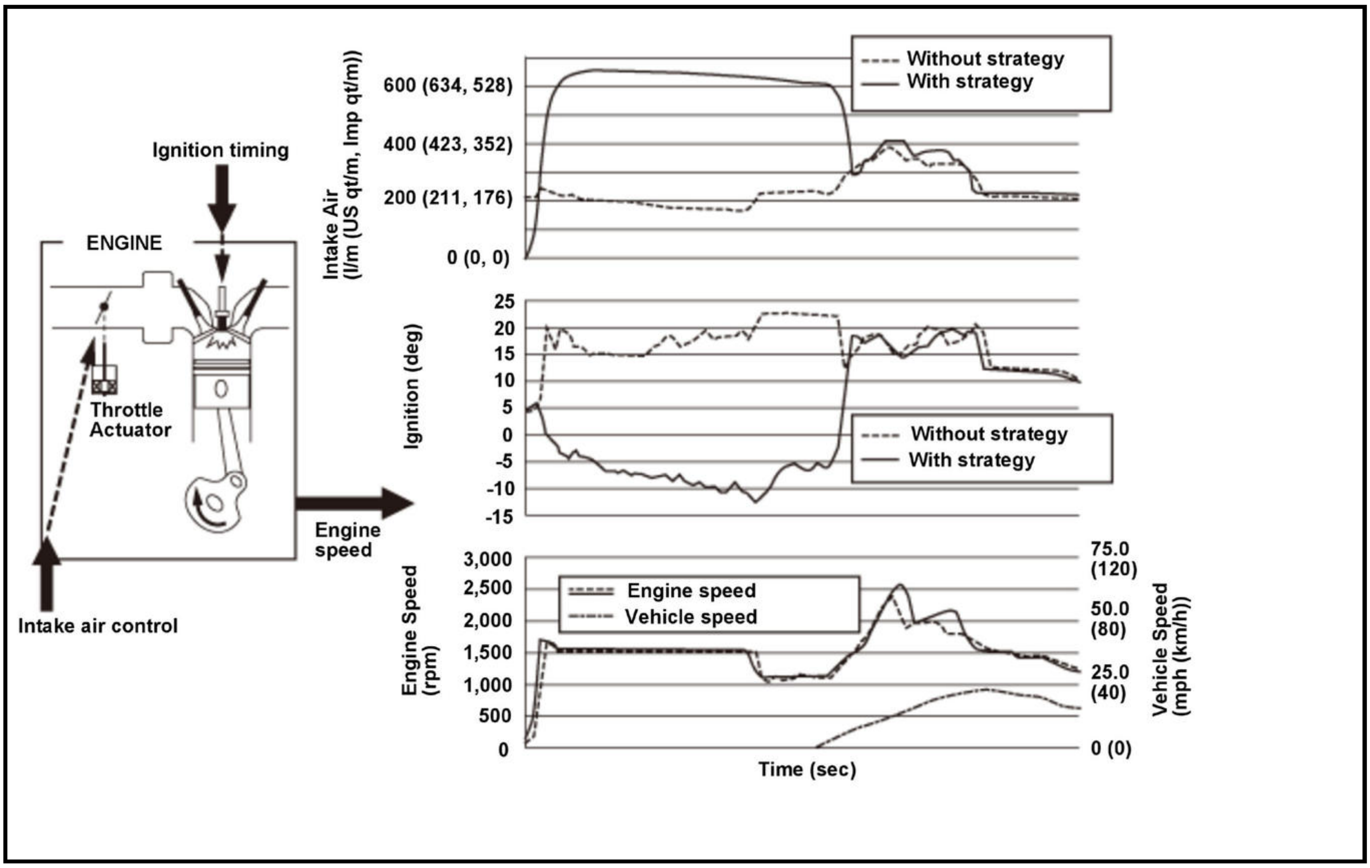

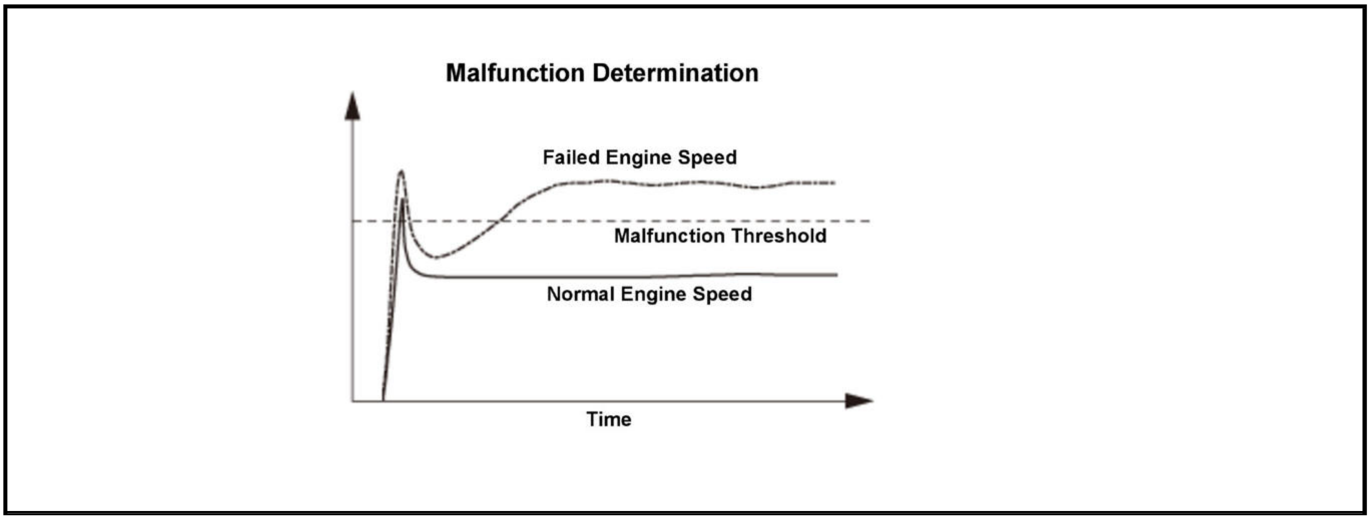

The quick warm-up system supplies additional air and retards the ignition timing when the engine is cold to activate the catalytic converter as quickly as possible. When the actual engine speed is a specified fast idle value, and it continues for a specified time, the powertrain control module (PCM) detects a malfunction and stores a DTC.

Monitor Execution, Sequence, Duration, DTC Type

Execution	Once per driving cycle
Sequence	None

Duration	3.5 seconds or more
DTC Type	Two drive cycles, MIL on

Enable Conditions

Condition	Minimum	Maximum
Elapsed time after starting the engine	1.0 seconds	-
Battery module capacity	20 %	-
Engine coolant temperature [ECT Sensor 1]	14 deg.F (-10 deg.C)	176 deg.F (80 deg.C)
Throttle position	Fully closed	
Other	Vehicle stopped	

[ ]: HDS Parameter

Malfunction Threshold

The engine speed [Engine Speed] is 2, 600 rpm or more for at least 3.5 seconds.

Possible Cause

NOTE: The causes shown may not be a complete list of all potential problems, and it is possible that there may be other causes.

- Intake air duct breakage
- Intake air duct misinstalled
- Air cleaner breakage
- Air cleaner damage
- Air cleaner clogged
- Mass airflow (MAF) sensor failure
- Generator motor failure

Confirmation Procedure

Operating Condition

- Allow the engine to cool to an ambient engine coolant temperature [ECT Sensor 1] of 122 deg.F (50 deg.C) or less.
- Enter the maintenance mode, then start the engine, and let it idle for at least 10 seconds.

Diagnosis Details

Conditions for setting the DTC

When a malfunction is detected during the first drive cycle with the engine coolant temperature and intake air temperature at engine start-up within the specified temperature range, a Pending DTC is stored in the PCM memory. If the malfunction returns in the next (second) drive cycle with the engine coolant temperature and intake air temperature at engine start-up within the specified temperature range, the MIL comes on and a Confirmed DTC and the freeze data are stored.

Conditions for clearing the DTC

The MIL is cleared if the malfunction does not return in three consecutive trips in which the diagnostic runs. The MIL, the Pending DTC, the Confirmed DTC, and the freeze data can be cleared with the scan tool clear command or by disconnecting the 12 volt battery.

DTC P0522, P0523

DTC P0522: Engine Oil Pressure Sensor Circuit Low Voltage

DTC P0523: Engine Oil Pressure Sensor Circuit High Voltage

General Description

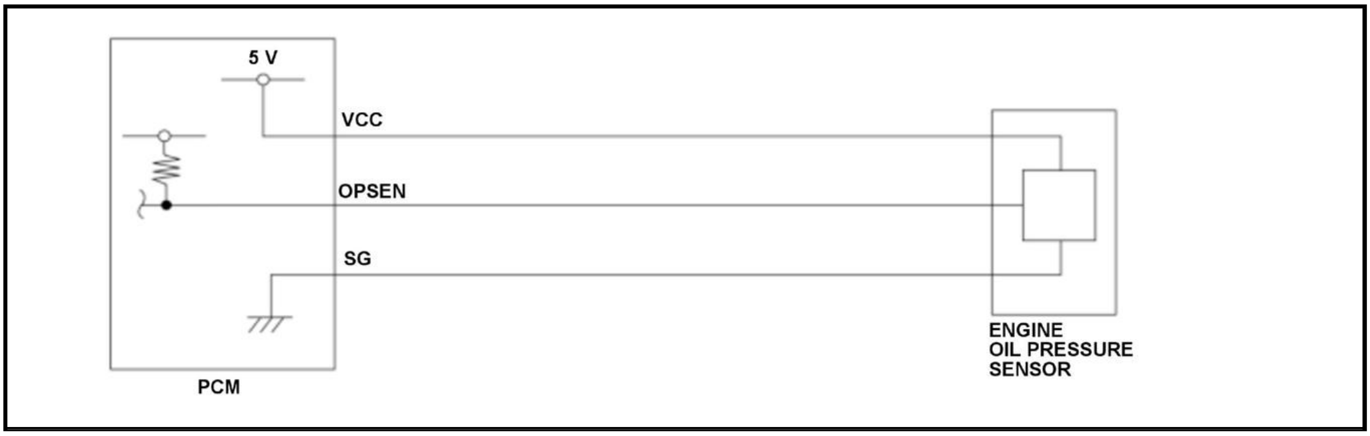

The engine oil pressure sensor detects engine oil pressure in the system. When the voltage from the engine oil pressure sensor is a set value for a specified time, the powertrain control module (PCM) detects a malfunction and stores a DTC.

Monitor Execution, Sequence, Duration, DTC Type

Execution	Continuous
Sequence	None
Duration	2.0 seconds or more
DTC Type	Two drive cycles, MIL off

Enable Conditions

DTC: P0522

Condition	Minimum	Maximum
Barometric pressure[Baro Sensor]	70 kPa (520 mmHg, 20.5 inHg)	-

DTC: P0523

Condition	Minimum	Maximum
Engine coolant temperature[ECT Sensor 1]	104 deg.F (40 deg.C)	-
Engine speed[Engine Speed]	-	6, 000 rpm

[ ]: HDS Parameter

Malfunction Threshold

DTC: P0522

The engine oil pressure sensor output voltage [Rocker Arm Oil Pressure Sensor Voltage] is 0.18 V or less for at least 2.0 seconds.

DTC: P0523

The engine oil pressure sensor output voltage [Rocker Arm Oil Pressure Sensor Voltage] is 4.79 V or more for at least 2.0 seconds.

Possible Cause

NOTE: The causes shown may not be a complete list of all potential problems, and it is possible that there may be other causes.

DTC: P0522

- Engine oil pressure sensor VCC line open
- Engine oil pressure sensor OPSEN line short to ground

DTC: P0523

- Engine oil pressure sensor OPSEN line open
- Engine oil pressure sensor SG line open

Common

- Engine oil pressure sensor failure
- PCM internal circuit failure

Diagnosis Details

Conditions for setting the DTC

When a malfunction is detected during the first drive cycle, a Pending DTC is stored in the PCM memory. If the malfunction returns in the next (second) drive cycle, a Confirmed DTC and the freeze data are stored. The MIL does not come on.

Conditions for clearing the DTC

The Pending DTC, the Confirmed DTC, and the freeze data can be cleared with the scan tool Clear command or by disconnecting the 12 volt battery.

DTC P0532, P0533

DTC P0532: A/C Pressure Sensor Circuit Low Voltage

DTC P0533: A/C Pressure Sensor Circuit High Voltage

General Description

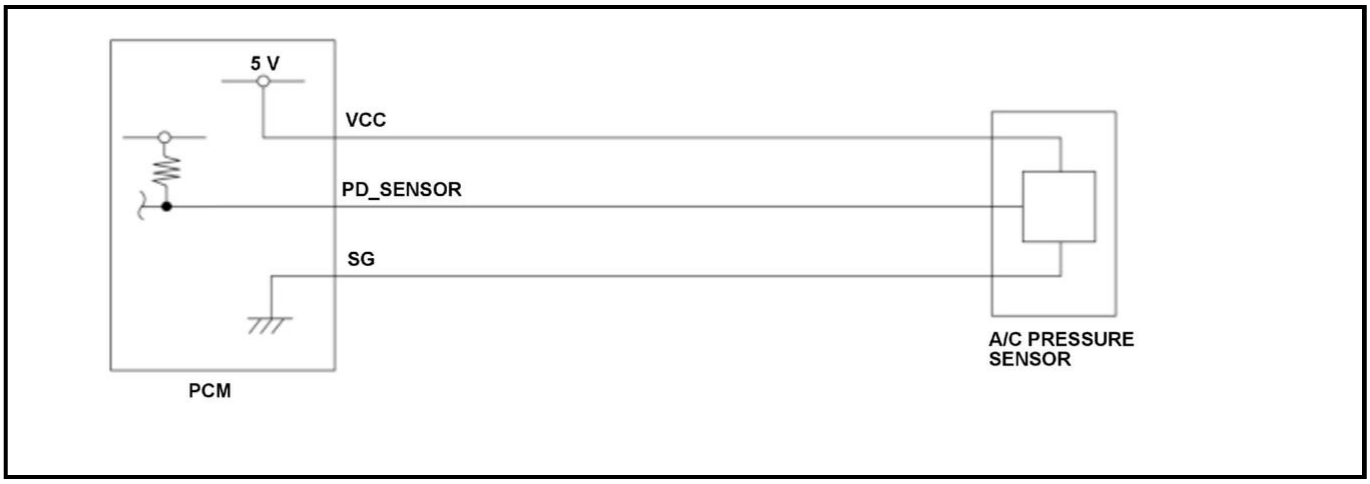

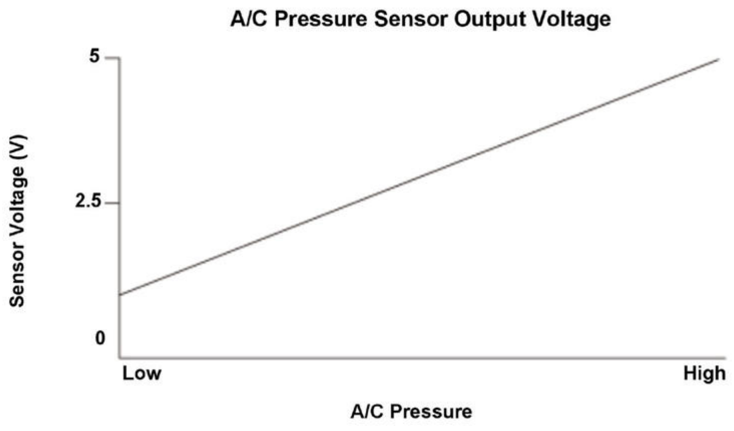

The A/C pressure sensor measures the change in the pressure of the air conditioning refrigerant. The signal from the A/C pressure sensor is low voltage at low pressure (when the air conditioning load is low) and high voltage at high pressure (when the air conditioning load is high). The powertrain control module (PCM) compares the expected voltage to the A/C pressure sensor output voltage. When the A/C pressure sensor output voltage is lower or higher than the expected voltage for a set time, the PCM detects a malfunction and stores a DTC.

Monitor Execution, Sequence, Duration, DTC Type

Execution	Continuous
Sequence	None
Duration	10 seconds or more
DTC Type	Two drive cycles, MIL off

Enable Conditions

Condition	B
Vehicle	ON mode

Malfunction Threshold

DTC: P0532

The A/C pressure sensor output voltage [A/C Pressure Sensor Voltage] is 0.24 V or less for at least 10 seconds.

DTC: P0533

The A/C pressure sensor output voltage [A/C Pressure Sensor Voltage] is 4.76 V or more for at least 10 seconds.

[ ]: HDS Parameter

Possible Cause

NOTE: The causes shown may not be a complete list of all potential problems, and it is possible that there may be other causes.

DTC: P0532

- A/C pressure sensor VCC line open
- A/C pressure sensor PD_SENSOR line short to ground

DTC: P0533

- A/C pressure sensor PD_SENSOR line open
- A/C pressure sensor SG line open

Common

- A/C pressure sensor failure
- PCM internal circuit failure

Diagnosis Details

Conditions for setting the DTC

When a malfunction is detected during the first drive cycle, a Pending DTC is stored in the PCM memory. If the malfunction returns in the next (second) drive cycle, a Confirmed DTC and the freeze data are stored. The MIL does not come on.

Conditions for clearing the DTC

The Pending DTC, the Confirmed DTC, and the freeze data can be cleared with the scan tool Clear command or by disconnecting the 12 volt battery.

DTC P055B

DTC P055B: Rocker Arm Oil Pressure Sensor Out of Range

General Description

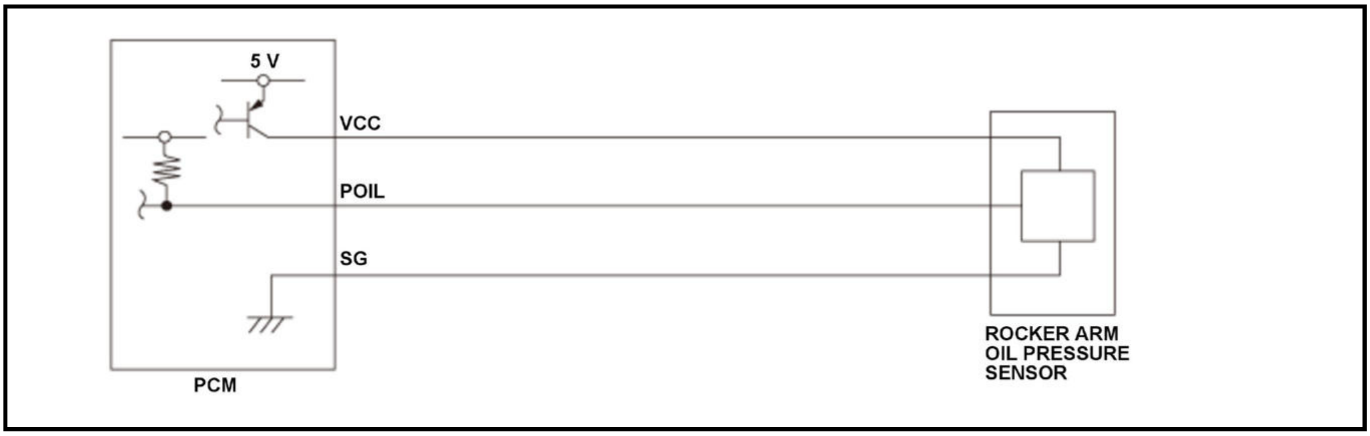

The rocker arm oil pressure sensor detects engine oil pressure in the VTEC system. When the voltage from the rocker arm oil pressure sensor is a set value for a specified time, the powertrain control module (PCM) detects a malfunction and stores a DTC.

Monitor Execution, Sequence, Duration, DTC Type

Execution	Continuous
Sequence	None
Duration	6 seconds or more
DTC Type	Two drive cycles, MIL on

Enable Conditions

Condition	B
Vehicle	ON mode

Malfunction Threshold

The rocker arm oil pressure sensor output voltage [(Rocker Arm) Oil Pressure Sensor (B) Voltage] is 0.28 V or less for at least 6 seconds.

[ ]: HDS Parameter

Possible Cause

NOTE: The causes shown may not be a complete list of all potential problems, and it is possible that there may be other causes.

- Rocker arm oil pressure sensor failure
- PCM internal circuit failure

Diagnosis Details

Conditions for setting the DTC

When a malfunction is detected during the first drive cycle, a Pending DTC is stored in the PCM memory. If the malfunction returns in the next (second) drive cycle, the MIL comes on and a Confirmed DTC, the freeze data, and the on-board snapshot are stored.

Conditions for clearing the DTC

The MIL is cleared if the malfunction does not return in three consecutive trips in which the diagnostic runs. The MIL, the Pending DTC, the Confirmed DTC, the freeze data, and the on-board snapshot can be cleared with the scan tool Clear command or by disconnecting the 12 volt battery.

DTC P055C, P055D

DTC P055C: Rocker Arm Oil Pressure Sensor Circuit Low Voltage

DTC P055D: Rocker Arm Oil Pressure Sensor Circuit High Voltage

General Description

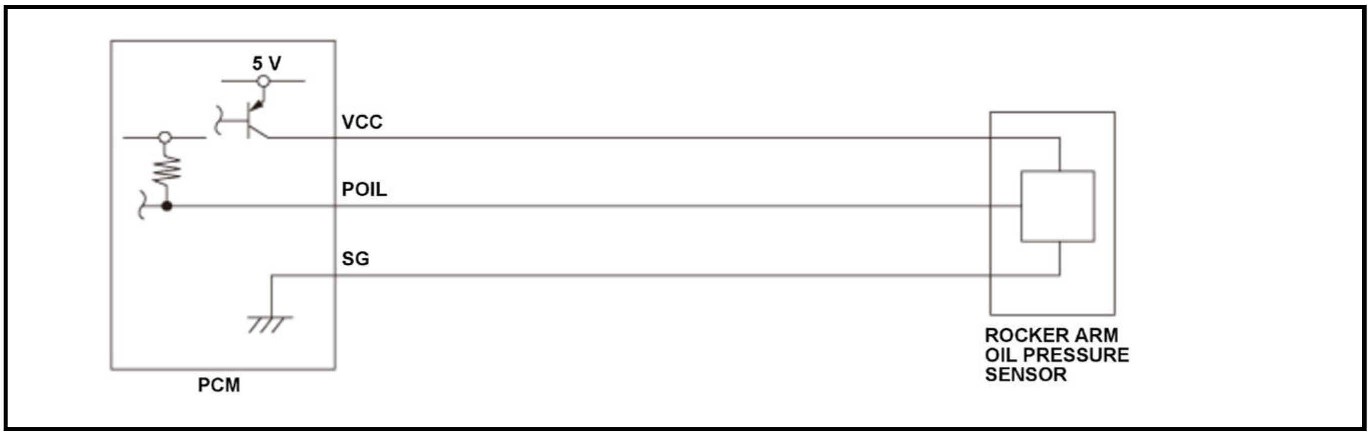

The rocker arm oil pressure sensor detects engine oil pressure in the VTEC system. When the voltage from the rocker arm oil pressure sensor is a set value for a specified time, the powertrain control module (PCM) detects a malfunction and stores a DTC.

Monitor Execution, Sequence, Duration, DTC Type

Execution	Continuous
Sequence	None
Duration	2 seconds or more

DTC Type	One drive cycle, MIL on

Enable Conditions

DTC: P055C

Condition	B
Vehicle	ON mode

DTC: P055D

Condition	Minimum	Maximum
Engine speed [Engine Speed]	-	6, 500 rpm

[ ]: HDS Parameter

Malfunction Threshold

DTC: P055C

The rocker arm oil pressure sensor output voltage [(Rocker Arm) Oil Pressure Sensor (B) Voltage] is 0.18 V or less for at least 2 seconds.

DTC: P055D

The rocker arm oil pressure sensor output voltage [(Rocker Arm) Oil Pressure Sensor (B) Voltage] is 4.79 V or more for at least 2.0 seconds.

Possible Cause

NOTE: The causes shown may not be a complete list of all potential problems, and it is possible that there may be other causes.

DTC: P055C

- Rocker arm oil pressure sensor VCC line open
- Rocker arm oil pressure sensor POIL line short to ground

DTC: P055D

- Rocker arm oil pressure sensor POIL line open
- Rocker arm oil pressure sensor SG line open

Common

- Rocker arm oil pressure sensor failure
- PCM internal circuit failure

Diagnosis Details

Conditions for setting the DTC

When a malfunction is detected, the MIL comes on and a Pending DTC, a Confirmed DTC, the freeze data, and the on-board snapshot are stored in the PCM memory.

Conditions for clearing the DTC

The MIL is cleared if the malfunction does not return in three consecutive trips in which the diagnostic runs. The MIL, the Pending DTC, the Confirmed DTC, the freeze data, and the on-board snapshot can be cleared with the scan tool Clear command or by disconnecting the 12 volt battery.

DTC P0560

DTC P0560: Powertrain Control Module (PCM) Power Source Circuit Unexpected Voltage

General Description

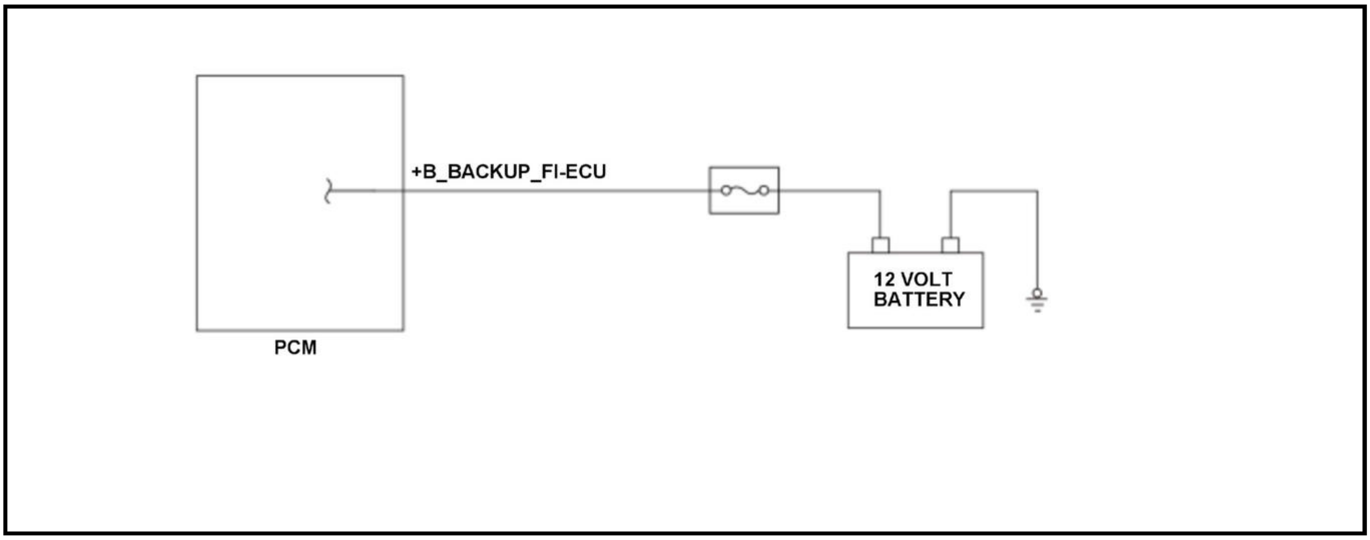

The powertrain control module (PCM) constantly draws power from +B_BACKUP_FI-ECU to maintain the back-up ram. If the +B_BACKUP_FI-ECU terminal voltage is a set value for a specified time, the PCM detects a malfunction and stores a DTC.

Monitor Execution, Sequence, Duration, DTC Type

Execution	Continuous
Sequence	None
Duration	5 seconds or more
DTC Type	One drive cycle, MIL on

Enable Conditions

Condition	B
Vehicle	ON mode

Malfunction Threshold

The +B BACKUP FI-ECU terminal voltage is 6.0 V or less for at least 5 seconds.

Possible Cause

NOTE: The causes shown may not be a complete list of all potential problems, and it is possible that there may be other causes.

- PCM +B_BACKUP_FI-ECU line failure
- PCM internal circuit failure

Diagnosis Details

Conditions for setting the DTC

.When a malfunction is detected, the MIL comes on and a Pending DTC, a Confirmed DTC, and the freeze data are stored in the PCM memory.

Conditions for clearing the DTC

The MIL is cleared if the malfunction does not return in three consecutive trips in which the diagnostic runs. The MIL, the Pending DTC, the Confirmed DTC, and the freeze data can be cleared with the scan tool Clear command or by disconnecting the 12 volt battery.

DTC P0563

DTC P0563: Powertrain Control Module (PCM) Power Source Circuit Unexpected Voltage

General Description

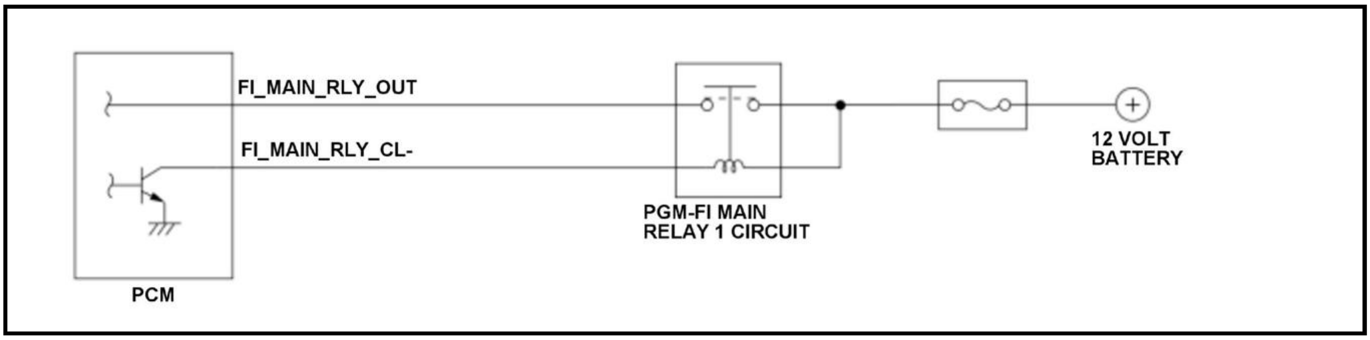

If there is a short to ground in the harness between the powertrain control module (PCM) and PGM-FI main relay 1 circuit, PGM-FI main relay 1 circuit stays ON even if the vehicle is turned to the OFF (LOCK) mode, and the PCM remains active. However, the engine is not running because power for the gauges, the ignition, and the fuel pump is turned OFF by the power switch. When the PCM operates for a set time after the vehicle is turned to the OFF (LOCK) mode, it detects a malfunction and stores a DTC.

Monitor Execution, Sequence, Duration, DTC Type

Execution	Continuous
Sequence	None
Duration	5 seconds or more
DTC Type	Two drive cycles, MIL off

Enable Conditions

Condition	Minimum	Maximum
12 volt battery voltage [Battery] (FI_MAIN_RLY_OUT terminal of PCM)	10.0 V	-
Vehicle	OFF (LOCK) mode	

[ ]: HDS Parameter

Malfunction Threshold

The PCM operates for at least 5 seconds after the vehicle condition is turned to the OFF (LOCK) mode.

Possible Cause

NOTE: The causes shown may not be a complete list of all potential problems, and it is possible that there may be other causes.

- PGM-FI main relay 1 circuit FI_MAIN_RLY_CL- line short to ground

- PGM-FI main relay 1 circuit stuck on
- PCM internal circuit failure

Diagnosis Details

Conditions for setting the DTC

When a malfunction is detected during the first drive cycle, a Pending DTC is stored in the PCM memory. If the malfunction returns in the next (second) drive cycle, a Confirmed DTC and the freeze data are stored. The MIL does not come on.

Conditions for clearing the DTC

The Pending DTC, the Confirmed DTC, and the freeze data can be cleared with the scan tool Clear command or by disconnecting the 12 volt battery.

DTC P0571

DTC P0571: Brake Pedal Position Switch Circuit Malfunction

General Description

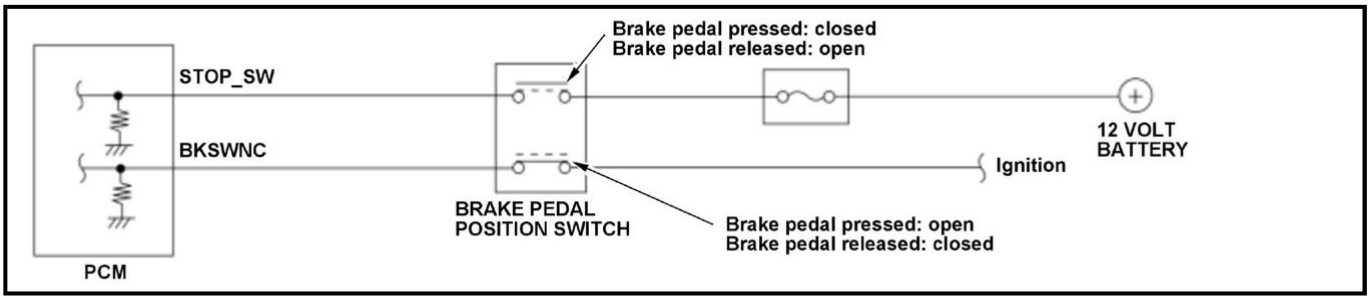
Brake pedal pressed: closed
Brake pedal released: open
STOP_SW
BKSWNC
12 VOLT
BATTERY
Ignition
BRAKE PEDAL
POSITION SWITCH
Brake pedal pressed: open
Brake pedal released: closed
PCM

The powertrain control module (PCM) detects a brake pedal position switch malfunction by monitoring the signals from the brake pedal position switch. If the PCM continuously inputs an abnormal signal from brake pedal position switch for a specified time during a specified condition, the PCM detects a malfunction and stores a DTC.

Monitor Execution, Sequence, Duration, DTC Type

Execution	Continuous
Sequence	None
Duration	5 minutes or more*, Depending on driving conditions**
DTC Type	Two drive cycles, MIL off

*: Symptom 1

**: Symptom 2

Enable Conditions

Condition	B
Vehicle	ON mode
Other*	Accelerator pedal pressed

Malfunction Threshold

Either of the symptom occurs:

- Symptom 1

The brake pedal position switch (STOP_SW line) is closed for at least 5 minutes when the vehicle speed [Vehicle Speed] is at 13 mph (20 km/h) or more.

- Symptom 2

  The brake pedal position switch (STOP_SW line) is open for three cycles when the vehicle is stopped (or decelerated to 1 mph (3 km/h) or less) from vehicle speed [Vehicle Speed] over 25 mph (40 km/h).

[ ]: HDS Parameter

Possible Cause

NOTE: The causes shown may not be a complete list of all potential problems, and it is possible that there may be other causes.

- Brake pedal position switch STOP_SW line open (includes a loose or disconnected connector)
- Brake pedal position switch STOP_SW line short to power
- Brake pedal position switch STOP_SW line short to ground
- Brake pedal position switch stuck
- Brake pedal position switch failure
- PCM internal circuit failure

Diagnosis Details

Conditions for setting the DTC

When a malfunction is detected during the first drive cycle, a Pending DTC is stored in the PCM memory. If the malfunction returns in the next (second) drive cycle, a Confirmed DTC and the freeze data are stored. The MIL does not come on.

Conditions for clearing the DTC

The Pending DTC, the Confirmed DTC, and the freeze data can be cleared with the scan tool Clear command or by disconnecting the 12 volt battery.

DTC P059F

DTC P059F: Shutter Grille Assembly (Upper) Malfunction

General Description

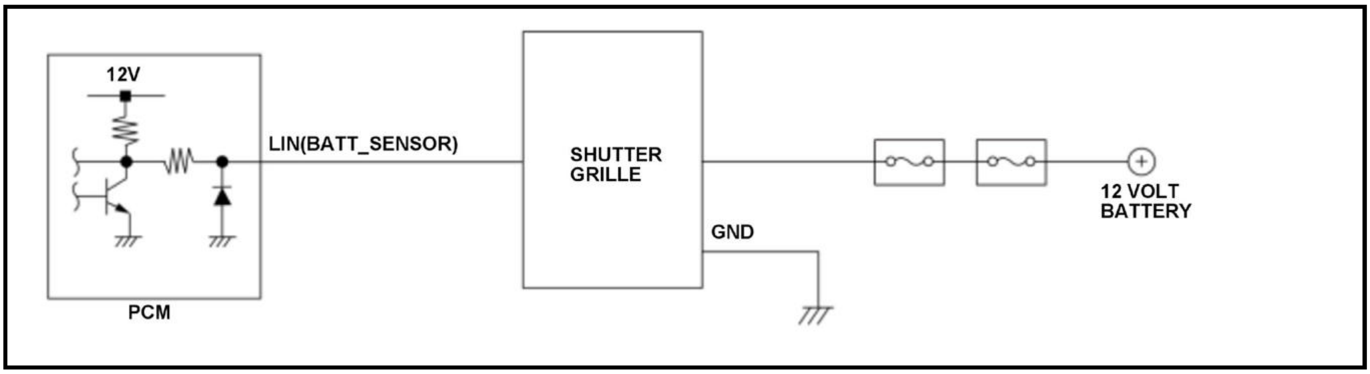

The shutter grille system open/closes the shutter depending on the driving conditions. The system improves fuel efficiency by reducing the wind drag. The shutter is controlled by the shutter grille which integrates the actuator. The powertrain control module (PCM) sends open/close requests which depends on the driving conditions to the shutter grille via the local interconnect network (LIN) line. If the actuator is detected as abnormal, the PCM confirms the abnormality and stores a DTC.

Monitor Execution, Sequence, Duration, DTC Type

Execution	Continuous
Sequence	None
Duration	2.5 seconds or more
DTC Type	One drive cycle, MIL off

Enable Conditions

Condition	B
State of the engine	Running

Malfunction Threshold

Either of the condition occurs for at least 2.5 seconds:

- The actuator does not reach the fully open position or the fully closed position by initial learning in the fully open position or fully closed position +12 % or more of the opening with respect to the position.
- The actuator does not reach the fully open or fully closed position by rotated 125 deg. or more.

Possible Cause

NOTE: The causes shown may not be a complete list of all potential problems, and it is possible that there may be other causes.

- Internal gear damage of actuator
- Shutter grille fins miss installed
- Torque transmission part of the shutter grille (link lever, link actuator) miss installed
- Actuator miss installed
- Shutter grille internal circuit failure

Diagnosis Details

Conditions for setting the DTC

When a malfunction is detected, a Pending DTC, a Confirmed DTC, and the freeze data are stored in the PCM memory. The MIL does not come on.

Conditions for clearing the DTC

The Pending DTC, the Confirmed DTC, and the freeze data can be cleared with the scan tool Clear command.

DTC P05A0

DTC P05A0: Shutter Grille Assembly (Upper) Malfunction

General Description

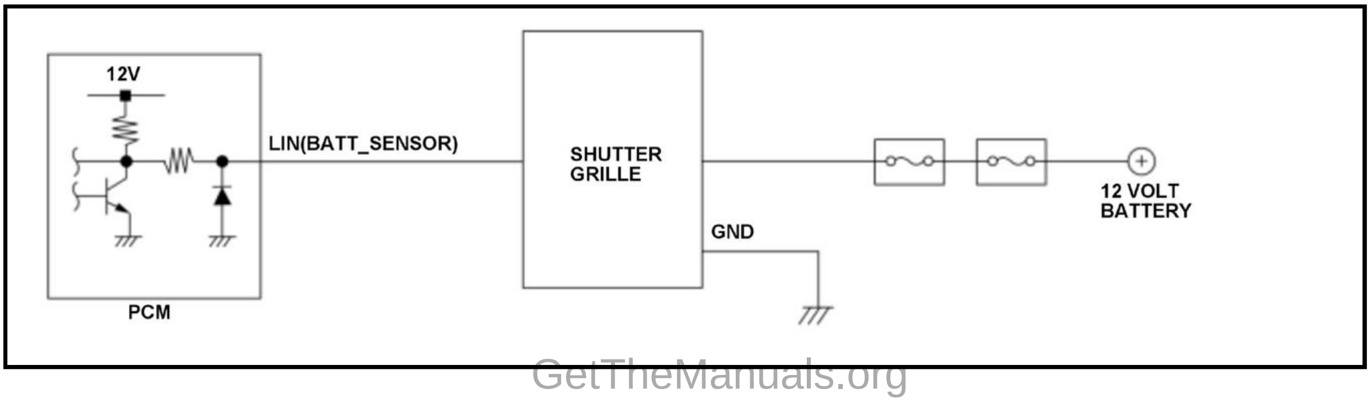

The shutter grille system opens/closes the shutter depending on the driving conditions. The system improves fuel efficiency by reducing the wind drag. The shutter is controlled by the shutter grille which includes the actuator with CPU. The powertrain control module (PCM) sends open/close requests which depends on the driving conditions to the shutter grille via the local interconnect network (LIN) line. If the shutter grille actuator detects a restriction and if the restriction condition continues even if the initial learning is retried for a specified time, the PCM confirms the abnormality and stores a DTC.

Monitor Execution, Sequence, Duration, DTC Type

Execution	Continuous
Sequence	None
Duration	Initial learning retry three times, and 2.5 seconds or more
DTC Type	One drive cycle, MIL off

Enable Conditions

Condition	B
State of the engine	Running

Malfunction Threshold

Both of the conditions occur:

- The shutter grille actuator detects a restriction and if the restriction condition continues for at least 2.5 seconds after the initial learning is retried for three times.
- The engine coolant temperature (ECT) sensor 1 output temperature [ECT SENSOR 1] is 221 deg.F (105 deg.C) or more and the ECT sensor 2 output temperature [ECT SENSOR 2] is 209 deg.F (98 deg.C) or more.

[ ]: HDS Parameter

Possible Cause

NOTE: The causes shown may not be a complete list of all potential problems, and it is possible that there may be other causes.

- Shutter grille stuck
- Temporary restriction of the shutter grille by foreign matter or freezing
- Shutter grille internal circuit failure

Diagnosis Details

Conditions for setting the DTC

When a malfunction is detected, a Pending DTC, a Confirmed DTC, and the freeze data are stored in the PCM memory. The MIL does not come on.

Conditions for clearing the DTC

The Pending DTC, the Confirmed DTC, and the freeze data can be cleared with the scan tool Clear command.

DTC P05A3

DTC P05A3: Shutter Grille Actuator (Upper) Malfunction

General Description

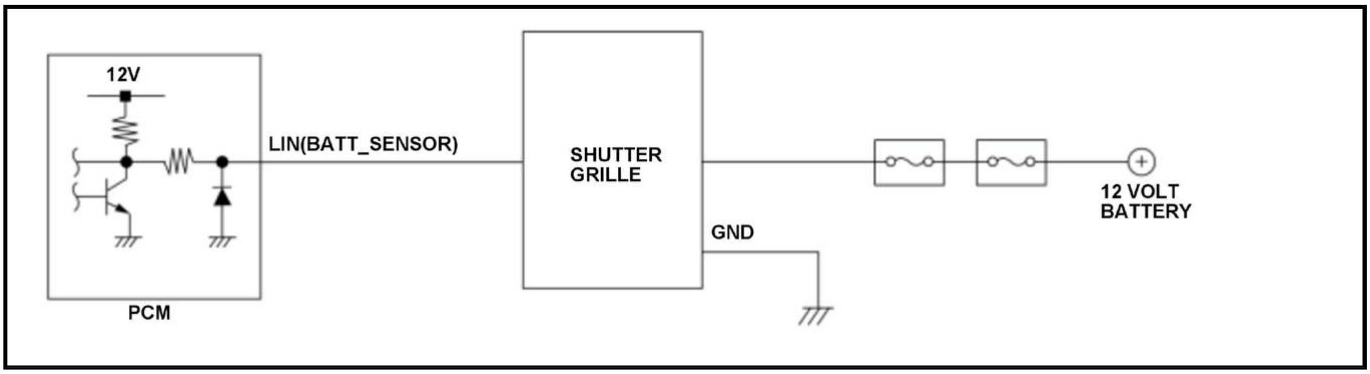

The shutter grille system open/closes the shutter depending on the driving conditions. The system improves fuel efficiency by reducing the wind drag. The shutter is controlled by the shutter grille which integrates the actuator. The powertrain control module (PCM) sends open/close requests which depends on the driving conditions to the shutter grille via the local interconnect network (LIN) line. The PCM also receives failure information from the shutter grille via the LIN line and discriminates a failure by the received signal value. If the PCM receives a specified signal from the shutter grille, the PCM detects as a shutter grille line open/short failure and stores a DTC.

Monitor Execution, Sequence, Duration, DTC Type

Execution	Continuous
Sequence	None
Duration	2.5 seconds or more
DTC Type	One drive cycle, MIL off

Enable Conditions

Condition	B
State of the engine	Running

Malfunction Threshold

Either of the condition occurs:

- The shutter grille actuator states a short to ground or read/write errors in the EEPROM of the motor for at least 2.5 seconds.
- The shutter grille actuator states a transmit/receive error in LIN communication for at least 2.5 seconds.

Possible Cause

NOTE: The causes shown may not be a complete list of all potential problems, and it is possible that there may be other causes.

- Shutter grille internal circuit failure

Diagnosis Details

Conditions for setting the DTC

When a malfunction is detected, a Pending DTC, a Confirmed DTC, and the freeze data are stored in the PCM memory. The MIL does not come on.

Conditions for clearing the DTC

The Pending DTC, the Confirmed DTC, and the freeze data can be cleared with the scan tool Clear command.

DTC P05A8

DTC P05A8: Shutter Grille Actuator (Upper) Malfunction

General Description

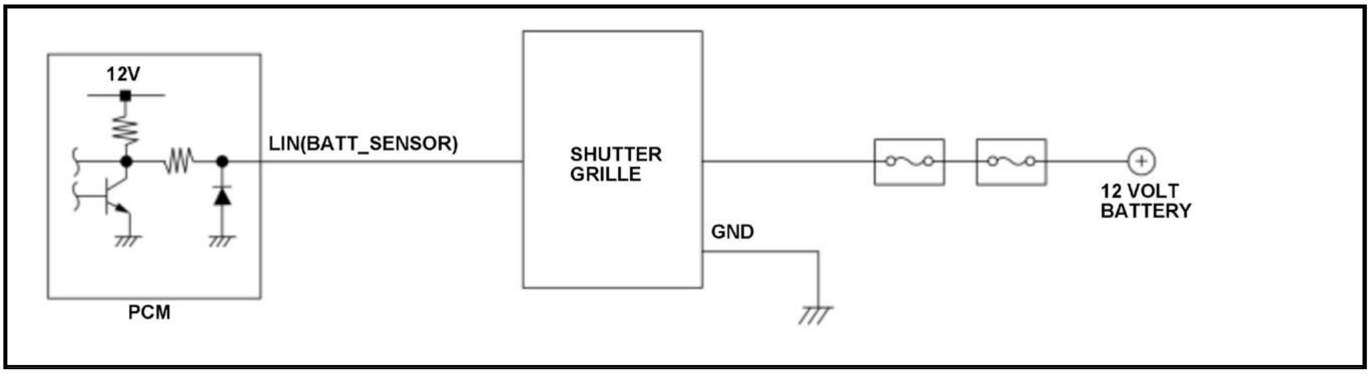

The shutter grille system open/closes the shutter depending on the driving conditions. The system improves fuel efficiency by reducing the wind drag. The shutter is controlled by the shutter grille which integrates the actuator. The powertrain control module (PCM) sends open/close requests which depends on the driving conditions to the shutter grille via the local interconnect network (LIN) line. If the actuator voltage is detected as abnormal, the PCM confirms the abnormality and stores a DTC.

Monitor Execution, Sequence, Duration, DTC Type

Execution	Continuous
Sequence	None
Duration	2.5 seconds or more
DTC Type	One drive cycle, MIL off

Enable Conditions

Condition	B
State of the engine	Running

Malfunction Threshold

The shutter grille actuator voltage is 17.5 V or more, or 7.5 V or less for at least 2.5 seconds when the power supply voltage of the PCM is 10.5 V or more.

Possible Cause

NOTE: The causes shown may not be a complete list of all potential problems, and it is possible that there may be other causes.

- Shutter grille power supply line open
- Shutter grille power supply line short to ground
- Shutter grille power supply line short to power
- Shutter grille GND line open
- Shutter grille internal circuit failure

Diagnosis Details

Conditions for setting the DTC

When a malfunction is detected, a Pending DTC, a Confirmed DTC, and the freeze data are stored in the PCM memory. The MIL does not come on.

Conditions for clearing the DTC

The Pending DTC, the Confirmed DTC, and the freeze data can be cleared with the scan tool Clear command.

DTC P05C0

DTC P05C0: Shutter Grille Actuator (Upper) Temperature Malfunction

General Description

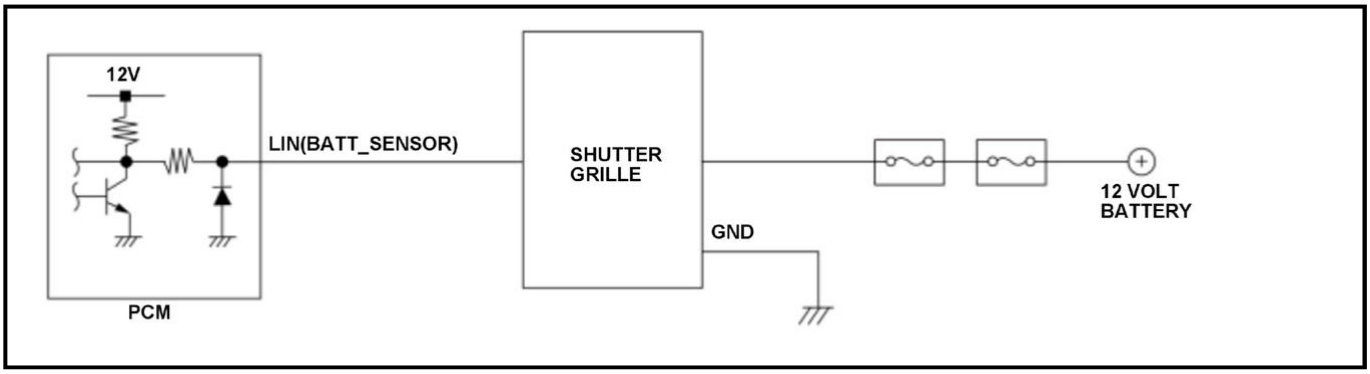

The shutter grille system open/closes the shutter depending on the driving conditions. The system improves fuel efficiency by reducing the wind drag. The shutter is controlled by the shutter grille which integrates the actuator. The powertrain control module (PCM) sends open/close requests which depends on the driving conditions to the shutter grille via the local interconnect network (LIN) line. If the temperature is detected as abnormal, the PCM confirms the abnormality and stores a DTC.

Monitor Execution, Sequence, Duration, DTC Type

Execution	Continuous
Sequence	None
Duration	2.5 seconds or more
DTC Type	One drive cycle, MIL off

Enable Conditions

Condition	B
State of the engine	Running

Malfunction Threshold

The internal temperature of the shutter grille actuator is 302 deg.F (150 deg.C) or more for at least 2.5 seconds.

Possible Cause

NOTE: The causes shown may not be a complete list of all potential problems, and it is possible that there may be other causes.

- Shutter grille internal circuit failure

Diagnosis Details

Conditions for setting the DTC

When a malfunction is detected, a Pending DTC, a Confirmed DTC, and the freeze data are stored in the PCM memory. The MIL does not come on.

Conditions for clearing the DTC

The Pending DTC, the Confirmed DTC, and the freeze data can be cleared with the scan tool Clear command.

DTC P05CC (2021)

DTC P05CC: Cold Start VTC System Malfunction

General Description

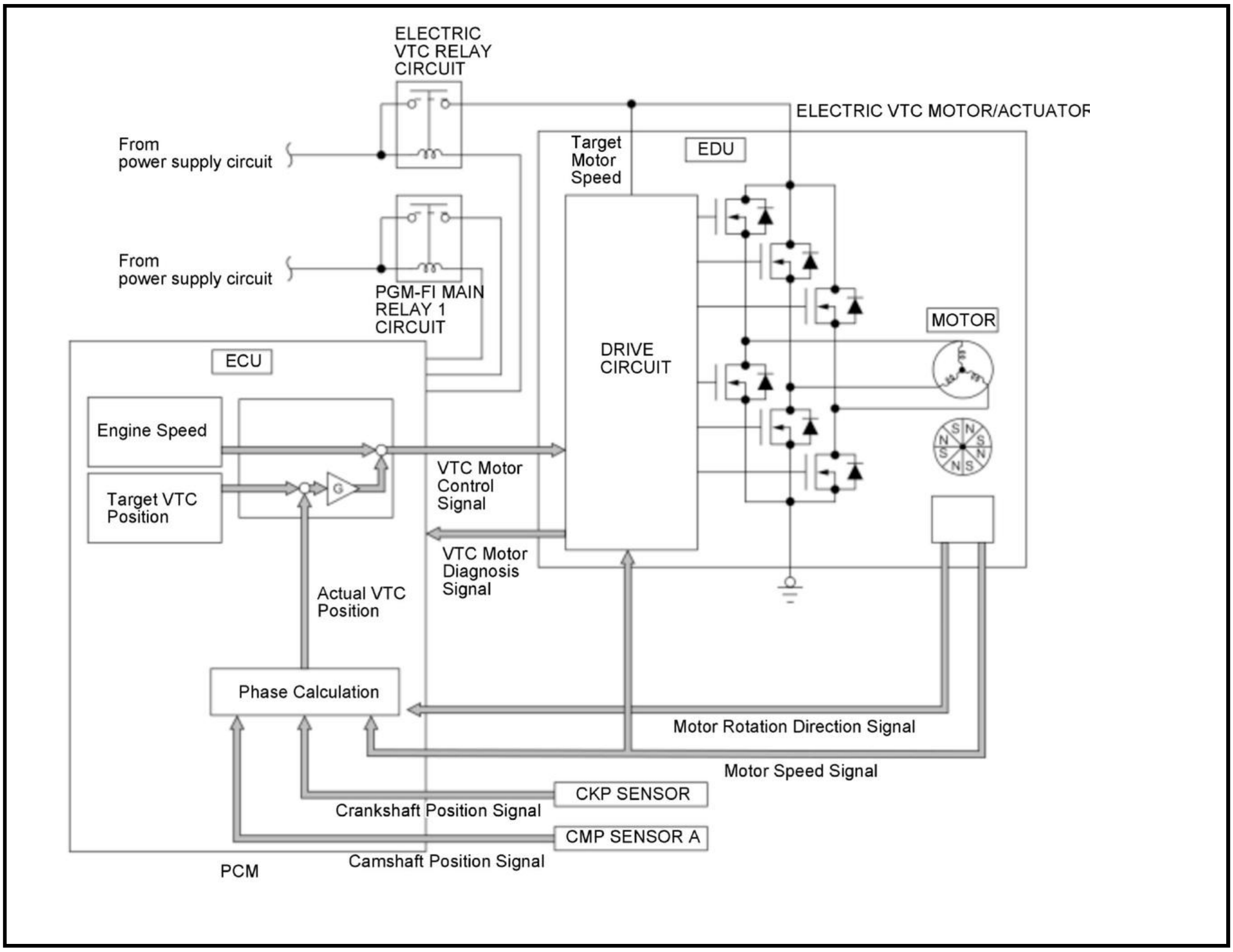
ELECTRIC VTC RELAY CIRCUIT
From power supply circuit
From power supply circuit
PGM-FI MAIN RELAY 1 CIRCUIT
ELECTRIC VTC MOTOR/ACTUATOR
Target Motor Speed
EDU
DRIVE CIRCUIT
MOTOR
ECU
Engine Speed
Target VTC Position
G
VTC Motor Control Signal
VTC Motor Diagnosis Signal
Actual VTC Position
Phase Calculation
Motor Rotation Direction Signal
Motor Speed Signal
CKP SENSOR
Crankshaft Position Signal
CMP SENSOR A
Camshaft Position Signal
PCM

The cold start emission reduction process controls the air fuel ratio to lean when the engine is cold to lower emissions as the catalyst is not warmed up. If the difference between the phase control command and the actual timing of the camshaft using the camshaft position (CMP) is excessive for a certain period of time, the PCM detects a malfunction and stores a DTC.

Monitor Execution, Sequence, Duration, DTC Type

Execution	Continuous
Sequence	None
Duration	15 seconds or more
DTC Type	Two drive cycles, MIL on

Enable Conditions

Condition	Minimum	Maximum
VTC operating voltage	6V	-
Engine coolant temperature [ECT Sensor 1]	14 deg.F (-10 deg.C)	176 deg.F (80 deg.C)
Engine speed [Engine Speed]	500 rpm	-

[ ]: HDS Parameter

Condition	Minimum	Maximum
12 volt battery voltage	10.5 V	-
High voltage battery capacity (SOC)	20 %	-
Quick warm-up system	Operation	
Accelerator pedal position	Released	
Other	Vehicle stopped	

[ ]: HDS Parameter

Malfunction Threshold

The phase difference between the phase control command and the actual phase of the intake camshaft is 15.0 deg. or more for at least 15 seconds.

Possible Cause

NOTE: The causes shown may not be a complete list of all potential problems, and it is possible that there may be other causes.

- VTC actuator stuck
- VTC actuator response delay
- Electric VTC motor lock
- Electric VTC motor failure
- Electric VTC failure

Confirmation Procedure

Operating Condition

- Enter the maintenance mode, then start the engine. Hold the engine speed [Engine Speed] at 3, 000 rpm without load (in P or N) until the radiator fan comes on, then let it idle.
- Drive the vehicle at a steady speed between 25 - 75 mph (40 - 120 km/h) for at least 15 seconds.

Diagnosis Details

Conditions for setting the DTC

When a malfunction is detected during the first drive cycle, a Pending DTC is stored in the PCM memory. If the malfunction returns in the next (second) drive cycle, the MIL comes on and a Confirmed DTC and the freeze data are stored.

Conditions for clearing the DTC

The MIL is cleared if the malfunction does not return in three consecutive trips in which the diagnostic runs. The MIL, the Pending DTC, the Confirmed DTC, and the freeze data can be cleared with the scan tool Clear command or by disconnecting the 12 volt battery.

DTC P0600

DTC P0600: Powertrain Control Module (PCM) Serial Communication Failure

General Description

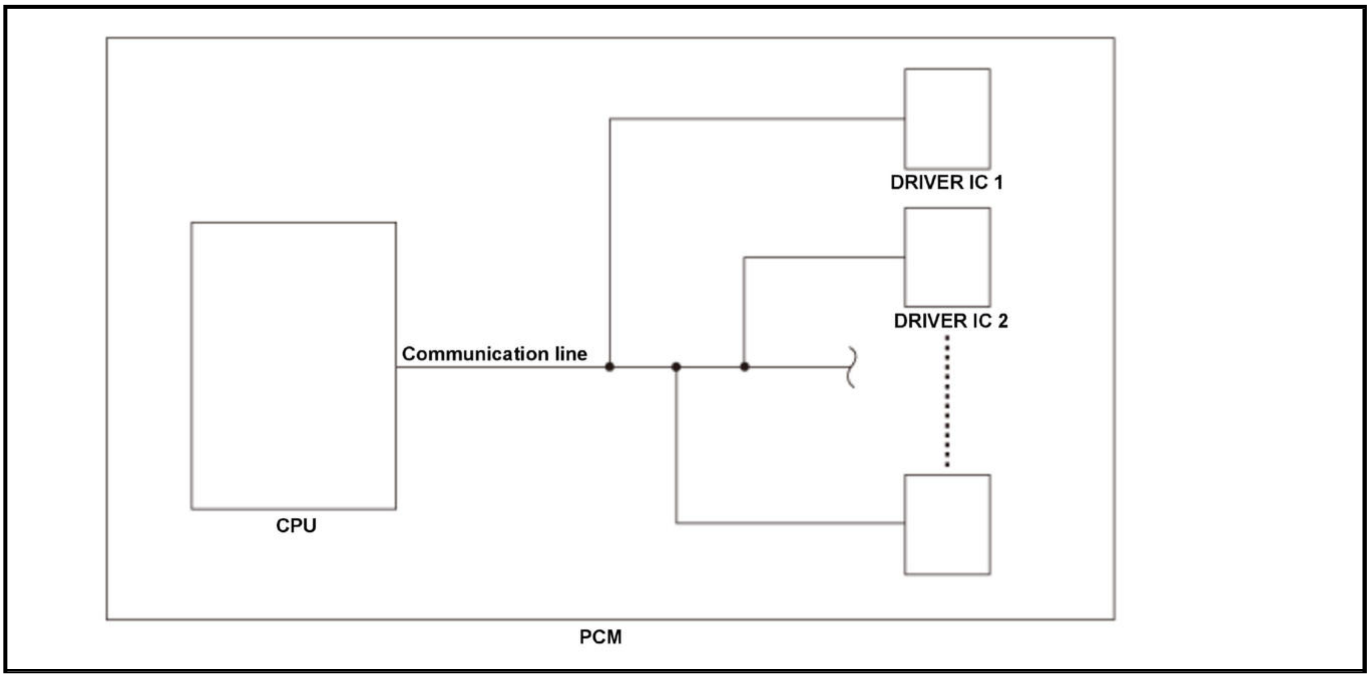

The driver IC which has diagnostic function and the CPU are built into the powertrain control module (PCM). If the CPU cannot receive diagnostic information from the driver IC for a specified duration due to occurrence of communication abnormality between the driver IC and the CPU, the PCM detects a malfunction and stores a DTC.

Monitor Execution, Sequence, Duration, DTC Type

Execution	Continuous
Sequence	None
Duration	5 seconds or more
DTC Type	One drive cycle, MIL on

Enable Conditions

Condition	Minimum	Maximum
12 volt battery voltage [Battery]	10.0 V	-
Vehicle	ON mode	

[ ]: HDS Parameter

Malfunction Threshold

One of the conditions is met for at least 5 seconds:

- The CPU does not receive signal from the driver IC via the communication lines.
- The signal sent from the driver IC is abnormal.

Possible Cause

NOTE: The causes shown may not be a complete list of all potential problems, and it is possible that there may be other causes.

- PCM internal circuit failure

Diagnosis Details

Conditions for setting the DTC

When a malfunction is detected, the MIL comes on and a Pending DTC, a Confirmed DTC, and the freeze data are stored in the PCM memory.

Conditions for clearing the DTC

The MIL is cleared if the malfunction does not return in three consecutive trips in which the diagnostic runs. The MIL, the Pending DTC, the Confirmed DTC, and the freeze data can be cleared with the scan tool Clear command or by disconnecting the 12 volt battery.

DTC P0602 (PGM-FI SYSTEM)

DTC P0602: Powertrain Control Module (PCM) Programming Error

General Description

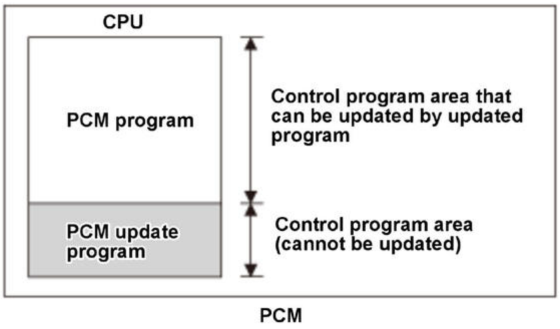
CPU
PCM program
PCM update program
Control program area that can be updated by updated program
Control program area (cannot be updated)
PCM

The powertrain control module (PCM) is equipped with an update program to update its control program. The programs in the CPU of the PCM are classified as a PCM program (update-capable program) and a program for the update function (non-updatable program). The program update only updates the PCM program. When the PCM power is turned off during an update, the power for the update function is lost, and the update process stops. When the program update is stopped before it is completed, the PCM stores a DTC that indicates the update is not finished.

Monitor Execution, Sequence, Duration, DTC Type

Execution	Continuous
Sequence	None
Duration	1 second or less
DTC Type	One drive cycle, MIL on

Enable Conditions

Condition	B
Vehicle	ON mode

Malfunction Threshold

The PCM program update stops 1 second before it is finished.

Possible Cause

NOTE: The causes shown may not be a complete list of all potential problems, and it is possible that there may be other causes.

- PCM program unwritten

Diagnosis Details

Conditions for setting the DTC

When the PCM program is not written in the PCM, the MIL comes on and a Pending DTC and a Confirmed DTC are stored in the PCM memory.

Conditions for clearing the DTC

The MIL, the Pending DTC, and the Confirmed DTC are cleared when the PCM program update is completed.

DTC P0606, P1A48, P1A49, P1A4A

DTC P0606: Powertrain Control Module (PCM) Processor Malfunction

DTC P1A48: Powertrain Control Module (PCM) Internal Malfunction (SBW Different Run)

DTC P1A49: Powertrain Control Module (PCM) Internal Malfunction (SBW Parking Position)

DTC P1A4A: Powertrain Control Module (PCM) Internal Malfunction (SBW Display Position)

General Description

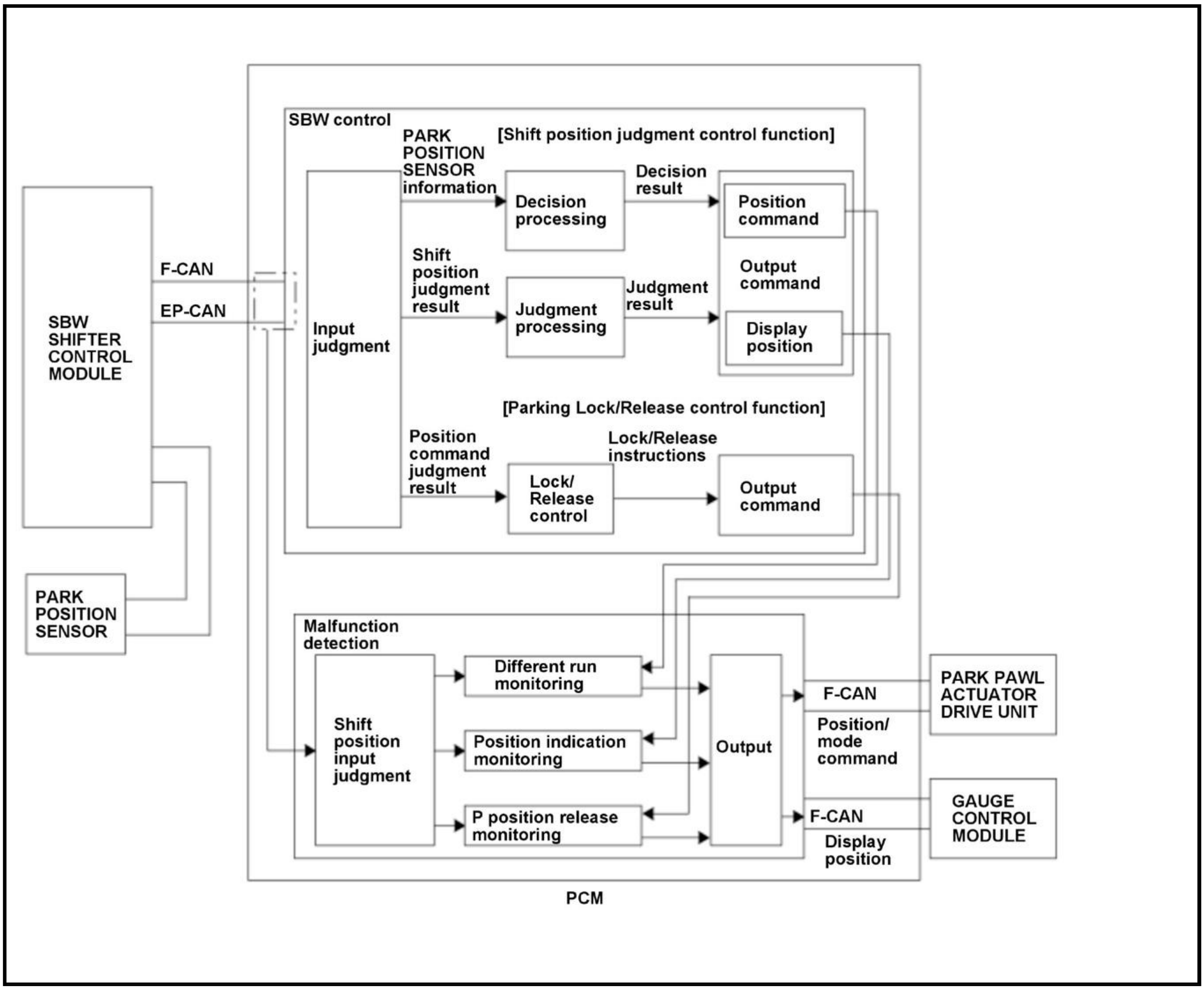
SBW control
PARK POSITION SENSOR information
[Shift position judgment control function]
Decision result
Decision processing
Position command
Shift position judgment result
Output command
Judgment processing
Judgment result
Display position
Input judgment
F-CAN
EP-CAN
SBW SHIFTER CONTROL MODULE
[Parking Lock/Release control function]
Position command judgment result
Lock/Release instructions
Lock/ Release control
Output command
PARK POSITION SENSOR
Malfunction detection
Different run monitoring
Shift position input judgment
Position indication monitoring
P position release monitoring
Output
F-CAN
Position/ mode command
PARK PAWL ACTUATOR DRIVE UNIT
F-CAN
Display position
GAUGE CONTROL MODULE
PCM

An abnormal condition is detected based on the correlation between the input signal of the shift by wire (SBW) shifter control module (in) and the position indication/display (out). The SBW control, which is the target of this detection, shifts the shift position/mode only when there is an input from the SBW shifter control module.

If the shift position/mode changes with no signal from the SBW shifter control module, the powertrain control module (PCM) detects a malfunction and stores a DTC.

B	Representative code	False command of shift position/mode	False command of parking release	False command of displaying position/mode
DTC	P0606*	P1A48	P1A49	P1A4A

*: DTC P0606 is stored when DTC P1A48, P1A49, and/or P1A4A are stored.

Monitor Execution, Sequence, Duration, DTC Type

Execution	Continuous

Sequence	None
Duration	-
DTC Type	One drive cycle, MIL on

Enable Conditions

Condition	B
Vehicle	ON mode

Malfunction Threshold

DTC: P1A48

One of the conditions is occurred for a specified time:

- The shift position/mode command changed from D to R with no signal input from the SBW shifter control module.
- The shift position/mode command changed from R to D with no signal input from the SBW shifter control module.
- The shift position/mode command changed from R to D while D to R is input from the SBW shifter control module.

DTC: P1A49

The shift position/mode command changed to parking release even when R, N, or D is not input from the SBW shifter control module.

DTC: P1A4A

One of the conditions is occurred for a specified time:

- The shift position/mode display request changed from D to R with no signal input from the SBW shifter control module.
- The shift position/mode display request changed from R to D while D to R is input from the SBW shifter control module.
- The shift position/mode display request changed to P while park position sensor signal is not P.

Possible Cause

NOTE: The causes shown may not be a complete list of all potential problems, and it is possible that there may be other causes.

- PCM internal circuit failure

Diagnosis Details

Conditions for setting the DTC

When a malfunction is detected, the MIL comes on and a Pending DTC, a Confirmed DTC and the freeze data are stored in the PCM memory.

Conditions for clearing the DTC

The MIL is cleared if the malfunction does not return in three consecutive trips in which the diagnostic runs. The MIL, the Pending DTC, the Confirmed DTC, and the freeze data can be cleared with the scan tool Clear command or by disconnecting the 12 volt battery.

DTC P060A

DTC P060A: Powertrain Control Module (PCM) Internal Control Module Malfunction

General Description

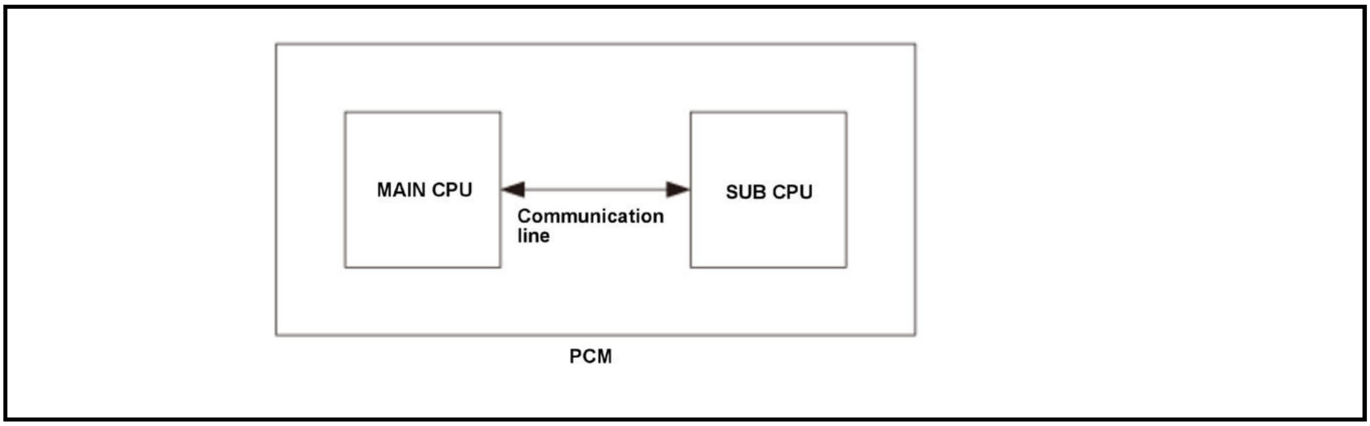

When a malfunction occurs in the communication line between the main CPU and the sub CPU in the powertrain control module (PCM), no monitor signals from the sub CPU for a set time, or abnormal signals are detected for a set time, the PCM detects a malfunction and stores a DTC.

Monitor Execution, Sequence, Duration, DTC Type

Execution	Continuous
Sequence	None
Duration	2.0 seconds or more
DTC Type	One drive cycle, MIL on

Enable Conditions

Condition	B
Vehicle	ON mode

Malfunction Threshold

One of these symptoms occurs for at least 2.0 seconds:

- No sub CPU monitor signals are detected.
- Sub CPU monitor signals are abnormal.

Possible Cause

NOTE: The causes shown may not be a complete list of all potential problems, and it is possible that there may be other causes.

- PCM internal circuit failure

Diagnosis Details

Conditions for setting the DTC

When a malfunction is detected, the MIL comes on and a Pending DTC, a Confirmed DTC, and the freeze data are stored in the PCM memory.

Conditions for clearing the DTC

The MIL is cleared if the malfunction does not return in three consecutive trips in which the diagnostic runs. The MIL, the Pending DTC, the Confirmed DTC, and the freeze data can be cleared with the scan tool Clear command or by disconnecting the 12 volt battery.

DTC P061B, P1A51, P1A52, P1A53 (PGM-FI SYSTEM)

DTC P061B: Powertrain Control Module (PCM) Internal Malfunction (Torque Calculation)

DTC P1A51: Powertrain Control Module (PCM) Internal Malfunction (Torque Calculation Acceleration)

DTC P1A52: Powertrain Control Module (PCM) Internal Malfunction (Torque Calculation Deceleration)

DTC P1A53: Powertrain Control Module (PCM) Internal Malfunction (Torque Calculation Different Run)

General Description

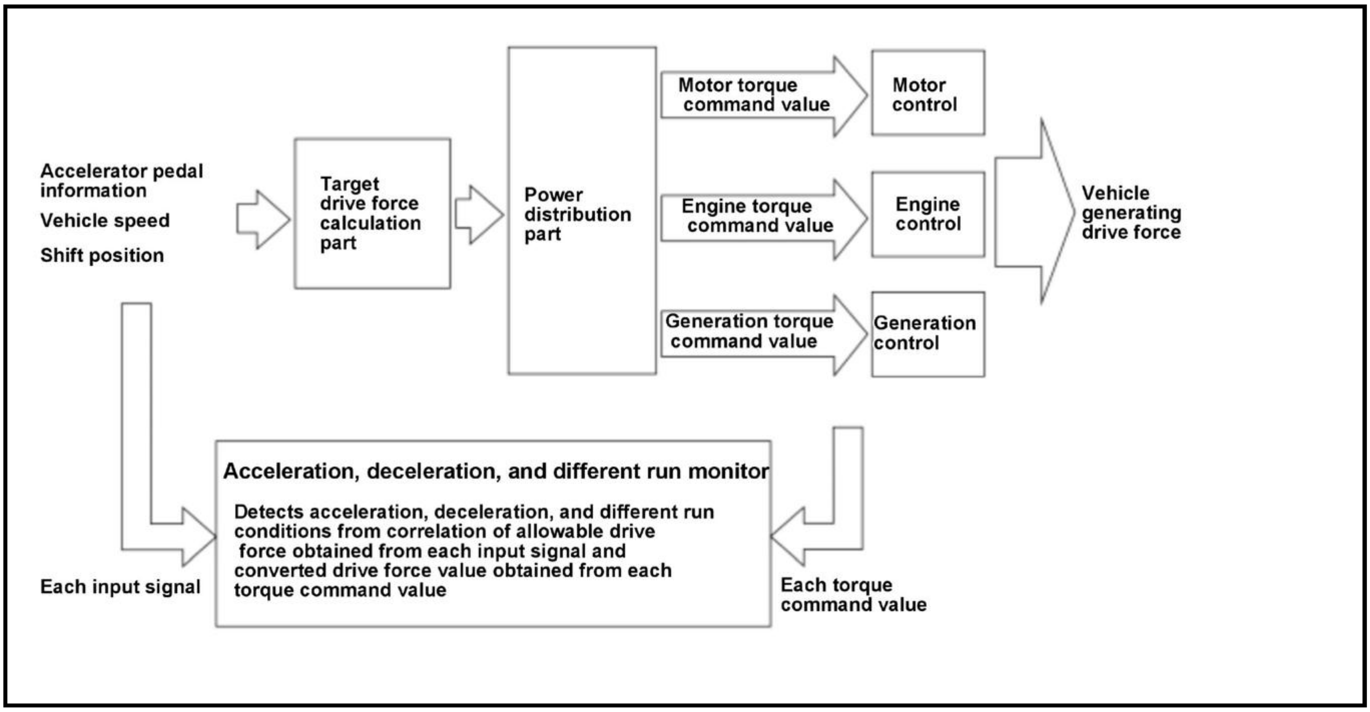
Accelerator pedal information
Vehicle speed
Shift position
Target drive force calculation part
Power distribution part
Motor torque command value
Motor control
Engine torque command value
Engine control
Generation torque command value
Generation control
Vehicle generating drive force
Acceleration, deceleration, and different run monitor
Detects acceleration, deceleration, and different run conditions from correlation of allowable drive force obtained from each input signal and converted drive force value obtained from each torque command value
Each input signal
Each torque command value

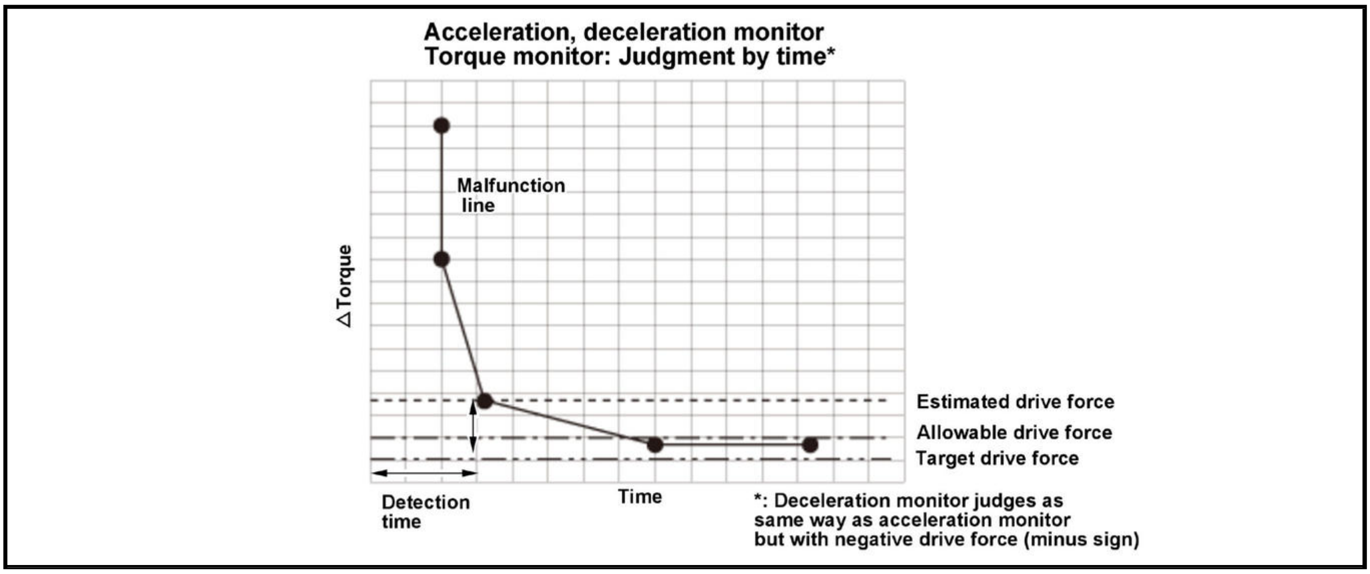

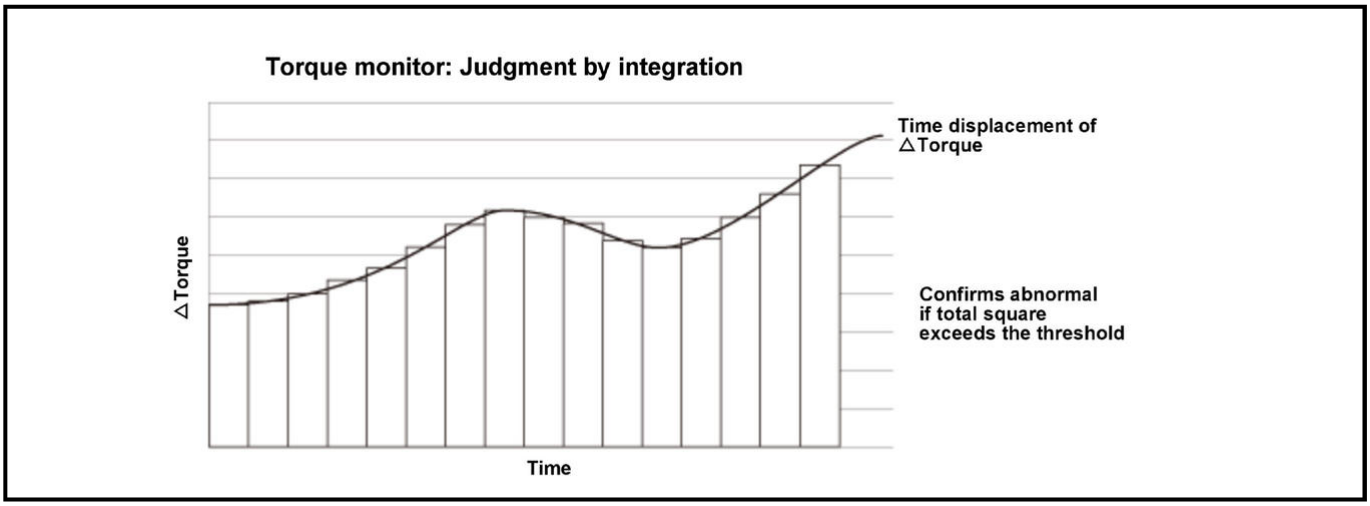

The powertrain control module (PCM) calculates the target drive force from the accelerator pedal inputs, external demands, and auxiliary load information, and calculates the allowable drive force until the acceleration state leads to a hazardous event for the target drive force. Abnormal accelerations are detected by the relations of the target drive force, the allowable drive force, and the converted drive force value of each torque command value.

- Acceleration monitor

  There are two methods to detect abnormal accelerations; time judgment method and integration judgment method. If both of the methods are judged abnormal, the PCM detects a malfunction and stores a DTC.

-
  - -

    Time judgment method:

    Malfunction is established if the estimated drive force is higher than the target drive force for a specified time. The allowable time changes depending on the difference width between the estimated drive force and the allowable drive force.

-
  - -

    Integration judgment method:

    Malfunction is established if the integration value of drive force difference exceeds a threshold.

- Deceleration monitor

  Deceleration monitor judges as same way as the acceleration monitor but with the negative drive force (minus sign).

- Different run monitor

  Malfunction is established if the vehicle drives opposite drive force to the driver's demand, or unintended vehicle start occurs at N position/mode for a specified time.

B	Torque monitor(Representative DTC)	Torque monitor(Acceleration)	Torque monitor(Deceleration)	Torque monitor(Different Run)
DTC	P061B*	P1A51	P1A52	P1A53

*: DTC P061B is stored when DTC P1A51, P1A52, and/or P1A53 are stored.

Monitor Execution, Sequence, Duration, DTC Type

Execution	Continuous
Sequence	None
Duration	Depending on the driving conditions
DTC Type	One drive cycle, MIL on

Enable Conditions

Condition	B
Vehicle	ON mode

Malfunction Threshold

DTC: P1A51, P1A52

Both conditions are met:

- The estimated drive force is higher than the target drive force for a specified time. The allowable time changes depending on the difference width between the estimated drive force and the allowable drive force.
- The integration value of drive force difference exceeds a threshold.

DTC: P1A53

The vehicle drives opposite drive force to the driver's demand or unintended vehicle start occurs at N position/mode.

Possible Cause

NOTE: The causes shown may not be a complete list of all potential problems, and it is possible that there may be other causes.

- PCM internal failure

Diagnosis Details

Conditions for setting the DTC

When a malfunction is detected, the MIL comes on and a Pending DTC, a Confirmed DTC and the freeze data are stored in the PCM memory.

Conditions for clearing the DTC

The MIL is cleared if the malfunction does not return in three consecutive trips in which the diagnostic runs. The MIL, the Pending DTC, the Confirmed DTC, and the freeze data can be cleared with the scan tool Clear command or by disconnecting the 12 volt battery.

DTC P062F (PGM-FI SYSTEM)

DTC P062F: Powertrain Control Module (PCM) Internal Control Module Keep Alive Memory (KAM) Error

General Description

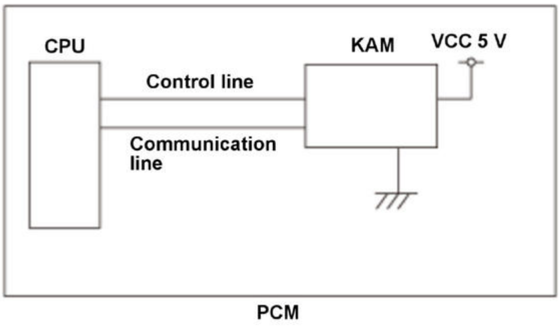

The powertrain control module (PCM) is equipped with a keep alive memory (KAM). The data (control learn data, etc.) for powertrain control and information (vehicle identification number (VIN), etc.) related to the vehicle control is stored in the KAM, so that it can be maintained even when power is not supplied to the PCM, such as when the 12 volt battery is disconnected. When powered up, the CPU retrieves the stored information from the KAM, as well as writes data to the KAM (control related data is written when the vehicle is turned to the ON mode, and vehicle information when commanded from the HDS). When the data retrieval or data writing process is not finished normally, the PCM detects a malfunction and stores a DTC.

Monitor Execution, Sequence, Duration, DTC Type

Execution	Continuous
Sequence	None
Duration	1 second or more
DTC Type	One drive cycle, MIL on

Enable Conditions

Condition	B
Vehicle	ON mode

Malfunction Threshold

A malfunction is detected whenever the keep alive data retrieval and writing process is not completed normally.

Possible Cause

NOTE: The causes shown may not be a complete list of all potential problems, and it is possible that there may be other causes.

- PCM internal circuit failure

Diagnosis Details

Conditions for setting the DTC

When a malfunction is detected, the MIL comes on and a Pending DTC, a Confirmed DTC, and the freeze data are stored in the PCM memory.

Conditions for clearing the DTC

The MIL is cleared if the malfunction does not return in three consecutive trips in which the diagnostic runs. The MIL, the Pending DTC, the Confirmed DTC, and the freeze data can be cleared with the scan tool Clear command or by disconnecting the 12 volt battery.

DTC P0630

DTC P0630: VIN Not Programmed or Mismatch

General Description

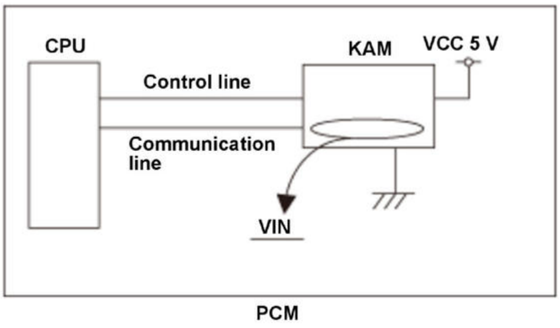

The powertrain control module (PCM) stores a vehicle identification number (VIN) in the keep alive memory (KAM) and outputs the VIN according to commands from the HDS. The VIN for each vehicle is registered to the PCM using the HDS. The registered VIN is read by the CPU from the KAM after the vehicle condition is turned to the ON mode or after the Clear command is executed. If the VIN is not registered in the KAM when the vehicle condition is turned to the ON mode or when the Clear command is executed, the PCM detects a VIN unregistered condition and stores a DTC.

Monitor Execution, Sequence, Duration, DTC Type

Execution	Continuous
Sequence	None
Duration	1 second or less
DTC Type	One drive cycle, MIL on

Enable Conditions

Condition	B
Vehicle	ON mode

Malfunction Threshold

The VIN is not registered in the KAM in the PCM.

Possible Cause

NOTE: The causes shown may not be a complete list of all potential problems, and it is possible that there may be other causes.

- VIN not registered in the PCM KAM

Diagnosis Details

Conditions for setting the DTC

When a malfunction is detected, the MIL comes on and a Pending DTC, a Confirmed DTC, and the freeze data are stored in the PCM memory.

Conditions for clearing the DTC

When the VIN registration is completed, the MIL is cleared.

DTC P0641

DTC P0641: Sensor Reference Voltage A Malfunction

General Description

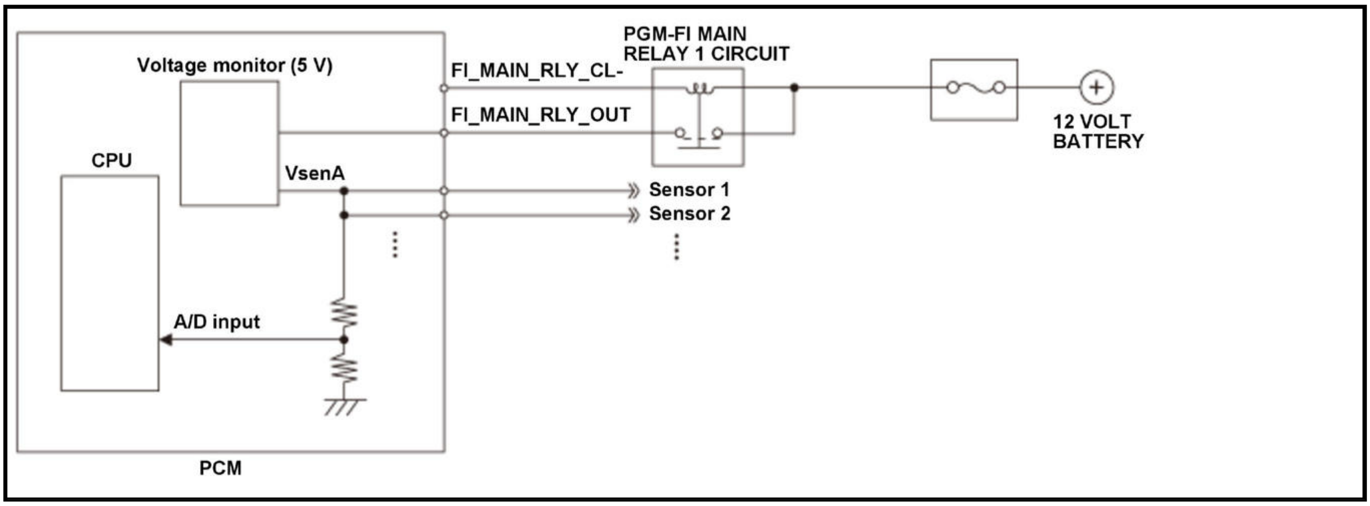
PGM-FI MAIN
RELAY 1 CIRCUIT
Voltage monitor (5 V)
FI_MAIN_RLY_CL-
FI_MAIN_RLY_OUT
12 VOLT
BATTERY
CPU
VsenA
Sensor 1
Sensor 2
A/D input
PCM

The powertrain control module (PCM) is equipped with a voltage monitor (5 V power source) to supply a stable 5 V to each sensor as reference voltage. The correct voltage for the sensors are loaded in the CPU of the PCM (A/D input) and when the sensor power voltage is a set value (high or low) for a certain time, the PCM detects a malfunction and stores a DTC.

Monitor Execution, Sequence, Duration, DTC Type

Execution	Continuous
Sequence	None
Duration	2.0 seconds or more
DTC Type	One drive cycle, MIL on

Enable Conditions

Condition	B
Vehicle	ON mode

Malfunction Threshold

The sensor power voltage is 6.00 V or more, or 3.99 V or less, for at least 2.0 seconds.

Possible Cause

NOTE: The causes shown may not be a complete list of all potential problems, and it is possible that there may be other causes.

- Manifold absolute pressure (MAP) sensor VCC line short to power
- Crankshaft position (CKP) sensor VCC line short to power
- Throttle body VCC line short to power
- Accelerator pedal position (APP) sensor VCC line short to power
- MAP sensor VCC line short to ground
- CKP sensor VCC line short to ground
- Throttle body VCC line short to ground
- APP sensor VCC line short to ground
- PCM internal circuit failure

Diagnosis Details

Conditions for setting the DTC

When a malfunction is detected, the MIL comes on and a Pending DTC, a Confirmed DTC, and the freeze data are stored in the PCM memory.

Conditions for clearing the DTC

The MIL is cleared if the malfunction does not return in three consecutive trips in which the diagnostic runs. The MIL, the Pending DTC, the Confirmed DTC, and the freeze data can be cleared with the scan tool Clear command or by disconnecting the 12 volt battery.

DTC P0651

DTC P0651: Sensor Reference Voltage B Malfunction

General Description

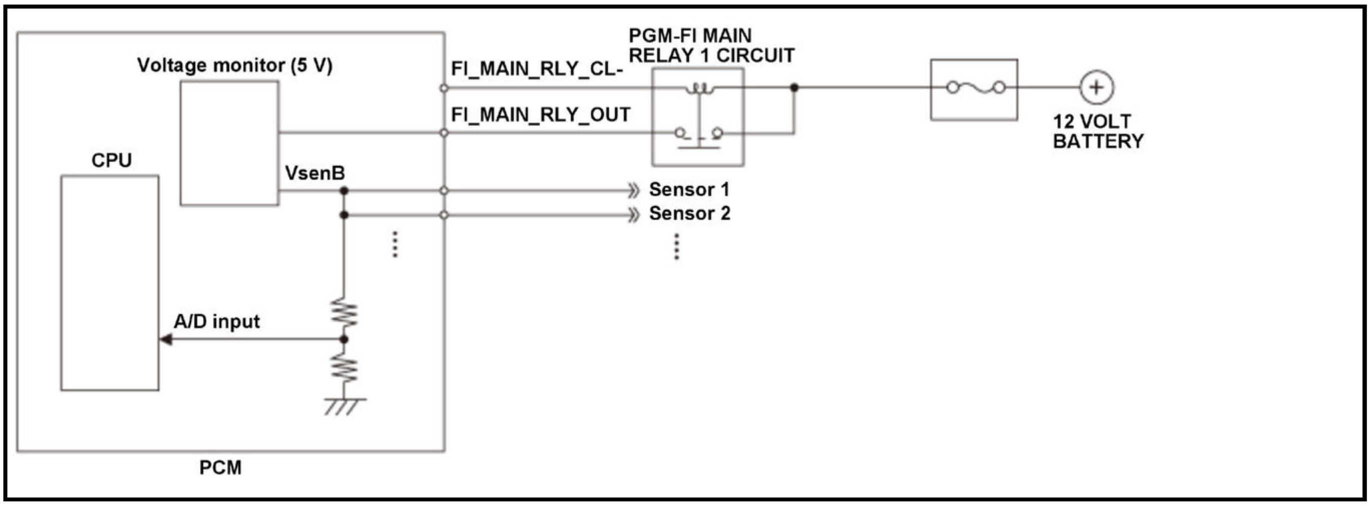

The powertrain control module (PCM) is equipped with a voltage monitor (5 V power source) to supply a stable 5 V to each sensor as reference voltage. The correct voltage for the sensors are loaded in the CPU of the PCM (A/D input) and when the sensor power voltage is a set value (high or low) for a certain time, the PCM detects a malfunction and stores a DTC.

Monitor Execution, Sequence, Duration, DTC Type

Execution	Continuous
Sequence	None

Duration	2.0 seconds or more
DTC Type	One drive cycle, MIL on

Enable Conditions

Condition	B
Vehicle	ON mode

Malfunction Threshold

The sensor power voltage is 6.00 V or more, or 3.99 V or less, for at least 2.0 seconds.

Possible Cause

NOTE: The causes shown may not be a complete list of all potential problems, and it is possible that there may be other causes.

- A/C pressure sensor VCC line short to power
- Accelerator pedal position (APP) sensor VCC line short to power
- Camshaft position (CMP) sensor A VCC line short to power
- CMP sensor B VCC line short to power
- Exhaust gas recirculation (EGR) valve VCC line short to power
- Rocker arm oil pressure sensor VCC line short to power
- Transmission fluid pressure sensor VCC line short to power
- Engine oil pressure sensor VCC line short to power
- Evaporative emission (EVAP) leak check module VCC line short to power
- A/C pressure sensor VCC line short to ground
- APP sensor VCC line short to ground
- CMP sensor A VCC line short to ground
- CMP sensor B VCC line short to ground
- EGR valve VCC line short to ground
- Rocker arm oil pressure sensor VCC line short to ground
- Transmission fluid pressure sensor VCC line short to ground
- Engine oil pressure sensor VCC line short to ground
- EVAP leak check module VCC line short to ground
- PCM internal circuit failure

Diagnosis Details

Conditions for setting the DTC

When a malfunction is detected, the MIL comes on and a Pending DTC, a Confirmed DTC, and the freeze data are stored in the PCM memory.

Conditions for clearing the DTC

The MIL is cleared if the malfunction does not return in three consecutive trips in which the diagnostic runs. The MIL, the Pending DTC, the Confirmed DTC, and the freeze data can be cleared with the scan tool Clear command or by disconnecting the 12 volt battery.

DTC P0657

DTC P0657: Powertrain Control Module (PCM) Power Supply Circuit Malfunction

General Description

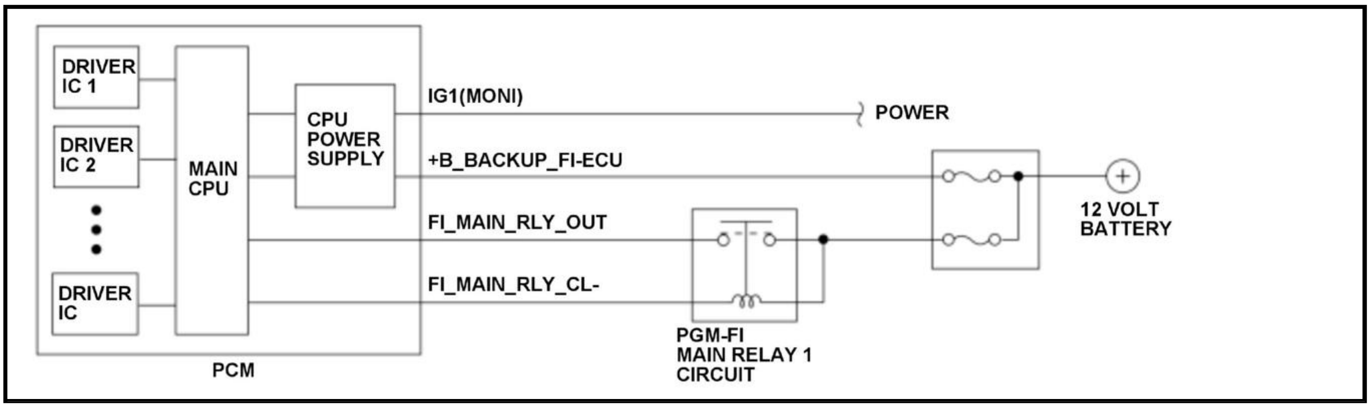
DRIVER IC 1
DRIVER IC 2
DRIVER IC
MAIN CPU
CPU POWER SUPPLY
PCM
IG1(MONI)
POWER
+B_BACKUP_FI-ECU
FI_MAIN_RLY_OUT
FI_MAIN_RLY_CL-
PGM-FI MAIN RELAY 1 CIRCUIT
12 VOLT BATTERY

Main CPU and driver ICs are built into the powertrain control module (PCM). The main CPU receives drive commands and driver IC drives each corresponding devices. Power for the main CPU is provided from +B_BACKUP_FI-ECU line via CPU power supply, and power for the driver ICs are provided from FI_MAIN_RLY_OUT line via PGM-FI main relay 1 circuit. If the FI_MAIN_RLY_OUT voltage is a specified voltage for a specified time, the PCM detects a malfunction and stores a DTC.

Monitor Execution, Sequence, Duration, DTC Type

Execution	Continuous
Sequence	None
Duration	5.0 seconds or more
DTC Type	One drive cycle, MIL on

Enable Conditions

Condition	Minimum	Maximum
12 volt battery voltage [Battery]	10.0 V	-

[ ]: HDS Parameter

Malfunction Threshold

FI_MAIN_RLY_OUT voltage is 6.0 V or less for at least 5.0 seconds.

Possible Cause

NOTE: The causes shown may not be a complete list of all potential problems, and it is possible that there may be other causes.

- PGM-FI main relay 1 circuit FI_MAIN_RLY_OUT line open (include fuse blown)
- PGM-FI main relay 1 circuit FI_MAIN_RLY_CL- line open (include fuse blown)
- PGM-FI main relay 1 circuit failure
- PCM internal circuit failure

Diagnosis Details

Conditions for setting the DTC

When a malfunction is detected, the MIL comes on and a Pending DTC, a Confirmed DTC, and the freeze data are stored in the PCM memory.

Conditions for clearing the DTC

The MIL is cleared if the malfunction does not return in three consecutive trips in which the diagnostic runs. The MIL, the Pending DTC, the Confirmed DTC, and the freeze data can be cleared with the scan tool Clear command or by disconnecting the 12 volt battery.

DTC P06A8

DTC P06A8: Internal VCC Power Malfunction

General Description

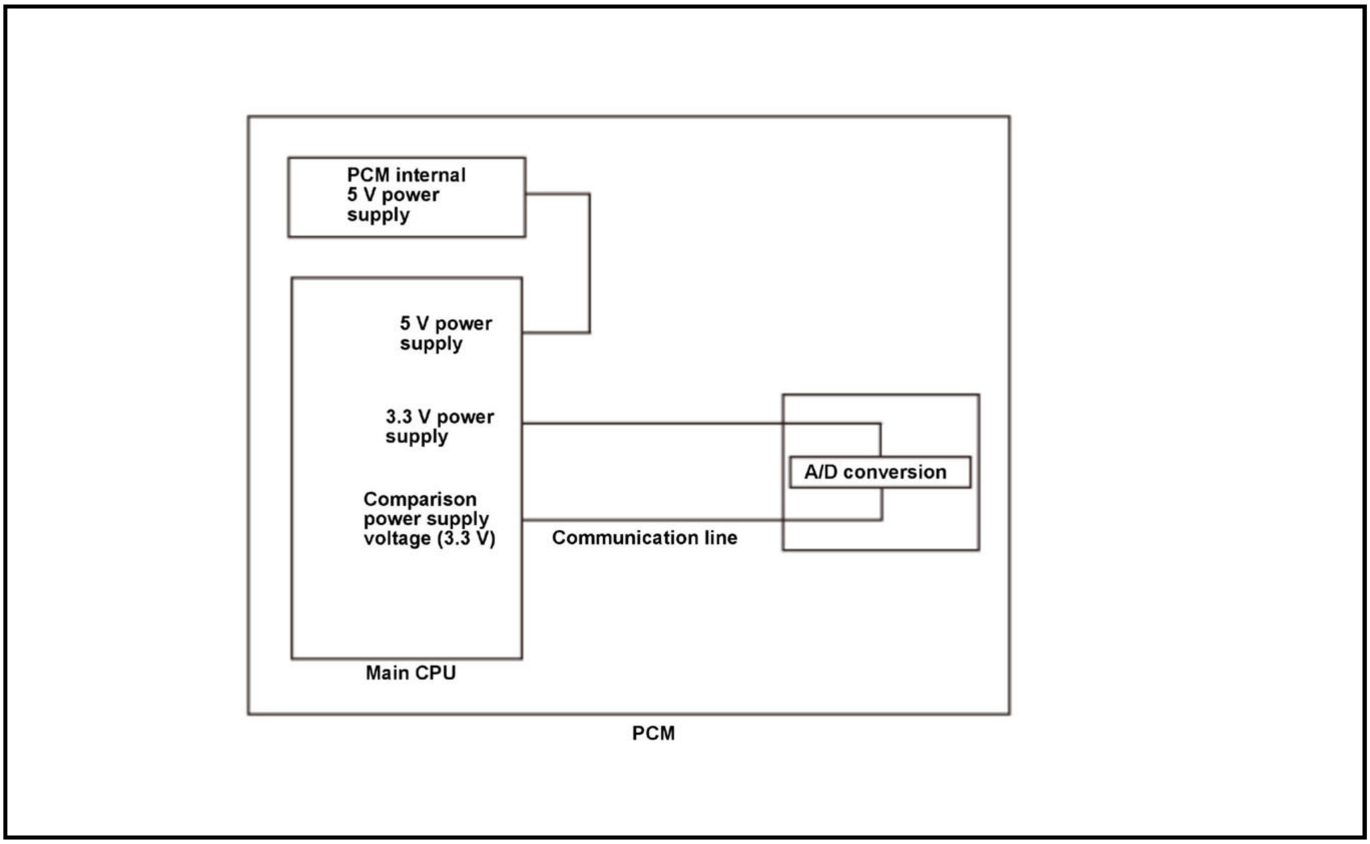

PCM internal 5 V power supply
5 V power supply
3.3 V power supply
Comparison power supply voltage (3.3 V)
A/D conversion
Communication line
Main CPU
PCM

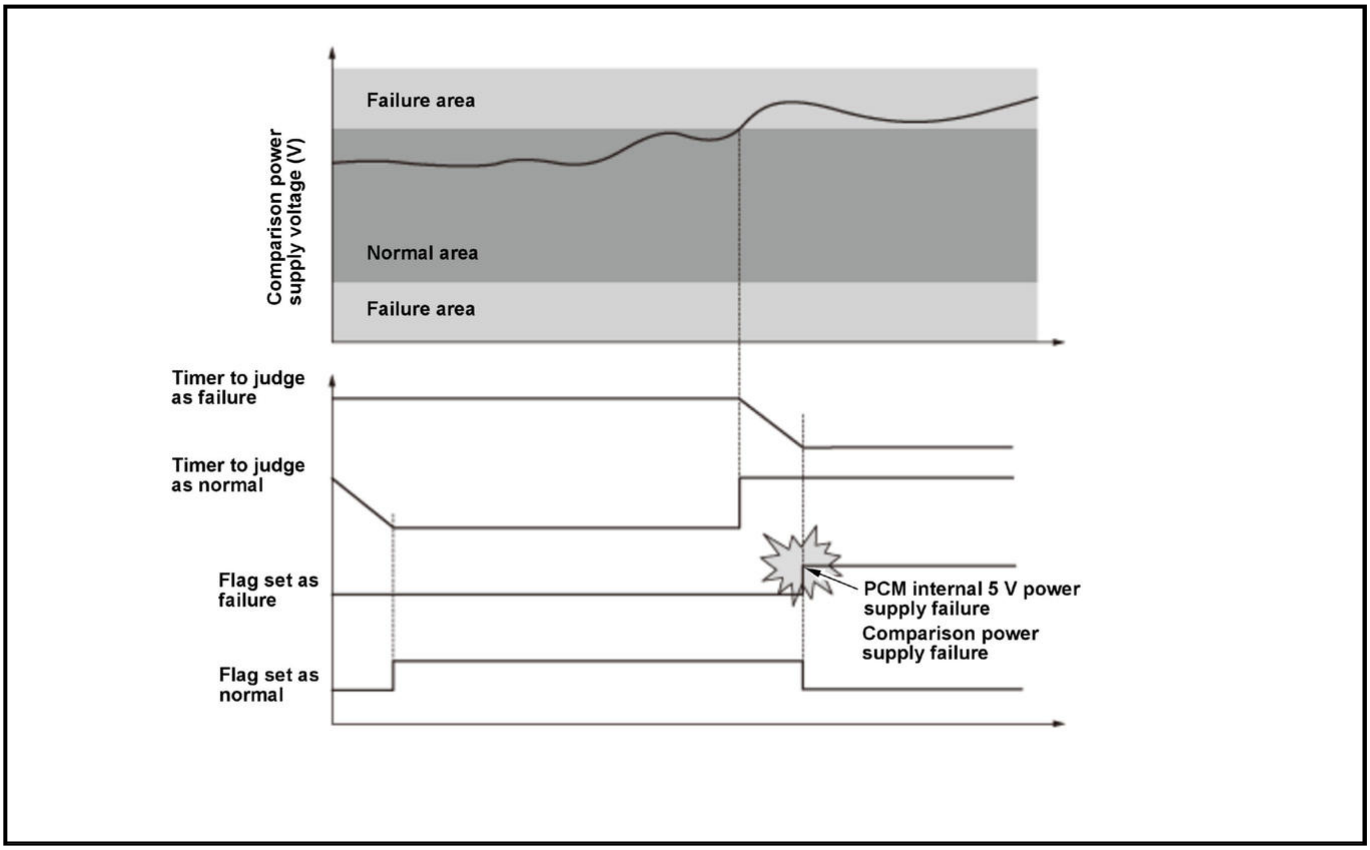

The powertrain control module (PCM) monitors the internal 5 V power supply by comparing it to the A/D input power supply voltage (3.3 V). When the 5 V power supply is normal, the comparison power supply voltage (3.3 V) falls within a normal area. But if the 5 V power supply malfunctions, the comparison power supply voltage (3.3 V) exceeds the range of normal area. If the comparison power supply voltage is out of permissible range for a set time, the PCM detects a malfunction and stores a DTC.

Monitor Execution, Sequence, Duration, DTC Type

Execution	Continuous
Sequence	None
Duration	2.0 seconds or more
DTC Type	One drive cycle, MIL on

Enable Conditions

Condition	B
Vehicle	ON mode

Malfunction Threshold

The PCM internal comparison power supply voltage is 3.10 V or less, 3.51 V or more for at least 2.0 seconds.

Possible Cause

NOTE: The causes shown may not be a complete list of all potential problems, and it is possible that there may be other causes.

- PCM (internal 5 V power supply circuit) failure

Diagnosis Details

Conditions for setting the DTC

When a malfunction is detected, the MIL comes on and a Pending DTC, a Confirmed DTC, and the freeze data are stored in the PCM memory.

Conditions for clearing the DTC

The MIL is cleared if the malfunction does not return in three consecutive trips in which the diagnostic runs. The MIL, the Pending DTC, the Confirmed DTC, and the freeze data can be cleared with the scan tool Clear command or by disconnecting the 12 volt battery.

DTC P06AF (2020)

DTC P06AF: Engine Stall

General Description

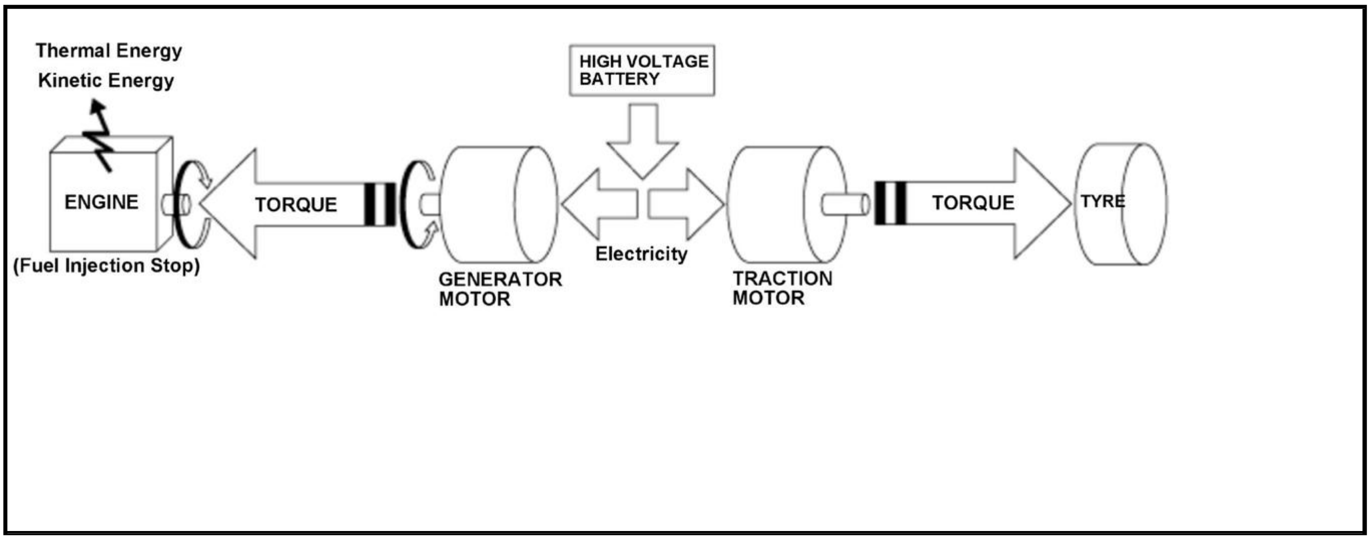
Thermal Energy
Kinetic Energy
HIGH VOLTAGE BATTERY
ENGINE
TORQUE
TORQUE
TYRE
(Fuel Injection Stop)
Electricity
GENERATOR MOTOR
TRACTION MOTOR

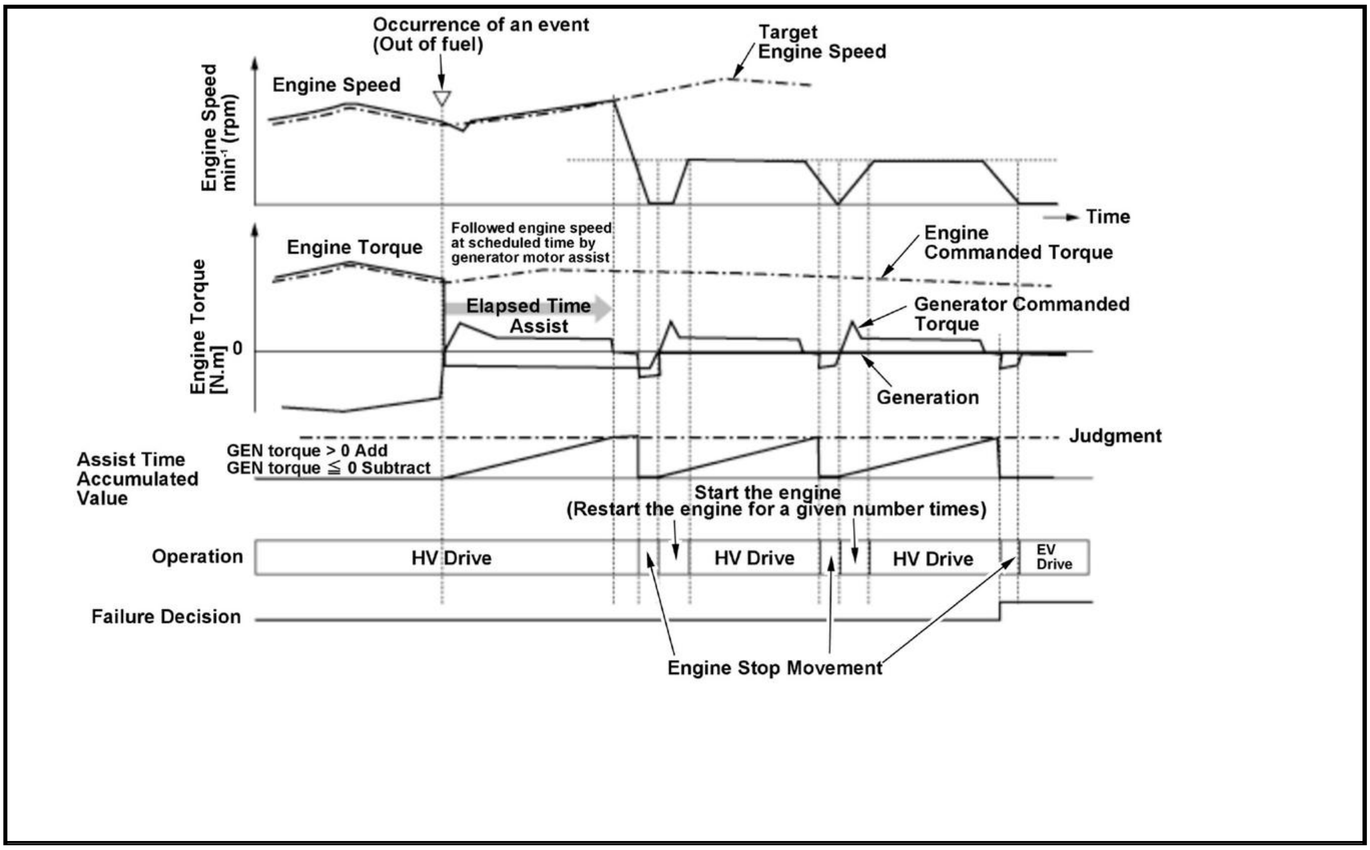

If engine speed decreases or if the engine stalls after the engine speed was maintained by the generator for a given period of time, then it determined that the engine torque is not being generated. When engine torque is still not generated after trying to restart the engine for a given number of times, the powertrain control module (PCM) detects a malfunction and stores a DTC.

Monitor Execution, Sequence, Duration, DTC Type

Execution	Continuous
Sequence	None

*: After disconnecting the 12 volt battery.

Duration	27 seconds or more (51 seconds or more)*
DTC Type	One drive cycle, MIL off

*: After disconnecting the 12 volt battery.

Enable Conditions

Condition	B
State of the vehicle	HV driving mode
	Engine clanking mode
Other	Other than a catalytic converter warm-up
	During fuel injection

Malfunction Threshold

When generator motor assists continues for 27 seconds (51 seconds)* or more.

Possible Cause

NOTE: The causes shown may not be a complete list of all potential problems, and it is possible that there may be other causes.

- Out of fuel
- Fuel system perfection stop
- Engine stall
- Ignition system relay failure

Confirmation Procedure

Operating Condition

Drive the vehicle for 27 seconds (51 seconds)* or more.

- Drive the vehicle in this manner only if the traffic regulations and ambient conditions allow.

With the HDS

None.

Diagnosis Details

Conditions for setting the DTC

When a malfunction is detected, a Pending DTC, a Confirmed DTC, and the freeze data are stored in the PCM memory. The MIL does not come on.

Conditions for clearing the DTC

The Pending DTC, the Confirmed DTC, and the freeze data can be cleared with the scan tool Clear command or by disconnecting the 12 volt battery.

DTC P0700 (2021)

DTC P0700: Transmission Control System (MIL Request)

General Description

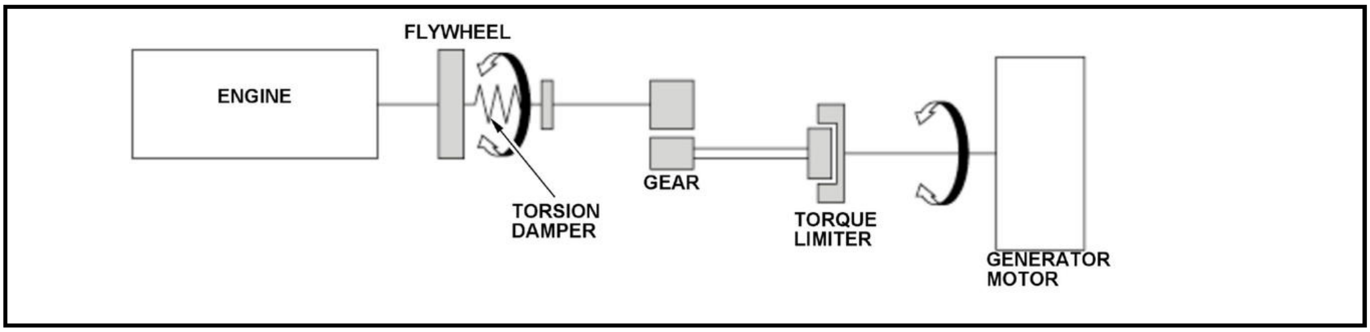

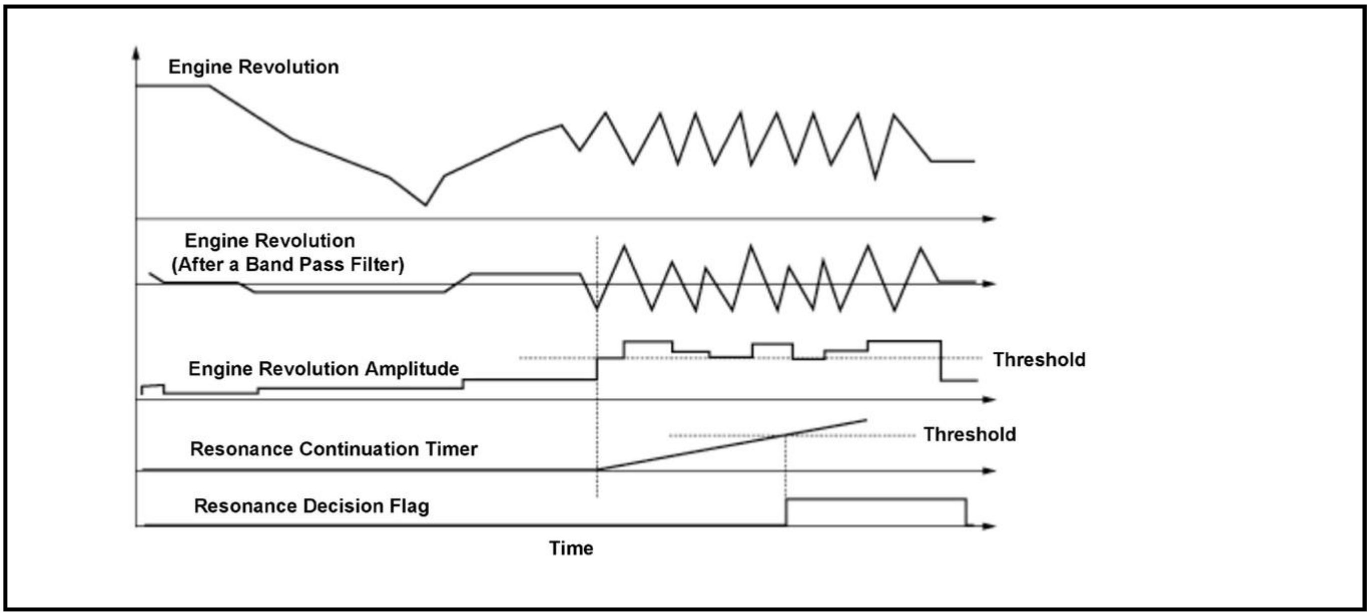

Engine resonance has the potential to cause severe engine damage. As a result, the flywheel is equipped with a high rate spring to help smooth out the transmission of power between the engine and the generator motor. However, there are still certain rpm levels where resonance can cause vibration. When resonance is detected by the powertrain control module (PCM), the rpm range is limited. There are also cases that resonance is caused by a misfire which can lead to an engine or generator motor failure.

Monitor Execution, Sequence, Duration, DTC Type

Execution	Continuous
Sequence	None
Duration	13.2 seconds or less
DTC Type	One drive cycle, MIL on

Enable Conditions

Condition	B
Fuel feedback	Other than during fuel cut-off operation
State of the vehicle*	HV driving mode
	Engine driving mode
	HV driving mode -> Engine driving mode
	Engine driving mode -> HV driving mode

*: In any of described driving condition

Malfunction Threshold

When vibration due to engine resonance has increased.

Possible Cause

NOTE: The causes shown may not be a complete list of all potential problems, and it is possible that there may be other causes.

- Misfire (1 cylinder or 2 cylinder continuation misfires)

Confirmation Procedure

Operating Condition

Drive the vehicle for 13.2 seconds or more.

- Drive the vehicle in this manner only if the traffic regulations and ambient conditions allow.

Diagnosis Details

Conditions for setting the DTC

When a malfunction is detected, the MIL comes on and a Pending DTC, a Confirmed DTC, and the freeze data are stored in the PCM memory.

Conditions for clearing the DTC

The Pending DTC, the Confirmed DTC, and the freeze data can be cleared with the scan tool Clear command or by disconnecting the 12 volt battery.

DTC P0703

DTC P0703: Brake Pedal Position Switch (NC) Malfunction

General Description

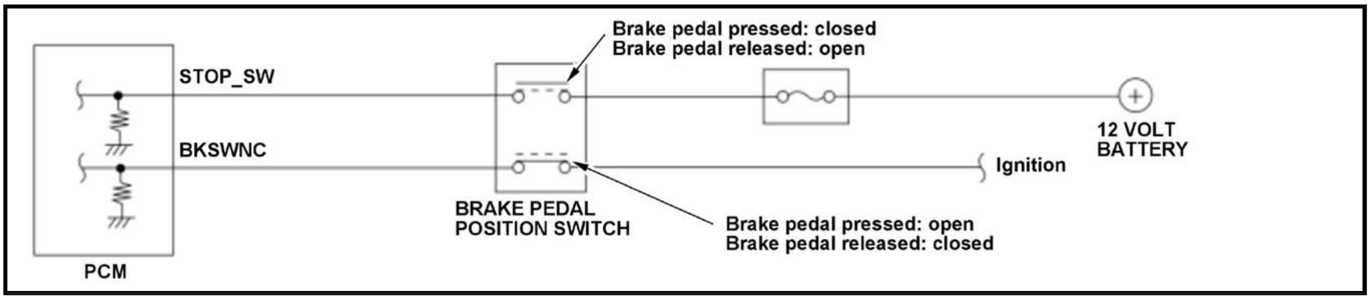
Brake pedal pressed: closed
Brake pedal released: open
STOP_SW
BKSWNC
12 VOLT BATTERY
Ignition
BRAKE PEDAL POSITION SWITCH
Brake pedal pressed: open
Brake pedal released: closed
PCM

The powertrain control module (PCM) detects a brake pedal position switch malfunction by monitoring the signals from the brake pedal position switch. If the PCM continuously inputs an abnormal signal from brake pedal position switch for a specified time during a specified condition, the PCM detects a malfunction and stores a DTC.

Monitor Execution, Sequence, Duration, DTC Type

Execution	Continuous
Sequence	None
Duration	5 minutes or more*, Depending on driving conditions**
DTC Type	Two drive cycles, MIL off

*: Symptom 1

**: Symptom 2

Enable Conditions

Condition	B
Vehicle	ON mode
Other*	Accelerator pedal pressed

Malfunction Threshold

Either of the symptom occurs:

- Symptom 1

  The brake pedal position switch (BKSWNC line) is open for at least 5 minutes when the vehicle speed [Vehicle Speed] is at 13 mph (20 km/h) or more.

- Symptom 2

  The brake pedal position switch (BKSWNC line) is closed for three cycles when the vehicle is stopped (or decelerated to 1 mph (3 km/h) or less) from vehicle speed [Vehicle Speed] over 25 mph (40 km/h).

[ ]: HDS Parameter

Possible Cause

NOTE: The causes shown may not be a complete list of all potential problems, and it is possible that there may be other causes.

- Brake pedal position switch BKSWNC line open (includes a loose or disconnected connector)
- Brake pedal position switch BKSWNC line short to power
- Brake pedal position switch BKSWNC line short to ground
- Brake pedal position switch stuck
- Brake pedal position switch failure
- PCM internal circuit failure

Diagnosis Details

Conditions for setting the DTC

When a malfunction is detected during the first drive cycle, a Pending DTC is stored in the PCM memory. If the malfunction returns in the next (second) drive cycle, a Confirmed DTC and the freeze data are stored. The MIL does not come on.

Conditions for clearing the DTC

The Pending DTC, the Confirmed DTC, and the freeze data can be cleared with the scan tool Clear command or by disconnecting the 12 volt battery.

DTC P0751

DTC P0751 : Shift Solenoid Valve A Stuck OFF

General Description

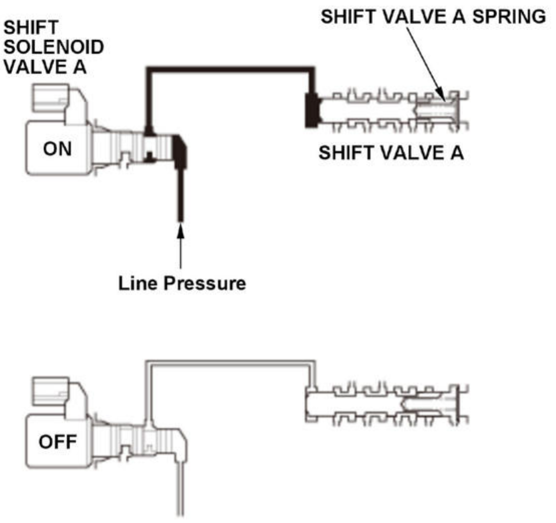

Condition of over drive clutch		Shift solenoid valve A	
		ON (12 V)	OFF (0 V)
Shift solenoid valve B	ON (12 V)	ON (engaged)	OFF (disengaged)
	OFF (0 V)	OFF (disengaged)	OFF (disengaged)

Shift solenoid valve A is installed on the flywheel housing. It is controlled by the ON/OFF signal from the powertrain control module (PCM) to apply line pressure to shift valve A. The signal from the PCM is output so that the line pressure is supplied to the clutch piston under the condition that overdrive clutch engagement is requested during running at 44 mph (70 km/h) or more. When the signal to shift solenoid valve A from the PCM is ON, and the line pressure is applied to shift valve A, it operates against the shift valve A spring. When the signal to shift solenoid valve A from the PCM is OFF, and the line pressure is discharged, shift valve A is inactive. The PCM monitors the transmission fluid pressure sensor and detects a shift solenoid valve A OFF failure and stores a DTC when the transmission fluid pressure sensor is specified pressure or less while engagement of the over drive clutch is requested.

Monitor Execution, Sequence, Duration, DTC Type

Execution	Continuous
Sequence	None
Duration	2.1 seconds or more
DTC Type	One drive cycle, MIL off, shift position indicator blinks

Enable Conditions

Condition	Minimum	Maximum
Vehicle speed [Vehicle Speed]	44 mph (70 km/h)	-
12 volt battery voltage [Battery Voltage]	11 V	-
Over drive clutch	ON (engaged)	
State of the vehicle	Engine driving mode	

[ ]: HDS Parameter

Malfunction Threshold

The transmission fluid pressure sensor output is specified hydraulic pressure or less for at least 2.1 seconds while engagement of the over drive clutch is requested.

Possible Cause

NOTE: The causes shown may not be a complete list of all potential problems, and it is possible that there may be other causes.

- Shift solenoid valve A stuck off
- Valve body assembly (shift valve A stuck)

Confirmation Procedure

Operating Condition

- Enter the maintenance mode, then start the engine. Hold the engine speed [Engine Speed] at 3, 000 rpm without load (in P or N) until the radiator fan comes on.
- Drive the vehicle at a steady speed of 44 mph (70 km/h) or more for at least 10 seconds with engine drive mode.

- Drive the vehicle in this manner only if the traffic regulations and ambient conditions allow.

With the HDS

None.

Diagnosis Details

Conditions for setting the DTC

When a malfunction is detected, the shift position indicator blinks and a Pending DTC, a Confirmed DTC, and the freeze data are stored in the PCM memory. The MIL does not come on.

Conditions for clearing the DTC

The shift position indicator comes off by turning the vehicle to the OFF (LOCK) mode. The Pending DTC, the Confirmed DTC, and the freeze data can be cleared with the scan tool Clear command or by disconnecting the 12 volt battery.

DTC P0752

DTC P0752 : Shift Solenoid Valve A Stuck ON

General Description

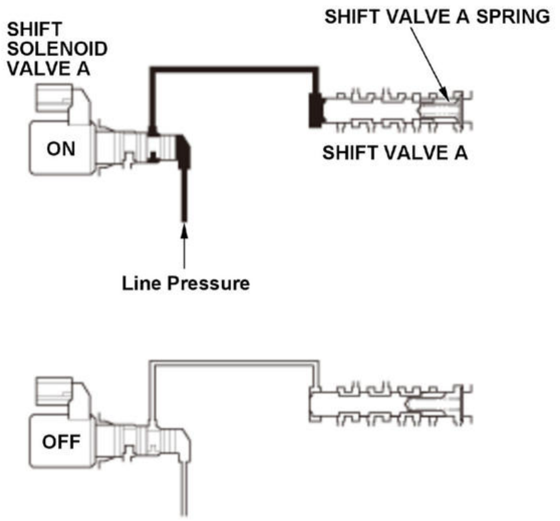

Condition of over drive clutch		Shift solenoid valve A	
		ON (12 V)	OFF (0 V)
Shift solenoid valve B	ON (12 V)	ON (engaged)	OFF (disengaged)
	OFF (0 V)	OFF (disengaged)	OFF (disengaged)

Shift solenoid valve A is installed on the flywheel housing. It is controlled by the ON/OFF signal from the powertrain control module (PCM) to apply line pressure to shift valve A. The signal from the PCM is output so that the line pressure is supplied to the clutch piston under the condition that overdrive clutch engagement is requested during running at 44 mph (70 km/h) or more. When the signal to shift solenoid valve A from the PCM is on, and the line pressure is applied to shift valve A, it operates against the shift valve A spring. When the signal to shift solenoid valve A from the PCM is off, and the line pressure is discharged, shift valve A is inactive. The PCM monitors the transmission fluid pressure sensor and detects a shift solenoid valve A stuck ON failure and stores a DTC when the transmission fluid pressure sensor is specified pressure or more though the shift solenoid valve A is outputting OFF signal in the over drive clutch engagement process in response to a request for engagement of the over drive clutch.

Monitor Execution, Sequence, Duration, DTC Type

Execution	Continuous
Sequence	None
Duration	1.6 seconds or more
DTC Type	One drive cycle, MIL off, shift position indicator blinks

Enable Conditions

Condition	Minimum	Maximum
Vehicle speed [Vehicle Speed]	44 mph (70 km/h)	-
12 volt battery voltage [Battery Voltage]	11 V	-
Over drive clutch	ON (engaged)	
State of the vehicle	Engine driving mode	

[ ]: HDS Parameter

Malfunction Threshold

The transmission fluid pressure sensor output is specified hydraulic pressure or more for at least 1.6 seconds despite the shift solenoid valve A OFF signal during the process of the over drive clutch engagement in response to the request.

Possible Cause

NOTE: The causes shown may not be a complete list of all potential problems, and it is possible that there may be other causes.

- Shift solenoid valve A stuck on
- Valve body assembly (shift valve A stuck)

Confirmation Procedure

Operating Condition

- Enter the maintenance mode, then start the engine. Hold the engine speed [Engine Speed] at 3, 000 rpm without load (in P or N) until the radiator fan comes on.
- Drive the vehicle at a steady speed of 44 mph (70 km/h) or more for at least 10 seconds with engine drive mode.

- Drive the vehicle in this manner only if the traffic regulations and ambient conditions allow.

With the HDS

None.

Diagnosis Details

Conditions for setting the DTC

When a malfunction is detected, the shift position indicator blinks and a Pending DTC, a Confirmed DTC, and the freeze data are stored in the PCM memory. The MIL does not come on.

Conditions for clearing the DTC

The shift position indicator comes off by turning the vehicle to the OFF (LOCK) mode. The Pending DTC, the Confirmed DTC, and the freeze data can be cleared with the scan tool Clear command or by disconnecting the 12 volt battery.

DTC P0756

DTC P0756 : Shift Solenoid Valve B Stuck OFF

General Description

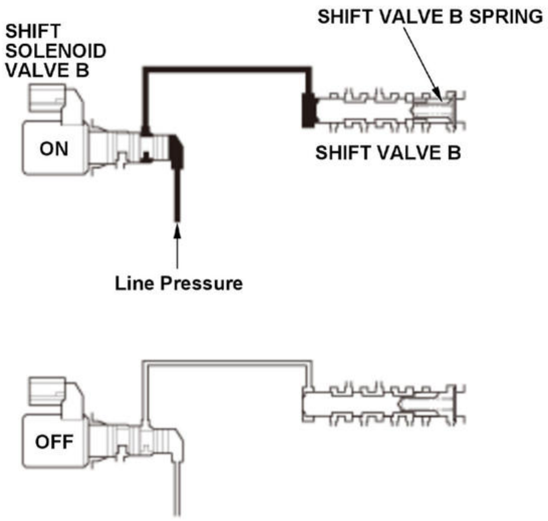

Condition of over drive clutch		Shift solenoid valve A	
		ON (12 V)	OFF (0 V)
Shift solenoid valve B	ON (12 V)	ON (engaged)	OFF (disengaged)
	OFF (0 V)	OFF (disengaged)	OFF (disengaged)

Shift solenoid valve B is installed on the flywheel housing. It is controlled by the ON/OFF signal from the powertrain control module (PCM) to apply line pressure to shift valve B. The signal from the PCM is output so that the line pressure is supplied to the clutch piston under the condition that overdrive clutch engagement is requested during running at 44 mph (70 km/h) or more. When the signal to shift solenoid valve B from the PCM is ON, and the line pressure is applied to shift valve B, it operates against the shift valve B spring. When the signal to shift solenoid valve B from the PCM is off, and the line pressure is discharged, shift valve B is inactive. The PCM monitors the transmission fluid pressure sensor and detects a shift solenoid valve B OFF failure and stores a DTC when the transmission fluid pressure sensor is specified pressure or less while engagement of the over drive clutch is requested.

Monitor Execution, Sequence, Duration, DTC Type

Execution	Continuous
Sequence	None
Duration	2.1 seconds or more
DTC Type	One drive cycle, MIL off, shift position indicator blinks

Enable Conditions

Condition	Minimum	Maximum
Vehicle speed [Vehicle Speed]	44 mph (70 km/h)	-
12 volt battery voltage [Battery Voltage]	11 V	-
Over drive clutch	ON (engaged)	
State of the vehicle	Engine driving mode	

[ ]: HDS Parameter

Malfunction Threshold

The transmission fluid pressure sensor output is specified hydraulic pressure or less for at least 2.1 seconds while engagement of the over drive clutch is requested.

Possible Cause

NOTE: The causes shown may not be a complete list of all potential problems, and it is possible that there may be other causes.

- Shift solenoid valve B stuck off
- Valve body assembly (shift valve B stuck)

Confirmation Procedure

Operating Condition

- Enter the maintenance mode, then start the engine. Hold the engine speed [Engine Speed] at 3, 000 rpm without load (in P or N) until the radiator fan comes on.
- Drive the vehicle at a steady speed of 44 mph (70 km/h) or more for at least 10 seconds with engine drive mode.

- Drive the vehicle in this manner only if the traffic regulations and ambient conditions allow.

With the HDS

None.

Diagnosis Details

Conditions for setting the DTC

When a malfunction is detected, the shift position indicator blinks and a Pending DTC, a Confirmed DTC, and the freeze data are stored in the PCM memory. The MIL does not come on.

Conditions for clearing the DTC

The shift position indicator comes off by turning the vehicle to the OFF (LOCK) mode. The Pending DTC, the Confirmed DTC, and the freeze data can be cleared with the scan tool Clear command or by disconnecting the 12 volt battery.

DTC P0757

DTC P0757 : Shift Solenoid Valve B Stuck ON

General Description

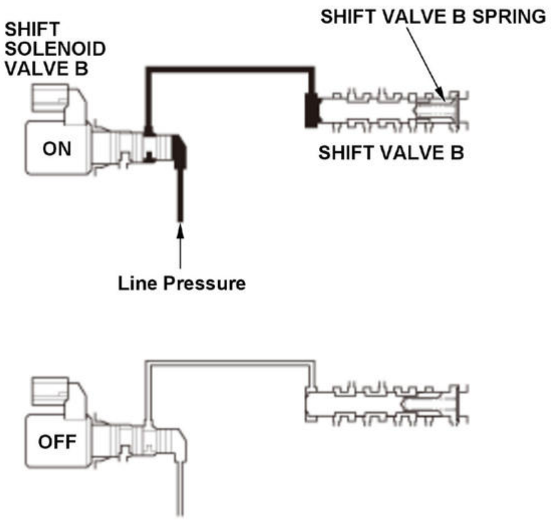

Condition of over drive clutch		Shift solenoid valve A	
		ON (12 V)	OFF (0 V)
Shift solenoid valve B	ON (12 V)	ON (engaged)	OFF (disengaged)
	OFF (0 V)	OFF (disengaged)	OFF (disengaged)

Shift solenoid valve B is installed on the flywheel housing. It is controlled by the ON/OFF signal from the powertrain control module (PCM) to apply line pressure to shift valve B. The signal from the PCM is output so that the line pressure is supplied to the clutch piston under the condition that overdrive clutch engagement is requested during running at 44 mph (70 km/h) or more. When the signal to shift solenoid valve B from the PCM is ON, and the line pressure is applied to shift valve B, it operates against the shift valve B spring. When the signal to shift solenoid valve B from the PCM is off, and the line pressure is discharged, shift valve B is inactive. The PCM monitors the transmission fluid pressure sensor and detects a shift solenoid valve B stuck ON failure and stores a DTC when the transmission fluid pressure sensor is specified pressure or more though the shift solenoid valve B is outputting OFF signal while the engine is running.

Monitor Execution, Sequence, Duration, DTC Type

Execution	Continuous
Sequence	None
Duration	1.6 seconds or more
DTC Type	One drive cycle, MIL off, shift position indicator blinks

Enable Conditions

Condition	Minimum	Maximum
12 volt battery voltage [Battery Voltage]	11 V	-
State of the engine	Running	

[ ]: HDS Parameter

Malfunction Threshold

The transmission fluid pressure sensor output is specified hydraulic pressure or more for at least 1.6 seconds despite the shift solenoid valve B OFF signal while the engine is running.

Possible Cause

NOTE: The causes shown may not be a complete list of all potential problems, and it is possible that there may be other causes.

- Shift solenoid valve B stuck on
- Valve body assembly (shift valve B stuck)

Confirmation Procedure

Operating Condition

Enter the maintenance mode, then start the engine, and wait for at least 1.6 seconds.

With the HDS

None.

Diagnosis Details

Conditions for setting the DTC

When a malfunction is detected, the shift position indicator blinks and a Pending DTC, a Confirmed DTC, and the freeze data are stored in the PCM memory. The MIL does not come on.

Conditions for clearing the DTC

The shift position indicator comes off by turning the vehicle to the OFF (LOCK) mode. The Pending DTC, the Confirmed DTC, and the freeze data can be cleared with the scan tool Clear command or by disconnecting the 12 volt battery.

DTC P07B3, P07B4

DTC P07B3 : Transmission Park Position Sensor/Switch A Circuit Low

DTC P07B4 : Transmission Park Position Sensor/Switch A Circuit High

General Description

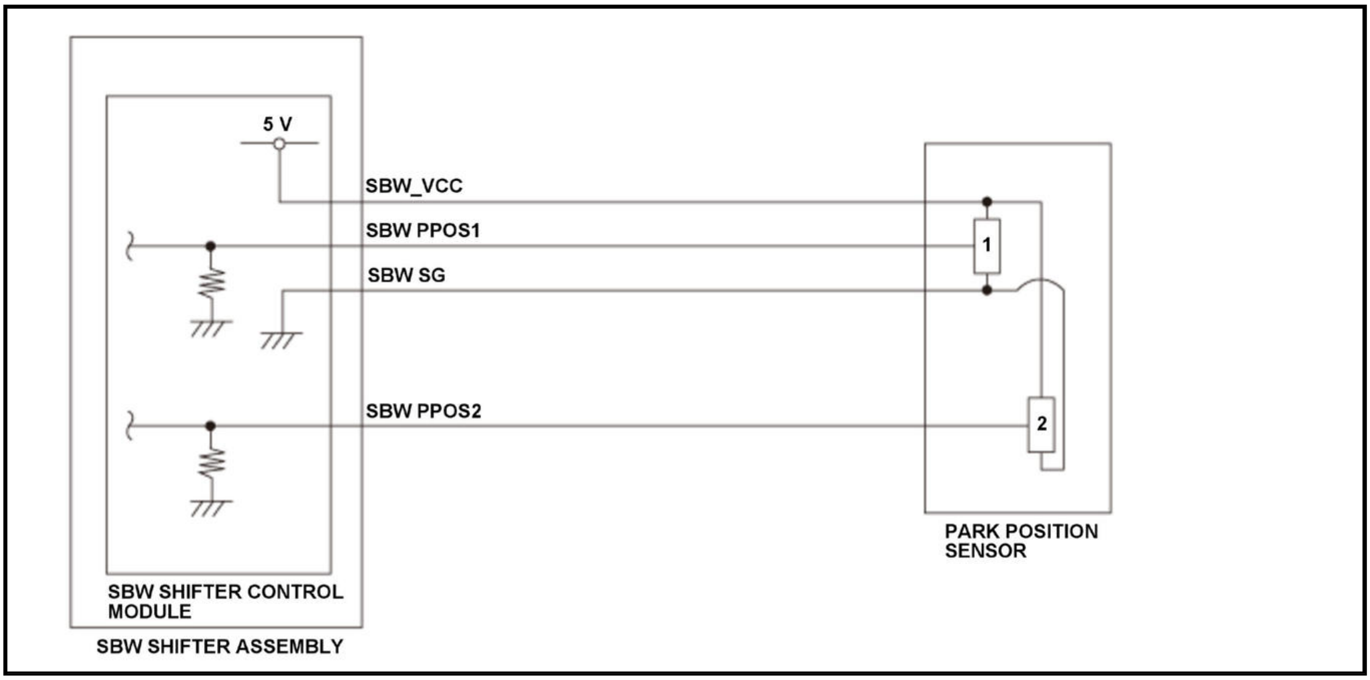

The SBW shifter control module in the SBW shifter assembly judges the parking position by the output voltage from the park position sensor. The SBW shifter control module monitors the park position sensor 1 output voltage, and when the output voltage is a specified value for a specified duration, the powertrain control module (PCM) receives a malfunction from the SBW shifter control module and stores a DTC.

Monitor Execution, Sequence, Duration, DTC Type

Execution	Continuous
Sequence	None
Duration	2 seconds or more
DTC Type	One drive cycle, MIL off, shift position indicator blinks

Enable Conditions

Condition	B
Vehicle	ON mode

Malfunction Threshold

DTC: P07B3

Park position sensor 1 output voltage [Parking Sensor 1 voltage] is 0.111 V or less for at least 2 seconds.

DTC: P07B4

Park position sensor 1 output voltage [Parking Sensor 1 voltage] is 4.855 V or more for at least 2 seconds.

Possible Cause

NOTE: The causes shown may not be a complete list of all potential problems, and it is possible that there may be other causes.

DTC: P07B3

- Park position sensor SBW PPOS1 line open (includes a loose or disconnected connector)
- Park position sensor SBW_VCC line open (includes a loose or disconnected connector)
- Park position sensor SBW SG line open (includes a loose or disconnected connector)
- Park position sensor SBW PPOS1 line short to ground
- Park position sensor SBW_VCC line short to ground

DTC: P07B4

- Park position sensor SBW PPOS1 line short to power

Common

- Park position sensor failure
- SBW shifter assembly (SBW shifter control module) internal failure

Confirmation Procedure

Operating Condition

Turn the vehicle to the ON mode, and wait for at least 10 seconds.

With the HDS

None.

Diagnosis Details

Conditions for setting the DTC

When a malfunction is detected, the shift position indicator blinks and a Pending DTC, a Confirmed DTC, and the freeze data are stored in the PCM memory. The MIL does not come on.

Conditions for clearing the DTC

The shift position indicator comes off by turning the vehicle to the OFF (LOCK) mode. The Pending DTC, the Confirmed DTC, and the freeze data can be cleared with the scan tool Clear command or by disconnecting the 12 volt battery.

DTC P07B9, P07BA

DTC P07B9 : Transmission Park Position Sensor/Switch B Circuit Low

DTC P07BA : Transmission Park Position Sensor/Switch B Circuit High

General Description

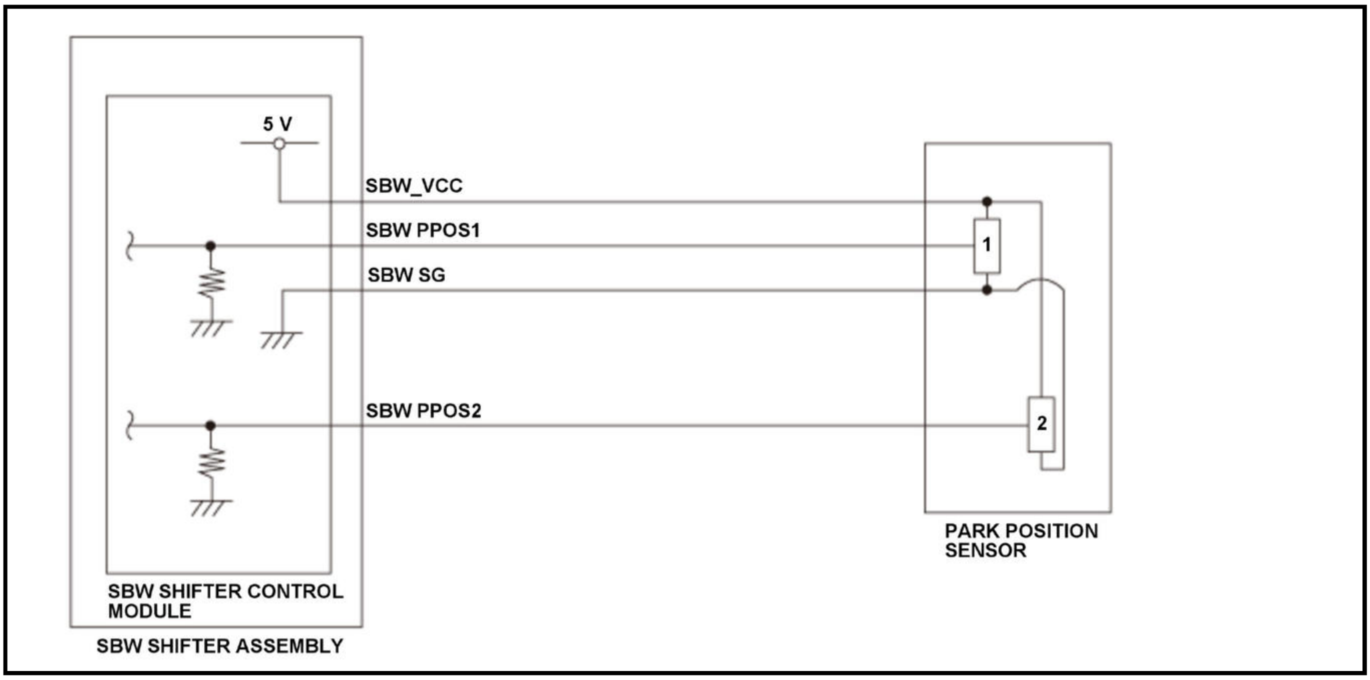

The SBW shifter control module in the SBW shifter assembly judges the parking position by the output voltage from the park position sensor. The SBW shifter control module monitors the park position sensor 2 output voltage, and when the output voltage is a specified value for a specified duration, the powertrain control module (PCM) receives a malfunction from the SBW shifter control module and stores a DTC.

Monitor Execution, Sequence, Duration, DTC Type

Execution	Continuous
Sequence	None
Duration	2 seconds or more
DTC Type	One drive cycle, MIL off, shift position indicator blinks

Enable Conditions

Condition	B
Vehicle	ON mode

Malfunction Threshold

DTC: P07B9

Park position sensor 2 output voltage [Parking Sensor 2 voltage] is 0.111 V or less for at least 2 seconds.

DTC: P07BA

Park position sensor 2 output voltage [Parking Sensor 2 voltage] is 4.855 V or more for at least 2 seconds.

Possible Cause

NOTE: The causes shown may not be a complete list of all potential problems, and it is possible that there may be other causes.

DTC: P07B9

- Park position sensor SBW PPOS2 line open (includes a loose or disconnected connector)
- Park position sensor SBW_VCC line open (includes a loose or disconnected connector)
- Park position sensor SBW SG line open (includes a loose or disconnected connector)
- Park position sensor SBW PPOS2 line short to ground
- Park position sensor SBW_VCC line short to ground

DTC: P07BA

- Park position sensor SBW PPOS2 line short to power

Common

- Park position sensor failure
- SBW shifter assembly (SBW shifter control module) internal failure

Confirmation Procedure

Operating Condition

Turn the vehicle to the ON mode, and wait for at least 10 seconds.

With the HDS

None.

Diagnosis Details

Conditions for setting the DTC

When a malfunction is detected, the shift position indicator blinks and a Pending DTC, a Confirmed DTC, and the freeze data are stored in the PCM memory. The MIL does not come on.

Conditions for clearing the DTC

The shift position indicator comes off by turning the vehicle to the OFF (LOCK) mode. The Pending DTC, the Confirmed DTC, and the freeze data can be cleared with the scan tool Clear command or by disconnecting the 12 volt battery.

DTC P07BE

DTC P07BE : Transmission Park Position Sensor/Switch A/B Incorrect Voltage Correlation

General Description

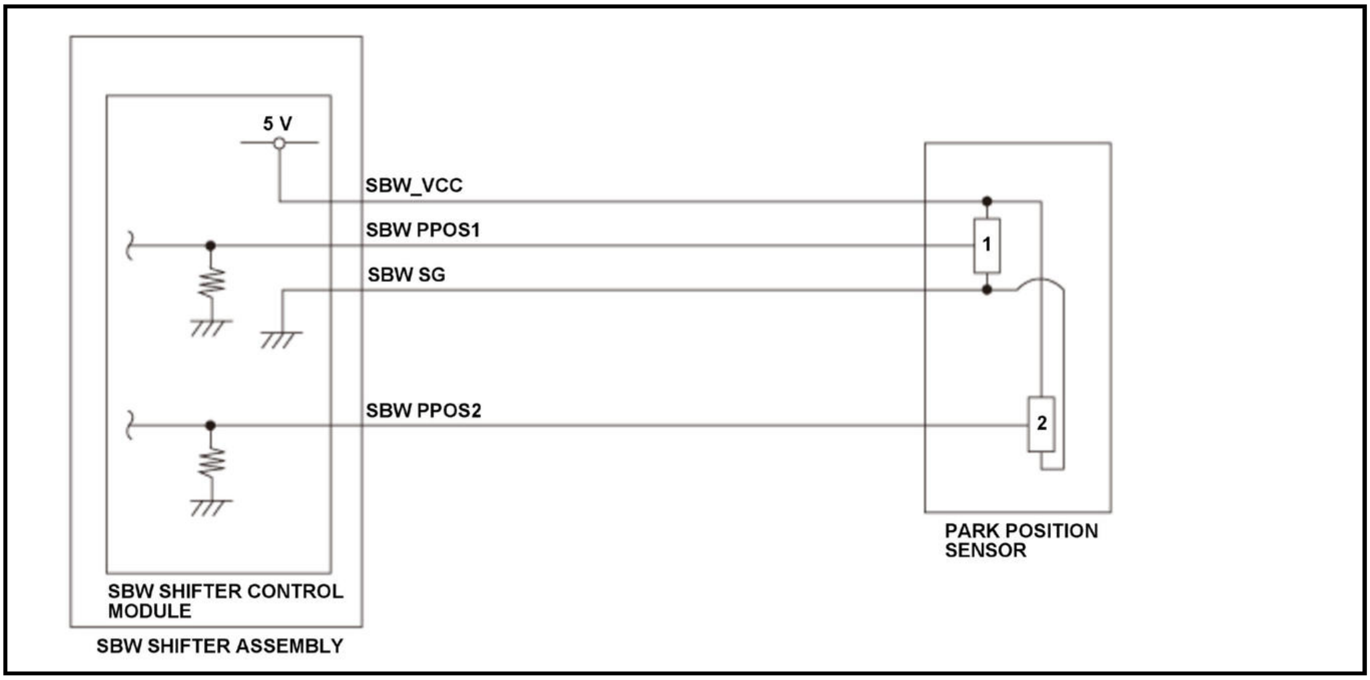

The SBW shifter control module in the SBW shifter assembly detects the parking position by the output voltage from the park position sensor. The SBW shifter control module monitors the total value of the park position sensor 1 output voltage and the park position sensor 2 output voltage. When the total voltage is out of a specified range for a specified duration, the powertrain control module (PCM) receives malfunction information from the SBW shifter control module and stores a DTC.

Monitor Execution, Sequence, Duration, DTC Type

Execution	Continuous
Sequence	None
Duration	2 seconds or more
DTC Type	One drive cycle, MIL off, shift position indicator blinks

Enable Conditions

Condition	B
Vehicle	ON mode

Malfunction Threshold

The total value of the park position sensor 1 output voltage and the park position sensor 2 output voltage is 3.4 V or more, or 2.6 V or less for at least 2 seconds.

Possible Cause

NOTE: The causes shown may not be a complete list of all potential problems, and it is possible that there may be other causes.

- Park position sensor SBW PPOS1 line short to park position sensor SBW PPOS2 line
- Park position sensor failure
- SBW shifter assembly (SBW shifter control module) internal failure

Confirmation Procedure

Operating Condition

- Turn the vehicle to the ON mode, and wait for at least 2 seconds.
- While pressing the brake pedal, shift the transmission to N position/mode.
- Shift the transmission to P position/mode.

With the HDS

None.

Diagnosis Details

Conditions for setting the DTC

When a malfunction is detected, the shift position indicator blinks and a Pending DTC, a Confirmed DTC, and the freeze data are stored in the PCM memory. The MIL does not come on.

Conditions for clearing the DTC

The shift position indicator comes off by turning the vehicle to the OFF (LOCK) mode. The Pending DTC, the Confirmed DTC, and the freeze data can be cleared with the scan tool Clear command or by disconnecting the 12 volt battery.

DTC P0811

DTC P0811 : Excessive Clutch A Slippage

General Description

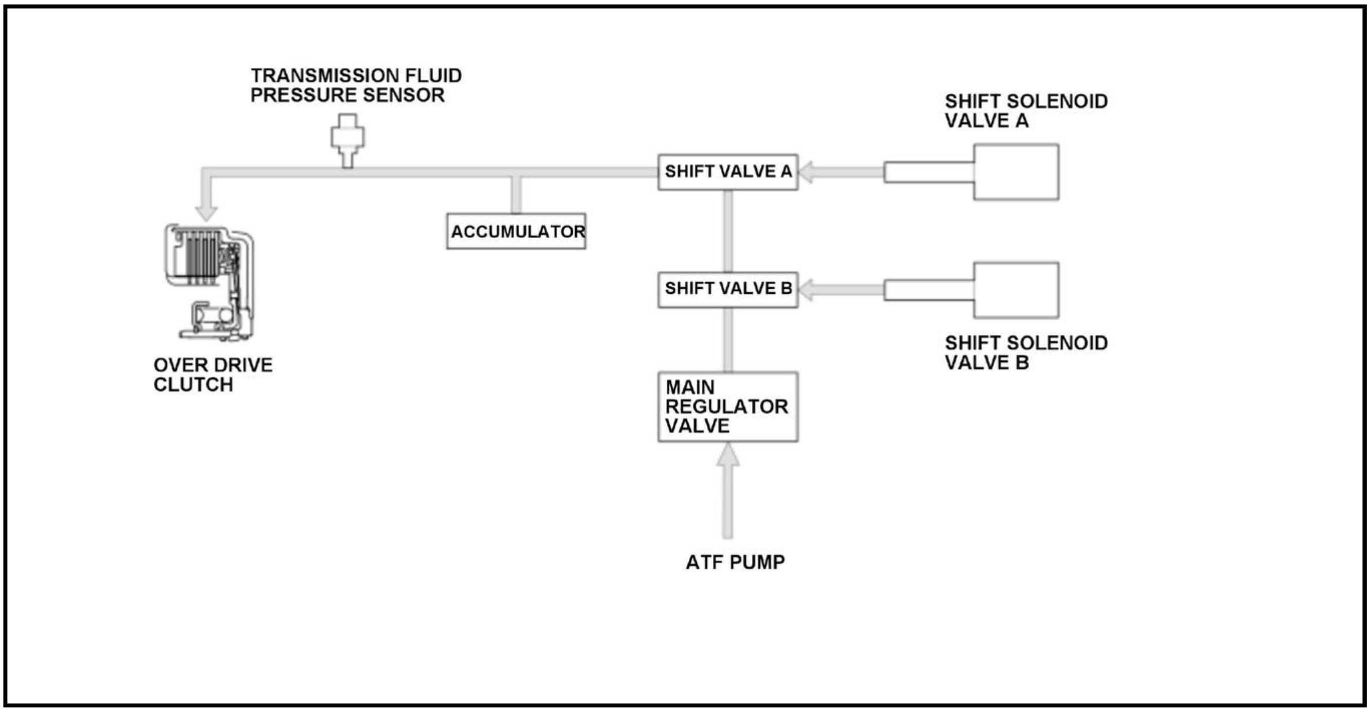

When running at 44 mph (70 km/h) or more, the line pressure is supplied to the clutch piston in response to a request for engagement of the over drive clutch from the powertrain control module (PCM) to cause the clutch to be engaged and the input shaft and the over drive gear rotate together to transmit the driving force. The hydraulic pressure to the clutch is supplied from the ATF pump -> regulator valve -> shift valve -> clutch piston. (Failure in the clutch piston in the supply paths above is detected by failure detection of each shift solenoid valve.) The PCM calculates the difference between the input revolution speed (Engine speed) to the over drive clutch and the output revolution speed (Traction motor speed) and detects a malfunction of the hydraulic pressure supply system or the clutch and stores a DTC when the difference in the revolution speed is more than the prescribed value when engagement of the over drive clutch is requested.

Monitor Execution, Sequence, Duration, DTC Type

Execution	Continuous
Sequence	None
Duration	0.5 seconds or more
DTC Type	Two drive cycles, MIL off, shift position indicator blinks

Enable Conditions

Condition	Minimum	Maximum
Vehicle speed [Vehicle Speed]	44 mph (70 km/h)	-
12 volt battery voltage [Battery Voltage]	11 V	-
Over drive clutch	ON (engaged)	
State of the vehicle	Engine driving mode	

[ ]: HDS Parameter

Malfunction Threshold

The difference between the input rotation speed (engine speed) and the output rotation speed (traction motor speed) is more than 100 rpm for at least 0.5 seconds when engagement of the over drive clutch is requested.

Possible Cause

NOTE: The causes shown may not be a complete list of all potential problems, and it is possible that there may be other causes.

- Over drive clutch failure
- Transmission (e-CVT) (over drive clutch hydraulic circuit) failure
- Valve body assembly (ATF pump, main regulator valve) failure

Confirmation Procedure

Operating Condition

- Enter the maintenance mode, then start the engine. Hold the engine speed [Engine Speed] at 3, 000 rpm without load (in P or N) until the radiator fan comes on.
- Drive the vehicle at a steady speed of 44 mph (70 km/h) or more for at least 10 seconds with engine drive mode.

- Drive the vehicle in this manner only if the traffic regulations and ambient conditions allow.

With the HDS

None.

Diagnosis Details

Conditions for setting the DTC

When a malfunction is detected during the first drive cycle, a Pending DTC is stored in the PCM memory. If the malfunction returns in the next (second) drive cycle, the shift position indicator blinks and a Confirmed DTC and the freeze data are stored. The MIL does not come on.

Conditions for clearing the DTC

The shift position indicator comes off by turning the vehicle to the OFF (LOCK) mode. The Pending DTC, the Confirmed DTC, and the freeze data can be cleared with the scan tool Clear command or by disconnecting the

12 volt battery.

DTC P0840 (2020)

DTC P0840 : Transmission Fluid Pressure Sensor Malfunction

General Description

DTC P0840 is stored when the DTC that is related to transmission fluid pressure sensor performance abnormality is detected. The powertrain control module (PCM) stores the DTC at the time when DTC P173A or P173B is detected.

DTC P0840 (2021)

DTC P0840: Transmission Fluid Pressure Sensor Malfunction

General Description

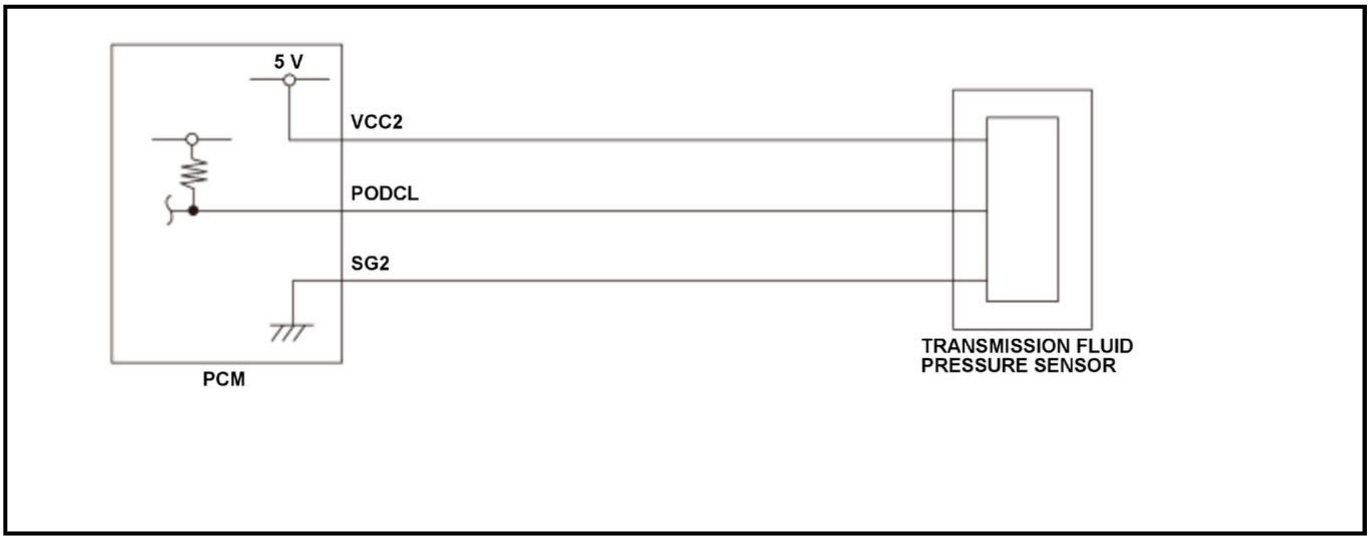

The transmission fluid pressure sensor is installed in the hydraulic pressure circuit to the over drive clutch. When hydraulic pressure is supplied to the over drive clutch, the transmission fluid pressure sensor output is above the main regulator valve output pressure. When hydraulic pressure is not supplied to the over drive clutch, the transmission fluid pressure sensor output is low. The signal from the transmission fluid pressure sensor is sent to the powertrain control module (PCM). The PCM detects the hydraulic pressure supply conditions at the over drive clutch to the hydraulic circuit. If the transmission fluid pressure sensor output voltage is a specified value for a set time, the PCM detects a transmission fluid pressure sensor failure and stores a DTC.

Monitor Execution, Sequence, Duration, DTC Type

Execution	Continuous
Sequence	None
Duration	6.0 seconds or more
DTC Type	Two drive cycle, MIL on, Shift position indicator blinks

Enable Conditions

Condition	Minimum	Maximum
12 volt battery voltage [BATTERY VOLTAGE]	11 V	-

[ ]: HDS Parameter

Malfunction Threshold

The transmission fluid pressure sensor output voltage [Oil Pressure Sensor 1 Voltage] is 0.34 V or less for at least 6.0 seconds.

Possible Cause

NOTE: The causes shown may not be a complete list of all potential problems, and it is possible that there may be other causes.

- Transmission fluid pressure sensor failure

Confirmation Procedure

Operating Condition

Turn the vehicle to the ON mode, and wait for at least 6.0 seconds.

Diagnosis Details

Conditions for setting the DTC

When a malfunction is detected during the first drive cycle, the shift position indicator blinks and a Pending DTC is stored in the PCM memory. If the malfunction returns in the next (second) drive cycle, the MIL comes on and a Confirmed DTC and the freeze data are stored.

Conditions for clearing the DTC

The shift position indicator comes off by turning the vehicle to the OFF (LOCK) mode. The Pending DTC, the Confirmed DTC, and the freeze data can be cleared with the scan tool Clear command or by disconnecting the 12 volt battery.

DTC P0841 (2021)

DTC P0841: Transmission Fluid Pressure Sensor Performance

General Description

DTC P0841 is stored when the DTC that is related to abnormality of the transmission fluid pressure sensor is detected. The powertrain control module (PCM) stores the DTC at the time when DTC P173A or P173B is detected.

DTC P0842 (2021)

DTC P0842: Transmission Fluid Pressure Sensor Circuit Low Input

General Description

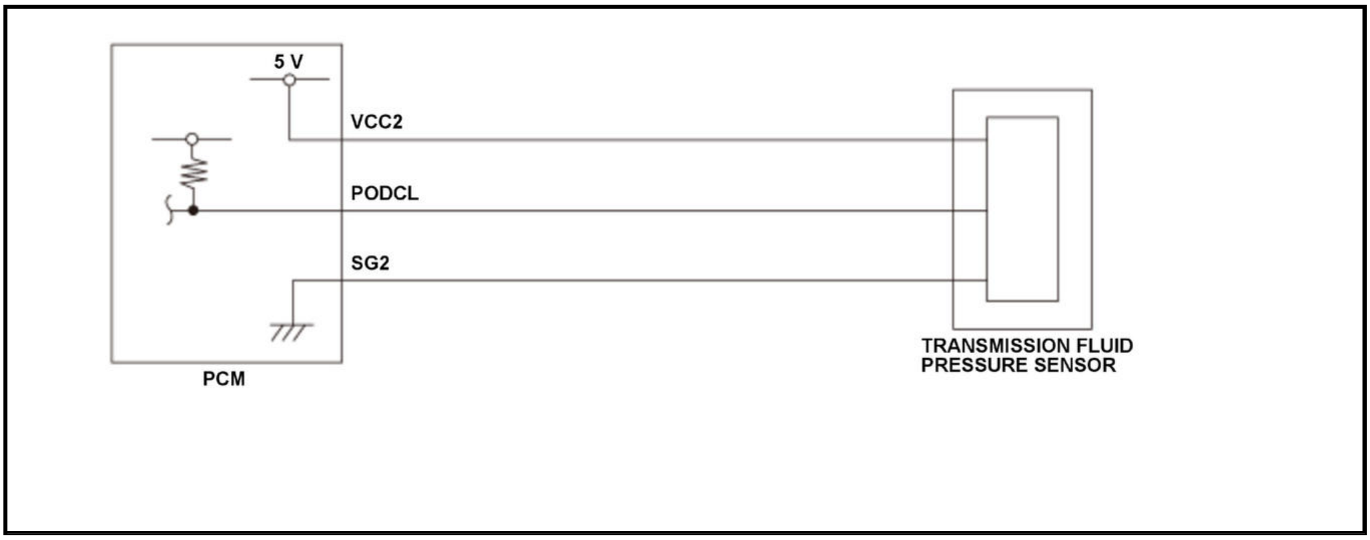

The transmission fluid pressure sensor is installed in the hydraulic pressure circuit to the over drive clutch. When hydraulic pressure is supplied to the over drive clutch, the transmission fluid pressure sensor output is above the main regulator valve output pressure. When hydraulic pressure is not supplied to the over drive clutch, the transmission fluid pressure sensor output is low. The signal from the transmission fluid pressure sensor is sent to the powertrain control module (PCM). The PCM detects the hydraulic pressure supply conditions at the over drive clutch to hydraulic circuit. If the transmission fluid pressure sensor output voltage is a specified value for a set time, the PCM detects a transmission fluid pressure sensor failure and stores a DTC.

Monitor Execution, Sequence, Duration, DTC Type

Execution	Continuous
Sequence	None
Duration	5.0 seconds or more
DTC Type	Two drive cycle, MIL on, Shift position indicator blinks

Enable Conditions

Condition	Minimum	Maximum
12 volt battery voltage [BATTERY VOLTAGE]	11 V	-

[ ]: HDS Parameter

Malfunction Threshold

When the transmission fluid pressure sensor output voltage [Oil Pressure Sensor 1 Voltage] is 0.25 V or less for 5.0 seconds or more while to vehicle is turned to the ON mode.

Possible Cause

NOTE: The causes shown may not be a complete list of all potential problems, and it is possible that there may be other causes.

- Transmission fluid pressure sensor PODCL line short to ground
- Transmission fluid pressure sensor VCC2 line open
- PCM internal failure

Confirmation Procedure

Operating Condition

Turn the vehicle to the ON mode, and wait for at least 5.0 seconds.

Diagnosis Details

Conditions for setting the DTC

When a malfunction is detected during the first drive cycle, the shift position indicator blinks and a Pending DTC is stored in the PCM memory. If the malfunction returns in the next (second) drive cycle, the MIL comes on and a Confirmed DTC and the freeze data are stored.

Conditions for clearing the DTC

The shift position indicator comes off by turning the vehicle to the OFF (LOCK) mode. The Pending DTC, the Confirmed DTC, and the freeze data can be cleared with the scan tool Clear command or by disconnecting the 12 volt battery.

DTC P0842, P0843 (2020)

DTC P0842 : Transmission Fluid Pressure Switch A (2nd Clutch) Circuit Low/Transmission Fluid Pressure Sensor Circuit Low Input

DTC P0843 : Transmission Fluid Pressure Switch A (2nd Clutch) Circuit High/Transmission Fluid Pressure Sensor Circuit High Input

General Description

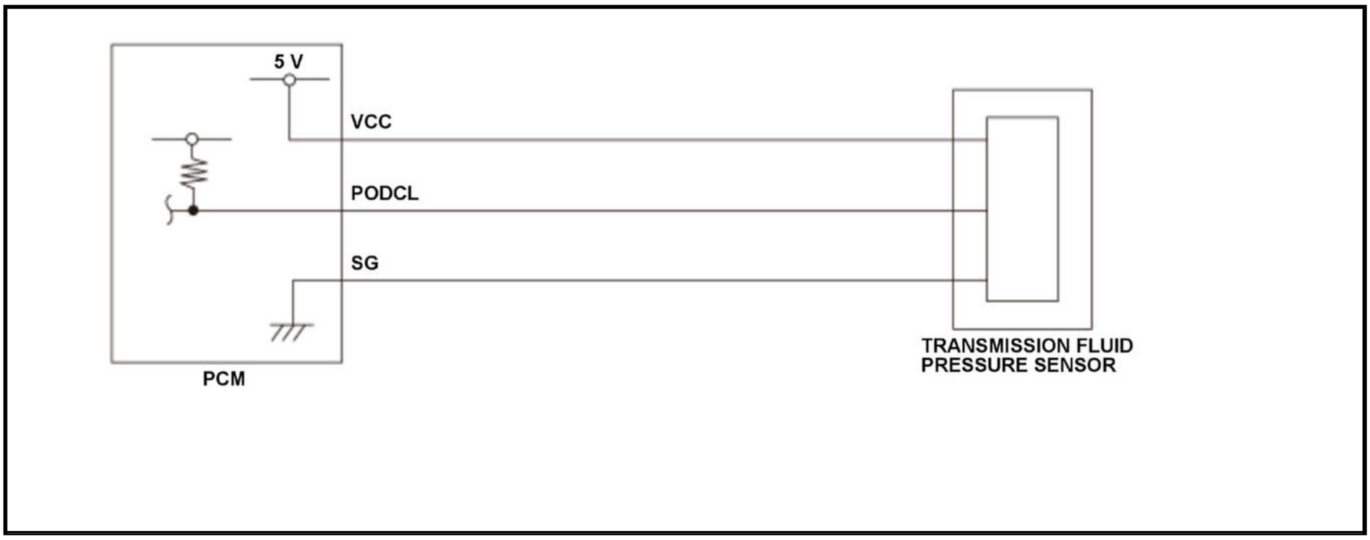

Transmission fluid pressure sensor is installed in the hydraulic pressure circuit to the over drive clutch. When hydraulic pressure is supplied to the over drive clutch, the transmission fluid pressure sensor output is above the main regulator valve output pressure. When hydraulic pressure is not supplied to the over drive clutch, the transmission fluid pressure sensor output is low pressure. The signal from transmission fluid pressure sensor is input to the powertrain control module (PCM). The PCM detects the hydraulic pressure supply conditions at the over drive clutch to hydraulic circuit. If transmission fluid pressure sensor output voltage is a specified value for a set time, the PCM detects a transmission fluid pressure sensor failure and stores a DTC.

Monitor Execution, Sequence, Duration, DTC Type

Execution	Continuous
Sequence	None
Duration	5.0 seconds or more
DTC Type	One drive cycle, MIL off, shift position indicator blinks

Enable Conditions

Condition	Minimum	Maximum
12 volt battery voltage [Battery Voltage]	11 V	-

[ ]: HDS Parameter

Malfunction Threshold

DTC: P0842

When the transmission fluid pressure sensor output voltage [Transmission Fluid Pressure Sensor] is 0.25 V or less for at least 5.0 seconds.

DTC: P0843

When the transmission fluid pressure sensor output voltage [Transmission Fluid Pressure Sensor] is 4.65 V or more for at least 5.0 seconds.

Possible Cause

NOTE: The causes shown may not be a complete list of all potential problems, and it is possible that there may be other causes.

DTC: P0842

- Transmission fluid pressure sensor VCC line open (includes a loose or disconnected connector)
- Transmission fluid pressure sensor PODCL line short to ground

DTC: P0843

- Transmission fluid pressure sensor PODCL line open (includes a loose or disconnected connector)
- Transmission fluid pressure sensor SG line open (includes a loose or disconnected connector)

Common

- Transmission fluid pressure sensor failure
- PCM internal failure

Confirmation Procedure

Operating Condition

Turn the vehicle to the ON mode, and wait for at least 5.0 seconds.

With the HDS

None.

Diagnosis Details

Conditions for setting the DTC

When a malfunction is detected, the shift position indicator blinks and a Pending DTC, a Confirmed DTC, and the freeze data are stored in the PCM memory. The MIL does not come on.

Conditions for clearing the DTC

The shift position indicator comes off by turning the vehicle to the OFF (LOCK) mode. The Pending DTC, the Confirmed DTC, and the freeze data can be cleared with the scan tool Clear command or by disconnecting the

12 volt battery.

ADVANCED DIAGNOSTICS

DTC P0843 (2021)

DTC P0843: Transmission Fluid Pressure Sensor Circuit High Input

General Description

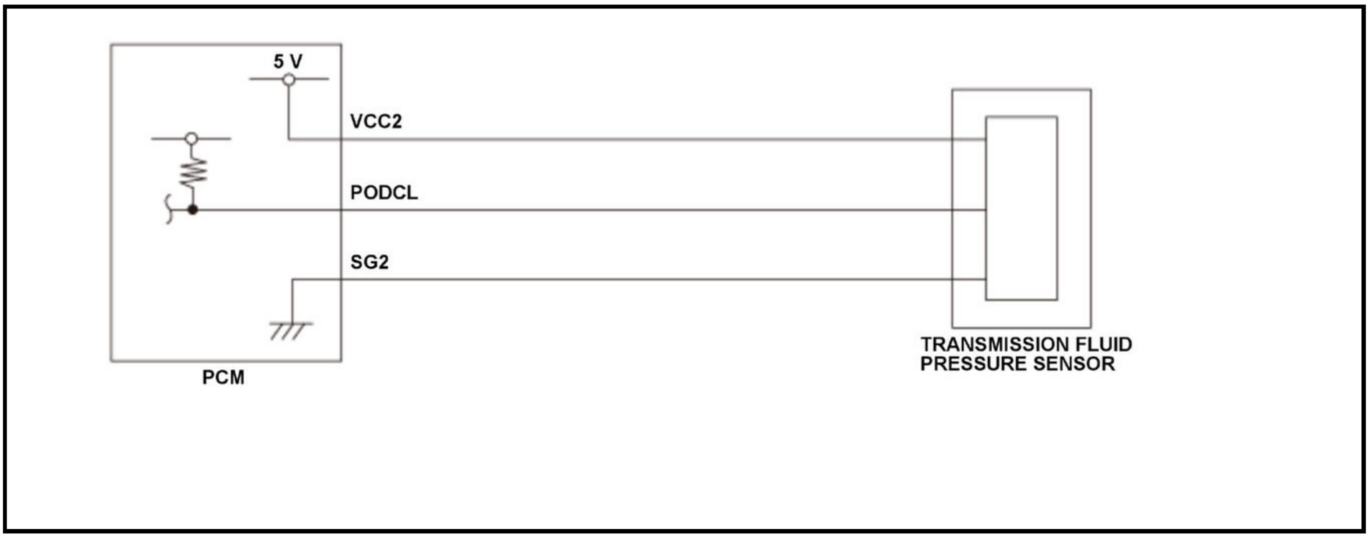

The transmission fluid pressure sensor is installed in the hydraulic pressure circuit to the over drive clutch. When hydraulic pressure is supplied to the over drive clutch, the transmission fluid pressure sensor output is above the main regulator valve output pressure. When hydraulic pressure is not supplied to the over drive clutch, the transmission fluid pressure sensor output is low. The signal from the transmission fluid pressure sensor is sent to the powertrain control module (PCM). The PCM detects the hydraulic pressure supply conditions at the over drive clutch. If the transmission fluid pressure sensor signal voltage is a specified value for a set time, the PCM detects a transmission fluid pressure sensor failure and stores a DTC.

Monitor Execution, Sequence, Duration, DTC Type

Execution	Continuous
Sequence	None
Duration	5.0 seconds or more
DTC Type	Two drive cycle, MIL on, Shift position indicator blinks

Enable Conditions

Condition	Minimum	Maximum
12 volt battery voltage[BATTERY VOLTAGE]	11 V	-

[ ]: HDS Parameter

Malfunction Threshold

When the transmission fluid pressure sensor output voltage [Oil Pressure Sensor 1 Voltage] is 4.65 V or more for 5.0 seconds or more while vehicle is turned to the ON mode.

Possible Cause

NOTE: The causes shown may not be a complete list of all potential problems, and it is possible that there may be other causes.

- Transmission fluid pressure sensor PODCL line open
- Transmission fluid pressure sensor SG2 line open
- PCM internal failure

Confirmation Procedure

Operating Condition

Turn the vehicle to the ON mode, and wait for at least 5.0 seconds.

Diagnosis Details

Conditions for setting the DTC

When a malfunction is detected during the first drive cycle, the shift position indicator blinks and a Pending DTC is stored in the PCM memory. If the malfunction returns in the next (second) drive cycle, the MIL comes on and a Confirmed DTC and the freeze data are stored.

Conditions for clearing the DTC

The shift position indicator comes off by turning the vehicle to the OFF (LOCK) mode. The Pending DTC, the Confirmed DTC, and the freeze data can be cleared with the scan tool Clear command or by disconnecting the 12 volt battery.

DTC P084F

DTC P084F : Park/Neutral Switch Output Circuit

General Description

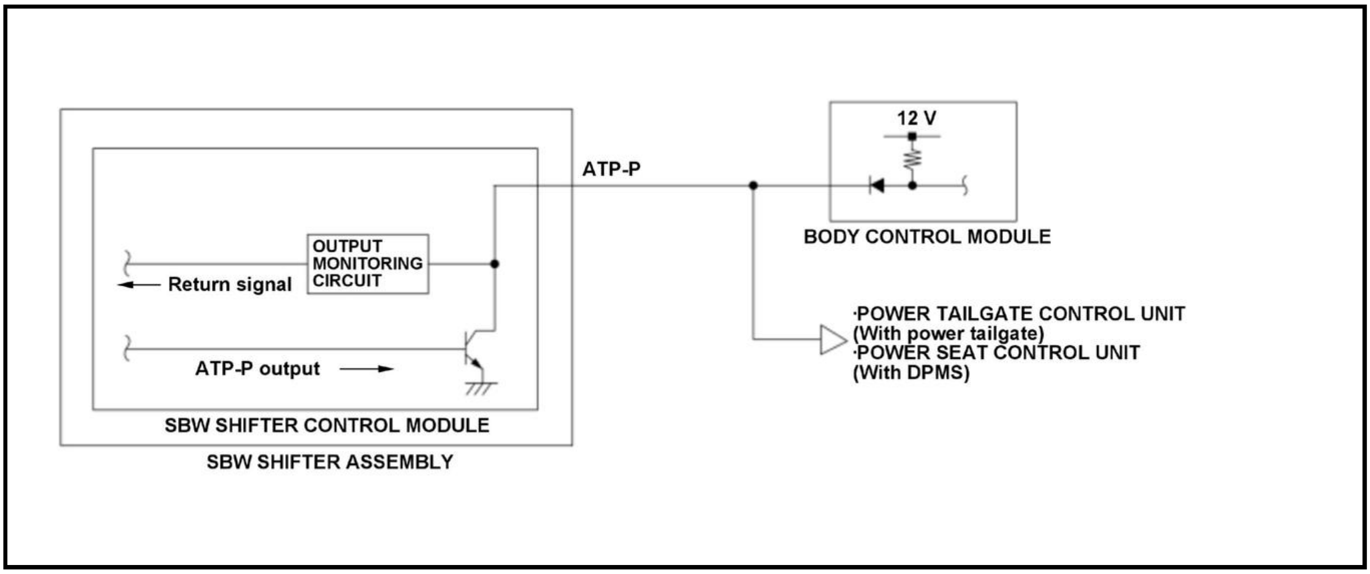
ATP-P
12 V
BODY CONTROL MODULE
OUTPUT MONITORING CIRCUIT
Return signal
ATP-P output
SBW SHIFTER CONTROL MODULE
SBW SHIFTER ASSEMBLY
·POWER TAILGATE CONTROL UNIT (With power tailgate)
·POWER SEAT CONTROL UNIT (With DPMS)

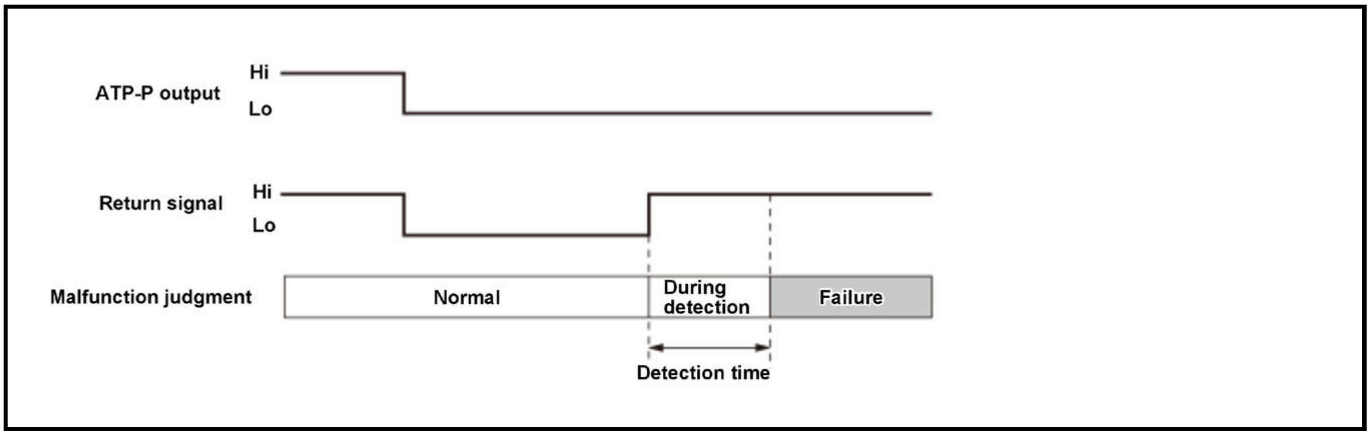

The SBW shifter control module in the SBW shifter assembly judges the parking position by the output voltage from the park position sensor. The SBW shifter control module switches the ATP-P output to Hi/Lo according to the parking condition of the transmission. The SBW shifter control module monitors the return signal of the ATP-P output, and when the return signal and ATP-P output does not match for a specified duration, the powertrain control module (PCM) receives malfunction from the SBW shifter control module, and stores a DTC.

Monitor Execution, Sequence, Duration, DTC Type

Execution	Continuous
Sequence	None
Duration	2 seconds or more
DTC Type	One drive cycle, MIL off, shift position indicator blinks

Enable Conditions

Condition	B
Vehicle	ON mode

Malfunction Threshold

The return signal and the ATP-P output do not match for at least 2 seconds.

Possible Cause

NOTE: The causes shown may not be a complete list of all potential problems, and it is possible that there may be other causes.

- SBW shifter control module ATP-P line short to ground
- SBW shifter control module ATP-P line short to power
- SBW shifter assembly internal failure
- Body control module internal failure
- Power tailgate control unit internal failure (With power tailgate)
- Power seat control unit internal failure (With DPMS)

Confirmation Procedure

Operating Condition

- Turn the vehicle to the READY TO DRIVE mode.
- Shift the transmission to P position/mode, and wait for at least 10 seconds.
- While pressing the brake pedal, shift the transmission to N position/mode, and wait for at least 10 seconds.

With the HDS

None.

Diagnosis Details

Conditions for setting the DTC

When a malfunction is detected, the shift position indicator blinks and a Pending DTC, a Confirmed DTC, and the freeze data are stored in the PCM memory. The MIL does not come on.

Conditions for clearing the DTC

The shift position indicator comes off by turning the vehicle to the OFF (LOCK) mode. The Pending DTC, the Confirmed DTC, and the freeze data can be cleared with the scan tool Clear command or by disconnecting the 12 volt battery.

DTC P0973

DTC P0973 : Shift Solenoid Valve A Control Circuit Low (Short)

General Description

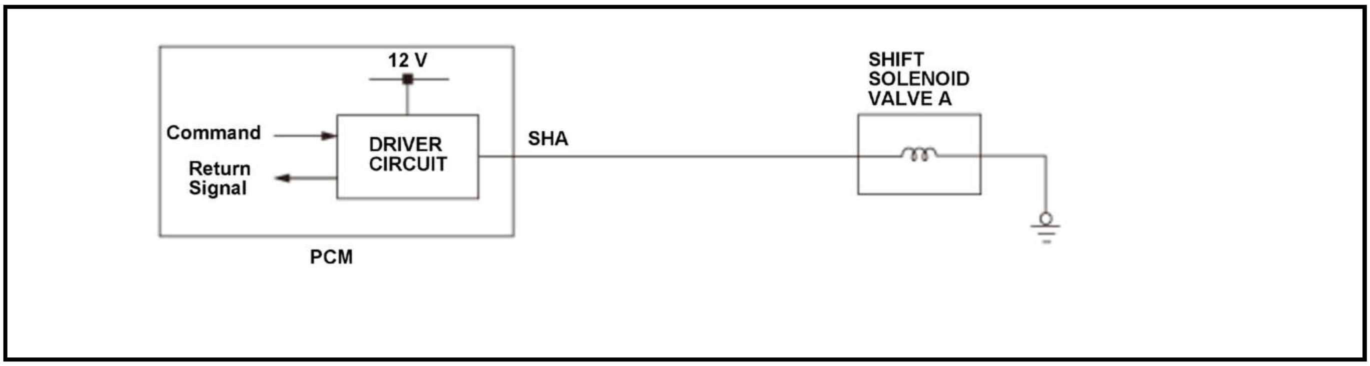

Condition of over drive clutch		Shift solenoid valve A	
		ON (12 V)	OFF (0 V)
Shift solenoid valve B	ON (12 V)	ON (engaged)	OFF (disengaged)
	OFF (0 V)	OFF (disengaged)	OFF (disengaged)

When shift solenoid valves A and B are turned ON, the hydraulic pressure circuit opens. The hydraulic pressure circuit supplies/discharges hydraulic pressure to/from each clutch according to the combination of the ON/OFF status of the shift solenoid valves. The powertrain control module (PCM) commands the driver circuit to turn ON the shift solenoid valve. The circuit detects malfunctions such as a circuit short or open, and sends back a return signal during the PCM's command. When the return signal does not match the PCM command to turn ON the shift solenoid valve, the PCM detects a malfunction and stores a DTC.

Monitor Execution, Sequence, Duration, DTC Type

Execution	Continuous
Sequence	None
Duration	1 second or more
DTC Type	One drive cycle, MIL off, shift position indicator blinks

Enable Conditions

Condition	Minimum	Maximum
12 volt battery voltage [Battery Voltage]	11 V	-

[ ]: HDS Parameter

Malfunction Threshold

The return signal does not match the command to turn ON shift solenoid valve A for at least 1 second.

Possible Cause

NOTE: The causes shown may not be a complete list of all potential problems, and it is possible that there may be other causes.

- Shift solenoid valve A SHA line short to ground
- Shift solenoid valve A internal circuit short
- PCM internal failure

Confirmation Procedure

Operating Condition

- Enter the maintenance mode, then start the engine. Hold the engine speed [Engine Speed] at 3, 000 rpm without load (in P or N) until the radiator fan comes on.
- Drive the vehicle at a steady speed of 44 mph (70 km/h) or more for at least 10 seconds with engine drive mode.

- Drive the vehicle in this manner only if the traffic regulations and ambient conditions allow.

With the HDS

None.

Diagnosis Details

Conditions for setting the DTC

When a malfunction is detected, the shift position indicator blinks and a Pending DTC, a Confirmed DTC, and the freeze data are stored in the PCM memory. The MIL does not come on.

Conditions for clearing the DTC

The shift position indicator comes off by turning the vehicle to the OFF (LOCK) mode. The Pending DTC, the Confirmed DTC, and the freeze data can be cleared with the scan tool Clear command or by disconnecting the 12 volt battery.

DTC P0974

DTC P0974 : Shift Solenoid Valve A Control Circuit High (Open)

General Description

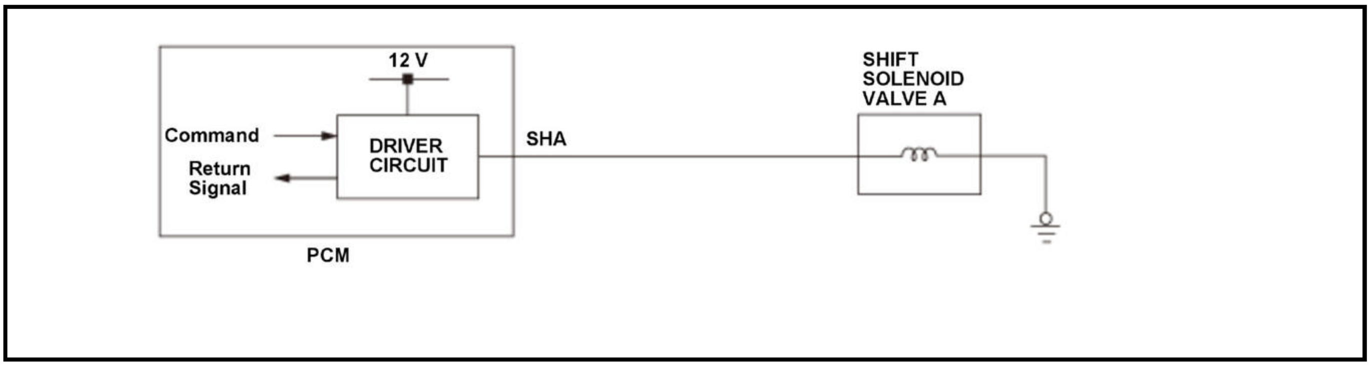

Condition of over drive clutch		Shift solenoid valve A	
		ON (12 V)	OFF (0 V)
Shift solenoid valve B	ON (12 V)	ON (engaged)	OFF (disengaged)
	OFF (0 V)	OFF (disengaged)	OFF (disengaged)

When shift solenoid valves A and B are turned ON, the hydraulic pressure circuit opens. The hydraulic pressure circuit supplies/discharges hydraulic pressure to/from each clutch according to the combination of the ON/OFF status of the shift solenoid valves. The powertrain control module (PCM) commands the driver circuit to turn ON the shift solenoid valve. The circuit detects malfunctions such as a circuit short or open, and sends back a return signal during the PCM's command. When the return signal does not match the PCM command to turn OFF the shift solenoid valve, the PCM detects a malfunction and stores a DTC.

Monitor Execution, Sequence, Duration, DTC Type

Execution	Continuous
Sequence	None
Duration	1 second or more
DTC Type	One drive cycle, MIL off, shift position indicator blinks

Enable Conditions

Condition	Minimum	Maximum
12 volt battery voltage [Battery Voltage]	11 V	-

[ ]: HDS Parameter

Malfunction Threshold

The return signal does not match the command to turn OFF shift solenoid valve A for at least 1 second.

Possible Cause

NOTE: The causes shown may not be a complete list of all potential problems, and it is possible that there may be other causes.

- Shift solenoid valve A SHA line open (includes a loose or disconnected connector)
- Shift solenoid valve A internal circuit open
- PCM internal failure

Confirmation Procedure

Operating Condition

- Turn the vehicle to the READY TO DRIVE mode.

- Shift the transmission to P position/mode, and wait for at least 1 second.

With the HDS

None.

Diagnosis Details

Conditions for setting the DTC

When a malfunction is detected, the shift position indicator blinks and a Pending DTC, a Confirmed DTC, and the freeze data are stored in the PCM memory. The MIL does not come on.

Conditions for clearing the DTC

The shift position indicator comes off by turning the vehicle to the OFF (LOCK) mode. The Pending DTC, the Confirmed DTC, and the freeze data can be cleared with the scan tool Clear command or by disconnecting the 12 volt battery.

DTC P0976

DTC P0976 : Shift Solenoid Valve B Control Circuit Low (Short)

General Description

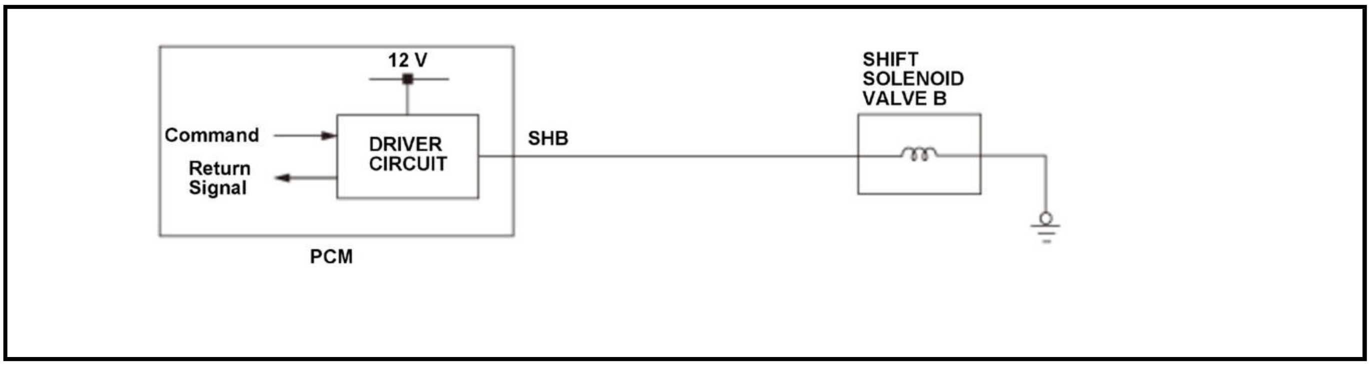

Condition of over drive clutch		Shift solenoid valve A	
		ON (12 V)	OFF (0 V)
Shift solenoid valve B	ON (12 V)	ON (engaged)	OFF (disengaged)
	OFF (0 V)	OFF (disengaged)	OFF (disengaged)

When shift solenoid valves A and B are turned ON, the hydraulic pressure circuit opens. The hydraulic pressure circuit supplies/discharges hydraulic pressure to/from each clutch according to the combination of the ON/OFF status of the shift solenoid valves. The powertrain control module (PCM) commands the driver circuit to turn ON the shift solenoid valve. The circuit detects malfunctions such as a circuit short or open, and sends back a return signal during the PCM's command. When the return signal does not match the PCM command to turn ON the shift solenoid valve, the PCM detects a malfunction and stores a DTC.

Monitor Execution, Sequence, Duration, DTC Type

Execution	Continuous
Sequence	None
Duration	1 second or more
DTC Type	One drive cycle, MIL off, shift position indicator blinks

Enable Conditions

Condition	Minimum	Maximum
12 volt battery voltage [Battery Voltage]	11 V	-

[ ]: HDS Parameter

Malfunction Threshold

The return signal does not match the command to turn ON shift solenoid valve B for at least 1 second.

Possible Cause

NOTE: The causes shown may not be a complete list of all potential problems, and it is possible that there may be other causes.

- Shift solenoid valve B SHB line short to ground
- Shift solenoid valve B internal circuit short
- PCM internal failure

Confirmation Procedure

Operating Condition

- Enter the maintenance mode, then start the engine. Hold the engine speed [Engine Speed] at 3, 000 rpm without load (in P or N) until the radiator fan comes on.
- Drive the vehicle at a steady speed of 44 mph (70 km/h) or more for at least 10 seconds with engine drive mode.

- Drive the vehicle in this manner only if the traffic regulations and ambient conditions allow.

With the HDS

None.

Diagnosis Details

Conditions for setting the DTC

When a malfunction is detected, the shift position indicator blinks and a Pending DTC, a Confirmed DTC, and the freeze data are stored in the PCM memory. The MIL does not come on.

Conditions for clearing the DTC

The shift position indicator comes off by turning the vehicle to the OFF (LOCK) mode. The Pending DTC, the Confirmed DTC, and the freeze data can be cleared with the scan tool Clear command or by disconnecting the 12 volt battery.

DTC P0977

DTC P0977 : Shift Solenoid Valve B Control Circuit High (Open)

General Description

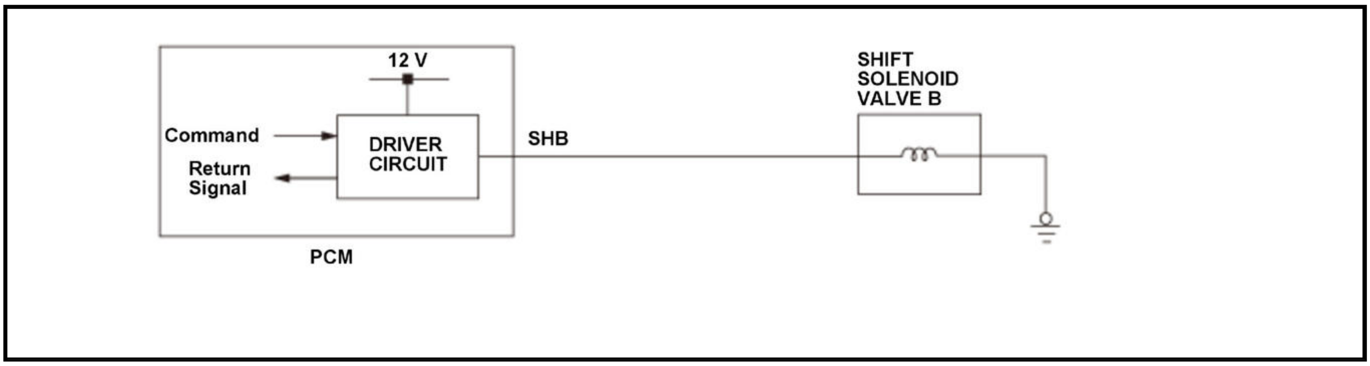

Condition of over drive clutch		Shift solenoid valve A	
		ON (12 V)	OFF (0 V)
Shift solenoid valve B	ON (12 V)	ON (engaged)	OFF (disengaged)
	OFF (0 V)	OFF (disengaged)	OFF (disengaged)

When shift solenoid valves A and B are turned ON, the hydraulic pressure circuit opens. The hydraulic pressure circuit supplies/discharges hydraulic pressure to/from each clutch according to the combination of the ON/OFF status of the shift solenoid valves. The powertrain control module (PCM) commands the driver circuit to turn ON the shift solenoid valve. The circuit detects malfunctions such as a circuit short or open, and sends back a return signal during the PCM's command. When the return signal does not match the PCM command to turn OFF the shift solenoid valve, the PCM detects a malfunction and stores a DTC.

Monitor Execution, Sequence, Duration, DTC Type

Execution	Continuous
Sequence	None
Duration	1 second or more
DTC Type	One drive cycle, MIL off, shift position indicator blinks

Enable Conditions

Condition	Minimum	Maximum
12 volt battery voltage [Battery Voltage]	11 V	-

[ ]: HDS Parameter

Malfunction Threshold

The return signal does not match the command to turn OFF shift solenoid valve B for at least 1 second.

Possible Cause

NOTE: The causes shown may not be a complete list of all potential problems, and it is possible that there may be other causes.

- Shift solenoid valve B SHB line open (includes a loose or disconnected connector)
- Shift solenoid valve B internal circuit open
- PCM internal failure

Confirmation Procedure

Operating Condition

- Turn the vehicle to the READY TO DRIVE mode.

- Shift the transmission to P position/mode, and wait for at least 1 second.

With the HDS

None.

Diagnosis Details

Conditions for setting the DTC

When a malfunction is detected, the shift position indicator blinks and a Pending DTC, a Confirmed DTC, and the freeze data are stored in the PCM memory. The MIL does not come on.

Conditions for clearing the DTC

The shift position indicator comes off by turning the vehicle to the OFF (LOCK) mode. The Pending DTC, the Confirmed DTC, and the freeze data can be cleared with the scan tool Clear command or by disconnecting the 12 volt battery.

DTC P0C2F

DTC P0C2F: GEN-ENG Angular Speed Correlation Malfunction

General Description

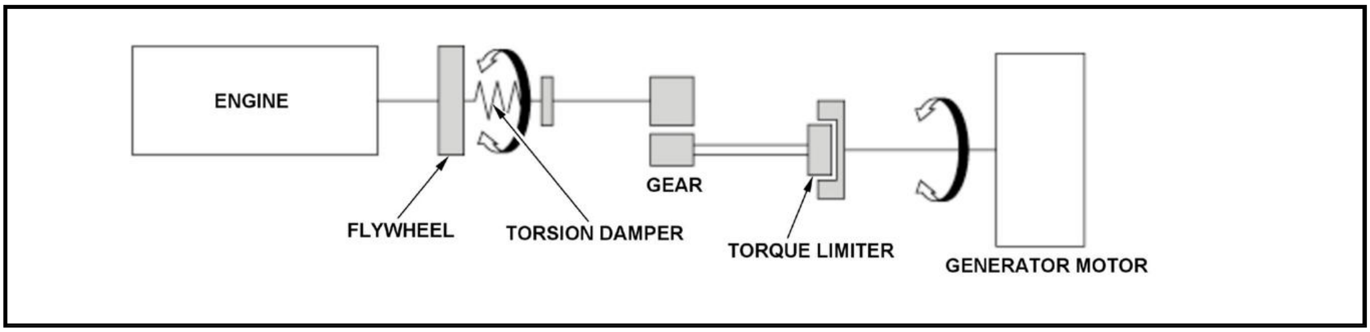

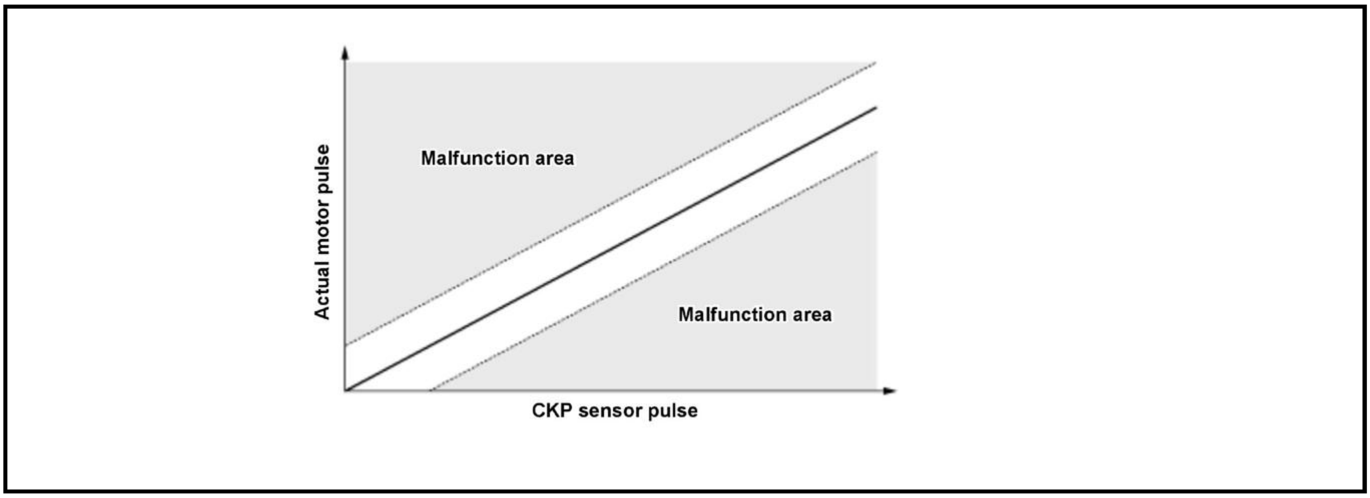

The powertrain control module (PCM) detects a malfunction and stores a DTC if the pulse value of the generator motor differs from the crank pulse value by either a set value or less, or a set vale or more.

Monitor Execution, Sequence, Duration, DTC Type

Execution	Once per driving cycle
Sequence	None
Duration	4.8 seconds or more, but not more than 24 seconds
DTC Type	Two drive cycles, MIL on

Enable Conditions

Condition	Minimum	Maximum
Engine speed [Engine Speed]	500 rpm	2, 500 rpm

[ ]: HDS Parameter

Malfunction Threshold

When the generator motor pulse count is different from the crank pulse count by 127 or less or by 154 or more.

Possible Cause

NOTE: The causes shown may not be a complete list of all potential problems, and it is possible that there may be other causes.

- PCM NGENPLS line open
- PCM NGENPLS line short to failure
- PCM NGENPLS line electrical noise overlapped
- CKP sensor CRKP line failure
- CKP sensor CRKP line electrical noise overlapped

Confirmation Procedure

Operating Condition

- Enter the maintenance mode, then start the engine.
- Drive the vehicle at engine speed [Engine Speed] between 500 - 2, 500 rpm for at least 24 seconds.

- When freeze data is stored, hold the engine speed under those conditions.

With the HDS

None.

Diagnosis Details

Conditions for setting the DTC

When a malfunction is detected during the first drive cycle, a Pending DTC is stored in the PCM memory. If the malfunction returns in the next (second) drive cycle, the MIL comes on and a Confirmed DTC and the freeze data are stored.

Conditions for clearing the DTC

The MIL is cleared if the malfunction does not return in three consecutive trips in which the diagnostic runs. The MIL, the Pending DTC, the Confirmed DTC, and the freeze data can be cleared with the scan tool Clear command or by disconnecting the 12 volt battery.

DTC P100A

DTC P100A: Electric VTC Motor Circuit Malfunction

General Description

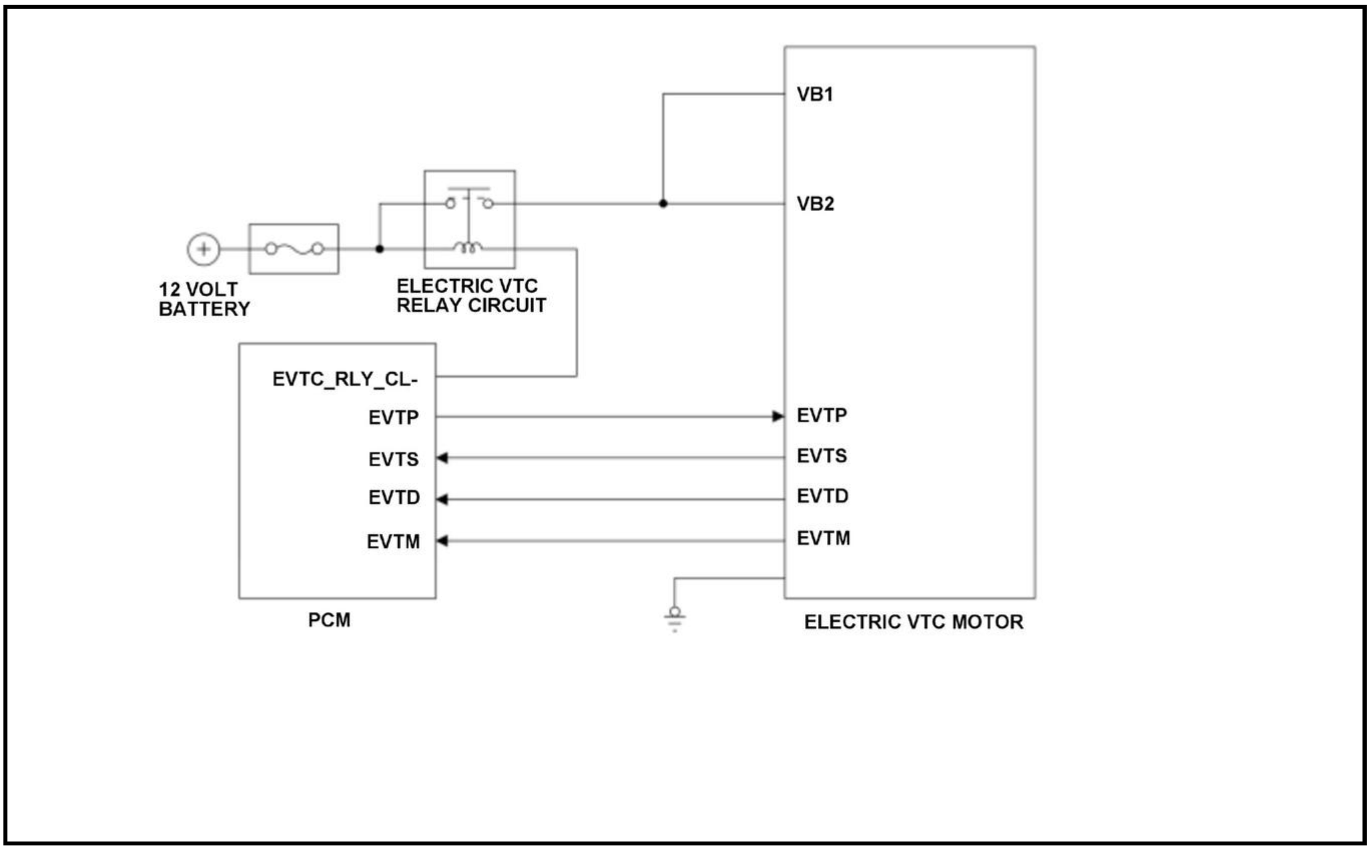
VB1
VB2
12 VOLT BATTERY
ELECTRIC VTC RELAY CIRCUIT
EVTC_RLY_CL-
EVTP
EVTS
EVTD
EVTM
PCM
EVTP
EVTS
EVTD
EVTM
ELECTRIC VTC MOTOR

The EVTM line of the powertrain control module (PCM) is installed to receive a diagnostic signal from the electric VTC motor. When the electric VTC relay circuit is on under normal conditions, the EVTM line output from the electric VTC motor is 80 % (+/-5 %) duty. The PCM detects a malfunction and stores a DTC when the EVTM line output is anything other than 80 % (+/-5 %) duty continuously for the prescribed time or when though the electric VTC relay circuit is turned on.

Monitor Execution, Sequence, Duration, DTC Type

Execution	Continuous
Sequence	None
Duration	5 seconds or more
DTC Type	One drive cycle, MIL on

Enable Conditions

Condition	Minimum	Maximum
12 volt battery voltage [Battery]	10.5 V	-

[ ]: HDS Parameter

Malfunction Threshold

When the EVTM output pulse number is incorrect and the 80 % (+/-5 %) duty continuously for 5 seconds or more when the PCM has turned on the electric VTC relay circuit.

Possible Cause

NOTE: The causes shown may not be a complete list of all potential problems, and it is possible that there may be other causes.

- Electric VTC motor EVTP line open
- Electric VTC motor EVTM line open

- Electric VTC motor ground line open
- Electric VTC relay circuit EVTC_RLY_CL- line open
- Electric VTC motor EVTP line short
- Electric VTC motor EVTM line short
- Electric VTC motor ground line short
- Electric VTC relay circuit EVTC_RLY_CL- line short to power
- Electric VTC motor VB1 line short to ground
- Electric VTC motor VB2 line short to ground
- Electric VTC relay circuit stuck off

Confirmation Procedure

Operating Condition

None.

With the HDS

Select the VTC TEST in the Function Test Menu with the HDS.

Diagnosis Details

Conditions for setting the DTC

When a malfunction is detected, the MIL comes on and a Pending DTC, a Confirmed DTC, and the freeze data are stored in the PCM memory.

Conditions for clearing the DTC

The MIL is cleared if the malfunction does not return in three consecutive trips in which the diagnostic runs. The MIL, the Pending DTC, the Confirmed DTC, and the freeze data can be cleared with the scan tool Clear command.

DTC P100B

DTC P100B: Electric VTC Motor Control Module Malfunction

General Description

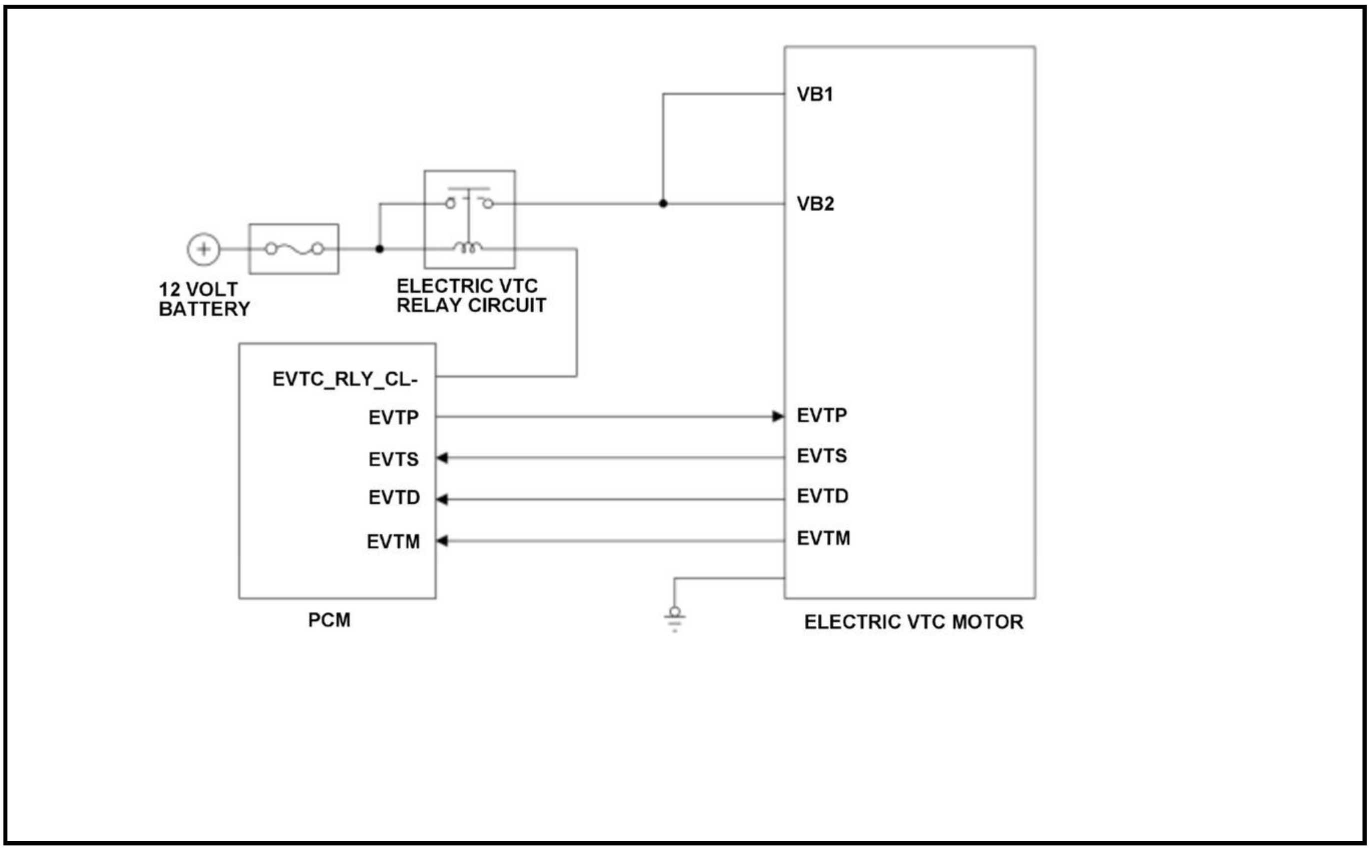
VB1
VB2
12 VOLT BATTERY
ELECTRIC VTC RELAY CIRCUIT
EVTC_RLY_CL-
EVTP
EVTS
EVTD
EVTM
PCM
EVTP
EVTS
EVTD
EVTM
ELECTRIC VTC MOTOR

The EVTM line of the powertrain control module (PCM) is installed to receive a diagnostic signal from the electric VTC motor. When the electric VTC relay circuit is on under normal conditions, the EVTM line output from the electric VTC motor is 80 % (+/-5 %) duty. The PCM detects a malfunction and stores a DTC when the EVTM line output is anything other than 40 % (+/-5 %) duty or 60 % (+/-5 %) duty continuously for the prescribed time or when though the electric VTC relay circuit is turned on.

Monitor Execution, Sequence, Duration, DTC Type

Execution	Continuous
Sequence	None
Duration	5 seconds or more
DTC Type	One drive cycle, MIL on

Enable Conditions

Condition	Minimum	Maximum
12 volt battery voltage [Battery]	10.5 V	-

[ ]: HDS Parameter

Malfunction Threshold

When the EVTM output is other than 40 % (+/-5 %) duty or 60 % (+/-5 %) duty continuously for 5 seconds or more though the PCM has turned on the electric VTC relay circuit.

Possible Cause

NOTE: The causes shown may not be a complete list of all potential problems, and it is possible that there may be other causes.

- Electric VTC motor internal circuit failure

Diagnosis Details

Conditions for setting the DTC

When a malfunction is detected, the MIL comes on and a Pending DTC, a Confirmed DTC, and the freeze data are stored in the PCM memory.

Conditions for clearing the DTC

The MIL is cleared if the malfunction does not return in three consecutive trips in which the diagnostic runs. The MIL, the Pending DTC, the Confirmed DTC, and the freeze data can be cleared with the scan tool Clear command.

DTC P100C

DTC P100C: Electric VTC Motor Speed Signal Circuit Malfunction

General Description

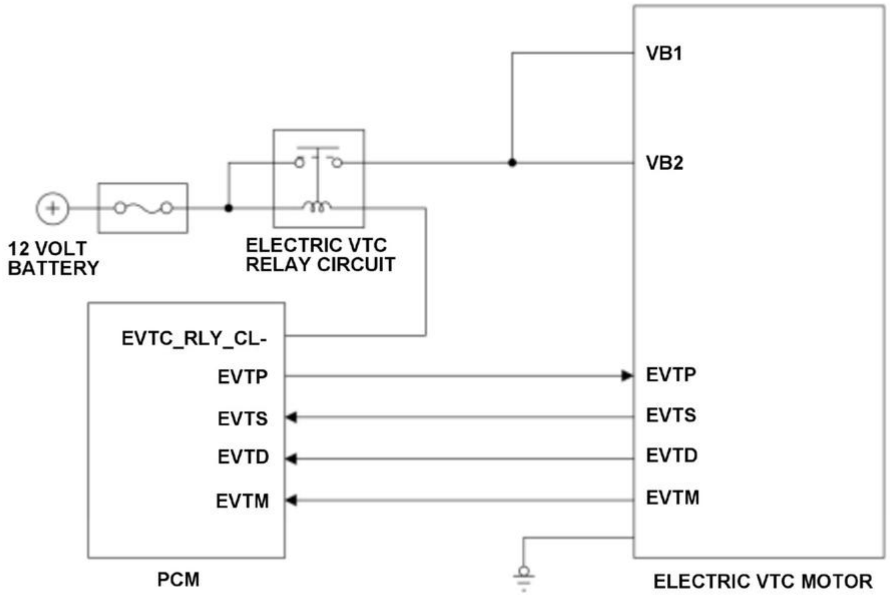

The EVTS line and the EVTM line of the powertrain control module (PCM) receive the electric VTC motor revolution speed and the electric VTC motor revolution direction data and output pulses accordingly. The EVTM outputs the same pulse as the EVTS when the electric VTC motor revolution direction is normal and outputs reverse pulse of the EVTS when reversing. The PCM detects a malfunction and stores a DTC when the EVTS pulse number and the EVTD pulse number sent from the electric VTC motor are different continuously for the prescribed time.

Monitor Execution, Sequence, Duration, DTC Type

Execution	Continuous
Sequence	None
Duration	5 seconds or more
DTC Type	One drive cycle, MIL on

Enable Conditions

Condition	Minimum	Maximum
12 volt battery voltage [Battery]	10.5 V	-

[ ]: HDS Parameter

Malfunction Threshold

When the EVTS line pulse number and the EVTD line pulse number are different continuously for 5 seconds or more when the PCM has turned on the electric VTC relay circuit.

Possible Cause

NOTE: The causes shown may not be a complete list of all potential problems, and it is possible that there may be other causes.

- Electric VTC motor EVTS line open
- Electric VTC motor EVTD line open
- Electric VTC motor EVTS line short
- Electric VTC motor EVTD line short
- Electric VTC motor EVTS line electrical noise overlapped
- Electric VTC motor EVTD line electrical noise overlapped

Confirmation Procedure

Operating Condition

None.

With the HDS

Select the VTC TEST in the Function Test Menu with the HDS.

Diagnosis Details

Conditions for setting the DTC

When a malfunction is detected, the MIL comes on and a Pending DTC, a Confirmed DTC, and the freeze data are stored in the PCM memory.

Conditions for clearing the DTC

The MIL is cleared if the malfunction does not return in three consecutive trips in which the diagnostic runs. The MIL, the Pending DTC, the Confirmed DTC, and the freeze data can be cleared with the scan tool Clear command.

DTC P100D

DTC P100D: Electric VTC Motor Power Relay Circuit Stuck On

General Description

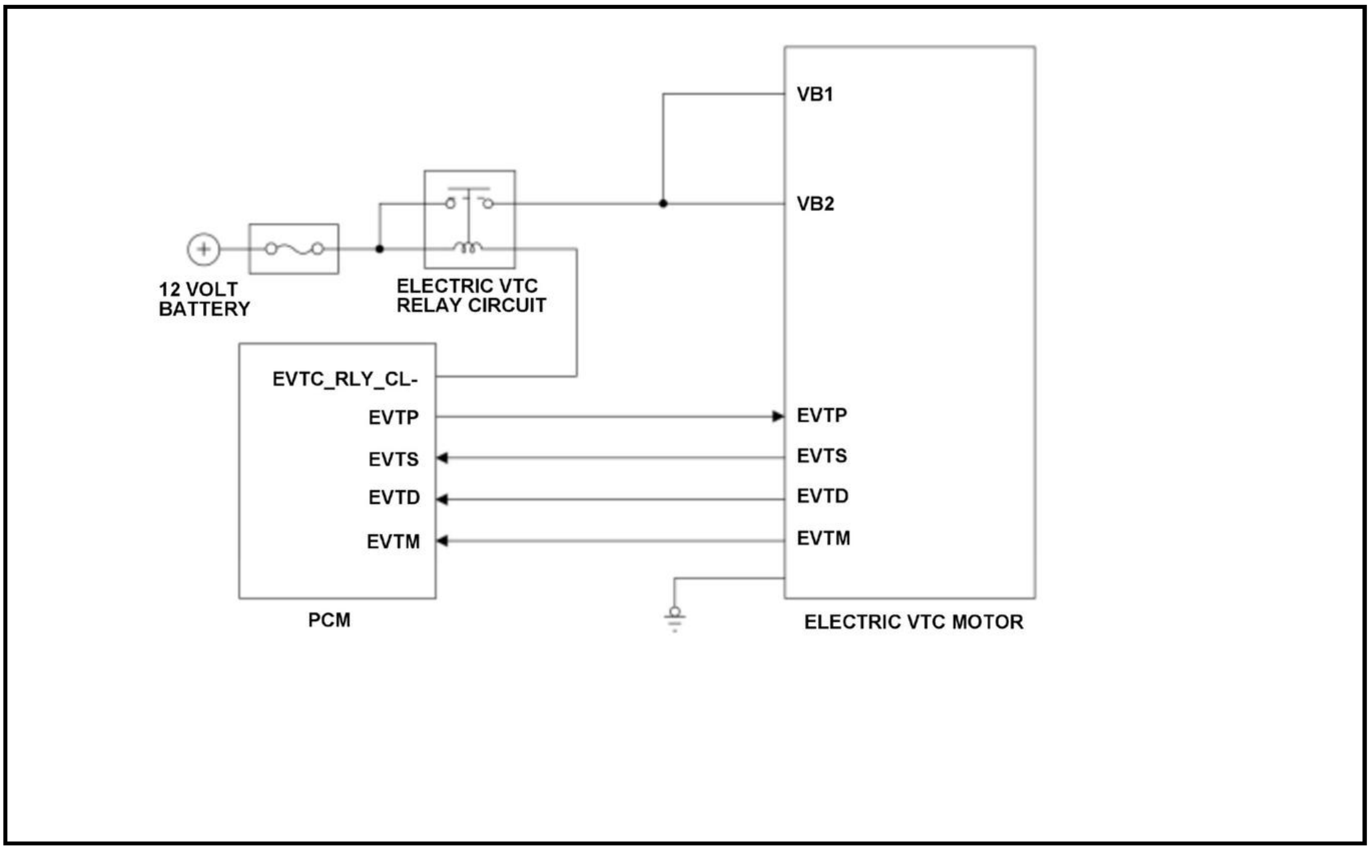

The EVTM line of the powertrain control module (PCM) is installed to receive diagnostic signal from the electric VTC motor. When the electric VTC relay circuit is off under normal conditions, the EVTM line output from the electric VTC motor is 100 % (+/-5 %) duty. When in the vehicle OFF (LOCK) mode, the PCM detects a malfunction and stores a DTC when the EVTM line output is anything other than 100 % (+/-5 %) duty continuously for the prescribed time though the electric VTC relay circuit is turned off.

Monitor Execution, Sequence, Duration, DTC Type

Execution	Continuous
Sequence	None
Duration	5 seconds or more
DTC Type	One drive cycle, MIL off

Enable Conditions

Condition	Minimum	Maximum
12 volt battery voltage [Battery]	10.5 V	-

[ ]: HDS Parameter

Malfunction Threshold

When the EVTM output is other than 100 % (+/-5 %) duty continuously for 5 seconds or more though the PCM has turned off the electric VTC relay circuit in the vehicle OFF (LOCK) mode.

Possible Cause

NOTE: The causes shown may not be a complete list of all potential problems, and it is possible that there may be other causes.

- Electric VTC motor VB2 line short to power
- Electric VTC motor EVTM line short to ground

- Electric VTC relay circuit EVTC_RLY_CL- line short to ground
- Electric VTC relay circuit stuck on

Diagnosis Details

Conditions for setting the DTC

When a malfunction is detected, a Pending DTC, a Confirmed DTC, and the freeze data are stored in the PCM memory. The MIL does not come on.

Conditions for clearing the DTC

The Pending DTC, the Confirmed DTC, and the freeze data can be cleared with the scan tool Clear command.

DTC P145E

DTC P145E: Evaporative Emission (EVAP) System Purge Flow Malfunction 2

General Description

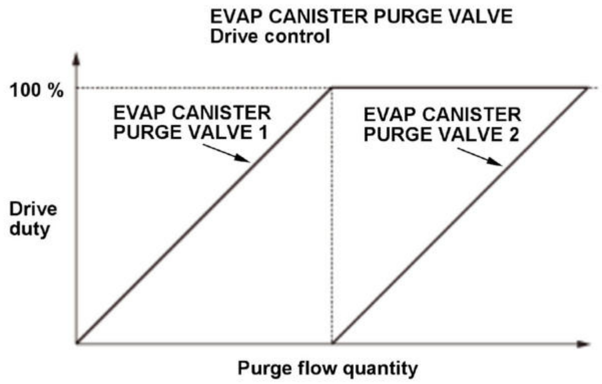

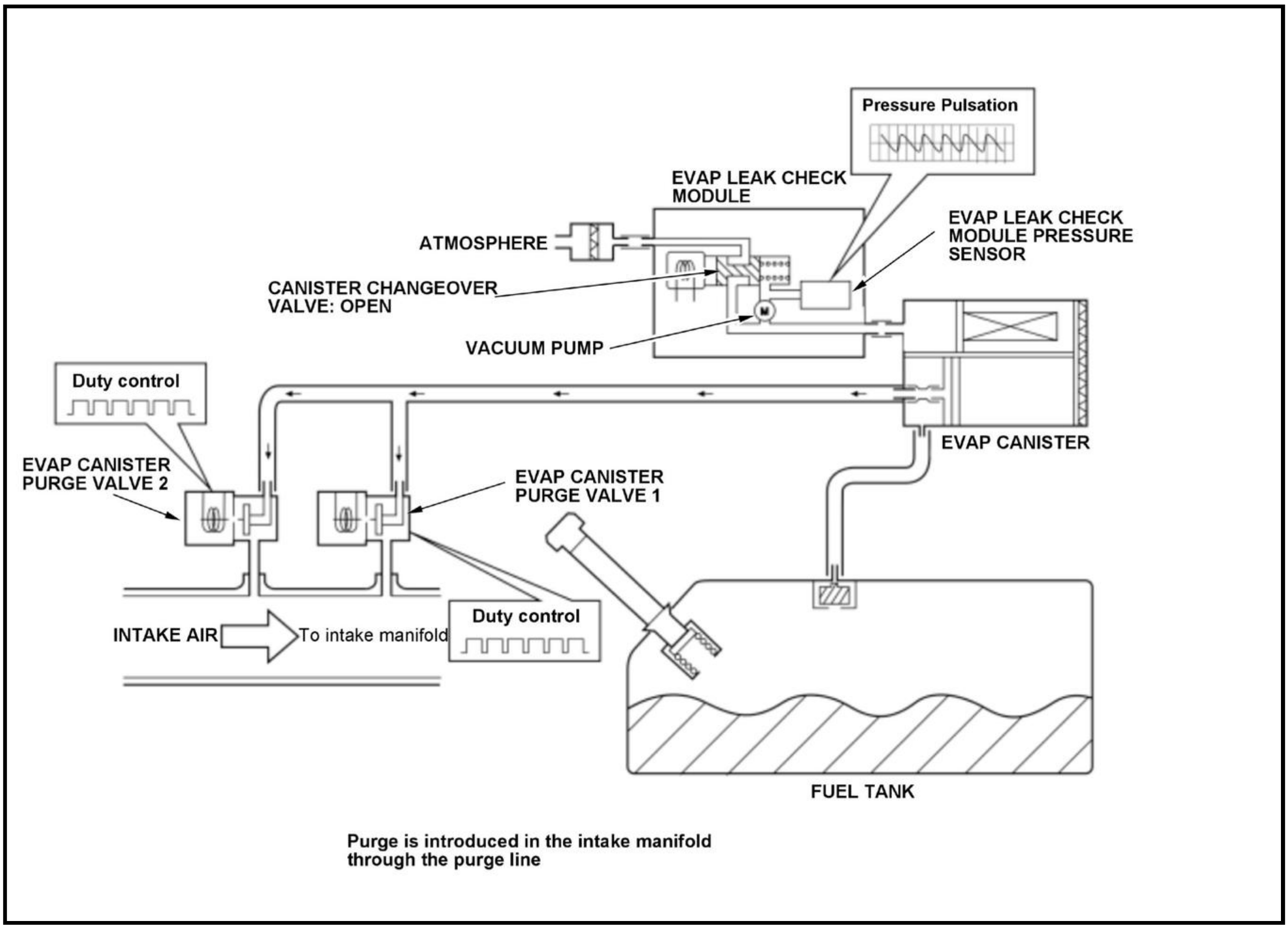
Pressure Pulsation
EVAP LEAK CHECK MODULE
EVAP LEAK CHECK MODULE PRESSURE SENSOR
ATMOSPHERE
CANISTER CHANGEOVER VALVE: OPEN
VACUUM PUMP
M
Duty control
EVAP CANISTER PURGE VALVE 2
EVAP CANISTER PURGE VALVE 1
EVAP CANISTER
INTAKE AIR
To intake manifold
Duty control
FUEL TANK
Purge is introduced in the intake manifold through the purge line

The fuel vapor in the fuel tank is temporarily stored in the evaporative emission (EVAP) canister and drawn into the engine through the EVAP canister purge valve. The powertrain control module (PCM) controls the amount of vapor introduced into the engine by varying the duty cycle of the EVAP canister purge valve according to the condition of the engine. The EVAP system is a system which has this EVAP canister purge valve equipped parallel and adjusts the amount of vapor by driving the EVAP canister purge valve 2 when the EVAP canister purge valve 1 is fully opened.

<STEP 1>

The EVAP canister purge valve opens normally (EVAP canister purge valve OPEN OK) and detects that the purge flow is normal when the pulse of the EVAP canister purge valve duty cycle is transmitted to the EVAP leak check module pressure sensor during purge flow (pulse method). If there are no pulsation with EVAP canister purge valve 1, it judges pulsation by switching to EVAP canister purge valve 2 drive in EVAP canister purge valve 1 drive area.

OK determination: If pulsation from EVAP canister purge valve 1 drive area and pulsation from EVAP canister purge valve 2 area (EVAP canister purge valve 1 is in fully opened driving condition) are both present. (P0441 OK/P145E OK)

- P04F1 Purge flow OK
- P04DF EVAP canister purge valve 1 stuck Open OK
- P04AE EVAP canister purge valve 2 stuck Open OK

NG determination: If pulsation from EVAP canister purge valve 1 drive area is not present but pulsation from EVAP canister purge valve 2 drive is present. (P0441 NG/P145E OK)

- Either purge flow P04F1 abnormality or P04DF EVAP canister purge valve 1 OPEN failure.
- In this case, classify the failed part according to <STEP 2>.

NG determination: If pulsation from EVAP canister purge valve 2 drive area is not present but pulsation from EVAP canister purge valve 1 drive is present. (P0441 OK/P145E NG)

- Either purge flow P04F1 abnormality or P04DF EVAP canister purge valve 1 OPEN failure.

NG determination: If pulsation from EVAP canister purge valve 1 and EVAP canister purge valve 2 drive area is not present. (P0441 NG/P145E NG)

- P04F1 Purge flow NG

<STEP 2>

If there is no pulse, it is determined as either no purge flow or the EVAP canister purge valve 1 is stuck OPEN:

When the EVAP leak check module pressure sensor fluctuates from negative pressure to atmospheric pressure after the engine stopped: P04DF EVAP canister purge valve 1 stuck OPEN

When there is no fluctuation of the EVAP leak check module pressure sensor: P04F1 purge flow NG

If there is no pulse, it is determined as either no purge flow or the EVAP canister purge valve 2 is stuck OPEN:

When the EVAP leak check module pressure sensor fluctuates from negative pressure to atmospheric pressure after the engine stopped: P04AE EVAP canister purge valve 2 stuck OPEN

When there is no fluctuation of the EVAP leak check module pressure sensor: P04F1 purge flow NG

Monitor Execution, Sequence, Duration, DTC Type

Execution	Once per driving cycle
Sequence	None
Duration	9.3 seconds or more
DTC Type	Two drive cycles, MIL on

Enable Conditions

Condition	Minimum	Maximum
Engine coolant temperature [ECT Sensor 1] before EVAP purge control starts	104 deg.F (40 deg.C)	-
MAP value [MAP Sensor (Hi Res)]	-	-9.3 kPa (-0.3 inHg, -70 mmHg)
Vehicle speed [Vehicle Speed]	-	2 mph (3 km/h)
12 volt battery voltage [Battery]	10.5 V	-
Fuel trim	0.69	1.47
EVAP canister purge valve 2 duty	15 %	90 %
Fuel feedback	Closed loop at stoichiometric	

[ ]: HDS Parameter

Malfunction Threshold

The pulses detected by the EVAP leak check module pressure sensor are 50 % or less for at least 9.3 seconds.

Possible Cause

NOTE: The causes shown may not be a complete list of all potential problems, and it is possible that there may be other causes.

- EVAP canister purge valve 2 middle stuck
- EVAP canister purge valve 2 open stuck
- EVAP leak check module pressure sensor stuck
- EVAP system line clogged
- EVAP system line miss installed
- EVAP canister purge valve 2 failure

Confirmation Procedure

Operating Condition

- Enter the maintenance mode, then start the engine. Hold the engine speed [Engine Speed] at 3, 000 rpm without load (in P or N) until the radiator fan comes on.
- Let the engine running for at least 30 seconds.
- Stop the engine and leave the vehicle for at least 10 seconds.

With the HDS

None.

Diagnosis Details

Conditions for setting the DTC

When a malfunction is detected during the first drive cycle, a Pending DTC is stored in the PCM memory. If the malfunction returns in the next (second) drive cycle, the MIL comes on and a Confirmed DTC and the freeze data are stored.

Conditions for clearing the DTC

The MIL is cleared if the malfunction does not return in three consecutive trips in which the diagnostic runs. The MIL, the Pending DTC, the Confirmed DTC, and the freeze data can be cleared with the scan tool Clear command or by disconnecting the 12 volt battery.

DTC P145F

DTC P145F: Evaporative Emission (EVAP) Leak Check Module Pressure Sensor Range/Performance Problem

General Description

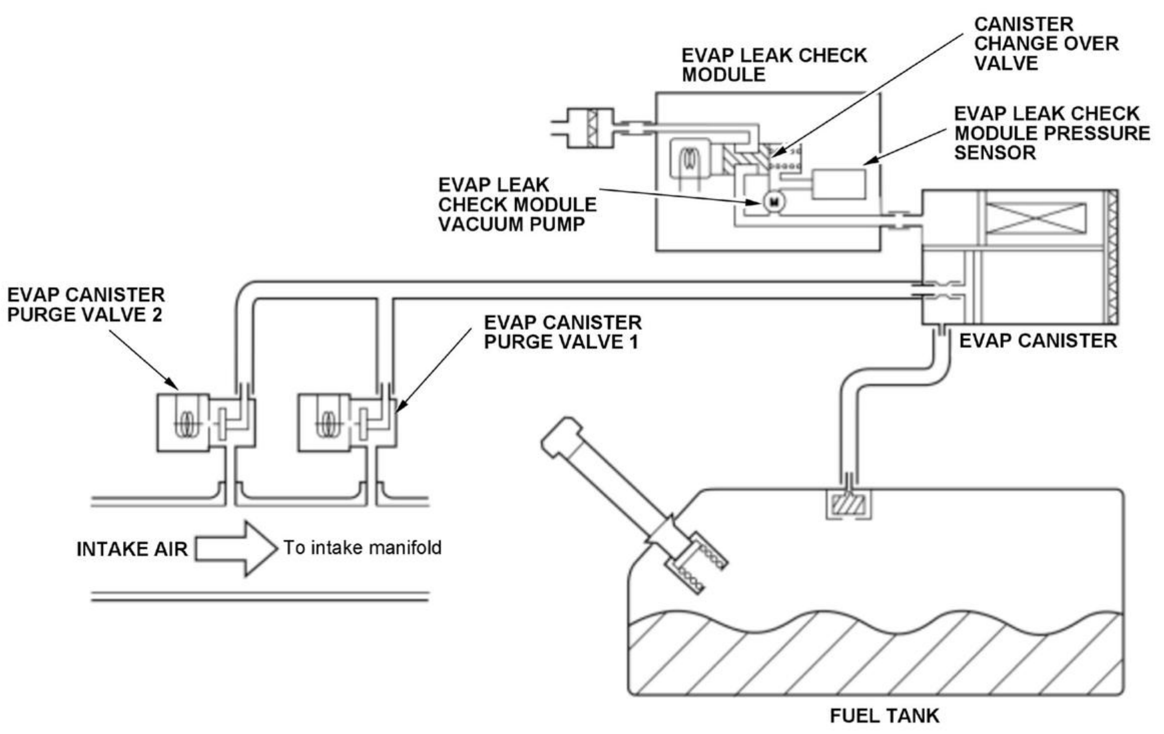
CANISTER
CHANGE OVER
VALVE
EVAP LEAK CHECK
MODULE
EVAP LEAK CHECK
MODULE PRESSURE
SENSOR
EVAP LEAK
CHECK MODULE
VACUUM PUMP
EVAP CANISTER
PURGE VALVE 2
EVAP CANISTER
PURGE VALVE 1
EVAP CANISTER
INTAKE AIR
To intake manifold
FUEL TANK

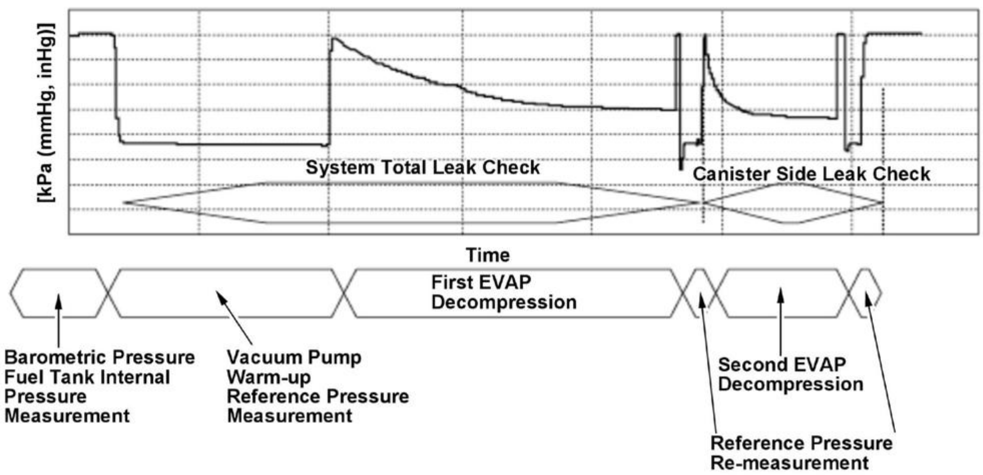
[kPa (mmHg, inHg)]
System Total Leak Check
Canister Side Leak Check
Time
First EVAP
Decompression
Barometric Pressure
Fuel Tank Internal
Pressure
Measurement
Vacuum Pump
Warm-up
Reference Pressure
Measurement
Second EVAP
Decompression
Reference Pressure
Re-measurement

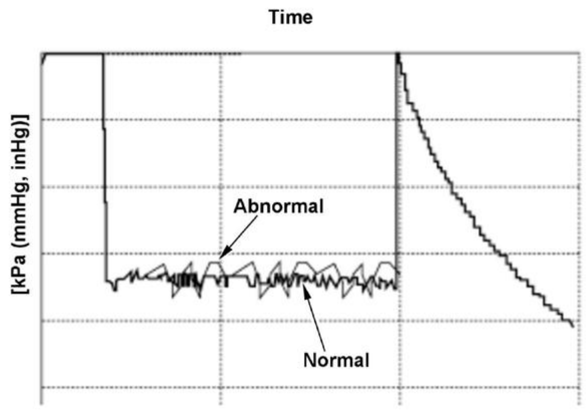

The powertrain control module (PCM) starts the evaporative emission (EVAP) system diagnosis after the vehicle has been turned to the OFF (LOCK) mode, and has met all other enable conditions (initial engine coolant temperature [ECT Sensor 1] and off for at least 5 hours). The EVAP system diagnosis is performed by reducing pressure between the EVAP canister and the atmosphere.

A malfunction is detected and a DTC is stored when the max and min values of the pressure measurements within the prescribed time during reference pressure measurement is equal to or more than the prescribed value.

EVAP leak check module operation flow

- Reference pressure measurement: Malfunction detection in the EVAP leak check module and determination of early completion of pressure reduction when normal.
- System pressure reduction: Pressure in the EVAP system is reduced to measure the ultimate pressure.
- Reference pressure re-measurement: Leak is detected by comparing with the ultimate pressure of the system pressure reduction.
- Reference value is to be measured twice considering change in the characteristics of the EVAP leak check module vacuum pump during detection.

Reference pressure is the pressure reduction caused by the reference orifice (#40 equivalent) in the EVAP leak check module used to check for leak by comparison with the system pressure reduction.

Monitor Execution, Sequence, Duration, DTC Type

Execution	Once per driving cycle
Sequence	None
Duration	At least 6 minutes 10 seconds but not more than 18 minutes 45 seconds
DTC Type	Two drive cycles, MIL on

Enable Conditions

Condition	Minimum	Maximum
Elapsed time after the vehicle condition is turned to the READY TO DRIVE mode	10 minutes	-
Elapsed time after the vehicle condition is turned to the OFF (LOCK) mode	5 hours	-
PCM wake up engine coolant temperature [ECT SENSOR 2]	40 deg.F (5 deg.C)	95 deg.F (35 deg.C)

Condition	Minimum	Maximum
Barometric pressure[BARO SENSOR]	76 kPa (569 mmHg, 22.5 inHg)	-

[ ]: HDS Parameter

Condition	Minimum	Maximum
12 volt battery voltage [BATTERY]	10.5 V	-
Other	No refueling is required	

[ ]: HDS Parameter

Malfunction Threshold

When the max and min values of the pressure measurements within the prescribed time during reference pressure measurement is 0.3 kPa (2.5 mmHg, 0.1 inHg) or more.

Possible Cause

NOTE: The causes shown may not be a complete list of all potential problems, and it is possible that there may be other causes.

- EVAP leak check module vacuum pump failure
- Canister change over valve failure
- Reference orifice flow quantity is excessive
- Reference orifice flow quantity is too few

Confirmation Procedure

Operating Condition

- With the engine coolant temperature [ECT Sensor 2] within the specified range, turn the vehicle to the READY TO DRIVE mode, and wait for at least 10 minutes.
- Turn the vehicle to the OFF (LOCK) mode, and wait for at least 5 hours.
- PCM wake up, and wait at least 18 minutes 45 seconds.

With the HDS

Select the EVAP TEST in the Function Test Menu, then select EVAP Leak Check Module Test with the HDS.

Diagnosis Details

Conditions for setting the DTC

When a malfunction is detected during the first drive cycle with the engine coolant temperature and intake air temperature at engine start-up within the specified temperature range, a Pending DTC is stored in the PCM memory. If the malfunction returns in the next (second) drive cycle with the engine coolant temperature and intake air temperature at engine start-up within the specified temperature range, the MIL comes on and a Confirmed DTC and freeze data are stored.

Conditions for clearing the DTC

The MIL is cleared if the malfunction does not return in three consecutive trips in which the diagnostic runs. The MIL, the Pending DTC, the Confirmed DTC, and the freeze data can be cleared with the scan tool clear command or by disconnecting the 12 volt battery.

DTC P1461

DTC P1461: Evaporative Emission (EVAP) Leak Check Module Pressure Sensor Shifts

General Description

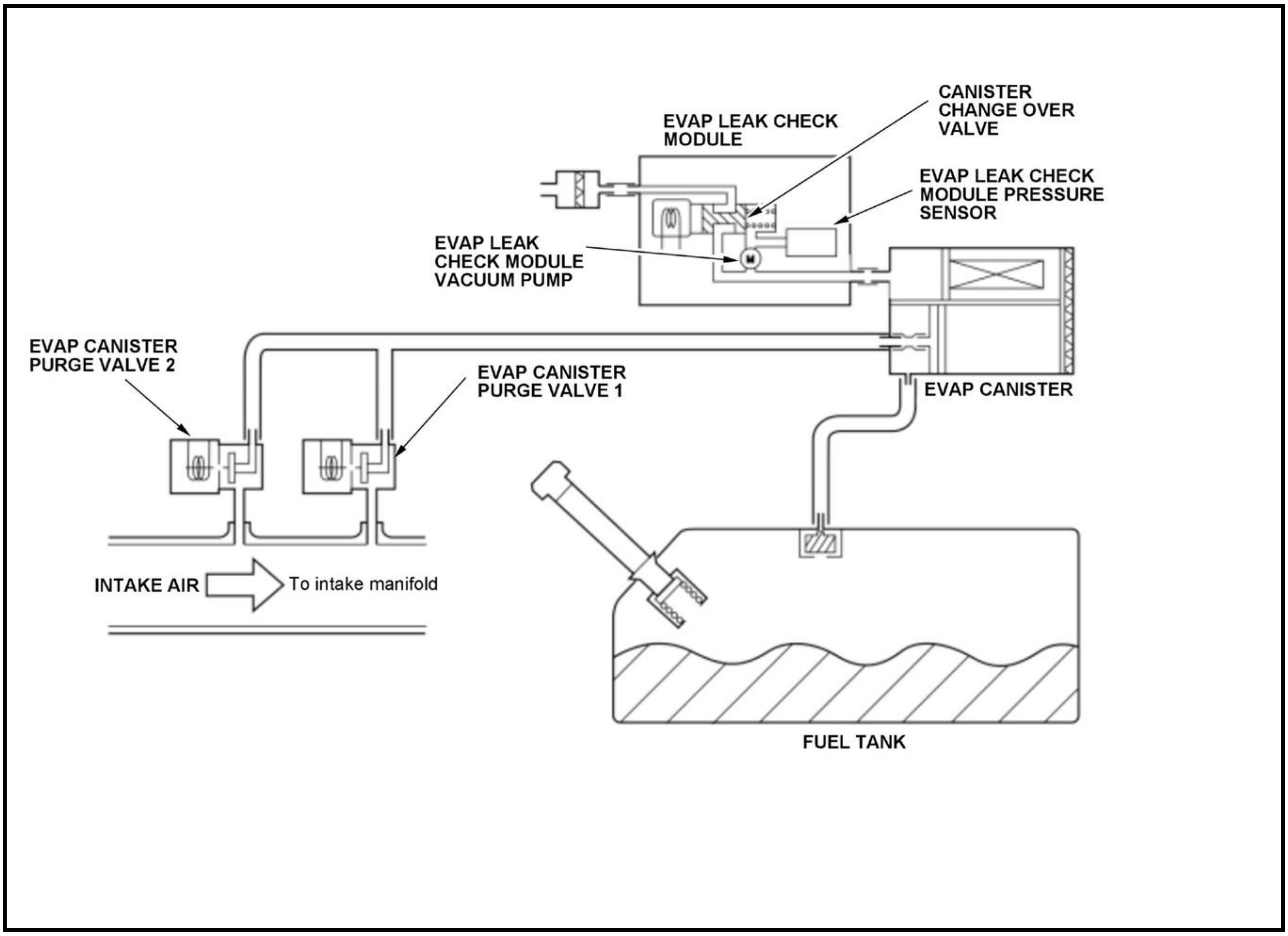
EVAP LEAK CHECK MODULE
CANISTER CHANGE OVER VALVE
EVAP LEAK CHECK MODULE PRESSURE SENSOR
EVAP LEAK CHECK MODULE VACUUM PUMP
M
EVAP CANISTER PURGE VALVE 2
EVAP CANISTER PURGE VALVE 1
EVAP CANISTER
INTAKE AIR
To intake manifold
FUEL TANK

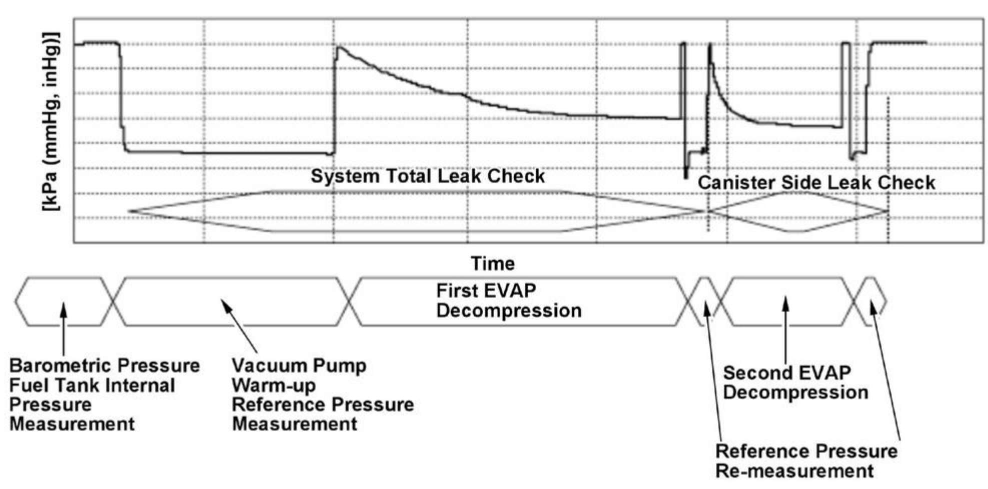

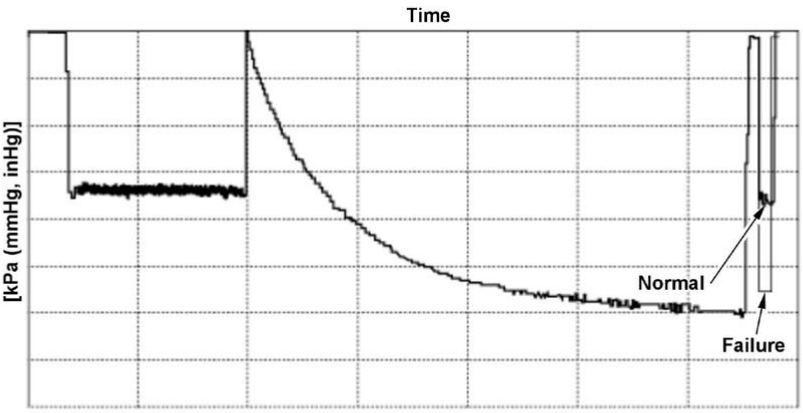

The powertrain control module (PCM) starts the evaporative emission (EVAP) system diagnosis after the vehicle has been turned to the OFF (LOCK) mode, and has met all other enable conditions (initial engine coolant temperature [ECT Sensor 1] and off for at least 5 hours). The EVAP system diagnosis is performed by reducing pressure between the EVAP canister and the atmosphere.

A malfunction is detected and a DTC is stored when the first reference pressure measurement and the second reference pressure measurement are equal to or more than prescribed values.

EVAP leak check module operation flow

- Reference pressure measurement: Malfunction detection in the EVAP leak check module and determination of early completion of pressure reduction when normal.
- System pressure reduction: Pressure in the EVAP system is reduced to measure the ultimate pressure.
- Reference pressure re-measurement: Leak is detected by comparing with the ultimate pressure of the system pressure reduction.
- Reference value is to be measured twice considering change in the characteristics of the EVAP leak check module vacuum pump during detection.

Monitor Execution, Sequence, Duration, DTC Type

Execution	Once per driving cycle
Sequence	None
Duration	At least 18 minutes 45 seconds
DTC Type	Two drive cycles, MIL on

Enable Conditions

Condition	Minimum	Maximum
Elapsed time after the vehicle condition is turned to the READY TO DRIVE mode	10 minutes	-
Elapsed time after the vehicle condition is turned to the OFF (LOCK) mode	5 hours	-
PCM wake up engine coolant temperature [ECT SENSOR 2]	40 deg.F (5 deg.C)	95 deg.F (35 deg.C)
Barometric pressure[BARO SENSOR]	76 kPa (569 mmHg, 22.5 inHg)	-
12 volt battery voltage [BATTERY]	10.5 V	-

Condition	Minimum	Maximum
Other	No refueling is required	

[ ]: HDS Parameter

Malfunction Threshold

When the second reference pressure measurement is higher than the first reference pressure measurement by 1.46 kPa (11 mmHg, 0.43 inHg).

Possible Cause

NOTE: The causes shown may not be a complete list of all potential problems, and it is possible that there may be other causes.

- EVAP leak check module vacuum pump failure
- Canister change over valve failure
- Reference orifice flow quantity is excessive
- Reference orifice flow quantity is too few

Confirmation Procedure

Operating Condition

- With the engine coolant temperature [ECT Sensor 2] within the specified range, turn the vehicle to the READY TO DRIVE mode, and wait for at least 10 minutes.
- Turn the vehicle to the OFF (LOCK) mode, and wait for at least 5 hours.
- PCM wake up, and wait at least 18 minutes 45 seconds.

With the HDS

Select the EVAP TEST in the Function Test Menu, then select EVAP Leak Check Module Test with the HDS.

Diagnosis Details

Conditions for setting the DTC

When a malfunction is detected during the first drive cycle with the engine coolant temperature and intake air temperature at engine start-up within the specified temperature range, a Pending DTC is stored in the PCM memory. If the malfunction returns in the next (second) drive cycle with the engine coolant temperature and intake air temperature at engine start-up within the specified temperature range, the MIL comes on and a Confirmed DTC and the freeze data are stored.

Conditions for clearing the DTC

The MIL is cleared if the malfunction does not return in three consecutive trips in which the diagnostic runs. The MIL, the Pending DTC, the Confirmed DTC, and the freeze data can be cleared with the scan tool clear command or by disconnecting the 12 volt battery.

DTC P1462

DTC P1462: Evaporative Emission (EVAP) Leak Check Module Pressure Decompression Defect

General Description

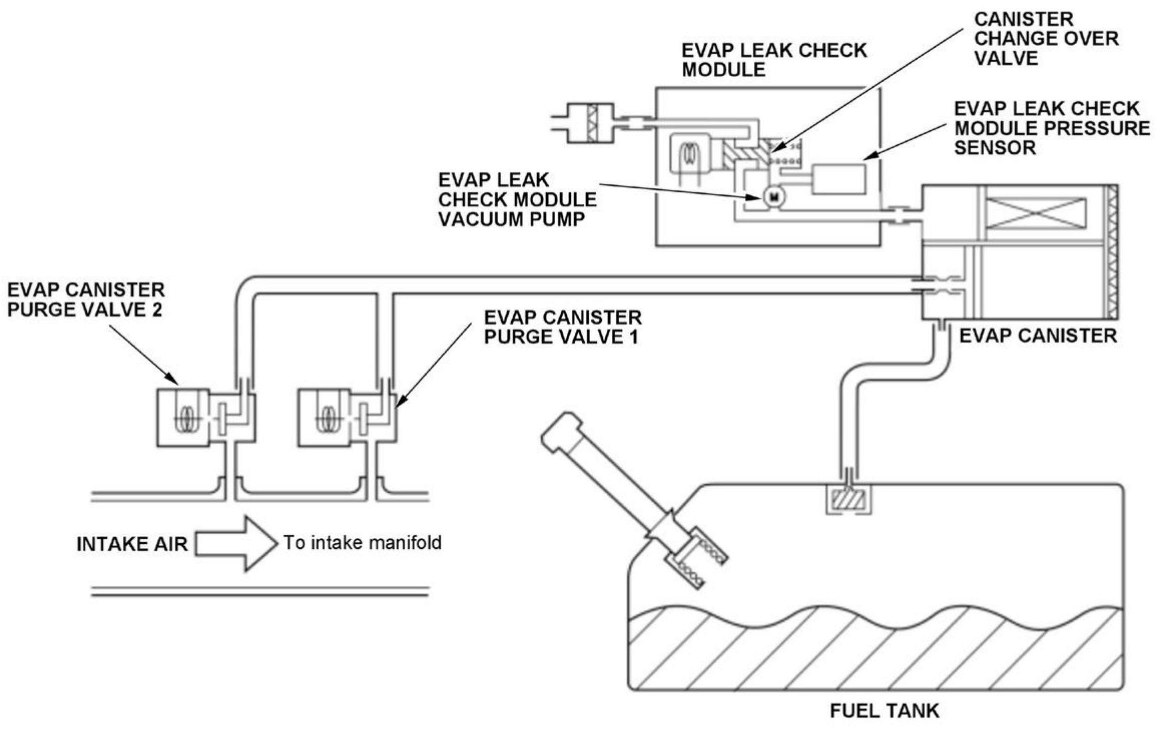
CANISTER CHANGE OVER VALVE
EVAP LEAK CHECK MODULE
EVAP LEAK CHECK MODULE PRESSURE SENSOR
EVAP LEAK CHECK MODULE VACUUM PUMP
EVAP CANISTER PURGE VALVE 2
EVAP CANISTER PURGE VALVE 1
EVAP CANISTER
INTAKE AIR
To intake manifold
FUEL TANK

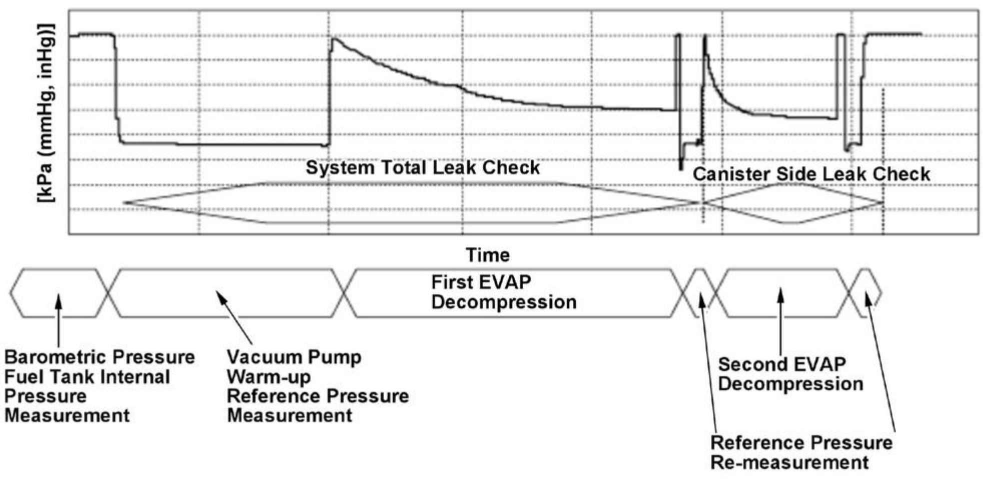
[kPa (mmHg, inHg)]
System Total Leak Check
Canister Side Leak Check
Time
First EVAP Decompression
Barometric Pressure Fuel Tank Internal Pressure Measurement
Vacuum Pump Warm-up Reference Pressure Measurement
Second EVAP Decompression
Reference Pressure Re-measurement

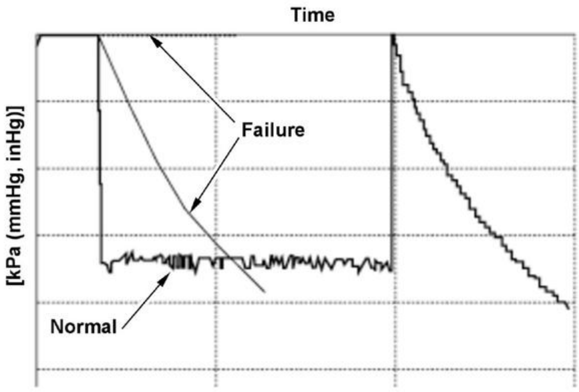

The powertrain control module (PCM) starts the evaporative emission (EVAP) system diagnosis after the vehicle has been turned to the OFF (LOCK) mode, and has met all other enable conditions (initial engine coolant temperature [ECT Sensor 1] and off for at least 5 hours). The EVAP system diagnosis is performed by reducing pressure between the EVAP canister and the atmosphere.

A malfunction is detected and a DTC is stored when the prescribed negative pressure is not created though pressure reduction when of the reference pressure measurement is started.

EVAP leak check module operation flow

- Reference pressure measurement: Malfunction detection in the EVAP leak check module and determination of early completion of pressure reduction when normal.
- System pressure reduction: Pressure in the EVAP system is reduced to measure the ultimate pressure.
- Reference pressure re-measurement: Leak is detected by comparing with the ultimate pressure of the system pressure reduction.
- Reference value is to be measured twice considering change in the characteristics of the EVAP leak check module vacuum pump during detection.

Monitor Execution, Sequence, Duration, DTC Type

Execution	Once per driving cycle
Sequence	None
Duration	1 minute 14 seconds or more
DTC Type	Two drive cycles, MIL on

Enable Conditions

Condition	Minimum	Maximum
Elapsed time after the vehicle condition is turned to the READY TO DRIVE mode	10 minutes	-
Elapsed time after the vehicle condition is turned to the OFF (LOCK) mode	5 hours	-
PCM wake up engine coolant temperature [ECT SENSOR 1]	40 deg.F (5 deg.C)	95 deg.F (35 deg.C)
Barometric pressure[BARO SENSOR]	76 kPa (569 mmHg, 22.5 inHg)	-
12 volt battery voltage [BATTERY]	10.5 V	-

Condition	Minimum	Maximum
Other	No refueling is required	

[ ]: HDS Parameter

Malfunction Threshold

When negative pressure of 1 kPa (-7.5 mmHg, -0.3 inHg) or more is not created though pressure reduction when the reference pressure measurement is started.

Possible Cause

NOTE: The causes shown may not be a complete list of all potential problems, and it is possible that there may be other causes.

- EVAP leak check module vacuum pump failure
- Canister change over valve failure
- Reference orifice flow quantity is excessive
- Reference orifice flow quantity is too few

Confirmation Procedure

Operating Condition

- With the engine coolant temperature [ECT Sensor 2] within the specified range, turn the vehicle to the READY TO DRIVE mode, and wait for at least 10 minutes.
- Turn the vehicle to the OFF (LOCK) mode, and wait for at least 5 hours.
- PCM wake up, and wait at least 1 minute 14 seconds.

With the HDS

Select the EVAP TEST in the Function Test Menu, then select EVAP Leak Check Module Test with the HDS.

Diagnosis Details

Conditions for setting the DTC

When a malfunction is detected during the first drive cycle with the engine coolant temperature and intake air temperature at engine start-up within the specified temperature range, a Pending DTC is stored in the PCM memory. If the malfunction returns in the next (second) drive cycle with the engine coolant temperature and intake air temperature at engine start-up within the specified temperature range, the MIL comes on and a Confirmed DTC and the freeze data are stored.

Conditions for clearing the DTC

The MIL is cleared if the malfunction does not return in three consecutive trips in which the diagnostic runs. The MIL, the Pending DTC, the Confirmed DTC, and the freeze data can be cleared with the scan tool clear command or by disconnecting the 12 volt battery.

DTC P14A0 (2020)

DTC P14A0: Engine Abnormal Vibration

General Description

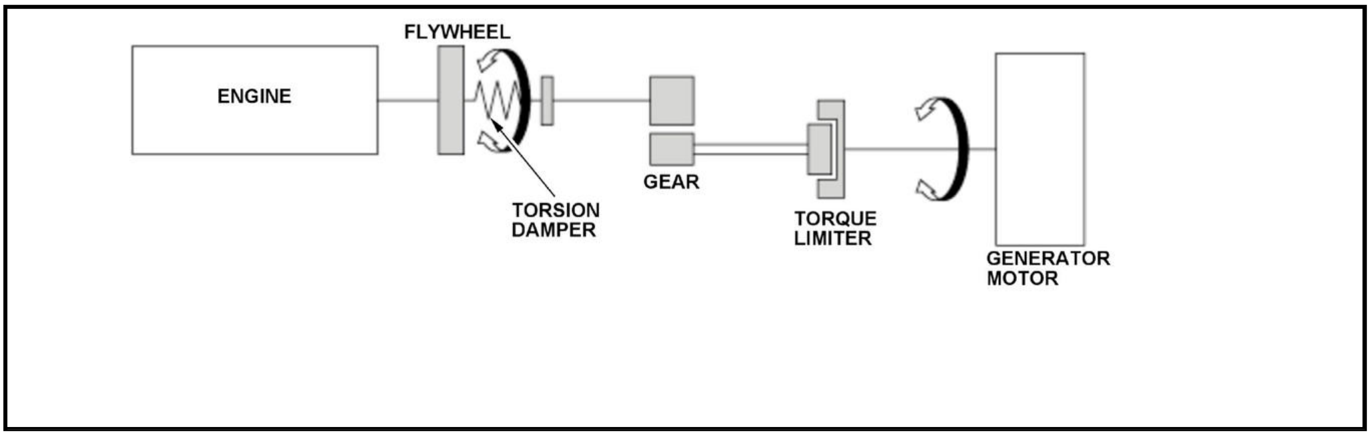

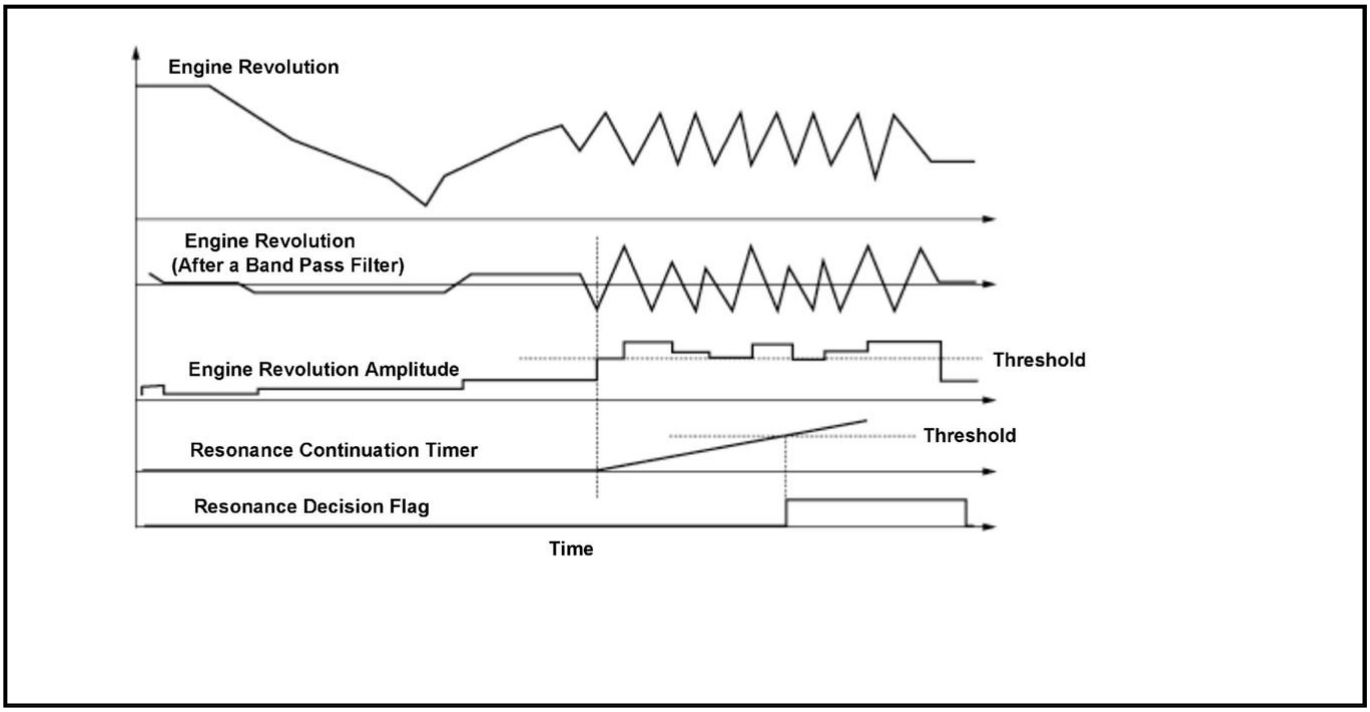

Engine resonance has the potential to cause severe engine damage. As a result, the flywheel is equipped with a high rate spring to help smooth out the transmission of power between the engine and the generator motor. But there are still certain rpm levels where resonance can cause vibration. When detected by the powertrain control module (PCM), the rpm range is limited. This is also the case if resonance is caused by misfire, engine failure or generator motor failure.

Monitor Execution, Sequence, Duration, DTC Type

Execution	Continuous
Sequence	None
Duration	13.2 seconds or less
DTC Type	One drive cycle, MIL off

Enable Conditions

Condition	B
Fuel feedback	Other than during fuel cut-off operation
State of the vehicle*	HV driving mode
	Engine driving mode
	HV driving mode -> Engine driving mode
	Engine driving mode -> HV driving mode

*: In any of described driving condition

Malfunction Threshold

When vibration due to engine resonance has increased.

Possible Cause

NOTE: The causes shown may not be a complete list of all potential problems, and it is possible that there may be other causes.

- Misfire (1 cylinder or 2 cylinder continuation misfires)

Confirmation Procedure

Operating Condition

Drive the vehicle for 13.2 seconds or more.

- Drive the vehicle in this manner only if the traffic regulations and ambient conditions allow.

With the HDS

None.

Diagnosis Details

Conditions for setting the DTC

When a malfunction is detected, a Pending DTC, a Confirmed DTC, and the freeze data are stored in the PCM memory. The MIL does not come on.

Conditions for clearing the DTC

The Pending DTC, the Confirmed DTC, and the freeze data can be cleared with the scan tool Clear command or by disconnecting the 12 volt battery.

DTC P154A

DTC P154A: Battery Sensor Internal Failure

General Description

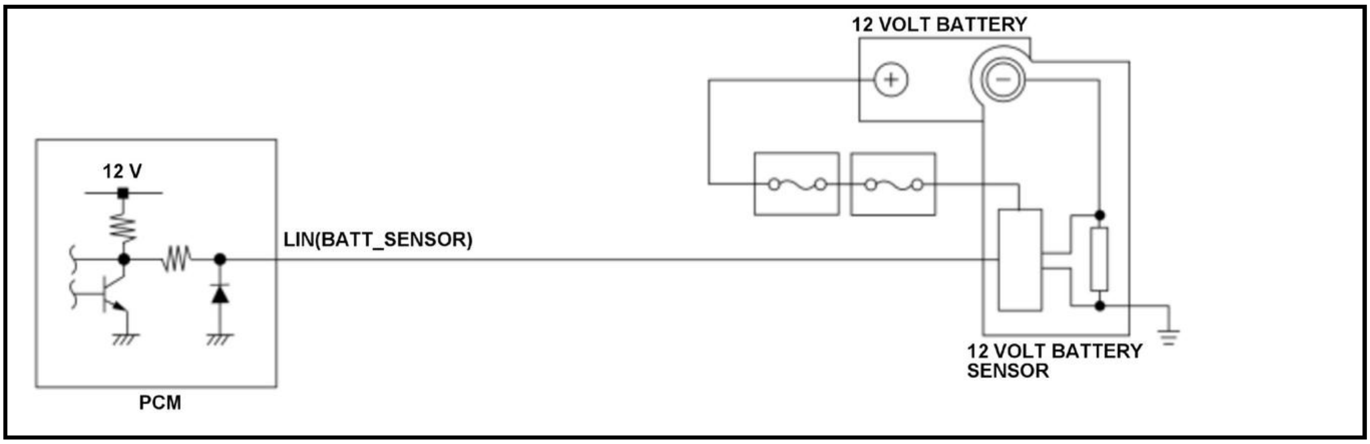

The 12 volt battery sensor is connected between the 12 volt battery and ground. It is also connected to the gauge control module by the local interconnect network (LIN) line and transmits/receives 12 volt battery sensor information to/from the powertrain control module (PCM) via the controller area network (CAN) line. The 12 volt battery sensor measures the 12 volt battery's current, voltage, and temperature. When the PCM requests this information to operate the engine electrical system efficiently, the 12 volt battery sensor runs a diagnostic program and sends the results to the PCM via the LIN and the CAN line. If the diagnostic results are outside the normal range, the PCM detects a malfunction and stores a DTC.

Monitor Execution, Sequence, Duration, DTC Type

Execution	Continuous
Sequence	None
Duration	10 seconds or more
DTC Type	One drive cycle, MIL off

Enable Conditions

Condition	B
Vehicle	ON mode

Malfunction Threshold

Either one of the conditions is met for at least 10 seconds:

- Internal current detection circuit open or A/D conversion circuit abnormal
- Internal voltage detection circuit open/short or A/D conversion circuit abnormal
- Internal temperature detection circuit open/short or A/D conversion circuit abnormal
- Calibration data abnormal

Possible Cause

NOTE: The causes shown may not be a complete list of all potential problems, and it is possible that there may be other causes.

- 12 volt battery sensor internal circuit failure

Diagnosis Details

Conditions for setting the DTC

When a malfunction is detected, a Pending DTC, a Confirmed DTC, and the freeze data are stored in the PCM memory. The MIL does not come on.

Conditions for clearing the DTC

The Pending DTC, the Confirmed DTC, and the freeze data can be cleared with the scan tool Clear command or by disconnecting the 12 volt battery.

DTC P161B

DTC P161B : Park Pawl Control Module Programming Error

General Description

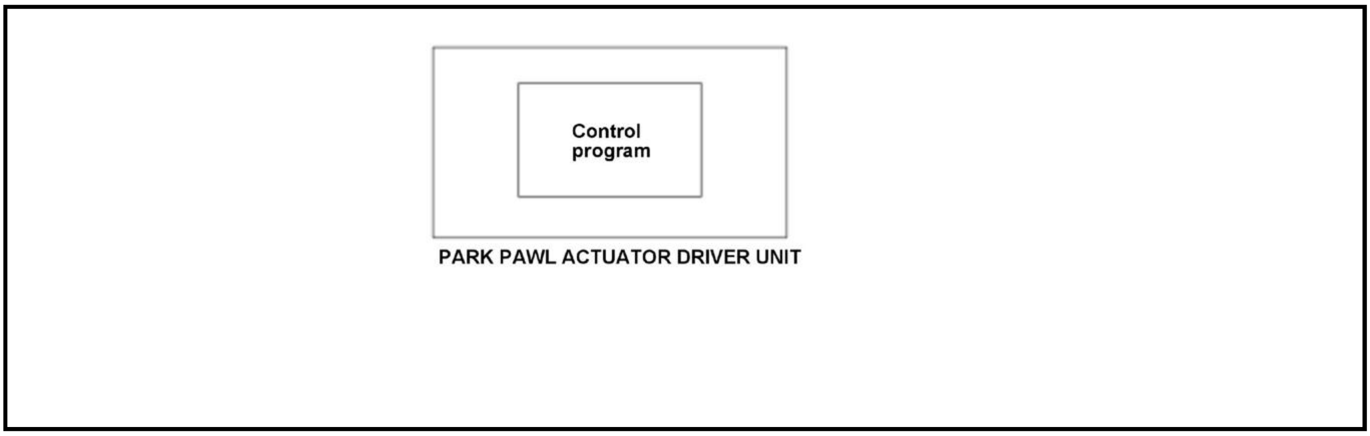

The park pawl actuator driver unit controls shifting/releasing of the park pawl actuator to/from the P position. A control program is stored in the park pawl actuator driver unit which confirms whether the control program is correctly written on start-up. If an abnormal condition of the control program is detected, the powertrain control module (PCM) receives malfunction from the park pawl actuator driver unit, and stores a DTC.

Monitor Execution, Sequence, Duration, DTC Type

Execution	-
Sequence	None
Duration	Depending on the driving conditions
DTC Type	One drive cycle, MIL off, shift position indicator blinks

Enable Conditions

Condition	B
Vehicle	ON mode

Malfunction Threshold

The abnormality or the unwritten condition is detected at the control program in the park pawl actuator driver unit.

Possible Cause

NOTE: The causes shown may not be a complete list of all potential problems, and it is possible that there may be other causes.

- Park pawl actuator driver unit internal failure
- PCM software data not updated

Confirmation Procedure

Operating Condition

Turn the vehicle to the ON mode, and wait for at least 5 seconds.

With the HDS

None.

Diagnosis Details

Conditions for setting the DTC

When a malfunction is detected, the shift position indicator blinks and a Pending DTC, a Confirmed DTC, and the freeze data are stored in the PCM memory. The MIL does not come on.

Conditions for clearing the DTC

The shift position indicator comes off by turning the vehicle to the OFF (LOCK) mode. The Pending DTC, the Confirmed DTC, and the freeze data can be cleared with the scan tool Clear command or by disconnecting the 12 volt battery.

DTC P1658

DTC P1658: Electronic Throttle Control System (ETCS) Control Relay ON Malfunction

General Description

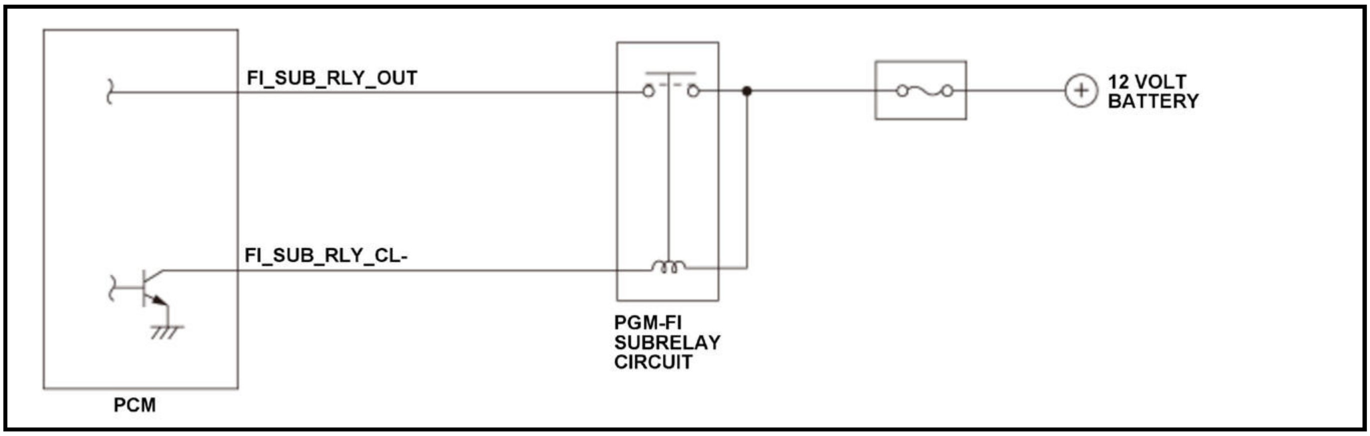

The electronic throttle control system controls the throttle valve opening. The system includes the throttle actuator, the throttle valve, throttle position (TP) sensors A and B, the PGM-FI subrelay circuit, the accelerator pedal position (APP) sensor, and the powertrain control module (PCM). When the accelerator pedal is pressed, the APP sensor detects the accelerator pedal opening value. The accelerator pedal opening value is converted to a signal in the APP sensor and transmitted to the PCM to compute the target position. The PCM determines the throttle valve target position according to the signal received and operates the throttle actuator to move the throttle valve to the target position. The actual throttle valve position is determined by TP sensors A and B (installed in the throttle body). When the voltage is applied from the PGM-FI subrelay circuit to the FI_SUB_RLY_OUT terminal for a set time after the PGM-FI subrelay circuit is turned off, the PCM detects a malfunction in the PGM-FI subrelay circuit power switch and stores a DTC.

Monitor Execution, Sequence, Duration, DTC Type

Execution	Once per driving cycle
Sequence	None
Duration	2.0 seconds or more
DTC Type	One drive cycle, MIL on

Enable Conditions

Condition	B
Vehicle	OFF (LOCK) mode

Malfunction Threshold

The communication signal is input from the PCM for at least 2.0 seconds after the PGM-FI subrelay circuit is turned off.

Possible Cause

NOTE: The causes shown may not be a complete list of all potential problems, and it is possible that there may be other causes.

- PGM-FI subrelay circuit FI_SUB_RLY_CL- line short to ground
- PGM-FI subrelay circuit failure
- PCM internal circuit failure

Diagnosis Details

Conditions for setting the DTC

When a malfunction is detected, the MIL comes on and a Pending DTC, a Confirmed DTC, and the freeze data are stored in the PCM memory.

Conditions for clearing the DTC

The MIL is cleared if the malfunction does not return in three consecutive trips in which the diagnostic runs. The MIL, the Pending DTC, the Confirmed DTC, and the freeze data can be cleared with the scan tool Clear command or by disconnecting the 12 volt battery.

DTC P1659

DTC P1659: Electronic Throttle Control System (ETCS) Control Relay OFF Malfunction

General Description

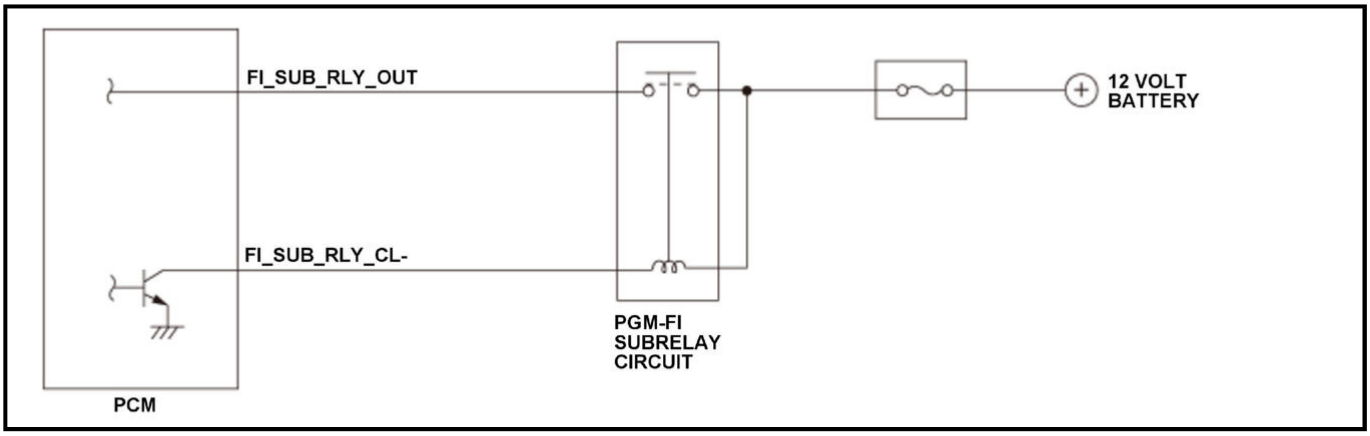

The electronic throttle control system controls the throttle valve opening. The system includes the throttle actuator, the throttle valve, throttle position (TP) sensors A and B, the PGM-FI subrelay circuit, the accelerator pedal position (APP) sensor, and the powertrain control module (PCM). When the accelerator pedal is pressed, the APP sensor detects the accelerator pedal opening value. The accelerator pedal opening value is converted to a signal in the APP sensor and transmitted to the PCM to compute the target position. The PCM determines the throttle valve target position according to the signal received and operates the throttle actuator to move the throttle valve to the target position. The actual throttle valve position is determined by TP sensors A and B (installed in the throttle body). When the voltage from the PGM-FI subrelay circuit is not input for a set time after the PGM-FI subrelay circuit is turned on when the vehicle is turned to the ON mode, the PCM detects a malfunction in the PGM-FI subrelay circuit power switch and stores a DTC.

Monitor Execution, Sequence, Duration, DTC Type

Execution	Continuous
Sequence	None
Duration	200 milliseconds or more
DTC Type	One drive cycle, MIL on

Enable Conditions

Condition	Minimum	Maximum
12 volt battery voltage [Battery]	10 V	-
Vehicle	ON mode	

[ ]: HDS Parameter

Malfunction Threshold

The power supply voltage is not applied from the PGM-FI subrelay circuit for at least 200 milliseconds.

Possible Cause

NOTE: The causes shown may not be a complete list of all potential problems, and it is possible that there may be other causes.

- PGM-FI subrelay circuit FI_SUB_RLY_OUT line open (include fuse blown)
- PGM-FI subrelay circuit FI_SUB_RLY_CL- line open (include fuse blown)
- PGM-FI subrelay circuit failure
- PCM internal circuit failure

Diagnosis Details

Conditions for setting the DTC

When a malfunction is detected, the MIL comes on and a Pending DTC, a Confirmed DTC, and the freeze data are stored in the PCM memory.

Conditions for clearing the DTC

The MIL is cleared if the malfunction does not return in three consecutive trips in which the diagnostic runs. The MIL, the Pending DTC, the Confirmed DTC, and the freeze data can be cleared with the scan tool Clear command or by disconnecting the 12 volt battery.

DTC P1683

DTC P1683: Throttle Valve Default Position Spring Performance Problem

General Description

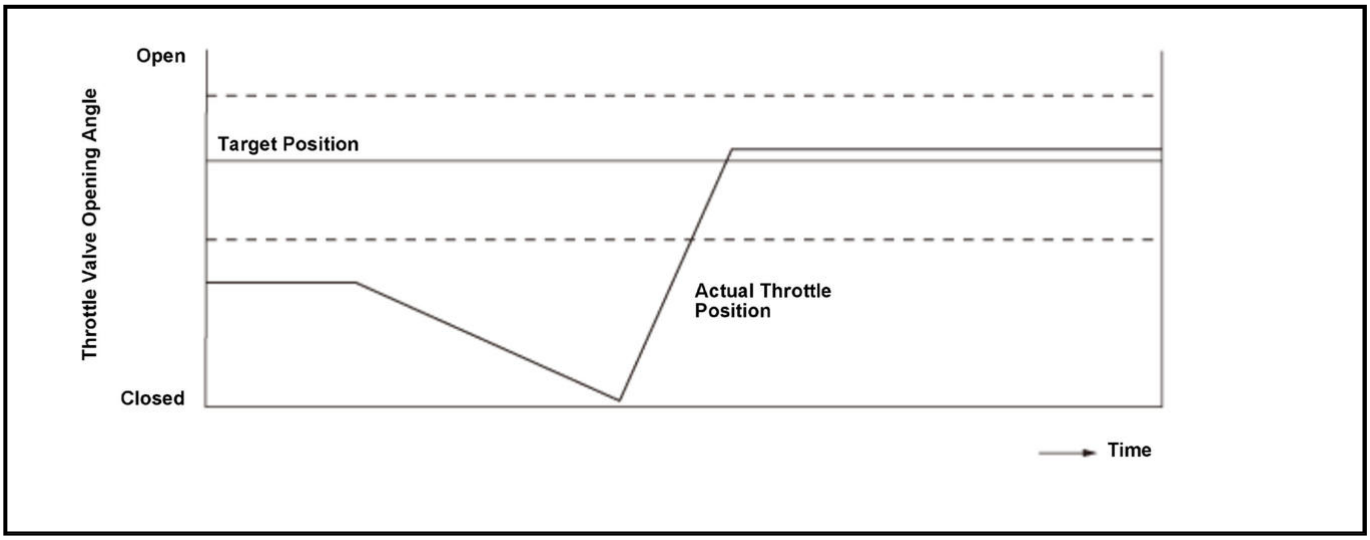

The electronic throttle control system controls the throttle valve opening. The system includes the throttle actuator, the throttle valve, throttle position (TP) sensors A and B, the PGM-FI subrelay circuit, the accelerator pedal position (APP) sensor, and the powertrain control module (PCM). The throttle valve default position spring is attached to the throttle valve gear. It opens the throttle valve to improve starting performance in cold conditions, or to retain minimum running performance in case of an electronic throttle control system failure. To confirm that the throttle valve is operating normally, and if the detecting condition meets, the throttle valve moves to a fully closed position and opens to the target position by the throttle valve default position spring. If the throttle valve does not move to the target position range, the PCM detects a throttle valve default position spring malfunction and stores a DTC.

Monitor Execution, Sequence, Duration, DTC Type

Execution	Once per driving cycle
Sequence	None
Duration	2.5 seconds or more
DTC Type	One drive cycle, MIL on

Enable Conditions

Condition	Minimum	Maximum
Engine coolant temperature [ECT Sensor 1]	158 deg.F (70 deg.C)	-
12 volt battery voltage [Battery]	7.0 V	-
Vehicle	OFF (LOCK) mode	

[ ]: HDS Parameter

Malfunction Threshold

The throttle valve position is +5 deg. or more from the fully closed position, or +3 deg. or less from the fully closed position, for at least 2.5 seconds.

Possible Cause

NOTE: The causes shown may not be a complete list of all potential problems, and it is possible that there may be other causes.

- Throttle valve default position spring abnormal
- Throttle valve friction increase (poor action)

Confirmation Procedure

Operating Condition

- Enter the maintenance mode, then start the engine. Hold the engine speed [Engine Speed] at 3, 000 rpm without load (in P or N) until the radiator fan comes on, then let it idle.
- Turn the vehicle to the OFF (LOCK) mode, and wait 10 seconds.
- Turn the vehicle to the ON mode.

With the HDS

None.

Diagnosis Details

Conditions for setting the DTC

When a malfunction is detected, the MIL comes on and a Pending DTC, a Confirmed DTC, and the freeze data are stored in the PCM memory.

Conditions for clearing the DTC

The MIL is cleared if the malfunction does not return in three consecutive trips in which the diagnostic runs. The MIL, the Pending DTC, the Confirmed DTC, and the freeze data can be cleared with the scan tool Clear command or by disconnecting the 12 volt battery.

DTC P1684

DTC P1684: Throttle Valve Return Spring Performance Problem

General Description

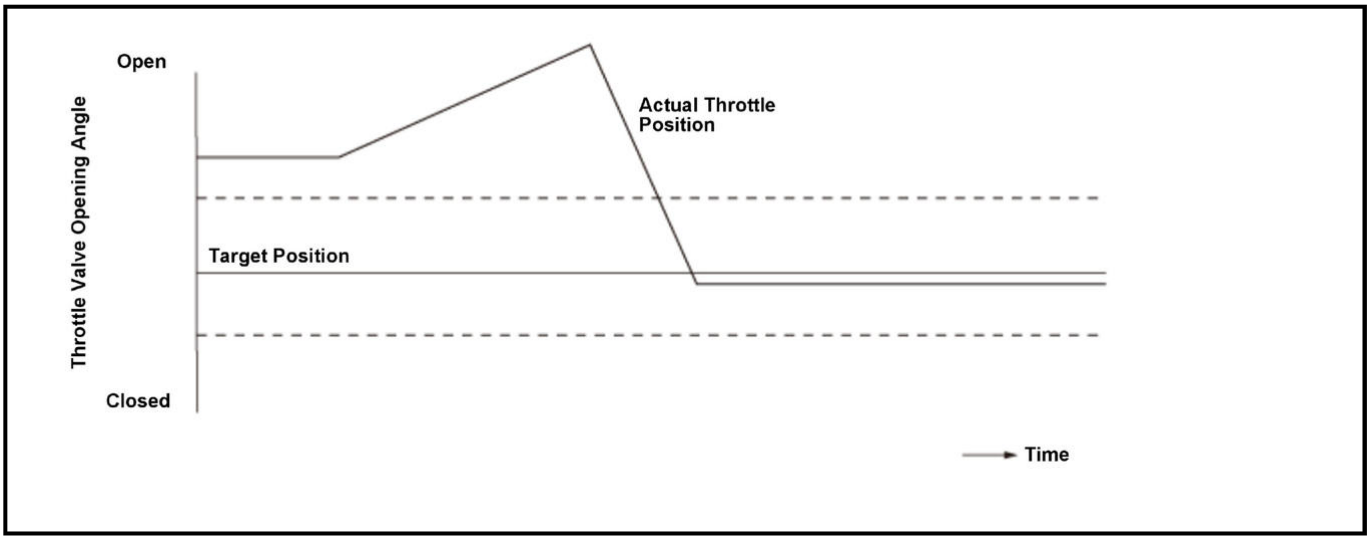

The electronic throttle control system controls the throttle valve opening. The system includes the throttle actuator, the throttle valve, throttle position (TP) sensors A and B, the PGM-FI subrelay circuit, the accelerator pedal position (APP) sensor, and the powertrain control module (PCM). The throttle valve return spring is attached to the throttle valve gear to return the throttle valve to the default position. To confirm that the throttle valve is operating normally, and if the detecting condition meets, the throttle valve moves to a specified position and closes to the target position by the throttle valve return spring. If the throttle valve does not move to the target position range, the PCM detects a throttle valve return spring malfunction and stores a DTC.

Monitor Execution, Sequence, Duration, DTC Type

Execution	Once per driving cycle
Sequence	None
Duration	2.5 seconds or more
DTC Type	One drive cycle, MIL on

Enable Conditions

Condition	Minimum	Maximum
Engine coolant temperature [ECT Sensor 1]	158 deg.F (70 deg.C)	-
12 volt battery voltage [Battery]	7.0 V	-
Vehicle	OFF (LOCK) mode	

[ ]: HDS Parameter

Malfunction Threshold

The throttle valve opening angle is 17 deg. or more, or 11 deg. or less, for at least 2.5 seconds.

Possible Cause

NOTE: The causes shown may not be a complete list of all potential problems, and it is possible that there may be other causes.

- Throttle valve return spring failure
- Throttle valve friction increase (poor action)

Confirmation Procedure

Operating Condition

- Enter the maintenance mode, then start the engine. Hold the engine speed [Engine Speed] at 3, 000 rpm without load (in P or N) until the radiator fan comes on, then let it idle.
- Turn the vehicle to the OFF (LOCK) mode, and wait 10 seconds.
- Turn the vehicle to the ON mode.

With the HDS

None.

Diagnosis Details

Conditions for setting the DTC

When a malfunction is detected, the MIL comes on and a Pending DTC, a Confirmed DTC, and the freeze data are stored in the PCM memory.

Conditions for clearing the DTC

The MIL is cleared if the malfunction does not return in three consecutive trips in which the diagnostic runs. The MIL, the Pending DTC, the Confirmed DTC, and the freeze data can be cleared with the scan tool Clear command or by disconnecting the 12 volt battery.

DTC P16E3

DTC P16E3: PGM-FI-Battery Sensor LIN Communication Error

General Description

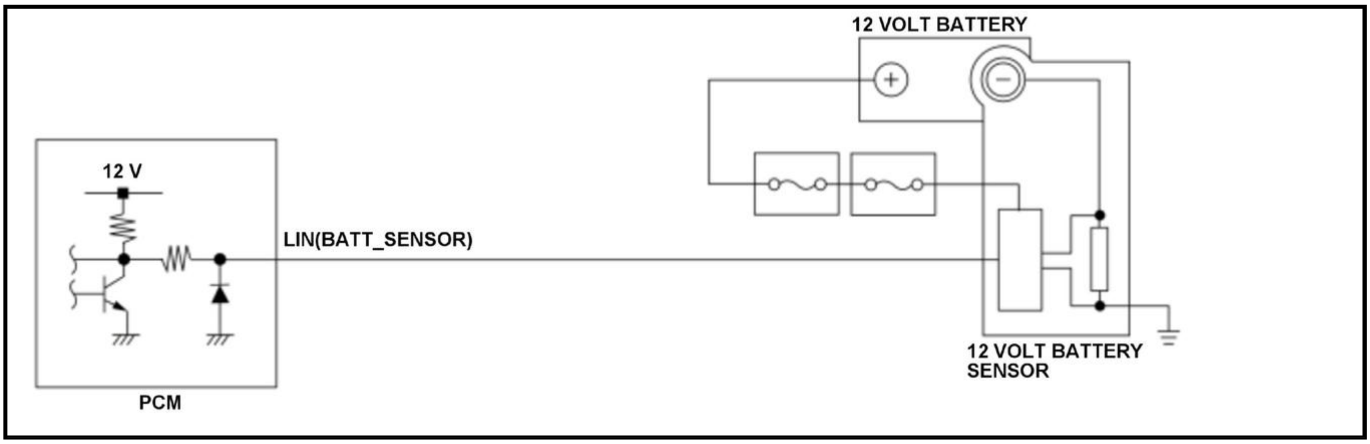

The 12 volt battery sensor measures the 12 volt battery's current, voltage, and temperature. It is connected to the gauge control module by the local interconnect network (LIN) line, and transmits/receives 12 volt battery sensor information to/from the powertrain control module (PCM) via the CAN line. The LIN communication abnormality between the 12 volt battery sensor and the gauge control module is detected by the gauge control module and sent to the PCM via the CAN line. If the PCM receives abnormal communication, a malfunction is detected and a DTC is stored.

Monitor Execution, Sequence, Duration, DTC Type

Execution	Continuous
Sequence	None
Duration	5 seconds or more
DTC Type	One drive cycle, MIL off

Enable Conditions

Condition	Minimum	Maximum
Elapsed time after the vehicle condition is turned to the ON mode	3 seconds	-
12 volt battery voltage [Battery]	10.0 V	-

[ ]: HDS Parameter

Malfunction Threshold

Either of the condition is met for at least 5 seconds:

- The PCM cannot receive any information via the LIN(BATT_SENSOR) line.
- The information sent from the 12 volt battery sensor is abnormal.

Possible Cause

NOTE: The causes shown may not be a complete list of all potential problems, and it is possible that there may be other causes.

- 12 volt battery sensor LIN(BATT_SENSOR) line open
- 12 volt battery sensor LIN(BATT_SENSOR) line short
- 12 volt battery sensor failure
- PCM internal circuit failure

Diagnosis Details

Conditions for setting the DTC

When a malfunction is detected, a Pending DTC, a Confirmed DTC, and the freeze data are stored in the PCM memory. The MIL does not come on.

Conditions for clearing the DTC

The Pending DTC, the Confirmed DTC, and the freeze data can be cleared with the scan tool Clear command or by disconnecting the 12 volt battery.

DTC P16E8

DTC P16E8: PGM-FI-Shutter Grille LIN Communication Error

General Description

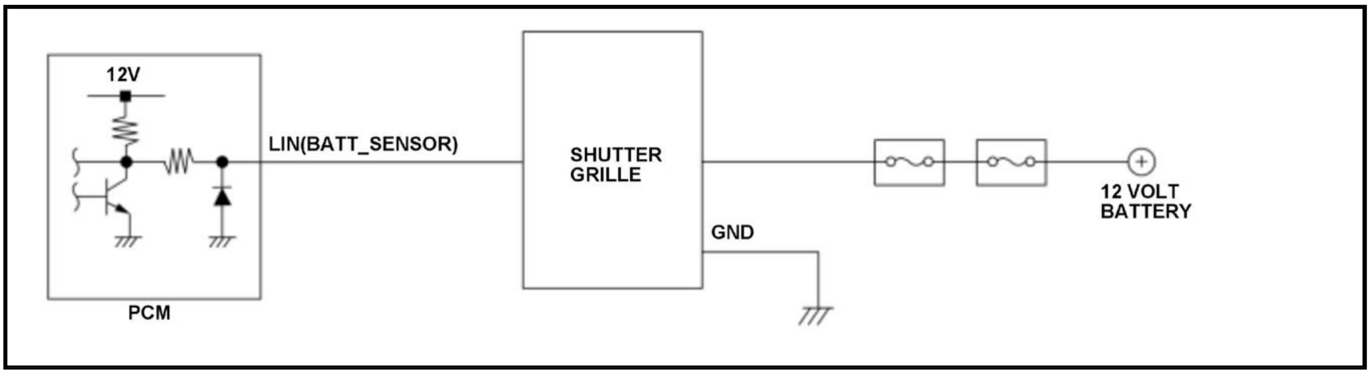

The local interconnect network (LIN) line connects the shutter grille and the powertrain control module (PCM). The LIN uses a master/slave protocol to send and receive data to the different components on the line. The PCM is the master unit, which controls the engine electrical system. The shutter grille is the slave. The shutter grille receives data from the PCM and provides feedback to the PCM, which allows the PCM to operate the engine electrical system efficiently. When the PCM does not receive signals from the shutter grille within its specified amount of time, the PCM detects a malfunction and stores a DTC.

Monitor Execution, Sequence, Duration, DTC Type

Execution	Continuous
Sequence	None
Duration	5 seconds or more
DTC Type	One drive cycle, MIL off

Enable Conditions

Condition	Minimum	Maximum
Elapsed time after the vehicle condition is turned to the ON mode	3 seconds	-
12 volt battery voltage [Battery]	10.0 V	-

[ ]: HDS Parameter

Malfunction Threshold

Either one of the conditions is met for at least 5 seconds:

- The PCM cannot receive any information via the LIN line.
- The information sent from the shutter grille is abnormal.

Possible Cause

NOTE: The causes shown may not be a complete list of all potential problems, it is possible that there may be other causes.

- Shutter grille LIN(BATT_SENSOR) line open
- Shutter grille LIN(BATT_SENSOR) line short
- Shutter grille failure
- PCM internal circuit failure

Diagnosis Details

Conditions for setting the DTC

When a malfunction is detected, a Pending DTC, a Confirmed DTC, and the freeze data are stored in the PCM memory. The MIL does not come on.

Conditions for clearing the DTC

The Pending DTC, the Confirmed DTC, and the freeze data can be cleared with the scan tool Clear command or by disconnecting the 12 volt battery.

DTC P16EA

DTC P16EA: Electric Engine Coolant Pump Relay Stuck On

General Description

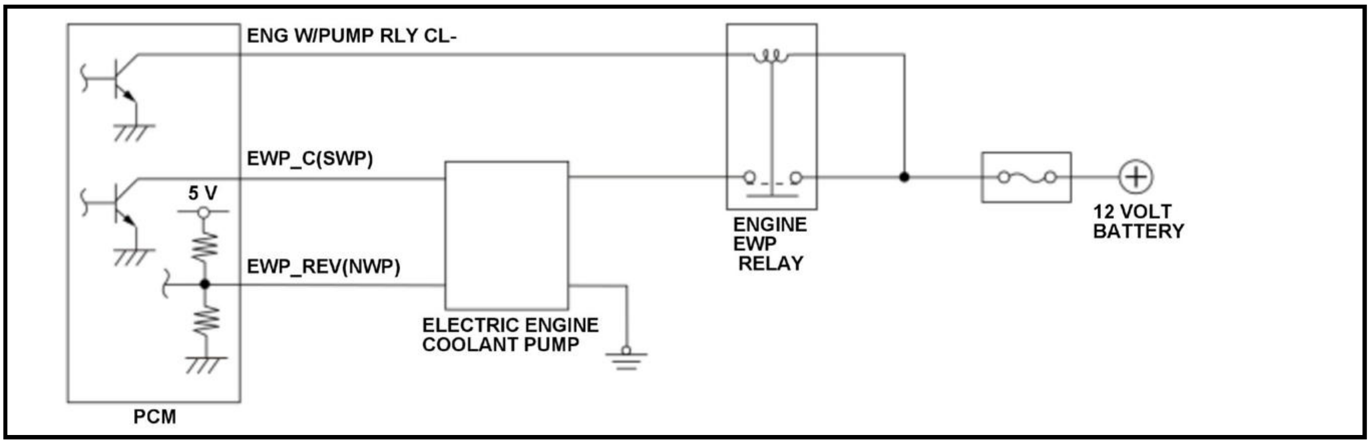

The electric engine coolant pump varies the pump revolution speed according to the powertrain control module (PCM) outputs signal. The PCM outputs signal (EWP_C(SWP)) to the electric engine coolant pump and feeds back the revolution speed (EWP_REV(NWP)) from the electric engine coolant pump to control the revolution speed. Since the flow rate of the pump is in proportion to the revolution speed, the flow rate increases as the revolution speed is raised. After the vehicle OFF (LOCK) mode, the PCM turns off the electric engine coolant pump relay. The PCM outputs electric engine coolant pump operation command signal when the electric engine coolant pump relay is off to check for electric engine coolant pump relay stuck on. The PCM detects a malfunction and stores a DTC when the revolution speed is equal to or more than the set value continuously for the prescribed time or more to the electric engine coolant pump operation command when the electric engine coolant pump relay is off.

Monitor Execution, Sequence, Duration, DTC Type

Execution	Once per driving cycle
Sequence	None
Duration	5 seconds or more
DTC Type	One drive cycle, MIL off

Enable Conditions

Condition	B
Vehicle	OFF (LOCK) mode

Malfunction Threshold

When the electric engine coolant pump revolution speed is 600 rpm or more continuously for 5 seconds or more while the engine EWP relay is off.

Possible Cause

NOTE: The causes shown may not be a complete list of all potential problems, and it is possible that there may be other causes.

- Electric engine coolant pump relay stuck on
- PCM internal circuit failure

Diagnosis Details

Conditions for setting the DTC

When a malfunction is detected, a Pending DTC, a Confirmed DTC, and the freeze data are stored in the PCM memory. The MIL does not come on.

Conditions for clearing the DTC

The Pending DTC, the Confirmed DTC, and the freeze data can be cleared with the scan tool Clear command or by disconnecting the 12 volt battery.

DTC P170E

DTC P170E: Park Pawl Motor Power Relay Circuit High

General Description

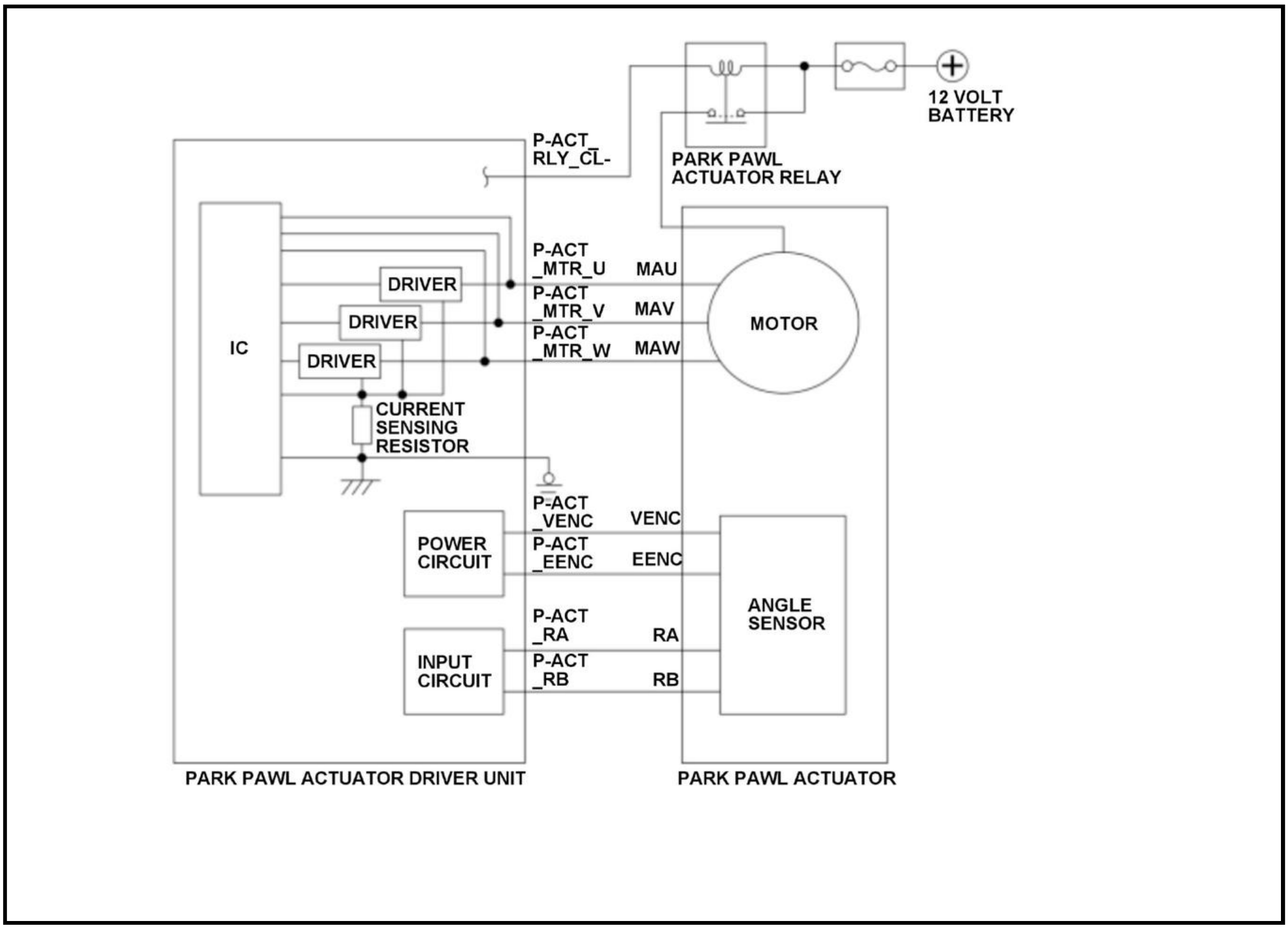
12 VOLT BATTERY
P-ACT_RLY_CL-
PARK PAWL ACTUATOR RELAY
IC
DRIVER
DRIVER
DRIVER
P-ACT_MTR_U
MAU
P-ACT_MTR_V
MAV
P-ACT_MTR_W
MAW
MOTOR
CURRENT SENSING RESISTOR
P-ACT_VENC
VENC
P-ACT_EENC
EENC
POWER CIRCUIT
ANGLE SENSOR
P-ACT_RA
RA
P-ACT_RB
RB
INPUT CIRCUIT
PARK PAWL ACTUATOR DRIVER UNIT
PARK PAWL ACTUATOR

The park pawl actuator driver unit controls shifting/releasing of the park pawl actuator to/from the P position. The park pawl actuator driver unit monitors the voltage supplied to the park pawl actuator using three lines (P-ACT MTR U, P-ACT MTR V, and P-ACT MTR W). If the voltage supplied to the park pawl actuator continues to be a specified value or more for a specified length of time or more when turn ON command is not output to the park pawl actuator relay, the powertrain control module (PCM) receives malfunction from the park pawl actuator driver unit, and stores a DTC.

Monitor Execution, Sequence, Duration, DTC Type

Execution	-
Sequence	None
Duration	64 milliseconds or more
DTC Type	Two drive cycles, MIL off, shift position indicator off

Enable Conditions

Condition	Minimum	Maximum
12 volt battery voltage [Battery Voltage]	7.0 V	-

[ ]: HDS Parameter

Malfunction Threshold

The voltage supplied to the park pawl actuator continues to be 4.22 V or more for at least 64 milliseconds when turn ON command is not output to the park pawl actuator relay.

Possible Cause

NOTE: The causes shown may not be a complete list of all potential problems, and it is possible that there may be other causes.

- Park pawl actuator relay stuck ON
- Park pawl actuator driver unit P-ACT CL- line short to ground

Confirmation Procedure

Operating Condition

Turn the vehicle to the ON mode, and wait for at least 10 seconds.

With the HDS

None.

Diagnosis Details

Conditions for setting the DTC

When a malfunction is detected during the first drive cycle, a Pending DTC is stored in the PCM memory. If the malfunction returns in the next (second) drive cycle, a Confirmed DTC and the freeze data are stored. The MIL does not come on and the shift position indicator does not blink.

Conditions for clearing the DTC

The Pending DTC, the Confirmed DTC, and the freeze data can be cleared with the scan tool Clear command or by disconnecting the 12 volt battery.

DTC P170F

DTC P170F : Park Pawl Unit Communication Circuit (PWM)

General Description

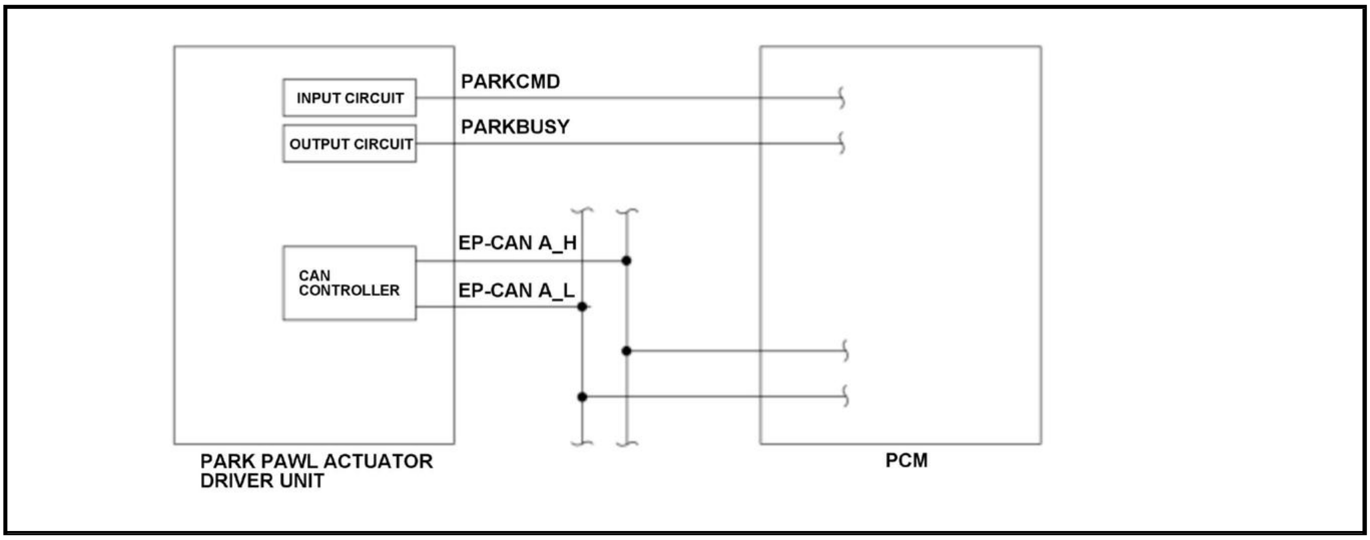

The park pawl actuator driver unit controls shifting/releasing of the park pawl actuator to/from the P position. The park pawl actuator driver unit usually uses two communication lines (EP-CAN A_H and EP-CAN A_L) to receive the shifting to/releasing from P position commands from powertrain control module (PCM) and to transmit/receive the feedback signals from the park pawl actuator driver unit to/from the PCM. If communication via EP-CAN is not available, it is also possible as an alternative method to transmit and receive via PWM communication using the communication line for shifting / releasing (PARKCMD) and the communication line for the feedback signals (PARKBUSY). The PCM and the park pawl actuator driver unit monitor the PWM communication together, and if transmitting and receiving are not available or if abnormal content continues to be received for a specified length of time or more, the PCM receives malfunction from the park pawl actuator driver unit, and stores a DTC.

Monitor Execution, Sequence, Duration, DTC Type

Execution	-
Sequence	None
Duration	1.5 seconds or more
DTC Type	Two drive cycles, MIL off, shift position indicator off

Enable Conditions

Condition	Minimum	Maximum
12 volt battery voltage [Battery Voltage]	10 V	-

[ ]: HDS Parameter

Malfunction Threshold

One of these conditions is met for at least 1.5 seconds:

- The park pawl actuator driver unit cannot transmit/receive any signals via the PWM communication.
- The signal received by the park pawl actuator driver unit is abnormal.

Possible Cause

NOTE: The causes shown may not be a complete list of all potential problems, and it is possible that there may be other causes.

- Park pawl actuator driver unit PARKCMD line open (includes a loose or disconnected connector)
- Park pawl actuator driver unit PARKBUSY line open (includes a loose or disconnected connector)
- Park pawl actuator driver unit PARKCMD line short to ground

- Park pawl actuator driver unit PARKBUSY line short to ground
- Park pawl actuator driver unit PARKCMD line short to power
- Park pawl actuator driver unit PARKBUSY line short to power
- Park pawl actuator driver unit internal failure
- PCM internal failure

Confirmation Procedure

Operating Condition

Turn the vehicle to the ON mode, and wait for at least 10 seconds.

With the HDS

None.

Diagnosis Details

Conditions for setting the DTC

When a malfunction is detected during the first drive cycle, a Pending DTC is stored in the PCM memory. If the malfunction returns in the next (second) drive cycle, a Confirmed DTC and the freeze data are stored. The MIL does not come on and the shift position indicator does not blink.

Conditions for clearing the DTC

The Pending DTC, the Confirmed DTC, and the freeze data can be cleared with the scan tool Clear command or by disconnecting the 12 volt battery.

DTC P1711

DTC P1711 : Park Pawl Unit Malfunction

General Description

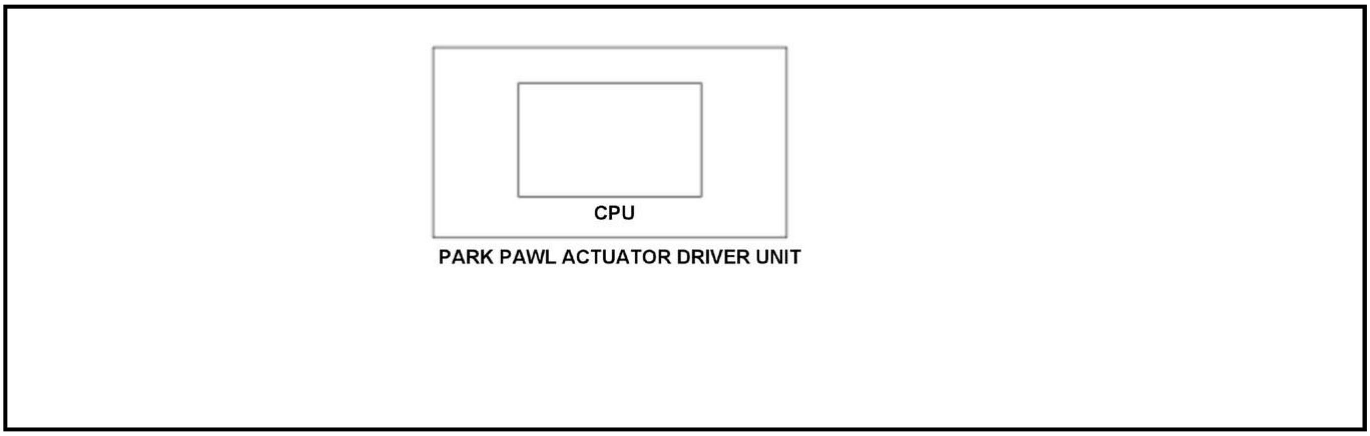

The park pawl actuator driver unit controls shifting/releasing of the park pawl actuator to/from the P position. The park pawl actuator driver unit monitors the malfunctions of the built-in CPU. If abnormal behavior of the CPU continues to be detected for a specified length of time or more, the powertrain control module (PCM) receives malfunction from the park pawl actuator driver unit, and stores a DTC.

Monitor Execution, Sequence, Duration, DTC Type

Execution	-
Sequence	None
Duration	96 milliseconds or more

DTC Type	One drive cycle, MIL off, shift position indicator blinks

Enable Conditions

Condition	B
Vehicle	ON mode

Malfunction Threshold

Abnormal behavior of the CPU built in the park pawl actuator driver unit continues to be detected for at least 96 milliseconds.

Possible Cause

NOTE: The causes shown may not be a complete list of all potential problems, and it is possible that there may be other causes.

- Park pawl actuator driver unit internal failure

Confirmation Procedure

Operating Condition

Turn the vehicle to the ON mode, and wait for at least 10 seconds.

With the HDS

None.

Diagnosis Details

Conditions for setting the DTC

When a malfunction is detected, the shift position indicator blinks and a Pending DTC, a Confirmed DTC, and the freeze data are stored in the PCM memory. The MIL does not come on.

Conditions for clearing the DTC

The shift position indicator comes off by turning the vehicle to the OFF (LOCK) mode. The Pending DTC, the Confirmed DTC, and the freeze data can be cleared with the scan tool Clear command or by disconnecting the 12 volt battery.

DTC P1719

DTC P1719 : Park Pawl System Stuck Malfunction

General Description

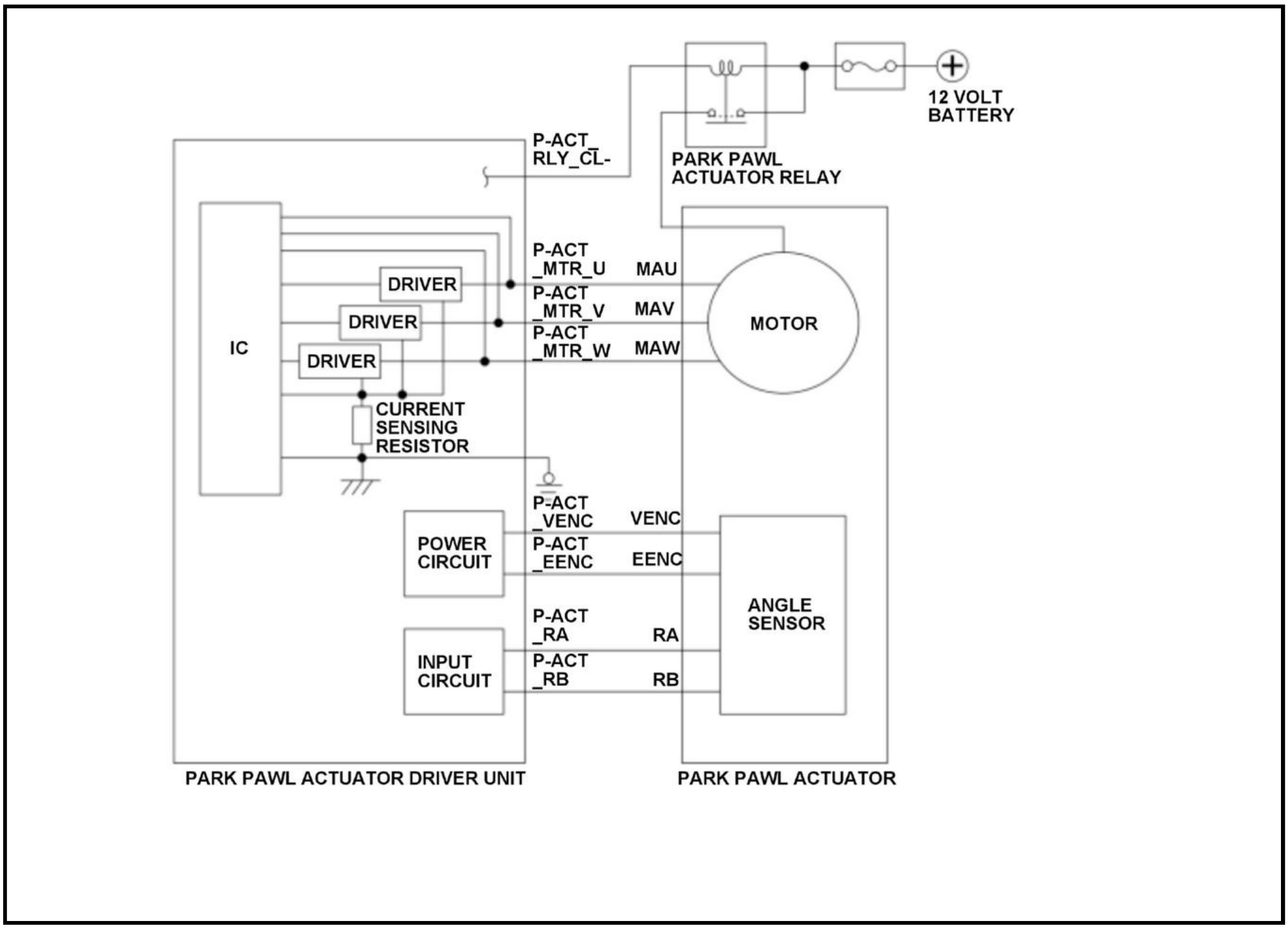
P-ACT_
RLY_CL-
PARK PAWL
ACTUATOR RELAY
12 VOLT
BATTERY
IC
DRIVER
DRIVER
DRIVER
CURRENT
SENSING
RESISTOR
P-ACT
_MTR_U
MAU
P-ACT
_MTR_V
MAV
P-ACT
_MTR_W
MAW
MOTOR
P-ACT
_VENC
VENC
P-ACT
_EENC
EENC
POWER
CIRCUIT
ANGLE
SENSOR
P-ACT
_RA
RA
P-ACT
_RB
RB
INPUT
CIRCUIT
PARK PAWL ACTUATOR DRIVER UNIT
PARK PAWL ACTUATOR

The park pawl actuator driver unit controls shifting/releasing of the park pawl actuator to/from the P position. If the shifting to/releasing from P position operation does not complete for a specified length of time or more after a shifting to/releasing from P position command is output from the park pawl actuator driver unit, the powertrain control module (PCM) receives malfunction from the park pawl actuator driver unit, and stores a DTC.

Monitor Execution, Sequence, Duration, DTC Type

Execution	-
Sequence	None
Duration	5.0 seconds or more
DTC Type	One drive cycle, MIL off, shift position indicator blinks

Enable Conditions

Condition	Minimum	Maximum
12 volt battery voltage [Battery Voltage]	10.5 V	-

[ ]: HDS Parameter

Malfunction Threshold

The switching to the parking position or the non-parking position has not been completed for at least 5.0 seconds even the parking position or the non-parking position command is outputted from the park pawl actuator driver unit.

Possible Cause

NOTE: The causes shown may not be a complete list of all potential problems, and it is possible that there may be other causes.

- Park pawl actuator failure
- Transmission (e-CVT) (transmission park mechanism) failure

Confirmation Procedure

Operating Condition

- Turn the vehicle to the ON mode, and wait for at least at 10 seconds.
- While pressing the brake pedal, shift to N position/mode, then shift to P position/mode and wait at least 5 seconds.

With the HDS

None.

Diagnosis Details

Conditions for setting the DTC

When a malfunction is detected, the shift position indicator blinks and a Pending DTC, a Confirmed DTC, and the freeze data are stored in the PCM memory. The MIL does not come on.

Conditions for clearing the DTC

The shift position indicator comes off by turning the vehicle to the OFF (LOCK) mode. The Pending DTC, the Confirmed DTC, and the freeze data can be cleared with the scan tool Clear command or by disconnecting the 12 volt battery.

DTC P171A

DTC P171A : Park Pawl System Position Control Error

General Description

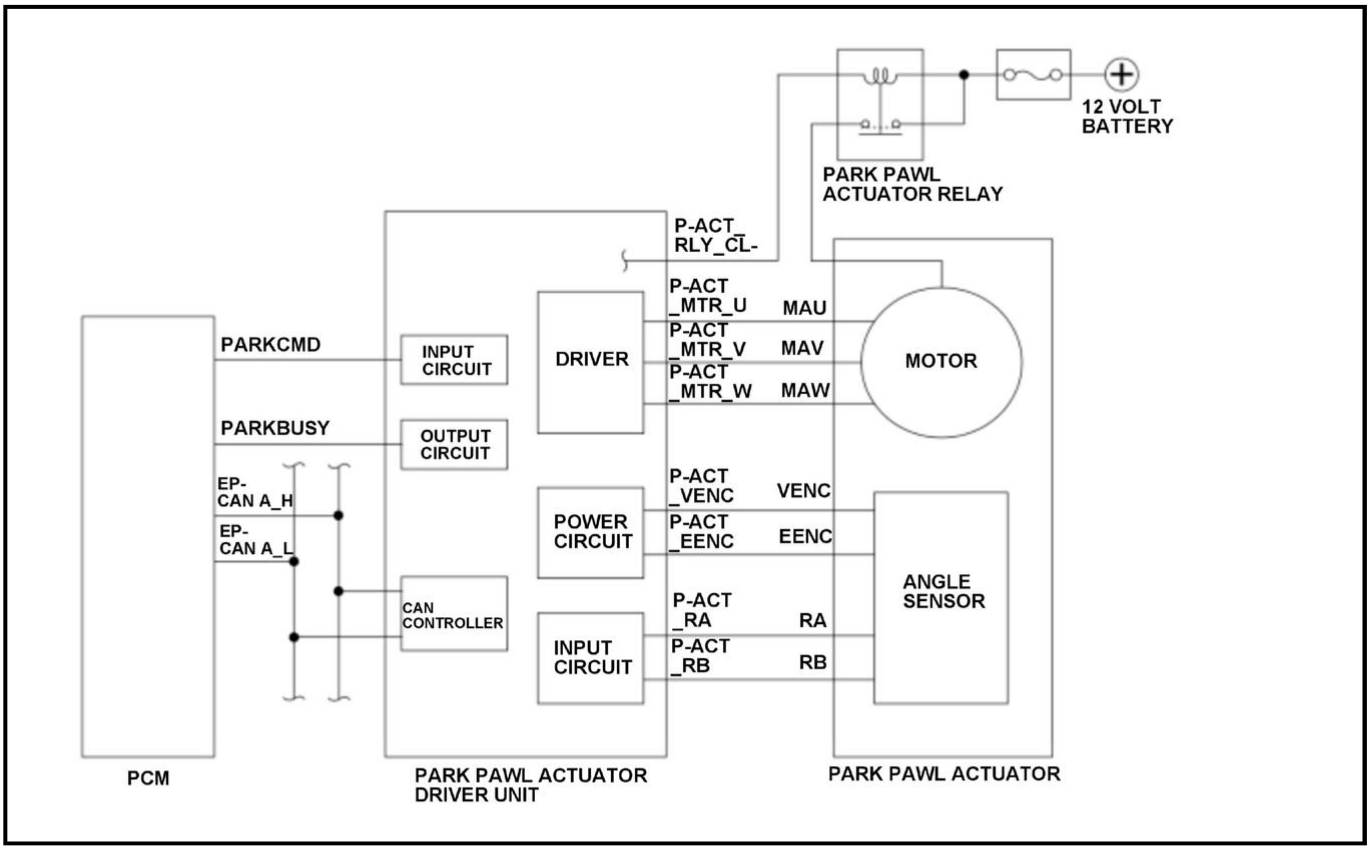
12 VOLT BATTERY
PARK PAWL ACTUATOR RELAY
P-ACT_ RLY_CL-
P-ACT _MTR_U
MAU
P-ACT _MTR_V
MAV
P-ACT _MTR_W
MAW
MOTOR
PARKCMD
INPUT CIRCUIT
DRIVER
PARKBUSY
OUTPUT CIRCUIT
EP-CAN A_H
EP-CAN A_L
P-ACT _VENC
VENC
POWER CIRCUIT
P-ACT _EENC
EENC
ANGLE SENSOR
CAN CONTROLLER
P-ACT _RA
RA
INPUT CIRCUIT
P-ACT _RB
RB
PCM
PARK PAWL ACTUATOR DRIVER UNIT
PARK PAWL ACTUATOR

The park pawl actuator driver unit controls the park pawl actuator to switch to and unlock the P position/mode by the command from the powertrain control module (PCM). If the position sensor in the park pawl actuator driver unit detects a change to the P position by a factor of such as applying external force to the transmission, while the switch/unlock command to the P position is not being transmitted to the park pawl actuator driver unit from the PCM, the PCM receives a malfunction from the park pawl actuator driver unit and stores a DTC.

Monitor Execution, Sequence, Duration, DTC Type

Execution	-
Sequence	None
Duration	40 milliseconds or more
DTC Type	One drive cycle, MIL off, shift position indicator blinks

Enable Conditions

Condition	Minimum	Maximum
12 volt battery voltage [Battery Voltage]	7 V	-

[ ]: HDS Parameter

Malfunction Threshold

The angle sensor of the park pawl actuator is different from the current commanded value for at least 40 milliseconds.

Possible Cause

NOTE: The causes shown may not be a complete list of all potential problems, and it is possible that there may be other causes.

- Park pawl actuator failure
- Parking mechanism failure

Confirmation Procedure

Operating Condition

- Turn the vehicle to the ON mode, and wait for at least 10 seconds.
- While pressing the brake pedal, shift the transmission to N, D, and R position/mode, then shift the transmission to P position/mode and wait at least 5 seconds.

With the HDS

None.

Diagnosis Details

Conditions for setting the DTC

When a malfunction is detected, the shift position indicator blinks and a Pending DTC, a Confirmed DTC, and the freeze data are stored in the PCM memory. The MIL does not come on.

Conditions for clearing the DTC

The shift position indicator comes off by turning the vehicle to the OFF (LOCK) mode. The Pending DTC, the Confirmed DTC, and the freeze data can be cleared with the scan tool Clear command or by disconnecting the 12 volt battery.

DTC P171C

DTC P171C : Park Pawl System Multiple Sensor Correlation

General Description

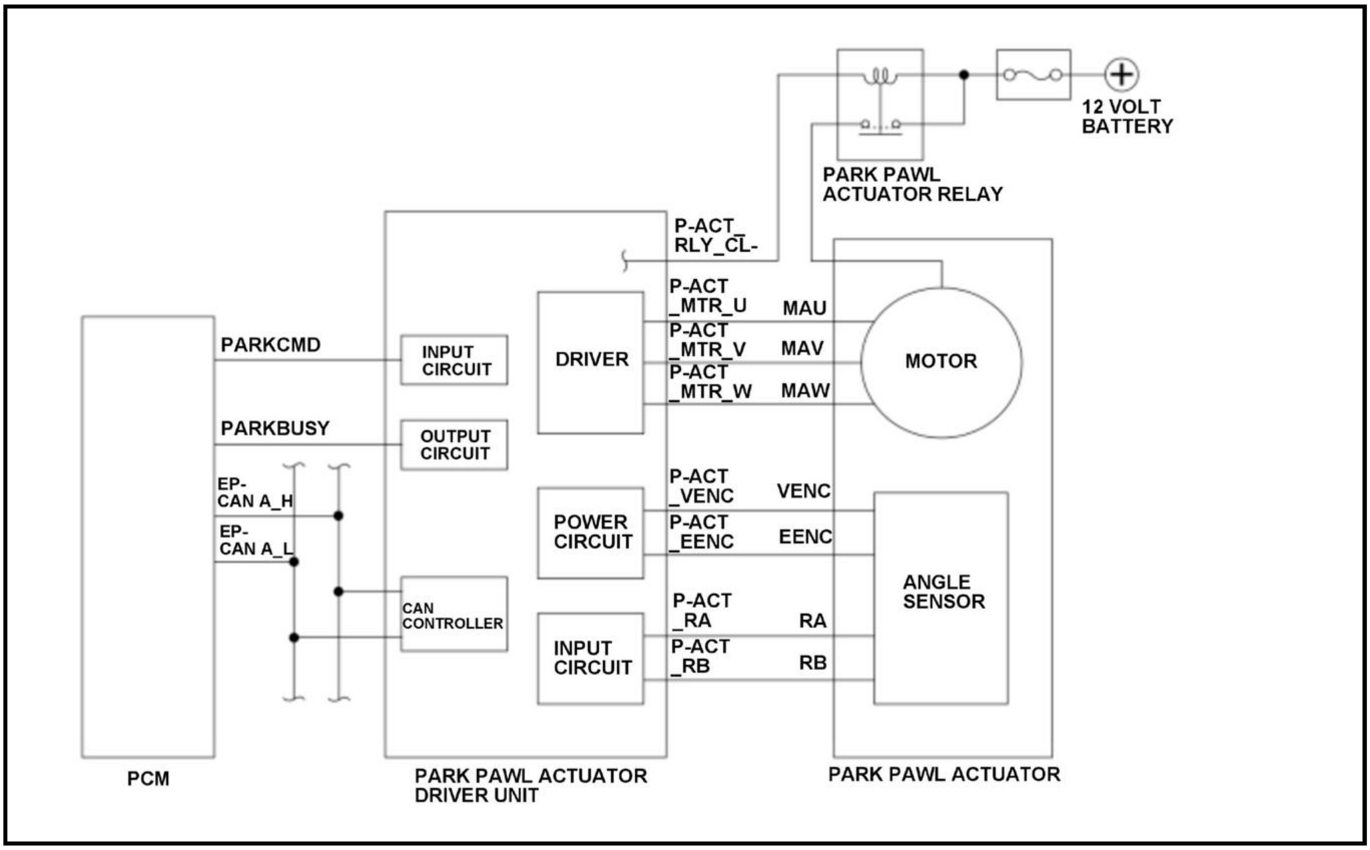
12 VOLT BATTERY
PARK PAWL ACTUATOR RELAY
P-ACT_RLY_CL-
P-ACT_MTR_U
P-ACT_MTR_V
P-ACT_MTR_W
MAU
MAV
MAW
MOTOR
PARKCMD
INPUT CIRCUIT
DRIVER
PARKBUSY
OUTPUT CIRCUIT
EP-CAN A_H
EP-CAN A_L
P-ACT_VENC
P-ACT_EENC
VENC
EENC
POWER CIRCUIT
ANGLE SENSOR
CAN CONTROLLER
P-ACT_RA
P-ACT_RB
RA
RB
INPUT CIRCUIT
PCM
PARK PAWL ACTUATOR DRIVER UNIT
PARK PAWL ACTUATOR

The park pawl actuator driver unit controls the park pawl actuator to switch the position to parking or non-parking by the command from the powertrain control module (PCM). When the switching to the parking position or the non-parking position is completed, the parking position or the non-parking position detected by the park pawl actuator driver unit and the parking position or the non-parking position detected by the park position sensor transmitted from the PCM are compared. If the information of the parking position or the non-parking position differs, the PCM receives malfunction from the park pawl actuator driver unit and stores a DTC.

Monitor Execution, Sequence, Duration, DTC Type

Execution	-
Sequence	None
Duration	40 milliseconds or more
DTC Type	One drive cycle, MIL off, shift position indicator blinks

Enable Conditions

Condition	Minimum	Maximum
12 volt battery voltage [Battery Voltage]	10.5 V	-
Other	There is no F-CAN communication failure	

[ ]: HDS Parameter

Malfunction Threshold

The parking position or the non-parking position detected by the park pawl actuator driver unit and the parking position or the non-parking position detected by the park position sensor transmitted from the PCM differs for at least 40 milliseconds.

Possible Cause

NOTE: The causes shown may not be a complete list of all potential problems, and it is possible that there may be other causes.

- Park pawl actuator failure
- Transmission (e-CVT) (transmission park mechanism) failure

Confirmation Procedure

Operating Condition

- Turn the vehicle to the ON mode, and wait for at least 10 seconds.
- While pressing the brake pedal, shift to N position/mode, then shift to P position/mode and wait at least 5 seconds.

With the HDS

None.

Diagnosis Details

Conditions for setting the DTC

When a malfunction is detected, the shift position indicator blinks and a Pending DTC, a Confirmed DTC, and the freeze data are stored in the PCM memory. The MIL does not come on.

Conditions for clearing the DTC

The shift position indicator comes off by turning the vehicle to the OFF (LOCK) mode. The Pending DTC, the Confirmed DTC, and the freeze data can be cleared with the scan tool Clear command or by disconnecting the 12 volt battery.

DTC P171E

DTC P171E : Park Pawl System Malfunction of learning mode

General Description

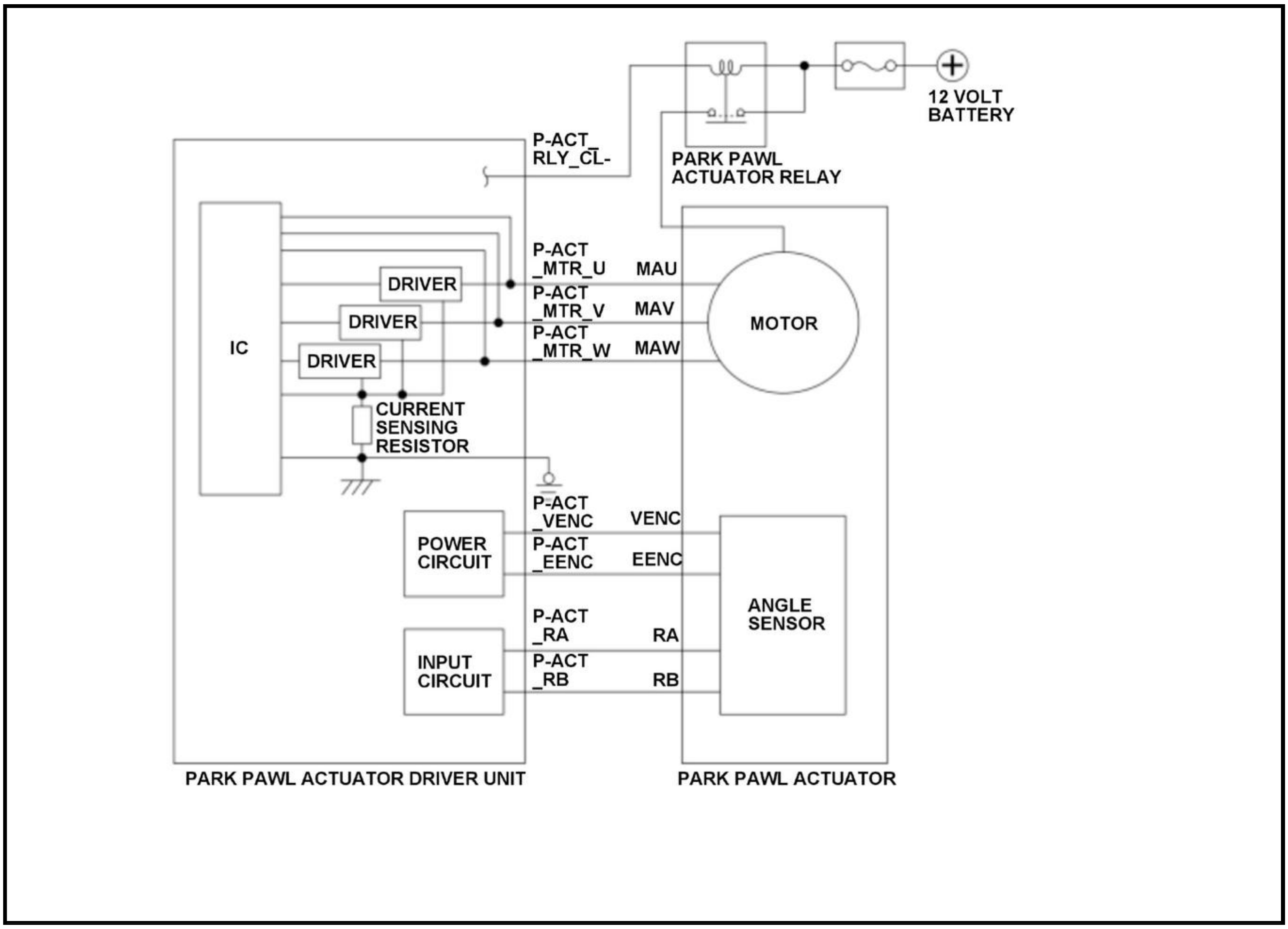

12 VOLT BATTERY
PARK PAWL ACTUATOR RELAY
P-ACT_RLY_CL-
IC
DRIVER
DRIVER
DRIVER
P-ACT_MTR_U
P-ACT_MTR_V
P-ACT_MTR_W
MAU
MAV
MAW
MOTOR
CURRENT SENSING RESISTOR
P-ACT_VENC
P-ACT_EENC
VENC
EENC
POWER CIRCUIT
P-ACT_RA
P-ACT_RB
RA
RB
INPUT CIRCUIT
ANGLE SENSOR
PARK PAWL ACTUATOR DRIVER UNIT
PARK PAWL ACTUATOR

The park pawl actuator driver unit controls shifting/releasing of the park pawl actuator to/from the P position. The park pawl actuator driver unit performs the initial learning according to the command from the powertrain control module (PCM). If the initial learning of the park pawl actuator driver unit does not complete for a specified length of time or more after an initial learning command is output from the PCM, the PCM receives malfunction from the park pawl actuator driver unit, and stores a DTC.

Monitor Execution, Sequence, Duration, DTC Type

Execution	-
Sequence	None
Duration	2.3 seconds or more
DTC Type	One drive cycle, MIL off, shift position indicator blinks

Enable Conditions

Condition	Minimum	Maximum
12 volt battery voltage [Battery Voltage]	10.5 V	-
Vehicle	ON mode	

Malfunction Threshold

The initial learning for the park pawl actuator driver unit has not been completed for at least 2.3 seconds after the initial learning command is output from the PCM.

Possible Cause

NOTE: The causes shown may not be a complete list of all potential problems, and it is possible that there may be other causes.

- Park pawl actuator failure
- Park mechanism failure

Confirmation Procedure

Operating Condition

Turn the vehicle to the ON mode, and wait for at least 10 seconds.

With the HDS

None.

Diagnosis Details

Conditions for setting the DTC

When a malfunction is detected, the shift position indicator blinks and a Pending DTC, a Confirmed DTC, and the freeze data are stored in the PCM memory. The MIL does not come on.

Conditions for clearing the DTC

The shift position indicator comes off by turning the vehicle to the OFF (LOCK) mode. The Pending DTC, the Confirmed DTC, and the freeze data can be cleared with the scan tool Clear command or by disconnecting the 12 volt battery.

DTC P171F

DTC P171F : Park Pawl System Stuck Malfunction After learning mode

General Description

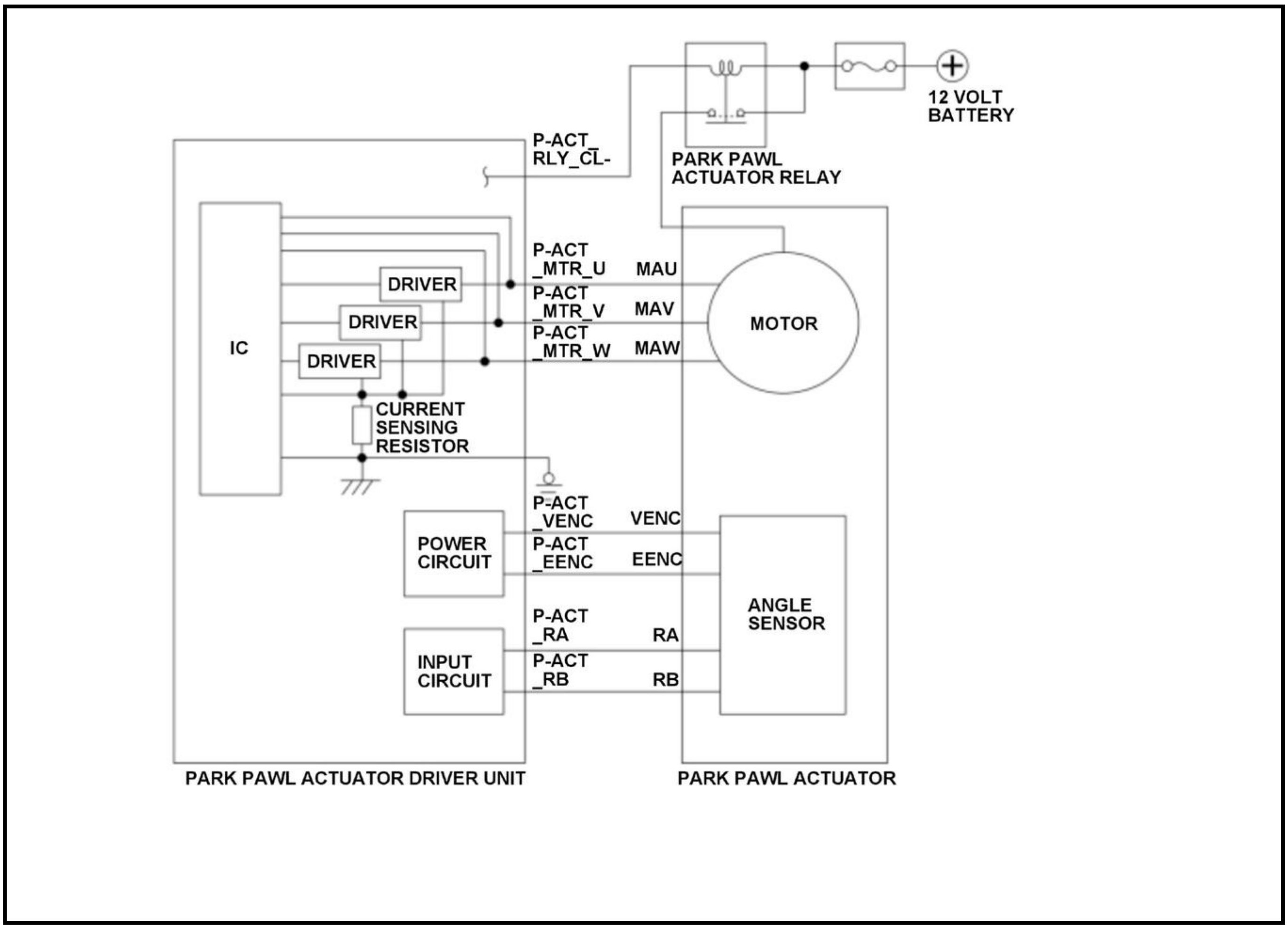
12 VOLT BATTERY
PARK PAWL ACTUATOR RELAY
P-ACT_ RLY_CL-
IC
DRIVER
DRIVER
DRIVER
CURRENT SENSING RESISTOR
P-ACT _MTR_U
MAU
P-ACT _MTR_V
MAV
P-ACT _MTR_W
MAW
MOTOR
POWER CIRCUIT
P-ACT _VENC
VENC
P-ACT _EENC
EENC
ANGLE SENSOR
INPUT CIRCUIT
P-ACT _RA
RA
P-ACT _RB
RB
PARK PAWL ACTUATOR DRIVER UNIT
PARK PAWL ACTUATOR

The park pawl actuator driver unit controls shifting/releasing of the park pawl actuator to/from the P position. If the shifting to/releasing from P position operation does not complete for a specified length of time or more after a shifting to/releasing from P position command is output from the powertrain control module (PCM), the PCM receives malfunction from the park pawl actuator driver unit, and stores a DTC.

Monitor Execution, Sequence, Duration, DTC Type

Execution	-
Sequence	None
Duration	1.5 seconds or more
DTC Type	One drive cycle, MIL off, shift position indicator blinks

Enable Conditions

Condition	Minimum	Maximum
12 volt battery voltage [Battery Voltage]	10.8 V	-
Vehicle	ON mode	

Malfunction Threshold

The switching to the parking position or the non-parking position has not been completed for at least 1.5 seconds after the switching to the parking position or the non-parking position command is output from the PCM.

Possible Cause

NOTE: The causes shown may not be a complete list of all potential problems, and it is possible that there may be other causes.

- Park pawl actuator failure
- Park mechanism failure

Confirmation Procedure

Operating Condition

- Turn the vehicle to the ON mode, and wait at for least 10 seconds.
- While pressing the brake pedal, shift to N position/mode, then shift to P position/mode and wait at least 5 seconds.

With the HDS

None.

Diagnosis Details

Conditions for setting the DTC

When a malfunction is detected, the shift position indicator blinks and a Pending DTC, a Confirmed DTC, and the freeze data are stored in the PCM memory. The MIL does not come on.

Conditions for clearing the DTC

The shift position indicator comes off by turning the vehicle to the OFF (LOCK) mode. The Pending DTC, the Confirmed DTC, and the freeze data can be cleared with the scan tool Clear command or by disconnecting the 12 volt battery.

DTC P1720

DTC P1720 : Park Pawl Motor Current Range/Performance

General Description

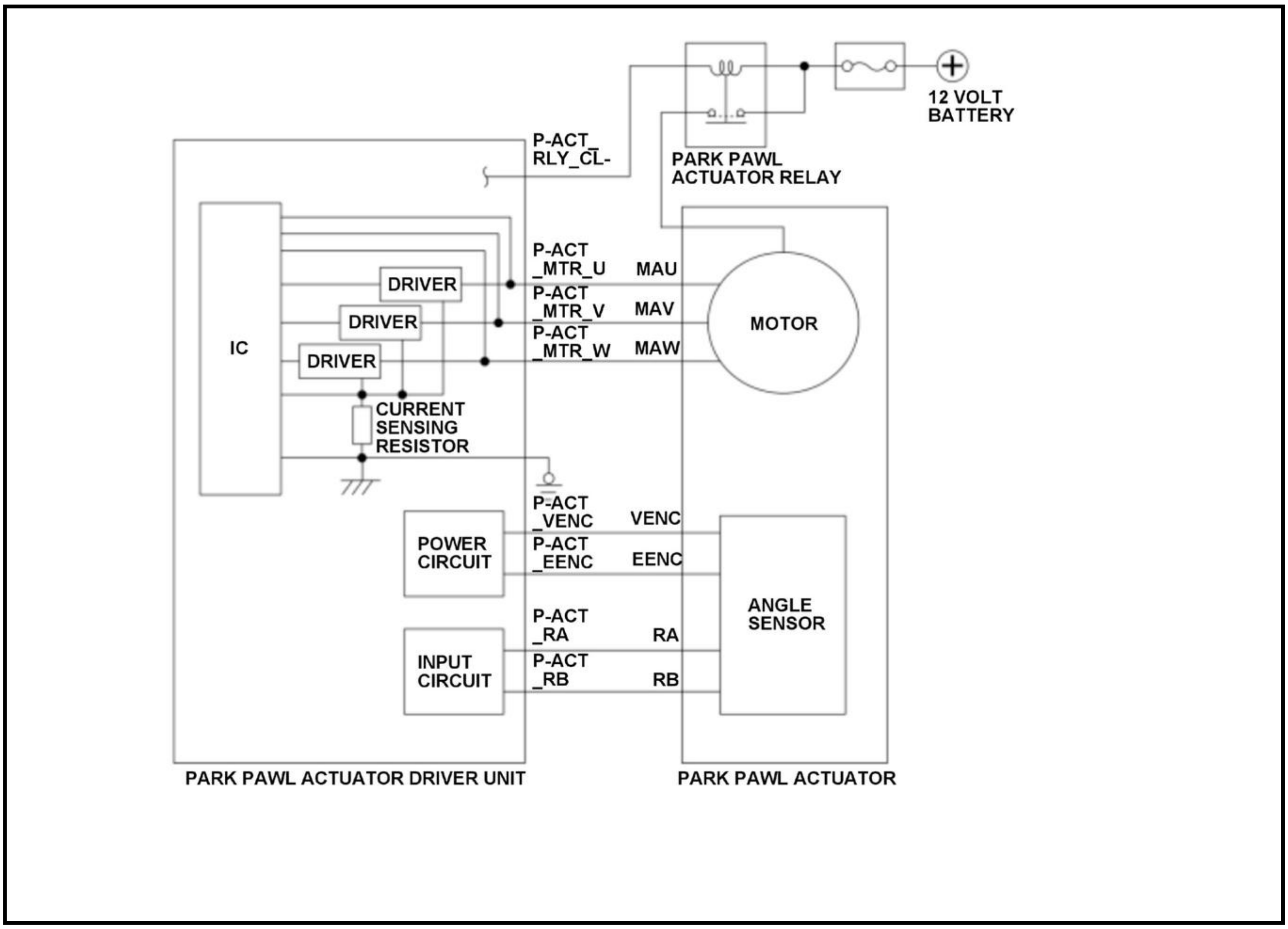
P-ACT_
RLY_CL-
PARK PAWL
ACTUATOR RELAY
12 VOLT
BATTERY
IC
DRIVER
DRIVER
DRIVER
CURRENT
SENSING
RESISTOR
P-ACT
_MTR_U
MAU
P-ACT
_MTR_V
MAV
P-ACT
_MTR_W
MAW
MOTOR
P-ACT
_VENC
VENC
POWER
CIRCUIT
P-ACT
_EENC
EENC
ANGLE
SENSOR
P-ACT
_RA
RA
INPUT
CIRCUIT
P-ACT
_RB
RB
PARK PAWL ACTUATOR DRIVER UNIT
PARK PAWL ACTUATOR

The park pawl actuator driver unit controls shifting/releasing of the park pawl actuator to/from the P position. The park pawl actuator driver unit monitors the current flowing into the park pawl actuator. If the current flowing into the park pawl actuator continues to be a specified value or more for a specified length of time or more, the powertrain control module (PCM) receives malfunction from the park pawl actuator driver unit, and stores a DTC.

Monitor Execution, Sequence, Duration, DTC Type

Execution	-
Sequence	None
Duration	48 milliseconds or more
DTC Type	One drive cycle, MIL off, shift position indicator blinks

Enable Conditions

Condition	B
Vehicle	ON mode

Malfunction Threshold

The total value of the current applied to the park pawl actuator (MAU/P-ACT_MTR_U, MAV/P-ACT_MTR_V, and MAW/P-ACT_MTR_W) is 50 A or more for at least 48 milliseconds.

Possible Cause

NOTE: The causes shown may not be a complete list of all potential problems, and it is possible that there may be other causes.

- Park pawl actuator MAU/P-ACT_MTR_U line short to power

- Park pawl actuator MAV/P-ACT_MTR_V line short to power
- Park pawl actuator MAW/P-ACT_MTR_W line short to power
- Park pawl actuator driver unit internal failure
- Park pawl actuator internal failure

Confirmation Procedure

Operating Condition

Turn the vehicle to the ON mode, and wait for at least 10 seconds.

With the HDS

None.

Diagnosis Details

Conditions for setting the DTC

When a malfunction is detected, the shift position indicator blinks and a Pending DTC, a Confirmed DTC, and the freeze data are stored in the PCM memory. The MIL does not come on.

Conditions for clearing the DTC

The shift position indicator comes off by turning the vehicle to the OFF (LOCK) mode. The Pending DTC, the Confirmed DTC, and the freeze data can be cleared with the scan tool Clear command or by disconnecting the 12 volt battery.

DTC P1721

DTC P1721 : Park Pawl Unit IG1 SW No Signal

General Description

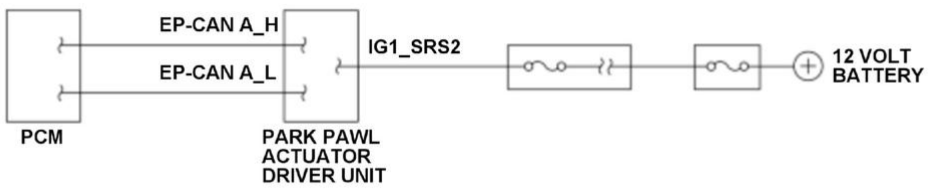

The park pawl actuator driver unit controls the park pawl actuator for shifting to/releasing from the P position. The park pawl actuator driver unit monitors the information of the IG1 signal to shift to a control mode in which the park pawl actuator is operational, using the information of the IG1 signal. If the IG1 signal information recognized by the park pawl actuator driver unit continues to be OFF for a specified time or more while the IG1 signal information that is recognized by the powertrain control module (PCM) and transmitted via EP-CAN is ON, the PCM receives malfunction from the park pawl actuator driver unit, and stores a DTC.

Monitor Execution, Sequence, Duration, DTC Type

Execution	-
Sequence	None

Duration	1.2 seconds or more
DTC Type	One drive cycle, MIL off, shift position indicator blinks

Enable Conditions

Condition	Minimum	Maximum
12 volt battery voltage [Battery Voltage]	10 V	-
Other	No abnormal condition in the communication via EP-CAN	

[ ]: HDS Parameter

Malfunction Threshold

The IG1 signal information recognized by the park pawl actuator driver unit continues to be OFF for at least 1.2 seconds while the IG1 signal information recognized by the PCM is ON.

Possible Cause

NOTE: The causes shown may not be a complete list of all potential problems, and it is possible that there may be other causes.

- Park pawl actuator driver unit IG1_SRS2 line open (includes a loose or disconnected connector)

Confirmation Procedure

Operating Condition

Turn the vehicle to the ON mode, and wait for at least 10 seconds.

With the HDS

None.

Diagnosis Details

Conditions for setting the DTC

When a malfunction is detected, the shift position indicator blinks and a Pending DTC, a Confirmed DTC, and the freeze data are stored in the PCM memory. The MIL does not come on.

Conditions for clearing the DTC

The shift position indicator comes off by turning the vehicle to the OFF (LOCK) mode. The Pending DTC, the Confirmed DTC, and the freeze data can be cleared with the scan tool Clear command or by disconnecting the 12 volt battery.

DTC P1722

DTC P1722 : Park Pawl Motor Torque Malfunction of learning mode

General Description

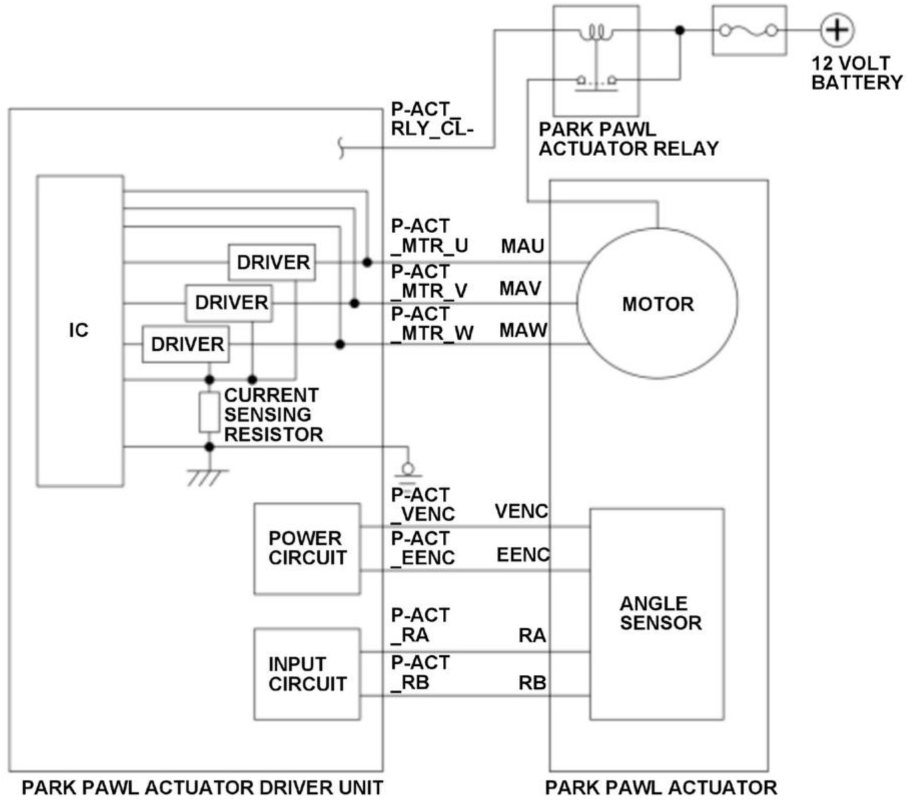
12 VOLT BATTERY
PARK PAWL ACTUATOR RELAY
P-ACT_RLY_CL-
IC
DRIVER
DRIVER
DRIVER
CURRENT SENSING RESISTOR
P-ACT_MTR_U
P-ACT_MTR_V
P-ACT_MTR_W
MAU
MAV
MAW
MOTOR
P-ACT_VENC
P-ACT_EENC
VENC
EENC
POWER CIRCUIT
P-ACT_RA
P-ACT_RB
RA
RB
INPUT CIRCUIT
ANGLE SENSOR
PARK PAWL ACTUATOR DRIVER UNIT
PARK PAWL ACTUATOR

The park pawl actuator driver unit controls shifting/releasing of the park pawl actuator to/from the P position. The park pawl actuator driver unit performs the initial learning when the vehicle is turned to the ON mode and controls to limit the current flowing into the park pawl actuator. If the current flowing into the park pawl actuator during the initial learning continues to be a specified value or more for a specified length of time or more, the powertrain control module (PCM) receives malfunction from the park pawl actuator driver unit, and stores a DTC.

Monitor Execution, Sequence, Duration, DTC Type

Execution	-
Sequence	None
Duration	32 milliseconds or more
DTC Type	Two drive cycles, MIL off, shift position indicator off

Enable Conditions

Condition	Minimum	Maximum
12 volt battery voltage [Battery Voltage]	7 V	-

[ ]: HDS Parameter

Malfunction Threshold

The total value of the current applied to the park pawl actuator (MAU/P-ACT_MTR_U, MAV/P-ACT_MTR_V, and MAW/P-ACT_MTR_W) is 15 A or more for at least 32 milliseconds when initial learning is performed.

Possible Cause

NOTE: The causes shown may not be a complete list of all potential problems, and it is possible that there may be other causes.

- Park pawl actuator driver unit internal failure

Confirmation Procedure

Operating Condition

Turn the vehicle to the ON mode, and wait at least 10 seconds.

With the HDS

None.

Diagnosis Details

Conditions for setting the DTC

When a malfunction is detected during the first drive cycle, a Pending DTC is stored in the PCM memory. If the malfunction returns in the next (second) drive cycle, a Confirmed DTC and the freeze data are stored. The MIL does not come on and the shift position indicator does not blink.

Conditions for clearing the DTC

The Pending DTC, the Confirmed DTC, and the freeze data can be cleared with the scan tool Clear command.

DTC P1723

DTC P1723 : Park Pawl System Initial Check Error

General Description

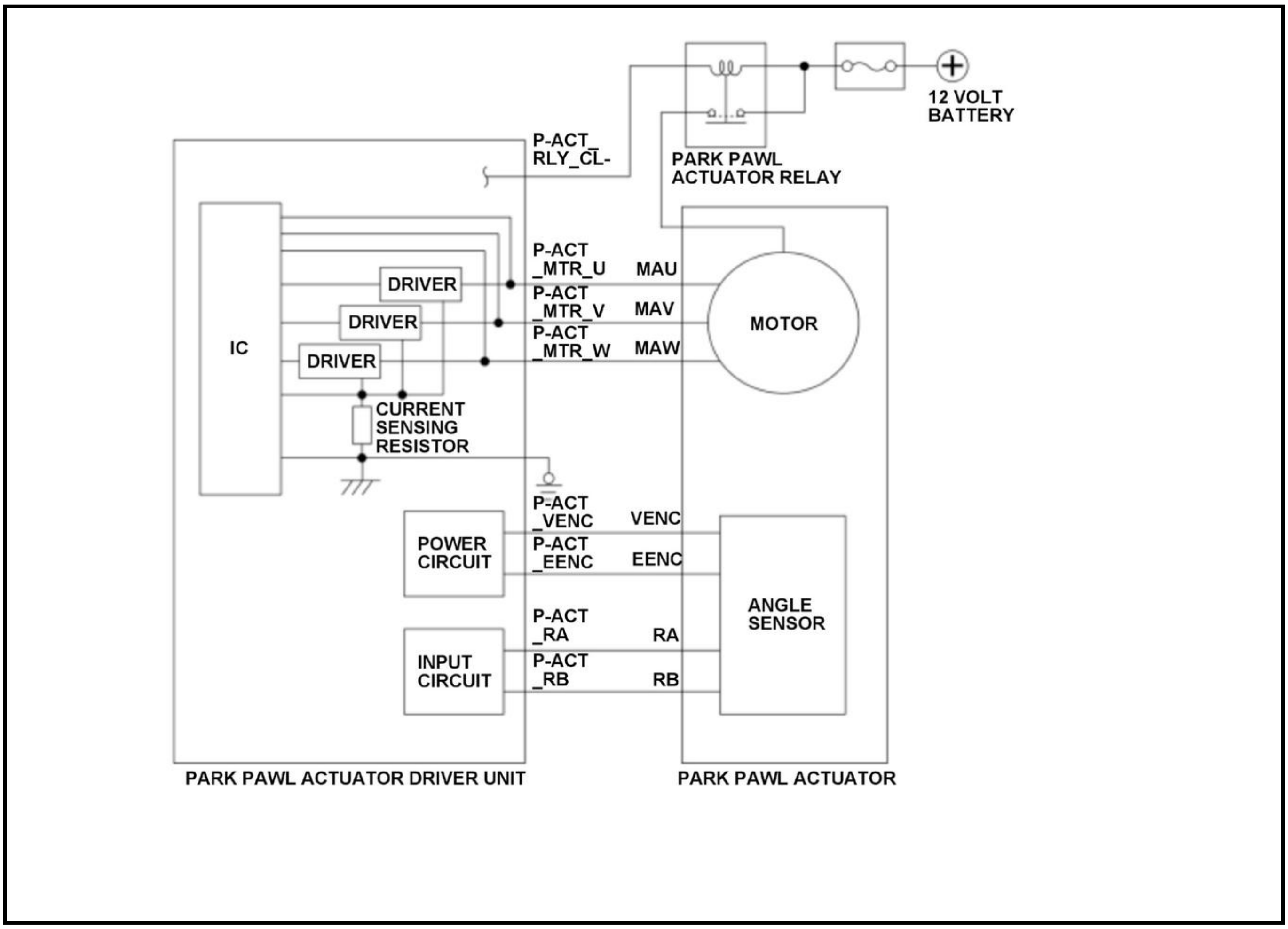
12 VOLT BATTERY
PARK PAWL ACTUATOR RELAY
P-ACT_ RLY_CL-
IC
DRIVER
DRIVER
DRIVER
CURRENT SENSING RESISTOR
P-ACT _MTR_U
P-ACT _MTR_V
P-ACT _MTR_W
MAU
MAV
MAW
MOTOR
P-ACT _VENC
P-ACT _EENC
VENC
EENC
POWER CIRCUIT
P-ACT _RA
P-ACT _RB
RA
RB
INPUT CIRCUIT
ANGLE SENSOR
PARK PAWL ACTUATOR DRIVER UNIT
PARK PAWL ACTUATOR

The park pawl actuator driver unit controls shifting/releasing of the park pawl actuator to/from the P position. The park pawl actuator driver unit performs the initial learning when the vehicle is turned to the ON mode. If the initial learning does not complete even when a specified length of time or more has passed after the vehicle is turned to the ON mode, the powertrain control module (PCM) receives malfunction from the park pawl actuator driver unit, and stores a DTC.

Monitor Execution, Sequence, Duration, DTC Type

Execution	-
Sequence	None
Duration	5.0 seconds or more
DTC Type	One drive cycle, MIL off, shift position indicator blinks

Enable Conditions

Condition	Minimum	Maximum
12 volt battery voltage [Battery Voltage]	10.5 V	-

[ ]: HDS Parameter

Malfunction Threshold

The initial learning continued for at least 5.0 seconds after the vehicle condition is turned to the ON mode.

Possible Cause

NOTE: The causes shown may not be a complete list of all potential problems, and it is possible that there may be other causes.

- Park pawl actuator internal failure
- Park mechanism failure

Confirmation Procedure

Operating Condition

Turn the vehicle to the ON mode, and wait for at least 10 seconds.

With the HDS

None.

Diagnosis Details

Conditions for setting the DTC

When a malfunction is detected, the shift position indicator blinks and a Pending DTC, a Confirmed DTC, and the freeze data are stored in the PCM memory. The MIL does not come on.

Conditions for clearing the DTC

The shift position indicator comes off by turning the vehicle to the OFF (LOCK) mode. The Pending DTC, the Confirmed DTC, and the freeze data can be cleared with the scan tool Clear command or by disconnecting the 12 volt battery.

DTC P172A

DTC P172A : KEY-Release Wake-up Output Circuit Malfunction

General Description

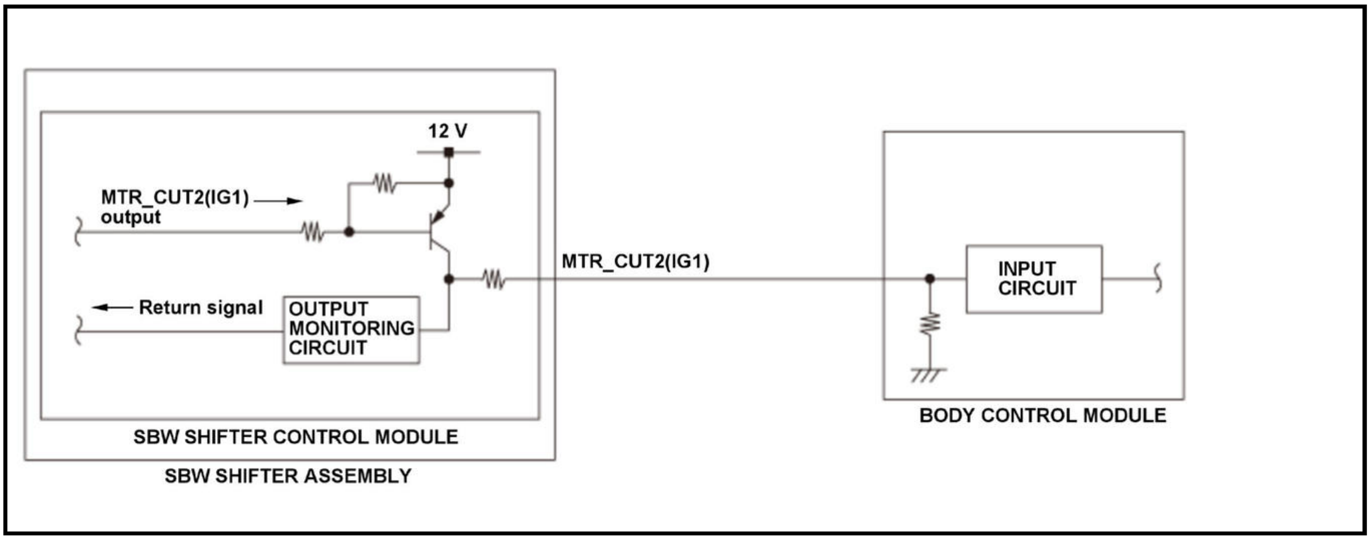
12 V
MTR_CUT2(IG1) output
Return signal
OUTPUT MONITORING CIRCUIT
SBW SHIFTER CONTROL MODULE
SBW SHIFTER ASSEMBLY
MTR_CUT2(IG1)
INPUT CIRCUIT
BODY CONTROL MODULE

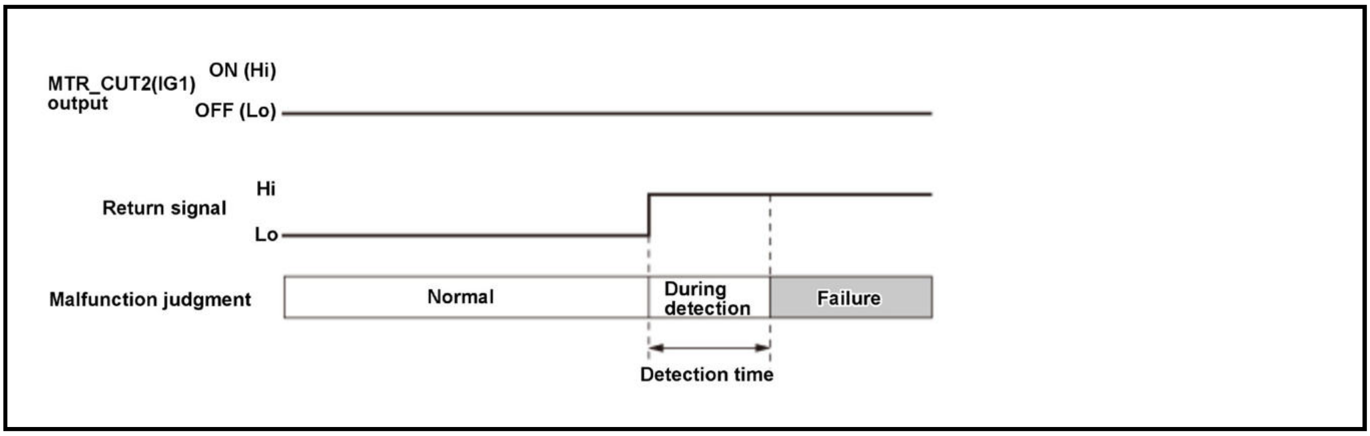

At the condition the vehicle is in OFF (LOCK) mode, the SBW shifter control module in the SBW shifter assembly turns the MTR_CUT2(IG1) output to ON (12 V) when the key release switch is pressed once. The SBW shifter control module monitors the return signal of the MTR_CUT2(IG1) output, and when the return signal and MTR_CUT2(IG1) output does match for a specified duration, the powertrain control module (PCM) receives malfunction from the SBW shifter control module and stores a DTC.

Monitor Execution, Sequence, Duration, DTC Type

Execution	Continuous
Sequence	None
Duration	2 seconds or more
DTC Type	One drive cycle, MIL off, shift position indicator off

Enable Conditions

Condition	B
Vehicle	ON mode

Malfunction Threshold

The return signal is abnormal for at least 2 seconds when the MTR_CUT2(IG1) outputs OFF.

Possible Cause

NOTE: The causes shown may not be a complete list of all potential problems, and it is possible that there may be other causes.

- SBW shifter control module MTR_CUT2(IG1) line short to power
- SBW shifter assembly (SBW shifter control module) internal failure
- Body control module internal failure

Confirmation Procedure

Operating Condition

Turn the vehicle to the ON mode, and wait for at least 10 seconds.

With the HDS

None.

Diagnosis Details

Conditions for setting the DTC

When a malfunction is detected, a Pending DTC, a Confirmed DTC, and the freeze data are stored in the PCM memory. The MIL does not come on and the shift position indicator does not blink.

Conditions for clearing the DTC

The Pending DTC, the Confirmed DTC, and the freeze data can be cleared with the scan tool Clear command or by disconnecting the 12 volt battery.

DTC P172B

DTC P172B : KEY-Release Switch Input Circuit Malfunction

General Description

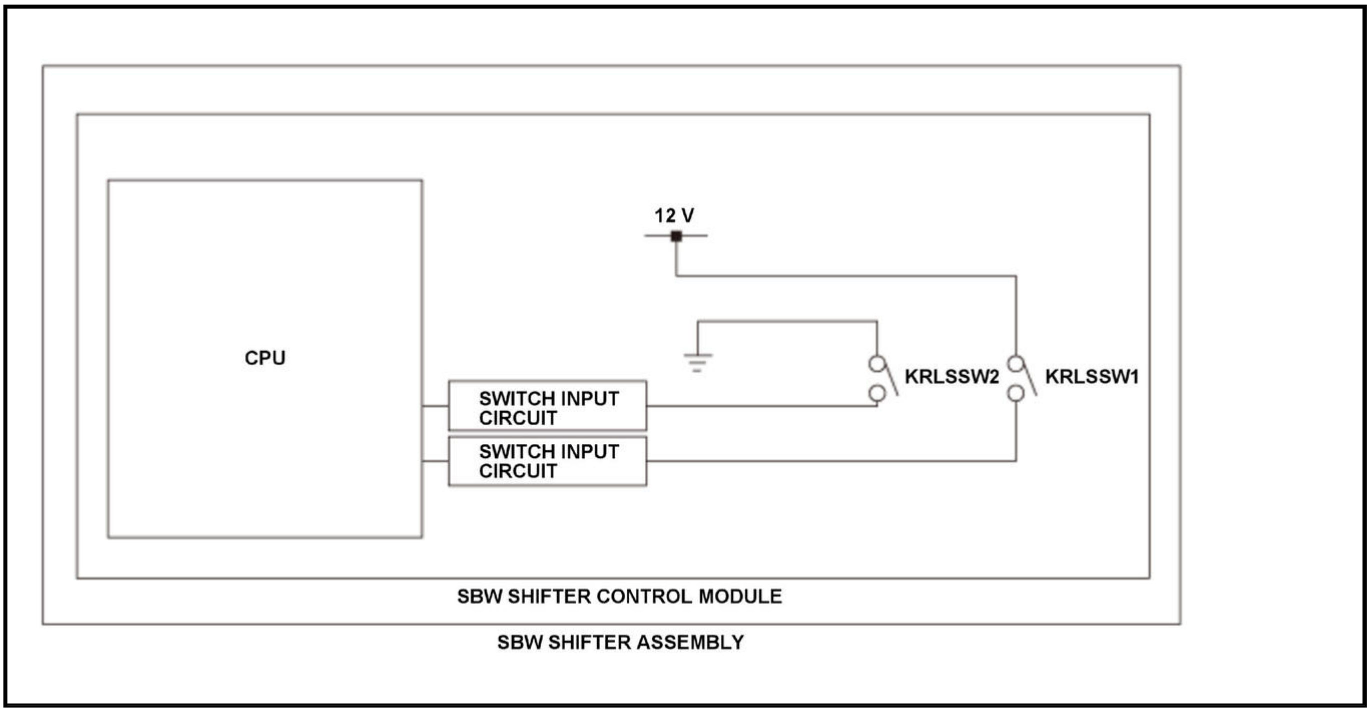

The SBW shifter control module in the SBW shifter assembly has a key release switch. By operating the key release switch, it unlocks the parking position in the transmission. The key release switch is composed of KRLSSW1 and KRLSSW2, and when the input signal logic does match for a specified duration, the powertrain control module (PCM) receives malfunction from the SBW shifter control module and stores a DTC.

Monitor Execution, Sequence, Duration, DTC Type

Execution	Continuous
Sequence	None
Duration	1 minute or more
DTC Type	One drive cycle, MIL off, shift position indicator off

Enable Conditions

Condition	B
Vehicle	ON mode

Malfunction Threshold

The input signal logic of KRLSSW1 and KRLSSW2 do not match (KRLSSW1 ON and KRLSSW2 OFF or KRLSSW1 OFF and KRLSSW2 ON) for at least 1 minute.

Possible Cause

NOTE: The causes shown may not be a complete list of all potential problems, and it is possible that there may be other causes.

- SBW shifter assembly (SBW shifter control module) internal failure

Confirmation Procedure

Operating Condition

Turn the vehicle to the ON mode, and wait at least 1 minute.

With the HDS

None.

Diagnosis Details

Conditions for setting the DTC

When a malfunction is detected, a Pending DTC, a Confirmed DTC, and the freeze data are stored in the PCM memory. The MIL does not come on and the shift position indicator does not blink.

Conditions for clearing the DTC

The Pending DTC, the Confirmed DTC, and the freeze data can be cleared with the scan tool Clear command or by disconnecting the 12 volt battery.

DTC P173A (2020)

DTC P173A : Transmission Fluid Pressure Sensor Performance High

General Description

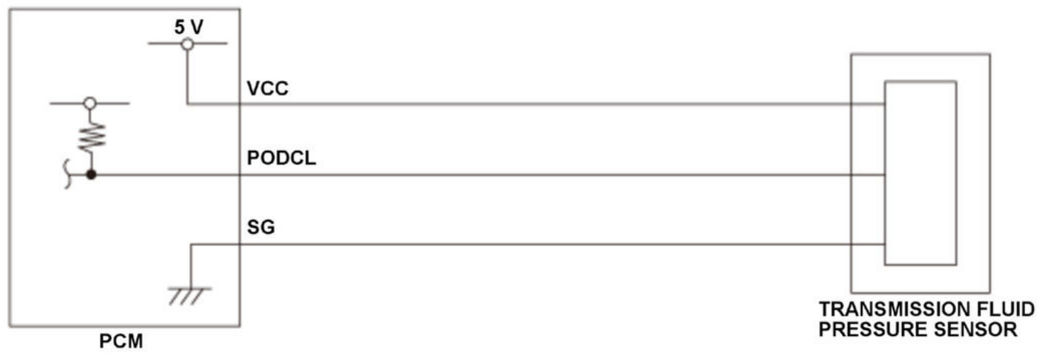

Condition of over drive clutch		Shift solenoid valve A	
		ON (12 V)	OFF (0 V)
Shift solenoid valve B	ON (12 V)	ON (engaged)	OFF (disengaged)
	OFF (0 V)	OFF (disengaged)	OFF (disengaged)

Shift solenoid valve A is installed on the flywheel housing. It is controlled by the ON/OFF signal from the powertrain control module (PCM) to apply line pressure to shift valve A. The signal from the PCM is output so that the line pressure is supplied to the clutch piston under the condition that overdrive clutch engagement is requested during running at 44 mph (70 km/h) or more. When the signal to shift solenoid valve A from the PCM is ON, and the line pressure is applied to shift valve A, it operates against the shift valve A spring. When the signal to shift solenoid valve A from the PCM is OFF, and the line pressure is discharged, shift valve A is inactive. The PCM monitors the transmission fluid pressure sensor. If the transmission fluid pressure sensor pressure is a specified value or more when the engine is stopped or engagement of the over drive clutch is not requested, the PCM detects a malfunction and stores a DTC.

Monitor Execution, Sequence, Duration, DTC Type

Execution	Continuous
Sequence	None
Duration	3.0 seconds or more
DTC Type	One drive cycle, MIL off, shift position indicator blinks

Enable Conditions

Condition	Minimum	Maximum
12 volt battery voltage [Battery Voltage]	11 V	-

[ ]: HDS Parameter

Malfunction Threshold

The transmission fluid pressure sensor output value is 177 kPa (1327 mmHg, 52.3 inHg) or more for at least 3.0 seconds when the engine is stopped or the engagement of the over drive clutch is not requested.

Possible Cause

NOTE: The causes shown may not be a complete list of all potential problems, and it is possible that there may be other causes.

- Transmission fluid pressure sensor failure
- PCM internal failure

Confirmation Procedure

Operating Condition

- Enter the maintenance mode, then start the engine. Hold the engine speed [ENGINE SPEED] at 3, 000 rpm without load (in P or N) until the radiator fan comes on, then let it idle.
- Drive the vehicle at speed of 44 mph (70 km/h) or less for at least 10 seconds.

- Drive the vehicle in this manner only if the traffic regulations and ambient conditions allow.

With the HDS

None.

Diagnosis Details

Conditions for setting the DTC

When a malfunction is detected, the shift position indicator blinks and a Pending DTC, a Confirmed DTC, and the freeze data are stored in the PCM memory. The MIL does not come on.

Conditions for clearing the DTC

The shift position indicator comes off by turning the vehicle to the OFF (LOCK) mode. The Pending DTC, the Confirmed DTC, and the freeze data can be cleared with the scan tool Clear command or by disconnecting the 12 volt battery.

DTC P173A (2021)

DTC P173A: Transmission Fluid Pressure Sensor Performance High

General Description

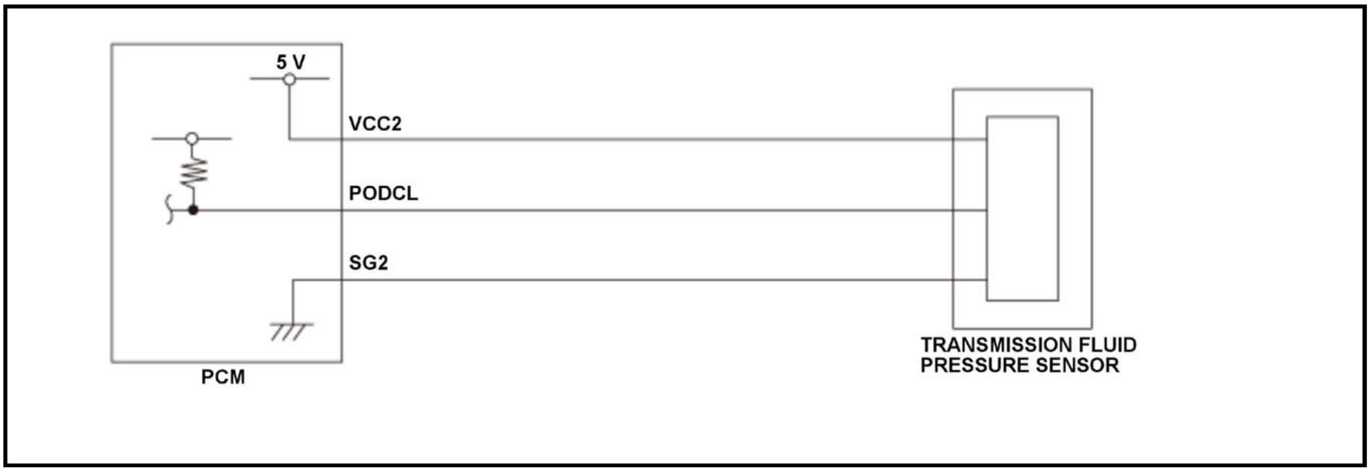

Capacity of Over Drive Clutch		Shift Solenoid Valve A	
		ON (12 V)	OFF (0 V)
Shift Solenoid Valve B	ON (12 V)	ON	OFF
	OFF (0 V)	OFF	OFF

Shift solenoid valve A is installed on the transmission housing. It is controlled by the ON/OFF signal from the powertrain control module (PCM) to apply line pressure to shift valve A. The signal from the PCM is outputted so that the line pressure is supplied to the clutch piston under the condition that the overdrive clutch engagement is requested while driving at 44 mph (70 km/h) or more. When the signal to shift solenoid valve A from the PCM is ON, and the line pressure is applied to shift valve A, it operates against the shift valve A spring. When the signal to shift solenoid valve A from the PCM is OFF, and the line pressure is discharged, shift valve A is inactive. The PCM monitors the transmission fluid pressure sensor. If the transmission fluid pressure sensor pressure is at specified value or more when the engine is stopped or engagement of the over drive clutch is not requested, the PCM detects a malfunction and stores a DTC.

Monitor Execution, Sequence, Duration, DTC Type

Execution	Continuous
Sequence	None
Duration	3.0 seconds or more
DTC Type	One drive cycle, MIL on, shift position indicator blinks

Enable Conditions

Condition	B
12 volt battery voltage [BATTERY VOLTAGE]	11 V

[ ]: HDS Parameter

Malfunction Threshold

The transmission fluid pressure sensor value is 177 kPa (1327 mmHg, 52.3 inHg) or more for at least 3.0 seconds when the engine is stopped or engagement of the over drive clutch is not requested.

Possible Cause

NOTE: The causes shown may not be a complete list of all potential problems, and it is possible that there may be other causes.

- Transmission fluid pressure sensor failure
- PCM internal failure

Confirmation Procedure

Operating Condition

- Enter the maintenance mode, then start the engine. Hold the engine speed [ENGINE SPEED] at 3, 000 rpm without load (in P or N) until the radiator fan comes on, then let it idle.
- Drive the vehicle at speed of a 44 mph (70 km/h) or less for at least 10 seconds.

- Drive the vehicle in this manner only if the traffic regulations and ambient conditions allow.

Diagnosis Details

Conditions for setting the DTC

When a malfunction is detected, the MIL comes on, the shift position indicator blinks and a Pending DTC, a Confirmed DTC, and the freeze data are stored in the PCM memory.

Conditions for clearing the DTC

The shift position indicator turns off by turning the vehicle to the OFF (LOCK) mode. The Pending DTC, the Confirmed DTC, and the freeze data can be cleared with the scan tool Clear command or by disconnecting the 12 volt battery.

DTC P173B (2020)

DTC P173B : Transmission Fluid Pressure Sensor Performance Low

General Description

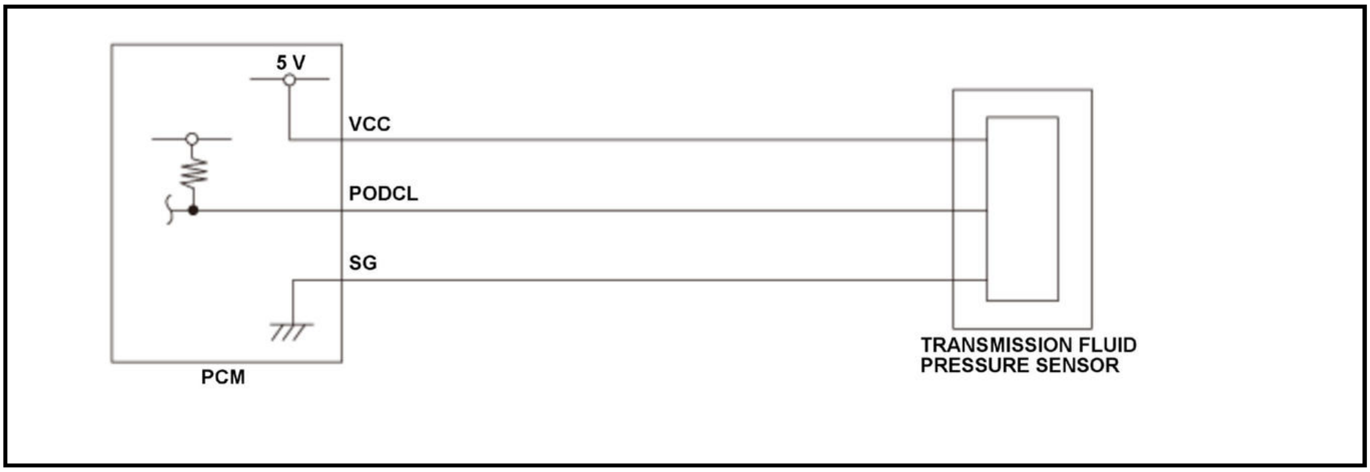

Condition of over drive clutch		Shift solenoid valve A	
		ON (12 V)	OFF (0 V)
Shift solenoid valve B	ON (12 V)	ON (engaged)	OFF (disengaged)
	OFF (0 V)	OFF (disengaged)	OFF (disengaged)

Shift solenoid valve A is installed on the flywheel housing. It is controlled by the ON/OFF signal from the powertrain control module (PCM) to apply line pressure to shift valve A. The signal from the PCM is output so that the line pressure is supplied to the clutch piston under the condition that overdrive clutch engagement is requested during running at 44 mph (70 km/h) or more. When the signal to shift solenoid valve A from the

PCM is ON, and the line pressure is applied to shift valve A, it operates against the shift valve A spring. When the signal to shift solenoid valve A from the PCM is OFF, and the line pressure is discharged, shift valve A is inactive. The PCM monitors the transmission fluid pressure sensor. If the transmission fluid pressure sensor pressure is a specified value or less when engagement of the over drive clutch is requested, the PCM detects a malfunction and stores a DTC.

Monitor Execution, Sequence, Duration, DTC Type

Execution	Continuous
Sequence	None
Duration	3.0 seconds or more
DTC Type	One drive cycle, MIL off, shift position indicator blinks

Enable Conditions

Condition	Minimum	Maximum
Vehicle speed [Vehicle Speed]	0 mph (0 km/h)	-
12 volt battery voltage [Battery Voltage]	11 V	-
State of the vehicle	Engine driving mode	

[ ]: HDS Parameter

Malfunction Threshold

The transmission fluid pressure sensor output value is 120 kPa (900 mmHg, 35.4 inHg) or less for at least 3.0 seconds when the engagement of the over drive clutch is requested.

Possible Cause

NOTE: The causes shown may not be a complete list of all potential problems, and it is possible that there may be other causes.

- Transmission fluid pressure sensor failure
- PCM internal failure

Confirmation Procedure

Operating Condition

- Enter the maintenance mode, then start the engine. Hold the engine speed [ENGINE SPEED] at 3, 000 rpm without load (in P or N) until the radiator fan comes on, then let it idle.
- Drive the vehicle at a steady speed of 44 mph (70 km/h) or more for at least 10 seconds with engine drive mode.

- Drive the vehicle in this manner only if the traffic regulations and ambient conditions allow.

With the HDS

None.

Diagnosis Details

Conditions for setting the DTC

When a malfunction is detected, the shift position indicator blinks and a Pending DTC, a Confirmed DTC, and the freeze data are stored in the PCM memory. The MIL does not come on.

Conditions for clearing the DTC

The shift position indicator comes off by turning the vehicle to the OFF (LOCK) mode. The Pending DTC, the Confirmed DTC, and the freeze data can be cleared with the scan tool Clear command or by disconnecting the 12 volt battery.

DTC P173B (2021)

DTC P173B: Transmission Fluid Pressure Sensor Performance Low

General Description

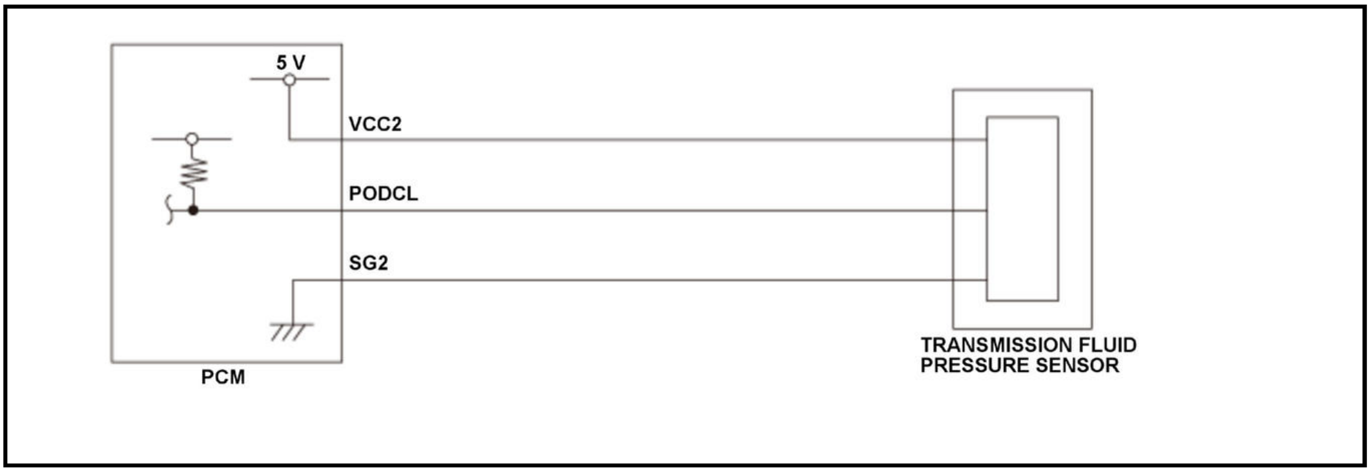

Capacity of Over Drive Clutch		Shift Solenoid Valve A	
		ON (12 V)	OFF (0 V)
Shift Solenoid Valve B	ON (12 V)	ON	OFF
	OFF (0 V)	OFF	OFF

Shift solenoid valve A is installed on the transmission housing. It is controlled by the ON/OFF signal from the powertrain control module (PCM) to apply line pressure to shift valve A. The signal from the PCM is outputted so that the line pressure is supplied to the clutch piston under the condition that the overdrive clutch engagement is requested while driving at 44 mph (70 km/h) or more. When the signal to shift solenoid valve A from the PCM is ON, and the line pressure is applied to shift valve A, it operates against the shift valve A spring. When the signal to shift solenoid valve A from the PCM is OFF, and the line pressure is discharged, shift valve A is inactive. The PCM monitors the transmission fluid pressure sensor. If the transmission fluid pressure sensor pressure is at specified value or less when engagement of the over drive clutch is requested, the PCM detects a malfunction and stores a DTC.

Monitor Execution, Sequence, Duration, DTC Type

Execution	Continuous
Sequence	None
Duration	3.0 seconds or more
DTC Type	Two drive cycle, MIL on, Shift position indicator blinks

Enable Conditions

Condition	Minimum	Maximum
Vehicle speed [VEHICLE SPEED]	0 mph (0 km/h)	-
12 volt battery voltage [BATTERY VOLTAGE]	11 V	-
State of the vehicle	Engine driving mode	

[ ]: HDS Parameter

Malfunction Threshold

The transmission fluid pressure sensor value is 120 kPa (900 mmHg, 35.4 inHg) or less for at least 3.0 seconds when engagement of the over drive clutch is requested.

Possible Cause

NOTE: The causes shown may not be a complete list of all potential problems, and it is possible that there may be other causes.

- Transmission fluid pressure sensor failure
- PCM internal failure

Confirmation Procedure

Operating Condition

- Enter the maintenance mode, then start the engine. Hold the engine speed [ENGINE SPEED] at 3, 000 rpm without load (in P or N) until the radiator fan comes on, then let it idle.
- Drive the vehicle at a steady speed of 44 mph (70 km/h) or more for at least 10 seconds with engine drive mode.

- Drive the vehicle in this manner only if the traffic regulations and ambient conditions allow.

Diagnosis Details

Conditions for setting the DTC

When a malfunction is detected during the first drive cycle, the shift position indicator blinks and a Pending DTC is stored in the PCM memory. If the malfunction returns in the next (second) drive cycle, the MIL comes on and a Confirmed DTC and the freeze data are stored.

Conditions for clearing the DTC

The shift position indicator comes off by turning the vehicle to the OFF (LOCK) mode. The Pending DTC, the Confirmed DTC, and the freeze data can be cleared with the scan tool Clear command or by disconnecting the 12 volt battery.

DTC P2096, P2097

DTC P2096: Post Catalyst Fuel Trim System Too Lean

DTC P2097: Post Catalyst Fuel Trim System Too Rich

General Description

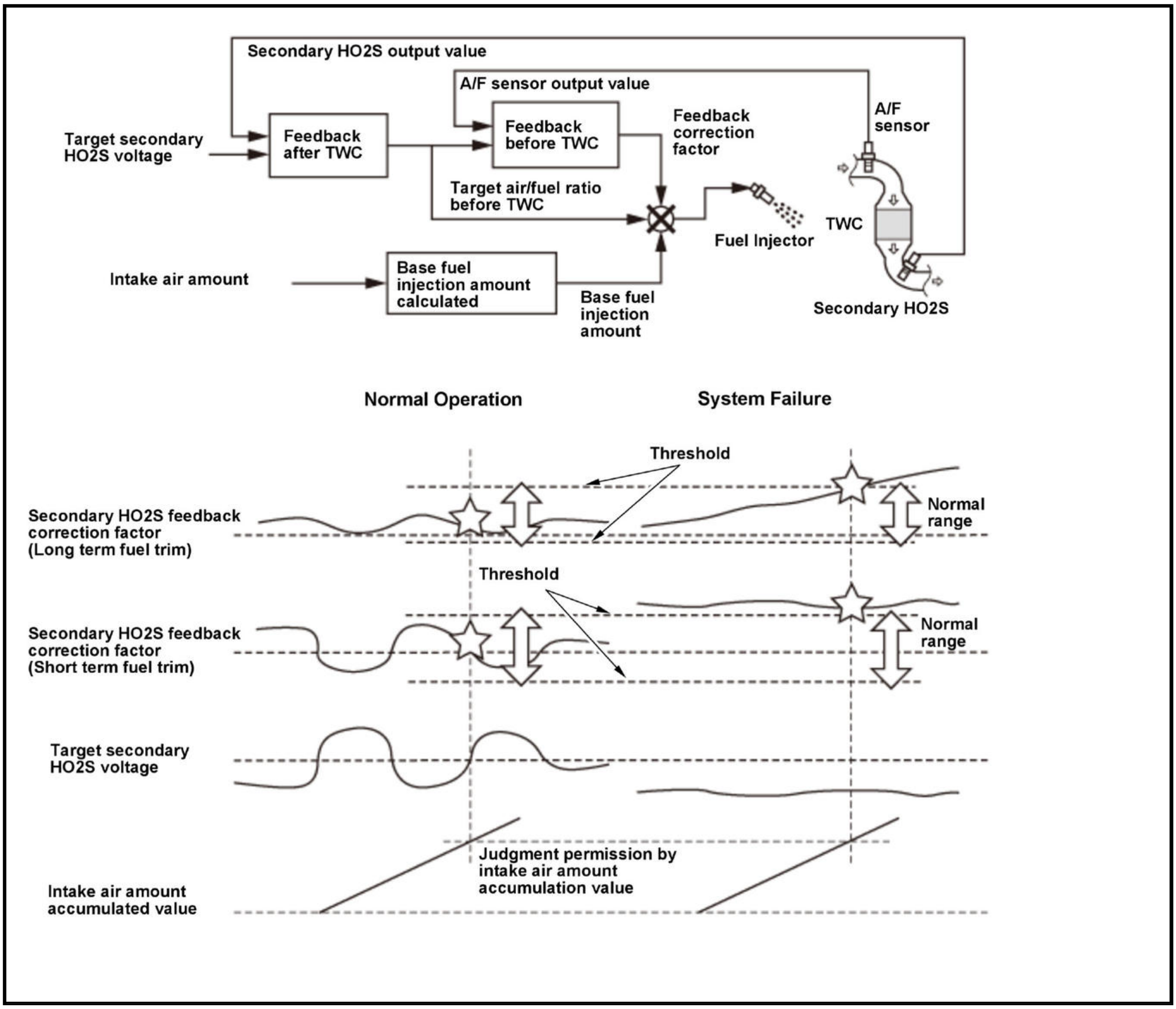
Secondary HO2S output value
A/F sensor output value
Target secondary HO2S voltage
Feedback after TWC
Feedback before TWC
Feedback correction factor
A/F sensor
Target air/fuel ratio before TWC
Fuel Injector
TWC
Intake air amount
Base fuel injection amount calculated
Base fuel injection amount
Secondary HO2S
Normal Operation
System Failure
Threshold
Secondary HO2S feedback correction factor (Long term fuel trim)
Normal range
Threshold
Secondary HO2S feedback correction factor (Short term fuel trim)
Normal range
Target secondary HO2S voltage
Judgment permission by intake air amount accumulation value
Intake air amount accumulated value

The powertrain control module (PCM) detects oxygen content in the exhaust gas by the air/fuel ratio (A/F) sensor (sensor 1), and it uses feedback control before the three way catalytic converter (TWC) to bring the air/fuel ratio close to the target air/fuel ratio. The target air/fuel ratio is adjusted by the secondary heated oxygen sensor (secondary HO2S (sensor 2)) output so that the air/fuel ratio in the TWC is optimized. When the A/F sensor (sensor 1) cannot measure air/fuel ratio in the exhaust gas normally, a gap occurs to the actual air/fuel ratio. As a result, the gap causes a deviation in target air/fuel ratio control (after TWC) which is determined by the secondary HO2S (sensor 2). If the deviation exceeds a limit, the PCM detects a malfunction and stores a DTC.

Monitor Execution, Sequence, Duration, DTC Type

Execution	Once per driving cycle*
Sequence	None
Duration	Depending on the driving conditions
DTC Type	Two drive cycles, MIL on

*: The malfunction judgment is cleared when it is judged as normal under the same driving conditions in which the malfunction is detected.

Enable Conditions

Condition	Minimum	Maximum
Engine coolant temperature [ECT Sensor 1]	155.9 deg.F (68.8 deg.C)	-

Condition	Minimum	Maximum
Intake air temperature [IAT Sensor (1)]	18.4 deg.F (-7.6 deg.C)	-
Engine speed [Engine Speed]	1, 100 rpm	4, 000 rpm
Intake air amount	9.0 g/second (0.318 oz/second)	-
Fuel feedback	Closed loop	

[ ]: HDS Parameter

Malfunction Threshold

Either of the conditions is met:

DTC: P2096

- Short term fuel trim is lower than -0.03.
- Long term fuel trim is lower than 0.001.

DTC: P2097

- Short term fuel trim is higher than -0.014.
- Long term fuel trim is higher than 0.042.

Possible Cause

NOTE: The causes shown may not be a complete list of all potential problems, and it is possible that there may be other causes.

- A/F sensor (sensor 1) malfunction/slow response
- A/F sensor (sensor 1) circuit range/performance
- Fuel system too lean
- Fuel system too rich
- Secondary HO2S (sensor 2) circuit signal stuck lean
- Secondary HO2S (sensor 2) circuit open
- Secondary HO2S (sensor 2) slow response
- Air/fuel ratio variation between cylinders
- Misfire
- Exhaust system failure (exhaust gas leak)

Confirmation Procedure

Operating Condition

- Enter the maintenace mode, then start the engine. Hold the engine speed [Engine Speed] at 3, 000 rpm without load (in P or N) until the radiator fan comes on, then let it idle.
- Drive at a steady speed between 15 - 75 mph (25 - 120 km/h) and engine speed [Engine Speed] 4, 000 rpm or less for at least 45 seconds.

- When freeze data is stored, drive the vehicle under those conditions instead of Driving Pattern step 2.
- Drive the vehicle in this manner only if the traffic regulations and ambient conditions allow.

Diagnosis Details

Conditions for setting the DTC

When a malfunction is detected during the first drive cycle, a Pending DTC is stored in the PCM memory. If the malfunction returns in the next (second) drive cycle, the MIL comes on and a Confirmed DTC and the freeze data are stored.

Conditions for clearing the DTC

The MIL is cleared if the malfunction does not return in three consecutive trips in which the diagnostic runs. The MIL, the Pending DTC, the Confirmed DTC, and the freeze data can be cleared with the scan tool clear command or by disconnecting the 12 volt battery.

DTC P2101

DTC P2101: Electronic Throttle Control System (ETCS) Malfunction

General Description

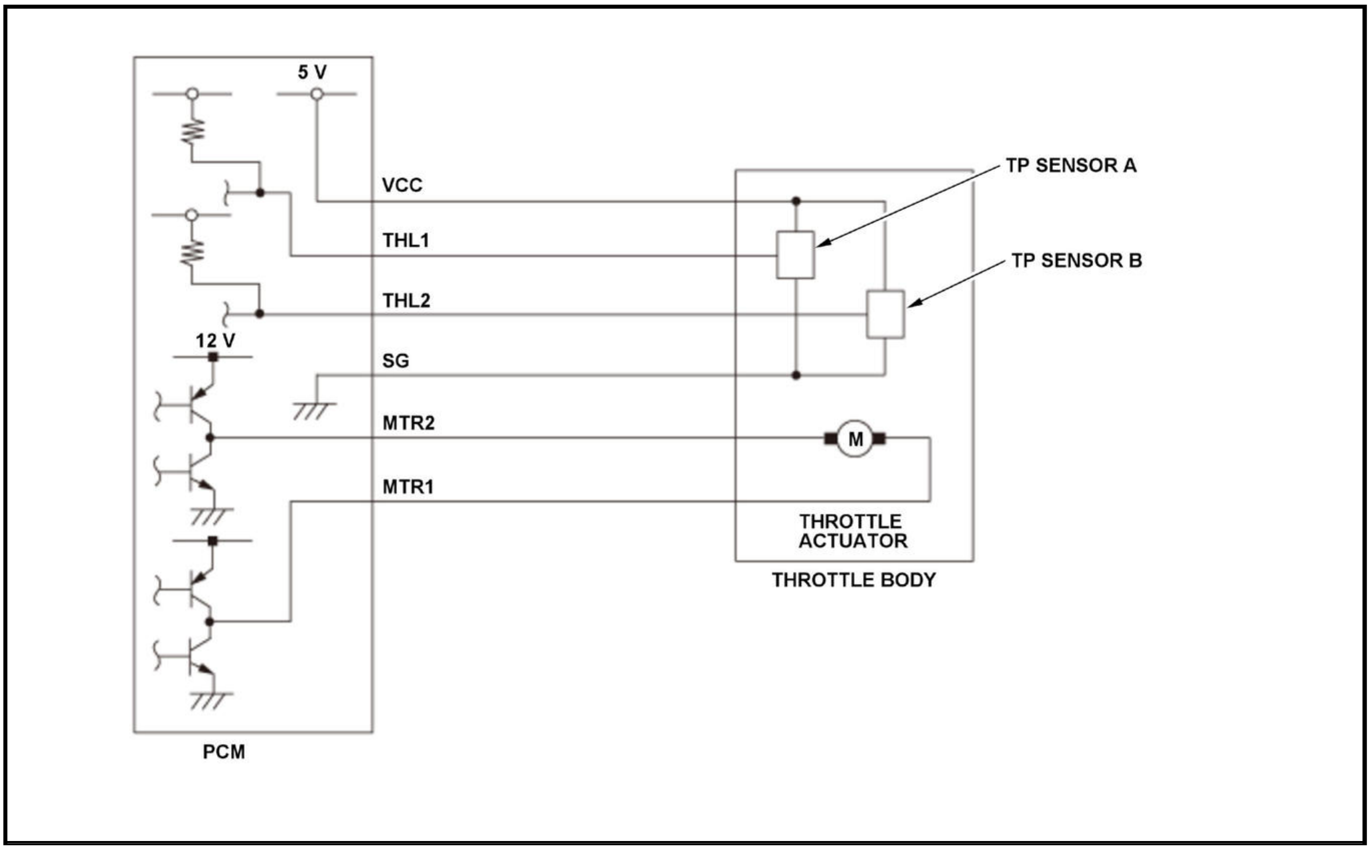

The electronic throttle control system controls the throttle valve opening. The system includes the throttle actuator, the throttle valve, throttle position (TP) sensors A and B, the PGM-FI subrelay circuit, the accelerator pedal position (APP) sensor, and the powertrain control module (PCM). When the accelerator pedal is pressed, the APP sensor detects the accelerator pedal opening value. The accelerator pedal opening value is converted to a signal in the APP sensor and transmitted to the PCM to compute the target position. The PCM determines the throttle valve target position according to the signal received and operates the throttle actuator to move the throttle valve to the target position. The actual throttle valve position is determined by TP sensor A (installed in the throttle body). The PCM compares the throttle valve target opening angle and the actual throttle valve opening angle from TP sensor A, and when the difference exceeds the specification, the PCM detects the malfunction of the electronic throttle control system and stores a DTC.

Monitor Execution, Sequence, Duration, DTC Type

Execution	Continuous
Sequence	None
Duration	250 milliseconds or more*500 milliseconds or more**
DTC Type	One drive cycle, MIL on

*: Throttle valve closed direction

**: Throttle valve open direction

Enable Conditions

Condition	Minimum	Maximum
12 volt battery voltage [Battery]	6.0 V	-
Vehicle	ON mode	

[ ]: HDS Parameter

Malfunction Threshold

One of the conditions in this table is met for at least 250* (500)** milliseconds.

Throttle valve target position	Difference between throttle valve target position and actual throttle valve position
2 deg.	4 deg. or more
6 deg.	5.4 deg. or more
10 deg.	5.7 deg. or more
15 deg.	6 deg. or more
90 deg.	6 deg. or more

Possible Cause

NOTE: The causes shown may not be a complete list of all potential problems, and it is possible that there may be other causes.

- Throttle actuator MTR1 line failure
- Throttle actuator MTR2 line failure
- Throttle actuator failure
- TP sensor A/B failure
- Throttle body failure
- PCM failure

Diagnosis Details

Conditions for setting the DTC

When a malfunction is detected, the MIL comes on and a Pending DTC, a Confirmed DTC, and the freeze data are stored in the PCM memory.

Conditions for clearing the DTC

The MIL is cleared if the malfunction does not return in three consecutive trips in which the diagnostic runs. The MIL, the Pending DTC, the Confirmed DTC, and the freeze data can be cleared with the scan tool Clear command or by disconnecting the 12 volt battery.

DTC P2108

DTC P2108: Throttle Actuator Control Module Performance

General Description

This fault code is a general (specified by SAE) DTC that is stored at the time the following DTC codes (P1658, P1659) are detected.

DTC P2118

DTC P2118: Throttle Actuator Current Range/Performance Problem

General Description

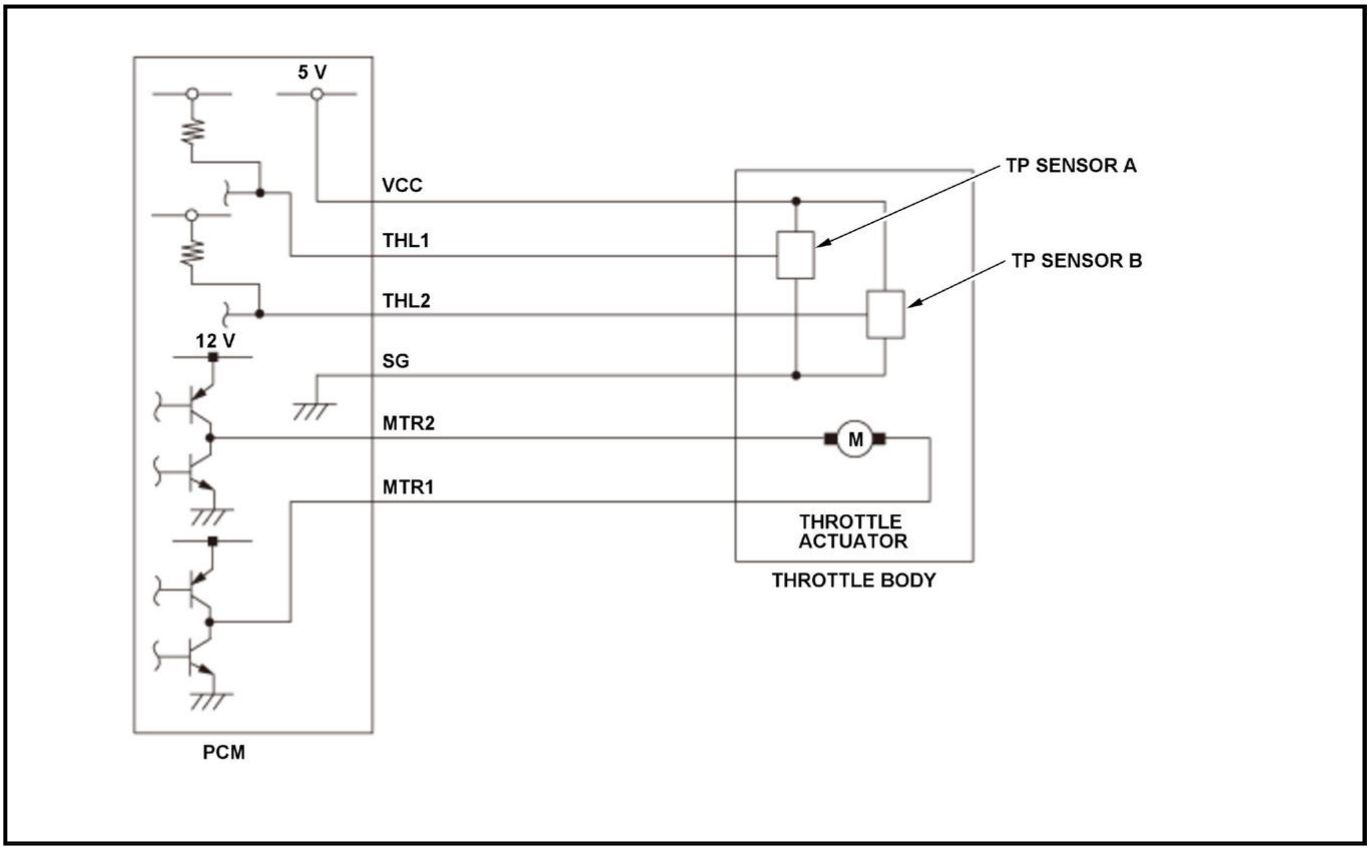

The electronic throttle control system controls the throttle valve opening. The system includes the throttle actuator, the throttle valve, throttle position (TP) sensors A and B, the PGM-FI subrelay circuit, the accelerator pedal position (APP) sensor, and the powertrain control module (PCM). When the accelerator pedal is pressed, the APP sensor detects the accelerator pedal opening value. The accelerator pedal opening value is converted to a signal in the APP sensor and transmitted to the PCM to compute the target position. The PCM determines the throttle valve target position according to the signal received and operates the throttle actuator to move the throttle valve to the target position. The actual throttle valve position is determined by TP sensor A (installed in the throttle body). When the output current to the throttle valve actuator exceeds the specification for a set time, the PCM detects a malfunction of the electronic throttle control system and stores a DTC.

Monitor Execution, Sequence, Duration, DTC Type

Execution	Continuous
Sequence	None
Duration	200 milliseconds or more
DTC Type	One drive cycle, MIL on

Enable Conditions

Condition	Minimum	Maximum
12 volt battery voltage [Battery]	6.0 V	-
Vehicle	ON mode	

[ ]: HDS Parameter

Malfunction Threshold

The current flow to the throttle actuator is 9 A or more for at least 200 milliseconds.

Possible Cause

NOTE: The causes shown may not be a complete list of all potential problems, and it is possible that there may be other causes.

- Throttle actuator MTR1 line short
- Throttle actuator MTR2 line short
- Throttle actuator internal circuit short
- PCM internal circuit failure

Diagnosis Details

Conditions for setting the DTC

When a malfunction is detected, the MIL comes on and a Pending DTC, a Confirmed DTC, and the freeze data are stored in the PCM memory.

Conditions for clearing the DTC

The MIL is cleared if the malfunction does not return in three consecutive trips in which the diagnostic runs. The MIL, the Pending DTC, the Confirmed DTC, and the freeze data can be cleared with the scan tool Clear command or by disconnecting the 12 volt battery.

DTC P2119

DTC P2119: Throttle Actuator Control Throttle Body Range/Performance

General Description

This fault code is a general (specified by SAE) DTC that is stored at the time the following DTC codes (P1683, P1684) are detected.

DTC P2121

DTC P2121: Accelerator Pedal Position (APP) Sensor A (Throttle Position (TP) Sensor D) Out of Range

General Description

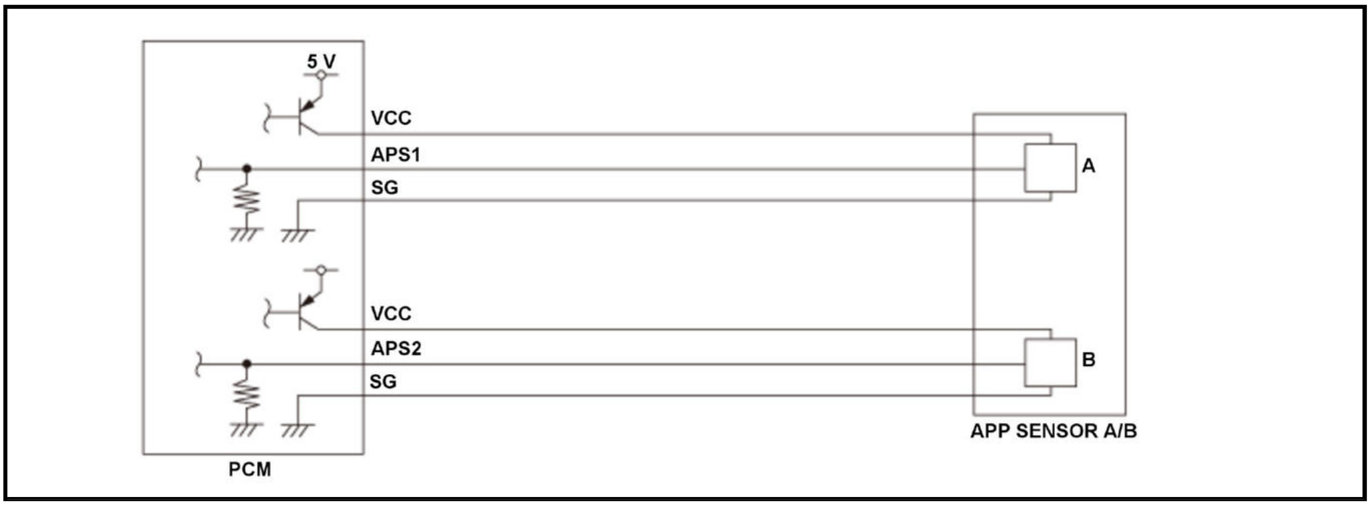

Accelerator pedal position (APP) sensor A is a part of the electronic throttle control system. It is used to convert the position of the accelerator pedal into electrical signals. Based on these signals, the powertrain control module (PCM) controls the throttle actuator so that the throttle position agrees with the accelerator pedal position. If the signal voltage from APP sensor A is a set value, the PCM detects a malfunction and stores a DTC.

Monitor Execution, Sequence, Duration, DTC Type

Execution	Continuous
Sequence	None
Duration	6 seconds or more
DTC Type	Two drive cycles, MIL on

Enable Conditions

Condition	B
Vehicle	ON mode

Malfunction Threshold

The APP sensor A output voltage [APP Sensor A Voltage] is 0.69 V or less for at least 6 seconds.

[ ]: HDS Parameter

Possible Cause

NOTE: The causes shown may not be a complete list of all potential problems, and it is possible that there may be other causes.

- APP sensor A failure
- PCM internal circuit failure

Diagnosis Details

Conditions for setting the DTC

When a malfunction is detected during the first drive cycle, a Pending DTC is stored in the PCM memory. If the malfunction returns in the next (second) drive cycle, the MIL comes on and a Confirmed DTC, the freeze data, and the on-board snapshot are stored.

Conditions for clearing the DTC

The MIL is cleared if the malfunction does not return in three consecutive trips in which the diagnostic runs. The MIL, the Pending DTC, the Confirmed DTC, the freeze data, and the on-board snapshot can be cleared with the scan tool Clear command or by disconnecting the 12 volt battery.

DTC P2122, P2123

DTC P2122: Accelerator Pedal Position (APP) Sensor A (Throttle Position (TP) Sensor D) Circuit Low Voltage

DTC P2123: Accelerator Pedal Position (APP) Sensor A (Throttle Position (TP) Sensor D) Circuit High Voltage

General Description

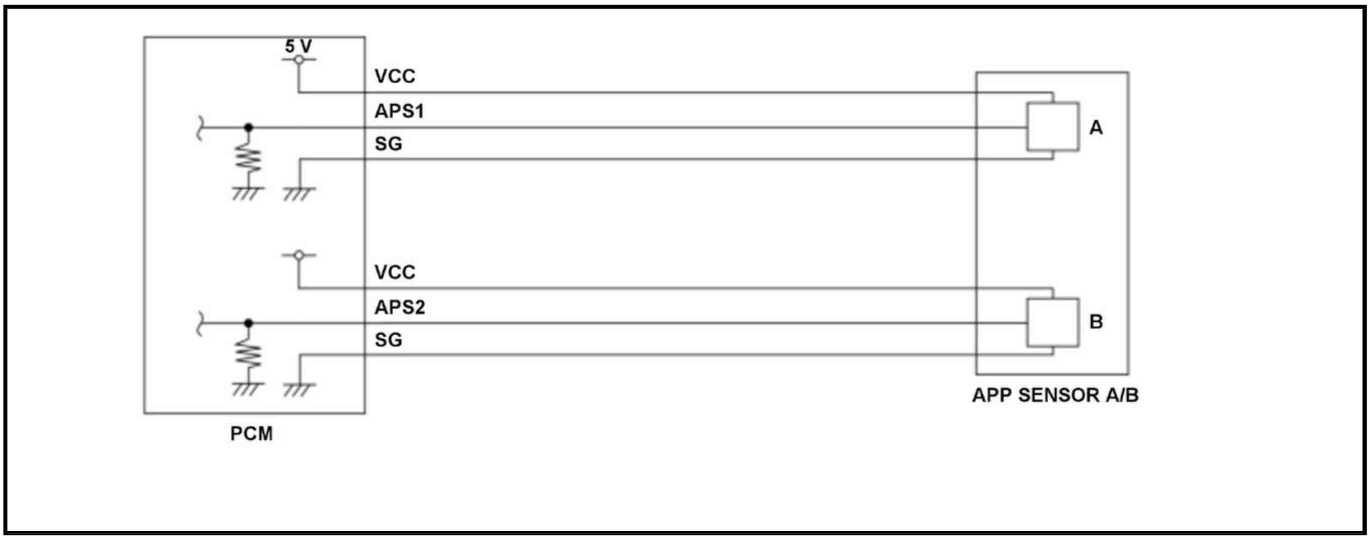

Accelerator pedal position (APP) sensor A is a part of the electronic throttle control system. It is used to convert the position of the accelerator pedal into electrical signals. Based on these signals, the powertrain control module (PCM) controls the throttle actuator so that the throttle position agrees with the accelerator pedal position. If the signal voltage from APP sensor A is a set value, the PCM detects a malfunction and stores a DTC.

Monitor Execution, Sequence, Duration, DTC Type

Execution	Continuous
Sequence	None
Duration	200 milliseconds or more
DTC Type	One drive cycle, MIL on

Enable Conditions

Condition	B
Vehicle	ON mode

Malfunction Threshold

DTC: P2122

The APP sensor A output voltage [APP Sensor A Voltage] is 0.2 V or less for at least 200 milliseconds.

DTC: P2123

The APP sensor A output voltage [APP Sensor A Voltage] is 4.9 V or more for at least 200 milliseconds.

[ ]: HDS Parameter

Possible Cause

NOTE: The causes shown may not be a complete list of all potential problems, and it is possible that there may be other causes.

DTC: P2122

- APP sensor A APS1 line open
- APP sensor A VCC line open
- APP sensor A APS1 line short to ground

DTC: P2123

- APP sensor A APS1 line short to APP sensor A VCC line
- APP sensor A SG line open

Common

- APP sensor A failure
- PCM internal circuit failure

Diagnosis Details

Conditions for setting the DTC

When a malfunction is detected, the MIL comes on and a Pending DTC, a Confirmed DTC, and the freeze data are stored in the PCM memory.

Conditions for clearing the DTC

The MIL is cleared if the malfunction does not return in three consecutive trips in which the diagnostic runs. The MIL, the Pending DTC, the Confirmed DTC, and the freeze data can be cleared with the scan tool Clear command or by disconnecting the 12 volt battery.

DTC P2126

DTC P2126: Accelerator Pedal Position (APP) Sensor B (Throttle Position (TP) Sensor E) Out of Range

General Description

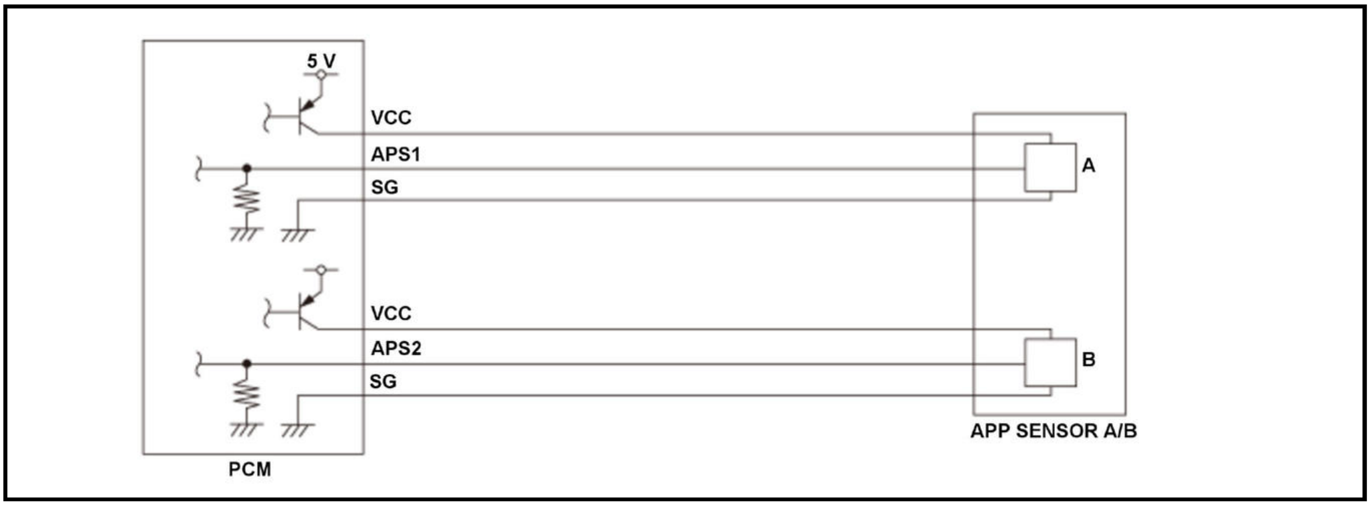

Accelerator pedal position (APP) sensor B is a part of the electronic throttle control system. It is used to convert the position of the accelerator pedal into electrical signals. Based on these signals, the powertrain control module (PCM) controls the throttle actuator so that the throttle position agrees with the accelerator pedal position. If the signal voltage from APP sensor B is a set value, the PCM detects a malfunction and stores a DTC.

Monitor Execution, Sequence, Duration, DTC Type

Execution	Continuous
Sequence	None
Duration	6.0 seconds or more
DTC Type	Two drive cycles, MIL on

Enable Conditions

Condition	B
Vehicle	ON mode

Malfunction Threshold

The APP sensor B output voltage [APP Sensor B Voltage] is 0.23 V or less, or 2.66 V or more for at least 6.0 seconds.

[ ]: HDS Parameter

Possible Cause

NOTE: The causes shown may not be a complete list of all potential problems, and it is possible that there may be other causes.

- APP sensor B failure
- PCM internal circuit failure

Diagnosis Details

Conditions for setting the DTC

When a malfunction is detected during the first drive cycle, a Pending DTC is stored in the PCM memory. If the malfunction returns in the next (second) drive cycle, the MIL comes on and a Confirmed DTC, the freeze data, and the on-board snapshot are stored.

Conditions for clearing the DTC

The MIL is cleared if the malfunction does not return in three consecutive trips in which the diagnostic runs. The MIL, the Pending DTC, the Confirmed DTC, the freeze data, and the on-board snapshot can be cleared with the scan tool Clear command or by disconnecting the 12 volt battery.

DTC P2127, P2128

DTC P2127: Accelerator pedal position (APP) Sensor B (Throttle Position (TP) Sensor E) Circuit Low Voltage

DTC P2128: Accelerator pedal position (APP) Sensor B (Throttle Position (TP) Sensor E) Circuit High Voltage

General Description

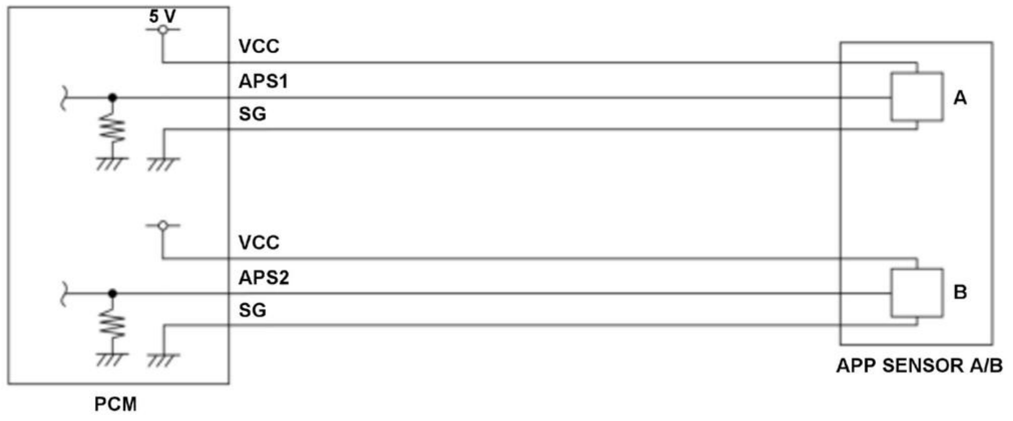

Accelerator pedal position (APP) sensor B is a part of the electronic throttle control system. It is used to convert the position of the accelerator pedal into electrical signals. Based on these signals, the powertrain control module (PCM) controls the throttle actuator so that the throttle position agrees with the accelerator pedal position. If the signal voltage from APP sensor B is a set value, the PCM detects a malfunction and stores a DTC.

Monitor Execution, Sequence, Duration, DTC Type

Execution	Continuous
Sequence	None
Duration	200 milliseconds or more
DTC Type	One drive cycle, MIL on

Enable Conditions

Condition	B
Vehicle	ON mode

Malfunction Threshold

DTC: P2127

The APP sensor B output voltage [APP Sensor B Voltage] is 0.2 V or less for at least 200 milliseconds.

DTC: P2128

The APP sensor B output voltage [APP Sensor B Voltage] is 4.0 V or more for at least 200 milliseconds.

[ ]: HDS Parameter

Possible Cause

NOTE: The causes shown may not be a complete list of all potential problems, and it is possible that there may be other causes.

DTC: P2127

- APP sensor B APS2 line open
- APP sensor B VCC line open
- APP sensor B APS2 line short to ground

DTC: P2128

- APP sensor B APS2 line short to APP sensor B VCC line
- APP sensor B SG line open

Common

- APP sensor B failure
- PCM internal circuit failure

Diagnosis Details

Conditions for setting the DTC

When a malfunction is detected, the MIL comes on and a Pending DTC, a Confirmed DTC, and the freeze data are stored in the PCM memory.

Conditions for clearing the DTC

The MIL is cleared if the malfunction does not return in three consecutive trips in which the diagnostic runs. The MIL, the Pending DTC, the Confirmed DTC, and the freeze data can be cleared with the scan tool Clear command or by disconnecting the 12 volt battery.

DTC P2135

DTC P2135: Throttle Position (TP) Sensor A/B Incorrect Voltage Correlation

General Description

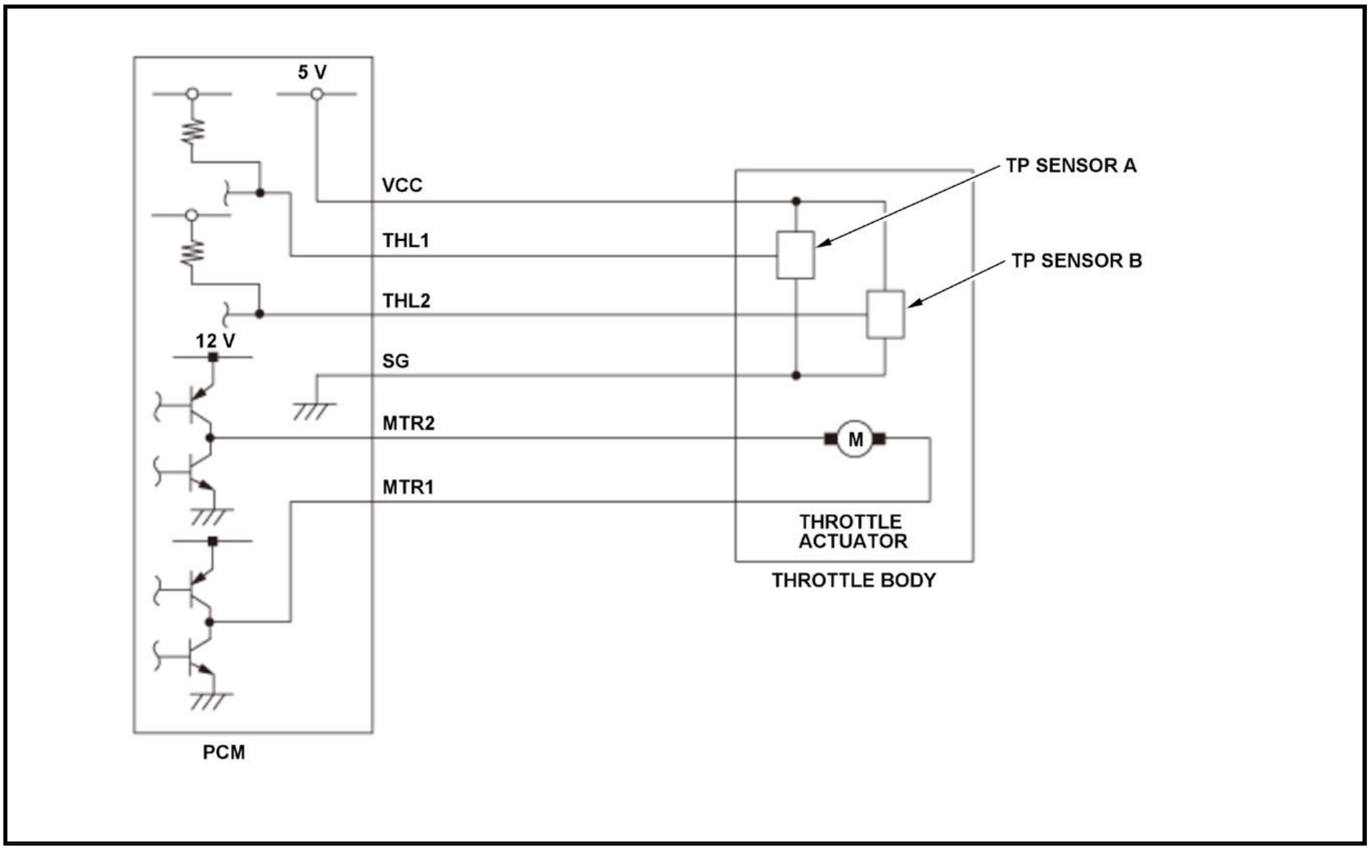
5 V
VCC
THL1
THL2
12 V
SG
MTR2
MTR1
TP SENSOR A
TP SENSOR B
M
THROTTLE ACTUATOR
THROTTLE BODY
PCM

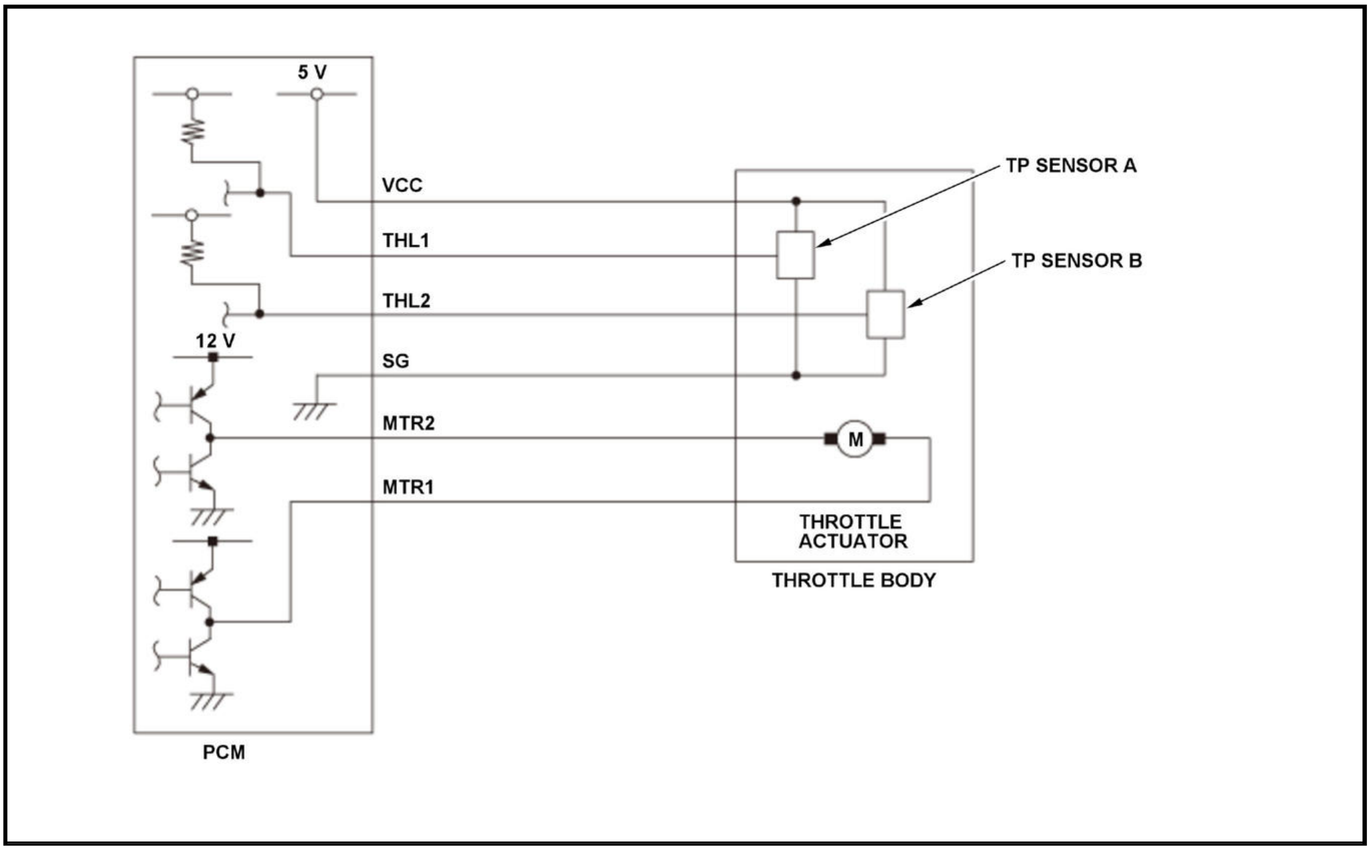
5 V
VCC
THL1
THL2
12 V
SG
MTR2
MTR1
TP SENSOR A
TP SENSOR B
M
THROTTLE ACTUATOR
THROTTLE BODY
PCM

The electronic throttle control system controls the throttle valve opening. The system includes the throttle actuator, the throttle valve, throttle position (TP) sensors A and B, the PGM-FI subrelay circuit, the accelerator pedal position (APP) sensor, and the powertrain control module (PCM). When the accelerator pedal is pressed, the APP sensor detects the accelerator pedal opening value. The accelerator pedal opening value is converted to a signal in the APP sensor and transmitted to the PCM to compute the target position. The PCM then operates the throttle actuator to move the throttle valve to the target position. The actual throttle valve position is determined by TP sensor A (installed in the throttle body). The PCM adds the TP sensor A and TP sensor B values, and compares the addition value with 5 V. If the deviation exceeds a certain value for a specified time, the PCM detects a malfunction in the relationship between TP sensor A and TP sensor B, and stores a DTC.

Monitor Execution, Sequence, Duration, DTC Type

Execution	Continuous
Sequence	None
Duration	200 milliseconds or more
DTC Type	One drive cycle, MIL on

Enable Conditions

Condition	Minimum	Maximum
TP sensor B voltage[TP Sensor B]	1.1 V	4.4 V
Vehicle	ON mode	

[ ]: HDS Parameter

Malfunction Threshold

The deviation between 5 V and addition value of TP sensor A and TP sensor B exceeds the threshold value which depends on TP sensor B voltage for at least 200 milliseconds as shown in the following graph.

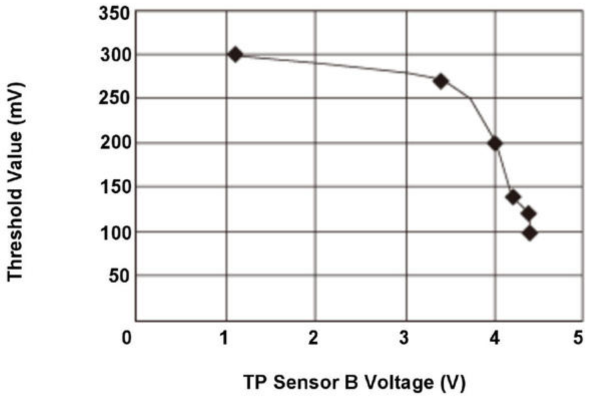

Possible Cause

NOTE: The causes shown may not be a complete list of all potential problems, and it is possible that there may be other causes.

- TP sensor A THL1 line short to TP sensor B THL2 line
- TP sensor A failure
- TP sensor B failure
- PCM internal circuit failure

Confirmation Procedure

Operating Condition

Turn the vehicle to the ON mode.

With the HDS

None.

Diagnosis Details

Conditions for setting the DTC

When a malfunction is detected, the MIL comes on and a Pending DTC, a Confirmed DTC, and the freeze data are stored in the PCM memory.

Conditions for clearing the DTC

The MIL is cleared if the malfunction does not return in three consecutive trips in which the diagnostic runs. The MIL, the Pending DTC, the Confirmed DTC, and the freeze data can be cleared with the scan tool Clear command or by disconnecting the 12 volt battery.

DTC P2138

DTC P2138: Accelerator pedal position (APP) Sensor A/B (Throttle Position (TP) Sensor D/E) Incorrect Voltage Correlation

General Description

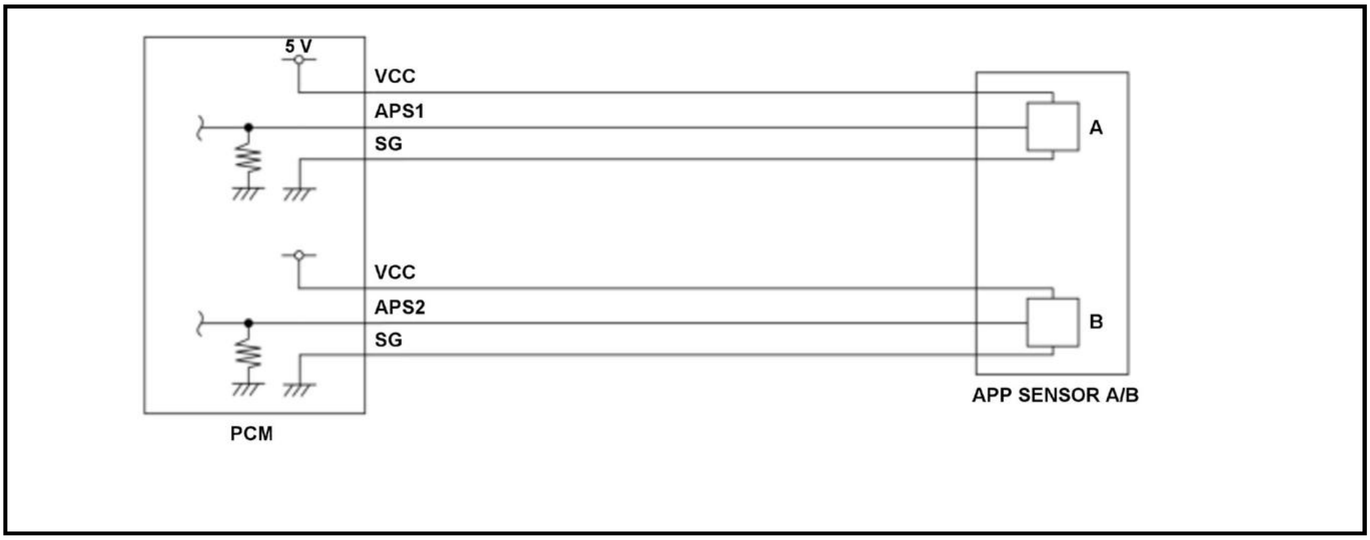

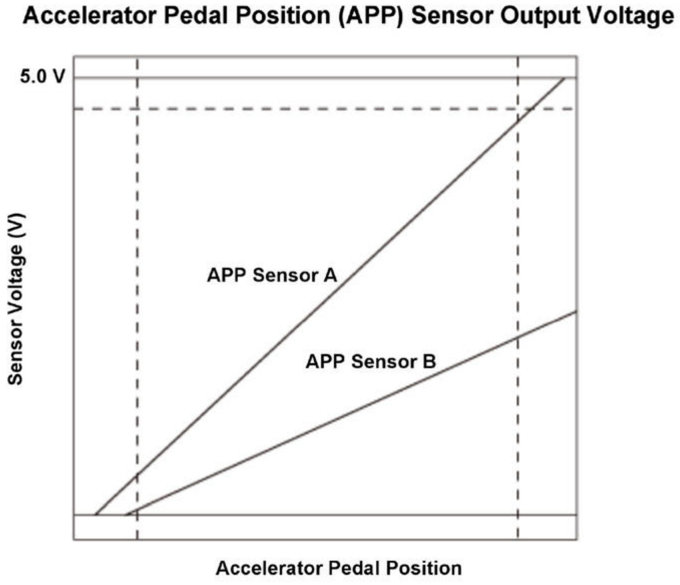

Accelerator pedal position (APP) sensor A and accelerator pedal position (APP) sensor B are potentiometers. They are installed on the accelerator pedal. When the accelerator pedal is pressed, APP sensors A and B detect the accelerator pedal opening value. The accelerator pedal opening value is converted to a signal in APP sensors A and B and transmitted to the powertrain control module (PCM) to compute the target position. APP sensor A is the primary control, and APP sensor B is a back-up of APP sensor A in case it malfunctions. Both sensors compare their output voltage to each other for malfunction detection. When the voltage difference of APP sensor B is out of a fixed range for a set time, the PCM detects a malfunction and stores a DTC.

Monitor Execution, Sequence, Duration, DTC Type

Execution	Continuous
Sequence	None

Duration	300 milliseconds or more
DTC Type	One drive cycle, MIL on

Enable Conditions

Condition	B
Vehicle	ON mode

Malfunction Threshold

The APP sensor B voltage [APP Sensor B Voltage] is in the malfunction area based on the APP sensor A voltage [APP Sensor A Voltage] as shown in the figure below for at least 300 milliseconds.

[ ]: HDS Parameter

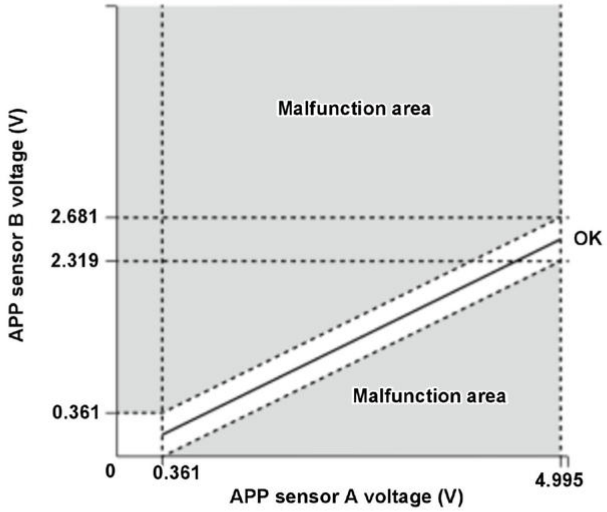

Possible Cause

NOTE: The causes shown may not be a complete list of all potential problems, and it is possible that there may be other causes.

- APP sensor A APS1 line short to APP sensor B APS2 line
- APP sensor A/B failure
- PCM internal circuit failure

Diagnosis Details

Conditions for setting the DTC

When a malfunction is detected, the MIL comes on and a Pending DTC, a Confirmed DTC, and the freeze data are stored in the PCM memory.

Conditions for clearing the DTC

The MIL is cleared if the malfunction does not return in three consecutive trips in which the diagnostic runs. The MIL, the Pending DTC, the Confirmed DTC, and the freeze data can be cleared with the scan tool Clear command or by disconnecting the 12 volt battery.

DTC P2175 (2021)

DTC P2175: Throttle Actuator Control System Low Air Flow Detected

General Description

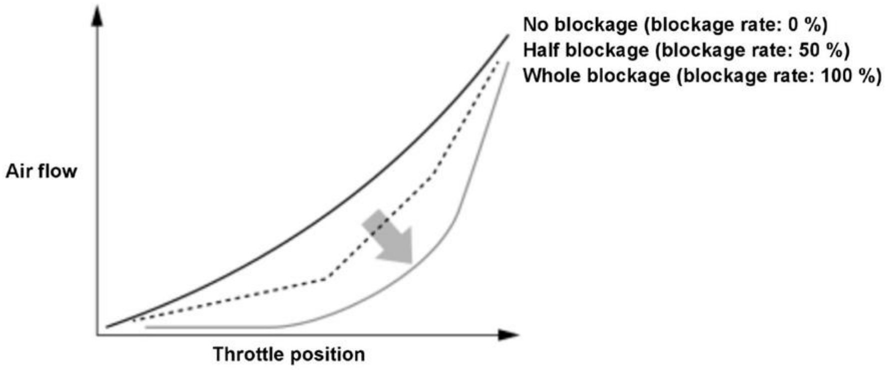

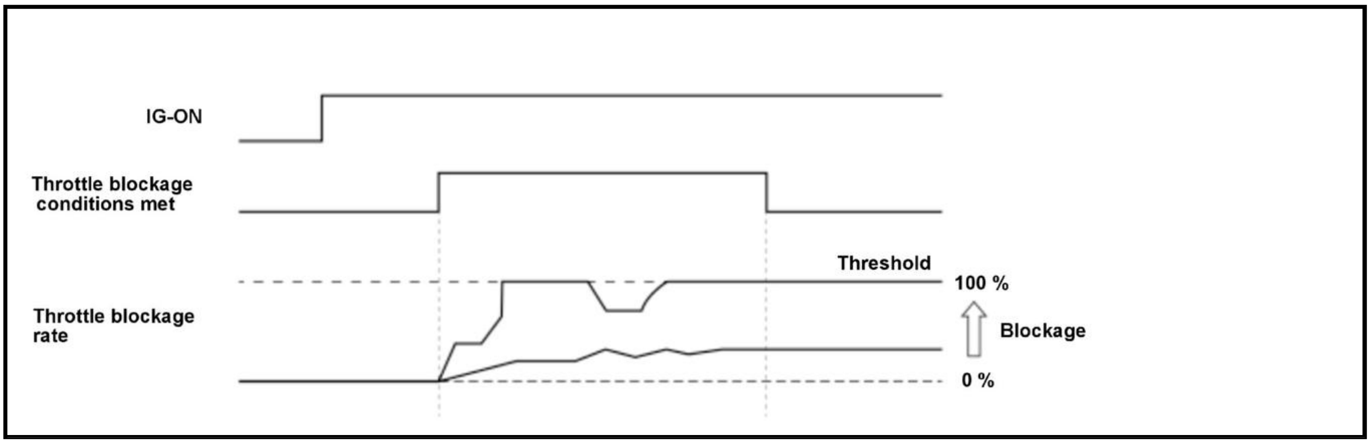

When a throttle body blockage occurs, air flow decreases compared to the normal condition at similar throttle position. From this characteristic, the powertrain control module (PCM) assumes a blockage of the throttle body. If the throttle body blockage rate reaches 100 % of the predetermined threshold, a malfunction is detected and a DTC is stored.

Monitor Execution, Sequence, Duration, DTC Type

Execution	Continuous
Sequence	None
Duration	0.5 second or more
DTC Type	Two drive cycles, MIL on

Enable Conditions

Condition	B
Other	At idle

Malfunction Threshold

The throttle body blockage rate is 0.99 or more.

Possible Cause

NOTE: The causes shown may not be a complete list of all potential problems, and it is possible that there may be other causes.

- Throttle body blockage
- Air cleaner blocked

Confirmation Procedure

Operating Condition

- Enter the maintenance mode, then start the engine. Hold the engine speed [Engine Speed] at 3, 000 rpm without load (in P or N) until the radiator fan comes on.
- Turn the vehicle to the OFF (LOCK) mode.
- Enter the maintenance mode, then start the engine and let it idle for at least 1 minute.
- Repeat steps 2 through 3, 20 times.
- Enter the maintenance mode, then start the engine and let it idle for at least 10 minutes.

Diagnosis Details

Conditions for setting the DTC

When a malfunction is detected during the first drive cycle, a Pending DTC is stored in the PCM memory. If the malfunction returns in the next (second) drive cycle, the MIL comes on and a Confirmed DTC and the freeze data are stored.

Conditions for clearing the DTC

The MIL is cleared if the malfunction does not return in three consecutive trips in which the diagnostic runs. The MIL, the Pending DTC, the Confirmed DTC, and the freeze data can be cleared with the scan tool Clear command or by disconnecting the 12 volt battery.

DTC P2176

DTC P2176: Throttle Actuator Control System Idle Position Not Learned

General Description

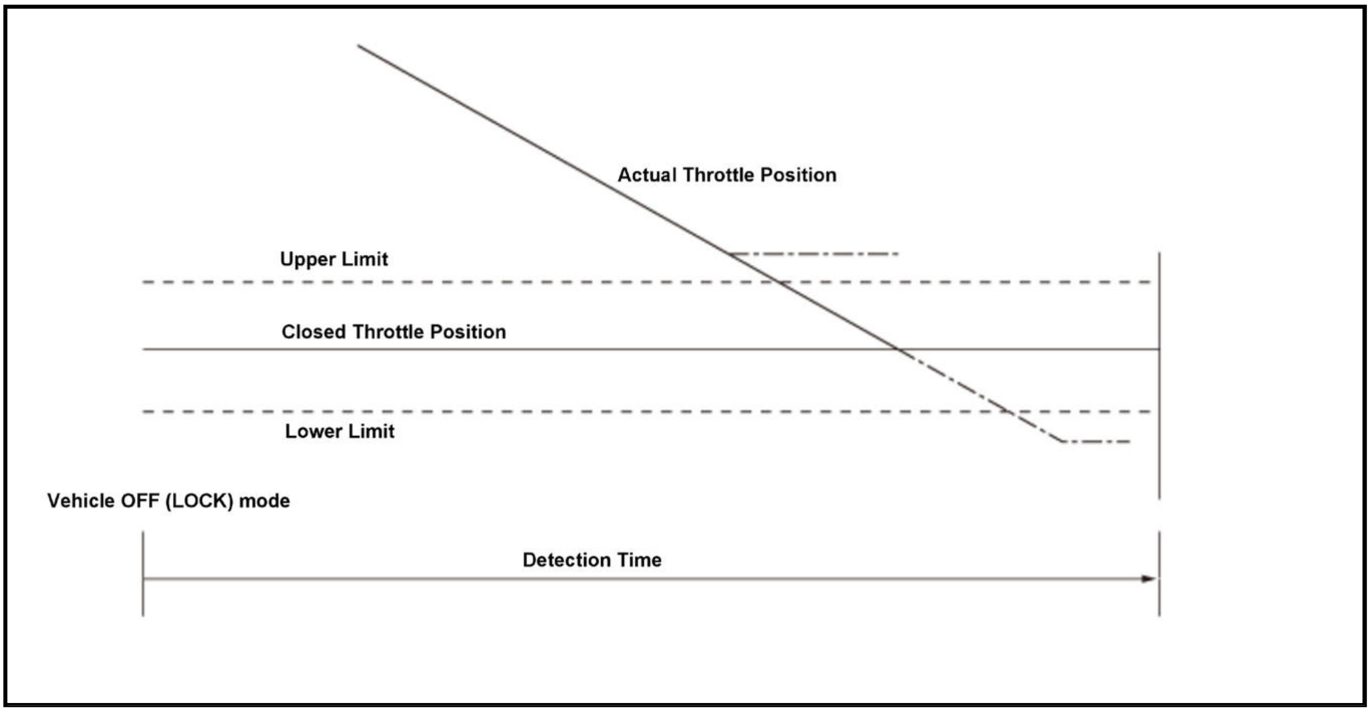

The electronic throttle control system controls the throttle valve opening. The system includes the throttle actuator, the throttle valve, throttle position (TP) sensors A and B, the PGM-FI subrelay circuit, the accelerator pedal position (APP) sensor, and the powertrain control module (PCM). When the accelerator pedal is pressed, the APP sensor detects the accelerator pedal opening value. The accelerator pedal opening value is converted to a signal in the APP sensor and transmitted to the PCM to compute the target position. The PCM determines the throttle valve target position according to the signal received and operates the throttle actuator to move the throttle valve to the target position. The actual throttle valve position is determined by TP sensors A and B (installed in the throttle body). The PCM transmits a signal to the throttle actuator and moves the throttle valve to the fully closed position to register the throttle valve fully closed position after the vehicle is turned to the OFF (LOCK) mode. When the registration of the throttle valve fully closed position is not completed within a predetermined time after the vehicle is turned to the OFF (LOCK) mode, also the registered value is out of predetermined range, the PCM detects a malfunction in the electronic throttle control system and stores a DTC.

Monitor Execution, Sequence, Duration, DTC Type

Execution	Once per driving cycle
Sequence	None
Duration	2.0 seconds or more
DTC Type	One drive cycle, MIL on

Enable Conditions

Condition	Minimum	Maximum
12 volt battery voltage [Battery]	6.0 V	-
Vehicle	OFF (LOCK) mode	

[ ]: HDS Parameter

Malfunction Threshold

One of these conditions is met, when the registration of the throttle valve fully closed position is not completed for at least 2.0 seconds after the vehicle condition is turned to the OFF (LOCK) mode:

- The registered value of the throttle valve fully closed position is more than 1.02 V, or less than 0.49 V.*
- The registered value of the throttle valve fully closed position is more than 4.51 V, or less than 3.98 V.**

*: TP sensor A [TP Sensor A]**: TP sensor B [TP Sensor B]

Possible Cause

NOTE: The causes shown may not be a complete list of all potential problems, and it is possible that there may be other causes.

- Throttle actuator MTR1 line failure
- Throttle actuator MTR2 line failure
- Throttle actuator failure
- TP sensor A/B failure
- Throttle body failure
- PCM internal circuit failure

Diagnosis Details

Conditions for setting the DTC

When a malfunction is detected, the MIL comes on and a Pending DTC, a Confirmed DTC, and the freeze data are stored in the PCM memory.

Conditions for clearing the DTC

The MIL is cleared if the malfunction does not return in three consecutive trips in which the diagnostic runs. The MIL, the Pending DTC, the Confirmed DTC, and the freeze data can be cleared with the scan tool Clear command or by disconnecting the 12 volt battery.

DTC P2182

DTC P2182: Engine Coolant Temperature (ECT) Sensor 2 Out of Range

General Description

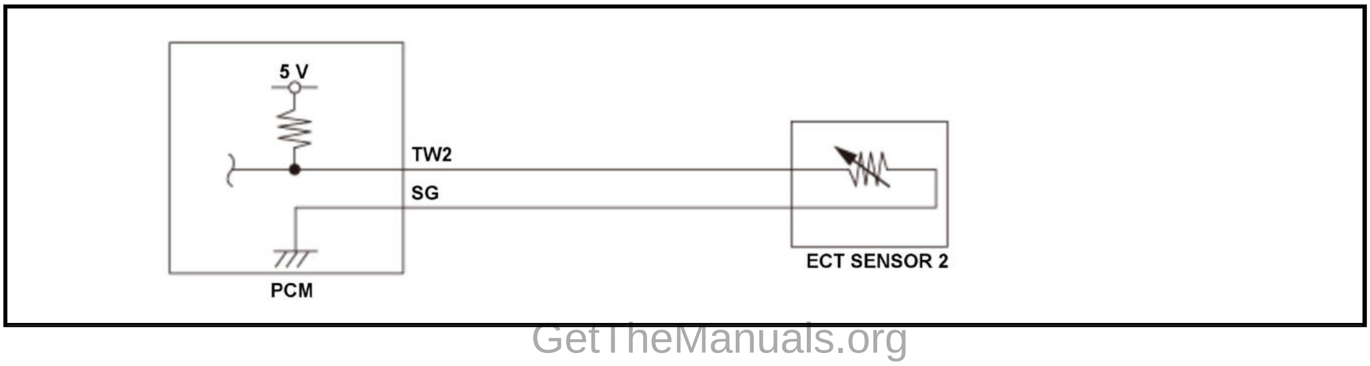

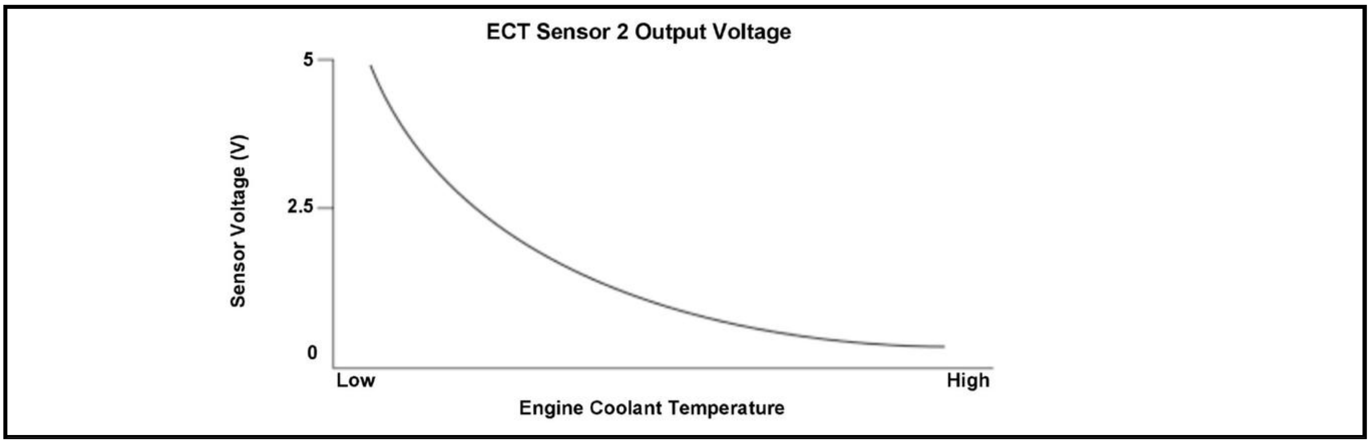

Engine coolant temperature (ECT) sensor 2 is a thermistor attached to the radiator. The powertrain control module (PCM) applies voltage (about 5 V) to the TW2 signal circuit through a pull-up resistor. As the engine coolant temperature cools, the ECT sensor 2 resistance increases, and the PCM detects a high signal voltage. As the engine coolant warms, the ECT sensor 2 resistance decreases, and the PCM detects a low signal voltage. If the ECT sensor 2 output voltage is a set value, the PCM detects a malfunction and stores a DTC.

Monitor Execution, Sequence, Duration, DTC Type

Execution	Continuous
Sequence	None
Duration	6 seconds or more
DTC Type	Two drive cycles, MIL on

Enable Conditions

Condition	B
Vehicle	ON mode

Malfunction Threshold

The ECT sensor 2 output voltage [ECT Sensor 2 Voltage] is 0.14 V or less for at least 6 seconds.

[ ]: HDS Parameter

Possible Cause

NOTE: The causes shown may not be a complete list of all potential problems, and it is possible that there may be other causes.

- ECT sensor 2 failure
- PCM internal circuit failure

Diagnosis Details

Conditions for setting the DTC

When a malfunction is detected during the first drive cycle, a Pending DTC is stored in the PCM memory. If the malfunction returns in the next (second) drive cycle, the MIL comes on and a Confirmed DTC, the freeze data, and the on-board snapshot are stored.

Conditions for clearing the DTC

The MIL is cleared if the malfunction does not return in three consecutive trips in which the diagnostic runs. The MIL, the Pending DTC, the Confirmed DTC, the freeze data, and the on-board snapshot can be cleared with the scan tool Clear command or by disconnecting the 12 volt battery.

DTC P2183

DTC P2183: Engine Coolant Temperature (ECT) Sensor 2 Circuit Range/Performance Problem

General Description

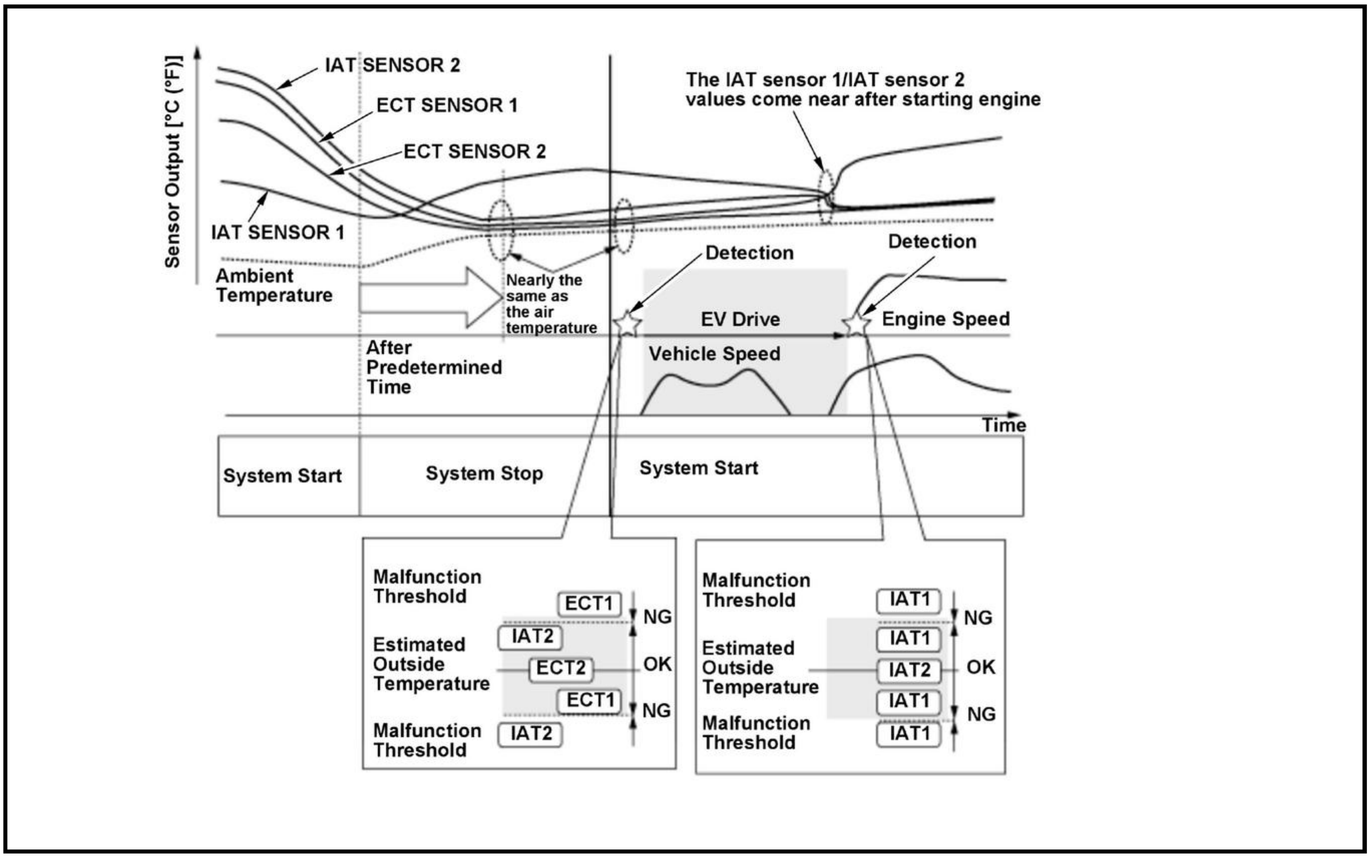

Sensor Output [°C (°F)]
IAT SENSOR 2
ECT SENSOR 1
ECT SENSOR 2
IAT SENSOR 1
Ambient Temperature
Nearly the same as the air temperature
After Predetermined Time
The IAT sensor 1/IAT sensor 2 values come near after starting engine
Detection
Detection
EV Drive
Engine Speed
Vehicle Speed
Time
System Start
System Stop
System Start
Malfunction Threshold
Estimated Outside Temperature
Malfunction Threshold
ECT1
IAT2
ECT2
ECT1
IAT2
NG
OK
NG
Malfunction Threshold
Estimated Outside Temperature
Malfunction Threshold
IAT1
IAT1
IAT2
IAT1
IAT1
NG
OK
NG

The powertrain control module (PCM) is equipped with two engine coolant temperature (ECT) sensors and two intake air temperature (IAT) sensors in order to measure engine temperature. The ECT sensor 1/ECT sensor 2 and the IAT sensor 2 temperatures are nearly the same as the air temperature after sufficient time shut down to cool the system. Furthermore, the IAT sensor 1/IAT sensor 2 values agree after starting the engine since they are located in the same air intake path. When the system is started after the prescribed time has elapsed, the IAT sensor 2 detects malfunction comparing the ECT sensor 1 and ECT sensor 2. When the sensors are normal, the PCM detects a malfunction in the IAT sensor 1 and stores a DTC comparing temperatures of the IAT 1 sensor and IAT 2 sensor after starting the engine.

Monitor Execution, Sequence, Duration, DTC Type

Execution	Once per driving cycle
Sequence	None
Duration	1.0 second or more* 10 seconds or less**
DTC Type	Two drive cycles, MIL on

*: After the system is activated**: After the engine is started

Enable Conditions

Condition	Minimum	Maximum
Engine off time	6 hours	-

Malfunction Threshold

A malfunction is detected if the following conditions are present after the engine has stopped and the vehicle condition has been turned to the OFF (LOCK) mode for at least 6 hours before restarting the engine:

Temperature difference between each sensor values		Malfunction judgment		
ECT sensor 1 - ECT sensor 2	IAT sensor 2 - ECT sensor 2	ECT sensor 1	IAT sensor 2	ECT sensor 2
Higher than 57 deg.F (32 deg.C)	Higher than 57 deg.F (32 deg.C)	Normal	Normal	Failure
	From -43 deg.F (-24 deg.C) to 57 deg.F (32 deg.C)	Failure	Normal	Normal
	Lower than -43 deg.F (-24 deg.C)	Failure	Failure	Normal
From -43 deg.F (-24 deg.C) to 57 deg.F (32 deg.C)	Higher than 57 deg.F (32 deg.C)	Normal	Failure	Normal
	From -43 deg.F (-24 deg.C) to 57 deg.F (32 deg.C)	Normal	Normal	Normal
	Lower than -24 deg.C (-43 deg.F)	Normal	Failure	Normal
Lower than -43 deg.F (-24 deg.C)	Higher than 57 deg.F (32 deg.C)	Failure	Failure	Normal
	From -43 deg.F (-24 deg.C) to 57 deg.F (32 deg.C)	Failure	Normal	Normal
	Lower than -43 deg.F (-24 deg.C)	Normal	Normal	Failure

Possible Cause

NOTE: The causes shown may not be a complete list of all potential problems, and it is possible that there may be other causes.

- ECT sensor 1 failure
- ECT sensor 2 failure
- IAT sensor 1 failure
- IAT sensor 2 failure
- Engine block heater attachment (besides a genuine part)

Confirmation Procedure

Operating Condition

- Turn the vehicle to the OFF (LOCK) mode, and wait at least 6 hours.
- Enter the maintenance mode, then start the engine, and let it idle for at least 10 seconds.

- Do not use an engine block heater because the engine coolant temperature will not stay equal during engine stop.
- When freeze data is stored, test the vehicle under an ambient temperature close to the intake air temperature in the freeze data.

Diagnosis Details

Conditions for setting the DTC

When a malfunction is detected during the first drive cycle, a Pending DTC is stored in the PCM memory. If the malfunction returns in the next (second) drive cycle, the MIL comes on and a Confirmed DTC and the

freeze data are stored.

Conditions for clearing the DTC

The MIL is cleared if the malfunction does not return in three consecutive trips in which the diagnostic runs. The MIL, the Pending DTC, the Confirmed DTC and the freeze data can be cleared with the scan tool clear command or by disconnecting the 12 volt battery.

DTC P2184, P2185

DTC P2184: Engine Coolant Temperature (ECT) Sensor 2 Circuit Low Voltage

DTC P2185: Engine Coolant Temperature (ECT) Sensor 2 Circuit High Voltage

General Description

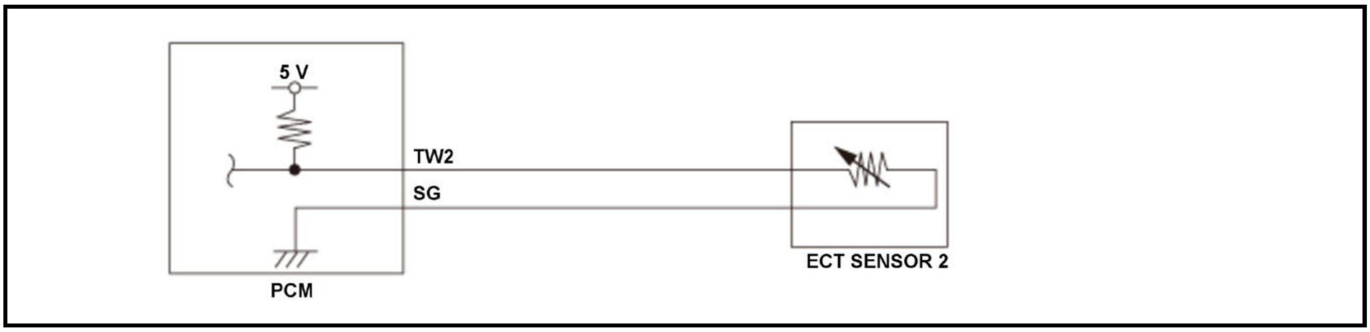

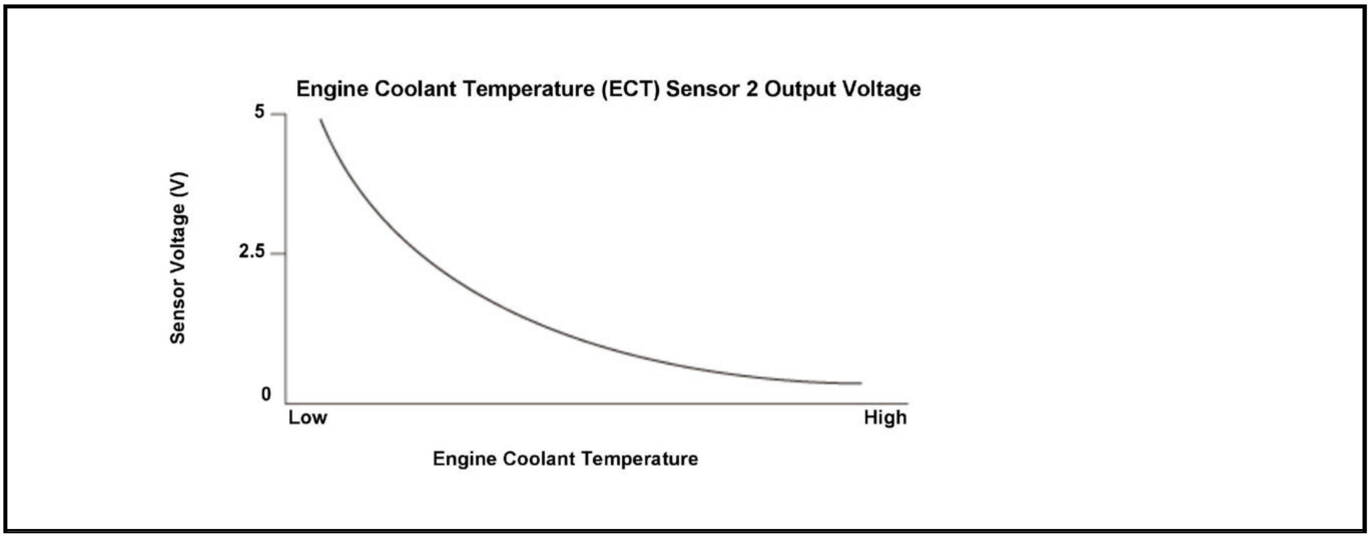

Engine coolant temperature (ECT) sensor 2 is a thermistor attached to the radiator. The powertrain control module (PCM) applies voltage (about 5 V) to the TW2 signal circuit through a pull-up resistor. As the engine coolant temperature cools, ECT sensor 2 resistance increases, and the PCM detects a high signal voltage. As the engine coolant warms, the sensor resistance decreases, and the PCM detects a low signal voltage. If the ECT sensor 2 output voltage is a set value when the engine coolant temperature is high or low, the PCM detects a malfunction and stores a DTC.

Monitor Execution, Sequence, Duration, DTC Type

Execution	Continuous
Sequence	None
Duration	2 seconds or more
DTC Type	Two drive cycles, MIL on

Enable Conditions

Condition	B
Vehicle	ON mode

Malfunction Threshold

DTC: P2184

The ECT sensor 2 output voltage [ECT Sensor 2 Voltage] is 0.08 V or less for at least 2 seconds.

DTC: P2185

The ECT sensor 2 output voltage [ECT Sensor 2 Voltage] is 4.92 V or more for at least 2 seconds.

[ ]: HDS Parameter

Possible Cause

NOTE: The causes shown may not be a complete list of all potential problems, and it is possible that there may be other causes.

DTC: P2184

- ECT sensor 2 TW2 line short to ground

DTC: P2185

- ECT sensor 2 TW2 line open
- ECT sensor 2 SG line open

Common

- ECT sensor 2 failure
- PCM internal circuit failure

Diagnosis Details

Conditions for setting the DTC

When a malfunction is detected during the first drive cycle, a Pending DTC is stored in the PCM memory. If the malfunction returns in the next (second) drive cycle, the MIL comes on and a Confirmed DTC and the freeze data are stored.

Conditions for clearing the DTC

The MIL is cleared if the malfunction does not return in three consecutive trips in which the diagnostic runs. The MIL, the Pending DTC, the Confirmed DTC, and the freeze data can be cleared with the scan tool Clear command or by disconnecting the 12 volt battery.

DTC P2195

DTC P2195: Air/Fuel Ratio (A/F) Sensor (Sensor 1) Signal Stuck Lean

General Description

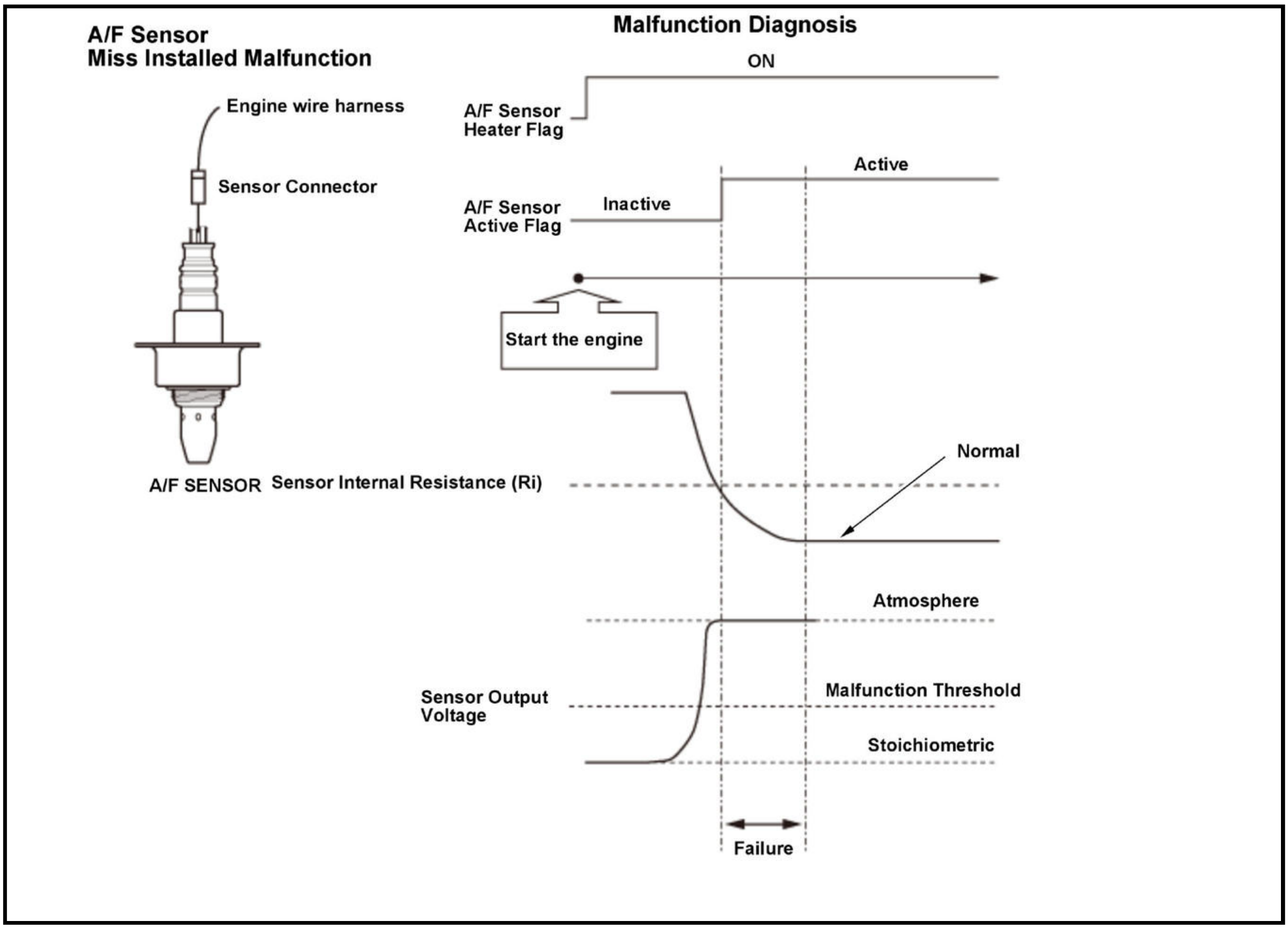
A/F Sensor
Miss Installed Malfunction
Engine wire harness
Sensor Connector
A/F SENSOR
Malfunction Diagnosis
ON
A/F Sensor Heater Flag
Active
Inactive
A/F Sensor Active Flag
Start the engine
Normal
Sensor Internal Resistance (Ri)
Atmosphere
Sensor Output Voltage
Malfunction Threshold
Stoichiometric
Failure

When the air/fuel ratio (A/F) sensor (sensor 1) is properly connected to the engine wire harness, but it is not installed in the exhaust pipe, the feedback is not done properly even if the A/F sensor (sensor 1) is active after starting the engine. Thus, the exhaust emissions increase. When the A/F sensor (sensor 1) output stays out of the normal range after the A/F sensor (sensor 1) becomes active, the powertrain control module (PCM) detects that the A/F sensor (sensor 1) is not properly installed and stores a DTC.

Monitor Execution, Sequence, Duration, DTC Type

Execution	Once per driving cycle
Sequence	None
Duration	7.0 seconds or more
DTC Type	Two drive cycles, MIL on

Enable Conditions

Condition	B
Fuel feedback	Other than during fuel cut-off operation

Malfunction Threshold

The A/F sensor (sensor 1) output voltage is 3.28 V or more for at least 7.0 seconds.

Possible Cause

NOTE: The causes shown may not be a complete list of all potential problems, and it is possible that there may be other causes.

- A/F sensor (sensor 1) heater failure
- A/F sensor (sensor 1) element failure

- Out of fuel

Confirmation Procedure

Operating Condition

Enter the maintenance mode, then start the engine, and let it idle for at least 2 minutes.

With the HDS

None.

Diagnosis Details

Conditions for setting the DTC

When a malfunction is detected during the first drive cycle, a Pending DTC is stored in the PCM memory. If the malfunction returns in the next (second) drive cycle, the MIL comes on and a Confirmed DTC and the freeze data are stored.

Conditions for clearing the DTC

The MIL is cleared if the malfunction does not return in three consecutive trips in which the diagnostic runs. The MIL, the Pending DTC, the Confirmed DTC, and the freeze data can be cleared with the scan tool Clear command or by disconnecting the 12 volt battery.

DTC P2199

DTC P2199: Intake Air Temperature (IAT) Sensor 1-2 Incorrect Correlation

General Description

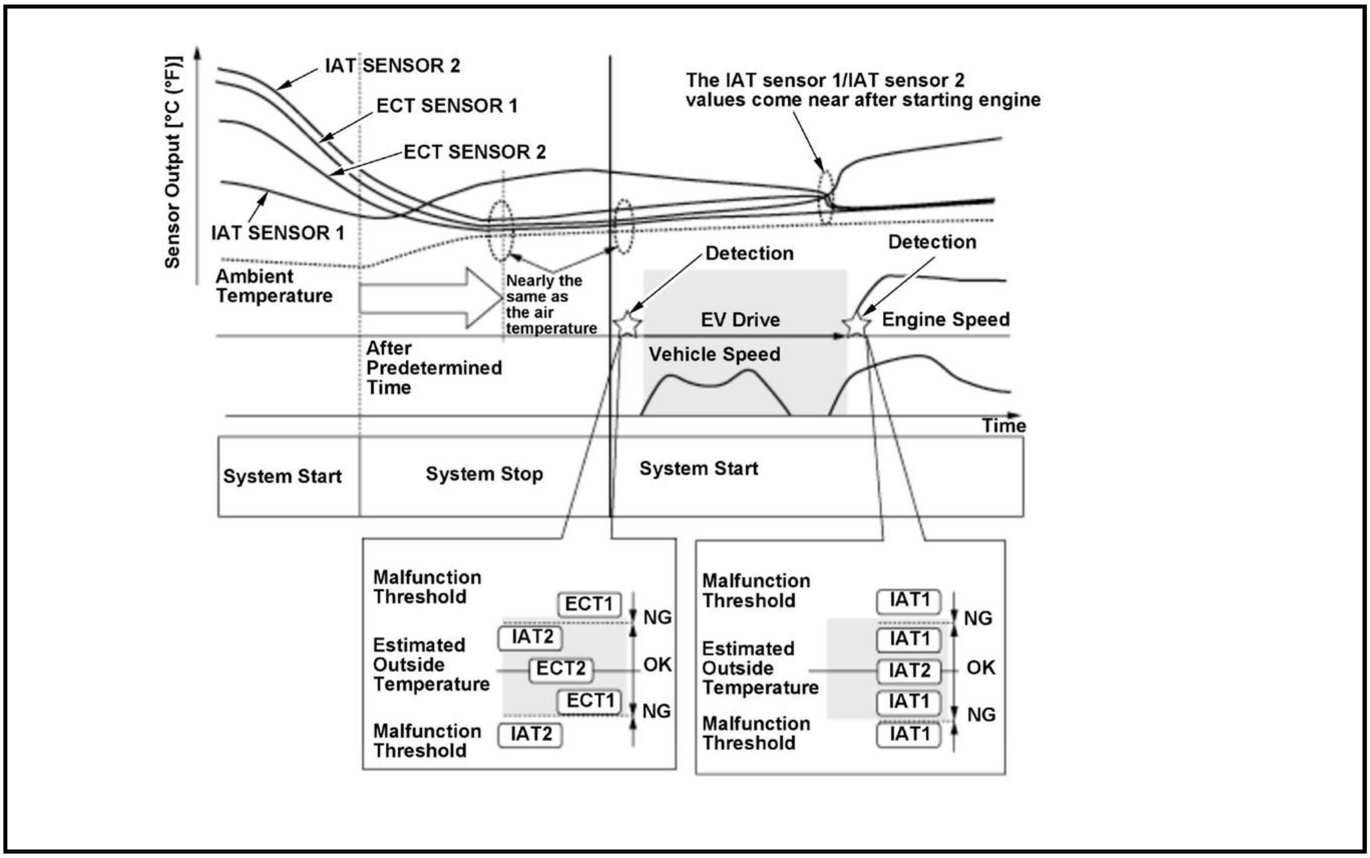
Sensor Output [°C (°F)]
IAT SENSOR 2
ECT SENSOR 1
ECT SENSOR 2
IAT SENSOR 1
Ambient Temperature
The IAT sensor 1/IAT sensor 2 values come near after starting engine
Nearly the same as the air temperature
After Predetermined Time
Detection
Detection
EV Drive
Engine Speed
Vehicle Speed
Time
System Start
System Stop
System Start
Malfunction Threshold
ECT1
NG
IAT2
Estimated Outside Temperature
ECT2
OK
ECT1
NG
Malfunction Threshold
IAT2
Malfunction Threshold
IAT1
NG
IAT1
Estimated Outside Temperature
IAT2
OK
IAT1
NG
Malfunction Threshold
IAT1

The powertrain control module (PCM) is equipped with two engine coolant temperature (ECT) sensors and two intake air temperature (IAT) sensors in order to measure engine temperature. The ECT sensor 1/ECT sensor 2 and the IAT sensor 2 temperatures are nearly the same as the air temperature after sufficient time shut down to cool the system. Furthermore, the IAT sensor 1/IAT sensor 2 values agree after starting the engine since they are located in the same air intake path. When the system is started after the prescribed time has elapsed, the IAT sensor 2 detects malfunction comparing the ECT sensor 1 and ECT sensor 2. When the sensors are normal, the PCM detects a malfunction in the IAT sensor 1 and stores a DTC comparing temperatures of the IAT 1 sensor and IAT 2 sensor after starting the engine.

Monitor Execution, Sequence, Duration, DTC Type

Execution	Once per driving cycle
Sequence	None
Duration	1.0 second or more* 10 seconds or less**
DTC Type	Two drive cycles, MIL on

*: After the system is activated**: After the engine is started

Enable Conditions

Condition	Minimum	Maximum
Engine off time	6 hours	-

Malfunction Threshold

A malfunction is detected if the following conditions are present after the engine has stopped and the vehicle condition has been turned to the OFF (LOCK) mode for at least 6 hours before restarting the engine:

Temperature difference between each sensor values		Malfunction judgment		
ECT sensor 1 - ECT sensor 2	IAT sensor 2 - ECT sensor 2	ECT sensor 1	IAT sensor 2	ECT sensor 2
Higher than 57 deg.F (32 deg.C)	Higher than 57 deg.F (32 deg.C)	Normal	Normal	Failure
	From -43 deg.F (-24 deg.C) to 57 deg.F (32 deg.C)	Failure	Normal	Normal
	Lower than -43 deg.F (-24 deg.C)	Failure	Failure	Normal
From -43 deg.F (-24 deg.C) to 57 deg.F (32 deg.C)	Higher than 57 deg.F (32 deg.C)	Normal	Failure	Normal
	From -43 deg.F (-24 deg.C) to 57 deg.F (32 deg.C)	Normal	Normal	Normal
	Lower than -43 deg.F (-24 deg.C)	Normal	Failure	Normal
Lower than -43 deg.F (-24 deg.C)	Higher than 57 deg.F (32 deg.C)	Failure	Failure	Normal
	From -43 deg.F (-24 deg.C) to 57 deg.F (32 deg.C)	Failure	Normal	Normal
	Lower than -43 deg.F (-24 deg.C)	Normal	Normal	Failure

Possible Cause

NOTE: The causes shown may not be a complete list of all potential problems, and it is possible that there may be other causes.

- ECT sensor 1 failure
- ECT sensor 2 failure
- IAT sensor 1 failure
- IAT sensor 2 failure
- Engine block heater attachment (besides a genuine part)

Confirmation Procedure

Operating Condition

- Turn the vehicle to the OFF (LOCK) mode and leave the vehicle for at least 6 hours.
- Enter the maintenance mode, then start the engine, and let it idle for at least 10 seconds.

- Do not use an engine block heater because the engine coolant temperature will not stay equal during engine stop.
- When freeze data is stored, test the vehicle under an ambient temperature close to the intake air temperature in the freeze data.

Diagnosis Details

Conditions for setting the DTC

When a malfunction is detected during the first drive cycle, a Pending DTC is stored in the PCM memory. If the malfunction returns in the next (second) drive cycle, the MIL comes on and a Confirmed DTC and the freeze data are stored.

Conditions for clearing the DTC

The MIL is cleared if the malfunction does not return in three consecutive trips in which the diagnostic runs. The MIL, the Pending DTC, the Confirmed DTC and the freeze data can be cleared with the scan tool clear command or by disconnecting the 12 volt battery.

DTC P219C, P219D, P219E, P219F

DTC P219C: No. 1 Cylinder Air-Fuel Ratio Variation

DTC P219D: No. 2 Cylinder Air-Fuel Ratio Variation

DTC P219E: No. 3 Cylinder Air-Fuel Ratio Variation

DTC P219F: No. 4 Cylinder Air-Fuel Ratio Variation

General Description

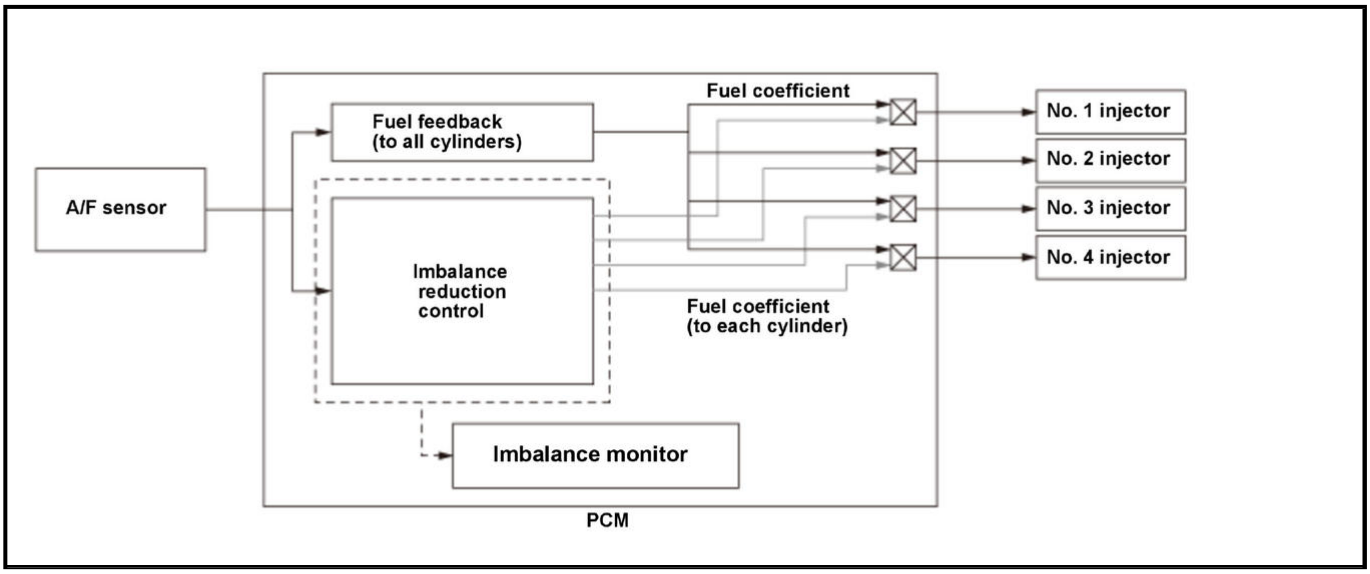
A/F sensor
Fuel feedback
(to all cylinders)
Imbalance
reduction
control
Fuel coefficient
Fuel coefficient
(to each cylinder)
No. 1 injector
No. 2 injector
No. 3 injector
No. 4 injector
Imbalance monitor
PCM

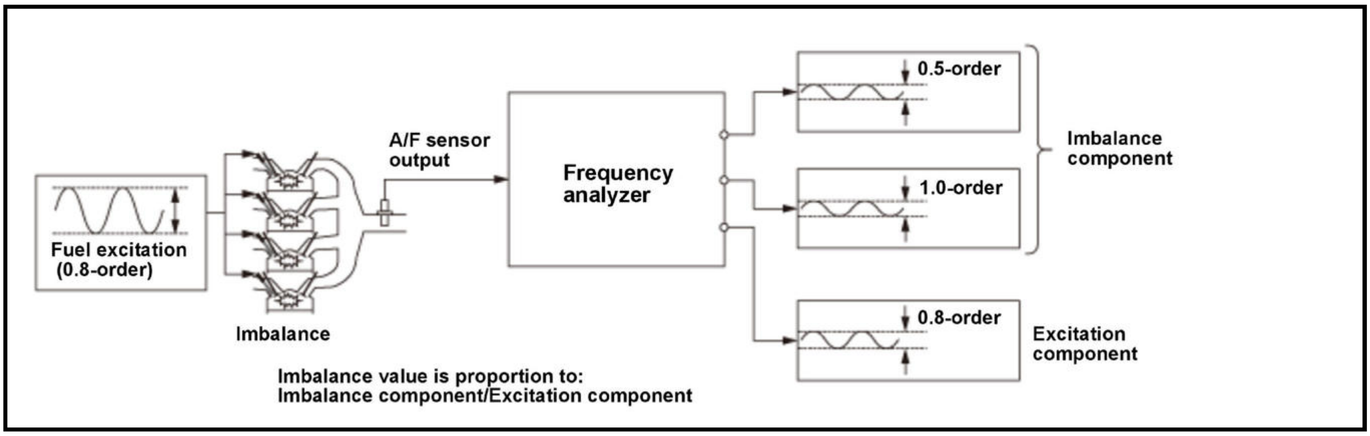
Fuel excitation
(0.8-order)
Imbalance
A/F sensor
output
Frequency
analyzer
0.5-order
1.0-order
0.8-order
Imbalance
component
Excitation
component
Imbalance value is proportion to:
Imbalance component/Excitation component

The powertrain control module (PCM) detects the imbalance amount from the sizes of the 0.5-order and 1.0-order components compared to 0.8-order excitation input by the fuel injection to determine the air/fuel ratio variation between the cylinder. The obtained components are used to learn the fuel coefficient of each cylinder and performs the imbalance reduction control. If it is not possible to suppress the variation even if the imbalance reduction control is performed; resulting the imbalance amount is large and the fuel coefficient is a specified value or more, the PCM detects as imbalance failure.

- When the imbalance amount is a specified value (about 10 %) or less:
-
  - -

    Fuel coefficient of each cylinder is higher than the threshold value: Failure on corresponding cylinder

-
  - -

    Fuel coefficient of each cylinder is lower than the threshold value: Pass

- When the imbalance amount is a specified value (about 10 %) or more:
-
  - -

    Performs imbalance reduction control and fuel coefficient is higher than the threshold value: failure on corresponding cylinder

-

- -

  Performs imbalance reduction control and fuel coefficient of each cylinder is lower than the threshold value: re-performs imbalance reduction control for a specified time and re-determines the failure by the fuel coefficient of each cylinder. If the imbalance amount is a specified value or less after imbalance reduction control is performed for a specified time, the determination is suspended. If the imbalance amount is a specified value or more after imbalance reduction control is performed for a specified time, the imbalance reduction control is performed again and if the fuel coefficient of each cylinder is higher than a specified value, the PCM detects the failure on corresponding cylinder.

Monitor Execution, Sequence, Duration, DTC Type

Execution	Once per driving cycle
Sequence	None
Duration	-
DTC Type	Two drive cycles, MIL on

Enable Conditions

Condition	Minimum	Maximum
Engine coolant temperature [ECT Sensor 1]	156 deg.F (69 deg.C)	-
Intake air temperature [IAT Sensor (1)]	-13 deg.F (-25 deg.C)	-
Engine speed [Engine Speed]	1, 850 rpm	3, 400 rpm
Engine speed variation during 1 cycle	-	100 rpm
Fuel trim	0.69	1.47
Intake air amount variation	-	0.1 g (0.003 oz)
Fuel feedback	Closed loop at stoichiometric	
Monitoring priority	P0133, P0400, P0420	

[ ]: HDS Parameter

Malfunction Threshold

Fuel correction coefficient of each cylinder is 0.83 or less, or 1.15 or more.

Possible Cause

NOTE: The causes shown may not be a complete list of all potential problems, and it is possible that there may be other causes.

- Fuel injector failure
- Fuel rail clogged
- Intake manifold air leak/clogged
- Cam lift failure
- Ignition system failure
- Engine compression abnormal
- Valve clearance incorrect

Confirmation Procedure

Operating Condition

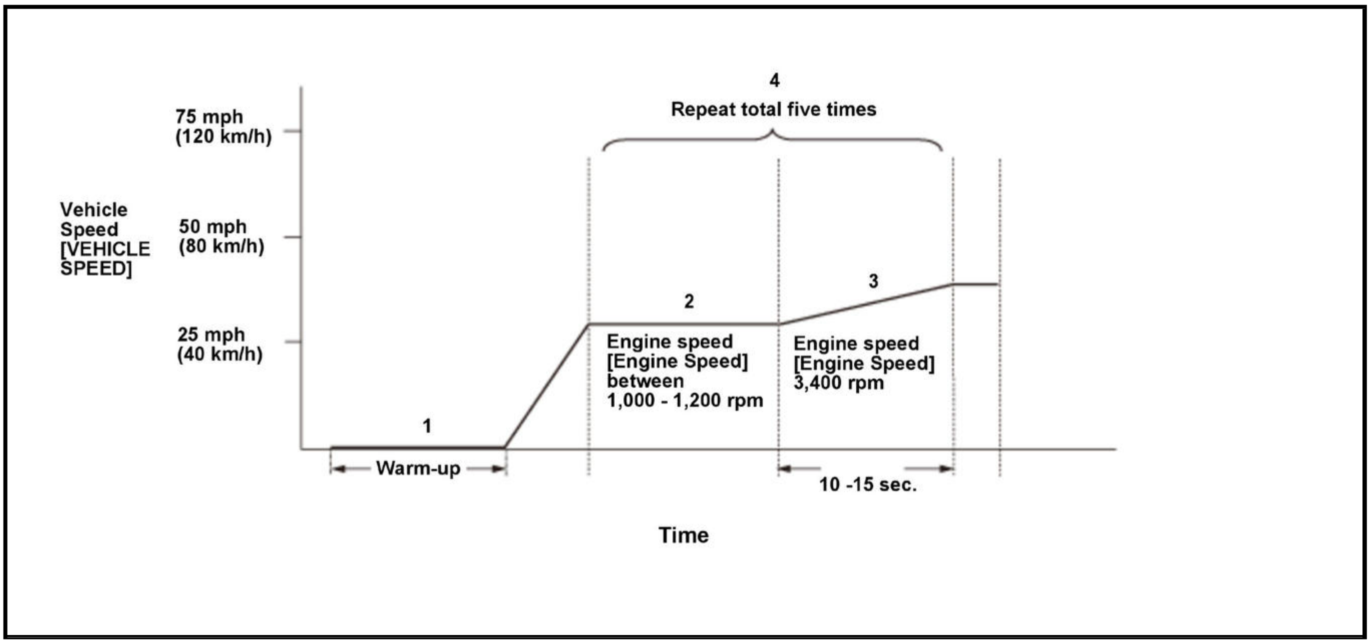

- Enter the maintenance mode, then start the engine. Hold the engine speed [Engine Speed] at 3, 000 rpm without load (in P or N) until the radiator fan comes on, then let it idle.
- Drive the vehicle at a steady engine speed [Engine Speed] 1, 000 - 1, 200 rpm.
- Take 10 - 15 seconds to accelerate up to engine speed [Engine Speed] 3, 400 rpm.
- When the diagnosis does not finish, repeat Driving Pattern steps 2 through 3, five times.

- Drive the vehicle in this manner only if the traffic regulations and ambient conditions allow.

With the HDS

None.

Diagnosis Details

Conditions for setting the DTC

When a malfunction is detected during the first drive cycle, a Pending DTC is stored in the PCM memory. If the malfunction returns in the next (second) drive cycle, the MIL comes on and a Confirmed DTC and the freeze data are stored.

Conditions for clearing the DTC

The MIL is cleared if the malfunction does not return in three consecutive drive cycles in which the engine conditions are similar to the first time the malfunction was detected. The MIL, the Pending DTC, the Confirmed DTC, and the freeze data can be cleared with the scan tool Clear command or by disconnecting the 12 volt battery.

DTC P2226

DTC P2226: Barometric Pressure (BARO) Sensor Circuit Malfunction

General Description

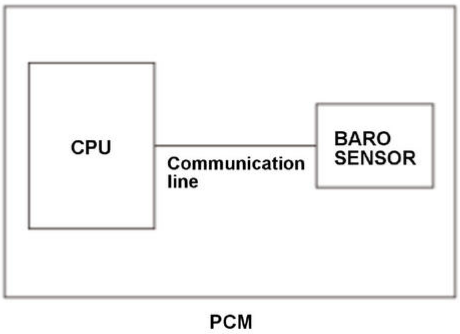

The barometric pressure (BARO) sensor is built into the powertrain control module (PCM), and it monitors atmospheric pressure. The BARO sensor output voltage is converted to A/D in the sensor inside, and transmitted to a CPU by serial communication. When the signal is not sent from the BARO sensor or when the signal sent from the BARO sensor is abnormal and this condition continues for a specified time, the PCM detects a malfunction and stores a DTC.

Monitor Execution, Sequence, Duration, DTC Type

Execution	Continuous
Sequence	None
Duration	2.0 seconds or more
DTC Type	Two drive cycles, MIL on

Enable Conditions

Condition	B
Vehicle	ON mode

Malfunction Threshold

One of these conditions is met at least 2.0 seconds:

- The PCM does not receive signals.
- The signal sent from the BARO sensor is abnormal.

Possible Cause

NOTE: The causes shown may not be a complete list of all potential problems, and it is possible that there may be other causes.

- BARO sensor failure
- PCM internal circuit failure

Diagnosis Details

Conditions for setting the DTC

When a malfunction is detected during the first drive cycle, a Pending DTC is stored in the PCM memory. If the malfunction returns in the next (second) drive cycle, the MIL comes on and a Confirmed DTC and the freeze data are stored.

Conditions for clearing the DTC

The MIL is cleared if the malfunction does not return in three consecutive trips in which the diagnostic runs. The MIL, the Pending DTC, the Confirmed DTC, and the freeze data can be cleared with the scan tool Clear command or by disconnecting the 12 volt battery.

DTC P2228, P2229

DTC P2228: Barometric Pressure (BARO) Sensor Circuit Low Voltage

DTC P2229: Barometric Pressure (BARO) Sensor Circuit High Voltage

General Description

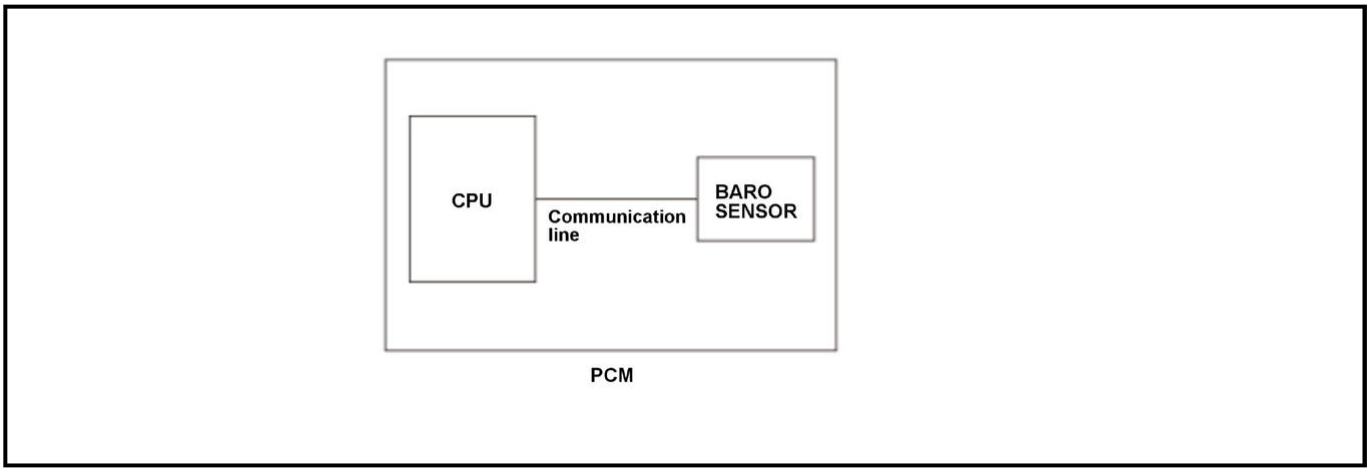

The barometric pressure (BARO) sensor is built into the powertrain control module (PCM), and it monitors atmospheric pressure. The BARO sensor output voltage is converted to A/D in the sensor inside, and transmitted to a CPU by serial communication. If the atmospheric pressure value sent from the BARO sensor is abnormal, the PCM detects a malfunction and stores a DTC.

Monitor Execution, Sequence, Duration, DTC Type

Execution	Continuous
Sequence	None
Duration	6.0 seconds or more
DTC Type	Two drive cycles, MIL on

Enable Conditions

Condition	B
Vehicle	ON mode

Malfunction Threshold

DTC: P2228

The BARO sensor output value [Baro Sensor] is 49 kPa (371 mmHg, 14.4 inHg) or less for at least 6.0 seconds.

DTC: P2229

The BARO sensor output value [Baro Sensor] is 114 kPa (855 mmHg, 33.7 inHg) or more for at least 6.0 seconds.

[ ]: HDS Parameter

Possible Cause

NOTE: The causes shown may not be a complete list of all potential problems, and it is possible that there may be other causes.

- BARO sensor failure
- PCM internal circuit failure

Diagnosis Details

Conditions for setting the DTC

When a malfunction is detected during the first drive cycle, a Pending DTC is stored in the PCM memory. If the malfunction returns in the next (second) drive cycle, the MIL comes on and a Confirmed DTC and the freeze data are stored.

Conditions for clearing the DTC

The MIL is cleared if the malfunction does not return in three consecutive trips in which the diagnostic runs. The MIL, the Pending DTC, the Confirmed DTC, and the freeze data can be cleared with the scan tool Clear command or by disconnecting the 12 volt battery.

DTC P2237

DTC P2237: Air/Fuel Ratio A/F Sensor (Sensor 1) IP Circuit High Voltage

General Description

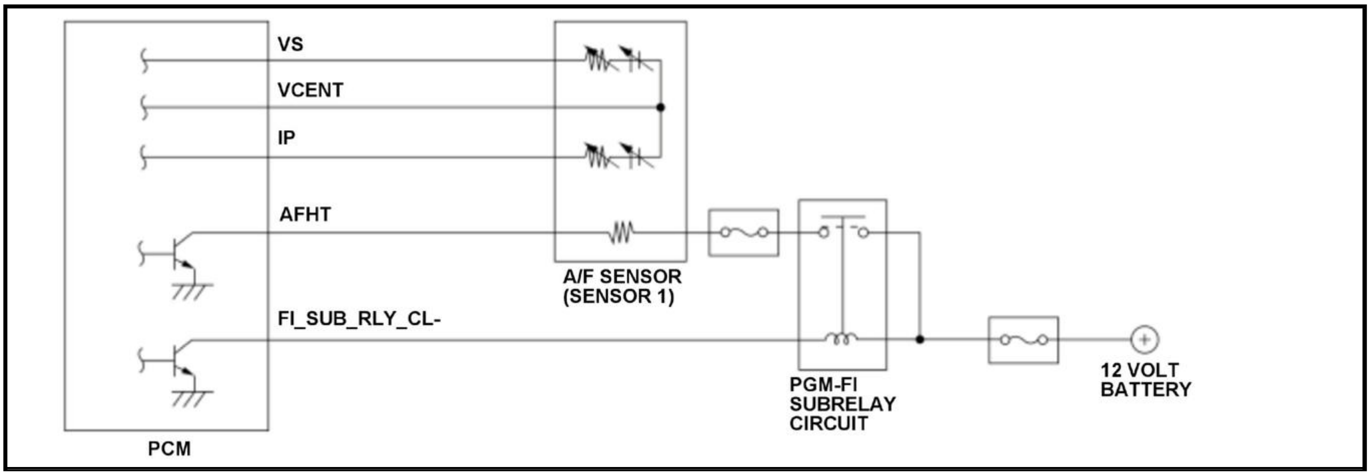

The air/fuel ratio (A/F) sensor (sensor 1) is installed in the exhaust manifold and detects oxygen content in the exhaust gas. The A/F sensor (sensor 1) transmits a signal to the powertrain control module (PCM), and the PCM controls fuel injection duration by comparing the target air/fuel ratio with the A/F sensor (sensor 1) signal. If the IP terminal voltage is within a specified range when the A/F sensor (sensor 1) pump cell voltage is excessively high, the PCM detects a malfunction and stores a DTC.

Monitor Execution, Sequence, Duration, DTC Type

Execution	Continuous
Sequence	None
Duration	15 seconds or more
DTC Type	Two drive cycles, MIL on

Enable Conditions

Condition	Minimum	Maximum
12 volt battery voltage [Battery]	9.0 V	-

Condition	Minimum	Maximum
State of the engine	Running	

[ ]: HDS Parameter

Malfunction Threshold

The IP terminal voltage is between 1.93 - 2.07 V for at least 15 seconds.

Possible Cause

NOTE: The causes shown may not be a complete list of all potential problems, and it is possible that there may be other causes.

- A/F sensor (sensor 1) IP line open
- A/F sensor (sensor 1) failure
- PCM internal circuit failure

Confirmation Procedure

Operating Condition

Enter the maintenance mode, start the engine. Hold the engine speed [Engine Speed] at 3, 000 rpm without load (in P or N) until the radiator fan comes on, then let it idle.

With the HDS

None.

Diagnosis Details

Conditions for setting the DTC

When a malfunction is detected during the first drive cycle, a Pending DTC is stored in the PCM memory. If the malfunction returns in the next (second) drive cycle, the MIL comes on and a Confirmed DTC and the freeze data are stored.

Conditions for clearing the DTC

The MIL is cleared if the malfunction does not return in three consecutive trips in which the diagnostic runs. The MIL, the Pending DTC, the Confirmed DTC, and the freeze data can be cleared with the scan tool Clear command or by disconnecting the 12 volt battery.

DTC P2238

DTC P2238: Air/Fuel Ratio (A/F) Sensor (Sensor 1) IP Circuit Low Voltage

General Description

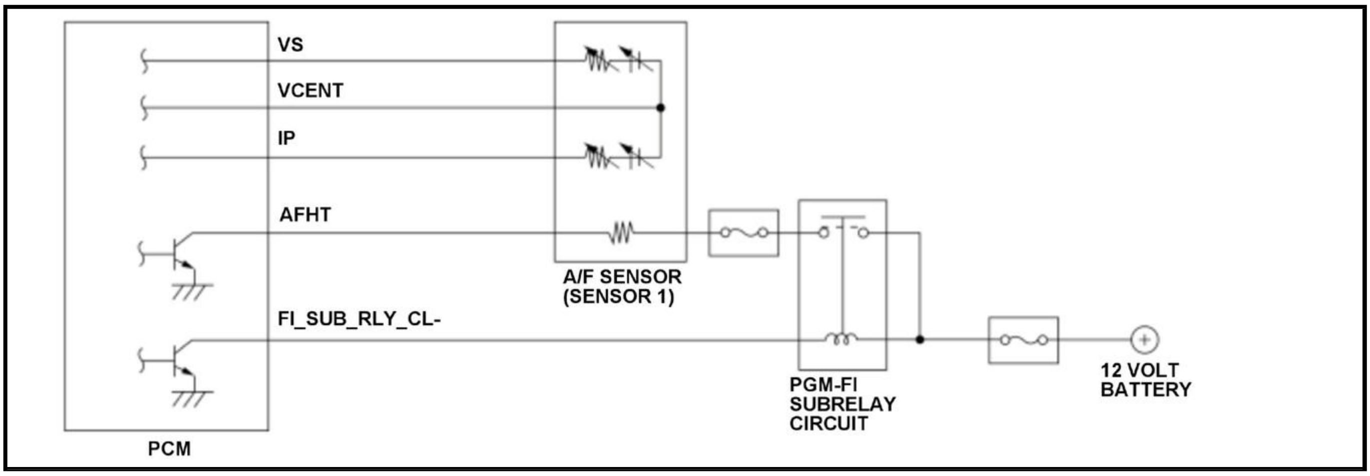

The air/fuel ratio (A/F) sensor (sensor 1) is installed in the exhaust manifold and detects oxygen content in the exhaust gas. The A/F sensor (sensor 1) transmits a signal to the powertrain control module (PCM), and the PCM controls fuel injection duration by comparing the target air/fuel ratio with the A/F sensor (sensor 1) signal. If the IP terminal voltage is a specified voltage when the self-diagnosis function in the PCM detects an abnormal condition, the PCM detects a malfunction and stores a DTC.

Monitor Execution, Sequence, Duration, DTC Type

Execution	Continuous
Sequence	None
Duration	5 seconds or more
DTC Type	Two drive cycles, MIL on

Enable Conditions

Condition	Minimum	Maximum
12 volt battery voltage [Battery]	9.0 V	-
State of the engine	Running	

[ ]: HDS Parameter

Malfunction Threshold

One of these symptoms occurs:

- When the element temperature is low before the sensor becomes active:

  The IP terminal voltage is 2.0 V or less for at least 5 seconds after the self-diagnosis function in the PCM detects low voltage abnormal for 500 milliseconds.

- When the element temperature is high before the sensor becomes active:

  The IP terminal voltage is 2.0 V or less for at least 5 seconds after the self-diagnosis function in the PCM detects short circuit for three times and the heater is stopped for 5 seconds.

Possible Cause

NOTE: The causes shown may not be a complete list of all potential problems, and it is possible that there may be other causes.

- A/F sensor (sensor 1) IP line short to ground
- A/F sensor (sensor 1) failure

- PCM internal circuit failure

Confirmation Procedure

Operating Condition

Enter the maintenance mode, start the engine. Hold the engine speed [Engine Speed] at 3, 000 rpm without load (in P or N) until the radiator fan comes on, then let it idle.

With the HDS

None.

Diagnosis Details

Conditions for setting the DTC

When a malfunction is detected during the first drive cycle, a Pending DTC is stored in the PCM memory. If the malfunction returns in the next (second) drive cycle, the MIL comes on and a Confirmed DTC and the freeze data are stored.

Conditions for clearing the DTC

The MIL is cleared if the malfunction does not return in three consecutive trips in which the diagnostic runs. The MIL, the Pending DTC, the Confirmed DTC, and the freeze data can be cleared with the scan tool Clear command or by disconnecting the 12 volt battery.

DTC P2243

DTC P2243: Air/Fuel Ratio (A/F) Sensor (Sensor 1) VCENT Circuit High Voltage

General Description

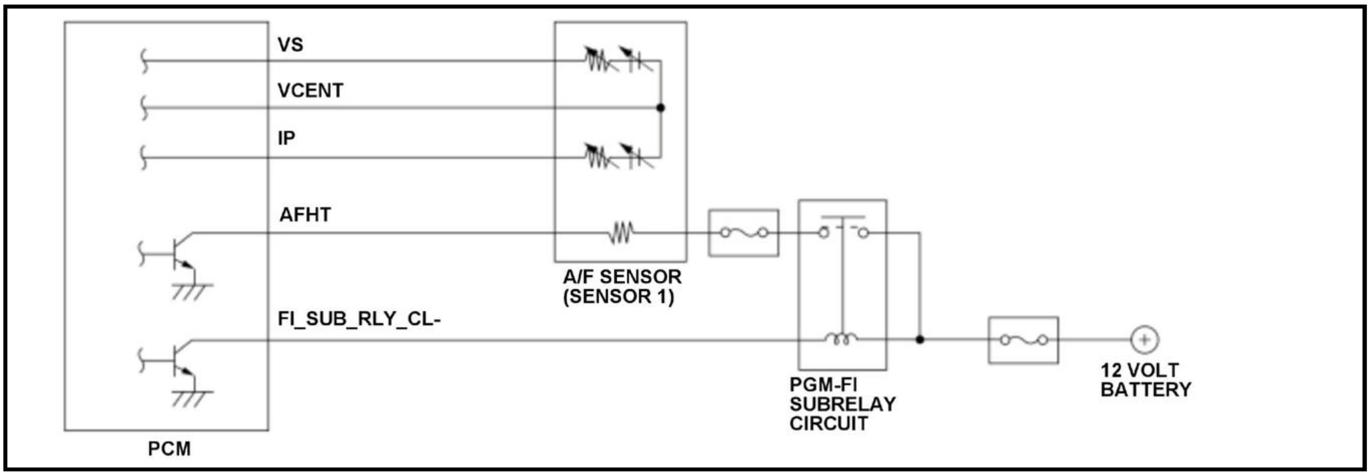

The air/fuel ratio (A/F) sensor (sensor 1) is installed in the exhaust manifold and detects oxygen content in the exhaust gas. The A/F sensor (sensor 1) transmits a signal to the powertrain control module (PCM), and the PCM controls fuel injection duration by comparing the target air/fuel ratio with the A/F sensor (sensor 1) signal. If the A/F sensor (sensor 1) element resistance is a specified value for a set time, the PCM detects a malfunction and stores a DTC.

Monitor Execution, Sequence, Duration, DTC Type

Execution	Continuous
Sequence	None
Duration	5 seconds or more*38 seconds or more**
DTC Type	Two drive cycles, MIL on

*: After the sensor becomes active**: Before the sensor becomes active

Enable Conditions

Condition	B
State of the engine	Running

Malfunction Threshold

One of these symptoms occurs:

- The A/F sensor (sensor 1) element resistance is more than 270 Ω for at least 38 seconds**.
- The A/F sensor (sensor 1) element resistance is 270 Ω or less and the self-diagnosis function in the PCM judges as an occurrence of open circuit for at least 5 seconds*.

Possible Cause

NOTE: The causes shown may not be a complete list of all potential problems, and it is possible that there may be other causes.

- A/F sensor (sensor 1) VCENT line open
- A/F sensor (sensor 1) failure
- PCM internal circuit failure

Confirmation Procedure

Operating Condition

Enter the maintenance mode, start the engine. Hold the engine speed [Engine Speed] at 3, 000 rpm without load (in P or N) until the radiator fan comes on, then let it idle.

[ ]: HDS Parameter

With the HDS

None.

Diagnosis Details

Conditions for setting the DTC

When a malfunction is detected during the first drive cycle, a Pending DTC is stored in the PCM memory. If the malfunction returns in the next (second) drive cycle, the MIL comes on and a Confirmed DTC and the freeze data are stored.

Conditions for clearing the DTC

The MIL is cleared if the malfunction does not return in three consecutive trips in which the diagnostic runs. The MIL, the Pending DTC, the Confirmed DTC, and the freeze data can be cleared with the scan tool Clear command or by disconnecting the 12 volt battery.

DTC P2245

DTC P2245: Air/Fuel Ratio (A/F) Sensor (Sensor 1) VCENT Circuit Low Voltage

General Description

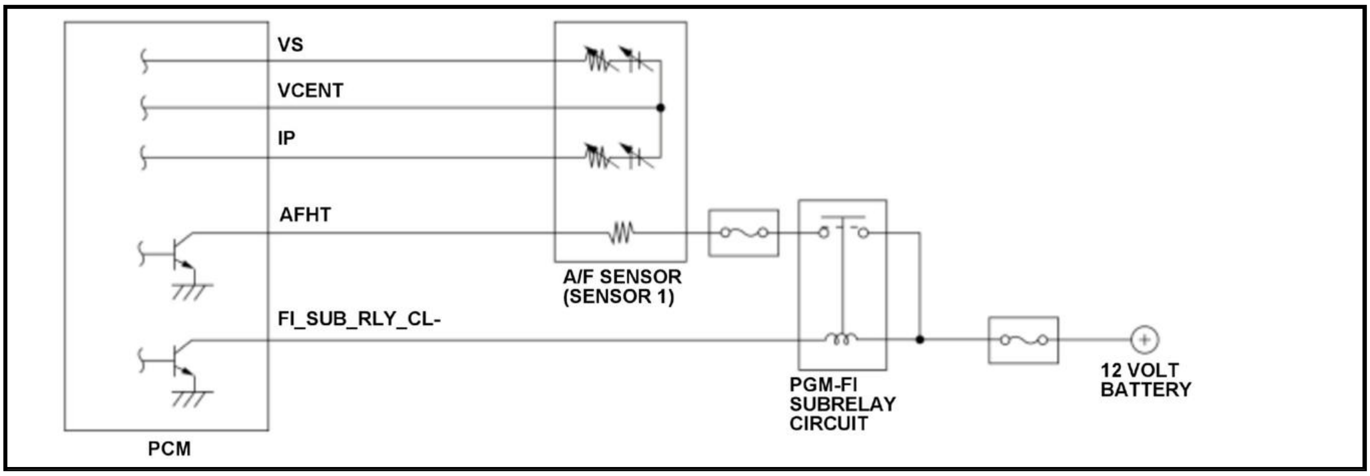

The air/fuel ratio (A/F) sensor (sensor 1) is installed in the exhaust manifold and detects oxygen content in the exhaust gas. The A/F sensor (sensor 1) transmits a signal to the powertrain control module (PCM), and the PCM controls fuel injection duration by comparing the target air/fuel ratio with the A/F sensor (sensor 1) signal. When the self-diagnosis function in the PCM detects a short circuit failure, the heater stops, and if the condition continues for a specified time, the PCM detects VCENT line short to ground and stores a DTC.

Monitor Execution, Sequence, Duration, DTC Type

Execution	Continuous
Sequence	None
Duration	5 seconds or more
DTC Type	Two drive cycles, MIL on

Enable Conditions

Condition	Minimum	Maximum
12 volt battery voltage [Battery]	9.0 V	-
State of the engine	Running	

[ ]: HDS Parameter

Malfunction Threshold

The PCM detects VCENT line short to ground after the self-diagnosis function in the PCM judges as an occurrence of short circuit for at least 5 seconds.

Possible Cause

NOTE: The causes shown may not be a complete list of all potential problems, and it is possible that there may be other causes.

- A/F sensor (sensor 1) VCENT line short to ground
- A/F sensor (sensor 1) failure
- PCM internal circuit failure

Confirmation Procedure

Operating Condition

Enter the maintenance mode, start the engine. Hold the engine speed [Engine Speed] at 3, 000 rpm without load (in P or N) until the radiator fan comes on, then let it idle.

With the HDS

None.

Diagnosis Details

Conditions for setting the DTC

When a malfunction is detected during the first drive cycle, a Pending DTC is stored in the PCM memory. If the malfunction returns in the next (second) drive cycle, the MIL comes on and a Confirmed DTC and the freeze data are stored.

Conditions for clearing the DTC

The MIL is cleared if the malfunction does not return in three consecutive trips in which the diagnostic runs. The MIL, the Pending DTC, the Confirmed DTC, and the freeze data can be cleared with the scan tool Clear command or by disconnecting the 12 volt battery.

DTC P2251

DTC P2251: Air/Fuel Ratio (A/F) Sensor (Sensor 1) VS Circuit High Voltage

General Description

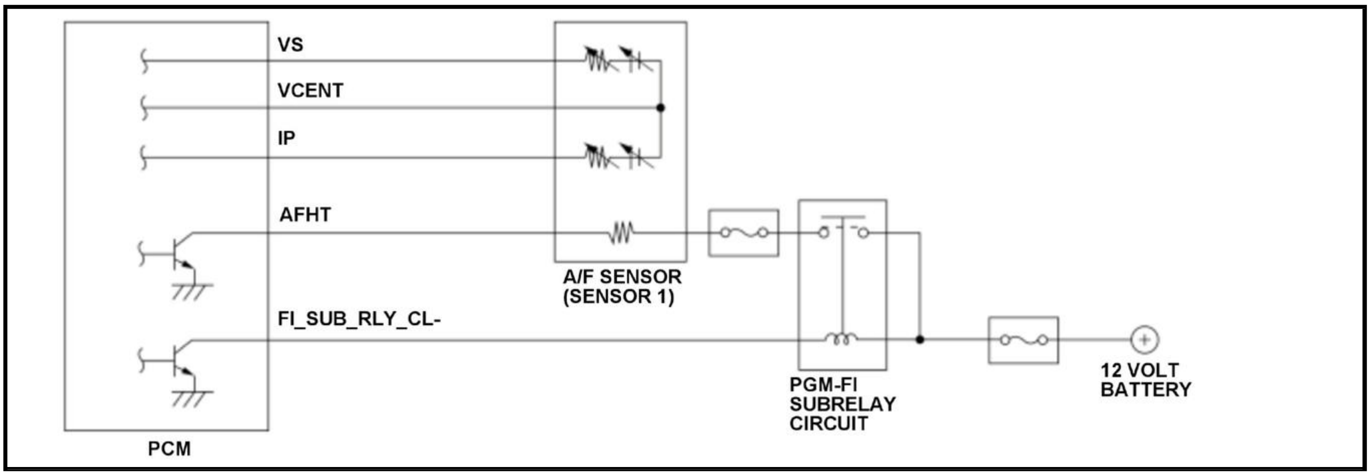

The air/fuel ratio (A/F) sensor (sensor 1) is installed in the exhaust manifold and detects oxygen content in the exhaust gas. The A/F sensor (sensor 1) transmits a signal to the powertrain control module (PCM), and the PCM controls fuel injection duration by comparing the target air/fuel ratio with the A/F sensor (sensor 1) signal. When the VS voltage is a specified value for a set time, the PCM detects a malfunction and stores a DTC.

Monitor Execution, Sequence, Duration, DTC Type

Execution	Continuous
Sequence	None
Duration	38 seconds or more
DTC Type	Two drive cycles, MIL on

Enable Conditions

Condition	Minimum	Maximum
12 volt battery voltage [Battery]	9.0 V	-
State of the engine	Running	

[ ]: HDS Parameter

Malfunction Threshold

The VS terminal voltage is 3.7 V or more for at least 38 seconds.

Possible Cause

NOTE: The causes shown may not be a complete list of all potential problems, and it is possible that there may be other causes.

- A/F sensor (sensor 1) VS line open
- A/F sensor (sensor 1) failure
- PCM internal circuit failure

Confirmation Procedure

Operating Condition

Enter the maintenance mode, start the engine. Hold the engine speed [Engine Speed] at 3, 000 rpm without load (in P or N) until the radiator fan comes on, then let it idle.

With the HDS

None.

Diagnosis Details

Conditions for setting the DTC

When a malfunction is detected during the first drive cycle, a Pending DTC is stored in the PCM memory. If the malfunction returns in the next (second) drive cycle, the MIL comes on and a Confirmed DTC and the freeze data are stored.

Conditions for clearing the DTC

The MIL is cleared if the malfunction does not return in three consecutive trips in which the diagnostic runs. The MIL, the Pending DTC, the Confirmed DTC, and the freeze data can be cleared with the scan tool Clear command or by disconnecting the 12 volt battery.

DTC P2252

DTC P2252: Air/Fuel Ratio (A/F) Sensor (Sensor 1) VS Circuit Low Voltage

General Description

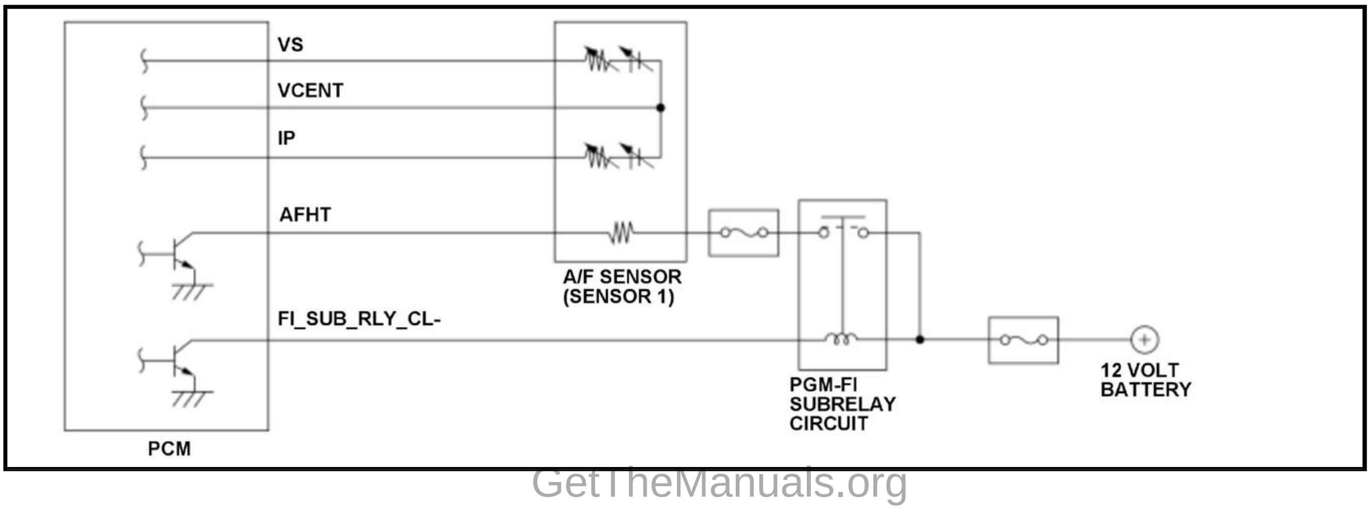

The air/fuel ratio (A/F) sensor (sensor 1) is installed in the exhaust manifold and detects oxygen content in the exhaust gas. The A/F sensor (sensor 1) transmits a signal to the powertrain control module (PCM), and the PCM controls fuel injection duration by comparing the target air/fuel ratio with the A/F sensor (sensor 1) signal. When the self-diagnosis function in the PCM detects a short circuit failure, the heater stops, and if the condition continues for a specified time, or if the VS terminal voltage is a specified value after a current is applied to the pump cell for a specified time, the PCM detects VS line short to ground and stores a DTC.

Monitor Execution, Sequence, Duration, DTC Type

Execution	Continuous
Sequence	None
Duration	5 seconds or more
DTC Type	Two drive cycles, MIL on

Enable Conditions

Condition	Minimum	Maximum
12 volt battery voltage [Battery]	9.0 V	-
State of the engine	Running	

[ ]: HDS Parameter

Malfunction Threshold

One of these symptoms occurs:

- The PCM detects VS line short to ground after the self-diagnosis function in the PCM judges as an occurrence of short circuit for at least 5 seconds.
- The VS terminal voltage is 2.6 V or less after a current is applied to the sensor pump cell for at least 500 milliseconds.

Possible Cause

NOTE: The causes shown may not be a complete list of all potential problems, and it is possible that there may be other causes.

- A/F sensor (sensor 1) VS line short to ground
- A/F sensor (sensor 1) failure
- PCM internal circuit failure

Confirmation Procedure

Operating Condition

Enter the maintenance mode, start the engine. Hold the engine speed [Engine Speed] at 3, 000 rpm without load (in P or N) until the radiator fan comes on, then let it idle.

With the HDS

None.

Diagnosis Details

Conditions for setting the DTC

When a malfunction is detected during the first drive cycle, a Pending DTC is stored in the PCM memory. If the malfunction returns in the next (second) drive cycle, the MIL comes on and a Confirmed DTC and the freeze data are stored.

Conditions for clearing the DTC

The MIL is cleared if the malfunction does not return in three consecutive trips in which the diagnostic runs. The MIL, the Pending DTC, the Confirmed DTC, and the freeze data can be cleared with the scan tool Clear command or by disconnecting the 12 volt battery.

DTC P2270

DTC P2270: Secondary Heated Oxygen Sensor (Secondary HO2S (Sensor 2)) Circuit Signal Stuck Lean

General Description

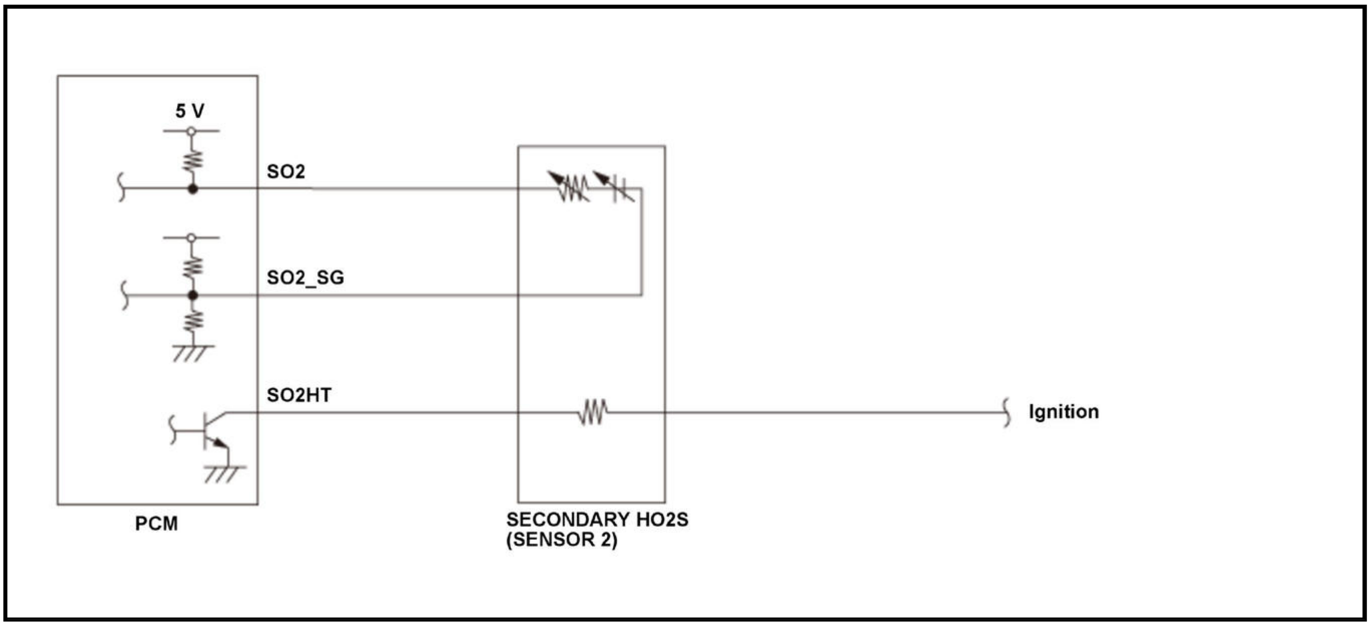

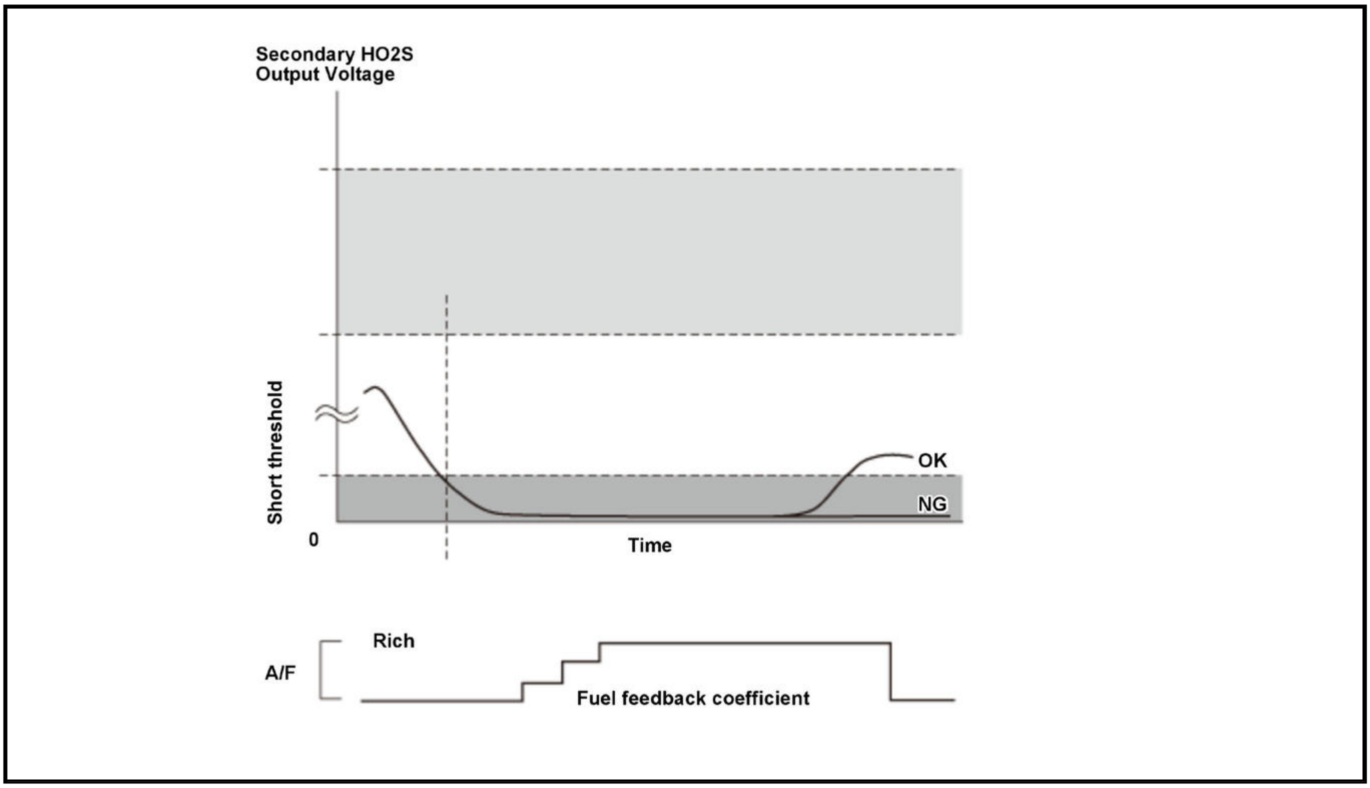

The secondary heated oxygen sensor (secondary HO2S (sensor 2)) detects the oxygen content in the exhaust gas downstream of the three way catalytic converter (TWC) during stoichiometric air/fuel ratio feedback control. The powertrain control module (PCM) controls the air/fuel ratio from the air/fuel ratio (A/F) sensor (sensor 1) output voltage so that the TWC efficiency is optimized. When power is applied to the secondary HO2S (sensor 2) heater, if the secondary HO2S (sensor 2) output continues to be low (lean) during feedback control, the PCM detects a malfunction and stores a DTC.

Monitor Execution, Sequence, Duration, DTC Type

Execution	Continuous
Sequence	None
Duration	18 seconds or more
DTC Type	Two drive cycles, MIL on

Enable Conditions

Condition	Minimum	Maximum
Elapsed time that secondary HO2S activity is not monitored after starting the engine	15 seconds	-
Engine coolant temperature [ECT Sensor 1]	156 deg.F (69 deg.C)	-
Intake air temperature [IAT Sensor (1)]	-13 deg.F (-25 deg.C)	-
Fuel trim	0.69	1.47
Fuel feedback	Closed loop	
Other	Cruise load or more	

[ ]: HDS Parameter

Malfunction Threshold

The secondary HO2S (sensor 2) output voltage [HO2S S2] is 0.05 V or less for at least 18 seconds.

Possible Cause

NOTE: The causes shown may not be a complete list of all potential problems, and it is possible that there may be other causes.

- Secondary HO2S (sensor 2) lean side stuck

Confirmation Procedure

Operating Condition

- Enter the maintenance mode, then start the engine, and let it idle until the radiator fan comes on.
- Drive immediately at a steady engine speed [Engine Speed] between 1, 500 - 3, 000 rpm for at least 18 seconds.

- When freeze data is stored, drive the vehicle under those conditions instead of Driving Pattern step 2.
- Drive the vehicle in this manner only if the traffic regulations and ambient conditions allow.

With the HDS

None.

Diagnosis Details

Conditions for setting the DTC

When a malfunction is detected during the first drive cycle, a Pending DTC is stored in the PCM memory. If the malfunction returns in the next (second) drive cycle, the MIL comes on and a Confirmed DTC and the freeze data are stored.

Conditions for clearing the DTC

The MIL is cleared if the malfunction does not return in three consecutive trips in which the diagnostic runs. The MIL, the Pending DTC, the Confirmed DTC, and the freeze data can be cleared with the scan tool Clear command or by disconnecting the 12 volt battery.

DTC P2279

DTC P2279: Intake Air System Leak

General Description

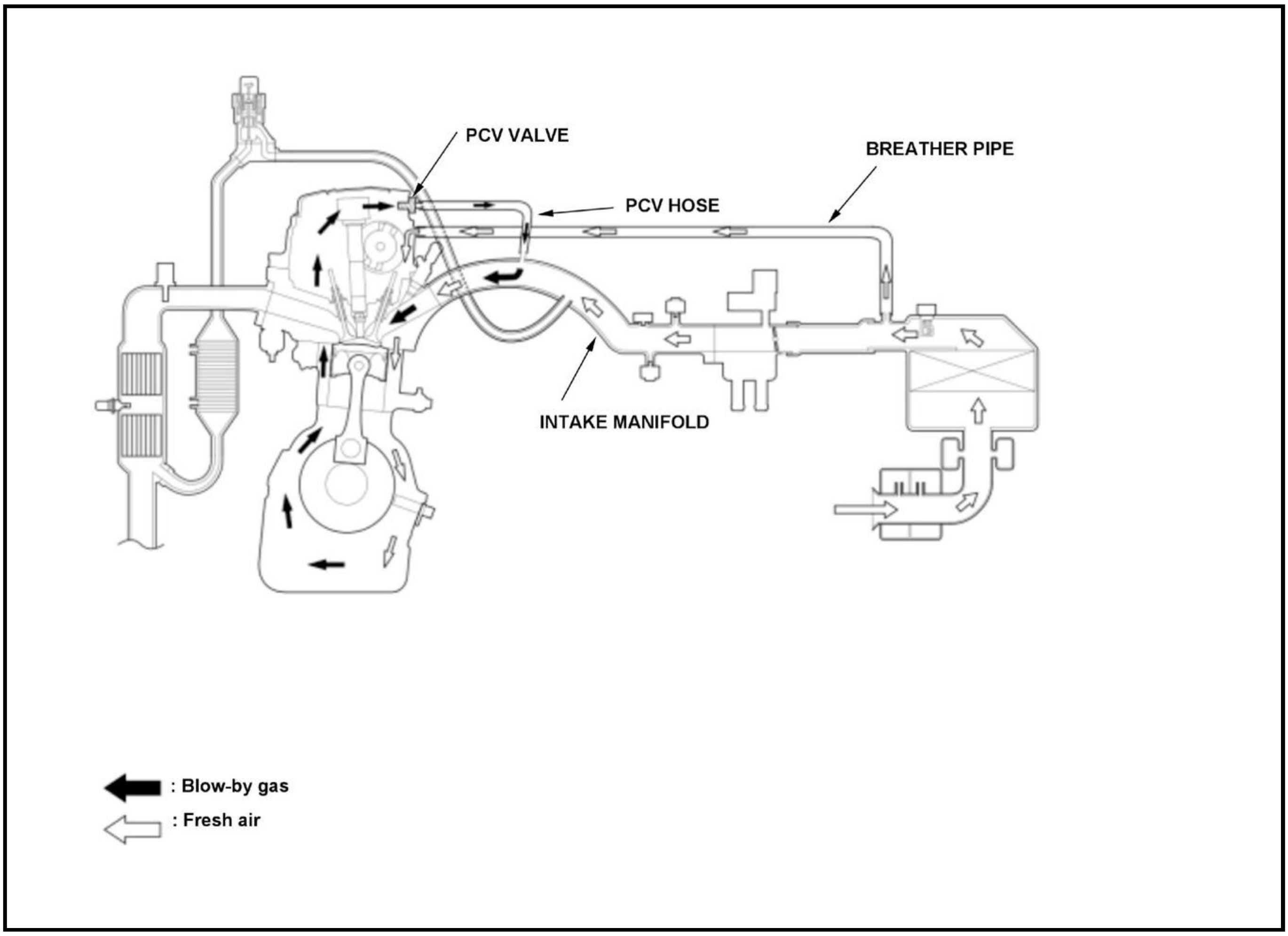
PCV VALVE
BREATHER PIPE
PCV HOSE
INTAKE MANIFOLD
⬅ : Blow-by gas
⇦ : Fresh air

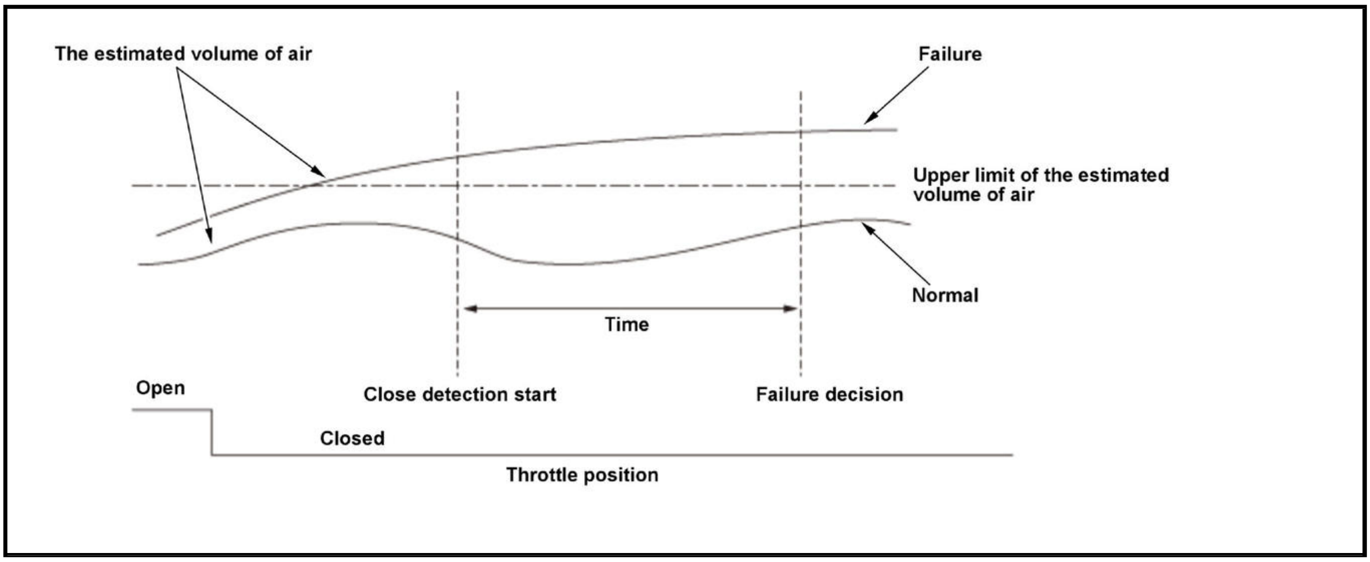
The estimated volume of air
Failure
Upper limit of the estimated volume of air
Normal
Time
Open
Close detection start
Failure decision
Closed
Throttle position

The positive crankcase ventilation (PCV) system reduces hydrocarbon (HC) emissions. The PCV system recirculates unburned air/fuel mixture (blow-by gas) into the intake manifold so that it is drawn into the engine and burned, thus reducing HC. Estimate the amount of air inflowing from the PCV valve from the deviation between the inflow air amount of the intake manifold calculated from the manifold absolute pressure (MAP) sensor and the amount of air passing through throttle body measured using mass airflow (MAF) sensor. When the PCV hose is disengaged, the amount of air flowing from the PCV valve increases and the deviation also increases. The estimated air quantity of PCV is compared with the judgment value (upper limit value), and when it exceeds the more than the upper limit, it detects a malfunction and stores a DTC.

Monitor Execution, Sequence, Duration, DTC Type

Execution	Once per driving cycle
Sequence	None
Duration	5.5 seconds or more
DTC Type	Two drive cycles, MIL on

Enable Conditions

Condition	Minimum	Maximum
Elapsed time after starting the engine	15 seconds	-
Engine speed [Engine Speed]	1, 200 rpm	3, 000 rpm
Engine coolant temperature [ECT Sensor 1]	122 deg.F (50 deg.C)	-
Intake air temperature [IAT Sensor (1)]	18.4 deg.F (-7.6 deg.C)	-
12 volt battery voltage [Battery]	10.5 V	-
Fuel trim	0.69	1.47
Fuel feedback	Closed loop	

[ ]: HDS Parameter

Malfunction Threshold

The estimated volume of intake air is 180.0 L/min (190.2 US qt/min) - 220.0 L/min (232.5 US qt/min) or more*.

*: Depends on engine speed and load

Possible Cause

NOTE: The causes shown may not be a complete list of all potential problems, and it is possible that there may be other causes.

- Vacuum hose fall
- Throttle body air leak
- Intake manifold air leak
- Evaporative emission (EVAP) canister purge valve failure
- Valve timing incorrect

Confirmation Procedure

Operating Condition

- Enter the maintenance mode, then start the engine. Hold the engine speed [Engine Speed] at 3, 000 rpm without load (in P or N) until the radiator fan comes on.
- Let the engine idle for at least 5.5 seconds.

Diagnosis Details

Conditions for setting the DTC

When a malfunction is detected during the first drive cycle, a Pending DTC is stored in the PCM memory. If the malfunction returns in the next (second) drive cycle, the MIL comes on and a Confirmed DTC and the freeze data are stored.

Conditions for clearing the DTC

The MIL is cleared if the malfunction does not return in three consecutive trips in which the diagnostic runs. The MIL, the Pending DTC, the Confirmed DTC and the freeze data can be cleared with the scan tool clear command or by disconnecting the 12 volt battery.

DTC P2401, P2402

DTC P2401: Evaporative Emission (EVAP) Leak Check Pump Control Circuit Low Voltage

DTC P2402: Evaporative Emission (EVAP) Leak Check Pump Control Circuit High Voltage

General Description

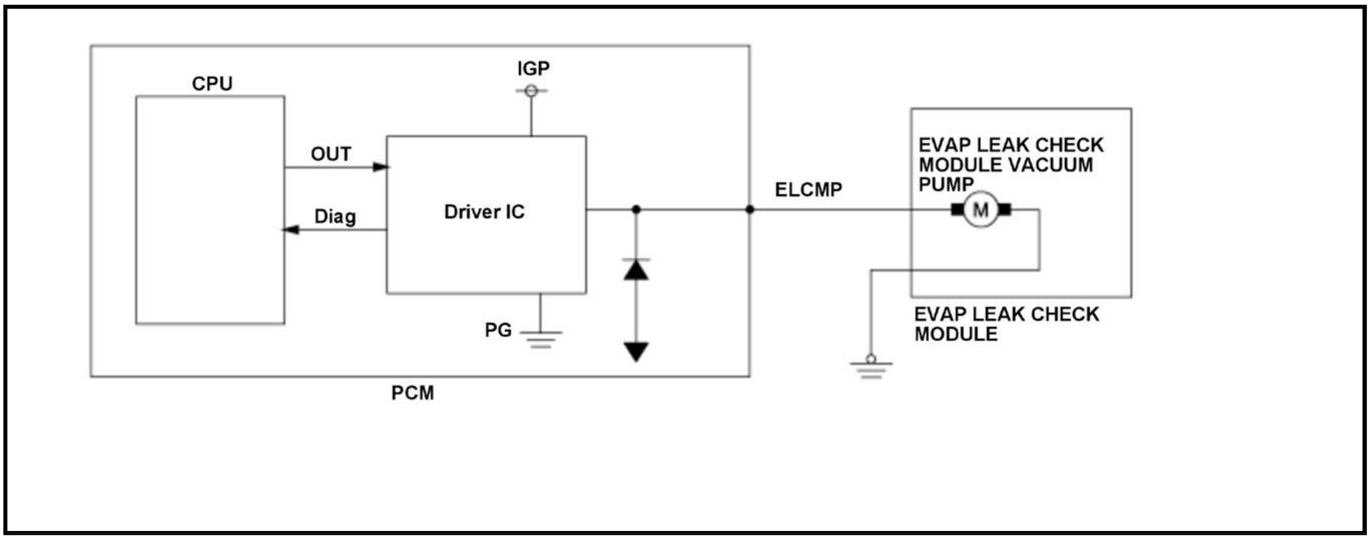

The evaporative emission (EVAP) leak check module vacuum pump is installed in the EVAP leak check module to create negative pressure in the EVAP passage when performing the EVAP leak check. The EVAP leak check module vacuum pump is normally non-energized and inactive. It is only activated when performing the EVAP leak check. The powertrain control module (PCM) detects a malfunction and stores a DTC when the diagnostic signal of the driver IC of the PCM internal circuit is low continuously for the prescribed time though operation signal is output to the EVAP leak check module vacuum pump.

Monitor Execution, Sequence, Duration, DTC Type

Execution	Continuous
Sequence	None
Duration	2.0 seconds or more
DTC Type	Two drive cycles, MIL on

Enable Conditions

Condition	Minimum	Maximum
12 volt battery voltage [BATTERY]	10 V	-

[ ]: HDS Parameter

Malfunction Threshold

DTC: P2401

When the diagnostic signal of the driver IC of the PCM internal circuit is low continuously for 2.0 seconds or more while the operation signal is output to the EVAP leak check module vacuum pump.

DTC: P2402

When the diagnostic signal of the driver IC of the PCM internal circuit is high continuously for 2.0 seconds or more while the operation signal is output to the EVAP leak check module vacuum pump.

Possible Cause

NOTE: The causes shown may not be a complete list of all potential problems, and it is possible that there may be other causes.

DTC: P2401

- EVAP leak check module ELCMP line short

DTC: P2402

- EVAP leak check module ELCMP line open
- EVAP leak check module ground line open
- EVAP leak check module ELCMP line short to power
- EVAP leak check module ground line short to power

Common

- PCM internal circuit failure

Confirmation Procedure

Operating Condition

Turn the vehicle to the ON mode.

With the HDS

Select the EVAP TEST in the INSPECTION MENU, then select the FUNCTION TEST with the HDS.

Diagnosis Details

Conditions for setting the DTC

When a malfunction is detected during the first drive cycle, a Pending DTC is stored in the PCM memory. If the malfunction returns in the next (second) drive cycle, the MIL comes on and a Confirmed DTC and the freeze data are stored.

Conditions for clearing the DTC

The MIL is cleared if the malfunction does not return in three consecutive trips in which the diagnostic runs. The MIL, the Pending DTC, the Confirmed DTC, and the freeze data can be cleared with the scan tool Clear command or by disconnecting the 12 volt battery.

DTC P2413

DTC P2413: Exhaust Gas Recirculation (EGR) System Malfunction

General Description

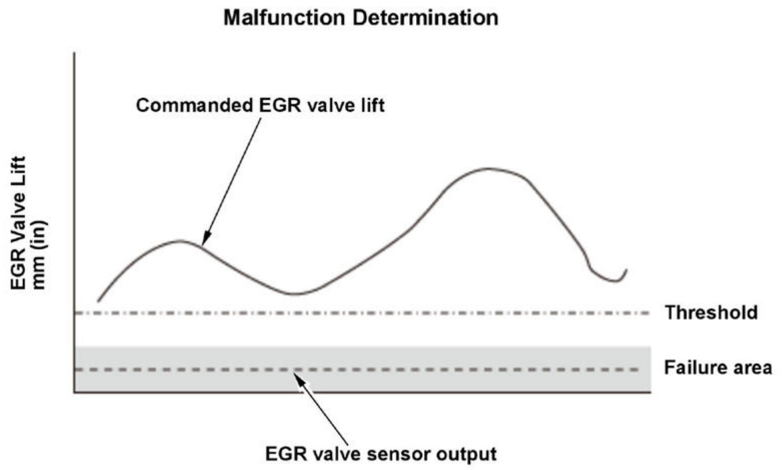

The exhaust gas recirculation (EGR) valve, which is controlled by the powertrain control module (PCM), is opened and the exhaust gas flows through the EGR valve, the intake manifold, and the EGR passage. The exhaust gas is circulated into the air/fuel mixture and the mixture is drawn into the combustion chamber to lower combustion temperatures, thus reducing oxides of nitrogen (NOx) emissions. A sensor (lift sensor) is built into the EGR valve and detects the amount of valve lift. The command value for the target valve lift is stored in the PCM so that exhaust gas recirculation can be optimized according to driving conditions. Comparing this command value with the lift sensor output signal value, the PCM controls the EGR valve to make the amount of actual valve lift equal to the command value. If the valve sensor output is insufficient for the commanded valve lift, the PCM detects a malfunction and stores a DTC.

Monitor Execution, Sequence, Duration, DTC Type

Execution	Once per driving cycle
Sequence	None
Duration	5.0 seconds or more

DTC Type	Two drive cycles, MIL on

Enable Conditions

Condition	Minimum	Maximum
Engine speed [Engine Speed]	-	4, 500 rpm
Commanded EGR valve lift	0.0394 in (1.00 mm)	-
12 volt battery voltage [Battery]	10.5 V	-

[ ]: HDS Parameter

Malfunction Threshold

If the actual valve lift is 0.0059 in (0.15 mm) or less for at least 5.0 seconds, the valve is considered stuck closed.

Possible Cause

NOTE: The causes shown may not be a complete list of all potential problems, and it is possible that there may be other causes.

- EGR valve position sensor line open
- EGR valve position sensor line short
- EGR valve closed stuck
- EGR valve position sensor middle stuck
- EGR valve position sensor range/performance problem

Confirmation Procedure

Operating Condition

- Enter the maintenance mode, then start the engine. Hold the engine speed [Engine Speed] at 3, 000 rpm without load (in P or N) until the radiator fan comes on, then let it idle.
- Drive the vehicle at a speed between 15 - 75 mph (24 - 120 km/h) for at least 5 seconds.

- Drive the vehicle in this manner only if the traffic regulations and ambient conditions allow.

With the HDS

Select the EGR TEST in the Function Test Menu with the HDS.

Diagnosis Details

Conditions for setting the DTC

When a malfunction is detected during the first drive cycle, a Pending DTC is stored in the PCM memory. If the malfunction returns in the next (second) drive cycle, the MIL comes on and a Confirmed DTC and the freeze data are stored.

Conditions for clearing the DTC

The MIL is cleared if the malfunction does not return in three consecutive trips in which the diagnostic runs. The MIL, the Pending DTC, the Confirmed DTC, and the freeze data can be cleared with the scan tool Clear command or by disconnecting the 12 volt battery.

DTC P24B8

DTC P24B8: Evaporative Emission (EVAP) Leak Check Module Absolute Pressure Sensor Out of Range

General Description

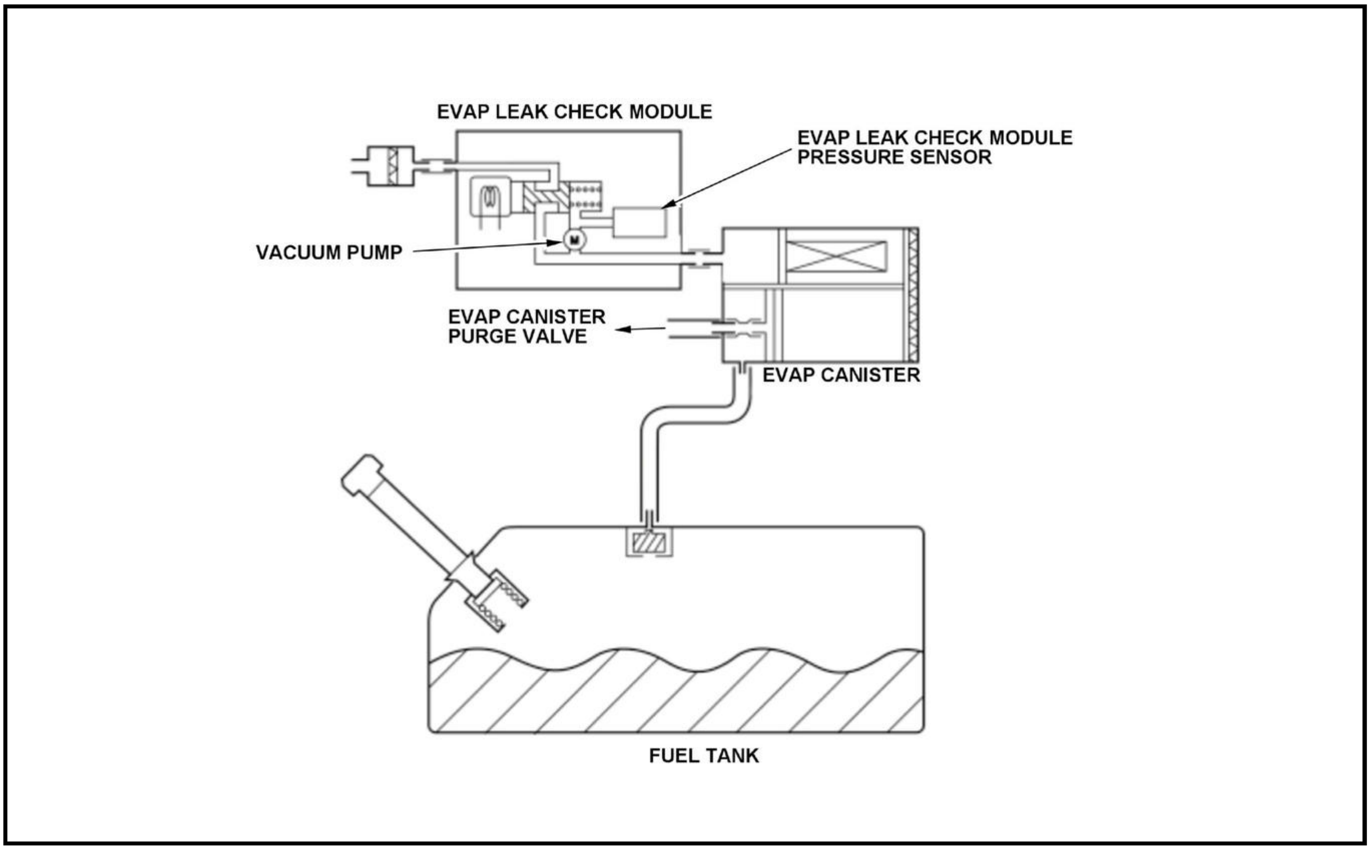
EVAP LEAK CHECK MODULE
EVAP LEAK CHECK MODULE PRESSURE SENSOR
VACUUM PUMP
M
EVAP CANISTER PURGE VALVE
EVAP CANISTER
FUEL TANK

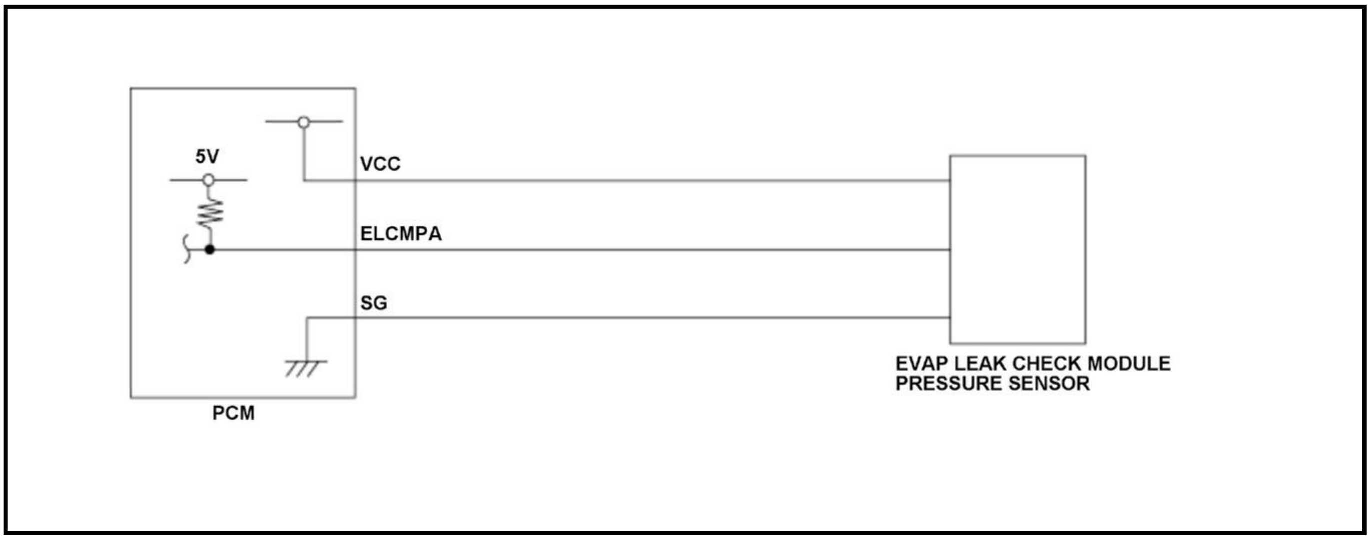
5V
VCC
ELCMPA
SG
PCM
EVAP LEAK CHECK MODULE PRESSURE SENSOR

The evaporative emission (EVAP) leak check module pressure sensor is a sensor used for leak detection of the fuel tank. The limit of the EVAP leak check module pressure sensor output is specified. If the output is exceed that limit, the powertrain control module (PCM) detects a malfunction and stores a DTC.

Monitor Execution, Sequence, Duration, DTC Type

Execution	Once per driving cycle
Sequence	None

Duration	6 seconds or more
DTC Type	Two drive cycles, MIL on

Enable Conditions

Condition	B
Vehicle	ON mode

Malfunction Threshold

The EVAP leak check module pressure sensor output level is 115 kPa (34 inHg, 857 mmHg) or more for at least 6 seconds.

Possible Cause

NOTE: The causes shown may not be a complete list of all potential problems, and it is possible that there may be other causes.

- EVAP leak check module pressure sensor ELCMPA line open
- EVAP leak check module pressure sensor SG line open
- EVAP leak check module pressure sensor VCC line open
- EVAP leak check module pressure sensor ELCMPA line short to ground
- EVAP leak check module pressure sensor ELCMPA line short to power
- EVAP leak check module pressure sensor failure
- PCM internal circuit failure

Confirmation Procedure

Operating Condition

Turn the vehicle to the ON mode, and wait for at least 6 seconds.

Diagnosis Details

Conditions for setting the DTC

When a malfunction is detected during the first drive cycle, a Pending DTC is stored in the PCM memory. If the malfunction returns in the next (second) drive cycle, the MIL comes on and a Confirmed DTC and the freeze data are stored.

Conditions for clearing the DTC

The MIL is cleared if the malfunction does not return in three consecutive trips in which the diagnostic runs. The MIL, the Pending DTC, the Confirmed DTC, and the freeze data can be cleared with the scan tool clear command or by disconnecting the 12 volt battery.

DTC P24B9

DTC P24B9: Evaporative Emission (EVAP) Leak Check Module Pressure Sensor Range/Performance Problem

General Description

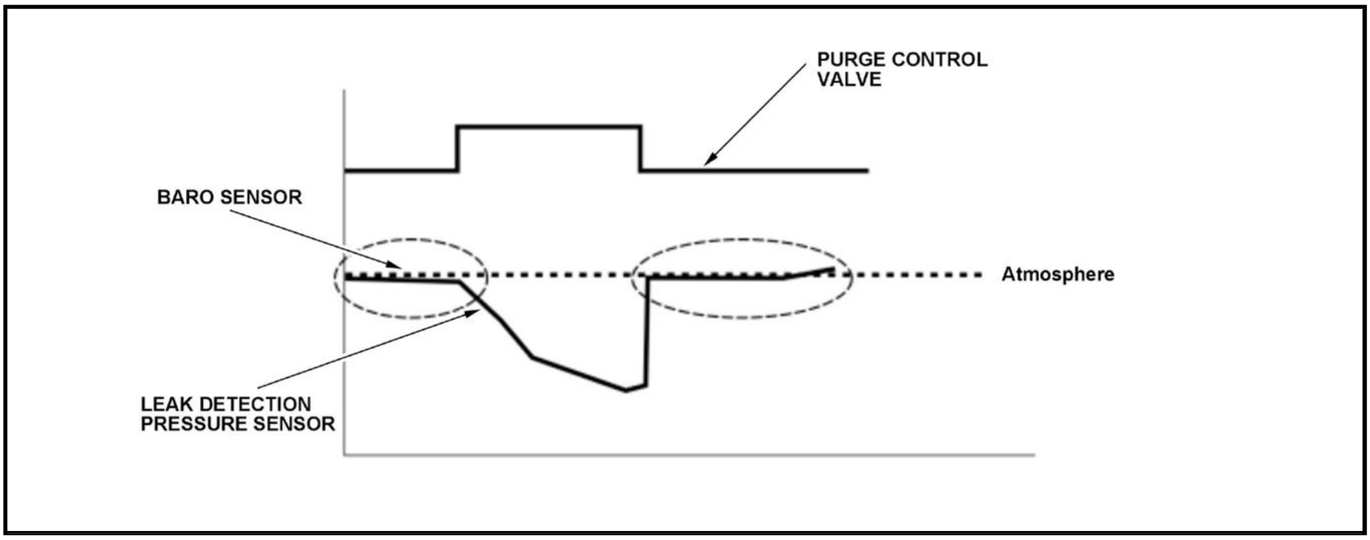

The fuel vapor in the fuel tank is temporarily stored in the evaporative emission (EVAP) canister and drawn into the engine through the EVAP canister purge valve. The powertrain control module (PCM) controls the amount of vapor introduced into the engine by varying the duty cycle of the EVAP canister purge valve according to the condition of the engine. While purge control is stopped, the EVAP leak check module pressure sensor output is a pressure equivalent to the atmospheric pressure. If the difference between the barometric pressure (BARO) sensor pressure and EVAP leak check module pressure sensor pressure exceeds the specified value for a set time, the PCM detects a malfunction and stores a DTC.

Monitor Execution, Sequence, Duration, DTC Type

Execution	Once per driving cycle
Sequence	None
Duration	4 seconds or more
DTC Type	Two drive cycles, MIL on

Enable Conditions

Condition	Minimum	Maximum
Elapsed time after starting the engine	10 seconds	-
Other	Purge control stopped	

Malfunction Threshold

When a difference in pressure of the leak detection sensor and the BARO sensor became more than 17 kPa (125 mmHg, 4.9 inHg).

Possible Cause

NOTE: The causes shown may not be a complete list of all potential problems, and it is possible that there may be other causes.

- BARO sensor range/performance problem
- EVAP leak check module pressure sensor range/performance problem
- Manifold absolute pressure (MAP) sensor range/performance problem
- Purge control solenoid failure
- Air cleaner element clogged
- Valve timing incorrect
- Throttle body air leak
- Intake manifold air leak

Confirmation Procedure

Operating Condition

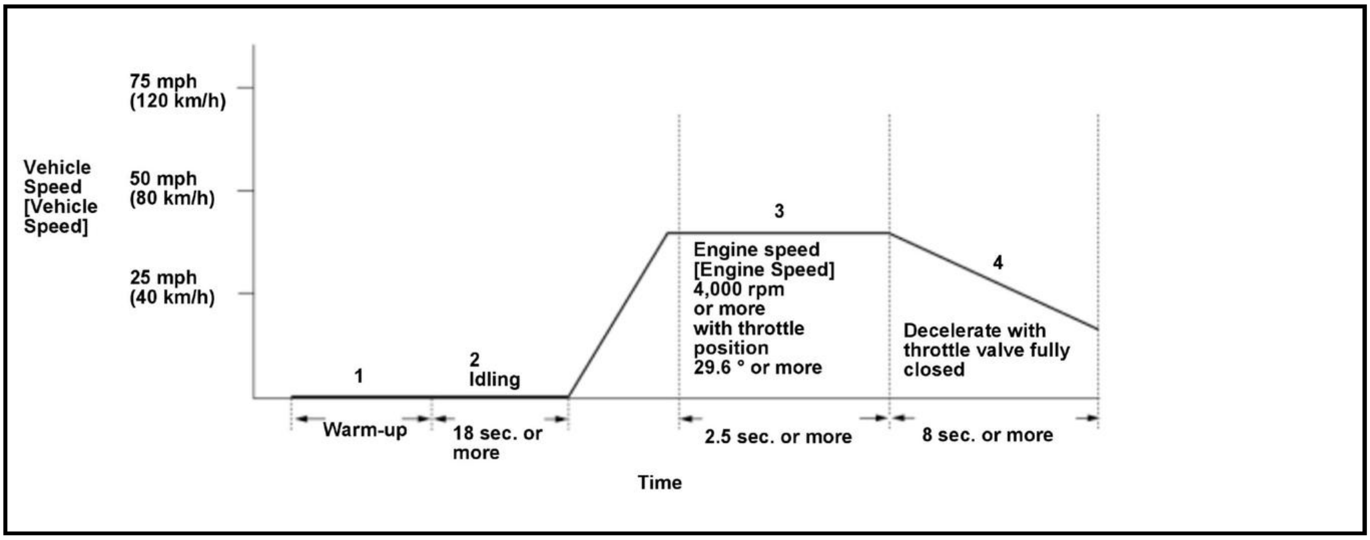

- Enter the maintenance mode, then start the engine. Hold the engine speed [Engine Speed] at 3, 000 rpm without load (in P or N) until the radiator fan comes on.
- Let the engine idle for at least 18 seconds.
- Drive the vehicle at engine speed [Engine Speed] 4, 000 rpm or more with throttle position 29.6 deg. or more for at least 2.5 seconds.
- Decelerate with the throttle valve fully closed for at least 8 seconds.

- When freeze data is stored, drive the vehicle under those conditions instead of Driving Pattern step 4.
- Drive the vehicle in this manner only if the traffic regulations and ambient conditions allow.

Diagnosis Details

Conditions for setting the DTC

When a malfunction is detected during the first drive cycle, a Pending DTC is stored in the PCM memory. If the malfunction returns in the next (second) drive cycle, the MIL comes on and a Confirmed DTC and the freeze data are stored.

Conditions for clearing the DTC

The MIL is cleared if the malfunction does not return in three consecutive trips in which the diagnostic runs. The MIL, the Pending DTC, the Confirmed DTC, and the freeze data can be cleared with the scan tool clear command or by disconnecting the 12 volt battery.

DTC P24BA, P24BB

DTC P24BA: Evaporative Emission (EVAP) Leak Check Module Pressure Sensor Circuit Low Voltage

DTC P24BB: Evaporative Emission (EVAP) Leak Check Module Pressure Sensor Circuit High Voltage

General Description

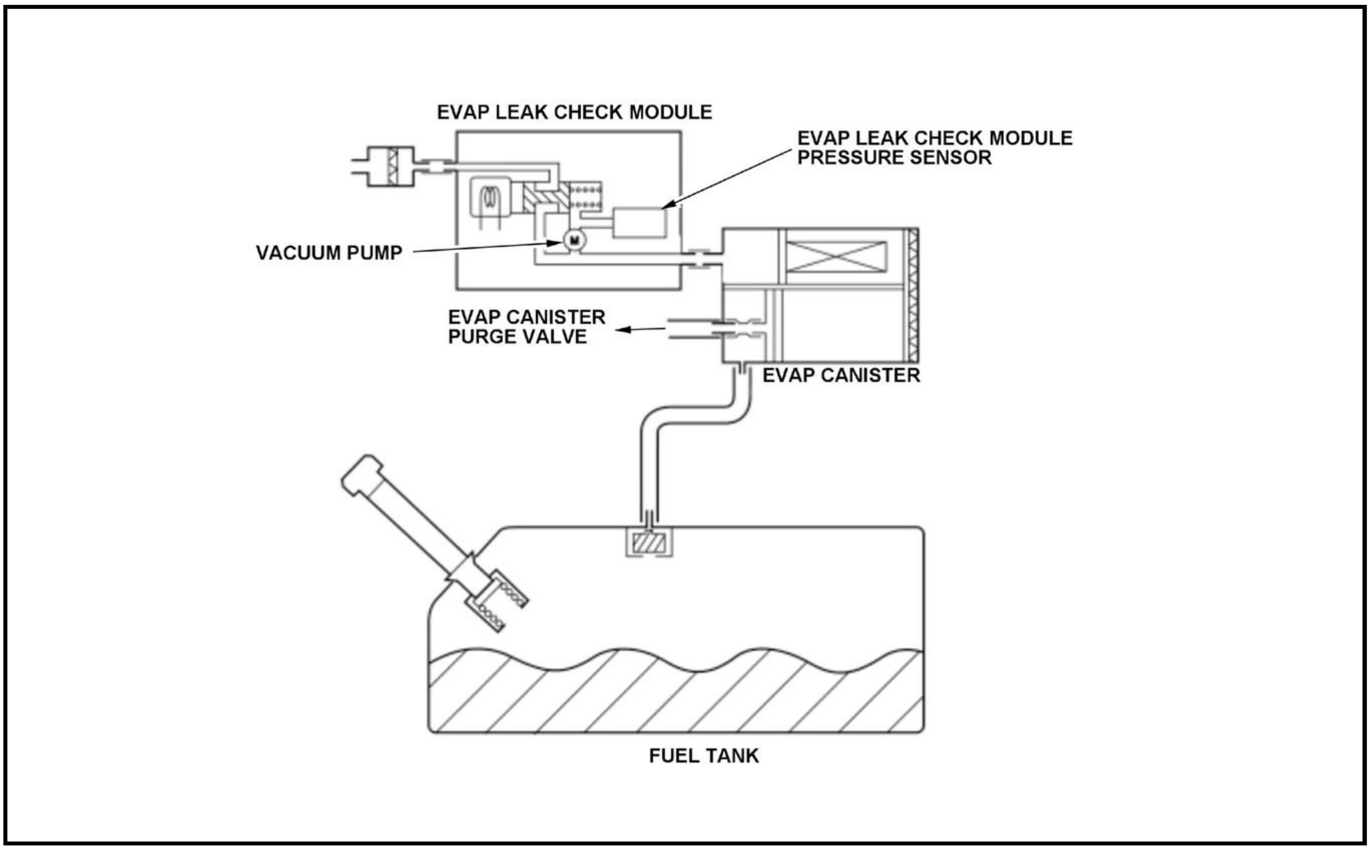
EVAP LEAK CHECK MODULE
EVAP LEAK CHECK MODULE PRESSURE SENSOR
VACUUM PUMP
M
EVAP CANISTER PURGE VALVE
EVAP CANISTER
FUEL TANK

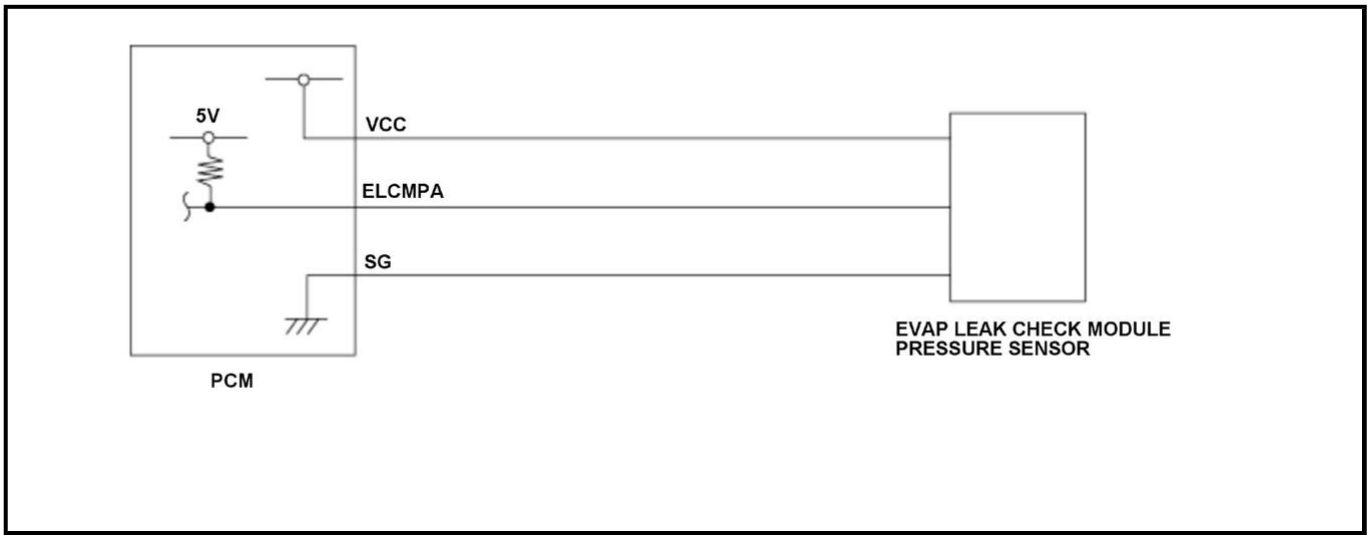
5V
VCC
ELCMPA
SG
PCM
EVAP LEAK CHECK MODULE PRESSURE SENSOR

The evaporative emission (EVAP) leak check module pressure sensor detects pressure in the fuel tank when the canister change over valve is open and detects barometric pressure when the canister change over valve is closed. If the EVAP leak check module pressure sensor output voltage is a set value for a set time, the powertrain control module (PCM) detects a malfunction and stores a DTC.

Monitor Execution, Sequence, Duration, DTC Type

Execution	Continuous
Sequence	None
Duration	3 seconds or more
DTC Type	Two drive cycles, MIL on

Enable Conditions

Condition	B
Vehicle	ON mode

Malfunction Threshold

DTC: P24BA

The EVAP leak check module pressure sensor [Absolute Pressure of ELCM Pressure Sensor] output level is 44 kPa (13 inHg, 331 mmHg) or less for at least 3 seconds.

DTC: P24BB

The EVAP leak check module pressure sensor [Absolute Pressure of ELCM Pressure Sensor] output level is 119 kPa (36 inHg, 893 mmHg) or more for at least 3 seconds.

Possible Cause

NOTE: The causes shown may not be a complete list of all potential problems, and it is possible that there may be other causes.

DTC: P24BA

- EVAP leak check module pressure sensor ELCMPA line short to ground

DTC: P24BB

- EVAP leak check module pressure sensor ELCMPA line open
- EVAP leak check module pressure sensor ELCMPA line short to power
- EVAP leak check module pressure sensor VCC line open

Common

- EVAP leak check module pressure sensor failure
- PCM internal circuit failure

Diagnosis Details

Conditions for setting the DTC

When a malfunction is detected during the first drive cycle, a Pending DTC is stored in the PCM memory. If the malfunction returns in the next (second) drive cycle, the MIL comes on and a Confirmed DTC and the freeze data are stored.

Conditions for clearing the DTC

The MIL is cleared if the malfunction does not return in three consecutive trips in which the diagnostic runs. The MIL, the Pending DTC, the Confirmed DTC, and the freeze data can be cleared with the scan tool clear command or by disconnecting the 12 volt battery.

DTC P24BE

DTC P24BE: Canister Change Over Valve Control Circuit Low Voltage

General Description

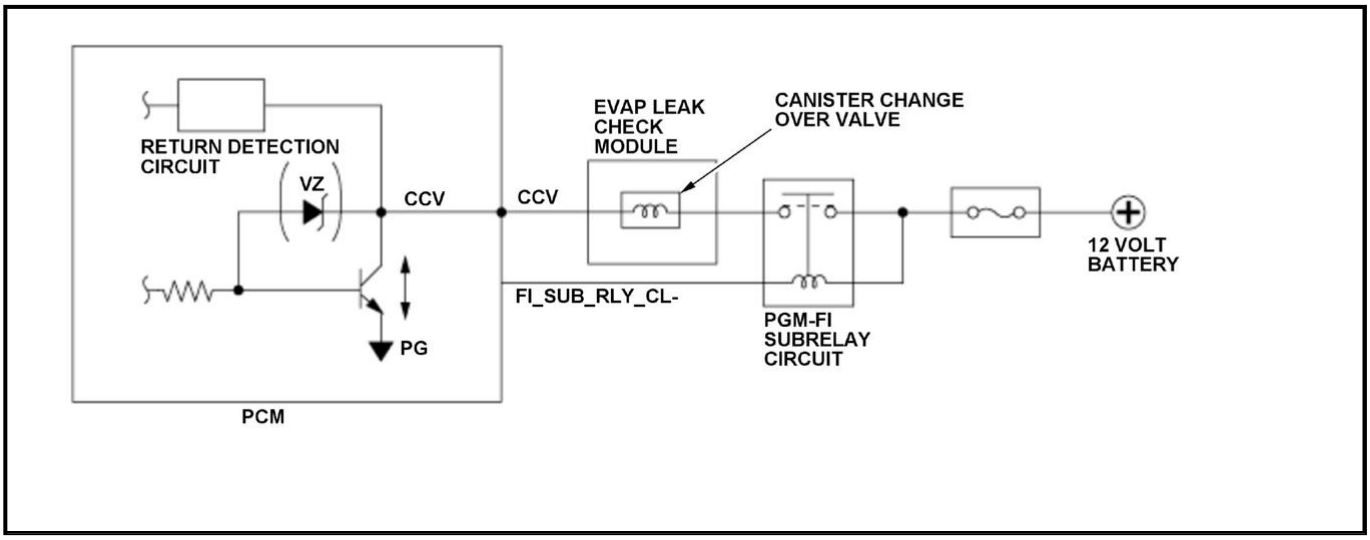

The canister change over valve is installed in the evaporative emission (EVAP) leak check module and used to seal up the EVAP passage when performing the EVAP leak check. The canister change over valve is normally open (open to the atmosphere) and only closed (sealed) when performing the EVAP leak check. The powertrain control module (PCM) detects a malfunction and stores a DTC when the close signal is returned continuously for the prescribed time or more though close signal is not output to the canister change over valve.

Monitor Execution, Sequence, Duration, DTC Type

Execution	Continuous
Sequence	None
Duration	2.0 seconds or more
DTC Type	Two drive cycles, MIL on

Enable Conditions

Condition	Minimum	Maximum
12 Volt Battery voltage [Battery]	10.0 V	-

[ ]: HDS Parameter

Malfunction Threshold

When close signal is returned continuously for 2.0 seconds or more though close signal is not output to the canister change over valve.

Possible Cause

NOTE: The causes shown may not be a complete list of all potential problems, and it is possible that there may be other causes.

- EVAP leak check module CCV line open
- EVAP leak check module power supply line open
- EVAP leak check module internal circuit open
- EVAP leak check module CCV line short
- EVAP leak check module power supply line short to ground
- PCM internal circuit failure

Confirmation Procedure

Operating Condition

Turn the vehicle to the ON mode.

With the HDS

Select the EVAP TEST in the Function Test Menu, then select EVAP Leak Check Module Test with the HDS.

Diagnosis Details

Conditions for setting the DTC

When a malfunction is detected during the first drive cycle, a Pending DTC is stored in the PCM memory. If the malfunction returns in the next (second) drive cycle, the MIL comes on and a Confirmed DTC and the freeze data are stored.

Conditions for clearing the DTC

The MIL is cleared if the malfunction does not return in three consecutive trips in which the diagnostic runs. The MIL, the Pending DTC, the Confirmed DTC, and the freeze data can be cleared with the scan tool Clear command or by disconnecting the 12 volt battery.

DTC P24BF

DTC P24BF: Canister Change Over Valve Control Circuit High Voltage

General Description

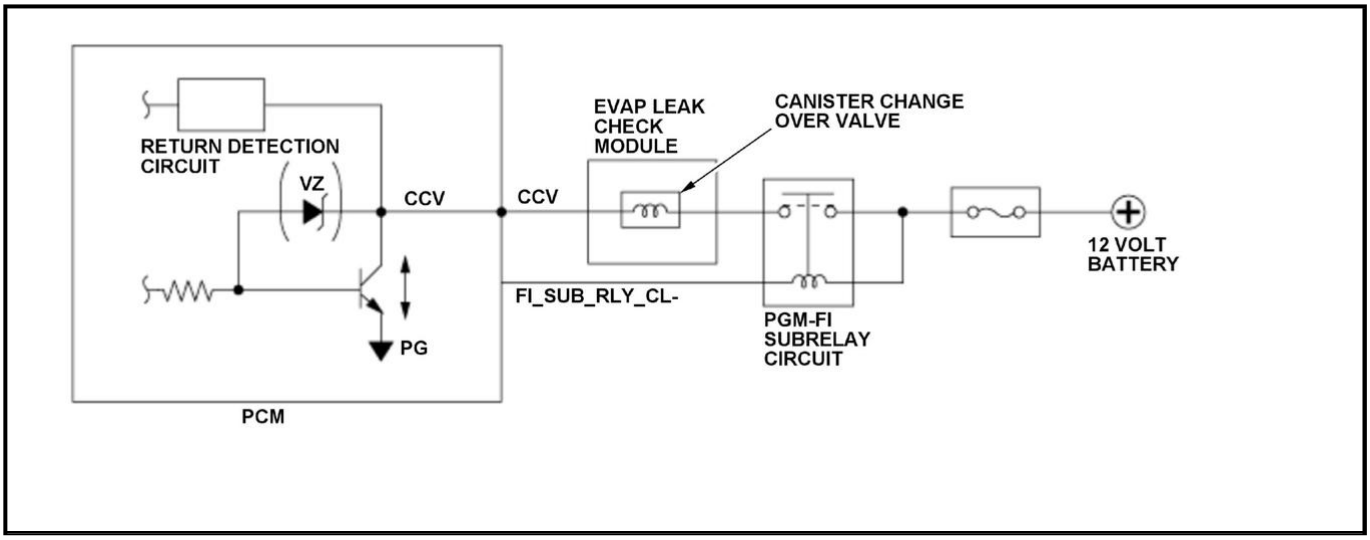

The canister change over valve is installed in the evaporative emission (EVAP) leak check module and used to seal up the EVAP passage when performing the EVAP leak check. The canister change over valve is normally open (open to the atmosphere) and only closed (sealed) when performing the EVAP leak check. The powertrain control module (PCM) detects a malfunction and stores a DTC when the close signal is returned continuously for the prescribed time or more though close signal is not output to the canister change over valve.

Monitor Execution, Sequence, Duration, DTC Type

Execution	Continuous
Sequence	None
Duration	2.0 seconds or more
DTC Type	Two drive cycles, MIL on

Enable Conditions

Condition	Minimum	Maximum
12 volt battery voltage [BATTERY]	10.0 V	-

[ ]: HDS Parameter

Malfunction Threshold

When open signal is returned continuously for 2.0 seconds or more though close signal is output to the canister change over valve.

Possible Cause

NOTE: The causes shown may not be a complete list of all potential problems, and it is possible that there may be other causes.

- EVAP leak check module CCV line short to power
- EVAP leak check module change valve internal circuit leak
- PCM internal circuit failure

Confirmation Procedure

Operating Condition

Turn the vehicle to the ON mode.

With the HDS

Select the EVAP TEST in the Function Test Menu, then select EVAP Leak Check Module Test with the HDS.

Diagnosis Details

Conditions for setting the DTC

When a malfunction is detected during the first drive cycle, a Pending DTC is stored in the PCM memory. If the malfunction returns in the next (second) drive cycle, the MIL comes on and a Confirmed DTC and the freeze data are stored.

Conditions for clearing the DTC

The MIL is cleared if the malfunction does not return in three consecutive trips in which the diagnostic runs. The MIL, the Pending DTC, the Confirmed DTC, and the freeze data can be cleared with the scan tool Clear command or by disconnecting the 12 volt battery.

DTC P24C0

DTC P24C0: Canister Change Over Valve Close Malfunction

General Description

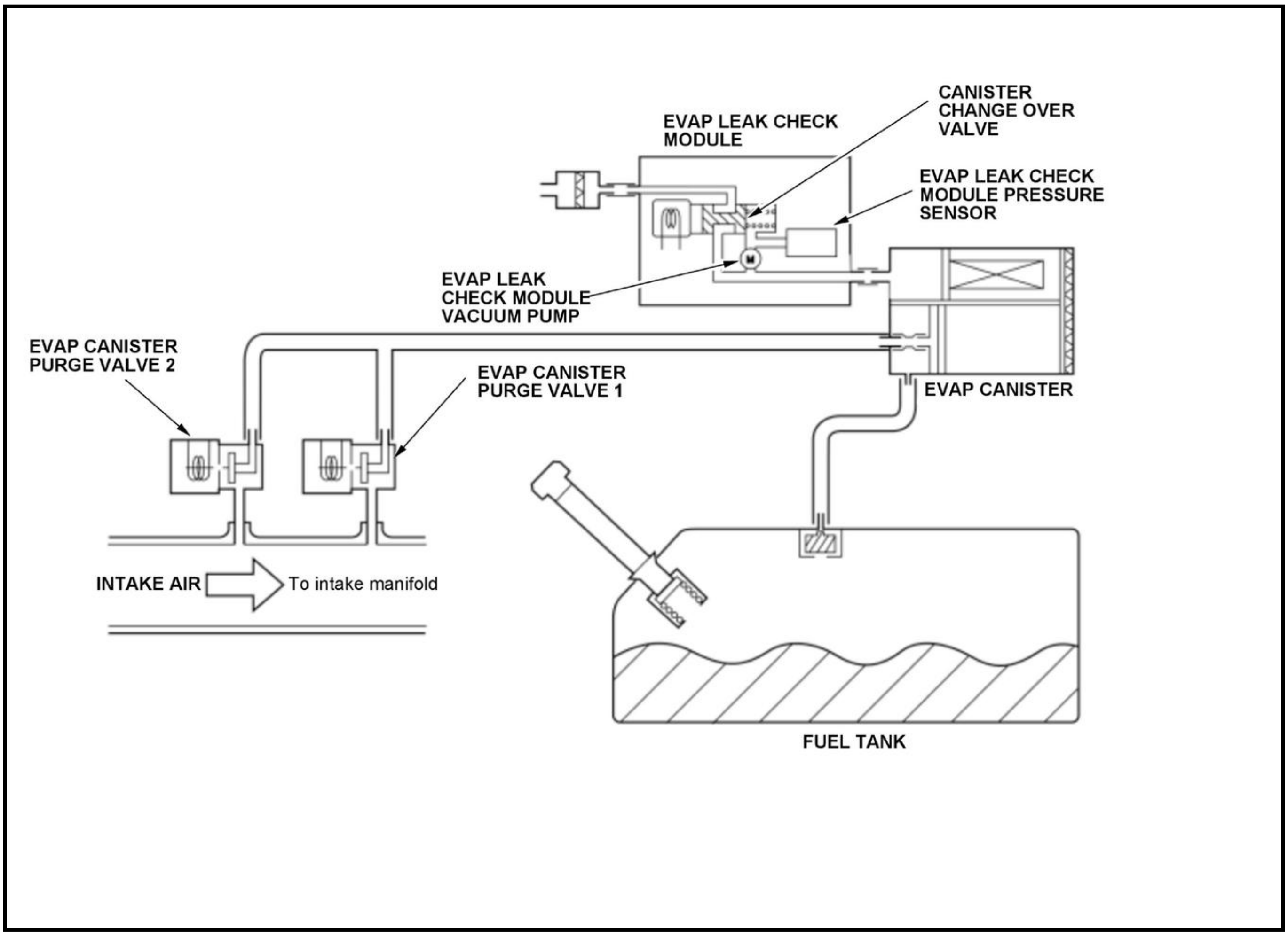
CANISTER CHANGE OVER VALVE
EVAP LEAK CHECK MODULE
EVAP LEAK CHECK MODULE PRESSURE SENSOR
EVAP LEAK CHECK MODULE VACUUM PUMP
EVAP CANISTER PURGE VALVE 2
EVAP CANISTER PURGE VALVE 1
EVAP CANISTER
INTAKE AIR
To intake manifold
FUEL TANK

When the canister change over valve is functioning normally, the value of evaporative emission (EVAP) leak check module pressure sensor will not show an negative pressure during the purge since the passage for purge flow and depressurization are constantly secured unless during the EVAP leak check. However, if the purge control is activated while the canister change over valve is stuck closed or the passage, the dust filter, or the drain is clogged, a fuel tank buckling will occur due to excessive negative pressure. If a relative pressure calculated from the EVAP leak check module pressure sensor continuously shows an excessive negative pressure, the powertrain control module (PCM) detects a malfunction and stores a DTC.

Monitor Execution, Sequence, Duration, DTC Type

Execution	Once per driving cycle
Sequence	None
Duration	1 seconds or more
DTC Type	Two drive cycles, MIL on

Enable Conditions

Condition	Minimum	Maximum
Engine coolant temperature [ECT SENSOR 1] before EVAP purge control starts	104 deg.F (40 deg.C)	-

[ ]: HDS Parameter

Condition	Minimum	Maximum
12 volt battery voltage [BATTERY]	10.5 V	-
Fuel feedback	Closed loop	

[ ]: HDS Parameter

Malfunction Threshold

The relative pressure calculated from the EVAP leak check module pressure sensor value is less than -3.7 kPa (-28.2 mmHg, -1.1 inHg) for at least 1 seconds.

Possible Cause

NOTE: The causes shown may not be a complete list of all potential problems, and it is possible that there may be other causes.

- Canister change over valve stuck closed
- Dust filter clogged

Confirmation Procedure

Operating Condition

- Enter the maintenance mode, then start the engine, and let it idle until the radiator fan comes on.
- When the diagnosis does not finish at idle, drive at 30 - 75 mph (48 - 120 km/h) at EVAP canister purge valve duty [EVAP PC Duty] 20 % or more.

- Drive the vehicle in this manner only if the traffic regulations and ambient conditions allow.

Diagnosis Details

Conditions for setting the DTC

When a malfunction is detected during the first drive cycle, a Pending DTC is stored in the PCM memory. If the malfunction returns in the next (second) drive cycle, the MIL comes on and a Confirmed DTC and the freeze data are stored.

Conditions for clearing the DTC

The MIL is cleared if the malfunction does not return in three consecutive trips in which the diagnostic runs. The MIL, the Pending DTC, the Confirmed DTC, and the freeze data can be cleared with the scan tool Clear command or by disconnecting the 12 volt battery.

DTC P24C1

DTC P24C1: Canister Change Over Valve Stuck Close

General Description

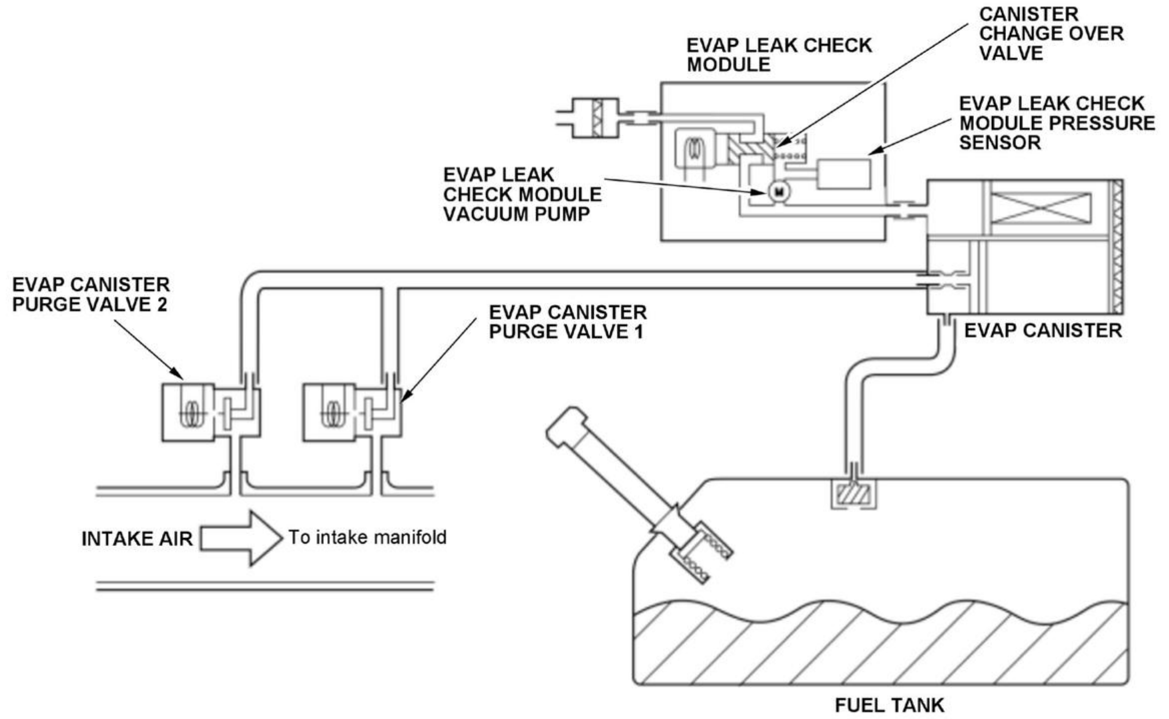
CANISTER CHANGE OVER VALVE
EVAP LEAK CHECK MODULE
EVAP LEAK CHECK MODULE PRESSURE SENSOR
EVAP LEAK CHECK MODULE VACUUM PUMP
EVAP CANISTER PURGE VALVE 2
EVAP CANISTER PURGE VALVE 1
EVAP CANISTER
INTAKE AIR
To intake manifold
FUEL TANK

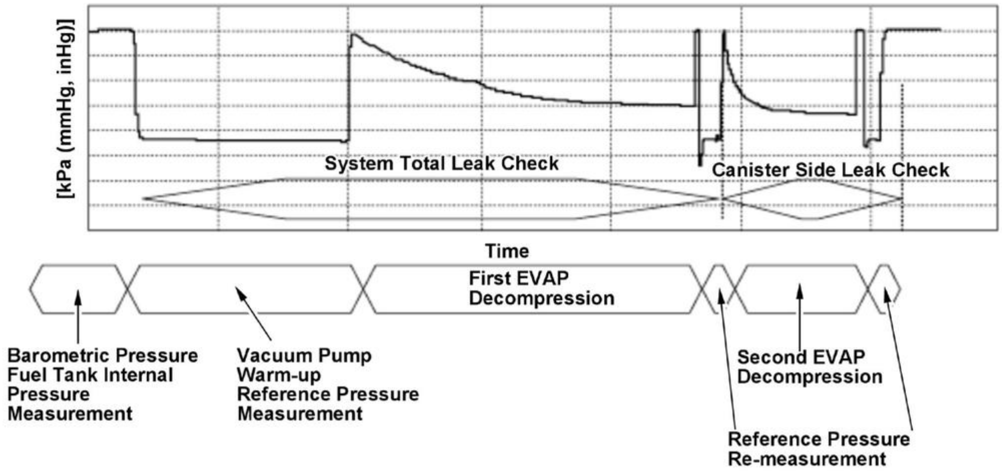
[kPa (mmHg, inHg)]
System Total Leak Check
Canister Side Leak Check
Time
First EVAP Decompression
Barometric Pressure Fuel Tank Internal Pressure Measurement
Vacuum Pump Warm-up Reference Pressure Measurement
Second EVAP Decompression
Reference Pressure Re-measurement

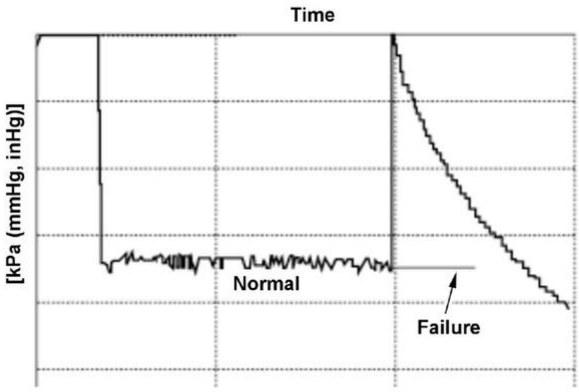

The powertrain control module (PCM) starts the evaporative emission (EVAP) system diagnosis after the vehicle has been turned to the OFF (LOCK) mode, and has met all other enable conditions (initial engine coolant temperature [ECT Sensor 1] and off for at least 5 hours). The EVAP system diagnosis is performed by reducing pressure between the EVAP canister and the atmosphere.

A malfunction is detected and a DTC is stored when changes in the pressure is equal to or less than the prescribed value after the prescribed time of starting the system pressure reduction.

EVAP leak detection module operation flow

- Reference pressure measurement: Malfunction check in the EVAP leak check module and determination of early completion of pressure reduction when normal.
- System pressure reduction: Pressure in the EVAP system is reduced to measure the ultimate pressure.
- Reference pressure re-measurement: Leak is detected by comparing with the ultimate pressure of the system pressure reduction.
- Reference value is to be measured twice considering change in the characteristics of the EVAP leak check module vacuum pump during detection.

Monitor Execution, Sequence, Duration, DTC Type

Execution	Once per driving cycle
Sequence	None
Duration	At least 6 minutes 40 seconds but not more than 18 minutes 55 seconds
DTC Type	Two drive cycles, MIL on

Enable Conditions

Condition	Minimum	Maximum
Elapsed time after the vehicle condition is turned to the READY TO DRIVE mode	10 minutes	-
Elapsed time after the vehicle condition is turned to the OFF (LOCK) mode	5 hours	-
PCM wake up radiator coolant temperature [ECT Sensor 2]	40 deg.F (5 deg.C)	95 deg.F (35 deg.C)
Barometric pressure[BARO SENSOR]	76 kPa (569 mmHg, 22.5 inHg)	-
12 volt battery voltage [BATTERY]	10.5 V	-

Condition	Minimum	Maximum
Other	No refueling is required	

[ ]: HDS Parameter

Malfunction Threshold

When the change in the pressure 6 minutes 40 seconds after starting the system pressure reduction is 0.3 kPa (2.3 mmHg, 0.09 inHg) or less.

Possible Cause

- EVAP leak check module vacuum pump failure
- Canister change over valve failure
- Reference orifice flow quantity is excessive
- Reference orifice flow quantity is too few

Confirmation Procedure

Operating Condition

- With the engine coolant temperature [ECT Sensor 2] within the specified range, turn the vehicle to the READY TO DRIVE mode, and wait for at least 10 minutes.
- Turn the vehicle to the OFF (LOCK) mode, and wait for at least 5 hours.
- PCM wake up, and wait at least 18 minutes 55 seconds.

With the HDS

Select the EVAP TEST in the Function Test Menu, then select EVAP Leak Check Module Test with the HDS.

Diagnosis Details

Conditions for setting the DTC

When a malfunction is detected during the first drive cycle, a Pending DTC is stored in the PCM memory. If the malfunction returns in the next (second) drive cycle, the MIL comes on and a Confirmed DTC and the freeze data are stored.

Conditions for clearing the DTC

The MIL is cleared if the malfunction does not return in three consecutive trips in which the diagnostic runs. The MIL, the Pending DTC, the Confirmed DTC, and the freeze data can be cleared with the scan tool clear command or by disconnecting the 12 volt battery.

DTC P2601

DTC P2601: Electric Engine Coolant Pump Range/Performance Problem

General Description

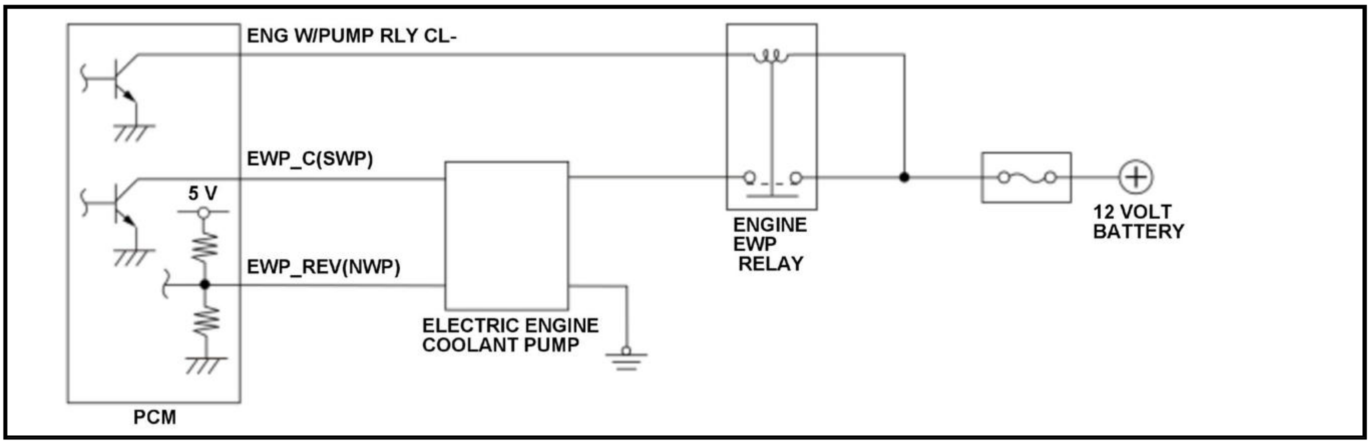

ENG W/PUMP RLY CL-
EWP_C(SWP)
5 V
EWP_REV(NWP)
PCM
ELECTRIC ENGINE COOLANT PUMP
ENGINE EWP RELAY
12 VOLT BATTERY

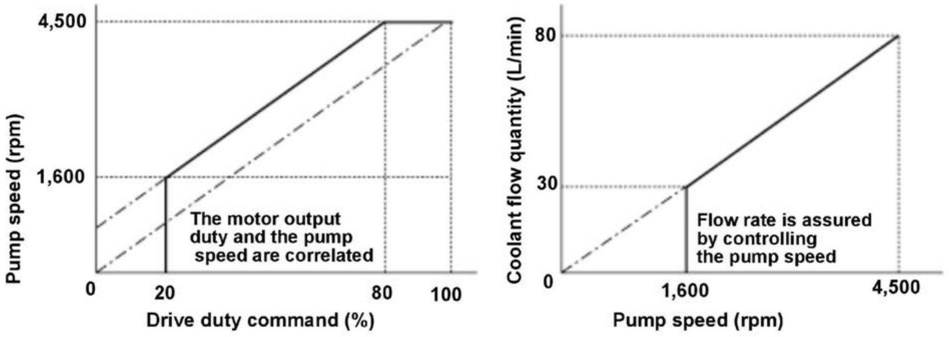

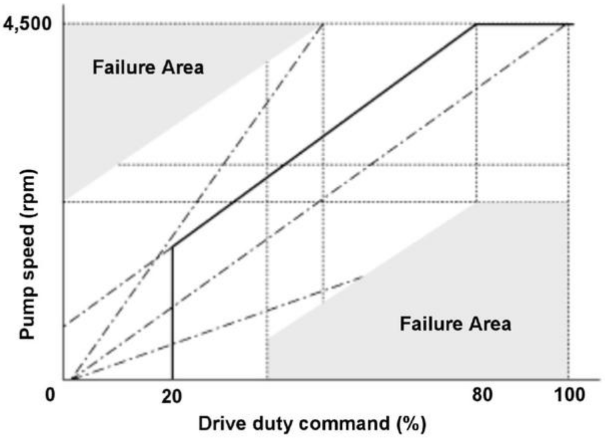

The electric engine coolant pump cools the engine. The pump motor speed is varied by a drive duty command and outputs pump speed to the powertrain control module (PCM). Malfunction detection is performed by comparing the drive duty command to the electric engine coolant pump and pump speed. If the pump speed is higher or lower than the drive duty command by the prescribed value, the PCM detects a malfunction and stores a DTC.

Monitor Execution, Sequence, Duration, DTC Type

Execution	Once per driving cycle
Sequence	None
Duration	10 seconds or more
DTC Type	Two drive cycles, MIL on

Enable Conditions

Condition	Minimum	Maximum
Engine coolant temperature [ECT Sensor 1]	-13 deg.F (-25 deg.C)	-
12 volt battery voltage [Battery]	10.5 V	16.0 V

[ ]: HDS Parameter

Malfunction Threshold

Either one of the conditions is met for at least 10 seconds:

- When the pump speed is lower than the drive duty command.

Drive duty command	Pump speed
45 %	0 rpm
90 %	2, 000 rpm

- When the pump speed is higher than the drive duty command while the 12 volt battery voltage is 14 V.

Drive duty command	Pump speed
0 %	3, 000 rpm
45 %	5, 500 rpm

Possible Cause

NOTE: The causes shown may not be a complete list of all potential problems, and it is possible that there may be other causes.

- Electric engine coolant pump lock
- Electric engine coolant pump impeller damage

Confirmation Procedure

Operating Condition

- Enter the maintenance mode, then start the engine.
- Hold the engine speed [Engine Speed] at 1, 000 rpm, and wait for at least 10 seconds.
- Hold the engine speed [Engine Speed] at 2, 000 rpm, and wait for at least 10 seconds.
- Hold the engine speed [Engine Speed] at 3, 000 rpm, and wait for at least 10 seconds.

With the HDS

Select the Electric Water Pump TEST in the Function Test Menu with the HDS.

Diagnosis Details

Conditions for setting the DTC

When a malfunction is detected during the first drive cycle with the engine coolant temperature and intake air temperature at engine start-up within the specified temperature range, a Pending DTC is stored in the PCM memory. If the malfunction returns in the next (second) drive cycle with the engine coolant temperature and intake air temperature at engine start-up within the specified temperature range, the MIL comes on and a Confirmed DTC and the freeze data are stored.

Conditions for clearing the DTC

The MIL is cleared if the malfunction does not return in three consecutive trips in which the diagnostic runs. The MIL, the Pending DTC, the Confirmed DTC, and the freeze data can be cleared with the scan tool Clear command or by disconnecting the 12 volt battery.

DTC P2602

DTC P2602: Electric Engine Coolant Pump Circuit Low Voltage

General Description

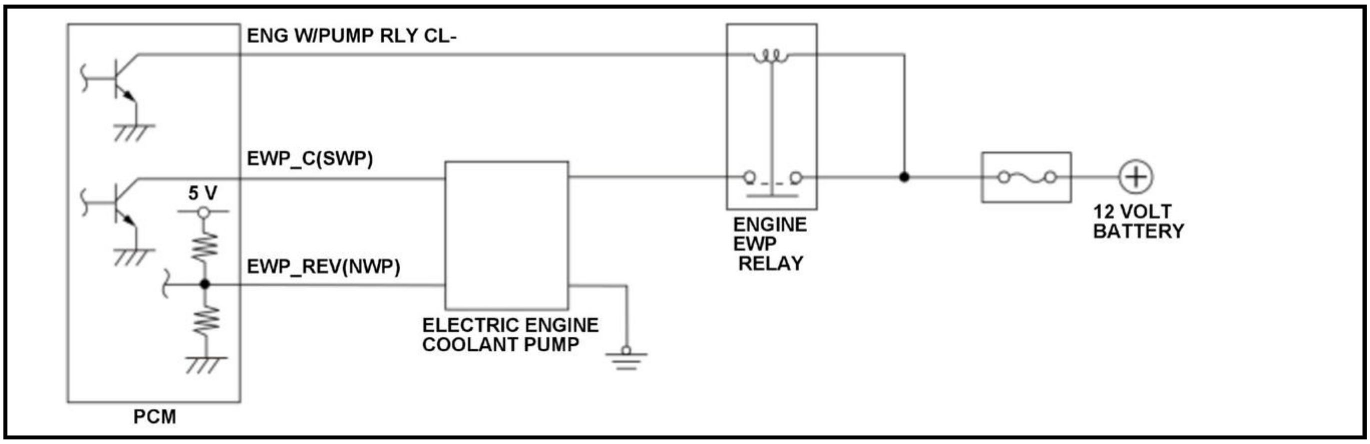

The electric engine coolant pump varies the pump revolution speed according to the powertrain control module (PCM) outputs signal. The PCM outputs signal (EWP_C(SWP)) to the electric engine coolant pump and feeds back the revolution speed (EWP_REV(NWP)) from the electric engine coolant pump to control the revolution speed. Since the flow rate of the pump is in proportion to the revolution speed, the flow rate increases as the revolution speed is raised. If the electric engine coolant pump revolution speed is low continuously for the prescribed time when the PCM outputs signal to the electric engine coolant pump, the PCM detects a malfunction and stores a DTC.

Monitor Execution, Sequence, Duration, DTC Type

Execution	Continuous
Sequence	None
Duration	5 seconds or more
DTC Type	One drive cycle, MIL on

Enable Conditions

Condition	Minimum	Maximum
Engine coolant temperature [ECT Sensor 1]	-13 deg.F (-25 deg.C)	-
12 volt battery voltage [Battery]	10.5 V	16.0 V
Electric engine coolant pump drive duty	40 %	-
Vehicle	ON mode	

[ ]: HDS Parameter

Malfunction Threshold

The electric engine coolant pump is 600 rpm or less for at least 5 seconds.

Possible Cause

NOTE: The causes shown may not be a complete list of all potential problems, and it is possible that there may be other causes.

- Electric engine coolant pump power supply line open
- Electric engine coolant pump EWP_REV(NWP) line open
- Electric engine coolant pump ground line open
- Electric engine coolant pump EWP_C(SWP) line short to ground
- Electric engine coolant pump power supply line short to ground
- Electric engine coolant pump EWP_REV(NWP) line short to ground
- Electric engine coolant pump failure
- PCM failure

Confirmation Procedure

Operating Condition

None.

With the HDS

Select the Electric Water Pump TEST in the Function Test Menu with the HDS.

Diagnosis Details

Conditions for setting the DTC

When a malfunction is detected, the MIL comes on and a Pending DTC, a Confirmed DTC, and the freeze data are stored in the PCM memory.

Conditions for clearing the DTC

The MIL is cleared if the malfunction does not return in three consecutive trips in which the diagnostic runs. The MIL, the Pending DTC, the Confirmed DTC, and the freeze data can be cleared with the scan tool Clear command or by disconnecting the 12 volt battery.

DTC P2603

DTC P2603: Electric Engine Coolant Pump Circuit High Voltage

General Description

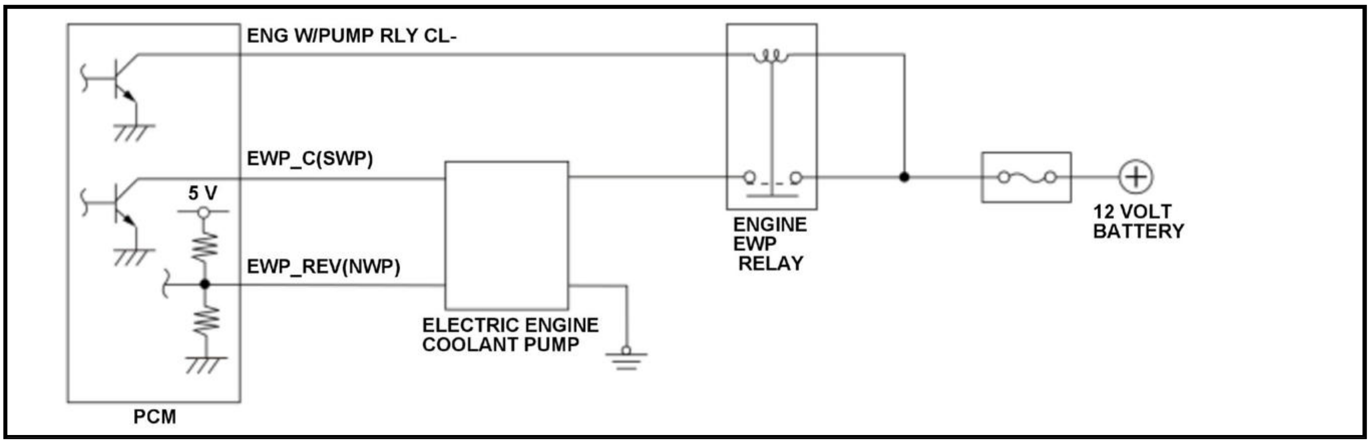

The electric engine coolant pump varies the pump revolution speed according to the powertrain control module (PCM) outputs signal. The PCM outputs signal (EWP_C(SWP)) to the electric engine coolant pump and feeds back the revolution speed (EWP_REV(NWP)) from the electric engine coolant pump to control the revolution speed. Since the flow rate of the pump is in proportion to the revolution speed, the flow rate increases as the revolution speed is raised. If the electric engine coolant pump revolution speed is more than a specified value continuously for the prescribed time when the PCM outputs stop signal to the electric engine coolant pump, the PCM detects a malfunction and stores a DTC.

Monitor Execution, Sequence, Duration, DTC Type

Execution	Continuous
Sequence	None
Duration	6.0 seconds or more
DTC Type	Two drive cycles, MIL on

Enable Conditions

Condition	Minimum	Maximum
Electric engine coolant pump drive duty	-	8 %
Vehicle	ON mode	

Malfunction Threshold

The electric engine coolant pump is at 600 rpm or more for at least 6.0 seconds

Possible Cause

NOTE: The causes shown may not be a complete list of all potential problems, and it is possible that there may be other causes.

- Electric engine coolant pump EWP_C(SWP) line open
- Electric engine coolant pump EWP_C(SWP) line short to power
- Electric engine coolant pump failure
- PCM failure

Confirmation Procedure

Operating Condition

None.

With the HDS

Select the Electric Water Pump TEST in the Function Test Menu with the HDS.

Diagnosis Details

Conditions for setting the DTC

When a malfunction is detected during the first drive cycle, a Pending DTC is stored in the PCM memory. If the malfunction returns in the next (second) drive cycle, the MIL comes on and a Confirmed DTC and the freeze data are stored.

Conditions for clearing the DTC

The MIL is cleared if the malfunction does not return in three consecutive trips in which the diagnostic runs. The MIL, the Pending DTC, the Confirmed DTC, and the freeze data can be cleared with the scan tool Clear command or by disconnecting the 12 volt battery.

DTC P2610

DTC P2610: Powertrain Control Module (PCM) Ignition Off Internal Timer Malfunction

General Description

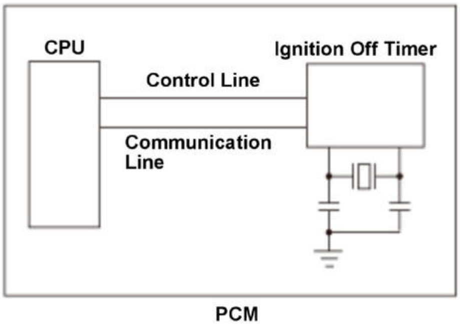

The powertrain control module (PCM) has a built-in ignition off timer that measures the duration from ignition off to the next ignition on. The measured duration is used for evaporative emission (EVAP) leak detection and temperature assumption of the catalytic converter. The CPU in the PCM accesses the ignition off timer when reading the measured duration. If the access process fails, a malfunction is detected and a DTC is stored. When an abnormality is found in the read data, the PCM detects a malfunction and stores a DTC. Even if the access is normally performed, the PCM stores a DTC when the measured duration accuracy of the ignition off timer is out of normal range.

Monitor Execution, Sequence, Duration, DTC Type

Execution	Continuous
Sequence	None
Duration	5 seconds or more
DTC Type	Two drive cycles, MIL on

Enable Conditions

Condition	B
Vehicle*	ON mode

*: Excludes after the 12 volt battery is reconnected.

Malfunction Threshold

One of these symptom occurs:

- The access process to the ignition off timer fails.
- The malfunction is found in the read data for at least 5 seconds.
- When the difference between the CPU and the ignition off timer measurement time is 2.0 % or more continuously for 5 times.

Possible Cause

NOTE: The causes shown may not be a complete list of all potential problems, and it is possible that there may be other causes.

- PCM internal circuit failure

Diagnosis Details

Conditions for setting the DTC

When a malfunction is detected during the first drive cycle, a Pending DTC is stored in the PCM memory. If the malfunction returns in the next (second) drive cycle, the MIL comes on and a Confirmed DTC and the freeze data are stored.

Conditions for clearing the DTC

The MIL is cleared if the malfunction does not return in three consecutive trips in which the diagnostic runs. The MIL, the Pending DTC, the Confirmed DTC, and the freeze data can be cleared with the scan tool Clear command or by disconnecting the 12 volt battery.

DTC P2646

DTC P2646: Rocker Arm Oil Pressure System Stuck Off

General Description

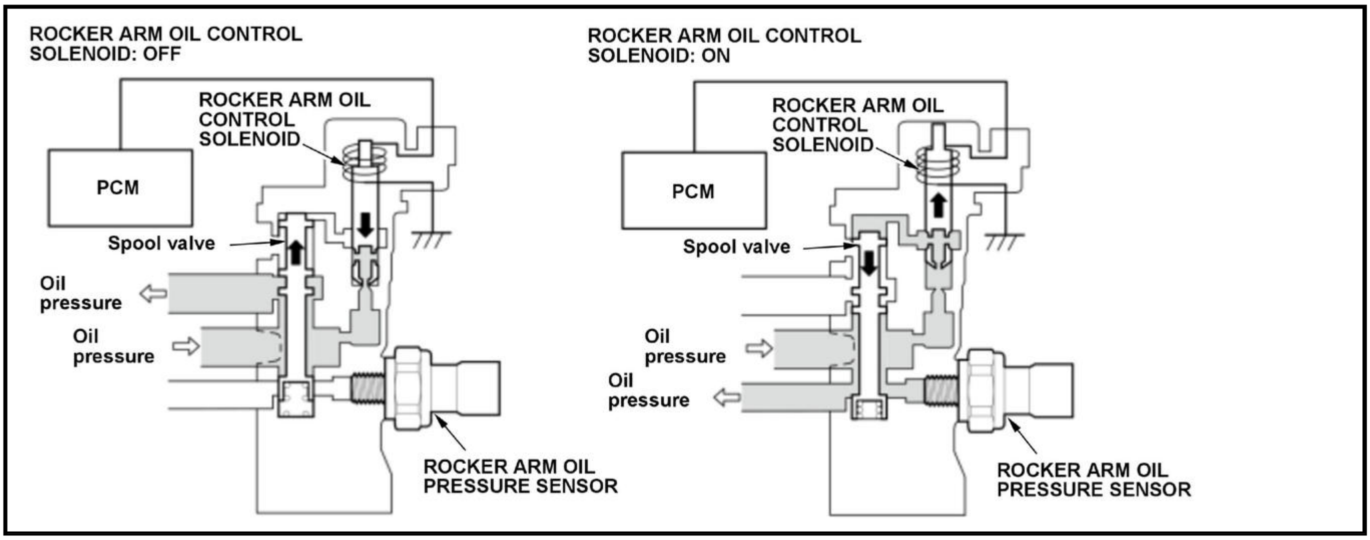
ROCKER ARM OIL CONTROL SOLENOID: OFF
ROCKER ARM OIL CONTROL SOLENOID
PCM
Spool valve
Oil pressure
Oil pressure
ROCKER ARM OIL PRESSURE SENSOR
ROCKER ARM OIL CONTROL SOLENOID: ON
ROCKER ARM OIL CONTROL SOLENOID
PCM
Spool valve
Oil pressure
Oil pressure
ROCKER ARM OIL PRESSURE SENSOR

Logic Decision	Rocker Arm Oil Pressure Switch	
	'Lo'	**'Hi'**
Rocker Arm Oil Control Solenoid Command 'ON'	Failure	Normal
Rocker Arm Oil Control Solenoid Command 'OFF'	Normal	Failure

The VTEC system activates the rocker arm oil control solenoid with a command from the powertrain control module (PCM), and it charges/discharges the hydraulic circuit of the VTEC mechanism that delays valve timing. The PCM monitors oil pressure in the hydraulic circuit of the VTEC mechanism using the rocker arm oil pressure sensor downstream of the rocker arm oil control solenoid. If there is a difference between the oil pressure condition in the hydraulic circuit determined by the PCM command and the oil pressure condition determined by the status of the rocker arm oil pressure sensor, the system is considered faulty, and a DTC is stored.

Monitor Execution, Sequence, Duration, DTC Type

Execution	Once per driving cycle
Sequence	None
Duration	7 seconds or more
DTC Type	Two drive cycles, MIL on

Enable Conditions

Condition	Minimum	Maximum
Engine coolant temperature [ECT Sensor 1]	50 deg.F (10 deg.C)	-
Engine speed [Engine Speed]*	990 rpm	-
Vehicle speed [Vehicle Speed]	0 mph (0 km/h)	-
12 volt battery voltage [Battery]	10.5 V	-
Other	Other than wide open throttle	

*: Variable that is depending on the engine load.

[ ]: HDS Parameter

Malfunction Threshold

When the rocker arm oil control solenoid is ON, the rocker arm oil pressure sensor output remains low (49 kPa (0.49 kgf/cm 2, 7.1 psi) or less).

Possible Cause

NOTE: The causes shown may not be a complete list of all potential problems, and it is possible that there may be other causes.

- Rocker arm oil control solenoid VTS line open
- Rocker arm oil control solenoid VTS line short
- Rocker arm oil pressure sensor output stuck
- Rocker arm oil control solenoid failure
- Oil passage clogged

Confirmation Procedure

Operating Condition

- Enter the maintenance mode, then start the engine, and let it idle until the radiator fan comes on.
- Drive the vehicle at an engine speed [ENGINE SPEED] 990 rpm or more for at least 7 seconds.

- Drive the vehicle in this manner only if the traffic regulations and ambient conditions allow.

With the HDS

Select the VTEC TEST in the Function Test Menu with the HDS.

Diagnosis Details

Conditions for setting the DTC

When a malfunction is detected during the first drive cycle, a Pending DTC is stored in the PCM memory. If the malfunction returns in the next (second) drive cycle, the MIL comes on and a Confirmed DTC and the freeze data are stored.

Conditions for clearing the DTC

The MIL is cleared if the malfunction does not return in three consecutive trips in which the diagnostic runs. The MIL, the Pending DTC, the Confirmed DTC, and the freeze data can be cleared with the scan tool clear command or by disconnecting the 12 volt battery.

DTC P2647

DTC P2647: Rocker Arm Oil Pressure System Stuck On

General Description

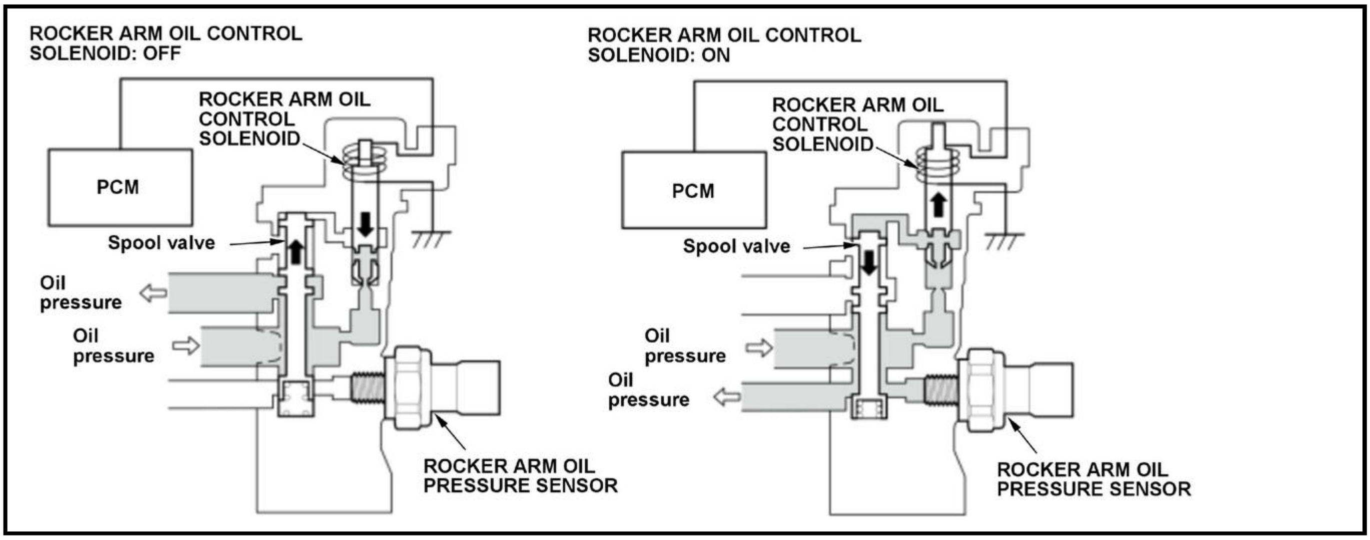
ROCKER ARM OIL CONTROL SOLENOID: OFF
ROCKER ARM OIL CONTROL SOLENOID
PCM
Spool valve
Oil pressure
Oil pressure
ROCKER ARM OIL PRESSURE SENSOR
ROCKER ARM OIL CONTROL SOLENOID: ON
ROCKER ARM OIL CONTROL SOLENOID
PCM
Spool valve
Oil pressure
Oil pressure
ROCKER ARM OIL PRESSURE SENSOR

Logic Decision	Rocker Arm Oil Pressure Sensor	
	'Lo'	'Hi'
Rocker Arm Oil Control Solenoid Command 'ON'	Failure	Normal
Rocker Arm Oil Control Solenoid Command 'OFF'	Normal	Failure

The VTEC system activates the rocker arm oil control solenoid with a command from the powertrain control module (PCM), and it charges/discharges the hydraulic circuit of the VTEC mechanism that delays valve timing. The PCM monitors oil pressure in the hydraulic circuit of the VTEC mechanism using the rocker arm oil pressure sensor downstream of the rocker arm oil control solenoid. If there is a difference between the oil pressure condition in the hydraulic circuit determined by the PCM command and the oil pressure condition determined by the status of the rocker arm oil pressure sensor, the system is considered faulty, and a DTC is stored.

Monitor Execution, Sequence, Duration, DTC Type

Execution	Once per driving cycle
Sequence	None
Duration	7 seconds or more
DTC Type	Two drive cycles, MIL on

Enable Conditions

Condition	Minimum	Maximum
12 volt battery voltage [Battery]	10.5 V	-
Other	At idle	

[ ]: HDS Parameter

Malfunction Threshold

When the rocker arm oil control solenoid is OFF, the rocker arm oil pressure sensor output remains high (49 kPa (0.50 kgf/cm 2, 7.1 psi) or more).

Possible Cause

NOTE: The causes shown may not be a complete list of all potential problems, and it is possible that there may be other causes.

- Rocker arm oil control solenoid VTS line open
- Rocker arm oil control solenoid VTS line short
- Rocker arm oil pressure sensor output stuck
- Rocker arm oil control solenoid failure
- Oil passage clogged

Confirmation Procedure

Operating Condition

Enter the maintenance mode, then start the engine, and let it idle for at least 7 seconds.

Diagnosis Details

Conditions for setting the DTC

When a malfunction is detected during the first drive cycle, a Pending DTC is stored in the PCM memory. If the malfunction returns in the next (second) drive cycle, the MIL comes on and a Confirmed DTC and the freeze data are stored.

Conditions for clearing the DTC

The MIL is cleared if the malfunction does not return in three consecutive trips in which the diagnostic runs. The MIL, the Pending DTC, the Confirmed DTC, and the freeze data can be cleared with the scan tool clear command or by disconnecting the 12 volt battery.

DTC P2648, P2649

DTC P2648: Rocker Arm Oil Control Solenoid Circuit Low Voltage

DTC P2649: Rocker Arm Oil Control Solenoid Circuit High Voltage

General Description

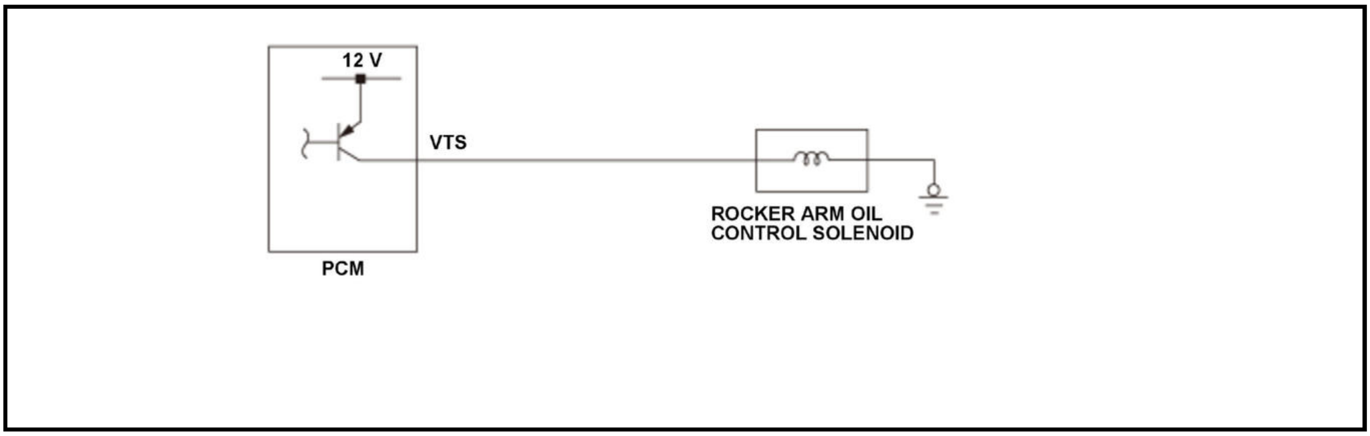

The VTEC system activates the rocker arm oil control solenoid by a command from the powertrain control module (PCM), and it charges/discharges the hydraulic circuit of the VTEC mechanism that switches valve timing between low and high. If the return signal is OFF (low) when the PCM outputs the ON (high) signal to the rocker arm oil control solenoid, or the return signal is ON (high) when the PCM outputs the OFF (low) signal to the rocker arm oil control solenoid, the PCM detects a malfunction and stores a DTC.

Monitor Execution, Sequence, Duration, DTC Type

Execution	Continuous
Sequence	None
Duration	2.0 seconds or more
DTC Type	One drive cycle, MIL on

Enable Conditions

Condition	Minimum	Maximum
12 volt battery voltage [Battery]	10.0 V	-

[ ]: HDS Parameter

Malfunction Threshold

DTC: P2648

The return signal is OFF (low) for at least 2.0 seconds when the PCM outputs the ON (high) signal to the rocker arm oil control solenoid.

DTC: P2649

The return signal is ON (high) for at least 2.0 seconds when the PCM outputs the OFF (low) signal to the rocker arm oil control solenoid.

Possible Cause

NOTE: The causes shown may not be a complete list of all potential problems, and it is possible that there may be other causes.

DTC: P2648

- Rocker arm oil control solenoid VTS line short to ground

DTC: P2649

- Rocker arm oil control solenoid VTS line open
- Rocker arm oil control solenoid ground line open

Common

- Rocker arm oil control solenoid failure
- PCM internal circuit failure

Confirmation Procedure

DTC: P2648

Operating Condition

- Enter the maintenance mode, then start the engine. Hold the engine speed [Engine Speed] at 3, 000 rpm without load (in P or N) until the radiator fan comes on, then let it idle.
- Drive the vehicle at a steady engine speed [Engine Speed] 990 rpm or more for at least 2 seconds.
- Drive the vehicle in this manner only if the traffic regulations and ambient conditions allow.

With the HDS

Select the VTEC TEST in the Function Test Menu with the HDS.

DTC: P2649

Operating Condition

Enter the maintenance mode, then start the engine, and let it idle for at least 2 seconds.

With the HDS

None.

Diagnosis Details

Conditions for setting the DTC

When a malfunction is detected, the MIL comes on and a Pending DTC, a Confirmed DTC, and the freeze data are stored in the PCM memory.

Conditions for clearing the DTC

The MIL is cleared if the malfunction does not return in three consecutive trips in which the diagnostic runs. The MIL, the Pending DTC, the Confirmed DTC, and the freeze data can be cleared with the scan tool Clear command or by disconnecting the 12 volt battery.

DTC P26C3

DTC P26C3 : Internal Control Module Transmission Range Sensor Performance

General Description

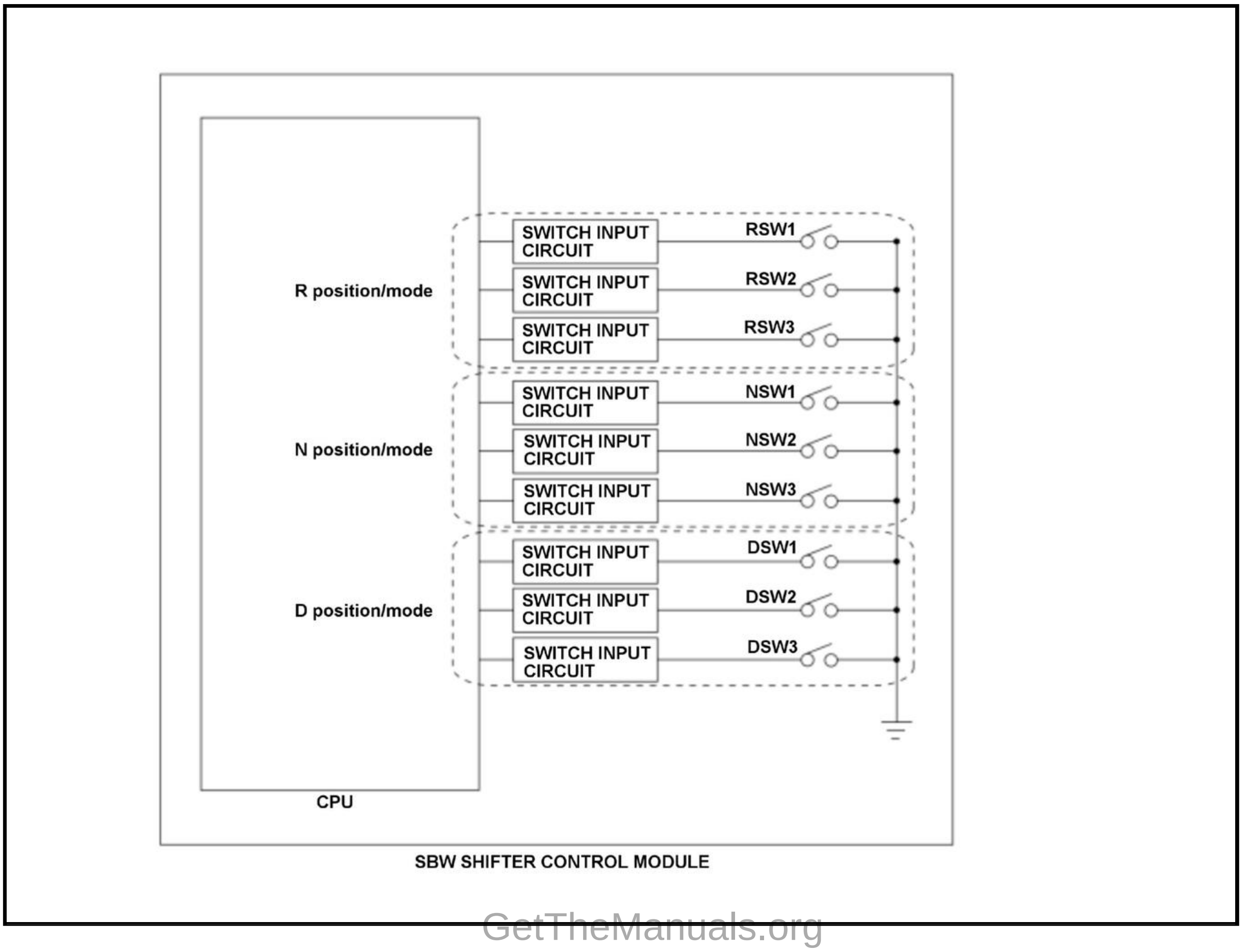
R position/mode
SWITCH INPUT CIRCUIT
SWITCH INPUT CIRCUIT
SWITCH INPUT CIRCUIT
RSW1
RSW2
RSW3
N position/mode
SWITCH INPUT CIRCUIT
SWITCH INPUT CIRCUIT
SWITCH INPUT CIRCUIT
NSW1
NSW2
NSW3
D position/mode
SWITCH INPUT CIRCUIT
SWITCH INPUT CIRCUIT
SWITCH INPUT CIRCUIT
DSW1
DSW2
DSW3
CPU
SBW SHIFTER CONTROL MODULE

If input information from the input circuit is abnormal during shifting the R, N, or D switch, the powertrain control module (PCM) receives malfunction from the SBW shifter control module, and stores a DTC.

Monitor Execution, Sequence, Duration, DTC Type

Execution	Continuous
Sequence	None
Duration	Depending on the driving conditions
DTC Type	One drive cycle, MIL off, shift position indicator blinks

Enable Conditions

Condition	B
Vehicle	ON mode or accelerating and decelerating

Malfunction Threshold

Either one of the condition is met:

- RSW1 or RSW3 is ON for at least 200 milliseconds when shifting the transmission to other than R position/mode.
- RSW2 is ON for at least 1 minute when shifting the transmission to other than R position/mode.
- Either RSW1, RSW2, or RSW3 is OFF for at least 10 times when shifting the transmission to R position/mode.
- NSW1 or NSW3 is ON for at least 200 milliseconds when shifting the transmission to other than N position/mode.
- NSW2 is ON for at least 1 minute when shifting the transmission to other than N position/mode.
- Either NSW1, NSW2, or NSW3 is OFF for at least 10 times when shifting the transmission to N position/mode.
- DSW1 or DSW3 is ON for at least 200 milliseconds when shifting the transmission to other than D position/mode.
- DSW2 is ON for at least 1 minute when shifting the transmission to other than D position/mode.
- Either DSW1, DSW2, or DSW3 is OFF for at least 10 times when shifting the transmission to D position/mode.

Possible Cause

NOTE: The causes shown may not be a complete list of all potential problems, and it is possible that there may be other causes.

- SBW shifter assembly (SBW shifter control module) internal failure

Confirmation Procedure

Operating Condition

- Shift the transmission to other than R position/mode for at least 1 minute.
- Shift the transmission to R position/mode for at least 10 times.
- Shift the transmission to other than N position/mode for at least 1 minute.
- Shift the transmission to N position/mode for at least 10 times.
- Shift the transmission to other than D position/mode for at least 1 minute.
- Shift the transmission to D position/mode for at least 10 times.

[ ]: HDS Parameter

With the HDS

None.

Diagnosis Details

Conditions for setting the DTC

When a malfunction is detected, the shift position indicator blinks and a Pending DTC, a Confirmed DTC, and the freeze data are stored in the PCM memory. The MIL does not come on.

Conditions for clearing the DTC

The shift position indicator comes off by turning the vehicle to the OFF (LOCK) mode. The Pending DTC, the Confirmed DTC, and the freeze data can be cleared with the scan tool Clear command or by disconnecting the 12 volt battery.

DTC P271A

DTC P271A : Park Pawl Position Sensor A Circuit Low

General Description

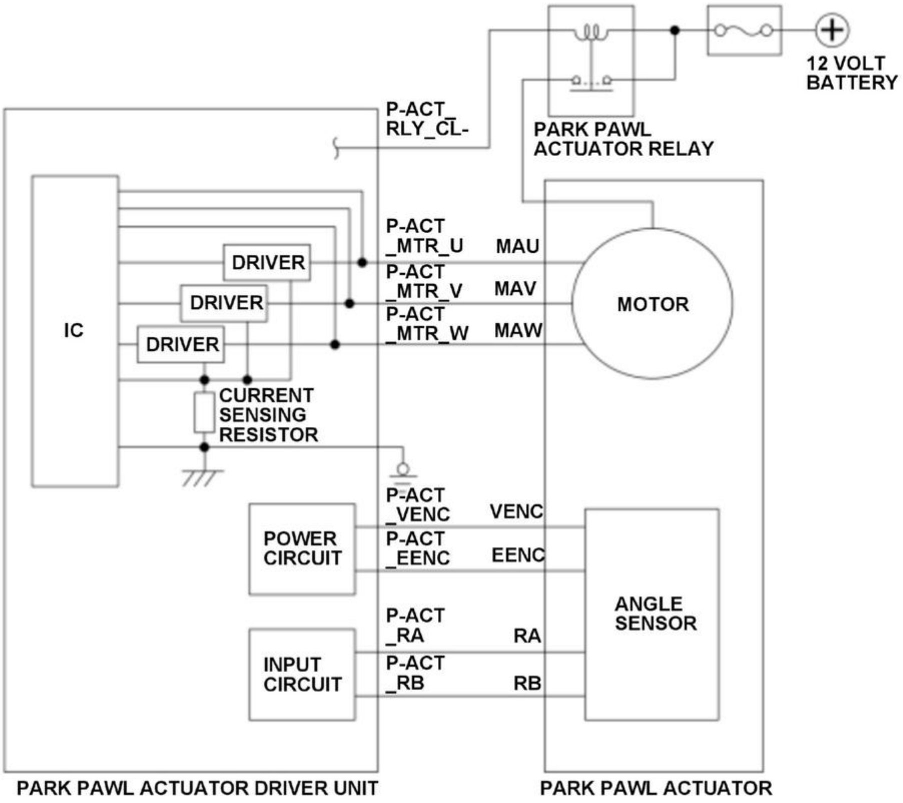
12 VOLT
BATTERY
P-ACT_
RLY_CL-
PARK PAWL
ACTUATOR RELAY
IC
DRIVER
DRIVER
DRIVER
P-ACT
_MTR_U
MAU
P-ACT
_MTR_V
MAV
P-ACT
_MTR_W
MAW
MOTOR
CURRENT
SENSING
RESISTOR
POWER
CIRCUIT
P-ACT
_VENC
VENC
P-ACT
_EENC
EENC
ANGLE
SENSOR
INPUT
CIRCUIT
P-ACT
_RA
RA
P-ACT
_RB
RB
PARK PAWL ACTUATOR DRIVER UNIT
PARK PAWL ACTUATOR

The park pawl actuator driver unit performs the initial learning and controls the park pawl actuator to switch the position to parking or non-parking by the command from the powertrain control module (PCM). If any abnormalities occur in the angle sensor in the park pawl actuator and the condition continues for a set time, the PCM receives a malfunction from the park pawl actuator driver unit and stores a DTC.

Monitor Execution, Sequence, Duration, DTC Type

Execution	-

Sequence	None
Duration	932 milliseconds*104 milliseconds**30 seconds***
DTC Type	One drive cycle, MIL off, shift position indicator blinks

*: Case 1

**: Case 2

***: Case 3

Enable Conditions

Condition	Minimum	Maximum
12 volt battery voltage [Battery Voltage]	10.5 V*, **	-
	10.43 V***	-

Malfunction Threshold

Any of these conditions is met:

- Case 1

  The output value of the angle sensor in the park pawl actuator remains unchanged for 932 milliseconds or more during the initial learning.

- Case 2

  The output value of the angle sensor in the park pawl actuator remains unchanged for 104 milliseconds or more when the switching to the parking position or the non-parking position.

- Case 3

  The 12 volt battery voltage exceeds the specified value after the 12 volt battery voltage continues to be less than the specified value for at least 30 seconds during the initial learning.

Possible Cause

NOTE: The causes shown may not be a complete list of all potential problems, and it is possible that there may be other causes.

- Park pawl actuator driver unit RA/P-ACT_RA line open
- Park pawl actuator driver unit RB/P-ACT_RB line open
- Park pawl actuator driver unit VENC/P-ACT_VENC line open
- Park pawl actuator driver unit EENC/P-ACT_EENC line open
- Park pawl actuator driver unit RA/P-ACT_RA line short to ground
- Park pawl actuator driver unit RB/P-ACT_RB line short to ground
- Park pawl actuator driver unit VENC/P-ACT_VENC line short to ground
- Park pawl actuator driver unit EENC/P-ACT_EENC line short to ground
- Park pawl actuator driver unit RA/P-ACT_RA line short to power
- Park pawl actuator driver unit RB/P-ACT_RB line short to power
- Park pawl actuator driver unit EENC/P-ACT_EENC line short to power
- Park pawl actuator power supply line abnormal (include fuse blown)
- Park pawl actuator driver unit GND line open
- Park pawl actuator driver unit power supply line abnormal (include fuse blown)

- 12 volt battery abnormal
- Park pawl actuator driver unit internal circuit failure

Confirmation Procedure

Operating Condition

- Turn the vehicle to the ON mode, and wait at least 10 seconds.
- While pressing the brake pedal, shift the transmission to N, D, and R position/mode, then shift transmission to P position/mode and wait at least 5 seconds.

With the HDS

None.

Diagnosis Details

Conditions for setting the DTC

When a malfunction is detected, the shift position indicator blinks and a Pending DTC, a Confirmed DTC, and the freeze data are stored in the PCM memory. The MIL does not come on.

Conditions for clearing the DTC

The shift position indicator comes off by turning the vehicle to the OFF (LOCK) mode. The Pending DTC, the Confirmed DTC, and the freeze data can be cleared with the scan tool Clear command or by disconnecting the 12 volt battery.

DTC P272C

DTC P272C : Park Pawl Motor Control Circuit

General Description

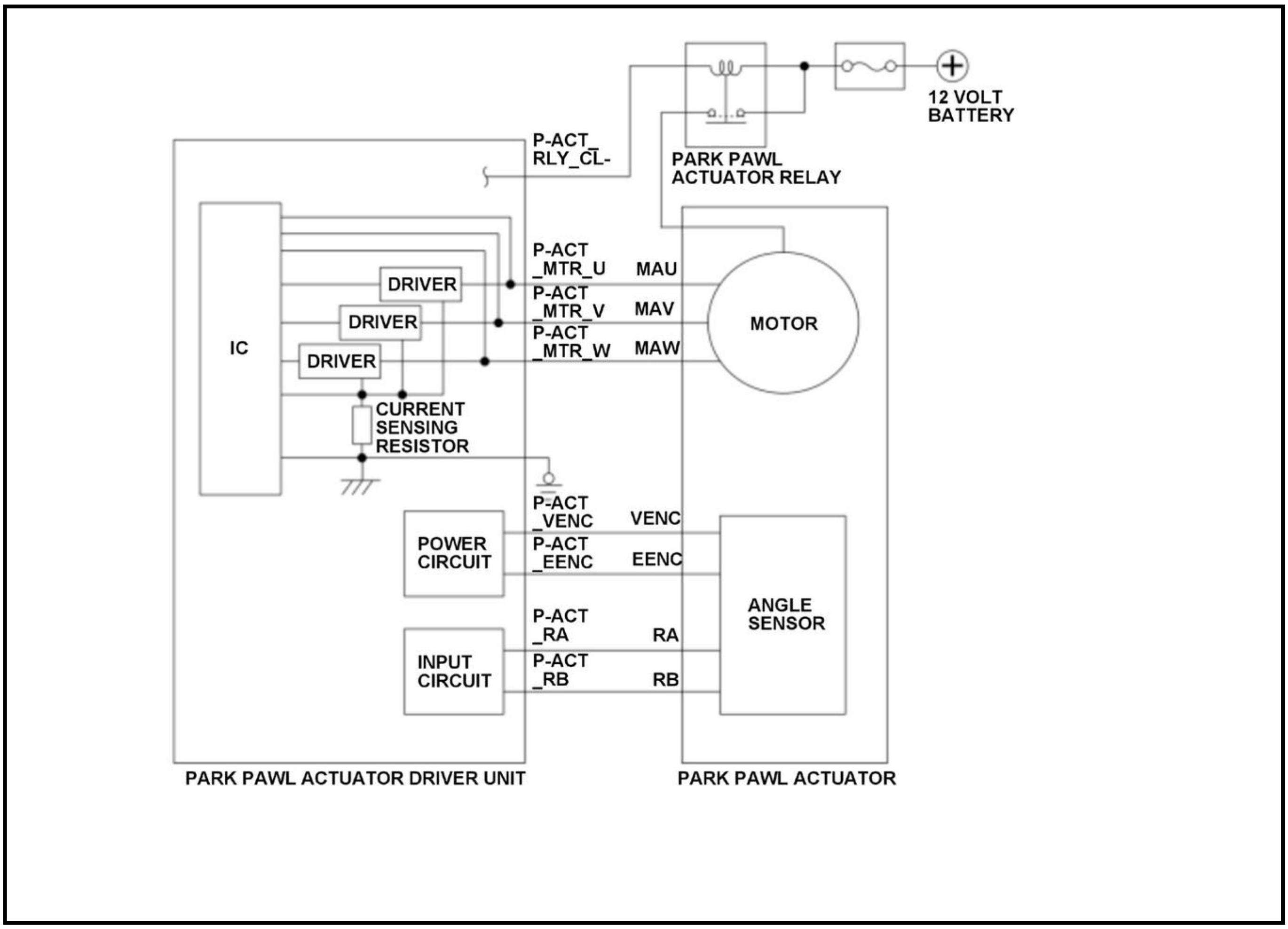
P-ACT_
RLY_CL-
PARK PAWL
ACTUATOR RELAY
12 VOLT
BATTERY
IC
DRIVER
DRIVER
DRIVER
P-ACT
_MTR_U
MAU
P-ACT
_MTR_V
MAV
P-ACT
_MTR_W
MAW
MOTOR
CURRENT
SENSING
RESISTOR
P-ACT
_VENC
VENC
POWER
CIRCUIT
P-ACT
_EENC
EENC
ANGLE
SENSOR
P-ACT
_RA
RA
INPUT
CIRCUIT
P-ACT
_RB
RB
PARK PAWL ACTUATOR DRIVER UNIT
PARK PAWL ACTUATOR

The park pawl actuator driver unit controls the park pawl actuator to switch to and unlock the P position. The park pawl actuator driver unit uses three lines (MAU/P-ACT_MTR_U, MAV/P-ACT_MTR_V, and MAW/P-ACT_MTR_W) to monitor the voltage applied to the park pawl actuator. If the voltage applied to the park pawl actuator is a specified value or more for a set time when the initial learning is performed, the powertrain control module (PCM) receives a malfunction from the park pawl actuator driver unit and stores a DTC.

Monitor Execution, Sequence, Duration, DTC Type

Execution	-
Sequence	None
Duration	64 milliseconds or more
DTC Type	One drive cycle, MIL off, shift position indicator blinks

Enable Conditions

Condition	Minimum	Maximum
12 volt battery voltage [Battery Voltage]	10.5 V	-

[ ]: HDS Parameter

Malfunction Threshold

The park pawl actuator input voltage is 4.22 V or more for at least 64 milliseconds.

Possible Cause

NOTE: The causes shown may not be a complete list of all potential problems, and it is possible that there may be other causes.

- Park pawl actuator driver unit GND line open
- Park pawl actuator driver unit MAU/P-ACT_MTR_U line short to power
- Park pawl actuator driver unit MAV/P-ACT_MTR_V line short to power
- Park pawl actuator driver unit MAW/P-ACT_MTR_W line short to power
- Park pawl actuator driver unit internal circuit failure

Confirmation Procedure

Operating Condition

Turn the vehicle to the ON mode, and wait at least 10 seconds.

With the HDS

None.

Diagnosis Details

Conditions for setting the DTC

When a malfunction is detected, the shift position indicator blinks and a Pending DTC, a Confirmed DTC, and the freeze data are stored in the PCM memory. The MIL does not come on.

Conditions for clearing the DTC

The shift position indicator comes off by turning the vehicle to the OFF (LOCK) mode. The Pending DTC, the Confirmed DTC, and the freeze data can be cleared with the scan tool Clear command or by disconnecting the 12 volt battery.

DTC P272D

DTC P272D : Park Pawl Motor Control Circuit Too High

General Description

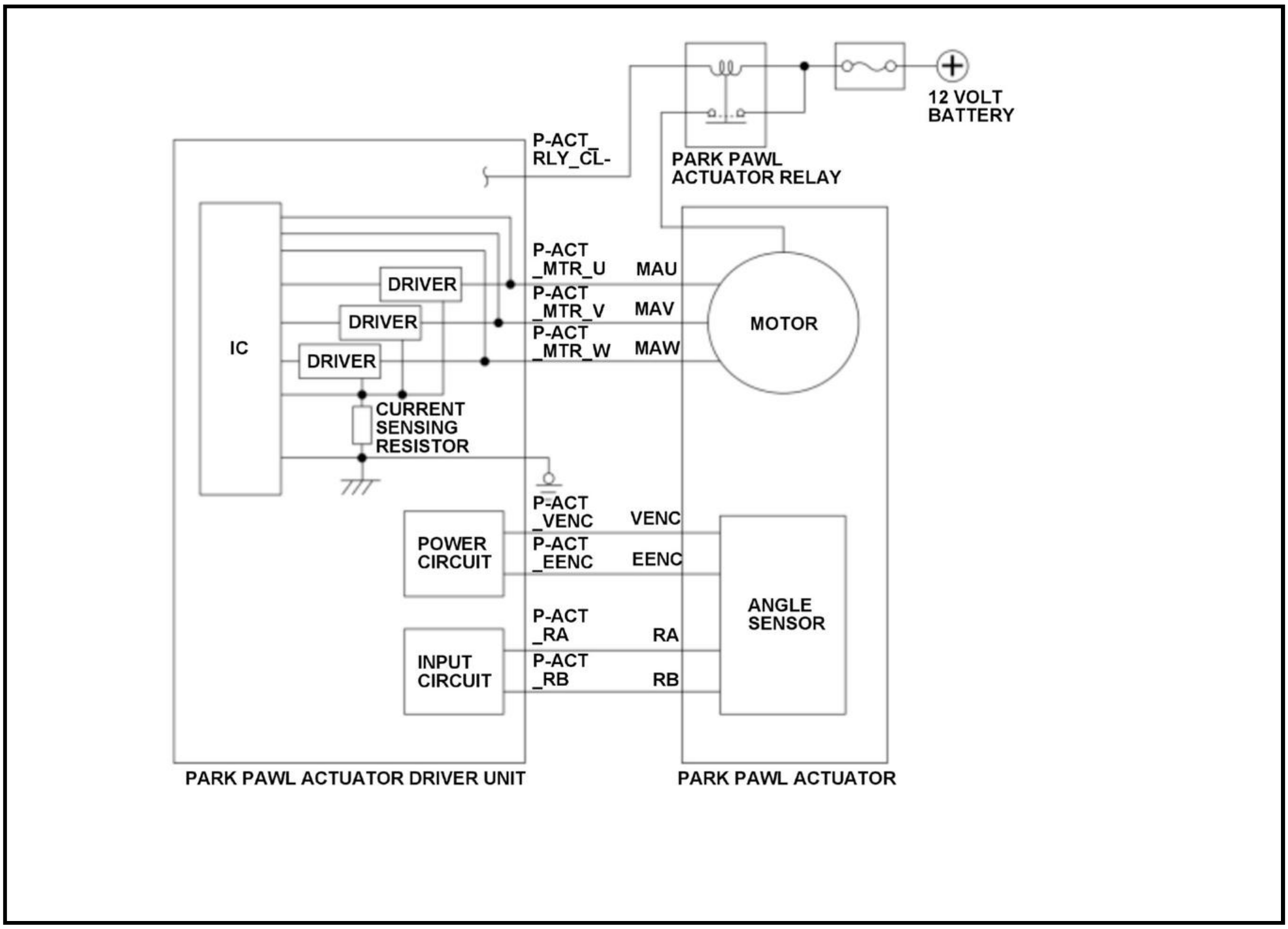
P-ACT_
RLY_CL-
PARK PAWL
ACTUATOR RELAY
12 VOLT
BATTERY
IC
DRIVER
DRIVER
DRIVER
CURRENT
SENSING
RESISTOR
P-ACT
_MTR_U
MAU
P-ACT
_MTR_V
MAV
P-ACT
_MTR_W
MAW
MOTOR
POWER
CIRCUIT
P-ACT
_VENC
VENC
P-ACT
_EENC
EENC
ANGLE
SENSOR
INPUT
CIRCUIT
P-ACT
_RA
RA
P-ACT
_RB
RB
PARK PAWL ACTUATOR DRIVER UNIT
PARK PAWL ACTUATOR

The park pawl actuator driver unit controls the park pawl actuator to switch to and unlock the P position. The park pawl actuator driver unit uses three lines (MAU/P-ACT_MTR_U, MAV/P-ACT_MTR_V, and MAW/P-ACT_MTR_W) to monitor the voltage applied to the park pawl actuator. If the voltage applied to the park pawl actuator is a specified value or less for a set time, the powertrain control module (PCM) receives a malfunction from the park pawl actuator driver unit and stores a DTC.

Monitor Execution, Sequence, Duration, DTC Type

Execution	-
Sequence	None
Duration	40 milliseconds or more
DTC Type	One drive cycle, MIL off, shift position indicator blinks

Enable Conditions

Condition	Minimum	Maximum
Elapsed time after the park pawl actuator relay is turned to the ON	56 milliseconds	-
12 volt battery voltage [Battery Voltage]	10.5 V	-

[ ]: HDS Parameter

Malfunction Threshold

The voltage applied to the park pawl actuator is 2.76 V or less for at least 40 milliseconds.

Possible Cause

NOTE: The causes shown may not be a complete list of all potential problems, and it is possible that there may be other causes.

- Park pawl actuator driver unit MAU/P-ACT_MTR_U line open (includes a loose or disconnected connector)
- Park pawl actuator driver unit MAV/P-ACT_MTR_V line open (includes a loose or disconnected connector)
- Park pawl actuator driver unit MAW/P-ACT_MTR_W line open (includes a loose or disconnected connector)
- Park pawl actuator relay P-ACT_RLY_CL- line open (includes a loose or disconnected connector)
- Line between the park pawl actuator and the park pawl actuator relay open
- Park pawl actuator relay power supply line open
- Park pawl actuator driver unit MAU/ACT_MTR_U line short to ground
- Park pawl actuator driver unit MAV/P-ACT_MTR_V line short to ground
- Park pawl actuator driver unit MAW/P-ACT_MTR_W line short to ground
- Park pawl actuator relay stuck off
- Park pawl actuator driver unit internal failure

Confirmation Procedure

Operating Condition

Turn the vehicle to the ON mode, and wait at least 10 seconds.

With the HDS

None.

Diagnosis Details

Conditions for setting the DTC

When a malfunction is detected, the shift position indicator blinks and a Pending DTC, a Confirmed DTC, and the freeze data are stored in the PCM memory. The MIL does not come on.

Conditions for clearing the DTC

The shift position indicator comes off by turning the vehicle to the OFF (LOCK) mode. The Pending DTC, the Confirmed DTC, and the freeze data can be cleared with the scan tool Clear command or by disconnecting the 12 volt battery.

DTC P2872 (2021)

DTC P2872: Over Drive Clutch Stuck Engaged

General Description

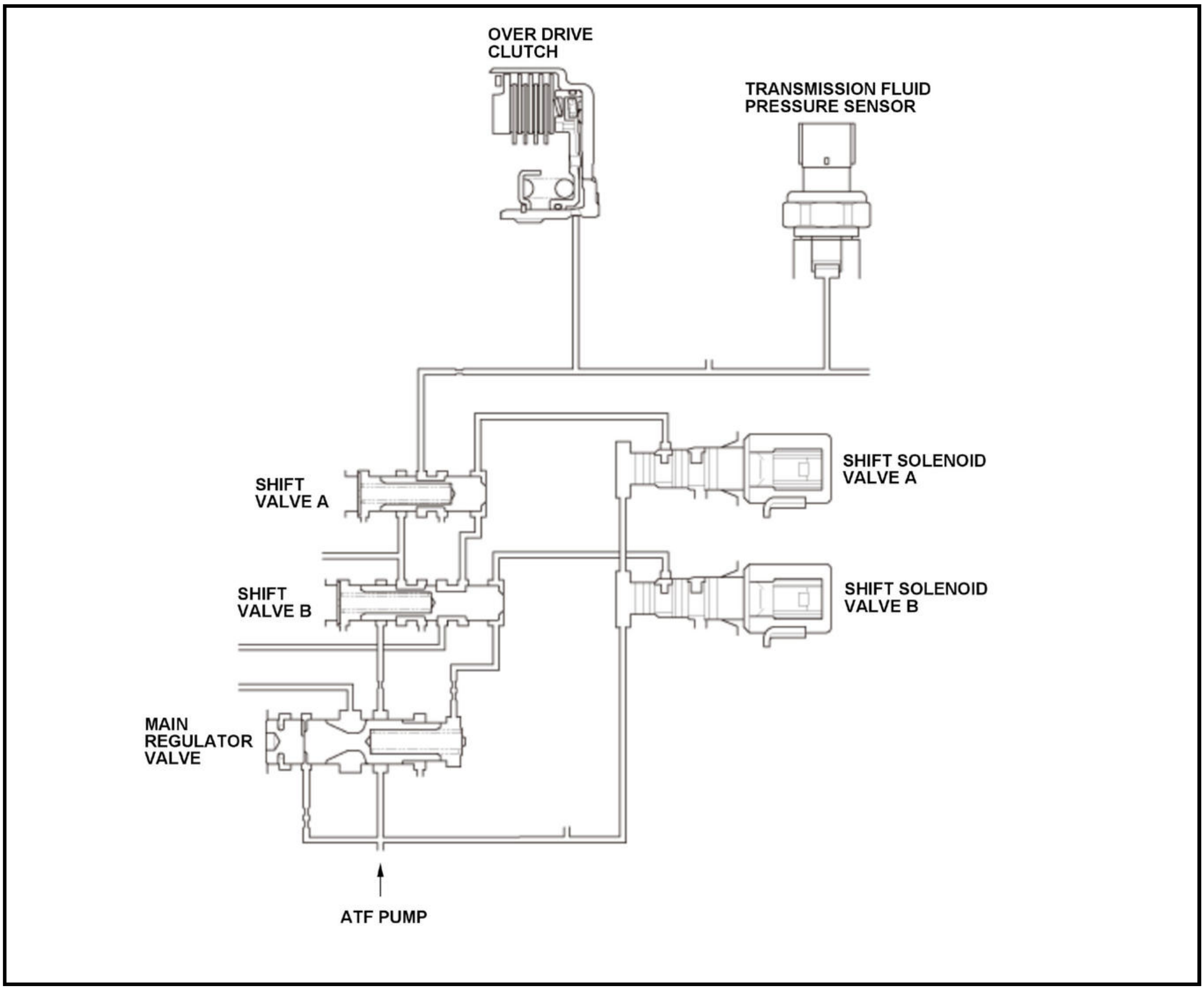
OVER DRIVE CLUTCH
TRANSMISSION FLUID PRESSURE SENSOR
SHIFT SOLENOID VALVE A
SHIFT VALVE A
SHIFT VALVE B
SHIFT SOLENOID VALVE B
MAIN REGULATOR VALVE
ATF PUMP

Capacity of Over Drive Clutch		Shift Solenoid Valve A	
		ON (12 V)	OFF (0 V)
Shift Solenoid Valve B	ON (12 V)	ON	OFF
	OFF (0 V)	OFF	OFF

Shift solenoid valve A is installed on the transmission housing. It is controlled by the ON/OFF signal from the powertrain control module (PCM) to apply line pressure to shift valve A. The signal from the PCM is output so that the line pressure is supplied to the clutch piston under the condition that overdrive clutch engagement is requested while driving at 44 mph (70 km/h) or more. When the signal to shift solenoid valve A from the PCM is ON, and the line pressure is applied to shift valve A, it operates against the shift valve A spring. When the signal to shift solenoid valve A from the PCM is OFF, and the line pressure is discharged, shift valve A is inactive. The PCM monitors the transmission fluid pressure sensor, and detects a failure of the over drive clutch stuck engaged and stores a DTC when the transmission fluid pressure sensor is at specified value or more when both shift solenoid valve A and B are outputting an OFF signal in the over drive clutch disengagement process in response to a request for disengagement of the engaged over drive clutch.

Monitor Execution, Sequence, Duration, DTC Type

Execution	Continuous
Sequence	None
Duration	1.0 seconds or more
DTC Type	One drive cycle, MIL on, shift position indicator blinks

Enable Conditions

Condition	Minimum	Maximum
12 volt battery voltage [BATTERY VOLTAGE]	10 V	-
Over drive clutch	OFF	
State of the vehicle	Engine driving mode	

[ ]: HDS Parameter

Malfunction Threshold

The transmission fluid pressure sensor value is at a specified pressure for 0.8 seconds or more when both shift solenoid valve A and B are outputting an OFF signal in the over drive clutch disengagement process in response to a request for disengagement of the over drive clutch.

Possible Cause

NOTE: The causes shown may not be a complete list of all potential problems, and it is possible that there may be other causes.

- Both Shift solenoid valve A and Shift solenoid valve B stuck on
- Shift valve failure

Confirmation Procedure

Operating Condition

- Enter the maintenance mode, then start the engine. Hold the engine speed [ENGINE SPEED] at 3, 000 rpm without load (in P or N) until the radiator fan comes on, then let it idle.
- Drive the vehicle at a steady speed of 44 mph (70 km / h) or more, turn off the APP sensor and turn off the overdrive clutch by decelerating the vehicle.

- Drive the vehicle in this manner only if the traffic regulations and ambient conditions allow.

Diagnosis Details

Conditions for setting the DTC

When a malfunction is detected, the MIL comes on, the shift position indicator blinks and a Pending DTC, a Confirmed DTC, and the freeze data are stored in the PCM memory.

Conditions for clearing the DTC

The shift position indicator comes off by turning the vehicle to the OFF (LOCK) mode. The Pending DTC, the Confirmed DTC, and the freeze data can be cleared with the scan tool Clear command or by disconnecting the 12 volt battery.

DTC P2A00

DTC P2A00: Air/Fuel ratio A/F Sensor (Sensor 1) Circuit Range/Performance Problem

General Description

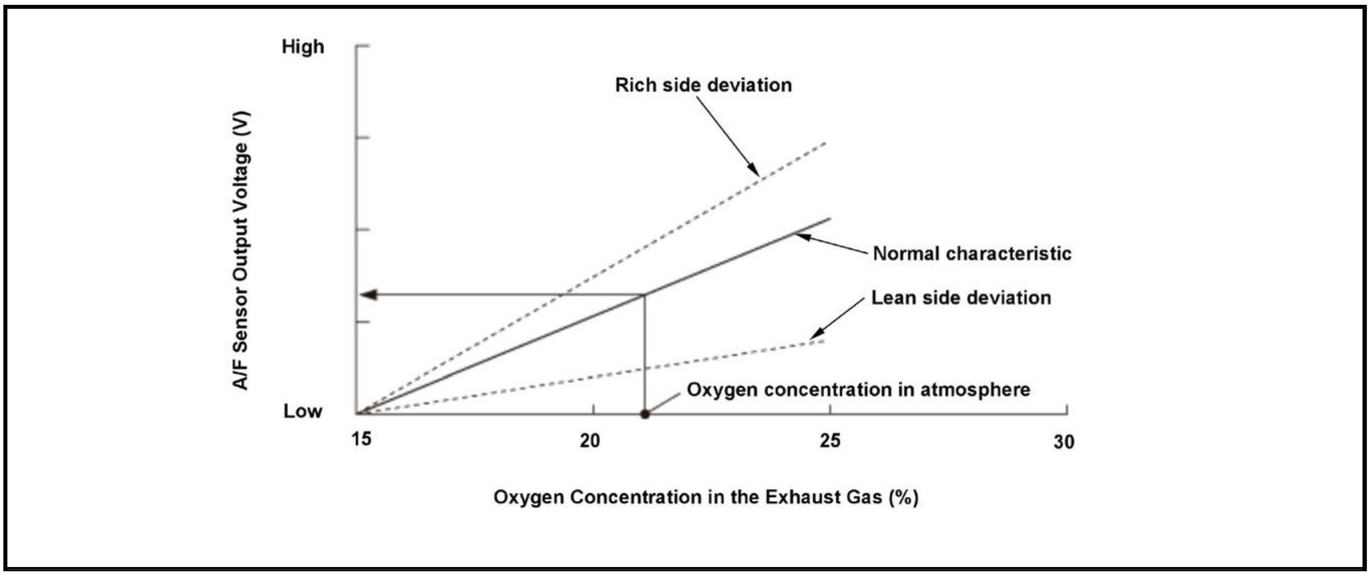

The air/fuel ratio (A/F) sensor (sensor 1) has a linear signal output in relation to the oxygen concentration. The powertrain control module (PCM) computes the air/fuel ratio from the A/F sensor (sensor 1) output voltage and uses fuel feedback control to improve exhaust emissions. The PCM monitors the A/F sensor (sensor 1) output voltage during deceleration with the throttle fully closed, and if the output voltage deviates greatly from normal oxygen concentration levels, it detects a malfunction and stores a DTC.

NOTE: Output to the scan tool exhibits a relationship between the A/F sensor (sensor 1) output and oxygen concentration, which is opposite to the characteristic shown in the graph. That is, a deviation toward the rich side increases the output voltage and one toward the lean side decreases the output voltage, as the stoichiometric ratio is 0.

Monitor Execution, Sequence, Duration, DTC Type

Execution	Once per driving cycle
Sequence	None
Duration	3.5 seconds or more
DTC Type	Two drive cycles, MIL on

Enable Conditions

Condition	Minimum	Maximum
Elapsed time after starting the engine	5 seconds	-
Engine coolant temperature [ECT Sensor 1]	156 deg.F (69 deg.C)	-
Intake air temperature [IAT Sensor (1)]	-13 deg.F (-25 deg.C)	-
Engine speed [Engine Speed]	500 rpm	4, 000 rpm
Vehicle speed [Vehicle Speed]	23 mph (37 km/h)	-
Fuel feedback	During deceleration with throttle fully closed	

[ ]: HDS Parameter

Malfunction Threshold

The A/F sensor (sensor 1) output voltage is 2.55 V or less, or 4.11 V or more.

Possible Cause

NOTE: The causes shown may not be a complete list of all potential problems, and it is possible that there may be other causes.

- A/F sensor (sensor 1) deterioration

Confirmation Procedure

Operating Condition

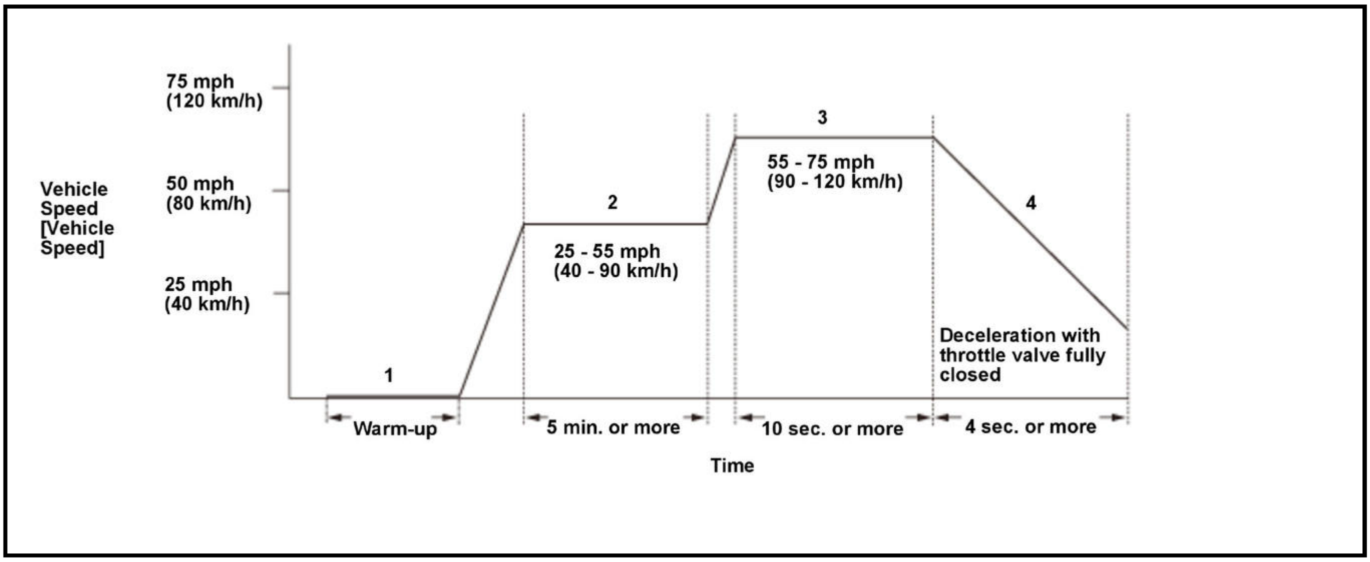

- Enter the maintenance mode, then start the engine. Hold the engine speed [Engine Speed] at 3, 000 rpm without load (in P or N) until the radiator fan comes on, then let it idle.
- Drive the vehicle at a speed between 25 - 55 mph (40 - 90 km/h) for at least 5 minutes.
- Drive immediately at a steady speed between 55 - 75 mph (90 - 120 km/h) for at least 10 seconds.
- Decelerate with the throttle valve fully closed for at least 4 seconds.

- Drive the vehicle in this manner only if the traffic regulations and ambient conditions allow.

Diagnosis Details

Conditions for setting the DTC

When a malfunction is detected during the first drive cycle, a Pending DTC is stored in the PCM memory. If the malfunction returns in the next (second) drive cycle, the MIL comes on and a Confirmed DTC and the freeze data are stored.

Conditions for clearing the DTC

The MIL is cleared if the malfunction does not return in three consecutive trips in which the diagnostic runs. The MIL, the Pending DTC, the Confirmed DTC, and the freeze data can be cleared with the scan tool clear command or by disconnecting the 12 volt battery.

DTC P2A01

DTC P2A01: Secondary HO2S (Sensor 2) Circuit Range/Performance Problem

General Description

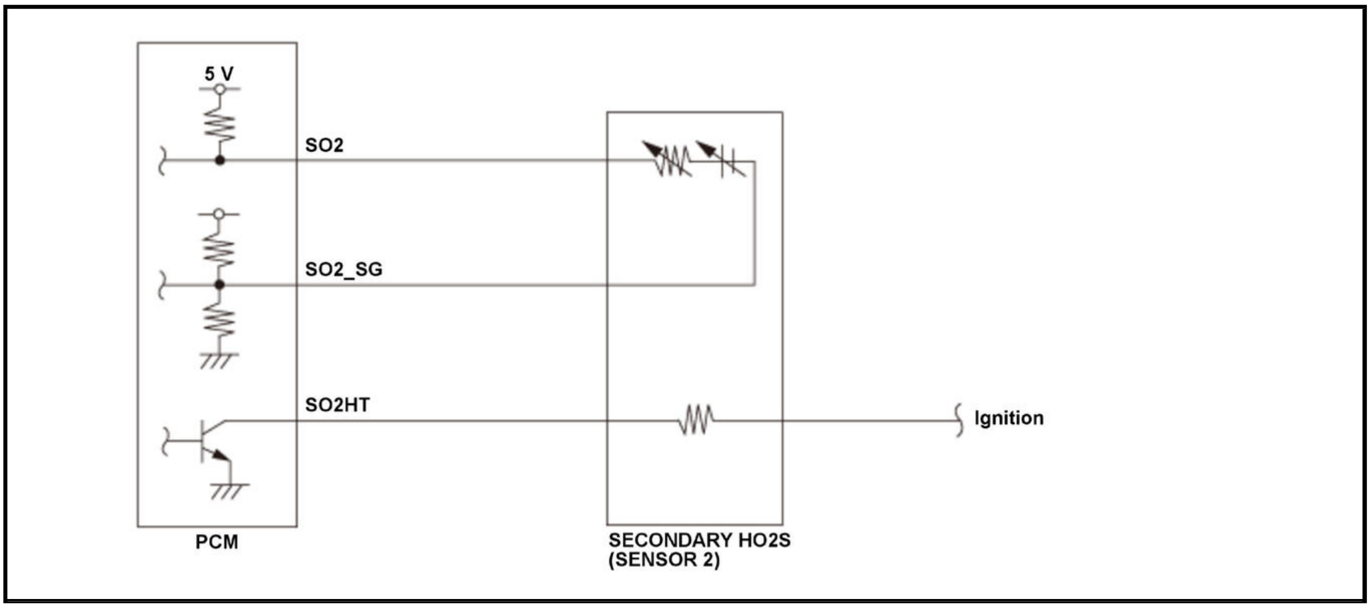

The secondary heated oxygen sensor (secondary HO2S (sensor 2)) detects the oxygen density in the exhaust gas and converts it into electrical signals. If the secondary HO2S (sensor 2) output voltage is a specified value for a set time, the powertrain control module (PCM) detects a malfunction and stores a DTC.

Monitor Execution, Sequence, Duration, DTC Type

Execution	Continuous
Sequence	None
Duration	6 seconds or more
DTC Type	Two drive cycles, MIL on

Enable Conditions

Condition	Minimum	Maximum
Secondary HO2S (sensor 2) output voltage [HO2S S2]	-	1.0 V
State of the engine	Running	

[ ]: HDS Parameter

Malfunction Threshold

The secondary HO2S (sensor 2) output voltage [HO2S S2] is 1.51 V or less for at least 6 seconds after the secondary HO2S (sensor 2) is judged that it is normally activated (1.0 V or less as a value).

Possible Cause

NOTE: The causes shown may not be a complete list of all potential problems, and it is possible that there may be other causes.

- Secondary HO2S (sensor 2) failure
- PCM internal circuit failure

Confirmation Procedure

Operating Condition

Enter the maintenance mode, then start the engine, and let it idle until the radiator fan comes on, then let it idle.

Diagnosis Details

Conditions for setting the DTC

When a malfunction is detected during the first drive cycle, a Pending DTC is stored in the PCM memory. If the malfunction returns in the next (second) drive cycle, the MIL comes on and a Confirmed DTC, the freeze data, and the on-board snapshot are stored.

Conditions for clearing the DTC

The MIL is cleared if the malfunction does not return in three consecutive trips in which the diagnostic runs. The MIL, the Pending DTC, the Confirmed DTC, the freeze data, and the on-board snapshot can be cleared with the scan tool Clear command or by disconnecting the 12 volt battery.

DTC P2DE0 (2021)

DTC P2DE0: Cold Start Air Fuel Ratio Control System Lean

General Description

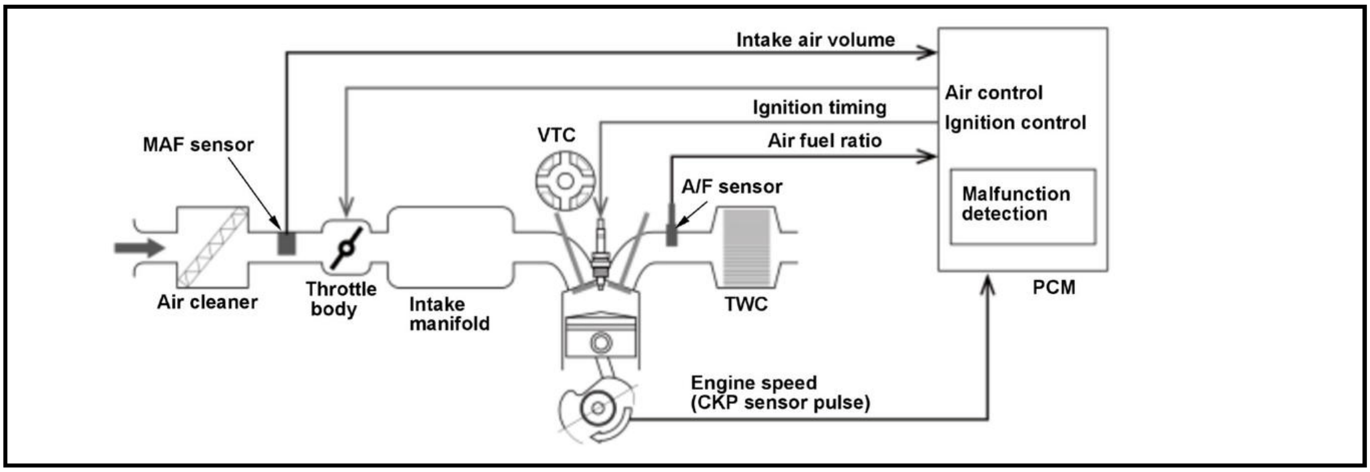
Intake air volume
Air control
Ignition control
Ignition timing
Air fuel ratio
MAF sensor
VTC
A/F sensor
Malfunction detection
Air cleaner
Throttle body
Intake manifold
TWC
PCM
Engine speed
(CKP sensor pulse)

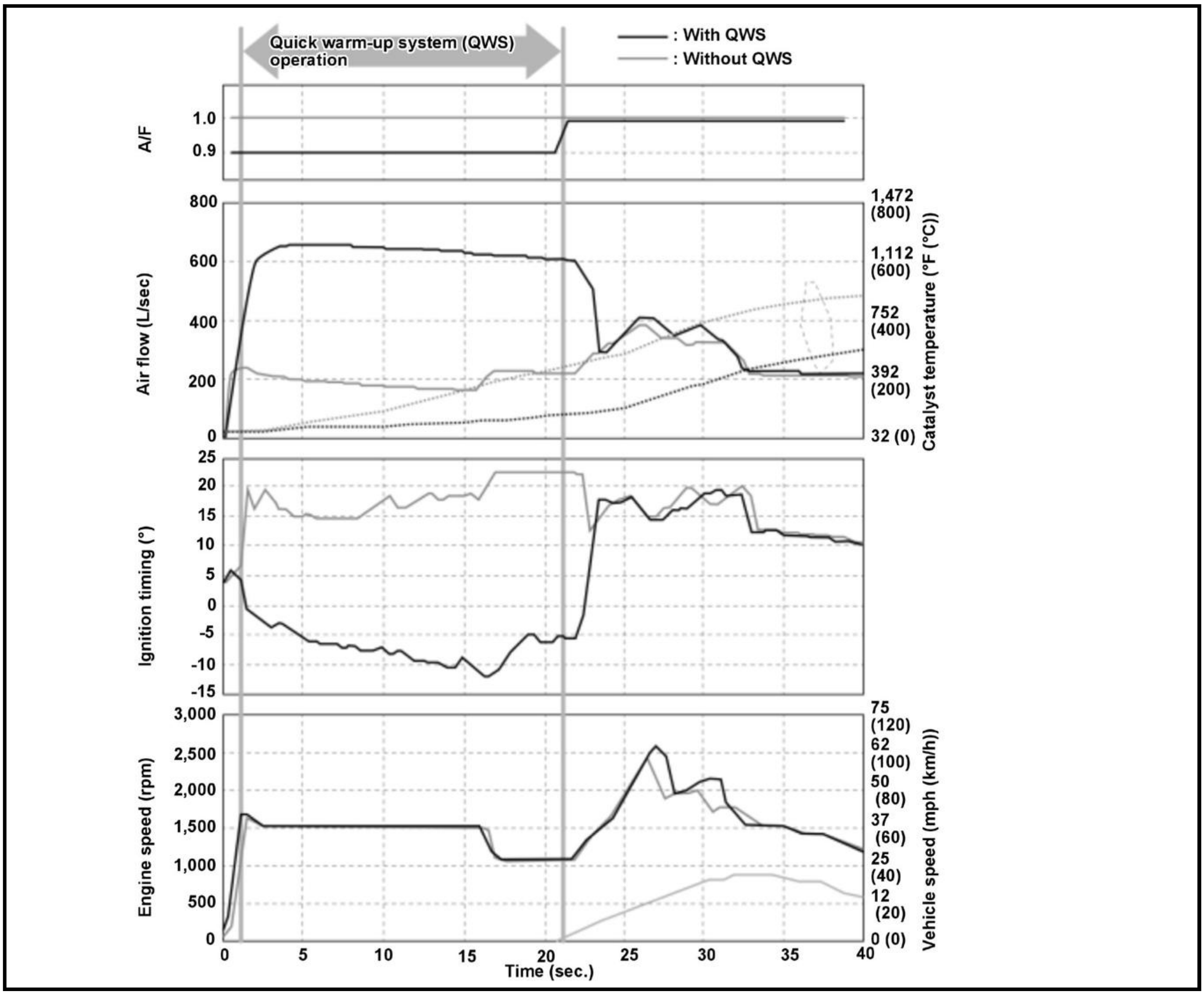

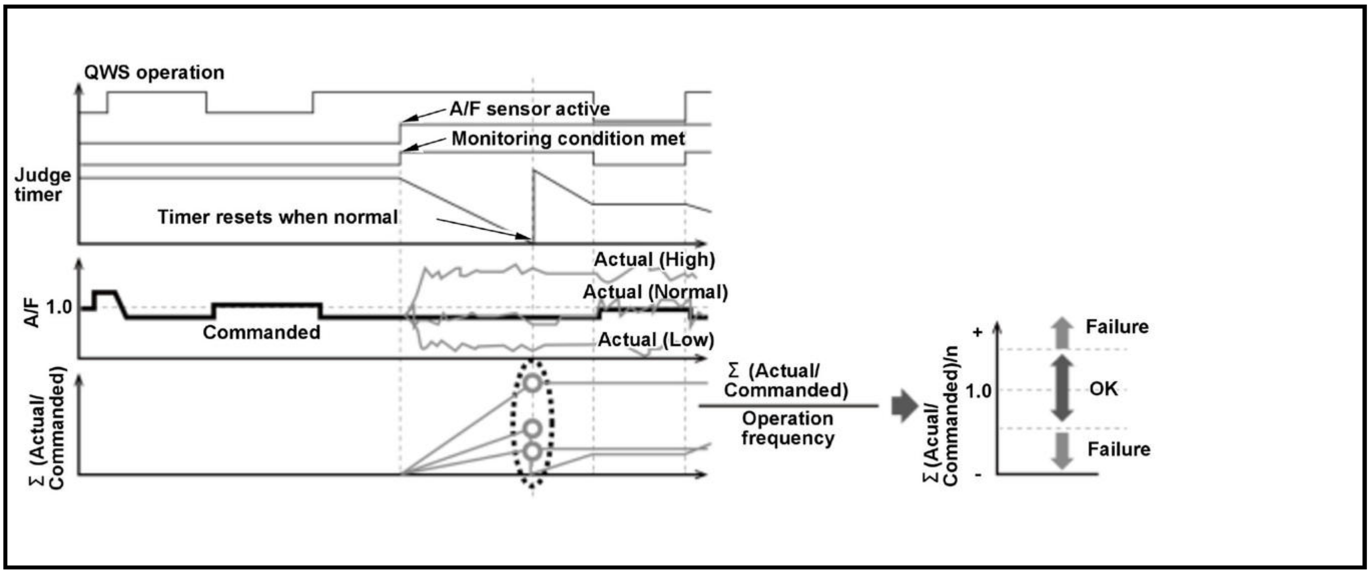
QWS operation
A/F sensor active
Monitoring condition met
Judge timer
Timer resets when normal
A/F
1.0
Commanded
Actual (High)
Actual (Normal)
Actual (Low)
Σ (Actual/ Commanded)
Σ (Actual/ Commanded)
Operation frequency
Σ (Acual/ Commanded)/n
+
1.0
-
Failure
OK
Failure

The cold start emission reduction process controls the air fuel ratio to lean when the engine is cold to lower emissions as the catalyst is not warmed up. If the actual air fuel ratio is too lean or too rich compared to the commanded air fuel ratio, the powertrain control module (PCM) detects a malfunction and stores a DTC.

Monitor Execution, Sequence, Duration, DTC Type

Execution	Continuous
Sequence	None
Duration	7.0 seconds or more

DTC Type	Two drive cycles, MIL on

Enable Conditions

Condition	Minimum	Maximum
Throttle valve	Fully closed	
Accelerator pedal position	Released	
A/F sensor	Active	
Other	Vehicle stopped	

Malfunction Threshold

The ratio of the actual air fuel ratio to commanded air fuel ratio is 0.86 or less.

Possible Cause

NOTE: The causes shown may not be a complete list of all potential problems, and it is possible that there may be other causes.

- Intake air duct breakage
- Intake air duct misinstalled
- Air cleaner breakage
- Air cleaner damage
- Air cleaner clogged
- Throttle body clogged
- Intake air system clogged
- Mass airflow (MAF) sensor failure
- Intake air temperature (IAT) sensor failure
- Engine coolant temperature (ECT) sensor 1 failure
- Air fuel ratio too rich
- Air fuel ratio too lean
- Ignition system failure

Confirmation Procedure

Operating Condition

- Leave the vehicle to cool the engine.
- Enter the maintenance mode, then start the engine, and let it idle for at least 7.0 seconds.

Diagnosis Details

Conditions for setting the DTC

When a malfunction is detected during the first drive cycle, a Pending DTC is stored in the PCM memory. If the malfunction returns in the next (second) drive cycle, the MIL comes on and a Confirmed DTC and the freeze data are stored.

Conditions for clearing the DTC

The MIL is cleared if the malfunction does not return in three consecutive trips in which the diagnostic runs. The MIL, the Pending DTC, the Confirmed DTC, and the freeze data can be cleared with the scan tool Clear command or by disconnecting the 12 volt battery.

DTC P2DE1 (2021)

DTC P2DE1: Cold Start Air Fuel Ratio Control System Rich

General Description

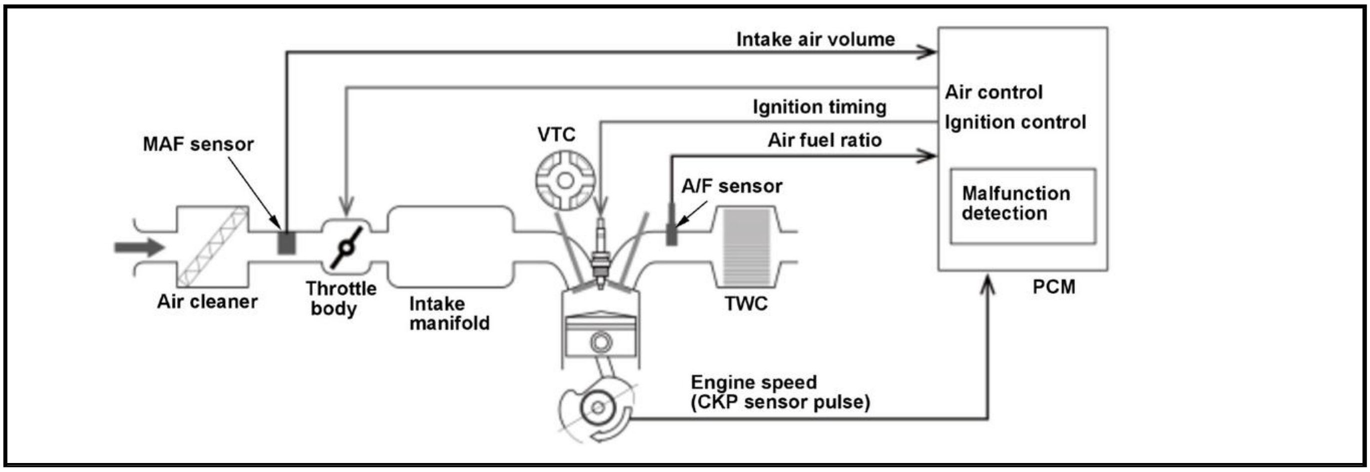
Intake air volume
Air control
Ignition timing
Ignition control
Air fuel ratio
MAF sensor
VTC
A/F sensor
Malfunction detection
Air cleaner
Throttle body
Intake manifold
TWC
PCM
Engine speed (CKP sensor pulse)

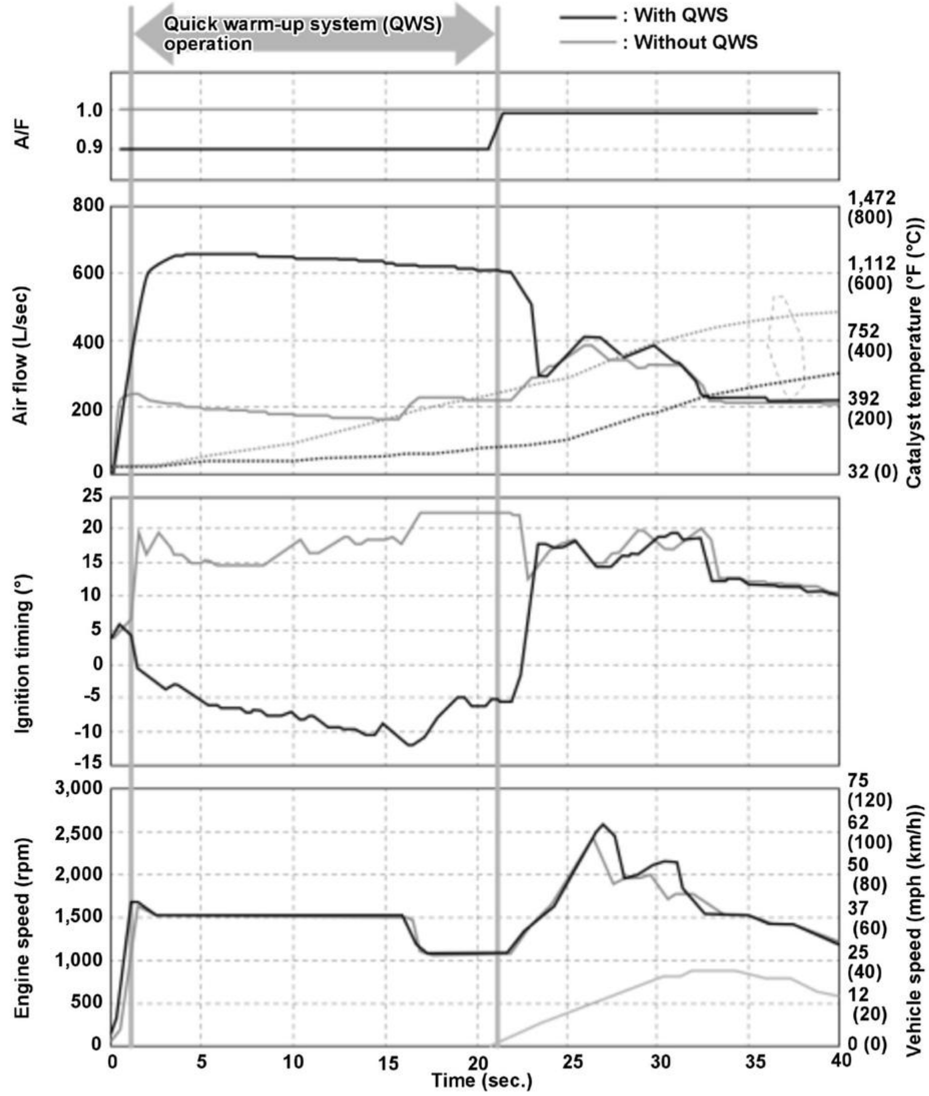

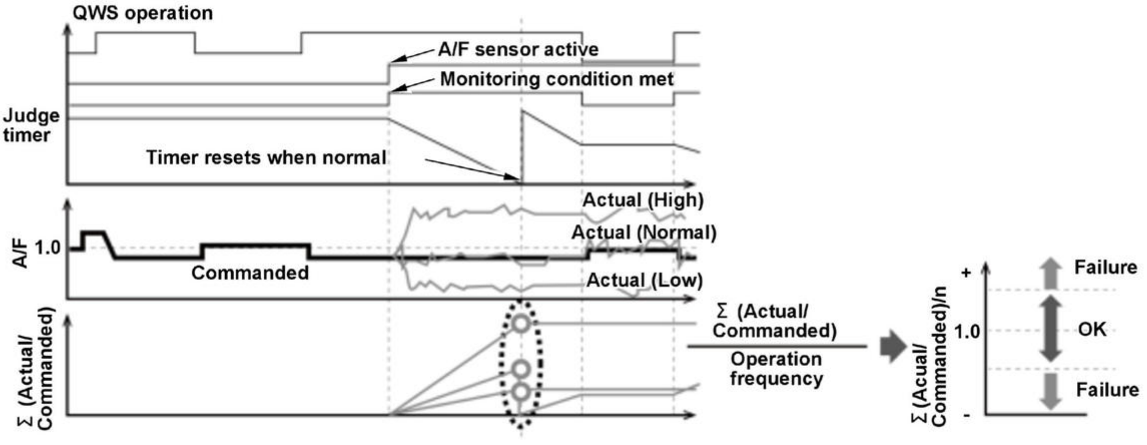
QWS operation
A/F sensor active
Monitoring condition met
Judge timer
Timer resets when normal
Actual (High)
Actual (Normal)
Actual (Low)
A/F
1.0
Commanded
Σ (Actual/ Commanded)
Σ (Actual/ Commanded)
Operation frequency
Σ (Acual/ Commanded)/n
+
1.0
-
Failure
OK
Failure

The cold start emission reduction process controls the air fuel ratio to lean when the engine is cold to lower emissions as the catalyst is not warmed up. If the actual air fuel ratio is too lean or too rich compared to the commanded air fuel ratio, the powertrain control module (PCM) detects a malfunction and stores a DTC.

Monitor Execution, Sequence, Duration, DTC Type

Execution	Continuous
Sequence	None
Duration	7.0 seconds or more
DTC Type	Two drive cycles, MIL on

Enable Conditions

Condition	Minimum	Maximum
Throttle valve	Fully closed	
Accelerator pedal position	Released	
A/F sensor	Active	
Other	Vehicle stopped	

Malfunction Threshold

The ratio of the actual air fuel ratio to commanded air fuel ratio is 1.14 or more.

Possible Cause

NOTE: The causes shown may not be a complete list of all potential problems, and it is possible that there may be other causes.

- Intake air duct breakage
- Intake air duct misinstalled
- Air cleaner breakage
- Air cleaner damage
- Air cleaner clogged
- Throttle body clogged
- Intake air system clogged
- Mass airflow (MAF) sensor failure
- Intake air temperature (IAT) sensor failure
- Engine coolant temperature (ECT) sensor 1 failure

- Air fuel ratio too rich
- Air fuel ratio too lean
- Ignition system failure

Confirmation Procedure

Operating Condition

- Leave the vehicle to cool the engine.
- Enter the maintenance mode, then start the engine, and let it idle for at least 7.0 seconds.

Diagnosis Details

Conditions for setting the DTC

When a malfunction is detected during the first drive cycle, a Pending DTC is stored in the PCM memory. If the malfunction returns in the next (second) drive cycle, the MIL comes on and a Confirmed DTC and the freeze data are stored.

Conditions for clearing the DTC

The MIL is cleared if the malfunction does not return in three consecutive trips in which the diagnostic runs. The MIL, the Pending DTC, the Confirmed DTC, and the freeze data can be cleared with the scan tool Clear command or by disconnecting the 12 volt battery.

DTC P2EA4 (2021)

DTC P2EA4: Cold Start Ignition Timing Problem

General Description

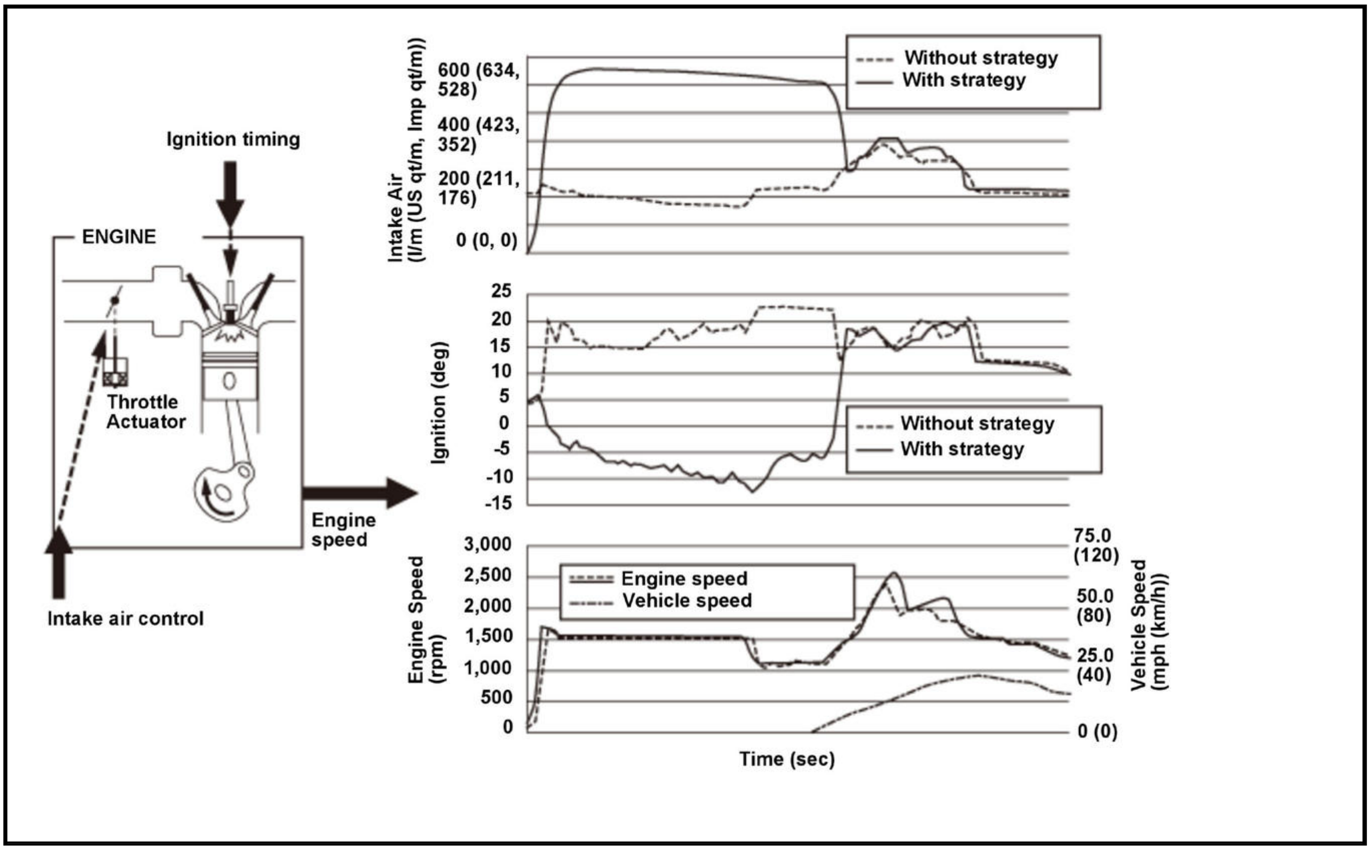

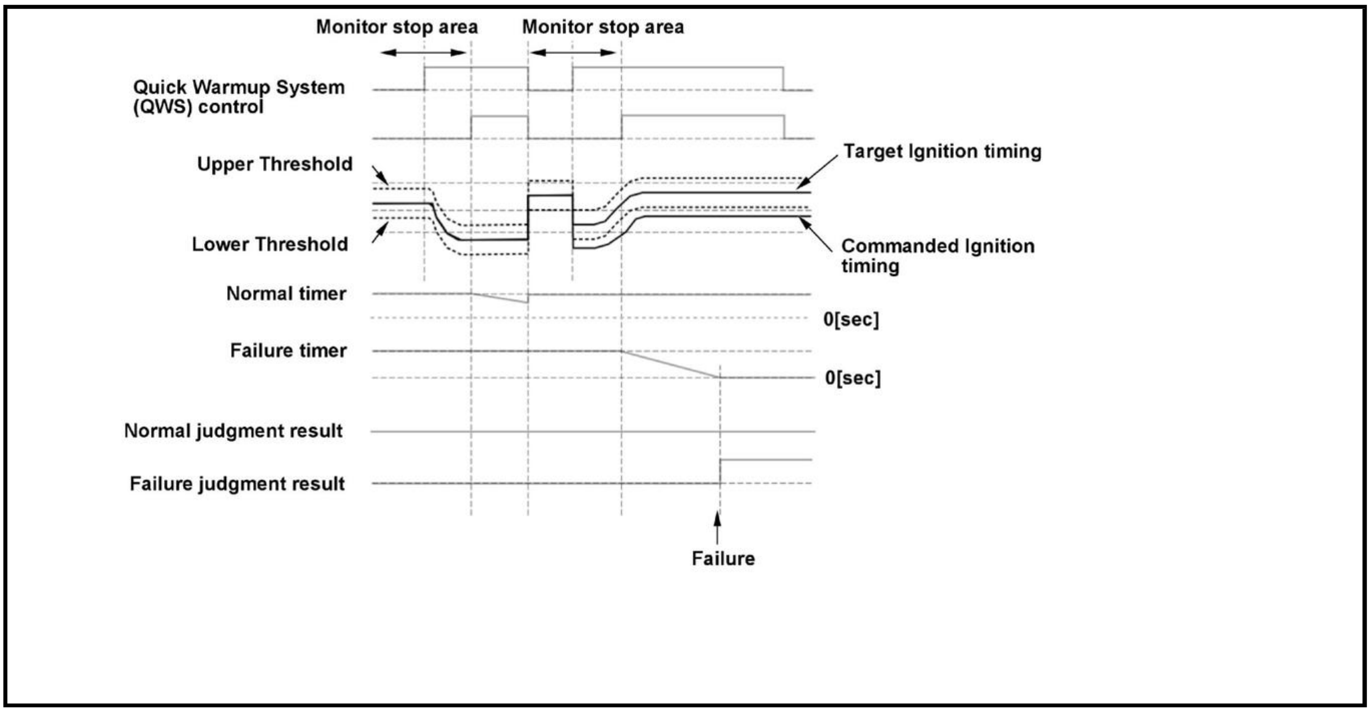

The cold start emission reduction process controls the air fuel ratio to lean when the engine is cold to lower emissions as the catalyst is not warmed up. If the ignition timing has not been retarded to the specified value for a specified time, the powertrain control module (PCM) detects a malfunction and stores a DTC.

Monitor Execution, Sequence, Duration, DTC Type

Execution	Once per driving cycle
Sequence	None
Duration	10.0 seconds or more
DTC Type	Two drive cycles, MIL on

Enable Conditions

Condition	Minimum	Maximum
Engine coolant temperature [ECT Sensor 1]	14 deg.F (-10 deg.C)	176 deg.F (80 deg.C)
Quick warm-up system	Operation	
Accelerator pedal position	Released	
Other	Vehicle stopped	

[ ]: HDS Parameter

Malfunction Threshold

The ignition timing deviation is 2 deg. or more for at least 10.0 seconds.

Possible Cause

NOTE: The causes shown may not be a complete list of all potential problems, and it is possible that there may be other causes.

- PCM internal circuit failure

Confirmation Procedure

Operating Condition

- Leave the vehicle until the engine coolant temperature [ECT Sensor 1] lowers to 122 deg.F (50 deg.C) or less.
- Enter the maintenance mode, then start the engine, and let it idle for at least 10 seconds.

Diagnosis Details

Conditions for setting the DTC

When a malfunction is detected during the first drive cycle with the engine coolant temperature and intake air temperature at engine start-up within the specified temperature range, a Pending DTC is stored in the PCM memory. If the malfunction returns in the next (second) drive cycle with the engine coolant temperature and intake air temperature at engine start-up is within the specified temperature range, the MIL comes on and a Confirmed DTC and the freeze data are stored.

Conditions for clearing the DTC

The MIL is cleared if the malfunction does not return in three consecutive trips in which the diagnostic runs. The MIL, the Pending DTC, the Confirmed DTC, and the freeze data can be cleared with the scan tool Clear command or by disconnecting the 12 volt battery.

DTC P2EC7 (2021)

DTC P2EC7: Cold Start Rocker Arm Oil Control System Problem

General Description

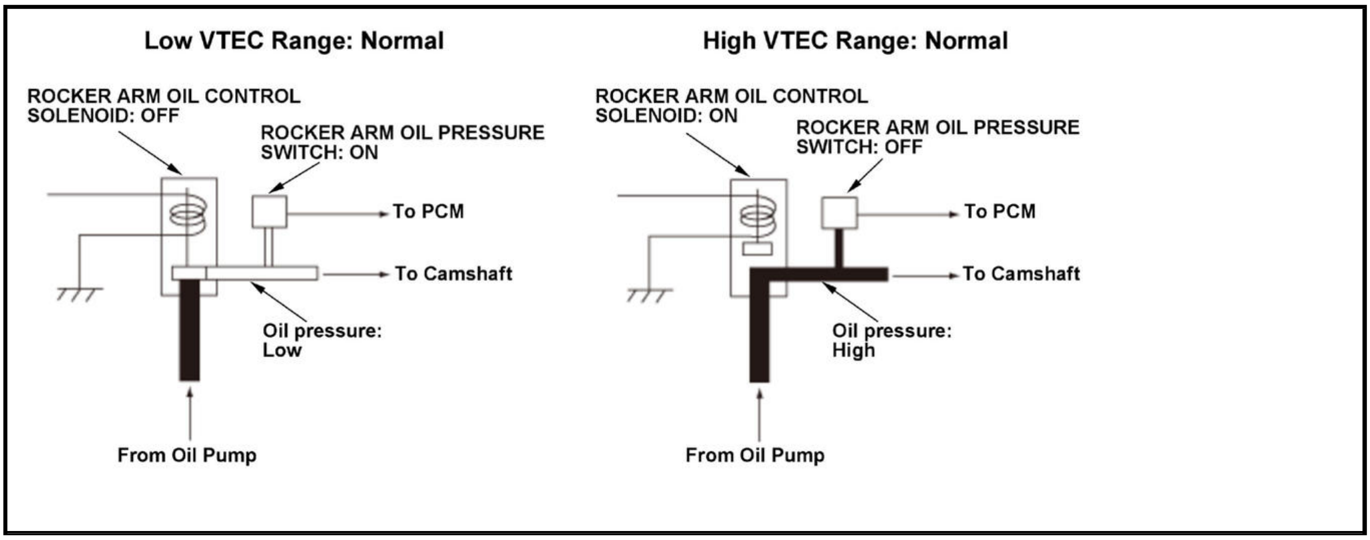
Low VTEC Range: Normal
ROCKER ARM OIL CONTROL SOLENOID: OFF
ROCKER ARM OIL PRESSURE SWITCH: ON
To PCM
To Camshaft
Oil pressure: Low
From Oil Pump
High VTEC Range: Normal
ROCKER ARM OIL CONTROL SOLENOID: ON
ROCKER ARM OIL PRESSURE SWITCH: OFF
To PCM
To Camshaft
Oil pressure: High
From Oil Pump

Logic Decision	Rocker Arm Oil Pressure Switch	
	'ON'	'OFF'
Rocker Arm Oil Control Solenoid Command 'OFF'	Normal	Failure

The cold start emission reduction process controls the air fuel ratio to lean when the engine is cold to lower emissions as the catalyst is not warmed up. If there is a difference between the oil pressure condition in the hydraulic circuit and the status of the rocker arm oil switch as determined by the power control module (PCM), the system is considered faulty, and a DTC is stored.

Monitor Execution, Sequence, Duration, DTC Type

Execution	Once per driving cycle
Sequence	None
Duration	7 seconds or more

DTC Type	Two drive cycles, MIL on

Enable Conditions

Condition	Minimum	Maximum
12 volt battery voltage [Battery]	10.5 V	-
Engine coolant temperature [ECT Sensor 1]	14 deg.F (-10 deg.C)	176 deg.F (80 deg.C)
High voltage battery capacity (SOC)	20 %	B
Quick warm-up system	Operation	
Accelerator pedal position	Released	
Other	Vehicle stopped	

[ ]: HDS Parameter

Malfunction Threshold

When the rocker arm oil control solenoid is OFF, the rocker arm oil pressure switch remains OFF.

Possible Cause

NOTE: The causes shown may not be a complete list of all potential problems, and it is possible that there may be other causes.

- Rocker arm oil control solenoid failure
- Rocker arm oil control solenoid VTS line open
- Rocker arm oil control solenoid VTS line short
- Rocker arm oil pressure switch failure
- Rocker arm oil pressure switch VTM line open
- Rocker arm oil pressure switch VTM line short
- Oil passage clogged

Confirmation Procedure

Operating Condition

- Leave the vehicle to cool the engine.
- Enter the maintenance mode, then start the engine, and let it idle for at least 7 seconds.

Diagnosis Details

Conditions for setting the DTC

When a malfunction is detected during the first drive cycle, a Pending DTC is stored in the PCM memory. If the malfunction returns in the next (second) drive cycle, the MIL comes on and a Confirmed DTC and the freeze data are stored.

Conditions for clearing the DTC

The MIL is cleared if the malfunction does not return in three consecutive trips in which the diagnostic runs. The MIL, the Pending DTC, the Confirmed DTC, and the freeze data can be cleared with the scan tool Clear command or by disconnecting the 12 volt battery.

DTC U0029 (PGM-FI SYSTEM)

DTC U0029: F-CAN Malfunction (BUS-OFF(Powertrain Control Module (PCM)))

General Description

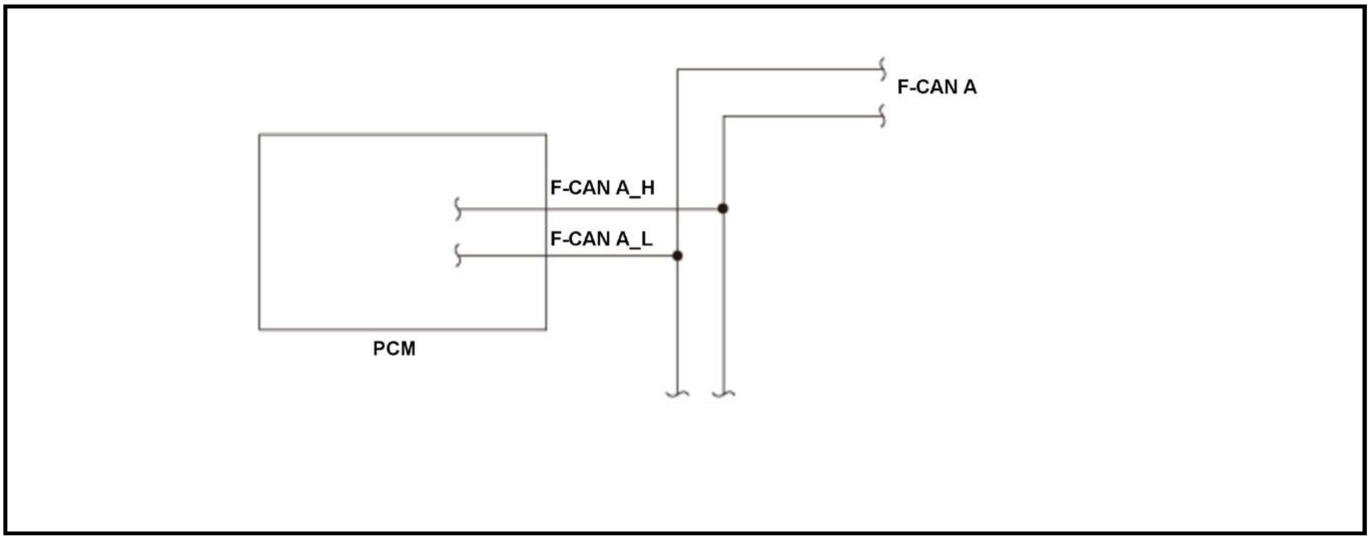

The controller area network (CAN) transmits/receives pulsing signals to/from the control modules simultaneously by using two signal lines (CAN H and CAN L). When the powertrain control module (PCM) cannot send the signals via the F-CAN lines for a set time, the PCM detects a malfunction and stores a DTC.

Monitor Execution, Sequence, Duration, DTC Type

Execution	Continuous
Sequence	None
Duration	1 second or more
DTC Type	One drive cycle, MIL on

Enable Conditions

Condition	Minimum	Maximum
Elapsed time after the vehicle condition is turned to the ON mode	3 seconds	-
12 volt battery voltage [Battery]	10.0 V	-

[ ]: HDS Parameter

Malfunction Threshold

The PCM cannot send any signals via the F-CAN lines for at least 1 second.

Possible Cause

NOTE: The causes shown may not be a complete list of all potential problems, and it is possible that there may be other causes.

- F-CAN circuit F-CAN A_H line open
- F-CAN circuit F-CAN A_L line open
- F-CAN circuit F-CAN A_H line short to ground
- F-CAN circuit F-CAN A_L line short to ground
- PCM internal circuit failure

Diagnosis Details

Conditions for setting the DTC

When a malfunction is detected, the MIL comes on and a Pending DTC, a Confirmed DTC, and the freeze data are stored in the PCM memory.

Conditions for clearing the DTC

The MIL is cleared if the malfunction does not return in three consecutive trips in which the diagnostic runs. The MIL, the Pending DTC, the Confirmed DTC, and the freeze data can be cleared with the scan tool Clear command or by disconnecting the 12 volt battery.

DTC U0038 (PGM-FI SYSTEM)

DTC U0038: EP-CAN Malfunction (BUS-OFF(Powertrain Control Module (PCM))/PT-CAN Malfunction (TCM ECU BUS-OFF))

General Description

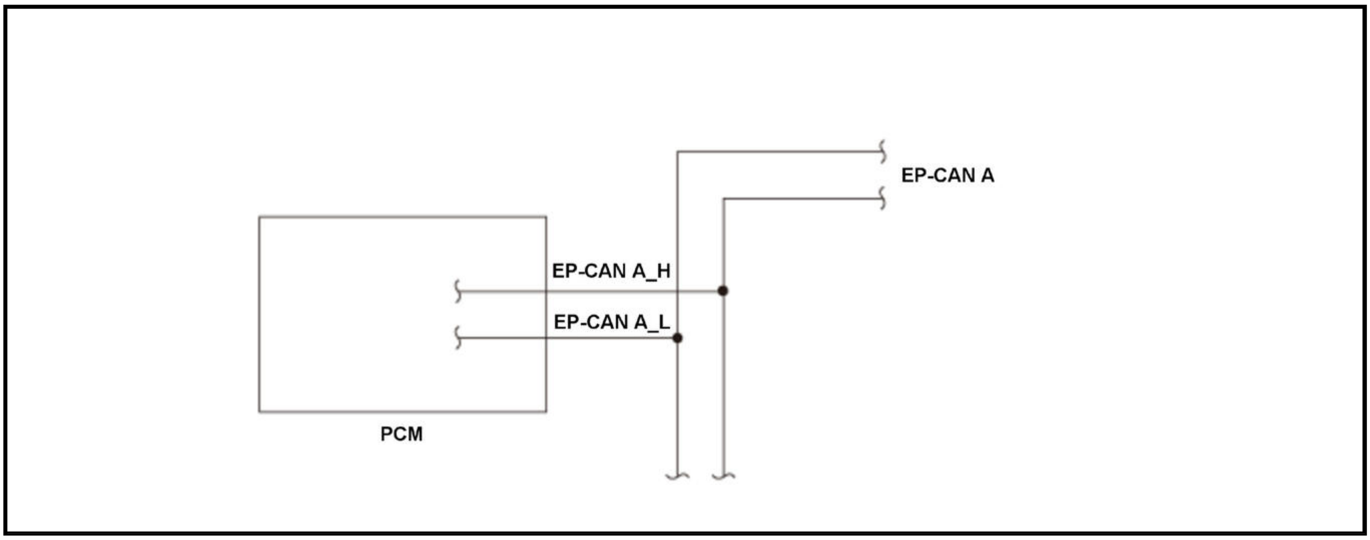

The controller area network (CAN) transmits/receives pulsing signals to/from the control modules simultaneously by using two signal lines (CAN H and CAN L). When the powertrain control module (PCM) cannot receive the signals via the EP-CAN lines for a set time, the PCM detects a malfunction and stores a DTC.

Monitor Execution, Sequence, Duration, DTC Type

Execution	Continuous
Sequence	None
Duration	1 second or more
DTC Type	One drive cycle, MIL on

Enable Conditions

Condition	Minimum	Maximum
Elapsed time after the vehicle condition is turned to the ON mode	3 seconds	-
12 volt battery voltage [Battery]	10.0 V	-

[ ]: HDS Parameter

Malfunction Threshold

The PCM cannot receive any signals via the EP-CAN lines for at least 1 second.

Possible Cause

NOTE: The causes shown may not be a complete list of all potential problems, and it is possible that there may be other causes.

- EP-CAN circuit EP-CAN A_H line open
- EP-CAN circuit EP-CAN A_L line open
- EP-CAN circuit EP-CAN A_H line short to ground
- EP-CAN circuit EP-CAN A_L line short to ground
- PCM internal circuit failure

Diagnosis Details

Conditions for setting the DTC

When a malfunction is detected, the MIL comes on and a Pending DTC, a Confirmed DTC, and the freeze data are stored in the PCM memory.

Conditions for clearing the DTC

The MIL is cleared if the malfunction does not return in three consecutive trips in which the diagnostic runs. The MIL, the Pending DTC, the Confirmed DTC, and the freeze data can be cleared with the scan tool Clear command or by disconnecting the 12 volt battery.

DTC U0047 (PGM-FI SYSTEM)

DTC U0047: F-CAN Malfunction For The Second Channel (BUS-OFF (Powertrain Control Module (PCM)))

General Description

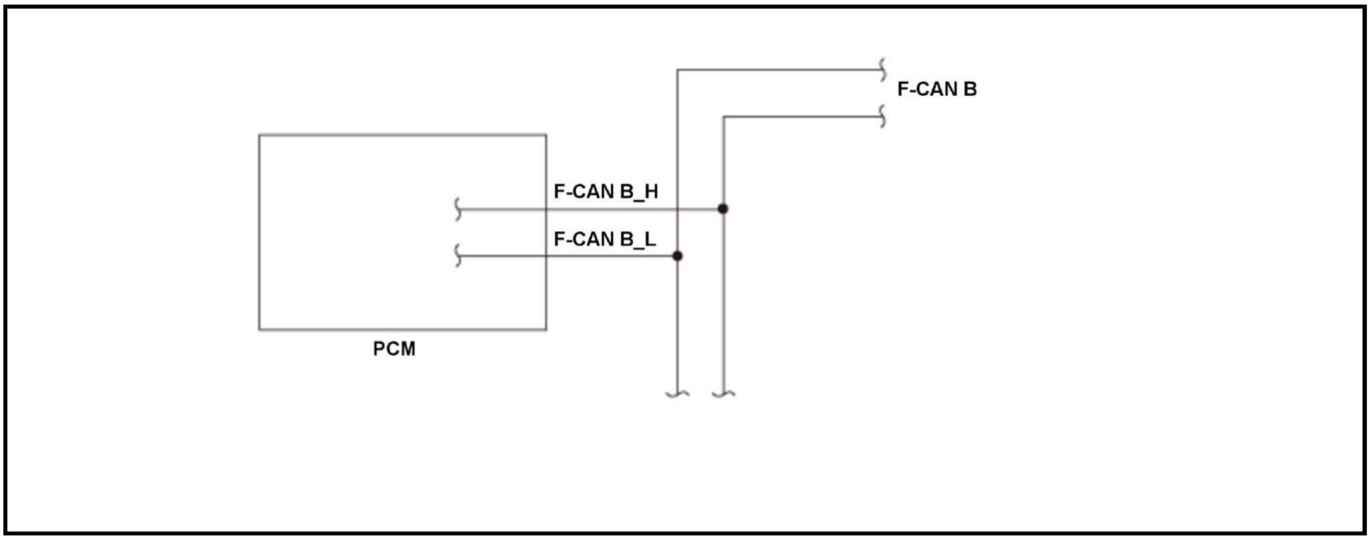

The controller area network (CAN) transmits/receives pulsing signals to/from the control modules simultaneously by using two signal lines (CAN H and CAN L). When the powertrain control module (PCM) cannot receive the signals via the F-CAN lines for a set time, the PCM detects a malfunction and stores a DTC.

Monitor Execution, Sequence, Duration, DTC Type

Execution	Continuous
Sequence	None

Duration	1 second or more
DTC Type	One drive cycle, MIL off

Enable Conditions

Condition	Minimum	Maximum
12 volt battery voltage [Battery]	10.0 V	-

[ ]: HDS Parameter

Malfunction Threshold

The PCM cannot receive any signals via the F-CAN lines for at least 1 second.

Possible Cause

NOTE: The causes shown may not be a complete list of all potential problems, and it is possible that there may be other causes.

- F-CAN circuit F-CAN B_H line open
- F-CAN circuit F-CAN B_L line open
- F-CAN circuit F-CAN B_H line short to ground
- F-CAN circuit F-CAN B_L line short to ground
- PCM internal circuit failure

Diagnosis Details

Conditions for setting the DTC

When a malfunction is detected, a Pending DTC, a Confirmed DTC, and the freeze data are stored in the PCM memory. The MIL does not come on.

Conditions for clearing the DTC

The Pending DTC, the Confirmed DTC, and the freeze data can be cleared with the scan tool Clear command or by disconnecting the 12 volt battery.

DTC U0103 (PGM-FI SYSTEM)

DTC U0103: F-CAN Malfunction (Powertrain Control Module (PCM)-SBW Shifter)

General Description

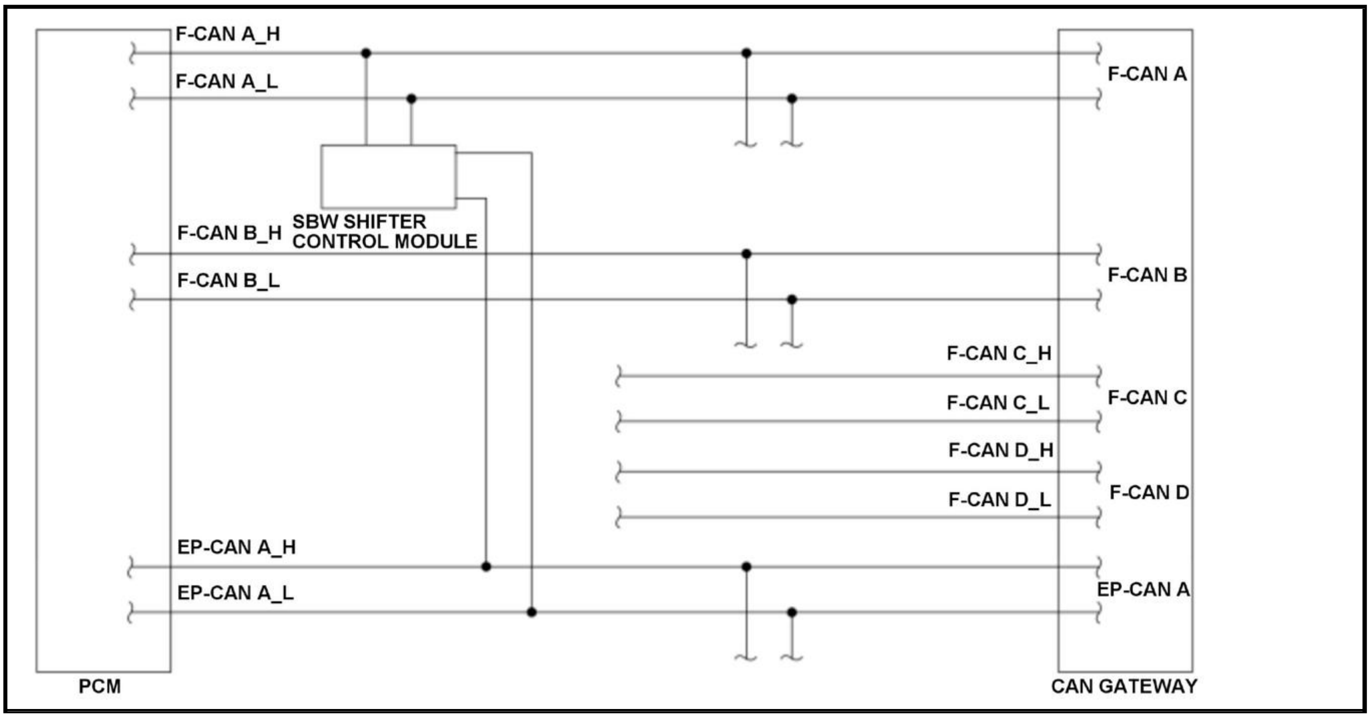
F-CAN A_H
F-CAN A_L
F-CAN A
SBW SHIFTER CONTROL MODULE
F-CAN B_H
F-CAN B_L
F-CAN B
F-CAN C_H
F-CAN C_L
F-CAN C
F-CAN D_H
F-CAN D_L
F-CAN D
EP-CAN A_H
EP-CAN A_L
EP-CAN A
PCM
CAN GATEWAY

The controller area network (CAN) transmits/receives pulsing signals to/from the control modules simultaneously by using two signal lines (CAN H and CAN L). When the powertrain control module (PCM) cannot receive the signals from the shift by wire (SBW) shifter control module via the F-CAN lines for a set time, the PCM detects a malfunction and stores a DTC.

Monitor Execution, Sequence, Duration, DTC Type

Execution	Continuous
Sequence	None
Duration	1.5 seconds or more
DTC Type	One drive cycle, MIL off

Enable Conditions

Condition	Minimum	Maximum
12 volt battery voltage [Battery]	10.0 V	-

[ ]: HDS Parameter

Malfunction Threshold

The PCM cannot receive any signals from the SBW shifter control module via the F-CAN lines for at least 1.5 seconds.

Possible Cause

NOTE: The causes shown may not be a complete list of all potential problems, and it is possible that there may be other causes.

- F-CAN circuit F-CAN A_H line open
- F-CAN circuit F-CAN A_L line open
- F-CAN circuit F-CAN A_H line short to ground
- F-CAN circuit F-CAN A_L line short to ground
- F-CAN circuit F-CAN B_H line open
- F-CAN circuit F-CAN B_L line open

- F-CAN circuit F-CAN B_H line short to ground
- F-CAN circuit F-CAN B_L line short to ground
- SBW shifter control module failure (include fuse blown)
- PCM internal circuit failure

Diagnosis Details

Conditions for setting the DTC

When a malfunction is detected, a Pending DTC, a Confirmed DTC, and the freeze data are stored in the PCM memory. The MIL does not come on.

Conditions for clearing the DTC

The Pending DTC, the Confirmed DTC, and the freeze data can be cleared with the scan tool Clear command or by disconnecting the 12 volt battery.

DTC U0104 (PGM-FI SYSTEM)

DTC U0104: F-CAN Malfunction (Powertrain Control Module (PCM)-Driving Support System Control Unit)

General Description

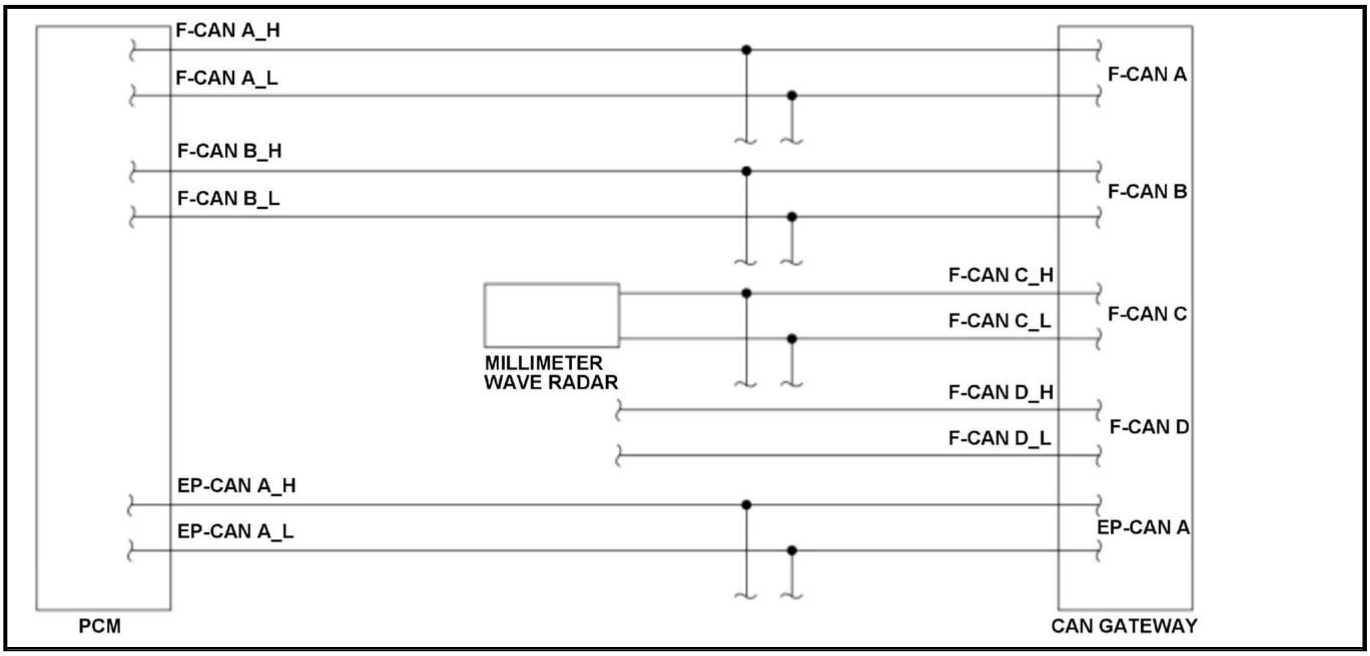

The controller area network (CAN) transmits/receives pulsing signals to/from the control modules simultaneously by using two signal lines (CAN H and CAN L). When the information is not sent from the millimeter wave radar via the F-CAN lines and this condition continues for a specified time or when the information sent from the millimeter wave radar is abnormal and this condition continues for a specified cycle, the powertrain control module (PCM) detects a malfunction and stores a DTC.

Monitor Execution, Sequence, Duration, DTC Type

Execution	Continuous
Sequence	None
Duration	1.5 seconds or more
DTC Type	One drive cycle, MIL off

Enable Conditions

Condition	Minimum	Maximum
Elapsed time after the vehicle condition is turned to the ON mode	3 seconds	-
12 volt battery voltage [Battery]	10.0 V	-

[ ]: HDS Parameter

Malfunction Threshold

Either of the condition is met:

- The PCM cannot receive any signals from the millimeter wave radar via the F-CAN lines for at least 1.5 seconds.
- The information sent from the millimeter wave radar is abnormal at least 20 times.

Possible Cause

NOTE: The causes shown may not be a complete list of all potential problems, and it is possible that there may be other causes.

- F-CAN circuit F-CAN A_H line open
- F-CAN circuit F-CAN A_L line open
- F-CAN circuit F-CAN A_H line short to ground
- F-CAN circuit F-CAN A_L line short to ground
- F-CAN circuit F-CAN B_H line open
- F-CAN circuit F-CAN B_L line open
- F-CAN circuit F-CAN B_H line short to ground
- F-CAN circuit F-CAN B_L line short to ground
- F-CAN circuit F-CAN C_H line open
- F-CAN circuit F-CAN C_L line open
- F-CAN circuit F-CAN C_H line short to ground
- F-CAN circuit F-CAN C_L line short to ground
- Millimeter wave radar failure (include fuse blown)
- PCM internal circuit failure

Diagnosis Details

Conditions for setting the DTC

When a malfunction is detected, a Pending DTC, a Confirmed DTC, and the freeze data are stored in the PCM memory. The MIL does not come on.

Conditions for clearing the DTC

The Pending DTC, the Confirmed DTC, and the freeze data can be cleared with the scan tool Clear command or by disconnecting the 12 volt battery.

DTC U0110 (PGM-FI SYSTEM)

DTC U0110: EP-CAN Malfunction (Powertrain Control Module (PCM)-Motor Control Module)

General Description

This fault code is a general (specified by SAE) DTC that is stored at the time the DTC code U1205 is detected.

DTC U0111 (PGM-FI SYSTEM)

DTC U0111: EP-CAN Malfunction (Powertrain Control Module (PCM)-Battery Condition Monitor Module)

General Description

This fault code is a general (specified by SAE) DTC that is stored at the time the DTC code U1206 is detected.

DTC U0114 (PGM-FI SYSTEM)

DTC U0114: F-CAN Malfunction (Powertrain Control Module (PCM)-AWD Control Unit)

General Description

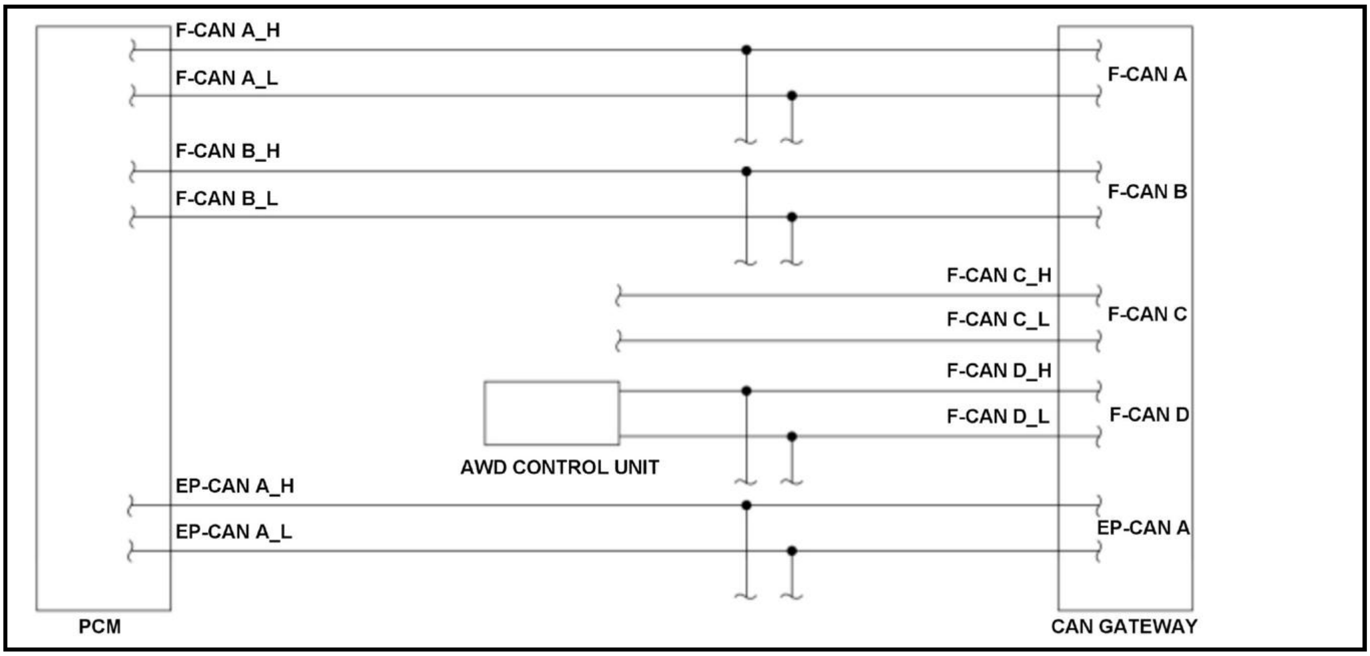
F-CAN A_H
F-CAN A_L
F-CAN A
F-CAN B_H
F-CAN B_L
F-CAN B
F-CAN C_H
F-CAN C_L
F-CAN C
F-CAN D_H
F-CAN D_L
F-CAN D
AWD CONTROL UNIT
EP-CAN A_H
EP-CAN A_L
EP-CAN A
PCM
CAN GATEWAY

The controller area network (CAN) transmits/receives pulsing signals to/from the control modules simultaneously by using two signal lines (CAN H and CAN L). When the information is not sent from the AWD control unit via the F-CAN lines and this condition continues for a specified time or when the information sent from the AWD control unit is abnormal and this condition continues for a specified cycle, the powertrain control module (PCM) detects a malfunction and stores a DTC.

Monitor Execution, Sequence, Duration, DTC Type

Execution	Continuous
Sequence	None
Duration	1.5 seconds or more
DTC Type	One drive cycle, MIL off

Enable Conditions

Condition	Minimum	Maximum
Elapsed time after the vehicle condition is turned to the ON mode	3 seconds	-
12 volt battery voltage [Battery]	10.0 V	-

[ ]: HDS Parameter

Malfunction Threshold

Either of the condition is met:

- The PCM cannot receive any signals from the AWD control unit via the F-CAN lines for at least 1.5 seconds.
- The information sent from the AWD control unit is abnormal at least 20 times.

Possible Cause

NOTE: The causes shown may not be a complete list of all potential problems, and it is possible that there may be other causes.

- F-CAN circuit F-CAN A_H line open
- F-CAN circuit F-CAN A_L line open
- F-CAN circuit F-CAN A_H line short to ground
- F-CAN circuit F-CAN A_L line short to ground
- F-CAN circuit F-CAN B_H line open
- F-CAN circuit F-CAN B_L line open
- F-CAN circuit F-CAN B_H line short to ground
- F-CAN circuit F-CAN B_L line short to ground
- F-CAN circuit F-CAN D_H line open
- F-CAN circuit F-CAN D_L line open
- F-CAN circuit F-CAN D_H line short to ground
- F-CAN circuit F-CAN D_L line short to ground
- AWD control unit failure (include fuse blown)
- PCM internal circuit failure

Diagnosis Details

Conditions for setting the DTC

When a malfunction is detected, a Pending DTC, a Confirmed DTC, and the freeze data are stored in the PCM memory. The MIL does not come on.

Conditions for clearing the DTC

The Pending DTC, the Confirmed DTC, and the freeze data can be cleared with the scan tool Clear command or by disconnecting the 12 volt battery.

DTC U0122 (PGM-FI SYSTEM)

DTC U0122: F-CAN Malfunction (Powertrain Control Module (PCM)-VSA Modulator-Control Unit)

General Description

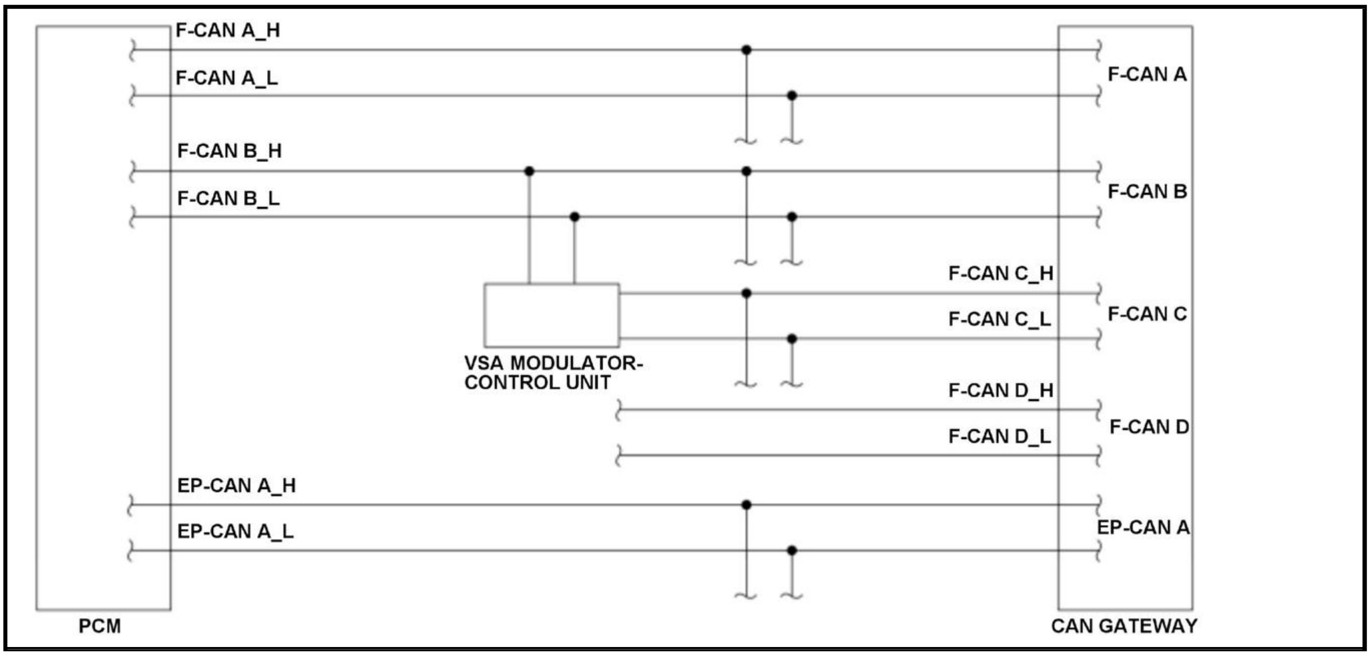

F-CAN A_H
F-CAN A_L
F-CAN A
F-CAN B_H
F-CAN B_L
F-CAN B
F-CAN C_H
F-CAN C_L
F-CAN C
VSA MODULATOR-
CONTROL UNIT
F-CAN D_H
F-CAN D_L
F-CAN D
EP-CAN A_H
EP-CAN A_L
EP-CAN A
PCM
CAN GATEWAY

The controller area network (CAN) transmits/receives pulsing signals to/from the control modules simultaneously by using two signal lines (CAN H and CAN L). When the information is not sent from the VSA modulator-control unit via the F-CAN lines and this condition continues for a specified time or when the information sent from the VSA modulator-control unit is abnormal and this condition continues for a specified cycle, the powertrain control module (PCM) detects a malfunction and stores a DTC.

Monitor Execution, Sequence, Duration, DTC Type

Execution	Continuous
Sequence	None
Duration	1.5 seconds or more
DTC Type	One drive cycle, MIL off

Enable Conditions

Condition	Minimum	Maximum
Elapsed time after the vehicle condition is turned to the ON mode	3 seconds	-
12 volt battery voltage [Battery]	10.0 V	-

[ ]: HDS Parameter

Malfunction Threshold

Either of the condition is met:

- The PCM cannot receive any signals from the VSA modulator-control unit via the F-CAN lines for at least 1.5 seconds.
- The information sent from the VSA modulator-control unit is abnormal at least 20 times.

Possible Cause

NOTE: The causes shown may not be a complete list of all potential problems, and it is possible that there may be other causes.

- F-CAN circuit F-CAN A_H line open
- F-CAN circuit F-CAN A_L line open

- F-CAN circuit F-CAN A_H line short to ground
- F-CAN circuit F-CAN A_L line short to ground
- F-CAN circuit F-CAN B_H line open
- F-CAN circuit F-CAN B_L line open
- F-CAN circuit F-CAN B_H line short to ground
- F-CAN circuit F-CAN B_L line short to ground
- F-CAN circuit F-CAN C_H line open
- F-CAN circuit F-CAN C_L line open
- F-CAN circuit F-CAN C_H line short to ground
- F-CAN circuit F-CAN C_L line short to ground
- VSA modulator-control unit failure (include fuse blown)
- PCM internal circuit failure

Diagnosis Details

Conditions for setting the DTC

When a malfunction is detected, a Pending DTC, a Confirmed DTC, and the freeze data are stored in the PCM memory. The MIL does not come on.

Conditions for clearing the DTC

The Pending DTC, the Confirmed DTC, and the freeze data can be cleared with the scan tool Clear command or by disconnecting the 12 volt battery.

DTC U0129 (PGM-FI SYSTEM)

DTC U0129: F-CAN Malfunction (Powertrain Control Module (PCM)-Electric Servo Brake Control Unit)

General Description

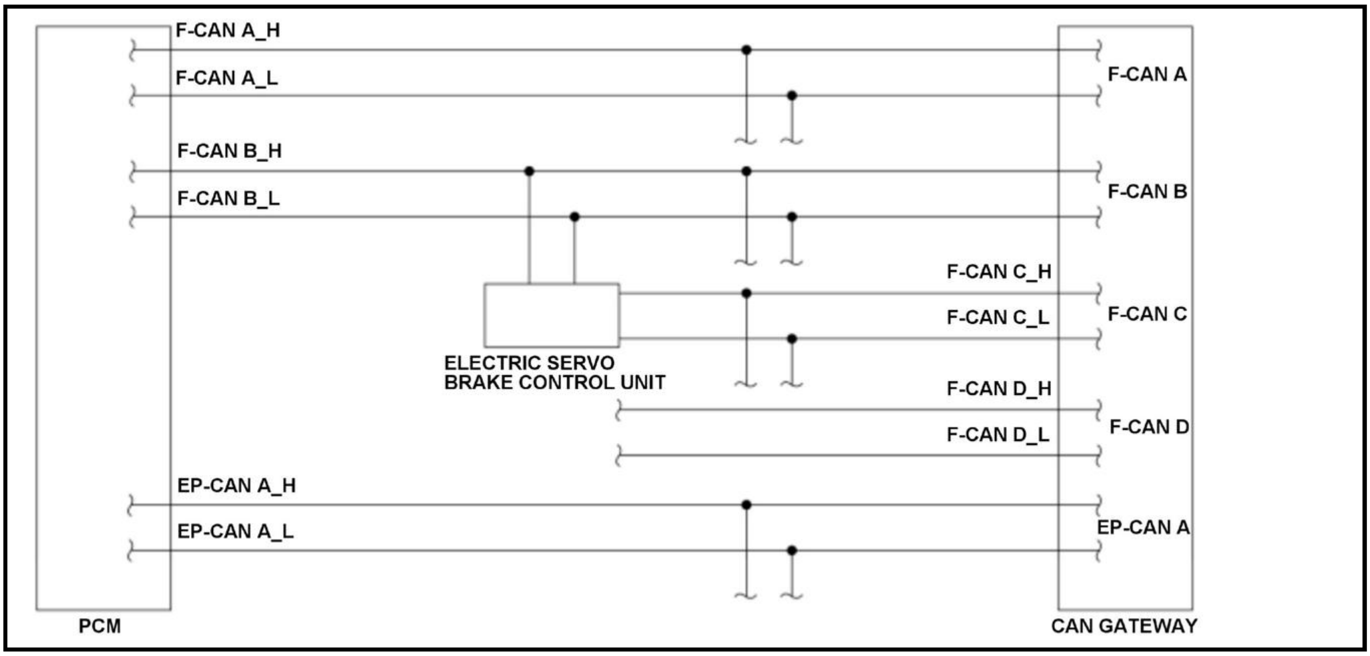

The controller area network (CAN) transmits/receives pulsing signals to/from the control modules simultaneously by using two signal lines (CAN H and CAN L). When the information is not sent from the electric servo brake control unit via the F-CAN lines and this condition continues for a specified time or when the information sent from the electric servo brake control unit is abnormal and this condition continues for a specified cycle, the powertrain control module (PCM) detects a malfunction and stores a DTC.

Monitor Execution, Sequence, Duration, DTC Type

Execution	Continuous
Sequence	None
Duration	1.5 seconds or more
DTC Type	One drive cycle, MIL off

Enable Conditions

Condition	Minimum	Maximum
Elapsed time after the vehicle condition is turned to the ON mode	3 seconds	-
12 volt battery voltage [Battery]	10.0 V	-

[ ]: HDS Parameter

Malfunction Threshold

Either of the condition is met:

- The PCM cannot receive any signals from the electric servo brake control unit via the F-CAN lines for at least 1.5 seconds.
- The information sent from the electric servo brake control unit is abnormal at least 20 times.

Possible Cause

NOTE: The causes shown may not be a complete list of all potential problems, and it is possible that there may be other causes.

- F-CAN circuit F-CAN A_H line open
- F-CAN circuit F-CAN A_L line open
- F-CAN circuit F-CAN A_H line short to ground
- F-CAN circuit F-CAN A_L line short to ground
- F-CAN circuit F-CAN B_H line open
- F-CAN circuit F-CAN B_L line open
- F-CAN circuit F-CAN B_H line short to ground
- F-CAN circuit F-CAN B_L line short to ground
- F-CAN circuit F-CAN C_H line open
- F-CAN circuit F-CAN C_L line open
- F-CAN circuit F-CAN C_H line short to ground
- F-CAN circuit F-CAN C_L line short to ground
- Electric servo brake control unit failure
- PCM internal circuit failure

Diagnosis Details

Conditions for setting the DTC

When a malfunction is detected, a Pending DTC, a Confirmed DTC, and the freeze data are stored in the PCM memory. The MIL does not come on.

Conditions for clearing the DTC

The Pending DTC, the Confirmed DTC, and the freeze data can be cleared with the scan tool Clear command or by disconnecting the 12 volt battery.

DTC U012D (PGM-FI SYSTEM)

DTC U012D: EP-CAN Malfunction (Powertrain Control Module (PCM)-Motor Control Module)

General Description

This fault code is a general (specified by SAE) DTC that is stored at the time the DTC code U12A5 is detected.

DTC U0146 (PGM-FI SYSTEM)

DTC U0146: F-CAN Malfunction (Powertrain Control Module (PCM)-CAN Gateway)

General Description

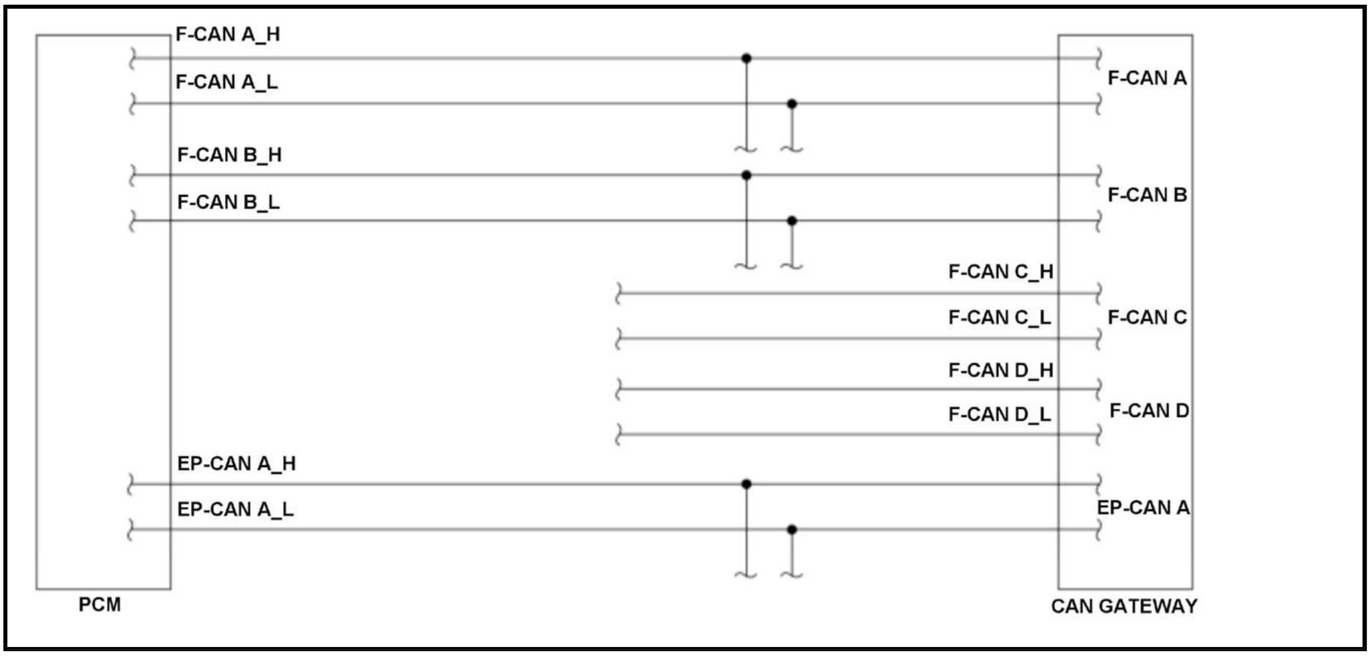

The controller area network (CAN) transmits/receives pulsing signals to/from the control modules simultaneously by using two signal lines (CAN H and CAN L). When the information is not sent from the CAN gateway via the F-CAN lines and this condition continues for a specified time or when the information sent from the CAN gateway is abnormal and this condition continues for a specified cycle, the powertrain control module (PCM) detects a malfunction and stores a DTC.

Monitor Execution, Sequence, Duration, DTC Type

Execution	Continuous
Sequence	None
Duration	1.5 seconds or more
DTC Type	One drive cycle, MIL on

Enable Conditions

Condition	Minimum	Maximum
Elapsed time after the vehicle condition is turned to the ON mode	3 seconds	-
12 volt battery voltage [Battery]	10.0 V	-

[ ]: HDS Parameter

Malfunction Threshold

Either of the condition is met:

- The PCM cannot receive any signals from the CAN gateway via the F-CAN lines for at least 1.5 seconds.
- The information sent from the CAN gateway is abnormal at least 20 times.

Possible Cause

NOTE: The causes shown may not be a complete list of all potential problems, and it is possible that there may be other causes.

- F-CAN circuit F-CAN A_H line open
- F-CAN circuit F-CAN A_L line open
- F-CAN circuit F-CAN A_H line short to ground
- F-CAN circuit F-CAN A_L line short to ground
- F-CAN circuit F-CAN B_H line open
- F-CAN circuit F-CAN B_L line open
- F-CAN circuit F-CAN B_H line short to ground
- F-CAN circuit F-CAN B_L line short to ground
- CAN gateway failure (include fuse blown)
- PCM internal circuit failure

Diagnosis Details

Conditions for setting the DTC

When a malfunction is detected, the MIL comes on and a Pending DTC, a Confirmed DTC, and the freeze data are stored in the PCM memory.

Conditions for clearing the DTC

The MIL is cleared if the malfunction does not return in three consecutive trips in which the diagnostic runs. The MIL, the Pending DTC, the Confirmed DTC, and the freeze data can be cleared with the scan tool Clear command or by disconnecting the 12 volt battery.

DTC U0151 (PGM-FI SYSTEM)

DTC U0151: F-CAN Malfunction (Powertrain Control Module (PCM)-SRS Unit)

General Description

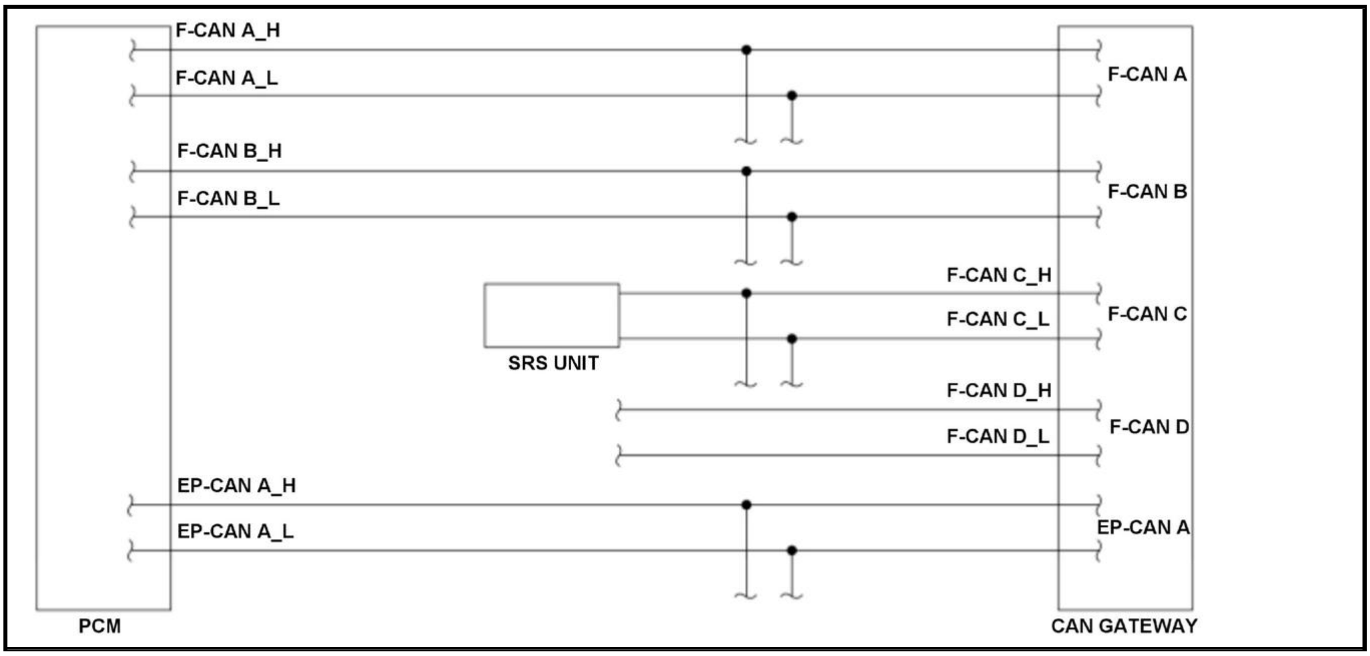

The controller area network (CAN) transmits/receives pulsing signals to/from the control modules simultaneously by using two signal lines (CAN H and CAN L). When the information is not sent from the SRS unit via the F-CAN lines and this condition continues for a specified time or when the information sent from the SRS unit is abnormal and this condition continues for a specified cycle, the powertrain control module (PCM) detects a malfunction and stores a DTC.

Monitor Execution, Sequence, Duration, DTC Type

Execution	Continuous
Sequence	None
Duration	1.5 seconds or more
DTC Type	One drive cycle, MIL off

Enable Conditions

Condition	Minimum	Maximum
Elapsed time after the vehicle condition is turned to the ON mode	3 seconds	-
12 volt battery voltage [Battery]	10.0 V	-

[ ]: HDS Parameter

Malfunction Threshold

Either of the condition is met:

- The PCM cannot receive any signals from the SRS unit via the F-CAN lines for at least 1.5 seconds.
- The information sent from the SRS unit is abnormal at least 20 times.

Possible Cause

NOTE: The causes shown may not be a complete list of all potential problems, and it is possible that there may be other causes.

- F-CAN circuit F-CAN A_H line open
- F-CAN circuit F-CAN A_L line open

- F-CAN circuit F-CAN A_H line short to ground
- F-CAN circuit F-CAN A_L line short to ground
- F-CAN circuit F-CAN B_H line open
- F-CAN circuit F-CAN B_L line open
- F-CAN circuit F-CAN B_H line short to ground
- F-CAN circuit F-CAN B_L line short to ground
- F-CAN circuit F-CAN C_H line open
- F-CAN circuit F-CAN C_L line open
- F-CAN circuit F-CAN C_H line short to ground
- F-CAN circuit F-CAN C_L line short to ground
- SRS unit failure
- PCM internal circuit failure

Diagnosis Details

Conditions for setting the DTC

When a malfunction is detected, a Pending DTC, a Confirmed DTC, and the freeze data are stored in the PCM memory. The MIL does not come on.

Conditions for clearing the DTC

The Pending DTC, the Confirmed DTC, and the freeze data can be cleared with the scan tool Clear command or by disconnecting the 12 volt battery.

DTC U0155 (PGM-FI SYSTEM)

DTC U0155: F-CAN Malfunction (Powertrain Control Module (PCM)-Gauge Control Module)

General Description

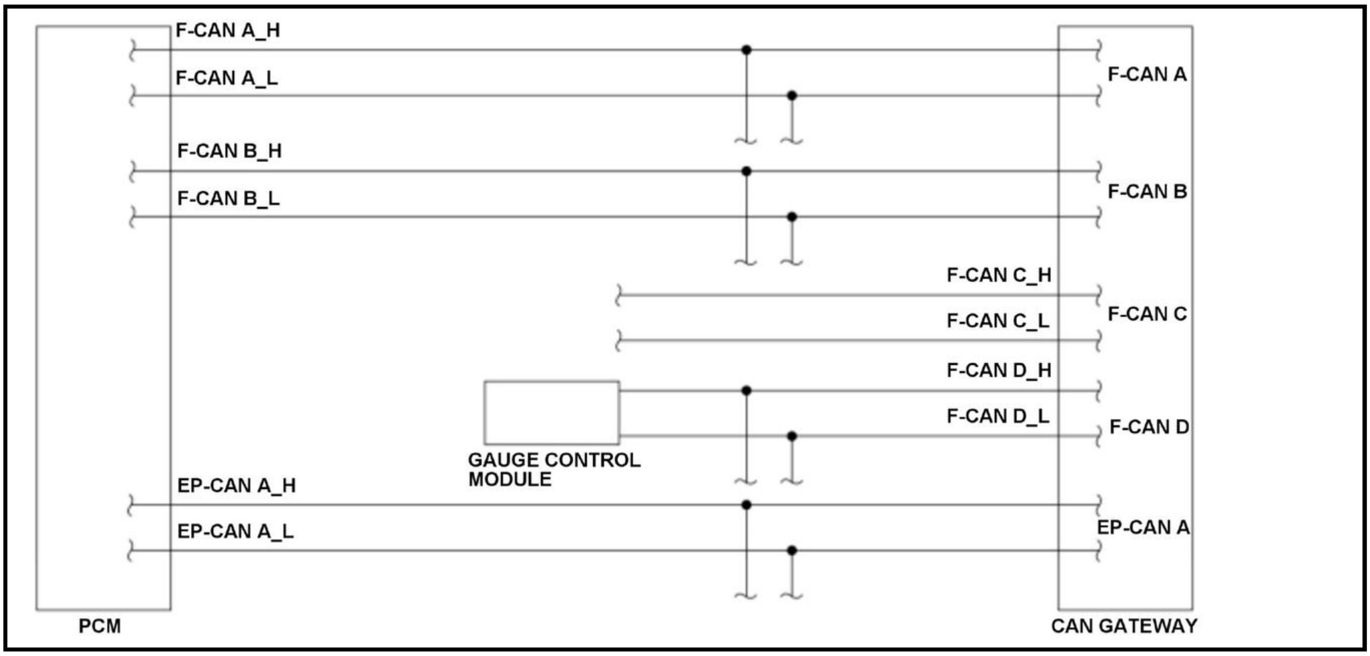

The controller area network (CAN) transmits/receives pulsing signals to/from the control modules simultaneously by using two signal lines (CAN H and CAN L). When the information is not sent from the gauge control module via the F-CAN lines and this condition continues for a specified time or when the information sent from the gauge control module is abnormal and this condition continues for a specified cycle, the powertrain control module (PCM) detects a malfunction and stores a DTC.

Monitor Execution, Sequence, Duration, DTC Type

Execution	Continuous
Sequence	None
Duration	1.5 seconds or more
DTC Type	One drive cycle, MIL on

Enable Conditions

Condition	Minimum	Maximum
Elapsed time after the vehicle condition is turned to the ON mode	3 seconds	-
12 volt battery voltage [Battery]	10.0 V	-

[ ]: HDS Parameter

Malfunction Threshold

Either of the condition is met:

- The PCM cannot receive any signals from the gauge control module via the F-CAN lines for at least 1.5 seconds.
- The information sent from the gauge control module is abnormal at least 20 times.

Possible Cause

NOTE: The causes shown may not be a complete list of all potential problems, and it is possible that there may be other causes.

- F-CAN circuit F-CAN A_H line open
- F-CAN circuit F-CAN A_L line open
- F-CAN circuit F-CAN A_H line short to ground
- F-CAN circuit F-CAN A_L line short to ground
- F-CAN circuit F-CAN B_H line open
- F-CAN circuit F-CAN B_L line open
- F-CAN circuit F-CAN B_H line short to ground
- F-CAN circuit F-CAN B_L line short to ground
- F-CAN circuit F-CAN D_H line open
- F-CAN circuit F-CAN D_L line open
- F-CAN circuit F-CAN D_H line short to ground
- F-CAN circuit F-CAN D_L line short to ground
- Gauge control module failure (include fuse blown)
- PCM internal circuit failure

Diagnosis Details

Conditions for setting the DTC

When a malfunction is detected, the MIL comes on and a Pending DTC, a Confirmed DTC, and the freeze data are stored in the PCM memory.

Conditions for clearing the DTC

The MIL is cleared if the malfunction does not return in three consecutive trips in which the diagnostic runs. The MIL, the Pending DTC, the Confirmed DTC, and the freeze data can be cleared with the scan tool Clear command or by disconnecting the 12 volt battery.

DTC U0301 (PGM-FI SYSTEM)

DTC U0301: PGM-FI System and Transmission System Program Version Mismatch

General Description

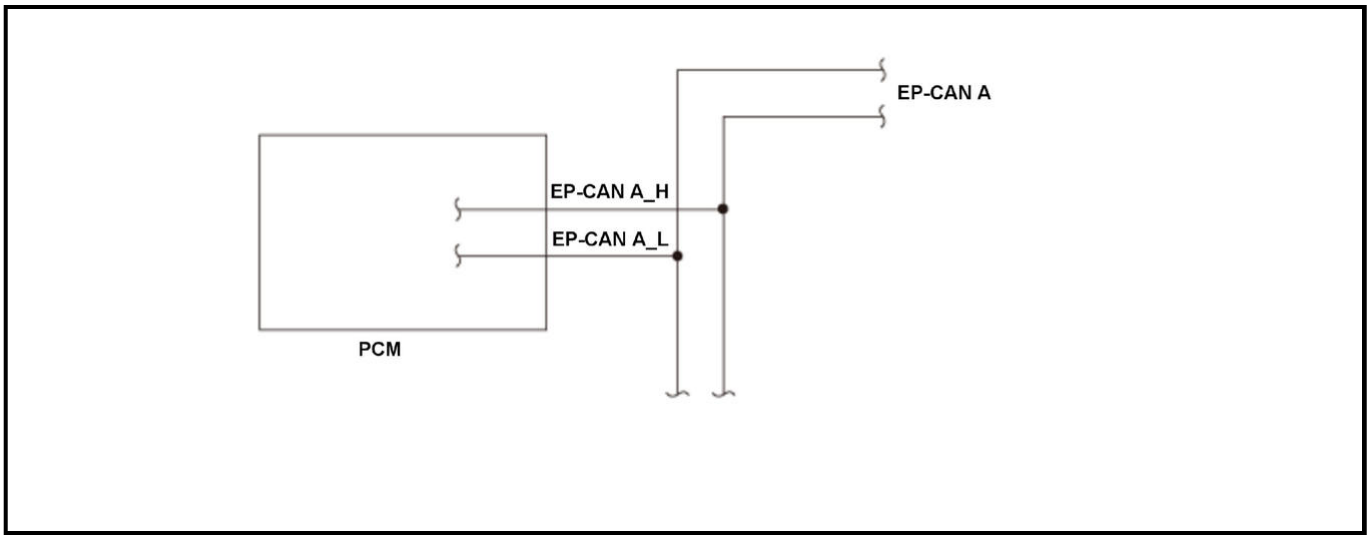

The controller area network (CAN) transmits/receives pulsing signals to/from the control modules simultaneously by using two signal lines (CAN H and CAN L). When the software version in the power control module (PCM) and a various unit are mismatched for a set time, the PCM detects a malfunction and stores a DTC.

Monitor Execution, Sequence, Duration, DTC Type

Execution	Continuous
Sequence	None
Duration	1 second or more
DTC Type	One drive cycle, MIL on

Enable Conditions

Condition	B
Vehicle	ON mode

Malfunction Threshold

The software version in the PCM and a various unit are mismatched for at least 1 second.

Possible Cause

NOTE: The causes shown may not be a complete list of all potential problems, and it is possible that there may be other causes.

- PCM software data not updated

Diagnosis Details

Conditions for setting the DTC

When a malfunction is detected, the MIL comes on and a Pending DTC, a Confirmed DTC, and the freeze data are stored in the PCM memory.

Conditions for clearing the DTC

The MIL is cleared if the malfunction does not return in three consecutive trips in which the diagnostic runs. The MIL, the Pending DTC, the Confirmed DTC, and the freeze data can be cleared with the scan tool Clear command or by disconnecting the 12 volt battery.

DTC U1205 (PGM-FI SYSTEM)

DTC U1205: EP-CAN Malfunction (Powertrain Control Module (PCM)-Motor Control Module)

General Description

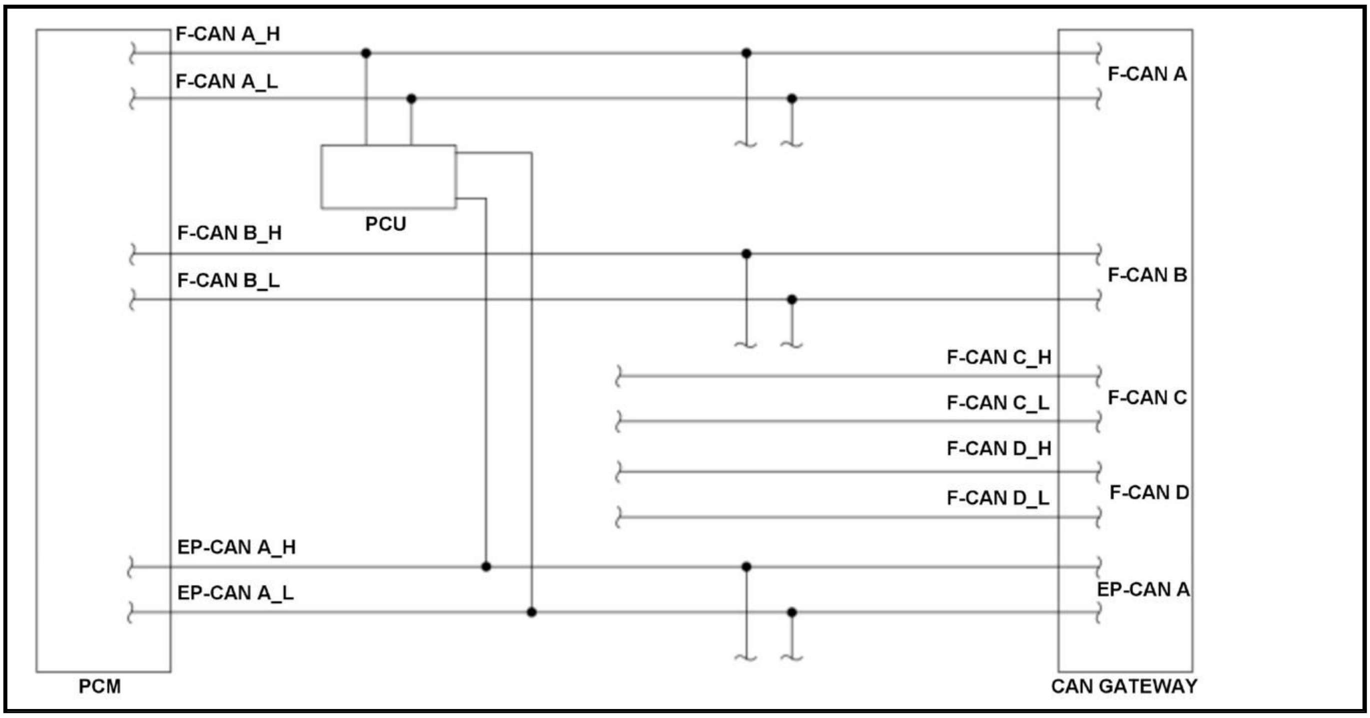

The controller area network (CAN) transmits/receives pulsing signals to/from the control modules simultaneously by using two signal lines (CAN H and CAN L). When the information is not sent from the power control unit (PCU) via the EP-CAN lines and this condition continues for a specified time or when the information sent from the PCU is abnormal and this condition continues for a specified cycle, the powertrain control module (PCM) detects a malfunction and stores a DTC.

Monitor Execution, Sequence, Duration, DTC Type

Execution	Continuous
Sequence	None
Duration	200 milliseconds or more
DTC Type	One drive cycle, MIL on

Enable Conditions

Condition	Minimum	Maximum
Elapsed time after the vehicle condition is turned to the ON mode	3 seconds	-
12 volt battery voltage [Battery]	10.0 V	-

[ ]: HDS Parameter

Malfunction Threshold

Either of the condition is met:

- The PCM cannot receive any signals from the PCU via the EP-CAN lines for at least 200 milliseconds.
- The information sent from the PCU is abnormal at least 20 times.

Possible Cause

NOTE: The causes shown may not be a complete list of all potential problems, and it is possible that there may be other causes.

- EP-CAN circuit EP-CAN A_H line open
- EP-CAN circuit EP-CAN A_L line open
- EP-CAN circuit EP-CAN A_H line short to ground
- EP-CAN circuit EP-CAN A_L line short to ground
- PCU failure (include fuse blown)
- PCM internal circuit failure

Diagnosis Details

Conditions for setting the DTC

When a malfunction is detected, the MIL comes on and a Pending DTC, a Confirmed DTC, and the freeze data are stored in the PCM memory.

Conditions for clearing the DTC

The MIL is cleared if the malfunction does not return in three consecutive trips in which the diagnostic runs. The MIL, the Pending DTC, the Confirmed DTC, and the freeze data can be cleared with the scan tool Clear command or by disconnecting the 12 volt battery.

DTC U1206 (PGM-FI SYSTEM)

DTC U1206: EP-CAN Malfunction (Powertrain Control Module (PCM)-Battery Condition Monitor Module)

General Description

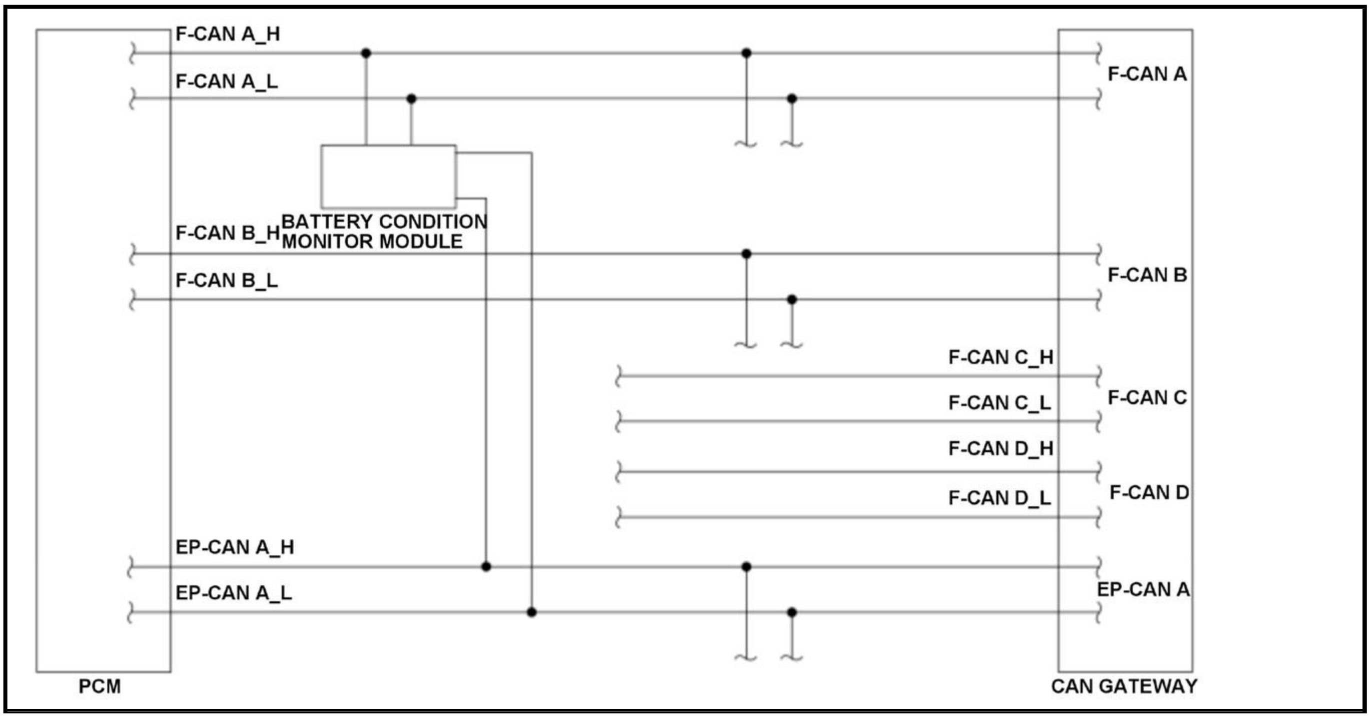
F-CAN A_H
F-CAN A_L
BATTERY CONDITION MONITOR MODULE
F-CAN B_H
F-CAN B_L
F-CAN C_H
F-CAN C_L
F-CAN D_H
F-CAN D_L
EP-CAN A_H
EP-CAN A_L
PCM
F-CAN A
F-CAN B
F-CAN C
F-CAN D
EP-CAN A
CAN GATEWAY

The controller area network (CAN) transmits/receives pulsing signals to/from the control modules simultaneously by using two signal lines (CAN H and CAN L). When the information is not sent from the battery condition monitor module via the EP-CAN lines and this condition continues for a specified time or when the information sent from the battery condition monitor module is abnormal and this condition continues for a specified cycle, the powertrain control module (PCM) detects a malfunction and stores a DTC.

Monitor Execution, Sequence, Duration, DTC Type

Execution	Continuous
Sequence	None
Duration	200 milliseconds or more
DTC Type	One drive cycle, MIL on

Enable Conditions

Condition	Minimum	Maximum
Elapsed time after the vehicle condition is turned to the ON mode	3 seconds	-
12 volt battery voltage [Battery]	10.0 V	-

[ ]: HDS Parameter

Malfunction Threshold

Either of the condition is met:

- The PCM cannot receive any signals from the battery condition monitor module via the EP-CAN lines for at least 200 milliseconds.
- The information sent from the battery condition monitor module is abnormal at least 20 times.

Possible Cause

NOTE: The causes shown may not be a complete list of all potential problems, and it is possible that there may be other causes.

- EP-CAN circuit EP-CAN A_H line open
- EP-CAN circuit EP-CAN A_L line open
- EP-CAN circuit EP-CAN A_H line short to ground
- EP-CAN circuit EP-CAN A_L line short to ground
- Battery condition monitor module failure (include fuse blown)
- PCM internal circuit failure

Diagnosis Details

Conditions for setting the DTC

When a malfunction is detected, the MIL comes on and a Pending DTC, a Confirmed DTC, and the freeze data are stored in the PCM memory.

Conditions for clearing the DTC

The MIL is cleared if the malfunction does not return in three consecutive trips in which the diagnostic runs. The MIL, the Pending DTC, the Confirmed DTC, and the freeze data can be cleared with the scan tool Clear command or by disconnecting the 12 volt battery.

DTC U1207 (PGM-FI SYSTEM)

DTC U1207: F-CAN Malfunction (Powertrain Control Module (PCM)-A/C Compressor Driver)

General Description

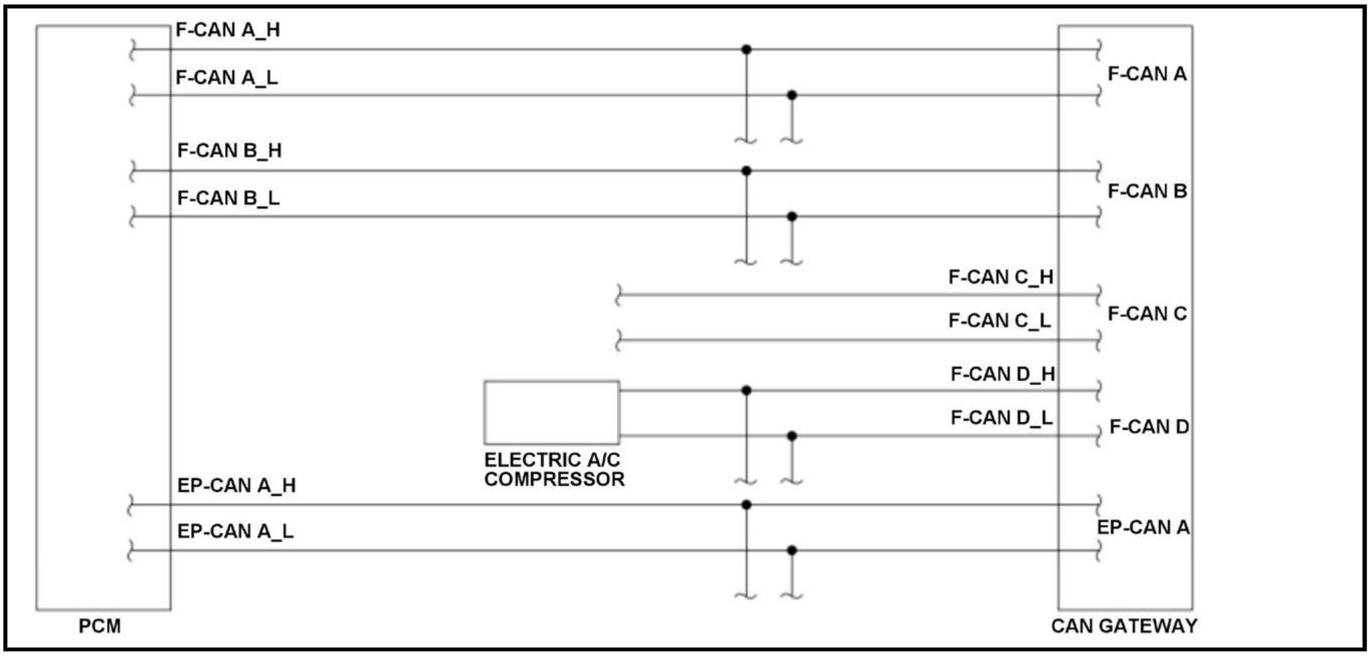

The controller area network (CAN) transmits/receives pulsing signals to/from the control modules simultaneously by using two signal lines (CAN H and CAN L). When the information is not sent from the electric A/C compressor via the F-CAN lines and this condition continues for a specified time or when the information sent from the electric A/C compressor is abnormal and this condition continues for a specified cycle, the powertrain control module (PCM) detects a malfunction and stores a DTC.

Monitor Execution, Sequence, Duration, DTC Type

Execution	Continuous
Sequence	None
Duration	1.5 seconds or more
DTC Type	One drive cycle, MIL off

Enable Conditions

Condition	Minimum	Maximum
Elapsed time after the vehicle condition is turned to the ON mode	3 seconds	-
12 volt battery voltage [Battery]	10.0 V	-

[ ]: HDS Parameter

Malfunction Threshold

Either of the condition is met:

- The PCM cannot receive any signals from the electric A/C compressor via the F-CAN lines for at least 1.5 seconds.
- The information sent from the electric A/C compressor is abnormal at least 20 times.

Possible Cause

NOTE: The causes shown may not be a complete list of all potential problems, and it is possible that there may be other causes.

- F-CAN circuit F-CAN A_H line open
- F-CAN circuit F-CAN A_L line open
- F-CAN circuit F-CAN A_H line short to ground
- F-CAN circuit F-CAN A_L line short to ground
- F-CAN circuit F-CAN B_H line open
- F-CAN circuit F-CAN B_L line open
- F-CAN circuit F-CAN B_H line short to ground
- F-CAN circuit F-CAN B_L line short to ground
- F-CAN circuit F-CAN D_H line open
- F-CAN circuit F-CAN D_L line open
- F-CAN circuit F-CAN D_H line short to ground
- F-CAN circuit F-CAN D_L line short to ground
- Electric A/C compressor failure (include fuse blown)
- PCM internal circuit failure

Diagnosis Details

Conditions for setting the DTC

When a malfunction is detected, a Pending DTC, a Confirmed DTC, and the freeze data are stored in the PCM memory. The MIL does not come on.

Conditions for clearing the DTC

The Pending DTC, the Confirmed DTC, and the freeze data can be cleared with the scan tool Clear command or by disconnecting the 12 volt battery.

DTC U129E (PGM-FI SYSTEM)

DTC U129E: F-CAN Malfunction (Powertrain Control Module (PCM)-Power Control Unit (PCU))

General Description

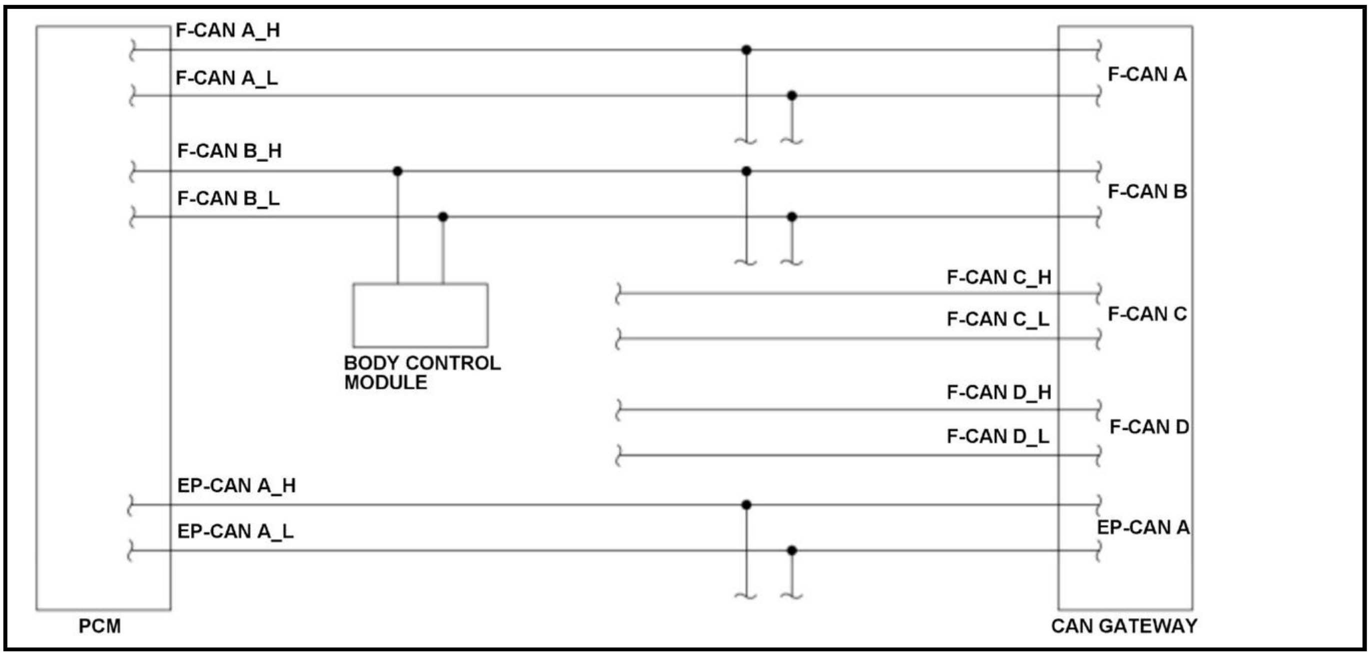
F-CAN A_H
F-CAN A_L
F-CAN A
F-CAN B_H
F-CAN B_L
F-CAN B
F-CAN C_H
F-CAN C_L
F-CAN C
BODY CONTROL MODULE
F-CAN D_H
F-CAN D_L
F-CAN D
EP-CAN A_H
EP-CAN A_L
EP-CAN A
PCM
CAN GATEWAY

The controller area network (CAN) transmits/receives pulsing signals to/from the control modules simultaneously by using two signal lines (CAN H and CAN L). When the information is not sent from the body control module via the F-CAN lines and this condition continues for a specified time or when the information sent from the body control module is abnormal and this condition continues for a specified cycle, the powertrain control module (PCM) detects a malfunction and stores a DTC.

Monitor Execution, Sequence, Duration, DTC Type

Execution	Continuous
Sequence	None
Duration	1.5 seconds or more
DTC Type	One drive cycle, MIL off

Enable Conditions

Condition	Minimum	Maximum
Elapsed time after the vehicle condition is turned to the ON mode	3 seconds	-
12 volt battery voltage [Battery]	10.0 V	-

[ ]: HDS Parameter

Malfunction Threshold

Either of the condition is met:

- The PCM cannot receive any signals from the body control module via the F-CAN lines for at least 1.5 seconds.
- The information sent from the body control module is abnormal at least 20 times.

Possible Cause

NOTE: The causes shown may not be a complete list of all potential problems, and it is possible that there may be other causes.

- F-CAN circuit F-CAN A_H line open
- F-CAN circuit F-CAN A_L line open
- F-CAN circuit F-CAN A_H line short to ground
- F-CAN circuit F-CAN A_L line short to ground
- F-CAN circuit F-CAN B_H line open
- F-CAN circuit F-CAN B_L line open
- F-CAN circuit F-CAN B_H line short to ground
- F-CAN circuit F-CAN B_L line short to ground
- Body control module failure (include fuse blown)
- PCM internal circuit failure

Diagnosis Details

Conditions for setting the DTC

When a malfunction is detected, a Pending DTC, a Confirmed DTC, and the freeze data are stored in the PCM memory. The MIL does not come on.

Conditions for clearing the DTC

The Pending DTC, the Confirmed DTC, and the freeze data can be cleared with the scan tool Clear command or by disconnecting the 12 volt battery.

DTC U12A5 (PGM-FI SYSTEM)

DTC U12A5: EP-CAN Malfunction (Powertrain Control Module (PCM)-Motor Control Module)

General Description

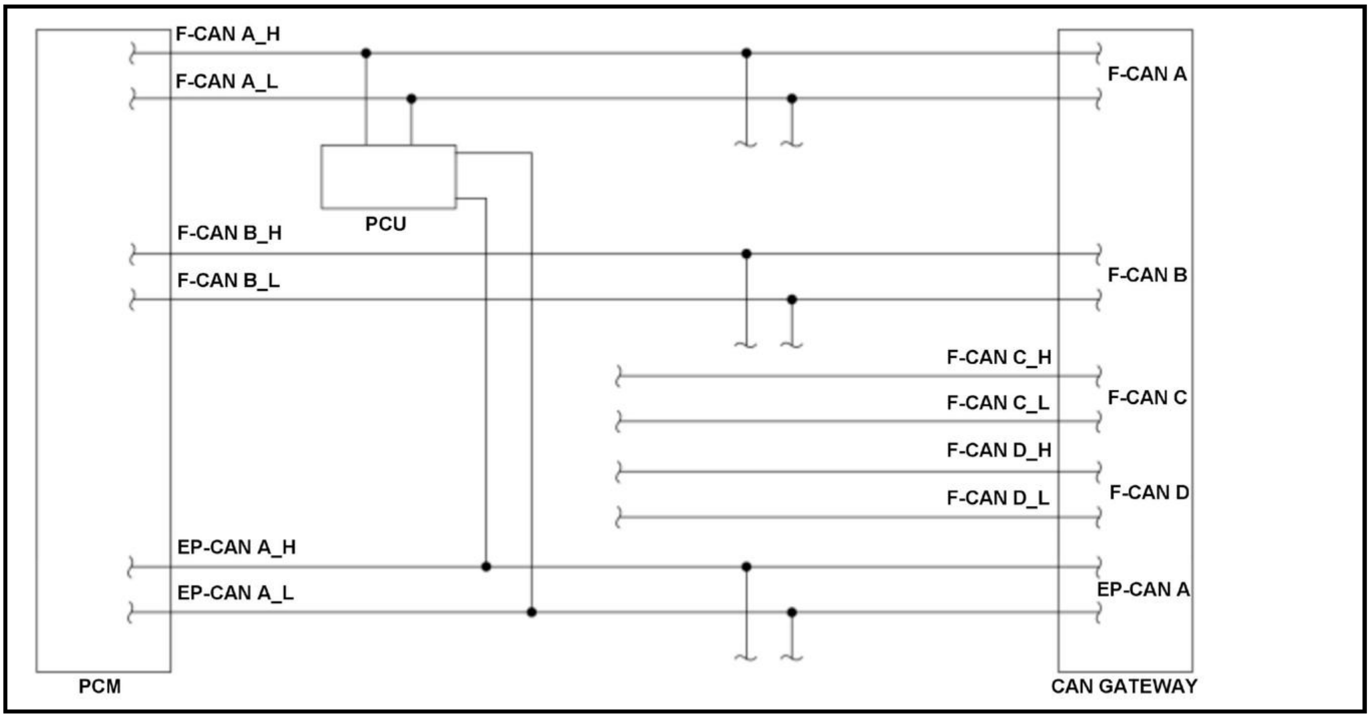

The controller area network (CAN) transmits/receives pulsing signals to/from the control modules simultaneously by using two signal lines (CAN H and CAN L). When the information is not sent from the power control unit (PCU) via the EP-CAN lines and this condition continues for a specified time or when the information sent from the PCU is abnormal and this condition continues for a specified cycle, the powertrain control module (PCM) detects a malfunction and stores a DTC.

Monitor Execution, Sequence, Duration, DTC Type

Execution	Continuous
Sequence	None
Duration	200 milliseconds or more
DTC Type	One drive cycle, MIL on

Enable Conditions

Condition	Minimum	Maximum
Elapsed time after the vehicle condition is turned to the ON mode	3 seconds	-
12 volt battery voltage [Battery]	10.0 V	-

[ ]: HDS Parameter

Malfunction Threshold

Either of the condition is met:

- The PCM cannot receive any signals from the PCU via the EP-CAN lines for at least 200 milliseconds.
- The information sent from the PCU is abnormal at least 20 times.

Possible Cause

NOTE: The causes shown may not be a complete list of all potential problems, and it is possible that there may be other causes.

- EP-CAN circuit EP-CAN A_H line open
- EP-CAN circuit EP-CAN A_L line open
- EP-CAN circuit EP-CAN A_H line short to ground
- EP-CAN circuit EP-CAN A_L line short to ground
- PCU failure (include fuse blown)
- PCM internal circuit failure

Diagnosis Details

Conditions for setting the DTC

When a malfunction is detected, the MIL comes on and a Pending DTC, a Confirmed DTC, and the freeze data are stored in the PCM memory.

Conditions for clearing the DTC

The MIL is cleared if the malfunction does not return in three consecutive trips in which the diagnostic runs. The MIL, the Pending DTC, the Confirmed DTC, and the freeze data can be cleared with the scan tool Clear command or by disconnecting the 12 volt battery.

DTC U12AA (PGM-FI SYSTEM)

DTC U12AA: EP-CAN Malfunction (Powertrain Control Module (PCM)-SBW Shifter)

General Description

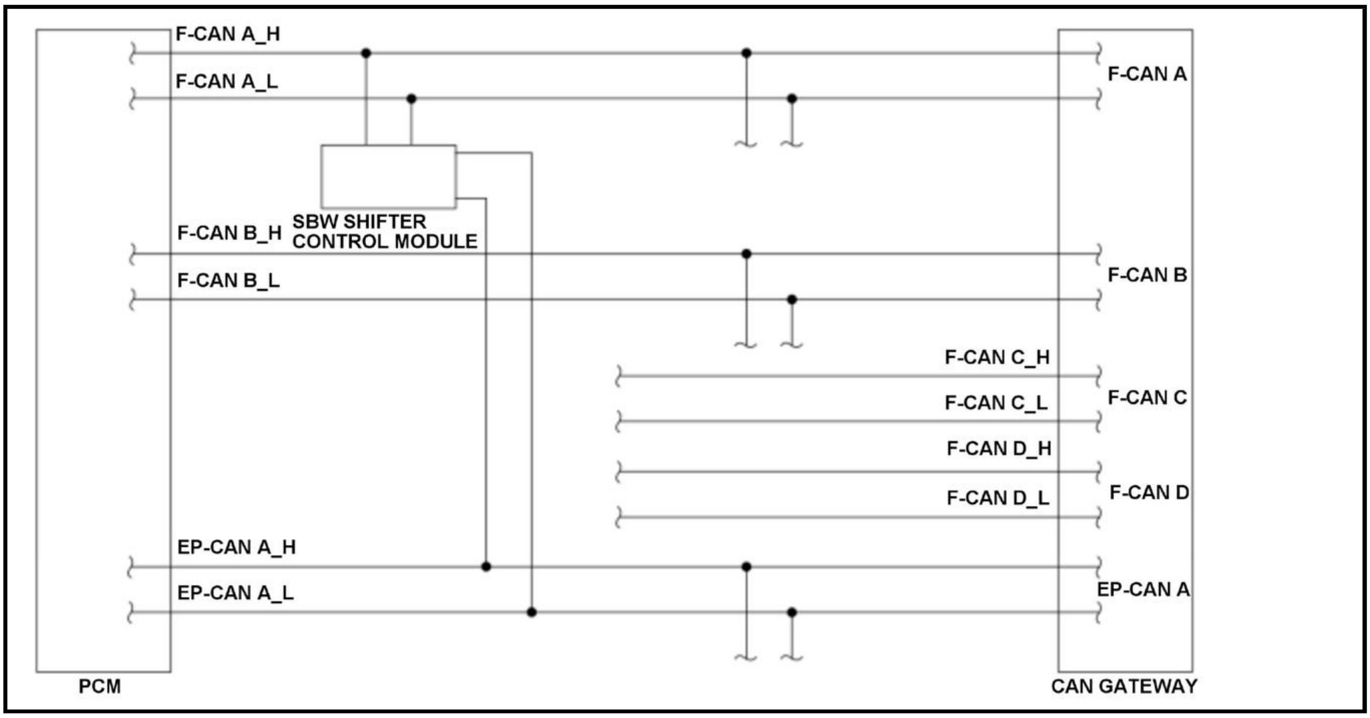
F-CAN A_H
F-CAN A_L
F-CAN A
SBW SHIFTER CONTROL MODULE
F-CAN B_H
F-CAN B_L
F-CAN B
F-CAN C_H
F-CAN C_L
F-CAN C
F-CAN D_H
F-CAN D_L
F-CAN D
EP-CAN A_H
EP-CAN A_L
EP-CAN A
PCM
CAN GATEWAY

The controller area network (CAN) transmits/receives pulsing signals to/from the control modules simultaneously by using two signal lines (CAN H and CAN L). When the powertrain control module (PCM) cannot receive the signals from the shift by wire (SBW) shifter control module via the EP-CAN lines for a set time, the PCM detects a malfunction and stores a DTC.

Monitor Execution, Sequence, Duration, DTC Type

Execution	Continuous
Sequence	None
Duration	1 second or more
DTC Type	One drive cycle, MIL off

Enable Conditions

Condition	Minimum	Maximum
Elapsed time after the vehicle condition is turned to the ON mode	3 seconds	-
12 volt battery voltage [Battery]	10.0 V	-

[ ]: HDS Parameter

Malfunction Threshold

The PCM cannot receive any signals from the SBW shifter control module via the EP-CAN lines for at least 1 second.

Possible Cause

NOTE: The causes shown may not be a complete list of all potential problems, and it is possible that there may be other causes.

- EP-CAN circuit EP-CAN A_H line open
- EP-CAN circuit EP-CAN A_L line open
- EP-CAN circuit EP-CAN A_H line short to ground

- EP-CAN circuit EP-CAN A_L line short to ground
- SBW shifter control module failure (include fuse blown)
- PCM internal circuit failure

Diagnosis Details

Conditions for setting the DTC

When a malfunction is detected, a Pending DTC, a Confirmed DTC, and the freeze data are stored in the PCM memory. The MIL does not come on.

Conditions for clearing the DTC

The Pending DTC, the Confirmed DTC, and the freeze data can be cleared with the scan tool Clear command or by disconnecting the 12 volt battery.

DTC U12B4 (PGM-FI SYSTEM)

DTC U12B4: EP-CAN Malfunction (Powertrain Control Module (PCM)-Park Pawl Actuator Driver Unit))

General Description

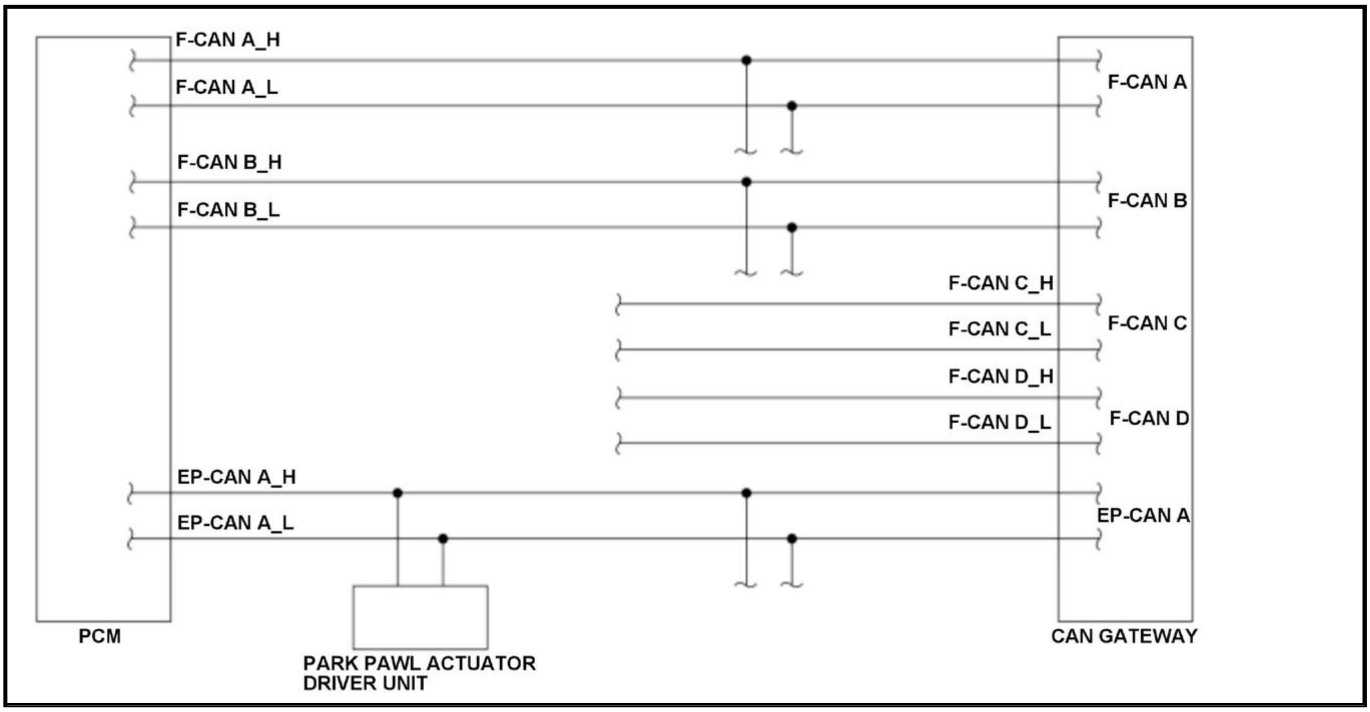
F-CAN A_H
F-CAN A_L
F-CAN B_H
F-CAN B_L
F-CAN C_H
F-CAN C_L
F-CAN D_H
F-CAN D_L
EP-CAN A_H
EP-CAN A_L
F-CAN A
F-CAN B
F-CAN C
F-CAN D
EP-CAN A
PCM
PARK PAWL ACTUATOR DRIVER UNIT
CAN GATEWAY

The controller area network (CAN) transmits/receives pulsing signals to/from the control modules simultaneously by using two signal lines (CAN H and CAN L). When the information is not sent from the park pawl actuator driver unit via the EP-CAN lines and this condition continues for a specified time or when the information sent from the park pawl actuator driver unit is abnormal and this condition continues for a specified cycle, the powertrain control module (PCM) detects a malfunction and stores a DTC.

Monitor Execution, Sequence, Duration, DTC Type

Execution	Continuous
Sequence	None
Duration	1.5 seconds or more
DTC Type	One drive cycle, MIL off

Enable Conditions

Condition	Minimum	Maximum
Elapsed time after the vehicle condition is turned to the ON mode	3 seconds	-
12 volt battery voltage [Battery]	10.0 V	-

[ ]: HDS Parameter

Malfunction Threshold

Either of the condition is met:

- The PCM cannot receive any signals from the park pawl actuator driver unit via the EP-CAN lines for at least 1.5 seconds.
- The information sent from the park pawl actuator driver unit is abnormal at least 20 times.

Possible Cause

NOTE: The causes shown may not be a complete list of all potential problems, and it is possible that there may be other causes.

- EP-CAN circuit EP-CAN A_H line open
- EP-CAN circuit EP-CAN A_L line open
- EP-CAN circuit EP-CAN A_H line short to ground
- EP-CAN circuit EP-CAN A_L line short to ground
- Park pawl actuator driver unit failure (include fuse blown)
- PCM internal circuit failure

Diagnosis Details

Conditions for setting the DTC

When a malfunction is detected, a Pending DTC, a Confirmed DTC, and the freeze data are stored in the PCM memory. The MIL does not come on.

Conditions for clearing the DTC

The Pending DTC, the Confirmed DTC, and the freeze data can be cleared with the scan tool Clear command or by disconnecting the 12 volt battery.

DTC U1603 (PGM-FI SYSTEM)

DTC U1603: F-CAN Malfunction (Powertrain Control Module (PCM)-Battery Condition Monitor Module)

General Description

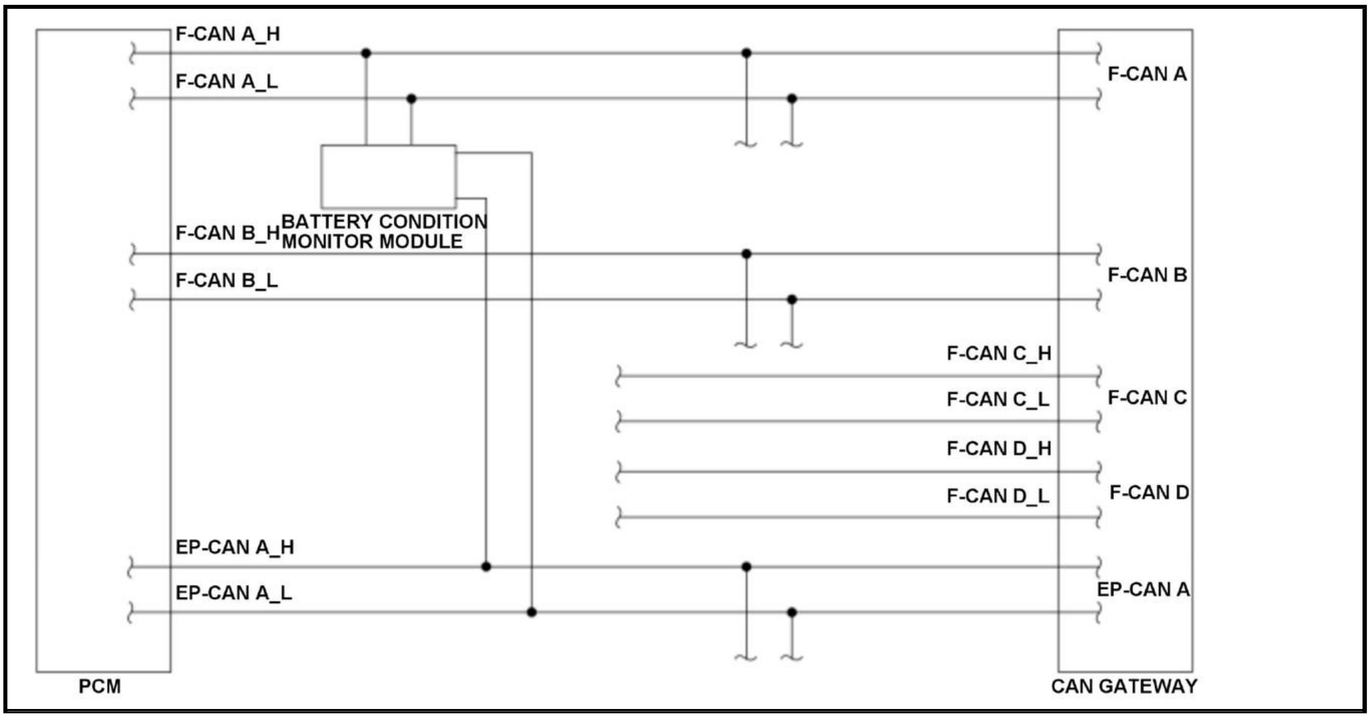
F-CAN A_H
F-CAN A_L
F-CAN A
BATTERY CONDITION MONITOR MODULE
F-CAN B_H
F-CAN B_L
F-CAN B
F-CAN C_H
F-CAN C_L
F-CAN C
F-CAN D_H
F-CAN D_L
F-CAN D
EP-CAN A_H
EP-CAN A_L
EP-CAN A
PCM
CAN GATEWAY

The controller area network (CAN) transmits/receives pulsing signals to/from the control modules simultaneously by using two signal lines (CAN H and CAN L). When the information is not sent from the battery condition monitor module via the F-CAN lines and this condition continues for a specified time or when the information sent from the battery condition monitor module is abnormal and this condition continues for a specified cycle, the powertrain control module (PCM) detects a malfunction and stores a DTC.

Monitor Execution, Sequence, Duration, DTC Type

Execution	Continuous
Sequence	None
Duration	1.5 seconds or more
DTC Type	One drive cycle, MIL off

Enable Conditions

Condition	Minimum	Maximum
Elapsed time after the vehicle condition is turned to the ON mode	3 seconds	-
12 volt battery voltage [Battery]	10.0 V	-

[ ]: HDS Parameter

Malfunction Threshold

Either of the condition is met:

- The PCM cannot receive any signals from the battery condition monitor module via the F-CAN lines for at least 1.5 seconds.
- The information sent from the battery condition monitor module is abnormal at least 20 times.

Possible Cause

NOTE: The causes shown may not be a complete list of all potential problems, and it is possible that there may be other causes.

- F-CAN circuit F-CAN A_H line open
- F-CAN circuit F-CAN A_L line open
- F-CAN circuit F-CAN A_H line short to ground
- F-CAN circuit F-CAN A_L line short to ground
- F-CAN circuit F-CAN B_H line open
- F-CAN circuit F-CAN B_L line open
- F-CAN circuit F-CAN B_H line short to ground
- F-CAN circuit F-CAN B_L line short to ground
- Battery condition monitor module failure (include fuse blown)
- PCM internal circuit failure

Diagnosis Details

Conditions for setting the DTC

When a malfunction is detected, a Pending DTC, a Confirmed DTC, the freeze data, and the on-board snapshot are stored in the PCM memory. The MIL does not come on.

Conditions for clearing the DTC

The Pending DTC, the Confirmed DTC, the freeze data, and the on-board snapshot can be cleared with the scan tool Clear command or by disconnecting the 12 volt battery.

DTC U1604 (PGM-FI SYSTEM)

DTC U1604: F-CAN Malfunction (Powertrain Control Module (PCM)-Motor Control Module)

General Description

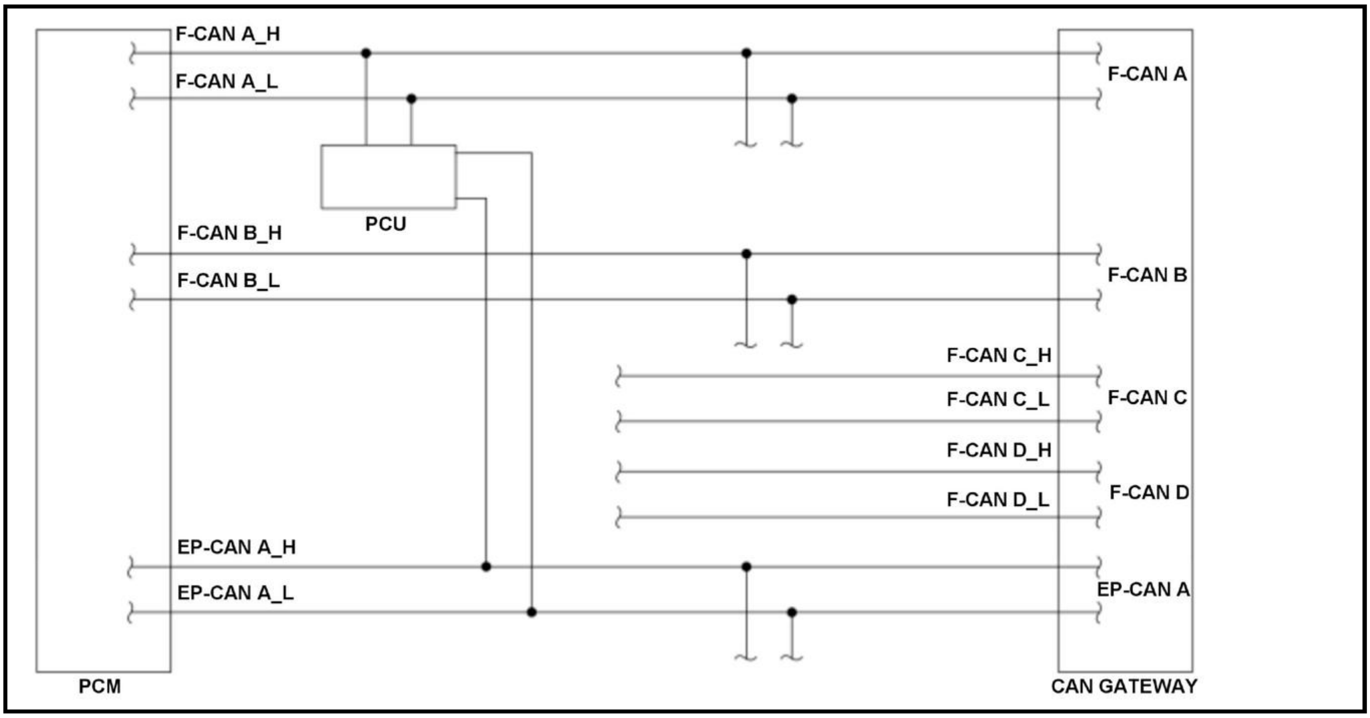

The controller area network (CAN) transmits/receives pulsing signals to/from the control modules simultaneously by using two signal lines (CAN H and CAN L). When the information is not sent from the power control unit (PCU) via the F-CAN lines and this condition continues for a specified time or when the information sent from the PCU is abnormal and this condition continues for a specified cycle, the powertrain control module (PCM) detects a malfunction and stores a DTC.

Monitor Execution, Sequence, Duration, DTC Type

Execution	Continuous
Sequence	None
Duration	1.5 seconds or more
DTC Type	One drive cycle, MIL off

Enable Conditions

Condition	Minimum	Maximum
Elapsed time after the vehicle condition is turned to the ON mode	3 seconds	-
12 volt battery voltage [Battery]	10.0 V	-

[ ]: HDS Parameter

Malfunction Threshold

Either of the condition is met:

- The PCM cannot receive any signals from the PCU via the F-CAN lines for at least 1.5 seconds.
- The information sent from the PCU is abnormal at least 20 times.

Possible Cause

NOTE: The causes shown may not be a complete list of all potential problems, and it is possible that there may be other causes.

- F-CAN circuit F-CAN A_H line open
- F-CAN circuit F-CAN A_L line open
- F-CAN circuit F-CAN A_H line short to ground
- F-CAN circuit F-CAN A_L line short to ground
- F-CAN circuit F-CAN B_H line open
- F-CAN circuit F-CAN B_L line open
- F-CAN circuit F-CAN B_H line short to ground
- F-CAN circuit F-CAN B_L line short to ground
- PCU failure (include fuse blown)
- PCM internal circuit failure

Diagnosis Details

Conditions for setting the DTC

When a malfunction is detected, a Pending DTC, a Confirmed DTC, the freeze data, and the on-board snapshot are stored in the PCM memory. The MIL does not come on.

Conditions for clearing the DTC

The Pending DTC, the Confirmed DTC, the freeze data, and the on-board snapshot can be cleared with the scan tool Clear command or by disconnecting the 12 volt battery.

DTC U1605 (PGM-FI SYSTEM)

DTC U1605: F-CAN Malfunction (Powertrain Control Module (PCM)-Motor Control Module)

General Description

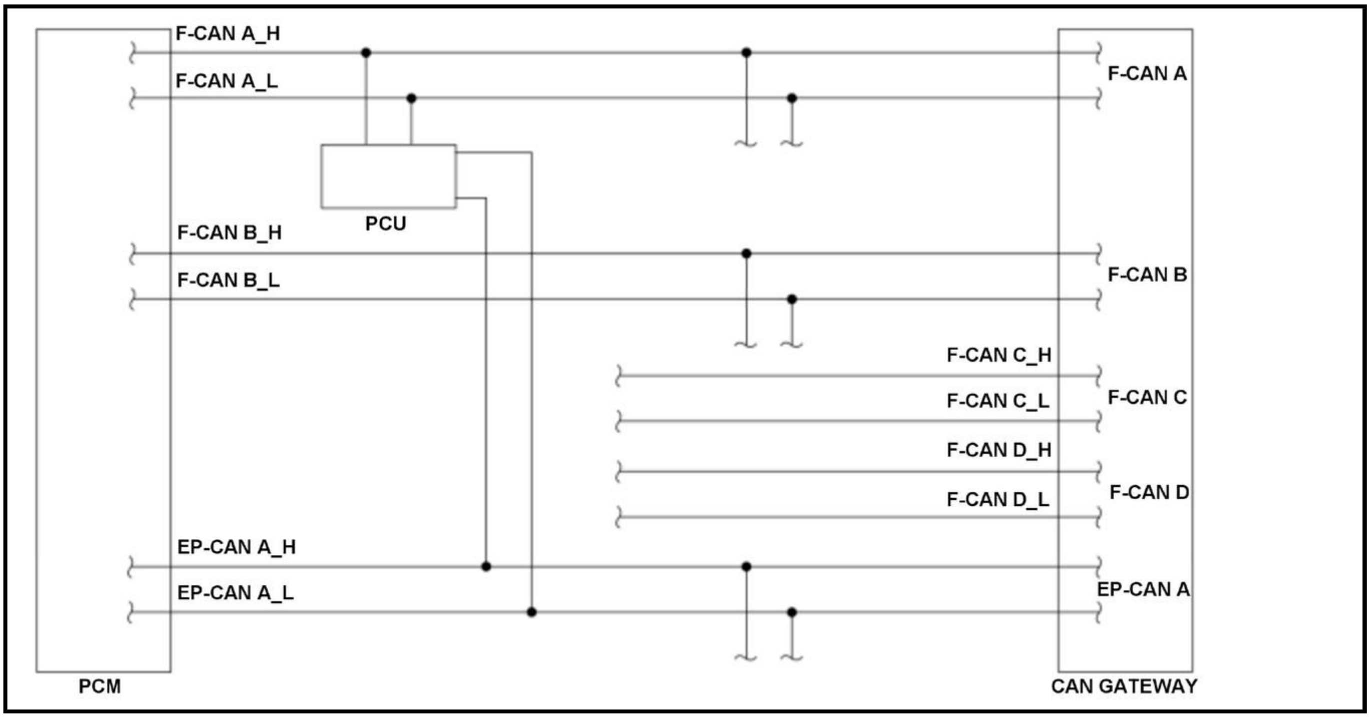
F-CAN A_H
F-CAN A_L
PCU
F-CAN B_H
F-CAN B_L
F-CAN C_H
F-CAN C_L
F-CAN D_H
F-CAN D_L
EP-CAN A_H
EP-CAN A_L
PCM
F-CAN A
F-CAN B
F-CAN C
F-CAN D
EP-CAN A
CAN GATEWAY

The controller area network (CAN) transmits/receives pulsing signals to/from the control modules simultaneously by using two signal lines (CAN H and CAN L). When the information is not sent from the power control unit (PCU) via the F-CAN lines and this condition continues for a specified time or when the information sent from the PCU is abnormal and this condition continues for a specified cycle, the powertrain control module (PCM) detects a malfunction and stores a DTC.

Monitor Execution, Sequence, Duration, DTC Type

Execution	Continuous
Sequence	None
Duration	1.5 seconds or more
DTC Type	One drive cycle, MIL off

Enable Conditions

Condition	Minimum	Maximum
Elapsed time after the vehicle condition is turned to the ON mode	3 seconds	-
12 volt battery voltage [Battery]	10.0 V	-

[ ]: HDS Parameter

Malfunction Threshold

Either of the condition is met:

- The PCM cannot receive any signals from the PCU via the F-CAN lines for at least 1.5 seconds.
- The information sent from the PCU is abnormal at least 20 times.

Possible Cause

NOTE: The causes shown may not be a complete list of all potential problems, and it is possible that there may be other causes.

- F-CAN circuit F-CAN A_H line open
- F-CAN circuit F-CAN A_L line open
- F-CAN circuit F-CAN A_H line short to ground
- F-CAN circuit F-CAN A_L line short to ground
- F-CAN circuit F-CAN B_H line open
- F-CAN circuit F-CAN B_L line open
- F-CAN circuit F-CAN B_H line short to ground
- F-CAN circuit F-CAN B_L line short to ground
- PCU failure (include fuse blown)
- PCM internal circuit failure

Diagnosis Details

Conditions for setting the DTC

When a malfunction is detected, a Pending DTC, a Confirmed DTC, the freeze data, and the on-board snapshot are stored in the PCM memory. The MIL does not come on.

Conditions for clearing the DTC

The Pending DTC, the Confirmed DTC, the freeze data, and the on-board snapshot can be cleared with the scan tool Clear command or by disconnecting the 12 volt battery.

DTC TROUBLESHOOTING

DTC P0010 (1.5 L ENGINE)

DTC P0010 : VTC Oil Control Solenoid Valve A Malfunction

NOTE: Before you troubleshoot, review the general troubleshooting information .

DTC Description	Confirmed DTC	Pending DTC
P0010 VTC Oil Control Solenoid Valve A Malfunction	B	B

DTC (PGM-FI)

1. Problem verification

   -1. Turn the vehicle to the ON mode.

   -2. Clear the DTC with the HDS.

   -3. Turn the vehicle to the OFF (LOCK) mode.

   -4. Start the engine. Hold the engine speed at 3, 000 rpm without load (in P or N) until the radiator fan comes on, then let it idle.

   -5. Select the VTC TEST in the INSPECTION MENU with the HDS, then select the IN-VTC.

   VTC TEST

   Check for Pending or Confirmed DTCs with the HDS.

DTC Description	Confirmed DTC	Pending DTC
P0010 VTC Oil Control Solenoid Valve A Malfunction	B	B

   Is DTC P0010 indicated?

   YES

   Go to step 2.

   NO

   Intermittent failure, the system is OK at this time. Check for poor connections or loose terminals at VTC oil control solenoid valve A and the PCM. If the on-board snapshot of this DTC is recorded, try to reproduce the failure under the same conditions with the on-board snapshot .

2. VTC oil control solenoid valve A internal resistance check

   -1. Turn the vehicle to the OFF (LOCK) mode.

   -2. Disconnect the following connector.

VTC oil control solenoid valve A 2P connector

   -3. At the solenoid valve side, measure the resistance between test points 1 and 2.

Test condition	Vehicle OFF (LOCK) mode
B	VTC oil control solenoid valve A 2P connector: disconnected
Test point 1	VTC oil control solenoid valve A 2P connector (male terminals) No. 1 (solenoid valve side): ①
Test point 2	VTC oil control solenoid valve A 2P connector (male terminals) No. 2 (solenoid valve side): ①

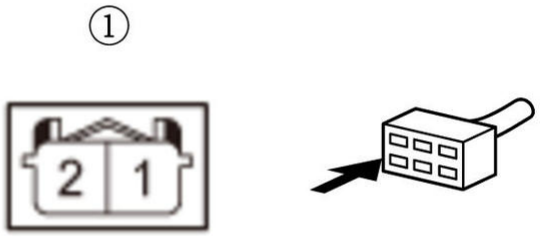

Is there 6.77-8.27 Ω at room temperature?

YES

Go to step 3.

NO

Replace VTC oil control solenoid valve A .

3. Open wire check (PG line)

-1. Check for continuity between test points 1 and 2.

Test condition	Vehicle OFF (LOCK) mode
B	VTC oil control solenoid valve A 2P connector: disconnected
Test point 1	VTC oil control solenoid valve A 2P connector (female terminals) No. 2: ①
Test point 2	Body ground

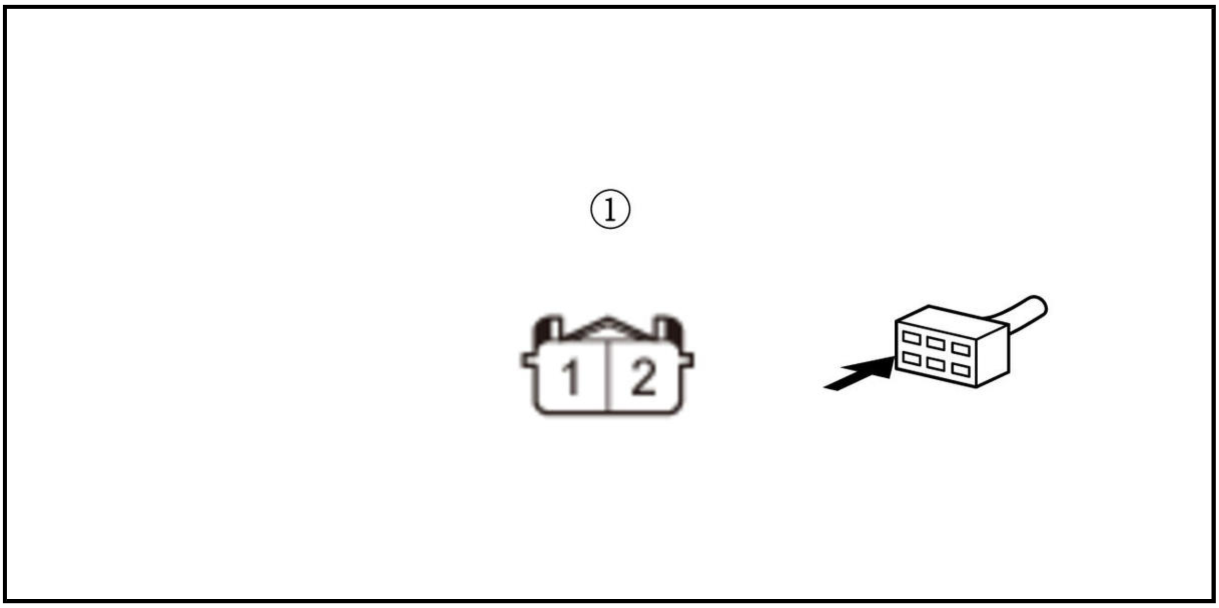

Is there continuity?

YES

The PG wire is OK. Go to step 4.

NO

Repair an open in the PG wire between VTC oil control solenoid valve A and G101.

4. Shorted wire check (VTC (IN) line)

-1. Jump the SCS line with the HDS, and wait more than 1 minute.

-2. Disconnect the following connector.

PCM connector E (80P)

-3. Check for continuity between test points 1 and 2.

Test condition	Vehicle OFF (LOCK) mode
B	VTC oil control solenoid valve A 2P connector: disconnected
B	PCM connector E (80P): disconnected
Test point 1	VTC oil control solenoid valve A 2P connector (female terminals) No. 1: ①
Test point 2	Body ground

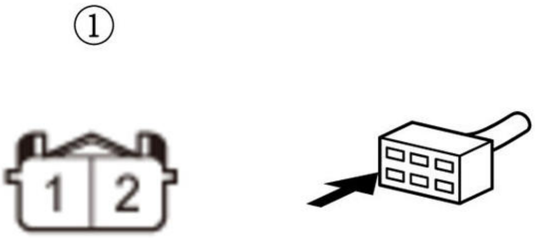

Is there continuity?

YES

Repair a short in the VTC (IN) wire between the PCM (E64) and VTC oil control solenoid valve A.

NO

Go to step 5.

5. Open wire check (VTC (IN) line)

-1. Check for continuity between test points 1 and 2.

Test condition	Vehicle OFF (LOCK) mode
B	VTC oil control solenoid valve A 2P connector: disconnected
B	PCM connector E (80P): disconnected
Test point 1	VTC oil control solenoid valve A 2P connector (female terminals) No. 1: ①
Test point 2	**PCM connector E (80P) No. 64**

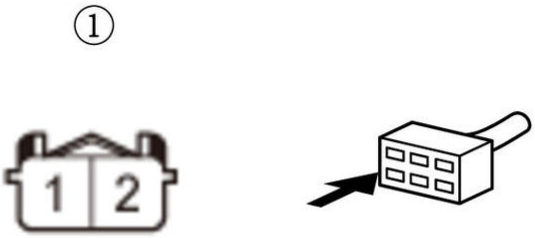

Is there continuity?

YES

The VTC (IN) wire is OK. Check for any authorized service information related to the DTCs or symptoms you are troubleshooting, or **substitute a known-good PCM** .

NO

Repair an open in the VTC (IN) wire between the PCM (E64) and VTC oil control solenoid valve A.

DTC P0010 (2.4 L ENGINE) (2017 2018 2019)

DTC P0010 : VTC Oil Control Solenoid Valve Malfunction

NOTE: Before you troubleshoot, **review the general troubleshooting information** .

DTC Description	Confirmed DTC	Pending DTC
P0010 VTC Oil Control Solenoid Valve Malfunction	B	B

DTC (PGM-FI)

1. Problem verification

-1. Turn the vehicle to the ON mode.

-2. Clear the DTC with the HDS.

-3. Start the engine. Hold the engine speed at 3, 000 rpm without load (in P or N) until the radiator fan comes on, then let it idle.

-4. Select the VTC TEST in the INSPECTION MENU with the HDS.

VTC TEST

Check for Pending or Confirmed DTCs with the HDS.

DTC Description	Confirmed DTC	Pending DTC
P0010 VTC Oil Control Solenoid Valve Malfunction	B	B

Is DTC P0010 indicated?

YES

The failure is duplicated. Go to step 2.

NO

Intermittent failure, the system is OK at this time. Check for poor connections or loose terminals at the VTC oil control solenoid valve and the PCM. **If the on-board snapshot of this DTC is recorded, try to reproduce the failure under the same conditions with the on-board snapshot** .

2. VTC oil control solenoid valve internal resistance check

-1. Turn the vehicle to the OFF (LOCK) mode.

-2. Disconnect the following connector.

VTC oil control solenoid valve 2P connector

-3. At the VTC oil control solenoid valve side, measure the resistance between test points 1 and 2.

Test condition	Vehicle OFF (LOCK) mode
B	VTC oil control solenoid valve 2P connector: disconnected
Test point 1	VTC oil control solenoid valve 2P connector (male terminals) No. 1 (VTC oil control solenoid valve side): ①
Test point 2	VTC oil control solenoid valve 2P connector (male terminals) No. 2 (VTC oil control solenoid valve side): ①

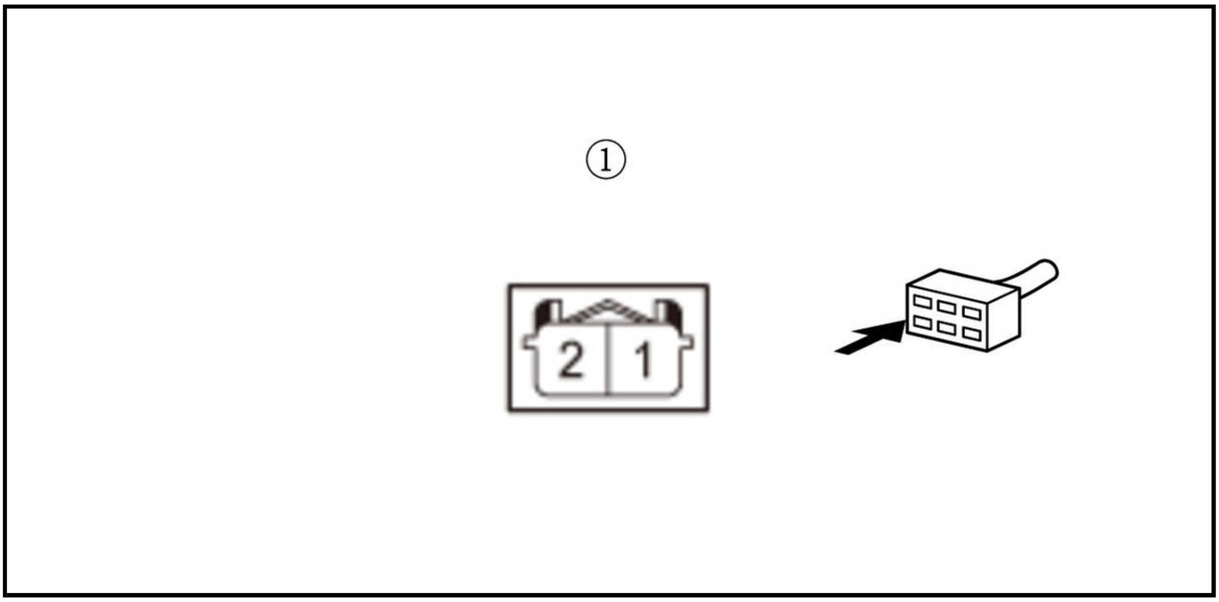

Is there 6.75 -8.25 Ω at room temperature?

YES

Go to step 3.

NO

Replace the VTC oil control solenoid valve .

3. Open wire check (PG line)

-1. Check for continuity between test points 1 and 2.

Test condition	Vehicle OFF (LOCK) mode
B	VTC oil control solenoid valve 2P connector: disconnected
Test point 1	VTC oil control solenoid valve 2P connector (female terminals) No. 2: ①
Test point 2	Body ground

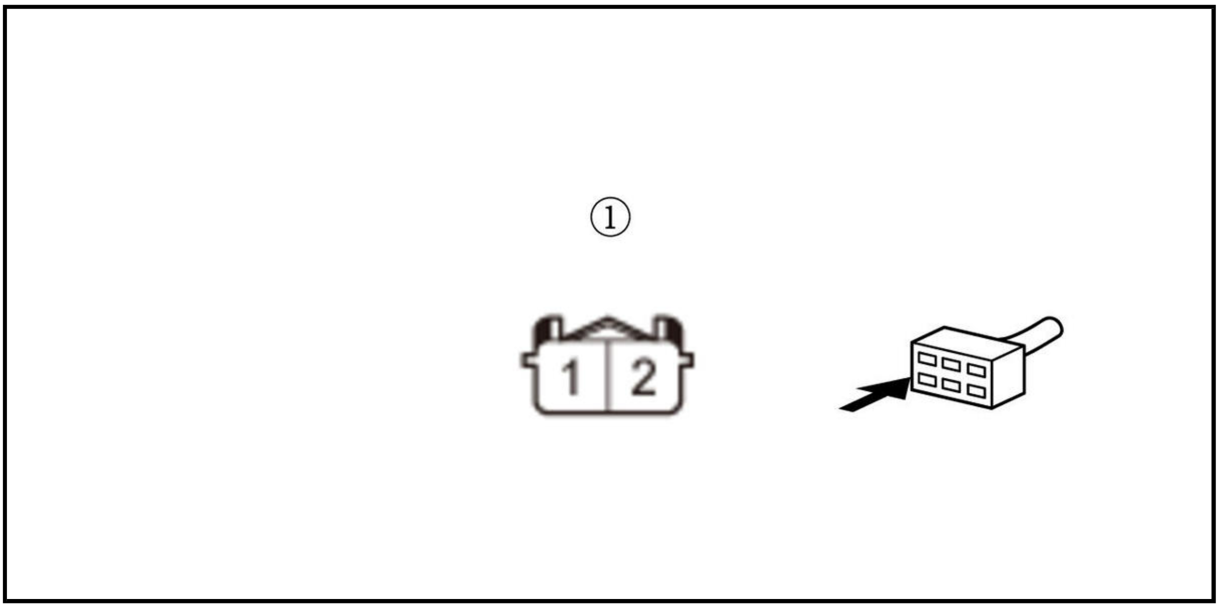

Is there continuity?

YES

The PG line is OK. Go to step 4.

NO

Repair an open in the PG wire between the VTC oil control solenoid valve and G101.

4. Shorted wire check (VTC line)

-1. Jump the SCS line with the HDS, and wait more than 1 minute.

-2. Disconnect the following connector.

PCM connector C (51P)

-3. Check for continuity between test points 1 and 2.

Test condition	Vehicle OFF (LOCK) mode
B	VTC oil control solenoid valve 2P connector: disconnected
B	PCM connector C (51P): disconnected
Test point 1	VTC oil control solenoid valve 2P connector (female terminals) No. 1: ①
Test point 2	Body ground

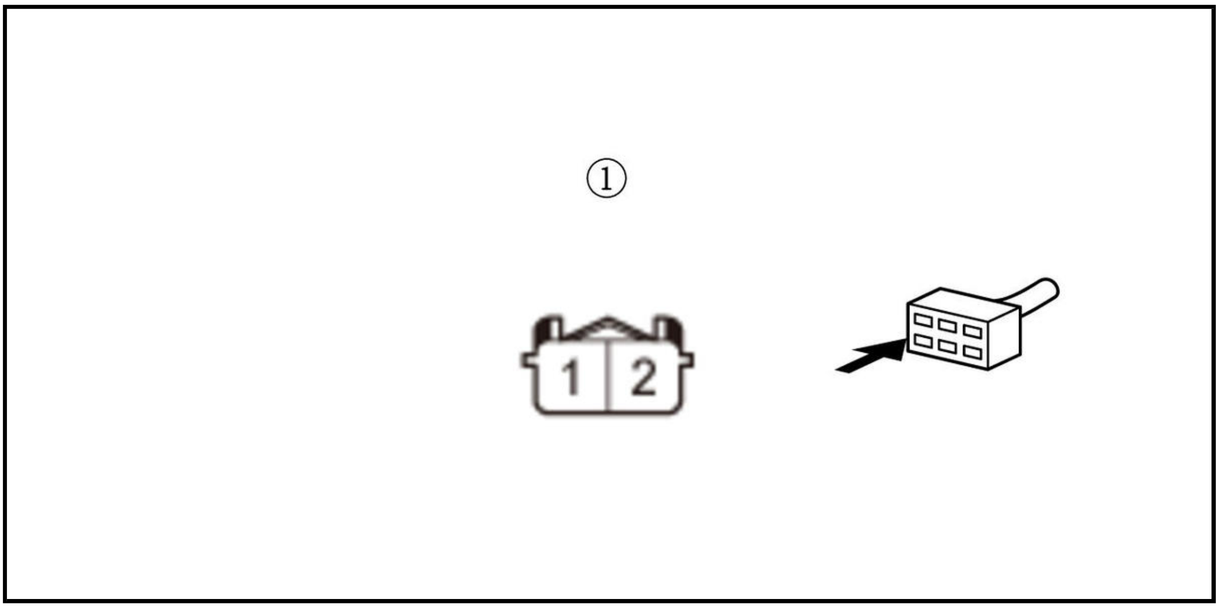

Is there continuity?

YES

Repair a short in the VTC wire between the PCM (C6) and the VTC oil control solenoid valve.

NO

The VTC wire is not shorted. Go to step 5.

5. Open wire check (VTC line)

-1. Check for continuity between test points 1 and 2.

Test condition	Vehicle OFF (LOCK) mode
B	VTC oil control solenoid valve 2P connector: disconnected
B	PCM connector C (51P): disconnected
Test point 1	VTC oil control solenoid valve 2P connector (female terminals) No. 1: ①
Test point 2	**PCM connector C (51P) No. 6**

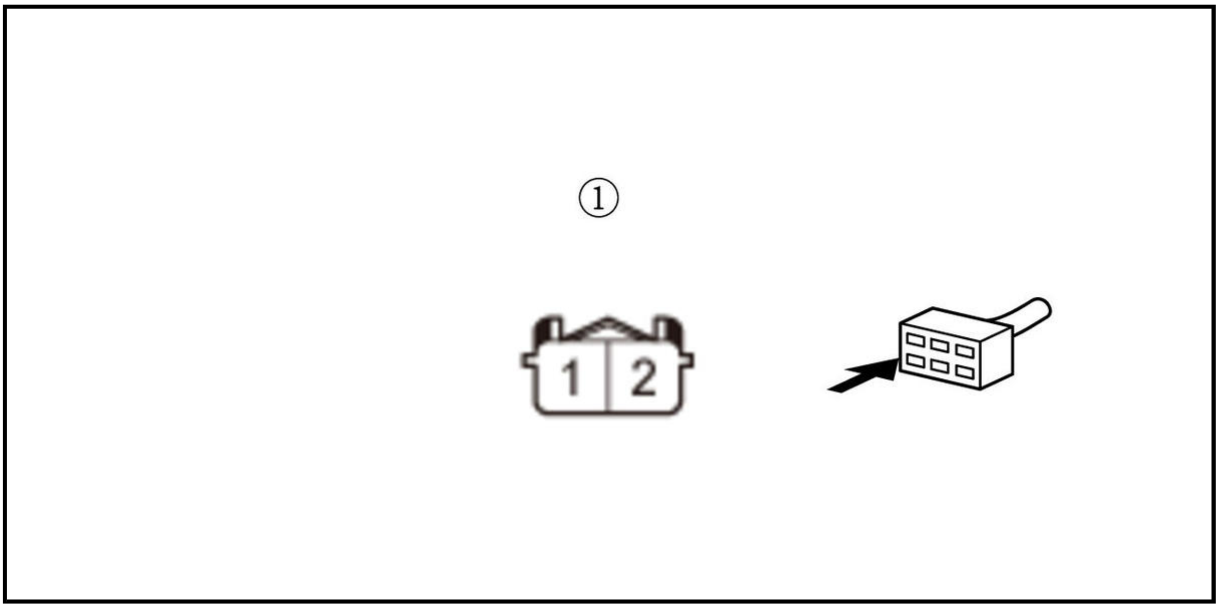

Is there continuity?

YES

The VTC wire is OK. Check for any authorized service information related to the DTCs or symptoms you are troubleshooting or **substitute a known-good PCM** .

NO

Repair an open in the VTC wire between the VTC oil control solenoid valve and the PCM (C6).

DTC P0011 (1.5 L ENGINE)

DTC P0011 : VTC A System Malfunction

NOTE:

- Before you troubleshoot, **review the general troubleshooting information** .
- If DTC P0010 and/or P0341 are stored at the same time as DTC P0011, troubleshoot those DTCs first, then recheck for DTC P0011.

DTC Description	Confirmed DTC	Pending DTC
P0011 VTC A System Malfunction	B	B

DTC (PGM-FI)

1. Oil pressure check

   -1. Turn the vehicle to the ON mode.

   -2. Clear the DTC with the HDS.

   -3. Turn the vehicle to the OFF (LOCK) mode.

   -4. Start the engine.

   -5. Watch the low oil pressure indicator in the gauge with the engine running.

   Is the low oil pressure indicator on?

   YES

   Check the engine oil level. If the level is OK, **check the engine oil pressure** .

   NO

   Go to step 2.

2. Problem verification

   -1. Select the VTC TEST in the INSPECTION MENU with the HDS, then select the IN-VTC.

   VTC TEST

   Is the result OK?

   YES

   Go to step 3.

   NO

Go to step 5.

3. VTC system check (HDS data list check)

   -1. Test-drive the vehicle at a steady speed between 19-37 mph (30-60 km/h) for 10 minutes.

   -2. Check the parameter (s) below with the HDS.

Signal	Threshold		Current conditions	
	Values	Unit	Values	Unit
VTC STATUS	ON	B	B	B

   Do the current condition (s) match the threshold?

   YES

   Go to step 4.

   NO

   Go to step 3, and recheck.

4. VTC system check (OBD STATUS check)

   -1. Test-drive the vehicle at a steady speed between 19-37 mph (30-60 km/h) for 10 minutes.

   -2. Monitor the OBD STATUS for DTC P0011 with the HDS.

DTC Description	OBD STATUS
P0011 VTC A System Malfunction	B

   Does the HDS indicate FAILED?

   YES

   Go to step 5.

   NO

   If the HDS indicates PASSED, intermittent failure, the system is OK at this time. Check for poor connections or loose terminals at VTC oil control solenoid valve A and the PCM. **If the on-board snapshot of this DTC is recorded, try to reproduce the failure under the same conditions with the on-board snapshot** . If the HDS indicates NOT COMPLETED, go to step 2 and recheck.

5. VTC oil control solenoid valve A check

   -1. **Test VTC oil control solenoid valve A** .

   Is the solenoid valve OK?

   YES

   Check the VTC system oil passages, and clean them if needed.

   NO

   Replace VTC oil control solenoid valve A .

DTC P0011 (2.4 L ENGINE) (2017 2018 2019)

DTC P0011 : VTC System Malfunction

NOTE:

- Before you troubleshoot, **review the general troubleshooting information** .
- If DTC P0010 and/or P0341 are stored at the same time as DTC P0011, troubleshoot those DTCs first, then recheck for DTC P0011.

DTC Description	Confirmed DTC	Pending DTC
P0011 VTC System Malfunction	B	B

DTC (PGM-FI)

1. Oil pressure check

   -1. Turn the vehicle to the ON mode.

   -2. Clear the DTC with the HDS.

   -3. Start the engine.

   -4. Watch the low oil pressure indicator in the gauge with the engine running.

   Is the low oil pressure indicator on?

   YES

   Check the engine oil level. If the level is OK, **check the engine oil pressure** .

   NO

   Go to step 2.

2. Problem verification

   -1. Select the VTC TEST in the INSPECTION MENU with the HDS.

   VTC TEST

   Is the result OK?

   YES

   The failure is not duplicated. Go to step 3.

   NO

   Go to step 6.

3. VTC system check (HDS data list check)

   -1. Test-drive at a steady speed between 19-37 mph (30-60 km/h) for 10 minutes.

   -2. Check the parameter (s) below with the HDS.

Signal	Threshold		Current conditions	
	Values	Unit	Values	Unit
VTC STATUS	ON	B	B	B

Do the current condition (s) match the threshold?

YES

Go to step 4.

NO

Go to step 3, and recheck.

4. VTC system check (OBD STATUS check)

-1. Test-drive at a steady speed between 19-37 mph (30-60 km/h) for 10 minutes.

-2. Monitor the OBD STATUS for DTC P0011 with the HDS.

DTC Description	OBD STATUS
P0011 VTC System Malfunction	B

Does the HDS indicate FAILED?

YES

Go to step 5.

NO

If the HDS indicates PASSED, intermittent failure, the system is OK at this time. Check for poor connections or loose terminals at the VTC oil control solenoid valve and the PCM. **If the on-board snapshot of this DTC is recorded, try to reproduce the failure under the same conditions with the on-board snapshot** . If the HDS indicates NOT COMPLETED, go to step 2 and recheck.

5. VTC strainer check

-1. Turn the vehicle to the OFF (LOCK) mode.

-2. **Remove the VTC strainer** .

-3. Check the VTC strainer for clogging.

Is the strainer OK?

YES

Go to step 6.

NO

Clean the VTC strainer, **replace the engine oil filter** and **engine oil** .

6. VTC oil control solenoid valve check

-1. **Test the VTC oil control solenoid valve** .

Is the valve OK?

YES

Go to step 7.

NO

Replace the VTC oil control solenoid valve .

7. VTC actuator check

   -1. Inspect the VTC actuator .

   Is the VTC actuator OK?

   YES

   Check the VTC system oil passages, and clean them if needed.

   NO

   Replace the VTC actuator .

DTC P0013 (1.5 L ENGINE)

DTC P0013 : VTC Oil Control Solenoid Valve B Malfunction

NOTE: Before you troubleshoot, review the general troubleshooting information .

DTC Description	Confirmed DTC	Pending DTC
P0013 VTC Oil Control Solenoid Valve B Malfunction	B	B

DTC (PGM-FI)

1. Problem verification

   -1. Turn the vehicle to the ON mode.

   -2. Clear the DTC with the HDS.

   -3. Turn the vehicle to the OFF (LOCK) mode.

   -4. Start the engine. Hold the engine speed at 3, 000 rpm without load (in P or N) until the radiator fan comes on, then let it idle.

   -5. Select the VTC TEST in the INSPECTION MENU with the HDS, then select the EX-VTC.

   VTC TEST - EX-VTC

   Check for Pending or Confirmed DTCs with the HDS.

DTC Description	Confirmed DTC	Pending DTC
P0013 VTC Oil Control Solenoid Valve B Malfunction	B	B

   Is DTC P0013 indicated?

   YES

   The failure is duplicated. Go to step 2.

   NO

   Intermittent failure, the system is OK at this time. Check for poor connections or loose terminals at VTC oil control solenoid valve B and the PCM. If the on-board snapshot of this DTC is recorded, try to reproduce the failure under the same conditions with the on-board snapshot .

2. VTC oil control solenoid valve B internal resistance check

-1. Turn the vehicle to the OFF (LOCK) mode.

-2. Disconnect the following connector.

VTC oil control solenoid valve B 2P connector

-3. At the solenoid valve side, measure the resistance between test points 1 and 2.

Test condition	Vehicle OFF (LOCK) mode
B	VTC oil control solenoid valve B 2P connector: disconnected
Test point 1	VTC oil control solenoid valve B 2P connector (male terminals) No. 1 (solenoid valve side): ①
Test point 2	VTC oil control solenoid valve B 2P connector (male terminals) No. 2 (solenoid valve side): ①

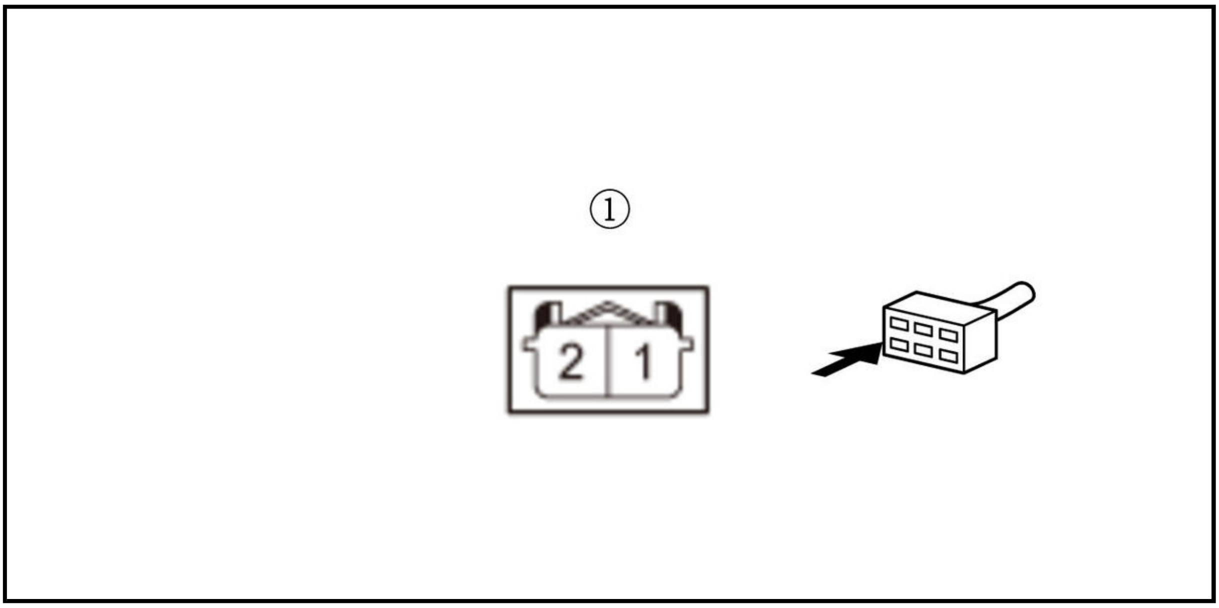

Is there 6.77-8.27 Ω at room temperature?

YES

Go to step 3.

NO

Replace VTC oil control solenoid valve B .

3. Open wire check (PG line)

-1. Check for continuity between test points 1 and 2.

Test condition	Vehicle OFF (LOCK) mode
B	VTC oil control solenoid valve B 2P connector: disconnected
Test point 1	VTC oil control solenoid valve B 2P connector (female terminals) No. 2: ①
Test point 2	Body ground

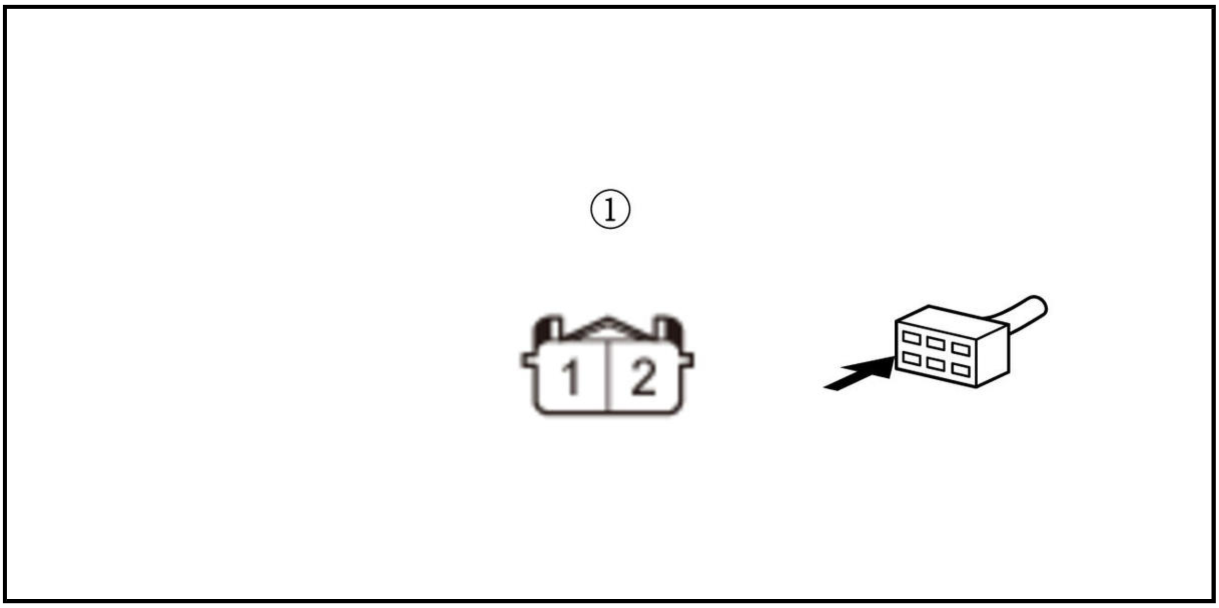

Is there continuity?

YES

Go to step 4.

NO

Repair an open in the PG wire between VTC oil control solenoid valve B and G101.

4. Shorted wire check (VTC (EX) line)

-1. Jump the SCS line with the HDS, and wait more than 1 minute.

-2. Disconnect the following connector.

PCM connector E (80P)

-3. Check for continuity between test points 1 and 2.

Test condition	Vehicle OFF (LOCK) mode
B	VTC oil control solenoid valve B 2P connector: disconnected
B	PCM connector E (80P): disconnected
Test point 1	VTC oil control solenoid valve B 2P connector (female terminals) No. 1: ①
Test point 2	Body ground

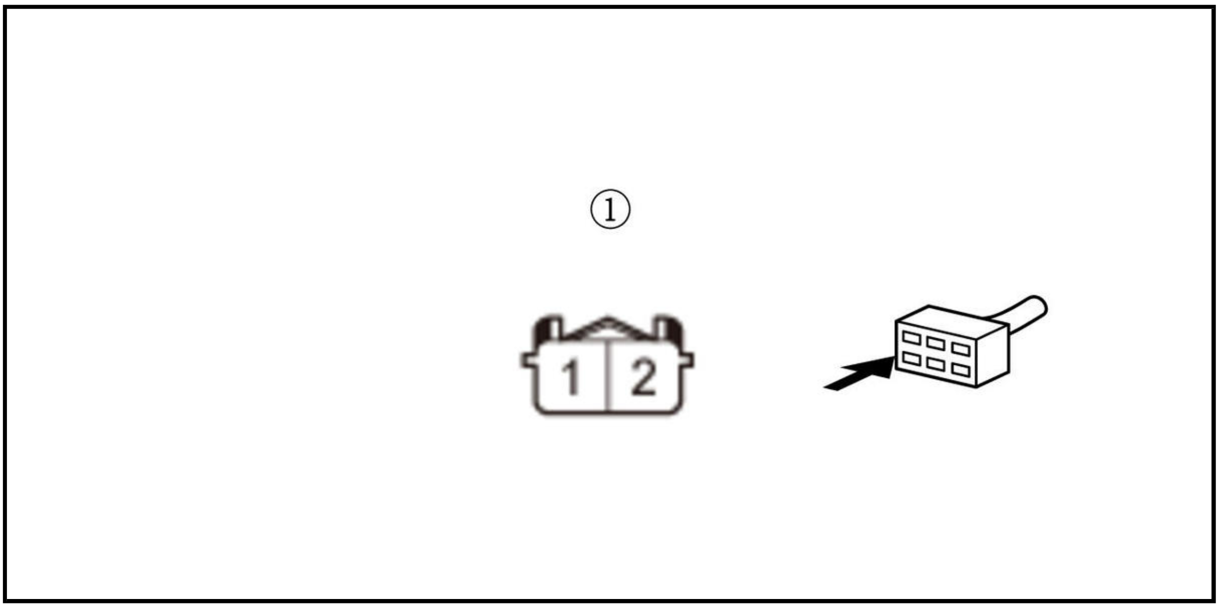

Is there continuity?

YES

Repair a short in VTC (EX) wire between the PCM (E46) and VTC oil control solenoid valve B.

NO

Go to step 5.

5. Open wire check (VTC (EX) line)

-1. Check for continuity between test points 1 and 2.

Test condition	Vehicle OFF (LOCK) mode
B	VTC oil control solenoid valve B 2P connector: disconnected
B	PCM connector E (80P): disconnected
Test point 1	VTC oil control solenoid valve B 2P connector (female terminals) No. 1: ①
Test point 2	**PCM connector E (80P) No. 46**

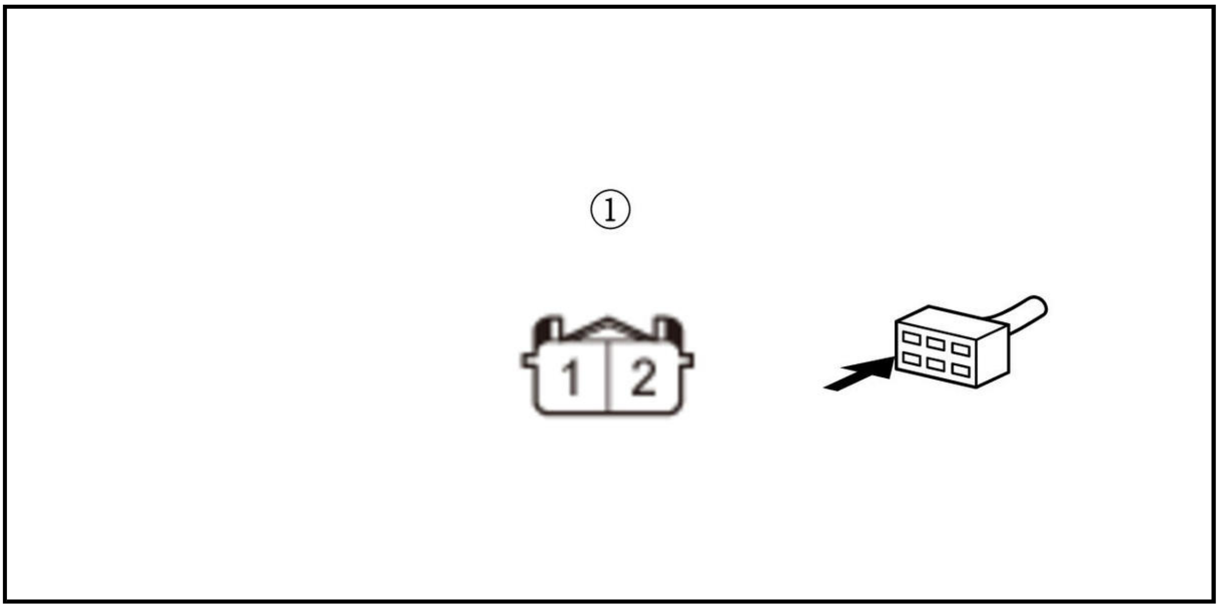

Is there continuity?

YES

The VTC (EX) wire is OK. Check for any authorized service information related to the DTCs or symptoms you are troubleshooting, or **substitute a known-good PCM** .

NO

Repair an open in the VTC (EX) wire between the PCM (E46) and VTC oil control solenoid valve B.

DTC P0014 (1.5 L ENGINE)

DTC P0014 : VTC B System Malfunction

NOTE:

- Before you troubleshoot, **review the general troubleshooting information** .
- If DTC P0013 and/or P0366 are stored at the same time as DTC P0014, troubleshoot those DTCs first, then recheck for DTC P0014.

DTC Description	Confirmed DTC	Pending DTC
P0014 VTC B System Malfunction	B	B

DTC (PGM-FI)

1. Oil pressure check

   -1. Turn the vehicle to the ON mode.

   -2. Clear the DTC with the HDS.

   -3. Turn the vehicle to the OFF (LOCK) mode.

   -4. Start the engine.

   -5. Watch the low oil pressure indicator in the gauge with the engine running.

   Is the low oil pressure indicator on?

   YES

   Check the engine oil level. If the level is OK, **check the engine oil pressure** .

   NO

   Go to step 2.

2. Problem verification

   -1. Select the VTC TEST in the INSPECTION MENU with the HDS, then select the EX-VTC.

   VTC TEST - EX-VTC

   Is the result OK?

   YES

   Go to step 3.

   NO

Go to step 5.

3. VTC system check (HDS data list check)

   -1. Test-drive the vehicle at a steady speed between 19-37 mph (30-60 km/h) for 10 minutes.

   -2. Check the parameter (s) below with the HDS.

Signal	Threshold		Current conditions	
	Values	Unit	Values	Unit
EX VTC STATUS	ON	B	B	B

   Do the current condition (s) match the threshold?

   YES

   Go to step 4.

   NO

   Go to step 3, and recheck.

4. VTC system check (OBD STATUS check)

   -1. Test-drive the vehicle at a steady speed between 19-37 mph (30-60 km/h) for 10 minutes.

   -2. Monitor the OBD STATUS for DTC P0014 with the HDS.

DTC Description	OBD STATUS
P0014 VTC B System Malfunction	B

   Does the HDS indicate FAILED?

   YES

   Go to step 5.

   NO

   If the HDS indicates PASSED, intermittent failure, the system is OK at this time. Check for poor connections or loose terminals at VTC oil control solenoid valve B and the PCM. **If the on-board snapshot of this DTC is recorded, try to reproduce the failure under the same conditions with the on-board snapshot** . If the HDS indicates NOT COMPLETED, go to step 2 and recheck.

5. VTC oil control solenoid valve B check

   -1. **Test the VTC oil control solenoid valve B** .

   Is the solenoid valve OK?

   YES

   Check the VTC system oil passages, and clean them if needed.

   NO

   Replace VTC oil control solenoid valve B .

DTC P0034 (1.5 L ENGINE)

DTC P0034 : Turbocharger Bypass Control Solenoid Valve Circuit Low Voltage

NOTE: Before you troubleshoot, review the general troubleshooting information .

DTC Description	Confirmed DTC	Pending DTC
P0034 Turbocharger Bypass Control Solenoid Valve Circuit Low Voltage	B	B

DTC (PGM-FI)

1. Problem verification

   -1. Turn the vehicle to the ON mode.

   -2. Clear the DTC with the HDS.

   -3. Turn the vehicle to the OFF (LOCK) mode.

   -4. Turn the vehicle to the ON mode.

   -5. Do the ABV TEST in the INSPECTION MENU with the HDS.

   ABV TEST

   Check for Pending or Confirmed DTCs with the HDS.

DTC Description	Confirmed DTC	Pending DTC
P0034 Turbocharger Bypass Control Solenoid Valve Circuit Low Voltage	B	B

   Is DTC P0034 indicated?

   YES

   Go to step 2.

   NO

   Intermittent failure, the system is OK at this time. Check for poor connections or loose terminals at the turbocharger bypass control solenoid valve and the PCM. If the on-board snapshot of this DTC is recorded, try to reproduce the failure under the same conditions with the on-board snapshot .

2. Turbocharger bypass control solenoid valve internal circuit check

   -1. Turn the vehicle to the OFF (LOCK) mode.

   -2. Disconnect the following connector.

Turbocharger bypass control solenoid valve 2P connector

   -3. At the solenoid valve side, measure the resistance between test points 1 and 2.

Test condition	Vehicle OFF (LOCK) mode
B	Turbocharger bypass control solenoid valve 2P connector: disconnected
Test point 1	Turbocharger bypass control solenoid valve 2P connector (male terminals) No. 1 (solenoid valve side): ①

Test point 2	Turbocharger bypass control solenoid valve 2P connector (male terminals) No. 2 (solenoid valve side): ①

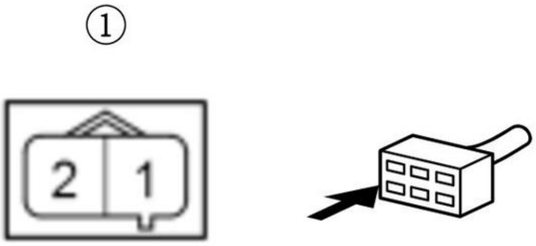

Is there about 30-34 Ω at room temperature?

YES

Go to step 3.

NO

Replace the turbocharger bypass control solenoid valve .

3. Fuse check

-1. Check the following fuse.

Fuse	No. D21 (10 A)
Location	Under-dash fuse/relay box

Is the fuse OK?

YES

Go to step 4.

NO

Repair a short in the IG1 ACG/IG1 (ACG)/IG1 (ABV) wire between the turbocharger bypass control solenoid valve and the No. D21 (10 A) fuse. Also replace the No. D21 (10 A) fuse.

4. Open wire check (IG1 ACG/IG1 (ACG)/IG1 (ABV) line)

-1. Turn the vehicle to the ON mode.

-2. Measure the voltage between test points 1 and 2.

Test condition	Vehicle ON mode
B	Turbocharger bypass control solenoid valve 2P connector: disconnected

Test point 1	Turbocharger bypass control solenoid valve 2P connector (female terminals) No. 2: ①
Test point 2	Body ground

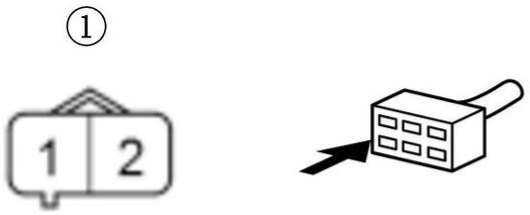

Is there battery voltage?

YES

Go to step 5.

NO

Repair an open in the IG1 ACG/IG1 (ACG)/IG1 (ABV) wire between the turbocharger bypass control solenoid valve and the No. D21 (10 A) fuse in the under-dash fuse/relay box. If needed, **replace the under-dash fuse/relay box** .

5. Short wire check (ABV line)

-1. Turn the vehicle to the OFF (LOCK) mode.

-2. Jump the SCS line with the HDS, and wait more than 1 minute.

-3. Disconnect the following connector.

PCM connector E (80P)

-4. Check for continuity between test points 1 and 2.

Test condition	Vehicle OFF (LOCK) mode
B	Turbocharger bypass control solenoid valve 2P connector: disconnected
B	PCM connector E (80P): disconnected
Test point 1	Turbocharger bypass control solenoid valve 2P connector (female terminals) No. 1: ①
Test point 2	Body ground

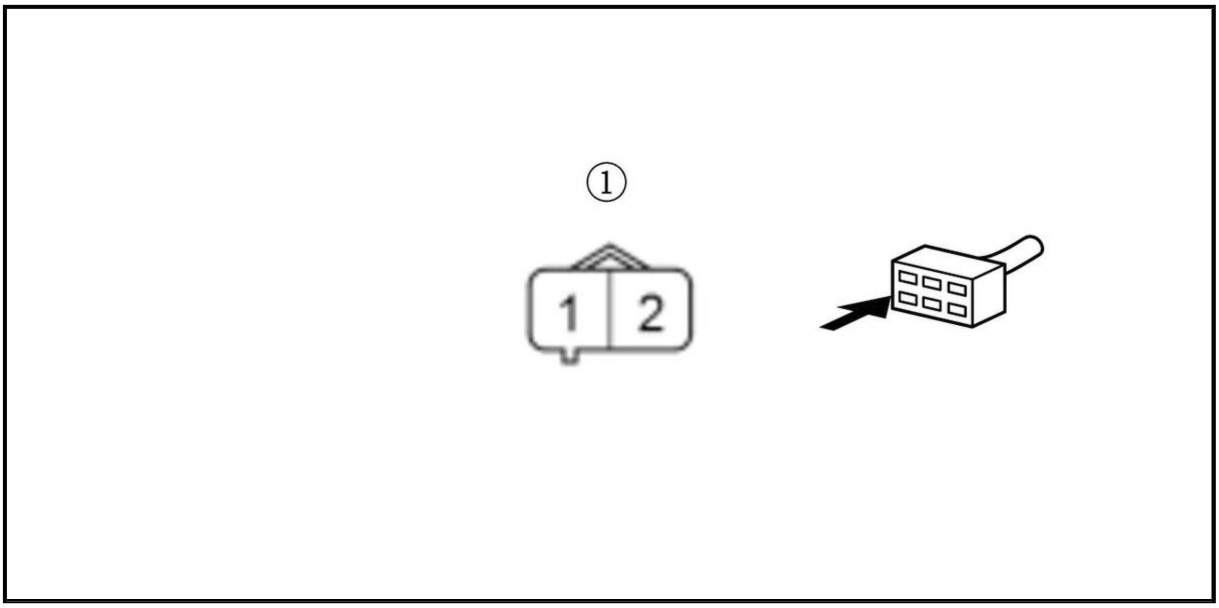

Is there continuity?

YES

Repair a short in the ABV wire between the PCM (E79) and the turbocharger bypass control solenoid valve.

NO

The ABV wire is OK. Check for any authorized service information related to the DTCs or symptoms you are troubleshooting, or **substitute a known-good PCM** .

DTC P0035 (1.5 L ENGINE)

DTC P0035 : Turbocharger Bypass Control Solenoid Valve Circuit High Voltage

NOTE: Before you troubleshoot, **review the general troubleshooting information** .

DTC Description	Confirmed DTC	Pending DTC
P0035 Turbocharger Bypass Control Solenoid Valve Circuit High Voltage	B	B

DTC (PGM-FI)

1. Problem verification

-1. Turn the vehicle to the ON mode.

-2. Clear the DTC with the HDS.

-3. Turn the vehicle to the OFF (LOCK) mode.

-4. Turn the vehicle to the ON mode.

-5. Do the ABV TEST in the INSPECTION MENU with the HDS.

ABV TEST

Monitor the OBD STATUS for DTC P0035 in the DTCs MENU with the HDS.

DTC Description	OBD STATUS
P0035 Turbocharger Bypass Control Solenoid Valve Circuit High Voltage	B

Does the HDS indicate FAILED?

YES

Go to step 2.

NO

If the HDS indicates PASSED, intermittent failure, the system is OK at this time. Check for poor connections or loose terminals at the turbocharger bypass control solenoid valve and the PCM. **If the on-board snapshot of this DTC is recorded, try to reproduce the failure under the same conditions with the on-board snapshot** . If the HDS indicates NOT COMPLETED, go to step 1-5 and recheck.

2. Open wire check (ABV line)

-1. Turn the vehicle to the OFF (LOCK) mode.

-2. Jump the SCS line with the HDS, and wait more than 1 minute.

-3. Disconnect the following connectors.

Turbocharger bypass control solenoid valve 2P connector
PCM connector E (80P)

-4. Check for continuity between test points 1 and 2.

Test condition	Vehicle OFF (LOCK) mode
B	Turbocharger bypass control solenoid valve 2P connector: disconnected
B	PCM connector E (80P): disconnected
Test point 1	Turbocharger bypass control solenoid valve 2P connector (female terminals) No. 1: ①
Test point 2	**PCM connector E (80P) No. 79**

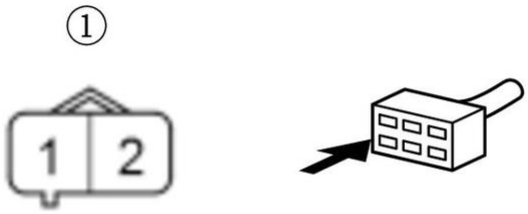

Is there continuity?

YES

The ABV wire is OK. Check for any authorized service information related to the DTCs or symptoms you are troubleshooting, or **substitute a known-good PCM** .

NO

Repair an open in the ABV wire between the PCM (E79) and the turbocharger bypass control solenoid valve.

DTC P003A, P0046 (1.5 L ENGINE)

DTC P003A : Turbocharger Wastegate Control Actuator Position Exceeded Learning Limit **DTC P0046** : Turbocharger Wastegate Control Actuator Circuit Range/Performance Problem

NOTE: Before you troubleshoot, **review the general troubleshooting information** .

DTC Description	Confirmed DTC	Pending DTC
P003A Turbocharger Wastegate Control Actuator Position Exceeded Learning Limit	B	B
P0046 Turbocharger Wastegate Control Actuator Circuit Range/Performance Problem	B	B

DTC (PGM-FI)

1. Problem verification

-1. Turn the vehicle to the ON mode.

-2. Clear the DTC with the HDS.

-3. Turn the vehicle to the OFF (LOCK) mode.

-4. Start the engine. Hold the engine speed at 3, 000 rpm without load (in P or N) until the radiator fan comes on.

-5. Select the Electric Waste Gate in the INSPECTION MENU with the HDS.

Electric Waste Gate

Check for Pending or Confirmed DTCs with the HDS.

DTC Description	Confirmed DTC	Pending DTC
P003A Turbocharger Wastegate Control Actuator Position Exceeded Learning Limit	B	B
P0046 Turbocharger Wastegate Control Actuator Circuit Range/Performance Problem	B	B

Is DTC P003A or P0046 indicated?

YES

Go to step 2.

NO

Intermittent failure, the system is OK at this time. Check for poor connections or loose terminals at the turbocharger wastegate control actuator and the PCM. **If the on-board snapshot of this DTC is recorded, try to reproduce the failure under the same conditions with the on-board snapshot** .

2. Turbocharger check

-1. Check for the foreign materials at the turbocharger wastegate control actuator link part and the damage on the turbocharger cover.

Is there foreign materials at the turbocharger wastegate control actuator link part or the damage on the turbocharger cover?

YES

Repair the turbocharger wastegate control actuator or the turbocharger cover, then go to step 1.

NO

Go to step 3.

3. Turbocharger wastegate control actuator check

-1. Select the Electric Waste Gate in the INSPECTION MENU with the HDS.

Electric Waste Gate

Visually inspect the operation of the turbocharger wastegate control actuator.

Does the turbocharger wastegate control actuator operate?

YES

Go to step 4.

NO

Replace the turbocharger .

4. Turbocharger wastegate control actuator position sensor check

-1. Turn the vehicle to the OFF (LOCK) mode.

-2. Disconnect the following connector.

Turbocharger 5P connector

-3. Turn the vehicle to the ON mode.

-4. Measure the voltage between test points 1 and 2.

Test condition	Vehicle ON mode
B	Turbocharger 5P connector: disconnected
Test point 1	Turbocharger 5P connector (female terminals) No. 2: ①
Test point 2	Turbocharger 5P connector (female terminals) No. 3: ①

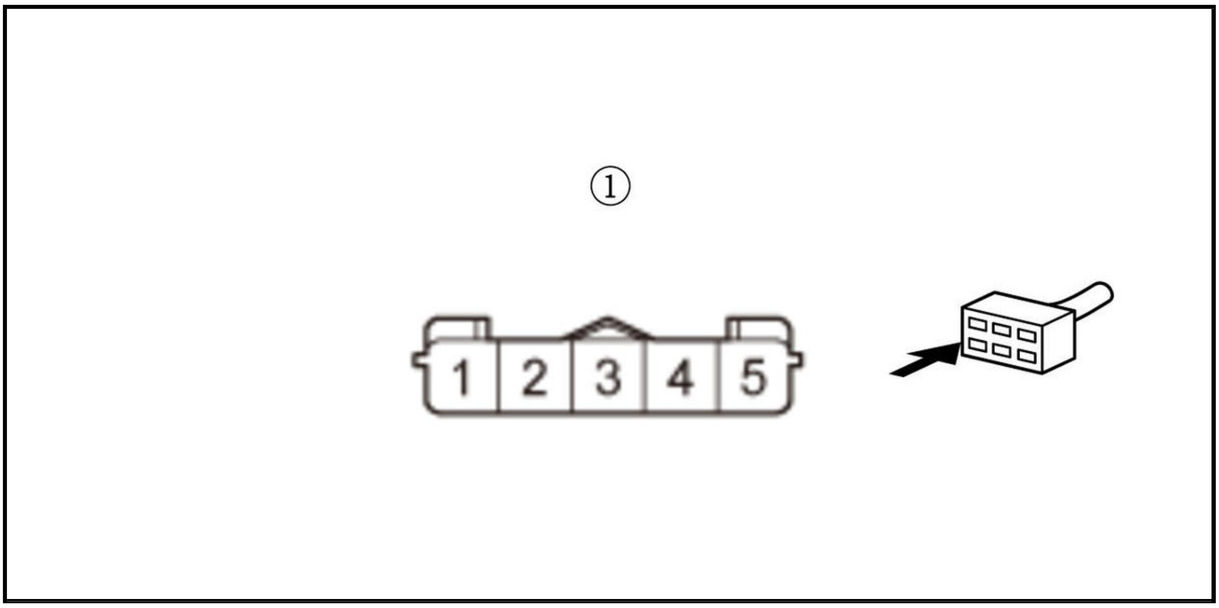

Is there about 5.0 V?

YES

Replace the turbocharger .

NO

The turbocharger wastegate control actuator position sensor is OK. Check for any authorized service information related to the DTCs or symptoms you are troubleshooting, or **substitute a known-good PCM** .

DTC P0045 (1.5 L ENGINE)

DTC P0045 : Turbocharger Wastegate Control Actuator Circuit Malfunction

NOTE: Before you troubleshoot, **review the general troubleshooting information** .

DTC Description	Confirmed DTC	Pending DTC
P0045 Turbocharger Wastegate Control Actuator Circuit Malfunction	B	B

DTC (PGM-FI)

1. Problem verification

-1. Turn the vehicle to the ON mode.

-2. Clear the DTC with the HDS.

-3. Turn the vehicle to the OFF (LOCK) mode.

-4. Start the engine. Hold the engine speed at 3, 000 rpm without load (in P or N) until the radiator fan comes on, then let it idle.

-5. Select the Electric Waste Gate in the INSPECTION MENU with the HDS.

Electric Waste Gate

Check for Pending or Confirmed DTCs with the HDS.

DTC Description	Confirmed DTC	Pending DTC
P0045 Turbocharger Wastegate Control Actuator Circuit Malfunction	B	B

Is DTC P0045 indicated?

YES

Go to step 2.

NO

Intermittent failure, the system is OK at this time. Check for poor connections or loose terminals at the turbocharger wastegate control actuator and the PCM. **If the on-board snapshot of this DTC is recorded, try to reproduce the failure under the same conditions with the on-board snapshot** .

2. Shorted wire check (WGMTR1 (+) line)

-1. Turn the vehicle to the OFF (LOCK) mode.

-2. Jump the SCS line with the HDS, and wait more than 1 minute.

-3. Disconnect the following connectors.

Turbocharger 5P connector
PCM connector E (80P)

-4. Check for continuity between test points 1 and 2.

Test condition	Vehicle OFF (LOCK) mode
B	Turbocharger 5P connector: disconnected
B	PCM connector E (80P): disconnected
Test point 1	Turbocharger 5P connector (female terminals) No. 5: ①
Test point 2	Body ground

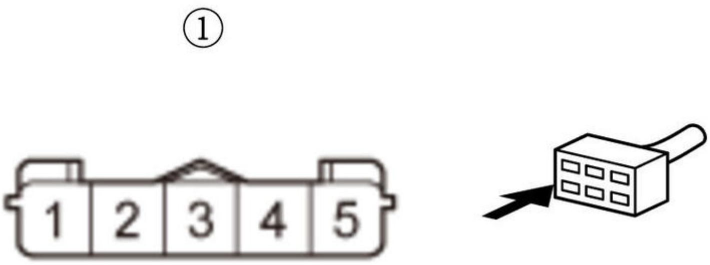

Is there continuity?

YES

Repair a short in the WGMTR1 (+) wire between the PCM (E26) and the turbocharger.

NO

Go to step 3.

3. Shorted wire check (WGMTR2 (-) line)

-1. Check for continuity between test points 1 and 2.

Test condition	Vehicle OFF (LOCK) mode
B	Turbocharger 5P connector: disconnected
B	PCM connector E (80P): disconnected
Test point 1	Turbocharger 5P connector (female terminals) No. 1: ①
Test point 2	Body ground

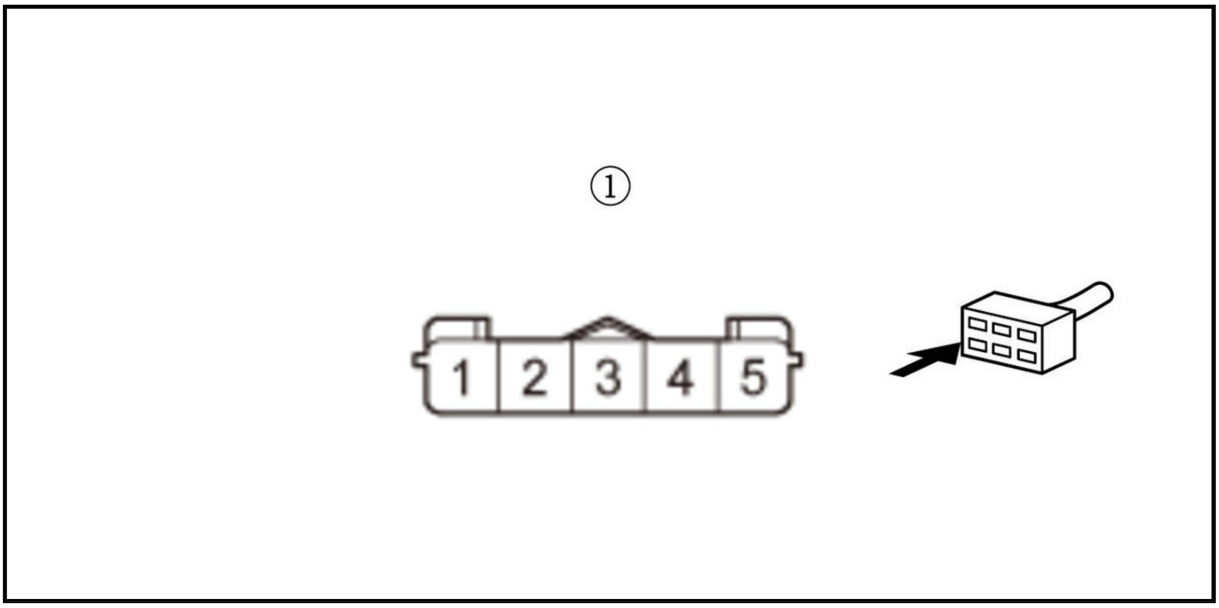

Is there continuity?

YES

Repair a short in the WGMTR2 (-) wire between the PCM (E25) and the turbocharger.

NO

Go to step 4.

4. Open wire check (WGMTR1 (+) line)

-1. Check for continuity between test points 1 and 2.

Test condition	Vehicle OFF (LOCK) mode
B	Turbocharger 5P connector: disconnected
B	PCM connector E (80P): disconnected
Test point 1	Turbocharger 5P connector (female terminals) No. 5: ①
Test point 2	**PCM connector E (80P) No. 26**

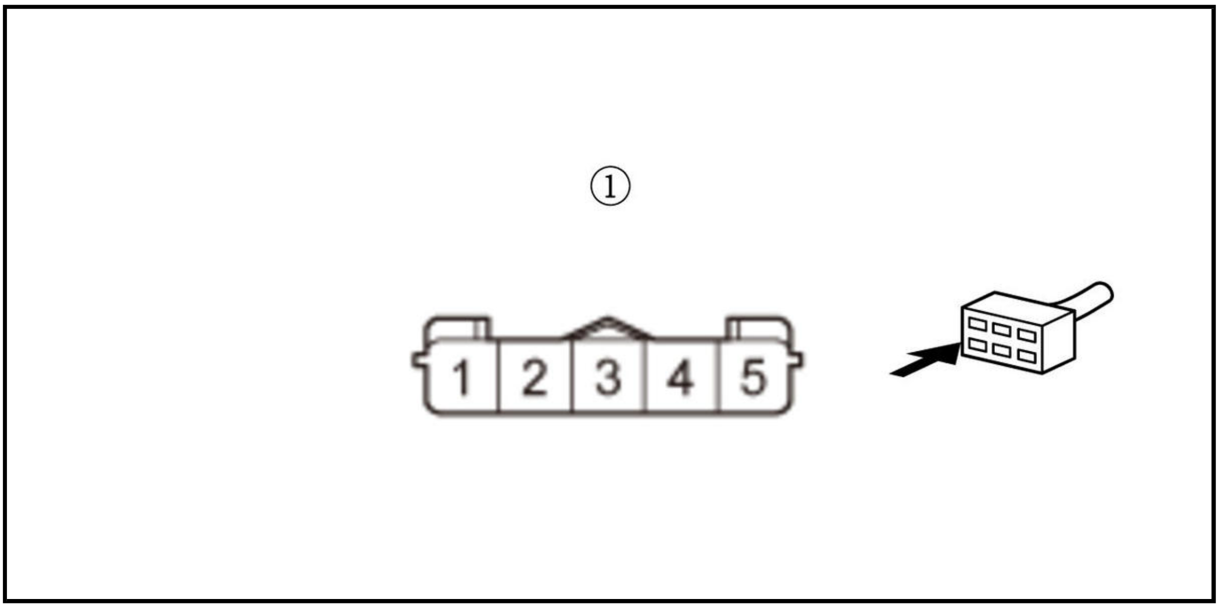

Is there continuity?

YES

Go to step 5.

NO

Repair an open in the WGMTR1 (+) wire between the PCM (E26) and the turbocharger.

5. Open wire check (WGMTR2 (-) line)

-1. Check for continuity between test points 1 and 2.

Test condition	Vehicle OFF (LOCK) mode

B	Turbocharger 5P connector: disconnected
B	PCM connector E (80P): disconnected
Test point 1	Turbocharger 5P connector (female terminals) No. 1: ①
Test point 2	PCM connector E (80P) No. 25

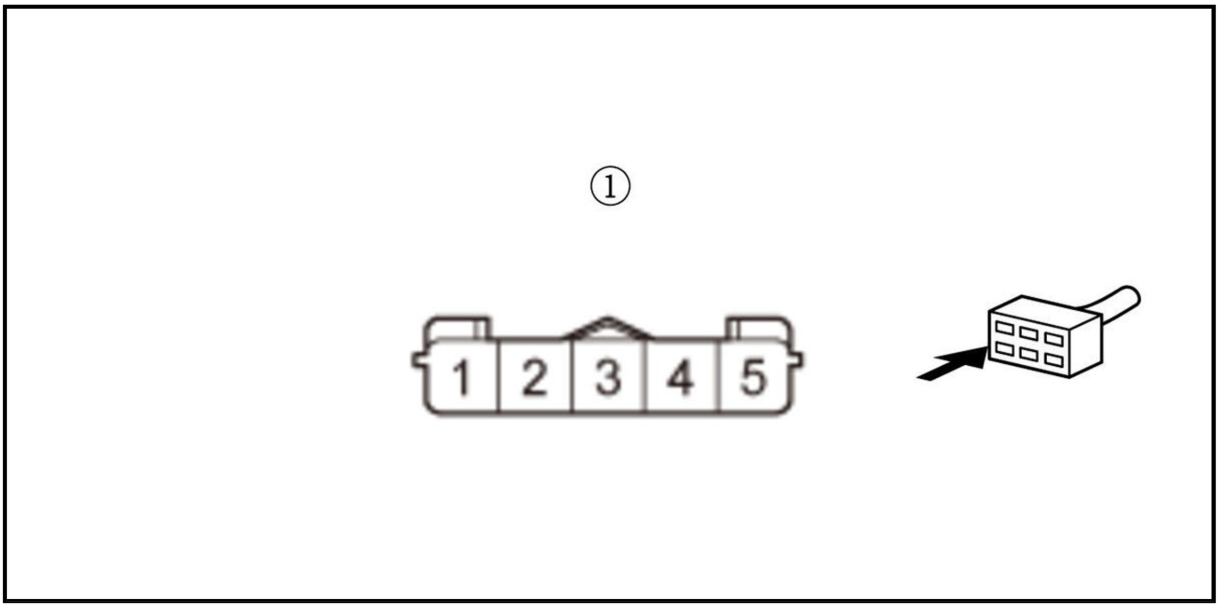

Is there continuity?

YES

Go to step 6.

NO

Repair an open in the WGMTR2 (-) wire between the PCM (E25) and the turbocharger.

6. Shorted wire check (WGMTR1 (+) line to WGMTR2 (-) line)

-1. Check for continuity between test points 1 and 2.

Test condition	Vehicle OFF (LOCK) mode
B	PCM connector E (80P): disconnected
B	Turbocharger 5P connector: disconnected
Test point 1	Turbocharger 5P connector (female terminals) No. 1: ①
Test point 2	Turbocharger 5P connector (female terminals) No. 5: ①

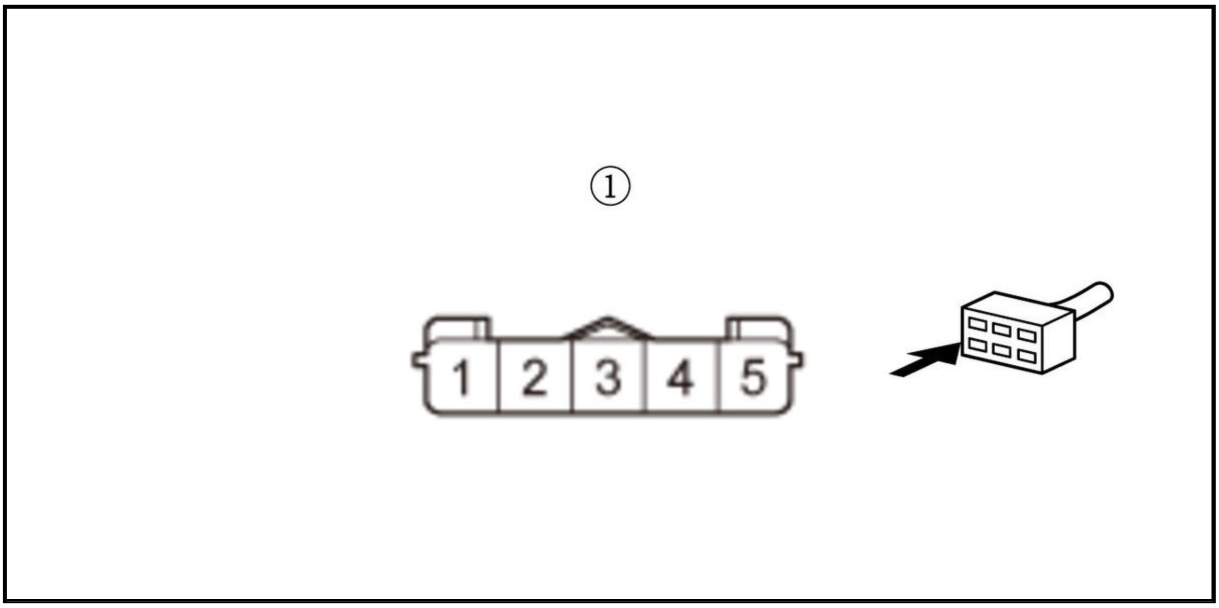

Is there continuity?

YES

Repair a short in the WGMTR1 (+) wire to the WGMTR2 (-) wire between the PCM (E25, E26) and the turbocharger.

NO

Go to step 7.

7. Turbocharger wastegate control actuator internal circuit check (short in wires)

-1. At the turbocharger wastegate control actuator side, measure the resistance between test points 1 and 2.

Test condition	Vehicle OFF (LOCK) mode
B	PCM connector E (80P): disconnected
B	Turbocharger 5P connector: disconnected
Test point 1	Turbocharger 5P connector (female terminals) No. 1 (actuator side): ①

Test point 2	Turbocharger 5P connector (female terminals) No. 5 (actuator side): ①

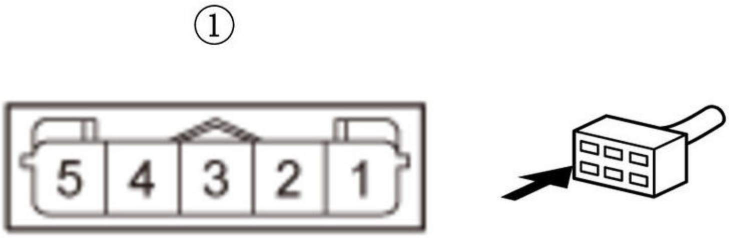

Is there about 1.2 Ω-1.0 kΩ?

YES

Go to step 8.

NO

Replace the turbocharger .

8. Turbocharger wastegate control actuator internal circuit check (short to ground)

-1. At the turbocharger side, check for continuity between test points 1 and 2.

Test condition	Vehicle OFF (LOCK) mode
B	PCM connector E (80P): disconnected
B	Turbocharger 5P connector: disconnected
Test point 1	Turbocharger 5P connector (female terminals) No. 1 (actuator side): ①
B	Turbocharger 5P connector (female terminals) No. 5 (actuator side): ①
Test point 2	Body ground

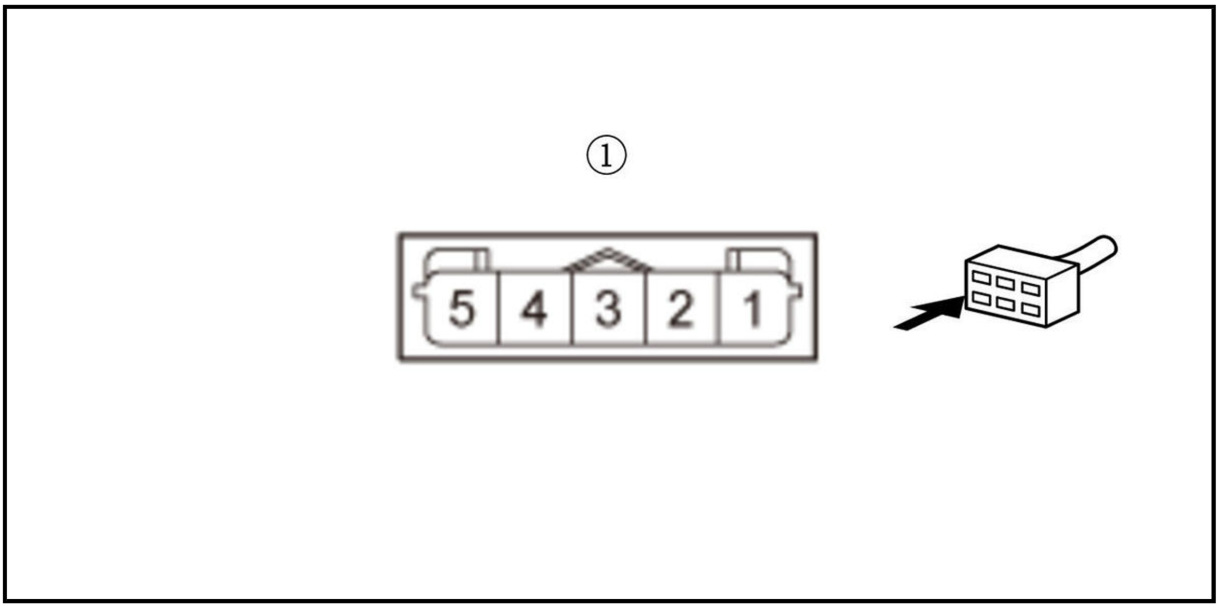

Is there continuity?

YES

Replace the turbocharger .

NO

The turbocharger wastegate control actuator internal circuit is OK. Check for any authorized service information related to the DTCs or symptoms you are troubleshooting, or **substitute a known-good PCM** .

DTC P0069 (1.5 L ENGINE)

DTC P0069 : BARO Sensor Circuit Range/Performance Problem

NOTE: Before you troubleshoot, **review the general troubleshooting information** .

DTC Description	Confirmed DTC	Pending DTC
P0069 BARO Sensor Circuit Range/Performance Problem	B	B

DTC (PGM-FI)

1. Problem verification

-1. Turn the vehicle to the ON mode.

-2. Clear the DTC with the HDS.

-3. Start the engine.

-4. Hold the engine speed at 3, 000 rpm without load (in P or N) until the radiator fan comes on, then let it idle.

-5. Test-drive the vehicle under these conditions:

- Engine speed above 1, 700 rpm
- REL TP SENSOR above 42.2 deg
- Drive 6 seconds or more

Signal	**Current conditions**	
	Values	**Unit**
ECT Sensor 1	B	B
Engine Speed	B	B
REL TP Sensor	B	B

-6. Check for Pending or Confirmed DTCs with the HDS.

DTC Description	**Confirmed DTC**	**Pending DTC**
P0069 BARO Sensor Circuit Range/Performance Problem	B	B

Is DTC P0069 indicated?

YES

The failure is duplicated. Check for any authorized service information related to the DTCs or symptoms you are troubleshooting, or **substitute a known-good PCM** .

NO

Intermittent failure, the system is OK at this time. **If the on-board snapshot of this DTC is recorded, try to reproduce the failure under the same conditions with the on-board snapshot** .

DTC P0069 (2.4 L ENGINE) (2017 2018 2019)

DTC P0069 : BARO Sensor Circuit Range/Performance Problem

NOTE: Before you troubleshoot, **review the general troubleshooting information** .

DTC Description	**Confirmed DTC**	**Pending DTC**
P0069 BARO Sensor Circuit Range/Performance Problem	B	B

DTC (PGM-FI)

1. Problem verification

-1. Turn the vehicle to the ON mode.

-2. Clear the DTC with the HDS.

-3. Start the engine.

-4. Hold the engine speed at 3, 000 rpm without load (in P or N) until the radiator fan comes on, then let it idle.

-5. Test-drive the vehicle under these conditions:

- Engine speed above 1, 000 rpm and REL TP SENSOR above 12 deg (or engine speed above 3, 000 rpm and REL TP SENSOR above 25 deg)
- Drive 2.5 seconds or more

Signal	**Current conditions**	
	Values	**Unit**
ECT Sensor 1	B	B
Engine Speed	B	B
REL TP Sensor	B	B

-6. Check for Pending or Confirmed DTCs with the HDS.

DTC Description	Confirmed DTC	Pending DTC
P0069 BARO Sensor Circuit Range/Performance Problem	B	B

Is DTC P0069 indicated?

YES

The failure is duplicated. Check for any authorized service information related to the DTCs or symptoms you are troubleshooting, or **substitute a known-good PCM** .

NO

Intermittent failure, the system is OK at this time. **If the on-board snapshot of this DTC is recorded, try to reproduce the failure under the same conditions with the on-board snapshot** .

DTC P006A (1.5 L ENGINE)

DTC P006A : MAF Sensor Circuit Range/Performance Problem

NOTE:

- Before you troubleshoot, **review the general troubleshooting information** .
- If DTC P2073, P2074, P2228, and/or P2229 are stored at the same time as DTC P006A, troubleshoot those DTCs first, then recheck for DTC P006A.

DTC Description	Confirmed DTC	Pending DTC
P006A MAF Sensor Circuit Range/Performance Problem	B	B

DTC (PGM-FI)

1. Parts condition check:

   Check for poor connections or damage to these parts:

   - PCV valve
   - PCV hose
   - Intake air duct
   - Air cleaner
   - Purge (PCS) line
   - All parts through the turbocharger joint to the throttle body

   Are the parts OK?

   YES

   Go to step 2.

   NO

   Repair or replace the damaged part (s).

2. Intake air duct visual check

   -1. Check for damage or looseness of the intake air duct in the air cleaner.

   Is it OK?

YES

Go to step 3.

NO

Reconnect or replace the intake air duct in the air cleaner.

3. Air cleaner element visual check

-1. Check for a dirty air cleaner element.

Is it dirty?

YES

Replace the air cleaner element .

NO

Go to step 4.

4. MAF sensor signal check (without engine running)

-1. Turn the vehicle to the OFF (LOCK) mode.

-2. Turn the vehicle to the ON mode.

-3. Check the parameter (s) below with the HDS.

Signal	Threshold		Current conditions	
	Values	Unit	Values	Unit
MAF SENSOR	About 0.2	g/s	B	B

Do the current condition (s) match the threshold?

YES

Go to step 5.

NO

Replace MAF sensor/IAT sensor 1 .

5. MAF sensor signal check (with engine running)

-1. Start the engine.

-2. Vary the engine speed between 2, 000 rpm and 3, 000 rpm.

-3. Check the parameter (s) below with the HDS.

Signal	Current conditions	
	Values	Unit
MAF Sensor	B	B

Does the MAF SENSOR reading change?

YES

Go to step 6.

NO

Replace the MAF sensor/IAT sensor 1 .

6. MAF sensor check

-1. Hold the engine speed at 3, 000 rpm without load (in P or N) until the radiator fan comes on, then let it idle.

Test-drive the vehicle for several minutes in the range of these recorded on-board snapshot parameters:

- ENGINE SPEED
- VEHICLE SPEED
- MAP SENSOR
- TP SENSOR

On-board Snapshot

Signal	**Current conditions**	
	Values	**Unit**
ENGINE SPEED	B	B
VEHICLE SPEED	B	B
MAP SENSOR	B	B
TP SENSOR	B	B

-3. Monitor the OBD STATUS for DTC P006A with the HDS.

DTC Description	**OBD STATUS**
P006A MAF Sensor Circuit Range/Performance Problem	B

Does the HDS indicate FAILED?

YES

Replace the MAF sensor/IAT sensor 1 .

NO

If the HDS indicates PASSED, intermittent failure, the system is OK at this time. Check for poor connections or loose terminals at the MAF sensor/IAT sensor and the PCM. **If the on-board snapshot of this DTC is recorded, try to reproduce the failure under the same conditions with the on-board snapshot** . If the HDS indicates NOT COMPLETED, go to step 6-2 and recheck.

DTC P006A (2.4 L ENGINE) (2017 2018 2019)

DTC P006A : MAF Sensor Circuit Range/Performance Problem

NOTE:

- Before you troubleshoot, **review the general troubleshooting information** .
- If DTC P2073, P2074, P2228, and/or P2229 are stored at the same time as DTC P006A, troubleshoot those DTCs first, then recheck for DTC P006A.

DTC Description	**Confirmed DTC**	**Pending DTC**
P006A MAF Sensor Circuit Range/Performance Problem	B	B

1. Parts condition check:

   Check for poor connections or damage to these parts:

   - PCV valve
   - PCV hose
   - Intake air duct
   - Air cleaner
   - Purge (PCS) line
   - All parts through the turbocharger joint to the throttle body

   Are the parts OK?

   YES

   Go to step 2.

   NO

   Repair or replace the damaged part (s).

2. Intake air duct visual check

   -1. Check for damage or looseness of the intake air duct in the air cleaner.

   Is it OK?

   YES

   Go to step 3.

   NO

   Reconnect or replace the intake air duct in the air cleaner.

3. Air cleaner element visual check

   -1. Check for a dirty air cleaner element.

   Is it dirty?

   YES

   Replace the air cleaner element .

   NO

   Go to step 4.

4. MAF sensor signal check (without engine running)

   -1. Turn the vehicle to the OFF (LOCK) mode.

   -2. Turn the vehicle to the ON mode.

   -3. Check the parameter (s) below with the HDS.

Signal	Threshold		Current conditions	
	Values	Unit	Values	Unit
MAF SENSOR	About 0.2	g/s	B	B

Do the current condition (s) match the threshold?

YES

Go to step 5.

NO

Replace MAF sensor/IAT sensor 1 .

5. MAF sensor signal check (with engine running)

-1. Start the engine.

-2. Vary the engine speed between 2, 000 rpm and 3, 000 rpm.

-3. Check the parameter (s) below with the HDS.

Signal	Current conditions	
	Values	Unit
MAF Sensor	B	B

Does the MAF SENSOR reading change?

YES

Go to step 6.

NO

Replace the MAF sensor/IAT sensor 1 .

6. MAF sensor check

-1. Hold the engine speed at 3, 000 rpm without load (in P or N) until the radiator fan comes on, then let it idle.

Test-drive the vehicle for several minutes in the range of these recorded on-board snapshot parameters:

- ENGINE SPEED
- VEHICLE SPEED
- MAP SENSOR
- TP SENSOR

On-board Snapshot

Signal	Current conditions	
	Values	Unit
ENGINE SPEED	B	B
VEHICLE SPEED	B	B
MAP SENSOR	B	B
TP SENSOR	B	B

-3. Monitor the OBD STATUS for DTC P006A with the HDS.

DTC Description	OBD STATUS
P006A MAF Sensor Circuit Range/Performance Problem	B

Does the HDS indicate FAILED?

YES

Replace the MAF sensor/IAT sensor 1 .

NO

If the HDS indicates PASSED, intermittent failure, the system is OK at this time. Check for poor connections or loose terminals at the MAF sensor/IAT sensor and the PCM. **If the on-board snapshot of this DTC is recorded, try to reproduce the failure under the same conditions with the on-board snapshot** . If the HDS indicates NOT COMPLETED, go to step 6-2 and recheck.

DTC P006E (1.5 L ENGINE)

DTC P006E : Turbocharger Power Supply Circuit Malfunction

NOTE: Before you troubleshoot, **review the general troubleshooting information** .

DTC Description	Confirmed DTC	Pending DTC
P006E Turbocharger Power Supply Circuit Malfunction	B	B

DTC (PGM-FI)

1. Problem verification

   -1. Turn the vehicle to the ON mode.

   -2. Clear the DTC with the HDS.

   -3. Turn the vehicle to the OFF (LOCK) mode.

   -4. Turn the vehicle to the ON mode.

   -5. Check for Pending or Confirmed DTCs with the HDS.

DTC Description	Confirmed DTC	Pending DTC
P006E Turbocharger Power Supply Circuit Malfunction	B	B

   Is DTC P006E indicated?

   YES

   Go to step 2.

   NO

   Intermittent failure, the system is OK at this time. Check for poor connections or loose terminals at the relay circuit board and the PCM. **If the on-board snapshot of this DTC is recorded, try to reproduce the failure under the same conditions with the on-board snapshot** .

2. DTC check

   -1. Check for Pending or Confirmed DTCs with the HDS.

DTC Description	Confirmed DTC	Pending DTC
P1658 ETCS Control Relay ON Malfunction	B	B
P1659 ETCS Control Relay OFF Malfunction	B	B

Is DTC P1658 and/or P1659 indicated?

YES

Go to the indicated DTCs troubleshooting.

NO

Go to step 3.

3. Fuse check

-1. Turn the vehicle to the OFF (LOCK) mode.

-2. Check the following fuse.

Fuse	No. A5 (7.5 A)
Location	Under-hood fuse/relay box

Is the fuse OK?

YES

Go to step 4.

NO

Go to step 5.

4. Open wire check (+B VBACT/FI SUB RLY OUT line)

-1. Jump the SCS line with the HDS, and wait more than 1 minute.

-2. Disconnect the following connectors.

PCM connector A (50P)
Relay circuit board connector C (18P)

-3. Check for continuity between test points 1 and 2.

Test condition	Vehicle OFF (LOCK) mode
	Relay circuit board connector C (18P): disconnected
	PCM connector A (50P): disconnected

Test point 1	Relay circuit board connector C (18P) (female terminals) No. 1: ①
Test point 2	**PCM connector A (50P) No. 3**

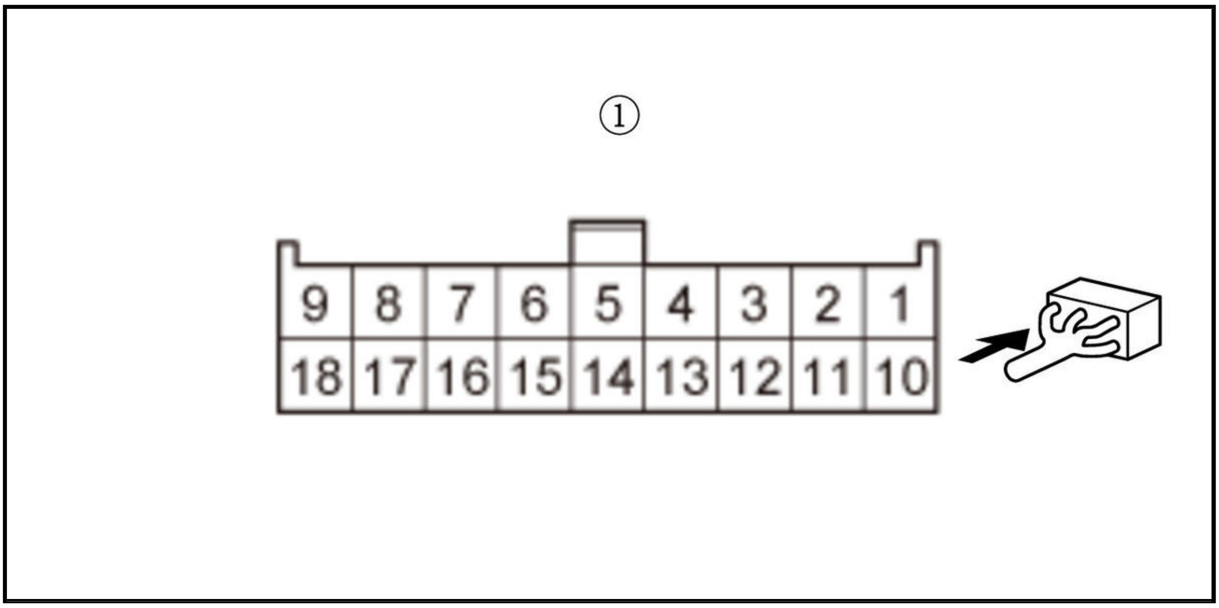

Is there continuity?

YES

The +B VBACT/FI SUB RLY OUT wire is OK. **Remove and test the relay circuit board** . If the relay circuit board is OK, check for any authorized service information related to the DTCs or symptoms you are troubleshooting, or **substitute a known-good PCM** .

NO

Repair an open in the +B VBACT/FI SUB RLY OUT wire between the PCM (A3) and the relay circuit board.

5. Shorted wire check (+B VBACT line)

-1. Remove the blown No. A5 (7.5 A) fuse from the under-hood fuse/relay box.

-2. Jump the SCS line with the HDS, and wait more than 1 minute.

-3. Disconnect the following connector.

PCM connector A (50P)

-4. Check for continuity between test points 1 and 2.

Test condition	Vehicle OFF (LOCK) mode
	PCM connector A (50P): disconnected
Test point 1	**PCM connector A (50P) No. 3**
Test point 2	Body ground

Is there continuity?

YES

Repair a short in the +B VBACT wire between the PCM (A3) and the No. A5 (7.5 A) fuse in the under-hood fuse/relay box. Also replace No. A5 (7.5 A) fuse.

NO

Replace the No. A5 (7.5 A) fuse in the under-hood fuse/relay box and recheck. If the fuse blown again, **replace the under-hood fuse/relay box** .

DTC P0087 (1.5 L ENGINE)

DTC P0087 : Fuel Rail Pressure Too Low

NOTE:

- Before you troubleshoot, **review the general troubleshooting information** .
- If the vehicle was out of fuel and the engine stalled before this DTC was stored, refuel, then clear the DTC with the HDS.
- If a fuel leak occurs, this DTC will be stored. Repair the fuel leak before troubleshooting.
- If any of the DTCs listed below are stored at the same time as P0087, troubleshoot those DTCs first, then recheck for P0087.

  P0192, P0193: Fuel rail pressure sensor

  P0201, P0202, P0203, P0204: No. 1-No. 4 cylinder injector (s)

  P0300, P0301, P0302, P0303, P0304: No. 1-No. 4 cylinder misfire

  P0351, P0352, P0353, P0354: No. 1-No. 4 cylinder ignition coil (s)

  P219C, P219D, P219E, P219F: No. 1-No. 4 cylinder A/F variation

  P2623: High pressure fuel pump

DTC Description	Confirmed DTC	Pending DTC
P0087 Fuel Rail Pressure Too Low	B	B

DTC (PGM-FI)

1. Problem verification (idling)

   -1. Turn the vehicle to the ON mode.

   -2. Clear the DTC with the HDS.

   -3. Turn the vehicle to the OFF (LOCK) mode.

   -4. Start the engine. Hold the engine speed at 3, 000 rpm without load (in P or N) until the radiator fan comes on, then let it idle.

   -5. Select the DI Fuel Pressure Test in the INSPECTION MENU with the HDS.

   DI FUEL PRESSURE TEST

   Is the result OK?

   YES

   Go to step 2.

   NO

   Go to step 3.

2. Problem verification (test-drive):

   Test-drive the vehicle for several minutes in the range of these recorded on-board snapshot parameters:

- ENGINE SPEED
- VEHICLE SPEED
- MAP SENSOR
- TP SENSOR
- APP SENSOR
- ECT SENSOR 1
- FUEL PRESSURE CONVERTED FROM PF SENSOR
- FUEL PRESSURE DIRECT INJECTION SYSTEM
- IAT SENSOR (1)

On-board Snapshot

Signal	**Current conditions**	
	Values	**Unit**
ENGINE SPEED	B	B
VEHICLE SPEED	B	B
MAP SENSOR	B	B
TP SENSOR	B	B
APP SENSOR	B	B
ECT SENSOR 1	B	B
FUEL PRESSURE CONVERTED FROM PF SENSOR	B	B

Signal	**Current conditions**	
	Values	**Unit**
FUEL PRESSURE DIRECT INJECTION SYSTEM	B	B
IAT SENSOR (1)	B	B

-2. Check for Pending or Confirmed DTCs with the HDS.

DTC Description	**Confirmed DTC**	**Pending DTC**
P0087 Fuel Rail Pressure Too Low	B	B

Is DTC P0087 indicated?

YES

Go to step 3.

NO

Intermittent failure, the system is OK at this time. **Test the PGM-FI main relay 2** . If the relay is OK, check for a poor connection or loose terminals at the fuel rail pressure sensor, the high pressure fuel pump, and the PCM. **If the on-board snapshot of this DTC is recorded, try to reproduce the failure under the same conditions with the on-board snapshot** .

3. Spill valve operation check

-1. Start the engine, then let it idle.

-2. Check for noise or vibration from the spill valve on the high pressure fuel pump.

When the high pressure fuel pump runs, you will hear some noise from the spill valve.

Is there any noise or vibration?

YES

Go to step 4.

NO

Replace the high pressure fuel pump .

4. Fuel rail pressure sensor check 1

-1. Turn the vehicle to the OFF (LOCK) mode.

-2. **Remove the PGM-FI main relay 2** .

-3. Start the engine, and let it idle until it stalls.

-4. After the engine stalls, crank the engine for several times.

-5. Check the parameter (s) below with the HDS.

Signal	Threshold		Current conditions	
	Values	Unit	Values	Unit
FUEL PRESSURE CONVERTED FROM PF SENSOR	Less than 1, 000	kPa	B	B

NOTE: It is normal if the value of several hundred kPa is indicated.

Do the current condition (s) match the threshold?

YES

Go to step 5.

NO

Replace the fuel rail (fuel rail pressure sensor) .

5. Fuel rail pressure sensor check 2

-1. Turn the vehicle to the OFF (LOCK) mode.

-2. **Install the PGM-FI main relay 2** .

-3. Start the engine.

-4. Hold the engine speed at 3, 000 rpm without load (in P or N) until the radiator fan comes on, then let it idle.

-5. Shift the transmission to D position/mode while pressing the brake pedal firmly, then press the accelerator pedal.**NOTE:** Do not shift the transmission or remove your foot off the brake pedal, while raising the engine speed.

-6. Check the parameter (s) below with the HDS.

Signal	Current conditions	
	Values	Unit
FUEL PRESSURE CONVERTED FROM PF SENSOR	B	B
FUEL PRESSURE DIRECT INJECTION SYSTEM	B	B

Are both values almost the same?

YES

Go to step 6.

NO

Replace the fuel rail (fuel rail pressure sensor) .

6. Fuel pressure check (low pressure side)

   -1. **Check the fuel pressure** .

   Is the fuel pressure OK?

   YES

   Go to step 7.

   NO

   Check the fuel pump, the fuel pressure regulator, the fuel filter , and **the fuel lines** .

7. High pressure fuel pump visual check

   -1. **Remove the high pressure fuel pump** .

   -2. **Visually check the cam that drives a high pressure fuel pump and the roller of the high pressure fuel pump for wear or damage** .

   Are the parts OK?

   YES

   Replace the high pressure fuel pump .

   NO

   Check for damage of the cam and the roller , and **replace the intake camshaft** and/or **the high pressure fuel pump** if needed.

DTC P0087 (2.4 L ENGINE) (2017 2018 2019)

DTC P0087 : Fuel Rail Pressure Too Low

NOTE:

- Before you troubleshoot, **review the general troubleshooting information** .
- If the vehicle was out of fuel and the engine stalled before this DTC was stored, refuel, then clear the DTC with the HDS.
- If a fuel leak occurs, this DTC will be stored. Repair the fuel leak before troubleshooting.
- If any of the DTCs listed below are stored at the same time as P0087, troubleshoot those DTCs first, then recheck for P0087.

  P0192, P0193: Fuel rail pressure sensor

  P0201, P0202, P0203, P0204: No. 1-No. 4 cylinder injector (s)

  P0300, P0301, P0302, P0303, P0304: No. 1-No. 4 cylinder misfire

  P0351, P0352, P0353, P0354: No. 1-No. 4 cylinder ignition coil (s)

P219A: Air-Fuel Ratio Variation of Cylinder

P2623: High pressure fuel pump

DTC Description	Confirmed DTC	Pending DTC
P0087 Fuel Rail Pressure Too Low	B	B

DTC (PGM-FI)

1. Problem verification (idling)

   -1. Turn the vehicle to the ON mode.

   -2. Clear the DTC with the HDS.

   -3. Turn the vehicle to the OFF (LOCK) mode.

   -4. Start the engine. Hold the engine speed at 3, 000 rpm without load (in P or N) until the radiator fan comes on, then let it idle.

   -5. Select the DI Fuel Pressure Test in the INSPECTION MENU with the HDS.

   DI FUEL PRESSURE TEST

   Is the result OK?

   YES

   Go to step 2.

   NO

   Go to step 3.

2. Problem verification (test-drive):

   Test-drive the vehicle for several minutes in the range of these recorded on-board snapshot parameters:

   - ENGINE SPEED
   - VEHICLE SPEED
   - MAP SENSOR
   - TP SENSOR
   - APP SENSOR
   - ECT SENSOR 1
   - FUEL PRESSURE CONVERTED FROM PF SENSOR
   - FUEL PRESSURE DIRECT INJECTION SYSTEM
   - IAT SENSOR (1)

   On-board Snapshot

Signal	Current conditions	
	Values	Unit
ENGINE SPEED	B	B
VEHICLE SPEED	B	B
MAP SENSOR	B	B
TP SENSOR	B	B

Signal	Current conditions	
	Values	Unit
APP SENSOR	B	B
ECT SENSOR 1	B	B
FUEL PRESSURE CONVERTED FROM PF SENSOR	B	B

Signal	Current conditions	
	Values	Unit
FUEL PRESSURE DIRECT INJECTION SYSTEM	B	B
IAT SENSOR (1)	B	B

-2. Check for Pending or Confirmed DTCs with the HDS.

DTC Description	Confirmed DTC	Pending DTC
P0087 Fuel Rail Pressure Too Low	B	B

Is DTC P0087 indicated?

YES

Go to step 3.

NO

Intermittent failure, the system is OK at this time. **Test the PGM-FI main relay 2** . If the relay is OK, check for a poor connection or loose terminals at the fuel rail pressure sensor, the high pressure fuel pump, and the PCM. **If the on-board snapshot of this DTC is recorded, try to reproduce the failure under the same conditions with the on-board snapshot** .

3. Spill valve operation check

-1. Start the engine, then let it idle.

-2. Check for noise or vibration from the spill valve on the high pressure fuel pump.

When the high pressure fuel pump runs, you will hear some noise from the spill valve.

Is there any noise or vibration?

YES

Go to step 4.

NO

Replace the high pressure fuel pump .

4. Fuel rail pressure sensor check 1

-1. Turn the vehicle to the OFF (LOCK) mode.

-2. **Remove the PGM-FI main relay 2** .

-3. Start the engine, and let it idle until it stalls.

-4. After the engine stalls, crank the engine for several times.

-5. Check the parameter (s) below with the HDS.

Signal	Threshold		Current conditions	
	Values	Unit	Values	Unit
FUEL PRESSURE CONVERTED FROM PF SENSOR	Less than 1, 000	kPa	B	B

NOTE: It is normal if the value of several hundred kPa is indicated.

Do the current condition (s) match the threshold?

YES

Go to step 5.

NO

Replace the fuel rail (fuel rail pressure sensor) .

5. Fuel rail pressure sensor check 2

-1. Turn the vehicle to the OFF (LOCK) mode.

-2. **Install the PGM-FI main relay 2** .

-3. Start the engine.

-4. Hold the engine speed at 3, 000 rpm without load (in P or N) until the radiator fan comes on, then let it idle.

-5. Shift the transmission to D position/mode while pressing the brake pedal firmly, then press the accelerator pedal.**NOTE:** Do not shift the transmission or remove your foot off the brake pedal, while raising the engine speed.

-6. Check the parameter (s) below with the HDS.

Signal	Current conditions	
	Values	Unit
FUEL PRESSURE CONVERTED FROM PF SENSOR	B	B
FUEL PRESSURE DIRECT INJECTION SYSTEM	B	B

Are both values almost the same?

YES

Go to step 6.

NO

Replace the fuel rail (fuel rail pressure sensor) .

6. Fuel pressure check (low pressure side)

-1. **Check the fuel pressure** .

Is the fuel pressure OK?

YES

Go to step 7.

NO

Check the fuel pump, the fuel pressure regulator, the fuel filter , and the fuel lines .

7. High pressure fuel pump visual check

   -1. Remove the high pressure fuel pump .

   -2. Visually check the cam that drives a high pressure fuel pump and the roller of the high pressure fuel pump for wear or damage .

   Are the parts OK?

   YES

   Replace the high pressure fuel pump .

   NO

   Check for damage of the cam and the roller , and replace the intake camshaft and/or the high pressure fuel pump if needed.

DTC P0088 (1.5 L ENGINE)

DTC P0088 : Fuel Rail Pressure Too High

NOTE:

- Before you troubleshoot, review the general troubleshooting information .
- If any of the DTCs listed below are stored at the same time as P0088, troubleshoot those DTCs first, then recheck for P0088.

  P0192, P0193: Fuel rail pressure sensor

  P0201, P0202, P0203, P0204: No. 1-No. 4 cylinder injector (s)

  P0351, P0352, P0353, P0354: No. 1-No. 4 cylinder ignition coil (s)

  P219C, P219D, P219E, P219F: No. 1-No. 4 cylinder A/F variation

  P2623: High pressure fuel pump

DTC Description	Confirmed DTC	Pending DTC
P0088 Fuel Rail Pressure Too High	B	B

DTC (PGM-FI)

1. Problem verification (idling)

   -1. Record on-board snapshots with the HDS.

   -2. Turn the vehicle to the ON mode.

   -3. Clear the DTC with the HDS.

   -4. Turn the vehicle to the OFF (LOCK) mode.

   -5. Start the engine.

   -6. Hold the engine speed at 3, 000 rpm without load (in P or N) until the radiator fan comes on, then let it idle.

-7. Select the DI Fuel Pressure Test in the INSPECTION MENU with the HDS.

DI FUEL PRESSURE TEST

Check for Pending or Confirmed DTCs with the HDS.

DTC Description	Confirmed DTC	Pending DTC
P0088 Fuel Rail Pressure Too High	B	B

Is DTC P0088 indicated?

YES

Go to step 3.

NO

Go to step 2.

2. Problem verification (test-drive):

Test-drive the vehicle for several minutes in the range of these recorded on-board snapshot parameters:

- ENGINE SPEED
- VEHICLE SPEED
- MAP SENSOR
- TP SENSOR
- APP SENSOR
- ECT SENSOR 1
- FUEL PRESSURE CONVERTED FROM PF SENSOR
- FUEL PRESSURE DIRECT INJECTION SYSTEM
- IAT SENSOR (1)

On-board Snapshot

Signal	Current conditions	
	Values	Unit
ENGINE SPEED	B	B
VEHICLE SPEED	B	B
MAP SENSOR	B	B
TP SENSOR	B	B
APP SENSOR	B	B
ECT SENSOR 1	B	B
FUEL PRESSURE CONVERTED FROM PF SENSOR	B	B
FUEL PRESSURE DIRECT INJECTION SYSTEM	B	B
IAT SENSOR (1)	B	B

-2. Check for Pending or Confirmed DTCs with the HDS.

DTC Description	Confirmed DTC	Pending DTC
P0088 Fuel Rail Pressure Too High	B	B

DTC (PGM-FI)

Is DTC P0088 indicated?

YES

Go to step 3.

NO

Intermittent failure, the system is OK at this time. Check for a poor connection or loose terminals at the fuel rail pressure sensor, the high pressure fuel pump, and the PCM. **If the on-board snapshot of this DTC is recorded, try to reproduce the failure under the same conditions with the on-board snapshot** .

3. Fuel rail pressure sensor check 1

   -1. Turn the vehicle to the OFF (LOCK) mode.

   -2. **Remove the PGM-FI main relay 2** .

   -3. Start the engine, and let it idle until it stalls.

   -4. After the engine stalls, press the accelerator pedal to the floor and crank the engine several times.

   -5. Check the parameter (s) below with the HDS.

Signal	Threshold		Current conditions	
	Values	Unit	Values	Unit
FUEL PRESSURE CONVERTED FROM PF SENSOR	Less than 1, 000	kPa	B	B

Do the current condition (s) match the threshold?

YES

Go to step 4.

NO

Replace the fuel rail (fuel rail pressure sensor) .

4. Fuel rail pressure sensor check 2

   -1. Turn the vehicle to the OFF (LOCK) mode.

   -2. **Install the PGM-FI main relay 2** .

   -3. Start the engine.

   -4. Hold the engine speed at 3, 000 rpm without load (in P or N) until the radiator fan comes on, then let it idle.

   -5. Shift the transmission to D position/mode while pressing the brake pedal firmly, then press the accelerator pedal.**NOTE:** Do not shift the transmission or remove your foot off the brake pedal, while raising the engine speed.

   -6. Check the parameter (s) below with the HDS.

Signal	Current conditions	
	Values	Unit
FUEL PRESSURE CONVERTED FROM PF SENSOR	B	B
FUEL PRESSURE DIRECT INJECTION SYSTEM	B	B

Signal	Current conditions	
	Values	Unit
RELIEF VALVE	B	B

Are both values almost the same, and does the RELIEF VALVE indicate Normal?

YES

Go to step 5.

NO (the values are not the same)

Replace the fuel rail (fuel rail pressure sensor) .

NO (Abnormal is indicated)

Replace the high pressure fuel pump .

5. Fuel pressure check (low pressure side)

-1. **Check the fuel pressure** .

Is the fuel pressure OK?

YES

Replace the high pressure fuel pump .

NO

Check the fuel supply system (low pressure side).

DTC P0088 (2.4 L ENGINE) (2017 2018 2019)

DTC P0088 : Fuel Rail Pressure Too High

NOTE:

- Before you troubleshoot, **review the general troubleshooting information** .
- If any of the DTCs listed below are stored at the same time as P0088, troubleshoot those DTCs first, then recheck for P0088.

  P0192, P0193: Fuel rail pressure sensor

  P0201, P0202, P0203, P0204: No. 1-No. 4 cylinder injector (s)

  P0351, P0352, P0353, P0354: No. 1-No. 4 cylinder ignition coil (s)

  P219A: Air-Fuel Ratio Variation of Cylinder

  P2623: High pressure fuel pump

DTC Description	Confirmed DTC	Pending DTC
P0088 Fuel Rail Pressure Too High	B	B

DTC (PGM-FI)

1. Problem verification (idling)

-1. Record on-board snapshots with the HDS.

-2. Turn the vehicle to the ON mode.

-3. Clear the DTC with the HDS.

-4. Turn the vehicle to the OFF (LOCK) mode.

-5. Start the engine.

-6. Hold the engine speed at 3, 000 rpm without load (in P or N) until the radiator fan comes on, then let it idle.

-7. Select the DI Fuel Pressure Test in the INSPECTION MENU with the HDS.

DI FUEL PRESSURE TEST

Check for Pending or Confirmed DTCs with the HDS.

DTC Description	Confirmed DTC	Pending DTC
P0088 Fuel Rail Pressure Too High	B	B

Is DTC P0088 indicated?

YES

Go to step 3.

NO

Go to step 2.

2. Problem verification (test-drive):

   Test-drive the vehicle for several minutes in the range of these recorded on-board snapshot parameters:

   - ENGINE SPEED
   - VEHICLE SPEED
   - MAP SENSOR
   - TP SENSOR
   - APP SENSOR
   - ECT SENSOR 1
   - FUEL PRESSURE CONVERTED FROM PF SENSOR
   - FUEL PRESSURE DIRECT INJECTION SYSTEM
   - IAT SENSOR (1)

   On-board Snapshot

Signal	Current conditions	
	Values	Unit
ENGINE SPEED	B	B
VEHICLE SPEED	B	B
MAP SENSOR	B	B
TP SENSOR	B	B
APP SENSOR	B	B
ECT SENSOR 1	B	B
FUEL PRESSURE CONVERTED FROM PF SENSOR	B	B
FUEL PRESSURE DIRECT INJECTION SYSTEM	B	B

Signal	Current conditions	
	Values	Unit
IAT SENSOR (1)	B	B

-2. Check for Pending or Confirmed DTCs with the HDS.

DTC Description	Confirmed DTC	Pending DTC
P0088 Fuel Rail Pressure Too High	B	B

Is DTC P0088 indicated?

YES

Go to step 3.

NO

Intermittent failure, the system is OK at this time. Check for a poor connection or loose terminals at the fuel rail pressure sensor, the high pressure fuel pump, and the PCM. **If the on-board snapshot of this DTC is recorded, try to reproduce the failure under the same conditions with the on-board snapshot** .

3. Fuel rail pressure sensor check 1

-1. Turn the vehicle to the OFF (LOCK) mode.

-2. **Remove the PGM-FI main relay 2** .

-3. Start the engine, and let it idle until it stalls.

-4. After the engine stalls, press the accelerator pedal to the floor and crank the engine several times.

-5. Check the parameter (s) below with the HDS.

Signal	Threshold		Current conditions	
	Values	Unit	Values	Unit
FUEL PRESSURE CONVERTED FROM PF SENSOR	Less than 1, 000	kPa	B	B

Do the current condition (s) match the threshold?

YES

Go to step 4.

NO

Replace the fuel rail (fuel rail pressure sensor) .

4. Fuel rail pressure sensor check 2

-1. Turn the vehicle to the OFF (LOCK) mode.

-2. **Install the PGM-FI main relay 2** .

-3. Start the engine.

-4. Hold the engine speed at 3, 000 rpm without load (in P or N) until the radiator fan comes on, then let it idle.

-5. Shift the transmission to D position/mode while pressing the brake pedal firmly, then press the accelerator pedal.**NOTE:** Do not shift the transmission or remove your foot off the brake pedal, while raising the engine speed.

-6. Check the parameter (s) below with the HDS.

Signal	Current conditions	
	Values	**Unit**
FUEL PRESSURE CONVERTED FROM PF SENSOR	B	B
FUEL PRESSURE DIRECT INJECTION SYSTEM	B	B
RELIEF VALVE	B	B

Are both values almost the same, and does the RELIEF VALVE indicate Normal?

YES

Go to step 5.

NO (the values are not the same)

Replace the fuel rail (fuel rail pressure sensor) .

NO (Abnormal is indicated)

Replace the high pressure fuel pump .

5. Fuel pressure check (low pressure side)

-1. **Check the fuel pressure** .

Is the fuel pressure OK?

YES

Replace the high pressure fuel pump .

NO

Check the fuel supply system (low pressure side).

DTC P0096 (1.5 L ENGINE)

DTC P0096 : IAT Sensor 2 Circuit Range/Performance Problem

NOTE: Before you troubleshoot, **review the general troubleshooting information** .

DTC Description	Confirmed DTC	Pending DTC
P0096 IAT Sensor 2 Circuit Range/Performance Problem	B	B

DTC (PGM-FI)

1. Connector visual check:

Check for poor connections or loose terminals of these connectors.

- ECT sensor 1
- ECT sensor 2
- MAF sensor/IAT sensor 1
- IAT sensor 2

Are the connections and terminals OK?

YES

Go to step 2.

NO

Repair the connections or terminals.

2. IAT sensor 2 performance check (low temperature)

-1. **Remove the IAT sensor 2** .

-2. Allow IAT sensor 2 to cool to the ambient temperature.

-3. Note the ambient temperature.

-4. Connect the IAT sensor 2 to its 2P connector, but do not install it.

-5. Turn the vehicle to the ON mode.

-6. Quickly note the value of IAT Sensor (2) in the DATA LIST with the HDS.

Signal	**Current conditions**	
	Values	**Unit**
IAT Sensor (2)	B	B

-7. Compare the value of IAT Sensor (2) to the ambient temperature.

Does the value of IAT Sensor (2) differ 5.4 deg. F (3 deg. C) or more from the ambient temperature?

YES

Replace the IAT sensor 2 .

NO

Go to step 3.

3. IAT sensor 2 performance check (high temperature)

-1. Turn the vehicle to the OFF (LOCK) mode.

-2. Disconnect the following connector.

IAT sensor 2 2P connector

-3. Using a heat gun, blow hot air on IAT sensor 2 for a few seconds. Do not apply the heat longer than a few seconds or you will damage the sensor.

-4. Connect the IAT sensor 2 to its 2P connector, but do not install it.

-5. Turn the vehicle to the ON mode.

-6. Check IAT Sensor (2) in the DATA LIST with the HDS.

Signal	**Current conditions**	
	Values	**Unit**
IAT Sensor (2)	B	B

Does IAT Sensor (2) change 76 deg. F (42 deg. C) or more?

YES

Intermittent failure, the system is OK at this time. Check for poor connections or loose terminals at IAT sensor 2 and the PCM. **If the on-board snapshot of this DTC is recorded, try to reproduce the failure under the same conditions with the on-board snapshot** .

NO

Replace the IAT sensor 2 .

DTC P0097 (1.5 L ENGINE)

DTC P0097 : IAT Sensor 2 Circuit Low Voltage

NOTE: Before you troubleshoot, **review the general troubleshooting information** .

DTC Description	Confirmed DTC	Pending DTC
P0097 IAT Sensor 2 Circuit Low Voltage	B	B

DTC (PGM-FI)

1. Problem verification

-1. Turn the vehicle to the ON mode.

-2. Check the parameter (s) below with the HDS.

Signal	Threshold		Current conditions	
	Values	Unit	Values	Unit
IAT Sensor (2)	Less than 0.08	V	B	B

Do the current condition (s) match the threshold?

YES

The failure is duplicated. Go to step 2.

NO

Intermittent failure, the system is OK at this time. Check for poor connections or loose terminals at IAT sensor 2 and the PCM. **If the on-board snapshot of this DTC is recorded, try to reproduce the failure under the same conditions with the on-board snapshot** .

2. Determine possible failure area (IAT sensor 2, others)

-1. Turn the vehicle to the OFF (LOCK) mode.

-2. Disconnect the following connector.

IAT sensor 2 2P connector

-3. Turn the vehicle to the ON mode.

-4. Check the parameter (s) below with the HDS.

Signal	Threshold		Current conditions	
	Values	**Unit**	**Values**	**Unit**
IAT Sensor (2)	Less than 0.08	V	B	B

Do the current condition (s) match the threshold?

YES

Go to step 3.

NO

Replace the IAT sensor 2 .

3. Shorted wire check (ITA2 (INTA) line)

-1. Turn the vehicle to the OFF (LOCK) mode.

-2. Jump the SCS line with the HDS, and wait more than 1 minute.

-3. Disconnect the following connector.

PCM connector E (80P)

-4. Check for continuity between test points 1 and 2.

Test condition	Vehicle OFF (LOCK) mode
B	IAT sensor 2 2P connector: disconnected
B	PCM connector E (80P): disconnected
Test point 1	IAT sensor 2 2P connector (female terminals) No. 1: ①
Test point 2	Body ground

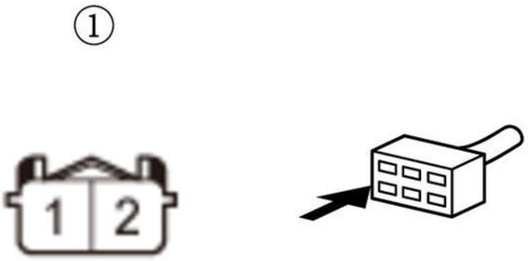

Is there continuity?

YES

Repair a short in the ITA2 (INTA) wire between the PCM (E55) and IAT sensor 2.

NO

The ITA2 (INTA) wire is OK. Check for any authorized service information related to the DTCs or symptoms you are troubleshooting, or **substitute a known-good PCM** .

DTC P0098 (1.5 L ENGINE)

DTC P0098 : IAT Sensor 2 Circuit High Voltage

NOTE: Before you troubleshoot, **review the general troubleshooting information** .

DTC Description	Confirmed DTC	Pending DTC
P0098 IAT Sensor 2 Circuit High Voltage	B	B

DTC (PGM-FI)

1. Problem verification

-1. Turn the vehicle to the ON mode.

-2. Check the parameter (s) below with the HDS.

Signal	Threshold		Current conditions	
	Values	Unit	Values	Unit
IAT Sensor (2)	More than 4.92	V	B	B

Do the current condition (s) match the threshold?

YES

The failure is duplicated. Go to step 2.

NO

Intermittent failure, the system is OK at this time. Check for poor connections or loose terminals at IAT sensor 2 and the PCM. **If the on-board snapshot of this DTC is recorded, try to reproduce the failure under the same conditions with the on-board snapshot** .

2. Determine possible failure area (IAT sensor 2, others)

-1. Turn the vehicle to the OFF (LOCK) mode.

-2. Disconnect the following connector.

IAT sensor 2 2P connector

-3. Connect terminals A and B with a jumper wire.

Terminal A	IAT sensor 2 2P connector (female terminals) No. 1: ①
Terminal B	IAT sensor 2 2P connector (female terminals) No. 2: ①

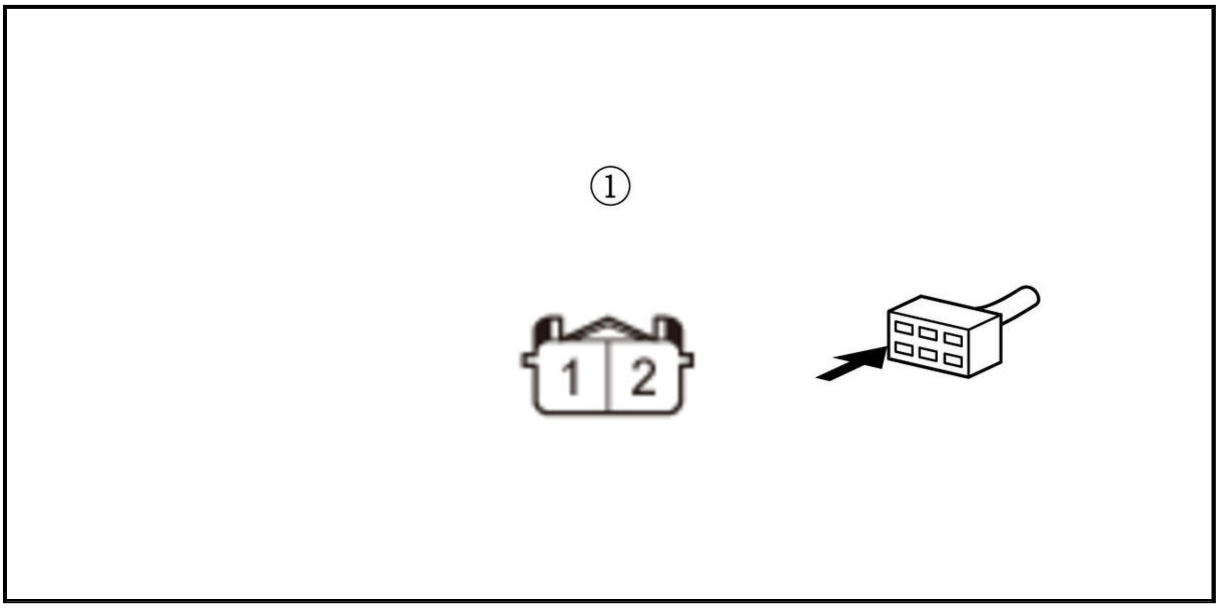

-4. Turn the vehicle to the ON mode.

-5. Check the parameter (s) below with the HDS.

Signal	Threshold		Current conditions	
	Values	Unit	Values	Unit
IAT Sensor (2)	More than 4.92	V	B	B

Do the current condition (s) match the threshold?

YES

Go to step 3.

NO

Replace the IAT sensor 2 .

3. Determine possible failure area (ITA2 (INTA) line, others)

-1. Turn the vehicle to the OFF (LOCK) mode.

-2. Remove the jumper wire from the IAT sensor 2 2P connector.

-3. Turn the vehicle to the ON mode.

-4. Measure the voltage between test points 1 and 2.

Test condition	Vehicle ON mode
B	IAT sensor 2 2P connector: disconnected
Test point 1	IAT sensor 2 2P connector (female terminals) No. 1: ①
Test point 2	Body ground

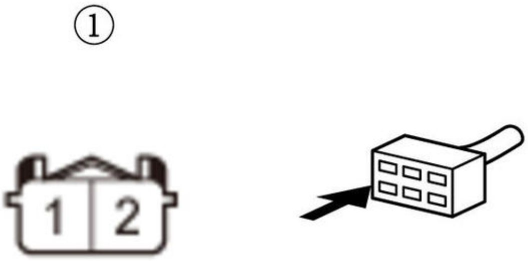

Is there about 5.0 V?

YES

Go to step 4.

NO

Go to step 5.

4. Open wire check (SG2 line)

-1. Turn the vehicle to the OFF (LOCK) mode.

-2. Jump the SCS line with the HDS, and wait more than 1 minute.

-3. Disconnect the following connector.

PCM connector E (80P)

-4. Check for continuity between test points 1 and 2.

Test condition	Vehicle OFF (LOCK) mode
B	IAT sensor 2 2P connector: disconnected
B	PCM connector E (80P): disconnected
Test point 1	IAT sensor 2 2P connector (female terminals) No. 2: ①
Test point 2	**PCM connector E (80P) No. 78**

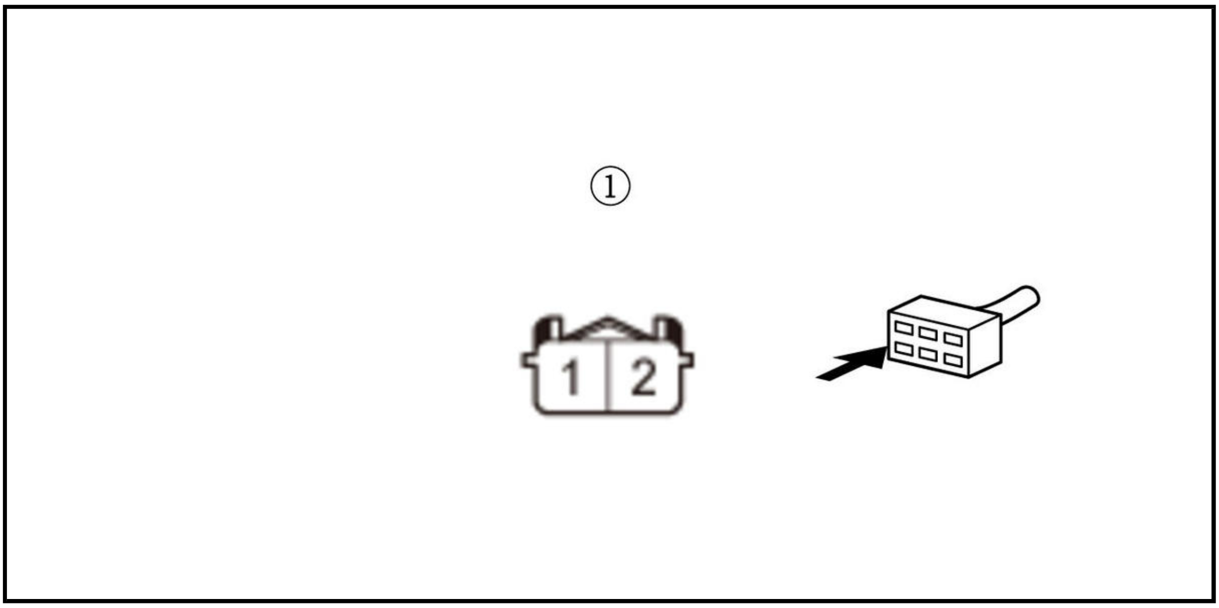

Is there continuity?

YES

The SG2 wire is OK. Check for any authorized service information related to the DTCs or symptoms you are troubleshooting, or **substitute a known-good PCM** .

NO

Repair an open in the SG2 wire between the PCM (E78) and IAT sensor 2.

5. Open wire check (ITA2 (INTA) line)

-1. Turn the vehicle to the OFF (LOCK) mode.

-2. Jump the SCS line with the HDS, and wait more than 1 minute.

-3. Disconnect the following connector.

PCM connector E (80P)

-4. Check for continuity between test points 1 and 2.

Test condition	Vehicle OFF (LOCK) mode
B	IAT sensor 2 2P connector: disconnected
B	PCM connector E (80P): disconnected
Test point 1	IAT sensor 2 2P connector (female terminals) No. 1: ①
Test point 2	**PCM connector E (80P) No. 55**

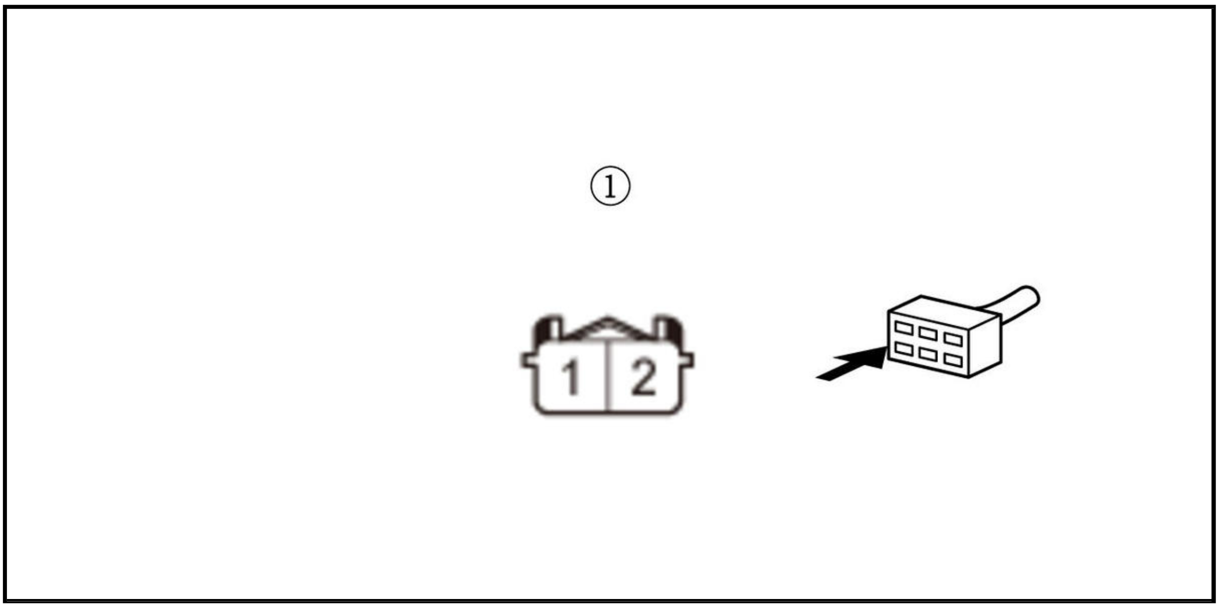

Is there continuity?

YES

The ITA2 (INTA) wire is OK. Check for any authorized service information related to the DTCs or symptoms you are troubleshooting, or **substitute a known-good PCM** .

NO

Repair an open in the ITA2 (INTA) wire between the PCM (E55) and IAT sensor 2.

DTC P00CF (1.5 L ENGINE)

DTC P00CF : Turbocharger Boost Sensor/BARO Sensor Incorrect Correlation

NOTE:

- Before you troubleshoot, **review the general troubleshooting information** .
- If DTC P00CF is indicated alone, do the troubleshooting for P0236 using the on-board snapshot for P00CF.
- If any of the DTCs listed below are indicated at the same time as DTC P00CF, troubleshoot those DTCs first, then recheck for P00CF.

  P0069: BARO sensor

  P0236: Turbocharger boost sensor

DTC Description	Confirmed DTC	Pending DTC
P00CF Turbocharger Boost Sensor Incorrect Correlation	B	B

DTC (PGM-FI)

1. DTC check

   -1. Turn the vehicle to the ON mode.

   -2. Check for Pending or Confirmed DTCs with the HDS.

DTC Description	Confirmed DTC	Pending DTC
P0069 BARO Sensor Circuit Range/Performance Problem	B	B

DTC Description	Confirmed DTC	Pending DTC
P00CF Turbocharger Boost Sensor/BARO Sensor Incorrect Correlation	B	B
P0236 Turbocharger Boost Sensor Circuit Range/Performance Problem	B	B

Are DTC P0069 or P0236 and P00CF indicated at the same time?

YES

Go to the indicated DTC's troubleshooting.

NO

Go to the troubleshooting for **DTC P0069** and **DTC P0236** .

DTC P00FE (1.5 L ENGINE) (2020 2021)

DTC P00FE : EVAP Vent Line Blockage

Special Tools Required

Vacuum Pump/Gauge, 0-30 inHg Snap-on YA4000A or equivalent, commercially available

NOTE: Before you troubleshoot, **review the general troubleshooting information** .

DTC Description	Confirmed DTC	Pending DTC
P00FE EVAP Vent Line Blockage	B	B

DTC (PGM-FI)

1. Fuel tank vapor control valve/fuel vent tube check

   -1. Turn the vehicle to the OFF (LOCK) mode.

   -2. **Insert the emergency fuel funnel into the fuel filler neck** .

   -3. Disconnect the fuel vent tube (A) from the EVAP canister (B), and connect a vacuum pump/gauge, 0-30 inHg, to the fuel vent tube as shown.

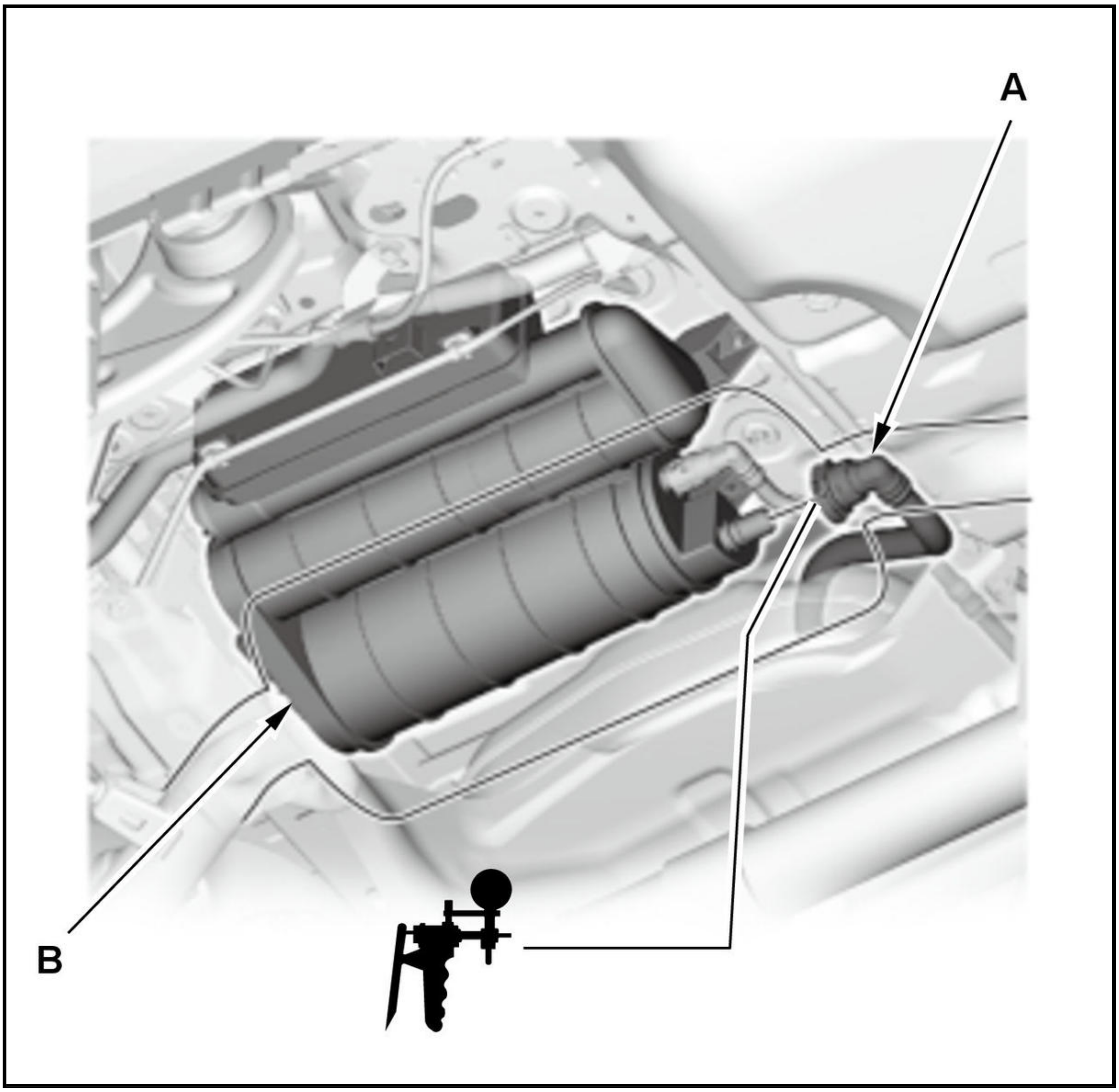

-4. Apply vacuum to the fuel vent tube.

Does it hold the vacuum?

YES

Replace the fuel tank .

NO

Go to step 2.

2. EVAP canister check 1

-1. Disconnect drain hose A from the EVAP canister (B), then plug the drain tube port (C).

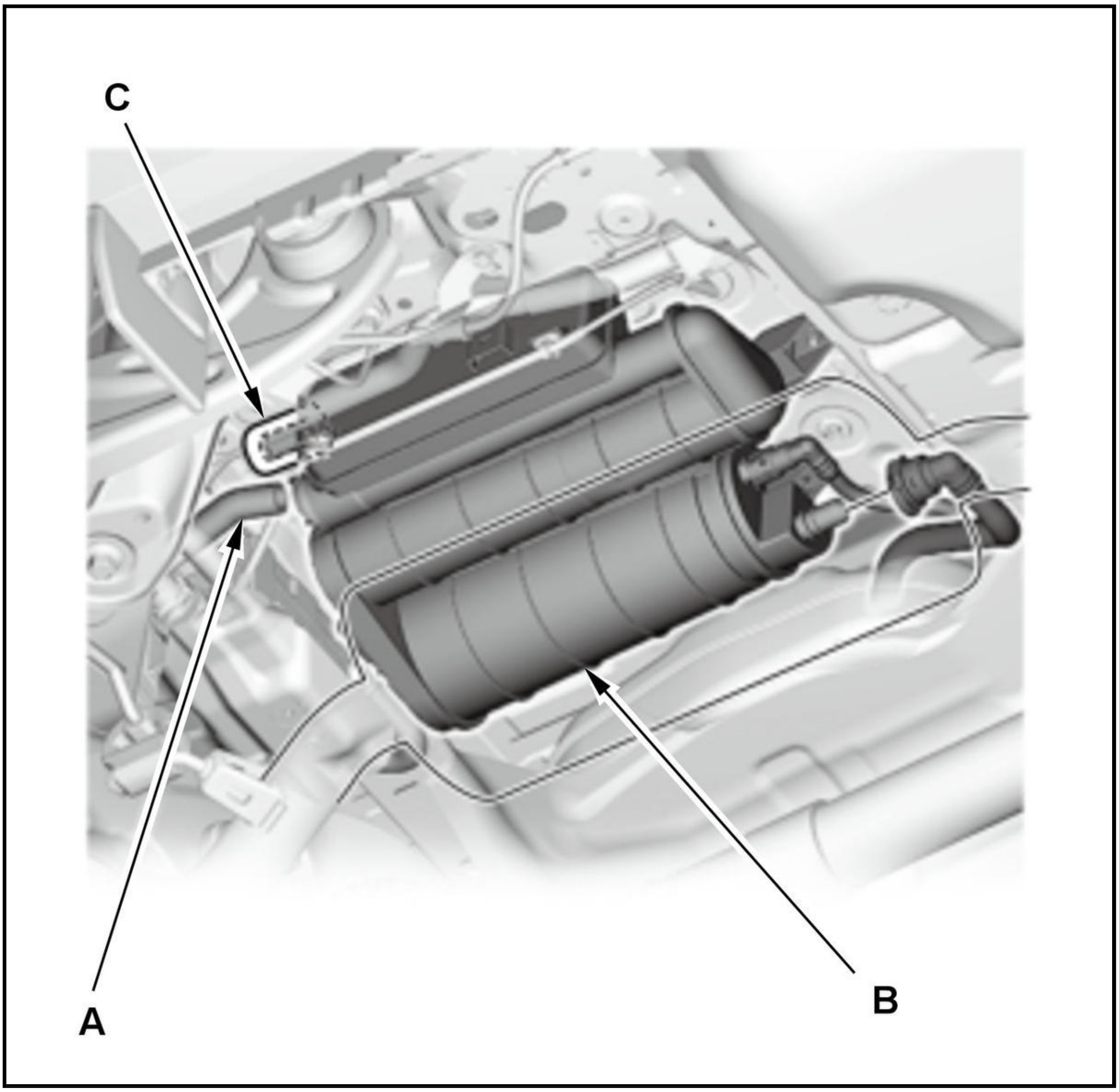

-2. Disconnect the EVAP canister purge hose (A) from the EVAP canister (B), then connect the vacuum pump/gauge, 0-30 inHg, to the EVAP canister as shown.

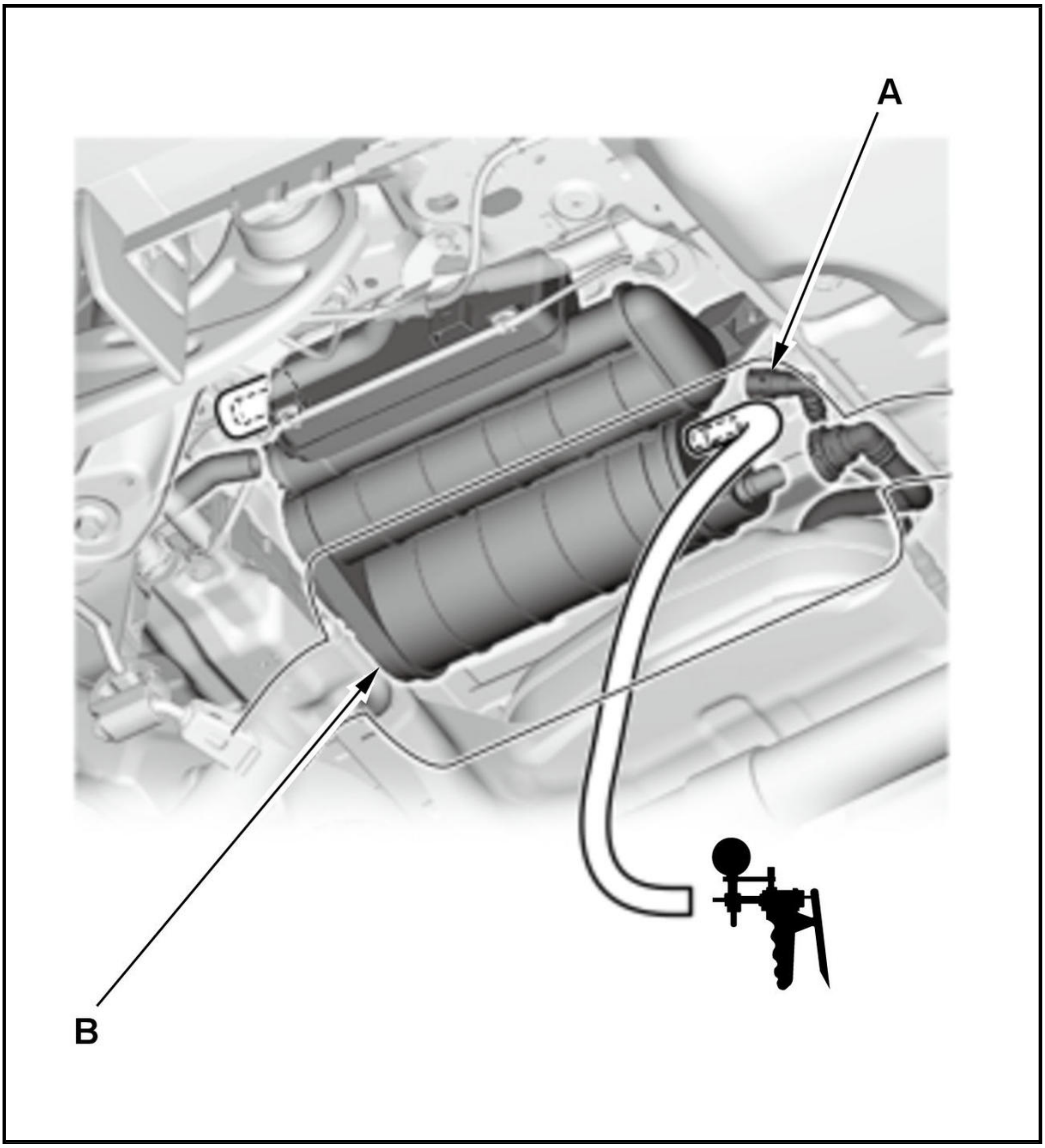

-3. Apply vacuum to the EVAP canister.

Does it hold the vacuum?

YES

Replace the EVAP canister .

NO

Go to step 3.

3. EVAP canister check 2

-1. Remove the plug from the drain tube port (A) and plug the fuel vent tube port (B), then connect the vacuum pump/gauge, 0-30 inHg, to the EVAP canister as shown.

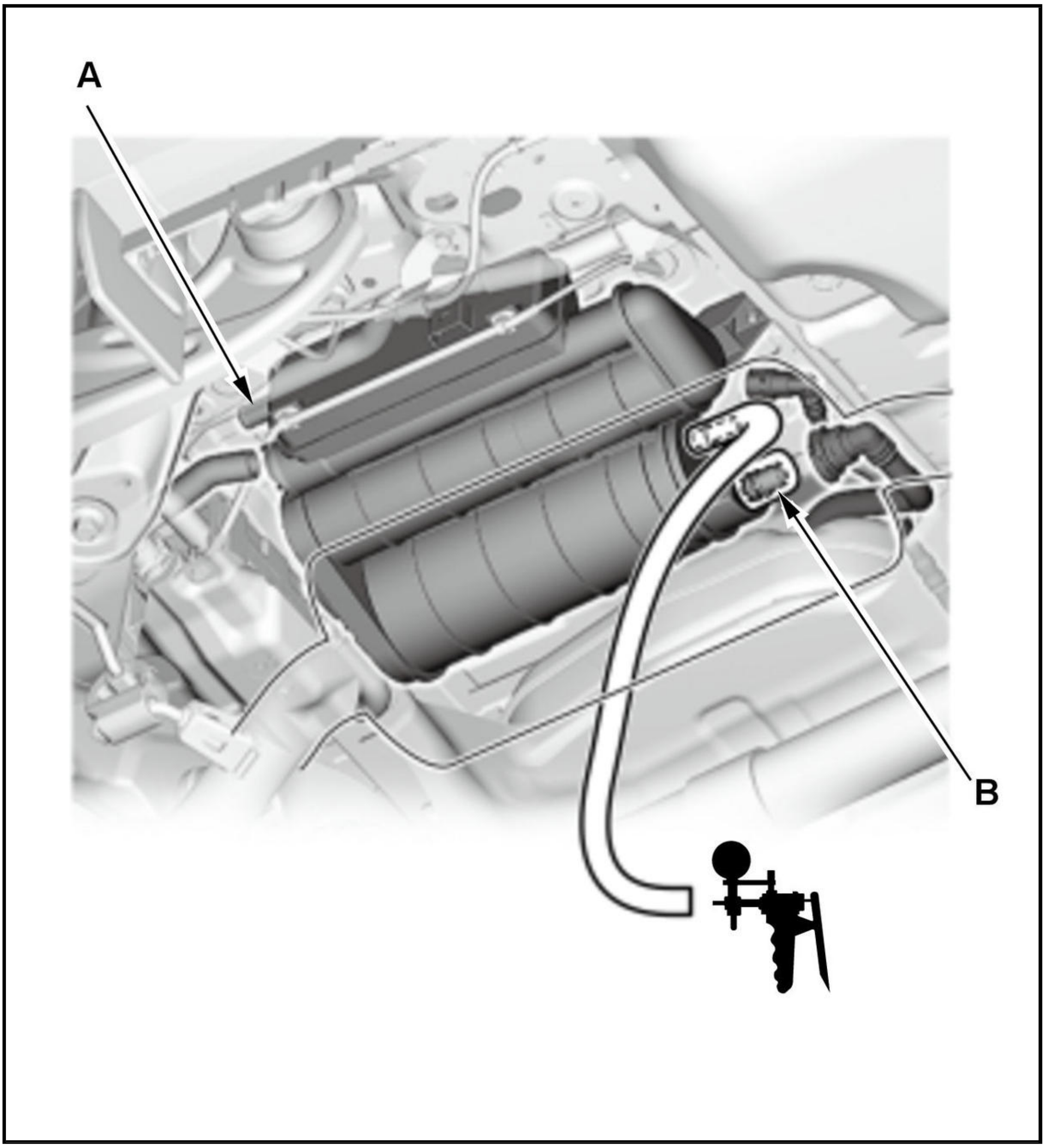

-2. Apply vacuum to the EVAP canister.

Does it hold the vacuum?

YES

Replace the EVAP canister .

NO

Go to step 4.

4. Drain hose A visual check

-1. Disconnect drain hose A from the EVAP leak check module (B).

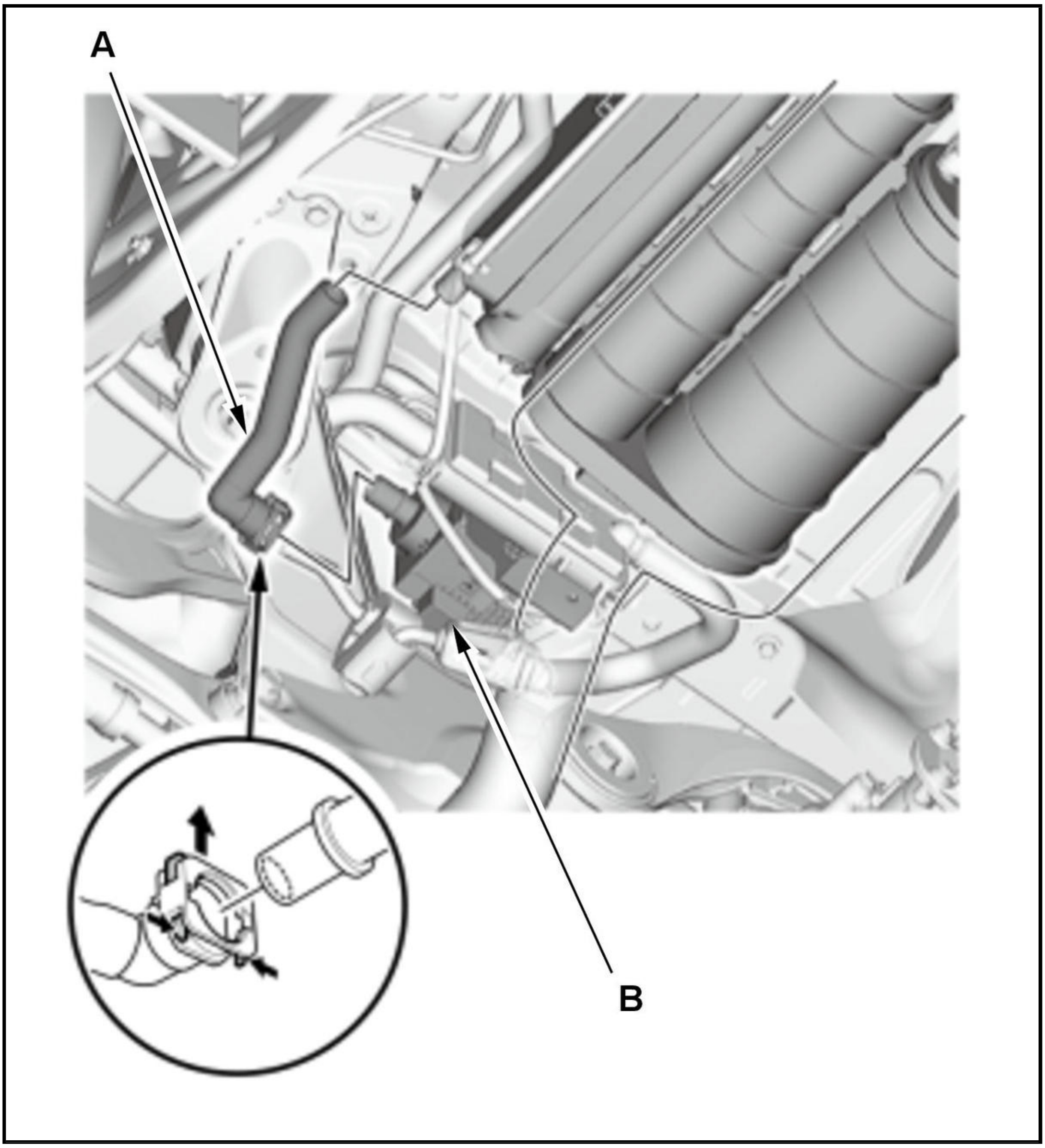

-2. Visually check drain hose A for deformation, foreign object clogged, or restrictions.

Is the hose OK?

YES

Replace the EVAP leak check module .

NO

Replace drain hose A .

DTC P0100 (1.5 L ENGINE)

DTC P0100 : MAF Sensor Circuit Malfunction

NOTE: Before you troubleshoot, review the general troubleshooting information .

DTC Description	Confirmed DTC	Pending DTC
P0100 MAF Sensor Circuit Malfunction	B	B

DTC (PGM-FI)

1. Problem verification

   -1. Turn the vehicle to the ON mode.

   -2. Clear the DTC with the HDS.

   -3. Wait 2 seconds or more.

   -4. Check for Pending or Confirmed DTCs with the HDS.

DTC Description	Confirmed DTC	Pending DTC
P0100 MAF Sensor Circuit Malfunction	B	B

   Is DTC P0100 indicated?

   YES

   The failure is duplicated. Go to step 2.

   NO

   Intermittent failure, the system is OK at this time. Check for poor connections or loose terminals at the MAF sensor/IAT sensor 1 and the PCM. **If the on-board snapshot of this DTC is recorded, try to reproduce the failure under the same conditions with the on-board snapshot** .

2. Determine possible failure area (FGP line, others)

   -1. Turn the vehicle to the OFF (LOCK) mode.

   -2. Disconnect the following connector.

MAF sensor/IAT sensor 1 4P connector

   -3. Turn the vehicle to the ON mode.

   -4. Measure the voltage between test points 1 and 2.

Test condition	Vehicle ON mode
B	MAF sensor/IAT sensor 1 4P connector: disconnected
Test point 1	MAF sensor/IAT sensor 1 4P connector (female terminals) No. 2: ①
Test point 2	MAF sensor/IAT sensor 1 4P connector (female terminals) No. 3: ①

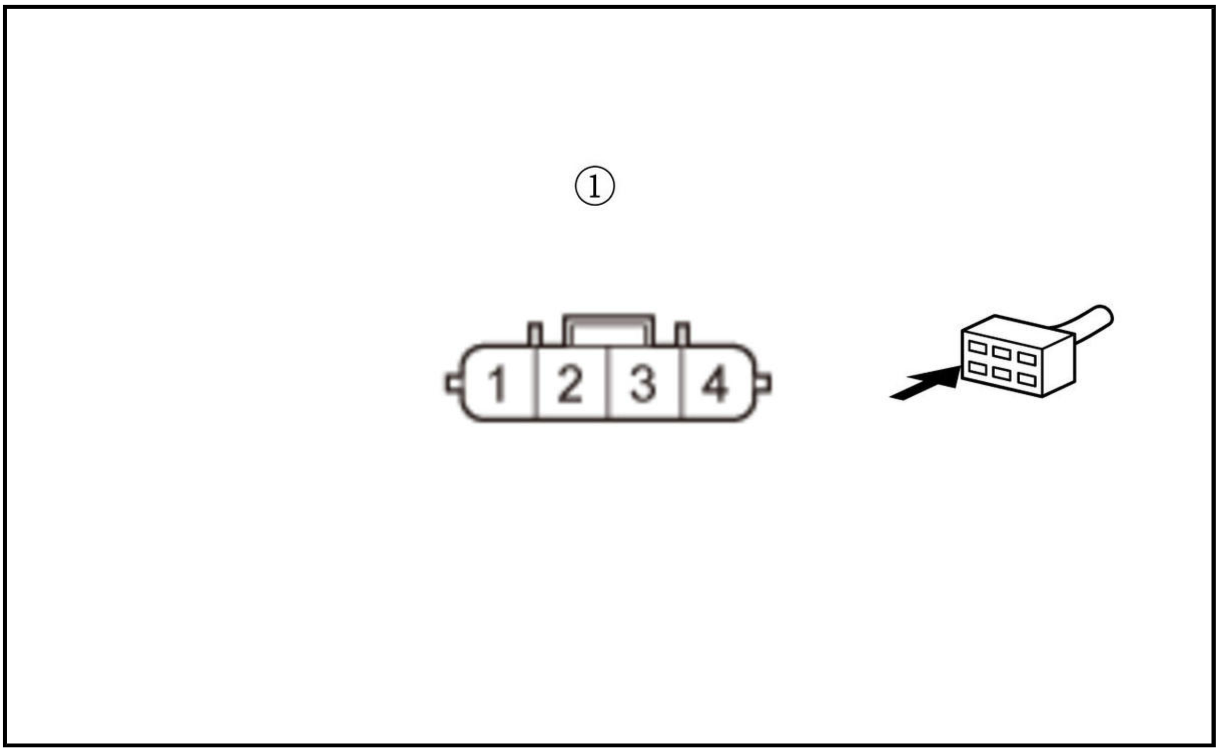

Is there about 5.0 V?

YES

Go to step 6.

NO

Go to step 3.

3. Shorted wire check (VCC2 line)

-1. Turn the vehicle to the OFF (LOCK) mode.

-2. Jump the SCS line with the HDS, and wait more than 1 minute.

-3. Disconnect the following connector.

PCM connector E (80P)

-4. Check for continuity between test points 1 and 2.

Test condition	Vehicle OFF (LOCK) mode
B	MAF sensor/IAT sensor 1 4P connector: disconnected
B	PCM connector E (80P): disconnected
Test point 1	MAF sensor/IAT sensor 1 4P connector (female terminals) No. 3: ①
Test point 2	Body ground

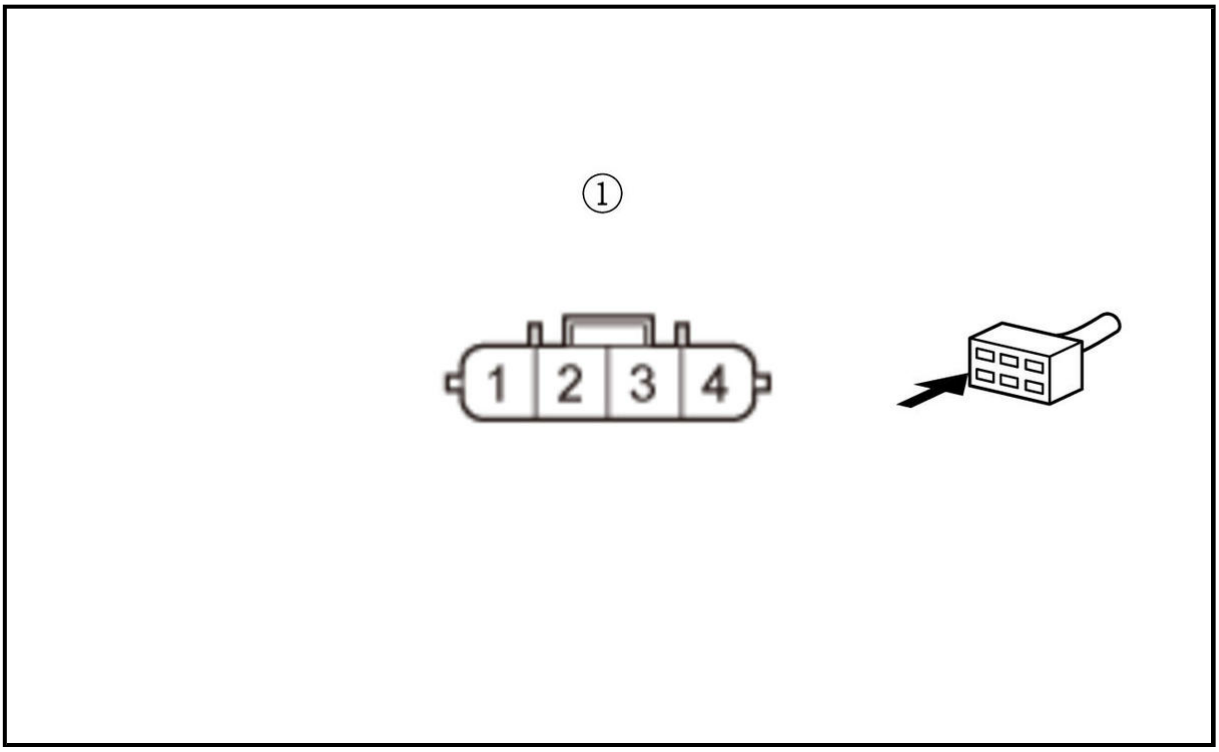

Is there continuity?

YES

Repair a short in the VCC2 wire between the PCM (E77) and the MAF sensor/IAT sensor 1.

NO

The VCC2 wire is not shorted. Go to step 4.

4. Open wire check (VCC2 line)

-1. Check for continuity between test points 1 and 2.

Test condition	Vehicle OFF (LOCK) mode
B	MAF sensor/IAT sensor 1 4P connector: disconnected
B	PCM connector E (80P): disconnected
Test point 1	MAF sensor/IAT sensor 1 4P connector (female terminals) No. 3: ①
Test point 2	**PCM connector E (80P) No. 77**

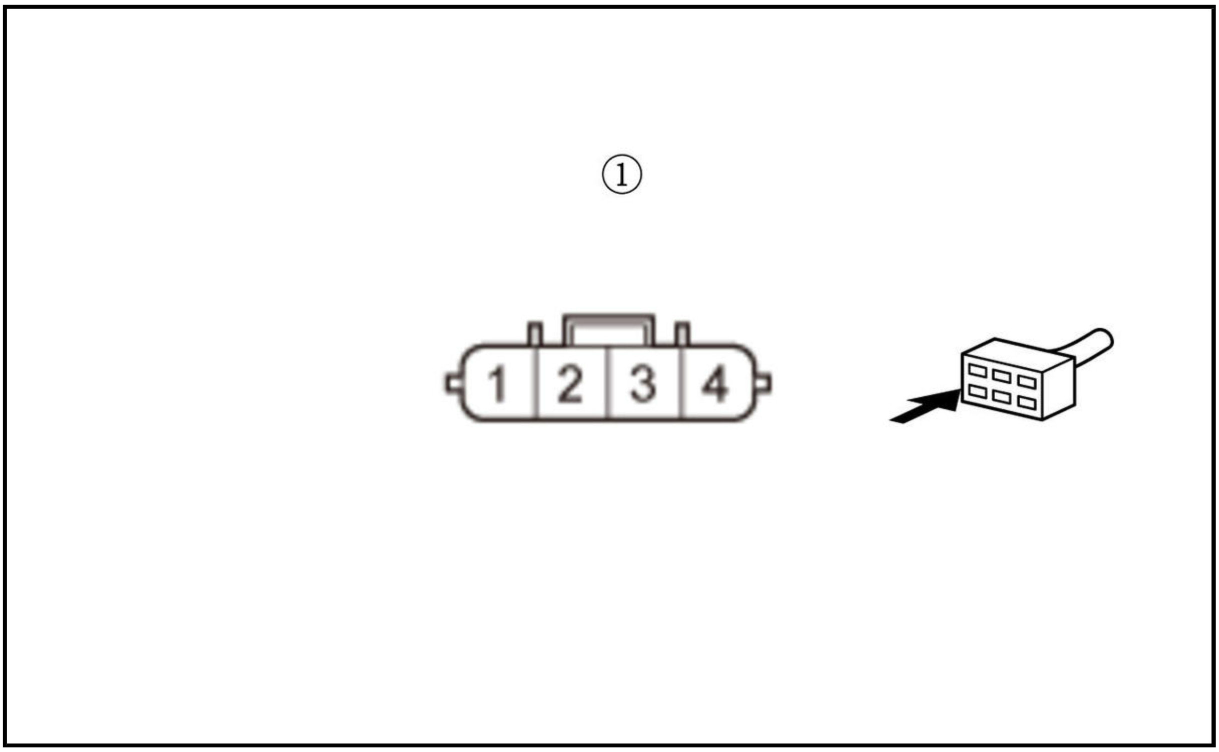

Is there continuity?

YES

The VCC2 wire is OK. Go to step 5.

NO

Repair an open in the VCC2 wire between the PCM (E77) and the MAF sensor/IAT sensor 1.

5. Open wire check (SG2 line)

-1. Check for continuity between test points 1 and 2.

Test condition	Vehicle OFF (LOCK) mode
B	MAF sensor/IAT sensor 1 4P connector: disconnected
B	PCM connector E (80P): disconnected
Test point 1	MAF sensor/IAT sensor 1 4P connector (female terminals) No. 2: ①
Test point 2	**PCM connector E (80P) No. 78**

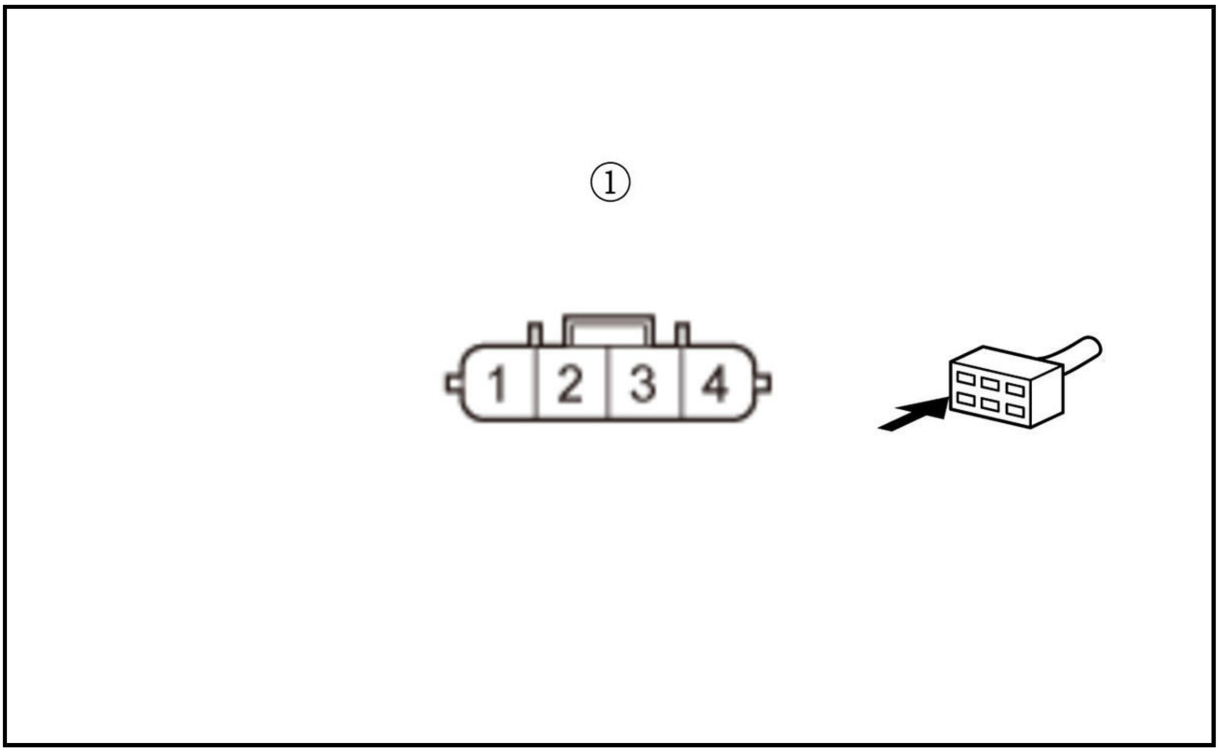

Is there continuity?

YES

The SG2 wire is OK. Check for any authorized service information related to the DTCs or symptoms you are troubleshooting, or **substitute a known-good PCM** .

NO

Repair an open in the SG2 wire between the PCM (E78) and the MAF sensor/IAT sensor 1.

6. Shorted wire check (FGP line)

-1. Turn the vehicle to the OFF (LOCK) mode.

-2. Jump the SCS line with the HDS, and wait more than 1 minute.

-3. Disconnect the following connector.

PCM connector E (80P)

-4. Check for continuity between test points 1 and 2.

Test condition	Vehicle OFF (LOCK) mode
B	MAF sensor/IAT sensor 1 4P connector: disconnected
B	PCM connector E (80P): disconnected
Test point 1	MAF sensor/IAT sensor 1 4P connector (female terminals) No. 1: ①
Test point 2	Body ground

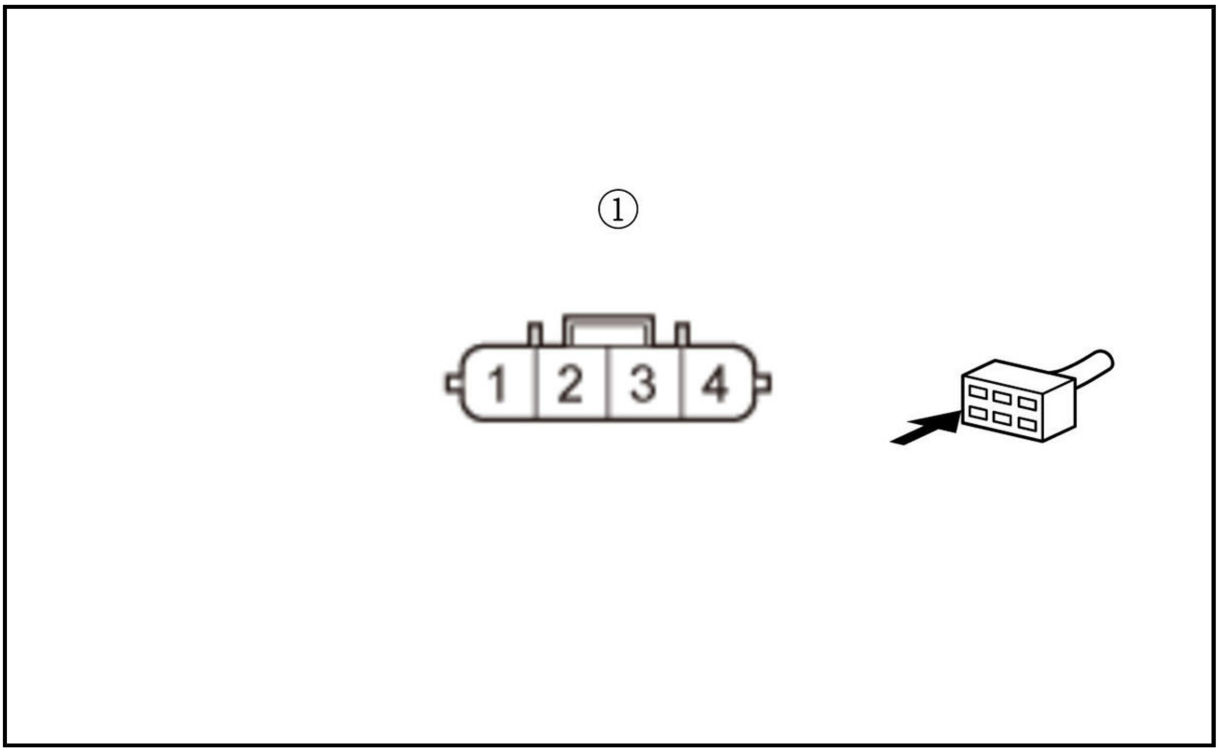

Is there continuity?

YES

Repair a short in the FGP wire between the PCM (E61) and the MAF sensor/IAT sensor 1.

NO

The FGP wire is not shorted to ground. Go to step 7.

7. Open wire check (FGP line)

-1. Check for continuity between test points 1 and 2.

Test condition	Vehicle OFF (LOCK) mode
B	MAF sensor/IAT sensor 1 4P connector: disconnected
B	PCM connector E (80P): disconnected
Test point 1	MAF sensor/IAT sensor 1 4P connector (female terminals) No. 1: ①
Test point 2	PCM connector E (80P) No. 61

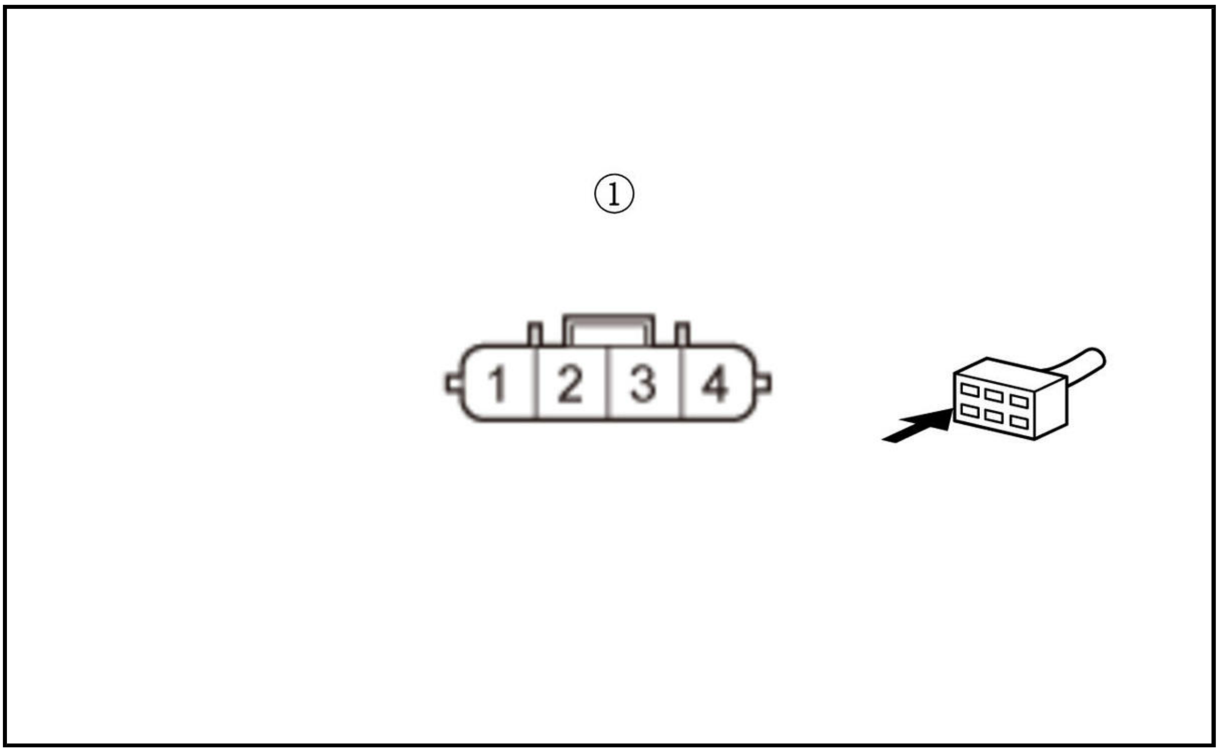

Is there continuity?

YES

The FGP wire is not open. Go to step 8.

NO

Repair an open in the FGP wire between the PCM (E61) and the MAF sensor/IAT sensor 1.

8. Shorted wire check (FGP line to power)

-1. Turn the vehicle to the ON mode.

-2. Measure the voltage between test points 1 and 2.

Test condition	Vehicle ON mode
B	MAF sensor/IAT sensor 1 4P connector: disconnected
B	PCM connector E (80P): disconnected
Test point 1	MAF sensor/IAT sensor 1 4P connector (female terminals) No. 1: ①
Test point 2	Body ground

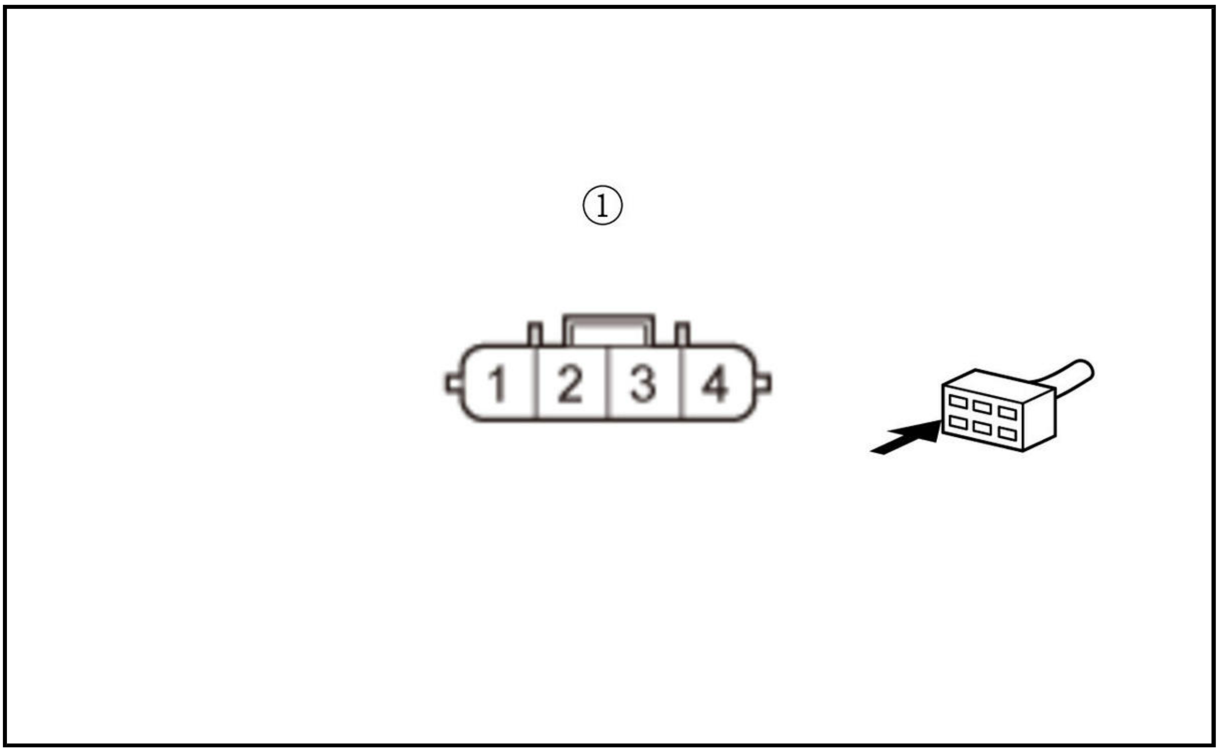

Is there any voltage?

YES

Repair a short to power in the FGP wire between the PCM (E61) and the MAF sensor/IAT sensor 1.

NO

The FGP wire is OK. Go to step 9.

9. MAF sensor/IAT sensor 1 check

-1. Turn the vehicle to the OFF (LOCK) mode.

-2. **Substitute a known-good MAF sensor/IAT sensor 1** .

-3. Reconnect all connectors.

-4. Exit the SCS mode with the HDS.

-5. Turn the vehicle to the ON mode.

-6. Clear the DTC with the HDS.

-7. Wait 2 seconds or more.

-8. Check for Pending or Confirmed DTCs with the HDS.

DTC Description	Confirmed DTC	Pending DTC
P0100 MAF Sensor Circuit Malfunction	B	B

Is DTC P0100 indicated?

YES

The MAF sensor/IAT sensor 1 is OK. Check for any authorized service information related to the DTCs or symptoms you are troubleshooting, or **substitute a known-good PCM** .

NO

Replace the original MAF sensor/IAT sensor 1 .

DTC P0101 (1.5 L ENGINE)

DTC P0101 : MAF Sensor Circuit Range/Performance Problem (Out of Range)

NOTE:

- Before you troubleshoot, review the general troubleshooting information .
- If DTC P2073, P2074, P2228, and/or P2229 are stored at the same time as DTC P0101, troubleshoot those DTCs first, then recheck for DTC P0101.

DTC Description	Confirmed DTC	Pending DTC
P0101 MAF Sensor Circuit Range/Performance Problem	B	B

DTC (PGM-FI)

1. Parts condition check:

   Check for poor connections or damage to these parts:

   - PCV valve
   - PCV hose
   - Intake air duct
   - Air cleaner
   - Purge (PCS) line
   - All parts through the turbocharger joint to the throttle body

   Are the parts OK?

   YES

   Go to step 2.

   NO

   Repair or replace the damaged part (s).

2. Intake air duct visual check

   -1. Check for damage or looseness of the intake air duct in the air cleaner.

   Is it OK?

   YES

   Go to step 3.

   NO

   Reconnect or replace the intake air duct in the air cleaner.

3. Air cleaner element visual check

   -1. Check for a dirty air cleaner element.

Is it dirty?

YES

Replace the air cleaner element .

NO

Go to step 4.

4. MAF sensor signal check (without engine running)

-1. Turn the vehicle to the ON mode.

-2. Check the parameter (s) below with the HDS.

Signal	Threshold		Current conditions	
	Values	Unit	Values	Unit
MAF SENSOR	520-10000	Hz	B	B

Do the current condition (s) match the threshold?

YES

Go to step 5.

NO

Replace the MAF sensor/IAT sensor 1 .

5. MAF sensor signal check (with engine running)

-1. Start the engine and let it idle.

-2. Check the parameter (s) below with the HDS.

Signal	Threshold		Current conditions	
	Values	Unit	Values	Unit
MAF SENSOR	520-10000	Hz	B	B

Do the current condition (s) match the threshold?

YES

Go to step 6.

NO

Replace the MAF sensor/IAT sensor 1 .

6. Problem verification

-1. Turn the vehicle to the OFF (LOCK) mode.

-2. Turn the vehicle to the ON mode.

-3. Clear the DTC with the HDS.

-4. Start the engine. Hold the engine speed at 3, 000 rpm without load (in P or N) until the radiator fan comes on, then let it idle at least 5 seconds.

-5. Drive the vehicle at 37 mph (60 km/h) at least 5 seconds.

-6. Check for Pending or Confirmed DTCs with the HDS.

DTC Description	Confirmed DTC	Pending DTC
P0101 MAF Sensor Circuit Range/Performance Problem	B	B

Is DTC P0101 indicated?

YES

The failure is duplicated. **Replace the MAF sensor/IAT sensor 1** .

NO

Intermittent failure, the system is OK at this time. Check for poor connections or loose terminals at the MAF sensor/IAT sensor 1 and the PCM. **If the on-board snapshot of this DTC is recorded, try to reproduce the failure under the same conditions with the on-board snapshot** .

DTC P0101 (2.4 L ENGINE) (2018 2019)

DTC P0101 : MAF Sensor Circuit Range/Performance Problem

NOTE: Before you troubleshoot, **review the general troubleshooting information** .

DTC Description	Confirmed DTC	Pending DTC
P0101 MAF Sensor Circuit Range/Performance Problem	B	B

DTC (PGM-FI)

1. Problem verification 1

-1. Turn the vehicle to the ON mode, and wait 2 seconds.

-2. Check the parameter (s) below with the HDS.

Signal	Threshold		Current conditions	
	Values	Unit	Values	Unit
MAF SENSOR	Less than 0.59	V	B	B

Do the current condition (s) match the threshold?

YES

The failure is duplicated. Go to step 3.

NO

Go to step 2.

2. Problem verification 2

-1. Check the parameter (s) below with the HDS.

Signal	Threshold		Current conditions	
	Values	Unit	Values	Unit
MAF SENSOR	More than 4.89	V	B	B

Do the current condition (s) match the threshold?

YES

The failure is duplicated. Go to step 8.

NO

Intermittent failure, the system is OK at this time. Check for poor connections or loose terminals at the MAF sensor/IAT sensor and the PCM. **If the on-board snapshot of this DTC is recorded, try to reproduce the failure under the same conditions with the on-board snapshot** .

3. Open wire check (IG1 ACG/IG1 (MAIN)/IG1 (AFM) line)

-1. Turn the vehicle to the OFF (LOCK) mode.

-2. Disconnect the following connector.

MAF sensor/IAT sensor 5P connector

-3. Turn the vehicle to the ON mode.

-4. Measure the voltage between test points 1 and 2.

Test condition	Vehicle ON mode
B	MAF sensor/IAT sensor 5P connector: disconnected
Test point 1	MAF sensor/IAT sensor 5P connector (female terminals) No. 3: ①
Test point 2	Body ground

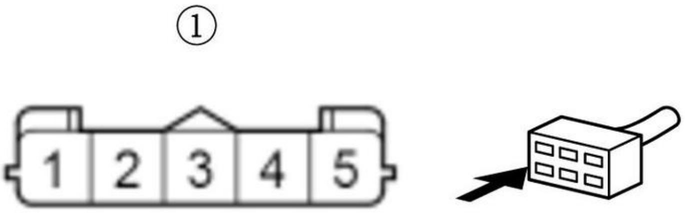

Is there battery voltage?

YES

The IG1 ACG/IG1 (MAIN)/IG1 (AFM) wire is OK. Go to step 4.

NO

Repair an open in the IG1 ACG/IG1 (MAIN)/IG1 (AFM) wire between the MAF sensor/IAT sensor and the No. D21 (10 A) fuse in the under-dash fuse/relay box.

4. Determine possible failure area (VGP line, others)

-1. Turn the vehicle to the OFF (LOCK) mode.

-2. Measure the resistance between test points 1 and 2.

Test condition	Vehicle OFF (LOCK) mode
B	MAF sensor/IAT sensor 5P connector: disconnected
Test point 1	MAF sensor/IAT sensor 5P connector (female terminals) No. 5: ①
Test point 2	Body ground

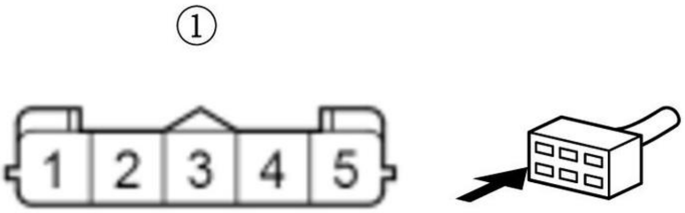

Is there about 170-210 kΩ?

YES

Go to step 7.

NO

Go to step 5.

5. Shorted wire check (VGP line)

-1. Jump the SCS line with the HDS, and wait more than 1 minute.

-2. Disconnect the following connector.

PCM connector B (51P)

-3. Check for continuity between test points 1 and 2.

Test condition	Vehicle OFF (LOCK) mode
B	MAF sensor/IAT sensor 5P connector: disconnected
B	PCM connector B (51P): disconnected
Test point 1	MAF sensor/IAT sensor 5P connector (female terminals) No. 5: ①
Test point 2	Body ground

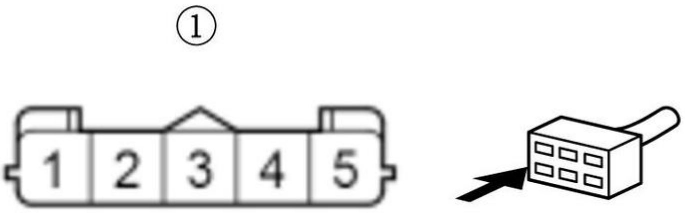

Is there continuity?

YES

Repair a short in the VGP wire between the PCM (B32) and the MAF sensor/IAT sensor.

NO

The VGP wire is not shorted. Go to step 6.

6. Open wire check (VGP line)

-1. Check for continuity between test points 1 and 2.

Test condition	Vehicle OFF (LOCK) mode
B	MAF sensor/IAT sensor 5P connector: disconnected
B	PCM connector B (51P): disconnected
Test point 1	MAF sensor/IAT sensor 5P connector (female terminals) No. 5: ①
Test point 2	**PCM connector B (51P) No. 32**

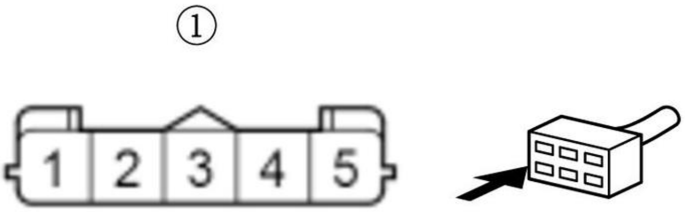

Is there continuity?

YES

The VGP wire is OK. Check for any authorized service information related to the DTCs or symptoms you are troubleshooting, or **substitute a known-good PCM** .

NO

Repair an open in the VGP wire between the PCM (B32) and the MAF sensor/IAT sensor.

7. MAF sensor/IAT sensor check

-1. Substitute a known-good MAF sensor/IAT sensor.

-2. Reconnect all connectors.

-3. Turn the vehicle to the ON mode.

-4. Clear the DTC with the HDS.

-5. Start the engine.

-6. Hold the engine speed at 2, 000 rpm without load (in P or N).

-7. Check for Pending or Confirmed DTCs with the HDS.

DTC Description	Confirmed DTC	Pending DTC
P0101 MAF Sensor Circuit Range/Performance Problem	B	B

Is DTC P0101 indicated?

YES

The MAF sensor/IAT sensor is OK. Check for any authorized service information related to the DTCs or symptoms you are troubleshooting, or **substitute a known-good PCM** .

NO

Replace the original MAF sensor/IAT sensor .

8. Open wire check (VGM line)

-1. Turn the vehicle to the OFF (LOCK) mode.

-2. Jump the SCS line with the HDS, and wait more than 1 minute.

-3. Disconnect the following connectors.

MAF sensor/IAT sensor 5P connector
PCM connector B (51P)

-4. Check for continuity between test points 1 and 2.

Test condition	Vehicle OFF (LOCK) mode
B	MAF sensor/IAT sensor 5P connector: disconnected
B	PCM connector B (51P): disconnected
Test point 1	MAF sensor/IAT sensor 5P connector (female terminals) No. 4: ①
Test point 2	**PCM connector B (51P) No. 33**

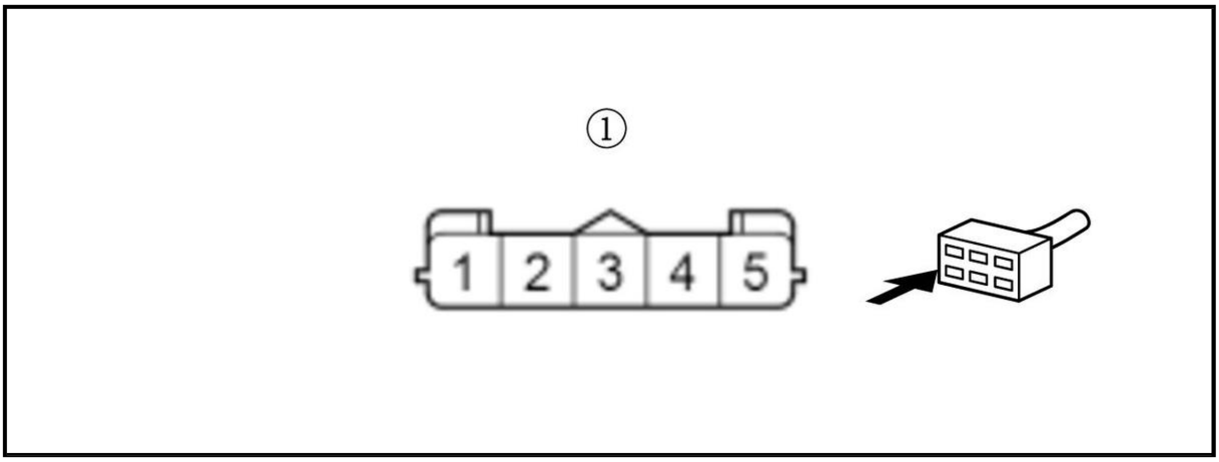

Is there continuity?

YES

The VGM wire is OK. Go to step 9.

NO

Repair an open in the VGM wire between the PCM (B33) and the MAF sensor/IAT sensor.

9. PCM internal circuit check

-1. Reconnect the following connector.

PCM connector B (51P)

-2. Connect terminals A and B with a jumper wire.

Terminal A	MAF sensor/IAT sensor 5P connector (female terminals) No. 4: ①
Terminal B	MAF sensor/IAT sensor 5P connector (female terminals) No. 5: ①

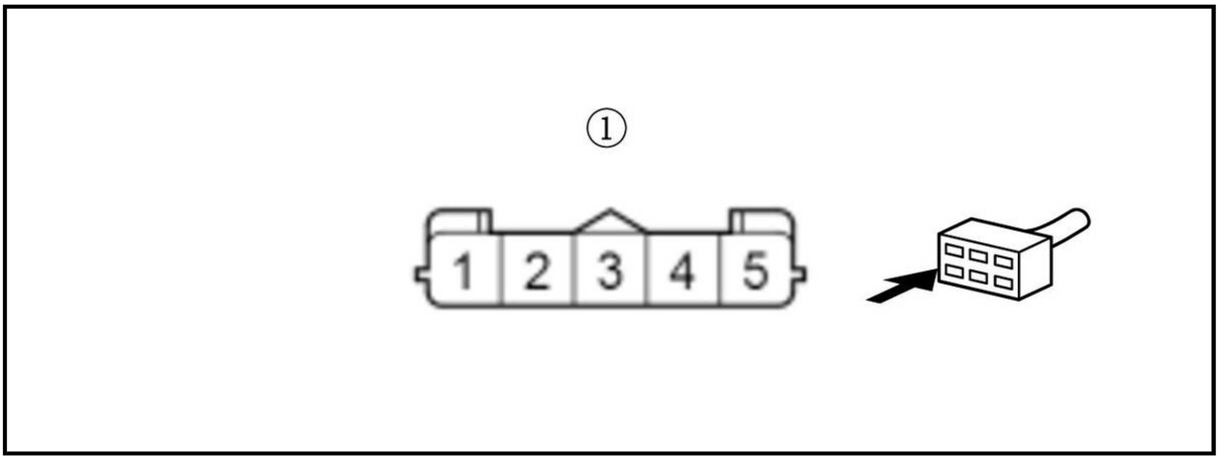

-3. Turn the vehicle to the ON mode.

-4. Clear the DTC with the HDS.

-5. Check for Pending or Confirmed DTCs with the HDS.

DTC Description	Confirmed DTC	Pending DTC
P0101 MAF Sensor Circuit Range/Performance Problem	B	B

Is DTC P0101 indicated?

YES

Check for any authorized service information related to the DTCs or symptoms you are troubleshooting, or substitute a known-good PCM .

NO

The PCM internal circuit is OK. Replace the MAF sensor/IAT sensor .

DTC P0102 (2.4 L ENGINE) (2017 2018 2019)

DTC P0102 : MAF Sensor Circuit Low Voltage

NOTE: Before you troubleshoot, review the general troubleshooting information .

DTC Description	Confirmed DTC	Pending DTC
P0102 MAF Sensor Circuit Low Voltage	B	B

DTC (PGM-FI)

1. Problem verification

-1. Turn the vehicle to the ON mode, and wait 2 seconds.

-2. Check the parameter (s) below with the HDS.

Signal	Threshold		Current conditions	
	Values	Unit	Values	Unit
MAF SENSOR	Less than 0.1	V	B	B

Do the current condition (s) match the threshold?

YES

The failure is duplicated. Go to step 2.

NO

Intermittent failure, the system is OK at this time. Check for poor connections or loose terminals at the MAF sensor/IAT sensor and the PCM. If the on-board snapshot of this DTC is recorded, try to reproduce the failure under the same conditions with the on-board snapshot .

2. Open wire check (IG1 ACG/IG1 (MAIN)/IG1 (AFM) line)

-1. Turn the vehicle to the OFF (LOCK) mode.

-2. Disconnect the following connector.

MAF sensor/IAT sensor 5P connector

-3. Turn the vehicle to the ON mode.

-4. Measure the voltage between test points 1 and 2.

Test condition	Vehicle ON mode
B	MAF sensor/IAT sensor 5P connector: disconnected

Test point 1	MAF sensor/IAT sensor 5P connector (female terminals) No. 3: ①
Test point 2	Body ground

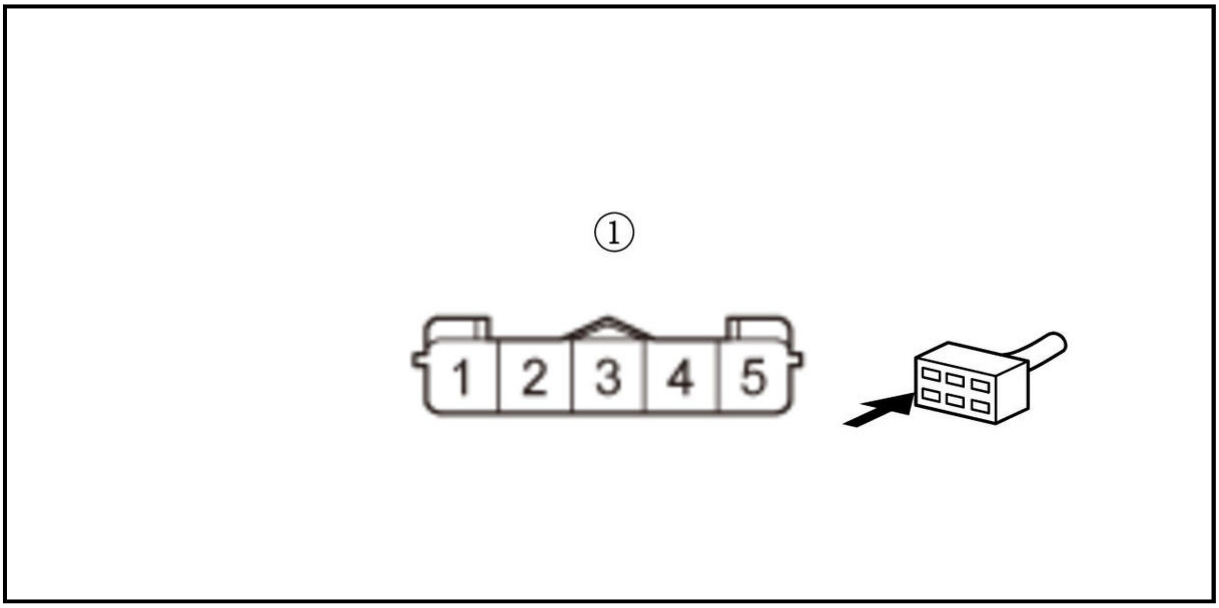

Is there battery voltage?

YES

The IG1 ACG/IG1 (MAIN)/IG1 (AFM) wire is OK. Go to step 3.

NO

Repair an open in the IG1 ACG/IG1 (MAIN)/IG1 (AFM) wire between the MAF sensor/IAT sensor and the No. D21 (10 A) fuse in the under-dash fuse/relay box.

3. Determine possible failure area (VGP line, others)

-1. Turn the vehicle to the OFF (LOCK) mode.

-2. Measure the resistance between test points 1 and 2.

Test condition	Vehicle OFF (LOCK) mode
B	MAF sensor/IAT sensor 5P connector: disconnected
Test point 1	MAF sensor/IAT sensor 5P connector (female terminals) No. 5: ①
Test point 2	Body ground

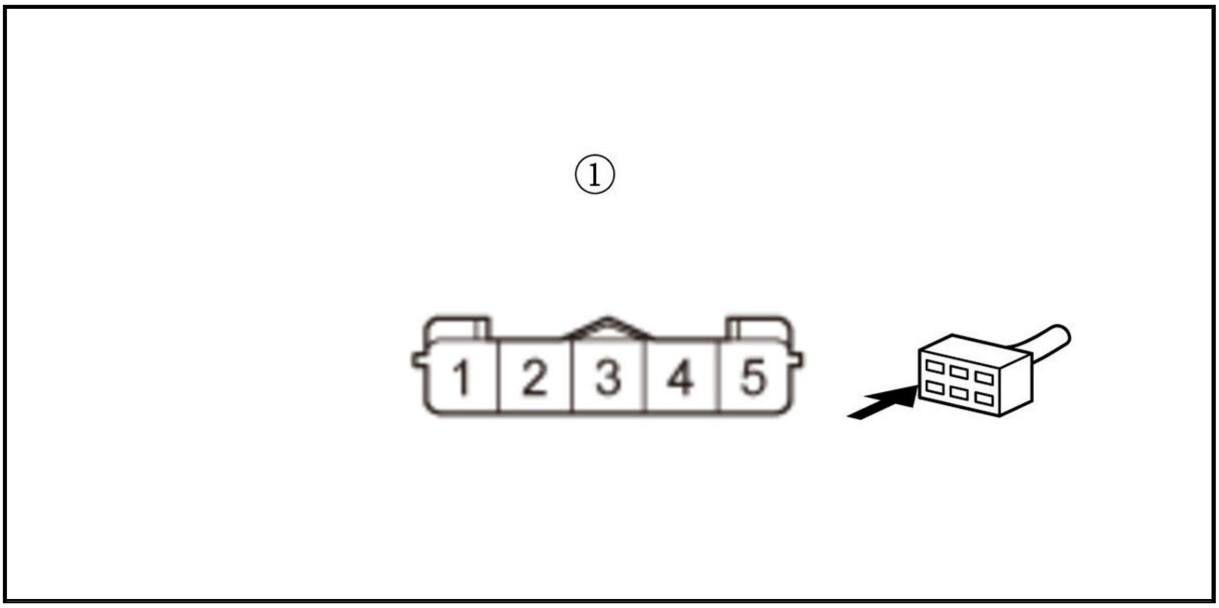

Is there about 170-210 kΩ?

YES

Go to step 6.

NO

Go to step 4.

4. Shorted wire check (VGP line)

-1. Jump the SCS line with the HDS, and wait more than 1 minute.

-2. Disconnect the following connector.

PCM connector B (51P)

-3. Check for continuity between test points 1 and 2.

Test condition	Vehicle OFF (LOCK) mode
B	MAF sensor/IAT sensor 5P connector: disconnected
B	PCM connector B (51P): disconnected
Test point 1	MAF sensor/IAT sensor 5P connector (female terminals) No. 5: ①
Test point 2	Body ground

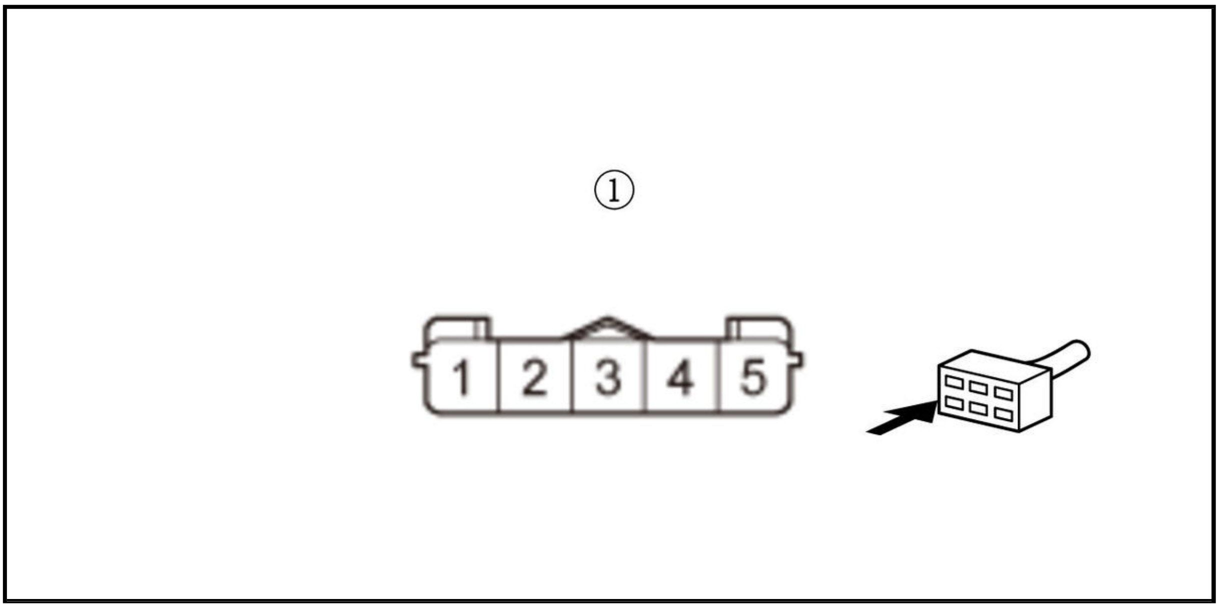

Is there continuity?

YES

Repair a short in the VGP wire between the PCM (B32) and the MAF sensor/IAT sensor.

NO

The VGP wire is not shorted. Go to step 5.

5. Open wire check (VGP line)

-1. Check for continuity between test points 1 and 2.

Test condition	Vehicle OFF (LOCK) mode
B	MAF sensor/IAT sensor 5P connector: disconnected
B	PCM connector B (51P): disconnected
Test point 1	MAF sensor/IAT sensor 5P connector (female terminals) No. 5: ①
Test point 2	**PCM connector B (51P) No. 32**

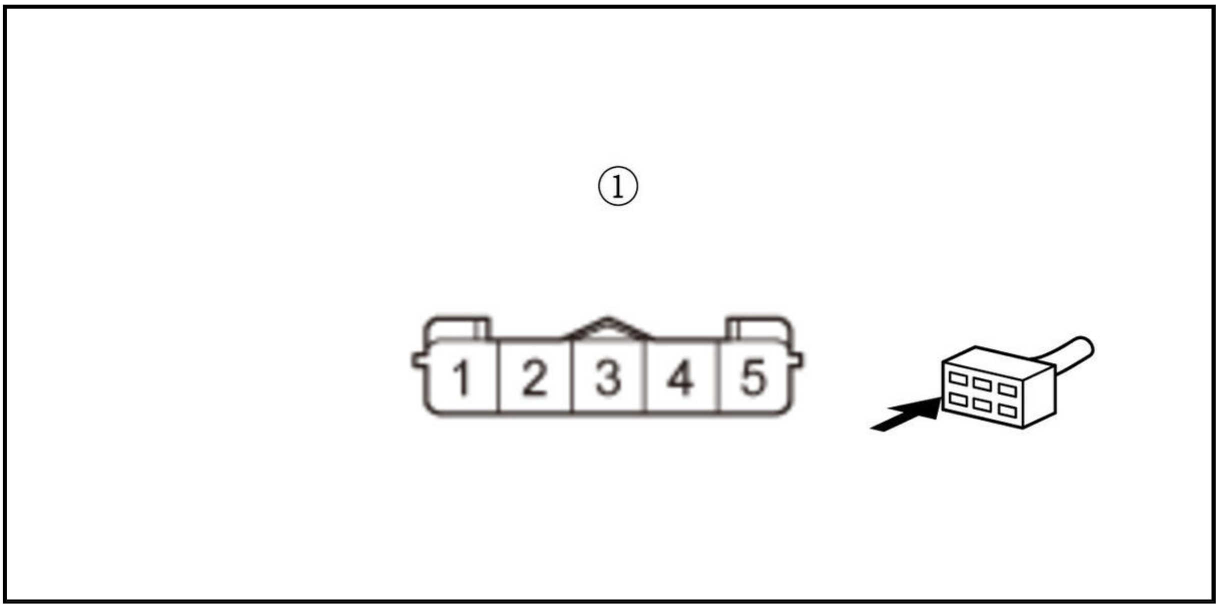

Is there continuity?

YES

The VGP wire is OK. Check for any authorized service information related to the DTCs or symptoms you are troubleshooting or **substitute a known-good PCM** .

NO

Repair an open in the VGP wire between the PCM (B32) and the MAF sensor/IAT sensor.

6. MAF sensor/IAT sensor check

-1. Substitute a known-good MAF sensor/IAT sensor.

-2. Reconnect all connectors.

-3. Turn the vehicle to the ON mode.

-4. Clear the DTC with the HDS.

-5. Start the engine.

-6. Hold the engine speed at 2, 000 rpm without load (in P or N).

-7. Check for Pending or Confirmed DTCs with the HDS.

DTC Description	Confirmed DTC	Pending DTC
P0102 MAF Sensor Circuit Low Voltage	B	B

Is DTC P0102 indicated?

YES

The MAF sensor/IAT sensor is OK. Check for any authorized service information related to the DTCs or symptoms you are troubleshooting or **substitute a known-good PCM** .

NO

Replace the original MAF sensor/IAT sensor .

DTC P0103 (2.4 L ENGINE) (2017 2018 2019)

DTC P0103 : MAF Sensor Circuit High Voltage

NOTE: Before you troubleshoot, **review the general troubleshooting information** .

DTC Description	Confirmed DTC	Pending DTC
P0103 MAF Sensor Circuit High Voltage	B	B

DTC (PGM-FI)

1. Problem verification

-1. Turn the vehicle to the ON mode, and wait 2 seconds.

-2. Check the parameter (s) below with the HDS.

Signal	Threshold		Current conditions	
	Values	Unit	Values	Unit
MAF SENSOR	More than 4.89	V	B	B

Do the current condition (s) match the threshold?

YES

The failure is duplicated. Go to step 2.

NO

Intermittent failure, the system is OK at this time. Check for poor connections or loose terminals at the MAF sensor/IAT sensor and the PCM. **If the on-board snapshot of this DTC is recorded, try to reproduce the failure under the same conditions with the on-board snapshot** .

2. Open wire check (VGM line)

-1. Turn the vehicle to the OFF (LOCK) mode.

-2. Jump the SCS line with the HDS, and wait more than 1 minute.

-3. Disconnect the following connectors.

MAF sensor/IAT sensor 5P connector
PCM connector B (51P)

-4. Check for continuity between test points 1 and 2.

Test condition	Vehicle OFF (LOCK) mode
B	MAF sensor/IAT sensor 5P connector: disconnected
B	PCM connector B (51P): disconnected
Test point 1	MAF sensor/IAT sensor 5P connector (female terminals) No. 4: ①
Test point 2	**PCM connector B (51P) No. 33**

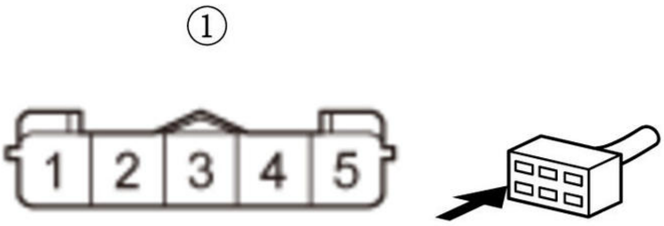

Is there continuity?

YES

The VGM wire is OK. Go to step 3.

NO

Repair an open in the VGM wire between the PCM (B33) and the MAF sensor/IAT sensor.

3. PCM internal circuit check

-1. Reconnect the following connector.

PCM connector B (51P)

-2. Check for continuity between test points 1 and 2.

Test condition	Vehicle OFF (LOCK) mode
B	MAF sensor/IAT sensor 5P connector: disconnected
Test point 1	MAF sensor/IAT sensor 5P connector (female terminals) No. 4: ①
Test point 2	Body ground

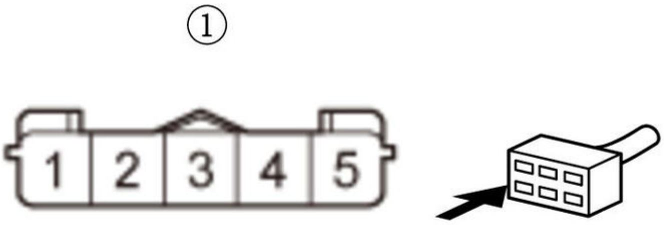

Is there continuity?

YES

The PCM internal circuit is OK. **Replace the MAF sensor/IAT sensor** .

NO

Check for any authorized service information related to the DTCs or symptoms you are troubleshooting or **substitute a known-good PCM** .

DTC P0105 (2.4 L ENGINE) (2018 2019)

DTC P0105 : MAP Sensor Out of Range

NOTE: Before you troubleshoot, **review the general troubleshooting information** .

DTC Description	Confirmed DTC	Pending DTC
P0105 MAP Sensor Out of Range	B	B

DTC (PGM-FI)

1. Problem verification 1

-1. Turn the vehicle to the ON mode.

-2. Check the parameter (s) below with the HDS.

Signal	Threshold		Current conditions	
	Values	**Unit**	**Values**	**Unit**
MAP SENSOR	Less than 0.23	V	B	B

Do the current condition (s) match the threshold?

YES

The failure is duplicated. Go to step 3.

NO

Go to step 2.

2. Problem verification 2

-1. Turn the vehicle to the ON mode.

-2. Check the parameter (s) below with the HDS.

Signal	Threshold		Current conditions	
	Values	**Unit**	**Values**	**Unit**
MAP SENSOR	More than 3.39	V	B	B

Do the current condition (s) match the threshold?

YES

The failure is duplicated. Go to step 7.

NO

Intermittent failure, the system is OK at this time. Check for poor connections or loose terminals at the MAP sensor and the PCM. **If the on-board snapshot of this DTC is recorded, try to reproduce the failure under the same conditions with the on-board snapshot** .

3. Determine possible failure area (PB line, others)

-1. Turn the vehicle to the OFF (LOCK) mode.

-2. Disconnect the following connector.

MAP sensor 3P connector

-3. Turn the vehicle to the ON mode.

-4. Check the parameter (s) below with the HDS.

Signal	Threshold		Current conditions	
	Values	**Unit**	**Values**	**Unit**
MAP SENSOR	Less than 0.23	V	B	B

Do the current condition (s) match the threshold?

YES

Go to step 6.

NO

Go to step 4.

4. Determine possible failure area (MAP sensor, others)

-1. Measure the voltage between test points 1 and 2.

Test condition	Vehicle ON mode
B	MAP sensor 3P connector: disconnected
Test point 1	MAP sensor 3P connector (female terminals) No. 1: ①
Test point 2	MAP sensor 3P connector (female terminals) No. 3: ①

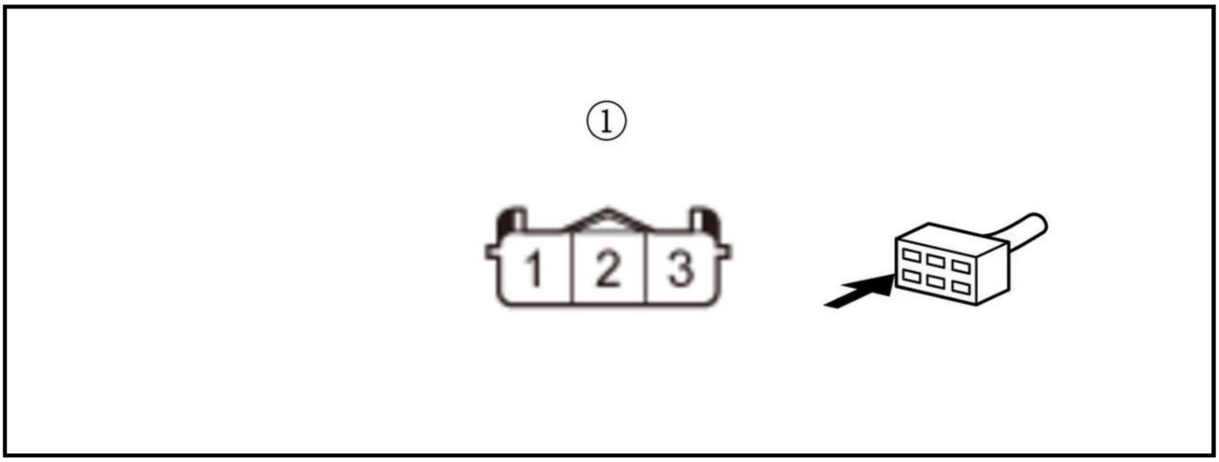

Is there about 5.0 V?

YES

Replace the MAP sensor .

NO

Go to step 5.

5. Open wire check (VCC1 line)

-1. Turn the vehicle to the OFF (LOCK) mode.

-2. Jump the SCS line with the HDS, and wait more than 1 minute.

-3. Disconnect the following connector.

PCM connector C (51P)

-4. Check for continuity between test points 1 and 2.

Test condition	Vehicle OFF (LOCK) mode
B	MAP sensor 3P connector: disconnected
B	PCM connector C (51P): disconnected
Test point 1	MAP sensor 3P connector (female terminals) No. 3: ①
Test point 2	**PCM connector C (51P) No. 41**

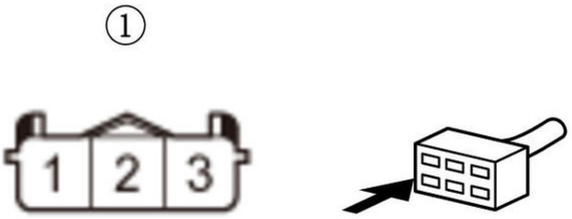

Is there continuity?

YES

The VCC1 wire is OK. Check for any authorized service information related to the DTCs or symptoms you are troubleshooting, or **substitute a known-good PCM** .

NO

Repair an open in the VCC1 wire between the PCM (C41) and the MAP sensor.

6. Shorted wire check (PB line)

-1. Turn the vehicle to the OFF (LOCK) mode.

-2. Jump the SCS line with the HDS, and wait more than 1 minute.

-3. Disconnect the following connector.

PCM connector C (51P)

-4. Check for continuity between test points 1 and 2.

Test condition	Vehicle OFF (LOCK) mode
B	MAP sensor 3P connector: disconnected
B	PCM connector C (51P): disconnected
Test point 1	MAP sensor 3P connector (female terminals) No. 2: ①
Test point 2	Body ground

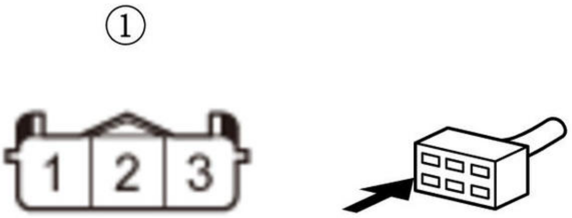

Is there continuity?

YES

Repair a short in the PB wire between the PCM (C45) and the MAP sensor.

NO

The PB wire is OK. Check for any authorized service information related to the DTCs or symptoms you are troubleshooting, or **substitute a known-good PCM** .

7. Determine possible failure area (MAP sensor, others)

-1. Turn the vehicle to the OFF (LOCK) mode.

-2. Disconnect the following connector.

MAP sensor 3P connector

-3. Connect terminals A and B with a jumper wire.

Terminal A	MAP sensor 3P connector (female terminals) No. 1: ①
Terminal B	MAP sensor 3P connector (female terminals) No. 2: ①

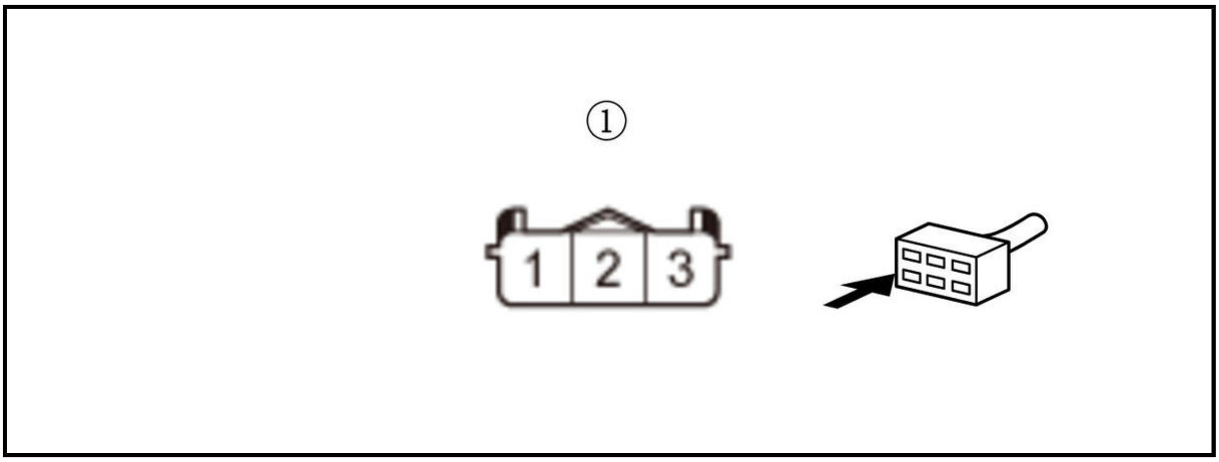

-4. Turn the vehicle to the ON mode.

-5. Check the parameter (s) below with the HDS.

Signal	**Threshold**		**Current conditions**	
	Values	**Unit**	**Values**	**Unit**
MAP SENSOR	More than 3.39	V	B	B

Do the current condition (s) match the threshold?

YES

Go to step 8.

NO

Replace the MAP sensor .

8. Determine possible failure area (SG1 line, others)

-1. Turn the vehicle to the OFF (LOCK) mode.

-2. Remove the jumper wire from the MAP sensor 3P connector.

-3. Turn the vehicle to the ON mode.

-4. Measure the voltage between test points 1 and 2.

Test condition	Vehicle ON mode
B	MAP sensor 3P connector: disconnected
Test point 1	MAP sensor 3P connector (female terminals) No. 1: ①
Test point 2	MAP sensor 3P connector (female terminals) No. 3: ①

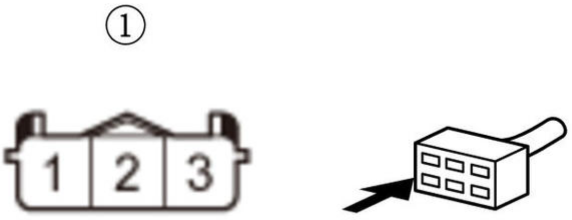

Is there about 5.0 V?

YES

Go to step 10.

NO

Go to step 9.

9. Open wire check (SG1 line)

-1. Turn the vehicle to the OFF (LOCK) mode.

-2. Jump the SCS line with the HDS, and wait more than 1 minute.

-3. Disconnect the following connector.

PCM connector C (51P)

-4. Check for continuity between test points 1 and 2.

Test condition	Vehicle OFF (LOCK) mode
B	MAP sensor 3P connector: disconnected
B	PCM connector C (51P): disconnected
Test point 1	MAP sensor 3P connector (female terminals) No. 1: ①
Test point 2	**PCM connector C (51P) No. 42**

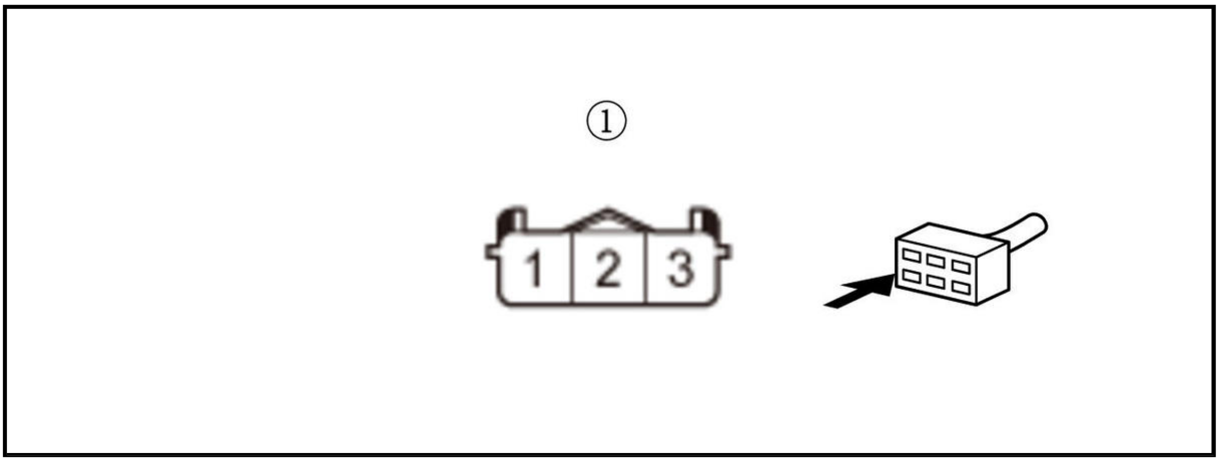

Is there continuity?

YES

The SG1 wire is OK. Check for any authorized service information related to the DTCs or symptoms you are troubleshooting, or **substitute a known-good PCM** .

NO

Repair an open in the SG1 wire between the PCM (C42) and the MAP sensor.

10. Open wire check (PB line)

-1. Turn the vehicle to the OFF (LOCK) mode.

-2. Jump the SCS line with the HDS, and wait more than 1 minute.

-3. Disconnect the following connector.

PCM connector C (51P)

-4. Check for continuity between test points 1 and 2.

Test condition	Vehicle OFF (LOCK) mode
B	MAP sensor 3P connector: disconnected
B	PCM connector C (51P): disconnected
Test point 1	MAP sensor 3P connector (female terminals) No. 2: ①
Test point 2	**PCM connector C (51P) No. 45**

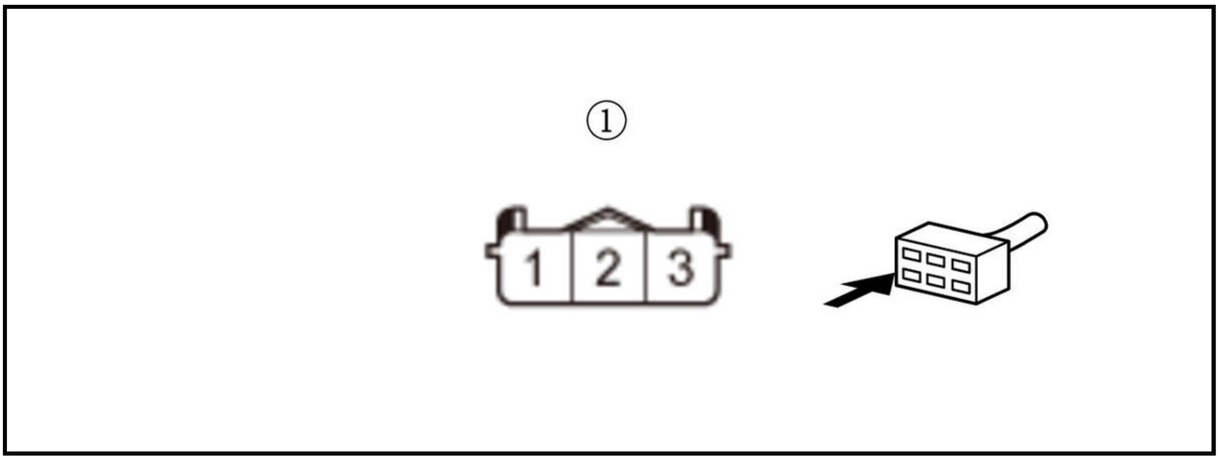

Is there continuity?

YES

The PB wire is OK. Check for any authorized service information related to the DTCs or symptoms you are troubleshooting, or **substitute a known-good PCM** .

NO

Repair an open in the PB wire between the PCM (C45) and the MAP sensor.

DTC P0107 (1.5 L ENGINE)

DTC P0107 : MAP Sensor Circuit Low Voltage

NOTE: Before you troubleshoot, **review the general troubleshooting information** .

DTC Description	Confirmed DTC	Pending DTC
P0107 MAP Sensor Circuit Low Voltage	B	B

DTC (PGM-FI)

1. Problem verification

   -1. Turn the vehicle to the ON mode.

   -2. Check the parameter (s) below with the HDS.

Signal	Threshold		Current conditions	
	Values	Unit	Values	Unit
MAP SENSOR	Less than 0.23	V	B	B

   Do the current condition (s) match the threshold?

   YES

   Go to step 2.

   NO

   Intermittent failure, the system is OK at this time. Check for poor connections or loose terminals at the MAP sensor and the PCM. **If the on-board snapshot of this DTC is recorded, try to reproduce the failure under the same conditions with the on-board snapshot** .

2. Determine possible failure area (PB line, others)

   -1. Turn the vehicle to the OFF (LOCK) mode.

   -2. Disconnect the following connector.

MAP sensor 3P connector

   -3. Turn the vehicle to the ON mode.

   -4. Check the parameter (s) below with the HDS.

Signal	Threshold		Current conditions	
	Values	Unit	Values	Unit
MAP SENSOR	Less than 0.23	V	B	B

Do the current condition (s) match the threshold?

YES

Go to step 5.

NO

Go to step 3.

3. Determine possible failure area (MAP sensor, others)

-1. Measure the voltage between test points 1 and 2.

Test condition	Vehicle ON mode
B	MAP sensor 3P connector: disconnected
Test point 1	MAP sensor 3P connector (female terminals) No. 1: ①
Test point 2	MAP sensor 3P connector (female terminals) No. 3: ①

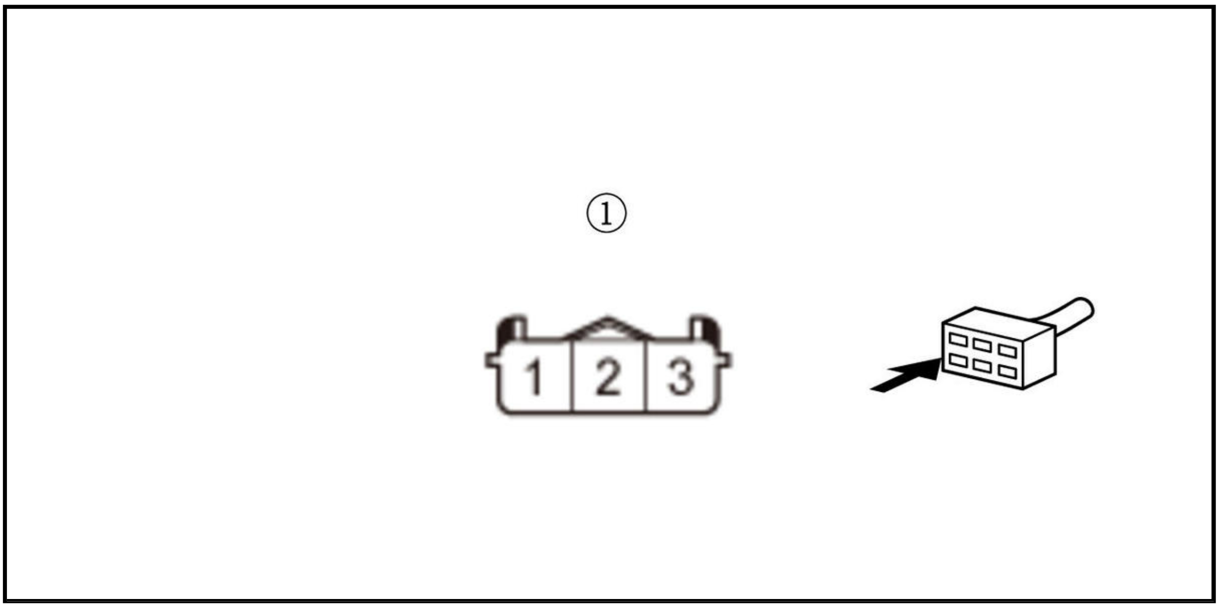

Is there about 5.0 V?

YES

Replace the MAP sensor .

NO

Go to step 4.

4. Open wire check (VCC1 line)

-1. Turn the vehicle to the OFF (LOCK) mode.

-2. Jump the SCS line with the HDS, and wait more than 1 minute.

-3. Disconnect the following connector.

PCM connector E (80P)

-4. Check for continuity between test points 1 and 2.

Test condition	Vehicle OFF (LOCK) mode
B	MAP sensor 3P connector: disconnected
B	PCM connector E (80P): disconnected
Test point 1	MAP sensor 3P connector (female terminals) No. 3: ①
Test point 2	**PCM connector E (80P) No. 70**

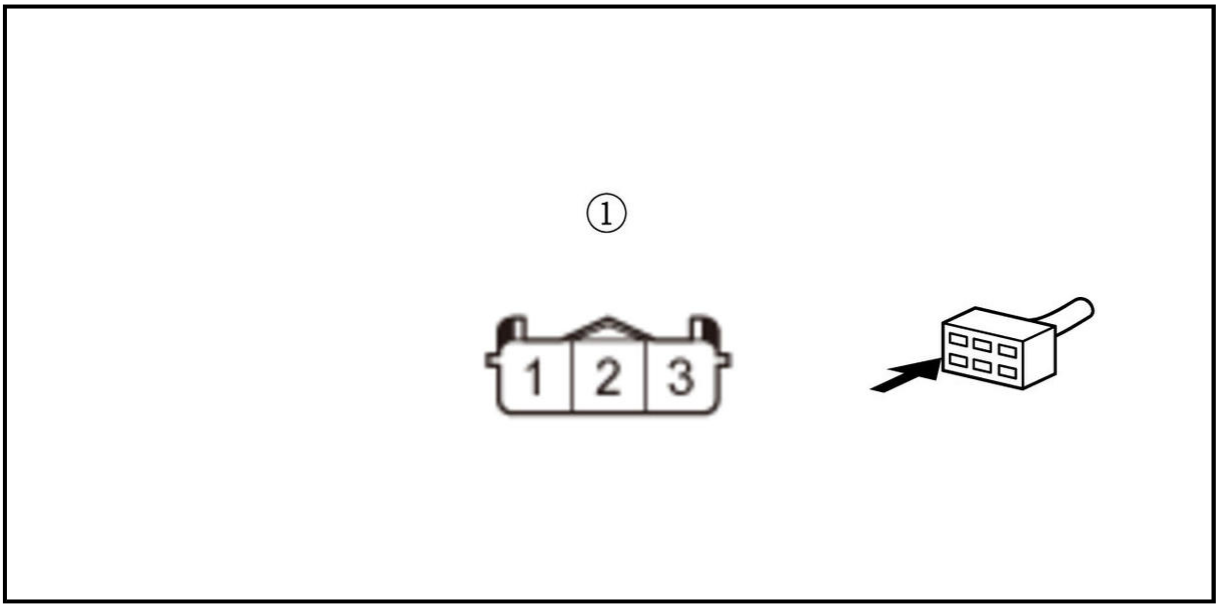

Is there continuity?

YES

The VCC1 wire is OK. Check for any authorized service information related to the DTCs or symptoms you are troubleshooting, or **substitute a known-good PCM** .

NO

Repair an open in the VCC1 wire between the PCM (E70) and the MAP sensor.

5. Shorted wire check (PB line)

-1. Turn the vehicle to the OFF (LOCK) mode.

-2. Jump the SCS line with the HDS, and wait more than 1 minute.

-3. Disconnect the following connector.

PCM connector E (80P)

-4. Check for continuity between test points 1 and 2.

Test condition	Vehicle OFF (LOCK) mode
B	MAP sensor 3P connector: disconnected
B	PCM connector E (80P): disconnected
Test point 1	MAP sensor 3P connector (female terminals) No. 2: ①
Test point 2	Body ground

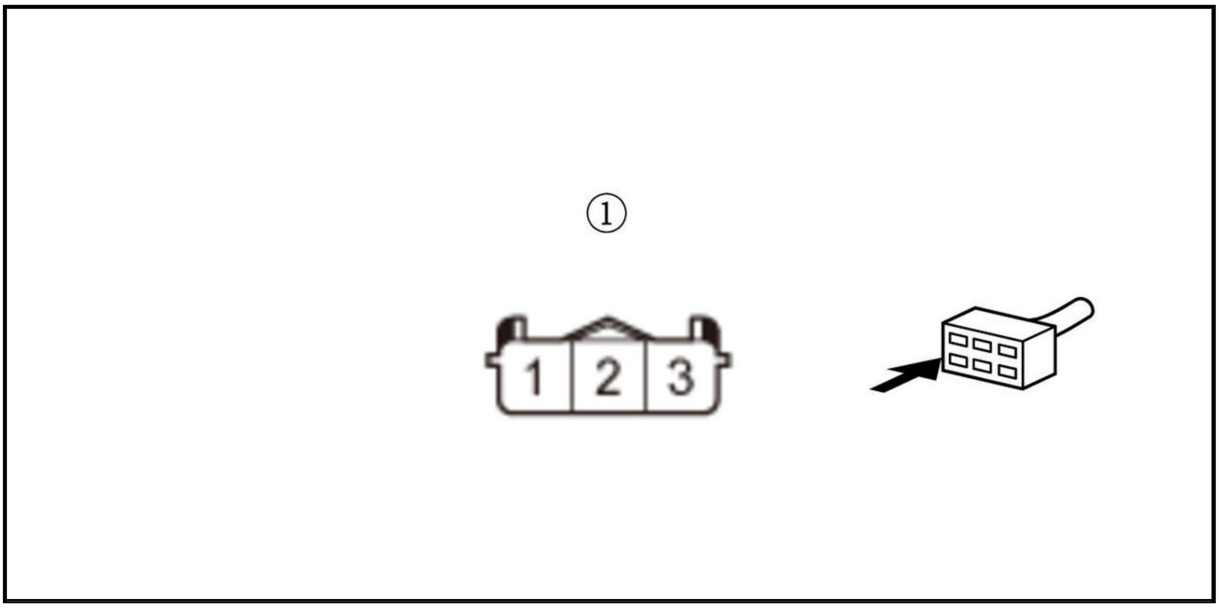

Is there continuity?

YES

Repair a short in the PB wire between the PCM (E56) and the MAP sensor.

NO

The PB wire is OK. Check for any authorized service information related to the DTCs or symptoms you are troubleshooting, or **substitute a known-good PCM** .

DTC P0107 (2.4 L ENGINE) (2017 2018 2019)

DTC P0107 : MAP Sensor Circuit Low Voltage

NOTE: Before you troubleshoot, **review the general troubleshooting information** .

DTC Description	Confirmed DTC	Pending DTC
P0107 MAP Sensor Circuit Low Voltage	B	B

DTC (PGM-FI)

1. Problem verification

   -1. Turn the vehicle to the ON mode.

   -2. Check the parameter (s) below with the HDS.

Signal	Threshold		Current conditions	
	Values	Unit	Values	Unit
MAP SENSOR	Less than 0.23	V	B	B

Do the current condition (s) match the threshold?

YES

The failure is duplicated. Go to step 2.

NO

Intermittent failure, the system is OK at this time. Check for poor connections or loose terminals at the MAP sensor and the PCM. **If the on-board snapshot of this DTC is recorded, try to reproduce the failure under the same conditions with the on-board snapshot** .

2. Determine possible failure area (PB line, others)

-1. Turn the vehicle to the OFF (LOCK) mode.

-2. Disconnect the following connector.

MAP sensor 3P connector

-3. Turn the vehicle to the ON mode.

-4. Check the parameter (s) below with the HDS.

Signal	**Threshold**		**Current conditions**	
	Values	**Unit**	**Values**	**Unit**
MAP SENSOR	Less than 0.23	V	B	B

Do the current condition (s) match the threshold?

YES

Go to step 5.

NO

Go to step 3.

3. Determine possible failure area (MAP sensor, others)

-1. Measure the voltage between test points 1 and 2.

Test condition	Vehicle ON mode
B	MAP sensor 3P connector: disconnected
Test point 1	MAP sensor 3P connector (female terminals) No. 1: ①
Test point 2	MAP sensor 3P connector (female terminals) No. 3: ①

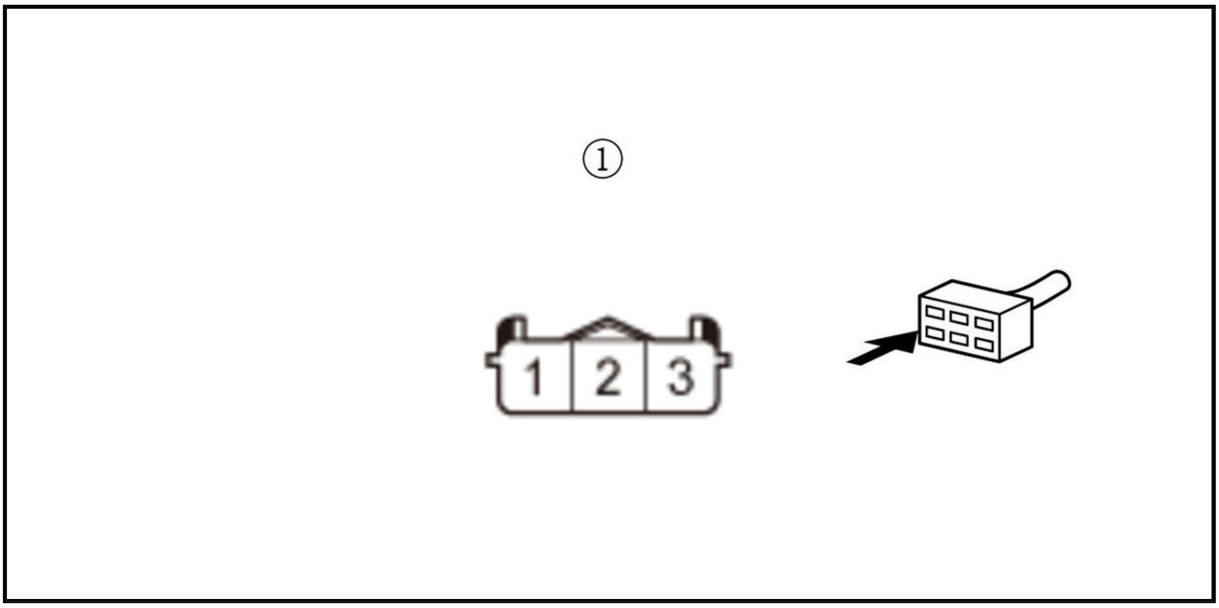

Is there about 5.0 V?

YES

Replace the MAP sensor .

NO

Go to step 4.

4. Open wire check (VCC1 line)

-1. Turn the vehicle to the OFF (LOCK) mode.

-2. Jump the SCS line with the HDS, and wait more than 1 minute.

-3. Disconnect the following connector.

PCM connector C (51P)

-4. Check for continuity between test points 1 and 2.

Test condition	Vehicle OFF (LOCK) mode
B	MAP sensor 3P connector: disconnected
B	PCM connector C (51P): disconnected
Test point 1	MAP sensor 3P connector (female terminals) No. 3: ①
Test point 2	**PCM connector C (51P) No. 41**

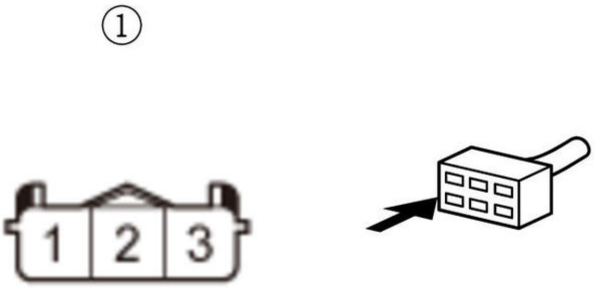

Is there continuity?

YES

The VCC1 wire is OK. Check for any authorized service information related to the DTCs or symptoms you are troubleshooting or **substitute a known-good PCM** .

NO

Repair an open in the VCC1 wire between the PCM (C41) and the MAP sensor.

5. Shorted wire check (PB line)

-1. Turn the vehicle to the OFF (LOCK) mode.

-2. Jump the SCS line with the HDS, and wait more than 1 minute.

-3. Disconnect the following connector.

PCM connector C (51P)

-4. Check for continuity between test points 1 and 2.

Test condition	Vehicle OFF (LOCK) mode
B	MAP sensor 3P connector: disconnected
B	PCM connector C (51P): disconnected
Test point 1	MAP sensor 3P connector (female terminals) No. 2: ①
Test point 2	Body ground

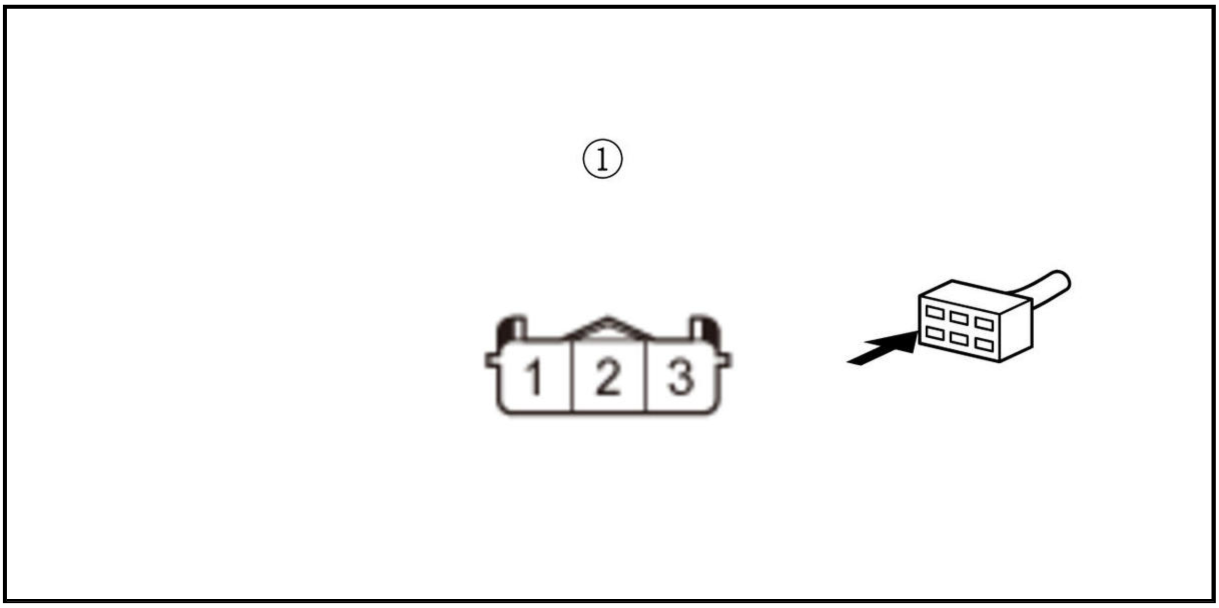

Is there continuity?

YES

Repair a short in the PB wire between the PCM (C45) and the MAP sensor.

NO

The PB wire is OK. Check for any authorized service information related to the DTCs or symptoms you are troubleshooting or **substitute a known-good PCM** .

DTC P0108 (1.5 L ENGINE)

DTC P0108 : MAP Sensor Circuit High Voltage

NOTE: Before you troubleshoot, **review the general troubleshooting information** .

DTC Description	Confirmed DTC	Pending DTC
P0108 MAP Sensor Circuit High Voltage	B	B

DTC (PGM-FI)

1. Problem verification

-1. Turn the vehicle to the ON mode.

-2. Check the MAP SENSOR in the DATA LIST with the HDS.

Signal	Threshold		Current conditions	
	Values	**Unit**	**Values**	**Unit**
MAP SENSOR	More than 4.49	V	B	B

Do the current condition (s) match the threshold?

YES

Go to step 2.

NO

Intermittent failure, the system is OK at this time. Check for poor connections or loose terminals at the MAP sensor and the PCM. **If the on-board snapshot of this DTC is recorded, try to reproduce the failure under the same conditions with the on-board snapshot** .

2. Determine possible failure area (MAP sensor, others)

-1. Turn the vehicle to the OFF (LOCK) mode.

-2. Disconnect the following connector.

MAP sensor 3P connector

-3. Connect terminals A and B with a jumper wire.

Terminal A	MAP sensor 3P connector (female terminals) No. 1: ①
Terminal B	MAP sensor 3P connector (female terminals) No. 2: ①

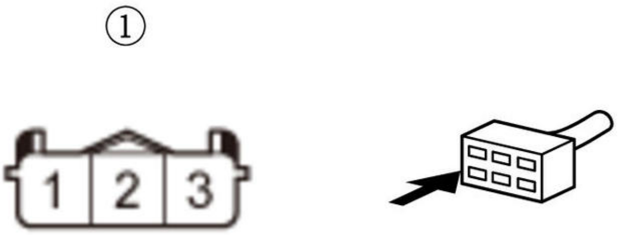

-4. Turn the vehicle to the ON mode.

-5. Check the parameter (s) below with the HDS.

Signal	Threshold		Current conditions	
	Values	Unit	Values	Unit
MAP SENSOR	More than 4.49	V	B	B

Do the current condition (s) match the threshold?

YES

Go to step 3.

NO

Replace the MAP sensor .

3. Determine possible failure area (SG1 line, others)

   -1. Turn the vehicle to the OFF (LOCK) mode.

   -2. Remove the jumper wire from the MAP sensor 3P connector.

   -3. Turn the vehicle to the ON mode.

   -4. Measure the voltage between test points 1 and 2.

Test condition	Vehicle ON mode
B	MAP sensor 3P connector: disconnected
Test point 1	MAP sensor 3P connector (female terminals) No. 1: ①
Test point 2	MAP sensor 3P connector (female terminals) No. 3: ①

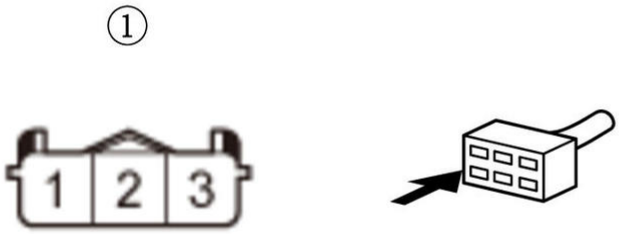

Is there about 5.0 V?

YES

Go to step 5.

NO

Go to step 4.

4. Open wire check (SG1 line)

-1. Turn the vehicle to the OFF (LOCK) mode.

-2. Jump the SCS line with the HDS, and wait more than 1 minute.

-3. Disconnect the following connector.

PCM connector E (80P)

-4. Check for continuity between test points 1 and 2.

Test condition	Vehicle OFF (LOCK) mode
B	MAP sensor 3P connector: disconnected
B	PCM connector E (80P): disconnected
Test point 1	MAP sensor 3P connector (female terminals) No. 1: ①
Test point 2	**PCM connector E (80P) No. 71**

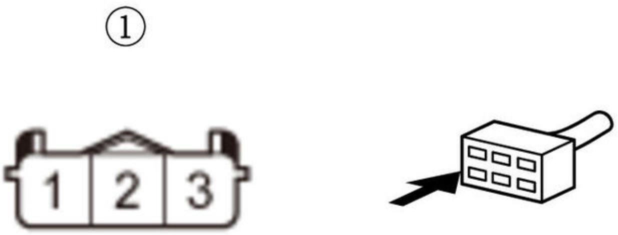

Is there continuity?

YES

The SG1 wire is OK. Check for any authorized service information related to the DTCs or symptoms you are troubleshooting, or **substitute a known-good PCM** .

NO

Repair an open in the SG1 wire between the PCM (E71) and the MAP sensor.

5. Open wire check (PB line)

-1. Turn the vehicle to the OFF (LOCK) mode.

-2. Jump the SCS line with the HDS, and wait more than 1 minute.

-3. Disconnect the following connector.

PCM connector E (80P)

-4. Check for continuity between test points 1 and 2.

Test condition	Vehicle OFF (LOCK) mode
B	MAP sensor 3P connector: disconnected
B	PCM connector E (80P): disconnected
Test point 1	MAP sensor 3P connector (female terminals) No. 2: ①
Test point 2	**PCM connector E (80P) No. 56**

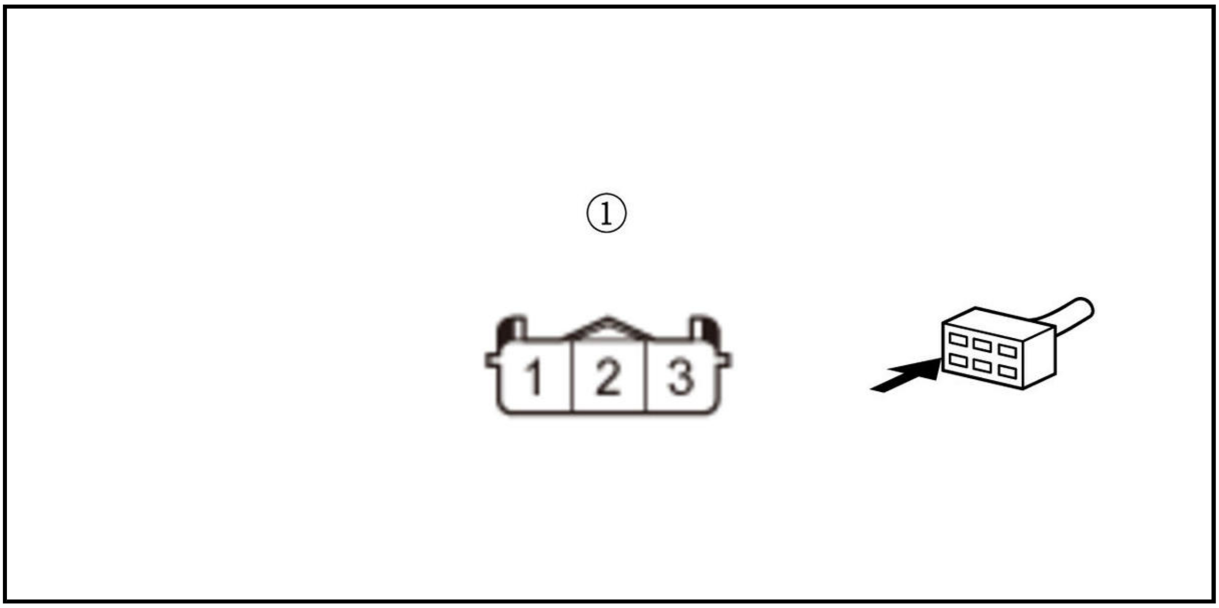

Is there continuity?

YES

The PB wire is OK. Check for any authorized service information related to the DTCs or symptoms you are troubleshooting, or **substitute a known-good PCM** .

NO

Repair an open in the PB wire between the PCM (E56) and the MAP sensor.

DTC P0108 (2.4 L ENGINE) (2017 2018 2019)

DTC P0108 : MAP Sensor Circuit High Voltage

NOTE: Before you troubleshoot, **review the general troubleshooting information** .

DTC Description	Confirmed DTC	Pending DTC
P0108 MAP Sensor Circuit High Voltage	B	B

DTC (PGM-FI)

1. Problem verification

-1. Turn the vehicle to the ON mode.

-2. Check the MAP SENSOR in the DATA LIST with the HDS.

Signal	Threshold		Current conditions	
	Values	Unit	Values	Unit
MAP SENSOR	More than 4.49	V	B	B

Do the current condition (s) match the threshold?

YES

The failure is duplicated. Go to step 2.

NO

Intermittent failure, the system is OK at this time. Check for poor connections or loose terminals at the MAP sensor and the PCM. **If the on-board snapshot of this DTC is recorded, try to reproduce the failure under the same conditions with the on-board snapshot** .

2. Determine possible failure area (MAP sensor, others)

-1. Turn the vehicle to the OFF (LOCK) mode.

-2. Disconnect the following connector.

MAP sensor 3P connector

-3. Connect terminals A and B with a jumper wire.

Terminal A	MAP sensor 3P connector (female terminals) No. 1: ①
Terminal B	MAP sensor 3P connector (female terminals) No. 2: ①

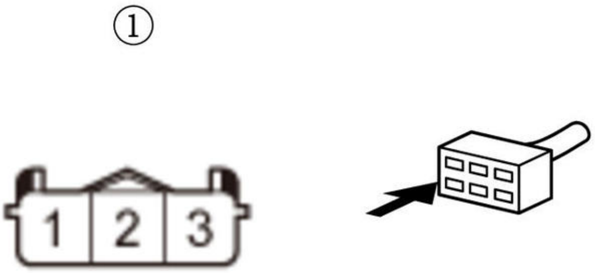

-4. Turn the vehicle to the ON mode.

-5. Check the parameter (s) below with the HDS.

Signal	Threshold		Current conditions	
	Values	Unit	Values	Unit
MAP SENSOR	More than 4.49	V	B	B

Do the current condition (s) match the threshold?

YES

Go to step 3.

NO

Replace the MAP sensor .

3. Determine possible failure area (SG1 line, others)

-1. Turn the vehicle to the OFF (LOCK) mode.

-2. Remove the jumper wire from the MAP sensor 3P connector.

-3. Turn the vehicle to the ON mode.

-4. Measure the voltage between test points 1 and 2.

Test condition	Vehicle ON mode
B	MAP sensor 3P connector: disconnected
Test point 1	MAP sensor 3P connector (female terminals) No. 1: ①
Test point 2	MAP sensor 3P connector (female terminals) No. 3: ①

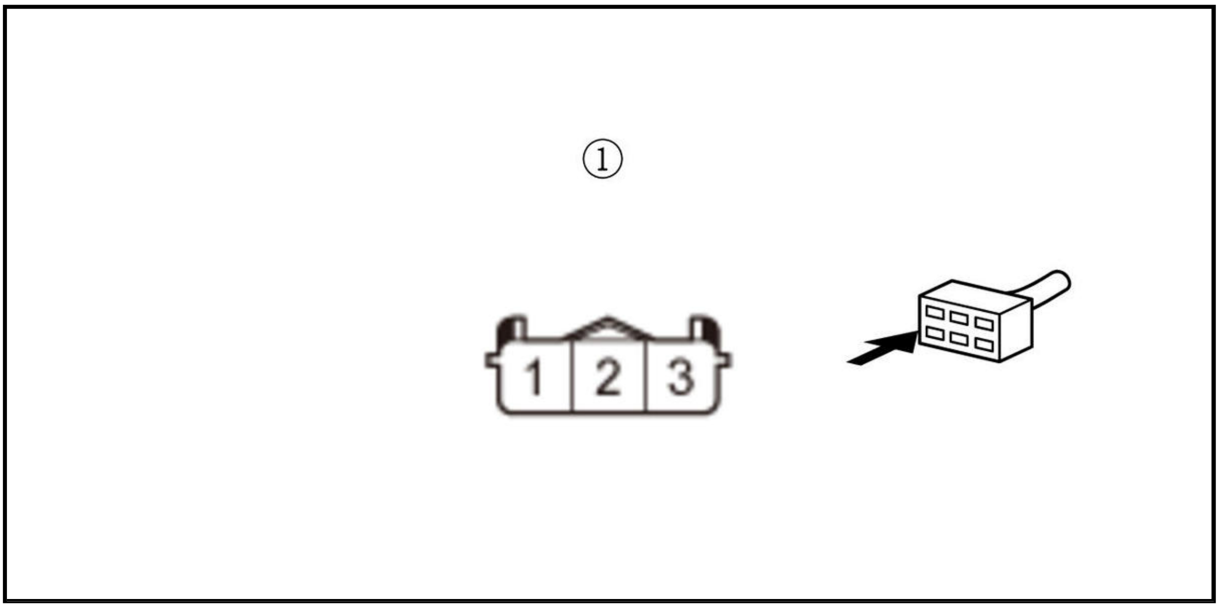

Is there about 5.0 V?

YES

Go to step 5.

NO

Go to step 4.

4. Open wire check (SG1 line)

-1. Turn the vehicle to the OFF (LOCK) mode.

-2. Jump the SCS line with the HDS, and wait more than 1 minute.

-3. Disconnect the following connector.

PCM connector C (51P)

-4. Check for continuity between test points 1 and 2.

Test condition	Vehicle OFF (LOCK) mode
B	MAP sensor 3P connector: disconnected
B	PCM connector C (51P): disconnected
Test point 1	MAP sensor 3P connector (female terminals) No. 1: ①
Test point 2	**PCM connector C (51P) No. 42**

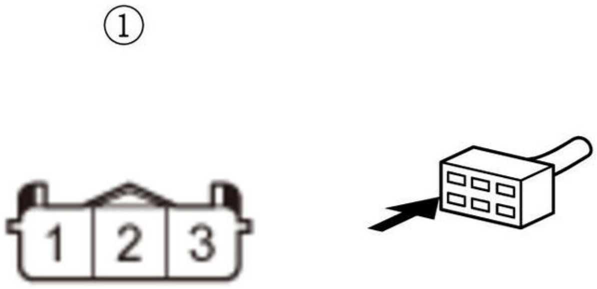

Is there continuity?

YES

The SG1 wire is OK. Check for any authorized service information related to the DTCs or symptoms you are troubleshooting or **substitute a known-good PCM** .

NO

Repair an open in the SG1 wire between the PCM (C42) and the MAP sensor.

5. Open wire check (PB line)

-1. Turn the vehicle to the OFF (LOCK) mode.

-2. Jump the SCS line with the HDS, and wait more than 1 minute.

-3. Disconnect the following connector.

PCM connector C (51P)

-4. Check for continuity between test points 1 and 2.

Test condition	Vehicle OFF (LOCK) mode
B	MAP sensor 3P connector: disconnected
B	PCM connector C (51P): disconnected
Test point 1	MAP sensor 3P connector (female terminals) No. 2: ①
Test point 2	**PCM connector C (51P) No. 45**

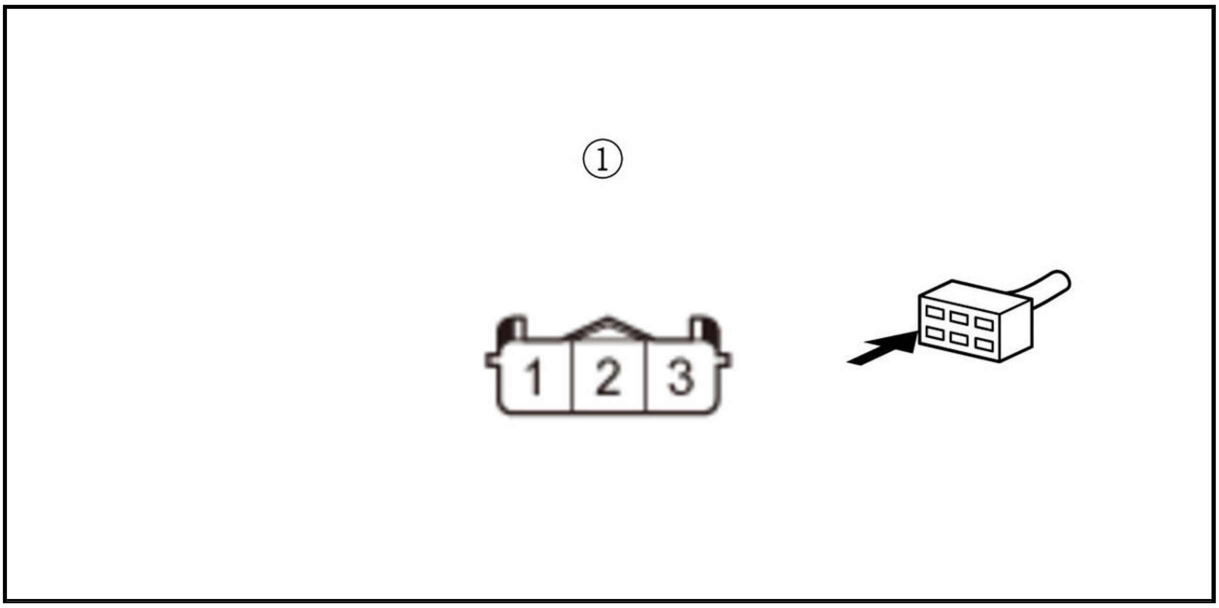

Is there continuity?

YES

The PB wire is OK. Check for any authorized service information related to the DTCs or symptoms you are troubleshooting or **substitute a known-good PCM** .

NO

Repair an open in the PB wire between the PCM (C45) and the MAP sensor.

DTC P0111, P011B (1.5 L ENGINE)

DTC P0111 : IAT Sensor 1 Circuit Range/Performance Problem **DTC P011B** : IAT Sensor 1 Circuit Range/Performance Problem

NOTE: Before you troubleshoot, **review the general troubleshooting information** .

DTC Description	Confirmed DTC	Pending DTC
P0111 IAT Sensor 1 Circuit Range/Performance Problem	B	B
P011B IAT Sensor 1 Circuit Range/Performance Problem	B	B

DTC (PGM-FI)

1. Connector visual check:

   Check for poor connections or loose terminals at these locations:

   - MAF sensor/IAT sensor 1
   - ECT sensor 1
   - ECT sensor 2

   Are the connections and terminals OK?

   YES

   Go to step 2.

   NO

   Repair the connections or terminals.

2. IAT sensor performance check (low temperature)

-1. Disconnect the following connector.

MAF sensor/IAT sensor 1 4P connector

-2. **Remove the MAF sensor/IAT sensor 1** .

-3. Allow MAF sensor/IAT sensor 1 to cool to the ambient temperature.

-4. Note the ambient temperature.

-5. Connect the MAF sensor/IAT sensor 1 to its 4P connector, but do not install it.

-6. Turn the vehicle to the ON mode.

-7. Quickly note the value of the IAT Sensor (1) in the DATA LIST with the HDS.

Signal	Current conditions	
	Values	Unit
IAT Sensor (1)	B	B

-8. Compare the value of the IAT Sensor (1) to the ambient temperature.

Does the value of the IAT Sensor (1) differ 5.4 deg. F (3 deg. C) or more from the ambient temperature?

YES

Replace the MAF sensor/IAT sensor 1 .

NO

Go to step 3.

3. IAT sensor performance check (high temperature)

-1. Turn the vehicle to the OFF (LOCK) mode.

-2. Disconnect the following connector.

MAF sensor/IAT sensor 1 4P connector

-3. Using a heat gun, blow hot air on MAF sensor/IAT sensor 1 for a few seconds. Do not apply the heat longer than a few seconds or you will damage the sensor.

-4. Connect the MAF sensor/IAT sensor 1 to its 4P connector, but do not install it.

-5. Check the parameter (s) below with the HDS.

Signal	Current conditions	
	Values	Unit
IAT Sensor (1)	B	B

Does the IAT Sensor (1) change 76 deg. F (42 deg. C) or more?

YES

Intermittent failure, the system is OK at this time. Check for poor connections or loose terminals at MAF sensor/IAT sensor 1 and the PCM. **If the on-board snapshot of this DTC is recorded, try to reproduce** the failure under the same conditions with the on-board snapshot .

NO

Replace the MAF sensor/IAT sensor 1 .

DTC P0111, P011B (2.4 L ENGINE) (2017 2018 2019)

DTC P0111 : IAT Sensor Circuit Range/Performance Problem **DTC P011B** : IAT Sensor 1 Circuit Range/Performance Problem

NOTE: Before you troubleshoot, review the general troubleshooting information .

DTC Description	Confirmed DTC	Pending DTC
P0111 IAT Sensor Circuit Range/Performance Problem	B	B
P011B IAT Sensor 1 Circuit Range/Performance Problem	B	B

DTC (PGM-FI)

1. Connector visual check:

   Check for poor connections or loose terminals at these locations:

   - MAF sensor/IAT sensor
   - ECT sensor 1
   - ECT sensor 2

   Are the connections and terminals OK?

   YES

   Go to step 2.

   NO

   Repair the connections or terminals.

2. IAT sensor performance check (low temperature)

   -1. Disconnect the following connector.

MAF sensor/IAT sensor 5P connector

   -2. Remove the MAF sensor/IAT sensor .

   -3. Allow MAF sensor/IAT sensor to cool to the ambient temperature.

   -4. Note the ambient temperature.

   -5. Connect the MAF sensor/IAT sensor to its 5P connector, but do not install it.

   -6. Turn the vehicle to the ON mode.

   -7. Quickly note the value of the IAT Sensor (1) in the DATA LIST with the HDS.

Signal	Current conditions	
	Values	Unit
IAT Sensor (1)	B	B

-8. Compare the value of the IAT Sensor (1) to the ambient temperature.

Does the value of the IAT Sensor (1) differ 5.4 deg. F (3 deg. C) or more from the ambient temperature?

YES

Replace the MAF sensor/IAT sensor .

NO

Go to step 3.

3. IAT sensor performance check (high temperature)

-1. Turn the vehicle to the OFF (LOCK) mode.

-2. Disconnect the following connector.

MAF sensor/IAT sensor 5P connector

-3. Using a heat gun, blow hot air on MAF sensor/IAT sensor for a few seconds. Do not apply the heat longer than a few seconds or you will damage the sensor.

-4. Connect the MAF sensor/IAT sensor to its 5P connector, but do not install it.

-5. Check the parameter (s) below with the HDS.

Signal	Current conditions	
	Values	Unit
IAT Sensor (1)	B	B

Does the IAT Sensor (1) change 76 deg. F (42 deg. C) or more?

YES

Intermittent failure, the system is OK at this time. Check for poor connections or loose terminals at MAF sensor/IAT sensor and the PCM. If the on-board snapshot of this DTC is recorded, try to reproduce the failure under the same conditions with the on-board snapshot .

NO

Replace the MAF sensor/IAT sensor .

DTC P0112 (1.5 L ENGINE)

DTC P0112 : IAT Sensor 1 Circuit Low Voltage

NOTE: Before you troubleshoot, review the general troubleshooting information .

DTC Description	Confirmed DTC	Pending DTC
P0112 IAT Sensor 1 Circuit Low Voltage	B	B

DTC (PGM-FI)

1. Problem verification

-1. Turn the vehicle to the ON mode.

-2. Check the parameter (s) below with the HDS.

Signal	Threshold		Current conditions	
	Values	Unit	Values	Unit
IAT SENSOR (1)	Less than 0.08	V	B	B

Do the current condition (s) match the threshold?

YES

Go to step 2.

NO

Intermittent failure, the system is OK at this time. Check for poor connections or loose terminals at MAF sensor/IAT sensor 1 and the PCM. **If the on-board snapshot of this DTC is recorded, try to reproduce the failure under the same conditions with the on-board snapshot** .

2. Determine possible failure area (IAT sensor 1, others)

-1. Turn the vehicle to the OFF (LOCK) mode.

-2. Disconnect the following connector.

MAF sensor/IAT sensor 1 4P connector

-3. Turn the vehicle to the ON mode.

-4. Check the parameter (s) below with the HDS.

Signal	Threshold		Current conditions	
	Values	Unit	Values	Unit
IAT SENSOR (1)	Less than 0.08	V	B	B

Do the current condition (s) match the threshold?

YES

Go to step 3.

NO

Replace the MAF sensor/IAT sensor 1 .

3. Shorted wire check (ITA1 (TA) line)

-1. Turn the vehicle to the OFF (LOCK) mode.

-2. Jump the SCS line with the HDS, and wait more than 1 minute.

-3. Disconnect the following connector.

PCM connector E (80P)

-4. Check for continuity between test points 1 and 2.

Test condition	Vehicle OFF (LOCK) mode
B	MAF sensor/IAT sensor 1 4P connector: disconnected
B	PCM connector E (80P): disconnected

Test point 1	MAF sensor/IAT sensor 1 4P connector (female terminals) No. 4: ①
Test point 2	Body ground

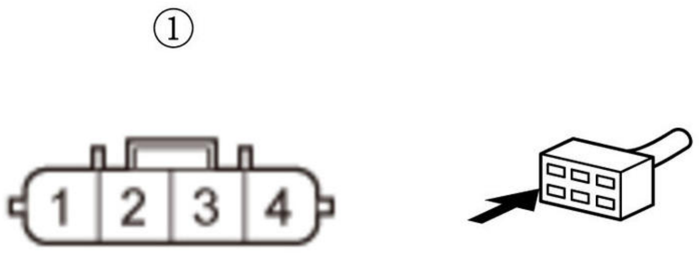

Is there continuity?

YES

Repair a short in the ITA1 (TA) wire between the PCM (E53) and MAF sensor/IAT sensor 1.

NO

The ITA1 (TA) wire is OK. Check for any authorized service information related to the DTCs or symptoms you are troubleshooting, or **substitute a known-good PCM** .

DTC P0112 (2.4 L ENGINE) (2017 2018 2019)

DTC P0112 : IAT Sensor Circuit Low Voltage

NOTE: Before you troubleshoot, **review the general troubleshooting information** .

DTC Description	Confirmed DTC	Pending DTC
P0112 IAT Sensor Circuit Low Voltage	B	B

DTC (PGM-FI)

1. Problem verification

-1. Turn the vehicle to the ON mode.

-2. Check the parameter (s) below with the HDS.

Signal	Threshold		Current conditions	
	Values	Unit	Values	Unit
IAT SENSOR (1)	Less than 0.08	V	B	B

Do the current condition (s) match the threshold?

YES

The failure is duplicated. Go to step 2.

NO

Intermittent failure, the system is OK at this time. Check for poor connections or loose terminals at the MAF sensor/IAT sensor and the PCM. **If the on-board snapshot of this DTC is recorded, try to reproduce the failure under the same conditions with the on-board snapshot** .

2. Determine possible failure area (IAT sensor, others)

-1. Turn the vehicle to the OFF (LOCK) mode.

-2. Disconnect the following connector.

MAF sensor/IAT sensor 5P connector

-3. Turn the vehicle to the ON mode.

-4. Check the parameter (s) below with the HDS.

Signal	Threshold		Current conditions	
	Values	**Unit**	**Values**	**Unit**
IAT SENSOR (1)	Less than 0.08	V	B	B

Do the current condition (s) match the threshold?

YES

Go to step 3.

NO

Replace the MAF sensor/IAT sensor .

3. Shorted wire check (TA line)

-1. Turn the vehicle to the OFF (LOCK) mode.

-2. Jump the SCS line with the HDS, and wait more than 1 minute.

-3. Disconnect the following connector.

PCM connector B (51P)

-4. Check for continuity between test points 1 and 2.

Test condition	Vehicle OFF (LOCK) mode
B	MAF sensor/IAT sensor 5P connector: disconnected
B	PCM connector B (51P): disconnected
Test point 1	MAF sensor/IAT sensor 5P connector (female terminals) No. 1: ①
Test point 2	Body ground

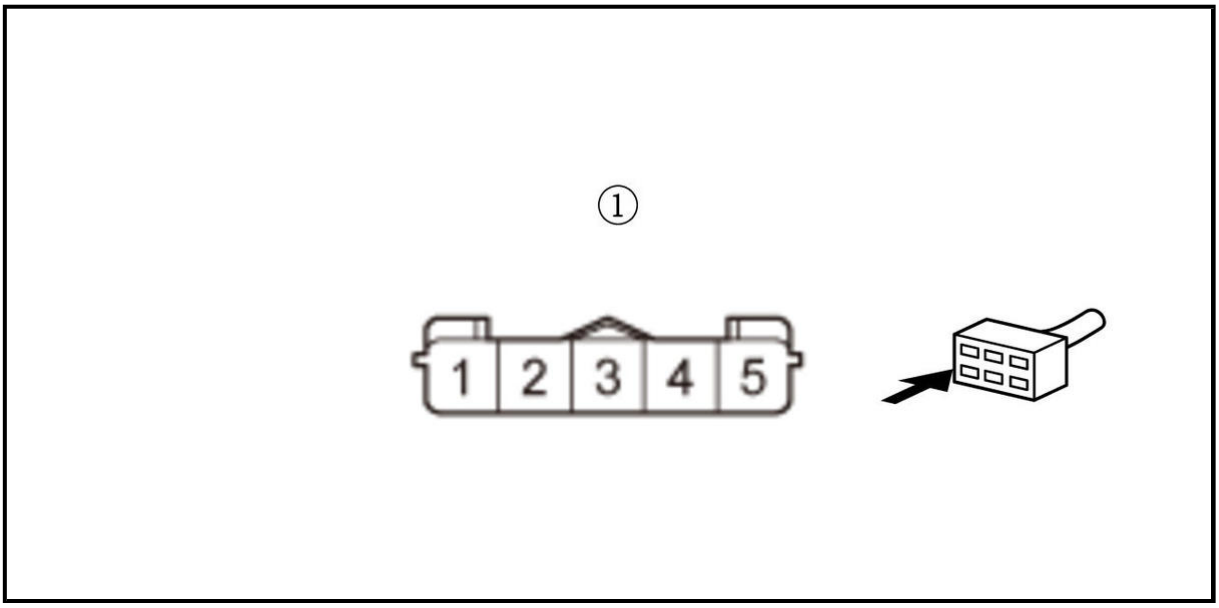

Is there continuity?

YES

Repair a short in the TA wire between the PCM (B51) and the MAF sensor/IAT sensor.

NO

The TA wire is OK. Check for any authorized service information related to the DTCs or symptoms you are troubleshooting or **substitute a known-good PCM** .

DTC P0113 (1.5 L ENGINE)

DTC P0113 : IAT Sensor 1 Circuit High Voltage

NOTE: Before you troubleshoot, **review the general troubleshooting information** .

DTC Description	Confirmed DTC	Pending DTC
P0113 IAT Sensor 1 Circuit High Voltage	B	B

DTC (PGM-FI)

1. Problem verification

-1. Turn the vehicle to the ON mode.

-2. Check the parameter (s) below with the HDS.

Signal	Threshold		Current conditions	
	Values	Unit	Values	Unit
IAT SENSOR (1)	More than 4.92	V	B	B

Do the current condition (s) match the threshold?

YES

Go to step 2.

NO

Intermittent failure, the system is OK at this time. Check for poor connections or loose terminals at MAF sensor/IAT sensor 1 and the PCM. **If the on-board snapshot of this DTC is recorded, try to reproduce the failure under the same conditions with the on-board snapshot** .

2. Determine possible failure area (IAT sensor 1, others)

-1. Turn the vehicle to the OFF (LOCK) mode.

-2. Disconnect the following connector.

MAF sensor/IAT sensor 1 4P connector

-3. Connect terminals A and B with a jumper wire.

Terminal A	MAF sensor/IAT sensor 1 4P connector (female terminals) No. 2: ①
Terminal B	MAF sensor/IAT sensor 1 4P connector (female terminals) No. 4: ①

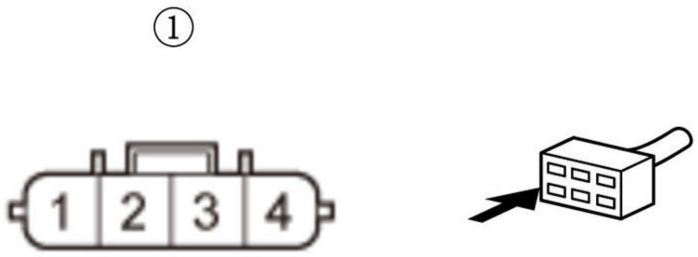

-4. Turn the vehicle to the ON mode.

-5. Check the parameter (s) below with the HDS.

Signal	Threshold		Current conditions	
	Values	Unit	Values	Unit
IAT SENSOR (1)	More than 4.92	V	B	B

Do the current condition (s) match the threshold?

YES

Go to step 3.

NO

Replace the MAF sensor/IAT sensor 1 .

3. Determine possible failure area (ITA1 (TA) line, others)

-1. Turn the vehicle to the OFF (LOCK) mode.

-2. Remove the jumper wire from MAF sensor/IAT sensor 1 4P connector.

-3. Turn the vehicle to the ON mode.

-4. Measure the voltage between test points 1 and 2.

Test condition	Vehicle ON mode
B	MAF sensor/IAT sensor 1 4P connector: disconnected
Test point 1	MAF sensor/IAT sensor 1 4P connector (female terminals) No. 4: ①
Test point 2	Body ground

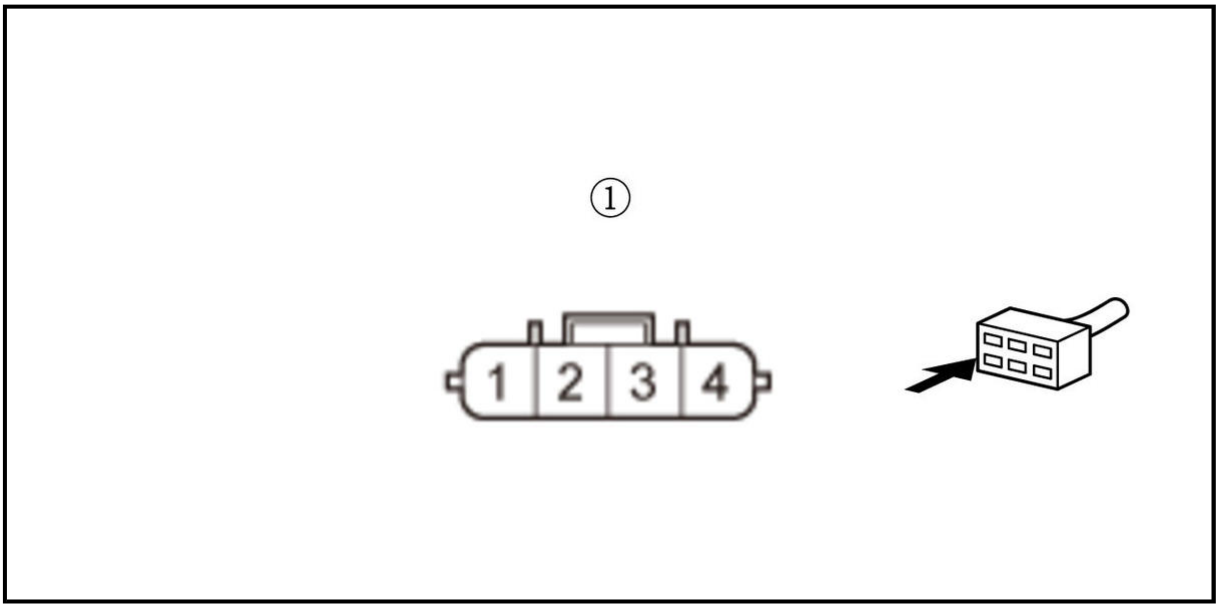

Is there about 5.0 V?

YES

Go to step 4.

NO

Go to step 5.

4. Open wire check (SG2 line)

-1. Turn the vehicle to the OFF (LOCK) mode.

-2. Jump the SCS line with the HDS, and wait more than 1 minute.

-3. Disconnect the following connector.

PCM connector E (80P)

-4. Check for continuity between test points 1 and 2.

Test condition	Vehicle OFF (LOCK) mode
B	MAF sensor/IAT sensor 1 4P connector: disconnected
B	PCM connector E (80P): disconnected
Test point 1	MAF sensor/IAT sensor 1 4P connector (female terminals) No. 2: ①
Test point 2	**PCM connector E (80P) No. 78**

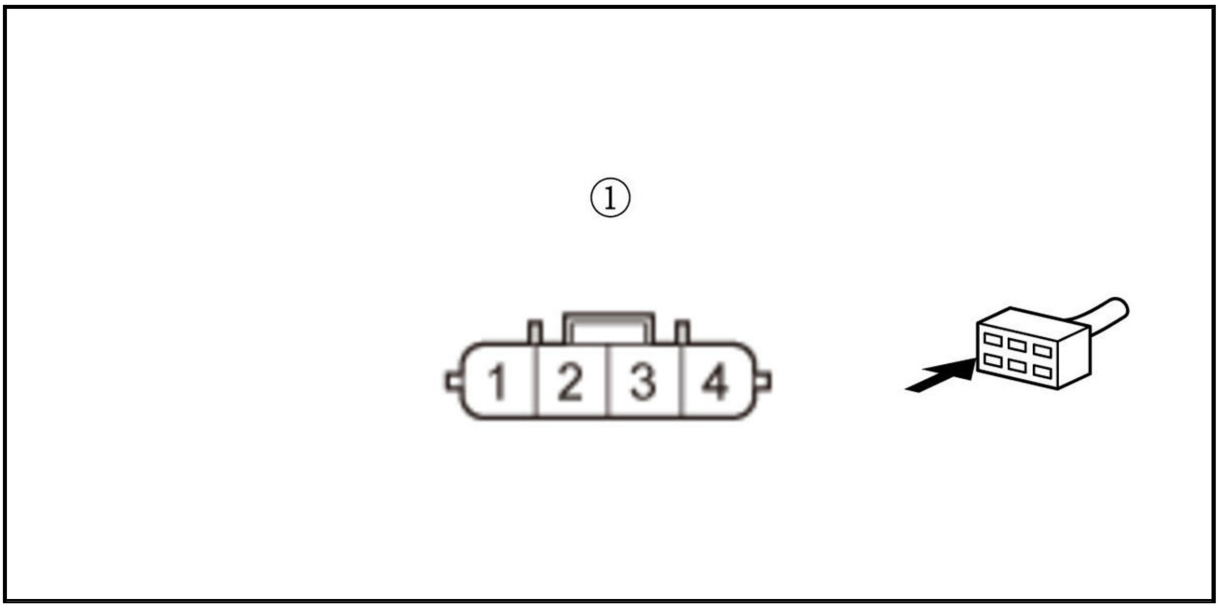

Is there continuity?

YES

The SG2 wire is OK. Check for any authorized service information related to the DTCs or symptoms you are troubleshooting, or **substitute a known-good PCM** .

NO

Repair an open in the SG2 wire between the PCM (E78) and MAF sensor/IAT sensor 1.

5. Open wire check (ITA1 (TA) line)

-1. Turn the vehicle to the OFF (LOCK) mode.

-2. Jump the SCS line with the HDS, and wait more than 1 minute.

-3. Disconnect the following connector.

PCM connector E (80P)

-4. Check for continuity between test points 1 and 2.

Test condition	Vehicle OFF (LOCK) mode
B	MAF sensor/IAT sensor 1 4P connector: disconnected
B	PCM connector E (80P): disconnected
Test point 1	MAF sensor/IAT sensor 1 4P connector (female terminals) No. 4: ①
Test point 2	**PCM connector E (80P) No. 53**

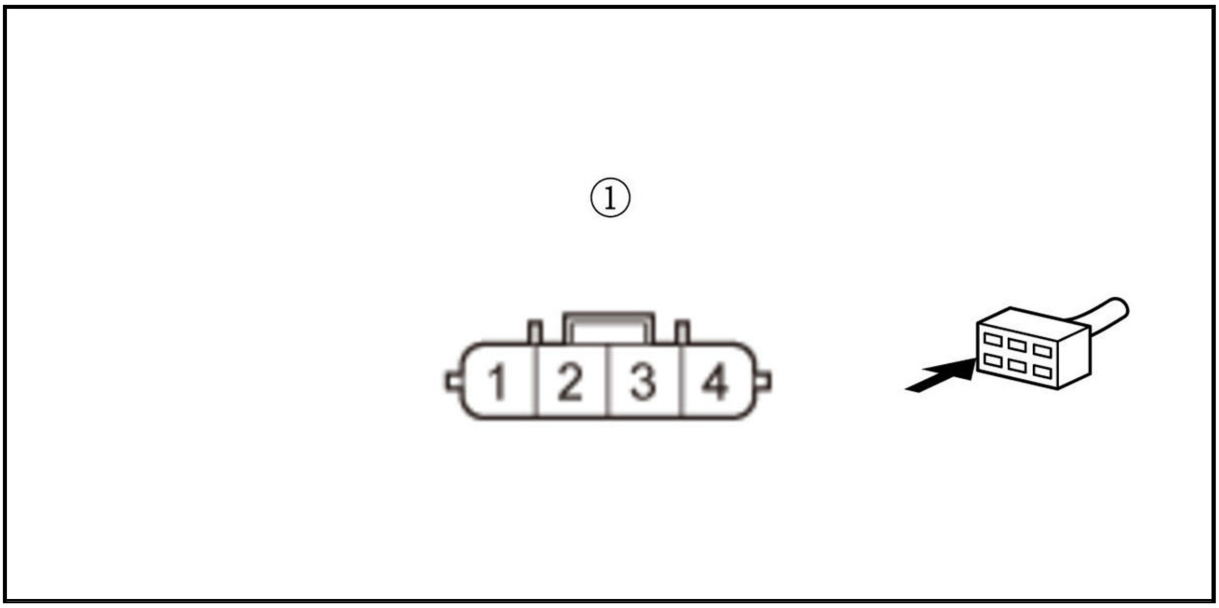

Is there continuity?

YES

The ITA1 (TA) wire is OK. Check for any authorized service information related to the DTCs or symptoms you are troubleshooting, or **substitute a known-good PCM** .

NO

Repair an open in the ITA1 (TA) wire between the PCM (E53) and MAF sensor/IAT sensor 1.

DTC P0113 (2.4 L ENGINE) (2017 2018 2019)

DTC P0113 : IAT Sensor Circuit High Voltage

NOTE: Before you troubleshoot, **review the general troubleshooting information** .

DTC Description	Confirmed DTC	Pending DTC
P0113 IAT Sensor Circuit High Voltage	B	B

DTC (PGM-FI)

1. Problem verification

-1. Turn the vehicle to the ON mode.

-2. Check the parameter (s) below with the HDS.

Signal	Threshold		Current conditions	
	Values	Unit	Values	Unit
IAT SENSOR (1)	More than 4.92	V	B	B

Do the current condition (s) match the threshold?

YES

The failure is duplicated. Go to step 2.

NO

Intermittent failure, the system is OK at this time. Check for poor connections or loose terminals at the MAF sensor/IAT sensor and the PCM. **If the on-board snapshot of this DTC is recorded, try to reproduce the failure under the same conditions with the on-board snapshot** .

2. Determine possible failure area (IAT sensor, others)

   -1. Turn the vehicle to the OFF (LOCK) mode.

   -2. Disconnect the following connector.

MAF sensor/IAT sensor 5P connector

   -3. Connect terminals A and B with a jumper wire.

Terminal A	MAF sensor/IAT sensor 5P connector (female terminals) No. 1: ①
Terminal B	MAF sensor/IAT sensor 5P connector (female terminals) No. 2: ①

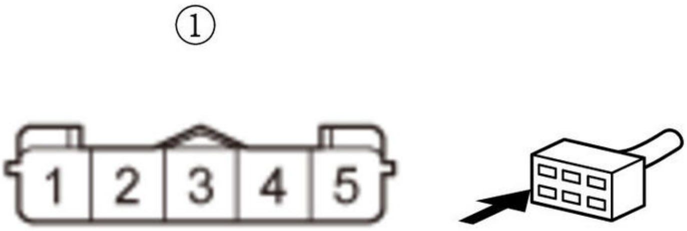

   -4. Turn the vehicle to the ON mode.

   -5. Check the parameter (s) below with the HDS.

Signal	Threshold		Current conditions	
	Values	Unit	Values	Unit
IAT SENSOR (1)	More than 4.92	V	B	B

   Do the current condition (s) match the threshold?

   YES

   Go to step 3.

   NO

   Replace the MAF sensor/IAT sensor .

3. Determine possible failure area (TA line, others)

   -1. Turn the vehicle to the OFF (LOCK) mode.

-2. Remove the jumper wire from the MAF sensor/IAT sensor 5P connector.

-3. Turn the vehicle to the ON mode.

-4. Measure the voltage between test points 1 and 2.

Test condition	Vehicle ON mode
B	MAF sensor/IAT sensor 5P connector: disconnected
Test point 1	MAF sensor/IAT sensor 5P connector (female terminals) No. 1: ①
Test point 2	Body ground

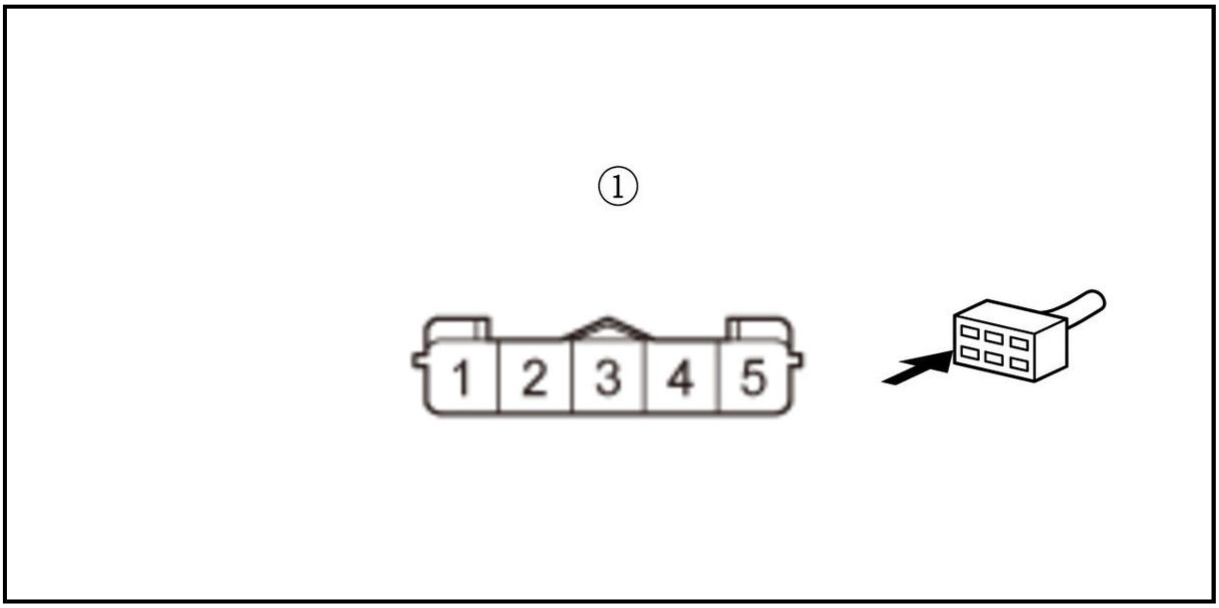

Is there about 5.0 V?

YES

Go to step 4.

NO

Go to step 5.

4. Open wire check (SG2 line)

-1. Turn the vehicle to the OFF (LOCK) mode.

-2. Jump the SCS line with the HDS, and wait more than 1 minute.

-3. Disconnect the following connector.

PCM connector C (51P)

-4. Check for continuity between test points 1 and 2.

Test condition	Vehicle OFF (LOCK) mode
B	MAF sensor/IAT sensor 5P connector: disconnected
B	PCM connector C (51P): disconnected
Test point 1	MAF sensor/IAT sensor 5P connector (female terminals) No. 2: ①
Test point 2	**PCM connector C (51P) No. 31**

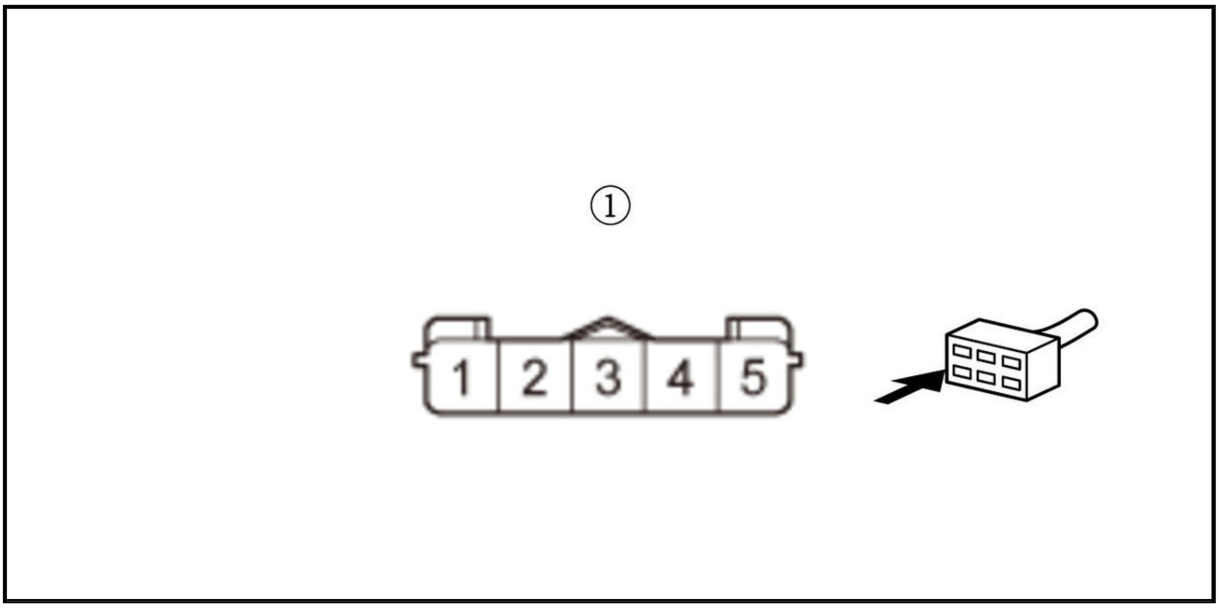

Is there continuity?

YES

The SG2 wire is OK. Check for any authorized service information related to the DTCs or symptoms you are troubleshooting or **substitute a known-good PCM** .

NO

Repair an open in the SG2 wire between the PCM (C31) and the MAF sensor/IAT sensor.

5. Open wire check (TA line)

-1. Turn the vehicle to the OFF (LOCK) mode.

-2. Jump the SCS line with the HDS, and wait more than 1 minute.

-3. Disconnect the following connector.

PCM connector B (51P)

-4. Check for continuity between test points 1 and 2.

Test condition	Vehicle OFF (LOCK) mode
B	MAF sensor/IAT sensor 5P connector: disconnected
B	PCM connector B (51P): disconnected
Test point 1	MAF sensor/IAT sensor 5P connector (female terminals) No. 1: ①
Test point 2	**PCM connector B (51P) No. 51**

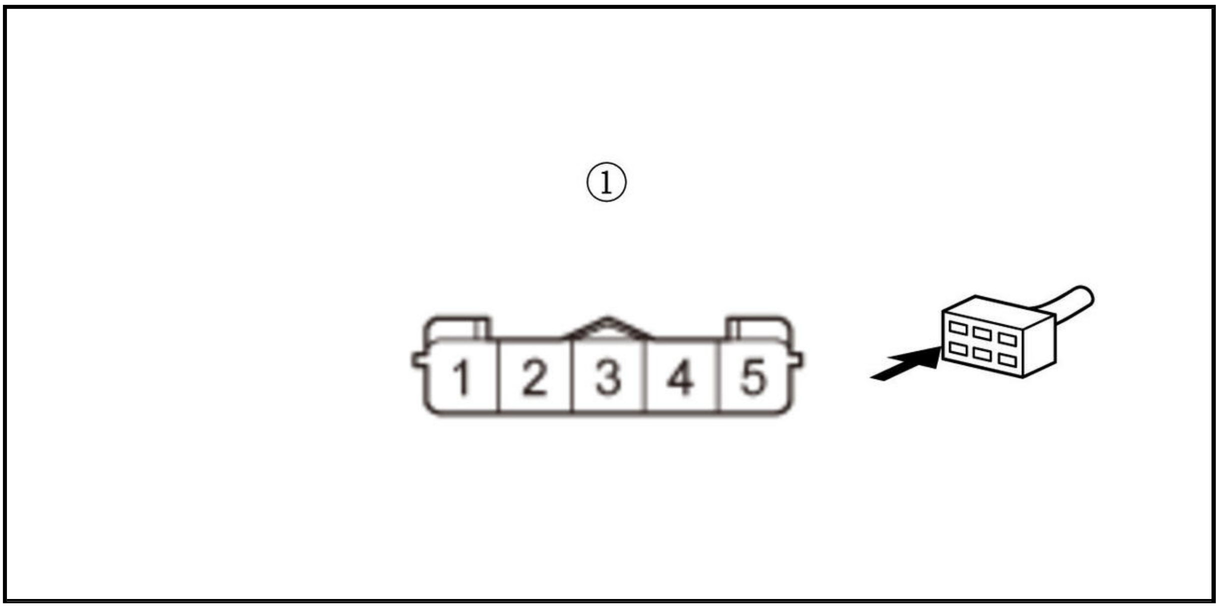

Is there continuity?

YES

The TA wire is OK. Check for any authorized service information related to the DTCs or symptoms you are troubleshooting or **substitute a known-good PCM** .

NO

Repair an open in the TA wire between the PCM (B51) and the MAF sensor/IAT sensor.

DTC P0115 (1.5 L ENGINE) (2018 2019 2020 2021)

DTC P0115 : ECT Sensor 1 Out of Range

NOTE: Before you troubleshoot, **review the general troubleshooting information** .

DTC Description	Confirmed DTC	Pending DTC
P0115 ECT Sensor 1 Out of Range	B	B

DTC (PGM-FI)

1. Problem verification 1

-1. Turn the vehicle to the ON mode.

-2. Check the parameter (s) below with the HDS.

Signal	Threshold		Current conditions	
	Values	Unit	Values	Unit
ECT SENSOR 1	Less than 0.14	V	B	B

Do the current condition (s) match the threshold?

YES

The failure is duplicated. Go to step 3.

NO

Go to step 2.

2. Problem verification 2

-1. Turn the vehicle to the ON mode.

-2. Check the parameter (s) below with the HDS.

Signal	Threshold		Current conditions	
	Values	Unit	Values	Unit
ECT SENSOR 1	More than 4.99	V	B	B

Do the current condition (s) match the threshold?

YES

The failure is duplicated. Go to step 5.

NO

Intermittent failure, the system is OK at this time. Check for poor connections or loose terminals at ECT sensor 1 and the PCM. **If the on-board snapshot of this DTC is recorded, try to reproduce the failure under the same conditions with the on-board snapshot** .

3. Determine possible failure area (ECT sensor 1, others)

-1. Turn the vehicle to the OFF (LOCK) mode.

-2. Disconnect the following connector.

ECT sensor 1 2P connector

-3. Turn the vehicle to the ON mode.

-4. Check the parameter (s) below with the HDS.

Signal	Threshold		Current conditions	
	Values	Unit	Values	Unit
ECT SENSOR 1	Less than 0.14	V	B	B

Do the current condition (s) match the threshold?

YES

Go to step 4.

NO

Replace ECT sensor 1 .

4. Shorted wire check (TW line)

-1. Turn the vehicle to the OFF (LOCK) mode.

-2. Jump the SCS line with the HDS, and wait more than 1 minute.

-3. Disconnect the following connector.

PCM connector E (80P)

-4. Check for continuity between test points 1 and 2.

Test condition	Vehicle OFF (LOCK) mode
B	ECT sensor 1 2P connector: disconnected
B	PCM connector E (80P): disconnected
Test point 1	ECT sensor 1 2P connector (female terminals) No. 2: ①
Test point 2	Body ground

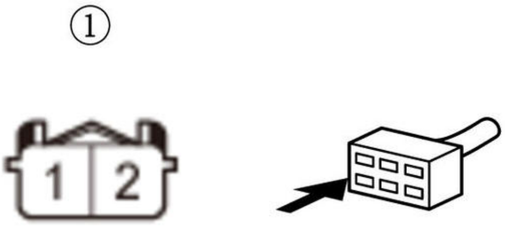

Is there continuity?

YES

Repair a short in the TW wire between the PCM (E52) and ECT sensor 1.

NO

The TW wire is OK. Check for any authorized service information related to the DTCs or symptoms you are troubleshooting, or **substitute a known-good PCM** .

5. Determine possible failure area (ECT sensor 1, others)

-1. Turn the vehicle to the OFF (LOCK) mode.

-2. Disconnect the following connector.

ECT sensor 1 2P connector

-3. Connect terminals A and B with a jumper wire.

Terminal A	ECT sensor 1 2P connector (female terminals) No. 1: ①
Terminal B	ECT sensor 1 2P connector (female terminals) No. 2: ①

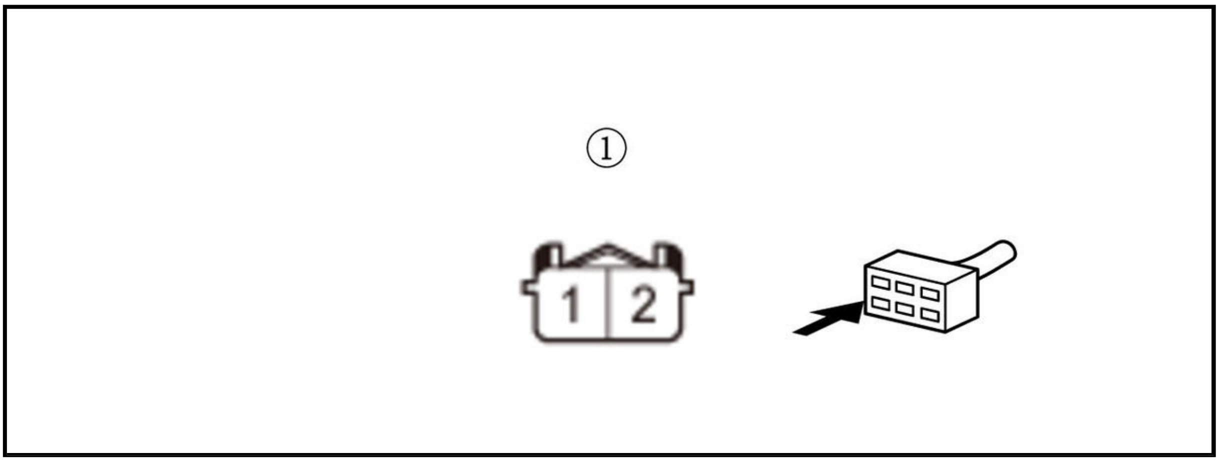

-4. Turn the vehicle to the ON mode.

-5. Check the parameter (s) below with the HDS.

Signal	Threshold		Current conditions	
	Values	**Unit**	**Values**	**Unit**
ECT SENSOR 1	More than 4.99	V	B	B

Do the current condition (s) match the threshold?

YES

Go to step 6.

NO

Replace ECT sensor 1 .

6. Determine possible failure area (TW line, others)

-1. Turn the vehicle to the OFF (LOCK) mode.

-2. Remove the jumper wire from the ECT sensor 1 2P connector.

-3. Turn the vehicle to the ON mode.

-4. Measure the voltage between test points 1 and 2.

Test condition	Vehicle ON mode
B	ECT sensor 1 2P connector: disconnected
Test point 1	ECT sensor 1 2P connector (female terminals) No. 2: ①
Test point 2	Body ground

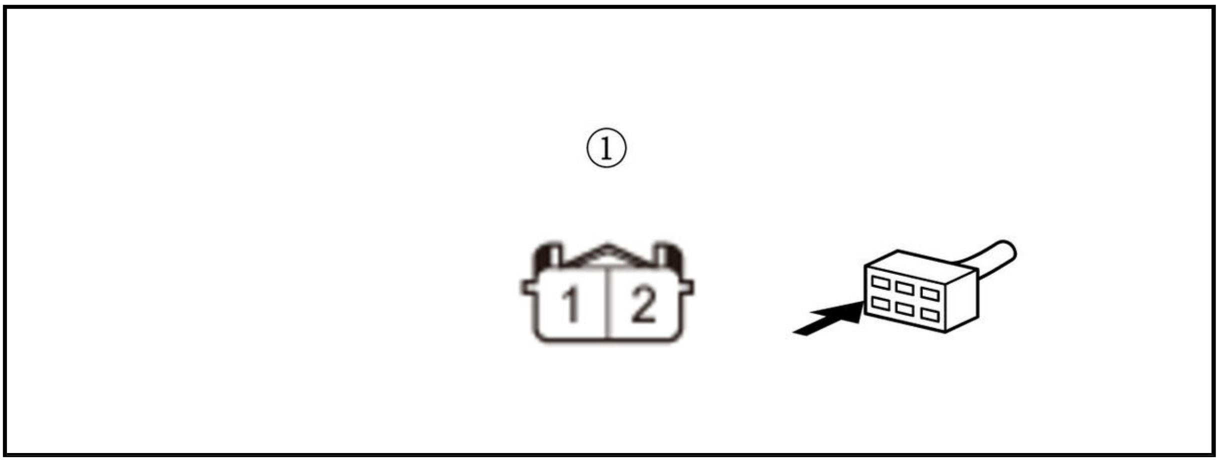

Is there about 5.0 V?

YES

Go to step 7.

NO

Go to step 8.

7. Open wire check (SG2 line)

-1. Turn the vehicle to the OFF (LOCK) mode.

-2. Jump the SCS line with the HDS, and wait more than 1 minute.

-3. Disconnect the following connector.

PCM connector E (80P)

-4. Check for continuity between test points 1 and 2.

Test condition	Vehicle OFF (LOCK) mode
B	ECT sensor 1 2P connector: disconnected
B	PCM connector E (80P): disconnected
Test point 1	ECT sensor 1 2P connector (female terminals) No. 1: ①
Test point 2	**PCM connector E (80P) No. 78**

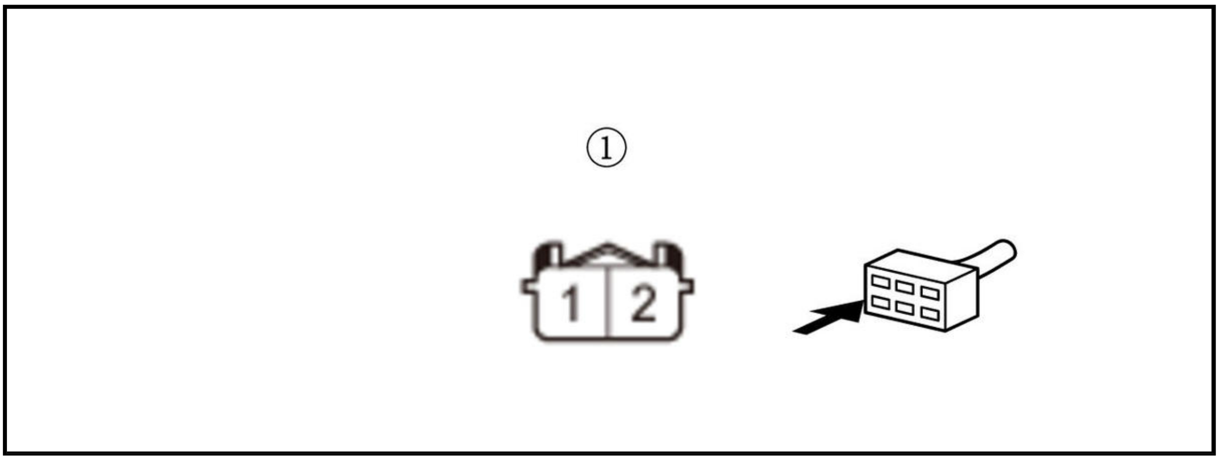

Is there continuity?

YES

The SG2 wire is OK. Check for any authorized service information related to the DTCs or symptoms you are troubleshooting, or **substitute a known-good PCM** .

NO

Repair an open in the SG2 wire between the PCM (E78) and ECT sensor 1.

8. Open wire check (TW line)

-1. Turn the vehicle to the OFF (LOCK) mode.

-2. Jump the SCS line with the HDS, and wait more than 1 minute.

-3. Disconnect the following connector.

PCM connector E (80P)

-4. Check for continuity between test points 1 and 2.

Test condition	Vehicle OFF (LOCK) mode
B	ECT sensor 1 2P connector: disconnected
B	PCM connector E (80P): disconnected
Test point 1	ECT sensor 1 2P connector (female terminals) No. 2: ①
Test point 2	**PCM connector E (80P) No. 52**

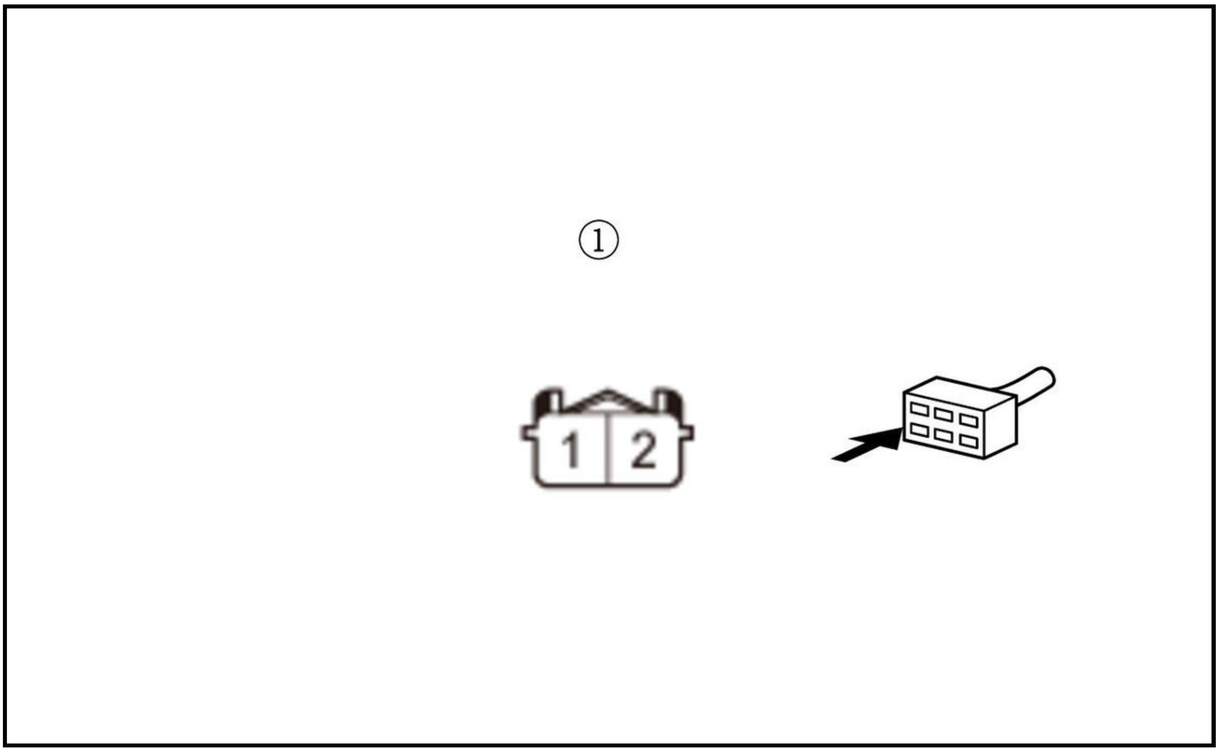

Is there continuity?

YES

The TW wire is OK. Check for any authorized service information related to the DTCs or symptoms you are troubleshooting, or **substitute a known-good PCM** .

NO

Repair an open in the TW wire between the PCM (E52) and ECT sensor 1.

DTC P0115 (2.4 L ENGINE) (2018 2019)

DTC P0115 : ECT Sensor 1 Out of Range

NOTE: Before you troubleshoot, **review the general troubleshooting information** .

DTC Description	Confirmed DTC	Pending DTC
P0115 ECT Sensor 1 Out of Range	B	B

DTC (PGM-FI)

1. Problem verification 1

   -1. Turn the vehicle to the ON mode.

   -2. Check the parameter (s) below with the HDS.

Signal	Threshold		Current conditions	
	Values	Unit	Values	Unit
ECT SENSOR 1	Less than 0.14	V	B	B

   Do the current condition (s) match the threshold?

   YES

   The failure is duplicated. Go to step 3.

   NO

   Go to step 2.

2. Problem verification 2

   -1. Turn the vehicle to the ON mode.

   -2. Check the parameter (s) below with the HDS.

Signal	Threshold		Current conditions	
	Values	Unit	Values	Unit
ECT SENSOR 1	More than 4.92	V	B	B

   Do the current condition (s) match the threshold?

   YES

   The failure is duplicated. Go to step 5.

   NO

   Intermittent failure, the system is OK at this time. Check for poor connections or loose terminals at ECT sensor 1 and the PCM. **If the on-board snapshot of this DTC is recorded, try to reproduce the failure under the same conditions with the on-board snapshot** .

3. Determine possible failure area (ECT sensor 1, others)

   -1. Turn the vehicle to the OFF (LOCK) mode.

   -2. Disconnect the following connector.

ECT sensor 1 2P connector

-3. Turn the vehicle to the ON mode.

-4. Check the parameter (s) below with the HDS.

Signal	Threshold		Current conditions	
	Values	Unit	Values	Unit
ECT SENSOR 1	Less than 0.14	V	B	B

Do the current condition (s) match the threshold?

YES

Go to step 4.

NO

Replace ECT sensor 1 .

4. Shorted wire check (TW line)

-1. Turn the vehicle to the OFF (LOCK) mode.

-2. Jump the SCS line with the HDS, and wait more than 1 minute.

-3. Disconnect the following connector.

PCM connector B (51P)

-4. Check for continuity between test points 1 and 2.

Test condition	Vehicle OFF (LOCK) mode
B	ECT sensor 1 2P connector: disconnected
B	PCM connector B (51P): disconnected
Test point 1	ECT sensor 1 2P connector (female terminals) No. 2: ①
Test point 2	Body ground

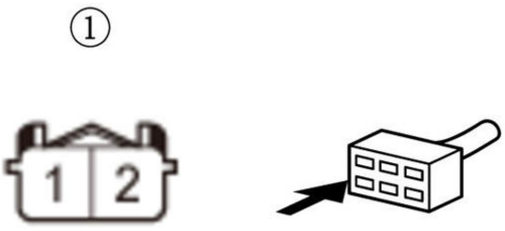

Is there continuity?

YES

Repair a short in the TW wire between the PCM (B50) and ECT sensor 1.

NO

The TW wire is OK. Check for any authorized service information related to the DTCs or symptoms you are troubleshooting, or **substitute a known-good PCM** .

5. Determine possible failure area (ECT sensor 1, others)

-1. Turn the vehicle to the OFF (LOCK) mode.

-2. Disconnect the following connector.

ECT sensor 1 2P connector

-3. Connect terminals A and B with a jumper wire.

Terminal A	ECT sensor 1 2P connector (female terminals) No. 1: ①
Terminal B	ECT sensor 1 2P connector (female terminals) No. 2: ①

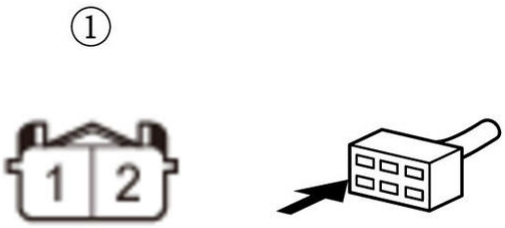

-4. Turn the vehicle to the ON mode.

-5. Check the parameter (s) below with the HDS.

Signal	Threshold		Current conditions	
	Values	Unit	Values	Unit
ECT SENSOR 1	More than 4.92	V	B	B

Do the current condition (s) match the threshold?

YES

Go to step 6.

NO

Replace ECT sensor 1 .

6. Determine possible failure area (TW line, others)

-1. Turn the vehicle to the OFF (LOCK) mode.

-2. Remove the jumper wire from the ECT sensor 1 2P connector.

-3. Turn the vehicle to the ON mode.

-4. Measure the voltage between test points 1 and 2.

Test condition	Vehicle ON mode
B	ECT sensor 1 2P connector: disconnected
Test point 1	ECT sensor 1 2P connector (female terminals) No. 2: ①
Test point 2	Body ground

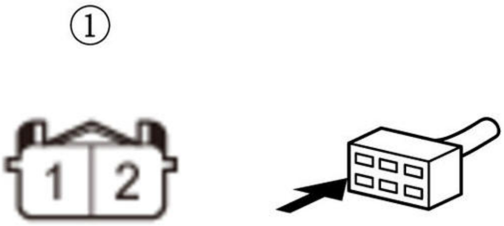

Is there about 5.0 V?

YES

Go to step 7.

NO

Go to step 8.

7. Open wire check (SG2 line)

-1. Turn the vehicle to the OFF (LOCK) mode.

-2. Jump the SCS line with the HDS, and wait more than 1 minute.

-3. Disconnect the following connector.

PCM connector C (51P)

-4. Check for continuity between test points 1 and 2.

Test condition	Vehicle OFF (LOCK) mode
B	ECT sensor 1 2P connector: disconnected
B	PCM connector C (51P): disconnected
Test point 1	ECT sensor 1 2P connector (female terminals) No. 1: ①
Test point 2	**PCM connector C (51P) No. 31**

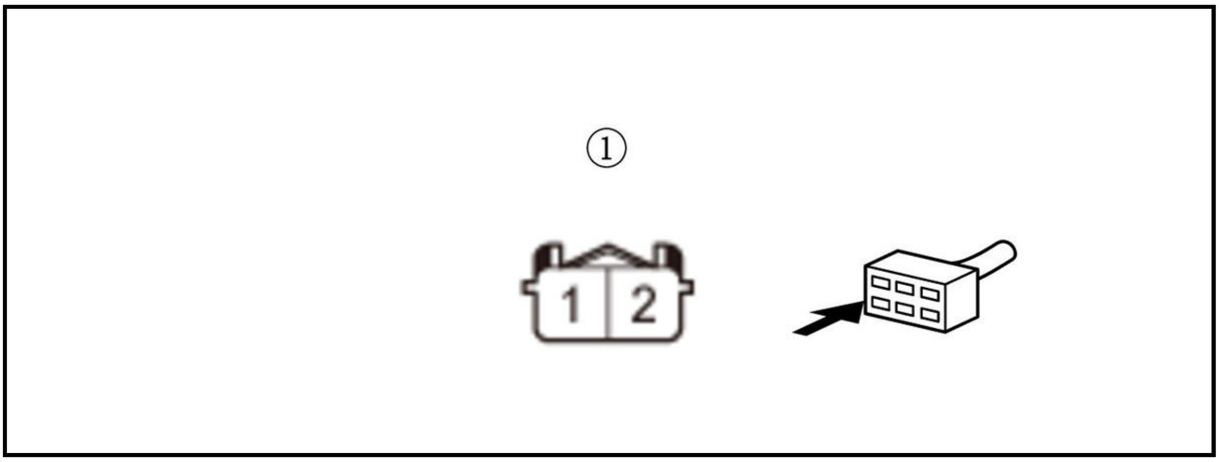

Is there continuity?

YES

The SG2 wire is OK. Check for any authorized service information related to the DTCs or symptoms you are troubleshooting, or **substitute a known-good PCM** .

NO

Repair an open in the SG2 wire between the PCM (C31) and ECT sensor 1.

8. Open wire check (TW line)

-1. Turn the vehicle to the OFF (LOCK) mode.

-2. Jump the SCS line with the HDS, and wait more than 1 minute.

-3. Disconnect the following connector.

PCM connector B (51P)

-4. Check for continuity between test points 1 and 2.

Test condition	Vehicle OFF (LOCK) mode
B	ECT sensor 1 2P connector: disconnected
B	PCM connector B (51P): disconnected
Test point 1	ECT sensor 1 2P connector (female terminals) No. 2: ①
Test point 2	**PCM connector B (51P) No. 50**

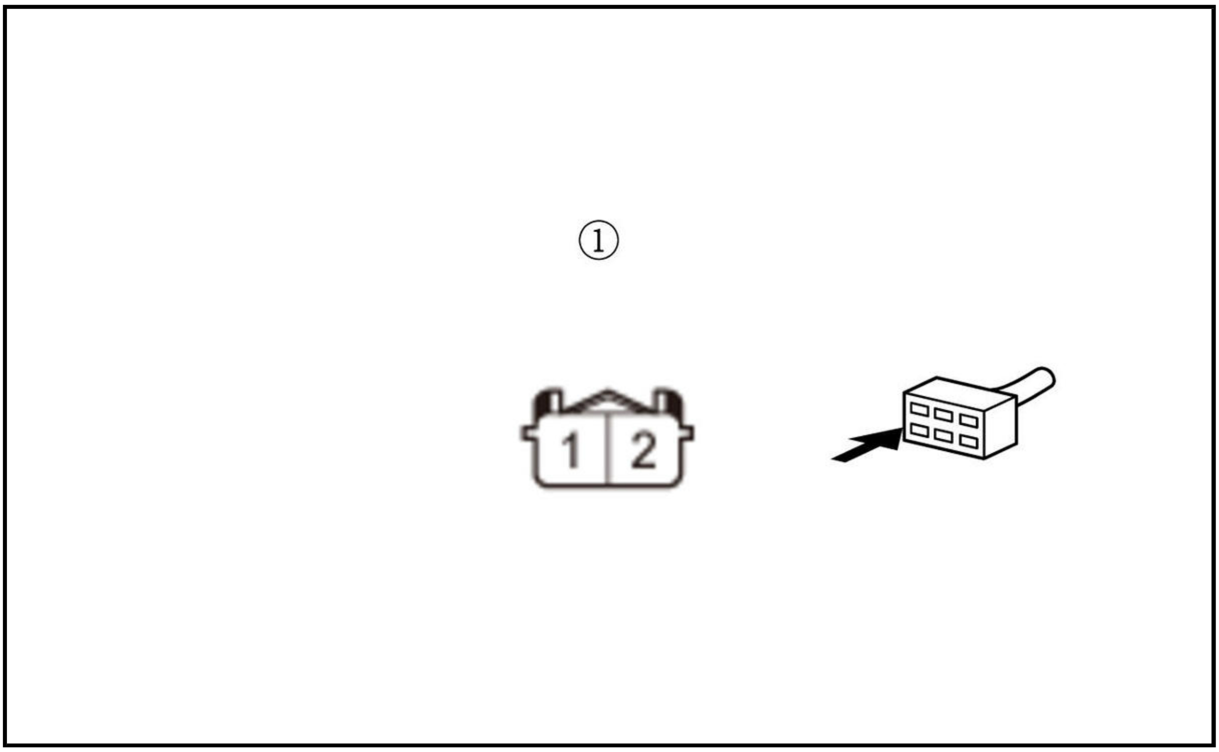

Is there continuity?

YES

The TW wire is OK. Check for any authorized service information related to the DTCs or symptoms you are troubleshooting, or **substitute a known-good PCM** .

NO

Repair an open in the TW wire between the PCM (B50) and ECT sensor 1.

DTC P0116 (1.5 L ENGINE)

DTC P0116 : ECT Sensor 1 Circuit Range/Performance Problem

NOTE: Before you troubleshoot, **review the general troubleshooting information** .

DTC Description	Confirmed DTC	Pending DTC
P0116 ECT Sensor 1 Circuit Range/Performance Problem	B	B

DTC (PGM-FI)

1. ECT sensor 1 check

-1. Turn the vehicle to the ON mode.

-2. Check the parameter (s) below with the HDS.

Signal	Threshold		Current conditions	
	Values	Unit	Values	Unit
ECT SENSOR 1	More than 80	deg. C	B	B
ECT SENSOR 1	More than 176	deg. F		

Do the current condition (s) match the threshold?

YES

Note the value of ECT SENSOR 1, then go to step 3.

NO

Note the value of ECT SENSOR 1, then go to step 2.

2. Problem verification (low temperature)

-1. Note the value of ECT SENSOR 1 in the DATA LIST with the HDS.

Signal	Current conditions	
	Values	**Unit**
ECT SENSOR 1	B	B

-2. Start the engine.

-3. Hold the engine speed at 3, 000 rpm without load (in P or N) until the radiator fan comes on, then let it idle.

-4. Check ECT SENSOR 1 in the DATA LIST with the HDS.

Signal	Current conditions	
	Values	**Unit**
ECT SENSOR 1	B	B

Does ECT SENSOR 1 change 18 deg. F (10 deg. C) or more?

YES

Intermittent failure, the system is OK at this time. Check for poor connections or loose terminals at ECT sensor 1 and the PCM. **If the on-board snapshot of this DTC is recorded, try to reproduce the failure under the same conditions with the on-board snapshot** .

NO

The failure is duplicated. **Replace the ECT sensor 1** .

3. Problem verification (high temperature)

-1. Turn the vehicle to the OFF (LOCK) mode.

-2. Open the hood, and let the engine cool for 3 hours.

-3. Turn the vehicle to the ON mode.

-4. Check ECT SENSOR 1 in the DATA LIST with the HDS.

Signal	Current conditions	
	Values	**Unit**
ECT SENSOR 1	B	B

Does ECT SENSOR 1 change 18 deg. F (10 deg. C) or more?

YES

Intermittent failure, the system is OK at this time. Check for poor connections or loose terminals at ECT sensor 1 and the PCM. **If the on-board snapshot of this DTC is recorded, try to reproduce the failure under the same conditions with the on-board snapshot** .

NO

The failure is duplicated. **Replace the ECT sensor 1** .

DTC P0116 (2.4 L ENGINE) (2017 2018 2019)

DTC P0116 : ECT Sensor 1 Circuit Range/Performance Problem

NOTE: Before you troubleshoot, **review the general troubleshooting information** .

DTC Description	Confirmed DTC	Pending DTC
P0116 ECT Sensor 1 Circuit Range/Performance Problem	B	B

DTC (PGM-FI)

1. ECT sensor 1 check

-1. Turn the vehicle to the ON mode.

-2. Check the parameter (s) below with the HDS.

Signal	Threshold		Current conditions	
	Values	Unit	Values	Unit
ECT SENSOR 1	More than 80	deg. C	B	B
ECT SENSOR 1	More than 176	deg. F		

Do the current condition (s) match the threshold?

YES

Note the value of ECT SENSOR 1, then go to step 3.

NO

Note the value of ECT SENSOR 1, then go to step 2.

2. Problem verification (low temperature)

-1. Note the value of ECT SENSOR 1 in the DATA LIST with the HDS.

Signal	Current conditions	
	Values	Unit
ECT SENSOR 1	B	B

-2. Start the engine.

-3. Hold the engine speed at 3, 000 rpm without load (in P or N) until the radiator fan comes on, then let it idle.

-4. Check ECT SENSOR 1 in the DATA LIST with the HDS.

Signal	Current conditions	
	Values	Unit
ECT SENSOR 1	B	B

Does ECT SENSOR 1 change 18 deg. F (10 deg. C) or more?

YES

Intermittent failure, the system is OK at this time. Check for poor connections or loose terminals at ECT sensor 1 and the PCM. **If the on-board snapshot of this DTC is recorded, try to reproduce the failure under the same conditions with the on-board snapshot** .

NO

The failure is duplicated. **Replace the ECT sensor 1** .

3. Problem verification (high temperature)

-1. Turn the vehicle to the OFF (LOCK) mode.

-2. Open the hood, and let the engine cool for 3 hours.

-3. Turn the vehicle to the ON mode.

-4. Check ECT SENSOR 1 in the DATA LIST with the HDS.

Signal	Current conditions	
	Values	Unit
ECT SENSOR 1	B	B

Does ECT SENSOR 1 change 18 deg. F (10 deg. C) or more?

YES

Intermittent failure, the system is OK at this time. Check for poor connections or loose terminals at ECT sensor 1 and the PCM. **If the on-board snapshot of this DTC is recorded, try to reproduce the failure under the same conditions with the on-board snapshot** .

NO

The failure is duplicated. **Replace the ECT sensor 1** .

DTC P0117 (1.5 L ENGINE)

DTC P0117 : ECT Sensor 1 Circuit Low Voltage

NOTE: Before you troubleshoot, **review the general troubleshooting information** .

DTC Description	Confirmed DTC	Pending DTC
P0117 ECT Sensor 1 Circuit Low Voltage	B	B

DTC (PGM-FI)

1. Problem verification

-1. Turn the vehicle to the ON mode.

-2. Check the parameter (s) below with the HDS.

Signal	Threshold		Current conditions	
	Values	Unit	Values	Unit
ECT SENSOR 1	Less than 0.08	V	B	B

Do the current condition (s) match the threshold?

YES

Go to step 2.

NO

Intermittent failure, the system is OK at this time. Check for poor connections or loose terminals at ECT sensor 1 and the PCM. **If the on-board snapshot of this DTC is recorded, try to reproduce the failure under the same conditions with the on-board snapshot** .

2. Determine possible failure area (ECT sensor 1, others)

-1. Turn the vehicle to the OFF (LOCK) mode.

-2. Disconnect the following connector.

ECT sensor 1 2P connector

-3. Turn the vehicle to the ON mode.

-4. Check the parameter (s) below with the HDS.

Signal	Threshold		Current conditions	
	Values	Unit	Values	Unit
ECT SENSOR 1	Less than 0.08	V	B	B

Do the current condition (s) match the threshold?

YES

Go to step 3.

NO

Replace the ECT sensor 1 .

3. Shorted wire check (TW line)

-1. Turn the vehicle to the OFF (LOCK) mode.

-2. Jump the SCS line with the HDS, and wait more than 1 minute.

-3. Disconnect the following connector.

PCM connector E (80P)

-4. Check for continuity between test points 1 and 2.

Test condition	Vehicle OFF (LOCK) mode
B	ECT sensor 1 2P connector: disconnected
B	PCM connector E (80P): disconnected
Test point 1	ECT sensor 1 2P connector (female terminals) No. 2: ①
Test point 2	Body ground

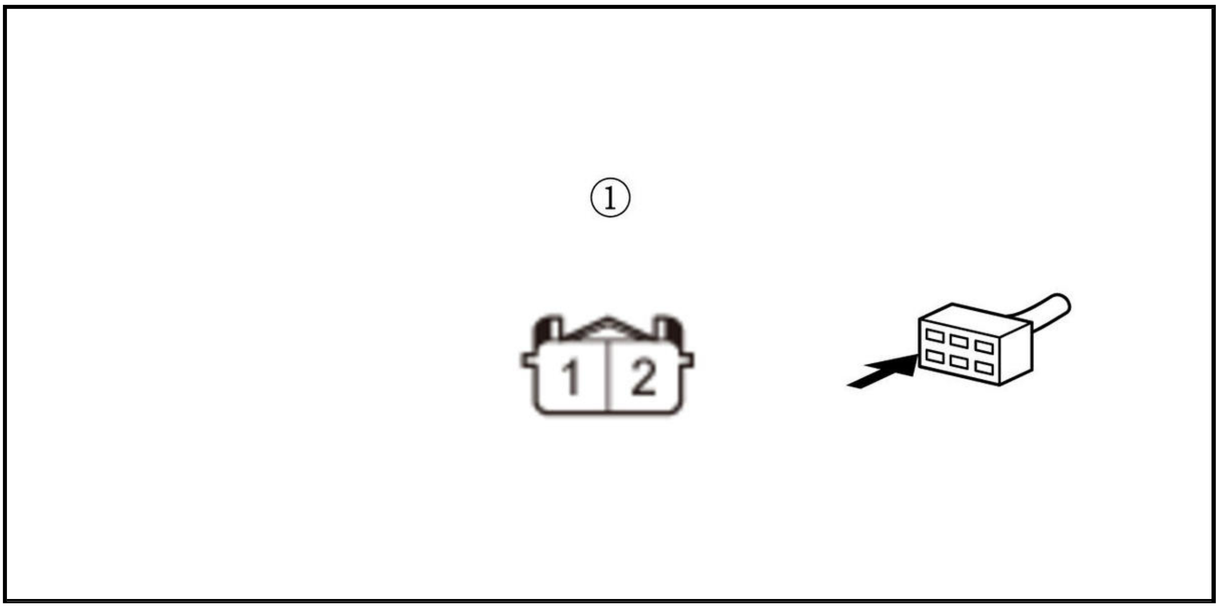

Is there continuity?

YES

Repair a short in the TW wire between the PCM (E52) and ECT sensor 1.

NO

The TW wire is OK. Check for any authorized service information related to the DTCs or symptoms you are troubleshooting, or **substitute a known-good PCM** .

DTC P0117 (2.4 L ENGINE) (2017 2018 2019)

DTC P0117 : ECT Sensor 1 Circuit Low Voltage

NOTE: Before you troubleshoot, **review the general troubleshooting information** .

DTC Description	Confirmed DTC	Pending DTC
P0117 ECT Sensor 1 Circuit Low Voltage	B	B

DTC (PGM-FI)

1. Problem verification

   -1. Turn the vehicle to the ON mode.

   -2. Check the parameter (s) below with the HDS.

Signal	Threshold		Current conditions	
	Values	Unit	Values	Unit
ECT SENSOR 1	Less than 0.08	V	B	B

Do the current condition (s) match the threshold?

YES

The failure is duplicated. Go to step 2.

NO

Intermittent failure, the system is OK at this time. Check for poor connections or loose terminals at ECT sensor 1 and the PCM. **If the on-board snapshot of this DTC is recorded, try to reproduce the failure under the same conditions with the on-board snapshot** .

2. ECT sensor 1 performance check

-1. Turn the vehicle to the OFF (LOCK) mode.

-2. Disconnect the following connector.

ECT sensor 1 2P connector

-3. Turn the vehicle to the ON mode.

-4. Check the parameter (s) below with the HDS.

Signal	Threshold		Current conditions	
	Values	**Unit**	**Values**	**Unit**
ECT SENSOR 1	Less than 0.08	V	B	B

Do the current condition (s) match the threshold?

YES

Go to step 3.

NO

Replace ECT sensor 1 .

3. Shorted wire check (TW line)

-1. Turn the vehicle to the OFF (LOCK) mode.

-2. Jump the SCS line with the HDS, and wait more than 1 minute.

-3. Disconnect the following connector.

PCM connector B (51P)

-4. Check for continuity between test points 1 and 2.

Test condition	Vehicle OFF (LOCK) mode
B	ECT sensor 1 2P connector: disconnected
B	PCM connector B (51P): disconnected
Test point 1	ECT sensor 1 2P connector (female terminals) No. 2: ①
Test point 2	Body ground

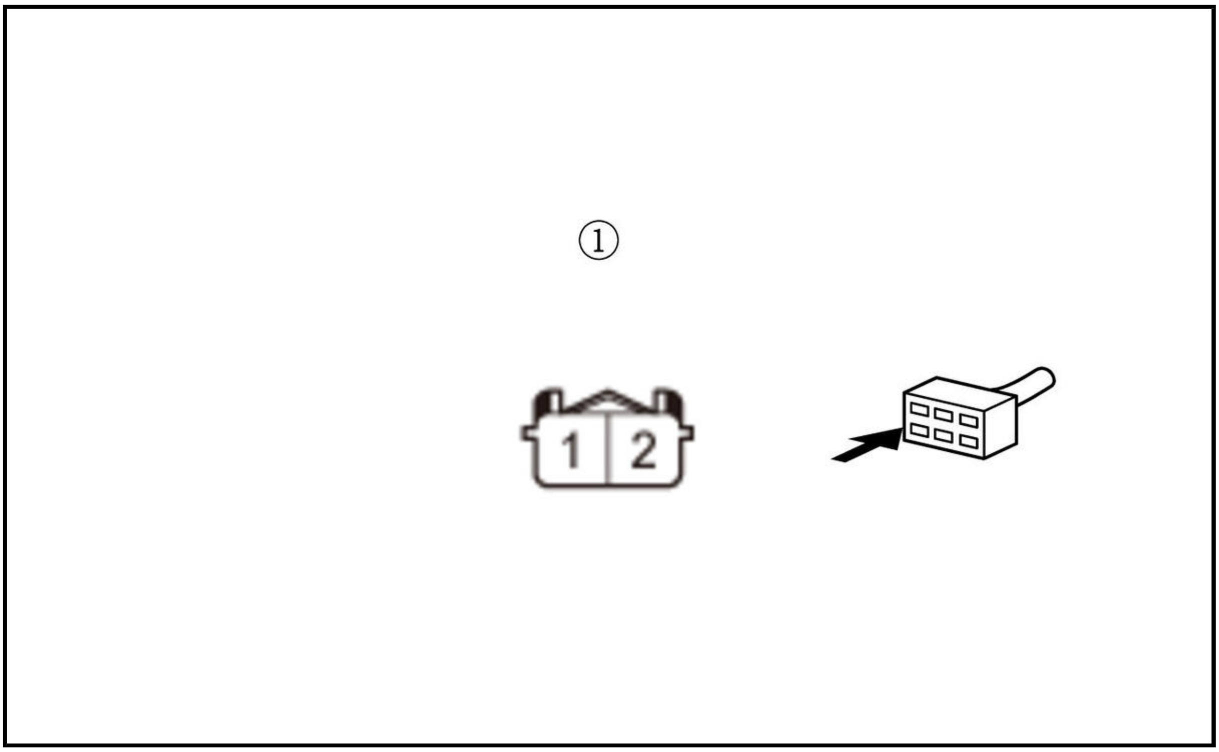

Is there continuity?

YES

Repair a short in the TW wire between the PCM (B50) and ECT sensor 1.

NO

The TW wire is OK. Check for any authorized service information related to the DTCs or symptoms you are troubleshooting or **substitute a known-good PCM** .

DTC P0118 (1.5 L ENGINE)

DTC P0118 : ECT Sensor 1 Circuit High Voltage

NOTE: Before you troubleshoot, **review the general troubleshooting information** .

DTC Description	Confirmed DTC	Pending DTC
P0118 ECT Sensor 1 Circuit High Voltage	B	B

DTC (PGM-FI)

1. Problem verification

-1. Turn the vehicle to the ON mode.

-2. Check the parameter (s) below with the HDS.

Signal	Threshold		Current conditions	
	Values	Unit	Values	Unit
ECT SENSOR 1	More than 4.92	V	B	B

Do the current condition (s) match the threshold?

YES

Go to step 2.

NO

Intermittent failure, the system is OK at this time. Check for poor connections or loose terminals at ECT sensor 1 and the PCM. **If the on-board snapshot of this DTC is recorded, try to reproduce the failure under the same conditions with the on-board snapshot** .

2. Determine possible failure area (ECT sensor 1, others)

-1. Turn the vehicle to the OFF (LOCK) mode.

-2. Disconnect the following connector.

ECT sensor 1 2P connector

-3. Connect terminals A and B with a jumper wire.

Terminal A	ECT sensor 1 2P connector (female terminals) No. 1: ①
Terminal B	ECT sensor 1 2P connector (female terminals) No. 2: ①

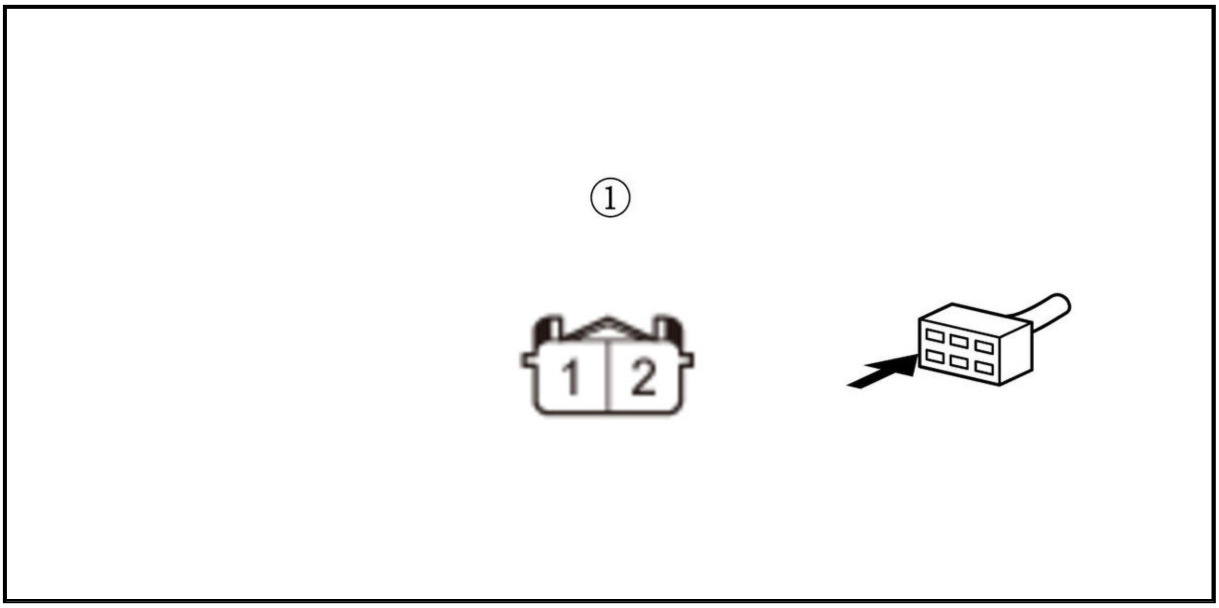

-4. Turn the vehicle to the ON mode.

-5. Check the parameter (s) below with the HDS.

Signal	Threshold		Current conditions	
	Values	Unit	Values	Unit
ECT SENSOR 1	More than 4.92	V	B	B

Do the current condition (s) match the threshold?

YES

Go to step 3.

NO

Replace the ECT sensor 1 .

3. Determine possible failure area (TW line, others)

-1. Turn the vehicle to the OFF (LOCK) mode.

-2. Remove the jumper wire from the ECT sensor 1 2P connector.

-3. Turn the vehicle to the ON mode.

-4. Measure the voltage between test points 1 and 2.

Test condition	Vehicle ON mode
B	ECT sensor 1 2P connector: disconnected
Test point 1	ECT sensor 1 2P connector (female terminals) No. 2: ①
Test point 2	Body ground

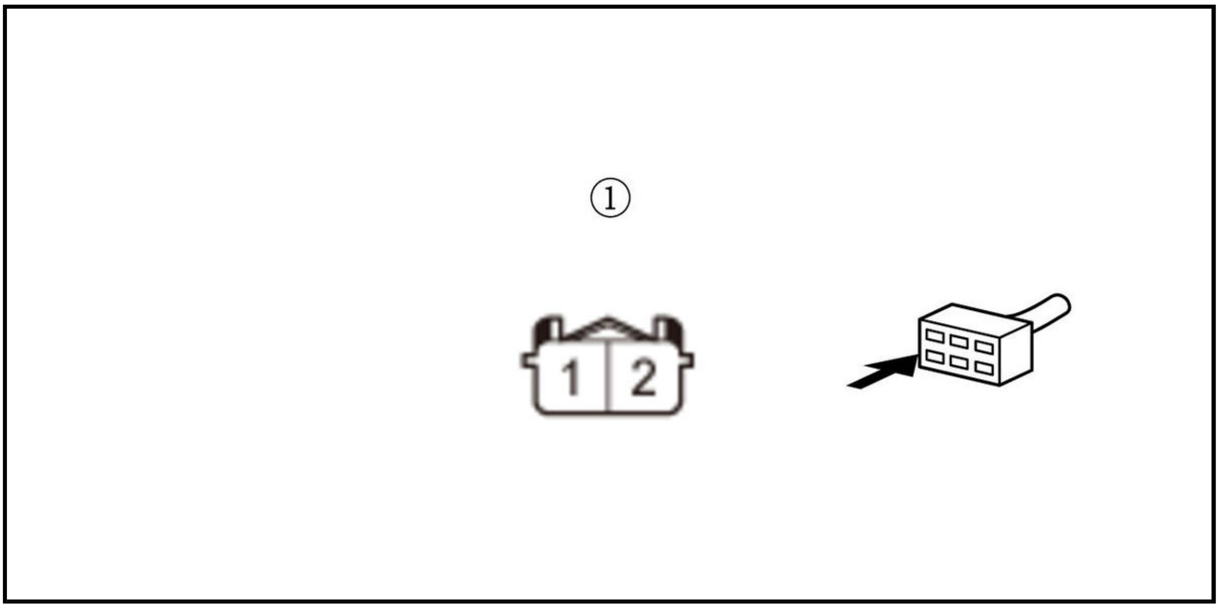

Is there about 5.0 V?

YES

Go to step 4.

NO

Go to step 5.

4. Open wire check (SG2 line)

-1. Turn the vehicle to the OFF (LOCK) mode.

-2. Jump the SCS line with the HDS, and wait more than 1 minute.

-3. Disconnect the following connector.

PCM connector E (80P)

-4. Check for continuity between test points 1 and 2.

Test condition	Vehicle OFF (LOCK) mode
B	ECT sensor 1 2P connector: disconnected
B	PCM connector E (80P): disconnected
Test point 1	ECT sensor 1 2P connector (female terminals) No. 1: ①

Test point 2	**PCM connector E (80P) No. 78**

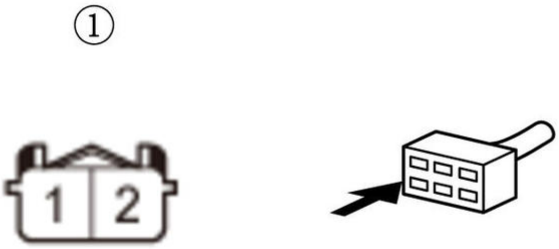

Is there continuity?

YES

The SG2 wire is OK. Check for any authorized service information related to the DTCs or symptoms you are troubleshooting, or **substitute a known-good PCM** .

NO

Repair an open in the SG2 wire between the PCM (E78) and ECT sensor 1.

5. Open wire check (TW line)

-1. Turn the vehicle to the OFF (LOCK) mode.

-2. Jump the SCS line with the HDS, and wait more than 1 minute.

-3. Disconnect the following connector.

PCM connector E (80P)

-4. Check for continuity between test points 1 and 2.

Test condition	Vehicle OFF (LOCK) mode
B	ECT sensor 1 2P connector: disconnected
B	PCM connector E (80P): disconnected
Test point 1	ECT sensor 1 2P connector (female terminals) No. 2: ①
Test point 2	**PCM connector E (80P) No. 52**

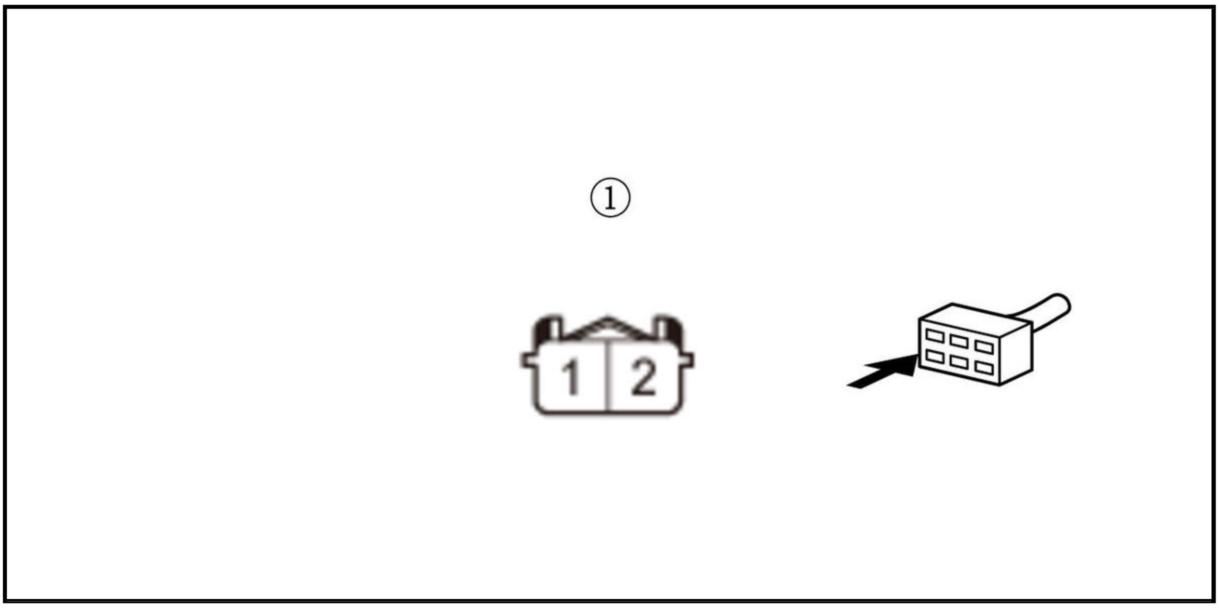

Is there continuity?

YES

The TW wire is OK. Check for any authorized service information related to the DTCs or symptoms you are troubleshooting, or **substitute a known-good PCM** .

NO

Repair an open in the TW wire between the PCM (E52) and ECT sensor 1.

DTC P0118 (2.4 L ENGINE) (2017 2018 2019)

DTC P0118 : ECT Sensor 1 Circuit High Voltage

NOTE: Before you troubleshoot, **review the general troubleshooting information** .

DTC Description	Confirmed DTC	Pending DTC
P0118 ECT Sensor 1 Circuit High Voltage	B	B

DTC (PGM-FI)

1. Problem verification

-1. Turn the vehicle to the ON mode.

-2. Check the parameter (s) below with the HDS.

Signal	Threshold		Current conditions	
	Values	Unit	Values	Unit
ECT SENSOR 1	More than 4.92	V	B	B

Do the current condition (s) match the threshold?

YES

The failure is duplicated. Go to step 2.

NO

Intermittent failure, the system is OK at this time. Check for poor connections or loose terminals at ECT sensor 1 and the PCM. **If the on-board snapshot of this DTC is recorded, try to reproduce the failure under the same conditions with the on-board snapshot** .

2. ECT sensor 1 check

-1. Turn the vehicle to the OFF (LOCK) mode.

-2. Disconnect the following connector.

ECT sensor 1 2P connector

-3. Connect terminals A and B with a jumper wire.

Terminal A	ECT sensor 1 2P connector (female terminals) No. 1: ①
Terminal B	ECT sensor 1 2P connector (female terminals) No. 2: ①

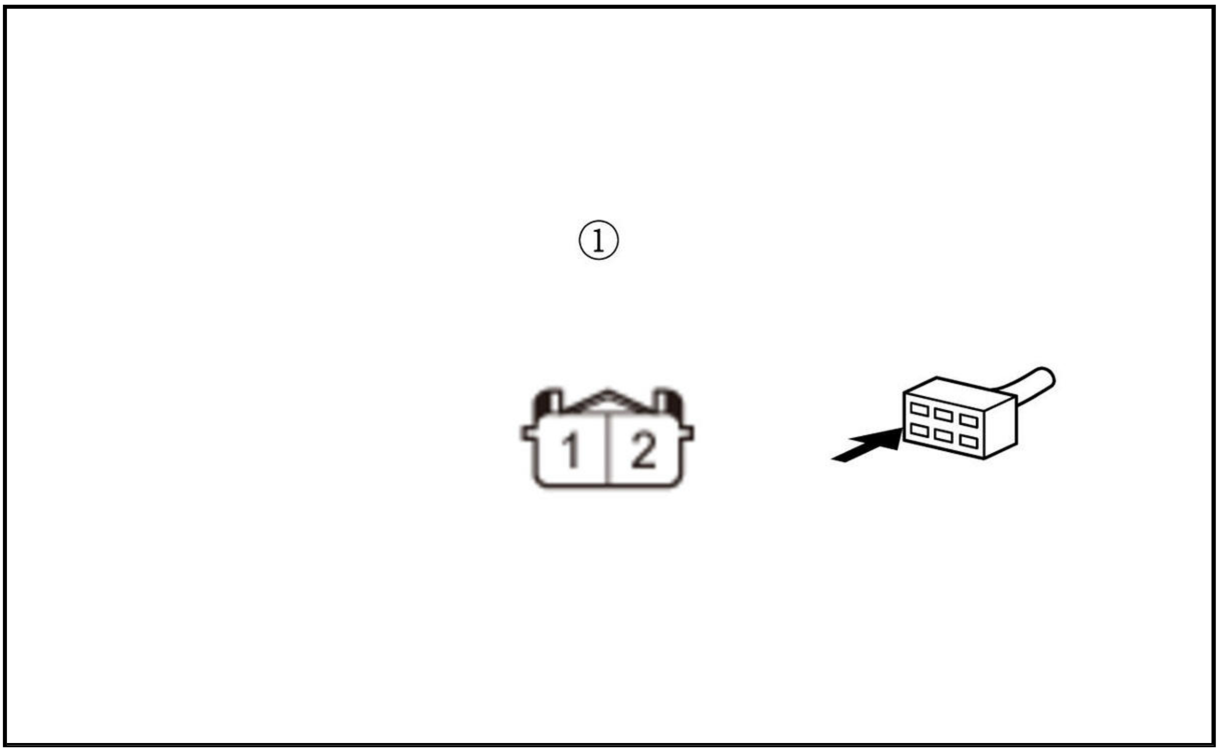

-4. Turn the vehicle to the ON mode.

-5. Check the parameter (s) below with the HDS.

Signal	**Threshold**		**Current conditions**	
	Values	**Unit**	**Values**	**Unit**
ECT SENSOR 1	More than 4.92	V	B	B

Do the current condition (s) match the threshold?

YES

Go to step 3.

NO

Replace ECT sensor 1 .

3. Determine possible failure area (TW line, others)

   -1. Turn the vehicle to the OFF (LOCK) mode.

   -2. Remove the jumper wire from the ECT sensor 1 2P connector.

   -3. Turn the vehicle to the ON mode.

   -4. Measure the voltage between test points 1 and 2.

Test condition	Vehicle ON mode
B	ECT sensor 1 2P connector: disconnected
Test point 1	ECT sensor 1 2P connector (female terminals) No. 2: ①
Test point 2	Body ground

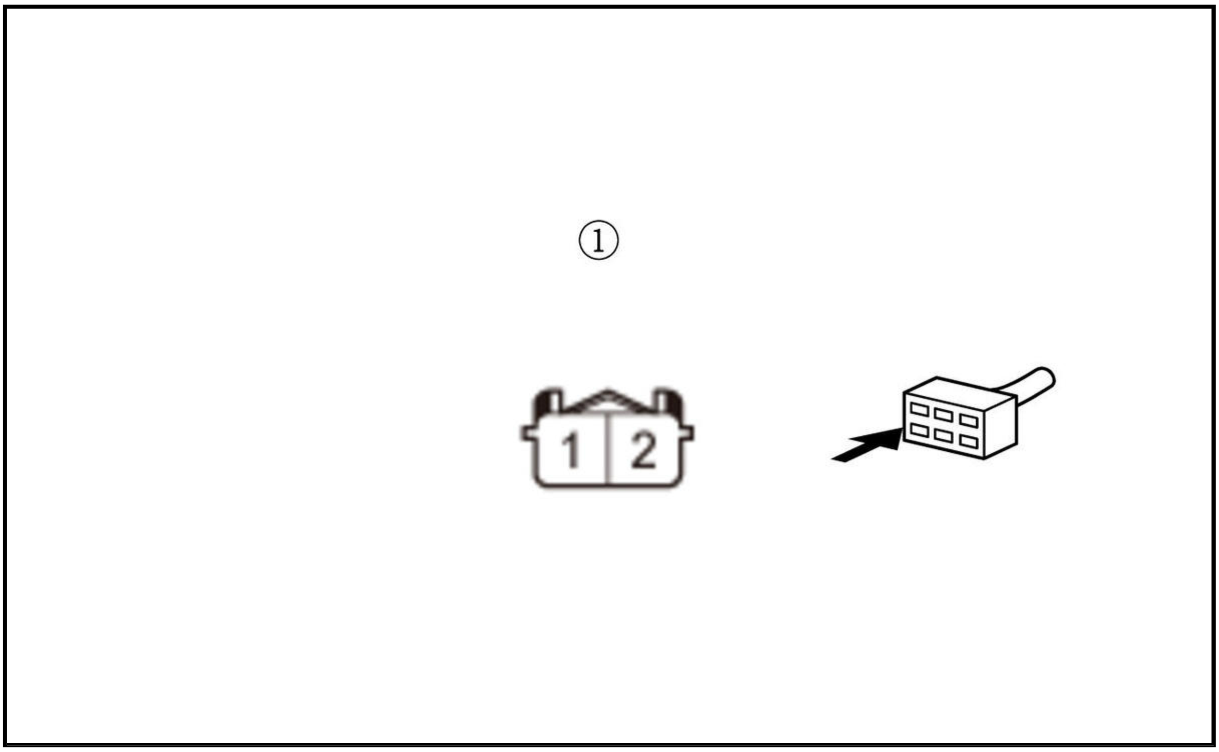

Is there about 5.0 V?

YES

Go to step 4.

NO

Go to step 5.

4. Open wire check (SG2 line)

   -1. Turn the vehicle to the OFF (LOCK) mode.

   -2. Jump the SCS line with the HDS, and wait more than 1 minute.

   -3. Disconnect the following connector.

PCM connector C (51P)

   -4. Check for continuity between test points 1 and 2.

Test condition	Vehicle OFF (LOCK) mode
B	ECT sensor 1 2P connector: disconnected
B	PCM connector C (51P): disconnected
Test point 1	ECT sensor 1 2P connector (female terminals) No. 1: ①
Test point 2	**PCM connector C (51P) No. 31**

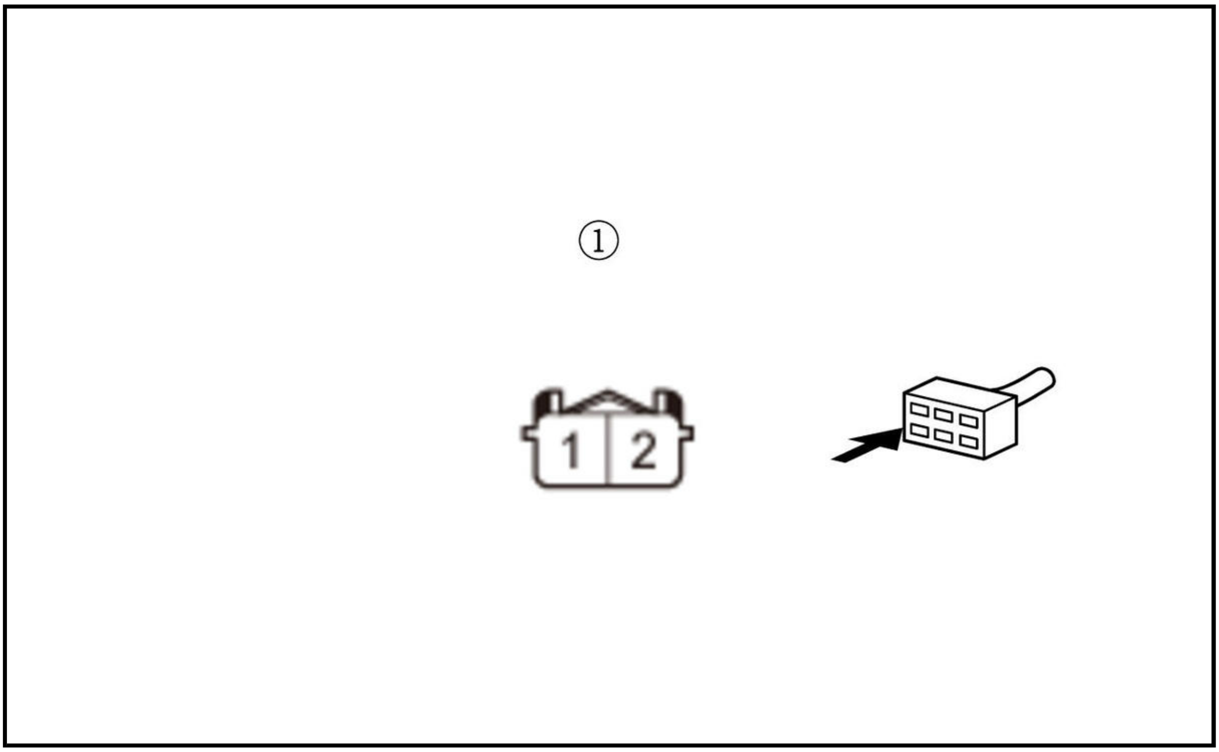

Is there continuity?

YES

The SG2 wire is OK. Check for any authorized service information related to the DTCs or symptoms you are troubleshooting or **substitute a known-good PCM** .

NO

Repair an open in the SG2 wire between the PCM (C31) and ECT sensor 1.

5. Open wire check (TW line)

-1. Turn the vehicle to the OFF (LOCK) mode.

-2. Jump the SCS line with the HDS, and wait more than 1 minute.

-3. Disconnect the following connector.

PCM connector B (51P)

-4. Check for continuity between test points 1 and 2.

Test condition	Vehicle OFF (LOCK) mode
B	ECT sensor 1 2P connector: disconnected
B	PCM connector B (51P): disconnected
Test point 1	ECT sensor 1 2P connector (female terminals) No. 2: ①
Test point 2	**PCM connector B (51P) No. 50**

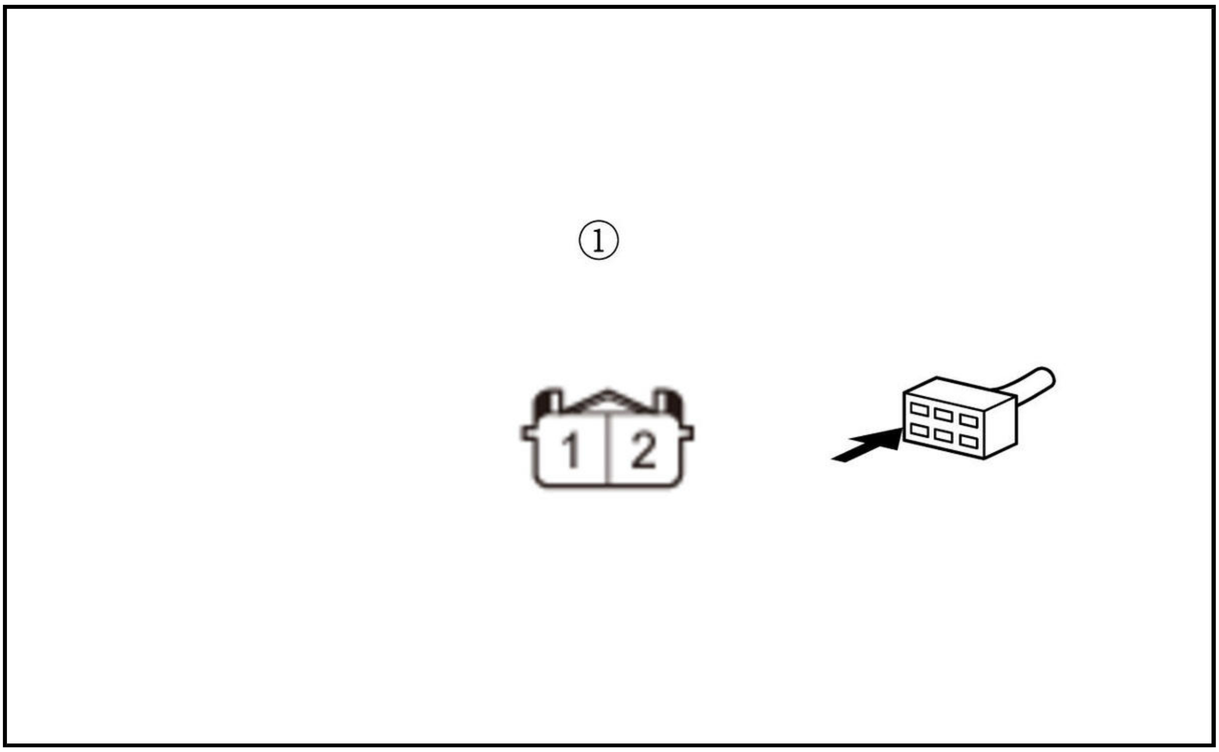

Is there continuity?

YES

The TW wire is OK. Check for any authorized service information related to the DTCs or symptoms you are troubleshooting or **substitute a known-good PCM** .

NO

Repair an open in the TW wire between the PCM (B50) and ECT sensor 1.

DTC P011A (1.5 L ENGINE)

DTC P011A : ECT Sensor 1 Circuit Range/Performance Problem

NOTE: Before you troubleshoot, **review the general troubleshooting information** .

DTC Description	Confirmed DTC	Pending DTC
P011A ECT Sensor1 Circuit Range/Performance Problem	B	B

DTC (PGM-FI)

1. Connector visual check:

   Check for poor connections or loose terminals of these connectors.

   - ECT sensor 1
   - ECT sensor 2
   - MAF sensor/IAT sensor 1

   Are the connection and terminals OK?

   YES

   Replace ECT sensor 1 .

   NO

Repair the connections or terminals, then recheck.

DTC P011A (2.4 L ENGINE) (2017 2018 2019)

DTC P011A : ECT Sensor 1 Circuit Range/Performance Problem

NOTE: Before you troubleshoot, **review the general troubleshooting information** .

DTC Description	Confirmed DTC	Pending DTC
P011A ECT Sensor1 Circuit Range/Performance Problem	B	B

DTC (PGM-FI)

1. Connector visual check:

   Check for poor connections or loose terminals of these connectors.

   - ECT sensor 1
   - ECT sensor 2
   - MAF sensor/IAT sensor 1

   Are the connection and terminals OK?

   YES

   Replace ECT sensor 1 .

   NO

   Repair the connections or terminals, then recheck.

DTC P0121 (1.5 L ENGINE) (2018 2019 2020 2021)

DTC P0121 : TP Sensor A Out of Range

NOTE: Before you troubleshoot, **review the general troubleshooting information** .

DTC Description	Confirmed DTC	Pending DTC
P0121 TP Sensor A Out of Range	B	B

DTC (PGM-FI)

1. Problem verification 1

   -1. Turn the vehicle to the ON mode.

   -2. Clear the DTC with the HDS.

   -3. Check the parameter (s) below with the HDS.

Signal	Threshold		Current conditions	
	Values	Unit	Values	Unit
TP SENSOR A	Less than 0.38	V	B	B

   Do the current condition (s) match the threshold?

   YES

The failure is duplicated. Go to step 3.

NO

Go to step 2.

2. Problem verification 2

-1. Check the parameter (s) below with the HDS.

Signal	Threshold		Current conditions	
	Values	Unit	Values	Unit
TP SENSOR A	More than 4.5	V	B	B

Do the current condition (s) match the threshold?

YES

The failure is duplicated. Go to step 7.

NO

Intermittent failure, the system is OK at this time. Check for poor connections or loose terminals at the throttle body and the PCM. **If the on-board snapshot of this DTC is recorded, try to reproduce the failure under the same conditions with the on-board snapshot** .

3. Determine possible failure area (THL1 line, others)

-1. Check for Pending or Confirmed DTCs with the HDS.

DTC Description	Confirmed DTC	Pending DTC
P0121 TP Sensor A Out of Range	B	B
P0221 TP Sensor B Out of Range	B	B

Are DTC P0121 and P0221 indicated at the same time?

YES

Go to step 5.

NO

Go to step 4.

4. Shorted wire check (THL1 line)

-1. Turn the vehicle to the OFF (LOCK) mode.

-2. Jump the SCS line with the HDS, and wait more than 1 minute.

-3. Disconnect the following connectors.

PCM connector E (80P)
Throttle body 6P connector

-4. Check for continuity between test points 1 and 2.

Test condition	Vehicle OFF (LOCK) mode
B	PCM connector E (80P): disconnected

B	Throttle body 6P connector: disconnected
Test point 1	Throttle body 6P connector (female terminals) No. 6: ①
Test point 2	Body ground

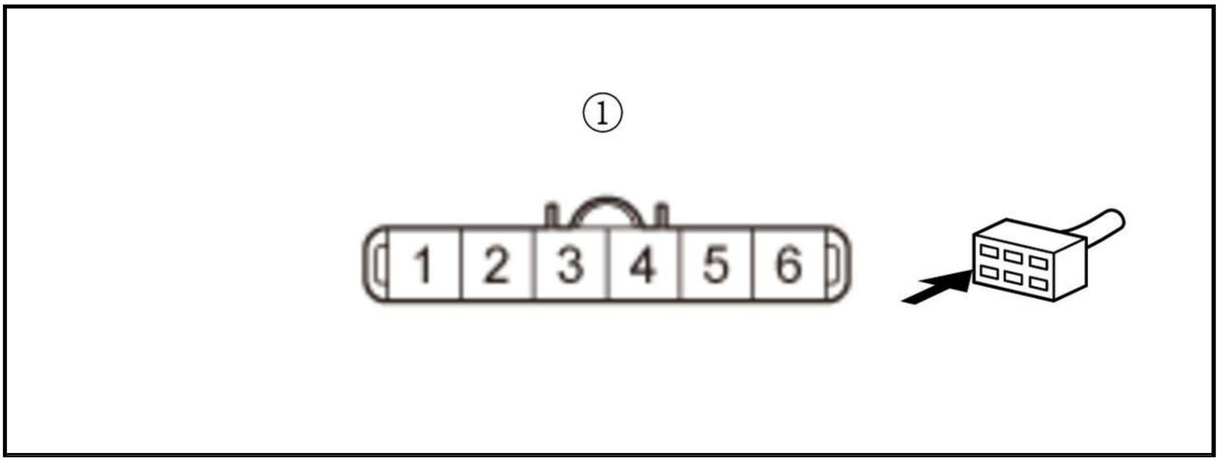

Is there continuity?

YES

Repair a short in the THL1 wire between the PCM (E50) and the throttle body.

NO

The THL1 wire is OK. Check for any authorized service information related to the DTCs or symptoms you are troubleshooting, or **substitute a known-good PCM** .

5. Determine possible failure area (throttle body, others)

-1. Turn the vehicle to the OFF (LOCK) mode.

-2. Disconnect the following connector.

Throttle body 6P connector

-3. Turn the vehicle to the ON mode.

-4. Measure the voltage between test points 1 and 2.

Test condition	Vehicle ON mode
B	Throttle body 6P connector: disconnected
Test point 1	Throttle body 6P connector (female terminals) No. 5: ①
Test point 2	Body ground

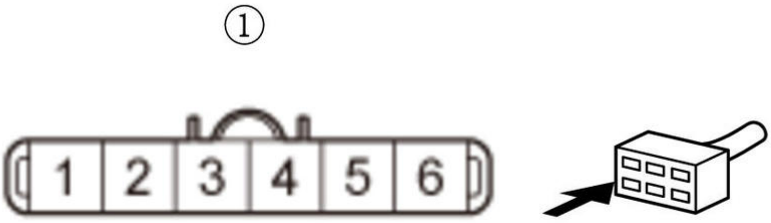

Is there about 5.0 V?

YES

Replace the throttle body .

NO

Go to step 6.

6. Open wire check (VCC3 line)

-1. Turn the vehicle to the OFF (LOCK) mode.

-2. Jump the SCS line with the HDS, and wait more than 1 minute.

-3. Disconnect the following connector.

PCM connector E (80P)

-4. Check for continuity between test points 1 and 2.

Test condition	Vehicle OFF (LOCK) mode
B	Throttle body 6P connector: disconnected
B	PCM connector E (80P): disconnected
Test point 1	Throttle body 6P connector (female terminals) No. 5: ①
Test point 2	**PCM connector E (80P) No. 75**

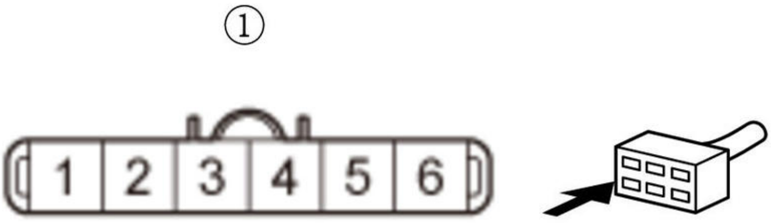

Is there continuity?

YES

The VCC3 wire is OK. Check for any authorized service information related to the DTCs or symptoms you are troubleshooting, or **substitute a known-good PCM** .

NO

Repair an open in the VCC3 wire between the PCM (E75) and the throttle body.

7. Determine possible failure area (SG3 line, others)

-1. Check for Pending or Confirmed DTCs with the HDS.

DTC Description	Confirmed DTC	Pending DTC
P0121 TP Sensor A Out of Range	B	B
P0221 TP Sensor B Out of Range	B	B

Are DTC P0121 and P0221 indicated at the same time?

YES

Go to step 10.

NO

Go to step 8.

8. Determine possible failure area (throttle body, others)

-1. Turn the vehicle to the OFF (LOCK) mode.

-2. Disconnect the following connector.

Throttle body 6P connector

-3. Turn the vehicle to the ON mode.

-4. Measure the voltage between test points 1 and 2.

Test condition	Vehicle ON mode
B	Throttle body 6P connector: disconnected
Test point 1	Throttle body 6P connector (female terminals) No. 6: ①
Test point 2	Body ground

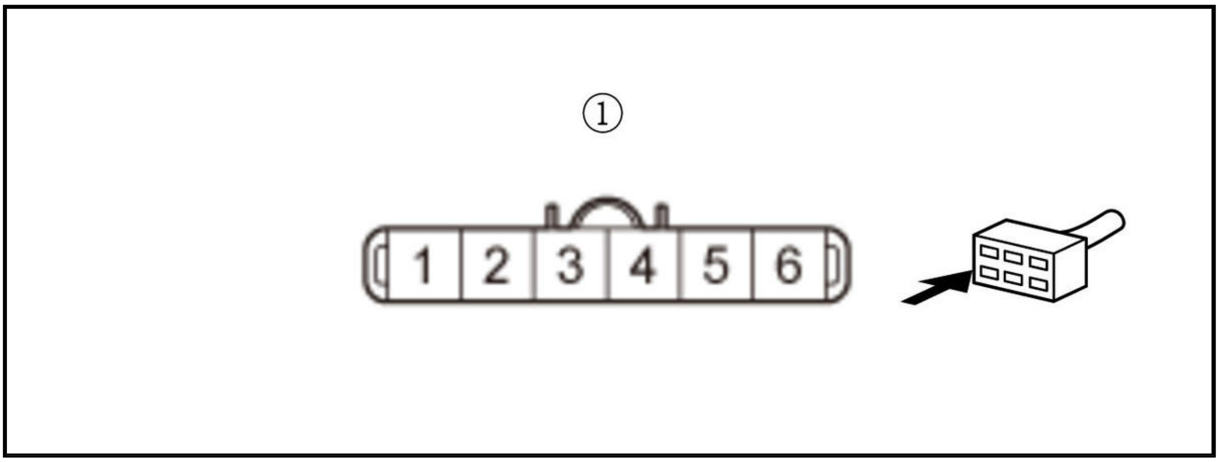

Is there about 5.0 V?

YES

Replace the throttle body .

NO

Go to step 9.

9. Open wire check (THL1 line)

-1. Turn the vehicle to the OFF (LOCK) mode.

-2. Jump the SCS line with the HDS, and wait more than 1 minute.

-3. Disconnect the following connector.

PCM connector E (80P)

-4. Check for continuity between test points 1 and 2.

Test condition	Vehicle OFF (LOCK) mode
B	Throttle body 6P connector: disconnected
B	PCM connector E (80P): disconnected
Test point 1	Throttle body 6P connector (female terminals) No. 6: ①
Test point 2	PCM connector E (80P) No. 50

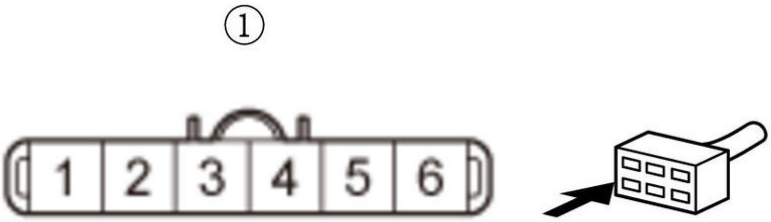

Is there continuity?

YES

The THL1 wire is OK. Check for any authorized service information related to the DTCs or symptoms you are troubleshooting, or substitute a known-good PCM .

NO

Repair an open in the THL1 wire between the PCM (E50) and the throttle body.

10. Open wire check (SG3 line)

-1. Turn the vehicle to the OFF (LOCK) mode.

-2. Jump the SCS line with the HDS, and wait more than 1 minute.

-3. Disconnect the following connectors.

PCM connector E (80P)
Throttle body 6P connector

-4. Check for continuity between test points 1 and 2.

Test condition	Vehicle OFF (LOCK) mode
B	PCM connector E (80P): disconnected
B	Throttle body 6P connector: disconnected
Test point 1	Throttle body 6P connector (female terminals) No. 3: ①
Test point 2	PCM connector E (80P) No. 76

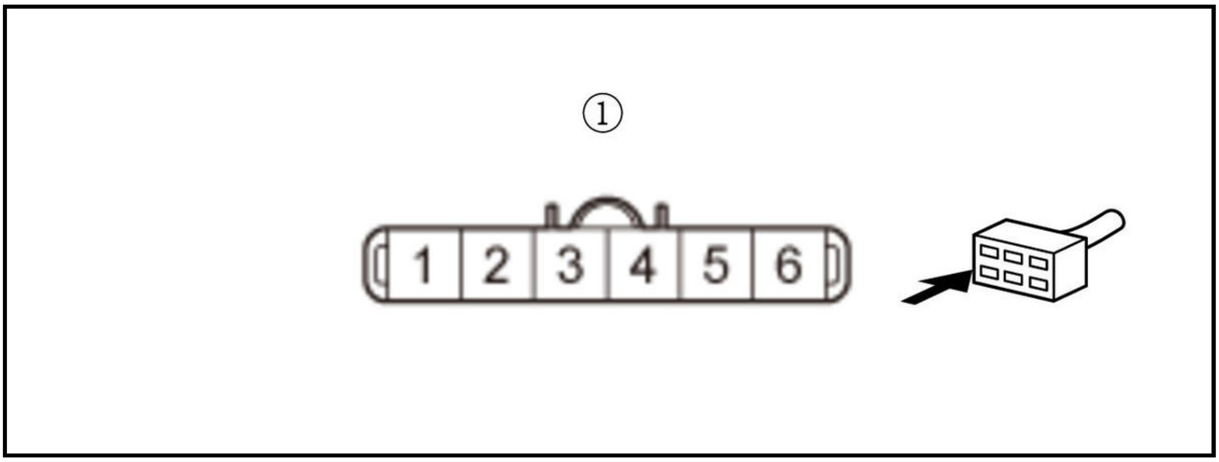

Is there continuity?

YES

The SG3 wire is OK. Check for any authorized service information related to the DTCs or symptoms you are troubleshooting, or substitute a known-good PCM .

NO

Repair an open in the SG3 wire between the PCM (E76) and the throttle body.

DTC P0121 (2.4 L ENGINE) (2018 2019)

DTC P0121 : TP Sensor A Out of Range

NOTE: Before you troubleshoot, review the general troubleshooting information .

DTC Description	Confirmed DTC	Pending DTC
P0121 TP Sensor A Out of Range	B	B

DTC (PGM-FI)

1. Problem verification 1

-1. Turn the vehicle to the ON mode.

-2. Clear the DTC with the HDS.

-3. Check the parameter (s) below with the HDS.

Signal	Threshold		Current conditions	
	Values	Unit	Values	Unit
TP SENSOR A	Less than 0.39	V	B	B

Do the current condition (s) match the threshold?

YES

The failure is duplicated. Go to step 3.

NO

Go to step 2.

2. Problem verification 2

-1. Check the parameter (s) below with the HDS.

Signal	Threshold		Current conditions	
	Values	Unit	Values	Unit
TP SENSOR A	More than 4.5	V	B	B

Do the current condition (s) match the threshold?

YES

The failure is duplicated. Go to step 7.

NO

Intermittent failure, the system is OK at this time. Check for poor connections or loose terminals at the throttle body and the PCM. **If the on-board snapshot of this DTC is recorded, try to reproduce the failure under the same conditions with the on-board snapshot** .

3. Determine possible failure area (THL1 line, others)

-1. Check for Pending or Confirmed DTCs with the HDS.

DTC Description	Confirmed DTC	Pending DTC
P0121 TP Sensor A Out of Range	B	B
P0221 TP Sensor B Out of Range	B	B

Are DTC P0121 and P0221 indicated at the same time?

YES

Go to step 5.

NO

Go to step 4.

4. Shorted wire check (THL1 line)

-1. Turn the vehicle to the OFF (LOCK) mode.

-2. Jump the SCS line with the HDS, and wait more than 1 minute.

-3. Disconnect the following connectors.

PCM connector B (51P)
Throttle body 6P connector

-4. Check for continuity between test points 1 and 2.

Test condition	Vehicle OFF (LOCK) mode
B	PCM connector B (51P): disconnected
B	Throttle body 6P connector: disconnected
Test point 1	Throttle body 6P connector (female terminals) No. 6: ①
Test point 2	Body ground

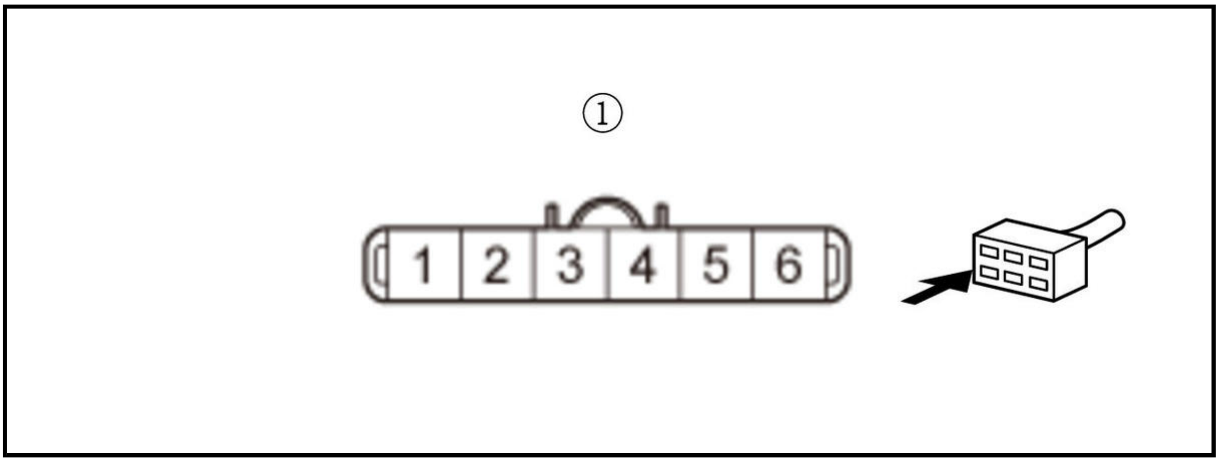

Is there continuity?

YES

Repair a short in the THL1 wire between the PCM (B46) and the throttle body.

NO

The THL1 wire is OK. Check for any authorized service information related to the DTCs or symptoms you are troubleshooting, or **substitute a known-good PCM** .

5. Determine possible failure area (throttle body, others)

-1. Turn the vehicle to the OFF (LOCK) mode.

-2. Disconnect the following connector.

Throttle body 6P connector

-3. Turn the vehicle to the ON mode.

-4. Measure the voltage between test points 1 and 2.

Test condition	Vehicle ON mode
B	Throttle body 6P connector: disconnected
Test point 1	Throttle body 6P connector (female terminals) No. 5: ①
Test point 2	Body ground

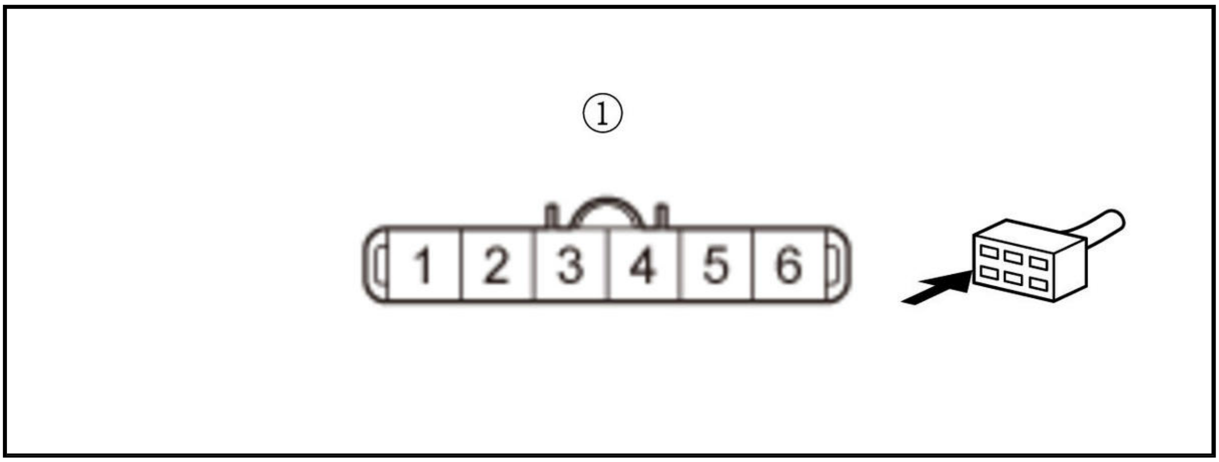

Is there about 5.0 V?

YES

Replace the throttle body .

NO

Go to step 6.

6. Open wire check (VCC3 line)

-1. Turn the vehicle to the OFF (LOCK) mode.

-2. Jump the SCS line with the HDS, and wait more than 1 minute.

-3. Disconnect the following connector.

PCM connector B (51P)

-4. Check for continuity between test points 1 and 2.

Test condition	Vehicle OFF (LOCK) mode
B	Throttle body 6P connector: disconnected
B	PCM connector B (51P): disconnected
Test point 1	Throttle body 6P connector (female terminals) No. 5: ①
Test point 2	**PCM connector B (51P) No. 48**

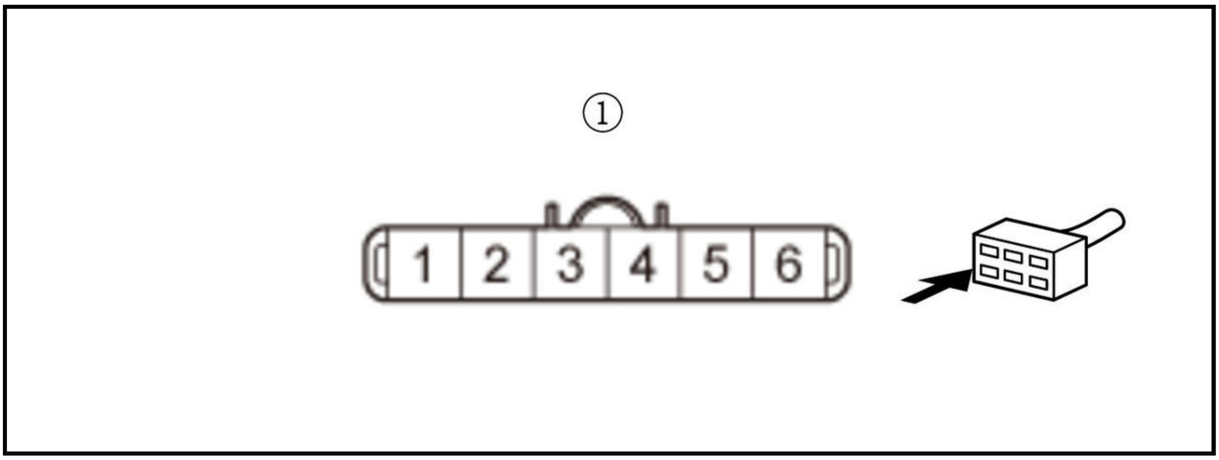

Is there continuity?

YES

The VCC3 wire is OK. Check for any authorized service information related to the DTCs or symptoms you are troubleshooting, or **substitute a known-good PCM** .

NO

Repair an open in the VCC3 wire between the PCM (B48) and the throttle body.

7. Determine possible failure area (SG3 line, others)

-1. Check for Pending or Confirmed DTCs with the HDS.

DTC Description	Confirmed DTC	Pending DTC
P0121 TP Sensor A Out of Range	B	B
P0221 TP Sensor B Out of Range	B	B

Are DTC P0121 and P0221 indicated at the same time?

YES

Go to step 10.

NO

Go to step 8.

8. Determine possible failure area (throttle body, others)

-1. Turn the vehicle to the OFF (LOCK) mode.

-2. Disconnect the following connector.

Throttle body 6P connector

-3. Turn the vehicle to the ON mode.

-4. Measure the voltage between test points 1 and 2.

Test condition	Vehicle ON mode
B	Throttle body 6P connector: disconnected
Test point 1	Throttle body 6P connector (female terminals) No. 6: ①
Test point 2	Body ground

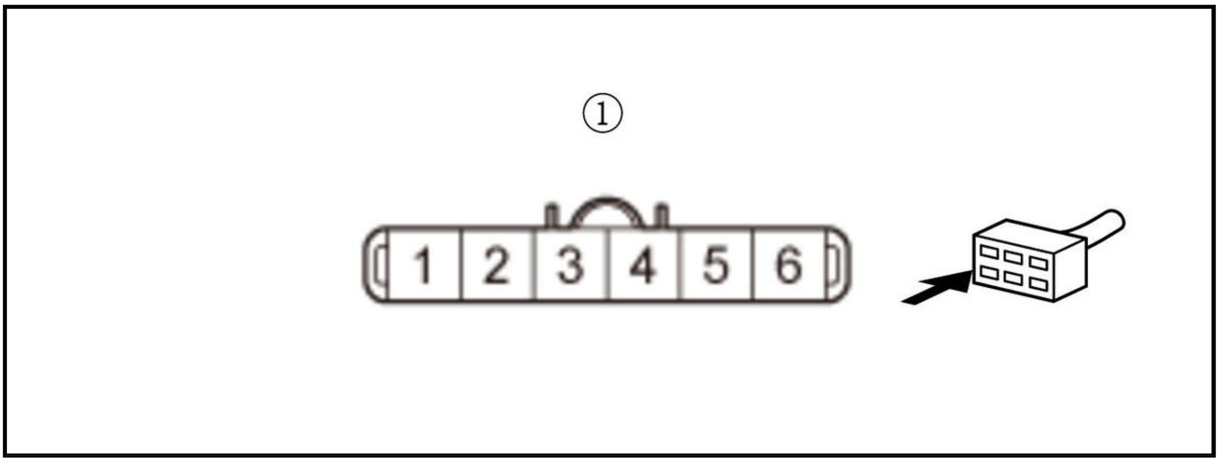

Is there about 5.0 V?

YES

Replace the throttle body .

NO

Go to step 9.

9. Open wire check (THL1 line)

-1. Turn the vehicle to the OFF (LOCK) mode.

-2. Jump the SCS line with the HDS, and wait more than 1 minute.

-3. Disconnect the following connector.

PCM connector B (51P)

-4. Check for continuity between test points 1 and 2.

Test condition	Vehicle OFF (LOCK) mode
B	Throttle body 6P connector: disconnected
B	PCM connector B (51P): disconnected
Test point 1	Throttle body 6P connector (female terminals) No. 6: ①
Test point 2	**PCM connector B (51P) No. 46**

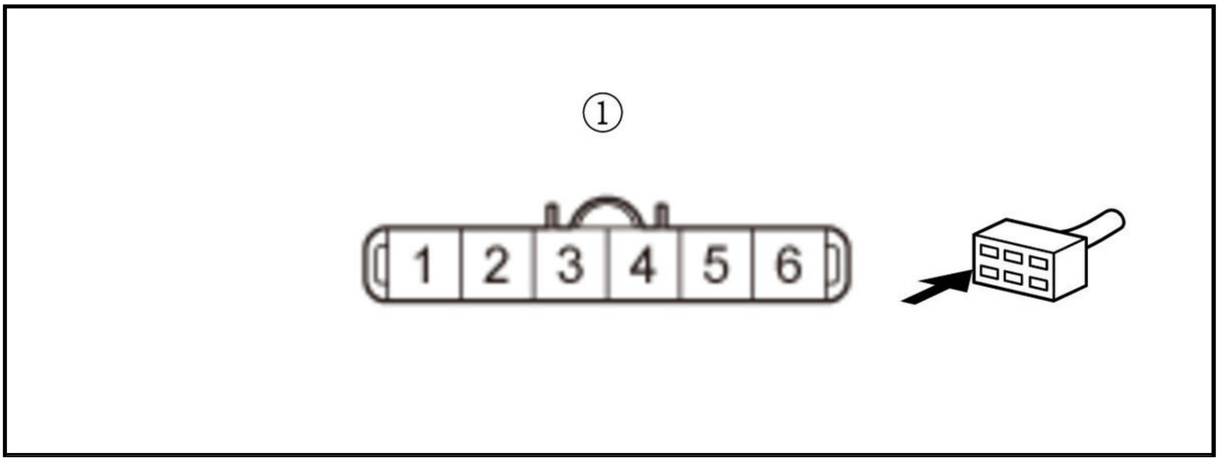

Is there continuity?

YES

The THL1 wire is OK. Check for any authorized service information related to the DTCs or symptoms you are troubleshooting, or **substitute a known-good PCM** .

NO

Repair an open in the THL1 wire between the PCM (B46) and the throttle body.

10. Open wire check (SG3 line)

-1. Turn the vehicle to the OFF (LOCK) mode.

-2. Jump the SCS line with the HDS, and wait more than 1 minute.

-3. Disconnect the following connectors.

PCM connector B (51P)
Throttle body 6P connector

-4. Check for continuity between test points 1 and 2.

Test condition	Vehicle OFF (LOCK) mode
B	PCM connector B (51P): disconnected
B	Throttle body 6P connector: disconnected
Test point 1	Throttle body 6P connector (female terminals) No. 3: ①
Test point 2	**PCM connector B (51P) No. 49**

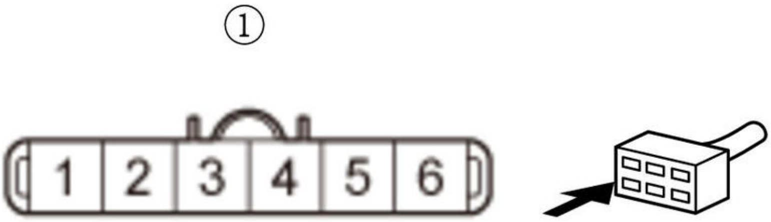

Is there continuity?

YES

The SG3 wire is OK. Check for any authorized service information related to the DTCs or symptoms you are troubleshooting, or **substitute a known-good PCM** .

NO

Repair an open in the SG3 wire between the PCM (B49) and the throttle body.

DTC P0122 (1.5 L ENGINE)

DTC P0122 : TP Sensor A Circuit Low Voltage

NOTE: Before you troubleshoot, **review the general troubleshooting information** .

DTC Description	Confirmed DTC	Pending DTC
P0122 TP Sensor A Circuit Low Voltage	B	B

DTC (PGM-FI)

1. Problem verification

-1. Turn the vehicle to the ON mode.

-2. Clear the DTC with the HDS.

-3. Turn the vehicle to the OFF (LOCK) mode.

-4. Turn the vehicle to the ON mode.

-5. Check the parameter (s) below with the HDS.

Signal	**Threshold**		**Current conditions**	
	Values	**Unit**	**Values**	**Unit**
TP SENSOR A	Less than 0.3	V	B	B

Do the current condition (s) match the threshold?

YES

Go to step 2.

NO

Intermittent failure, the system is OK at this time. Check for poor connections or loose terminals at the throttle body and the PCM. **If the on-board snapshot of this DTC is recorded, try to reproduce the failure under the same conditions with the on-board snapshot** .

2. Determine possible failure area (THL1 line, others)

-1. Check for Pending or Confirmed DTCs with the HDS.

DTC Description	**Confirmed DTC**	**Pending DTC**
P0122 TP Sensor A Circuit Low Voltage	B	B
P0222 TP Sensor B Circuit Low Voltage	B	B

Are DTC P0122 and P0222 indicated at the same time?

YES

Go to step 4.

NO

Go to step 3.

3. Shorted wire check (THL1 line)

-1. Turn the vehicle to the OFF (LOCK) mode.

-2. Jump the SCS line with the HDS, and wait more than 1 minute.

-3. Disconnect the following connectors.

PCM connector E (80P)	
Throttle body 6P connector	

-4. Check for continuity between test points 1 and 2.

Test condition	Vehicle OFF (LOCK) mode
B	PCM connector E (80P): disconnected
B	Throttle body 6P connector: disconnected
Test point 1	Throttle body 6P connector (female terminals) No. 6: ①
Test point 2	Body ground

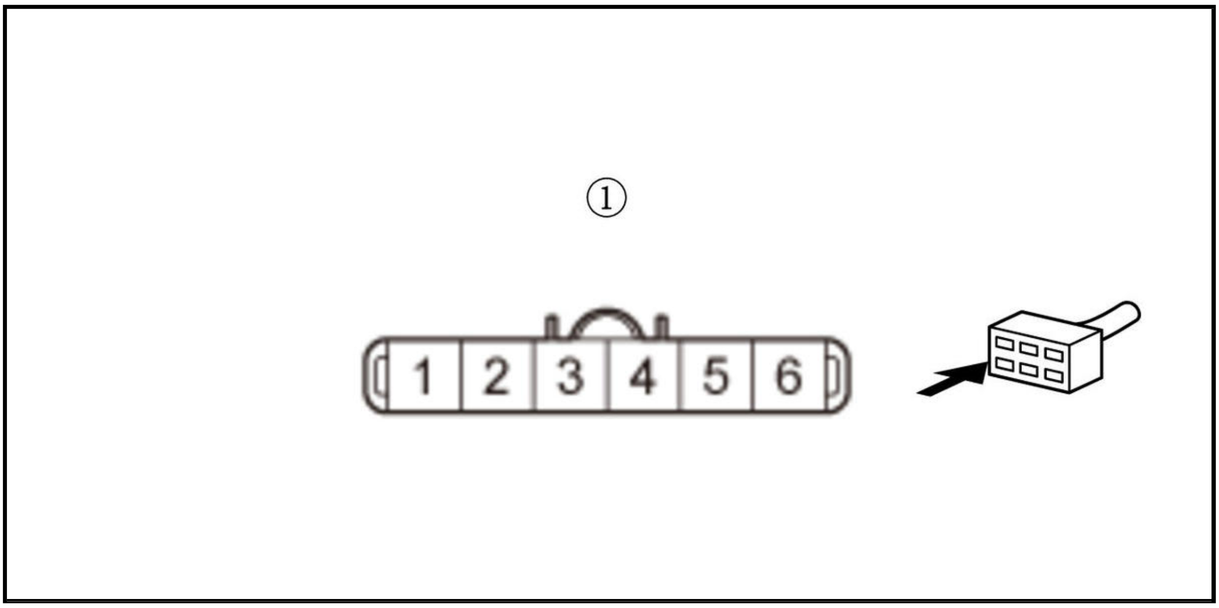

Is there continuity?

YES

Repair a short in the THL1 wire between the PCM (E50) and the throttle body.

NO

The THL1 wire is OK. Check for any authorized service information related to the DTCs or symptoms you are troubleshooting, or **substitute a known-good PCM** .

4. Determine possible failure area (VCC3 line, throttle body)

-1. Turn the vehicle to the OFF (LOCK) mode.

-2. Disconnect the following connector.

Throttle body 6P connector

-3. Turn the vehicle to the ON mode.

-4. Measure the voltage between test points 1 and 2.

Test condition	Vehicle ON mode
B	Throttle body 6P connector: disconnected
Test point 1	Throttle body 6P connector (female terminals) No. 5: ①
Test point 2	Body ground

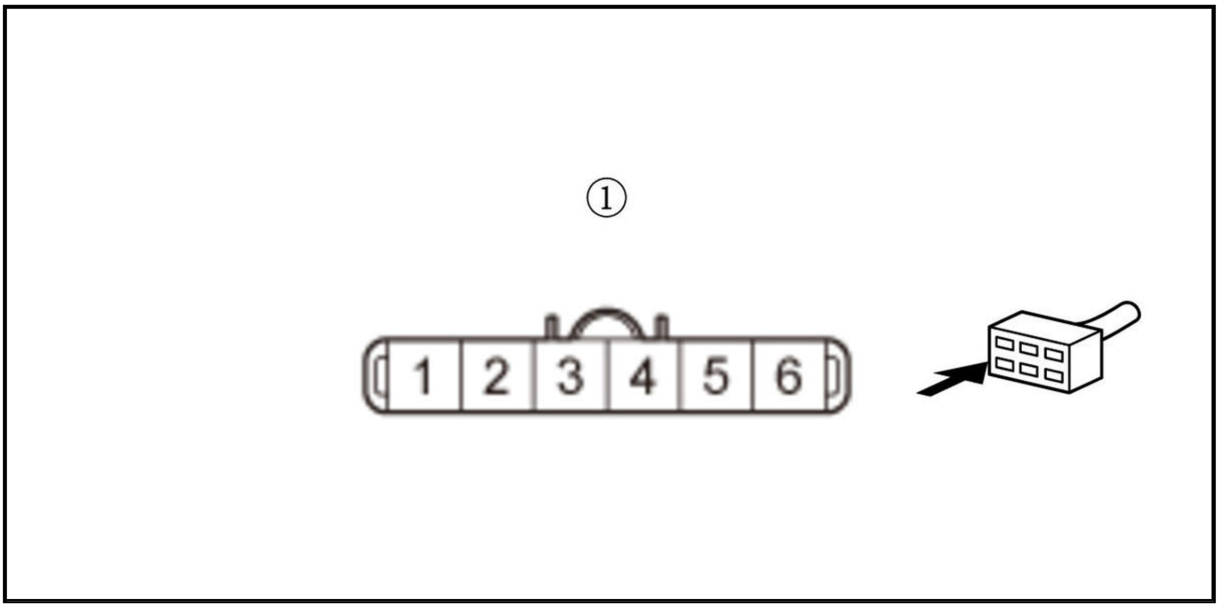

Is there about 5.0 V?

YES

Replace the throttle body .

NO

Go to step 5.

5. Open wire check (VCC3 line)

-1. Turn the vehicle to the OFF (LOCK) mode.

-2. Jump the SCS line with the HDS, and wait more than 1 minute.

-3. Disconnect the following connector.

PCM connector E (80P)

-4. Check for continuity between test points 1 and 2.

Test condition	Vehicle OFF (LOCK) mode
B	Throttle body 6P connector: disconnected
B	PCM connector E (80P): disconnected
Test point 1	Throttle body 6P connector (female terminals) No. 5: ①
Test point 2	**PCM connector E (80P) No. 75**

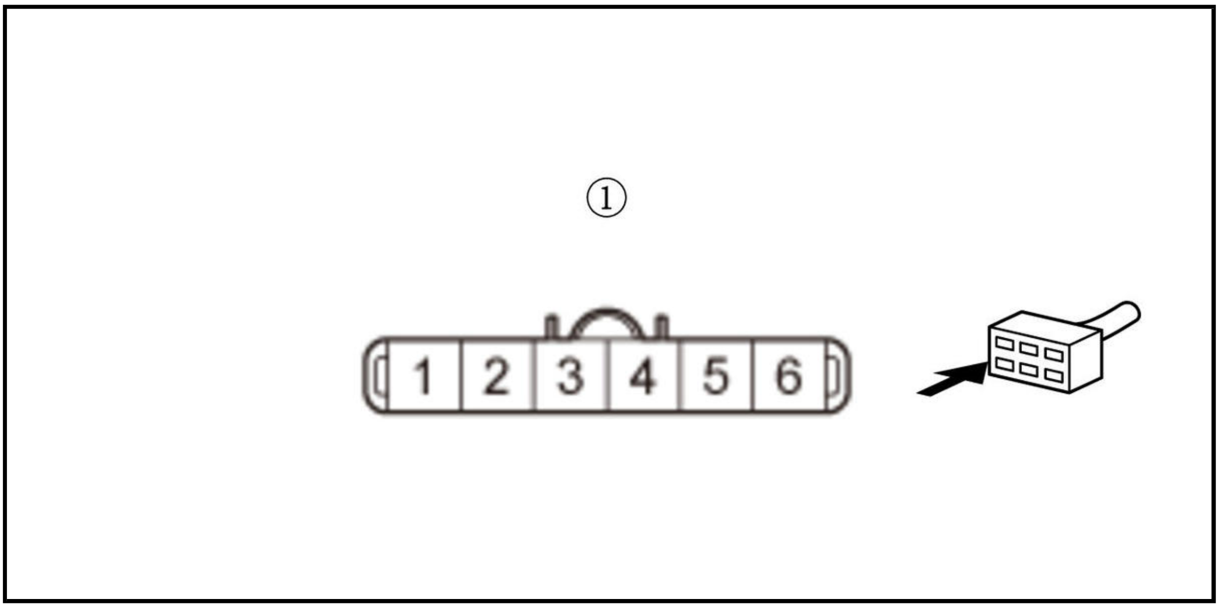

Is there continuity?

YES

The VCC3 wire is OK. Check for any authorized service information related to the DTCs or symptoms you are troubleshooting, or **substitute a known-good PCM** .

NO

Repair an open in the VCC3 wire between the PCM (E75) and the throttle body.

DTC P0122 (2.4 L ENGINE) (2017 2018 2019)

DTC P0122 : TP Sensor A Circuit Low Voltage

NOTE: Before you troubleshoot, **review the general troubleshooting information** .

DTC Description	Confirmed DTC	Pending DTC
P0122 TP Sensor A Circuit Low Voltage	B	B

DTC (PGM-FI)

1. Problem verification

-1. Turn the vehicle to the ON mode.

-2. Clear the DTC with the HDS.

-3. Check the parameter (s) below with the HDS.

Signal	Threshold		Current conditions	
	Values	Unit	Values	Unit
TP SENSOR A	Less than 0.3	V	B	B

Do the current condition (s) match the threshold?

YES

The failure is duplicated. Go to step 2.

NO

Intermittent failure, the system is OK at this time. Check for poor connections or loose terminals at the throttle body and the PCM.**If the on-board snapshot of this DTC is recorded, try to reproduce the failure under the same conditions with the on-board snapshot** .

2. Determine possible failure area (THL1 line, others)

-1. Check for Pending or Confirmed DTCs with the HDS.

DTC Description	Confirmed DTC	Pending DTC
P0122 TP Sensor A Circuit Low Voltage	B	B
P0222 TP Sensor B Circuit Low Voltage	B	B

Are DTC P0122 and P0222 indicated at the same time?

YES

Go to step 4.

NO

Go to step 3.

3. Shorted wire check (THL1 line)

-1. Turn the vehicle to the OFF (LOCK) mode.

-2. Jump the SCS line with the HDS, and wait more than 1 minute.

-3. Disconnect the following connectors.

PCM connector B (51P)
Throttle body 6P connector

-4. Check for continuity between test points 1 and 2.

Test condition	Vehicle OFF (LOCK) mode
B	PCM connector B (51P): disconnected
B	Throttle body 6P connector: disconnected
Test point 1	Throttle body 6P connector (female terminals) No. 6: ①
Test point 2	Body ground

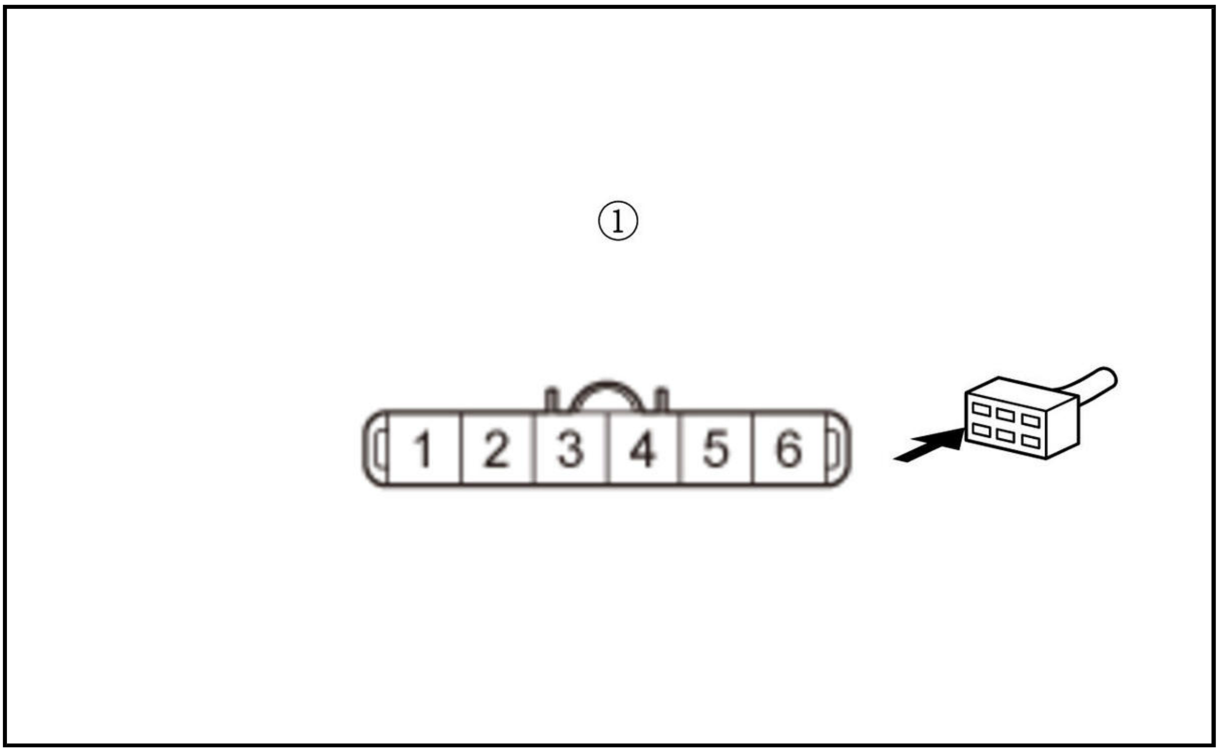

Is there continuity?

YES

Repair a short in the THL1 wire between the PCM (B46) and the throttle body.

NO

The THL1 wire is OK. Check for any authorized service information related to the DTCs or symptoms you are troubleshooting or **substitute a known-good PCM** .

4. Determine possible failure area (VCC3 line, throttle body)

-1. Turn the vehicle to the OFF (LOCK) mode.

-2. Disconnect the following connector.

Throttle body 6P connector

-3. Turn the vehicle to the ON mode.

-4. Measure the voltage between test points 1 and 2.

Test condition	Vehicle ON mode
B	Throttle body 6P connector: disconnected
Test point 1	Throttle body 6P connector (female terminals) No. 5: ①
Test point 2	Body ground

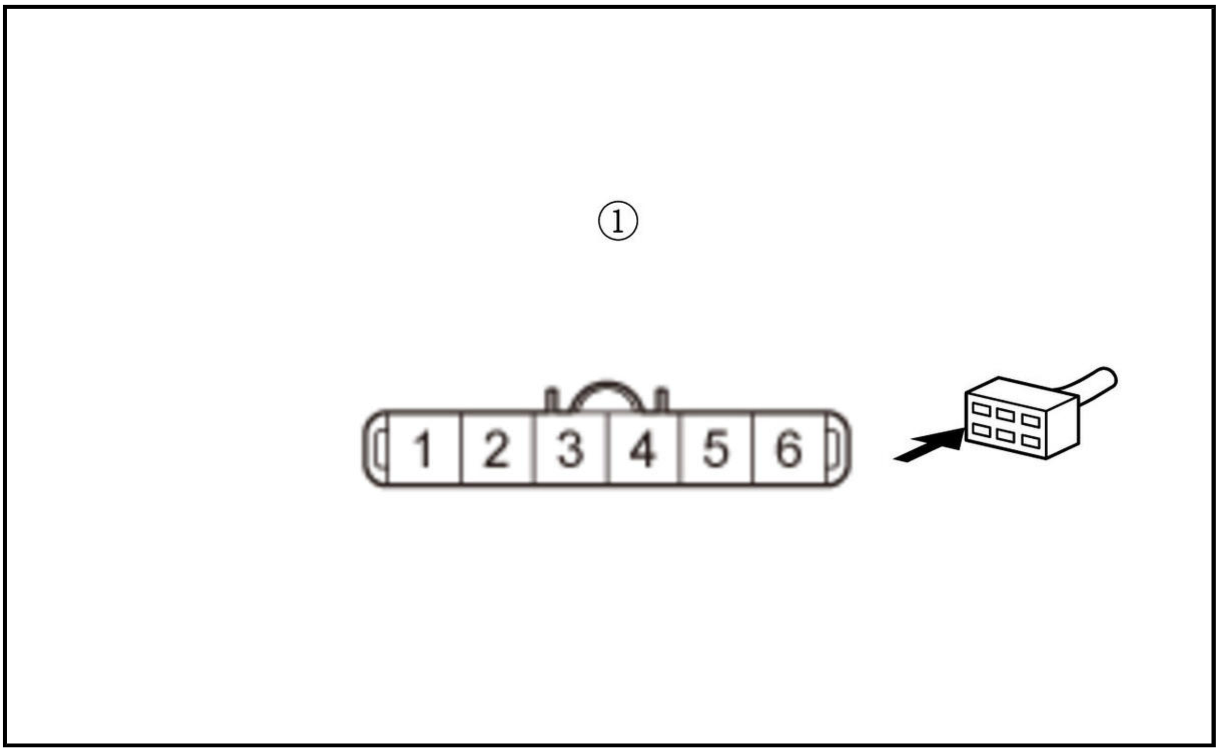

Is there about 5.0 V?

YES

Replace the throttle body .

NO

Go to step 5.

5. Open wire check (VCC3 line)

-1. Turn the vehicle to the OFF (LOCK) mode.

-2. Jump the SCS line with the HDS, and wait more than 1 minute.

-3. Disconnect the following connector.

PCM connector B (51P)

-4. Check for continuity between test points 1 and 2.

Test condition	Vehicle OFF (LOCK) mode
B	Throttle body 6P connector: disconnected
B	PCM connector B (51P): disconnected
Test point 1	Throttle body 6P connector (female terminals) No. 5: ①
Test point 2	**PCM connector B (51P) No. 48**

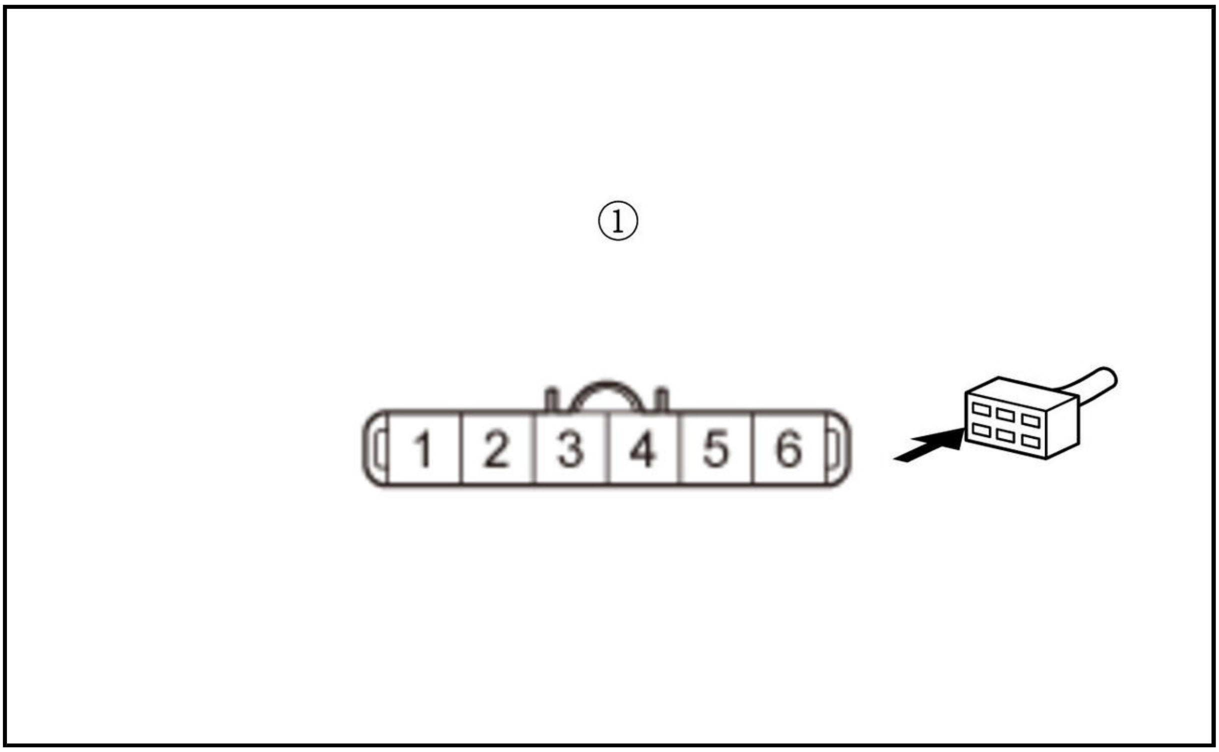

Is there continuity?

YES

The VCC3 wire is OK. Check for any authorized service information related to the DTCs or symptoms you are troubleshooting or **substitute a known-good PCM** .

NO

Repair an open in the VCC3 wire between the PCM (B48) and the throttle body.

DTC P0123 (1.5 L ENGINE)

DTC P0123 : TP Sensor A Circuit High Voltage

NOTE: Before you troubleshoot, **review the general troubleshooting information** .

DTC Description	Confirmed DTC	Pending DTC
P0123 TP Sensor A Circuit High Voltage	B	B

DTC (PGM-FI)

1. Problem verification

-1. Turn the vehicle to the ON mode.

-2. Clear the DTC with the HDS.

-3. Turn the vehicle to the OFF (LOCK) mode.

-4. Turn the vehicle to the ON mode.

-5. Check the parameter (s) below with the HDS.

Signal	Threshold		Current conditions	
	Values	Unit	Values	Unit
TP SENSOR A	More than 4.8	V	B	B

Do the current condition (s) match the threshold?

YES

Go to step 2.

NO

Intermittent failure, the system is OK at this time. Check for poor connections or loose terminals at the throttle body and the PCM. **If the on-board snapshot of this DTC is recorded, try to reproduce the failure under the same conditions with the on-board snapshot** .

2. Determine possible failure area (SG3 line, others)

-1. Check for Pending or Confirmed DTCs with the HDS.

DTC Description	Confirmed DTC	Pending DTC
P0123 TP Sensor A Circuit High Voltage	B	B
P0223 TP Sensor B Circuit High Voltage	B	B

Are DTC P0123 and P0223 indicated at the same time?

YES

Go to step 5.

NO

Go to step 3.

3. Determine possible failure area (THL1 line, throttle body)

-1. Turn the vehicle to the OFF (LOCK) mode.

-2. Disconnect the following connector.

Throttle body 6P connector

-3. Turn the vehicle to the ON mode.

-4. Measure the voltage between test points 1 and 2.

Test condition	Vehicle ON mode
B	Throttle body 6P connector: disconnected
Test point 1	Throttle body 6P connector (female terminals) No. 6: ①
Test point 2	Body ground

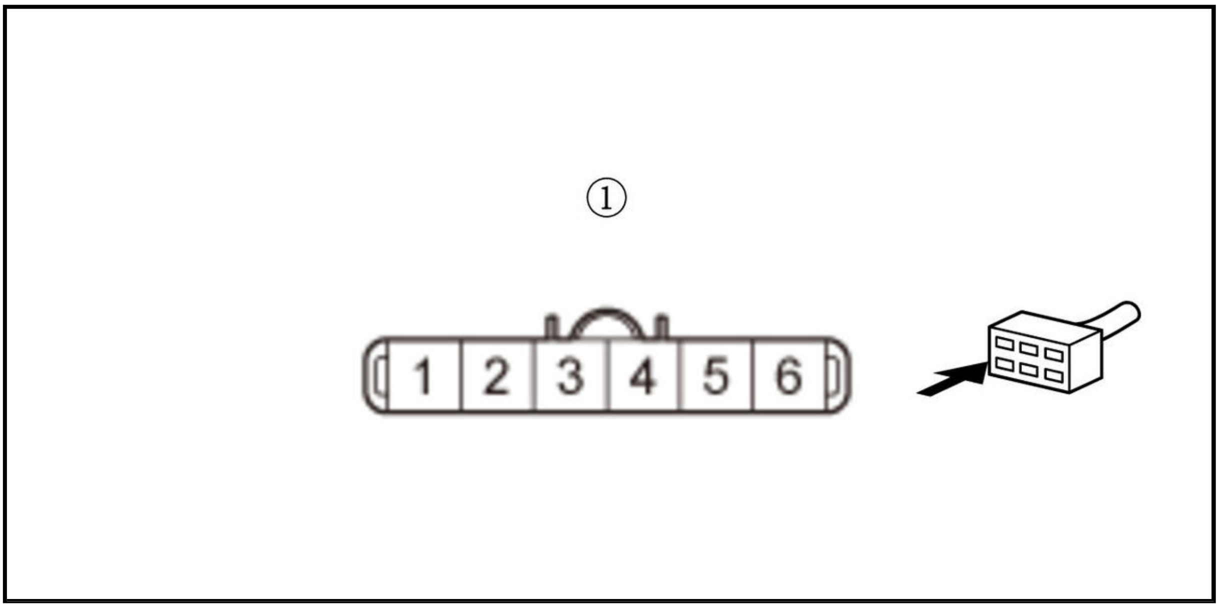

Is there about 5.0 V?

YES

Replace the throttle body .

NO

Go to step 4.

4. Open wire check (THL1 line)

-1. Turn the vehicle to the OFF (LOCK) mode.

-2. Jump the SCS line with the HDS, and wait more than 1 minute.

-3. Disconnect the following connector.

PCM connector E (80P)

-4. Check for continuity between test points 1 and 2.

Test condition	Vehicle OFF (LOCK) mode
B	Throttle body 6P connector: disconnected
B	PCM connector E (80P): disconnected
Test point 1	Throttle body 6P connector (female terminals) No. 6: ①
Test point 2	PCM connector E (80P) No. 50

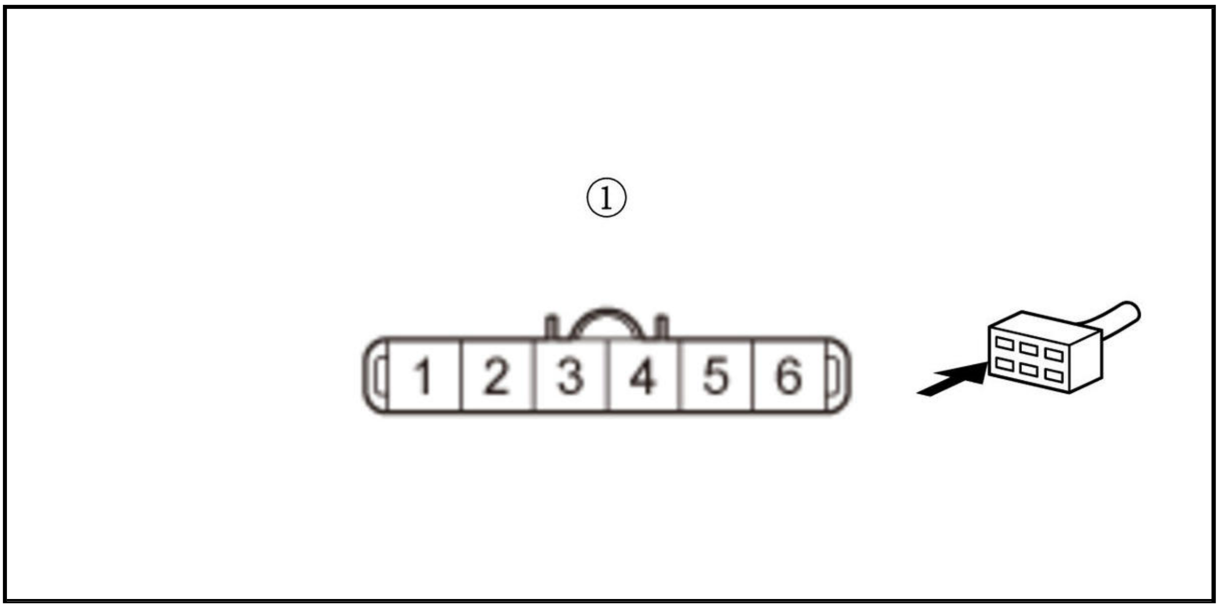

Is there continuity?

YES

The THL1 wire is OK. Check for any authorized service information related to the DTCs or symptoms you are troubleshooting, or **substitute a known-good PCM** .

NO

Repair an open in the THL1 wire between the PCM (E50) and the throttle body.

5. Open wire check (SG3 line)

-1. Turn the vehicle to the OFF (LOCK) mode.

-2. Jump the SCS line with the HDS, and wait more than 1 minute.

-3. Disconnect the following connectors.

PCM connector E (80P)
Throttle body 6P connector

-4. Check for continuity between test points 1 and 2.

Test condition	Vehicle OFF (LOCK) mode
B	PCM connector E (80P): disconnected
B	Throttle body 6P connector: disconnected
Test point 1	Throttle body 6P connector (female terminals) No. 3: ①
Test point 2	**PCM connector E (80P) No. 76**

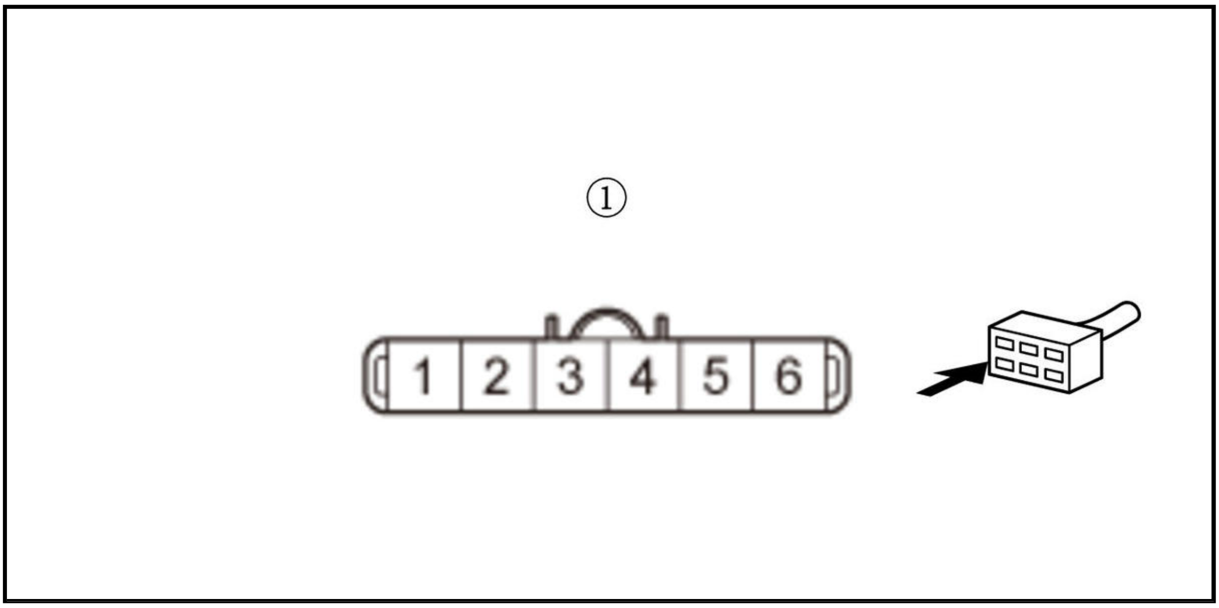

Is there continuity?

YES

The SG3 wire is OK. Check for any authorized service information related to the DTCs or symptoms you are troubleshooting, or **substitute a known-good PCM** .

NO

Repair an open in the SG3 wire between the PCM (E76) and the throttle body.

DTC P0123 (2.4 L ENGINE) (2017 2018 2019)

DTC P0123 : TP Sensor A Circuit High Voltage

NOTE: Before you troubleshoot, **review the general troubleshooting information** .

DTC Description	Confirmed DTC	Pending DTC
P0123 TP Sensor A Circuit High Voltage	B	B

DTC (PGM-FI)

1. Problem verification

-1. Turn the vehicle to the ON mode.

-2. Clear the DTC with the HDS.

-3. Check the parameter (s) below with the HDS.

Signal	Threshold		Current conditions	
	Values	Unit	Values	Unit
TP SENSOR A	More than 4.8	V	B	B

Do the current condition (s) match the threshold?

YES

The failure is duplicated. Go to step 2.

NO

Intermittent failure, the system is OK at this time. Check for poor connections or loose terminals at the throttle body and the PCM. **If the on-board snapshot of this DTC is recorded, try to reproduce the failure under the same conditions with the on-board snapshot** .

2. Determine possible failure area (SG3 line, others)

-1. Check for Pending or Confirmed DTCs with the HDS.

DTC Description	Confirmed DTC	Pending DTC
P0123 TP Sensor A Circuit High Voltage	B	B
P0223 TP Sensor B Circuit High Voltage	B	B

Are DTC P0123 and P0223 indicated at the same time?

YES

Go to step 5.

NO

Go to step 3.

3. Determine possible failure area (THL1 line, throttle body)

-1. Turn the vehicle to the OFF (LOCK) mode.

-2. Disconnect the following connector.

Throttle body 6P connector

-3. Turn the vehicle to the ON mode.

-4. Measure the voltage between test points 1 and 2.

Test condition	Vehicle ON mode
B	Throttle body 6P connector: disconnected
Test point 1	Throttle body 6P connector (female terminals) No. 6: ①
Test point 2	Body ground

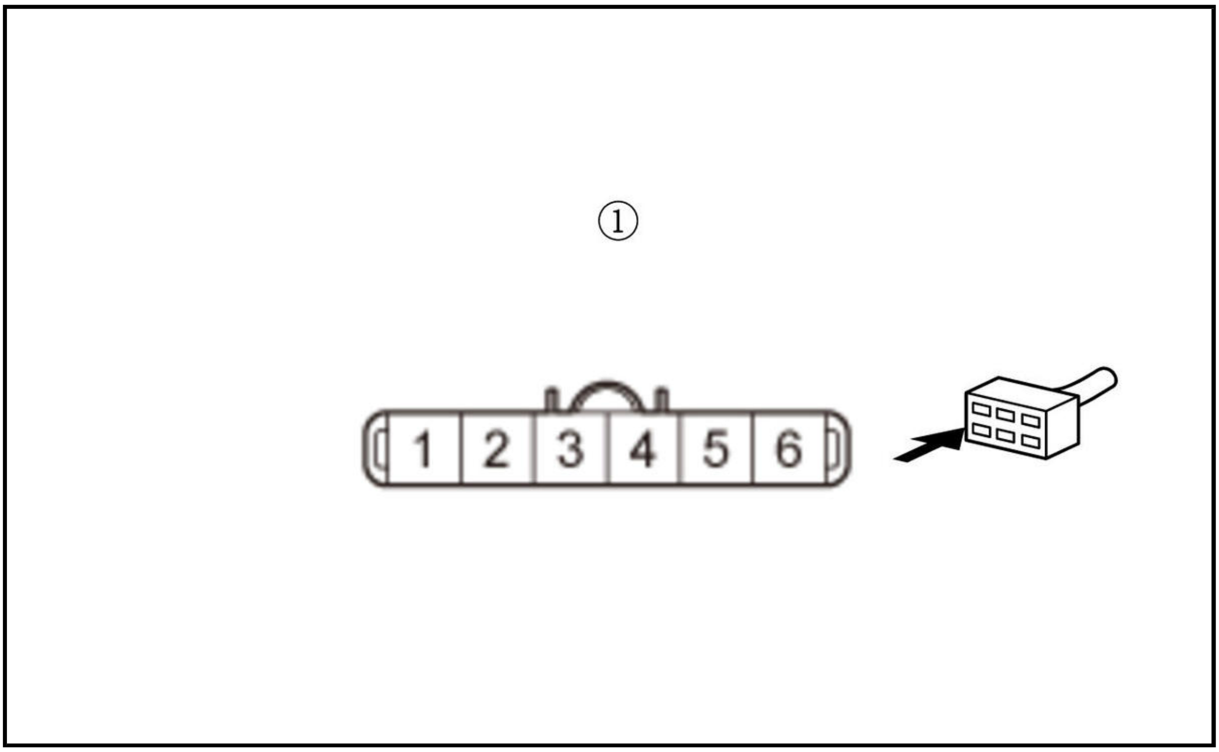

Is there about 5.0 V?

YES

Replace the throttle body .

NO

Go to step 4.

4. Open wire check (THL1 line)

-1. Turn the vehicle to the OFF (LOCK) mode.

-2. Jump the SCS line with the HDS, and wait more than 1 minute.

-3. Disconnect the following connector.

PCM connector B (51P)

-4. Check for continuity between test points 1 and 2.

Test condition	Vehicle OFF (LOCK) mode
B	Throttle body 6P connector: disconnected
B	PCM connector B (51P): disconnected
Test point 1	Throttle body 6P connector (female terminals) No. 6: ①
Test point 2	**PCM connector B (51P) No. 46**

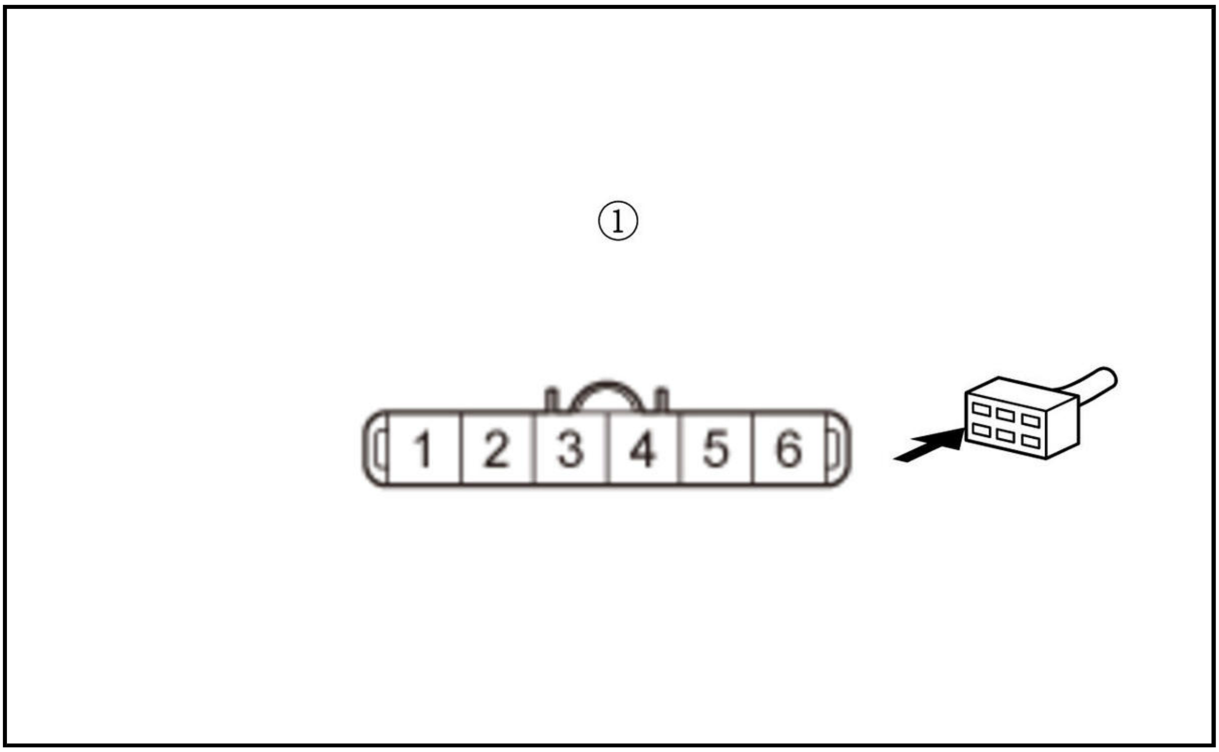

Is there continuity?

YES

The THL1 wire is OK. Check for any authorized service information related to the DTCs or symptoms you are troubleshooting or **substitute a known-good PCM** .

NO

Repair an open in the THL1 wire between the PCM (B46) and the throttle body.

5. Open wire check (SG3 line)

-1. Turn the vehicle to the OFF (LOCK) mode.

-2. Jump the SCS line with the HDS, and wait more than 1 minute.

-3. Disconnect the following connectors.

PCM connector B (51P)
Throttle body 6P connector

-4. Check for continuity between test points 1 and 2.

Test condition	Vehicle OFF (LOCK) mode
B	PCM connector B (51P): disconnected
B	Throttle body 6P connector: disconnected
Test point 1	Throttle body 6P connector (female terminals) No. 3: ①
Test point 2	**PCM connector B (51P) No. 49**

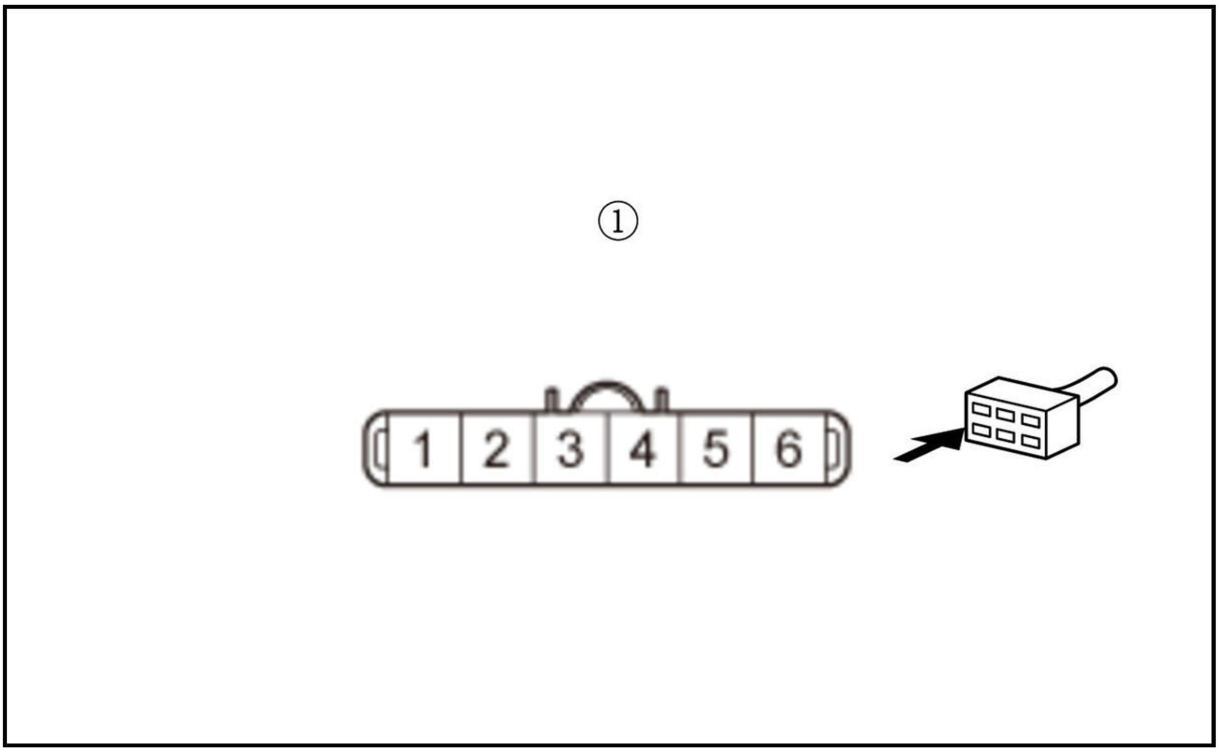

Is there continuity?

YES

The SG3 wire is OK. Check for any authorized service information related to the DTCs or symptoms you are troubleshooting or **substitute a known-good PCM** .

NO

Repair an open in the SG3 wire between the PCM (B49) and the throttle body.

DTC P0125 (1.5 L ENGINE)

DTC P0125 : ECT Sensor 1 Malfunction/Slow Response

NOTE: Before you troubleshoot, **review the general troubleshooting information** .

DTC Description	Confirmed DTC	Pending DTC
P0125 ECT Sensor 1 Malfunction/Slow Response	B	B

DTC (PGM-FI)

1. ECT sensor 1 check

-1. Start the engine, and let it idle for 5 minutes or more.

-2. Check the parameter (s) below with the HDS.

Signal	Threshold		Current conditions	
	Values	Unit	Values	Unit
ECT SENSOR 1	Less than -18	deg. C	B	B
	Less than 0	deg. F		

Do the current condition (s) match the threshold?

YES

Check for poor connections or loose terminals at ECT sensor 1, ECT sensor 2, and the PCM. If they are OK, replace the ECT sensor 1 .

NO

Go to step 2.

2. Problem verification

-1. Turn the vehicle to the OFF (LOCK) mode.

-2. Allow the engine to cool to 104 deg. F (40 deg. C) or less.

-3. Start the engine, and let it idle until ECT SENSOR 1 goes up to about 158 deg. F (70 deg. C).

Signal	Current conditions	
	Values	Unit
ECT SENSOR 1	B	B

-4. Check the parameter (s) below with the HDS.

Signal	Threshold		Current conditions	
	Values	Unit	Values	Unit
ECT Sensor 2	About 70	deg. C	B	B
	About 158	deg. F		

Do the current condition (s) match the threshold?

YES

Go to step 3.

NO

Intermittent failure, the system is OK at this time. Check for poor connections or loose terminals at ECT sensor 1, ECT sensor 2, and the PCM. If the on-board snapshot of this DTC is recorded, try to reproduce the failure under the same conditions with the on-board snapshot .

3. Thermostat check

-1. Check the thermostat .

Is the thermostat OK?

YES

Check for poor connections or loose terminals at ECT sensor 1, ECT sensor 2, and the PCM. If the connections and terminals are OK, replace the ECT sensor 1 .

NO

Replace the thermostat .

DTC P0125 (2.4 L ENGINE) (2017 2018 2019)

DTC P0125 : ECT Sensor 1 Malfunction/Slow Response

NOTE: Before you troubleshoot, review the general troubleshooting information .

DTC Description	Confirmed DTC	Pending DTC
P0125 ECT Sensor 1 Malfunction/Slow Response	B	B

DTC (PGM-FI)

1. ECT sensor 1 check

   -1. Start the engine, and let it idle for 5 minutes or more.

   -2. Check the parameter (s) below with the HDS.

Signal	Threshold		Current conditions	
	Values	Unit	Values	Unit
ECT SENSOR 1	Less than 10	deg. F	B	B
	Less than -12	deg. C		

   Do the current condition (s) match the threshold?

   YES

   Check for poor connections or loose terminals at ECT sensor 1, ECT sensor 2, and the PCM. If they are OK, **replace ECT sensor 1** .

   NO

   Go to step 2.

2. Problem verification

   -1. Turn the vehicle to the OFF (LOCK) mode.

   -2. Allow the engine to cool to 104 deg. F (40 deg. C) or less.

   -3. Start the engine, and let it idle until ECT SENSOR 1 goes up to about 158 deg. F (70 deg. C).

Signal	Current conditions	
	Values	Unit
ECT SENSOR 1	B	B

   -4. Check the parameter (s) below with the HDS.

Signal	Threshold		Current conditions	
	Values	Unit	Values	Unit
ECT SENSOR 2	About 158	deg. F	B	B
	About 70	deg. C		

   Do the current condition (s) match the threshold?

   YES

   The failure is duplicated. Go to step 3.

   NO

   Intermittent failure, the system is OK at this time. Check for poor connections or loose terminals at ECT sensor 1, ECT sensor 2, and the PCM. **If the on-board snapshot of this DTC is recorded, try to reproduce the failure under the same conditions with the on-board snapshot** .

3. Thermostat check

   -1. Check the thermostat .

   Is the thermostat OK?

   YES

   Check for poor connections or loose terminals at ECT sensor 1, ECT sensor 2, and the PCM. If the connections and terminals are OK, replace ECT sensor 1 .

   NO

   Replace the thermostat .

DTC P0128 (1.5 L ENGINE)

DTC P0128 : Cooling System Malfunction

NOTE: Before you troubleshoot, review the general troubleshooting information .

DTC Description	Confirmed DTC	Pending DTC
P0128 Cooling System Malfunction	B	B

DTC (PGM-FI)

1. Radiator fan control command check

   -1. Turn the vehicle to the ON mode.

   -2. Clear the DTC with the HDS.

   -3. Turn the blower switch off.

   -4. Check the parameter (s) below with the HDS.

Signal	Threshold		Current conditions	
	Values	Unit	Values	Unit
FAN HIGH CTRL	OFF	B	B	B
FAN LOW CTRL	OFF	B	B	B

   Do the current condition (s) match the threshold?

   YES

   Go to step 2.

   NO

   Wait until the FAN HIGH CTRL and the FAN LOW CTRL are OFF, then go to step 2.

2. Radiator fan operation check

   -1. Check the radiator fan operation.

   Does the radiator fan keep running?

   YES

Go to step 3.

NO

Go to step 4.

3. Radiator fan circuit and radiator fan relay check

-1. Check the radiator fan circuit and the radiator fan relay.

Is it OK?

YES

Check for any authorized service information related to the DTCs or symptoms you are troubleshooting or **substitute a known-good PCM** .

NO

Repair the radiator fan circuit, and the radiator fan relay.

4. Problem verification

-1. Let the engine cool until the coolant temperature is 104 deg. F (40 deg. C) or less.

-2. Note the value of ECT SENSOR 1 and ECT SENSOR 2 in the DATA LIST with the HDS.

Signal	Current conditions	
	Values	**Unit**
ECT SENSOR 1	B	B
ECT SENSOR 2	B	B

-3. Start the engine, and let it idle.

-4. Let the engine idle until ECT SENSOR 1 goes up 40 deg. F (22 deg. C) or more from the recorded start temperature.

Signal	Current conditions	
	Values	**Unit**
ECT SENSOR 1	B	B

-5. Check ECT SENSOR 2 in the DATA LIST with the HDS.

Signal	Current conditions	
	Values	**Unit**
ECT SENSOR 2	B	B

-6. Compare the recorded start value of ECT SENSOR 2 and the present value of ECT SENSOR 2.

Did the temperature rise 13 deg. F (7 deg. C) or more?

YES

Test the thermostat and replace it if needed .

NO

Intermittent failure, the system is OK at this time. Check for poor connections or loose terminals at ECT sensor 1, ECT sensor 2, and the PCM. **If the on-board snapshot of this DTC is recorded, try to** reproduce the failure under the same conditions with the on-board snapshot .

DTC P0128 (2.4 L ENGINE) (2017 2018 2019)

DTC P0128 : Cooling System Malfunction

NOTE: Before you troubleshoot, review the general troubleshooting information .

DTC Description	Confirmed DTC	Pending DTC
P0128 Cooling System Malfunction	B	B

DTC (PGM-FI)

1. Radiator fan control command check

   -1. Turn the vehicle to the ON mode.

   -2. Clear the DTC with the HDS.

   -3. Turn the blower switch off.

   -4. Check the parameter (s) below with the HDS.

Signal	Threshold		Current conditions	
	Values	Unit	Values	Unit
FAN HIGH CTRL	OFF	B	B	B
FAN LOW CTRL	OFF	B	B	B

   Do the current condition (s) match the threshold?

   YES

   Go to step 2.

   NO

   Wait until the FAN HIGH CTRL and the FAN LOW CTRL are OFF, then go to step 2.

2. Radiator fan operation check

   -1. Check the radiator fan operation.

   Does the radiator fan keep running?

   YES

   Go to step 3.

   NO

   Go to step 4.

3. Radiator fan circuit and radiator fan relay check

   -1. Check the radiator fan circuit and the radiator fan relay.

   Is it OK?

   YES

Check for any authorized service information related to the DTCs or symptoms you are troubleshooting or substitute a known-good PCM .

NO

Repair the radiator fan circuit, and the radiator fan relay.

4. Problem verification

-1. Let the engine cool until the coolant temperature is 104 deg. F (40 deg. C) or less.

-2. Note the value of ECT SENSOR 1 and ECT SENSOR 2 in the DATA LIST with the HDS.

Signal	Current conditions	
	Values	Unit
ECT SENSOR 1	B	B
ECT SENSOR 2	B	B

-3. Start the engine, and let it idle.

-4. Let the engine idle until ECT SENSOR 1 goes up 40 deg. F (22 deg. C) or more from the recorded start temperature.

Signal	Current conditions	
	Values	Unit
ECT SENSOR 1	B	B

-5. Check ECT SENSOR 2 in the DATA LIST with the HDS.

Signal	Current conditions	
	Values	Unit
ECT SENSOR 2	B	B

-6. Compare the recorded start value of ECT SENSOR 2 and the present value of ECT SENSOR 2.

Did the temperature rise 13 deg. F (7 deg. C) or more?

YES

Test the thermostat and replace it if needed .

NO

Intermittent failure, the system is OK at this time. Check for poor connections or loose terminals at ECT sensor 1, ECT sensor 2, and the PCM. **If the on-board snapshot of this DTC is recorded, try to reproduce the failure under the same conditions with the on-board snapshot** .

DTC P0130 (1.5 L ENGINE) (2018 2019 2020 2021)

DTC P0130 : A/F Sensor (Sensor 1) Out of Range

NOTE: Before you troubleshoot, **review the general troubleshooting information** .

DTC Description	Confirmed DTC	Pending DTC
P0130 A/F Sensor (Sensor 1) Out of Range	B	B

DTC (PGM-FI)

1. Problem verification

-1. Turn the vehicle to the ON mode.

-2. Clear the DTC with the HDS.

-3. Start the engine.

-4. Hold the engine speed at 3, 000 rpm without load (in P or N) until the radiator fan comes on, then let it idle.

-5. Monitor the OBD STATUS for P0130 with the HDS.

DTC Description	OBD STATUS
P0130 A/F Sensor (Sensor 1) Out of Range	B

Does the HDS indicate FAILED?

YES

Replace the A/F sensor (Sensor 1) .

NO

If the HDS indicates PASSED, intermittent failure, the system is OK at this time. Check for poor connections or loose terminals at the A/F Sensor (Sensor 1) and the PCM. **If the on-board snapshot of this DTC is recorded, try to reproduce the failure under the same conditions with the on-board snapshot** . If the HDS indicates EXECUTING, keep idling until a result comes on. If the HDS indicates OUT OF CONDITION, go to step 1-4 and recheck.

DTC P0130 (2.4 L ENGINE) (2018 2019)

DTC P0130 : A/F Sensor (Sensor 1) Out of Range

NOTE: Before you troubleshoot, **review the general troubleshooting information** .

DTC Description	Confirmed DTC	Pending DTC
P0130 A/F Sensor (Sensor 1) Out of Range	B	B

DTC (PGM-FI)

1. Problem verification

-1. Turn the vehicle to the ON mode.

-2. Clear the DTC with the HDS.

-3. Start the engine.

-4. Hold the engine speed at 3, 000 rpm without load (in P or N) until the radiator fan comes on, then let it idle.

-5. Monitor the OBD STATUS for P0130 with the HDS.

DTC Description	OBD STATUS
P0130 A/F Sensor (Sensor 1) Out of Range	B

Does the HDS indicate FAILED?

YES

Replace the A/F sensor (Sensor 1) .

NO

If the HDS indicates PASSED, intermittent failure, the system is OK at this time. Check for poor connections or loose terminals at the A/F Sensor (Sensor 1) and the PCM. **If the on-board snapshot of this DTC is recorded, try to reproduce the failure under the same conditions with the on-board snapshot** . If the HDS indicates EXECUTING, keep idling until a result comes on. If the HDS indicates OUT OF CONDITION, go to step 1-4 and recheck.

DTC P0133 (1.5 L ENGINE)

DTC P0133 : A/F Sensor (Sensor 1) Malfunction/Slow Response

NOTE:

- Before you troubleshoot, **review the general troubleshooting information** .
- If DTC P0139 is stored at the same time as DTC P0133, troubleshoot DTC P0139 first, then recheck for DTC P0133.

DTC Description	Confirmed DTC	Pending DTC
P0133 A/F Sensor (Sensor 1) Malfunction/Slow Response	B	B

DTC (PGM-FI)

1. Problem verification

-1. Turn the vehicle to the ON mode.

-2. Clear the DTC with the HDS.

-3. Turn the vehicle to the OFF (LOCK) mode.

-4. Start the engine.

-5. Hold the engine speed at 3, 000 rpm without load (in P or N) until the radiator fan comes on, then let it idle.

-6. Test-drive the vehicle under these conditions:

- Engine coolant temperature (ECT SENSOR 1) above 158 deg. (70 deg. C)
- Transmission in D
- Engine speed between 1, 500-3, 000 rpm
- Drive the vehicle at 25 mph (40 km/h) or less for 5 minutes, then drive at a steady speed of 25 mph (41 km/h) or more

Signal	Current conditions	
	Values	Unit
ECT SENSOR 1	B	B
ENGINE SPEED	B	B
VEHICLE SPEED	B	B

-7. Monitor the OBD STATUS for DTC P0133 in the DTCs MENU with the HDS.

DTC Description	OBD STATUS
P0133 A/F Sensor (Sensor 1) Malfunction/Slow Response	B

Does the HDS indicate FAILED?

YES

The failure is duplicated. **Replace the A/F sensor (Sensor 1)** .

NO

If the HDS indicates PASSED, intermittent failure, the system is OK at this time. Check for poor connections or loose terminals at the A/F sensor (Sensor 1) and the PCM. **If the on-board snapshot of this DTC is recorded, try to reproduce the failure under the same conditions with the on-board snapshot** . If the HDS indicates EXECUTING, keep driving until a result comes on. If the HDS indicates OUT OF CONDITION, go to step 1-4 on this step and recheck.

DTC P0133 (2.4 L ENGINE) (2017 2018 2019)

DTC P0133 : A/F Sensor (Sensor 1) Malfunction/Slow Response

NOTE:

- Before you troubleshoot, **review the general troubleshooting information** .
- If DTC P0139 is stored at the same time as DTC P0133, troubleshoot DTC P0139 first, then recheck for DTC P0133.

DTC Description	Confirmed DTC	Pending DTC
P0133 A/F Sensor (Sensor 1) Malfunction/Slow Response	B	B

DTC (PGM-FI)

1. Problem verification

-1. Turn the vehicle to the ON mode.

-2. Clear the DTC with the HDS.

-3. Start the engine.

-4. Hold the engine speed at 3, 000 rpm without load (in P or N) until the radiator fan comes on, then let it idle.

-5. Test-drive under these conditions:

- Engine coolant temperature (ECT SENSOR 1) above 158 deg. F (70 deg. C)
- Transmission in D
- Engine speed between 1, 250-3, 000 rpm
- Drive the vehicle at 25 mph (40 km/h) or less for 5 minutes, then drive at a steady speed of 33 mph (52 km/h) or more

Signal	Current conditions	
	Values	Unit
ECT SENSOR 1	B	B
ENGINE SPEED	B	B
VEHICLE SPEED	B	B

-6. Monitor the OBD STATUS for DTC P0133 in the DTCs MENU with the HDS.

DTC Description	OBD STATUS
P0133 A/F Sensor (Sensor 1) Malfunction/Slow Response	B

Does the HDS indicate FAILED?

YES

Replace the A/F sensor (Sensor 1) .

NO

If the HDS indicates PASSED, intermittent failure, the system is OK at this time. Check for poor connections or loose terminals at the A/F sensor (Sensor 1) and the PCM. **If the on-board snapshot of this DTC is recorded, try to reproduce the failure under the same conditions with the on-board snapshot** . If the HDS indicates EXECUTING, keep driving until a result comes on. If the HDS indicates OUT OF CONDITION, go to step 1-3 on this step and recheck.

DTC P0134 (1.5 L ENGINE)

DTC P0134 : A/F Sensor (Sensor 1) Heater System Malfunction

NOTE:

- Before you troubleshoot, **review the general troubleshooting information** .
- If DTC P2251 is stored at the same time as DTC P0134, troubleshoot DTC P2251 first, then recheck for P0134.

DTC Description	Confirmed DTC	Pending DTC
P0134 A/F Sensor (Sensor 1) Heater System Malfunction	B	B

DTC (PGM-FI)

1. Problem verification

-1. Turn the vehicle to the ON mode.

-2. Clear the DTC with the HDS.

-3. Turn the vehicle to the OFF (LOCK) mode.

-4. Start the engine, and let it idle without load (in P or N) for at least 1 minute.

-5. Check for Pending or Confirmed DTCs with the HDS.

DTC Description	Confirmed DTC	Pending DTC
P0134 A/F Sensor (Sensor 1) Heater System Malfunction	B	B

Is DTC P0134 indicated?

YES

Go to step 2.

NO

Intermittent failure, the system is OK at this time. Check for poor connections or loose terminals at the A/F sensor (Sensor 1), the relay circuit board (PGM-FI subrelay), and the PCM. **If the on-board**

snapshot of this DTC is recorded, try to reproduce the failure under the same conditions with the on-board snapshot .

2. Open wire check (VS line)

-1. Turn the vehicle to the OFF (LOCK) mode.

-2. Jump the SCS line with the HDS, and wait more than 1 minute.

-3. Disconnect the following connectors.

A/F sensor (Sensor 1) 6P connector
PCM connector E (80P)

-4. Check for continuity between test points 1 and 2.

Test condition	Vehicle OFF (LOCK) mode
B	PCM connector E (80P): disconnected
B	A/F sensor (Sensor 1) 6P connector: disconnected
Test point 1	A/F sensor (Sensor 1) 6P connector (female terminals) No. 6: ①
Test point 2	**PCM connector E (80P) No. 73**

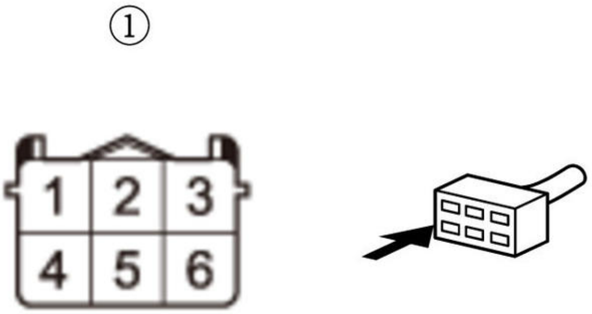

Is there continuity?

YES

Go to step 3.

NO

Repair an open in the VS wire between the PCM (E73) and the A/F sensor (Sensor 1).

3. PCM internal circuit check

-1. Reconnect the following connector.

PCM connector E (80P)

-2. Exit the SCS mode with the HDS.

-3. Start the engine, and let it idle without load (in P or N) for at least 1 minute.

-4. Measure the voltage between test point 1 and 2.

Test condition	Engine running
B	A/F sensor (Sensor 1) 6P connector: disconnected
Test point 1	A/F sensor (Sensor 1) 6P connector (female terminals) No. 6: ①
Test point 2	Body ground

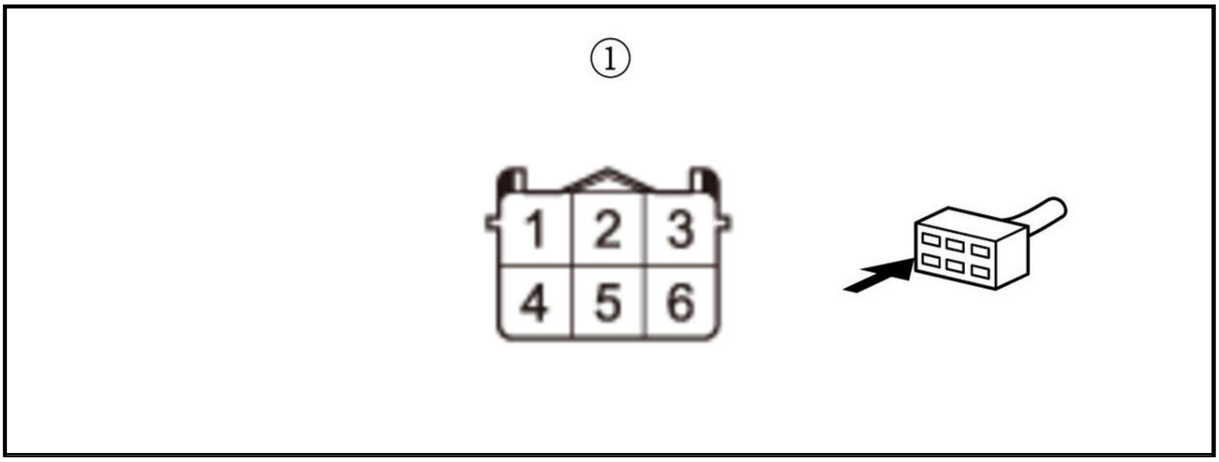

Is there about 0.2 V or less?

YES

Check for any authorized service information related to the DTCs or symptoms you are troubleshooting, or **substitute a known-good PCM** .

NO

Replace the A/F sensor (Sensor 1) .

DTC P0134 (2.4 L ENGINE) (2017 2018 2019)

DTC P0134 : A/F Sensor (Sensor 1) Heater System Malfunction

NOTE:

- Before you troubleshoot, **review the general troubleshooting information** .
- If DTC P0135 is stored at the same time as DTC P0134, troubleshoot DTC P0135 first, then recheck for P0134.

DTC Description	Confirmed DTC	Pending DTC
P0134 A/F Sensor (Sensor 1) Heater System Malfunction	B	B

DTC (PGM-FI)

1. Problem verification

-1. Turn the vehicle to the ON mode.

-2. Clear the DTC with the HDS.

-3. Start the engine, and let it idle without load (in P or N) for at least 1 minute.

-4. Check for Pending or Confirmed DTCs with the HDS.

DTC Description	Confirmed DTC	Pending DTC
P0134 A/F Sensor (Sensor 1) Heater System Malfunction	B	B

Is DTC P0134 indicated?

YES

The failure is duplicated. **Replace the A/F sensor (Sensor 1)** .

NO

Intermittent failure, the system is OK at this time. Check for poor connections or loose terminals at the A/F sensor (Sensor 1), the relay circuit board (PGM-FI subrelay), and the PCM. **If the on-board snapshot of this DTC is recorded, try to reproduce the failure under the same conditions with the on-board snapshot** .

DTC P0135 (1.5 L ENGINE)

DTC P0135 : A/F Sensor (Sensor 1) Heater Circuit Malfunction

NOTE: Before you troubleshoot, **review the general troubleshooting information** .

DTC Description	Confirmed DTC	Pending DTC
P0135 A/F Sensor (Sensor 1) Heater Circuit Malfunction	B	B

DTC (PGM-FI)

1. Problem verification

   -1. Turn the vehicle to the ON mode.

   -2. Clear the DTC with the HDS.

   -3. Turn the vehicle to the OFF (LOCK) mode.

   -4. Start the engine.

   -5. Hold the engine speed at 3, 000 rpm without load (in P or N) until the radiator fan comes on, then let it idle.

   -6. Check for Pending or Confirmed DTCs with the HDS.

DTC Description	Confirmed DTC	Pending DTC
P0135 A/F Sensor (Sensor 1) Heater Circuit Malfunction	B	B

   Is DTC P0135 indicated?

   YES

   Go to step 2.

   NO

   Intermittent failure, the system is OK at this time. Check for poor connections or loose terminals at the A/F sensor (Sensor 1), the relay circuit board (PGM-FI subrelay), and the PCM. **If the on-board snapshot of this DTC is recorded, try to reproduce the failure under the same conditions with the on-board snapshot** .

2. DTC check

   -1. Check for Pending or Confirmed DTCs with the HDS.

DTC Description	Confirmed DTC	Pending DTC
P1658 ETCS Control Relay ON Malfunction	B	B
P1659 ETCS Control Relay OFF Malfunction	B	B

Is DTC P1658 and/or P1659 indicated?

YES

Go to the indicated DTCs troubleshooting.

NO

Go to step 3.

3. Fuse check

-1. Turn the vehicle to the OFF (LOCK) mode.

-2. Check the following fuse.

Fuse	No. A11 (7.5 A)
Location	Under-hood fuse/relay box

Is the fuse OK?

YES

Go to step 4.

NO

Repair a short in the IGPS (LAF) wire between the No. A11 (7.5 A) fuse in the under-hood fuse/relay box and the A/F sensor (Sensor 1). Also replace the No. A11 (7.5 A) fuse.

4. A/F sensor (Sensor 1) internal heater resistance check

-1. Disconnect the following connector.

A/F sensor (Sensor 1) 6P connector

-2. At the sensor side, measure the resistance between test points 1 and 2.

Test condition	Vehicle OFF (LOCK) mode
B	A/F sensor (Sensor 1) 6P connector: disconnected
Test point 1	A/F sensor (Sensor 1) 6P connector (male terminals) No. 2 (A/F sensor (Sensor 1) side): ①
Test point 2	A/F sensor (Sensor 1) 6P connector (male terminals) No. 3 (A/F sensor (Sensor 1) side): ①

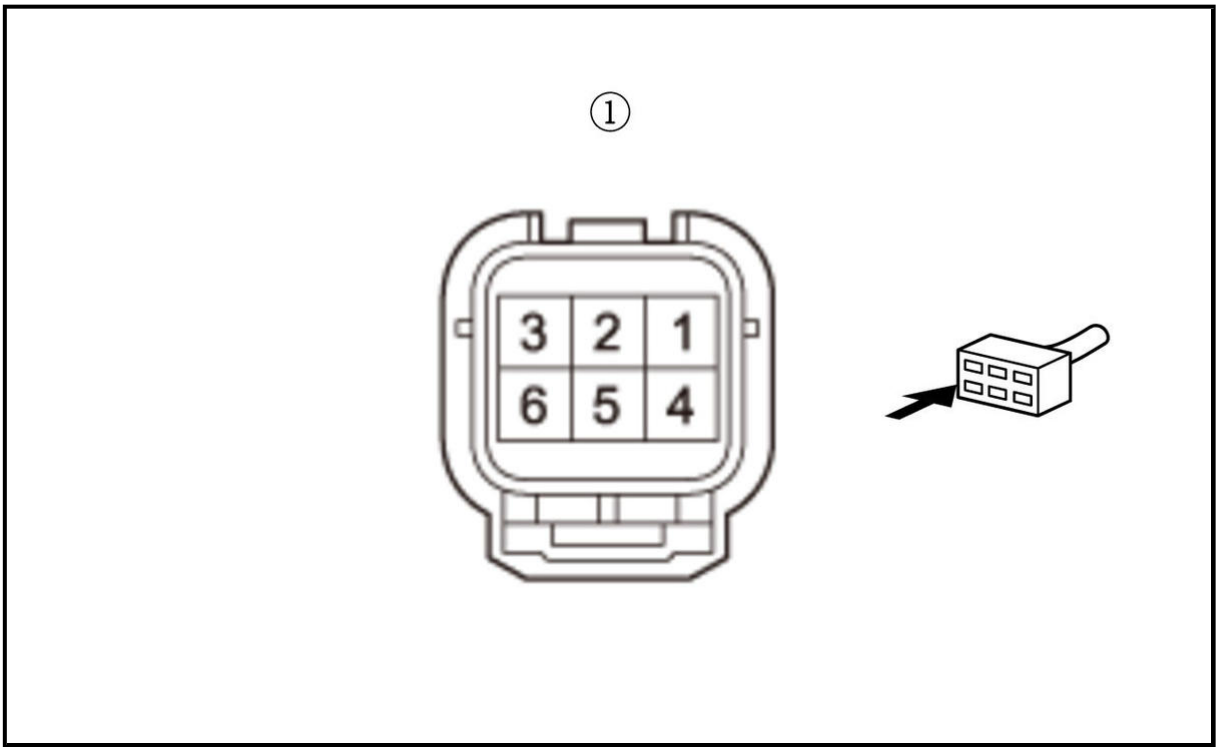

Is there 2.8-4.5 Ω at room temperature?

YES

Go to step 5.

NO

Replace the A/F sensor (Sensor 1) .

5. A/F sensor (Sensor 1) internal circuit check 1

-1. Check for continuity between the following test points and body ground individually.

Test condition	Vehicle OFF (LOCK) mode
B	A/F sensor (Sensor 1) 6P connector: disconnected

Connector	Test circuit	Terminal
A/F sensor (Sensor 1) (A/F sensor (Sensor 1) side)	AFHT N	(male terminals) No. 2: ①
	IGPS (LAF)	(male terminals) No. 3: ①
	VCENT	(male terminals) No. 4: ①
	IP	(male terminals) No. 5: ①
	VS	(male terminals) No. 6: ①

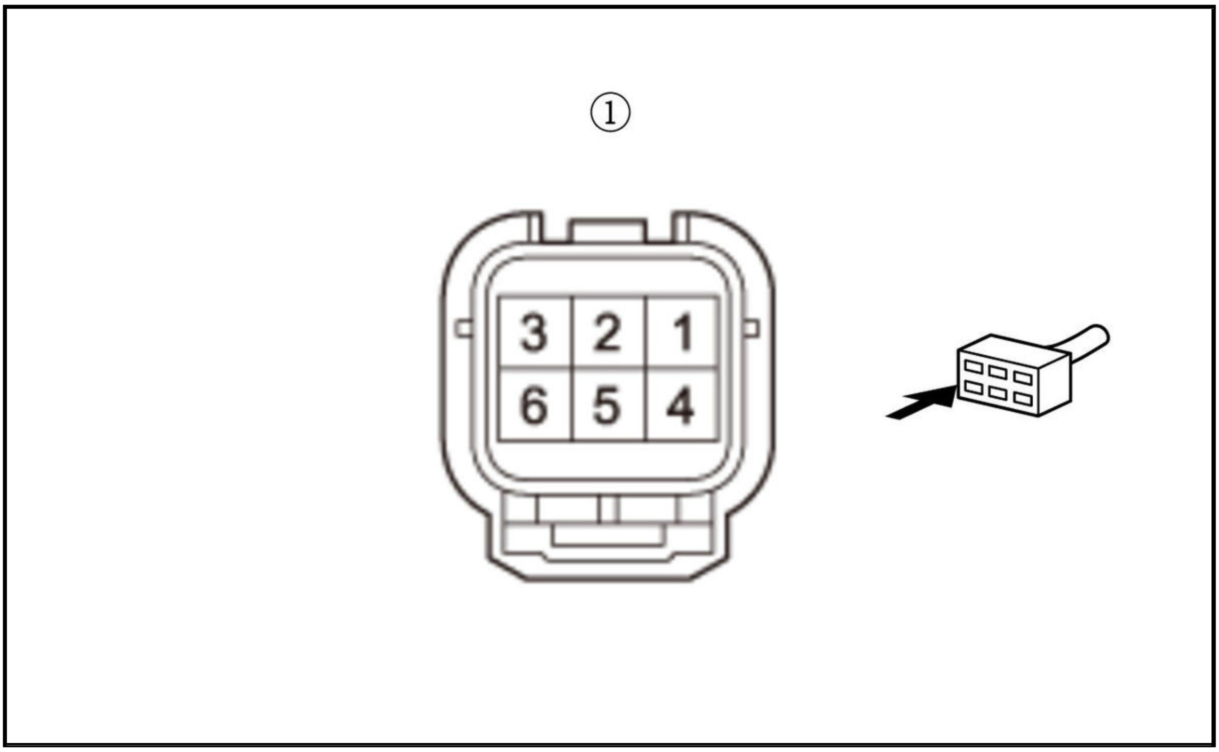

Is there continuity?

YES

Replace the A/F sensor (Sensor 1) .

NO

Go to step 6.

6. A/F sensor (Sensor 1) internal circuit check 2

-1. Check for continuity between the following test points and the A/F sensor (Sensor 1) 6P connector No. 3 individually.

Test condition	Vehicle OFF (LOCK) mode
B	A/F sensor (Sensor 1) 6P connector: disconnected

Connector	Test circuit	Terminal
A/F sensor (Sensor 1) (A/F sensor (Sensor 1) side)	AFHT N	(male terminals) No. 2: ①
	VCENT	(male terminals) No. 4: ①
	IP	(male terminals) No. 5: ①
	VS	(male terminals) No. 6: ①

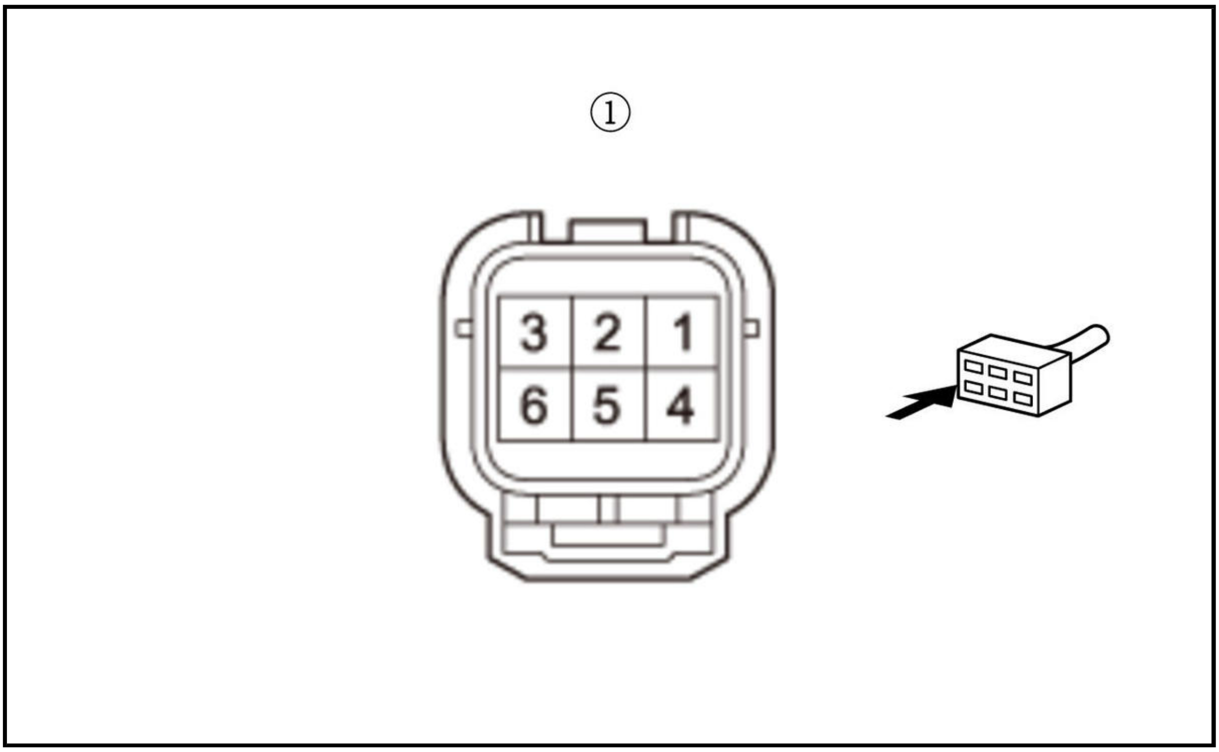

Is there continuity?

YES

Replace the A/F sensor (Sensor 1) .

NO

Go to step 7.

7. Shorted wire check (AFHT N line)

-1. Jump the SCS line with the HDS, and wait more than 1 minute.

-2. Disconnect the following connector.

PCM connector E (80P)

-3. Check for continuity between test points 1 and 2.

Test condition	Vehicle OFF (LOCK) mode
B	A/F sensor (Sensor 1) 6P connector: disconnected
B	PCM connector E (80P): disconnected
Test point 1	**PCM connector E (80P) No. 13**
Test point 2	Body ground

Is there continuity?

YES

Repair a short in the AFHT N wire between the PCM (E13) and the A/F sensor (Sensor 1).

NO

Go to step 8.

8. Open wire check (AFHT N line)

-1. Check for continuity between test points 1 and 2.

Test condition	Vehicle OFF (LOCK) mode
B	A/F sensor (Sensor 1) 6P connector: disconnected
B	PCM connector E (80P): disconnected
Test point 1	A/F sensor (Sensor 1) 6P connector (female terminals) No. 2: ①
Test point 2	**PCM connector E (80P) No. 13**

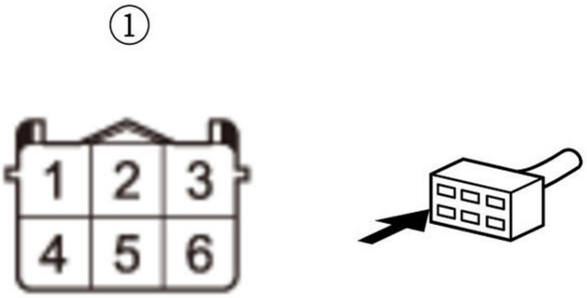

Is there continuity?

YES

Go to step 9.

NO

Repair an open in the AFHT N wire between the PCM (E13) and the A/F sensor (Sensor 1).

9. Open wire check (IGPS (LAF) line)

-1. Turn the vehicle to the ON mode.

-2. Measure the voltage between test points 1 and 2.

Test condition	Vehicle ON mode
B	A/F sensor (Sensor 1) 6P connector: disconnected
B	PCM connector E (80P): disconnected
Test point 1	A/F sensor (Sensor 1) 6P connector (female terminals) No. 3: ①
Test point 2	Body ground

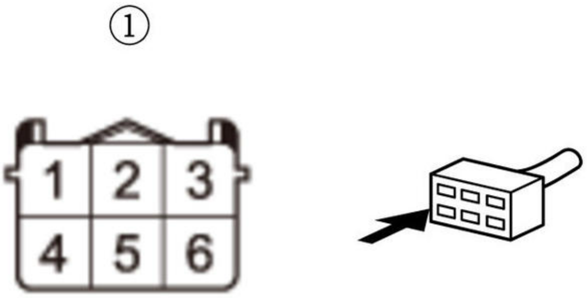

Is there battery voltage?

YES

The IGPS (LAF) wire is OK. Check for any authorized service information related to the DTCs or symptoms you are troubleshooting, or **substitute a known-good PCM** .

NO

Repair an open in the IGPS (LAF) wire between the A/F sensor (Sensor 1) and the No. A11 (7.5 A) fuse in the under-hood fuse/relay box.

DTC P0135 (2.4 L ENGINE) (2017 2018 2019)

DTC P0135 : A/F Sensor (Sensor 1) Heater Circuit Malfunction

NOTE: Before you troubleshoot, **review the general troubleshooting information** .

DTC Description	Confirmed DTC	Pending DTC
P0135 A/F Sensor (Sensor 1) Heater Circuit Malfunction	B	B

DTC (PGM-FI)

1. Problem verification

   -1. Turn the vehicle to the ON mode.

   -2. Clear the DTC with the HDS.

   -3. Start the engine. Hold the engine speed at 3, 000 rpm without load (in P or N) until the radiator fan comes on.

   -4. Check for Pending or Confirmed DTCs with the HDS.

DTC Description	Confirmed DTC	Pending DTC
P0135 A/F Sensor (Sensor 1) Heater Circuit Malfunction	B	B

   Is DTC P0135 indicated?

   YES

   The failure is duplicated. Go to step 2.

   NO

   Intermittent failure, the system is OK at this time. Check for poor connections or loose terminals at the A/F sensor (Sensor 1), the relay circuit board (PGM-FI subrelay circuit), and the PCM. **If the on-board snapshot of this DTC is recorded, try to reproduce the failure under the same conditions with the on-board snapshot** .

2. DTC check

   -1. Check for Pending or Confirmed DTCs with the HDS.

DTC Description	Confirmed DTC	Pending DTC
P1658 ETCS Control Relay ON Malfunction	B	B
P1659 ETCS Control Relay OFF Malfunction	B	B

   Is DTC P1658 and/or P1659 indicated?

YES

Go to the indicated DTC's troubleshooting.

NO

Go to step 3.

3. Fuse check

   -1. Turn the vehicle to the OFF (LOCK) mode.

   -2. Check the following fuse.

Fuse	No. A11 (7.5 A)
Location	Under-hood fuse/relay box

   Is the fuse OK?

   YES

   Go to step 4.

   NO

   Repair a short in the IGPS (LAF) wire between the No. A11 (7.5 A) fuse in the under-hood fuse/relay box and the A/F sensor (Sensor 1). Also replace the No. A11 (7.5 A) fuse.

4. A/F sensor (Sensor 1) internal heater resistance check

   -1. Disconnect the following connector.

A/F sensor (Sensor 1) 4P connector

   -2. At the sensor side, measure the resistance between test points 1 and 2.

Test condition	Vehicle OFF (LOCK) mode
	A/F sensor (Sensor 1) 4P connector: disconnected
Test point 1	A/F sensor (Sensor 1) 4P connector (male terminals) No. 3 (A/F sensor (Sensor 1) side): ①
Test point 2	A/F sensor (Sensor 1) 4P connector (male terminals) No. 4 (A/F sensor (Sensor 1) side): ①

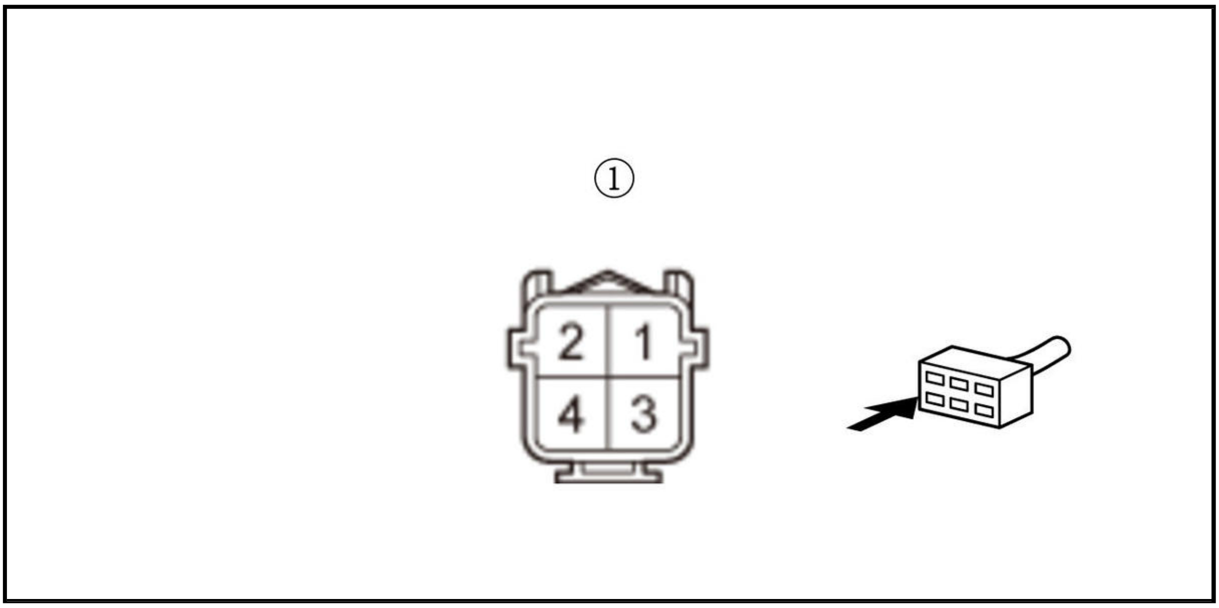

Is there 2.2-2.7 Ω at room temperature?

YES

Go to step 5.

NO

Replace the A/F sensor (Sensor 1) .

5. A/F sensor (Sensor 1) internal circuit check

-1. At the sensor side, check for continuity under the following conditions.

Test condition	Vehicle OFF (LOCK) mode
B	A/F sensor (Sensor 1) 4P connector: disconnected

Test condition	Vehicle OFF (LOCK) mode
B	A/F sensor (Sensor 1) 4P connector: disconnected
Test point 1	A/F sensor (Sensor 1) 4P connector (male terminals) No. 3 (A/F sensor (Sensor 1) side): ①
	A/F sensor (Sensor 1) 4P connector (male terminals) No. 4 (A/F sensor (Sensor 1) side): ①
Test point 2	A/F sensor (Sensor 1) 4P connector (male terminals) No. 1 (A/F sensor (Sensor 1) side): ①

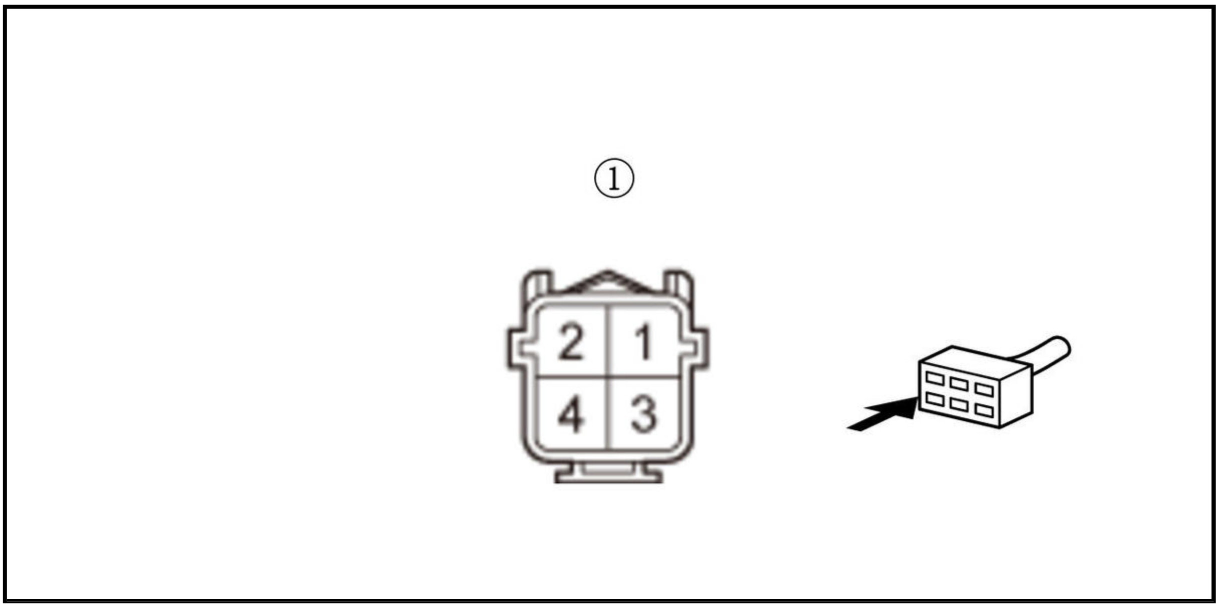

Is there continuity?

YES

Replace the A/F sensor (Sensor 1) .

NO

Go to step 6.

6. Shorted wire check (AFHT line)

-1. Jump the SCS line with the HDS, and wait more than 1 minute.

-2. Disconnect the following connector.

PCM connector C (51P)

-3. Check for continuity between test points 1 and 2.

Test condition	Vehicle OFF (LOCK) mode
	A/F sensor (Sensor 1) 4P connector: disconnected
B	PCM connector C (51P): disconnected
Test point 1	**PCM connector C (51P) No. 7**
Test point 2	Body ground

Is there continuity?

YES

Repair a short in the AFHT wire between the PCM (C7) and the A/F sensor (Sensor 1).

NO

The AFHT wire is not shorted. Go to step 7.

7. Open wire check (AFHT line)

-1. Check for continuity between test points 1 and 2.

Test condition	Vehicle OFF (LOCK) mode

B	A/F sensor (Sensor 1) 4P connector: disconnected
B	PCM connector C (51P): disconnected
Test point 1	A/F sensor (Sensor 1) 4P connector (female terminals) No. 3: ①
Test point 2	**PCM connector C (51P) No. 7**

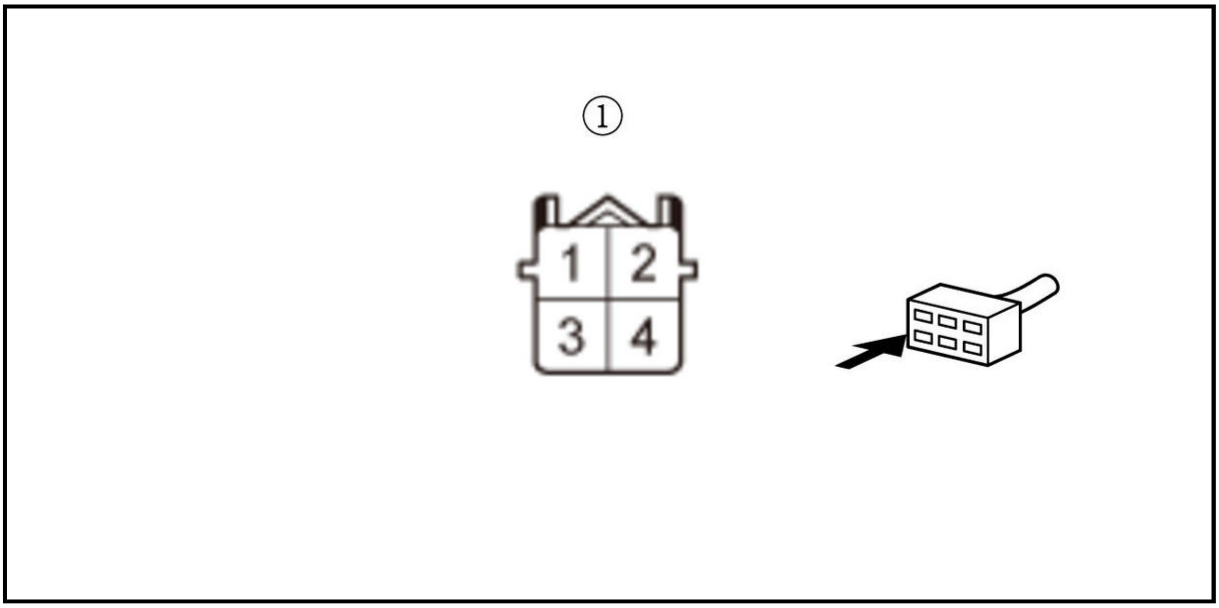

Is there continuity?

YES

The AFHT wire is OK. Go to step 8.

NO

Repair an open in the AFHT wire between the PCM (C7) and the A/F sensor (Sensor 1).

8. Open wire check (IGPS (LAF)/LAF+ line)

-1. Turn the vehicle to the ON mode.

-2. Measure the voltage between test points 1 and 2.

Test condition	Vehicle ON mode
B	A/F sensor (Sensor 1) 4P connector: disconnected
B	PCM connector C (51P): disconnected
Test point 1	A/F sensor (Sensor 1) 4P connector (female terminals) No. 4: ①
Test point 2	Body ground

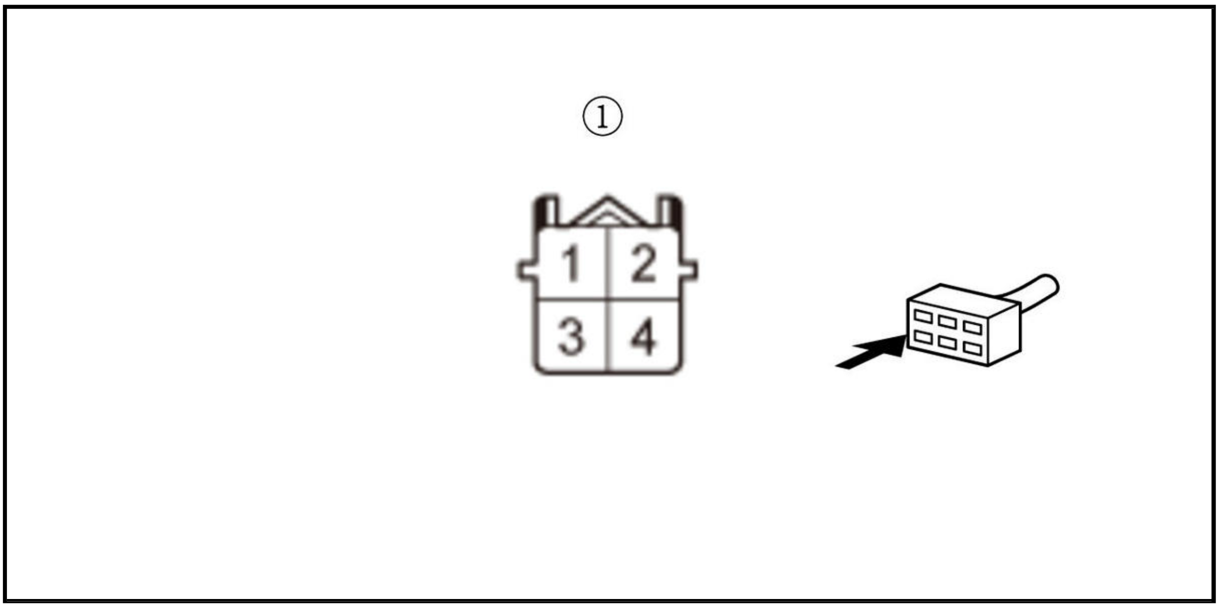

Is there battery voltage?

YES

The IGPS (LAF)/LAF+ wire is OK. Check for any authorized service information related to the DTCs or symptoms you are troubleshooting or **substitute a known-good PCM** .

NO

Repair an open in the IGPS (LAF)/LAF+ wire between the A/F sensor (Sensor 1) and the relay circuit board (PGM-FI subrelay circuit).

DTC P0137 (1.5 L ENGINE)

DTC P0137 : Secondary HO2S (Sensor 2) Circuit Low Voltage

NOTE: Before you troubleshoot, **review the general troubleshooting information** .

DTC Description	Confirmed DTC	Pending DTC
P0137 Secondary HO2S (Sensor 2) Circuit Low Voltage	B	B

DTC (PGM-FI)

1. Problem verification

-1. Turn the vehicle to the ON mode.

-2. Clear the DTC with the HDS.

-3. Turn the vehicle to the OFF (LOCK) mode.

-4. Start the engine, and let it idle without load (in P or N) until the radiator fan comes on, then let it idle.

-5. Monitor the OBD STATUS for DTC P0137 in the DTCs MENU with the HDS.

DTC Description	OBD STATUS
P0137 Secondary HO2S (Sensor 2) Circuit Low Voltage	B

Does the HDS indicate FAILED?

YES

Go to step 2.

NO

If the HDS indicates PASSED, intermittent failure, the system is OK at this time. Check for poor connections or loose terminals at secondary HO2S (Sensor 2) and the PCM. **If the on-board snapshot of this DTC is recorded, try to reproduce the failure under the same conditions with the on-board snapshot** . If the HDS indicates EXECUTING, keep idling until a result comes on. If the HDS indicates OUT OF CONDITION, go to step 1-4 and recheck.

2. Determine possible failure area (secondary HO2S (Sensor 2), others)

-1. Turn the vehicle to the OFF (LOCK) mode.

-2. Disconnect the following connector.

Secondary HO2S (Sensor 2) 4P connector

-3. Turn the vehicle to the ON mode.

-4. Check the parameter (s) below with the HDS.

Signal	**Threshold**		**Current conditions**	
	Values	**Unit**	**Values**	**Unit**
HO2S S2	Less than 0.17	V	B	B

Do the current condition (s) match the threshold?

YES

Go to step 3.

NO

Replace the secondary HO2S (Sensor 2) .

3. Determine possible failure area (short in SO2 line, short in SO2SG/SO2 SG line)

-1. Turn the vehicle to the OFF (LOCK) mode.

-2. Check for continuity between test points 1 and 2.

Test condition	Vehicle OFF (LOCK) mode
B	Secondary HO2S (Sensor 2) 4P connector: disconnected
Test point 1	Secondary HO2S (Sensor 2) 4P connector (male terminals) No. 1: ①
Test point 2	Body ground

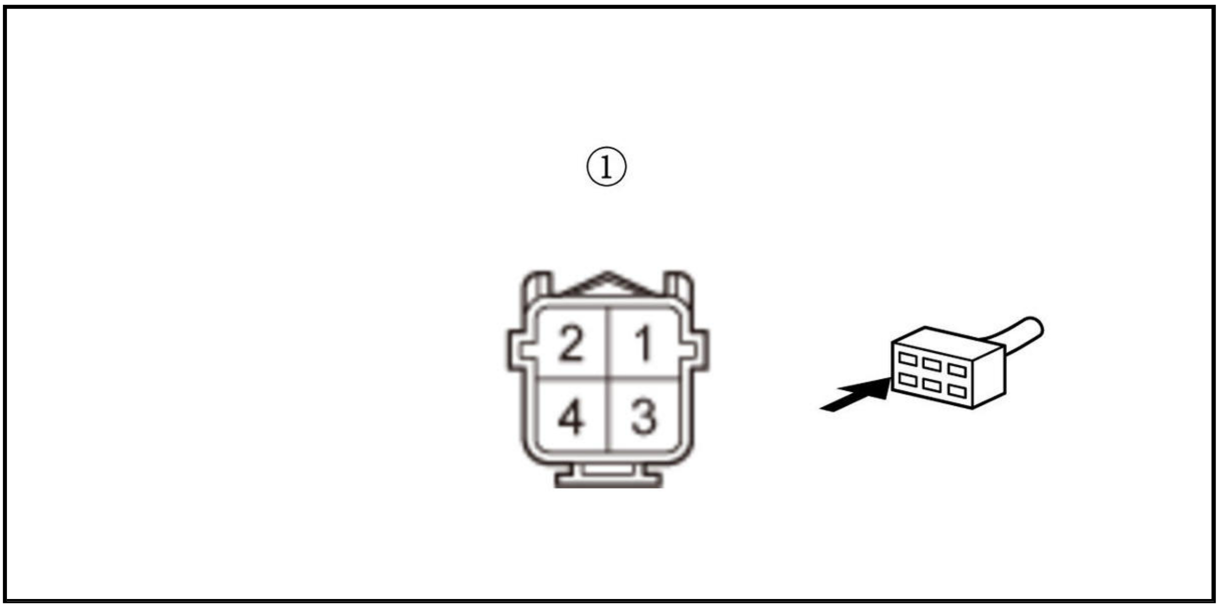

Is there continuity?

YES

Go to step 4.

NO

Go to step 5.

4. Shorted wire check (SO2 line)

-1. Jump the SCS line with the HDS, and wait more than 1 minute.

-2. Disconnect the following connector.

PCM connector A (50P)

-3. Check for continuity between test points 1 and 2.

Test condition	Vehicle OFF (LOCK) mode
B	PCM connector A (50P): disconnected
B	Secondary HO2S (Sensor 2) 4P connector: disconnected
Test point 1	Secondary HO2S (Sensor 2) 4P connector (male terminals) No. 1: ①
Test point 2	Body ground

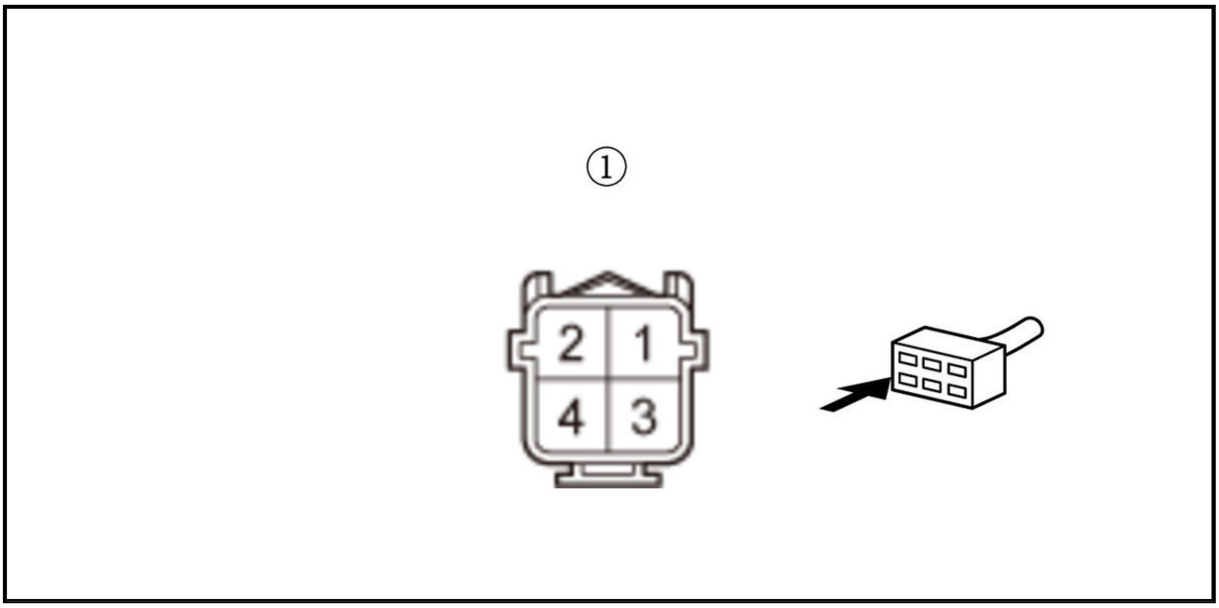

Is there continuity?

YES

Repair a short in the SO2 wire between the PCM (A47) and secondary HO2S (Sensor 2).

NO

The SO2 wire is OK. Check for any authorized service information related to the DTCs or symptoms you are troubleshooting, or **substitute a known-good PCM** .

5. Shorted wire check (SO2SG/SO2 SG line)

-1. Jump the SCS line with the HDS, and wait more than 1 minute.

-2. Disconnect the following connector.

PCM connector A (50P)

-3. Check for continuity between test points 1 and 2.

Test condition	Vehicle OFF (LOCK) mode
B	PCM connector A (50P): disconnected
B	Secondary HO2S (Sensor 2) 4P connector: disconnected
Test point 1	Secondary HO2S (Sensor 2) 4P connector (male terminals) No. 2: ①
Test point 2	Body ground

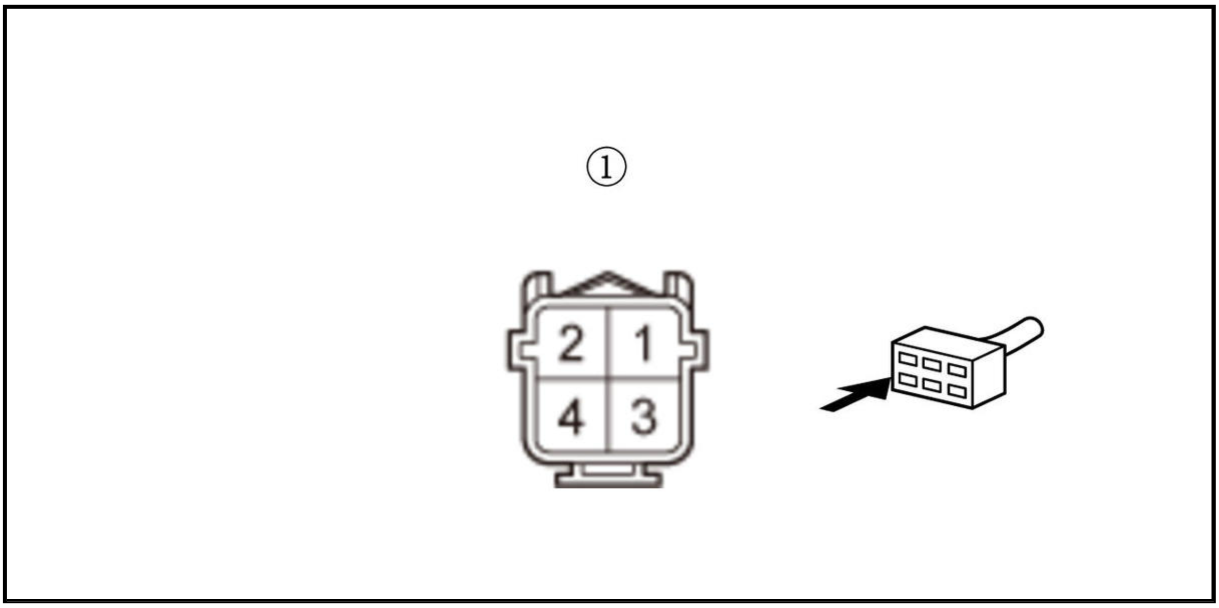

Is there continuity?

YES

Repair a short in the SO2SG/SO2 SG wire between the PCM (A48) and secondary HO2S (Sensor 2).

NO

The SO2SG/SO2 SG wire is OK. Check for any authorized service information related to the DTCs or symptoms you are troubleshooting, or **substitute a known-good PCM** .

DTC P0137 (2.4 L ENGINE) (2017 2018 2019)

DTC P0137 : Secondary HO2S (Sensor 2) Circuit Low Voltage

NOTE: Before you troubleshoot, **review the general troubleshooting information** .

DTC Description	Confirmed DTC	Pending DTC
P0137 Secondary HO2S (Sensor 2) Circuit Low Voltage	B	B

DTC (PGM-FI)

1. Problem verification

-1. Turn the vehicle to the ON mode.

-2. Clear the DTC with the HDS.

-3. Start the engine.

-4. Hold the engine speed at 3, 000 rpm without load (in P or N) until the radiator fan comes on.

-5. Monitor the OBD STATUS for DTC P0137 in the DTCs MENU with the HDS.

DTC Description	OBD STATUS
P0137 Secondary HO2S (Sensor 2) Circuit Low Voltage	B

Does the HDS indicate FAILED?

YES

The failure is duplicated. Go to step 2.

NO

If the HDS indicates PASSED, intermittent failure, the system is OK at this time. Check for poor connections or loose terminals at secondary HO2S (Sensor 2) and the PCM. **If the on-board snapshot of this DTC is recorded, try to reproduce the failure under the same conditions with the on-board snapshot** . If the HDS indicates EXECUTING, keep idling until a result comes on. If the HDS indicates OUT OF CONDITION, go to step 1-4 and recheck.

2. Determine possible failure area (secondary HO2S (Sensor 2), others)

-1. Turn the vehicle to the OFF (LOCK) mode.

-2. Disconnect the following connector.

Secondary HO2S (Sensor 2) 4P connector

-3. Connect terminals A and B with a jumper wire.

Terminal A	Secondary HO2S (Sensor 2) 4P connector (male terminals) No. 1: ①
Terminal B	Secondary HO2S (Sensor 2) 4P connector (male terminals) No. 2: ①

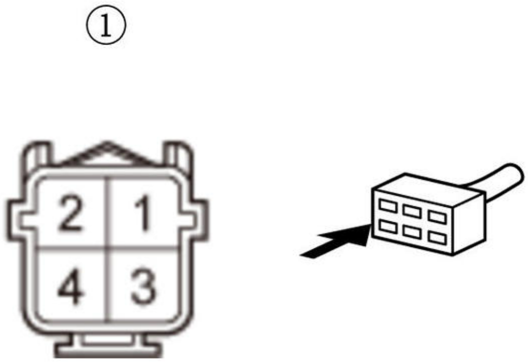

-4. Turn the vehicle to the ON mode.

-5. Check the parameter (s) below with the HDS.

Signal	Threshold		Current conditions	
	Values	Unit	Values	Unit
HO2S S2	Less than 0.12	V	B	B

Do the current condition (s) match the threshold?

YES

Go to step 3.

NO

Replace secondary HO2S (Sensor 2) .

3. Determine possible failure area (short in SO2 line, short in SO2SG/SO2 SG line)

-1. Turn the vehicle to the OFF (LOCK) mode.

-2. Check for continuity between test points 1 and 2.

Test condition	Vehicle OFF (LOCK) mode
B	Secondary HO2S (Sensor 2) 4P connector: disconnected

Test point 1	Secondary HO2S (Sensor 2) 4P connector (male terminals) No. 1: ①
Test point 2	Body ground

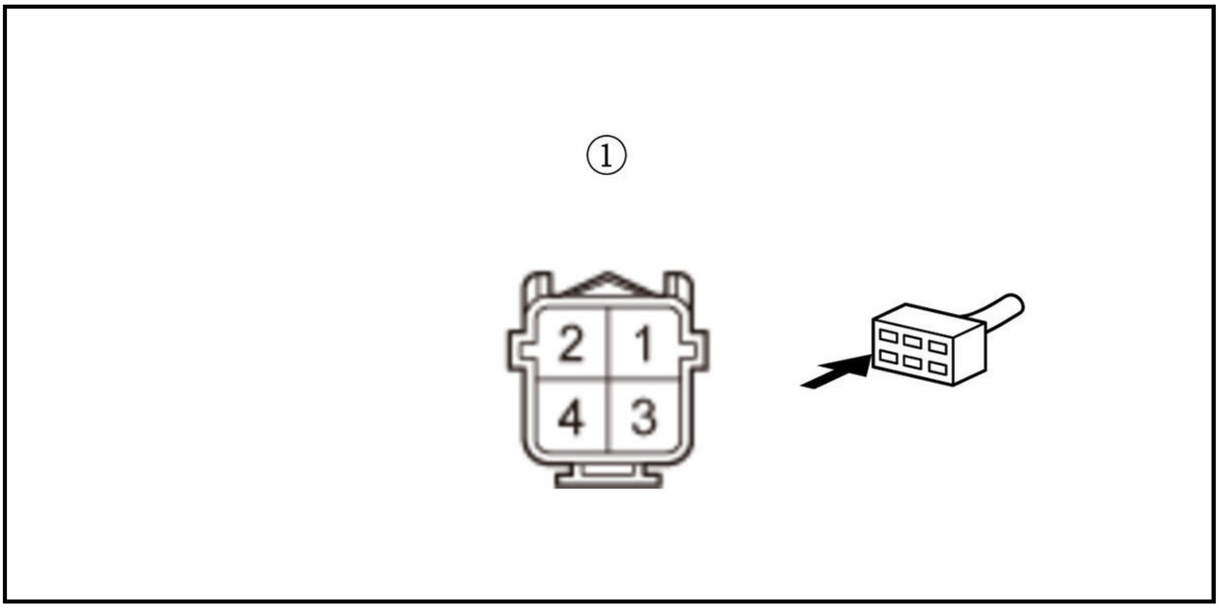

Is there continuity?

YES

Go to step 4.

NO

Go to step 5.

4. Shorted wire check (SO2 line)

-1. Jump the SCS line with the HDS, and wait more than 1 minute.

-2. Disconnect the following connector.

PCM connector C (51P)

-3. Check for continuity between test points 1 and 2.

Test condition	Vehicle OFF (LOCK) mode
B	PCM connector C (51P): disconnected
B	Secondary HO2S (Sensor 2) 4P connector: disconnected
Test point 1	Secondary HO2S (Sensor 2) 4P connector (male terminals) No. 1: ①

Test point 2	Body ground

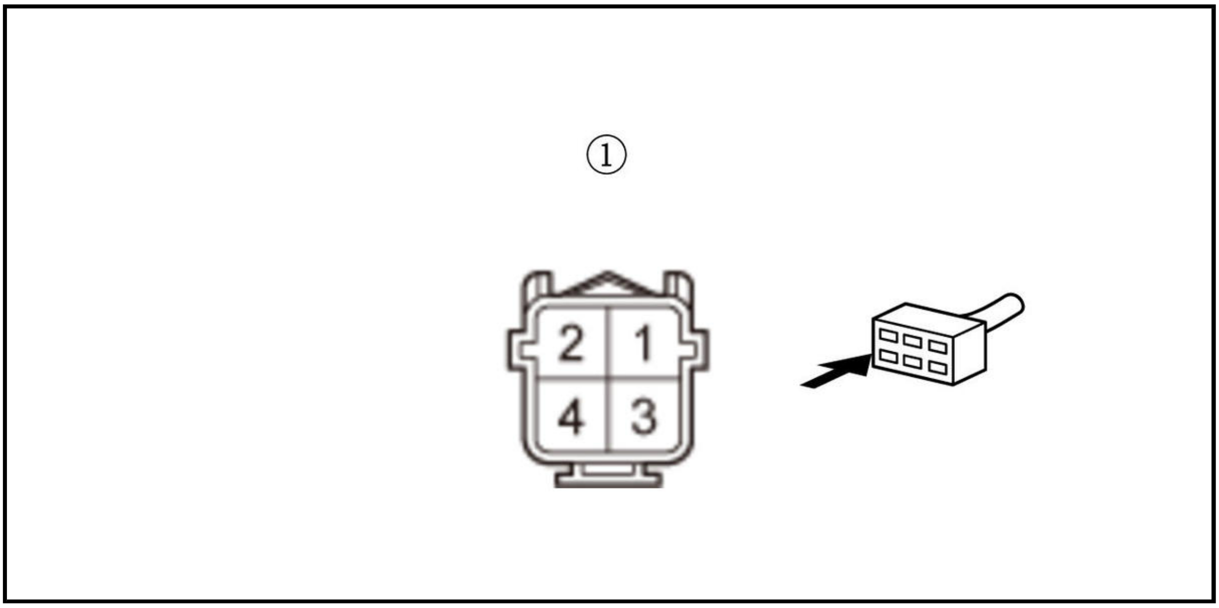

Is there continuity?

YES

Repair a short in the SO2 wire between the PCM (C38) and secondary HO2S (Sensor 2).

NO

The SO2 wire is OK. Check for any authorized service information related to the DTCs or symptoms you are troubleshooting, or **substitute a known-good PCM** .

5. Shorted wire check (SO2SG/SO2 SG line)

-1. Jump the SCS line with the HDS, and wait more than 1 minute.

-2. Disconnect the following connector.

PCM connector C (51P)

-3. Check for continuity between test points 1 and 2.

Test condition	Vehicle OFF (LOCK) mode
B	PCM connector C (51P): disconnected
B	Secondary HO2S (Sensor 2) 4P connector: disconnected
Test point 1	Secondary HO2S (Sensor 2) 4P connector (male terminals) No. 2: ①
Test point 2	Body ground

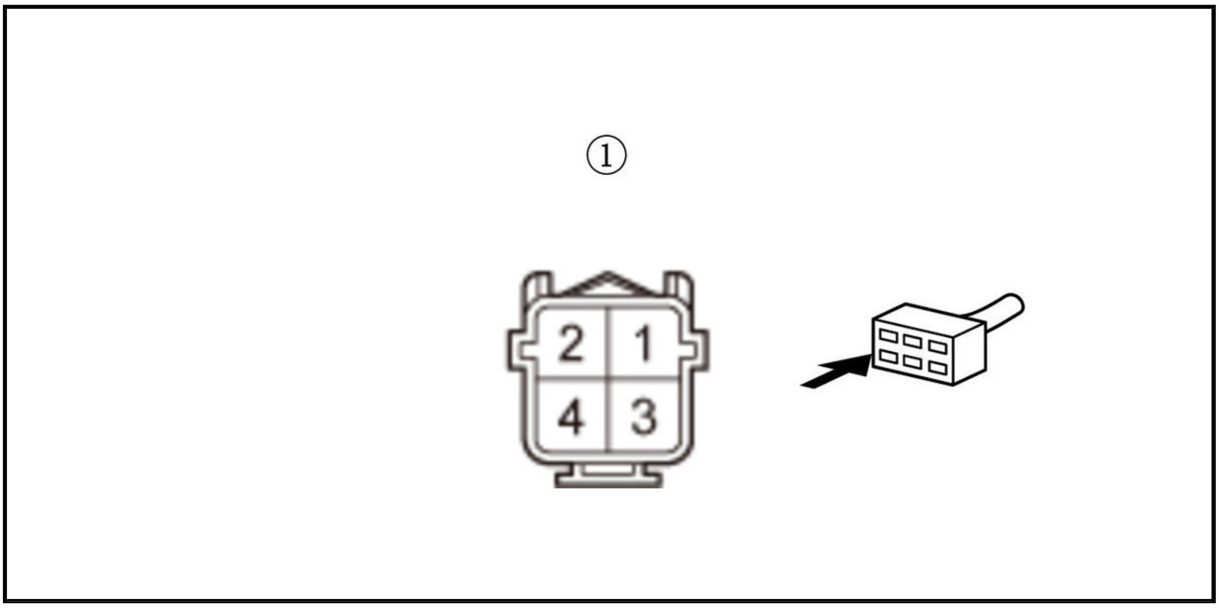

Is there continuity?

YES

Repair a short in the SO2SG/SO2 SG wire between the PCM (C39) and secondary HO2S (Sensor 2).

NO

The SO2SG/SO2 SG wire is OK. Check for any authorized service information related to the DTCs or symptoms you are troubleshooting, or **substitute a known-good PCM** .

DTC P0138 (1.5 L ENGINE) (2017)

DTC P0138 : Secondary HO2S (Sensor 2) Circuit High Voltage

NOTE: Before you troubleshoot, **review the general troubleshooting information** .

DTC Description	Confirmed DTC	Pending DTC
P0138 Secondary HO2S (Sensor 2) Circuit High Voltage	B	B

DTC (PGM-FI)

1. Problem verification

-1. Turn the vehicle to the ON mode.

-2. Clear the DTC with the HDS.

-3. Turn the vehicle to the OFF (LOCK) mode.

-4. Start the engine, and let it idle without load (in P or N) until the radiator fan comes on, then let it idle.

-5. Check the parameter (s) below with the HDS.

Signal	Threshold		Current conditions	
	Values	Unit	Values	Unit
HO2S S2	More than 1.27	V	B	B

Do the current condition (s) match the threshold?

YES

Go to step 2.

NO

Intermittent failure, the system is OK at this time. Check for poor connections or loose terminals at secondary HO2S (Sensor 2) and the PCM. **If the on-board snapshot of this DTC is recorded, try to reproduce the failure under the same conditions with the on-board snapshot** .

2. Determine possible failure area (secondary HO2S (Sensor 2), others)

-1. Turn the vehicle to the OFF (LOCK) mode.

-2. Disconnect the following connector.

Secondary HO2S (Sensor 2) 4P connector

-3. Connect terminals A and B with a jumper wire.

Terminal A	Secondary HO2S (Sensor 2) 4P connector (male terminals) No. 1: ①
Terminal B	Secondary HO2S (Sensor 2) 4P connector (male terminals) No. 2: ①

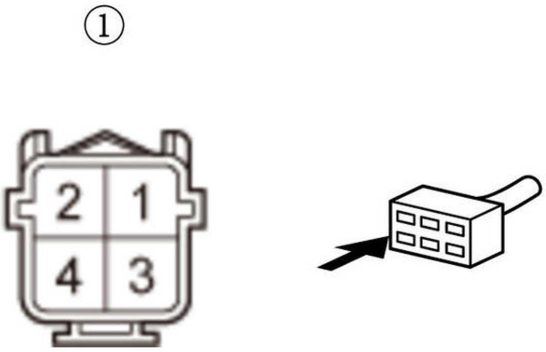

-4. Turn the vehicle to the ON mode.

-5. Check the parameter (s) below with the HDS.

Signal	**Threshold**		**Current conditions**	
	Values	**Unit**	**Values**	**Unit**
HO2S S2	More than 1.27	V	B	B

Do the current condition (s) match the threshold?

YES

Go to step 3.

NO

Replace the secondary HO2S (Sensor 2) .

3. Open wire check (SO2SG/SO2 SG line)

-1. Turn the vehicle to the OFF (LOCK) mode.

-2. Remove the jumper wire from the secondary HO2S (Sensor 2) 4P connector.

-3. Connect terminals A and B with a jumper wire.

Terminal A	Secondary HO2S (Sensor 2) 4P connector (male terminals) No. 1: ①

Terminal B	Body ground

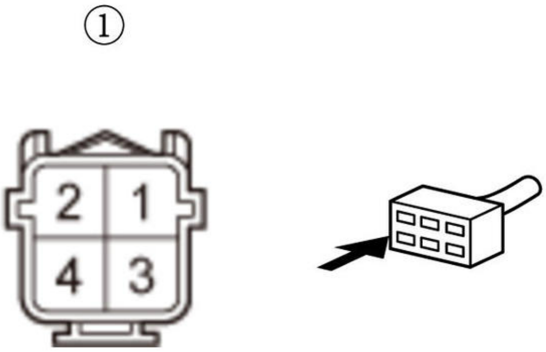

-4. Turn the vehicle to the ON mode.

-5. Check the parameter (s) below with the HDS.

Signal	**Threshold**		**Current conditions**	
	Values	**Unit**	**Values**	**Unit**
HO2S S2	More than 1.27	V	B	B

Do the current condition (s) match the threshold?

YES

The SO2SG/SO2 SG wire is OK. Go to step 4.

NO

Go to step 5.

4. Open wire check (SO2 line)

-1. Turn the vehicle to the OFF (LOCK) mode.

-2. Jump the SCS line with the HDS, and wait more than 1 minute.

-3. Disconnect the following connector.

PCM connector A (50P)

-4. Check for continuity between test points 1 and 2.

Test condition	Vehicle OFF (LOCK) mode
	Secondary HO2S (Sensor 2) 4P connector: disconnected
	Secondary HO2S (Sensor 2) 4P connector No. 1: jumped to body ground
	PCM connector A (50P): disconnected
Test point 1	**PCM connector A (50P) No. 47**
Test point 2	Body ground

Is there continuity?

YES

The SO2 wire is OK. Check for any authorized service information related to the DTCs or symptoms you are troubleshooting, or **substitute a known-good PCM** .

NO

Repair an open in the SO2 wire between the PCM (A47) and secondary HO2S (Sensor 2).

5. Open wire check (SO2SG/SO2 SG line)

-1. Turn the vehicle to the OFF (LOCK) mode.

-2. Remove the jumper wire from the secondary HO2S (Sensor 2) 4P connector.

-3. Connect terminals A and B with a jumper wire.

Terminal A	Secondary HO2S (Sensor 2) 4P connector (male terminals) No. 2: ①
Terminal B	Body ground

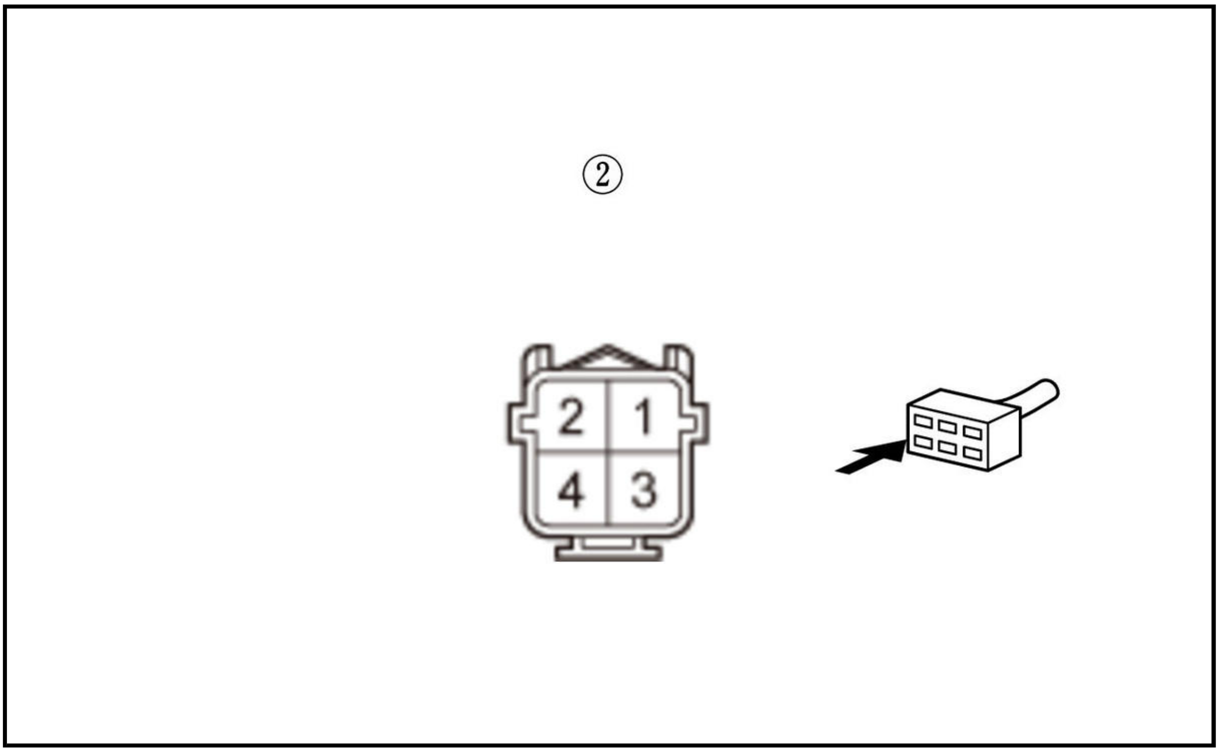

-4. Jump the SCS line with the HDS, and wait more than 1 minute.

-5. Disconnect the following connector.

PCM connector A (50P)

-6. Check for continuity between test points 1 and 2.

Test condition	Vehicle OFF (LOCK) mode
B	Secondary HO2S (Sensor 2) 4P connector: disconnected
B	Secondary HO2S (Sensor 2) 4P connector No. 2: jumped to body ground
B	PCM connector A (50P): disconnected
Test point 1	**PCM connector A (50P) No. 48**
Test point 2	Body ground

Is there continuity?

YES

The SO2SG/SO2 SG wire is OK. Check for any authorized service information related to the DTCs or symptoms you are troubleshooting or **substitute a known-good PCM** .

NO

Repair an open in the SO2SG/SO2 SG wire between the PCM (A48) and secondary HO2S (Sensor 2).

DTC P0138 (1.5 L ENGINE) (2018 2019)

DTC P0138 : Secondary HO2S (Sensor 2) Circuit High Voltage

NOTE: Before you troubleshoot, **review the general troubleshooting information** .

DTC Description	Confirmed DTC	Pending DTC
P0138 Secondary HO2S (Sensor 2) Circuit High Voltage	B	B

DTC (PGM-FI)

1. Problem verification

-1. Turn the vehicle to the ON mode.

-2. Clear the DTC with the HDS.

-3. Turn the vehicle to the OFF (LOCK) mode.

-4. Start the engine, and let it idle without load (in P or N) until the radiator fan comes on, then let it idle.

-5. Check the parameter (s) below with the HDS.

Signal	Threshold		Current conditions	
	Values	Unit	Values	Unit
HO2S S2	More than 3.28	V	B	B

Do the current condition (s) match the threshold?

YES

Go to step 2.

NO

Intermittent failure, the system is OK at this time. Check for poor connections or loose terminals at secondary HO2S (Sensor 2) and the PCM. **If the on-board snapshot of this DTC is recorded, try to reproduce the failure under the same conditions with the on-board snapshot** .

2. Determine possible failure area (secondary HO2S (Sensor 2), others)

-1. Turn the vehicle to the OFF (LOCK) mode.

-2. Disconnect the following connector.

Secondary HO2S (Sensor 2) 4P connector

-3. Connect terminals A and B with a jumper wire.

Terminal A	Secondary HO2S (Sensor 2) 4P connector (male terminals) No. 1: ①
Terminal B	Secondary HO2S (Sensor 2) 4P connector (male terminals) No. 2: ①

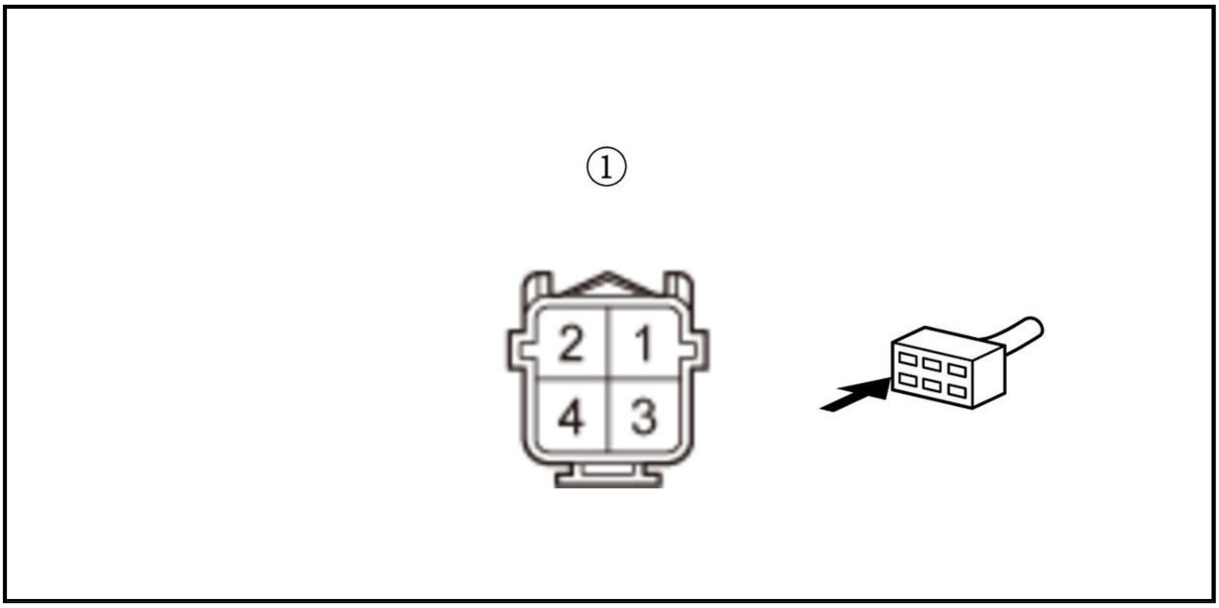

-4. Turn the vehicle to the ON mode.

-5. Check the parameter (s) below with the HDS.

Signal	Threshold		Current conditions	
	Values	**Unit**	**Values**	**Unit**
HO2S S2	More than 3.28	V	B	B

Do the current condition (s) match the threshold?

YES

Go to step 3.

NO

Replace the secondary HO2S (Sensor 2) .

3. Open wire check (SO2SG/SO2 SG line)

-1. Turn the vehicle to the OFF (LOCK) mode.

-2. Remove the jumper wire from the secondary HO2S (Sensor 2) 4P connector.

-3. Connect terminals A and B with a jumper wire.

Terminal A	Secondary HO2S (Sensor 2) 4P connector (male terminals) No. 1: ①

Terminal B	Body ground

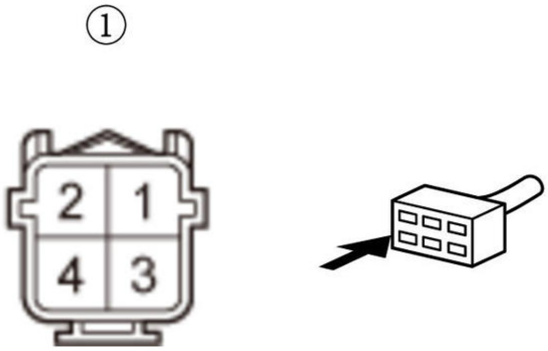

-4. Turn the vehicle to the ON mode.

-5. Check the parameter (s) below with the HDS.

Signal	Threshold		Current conditions	
	Values	**Unit**	**Values**	**Unit**
HO2S S2	More than 3.28	V	B	B

Do the current condition (s) match the threshold?

YES

The SO2SG/SO2 SG wire is OK. Go to step 4.

NO

Go to step 5.

4. Open wire check (SO2 line)

-1. Turn the vehicle to the OFF (LOCK) mode.

-2. Jump the SCS line with the HDS, and wait more than 1 minute.

-3. Disconnect the following connector.

PCM connector A (50P)

-4. Check for continuity between test points 1 and 2.

Test condition	Vehicle OFF (LOCK) mode
	Secondary HO2S (Sensor 2) 4P connector: disconnected

	Secondary HO2S (Sensor 2) 4P connector No. 1: jumped to body ground
	PCM connector A (50P): disconnected
Test point 1	**PCM connector A (50P) No. 47**
Test point 2	Body ground

Is there continuity?

YES

The SO2 wire is OK. Check for any authorized service information related to the DTCs or symptoms you are troubleshooting, or **substitute a known-good PCM** .

NO

Repair an open in the SO2 wire between the PCM (A47) and secondary HO2S (Sensor 2).

5. Open wire check (SO2SG/SO2 SG line)

-1. Turn the vehicle to the OFF (LOCK) mode.

-2. Remove the jumper wire from the secondary HO2S (Sensor 2) 4P connector.

-3. Connect terminals A and B with a jumper wire.

Terminal A	Secondary HO2S (Sensor 2) 4P connector (male terminals) No. 2: ①
Terminal B	Body ground

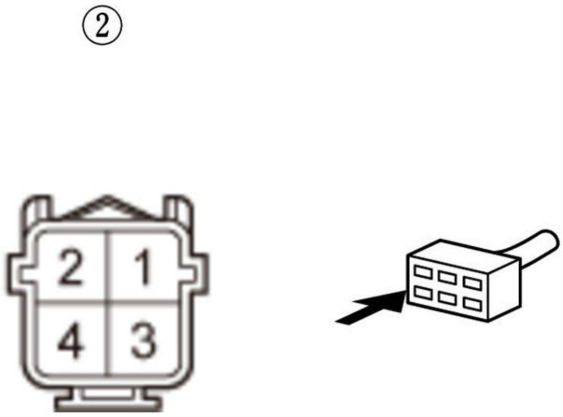

-4. Jump the SCS line with the HDS, and wait more than 1 minute.

-5. Disconnect the following connector.

PCM connector A (50P)

-6. Check for continuity between test points 1 and 2.

Test condition	Vehicle OFF (LOCK) mode

B	Secondary HO2S (Sensor 2) 4P connector: disconnected
B	Secondary HO2S (Sensor 2) 4P connector No. 2: jumped to body ground
B	PCM connector A (50P): disconnected
Test point 1	**PCM connector A (50P) No. 48**
Test point 2	Body ground

Is there continuity?

YES

The SO2SG/SO2 SG wire is OK. Check for any authorized service information related to the DTCs or symptoms you are troubleshooting or **substitute a known-good PCM** .

NO

Repair an open in the SO2SG/SO2 SG wire between the PCM (A48) and secondary HO2S (Sensor 2).

DTC P0138 (1.5 L ENGINE) (2020 2021)

DTC P0138 : Secondary HO2S (Sensor 2) Circuit High Voltage

NOTE: Before you troubleshoot, **review the general troubleshooting information** .

DTC Description	Confirmed DTC	Pending DTC
P0138 Secondary HO2S (Sensor 2) Circuit High Voltage	B	B

DTC (PGM-FI)

1. Problem verification

   -1. Turn the vehicle to the ON mode.

   -2. Clear the DTC with the HDS.

   -3. Turn the vehicle to the OFF (LOCK) mode.

   -4. Start the engine, and let it idle without load (in P or N) until the radiator fan comes on, then let it idle.

   -5. Check the parameter (s) below with the HDS.

Signal	Threshold		Current conditions	
	Values	Unit	Values	Unit
HO2S S2	More than 3.27	V	B	B

   Do the current condition (s) match the threshold?

   YES

   Go to step 2.

   NO

   Intermittent failure, the system is OK at this time. Check for poor connections or loose terminals at secondary HO2S (Sensor 2) and the PCM. **If the on-board snapshot of this DTC is recorded, try to reproduce the failure under the same conditions with the on-board snapshot** .

2. Determine possible failure area (secondary HO2S (Sensor 2), others)

-1. Turn the vehicle to the OFF (LOCK) mode.

-2. Disconnect the following connector.

Secondary HO2S (Sensor 2) 4P connector

-3. Connect terminals A and B with a jumper wire.

Terminal A	Secondary HO2S (Sensor 2) 4P connector (male terminals) No. 1: ①
Terminal B	Secondary HO2S (Sensor 2) 4P connector (male terminals) No. 2: ①

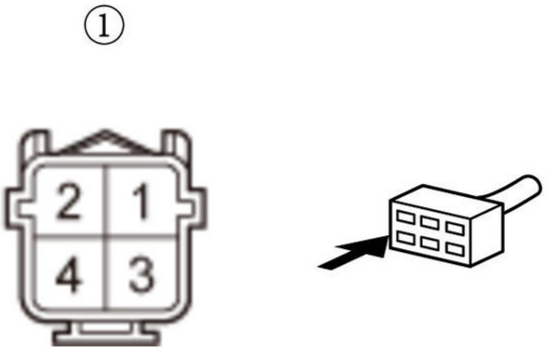

-4. Turn the vehicle to the ON mode.

-5. Check the parameter (s) below with the HDS.

Signal	**Threshold**		**Current conditions**	
	Values	**Unit**	**Values**	**Unit**
HO2S S2	More than 3.27	V	B	B

Do the current condition (s) match the threshold?

YES

Go to step 3.

NO

Replace the secondary HO2S (Sensor 2) .

3. Open wire check (SO2SG/SO2 SG line)

-1. Turn the vehicle to the OFF (LOCK) mode.

-2. Remove the jumper wire from the secondary HO2S (Sensor 2) 4P connector.

-3. Connect terminals A and B with a jumper wire.

Terminal A	Secondary HO2S (Sensor 2) 4P connector (male terminals) No. 1: ①

Terminal B	Body ground

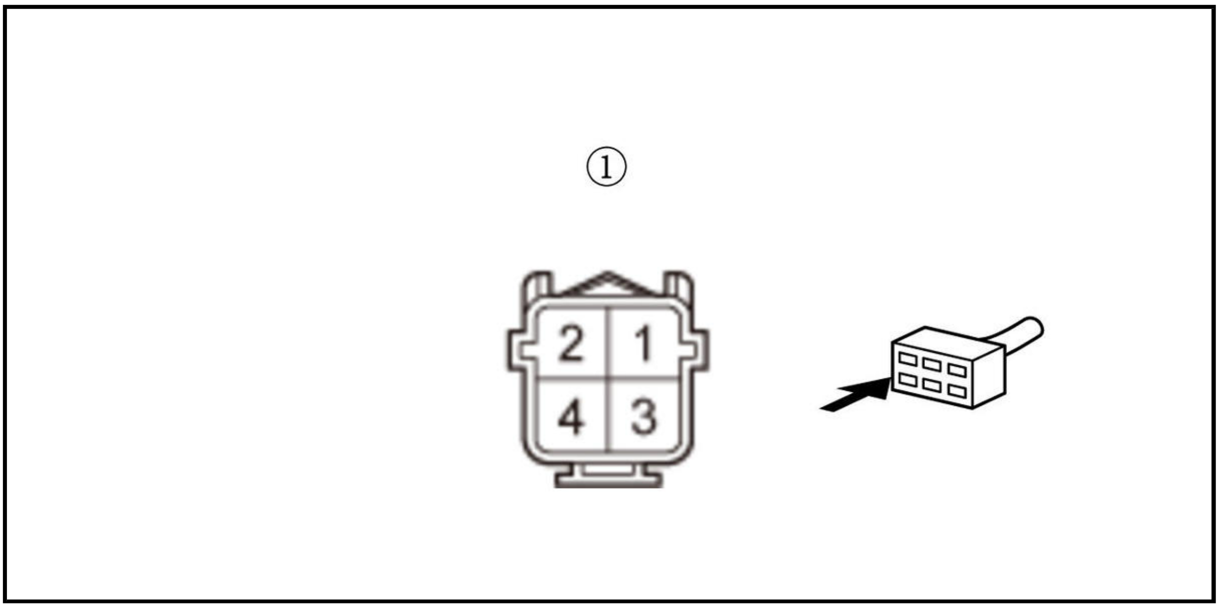

-4. Turn the vehicle to the ON mode.

-5. Check the parameter (s) below with the HDS.

Signal	**Threshold**		**Current conditions**	
	Values	**Unit**	**Values**	**Unit**
HO2S S2	More than 3.27	V	B	B

Do the current condition (s) match the threshold?

YES

The SO2SG/SO2 SG wire is not open. Go to step 4.

NO

Repair an open in the SO2SG/SO2 SG wire between the PCM (A48) and secondary HO2S (Sensor 2).

4. Open wire check (SO2 line)

-1. Turn the vehicle to the OFF (LOCK) mode.

-2. Jump the SCS line with the HDS, and wait more than 1 minute.

-3. Disconnect the following connector.

PCM connector A (50P)

-4. Measure the resistance between test points 1 and 2.

Test condition	Vehicle OFF (LOCK) mode
	Secondary HO2S (Sensor 2) 4P connector: disconnected
	Secondary HO2S (Sensor 2) 4P connector No. 1: jumped to body ground
	PCM connector A (50P): disconnected
Test point 1	PCM connector A (50P) No. 47
Test point 2	Body ground

Is there 1.0 Ω or less?

YES

The SO2 wire is OK. Go to step 5.

NO

Repair an open in the SO2 wire between the PCM (A47) and secondary HO2S (Sensor 2).

5. Shorted wire check (SO2SG/SO2 SG line to power)

-1. Remove the jumper wire from the secondary HO2S (Sensor 2) 4P connector.

-2. Turn the vehicle to the ON mode.

-3. Measure the voltage between test points 1 and 2.

Test condition	Vehicle ON mode
B	Secondary HO2S (Sensor 2) 4P connector: disconnected
B	PCM connector A (50P): disconnected
Test point 1	**PCM connector A (50P) No. 48**
Test point 2	Body ground

Is there about 5 V or more?

YES

Repair a short to power in the SO2SG/SO2 SG wire between the PCM (A48) and secondary HO2S (Sensor 2).

NO

The SO2SG/SO2 SG wire is OK. Check for any authorized service information related to the DTCs or symptoms you are troubleshooting, or **substitute a known-good PCM** .

DTC P0138 (2.4 L ENGINE) (2017 2018 2019)

DTC P0138 : Secondary HO2S (Sensor 2) Circuit High Voltage

NOTE: Before you troubleshoot, **review the general troubleshooting information** .

DTC Description	Confirmed DTC	Pending DTC
P0138 Secondary HO2S (Sensor 2) Circuit High Voltage	B	B

DTC (PGM-FI)

1. Problem verification

-1. Turn the vehicle to the ON mode.

-2. Clear the DTC with the HDS.

-3. Start the engine.

-4. Hold the engine speed at 3, 000 rpm without load (in P or N) until the radiator fan comes on, then let it idle.

Signal	Current conditions	
	Values	Unit
ECT SENSOR 1	B	B

Signal	Current conditions	
	Values	Unit
ENGINE SPEED	B	B

-5. Check the parameter (s) below with the HDS.

Signal	Threshold		Current conditions	
	Values	Unit	Values	Unit
HO2S S2	More than 1.27	V	B	B

Do the current condition (s) match the threshold?

YES

The failure is duplicated. Go to step 2.

NO

Intermittent failure, the system is OK at this time. Check for poor connections or loose terminals at secondary HO2S (Sensor 2) and the PCM. **If the on-board snapshot of this DTC is recorded, try to reproduce the failure under the same conditions with the on-board snapshot** .

2. Determine possible failure area (secondary HO2S (Sensor 2), others)

-1. Turn the vehicle to the OFF (LOCK) mode.

-2. Disconnect the following connector.

Secondary HO2S (Sensor 2) 4P connector

-3. Connect terminals A and B with a jumper wire.

Terminal A	Secondary HO2S (Sensor 2) 4P connector (male terminals) No. 1: ①
Terminal B	Secondary HO2S (Sensor 2) 4P connector (male terminals) No. 2: ①

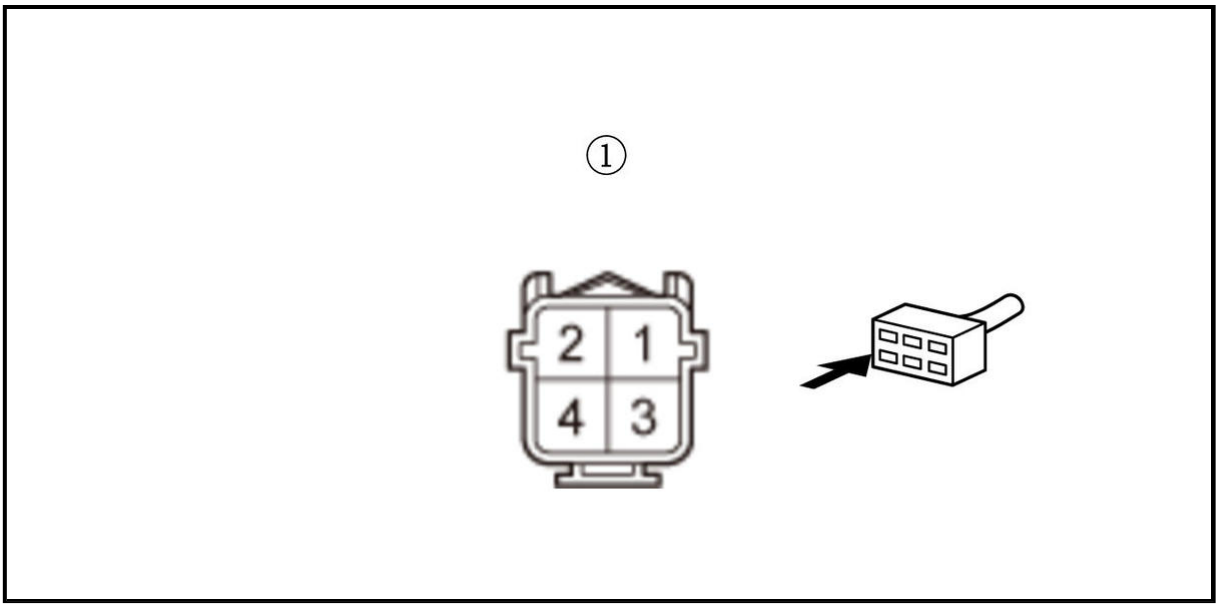

-4. Turn the vehicle to the ON mode.

-5. Check the parameter (s) below with the HDS.

Signal	Threshold		Current conditions	
	Values	Unit	Values	Unit
HO2S S2	More than 1.27	V	B	B

Do the current condition (s) match the threshold?

YES

Go to step 3.

NO

Replace secondary HO2S (Sensor 2) .

3. Determine possible failure area (open in SO2 line, open in SO2SG/SO2 SG line)

-1. Turn the vehicle to the OFF (LOCK) mode.

-2. Remove the jumper wire from the secondary HO2S (Sensor 2) 4P connector.

-3. Connect terminals A and B with a jumper wire.

Terminal A	Secondary HO2S (Sensor 2) 4P connector (male terminals) No. 1: ①
Terminal B	Body ground

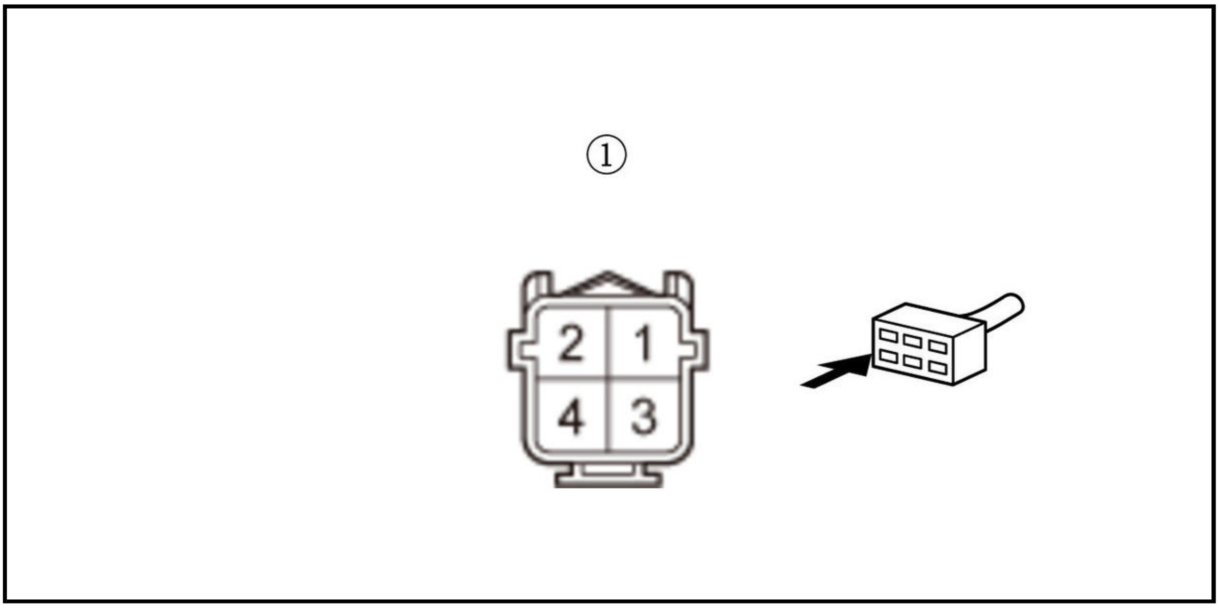

-4. Turn the vehicle to the ON mode.

-5. Check the parameter (s) below with the HDS.

Signal	Threshold		Current conditions	
	Values	Unit	Values	Unit
HO2S S2	More than 1.27	V	B	B

Do the current condition (s) match the threshold?

YES

Go to step 4.

NO

Go to step 5.

4. Open wire check (SO2 line)

-1. Turn the vehicle to the OFF (LOCK) mode.

-2. Jump the SCS line with the HDS, and wait more than 1 minute.

-3. Disconnect the following connector.

PCM connector C (51P)

-4. Check for continuity between test points 1 and 2.

Test condition	Vehicle OFF (LOCK) mode
B	Secondary HO2S (Sensor 2) 4P connector: disconnected
B	Secondary HO2S (Sensor 2) 4P connector No. 1: jumped to body ground
B	PCM connector C (51P): disconnected
Test point 1	**PCM connector C (51P) No. 38**
Test point 2	Body ground

Is there continuity?

YES

The SO2 wire is OK. Check for any authorized service information related to the DTCs or symptoms you are troubleshooting or **substitute a known-good PCM** .

NO

Repair an open in the SO2 wire between the PCM (C38) and secondary HO2S (Sensor 2).

5. Open wire check (SO2SG/SO2 SG line)

-1. Turn the vehicle to the OFF (LOCK) mode.

-2. Remove the jumper wire from the secondary HO2S (Sensor 2) 4P connector.

-3. Jump the SCS line with the HDS, and wait more than 1 minute.

-4. Disconnect the following connector.

PCM connector C (51P)

-5. Connect terminals A and B with a jumper wire.

Terminal A	Secondary HO2S (Sensor 2) 4P connector (male terminals) No. 2: ①
Terminal B	Body ground

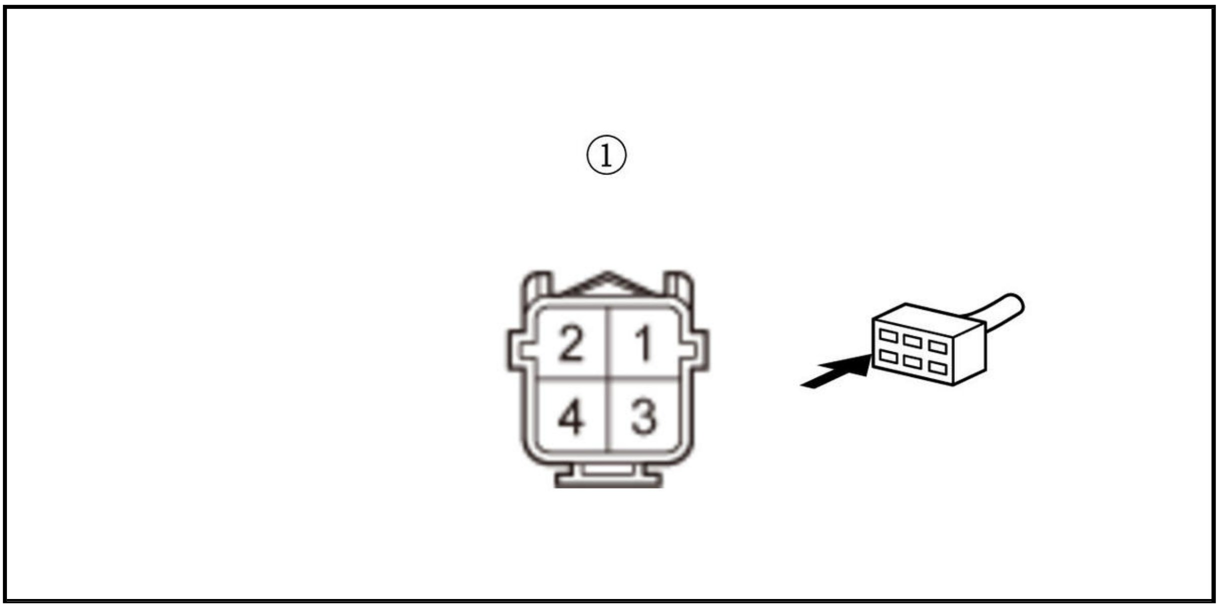

-6. Check for continuity between test points 1 and 2.

Test condition	Vehicle OFF (LOCK) mode
B	Secondary HO2S (Sensor 2) 4P connector: disconnected
B	PCM connector C (51P): disconnected
Test point 1	**PCM connector C (51P) No. 39**
Test point 2	Body ground

Is there continuity?

YES

The SO2SG/SO2 SG wire is OK. Check for any authorized service information related to the DTCs or symptoms you are troubleshooting or **substitute a known-good PCM** .

NO

Repair an open in the SO2SG/SO2 SG wire between the PCM (C39) and secondary HO2S (Sensor 2).

DTC P0139 (1.5 L ENGINE)

DTC P0139 : Secondary HO2S (Sensor 2) Slow Response

NOTE:

- Before you troubleshoot, **review the general troubleshooting information** .
- If there are leaks from the exhaust system, this DTC will be set. Check for damage in the exhaust pipe and repair it if needed.

DTC Description	Confirmed DTC	Pending DTC
P0139 Secondary HO2S (Sensor 2) Slow Response	B	B

DTC (PGM-FI)

1. Problem verification

-1. Turn the vehicle to the ON mode.

-2. Clear the DTC with the HDS.

-3. Turn the vehicle to the OFF (LOCK) mode.

-4. Start the engine.

-5. Hold the engine speed at 3, 000 rpm without load (in P or N) until the radiator fan comes on, then let it idle.

-6. Test-drive the vehicle under these conditions:

- Engine coolant temperature (ECT SENSOR 1) above 158 deg. F (70 deg. C)
- Transmission in D
- Drive at a steady speed between 55-75 mph (90-120 km/h) for 1 minute, then decelerate (with the throttle fully closed) for 10 seconds

Signal	Current conditions	
	Values	Unit
ECT SENSOR 1	B	B
VEHICLE SPEED	B	B

-7. Monitor the OBD STATUS for DTC P0139 in the DTCs MENU with the HDS.

DTC Description	OBD STATUS
P0139 Secondary HO2S (Sensor 2) Slow Response	B

Does the HDS indicate FAILED?

YES

The failure is duplicated. **Replace the secondary HO2S (Sensor 2)** .

NO

If the HDS indicates PASSED, intermittent failure, the system is OK at this time. Check for poor connections or loose terminals at secondary HO2S (Sensor 2) and the PCM. **If the on-board snapshot of this DTC is recorded, try to reproduce the failure under the same conditions with the on-board snapshot** . If the HDS indicates EXECUTING, keep driving until a result comes on. If the HDS indicates OUT OF CONDITION, go to step 1-5 and recheck.

DTC P0139 (2.4 L ENGINE) (2017 2018 2019)

DTC P0139 : Secondary HO2S (Sensor 2) Slow Response

NOTE:

- Before you troubleshoot, **review the general troubleshooting information** .
- If there are leaks from the exhaust system, this DTC will be set. Check for damage in the exhaust pipe and repair it if needed.

DTC Description	Confirmed DTC	Pending DTC
P0139 Secondary HO2S (Sensor 2) Slow Response	B	B

DTC (PGM-FI)

1. Problem verification

-1. Turn the vehicle to the ON mode.

-2. Clear the DTC with the HDS.

-3. Start the engine.

-4. Hold the engine speed at 3, 000 rpm) without load (in P or N) until the radiator fan comes on, then let it idle.

-5. Test-drive under these conditions:

- Engine coolant temperature (ECT SENSOR 1) above 158 deg. F (70 deg. C)
- Transmission in D
- Drive at a steady speed between 55-75 mph (90-120 km/h) for 1 minute, then decelerate (with the throttle fully closed) for 10 seconds

Signal	**Current conditions**	
	Values	**Unit**
ECT Sensor 1	B	B
VEHICLE SPEED	B	B

-6. Monitor the OBD STATUS for DTC P0139 in the DTCs MENU with the HDS.

DTC Description	**OBD STATUS**
P0139 Secondary HO2S (Sensor 2) Slow Response	B

Does the HDS indicate FAILED?

YES

The failure is duplicated. **Replace secondary HO2S (Sensor 2)** .

NO

If the HDS indicates PASSED, intermittent failure, the system is OK at this time. Check for poor connections or loose terminals at secondary HO2S (Sensor 2) and the PCM. **If the on-board snapshot of this DTC is recorded, try to reproduce the failure under the same conditions with the on-board snapshot** . If the HDS indicates EXECUTING, keep driving until a result comes on. If the HDS indicates OUT OF CONDITION, go to step 1-4 on this step and recheck.

DTC P0141 (1.5 L ENGINE)

DTC P0141 : Secondary HO2S (Sensor 2) Heater Circuit Malfunction

NOTE: Before you troubleshoot, **review the general troubleshooting information** .

DTC Description	**Confirmed DTC**	**Pending DTC**
P0141 Secondary HO2S (Sensor 2) Heater Circuit Malfunction	B	B

DTC (PGM-FI)

1. Problem verification

-1. Turn the vehicle to the ON mode.

-2. Clear the DTC with the HDS.

-3. Turn the vehicle to the OFF (LOCK) mode.

-4. Start the engine, and let it idle.

-5. Check for Pending or Confirmed DTCs with the HDS.

DTC Description	Confirmed DTC	Pending DTC
P0141 Secondary HO2S (Sensor 2) Heater Circuit Malfunction	B	B

Is DTC P0141 indicated?

YES

Go to step 2.

NO

Intermittent failure, the system is OK at this time. Check for poor connections or loose terminals at secondary HO2S (Sensor 2) and the PCM. **If the on-board snapshot of this DTC is recorded, try to reproduce the failure under the same conditions with the on-board snapshot** .

2. Shorted wire check (IG1 ACG/IG1 (ACG)/IG1 (SO2) line)

-1. Turn the vehicle to the OFF (LOCK) mode.

-2. Check the following fuse.

Fuse	No. D21 (10 A)
Location	Under-dash fuse/relay box

Is the fuse OK?

YES

Go to step 3.

NO

Repair a short in the IG1 ACG/IG1 (ACG)/IG1 (SO2) wire between secondary HO2S (Sensor 2) and the No. D21 (10 A) fuse. Also replace the No. D21 (10 A) fuse.

3. Secondary HO2S (Sensor 2) internal heater resistance check

-1. Disconnect the following connector.

Secondary HO2S (Sensor 2) 4P connector

-2. At the sensor side, measure the resistance between test points 1 and 2.

Test condition	Vehicle OFF (LOCK) mode
B	Secondary HO2S (Sensor 2) 4P connector: disconnected
Test point 1	Secondary HO2S (Sensor 2) 4P connector (female terminals) No. 3 (secondary HO2S (Sensor 2) side): ①
Test point 2	Secondary HO2S (Sensor 2) 4P connector (female terminals) No. 4 (secondary HO2S (Sensor 2) side): ①

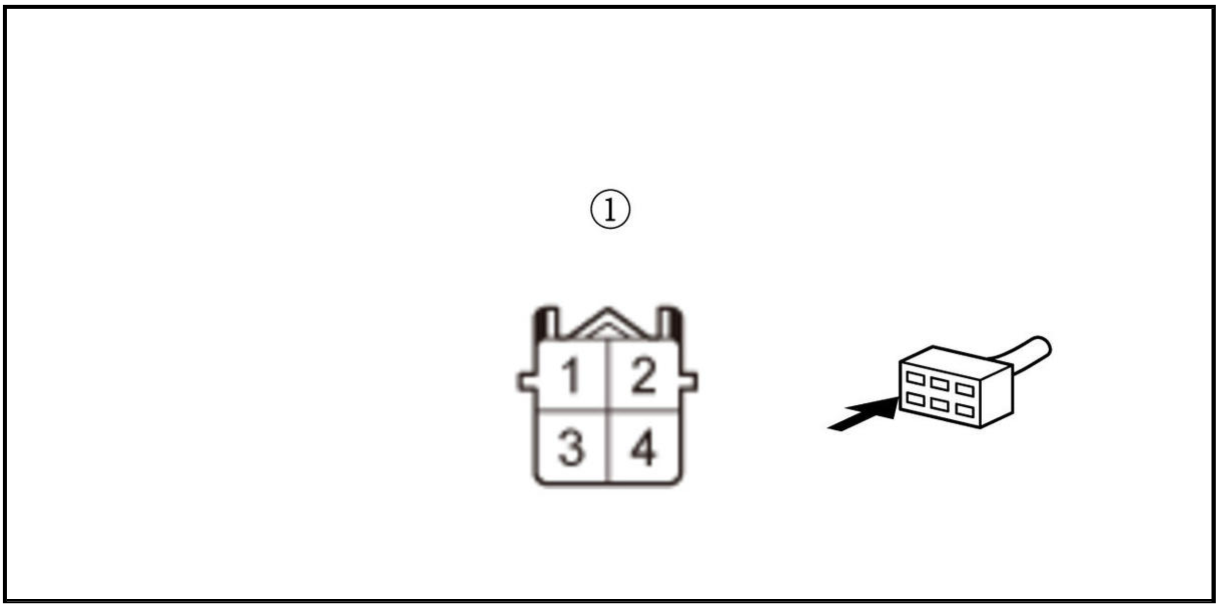

Is there 4.2-6.6 Ω at room temperature?

YES

Go to step 4.

NO

Replace the secondary HO2S (Sensor 2) .

4. Secondary HO2S (Sensor 2) internal circuit check

-1. At the sensor side, check for continuity between test point 1 and 2.

Test condition	Vehicle OFF (LOCK) mode
B	Secondary HO2S (Sensor 2) 4P connector: disconnected
Test point 1	Secondary HO2S (Sensor 2) 4P connector (female terminals) No. 3 and No. 4 (secondary HO2S (Sensor 2) side): ①
Test point 2	Body ground

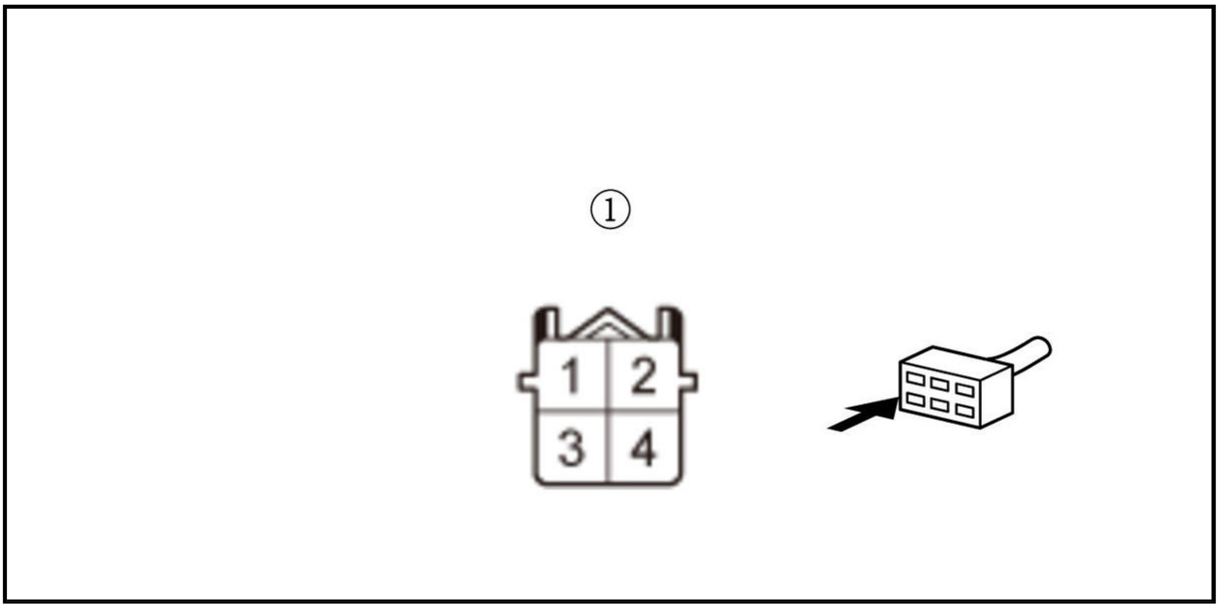

Is there continuity?

YES

Replace the secondary HO2S (Sensor 2) .

NO

Go to step 5.

5. Shorted wire check (SO2HT line)

-1. Jump the SCS line with the HDS, and wait more than 1 minute.

-2. Disconnect the following connector.

PCM connector A (50P)

-3. Check for continuity between test points 1 and 2.

Test condition	Vehicle OFF (LOCK) mode
B	Secondary HO2S (Sensor 2) 4P connector: disconnected
B	PCM connector A (50P): disconnected
Test point 1	**PCM connector A (50P) No. 4**
Test point 2	Body ground

Is there continuity?

YES

Repair a short in the SO2HT wire between the PCM (A4) and secondary HO2S (Sensor 2).

NO

Go to step 6.

6. Open wire check (SO2HT line)

-1. Check for continuity between test points 1 and 2.

Test condition	Vehicle OFF (LOCK) mode
B	Secondary HO2S (Sensor 2) 4P connector: disconnected
B	PCM connector A (50P): disconnected
Test point 1	Secondary HO2S (Sensor 2) 4P connector (male terminals) No. 3: ①
Test point 2	**PCM connector A (50P) No. 4**

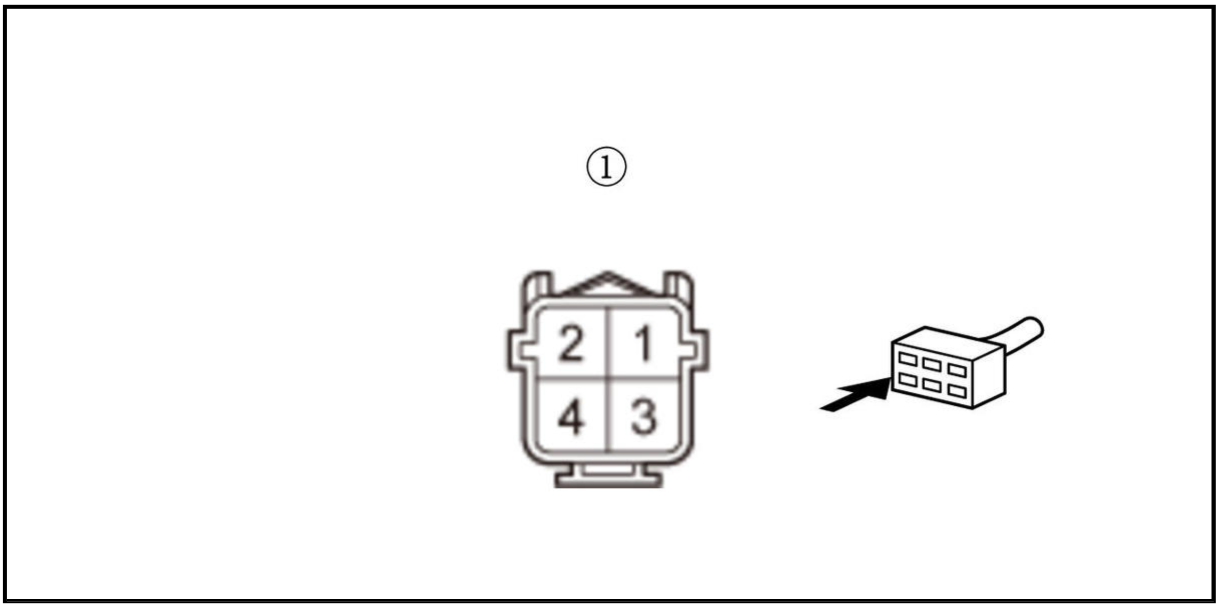

Is there continuity?

YES

Go to step 7.

NO

Repair an open in the SO2HT wire between the PCM (A4) and secondary HO2S (Sensor 2).

7. Open wire check (IG1 ACG/IG1 (ACG)/IG1 (SO2) line)

   -1. Turn the vehicle to the ON mode.

   -2. Measure the voltage between test points 1 and 2.

Test condition	Vehicle ON mode
B	Secondary HO2S (Sensor 2) 4P connector: disconnected
B	PCM connector A (50P): disconnected
Test point 1	Secondary HO2S (Sensor 2) 4P connector (male terminals) No. 4: ①
Test point 2	Body ground

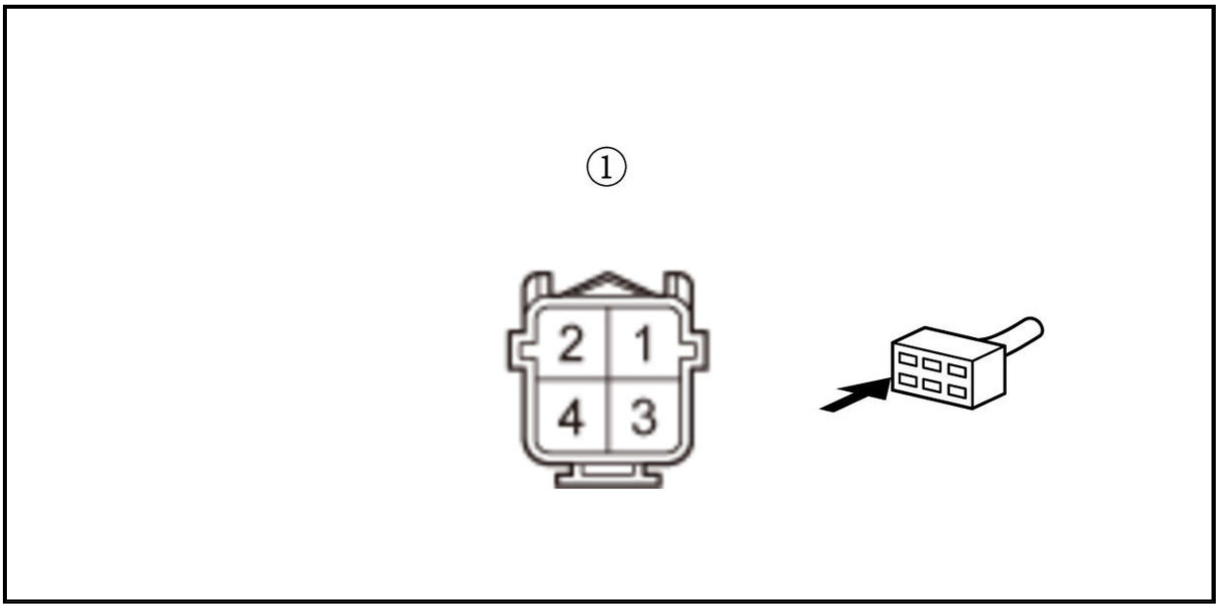

Is there battery voltage?

YES

The IG1 ACG/IG1 (ACG)/IG1 (SO2) wire is OK. Check for any authorized service information related to the DTCs or symptoms you are troubleshooting, or **substitute a known-good PCM** .

NO

Repair an open in the IG1 ACG/IG1 (ACG)/IG1 (SO2) wire between secondary HO2S (Sensor 2) and the No. D21 (10 A) fuse in the under-dash fuse/relay box.

DTC P0141 (2.4 L ENGINE) (2017 2018 2019)

DTC P0141 : Secondary HO2S (Sensor 2) Heater Circuit Malfunction

NOTE: Before you troubleshoot, **review the general troubleshooting information** .

DTC Description	Confirmed DTC	Pending DTC
P0141 Secondary HO2S (Sensor 2) Heater Circuit Malfunction	B	B

DTC (PGM-FI)

1. Problem verification

   -1. Turn the vehicle to the ON mode.

   -2. Clear the DTC with the HDS.

   -3. Start the engine, and let it idle.

   -4. Check for Pending or Confirmed DTCs with the HDS.

DTC Description	Confirmed DTC	Pending DTC
P0141 Secondary HO2S (Sensor 2) Heater Circuit Malfunction	B	B

   Is DTC P0141 indicated?

   YES

   The failure is duplicated. Go to step 2.

   NO

   Intermittent failure, the system is OK at this time. Check for poor connections or loose terminals at secondary HO2S (Sensor 2) and the PCM. **If the on-board snapshot of this DTC is recorded, try to reproduce the failure under the same conditions with the on-board snapshot** .

2. Shorted wire check (IG1 ACG line)

   -1. Turn the vehicle to the OFF (LOCK) mode.

   -2. Check the following fuse.

Fuse	No. D21 (10 A)
Location	Under-dash fuse/relay box

Is the fuse OK?

YES

The IG1 ACG wire is not shorted. Go to step 3.

NO

Repair a short in the IG1 ACG wire between secondary HO2S (Sensor 2) and the No. D21 (10 A) fuse. Also replace the No. D21 (10 A) fuse.

3. Secondary HO2S (Sensor 2) internal heater resistance check

-1. Disconnect the following connector.

Secondary HO2S (Sensor 2) 4P connector

-2. At the sensor side, measure the resistance between test points 1 and 2.

Test condition	Vehicle OFF (LOCK) mode
B	Secondary HO2S (Sensor 2) 4P connectors: disconnected
Test point 1	Secondary HO2S (Sensor 2) 4P connector (female terminals) No. 3 (secondary HO2S (Sensor 2) side): ①
Test point 2	Secondary HO2S (Sensor 2) 4P connector (female terminals) No. 4 (secondary HO2S (Sensor 2) side): ①

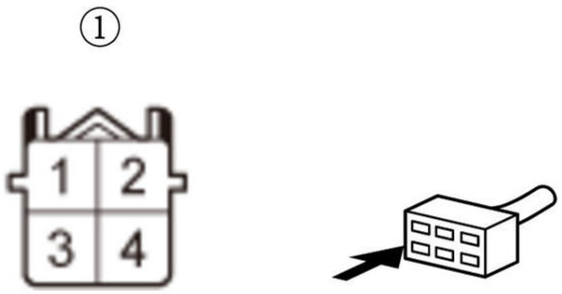

Is there 5.4-7.3 Ω at room temperature?

YES

Go to step 4.

NO

Replace secondary HO2S (Sensor 2) .

4. Secondary HO2S (Sensor 2) internal circuit check

-1. At the sensor side, check for continuity between test point 1 and 2

Test condition	Vehicle OFF (LOCK) mode
B	Secondary HO2S (Sensor 2) 4P connectors: disconnected
Test point 1	Secondary HO2S (Sensor 2) 4P connector (female terminals) No. 3 (secondary HO2S (Sensor 2) side): ①
	Secondary HO2S (Sensor 2) 4P connector (female terminals) No. 4 (secondary HO2S (Sensor 2) side): ①
Test point 2	Body ground

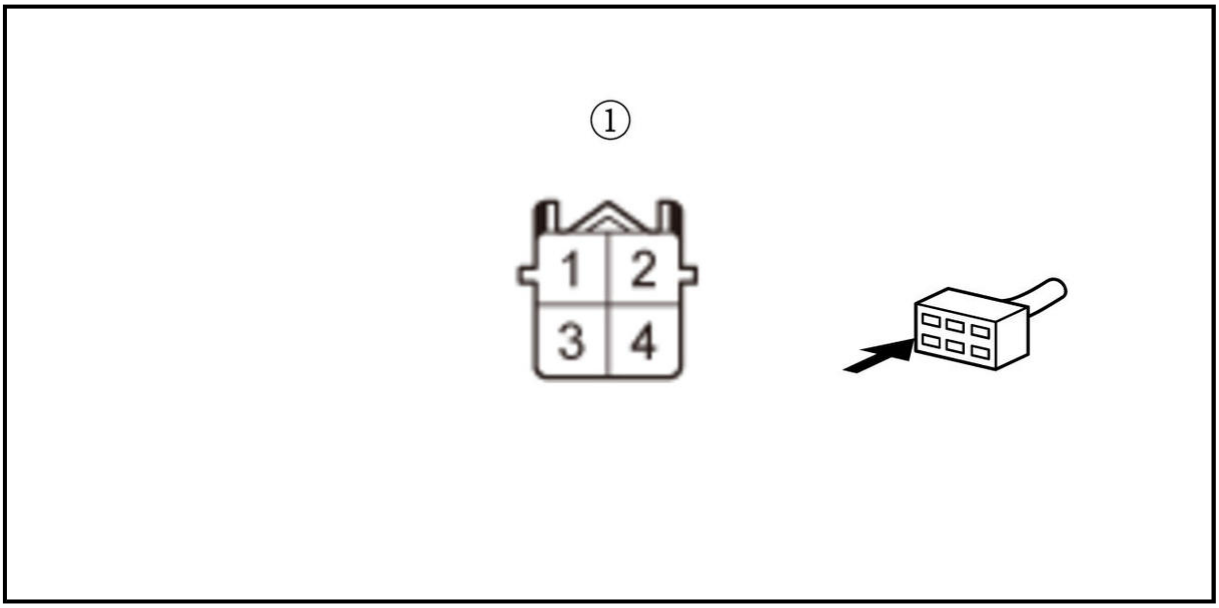

Is there continuity?

YES

Replace secondary HO2S (Sensor 2) .

NO

Go to step 5.

5. Shorted wire check (SO2 HT line)

-1. Jump the SCS line with the HDS, and wait more than 1 minute.

-2. Disconnect the following connector.

PCM connector C (51P)

-3. Check for continuity between test points 1 and 2.

Test condition	Vehicle OFF (LOCK) mode
B	Secondary HO2S (Sensor 2) 4P connector: disconnected
B	PCM connector C (51P): disconnected
Test point 1	**PCM connector C (51P) No. 9**
Test point 2	Body ground

Is there continuity?

YES

Repair a short in the SO2 HT wire between the PCM (C9) and secondary HO2S (Sensor 2).

NO

The SO2 HT wire is not shorted. Go to step 6.

6. Open wire check (SO2 HT line)

-1. Check for continuity between test points 1 and 2.

Test condition	Vehicle OFF (LOCK) mode
B	Secondary HO2S (Sensor 2) 4P connector: disconnected
B	PCM connector C (51P): disconnected
Test point 1	Secondary HO2S (Sensor 2) 4P connector (male terminals) No. 4: ①
Test point 2	**PCM connector C (51P) No. 9**

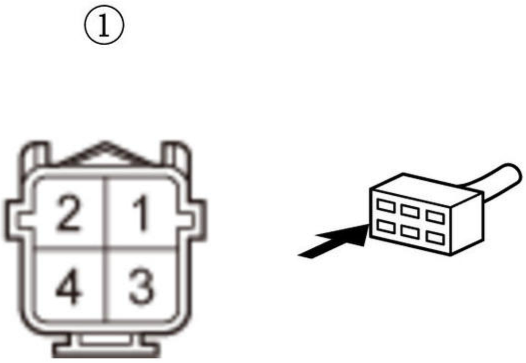

Is there continuity?

YES

The SO2 HT wire is OK. Go to step 7.

NO

Repair an open in the SO2 HT wire between the PCM (C9) and secondary HO2S (Sensor 2).

7. Open wire check (IG1 ACG line)

-1. Turn the vehicle to the ON mode.

-2. Measure the voltage between test points 1 and 2.

Test condition	Vehicle ON mode
B	Secondary HO2S (Sensor 2) 4P connector: disconnected
B	PCM connector C (51P): disconnected
Test point 1	Secondary HO2S (Sensor 2) 4P connector (male terminals) No. 3: ①
Test point 2	Body ground

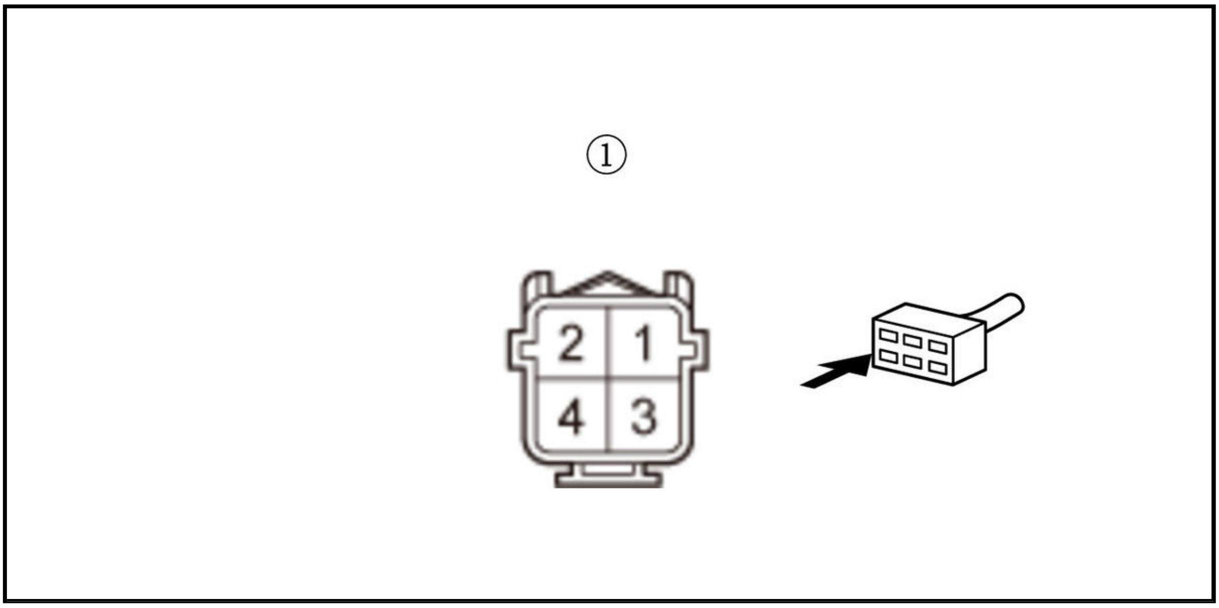

Is there battery voltage?

YES

The IG1 ACG wire is OK. Check for any authorized service information related to the DTCs or symptoms you are troubleshooting or **substitute a known-good PCM** .

NO

Repair an open in the IG1 ACG wire between secondary HO2S (Sensor 2) and the No. D21 (10 A) fuse in the under-dash fuse/relay box.

DTC TROUBLESHOOTING

DTC P0328 (2.4 L ENGINE) (2017 2018 2019)

DTC P0328 : Knock Sensor Circuit High Voltage

NOTE: Before you troubleshoot, review the general troubleshooting information .

DTC Description	Confirmed DTC	Pending DTC
P0328 Knock Sensor Circuit High Voltage	B	B

DTC (PGM-FI)

1. Problem verification

   -1. Turn the vehicle to the ON mode.

   -2. Clear the DTC with the HDS.

   -3. Turn the vehicle to the OFF (LOCK) mode.

   -4. Turn the vehicle to the ON mode.

   -5. Check for Pending or Confirmed DTCs with the HDS.

DTC Description	Confirmed DTC	Pending DTC
P0328 Knock Sensor Circuit High Voltage	B	B

   Is DTC P0328 indicated?

   YES

   The failure is duplicated. Go to step 2.

   NO

   Intermittent failure, the system is OK at this time. Check for poor connections or loose terminals at the knock sensor and the PCM. If the on-board snapshot of this DTC is recorded, try to reproduce the failure under the same conditions with the on-board snapshot .

2. Determine possible failure area (knock sensor, others)

   -1. Turn the vehicle to the OFF (LOCK) mode.

   -2. Disconnect the following connector.

Knock sensor 2P connector

   -3. Turn the vehicle to the ON mode.

   -4. Measure the voltage between test points 1 and 2.

Test condition	Vehicle ON mode
B	Knock sensor 2P connector: disconnected

Test point 1	Knock sensor 2P connector (female terminals) No. 1: ①
Test point 2	Knock sensor 2P connector (female terminals) No. 2: ①

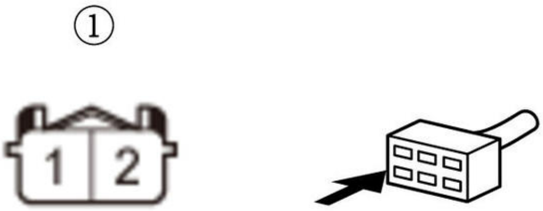

Is there about 5.0 V?

YES

Replace the knock sensor .

NO

Go to step 3.

3. Determine possible failure area (KS line, others)

-1. Measure the voltage between test points 1 and 2.

Test condition	Vehicle ON mode
B	Knock sensor 2P connector: disconnected
Test point 1	Knock sensor 2P connector (female terminals) No. 1: ①
Test point 2	Body ground

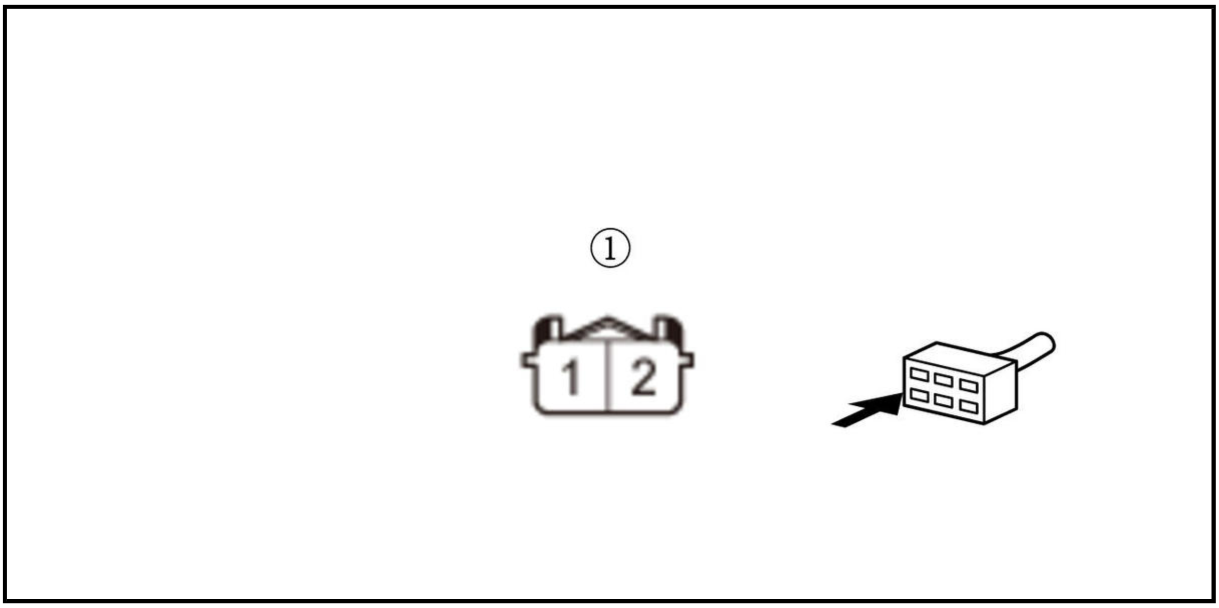

Is there about 5.0 V?

YES

Go to step 5.

NO

Go to step 4.

4. Open wire check (KS line)

-1. Turn the vehicle to the OFF (LOCK) mode.

-2. Jump the SCS line with the HDS, and wait more than 1 minute.

-3. Disconnect the following connector.

PCM connector C (51P)

-4. Check for continuity between test points 1 and 2.

Test condition	Vehicle OFF (LOCK) mode
B	Knock sensor 2P connector: disconnected
B	PCM connector C (51P): disconnected
Test point 1	Knock sensor 2P connector (female terminals) No. 1: ①
Test point 2	**PCM connector C (51P) No. 29**

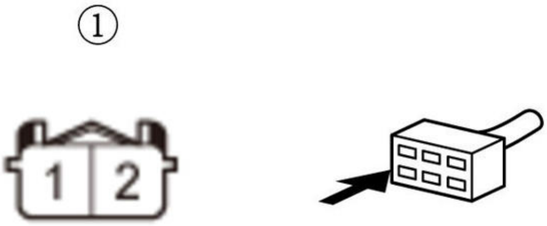

Is there continuity?

YES

The KS wire is OK. Check for any authorized service information related to the DTCs or symptoms you are troubleshooting or **substitute a known-good PCM** .

NO

Repair an open in the KS wire between the PCM (C29) and the knock sensor.

5. Open wire check (KSGND line)

-1. Turn the vehicle to the OFF (LOCK) mode.

-2. Jump the SCS line with the HDS, and wait more than 1 minute.

-3. Disconnect the following connector.

PCM connector C (51P)

-4. Check for continuity between test points 1 and 2.

Test condition	Vehicle OFF (LOCK) mode
B	Knock sensor 2P connector: disconnected
B	PCM connector C (51P): disconnected
Test point 1	Knock sensor 2P connector (female terminals) No. 2: ①
Test point 2	**PCM connector C (51P) No. 28**

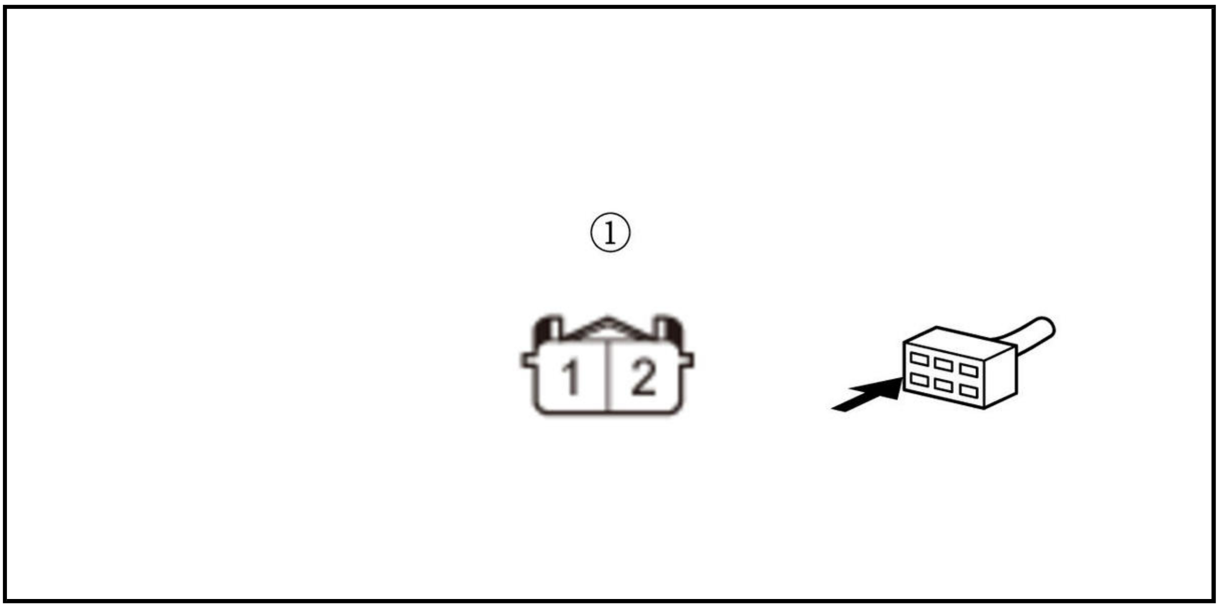

Is there continuity?

YES

The KSGND wire is OK. Check for any authorized service information related to the DTCs or symptoms you are troubleshooting or **substitute a known-good PCM** .

NO

Repair an open in the KSGND wire between the PCM (C28) and the knock sensor.

DTC P0335 (1.5 L ENGINE)

DTC P0335 : CKP Sensor No Signal

NOTE: Before you troubleshoot, **review the general troubleshooting information** .

DTC Description	Confirmed DTC	Pending DTC
P0335 CKP Sensor No Signal	B	B

DTC (PGM-FI)

1. Problem verification

-1. Turn the vehicle to the ON mode.

-2. Clear the DTC with the HDS.

-3. Turn the vehicle to the OFF (LOCK) mode.

-4. Start the engine.

-5. Check for Pending or Confirmed DTCs with the HDS.

DTC Description	Confirmed DTC	Pending DTC
P0335 CKP Sensor No Signal	B	B

Is DTC P0335 indicated?

YES

Go to step 2.

NO

Intermittent failure, the system is OK at this time. Check for poor connections or loose terminals at the CKP sensor and the PCM. **If the on-board snapshot of this DTC is recorded, try to reproduce the failure under the same conditions with the on-board snapshot** .

2. Determine possible failure area (VCC1 line, others)

-1. Turn the vehicle to the OFF (LOCK) mode.

-2. Disconnect the following connector.

CKP sensor 3P connector

-3. Turn the vehicle to the ON mode.

-4. Measure the voltage between test points 1 and 2.

Test condition	Vehicle ON mode
B	CKP sensor 3P connector: disconnected
Test point 1	CKP sensor 3P connector (female terminals) No. 3: ①
Test point 2	Body ground

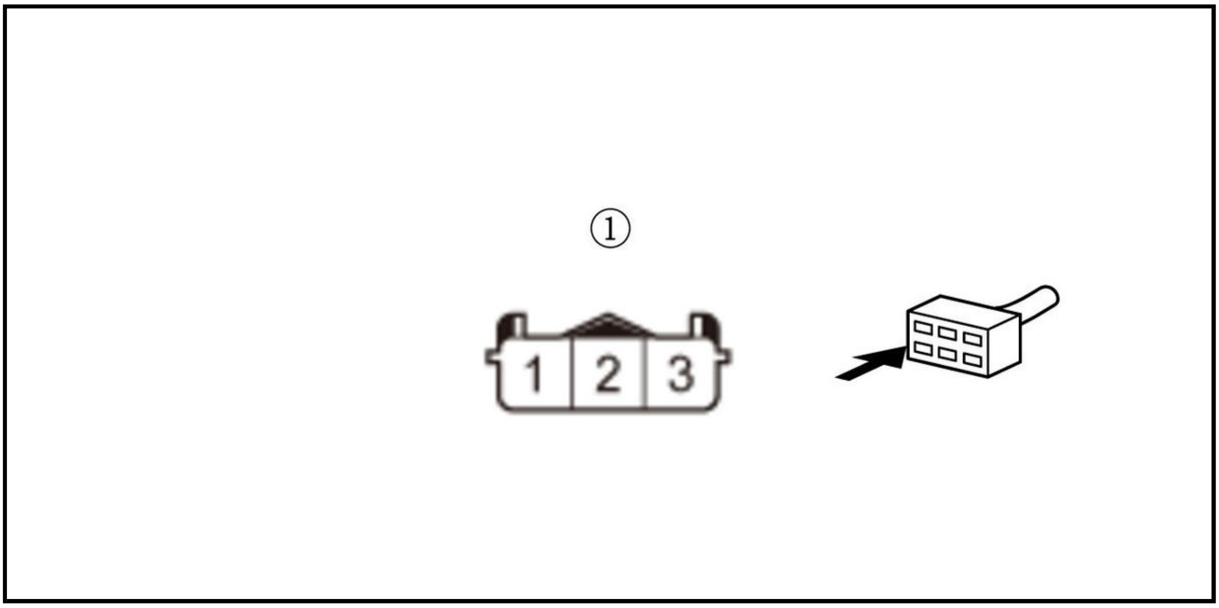

Is there about 5.0 V?

YES

Go to step 4.

NO

Go to step 3.

3. Open wire check (VCC1 line)

-1. Turn the vehicle to the OFF (LOCK) mode.

-2. Jump the SCS line with the HDS, and wait more than 1 minute.

-3. Disconnect the following connector.

PCM connector E (80P)

-4. Check for continuity between test points 1 and 2.

Test condition	Vehicle OFF (LOCK) mode
B	CKP sensor 3P connector: disconnected
B	PCM connector E (80P): disconnected
Test point 1	CKP sensor 3P connector (female terminals) No. 3: ①
Test point 2	**PCM connector E (80P) No. 70**

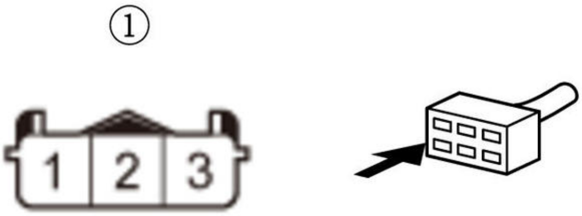

Is there continuity?

YES

The VCC1 wire is OK. Check for any authorized service information related to the DTCs or symptoms you are troubleshooting, or **substitute a known-good PCM** .

NO

Repair an open in the VCC1 wire between the PCM (E70) and the CKP sensor.

4. Determine possible failure area (CRKP line, others)

-1. Measure the voltage between test points 1 and 2.

Test condition	Vehicle ON mode
B	CKP sensor 3P connector: disconnected
Test point 1	CKP sensor 3P connector (female terminals) No. 1: ①
Test point 2	Body ground

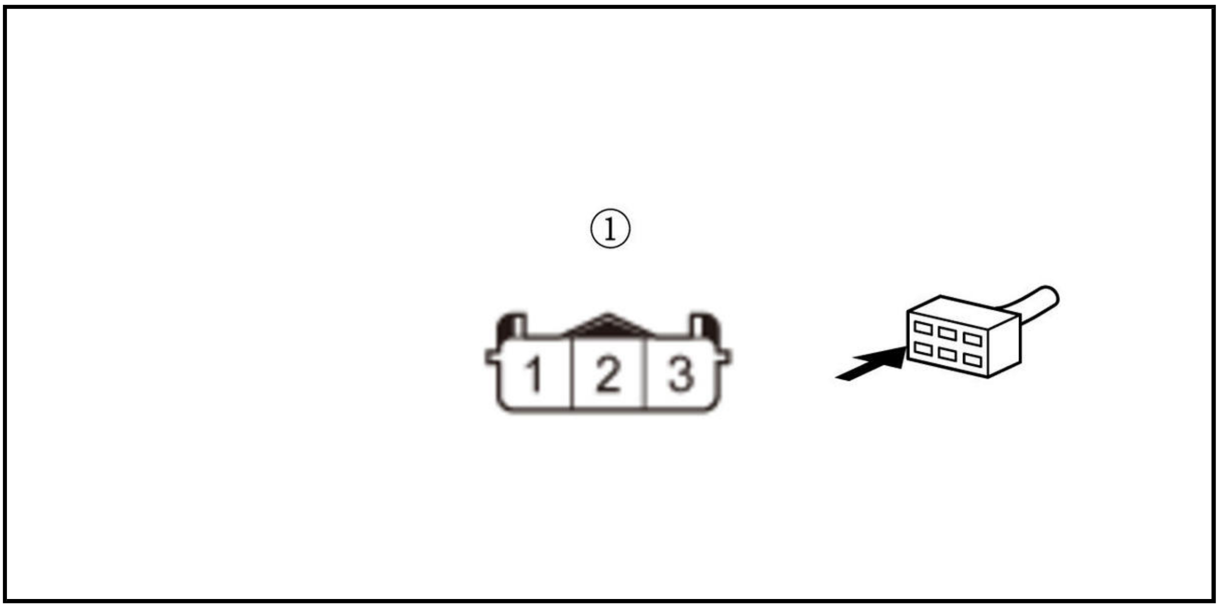

Is there about 5.0 V?

YES

Go to step 5.

NO

Go to step 7.

5. Determine possible failure area (SG1 line, others)

-1. Measure the voltage between test points 1 and 2.

Test condition	Vehicle ON mode
B	CKP sensor 3P connector: disconnected
Test point 1	CKP sensor 3P connector (female terminals) No. 2: ①
Test point 2	CKP sensor 3P connector (female terminals) No. 3: ①

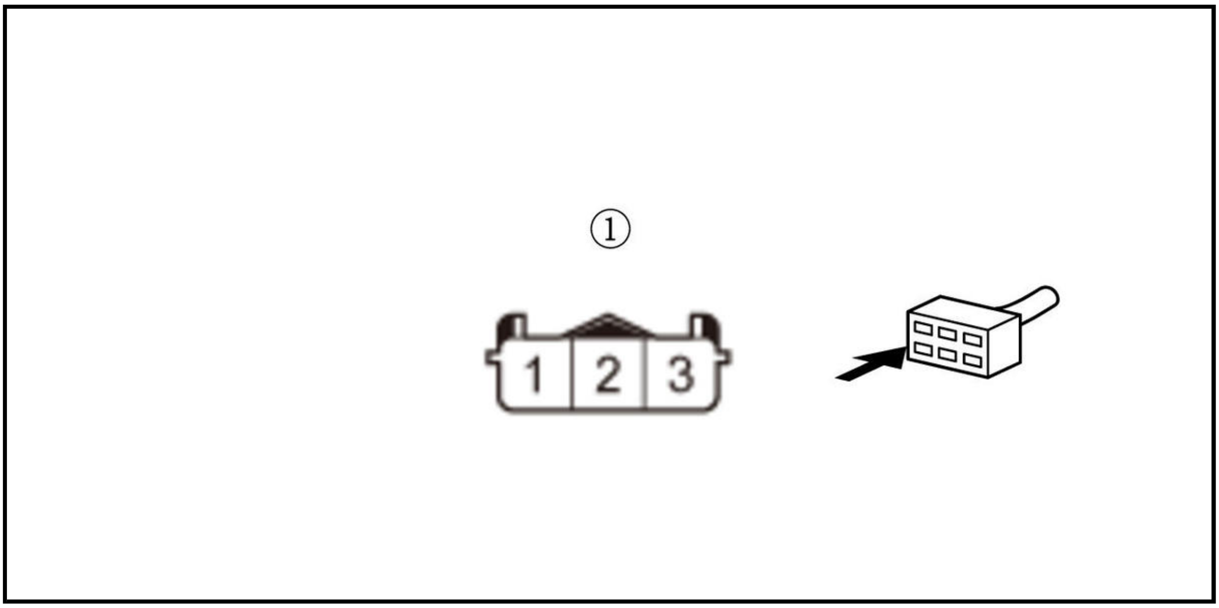

Is there about 5.0 V?

YES

The SG1 wire is OK. **Replace the CKP sensor** .

NO

Go to step 6.

6. Open wire check (SG1 line)

-1. Turn the vehicle to the OFF (LOCK) mode.

-2. Jump the SCS line with the HDS, and wait more than 1 minute.

-3. Disconnect the following connector.

PCM connector E (80P)

-4. Check for continuity between test points 1 and 2.

Test condition	Vehicle OFF (LOCK) mode
B	CKP sensor 3P connector: disconnected
B	PCM connector E (80P): disconnected
Test point 1	CKP sensor 3P connector (female terminals) No. 2: ①
Test point 2	**PCM connector E (80P) No. 71**

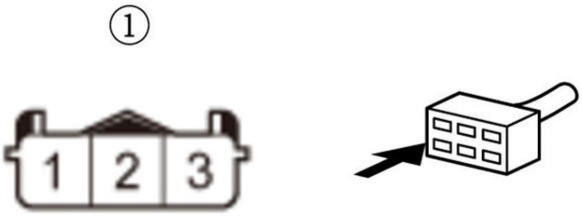

Is there continuity?

YES

The SG1 wire is OK. Check for any authorized service information related to the DTCs or symptoms you are troubleshooting, or **substitute a known-good PCM** .

NO

Repair an open in the SG1 wire between the PCM (E71) and the CKP sensor.

7. Shorted wire check (CRKP line)

-1. Turn the vehicle to the OFF (LOCK) mode.

-2. Jump the SCS line with the HDS, and wait more than 1 minute.

-3. Disconnect the following connector.

PCM connector E (80P)

-4. Check for continuity between test points 1 and 2.

Test condition	Vehicle OFF (LOCK) mode
B	CKP sensor 3P connector: disconnected
B	PCM connector E (80P): disconnected
Test point 1	**PCM connector E (80P) No. 44**
Test point 2	Body ground

Is there continuity?

YES

Repair a short in the CRKP wire between the PCM (E44) and the CKP sensor.

NO

Go to step 8.

8. Open wire check (CRKP line)

-1. Check for continuity between test points 1 and 2.

Test condition	Vehicle OFF (LOCK) mode
B	CKP sensor 3P connector: disconnected
B	PCM connector E (80P): disconnected
Test point 1	CKP sensor 3P connector (female terminals) No. 1: ①
Test point 2	**PCM connector E (80P) No. 44**

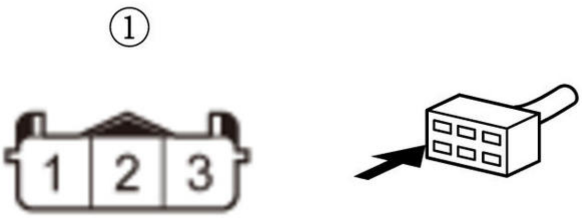

Is there continuity?

YES

The CRKP wire is OK. Check for any authorized service information related to the DTCs or symptoms you are troubleshooting, or **substitute a known-good PCM** .

NO

Repair an open in the CRKP wire between the PCM (E44) and the CKP sensor.

DTC P0335 (2.4 L ENGINE) (2017 2018 2019)

DTC P0335 : CKP Sensor No Signal

NOTE: Before you troubleshoot, **review the general troubleshooting information** .

DTC Description	Confirmed DTC	Pending DTC
P0335 CKP Sensor No Signal	B	B

DTC (PGM-FI)

1. Problem verification

   -1. Turn the vehicle to the ON mode.

   -2. Clear the DTC with the HDS.

   -3. Start the engine.

   -4. Check for Pending or Confirmed DTCs with the HDS.

DTC Description	Confirmed DTC	Pending DTC
P0335 CKP Sensor No Signal	B	B

   Is DTC P0335 indicated?

   YES

   The failure is duplicated. Go to step 2.

   NO

   Intermittent failure, the system is OK at this time. Check for poor connections or loose terminals at the CKP sensor and the PCM. **If the on-board snapshot of this DTC is recorded, try to reproduce the failure under the same conditions with the on-board snapshot** .

2. Open wire check (IGP (CRANK)/IGP (MAIN)/FI MAIN RLY OUT line)

   -1. Turn the vehicle to the OFF (LOCK) mode.

   -2. Disconnect the following connector.

CKP sensor 3P connector

   -3. Turn the vehicle to the ON mode.

   -4. Measure the voltage between test points 1 and 2.

Test condition	Vehicle ON mode
B	CKP sensor 3P connector: disconnected
Test point 1	CKP sensor 3P connector (female terminals) No. 3: ①
Test point 2	Body ground

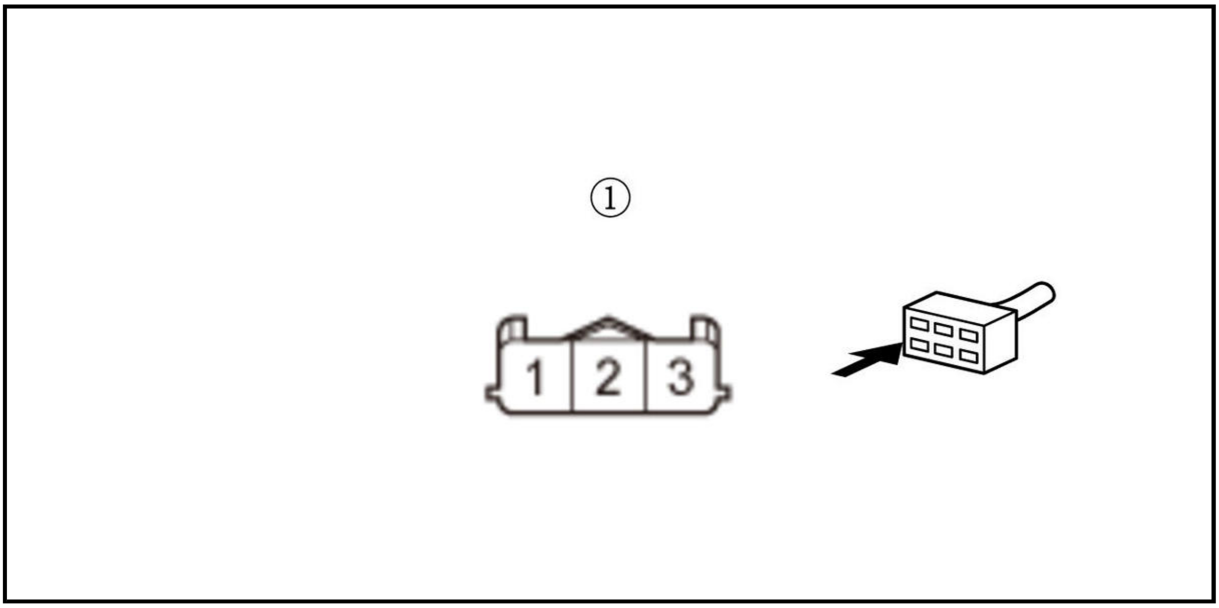

Is there battery voltage?

YES

The IGP (CRK)/IGP (MAIN)/FI MAIN RLY OUT wire is OK. Go to step 3.

NO

Repair an open in the IGP (CRK)/IGP (MAIN)/FI MAIN RLY OUT wire between the CKP sensor and the relay circuit board (PGM-FI main relay 1 circuit).

3. Determine possible failure area (CRKN line, others)

-1. Measure the voltage between test points 1 and 2.

Test condition	Vehicle ON mode
B	CKP sensor 3P connector: disconnected
Test point 1	CKP sensor 3P connector (female terminals) No. 1: ①
Test point 2	Body ground

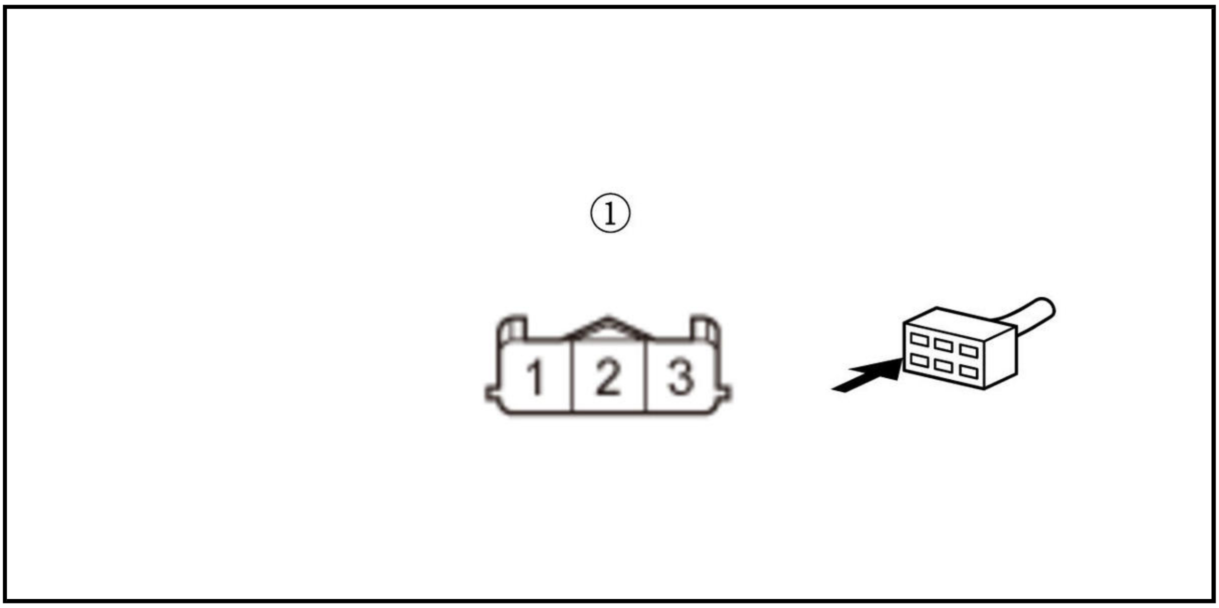

Is there about 5.0 V?

YES

Go to step 4.

NO

Go to step 5.

4. Open wire check (LG/LG2 line)

-1. Measure the voltage between test points 1 and 2.

Test condition	Vehicle ON mode
B	CKP sensor 3P connector: disconnected
Test point 1	CKP sensor 3P connector (female terminals) No. 2: ①
Test point 2	CKP sensor 3P connector (female terminals) No. 3: ①

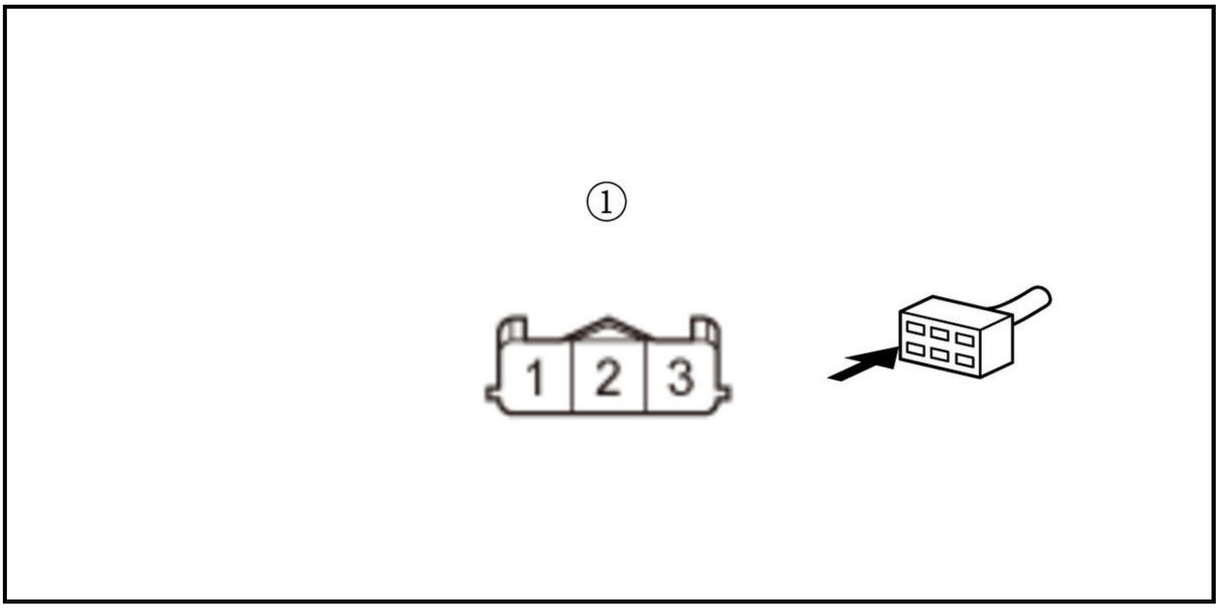

Is there battery voltage?

YES

The LG/LG2 wire is OK. **Replace the CKP sensor** .

NO

Repair an open in the LG/LG2 wire between the CKP sensor and G101.

5. Shorted wire check (CRKN line)

-1. Turn the vehicle to the OFF (LOCK) mode.

-2. Jump the SCS line with the HDS, and wait more than 1 minute.

-3. Disconnect the following connector.

PCM connector B (51P)

-4. Check for continuity between test points 1 and 2.

Test condition	Vehicle OFF (LOCK) mode
B	CKP sensor 3P connector: disconnected
B	PCM connector B (51P): disconnected
Test point 1	**PCM connector B (51P) No. 38**

Test point 2	Body ground

Is there continuity?

YES

Repair a short in the CRKN wire between the PCM (B38) and the CKP sensor.

NO

The CRKN wire is not shorted. Go to step 6.

6. Open wire check (CRKN line)

-1. Connect terminals A and B with a jumper wire.

Terminal A	CKP sensor 3P connector (female terminals) No. 1: ①
Terminal B	Body ground

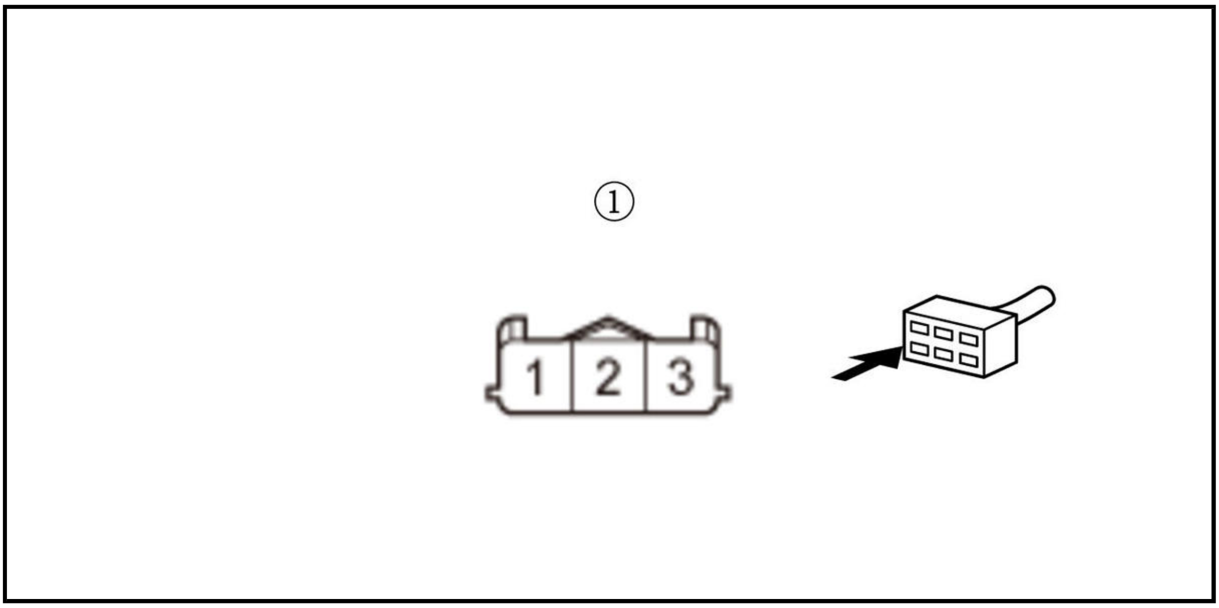

-2. Check for continuity between test points 1 and 2.

Test condition	Vehicle OFF (LOCK) mode
B	CKP sensor 3P connector: disconnected
B	CKP sensor 3P connector No. 1: jumped to body ground
B	PCM connector B (51P): disconnected
Test point 1	**PCM connector B (51P) No. 38**
Test point 2	Body ground

Is there continuity?

YES

The CRKN wire is OK. Check for any authorized service information related to the DTCs or symptoms you are troubleshooting or **substitute a known-good PCM** .

NO

Repair an open in the CRKN wire between the PCM (B38) and the CKP sensor.

DTC P0339 (1.5 L ENGINE)

DTC P0339 : CKP Sensor Circuit Intermittent Interruption

NOTE:

- Before you troubleshoot, **review the general troubleshooting information** .
- If A/T system DTCs are stored at the same time as DTC P0339, troubleshoot A/T system DTCs first, then recheck for DTC P0339.

DTC Description	Confirmed DTC	Pending DTC
P0339 CKP Sensor Circuit Intermittent Interruption	B	B

DTC (PGM-FI)

1. Problem verification (idling)

-1. Turn the vehicle to the ON mode.

-2. Clear the DTC with the HDS.

-3. Turn the vehicle to the OFF (LOCK) mode.

-4. Start the engine, and let it idle for 10 seconds.

-5. Monitor the OBD STATUS for DTC P0339 in the DTCs MENU with the HDS.

DTC Description	OBD STATUS
P0339 CKP Sensor Circuit Intermittent Interruption	B

Does the HDS indicate FAILED?

YES

Go to step 3.

NO

If the HDS indicates PASSED, go to step 2. If the HDS indicates NOT COMPLETED, keep idling until a result comes on.

2. Problem verification (test-drive):

-1. Test-drive the vehicle for several minutes in the range of these recorded on-board snapshot parameters:

- ENGINE SPEED
- VEHICLE SPEED

-2. Monitor the OBD STATUS for DTC P0339 in the DTCs MENU with the HDS.

DTC Description	OBD STATUS
P0339 CKP Sensor Circuit Intermittent Interruption	B

Does the HDS indicate FAILED?

YES

Go to step 3.

NO

If the HDS indicates PASSED, intermittent failure, the system is OK at this time. Check for poor connections or loose terminals at the CKP sensor and the PCM. **If the on-board snapshot of this DTC is recorded, try to reproduce the failure under the same conditions with the on-board snapshot** . If the HDS indicates NOT COMPLETED, retest and check the OBD STATUS again.

3. CKP sensor circuit connectors and terminals condition check:

Check for poor connections or loose terminals at these locations:

- CKP sensor
- PCM
- Engine ground
- Body ground

Are the connections and terminals OK?

YES

Go to step 4.

NO

Repair the connections or terminals.

4. CKP pulse plate visual check

-1. **Remove the CKP sensor** , and check for damage to the CKP pulse plate.

Is the pulse plate damaged or loose?

YES

Replace the CKP pulse plate .

NO

Replace the CKP sensor .

DTC P0339 (2.4 L ENGINE) (2017 2018 2019)

DTC P0339 : CKP Sensor Circuit Intermittent Interruption

NOTE:

- Before you troubleshoot, **review the general troubleshooting information** .
- If A/T system DTCs are stored at the same time as DTC P0339, troubleshoot A/T system DTCs first, then recheck for DTC P0339.

DTC Description	Confirmed DTC	Pending DTC
P0339 CKP Sensor Circuit Intermittent Interruption	B	B

DTC (PGM-FI)

1. Problem verification (idling)

-1. Turn the vehicle to the ON mode.

-2. Clear the DTC with the HDS.

-3. Start the engine, and let it idle for 10 seconds.

-4. Monitor the OBD STATUS for DTC P0339 in the DTCs MENU with the HDS.

DTC Description	OBD STATUS
P0339 CKP Sensor Circuit Intermittent Interruption	B

Does the HDS indicate FAILED?

YES

The failure is duplicated. Go to step 3.

NO

If the HDS indicates PASSED, go to step 2. If the HDS indicates NOT COMPLETED, keep idling until a result comes on.

2. Problem verification (test-drive):

-1. Test-drive the vehicle for several minutes in the range of these recorded freeze data parameters:

- ENGINE SPEED
- VEHICLE SPEED

-2. Monitor the OBD STATUS for DTC P0339 in the DTCs MENU with the HDS.

DTC Description	OBD STATUS
P0339 CKP Sensor Circuit Intermittent Interruption	B

Does the HDS indicate FAILED?

YES

The failure is duplicated. Go to step 3.

NO

If the HDS indicates PASSED, intermittent failure, the system is OK at this time. Check for poor connections or loose terminals at the CKP sensor and the PCM. **If the on-board snapshot of this DTC is recorded, try to reproduce the failure under the same conditions with the on-board snapshot** . If the HDS indicates NOT COMPLETED, retest and check the OBD STATUS again.

3. CKP sensor circuit connectors and terminals condition check:

Check for poor connections or loose terminals at these locations:

- CKP sensor
- PCM
- Engine ground
- Body ground

Are the connections and terminals OK?

YES

Go to step 4.

NO

Repair the connections or terminals.

4. CKP pulse plate visual check

-1. **Remove the CKP sensor** , and check for damage to the CKP pulse plate.

Is the pulse plate damaged?

YES

Replace the CKP pulse plate .

NO

Replace the CKP sensor .

DTC P0340 (1.5 L ENGINE)

DTC P0340 : CMP Sensor A No Signal

NOTE: Before you troubleshoot, **review the general troubleshooting information** .

DTC Description	Confirmed DTC	Pending DTC
P0340 CMP Sensor A No Signal	B	B

DTC (PGM-FI)

1. Problem verification

   -1. Turn the vehicle to the ON mode.

   -2. Clear the DTC with the HDS.

   -3. Turn the vehicle to the OFF (LOCK) mode.

   -4. Start the engine.

   -5. Check for Pending or Confirmed DTCs with the HDS.

DTC Description	Confirmed DTC	Pending DTC
P0340 CMP Sensor A No Signal	B	B

   Is DTC P0340 indicated?

   YES

   Go to step 2.

   NO

   Intermittent failure, the system is OK at this time. Check for poor connections or loose terminals at CMP sensor A and the PCM. **If the on-board snapshot of this DTC is recorded, try to reproduce the failure under the same conditions with the on-board snapshot** .

2. Determine possible failure area (VCC2 line, others)

   -1. Turn the vehicle to the OFF (LOCK) mode.

   -2. Disconnect the following connector.

CMP sensor A 3P connector

   -3. Turn the vehicle to the ON mode.

   -4. Measure the voltage between test points 1 and 2.

Test condition	Vehicle ON mode
B	CMP sensor A 3P connector: disconnected
Test point 1	CMP sensor A 3P connector (female terminals) No. 1: ①
Test point 2	Body ground

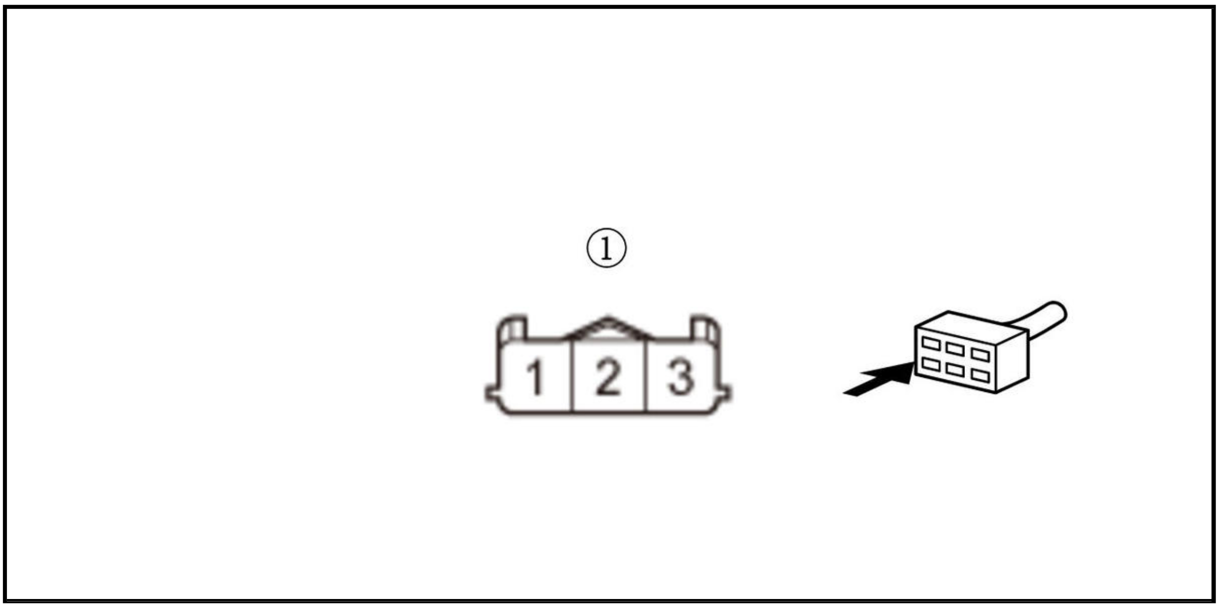

Is there about 5.0 V?

YES

Go to step 4.

NO

Go to step 3.

3. Open wire check (VCC2 line)

-1. Turn the vehicle to the OFF (LOCK) mode.

-2. Jump the SCS line with HDS, and wait more than 1 minute.

-3. Disconnect the following connector.

PCM connector E (80P)

-4. Check the continuity between test points 1 and 2.

Test condition	Vehicle OFF (LOCK) mode
B	CMP sensor A 3P connector: disconnected
B	PCM connector E (80P): disconnected
Test point 1	CMP sensor A 3P connector (female terminals) No. 1: ①
Test point 2	**PCM connector E (80P) No. 77**

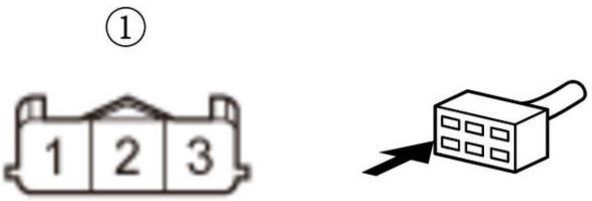

Is there continuity?

YES

The VCC2 wire is OK. Check for any authorized service information related to the DTCs or symptoms you are troubleshooting, or **substitute a known-good PCM** .

NO

Repair an open in the VCC2 wire between the PCM (E77) and CMP sensor A.

4. Determine possible failure area (TDCAM line, others)

-1. Measure the voltage between test points 1 and 2.

Test condition	Vehicle ON mode
B	CMP sensor A 3P connector: disconnected
Test point 1	CMP sensor A 3P connector (female terminals) No. 3: ①
Test point 2	Body ground

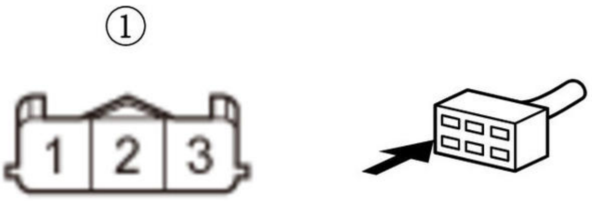

Is there about 5.0 V?

YES

Go to step 5.

NO

Go to step 7.

5. Determine possible failure area (SG2 line, others)

-1. Measure the voltage between test points 1 and 2.

Test condition	Vehicle ON mode
B	CMP sensor A 3P connector: disconnected
Test point 1	CMP sensor A 3P connector (female terminals) No. 1: ①
Test point 2	CMP sensor A 3P connector (female terminals) No. 2: ①

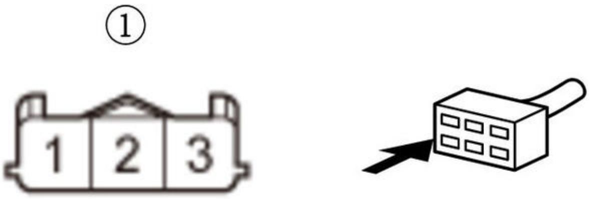

Is there about 5.0 V?

YES

The SG2 wire is OK. **Replace CMP sensor A** .

NO

Go to step 6.

6. Open wire check (SG2 line)

-1. Turn the vehicle to the OFF (LOCK) mode.

-2. Jump the SCS line with the HDS, and wait more than 1 minute.

-3. Disconnected the following connector.

PCM connector E (80P)

-4. Check for continuity between test points 1 and 2.

Test condition	Vehicle OFF (LOCK) mode
B	CMP sensor A 3P connector: disconnected
B	PCM connector E (80P): disconnected
Test point 1	CMP sensor A 3P connector (female terminals) No. 2: ①
Test point 2	**PCM connector E (80P) No. 78**

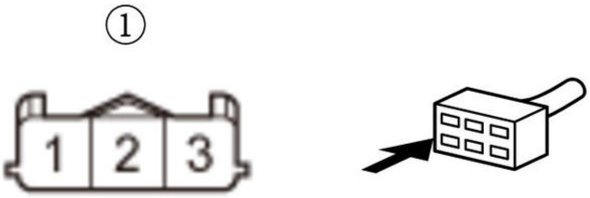

Is there continuity?

YES

The SG2 wire is OK. Check for any authorized service information related to the DTCs or symptoms you are troubleshooting, or **substitute a known-good PCM** .

NO

Repair an open in the SG2 wire between the PCM (E78) and CMP sensor A.

7. Shorted wire check (TDCAM line)

-1. Turn the vehicle to the OFF (LOCK) mode.

-2. Jump the SCS line with the HDS, and wait more than 1 minute.

-3. Disconnect the following connector.

PCM connector E (80P)

-4. Check for continuity between test points 1 and 2.

Test condition	Vehicle OFF (LOCK) mode
B	CMP sensor A 3P connector: disconnected
B	PCM connector E (80P): disconnected
Test point 1	**PCM connector E (80P) No. 43**
Test point 2	Body ground

Is there continuity?

YES

Repair a short in the TDCAM wire between the PCM (E43) and CMP sensor A.

NO

Go to step 8.

8. Open wire check (TDCAM line)

-1. Check for continuity between test points 1 and 2.

Test condition	Vehicle OFF (LOCK) mode
B	CMP sensor A 3P connector: disconnected
B	PCM connector E (80P): disconnected
Test point 1	CMP sensor A 3P connector (female terminals) No. 3: ①
Test point 2	**PCM connector E (80P) No. 43**

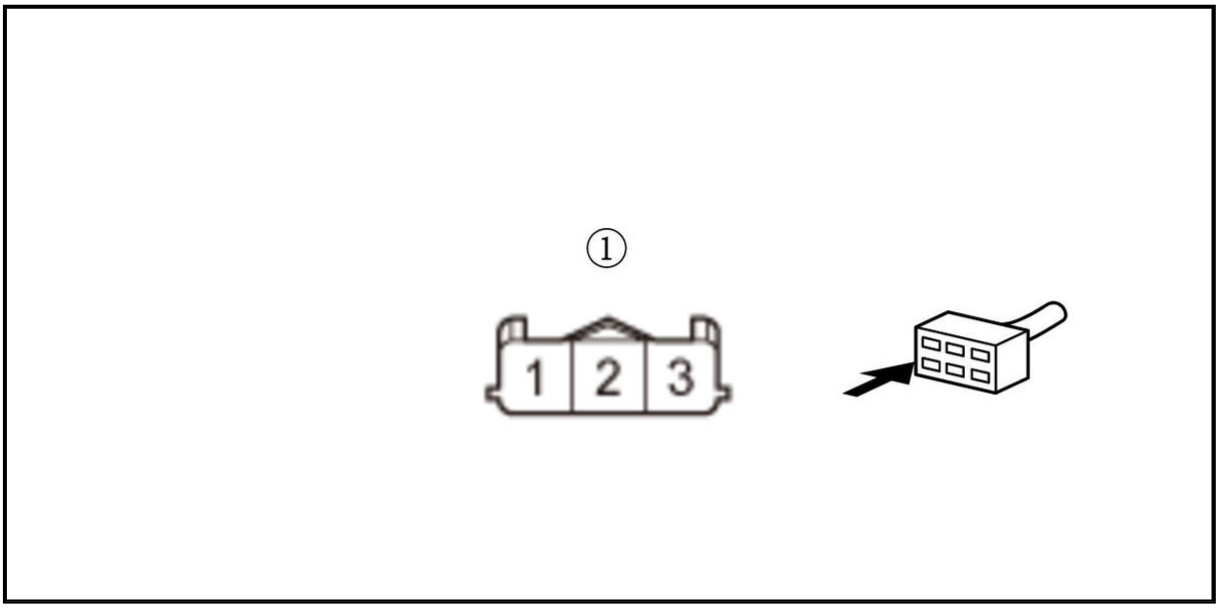

Is there continuity?

YES

The TDCAM wire is OK. Check for any authorized service information related to the DTCs or symptoms you are troubleshooting, or **substitute a known-good PCM** .

NO

Repair an open in the TDCAM wire between the PCM (E43) and CMP sensor A.

DTC P0340 (2.4 L ENGINE) (2017 2018 2019)

DTC P0340 : CMP Sensor A No Signal

NOTE: Before you troubleshoot, **review the general troubleshooting information** .

DTC Description	Confirmed DTC	Pending DTC
P0340 CMP Sensor A No Signal	B	B

DTC (PGM-FI)

1. Problem verification

-1. Turn the vehicle to the ON mode.

-2. Clear the DTC with the HDS.

-3. Start the engine.

-4. Check for Pending or Confirmed DTCs with the HDS.

DTC Description	Confirmed DTC	Pending DTC
P0340 CMP Sensor A No Signal	B	B

Is DTC P0340 indicated?

YES

The failure is duplicated. Go to step 2.

NO

Intermittent failure, the system is OK at this time. Check for poor connections or loose terminals at CMP sensor A and the PCM. **If the on-board snapshot of this DTC is recorded, try to reproduce the failure under the same conditions with the on-board snapshot** .

2. Open wire check (IG1 ACG/IG1 (MAIN)/IG1 (CAM) line)

-1. Turn the vehicle to the OFF (LOCK) mode.

-2. Disconnect the following connector.

CMP sensor A 3P connector

-3. Turn the vehicle to the ON mode.

-4. Measure the voltage between test points 1 and 2.

Test condition	Vehicle ON mode
B	CMP sensor A 3P connector: disconnected
Test point 1	CMP sensor A 3P connector (female terminals) No. 1: ①
Test point 2	Body ground

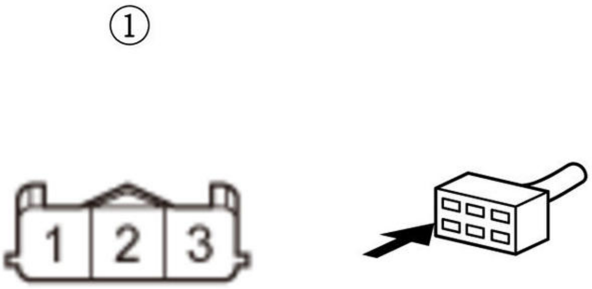

Is there battery voltage?

YES

The IG1 ACG/IG1 (MAIN)/IG1 (CAM) wire is OK. Go to step 3.

NO

Repair an open in the IG1 ACG/IG1 (MAIN)/IG1 (CAM) wire between No. D21 (10 A) fuse in the under-dash fuse/relay box and CMP sensor A.

3. Determine possible failure area (CAM line, LG/LG2 line)

-1. Measure the voltage between test points 1 and 2.

Test condition	Vehicle ON mode
B	CMP sensor A 3P connector: disconnected
Test point 1	CMP sensor A 3P connector (female terminals) No. 3: ①
Test point 2	Body ground

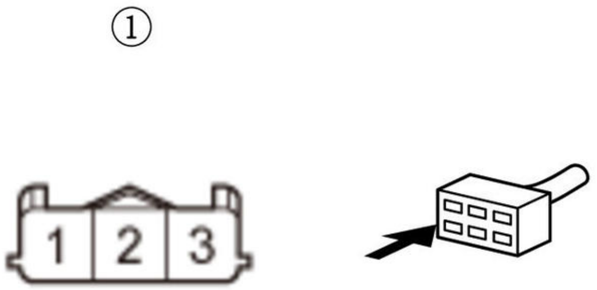

Is there about 5.0 V?

YES

Go to step 4.

NO

Go to step 5.

4. Open wire check (LG/LG2 line)

-1. Measure the voltage between test points 1 and 2.

Test condition	Vehicle ON mode
B	CMP sensor A 3P connector: disconnected
Test point 1	CMP sensor A 3P connector (female terminals) No. 1: ①
Test point 2	CMP sensor A 3P connector (female terminals) No. 2: ①

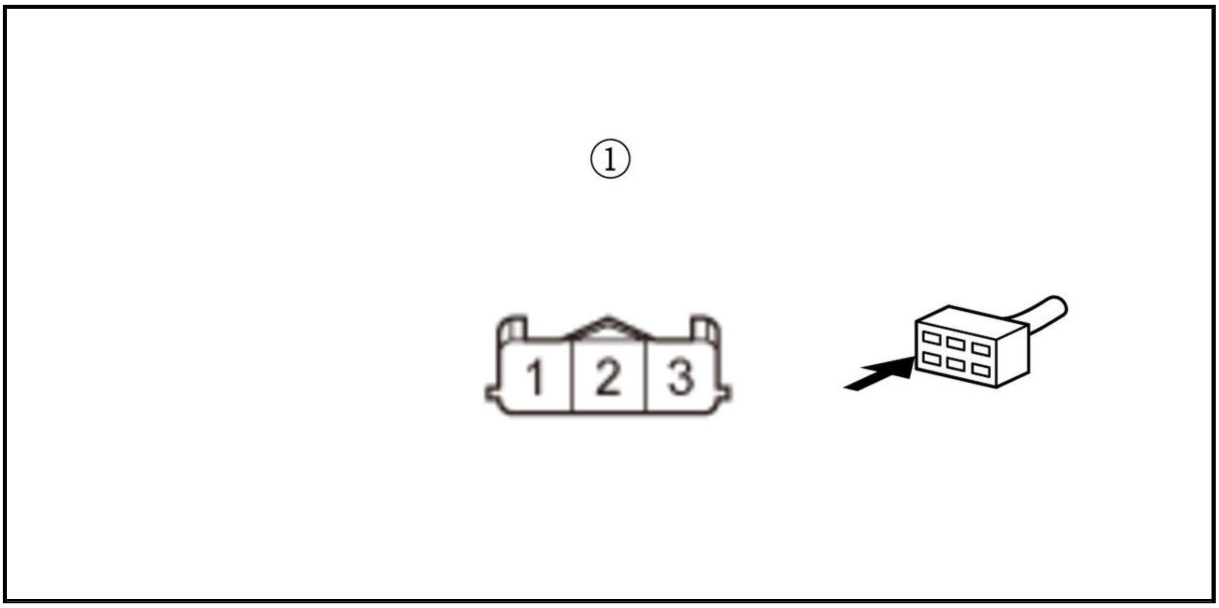

Is there battery voltage?

YES

The LG/LG2 wire is OK. **Replace CMP sensor A** .

NO

Repair an open in the LG/LG2 wire between CMP sensor A and G101.

5. Shorted wire check (CAM line)

-1. Turn the vehicle to the OFF (LOCK) mode.

-2. Jump the SCS line with the HDS, and wait more than 1 minute.

-3. Disconnect the following connector.

PCM connector B (51P)

-4. Check for continuity between test points 1 and 2.

Test condition	Vehicle OFF (LOCK) mode
B	CMP sensor A 3P connector: disconnected
B	PCM connector B (51P): disconnected
Test point 1	**PCM connector B (51P) No. 39**

Test point 2	Body ground

Is there continuity?

YES

Repair a short in the CAM wire between the PCM (B39) and CMP sensor A.

NO

The CAM wire is not shorted. Go to step 6.

6. Open wire check (CAM line)

-1. Check for continuity between test points 1 and 2.

Test condition	Vehicle OFF (LOCK) mode
B	CMP sensor A 3P connector: disconnected
B	PCM connector B (51P): disconnected
Test point 1	CMP sensor A 3P connector (female terminals) No. 3: ①
Test point 2	**PCM connector B (51P) No. 39**

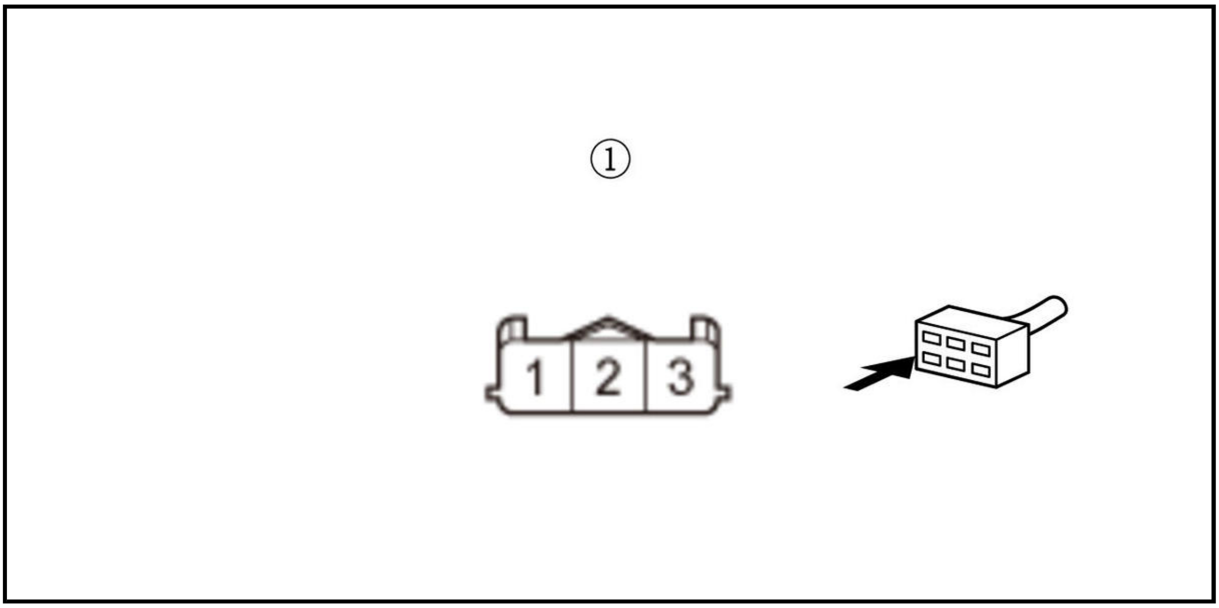

Is there continuity?

YES

The CAM wire is OK. Check for any authorized service information related to the DTCs or symptoms you are troubleshooting or **substitute a known-good PCM** .

NO

Repair an open in the CAM wire between the PCM (B39) and CMP sensor A.

DTC P0341 (1.5 L ENGINE)

DTC P0341 : CMP Sensor A and CKP Sensor Incorrect Phase Detected

NOTE:

- Before you troubleshoot, **review the general troubleshooting information** .
- If the DTC P1009 stored at the same time as DTC P0341, troubleshoot DTC P1009 first, then recheck for DTC P0341.

DTC Description	Confirmed DTC	Pending DTC
P0341 CMP Sensor A and CKP Sensor Incorrect Phase Detected	B	B

DTC (PGM-FI)

1. Problem verification

-1. Turn the vehicle to the ON mode.

-2. Clear the DTC with the HDS.

-3. Turn the vehicle to the OFF (LOCK) mode, and allow the engine to cool below 104 deg. F (40 deg. C).

-4. Start the engine, and let it idle without load (in P or N).

-5. Check for Pending or Confirmed DTCs with the HDS.

DTC Description	Confirmed DTC	Pending DTC
P0341 CMP Sensor A and CKP Sensor Incorrect Phase Detected	B	B

Is DTC P0341 indicated?

YES

Go to step 5.

NO

Go to step 2.

2. VTC system check (VTC TEST with the HDS)

-1. Select the VTC TEST in the INSPECTION MENU with the HDS, then select the IN-VTC.

VTC TEST

Is the result OK?

YES

Go to step 3.

NO

Go to step 5.

3. VTC system check (VTC STATUS check with the HDS)

-1. Test-drive the vehicle at a steady speed between 19-38 mph (30-60 km/h) for 10 minutes.

-2. Check the parameter (s) below with the HDS.

Signal	Threshold		Current conditions	
	Values	Unit	Values	Unit
VTC STATUS	ON	B	B	B

Do the current condition (s) match the threshold?

YES

Go to step 4.

NO

Do the test-drive again, then recheck the VTC STATUS.

4. VTC system check (OBD status check)

-1. Monitor the OBD STATUS for DTC P0341 in the DTCs MENU with the HDS.

DTC Description	OBD STATUS
P0341 CMP Sensor A and CKP Sensor Incorrect Phase Detected	B

Does the HDS indicate FAILED?

YES

Go to step 5.

NO

If the HDS indicates PASSED, intermittent failure, the system is OK at this time. **If the on-board snapshot of this DTC is recorded, try to reproduce the failure under the same conditions with the on-board snapshot** . If the HDS indicates NOT COMPLETED, go to step 3, and recheck.

5. VTC oil control solenoid valve A operation check

-1. **Test VTC oil control solenoid valve A** .

Is the solenoid valve OK?

YES

Go to step 6.

NO

Replace VTC oil control solenoid valve A .

6. Camshaft timing check

-1. **Check the camshaft timing** .

Is the camshaft timing OK?

YES

Go to step 7.

NO

Reset the camshaft timing .

7. Cam chain check

-1. **Check for damage or stretch at the cam chain** .

Is the cam chain damaged or stretched?

YES

Replace the cam chain and **the auto-tensioner** .

NO

Go to step 8.

8. VTC actuator A check

-1. **Inspect VTC actuator A** .

Is the actuator OK?

YES

Go to step 9.

NO

Replace VTC actuator A .

9. PGM-FI system check (DTC check)

-1. Turn the vehicle to the ON mode.

-2. **Reset the PCM with the HDS** .

Reset PCM

-3. **Do the CKP pattern clear procedure** .

CRANK (CKP) PATTERN CLEAR

-4. **Do the PCM idle learn procedure** .

-5. **Do the CKP pattern learn procedure** .

CRANK PATTERN LEARNING

-6. Turn the vehicle to the OFF (LOCK) mode, and allow the engine to cool below 104 deg. F (40 deg. C).

-7. Start the engine, and let it idle without load (in P or N).

-8. Check for Pending or Confirmed DTCs with the HDS.

DTC Description	Confirmed DTC	Pending DTC
P0341 CMP Sensor A and CKP Sensor Incorrect Phase Detected	B	B

Is DTC P0341 indicated?

YES

Check for poor connections or loose terminals at VTC oil control solenoid valve A and the PCM, then go to step 1.

NO

Intermittent failure, the system is OK at this time. **If the on-board snapshot of this DTC is recorded, try to reproduce the failure under the same conditions with the on-board snapshot** .

DTC P0341 (2.4 L ENGINE) (2017 2018 2019)

DTC P0341 : CMP Sensor A and CKP Sensor Incorrect Phase Detected

NOTE: Before you troubleshoot, **review the general troubleshooting information** .

DTC Description	Confirmed DTC	Pending DTC
P0341 CMP Sensor A and CKP Sensor Incorrect Phase Detected	B	B

DTC (PGM-FI)

1. Problem verification

   -1. Turn the vehicle to the ON mode.

   -2. Clear the DTC with the HDS.

   -3. Turn the vehicle to the OFF (LOCK) mode, and allow the engine to cool below 104 deg. F (40 deg. C).

   -4. Start the engine, and let it idle without load (in P or N).

   -5. Check for Pending or Confirmed DTCs with the HDS.

DTC Description	Confirmed DTC	Pending DTC
P0341 CMP Sensor A and CKP Sensor Incorrect Phase Detected	B	B

   Is DTC P0341 indicated?

   YES

   The failure is duplicated. Go to step 5.

   NO

   Go to step 2.

2. VTC system check (VTC TEST with the HDS)

   -1. Select the VTC TEST in the INSPECTION MENU with the HDS.

   VTC TEST

   Is the result OK?

   YES

   Go to step 3.

   NO

   Go to step 5.

3. VTC system check (VTC STATUS check with the HDS)

   -1. Test-drive at a steady speed between 19-38 mph (30-60 km/h) for 10 minutes.

   -2. Check the parameter (s) below with the HDS.

Signal	Threshold		Current conditions	
	Values	Unit	Values	Unit
VTC STATUS	ON	B	B	B

Do the current condition (s) match the threshold?

YES

Go to step 4.

NO

Do the test-drive again, then recheck the VTC STATUS.

4. VTC system check (DTC check)

   -1. Monitor the OBD STATUS for DTC P0341 in the DTCs MENU with the HDS.

DTC Description	OBD STATUS
P0011 VTC System Malfunction	B

   Does the HDS indicate FAILED?

   YES

   Go to step 5.

   NO

   If the HDS indicates PASSED, intermittent failure, the system is OK at this time. **If the on-board snapshot of this DTC is recorded, try to reproduce the failure under the same conditions with the on-board snapshot** . If the HDS indicates NOT COMPLETED, go to step 3, and recheck.

5. VTC oil control solenoid valve operation check

   -1. **Test the VTC oil control solenoid valve** .

   Is the VTC oil control valve OK?

   YES

   Go to step 6.

   NO

   Replace the VTC oil control solenoid valve .

6. Camshaft timing check

   -1. **Check the camshaft timing** .

   Is the camshaft timing OK?

   YES

   Go to step 7.

   NO

   Reset the camshaft timing .

7. Cam chain check

   -1. **Check for damage or stretch at the cam chain** .

Is the cam chain damaged or stretched?

YES

Replace the cam chain and **the auto-tensioner** .

NO

Go to step 8.

8. VTC actuator check

-1. **Inspect the VTC actuator** .

Is the actuator OK?

YES

Go to step 9.

NO

Replace the VTC actuator .

9. PGM-FI system check (DTC check)

-1. Turn the vehicle to the ON mode.

-2. **Reset the PCM with the HDS** .

Reset PCM

-3. **Do the CKP pattern clear procedure** .

CRANK (CKP) PATTERN CLEAR

-4. **Do the PCM idle learn procedure** .

-5. **Do the CKP pattern learn procedure** .

CRANK PATTERN LEARNING

Test-drive at a steady speed between 19-38 mph (30-60 km/h) for 10 minutes.

-7. Check for Pending or Confirmed DTCs with the HDS.

DTC Description	Confirmed DTC	Pending DTC
P0341 CMP Sensor A and CKP Sensor Incorrect Phase Detected	B	B

Is DTC P0341 indicated?

YES

Check for poor connections or loose terminals at the VTC oil control solenoid valve and the PCM, then go to step 1.

NO

Intermittent failure, the system is OK at this time. **If the on-board snapshot of this DTC is recorded, try to reproduce the failure under the same conditions with the on-board snapshot** .

DTC P0344 (1.5 L ENGINE)

DTC P0344 : CMP Sensor A Circuit Intermittent Interruption

NOTE: Before you troubleshoot, **review the general troubleshooting information** .

DTC Description	Confirmed DTC	Pending DTC
P0344 CMP Sensor A Circuit Intermittent Interruption	B	B

DTC (PGM-FI)

1. Problem verification (idling)

   -1. Turn the vehicle to the ON mode.

   -2. Clear the DTC with the HDS.

   -3. Turn the vehicle to the OFF (LOCK) mode.

   -4. Start the engine, and let it idle for 10 seconds.

   -5. Monitor the OBD STATUS for DTC P0344 in the DTCs MENU with the HDS.

DTC Description	OBD STATUS
P0344 CMP Sensor A Circuit Intermittent Interruption	B

   Does the HDS indicate FAILED?

   YES

   Go to step 3.

   NO

   If the HDS indicates PASSED, go to step 2. If the HDS indicates NOT COMPLETED, keep idling until a result comes on.

2. Problem verification (test-drive):

   -1. Test-drive the vehicle for several minutes in the range of these recorded on-board snapshot parameters:

   - ENGINE SPEED
   - VEHICLE SPEED

   On-board Snapshot

   -2. Monitor the OBD STATUS for DTC P0344 in the DTCs MENU with the HDS.

DTC Description	OBD STATUS
P0344 CMP Sensor A Circuit Intermittent Interruption	B

   Does the HDS indicate FAILED?

   YES

   Go to step 3.

   NO

If the HDS indicates PASSED, intermittent failure, the system is OK at this time. Check for poor connections or loose terminals at CMP sensor A and the PCM. **If the on-board snapshot of this DTC is recorded, try to reproduce the failure under the same conditions with the on-board snapshot** . If the HDS indicates NOT COMPLETED, retest and check the OBD STATUS again.

3. CMP sensor circuit connectors and terminals condition check:

   Check for poor connections or loose terminals at these locations:

   - CMP sensor A
   - PCM
   - Engine ground
   - Body ground

   Are the connections and terminals OK?

   YES

   Go to step 4.

   NO

   Repair the connections or terminals.

4. CMP pulse plate A visual check

   -1. **Remove the cylinder head cover** , then check for damage to CMP pulse plate A on the intake camshaft.

   Is the pulse plate damaged or loose?

   YES

   Replace the intake camshaft (CMP pulse plate A) .

   NO

   Replace the CMP sensor A .

DTC P0344 (2.4 L ENGINE) (2017 2018 2019)

DTC P0344 : CMP Sensor A Circuit Intermittent Interruption

NOTE: Before you troubleshoot, **review the general troubleshooting information** .

DTC Description	Confirmed DTC	Pending DTC
P0344 CMP Sensor A Circuit Intermittent Interruption	B	B

DTC (PGM-FI)

1. Problem verification (idling)

   -1. Turn the vehicle to the ON mode.

   -2. Clear the DTC with the HDS.

   -3. Start the engine, and let it idle for 10 seconds.

   -4. Monitor the OBD STATUS for DTC P0344 in the DTCs MENU with the HDS.

DTC Description	OBD STATUS
P0344 CMP Sensor A Circuit Intermittent Interruption	B

Does the HDS indicate FAILED?

YES

The failure is duplicated. Go to step 3.

NO

If the HDS indicates PASSED, go to step 2. If the HDS indicates NOT COMPLETED, keep idling until a result comes on.

2. Problem verification (test-drive):

-1. Test-drive the vehicle for several minutes in the range of these recorded freeze data parameters:

- ENGINE SPEED
- VEHICLE SPEED

-2. Monitor the OBD STATUS for DTC P0344 in the DTCs MENU with the HDS.

DTC Description	OBD STATUS
P0344 CMP Sensor A Circuit Intermittent Interruption	B

Does the HDS indicate FAILED?

YES

The failure is duplicated. Go to step 3.

NO

If the HDS indicates PASSED, intermittent failure, the system is OK at this time. Check for poor connections or loose terminals at CMP sensor A and the PCM. **If the on-board snapshot of this DTC is recorded, try to reproduce the failure under the same conditions with the on-board snapshot** . If the HDS indicates NOT COMPLETED, retest and check the OBD STATUS again.

3. CMP sensor circuit connectors and terminals condition check:

Check for poor connections or loose terminals at these locations:

- CMP sensor A
- PCM
- Engine ground
- Body ground

Are the connections and terminals OK?

YES

Go to step 4.

NO

Repair the connections or terminals.

4. CMP pulse plate A visual check

-1. Remove the cylinder head cover , then check for damage to CMP pulse plate A on the intake camshaft.

Is the pulse plate damaged?

YES

Replace the intake camshaft .

NO

Replace CMP sensor A .

DTC P0351, P0352, P0353, P0354 (1.5 L ENGINE)

DTC P0351 : No. 1 Cylinder Ignition Coil Circuit Malfunction **DTC P0352** : No. 2 Cylinder Ignition Coil Circuit Malfunction **DTC P0353** : No. 3 Cylinder Ignition Coil Circuit Malfunction **DTC P0354** : No. 4 Cylinder Ignition Coil Circuit Malfunction

NOTE: Before you troubleshoot, review the general troubleshooting information .

DTC Description	Confirmed DTC	Pending DTC
P0351 No. 1 Cylinder Ignition Coil Circuit Malfunction	B	B

DTC Description	Confirmed DTC	Pending DTC
P0352 No. 2 Cylinder Ignition Coil Circuit Malfunction	B	B
P0353 No. 3 Cylinder Ignition Coil Circuit Malfunction	B	B
P0354 No. 4 Cylinder Ignition Coil Circuit Malfunction	B	B

DTC (PGM-FI)

1. Problem verification

-1. Turn the vehicle to the ON mode.

-2. Clear the DTC with the HDS.

-3. Turn the vehicle to the OFF (LOCK) mode.

-4. Start the engine.

-5. Check for Pending or Confirmed DTCs with the HDS.

DTC Description	Confirmed DTC	Pending DTC
P0351 No. 1 Cylinder Ignition Coil Circuit Malfunction	B	B
P0352 No. 2 Cylinder Ignition Coil Circuit Malfunction	B	B
P0353 No. 3 Cylinder Ignition Coil Circuit Malfunction	B	B
P0354 No. 4 Cylinder Ignition Coil Circuit Malfunction	B	B

Is DTC P0351, P0352, P0353, and/or P0354 indicated?

YES

Go to step 2.

NO

Intermittent failure, the system is OK at this time. Check for poor connections or loose terminals at the ignition coil and the PCM. **If the on-board snapshot of this DTC is recorded, try to reproduce the failure under the same conditions with the on-board snapshot** .

2. Ignition coil check

   -1. Turn the vehicle to the OFF (LOCK) mode.

   -2. **Exchange the ignition coil from the problem cylinder with one from another cylinder** .

   -3. Start the engine.

   -4. Check for Pending or Confirmed DTCs with the HDS.

DTC Description	Confirmed DTC	Pending DTC
P0351 No. 1 Cylinder Ignition Coil Circuit Malfunction	B	B
P0352 No. 2 Cylinder Ignition Coil Circuit Malfunction	B	B

DTC Description	Confirmed DTC	Pending DTC
P0353 No. 3 Cylinder Ignition Coil Circuit Malfunction	B	B
P0354 No. 4 Cylinder Ignition Coil Circuit Malfunction	B	B

   Is DTC indicated at the exchanged position?

   YES

   Replace the faulty ignition coil .

   NO

   Go to step 3.

3. Fuse check

   -1. Turn the vehicle to the OFF (LOCK) mode.

   -2. Check the following fuse.

Fuse	No. A15 (15 A)
Location	Under-hood fuse/relay box

   Is the fuse OK?

   YES

   Go to step 4.

   NO

   Check for a short in the +B IG COIL wire between the No. A15 (15 A) fuse and the relay circuit board, and repair it as needed. Also replace the No. A15 (15 A) fuse.

4. Relay circuit board check

   -1. **Remove and test the relay circuit board** .

   Is the relay circuit board OK?

   YES

Go to step 5.

NO

Replace the relay circuit board .

5. Open wire check (+B IG COIL line)

-1. Measure the voltage between test points 1 and 2.

Test condition	Vehicle OFF (LOCK) mode
B	Relay circuit board: removed
Test point 1	Relay circuit board connector C (18P) (female terminals) No. 9: ①
Test point 2	Body ground

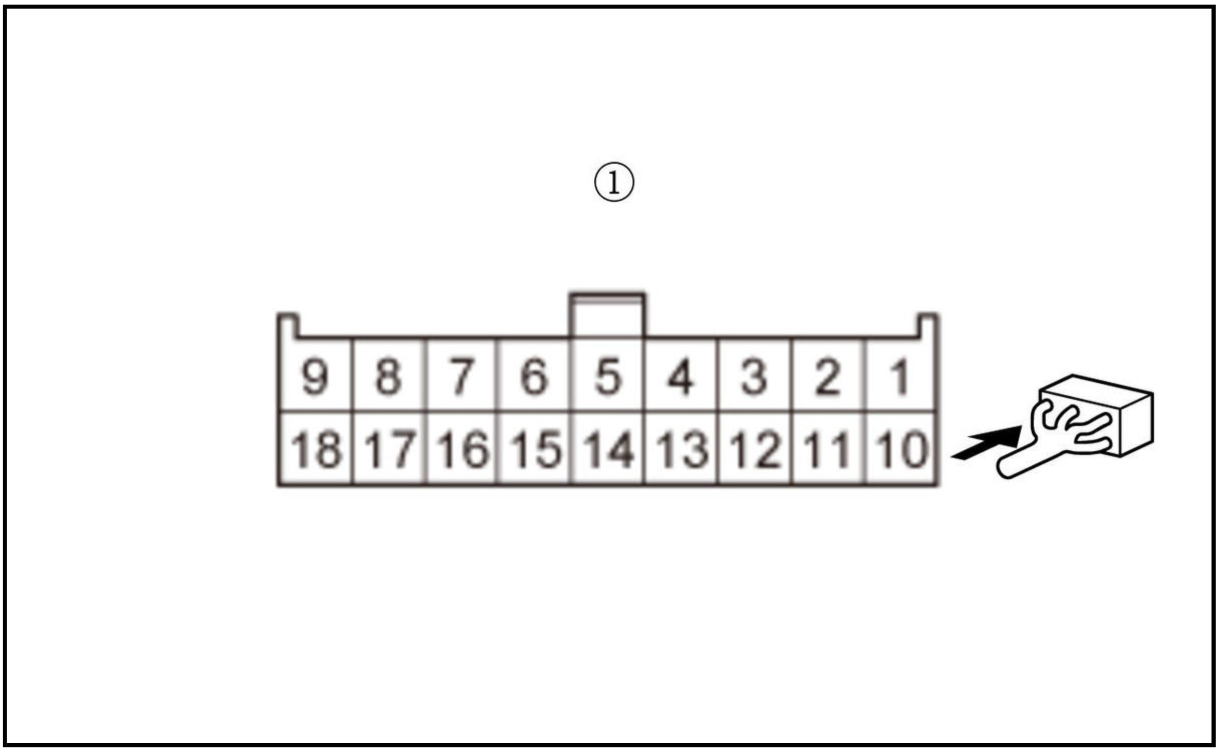

Is there battery voltage?

YES

Go to step 6.

NO

Check for an open in the +B IG COIL wire between the No. A15 (15 A) fuse and the relay circuit board.

6. Open wire check (IG COIL RLY OUT/IG1 (COIL)/IG1 (IGN) line)

-1. Reinstall the relay circuit board.

-2. Disconnect the following connector (s).

Ignition coil 3P connector (problem cylinder)

-3. Turn the vehicle to the ON mode.

-4. Measure the voltage between test points 1 and 2.

Test condition	Vehicle ON mode
B	Ignition coil 3P connector (problem cylinder): disconnected
Test point 1	Ignition coil 3P connector (female terminals) No. 1: ①
Test point 2	Body ground

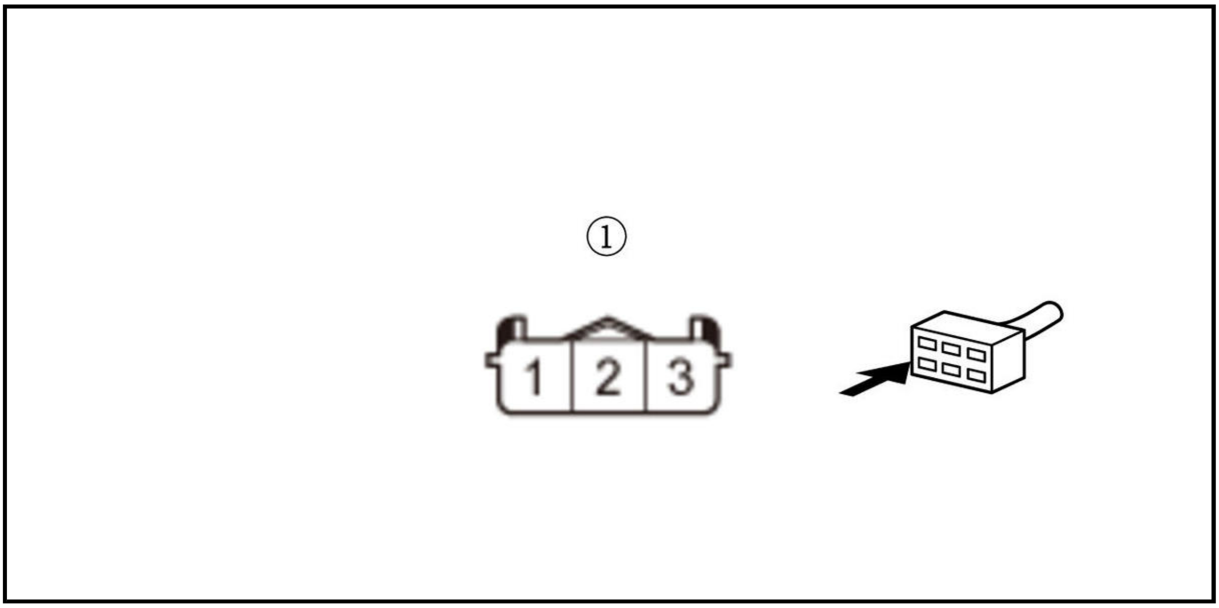

Is there battery voltage?

YES

Go to step 7.

NO

Repair an open in the IG COIL RLY OUT/IG1 (COIL)/IG1 (IGN) wire between the ignition coil and the relay circuit board (ignition coil relay circuit).

7. Open wire check (PG (COIL) line)

-1. Turn the vehicle to the OFF (LOCK) mode.

-2. Check for continuity between test points 1 and 2.

Test condition	Vehicle OFF (LOCK) mode
B	Ignition coil 3P connector (problem cylinder): disconnected
Test point 1	Ignition coil 3P connector (female terminals) No. 2: ①
Test point 2	Body ground

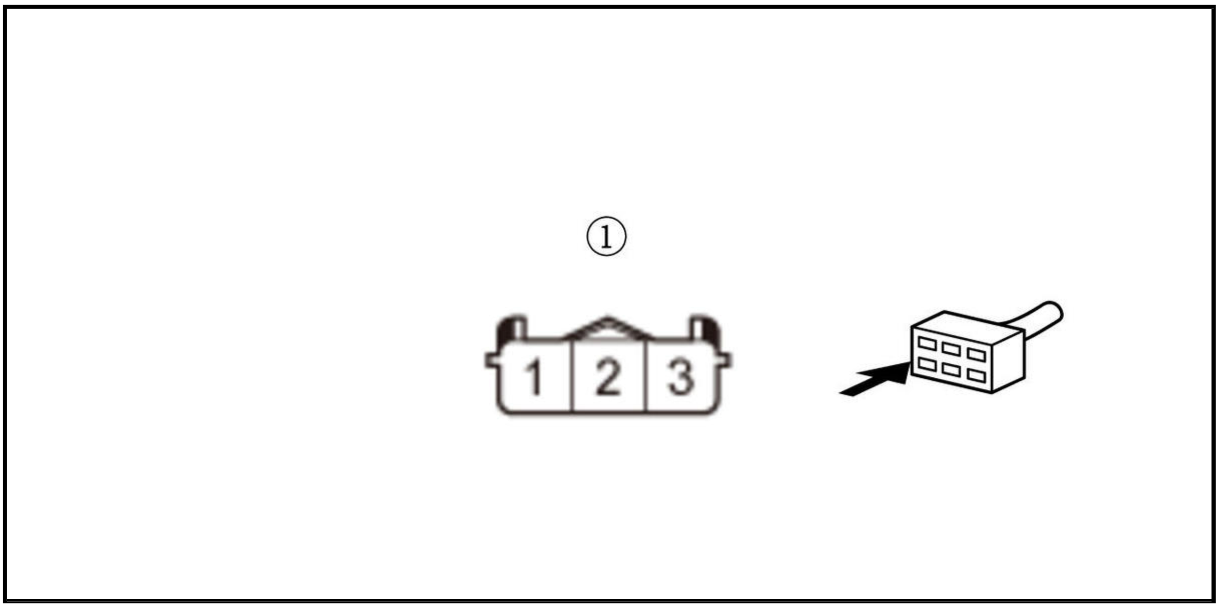

Is there continuity?

YES

Go to step 8.

NO

Repair an open in the PG (COIL) wire between the ignition coil and G101.

8. Shorted wire check (IGN lines)

-1. Jump the SCS line with the HDS, and wait more than 1 minute.

-2. Disconnect the following connector.

PCM connector E (80P)

-3. Check for continuity between body ground and the appropriate PCM connector terminal of the problem ignition coil (see table).

Test condition	Vehicle OFF (LOCK) mode
B	Ignition coil 3P connector (problem cylinder): disconnected
B	PCM connector E (80P): disconnected

Problem cylinder	DTC	Connector	Terminal
No. 1	P0351	PCM connector E (80P)	No. 37
No. 2	P0352		No. 38
No. 3	P0353		No. 39
No. 4	P0354		No. 40

Is there continuity?

YES

Repair a short in the IGN wire between the PCM and the ignition coil.

NO

Go to step 9.

9. Open wire check (IGN lines)

-1. Check for continuity between appropriate ignition coil 3P connector terminal (female terminals) No. 3: ① and the appropriate PCM connector terminal of the problem ignition coil (see table).

Test condition	Vehicle OFF (LOCK) mode
B	Ignition coil 3P connector (problem cylinder): disconnected
B	PCM connector E (80P): disconnected

Problem cylinder	DTC	Connector	Terminal
No. 1	P0351	PCM connector E (80P)	No. 37
No. 2	P0352		No. 38
No. 3	P0353		No. 39
No. 4	P0354		No. 40

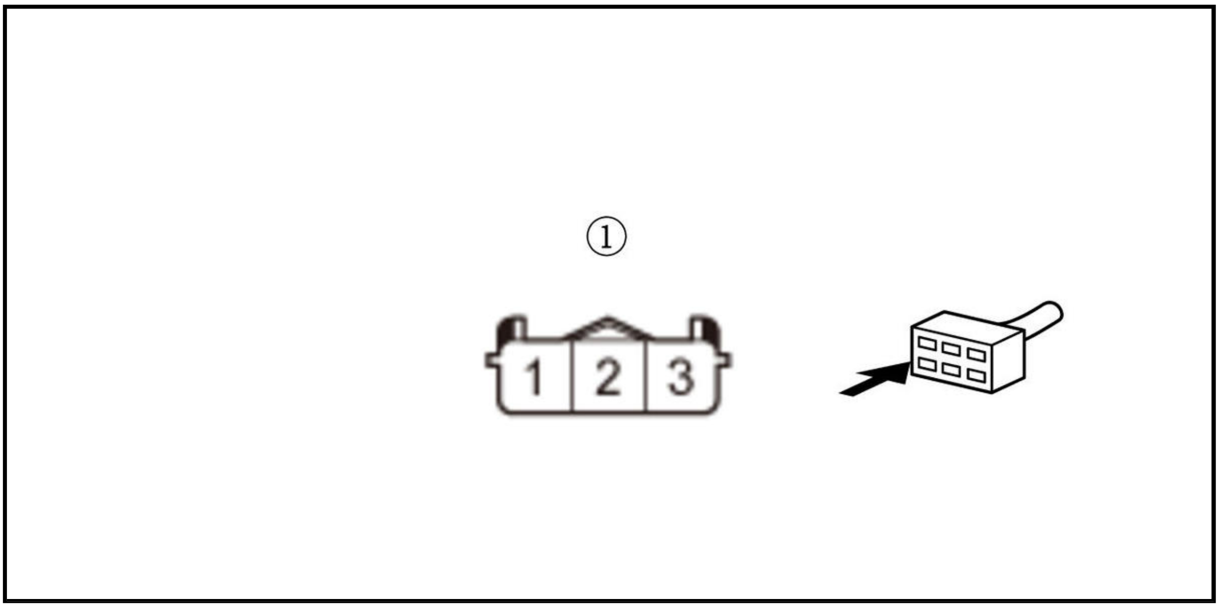

Is there continuity?

YES

The IGN wires are OK. Check for any authorized service information related to the DTCs or symptoms you are troubleshooting, or substitute a known-good PCM .

NO

Repair an open in the IGN wire between the PCM and the ignition coil.

DTC P0351, P0352, P0353, P0354 (2.4 L ENGINE) (2017 2018 2019)

DTC P0351 : No. 1 Cylinder Ignition Coil Circuit Malfunction **DTC P0352** : No. 2 Cylinder Ignition Coil Circuit Malfunction **DTC P0353** : No. 3 Cylinder Ignition Coil Circuit Malfunction **DTC P0354** : No. 4 Cylinder Ignition Coil Circuit Malfunction

NOTE: Before you troubleshoot, review the general troubleshooting information .

DTC Description	Confirmed DTC	Pending DTC
P0351 No. 1 Cylinder Ignition Coil Circuit Malfunction	B	B

DTC Description	Confirmed DTC	Pending DTC
P0352 No. 2 Cylinder Ignition Coil Circuit Malfunction	B	B
P0353 No. 3 Cylinder Ignition Coil Circuit Malfunction	B	B
P0354 No. 4 Cylinder Ignition Coil Circuit Malfunction	B	B

DTC (PGM-FI)

1. Problem verification

   -1. Turn the vehicle to the ON mode.

   -2. Clear the DTC with the HDS.

   -3. Start the engine.

   -4. Check for Pending or Confirmed DTCs with the HDS.

DTC Description	Confirmed DTC	Pending DTC
P0351 No. 1 Cylinder Ignition Coil Circuit Malfunction	B	B
P0352 No. 2 Cylinder Ignition Coil Circuit Malfunction	B	B
P0353 No. 3 Cylinder Ignition Coil Circuit Malfunction	B	B
P0354 No. 4 Cylinder Ignition Coil Circuit Malfunction	B	B

   Is DTC P0351, P0352, P0353, and/or P0354 indicated?

   YES

   The failure is duplicated. Go to step 2.

   NO

   Intermittent failure, the system is OK at this time. Check for poor connections or loose terminals at the ignition coil and the PCM. **If the on-board snapshot of this DTC is recorded, try to reproduce the failure under the same conditions with the on-board snapshot** .

2. Ignition coil check

   -1. Turn the vehicle to the OFF (LOCK) mode.

   -2. **Exchange the ignition coil from the problem cylinder with one from another cylinder** .

   -3. Start the engine.

   -4. Check for Pending or Confirmed DTCs with the HDS.

DTC Description	Confirmed DTC	Pending DTC
P0351 No. 1 Cylinder Ignition Coil Circuit Malfunction	B	B
P0352 No. 2 Cylinder Ignition Coil Circuit Malfunction	B	B
P0353 No. 3 Cylinder Ignition Coil Circuit Malfunction	B	B

DTC Description	Confirmed DTC	Pending DTC
P0354 No. 4 Cylinder Ignition Coil Circuit Malfunction	B	B

   Is DTC indicated at the exchanged position?

   YES

Replace the faulty ignition coil .

NO

Go to step 3.

3. Fuse check

-1. Turn the vehicle to the OFF (LOCK) mode.

-2. Check the following fuse.

Fuse	No. A15 (15 A)
Location	Under-hood fuse/relay box

Is the fuse OK?

YES

Go to step 4.

NO

Check for a short in the +B IG COIL wire between the No. A15 (15 A) fuse and the relay circuit board, and repair it as needed. Also replace the No. A15 (15 A) fuse.

4. Relay circuit board check

-1. **Remove and test the relay circuit board** .

Is the relay circuit board OK?

YES

Go to step 5.

NO

Replace the relay circuit board .

5. Open wire check (+B IG COIL line)

-1. Measure the voltage between test points 1 and 2.

Test condition	Vehicle OFF (LOCK) mode
B	Relay circuit board: removed
Test point 1	Relay circuit board connector C (18P) (female terminals) No. 9: ①
Test point 2	Body ground

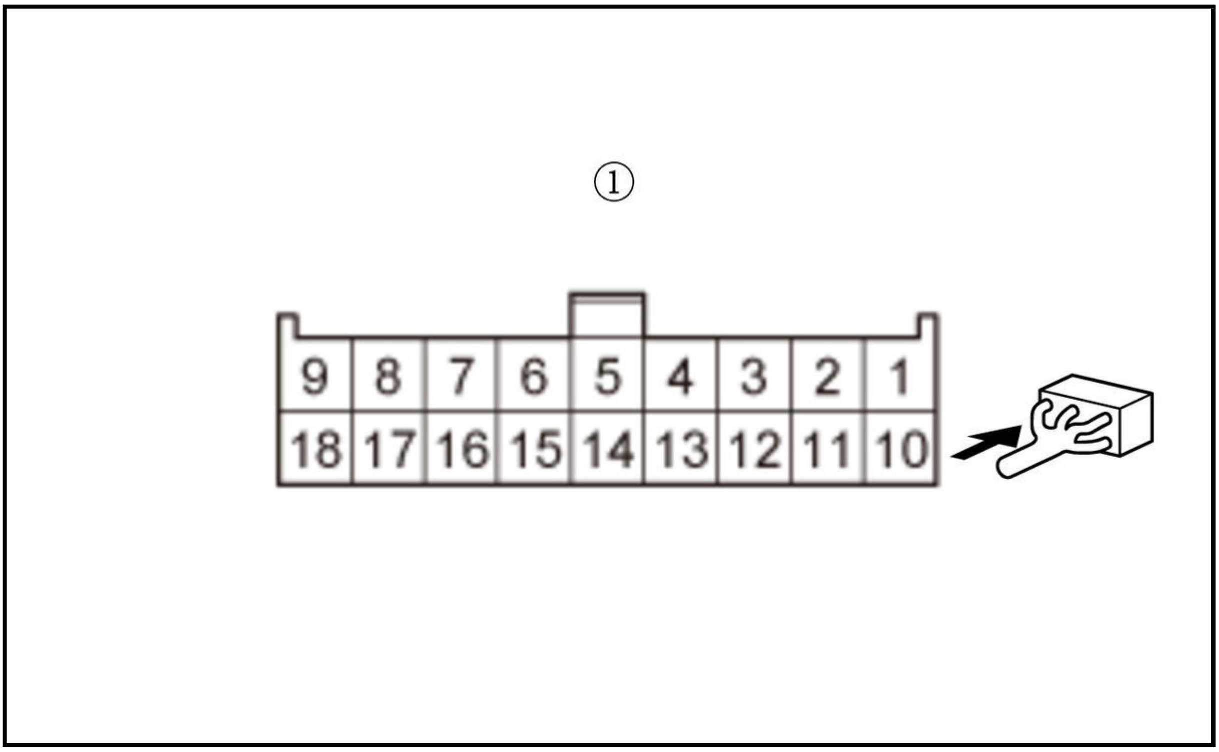

Is there battery voltage?

YES

Go to step 6.

NO

Check for an open in the +B IG COIL wire between the No. A15 (15 A) fuse and the relay circuit board.

6. Open wire check (IG COIL RLY OUT/IG1 (COIL)/IG1 (IGN) line)

-1. Reinstall the relay circuit board.

-2. Disconnect the following connector (s).

Ignition coil 3P connector (problem cylinder)

-3. Turn the vehicle to the ON mode.

-4. Measure the voltage between test points 1 and 2.

Test condition	Vehicle ON mode
B	Ignition coil 3P connector (problem cylinder): disconnected
Test point 1	Ignition coil 3P connector (female terminals) No. 1: ①
Test point 2	Body ground

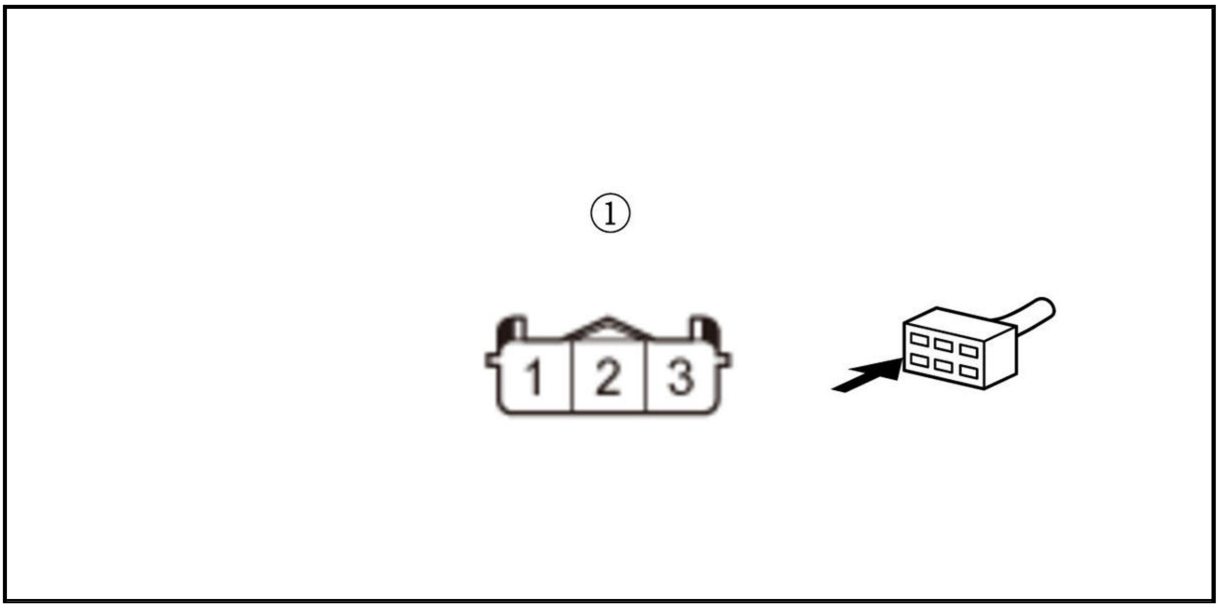

Is there battery voltage?

YES

The IG COIL RLY OUT/IG1 (COIL)/IG1 (IGN) wire is OK. Go to step 7.

NO

Repair an open in the IG COIL RLY OUT/IG1 (COIL)/IG1 (IGN) wire between the ignition coil and the relay circuit board (ignition coil relay).

7. Open wire check (PG (COIL) line)

-1. Turn the vehicle to the OFF (LOCK) mode.

-2. Check for continuity between test points 1 and 2.

Test condition	Vehicle OFF (LOCK) mode
B	Ignition coil 3P connector (problem cylinder): disconnected
Test point 1	Ignition coil 3P connector (female terminals) No. 2: ①
Test point 2	Body ground

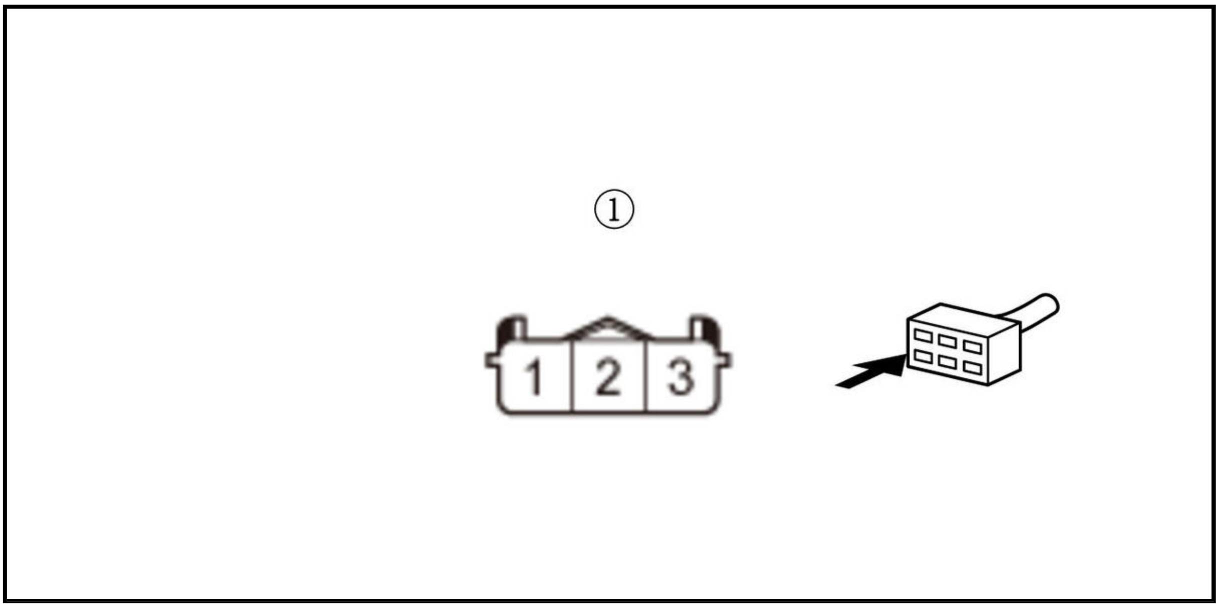

Is there continuity?

YES

The PG (COIL) wires are OK. Go to step 8.

NO

Repair an open in the PG (COIL) wire between the ignition coil and G101.

8. Shorted wire check (IGN lines)

-1. Jump the SCS line with the HDS, and wait more than 1 minute.

-2. Disconnect the following connector.

PCM connector B (51P)

-3. Check for continuity between body ground and the appropriate PCM connector terminal of the problem ignition coil (see table).

Test condition	Vehicle OFF (LOCK) mode
B	Ignition coil 3P connector (problem cylinder): disconnected
B	PCM connector B (51P): disconnected

Problem cylinder	DTC	Connector	Terminal
No. 1	P0351	PCM connector B (51P)	No. 24
No. 2	P0352		No. 25
No. 3	P0353		No. 26
No. 4	P0354		No. 27

Is there continuity?

YES

Repair a short in the IGN wire between the PCM and the ignition coil.

NO

The IGN wires are not shorted. Go to step 9.

9. Open wire check (IGN lines)

-1. Check for continuity between the appropriate PCM connector terminal of the problem ignition coil (see table) and appropriate ignition coil 3P connector (female terminals) No. 3: ①

Test condition	Vehicle OFF (LOCK) mode
B	Ignition coil 3P connector (problem cylinder): disconnected
B	PCM connector B (51P): disconnected

Problem cylinder	DTC	Connector	Terminal
No. 1	P0351	PCM connector B (51P)	No. 24
No. 2	P0352		No. 25
No. 3	P0353		No. 26
No. 4	P0354		No. 27

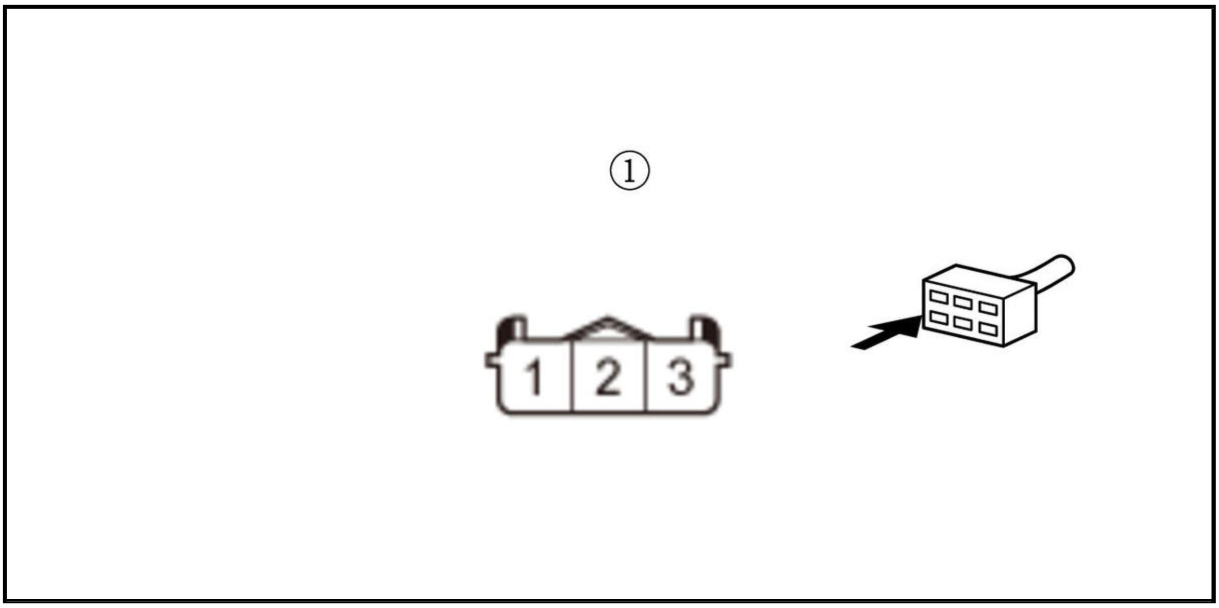

Is there continuity?

YES

The IGN wires are OK. Check for any authorized service information related to the DTCs or symptoms you are troubleshooting or substitute a known-good PCM .

NO

Repair an open in the IGN wire between the PCM and the ignition coil.

DTC P0365 (1.5 L ENGINE)

DTC P0365 : CMP Sensor B Circuit No Signal

NOTE: Before you troubleshoot, review the general troubleshooting information .

DTC Description	Confirmed DTC	Pending DTC
P0365 CMP Sensor B Circuit No Signal	B	B

DTC (PGM-FI)

1. Problem verification

-1. Turn the vehicle to the ON mode.

-2. Clear the DTC with the HDS.

-3. Turn the vehicle to the OFF (LOCK) mode.

-4. Start the engine.

-5. Check for Pending or Confirmed DTCs with the HDS.

DTC Description	Confirmed DTC	Pending DTC
P0365 CMP Sensor B Circuit No Signal	B	B

Is DTC P0365 indicated?

YES

Go to step 2.

NO

Intermittent failure, the system is OK at this time. Check for poor connections or loose terminals at CMP sensor B and the PCM. **If the on-board snapshot of this DTC is recorded, try to reproduce the failure under the same conditions with the on-board snapshot** .

2. Determine possible failure area (VCC2 line, others)

-1. Turn the vehicle to the OFF (LOCK) mode.

-2. Disconnect the following connector.

CMP sensor B 3P connector

-3. Turn the vehicle to the ON mode.

-4. Measure the voltage between test points 1 and 2.

Test condition	Vehicle ON mode
B	CMP sensor B 3P connector: disconnected
Test point 1	CMP sensor B 3P connector (female terminals) No. 1: ①
Test point 2	Body ground

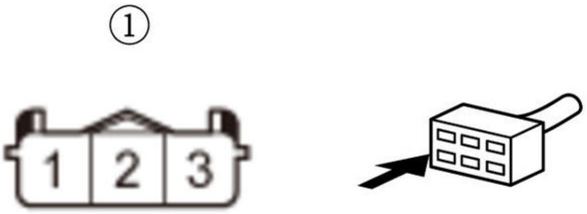

Is there about 5.0 V?

YES

Go to step 4.

NO

Go to step 3.

3. Open wire check (VCC2 line)

-1. Turn the vehicle to the OFF (LOCK) mode.

-2. Jump the SCS line with HDS, and wait more than 1 minute.

-3. Disconnect the following connector.

PCM connector E (80P)

-4. Check the continuity between test points 1 and 2.

Test condition	Vehicle OFF (LOCK) mode
B	CMP sensor B 3P connector: disconnected
B	PCM connector E (80P): disconnected
Test point 1	CMP sensor B 3P connector (female terminals) No. 1: ①
Test point 2	**PCM connector E (80P) No. 77**

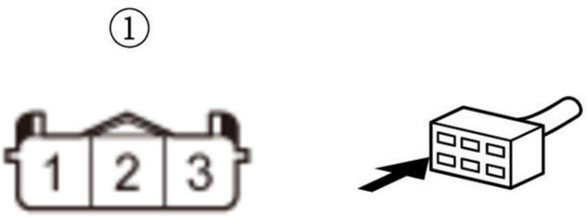

Is there continuity?

YES

The VCC2 wire is OK. Check for any authorized service information related to the DTCs or symptoms you are troubleshooting, or **substitute a known-good PCM** .

NO

Repair an open in the VCC2 wire between the PCM (E77) and CMP sensor B.

4. Determine possible failure area (CAM EX line, others)

-1. Measure the voltage between test points 1 and 2.

Test condition	Vehicle ON mode
B	CMP sensor B 3P connector: disconnected
Test point 1	CMP sensor B 3P connector (female terminals) No. 3: ①
Test point 2	Body ground

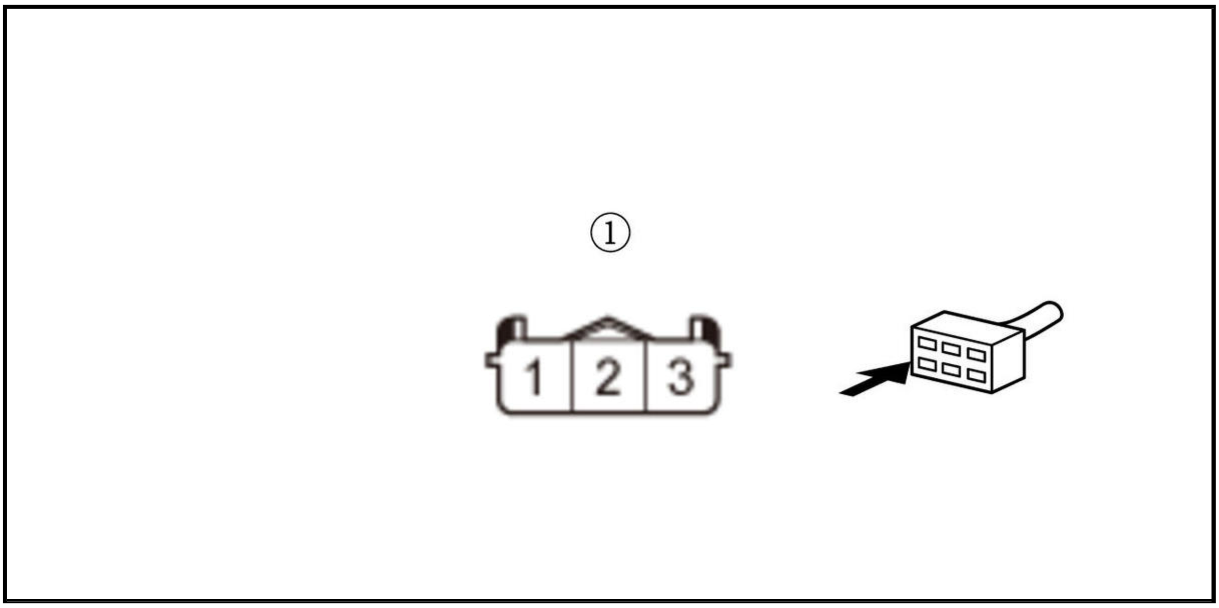

Is there about 5.0 V?

YES

Go to step 5.

NO

Go to step 7.

5. Determine possible failure area (SG2 line, others)

-1. Measure the voltage between test points 1 and 2.

Test condition	Vehicle ON mode
B	CMP sensor B 3P connector: disconnected
Test point 1	CMP sensor B 3P connector (female terminals) No. 1: ①
Test point 2	CMP sensor B 3P connector (female terminals) No. 2: ①

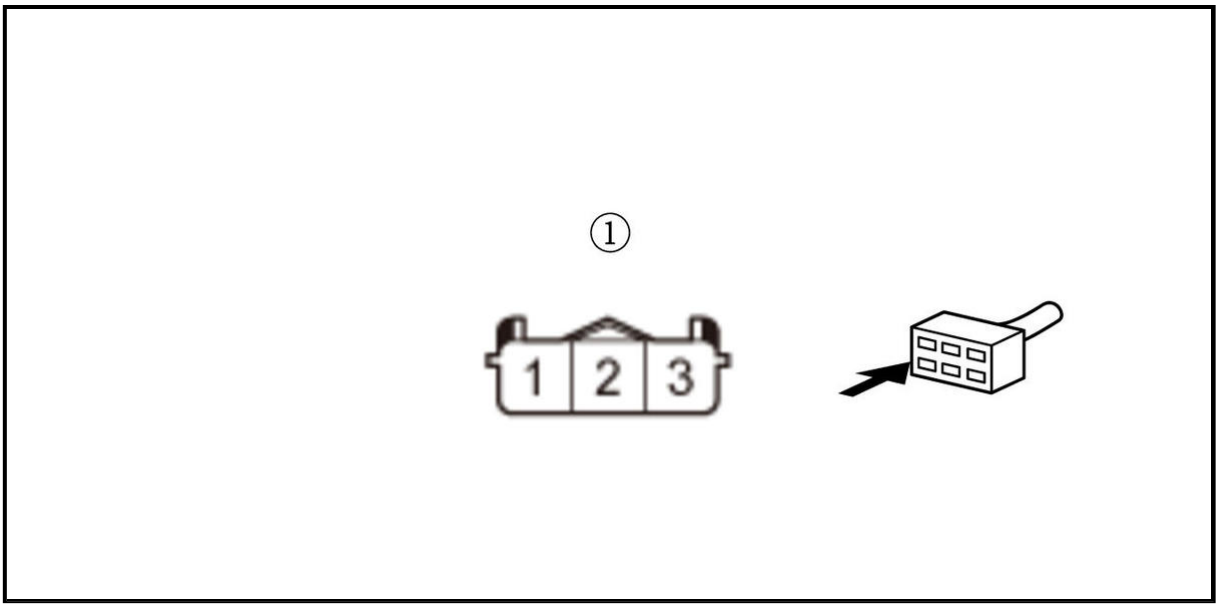

Is there about 5.0 V?

YES

The SG2 wire is OK. **Replace CMP sensor B** .

NO

Go to step 6.

6. Open wire check (SG2 line)

-1. Turn the vehicle to the OFF (LOCK) mode.

-2. Jump the SCS line with the HDS, and wait more than 1 minute.

-3. Disconnected the following connector.

PCM connector E (80P)

-4. Check for continuity between test points 1 and 2.

Test condition	Vehicle OFF (LOCK) mode
B	CMP sensor B 3P connector: disconnected
B	PCM connector E (80P): disconnected
Test point 1	CMP sensor B 3P connector (female terminals) No. 2: ①
Test point 2	**PCM connector E (80P) No. 78**

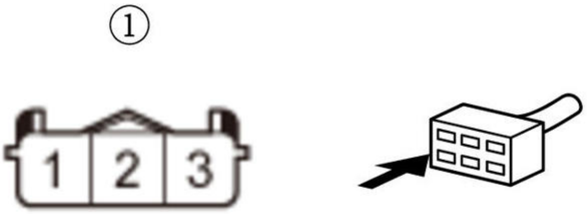

Is there continuity?

YES

The SG2 wire is OK. Check for any authorized service information related to the DTCs or symptoms you are troubleshooting, or **substitute a known-good PCM** .

NO

Repair an open in the SG2 wire between the PCM (E78) and CMP sensor B.

7. Shorted wire check (CAM EX line)

-1. Turn the vehicle to the OFF (LOCK) mode.

-2. Jump the SCS line with the HDS, and wait more than 1 minute.

-3. Disconnect the following connector.

PCM connector E (80P)

-4. Check for continuity between test points 1 and 2.

Test condition	Vehicle OFF (LOCK) mode
B	CMP sensor B 3P connector: disconnected
B	PCM connector E (80P): disconnected
Test point 1	**PCM connector E (80P) No. 32**
Test point 2	Body ground

Is there continuity?

YES

Repair a short in the CAM EX wire between the PCM (E32) and CMP sensor B.

NO

Go to step 8.

8. Open wire check (CAM EX line)

-1. Check for continuity between test points 1 and 2.

Test condition	Vehicle OFF (LOCK) mode
B	CMP sensor B 3P connector: disconnected
B	PCM connector E (80P): disconnected
Test point 1	CMP sensor B 3P connector (female terminals) No. 3: ①
Test point 2	**PCM connector E (80P) No. 32**

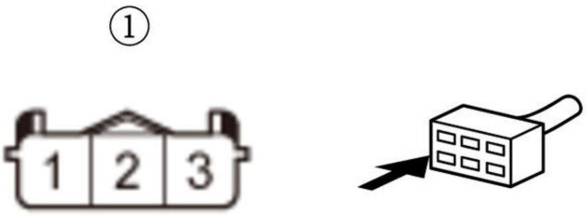

Is there continuity?

YES

The CAM EX wire is OK. Check for any authorized service information related to the DTCs or symptoms you are troubleshooting, or **substitute a known-good PCM** .

NO

Repair an open in the CAM EX wire between the PCM (E32) and CMP sensor B.

DTC P0365 (2.4 L ENGINE) (2017 2018 2019)

DTC P0365 : CMP Sensor B Circuit No Signal

NOTE: Before you troubleshoot, **review the general troubleshooting information** .

DTC Description	Confirmed DTC	Pending DTC
P0365 CMP Sensor B Circuit No Signal	B	B

DTC (PGM-FI)

1. Problem verification

-1. Turn the vehicle to the ON mode.

-2. Clear the DTC with the HDS.

-3. Start the engine.

-4. Check for Pending or Confirmed DTCs with the HDS.

DTC Description	Confirmed DTC	Pending DTC
P0365 CMP Sensor B Circuit No Signal	B	B

Is DTC P0365 indicated?

YES

The failure is duplicated. Go to step 2.

NO

Intermittent failure, the system is OK at this time. Check for poor connections or loose terminals at CMP sensor B and the PCM. **If the on-board snapshot of this DTC is recorded, try to reproduce the failure under the same conditions with the on-board snapshot** .

2. Open wire check (IGP (TDC)/IGP (MAIN)/FI MAIN RLY OUT line)

-1. Turn the vehicle to the OFF (LOCK) mode.

-2. Disconnect the following connector.

CMP sensor B 3P connector

-3. Turn the vehicle to the ON mode.

-4. Measure the voltage between test points 1 and 2.

Test condition	Vehicle ON mode
B	CMP sensor B 3P connector: disconnected
Test point 1	CMP sensor B 3P connector (female terminals) No. 1: ①
Test point 2	Body ground

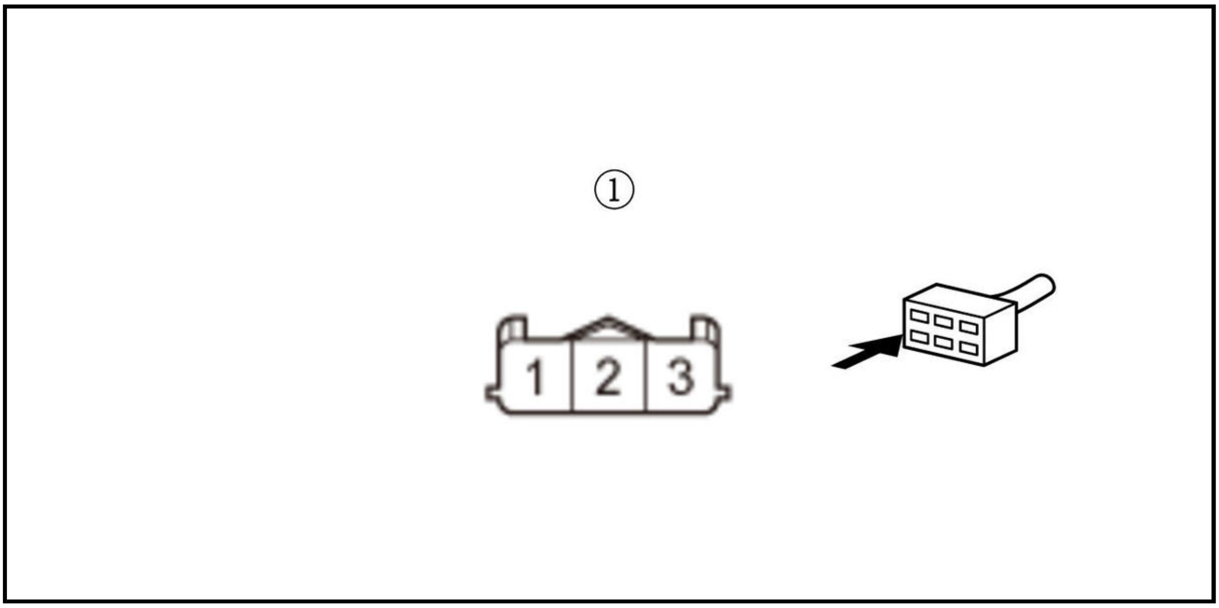

Is there battery voltage?

YES

The IGP (TDC)/IGP (MAIN)/FI MAIN RLY OUT wire is OK. Go to step 3.

NO

Repair an open in the IGP (TDC)/IGP (MAIN)/FI MAIN RLY OUT wire between CMP sensor B and the relay circuit board (PGM-FI main relay 1 circuit).

3. Determine possible failure area (TDC line, others)

-1. Measure the voltage between test points 1 and 2.

Test condition	Vehicle ON mode
B	CMP sensor B 3P connector: disconnected
Test point 1	CMP sensor B 3P connector (female terminals) No. 3: ①
Test point 2	Body ground

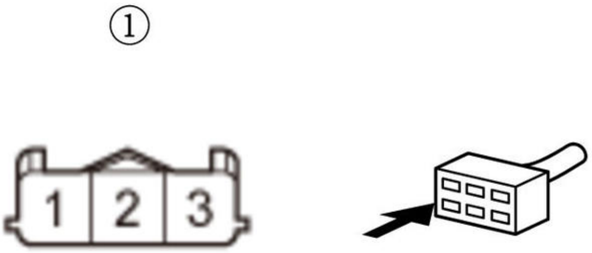

Is there about 5.0 V?

YES

Go to step 4.

NO

Go to step 5.

4. Open wire check (LG/LG2 line)

-1. Measure the voltage between test points 1 and 2.

Test condition	Vehicle ON mode
B	CMP sensor B 3P connector: disconnected
Test point 1	CMP sensor B 3P connector (female terminals) No. 1: ①
Test point 2	CMP sensor B 3P connector (female terminals) No. 2: ①

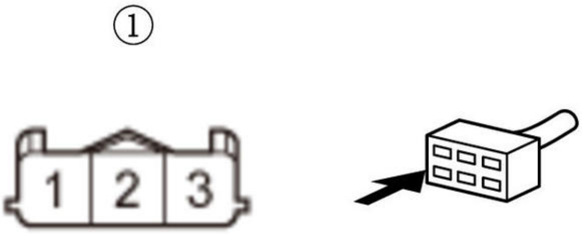

Is there battery voltage?

YES

The LG/LG2 wire is OK. **Replace CMP sensor B** .

NO

Repair an open in the LG/LG2 wire between CMP sensor B and G101.

5. Shorted wire check (TDC line)

-1. Turn the vehicle to the OFF (LOCK) mode.

-2. Jump the SCS line with the HDS, and wait more than 1 minute.

-3. Disconnect the following connector.

PCM connector B (51P)

-4. Check for continuity between test points 1 and 2.

Test condition	Vehicle OFF (LOCK) mode
B	CMP sensor B 3P connector: disconnected
B	PCM connector B (51P): disconnected
Test point 1	**PCM connector B (51P) No. 30**

Test point 2	Body ground

Is there continuity?

YES

Repair a short in the TDC wire between the PCM (B30) and CMP sensor B.

NO

The TDC wire is not shorted. Go to step 6.

6. Open wire check (TDC line)

-1. Check for continuity between test points 1 and 2.

Test condition	Vehicle OFF (LOCK) mode
B	CMP sensor B 3P connector: disconnected
B	PCM connector B (51P): disconnected
Test point 1	CMP sensor B 3P connector (female terminals) No. 3: ①
Test point 2	**PCM connector B (51P) No. 30**

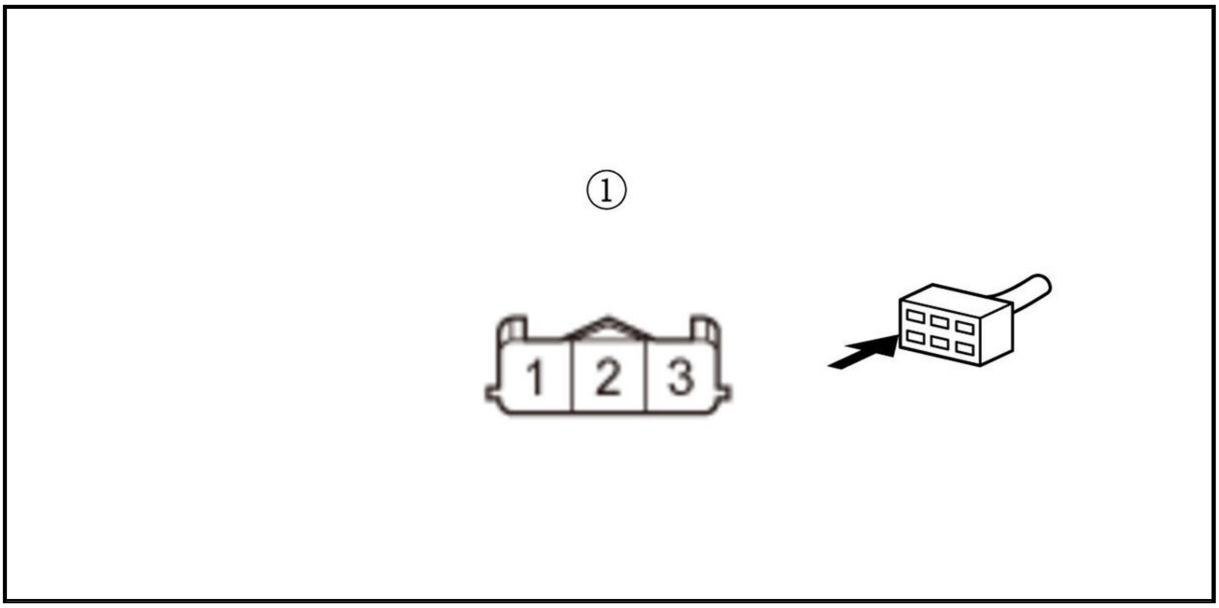

Is there continuity?

YES

The TDC wire is OK. Check for any authorized service information related to the DTCs or symptoms you are troubleshooting or **substitute a known-good PCM** .

NO

Repair an open in the TDC wire between the PCM (B30) and CMP sensor B.

DTC P0366 (1.5 L ENGINE)

DTC P0366 : CMP Sensor B and CKP Sensor Incorrect Phase Detected

NOTE:

- Before you troubleshoot, **review the general troubleshooting information** .
- If the DTC P101A stored at the same time as DTC P0366, troubleshoot DTC P101A first, then recheck for DTC P0366.

DTC Description	Confirmed DTC	Pending DTC
P0366 CMP Sensor B and CKP Sensor Incorrect Phase Detected	B	B

DTC (PGM-FI)

1. Problem verification

   -1. Turn the vehicle to the ON mode.

   -2. Clear the DTC with the HDS.

   -3. Turn the vehicle to the OFF (LOCK) mode, and allow the engine to cool below 104 deg. F (40 deg. C).

   -4. Start the engine, and let it idle without load (in P or N).

   -5. Check for Pending or Confirmed DTCs with the HDS.

DTC Description	Confirmed DTC	Pending DTC
P0366 CMP Sensor B and CKP Sensor Incorrect Phase Detected	B	B

Is DTC P0366 indicated?

YES

Go to step 5.

NO

Go to step 2.

2. VTC system check (VTC TEST with the HDS)

-1. Select the VTC TEST in the INSPECTION MENU with the HDS, then select the EX-VTC.

VTC TEST - EX-VTC

Is the result OK?

YES

Go to step 3.

NO

Go to step 5.

3. VTC system check (VTC STATUS check with the HDS)

-1. Test-drive the vehicle at a steady speed between 19-38 mph (30-60 km/h) for 10 minutes.

-2. Check the parameter (s) below with the HDS.

Signal	Threshold		Current conditions	
	Values	Unit	Values	Unit
EX VTC STATUS	ON	B	B	B

Do the current condition (s) match the threshold?

YES

Go to step 4.

NO

Do the test-drive again, then recheck the VTC STATUS.

4. VTC system check (OBD status check)

-1. Monitor the OBD STATUS for DTC P0366 in the DTCs MENU with the HDS.

DTC Description	OBD STATUS
P0366 CMP Sensor B and CKP Sensor Incorrect Phase Detected	B

Does the HDS indicate FAILED?

YES

Go to step 5.

NO

If the HDS indicates PASSED, intermittent failure, the system is OK at this time. **If the on-board snapshot of this DTC is recorded, try to reproduce the failure under the same conditions with the on-board snapshot** . If the HDS indicates NOT COMPLETED, go to step 3, and recheck.

5. VTC oil control solenoid valve B operation check

-1. **Test VTC oil control solenoid valve B** .

Is the solenoid valve OK?

YES

Go to step 6.

NO

Replace VTC oil control solenoid valve B .

6. Camshaft timing check

-1. **Check the camshaft timing** .

Is the camshaft timing OK?

YES

Go to step 7.

NO

Reset the camshaft timing .

7. Cam chain check

-1. **Check for damage or stretch at the cam chain** .

Is the cam chain damaged or stretched?

YES

Replace the cam chain and **the auto-tensioner** .

NO

Go to step 8.

8. VTC actuator B check

-1. **Inspect VTC actuator B** .

Is the actuator OK?

YES

Go to step 9.

NO

Replace VTC actuator B .

9. PGM-FI system check (DTC check)

   -1. Turn the vehicle to the ON mode.

   -2. Reset the PCM with the HDS .

   Reset PCM

   -3. Do the CKP pattern clear procedure .

   CRANK (CKP) PATTERN CLEAR

   -4. Do the PCM idle learn procedure .

   -5. Do the CKP pattern learn procedure .

   CRANK PATTERN LEARNING

   Turn the vehicle to the OFF (LOCK) mode, and allow the engine to cool below 104 deg. F (40 deg. C).

   -7. Start the engine, and let it idle without load (in P or N).

   -8. Check for Pending or Confirmed DTCs with the HDS.

DTC Description	Confirmed DTC	Pending DTC
P0366 CMP Sensor B and CKP Sensor Incorrect Phase Detected	B	B

   Is DTC P0366 indicated?

   YES

   Check for poor connections or loose terminals at VTC oil control solenoid valve B and the PCM, then go to step 1.

   NO

   Intermittent failure, the system is OK at this time. If the on-board snapshot of this DTC is recorded, try to reproduce the failure under the same conditions with the on-board snapshot .

DTC P0369 (1.5 L ENGINE)

DTC P0369 : CMP Sensor B Circuit Intermittent Interruption

NOTE: Before you troubleshoot, review the general troubleshooting information .

DTC Description	Confirmed DTC	Pending DTC
P0369 CMP Sensor B Circuit Intermittent Interruption	B	B

DTC (PGM-FI)

1. Problem verification (idling)

   -1. Turn the vehicle to the ON mode.

   -2. Clear the DTC with the HDS.

   -3. Turn the vehicle to the OFF (LOCK) mode.

-4. Start the engine, and let it idle for 10 seconds.

-5. Monitor the OBD STATUS for DTC P0369 in the DTCs MENU with the HDS.

DTC Description	OBD STATUS
P0369 CMP Sensor B Circuit Intermittent Interruption	B

Does the HDS indicate FAILED?

YES

Go to step 3.

NO

If the HDS indicates PASSED, go to step 2. If the HDS indicates NOT COMPLETED, keep idling until a result comes on.

2. Problem verification (test-drive):

-1. Test-drive the vehicle for several minutes in the range of these recorded on-board snapshot parameters:

- ENGINE SPEED
- VEHICLE SPEED

-2. Monitor the OBD STATUS for DTC P0369 in the DTCs MENU with the HDS.

DTC Description	OBD STATUS
P0369 CMP Sensor B Circuit Intermittent Interruption	B

Does the HDS indicate FAILED?

YES

Go to step 3.

NO

If the HDS indicates PASSED, intermittent failure, the system is OK at this time. Check for poor connections or loose terminals at CMP sensor B and the PCM. **If the on-board snapshot of this DTC is recorded, try to reproduce the failure under the same conditions with the on-board snapshot** . If the HDS indicates NOT COMPLETED, retest and check the OBD STATUS again.

3. CMP sensor circuit connectors and terminals condition check:

Check for poor connections or loose terminals at these locations:

- CMP sensor B
- PCM
- Engine ground
- Body ground

Are the connections and terminals OK?

YES

Go to step 4.

NO

Repair the connections or terminals.

4. CMP pulse plate B visual check

-1. **Remove the cylinder head cover** , then check for damage to CMP pulse plate B on the exhaust camshaft.

Is the pulse plate damaged or loose?

YES

Replace the exhaust camshaft (CMP pulse plate B) .

NO

Replace the CMP sensor B .

DTC P0369 (2.4 L ENGINE) (2017 2018 2019)

DTC P0369 : CMP Sensor B Circuit Intermittent Interruption

NOTE: Before you troubleshoot, **review the general troubleshooting information** .

DTC Description	Confirmed DTC	Pending DTC
P0369 CMP Sensor B Circuit Intermittent Interruption	B	B

DTC (PGM-FI)

1. Problem verification (idling)

-1. Turn the vehicle to the ON mode.

-2. Clear the DTC with the HDS.

-3. Start the engine, and let it idle for 10 seconds.

-4. Monitor the OBD STATUS for DTC P0369 in the DTCs MENU with the HDS.

DTC Description	OBD STATUS
P0369 CMP Sensor B Circuit Intermittent Interruption	B

Does the HDS indicate FAILED?

YES

The failure is duplicated. Go to step 3.

NO

If the HDS indicates PASSED, go to step 2. If the HDS indicates NOT COMPLETED, keep idling until a result comes on.

2. Problem verification (test-drive):

-1. Test-drive the vehicle for several minutes in the range of these recorded freeze data parameters:

- ENGINE SPEED
- VEHICLE SPEED

-2. Monitor the OBD STATUS for DTC P0369 in the DTCs MENU with the HDS.

DTC Description	OBD STATUS
P0369 CMP Sensor B Circuit Intermittent Interruption	B

Does the HDS indicate FAILED?

YES

The failure is duplicated. Go to step 3.

NO

If the HDS indicates PASSED, intermittent failure, the system is OK at this time. Check for poor connections or loose terminals at CMP sensor B and the PCM. **If the on-board snapshot of this DTC is recorded, try to reproduce the failure under the same conditions with the on-board snapshot** . If the HDS indicates NOT COMPLETED, retest and check the OBD STATUS again.

3. CMP sensor B circuit connectors and terminals condition check:

   Check for poor connections or loose terminals at these locations:

   - CMP sensor B
   - PCM
   - Engine ground
   - Body ground

   Are the connections and terminals OK?

   YES

   Go to step 4.

   NO

   Repair the connections or terminals.

4. CMP pulse plate visual check

   -1. **Check for damage to CMP pulse plate** .

   Is the pulse plate damaged?

   YES

   Replace the exhaust camshaft (CMP pulse plate) .

   NO

   Replace CMP sensor B .

DTC P0420 (1.5 L ENGINE)

DTC P0420 : Catalyst System Efficiency Below Threshold

NOTE:

- Before you troubleshoot, **review the general troubleshooting information** .

- If some of the DTCs listed below are stored at the same time as DTC P0420, troubleshoot them first, then recheck for DTC P0420.

  P0137, P0138, P2270: Secondary HO2S (Sensor 2)

  P0141: Secondary HO2S (Sensor 2) heater

  P0300: Random misfire

  P0301, P0302, P0303, P0304: No. 1-No. 4 cylinder misfire

- Poor quality fuel may cause this DTC.

DTC Description	Confirmed DTC	Pending DTC
P0420 Catalyst System Efficiency Below Threshold	B	B

DTC (PGM-FI)

1. PGM-FI system check 1

   -1. Turn the vehicle to the ON mode.

   -2. Clear the DTC with the HDS.

   -3. Turn the vehicle to the OFF (LOCK) mode.

   -4. Start the engine.

   -5. Hold the engine speed at 3, 000 rpm without load (in P or N) until the radiator fan comes on, then let it idle.

   -6. Test-drive the vehicle under these conditions:

   - Engine coolant temperature (ECT SENSOR 1) above 158 deg. F (70 deg. C)
   - Transmission in D
   - Vehicle speed between 45-75 mph (70-120 km/h) for 5 minutes or more
   - Vehicle speed between 55-75 mph (90-120 km/h) for 10 seconds, then decelerate (with the throttle fully closed). Repeat this three or more times
   - Maintain the vehicle speed at 55 mph (90 km/h) for 9 minutes or more with cruise control set.

Signal	Current conditions	
	Values	Unit
ECT SENSOR 1	B	B
VEHICLE SPEED	B	B

   -7. Monitor the OBD STATUS for DTC P0420 in the DTCs MENU with the HDS.

DTC Description	OBD STATUS
P0420 Catalyst System Efficiency Below Threshold	B

   Does the HDS indicate FAILED?

   YES

   Replace the TWC .

   NO

If the HDS indicates EXECUTING, go to step 2. If the HDS indicates OUT OF CONDITION, meet the test conditions and recheck. **If the on-board snapshot of this DTC is recorded, try to reproduce the failure under the same conditions with the on-board snapshot** . If the HDS indicates PASSED, intermittent failure the system is OK at this time.

2. PGM-FI system check 2

   -1. Continue test-drive until a result comes on.

   -2. Monitor the OBD STATUS for DTC P0420 in the DTCs MENU with the HDS.

DTC Description	OBD STATUS
P0420 Catalyst System Efficiency Below Threshold	B

   Does the HDS indicate FAILED?

   YES

   Replace the TWC .

   NO

   If the HDS indicates PASSED, intermittent failure, the system is OK at this time. **If the on-board snapshot of this DTC is recorded, try to reproduce the failure under the same conditions with the on-board snapshot** . If the HDS indicates EXECUTING, keep driving until a result comes on. If the HDS indicates OUT OF CONDITION, meet the test conditions and recheck.

DTC P0420 (2.4 L ENGINE) (2017 2018 2019)

DTC P0420 : Catalyst System Efficiency Below Threshold

NOTE:

- Before you troubleshoot, **review the general troubleshooting information** .
- If some of the DTCs listed below are stored at the same time as DTC P0420, troubleshoot them first, then recheck for DTC P0420.

  P0137, P0138, P2270: Secondary HO2S (Sensor 2)

  P0141: Secondary HO2S (Sensor 2) heater

  P0300: Random misfire

  P0301, P0302, P0303, P0304: No. 1-No. 4 cylinder misfire

- Poor quality fuel may cause this DTC.

DTC Description	Confirmed DTC	Pending DTC
P0420 Catalyst System Efficiency Below Threshold	B	B

DTC (PGM-FI)

1. PGM-FI system check 1

   -1. Turn the vehicle to the ON mode.

   -2. Clear the DTC with the HDS.

   -3. Turn the vehicle to the OFF (LOCK) mode.

-4. Start the engine.

-5. Hold the engine speed at 3, 000 rpm without load (in P or N) until the radiator fan comes on, then let it idle.

-6. Test-drive the vehicle under these conditions:

- Engine coolant temperature (ECT SENSOR 1) above 158 deg. F (70 deg. C)
- Transmission in D
- Vehicle speed between 45-75 mph (70-120 km/h) for 5 minutes or more
- Vehicle speed between 55-75 mph (90-120 km/h) for 10 seconds, then decelerate (with the throttle fully closed). Repeat this three or more times
- Maintain the vehicle speed at 55 mph (90 km/h) for 9 minutes or more with cruise control set.

Signal	Current conditions	
	Values	Unit
ECT SENSOR 1	B	B
VEHICLE SPEED	B	B

-7. Monitor the OBD STATUS for DTC P0420 in the DTCs MENU with the HDS.

DTC Description	OBD STATUS
P0420 Catalyst System Efficiency Below Threshold	B

Does the HDS indicate FAILED?

YES

Replace the WU-TWC .

NO

If the HDS indicates EXECUTING, go to step 2. If the HDS indicates OUT OF CONDITION, meet the test conditions and recheck. **If the on-board snapshot of this DTC is recorded, try to reproduce the failure under the same conditions with the on-board snapshot** . If the HDS indicates PASSED, intermittent failure the system is OK at this time.

2. PGM-FI system check 2

-1. Continue test-drive until a result comes on.

-2. Monitor the OBD STATUS for DTC P0420 in the DTCs MENU with the HDS.

DTC Description	OBD STATUS
P0420 Catalyst System Efficiency Below Threshold	B

Does the HDS indicate FAILED?

YES

Replace the WU-TWC .

NO

If the HDS indicates PASSED, intermittent failure, the system is OK at this time. **If the on-board snapshot of this DTC is recorded, try to reproduce the failure under the same conditions with the on-board snapshot** . If the HDS indicates EXECUTING, keep driving until a result comes on. If the HDS indicates OUT OF CONDITION, meet the test conditions and recheck.

DTC P043E, P043F (1.5 L ENGINE)

DTC P043E : EVAP Leak Check Module Standard Pressure Low **DTC P043F** : EVAP Leak Check Module Standard Pressure High

NOTE: Before you troubleshoot, review the general troubleshooting information .

DTC Description	Confirmed DTC	Pending DTC
P043E EVAP Leak Check Module Standard Pressure Low	B	B
P043F EVAP Leak Check Module Standard Pressure High	B	B

DTC (PGM-FI)

1. Problem verification

   -1. Turn the vehicle to the ON mode.

   -2. Clear the DTC with the HDS.

   -3. Turn the vehicle to the OFF (LOCK) mode.

   -4. Turn the vehicle to the ON mode.

   -5. Select the EVAP TEST (ELCM) in the INSPECTION MENU, then select EVAP Leak Check Module Test with the HDS.

   EVAP TEST (ELCM)

   Is the result OK?

   YES

   If the test result is PASSED, intermittent failure, the system is OK at this time. Check for poor connections or loose terminals at the EVAP leak check module and the PCM. If the on-board snapshot of this DTC is recorded, try to reproduce the failure under the same conditions with the on-board snapshot .

   NO

   The failure is duplicated. Go to step 2.

2. EVAP leak check module drain hose check

   -1. Remove the EVAP leak check module and the EVAP canister filter , then check the blockage in the drain hoses and the EVAP canister filter.

   Are the parts OK?

   YES

   Replace the EVAP leak check module .

   NO

   Remove the blockage from them, or replace the part (s) if needed.

DTC P0441 (1.5 L ENGINE)

DTC P0441 : EVAP System Purge Flow Malfunction

NOTE:

- Before you troubleshoot, **review the general troubleshooting information** .
- If DTC P0441 is indicated alone, do the troubleshooting for DTC P04DF and P04F1 using the on-board snapshot for P0441.
- If DTC P04F0, P04F1, P145D, and P0441 are stored at the same time, check for a poor connection, a blockage, or damage at the EVAP canister purge line between the EVAP canister purge valve and the EVAP canister. Also check for a stuck closed EVAP canister purge valve.
- If any of the DTCs listed below are indicated at the same time as DTC P0441, troubleshoot those DTCs first, then recheck for P0441.

  P04DF, P04F0, P04F1: EVAP system purge flow

DTC Description	Confirmed DTC	Pending DTC
P0441 EVAP System Purge Flow Malfunction	B	B

DTC (PGM-FI)

1. DTC check

   -1. Turn the vehicle to the ON mode.

   -2. Select the EVAP TEST (ELCM) in the INSPECTION MENU, then select EVAP Purge Flow Check Test with the HDS.

   EVAP TEST (ELCM)

   -3. Check for Pending or Confirmed DTCs with the HDS.

DTC Description	Confirmed DTC	Pending DTC
P0441 EVAP System Purge Flow Malfunction	B	B
P04DF EVAP System High Purge Flow Detected	B	B
P04F0 EVAP System Incorrect Purge Flow Detected	B	B
P04F1 EVAP System Low Purge Flow Detected	B	B

   Are DTC P04DF, P04F0, or P04F1 and P0441 indicated at the same time?

   YES

   Go to the indicated DTC's troubleshooting.

   NO

   Go to the troubleshooting for **DTC P04DF**, **P04F0**, and **DTC P04F1**.

DTC P0441 (2.4 L ENGINE) (2017 2018 2019)

DTC P0441 : EVAP System Purge Flow Malfunction

NOTE:

- Before you troubleshoot, **review the general troubleshooting information** .
- If DTC P0441 is indicated alone, do the troubleshooting for DTC P04DF and P04F1 using the on-board snapshot for P0441.
- If DTC P04F1 and P0441 are stored at the same time, check for a poor connection, a blockage, or damage at the EVAP canister purge line between the EVAP canister purge valve and the EVAP canister. Also check for a stuck closed EVAP canister purge valve.

- If any of the DTCs listed below are indicated at the same time as DTC P0441, troubleshoot those DTCs first, then recheck for P0441.

  P04DF, P04F1: EVAP system purge flow

DTC Description	Confirmed DTC	Pending DTC
P0441 EVAP System Purge Flow Malfunction	B	B

DTC (PGM-FI)

1. DTC check

   -1. Turn the vehicle to the ON mode.

   -2. Check for Pending or Confirmed DTCs with the HDS.

DTC Description	Confirmed DTC	Pending DTC
P04DF EVAP System High Purge Flow Detected	B	B
P04F1 EVAP System Low Purge Flow Detected	B	B
P0441 EVAP System Purge Flow Malfunction	B	B

   Are DTC P04DF or P04F1 and P0441 indicated at the same time?

   YES

   Go to the indicated DTC's troubleshooting.

   NO

   Go to the troubleshooting for **DTC P04DF** and **DTC P04F1**.

DTC P0443 (1.5 L ENGINE)

DTC P0443 : EVAP Canister Purge Valve Circuit Malfunction

Special Tools Required

Vacuum Pump/Gauge, 0-30 inHg Snap-on YA4000A or equivalent, commercially available

NOTE: Before you troubleshoot, **review the general troubleshooting information** .

DTC Description	Confirmed DTC	Pending DTC
P0443 EVAP Canister Purge Valve Circuit Malfunction	B	B

DTC (PGM-FI)

1. Problem verification

   -1. Turn the vehicle to the ON mode.

   -2. Clear the DTC with the HDS.

   -3. Turn the vehicle to the OFF (LOCK) mode.

   -4. Start the engine.

   -5. Hold the engine speed at 3, 000 rpm without load (in P or N) until the radiator fan comes on, then let it idle.

-6. Check for Pending or Confirmed DTCs with the HDS.

DTC Description	Confirmed DTC	Pending DTC
P0443 EVAP Canister Purge Valve Circuit Malfunction	B	B

Is DTC P0443 indicated?

YES

Go to step 2.

NO

Intermittent failure, the system is OK at this time. Check for poor connections or loose terminals at the EVAP canister purge valve and the PCM. **If the on-board snapshot of this DTC is recorded, try to reproduce the failure under the same conditions with the on-board snapshot** .

2. Determine possible failure area (EVAP canister purge valve stuck open failure, EVAP canister purge valve stuck closed failure)

   -1. Turn the vehicle to the OFF (LOCK) mode, and allow the engine to cool below 131 deg. F (55 deg. C).

   -2. **Remove the EVAP canister purge valve** with its connector and vacuum hose connected.

   -3. Disconnect the vacuum hose (purge line) (A) from the EVAP canister purge valve (B) in the engine compartment, then connect a vacuum pump/gauge, 0-30 inHg (C) to the EVAP canister purge valve as shown.

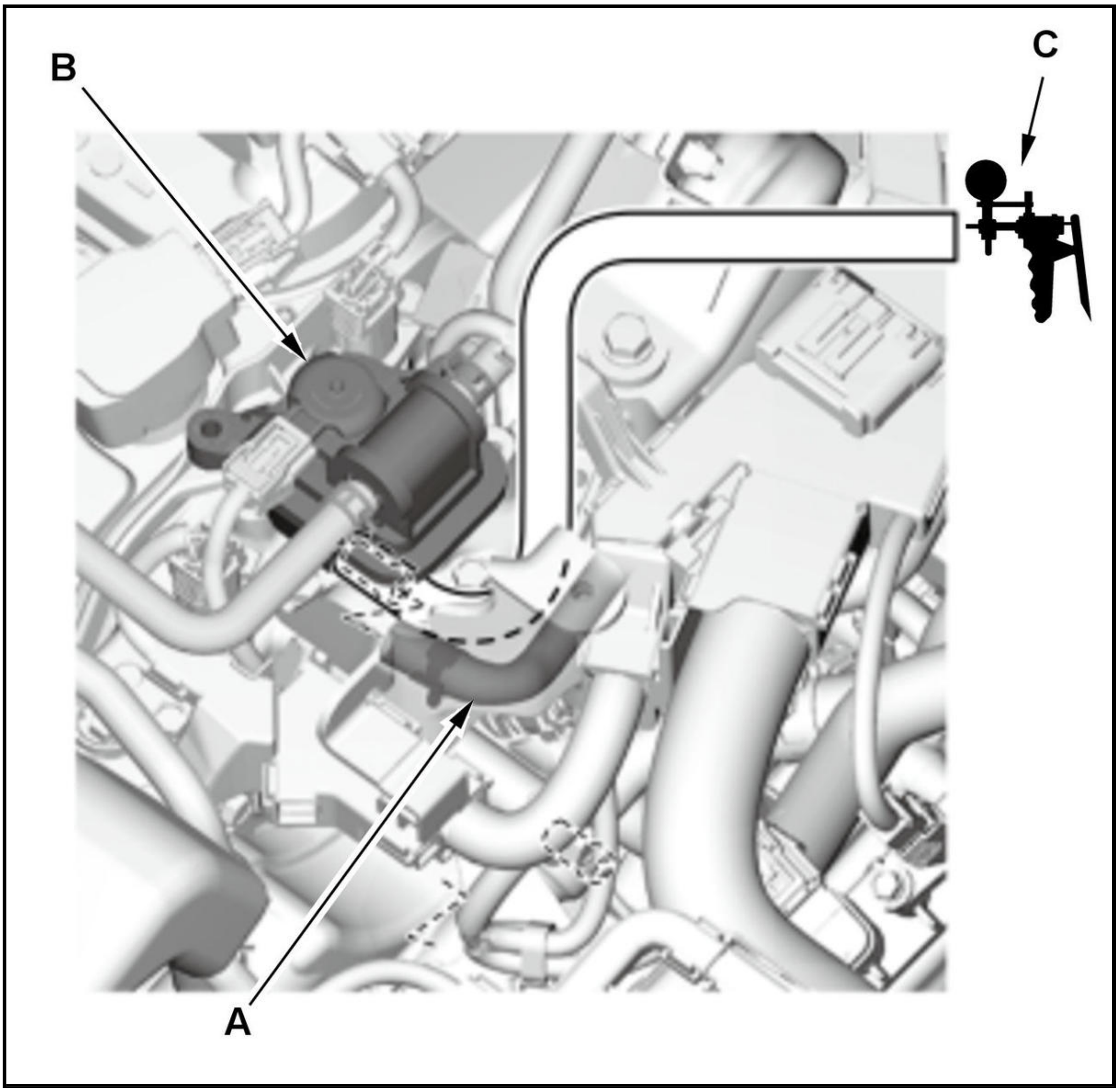

-4. Start the engine, and let it idle.

Is there vacuum?

YES

The EVAP canister purge valve is stuck open. Go to step 3.

NO

The EVAP canister purge valve is stuck closed. Go to step 5.

3. Determine possible failure area (IPV line, EVAP canister purge valve)

-1. Turn the vehicle to the OFF (LOCK) mode.

-2. Disconnect the following connector.

EVAP canister purge valve 2P connector

-3. Check for continuity between test points 1 and 2.

Test condition	Vehicle OFF (LOCK) mode
B	EVAP canister purge valve 2P connector: disconnected

Test point 1	EVAP canister purge valve 2P connector (female terminals) No. 1: ①
Test point 2	Body ground

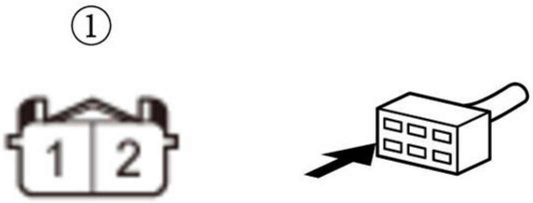

Is there continuity?

YES

Go to step 4.

NO

Replace the EVAP canister purge valve .

4. Shorted wire check (IPV line)

-1. Jump the SCS line with the HDS, and wait more than 1 minute.

-2. Disconnect the following connector.

PCM connector E (80P)

-3. Check for continuity between test points 1 and 2.

Test condition	Vehicle OFF (LOCK) mode
B	EVAP canister purge valve 2P connector: disconnected
B	PCM connector E (80P): disconnected
Test point 1	EVAP canister purge valve 2P connector (female terminals) No. 1: ①
Test point 2	Body ground

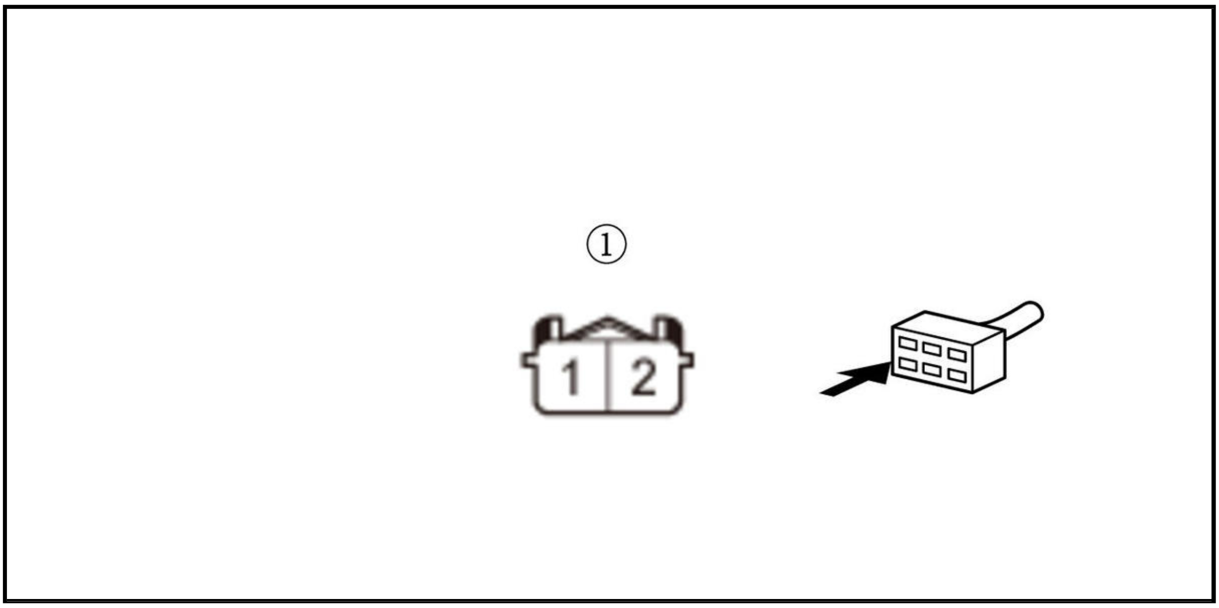

Is there continuity?

YES

Repair a short in the IPV wire between the PCM (E80) and the EVAP canister purge valve.

NO

The IPV wire is OK. Check for any authorized service information related to the DTCs or symptoms you are troubleshooting, or **substitute a known-good PCM** .

5. Open wire check (IGPS (IPV)/IGPS (LAF) line)

-1. Turn the vehicle to the OFF (LOCK) mode.

-2. Disconnect the following connector.

EVAP canister purge valve 2P connector

-3. Turn the vehicle to the ON mode.

-4. Measure the voltage between test points 1 and 2.

Test condition	Vehicle ON mode
B	EVAP canister purge valve 2P connector: disconnected
Test point 1	EVAP canister purge valve 2P connector (female terminals) No. 2: ①
Test point 2	Body ground

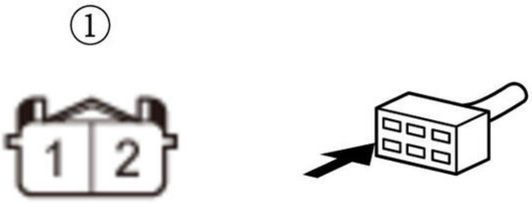

Is there battery voltage?

YES

Go to step 6.

NO

Repair an open in the IGPS (IPV)/IGPS (LAF) wire between the EVAP canister purge valve and the No. A11 (7.5 A) fuse in the under-hood fuse/relay box.

6. Open wire check (IPV line)

   -1. Turn the vehicle to the OFF (LOCK) mode.

   -2. Jump the SCS line with the HDS, and wait more than 1 minute.

   -3. Disconnect the following connector.

PCM connector E (80P)

   -4. Check for continuity between test points 1 and 2.

Test condition	Vehicle OFF (LOCK) mode
B	EVAP canister purge valve 2P connector: disconnected
B	PCM connector E (80P): disconnected
Test point 1	EVAP canister purge valve 2P connector (female terminals) No. 1: ①
Test point 2	**PCM connector E (80P) No. 80**

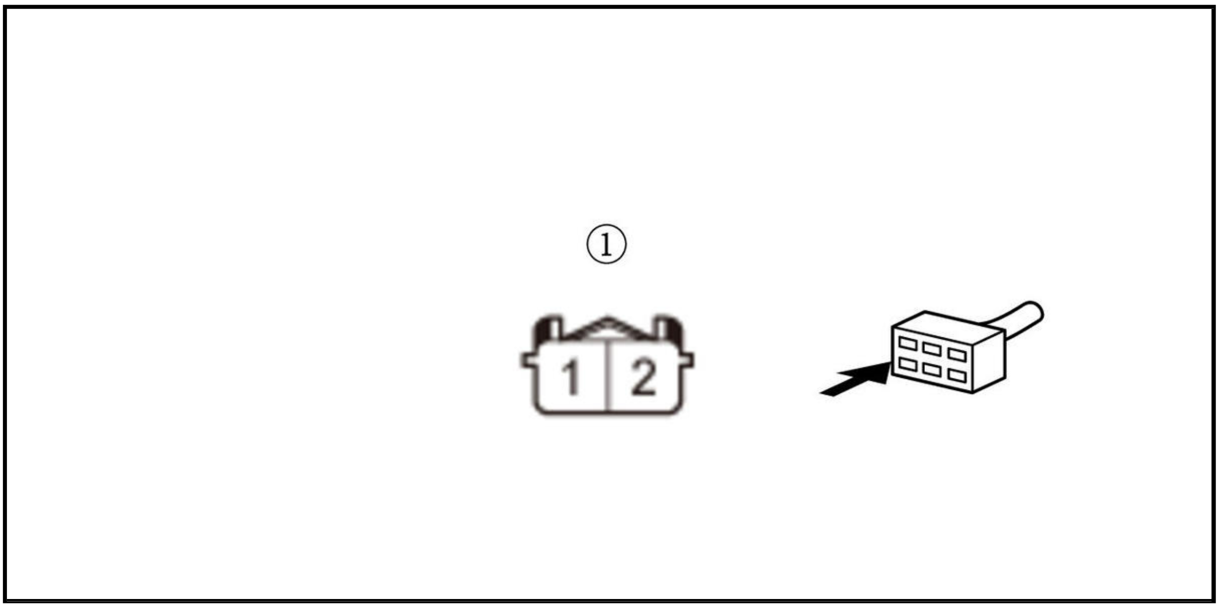

Is there continuity?

YES

Go to step 7.

NO

Repair an open in the IPV wire between the PCM (E80) and the EVAP canister purge valve.

7. EVAP canister purge valve internal resistance check

-1. At the purge valve side, measure the resistance between test points 1 and 2.

Test condition	Vehicle OFF (LOCK) mode
B	EVAP canister purge valve 2P connector: disconnected
B	PCM connector E (80P): disconnected
Test point 1	EVAP canister purge valve 2P connector (male terminals) No. 1 (EVAP canister purge valve side): ①
Test point 2	EVAP canister purge valve 2P connector (male terminals) No. 2 (EVAP canister purge valve side): ①

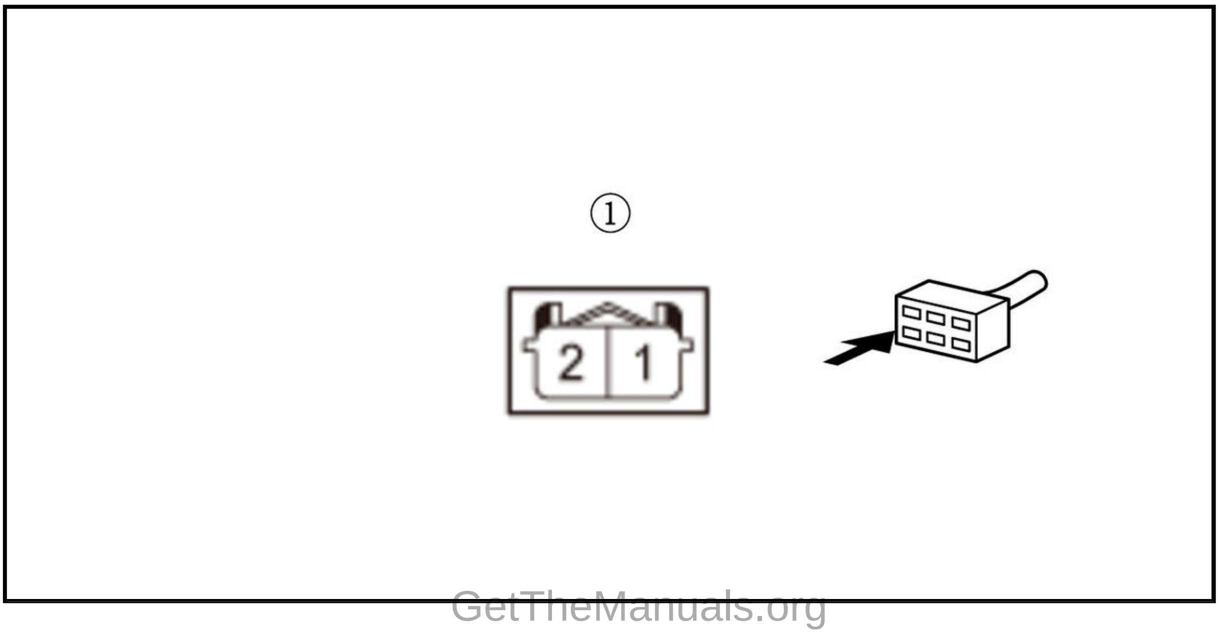

Is there about 23-26 Ω at room temperature?

YES

The EVAP canister purge valve is OK. Check for any authorized service information related to the DTCs or symptoms you are troubleshooting, or **substitute a known-good PCM** .

NO

Replace the EVAP canister purge valve .

DTC P0443 (2.4 L ENGINE) (2017 2018 2019)

DTC P0443 : EVAP Canister Purge Valve Circuit Malfunction

Special Tools Required

Vacuum Pump/Gauge, 0-30 inHg Snap-on YA4000A or equivalent, commercially available

NOTE: Before you troubleshoot, **review the general troubleshooting information** .

DTC Description	Confirmed DTC	Pending DTC
P0443 EVAP Canister Purge Valve Circuit Malfunction	B	B

DTC (PGM-FI)

1. Problem verification

   -1. Turn the vehicle to the ON mode.

   -2. Clear the DTC with the HDS.

   -3. Start the engine.

   -4. Hold the engine speed at 3, 000 rpm without load (in P or N) until the radiator fan comes on, then let it idle.

   -5. Check for Pending or Confirmed DTCs with the HDS.

DTC Description	Confirmed DTC	Pending DTC
P0443 EVAP Canister Purge Valve Circuit Malfunction	B	B

   Is DTC P0443 indicated?

   YES

   The failure is duplicated. Go to step 2.

   NO

   Intermittent failure, the system is OK at this time. Check for poor connections or loose terminals at the EVAP canister purge valve and the PCM. **If the on-board snapshot of this DTC is recorded, try to reproduce the failure under the same conditions with the on-board snapshot** .

2. Determine possible failure area (EVAP canister purge valve stuck open failure, EVAP canister purge valve stuck closed failure)

   -1. Remove the high pressure fuel pump cover and the fuel bracket.

-2. Turn the vehicle to the OFF (LOCK) mode, and allow the engine to cool below 140 deg. F (60 deg. C).

-3. Disconnect the vacuum hose (A) from the EVAP canister purge valve (B) in the engine compartment, then connect a vacuum pump/gauge, 0-30 inHg, (C) to the EVAP canister purge valve as shown.

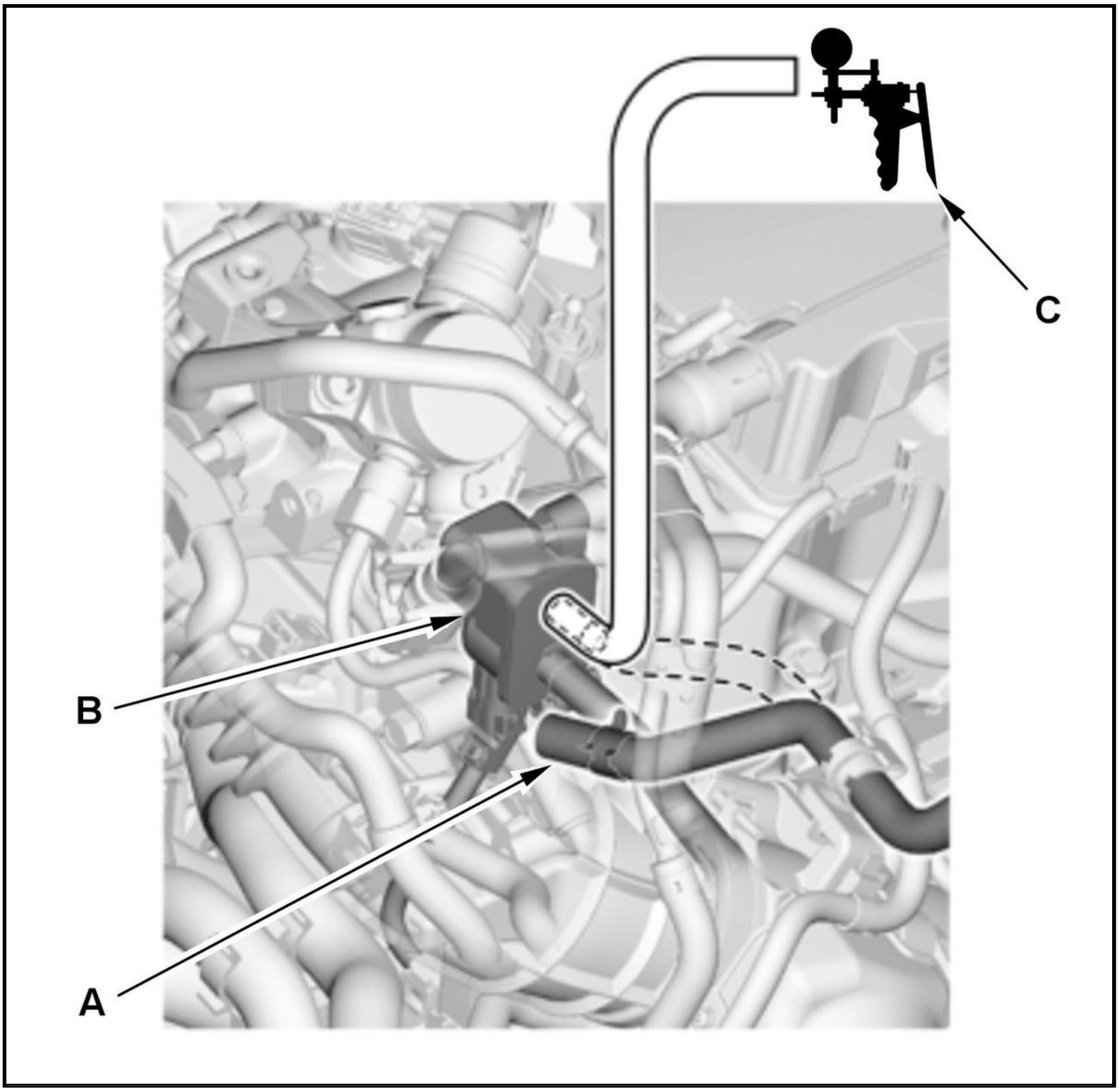

-4. Start the engine, and let it idle.

Is there vacuum?

YES

The EVAP canister purge valve is stuck open. Go to step 3.

NO

The EVAP canister purge valve is stuck closed. Go to step 5.

3. Determine possible failure area (PCS line, EVAP canister purge valve)

-1. Turn the vehicle to the OFF (LOCK) mode.

-2. Disconnect the following connector.

EVAP canister purge valve 2P connector

-3. Check for continuity between test points 1 and 2.

Test condition	Vehicle OFF (LOCK) mode
B	EVAP canister purge valve 2P connector: disconnected
Test point 1	EVAP canister purge valve 2P connector (female terminals) No. 1: ①
Test point 2	Body ground

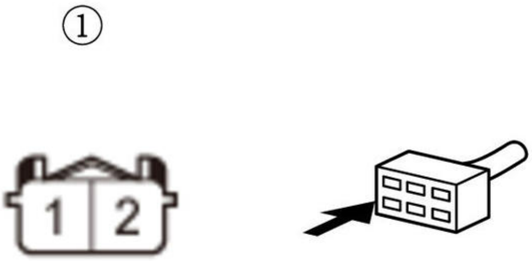

Is there continuity?

YES

Go to step 4.

NO

Replace the EVAP canister purge valve .

4. Shorted wire check (PCS line)

-1. Jump the SCS line with the HDS, and wait more than 1 minute.

-2. Disconnect the following connector.

PCM connector B (51P)

-3. Check for continuity between test points 1 and 2.

Test condition	Vehicle OFF (LOCK) mode
B	EVAP canister purge valve 2P connector: disconnected
B	PCM connector B (51P): disconnected
Test point 1	EVAP canister purge valve 2P connector (female terminals) No. 1: ①
Test point 2	Body ground

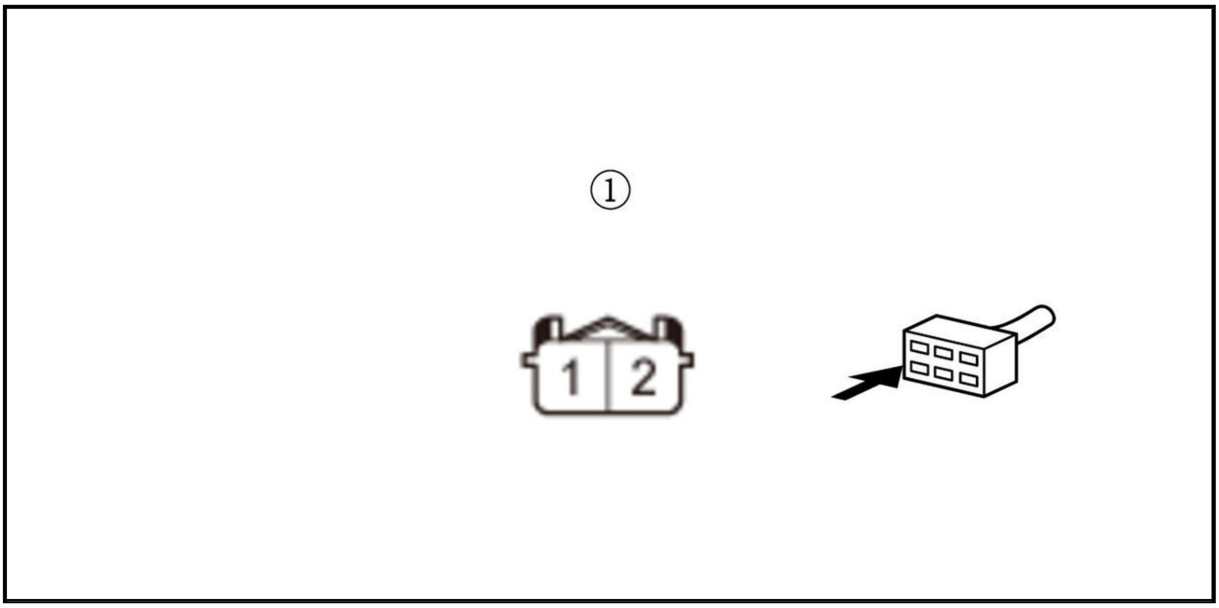

Is there continuity?

YES

Repair a short in the PCS wire between the PCM (B15) and the EVAP canister purge valve.

NO

The PCS wire is OK. Check for any authorized service information related to the DTCs or symptoms you are troubleshooting or **substitute a known-good PCM** .

5. Open wire check (IG1 ACG/IG1 (MAIN)/IG1 (PCS) line)

-1. Turn the vehicle to the OFF (LOCK) mode.

-2. Disconnect the following connector.

EVAP canister purge valve 2P connector

-3. Turn the vehicle to the ON mode.

-4. Measure the voltage between test points 1 and 2.

Test condition	Vehicle ON mode
B	EVAP canister purge valve 2P connector: disconnected
Test point 1	EVAP canister purge valve 2P connector (female terminals) No. 2: ①
Test point 2	Body ground

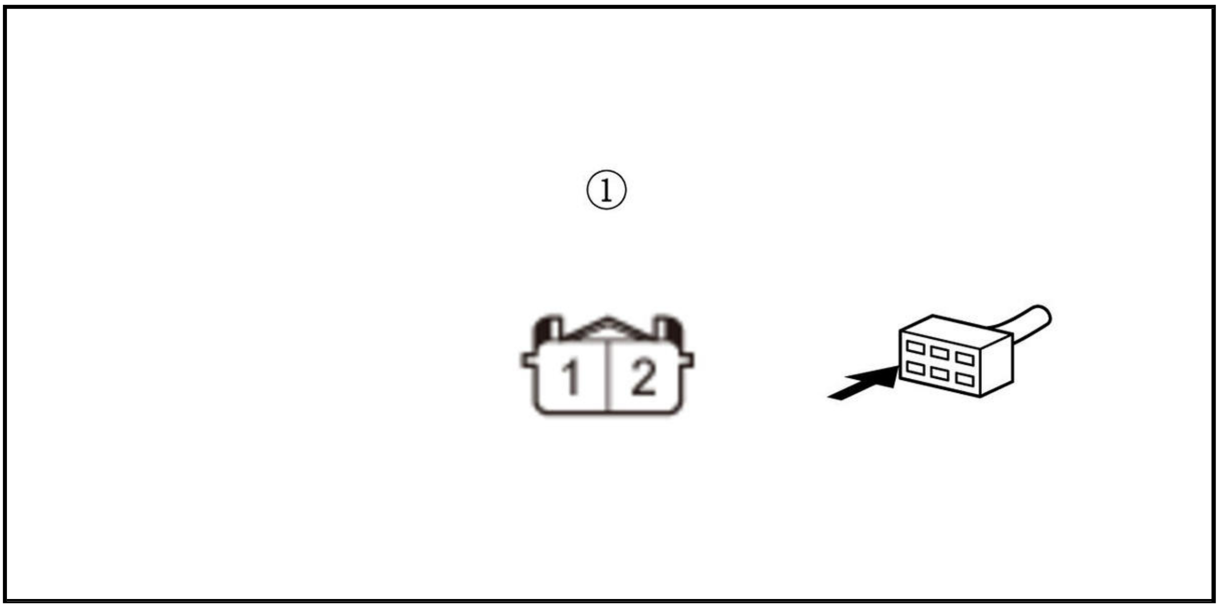

Is there battery voltage?

YES

The IG1 ACG/IG1 (MAIN)/IG1 (PCS) wire is OK. Go to step 6.

NO

Repair an open in the IG1 ACG/IG1 (MAIN)/IG1 (PCS) wire between the EVAP canister purge valve and the No. D21 (10 A) fuse in the under-dash fuse/relay box.

6. Open wire check (PCS line)

-1. Turn the vehicle to the OFF (LOCK) mode.

-2. Jump the SCS line with the HDS, and wait more than 1 minute.

-3. Disconnect the following connector.

PCM connector B (51P)

-4. Check for continuity between test points 1 and 2.

Test condition	Vehicle OFF (LOCK) mode
B	EVAP canister purge valve 2P connector: disconnected
B	PCM connector B (51P): disconnected
Test point 1	EVAP canister purge valve 2P connector (female terminals) No. 1: ①
Test point 2	**PCM connector B (51P) No. 15**

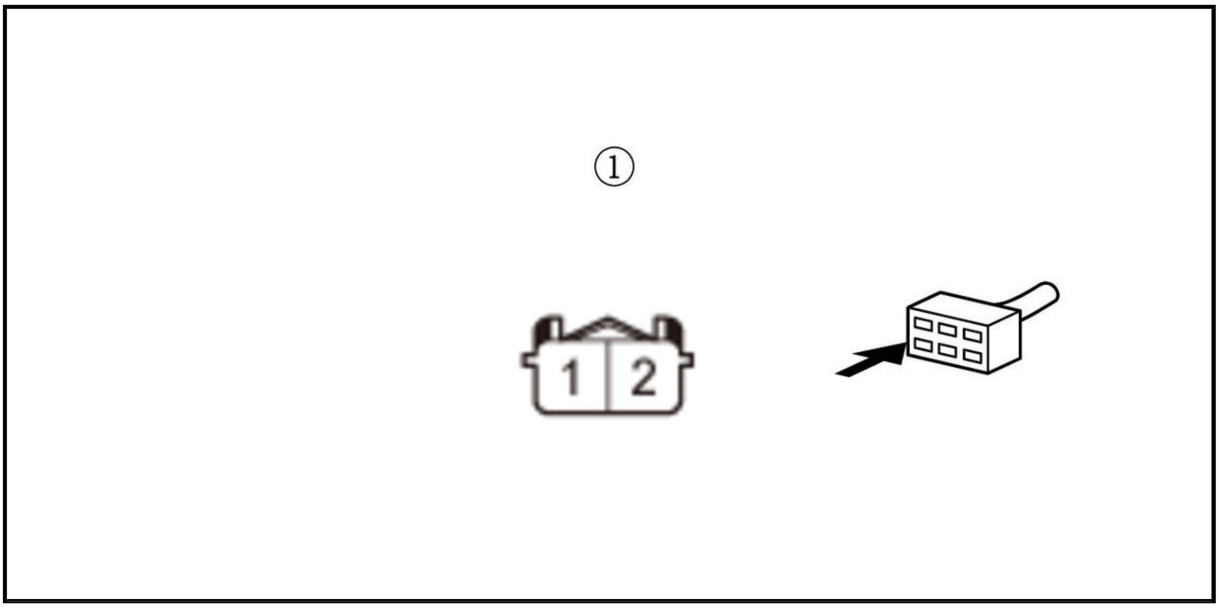

Is there continuity?

YES

The PCS wire is OK. Go to step 7.

NO

Repair an open in the PCS wire between the PCM (B15) and the EVAP canister purge valve.

7. EVAP canister purge valve internal resistance check

-1. At the purge valve side, measure the resistance between test points 1 and 2.

Test condition	Vehicle OFF (LOCK) mode
B	EVAP canister purge valve 2P connector: disconnected
B	PCM connector B (51P): disconnected
Test point 1	EVAP canister purge valve 2P connector (male terminals) No. 1 (EVAP canister purge valve side): ①
Test point 2	EVAP canister purge valve 2P connector (male terminals) No. 2 (EVAP canister purge valve side): ①

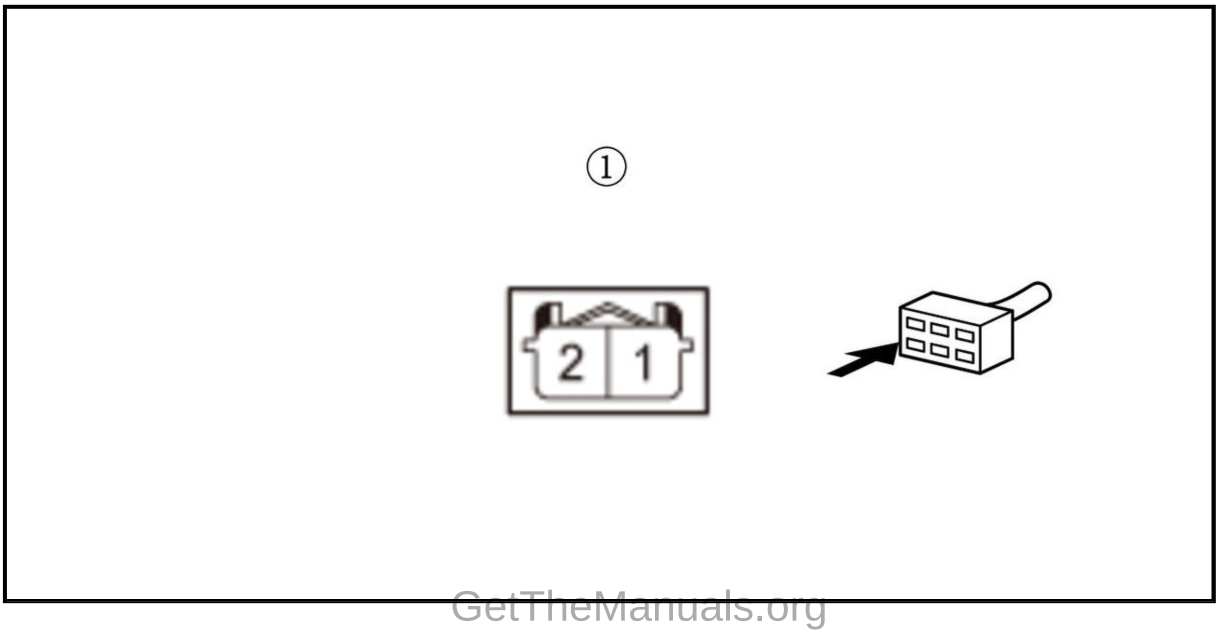

Is there about 22-27 Ω at room temperature?

YES

The EVAP canister purge valve is OK. Check for any authorized service information related to the DTCs or symptoms you are troubleshooting or **substitute a known-good PCM** .

NO

Replace the EVAP canister purge valve .

DTC P0451 (1.5 L ENGINE)

DTC P0451 : EVAP Leak Check Module Pressure Sensor Range/Performance

NOTE:

- Before you troubleshoot, **review the general troubleshooting information** .
- If DTC P24BA or P24BB is stored at the same time as DTC P0451, troubleshoot DTC P24BA or P24BB first, then recheck for DTC P0451.

DTC Description	Confirmed DTC	Pending DTC
P0451 EVAP Leak Check Module Pressure Sensor Range/Performance	B	B

DTC (PGM-FI)

1. Problem verification

   -1. Turn the vehicle to the ON mode.

   -2. Clear the DTC with the HDS.

   -3. Start the engine, and let it idle for 1 minute.

   -4. Monitor the OBD STATUS for DTC P0451 in the DTCs MENU with the HDS.

DTC Description	OBD STATUS
P0451 EVAP Leak Check Module Pressure Sensor Range/Performance	B

   Does the HDS indicate FAILED?

   YES

   The failure is duplicated. **Replace the EVAP leak check module** .

   NO

   If the HDS indicates PASSED, intermittent failure, the system is OK at this time. Check for poor connections or loose terminals at the EVAP leak check module and the PCM. **If the on-board snapshot of this DTC is recorded, try to reproduce the failure under the same conditions with the on-board snapshot** .

DTC P0451 (2.4 L ENGINE) (2017 2018 2019)

DTC P0451 : FTP Sensor Circuit Range/Performance Problem

NOTE:

- Before you troubleshoot, **review the general troubleshooting information** .
- If DTC P2422 is stored at the same time as DTC P0451, troubleshoot DTC P2422 first, then recheck for DTC P0451.

DTC Description	Confirmed DTC	Pending DTC
P0451 FTP Sensor Circuit Range/Performance Problem	B	B

DTC (PGM-FI)

1. Problem verification

   -1. Turn the vehicle to the ON mode.

   -2. Clear the DTC with the HDS.

   -3. Start the engine, and let it idle for 1 minute.

   -4. Monitor the OBD STATUS for DTC P0451 in the DTCs MENU with the HDS.

DTC Description	OBD STATUS
P0451 FTP Sensor Circuit Range/Performance Problem	B

   Does the HDS indicate FAILED?

   YES

   The failure is duplicated. **Replace the FTP sensor** .

   NO

   If the HDS indicates PASSED, intermittent failure, the system is OK at this time. Check for poor connections or loose terminals at the FTP sensor and the PCM. **If the on-board snapshot of this DTC is recorded, try to reproduce the failure under the same conditions with the on-board snapshot** . If the HDS indicates NOT COMPLETED, keep idling until a result comes on.

DTC P0452 (2.4 L ENGINE) (2017 2018 2019)

DTC P0452 : FTP Sensor Circuit Low Voltage

NOTE: Before you troubleshoot, **review the general troubleshooting information** .

DTC Description	Confirmed DTC	Pending DTC
P0452 FTP Sensor Circuit Low Voltage	B	B

DTC (PGM-FI)

1. EVAP system check

   -1. Turn the vehicle to the ON mode.

   -2. Clear the DTC with the HDS.

   -3. Turn the vehicle to the OFF (LOCK) mode.

   -4. **Insert the emergency fuel funnel into the fuel filler neck** .

   NOTE: The emergency fuel funnel is stored under the cargo lid.

-5. Check the parameter (s) below with the HDS.

Signal	**Threshold**		**Current conditions**	
	Values	**Unit**	**Values**	**Unit**
FTP SENSOR	Less than 0.3	V	B	B

Do the current condition (s) match the malfunction threshold?

YES

Go to step 3.

NO

Go to step 2.

2. Problem verification

-1. Remove the emergency fuel funnel from the fuel filler neck.

-2. Start the engine, and let it idle.

-3. Monitor the OBD STATUS for DTC P0452 in the DTCs MENU with the HDS.

DTC Description	**OBD STATUS**
P0452 FTP Sensor Circuit Low Voltage	B

Does the HDS indicate FAILED?

YES

The failure is duplicated. Go to step 3.

NO

If the HDS indicates PASSED, intermittent failure, the system is OK at this time. Check for poor connections or loose terminals at the FTP sensor and the PCM. **If the on-board snapshot of this DTC is recorded, try to reproduce the failure under the same conditions with the on-board snapshot** . If the HDS indicates NOT COMPLETED, keep idling until a result comes on.

3. Determine possible failure area (PTANK line, others)

-1. Turn the vehicle to the OFF (LOCK) mode.

-2. Disconnect the following connector.

FTP sensor 3P connector

-3. Turn the vehicle to the ON mode.

-4. Check the parameter (s) below with the HDS.

Signal	**Threshold**		**Current conditions**	
	Values	**Unit**	**Values**	**Unit**
FTP SENSOR	Less than 0.3	V	B	B

Do the current condition (s) match the malfunction threshold?

YES

Go to step 4.

NO

Go to step 5.

4. Shorted wire check (PTANK line)

-1. Turn the vehicle to the OFF (LOCK) mode.

-2. Jump the SCS line with the HDS, and wait more than 1 minute.

-3. Disconnect the following connector.

PCM connector A (51P)

-4. Check for continuity between test points 1 and 2.

Test condition	Vehicle OFF (LOCK) mode
B	FTP sensor 3P connector: disconnected
B	PCM connector A (51P): disconnected
Test point 1	FTP sensor 3P connector (female terminals) No. 2: ①
Test point 2	Body ground

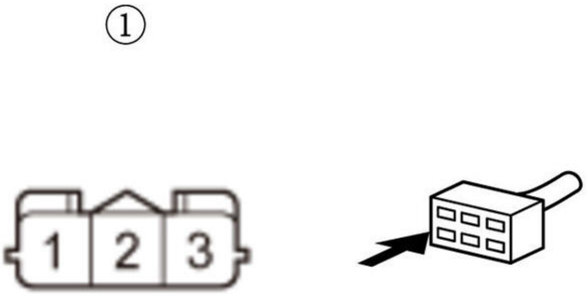

Is there continuity?

YES

Repair a short in the PTANK wire between the PCM (A42) and the FTP sensor.

NO

The PTANK wire is OK. Check for any authorized service information related to the DTCs or symptoms you are troubleshooting, or **substitute a known-good PCM** .

5. Determine possible failure area (FTP sensor, others)

-1. Measure the voltage between test points 1 and 2.

Test condition	Vehicle ON mode
B	FTP sensor 3P connector: disconnected
Test point 1	FTP sensor 3P connector (female terminals) No. 3: ①
Test point 2	Body ground

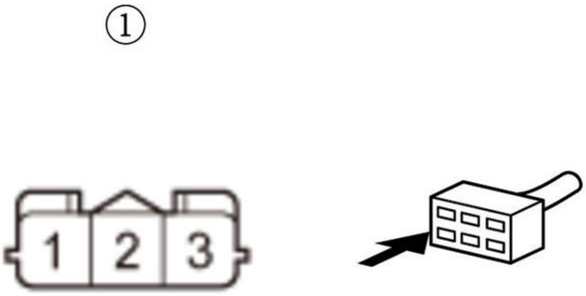

Is there about 5.0 V?

YES

Replace the FTP sensor .

NO

Go to step 6.

6. Open wire check (VCC6 line)

-1. Turn the vehicle to the OFF (LOCK) mode.

-2. Jump the SCS line with the HDS, and wait more than 1 minute.

-3. Disconnect the following connector.

PCM connector A (51P)

-4. Connect terminals A and B with a jumper wire.

Terminal A	FTP sensor 3P connector (female terminals) No. 3: ①
Terminal B	Body ground

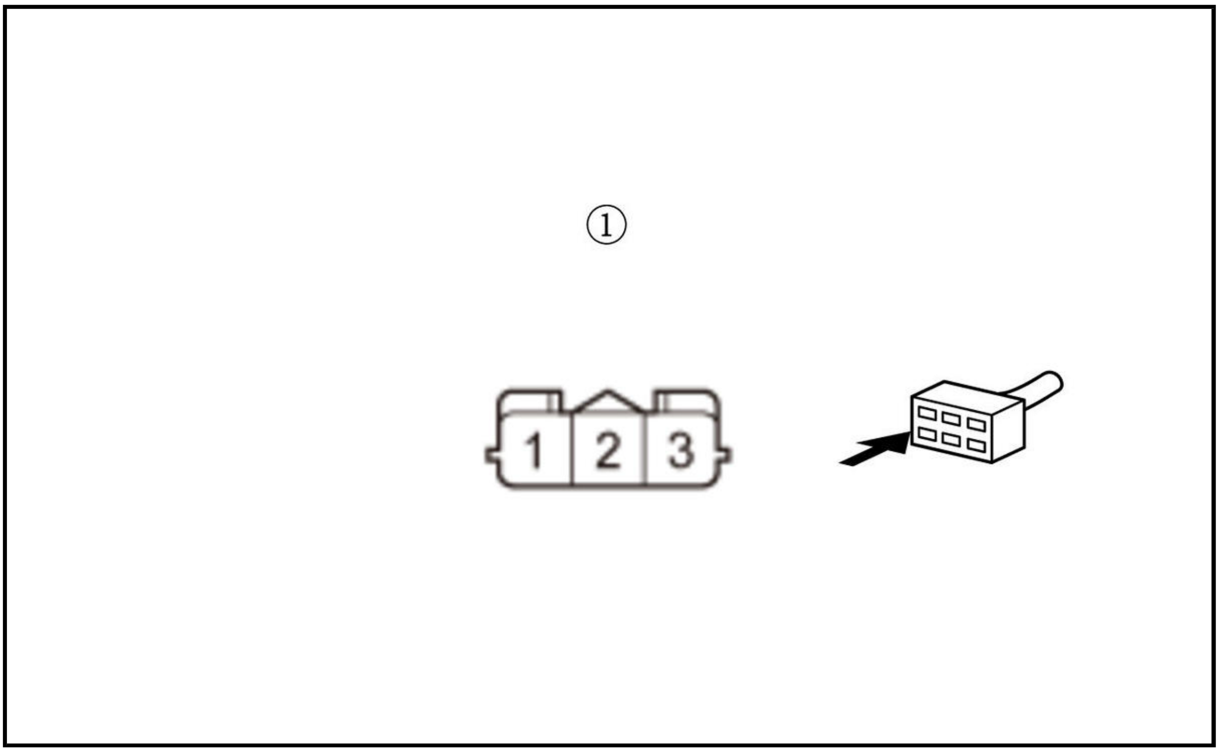

-5. Check for continuity between test points 1 and 2.

Test condition	Vehicle OFF (LOCK) mode
	FTP sensor 3P connector: disconnected
	FTP sensor 3P connector No. 3: jumped to body ground
	PCM connector A (51P): disconnected
Test point 1	**PCM connector A (51P) No. 29**
Test point 2	Body ground

Is there continuity?

YES

The VCC6 wire is OK. Check for any authorized service information related to the DTCs or symptoms you are troubleshooting, or **substitute a known-good PCM** .

NO

Repair an open in the VCC6 wire between the PCM (A29) and the FTP sensor.

DTC P0453 (2.4 L ENGINE) (2017 2018 2019)

DTC P0453 : FTP Sensor Circuit High Voltage

NOTE: Before you troubleshoot, **review the general troubleshooting information** .

DTC Description	Confirmed DTC	Pending DTC
P0453 FTP Sensor Circuit High Voltage	B	B

DTC (PGM-FI)

1. EVAP system check

-1. Turn the vehicle to the ON mode.

-2. Clear the DTC with the HDS.

-3. Turn the vehicle to the OFF (LOCK) mode.

-4. **Insert the emergency fuel funnel into the fuel filler neck** .

NOTE: The emergency fuel funnel is stored under the cargo lid.

-5. Check the parameter (s) below with the HDS.

Signal	Threshold		Current conditions	
	Values	Unit	Values	Unit
FTP Sensor	More than 4.7	V	B	B

Do the current condition (s) match the malfunction threshold?

YES

Go to step 3.

NO

Go to step 2.

2. Problem verification

-1. Remove the emergency fuel funnel from the fuel filler neck.

-2. Start the engine.

-3. Hold the engine speed at 3, 000 rpm without load (in P or N) until the radiator fan comes on, then let it idle.

-4. Monitor the OBD STATUS for DTC P0453 in the DTCs MENU with the HDS.

DTC Description	OBD STATUS
P0453 FTP Sensor Circuit High Voltage	B

Does the HDS indicate FAILED?

YES

The failure is duplicated. Go to step 3.

NO

If the HDS indicates PASSED, intermittent failure, the system is OK at this time. Check for poor connections or loose terminals at the FTP sensor and the PCM. **If the on-board snapshot of this DTC is recorded, try to reproduce the failure under the same conditions with the on-board snapshot** . If the HDS indicates NOT COMPLETED, keep idling until a result comes on.

3. Determine possible failure area (FTP sensor, others)

-1. Turn the vehicle to the OFF (LOCK) mode.

-2. Disconnect the following connector.

FTP sensor 3P connector

-3. Connect terminals A and B with a jumper wire.

Terminal A	FTP sensor 3P connector (female terminals) No. 1: ①
Terminal B	FTP sensor 3P connector (female terminals) No. 2: ①

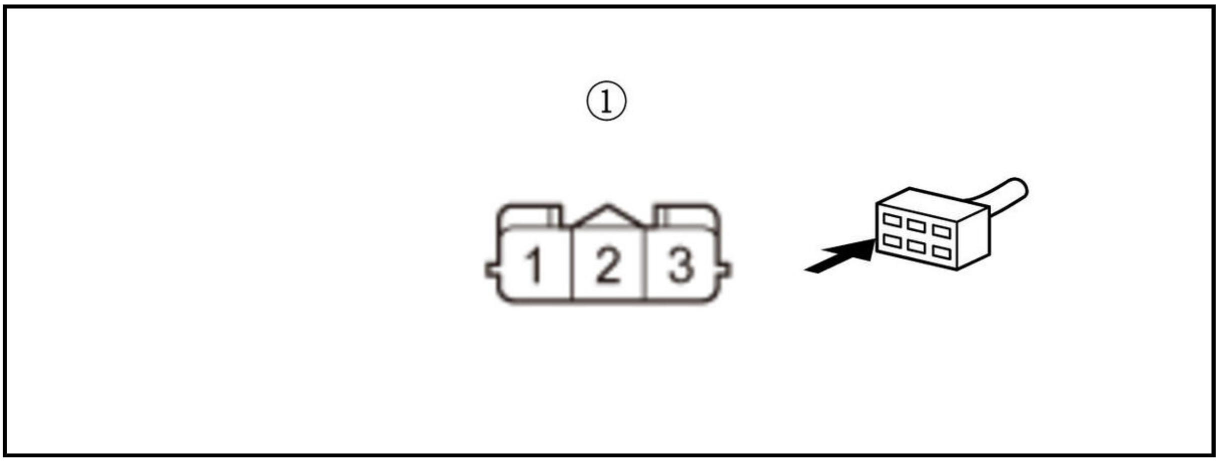

-4. Turn the vehicle to the ON mode.

-5. Check the parameter (s) below with the HDS.

Signal	**Threshold**		**Current conditions**	
	Values	**Unit**	**Values**	**Unit**
FTP SENSOR	More than 4.7	V	B	B

Do the current condition (s) match the malfunction threshold?

YES

Go to step 4.

NO

Replace the FTP sensor .

4. Determine possible failure area (SG6 line, others)

-1. Turn the vehicle to the OFF (LOCK) mode.

-2. Remove the jumper wire from the FTP sensor 3P connector.

-3. Turn the vehicle to the ON mode.

-4. Measure the voltage between test points 1 and 2.

Test condition	Vehicle ON mode
B	FTP sensor 3P connector: disconnected
Test point 1	FTP sensor 3P connector (female terminals) No. 1: ①
Test point 2	FTP sensor 3P connector (female terminals) No. 3: ①

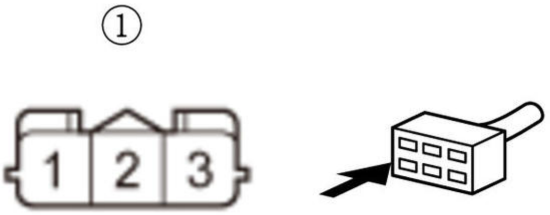

Is there about 5.0 V?

YES

Go to step 5.

NO

Go to step 6.

5. Open wire check (PTANK line)

-1. Turn the vehicle to the OFF (LOCK) mode.

-2. Jump the SCS line with the HDS, and wait more than 1 minute.

-3. Disconnect the following connector.

PCM connector A (51P)

-4. Connect terminals A and B with a jumper wire.

Terminal A	FTP sensor 3P connector (female terminals) No. 2: ①
Terminal B	Body ground

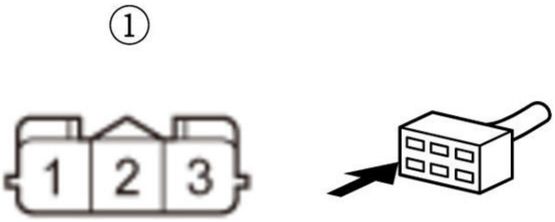

-5. Check for continuity between test points 1 and 2.

Test condition	Vehicle OFF (LOCK) mode
	FTP sensor 3P connector: disconnected
	FTP sensor 3P connector No. 2: jumped to body ground

	PCM connector A (51P): disconnected
Test point 1	**PCM connector A (51P) No. 42**
Test point 2	Body ground

Is there continuity?

YES

The PTANK wire is OK. Check for any authorized service information related to the DTCs or symptoms you are troubleshooting, or **substitute a known-good PCM** .

NO

Repair an open in the PTANK wire between the PCM (A42) and the FTP sensor.

6. Open wire check (SG6 line)

-1. Turn the vehicle to the OFF (LOCK) mode.

-2. Jump the SCS line with the HDS, and wait more than 1 minute.

-3. Disconnect the following connector.

PCM connector A (51P)

-4. Connect terminals A and B with a jumper wire.

Terminal A	FTP sensor 3P connector (female terminals) No. 1: ①
Terminal B	Body ground

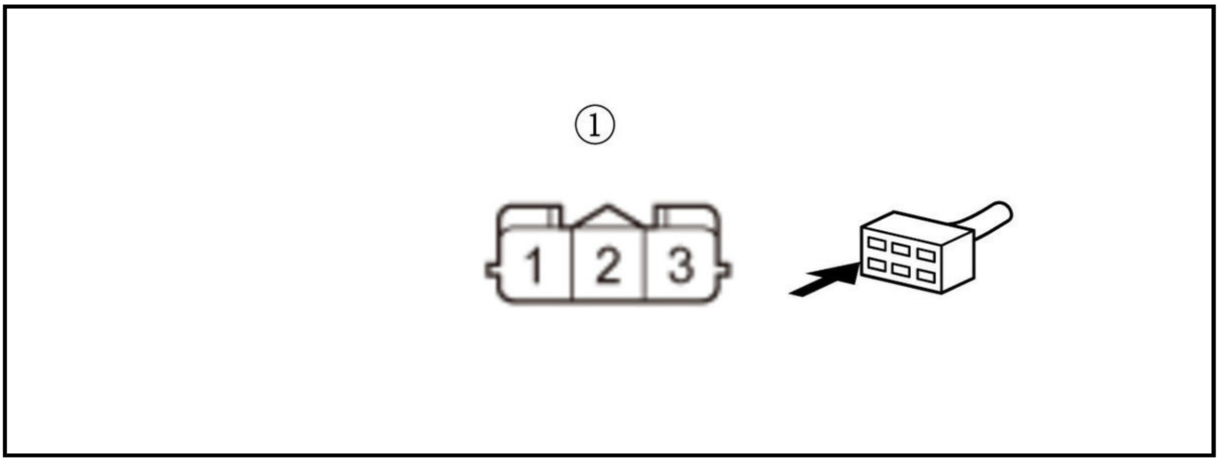

-5. Check for continuity between test points 1 and 2.

Test condition	Vehicle OFF (LOCK) mode
	FTP sensor 3P connector: disconnected
	FTP sensor 3P connector No. 1: jumped to body ground
	PCM connector A (51P): disconnected
Test point 1	**PCM connector A (51P) No. 28**
Test point 2	Body ground

Is there continuity?

YES

The SG6 wire is OK. Check for any authorized service information related to the DTCs or symptoms you are troubleshooting, or substitute a known-good PCM .

NO

Repair an open in the SG6 wire between the PCM (A28) and the FTP sensor.

DTC P0455, P0456 (2.4 L ENGINE) (2017 2018 2019)

DTC P0455 : EVAP System Large Leak Detected **DTC P0456** : EVAP System Very Small Leak Detected

Special Tools Required

Vacuum Pump/Gauge, 0-30 inHg Snap-on YA4000A or equivalent, commercially available

Vacuum/Pressure Gauge, 0-4 inHg 07JAZ-001000B

NOTICE:

The fuel system is designed to allow specified maximum vacuum and pressure conditions. Do not deviate from the vacuum and pressure tests as indicated in these procedures. Excessive pressure/vacuum would damage the EVAP components or cause eventual fuel tank failure.

NOTE:

- Before you troubleshoot, review the general troubleshooting information .
- Fresh fuel has a higher volatility that will create greater pressure/vacuum. The best condition for testing is less than a full tank of fresh fuel. If possible, to assist in leak detection, add 1 gallon of fresh fuel to the tank (as long as it will not fill the tank), just before starting these procedures.

DTC Description	Confirmed DTC	Pending DTC
P0455 EVAP System Large Leak Detected	B	B
P0456 EVAP System Very Small Leak Detected	B	B

DTC (PGM-FI)

1. Problem verification

   -1. Turn the vehicle to the ON mode.

   -2. Clear the DTC with the HDS.

   -3. Select the EVAP TEST in the INSPECTION MENU, then select the FUNCTION TEST with the HDS.

   EVAP TEST

   Is the result OK?

   YES

   Intermittent failure, the system is OK at this time. Check for poor connections or loose terminals at the FTP sensor, the EVAP canister purge valve, the EVAP canister vent shut valve, and the PCM. If the on-board snapshot of this DTC is recorded, try to reproduce the failure under the same conditions with the on-board snapshot . If the vehicle returns with the same DTC, continue with step 4.

   NO

   The failure is duplicated. Go to step 2.

2. EVAP canister vent hose check

   -1. Check the EVAP canister vent hose (A) for a blockage or a restriction.

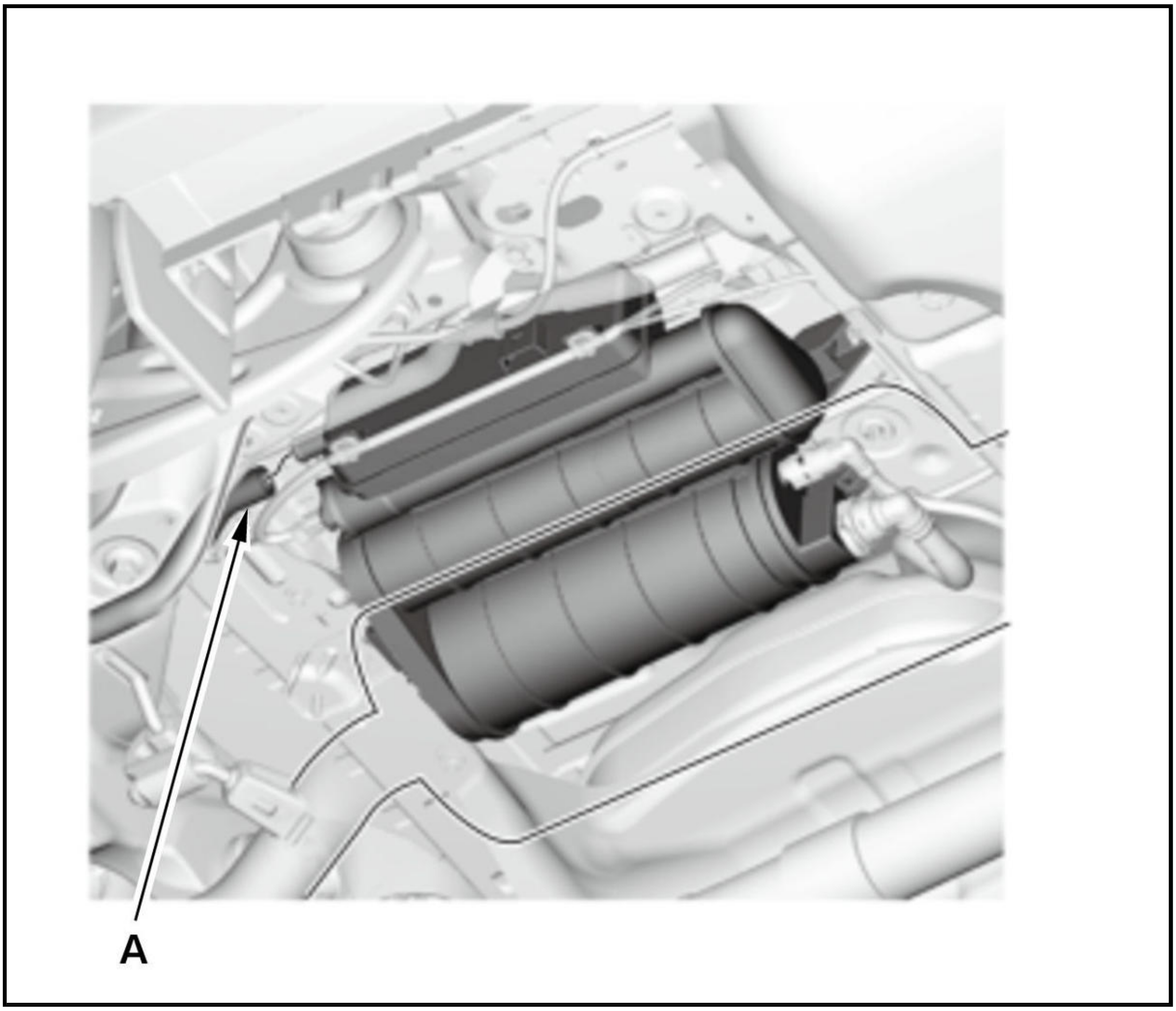

   Is there a blockage or a restriction in the hose?

   YES

   Remove a blockage or a restriction, if needed, replace the EVAP canister vent hose.

   NO

   Go to step 3.

3. Fuel tank vapor recirculation tube visual check

   -1. Check for a poor connection or damage at the fuel tank vapor recirculation tube.

   Is the tube OK?

   YES

   The tube is OK. Go to step 4.

   NO

   Replace the fuel tank or **replace the fuel tank unit** if needed.

4. EVAP canister purge valve leak check

-1. **Remove the EVAP canister purge valve** with its connector and vacuum hose connected.

-2. Disconnect the vacuum hose (purge line) (A) from the EVAP canister purge valve (B) in the engine compartment, then connect a T-fitting (C), a vacuum gauge, and a vacuum pump/gauge, 0-30 inHg, to the vacuum hose as shown.

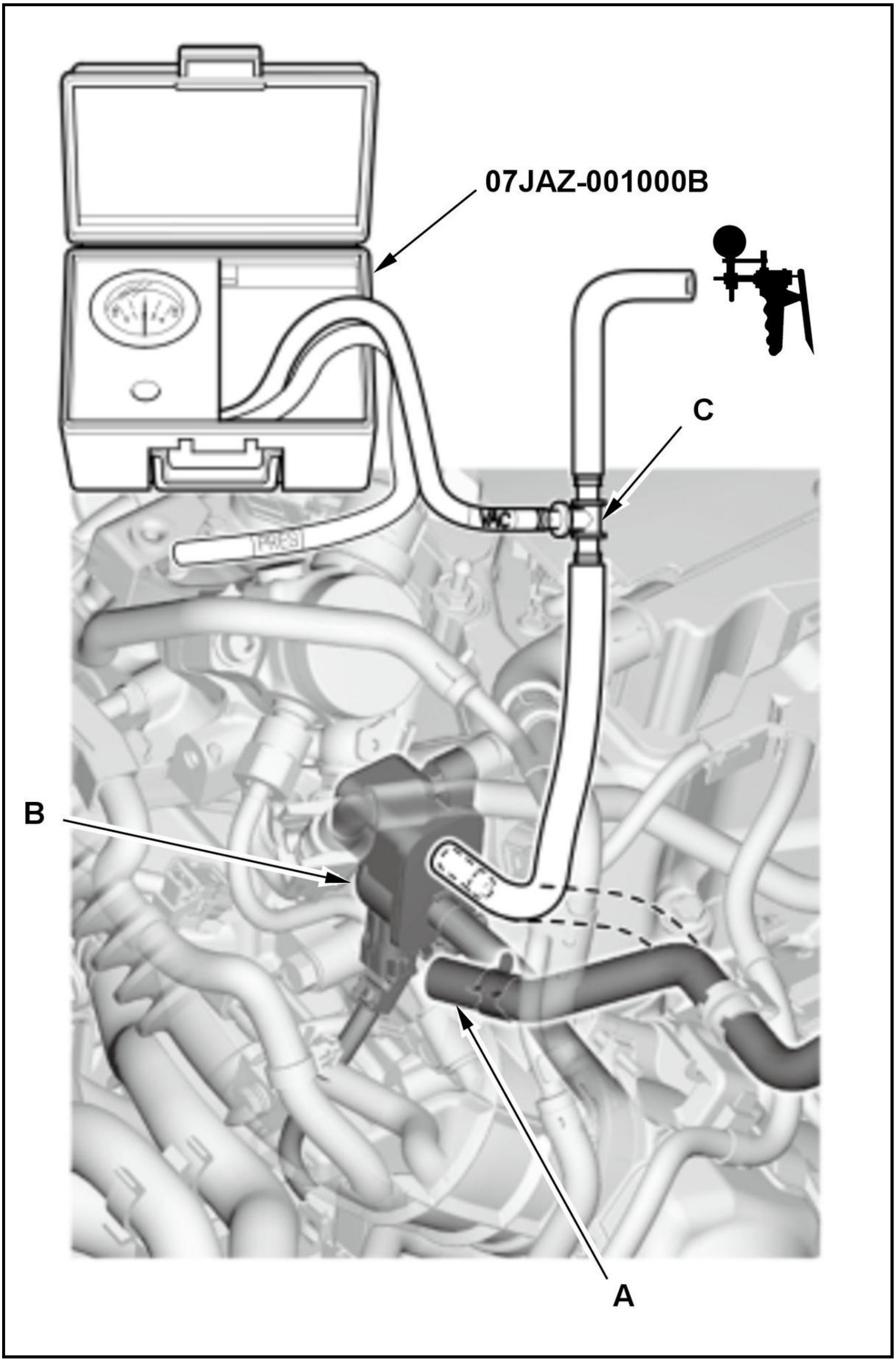

-3. Slowly apply about 2 kPa (0.6 inHg, 15 mmHg) of vacuum to the hose.

Does it hold vacuum for 1 minute?

YES

Leak not detected at the EVAP canister purge valve. Go to step 5.

NO

Replace the EVAP canister purge valve .

5. Determine possible failure area (EVAP canister vent shut valve, others)

-1. Turn the vehicle to the OFF (LOCK) mode.

-2. Disconnect the fuel vent tube (A) from the EVAP canister (B), and plug the EVAP canister port (C).

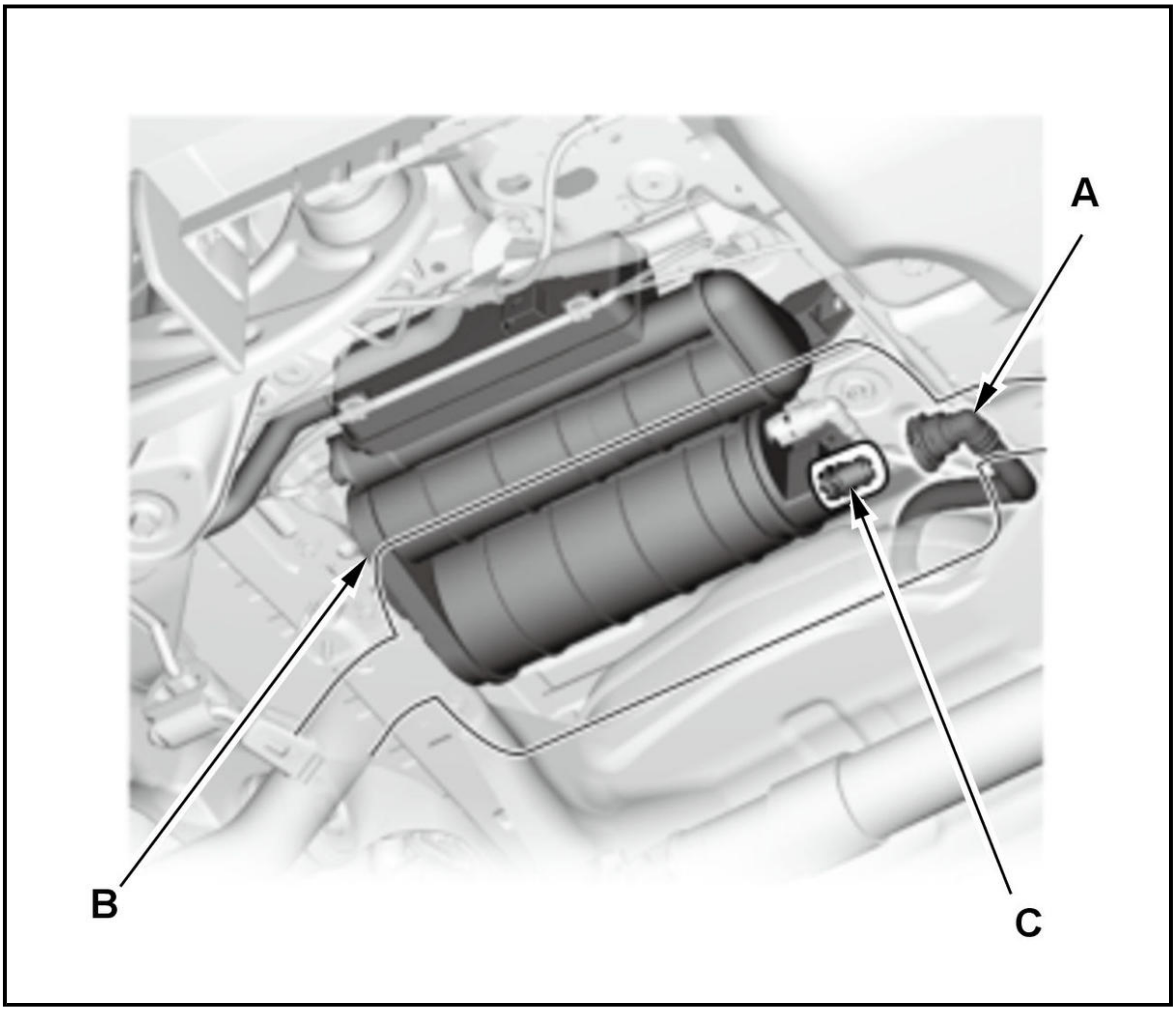

-3. Remove the T-fitting and vacuum pump/gauge, 0-30 inHg, and connect the vacuum pump/gauge, 0-30 inHg to the vacuum hose (purge line) (A) as shown.

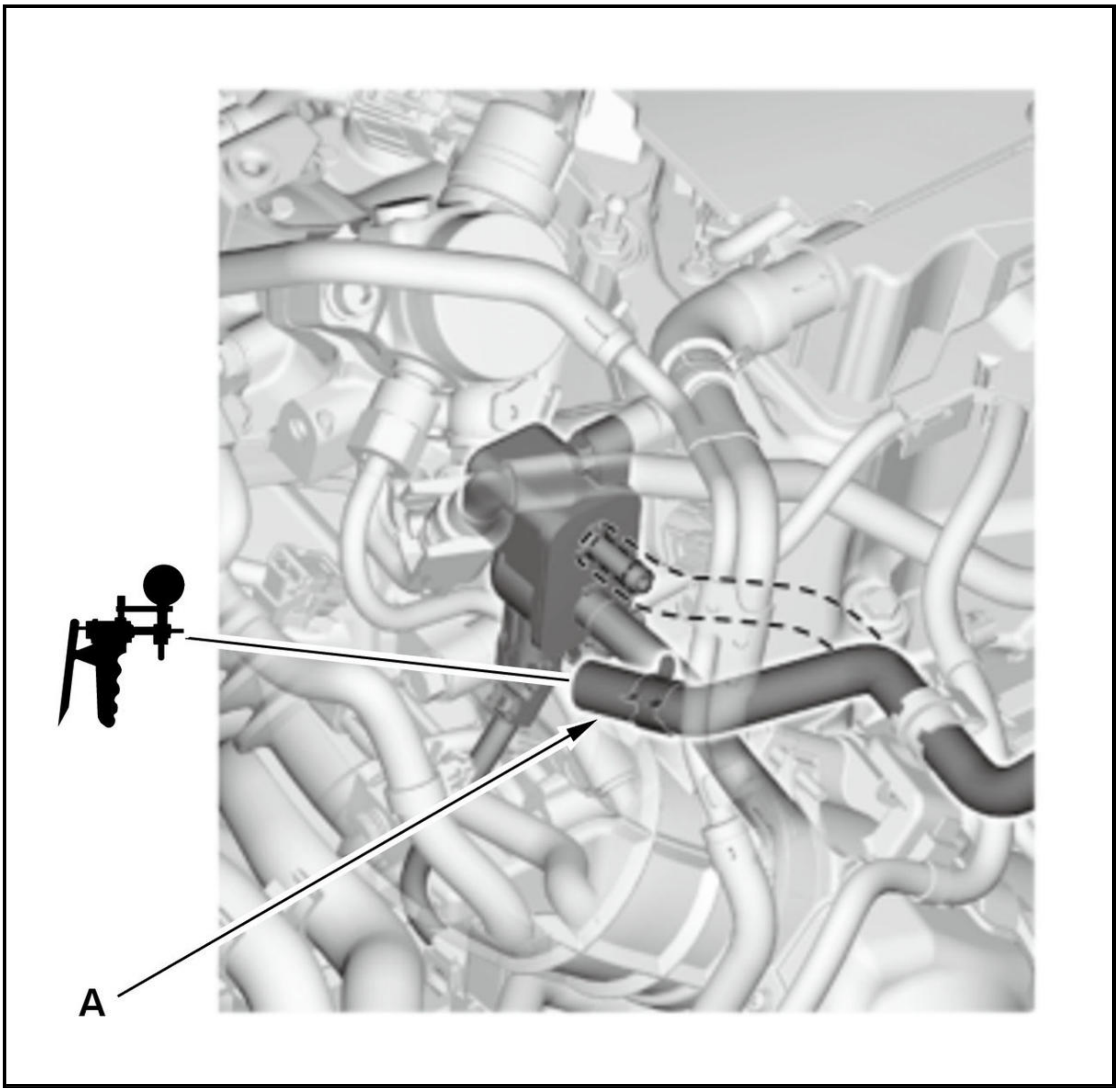

-4. Turn the vehicle to the ON mode.

-5. Select the EVAP TEST in the INSPECTION MENU, then select EVAP CVS ON in the SINGLE SOLENOID with the HDS.

EVAP TEST

Apply vacuum to the hose until the FTP reads 1.90 V (-0.59 inHg, -15.1 mmHg).

NOTE: Be careful not to exceed the vacuum. If you do, the FTP sensor can be damaged.

Signal	Current conditions	
	Values	**Unit**
FTP SENSOR	B	B

-7. Check the parameter (s) below with the HDS for 1 minute.

Signal	Current conditions	
	Values	**Unit**
FTP SENSOR	B	B

Does the voltage increase more than 0.2 V (0.1 inHg, 2.5 mmHg)?

YES

Go to step 6.

NO

Go to step 8.

6. EVAP canister vent shut valve operation check

-1. Select the EVAP TEST in the INSPECTION MENU, then select EVAP CVS OFF in the SINGLE SOLENOID with the HDS.

EVAP TEST

-2. Disconnect the EVAP canister vent hose (A) from the EVAP canister vent shut valve port (B), and plug it.

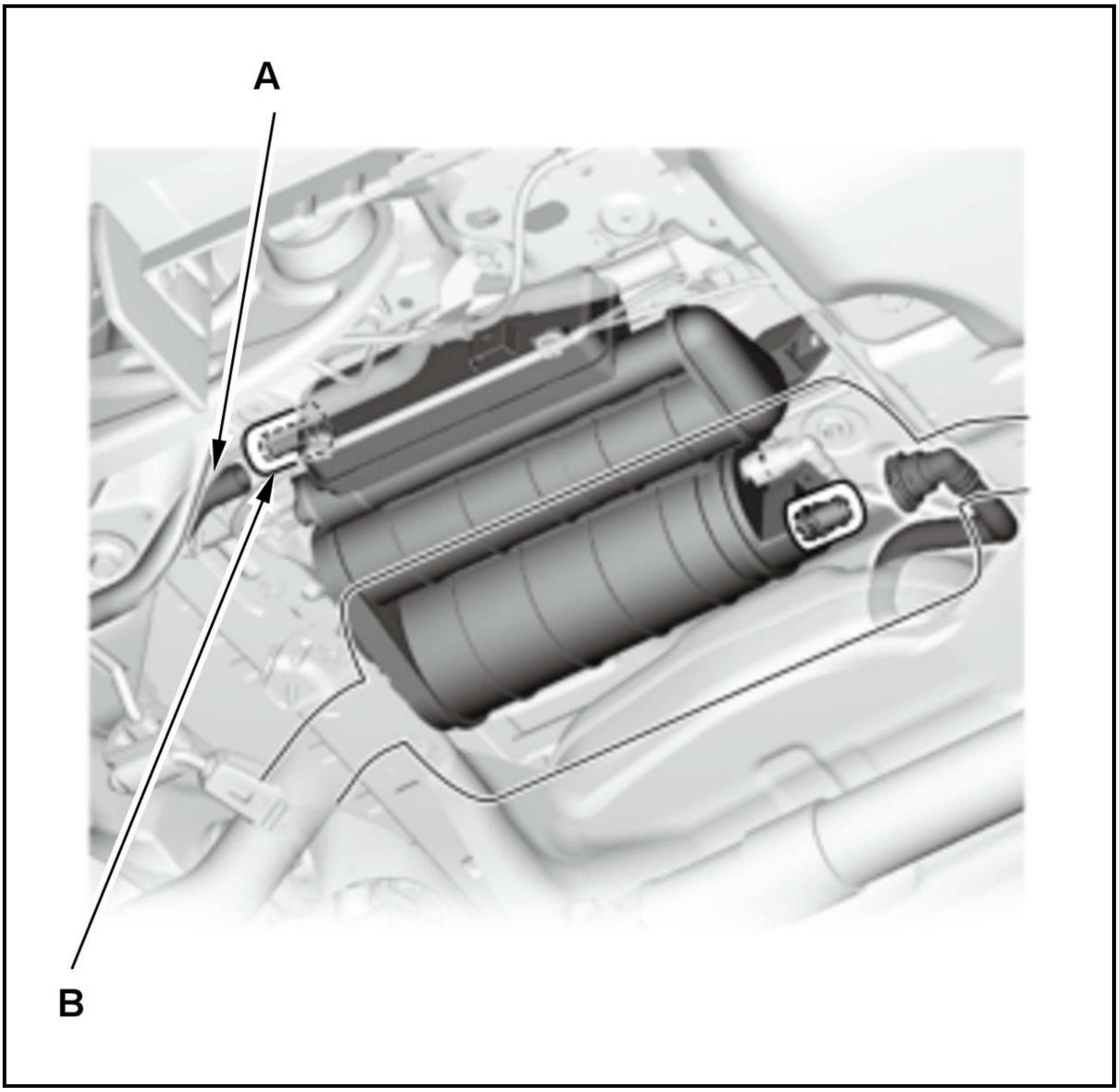

-3. Apply vacuum to the hose until the FTP reads 1.90 V (-0.59 inHg, -15.1 mmHg).

NOTE: Be careful not to exceed the vacuum. If you do, the FTP sensor can be damaged.

Signal	Current conditions	
	Values	Unit
FTP SENSOR	B	B

-4. Check the parameter (s) below with the HDS for 1 minute.

Signal	Current conditions	
	Values	Unit
FTP Sensor	B	B

Does the voltage increase more than 0.2 V (0.1 inHg, 2.5 mmHg)?

YES

The EVAP canister vent shut valve is OK. Go to step 7.

NO

Replace the EVAP canister vent shut valve .

7. EVAP canister purge line visual check

   -1. Check for a poor connection or damaged EVAP canister purge line between the EVAP canister and the EVAP canister purge valve. Also check for damage to the EVAP canister.

   Are the line and the EVAP canister OK?

   1. **YES**

      Replace these parts.

      - FTP sensor O-ring
      - EVAP canister vent shut valve case and O-ring
      - EVAP canister

      NO

      Replace or repair the EVAP canister purge line or the canister.

8. Fuel fill pipe and fuel tank vapor recirculation tube visual check

   -1. Select the EVAP TEST in the INSPECTION MENU, then select EVAP CVS OFF in the SINGLE SOLENOID with the HDS.

   EVAP TEST

   Check for a poor connection or damage to the fuel fill pipe and the fuel tank vapor recirculation tube.

   Are the parts and connections OK?

   YES

   The fuel fill pipe and the fuel tank vapor recirculation tube are OK. Go to step 9.

   NO

   Replace the fuel tank .

9. Shut-off valve check

   -1. Turn the vehicle to the OFF (LOCK) mode.

   -2. Check the flap of the shut-off valve (A).

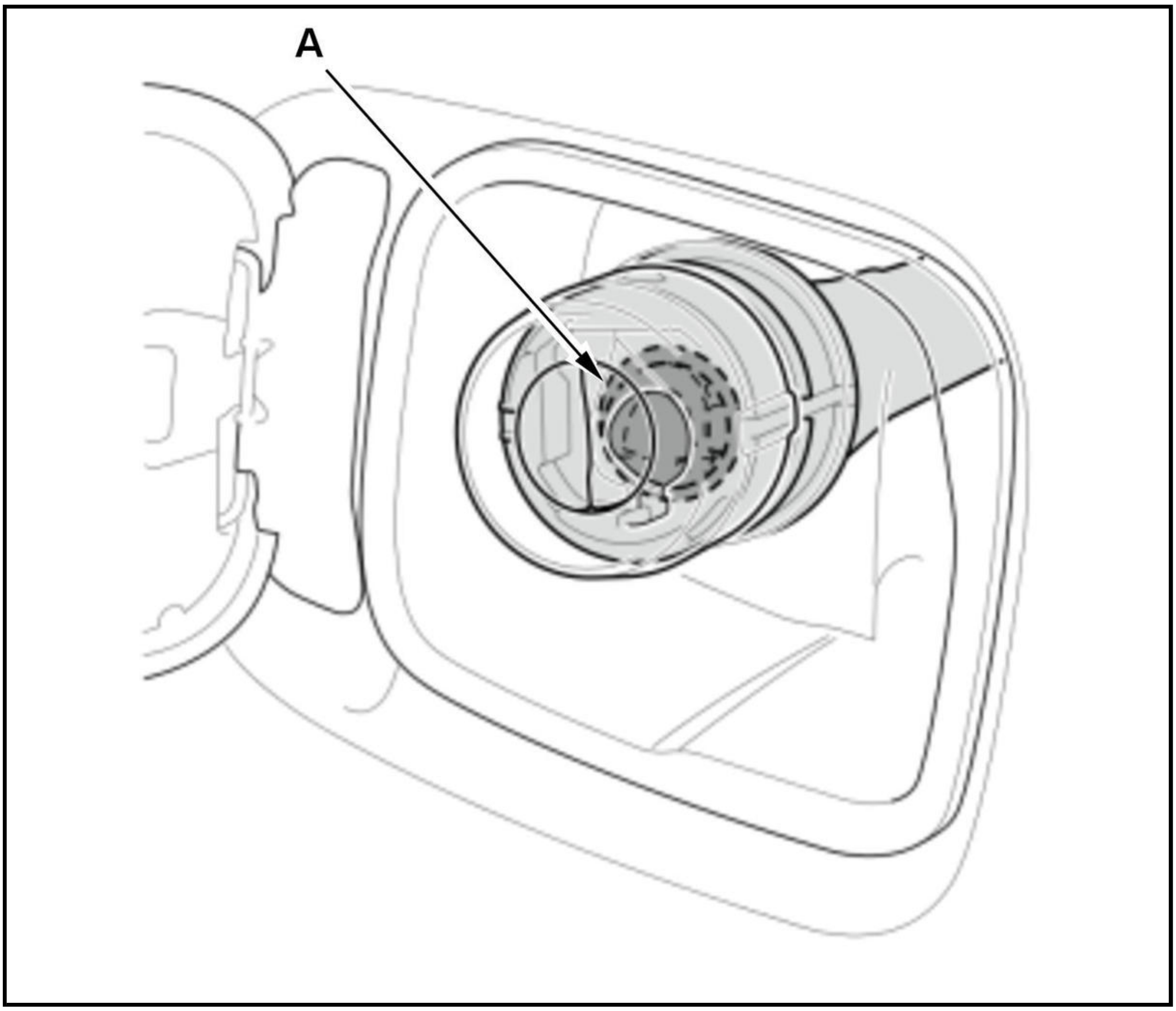

Is the flap closed?

YES

Go to step 10.

NO

Replace the main flap unit .

10. Shut-off valve seal check

    -1. Check the flap seal of the shut-off valve (A) and the mating surface on the shut-off valve.

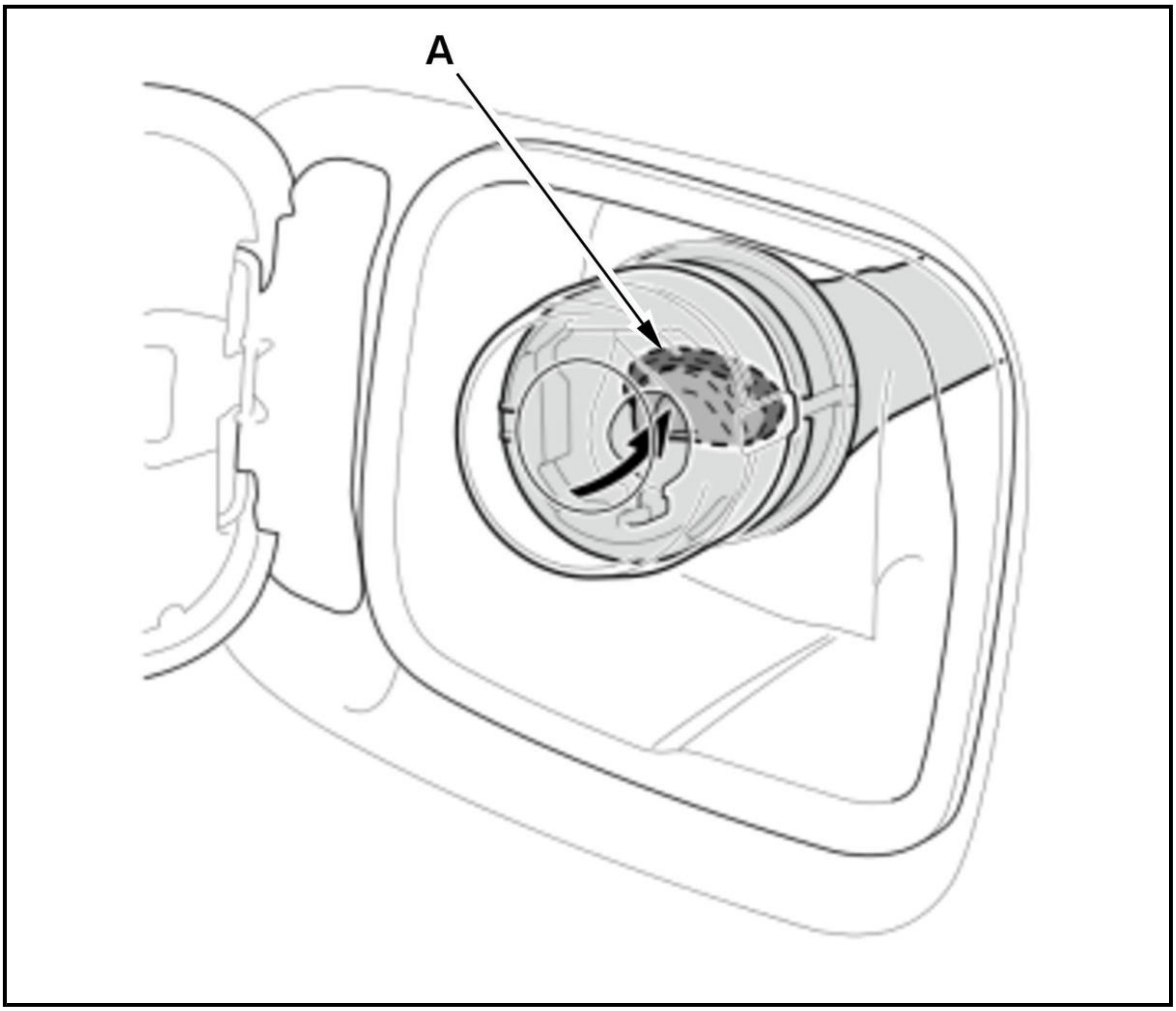

Is the flap seal missing or damaged, is the shut-off valve mating surface damaged?

YES

Replace the main flap unit .

NO

The shut-off valve is OK. Check the fuel tank unit base gasket and fuel tank.

DTC P0456 (1.5 L ENGINE)

DTC P0456 : EVAP System Very Small Leak Detected

Special Tools Required

Vacuum Pump/Gauge, 0-30 inHg Snap-on YA4000A or equivalent, commercially available

Vacuum/Pressure Gauge, 0-4 inHg 07JAZ-001000B

NOTICE:

The fuel system is designed to allow specified maximum vacuum and pressure conditions. Do not deviate from the vacuum and pressure tests as indicated in these procedures. Excessive pressure/vacuum would damage the EVAP components or cause eventual fuel tank failure.

NOTE:

- Before you troubleshoot, **review the general troubleshooting information** .

- Fresh fuel has a higher volatility that will create greater pressure/vacuum. The best condition for testing is less than a full tank of fresh fuel. If possible, to assist in leak detection, add 1 gallon of fresh fuel to the tank (as long as it will not fill the tank), just before starting these procedures.

DTC Description	Confirmed DTC	Pending DTC
P0456 EVAP System Very Small Leak Detected	B	B

DTC (PGM-FI)

1. Problem verification

   -1. Turn the vehicle to the ON mode.

   -2. Clear the DTC with the HDS.

   -3. Select the EVAP TEST (ELCM) in the INSPECTION MENU, then select EVAP Leak Check Module Test with the HDS.

   EVAP TEST (ELCM)

   Is the result OK?

   YES

   If the test result is PASSED, intermittent failure, the system is OK at this time. Check for poor connections or loose terminals at the EVAP leak check module, the EVAP canister purge valve, and the PCM. **If the on-board snapshot of this DTC is recorded, try to reproduce the failure under the same conditions with the on-board snapshot** . If the vehicle returns with the same DTC, continue with step 5.

   NO

   The failure is duplicated. Go to step 2.

2. EVAP canister vent hose check

   -1. Check the EVAP canister drain hose (A) for a blockage or a restriction.

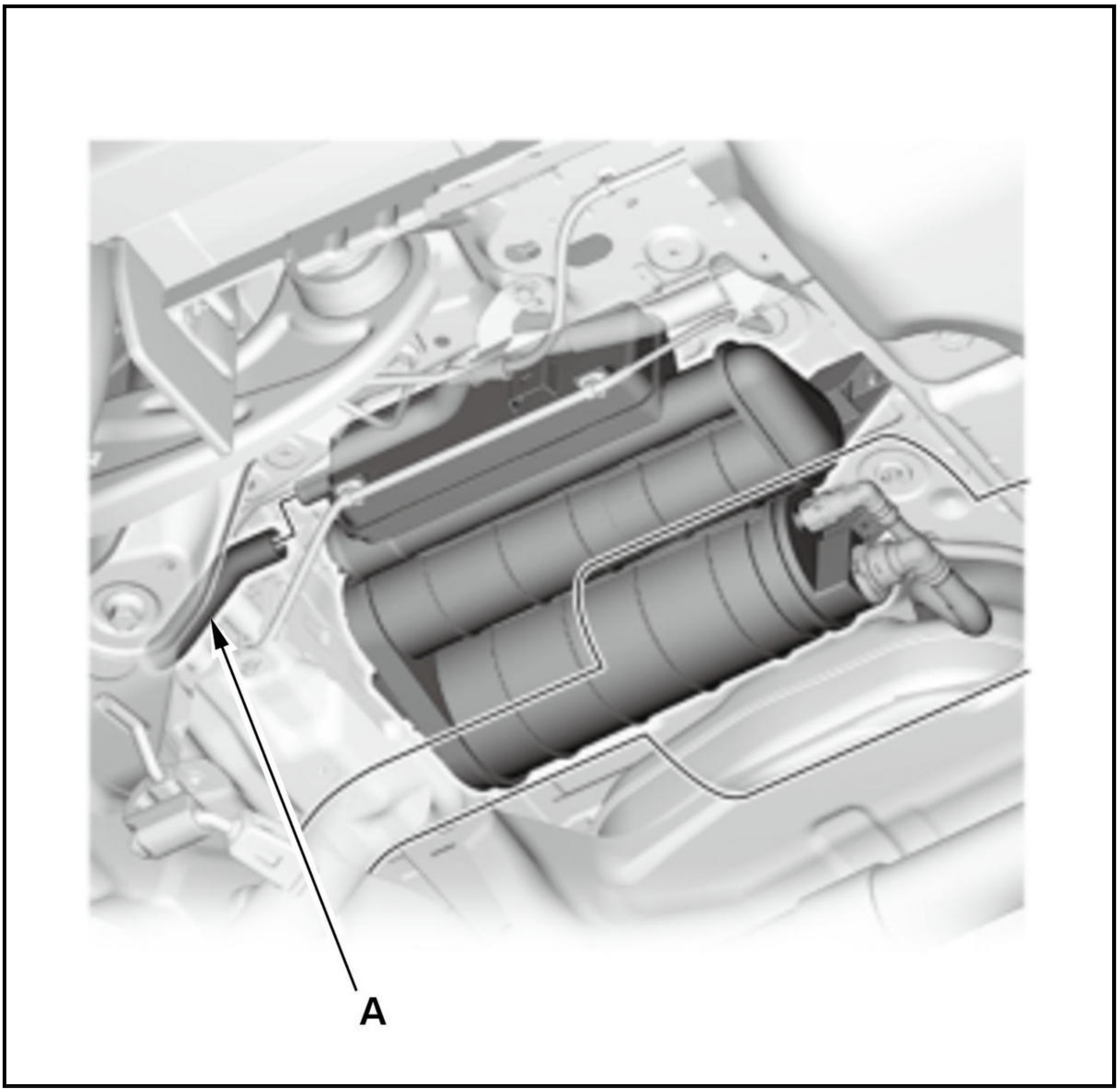

Is there a blockage or a restriction in the hose?

YES

Remove a blockage or a restriction, if needed, replace the EVAP canister drain hose.

NO

Go to step 3.

3. EVAP leak check module drain hose check

-1. **Remove the EVAP canister filter** , then check the blockage in the hoses and the EVAP canister filter.

Are the parts OK?

YES

Go to step 4.

NO

Remove the blockage from them, or replace the part (s) if needed.

4. EVAP canister purge valve leak check

-1. Remove the EVAP canister purge valve with its connector and vacuum hose connected.

-2. Disconnect the vacuum hose (purge line) (A) from the EVAP canister purge valve (B) in the engine compartment, then connect the T-fitting (C), the vacuum gauge, and the vacuum pump/gauge, 0-30 inHg as shown.

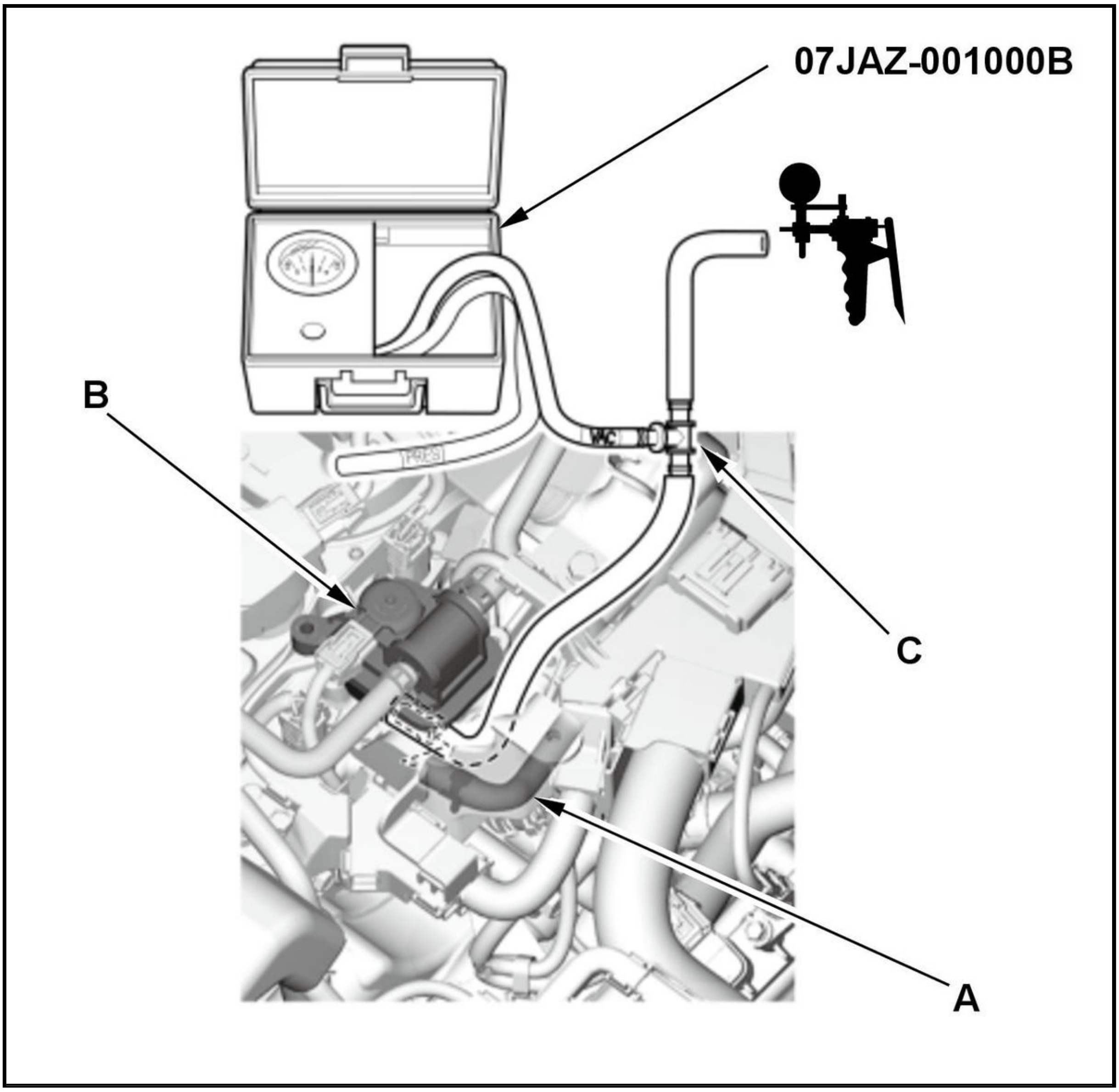

-3. Slowly apply about 2 kPa (0.6 inHg, 15 mmHg) of vacuum to the hose.

Does it hold vacuum for 1 minute?

YES

Leak not detected at the EVAP canister purge valve. Go to step 5.

NO

Replace the EVAP canister purge valve .

5. Determine possible failure area (EVAP canister, others)

-1. Turn the vehicle to the OFF (LOCK) mode.

-2. Disconnect the fuel vent tube (A) from the EVAP canister (B), and plug the EVAP canister port (C).

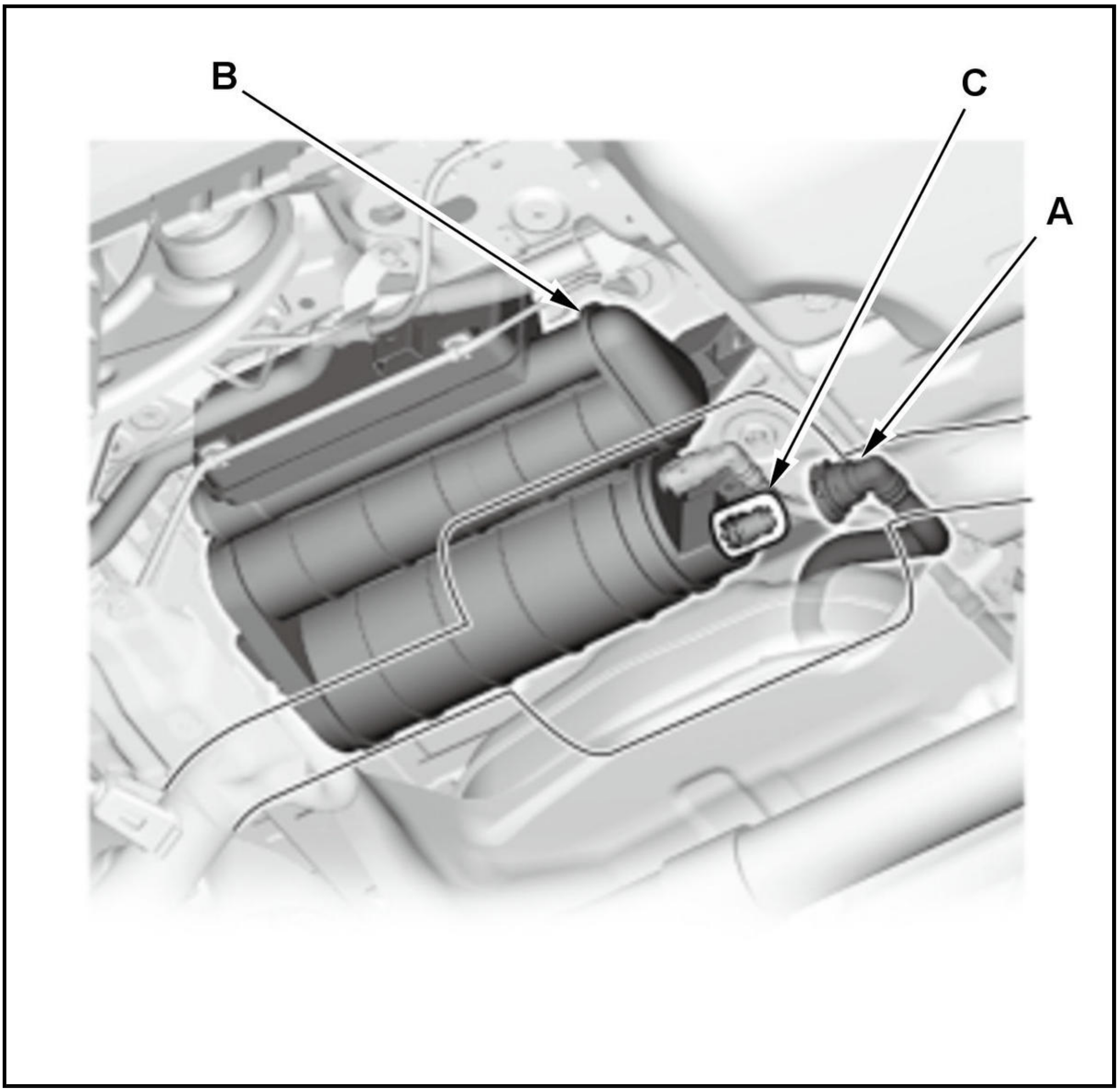

-3. Remove the vacuum gauge and the tube joint adapter, and connect the vacuum pump/gauge (A) to the vacuum hose (purge line) (B) as shown.

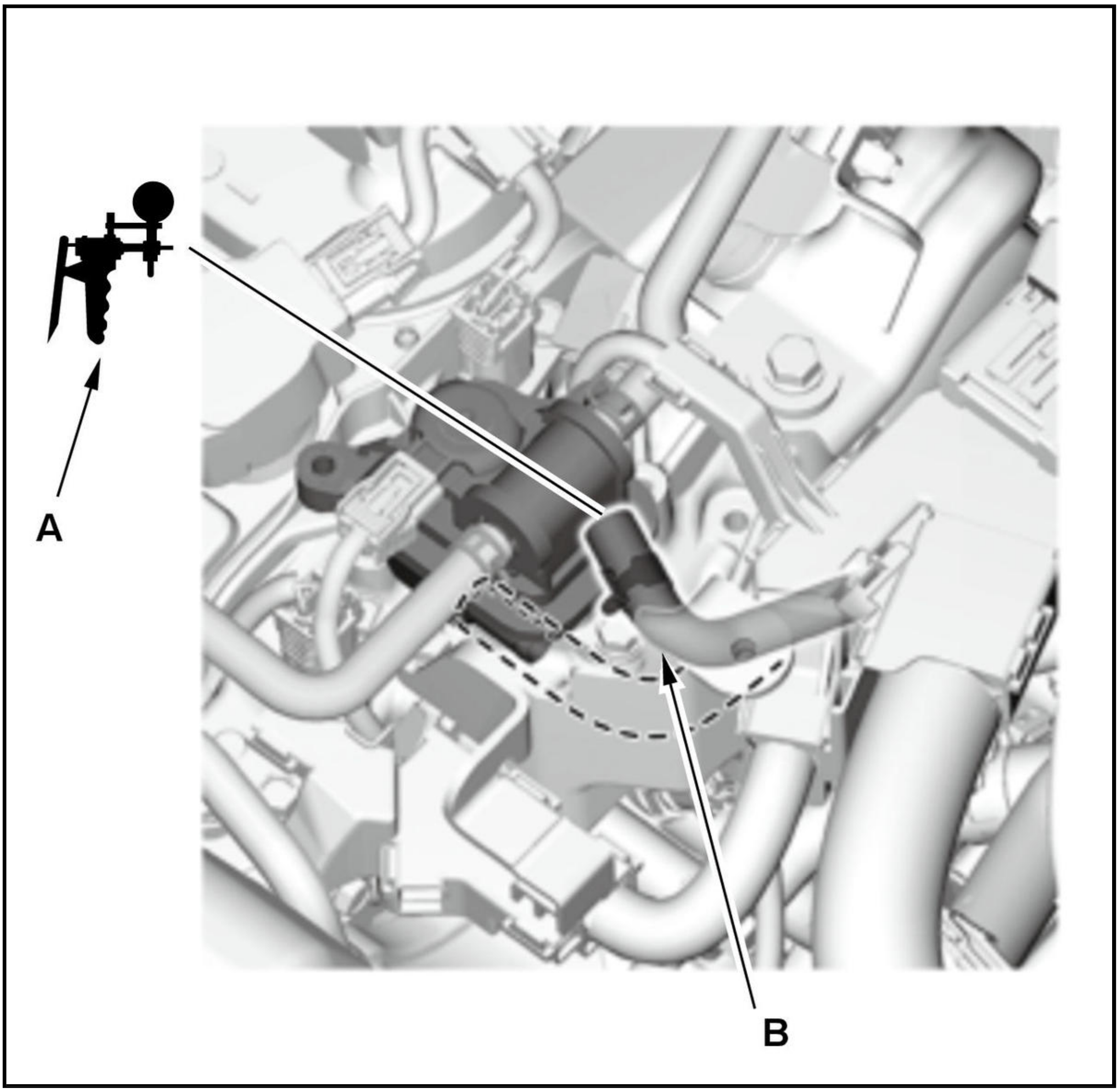

-4. Turn the vehicle to the ON mode.

-5. Select the EVAP TEST (ELCM) in the INSPECTION MENU, then select CCV ON in the Single Solenoid Test with the HDS.

EVAP TEST (ELCM)

-6. Apply vacuum to the hose until the Absolute Pressure of ELCM Pressure Sensor 2 kPa (0.6 inHg, 15 mmHg).

NOTE: Be careful not to exceed the vacuum. If you do, the EVAP leak check module can be damaged.

Signal	Current conditions	
	Values	**Unit**
Absolute Pressure of ELCM Pressure Sensor	B	B

-7. Check the parameter (s) below with the HDS for 1 minute.

Signal	Current conditions	
	Values	**Unit**
Absolute Pressure of ELCM Pressure Sensor	B	B

Does it hold a vacuum?

YES

Go to step 7.

NO

Go to step 6.

6. EVAP canister check

-1. Disconnect the EVAP canister drain hose (A) from the EVAP leak check module port (B), and plug it.

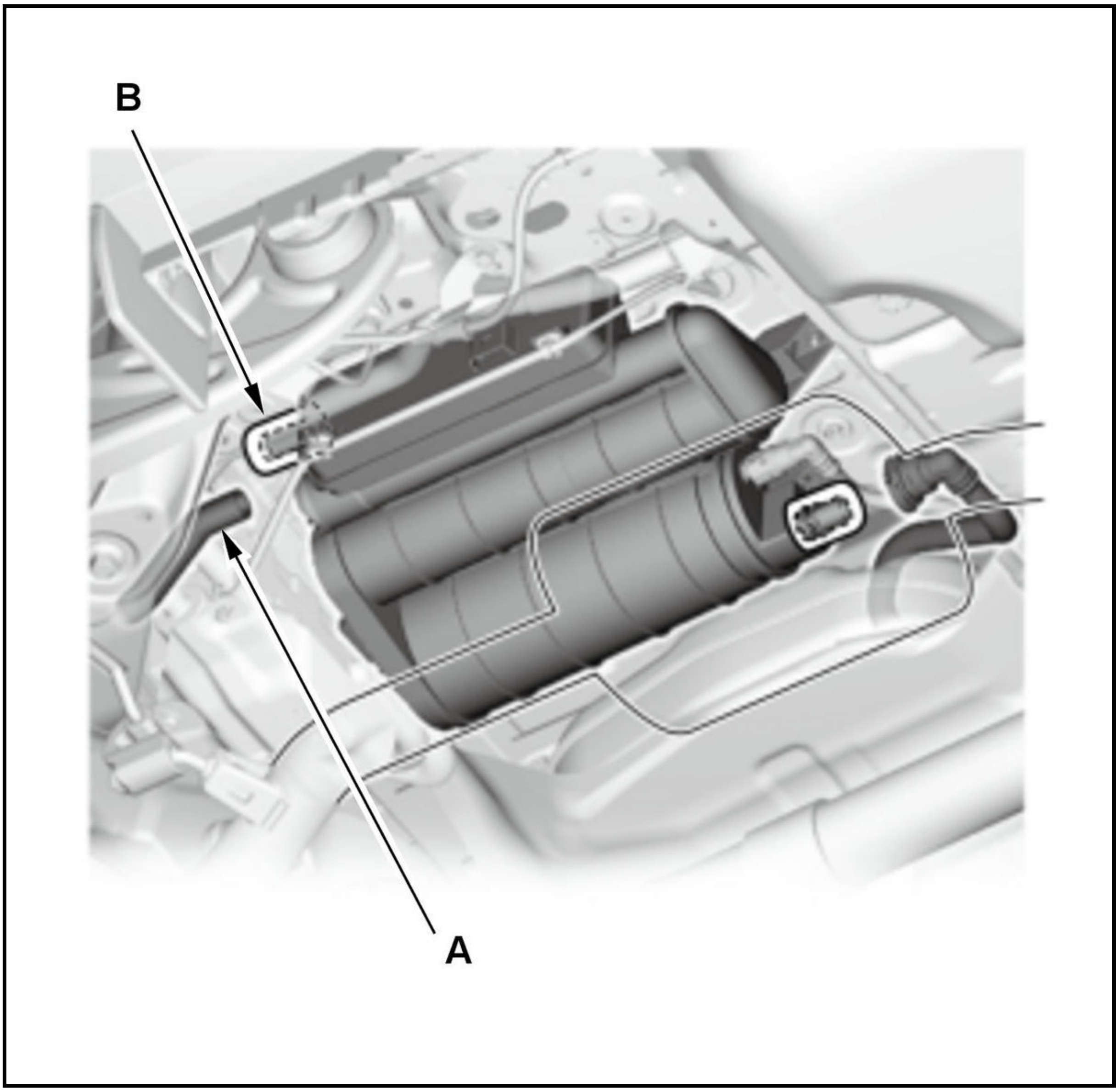

-2. Connect the T-fitting (A), the vacuum gauge, and the vacuum pump/gauge, 0-30 inHg as shown.

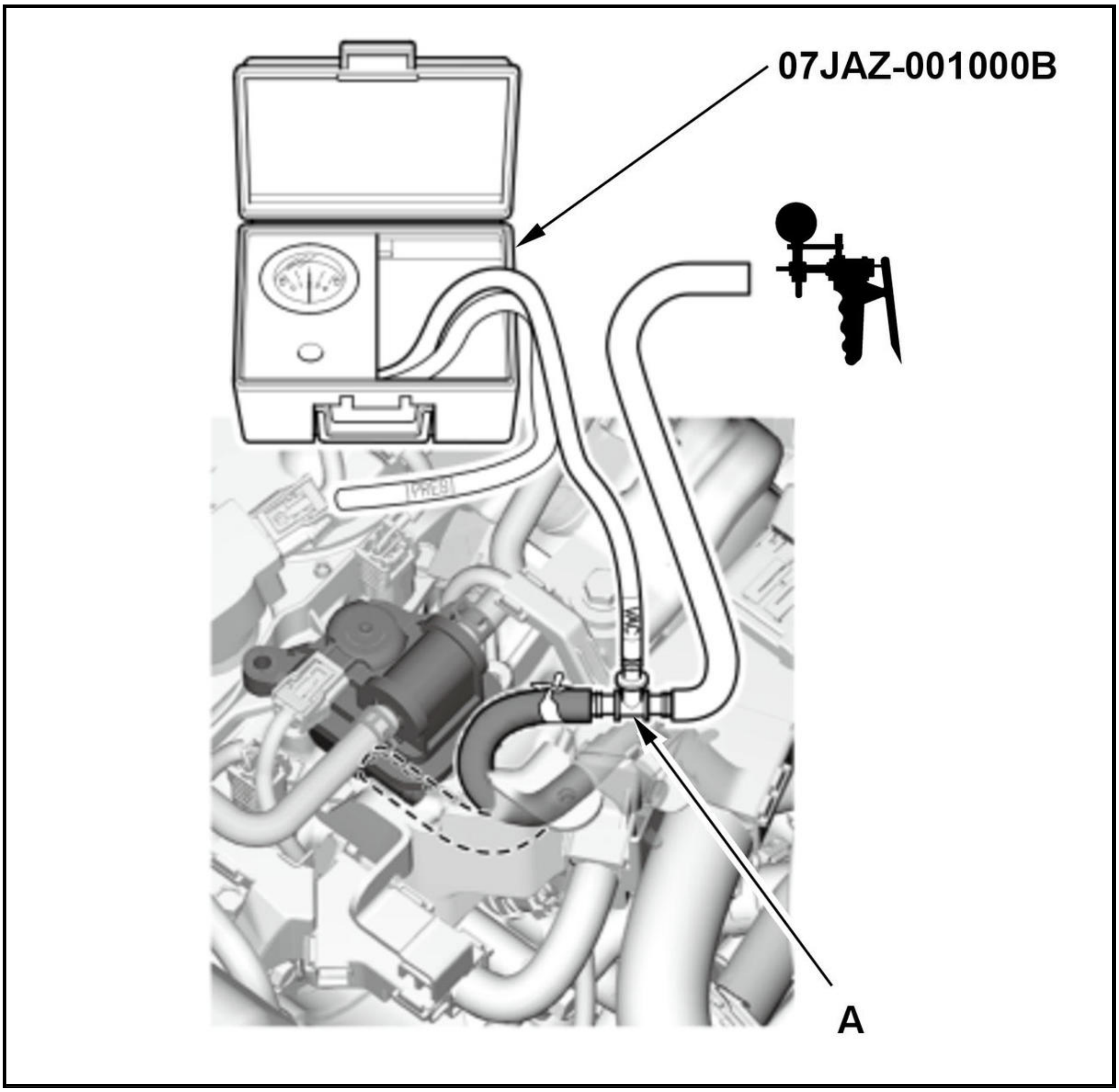

-3. Slow apply about 2 kPa (0.6 inHg, 15 mmHg) of vacuum to the hose.

Does the hose hold vacuum?

YES

The EVAP canister is OK. **Replace the EVAP leak check module** .

NO

Check for a poor connection or damage to the EVAP purge line between the EVAP canister purge valve and the EVAP canister, then **replace the EVAP canister** .

7. Fuel fill pipe and fuel tank vapor recirculation tube visual check

-1. Check for a poor connection or damage to the fuel fill pipe and the fuel tank vapor recirculation tube.

Are the parts and connections OK?

YES

The fuel fill pipe and fuel tank vapor recirculation tube are OK. Go to step 8.

NO

Replace the fuel tank .

8. Shut-off valve check

   -1. Turn the vehicle to the OFF (LOCK) mode.

   -2. Check the flap of the shut-off valve (A).

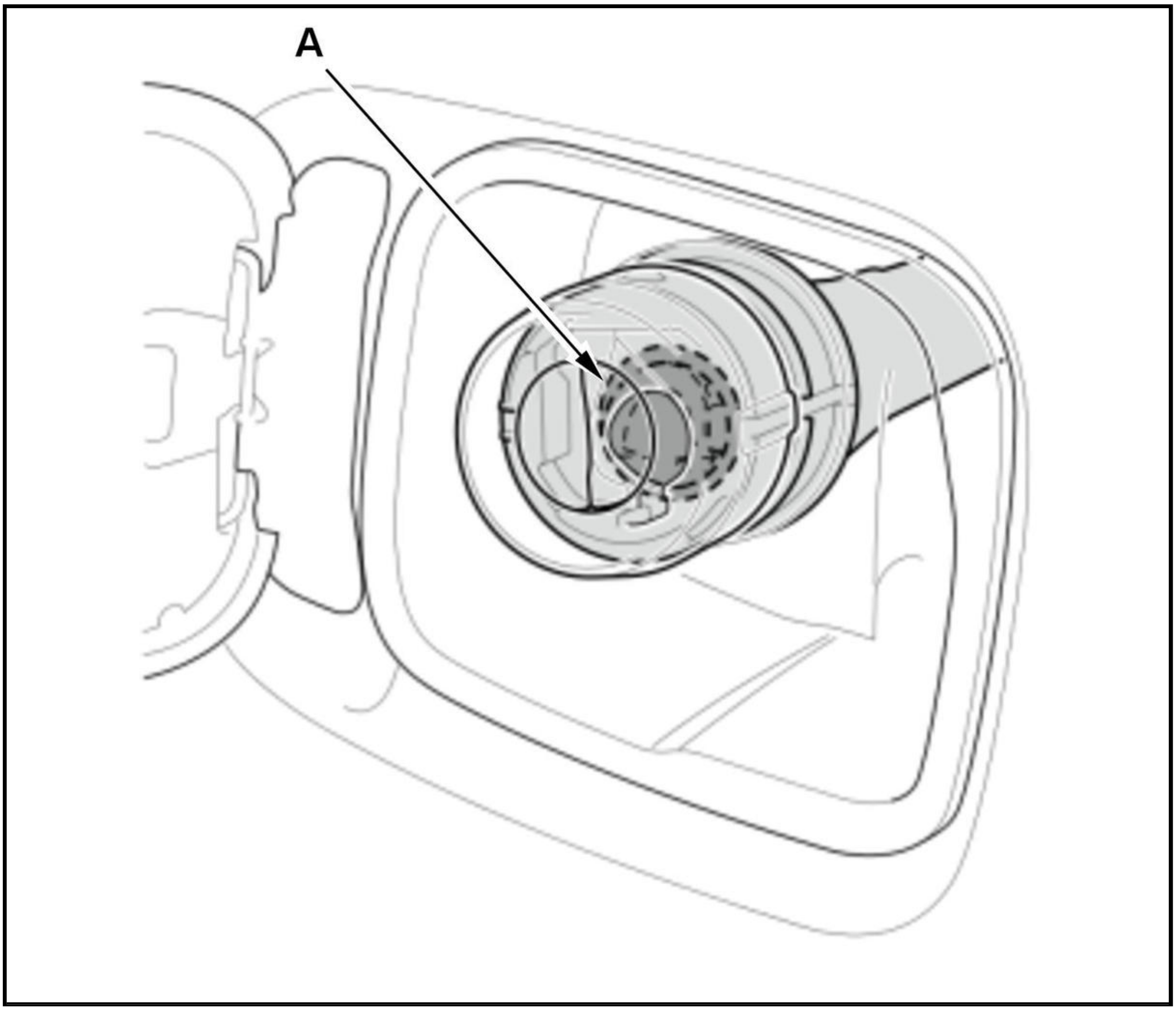

Is the flap closed?

YES

Go to step 9.

NO

Replace the main flap unit .

9. Shut-off valve seal check

   -1. Check the flap seal of the shut-off valve (A) and the mating surface on the shut-off valve.

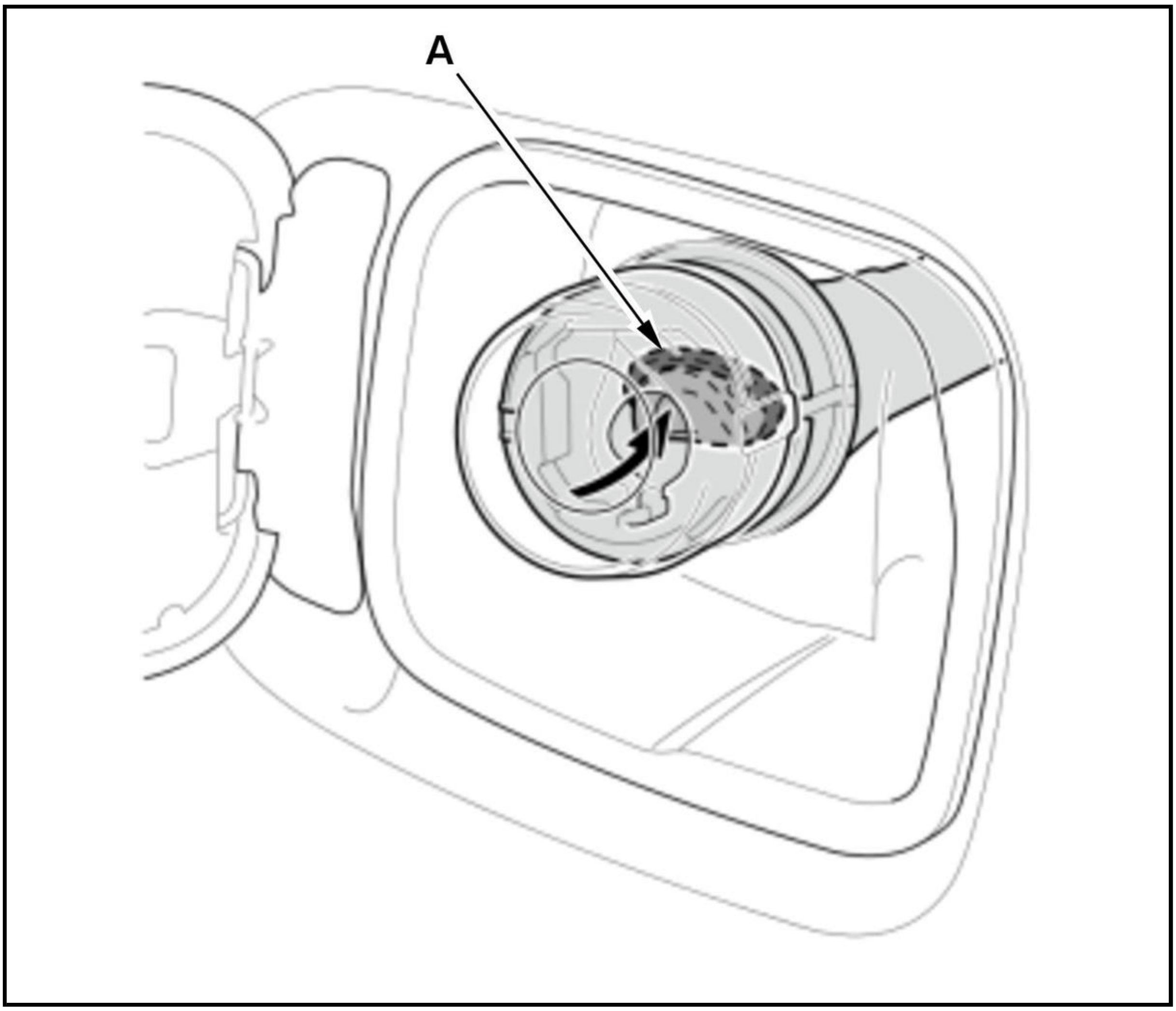

Is the flap seal missing or damaged, is the shut-off valve mating surface damaged?

YES

Replace the main flap unit .

NO

The shut-off valve is OK. Check the fuel tank unit base gasket and fuel tank.

DTC P0460 (1.5 L ENGINE) (2020 2021)

DTC P0460 : Fuel Level Sensor (Fuel Gauge Sending Unit) Out of Range

NOTE:

- Before you troubleshoot, **review the general troubleshooting information** .
- If DTC P0462 and/or P0463 are stored at the same time as DTC P0460, troubleshoot those DTCs first, then recheck for DTC P0460.

DTC Description	Confirmed DTC	Pending DTC
P0460 Fuel Level Sensor (Fuel Gauge Sending Unit) Out of Range	B	B

DTC (PGM-FI)

1. Problem verification

-1. Turn the vehicle to the ON mode.

-2. Clear the DTC with the HDS.

-3. Turn the vehicle to the OFF (LOCK) mode.

-4. Turn the vehicle to the ON mode.

-5. Wait 30 seconds.

-6. Check for Pending or Confirmed DTCs with the HDS.

DTC Description	Confirmed DTC	Pending DTC
P0460 Fuel Level Sensor (Fuel Gauge Sending Unit) Out of Range	B	B

Is DTC P0460 indicated?

YES

The failure is duplicated. Go to step 2.

NO

Intermittent failure, the system is OK at this time. Check for poor connections or loose terminals at the gauge control module and the fuel tank unit. **If the on-board snapshot of this DTC is recorded, try to reproduce the failure under the same conditions with the on-board snapshot** .

2. Shorted wire check (FUEL GAUGE+ line)

-1. Turn the vehicle to the OFF (LOCK) mode.

-2. **Remove the gauge control module** .

-3. Disconnect the following connectors.

Fuel tank unit 4P connector
Gauge control module connector A (32P)

-4. Measure the resistance between test points 1 and 2.

Test condition	Vehicle OFF (LOCK) mode
	Fuel tank unit 4P connector: disconnected
	Gauge control module connector A (32P): disconnected
Test point 1	Fuel tank unit 4P connector (female terminals) No. 2: ①
Test point 2	Body ground

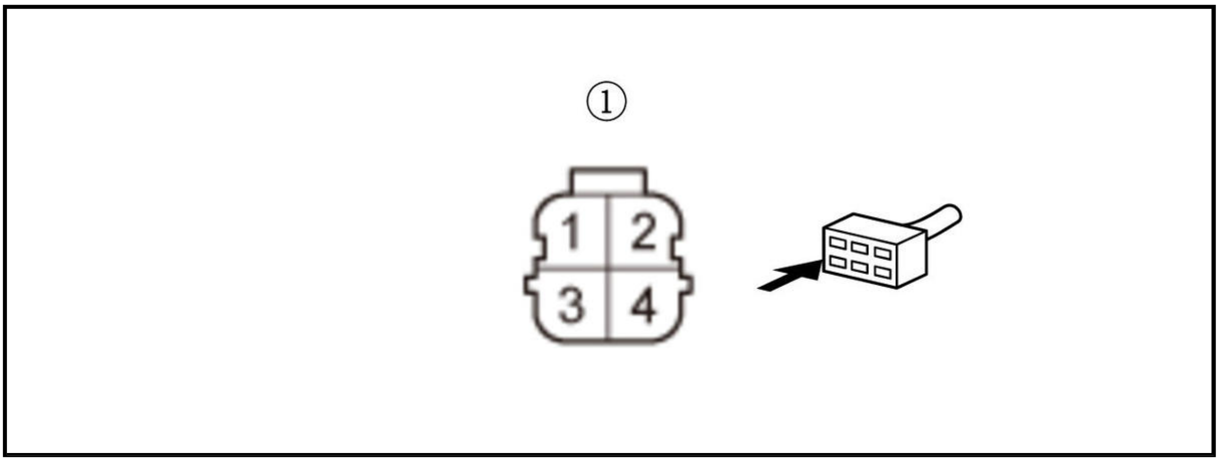

Is there 1 MΩ or more?

YES

Go to step 3.

NO

Repair a short in the FUEL GAUGE+ wire between the gauge control module and the fuel tank unit.

3. Open wire check (FUEL GAUGE+ line)

-1. Connect terminals A and B with a jumper wire.

Terminal A	Fuel tank unit 4P connector (female terminals) No. 2: ①
Terminal B	Body ground

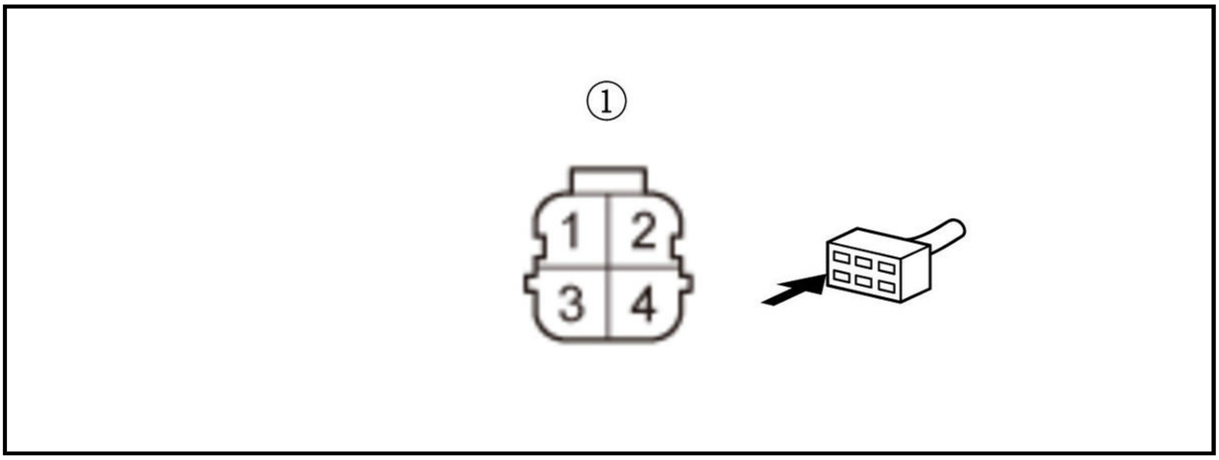

-2. Measure the resistance between test points 1 and 2.

Test condition	Vehicle OFF (LOCK) mode
B	Fuel tank unit 4P connector: disconnected
B	Gauge control module connector A (32P): disconnected
B	Fuel tank unit 4P connector No. 2: jumped to body ground
Test point 1	Gauge control module connector A (32P) No. 22
Test point 2	Body ground

Is there 1.0 Ω or less?

YES

Go to step 4.

NO

Repair an open in the FUEL GAUGE+ wire between the gauge control module and the fuel tank unit.

4. Open wire check (FUEL GAUGE- line)

-1. Remove the jumper wire from the fuel tank unit 4P connector.

-2. Connect terminals A and B with a jumper wire.

Terminal A	Fuel tank unit 4P connector (female terminals) No. 4: ①
Terminal B	Body ground

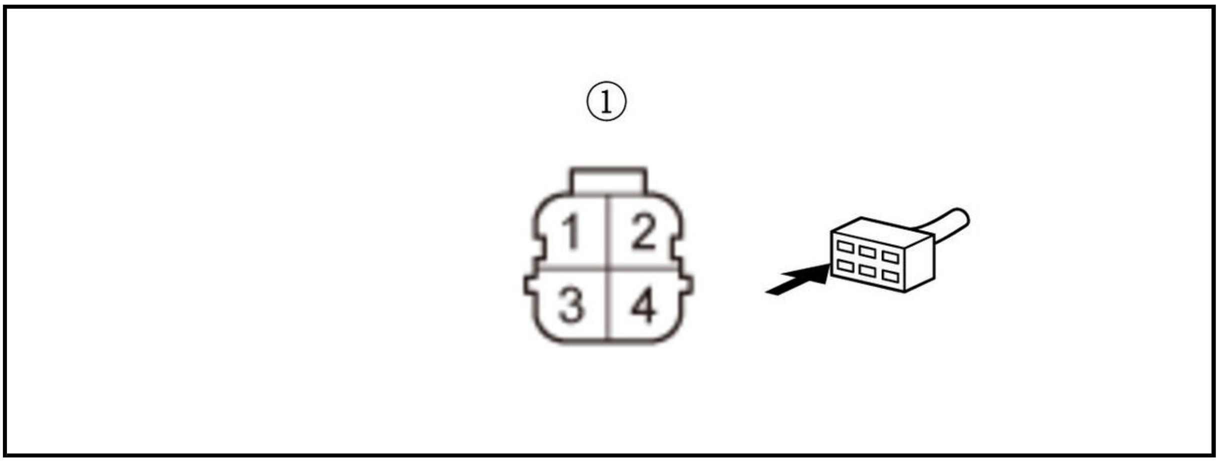

-3. Measure the resistance between test points 1 and 2.

Test condition	Vehicle OFF (LOCK) mode
B	Fuel tank unit 4P connector: disconnected
B	Gauge control module connector A (32P): disconnected
B	Fuel tank unit 4P connector No. 4: jumped to body ground
Test point 1	**Gauge control module connector A (32P) No. 21**
Test point 2	Body ground

Is there 1.0 Ω or less?

YES

Go to step 5.

NO

Repair an open in the FUEL GAUGE- wire between the gauge control module and the fuel tank unit.

5. Fuel gauge sending unit check

-1. Remove the jumper wire from the fuel tank unit 4P connector.

-2. **Test the fuel gauge sending unit** .

Is the fuel gauge sending unit OK?

YES

Replace the gauge control module .

NO

Replace the fuel gauge sending unit .

DTC P0461 (1.5 L ENGINE) (2017 2018 2019 2020)

DTC P0461 : Fuel Level Sensor (Fuel Gauge Sending Unit) Circuit Range/Performance Problem

NOTE:

- Before you troubleshoot, **review the general troubleshooting information** .
- Because it requires 124 miles (200 km) of driving without refueling to complete this diagnosis, DTC P0461 cannot be duplicated during this troubleshooting.

DTC Description	Confirmed DTC	Pending DTC
P0461 Fuel Level Sensor (Fuel Gauge Sending Unit) Circuit Range/Performance Problem	B	B

DTC (PGM-FI)

1. Fuel gauge sending unit performance check

-1. **Test the fuel gauge sending unit** .

Is the fuel gauge sending unit OK?

YES

Check for poor connections or loose terminals at the fuel gauge sending unit and the gauge control module. **If the on-board snapshot of this DTC is recorded, try to reproduce the failure under the same conditions with the on-board snapshot** .

NO

Replace the fuel gauge sending unit .

DTC P0461 (1.5 L ENGINE) (2021)

DTC P0461 : Fuel Level Sensor (Fuel Gauge Sending Unit) Circuit Range/Performance Problem

NOTE:

- Before you troubleshoot, **review the general troubleshooting information** .
- Because it requires 4.7 US gal (17.7L) of fuel consumption without refueling to complete this diagnosis, DTC P0461 cannot be duplicated during this troubleshooting.
- DTC P0461 may be stored due to the following:
-
    - -

      Repeated small amounts of refueling
    - -

      Fuel draining during repairs
    - -

Constant cornering or driving on a sloping road for a certain period of time

DTC Description	Confirmed DTC	Pending DTC
P0461 Fuel Level Sensor (Fuel Gauge Sending Unit) Circuit Range/Performance Problem	B	B

DTC (PGM-FI)

1. Customer usage check

   -1. Ask the customer about their refueling method.

   Has the vehicle been repeatedly refilled with less than 1.3 US gal (5.0 L) at each refuel?

   YES

   Direct the customer on the proper refilling conditions in the How to Refuel section of the owner's manual.

   NO

   Go to step 2.

2. Fuel gauge sending unit performance check

   -1. **Test the fuel gauge sending unit** .

   Is the fuel gauge sending unit OK?

   YES

   Check for poor connections or loose terminals at the fuel gauge sending unit and the gauge control module. **If the on-board snapshot of this DTC is recorded, try to reproduce the failure under the same conditions with the on-board snapshot** .

   NO

   Replace the fuel gauge sending unit .

DTC P0461 (2.4 L ENGINE) (2017 2018 2019)

DTC P0461 : Fuel Level Sensor (Fuel Gauge Sending Unit) Circuit Range/Performance Problem

NOTE:

- Before you troubleshoot, **review the general troubleshooting information** .
- Because it requires 124 miles (200 km) of driving without refueling to complete this diagnosis, DTC P0461 cannot be duplicated during this troubleshooting.

DTC Description	Confirmed DTC	Pending DTC
P0461 Fuel Level Sensor (Fuel Gauge Sending Unit) Circuit Range/Performance Problem	B	B

DTC (PGM-FI)

1. Fuel gauge sending unit performance check

   -1. **Test the fuel gauge sending unit** .

Is the fuel gauge sending unit OK?

YES

Check for poor connections or loose terminals at the fuel gauge sending unit and the gauge control module. **If the on-board snapshot of this DTC is recorded, try to reproduce the failure under the same conditions with the on-board snapshot** .

NO

Replace the fuel gauge sending unit .

DTC P0462 (1.5 L ENGINE)

DTC P0462 : Fuel Level Sensor (Fuel Gauge Sending Unit) Circuit Low Voltage

NOTE: Before you troubleshoot, **review the general troubleshooting information** .

DTC Description	Confirmed DTC	Pending DTC
P0462 Fuel Level Sensor (Fuel Gauge Sending Unit) Circuit Low Voltage	B	B

DTC (PGM-FI)

1. Problem verification

   -1. Turn the vehicle to the ON mode.

   -2. Clear the DTC with the HDS.

   -3. Wait 5 seconds.

   -4. Check for Pending or Confirmed DTCs with the HDS.

DTC Description	Confirmed DTC	Pending DTC
P0462 Fuel Level Sensor (Fuel Gauge Sending Unit) Circuit Low Voltage	B	B

   Is DTC P0462 indicated?

   YES

   The failure is duplicated. Go to step 2.

   NO

   Intermittent failure, the system is OK at this time. Check for poor connections or loose terminals at the gauge control module and the fuel tank unit. **If the on-board snapshot of this DTC is recorded, try to reproduce the failure under the same conditions with the on-board snapshot** .

2. Shorted wire check (FUEL GAUGE+ line)

   -1. Turn the vehicle to the OFF (LOCK) mode.

   -2. **Remove the gauge control module** .

   -3. Disconnect the following connectors.

Fuel tank unit 4P connector

Gauge control module connector A (32P)

-4. Check for continuity between test points 1 and 2.

Test condition	Vehicle OFF (LOCK) mode
	Fuel tank unit 4P connector: disconnected
	Gauge control module connector A (32P): disconnected
Test point 1	Fuel tank unit 4P connector (female terminals) No. 2: ①
Test point 2	Body ground

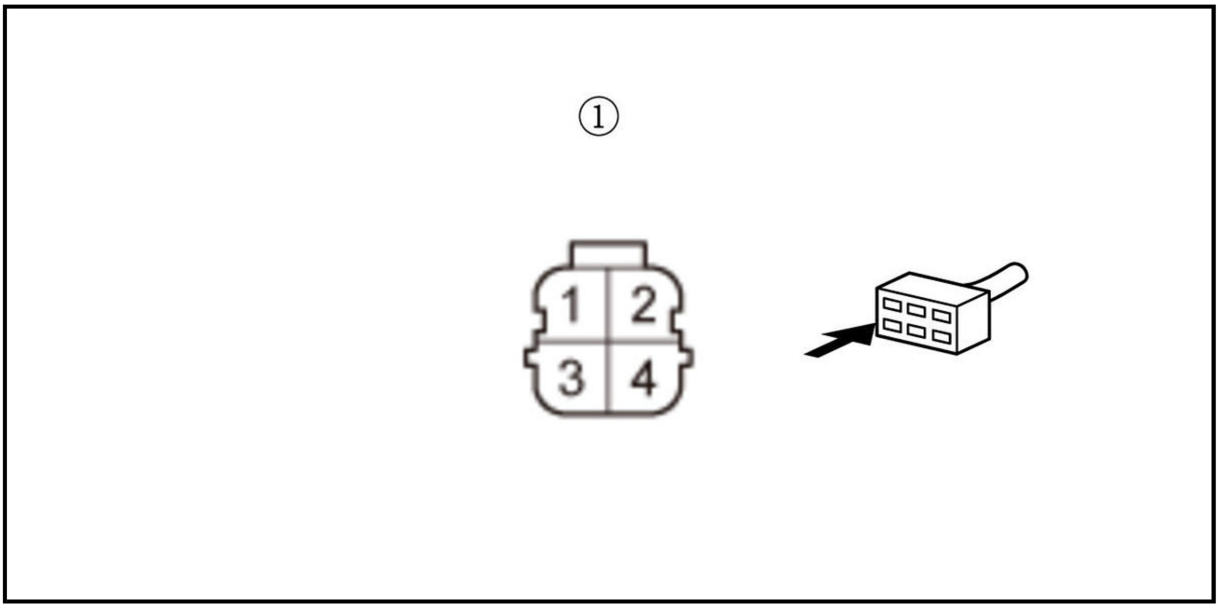

Is there continuity?

YES

Repair a short in the FUEL GAUGE+ wire between the gauge control module and the fuel tank unit.

NO

Go to step 3.

3. Fuel gauge sending unit check

-1. Test the fuel gauge sending unit .

Is the fuel gauge sending unit OK?

YES

Replace the gauge control module .

NO

Replace the fuel gauge sending unit .

DTC P0462 (2.4 L ENGINE) (2017 2018 2019)

DTC P0462 : Fuel Level Sensor (Fuel Gauge Sending Unit) Circuit Low Voltage

NOTE: Before you troubleshoot, review the general troubleshooting information .

DTC Description	Confirmed DTC	Pending DTC
P0462 Fuel Level Sensor (Fuel Gauge Sending Unit) Circuit Low Voltage	B	B

DTC (PGM-FI)

1. Problem verification

   -1. Turn the vehicle to the ON mode.

   -2. Clear the DTC with the HDS.

   -3. Wait 5 seconds.

   -4. Check for Pending or Confirmed DTCs with the HDS.

DTC Description	Confirmed DTC	Pending DTC
P0462 Fuel Level Sensor (Fuel Gauge Sending Unit) Circuit Low Voltage	B	B

   Is DTC P0462 indicated?

   YES

   The failure is duplicated. Go to step 2.

   NO

   Intermittent failure, the system is OK at this time. Check for poor connections or loose terminals at the gauge control module and the fuel tank unit. **If the on-board snapshot of this DTC is recorded, try to reproduce the failure under the same conditions with the on-board snapshot** .

2. Shorted wire check (FUEL GAUGE+ line)

   -1. Turn the vehicle to the OFF (LOCK) mode.

   -2. **Remove the gauge control module** .

   -3. Disconnect the following connectors.

Fuel tank unit 4P connector
Gauge control module connector A (32P)

   -4. Check for continuity between test points 1 and 2.

Test condition	Vehicle OFF (LOCK) mode
	Fuel tank unit 4P connector: disconnected
	Gauge control module connector A (32P): disconnected
Test point 1	Fuel tank unit 4P connector (female terminals) No. 2: ①
Test point 2	Body ground

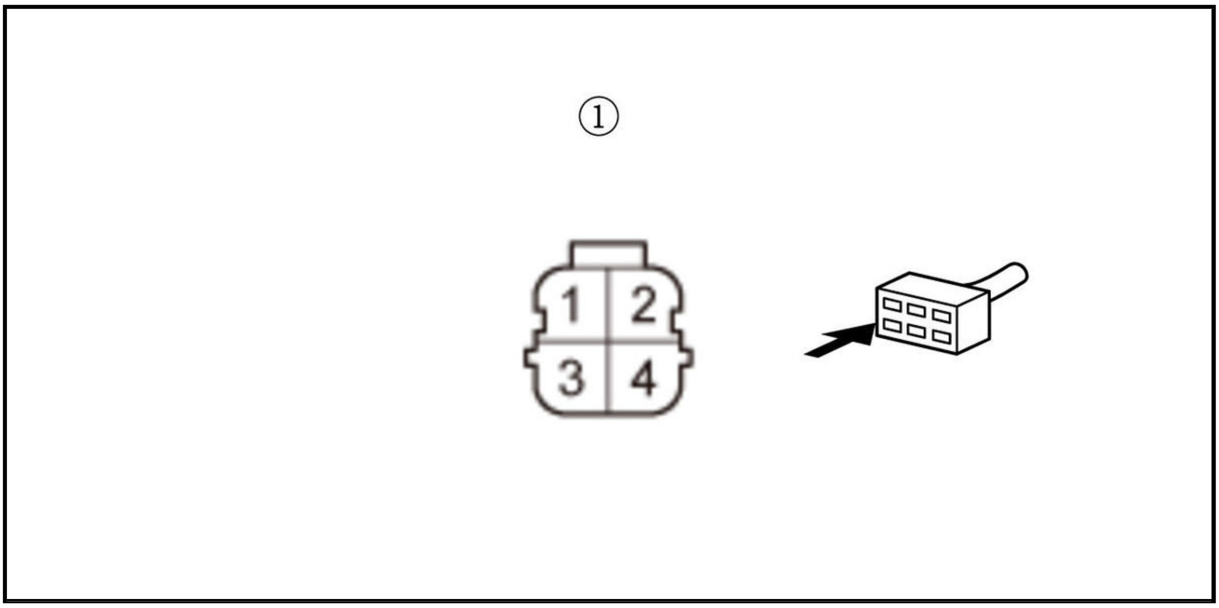

Is there continuity?

YES

Repair a short in the FUEL GAUGE+ wire between the gauge control module and the fuel tank unit.

NO

Go to step 3.

3. Fuel gauge sending unit check

-1. **Test the fuel gauge sending unit** .

Is the fuel gauge sending unit OK?

YES

Replace the gauge control module .

NO

Replace the fuel gauge sending unit .

DTC P0463 (1.5 L ENGINE)

DTC P0463 : Fuel Level Sensor (Fuel Gauge Sending Unit) Circuit High Voltage

NOTE: Before you troubleshoot, **review the general troubleshooting information** .

DTC Description	Confirmed DTC	Pending DTC
P0463 Fuel Level Sensor (Fuel Gauge Sending Unit) Circuit High Voltage	B	B

DTC (PGM-FI)

1. Problem verification

-1. Turn the vehicle to the ON mode.

-2. Clear the DTC with the HDS.

-3. Wait 5 seconds.

-4. Check for Pending or Confirmed DTCs with the HDS.

DTC Description	Confirmed DTC	Pending DTC
P0463 Fuel Level Sensor (Fuel Gauge Sending Unit) Circuit High Voltage	B	B

Is DTC P0463 indicated?

YES

The failure is duplicated. Go to step 2.

NO

Intermittent failure, the system is OK at this time. Check for poor connections or loose terminals at the gauge control module and the fuel tank unit. **If the on-board snapshot of this DTC is recorded, try to reproduce the failure under the same conditions with the on-board snapshot** .

2. Open wire check (FUEL GAUGE- line)

-1. Turn the vehicle to the OFF (LOCK) mode.

-2. **Remove the gauge control module** .

-3. Disconnect the following connectors.

Fuel tank unit 4P connector
Gauge control module connector A (32P)

-4. Connect terminals A and B with a jumper wire.

Terminal A	Fuel tank unit 4P connector (female terminals) No. 4: ①
Terminal B	Body ground

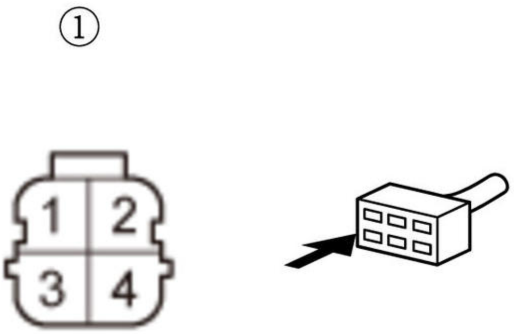

-5. Check for continuity between test points 1 and 2.

Test condition	Vehicle OFF (LOCK) mode Fuel tank unit 4P connector: disconnected

	Fuel tank unit 4P connector No. 4: jumped to body ground
	Gauge control module connector A (32P): disconnected
Test point 1	**Gauge control module connector A (32P) No. 21**
Test point 2	Body ground

Is there continuity?

YES

Go to step 3.

NO

Repair an open in the FUEL GAUGE- wire between the gauge control module and the fuel tank unit.

3. Open wire check (FUEL GAUGE+ line)

-1. Remove the jumper wire from the fuel tank unit 4P connector.

-2. Connect terminals A and B with a jumper wire.

Terminal A	Fuel tank unit 4P connector (female terminals) No. 2: ①
Terminal B	Body ground

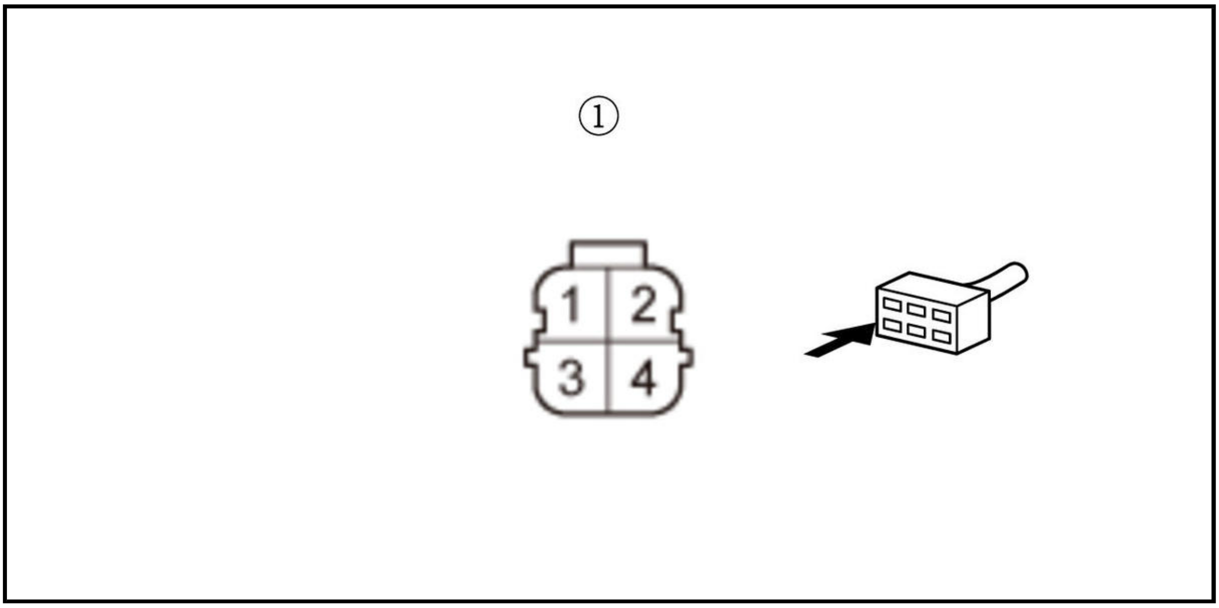

-3. Check for continuity between test points 1 and 2.

Test condition	Vehicle OFF (LOCK) mode
	Fuel tank unit 4P connector: disconnected
	Fuel tank unit 4P connector No. 2: jumped to body ground
	Gauge control module connector A (32P): disconnected
Test point 1	**Gauge control module connector A (32P) No. 22**
Test point 2	Body ground

Is there continuity?

YES

Go to step 4.

NO

Repair an open in the FUEL GAUGE+ wire between the gauge control module and the fuel tank unit.

4. Fuel gauge sending unit check

-1. Remove the jumper wire from the fuel tank unit 4P connector.

-2. **Test the fuel gauge sending unit** .

Is the fuel gauge sending unit OK?

YES

Replace the gauge control module .

NO

Replace the fuel gauge sending unit .

DTC P0463 (2.4 L ENGINE) (2017 2018 2019)

DTC P0463 : Fuel Level Sensor (Fuel Gauge Sending Unit) Circuit High Voltage

NOTE: Before you troubleshoot, **review the general troubleshooting information** .

DTC Description	Confirmed DTC	Pending DTC
P0463 Fuel Level Sensor (Fuel Gauge Sending Unit) Circuit High Voltage	B	B

DTC (PGM-FI)

1. Problem verification

-1. Turn the vehicle to the ON mode.

-2. Clear the DTC with the HDS.

-3. Wait 5 seconds.

-4. Check for Pending or Confirmed DTCs with the HDS.

DTC Description	Confirmed DTC	Pending DTC
P0463 Fuel Level Sensor (Fuel Gauge Sending Unit) Circuit High Voltage	B	B

Is DTC P0463 indicated?

YES

The failure is duplicated. Go to step 2.

NO

Intermittent failure, the system is OK at this time. Check for poor connections or loose terminals at the gauge control module and the fuel tank unit. **If the on-board snapshot of this DTC is recorded, try to reproduce the failure under the same conditions with the on-board snapshot** .

2. Open wire check (FUEL GAUGE- line)

-1. Turn the vehicle to the OFF (LOCK) mode.

-2. **Remove the gauge control module** .

-3. Disconnect the following connectors.

Fuel tank unit 4P connector
Gauge control module connector A (32P)

-4. Connect terminals A and B with a jumper wire.

Terminal A	Fuel tank unit 4P connector (female terminals) No. 4: ①
Terminal B	Body ground

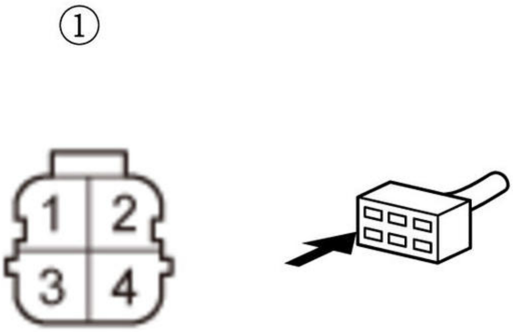

-5. Check for continuity between test points 1 and 2.

Test condition	Vehicle OFF (LOCK) mode
	Fuel tank unit 4P connector: disconnected
	Fuel tank unit 4P connector No. 4: jumped to body ground
	Gauge control module connector A (32P): disconnected
Test point 1	**Gauge control module connector A (32P) No. 21**
Test point 2	Body ground

Is there continuity?

YES

Go to step 3.

NO

Repair an open in the FUEL GAUGE- wire between the gauge control module and the fuel tank unit.

3. Open wire check (FUEL GAUGE+ line)

-1. Remove the jumper wire from the fuel tank unit 4P connector.

-2. Connect terminals A and B with a jumper wire.

Terminal A	Fuel tank unit 4P connector (female terminals) No. 2: ①
Terminal B	Body ground

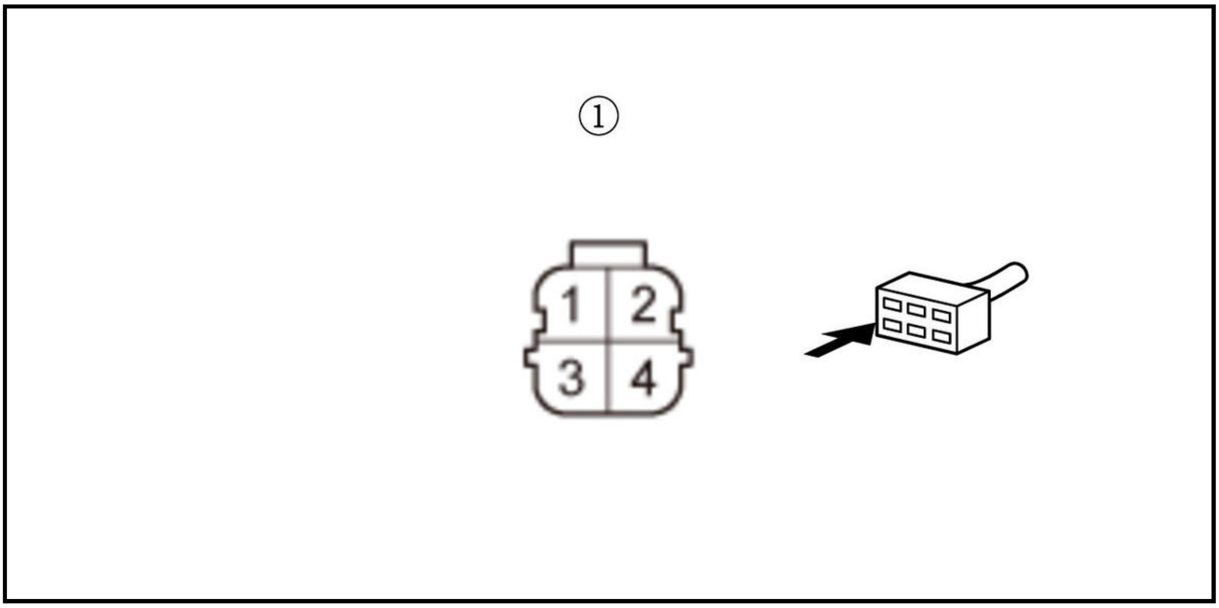

-3. Check for continuity between test points 1 and 2.

Test condition	Vehicle OFF (LOCK) mode Fuel tank unit 4P connector: disconnected Fuel tank unit 4P connector No. 2: jumped to body ground Gauge control module connector A (32P): disconnected
Test point 1	**Gauge control module connector A (32P) No. 22**
Test point 2	Body ground

Is there continuity?

YES

Go to step 4.

NO

Repair an open in the FUEL GAUGE+ wire between the gauge control module and the fuel tank unit.

4. Fuel gauge sending unit check

-1. Remove the jumper wire from the fuel tank unit 4P connector.

-2. **Test the fuel gauge sending unit** .

Is the fuel gauge sending unit OK?

YES

Replace the gauge control module .

NO

Replace the fuel gauge sending unit .

DTC P0498 (2.4 L ENGINE) (2017 2018)

DTC P0498 : EVAP Canister Vent Shut Valve Circuit Low Voltage

NOTE: Before you troubleshoot, **review the general troubleshooting information** .

DTC Description	Confirmed DTC	Pending DTC
P0498 EVAP Canister Vent Shut Valve Circuit Low Voltage	B	B

DTC (PGM-FI)

1. EVAP system check

   -1. Turn the vehicle to the ON mode.

   -2. Clear the DTC with the HDS.

   -3. Start the engine, and let it idle without load (in P or N) for at least 5 seconds.

   -4. Check for Pending or Confirmed DTCs with the HDS.

DTC Description	Confirmed DTC	Pending DTC
P0498 EVAP Canister Vent Shut Valve Circuit Low Voltage	B	B

   Is DTC P0498 indicated?

   YES

   Go to step 3.

   NO

   Go to step 2.

2. Problem verification

   -1. Select the EVAP TEST in the INSPECTION MENU, and do the EVAP CVS ON in the SINGLE SOLENOID with the HDS.

   EVAP FUNCTION TEST

   Check for Pending or Confirmed DTCs with the HDS.

DTC Description	Confirmed DTC	Pending DTC
P0498 EVAP Canister Vent Shut Valve Circuit Low Voltage	B	B

   Is DTC P0498 indicated?

   YES

   The failure is duplicated. Go to step 3.

   NO

   Intermittent failure, the system is OK at this time. Check for poor connections or loose terminals at the EVAP canister vent shut valve and the PCM. **If the on-board snapshot of this DTC is recorded, try to reproduce the failure under the same conditions with the on-board snapshot** .

3. Open wire check (DBW RLY OUT line)

-1. Turn the vehicle to the OFF (LOCK) mode.

-2. Disconnect the following connector.

EVAP canister vent shut valve 2P connector

-3. Turn the vehicle to the ON mode.

-4. Measure the voltage between test points 1 and 2.

Test condition	Vehicle ON mode
	EVAP canister vent shut valve 2P connector: disconnected
Test point 1	EVAP canister vent shut valve 2P connector (female terminals) No. 1: ①
Test point 2	Body ground

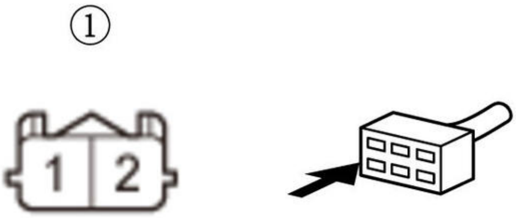

Is there battery voltage?

YES

The DBW RLY OUT wire is OK. Go to step 4.

NO

Repair an open in the DBW RLY OUT wire between the EVAP canister vent shut valve and the relay circuit board (PGM-FI subrelay circuit).

4. EVAP canister vent shut valve internal resistance check

-1. Turn the vehicle to the OFF (LOCK) mode.

-2. At the vent shut valve side, measure the resistance between test points 1 and 2.

Test condition	Vehicle OFF (LOCK) mode
B	EVAP canister vent shut valve 2P connector: disconnected
Test point 1	EVAP canister vent shut valve 2P connector (male terminals) No. 1 (EVAP canister vent shut valve side): ①
Test point 2	EVAP canister vent shut valve 2P connector (male terminals) No. 2 (EVAP canister vent shut valve side): ①

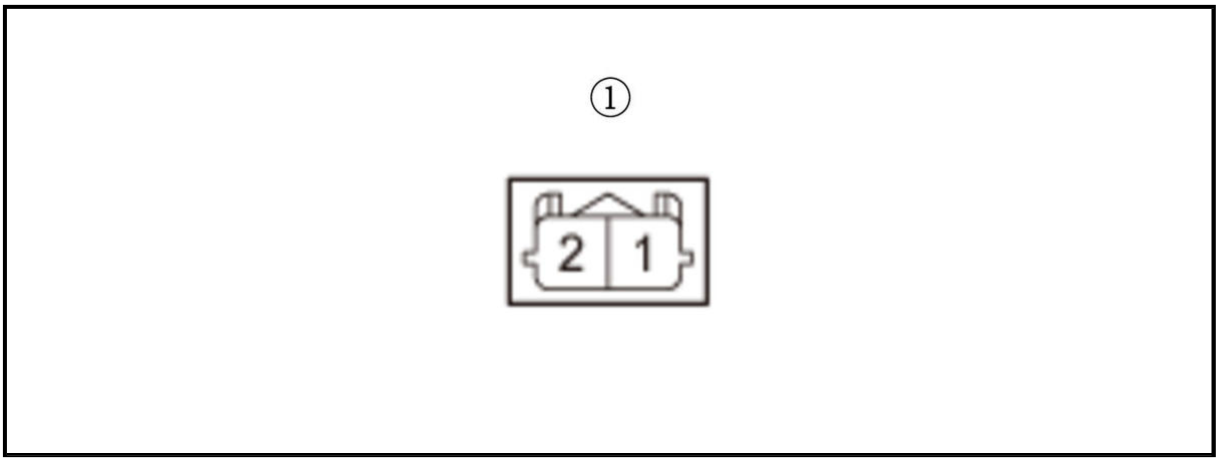

Is there about 25-30 Ω at room temperature?

YES

The EVAP canister vent shut valve is OK. Go to step 5.

NO

Replace the EVAP canister vent shut valve .

5. Shorted wire check (VSV line)

-1. Turn the vehicle to the OFF (LOCK) mode.

-2. Jump the SCS line with the HDS, and wait more than 1 minute.

-3. Disconnect the following connector.

PCM connector A (51P)

-4. Check for continuity between test points 1 and 2.

Test condition	Vehicle OFF (LOCK) mode
	EVAP canister vent shut valve 2P connector: disconnected
	PCM connector A (51P): disconnected
Test point 1	**PCM connector A (51P) No. 17**
Test point 2	Body ground

Is there continuity?

YES

Repair a short in the VSV wire between the PCM (A17) and the EVAP canister vent shut valve.

NO

The VSV wire is not shorted. Go to step 6.

6. Open wire check (VSV line)

-1. Connect terminals A and B with a jumper wire.

Terminal A	EVAP canister vent shut valve 2P connector (female terminals) No. 2: ①
Terminal B	Body ground

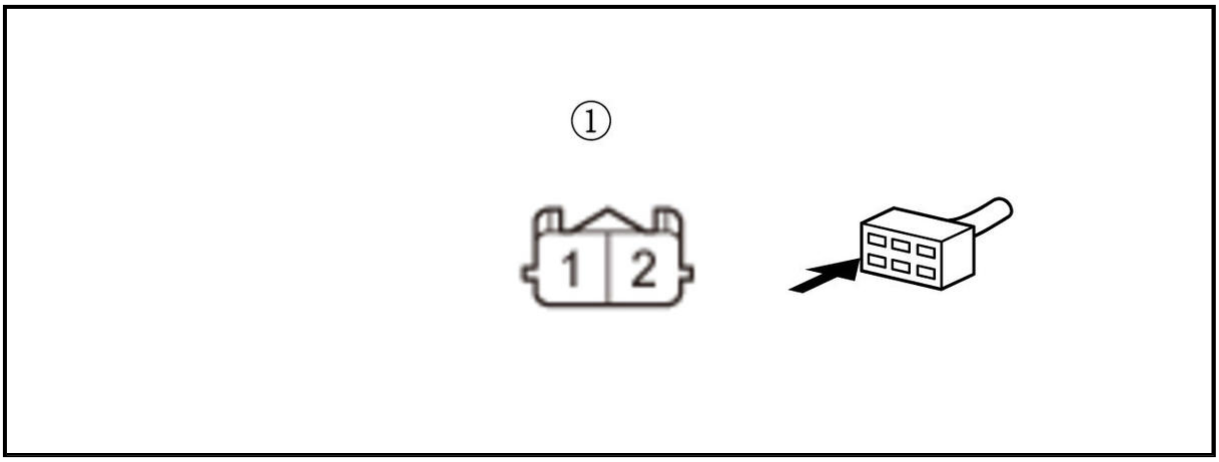

-2. Check for continuity between test points 1 and 2.

Test condition	Vehicle OFF (LOCK) mode
	EVAP canister vent shut valve 2P connector: disconnected
	EVAP canister vent shut valve 2P connector No. 2: jumped to body ground
	PCM connector A (51P): disconnected
Test point 1	**PCM connector A (51P) No. 17**
Test point 2	Body ground

Is there continuity?

YES

The VSV wire is OK. Check for any authorized service information related to the DTCs or symptoms you are troubleshooting, or **substitute a known-good PCM** .

NO

Repair an open in the VSV wire between the PCM (A17) and the EVAP canister vent shut valve.

DTC P0498 (2.4 L ENGINE) (2018)

DTC P0498 : EVAP Canister Vent Shut Valve Circuit Low Voltage

NOTE: Before you troubleshoot, **review the general troubleshooting information** .

DTC Description	Confirmed DTC	Pending DTC
P0498 EVAP Canister Vent Shut Valve Circuit Low Voltage	B	B

DTC (PGM-FI)

1. EVAP system check

-1. Turn the vehicle to the ON mode.

-2. Clear the DTC with the HDS.

-3. Start the engine, and let it idle without load (in P or N) for at least 5 seconds.

-4. Check for Pending or Confirmed DTCs with the HDS.

DTC Description	Confirmed DTC	Pending DTC
P0498 EVAP Canister Vent Shut Valve Circuit Low Voltage	B	B

Is DTC P0498 indicated?

YES

Go to step 3.

NO

Go to step 2.

2. Problem verification

-1. Select the EVAP TEST in the INSPECTION MENU, and do the EVAP CVS ON in the SINGLE SOLENOID with the HDS.

EVAP TEST

Check for Pending or Confirmed DTCs with the HDS.

DTC Description	Confirmed DTC	Pending DTC
P0498 EVAP Canister Vent Shut Valve Circuit Low Voltage	B	B

Is DTC P0498 indicated?

YES

The failure is duplicated. Go to step 3.

NO

Intermittent failure, the system is OK at this time. Check for poor connections or loose terminals at the EVAP canister vent shut valve and the PCM. **If the on-board snapshot of this DTC is recorded, try to reproduce the failure under the same conditions with the on-board snapshot** .

3. Open wire check (DBW RLY OUT/IGPS (LAF) line)

-1. Turn the vehicle to the OFF (LOCK) mode.

-2. Disconnect the following connector.

EVAP canister vent shut valve 2P connector

-3. Turn the vehicle to the ON mode.

-4. Measure the voltage between test points 1 and 2.

Test condition	Vehicle ON mode
	EVAP canister vent shut valve 2P connector: disconnected
Test point 1	EVAP canister vent shut valve 2P connector (female terminals) No. 1: ①
Test point 2	Body ground

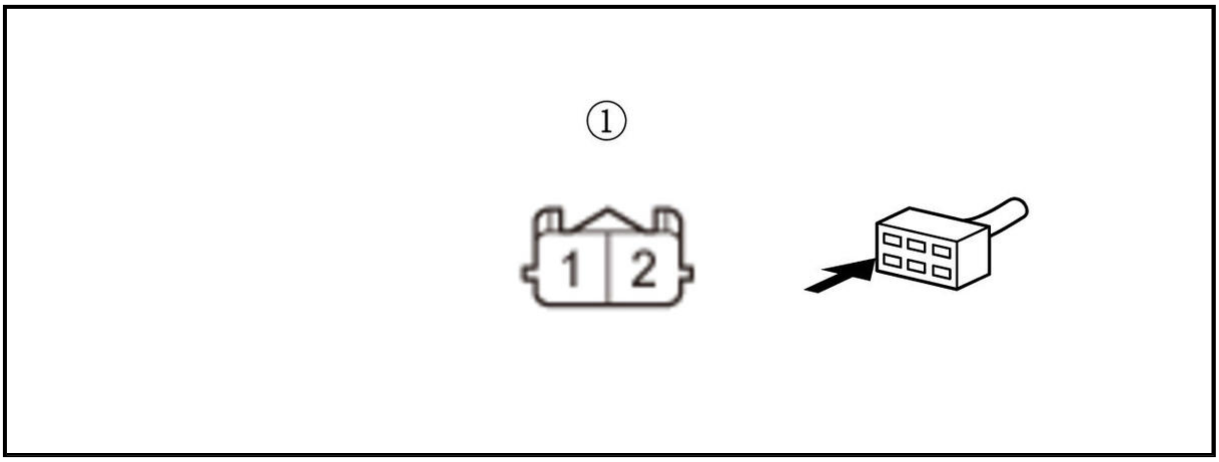

Is there battery voltage?

YES

The DBW RLY OUT/IGPS (LAF) wire is OK. Go to step 4.

NO

Repair an open in the DBW RLY OUT/IGPS (LAF) wire between the EVAP canister vent shut valve and the No. A11 (7.5 A) fuse . Also replace the No. A11 (7.5 A) fuse.

4. EVAP canister vent shut valve internal resistance check

-1. Turn the vehicle to the OFF (LOCK) mode.

-2. At the vent shut valve side, measure the resistance between test points 1 and 2.

Test condition	Vehicle OFF (LOCK) mode
B	EVAP canister vent shut valve 2P connector: disconnected
Test point 1	EVAP canister vent shut valve 2P connector (male terminals) No. 1 (EVAP canister vent shut valve side): ①
Test point 2	EVAP canister vent shut valve 2P connector (male terminals) No. 2 (EVAP canister vent shut valve side): ①

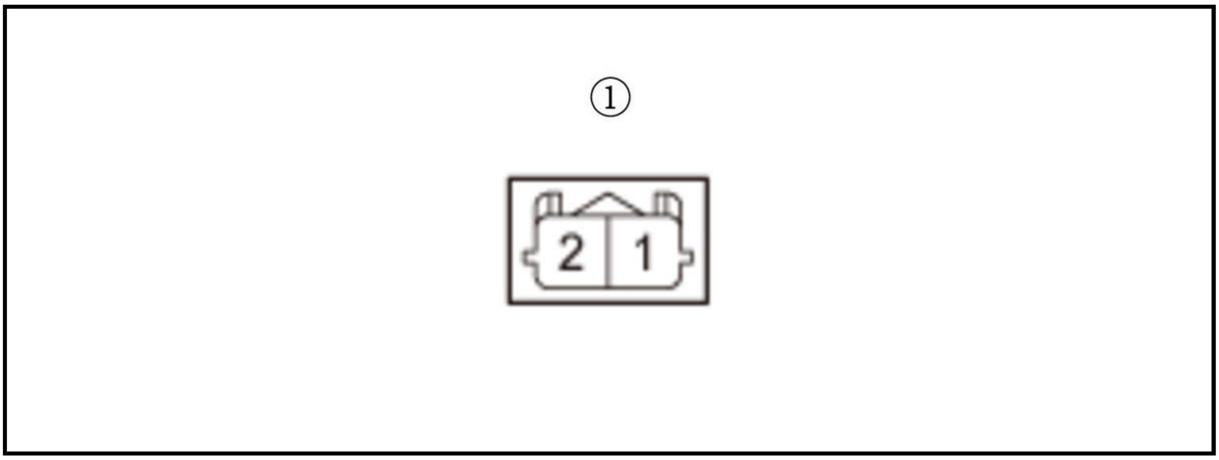

Is there about 25-30 Ω at room temperature?

YES

The EVAP canister vent shut valve is OK. Go to step 5.

NO

Replace the EVAP canister vent shut valve .

5. Shorted wire check (VSV line)

-1. Turn the vehicle to the OFF (LOCK) mode.

-2. Jump the SCS line with the HDS, and wait more than 1 minute.

-3. Disconnect the following connector.

PCM connector A (51P)

-4. Check for continuity between test points 1 and 2.

Test condition	Vehicle OFF (LOCK) mode
	EVAP canister vent shut valve 2P connector: disconnected
	PCM connector A (51P): disconnected
Test point 1	**PCM connector A (51P) No. 17**
Test point 2	Body ground

Is there continuity?

YES

Repair a short in the VSV wire between the PCM (A17) and the EVAP canister vent shut valve.

NO

The VSV wire is not shorted. Go to step 6.

6. Open wire check (VSV line)

-1. Connect terminals A and B with a jumper wire.

Terminal A	EVAP canister vent shut valve 2P connector (female terminals) No. 2: ①
Terminal B	Body ground

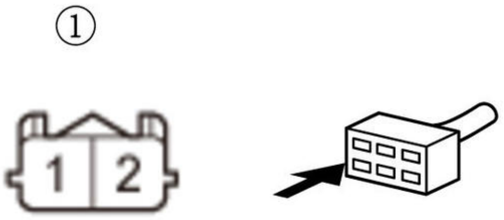

-2. Check for continuity between test points 1 and 2.

Test condition	Vehicle OFF (LOCK) mode
	EVAP canister vent shut valve 2P connector: disconnected

	EVAP canister vent shut valve 2P connector No. 2: jumped to body ground
	PCM connector A (51P): disconnected
Test point 1	**PCM connector A (51P) No. 17**
Test point 2	Body ground

Is there continuity?

YES

The VSV wire is OK. Check for any authorized service information related to the DTCs or symptoms you are troubleshooting, or **substitute a known-good PCM** .

NO

Repair an open in the VSV wire between the PCM (A17) and the EVAP canister vent shut valve.

DTC P0498 (2.4 L ENGINE) (2019)

DTC P0498 : EVAP Canister Vent Shut Valve Circuit Low Voltage

NOTE: Before you troubleshoot, **review the general troubleshooting information** .

DTC Description	Confirmed DTC	Pending DTC
P0498 EVAP Canister Vent Shut Valve Circuit Low Voltage	B	B

DTC (PGM-FI)

1. EVAP system check

   -1. Turn the vehicle to the ON mode.

   -2. Clear the DTC with the HDS.

   -3. Start the engine, and let it idle without load (in P or N) for at least 5 seconds.

   -4. Check for Pending or Confirmed DTCs with the HDS.

DTC Description	Confirmed DTC	Pending DTC
P0498 EVAP Canister Vent Shut Valve Circuit Low Voltage	B	B

   Is DTC P0498 indicated?

   YES

   Go to step 3.

   NO

   Go to step 2.

2. Problem verification

   -1. Select the EVAP TEST in the INSPECTION MENU, and do the EVAP CVS ON in the SINGLE SOLENOID with the HDS.

   EVAP TEST

   Check for Pending or Confirmed DTCs with the HDS.

DTC Description	Confirmed DTC	Pending DTC
P0498 EVAP Canister Vent Shut Valve Circuit Low Voltage	B	B

Is DTC P0498 indicated?

YES

The failure is duplicated. Go to step 3.

NO

Intermittent failure, the system is OK at this time. Check for poor connections or loose terminals at the EVAP canister vent shut valve and the PCM. **If the on-board snapshot of this DTC is recorded, try to reproduce the failure under the same conditions with the on-board snapshot** .

3. Open wire check (IGPS (LAF) line)

-1. Turn the vehicle to the OFF (LOCK) mode.

-2. Disconnect the following connector.

EVAP canister vent shut valve 2P connector

-3. Turn the vehicle to the ON mode.

-4. Measure the voltage between test points 1 and 2.

Test condition	Vehicle ON mode
	EVAP canister vent shut valve 2P connector: disconnected
Test point 1	EVAP canister vent shut valve 2P connector (female terminals) No. 1: ①
Test point 2	Body ground

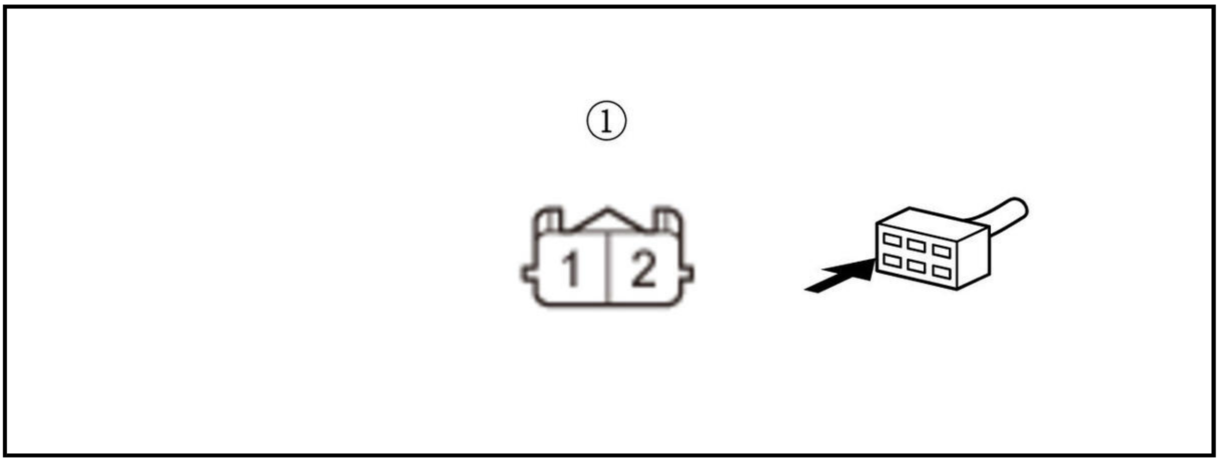

Is there battery voltage?

YES

The IGPS (LAF) wire is OK. Go to step 4.

NO

Repair an open in the IGPS (LAF) wire between the EVAP canister vent shut valve and the **No. A11 (7.5 A) fuse** . Also replace the No. A11 (7.5 A) fuse.

4. EVAP canister vent shut valve internal resistance check

-1. Turn the vehicle to the OFF (LOCK) mode.

-2. At the vent shut valve side, measure the resistance between test points 1 and 2.

Test condition	Vehicle OFF (LOCK) mode
B	EVAP canister vent shut valve 2P connector: disconnected
Test point 1	EVAP canister vent shut valve 2P connector (male terminals) No. 1 (EVAP canister vent shut valve side): ①
Test point 2	EVAP canister vent shut valve 2P connector (male terminals) No. 2 (EVAP canister vent shut valve side): ①

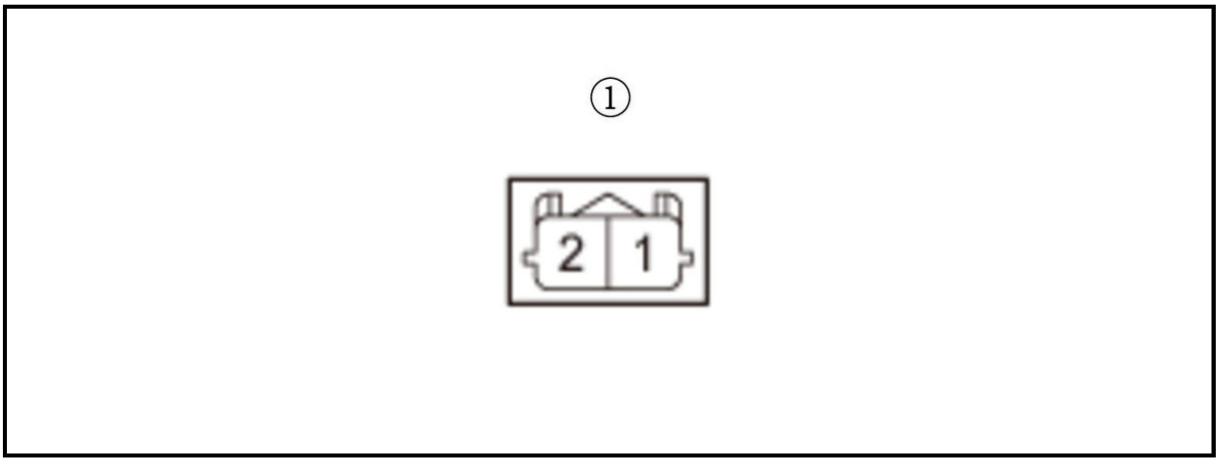

Is there about 25-30 Ω at room temperature?

YES

The EVAP canister vent shut valve is OK. Go to step 5.

NO

Replace the EVAP canister vent shut valve .

5. Shorted wire check (VSV line)

-1. Turn the vehicle to the OFF (LOCK) mode.

-2. Jump the SCS line with the HDS, and wait more than 1 minute.

-3. Disconnect the following connector.

PCM connector A (51P)

-4. Check for continuity between test points 1 and 2.

Test condition	Vehicle OFF (LOCK) mode
	EVAP canister vent shut valve 2P connector: disconnected
	PCM connector A (51P): disconnected
Test point 1	**PCM connector A (51P) No. 17**
Test point 2	Body ground

Is there continuity?

YES

Repair a short in the VSV wire between the PCM (A17) and the EVAP canister vent shut valve.

NO

The VSV wire is not shorted. Go to step 6.

6. Open wire check (VSV line)

-1. Connect terminals A and B with a jumper wire.

Terminal A	EVAP canister vent shut valve 2P connector (female terminals) No. 2: ①
Terminal B	Body ground

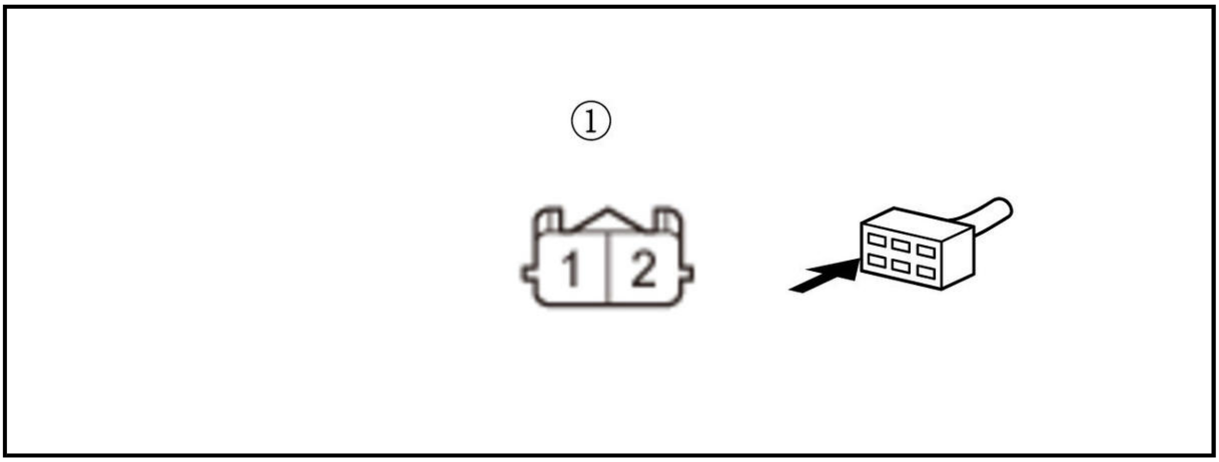

-2. Check for continuity between test points 1 and 2.

Test condition	Vehicle OFF (LOCK) mode
	EVAP canister vent shut valve 2P connector: disconnected
	EVAP canister vent shut valve 2P connector No. 2: jumped to body ground
	PCM connector A (51P): disconnected
Test point 1	PCM connector A (51P) No. 17
Test point 2	Body ground

Is there continuity?

YES

The VSV wire is OK. Check for any authorized service information related to the DTCs or symptoms you are troubleshooting, or substitute a known-good PCM .

NO

Repair an open in the VSV wire between the PCM (A17) and the EVAP canister vent shut valve.

DTC P0499 (2.4 L ENGINE) (2017 2018 2019)

DTC P0499 : EVAP Canister Vent Shut Valve Circuit High Voltage

NOTE: Before you troubleshoot, review the general troubleshooting information .

DTC Description	Confirmed DTC	Pending DTC
P0499 EVAP Canister Vent Shut Valve Circuit High Voltage	B	B

DTC (PGM-FI)

1. Problem verification

   -1. Turn the vehicle to the ON mode.

   -2. Clear the DTC with the HDS.

   -3. Select the EVAP TEST in the INSPECTION MENU, and do the EVAP CVS ON in the SINGLE SOLENOID with the HDS.

   EVAP FUNCTION TEST

   -4. Check for Pending or Confirmed DTCs with the HDS.

DTC Description	Confirmed DTC	Pending DTC
P0499 EVAP Canister Vent Shut Valve Circuit High Voltage	B	B

   Is DTC P0499 indicated?

   YES

   The failure is duplicated. Check for any authorized service information related to the DTCs or symptoms you are troubleshooting, or **substitute a known-good PCM** .

   NO

   Intermittent failure, the system is OK at this time. Check for poor connections or loose terminals at the EVAP canister vent shut valve and the PCM. **If the on-board snapshot of this DTC is recorded, try to reproduce the failure under the same conditions with the on-board snapshot** .

DTC P04DF (1.5 L ENGINE)

DTC P04DF : EVAP System High Purge Flow Detected

Special Tools Required

Vacuum Pump/Gauge, 0-30 inHg Snap-on YA4000A or equivalent, commercially available

Vacuum/Pressure Gauge, 0-4 inHg 07JAZ-001000B

NOTE: Before you troubleshoot, **review the general troubleshooting information** .

DTC Description	Confirmed DTC	Pending DTC
P04DF EVAP System High Purge Flow Detected	B	B

DTC (PGM-FI)

1. Problem verification

   -1. Turn the vehicle to the ON mode.

   -2. Clear the DTC with the HDS.

   -3. Select the EVAP TEST (ELCM) in the INSPECTION MENU, then select EVAP Leak Check Module Test with the HDS.

   NOTE: If the test could not be completed because of another DTC, do the troubleshooting for that DTC.

EVAP TEST (ELCM)

Is the result OK?

YES

If the test result is PASSED, intermittent failure, the system is OK at this time. Check the EVAP canister purge valve for debris that may cause it to stick open intermittently. **If the on-board snapshot of this DTC is recorded, try to reproduce the failure under the same conditions with the on-board snapshot** .

NO

The failure is duplicated. Go to step 2.

2. EVAP canister purge valve open stuck check

-1. **Remove the EVAP canister purge valve** with its connector and vacuum hose connected.

-2. Disconnect the vacuum hose (purge line) (A) from the EVAP canister purge valve (B) in the engine compartment, then connect a T-fitting (C), a vacuum gauge, and a vacuum pump/gauge, 0-30 inHg, to the vacuum hose as shown.

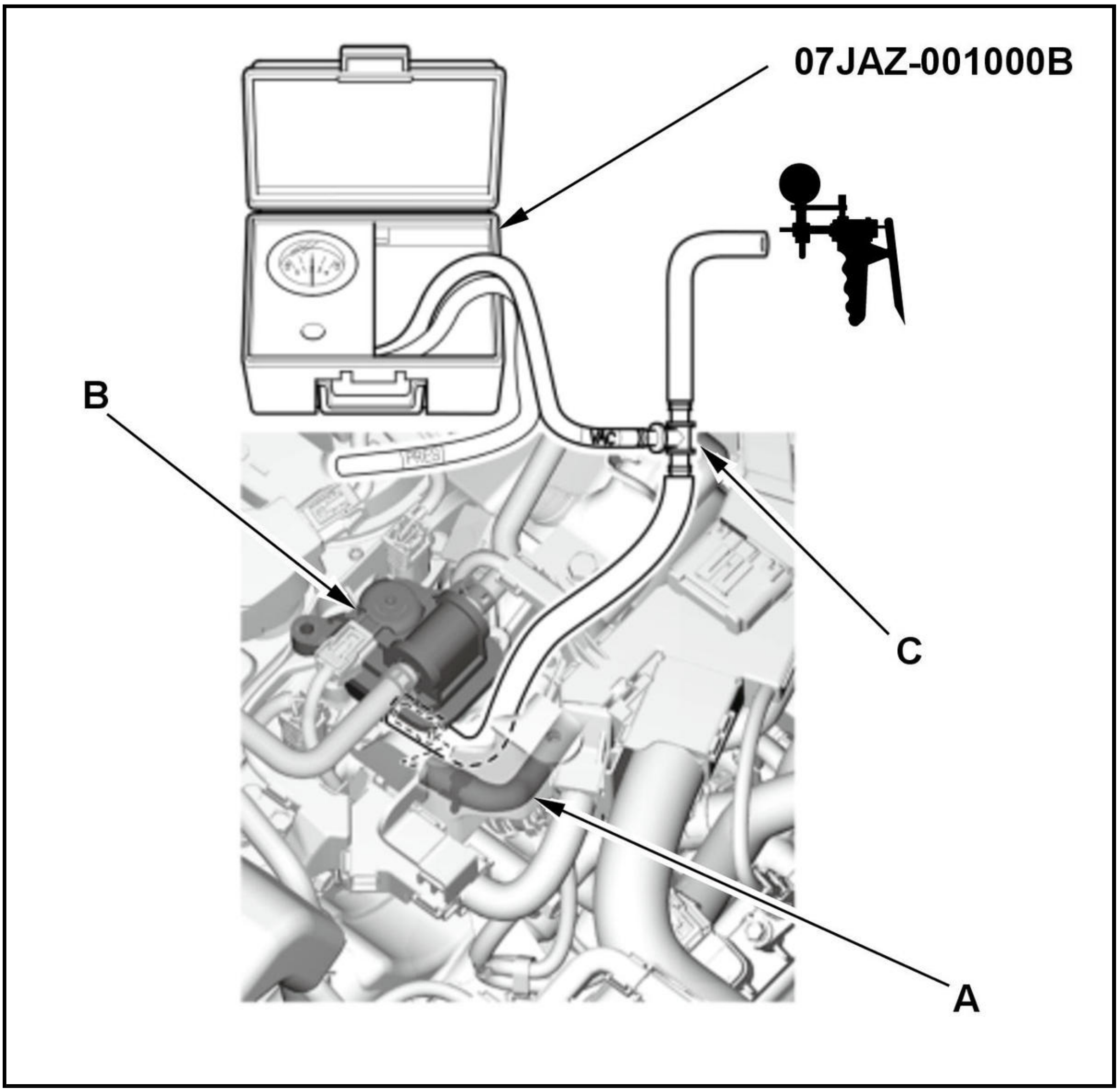

-3. Apply about 2 kPa (0.6 inHg, 15 mmHg) of vacuum to the EVAP canister purge valve.

Does it hold vacuum?

YES

Go to step 3.

NO

Replace the EVAP canister purge valve .

3. Non-return valve check

   -1. **Inspect the non-return valve** .

   Is the valve OK?

   YES

   Replace the EVAP leak check module .

   NO

   Replace the EVAP canister purge valve .

DTC P04DF (2.4 L ENGINE) (2017 2018 2019)

DTC P04DF : EVAP System High Purge Flow Detected

Special Tools Required

Vacuum Pump/Gauge, 0-30 inHg Snap-on YA4000A or equivalent, commercially available

Vacuum/Pressure Gauge, 0-4 inHg 07JAZ-001000B

NOTE: Before you troubleshoot, **review the general troubleshooting information** .

DTC Description	Confirmed DTC	Pending DTC
P04DF EVAP System High Purge Flow Detected	B	B

DTC (PGM-FI)

1. Problem verification

   -1. Turn the vehicle to the ON mode.

   -2. Clear the DTC with the HDS.

   -3. Select the EVAP TEST in the INSPECTION MENU, then select the FUNCTION TEST with the HDS.

   NOTE: If the test could not be completed because of another DTC, do the troubleshooting for that DTC.

   Is the result OK?

   YES

   Intermittent failure, the system is OK at this time. Check the EVAP canister purge valve for debris that may cause it to stick open intermittently. **If the on-board snapshot of this DTC is recorded, try to reproduce the failure under the same conditions with the on-board snapshot** .

   NO

   The failure is duplicated. Go to step 2.

2. EVAP canister purge valve open stuck check

-1. Disconnect the vacuum hose (purge line) (A) from the EVAP canister purge valve (B) in the engine compartment, then connect a T-fitting (C), a vacuum gauge, and a vacuum pump/gauge, 0-30 inHg, to the vacuum hose as shown.

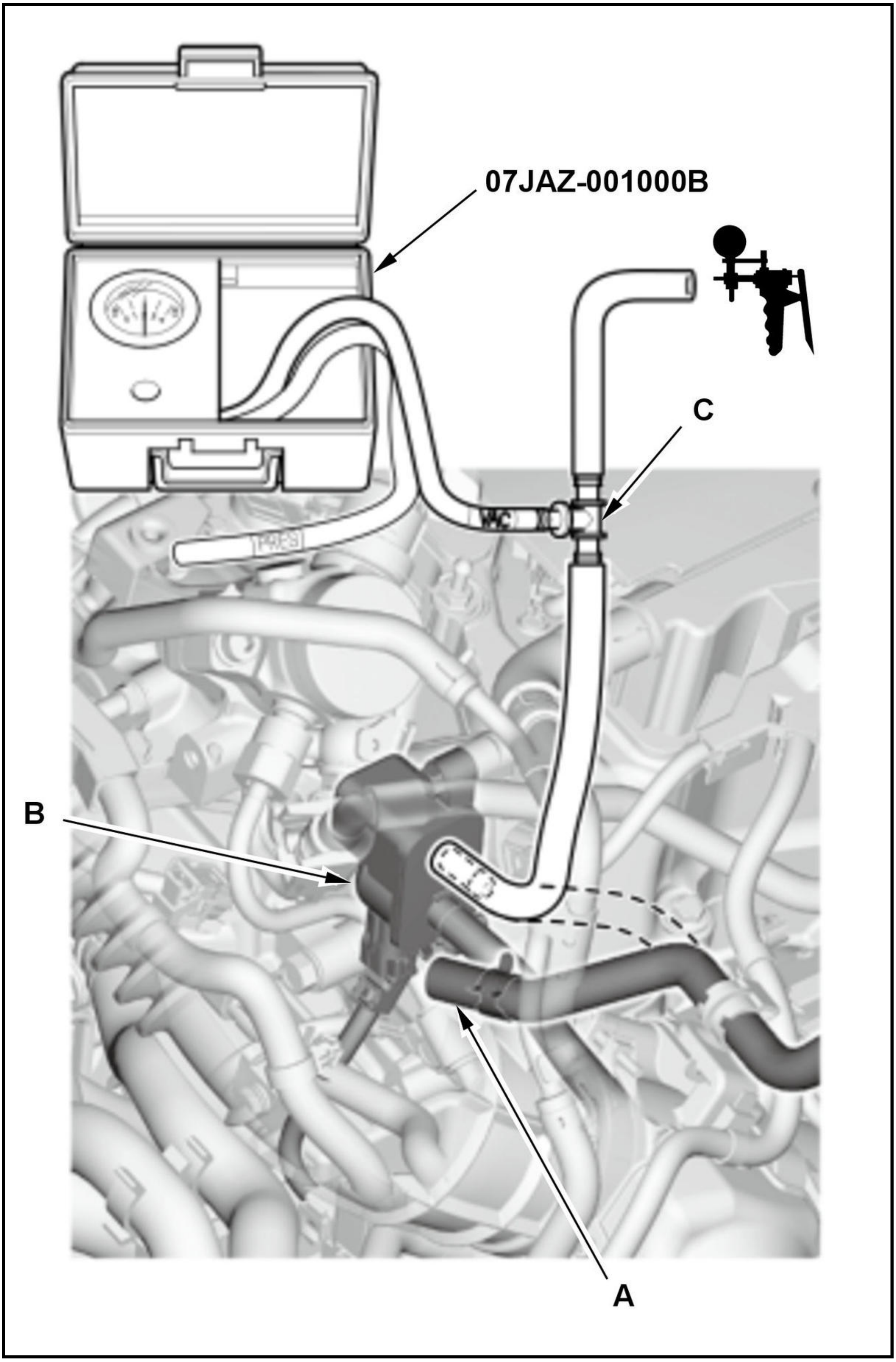

-2. Apply about 2 kPa (0.6 inHg, 15 mmHg) of vacuum to the EVAP canister purge valve.

Does it hold vacuum?

YES

Replace the EVAP canister vent shut valve .

NO

Replace the EVAP canister purge valve .

DTC P04F0 (1.5 L ENGINE)

DTC P04F0 : EVAP System Incorrect Purge Flow Detected

Special Tools Required

Vacuum Pump/Gauge, 0-30 inHg Snap-on YA4000A or equivalent, commercially available

Vacuum/Pressure Gauge, 0-4 inHg 07JAZ-001000B

NOTE: Before you troubleshoot, **review the general troubleshooting information** .

DTC Description	Confirmed DTC	Pending DTC
P04F0 EVAP System Incorrect Purge Flow Detected	B	B

DTC (PGM-FI)

1. Problem verification

   -1. Turn the vehicle to the ON mode.

   -2. Clear the DTC with the HDS.

   -3. Select the EVAP TEST (ELCM) in the INSPECTION MENU, then select EVAP Purge Flow Check Test with the HDS.

   EVAP TEST (ELCM)

   Is DTC P04F0 indicated?

   YES

   The failure is duplicated. Go to step 2.

   NO

   Intermittent failure, the system is OK at this time. Check for poor connections or loose terminals at the EVAP leak check module, the EVAP canister purge valve, and the PCM. **If the on-board snapshot of this DTC is recorded, try to reproduce the failure under the same conditions with the on-board snapshot** .

2. Purge tube B visual check

   -1. Turn the vehicle to the OFF (LOCK) mode.

   -2. Check for poor connection, blockage, or damage at purge tube B between the EVAP canister purge nozzle and the EVAP canister purge valve.

Is the line OK?

YES

Go to step 3.

NO

Reconnect or repair purge tube B.

3. Purge tube D visual check

   -1. Check for poor connection, blockage, or damage at purge tube D between the EVAP canister purge nozzle and intake air duct E.

   Is the hose OK?

   YES

   Go to step 4.

   NO

   Reconnect or replace purge tube D.

4. Determine possible failure area (EVAP canister purge line, others)

   -1. **Remove the EVAP canister purge valve** with its connector and vacuum hose connected.

   -2. Disconnect the vacuum hose (purge line) (A) from the EVAP canister purge valve (B).

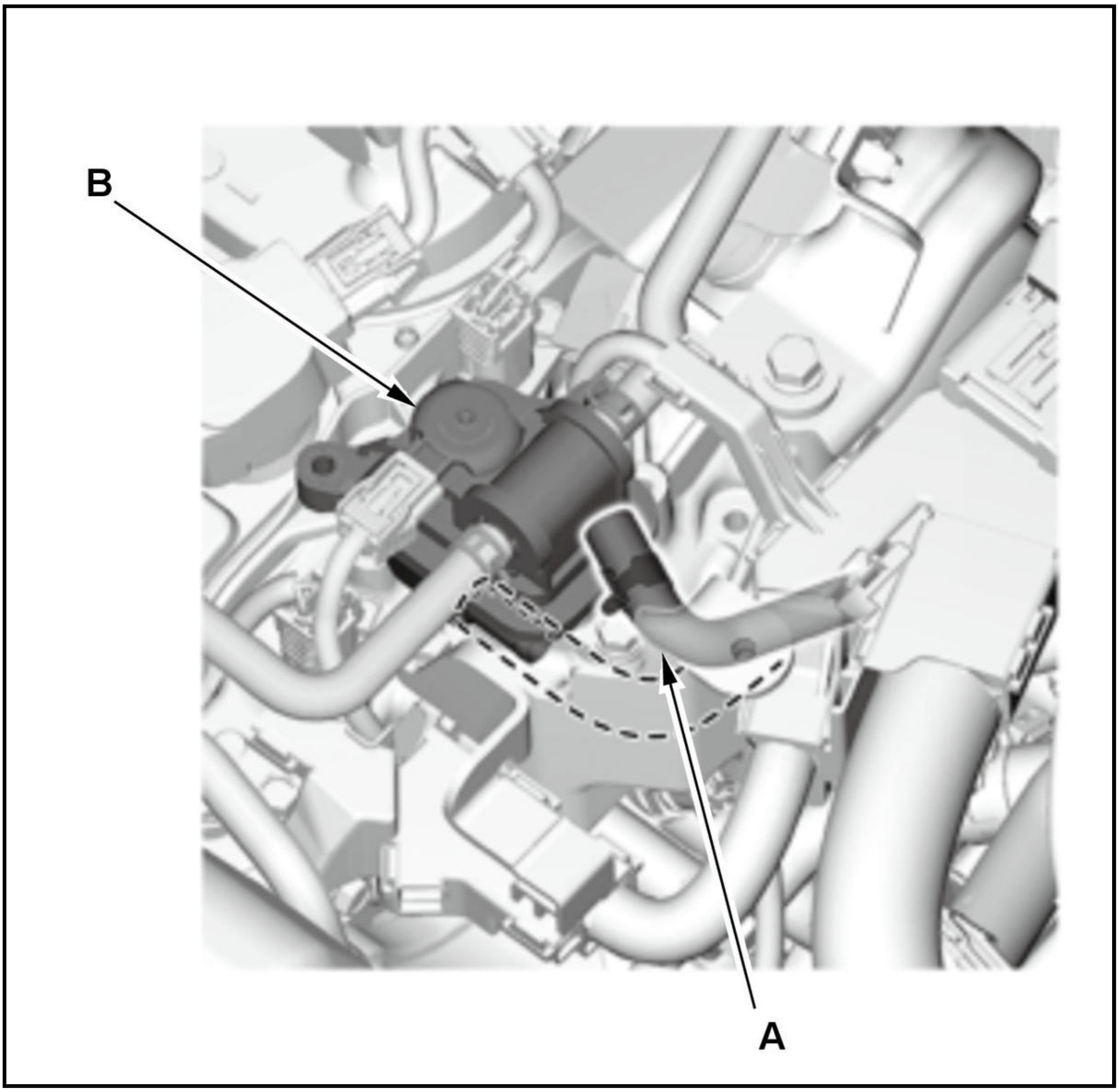

-3. Disconnect the EVAP canister purge line (A) from the EVAP canister (B). Connect the T-fitting (C), the vacuum gauge, and the vacuum pump/gauge, 0-30 inHg to the EVAP canister purge line as shown.

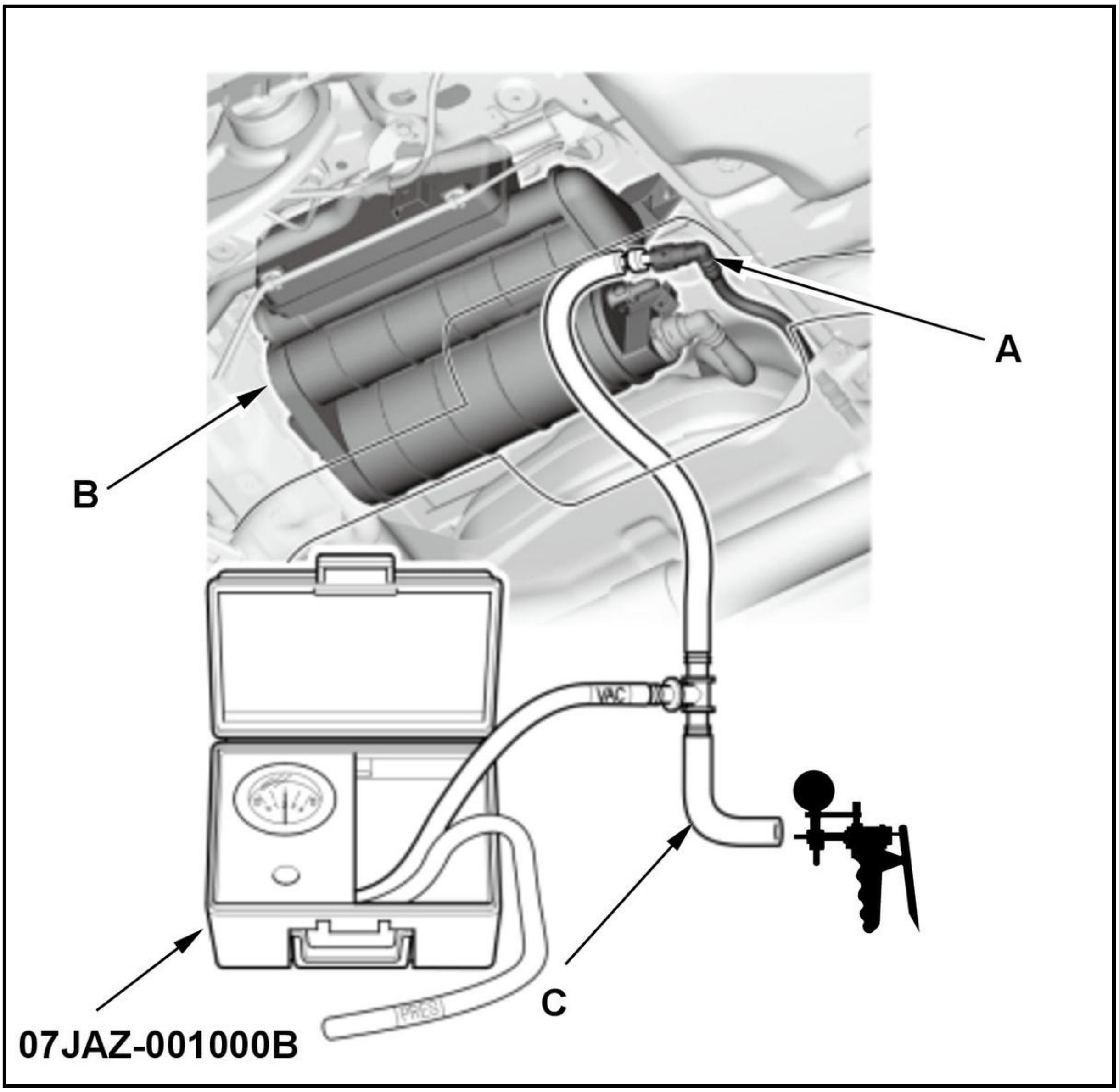

-4. Slow apply about 2 kPa (0.6 inHg, 15 mmHg) of vacuum to the hose.

Does the hose hold vacuum?

YES

Check for blockage in the EVAP canister purge line between the EVAP canister purge valve and the EVAP canister.

NO

Go to step 5.

5. Purge tube D check

-1. Disconnect purge tube D from intake air duct E, and connect the vacuum pump/gauge, to purge tube D as shown.

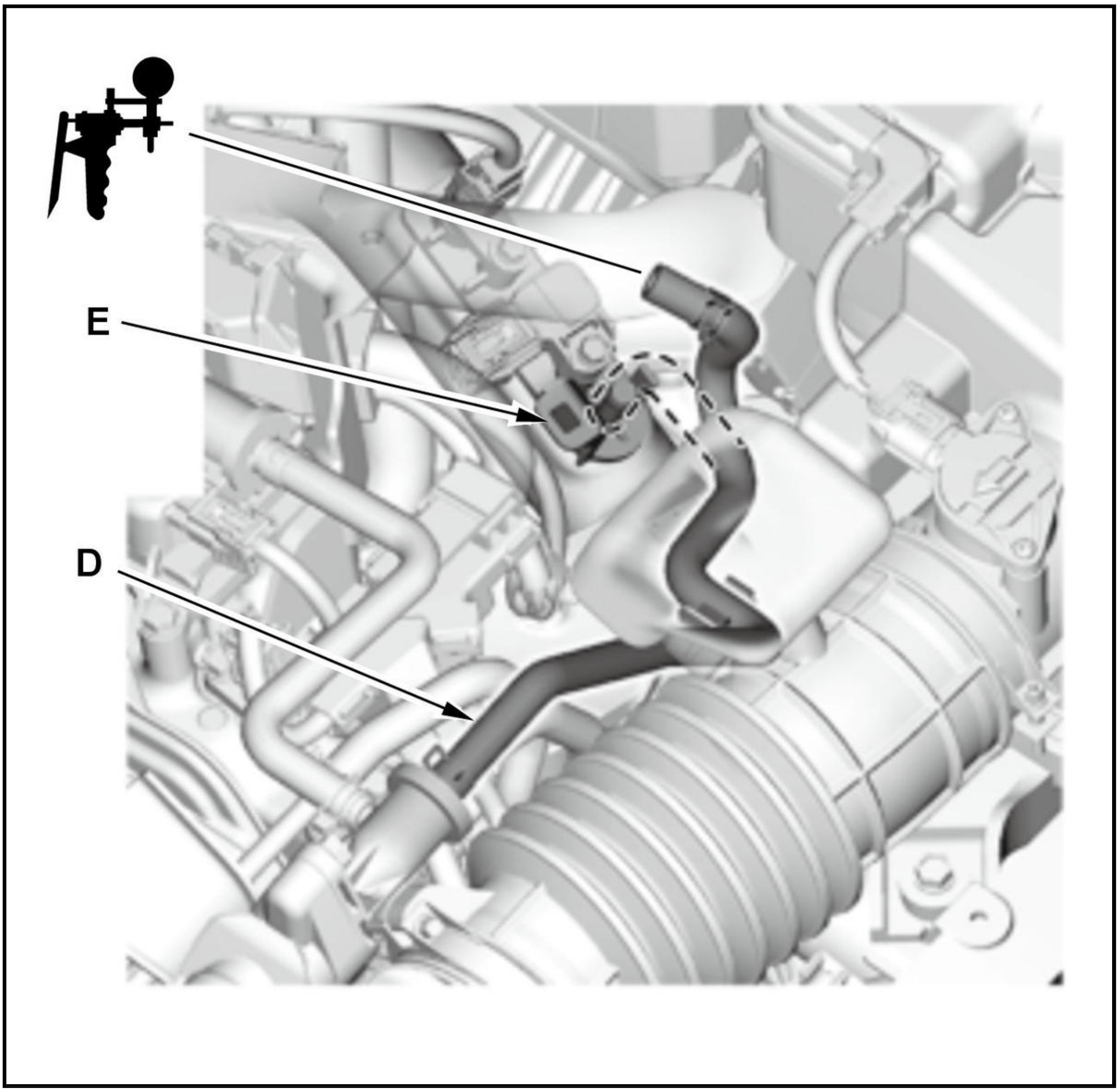

-2. Apply vacuum to the hose.

Does it hold vacuum?

YES

Check for blockage at purge tube D between intake air duct E and the EVAP canister purge nozzle.

NO

Go to step 6.

6. Intake air duct port check

-1. Check for debris or clogging at the port (A) of intake air duct E.

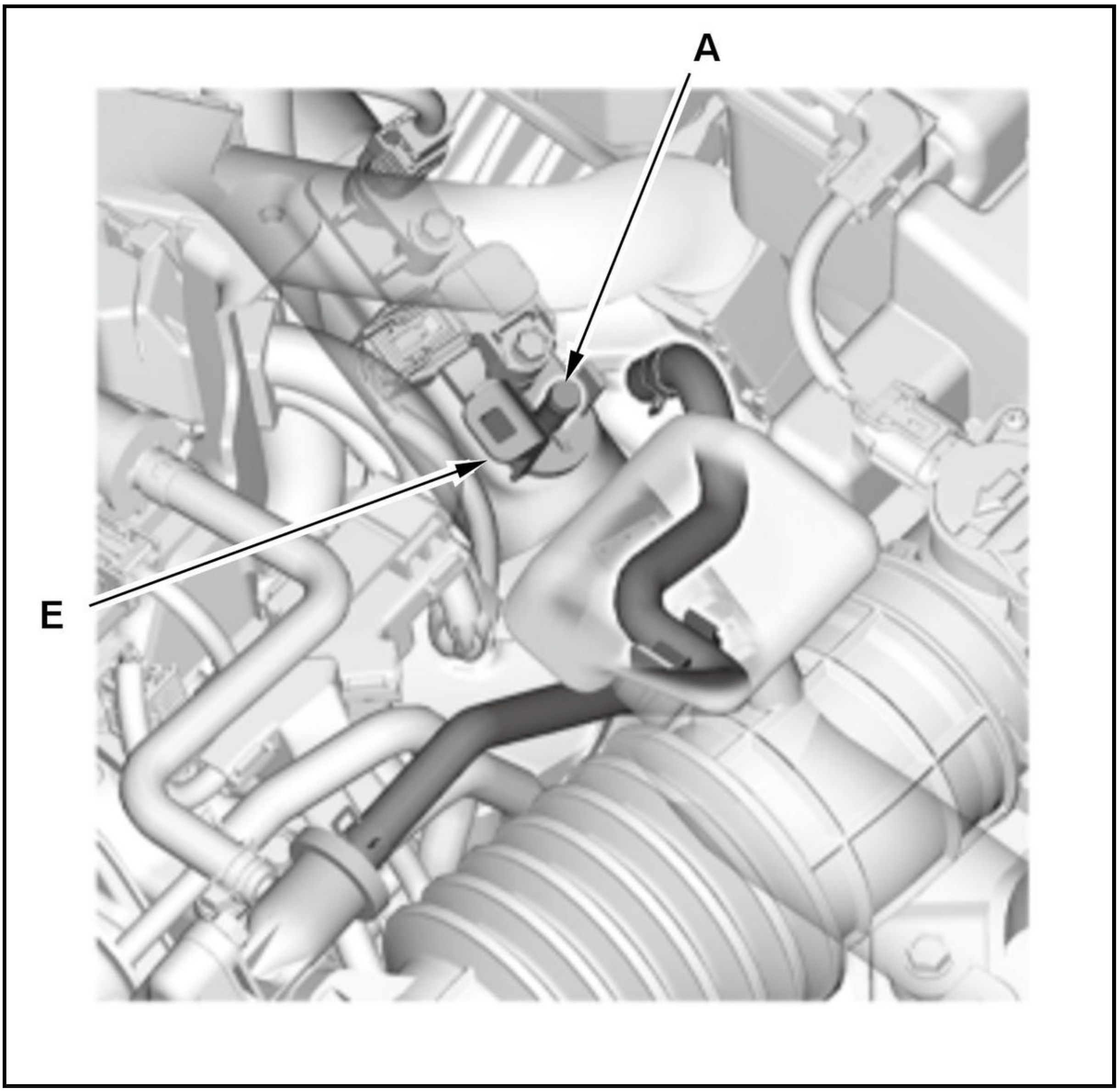

Is the port OK?

YES

Go to step 7.

NO

Clean intake air duct E port, or replace intake air duct E if needed .

7. Purge tube B check

-1. Disconnect purge tube B from the EVAP canister purge nozzle (A), and connect the vacuum pump/gauge, to the hose as shown.

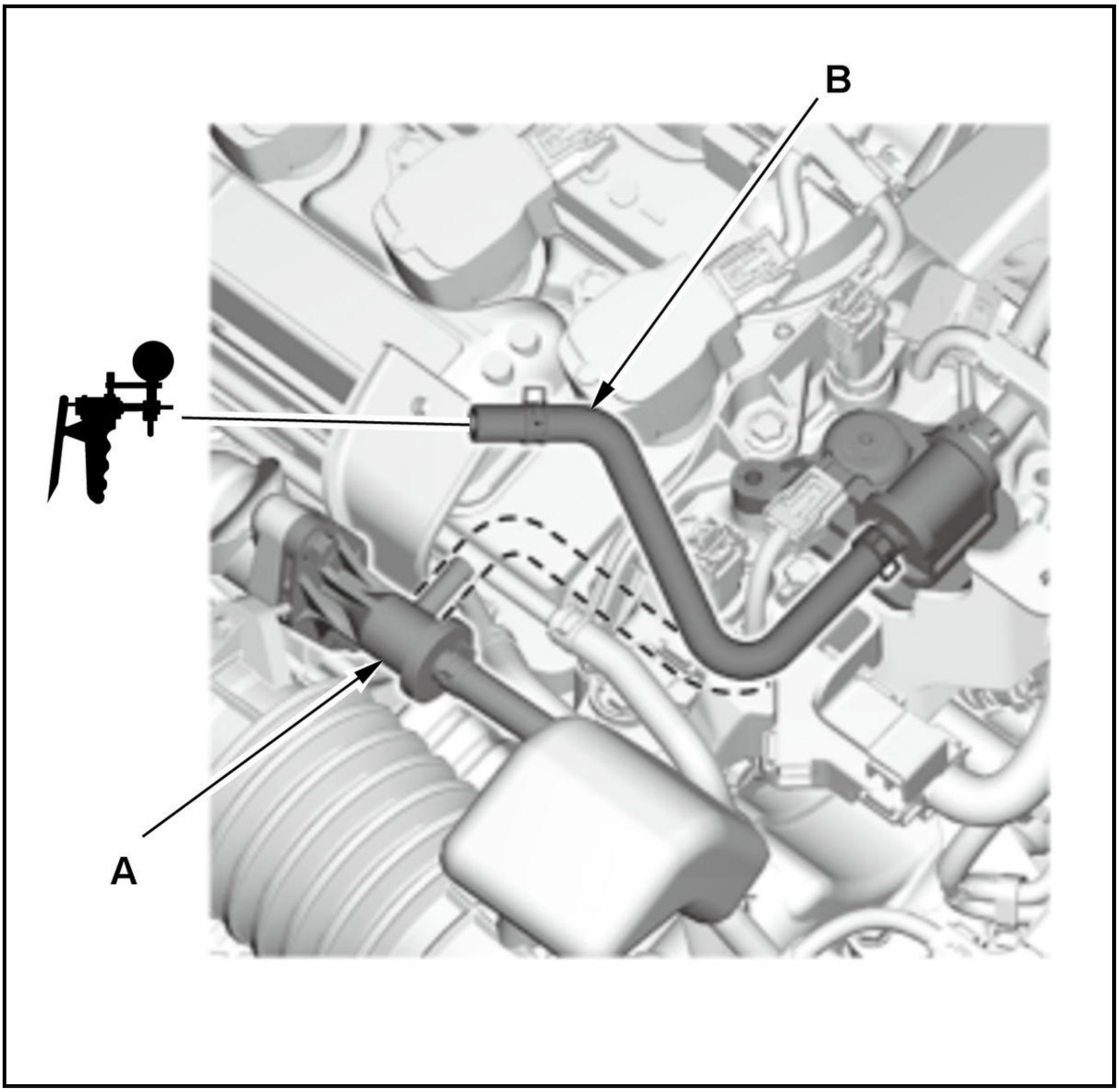

-2. Select the EVAP TEST (ELCM) in the INSPECTION MENU, then select PCS ON in the Single Solenoid Test with the HDS.

EVAP TEST (ELCM)

Apply vacuum to the tube.

Does it hold vacuum?

YES

Check for blockage at purge tube B line between the EVAP canister purge nozzle and the EVAP canister purge valve.

NO

Go to step 8.

8. Non-return valve B check

-1. **Inspect non-return valve B** .

Is the valve OK?

YES

Check for debris or clogging at the EVAP canister purge nozzle port and intake air duct E port. If needed, replace the EVAP canister purge valve .

NO

Replace the EVAP canister purge valve .

DTC P04F1 (1.5 L ENGINE)

DTC P04F1 : EVAP System Low Purge Flow Detected

Special Tools Required

Vacuum Pump/Gauge, 0-30 inHg Snap-on YA4000A or equivalent, commercially available

Vacuum/Pressure Gauge, 0-4 inHg 07JAZ-001000B

NOTE: Before you troubleshoot, review the general troubleshooting information .

DTC Description	Confirmed DTC	Pending DTC
P04F1 EVAP System Low Purge Flow Detected	B	B

DTC (PGM-FI)

1. Problem verification

   -1. Turn the vehicle to the ON mode.

   -2. Clear the DTC with the HDS.

   -3. Select the EVAP TEST (ELCM) in the INSPECTION MENU, then select EVAP Leak Check Module Test with the HDS.

   EVAP TEST (ELCM)

   Is the result OK?

   YES

   If the test result is PASSED, intermittent failure, the system is OK at this time. Check for poor connections or loose terminals at the EVAP leak check module, the EVAP canister purge valve, and the PCM. If the on-board snapshot of this DTC is recorded, try to reproduce the failure under the same conditions with the on-board snapshot .

   NO

   The failure is duplicated. Go to step 2.

2. EVAP canister purge line visual check

   -1. Turn the vehicle to the OFF (LOCK) mode.

   -2. Check for poor connection, blockage, or damage at the EVAP canister purge line between the intake manifold and the EVAP canister.

   Is the line OK?

   YES

   Go to step 3.

NO

Reconnect or repair the EVAP canister purge line.

3. Determine possible failure area (EVAP canister purge line, others)

-1. **Remove the EVAP canister purge valve** with its connector and vacuum hose connected.

-2. Disconnect the vacuum hose (purge line) (A) from the EVAP canister purge valve (B).

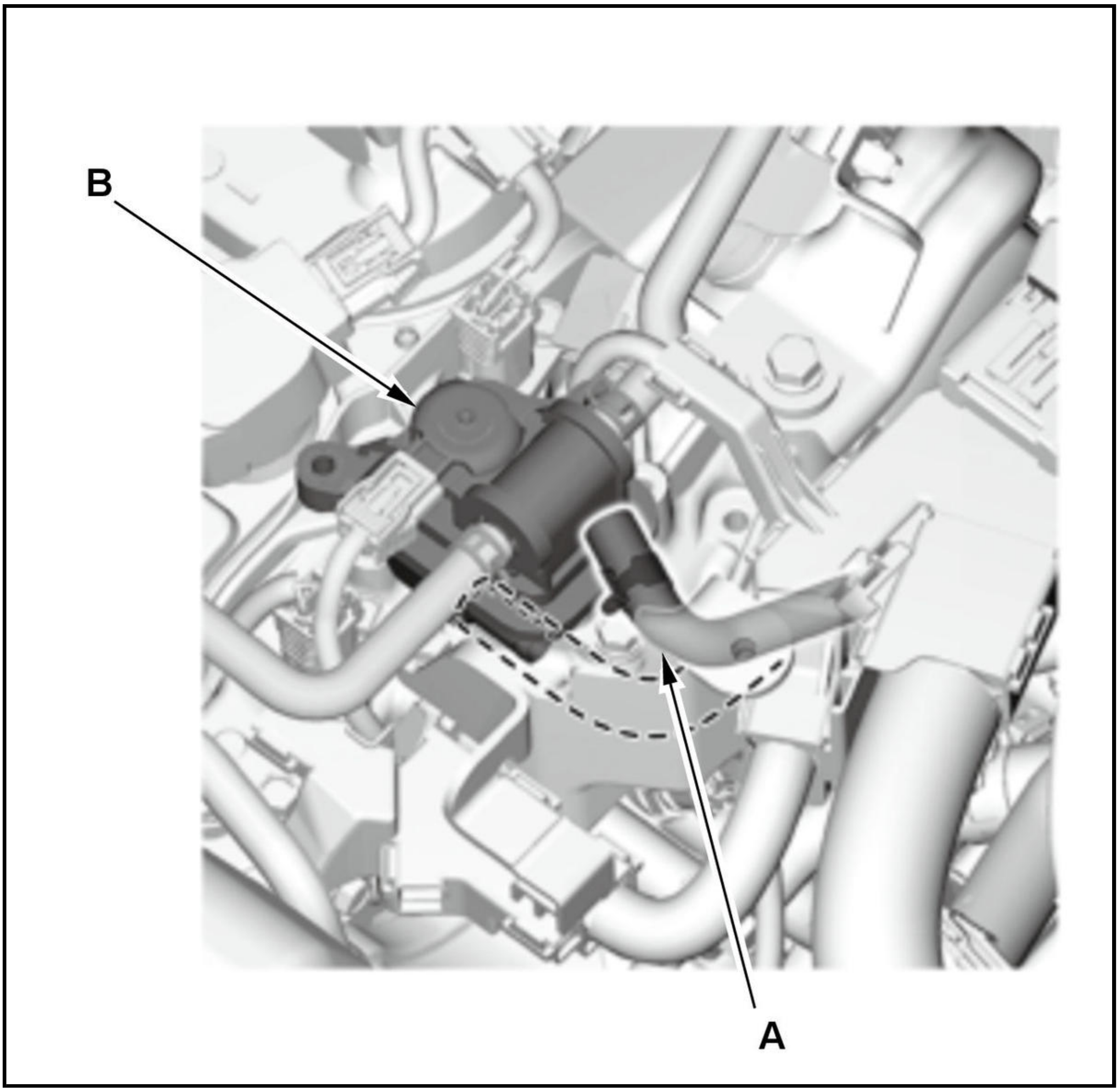

-3. Disconnect the EVAP canister purge line (A) from the EVAP canister (B). Connect the T-fitting (C), the vacuum gauge, and the vacuum pump/gauge, 0-30 inHg to the EVAP canister purge line as shown.

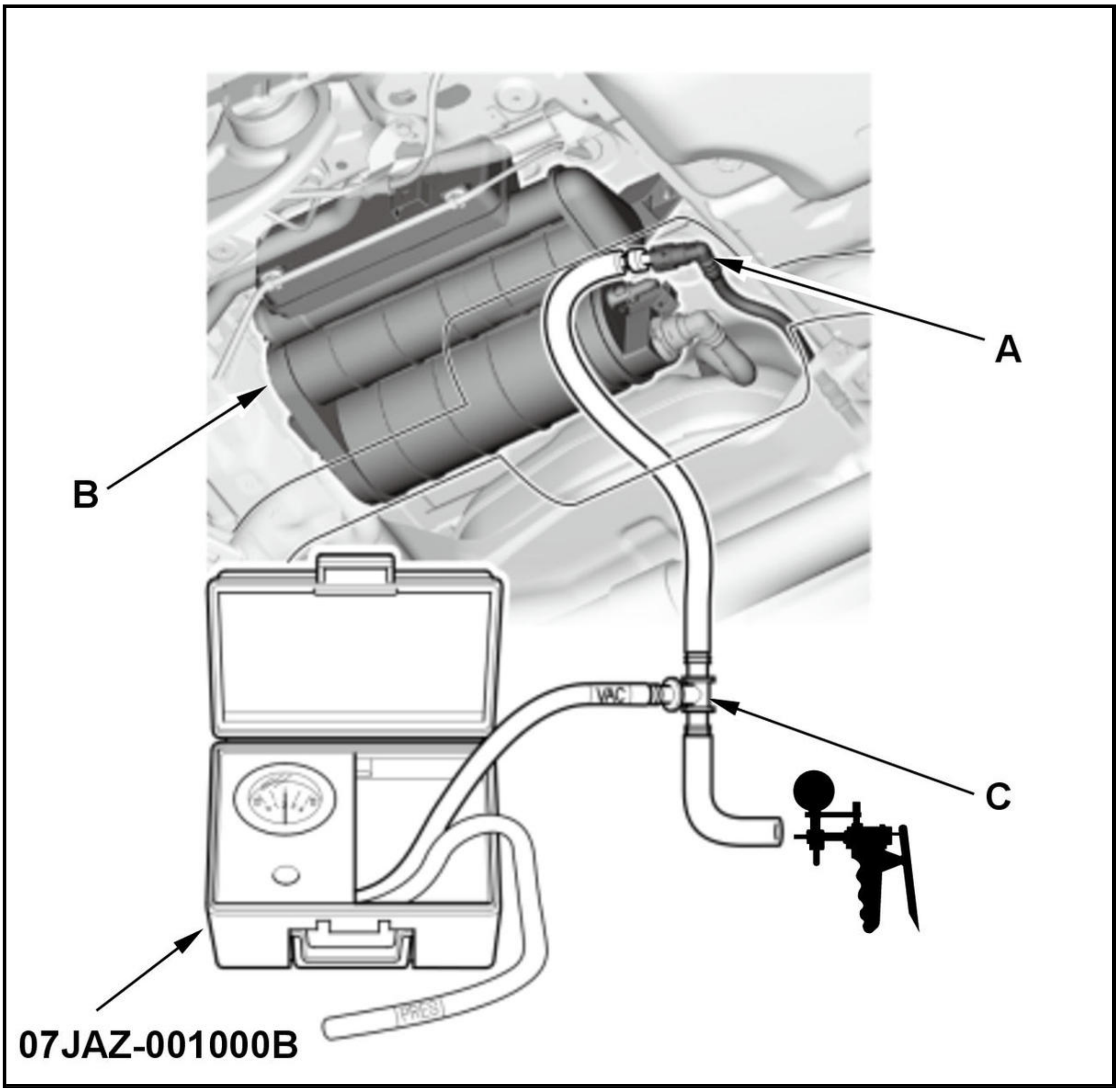

-4. Apply about 2 kPa (0.6 inHg, 15 mmHg) of vacuum to the hose.

Does the hose hold vacuum?

YES

Check for blockage in the EVAP purge line between the EVAP canister purge valve and the EVAP canister.

NO

Go to step 4.

4. EVAP canister purge valve check

-1. **Inspect the EVAP canister purge valve** .

Is the EVAP canister purge valve OK?

YES

Go to step 5.

NO

Replace the EVAP canister purge valve .

5. Purge tube A check

-1. Connect the vacuum pump/gauge, to purge tube A as shown.

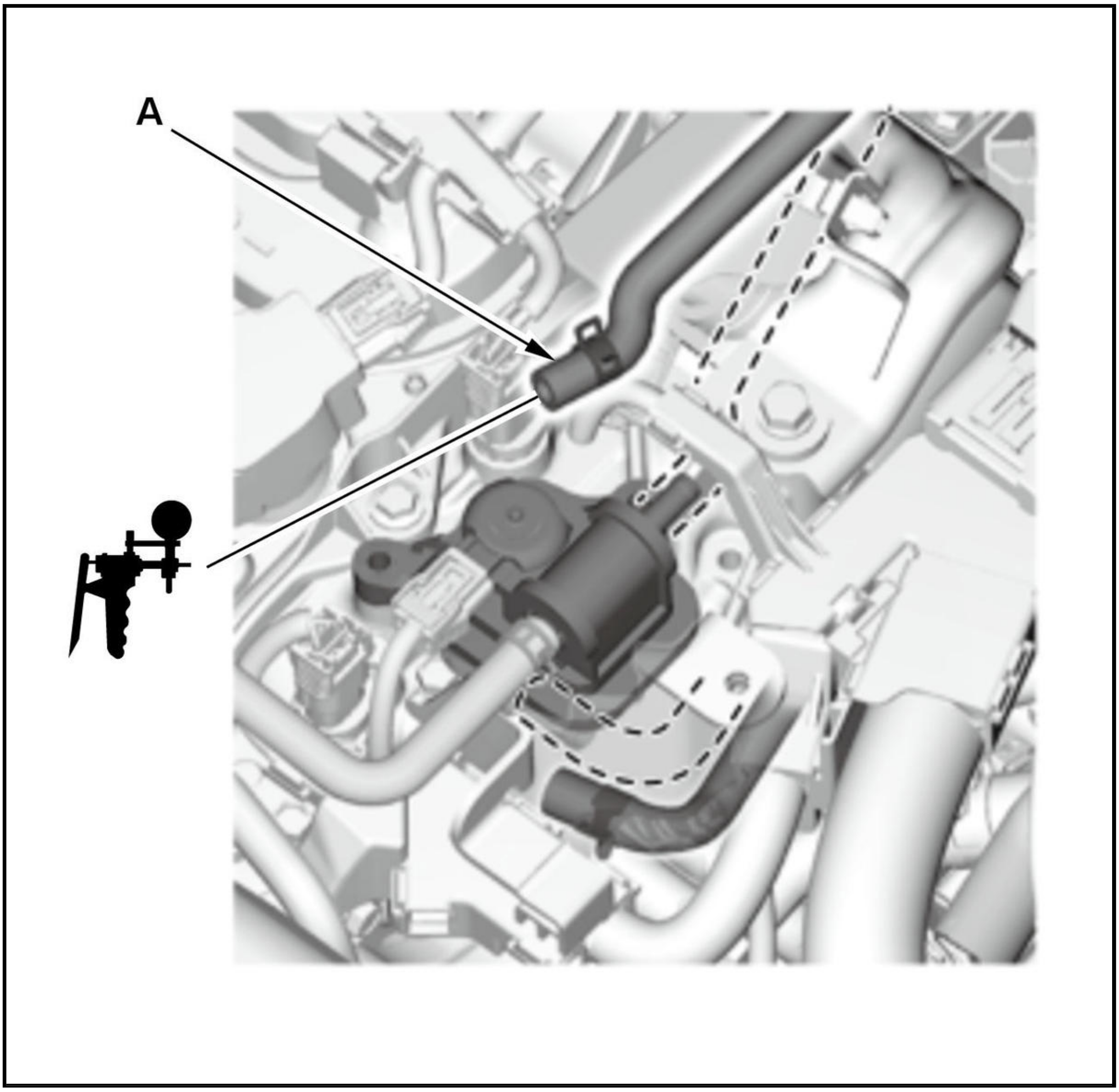

-2. Start the engine, and let it idle.

Is there vacuum?

YES

Go to step 6.

NO

Check for blockage at purge tube A between the intake manifold and the EVAP canister purge valve.

6. EVAP canister check

-1. Turn the vehicle to the OFF (LOCK) mode.

-2. Disconnect the fuel vent tube (A) and the EVAP canister drain hose (B) from the EVAP canister (C), and plug the EVAP canister port (D) and the EVAP leak check module port (E).

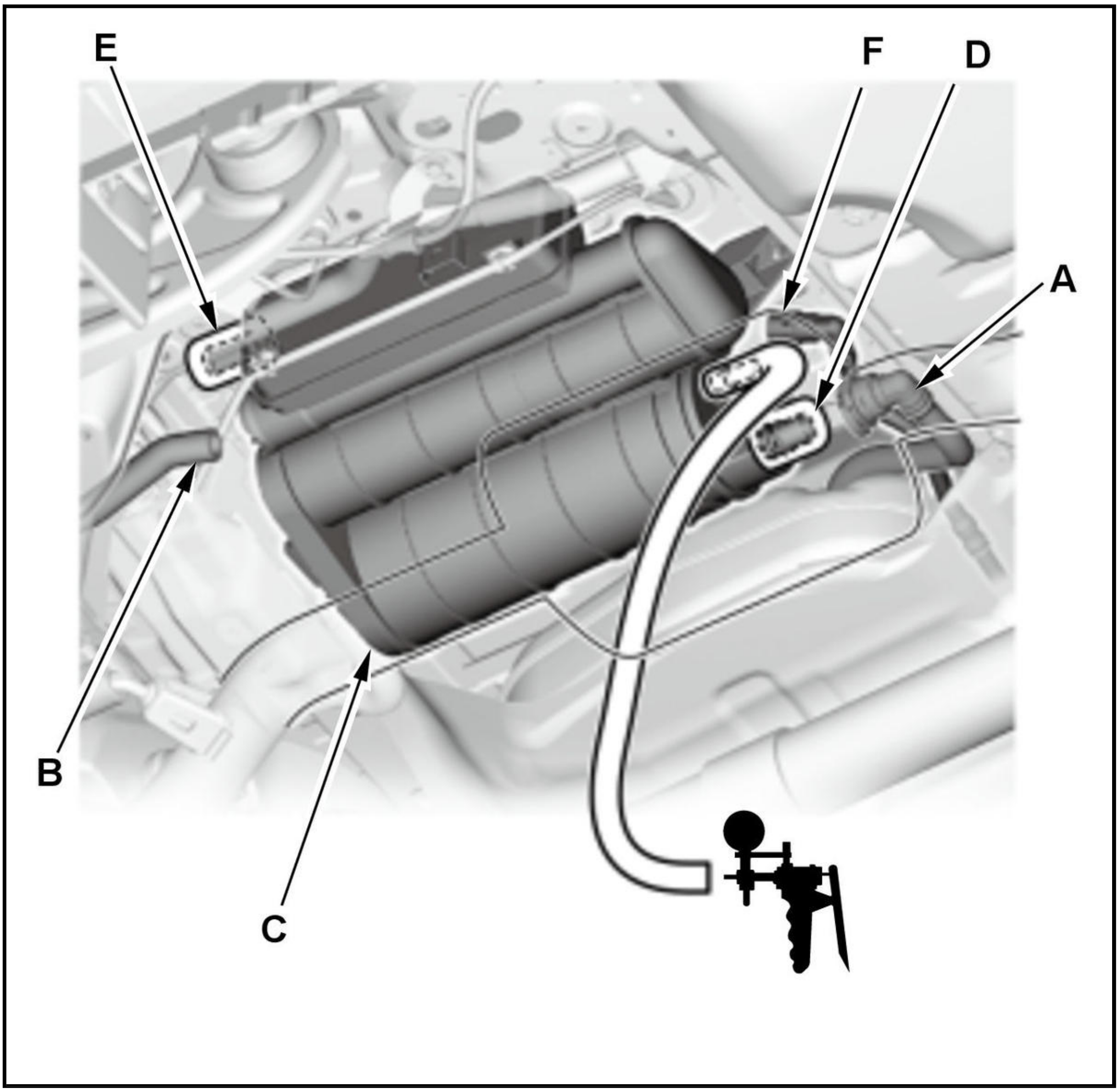

-3. Disconnect the EVAP canister purge line (F) from the EVAP canister. Connect the vacuum pump/gauge.

-4. Slowly apply the vacuum to the EVAP canister.

Does it hold vacuum?

YES

Replace the EVAP canister .

NO

The EVAP canister is OK. Go to step 7.

7. EVAP leak check module performance check

-1. Connect the EVAP canister drain hose (A) to the EVAP canister (B).

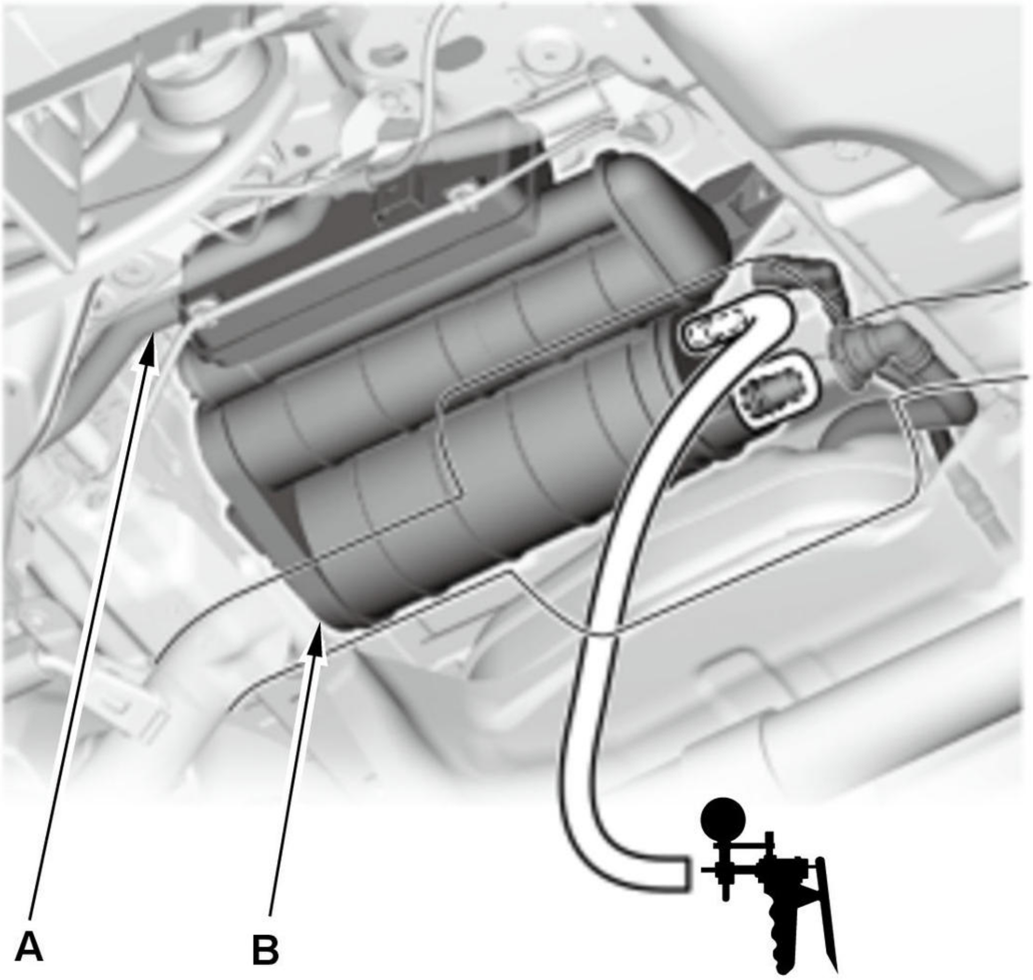

-2. Turn the vehicle to the ON mode.

-3. Select the EVAP TEST (ELCM) in the INSPECTION MENU, then select CCV ON in the Single Solenoid Test with the HDS.

EVAP TEST (ELCM)

-4. Check and record the Absolute Pressure of ELCM Pressure Sensor reading in the DATA LIST with the HDS.

Signal	Current conditions	
	Values	Unit
Absolute Pressure of ELCM Pressure Sensor	B	B

-5. Slowly apply about 1.3 kPa (0.4 inHg, 10 mmHg) of vacuum to the hose.

NOTE: Be careful not to exceed the vacuum. If you do, the EVAP leak check module can be damaged.

-6. Check the Absolute Pressure of ELCM Pressure Sensor in the DATA LIST with the HDS.

Signal	Current conditions	
	Values	Unit
Absolute Pressure of ELCM Pressure Sensor	B	B

Does the value change?

YES

Check for blockage at the EVAP canister purge line port.

NO

Replace the EVAP leak check module .

DTC P04F1 (2.4 L ENGINE) (2017 2018 2019)

DTC P04F1 : EVAP System Low Purge Flow Detected

Special Tools Required

Vacuum Pump/Gauge, 0-30 inHg Snap-on YA4000A or equivalent, commercially available

Vacuum/Pressure Gauge, 0-4 inHg 07JAZ-001000B

NOTE: Before you troubleshoot, review the general troubleshooting information .

DTC Description	Confirmed DTC	Pending DTC
P04F1 EVAP System Low Purge Flow Detected	B	B

DTC (PGM-FI)

1. Problem verification

   -1. Turn the vehicle to the ON mode.

   -2. Clear the DTC with the HDS.

   -3. Select the EVAP TEST in the INSPECTION MENU, then select the FUNCTION TEST with the HDS.

   EVAP TEST

   Is the result OK?

   YES

   Intermittent failure, the system is OK at this time. Check for poor connections or loose terminals at the FTP sensor, the EVAP canister purge valve, the EVAP canister vent shut valve, and the PCM. If the on-board snapshot of this DTC is recorded, try to reproduce the failure under the same conditions with the on-board snapshot .

   NO

   The failure is duplicated. Go to step 2.

2. EVAP canister purge line visual check

   -1. Turn the vehicle to the OFF (LOCK) mode.

   -2. Check for a poor connection, a blockage, or damage at the EVAP canister purge line between the intake manifold and the EVAP canister.

   Is the line OK?

YES

Go to step 3.

NO

Reconnect or repair the EVAP canister purge line.

3. Determine possible failure area (EVAP canister purge valve, others)

   -1. Disconnect the vacuum hose (purge line) (A) from the EVAP canister purge valve (B) in the engine compartment, then connect a T-fitting (C), a vacuum gauge, and a vacuum pump/gauge, 0-30 inHg, to the vacuum hose as shown.

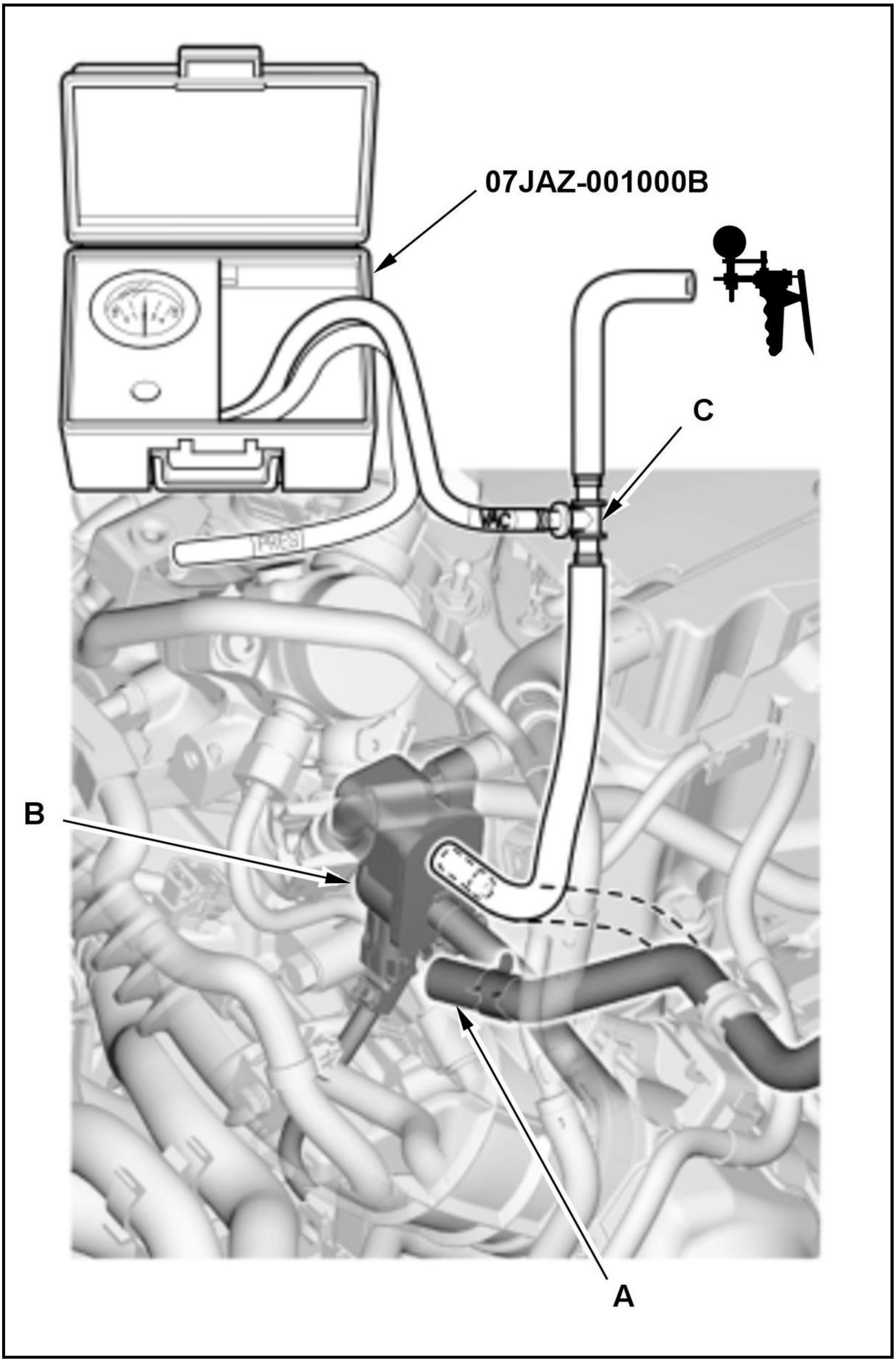
07JAZ-001000B
C
B
A

-2. Turn the vehicle to the ON mode.

-3. Select the EVAP TEST in the INSPECTION MENU, then select the EVAP PCS ON in the SINGLE SOLENOID with the HDS.

EVAP TEST

Apply about 2 kPa (0.6 inHg, 15 mmHg) of vacuum to the hose.

Does it hold vacuum?

YES

Replace the EVAP canister purge valve .

NO

Go to step 4.

4. Determine possible failure area (EVAP canister purge line, others)

-1. Select the EVAP TEST in the INSPECTION MENU, then select the EVAP PCS OFF in the SINGLE SOLENOID with the HDS.

EVAP TEST

-2. Reconnect the vacuum hose to the EVAP canister purge valve.

-3. Disconnect the EVAP canister purge line (A) from the canister (B). Connect the T-fitting (C), the vacuum gauge, and the vacuum pump/gauge, 0-30 inHg, to the EVAP canister purge line as shown.

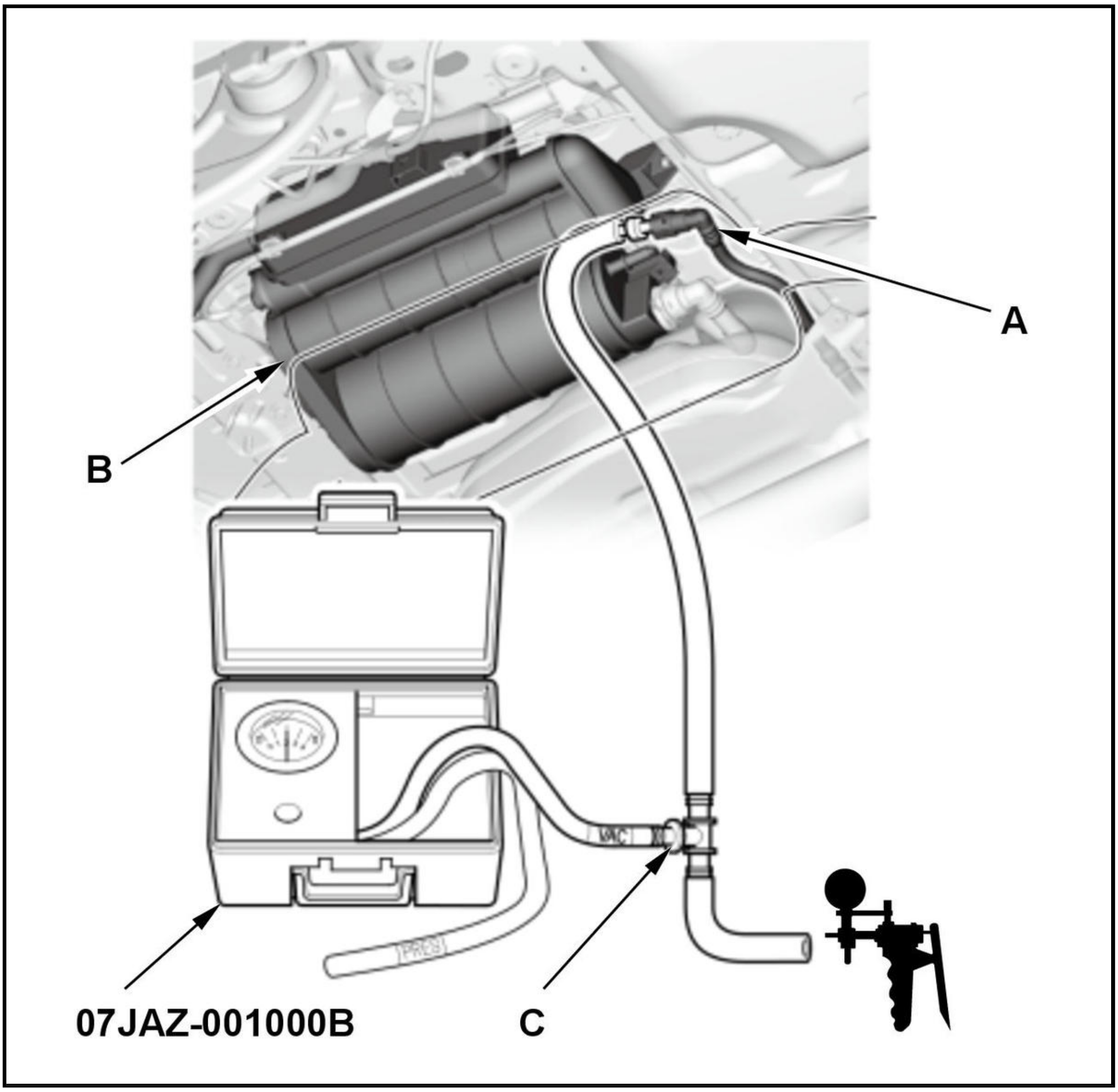

-4. Apply about 2 kPa (0.6 inHg, 15 mmHg) of vacuum to the hose.

-5. Select the EVAP PCS ON in the SINGLE SOLENOID with the HDS.

EVAP TEST

Does it hold vacuum?

YES

Check for a blockage in the purge line between the EVAP canister purge valve and the EVAP canister.

NO

Go to step 5.

5. FTP sensor performance check

-1. Turn the vehicle to the OFF (LOCK) mode.

-2. **Remove the FTP sensor with its connector connected** .

-3. Connect the T-fitting (A) to the vacuum pump/gauge, 0-30 inHg, and the vacuum gauge to the FTP sensor (B) as shown.

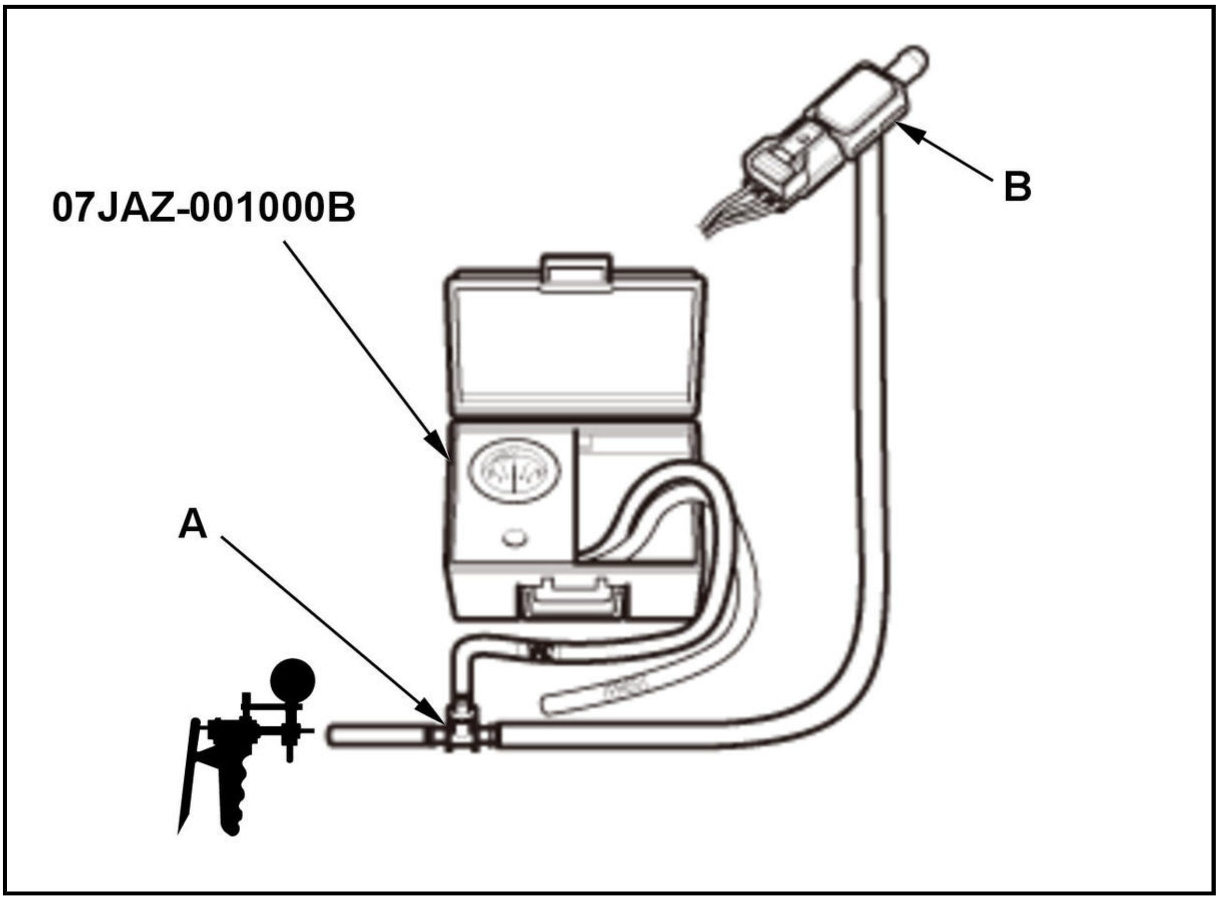

-4. Turn the vehicle to the ON mode.

-5. Check and record the FTP sensor reading in the DATA LIST with the HDS.

Signal	Current conditions	
	Values	Unit
FTP SENSOR	B	B

-6. Slowly apply about 1.3 kPa (0.4 inHg, 10 mmHg) of vacuum to the hose.

NOTE: Be careful not to exceed the vacuum. If you do, the FTP sensor can be damaged.

-7. Check the FTP SENSOR in the DATA LIST with the HDS.

Signal	Current conditions	
	Values	**Unit**
FTP SENSOR	B	B

Does the value change?

YES

Go to step 6.

NO

Replace the FTP sensor .

6. EVAP canister purge line check

   -1. Turn the vehicle to the OFF (LOCK) mode.

   -2. Reconnect the EVAP canister purge line to the EVAP canister, and **reinstall the FTP sensor** .

   -3. **Remove the EVAP canister vent shut valve** .

   -4. Disconnect the vacuum hose (purge line) (A) from the EVAP canister purge valve (B) in the engine compartment, then connect the T-fitting (C), the vacuum gauge, and the vacuum pump/gauge, 0-30 inHg, to the vacuum hose as shown.

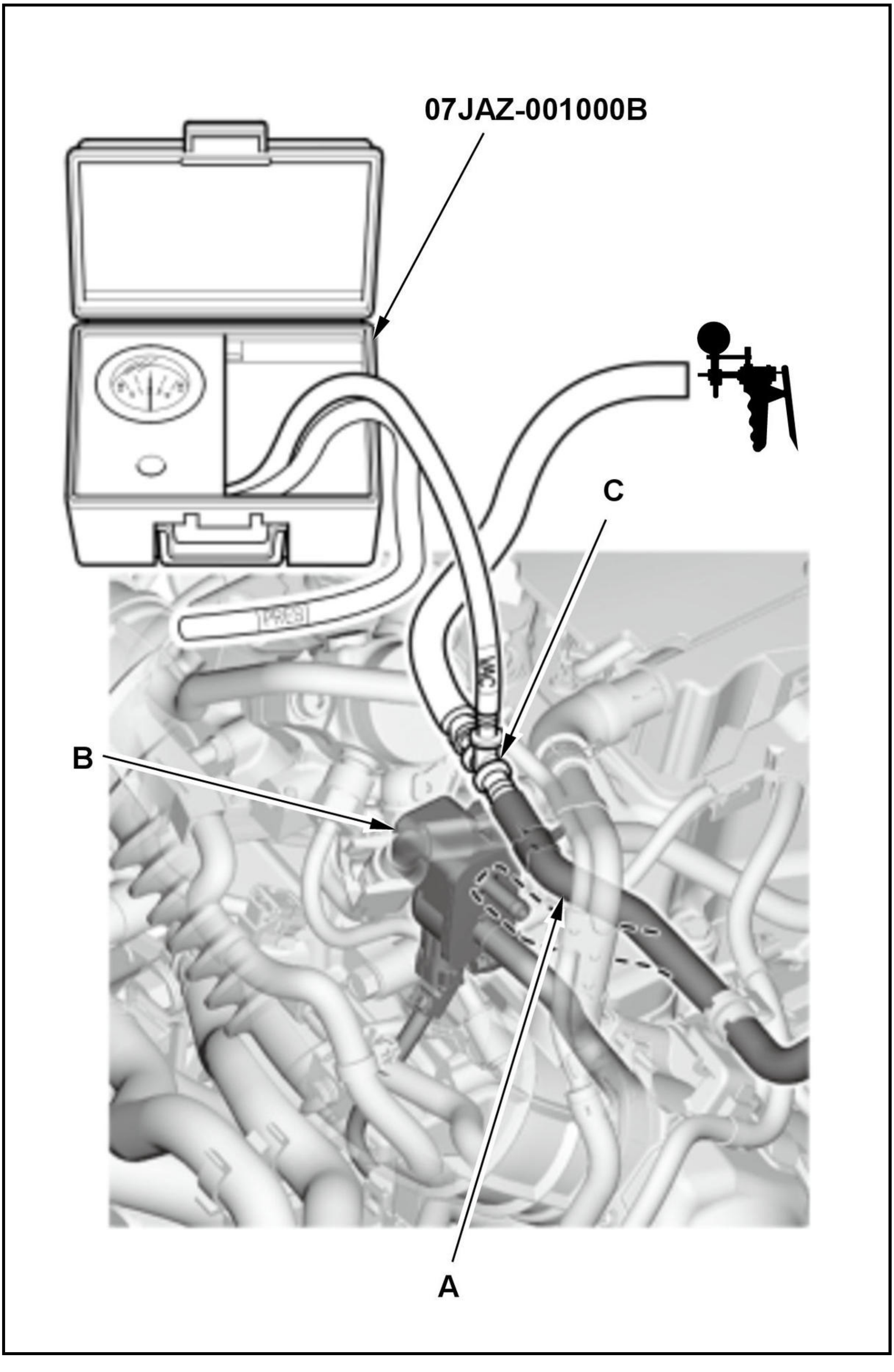
07JAZ-001000B
C
B
A

-5. Slowly apply about 2 kPa (0.6 inHg, 15 mmHg) of vacuum to the hose.

Does the hose hold vacuum?

YES

Check for a blockage at the EVAP canister purge line port.

NO

Replace the EVAP canister vent shut valve .

DTC P0501 (CVT (ECM/PCM))

DTC P0501 : CVT Speed Sensor Circuit Range/Performance

NOTE:

- Before you troubleshoot, **review the General Troubleshooting Information** .
- This code is caused by an electrical circuit problem and cannot be caused by a mechanical problem in the transmission.

DTC Description	Confirmed DTC	Pending DTC	Freeze Frame
P0501 CVT Speed Sensor Circuit Range/Performance	B	B	B

DTC (CVT)

1. Problem verification

   -1. Turn the vehicle to the ON mode.

   -2. Clear the DTC with the HDS.

   -3. Raise the vehicle on a lift. Make sure it is securely supported, and allow the front wheels to rotate freely.

   -4. Start the engine.

   -5. **Enter the VSA maintenance mode** .

   -6. Test-drive the vehicle in D position/mode, and the engine speed at 1, 000 rpm or higher, then release the accelerator without pressing it again, for at least 4 seconds. Slow down and stop the wheels.

   -7. Check for Pending or Confirmed DTCs with the HDS.

DTC Description	Confirmed DTC	Pending DTC	Freeze Frame
P0501 CVT Speed Sensor Circuit Range/Performance	B	B	B

   Is DTC P0501 indicated?

   YES

   The failure is duplicated. Go to step 2.

   NO

   Intermittent failure, the system is OK at this time. If the freeze data/on-board snapshot of this DTC is recorded, try to reproduce the failure under the same conditions with the freeze data/on-board snapshot.

2. Vehicle speed sensor installation check

   -1. Check for poor connections and loose terminals between the vehicle speed sensor and the PCM, and check for proper installation of the vehicle speed sensor.

Are the connection and installation OK?

YES

Connection and installation are OK. **Replace the CVT speed sensor** .

NO

Repair faulty connection or installation.

DTC P0502 (CVT (ECM/PCM))

DTC P0502 : CVT Speed Sensor Circuit Open/Short

NOTE:

- Before you troubleshoot, **review the General Troubleshooting Information** .
- This code is caused by an electrical circuit problem and cannot be caused by a mechanical problem in the transmission.

DTC Description	Confirmed DTC	Pending DTC	Freeze Frame
P0502 CVT Speed Sensor Circuit Open/Short	B	B	B

DTC (CVT)

1. Problem verification

   -1. Turn the vehicle to the ON mode.

   -2. Clear the DTC with the HDS.

   -3. Raise the vehicle on a lift. Make sure it is securely supported, and allow the front wheels to rotate freely.

   -4. Start the engine.

   -5. **Enter the VSA maintenance mode** .

   -6. Test-drive the vehicle in D position/mode, and the engine speed at 1, 000 rpm or higher, then release the accelerator without pressing it again, for at least 4 seconds. Slow down and stop the wheels.

   -7. Check for Pending or Confirmed DTCs with the HDS.

DTC Description	Confirmed DTC	Pending DTC	Freeze Frame
P0502 CVT Speed Sensor Circuit Open/Short	B	B	B

   Is DTC P0502 indicated?

   YES

   The failure is duplicated. Go to step 2.

   NO

   Intermittent failure, the system is OK at this time. If the freeze data/on-board snapshot of this DTC is recorded, try to reproduce the failure under the same conditions with the freeze data/on-board snapshot.

2. Determine possible failure area (VCC2 line, others)

-1. Turn the vehicle to the OFF (LOCK) mode.

-2. Disconnect the following connector.

CVT speed sensor 3P connector

-3. Turn the vehicle to the ON mode.

-4. Measure the voltage between test points 1 and 2.

Test condition	Vehicle ON mode
B	CVT speed sensor 3P connector: disconnected
Test point 1	CVT speed sensor 3P connector (female terminals) No. 3 : ①
Test point 2	Body ground

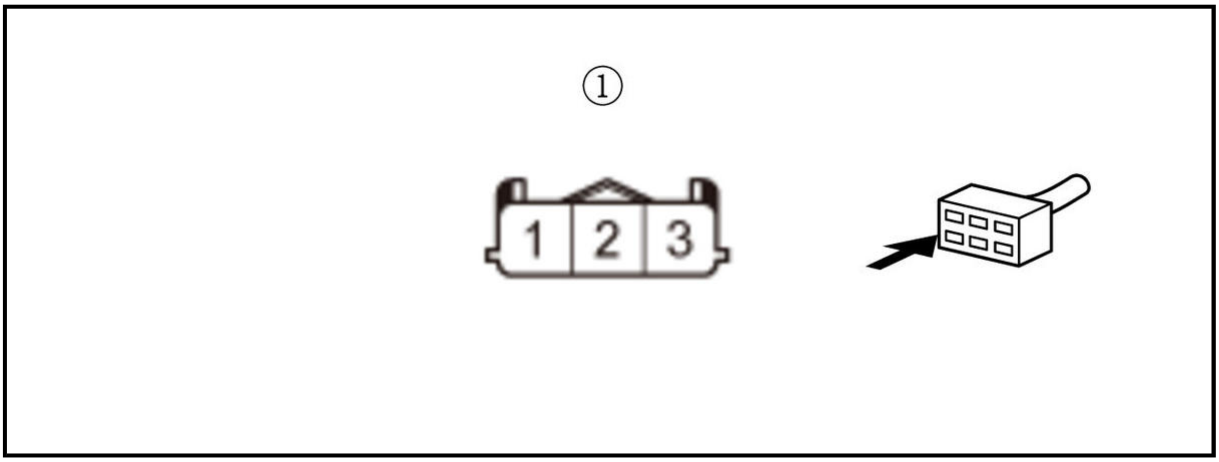

Is there about 5 V?

YES

The VCC2 wire is OK. Go to step 4.

NO

Go to step 3.

3. Open wire check (VCC2 line)

-1. Turn the vehicle to the OFF (LOCK) mode.

-2. Jump the SCS line with the HDS, and wait more than 1 minute.

NOTE: This step must be done to protect the PCM from damage.

-3. Disconnect the following connector.

PCM connector C (51P)

-4. Check for continuity between test points 1 and 2.

Test condition	Vehicle OFF (LOCK) mode
B	CVT speed sensor 3P connector: disconnected
B	PCM connector C (51P): disconnected
Test point 1	CVT speed sensor 3P connector (female terminals) No. 3 : ①

Test point 2	**PCM connector C (51P) No. 30**

Is there continuity?

YES

The VCC2 wire is OK. Check for any authorized service information related to the DTCs or symptoms you are troubleshooting, or **replace the original PCM** .

NO

Repair an open in the VCC2 wire between the CVT speed sensor and the PCM.

4. Open wire check (SG2 line)

-1. Measure the voltage between test points 1 and 2.

Test condition	Vehicle ON mode
B	CVT speed sensor 3P connector: disconnected
Test point 1	CVT speed sensor 3P connector (female terminals) No. 2 : ①
Test point 2	CVT speed sensor 3P connector (female terminals) No. 3 : ①

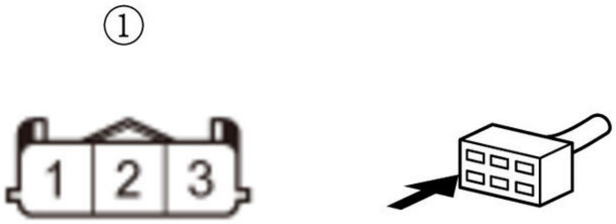

Is there about 5 V?

YES

The SG2 wire is OK. Go to step 5.

NO

Repair an open in the SG2 wire between the CVT speed sensor and the PCM.

5. Shorted wire check (VEL DD line)

-1. Turn the vehicle to the OFF (LOCK) mode.

-2. Jump the SCS line with the HDS, and wait more than 1 minute.

NOTE: This step must be done to protect the PCM from damage.

-3. Disconnect the following connector.

PCM connector C (51P)

-4. Check for continuity between test points 1 and 2.

Test condition	Vehicle OFF (LOCK) mode
B	CVT speed sensor 3P connector: disconnected
B	PCM connector C (51P): disconnected

Test point 1	CVT speed sensor 3P connector (female terminals) No. 1 : ①
Test point 2	Body ground

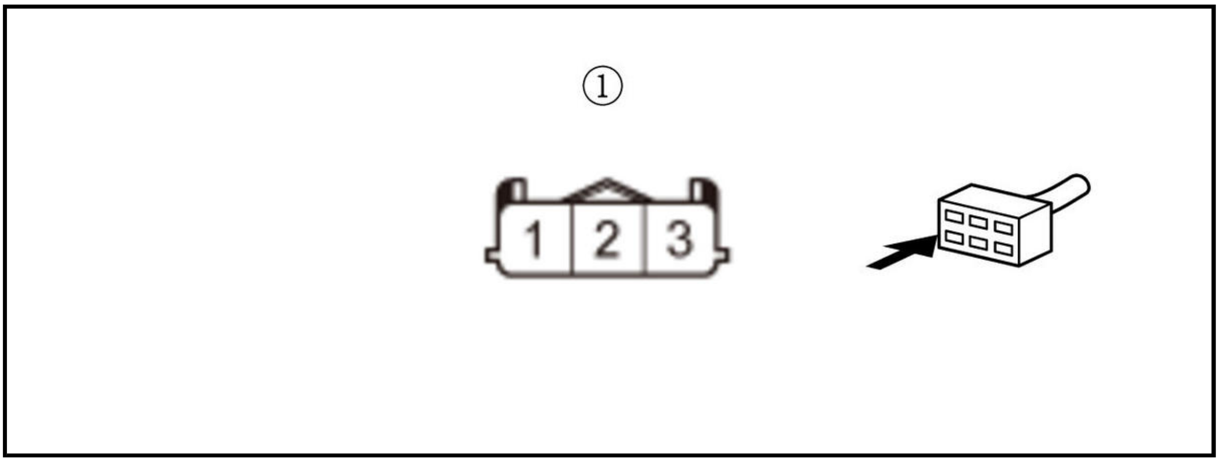

Is there continuity?

YES

Repair a short to body ground in the VEL DD wire between the CVT speed sensor and the PCM.

NO

The VEL DD wire is not shorted. Go to step 6.

6. Open wire check (VEL DD line)

-1. Check for continuity between test points 1 and 2.

Test condition	Vehicle OFF (LOCK) mode
B	CVT speed sensor 3P connector: disconnected
B	PCM connector C (51P): disconnected
Test point 1	CVT speed sensor 3P connector (female terminals) No. 1 : ①
Test point 2	**PCM connector C (51P) No. 32**

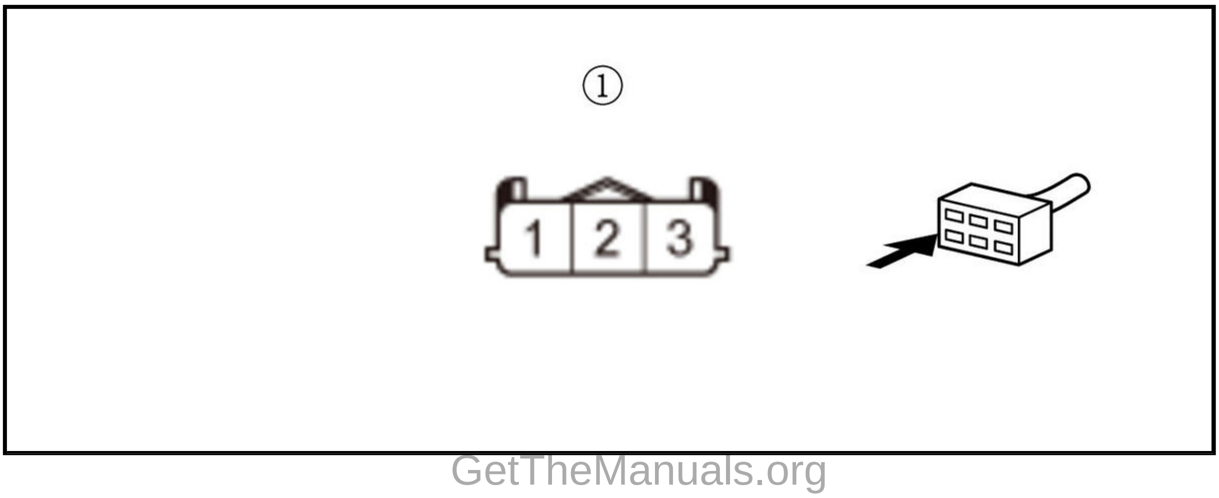

Is there continuity?

YES

The VEL DD wire is OK. **Replace the CVT speed sensor** .

NO

Repair an open in the VEL DD wire between the CVT speed sensor and the PCM.

DTC P0506 (1.5 L ENGINE)

DTC P0506 : Idle Control System RPM Lower Than Expected

NOTE: Before you troubleshoot, **review the general troubleshooting information** .

DTC Description	Confirmed DTC	Pending DTC
P0506 Idle Control System RPM Lower Than Expected	B	B

DTC (PGM-FI)

1. Problem verification

-1. Turn the vehicle to the ON mode.

-2. Clear the DTC with the HDS.

-3. Start the engine.

-4. Hold the engine speed at 3, 000 rpm without load (in P or N) until the radiator fan comes on, then let it idle at least 20 seconds.

-5. Check for these conditions in the DATA LIST with the HDS.

- Engine coolant temperature (ECT SENSOR 1) above 158 deg. F (70 deg. C)
- IAT SENSOR (1) above 18 deg. F (-7.6 deg. C)
- VEHICLE SPEED is 0 mph (0 km/h)
- AF FB (ST FUEL TRIM) between 0.75 and 1.47
- FSS is CLOSED

Signal	Current conditions	
	Values	Unit
ECT SENSOR 1	B	B
IAT SENSOR (1)	B	B
VEHICLE SPEED	B	B
AF FB (ST FUEL TRIM)	B	B
FSS	B	B

-6. Monitor the OBD STATUS for DTC P0506 in the DTCs MENU with the HDS.

DTC Description	OBD STATUS
P0506 Idle Control System RPM Lower Than Expected	B

Does the HDS indicate FAILED?

YES

The failure is duplicated. Go to step 2.

NO

If the HDS indicates PASSED, go to step 3. If the HDS indicates EXECUTING, keep idling until a result comes on. If the HDS indicates OUT OF CONDITION, go to step 1-5 and recheck.

2. Throttle body visual check

-1. Turn the vehicle to the OFF (LOCK) mode.

-2. **Remove the intake air duct from the throttle body** .

-3. Check for dirt, carbon, or damage in the throttle bore.

Is there dirt, carbon, or damage in the throttle bore?

YES

If there is dirt or carbon, **clean the throttle body** . Also check for damage to the air cleaner element. If there is damage in the throttle bore, **replace the throttle body** .

NO

The throttle body is OK. Check the A/C system, then go to step 4.

3. Throttle body visual check

-1. Turn the vehicle to the OFF (LOCK) mode.

-2. **Remove the intake air duct from the throttle body** .

-3. Check for dirt, carbon, or damage in the throttle bore.

Is there dirt, carbon, or damage in the throttle bore?

YES

If there is dirt or carbon, **clean the throttle body** . Also check for damage to the air cleaner element. If there is damage in the throttle bore, **replace the throttle body** .

NO

The throttle body is OK. Go to step 4.

4. Idle control system check

-1. **Reinstall the intake air duct** .

-2. Turn the vehicle to the ON mode.

-3. Clear the DTC with the HDS.

-4. Start the engine.

-5. Hold the engine speed at 3, 000 rpm without load (in P or N) until the radiator fan comes on, then let it idle at least 20 seconds.

-6. Engine coolant temperature (ECT SENSOR 1) above 158 deg. F (70 deg. C)

- Engine coolant temperature (ECT SENSOR 1) above 158 deg. F (70 deg. C)

- IAT SENSOR (1) above 18 deg. F (-7.6 deg. C)
- VEHICLE SPEED is 0 mph (0 km/h)
- AF FB (ST FUEL TRIM) between 0.75 and 1.47
- FSS is CLOSED

Signal	Current conditions	
	Values	**Unit**
ECT SENSOR 1	B	B
IAT SENSOR (1)	B	B
VEHICLE SPEED	B	B
AF FB (ST FUEL TRIM)	B	B
FSS	B	B

-7. Monitor the OBD STATUS for DTC P0506 in the DTCs MENU with the HDS.

DTC Description	OBD STATUS
P0506 Idle Control System RPM Lower Than Expected	B

Does the HDS indicate PASSED?

YES

Intermittent failure, the system is OK at this time. **If the on-board snapshot of this DTC is recorded, try to reproduce the failure under the same conditions with the on-board snapshot** .

NO

If the HDS indicates FAILED, check the A/C system, then recheck. If the HDS indicates EXECUTING, keep idling until a result comes on. If the HDS indicates OUT OF CONDITION, go to step 4-6 and recheck.

DTC P0506 (2.4 L ENGINE) (2017 2018 2019)

DTC P0506 : Idle Control System RPM Lower Than Expected

NOTE: Before you troubleshoot, **review the general troubleshooting information** .

DTC Description	Confirmed DTC	Pending DTC
P0506 Idle Control System RPM Lower Than Expected	B	B

DTC (PGM-FI)

1. Problem verification

-1. Turn the vehicle to the ON mode.

-2. Clear the DTC with the HDS.

-3. Start the engine.

-4. Hold the engine speed at 3, 000 rpm without load (in P or N) until the radiator fan comes on, then let it idle at least 20 seconds.

-5. Check for these conditions in the DATA LIST with the HDS.

- Engine coolant temperature (ECT SENSOR 1) above 158 deg. F (70 deg. C)

- IAT SENSOR (1) above 18 deg. F (-7.6 deg. C)
- VEHICLE SPEED is 0 mph (0 km/h)
- AF FB (ST FUEL TRIM) between 0.69 and 1.47
- FSS is CLOSED

Signal	Current conditions	
	Values	Unit
ECT SENSOR 1	B	B
IAT SENSOR (1)	B	B
VEHICLE SPEED	B	B
AF FB (ST FUEL TRIM)	B	B
FSS	B	B

-6. Monitor the OBD STATUS for DTC P0506 in the DTCs MENU with the HDS.

DTC Description	OBD STATUS
P0506 Idle Control System RPM Lower Than Expected	B

Does the HDS indicate FAILED?

YES

The failure is duplicated. Go to step 2.

NO

If the HDS indicates PASSED, go to step 3. If the HDS indicates EXECUTING, keep idling until a result comes on. If the HDS indicates OUT OF CONDITION, go to step 1-5 and recheck.

2. Throttle body visual check

-1. Turn the vehicle to the OFF (LOCK) mode.

-2. **Remove the intake air duct from the throttle body** .

-3. Check for dirt, carbon, or damage in the throttle bore.

Is there dirt, carbon, or damage in the throttle bore?

YES

If there is dirt or carbon, **clean the throttle body** . Also check for damage to the air cleaner element. If there is damage in the throttle bore, **replace the throttle body** .

NO

The throttle body is OK. Check the A/C system, then go to step 4.

3. Throttle body visual check

-1. Turn the vehicle to the OFF (LOCK) mode.

-2. **Remove the intake air duct from the throttle body** .

-3. Check for dirt, carbon, or damage in the throttle bore.

Is there dirt, carbon, or damage in the throttle bore?

YES

If there is dirt or carbon, **clean the throttle body** . Also check for damage to the air cleaner element. If there is damage in the throttle bore, **replace the throttle body** .

NO

The throttle body is OK. Go to step 4.

4. Idle control system check

-1. **Reinstall the intake air duct** .

-2. Turn the vehicle to the ON mode.

-3. Clear the DTC with the HDS.

-4. Start the engine.

-5. Hold the engine speed at 3, 000 rpm without load (in P or N) until the radiator fan comes on, then let it idle at least 20 seconds.

-6. Engine coolant temperature (ECT SENSOR 1) above 158 deg. F (70 deg. C)

- Engine coolant temperature (ECT SENSOR 1) above 158 deg. F (70 deg. C)
- IAT SENSOR (1) above 18 deg. F (-7.6 deg. C)
- VEHICLE SPEED is 0 mph (0 km/h)
- AF FB (ST FUEL TRIM) between 0.69 and 1.47
- FSS is CLOSED

Signal	Current conditions	
	Values	Unit
ECT SENSOR 1	B	B
IAT SENSOR (1)	B	B
VEHICLE SPEED	B	B
AF FB (ST FUEL TRIM)	B	B
FSS	B	B

-7. Monitor the OBD STATUS for DTC P0506 in the DTCs MENU with the HDS.

DTC Description	OBD STATUS
P0506 Idle Control System RPM Lower Than Expected	B

Does the HDS indicate PASSED?

YES

Intermittent failure, the system is OK at this time. **If the on-board snapshot of this DTC is recorded, try to reproduce the failure under the same conditions with the on-board snapshot** .

NO

If the HDS indicates FAILED, check the A/C system, then recheck. If the HDS indicates EXECUTING, keep idling until a result comes on. If the HDS indicates OUT OF CONDITION, go to step 4-6 and recheck.

DTC P0507 (1.5 L ENGINE)

DTC P0507 : Idle Control System RPM Higher Than Expected

NOTE: Before you troubleshoot, **review the general troubleshooting information** .

DTC Description	Confirmed DTC	Pending DTC
P0507 Idle Control System RPM Higher Than Expected	B	B

DTC (PGM-FI)

1. Problem verification

   -1. Turn the vehicle to the ON mode.

   -2. Clear the DTC with the HDS.

   -3. Start the engine.

   -4. Hold the engine speed at 3, 000 rpm without load (in P or N) until the radiator fan comes on, then let it idle at least 20 seconds.

   -5. Monitor the OBD STATUS for DTC P0507 in the DTCs MENU with the HDS.

DTC Description	OBD STATUS
P0507 Idle Control System RPM Higher Than Expected	B

   Does the HDS indicate FAILED?

   YES

   The failure is duplicated. Go to step 2.

   NO

   If the HDS indicates PASSED, intermittent failure, the system is OK at this time. If the on-board snapshot of this DTC is recorded, try to reproduce the failure under the same conditions with the on-board snapshot. If the HDS indicates EXECUTING, keep idling until a result comes on. If the HDS indicates OUT OF CONDITION, recheck with different load conditions (electrical, A/C, gear position, etc.), then go to step 1

2. Vacuum leak check

   -1. Turn the vehicle to the OFF (LOCK) mode.

   Check for vacuum leaks at these parts:

   - PCV valve
   - PCV hose
   - EVAP canister purge valve
   - Throttle body
   - Intake air duct
   - Intake manifold
   - All parts through the turbocharger joint to the throttle body

   Are there any leaks?

   YES

Repair or replace the leaking part (s).

NO

Recheck with different load conditions (turn on the headlights, the blower motor, or the A/C, change the gear position, etc.).

DTC P0507 (2.4 L ENGINE) (2017 2018 2019)

DTC P0507 : Idle Control System RPM Higher Than Expected

NOTE: Before you troubleshoot, **review the general troubleshooting information** .

DTC Description	Confirmed DTC	Pending DTC
P0507 Idle Control System RPM Higher Than Expected	B	B

DTC (PGM-FI)

1. Problem verification

   -1. Turn the vehicle to the ON mode.

   -2. Clear the DTC with the HDS.

   -3. Start the engine.

   -4. Hold the engine speed at 3, 000 rpm without load (in P or N) until the radiator fan comes on, then let it idle at least 20 seconds.

   -5. Monitor the OBD STATUS for DTC P0507 in the DTCs MENU with the HDS.

DTC Description	OBD STATUS
P0507 Idle Control System RPM Higher Than Expected	B

   Does the HDS indicate FAILED?

   YES

   The failure is duplicated. Go to step 2.

   NO

   If the HDS indicates PASSED, intermittent failure, the system is OK at this time. If the on-board snapshot of this DTC is recorded, try to reproduce the failure under the same conditions with the on-board snapshot. If the HDS indicates EXECUTING, keep idling until a result comes on. If the HDS indicates OUT OF CONDITION, recheck with different load conditions (electrical, A/C, gear position, etc.), then go to step 1

2. Vacuum leak check

   -1. Turn the vehicle to the OFF (LOCK) mode.

   Check for vacuum leaks at these parts:

   - PCV valve
   - PCV hose
   - EVAP canister purge valve
   - Throttle body

- Intake air duct
- Intake manifold
- All parts through the turbocharger joint to the throttle body

Are there any leaks?

YES

Repair or replace the leaking part (s).

NO

Recheck with different load conditions (turn on the headlights, the blower motor, or the A/C, change the gear position, etc.).

DTC P050A (1.5 L ENGINE)

DTC P050A : Cold Start Idle Air Control System Performance Problem

NOTE: Before you troubleshoot, **review the general troubleshooting information** .

DTC Description	Confirmed DTC	Pending DTC
P050A Cold Start Idle Air Control System Performance Problem	B	B

DTC (PGM-FI)

1. PGM-FI system check

    -1. Turn the vehicle to the ON mode.

    -2. Check for Pending or Confirmed DTCs with the HDS.

DTC Description	Confirmed DTC	Pending DTC
B	B	B

    Are any Pending or Confirmed DTCs other than P050A indicated?

    YES

    Go to the indicated DTC's troubleshooting.

    NO

    Go to step 2.

2. Intake air duct visual check

    -1. Check for poor connection or blockage at the intake air duct.

    Is it OK?

    YES

    Go to step 3.

    NO

    Reconnect or repair the intake air duct, or **replace it if needed** .

3. Air cleaner housing visual check

-1. Check for poor connection or blockage at the air cleaner housing .

Is it OK?

YES

Go to step 4.

NO

Replace the air cleaner housing .

4. Air cleaner element visual check

-1. Check for dirt or debris on the air cleaner element .

Is it dirty?

YES

Replace the air cleaner element .

NO

Go to step 5.

5. Problem verification

-1. Let the engine cool until the value of ECT SENSOR 1 is 122 deg. F (50 deg. C) or less.

Signal	Current conditions	
	Values	Unit
ECT SENSOR 1	B	B

-2. Clear the DTC with the HDS.

-3. Start the engine, and let it idle for 10 seconds or more.

-4. Monitor the OBD STATUS for DTC P050A in the DTCs MENU with the HDS.

DTC Description	OBD STATUS
P050A Cold Start Idle Air Control System Performance Problem	B

Does the HDS indicate FAILED?

YES

The failure is duplicated. Go to step 6.

NO

If the HDS indicates PASSED, intermittent failure, the system is OK at this time. Check for poor connections or loose terminals at the throttle body, the MAF sensor/IAT sensor 1, and the PCM. If the on-board snapshot of this DTC is recorded, try to reproduce the failure under the same conditions with the on-board snapshot . If the HDS indicates EXECUTING, keep idling until a result comes on. If the HDS indicates OUT OF CONDITION, go to step 5-1 and recheck.

6. Throttle body test

-1. Select the ETCS TEST in the INSPECTION MENU with the HDS.

ETCS TEST

Is the THROTTLE ACTUATOR CONTROL VALVE normal?

YES

Go to step 7.

NO

Replace the throttle body .

7. MAF sensor performance check

-1. Start the engine.

-2. Hold the engine speed at 3, 000 rpm without load (in P or N) until the radiator fan comes on, then let it idle.

-3. While holding the engine speed at 2, 500 rpm for 30 seconds, check the parameter (s) below with the HDS.

Signal	Threshold		Current conditions	
	Values	Unit	Values	Unit
MAF SENSOR	4.1-5.7	g/s	B	B

Do the current condition (s) match the threshold?

YES

The MAF sensor is OK. Go to step 8.

NO

Replace MAF sensor/IAT sensor 1 .

8. IAT sensor 1 performance check

-1. Turn the vehicle to the OFF (LOCK) mode.

-2. Allow the engine to cool to ambient temperature.

-3. Note the ambient temperature.

-4. Turn the vehicle to the ON mode.

-5. Quickly note the value of the IAT SENSOR (1) in the DATA LIST with the HDS.

Signal	Current conditions	
	Values	Unit
IAT SENSOR (1)	B	B

-6. Compare the value of the IAT SENSOR (1) with the ambient temperature.

Does the value of the IAT SENSOR (1) differ 5.4 deg. F (3 deg. C) or more from the ambient temperature?

YES

Replace MAF sensor/IAT sensor 1 .

NO

The IAT sensor 1 is OK. Check for dirt, carbon, or damage in the throttle bore. If there is dirt or carbon, **clean the throttle body** . If there is damage in the throttle bore, **replace the throttle body** .

DTC P050A (2.4 L ENGINE) (2017 2018 2019)

DTC P050A : Cold Start Idle Air Control System Performance Problem

NOTE: Before you troubleshoot, **review the general troubleshooting information** .

DTC Description	Confirmed DTC	Pending DTC
P050A Cold Start Idle Air Control System Performance Problem	B	B

DTC (PGM-FI)

1. PGM-FI system check

   -1. Turn the vehicle to the ON mode.

   -2. Check for Pending or Confirmed DTCs with the HDS.

DTC Description	Confirmed DTC	Pending DTC
B	B	B

   Are any Pending or Confirmed DTCs other than P050A indicated?

   YES

   Go to the indicated DTC's troubleshooting.

   NO

   Go to step 2.

2. Intake air duct visual check

   -1. Check for poor connection or blockage at the intake air duct.

   Is it OK?

   YES

   Go to step 3.

   NO

   Reconnect or repair the intake air duct, or **replace it if needed** .

3. Air cleaner housing visual check

   -1. **Check for poor connection or blockage at the air cleaner housing** .

Is it OK?

YES

Go to step 4.

NO

Replace the air cleaner housing .

4. Air cleaner element visual check

-1. **Check for dirt or debris on the air cleaner element** .

Is it dirty?

YES

Replace the air cleaner element .

NO

Go to step 5.

5. Problem verification

-1. Let the engine cool until the value of ECT SENSOR 1 is 122 deg. F (50 deg. C) or less.

Signal	Current conditions	
	Values	**Unit**
ECT SENSOR 1	B	B

-2. Clear the DTC with the HDS.

-3. Start the engine, and let it idle for 10 seconds or more.

-4. Monitor the OBD STATUS for DTC P050A in the DTCs MENU with the HDS.

DTC Description	OBD STATUS
P050A Cold Start Idle Air Control System Performance Problem	B

Does the HDS indicate FAILED?

YES

The failure is duplicated. Go to step 6.

NO

If the HDS indicates PASSED, intermittent failure, the system is OK at this time. Check for poor connections or loose terminals at the throttle body, the MAF sensor/IAT sensor 1, and the PCM. **If the on-board snapshot of this DTC is recorded, try to reproduce the failure under the same conditions with the on-board snapshot** . If the HDS indicates EXECUTING, keep idling until a result comes on. If the HDS indicates OUT OF CONDITION, go to step 5-1 and recheck.

6. Throttle body test

-1. Select the ETCS TEST in the INSPECTION MENU with the HDS.

ETCS TEST

Is the THROTTLE ACTUATOR CONTROL VALVE normal?

YES

Go to step 7.

NO

Replace the throttle body .

7. MAF sensor performance check

-1. Start the engine.

-2. Hold the engine speed at 3, 000 rpm without load (in P or N) until the radiator fan comes on, then let it idle.

-3. While holding the engine speed at 2, 500 rpm for 30 seconds, check the parameter (s) below with the HDS.

Signal	Threshold		Current conditions	
	Values	Unit	Values	Unit
MAF SENSOR	6.5-9.1	g/s	B	B

Do the current condition (s) match the threshold?

YES

The MAF sensor is OK. Go to step 8.

NO

Replace MAF sensor/IAT sensor 1 .

8. IAT sensor 1 performance check

-1. Turn the vehicle to the OFF (LOCK) mode.

-2. Allow the engine to cool to ambient temperature.

-3. Note the ambient temperature.

-4. Turn the vehicle to the ON mode.

-5. Quickly note the value of the IAT SENSOR (1) in the DATA LIST with the HDS.

Signal	Current conditions	
	Values	Unit
IAT SENSOR (1)	B	B

-6. Compare the value of the IAT SENSOR (1) with the ambient temperature.

Does the value of the IAT SENSOR (1) differ 5.4 deg. F (3 deg. C) or more from the ambient temperature?

YES

Replace MAF sensor/IAT sensor 1 .

NO

The IAT sensor 1 is OK. Check for dirt, carbon, or damage in the throttle bore. If there is dirt or carbon, **clean the throttle body** . If there is damage in the throttle bore, **replace the throttle body** .

DTC P050B (1.5 L ENGINE) (2020 2021)

DTC P050B : Cold Start Ignition Timing Control System Performance Problem

NOTE: Before you troubleshoot, **review the general troubleshooting information** .

DTC Description	Confirmed DTC	Pending DTC
P050B Cold Start Ignition Timing Control System Performance Problem	B	B

DTC (PGM-FI)

1. PGM-FI system check

   -1. Turn the vehicle to the ON mode.

   -2. Check for Pending or Confirmed DTCs with the HDS.

DTC Description	Confirmed DTC	Pending DTC
B	B	B

   Are any Pending or Confirmed DTCs other than P050B indicated?

   YES

   Go to the indicated DTC's troubleshooting.

   NO

   Go to step 2.

2. Inlet pipe visual check

   -1. Turn the vehicle to the OFF (LOCK) mode.

   -2. Check for poor connection or blockage at the inlet pipe.

   Is it OK?

   YES

   Go to step 3.

   NO

   Reconnect or repair the inlet pipe, or replace it if needed.

3. Air cleaner housing visual check

   -1. **Check for poor connection or blockage at the air cleaner housing** .

   Is it OK?

   YES

   Go to step 4.

NO

Replace the air cleaner housing .

4. Air cleaner element visual check

-1. Check for dirt or debris on the air cleaner element .

Is it dirty?

YES

Replace the air cleaner element .

NO

Go to step 5.

5. Problem verification

-1. Turn the vehicle to the ON mode.

-2. Let the engine cool until the value of ECT SENSOR 1 is 77 deg. F (25 deg. C) or less.

Signal	Current conditions	
	Values	Unit
ECT Sensor 1	B	B

-3. Clear the DTC with the HDS.

-4. Turn the vehicle to the OFF (LOCK) mode.

-5. Start the engine, and let it idle for 10 seconds or more.

-6. Monitor the OBD STATUS for DTC P050B in the DTCs MENU with the HDS.

DTC Description	OBD STATUS
P050B Cold Start Ignition Timing Control System Performance Problem	B

Does the HDS indicate FAILED?

YES

The failure is duplicated. Go to step 6.

NO

If the HDS indicates PASSED, there is an intermittent failure and the system is OK at this time. Check for poor connections or loose terminals at the CKP sensor, the throttle body, MAF sensor/IAT sensor 1, ECT sensor 1, ECT sensor 2, and the PCM. If the on-board snapshot of this DTC is recorded, try to reproduce the failure under the same conditions with the on-board snapshot . If the HDS indicates EXECUTING, keep idling until a result comes on. If the HDS indicates OUT OF CONDITION, go to step 5-2 and recheck.

6. MAF sensor performance check

-1. Hold the engine speed at 3, 000 rpm without load (in P or N) until the radiator fan comes on, then let it idle.

-2. While holding the engine speed at 2, 500 rpm for 30 seconds, check the parameter (s) below with the HDS.

Signal	Threshold		Current conditions	
	Values	Unit	Values	Unit
MAF SENSOR	4.1-5.7	g/s	B	B

Do the current condition (s) match the malfunction threshold?

YES

The MAF sensor is OK. Go to step 7.

NO

Replace MAF sensor/IAT sensor 1 .

7. IAT sensor 1 performance check

-1. Turn the vehicle to the OFF (LOCK) mode.

-2. Allow the engine to cool to ambient temperature.

-3. Note the ambient temperature.

-4. Turn the vehicle to the ON mode.

-5. Quickly note the value of IAT SENSOR (1) in the DATA LIST with the HDS.

Signal	Current conditions	
	Values	Unit
IAT SENSOR (1)	B	B

-6. Compare the value of the IAT SENSOR (1) with the ambient temperature.

Does the value of the IAT SENSOR (1) differ 5.4 deg. F (3 deg. C) or more from the ambient temperature?

YES

Replace MAF sensor/IAT sensor 1 .

NO

IAT sensor 1 is OK. Check for dirt, carbon, or damage in the throttle bore. If there is dirt or carbon, **clean the throttle body** . If there is damage in the throttle bore, **replace the throttle body** .

DTC P050D (1.5 L ENGINE)

DTC P050D : Cold Start Idle Speed Problem

NOTE: Before you troubleshoot, **review the general troubleshooting information** .

DTC Description	Confirmed DTC	Pending DTC
P050D Cold Start Idle Speed Problem	B	B

DTC (PGM-FI)

1. PGM-FI system check

-1. Turn the vehicle to the ON mode.

-2. Check for Pending or Confirmed DTCs with the HDS.

DTC Description	Confirmed DTC	Pending DTC
P050D Cold Start Idle Speed Problem	B	B

Are any Pending or Confirmed DTCs other than P050D indicated?

YES

Go to the indicated DTC's troubleshooting.

NO

Go to step 2.

2. Intake air duct visual check

-1. Check for poor connection or blockage at the intake air duct.

Is it OK?

YES

Go to step 3.

NO

Reconnect or repair the intake air duct, or **replace it if needed** .

3. Air cleaner housing visual check

-1. **Check for poor connection or blockage at the air cleaner housing** .

Is it OK?

YES

Go to step 4.

NO

Replace the air cleaner housing .

4. Air cleaner element visual check

-1. **Check for dirt or debris on the air cleaner element** .

Is it dirty?

YES

Replace the air cleaner element .

NO

Go to step 5.

5. Problem verification

-1. Let the engine cool until the value of ECT SENSOR 1 is 122 deg. F (50 deg. C) or less.

Signal	Current conditions	
	Values	Unit
ECT SENSOR 1	B	B

-2. Clear the DTC with the HDS.

-3. Start the engine and let it idle for 10 seconds or more.

-4. Monitor the OBD STATUS for DTC P050D in the DTCs MENU with the HDS.

DTC Description	OBD STATUS
P050D Cold Start Idle Speed Problem	B

Does the HDS indicate FAILED?

YES

The failure is duplicated. Go to step 6.

NO

If the HDS indicates PASSED, intermittent failure, the system is OK at this time. Check for poor connections or loose terminals at the CKP sensor, the throttle body, MAF/IAT sensor 1, ECT sensor 1, ECT sensor 2, and the PCM. **If the on-board snapshot of this DTC is recorded, try to reproduce the failure under the same conditions with the on-board snapshot** . If the HDS indicates EXECUTING, keep idling until a result comes on. If the HDS indicates OUT OF CONDITION, go to step 5-1 and recheck.

6. MAF sensor performance check

-1. Start the engine.

-2. Hold the engine speed at 3, 000 rpm without load (in P or N) until the radiator fan comes on, then let it idle.

-3. While holding the engine speed at 2, 500 rpm for 30 seconds, check the parameter (s) below with the HDS.

Signal	Threshold		Current conditions	
	Values	Unit	Values	Unit
MAF SENSOR	4.1-5.7	g/s	B	B

Do the current condition (s) match the malfunction threshold?

YES

The MAF sensor is OK. Go to step 7.

NO

Replace MAF sensor/IAT sensor 1 .

7. IAT sensor 1 performance check

-1. Turn the vehicle to the OFF (LOCK) mode.

-2. Allow the engine to cool to ambient temperature.

-3. Note the ambient temperature.

-4. Turn the vehicle to the ON mode.

-5. Quickly note the value of IAT SENSOR (1) in the DATA LIST with the HDS.

Signal	Current conditions	
	Values	Unit
IAT Sensor (1) Voltage	B	B

-6. Compare the value of the IAT SENSOR with the ambient temperature.

Does the value of the IAT SENSOR (1) differ 5.4 deg. F (3 deg. C) or more from the ambient temperature?

YES

Replace MAF sensor/IAT sensor 1 .

NO

The IAT sensor 1 is OK. Check for dirt, carbon, or damage in the throttle bore. If there is dirt or carbon, **clean the throttle body** . If there is damage in the throttle bore, **replace the throttle body** .

DTC P050D (2.4 L ENGINE) (2017 2018 2019)

DTC P050D : Cold Start Idle Speed Problem

NOTE: Before you troubleshoot, **review the general troubleshooting information** .

DTC Description	Confirmed DTC	Pending DTC
P050D Cold Start Idle Speed Problem	B	B

DTC (PGM-FI)

1. PGM-FI system check

-1. Turn the vehicle to the ON mode.

-2. Check for Pending or Confirmed DTCs with the HDS.

DTC Description	Confirmed DTC	Pending DTC
P050D Cold Start Idle Speed Problem	B	B

Are any Pending or Confirmed DTCs other than P050D indicated?

YES

Go to the indicated DTC's troubleshooting.

NO

Go to step 2.

2. Intake air duct visual check

-1. Check for poor connection or blockage at the intake air duct.

Is it OK?

YES

Go to step 3.

NO

Reconnect or repair the intake air duct, or **replace it if needed** .

3. Air cleaner housing visual check

-1. **Check for poor connection or blockage at the air cleaner housing** .

Is it OK?

YES

Go to step 4.

NO

Replace the air cleaner housing .

4. Air cleaner element visual check

-1. **Check for dirt or debris on the air cleaner element** .

Is it dirty?

YES

Replace the air cleaner element .

NO

Go to step 5.

5. Problem verification

-1. Let the engine cool until the value of ECT SENSOR 1 is 122 deg. F (50 deg. C) or less.

Signal	Current conditions	
	Values	Unit
ECT SENSOR 1	B	B

-2. Clear the DTC with the HDS.

-3. Start the engine and let it idle for 10 seconds or more.

-4. Monitor the OBD STATUS for DTC P050D in the DTCs MENU with the HDS.

DTC Description	OBD STATUS
P050D Cold Start Idle Speed Problem	B

Does the HDS indicate FAILED?

YES

The failure is duplicated. Go to step 6.

NO

If the HDS indicates PASSED, intermittent failure, the system is OK at this time. Check for poor connections or loose terminals at the CKP sensor, the throttle body, MAF/IAT sensor 1, ECT sensor 1, ECT sensor 2, and the PCM. **If the on-board snapshot of this DTC is recorded, try to reproduce the failure under the same conditions with the on-board snapshot** . If the HDS indicates EXECUTING, keep idling until a result comes on. If the HDS indicates OUT OF CONDITION, go to step 5-1 and recheck.

6. MAF sensor performance check

-1. Start the engine.

-2. Hold the engine speed at 3, 000 rpm without load (in P or N) until the radiator fan comes on, then let it idle.

-3. While holding the engine speed at 2, 500 rpm for 30 seconds, check the parameter (s) below with the HDS.

Signal	Threshold		Current conditions	
	Values	Unit	Values	Unit
MAF SENSOR	6.5-9.1	g/s	B	B

Do the current condition (s) match the malfunction threshold?

YES

The MAF sensor is OK. Go to step 7.

NO

Replace MAF sensor/IAT sensor 1 .

7. IAT sensor 1 performance check

-1. Turn the vehicle to the OFF (LOCK) mode.

-2. Allow the engine to cool to ambient temperature.

-3. Note the ambient temperature.

-4. Turn the vehicle to the ON mode.

-5. Quickly note the value of IAT SENSOR (1) in the DATA LIST with the HDS.

Signal	Current conditions	
	Values	Unit
IAT Sensor (1) Voltage	B	B

-6. Compare the value of the IAT SENSOR with the ambient temperature.

Does the value of the IAT SENSOR (1) differ 5.4 deg. F (3 deg. C) or more from the ambient temperature?

YES

Replace MAF sensor/IAT sensor 1 .

NO

The IAT sensor 1 is OK. Check for dirt, carbon, or damage in the throttle bore. If there is dirt or carbon, **clean the throttle body** . If there is damage in the throttle bore, **replace the throttle body** .

DTC P0532 (1.5 L ENGINE)

DTC P0532 : A/C Pressure Sensor Circuit Low Voltage

NOTE: Before you troubleshoot, **review the general troubleshooting information** .

DTC Description	Confirmed DTC	Pending DTC
P0532 A/C Pressure Sensor Circuit Low Voltage	B	B

DTC (PGM-FI)

1. Problem verification

   -1. Start the engine, and let it idle.

   -2. Turn the blower switch on.

   -3. Turn the A/C switch on.

   -4. Check the parameter (s) below with the HDS.

Signal	Threshold		Current conditions	
	Values	Unit	Values	Unit
A/C PRESSURE SENSOR	Less than 0.24	V	B	B

Do the current condition (s) match the threshold?

YES

Go to step 2.

NO

Intermittent failure, the system is OK at this time. Check for poor connections or loose terminals at the A/C pressure sensor and the PCM. **If the on-board snapshot of this DTC is recorded, try to reproduce the failure under the same conditions with the on-board snapshot** .

2. Determine possible failure area (PD SENSOR line, others)

   -1. Turn the vehicle to the OFF (LOCK) mode.

   -2. Disconnect the following connector.

A/C pressure sensor 3P connector

   -3. Turn the vehicle to the ON mode.

   -4. Check the parameter (s) below with the HDS.

Signal	Threshold		Current conditions	
	Values	Unit	Values	Unit
A/C PRESSURE SENSOR	Less than 0.24	V	B	B

Do the current condition (s) match the threshold?

YES

Go to step 5.

NO

Go to step 3.

3. Determine possible failure area (A/C pressure sensor, others)

-1. Measure the voltage between test points 1 and 2.

Test condition	Vehicle ON mode
B	A/C pressure sensor 3P connector: disconnected
Test point 1	A/C pressure sensor 3P connector (female terminals) No. 1: ①
Test point 2	A/C pressure sensor 3P connector (female terminals) No. 3: ①

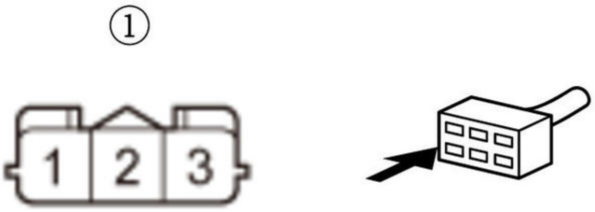

Is there about 5.0 V?

YES

Replace the A/C pressure sensor .

NO

Go to step 4.

4. Open wire check (VCC6 line)

-1. Turn the vehicle to the OFF (LOCK) mode.

-2. Jump the SCS line with the HDS, and wait more than 1 minute.

-3. Disconnect the following connector.

PCM connector E (80P)

-4. Check for continuity between test points 1 and 2.

Test condition	Vehicle OFF (LOCK) mode
B	A/C pressure sensor 3P connector: disconnected
B	PCM connector E (80P): disconnected
Test point 1	A/C pressure sensor 3P connector (female terminals) No. 3: ①
Test point 2	**PCM connector E (80P) No. 63**

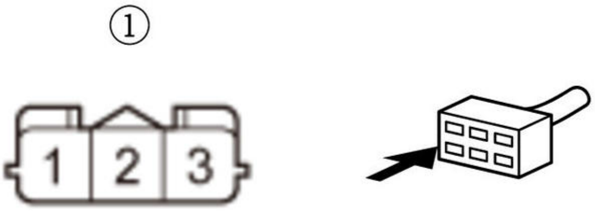

Is there continuity?

YES

The VCC6 wire is OK. Check for any authorized service information related to the DTCs or symptoms you are troubleshooting, or **substitute a known-good PCM** .

NO

Repair an open in the VCC6 wire between the PCM (E63) and the A/C pressure sensor.

5. Shorted wire check (PD SENSOR line)

-1. Turn the vehicle to the OFF (LOCK) mode.

-2. Jump the SCS line with the HDS, and wait more than 1 minute.

-3. Disconnect the following connector.

PCM connector A (50P)

-4. Check for continuity between test points 1 and 2.

Test condition	Vehicle OFF (LOCK) mode
B	A/C pressure sensor 3P connector: disconnected
B	PCM connector A (50P): disconnected
Test point 1	A/C pressure sensor 3P connector (female terminals) No. 2: ①
Test point 2	Body ground

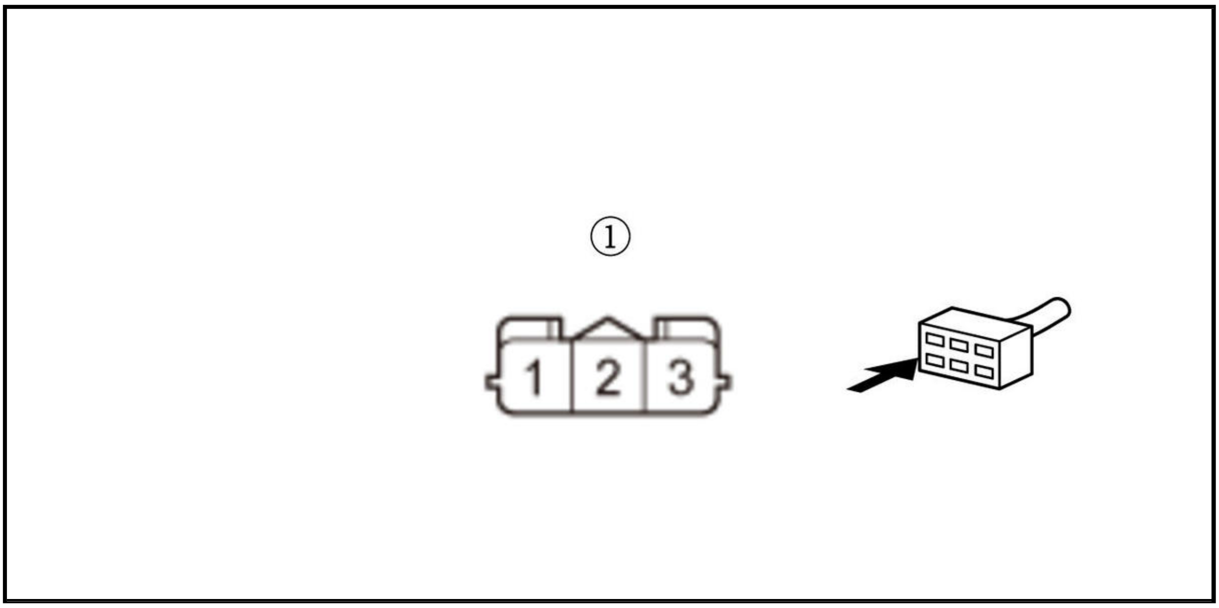

Is there continuity?

YES

Repair a short in the PD SENSOR wire between the PCM (A33) and the A/C pressure sensor.

NO

The PD SENSOR wire is OK. Check for any authorized service information related to the DTCs or symptoms you are troubleshooting, or **substitute a known-good PCM** .

DTC P0532 (2.4 L ENGINE) (2017 2018 2019)

DTC P0532 : A/C Pressure Sensor Circuit Low Voltage

NOTE: Before you troubleshoot, **review the general troubleshooting information** .

DTC Description	Confirmed DTC	Pending DTC
P0532 A/C Pressure Sensor Circuit Low Voltage	B	B

DTC (PGM-FI)

1. Problem verification

-1. Start the engine, and let it idle.

-2. Turn the blower switch on.

-3. Turn the A/C switch on.

-4. Check the parameter (s) below with the HDS.

Signal	Threshold		Current conditions	
	Values	Unit	Values	Unit
A/C Pressure Sensor	Less than 0.24	V	B	B

Do the current condition (s) match the threshold?

YES

The failure is duplicated. Go to step 2.

NO

Intermittent failure, the system is OK at this time. Check for poor connections or loose terminals at the A/C pressure sensor and the PCM. **If the on-board snapshot of this DTC is recorded, try to reproduce the failure under the same conditions with the on-board snapshot** .

2. Determine possible failure area (PD SENSOR line, others)

-1. Turn the vehicle to the OFF (LOCK) mode.

-2. Disconnect the following connector.

A/C pressure sensor 3P connector

-3. Turn the vehicle to the ON mode.

-4. Check the parameter (s) below with the HDS.

Signal	**Threshold**		**Current conditions**	
	Values	**Unit**	**Values**	**Unit**
A/C Pressure Sensor	Less than 0.24	V	B	B

Do the current condition (s) match the threshold?

YES

Go to step 5.

NO

Go to step 3.

3. Determine possible failure area (A/C pressure sensor, others)

-1. Measure the voltage between test points 1 and 2.

Test condition	Vehicle ON mode
B	A/C pressure sensor 3P connector: disconnected
Test point 1	A/C pressure sensor 3P connector (female terminals) No. 1: ①
Test point 2	A/C pressure sensor 3P connector (female terminals) No. 3: ①

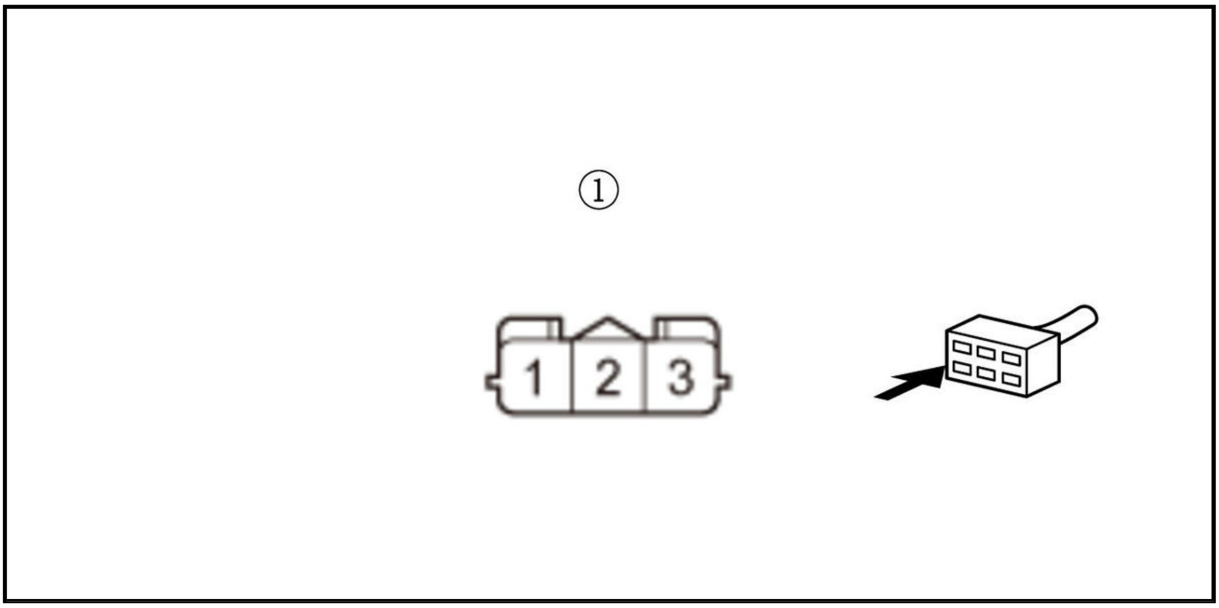

Is there about 5.0 V?

YES

Replace the A/C pressure sensor .

NO

Go to step 4.

4. Open wire check (VCC6 line)

-1. Turn the vehicle to the OFF (LOCK) mode.

-2. Jump the SCS line with the HDS, and wait more than 1 minute.

-3. Disconnect the following connector.

PCM connector A (51P)

-4. Check for continuity between test points 1 and 2.

Test condition	Vehicle OFF (LOCK) mode
B	A/C pressure sensor 3P connector: disconnected
B	PCM connector A (51P): disconnected
Test point 1	A/C pressure sensor 3P connector (female terminals) No. 3: ①
Test point 2	**PCM connector A (51P) No. 29**

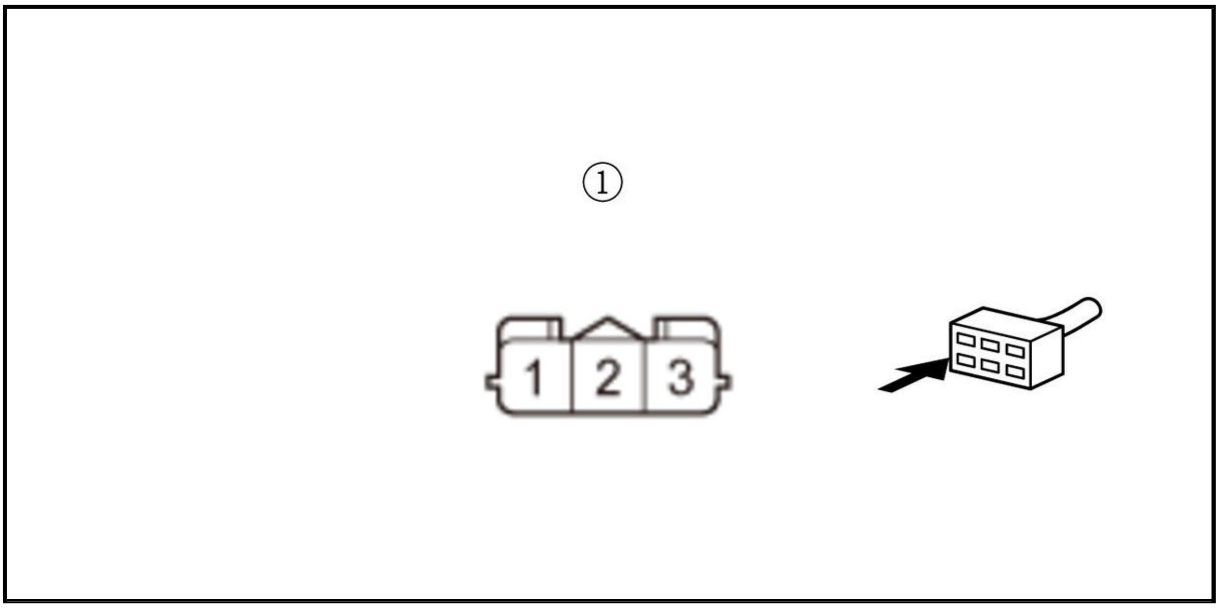

Is there continuity?

YES

The VCC6 wire is OK. Check for any authorized service information related to the DTCs or symptoms you are troubleshooting, or **substitute a known-good PCM** .

NO

Repair an open in the VCC6 wire between the PCM (A29) and the A/C pressure sensor.

5. Shorted wire check (PD SENSOR line)

-1. Turn the vehicle to the OFF (LOCK) mode.

-2. Jump the SCS line with the HDS, and wait more than 1 minute.

-3. Disconnect the following connector.

PCM connector A (51P)

-4. Check for continuity between test points 1 and 2.

Test condition	Vehicle OFF (LOCK) mode
B	A/C pressure sensor 3P connector: disconnected
B	PCM connector A (51P): disconnected
Test point 1	A/C pressure sensor 3P connector (female terminals) No. 2: ①
Test point 2	Body ground

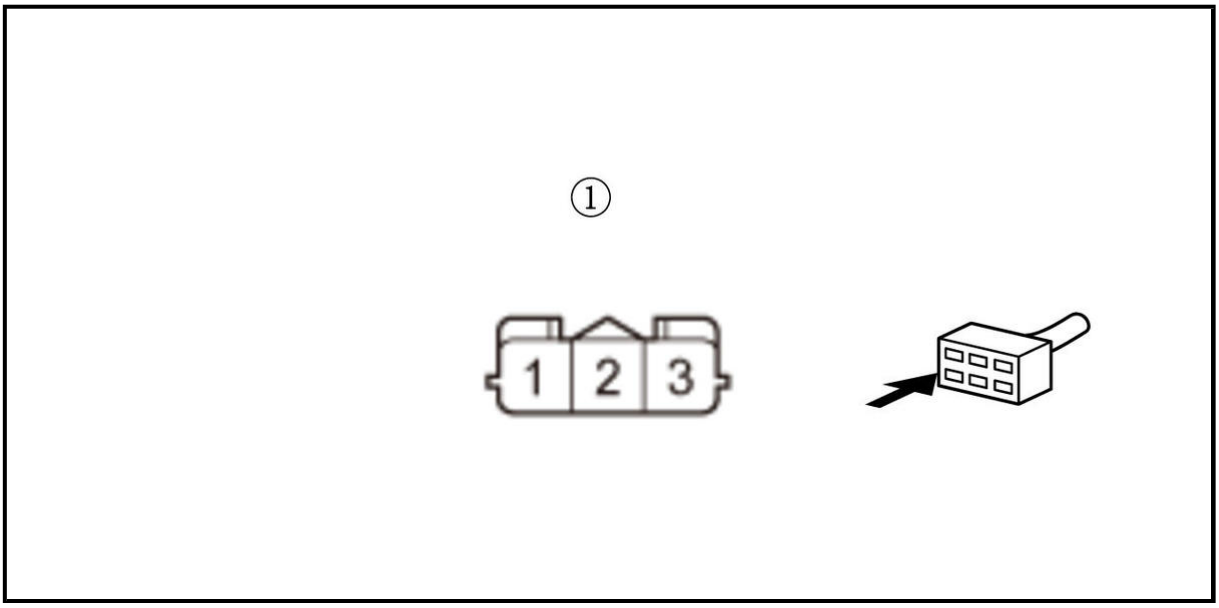

Is there continuity?

YES

Repair a short in the PD SENSOR wire between the PCM (A41) and the A/C pressure sensor.

NO

The PD SENSOR wire is OK. Check for any authorized service information related to the DTCs or symptoms you are troubleshooting, or **substitute a known-good PCM** .

DTC P0533 (1.5 L ENGINE)

DTC P0533 : A/C Pressure Sensor Circuit High Voltage

NOTE: Before you troubleshoot, **review the general troubleshooting information** .

DTC Description	Confirmed DTC	Pending DTC
P0533 A/C Pressure Sensor Circuit High Voltage	B	B

DTC (PGM-FI)

1. Problem verification

-1. Start the engine, and let it idle.

-2. Turn the blower switch on.

-3. Turn the A/C switch on.

-4. Check the parameter (s) below with the HDS.

Signal	Threshold		Current conditions	
	Values	Unit	Values	Unit
A/C PRESSURE SENSOR	More than 4.75	V	B	B

Do the current condition (s) match the threshold?

YES

Go to step 2.

NO

Intermittent failure, the system is OK at this time. Check for poor connections or loose terminals at the A/C pressure sensor and the PCM. **If the on-board snapshot of this DTC is recorded, try to reproduce the failure under the same conditions with the on-board snapshot** .

2. Determine possible failure area (A/C pressure sensor, others)

-1. Turn the vehicle to the OFF (LOCK) mode.

-2. Disconnect the following connector.

A/C pressure sensor 3P connector

-3. Connect terminals A and B with a jumper wire.

Terminal A	A/C pressure sensor 3P connector (female terminals) No. 1: ①
Terminal B	A/C pressure sensor 3P connector (female terminals) No. 2: ①

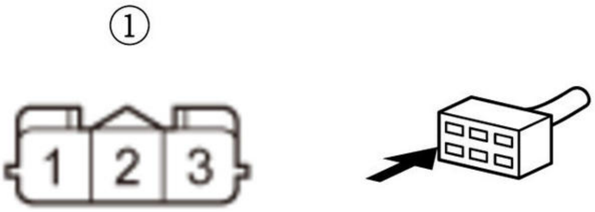

-4. Turn the vehicle to the ON mode.

-5. Check the parameter (s) below with the HDS.

Signal	Threshold		Current conditions	
	Values	Unit	Values	Unit
A/C PRESSURE SENSOR	More than 4.75	V	B	B

Do the current condition (s) match the threshold?

YES

Go to step 3.

NO

Replace the A/C pressure sensor .

3. Determine possible failure area (SG6 line, others)

-1. Turn the vehicle to the OFF (LOCK) mode.

-2. Remove the jumper wire from the A/C pressure sensor 3P connector.

-3. Turn the vehicle to the ON mode.

-4. Measure the voltage between test points 1 and 2.

Test condition	Vehicle ON mode
B	A/C pressure sensor 3P connector: disconnected
Test point 1	A/C pressure sensor 3P connector (female terminals) No. 1: ①
Test point 2	A/C pressure sensor 3P connector (female terminals) No. 3: ①

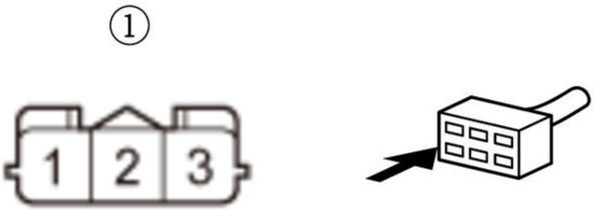

Is there about 5.0 V?

YES

Go to step 4.

NO

Go to step 5.

4. Open wire check (PD SENSOR line)

-1. Turn the vehicle to the OFF (LOCK) mode.

-2. Jump the SCS line with the HDS, and wait more than 1 minute.

-3. Disconnect the following connector.

PCM connector A (50P)

-4. Check for continuity between test points 1 and 2.

Test condition	Vehicle OFF (LOCK) mode
B	A/C pressure sensor 3P connector: disconnected
B	PCM connector A (50P): disconnected

Test point 1	A/C pressure sensor 3P connector (female terminals) No. 2: ①
Test point 2	**PCM connector A (50P) No. 33**

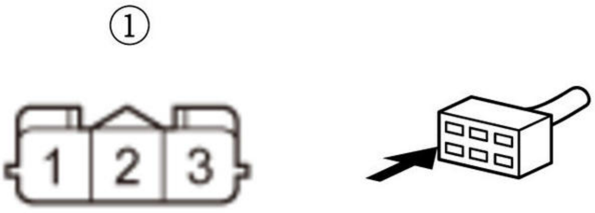

Is there continuity?

YES

The PD SENSOR wire is OK. Check for any authorized service information related to the DTCs or symptoms you are troubleshooting, or **substitute a known-good PCM** .

NO

Repair an open in the PD SENSOR wire between the PCM (A33) and the A/C pressure sensor.

5. Open wire check (SG6 line)

-1. Turn the vehicle to the OFF (LOCK) mode.

-2. Jump the SCS line with the HDS, and wait more than 1 minute.

-3. Disconnect the following connector.

PCM connector E (80P)

-4. Check for continuity between test points 1 and 2.

Test condition	Vehicle OFF (LOCK) mode
B	A/C pressure sensor 3P connector: disconnected
B	PCM connector E (80P): disconnected
Test point 1	A/C pressure sensor 3P connector (female terminals) No. 1: ①
Test point 2	**PCM connector E (80P) No. 45**

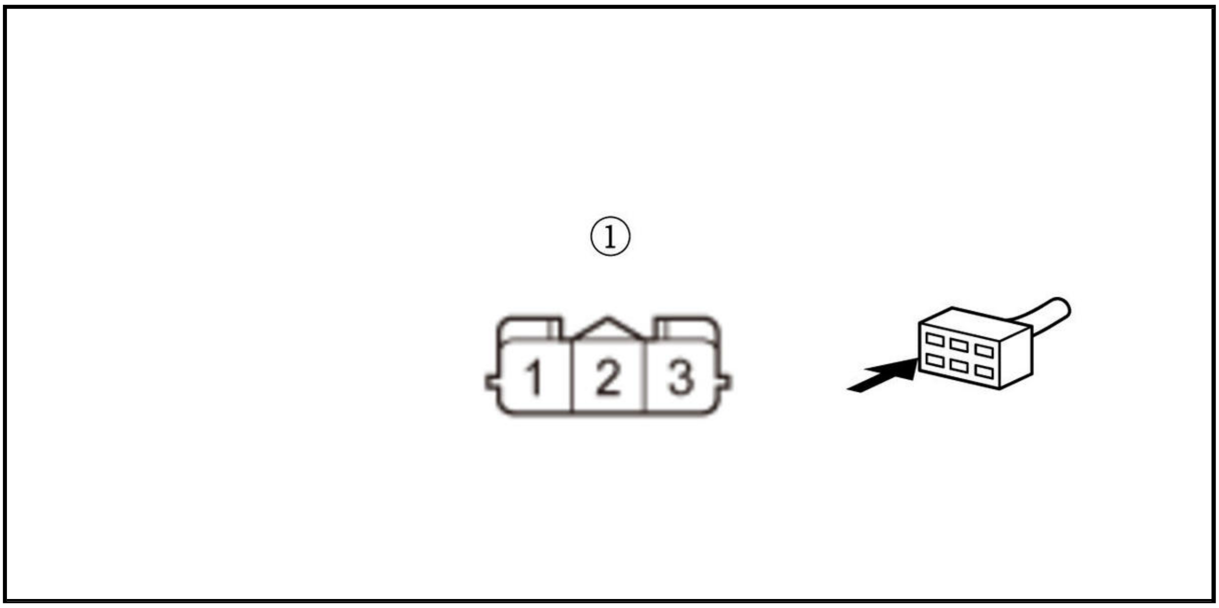

Is there continuity?

YES

The SG6 wire is OK. Check for any authorized service information related to the DTCs or symptoms you are troubleshooting, or substitute a known-good PCM .

NO

Repair an open in the SG6 wire between the PCM (E45) and the A/C pressure sensor.

DTC P0533 (2.4 L ENGINE) (2017 2018 2019)

DTC P0533 : A/C Pressure Sensor Circuit High Voltage

NOTE: Before you troubleshoot, review the general troubleshooting information .

DTC Description	Confirmed DTC	Pending DTC
P0533 A/C Pressure Sensor Circuit High Voltage	B	B

DTC (PGM-FI)

1. Problem verification

-1. Start the engine, and let it idle.

-2. Turn the blower switch on.

-3. Turn the A/C switch on.

-4. Check the parameter (s) below with the HDS.

Signal	Threshold		Current conditions	
	Values	Unit	Values	Unit
A/C Pressure Sensor	More than 4.75	V	B	B

Do the current condition (s) match the threshold?

YES

The failure is duplicated. Go to step 2.

NO

Intermittent failure, the system is OK at this time. Check for poor connections or loose terminals at the A/C pressure sensor and the PCM. **If the on-board snapshot of this DTC is recorded, try to reproduce the failure under the same conditions with the on-board snapshot** .

2. Determine possible failure area (A/C pressure sensor, others)

-1. Turn the vehicle to the OFF (LOCK) mode.

-2. Disconnect the following connector.

A/C pressure sensor 3P connector

-3. Connect terminals A and B with a jumper wire.

Terminal A	A/C pressure sensor 3P connector (female terminals) No. 1: ①
Terminal B	A/C pressure sensor 3P connector (female terminals) No. 2: ①

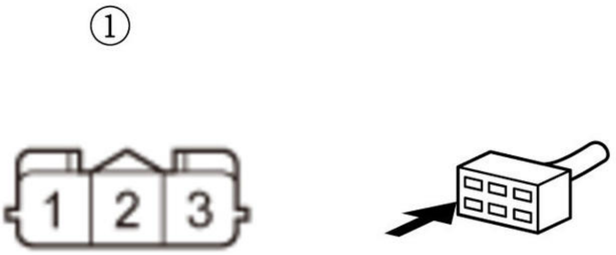

-4. Turn the vehicle to the ON mode.

-5. Check the parameter (s) below with the HDS.

Signal	Threshold		Current conditions	
	Values	Unit	Values	Unit
A/C Pressure Sensor	More than 4.75	V	B	B

Do the current condition (s) match the threshold?

YES

Go to step 3.

NO

Replace the A/C pressure sensor .

3. Determine possible failure area (SG6 line, others)

-1. Turn the vehicle to the OFF (LOCK) mode.

-2. Remove the jumper wire from the A/C pressure sensor 3P connector.

-3. Turn the vehicle to the ON mode.

-4. Measure the voltage between test points 1 and 2.

Test condition	Vehicle ON mode
B	A/C pressure sensor 3P connector: disconnected
Test point 1	A/C pressure sensor 3P connector (female terminals) No. 1: ①
Test point 2	A/C pressure sensor 3P connector (female terminals) No. 3: ①

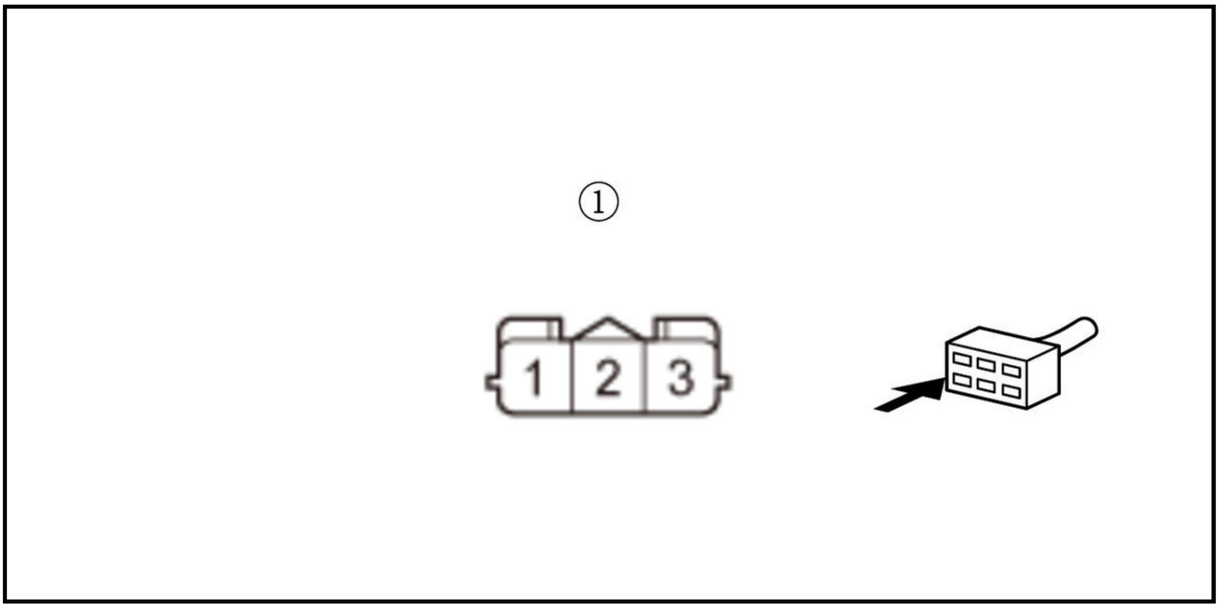

Is there about 5.0 V?

YES

Go to step 4.

NO

Go to step 5.

4. Open wire check (PD SENSOR line)

-1. Turn the vehicle to the OFF (LOCK) mode.

-2. Jump the SCS line with the HDS, and wait more than 1 minute.

-3. Disconnect the following connector.

PCM connector A (51P)

-4. Check for continuity between test points 1 and 2.

Test condition	Vehicle OFF (LOCK) mode
B	A/C pressure sensor 3P connector: disconnected
B	PCM connector A (51P): disconnected

Test point 1	A/C pressure sensor 3P connector (female terminals) No. 2: ①
Test point 2	**PCM connector A (51P) No. 41**

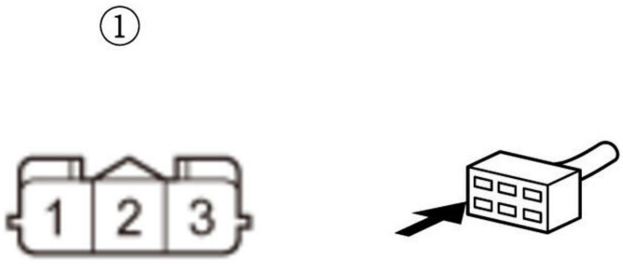

Is there continuity?

YES

The PD SENSOR wire is OK. Check for any authorized service information related to the DTCs or symptoms you are troubleshooting, or **substitute a known-good PCM** .

NO

Repair an open in the PD SENSOR wire between the PCM (A41) and the A/C pressure sensor.

5. Open wire check (SG6 line)

-1. Turn the vehicle to the OFF (LOCK) mode.

-2. Jump the SCS line with the HDS, and wait more than 1 minute.

-3. Disconnect the following connector.

PCM connector A (51P)

-4. Check for continuity between test points 1 and 2.

Test condition	Vehicle OFF (LOCK) mode
B	A/C pressure sensor 3P connector: disconnected
B	PCM connector A (51P): disconnected
Test point 1	A/C pressure sensor 3P connector (female terminals) No. 1: ①
Test point 2	**PCM connector A (51P) No. 28**

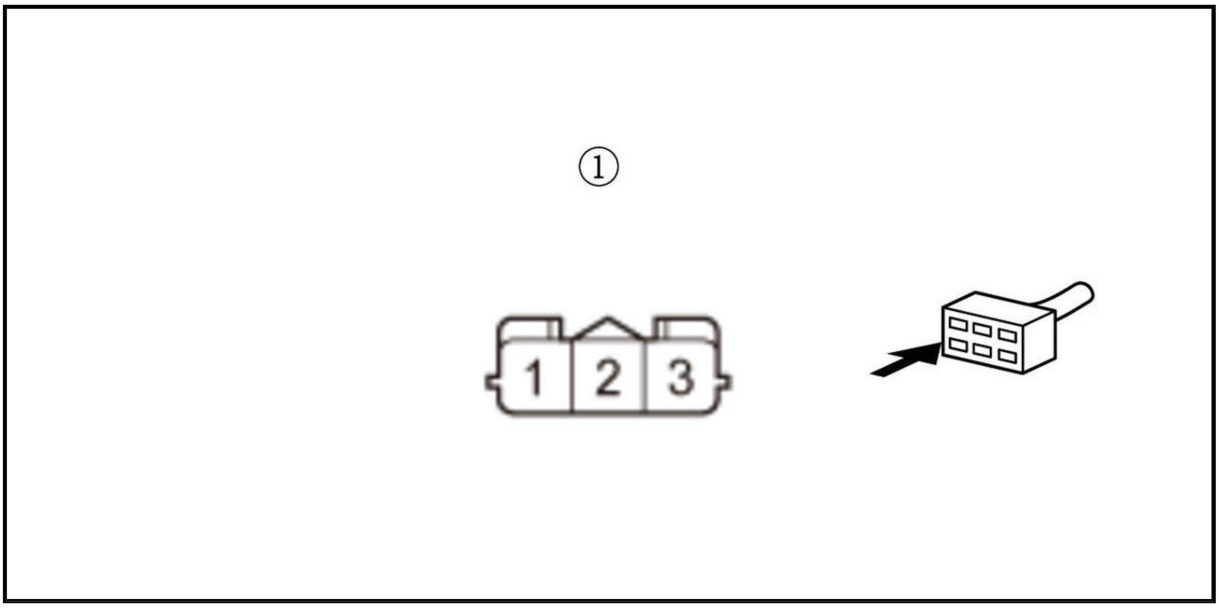

Is there continuity?

YES

The SG6 wire is OK. Check for any authorized service information related to the DTCs or symptoms you are troubleshooting, or **substitute a known-good PCM** .

NO

Repair an open in the SG6 wire between the PCM (A28) and the A/C pressure sensor.

DTC P0562 (1.5 L ENGINE)

DTC P0562 : Charging System Low Voltage

NOTE:

- Before you troubleshoot, **review the general troubleshooting information** .
- Check for a loose terminal on the alternator (+B terminal). If the alternator +B terminal was loose, DTC P0562 will be stored.

DTC Description	Confirmed DTC	Pending DTC
P0562 Charging System Low Voltage	B	B

DTC (PGM-FI)

1. DTC check

   -1. Turn the vehicle to the ON mode.

   -2. Clear the DTC with the HDS.

   -3. Turn the vehicle to the OFF (LOCK) mode.

   -4. Start the engine, and let it idle without load (in P or N) for 1 minute.

   -5. Check for Pending or Confirmed DTCs with the HDS.

DTC Description	Confirmed DTC	Pending DTC
P16BB Alternator B Terminal Circuit Low Voltage	B	B

Is DTC P16BB indicated?

YES

Go to the troubleshooting for **DTC P16BB** .

NO

Go to step 2.

2. Problem verification

   -1. Check for Pending or Confirmed DTCs with the HDS.

DTC Description	Confirmed DTC	Pending DTC
P0562 Charging System Low Voltage	B	B

   Is DTC P0562 is indicated?

   YES

   The failure is duplicated. **Repair** or **replace the alternator** .

   NO

   Intermittent failure, the system is OK at this time. Check for poor connections or loose terminals at the +B terminal on the alternator and the under-hood fuse/relay box. **If the on-board snapshot of this DTC is recorded, try to reproduce the failure under the same conditions with the on-board snapshot** .

DTC P0562 (2.4 L ENGINE) (2017 2018 2019)

DTC P0562 : Charging System Low Voltage

NOTE:

- Before you troubleshoot, **review the general troubleshooting information** .
- Check for a loose terminal on the alternator (+B terminal). If the alternator +B terminal was loose, DTC P0562 will be stored.

DTC Description	Confirmed DTC	Pending DTC
P0562 Charging System Low Voltage	B	B

DTC (PGM-FI)

1. DTC check

   -1. Turn the vehicle to the ON mode.

   -2. Clear the DTC with the HDS.

   -3. Start the engine, and let it idle without load (in P or N) for 1 minute.

   -4. Check for Pending or Confirmed DTCs with the HDS.

DTC Description	Confirmed DTC	Pending DTC
P16BB Alternator B Terminal Circuit Low Voltage	B	B

   Is DTC P16BB indicated?

YES

Go to the troubleshooting for DTC P16BB .

NO

Go to step 2.

2. Problem verification

   -1. Check for Pending or Confirmed DTCs with the HDS.

DTC Description	Confirmed DTC	Pending DTC
P0562 Charging System Low Voltage	B	B

   Is DTC P0562 is indicated?

   YES

   The failure is duplicated. **Repair** or **replace the alternator** .

   NO

   Intermittent failure, the system is OK at this time. Check for poor connections or loose terminals at the +B terminal on the alternator and the under-hood fuse/relay box. **If the on-board snapshot of this DTC is recorded, try to reproduce the failure under the same conditions with the on-board snapshot** .

DTC P0563 (1.5 L ENGINE)

DTC P0563 : PCM Power Source Circuit Unexpected Voltage

NOTE: Before you troubleshoot, **review the general troubleshooting information** .

DTC Description	Confirmed DTC	Pending DTC
P0563 PCM Power Source Circuit Unexpected Voltage	B	B

DTC (PGM-FI)

1. Problem verification

   -1. Turn the vehicle to the ON mode.

   -2. Clear the DTC with the HDS.

   -3. Turn the vehicle to the OFF (LOCK) mode.

   -4. Wait 10 seconds.

   -5. Turn the vehicle to the ON mode.

   -6. Check for Pending or Confirmed DTCs with the HDS.

DTC Description	Confirmed DTC	Pending DTC
P0563 PCM Power Source Circuit Unexpected Voltage	B	B

   Is DTC P0563 indicated?

   YES

   Go to step 2.

NO

Intermittent failure, the system is OK at this time. Check for poor connections or loose terminals at the relay circuit board (PGM-FI main relay 1 circuit) and the PCM. **If the on-board snapshot of this DTC is recorded, try to reproduce the failure under the same conditions with the on-board snapshot** .

2. Determine possible failure area (FI MAIN RLY CL- line, others)

-1. Turn the vehicle to the OFF (LOCK) mode.

-2. Jump the SCS line with the HDS, and wait more than 1 minute.

-3. Disconnect the following connector.

PCM connector A (50P)

-4. Measure the voltage between test points 1 and 2.

Test condition	Vehicle OFF (LOCK) mode
B	PCM connector A (50P): disconnected
Test point 1	**PCM connector A (50P) No. 5**
Test point 2	Body ground

Is there battery voltage?

YES

Go to step 5.

NO

Go to step 3.

3. Shorted wire check (FI MAIN RLY CL- line)

-1. Disconnect the following connector

Relay circuit board connector A (8P)

-2. Check for continuity between test points 1 and 2.

Test condition	Vehicle OFF (LOCK) mode
B	PCM connector A (50P): disconnected
B	Relay circuit board connector A (8P): disconnected
Test point 1	**PCM connector A (50P) No. 5**
Test point 2	Body ground

Is there continuity?

YES

Repair a short in the FI MAIN RLY CL- wire between the PCM (A5) and the relay circuit board (PGM-FI main relay 1 circuit).

NO

Go to step 4.

4. Relay circuit board check

   -1. **Remove and test the relay circuit board** .

   Is the relay circuit board OK?

   YES

   Check for any authorized service information related to the DTCs or symptoms you are troubleshooting or **substitute a known-good PCM** .

   NO

   Replace the relay circuit board .

5. Shorted wire check (FI MAIN RLY OUT line to power)

   -1. Disconnect the following connector.

Relay circuit board connector C (18P)

   -2. Measure the voltage between test points 1 and 2.

Test condition	Vehicle OFF (LOCK) mode
	PCM connector A (50P): disconnected
	Relay circuit board connector C (18P): disconnected
Test point 1	**PCM connector A (50P) No. 8**
Test point 2	Body ground

   Is there battery voltage?

   YES

   Repair a short to power in the FI MAIN RLY OUT wire between the PCM (A8) and the relay circuit board (PGM-FI main relay 1 circuit).

   NO

   Go to step 6.

6. Relay circuit board check

   -1. **Remove and test the relay circuit board** .

   Is the relay circuit board OK?

   YES

   The relay circuit board is OK. Check for any authorized service information related to the DTCs or symptoms you are troubleshooting or **substitute a known-good PCM** .

   NO

   Replace the relay circuit board .

DTC P0563 (2.4 L ENGINE) (2017 2018 2019)

DTC P0563 : PCM Power Source Circuit Unexpected Voltage

NOTE: Before you troubleshoot, review the general troubleshooting information .

DTC Description	Confirmed DTC	Pending DTC
P0563 PCM Power Source Circuit Unexpected Voltage	B	B

DTC (PGM-FI)

1. Problem verification

   -1. Turn the vehicle to the ON mode.

   -2. Clear the DTC with the HDS.

   -3. Turn the vehicle to the OFF (LOCK) mode.

   -4. Wait 10 seconds.

   -5. Turn the vehicle to the ON mode.

   -6. Check for Pending or Confirmed DTCs with the HDS.

DTC Description	Confirmed DTC	Pending DTC
P0563 PCM Power Source Circuit Unexpected Voltage	B	B

   Is DTC P0563 indicated?

   YES

   The failure is duplicated. Go to step 2.

   NO

   Intermittent failure, the system is OK at this time. Check for poor connections or loose terminals at the relay circuit board (PGM-FI main relay 1 circuit) and the PCM. If the on-board snapshot of this DTC is recorded, try to reproduce the failure under the same conditions with the on-board snapshot .

2. Determine possible failure area (FI MAIN RLY CL- line, others)

   -1. Turn the vehicle to the OFF (LOCK) mode.

   -2. Jump the SCS line with the HDS, and wait more than 1 minute.

   -3. Disconnect the following connector.

PCM connector A (51P)

   -4. Measure the voltage between test points 1 and 2.

Test condition	Vehicle OFF (LOCK) mode
B	PCM connector A (51P): disconnected
Test point 1	PCM connector A (51P) No. 3
Test point 2	Body ground

   Is there battery voltage?

   YES

   Go to step 5.

NO

Go to step 3.

3. Shorted wire check (FI MAIN RLY CL- line)

-1. Disconnect the following connector

Relay circuit board connector A (8P)

-2. Check for continuity between test points 1 and 2.

Test condition	Vehicle OFF (LOCK) mode
	PCM connector A (51P): disconnected
	Relay circuit board connector A (8P): disconnected
Test point 1	**PCM connector A (51P) No. 3**
Test point 2	Body ground

Is there continuity?

YES

Repair a short in the FI MAIN RLY CL- wire between the PCM (A3) and the relay circuit board (PGM-FI main relay 1 circuit).

NO

The FI MAIN RLY CL- wire is OK. Go to step 4.

4. Relay circuit board check

-1. **Remove and test the relay circuit board** .

Is the relay circuit board OK?

YES

Check for any authorized service information related to the DTCs or symptoms you are troubleshooting or **substitute a known-good PCM** .

NO

Replace the relay circuit board .

5. Shorted wire check (FI MAIN RLY OUT line to power)

-1. Disconnect the following connector.

Relay circuit board connector C (18P)

-2. Measure the voltage between test points 1 and 2.

Test condition	Vehicle OFF (LOCK) mode
	PCM connector A (51P): disconnected
	Relay circuit board connector C (18P): disconnected
Test point 1	**PCM connector A (51P) No. 5**
Test point 2	Body ground

Is there battery voltage?

YES

Repair a short to power in the FI MAIN RLY OUT wire between the PCM (A5) and the relay circuit board (PGM-FI main relay 1 circuit).

NO

The FI MAIN RLY OUT wire is OK. Go to step 6.

6. Relay circuit board check

   -1. **Remove and test the relay circuit board** .

   Is the relay circuit board OK?

   YES

   The relay circuit board is OK. Check for any authorized service information related to the DTCs or symptoms you are troubleshooting or **substitute a known-good PCM** .

   NO

   Replace the relay circuit board .

DTC P0571 (1.5 L ENGINE)

DTC P0571 : Brake Pedal Position Switch Circuit Malfunction

NOTE:

- Before you troubleshoot, **review the general troubleshooting information** .
- If the accelerator pedal is pressed with pressing the brake pedal lightly and continuously for 5 minutes or more, this DTC will be stored.

DTC Description	Confirmed DTC	Pending DTC
P0571 Brake Pedal Position Switch Circuit Malfunction	B	B

DTC (PGM-FI)

1. Brake lights check 1

   -1. Check the brake lights without the brake pedal pressed.

   Do the brake lights stay on?

   YES

   Go to step 9.

   NO

   Go to step 2.

2. Brake lights check 2

   -1. Check the brake lights with the brake pedal pressed.

   Do the brake lights come on?

YES

Go to step 3.

NO

Go to step 5.

3. Brake pedal position switch signal check

-1. Turn the vehicle to the ON mode.

-2. Check the parameter (s) below with the HDS.

Signal	Current conditions	
	Values	**Unit**
BRAKE SWITCH	B	B

Does the signal change ON and OFF when the brake pedal is pressed and released?

YES

Intermittent failure, the system is OK at this time. Check for poor connections or loose terminals at the brake pedal position switch and the PCM. **If the on-board snapshot of this DTC is recorded, try to reproduce the failure under the same conditions with the on-board snapshot** .

NO

Go to step 4.

4. Open wire check (STOP SW line)

-1. Turn the vehicle to the OFF (LOCK) mode.

-2. Jump the SCS line with the HDS, and wait more than 1 minute.

-3. Disconnect the following connector.

PCM connector A (50P)

-4. Press the brake pedal, and measure the voltage between test points 1 and 2.

Test condition	Vehicle OFF (LOCK) mode
	PCM connector A (50P): disconnected
	Brake pedal: pressed
Test point 1	**PCM connector A (50P) No. 26**
Test point 2	Body ground

Is there battery voltage?

YES

The STOP SW wire is OK. Check for any authorized service information related to the DTCs or symptoms you are troubleshooting, or **substitute a known-good PCM** .

NO

Repair an open in the STOP SW wire between the PCM (A26) and the brake pedal position switch.

5. Brake pedal position switch check

-1. **Test the brake pedal position switch** .

Is the brake pedal position switch normal?

YES

Go to step 6.

NO

Replace the brake pedal position switch .

6. Fuse check

-1. Check the following fuse.

Fuse	No. A9 (10 A)
Location	Under-hood fuse/relay box

Is the fuse OK?

YES

Go to step 7.

NO

Replace the No. A9 (10 A) fuse. Also check for a short to ground on the No. A9 (10 A) fuse circuit if needed.

7. Open wire check (+B STOP line)

-1. Measure the voltage between test points 1 and 2.

Test condition	Vehicle OFF (LOCK) mode
Test point 1	Brake pedal position switch 4P connector (female terminals) No. 2: ①
Test point 2	Body ground

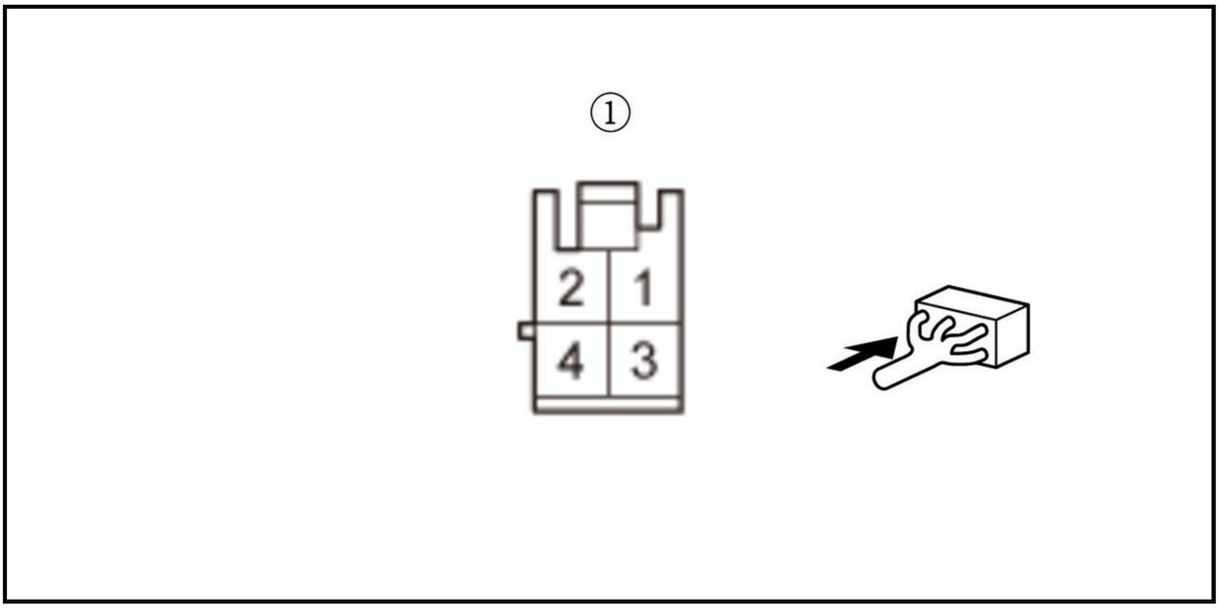

Is there battery voltage?

YES

Go to step 8.

NO

Repair an open in the +B STOP wire between the No. A9 (10 A) fuse in the under-hood fuse/relay box and the brake pedal position switch.

8. Open wire check (STOP SW line)

-1. Jump the SCS line with the HDS, and wait more than 1 minute.

-2. Disconnect the following connector.

PCM connector A (50P)

-3. Press the brake pedal, and measure the voltage between test points 1 and 2.

Test condition	Vehicle OFF (LOCK) mode
	PCM connector A (50P): disconnected
	Brake pedal: pressed
Test point 1	**PCM connector A (50P) No. 26**
Test point 2	Body ground

Is there battery voltage?

YES

The STOP SW wire is OK. Check for any authorized service information related to the DTCs or symptoms you are troubleshooting, or **substitute a known-good PCM** .

NO

Repair an open in the STOP SW wire between the PCM (A26) and the brake pedal position switch.

9. Brake pedal position switch installation check

-1. **Remove the brake pedal position switch with the connector is connected** .

-2. Check the brake lights with the rod of the brake pedal position switch pressed.

Do the brake lights go off?

YES

The brake pedal position switch installation is incorrect, **install the brake pedal position switch and adjust the pedal height** .

NO

Go to step 10.

10. Brake pedal position switch check

-1. **Test the brake pedal position switch** .

Is the brake pedal position switch normal?

YES

The brake pedal position switch is OK, repair a short to power in the STOP SW wire between the PCM (A26) and the brake pedal position switch.

NO

Replace the brake pedal position switch .

DTC P0571 (2.4 L ENGINE) (2017 2018 2019)

DTC P0571 : Brake Pedal Position Switch Circuit Malfunction

NOTE:

- Before you troubleshoot, **review the general troubleshooting information** .
- If the accelerator pedal is pressed with pressing the brake pedal lightly and continuously for 5 minutes or more, this DTC will be stored.

DTC Description	Confirmed DTC	Pending DTC
P0571 Brake Pedal Position Switch Circuit Malfunction	B	B

DTC (PGM-FI)

1. Brake lights check 1

   -1. Check the brake lights without the brake pedal pressed.

   Do the brake lights stay on?

   YES

   Go to step 9.

   NO

   Go to step 2.

2. Brake lights check 2

   -1. Check the brake lights with the brake pedal pressed.

   Do the brake lights come on?

   YES

   Go to step 3.

   NO

   Go to step 5.

3. Brake pedal position switch signal check

   -1. Turn the vehicle to the ON mode.

   -2. Check the parameter (s) below with the HDS.

Signal	Current conditions	
	Values	**Unit**
BRAKE SWITCH	B	B

Does the signal change ON and OFF when the brake pedal is pressed and released?

YES

Intermittent failure, the system is OK at this time. Check for poor connections or loose terminals at the brake pedal position switch and the PCM. **If the on-board snapshot of this DTC is recorded, try to reproduce the failure under the same conditions with the on-board snapshot** .

NO

Go to step 4.

4. Open wire check (STOP SW line)

-1. Turn the vehicle to the OFF (LOCK) mode.

-2. Jump the SCS line with the HDS, and wait more than 1 minute.

-3. Disconnect the following connector.

PCM connector A (51P)

-4. Press the brake pedal, and measure the voltage between test points 1 and 2.

Test condition	Vehicle OFF (LOCK) mode
	PCM connector A (51P): disconnected
	Brake pedal: pressed
Test point 1	**PCM connector A (51P) No. 37**
Test point 2	Body ground

Is there battery voltage?

YES

The STOP SW wire is OK. Check for any authorized service information related to the DTCs or symptoms you are troubleshooting or **substitute a known-good PCM** .

NO

Repair an open in the STOP SW wire between the PCM (A37) and the brake pedal position switch.

5. Brake pedal position switch check

-1. **Test the brake pedal position switch** .

Is the brake pedal position switch normal?

YES

Go to step 6.

NO

Replace the brake pedal position switch .

6. Fuse check

-1. Check the following fuse.

Fuse	No. A9 (10 A)
Location	Under-hood fuse/relay box

Is the fuse OK?

YES

Go to step 7.

NO

Replace the No. A9 (10 A) fuse. Also check for a short to ground on the No. A9 (10 A) fuse circuit if needed.

7. Open wire check (+B STOP line)

-1. Measure the voltage between test points 1 and 2.

Test condition	Vehicle OFF (LOCK) mode
Test point 1	Brake pedal position switch 4P connector (female terminals) No. 2: ①
Test point 2	Body ground

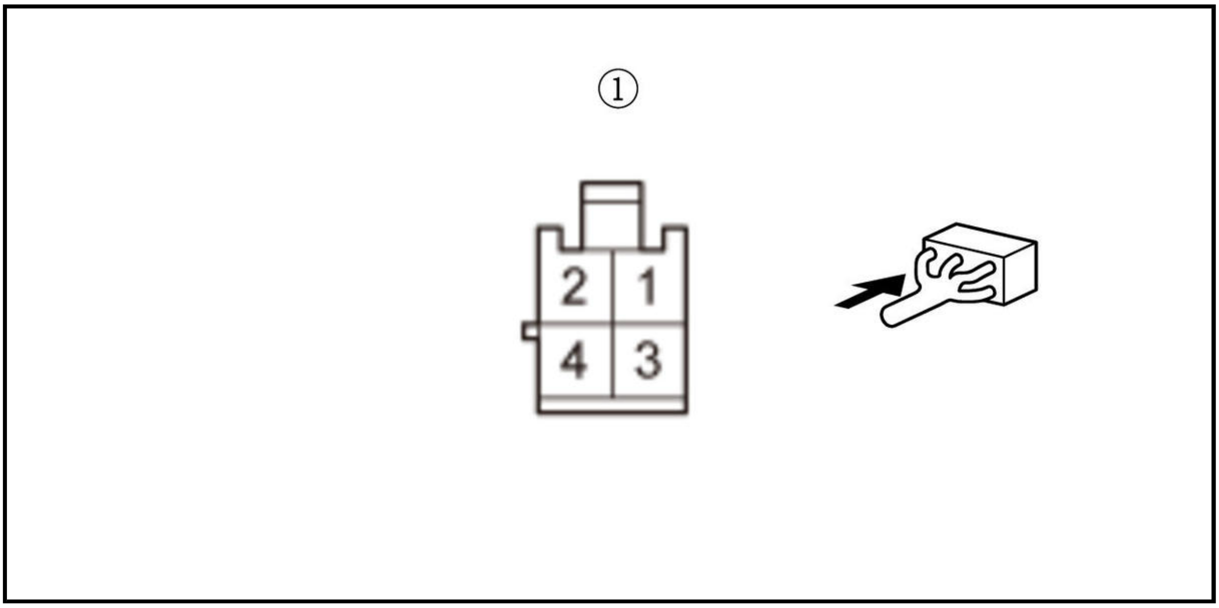

Is there battery voltage?

YES

The +B STOP wire is OK. Go to step 8.

NO

Repair an open in the +B STOP wire between the No. A9 (10 A) fuse in the under-hood fuse/relay box and the brake pedal position switch.

8. Open wire check (STOP SW line)

-1. Jump the SCS line with the HDS, and wait more than 1 minute.

-2. Disconnect the following connector.

PCM connector A (51P)

-3. Press the brake pedal, and measure the voltage between test points 1 and 2.

Test condition	Vehicle OFF (LOCK) mode
	PCM connector A (51P): disconnected
	Brake pedal: pressed
Test point 1	**PCM connector A (51P) No. 37**
Test point 2	Body ground

Is there battery voltage?

YES

The STOP SW wire is OK. Check for any authorized service information related to the DTCs or symptoms you are troubleshooting or **substitute a known-good PCM** .

NO

Repair an open in the STOP SW wire between the PCM (A37) and the brake pedal position switch.

9. Brake pedal position switch installation check

-1. **Remove the brake pedal position switch with the connector is connected** .

-2. Check the brake lights with the rod of the brake pedal position switch pressed.

Do the brake lights go off?

YES

The brake pedal position switch installation is incorrect, **install the brake pedal position switch and adjust the pedal height** .

NO

Go to step 10.

10. Brake pedal position switch check

-1. **Test the brake pedal position switch** .

Is the brake pedal position switch normal?

YES

The brake pedal position switch is OK, repair a short to power in the STOP SW wire between the PCM (A37) and the brake pedal position switch.

NO

Replace the brake pedal position switch .

DTC P059F, P05A3, P05A8, P05C0 (1.5 L ENGINE)

DTC P059F : Shutter Grille Assembly (Upper) Malfunction **DTC P05A3** : Shutter Grille Actuator (Upper) Malfunction **DTC P05A8** : Shutter Grille Actuator (Upper) Malfunction **DTC P05C0** : Shutter Grille Actuator (Upper) Temperature Malfunction

NOTE: Before you troubleshoot, **review the general troubleshooting information** .

DTC Description	Confirmed DTC	Pending DTC
P059F Shutter Grille Assembly (Upper) Malfunction	B	B
P05A3 Shutter Grille Actuator (Upper) Malfunction	B	B

DTC Description	Confirmed DTC	Pending DTC
P05A8 Shutter Grille Actuator (Upper) Malfunction	B	B
P05C0 Shutter Grille Actuator (Upper) Temperature Malfunction	B	B

DTC (PGM-FI)

1. Problem verification

   -1. Turn the vehicle to the ON mode.

   -2. Clear the DTC with the HDS.

   -3. Turn the vehicle to the OFF (LOCK) mode.

   -4. Start the engine, then let it idle.

   -5. Check for Pending or Confirmed DTCs with the HDS.

DTC Description	Confirmed DTC	Pending DTC
P059F Shutter Grille Assembly (Upper) Malfunction	B	B
P05A3 Shutter Grille Actuator (Upper) Malfunction	B	B
P05A8 Shutter Grille Actuator (Upper) Malfunction	B	B
P05C0 Shutter Grille Actuator (Upper) Temperature Malfunction	B	B

   Is DTC P059F, P05A3, P05A8, or P05C0 is indicated?

   YES

   Go to step 2.

   NO

   Intermittent failure, the system is OK at this time. Check for poor connections or loose terminals at the shutter grille (upper) and the PCM. **If the on-board snapshot of this DTC is recorded, try to reproduce the failure under the same conditions with the on-board snapshot** .

2. Shutter grille condition check

   -1. Turn the vehicle to the OFF (LOCK) mode.

   -2. Check for condition (damage, fixation, foreign material, etc.) at shutter grille.

   Is the shutter grille OK?

   YES (Without wireless charger)

   Go to step 3.

   YES (With wireless charger)

Go to step 4.

NO

Reassembly or repair the shutter grille, if needed.

3. Shorted wire check (VMP line)

-1. Check the following fuse.

Fuse	**No. A23**

Is the fuse OK?

YES

Go to step 6.

NO

Repair a short in the VMP wire between shutter grille (upper) and the No. A23 fuse. Also replace the No. A23 fuse.

4. Shorted wire check (VMP line)

-1. Check the following fuse.

Fuse	**No. G31**

Is the fuse OK?

YES

Go to step 5.

NO

Repair a short in the VMP wire between shutter grille (upper) and the No. G31 fuse. Also replace the No. G31 fuse.

5. Shorted wire check (+B FI ECU MAIN line)

-1. Check the following fuse.

Fuse	**No. A23**

Is the fuse OK?

YES

Go to step 6.

NO

Repair a short in the +B FI ECU MAIN wire between the A23 fuse and the No. G31 fuse. Also replace the No. A23 fuse.

6. Open wire check (VMP line)

-1. Disconnect the following connector.

Shutter grille (upper) 4P connector

-2. Measure the voltage between test points 1 and 2.

Test condition	Vehicle OFF (LOCK) mode
B	Shutter grille (upper) 4P connector: disconnected
Test point 1	Shutter grille (upper) 4P connector (female terminals) No. 1: ①
Test point 2	Body ground

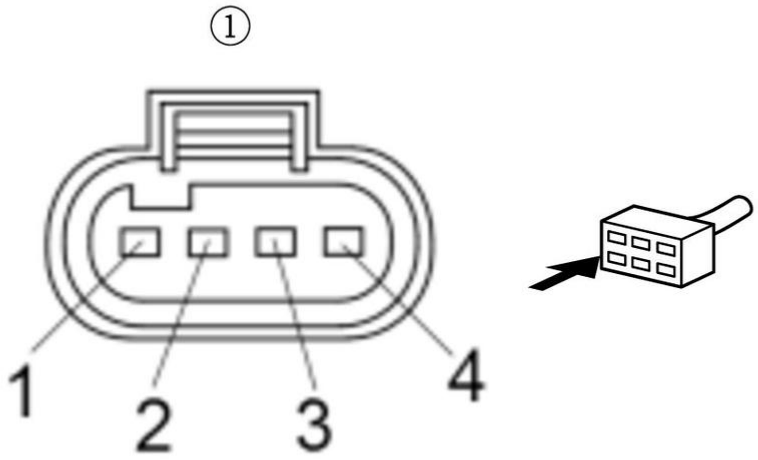

Is there battery voltage?

YES

Go to step 7.

NO

Repair an open in the VMP wire between the shutter grille (upper) and the **No. A23 fuse** (with wireless charger: **No. G31 fuse**).

7. Open wire check (GND line)

-1. Measure the resistance between test points 1 and 2.

Test condition	Vehicle OFF (LOCK) mode
B	Shutter grille (upper) 4P connector: disconnected
Test point 1	Shutter grille (upper) 4P connector (female terminals) No. 4: ①
Test point 2	Body ground

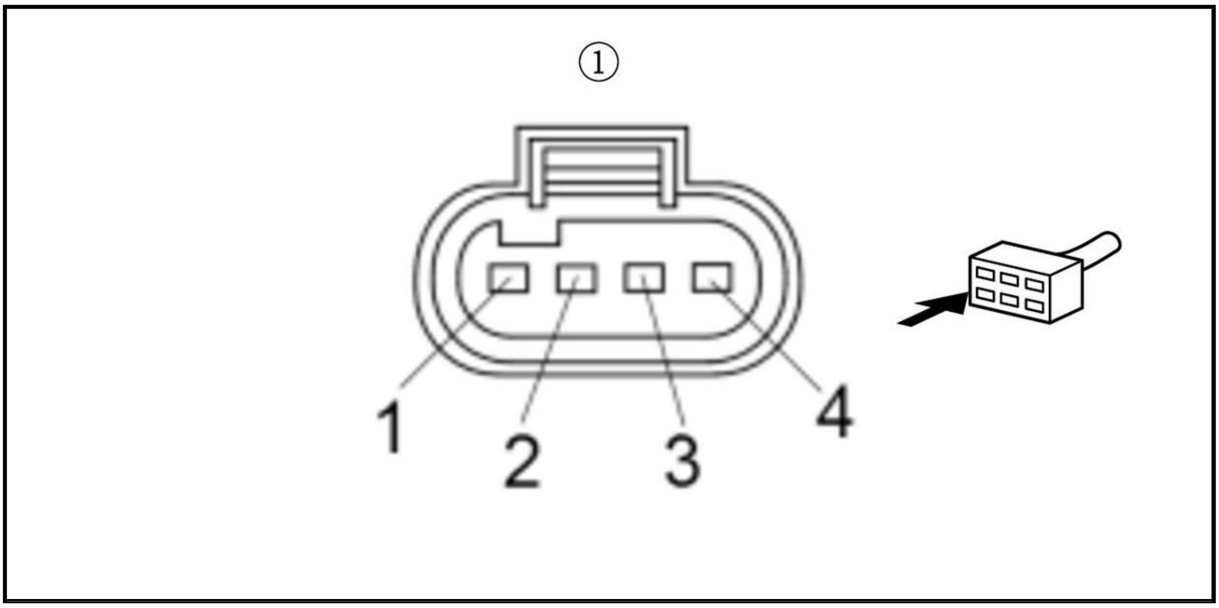

Is there 1.0 Ω or less?

YES

Replace the shutter grille (upper) .

NO

Repair an open in the GND wire between the shutter grille (upper) and G351.

DTC P059F, P05A3, P05A8, P05C0 (2.4 L ENGINE) (2017 2018 2019)

DTC P059F : Shutter Grille Assembly (Upper) Malfunction **DTC P05A3** : Shutter Grille Actuator (Upper) Malfunction **DTC P05A8** : Shutter Grille Actuator (Upper) Malfunction **DTC P05C0** : Shutter Grille Actuator (Upper) Temperature Malfunction

NOTE: Before you troubleshoot, review the general troubleshooting information .

DTC Description	Confirmed DTC	Pending DTC
P059F Shutter Grille Assembly (Upper) Malfunction	B	B
P05A3 Shutter Grille Actuator (Upper) Malfunction	B	B
P05A8 Shutter Grille Actuator (Upper) Malfunction	B	B
P05C0 Shutter Grille Actuator (Upper) Temperature Malfunction	B	B

DTC (PGM-FI)

1. Problem verification

-1. Turn the vehicle to the ON mode.

-2. Clear the DTC with the HDS.

-3. Turn the vehicle to the OFF (LOCK) mode.

-4. Start the engine, then let it idle.

-5. Check for Pending or Confirmed DTCs with the HDS.

DTC Description	Confirmed DTC	Pending DTC
P059F Shutter Grille Assembly (Upper) Malfunction	B	B
P05A3 Shutter Grille Actuator (Upper) Malfunction	B	B
P05A8 Shutter Grille Actuator (Upper) Malfunction	B	B
P05C0 Shutter Grille Actuator (Upper) Temperature Malfunction	B	B

Is DTC P059F, P05A3, P05A8, or P05C0 is indicated?

YES

Go to step 2.

NO

Intermittent failure, the system is OK at this time. Check for poor connections or loose terminals at the shutter grille (upper) and the PCM. **If the on-board snapshot of this DTC is recorded, try to reproduce the failure under the same conditions with the on-board snapshot** .

2. Shutter grille condition check

-1. Turn the vehicle to the OFF (LOCK) mode.

-2. Check for condition (damage, fixation, foreign material, etc.) at shutter grille.

Is the shutter grille OK?

YES

Go to step 3.

NO

Reassembly or repair the shutter grille, if needed.

3. Shorted wire check (VMP line)

-1. Check the following fuse.

Fuse	No. A23 (10 A)
Location	Under-hood fuse/relay box

Is the fuse OK?

YES

Go to step 4.

NO

Repair a short in the VMP wire between shutter grille (upper) and the No. A23 (10 A) fuse. Also replace the No. A23 (10 A) fuse.

4. Open wire check (VMP line)

-1. Disconnect the following connector.

Shutter grille (upper) 4P connector

-2. Measure the voltage between test points 1 and 2.

Test condition	Vehicle OFF (LOCK) mode
B	Shutter grille (upper) 4P connector: disconnected
Test point 1	Shutter grille (upper) 4P connector (female terminals) No. 1: ①
Test point 2	Body ground

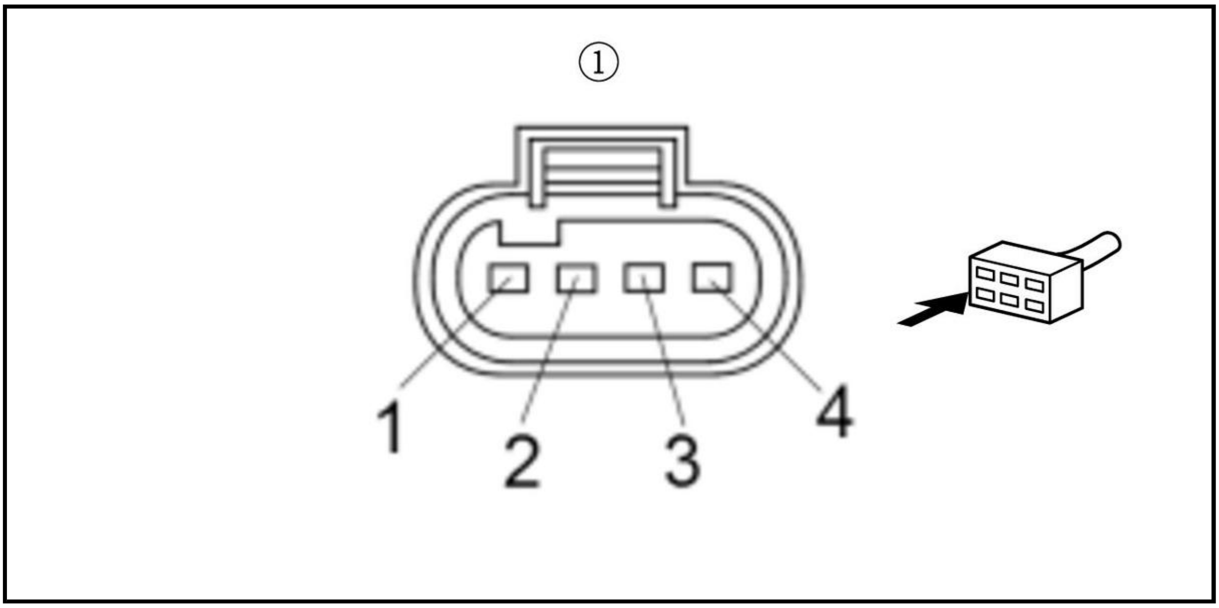

Is there battery voltage?

YES

Go to step 5.

NO

Repair an open in the VMP wire between the shutter grille (upper) and the No. A23 (10 A) fuse in the under-hood fuse/relay box.

5. Open wire check (GND line)

-1. Check for continuity between test points 1 and 2.

Test condition	Vehicle OFF (LOCK) mode
B	Shutter grille (upper) 4P connector: disconnected
Test point 1	Shutter grille (upper) 4P connector (female terminals) No. 4: ①
Test point 2	Body ground

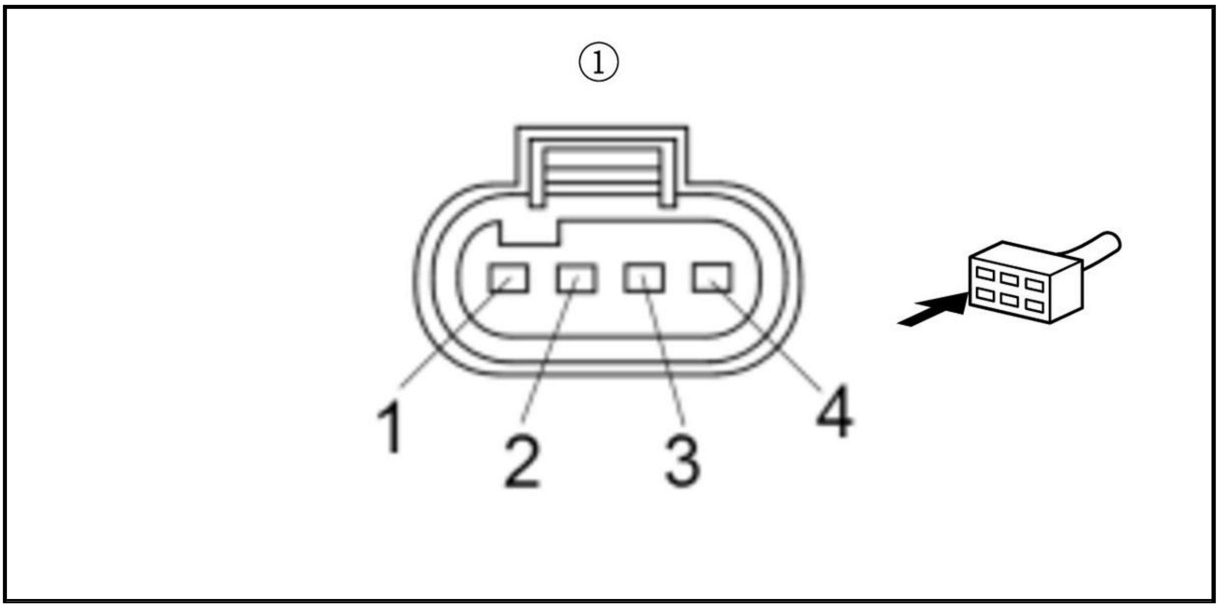

Is there continuity?

YES

Replace the shutter grille (upper) .

NO

Repair an open in the GND wire between the shutter grille (upper) and G351.

DTC P05A0 (1.5 L ENGINE)

DTC P05A0 : Shutter Grille Assembly (Upper) Malfunction

NOTE: Before you troubleshoot, review the general troubleshooting information .

DTC Description	Confirmed DTC	Pending DTC
P05A0 Shutter Grille Assembly (Upper) Malfunction	B	B

DTC (PGM-FI)

1. Problem verification

-1. Turn the vehicle to the ON mode.

-2. Clear the DTC with the HDS.

-3. Turn the vehicle to the OFF (LOCK) mode.

-4. Start the engine, then let it idle.

-5. Check the parameter (s) below with the HDS.

Signal	Threshold		Current conditions	
	Values	Unit	Values	Unit
Upper shutter grill block error	Normal	B	B	B
Upper shutter grill initial learning error	Completed	B	B	B

Do the current condition (s) match the threshold?

YES

Intermittent failure, the system is OK at this time. Check for poor connections or loose terminals at the shutter grille (upper) and the PCM. **If the on-board snapshot of this DTC is recorded, try to reproduce the failure under the same conditions with the on-board snapshot** .

NO

Go to step 2.

2. Shutter grille condition check

   -1. Turn the vehicle to the OFF (LOCK) mode.

   -2. Inspect the upper shutter grille for any damage or foreign materials caught in the shutter assembly.

   Is the shutter grille OK?

   YES (Without wireless charger)

   Go to step 3.

   YES (With wireless charger)

   Go to step 4.

   NO

   Remove the foreign material or **replace the shutter grille (upper)** .

3. Shorted wire check (VMP line)

   -1. Check the following fuse.

Fuse	**No. A23**

   Is the fuse OK?

   YES

   Go to step 6.

   NO

   Repair a short in the VMP wire between shutter grille (upper) and the No. A23 fuse. Also replace the No. A23 fuse.

4. Shorted wire check (VMP line)

   -1. Check the following fuse.

Fuse	**No. G31**

   Is the fuse OK?

   YES

   Go to step 5.

   NO

Repair a short in the VMP wire between shutter grille (upper) and the No. G31 fuse. Also replace the No. G31 fuse.

5. Shorted wire check (+B FI ECU MAIN line)

-1. Check the following fuse.

Fuse	**No. A23**

Is the fuse OK?

YES

Go to step 6.

NO

Repair a short in the +B FI ECU MAIN wire between the A23 fuse and the No. G31 fuse. Also replace the No. A23 fuse.

6. Open wire check (VMP line)

-1. Disconnect the following connector.

Shutter grille (upper) 4P connector

-2. Measure the voltage between test points 1 and 2.

Test condition	Vehicle OFF (LOCK) mode
B	Shutter grille (upper) 4P connector: disconnected
Test point 1	Shutter grille (upper) 4P connector (female terminals) No. 1: ①
Test point 2	Body ground

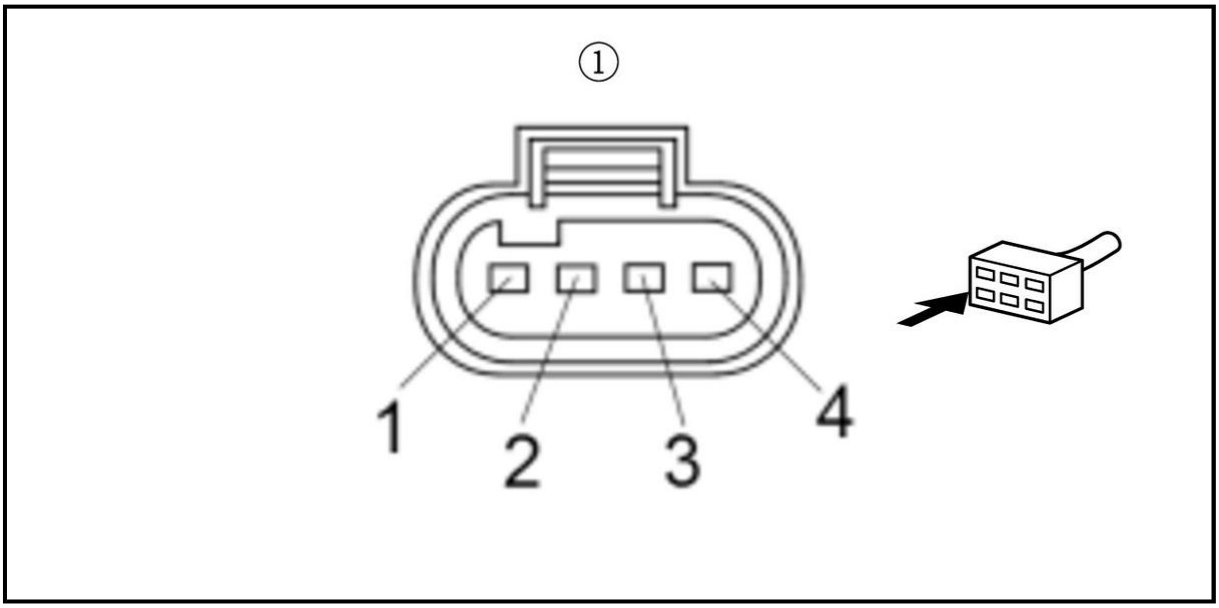

Is there battery voltage?

YES

Go to step 7.

NO

Repair an open in the VMP wire between the shutter grille (upper) and the **No. A23 fuse** (with wireless charger: **No. G31 fuse**).

7. Open wire check (GND line)

-1. Measure the resistance between test points 1 and 2.

Test condition	Vehicle OFF (LOCK) mode
B	Shutter grille (upper) 4P connector: disconnected
Test point 1	Shutter grille (upper) 4P connector (female terminals) No. 4: ①
Test point 2	Body ground

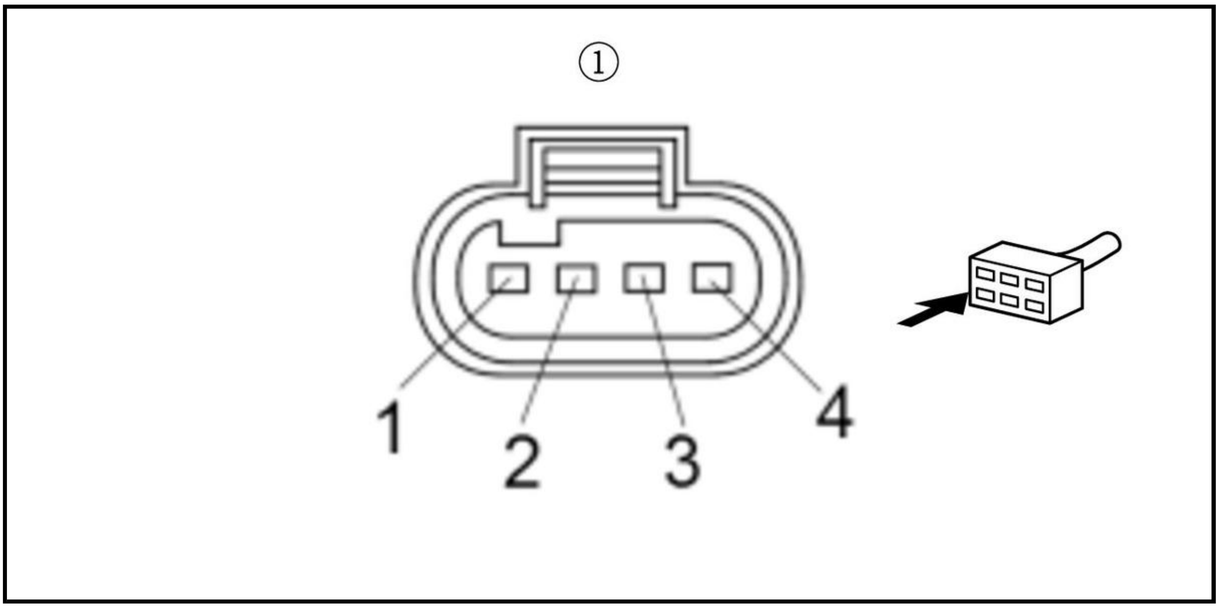

Is there 1.0 Ω or less?

YES

Replace the shutter grille (upper) .

NO

Repair an open in the GND wire between the shutter grille (upper) and G351.

DTC P05A0 (2.4 L ENGINE) (2017 2018 2019)

DTC P05A0 : Shutter Grille Assembly (Upper) Malfunction

NOTE: Before you troubleshoot, **review the general troubleshooting information** .

DTC Description	Confirmed DTC	Pending DTC
P05A0 Shutter Grille Assembly (Upper) Malfunction	B	B

DTC (PGM-FI)

1. Problem verification

-1. Turn the vehicle to the ON mode.

-2. Clear the DTC with the HDS.

-3. Turn the vehicle to the OFF (LOCK) mode.

-4. Start the engine, then let it idle.

-5. Check the parameter (s) below with the HDS.

Signal	Threshold		Current conditions	
	Values	Unit	Values	Unit
Upper shutter grill block error	Normal	B	B	B
Upper shutter grill initial learning error	Completed	B	B	B

Do the current condition (s) match the threshold?

YES

Intermittent failure, the system is OK at this time. Check for poor connections or loose terminals at the shutter grille (upper) and the PCM. **If the on-board snapshot of this DTC is recorded, try to reproduce the failure under the same conditions with the on-board snapshot** .

NO

Go to step 2.

2. Shutter grille condition check

-1. Turn the vehicle to the OFF (LOCK) mode.

-2. Inspect the upper shutter grille for any damage or foreign materials caught in the shutter assembly.

Is the shutter grille OK?

YES

Go to step 3.

NO

Remove the foreign material or **replace the shutter grille (upper)** .

3. Shorted wire check (VMP line)

-1. Check the following fuse.

Fuse	No. A23 (10 A)
Location	Under-hood fuse/relay box

Is the fuse OK?

YES

Go to step 4.

NO

Repair a short in the VMP wire between shutter grille (upper) and the No. A23 (10 A) fuse. Also replace the No. A23 (10 A) fuse.

4. Open wire check (VMP line)

-1. Disconnect the following connector.

Shutter grille (upper) 4P connector

-2. Measure the voltage between test points 1 and 2.

Test condition	Vehicle OFF (LOCK) mode
B	Shutter grille (upper) 4P connector: disconnected
Test point 1	Shutter grille (upper) 4P connector (female terminals) No. 1: ①
Test point 2	Body ground

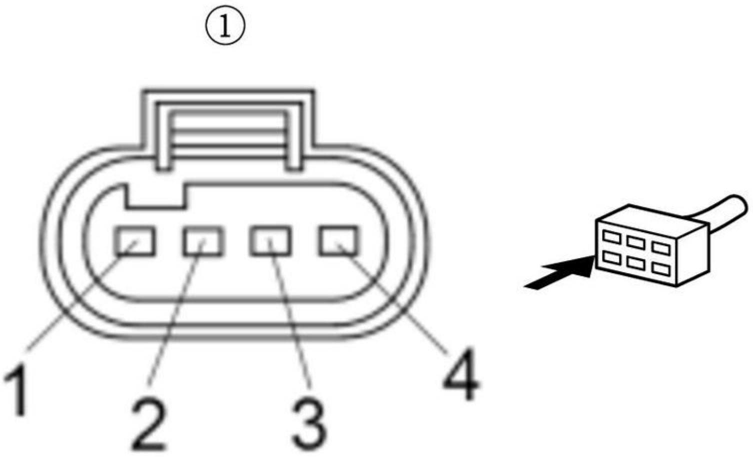

Is there battery voltage?

YES

Go to step 5.

NO

Repair an open in the VMP wire between the shutter grille (upper) and the No. A23 (10 A) fuse in the under-hood fuse/relay box.

5. Open wire check (GND line)

-1. Check for continuity between test points 1 and 2.

Test condition	Vehicle OFF (LOCK) mode
B	Shutter grille (upper) 4P connector: disconnected
Test point 1	Shutter grille (upper) 4P connector (female terminals) No. 4: ①
Test point 2	Body ground

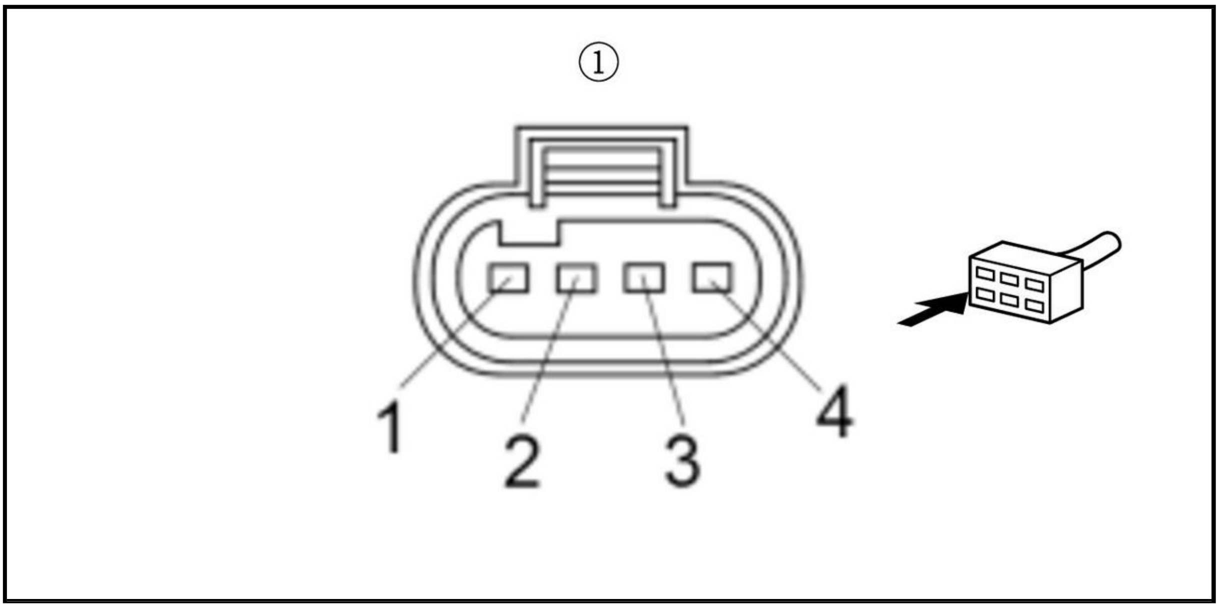

Is there continuity?

YES

Replace the shutter grille (upper) .

NO

Repair an open in the GND wire between the shutter grille (upper) and G351.

DTC P05AE, P05B2, P05B7, P05C1 (1.5 L ENGINE)

DTC P05AE : Shutter Grille Assembly (Lower) Malfunction **DTC P05B2** : Shutter Grille Actuator (Lower) Malfunction **DTC P05B7** : Shutter Grille Actuator (Lower) Malfunction **DTC P05C1** : Shutter Grille Actuator (Lower) Temperature Malfunction

NOTE: Before you troubleshoot, review the general troubleshooting information .

DTC Description	Confirmed DTC	Pending DTC
P05AE Shutter Grille Assembly (Lower) Malfunction	B	B
P05B2 Shutter Grille Actuator (Lower) Malfunction	B	B
P05B7 Shutter Grille Actuator (Lower) Malfunction	B	B
P05C1 Shutter Grille Actuator (Lower) Temperature Malfunction	B	B

DTC (PGM-FI)

1. Problem verification

   -1. Turn the vehicle to the ON mode.

   -2. Clear the DTC with the HDS.

   -3. Turn the vehicle to the OFF (LOCK) mode.

   -4. Start the engine, then let it idle.

   -5. Check for Pending or Confirmed DTCs with the HDS.

DTC Description	Confirmed DTC	Pending DTC
P05AE Shutter Grille Assembly (Lower) Malfunction	B	B
P05B2 Shutter Grille Actuator (Lower) Malfunction	B	B
P05B7 Shutter Grille Actuator (Lower) Malfunction	B	B
P05C1 Shutter Grille Actuator (Lower) Temperature Malfunction	B	B

Is DTC P05AE, P05B2, P05B7, or P05C1 is indicated?

YES

Go to step 2.

NO

Intermittent failure, the system is OK at this time. Check for poor connections or loose terminals at the shutter grille (lower) and the PCM. **If the on-board snapshot of this DTC is recorded, try to reproduce the failure under the same conditions with the on-board snapshot** .

2. Shutter grille condition check

-1. Turn the vehicle to the OFF (LOCK) mode.

-2. Check for condition (damage, fixation, foreign material, etc.) at shutter grille.

Is the shutter grille OK?

YES

Go to step 3.

NO

Reassembly or repair the shutter grille, if needed.

3. Shorted wire check (+B FR FOG/VMP line)

-1. Check the following fuse.

Fuse	**No. A22**

Is the fuse OK?

YES

Go to step 4.

NO

Repair a short in the +B FR FOG/VMP wire between shutter grille (lower) and the No. A22 fuse. Also replace the No. A22 fuse.

4. Open wire check (+B FR FOG/VMP line)

-1. Disconnect the following connector.

Shutter grille (lower) 4P connector

-2. Measure the voltage between test points 1 and 2.

Test condition	Vehicle OFF (LOCK) mode
B	Shutter grille (lower) 4P connector: disconnected
Test point 1	Shutter grille (lower) 4P connector (female terminals) No. 1: ①
Test point 2	Body ground

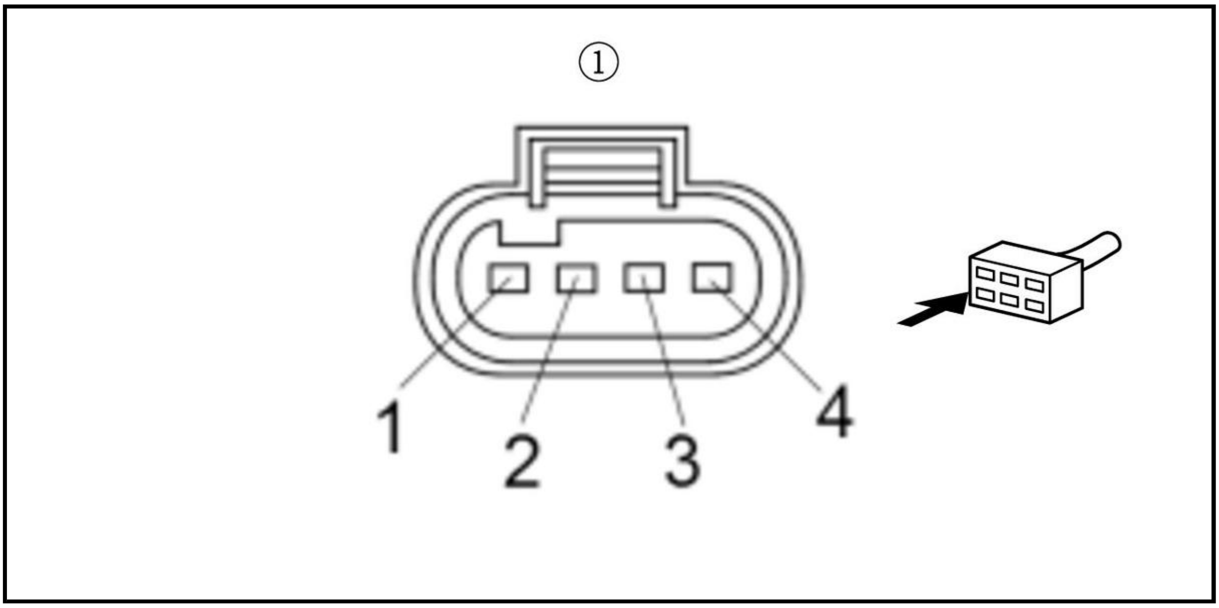

Is there battery voltage?

YES

Go to step 5.

NO

Repair an open in the +B FR FOG/VMP wire between the shutter grille (lower) and the **No. A22 fuse** .

5. Open wire check (GND line)

-1. Measure the resistance between test points 1 and 2.

Test condition	Vehicle OFF (LOCK) mode
B	Shutter grille (lower) 4P connector: disconnected
Test point 1	Shutter grille (lower) 4P connector (female terminals) No. 4: ①
Test point 2	Body ground

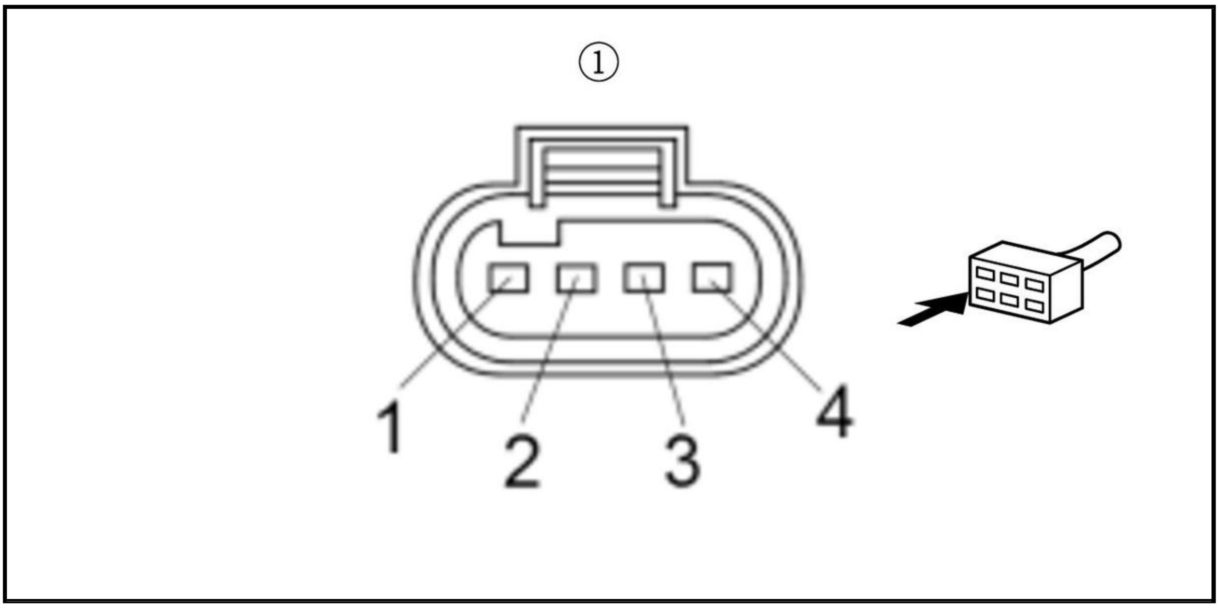

Is there 1.0 Ω or less?

YES

Replace the shutter grille (lower) .

NO

Repair an open in the GND wire between the shutter grille (lower) and G251.

DTC P05AE, P05B2, P05B7, P05C1 (2.4 L ENGINE) (2017 2018 2019)

DTC P05AE : Shutter Grille Assembly (Lower) Malfunction **DTC P05B2** : Shutter Grille Actuator (Lower) Malfunction **DTC P05B7** : Shutter Grille Actuator (Lower) Malfunction **DTC P05C1** : Shutter Grille Actuator (Lower) Temperature Malfunction

NOTE: Before you troubleshoot, review the general troubleshooting information .

DTC Description	Confirmed DTC	Pending DTC
P05AE Shutter Grille Assembly (Lower) Malfunction	B	B
P05B2 Shutter Grille Actuator (Lower) Malfunction	B	B
P05B7 Shutter Grille Actuator (Lower) Malfunction	B	B
P05C1 Shutter Grille Actuator (Lower) Temperature Malfunction	B	B

DTC (PGM-FI)

1. Problem verification

   -1. Turn the vehicle to the ON mode.

   -2. Clear the DTC with the HDS.

   -3. Turn the vehicle to the OFF (LOCK) mode.

   -4. Start the engine, then let it idle.

   -5. Check for Pending or Confirmed DTCs with the HDS.

DTC Description	Confirmed DTC	Pending DTC
P05AE Shutter Grille Assembly (Lower) Malfunction	B	B
P05B2 Shutter Grille Actuator (Lower) Malfunction	B	B
P05B7 Shutter Grille Actuator (Lower) Malfunction	B	B
P05C1 Shutter Grille Actuator (Lower) Temperature Malfunction	B	B

Is DTC P05AE, P05B2, P05B7, or P05C1 is indicated?

YES

Go to step 2.

NO

Intermittent failure, the system is OK at this time. Check for poor connections or loose terminals at the shutter grille (lower) and the PCM. **If the on-board snapshot of this DTC is recorded, try to reproduce the failure under the same conditions with the on-board snapshot** .

2. Shutter grille condition check

-1. Turn the vehicle to the OFF (LOCK) mode.

-2. Check for condition (damage, fixation, foreign material, etc.) at shutter grille.

Is the shutter grille OK?

YES

Go to step 3.

NO

Reassembly or repair the shutter grille, if needed.

3. Shorted wire check (+B FR FOG line)

-1. Check the following fuse.

Fuse	No. A22 (15 A)
Location	Under-hood fuse/relay box

Is the fuse OK?

YES

Go to step 4.

NO

Repair a short in the +B FR FOG wire between shutter grille (lower) and the No. A22 (15 A) fuse. Also replace the No. A22 (15 A) fuse.

4. Open wire check (+B FR FOG line)

-1. Disconnect the following connector.

Shutter grille (lower) 4P connector

-2. Measure the voltage between test points 1 and 2.

Test condition	Vehicle OFF (LOCK) mode
B	Shutter grille (lower) 4P connector: disconnected
Test point 1	Shutter grille (lower) 4P connector (female terminals) No. 1: ①

Test point 2	Body ground

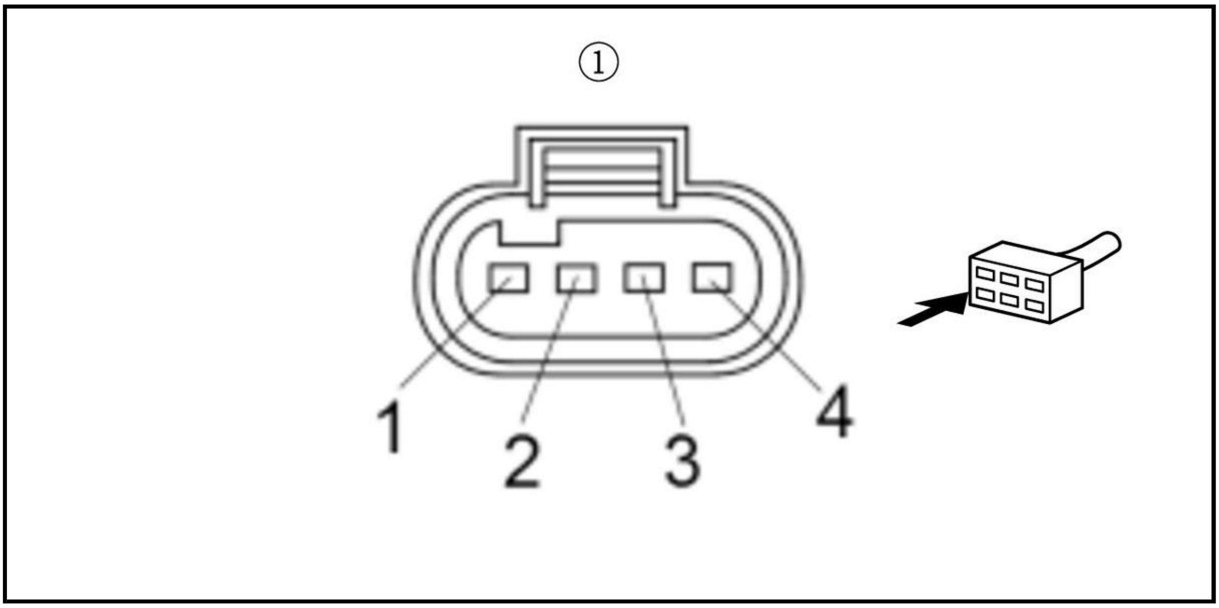

Is there battery voltage?

YES

Go to step 5.

NO

Repair an open in the +B FR FOG wire between the shutter grille (lower) and the No. A22 (15 A) fuse in the under-hood fuse/relay box.

5. Open wire check (GND line)

-1. Check for continuity between test points 1 and 2.

Test condition	Vehicle OFF (LOCK) mode
B	Shutter grille (lower) 4P connector: disconnected
Test point 1	Shutter grille (lower) 4P connector (female terminals) No. 4: ①
Test point 2	Body ground

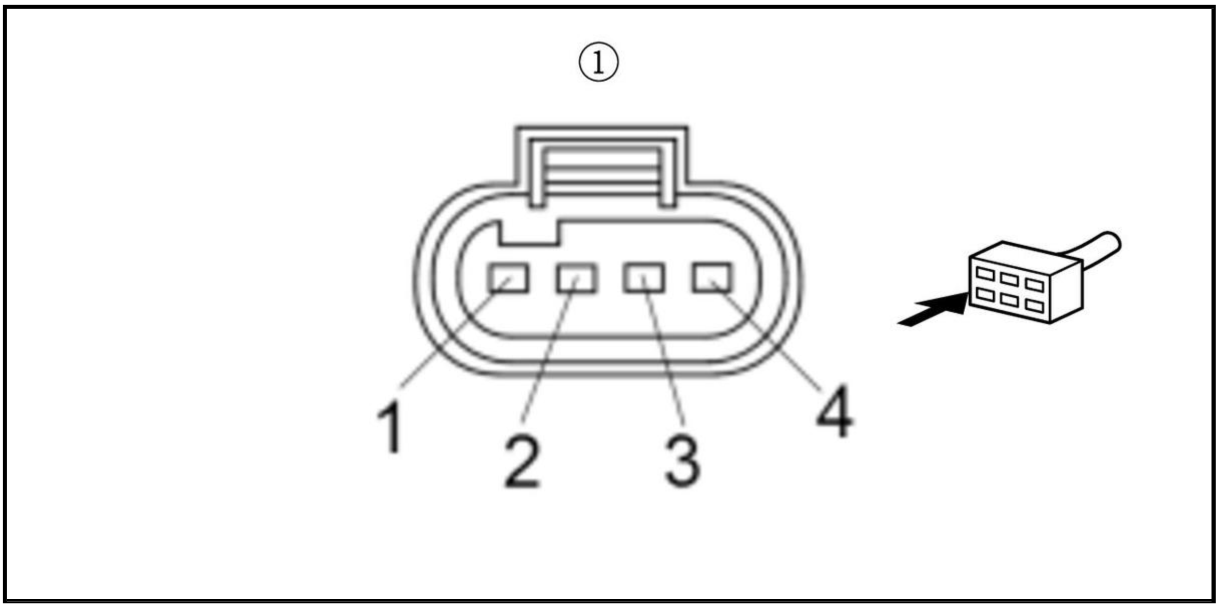

Is there continuity?

YES

Replace the shutter grille (lower) .

NO

Repair an open in the GND wire between the shutter grille (lower) and G251.

DTC P05AF (1.5 L ENGINE)

DTC P05AF : Shutter Grille Assembly (Lower) Malfunction

NOTE: Before you troubleshoot, review the general troubleshooting information .

DTC Description	Confirmed DTC	Pending DTC
P05AF Shutter Grille Assembly (Lower) Malfunction	B	B

DTC (PGM-FI)

1. Problem verification

-1. Turn the vehicle to the ON mode.

-2. Clear the DTC with the HDS.

-3. Turn the vehicle to the OFF (LOCK) mode.

-4. Start the engine, then let it idle.

-5. Check the parameter (s) below with the HDS.

Signal	Threshold		Current conditions	
	Values	Unit	Values	Unit
Lower shutter grill block error	Normal	B	B	B
Lower shutter grill initial learning error	Completed	B	B	B

Do the current condition (s) match the threshold?

YES

Intermittent failure, the system is OK at this time. Check for poor connections or loose terminals at the shutter grille (lower) and the PCM. **If the on-board snapshot of this DTC is recorded, try to reproduce the failure under the same conditions with the on-board snapshot** .

NO

Go to step 2.

2. Shutter grille condition check

-1. Turn the vehicle to the OFF (LOCK) mode.

-2. Inspect the lower shutter grille for any damage or foreign materials caught in the shutter assembly.

Is the shutter grille OK?

YES

Go to step 3.

NO

Remove the foreign material or **replace the shutter grille (lower)** .

3. Shorted wire check (+B FR FOG/VMP line)

-1. Check the following fuse.

Fuse	**No. A22**

Is the fuse OK?

YES

Go to step 4.

NO

Repair a short in the +B FR FOG/VMP wire between shutter grille (lower) and the No. A22 fuse. Also replace the No. A22 fuse.

4. Open wire check (+B FR FOG/VMP line)

-1. Disconnect the following connector.

Shutter grille (lower) 4P connector

-2. Measure the voltage between test points 1 and 2.

Test condition	Vehicle OFF (LOCK) mode
B	Shutter grille (lower) 4P connector: disconnected
Test point 1	Shutter grille (lower) 4P connector (female terminals) No. 1: ①
Test point 2	Body ground

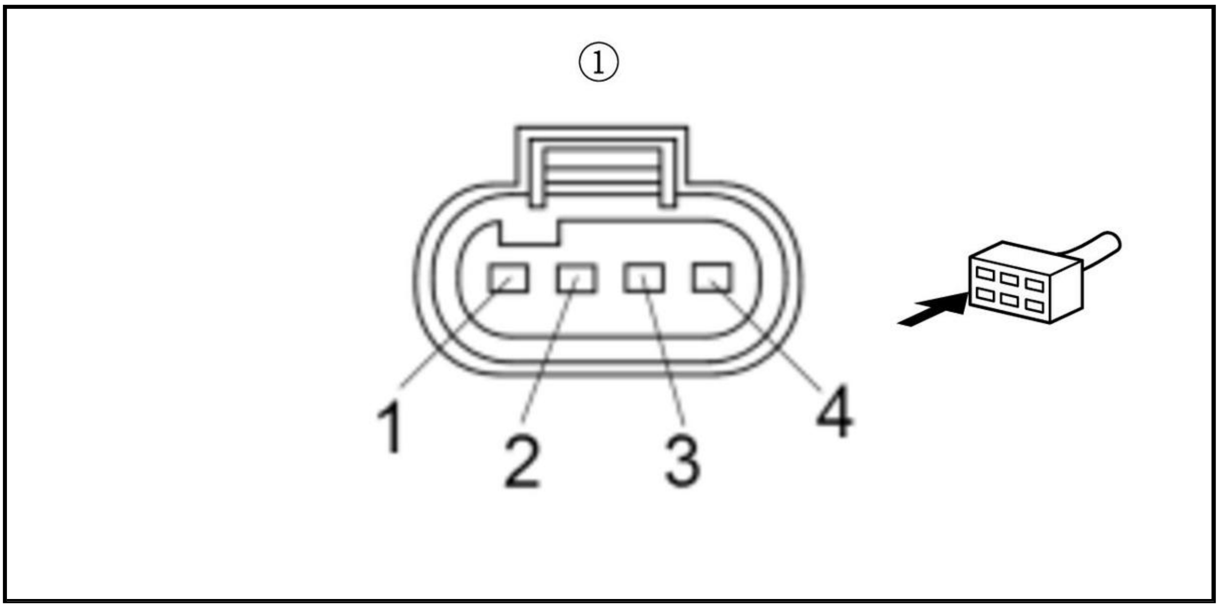

Is there battery voltage?

YES

Go to step 5.

NO

Repair an open in the +B FR FOG/VMP wire between the shutter grille (lower) and the **No. A22 fuse** .

5. Open wire check (GND line)

-1. Measure the resistance between test points 1 and 2.

Test condition	Vehicle OFF (LOCK) mode
B	Shutter grille (lower) 4P connector: disconnected
Test point 1	Shutter grille (lower) 4P connector (female terminals) No. 4: ①
Test point 2	Body ground

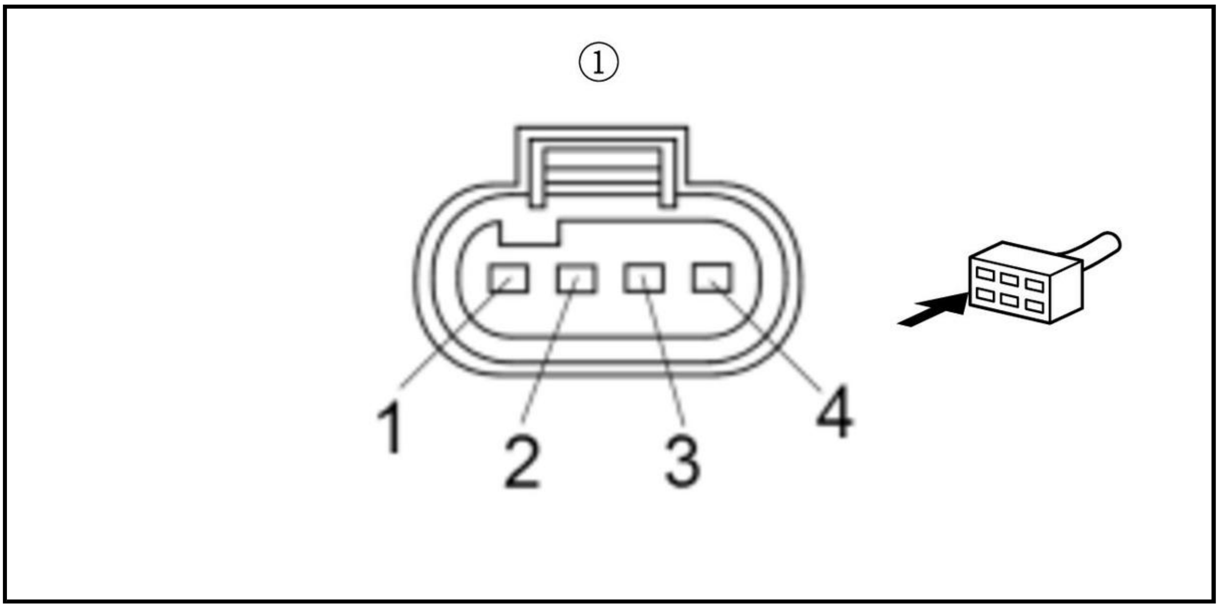

Is there 1.0 Ω or less?

YES

Replace the shutter grille (lower) .

NO

Repair an open in the GND wire between the shutter grille (lower) and G251.

DTC P05AF (2.4 L ENGINE) (2017 2018 2019)

DTC P05AF : Shutter Grille Assembly (Lower) Malfunction

NOTE: Before you troubleshoot, **review the general troubleshooting information** .

DTC Description	Confirmed DTC	Pending DTC
P05AF Shutter Grille Assembly (Lower) Malfunction	B	B

DTC (PGM-FI)

1. Problem verification

   -1. Turn the vehicle to the ON mode.

   -2. Clear the DTC with the HDS.

   -3. Turn the vehicle to the OFF (LOCK) mode.

   -4. Start the engine, then let it idle.

   -5. Check the parameter (s) below with the HDS.

Signal	Threshold		Current conditions	
	Values	Unit	Values	Unit
Lower shutter grill block error	Normal	B	B	B
Lower shutter grill initial learning error	Completed	B	B	B

   Do the current condition (s) match the threshold?

   YES

   Intermittent failure, the system is OK at this time. Check for poor connections or loose terminals at the shutter grille (lower) and the PCM. **If the on-board snapshot of this DTC is recorded, try to reproduce the failure under the same conditions with the on-board snapshot** .

   NO

   Go to step 2.

2. Shutter grille condition check

   -1. Turn the vehicle to the OFF (LOCK) mode.

   -2. Inspect the lower shutter grille for any damage or foreign materials caught in the shutter assembly.

   Is the shutter grille OK?

   YES

   Go to step 3.

NO

Remove the foreign material or replace the shutter grille (lower) .

3. Shorted wire check (+B FR FOG line)

-1. Check the following fuse.

Fuse	No. A22 (15 A)
Location	Under-hood fuse/relay box

Is the fuse OK?

YES

Go to step 4.

NO

Repair a short in the +B FR FOG wire between shutter grille (lower) and the No. A22 (15 A) fuse. Also replace the No. A22 (15 A) fuse.

4. Open wire check (+B FR FOG line)

-1. Disconnect the following connector.

Shutter grille (lower) 4P connector

-2. Measure the voltage between test points 1 and 2.

Test condition	Vehicle OFF (LOCK) mode
B	Shutter grille (lower) 4P connector: disconnected
Test point 1	Shutter grille (lower) 4P connector (female terminals) No. 1: ①
Test point 2	Body ground

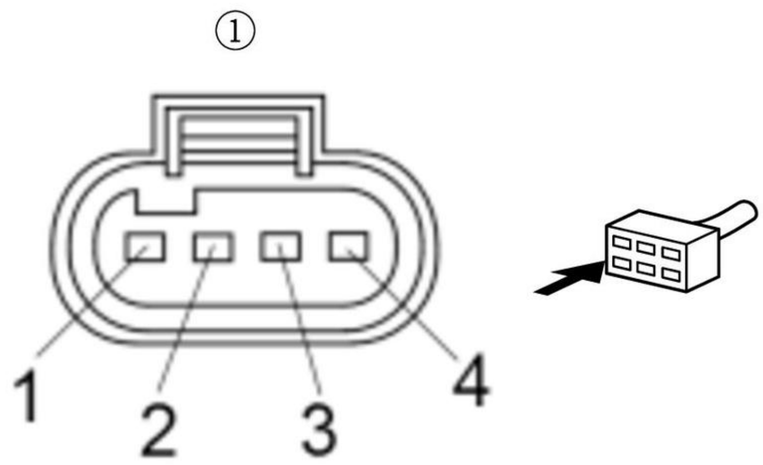

Is there battery voltage?

YES

Go to step 5.

NO

Repair an open in the +B FR FOG wire between the shutter grille (lower) and the No. A22 (15 A) fuse in the under-hood fuse/relay box.

5. Open wire check (GND line)

-1. Check for continuity between test points 1 and 2.

Test condition	Vehicle OFF (LOCK) mode
B	Shutter grille (lower) 4P connector: disconnected
Test point 1	Shutter grille (lower) 4P connector (female terminals) No. 4: ①
Test point 2	Body ground

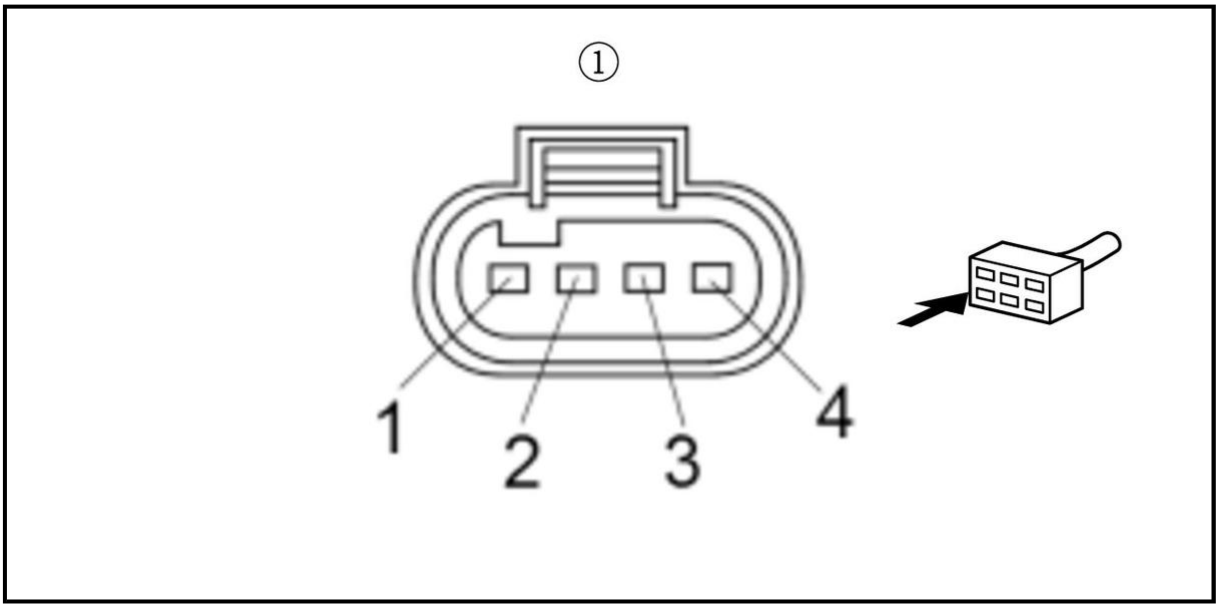

Is there continuity?

YES

Replace the shutter grille (lower) .

NO

Repair an open in the GND wire between the shutter grille (lower) and G251.

DTC P0600 (PGM-FI SYSTEM (1.5 L ENGINE))

DTC P0600 : PCM Serial Communication Failure

NOTE: Before you troubleshoot, **review the general troubleshooting information** .

DTC Description	Confirmed DTC	Pending DTC
P0600 PCM Serial Communication Failure	B	B

DTC (PGM-FI)

1. Problem verification

-1. Turn the vehicle to the ON mode.

-2. Clear the DTC with the HDS.

-3. Turn the vehicle to the OFF (LOCK) mode.

-4. Start the engine, and let it idle 5 seconds or more.

-5. Check for Pending or Confirmed DTCs with the HDS.

DTC Description	Confirmed DTC	Pending DTC
P0600 PCM Serial Communication Failure	B	B

Is DTC P0600 indicated?

YES

The failure is duplicated. Check for any authorized service information related to the DTCs or symptoms you are troubleshooting, or **substitute a known-good PCM** .

NO

Intermittent failure, the system is OK at this time. **If the on-board snapshot of this DTC is recorded, try to reproduce the failure under the same conditions with the on-board snapshot** .

DTC P0602 (PGM-FI SYSTEM (1.5 L ENGINE))

DTC P0602 : PCM Programming Error

NOTE:

- Before you troubleshoot, **review the general troubleshooting information** .
- This DTC is indicated when the PCM update procedure is not completed.
- Do not turn the vehicle to the other than ON mode while updating the PCM. If you do, the PCM can be damaged.

DTC Description	Confirmed DTC	Pending DTC
P0602 PCM Programming Error	B	B

DTC (PGM-FI)

1. Problem verification (update)

-1. **Update the PCM** .

-2. Check for Pending or Confirmed DTCs with the HDS.

DTC Description	Confirmed DTC	Pending DTC
P0602 PCM Programming Error	B	B

Is DTC P0602 indicated?

YES

Replace the PCM .

NO

Update is complete. If any other Pending or Confirmed DTCs are indicated, go to the indicated DTCs troubleshooting.

DTC P0602 (PGM-FI SYSTEM (2.4 L ENGINE)) (2017 2018 2019)

DTC P0602 : PCM Programming Error

NOTE:

- Before you troubleshoot, **review the general troubleshooting information** .
- This DTC is indicated when the PCM update procedure is not completed.
- Do not turn the vehicle to the other than ON mode while updating the PCM. If you do, the PCM can be damaged.

DTC Description	Confirmed DTC	Pending DTC
P0602 ECM/PCM Programming Error	B	B

DTC (PGM-FI)

1. Problem verification (update)

   -1. **Update the PCM** .

   -2. Check for Pending or Confirmed DTCs with the HDS.

DTC Description	Confirmed DTC	Pending DTC
P0602 ECM/PCM Programming Error	B	B

   Is DTC P0602 indicated?

   YES

   Replace the PCM .

   NO

   Update is complete. If any other Pending or Confirmed DTCs are indicated, go to the indicated DTC's troubleshooting.

DTC P0607 (2.4 L ENGINE) (2017 2018 2019)

DTC P0607 : PCM Internal Circuit Malfunction

NOTE:

- Before you troubleshoot, **review the general troubleshooting information** .
- DTC P0607 is stored at the same time as any of DTC P1xxx caused by the PCM internal failure. Troubleshoot those DTCs indicated at the same time as DTC P0607 first, then recheck for P0607.

DTC Description	Confirmed DTC	Pending DTC
P0607 PCM Internal Circuit Malfunction	B	B

DTC (PGM-FI)

1. Problem verification

   -1. Turn the vehicle to the ON mode.

   -2. Clear the DTC with the HDS.

   -3. Check for Pending or Confirmed DTCs with the HDS.

DTC Description	Confirmed DTC	Pending DTC
B	B	B

Are any of DTC P1xxx indicated at the same time as DTC P0607?

YES

Go to the indicated DTC's troubleshooting.

NO

Go to step 1-2 and recheck. Check for any authorized service information related to the DTCs or symptoms you are troubleshooting, or **substitute a known-good PCM** .

DTC P060A (1.5 L ENGINE)

DTC P060A : PCM Internal Control Module Malfunction

NOTE: Before you troubleshoot, **review the general troubleshooting information** .

DTC Description	Confirmed DTC	Pending DTC
P060A PCM Internal Control Module Malfunction	B	B

DTC (PGM-FI)

1. Problem verification

   -1. Turn the vehicle to the ON mode.

   -2. Clear the DTC with the HDS.

   -3. Turn the vehicle to the OFF (LOCK) mode.

   -4. Turn the vehicle to the ON mode.

   -5. Check for Pending or Confirmed DTCs with the HDS.

DTC Description	Confirmed DTC	Pending DTC
P060A PCM Internal Control Module Malfunction	B	B

Is DTC P060A indicated?

YES

The failure is duplicated. Check for any authorized service information related to the DTCs or symptoms you are troubleshooting, or **substitute a known-good PCM** .

NO

Intermittent failure, the system is OK at this time. **If the on-board snapshot of this DTC is recorded, try to reproduce the failure under the same conditions with the on-board snapshot** .

DTC P060A (2.4 L ENGINE) (2017 2018 2019)

DTC P060A : PCM Internal Control Module Malfunction

NOTE: Before you troubleshoot, **review the general troubleshooting information** .

DTC Description	Confirmed DTC	Pending DTC
P060A PCM Internal Control Module Malfunction	B	B

DTC (PGM-FI)

1. Problem verification

   -1. Turn the vehicle to the ON mode.

   -2. Clear the DTC with the HDS.

   -3. Check for Pending or Confirmed DTCs with the HDS.

DTC Description	Confirmed DTC	Pending DTC
P060A PCM Internal Control Module Malfunction	B	B

   Is DTC P060A indicated?

   YES

   The failure is duplicated. Check for any authorized service information related to the DTCs or symptoms you are troubleshooting or **substitute a known-good PCM** .

   NO

   Intermittent failure, the system is OK at this time. **If the on-board snapshot of this DTC is recorded, try to reproduce the failure under the same conditions with the on-board snapshot** .

DTC P0615 (1.5 L ENGINE)

DTC P0615 : Starter Cut Relay Diagnosis Circuit Malfunction

NOTE: Before you troubleshoot, **review the general troubleshooting information** .

DTC Description	Confirmed DTC	Pending DTC
P0615 Starter Cut Relay Diagnosis Circuit Malfunction	B	B

DTC (PGM-FI)

1. Problem verification

   -1. Turn the vehicle to the ON mode.

   -2. Clear the DTC with the HDS.

   -3. Try to start the engine.

   -4. Check for Pending or Confirmed DTCs with the HDS.

DTC Description	Confirmed DTC	Pending DTC
P0615 Starter Cut Relay Diagnosis Circuit Malfunction	B	B

   Is DTC P0615 indicated?

   YES

   The failure is duplicated. Go to step 2.

   NO

Intermittent failure, the system is OK at this time. Check for poor connections or loose terminals at the relay circuit board, and the PCM. **If the on-board snapshot of this DTC is recorded, try to reproduce the failure under the same conditions with the on-board snapshot** .

2. DTC check

-1. Check for Pending or Confirmed DTCs with the HDS.

DTC Description	Confirmed DTC	Pending DTC
P16F3 Starter Cut Relay 1 Control Circuit Low Voltage	B	B
P16F4 Starter Cut Relay 2 Control Circuit Low Voltage	B	B

Are DTC P16F3 and P16F4 indicated?

YES

Go to the troubleshooting for DTC **P16F3** and **P16F4** .

NO

Go to step 3.

3. Determine possible failure area (START DIAG line, others)

-1. Turn the vehicle to the ON mode.

-2. Clear the DTC with the HDS.

-3. Try to start the engine.

Does the engine start?

YES

Go to step 4.

NO

Go to step 5.

4. Open wire check (START DIAG line)

-1. Turn the vehicle to the OFF (LOCK) mode.

-2. Jump the SCS line with the HDS, and wait more than 1 minute.

-3. Disconnect the following connectors.

PCM connector A (50P)
Relay circuit board connector A (8P)

-4. Check for continuity between test points 1 and 2.

Test condition	Vehicle OFF (LOCK) mode
	Relay circuit board connector A (8P): disconnected
	PCM connector A (50P): disconnected
Test point 1	Relay circuit board connector A (8P) (female terminals) No. 8: ①
Test point 2	**PCM connector A (50P) No. 19**

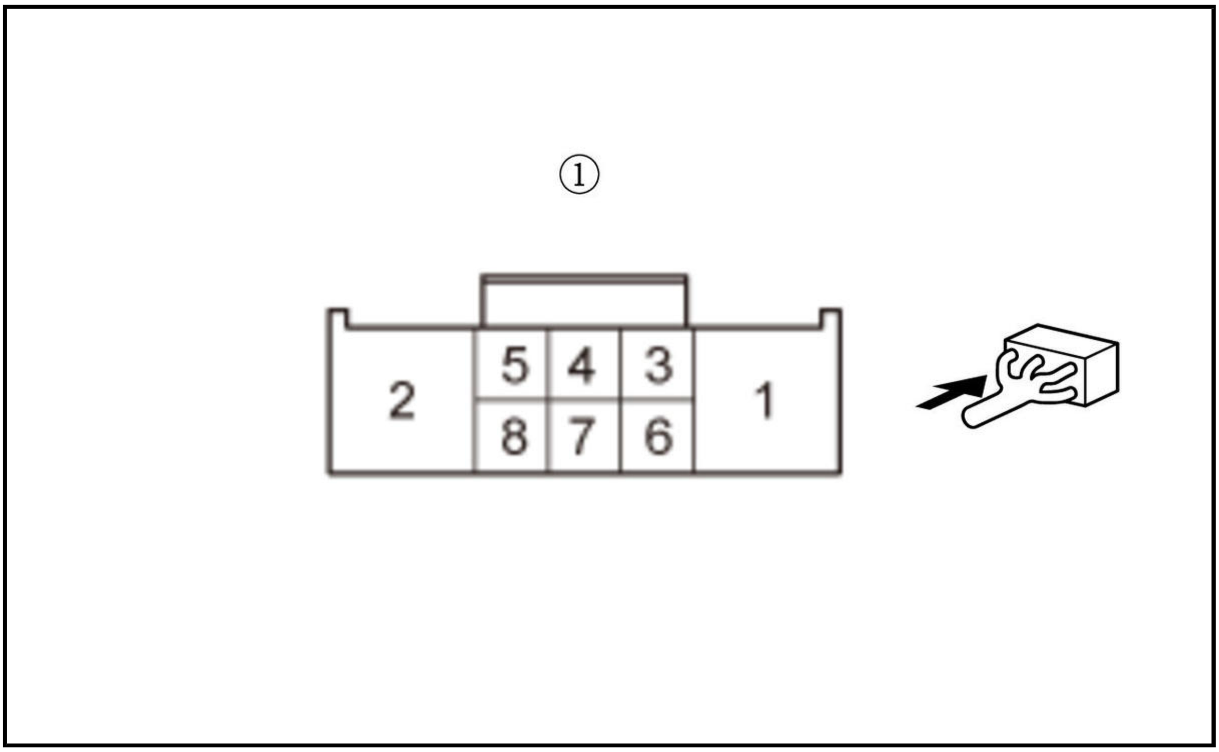

Is there continuity?

YES

The START DIAG wire is OK. Check for any authorized service information related to the DTCs or symptoms you are troubleshooting, or **substitute a known-good PCM** .

NO

Repair an open in the START DIAG wire between the PCM (A19) and the relay circuit board.

5. Fuse check

-1. Turn the vehicle to the OFF (LOCK) mode.

-2. Check the following fuse.

Fuse	No. D20 (10 A)
Location	Under-dash fuse/relay box

Is the fuse OK?

YES

Go to step 6.

NO

Check for a short in the IG1 STARTER CUT wire between the No. D20 (10 A) fuse and the relay circuit board. If the wire is OK, **replace the under-dash fuse/relay box** . Also replace the No. D20 (10 A) fuse.

6. Open wire check (IG1 STARTER CUT line)

-1. Disconnect the following connectors.

Under-dash fuse/relay box connector C (27P)
Relay circuit board connector B (6P)

-2. Connect terminals A and B with a jumper wire.

Terminal A	Under-dash fuse/relay box connector C (27P) (female terminals) No. 23: ①
Terminal B	Body ground

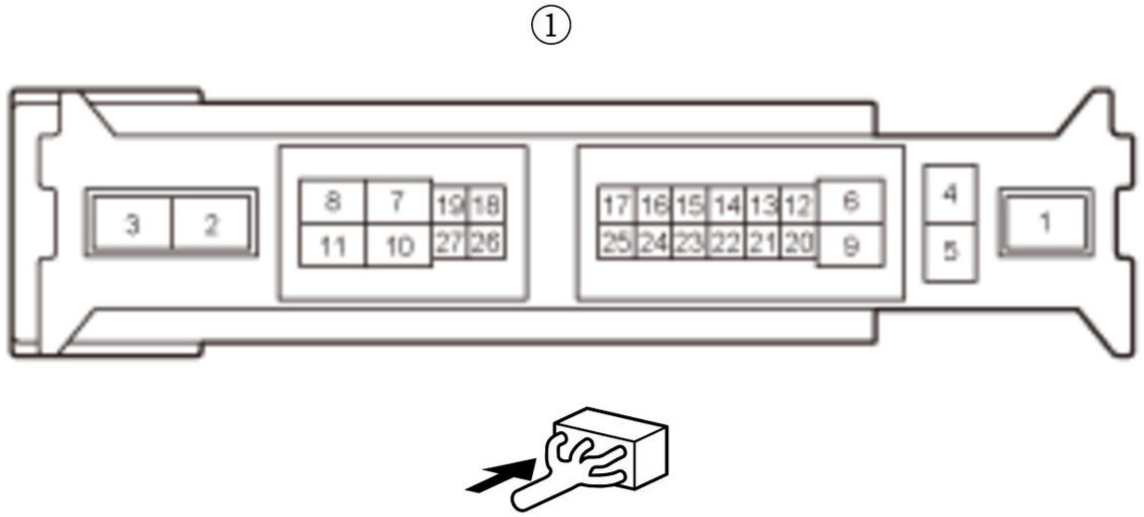
①
3
2
8
7
19
18
11
10
27
26
17
16
15
14
13
12
6
25
24
23
22
21
20
9
4
5
1

-3. Check for continuity between test points 1 and 2.

Test condition	Vehicle OFF (LOCK) mode
	Relay circuit board connector B (6P): disconnected
B	Under-dash fuse/relay box connector C (27P): disconnected
B	Under-dash fuse/relay box connector C (27P) No. 23: jumped to body ground
Test point 1	Relay circuit board connector B (6P) (female terminals) No. 4: ①
Test point 2	Body ground

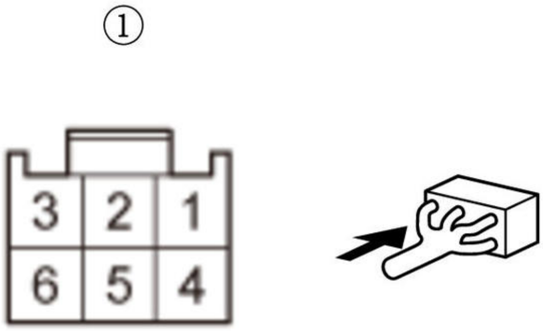

Is there continuity?

YES

Go to step 7.

NO

Repair an open in the IG1 STARTER CUT wire between the relay circuit board and the under-dash fuse/relay box.

7. Relay circuit board check

   -1. **Remove and test the relay circuit board** .

   Is the relay circuit board OK?

   YES

   Replace the under-dash fuse/relay box .

   NO

   Replace the relay circuit board .

DTC P0615 (2.4 L ENGINE) (2017 2018 2019)

DTC P0615 : Starter Cut Relay Diagnosis Circuit Malfunction

NOTE: Before you troubleshoot, **review the general troubleshooting information** .

DTC Description	Confirmed DTC	Pending DTC
P0615 Starter Cut Relay Diagnosis Circuit Malfunction	B	B

DTC (PGM-FI)

1. Problem verification

   -1. Turn the vehicle to the ON mode.

   -2. Clear the DTC with the HDS.

   -3. Try to start the engine.

   -4. Check for Pending or Confirmed DTCs with the HDS.

DTC Description	Confirmed DTC	Pending DTC
P0615 Starter Cut Relay Diagnosis Circuit Malfunction	B	B

   Is DTC P0615 indicated?

   YES

   The failure is duplicated. Go to step 2.

   NO

   Intermittent failure, the system is OK at this time. Check for poor connections or loose terminals at the relay circuit board, and the PCM. **If the on-board snapshot of this DTC is recorded, try to reproduce the failure under the same conditions with the on-board snapshot** .

2. DTC check

-1. Check for Pending or Confirmed DTCs with the HDS.

DTC Description	Confirmed DTC	Pending DTC
P16F3 Starter Cut Relay 1 Control Circuit Low Voltage	B	B
P16F4 Starter Cut Relay 2 Control Circuit Low Voltage	B	B

Are DTC P16F3 and P16F4 indicated?

YES

Go to the troubleshooting for DTC **P16F3** and **P16F4** .

NO

Go to step 3.

3. Determine possible failure area (START DIAG line, others)

-1. Turn the vehicle to the ON mode.

-2. Clear the DTC with the HDS.

-3. Try to start the engine.

Does the engine start?

YES

Go to step 4.

NO

Go to step 5.

4. Open wire check (START DIAG line)

-1. Turn the vehicle to the OFF (LOCK) mode.

-2. Jump the SCS line with the HDS, and wait more than 1 minute.

-3. Disconnect the following connectors.

PCM connector A (51P)
Relay circuit board connector A (8P)

-4. Check for continuity between test points 1 and 2.

Test condition	Vehicle OFF (LOCK) mode Relay circuit board connector A (8P): disconnected PCM connector A (51P): disconnected
Test point 1	Relay circuit board connector A (8P) (female terminals) No. 8: ①
Test point 2	**PCM connector A (51P) No. 47**

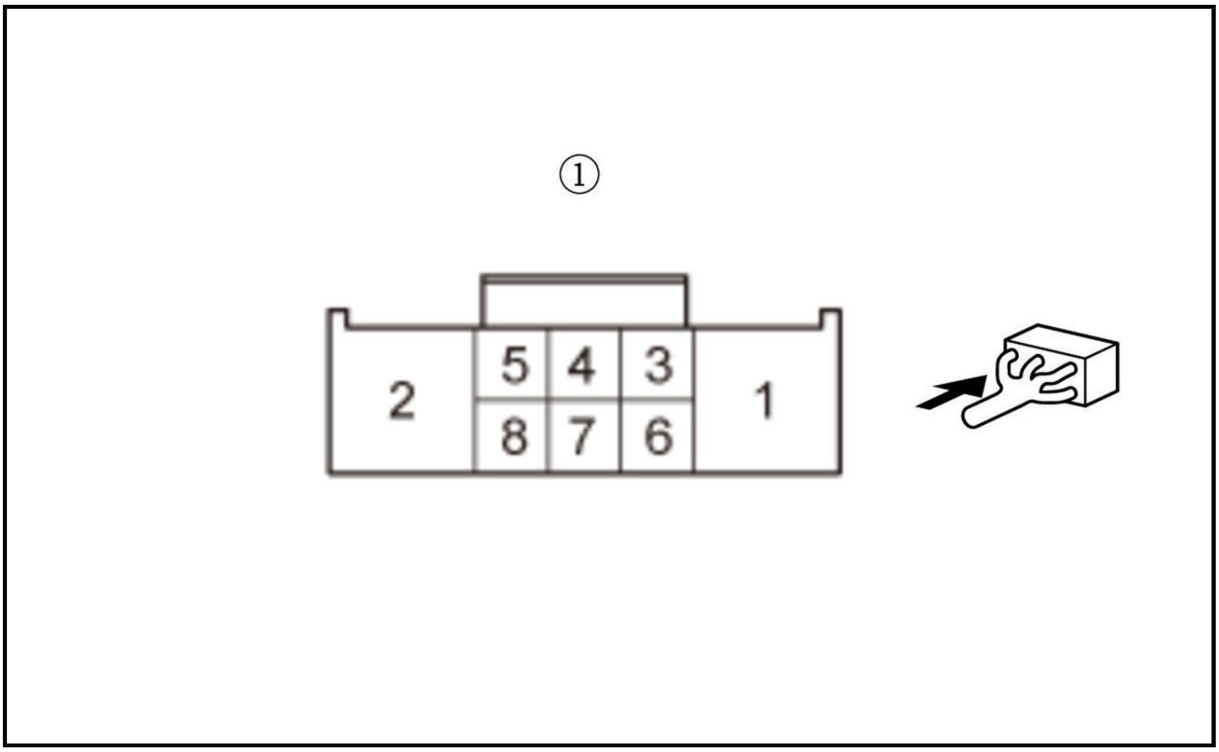

Is there continuity?

YES

The START DIAG wire is OK. Check for any authorized service information related to the DTCs or symptoms you are troubleshooting, or **substitute a known-good PCM** .

NO

Repair an open in the START DIAG wire between the PCM (A47) and the relay circuit board.

5. Fuse check

-1. Turn the vehicle to the OFF (LOCK) mode.

-2. Check the following fuse.

Fuse	No. D20 (10 A)
Location	Under-dash fuse/relay box

Is the fuse OK?

YES

Go to step 6.

NO

Check for a short in the IG1STARTER CUT wire between the No. D20 (10 A) fuse and the relay circuit board. If the wire is OK, **replace the under-dash fuse/relay box** . Also replace the No. D20 (10 A) fuse.

6. Open wire check (IG1 STARTER CUT line)

-1. Disconnect the following connectors.

Under-dash fuse/relay box connector C (27P)
Relay circuit board connector B (6P)

-2. Connect terminals A and B with a jumper wire.

Terminal A	Under-dash fuse/relay box connector C (27P) (female terminals) No. 23: ①
Terminal B	Body ground

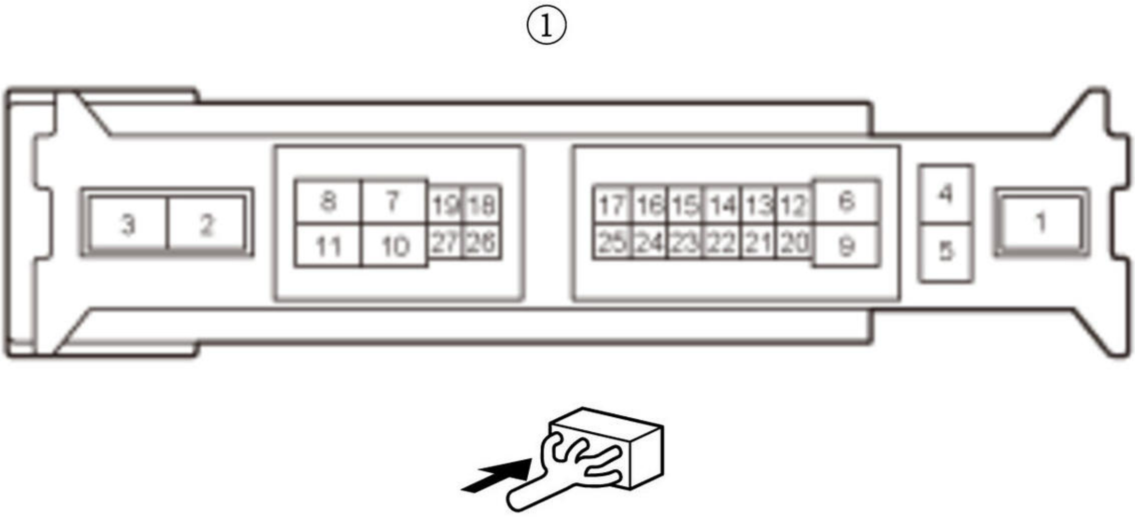
①
3
2
8
7
19
18
11
10
27
26
17
16
15
14
13
12
6
25
24
23
22
21
20
9
4
5
1

-3. Check for continuity between test points 1 and 2.

Test condition	Vehicle OFF (LOCK) mode
	Relay circuit board connector B (6P): disconnected
B	Under-dash fuse/relay box connector C (27P): disconnected
B	Under-dash fuse/relay box connector C (27P) No. 23: jumped to body ground
Test point 1	Relay circuit board connector B (6P) (female terminals) No. 4: ①
Test point 2	Body ground

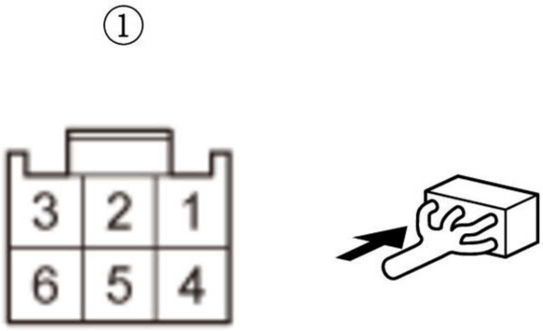

Is there continuity?

YES

Go to step 7.

NO

Repair an open in the IG1 STARTER CUT wire between the relay circuit board and the under-dash fuse/relay box.

7. Relay circuit board check

-1. **Remove and test the relay circuit board** .

Is the relay circuit board OK?

YES

Replace the under-dash fuse/relay box .

NO

Replace the relay circuit board .

DTC P0616 (1.5 L ENGINE)

DTC P0616 : Starter Cut Relay Diagnosis Circuit Low Voltage

NOTE: Before you troubleshoot, **review the general troubleshooting information** .

DTC Description	Confirmed DTC	Pending DTC
P0616 Starter Cut Relay Diagnosis Circuit Low Voltage	B	B

DTC (PGM-FI)

1. Problem verification

-1. Turn the vehicle to the ON mode.

-2. Clear the DTC with the HDS.

-3. Check the parameter (s) below with the HDS.

Signal	Threshold		Current conditions	
	Values	Unit	Values	Unit
STARTER CUT RELAY	Less than 2.2	V	B	B

Do the current condition (s) match the threshold?

YES

The failure is duplicated. Go to step 2.

NO

Intermittent failure, the system is OK at this time. Check for poor connections or loose terminals at the relay circuit board and the PCM. **If the on-board snapshot of this DTC is recorded, try to reproduce the failure under the same conditions with the on-board snapshot** .

2. Relay circuit board check

-1. Turn the vehicle to the OFF (LOCK) mode.

-2. **Remove and test the relay circuit board** .

Is the relay circuit board OK?

YES

Go to step 3.

NO

Replace the relay circuit board .

3. Shorted wire check (START DIAG line)

-1. Jump the SCS line with the HDS, and wait more than 1 minute.

-2. Disconnect the following connector.

PCM connector A (50P)

-3. Measure the resistance between test points 1 and 2.

Test condition	Vehicle OFF (LOCK) mode
	Relay circuit board: removed
	PCM connector A (50P): disconnected
Test point 1	**PCM connector A (50P) No. 19**
Test point 2	Body ground

Is there 1.0 MΩ or more?

YES

Check for any authorized service information related to the DTCs or symptoms you are troubleshooting or **substitute a known-good PCM** .

NO

Repair a short in the START DIAG wire between the PCM (A19) and the relay circuit board.

DTC P0616 (2.4 L ENGINE) (2017 2018 2019)

DTC P0616 : Starter Cut Relay Diagnosis Circuit Low Voltage

NOTE: Before you troubleshoot, **review the general troubleshooting information** .

DTC Description	Confirmed DTC	Pending DTC
P0616 Starter Cut Relay Diagnosis Circuit Low Voltage	B	B

DTC (PGM-FI)

1. Problem verification

-1. Turn the vehicle to the ON mode.

-2. Clear the DTC with the HDS.

-3. Check the parameter (s) below with the HDS.

Signal	Threshold		Current conditions	
	Values	Unit	Values	Unit
STARTER CUT RELAY	Less than 1.29	V	B	B

Do the current condition (s) match the threshold?

YES

The failure is duplicated. Go to step 2.

NO

Intermittent failure, the system is OK at this time. Check for poor connections or loose terminals at the relay circuit board and the PCM. **If the on-board snapshot of this DTC is recorded, try to reproduce the failure under the same conditions with the on-board snapshot** .

2. Relay circuit board check

-1. Turn the vehicle to the OFF (LOCK) mode.

-2. **Remove and test the relay circuit board** .

Is the relay circuit board OK?

YES

Go to step 3.

NO

Replace the relay circuit board .

3. Shorted wire check (START DIAG line)

-1. Jump the SCS line with the HDS, and wait more than 1 minute.

-2. Disconnect the following connector.

PCM connector A (51P)

-3. Measure the resistance between test points 1 and 2.

Test condition	Vehicle OFF (LOCK) mode
	Relay circuit board: removed
	PCM connector A (51P): disconnected
Test point 1	**PCM connector A (51P) No. 47**
Test point 2	Body ground

Is there 1.0 MΩ or more?

YES

Check for any authorized service information related to the DTCs or symptoms you are troubleshooting or **substitute a known-good PCM** .

NO

Repair a short in the START DIAG wire between the PCM (A47) and the relay circuit board.

DTC P0617 (1.5 L ENGINE)

DTC P0617 : Starter Cut Relay Diagnosis Circuit High Voltage

NOTE: Before you troubleshoot, **review the general troubleshooting information** .

DTC Description	Confirmed DTC	Pending DTC
P0617 Starter Cut Relay Diagnosis Circuit High Voltage	B	B

DTC (PGM-FI)

1. Problem verification

   -1. Turn the vehicle to the ON mode.

   -2. Clear the DTC with the HDS.

   -3. Check the parameter (s) below with the HDS.

Signal	Threshold		Current conditions	
	Values	Unit	Values	Unit
STARTER CUT RELAY	More than 3.2	V	B	B

   Do the current condition (s) match the threshold?

   YES

   The failure is duplicated. Go to step 2.

   NO

   Intermittent failure, the system is OK at this time. Check for poor connections or loose terminals at the relay circuit board and the PCM. **If the on-board snapshot of this DTC is recorded, try to reproduce the failure under the same conditions with the on-board snapshot** .

2. Relay circuit board check

   -1. Turn the vehicle to the OFF (LOCK) mode.

   -2. **Remove and test the relay circuit board** .

   Is the relay circuit board OK?

   YES

   Go to step 3.

   NO

   Replace the relay circuit board .

3. Shorted wire check (START DIAG line to power)

   -1. Jump the SCS line with the HDS, and wait more than 1 minute.

   -2. Disconnect the following connector.

PCM connector A (50P)

-3. Turn the vehicle to the ON mode.

-4. Measure the voltage between test points 1 and 2.

Test condition	Vehicle ON mode
	Relay circuit board: removed
	PCM connector A (50P): disconnected
Test point 1	**PCM connector A (50P) No. 19**
Test point 2	Body ground

Is there about 0.1 V or less?

YES

The START DIAG wire is OK. Check for any authorized service information related to the DTCs or symptoms you are troubleshooting, or **substitute a known-good PCM** .

NO

Repair a short to power in the START DIAG wire between the PCM (A19) and the relay circuit board.

DTC P0617 (2.4 L ENGINE) (2017 2018 2019)

DTC P0617 : Starter Cut Relay Diagnosis Circuit High Voltage

NOTE: Before you troubleshoot, **review the general troubleshooting information** .

DTC Description	Confirmed DTC	Pending DTC
P0617 Starter Cut Relay Diagnosis Circuit High Voltage	B	B

DTC (PGM-FI)

1. Problem verification

-1. Turn the vehicle to the ON mode.

-2. Clear the DTC with the HDS.

-3. Check the parameter (s) below with the HDS.

Signal	Threshold		Current conditions	
	Values	Unit	Values	Unit
STARTER CUT RELAY	More than 4.67	V	B	B

Do the current condition (s) match the threshold?

YES

The failure is duplicated. Go to step 2.

NO

Intermittent failure, the system is OK at this time. Check for poor connections or loose terminals at the relay circuit board and the PCM. **If the on-board snapshot of this DTC is recorded, try to reproduce the failure under the same conditions with the on-board snapshot** .

2. Relay circuit board check

-1. Turn the vehicle to the OFF (LOCK) mode.

-2. **Remove and test the relay circuit board** .

Is the relay circuit board OK?

YES

Go to step 3.

NO

Replace the relay circuit board .

3. Shorted wire check (START DIAG line to power)

-1. Jump the SCS line with the HDS, and wait more than 1 minute.

-2. Disconnect the following connector.

PCM connector A (51P)

-3. Turn the vehicle to the ON mode.

-4. Measure the voltage between test points 1 and 2.

Test condition	Vehicle ON mode
	Relay circuit board: removed
	PCM connector A (51P): disconnected
Test point 1	**PCM connector A (51P) No. 47**
Test point 2	Body ground

Is there about 0.1 V or less?

YES

The START DIAG wire is OK. Check for any authorized service information related to the DTCs or symptoms you are troubleshooting, or **substitute a known-good PCM** .

NO

Repair a short to power in the START DIAG wire between the PCM (A47) and the relay circuit board.

DTC P061B (1.5 L ENGINE)

DTC P061B : PCM Internal Malfunction (Torque Calculation)

NOTE: Before you troubleshoot, **review the general troubleshooting information** .

DTC Description	Confirmed DTC	Pending DTC
P061B PCM Internal Malfunction (Torque Calculation)	B	B

DTC (PGM-FI)

1. Problem verification

-1. Turn the vehicle to the ON mode.

-2. Clear the DTC with the HDS.

-3. Turn the vehicle to the OFF (LOCK) mode.

-4. Start the engine, then let it idle.

-5. Test-drive the vehicle for several minutes in the range of these recorded on-board snapshot parameter.

- Engine speed
- APP Sensor A/B

On-board Snapshot

-6. Check for Pending or Confirmed DTCs with the HDS.

DTC Description	Confirmed DTC	Pending DTC
P061B PCM Internal Malfunction (Torque Calculation)	B	B

Is DTC P061B indicated?

YES

The failure is duplicated. Check for any authorized service information related to the DTCs or symptoms you are troubleshooting, or **substitute a known-good PCM** .

NO

Intermittent failure, the system is OK at this time. Check for poor connections or loose terminals at the throttle body and the PCM. **If the on-board snapshot of this DTC is recorded, try to reproduce the failure under the same conditions with the on-board snapshot** .

DTC TROUBLESHOOTING

DTC P0171 (2.4 L ENGINE) (2017 2018 2019)

DTC P0171 : Fuel System Too Lean

NOTE:

- Before you troubleshoot, review the general troubleshooting information .
- Do not clear the DTC or reset the PCM before beginning this troubleshooting procedure until instructed to clear it. Clearing the DTC or resetting the PCM can delete valuable diagnostic information, even if the on-board snapshot and the freeze data are saved.
- Inspect for aftermarket fuel system and engine components before beginning troubleshooting.
- If any of the DTCs listed below are stored at the same time as DTC P0171, troubleshoot those DTCs first, then recheck for P0171.

  P0010, P0011: VTC system

  P0087, P0088, P0191: Fuel rail pressure sensor

  P006A, P0101, P0102, P0103: MAF sensor

  P0105, P0107, P0108, P2073, P2074: MAP sensor

  P0130, P0133, P1172, P2195, P2237, P2238, P2252, P2A00: A/F sensor (Sensor 1)

  P0134, P0135: A/F sensor (Sensor 1) heater

  P0137, P0138, P0139, P2270: Secondary HO2S (Sensor 2)

  P0141: Secondary HO2S (Sensor 2) heater

  P0201, P0202, P0203, P0204: No. 1-No. 4 cylinder injector (s)

  P0443: EVAP canister purge valve

  P2648, P2649: VTEC system

DTC Description	Confirmed DTC	Pending DTC
P0171 Fuel System Too Lean	B	B

DTC (PGM-FI)

1. Problem verification - Idle

   -1. Start the engine and let it idle without load (in P or N).

   -2. Check the parameter (s) below with the HDS.

Signal	Threshold		Current conditions	
	Values	Unit	Values	Unit
AF FB (ST FUEL TRIM)	More than 1.33	B	B	B

   Do the current condition (s) match the threshold?

YES

The AF FB (ST FUEL TRIM) is too high at idle. Go to step 3.

NO

The AF FB (ST FUEL TRIM) is OK at idle. Go to step 2.

2. Problem verification - On-board Snapshot

-1. Review the on-board snapshot and record the value of the parameters below when the AF FB (ST FUEL TRIM) was at its highest point.

ENGINE SPEED	B
VEHICLE SPEED	B
REL TP SENSOR	B
APP SENSOR	B

On-board Snapshot

-2. Drive the vehicle according to the conditions determined above.

Signal	**Current conditions**	
	Values	**Unit**
ENGINE SPEED	B	B
VEHICLE SPEED	B	B
REL TP SENSOR	B	B
APP SENSOR	B	B

-3. Check the parameter (s) below with the HDS while driving.

Signal	**Threshold**		**Current conditions**	
	Values	**Unit**	**Values**	**Unit**
AF FB (ST FUEL TRIM)	More than 1.33	B	B	B

Do the current condition (s) match the threshold under the on-board snapshot conditions?

YES

The AF FB (ST FUEL TRIM) is too high under the conditions above. Go to step 3.

NO

The AF FB (ST FUEL TRIM) is OK under the same conditions as the on-board snapshot. The system is normal at this time.

3. Check for debris in MAF sensor

-1. Turn the vehicle to the OFF (LOCK) mode.

-2. **Remove the MAF sensor/IAT sensor** .

-3. Check for lint, bugs, and other foreign objects in the sensor.

Is there debris in the MAF sensor/IAT sensor?

YES

Remove the debris from the MAF sensor/IAT sensor and then use a vacuum cleaner to remove any debris from the air cleaner housing.

NO

Reinstall the MAF sensor/IAT sensor . Go to step 4.

4. Check for disconnected or damaged components:

   Visually inspect each of the components below for disconnected hoses, cracks, or damage:

   - Crankcase breather hose (A)
   - Air cleaner housing (B)
   - Intake air duct (C)
   - Oil cap (D) and dipstick (E)

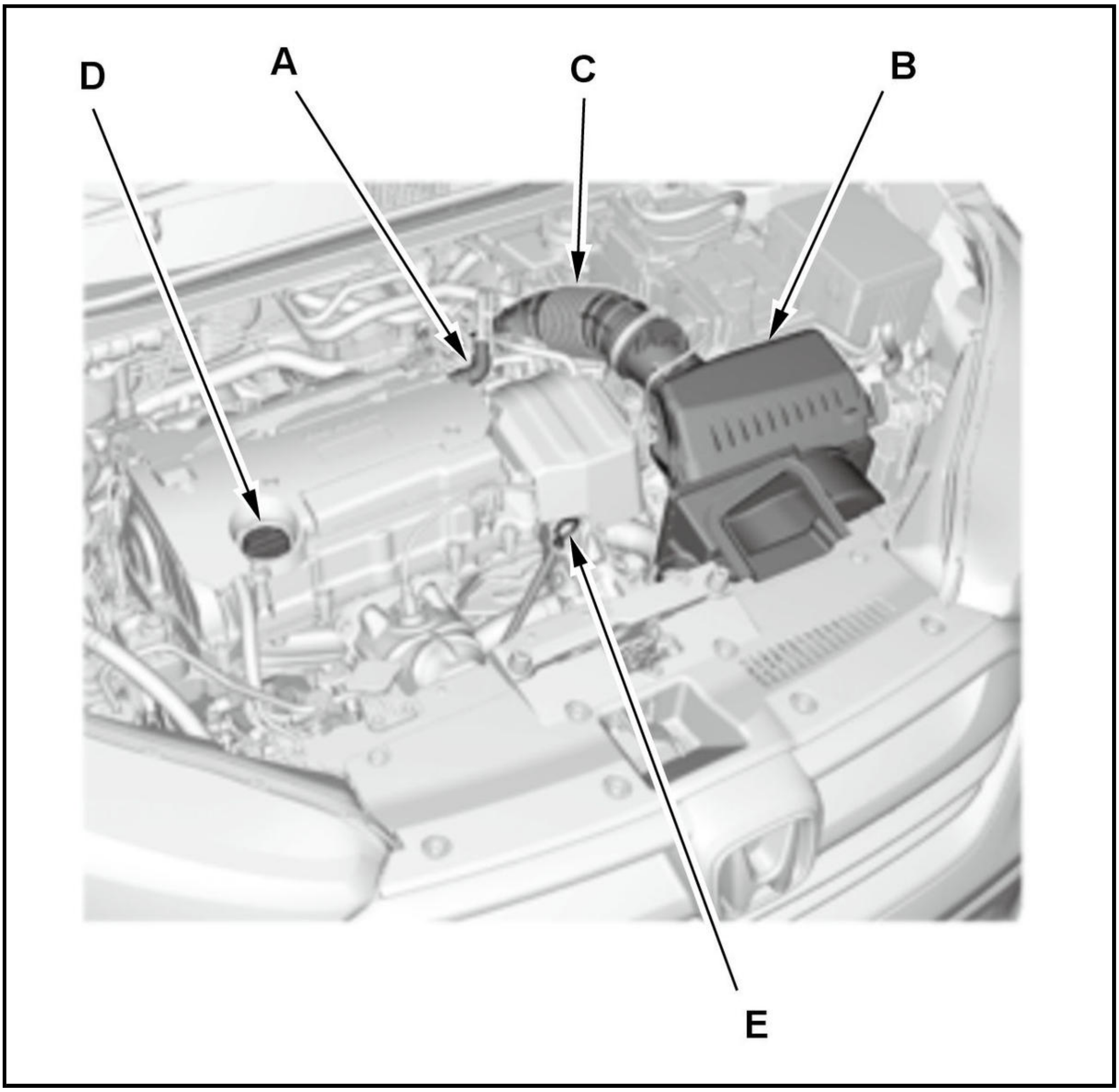

Are any components disconnected or damaged?

YES

Repair as necessary.

NO

Go to step 5.

5. Check PCV system

-1. Continue to let the engine idle.

-2. Pinch the PCV vacuum hose (A).

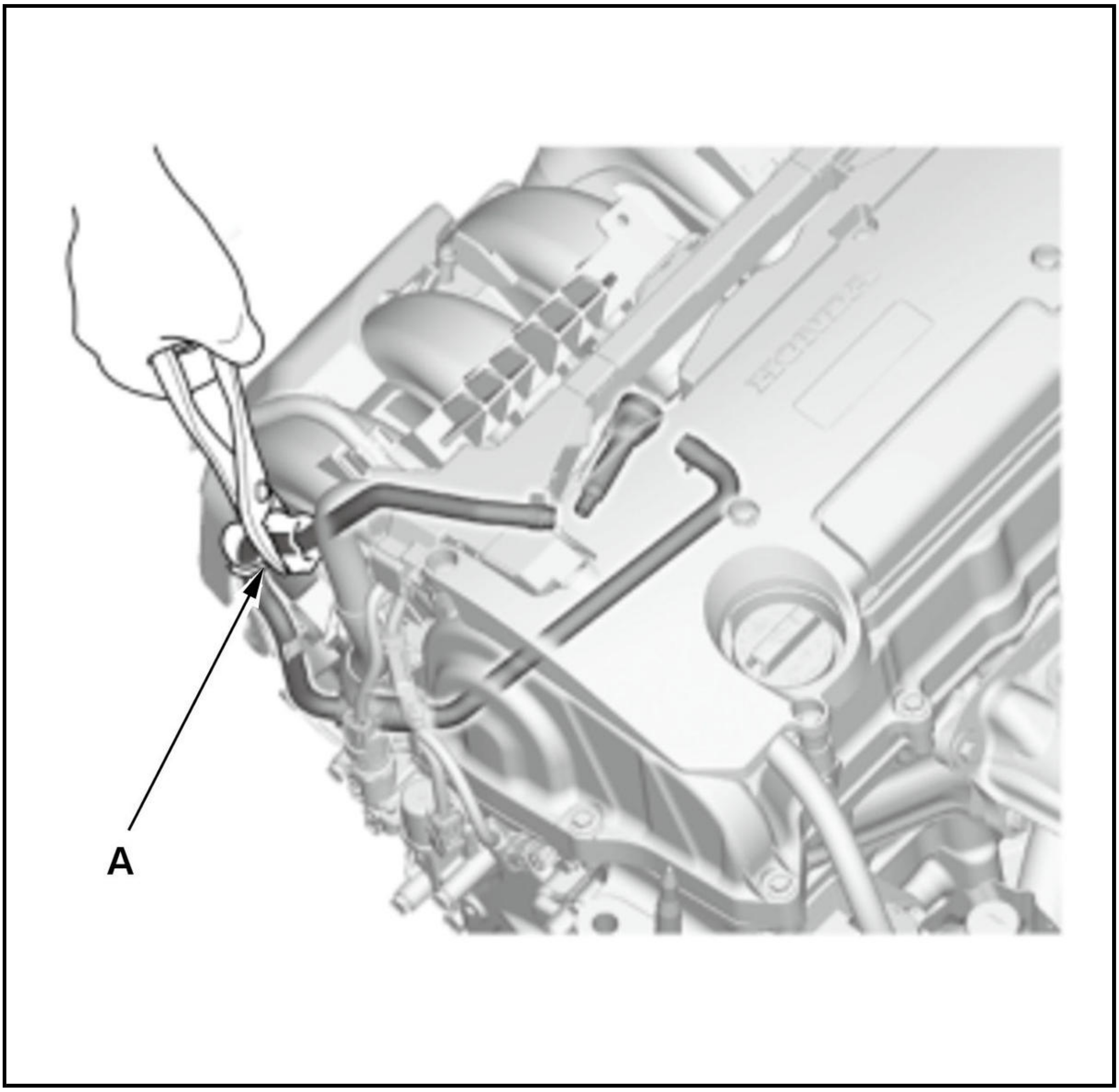

-3. Check the parameter (s) below with the HDS with the vacuum hose pinched.

Signal	Threshold		Current conditions	
	Values	Unit	Values	Unit
AF FB (ST FUEL TRIM)	More than 1.33	B	B	B

Do the current condition (s) match the threshold?

YES

The PCV system is not leaking. Go to step 6.

NO

There is a leak in the PCV system. Check the vacuum hoses for leaks and repair as needed.

6. Check for Intake manifold vacuum leaks

-1. Disconnect the intake air duct from the air cleaner housing.

-2. Connect a large intake manifold adapter cone into the intake air duct from the OTC LeakMaster evaporative emissions system tester kit.

-3. Use the OTC LeakMaster evaporative emissions system tester to direct smoke into the intake manifold.

Inspect each of the areas below for signs of leaks:

- Intake manifold and gaskets
- Throttle body and gasket
- Air intake ducting
- All vacuum and air hoses

Are there any leaks?

YES

Repair the vacuum leak.

NO

Reconnect any disconnected components, then go to step 7.

7. Check MAF sensor reading

-1. Continue to let the engine idle.

-2. Make sure the following conditions are met:

- ECT Sensor 1 above 158 deg. F (70 deg. C)
- Transmission in P or N
- All engine and electrical loads turned off

Signal	Current conditions	
	Values	Unit
ECT SENSOR 1	B	B

-3. Monitor the ENGINE SPEED in the DATA LIST with the HDS, then hold the engine speed at 2, 500 rpm with the accelerator pedal held steady.

Signal	Current conditions	
	Values	Unit
ENGINE SPEED	B	B

-4. While holding the engine speed at 2, 500 rpm for 30 seconds, check the parameter (s) below with the HDS.

Signal	Threshold		Current conditions	
	Values	Unit	Values	Unit
MAF SENSOR	6.5-9.1	g/s	B	B

Do the current condition (s) match the threshold?

YES

The MAF sensor read value is OK. Go to step 8.

NO

The MAF sensor read value is incorrect. Inspect for a cracked, damaged, or incorrectly installed air cleaner assembly. If OK, **replace the MAF sensor/IAT sensor** .

8. Check fuel pressure (low pressure side)

 -1. Check the fuel pressure under the conditions when the AF FB (ST FUEL TRIM) is 1.33 or more.

Signal	Current conditions	
	Values	Unit
AF FB (ST FUEL TRIM)	B	B

 Is the fuel pressure within a specified range of **fuel pressure test?**

 YES

 The fuel pressure (low pressure side) is OK. Go to step 9.

 NO

 Check the correct power supply and ground for the fuel pump and if both are OK, **replace the fuel tank unit** .

9. Check fuel pressure (high pressure side)

 -1. Turn the vehicle to the OFF (LOCK) mode.

 -2. Turn the vehicle to the ON mode.

 -3. Clear the DTC with the HDS.

 -4. Start the engine.

 -5. Hold the engine speed at 3, 000 rpm without load (in P or N) until the radiator fan comes on, then let it idle.

 -6. Select the DI FUEL PRESSURE TEST in the INSPECTION MENU with the HDS.

 DI FUEL PRESSURE TEST

 Does the HDS indicate NORMAL?

 YES

 The fuel pressure (high pressure side) is OK. Go to step 10.

 NO

 Go to the troubleshooting for **DTC P0087** and **DTC P0088** .

10. Replace fuel:**NOTE:** There is an increased likelihood of a fuel related issue if the lean condition appeared shortly after refueling. The MIL DIST (MIL Distance) value in the DATA LIST in combination with the fuel level may help you make this determination.

 -1. Turn the vehicle to the OFF (LOCK) mode.

 -2. **Drain the fuel from the fuel tank** , then refill the fuel tank with known-good fuel.

 -3. Operate the vehicle under the same conditions where the AF FB (ST FUEL TRIM) was 1.33 or more.

ENGINE SPEED	B
VEHICLE SPEED	B
REL TP SENSOR	B
APP SENSOR	B

On-board Snapshot

Signal	Current conditions	
	Values	**Unit**
ENGINE SPEED	B	B
VEHICLE SPEED	B	B
REL TP SENSOR	B	B
APP SENSOR	B	B

-4. Start the engine.

-5. Check the parameter (s) below with the HDS while driving.

Signal	Threshold		Current conditions	
	Values	**Unit**	**Values**	**Unit**
AF FB (ST FUEL TRIM)	More than 1.33	B	B	B

Do the current condition (s) match the threshold under the on-board snapshot conditions?

YES

The fuel is not the cause of the high AF FB (ST FUEL TRIM) value. Go to step 11.

NO

The fuel was causing the high AF FB (ST FUEL TRIM) value.

11. Replace A/F sensor (Sensor 1)

-1. Turn the vehicle to the OFF (LOCK) mode.

-2. Replace the A/F sensor (Sensor 1) with a known-good sensor.

-3. Start the engine.

-4. Operate the vehicle under the same conditions where the AF FB (ST FUEL TRIM) was 1.33 or more.

ENGINE SPEED	B
VEHICLE SPEED	B
REL TP SENSOR	B
APP SENSOR	B

On-board Snapshot

Signal	Current conditions	
	Values	**Unit**
ENGINE SPEED	B	B
VEHICLE SPEED	B	B
REL TP SENSOR	B	B
APP SENSOR	B	B

-5. Check the parameter (s) below with the HDS while driving.

Signal	Threshold		Current conditions	
	Values	Unit	Values	Unit
AF FB (ST FUEL TRIM)	More than 1.33	B	B	B

Do the current condition (s) match the threshold under the on-board snapshot conditions?

YES

The A/F sensor (Sensor 1) is not the cause of the high AF FB (ST FUEL TRIM) value. Reinstall the original A/F sensor, then go to step 12.

NO

The A/F sensor (Sensor 1) was causing the high AF FB (ST FUEL TRIM) value. **Replace the original A/F sensor (Sensor 1)** .

12. Replace injectors

-1. Turn the vehicle to the OFF (LOCK) mode.

-2. Replace the injectors with known-good injectors.

-3. Start the engine.

-4. Operate the vehicle under the same conditions where AF FB (ST FUEL TRIM) was 1.33 or more.

ENGINE SPEED	B
VEHICLE SPEED	B
REL TP SENSOR	B
APP SENSOR	B

On-board Snapshot

Signal	Current conditions	
	Values	Unit
ENGINE SPEED	B	B
VEHICLE SPEED	B	B
REL TP SENSOR	B	B
APP SENSOR	B	B

-5. Check the parameter (s) below with the HDS while driving.

Signal	Threshold		Current conditions	
	Values	Unit	Values	Unit
AF FB (ST FUEL TRIM)	More than 1.33	B	B	B

Do the current condition (s) match the threshold under the on-board snapshot conditions?

YES

The injectors are not the cause of the high AF FB (ST FUEL TRIM) value. **Substitute a known-good PCM** , then recheck.

NO

The injectors were causing the high AF FB (ST FUEL TRIM) value. Replace all injectors as a set .

DTC P0171, P2187 (1.5 L ENGINE)

DTC P0171 : Fuel System Too Lean **DTC P2187** : Fuel System Too Lean at Idle

NOTE:

- Before you troubleshoot, review the general troubleshooting information .
- Do not clear the DTC or reset the PCM before beginning this troubleshooting procedure until instructed to clear it. Clearing the DTC or resetting the PCM can delete valuable diagnostic information, even if the on-board snapshot is saved.
- Inspect for aftermarket fuel system and engine components before beginning troubleshooting.
- If any of the DTCs listed below are stored at the same time as DTC P0171 and/or P2187, troubleshoot those DTCs first, then recheck for P0171 or P2187.

  P0010, P0011, P0013, P0014: VTC system

  P0087, P0088: Fuel rail pressure sensor

  P006A, P0100, P0101: MAF sensor

  P0107, P0108: MAP sensor

  P0130, P0133, P1172, P2195, P2237, P2238, P2243, P2245, P2251, P2252, P2A00: A/F sensor (Sensor 1)

  P0134, P0135: A/F sensor (Sensor 1) heater

  P0137, P0138, P0139, P2270, P2A01: Secondary HO2S (Sensor 2)

  P0141: Secondary HO2S (Sensor 2) heater

  P0201, P0202, P0203, P0204: No. 1-No. 4 cylinder injector (s)

  P0443: EVAP canister purge valve

  P2279: Intake air leakage

DTC Description	Confirmed DTC	Pending DTC
P0171 Fuel System Too Lean	B	B
P2187 Fuel System Too Lean at Idle	B	B

DTC (PGM-FI)

1. Problem verification - Idle

   -1. Start the engine and let it idle without load (in P or N).

   -2. Check the parameter (s) below with the HDS.

Signal	Threshold		Current conditions	
	Values	Unit	Values	Unit
AF FB (ST FUEL TRIM)	More than 1.33	B	B	B

   Do the current condition (s) match the threshold?

   YES

The AF FB (ST FUEL TRIM) is too high at idle. Go to step 3.

NO

The AF FB (ST FUEL TRIM) is OK at idle. Go to step 2.

2. Problem verification - On-board Snapshot

-1. Review the on-board snapshot and record the value of the parameters below when the AF FB (ST FUEL TRIM) was at its highest point.

ENGINE SPEED	B
VEHICLE SPEED	B
REL TP SENSOR	B
APP SENSOR	B

On-board Snapshot

-2. Drive the vehicle according to the conditions determined above.

Signal	**Current conditions**	
	Values	**Unit**
ENGINE SPEED	B	B
VEHICLE SPEED	B	B
REL TP SENSOR	B	B
APP SENSOR	B	B

-3. Check the parameter (s) below with the HDS while driving.

Signal	**Threshold**		**Current conditions**	
	Values	**Unit**	**Values**	**Unit**
AF FB (ST FUEL TRIM)	More than 1.33	B	B	B

Do the current condition (s) match the threshold under the on-board snapshot conditions?

YES

The AF FB (ST FUEL TRIM) is too high under the conditions above. Go to step 3.

NO

The AF FB (ST FUEL TRIM) is OK under the same conditions as the on-board snapshot. The system is normal at this time. **If the on-board snapshot of this DTC is recorded, try to reproduce the failure under the same conditions with the on-board snapshot** .

3. Check for debris in MAF sensor

-1. Turn the vehicle to the OFF (LOCK) mode.

-2. **Remove the MAF sensor/IAT sensor 1** .

-3. Check for lint, bugs, and other foreign objects in the sensor.

Is there debris in MAF sensor/IAT sensor 1?

YES

Remove the debris from the MAF sensor/IAT sensor 1 and then use a vacuum cleaner to remove any debris from the air cleaner housing.

NO

Reinstall the MAF sensor/IAT sensor 1 . Go to step 4.

4. Check for disconnected or damaged components:

   Visually inspect each of the components below for disconnected hoses, cracks, or damage:

   - Crankcase breather hose (A)
   - Air cleaner housing (B)
   - Intake air duct (C)
   - Oil cap (D) and dipstick (E)

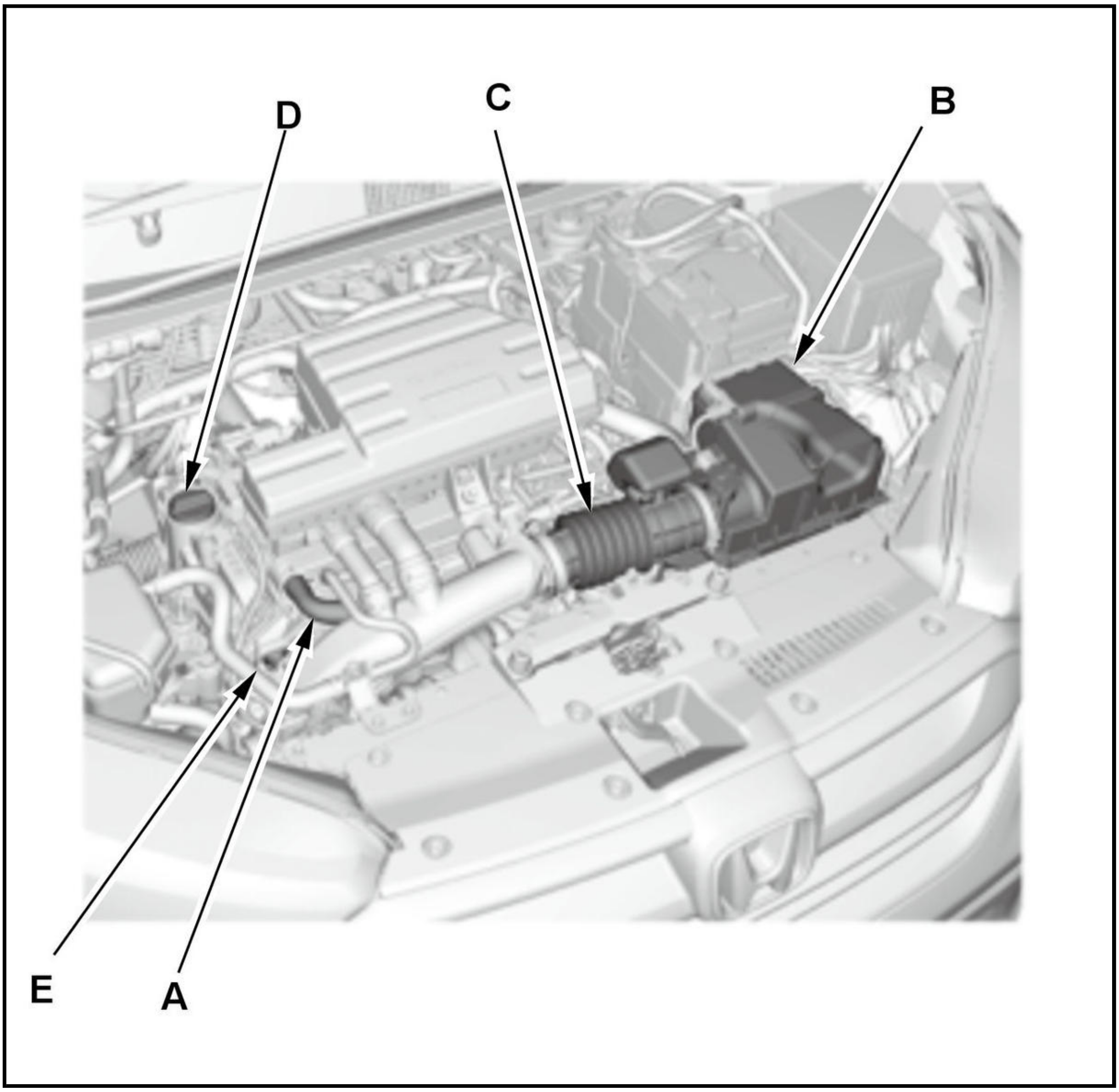

Are any components disconnected or damaged?

YES

Repair as necessary.

NO

Go to step 5.

5. Check EVAP canister purge line:

Visually inspect each of the components below for disconnected hoses, cracks, or damage:

- Non-return valve A (A) (built into the EVAP canister purge valve)
- Non-return valve B (B) (built into the EVAP canister purge valve)
- EVAP canister purge valve (C)
- Hose (D)

USA and Canada models

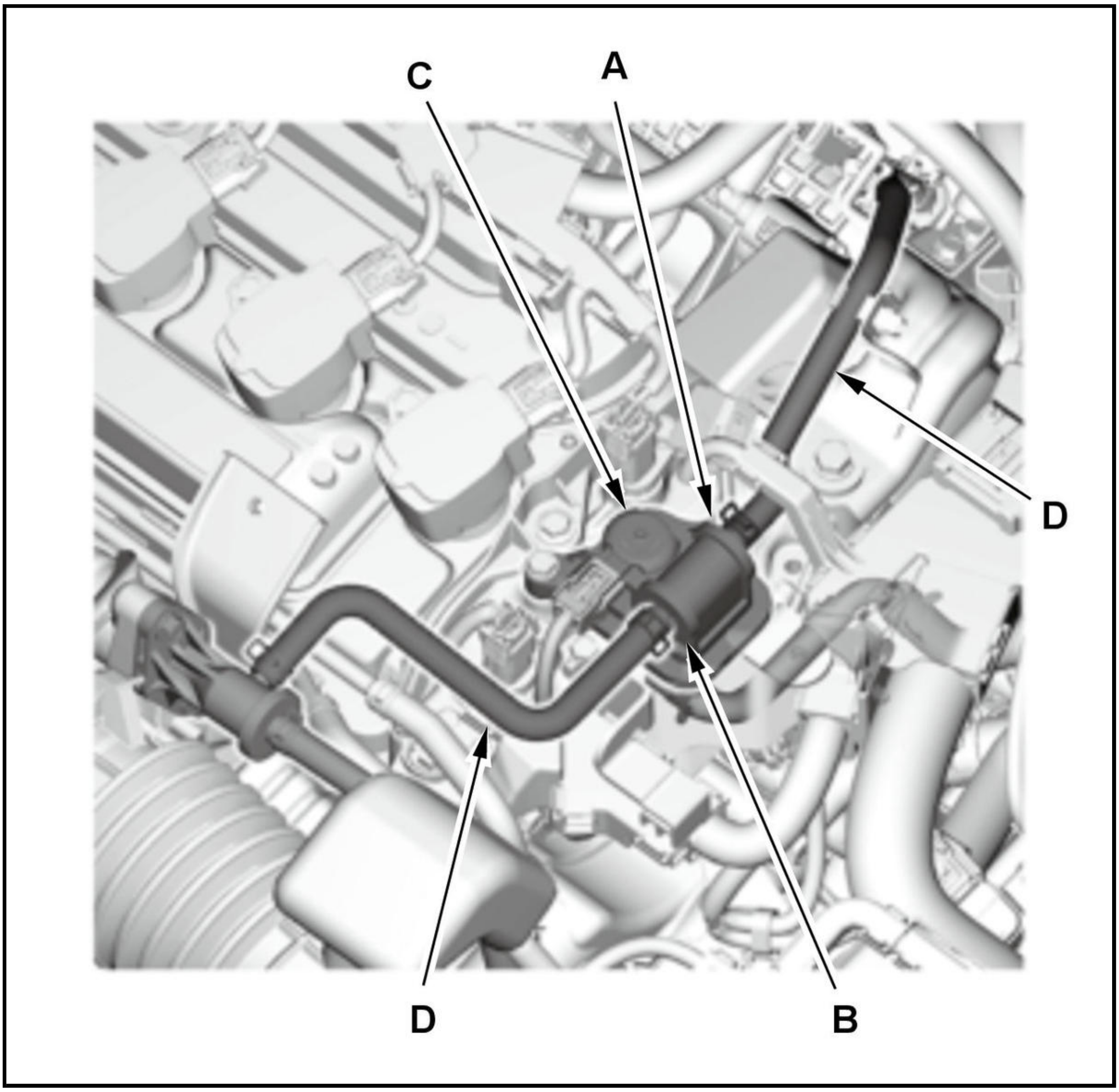

Mexico models

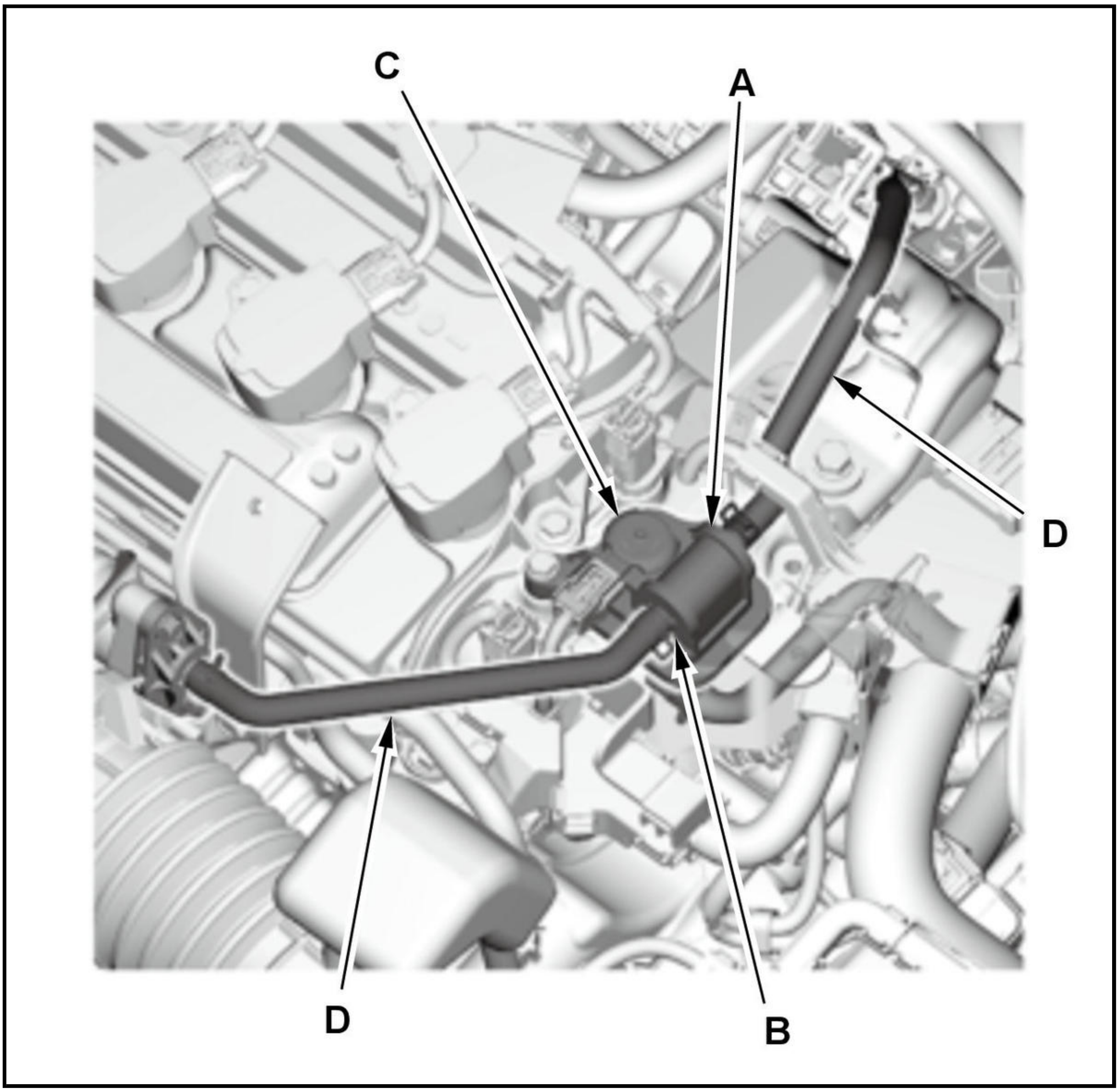

Are any components disconnected or damaged?

YES

Repair the connection or replace the damaged part (s).

NO

Go to step 6.

6. Check PCV system

   -1. Continue to let the engine idle.

   -2. Gently pinch the PCV vacuum hose (A).

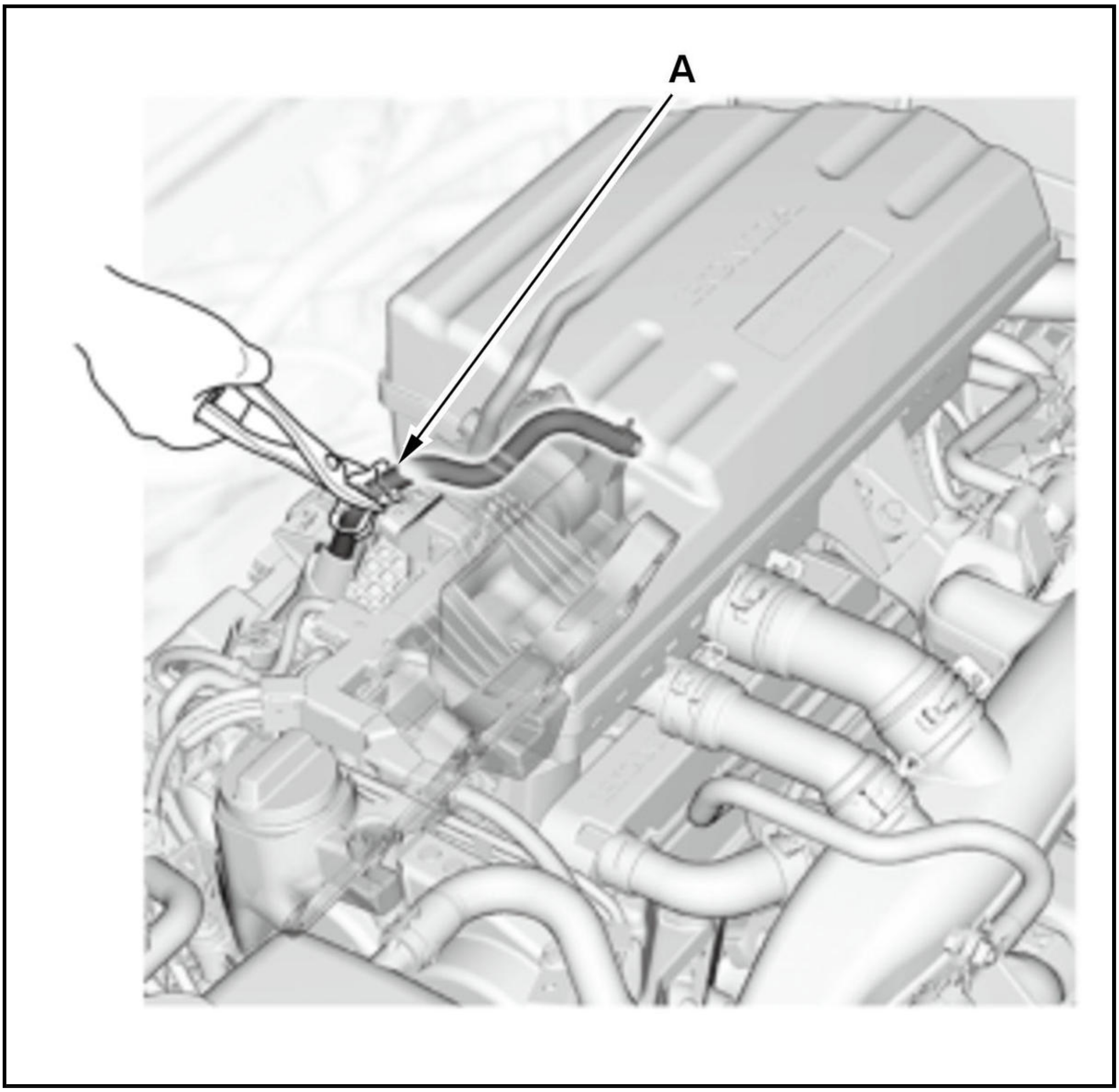

-3. Check the parameter (s) below with the HDS with the vacuum hose pinched.

Signal	Threshold		Current conditions	
	Values	Unit	Values	Unit
AF FB (ST FUEL TRIM)	More than 1.33	B	B	B

Do the current condition (s) match the threshold?

YES

The PCV system is not leaking. Go to step 7.

NO

There is a leak in the PCV system. Check the vacuum hoses for leaks and repair as needed.

7. Check for Intake manifold vacuum leaks

-1. Turn the vehicle to the OFF (LOCK) mode.

-2. Disconnect the intake air duct from the air cleaner housing.

-3. Connect a large intake manifold adapter cone into the intake air duct from the OTC LeakMaster evaporative emissions system tester kit.

-4. Use the OTC LeakMaster evaporative emissions system tester to direct smoke into the intake manifold.

Inspect each of the areas below for signs of leaks:

- Intake manifold and gaskets
- Throttle body and gasket
- Air intake ducting
- All vacuum and air hoses

Are there any leaks?

YES

Repair the vacuum leak.

NO

Reconnect any disconnected components, then go to step 8.

8. Check MAF sensor reading

-1. Start the engine and let it idle.

-2. Make sure the following conditions are met:

- Engine coolant temperature (ECT SENSOR 1) above 158 deg. F (70 deg. C)
- Transmission in P or N
- All engine and electrical loads turned off

Signal	**Current conditions**	
	Values	**Unit**
ECT SENSOR 1	B	B

-3. Monitor the ENGINE SPEED in the DATA LIST with the HDS, then hold the engine speed at 2, 500 rpm with the accelerator pedal held steady.

Signal	**Current conditions**	
	Values	**Unit**
ENGINE SPEED	B	B

-4. While holding the engine speed at 2, 500 rpm for 30 seconds, check the parameter (s) below with the HDS.

Signal	**Threshold**		**Current conditions**	
	Values	**Unit**	**Values**	**Unit**
MAF SENSOR	4.1-5.7	g/s	B	B

Do the current condition (s) match the threshold?

YES

Go to step 9.

NO

The MAF sensor read value is incorrect. Inspect for a cracked, damaged, or incorrectly installed air cleaner assembly. If OK, **replace the MAF sensor/IAT sensor 1** .

9. Check fuel pressure (low pressure side)

   -1. **Check the fuel pressure** under the conditions when the AF FB (ST FUEL TRIM) is 1.33 or more.

Signal	Current conditions	
	Values	Unit
AF FB (ST FUEL TRIM)	B	B

   Is the fuel pressure within a specified range of **fuel pressure test?**

   YES

   Go to step 10.

   NO

   Check the correct power supply and ground for the fuel pump and if both are OK, **replace the fuel tank unit** .

10. Check fuel pressure (high pressure side)

   -1. Turn the vehicle to the OFF (LOCK) mode.

   -2. Turn the vehicle to the ON mode.

   -3. Clear the DTC with the HDS.

   -4. Turn the vehicle to the OFF (LOCK) mode.

   -5. Start the engine.

   -6. Hold the engine speed at 3, 000 rpm without load (in P or N) until the radiator fan comes on, then let it idle.

   -7. Select the DI Fuel Pressure Test in the INSPECTION MENU with the HDS.

   DI FUEL PRESSURE TEST

   Does the HDS indicate NORMAL?

   YES

   Go to step 11.

   NO

   Go to the troubleshooting for **DTC P0087** and **DTC P0088** .

11. Replace fuel:**NOTE:** There is an increased likelihood of a fuel related issue if the lean condition appeared shortly after refueling. The MIL DIST (MIL Distance) value in the DATA LIST in combination with the fuel level may help you make this determination.

   -1. Turn the vehicle to the OFF (LOCK) mode.

   -2. **Drain the fuel from the fuel tank** , then refill the fuel tank with known-good fuel.

   -3. Start the engine.

-4. Operate the vehicle under the same conditions where the AF FB (ST FUEL TRIM) was 1.33 or more.

ENGINE SPEED	B
VEHICLE SPEED	B
REL TP SENSOR	B
APP SENSOR	B

On-board Snapshot

Signal	**Current conditions**	
	Values	**Unit**
ENGINE SPEED	B	B
VEHICLE SPEED	B	B
REL TP SENSOR	B	B
APP SENSOR	B	B

-5. Check the parameter (s) below with the HDS while driving.

Signal	**Threshold**		**Current conditions**	
	Values	**Unit**	**Values**	**Unit**
AF FB (ST FUEL TRIM)	More than 1.33	B	B	B

Do the current condition (s) match the threshold under the on-board snapshot conditions?

YES

The fuel is not the cause of the high AF FB (ST FUEL TRIM) value. Go to step 12.

NO

The fuel was causing the high AF FB (ST FUEL TRIM) value.

12. Replace A/F sensor (Sensor 1)

-1. Turn the vehicle to the OFF (LOCK) mode.

-2. **Replace the A/F sensor (Sensor 1) with a known-good sensor** .

-3. Start the engine.

-4. Operate the vehicle under the same conditions where the AF FB (ST FUEL TRIM) was 1.33 or more.

ENGINE SPEED	B
VEHICLE SPEED	B
REL TP SENSOR	B
APP SENSOR	B

On-board Snapshot

Signal	**Current conditions**	
	Values	**Unit**
ENGINE SPEED	B	B
VEHICLE SPEED	B	B
REL TP SENSOR	B	B
APP SENSOR	B	B

-5. Check the parameter (s) below with the HDS while driving.

Signal	Threshold		Current conditions	
	Values	Unit	Values	Unit
AF FB (ST FUEL TRIM)	More than 1.33	B	B	B

Do the current condition (s) match the threshold under the on-board snapshot conditions?

YES

The A/F sensor (Sensor 1) is not the cause of the high AF FB (ST FUEL TRIM) value. Reinstall the original A/F sensor (Sensor 1), then go to step 13.

NO

The A/F sensor (Sensor 1) was causing the high AF FB (ST FUEL TRIM) value. **Replace the original A/F sensor (Sensor 1)** .

13. Replace injectors

-1. Turn the vehicle to the OFF (LOCK) mode.

-2. **Replace the injectors with known-good injectors** .

-3. Start the engine.

-4. Operate the vehicle under the same conditions where the AF FB (ST FUEL TRIM) was 1.33 or more.

ENGINE SPEED	B
VEHICLE SPEED	B
REL TP SENSOR	B
APP SENSOR	B

On-board Snapshot

Signal	Current conditions	
	Values	Unit
ENGINE SPEED	B	B
VEHICLE SPEED	B	B
REL TP SENSOR	B	B
APP SENSOR	B	B

-5. Check the parameter (s) below with the HDS while driving.

Signal	Threshold		Current conditions	
	Values	Unit	Values	Unit
AF FB (ST FUEL TRIM)	More than 1.33	B	B	B

Do the current condition (s) match the threshold under the on-board snapshot conditions?

YES

The injectors are not the cause of the high AF FB (ST FUEL TRIM) value. **Substitute a known-good PCM** .

NO

The injectors were causing the high AF FB (ST FUEL TRIM) value. **Replace all injectors as a set** .

DTC P0172 (1.5 L ENGINE)

DTC P0172 : Fuel System Too Rich

Special Tools Required

Vacuum Pump/Gauge, 0-30 inHg Snap-on YA4000A or equivalent, commercially available

NOTE:

- Before you troubleshoot, **review the general troubleshooting information** .
- Do not clear the DTC or reset the PCM before beginning this troubleshooting procedure until instructed to clear it. Clearing the DTC or resetting the PCM can delete valuable diagnostic information, even if the on-board snapshot is saved.
- Inspect for aftermarket fuel system and engine components before beginning troubleshooting.
- If any of the DTCs listed below are stored at the same time as P0172, troubleshoot those DTCs first, then recheck for P0172.

  P0010, P0011, P0013, P0014: VTC system

  P0087, P0088: Fuel rail pressure sensor

  P006A, P0100, P0101: MAF sensor

  P0107, P0108: MAP sensor

  P0130, P0133, P1172, P2195, P2237, P2238, P2243, P2245, P2251, P2252, P2A00: A/F sensor (Sensor 1)

  P0134, P0135: A/F sensor (Sensor 1) heater

  P0137, P0138, P0139, P2270, P2A01: Secondary HO2S (Sensor 2)

  P0141: Secondary HO2S (Sensor 2) heater

  P0201, P0202, P0203, P0204: No. 1-No. 4 cylinder injector (s)

  P0443: EVAP canister purge valve

  P2279: Intake air leakage

DTC Description	Confirmed DTC	Pending DTC
P0172 Fuel System Too Rich	B	B

DTC (PGM-FI)

1. Problem verification - Idle

   -1. Start the engine, and let it idle without load (in P or N).

   -2. Check the parameter (s) below with the HDS.

Signal	Threshold		Current conditions	
	Values	Unit	Values	Unit
AF FB (ST FUEL TRIM)	Less than 0.80	B	B	B

Do the current condition (s) match the threshold?

YES

The AF FB (ST FUEL TRIM) is too low at idle. Go to step 3.

NO

The AF FB (ST FUEL TRIM) is OK at idle. Go to step 2.

2. Problem verification - On-board Snapshot

-1. Review the on-board snapshot and record the value of the parameters below when the AF FB (ST FUEL TRIM) was at its lowest point.

ENGINE SPEED	B
VEHICLE SPEED	B
REL TP SENSOR	B
APP SENSOR	B

On-board Snapshot

-2. Drive the vehicle according to the conditions determined above.

Signal	**Current conditions**	
	Values	**Unit**
ENGINE SPEED	B	B
VEHICLE SPEED	B	B
REL TP SENSOR	B	B
APP SENSOR	B	B

-3. Check the parameter (s) below with the HDS while driving.

Signal	**Threshold**		**Current conditions**	
	Values	**Unit**	**Values**	**Unit**
AF FB (ST FUEL TRIM)	Less than 0.80	B	B	B

Do the current condition (s) match the threshold under the on-board snapshot conditions?

YES

The AF FB (ST FUEL TRIM) is too low under the conditions above. Go to step 3.

NO

The AF FB (ST FUEL TRIM) is OK under the same conditions as the on-board snapshot. The system is normal at this time. **If the on-board snapshot of this DTC is recorded, try to reproduce the failure under the same conditions with the on-board snapshot** .

3. Check fuel pressure (low pressure side)

-1. Start the engine, and let it idle.

-2. **Check the fuel pressure** under the conditions when the AF FB (ST FUEL TRIM) is 0.80 or less.

Signal	Current conditions	
	Values	Unit
AF FB (ST FUEL TRIM)	B	B

Is the fuel pressure within a specified range of fuel pressure test?

YES

The fuel pressure (low pressure side) is not the cause of the low AF FB (ST FUEL TRIM) value. Go to step 4.

NO

Replace the fuel tank unit .

4. Check fuel pressure (high pressure side)

   -1. Turn the vehicle to the OFF (LOCK) mode.

   -2. Turn the vehicle to the ON mode.

   -3. Clear the DTC with the HDS.

   -4. Start the engine.

   -5. Hold the engine speed at 3, 000 rpm without load (in P or N) until the radiator fan comes on, then let it idle.

   -6. Select the DI FUEL PRESSURE TEST in the INSPECTION MENU with the HDS.

   DI FUEL PRESSURE TEST

   Does the HDS indicate NORMAL?

   YES

   Go to step 5.

   NO

   Go to the troubleshooting for **DTC P0087** and **DTC P0088** .

5. Replace fuel:**NOTE:** There would be an increased likelihood of a fuel related issue if the rich condition appeared shortly after refueling. The MIL DIST (MIL Distance) value in the DATA LIST in combination with the fuel level may help you make this determination.

   -1. Turn the vehicle to the OFF (LOCK) mode.

   -2. **Drain the fuel from the fuel tank** , then refill the fuel tank with known-good fuel.

   -3. Start the engine, and let it idle.

   -4. Operate the vehicle under the same conditions where the AF FB (ST FUEL TRIM) was 0.80 or less.

ENGINE SPEED	B
VEHICLE SPEED	B
REL TP SENSOR	B
APP SENSOR	B

On-board Snapshot

Signal	Current conditions	
	Values	Unit
ENGINE SPEED	B	B
VEHICLE SPEED	B	B
REL TP SENSOR	B	B
APP SENSOR	B	B

-5. Check the parameter (s) below with the HDS while driving.

Signal	Threshold		Current conditions	
	Values	Unit	Values	Unit
AF FB (ST FUEL TRIM)	Less than 0.80	B	B	B

Do the current condition (s) match the threshold under the on-board snapshot conditions?

YES

The fuel is not the cause of the low AF FB (ST FUEL TRIM) value. Go to step 6.

NO

The fuel was causing the low AF FB (ST FUEL TRIM) value.

6. Check MAF sensor reading

-1. Continue to let the engine idle.

-2. Make sure the following conditions are met:

- Engine coolant temperature (ECT SENSOR 1) above 158 deg. F (70 deg. C)
- Transmission in P or N
- All engine and electrical loads turned off

Signal	Current conditions	
	Values	Unit
ECT SENSOR 1	B	B

-3. Monitor the ENGINE SPEED in the DATA LIST with the HDS, then hold the engine speed at 2, 500 rpm with the accelerator pedal held steady.

Signal	Current conditions	
	Values	Unit
ENGINE SPEED	B	B

-4. While holding the engine speed at 2, 500 rpm for 30 seconds, check the parameter (s) below with the HDS.

Signal	Threshold		Current conditions	
	Values	Unit	Values	Unit
MAF SENSOR	4.1-5.7	g/s	B	B

Do the current condition (s) match the threshold?

YES

Go to step 7.

NO

The MAF sensor read value is incorrect. Inspect for a cracked, damaged, or incorrectly installed air cleaner assembly. If OK, **replace the MAF sensor/IAT sensor 1** .

7. Check engine oil

-1. Continue to let the engine idle.

-2. Gently pinch the PCV vacuum hose (A).

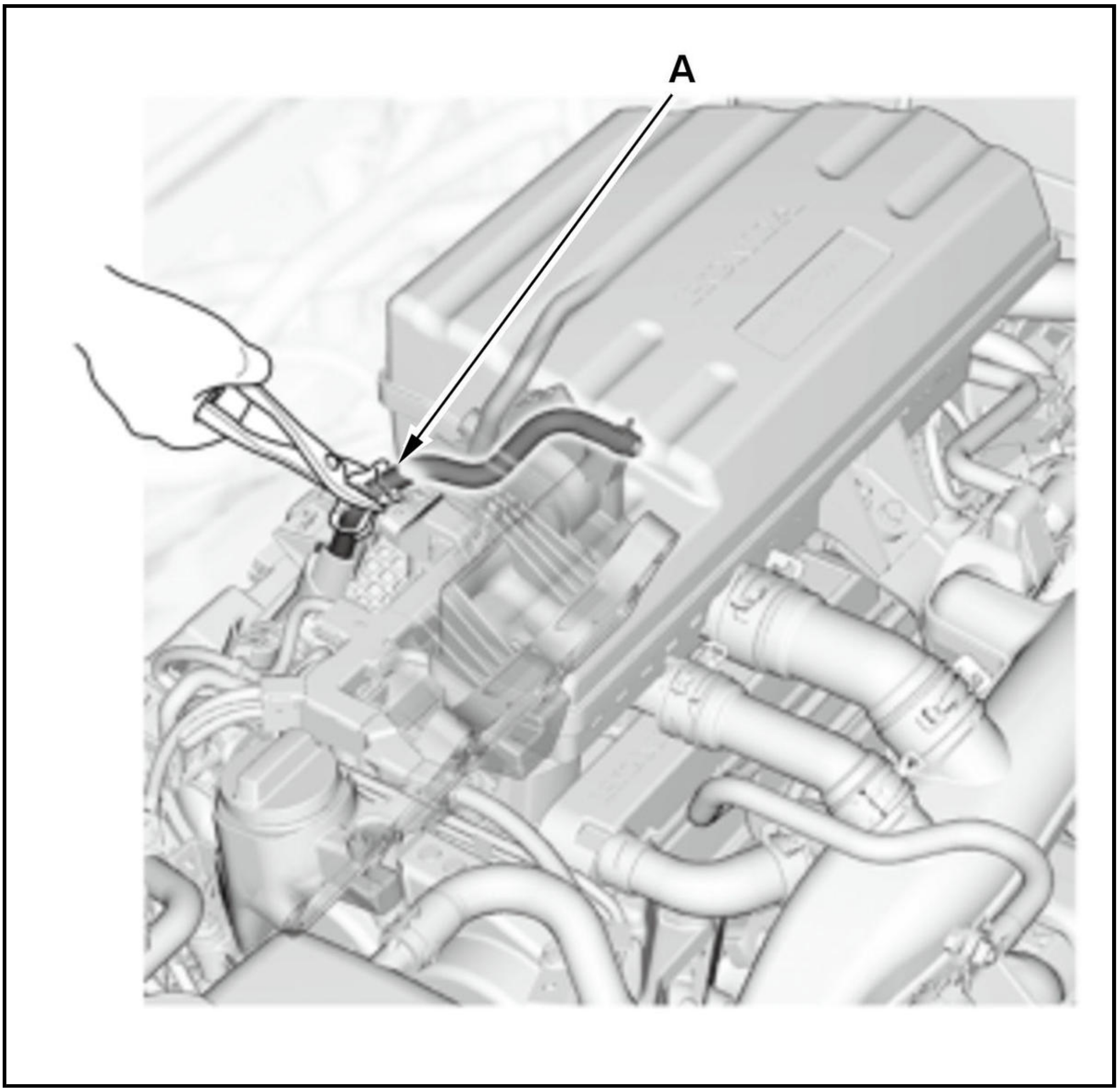

-3. Check the parameter (s) below with the HDS with the vacuum hose pinched.

Signal	Threshold		Current conditions	
	Values	Unit	Values	Unit
AF FB (ST FUEL TRIM)	Less than 0.80	B	B	B

Do the current condition (s) match the threshold?

YES

Go to step 8.

NO

The engine oil is contaminated. Determine the cause of the contaminated oil (faulty injectors, etc.), then **replace the engine oil** and **oil filter** .

8. EVAP canister purge valve check

-1. Turn the vehicle to the OFF (LOCK) mode.

-2. Disconnect the following connector.

EVAP canister purge valve 2P connector

-3. **Remove the EVAP canister purge valve** with its vacuum hose connected.

-4. Disconnect the vacuum hose (purge line) (A) from the EVAP canister purge valve (B) in the engine compartment, and connect a vacuum pump/gauge, 0-30 inHg (C) to the purge valve.

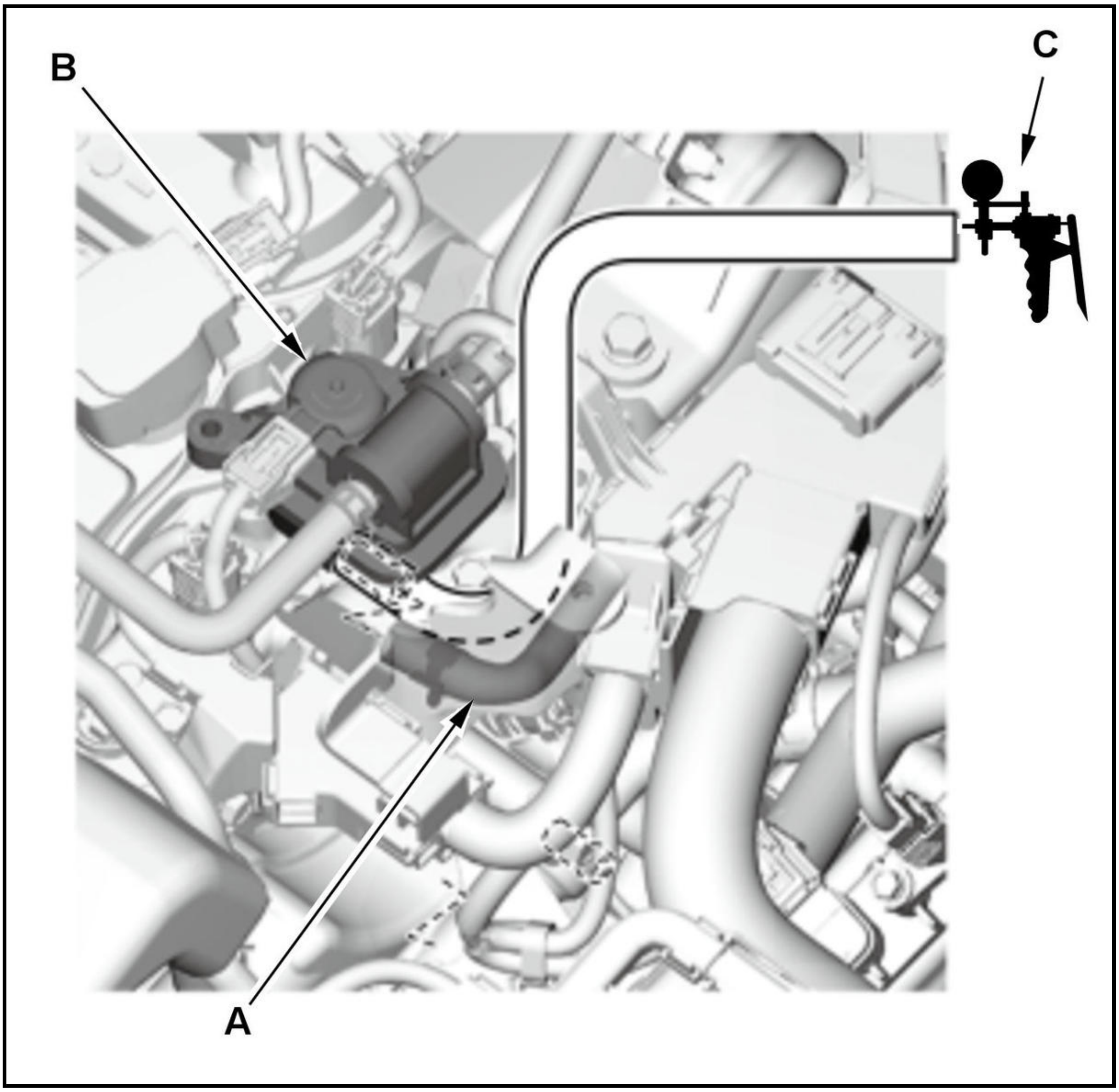

-5. Start the engine.

Does the vacuum pump indicate vacuum?

YES

When the climate is warm, fuel vapor from the canister line to the fuel tank enters intake manifold, enriching mixture (excessively rich), causing the engine to stall in some cases. If needed, **replace the EVAP canister purge valve** .

NO

Go to step 9.

9. Replace A/F sensor (Sensor 1)

-1. Turn the vehicle to the OFF (LOCK) mode.

-2. **Replace the A/F sensor (Sensor 1) with a known-good sensor** .

-3. Start the engine, and let it idle.

-4. Operate the vehicle under the same conditions where the AF FB (ST FUEL TRIM) was 0.80 or less.

ENGINE SPEED	B
VEHICLE SPEED	B
REL TP SENSOR	B
APP SENSOR	B

On-board Snapshot

Signal	Current conditions	
	Values	Unit
ENGINE SPEED	B	B
VEHICLE SPEED	B	B
REL TP SENSOR	B	B
APP SENSOR	B	B

-5. Check the parameter (s) below with the HDS while driving.

Signal	Threshold		Current conditions	
	Values	Unit	Values	Unit
AF FB (ST FUEL TRIM)	Less than 0.80	B	B	B

Do the current condition (s) match the threshold under the on-board snapshot conditions?

YES

The A/F sensor (Sensor 1) is not the cause of the low AF FB (ST FUEL TRIM) value. Reinstall the original A/F sensor (Sensor 1), then go to step 10.

NO

The A/F sensor (Sensor 1) was causing the low AF FB (ST FUEL TRIM) value. **Replace the original A/F sensor (Sensor 1)** .

10. Replace injectors

-1. Turn the vehicle to the OFF (LOCK) mode.

-2. **Replace the injectors with known-good injectors** .

-3. Start the engine, and let it idle.

-4. Operate the vehicle under the same conditions where the AF FB (ST FUEL TRIM) was 0.80 or less.

ENGINE SPEED	B
VEHICLE SPEED	B

REL TP SENSOR	B
APP SENSOR	B

On-board Snapshot

Signal	Current conditions	
	Values	Unit
ENGINE SPEED	B	B
VEHICLE SPEED	B	B

Signal	Current conditions	
	Values	Unit
REL TP SENSOR	B	B
APP SENSOR	B	B

-5. Check the parameter (s) below with the HDS while driving.

Signal	Threshold		Current conditions	
	Values	Unit	Values	Unit
AF FB (ST FUEL TRIM)	Less than 0.80	B	B	B

Do the current condition (s) match the threshold under the on-board snapshot conditions?

YES

The injectors are not the cause of the low AF FB (ST FUEL TRIM) value. **Substitute a known-good PCM** , then recheck.

NO

The injectors were causing the low AF FB (ST FUEL TRIM) value. **Replace all injectors as a set** .

DTC P0172 (2.4 L ENGINE) (2017 2018 2019)

DTC P0172 : Fuel System Too Rich

Special Tools Required

Vacuum Pump/Gauge, 0-30 inHg Snap-on YA4000A or equivalent, commercially available

NOTE:

- Before you troubleshoot, **review the general troubleshooting information** .
- Do not clear the DTC or reset the PCM before beginning this troubleshooting procedure until instructed to clear it. Clearing the DTC or resetting the PCM can delete valuable diagnostic information, even if the on-board snapshot and the freeze data are saved.
- Inspect for aftermarket fuel system and engine components before beginning troubleshooting.
- If any of the DTCs listed below are stored at the same time as P0172, troubleshoot those DTCs first, then recheck for P0172.

P0010, P0011: VTC system

P0087, P0088, P0191: Fuel rail pressure sensor

P006A, P0101, P0102, P0103: MAF sensor

P0105, P0107, P0108, P2073, P2074: MAP sensor

P0130, P0133, P1172, P2195, P2237, P2238, P2252, P2A00: A/F sensor (Sensor 1)

P0134, P0135: A/F sensor (Sensor 1) heater

P0137, P0138, P0139, P2270: Secondary HO2S (Sensor 2)

P0141: Secondary HO2S (Sensor 2) heater

P0201, P0202, P0203, P0204: No. 1-No. 4 cylinder injector (s)

P0443: EVAP canister purge valve

P2648, P2649: VTEC system

DTC Description	Confirmed DTC	Pending DTC
P0172 Fuel System Too Rich	B	B

DTC (PGM-FI)

1. Problem verification - Idle

   -1. Start the engine, and let it idle without load (in P or N).

   -2. Check the parameter (s) below with the HDS.

Signal	Threshold		Current conditions	
	Values	Unit	Values	Unit
AF FB (ST FUEL TRIM)	Less than 0.79	B	B	B

   Do the current condition (s) match the threshold?

   YES

   The AF FB (ST FUEL TRIM) is too low at idle. Go to step 3.

   NO

   The AF FB (ST FUEL TRIM) is OK at idle. Go to step 2.

2. Problem verification - On-board Snapshot

   -1. Review the on-board snapshot and record the value of the parameters below when the AF FB (ST FUEL TRIM) was at its lowest point.

ENGINE SPEED	B
VEHICLE SPEED	B
REL TP SENSOR	B
APP SENSOR	B

   On-board Snapshot

   -2. Drive the vehicle according to the conditions determined above.

Signal	Current conditions	
	Values	Unit
ENGINE SPEED	B	B

Signal	Current conditions	
	Values	Unit
VEHICLE SPEED	B	B
REL TP SENSOR	B	B
APP SENSOR	B	B

-3. Check the parameter (s) below with the HDS while driving.

Signal	Threshold		Current conditions	
	Values	Unit	Values	Unit
AF FB (ST FUEL TRIM)	Less than 0.79	B	B	B

Do the current condition (s) match the threshold under the on-board snapshot conditions?

YES

The AF FB (ST FUEL TRIM) is too low under the conditions above. Go to step 3.

NO

The AF FB (ST FUEL TRIM) is OK under the same conditions as the on-board snapshot. The system is normal at this time. **If the on-board snapshot of this DTC is recorded, try to reproduce the failure under the same conditions with the on-board snapshot** .

3. Check fuel pressure (low pressure side)

-1. Start the engine, and let it idle.

-2. Check the fuel pressure under the conditions when the AF FB (ST FUEL TRIM) is 0.79 or less.

Signal	Current conditions	
	Values	Unit
AF FB (ST FUEL TRIM)	B	B

Is the fuel pressure within a specified range of **fuel pressure test?**

YES

The fuel pressure (low pressure side) is not the cause of the low AF FB (ST FUEL TRIM) value. Go to step 4.

NO

Replace the fuel tank unit .

4. Check fuel pressure (high pressure side)

-1. Turn the vehicle to the OFF (LOCK) mode.

-2. Turn the vehicle to the ON mode.

-3. Clear the DTC with the HDS.

-4. Start the engine.

-5. Hold the engine speed at 3, 000 rpm without load (in P or N) until the radiator fan comes on, then let it idle.

-6. Select the DI FUEL PRESSURE TEST in the INSPECTION MENU with the HDS.

DI FUEL PRESSURE TEST

Does the HDS indicate NORMAL?

YES

The fuel pressure (high pressure side) is OK. Go to step 5.

NO

Go to the troubleshooting for DTC P0087 and DTC P0088 .

5. Replace fuel:**NOTE:** There would be an increased likelihood of a fuel related issue if the rich condition appeared shortly after refueling. The MIL DIST (MIL Distance) value in the DATA LIST in combination with the fuel level may help you make this determination.

   -1. Turn the vehicle to the OFF (LOCK) mode.

   -2. Drain the fuel from the fuel tank , then refill the fuel tank with known-good fuel.

   -3. Start the engine, and let it idle.

   -4. Operate the vehicle under the same conditions where the AF FB (ST FUEL TRIM) was 0.79 or less.

ENGINE SPEED	B
VEHICLE SPEED	B
REL TP SENSOR	B
APP SENSOR	B

On-board Snapshot

Signal	Current conditions	
	Values	Unit
ENGINE SPEED	B	B
VEHICLE SPEED	B	B
REL TP SENSOR	B	B
APP SENSOR	B	B

-5. Check the parameter (s) below with the HDS while driving.

Signal	Threshold		Current conditions	
	Values	Unit	Values	Unit
AF FB (ST FUEL TRIM)	Less than 0.79	B	B	B

Do the current condition (s) match the threshold under the on-board snapshot conditions?

YES

The fuel is not the cause of the low AF FB (ST FUEL TRIM) value. Go to step 6.

NO

The fuel was causing the low AF FB (ST FUEL TRIM) value.

6. Check MAF sensor reading

   -1. Continue to let the engine idle.

-2. Make sure the following conditions are met:

- ECT Sensor 1 above 158 deg. F (70 deg. C)
- Transmission in P or N
- All engine and electrical loads turned off

Signal	Current conditions	
	Values	Unit
ECT SENSOR 1	B	B

-3. Monitor the ENGINE SPEED in the DATA LIST with the HDS, then hold the engine speed at 2, 500 rpm with the accelerator pedal held steady.

Signal	Current conditions	
	Values	Unit
ENGINE SPEED	B	B

-4. While holding the engine speed at 2, 500 rpm for 30 seconds, check the parameter (s) below with the HDS.

Signal	Threshold		Current conditions	
	Values	Unit	Values	Unit
MAF SENSOR	6.5-9.1	g/s	B	B

Do the current condition (s) match the threshold?

YES

The MAF sensor read value is OK. Go to step 7.

NO

The MAF sensor read value is incorrect. Inspect for a cracked, damaged, or incorrectly installed air cleaner assembly. If OK, **replace the MAF sensor/IAT sensor** .

7. Check engine oil

-1. Continue to let the engine idle.

-2. Gently pinch the PCV vacuum hose (A).

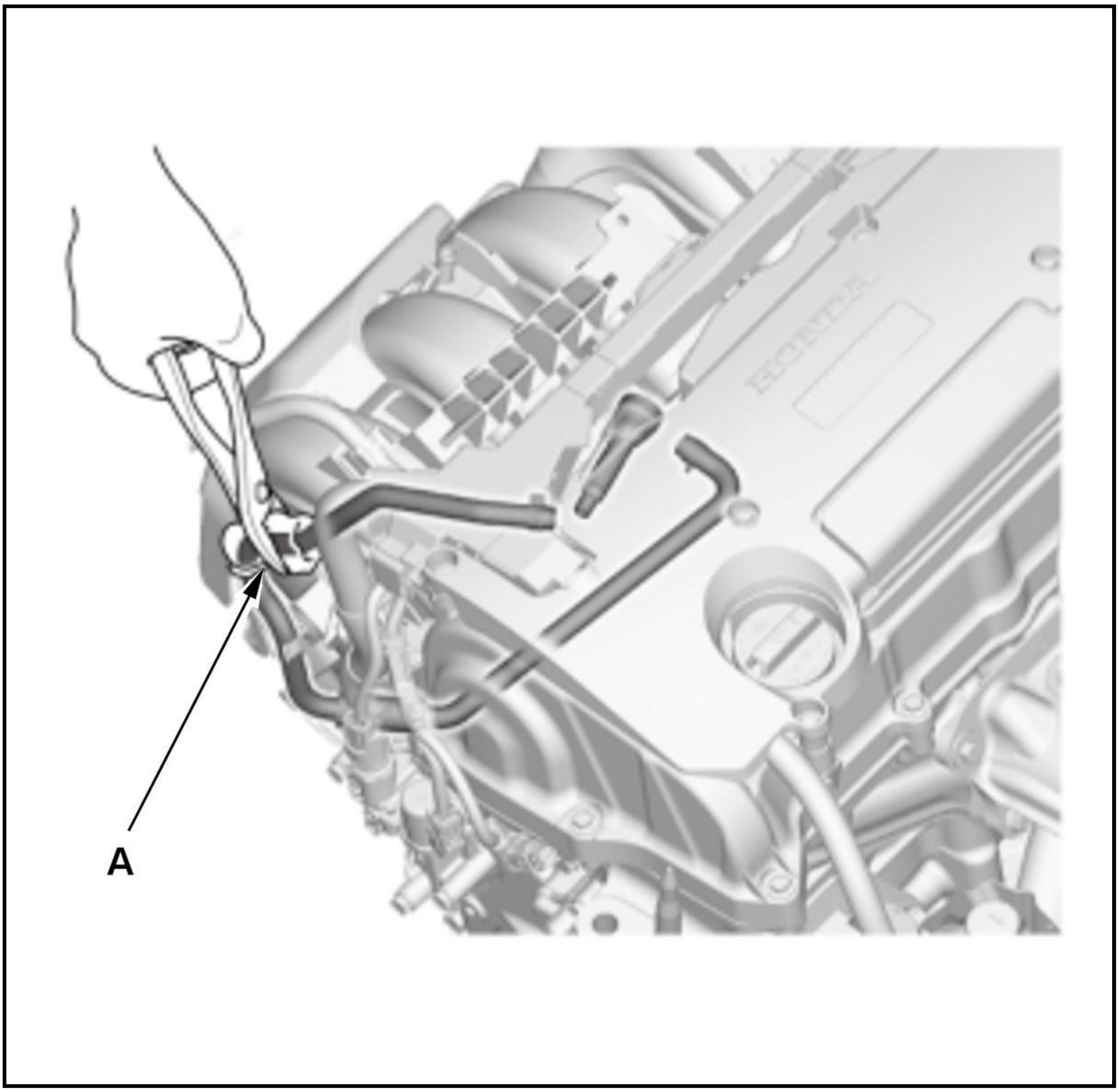

-3. Check the parameter (s) below with the HDS with the vacuum hose pinched.

Signal	Threshold		Current conditions	
	Values	**Unit**	**Values**	**Unit**
AF FB (ST FUEL TRIM)	Less than 0.79	B	B	B

Do the current condition (s) match the threshold?

YES

The engine oil is OK. Go to step 8.

NO

The engine oil is contaminated. Determine the cause of the contaminated oil (faulty injectors, etc.), then **replace the engine oil** and **oil filter** .

8. EVAP canister purge valve check

-1. Turn the vehicle to the OFF (LOCK) mode.

-2. Remove the high pressure fuel pump cover and the fuel bracket.

-3. Disconnect the following connector.

EVAP canister purge valve 2P connector

-4. Disconnect the vacuum hose (purge line) (A) from the EVAP canister purge valve (B) in the engine compartment, and connect a vacuum pump/gauge, 0-30 inHg (C) to the purge valve.

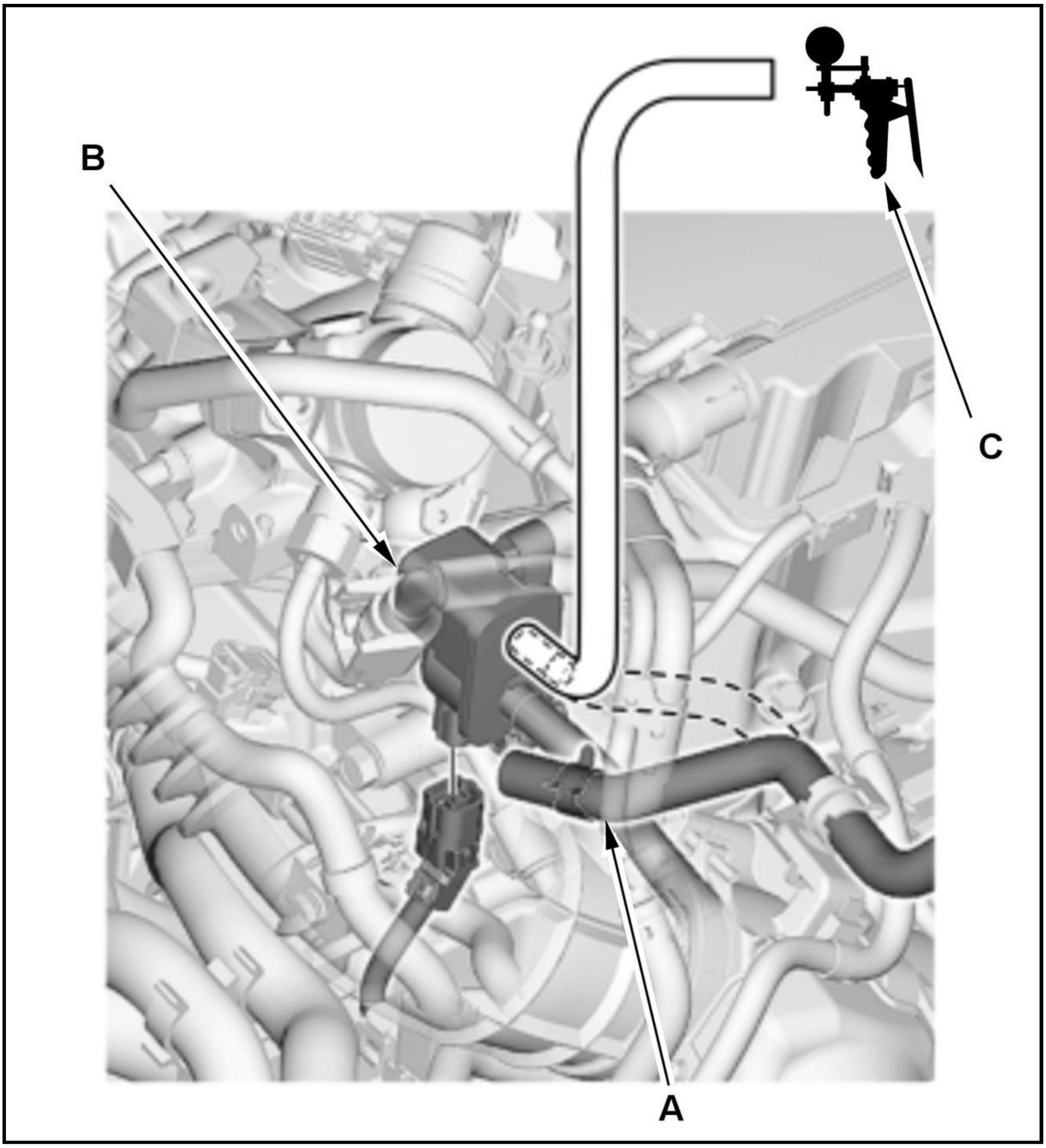

-5. Start the engine.

Does the vacuum pump indicate vacuum?

YES

When the climate is warm, fuel vapor from the canister line to the fuel tank enters intake manifold, enriching mixture (excessively rich), causing the engine to stall in some cases. If needed, **replace the EVAP canister purge valve** .

NO

Go to step 9.

9. Replace A/F sensor (Sensor 1)

-1. Turn the vehicle to the OFF (LOCK) mode.

-2. Replace the A/F sensor (Sensor 1) with a known-good sensor .

-3. Start the engine, and let it idle.

-4. Operate the vehicle under the same conditions where the AF FB (ST FUEL TRIM) was 0.79 or less.

ENGINE SPEED	B
VEHICLE SPEED	B
REL TP SENSOR	B
APP SENSOR	B

On-board Snapshot

Signal	Current conditions	
	Values	Unit
ENGINE SPEED	B	B
VEHICLE SPEED	B	B
REL TP SENSOR	B	B
APP SENSOR	B	B

-5. Check the parameter (s) below with the HDS while driving.

Signal	Threshold		Current conditions	
	Values	Unit	Values	Unit
AF FB (ST FUEL TRIM)	Less than 0.79	B	B	B

Do the current condition (s) match the threshold under the on-board snapshot conditions?

YES

The A/F sensor (Sensor 1) is not the cause of the low AF FB (ST FUEL TRIM) value. Reinstall the original A/F sensor, then go to step 10.

NO

The A/F sensor (Sensor 1) was causing the low AF FB (ST FUEL TRIM) value. Replace the original A/F sensor (Sensor 1) .

10. Replace injectors

-1. Turn the vehicle to the OFF (LOCK) mode.

-2. Replace the injectors with known-good injectors .

-3. Start the engine, and let it idle.

-4. Operate the vehicle under the same conditions where the AF FB (ST FUEL TRIM) was 0.79 or less.

ENGINE SPEED	B
VEHICLE SPEED	B
REL TP SENSOR	B
APP SENSOR	B

On-board Snapshot

Signal	Current conditions	
	Values	Unit
ENGINE SPEED	B	B
VEHICLE SPEED	B	B
REL TP SENSOR	B	B
APP SENSOR	B	B

-5. Check the parameter (s) below with the HDS while driving.

Signal	Threshold		Current conditions	
	Values	Unit	Values	Unit
AF FB (ST FUEL TRIM)	Less than 0.79	B	B	B

Do the current condition (s) match the threshold under the on-board snapshot conditions?

YES

The injectors are not the cause of the low AF FB (ST FUEL TRIM) value. **Substitute a known-good PCM** , then recheck.

NO

The injectors were causing the low AF FB (ST FUEL TRIM) value. **Replace all injectors as a set** .

DTC P0191 (2.4 L ENGINE) (2018 2019)

DTC P0191 : Fuel Rail Pressure Sensor Out of Range

NOTE: Before you troubleshoot, **review the general troubleshooting information** .

DTC Description	Confirmed DTC	Pending DTC
P0191 Fuel Rail Pressure Sensor Out of Range	B	B

DTC (PGM-FI)

1. Problem verification 1

-1. Turn the vehicle to the ON mode and wait 6 seconds.

-2. Check the parameter (s) below with the HDS.

Signal	Threshold		Current conditions	
	Values	Unit	Values	Unit
FUEL PRESSURE CONVERTED FROM PF SENSOR	Less than 0.22	V	B	B

Do the current condition (s) match the threshold?

YES

The failure is duplicated. Go to step 3.

NO

Go to step 2.

2. Problem verification 2

-1. Check the parameter (s) below with the HDS.

Signal	Threshold		Current conditions	
	Values	Unit	Values	Unit
FUEL PRESSURE CONVERTED FROM PF SENSOR	More than 4.89	V	B	B

Do the current condition (s) match the threshold?

YES

The failure is duplicated. Go to step 7.

NO

Intermittent failure, the system is OK at this time. Check for poor connections or loose terminals at the fuel rail pressure sensor and the PCM. **If the on-board snapshot of this DTC is recorded, try to reproduce the failure under the same conditions with the on-board snapshot** .

3. Determine possible failure area (PF line, others)

-1. Turn the vehicle to the OFF (LOCK) mode.

-2. Disconnect the following connector.

Fuel rail pressure sensor 3P connector

-3. Turn the vehicle to the ON mode.

-4. Check the parameter (s) below with the HDS.

Signal	Threshold		Current conditions	
	Values	Unit	Values	Unit
FUEL PRESSURE CONVERTED FROM PF SENSOR	Less than 0.22	V	B	B

Do the current condition (s) match the threshold?

YES

Go to step 4.

NO

Go to step 5.

4. Shorted wire check (PF line)

-1. Turn the vehicle to the OFF (LOCK) mode.

-2. Jump the SCS line with the HDS, and wait more than 1 minute.

-3. Disconnect the following connector.

PCM connector C (51P)

-4. Check for continuity between test points 1 and 2.

Test condition	Vehicle OFF (LOCK) mode

B	Fuel rail pressure sensor 3P connector: disconnected
B	PCM connector C (51P): disconnected
Test point 1	Fuel rail pressure sensor 3P connector (female terminals) No. 1: ①
Test point 2	Body ground

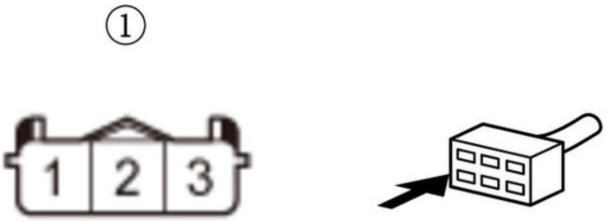

Is there continuity?

YES

Repair a short in the PF wire between the PCM (C46) and the fuel rail pressure sensor.

NO

The PF wire is OK. Check for any authorized service information related to the DTCs or symptoms you are troubleshooting, or **substitute a known-good PCM** .

5. Determine possible failure area (fuel rail pressure sensor, others)

-1. Measure the voltage between test points 1 and 2.

Test condition	Vehicle ON mode
B	Fuel rail pressure sensor 3P connector: disconnected
Test point 1	Fuel rail pressure sensor 3P connector (female terminals) No. 2: ①
Test point 2	Fuel rail pressure sensor 3P connector (female terminals) No. 3: ①

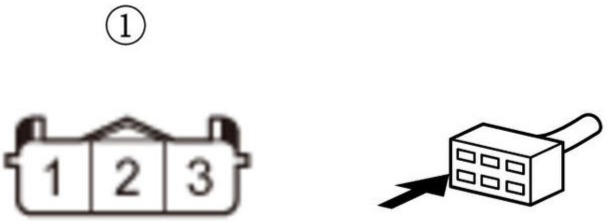

Is there about 5.0 V?

YES

Replace the fuel rail (fuel rail pressure sensor) .

NO

Go to step 6.

6. Open wire check (VCC1 line)

-1. Turn the vehicle to the OFF (LOCK) mode.

-2. Jump the SCS line with the HDS, and wait more than 1 minute.

-3. Disconnect the following connector.

PCM connector C (51P)

-4. Check for continuity between test points 1 and 2.

Test condition	Vehicle OFF (LOCK) mode
B	Fuel rail pressure sensor 3P connector: disconnected
B	PCM connector C (51P): disconnected
Test point 1	Fuel rail pressure sensor 3P connector (female terminals) No. 3: ①
Test point 2	PCM connector C (51P) No. 41

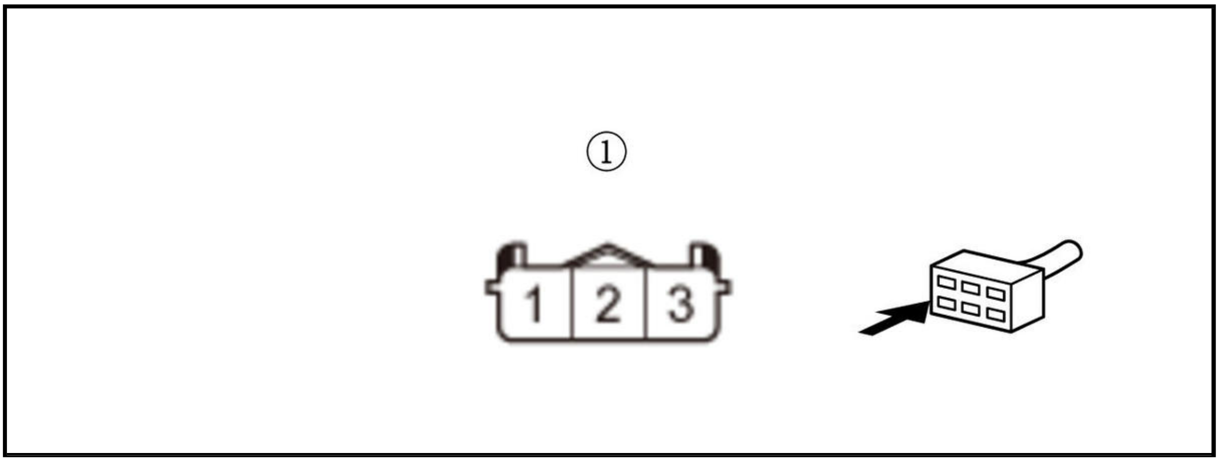

Is there continuity?

YES

The VCC1 wire is OK. Check for any authorized service information related to the DTCs or symptoms you are troubleshooting, or **substitute a known-good PCM** .

NO

Repair an open in the VCC1 wire between the PCM (C41) and the fuel rail pressure sensor.

7. Determine possible failure area (fuel rail pressure sensor, others)

-1. Turn the vehicle to the OFF (LOCK) mode.

-2. Disconnect the following connector.

Fuel rail pressure sensor 3P connector

-3. Connect terminals A and B with a jumper wire.

Terminal A	Fuel rail pressure sensor 3P connector (female terminals) No. 1: ①
Terminal B	Fuel rail pressure sensor 3P connector (female terminals) No. 2: ①

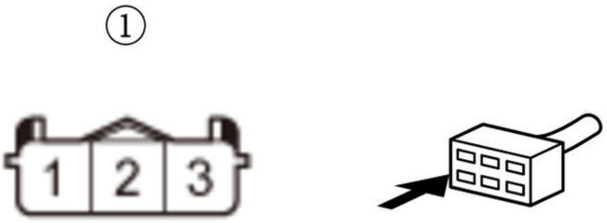

-4. Turn the vehicle to the ON mode.

-5. Check the parameter (s) below with the HDS.

Signal	Threshold		Current conditions	
	Values	**Unit**	**Values**	**Unit**
FUEL PRESSURE CONVERTED FROM PF SENSOR	More than 4.89	V	B	B

Do the current condition (s) match the threshold?

YES

Go to step 8.

NO

Replace the fuel rail (fuel rail pressure sensor) .

8. Determine possible failure area (SG1 line, others)

-1. Turn the vehicle to the OFF (LOCK) mode.

-2. Remove the jumper wire from the fuel rail pressure sensor 3P connector.

-3. Turn the vehicle to the ON mode.

-4. Measure the voltage between test points 1 and 2.

Test condition	Vehicle ON mode
B	Fuel rail pressure sensor 3P connector: disconnected
Test point 1	Fuel rail pressure sensor 3P connector (female terminals) No. 2: ①
Test point 2	Fuel rail pressure sensor 3P connector (female terminals) No. 3: ①

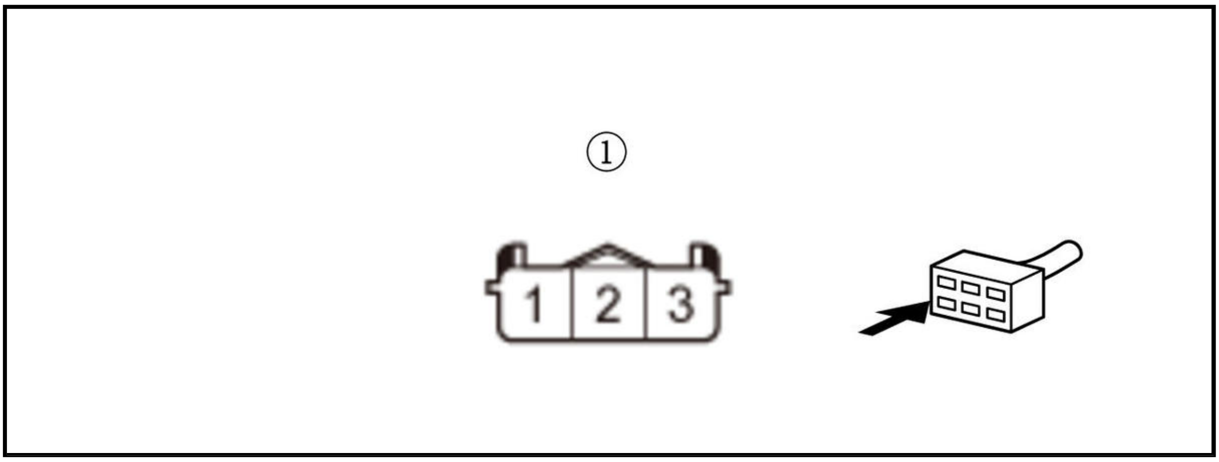

Is there about 5.0 V?

YES

The SG1 wire is OK. Go to step 9.

NO

Go to step 10.

9. Open wire check (PF line)

-1. Turn the vehicle to the OFF (LOCK) mode.

-2. Jump the SCS line with the HDS, and wait more than 1 minute.

-3. Disconnect the following connector.

PCM connector C (51P)

-4. Check for continuity between test points 1 and 2.

Test condition	Vehicle OFF (LOCK) mode
B	Fuel rail pressure sensor 3P connector: disconnected
B	PCM connector C (51P): disconnected
Test point 1	Fuel rail pressure sensor 3P connector (female terminals) No. 1: ①
Test point 2	**PCM connector C (51P) No. 46**

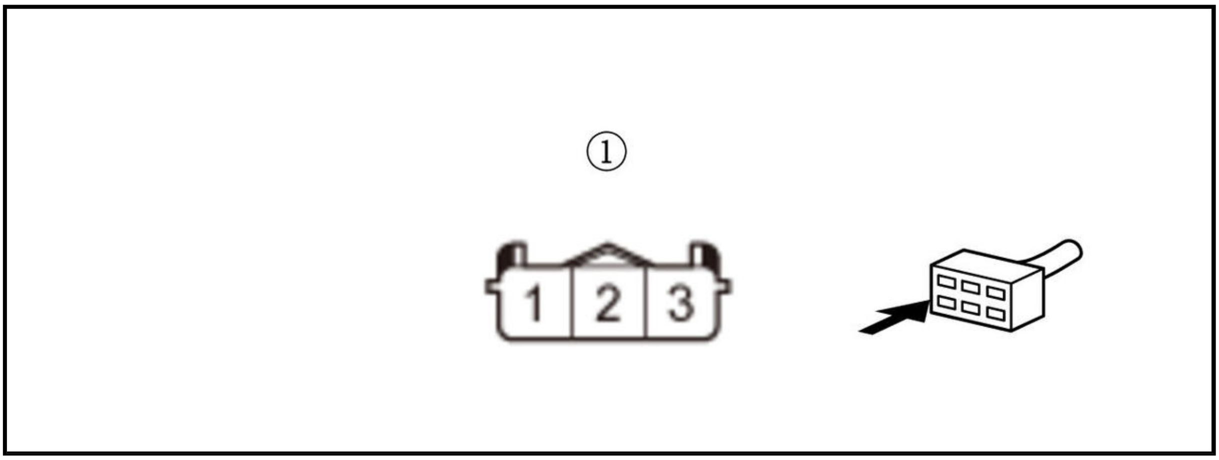

Is there continuity?

YES

The PF wire is OK. Check for any authorized service information related to the DTCs or symptoms you are troubleshooting, or **substitute a known-good PCM** .

NO

Repair an open in the PF wire between the PCM (C46) and the fuel rail pressure sensor.

10. Open wire check (SG1 line)

-1. Turn the vehicle to the OFF (LOCK) mode.

-2. Jump the SCS line with the HDS, and wait more than 1 minute.

-3. Disconnect the following connector.

PCM connector C (51P)

-4. Check for continuity between test points 1 and 2.

Test condition	Vehicle OFF (LOCK) mode
B	Fuel rail pressure sensor 3P connector: disconnected
B	PCM connector C (51P): disconnected
Test point 1	Fuel rail pressure sensor 3P connector (female terminals) No. 2: ①
Test point 2	**PCM connector C (51P) No. 42**

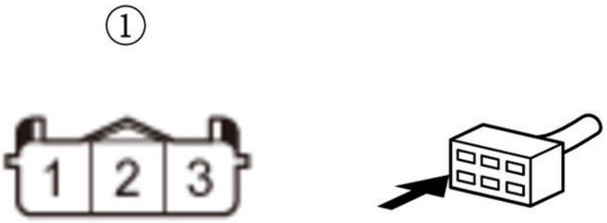

Is there continuity?

YES

The SG1 wire is OK. Check for any authorized service information related to the DTCs or symptoms you are troubleshooting, or **substitute a known-good PCM** .

NO

Repair an open in the SG1 wire between the PCM (C42) and the fuel rail pressure sensor.

DTC P0192 (1.5 L ENGINE)

DTC P0192 : Fuel Rail Pressure Sensor Circuit Low Voltage

NOTE: Before you troubleshoot, **review the general troubleshooting information** .

DTC Description	Confirmed DTC	Pending DTC
P0192 Fuel Rail Pressure Sensor Circuit Low Voltage	B	B

1. Problem verification

   -1. Turn the vehicle to the ON mode and wait 2 seconds.

   -2. Check the parameter (s) below with the HDS.

Signal	Threshold		Current conditions	
	Values	Unit	Values	Unit
FUEL PRESSURE CONVERTED FROM PF SENSOR	Less than 0.31	V	B	B

   Do the current condition (s) match the threshold?

   YES

   Go to step 2.

   NO

   Intermittent failure, the system is OK at this time. Check for poor connections or loose terminals at the fuel rail pressure sensor and the PCM. **If the on-board snapshot of this DTC is recorded, try to reproduce the failure under the same conditions with the on-board snapshot** .

2. Determine possible failure area (PF line, others)

   -1. Turn the vehicle to the OFF (LOCK) mode.

   -2. Disconnect the following connector.

Fuel rail pressure sensor 3P connector

   -3. Turn the vehicle to the ON mode.

   -4. Check the parameter (s) below with the HDS.

Signal	Threshold		Current conditions	
	Values	Unit	Values	Unit
FUEL PRESSURE CONVERTED FROM PF SENSOR	Less than 0.31	V	B	B

   Do the current condition (s) match the threshold?

   YES

   Go to step 3.

   NO

   Go to step 4.

3. Shorted wire check (PF line)

   -1. Turn the vehicle to the OFF (LOCK) mode.

   -2. Jump the SCS line with the HDS, and wait more than 1 minute.

   -3. Disconnect the following connector.

PCM connector E (80P)

-4. Check for continuity between test points 1 and 2.

Test condition	Vehicle OFF (LOCK) mode
B	Fuel rail pressure sensor 3P connector: disconnected
B	PCM connector E (80P): disconnected
Test point 1	Fuel rail pressure sensor 3P connector (female terminals) No. 1: ①
Test point 2	Body ground

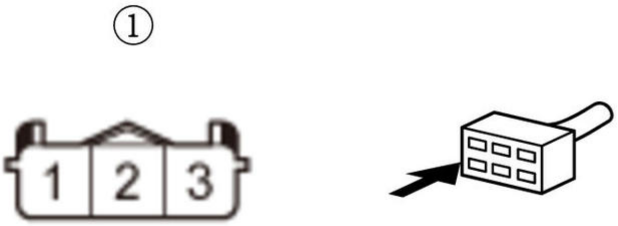

Is there continuity?

YES

Repair a short in the PF wire between the PCM (E72) and the fuel rail pressure sensor.

NO

The PF wire is OK. Check for any authorized service information related to the DTCs or symptoms you are troubleshooting, or **substitute a known-good PCM** .

4. Determine possible failure area (fuel rail pressure sensor, others)

-1. Measure the voltage between test points 1 and 2.

Test condition	Vehicle ON mode
B	Fuel rail pressure sensor 3P connector: disconnected
Test point 1	Fuel rail pressure sensor 3P connector (female terminals) No. 2: ①
Test point 2	Fuel rail pressure sensor 3P connector (female terminals) No. 3: ①

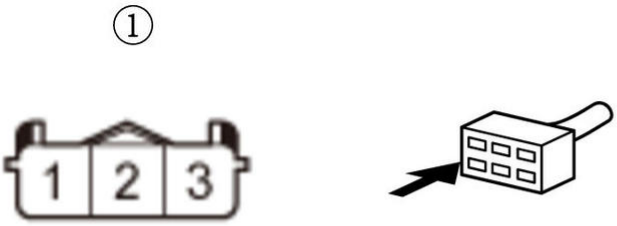

Is there about 5.0 V?

YES

Replace the fuel rail (fuel rail pressure sensor) .

NO

Go to step 5.

5. Open wire check (VCC1 line)

-1. Turn the vehicle to the OFF (LOCK) mode.

-2. Jump the SCS line with the HDS, and wait more than 1 minute.

-3. Disconnect the following connector.

PCM connector E (80P)

-4. Check for continuity between test points 1 and 2.

Test condition	Vehicle OFF (LOCK) mode
B	Fuel rail pressure sensor 3P connector: disconnected
B	PCM connector E (80P): disconnected
Test point 1	Fuel rail pressure sensor 3P connector (female terminals) No. 3: ①
Test point 2	**PCM connector E (80P) No. 70**

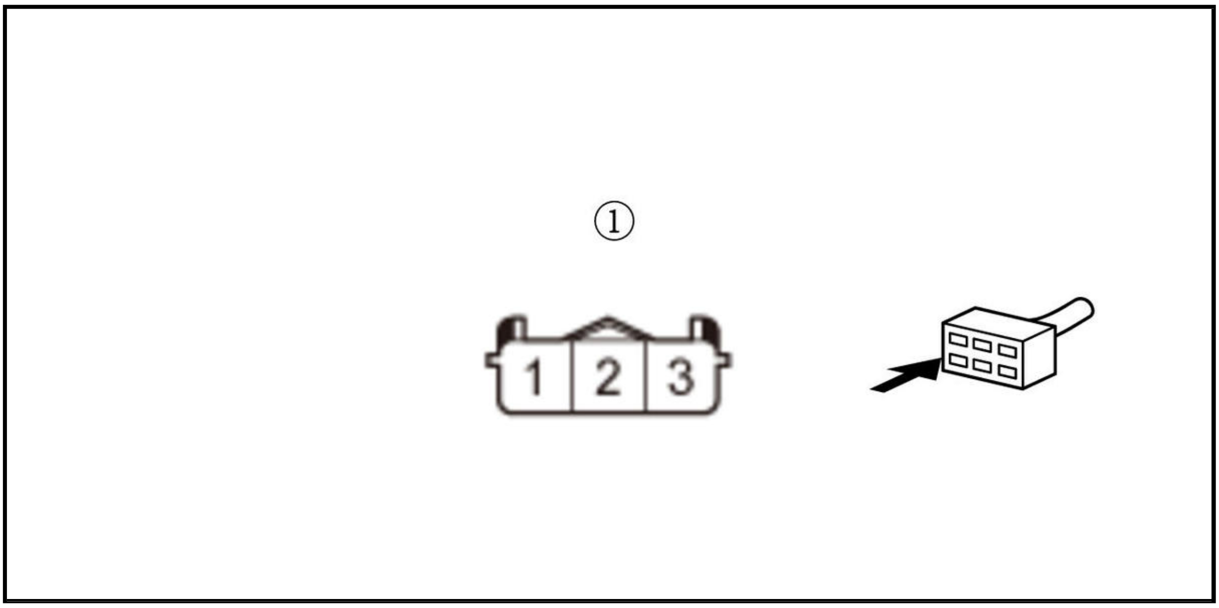

Is there continuity?

YES

The VCC1 wire is OK. Check for any authorized service information related to the DTCs or symptoms you are troubleshooting, or **substitute a known-good PCM** .

NO

Repair an open in the VCC1 wire between the PCM (E70) and the fuel rail pressure sensor.

DTC P0192 (2.4 L ENGINE) (2017 2018 2019)

DTC P0192 : Fuel Rail Pressure Sensor Circuit Low Voltage

NOTE: Before you troubleshoot, **review the general troubleshooting information** .

DTC Description	Confirmed DTC	Pending DTC
P0192 Fuel Rail Pressure Sensor Circuit Low Voltage	B	B

DTC (PGM-FI)

1. Problem verification

-1. Turn the vehicle to the ON mode and wait 2 seconds.

-2. Check the parameter (s) below with the HDS.

Signal	Threshold		Current conditions	
	Values	Unit	Values	Unit
FUEL PRESSURE CONVERTED FROM PF SENSOR	Less than 0.31	V	B	B

Do the current condition (s) match the threshold?

YES

The failure is duplicated. Go to step 2.

NO

Intermittent failure, the system is OK at this time. Check for poor connections or loose terminals at the fuel rail pressure sensor and the PCM. **If the on-board snapshot of this DTC is recorded, try to reproduce the failure under the same conditions with the on-board snapshot** .

2. Determine possible failure area (PF line, others)

-1. Turn the vehicle to the OFF (LOCK) mode.

-2. Disconnect the following connector.

Fuel rail pressure sensor 3P connector

-3. Turn the vehicle to the ON mode.

-4. Check the parameter (s) below with the HDS.

Signal	Threshold		Current conditions	
	Values	**Unit**	**Values**	**Unit**
FUEL PRESSURE CONVERTED FROM PF SENSOR	Less than 0.31	V	B	B

Do the current condition (s) match the threshold?

YES

Go to step 3.

NO

Go to step 4.

3. Shorted wire check (PF line)

-1. Turn the vehicle to the OFF (LOCK) mode.

-2. Jump the SCS line with the HDS, and wait more than 1 minute.

-3. Disconnect the following connector.

PCM connector C (51P)

-4. Check for continuity between test points 1 and 2.

Test condition	Vehicle OFF (LOCK) mode
B	Fuel rail pressure sensor 3P connector: disconnected
B	PCM connector C (51P): disconnected
Test point 1	Fuel rail pressure sensor 3P connector (female terminals) No. 1: ①
Test point 2	Body ground

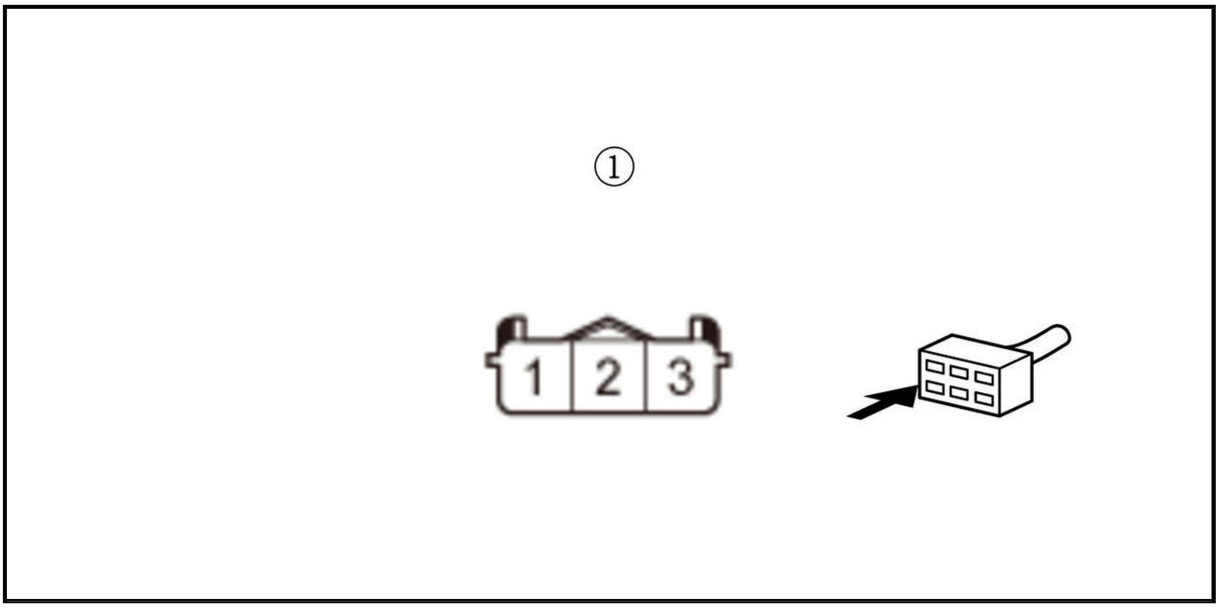

Is there continuity?

YES

Repair a short in the PF wire between the PCM (C46) and the fuel rail pressure sensor.

NO

The PF wire is OK. Check for any authorized service information related to the DTCs or symptoms you are troubleshooting or **substitute a known-good PCM** .

4. Determine possible failure area (fuel rail pressure sensor, others)

-1. Measure the voltage between test points 1 and 2.

Test condition	Vehicle ON mode
B	Fuel rail pressure sensor 3P connector: disconnected
Test point 1	Fuel rail pressure sensor 3P connector (female terminals) No. 2: ①
Test point 2	Fuel rail pressure sensor 3P connector (female terminals) No. 3: ①

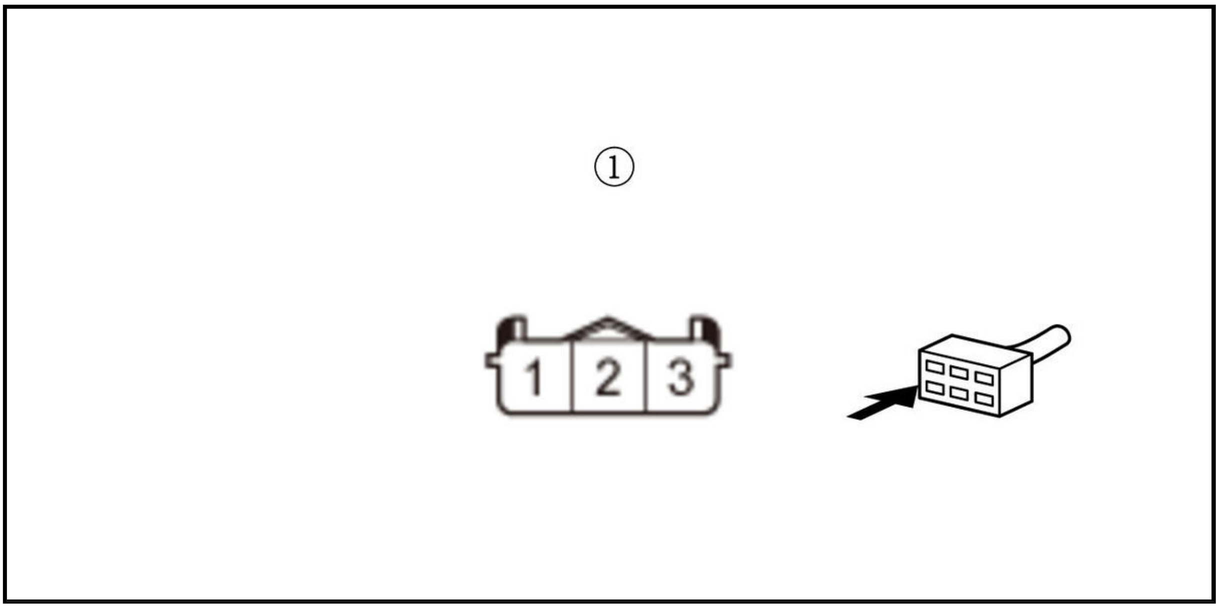

Is there about 5.0 V?

YES

Replace the fuel rail (fuel rail pressure sensor) .

NO

Go to step 5.

5. Open wire check (VCC1 line)

-1. Turn the vehicle to the OFF (LOCK) mode.

-2. Jump the SCS line with the HDS, and wait more than 1 minute.

-3. Disconnect the following connector.

PCM connector C (51P)

-4. Check for continuity between test points 1 and 2.

Test condition	Vehicle OFF (LOCK) mode
B	Fuel rail pressure sensor 3P connector: disconnected
B	PCM connector C (51P): disconnected
Test point 1	Fuel rail pressure sensor 3P connector (female terminals) No. 3: ①
Test point 2	**PCM connector C (51P) No. 41**

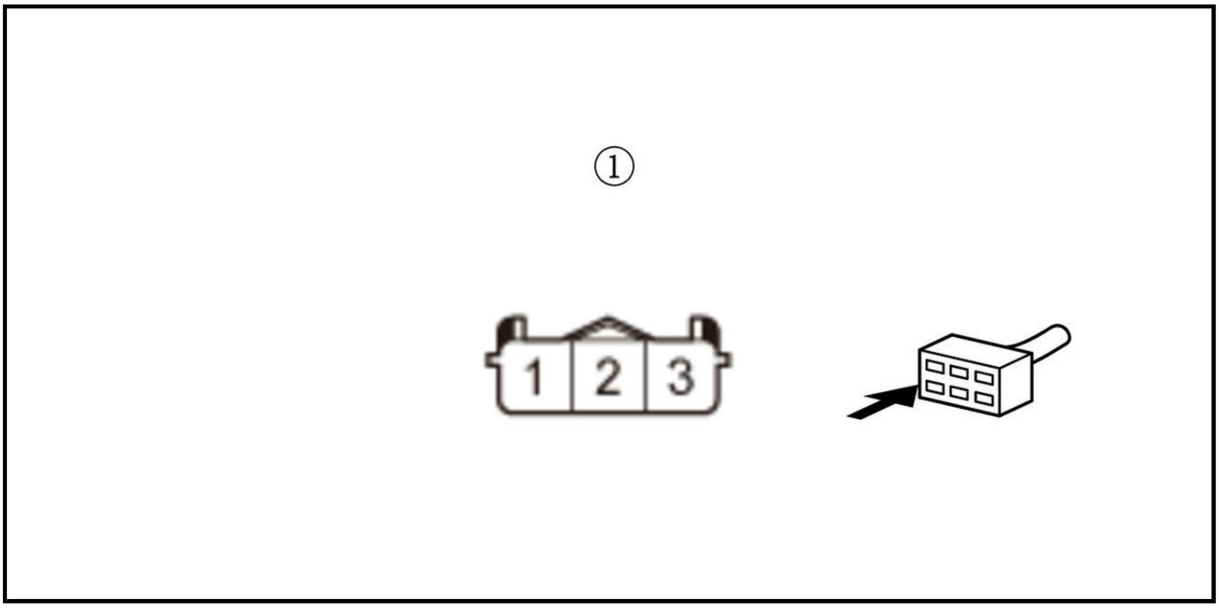

Is there continuity?

YES

The VCC1 wire is OK. Check for any authorized service information related to the DTCs or symptoms you are troubleshooting or **substitute a known-good PCM** .

NO

Repair an open in the VCC1 wire between the PCM (C41) and the fuel rail pressure sensor.

DTC P0193 (1.5 L ENGINE)

DTC P0193 : Fuel Rail Pressure Sensor Circuit High Voltage

NOTE: Before you troubleshoot, **review the general troubleshooting information** .

DTC Description	Confirmed DTC	Pending DTC
P0193 Fuel Rail Pressure Sensor Circuit High Voltage	B	B

DTC (PGM-FI)

1. Problem verification

   -1. Turn the vehicle to the ON mode, and wait 2 seconds.

   -2. Check the parameter (s) below with the HDS.

Signal	Threshold		Current conditions	
	Values	Unit	Values	Unit
FUEL PRESSURE CONVERTED FROM PF SENSOR	More than 4.89	V	B	B

   Do the current condition (s) match the threshold?

   YES

   Go to step 2.

   NO

   Intermittent failure, the system is OK at this time. Check for poor connections or loose terminals at the fuel rail pressure sensor and the PCM. **If the on-board snapshot of this DTC is recorded, try to reproduce the failure under the same conditions with the on-board snapshot** .

2. Determine possible failure area (fuel rail pressure sensor, others)

   -1. Turn the vehicle to the OFF (LOCK) mode.

   -2. Disconnect the following connector.

Fuel rail pressure sensor 3P connector

   -3. Connect terminals A and B with a jumper wire.

Terminal A	Fuel rail pressure sensor 3P connector (female terminals) No. 1: ①
Terminal B	Fuel rail pressure sensor 3P connector (female terminals) No. 2: ①

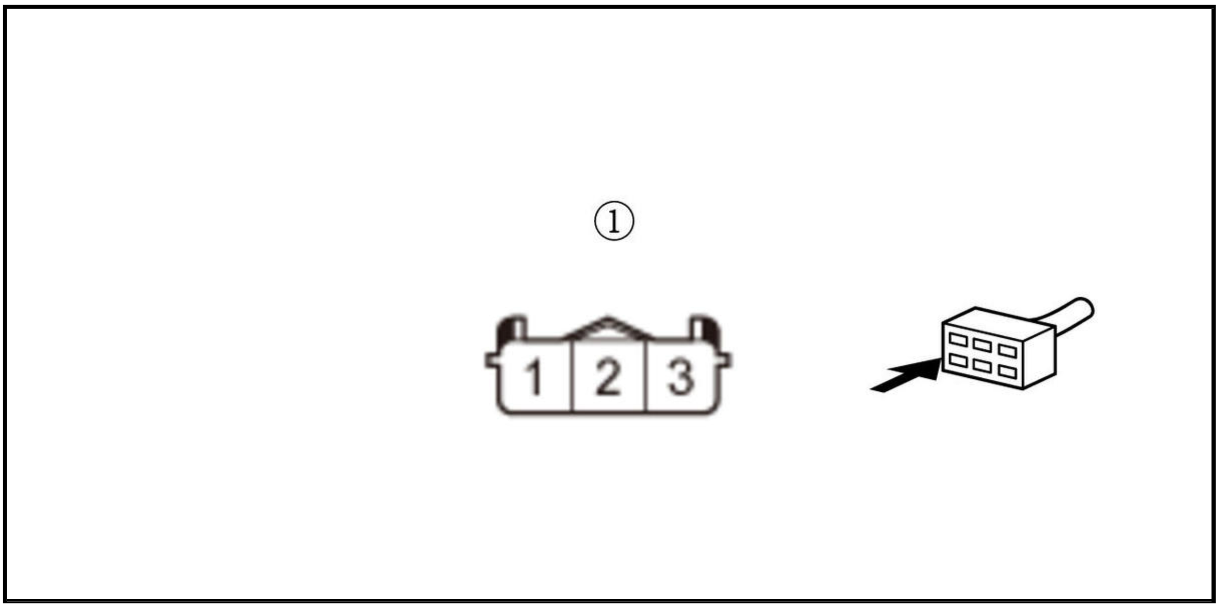

-4. Turn the vehicle to the ON mode.

-5. Check the parameter (s) below with the HDS.

Signal	Threshold		Current conditions	
	Values	Unit	Values	Unit
FUEL PRESSURE CONVERTED FROM PF SENSOR	More than 4.89	V	B	B

Do the current condition (s) match the threshold?

YES

Go to step 3.

NO

Replace the fuel rail (fuel rail pressure sensor) .

3. Determine possible failure area (SG1 line, others)

-1. Turn the vehicle to the OFF (LOCK) mode.

-2. Remove the jumper wire from the fuel rail pressure sensor 3P connector.

-3. Turn the vehicle to the ON mode.

-4. Measure the voltage between test points 1 and 2.

Test condition	Vehicle ON mode
B	Fuel rail pressure sensor 3P connector: disconnected
Test point 1	Fuel rail pressure sensor 3P connector (female terminals) No. 2: ①
Test point 2	Fuel rail pressure sensor 3P connector (female terminals) No. 3: ①

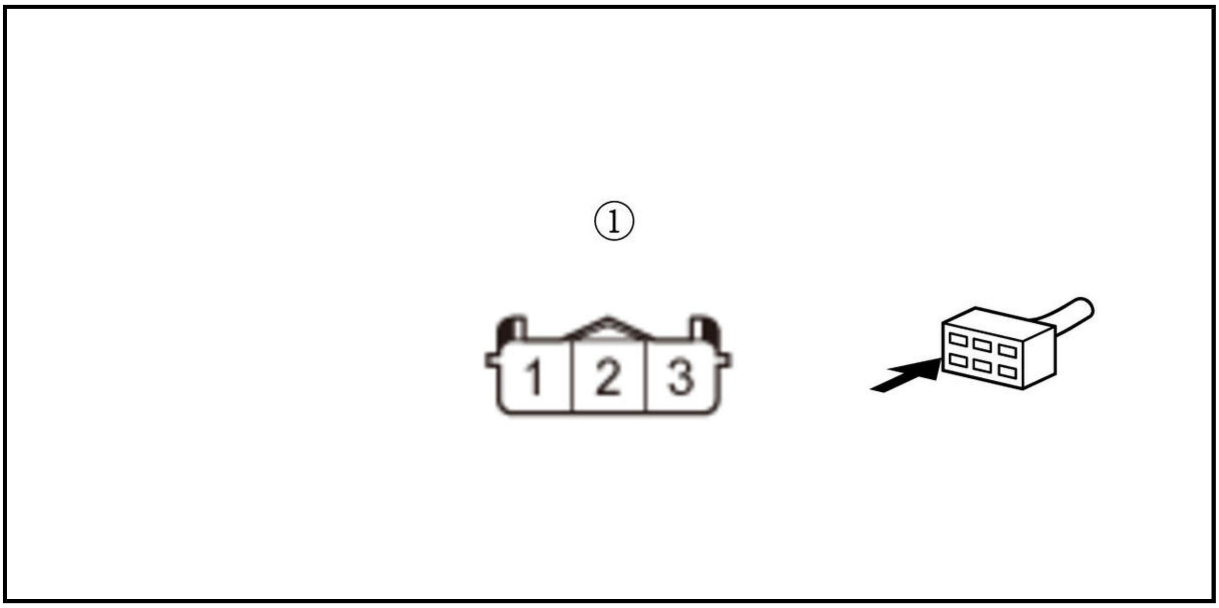

Is there about 5.0 V?

YES

Go to step 4.

NO

Go to step 5.

4. Open wire check (PF line)

-1. Turn the vehicle to the OFF (LOCK) mode.

-2. Jump the SCS line with the HDS, and wait more than 1 minute.

-3. Disconnect the following connector.

PCM connector E (80P)

-4. Check for continuity between test points 1 and 2.

Test condition	Vehicle OFF (LOCK) mode
B	Fuel rail pressure sensor 3P connector: disconnected
B	PCM connector E (80P): disconnected
Test point 1	Fuel rail pressure sensor 3P connector (female terminals) No. 1: ①
Test point 2	**PCM connector E (80P) No. 72**

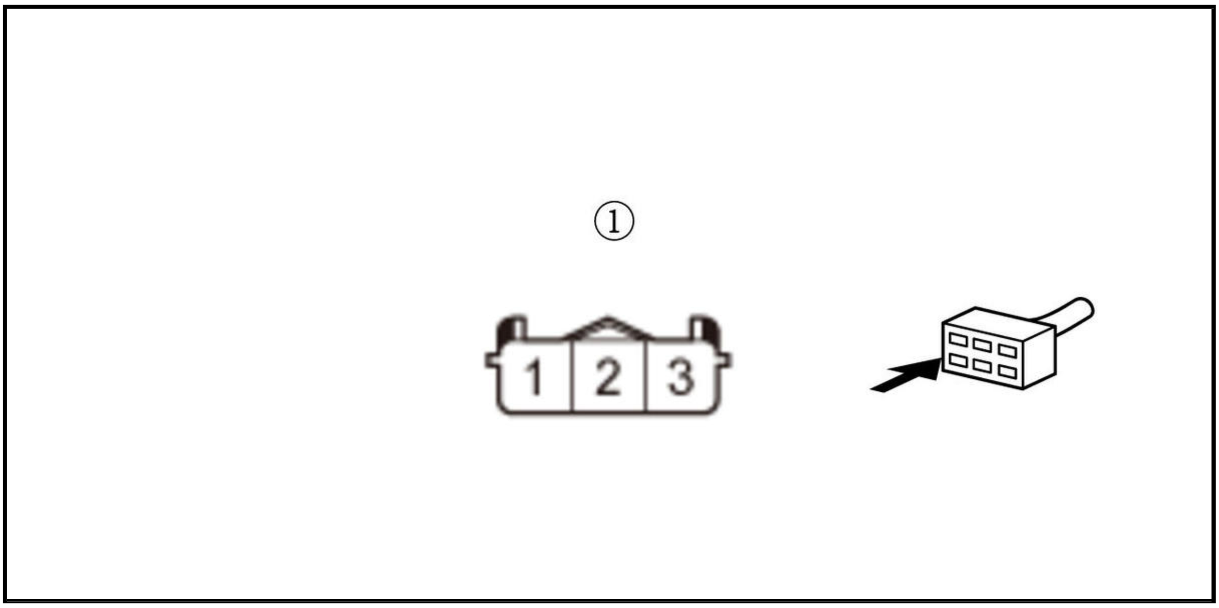

Is there continuity?

YES

The PF wire is OK. Check for any authorized service information related to the DTCs or symptoms you are troubleshooting, or **substitute a known-good PCM** .

NO

Repair an open in the PF wire between the PCM (E72) and the fuel rail pressure sensor.

5. Open wire check (SG1 line)

-1. Turn the vehicle to the OFF (LOCK) mode.

-2. Jump the SCS line with the HDS, and wait more than 1 minute.

-3. Disconnect the following connector.

PCM connector E (80P)

-4. Check for continuity between test points 1 and 2.

Test condition	Vehicle OFF (LOCK) mode
B	Fuel rail pressure sensor 3P connector: disconnected
B	PCM connector E (80P): disconnected
Test point 1	Fuel rail pressure sensor 3P connector (female terminals) No. 2: ①
Test point 2	**PCM connector E (80P) No. 71**

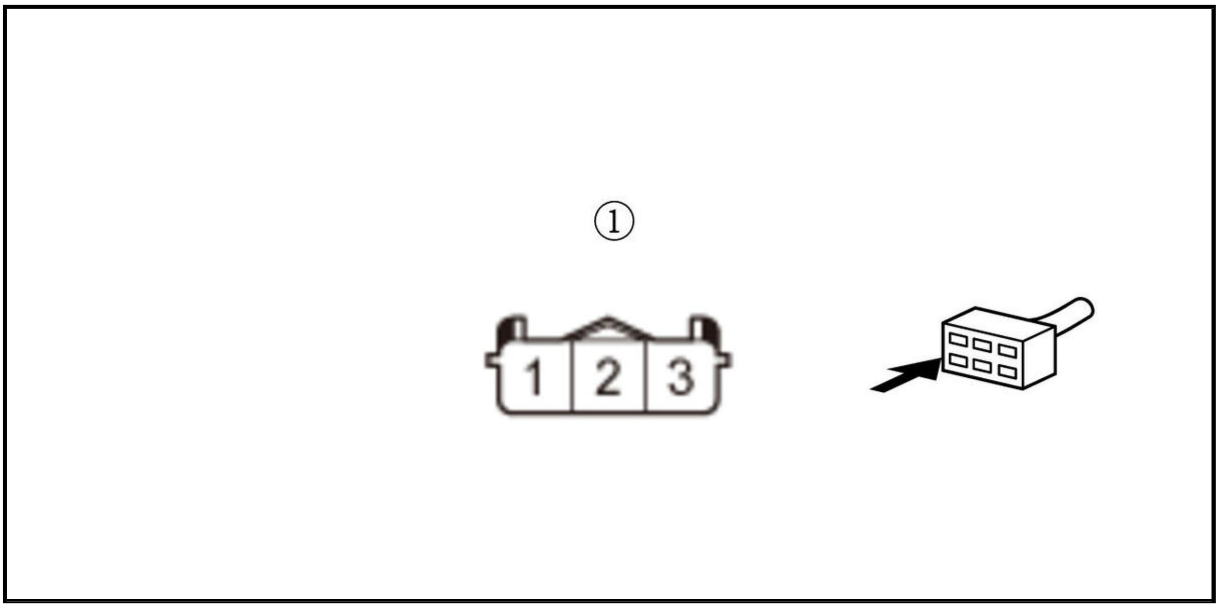

Is there continuity?

YES

The SG1 wire is OK. Check for any authorized service information related to the DTCs or symptoms you are troubleshooting, or **substitute a known-good PCM** .

NO

Repair an open in the SG1 wire between the PCM (E71) and the fuel rail pressure sensor.

DTC P0193 (2.4 L ENGINE) (2017 2018 2019)

DTC P0193 : Fuel Rail Pressure Sensor Circuit High Voltage

NOTE: Before you troubleshoot, **review the general troubleshooting information** .

DTC Description	Confirmed DTC	Pending DTC
P0193 Fuel Rail Pressure Sensor Circuit High Voltage	B	B

DTC (PGM-FI)

1. Problem verification

-1. Turn the vehicle to the ON mode, and wait 2 seconds.

-2. Check the parameter (s) below with the HDS.

Signal	Threshold		Current conditions	
	Values	Unit	Values	Unit
FUEL PRESSURE CONVERTED FROM PF SENSOR	More than 4.89	V	B	B

Do the current condition (s) match the threshold?

YES

The failure is duplicated. Go to step 2.

NO

Intermittent failure, the system is OK at this time. Check for poor connections or loose terminals at the fuel rail pressure sensor and the PCM. **If the on-board snapshot of this DTC is recorded, try to reproduce the failure under the same conditions with the on-board snapshot** .

2. Determine possible failure area (fuel rail pressure sensor, others)

-1. Turn the vehicle to the OFF (LOCK) mode.

-2. Disconnect the following connector.

Fuel rail pressure sensor 3P connector

-3. Connect terminals A and B with a jumper wire.

Terminal A	Fuel rail pressure sensor 3P connector (female terminals) No. 1: ①
Terminal B	Fuel rail pressure sensor 3P connector (female terminals) No. 2: ①

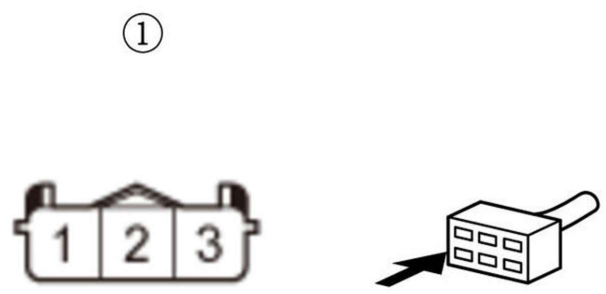

-4. Turn the vehicle to the ON mode.

-5. Check the parameter (s) below with the HDS.

Signal	Threshold		Current conditions	
	Values	Unit	Values	Unit
FUEL PRESSURE CONVERTED FROM PF SENSOR	More than 4.89	V	B	B

Do the current condition (s) match the threshold?

YES

Go to step 3.

NO

Replace the fuel rail (fuel rail pressure sensor) .

3. Determine possible failure area (SG1 line, others)

-1. Turn the vehicle to the OFF (LOCK) mode.

-2. Remove the jumper wire from the fuel rail pressure sensor 3P connector.

-3. Turn the vehicle to the ON mode.

-4. Measure the voltage between test points 1 and 2.

Test condition	Vehicle ON mode
B	Fuel rail pressure sensor 3P connector: disconnected
Test point 1	Fuel rail pressure sensor 3P connector (female terminals) No. 2: ①
Test point 2	Fuel rail pressure sensor 3P connector (female terminals) No. 3: ①

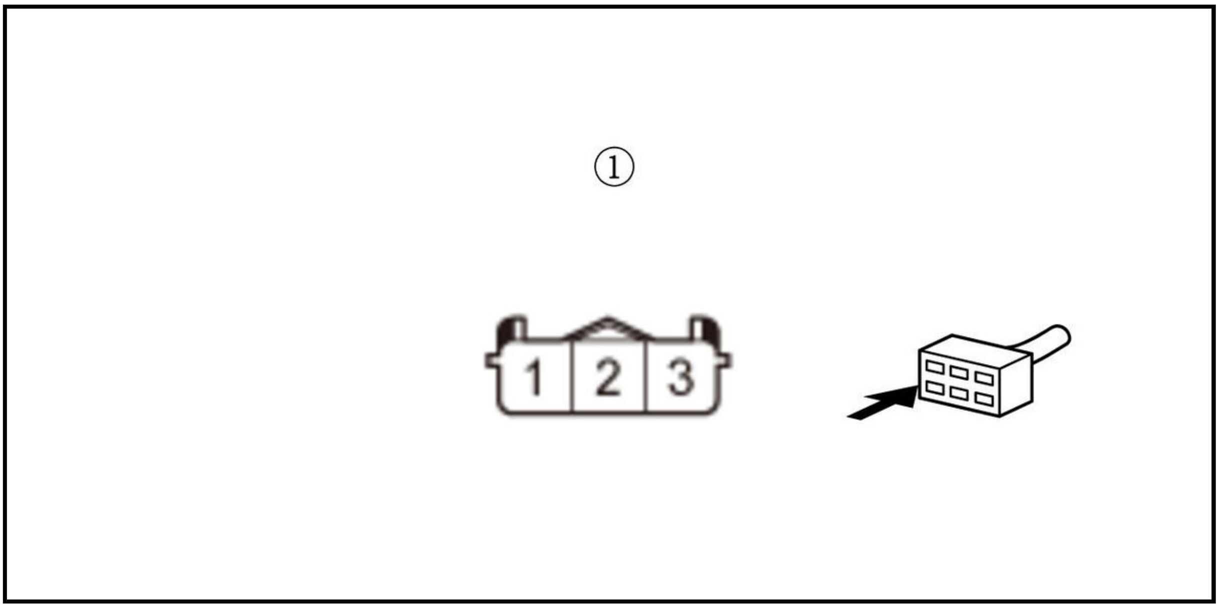

Is there about 5.0 V?

YES

The SG1 wire is OK. Go to step 4.

NO

Go to step 5.

4. Open wire check (PF line)

-1. Turn the vehicle to the OFF (LOCK) mode.

-2. Jump the SCS line with the HDS, and wait more than 1 minute.

-3. Disconnect the following connector.

PCM connector C (51P)

-4. Check for continuity between test points 1 and 2.

Test condition	Vehicle OFF (LOCK) mode
B	Fuel rail pressure sensor 3P connector: disconnected
B	PCM connector C (51P): disconnected
Test point 1	Fuel rail pressure sensor 3P connector No. 1
Test point 2	**PCM connector C (51P) No. 46**

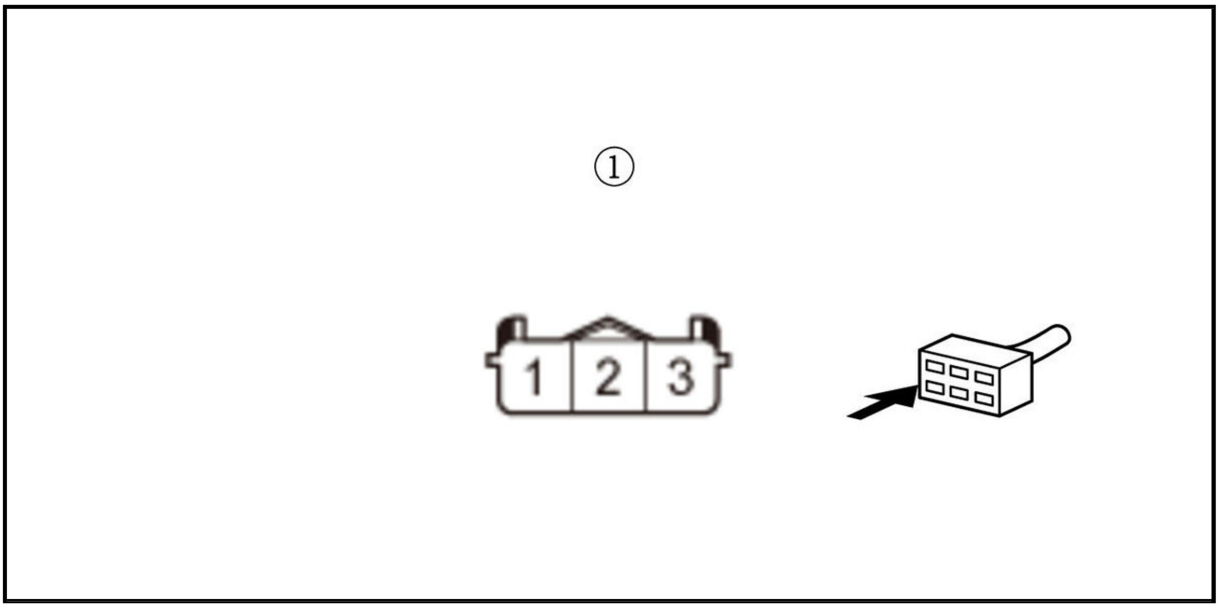

Is there continuity?

YES

The PF wire is OK. Check for any authorized service information related to the DTCs or symptoms you are troubleshooting or **substitute a known-good PCM** .

NO

Repair an open in the PF wire between the PCM (C46) and the fuel rail pressure sensor.

5. Open wire check (SG1 line)

-1. Turn the vehicle to the OFF (LOCK) mode.

-2. Jump the SCS line with the HDS, and wait more than 1 minute.

-3. Disconnect the following connector.

PCM connector C (51P)

-4. Check for continuity between test points 1 and 2.

Test condition	Vehicle OFF (LOCK) mode
B	Fuel rail pressure sensor 3P connector: disconnected
B	PCM connector C (51P): disconnected
Test point 1	Fuel rail pressure sensor 3P connector (female terminals) No. 2: ①
Test point 2	**PCM connector C (51P) No. 42**

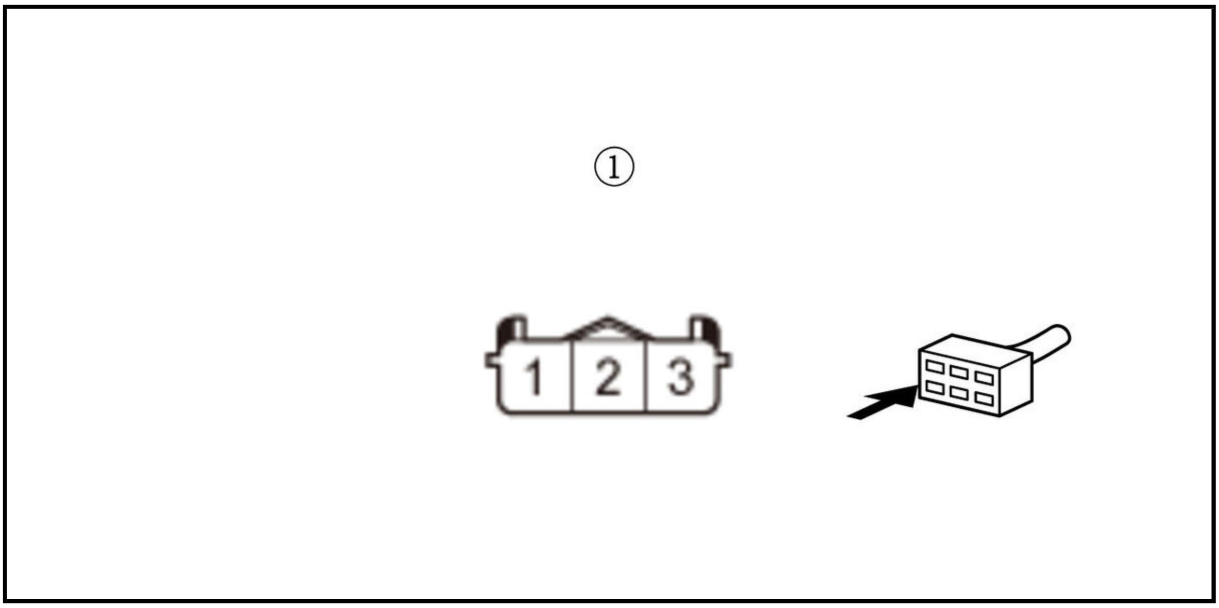

Is there continuity?

YES

The SG1 wire is OK. Check for any authorized service information related to the DTCs or symptoms you are troubleshooting or substitute a known-good PCM .

NO

Repair an open in the SG1 wire between the PCM (C42) and the fuel rail pressure sensor.

DTC P0201, P0204 (1.5 L ENGINE)

DTC P0201 : No. 1 Cylinder Injector Circuit Malfunction **DTC P0204** : No. 4 Cylinder Injector Circuit Malfunction

NOTE: Before you troubleshoot, review the general troubleshooting information .

DTC Description	Confirmed DTC	Pending DTC
P0201 No. 1 Cylinder Injector Circuit Malfunction	B	B
P0204 No. 4 Cylinder Injector Circuit Malfunction	B	B

DTC (PGM-FI)

1. Problem verification

   -1. Turn the vehicle to the ON mode.

   -2. Clear the DTC with the HDS.

   -3. Turn the vehicle to the OFF (LOCK) mode.

   -4. Start the engine (If the engine does not start, crank the engine for 20 seconds).

   -5. Check for Pending or Confirmed DTCs with the HDS.

DTC Description	Confirmed DTC	Pending DTC
P0201 No. 1 Cylinder Injector Circuit Malfunction	B	B
P0204 No. 4 Cylinder Injector Circuit Malfunction	B	B

Is DTC P0201 and/or P0204 indicated?

YES

Go to step 2.

NO

Intermittent failure, the system is OK at this time. Check for poor connections or loose terminals at the injector and the PCM. **If the on-board snapshot of this DTC is recorded, try to reproduce the failure under the same conditions with the on-board snapshot** .

2. Engine starting check

-1. Try to start the engine.

Does the engine start?

YES

Go to step 11.

NO

Go to step 3.

3. Relay check

-1. Turn the vehicle to the OFF (LOCK) mode.

-2. **Remove the injector relay** .

-3. **Test the injector relay** .

Is the relay OK?

YES

Go to step 4.

NO

Replace the injector relay.

4. Open wire check (+B IGP line)

-1. Measure the voltage between test points 1 and 2.

Test condition	Vehicle OFF (LOCK) mode Injector relay: disconnected
Test point 1	Injector relay 4P socket (female terminals) No. 3: ①
Test point 2	Body ground

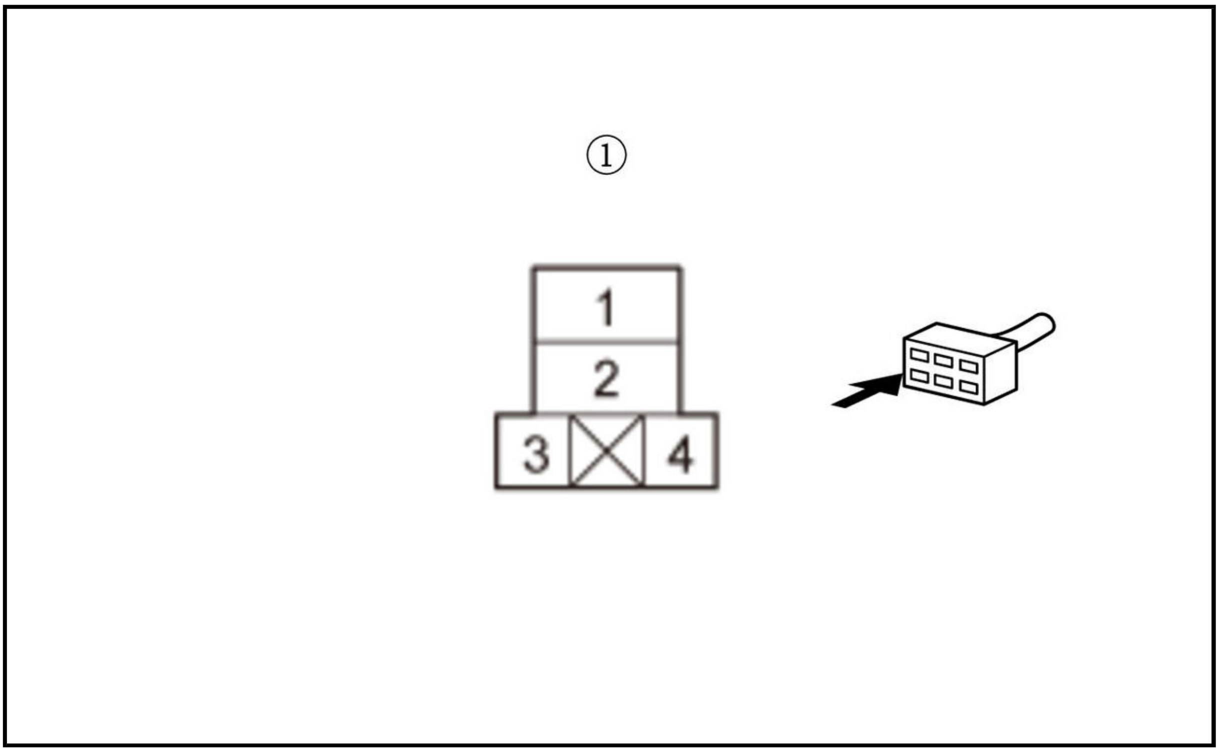

Is there battery voltage?

YES

The +B IGP wire is OK. Go to step 6.

NO

Go to step 5.

5. Fuse check 1

-1. Check the following fuse.

Fuse	No. A7 (15 A)
Location	Under-hood fuse/relay box

Is the fuse OK?

YES

Repair an open in the +B IGP wire between the No. A7 (15 A) fuse and the injector relay.

NO

Repair a short in the +B IGP wire between the No. A7 (15 A) fuse and the injector relay. Also replace the No. A7 (15 A) fuse.

6. Open wire check (+B INJ line)

-1. Measure the voltage between test points 1 and 2.

Test condition	Vehicle OFF (LOCK) mode Injector relay: disconnected
Test point 1	Injector relay 4P socket (female terminals) No. 1: ①
Test point 2	Body ground

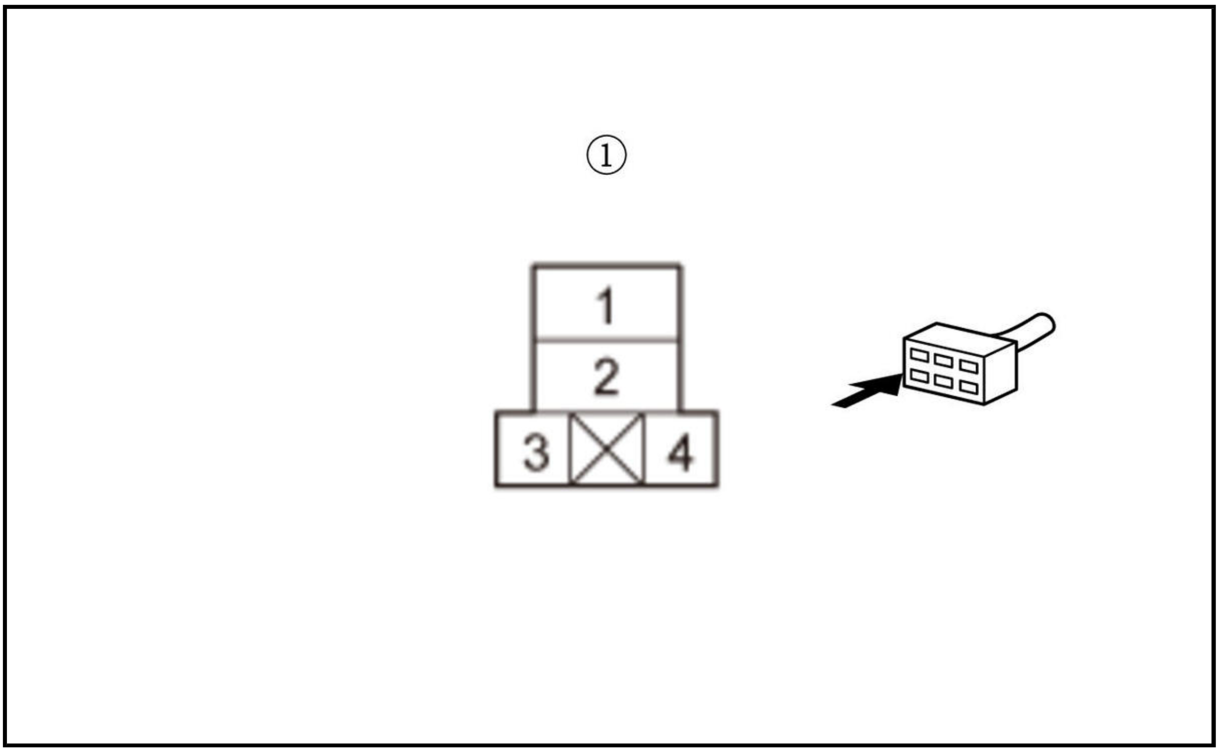

Is there battery voltage?

YES

The +B INJ wire is OK. Go to step 8.

NO

Go to step 7.

7. Fuse check

-1. Check the following fuse.

Fuse	No. A10 (20 A)
Location	Under-hood fuse/relay box

Is the fuse OK?

YES

Repair an open in the +B INJ wire between the No. A10 (20 A) fuse and the injector relay.

NO

Repair a short in the +B INJ wire between the No. A10 (20 A) fuse and the injector relay. Also replace the No. A10 (20 A) fuse.

8. Determine possible failure area (FI MAIN RLY CL- line, others)

-1. Turn the vehicle to ON mode.

-2. Measure the voltage between test points 1 and 2.

Test condition	Vehicle ON mode Injector relay: disconnected
Test point 1	Injector relay 4P socket (female terminals) No. 3: ①
Test point 2	Injector relay 4P socket (female terminals) No. 4: ①

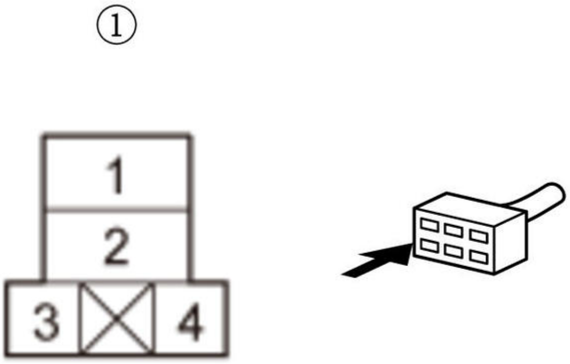

Is there battery voltage?

YES

Go to step 10.

NO

Go to step 9.

9. Open wire check (FI MAIN RLY CL- line)

-1. Turn the vehicle to the OFF (LOCK) mode.

-2. Jump the SCS line with the HDS, and wait more than 1 minute.

-3. Disconnect the following connector.

PCM connector A (50P)

-4. Check for continuity between test points 1 and 2.

Test condition	Vehicle OFF (LOCK) mode Injector relay: disconnected PCM connector A (50P): disconnected
Test point 1	Injector relay 4P socket (female terminals) No. 4: ①
Test point 2	**PCM connector A (50P) No. 5**

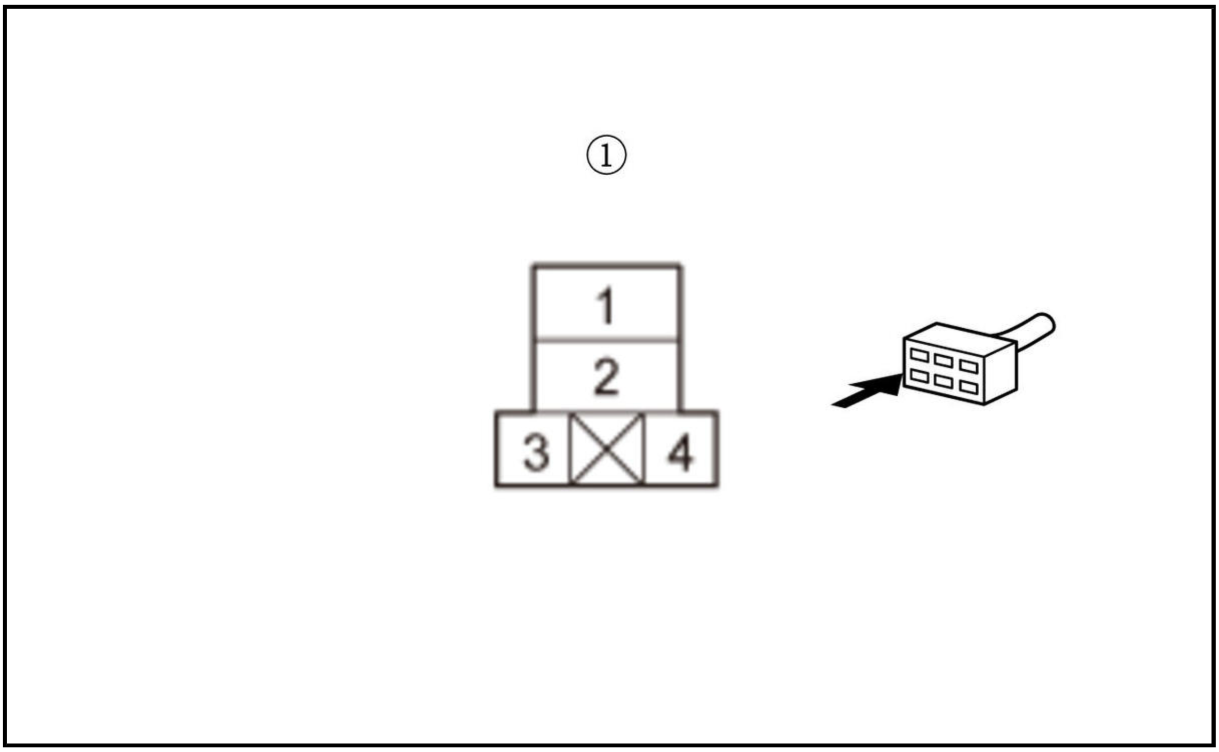

Is there continuity?

YES

The FI MAIN RLY CL- wire is OK. Check for any authorized service information related to the DTCs or symptoms you are troubleshooting, or **substitute a known-good PCM** .

NO

Repair an open in the FI MAIN RLY CL- wire between the PCM (A5) and the injector relay.

10. Open wire check (INJ RLY OUT line)

-1. Turn the vehicle to the OFF (LOCK) mode.

-2. Connect terminals A and B with a jumper wire.

Terminal A	Injector relay 4P socket (female terminals) No. 1: ①
Terminal B	Injector relay 4P socket (female terminals) No. 2: ①

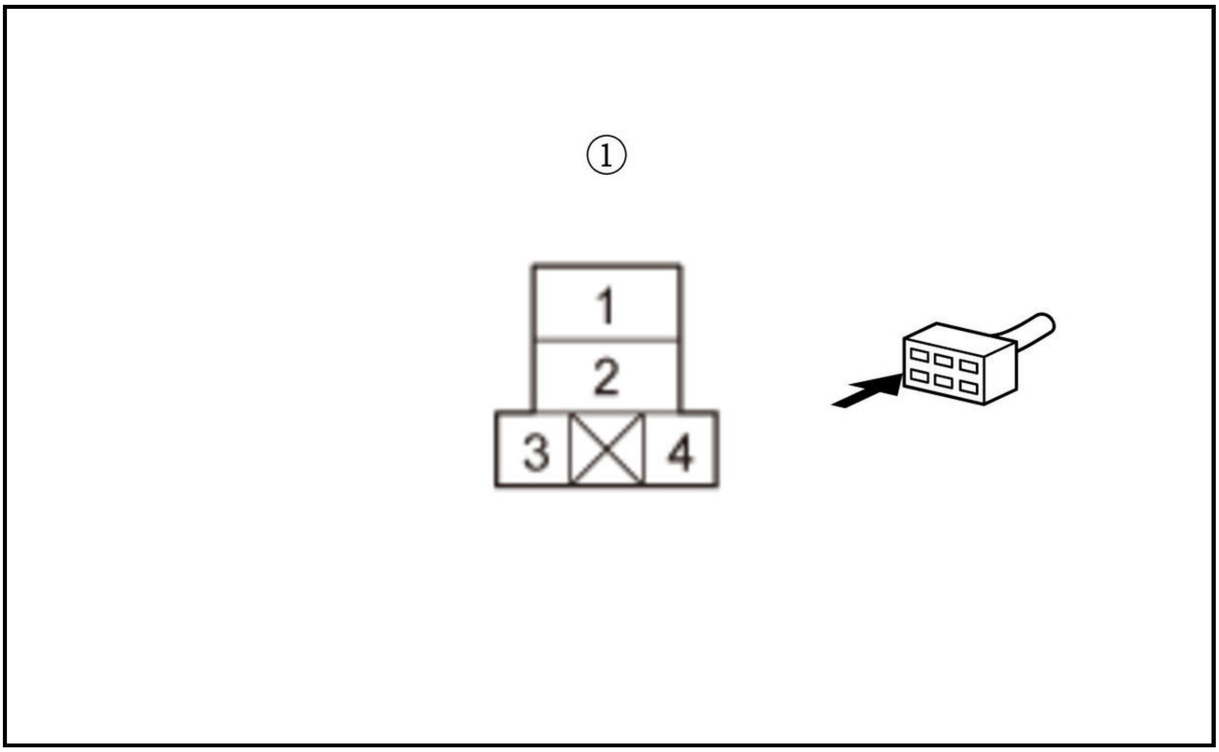

-3. Jump the SCS line with the HDS, and wait more than 1 minute.

-4. Disconnect the following connector.

PCM connector A (50P)

-5. Measure the voltage between test points 1 and 2.

Test condition	Vehicle OFF (LOCK) mode
	Injector relay: disconnected
	Injector relay 4P socket No. 1 and No. 2: jumped
	PCM connector A (50P): disconnected
Test point 1	PCM connector A (50P) No. 1 and No. 2
Test point 2	Body ground

Is there battery voltage?

YES

Go to step 11.

NO

Repair an open in the INJ RLY OUT wire between the PCM (A1, A2) and the injector relay.

11. DTC check

-1. Check the indicated DTC in step 1.

Is DTC P0201 indicated?

YES

Go to step 12.

NO

Go to step 20.

12. Open wire check (INJH1 line, INJL1 line)

-1. Turn the vehicle to the OFF (LOCK) mode.

-2. Reinstall the injector relay.

-3. Jump the SCS line with the HDS, and wait more than 1 minute.

-4. Disconnect the following connector.

PCM connector E (80P)

-5. Check for continuity between test points 1 and 2.

Test condition	Vehicle OFF (LOCK) mode
	PCM connector A (50P): disconnected
	PCM connector E (80P): disconnected
Test point 1	**PCM connector E (80P) No. 3**
Test point 2	**PCM connector E (80P) No. 15**

Is there continuity?

YES

Go to step 15.

NO

Go to step 13.

13. Open wire check (INJH1 line)

-1. Disconnect the following connector.

No. 1 injector 2P connector

-2. Check for continuity between test points 1 and 2.

Test condition	Vehicle OFF (LOCK) mode
	PCM connector A (50P): disconnected
	PCM connector E (80P): disconnected
	No. 1 injector 2P connector: disconnected
Test point 1	No. 1 injector 2P connector (female terminals) No. 1: ①
Test point 2	**PCM connector E (80P) No. 15**

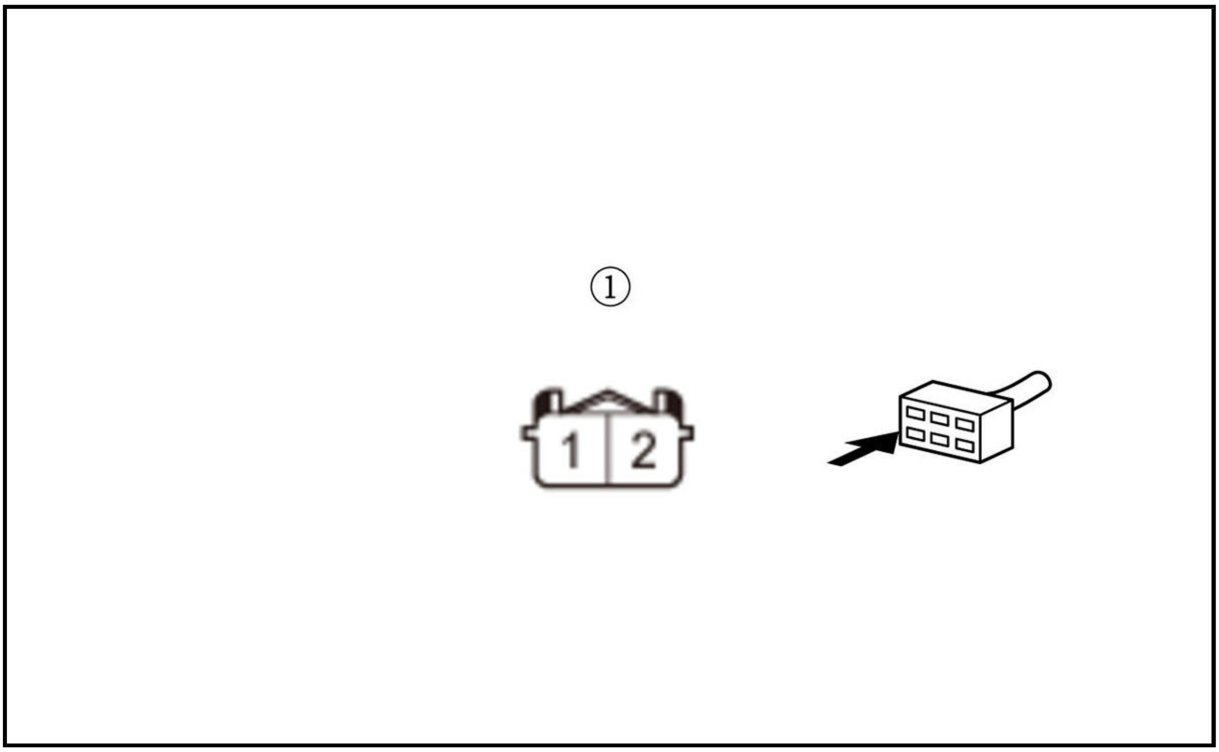

Is there continuity?

YES

Go to step 14.

NO

Repair an open in the INJH1 wire between the PCM (E15) and the No. 1 injector.

14. Open wire check (INJL1 line)

-1. Check for continuity between test points 1 and 2.

Test condition	Vehicle OFF (LOCK) mode
	PCM connector A (50P): disconnected
	PCM connector E (80P): disconnected
	No. 1 injector 2P connector: disconnected
Test point 1	No. 1 injector 2P connector (female terminals) No. 2: ①
Test point 2	**PCM connector E (80P) No. 3**

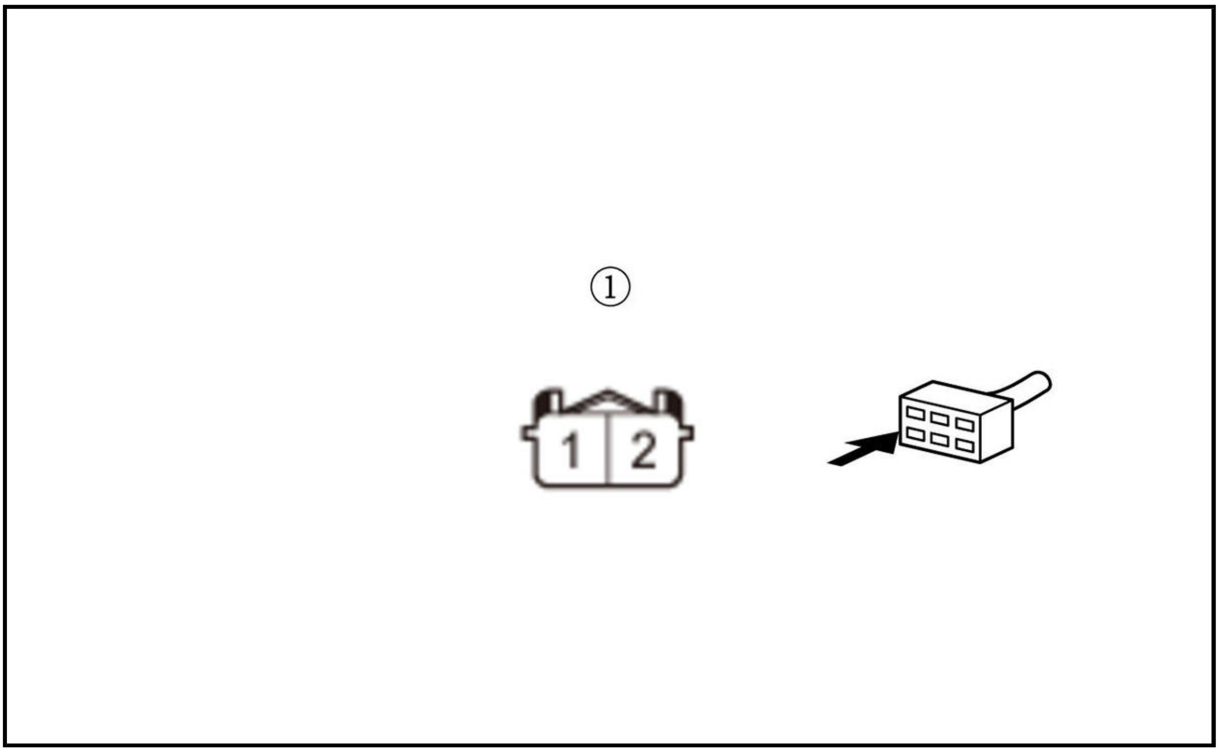

Is there continuity?

YES

The INJL1 wire is OK. **Replace the No. 1 injector** .

NO

Repair an open in the INJL1 wire between the PCM (E3) and the No. 1 injector.

15. Shorted wire check (INJH1 line to power)

-1. Disconnect the following connector.

No. 1 injector 2P connector

-2. Turn the vehicle to the ON mode.

-3. Measure the voltage between test points 1 and 2.

Test condition	Vehicle ON mode
	PCM connector A (50P): disconnected
	PCM connector E (80P): disconnected
	No. 1 injector 2P connector: disconnected
Test point 1	**PCM connector E (80P) No. 15**
Test point 2	Body ground

Is there any voltage?

YES

Repair a short to power in the INJH1 wire between the PCM (E15) and the No. 1 injector.

NO

Go to step 16.

16. Shorted wire check (INJL1 line to power)

-1. Measure the voltage between test points 1 and 2.

Test condition	Vehicle ON mode PCM connector A (50P): disconnected PCM connector E (80P): disconnected No. 1 injector 2P connector: disconnected
Test point 1	**PCM connector E (80P) No. 3**
Test point 2	Body ground

Is there any voltage?

YES

Repair a short to power in the INJL1 wire between the PCM (E3) and the No. 1 injector.

NO

Go to step 17.

17. Shorted wire check (INJH1 line to ground)

-1. Turn the vehicle to the OFF (LOCK) mode.

-2. Check for continuity between test points 1 and 2.

Test condition	Vehicle OFF (LOCK) mode PCM connector A (50P): disconnected PCM connector E (80P): disconnected No. 1 injector 2P connector: disconnected
Test point 1	**PCM connector E (80P) No. 15**
Test point 2	Body ground

Is there continuity?

YES

Repair a short to ground in the INJH1 wire between the PCM (E15) and the No. 1 injector.

NO

Go to step 18.

18. Shorted wire check (INJL1 line to ground)

-1. Check for continuity between test points 1 and 2.

Test condition	Vehicle OFF (LOCK) mode PCM connector A (50P): disconnected PCM connector E (80P): disconnected No. 1 injector 2P connector: disconnected
Test point 1	**PCM connector E (80P) No. 3**
Test point 2	Body ground

Is there continuity?

YES

Repair a short to ground in the INJL1 wire between the PCM (E3) and the No. 1 injector.

NO

Go to step 19.

19. Shorted wire check (INJH4 line)

-1. Disconnect the following connector.

No. 4 injector 2P connector

-2. Check for continuity between test points 1 and 2.

Test condition	Vehicle OFF (LOCK) mode
	PCM connector A (50P): disconnected
	PCM connector E (80P): disconnected
	No. 1 injector 2P connector: disconnected
	No. 4 injector 2P connector: disconnected
Test point 1	**PCM connector E (80P) No. 2**
Test point 2	Body ground

Is there continuity?

YES

Repair a short in the INJH4 wire between the PCM (E2) and the No. 4 injector.

NO

The INJH4 wire is OK. Check for any authorized service information related to the DTCs or symptoms you are troubleshooting, or **substitute a known-good PCM** .

20. Open wire check (INJH4 line, INJL4 line)

-1. Turn the vehicle to the OFF (LOCK) mode.

-2. Reinstall the injector relay.

-3. Jump the SCS line with the HDS, and wait more than 1 minute.

-4. Disconnect the following connector.

PCM connector E (80P)

-5. Check for continuity between test points 1 and 2.

Test condition	Vehicle OFF (LOCK) mode
	PCM connector A (50P): disconnected
	PCM connector E (80P): disconnected
Test point 1	**PCM connector E (80P) No. 2**
Test point 2	**PCM connector E (80P) No. 16**

Is there continuity?

YES

The INJH4 and INJL4 wires are not open. Go to step 23.

NO

Go to step 21.

21. Open wire check (INJH4 line)

-1. Disconnect the following connector.

No. 4 injector 2P connector

-2. Check for continuity between test points 1 and 2.

Test condition	Vehicle OFF (LOCK) mode
	PCM connector A (50P): disconnected
	PCM connector E (80P): disconnected
	No. 4 injector 2P connector: disconnected
Test point 1	No. 4 injector 2P connector (female terminals) No. 1: ①
Test point 2	**PCM connector E (80P) No. 2**

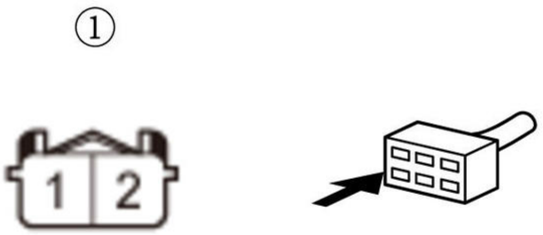

Is there continuity?

YES

Go to step 22.

NO

Repair an open in the INJH4 wire between the PCM (E2) and the No. 4 injector.

22. Open wire check (INJL4 line)

-1. Check for continuity between test points 1 and 2.

Test condition	Vehicle OFF (LOCK) mode

	PCM connector A (50P): disconnected
	PCM connector E (80P): disconnected
	No. 4 injector 2P connector: disconnected
Test point 1	No. 4 injector 2P connector (female terminals) No. 2: ①
Test point 2	**PCM connector E (80P) No. 16**

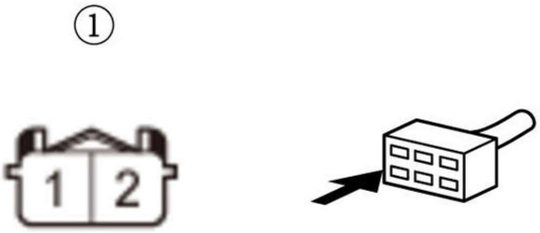

Is there continuity?

YES

The INJL4 wire is OK. **Replace the No. 4 injector** .

NO

Repair an open in the INJL4 wire between the PCM (E16) and the No. 4 injector.

23. Shorted wire check (INJH4 line to power)

-1. Disconnect the following connector.

No. 4 injector 2P connector

-2. Turn the vehicle to the ON mode.

-3. Measure the voltage between test points 1 and 2.

Test condition	Vehicle ON mode
	PCM connector A (50P): disconnected
	PCM connector E (80P): disconnected
	No. 4 injector 2P connector: disconnected
Test point 1	**PCM connector E (80P) No. 2**
Test point 2	Body ground

Is there any voltage?

YES

Repair a short to power in the INJH4 wire between the PCM (E2) and the No. 4 injector.

NO

Go to step 24.

24. Shorted wire check (INJL4 line to power)

-1. Measure the voltage between test points 1 and 2.

Test condition	Vehicle ON mode
	PCM connector A (50P): disconnected
	PCM connector E (80P): disconnected
	No. 4 injector 2P connector: disconnected
Test point 1	**PCM connector E (80P) No. 16**

Test point 2	Body ground

Is there any voltage?

YES

Repair a short to power in the INJL4 wire between the PCM (E16) and the No. 4 injector.

NO

Go to step 25.

25. Shorted wire check (INJH4 line to ground)

-1. Turn the vehicle to the OFF (LOCK) mode.

-2. Check for continuity between test points 1 and 2.

Test condition	Vehicle OFF (LOCK) mode
	PCM connector A (50P): disconnected
	PCM connector E (80P): disconnected
	No. 4 injector 2P connector: disconnected
Test point 1	**PCM connector E (80P) No. 2**
Test point 2	Body ground

Is there continuity?

YES

Repair a short to ground in the INJH4 wire between the PCM (E2) and the No. 4 injector.

NO

Go to step 26.

26. Shorted wire check (INJL4 line to ground)

-1. Check for continuity between test points 1 and 2.

Test condition	Vehicle OFF (LOCK) mode

	PCM connector A (50P): disconnected
	PCM connector E (80P): disconnected
	No. 4 injector 2P connector: disconnected
Test point 1	**PCM connector E (80P) No. 16**
Test point 2	Body ground

Is there continuity?

YES

Repair a short to ground in the INJL4 wire between the PCM (E16) and the No. 4 injector.

NO

Go to step 27.

27. Shorted wire check (INJH1 line)

-1. Disconnect the following connector.

No. 1 injector 2P connector

-2. Check for continuity between test points 1 and 2.

Test condition	Vehicle OFF (LOCK) mode PCM connector A (50P): disconnected PCM connector E (80P): disconnected No. 4 injector 2P connector: disconnected No. 1 injector 2P connector: disconnected
Test point 1	**PCM connector E (80P) No. 15**
Test point 2	Body ground

Is there continuity?

YES

Repair a short in the INJH1 wire between the PCM (E15) and the No. 1 injector.

NO

The INJH1 wire is OK. Check for any authorized service information related to the DTCs or symptoms you are troubleshooting, or **substitute a known-good PCM** .

DTC P0201, P0204 (2.4 L ENGINE) (2017 2018 2019)

DTC P0201 : No. 1 Cylinder Injector Circuit Malfunction **DTC P0204** : No. 4 Cylinder Injector Circuit Malfunction

NOTE: Before you troubleshoot, **review the general troubleshooting information** .

DTC Description	Confirmed DTC	Pending DTC
P0201 No. 1 Cylinder Injector Circuit Malfunction	B	B
P0204 No. 4 Cylinder Injector Circuit Malfunction	B	B

DTC (PGM-FI)

1. Problem verification

-1. Turn the vehicle to the ON mode.

-2. Clear the DTC with the HDS.

-3. Turn the vehicle to the OFF (LOCK) mode.

-4. Start the engine (If the engine does not start, crank the engine for 20 seconds).

-5. Check for Pending or Confirmed DTCs with the HDS.

DTC Description	Confirmed DTC	Pending DTC
P0201 No. 1 Cylinder Injector Circuit Malfunction	B	B
P0204 No. 4 Cylinder Injector Circuit Malfunction	B	B

Is DTC P0201 or P0204 indicated?

YES

Go to step 2.

NO

Intermittent failure, the system is OK at this time. Check for poor connections or loose terminals at the injector and the PCM. **If the on-board snapshot of this DTC is recorded, try to reproduce the failure under the same conditions with the on-board snapshot** .

2. Engine starting check

-1. Try to start the engine.

Does the engine start?

YES

Go to step 10.

NO

Go to step 3.

3. Relay check

-1. Turn the vehicle to the OFF (LOCK) mode.

-2. **Remove the injector relay** .

-3. **Test the injector relay** .

Is the relay OK?

YES

The injector relay is OK. Go to step 4.

NO

Replace the injector relay.

4. Open wire check (FI MAIN RLY OUT line)

-1. Turn the vehicle to the ON mode.

-2. Measure the voltage between test points 1 and 2.

Test condition	Vehicle ON mode
	Injector relay: disconnected
Test point 1	Injector relay 4P socket (female terminals) No. 3: ①
Test point 2	Body ground

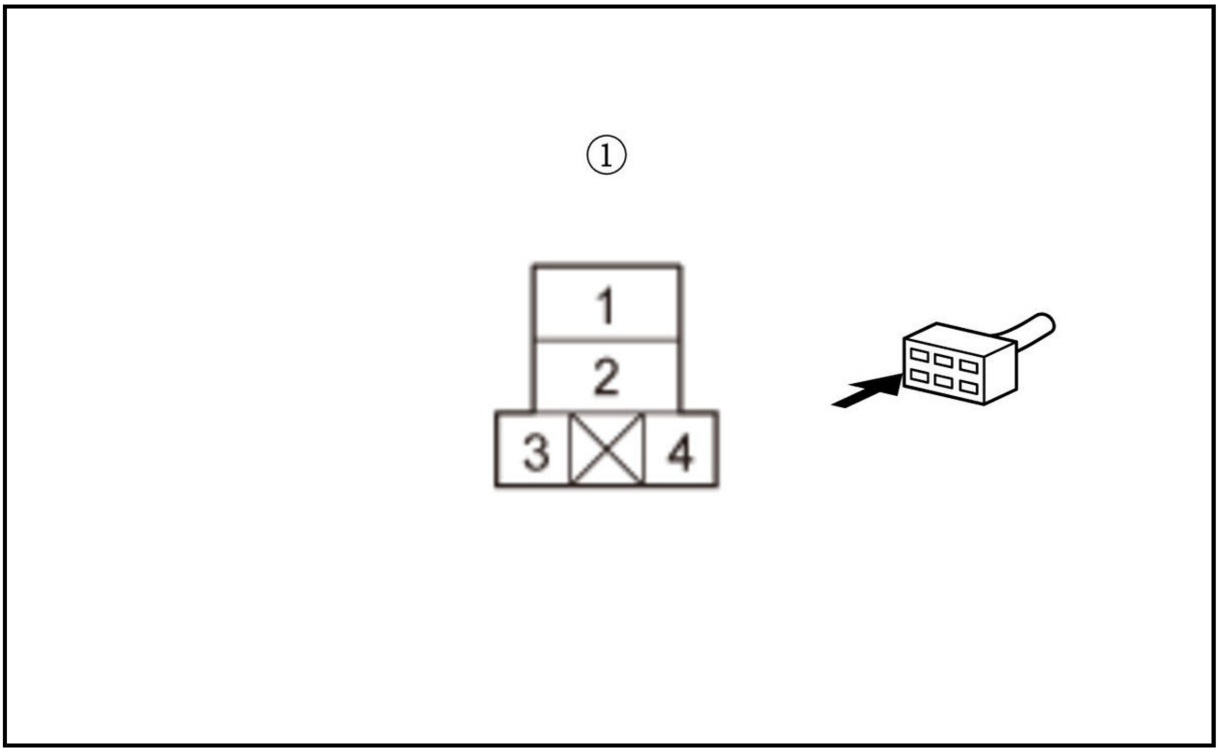

Is there battery voltage?

YES

The FI MAIN RLY OUT wire is OK. Go to step 5.

NO

Repair an open in the FI MAIN RLY OUT wire between PGM-FI main relay 1 and the injector relay.

5. Open wire check (+B INJ line)

-1. Turn the vehicle to the OFF (LOCK) mode.

-2. Measure the voltage between test points 1 and 2.

Test condition	Vehicle OFF (LOCK) mode
	Injector relay: disconnected
Test point 1	Injector relay 4P socket (female terminals) No. 1: ①
Test point 2	Body ground

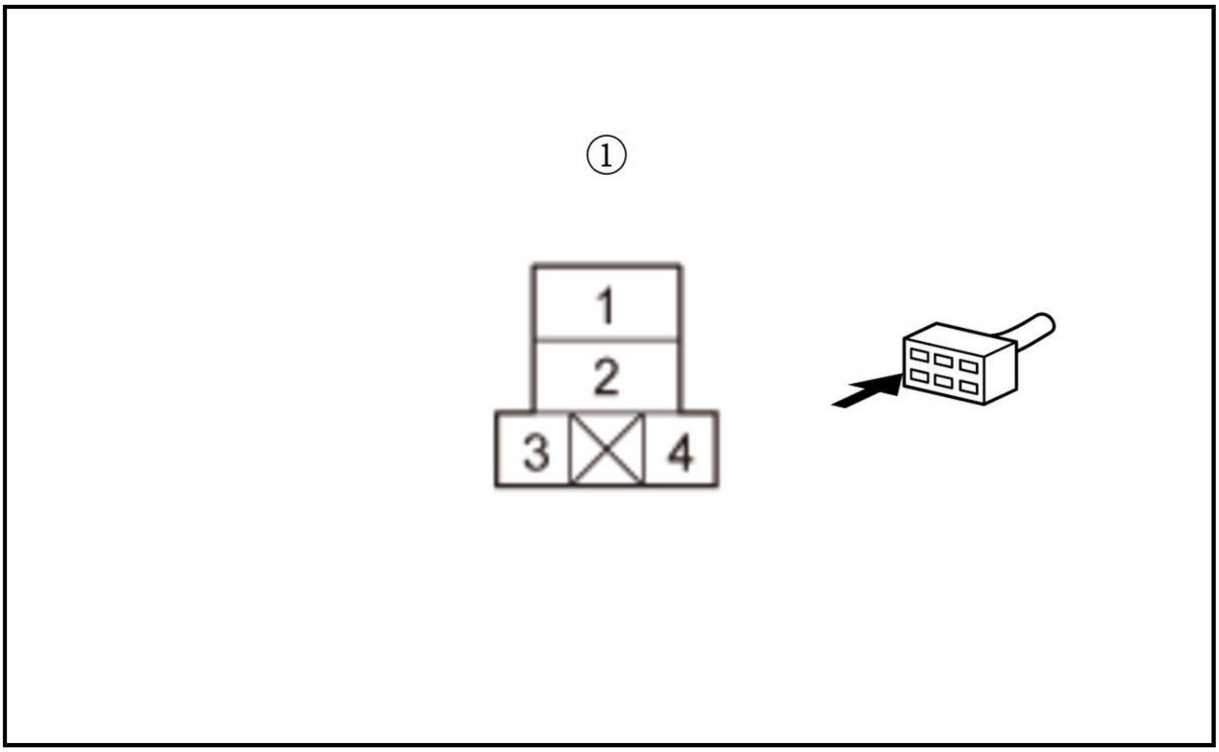

Is there battery voltage?

YES

The +B INJ wire is OK. Go to step 7.

NO

Go to step 6.

6. Fuse check

-1. Check the following fuse.

Fuse	No. A10 (20 A)
Location	Under-hood fuse/relay box

Is the fuse OK?

YES

Repair an open in the +B INJ wire between the No. A10 (20 A) fuse and the injector relay. If needed, replace the under-hood fuse/relay box .

NO

Repair a short in the +B INJ wire between the No. A10 (20 A) fuse and the injector relay. If needed, replace the under-hood fuse/relay box . Also replace the No. A10 (20 A) fuse.

7. Determine possible failure area (INJ RLY CL- line, others)

-1. Turn the vehicle to ON mode, and measure the voltage between test points 1 and 2 momentarily.

Test condition	Momentarily after ON mode
	Injector relay: disconnected
Test point 1	Injector relay 4P socket (female terminals) No. 3: ①

Test point 2	Injector relay 4P socket (female terminals) No. 4: ①

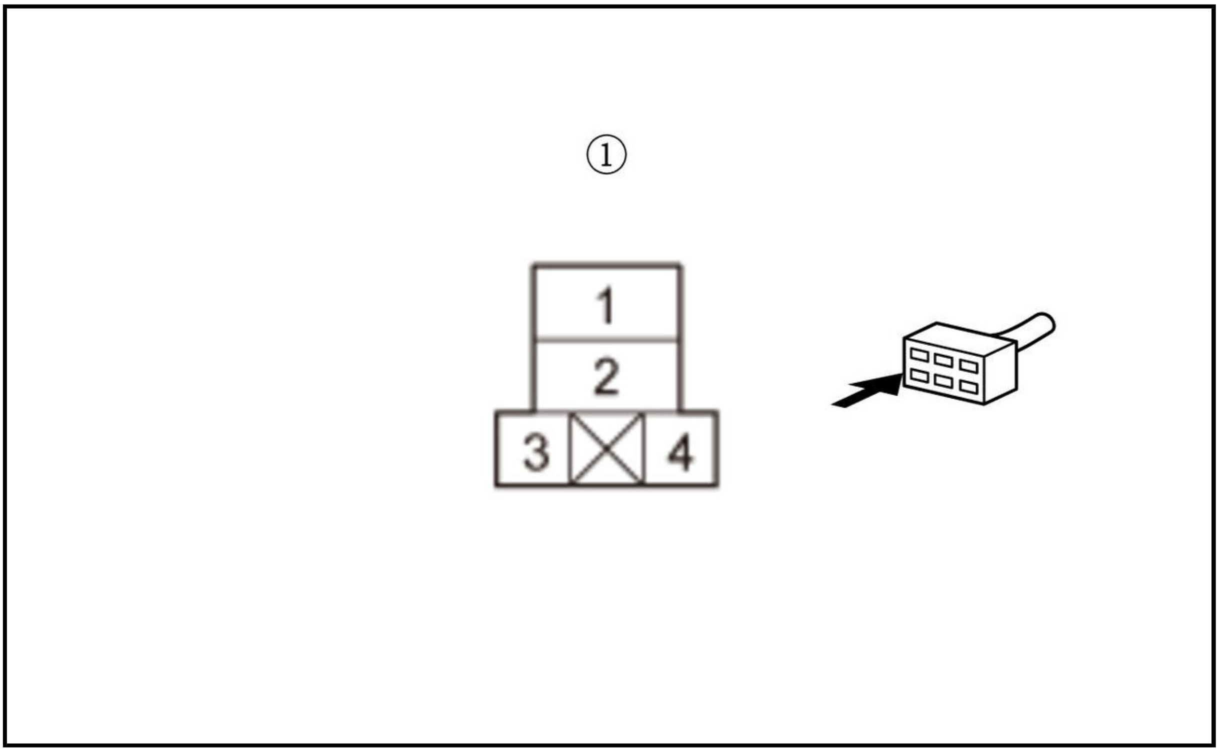

Is there battery voltage momentarily?

YES

Go to step 9.

NO

Go to step 8.

8. Open wire check (INJ RLY CL- line)

-1. Turn the vehicle to the OFF (LOCK) mode.

-2. Jump the SCS line with the HDS, and wait more than 1 minute.

-3. Disconnect the following connector.

PCM connector A (51P)

-4. Check for continuity between test points 1 and 2.

Test condition	Vehicle OFF (LOCK) mode
	Injector relay: disconnected
	PCM connector A (51P): disconnected
Test point 1	Injector relay 4P socket (female terminals) No. 4: ①
Test point 2	**PCM connector A (51P) No. 15**

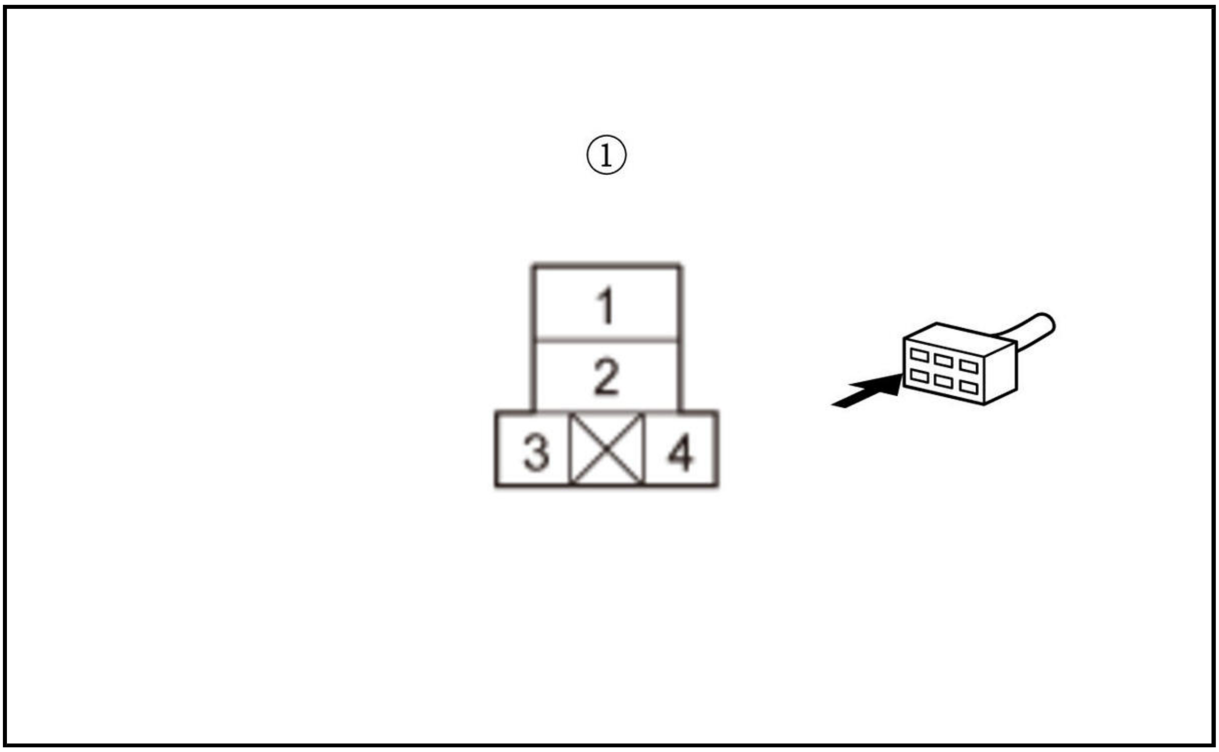

Is there continuity?

YES

The INJ RLY CL- wire is OK. Check for any authorized service information related to the DTCs or symptoms you are troubleshooting, or **substitute a known-good PCM** .

NO

Repair an open in the INJ RLY CL- wire between the PCM (A15) and the injector relay.

9. Open wire check (INJ RLY OUT line)

-1. Turn the vehicle to the OFF (LOCK) mode.

-2. Connect terminals A and B with a jumper wire.

Terminal A	Injector relay 4P socket (female terminals) No. 1: ①
Terminal B	Injector relay 4P socket (female terminals) No. 2: ①

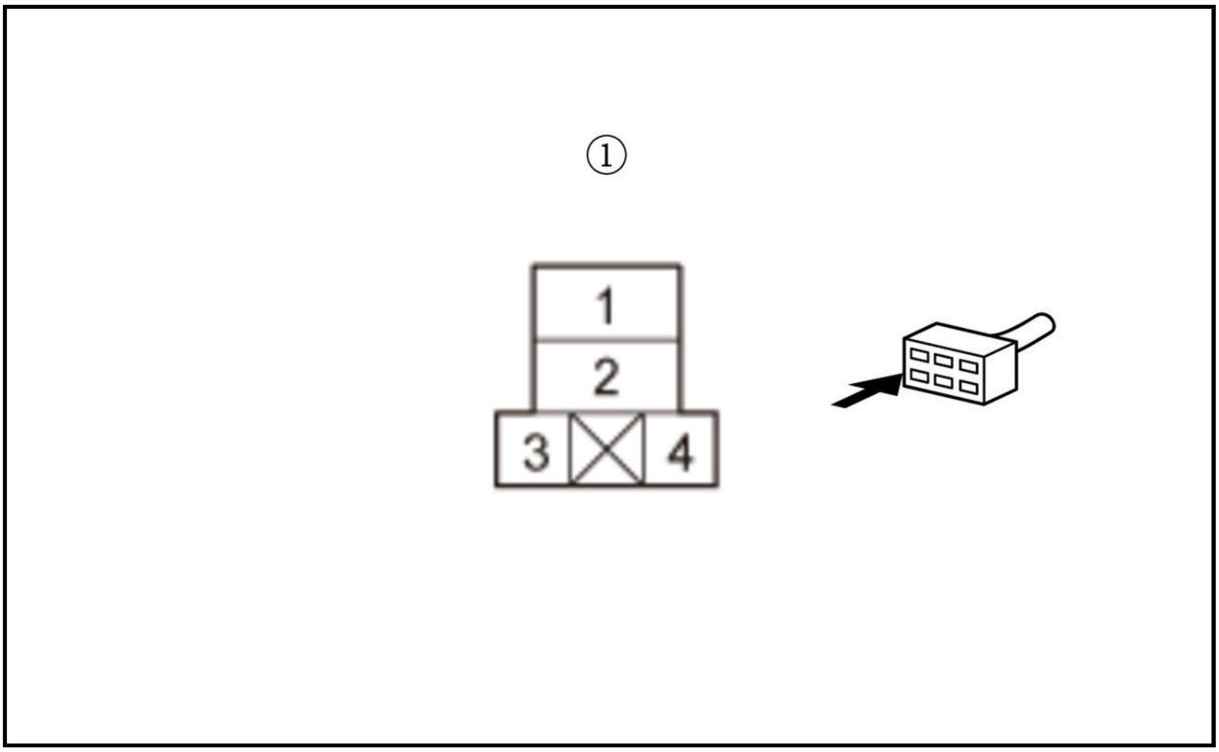

-3. Jump the SCS line with the HDS, and wait more than 1 minute.

-4. Disconnect the following connector.

PCM connector A (51P)

-5. Measure the voltage between test points 1 and 2.

Test condition	Vehicle OFF (LOCK) mode
	Injector relay: disconnected
	Injector relay 4P socket terminal No. 1 and No. 2: jumped
	PCM connector A (51P): disconnected
Test point 1	PCM connector A (51P) No. 6
Test point 2	Body ground

Test point 1	PCM connector A (51P) No. 7
Test point 2	Body ground

Are there battery voltage?

YES

The INJ RLY OUT wire is OK. Go to step 10.

NO

Repair an open in the INJ RLY OUT wire between the PCM (A6, A7) and the injector relay.

10. DTC check

-1. Check the indicated DTC in step 1.

Is DTC P0201 indicated?

YES

Go to step 11.

NO

Go to step 19.

11. Open wire check (INJ H1, INJ L1 line)

-1. Turn the vehicle to the OFF (LOCK) mode.

-2. Reinstall the injector relay.

-3. Jump the SCS line with the HDS, and wait more than 1 minute.

-4. Disconnect the following connector.

PCM connector B (51P)

-5. Check for continuity between test points 1 and 2.

Test condition	Vehicle OFF (LOCK) mode
	PCM connector A (51P): disconnected
	PCM connector B (51P): disconnected
Test point 1	**PCM connector B (51P) No. 1**
Test point 2	**PCM connector B (51P) No. 2**

Is there continuity?

YES

The INJ H1 and INJ L1 wires are not open. Go to step 14.

NO

Go to step 12.

12. Open wire check (INJ H1 line)

-1. Disconnect the following connector.

No. 1 injector 2P connector

-2. Check for continuity between test points 1 and 2.

Test condition	Vehicle OFF (LOCK) mode
	PCM connector A (51P): disconnected
	PCM connector B (51P): disconnected
	No. 1 injector 2P connector: disconnected
Test point 1	No. 1 injector 2P connector (female terminals) No. 2: ①
Test point 2	**PCM connector B (51P) No. 1**

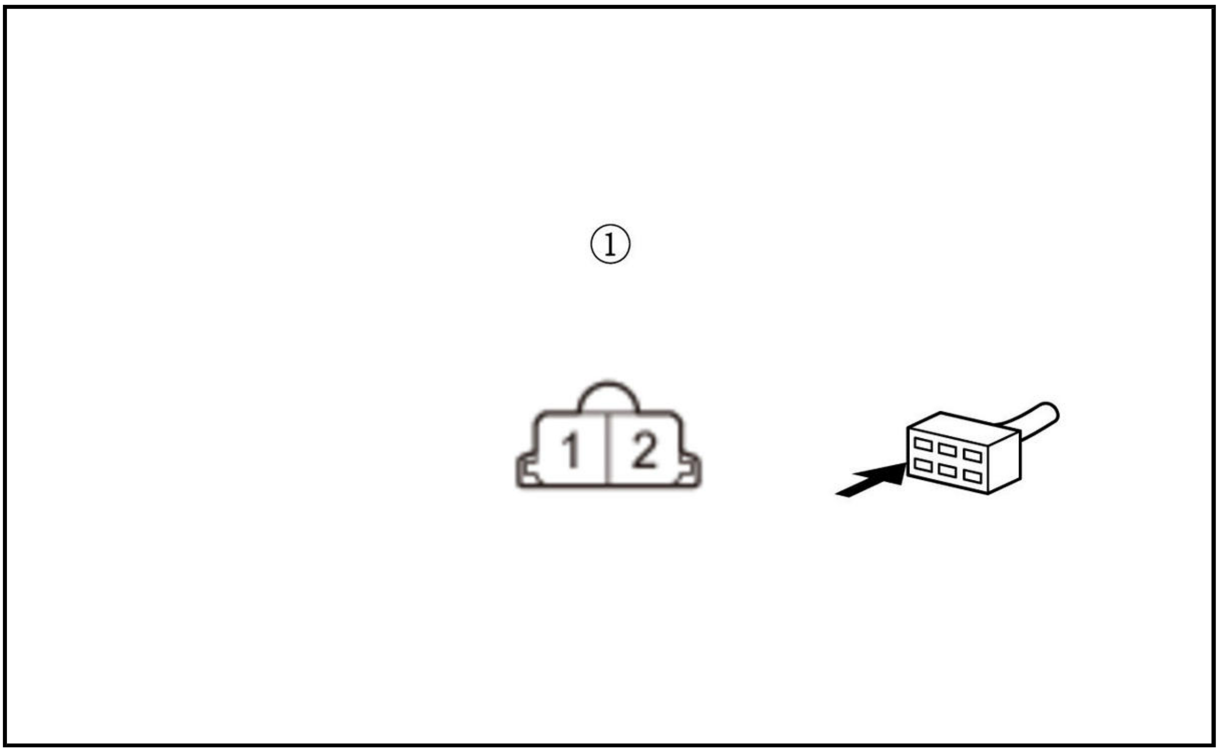

Is there continuity?

YES

The INJ H1 wire is OK. Go to step 13.

NO

Repair an open in the INJ H1 wire between the PCM (B1) and the No. 1 injector.

13. Open wire check (INJ L1 line)

-1. Check for continuity between test points 1 and 2.

Test condition	Vehicle OFF (LOCK) mode
	PCM connector A (51P): disconnected
	PCM connector B (51P): disconnected
	No. 1 injector 2P connector: disconnected
Test point 1	No. 1 injector 2P connector (female terminals) No. 1: ①
Test point 2	**PCM connector B (51P) No. 2**

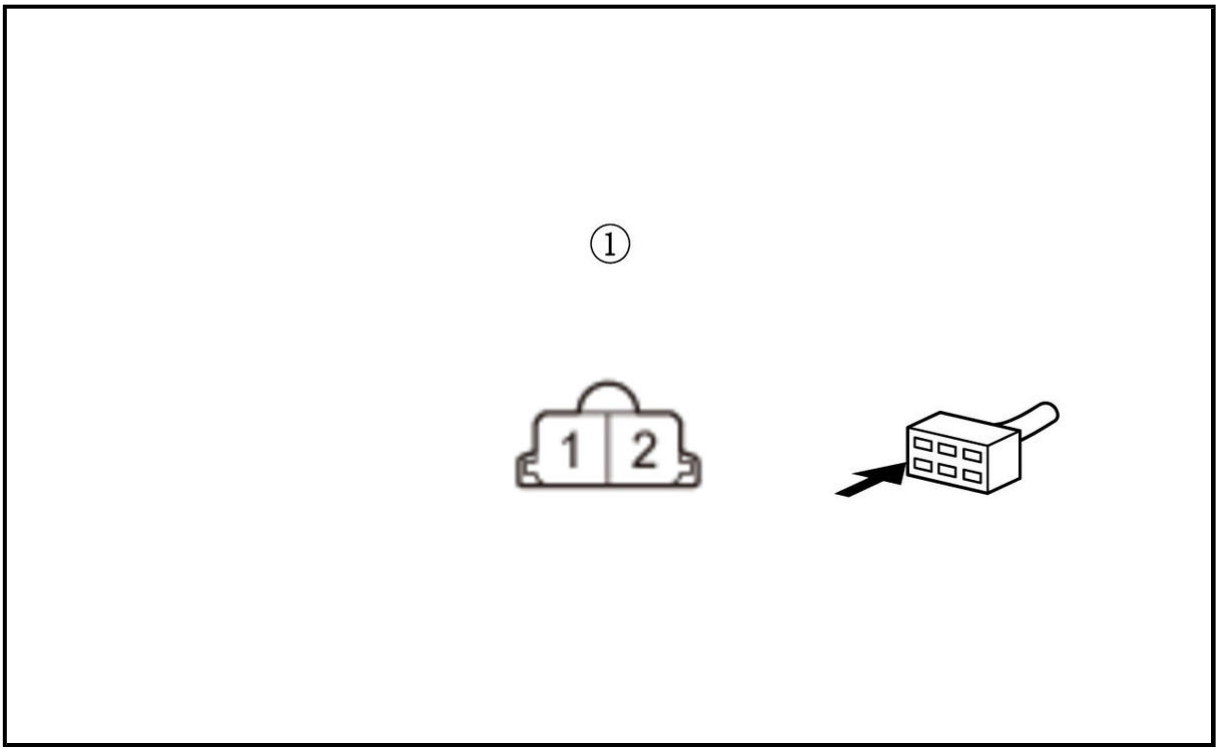

Is there continuity?

YES

The INJ L1 wire is OK. **Replace the No. 1 injector** .

NO

Repair an open in the INJ L1 wire between the PCM (B2) and the No. 1 injector.

14. Shorted wire check (INJ H1 line to power)

-1. Disconnect the following connector.

No. 1 injector 2P connector

-2. Turn the vehicle to the ON mode.

-3. Measure the voltage between test points 1 and 2.

Test condition	Vehicle ON mode
	PCM connector A (51P): disconnected
	PCM connector B (51P): disconnected
	No. 1 injector 2P connector: disconnected
Test point 1	**PCM connector B (51P) No. 1**
Test point 2	Body ground

Is there any voltage?

YES

Repair a short to power in the INJ H1 wire between the PCM (B1) and the No. 1 injector.

NO

Go to step 15.

15. Shorted wire check (INJ L1 line to power)

-1. Measure the voltage between test points 1 and 2.

Test condition	Vehicle ON mode
	PCM connector A (51P): disconnected
	PCM connector B (51P): disconnected
	No. 1 injector 2P connector: disconnected
Test point 1	**PCM connector B (51P) No. 2**
Test point 2	Body ground

Is there any voltage?

YES

Repair a short to power in the INJ L1 wire between the PCM (B2) and the No. 1 injector.

NO

Go to step 16.

16. Shorted wire check (INJ H1 line)

-1. Turn the vehicle to the OFF (LOCK) mode.

-2. Check for continuity between test points 1 and 2.

Test condition	Vehicle OFF (LOCK) mode
	PCM connector A (51P): disconnected
	PCM connector B (51P): disconnected
	No. 1 injector 2P connector: disconnected
Test point 1	**PCM connector B (51P) No. 1**
Test point 2	Body ground

Is there continuity?

YES

Repair a short in the INJ H1 wire between the PCM (B1) and the No. 1 injector.

NO

The INJ H1 wire is OK. Go to step 17.

17. Shorted wire check (INJ L1)

-1. Check for continuity between test points 1 and 2.

Test condition	Vehicle OFF (LOCK) mode
	PCM connector A (51P): disconnected
	PCM connector B (51P): disconnected
	No. 1 injector 2P connector: disconnected
Test point 1	**PCM connector B (51P) No. 2**
Test point 2	Body ground

Is there continuity?

YES

Repair a short in the INJ L1 wire between the PCM (B2) and the No. 1 injector.

NO

The INJ L1 wire is OK. Go to step 18.

18. Shorted wire check (INJ H4 line)

-1. Disconnect the following connector.

No. 4 injector 2P connector

-2. Check for continuity between test points 1 and 2.

Test condition	Vehicle OFF (LOCK) mode
	PCM connector A (51P): disconnected
	PCM connector B (51P): disconnected
	No. 1 injector 2P connector: disconnected
	No. 4 injector 2P connector: disconnected
Test point 1	**PCM connector B (51P) No. 3**
Test point 2	Body ground

Is there continuity?

YES

Repair a short in the INJ H4 wire between the PCM (B3) and the No. 4 injector.

NO

The INJH4 wire is OK. Check for any authorized service information related to the DTCs or symptoms you are troubleshooting, or **substitute a known-good PCM** .

19. Open wire check (INJ H4, INJ L4 line)

-1. Turn the vehicle to the OFF (LOCK) mode.

-2. Reinstall the injector relay.

-3. Jump the SCS line with the HDS, and wait more than 1 minute.

-4. Disconnect the following connector.

PCM connector B (51P)

-5. Check for continuity between test points 1 and 2.

Test condition	Vehicle OFF (LOCK) mode
	PCM connector A (51P): disconnected
	PCM connector B (51P): disconnected
Test point 1	**PCM connector B (51P) No. 3**
Test point 2	**PCM connector B (51P) No. 4**

Is there continuity?

YES

The INJ H4 and INJ L4 wires are not open. Go to step 22.

NO

Go to step 20.

20. Open wire check (INJ H4 line)

-1. Disconnect the following connector.

No. 4 injector 2P connector

-2. Check for continuity between test points 1 and 2.

Test condition	PCM connector A (51P): disconnected
	PCM connector B (51P): disconnected
	No. 4 injector 2P connector: disconnected
Test circuit	INJ H4
Test point 1	No. 4 injector 2P connector (female terminals) No. 2: ①
Test point 2	**PCM connector B (51P) No. 3**

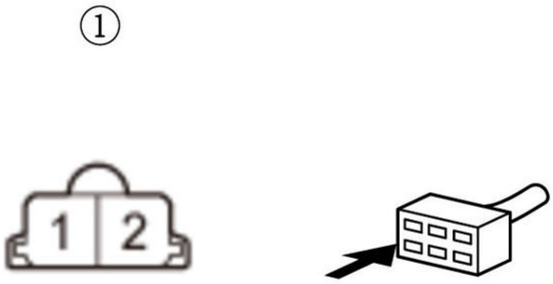

Is there continuity?

YES

The INJ H4 wire is OK. Go to step 21.

NO

Repair an open in the INJ H4 wire between the PCM (B3) and the No. 4 injector.

21. Open wire check (INJ L4 line)

-1. Check for continuity between test points 1 and 2.

Test condition	Vehicle OFF (LOCK) mode

	PCM connector A (51P): disconnected
	PCM connector B (51P): disconnected
	No. 4 injector 2P connector: disconnected
Test point 1	No. 4 injector 2P connector (female terminals) No. 1: ①
Test point 2	**PCM connector B (51P) No. 4**

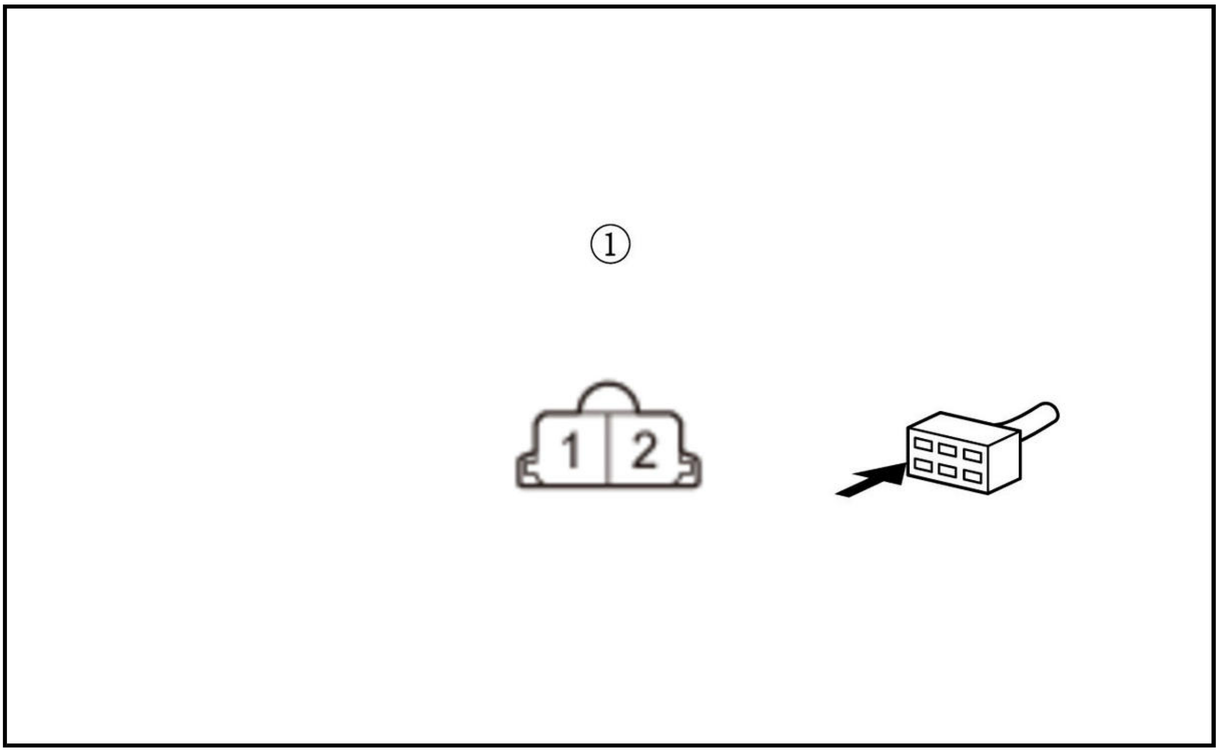

Is there continuity?

YES

The INJ L4 wire is OK. **Replace the No. 4 injector** .

NO

Repair an open in the INJ L4 wire between the PCM (B4) and the No. 4 injector.

22. Shorted wire check (INJ H4 line to power)

-1. Disconnect the following connector.

No. 4 injector 2P connector

-2. Turn the vehicle to the ON mode.

-3. Measure the voltage between test points 1 and 2.

Test condition	Vehicle ON mode
	PCM connector A (51P): disconnected
	PCM connector B (51P): disconnected
	No. 4 injector 2P connector: disconnected
Test point 1	**PCM connector B (51P) No. 3**
Test point 2	Body ground

Is there voltage?

YES

Repair a short to power in the INJ H4 wire between the PCM (B3) and the No. 4 injector.

NO

Go to step 23.

23. Shorted wire check (INJ L4 line to power)

-1. Measure the voltage between test points 1 and 2.

Test condition	Vehicle ON mode
	PCM connector A (51P): disconnected
	PCM connector B (51P): disconnected
	No. 4 injector 2P connector: disconnected
Test point 1	**PCM connector B (51P) No. 4**
Test point 2	Body ground

Is there voltage?

YES

Repair a short to power in the INJ L4 wire between the PCM (B4) and the No. 4 injector.

NO

Go to step 24.

24. Shorted wire check (INJ H4 line)

-1. Turn the vehicle to the OFF (LOCK) mode.

-2. Check for continuity between test points 1 and 2.

Test condition	Vehicle OFF (LOCK) mode
	PCM connector A (51P): disconnected
	PCM connector B (51P): disconnected
	No. 4 injector 2P connector: disconnected
Test point 1	**PCM connector B (51P) No. 3**
Test point 2	Body ground

Is there continuity?

YES

Repair a short in the INJ H4 wire between the PCM (B3) and the No. 4 injector.

NO

The INJ H4 wire is OK. Go to step 25.

25. Shorted wire check (INJ L4)

-1. Check for continuity between test points 1 and 2.

Test condition	PCM connector A (51P): disconnected
	PCM connector B (51P): disconnected

	No. 4 injector 2P connector: disconnected
Test point 1	**PCM connector B (51P) No. 4**
Test point 2	Body ground

Is there continuity?

YES

Repair a short in the INJ L4 wire between the PCM (B4) and the No. 4 injector.

NO

The INJ L4 wire is OK. Go to step 26.

26. Shorted wire check (INJ H1 line)

-1. Disconnect the following connector.

No. 1 injector 2P connector

-2. Check for continuity between test points 1 and 2.

Test condition	Vehicle OFF (LOCK) mode
	PCM connector A (51P): disconnected
	PCM connector B (51P): disconnected
	No. 1 injector 2P connector: disconnected
	No. 4 injector 2P connector: disconnected
Test point 1	**PCM connector B (51P) No. 1**
Test point 2	Body ground

Is there continuity?

YES

Repair a short in the INJ H1 wire between the PCM (B1) and the No. 1 injector.

NO

The INJH1 wire is OK. Check for any authorized service information related to the DTCs or symptoms you are troubleshooting, or **substitute a known-good PCM** .

DTC P0202, P0203 (1.5 L ENGINE)

DTC P0202 : No. 2 Cylinder Injector Circuit Malfunction **DTC P0203** : No. 3 Cylinder Injector Circuit Malfunction

NOTE: Before you troubleshoot, **review the general troubleshooting information** .

DTC Description	Confirmed DTC	Pending DTC
P0202 No. 2 Cylinder Injector Circuit Malfunction	B	B
P0203 No. 3 Cylinder Injector Circuit Malfunction	B	B

DTC (PGM-FI)

1. Problem verification

-1. Turn the vehicle to the ON mode.

-2. Clear the DTC with the HDS.

-3. Turn the vehicle to the OFF (LOCK) mode.

-4. Start the engine (If the engine does not start, crank the engine for 20 seconds).

-5. Check for Pending or Confirmed DTCs with the HDS.

DTC Description	Confirmed DTC	Pending DTC
P0202 No. 2 Cylinder Injector Circuit Malfunction	B	B
P0203 No. 3 Cylinder Injector Circuit Malfunction	B	B

Is DTC P0202 and/or P0203 indicated?

YES

Go to step 2.

NO

Intermittent failure, the system is OK at this time. Check for poor connections or loose terminals at the injector and the PCM. **If the on-board snapshot of this DTC is recorded, try to reproduce the failure under the same conditions with the on-board snapshot** .

2. Engine starting check

-1. Try to start the engine.

Does the engine start?

YES

Go to step 11.

NO

Go to step 3.

3. Relay check

-1. Turn the vehicle to the OFF (LOCK) mode.

-2. **Remove the injector relay** .

-3. **Test the injector relay** .

Is the relay OK?

YES

Go to step 4.

NO

Replace the injector relay.

4. Open wire check (+B IGP line)

-1. Measure the voltage between test points 1 and 2.

Test condition	Vehicle OFF (LOCK) mode Injector relay: disconnected
Test point 1	Injector relay 4P socket (female terminals) No. 3: ①
Test point 2	Body ground

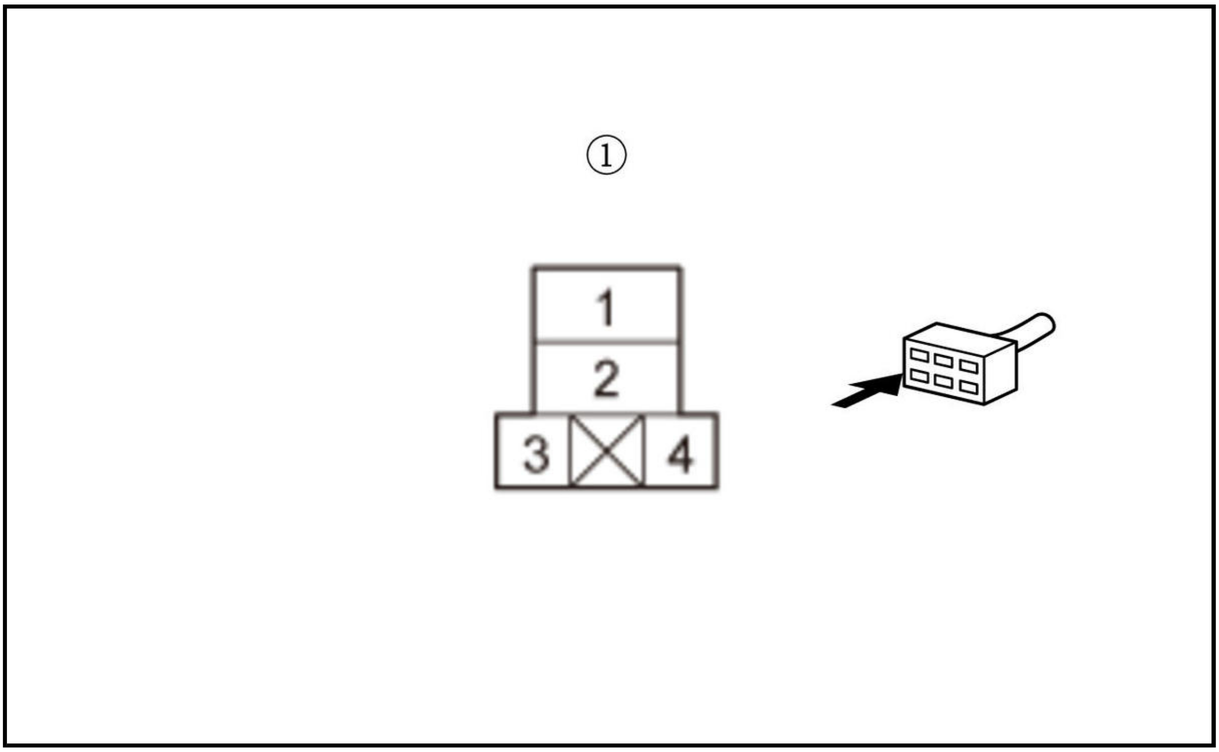

Is there battery voltage?

YES

The +B IGP wire is OK. Go to step 6.

NO

Go to step 5.

5. Fuse check 1

-1. Check the following fuse.

Fuse	No. A7 (15 A)
Location	Under-hood fuse/relay box

Is the fuse OK?

YES

Repair an open in the +B IGP wire between the No. A7 (15 A) fuse and the injector relay.

NO

Repair a short in the +B IGP wire between the No. A7 (15 A) fuse and the injector relay. Also replace the No. A7 (15 A) fuse.

6. Open wire check (+B INJ line)

-1. Measure the voltage between test points 1 and 2.

Test condition	Vehicle OFF (LOCK) mode Injector relay: disconnected
Test point 1	Injector relay 4P socket (female terminals) No. 1: ①
Test point 2	Body ground

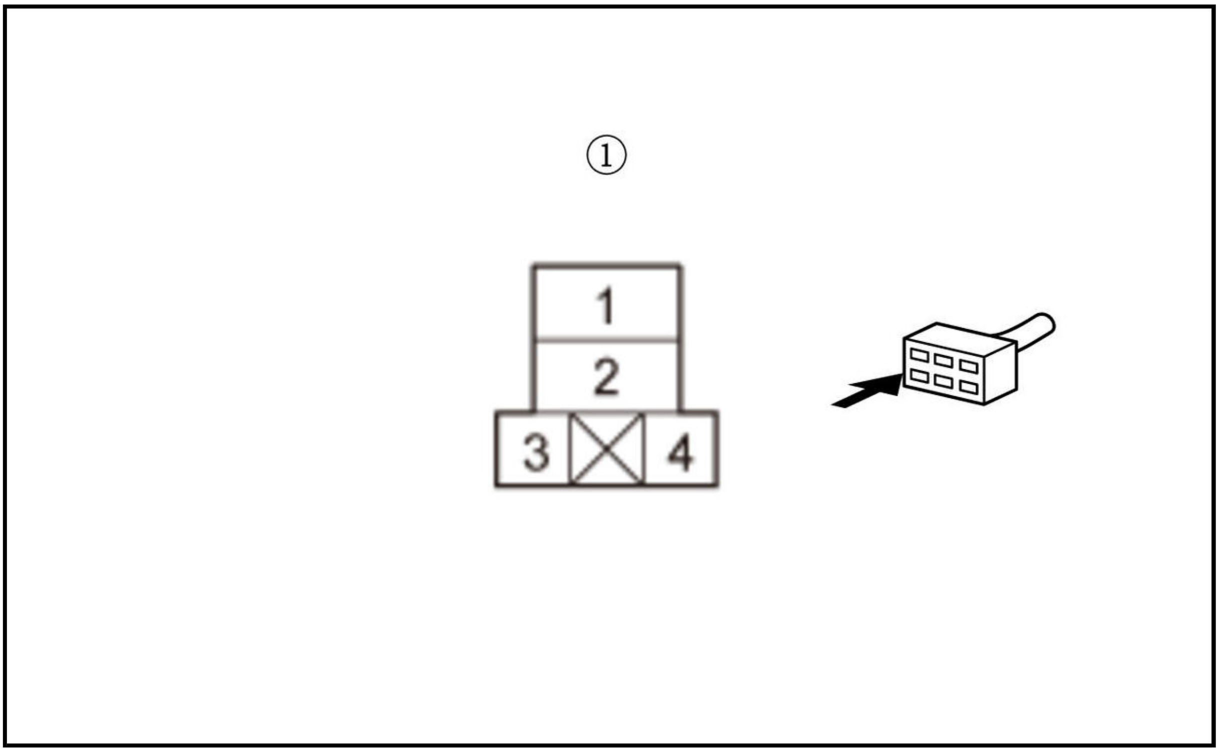

Is there battery voltage?

YES

The +B INJ wire is OK. Go to step 8.

NO

Go to step 7.

7. Fuse check

   -1. Check the following fuse.

Fuse	No. A10 (20 A)
Location	Under-hood fuse/relay box

   Is the fuse OK?

   YES

   Repair an open in the +B INJ wire between the No. A10 (20 A) fuse and the injector relay.

   NO

   Repair a short in the +B INJ wire between the No. A10 (20 A) fuse and the injector relay. Also replace the No. A10 (20 A) fuse.

8. Determine possible failure area (FI MAIN RLY CL- line, others)

   -1. Turn the vehicle to the ON mode.

-2. Measure the voltage between test points 1 and 2.

Test condition	Vehicle ON mode Injector relay: disconnected
Test point 1	Injector relay 4P socket (female terminals) No. 3: ①
Test point 2	Injector relay 4P socket (female terminals) No. 4: ①

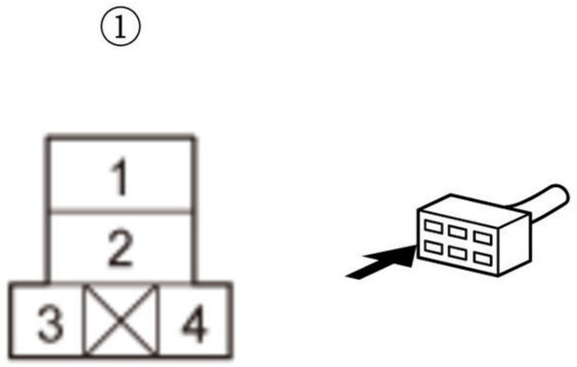

Is there battery voltage?

YES

Go to step 10.

NO

Go to step 9.

9. Open wire check (FI MAIN RLY CL- line)

-1. Turn the vehicle to the OFF (LOCK) mode.

-2. Jump the SCS line with the HDS, and wait more than 1 minute.

-3. Disconnect the following connector.

PCM connector A (50P)

-4. Check for continuity between test points 1 and 2.

Test condition	Vehicle OFF (LOCK) mode Injector relay: disconnected PCM connector A (50P): disconnected
Test point 1	Injector relay 4P socket (female terminals) No. 4: ①

Test point 2	**PCM connector A (50P) No. 5**

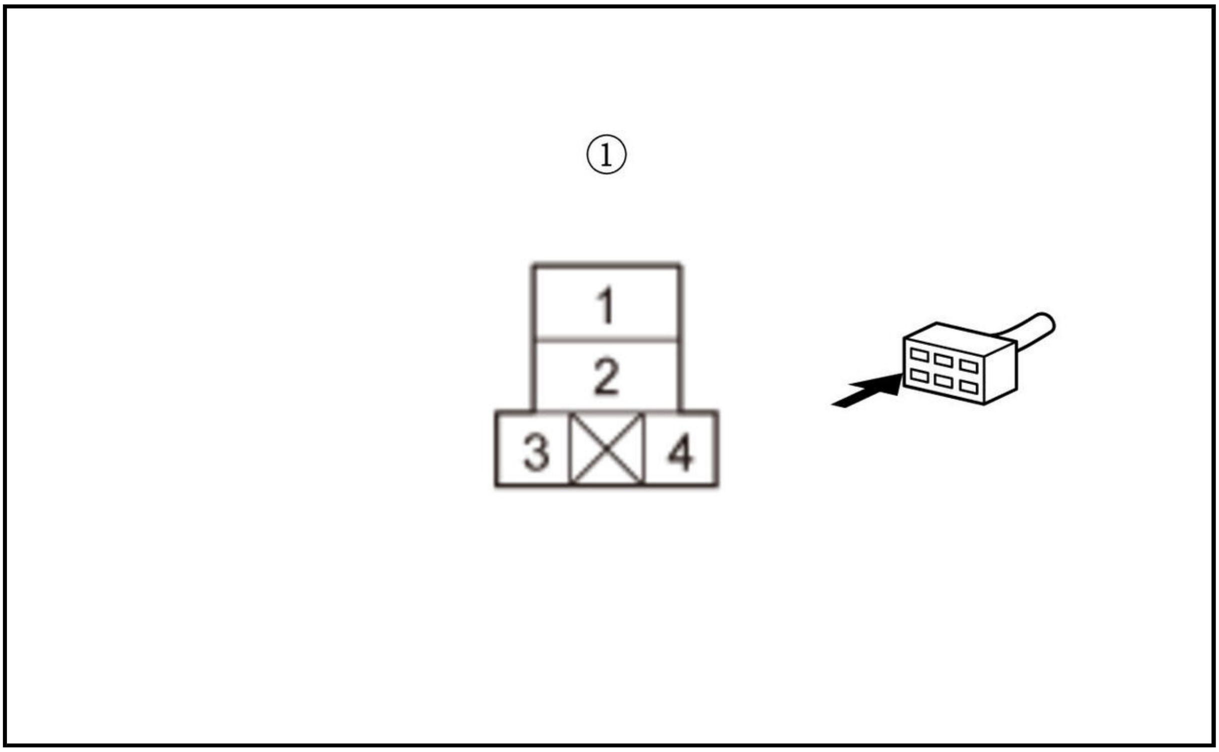

Is there continuity?

YES

The FI MAIN RLY CL- wire is OK. Check for any authorized service information related to the DTCs or symptoms you are troubleshooting, or **substitute a known-good PCM** .

NO

Repair an open in the FI MAIN RLY CL- wire between the PCM (A5) and the injector relay.

10. Open wire check (INJ RLY OUT line)

-1. Turn the vehicle to the OFF (LOCK) mode.

-2. Connect terminals A and B with a jumper wire.

Terminal A	Injector relay 4P socket (female terminals) No. 1: ①
Terminal B	Injector relay 4P socket (female terminals) No. 2: ①

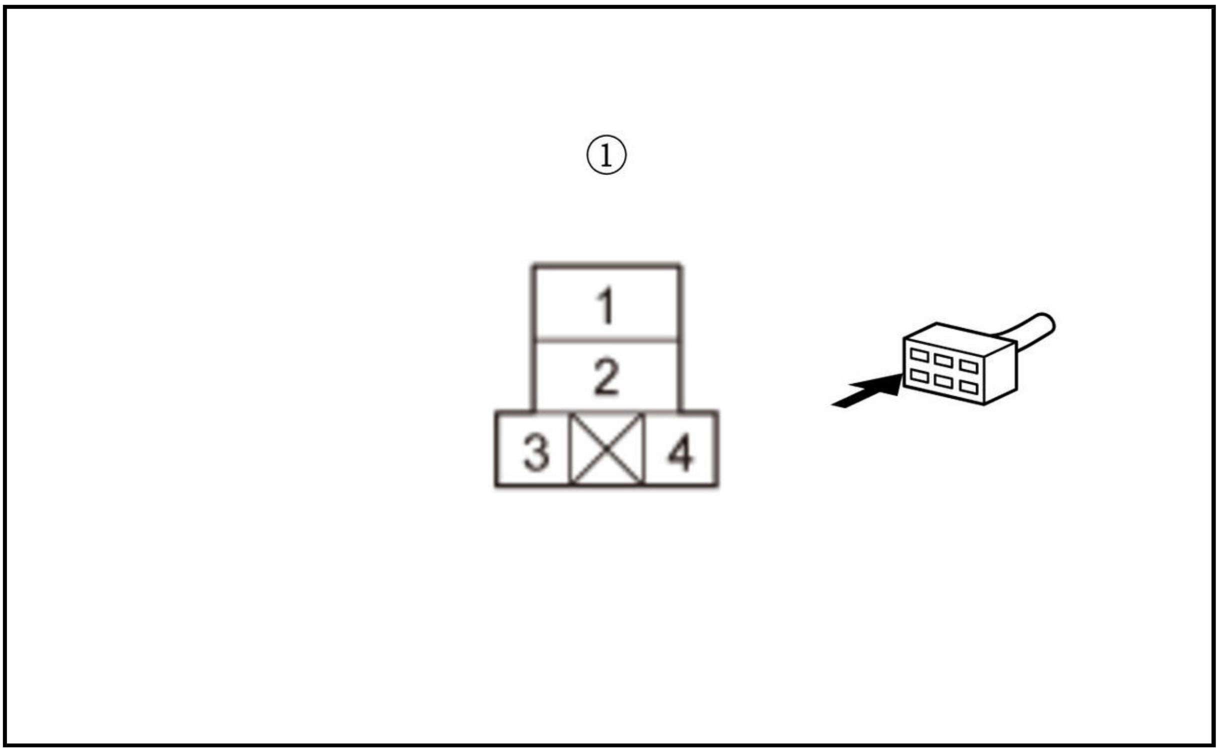

-3. Jump the SCS line with the HDS, and wait more than 1 minute.

-4. Disconnect the following connector.

PCM connector A (50P)

-5. Measure the voltage between test points 1 and 2.

Test condition	Vehicle OFF (LOCK) mode Injector relay: disconnected Injector relay 4P socket No. 1 and No. 2: jumped PCM connector A (50P): disconnected
Test point 1	**PCM connector A (50P) No. 1 and No. 2**
Test point 2	Body ground

Is there battery voltage?

YES

Go to step 11.

NO

Repair an open in the INJ RLY OUT wire between the PCM (A1, A2) and the injector relay.

11. DTC check

-1. Check the indicated DTC in step 1.

Is DTC P0202 indicated?

YES

Go to step 12.

NO

Go to step 20.

12. Open wire check (INJH2 line, INJL2 line)

    -1. Turn the vehicle to the OFF (LOCK) mode.

    -2. Reinstall the injector relay.

    -3. Jump the SCS line with the HDS, and wait more than 1 minute.

    -4. Disconnect the following connector.

    PCM connector E (80P)

    -5. Check for continuity between test points 1 and 2.

Test condition	Vehicle OFF (LOCK) mode
	PCM connector A (50P): disconnected
	PCM connector E (80P): disconnected
Test point 1	**PCM connector E (80P) No. 5**
Test point 2	**PCM connector E (80P) No. 17**

Is there continuity?

YES

Go to step 15.

NO

Go to step 13.

13. Open wire check (INJH2 line)

    -1. Disconnect the following connector.

    No. 2 injector 2P connector

    -2. Check for continuity between test points 1 and 2.

Test condition	Vehicle OFF (LOCK) mode
	PCM connector A (50P): disconnected
	PCM connector E (80P): disconnected
	No. 2 injector 2P connector: disconnected
Test point 1	No. 2 injector 2P connector (female terminals) No. 1: ①
Test point 2	**PCM connector E (80P) No. 5**

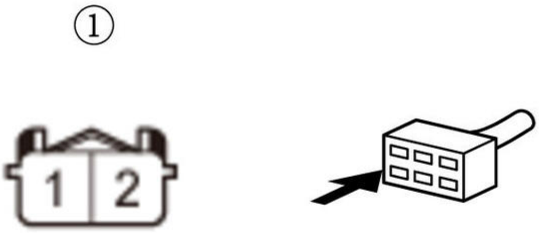

Is there continuity?

YES

Go to step 14.

NO

Repair an open in the INJH2 wire between the PCM (E5) and the No. 2 injector.

14. Open wire check (INJL2 line)

-1. Check for continuity between test points 1 and 2.

Test condition	Vehicle OFF (LOCK) mode
	PCM connector A (50P): disconnected
	PCM connector E (80P): disconnected
	No. 2 injector 2P connector: disconnected
Test point 1	No. 2 injector 2P connector (female terminals) No. 2: ①
Test point 2	**PCM connector E (80P) No. 17**

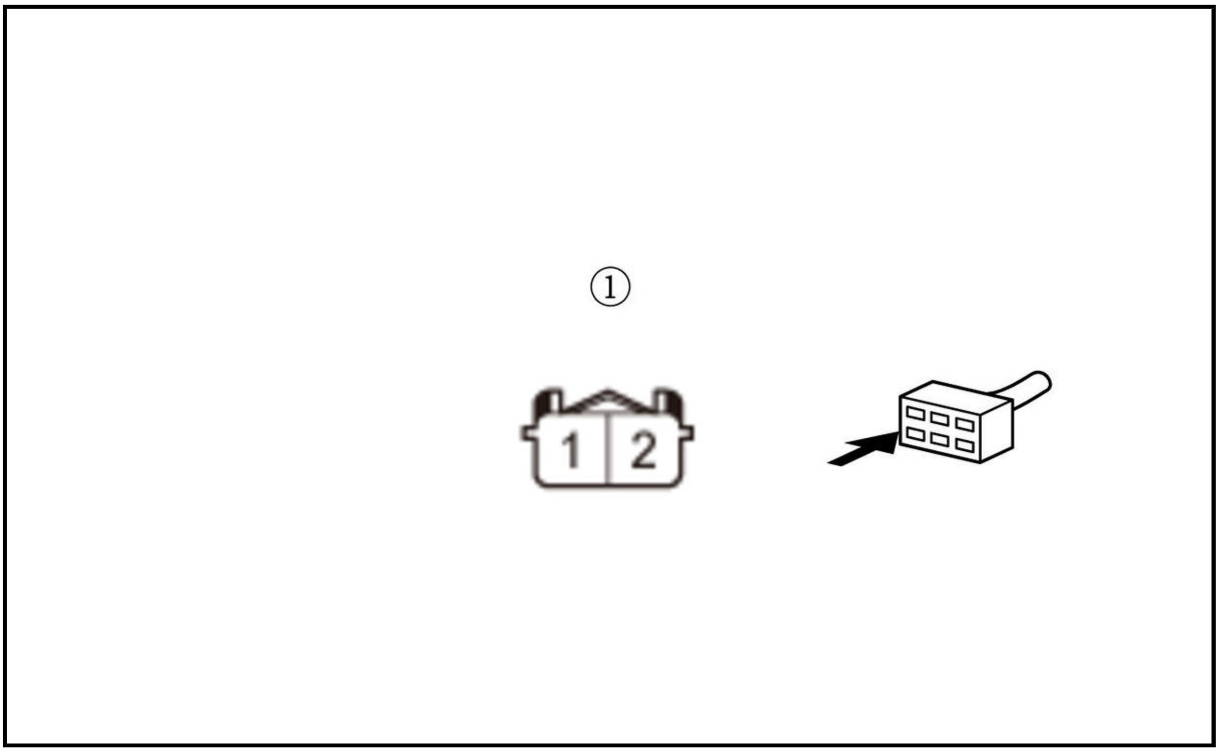

Is there continuity?

YES

The INJL2 wire is OK. **Replace the No. 2 injector** .

NO

Repair an open in the INJL2 wire between the PCM (E17) and the No. 2 injector.

15. Shorted wire check (INJH2 line to power)

-1. Disconnect the following connector.

No. 2 injector 2P connector

-2. Turn the vehicle to the ON mode.

-3. Measure the voltage between test points 1 and 2.

Test condition	Vehicle ON mode
	PCM connector A (50P): disconnected
	PCM connector E (80P): disconnected
	No. 2 injector 2P connector: disconnected
Test point 1	**PCM connector E (80P) No. 5**
Test point 2	Body ground

Is there any voltage?

YES

Repair a short to power in the INJH2 wire between the PCM (E5) and the No. 2 injector.

NO

Go to step 16.

16. Shorted wire check (INJL2 line to power)

-1. Measure the voltage between test points 1 and 2.

Test condition	Vehicle ON mode
	PCM connector A (50P): disconnected
	PCM connector E (80P): disconnected
	No. 2 injector 2P connector: disconnected
Test point 1	**PCM connector E (80P) No. 17**
Test point 2	Body ground

Is there any voltage?

YES

Repair a short to power in the INJL2 wire between the PCM (E17) and the No. 2 injector.

NO

Go to step 17.

17. Shorted wire check (INJH2 line to ground)

-1. Turn the vehicle to the OFF (LOCK) mode.

-2. Check for continuity between test points 1 and 2.

Test condition	Vehicle OFF (LOCK) mode
	PCM connector A (50P): disconnected
	PCM connector E (80P): disconnected
	No. 2 injector 2P connector: disconnected
Test point 1	**PCM connector E (80P) No. 5**
Test point 2	Body ground

Is there continuity?

YES

Repair a short to ground in the INJH2 wire between the PCM (E5) and the No. 2 injector.

NO

Go to step 18.

18. Shorted wire check (INJL2 line to ground)

-1. Check for continuity between test points 1 and 2.

Test condition	Vehicle OFF (LOCK) mode
	PCM connector A (50P): disconnected
	PCM connector E (80P): disconnected
	No. 2 injector 2P connector: disconnected
Test point 1	**PCM connector E (80P) No. 17**
Test point 2	Body ground

Is there continuity?

YES

Repair a short to ground in the INJL2 wire between the PCM (E17) and the No. 2 injector.

NO

Go to step 19.

19. Shorted wire check (INJH3 line)

-1. Disconnect the following connector.

No. 3 injector 2P connector

-2. Check for continuity between test points 1 and 2.

Test condition	Vehicle OFF (LOCK) mode
	PCM connector A (50P): disconnected
	PCM connector E (80P): disconnected
	No. 2 injector 2P connector: disconnected
	No. 3 injector 2P connector: disconnected
Test point 1	**PCM connector E (80P) No. 6**
Test point 2	Body ground

Is there continuity?

YES

Repair a short in the INJH3 wire between the PCM (E6) and the No. 3 injector.

NO

The INJH3 wire is OK. Check for any authorized service information related to the DTCs or symptoms you are troubleshooting, or **substitute a known-good PCM** .

20. Open wire check (INJH3 line, INJL3 line)

-1. Turn the vehicle to the OFF (LOCK) mode.

-2. Reinstall the injector relay.

-3. Jump the SCS line with the HDS, and wait more than 1 minute.

-4. Disconnect the following connector.

PCM connector E (80P)

-5. Check for continuity between test points 1 and 2.

Test condition	Vehicle OFF (LOCK) mode
	PCM connector A (50P): disconnected
	PCM connector E (80P): disconnected
Test point 1	**PCM connector E (80P) No. 4**
Test point 2	**PCM connector E (80P) No. 6**

Is there continuity?

YES

Go to step 23.

NO

Go to step 21.

21. Open wire check (INJH3 line)

-1. Disconnect the following connector.

No. 3 injector 2P connector

-2. Check for continuity between test points 1 and 2.

Test condition	Vehicle OFF (LOCK) mode
	PCM connector A (50P): disconnected
	PCM connector E (80P): disconnected
	No. 3 injector 2P connector: disconnected
Test point 1	No. 3 injector 2P connector (female terminals) No. 1: ①
Test point 2	**PCM connector E (80P) No. 6**

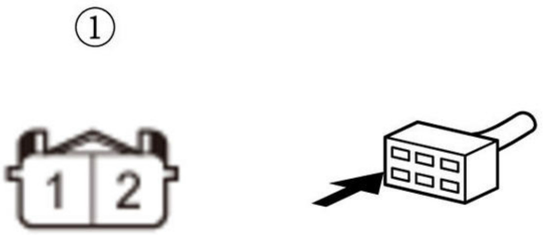

Is there continuity?

YES

Go to step 22.

NO

Repair an open in the INJH3 wire between the PCM (E6) and the No. 3 injector.

22. Open wire check (INJL3 line)

-1. Check for continuity between test points 1 and 2.

Test condition	Vehicle OFF (LOCK) mode

	PCM connector A (50P): disconnected
	PCM connector E (80P): disconnected
	No. 3 injector 2P connector: disconnected
Test point 1	No. 3 injector 2P connector (female terminals) No. 2: ①
Test point 2	**PCM connector E (80P) No. 4**

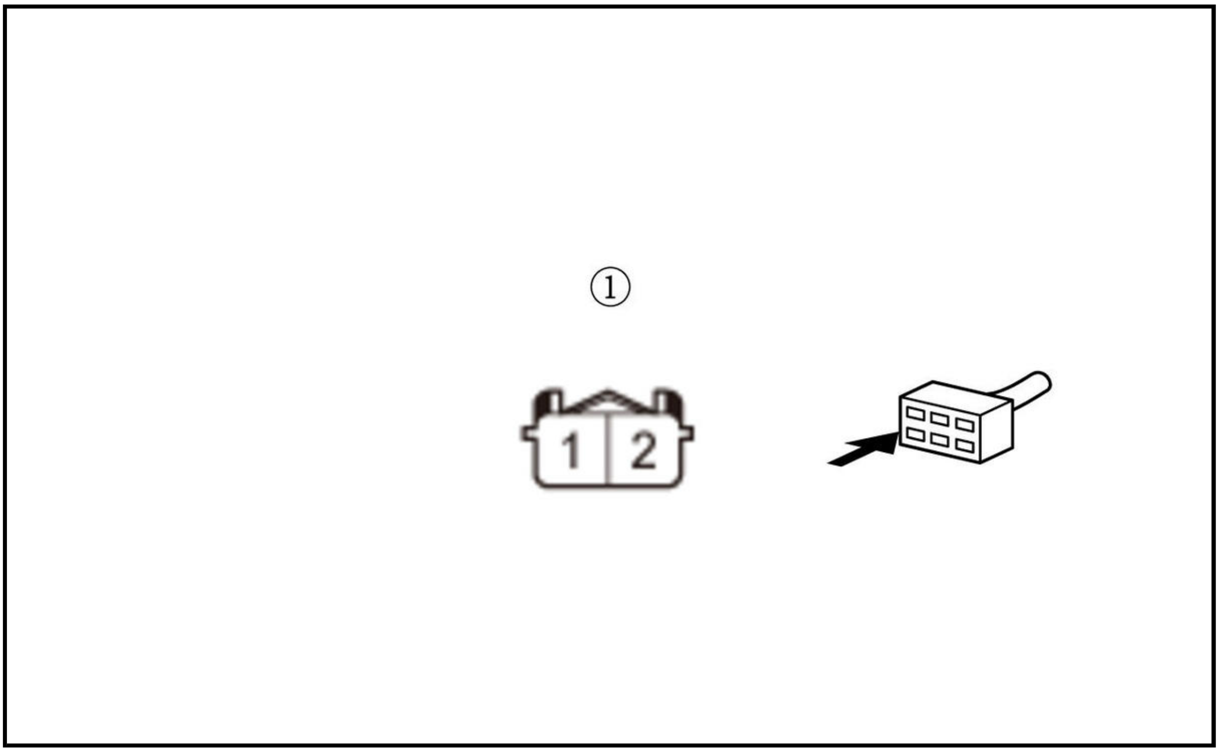

Is there continuity?

YES

The INJL3 wire is OK. **Replace the No. 3 injector** .

NO

Repair an open in the INJL3 wire between the PCM (E4) and the No. 3 injector.

23. Shorted wire check (INJH3 line to power)

-1. Disconnect the following connector.

No. 3 injector 2P connector

-2. Turn the vehicle to the ON mode.

-3. Measure the voltage between test points 1 and 2.

Test condition	Vehicle ON mode
	PCM connector A (50P): disconnected
	PCM connector E (80P): disconnected
	No. 3 injector 2P connector: disconnected
Test point 1	**PCM connector E (80P) No. 6**
Test point 2	Body ground

Is there any voltage?

YES

Repair a short to power in the INJH3 wire between the PCM (E6) and the No. 3 injector.

NO

Go to step 24.

24. Shorted wire check (INJL3 line to power)

-1. Measure the voltage between test points 1 and 2.

Test condition	Vehicle ON mode
	PCM connector A (50P): disconnected
	PCM connector E (80P): disconnected
	No. 3 injector 2P connector: disconnected
Test point 1	**PCM connector E (80P) No. 4**
Test point 2	Body ground

Is there any voltage?

YES

Repair a short to power in the INJL3 wire between the PCM (E4) and the No. 3 injector.

NO

Go to step 25.

25. Shorted wire check (INJH3 line to ground)

-1. Turn the vehicle to the OFF (LOCK) mode.

-2. Check for continuity between test points 1 and 2.

Test condition	Vehicle OFF (LOCK) mode
	PCM connector A (50P): disconnected
	PCM connector E (80P): disconnected
	No. 3 injector 2P connector: disconnected
Test point 1	**PCM connector E (80P) No. 6**
Test point 2	Body ground

Is there continuity?

YES

Repair a short to ground in the INJH3 wire between the PCM (E6) and the No. 3 injector.

NO

Go to step 26.

26. Shorted wire check (INJL3 line to ground)

-1. Check for continuity between test points 1 and 2.

Test condition	Vehicle OFF (LOCK) mode

	PCM connector A (50P): disconnected
	PCM connector E (80P): disconnected
	No. 3 injector 2P connector: disconnected
Test point 1	**PCM connector E (80P) No. 4**
Test point 2	Body ground

Is there continuity?

YES

Repair a short to ground in the INJL3 wire between the PCM (E4) and the No. 3 injector.

NO

Go to step 27.

27. Shorted wire check (INJH2 line)

-1. Disconnect the following connector.

No. 2 injector 2P connector

-2. Check for continuity between test points 1 and 2.

Test condition	Vehicle OFF (LOCK) mode PCM connector A (50P): disconnected PCM connector E (80P): disconnected No. 3 injector 2P connector: disconnected No. 2 injector 2P connector: disconnected
Test point 1	**PCM connector E (80P) No. 5**
Test point 2	Body ground

Is there continuity?

YES

Repair a short in the INJH2 wire between the PCM (E5) and the No. 2 injector.

NO

The INJH2 wire is OK. Check for any authorized service information related to the DTCs or symptoms you are troubleshooting, or **substitute a known-good PCM** .

DTC P0202, P0203 (2.4 L ENGINE) (2017 2018 2019)

DTC P0202 : No. 2 Cylinder Injector Circuit Malfunction **DTC P0203** : No. 3 Cylinder Injector Circuit Malfunction

NOTE: Before you troubleshoot, **review the general troubleshooting information** .

DTC Description	Confirmed DTC	Pending DTC
P0202 No. 2 Cylinder Injector Circuit Malfunction	B	B
P0203 No. 3 Cylinder Injector Circuit Malfunction	B	B

DTC (PGM-FI)

1. Problem verification

-1. Turn the vehicle to the ON mode.

-2. Clear the DTC with the HDS.

-3. Turn the vehicle to the OFF (LOCK) mode.

-4. Start the engine (If the engine does not start, crank the engine for 20 seconds).

-5. Check for Pending or Confirmed DTCs with the HDS.

DTC Description	Confirmed DTC	Pending DTC
P0202 No. 2 Cylinder Injector Circuit Malfunction	B	B
P0203 No. 3 Cylinder Injector Circuit Malfunction	B	B

Is DTC P0202 and/or P0203 indicated?

YES

The failure is duplicated. Go to step 2.

NO

Intermittent failure, the system is OK at this time. Check for poor connections or loose terminals at the injector and the PCM. **If the on-board snapshot of this DTC is recorded, try to reproduce the failure under the same conditions with the on-board snapshot** .

2. Engine starting check

   -1. Try to start the engine.

   Does the engine start?

   YES

   Go to step 10.

   NO

   Go to step 3.

3. Relay check

   -1. Turn the vehicle to the OFF (LOCK) mode.

   -2. **Remove the injector relay** .

   -3. **Test the injector relay** .

   Is the relay OK?

   YES

   The injector relay is OK. Go to step 4.

   NO

   Replace the injector relay.

4. Open wire check (FI MAIN RLY OUT line)

   -1. Turn the vehicle to the ON mode.

-2. Measure the voltage between test points 1 and 2.

Test condition	Vehicle ON mode
	Injector relay: disconnected
Test point 1	Injector relay 4P socket (female terminals) No. 3: ①
Test point 2	Body ground

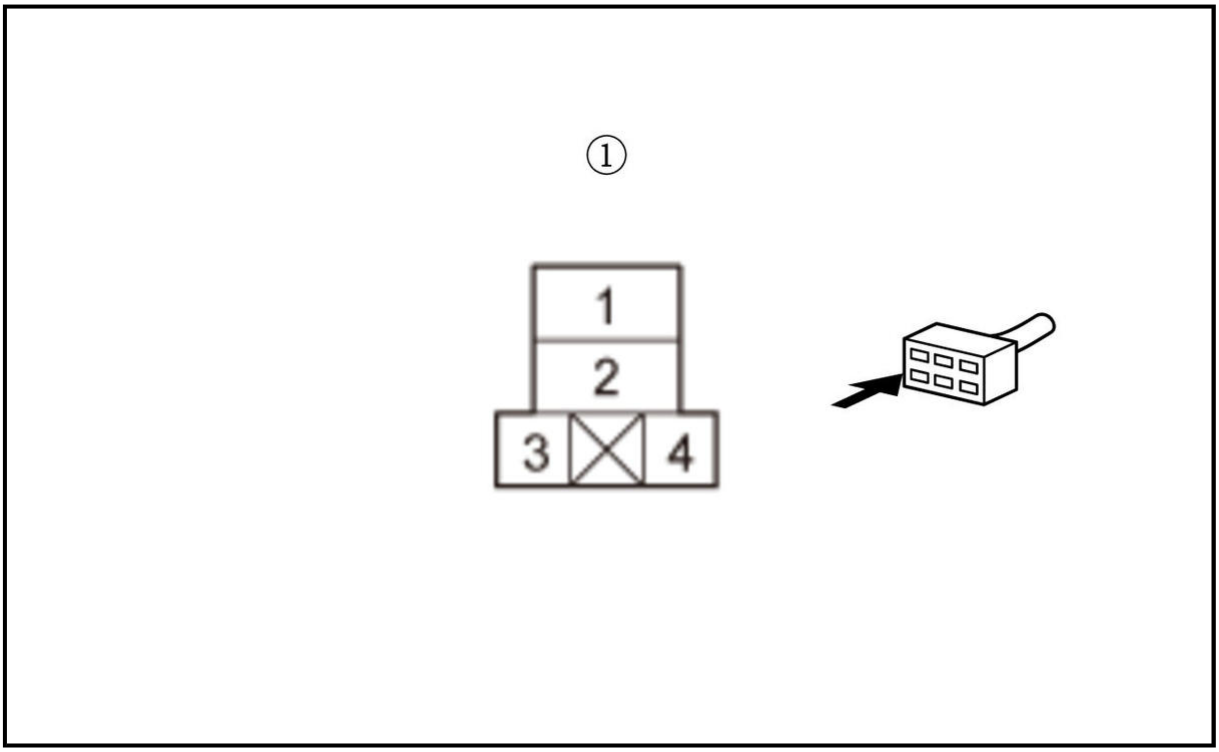

Is there battery voltage?

YES

The FI MAIN RLY OUT wire is OK. Go to step 5.

NO

Repair an open in the FI MAIN RLY OUT wire between PGM-FI main relay 1 and the injector relay.

5. Open wire check (+B INJ line)

-1. Turn the vehicle to the OFF (LOCK) mode.

-2. Measure the voltage between test points 1 and 2.

Test condition	Vehicle OFF (LOCK) mode
	Injector relay: disconnected
Test point 1	Injector relay 4P socket (female terminals) No. 1: ①
Test point 2	Body ground

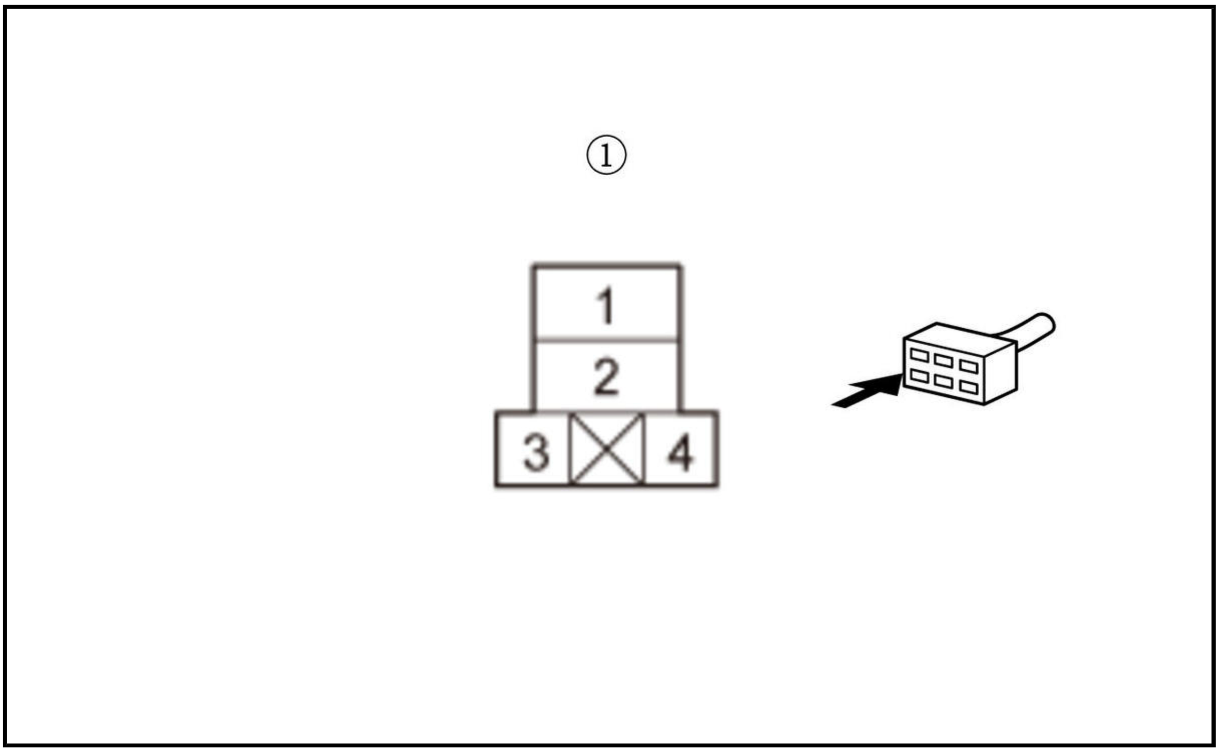

Is there battery voltage?

YES

The +B INJ wire is OK. Go to step 7.

NO

Go to step 6.

6. Fuse check

-1. Check the following fuse.

Fuse	No. A10 (20 A)
Location	Under-hood fuse/relay box

Is the fuse OK?

YES

Repair an open in the +B INJ wire between the No. A10 (20 A) fuse and the injector relay. If needed, replace the under-hood fuse/relay box .

NO

Repair a short in the +B INJ wire between the No. A10 (20 A) fuse and the injector relay. If needed, replace the under-hood fuse/relay box . Also replace the No. A10 (20 A) fuse.

7. Determine possible failure area (INJ RLY CL- line, others)

-1. Turn the vehicle to the ON mode, and measure the voltage between test points 1 and 2 momentarily.

Test condition	Momentarily after ON mode
	Injector relay: disconnected
Test point 1	Injector relay 4P socket (female terminals) No. 3: ①

Test point 2	Injector relay 4P socket (female terminals) No. 4: ①

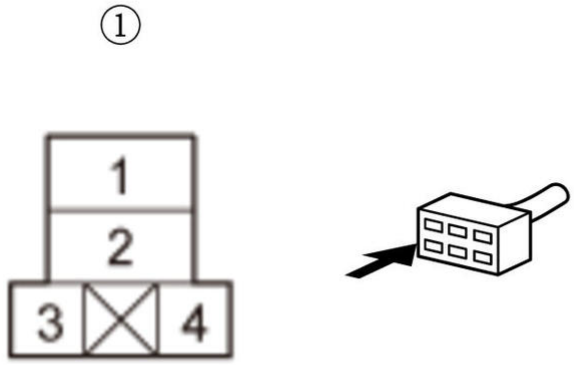

Is there battery voltage momentarily?

YES

Go to step 9.

NO

Go to step 8.

8. Open wire check (INJ RLY CL- line)

-1. Turn the vehicle to the OFF (LOCK) mode.

-2. Jump the SCS line with the HDS, and wait more than 1 minute.

-3. Disconnect the following connector.

PCM connector A (51P)

-4. Check for continuity between test points 1 and 2.

Test condition	Vehicle OFF (LOCK) mode
	Injector relay: disconnected
	PCM connector A (51P): disconnected
Test point 1	Injector relay 4P socket (female terminals) No. 4: ①
Test point 2	**PCM connector A (51P) No. 15**

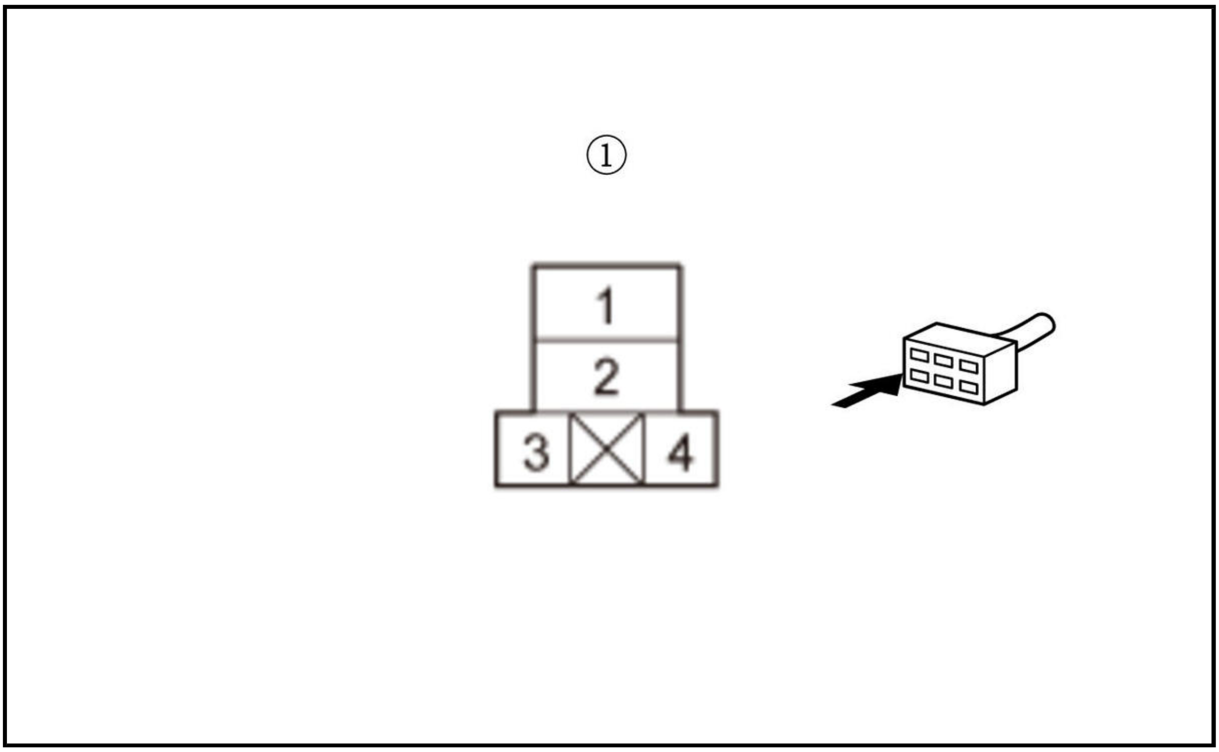

Is there battery voltage?

YES

The INJ RLY CL- wire is OK. Check for any authorized service information related to the DTCs or symptoms you are troubleshooting, or **substitute a known-good PCM** .

NO

Repair an open in the INJ RLY CL- wire between the PCM (A15) and the injector relay.

9. Open wire check (INJ RLY OUT line)

-1. Turn the vehicle to the OFF (LOCK) mode.

-2. Connect terminals A and B with a jumper wire.

Terminal A	Injector relay 4P socket (female terminals) No. 1: ①
Terminal B	Injector relay 4P socket (female terminals) No. 2: ①

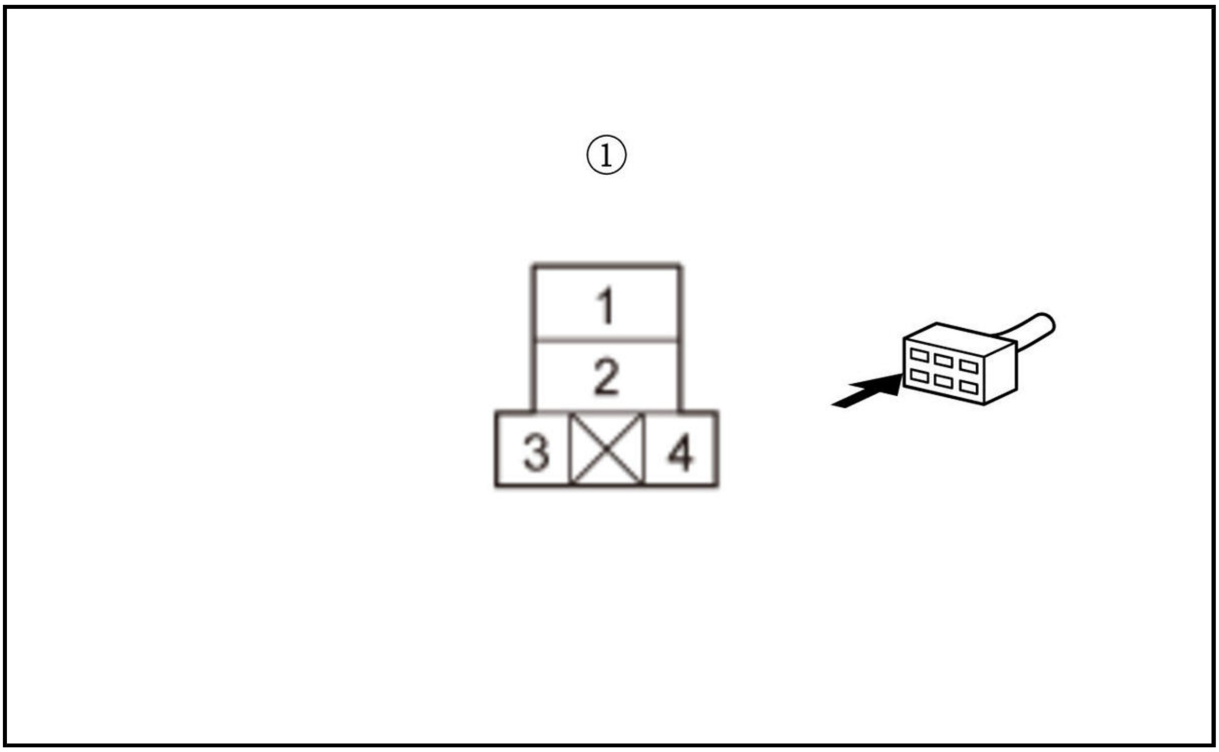

-3. Jump the SCS line with the HDS, and wait more than 1 minute.

-4. Disconnect the following connector.

PCM connector A (51P)

-5. Measure the voltage between test points 1 and 2.

Test condition	Vehicle OFF (LOCK) mode
	Injector relay: disconnected
	Injector relay 4P socket terminal No. 1 and No. 2: jumped
	PCM connector A (51P): disconnected
Test point 1	**PCM connector A (51P) No. 6**
Test point 2	Body ground

Test point 1	**PCM connector A (51P) No. 7**
Test point 2	Body ground

Are there battery voltage?

YES

The INJ RLY OUT wire is OK. Go to step 10.

NO

Repair an open in the INJ RLY OUT wire between the PCM (A6, A7) and the injector relay.

10. DTC check

-1. Check the indicated DTC in step 1.

Is DTC P0202 indicated?

YES

Go to step 11.

NO

Go to step 19.

11. Open wire check (INJ H2, INJ L2 line)

-1. Turn the vehicle to the OFF (LOCK) mode.

-2. Install the injector relay.

-3. Jump the SCS line with the HDS, and wait more than 1 minute.

-4. Disconnect the following connector.

PCM connector B (51P)

-5. Check for continuity between test points 1 and 2.

Test condition	Vehicle OFF (LOCK) mode
	PCM connector A (51P): disconnected
	PCM connector B (51P): disconnected
Test point 1	**PCM connector B (51P) No. 5**
Test point 2	**PCM connector B (51P) No. 6**

Is there continuity?

YES

The INJ H2 and INJ L2 wires are not open. Go to step 14.

NO

Go to step 12.

12. Open wire check (INJ H2 line)

-1. Disconnect the following connector.

No. 2 injector 2P connector

-2. Check for continuity between test points 1 and 2.

Test condition	Vehicle OFF (LOCK) mode
	PCM connector A (51P): disconnected
	PCM connector B (51P): disconnected
	No. 2 injector 2P connector: disconnected
Test point 1	No. 2 injector 2P connector No. 2
Test point 2	**PCM connector B (51P) No. 5**

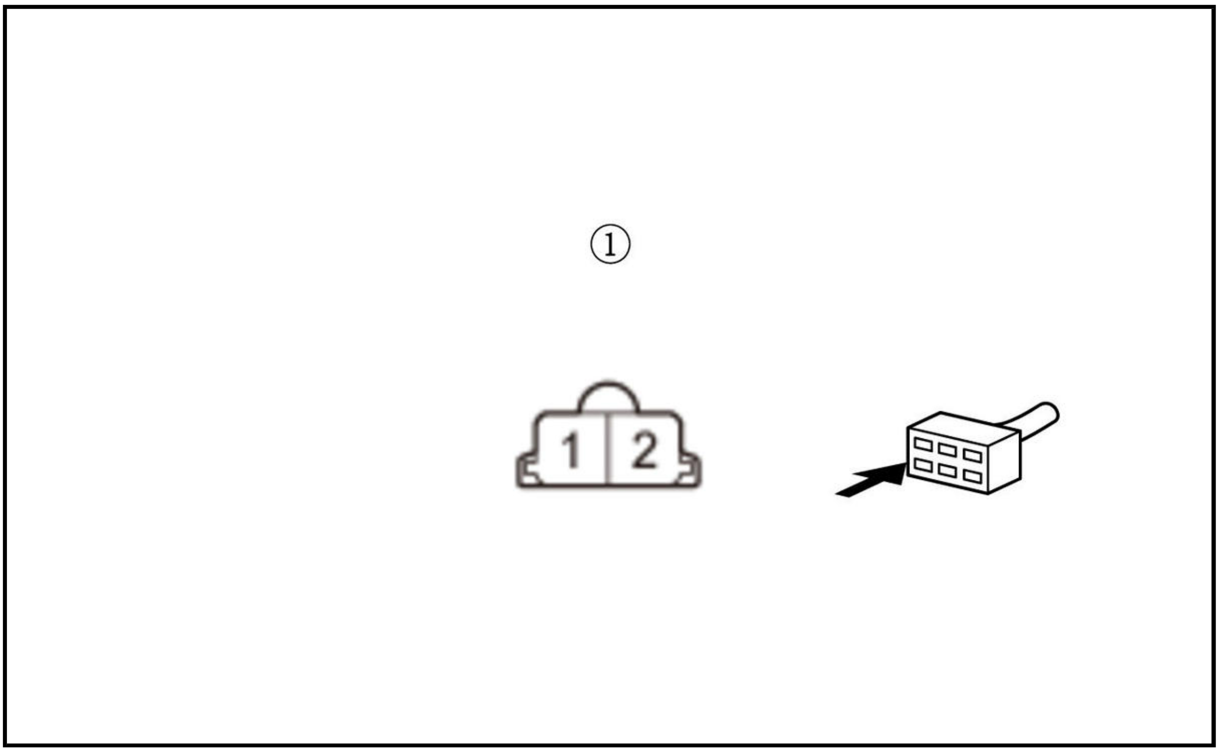

Is there continuity?

YES

The INJ H2 wire is OK. Go to step 13.

NO

Repair an open in the INJ H2 wire between the PCM (B5) and the No. 2 injector.

13. Open wire check (INJ L2 line)

-1. Check for continuity between test points 1 and 2.

Test condition	Vehicle OFF (LOCK) mode
	PCM connector A (51P): disconnected
	PCM connector B (51P): disconnected
	No. 2 injector 2P connector: disconnected
Test point 1	No. 2 injector 2P connector No. 1
Test point 2	**PCM connector B (51P) No. 6**

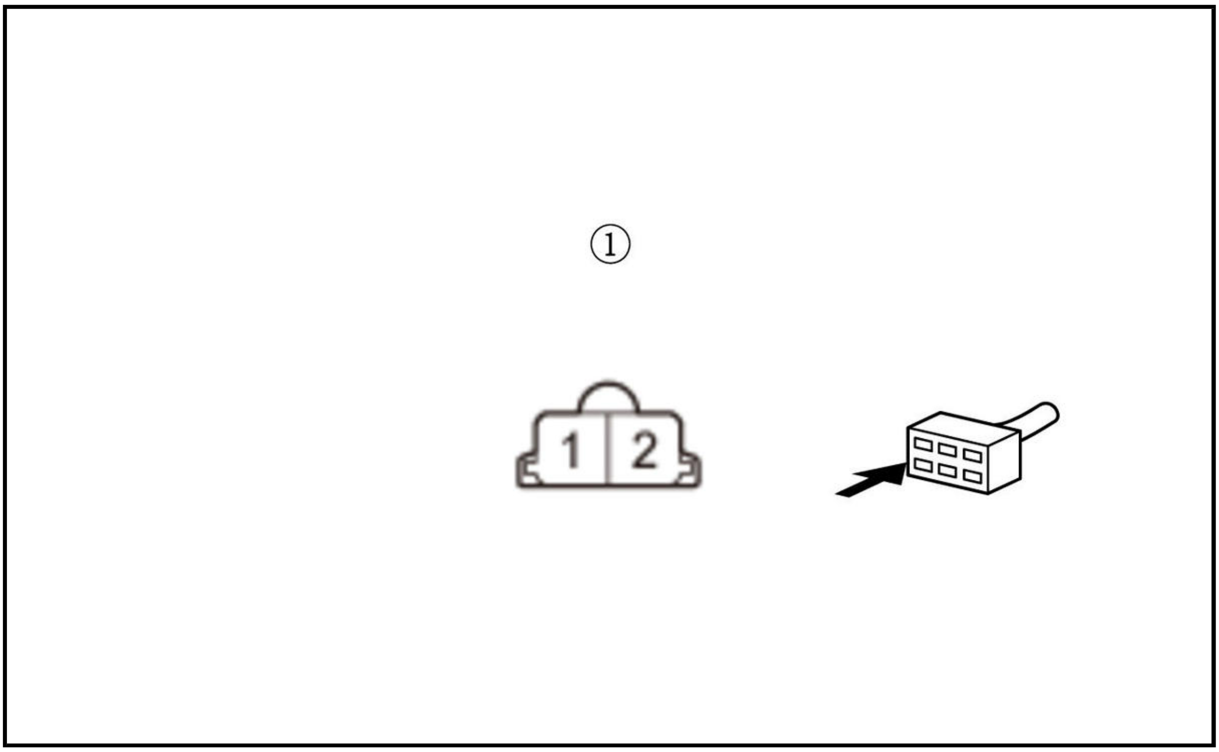

Is there continuity?

YES

The INJ L2 wire is OK. **Replace the No. 2 injector** .

NO

Repair an open in the INJ L2 wire between the PCM (B6) and the No. 2 injector.

14. Shorted wire check (INJ H2 line to power)

-1. Disconnect the following connector.

No. 2 injector 2P connector

-2. Turn the vehicle to the ON mode.

-3. Measure the voltage between test points 1 and 2.

Test condition	Vehicle ON mode
	PCM connector A (51P): disconnected
	PCM connector B (51P): disconnected
	No. 2 injector 2P connector: disconnected
Test point 1	**PCM connector B (51P) No. 5**
Test point 2	Body ground

Is there any voltage?

YES

Repair a short to power in the INJ H2 wire between the PCM (B5) and the No. 2 injector.

NO

Go to step 15.

15. Shorted wire check (INJ L2 line to power)

-1. Measure the voltage between test points 1 and 2.

Test condition	Vehicle ON mode PCM connector A (51P): disconnected PCM connector B (51P): disconnected No. 2 injector 2P connector: disconnected
Test point 1	**PCM connector B (51P) No. 6**
Test point 2	Body ground

Is there any voltage?

YES

Repair a short to power in the INJ L2 wire between the PCM (B6) and the No. 2 injector.

NO

Go to step 16.

16. Shorted wire check (INJ H2 line)

-1. Turn the vehicle to the OFF (LOCK) mode.

-2. Check for continuity between test points 1 and 2.

Test condition	Vehicle OFF (LOCK) mode PCM connector A (51P): disconnected PCM connector B (51P): disconnected No. 2 injector 2P connector: disconnected
Test point 1	**PCM connector B (51P) No. 5**
Test point 2	Body ground

Is there continuity?

YES

Repair a short in the INJ H2 wire between the PCM (B5) and the No. 2 injector.

NO

The INJ H2 wire is OK. Go to step 17.

17. Shorted wire check (INJ L2)

-1. Check for continuity between test points 1 and 2.

Test condition	Vehicle OFF (LOCK) mode PCM connector A (51P): disconnected PCM connector B (51P): disconnected No. 2 injector 2P connector: disconnected
Test point 1	**PCM connector B (51P) No. 6**
Test point 2	Body ground

Is there continuity?

YES

Repair a short in the INJ L2 wire between the PCM (B6) and the No. 2 injector.

NO

The INJ L2 wire is OK. Go to step 18.

18. Shorted wire check (INJ H3 line)

-1. Disconnect the following connector.

No. 3 injector 2P connector

-2. Check for continuity between test points 1 and 2.

Test condition	Vehicle OFF (LOCK) mode
	PCM connector A (51P): disconnected
	PCM connector B (51P): disconnected
	No. 2 injector 2P connector: disconnected
	No. 3 injector 2P connector: disconnected
Test point 1	**PCM connector B (51P) No. 7**
Test point 2	Body ground

Is there continuity?

YES

Repair a short in the INJ H3 wire between the PCM (B7) and the No. 3 injector.

NO

The INJH3 wire is OK. Check for any authorized service information related to the DTCs or symptoms you are troubleshooting, or **substitute a known-good PCM** .

19. Open wire check (INJ H3, INJ L3 line)

-1. Turn the vehicle to the OFF (LOCK) mode.

-2. Install the injector relay.

-3. Jump the SCS line with the HDS, and wait more than 1 minute.

-4. Disconnect the following connector.

PCM connector B (51P)

-5. Check for continuity between test points 1 and 2.

Test condition	Vehicle OFF (LOCK) mode
	PCM connector A (51P): disconnected
	PCM connector B (51P): disconnected
Test point 1	**PCM connector B (51P) No. 7**
Test point 2	**PCM connector B (51P) No. 8**

Is there continuity?

YES

The INJ H3 and INJ L3 wires are not open. Go to step 22.

NO

Go to step 20.

20. Open wire check (INJ H3 line)

-1. Disconnect the following connector.

No. 3 injector 2P connector

-2. Check for continuity between test points 1 and 2.

Test condition	Vehicle OFF (LOCK) mode
	PCM connector A (51P): disconnected
	PCM connector B (51P): disconnected
	No. 3 injector 2P connector: disconnected
Test point 1	No. 3 injector 2P connector No. 2
Test point 2	**PCM connector B (51P) No. 7**

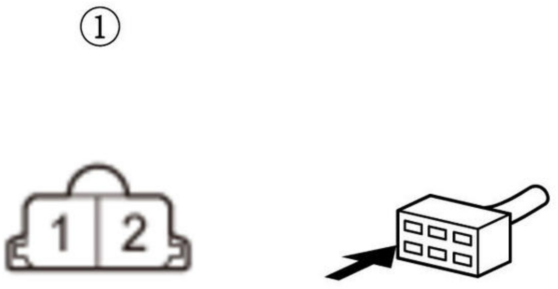

Is there continuity?

YES

The INJ H3 wire is OK. Go to step 21.

NO

Repair an open in the INJ H3 wire between the PCM (B7) and the No. 3 injector.

21. Open wire check (INJ L3 line)

-1. Check for continuity between test points 1 and 2.

Test condition	Vehicle OFF (LOCK) mode

	PCM connector A (51P): disconnected
	PCM connector B (51P): disconnected
	No. 3 injector 2P connector: disconnected
Test point 1	No. 3 injector 2P connector No. 1
Test point 2	**PCM connector B (51P) No. 8**

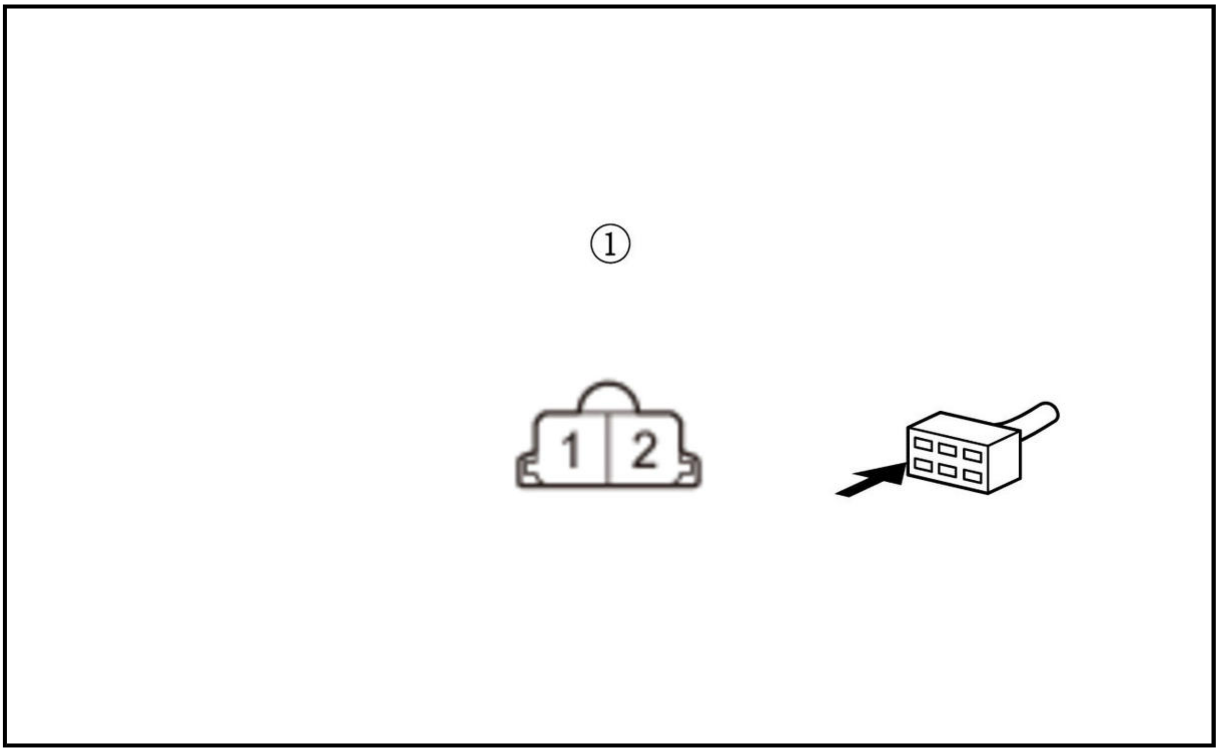

Is there continuity?

YES

The INJ L3 wire is OK. **Replace the No. 3 injector** .

NO

Repair an open in the INJ L3 wire between the PCM (B8) and the No. 3 injector.

22. Shorted wire check (INJ H3 line to power)

-1. Disconnect the following connector.

No. 3 injector 2P connector

-2. Turn the vehicle to the ON mode.

-3. Measure the voltage between test points 1 and 2.

Test condition	Vehicle ON mode
	PCM connector A (51P): disconnected
	PCM connector B (51P): disconnected
	No. 3 injector 2P connector: disconnected
Test point 1	**PCM connector B (51P) No. 7**
Test point 2	Body ground

Is there voltage?

YES

Repair a short to power in the INJ H3 wire between the PCM (B7) and the No. 3 injector.

NO

Go to step 23.

23. Shorted wire check (INJ L3 line to power)

-1. Measure the voltage between test points 1 and 2.

Test condition	Vehicle ON mode
	PCM connector A (51P): disconnected
	PCM connector B (51P): disconnected
	No. 3 injector 2P connector: disconnected
Test point 1	**PCM connector B (51P) No. 8**
Test point 2	Body ground

Is there voltage?

YES

Repair a short to power in the INJ L3 wire between the PCM (B8) and the No. 3 injector.

NO

Go to step 24.

24. Shorted wire check (INJ H3 line)

-1. Turn the vehicle to the OFF (LOCK) mode.

-2. Check for continuity between test points 1 and 2.

Test condition	Vehicle OFF (LOCK) mode
	PCM connector A (51P): disconnected
	PCM connector B (51P): disconnected
	No. 3 injector 2P connector: disconnected
Test point 1	**PCM connector B (51P) No. 7**
Test point 2	Body ground

Is there continuity?

YES

Repair a short in the INJ H3 wire between the PCM (B7) and the No. 3 injector.

NO

The INJ H3 wire is OK. Go to step 25.

25. Shorted wire check (INJ L3)

-1. Check for continuity between test points 1 and 2.

Test condition	Vehicle OFF (LOCK) mode
	PCM connector A (51P): disconnected
	PCM connector B (51P): disconnected
	No. 3 injector 2P connector: disconnected

Test point 1	PCM connector B (51P) No. 8
Test point 2	Body ground

Is there continuity?

YES

Repair a short in the INJ L3 wire between the PCM (B8) and the No. 3 injector.

NO

The INJ L3 wire is OK. Go to step 26.

26. Shorted wire check (INJ H2 line)

-1. Disconnect the following connector.

No. 2 injector 2P connector

-2. Check for continuity between test points 1 and 2.

Test condition	Vehicle OFF (LOCK) mode
	PCM connector A (51P): disconnected
	PCM connector B (51P): disconnected
	No. 2 injector 2P connector: disconnected
	No. 3 injector 2P connector: disconnected
Test point 1	PCM connector B (51P) No. 5
Test point 2	Body ground

Is there continuity?

YES

Repair a short in the INJ H2 wire between the PCM (B5) and the No. 2 injector.

NO

The INJH2 wire is OK. Check for any authorized service information related to the DTCs or symptoms you are troubleshooting, or **substitute a known-good PCM** .

DTC P0221 (1.5 L ENGINE) (2018 2019 2020 2021)

DTC P0221 : TP Sensor B Out of Range

NOTE: Before you troubleshoot, **review the general troubleshooting information** .

DTC Description	Confirmed DTC	Pending DTC
P0221 TP Sensor B Out of Range	B	B

DTC (PGM-FI)

1. Problem verification 1

-1. Turn the vehicle to the ON mode.

-2. Clear the DTC with the HDS.

-3. Check the parameter (s) below with the HDS.

Signal	Threshold		Current conditions	
	Values	Unit	Values	Unit
TP SENSOR B	Less than 0.48	V	B	B

Do the current condition (s) match the threshold?

YES

The failure is duplicated. Go to step 3.

NO

Go to step 2.

2. Problem verification 2

-1. Check the parameter (s) below with the HDS.

Signal	Threshold		Current conditions	
	Values	Unit	Values	Unit
TP SENSOR B	More than 4.61	V	B	B

Do the current condition (s) match the threshold?

YES

The failure is duplicated. Go to step 7.

NO

Intermittent failure, the system is OK at this time. Check for poor connections or loose terminals at the throttle body and the PCM. **If the on-board snapshot of this DTC is recorded, try to reproduce the failure under the same conditions with the on-board snapshot** .

3. Determine possible failure area (THL2 line, others)

-1. Check for Pending or Confirmed DTCs with the HDS.

DTC Description	Confirmed DTC	Pending DTC
P0121 TP Sensor A Out of Range	B	B
P0221 TP Sensor B Out of Range	B	B

Are DTC P0121 and P0221 indicated at the same time?

YES

Go to step 5.

NO

Go to step 4.

4. Shorted wire check (THL2 line)

-1. Turn the vehicle to the OFF (LOCK) mode.

-2. Jump the SCS line with the HDS, and wait more than 1 minute.

-3. Disconnect the following connectors.

PCM connector E (80P)
Throttle body 6P connector

-4. Check for continuity between test points 1 and 2.

Test condition	Vehicle OFF (LOCK) mode
B	PCM connector E (80P): disconnected
B	Throttle body 6P connector: disconnected
Test point 1	Throttle body 6P connector (female terminals) No. 4: ①
Test point 2	Body ground

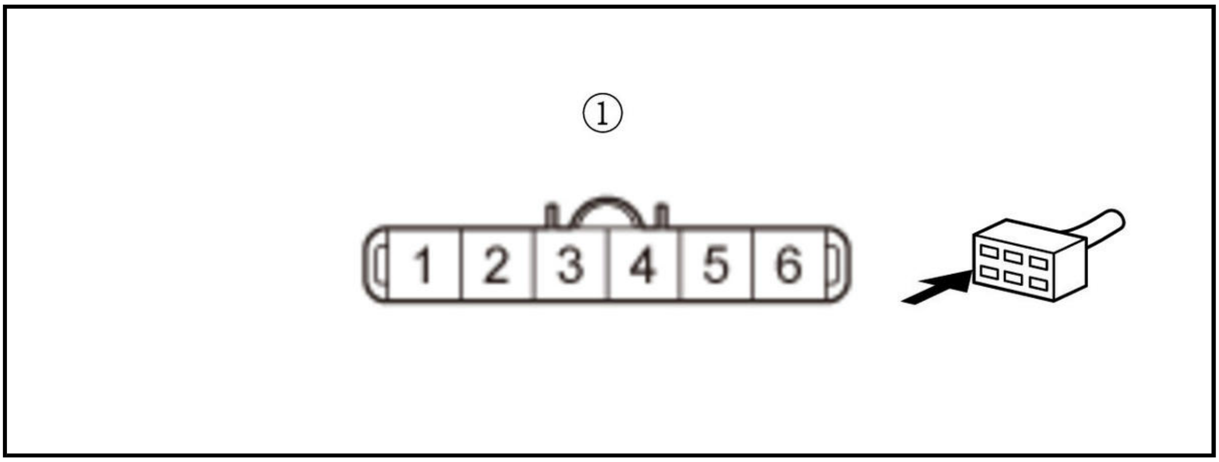

Is there continuity?

YES

Repair a short in the THL2 wire between the PCM (E51) and the throttle body.

NO

The THL2 wire is OK. Check for any authorized service information related to the DTCs or symptoms you are troubleshooting, or **substitute a known-good PCM** .

5. Determine possible failure area (throttle body, others)

-1. Turn the vehicle to the OFF (LOCK) mode.

-2. Disconnect the following connector.

Throttle body 6P connector

-3. Turn the vehicle to the ON mode.

-4. Measure the voltage between test points 1 and 2.

Test condition	Vehicle ON mode
B	Throttle body 6P connector: disconnected
Test point 1	Throttle body 6P connector (female terminals) No. 5: ①
Test point 2	Body ground

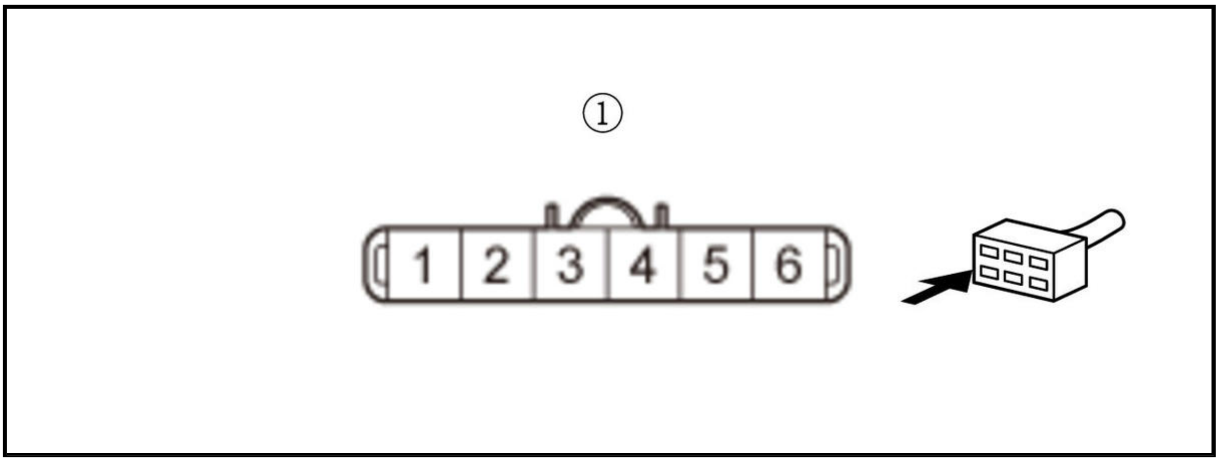

Is there about 5.0 V?

YES

Replace the throttle body .

NO

Go to step 6.

6. Open wire check (VCC3 line)

-1. Turn the vehicle to the OFF (LOCK) mode.

-2. Jump the SCS line with the HDS, and wait more than 1 minute.

-3. Disconnect the following connector.

PCM connector E (80P)

-4. Check for continuity between test points 1 and 2.

Test condition	Vehicle OFF (LOCK) mode
B	Throttle body 6P connector: disconnected
B	PCM connector E (80P): disconnected
Test point 1	Throttle body 6P connector (female terminals) No. 5: ①
Test point 2	**PCM connector E (80P) No. 75**

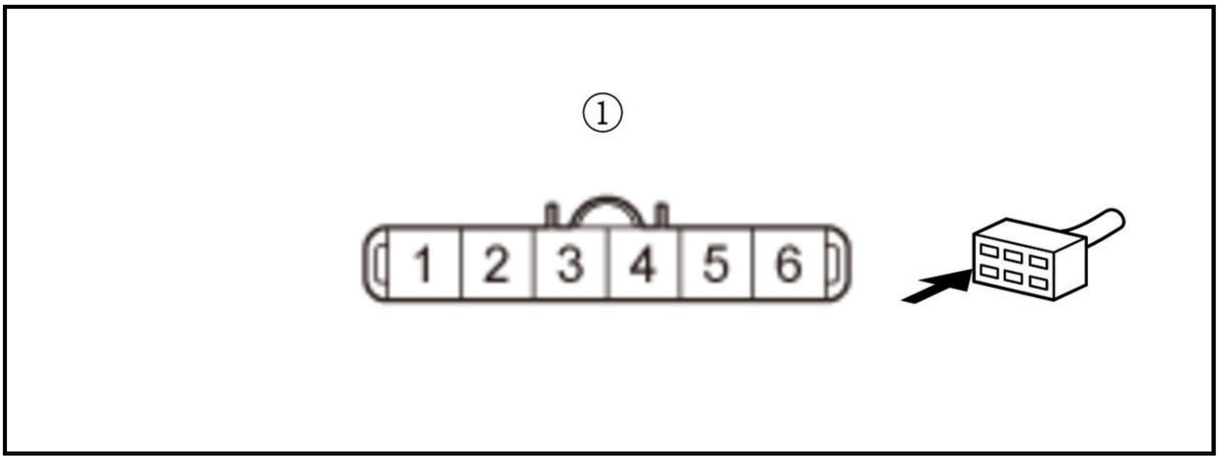

Is there continuity?

YES

The VCC3 wire is OK. Check for any authorized service information related to the DTCs or symptoms you are troubleshooting, or **substitute a known-good PCM** .

NO

Repair an open in the VCC3 wire between the PCM (E75) and the throttle body.

7. Determine possible failure area (SG3 line, others)

-1. Check for Pending or Confirmed DTCs with the HDS.

DTC Description	Confirmed DTC	Pending DTC
P0121 TP Sensor A Out of Range	B	B
P0221 TP Sensor B Out of Range	B	B

Are DTC P0121 and P0221 indicated at the same time?

YES

Go to step 10.

NO

Go to step 8.

8. Determine possible failure area (throttle body, others)

-1. Turn the vehicle to the OFF (LOCK) mode.

-2. Disconnect the following connector.

Throttle body 6P connector

-3. Turn the vehicle to the ON mode.

-4. Measure the voltage between test points 1 and 2.

Test condition	Vehicle ON mode
B	Throttle body 6P connector: disconnected
Test point 1	Throttle body 6P connector (female terminals) No. 4: ①
Test point 2	Body ground

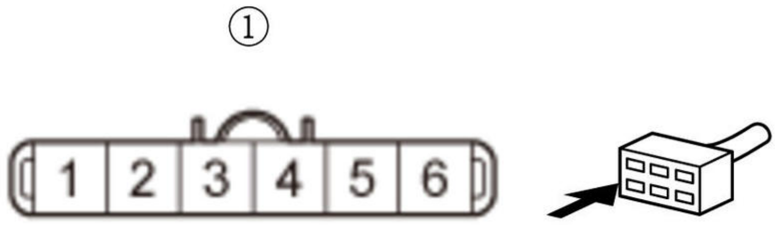

Is there about 5.0 V?

YES

Replace the throttle body .

NO

Go to step 9.

9. Open wire check (THL2 line)

-1. Turn the vehicle to the OFF (LOCK) mode.

-2. Jump the SCS line with the HDS, and wait more than 1 minute.

-3. Disconnect the following connector.

PCM connector E (80P)

-4. Check for continuity between test points 1 and 2.

Test condition	Vehicle OFF (LOCK) mode
B	Throttle body 6P connector: disconnected
B	PCM connector E (80P): disconnected
Test point 1	Throttle body 6P connector (female terminals) No. 4: ①
Test point 2	**PCM connector E (80P) No. 51**

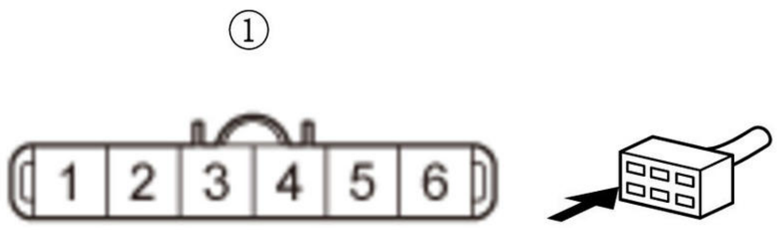

Is there continuity?

YES

The THL2 wire is OK. Check for any authorized service information related to the DTCs or symptoms you are troubleshooting, or **substitute a known-good PCM** .

NO

Repair an open in the THL2 wire between the PCM (E51) and the throttle body.

10. Open wire check (SG3 line)

-1. Turn the vehicle to the OFF (LOCK) mode.

-2. Jump the SCS line with the HDS, and wait more than 1 minute.

-3. Disconnect the following connectors.

PCM connector E (80P)
Throttle body 6P connector

-4. Check for continuity between test points 1 and 2.

Test condition	Vehicle OFF (LOCK) mode
B	PCM connector E (80P): disconnected
B	Throttle body 6P connector: disconnected
Test point 1	Throttle body 6P connector (female terminals) No. 3: ①
Test point 2	PCM connector E (80P) No. 76

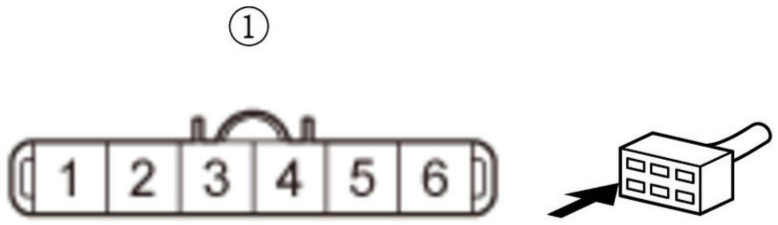

Is there continuity?

YES

The SG5 wire is OK. Check for any authorized service information related to the DTCs or symptoms you are troubleshooting, or substitute a known-good PCM .

NO

Repair an open in the SG3 wire between the PCM (E76) and the throttle body.

DTC P0221 (2.4 L ENGINE) (2018 2019)

DTC P0221 : TP Sensor B Out of Range

NOTE: Before you troubleshoot, review the general troubleshooting information .

DTC Description	Confirmed DTC	Pending DTC
P0221 TP Sensor B Out of Range	B	B

DTC (PGM-FI)

1. Problem verification 1

-1. Turn the vehicle to the ON mode.

-2. Clear the DTC with the HDS.

-3. Check the parameter (s) below with the HDS.

Signal	Threshold		Current conditions	
	Values	Unit	Values	Unit
TP SENSOR B	Less than 1.24	V	B	B

Do the current condition (s) match the threshold?

YES

The failure is duplicated. Go to step 3.

NO

Go to step 2.

2. Problem verification 2

-1. Check the parameter (s) below with the HDS.

Signal	Threshold		Current conditions	
	Values	Unit	Values	Unit
TP SENSOR B	More than 4.73	V	B	B

Do the current condition (s) match the threshold?

YES

The failure is duplicated. Go to step 7.

NO

Intermittent failure, the system is OK at this time. Check for poor connections or loose terminals at the throttle body and the PCM. **If the on-board snapshot of this DTC is recorded, try to reproduce the failure under the same conditions with the on-board snapshot** .

3. Determine possible failure area (THL2 line, others)

-1. Check for Pending or Confirmed DTCs with the HDS.

DTC Description	Confirmed DTC	Pending DTC
P0121 TP Sensor A Out of Range	B	B
P0221 TP Sensor B Out of Range	B	B

Are DTC P0121 and P0221 indicated at the same time?

YES

Go to step 5.

NO

Go to step 4.

4. Shorted wire check (THL2 line)

-1. Turn the vehicle to the OFF (LOCK) mode.

-2. Jump the SCS line with the HDS, and wait more than 1 minute.

-3. Disconnect the following connectors.

PCM connector B (51P)
Throttle body 6P connector

-4. Check for continuity between test points 1 and 2.

Test condition	Vehicle OFF (LOCK) mode
B	PCM connector B (51P): disconnected
B	Throttle body 6P connector: disconnected
Test point 1	Throttle body 6P connector (female terminals) No. 4: ①
Test point 2	Body ground

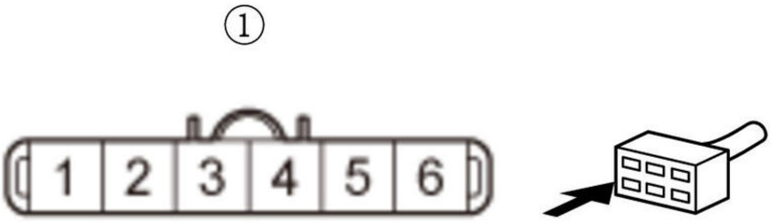

Is there continuity?

YES

Repair a short in the THL2 wire between the PCM (B47) and the throttle body.

NO

The THL2 wire is OK. Check for any authorized service information related to the DTCs or symptoms you are troubleshooting, or **substitute a known-good PCM** .

5. Determine possible failure area (throttle body, others)

-1. Turn the vehicle to the OFF (LOCK) mode.

-2. Disconnect the following connector.

Throttle body 6P connector

-3. Turn the vehicle to the ON mode.

-4. Measure the voltage between test points 1 and 2.

Test condition	Vehicle ON mode
B	Throttle body 6P connector: disconnected
Test point 1	Throttle body 6P connector (female terminals) No. 5: ①
Test point 2	Body ground

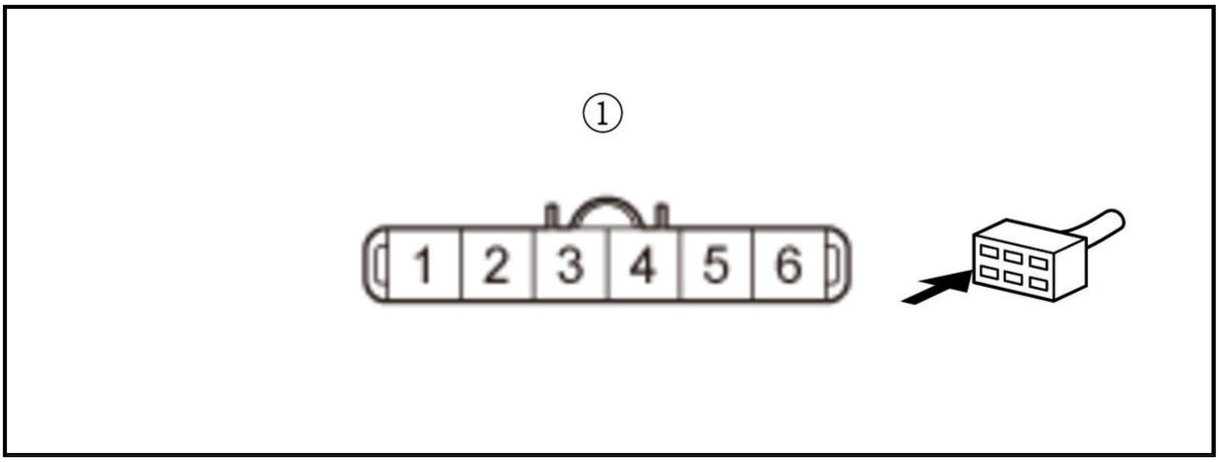

Is there about 5.0 V?

YES

Replace the throttle body .

NO

Go to step 6.

6. Open wire check (VCC3 line)

-1. Turn the vehicle to the OFF (LOCK) mode.

-2. Jump the SCS line with the HDS, and wait more than 1 minute.

-3. Disconnect the following connector.

PCM connector B (51P)

-4. Check for continuity between test points 1 and 2.

Test condition	Vehicle OFF (LOCK) mode
B	Throttle body 6P connector: disconnected
B	PCM connector B (51P): disconnected
Test point 1	Throttle body 6P connector (female terminals) No. 5: ①
Test point 2	PCM connector B (51P) No. 48

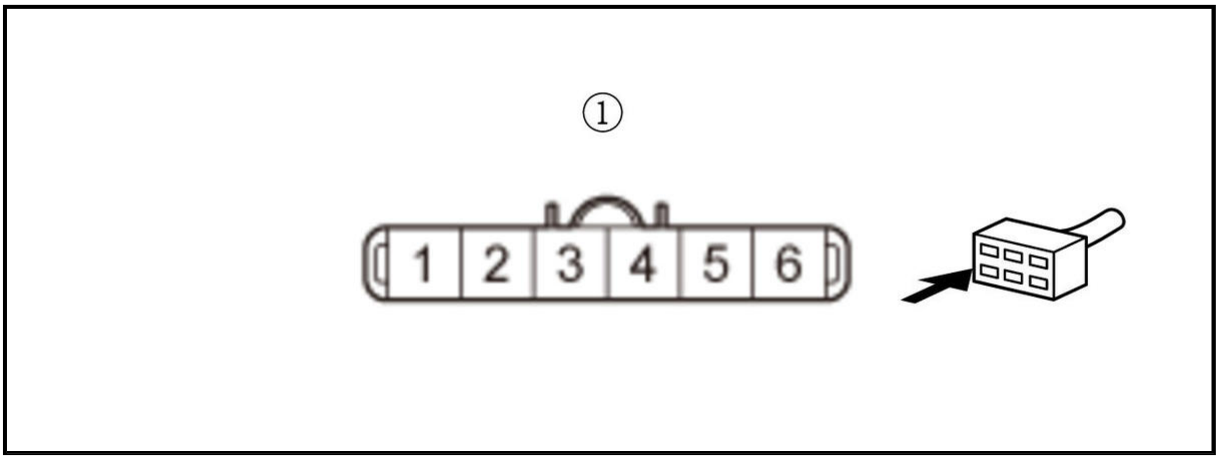

Is there continuity?

YES

The VCC3 wire is OK. Check for any authorized service information related to the DTCs or symptoms you are troubleshooting, or **substitute a known-good PCM** .

NO

Repair an open in the VCC3 wire between the PCM (B48) and the throttle body.

7. Determine possible failure area (SG3 line, others)

-1. Check for Pending or Confirmed DTCs with the HDS.

DTC Description	Confirmed DTC	Pending DTC
P0121 TP Sensor A Out of Range	B	B
P0221 TP Sensor B Out of Range	B	B

Are DTC P0121 and P0221 indicated at the same time?

YES

Go to step 10.

NO

Go to step 8.

8. Determine possible failure area (throttle body, others)

-1. Turn the vehicle to the OFF (LOCK) mode.

-2. Disconnect the following connector.

Throttle body 6P connector

-3. Turn the vehicle to the ON mode.

-4. Measure the voltage between test points 1 and 2.

Test condition	Vehicle ON mode
B	Throttle body 6P connector: disconnected
Test point 1	Throttle body 6P connector (female terminals) No. 4: ①
Test point 2	Body ground

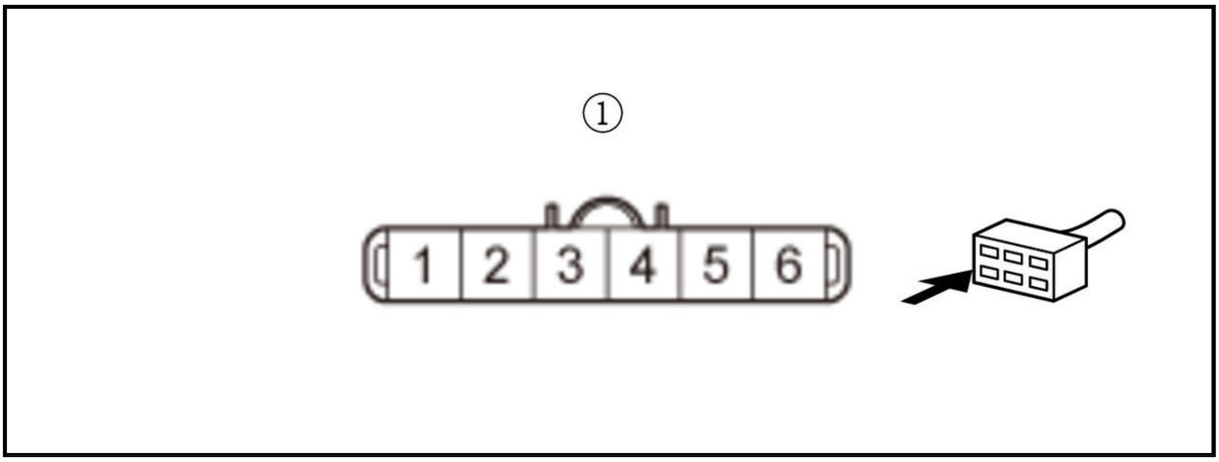

Is there about 5.0 V?

YES

Replace the throttle body .

NO

Go to step 9.

9. Open wire check (THL2 line)

-1. Turn the vehicle to the OFF (LOCK) mode.

-2. Jump the SCS line with the HDS, and wait more than 1 minute.

-3. Disconnect the following connector.

PCM connector B (51P)

-4. Check for continuity between test points 1 and 2.

Test condition	Vehicle OFF (LOCK) mode
B	Throttle body 6P connector: disconnected
B	PCM connector B (51P): disconnected
Test point 1	Throttle body 6P connector (female terminals) No. 4: ①
Test point 2	**PCM connector B (51P) No. 47**

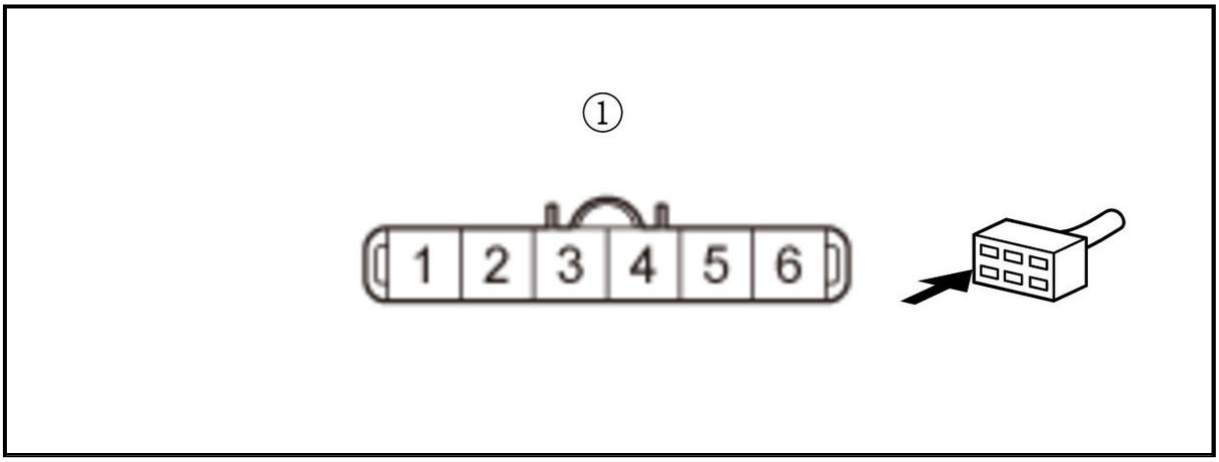

Is there continuity?

YES

The THL2 wire is OK. Check for any authorized service information related to the DTCs or symptoms you are troubleshooting, or **substitute a known-good PCM** .

NO

Repair an open in the THL2 wire between the PCM (B47) and the throttle body.

10. Open wire check (SG3 line)

-1. Turn the vehicle to the OFF (LOCK) mode.

-2. Jump the SCS line with the HDS, and wait more than 1 minute.

-3. Disconnect the following connectors.

PCM connector B (51P)
Throttle body 6P connector

-4. Check for continuity between test points 1 and 2.

Test condition	Vehicle OFF (LOCK) mode
B	PCM connector B (51P): disconnected
B	Throttle body 6P connector: disconnected
Test point 1	Throttle body 6P connector (female terminals) No. 3: ①
Test point 2	PCM connector B (51P) No. 49

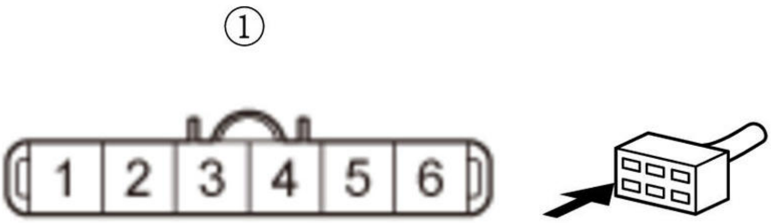

Is there continuity?

YES

The SG5 wire is OK. Check for any authorized service information related to the DTCs or symptoms you are troubleshooting, or substitute a known-good PCM .

NO

Repair an open in the SG3 wire between the PCM (B49) and the throttle body.

DTC P0222 (1.5 L ENGINE)

DTC P0222 : TP Sensor B Circuit Low Voltage

NOTE: Before you troubleshoot, review the general troubleshooting information .

DTC Description	Confirmed DTC	Pending DTC
P0222 TP Sensor B Circuit Low Voltage	B	B

DTC (PGM-FI)

1. Problem verification

-1. Turn the vehicle to the ON mode.

-2. Clear the DTC with the HDS.

-3. Turn the vehicle to the OFF (LOCK) mode.

-4. Turn the vehicle to the ON mode.

-5. Check the parameter (s) below with the HDS.

Signal	Threshold		Current conditions	
	Values	**Unit**	**Values**	**Unit**
TP SENSOR B	Less than 0.3	V	B	B

Do the current condition (s) match the threshold?

YES

Go to step 2.

NO

Intermittent failure, the system is OK at this time. Check for poor connections or loose terminals at the throttle body and the PCM. **If the on-board snapshot of this DTC is recorded, try to reproduce the failure under the same conditions with the on-board snapshot** .

2. Determine possible failure area (THL2 line, others)

-1. Check for Pending or Confirmed DTCs with the HDS.

DTC Description	Confirmed DTC	Pending DTC
P0122 TP Sensor A Circuit Low Voltage	B	B
P0222 TP Sensor B Circuit Low Voltage	B	B

Are DTC P0122 and P0222 indicated at the same time?

YES

Go to step 4.

NO

Go to step 3.

3. Shorted wire check (THL2 line)

-1. Turn the vehicle to the OFF (LOCK) mode.

-2. Jump the SCS line with the HDS, and wait more than 1 minute.

-3. Disconnect the following connectors.

PCM connector E (80P)
Throttle body 6P connector

-4. Check for continuity between test points 1 and 2.

Test condition	Vehicle OFF (LOCK) mode
B	PCM connector E (80P): disconnected
B	Throttle body 6P connector: disconnected
Test point 1	Throttle body 6P connector (female terminals) No. 4: ①
Test point 2	Body ground

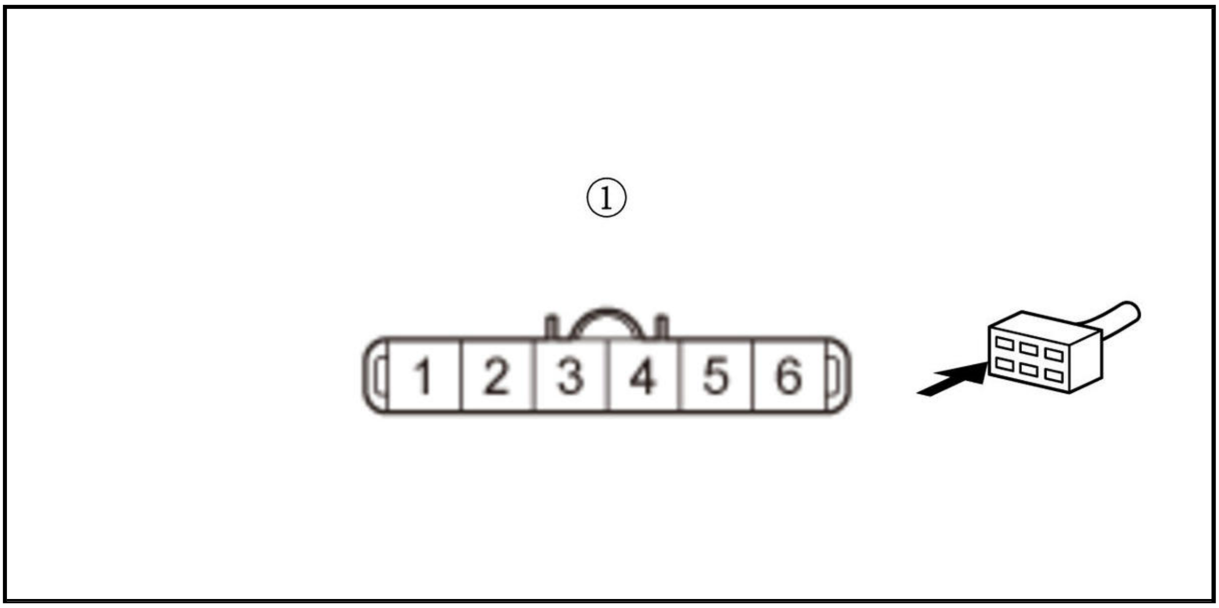

Is there continuity?

YES

Repair a short in the THL2 wire between the PCM (E51) and the throttle body.

NO

The THL2 wire is OK. Check for any authorized service information related to the DTCs or symptoms you are troubleshooting, or **substitute a known-good PCM** .

4. Determine possible failure area (VCC3 line, throttle body)

-1. Turn the vehicle to the OFF (LOCK) mode.

-2. Disconnect the following connector.

Throttle body 6P connector

-3. Turn the vehicle to the ON mode.

-4. Measure the voltage between test points 1 and 2.

Test condition	Vehicle ON mode
B	Throttle body 6P connector: disconnected
Test point 1	Throttle body 6P connector (female terminals) No. 5: ①
Test point 2	Body ground

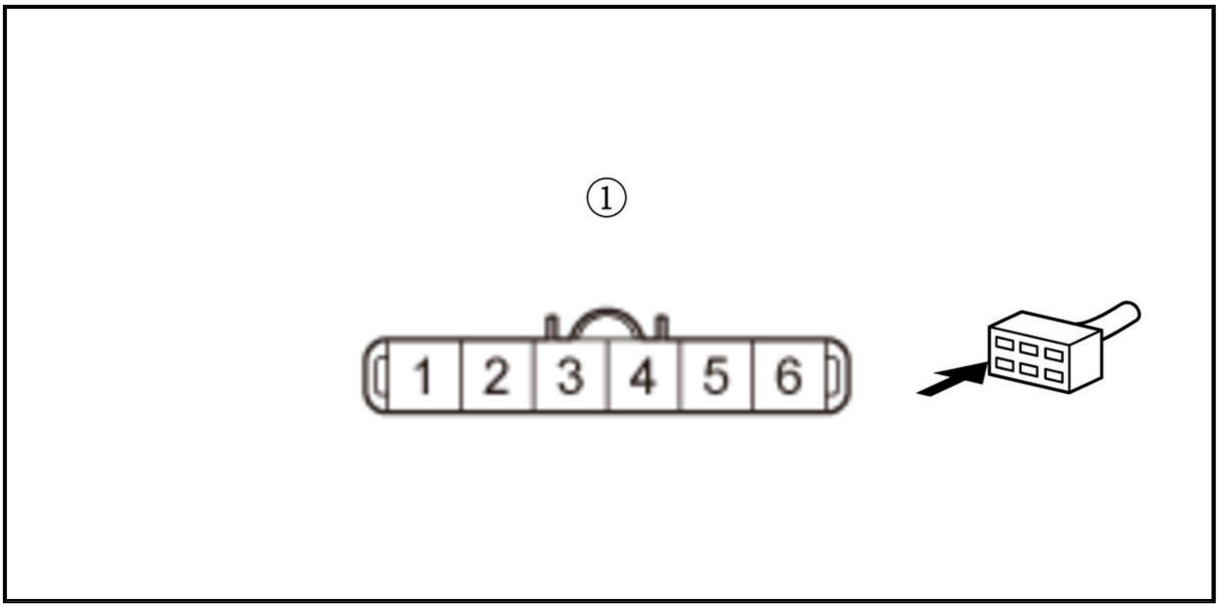

Is there about 5.0 V?

YES

Replace the throttle body .

NO

Go to step 5.

5. Open wire check (VCC3 line)

-1. Turn the vehicle to the OFF (LOCK) mode.

-2. Jump the SCS line with the HDS, and wait more than 1 minute.

-3. Disconnect the following connector.

PCM connector E (80P)

-4. Check for continuity between test points 1 and 2.

Test condition	Vehicle OFF (LOCK) mode
B	Throttle body 6P connector: disconnected
B	PCM connector E (80P): disconnected
Test point 1	Throttle body 6P connector (female terminals) No. 5: ①
Test point 2	**PCM connector E (80P) No. 75**

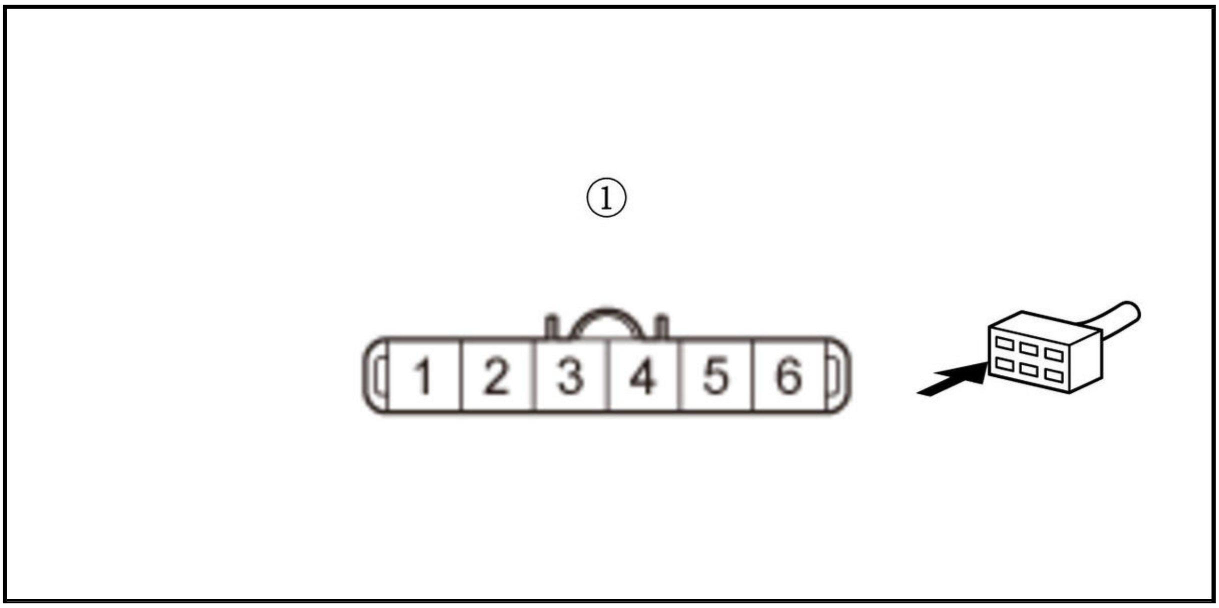

Is there continuity?

YES

The VCC3 wire is OK. Check for any authorized service information related to the DTCs or symptoms you are troubleshooting, or **substitute a known-good PCM** .

NO

Repair an open in the VCC3 wire between the PCM (E75) and the throttle body.

DTC P0222 (2.4 L ENGINE) (2017 2018 2019)

DTC P0222 : TP Sensor B Circuit Low Voltage

NOTE: Before you troubleshoot, **review the general troubleshooting information** .

DTC Description	Confirmed DTC	Pending DTC
P0222 TP Sensor B Circuit Low Voltage	B	B

DTC (PGM-FI)

1. Problem verification

-1. Turn the vehicle to the ON mode.

-2. Clear the DTC with the HDS.

-3. Check the parameter (s) below with the HDS.

Signal	Threshold		Current conditions	
	Values	Unit	Values	Unit
TP SENSOR B	Less than 0.3	V	B	B

Do the current condition (s) match the threshold?

YES

The failure is duplicated. Go to step 2.

NO

Intermittent failure, the system is OK at this time. Check for poor connections or loose terminals at the throttle body and the PCM. **If the on-board snapshot of this DTC is recorded, try to reproduce the failure under the same conditions with the on-board snapshot** .

2. Determine possible failure area (THL2 line, others)

-1. Check for Pending or Confirmed DTCs with the HDS.

DTC Description	Confirmed DTC	Pending DTC
P0122 TP Sensor A Circuit Low Voltage	B	B
P0222 TP Sensor B Circuit Low Voltage	B	B

Are DTC P0122 and P0222 indicated at the same time?

YES

Go to step 4.

NO

Go to step 3.

3. Shorted wire check (THL2 line)

-1. Turn the vehicle to the OFF (LOCK) mode.

-2. Jump the SCS line with the HDS, and wait more than 1 minute.

-3. Disconnect the following connectors.

PCM connector B (51P)
Throttle body 6P connector

-4. Check for continuity between test points 1 and 2.

Test condition	Vehicle OFF (LOCK) mode
B	PCM connector B (51P): disconnected
B	Throttle body 6P connector: disconnected
Test point 1	Throttle body 6P connector (female terminals) No. 4: ①
Test point 2	Body ground

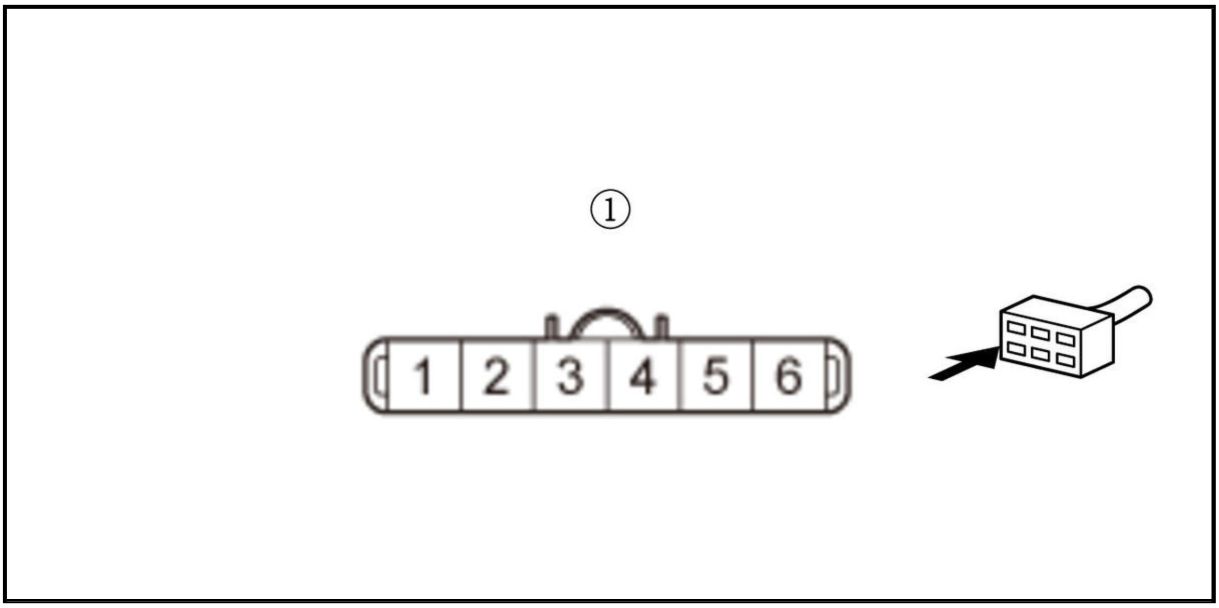

Is there continuity?

YES

Repair a short in the THL2 wire between the PCM (B47) and the throttle body.

NO

The THL2 wire is OK. Check for any authorized service information related to the DTCs or symptoms you are troubleshooting or **substitute a known-good PCM** .

4. Determine possible failure area (VCC3 line, throttle body)

-1. Turn the vehicle to the OFF (LOCK) mode.

-2. Disconnect the following connector.

Throttle body 6P connector

-3. Turn the vehicle to the ON mode.

-4. Measure the voltage between test points 1 and 2.

Test condition	Vehicle ON mode
B	Throttle body 6P connector: disconnected
Test point 1	Throttle body 6P connector (female terminals) No. 5: ①
Test point 2	Body ground

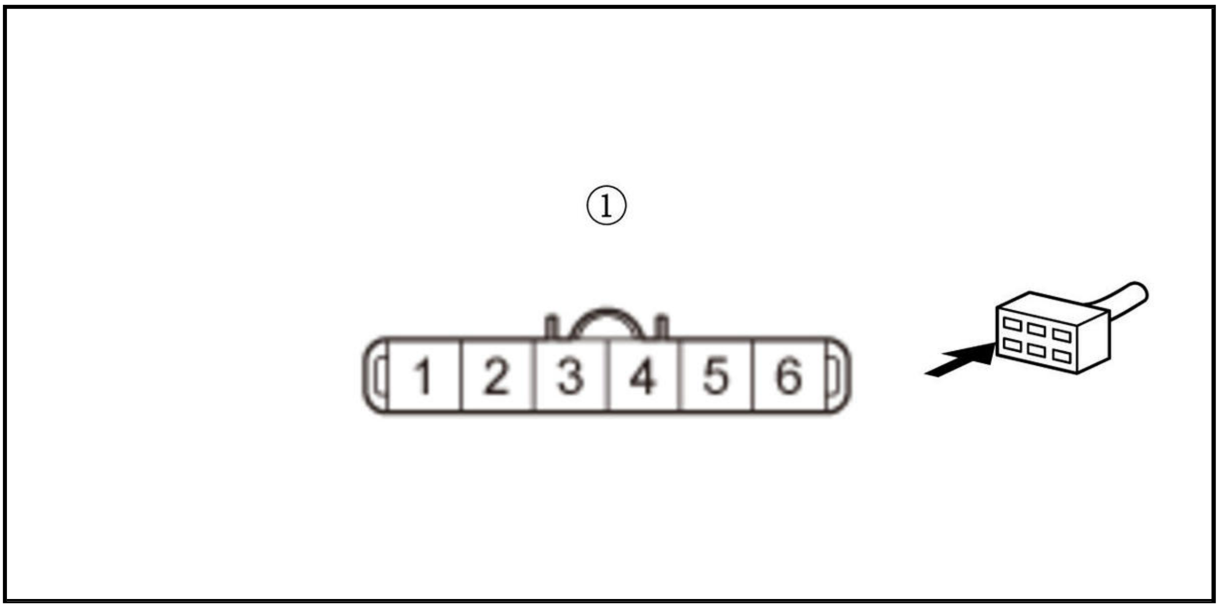

Is there about 5.0 V?

YES

Replace the throttle body .

NO

Go to step 5.

5. Open wire check (VCC3 line)

-1. Turn the vehicle to the OFF (LOCK) mode.

-2. Jump the SCS line with the HDS, and wait more than 1 minute.

-3. Disconnect the following connector.

PCM connector B (51P)

-4. Check for continuity between test points 1 and 2.

Test condition	Vehicle OFF (LOCK) mode
B	Throttle body 6P connector: disconnected
B	PCM connector B (51P): disconnected
Test point 1	Throttle body 6P connector (female terminals) No. 5: ①
Test point 2	PCM connector B (51P) No. 48

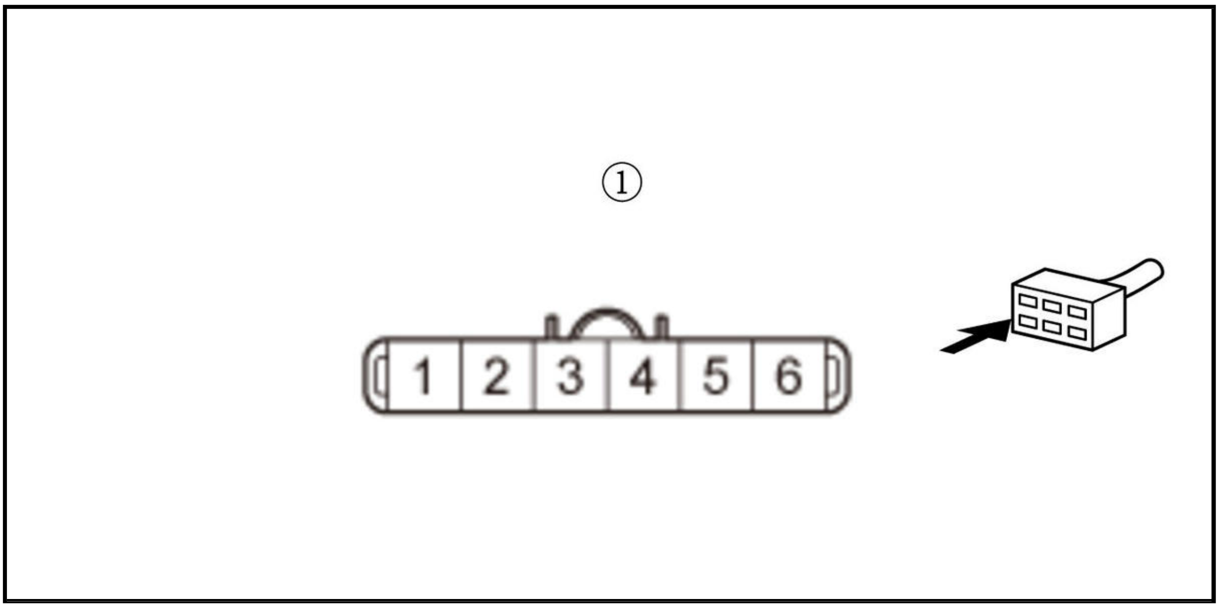

Is there continuity?

YES

The VCC3 wire is OK. Check for any authorized service information related to the DTCs or symptoms you are troubleshooting or **substitute a known-good PCM** .

NO

Repair an open in the VCC3 wire between the PCM (B48) and the throttle body.

DTC P0223 (1.5 L ENGINE)

DTC P0223 : TP Sensor B Circuit High Voltage

NOTE: Before you troubleshoot, **review the general troubleshooting information** .

DTC Description	Confirmed DTC	Pending DTC
P0223 TP Sensor B Circuit High Voltage	B	B

DTC (PGM-FI)

1. Problem verification

-1. Turn the vehicle to the ON mode.

-2. Clear the DTC with the HDS.

-3. Turn the vehicle to the OFF (LOCK) mode.

-4. Turn the vehicle to the ON mode.

-5. Check the parameter (s) below with the HDS.

Signal	Threshold		Current conditions	
	Values	Unit	Values	Unit
TP SENSOR B	More than 4.8	V	B	B

Do the current condition (s) match the threshold?

YES

Go to step 2.

NO

Intermittent failure, the system is OK at this time. Check for poor connections or loose terminals at the throttle body and the PCM. **If the on-board snapshot of this DTC is recorded, try to reproduce the failure under the same conditions with the on-board snapshot** .

2. Determine possible failure area (SG3 line, others)

-1. Check for Pending or Confirmed DTCs with the HDS.

DTC Description	Confirmed DTC	Pending DTC
P0123 TP Sensor A Circuit High Voltage	B	B
P0223 TP Sensor B Circuit High Voltage	B	B

Are DTC P0123 and P0223 indicated at the same time?

YES

Go to step 5.

NO

Go to step 3.

3. Determine possible failure area (THL2 line, throttle body)

-1. Turn the vehicle to the OFF (LOCK) mode.

-2. Disconnect the following connector.

Throttle body 6P connector

-3. Turn the vehicle to the ON mode.

-4. Measure the voltage between test points 1 and 2.

Test condition	Vehicle ON mode
B	Throttle body 6P connector: disconnected
Test point 1	Throttle body 6P connector (female terminals) No. 4: ①
Test point 2	Body ground

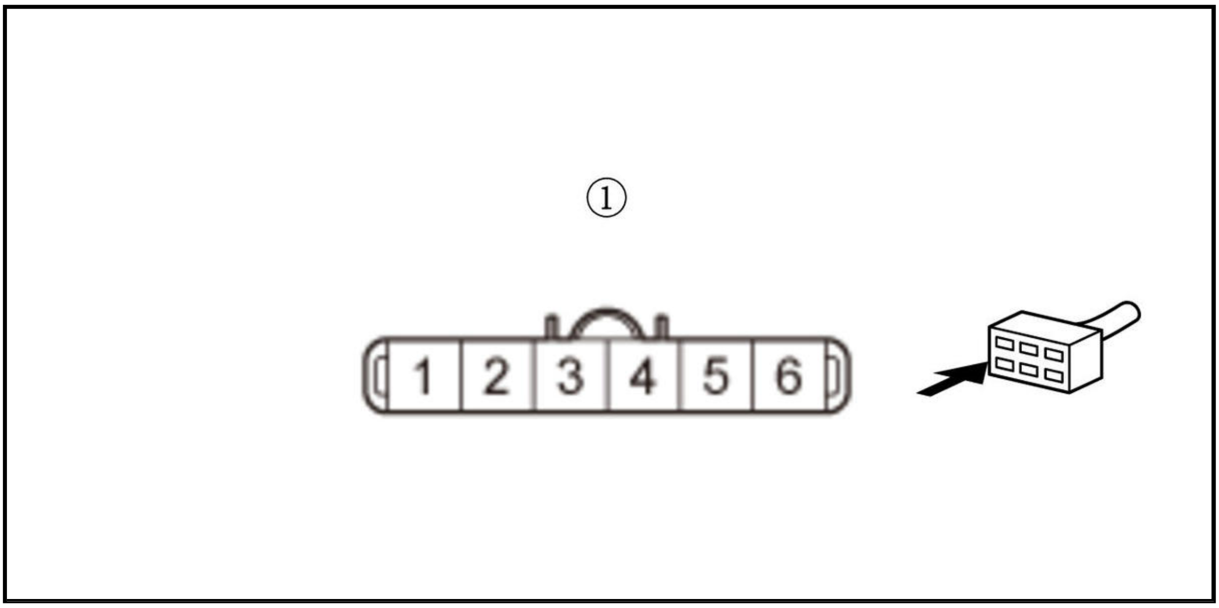

Is there about 5.0 V?

YES

Replace the throttle body .

NO

Go to step 4.

4. Open wire check (THL2 line)

   -1. Turn the vehicle to the OFF (LOCK) mode.

   -2. Jump the SCS line with the HDS, and wait more than 1 minute.

   -3. Disconnect the following connector.

PCM connector E (80P)

   -4. Check for continuity between test points 1 and 2.

Test condition	Vehicle OFF (LOCK) mode
B	Throttle body 6P connector: disconnected
B	PCM connector E (80P): disconnected
Test point 1	Throttle body 6P connector (female terminals) No. 4: ①
Test point 2	**PCM connector E (80P) No. 51**

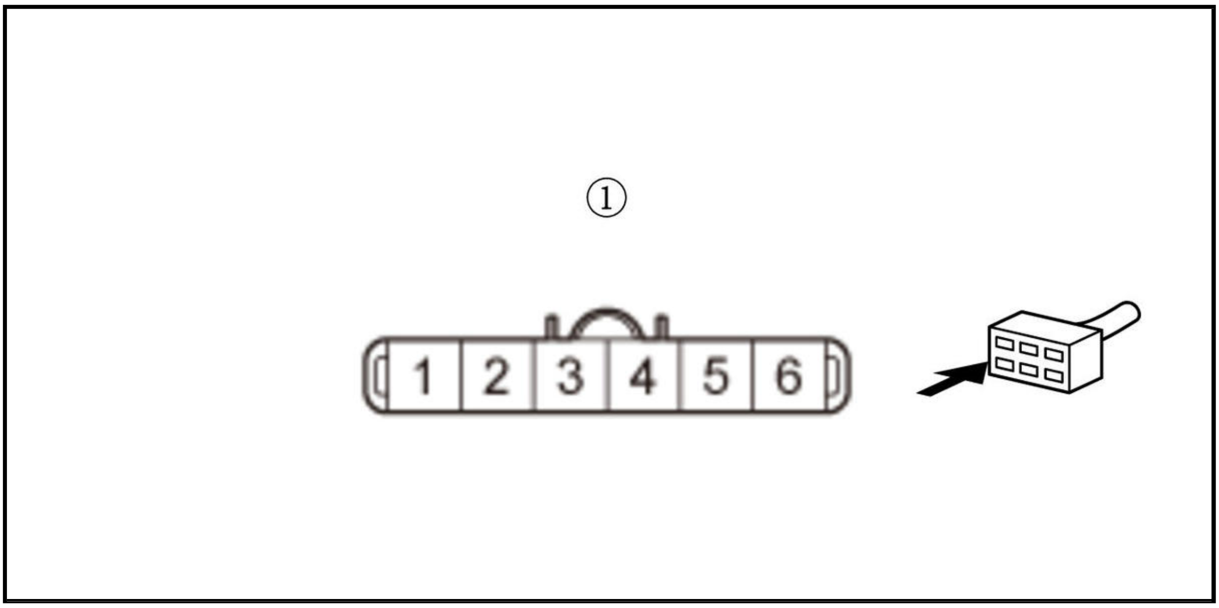

Is there continuity?

YES

The THL2 wire is OK. Check for any authorized service information related to the DTCs or symptoms you are troubleshooting, or **substitute a known-good PCM** .

NO

Repair an open in the THL2 wire between the PCM (E51) and the throttle body.

5. Open wire check (SG3 line)

-1. Turn the vehicle to the OFF (LOCK) mode.

-2. Jump the SCS line with the HDS, and wait more than 1 minute.

-3. Disconnect the following connectors.

PCM connector E (80P)
Throttle body 6P connector

-4. Check for continuity between test points 1 and 2.

Test condition	Vehicle OFF (LOCK) mode
B	PCM connector E (80P): disconnected
B	Throttle body 6P connector: disconnected
Test point 1	Throttle body 6P connector (female terminals) No. 3: ①
Test point 2	**PCM connector E (80P) No. 76**

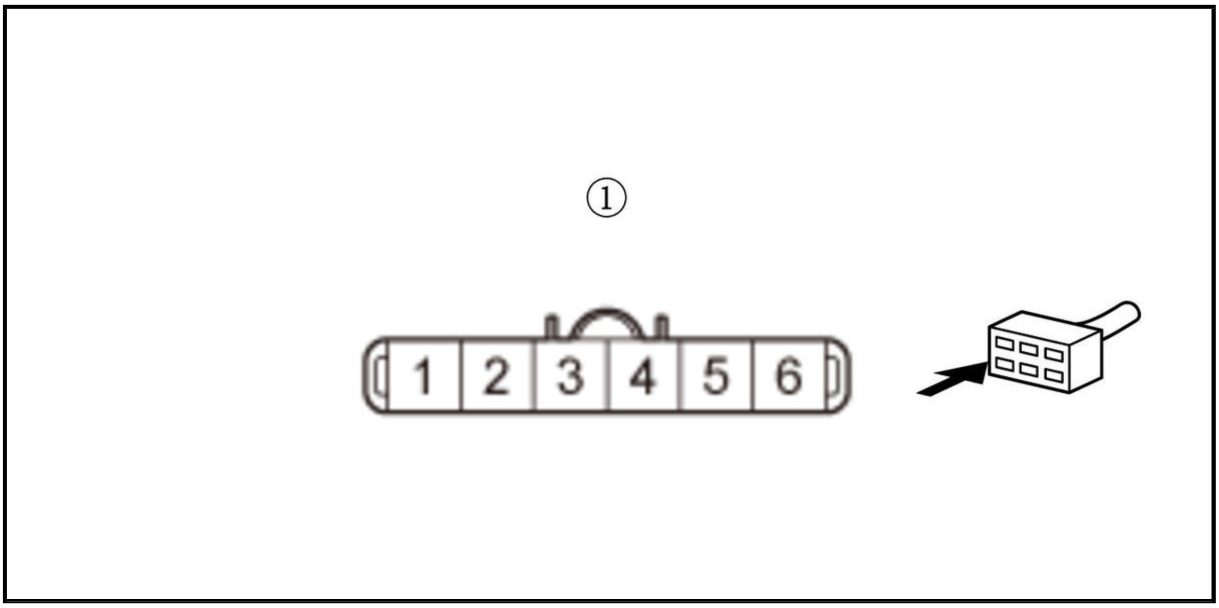

Is there continuity?

YES

The SG3 wire is OK. Check for any authorized service information related to the DTCs or symptoms you are troubleshooting, or **substitute a known-good PCM** .

NO

Repair an open in the SG3 wire between the PCM (E76) and the throttle body.

DTC P0223 (2.4 L ENGINE) (2017 2018 2019)

DTC P0223 : TP Sensor B Circuit High Voltage

NOTE: Before you troubleshoot, **review the general troubleshooting information** .

DTC Description	Confirmed DTC	Pending DTC
P0223 TP Sensor B Circuit High Voltage	B	B

DTC (PGM-FI)

1. Problem verification

-1. Turn the vehicle to the ON mode.

-2. Clear the DTC with the HDS.

-3. Check the parameter (s) below with the HDS.

Signal	Threshold		Current conditions	
	Values	Unit	Values	Unit
TP SENSOR B	More than 4.8	V	B	B

Do the current condition (s) match the threshold?

YES

The failure is duplicated. Go to step 2.

NO

Intermittent failure, the system is OK at this time. Check for poor connections or loose terminals at the throttle body and the PCM. **If the on-board snapshot of this DTC is recorded, try to reproduce the failure under the same conditions with the on-board snapshot** .

2. Determine possible failure area (SG3 line, others)

-1. Check for Pending or Confirmed DTCs with the HDS.

Signal	**Threshold**		**Current conditions**	
	Values	**Unit**	**Values**	**Unit**
TP SENSOR B	More than 4.8	V	B	B

Are DTC P0123 and P0223 indicated at the same time?

YES

Go to step 5.

NO

Go to step 3.

3. Determine possible failure area (THL2 line, throttle body)

-1. Turn the vehicle to the OFF (LOCK) mode.

-2. Disconnect the following connector.

Throttle body 6P connector

-3. Turn the vehicle to the ON mode.

-4. Measure the voltage between test points 1 and 2.

Test condition	Vehicle ON mode
B	Throttle body 6P connector: disconnected
Test point 1	Throttle body 6P connector (female terminals) No. 4: ①
Test point 2	Body ground

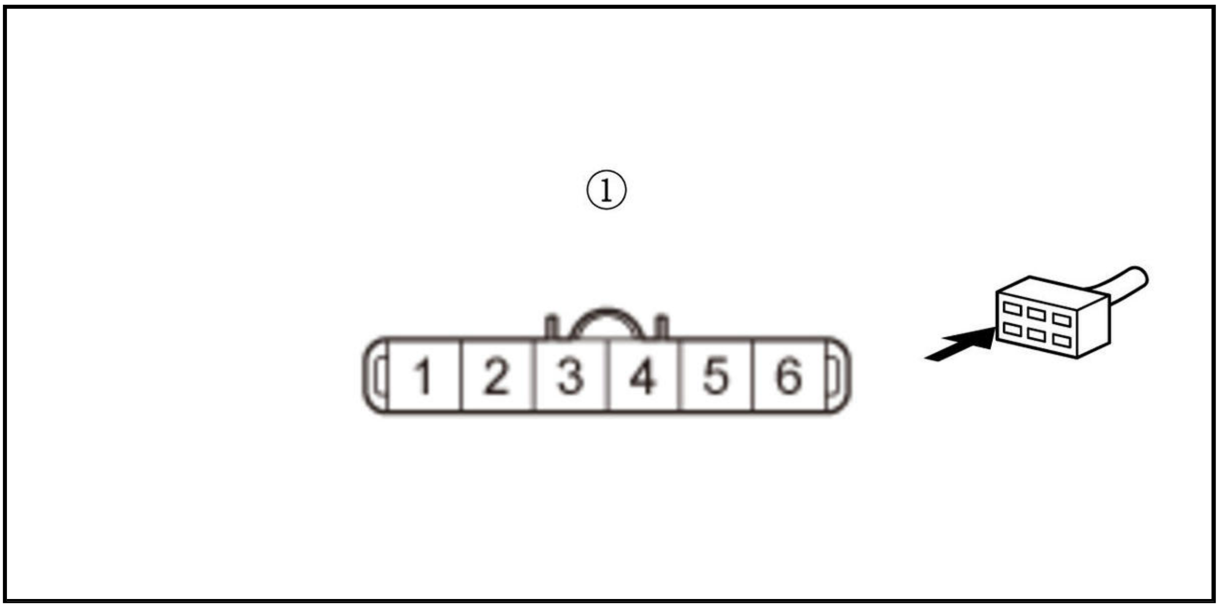

Is there about 5.0 V?

YES

Replace the throttle body .

NO

Go to step 4.

4. Open wire check (THL2 line)

-1. Turn the vehicle to the OFF (LOCK) mode.

-2. Jump the SCS line with the HDS, and wait more than 1 minute.

-3. Disconnect the following connector.

PCM connector B (51P)

-4. Check for continuity between test points 1 and 2.

Test condition	Vehicle OFF (LOCK) mode
B	Throttle body 6P connector: disconnected
B	PCM connector B (51P): disconnected
Test point 1	Throttle body 6P connector (female terminals) No. 4: ①
Test point 2	PCM connector B (51P) No. 47

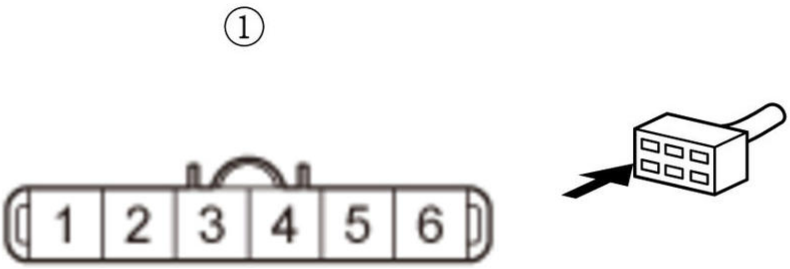

Is there continuity?

YES

The THL2 wire is OK. Check for any authorized service information related to the DTCs or symptoms you are troubleshooting or substitute a known-good PCM .

NO

Repair an open in the THL2 wire between the PCM (B47) and the throttle body.

5. Open wire check (SG3 line)

-1. Turn the vehicle to the OFF (LOCK) mode.

-2. Jump the SCS line with the HDS, and wait more than 1 minute.

-3. Disconnect the following connectors.

PCM connector B (51P)
Throttle body 6P connector

-4. Check for continuity between test points 1 and 2.

Test condition	Vehicle OFF (LOCK) mode
B	PCM connector B (51P): disconnected
B	Throttle body 6P connector: disconnected
Test point 1	Throttle body 6P connector (female terminals) No. 3: ①
Test point 2	**PCM connector B (51P) No. 49**

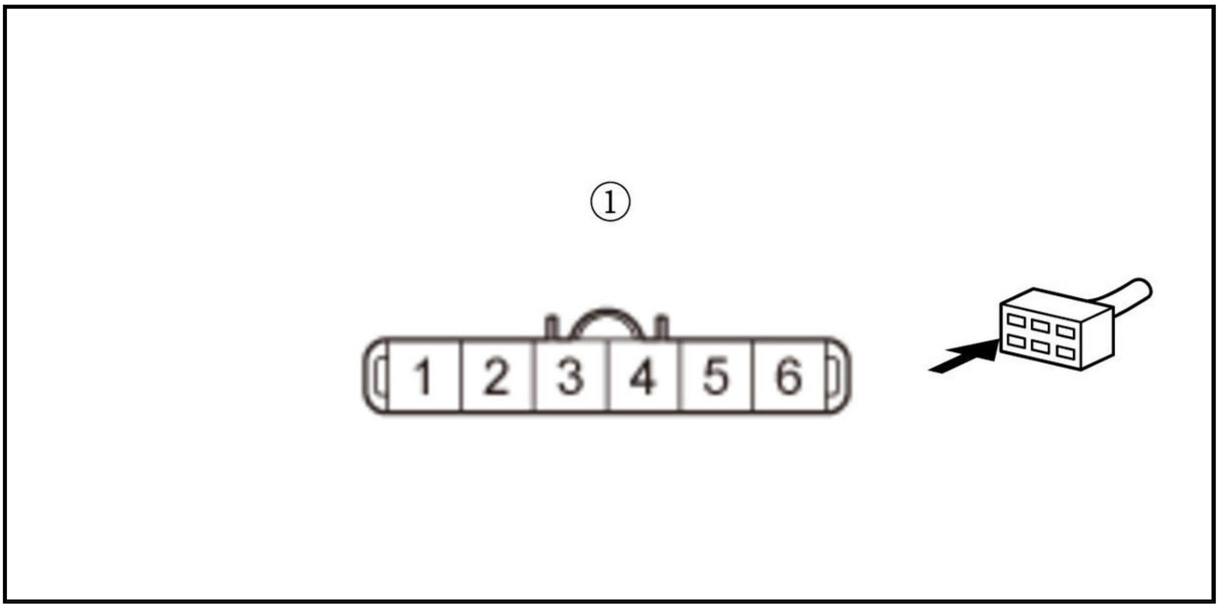

Is there continuity?

YES

The SG3 wire is OK. Check for any authorized service information related to the DTCs or symptoms you are troubleshooting or **substitute a known-good PCM** .

NO

Repair an open in the SG3 wire between the PCM (B49) and the throttle body.

DTC P0234 (1.5 L ENGINE)

DTC P0234 : Turbocharger Overboost Problem

NOTE:

- Before you troubleshoot, **review the general troubleshooting information** .
- If any of the DTCs listed below are stored at the same time as DTC P0234, troubleshoot those DTCs first, then recheck for P0234.

  P0107, P0108: MAP sensor

  P0237, P0238: Turbocharger boost sensor

DTC Description	Confirmed DTC	Pending DTC
P0234 Turbocharger Overboost Problem	B	B

DTC (PGM-FI)

1. Problem verification

   -1. Turn the vehicle to the ON mode.

   -2. Clear the DTC with the HDS.

   -3. Turn the vehicle to the OFF (LOCK) mode.

   -4. Start the engine.

   -5. Hold the engine speed at 3, 000 rpm without load (in P or N) until the radiator fan comes on.

   -6. Test-drive the vehicle under the same conditions with the on-board snapshot of this DTC is recorded.

Signal	Current conditions	
	Values	Unit
VEHICLE SPEED	B	B
ECT SENSOR 1	B	B
MAP SENSOR (HI RES)	B	B
TC BOOST PRESSURE	B	B
ENGINE SPEED	B	B

   -7. Check for Pending or Confirmed DTCs with the HDS.

DTC Description	Confirmed DTC	Pending DTC
P0234 Turbocharger Overboost Problem	B	B

   Is DTC P0234 indicated?

   YES

   Go to step 2.

   NO

   Intermittent failure, the system is OK at this time. Check for poor connections or loose terminals at the turbocharger and the PCM. **If the on-board snapshot of this DTC is recorded, try to reproduce the failure under the same conditions with the on-board snapshot** .

2. Turbocharger wastegate control actuator check

   -1. Select the Electric Waste Gate in the INSPECTION MENU with the HDS.

   ELECTRIC WASTE GATE

   Visually inspect the operation of the turbocharger wastegate control actuator.

   Does the turbocharger wastegate control actuator operate?

   YES

   Check for any authorized service information related to the DTCs or symptoms you are troubleshooting, or **substitute a known-good PCM** .

NO

Replace the turbocharger .

DTC P0235 (1.5 L ENGINE) (2018 2019 2020 2021)

DTC P0235 : Turbocharger Boost Sensor Out of Range

NOTE: Before you troubleshoot, review the general troubleshooting information .

DTC Description	Confirmed DTC	Pending DTC
P0235 Turbocharger Boost Sensor Out of Range	B	B

DTC (PGM-FI)

1. Problem verification

   -1. Turn the vehicle to the ON mode.

   -2. Check the parameter (s) below with the HDS.

Signal	Threshold		Current conditions	
	Values	Unit	Values	Unit
TC BOOST PRESSURE SENSOR	Less than 0.37	V	B	B

   Do the current condition (s) match the threshold?

   YES

   Go to step 2.

   NO

   Intermittent failure, the system is OK at this time. Check for poor connections or loose terminals at the turbocharger boost sensor and the PCM. If the on-board snapshot of this DTC is recorded, try to reproduce the failure under the same conditions with the on-board snapshot .

2. Determine possible failure area (P3 line, others)

   -1. Turn the vehicle to the OFF (LOCK) mode.

   -2. Disconnect the following connector.

Turbocharger boost sensor 3P connector

   -3. Turn the vehicle to the ON mode.

   -4. Check the parameter (s) below with the HDS.

Signal	Threshold		Current conditions	
	Values	Unit	Values	Unit
TC BOOST PRESSURE SENSOR	Less than 0.37	V	B	B

   Do the current condition (s) match the threshold?

   YES

   Go to step 5.

NO

Go to step 3.

3. Determine possible failure area (turbocharger boost sensor, others)

-1. Measure the voltage between test points 1 and 2.

Test condition	Vehicle ON mode
B	Turbocharger boost sensor 3P connector: disconnected
Test point 1	Turbocharger boost sensor 3P connector (female terminals) No. 1: ①
Test point 2	Turbocharger boost sensor 3P connector (female terminals) No. 3: ①

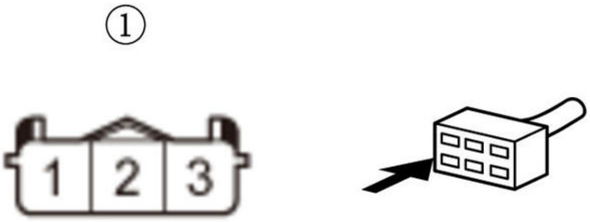

Is there about 5.0 V?

YES

Replace the turbocharger boost sensor .

NO

Go to step 4.

4. Open wire check (VCC2 line)

-1. Turn the vehicle to the OFF (LOCK) mode.

-2. Jump the SCS line with the HDS, and wait more than 1 minute.

-3. Disconnect the following connector.

PCM connector E (80P)

-4. Check for continuity between test points 1 and 2.

Test condition	Vehicle OFF (LOCK) mode
B	Turbocharger boost sensor 3P connector: disconnected
B	PCM connector E (80P): disconnected

Test point 1	Turbocharger boost sensor 3P connector (female terminals) No. 3: ①
Test point 2	**PCM connector E (80P) No. 77**

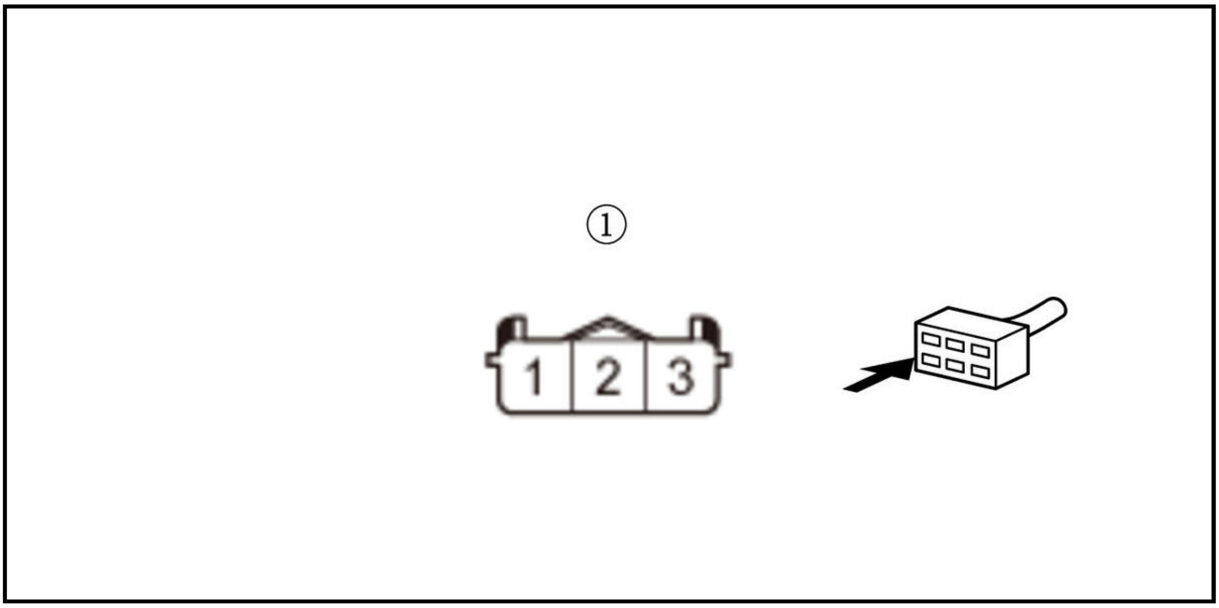

Is there continuity?

YES

The VCC2 wire is OK. Check for any authorized service information related to the DTCs or symptoms you are troubleshooting, or **substitute a known-good PCM** .

NO

Repair an open in the VCC2 wire between the PCM (E77) and the turbocharger boost sensor.

5. Shorted wire check (P3 line)

-1. Turn the vehicle to the OFF (LOCK) mode.

-2. Jump the SCS line with the HDS, and wait more than 1 minute.

-3. Disconnect the following connector.

PCM connector E (80P)

-4. Check for continuity between test points 1 and 2.

Test condition	Vehicle OFF (LOCK) mode
B	Turbocharger boost sensor 3P connector: disconnected
B	PCM connector E (80P): disconnected
Test point 1	Turbocharger boost sensor 3P connector (female terminals) No. 2: ①
Test point 2	Body ground

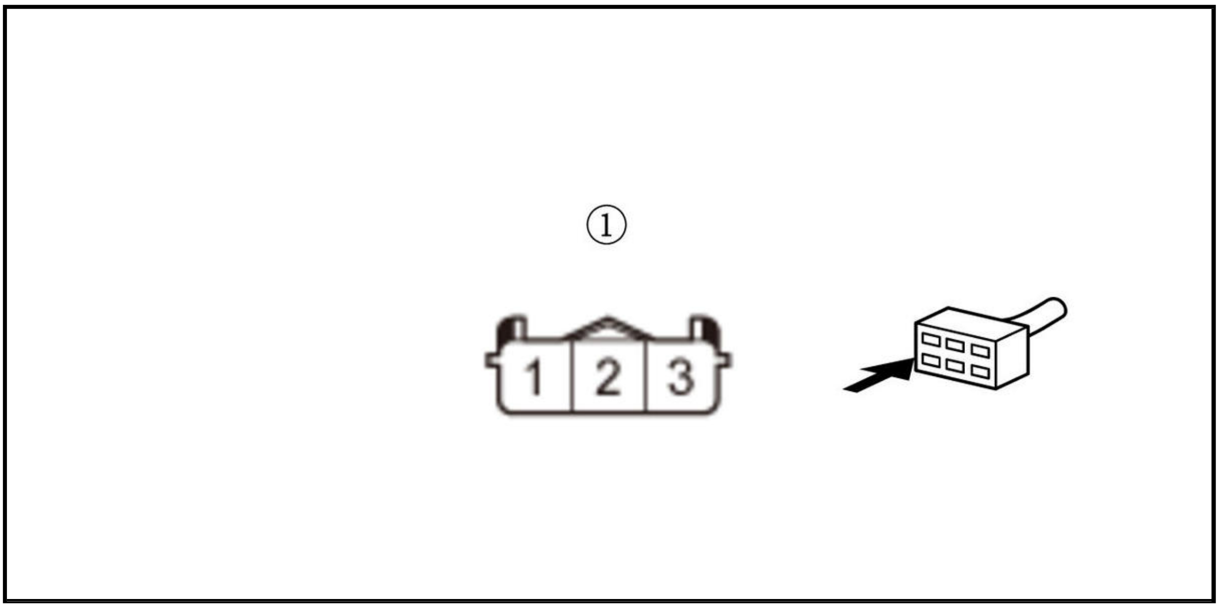

Is there continuity?

YES

Repair a short in the P3 wire between the PCM (E57) and the turbocharger boost sensor.

NO

The P3 wire is OK. Check for any authorized service information related to the DTCs or symptoms you are troubleshooting, or **substitute a known-good PCM** .

DTC P0236 (1.5 L ENGINE)

DTC P0236 : Turbocharger Boost Sensor Circuit Range/Performance Problem

NOTE: Before you troubleshoot, **review the general troubleshooting information** .

DTC Description	Confirmed DTC	Pending DTC
P0236 Turbocharger Boost Sensor Circuit Range/Performance Problem	B	B

DTC (PGM-FI)

1. Problem verification

-1. Turn the vehicle to the ON mode.

-2. Clear the DTC with the HDS.

-3. Start the engine.

-4. Hold the engine speed at 3, 000 rpm without load (in P or N) until the radiator fan comes on, then let it idle at least 6 seconds.

-5. Check for Pending or Confirmed DTCs with the HDS.

DTC Description	Confirmed DTC	Pending DTC
P0236 Turbocharger Boost Sensor Circuit Range/Performance Problem	B	B

Is DTC P0236 indicated?

YES

The failure is duplicated. Go to step 2.

NO

Intermittent failure, the system is OK at this time. Check for poor connections or loose terminals at turbocharger boost sensor and the PCM. **If the on-board snapshot of this DTC is recorded, try to reproduce the failure under the same conditions with the on-board snapshot** .

2. Turbocharger boost sensor check 1

   -1. Check the parameters below with the HDS.

Signal	Current conditions	
	Values	Unit
TC BOOST PRESSURE	B	B
BARO SENSOR	B	B

   -2. Compare the value of TC BOOST PRESSURE to the BARO SENSOR.

   Is the difference in value between the sensors 26.7 kPa (7.9 inHg, 200 mmHg) or more?

   YES

   Replace the turbocharger boost sensor .

   NO

   Go to step 3.

3. Turbocharger boost sensor check 2

   -1. Note the value of TC BOOST PRESSURE in the DATA LIST with the HDS.

   -2. Start the engine.

   -3. Hold the engine speed at 3, 000 rpm without load (in P or N) until the radiator fan comes on, then let it idle.

   -4. Hold the engine speed at 4, 500 rpm without load.

   -5. Check the parameter below with the HDS.

Signal	Current conditions	
	Values	Unit
TC BOOST PRESSURE	B	B

   Does the value change 0.67 kPa (0.2 inHg, 5 mmHg) or more?

   YES

   Go to step 4.

   NO

   Replace the turbocharger boost sensor .

4. Problem verification (test-drive):

Test-drive the vehicle for several minutes in the range of these recorded on-board snapshot parameters:

- ENGINE SPEED
- VEHICLE SPEED
- REL TP SENSOR
- CLV (calculated load value)
- APP SENSOR

On-board Snapshot

-2. Monitor the OBD STATUS for DTC P0236 in the DTCs MENU with the HDS.

DTC Description	OBD STATUS
P0236 Turbocharger Boost Sensor Circuit Range/Performance Problem	B

Does the HDS indicate FAILED?

YES

Replace the turbocharger boost sensor .

NO

If the HDS indicates PASSED, intermittent failure, the system is OK at this time. Check for poor connections or loose terminals at turbocharger boost sensor and the PCM. **If the on-board snapshot of this DTC is recorded, try to reproduce the failure under the same conditions with the on-board snapshot** . If the HDS indicates NOT COMPLETED, retest and check the OBD STATUS again.

DTC P0237 (1.5 L ENGINE)

DTC P0237 : Turbocharger Boost Sensor Circuit Low Voltage

NOTE: Before you troubleshoot, **review the general troubleshooting information** .

DTC Description	Confirmed DTC	Pending DTC
P0237 Turbocharger Boost Sensor Circuit Low Voltage	B	B

DTC (PGM-FI)

1. Problem verification

-1. Turn the vehicle to the ON mode.

-2. Check the parameter (s) below with the HDS.

Signal	Threshold		Current conditions	
	Values	Unit	Values	Unit
TC BOOST PRESSURE SENSOR	Less than 0.23	V	B	B

Do the current condition (s) match the threshold?

YES

Go to step 2.

NO

Intermittent failure, the system is OK at this time. Check for poor connections or loose terminals at the turbocharger boost sensor and the PCM. **If the on-board snapshot of this DTC is recorded, try to reproduce the failure under the same conditions with the on-board snapshot** .

2. Determine possible failure area (P3 line, others)

-1. Turn the vehicle to the OFF (LOCK) mode.

-2. Disconnect the following connector.

Turbocharger boost sensor 3P connector

-3. Turn the vehicle to the ON mode.

-4. Check the parameter (s) below with the HDS.

Signal	Threshold		Current conditions	
	Values	Unit	Values	Unit
TC BOOST PRESSURE SENSOR	Less than 0.23	V	B	B

Do the current condition (s) match the threshold?

YES

Go to step 5.

NO

Go to step 3.

3. Determine possible failure area (turbocharger boost sensor, others)

-1. Measure the voltage between test points 1 and 2.

Test condition	Vehicle ON mode
B	Turbocharger boost sensor 3P connector: disconnected
Test point 1	Turbocharger boost sensor 3P connector (female terminals) No. 1: ①
Test point 2	Turbocharger boost sensor 3P connector (female terminals) No. 3: ①

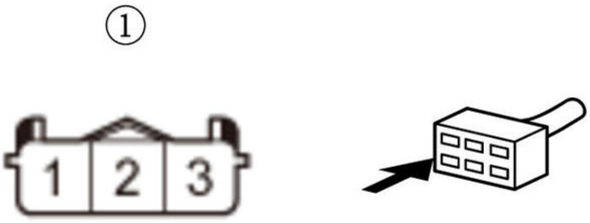

Is there about 5.0 V?

YES

Replace the turbocharger boost sensor .

NO

Go to step 4.

4. Open wire check (VCC2 line)

-1. Turn the vehicle to the OFF (LOCK) mode.

-2. Jump the SCS line with the HDS, and wait more than 1 minute.

-3. Disconnect the following connector.

PCM connector E (80P)

-4. Check for continuity between test points 1 and 2.

Test condition	Vehicle OFF (LOCK) mode
B	Turbocharger boost sensor 3P connector: disconnected
B	PCM connector E (80P): disconnected
Test point 1	Turbocharger boost sensor 3P connector (female terminals) No. 3: ①
Test point 2	PCM connector E (80P) No. 77

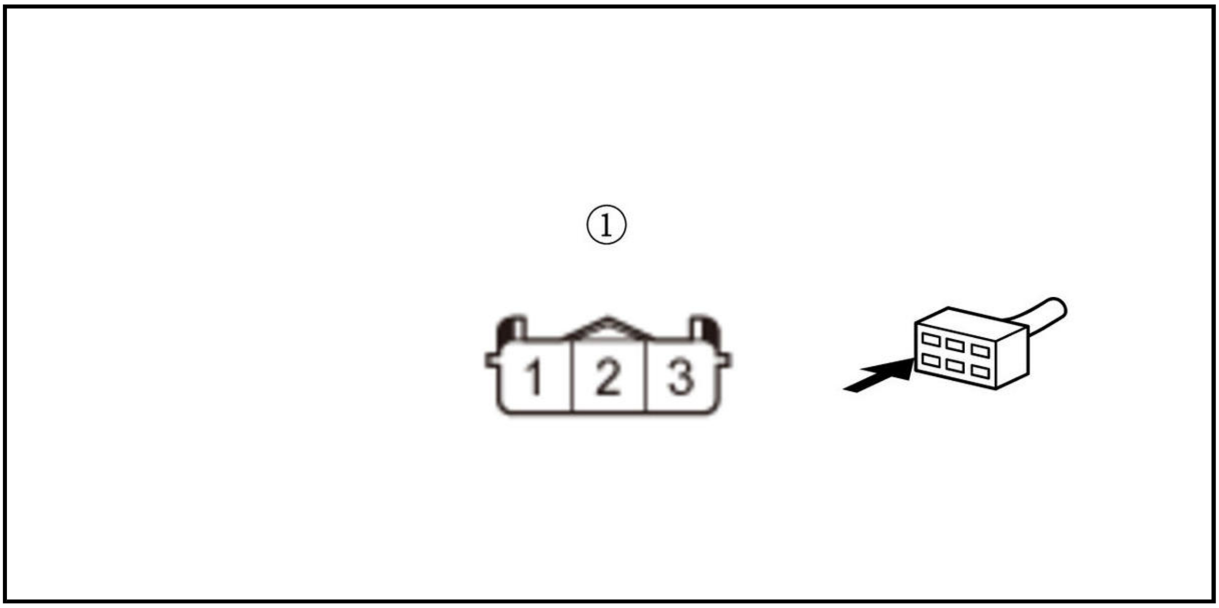

Is there continuity?

YES

The VCC2 wire is OK. Check for any authorized service information related to the DTCs or symptoms you are troubleshooting, or substitute a known-good PCM .

NO

Repair an open in the VCC2 wire between the PCM (E77) and the turbocharger boost sensor.

5. Shorted wire check (P3 line)

-1. Turn the vehicle to the OFF (LOCK) mode.

-2. Jump the SCS line with the HDS, and wait more than 1 minute.

-3. Disconnect the following connector.

PCM connector E (80P)

-4. Check for continuity between test points 1 and 2.

Test condition	Vehicle OFF (LOCK) mode
B	Turbocharger boost sensor 3P connector: disconnected
B	PCM connector E (80P): disconnected
Test point 1	Turbocharger boost sensor 3P connector (female terminals) No. 2: ①
Test point 2	Body ground

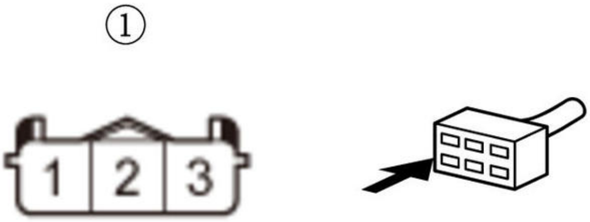

Is there continuity?

YES

Repair a short in the P3 wire between the PCM (E57) and the turbocharger boost sensor.

NO

The P3 wire is OK. Check for any authorized service information related to the DTCs or symptoms you are troubleshooting, or **substitute a known-good PCM** .

DTC P0238 (1.5 L ENGINE)

DTC P0238 : Turbocharger Boost Sensor Circuit High Voltage

NOTE: Before you troubleshoot, **review the general troubleshooting information** .

DTC Description	Confirmed DTC	Pending DTC
P0238 Turbocharger Boost Sensor Circuit High Voltage	B	B

DTC (PGM-FI)

1. Problem verification

-1. Turn the vehicle to the ON mode.

-2. Check the parameter (s) below with the HDS.

Signal	Threshold		Current conditions	
	Values	**Unit**	**Values**	**Unit**
TC BOOST PRESSURE SENSOR	More than 4.49	V	B	B

Do the current condition (s) match the threshold?

YES

Go to step 2.

NO

Intermittent failure, the system is OK at this time. Check for poor connections or loose terminals at the turbocharger boost sensor and the PCM. **If the on-board snapshot of this DTC is recorded, try to reproduce the failure under the same conditions with the on-board snapshot** .

2. Determine possible failure area (turbocharger boost sensor, others)

-1. Turn the vehicle to the OFF (LOCK) mode.

-2. Disconnect the following connector.

Turbocharger boost sensor 3P connector

-3. Connect terminals A and B with a jumper wire.

Terminal A	Turbocharger boost sensor 3P connector (female terminals) No. 1: ①
Terminal B	Turbocharger boost sensor 3P connector (female terminals) No. 2: ①

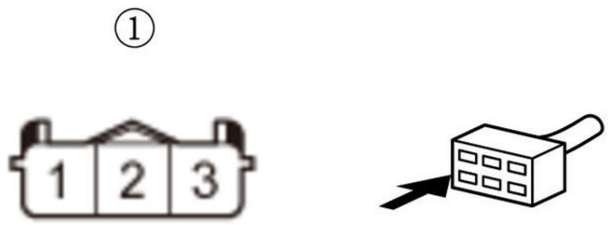

-4. Turn the vehicle to the ON mode.

-5. Check the parameter (s) below with the HDS.

Signal	Threshold		Current conditions	
	Values	Unit	Values	Unit
TC BOOST PRESSURE SENSOR	More than 4.49	V	B	B

Do the current condition (s) match the threshold?

YES

Go to step 3.

NO

Replace the turbocharger boost sensor .

3. Determine possible failure area (SG2 line, others)

-1. Turn the vehicle to the OFF (LOCK) mode.

-2. Remove the jumper wire from the turbocharger boost sensor 3P connector.

-3. Turn the vehicle to the ON mode.

-4. Measure the voltage between test points 1 and 2.

Test condition	Vehicle ON mode
B	Turbocharger boost sensor 3P connector: disconnected
Test point 1	Turbocharger boost sensor 3P connector (female terminals) No. 1: ①
Test point 2	Turbocharger boost sensor 3P connector (female terminals) No. 3: ①

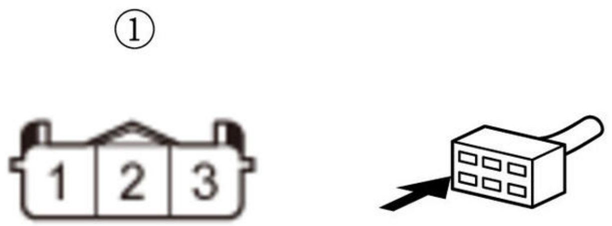

Is there about 5.0 V?

YES

Go to step 5.

NO

Go to step 4.

4. Open wire check (SG2 line)

-1. Turn the vehicle to the OFF (LOCK) mode.

-2. Jump the SCS line with the HDS, and wait more than 1 minute.

-3. Disconnect the following connector.

PCM connector E (80P)

-4. Check for continuity between test points 1 and 2.

Test condition	Vehicle OFF (LOCK) mode
B	Turbocharger boost sensor 3P connector: disconnected
B	PCM connector E (80P): disconnected
Test point 1	Turbocharger boost sensor 3P connector (female terminals) No. 1: ①
Test point 2	**PCM connector E (80P) No. 78**

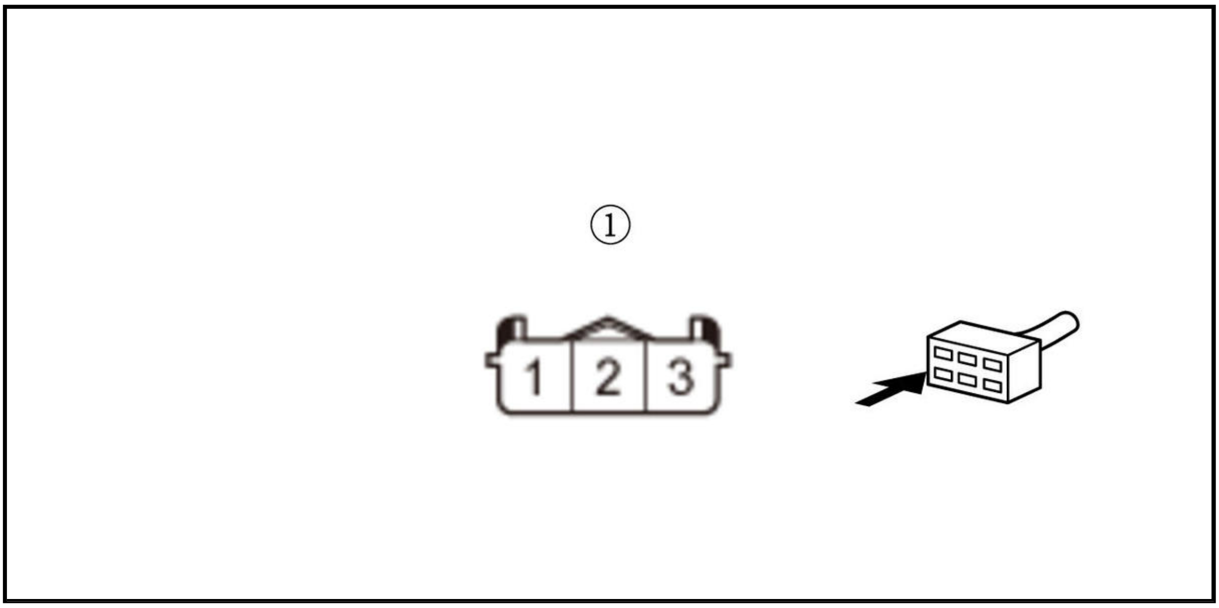

Is there continuity?

YES

The SG2 wire is OK. Check for any authorized service information related to the DTCs or symptoms you are troubleshooting, or **substitute a known-good PCM** .

NO

Repair an open in the SG2 wire between the PCM (E78) and the turbocharger boost sensor.

5. Open wire check (P3 line)

-1. Turn the vehicle to the OFF (LOCK) mode.

-2. Jump the SCS line with the HDS, and wait more than 1 minute.

-3. Disconnect the following connector.

PCM connector E (80P)

-4. Check for continuity between test points 1 and 2.

Test condition	Vehicle OFF (LOCK) mode
B	Turbocharger boost sensor 3P connector: disconnected
B	PCM connector E (80P): disconnected
Test point 1	Turbocharger boost sensor 3P connector (female terminals) No. 2: ①
Test point 2	**PCM connector E (80P) No. 57**

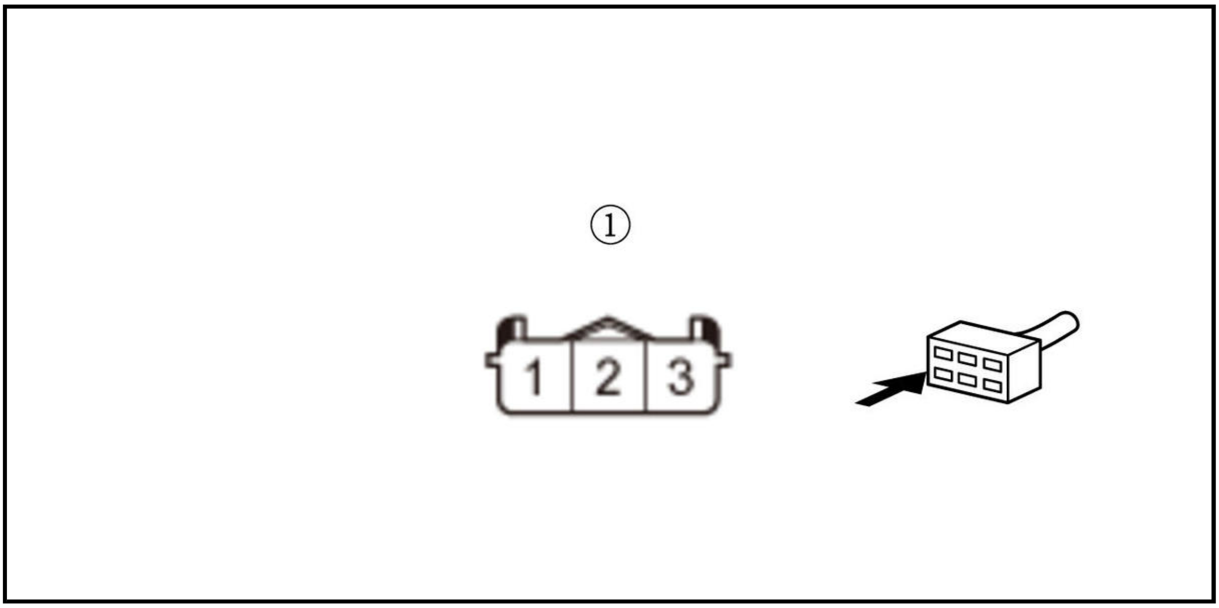

Is there continuity?

YES

The P3 wire is OK. Check for any authorized service information related to the DTCs or symptoms you are troubleshooting, or **substitute a known-good PCM** .

NO

Repair an open in the P3 wire between the PCM (E57) and the turbocharger boost sensor.

DTC P023D (1.5 L ENGINE)

DTC P023D : Turbocharger Boost Sensor/MAP Sensor Incorrect Correlation

NOTE:

- Before you troubleshoot, **review the general troubleshooting information** .
- If DTC P023D is indicated alone, do the troubleshooting for DTC P0236, P2073, and P2074 using the on-board snapshot for P023D.
- If any of the DTCs listed below are indicated at the same time as DTC P023D, troubleshoot those DTCs first, then recheck for P023D.

  P0236: Turbocharger boost sensor

  P2073, P2074: MAP sensor

DTC Description	Confirmed DTC	Pending DTC
P023D Turbocharger Boost Sensor/MAP Sensor Incorrect Correlation	B	B

DTC (PGM-FI)

1. DTC check

   -1. Turn the vehicle to the ON mode.

   -2. Check for Pending or Confirmed DTCs with the HDS.

DTC Description	Confirmed DTC	Pending DTC
P0236 Turbocharger Boost Sensor Circuit Range/Performance Problem	B	B
P2073 MAP Sensor Signal Higher Than Expected	B	B
P2074 MAP Sensor Signal Lower Than Expected	B	B
P023D Turbocharger Boost Sensor/MAP Sensor Incorrect Correlation	B	B

Are DTC P0236, P2073, or P2074 and P023D indicated at the same time?

YES

Go to the indicated DTC's troubleshooting.

NO

Go to the troubleshooting for **DTC P0236**, **DTC P2073** , and **DTC P2074** .

DTC P027E (1.5 L ENGINE) (2020 2021)

DTC P027E : Cold Start Air Fuel Ratio Control System Command Lean

NOTE: Before you troubleshoot, **review the general troubleshooting information** .

DTC Description	Confirmed DTC	Pending DTC
P027E Cold Start Air Fuel Ratio Control System Command Lean Bank1	B	B

DTC (PGM-FI)

1. Problem verification

   -1. Turn the vehicle to the ON mode.

   -2. Let the engine cool until the value of ECT SENSOR 1 is 122 deg. F (50 deg. C) or less.

Signal	Current conditions	
	Values	Unit
ECT Sensor 1	B	B

   -3. Clear the DTC with the HDS.

   -4. Turn the vehicle to the OFF (LOCK) mode.

   -5. Start the engine, and let it idle for 10 seconds or more.

   -6. Check for Pending or Confirmed DTCs with the HDS.

DTC Description	Confirmed DTC	Pending DTC
P027E Cold Start Air Fuel Ratio Control System Command Lean Bank1	B	B

Is DTC P027E indicated?

YES

The failure is duplicated. Check for any authorized service information related to the DTCs or symptoms you are troubleshooting, or **substitute a known-good PCM** .

NO

Intermittent failure, the system is OK at this time. **If the on-board snapshot of this DTC is recorded, try to reproduce the failure under the same conditions with the on-board snapshot** .

DTC P027F (1.5 L ENGINE) (2020 2021)

DTC P027F : Cold Start Air Fuel Ratio Control System Command Rich

NOTE: Before you troubleshoot, **review the general troubleshooting information** .

DTC Description	Confirmed DTC	Pending DTC
P027F Cold Start Air Fuel Ratio Control System Command Rich	B	B

DTC (PGM-FI)

1. Problem verification

-1. Turn the vehicle to the ON mode.

-2. Let the engine cool until the value of ECT SENSOR 1 is 122 deg. F (50 deg. C) or less.

Signal	Current conditions	
	Values	Unit
ECT Sensor 1	B	B

-3. Clear the DTC with the HDS.

-4. Turn the vehicle to the OFF (LOCK) mode.

-5. Start the engine, and let it idle for 10 seconds or more.

-6. Check for Pending or Confirmed DTCs with the HDS.

DTC Description	Confirmed DTC	Pending DTC
P027F Cold Start Air Fuel Ratio Control System Command Rich	B	B

Is DTC P027F indicated?

YES

The failure is duplicated. Check for any authorized service information related to the DTCs or symptoms you are troubleshooting, or **substitute a known-good PCM** .

NO

Intermittent failure, the system is OK at this time. **If the on-board snapshot of this DTC is recorded, try to reproduce the failure under the same conditions with the on-board snapshot** .

DTC P0299 (1.5 L ENGINE)

DTC P0299 : Turbocharger Underboost Problem

NOTE: Before you troubleshoot, **review the general troubleshooting information** .

DTC Description	Confirmed DTC	Pending DTC
P0299 Turbocharger Underboost Problem	B	B

DTC (PGM-FI)

1. Problem verification

   -1. Turn the vehicle to the ON mode.

   -2. Clear the DTC with the HDS.

   -3. Turn the vehicle to the OFF (LOCK) mode.

   -4. Start the engine.

   -5. Hold the engine speed at 3, 000 rpm without load (in P or N) until the radiator fan comes on.

   -6. Test-drive the vehicle under the same conditions with the on-board snapshot of this DTC is recorded.

Signal	Current conditions	
	Values	Unit
VEHICLE SPEED	B	B
ECT SENSOR 1	B	B
MAP SENSOR (HI RES)	B	B
TC BOOST PRESSURE	B	B
ENGINE SPEED	B	B

   -7. Check for Pending or Confirmed DTCs with the HDS.

DTC Description	Confirmed DTC	Pending DTC
P0299 Turbocharger Underboost Problem	B	B

   Is DTC P0299 indicated?

   YES

   Go to step 2.

   NO

   Intermittent failure, the system is OK at this time. Check for poor connections or loose terminals at the turbocharger and the PCM. **If the on-board snapshot of this DTC is recorded, try to reproduce the failure under the same conditions with the on-board snapshot** .

2. Air cleaner check

   -1. Turn the vehicle to the OFF (LOCK) mode.

   -2. **Inspect the air cleaner element** .

Is the air cleaner element clogged?

YES

Replace the air cleaner element .

NO

Go to step 3.

3. Check for leak or damage components

   -1. Check for leak or damage parts through the intake air duct to the throttle body.

   Are the parts OK?

   YES

   Go to step 4.

   NO

   Repair or replace the damaged parts.

4. Check for EVAP canister purge line:

   Visually inspect each of the components below for disconnected hoses, cracks, or damage:

   - Non-return valve A (A) (built into the EVAP canister purge valve)
   - Non-return valve B (B) (built into the EVAP canister purge valve)
   - EVAP canister purge valve (C)
   - Hose (D)

   USA and Canada models

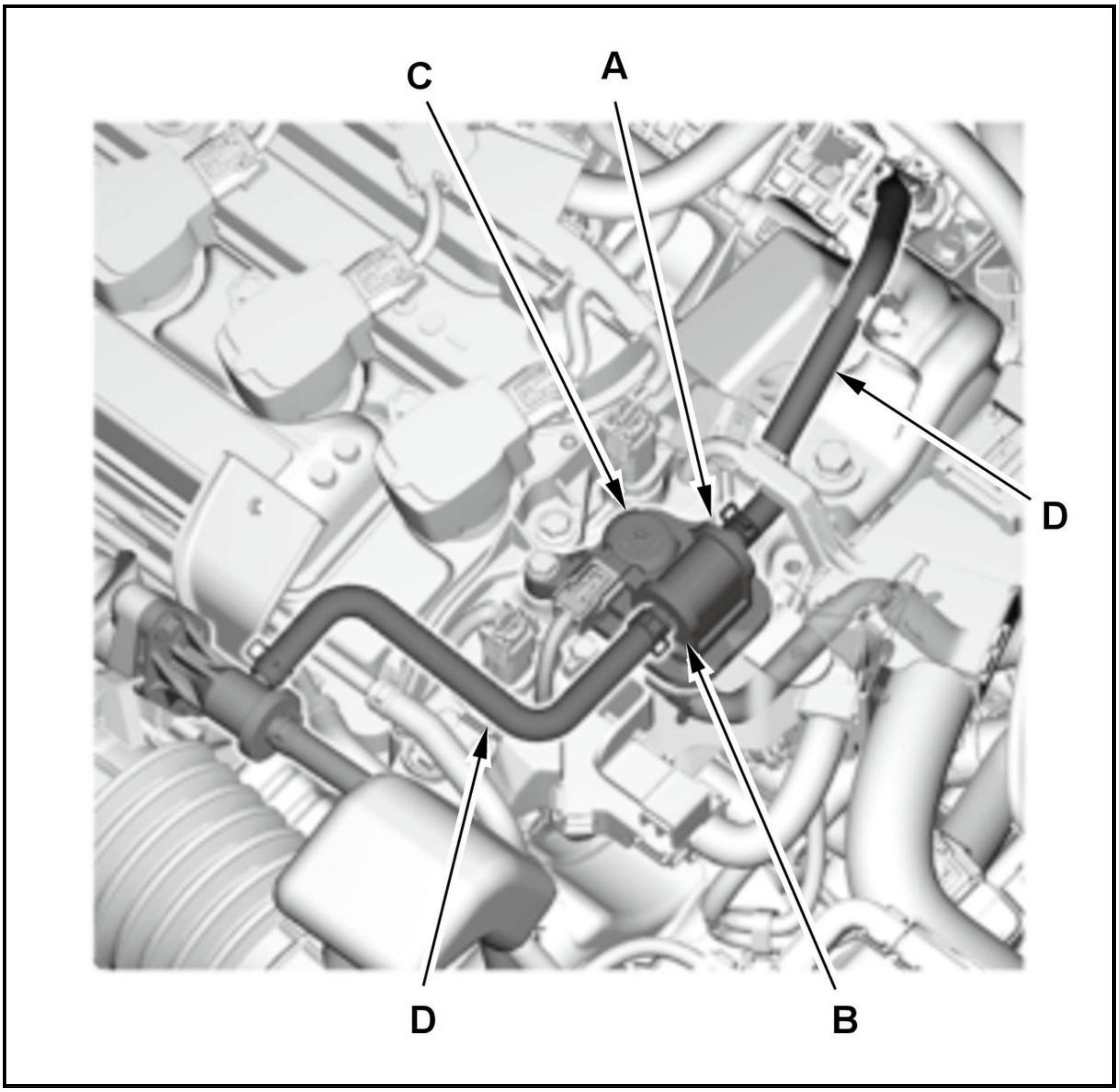

Mexico models

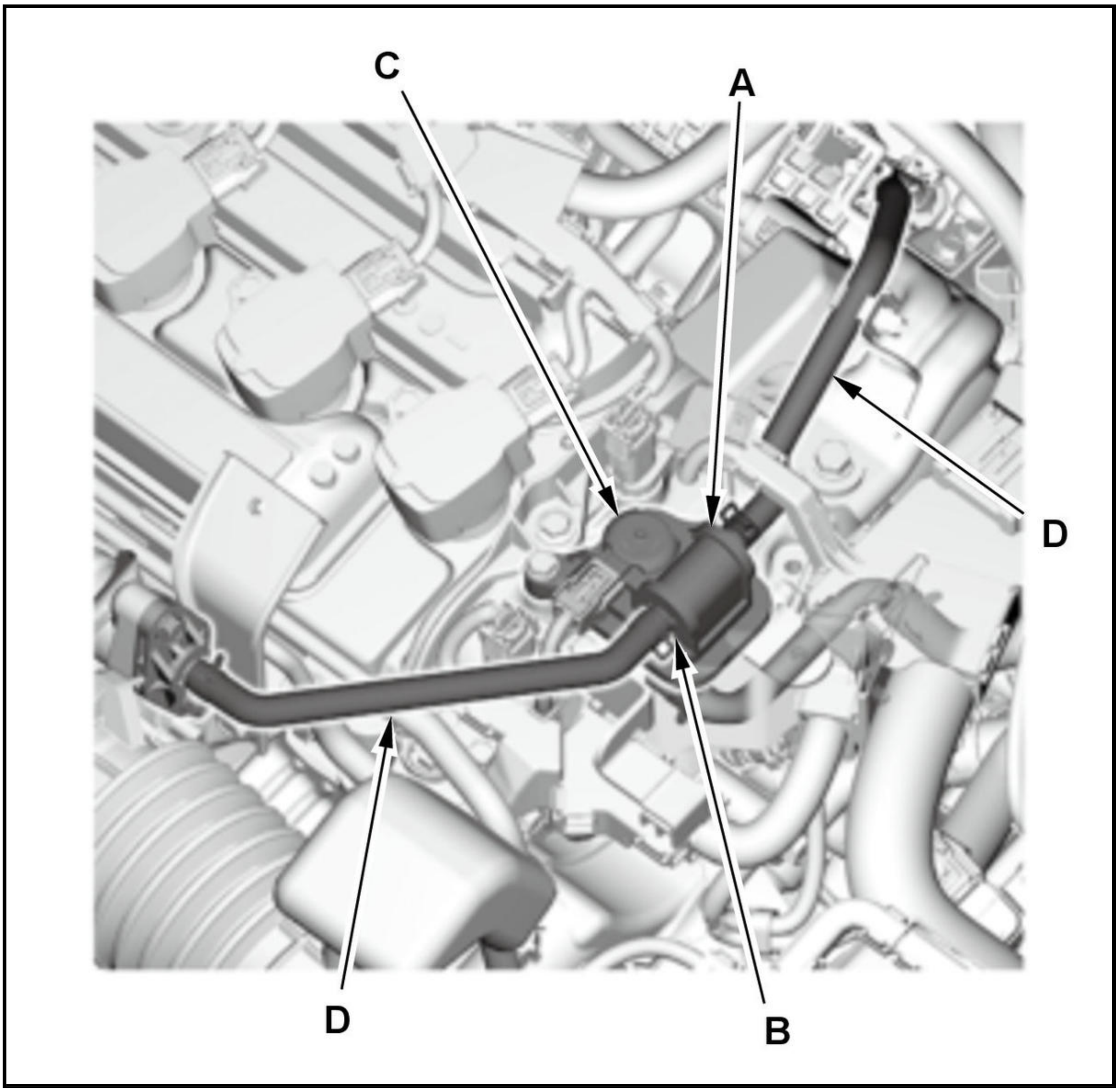

Are any components disconnected or damaged?

YES

Repair the connection or replace the damaged part (s).

NO

Go to step 5.

5. Check for EVAP canister purge valve

   -1. **Inspect the EVAP canister purge valve** .

   Is the EVAP canister purge valve OK?

   YES

   Go to step 6.

   NO

   Replace the EVAP canister purge valve .

6. Turbocharger bypass control solenoid valve operation check

-1. Turn the vehicle to the ON mode.

-2. Select the TC BYPASS CONTROL SOL. V TEST in the INSPECTION MENU with the HDS.

TC BYPASS CONTROL SOL. V. TEST

Is there a clicking noise from the turbocharger bypass solenoid valve?

YES

Go to step 7.

NO

Replace the turbocharger bypass control solenoid valve .

7. Check for turbocharger bypass control valve control line

-1. Turn the vehicle to the OFF (LOCK) mode.

Visually inspect each of the components below for disconnected hoses, blockage, or damage:

- Hose (A) between the turbocharger bypass control solenoid valve and the intake manifold
- Hose (B) between the turbocharger bypass control solenoid valve and the turbocharger bypass control valve
- Hose (C) between turbocharger bypass control solenoid valve and the turbocharger joint

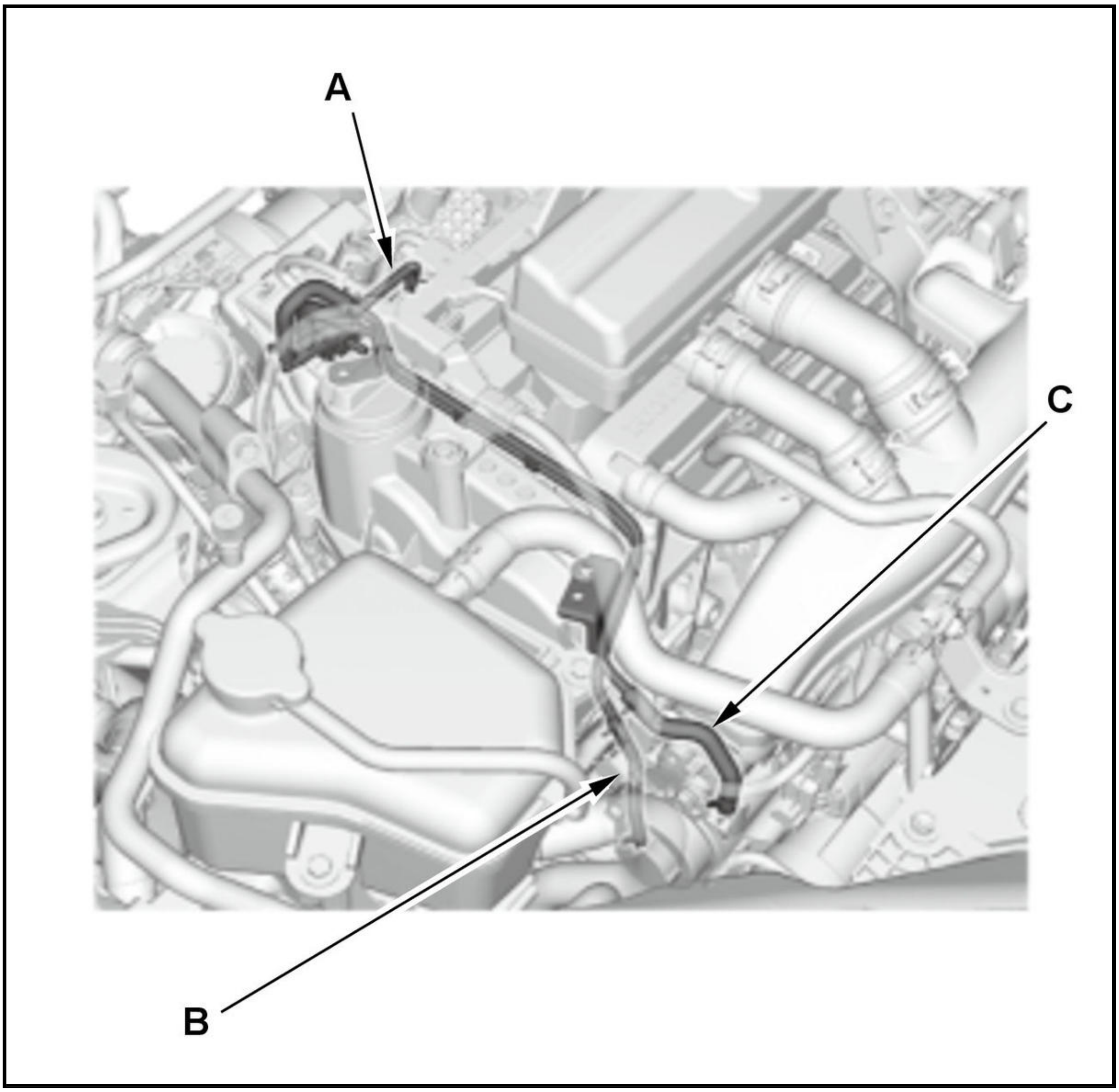

Are any components disconnected, blockage, or damaged?

YES

Repair the connection or replace the damaged part (s).

NO

Go to step 8.

8. Turbocharger bypass control solenoid valve check

   -1. **Inspect the turbocharger bypass control solenoid valve** .

   Is the solenoid valve OK?

   YES

   Go to step 9.

   NO

   Replace the turbocharger bypass control solenoid valve .

9. Turbocharger bypass control valve check

-1. Inspect the turbocharger bypass control valve .

Is the valve OK?

YES

Go to step 10.

NO

Replace the turbocharger joint .

10. Turbocharger wastegate control actuator check

-1. Select the ELECTRIC WASTE GATE in the INSPECTION MENU with the HDS.

ELECTRIC WASTE GATE

Visually inspect the operation of the turbocharger wastegate control actuator.

Does the turbocharger wastegate control actuator operate?

1. **YES**

    - Check for clogging or damaged in these parts.
    -
        - -

          Turbocharger
        - -

          Catalytic converter
    - Check for any authorized service information related to the DTCs or symptoms you are troubleshooting, or substitute a known-good PCM .

   NO

   Replace the turbocharger .

DTC P0300, P0301, P0302, P0303, P0304 (1.5 L ENGINE)

DTC P0300 : Random Misfire Detected **DTC P0301** : No. 1 Cylinder Misfire Detected **DTC P0302** : No. 2 Cylinder Misfire Detected **DTC P0303** : No. 3 Cylinder Misfire Detected **DTC P0304** : No. 4 Cylinder Misfire Detected

NOTE:

- Before you troubleshoot, review the general troubleshooting information .
- If the misfire is frequent enough to trigger detection of increased emissions during two consecutive driving cycles, the MIL will come on, and DTC P0300 (and some combination of P0301 through P0304) will be stored.
- If the misfire is frequent enough to damage the catalyst, the MIL will flash whenever the misfire occurs, and DTC P0300 (and some combination of P0301 through P0304) will be stored. When the misfire stops, the MIL will remain on.
- Troubleshoot the following DTCs first, if any of them were stored along with the random misfire DTC (s) (Because parts can sometimes fail without setting DTC's you should also do a physical inspection of the systems listed below):

P0087, P0088: Fuel rail pressure sensor

P006A, P0100, P0101: MAF sensor

P0107, P0108, P2073, P2074: MAP sensor

P0171, P0172, P2187: Fuel system

P0335, P0339: CKP sensor

P0340, P0344: CMP sensor A

P0351, P0352, P0353, P0354: No. 1-No. 4 cylinder ignition coil (s)

P0506, P0507: Idle control system

P2623: High pressure fuel pump

DTC Description	Confirmed DTC	Pending DTC
P0300 Random Misfire Detected	B	B
P0301 No. 1 Cylinder Misfire Detected	B	B
P0302 No. 2 Cylinder Misfire Detected	B	B
P0303 No. 3 Cylinder Misfire Detected	B	B
P0304 No. 4 Cylinder Misfire Detected	B	B

DTC (PGM-FI)

1. Problem verification - Idle

-1. Record the ONBOARD SNAPSHOT with the HDS.

-2. Start the engine, and let it idle.

-3. Monitor these parameters in the DATA LIST:

Signal	Current conditions	
	Values	Unit
CYL1 MISFIRE	B	B
CYL2 MISFIRE	B	B
CYL3 MISFIRE	B	B
CYL4 MISFIRE	B	B

Are the misfire counts increasing on any cylinder at idle?

YES

The engine is misfiring at idle, go to step 2.

NO

The engine does not misfire at idle, go to step 3.

2. Determine Affected Cylinders

-1. Continue to monitor the misfire parameters in the DATA LIST.

Signal	Current conditions	
	Values	Unit
CYL1 MISFIRE	B	B
CYL2 MISFIRE	B	B
CYL3 MISFIRE	B	B
CYL4 MISFIRE	B	B

Are the misfire counts generally isolated to a single cylinder?

1. **YES**

   The misfire is isolated to a single cylinder.

   - If the misfire counts are increasing every engine revolution (completely inactive cylinder), go to Single Cylinder Continuous Misfire at Idle troubleshooting on step 6.
   - If the misfire counts are increasing every few engine revolutions (partially inactive cylinder), go to Single Cylinder Non-Continuous Misfire at Idle troubleshooting on step 21.

   NO

   The misfire affects multiple cylinders.

   - If the misfire counts are increasing every engine revolution (completely inactive cylinder), go to Multiple Cylinder Continuous Misfire at Idle troubleshooting on step 30.
   - If the misfire counts are increasing every few engine revolutions (partially inactive cylinder), go to Multiple Cylinder Non-Continuous Misfire at Idle troubleshooting on step 48.

3. Problem verification - Static Load

-1. Increase the engine speed to 3, 500 rpm.

-2. Hold the engine speed steady, and monitor the misfire parameters in the DATA LIST.

Signal	Current conditions	
	Values	Unit
CYL1 MISFIRE	B	B
CYL2 MISFIRE	B	B
CYL3 MISFIRE	B	B
CYL4 MISFIRE	B	B

Are the misfire counts increasing on any cylinder?

YES

The engine is misfiring under load. Go to step 4.

NO

The engine does not misfire under a static load. Go to step 5.

4. Determine Affected Cylinders

-1. Continue to monitor the misfire parameters in the DATA LIST.

Signal	Current conditions	
	Values	Unit
CYL1 MISFIRE	B	B

Signal	Current conditions	
	Values	Unit
CYL2 MISFIRE	B	B
CYL3 MISFIRE	B	B

Signal	Current conditions	
	Values	Unit
CYL4 MISFIRE	B	B

Are misfire counts generally isolated to a single cylinder?

YES

The misfire is isolated to a single cylinder, go to Single Cylinder Misfire. Under Load troubleshooting on step 56.

NO

The misfire affects multiple cylinders, go to Multiple Cylinder Misfire. Under Load troubleshooting on step 62.

5. Problem verification - On-board Snapshot

-1. Open the ONBOARD SNAPSHOT with the HDS.

-2. Scroll through the snapshot, and find when the MISFIRE value begins to increase.

-3. Record the value of these parameters as the MISFIRE value increases:

Signal	Values	Unit
ECT SENSOR 1	B	deg. F
ENGINE SPEED	B	RPM
VEHICLE SPEED	B	MPH
MAP SENSOR	B	V
TP SENSOR	B	V

On-board Snapshot

-4. Drive the vehicle according to the conditions you identified above while monitoring the misfire counts.

Signal	Current conditions	
	Values	Unit
ECT SENSOR 1	B	B
ENGINE SPEED	B	B
VEHICLE SPEED	B	B
MAP SENSOR	B	B
TP SENSOR	B	B

Signal	Current conditions	
	Values	Unit
CYL1 MISFIRE	B	B
CYL2 MISFIRE	B	B
CYL3 MISFIRE	B	B
CYL4 MISFIRE	B	B

Are the misfire counts increasing on any cylinder?

YES

The engine is misfiring under the specific operating conditions above.

- If the misfire occurred when the engine was cold, go to Misfire When Cold troubleshooting on step 68.
- If the misfire occurred when the engine was loaded, go to step 4.

NO

Intermittent failure; the engine is not misfiring at this time.**NOTE:** If the misfire cannot be reproduced, there is a possibility that the problem may have been caused by poor quality fuel. The problem may have disappeared after refueling with fresh fuel. The MIL DIST (MIL Distance) value in the Data List in combination with the fuel level may help you make this determination.

6. Check Ignition Coil Spark

-1. Turn the vehicle to the OFF (LOCK) mode.

-2. **Remove the ignition coil from the problem cylinder** .

-3. Connect a commercially available spark tester between the ignition coil and engine ground.

-4. Start the engine with the ignition coil connected.

Does the ignition coil produce a spark?

YES

The ignition coil wiring is OK. Go to step 14.

NO

There is a problem with the ignition coil, or the ignition coil circuit. Go to step 7.

7. Ignition Coil Check

-1. **Exchange the ignition coil on the problem cylinder with a normally operating cylinder** .

-2. Connect a commercially available spark tester between the ignition coil and engine ground.

-3. Start the engine with the ignition coil connected.

Does the ignition coil produce a spark?

YES

The ignition coil has a failure. **Replace the ignition coil** .

NO

There is a problem with the ignition coil circuit. Go to step 8.

8. Check Ignition Coil Power and Ground

-1. Disconnect the ignition coil 3P connector from the problem cylinder.

-2. Turn the vehicle to the ON mode.

-3. Measure the voltage between ignition coil 3P connector terminals No. 1 (power) and No. 2 (ground).

NOTE: After the vehicle is turned to the OFF (LOCK) mode, this circuit may still show battery voltage for a period of time. This is normal.

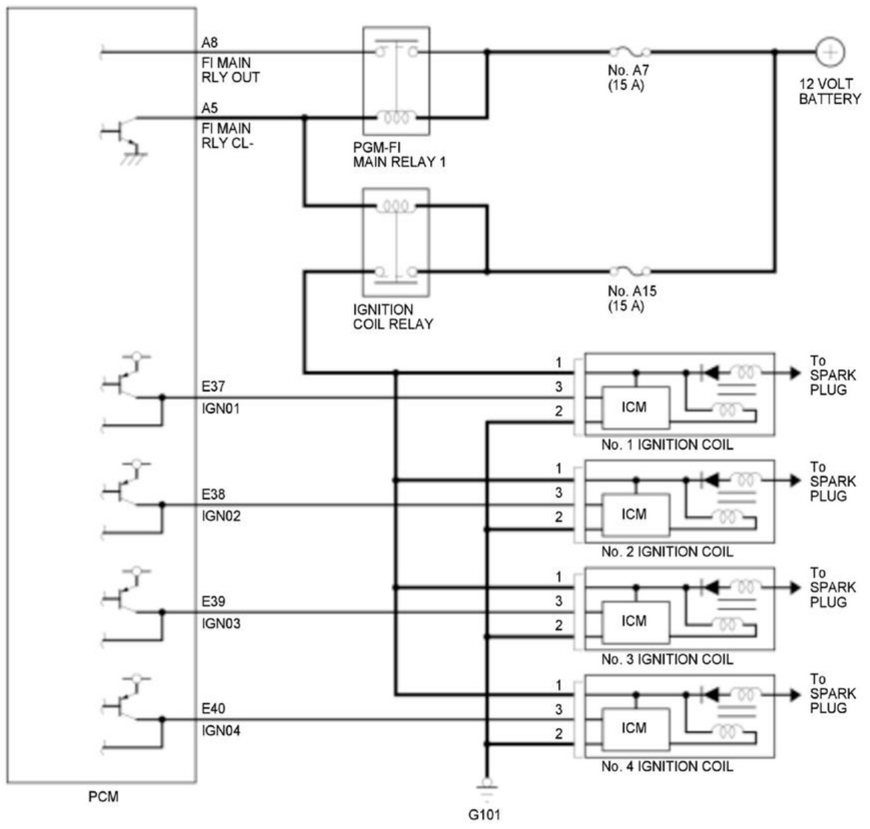

A8
FI MAIN RLY OUT
A5
FI MAIN RLY CL-
PGM-FI MAIN RELAY 1
No. A7 (15 A)
12 VOLT BATTERY
IGNITION COIL RELAY
No. A15 (15 A)
E37
IGN01
E38
IGN02
E39
IGN03
E40
IGN04
1
3
2
ICM
No. 1 IGNITION COIL
No. 2 IGNITION COIL
No. 3 IGNITION COIL
No. 4 IGNITION COIL
To SPARK PLUG
PCM
G101

Is there battery voltage?

YES

The ignition coil power and ground circuits are OK. Go to step 9.

NO

There is a problem with the ignition coil power or ground circuit. Go to step 13.

9. Check Ignition Coil Control Short to Power

-1. Turn the vehicle to the ON mode.

-2. Measure the voltage between ignition coil 3P connector terminals No. 3 (Ignition Control) and body ground.

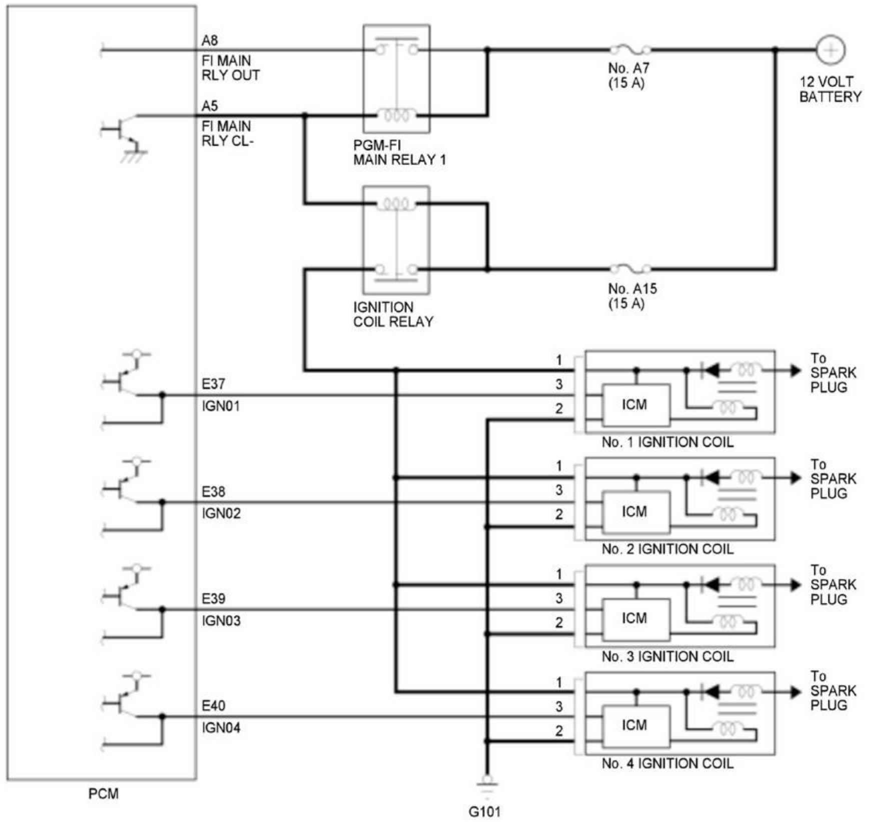
A8
FI MAIN
RLY OUT
A5
FI MAIN
RLY CL-
PGM-FI
MAIN RELAY 1
No. A7
(15 A)
12 VOLT
BATTERY
IGNITION
COIL RELAY
No. A15
(15 A)
E37
IGN01
E38
IGN02
E39
IGN03
E40
IGN04
1
3
2
ICM
No. 1 IGNITION COIL
No. 2 IGNITION COIL
No. 3 IGNITION COIL
No. 4 IGNITION COIL
To
SPARK
PLUG
PCM
G101

Is there about 4 V or more?

YES

The ignition coil control circuit is shorted to power. Go to step 10.

NO

The ignition coil control circuit is not shorted to power. Go to step 11.

10. Isolate Ignition Coil Control Short to Power

-1. Turn the vehicle to the OFF (LOCK) mode.

-2. Jump the SCS line with the HDS, and wait more than 1 minute.

-3. Disconnect the PCM connectors.

-4. Turn the vehicle to the ON mode.

-5. Measure the voltage between ignition coil 3P connector terminals No. 3 (Ignition Control) and body ground.

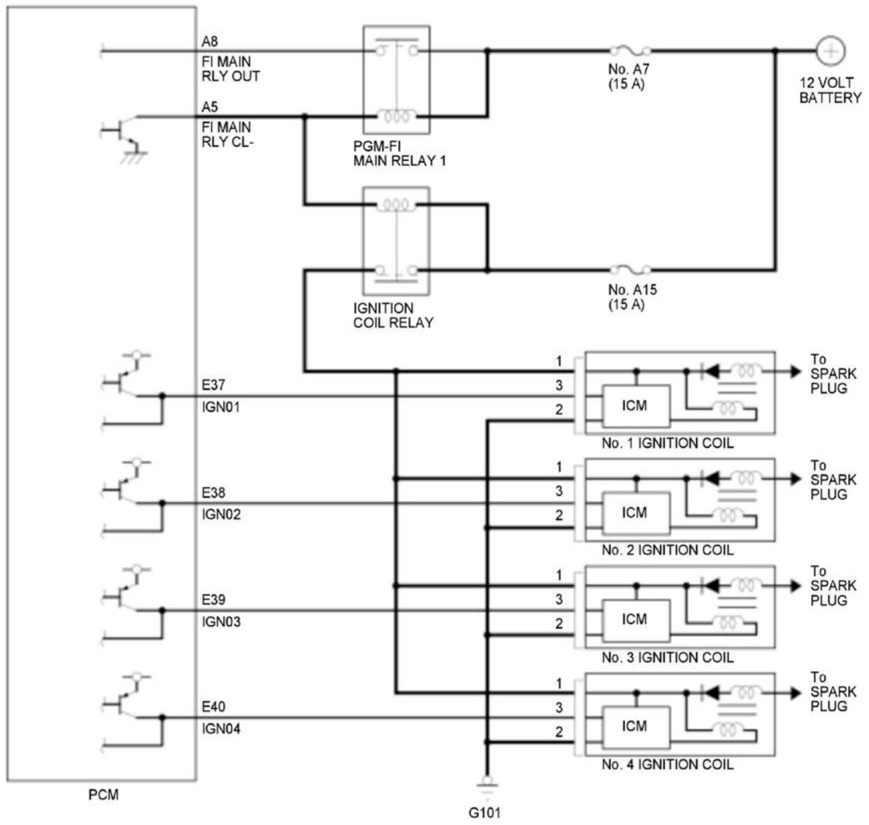
A8
FI MAIN
RLY OUT
A5
FI MAIN
RLY CL-
PGM-FI
MAIN RELAY 1
No. A7
(15 A)
12 VOLT
BATTERY
IGNITION
COIL RELAY
No. A15
(15 A)
E37
IGN01
E38
IGN02
E39
IGN03
E40
IGN04
1
3
2
ICM
No. 1 IGNITION COIL
No. 2 IGNITION COIL
No. 3 IGNITION COIL
No. 4 IGNITION COIL
To
SPARK
PLUG
PCM
G101

Is there about 4 V or more?

YES

There is a short to power on the ignition coil control circuit. Find and repair the failure.

NO

The PCM is malfunctioning. **Replace the PCM** .

11. Check Ignition Coil Control Open Circuit

    -1. Turn the vehicle to the OFF (LOCK) mode.

    -2. Jump the SCS line with the HDS, and wait more than 1 minute.

    -3. Disconnect the PCM connectors.

    -4. Check for continuity between the ignition coil control terminal at the PCM connector and at ignition coil 3P connector terminal No. 3.

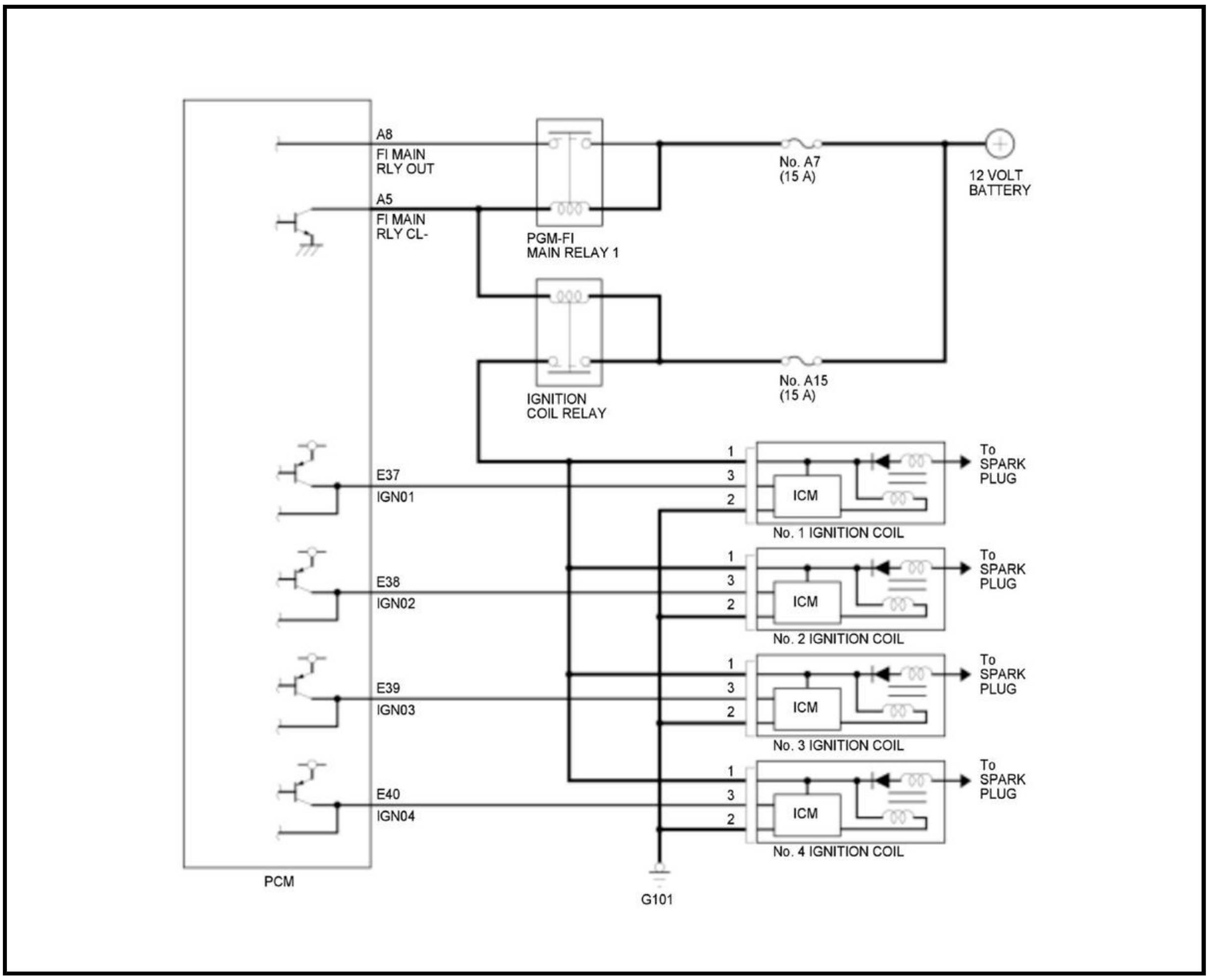
A8
FI MAIN
RLY OUT
A5
FI MAIN
RLY CL-
PGM-FI
MAIN RELAY 1
No. A7
(15 A)
12 VOLT
BATTERY
IGNITION
COIL RELAY
No. A15
(15 A)
E37
IGN01
E38
IGN02
E39
IGN03
E40
IGN04
1
3
2
ICM
No. 1 IGNITION COIL
No. 2 IGNITION COIL
No. 3 IGNITION COIL
No. 4 IGNITION COIL
To
SPARK
PLUG
PCM
G101

Is there continuity?

YES

The ignition coil control circuit is not open. Go to step 12.

NO

Repair the open circuit between the ignition coil and the PCM.

12. Check Ignition Coil Control Short to Ground

    -1. Check for continuity between the ignition coil control terminal at ignition coil 3P connector terminal No. 3 and body ground.

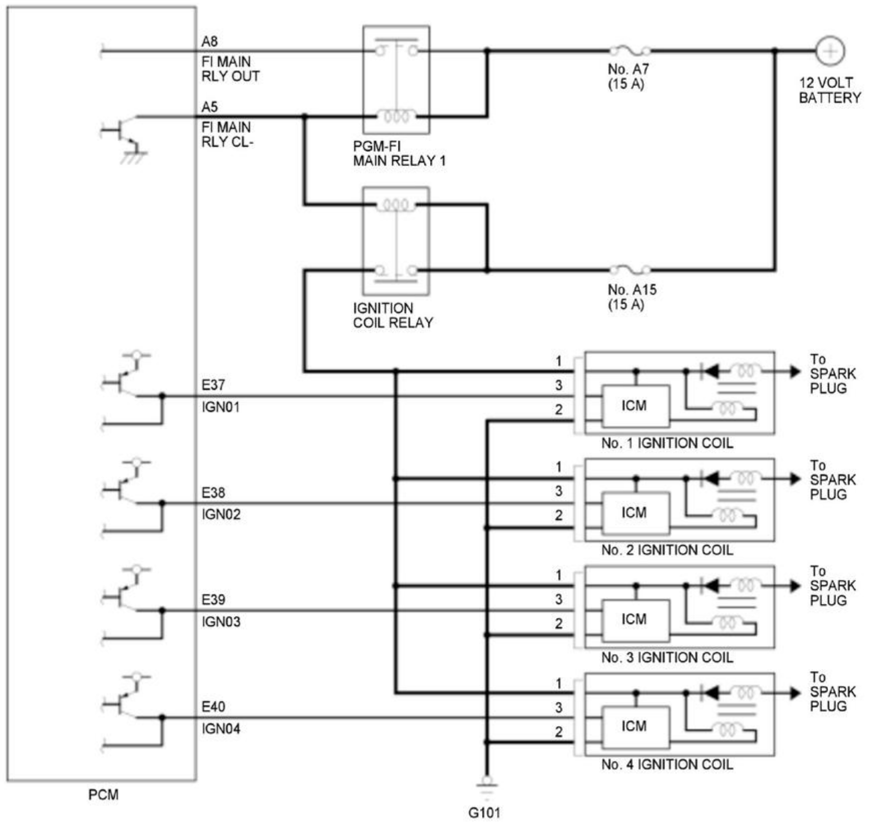
A8
FI MAIN
RLY OUT
A5
FI MAIN
RLY CL-
PGM-FI
MAIN RELAY 1
No. A7
(15 A)
12 VOLT
BATTERY
IGNITION
COIL RELAY
No. A15
(15 A)
E37
IGN01
E38
IGN02
E39
IGN03
E40
IGN04
1
3
2
ICM
No. 1 IGNITION COIL
No. 2 IGNITION COIL
No. 3 IGNITION COIL
No. 4 IGNITION COIL
To
SPARK
PLUG
PCM
G101

Is there continuity?

YES

Repair the short to ground on the ignition coil control wire.

NO

The ignition coil control wiring is OK. **Substitute a known-good PCM** .

13. Check Ignition Coil Power Circuit

    -1. Measure the voltage between ignition coil 3P connector terminal No. 1 (power) and a known-good engine ground.

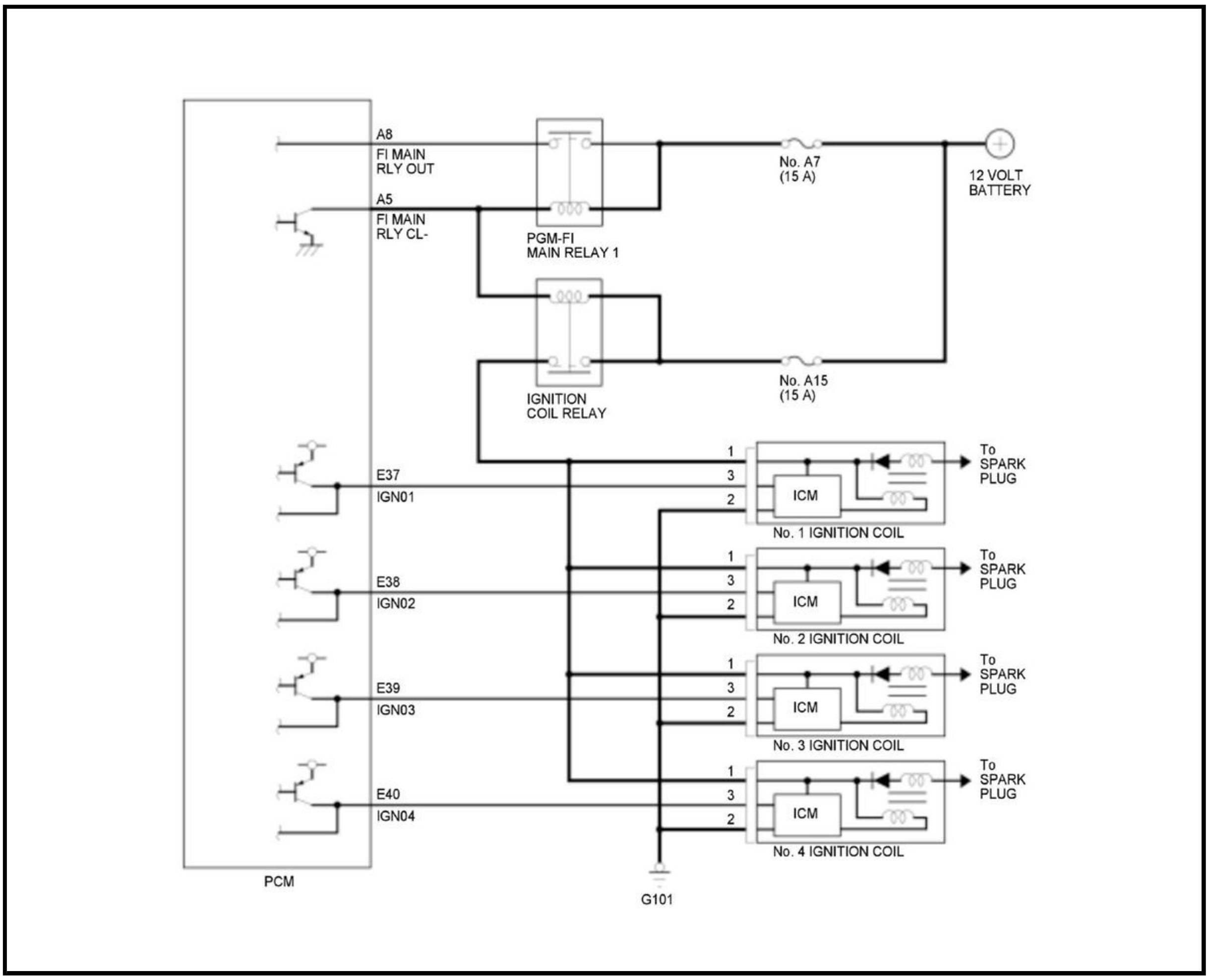
A8
FI MAIN RLY OUT
A5
FI MAIN RLY CL-
PGM-FI MAIN RELAY 1
No. A7 (15 A)
12 VOLT BATTERY
IGNITION COIL RELAY
No. A15 (15 A)
E37
IGN01
E38
IGN02
E39
IGN03
E40
IGN04
1
3
2
ICM
No. 1 IGNITION COIL
No. 2 IGNITION COIL
No. 3 IGNITION COIL
No. 4 IGNITION COIL
To SPARK PLUG
PCM
G101

Is there battery voltage between the ignition coil power terminal and engine ground?

YES

The power circuit is OK. Repair the open circuit between the ignition coil (3P connector terminal No. 2) and G101.

NO

Repair the open circuit between the ignition coil and the ignition coil relay.

14. Inspect Ignition Coil

-1. Inspect the ignition coil and spark plug tube for engine oil contamination.

Is the ignition coil covered in engine oil?

YES

Clean the oil from the ignition coil and spark plug tube. **Replace the spark plug tube seals in the cylinder head cover** .

NO

Go to step 15.

15. Exchange Spark Plug and Ignition Coil

-1. **Exchange the spark plug and the ignition coil with one from a normally operating cylinder** .

-2. Drive the vehicle under the conditions when the misfire was duplicated.

-3. Monitor the misfire parameters in the DATA LIST.

Signal	**Current conditions**	
	Values	**Unit**
CYL1 MISFIRE	B	B
CYL2 MISFIRE	B	B
CYL3 MISFIRE	B	B
CYL4 MISFIRE	B	B

Did the misfire counts stay on the problem cylinder?

YES

The ignition coil and spark plug are OK. Go to step 17.

NO

There is a failure in the ignition coil or the spark plug. Go to step 16.

16. Exchange Ignition Coil

-1. **Exchange the ignition coil on the problem cylinder with a normally operating cylinder** .

-2. Drive the vehicle under the conditions when the misfire was duplicated.

-3. Monitor the misfire parameters in the DATA LIST.

Signal	**Current conditions**	
	Values	**Unit**
CYL1 MISFIRE	B	B
CYL2 MISFIRE	B	B
CYL3 MISFIRE	B	B
CYL4 MISFIRE	B	B

Did the misfire counts stay on the problem cylinder?

YES

The spark plug has a failure. **Replace the spark plug** .

NO

The ignition coil has a failure. **Replace the ignition coil** .

17. Check Cylinder Compression

-1. **Perform a cylinder compression test** .

-2. Record your test results in a chart similar to the one shown below.

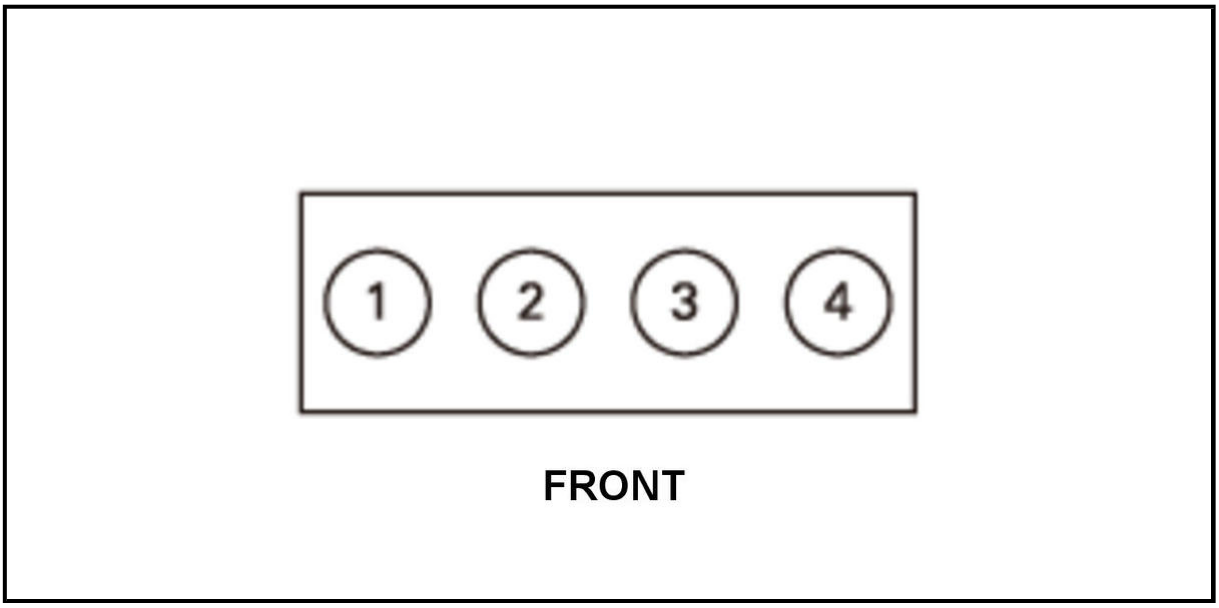

B	Compression (PSI)
No. 1	B
No. 2	B
No. 3	B
No. 4	B

Highest Reading (PSI)	Lowest Reading (PSI)	Variation (%)
B	B	B

Does the compression vary more than 10 % between cylinders, or does any cylinder read below 150 PSI?

1. **YES**

   The cylinder leakage is normal, but the engine compression is low. Check for each of the conditions below and repair as needed.

   - Incorrect camshaft timing.
   - A bent (short) connecting rod.
   - Worn or damaged camshaft lobes.

   NO

   The engine compression and the cylinder leakage are normal. Go to step 18.

18. Check Cylinder Leakage

-1. **Perform a cylinder leakage test** .

-2. Record your test results in the chart shown below.

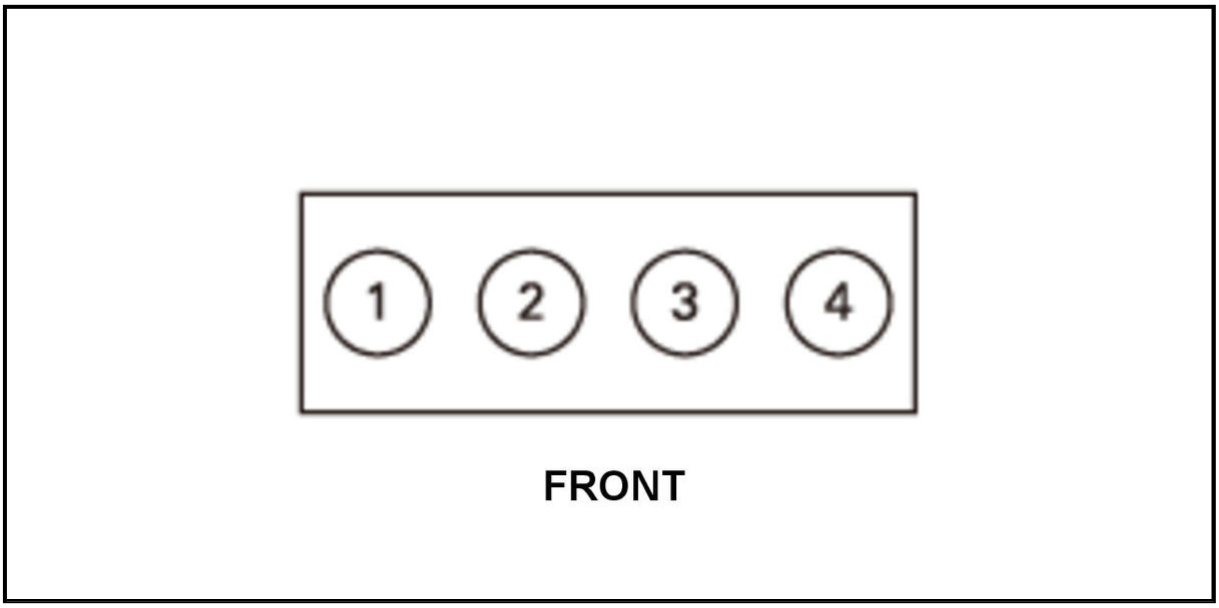

B	Leakage (%)	Leakage Area
No. 1	B	B
No. 2	B	B
No. 3	B	B
No. 4	B	B

Does any cylinder have leakage greater than 10 %?

YES

If the majority of the air is escaping from exhaust pipe or throttle body, check for tight valve clearance and adjust valve clearance to specification (cold), then retest. Determine the cause of the cylinder leakage and repair the engine as needed.

NO

The cylinders are sealing properly. Go to step 19.

19. Exchange Fuel Injector

-1. **Exchange the fuel injector from the problem cylinder with one from another cylinder** .

-2. Drive the vehicle under the conditions when the misfire was duplicated.

-3. Monitor the misfire parameters in the DATA LIST.

Signal	Current conditions	
	Values	Unit
CYL1 MISFIRE	B	B
CYL2 MISFIRE	B	B
CYL3 MISFIRE	B	B

Signal	Current conditions	
	Values	Unit
CYL4 MISFIRE	B	B

Do the misfire counts stay on the problem cylinder when the fuel injector is swapped?

YES

The fuel injector is OK. Go to step 20.

NO

The fuel injector is faulty. **Replace all fuel injectors as a set** .

20. CKP Pattern Clear/Pattern Learn

-1. Select CRANK PATTERN in the ADJUSTMENT MENU with the HDS.

-2. **Select CRANK PATTERN CLEAR, and clear the CKP pattern** .

CRANK PATTERN CLEAR

Select CRANK PATTERN LEARNING with the HDS, and follow the screen prompts .

CRANK PATTERN LEARNING

Monitor the misfire parameters in the DATA LIST.

Signal	Current conditions	
	Values	Unit
CYL1 MISFIRE	B	B
CYL2 MISFIRE	B	B
CYL3 MISFIRE	B	B
CYL4 MISFIRE	B	B

Did the misfire counts stay on the problem cylinder?

YES

Check for any authorized service information related to the DTCs or symptoms you are troubleshooting or **substitute a known-good PCM** .

NO

The misfire problem has been fixed.

21. Inspect Spark Plug

-1. **Remove the spark plug from the problem cylinder** .

-2. Inspect the spark plug for signs of failure. Also make sure the spark plugs are the correct part number for the vehicle.

Does the spark plug show any signs of failure or is it not the correct part number?

YES

Replace the spark plug .

NO

Go to step 22.

22. Inspect Ignition Coil

-1. Inspect the ignition coil and the spark plug tube for engine oil contamination.

Is the ignition coil covered in engine oil?

YES

Clean the oil from the ignition coil and the spark plug tube. **Replace the spark plug tube seals in the cylinder head cover** .

NO

Go to step 23.

23. Exchange Spark Plug and Ignition Coil

-1. **Exchange the spark plug and the ignition coil with ones from a normally operating cylinder** .

-2. Drive the vehicle under the conditions when the misfire was duplicated.

-3. Monitor the misfire parameters in the DATA LIST.

Signal	Current conditions	
	Values	Unit
CYL1 MISFIRE	B	B
CYL2 MISFIRE	B	B
CYL3 MISFIRE	B	B
CYL4 MISFIRE	B	B

Did the misfire counts stay on the problem cylinder?

YES

The ignition coil and spark plug are OK. Go to step 25.

NO

There is a failure in the ignition coil or the spark plug. Go to step 24.

24. Exchange Ignition Coil

-1. **Exchange the ignition coil on the problem cylinder with a normally operating cylinder** .

-2. Drive the vehicle under the conditions when the misfire was duplicated.

-3. Monitor the misfire parameters in the DATA LIST.

Signal	Current conditions	
	Values	Unit
CYL1 MISFIRE	B	B
CYL2 MISFIRE	B	B
CYL3 MISFIRE	B	B
CYL4 MISFIRE	B	B

Did the misfire counts stay on the problem cylinder?

YES

The spark plug has a failure. **Replace the spark plug** .

NO

The ignition coil has a failure. **Replace the ignition coil** .

25. Check MAP Sensor Fluctuation

-1. Start the engine, and let it idle until the cooling fans cycle twice.

-2. Turn off all engine and electrical loads (A/C, audio, lights, etc.).

-3. Configure a HIGH-SPEED SNAPSHOT, and select only the MAP SENSOR.

-4. Begin displaying live vehicle data on a line graph.

-5. Configure the MAP SENSOR line graph range for 1.2 V MAX and 0.8 V MIN.

-6. Watch the MAP SENSOR fluctuation. See examples below.

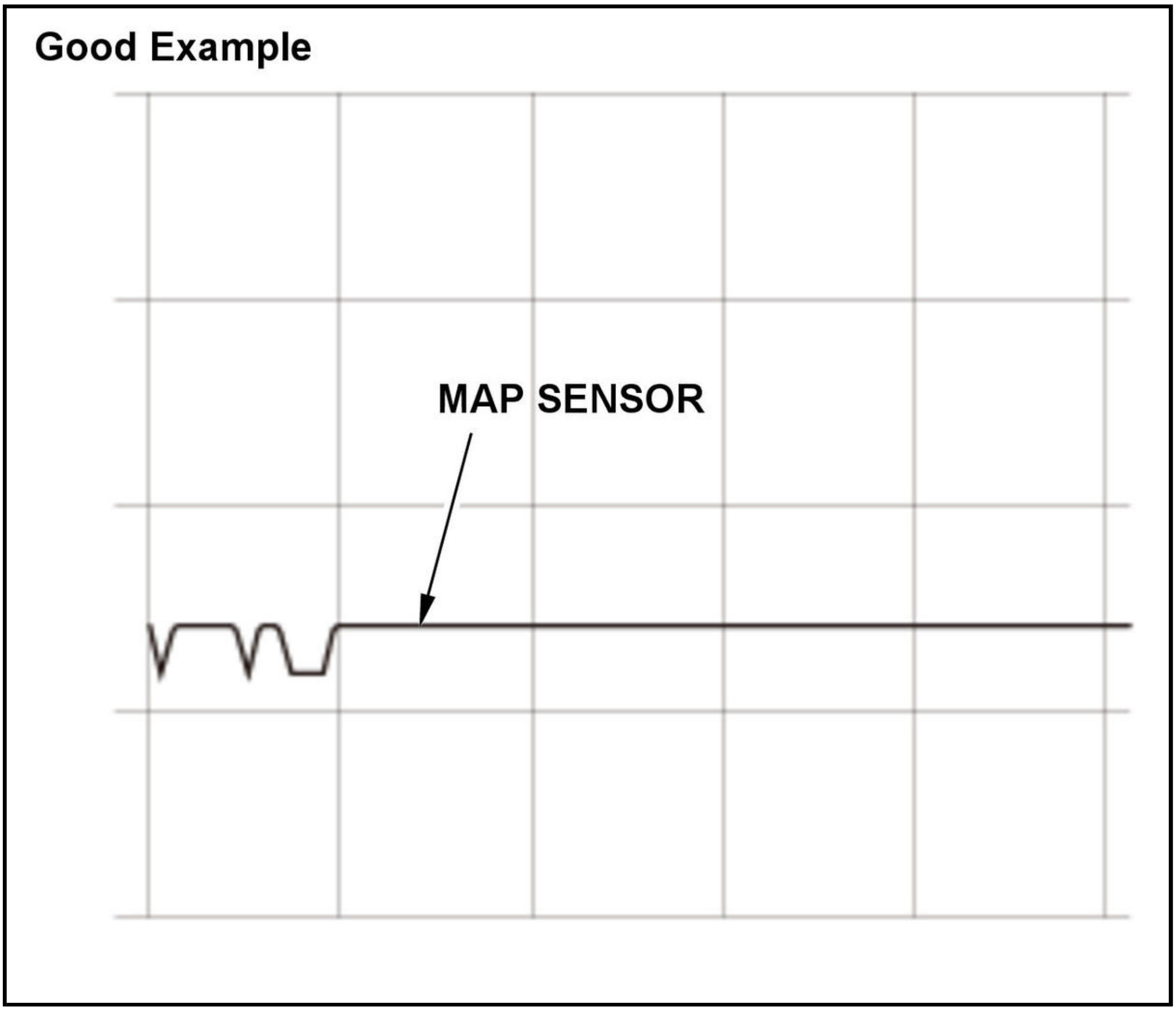

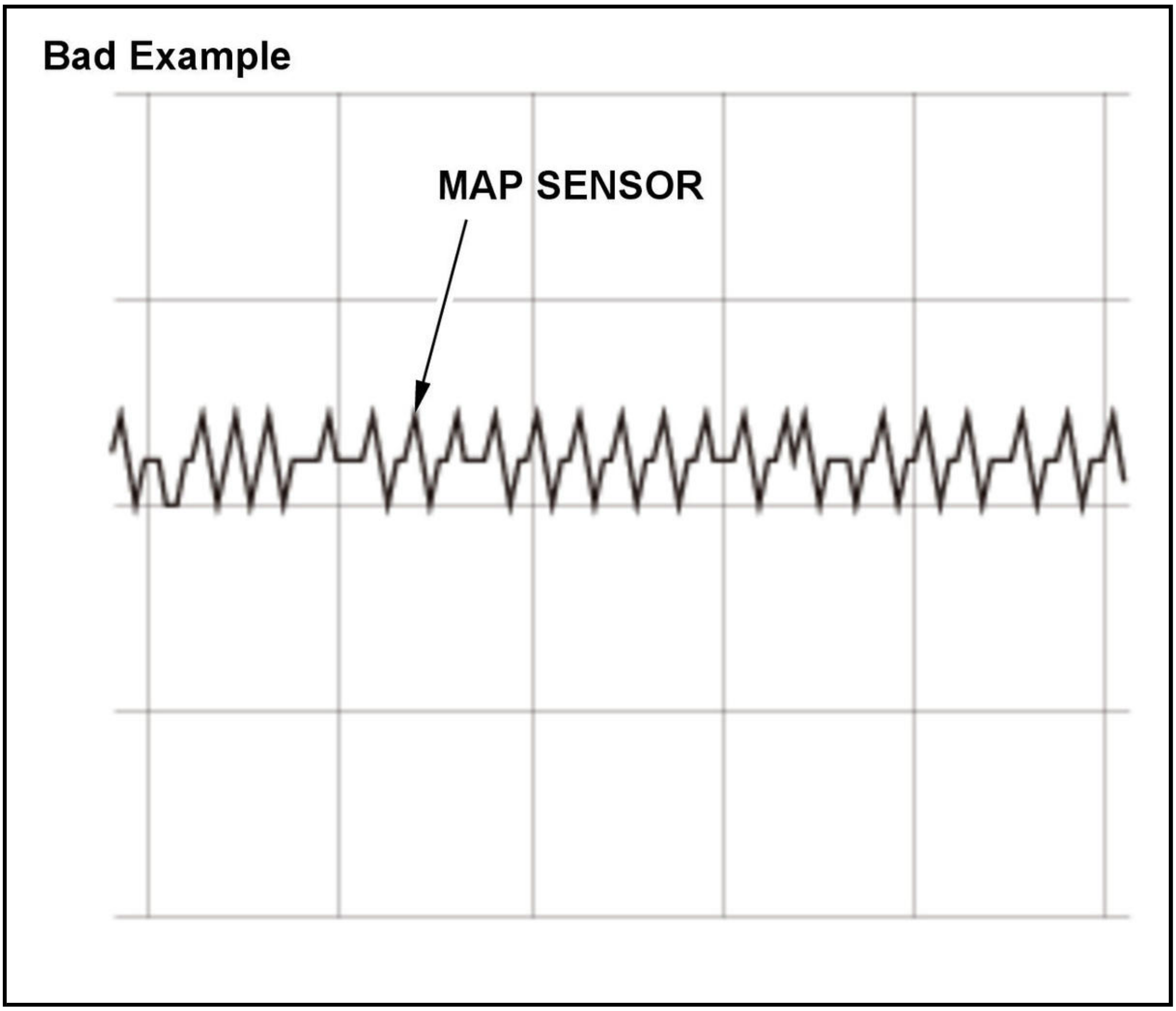

Does the MAP SENSOR continuously fluctuate 0.04 V or more at idle, no loads, engine hot?

YES

The intake manifold pressure fluctuation indicates a mechanical engine failure. Go to step 26.

NO

The intake manifold vacuum fluctuation is OK. Go to step 29.

26. Adjust Valve Clearance

-1. **Adjust the valve clearances** , and inspect the camshaft for excessive wear or grooves.

NOTE: ECT Sensor 1 must read less than 100 deg. F (38 deg. C) before adjusting the valve clearance. Shortcutting this step may cause incorrect valve clearance and engine misfire.

-2. Recheck the MAP SENSOR fluctuation at idle.

Does the MAP SENSOR continuously fluctuate 0.04 V or more at idle, no loads, engine hot?

YES

Adjusting the valve clearance did not correct the excessive MAP sensor fluctuation. Go to step 27.

NO

The excessive MAP sensor fluctuation was caused by incorrect valve clearance.

27. Check Cylinder Compression

-1. **Perform a cylinder compression test** .

-2. Record your test results in a chart similar to the one shown below.

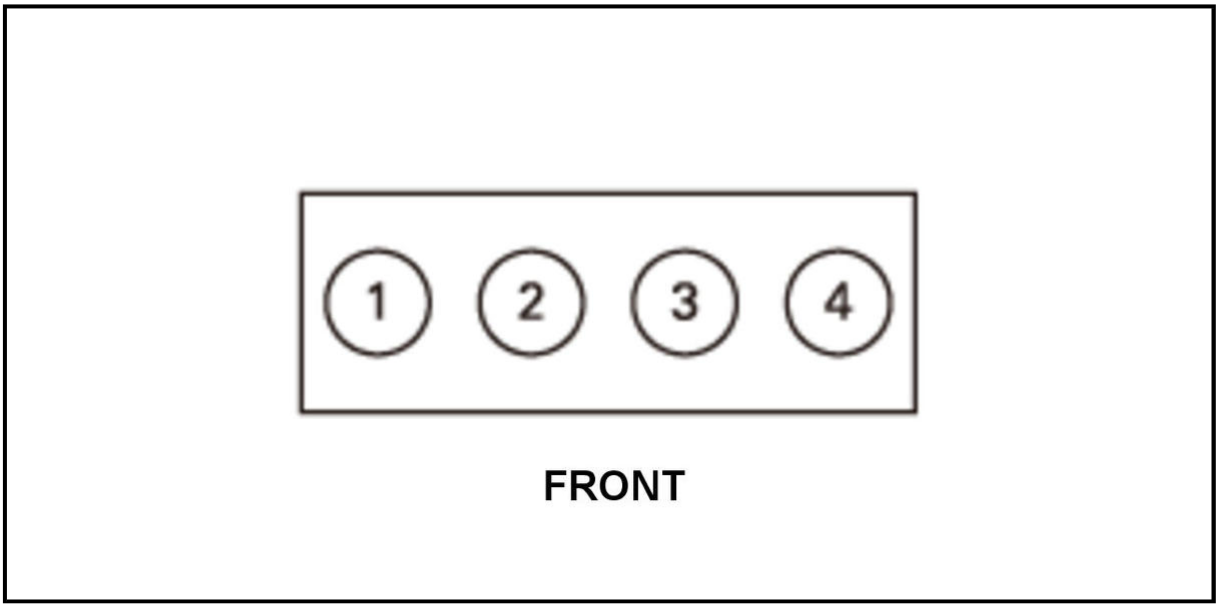

B	Compression (PSI)
No. 1	B
No. 2	B
No. 3	B
No. 4	B

Highest Reading (PSI)	Lowest Reading (PSI)	Variation (%)
B	B	B

Does the compression vary more than 10 % between cylinders, or does any cylinder read below 150 PSI?

1. **YES**

   The cylinder leakage is normal, but the engine compression is low. Check for each of the conditions below and repair as needed.

   - Incorrect camshaft timing.
   - A bent (short) connecting rod.
   - Worn or damaged camshaft lobes.

   NO

   The engine compression and the cylinder leakage are normal. Go to step 28.

28. Check Cylinder Leakage

-1. **Perform a cylinder leakage test** .

-2. Record your test results in the chart shown below.

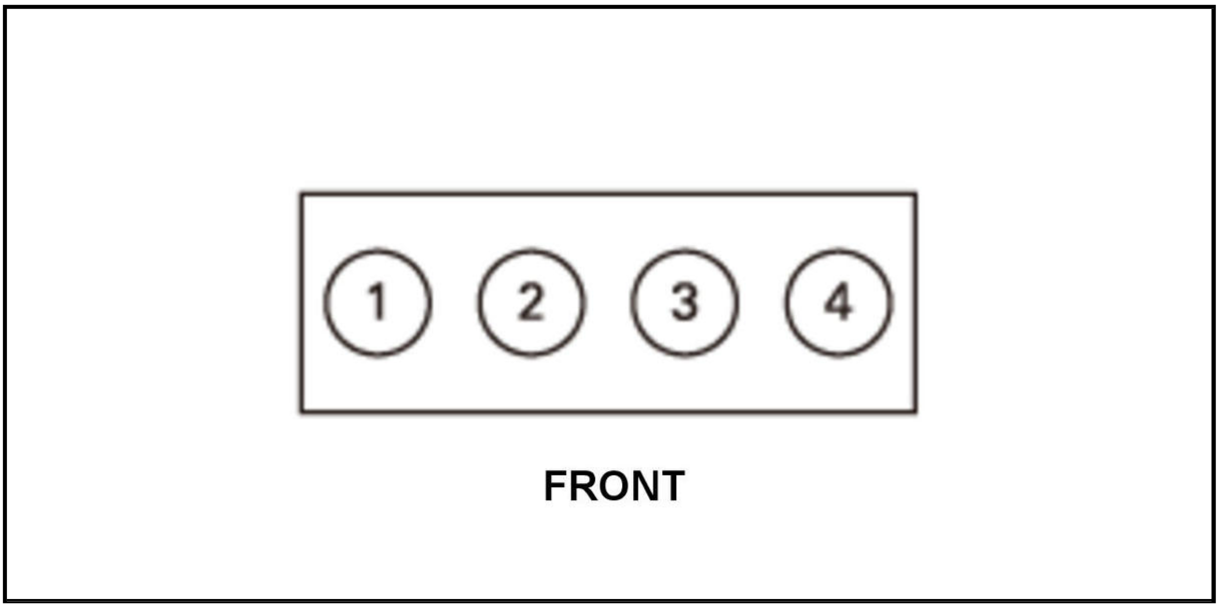

B	Leakage (%)	Leakage Area
No. 1	B	B
No. 2	B	B
No. 3	B	B
No. 4	B	B

Does any cylinder have leakage greater than 10 %?

YES

If the majority of the air is escaping from exhaust pipe or throttle body, check for tight valve clearance and adjust each cylinder as needed, then retest. Determine the cause of the cylinder leakage and repair the engine as needed.

NO

The cylinders are sealing properly. Go to step 29.

29. Exchange Fuel Injector

-1. **Exchange the fuel injector from the problem cylinder with one from another cylinder** .

-2. Drive the vehicle under the conditions when the misfire was duplicated.

-3. Monitor the misfire parameters in the DATA LIST.

Signal	Current conditions	
	Values	Unit
CYL1 MISFIRE	B	B
CYL2 MISFIRE	B	B
CYL3 MISFIRE	B	B
CYL4 MISFIRE	B	B

Do the misfire counts stay on the problem cylinder when the fuel injector is swapped?

YES

The fuel injector is OK. All of the failures have been checked for this type of misfire. Go to step 1 in the Problem verification procedure and ensure you selected the correct troubleshooting procedure.

NO

The fuel injector is faulty. **Replace all fuel injectors as a set** .

30. Inspect Spark Plug

-1. **Remove the spark plug from the problem cylinder** .

-2. Inspect the spark plug for signs of failure. Also make sure the spark plugs are the correct part number for the vehicle.

Does the spark plug show any signs of failure or is it not the correct part number?

YES

Replace the spark plug .

NO

Go to step 31.

31. Check Ignition Coil Spark

-1. Turn the vehicle to the OFF (LOCK) mode.

-2. **Remove the ignition coil from the problem cylinder** .

-3. Connect a commercially available spark tester between the ignition coil and engine ground.

-4. Start the engine with the ignition coil connected.

Does the ignition coil produce a spark?

YES

The ignition coil wiring is OK. Go to step 39.

NO

There is a problem with the ignition coil, or the Ignition coil circuit. Go to step 32.

32. Exchange Ignition Coil

-1. **Exchange the ignition coil on the problem cylinder with a normally operating cylinder** .

-2. Connect a commercially available spark tester between the ignition coil and engine ground.

-3. Start the engine with the ignition coil connected.

Does the ignition coil produce a spark?

YES

The ignition coil has a failure. **Replace the ignition coil** .

NO

There is a problem with the ignition coil circuit. Go to step 33.

33. Check Ignition Coil Power and Ground

-1. Disconnect the ignition coil 3P connector from the problem cylinder.

-2. Turn the vehicle to the ON mode.

-3. Measure the voltage between ignition coil 3P connector terminals No. 1 (power) and No. 2 (ground).

NOTE: After the vehicle is turned to the OFF (LOCK) mode, this circuit may still show battery voltage for a period of time. This is normal.

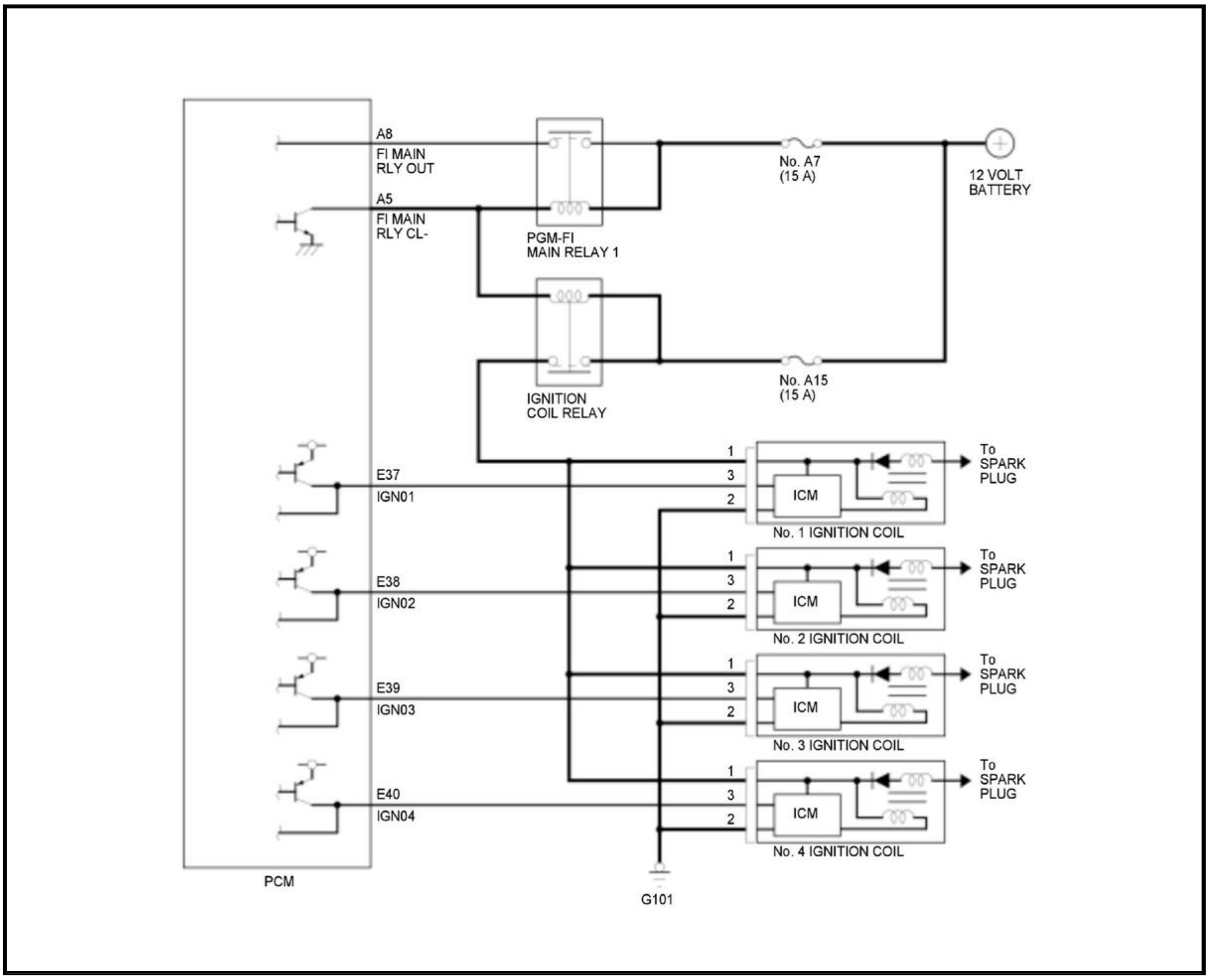
A8
FI MAIN
RLY OUT
A5
FI MAIN
RLY CL-
PGM-FI
MAIN RELAY 1
No. A7
(15 A)
12 VOLT
BATTERY
IGNITION
COIL RELAY
No. A15
(15 A)
E37
IGN01
1
3
2
ICM
To
SPARK
PLUG
No. 1 IGNITION COIL
E38
IGN02
1
3
2
ICM
To
SPARK
PLUG
No. 2 IGNITION COIL
E39
IGN03
1
3
2
ICM
To
SPARK
PLUG
No. 3 IGNITION COIL
E40
IGN04
1
3
2
ICM
To
SPARK
PLUG
No. 4 IGNITION COIL
PCM
G101

Is there battery voltage?

YES

The ignition coil power and ground circuits are OK. Go to step 34.

NO

There is a problem with the ignition coil power or ground circuit. Go to step 38.

34. Check Ignition Coil Control Short to Power

-1. Turn the vehicle to the ON mode.

-2. Measure the voltage between ignition coil 3P connector terminals No. 3 (Ignition Control) and body ground.

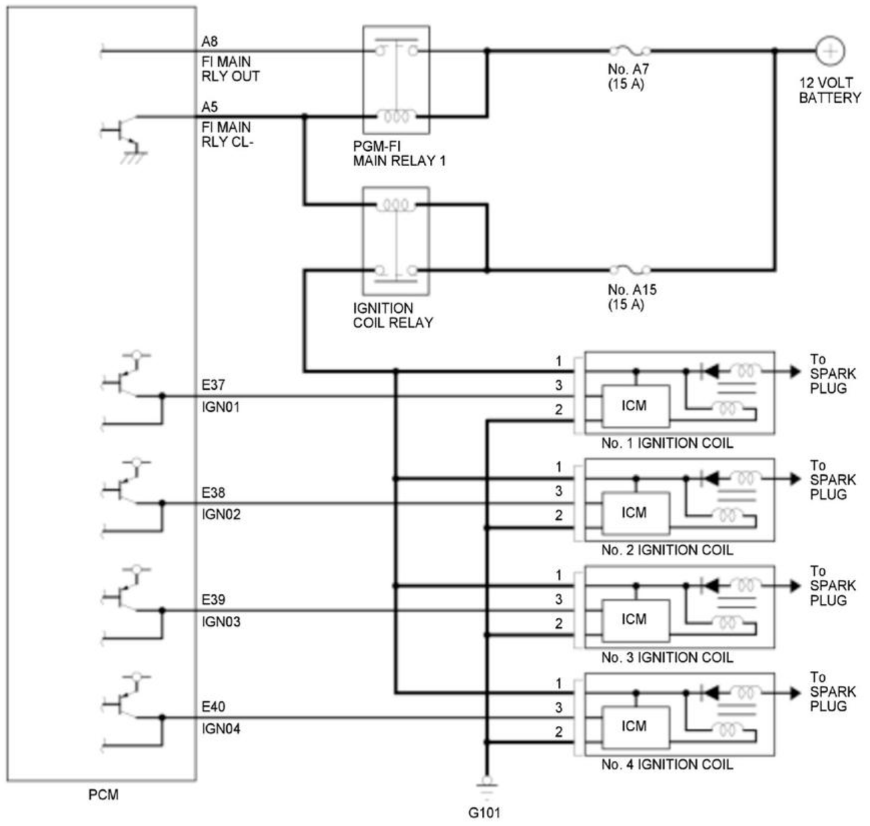
A8
FI MAIN RLY OUT
A5
FI MAIN RLY CL-
PGM-FI MAIN RELAY 1
No. A7 (15 A)
12 VOLT BATTERY
IGNITION COIL RELAY
No. A15 (15 A)
E37
IGN01
E38
IGN02
E39
IGN03
E40
IGN04
1
3
2
ICM
No. 1 IGNITION COIL
No. 2 IGNITION COIL
No. 3 IGNITION COIL
No. 4 IGNITION COIL
To SPARK PLUG
PCM
G101

Is there about 4 V or more?

YES

The ignition coil control circuit is shorted to power. Go to step 35.

NO

The ignition coil control circuit is not shorted to power. Go to step 36.

35. Isolate Ignition Coil Control Short to Power

-1. Turn the vehicle to the OFF (LOCK) mode.

-2. Jump the SCS line with the HDS, and wait more than 1 minute.

-3. Disconnect the PCM connectors.

-4. Turn the vehicle to the ON mode.

-5. Measure the voltage between ignition coil 3P connector terminals No. 3 (Ignition Control) and body ground.

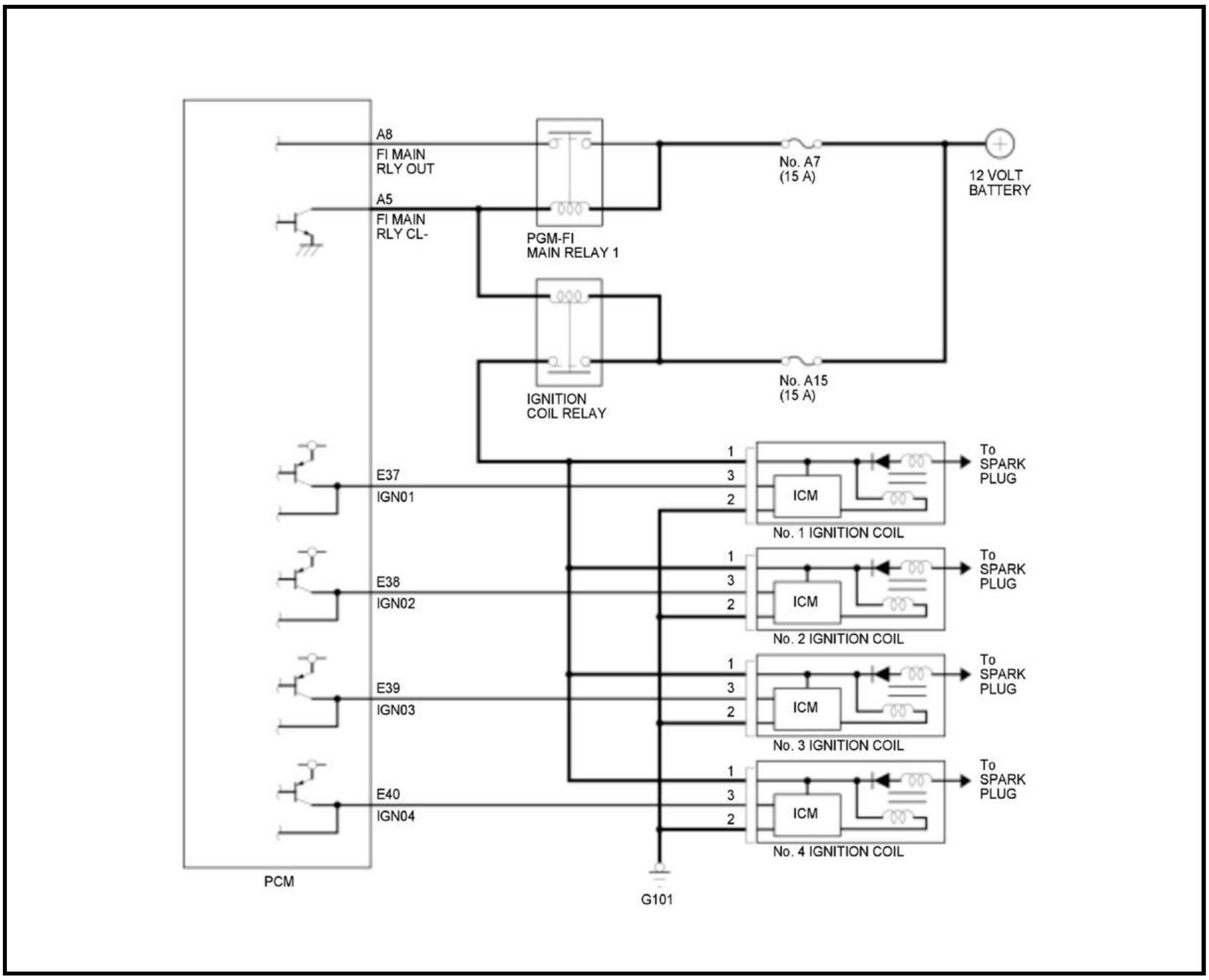
A8
FI MAIN RLY OUT
A5
FI MAIN RLY CL-
PGM-FI MAIN RELAY 1
No. A7 (15 A)
12 VOLT BATTERY
IGNITION COIL RELAY
No. A15 (15 A)
E37
IGN01
E38
IGN02
E39
IGN03
E40
IGN04
1
3
2
ICM
To SPARK PLUG
No. 1 IGNITION COIL
No. 2 IGNITION COIL
No. 3 IGNITION COIL
No. 4 IGNITION COIL
PCM
G101

Is there about 4 V or more?

YES

There is a short to power on the ignition coil control circuit. Find and repair the failure.

NO

The PCM is malfunctioning. **Replace the PCM** .

36. Check Ignition Coil Control Open Circuit

-1. Turn the vehicle to the OFF (LOCK) mode.

-2. Jump the SCS line with the HDS, and wait more than 1 minute.

-3. Disconnect the PCM connectors.

-4. Check for continuity between the ignition coil control terminal at the PCM connector and at the ignition coil 3P connector terminal No. 3.

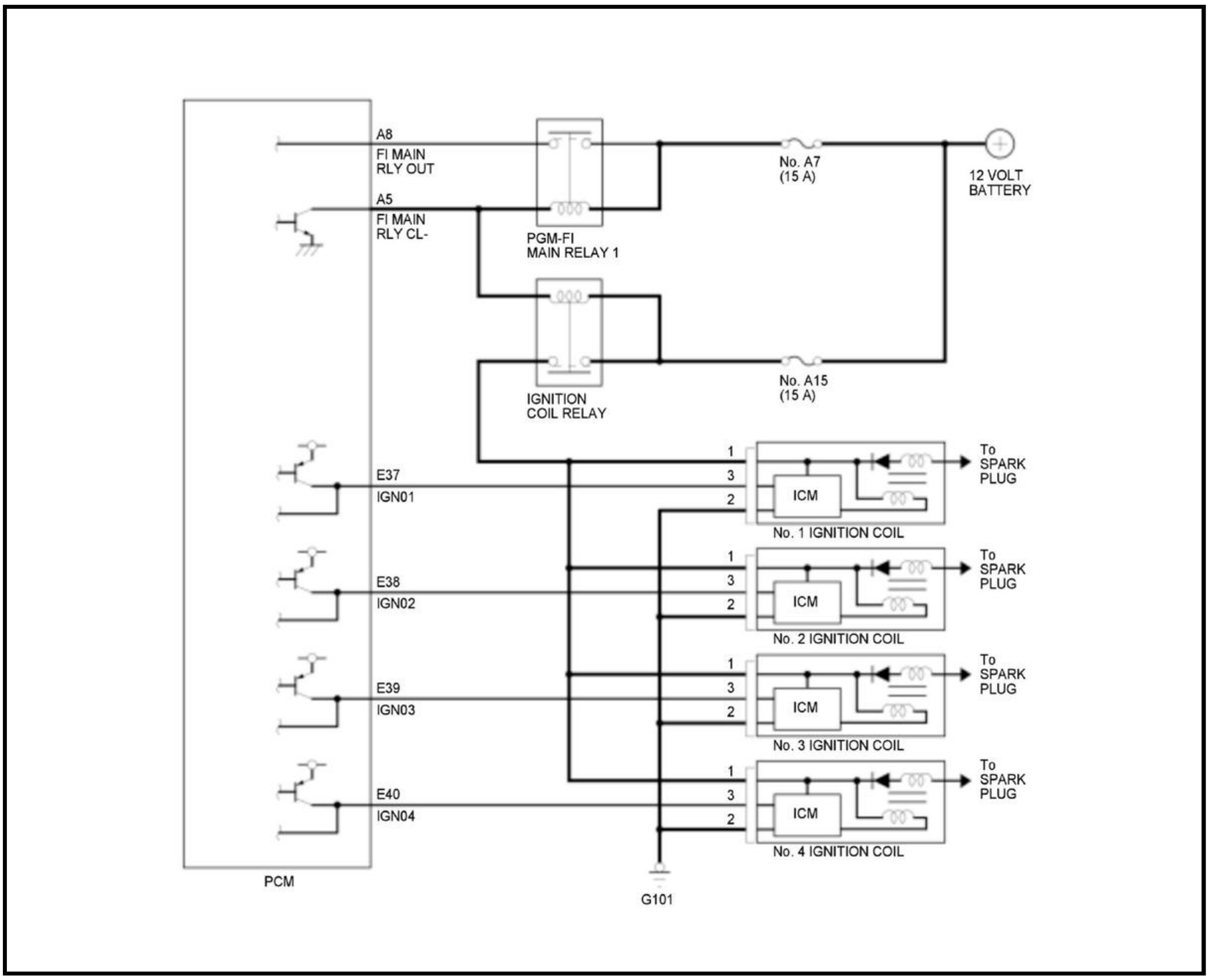
A8
FI MAIN
RLY OUT
A5
FI MAIN
RLY CL-
PGM-FI
MAIN RELAY 1
No. A7
(15 A)
12 VOLT
BATTERY
IGNITION
COIL RELAY
No. A15
(15 A)
E37
IGN01
E38
IGN02
E39
IGN03
E40
IGN04
1
3
2
ICM
No. 1 IGNITION COIL
No. 2 IGNITION COIL
No. 3 IGNITION COIL
No. 4 IGNITION COIL
To
SPARK
PLUG
PCM
G101

Is there continuity?

YES

The ignition coil control circuit is not open. Go to step 37.

NO

Repair the open circuit between the ignition coil and the PCM.

37. Check Ignition Coil Control Short to Ground

-1. Check for continuity between ignition coil control terminal at the ignition coil 3P connector terminal No. 3 (Ignition Control) and body ground.

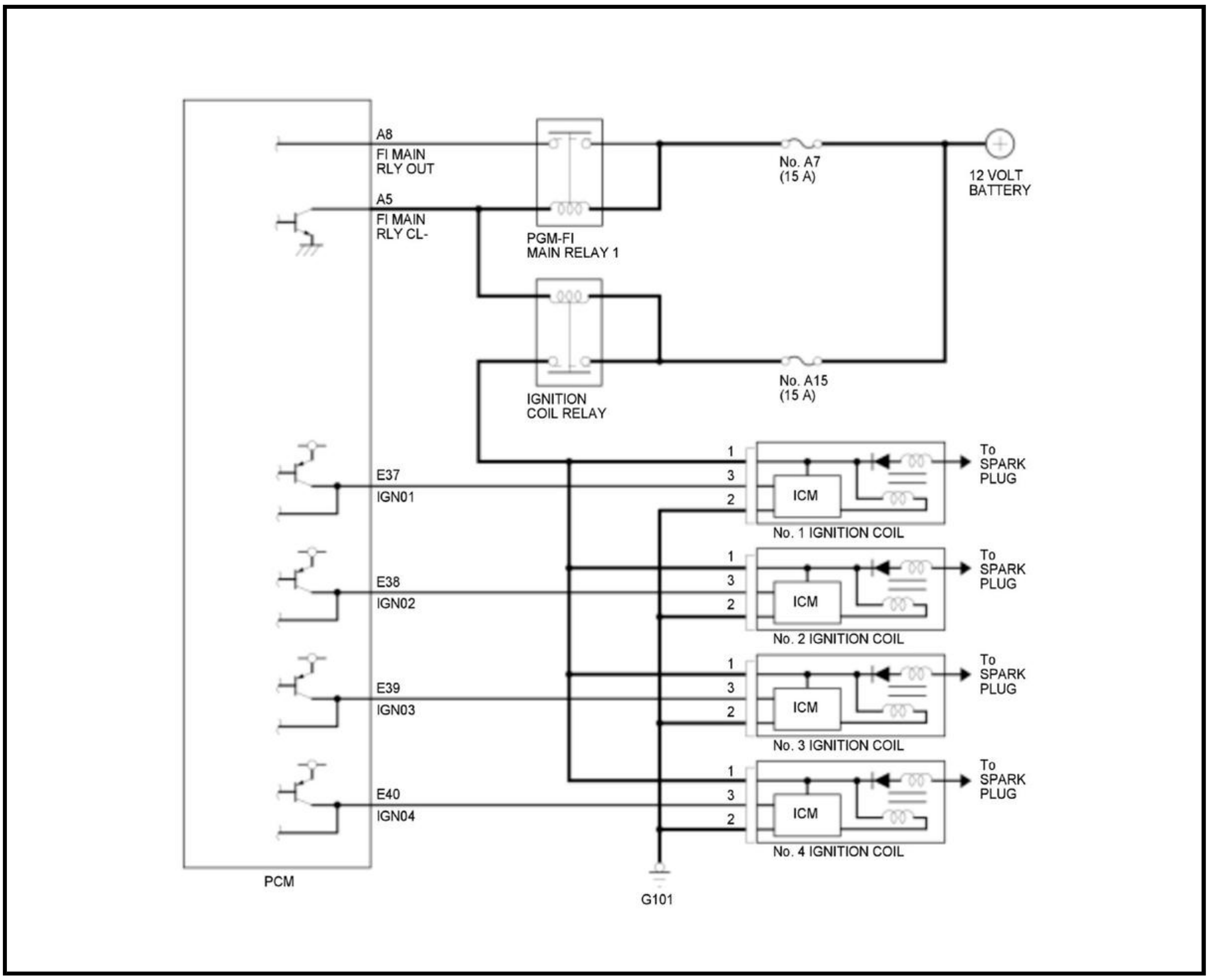
A8
FI MAIN RLY OUT
A5
FI MAIN RLY CL-
PGM-FI MAIN RELAY 1
No. A7 (15 A)
12 VOLT BATTERY
IGNITION COIL RELAY
No. A15 (15 A)
E37
IGN01
E38
IGN02
E39
IGN03
E40
IGN04
1
3
2
ICM
No. 1 IGNITION COIL
No. 2 IGNITION COIL
No. 3 IGNITION COIL
No. 4 IGNITION COIL
To SPARK PLUG
PCM
G101

Is there continuity?

YES

Repair the short to ground on the ignition coil control wire.

NO

The ignition coil control wiring is OK. **Substitute a known-good PCM** .

38. Check Ignition Coil Power Circuit

-1. Measure the voltage between ignition coil 3P connector terminal No. 1 (power) and a known-good engine ground.

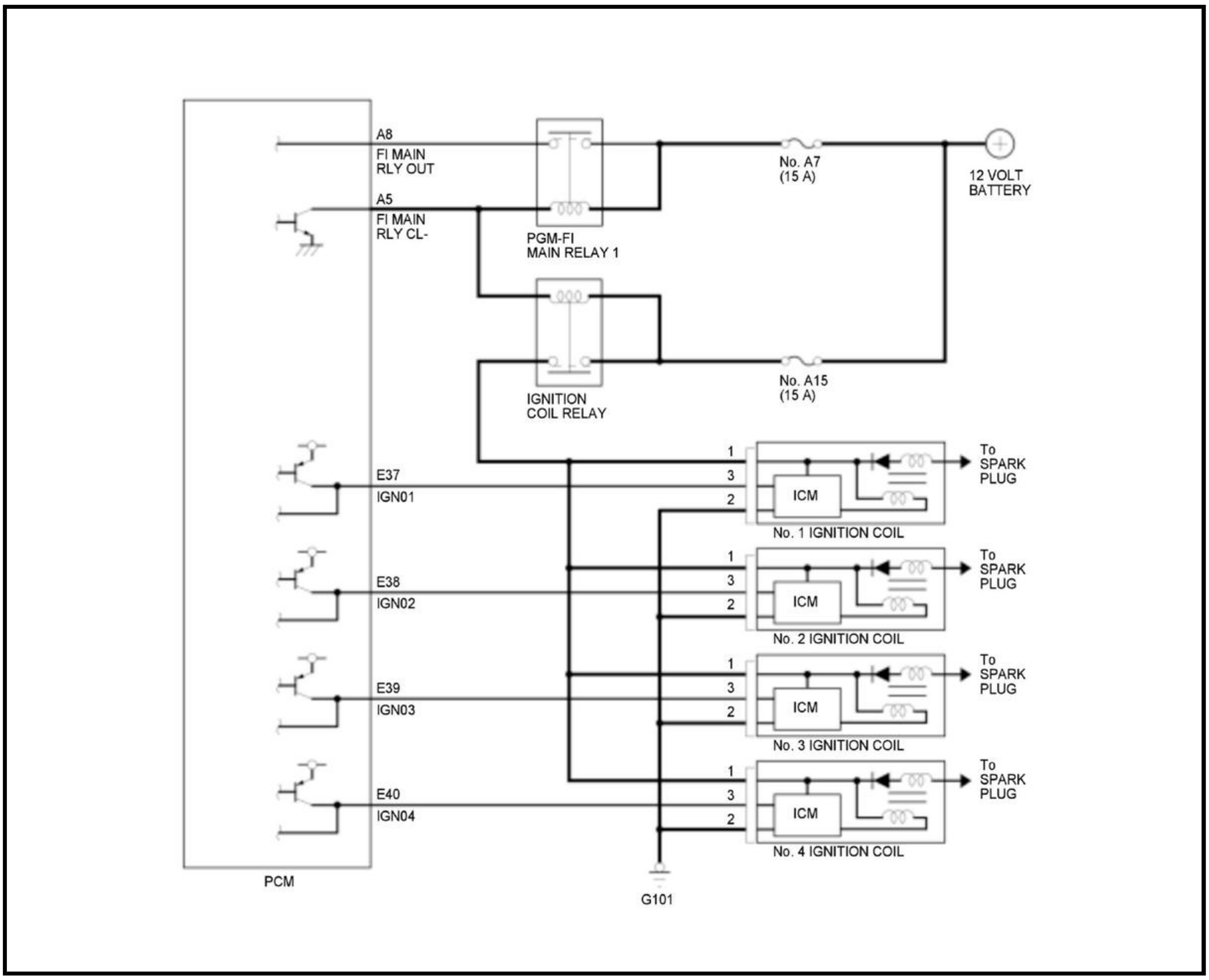
A8
FI MAIN
RLY OUT
A5
FI MAIN
RLY CL-
PGM-FI
MAIN RELAY 1
No. A7
(15 A)
12 VOLT
BATTERY
IGNITION
COIL RELAY
No. A15
(15 A)
E37
IGN01
1
3
2
ICM
To
SPARK
PLUG
No. 1 IGNITION COIL
E38
IGN02
1
3
2
ICM
To
SPARK
PLUG
No. 2 IGNITION COIL
E39
IGN03
1
3
2
ICM
To
SPARK
PLUG
No. 3 IGNITION COIL
E40
IGN04
1
3
2
ICM
To
SPARK
PLUG
No. 4 IGNITION COIL
PCM
G101

Is there battery voltage between the ignition coil power terminal and engine ground?

YES

The power circuit is OK. Repair the open circuit between the ignition coil (3P connector terminal No. 2) and G101.

NO

Repair the open circuit between the ignition coil and the ignition coil relay.

39. Inspect Ignition Coil

-1. Inspect the ignition coil and spark plug tube for engine oil contamination.

Is the ignition coil covered in engine oil?

YES

Clean the oil from the ignition coil and spark plug tube. **Replace the spark plug tube seals in the cylinder head cover** .

NO

Go to step 40.

40. Exchange Spark Plug and Ignition Coil

-1. **Exchange the spark plug and the ignition coil with one from a normally operating cylinder** .

-2. Drive the vehicle under the conditions when the misfire was duplicated.

-3. Monitor the misfire parameters in the DATA LIST.

Signal	**Current conditions**	
	Values	**Unit**
CYL1 MISFIRE	B	B
CYL2 MISFIRE	B	B
CYL3 MISFIRE	B	B
CYL4 MISFIRE	B	B

Did the misfire counts stay on the problem cylinder?

YES

The ignition coil and spark plug are OK. Go to step 42.

NO

There is a failure in the ignition coil or the spark plug. Go to step 41.

41. Exchange Ignition Coil

-1. **Exchange the ignition coil on the problem cylinder with a normally operating cylinder** .

-2. Drive the vehicle under the conditions when the misfire was duplicated.

-3. Monitor the misfire parameters in the DATA LIST.

Signal	**Current conditions**	
	Values	**Unit**
CYL1 MISFIRE	B	B
CYL2 MISFIRE	B	B
CYL3 MISFIRE	B	B
CYL4 MISFIRE	B	B

Did the misfire counts stay on the problem cylinder?

YES

The spark plug has a failure. **Replace the spark plug** .

NO

The ignition coil has a failure. **Replace the ignition coil** .

42. Check MAP Sensor Fluctuation

-1. Start the engine, and let it idle until the cooling fans cycle twice.

-2. Turn off all engine and electrical loads (A/C, audio, lights, etc.).

-3. Configure a HIGH-SPEED SNAPSHOT, and select only the MAP SENSOR.

-4. Begin displaying live vehicle data on a line graph.

-5. Configure the MAP SENSOR line graph range for 1.2 V MAX and 0.8 V MIN.

-6. Watch the MAP SENSOR fluctuation. See examples below.

Good Example

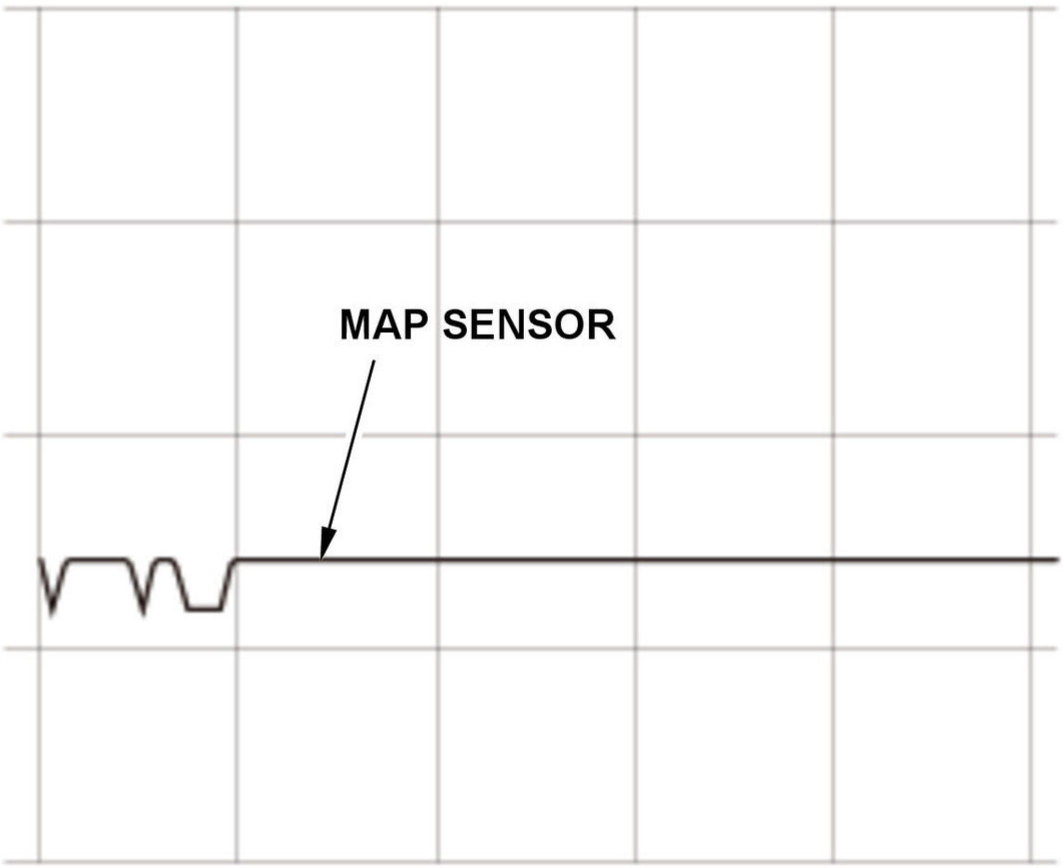

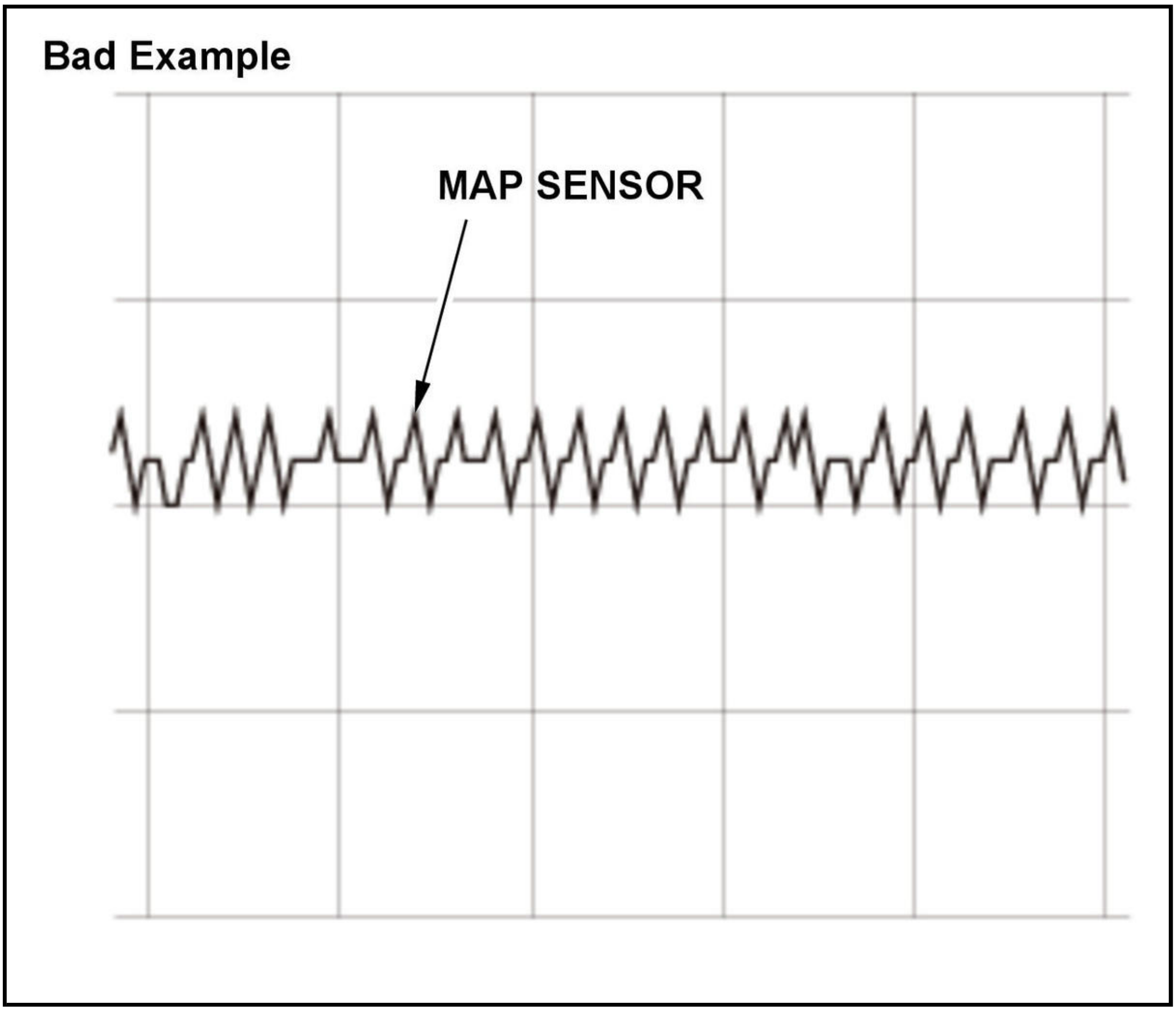

Does the MAP SENSOR continuously fluctuate 0.04 V or more at idle, no loads, engine hot?

YES

The intake manifold pressure fluctuation indicates a mechanical engine failure. Go to step 43.

NO

The intake manifold vacuum fluctuation is OK. Go to step 46.

43. Adjust Valve Clearance

-1. **Adjust the valve clearances** , and inspect the camshaft for excessive wear or grooves.

NOTE: ECT Sensor 1 must read less than 100 deg. F (38 deg. C) before adjusting the valve clearance. Shortcutting this step may cause incorrect valve clearance and engine misfire.

-2. Recheck the MAP SENSOR fluctuation at idle.

Does the MAP SENSOR continuously fluctuate 0.04 V or more at idle, no loads, engine hot?

YES

Adjusting the valve clearance did not correct the excessive MAP sensor fluctuation. Go to step 44.

NO

The excessive MAP sensor fluctuation was caused by incorrect valve clearance.

44. Check Cylinder Compression

-1. **Perform a cylinder compression test** .

-2. Record your test results in a chart similar to the one shown below.

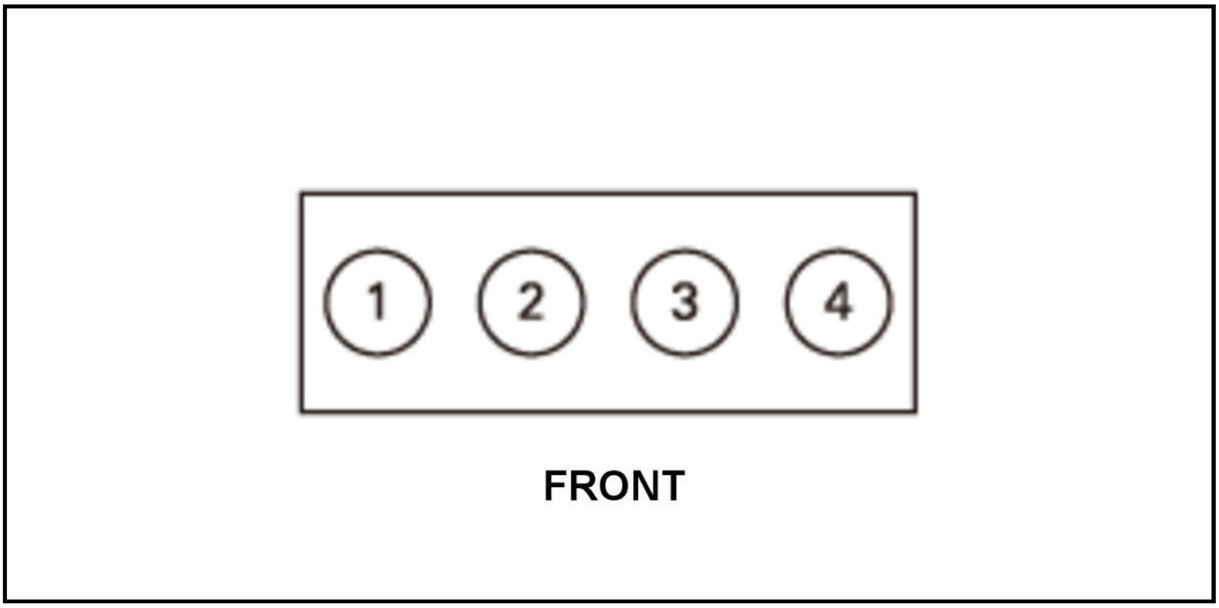

B	Compression (PSI)
No. 1	B
No. 2	B
No. 3	B
No. 4	B

Highest Reading (PSI)	Lowest Reading (PSI)	Variation (%)
B	B	B

Does the compression vary more than 10 % between cylinders, or does any cylinder read below 150 PSI?

1. **YES**

   The cylinder leakage is normal, but the engine compression is low. Check for each of the conditions below and repair as needed.

   - Incorrect camshaft timing.
   - A bent (short) connecting rod.
   - Worn or damaged camshaft lobes.

   NO

   The engine compression and the cylinder leakage are normal. Go to step 45.

45. Check Cylinder Leakage

-1. **Perform a cylinder leakage test** .

-2. Record your test results in the chart shown below.

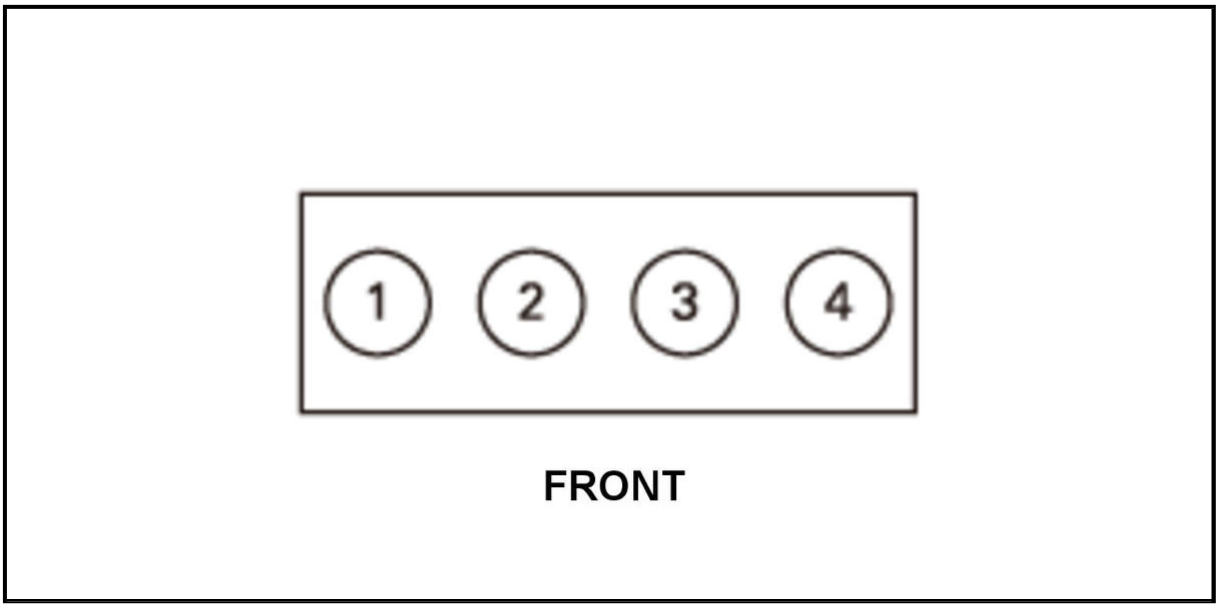

B	Leakage (%)	Leakage Area
No. 1	B	B
No. 2	B	B
No. 3	B	B
No. 4	B	B

Does any cylinder have leakage greater than 10 %?

YES

If the majority of the air is escaping from exhaust pipe or throttle body, check for tight valve clearance and adjust each cylinder as needed, then retest. Determine the cause of the cylinder leakage and repair the engine as needed.

NO

The cylinders are sealing properly. Go to step 46.

46. Exchange Fuel Injector

-1. **Exchange the fuel injector from the problem cylinder with one from another cylinder** .

-2. Drive the vehicle under the conditions when the misfire was duplicated.

-3. Monitor the misfire parameters in the DATA LIST.

Signal	Current conditions	
	Values	Unit
CYL1 MISFIRE	B	B
CYL2 MISFIRE	B	B
CYL3 MISFIRE	B	B
CYL4 MISFIRE	B	B

Do the misfire counts stay on the problem cylinder when the fuel injector is swapped?

YES

The fuel injector is OK. Go to step 47.

NO

The fuel injector is faulty. **Replace all fuel injectors as a set** .

47. CKP Pattern Clear/Pattern Learn

 -1. Select CRANK PATTERN in the ADJUSTMENT MENU with the HDS.

 -2. **Select CRANK PATTERN CLEAR, and clear the CKP pattern** .

 CRANK PATTERN CLEAR

 Select CRANK PATTERN LEARNING with the HDS, and follow the screen prompts .

 CRANK PATTERN LEARNING

 Monitor the misfire parameters in the DATA LIST.

Signal	Current conditions	
	Values	Unit
CYL1 MISFIRE	B	B
CYL2 MISFIRE	B	B
CYL3 MISFIRE	B	B
CYL4 MISFIRE	B	B

 Did the misfire counts stay on the problem cylinder?

 YES

 Check for authorized service information related to the DTCs or symptoms you are troubleshooting or **substitute a known-good PCM** .

 NO

 The misfire problem has been fixed.

48. Inspect Spark Plug

 -1. **Remove the spark plug from the problem cylinder** .

 -2. Inspect the spark plug for signs of failure. Also make sure the spark plugs are the correct part number for the vehicle.

 Does the spark plug show any signs of failure or is it not the correct part number?

 YES

 Replace the spark plug .

 NO

 Go to step 49.

49. Check MAP Sensor Fluctuation

 -1. Start the engine, and let it idle until the cooling fans cycle twice.

 -2. Turn off all engine and electrical loads (A/C, audio, lights, etc.).

 -3. Configure a HIGH-SPEED SNAPSHOT, and select only the MAP SENSOR.

 -4. Begin displaying live vehicle data on a line graph.

-5. Configure the MAP SENSOR line graph range for 1.2 V MAX and 0.8 V MIN.

-6. Watch the MAP SENSOR fluctuation. See examples below.

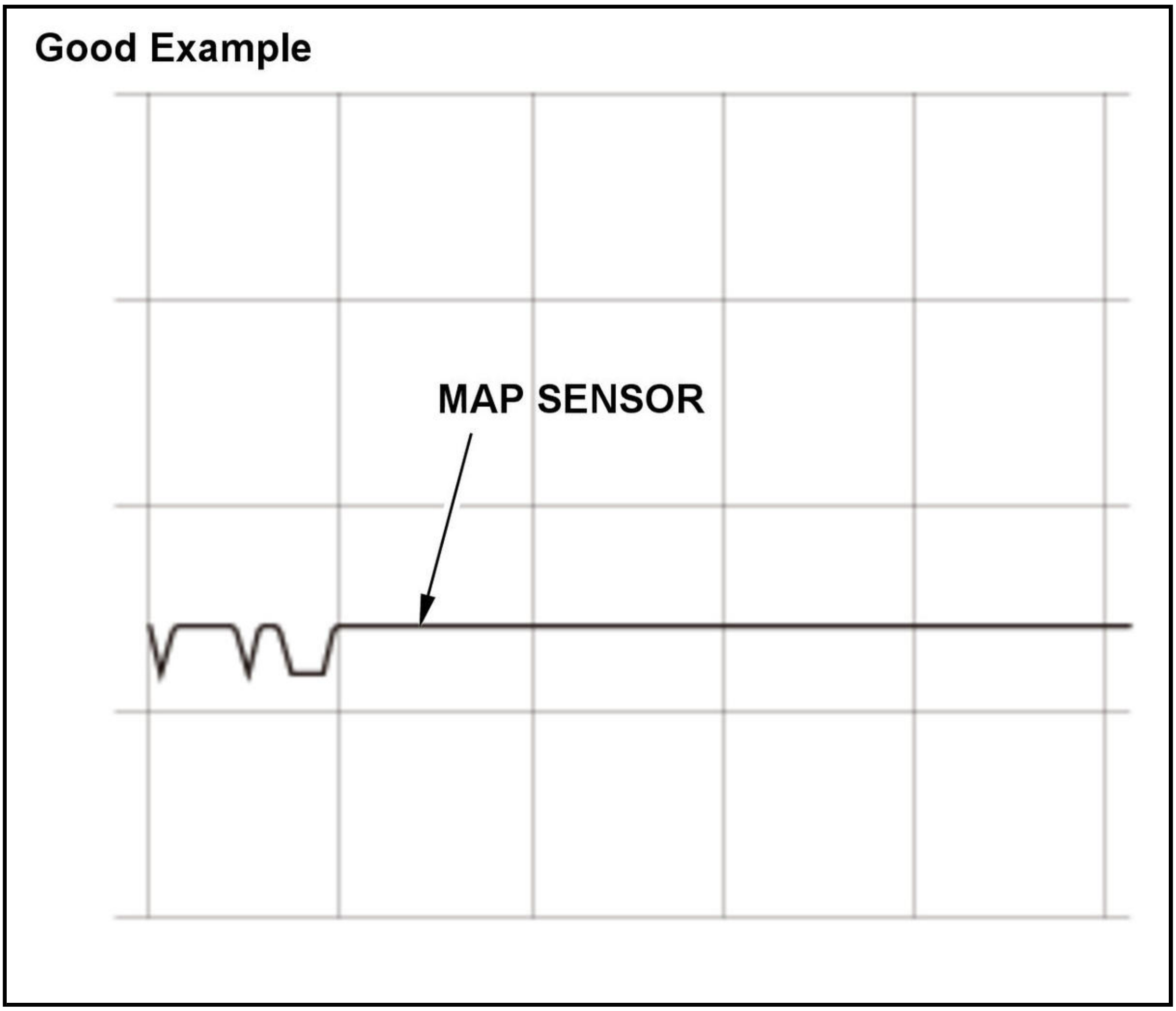

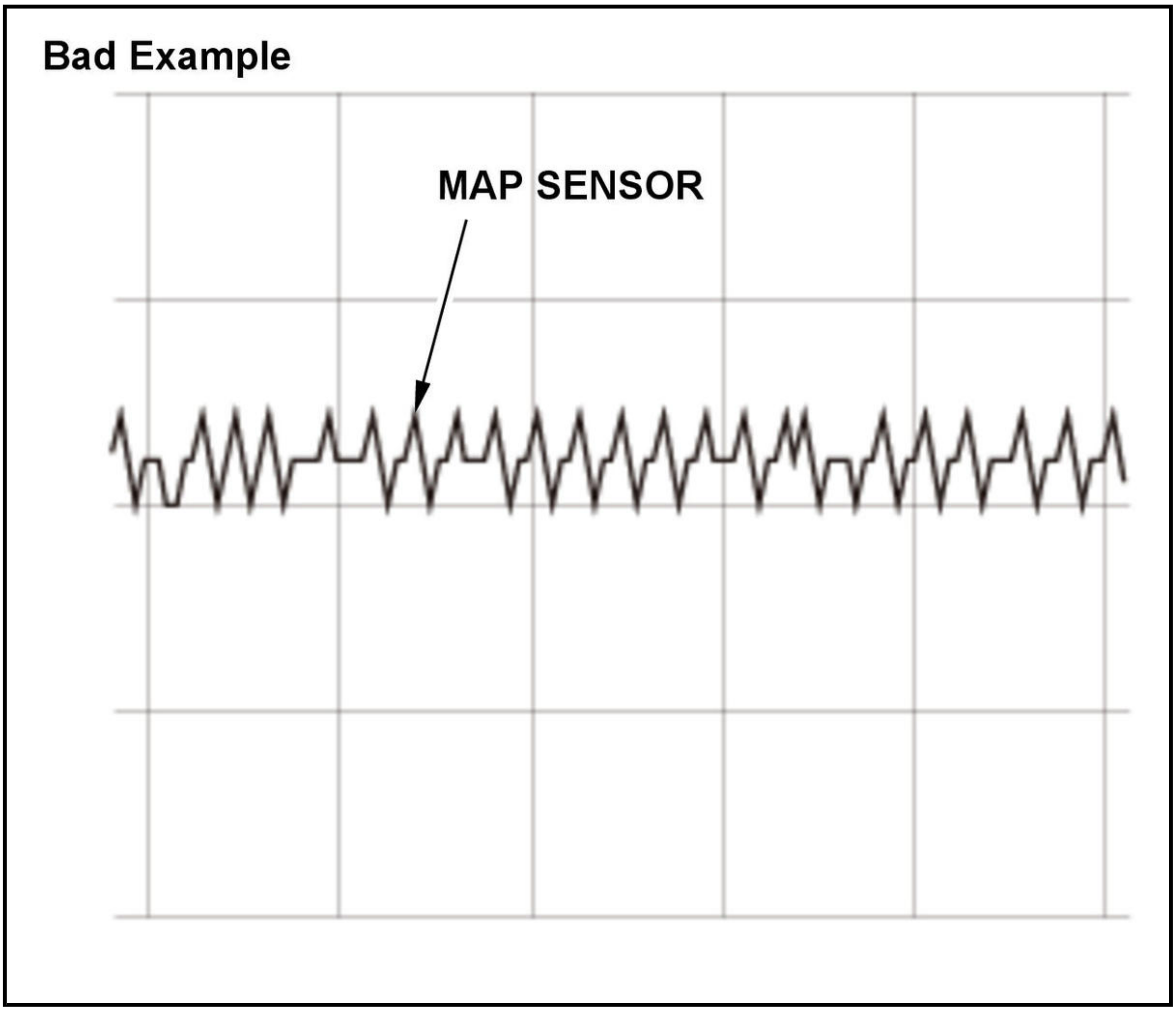

Does the MAP SENSOR continuously fluctuate 0.04 V or more at idle, no loads, engine hot?

YES

The intake manifold pressure fluctuation indicates a mechanical engine failure. Go to step 50.

NO

The intake manifold vacuum fluctuation is OK. Go to step 53.

50. Adjust Valve Clearance

-1. **Adjust the valve clearances** , and inspect the camshaft for excessive wear or grooves.

NOTE: ECT Sensor 1 must read less than 100 deg. F (38 deg. C) before adjusting the valve clearance. Shortcutting this step may cause incorrect valve clearance and engine misfire.

-2. Recheck the MAP SENSOR fluctuation at idle.

Does the MAP SENSOR continuously fluctuate 0.04 V or more at idle, no loads, engine hot?

YES

Adjusting the valve clearance did not correct the excessive MAP sensor fluctuation. Go to step 51.

NO

The excessive MAP sensor fluctuation was caused by incorrect valve clearance.

51. Check Cylinder Compression

-1. **Perform a cylinder compression test** .

-2. Record your test results in a chart similar to the one shown below.

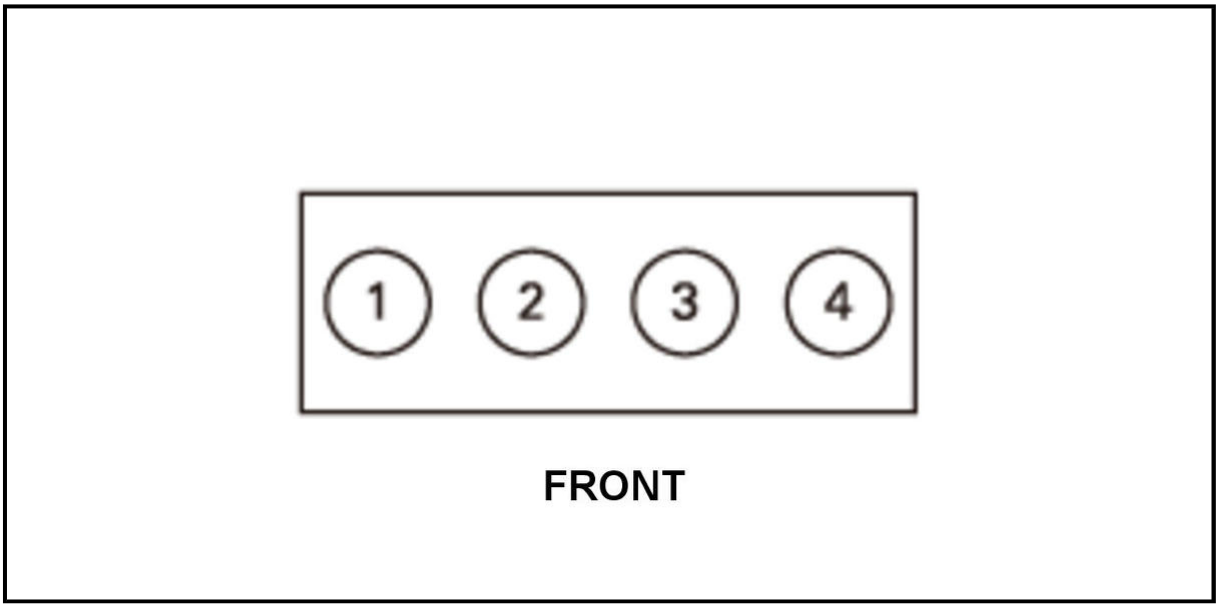

B	Compression (PSI)
No. 1	B
No. 2	B
No. 3	B
No. 4	B

Highest Reading (PSI)	Lowest Reading (PSI)	Variation (%)
B	B	B

Does the compression vary more than 10 % between cylinders, or does any cylinder read below 150 PSI?

1. **YES**

   The cylinder leakage is normal, but the engine compression is low. Check for each of the conditions below and repair as needed.

   - Incorrect camshaft timing.
   - A bent (short) connecting rod.
   - Worn or damaged camshaft lobes.

   NO

   The engine compression and the cylinder leakage are normal. Go to step 52.

52. Check Cylinder Leakage

-1. **Perform a cylinder leakage test** .

-2. Record your test results in the chart shown below.

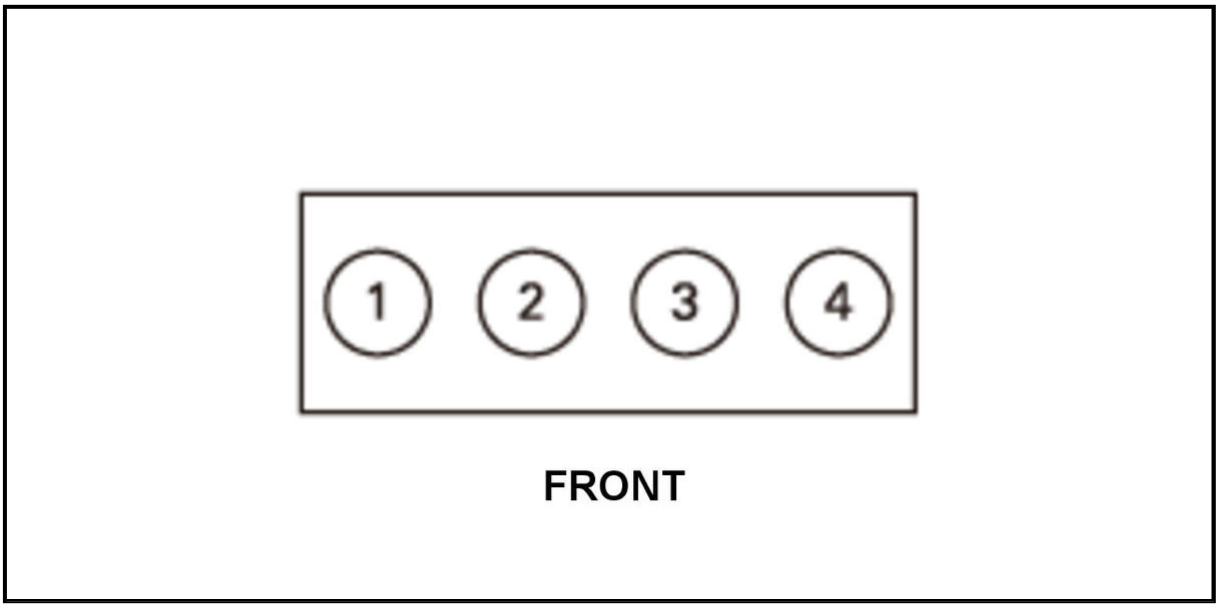

B	Leakage (%)	Leakage Area
No. 1	B	B
No. 2	B	B
No. 3	B	B
No. 4	B	B

Does any cylinder have leakage greater than 10 %?

YES

If the majority of the air is escaping from exhaust pipe or throttle body, check for tight valve clearance and adjust each cylinder as needed, then retest. Determine the cause of the cylinder leakage and repair the engine as needed.

NO

The cylinders are sealing properly. Go to step 53.

53. Check Fuel Pressure

-1. **Relieve the fuel pressure** .

-2. **Attach the fuel pressure gauge set and the fuel pressure gauge** .

-3. Locate and record the fuel pressure specification for your vehicle.

Minimum Pressure (kPa)	Maximum Pressure (kPa)
B	B

-4. Start the engine, and record the fuel pressure under the conditions the misfire was duplicated.

Fuel Pressure (kPa)
B

Is the fuel pressure within specifications?

YES

The fuel pressure is OK. Go to step 54.

NO

Check for pinched or damaged fuel lines. If OK, **replace the fuel tank unit** .

54. Check Fuel Contamination

-1. **Remove the fuel tank unit** .

-2. Inspect for evidence of fuel contamination such as diesel fuel, water, rust, or debris.

NOTE: If the misfire occurred shortly after refueling, the likely cause is poor fuel quality. The MIL DIST (MIL distance) value in the DATA LIST, along with the fuel level, can help you make this determination. Incorrect or contaminated fuel typically affects multiple cylinders. But a problem such as water in the fuel can cause a single cylinder misfire that occurs randomly.

Is there evidence of fuel contamination?

YES

Replace the fuel filter and then drain/refill the fuel tank with known-good fuel.

NO

The fuel system has no signs of fuel contamination. Go to step 55.

55. Check MAF Sensor g/s

-1. Locate and record the MAF SENSOR g/s specification for your vehicle. This can be found in troubleshooting procedure for DTC P0171.

Minimum g/s	Maximum g/s	Specified RPM
B	B	B

Ensure the vehicle meets these conditions:

- Engine coolant temperature (ECT SENSOR 1) above 176 deg. F (80 deg. C)
- Transmission in P or N
- All electrical loads off

Signal	Current conditions	
	Values	Unit
ECT SENSOR 1	B	B

-3. Monitor the ENGINE SPEED in the DATA LIST with the HDS. Raise and hold the engine speed steady at the specified rpm.

Signal	Current conditions	
	Values	Unit
ENGINE SPEED	B	B

-4. While holding the rpm steady, check the MAF SENSOR in the DATA LIST.

Signal	Current conditions	
	Values	Unit
MAF SENSOR	B	B

Is the MAF Sensor g/s value within specifications?

YES

The MAF sensor is reading correctly. **Replace all fuel injectors as a set** .

NO

The MAF sensor is not reading correctly. **Replace MAF sensor/IAT sensor 1** .

56. Inspect Spark Plug

-1. **Remove the spark plug from the problem cylinder** .

-2. Inspect the spark plug for signs of failure. Also make sure the spark plugs are the correct part number for the vehicle.

Does the spark plug show any signs of failure or is it not the correct part number?

YES

Replace the spark plug .

NO

Go to step 57.

57. Inspect Ignition Coil

-1. Inspect the ignition coil and the spark plug tube for engine oil contamination.

Is the ignition coil covered in engine oil?

YES

Clean the oil from the ignition coil and the spark plug tube. **Replace the spark plug tube seals in the cylinder head cover** .

NO

Go to step 58.

58. Exchange Spark Plug and Ignition Coil

-1. **Exchange the spark plug and the ignition coil with ones from a normally operating cylinder** .

-2. Drive the vehicle under the conditions when the misfire was duplicated.

-3. Monitor the misfire parameters in the DATA LIST.

Signal	Current conditions	
	Values	Unit
CYL1 MISFIRE	B	B
CYL2 MISFIRE	B	B
CYL3 MISFIRE	B	B
CYL4 MISFIRE	B	B

Did the misfire counts stay on the problem cylinder?

YES

The ignition coil and the spark plug are OK. Go to step 60.

NO

There is a failure in the ignition coil or the spark plug. Go to step 59.

59. Exchange Ignition Coil

-1. **Exchange the ignition coil on the problem cylinder with a normally operating cylinder** .

-2. Drive the vehicle under the conditions when the misfire was duplicated.

-3. Monitor the misfire parameters in the DATA LIST.

Signal	**Current conditions**	
	Values	**Unit**
CYL1 MISFIRE	B	B
CYL2 MISFIRE	B	B
CYL3 MISFIRE	B	B
CYL4 MISFIRE	B	B

Did the misfire counts stay on the problem cylinder?

YES

The spark plug has a failure. **Replace the spark plug** .

NO

The ignition coil has a failure. **Replace the ignition coil** .

60. Exchange Fuel Injector

-1. **Exchange the fuel injector from the problem cylinder with one from another cylinder** .

-2. Drive the vehicle under the conditions when the misfire was duplicated.

-3. Monitor the misfire parameters in the DATA LIST.

Signal	**Current conditions**	
	Values	**Unit**
CYL1 MISFIRE	B	B
CYL2 MISFIRE	B	B
CYL3 MISFIRE	B	B
CYL4 MISFIRE	B	B

Do the misfire counts stay on the problem cylinder when the fuel injector is swapped?

YES

The fuel injector is OK. Go to step 61.

NO

The fuel injector is faulty. **Replace all fuel injectors as a set** .

61. CKP Pattern Clear/Pattern Learn

-1. Select CRANK PATTERN in the ADJUSTMENT MENU with the HDS.

-2. **Select CRANK PATTERN CLEAR, and clear the CKP pattern** .

CRANK PATTERN CLEAR

Select CRANK PATTERN LEARNING with the HDS, and follow the screen prompts .

CRANK PATTERN LEARNING

Monitor the misfire parameters in the DATA LIST.

Signal	Current conditions	
	Values	Unit
CYL1 MISFIRE	B	B
CYL2 MISFIRE	B	B
CYL3 MISFIRE	B	B
CYL4 MISFIRE	B	B

Did the misfire counts stay on the problem cylinder?

YES

Check for any authorized service information related to the DTCs or symptoms you are troubleshooting or **substitute a known-good PCM** .

NO

The misfire problem has been fixed.

62. Inspect Spark Plug

-1. **Remove the spark plug from the problem cylinder** .

-2. Inspect the spark plug for signs of failure. Also make sure the spark plugs are the correct part number for the vehicle.

Does the spark plug show any signs of failure or is it not the correct part number?

YES

Replace the spark plug .

NO

Go to step 63.

63. Check Fuel Pressure

-1. **Relieve the fuel pressure** .

-2. **Attach the fuel pressure gauge set and the fuel pressure gauge** .

-3. Locate and record the fuel pressure specification for your vehicle.

Minimum Pressure (kPa)	Maximum Pressure (kPa)
B	B

-4. Start the engine, and record the fuel pressure under the conditions the misfire was duplicated.

Fuel Pressure (kPa)
B

Is the fuel pressure within specifications?

YES

The fuel pressure is OK. Go to step 64.

NO

Check for pinched or damaged fuel lines. If OK, **replace the fuel tank unit** .

64. Check Fuel Contamination

-1. **Remove the fuel tank unit** .

-2. Inspect for evidence of fuel contamination such as diesel fuel, water, rust, or debris.

NOTE: If the misfire occurred shortly after refueling, the likely cause is poor fuel quality. The MIL DIST (MIL distance) value in the DATA LIST, along with the fuel level, can help you make this determination. Incorrect or contaminated fuel typically affects multiple cylinders. But a problem such as water in the fuel can cause a single cylinder misfire that occurs randomly.

Is there evidence of fuel contamination?

YES

Replace the fuel filter and then drain/refill the fuel tank with a known-good fuel.

NO

The fuel system has no signs of fuel contamination. Go to step 65.

65. Exchange Fuel Injector

-1. **Exchange the fuel injector from the problem cylinder with one from another cylinder** .

-2. Drive the vehicle under the conditions when the misfire was duplicated.

-3. Monitor the misfire parameters in the DATA LIST.

Signal	Current conditions	
	Values	Unit
CYL1 MISFIRE	B	B
CYL2 MISFIRE	B	B
CYL3 MISFIRE	B	B
CYL4 MISFIRE	B	B

Do the misfire counts stay on the problem cylinder when the fuel injector is swapped?

YES

The fuel injector is OK. Go to step 66.

NO

The fuel injector is faulty. **Replace all fuel injectors as a set** .

66. Check for Exhaust Restrictions

-1. Reinstall all removed parts, and reconnect all connectors.

-2. Record the MAP SENSOR value while the engine is off.

Signal	Current conditions	
	Values	Unit
MAP Sensor (Hi Res)	B	B

-3. Start the engine, and monitor the ENGINE SPEED and MAP SENSOR in the DATA LIST with the HDS.

Signal	Current conditions	
	Values	Unit
MAP Sensor (Hi Res)	B	B
ENGINE SPEED	B	B

-4. Raise the engine speed to 3, 500 rpm and hold the throttle steady.

Does the MAP SENSOR read near atmospheric pressure (engine off value)?

YES

There is a restriction in the exhaust system. Check for catalyst damage and repair as necessary.

NO

Go to step 67.

67. CKP Pattern Clear/Pattern Learn

-1. Select CRANK PATTERN in the ADJUSTMENT MENU with the HDS.

-2. **Select CRANK PATTERN CLEAR, and clear the CKP pattern** .

CRANK PATTERN CLEAR

Select CRANK PATTERN LEARNING with the HDS, and follow the screen prompts .

CRANK PATTERN LEARNING

Monitor the misfire parameters in the DATA LIST.

Signal	Current conditions	
	Values	Unit
CYL1 MISFIRE	B	B
CYL2 MISFIRE	B	B
CYL3 MISFIRE	B	B
CYL4 MISFIRE	B	B

Did the misfire counts stay on the problem cylinder?

YES

Check for any authorized service information related to the DTCs or symptoms you are troubleshooting or **substitute a known-good PCM** .

NO

The misfire problem has been fixed.

68. Check MAP Sensor Fluctuation

-1. Start the engine, and let it idle until the cooling fans cycle twice.

-2. Turn off all engine and electrical loads (A/C, audio, lights, etc.).

-3. Configure a HIGH-SPEED SNAPSHOT, and select only the MAP SENSOR.

-4. Begin displaying live vehicle data on a line graph.

-5. Configure the MAP SENSOR line graph range for 1.2 V MAX and 0.8 V MIN.

-6. Watch the MAP SENSOR fluctuation. See examples below.

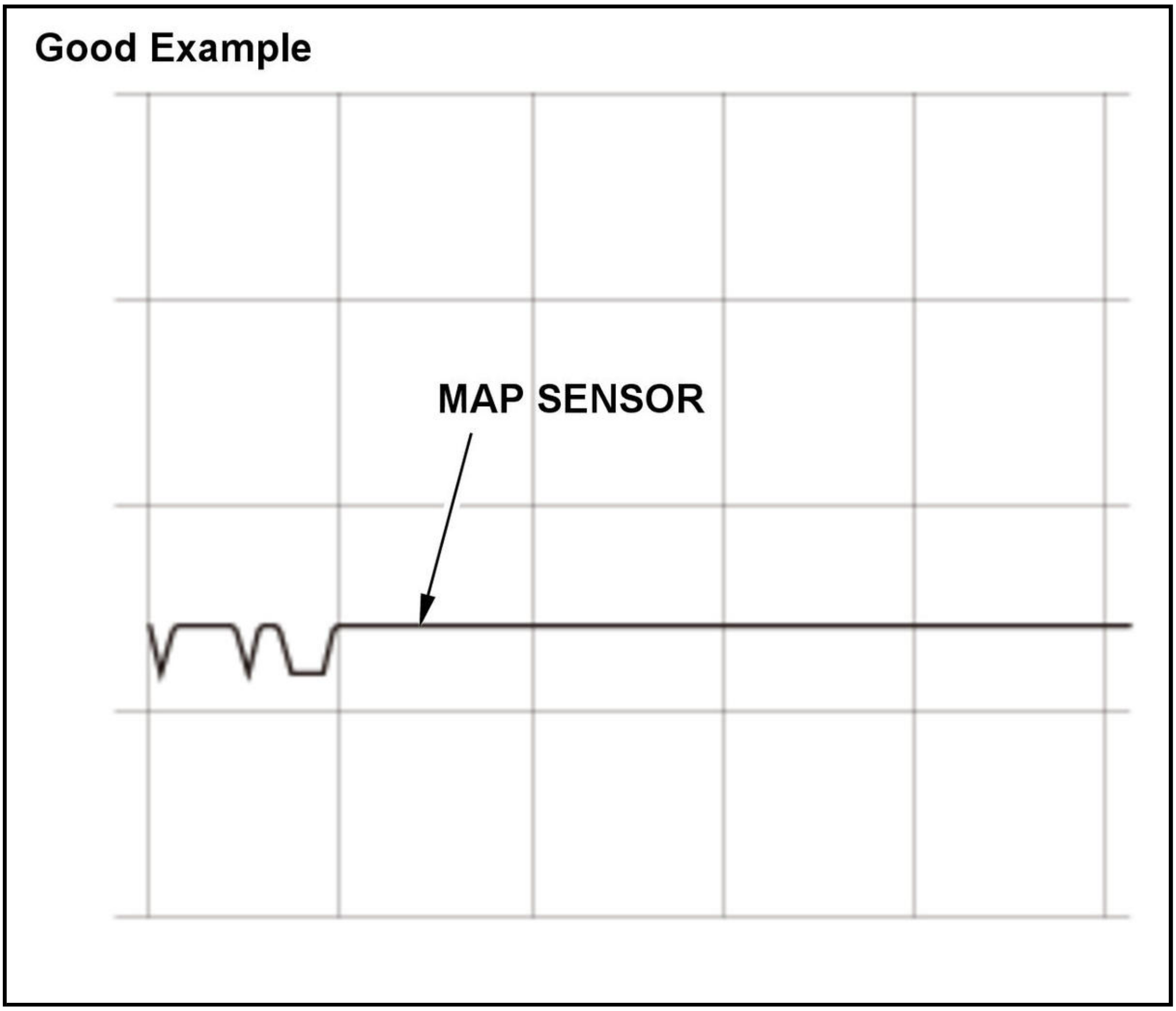

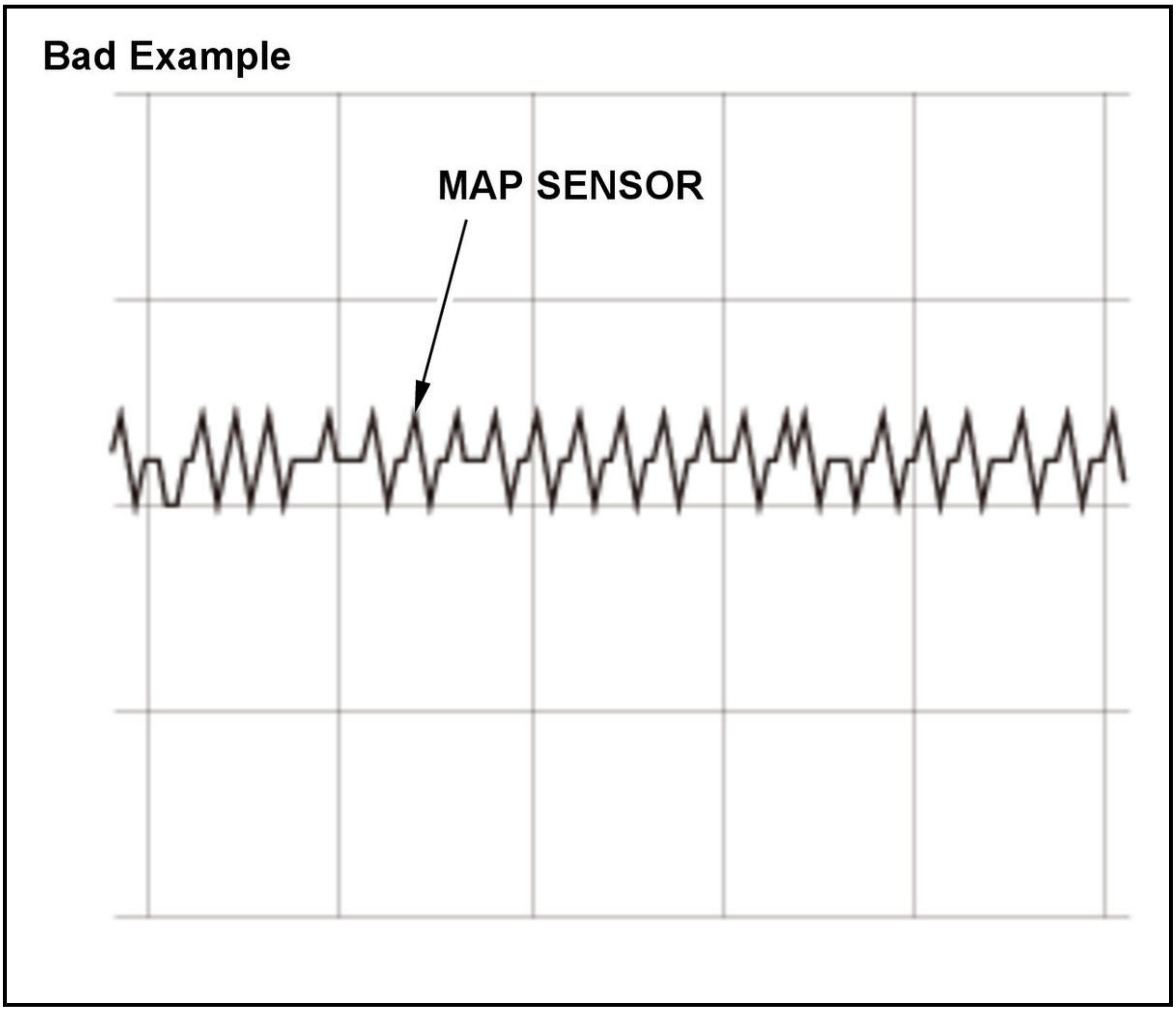

Does the MAP SENSOR continuously fluctuate 0.04 V or more at idle, no loads, engine hot?

YES

The intake manifold pressure fluctuation indicates a mechanical engine failure. Go to step 69.

NO

The intake manifold vacuum fluctuation is OK. Go to step 72.

69. Adjust Valve Clearance

-1. **Adjust the valve clearances** , and inspect the camshaft for excessive wear or grooves.

NOTE: ECT Sensor 1 must read less than 100 deg. F (38 deg. C) before adjusting the valve clearance. Shortcutting this step may cause incorrect valve clearance and engine misfire.

-2. Recheck the MAP SENSOR fluctuation at idle.

Does the MAP SENSOR continuously fluctuate 0.04 V or more at idle, no loads, engine hot?

YES

Adjusting the valve clearance did not correct the excessive MAP sensor fluctuation. Go to step 70.

NO

The excessive MAP sensor fluctuation was caused by incorrect valve clearance.

70. Check Cylinder Compression

-1. **Perform a cylinder compression test** .

-2. Record your test results in a chart similar to the one shown below.

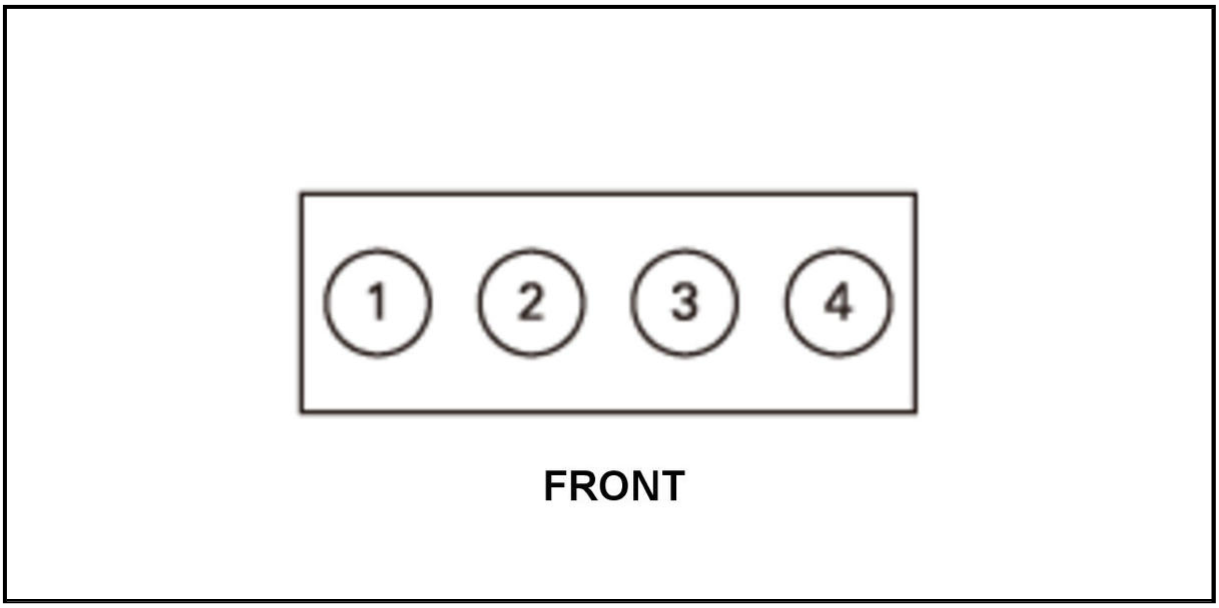

B	Compression (PSI)
No. 1	B
No. 2	B
No. 3	B
No. 4	B

Highest Reading (PSI)	Lowest Reading (PSI)	Variation (%)
B	B	B

Does the compression vary more than 10 % between cylinders, or does any cylinder read below 150 PSI?

1. **YES**

   The cylinder leakage is normal, but the engine compression is low. Check for each of the conditions below and repair as needed.

   - Incorrect camshaft timing.
   - A bent (short) connecting rod.
   - Worn or damaged camshaft lobes.

   NO

   The engine compression and the cylinder leakage are normal. Go to step 71.

71. Check Cylinder Leakage

-1. **Perform a cylinder leakage test** .

-2. Record your test results in the chart shown below.

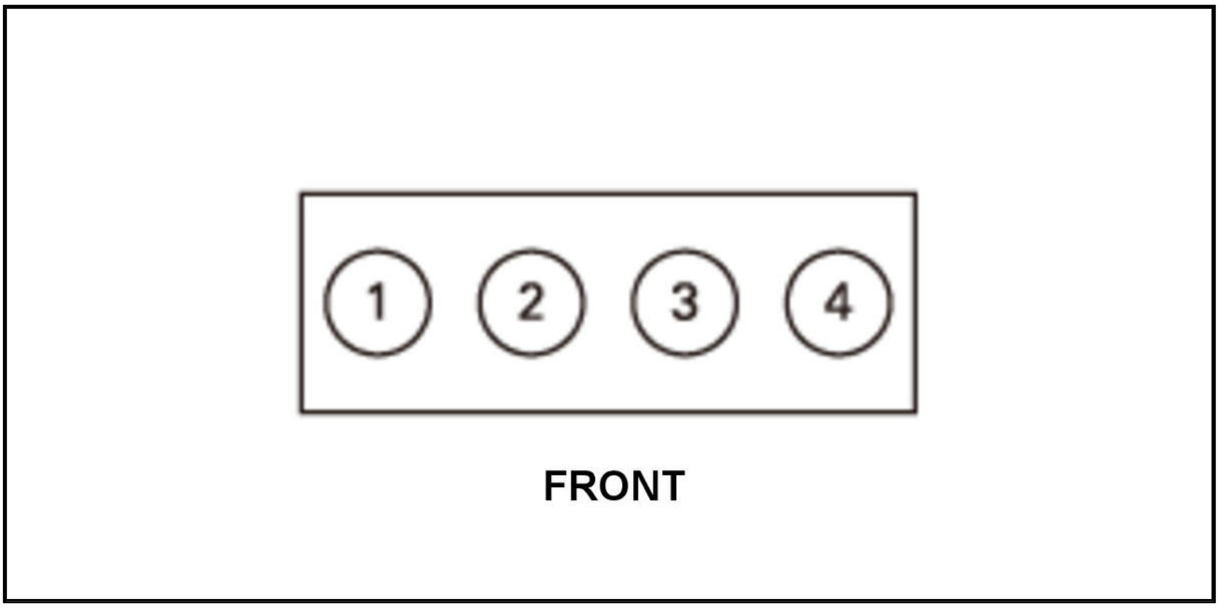

B	Leakage (%)	Leakage Area
No. 1	B	B

B	Leakage (%)	Leakage Area
No. 2	B	B
No. 3	B	B
No. 4	B	B

Does any cylinder have leakage greater than 10 %?

YES

If the majority of the air is escaping from exhaust pipe or throttle body, check for tight valve clearance and adjust each cylinder as needed, then retest. Determine the cause of the cylinder leakage and repair the engine as needed.

NO

The cylinders are sealing properly. Go to step 72.

72. Check Fuel Injector Leak Down

-1. **Connect the fuel pressure gauge set** .

-2. Ensure that the fuel shut off valve is on the fuel pump side of the pressure gauge.

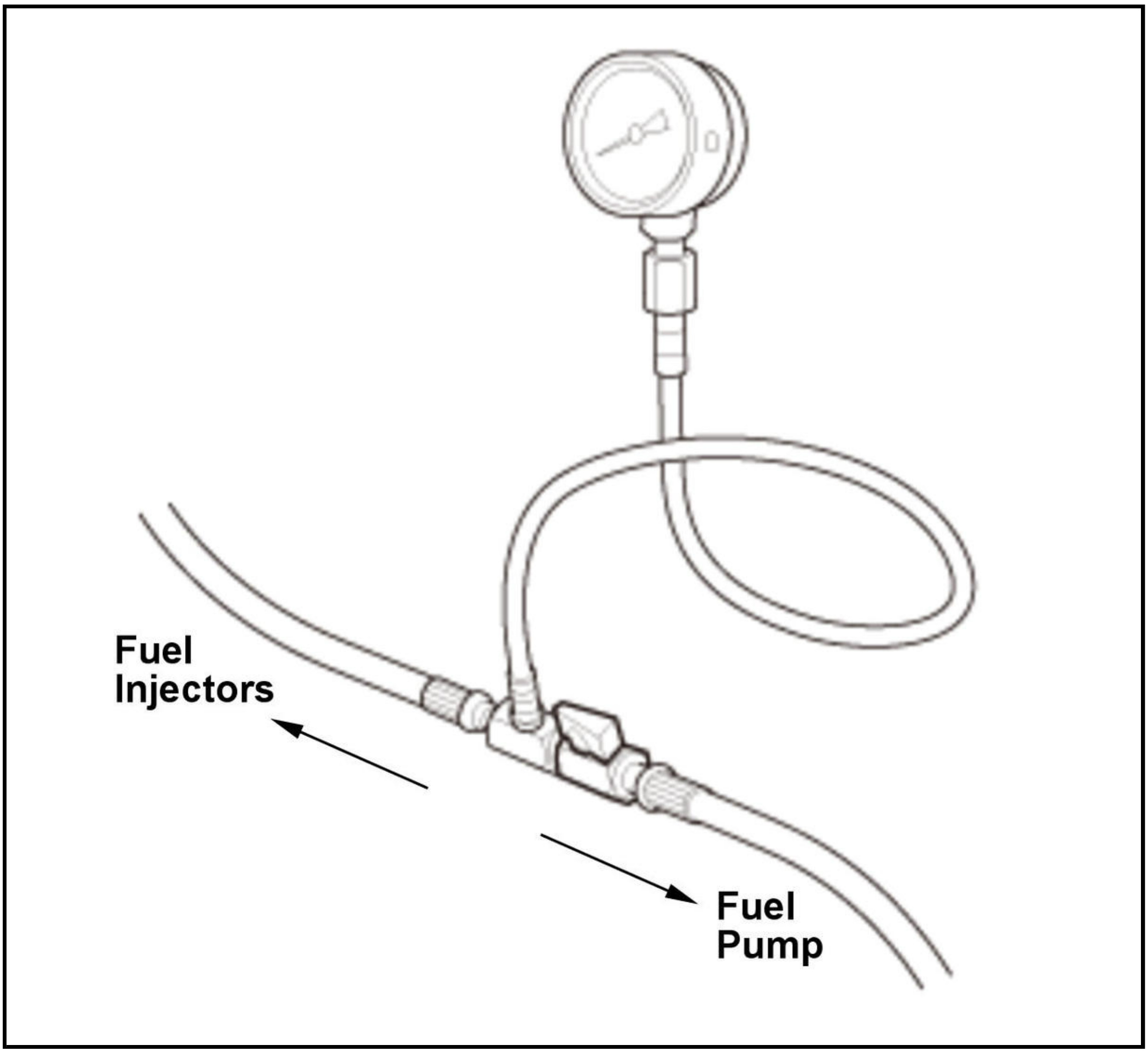

-3. Start the engine, and then shut it off.

-4. Turn the shut off valve 90 deg. to isolate the pressure between the fuel injectors and the fuel pressure gauge.

-5. Record the initial fuel pressure reading.

-6. Let the vehicle sit for 10 minutes.

-7. Check the fuel pressure.

Does the pressure drop more than 10 PSI within 10 minutes?

YES

The fuel injectors are leaking. **Replace all fuel injectors as a set** .

NO

Go to step 73.

73. Inspect Spark Plug

-1. **Remove the spark plug from the problem cylinder** .

-2. Inspect the spark plug for signs of failure. Also make sure the spark plugs are the correct part number for the vehicle.

Does the spark plug show any signs of failure or is it not the correct part number?

YES

Replace the spark plug .

NO

Go to step 74.

74. Exchange Spark Plug and Ignition Coil

-1. **Exchange the spark plug and the ignition coil with ones from a normally operating cylinder** .

-2. Drive the vehicle under the conditions when the misfire was duplicated.

-3. Monitor the misfire parameters in the DATA LIST.

Signal	Current conditions	
	Values	Unit
CYL1 MISFIRE	B	B
CYL2 MISFIRE	B	B
CYL3 MISFIRE	B	B
CYL4 MISFIRE	B	B

Did the misfire counts stay on the problem cylinder?

YES

The ignition coil and the spark plug are OK. Go to step 76.

NO

There is a failure in the ignition coil or the spark plug. Go to step 75.

75. Exchange Ignition Coil

-1. **Exchange the ignition coil on the problem cylinder with a normally operating cylinder** .

-2. Drive the vehicle under the conditions when the misfire was duplicated.

-3. Monitor the misfire parameters in the DATA LIST.

Signal	Current conditions	
	Values	Unit
CYL1 MISFIRE	B	B
CYL2 MISFIRE	B	B
CYL3 MISFIRE	B	B
CYL4 MISFIRE	B	B

Did the misfire counts stay on the problem cylinder?

YES

The spark plug has a failure. **Replace the spark plug** .

NO

The ignition coil has a failure. **Replace the ignition coil** .

76. Engine Carbon Removal

-1. Perform a top engine cleaning following the product manufacturer's instructions.

-2. Drive the vehicle under the conditions when the misfire was duplicated.

-3. Monitor the misfire parameters in the DATA LIST.

Signal	**Current conditions**	
	Values	**Unit**
CYL1 MISFIRE	B	B
CYL2 MISFIRE	B	B
CYL3 MISFIRE	B	B
CYL4 MISFIRE	B	B

Did the misfire counts stay?

YES

The carbon removal procedure did not correct the misfire. **Replace all fuel injectors as a set** .

NO

The carbon removal procedure corrected the misfire.

DTC P0300, P0301, P0302, P0303, P0304 (2.4 L ENGINE) (2017 2018 2019)

DTC P0300 : Random Misfire Detected **DTC P0301** : No. 1 Cylinder Misfire Detected **DTC P0302** : No. 2 Cylinder Misfire Detected **DTC P0303** : No. 3 Cylinder Misfire Detected **DTC P0304** : No. 4 Cylinder Misfire Detected

NOTE:

- Before you troubleshoot, **review the general troubleshooting information** .
- If the misfire is frequent enough to trigger detection of increased emissions during two consecutive driving cycles, the MIL will come on, and DTC P0300 (and some combination of P0301 through P0304) will be stored.
- If the misfire is frequent enough to damage the catalyst, the MIL will flash whenever the misfire occurs, and DTC P0300 (and some combination of P0301 through P0304) will be stored. When the misfire stops, the MIL will remain on.
- Troubleshoot the following DTCs first, if any of them were stored along with the random misfire DTC (s) (Because parts can sometimes fail without setting DTC's you should also do a physical inspection of the systems listed below):

  P0087, P0088: Fuel rail pressure sensor

  P0102, P0103: MAF sensor

  P0107, P0108, P2073, P2074: MAP sensor

  P0171, P0172: Fuel system

  P0335, P0339: CKP sensor

  P0340, P0344: CMP sensor A

  P0351, P0352, P0353, P0354: No. 1-No. 4 cylinder ignition coil (s)

P0506, P0507: Idle control system

P2646, P2647, P2648, P2649: VTEC system

P2623: High pressure fuel pump

DTC Description	Confirmed DTC	Pending DTC
P0300 Random Misfire Detected	B	B
P0301 No. 1 Cylinder Misfire Detected	B	B
P0302 No. 2 Cylinder Misfire Detected	B	B
P0303 No. 3 Cylinder Misfire Detected	B	B
P0304 No. 4 Cylinder Misfire Detected	B	B

DTC (PGM-FI)

1. Problem verification - Idle

-1. Record the ONBOARD SNAPSHOT with the HDS.

-2. Start the engine, and let it idle.

-3. Monitor these parameters in the DATA LIST:

Signal	Current conditions	
	Values	Unit
CYL1 MISFIRE	B	B
CYL2 MISFIRE	B	B
CYL3 MISFIRE	B	B
CYL4 MISFIRE	B	B

Are the misfire counts increasing on any cylinder at idle?

YES

The engine is misfiring at idle, go to step 2.

NO

The engine does not misfire at idle, go to step 3.

2. Determine Affected Cylinders

-1. Continue to monitor the misfire parameters in the DATA LIST.

Signal	Current conditions	
	Values	Unit
CYL1 MISFIRE	B	B
CYL2 MISFIRE	B	B
CYL3 MISFIRE	B	B
CYL4 MISFIRE	B	B

Are the misfire counts generally isolated to a single cylinder?

1. **YES**

   The misfire is isolated to a single cylinder.

- If the misfire counts are increasing every engine revolution (completely inactive cylinder), go to Single Cylinder Continuous Misfire at Idle troubleshooting on step 6.
- If the misfire counts are increasing every few engine revolutions (partially inactive cylinder), go to Single Cylinder Non-Continuous Misfire at Idle troubleshooting on step 21.

NO

The misfire affects multiple cylinders.

- If the misfire counts are increasing every engine revolution (completely inactive cylinder), go to Multiple Cylinder Continuous Misfire at Idle troubleshooting on step 30.
- If the misfire counts are increasing every few engine revolutions (partially inactive cylinder), go to Multiple Cylinder Non-Continuous Misfire at Idle troubleshooting on step 48.

3. Problem verification - Static Load

-1. Increase the engine speed to 3, 500 rpm.

-2. Hold the engine speed steady, and monitor the misfire parameters in the DATA LIST.

Signal	Current conditions	
	Values	Unit
CYL1 MISFIRE	B	B
CYL2 MISFIRE	B	B
CYL3 MISFIRE	B	B
CYL4 MISFIRE	B	B

Are the misfire counts increasing on any cylinder?

YES

The engine is misfiring under load. Go to step 4.

NO

The engine does not misfire under a static load. Go to step 5.

4. Determine Affected Cylinders

-1. Continue to monitor the misfire parameters in the DATA LIST.

Signal	Current conditions	
	Values	Unit
CYL1 MISFIRE	B	B
CYL2 MISFIRE	B	B
CYL3 MISFIRE	B	B

Signal	Current conditions	
	Values	Unit
CYL4 MISFIRE	B	B

Are misfire counts generally isolated to a single cylinder?

YES

The misfire is isolated to a single cylinder, go to Single Cylinder Misfire. Under Load troubleshooting on step 56.

NO

The misfire affects multiple cylinders, go to Multiple Cylinder Misfire. Under Load troubleshooting on step 63.

5. Problem verification - On-board Snapshot

-1. Open the ONBOARD SNAPSHOT with the HDS.

-2. Scroll through the snapshot, and find when the MISFIRE value begins to increase.

-3. Record the value of these parameters as the MISFIRE value increases:

Signal	Values	Unit
ECT SENSOR 1	B	deg. F
ENGINE SPEED	B	RPM
VEHICLE SPEED	B	MPH
MAP SENSOR	B	V
TP SENSOR	B	V

On-board Snapshot

-4. Drive the vehicle according to the conditions you identified above while monitoring the misfire counts.

Signal	Current conditions	
	Values	Unit
ECT SENSOR 1	B	B
ENGINE SPEED	B	B
VEHICLE SPEED	B	B
MAP SENSOR	B	B
TP SENSOR	B	B

Signal	Current conditions	
	Values	Unit
CYL1 MISFIRE	B	B
CYL2 MISFIRE	B	B
CYL3 MISFIRE	B	B
CYL4 MISFIRE	B	B

Are the misfire counts increasing on any cylinder?

YES

The engine is misfiring under the specific operating conditions above.

- If the misfire occurred when the engine was cold, go to Misfire When Cold troubleshooting on step 70.
- If the misfire occurred when the engine was loaded, go to step 4.

NO

Intermittent failure; the engine is not misfiring at this time.**NOTE:** If the misfire cannot be reproduced, there is a possibility that the problem may have been caused by poor quality fuel. The problem may have disappeared after refueling with fresh fuel. The MIL DIST (MIL Distance) value in the Data List in combination with the fuel level may help you make this determination.

6. Check Ignition Coil Spark

-1. Turn the vehicle to the OFF (LOCK) mode.

-2. **Remove the ignition coil from the problem cylinder** .

-3. Connect a commercially available spark tester between the ignition coil and engine ground.

-4. Start the engine with the ignition coil connected.

Does the ignition coil produce a spark?

YES

The ignition coil wiring is OK. Go to step 14.

NO

There is a problem with the ignition coil, or the ignition coil circuit. Go to step 7.

7. Ignition Coil Check

-1. **Exchange the ignition coil on the problem cylinder with a normally operating cylinder** .

-2. Connect a commercially available spark tester between the ignition coil and engine ground.

-3. Start the engine with the ignition coil connected.

Does the ignition coil produce a spark?

YES

The ignition coil has a failure. **Replace the ignition coil** .

NO

There is a problem with the ignition coil circuit. Go to step 8.

8. Check Ignition Coil Power and Ground

-1. Disconnect the ignition coil 3P connector from the problem cylinder.

-2. Turn the vehicle to the ON mode.

-3. Measure the voltage between ignition coil 3P connector terminals No. 1 (power) and No. 2 (ground).

NOTE: After the vehicle is turned to the OFF (LOCK) mode, this circuit may still show battery voltage for a period of time. This is normal.

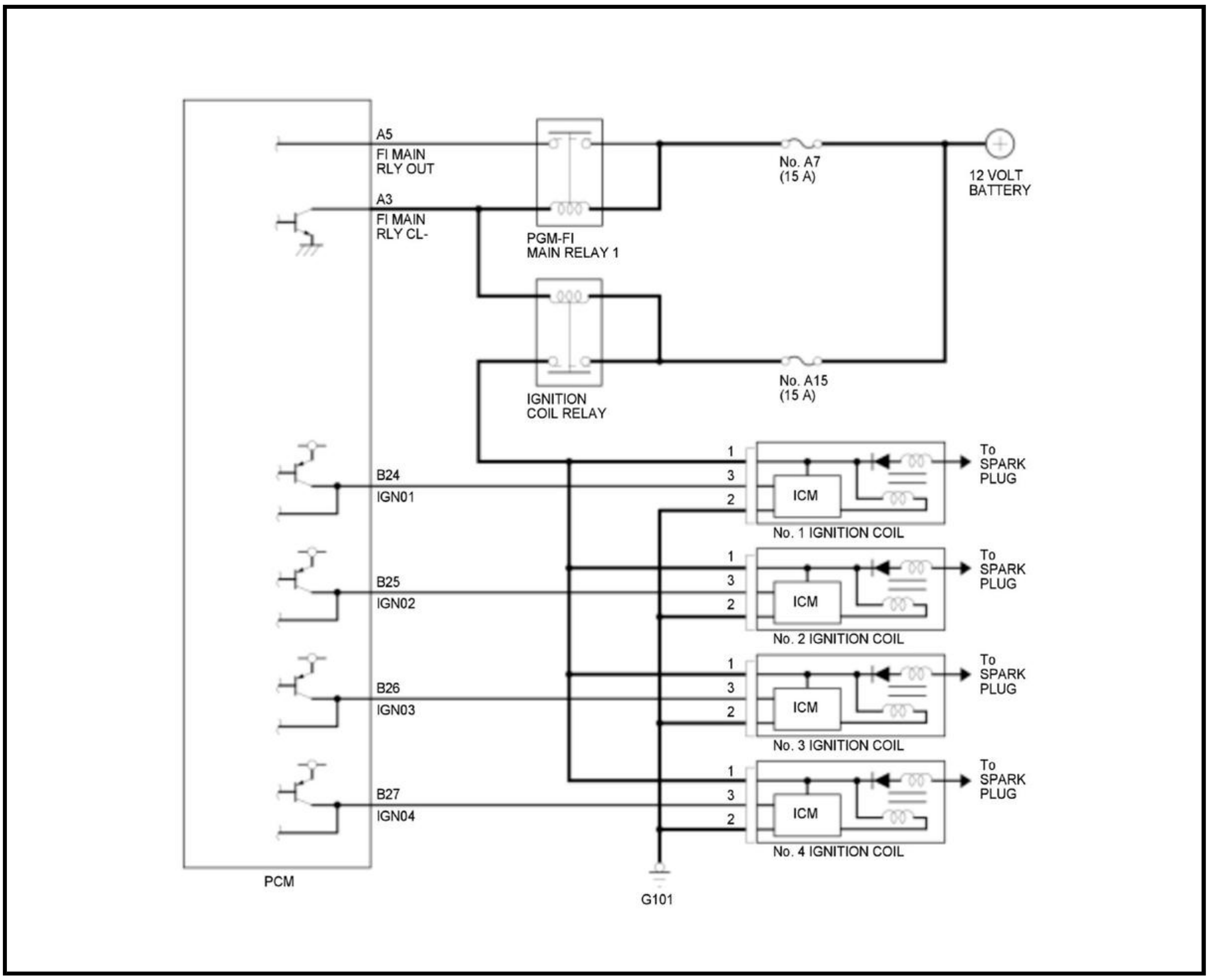
A5
FI MAIN
RLY OUT
A3
FI MAIN
RLY CL-
PGM-FI
MAIN RELAY 1
No. A7
(15 A)
12 VOLT
BATTERY
IGNITION
COIL RELAY
No. A15
(15 A)
B24
IGN01
B25
IGN02
B26
IGN03
B27
IGN04
1
3
2
ICM
No. 1 IGNITION COIL
No. 2 IGNITION COIL
No. 3 IGNITION COIL
No. 4 IGNITION COIL
To
SPARK
PLUG
PCM
G101

Is there battery voltage?

YES

The ignition coil power and ground circuits are OK. Go to step 9.

NO

There is a problem with the ignition coil power or ground circuit. Go to step 13.

9. Check Ignition Coil Control Short to Power

-1. Turn the vehicle to the ON mode.

-2. Measure the voltage between ignition coil 3P connector terminals No. 3 (Ignition Control) and body ground.

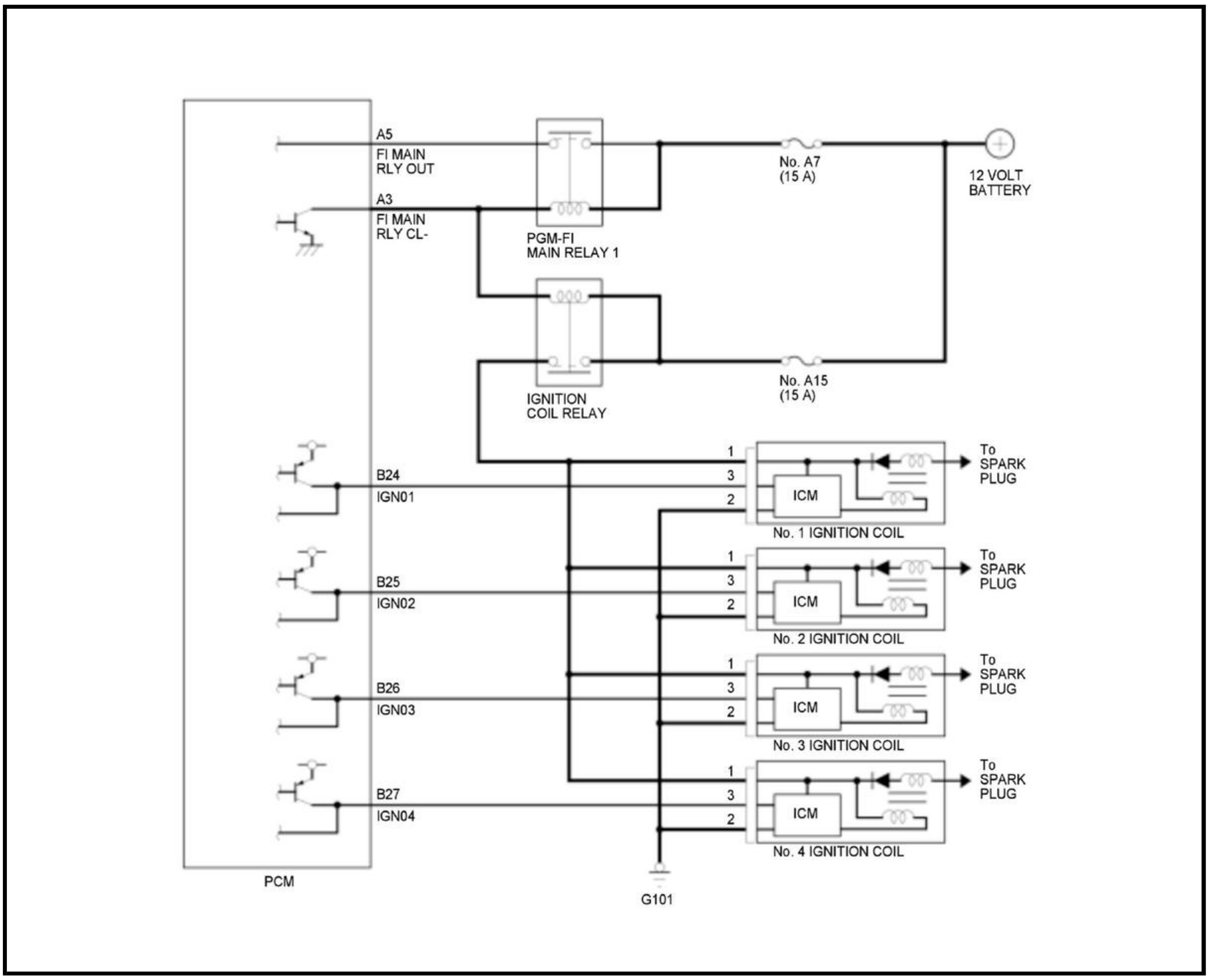
A5
FI MAIN
RLY OUT
A3
FI MAIN
RLY CL-
PGM-FI
MAIN RELAY 1
No. A7
(15 A)
12 VOLT
BATTERY
IGNITION
COIL RELAY
No. A15
(15 A)
B24
IGN01
1
3
2
ICM
No. 1 IGNITION COIL
To
SPARK
PLUG
B25
IGN02
ICM
No. 2 IGNITION COIL
B26
IGN03
ICM
No. 3 IGNITION COIL
B27
IGN04
ICM
No. 4 IGNITION COIL
PCM
G101

Is there about 4 V or more?

YES

The ignition coil control circuit is shorted to power. Go to step 10.

NO

The ignition coil control circuit is not shorted to power. Go to step 11.

10. Isolate Ignition Coil Control Short to Power

    -1. Jump the SCS line with the HDS, and wait more than 1 minute.

    -2. Turn the vehicle to the OFF (LOCK) mode.

    -3. Disconnect the PCM connectors.

    -4. Turn the vehicle to the ON mode.

    -5. Measure the voltage between ignition coil 3P connector terminals No. 3 (Ignition Control) and body ground.

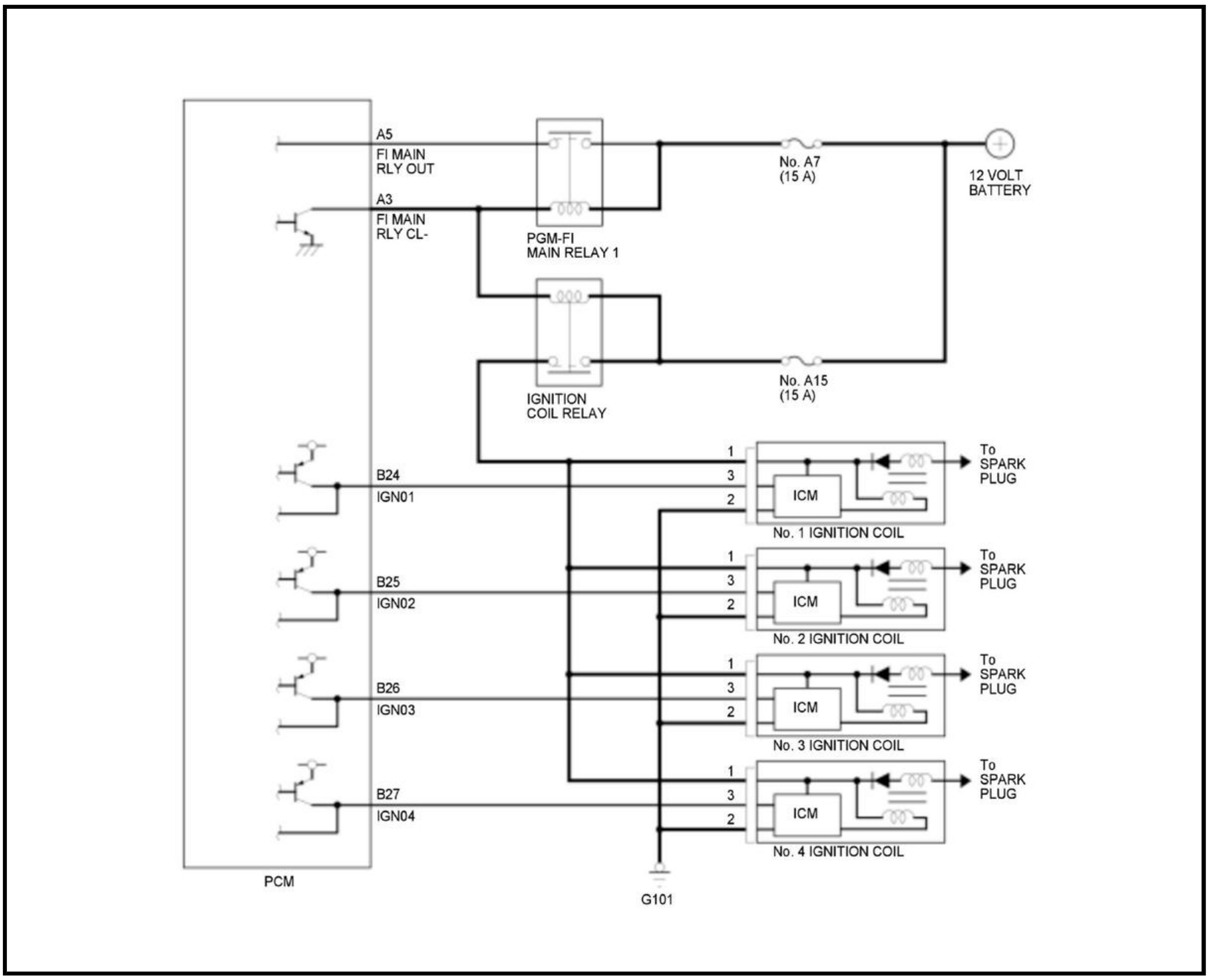
A5
FI MAIN RLY OUT
A3
FI MAIN RLY CL-
PGM-FI MAIN RELAY 1
No. A7 (15 A)
12 VOLT BATTERY
IGNITION COIL RELAY
No. A15 (15 A)
B24
IGN01
B25
IGN02
B26
IGN03
B27
IGN04
1
3
2
ICM
No. 1 IGNITION COIL
No. 2 IGNITION COIL
No. 3 IGNITION COIL
No. 4 IGNITION COIL
To SPARK PLUG
PCM
G101

Is there about 4 V or more?

YES

There is a short to power on the ignition coil control circuit. Find and repair the failure.

NO

The PCM is malfunctioning. **Replace the PCM** .

11. Check Ignition Coil Control Open Circuit

    -1. Turn the vehicle to the OFF (LOCK) mode.

    -2. Jump the SCS line with the HDS, and wait more than 1 minute.

    -3. Disconnect the PCM connectors.

    -4. Check for continuity between the ignition coil control terminal at the PCM connector and at ignition coil 3P connector terminal No. 3.

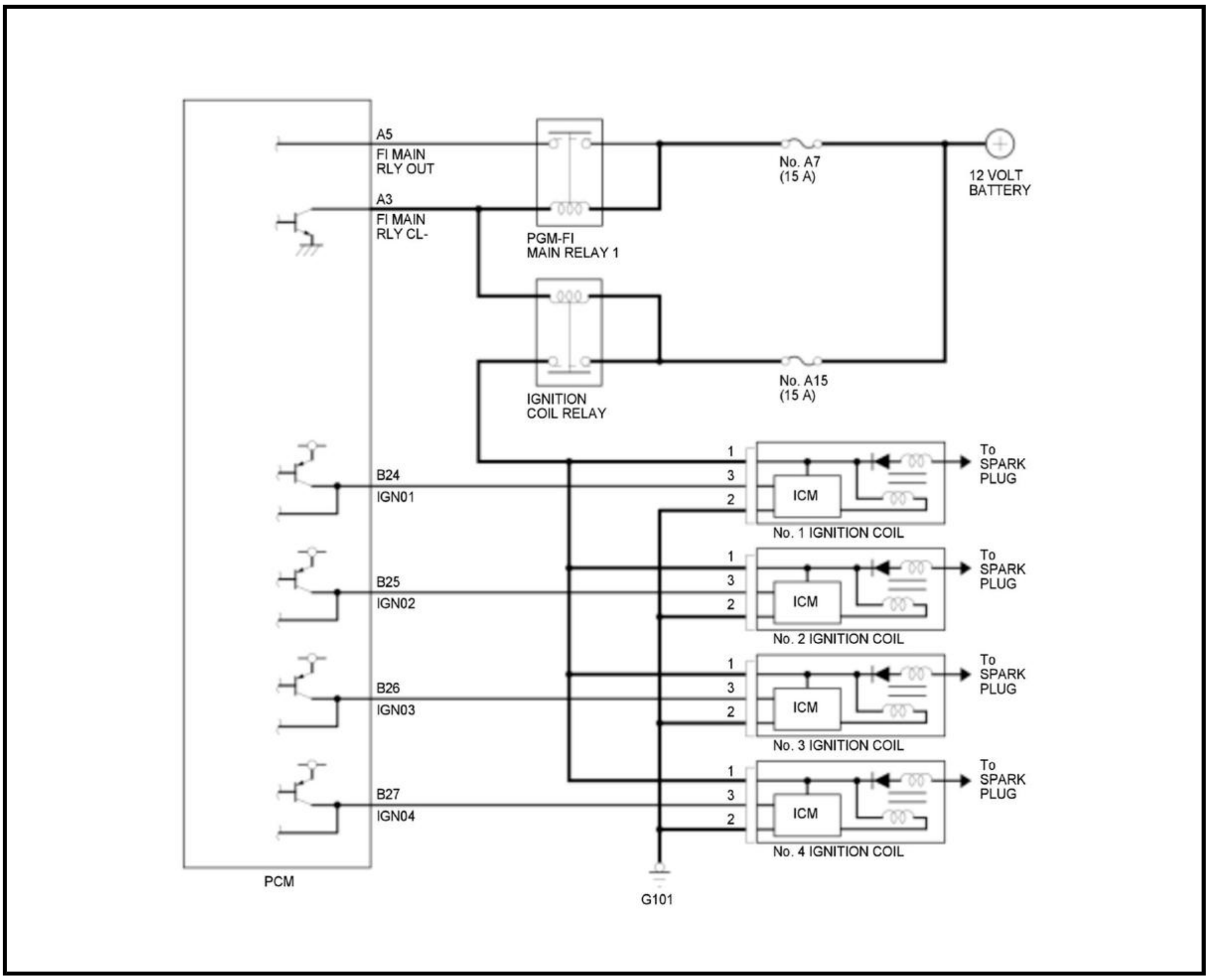
A5
FI MAIN
RLY OUT
A3
FI MAIN
RLY CL-
PGM-FI
MAIN RELAY 1
No. A7
(15 A)
12 VOLT
BATTERY
IGNITION
COIL RELAY
No. A15
(15 A)
B24
IGN01
B25
IGN02
B26
IGN03
B27
IGN04
1
3
2
ICM
No. 1 IGNITION COIL
No. 2 IGNITION COIL
No. 3 IGNITION COIL
No. 4 IGNITION COIL
To
SPARK
PLUG
PCM
G101

Is there continuity?

YES

The ignition coil control circuit is not open. Go to step 12.

NO

Repair the open circuit between the ignition coil and the PCM.

12. Check Ignition Coil Control Short to Ground

-1. Check for continuity between the ignition coil control terminal at ignition coil 3P connector terminal No. 3 and body ground.

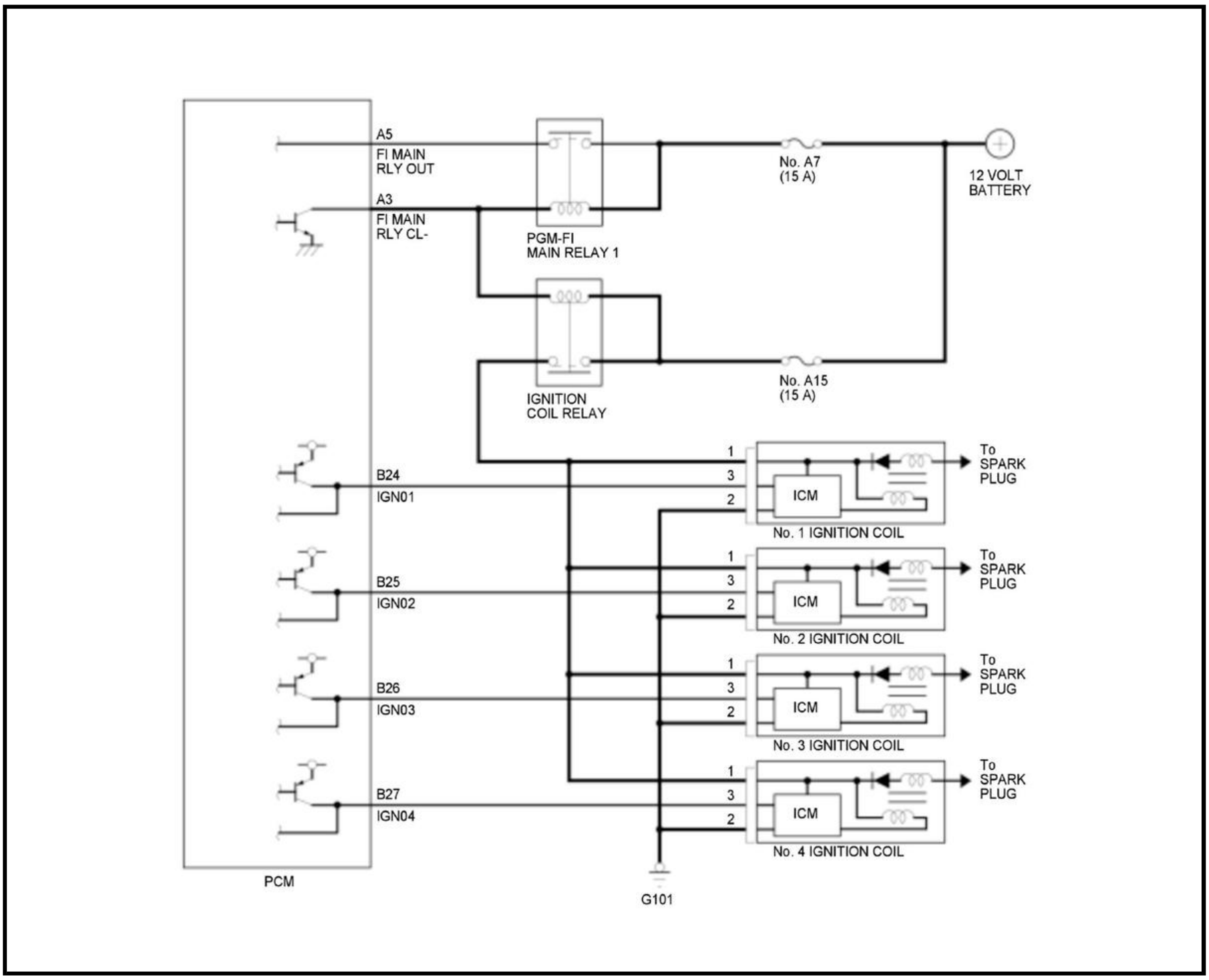
A5
FI MAIN
RLY OUT
A3
FI MAIN
RLY CL-
PGM-FI
MAIN RELAY 1
No. A7
(15 A)
12 VOLT
BATTERY
IGNITION
COIL RELAY
No. A15
(15 A)
B24
IGN01
B25
IGN02
B26
IGN03
B27
IGN04
1
3
2
ICM
No. 1 IGNITION COIL
No. 2 IGNITION COIL
No. 3 IGNITION COIL
No. 4 IGNITION COIL
To
SPARK
PLUG
PCM
G101

Is there continuity?

YES

Repair the short to ground on the ignition coil control wire.

NO

The ignition coil control wiring is OK. **Substitute a known-good PCM** .

13. Check Ignition Coil Power Circuit

    -1. Measure the voltage between ignition coil 3P connector terminal No. 1 (power) and a known-good engine ground.

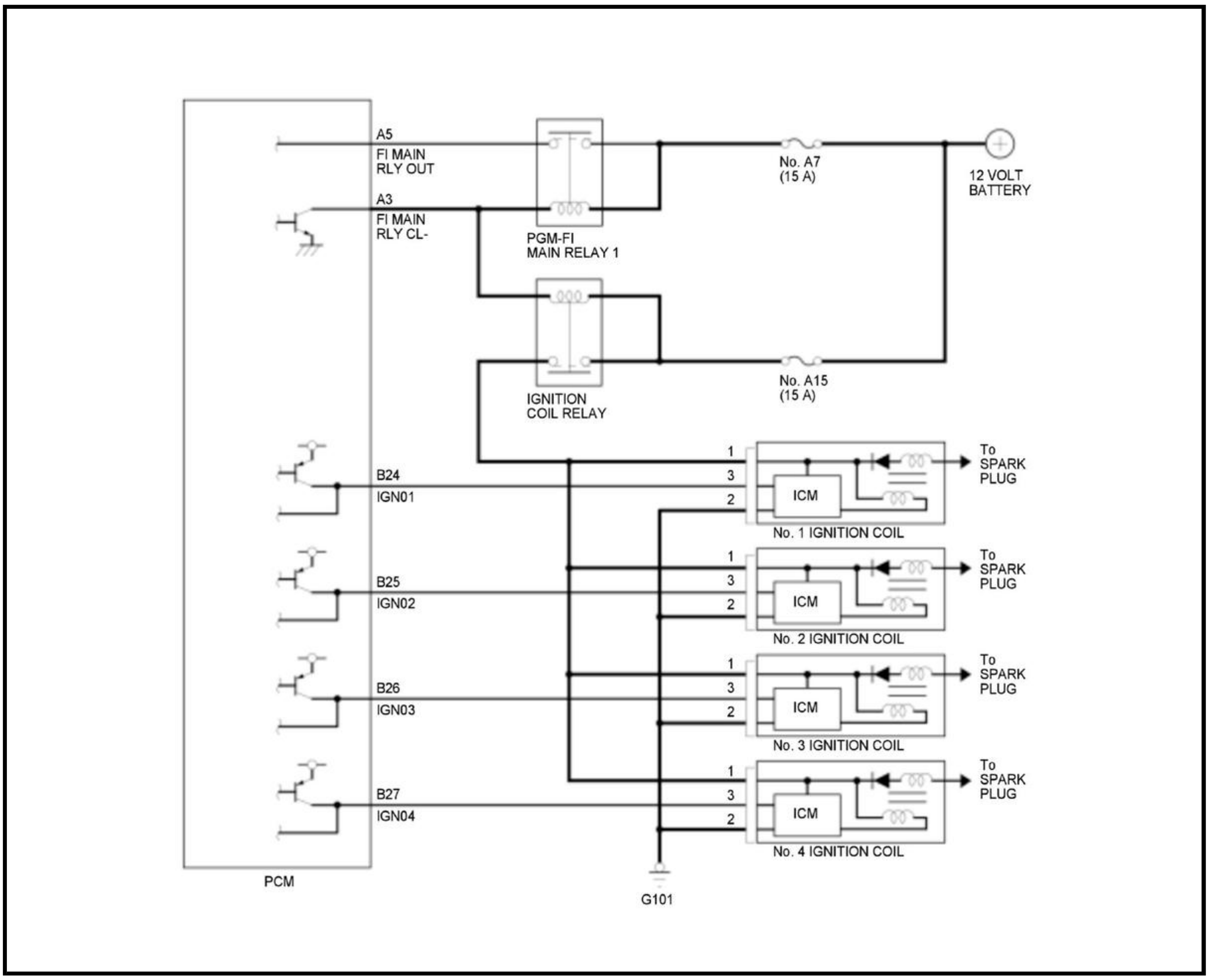
A5
FI MAIN RLY OUT
A3
FI MAIN RLY CL-
PGM-FI MAIN RELAY 1
No. A7 (15 A)
12 VOLT BATTERY
IGNITION COIL RELAY
No. A15 (15 A)
B24
IGN01
B25
IGN02
B26
IGN03
B27
IGN04
1
3
2
ICM
To SPARK PLUG
No. 1 IGNITION COIL
No. 2 IGNITION COIL
No. 3 IGNITION COIL
No. 4 IGNITION COIL
PCM
G101

Is there battery voltage between the ignition coil power terminal and engine ground?

YES

The power circuit is OK. Repair the open circuit between the ignition coil (3P connector terminal No. 2) and G101.

NO

Repair the open circuit between the ignition coil and the ignition coil relay.

14. Inspect Ignition Coil

-1. Inspect the ignition coil and spark plug tube for engine oil contamination.

Is the ignition coil covered in engine oil?

YES

Clean the oil from the ignition coil and spark plug tube. Replace the spark plug tube seals in the cylinder head cover .

NO

Go to step 15.

15. Exchange Spark Plug and Ignition Coil

-1. Exchange the spark plug and the ignition coil with one from a normally operating cylinder .

-2. Drive the vehicle under the conditions when the misfire was duplicated.

-3. Monitor the misfire parameters in the DATA LIST.

Signal	Current conditions	
	Values	Unit
CYL1 MISFIRE	B	B
CYL2 MISFIRE	B	B
CYL3 MISFIRE	B	B
CYL4 MISFIRE	B	B

Did the misfire counts stay on the problem cylinder?

YES

The ignition coil and spark plug are OK. Go to step 17.

NO

There is a failure in the ignition coil or the spark plug. Go to step 16.

16. Exchange Ignition Coil

-1. **Exchange the ignition coil on the problem cylinder with a normally operating cylinder** .

-2. Drive the vehicle under the conditions when the misfire was duplicated.

-3. Monitor the misfire parameters in the DATA LIST.

Signal	Current conditions	
	Values	Unit
CYL1 MISFIRE	B	B
CYL2 MISFIRE	B	B
CYL3 MISFIRE	B	B
CYL4 MISFIRE	B	B

Did the misfire counts stay on the problem cylinder?

YES

The spark plug has a failure. **Replace the spark plug** .

NO

The ignition coil has a failure. **Replace the ignition coil** .

17. Check Cylinder Compression

-1. **Perform a cylinder compression test** .

-2. Record your test results in a chart similar to the one shown below.

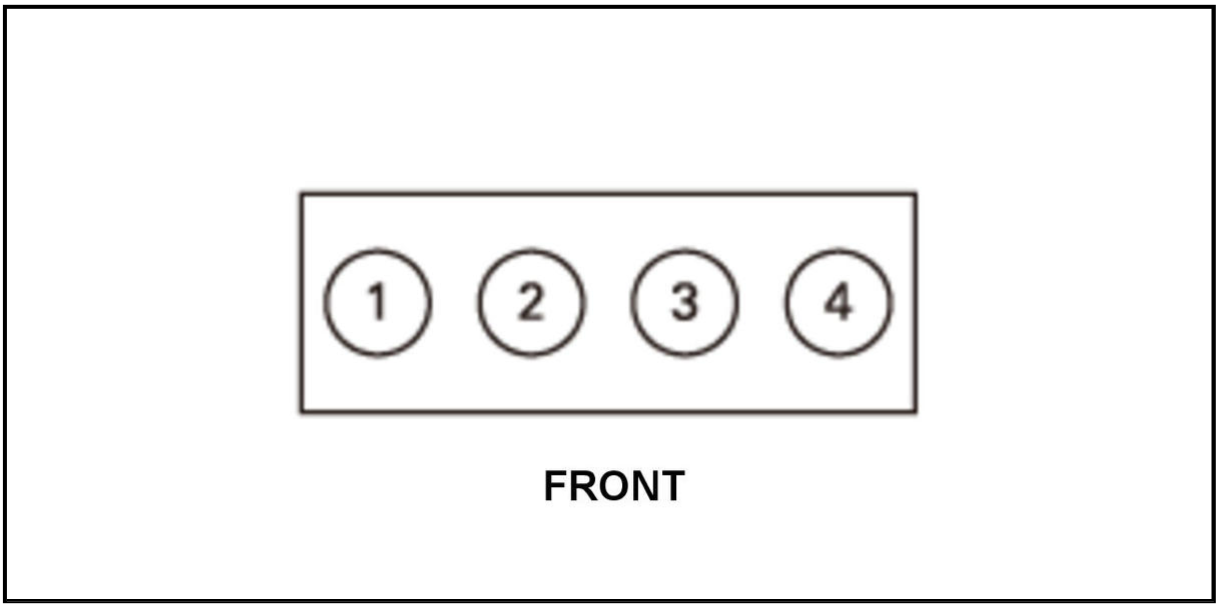

B	Compression (PSI)
No. 1	B
No. 2	B
No. 3	B
No. 4	B

Highest Reading (PSI)	Lowest Reading (PSI)	Variation (%)
B	B	B

Does the compression vary more than 10 % between cylinders, or does any cylinder read below 150 PSI?

1. **YES**

   The cylinder leakage is normal, but the engine compression is low. Check for each of the conditions below and repair as needed.

   - Incorrect camshaft timing.
   - A bent (short) connecting rod.
   - Worn or damaged camshaft lobes.

   NO

   The engine compression and the cylinder leakage are normal. Go to step 18.

18. Check Cylinder Leakage

-1. **Perform a cylinder leakage test** .

-2. Record your test results in the chart shown below.

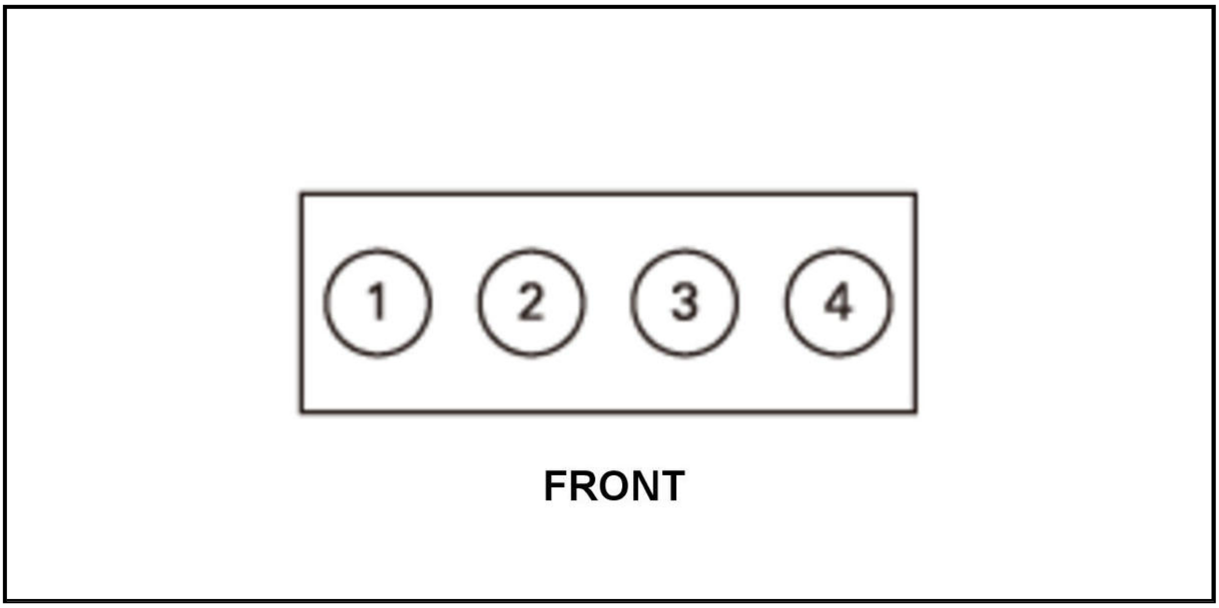

B	Leakage (%)	Leakage Area
No. 1	B	B
No. 2	B	B
No. 3	B	B
No. 4	B	B

Does any cylinder have leakage greater than 10 %?

YES

If the majority of the air is escaping from exhaust pipe or throttle body, check for tight valve clearance and adjust valve clearance to specification (cold), then retest. Determine the cause of the cylinder leakage and repair the engine as needed.

NO

The cylinders are sealing properly. Go to step 19.

19. Exchange Fuel Injector

-1. **Exchange the fuel injector from the problem cylinder with one from another cylinder** .

-2. Drive the vehicle under the conditions when the misfire was duplicated.

-3. Monitor the misfire parameters in the DATA LIST.

Signal	Current conditions	
	Values	Unit
CYL1 MISFIRE	B	B
CYL2 MISFIRE	B	B
CYL3 MISFIRE	B	B

Signal	Current conditions	
	Values	Unit
CYL4 MISFIRE	B	B

Do the misfire counts stay on the problem cylinder when the fuel injector is swapped?

YES

The fuel injector is OK. Go to step 20.

NO

The fuel injector is faulty. **Replace all fuel injectors as a set** .

20. CKP Pattern Clear/Pattern Learn

-1. Select CRANK PATTERN in the ADJUSTMENT MENU with the HDS.

-2. **Select CRANK PATTERN CLEAR, and clear the CKP pattern** .

CRANK PATTERN CLEAR

Select CRANK PATTERN LEARNING with the HDS, and follow the screen prompts .

CRANK PATTERN LEARNING

Monitor the misfire parameters in the DATA LIST.

Signal	Current conditions	
	Values	Unit
CYL1 MISFIRE	B	B
CYL2 MISFIRE	B	B
CYL3 MISFIRE	B	B
CYL4 MISFIRE	B	B

Did the misfire counts stay on the problem cylinder?

YES

Check for any authorized service information related to the DTCs or symptoms you are troubleshooting or **substitute a known-good PCM** .

NO

The misfire problem has been fixed.

21. Inspect Spark Plug

-1. **Remove the spark plug from the problem cylinder** .

-2. Inspect the spark plug for signs of failure. Also make sure the spark plugs are the correct part number for the vehicle.

Does the spark plug show any signs of failure or is it not the correct part number?

YES

Replace the spark plug .

NO

Go to step 22.

22. Inspect Ignition Coil

-1. Inspect the ignition coil and the spark plug tube for engine oil contamination.

Is the ignition coil covered in engine oil?

YES

Clean the oil from the ignition coil and the spark plug tube. **Replace the spark plug tube seals in the cylinder head cover** .

NO

Go to step 23.

23. Exchange Spark Plug and Ignition Coil

-1. **Exchange the spark plug and the ignition coil with ones from a normally operating cylinder** .

-2. Drive the vehicle under the conditions when the misfire was duplicated.

-3. Monitor the misfire parameters in the DATA LIST.

Signal	Current conditions	
	Values	Unit
CYL1 MISFIRE	B	B
CYL2 MISFIRE	B	B
CYL3 MISFIRE	B	B
CYL4 MISFIRE	B	B

Did the misfire counts stay on the problem cylinder?

YES

The ignition coil and spark plug are OK. Go to step 25.

NO

There is a failure in the ignition coil or the spark plug. Go to step 24.

24. Exchange Ignition Coil

-1. **Exchange the ignition coil on the problem cylinder with a normally operating cylinder** .

-2. Drive the vehicle under the conditions when the misfire was duplicated.

-3. Monitor the misfire parameters in the DATA LIST.

Signal	Current conditions	
	Values	Unit
CYL1 MISFIRE	B	B
CYL2 MISFIRE	B	B
CYL3 MISFIRE	B	B
CYL4 MISFIRE	B	B

Did the misfire counts stay on the problem cylinder?

YES

The spark plug has a failure. **Replace the spark plug** .

NO

The ignition coil has a failure. **Replace the ignition coil** .

25. Check MAP Sensor Fluctuation

-1. Start the engine, and let it idle until the cooling fans cycle twice.

-2. Turn off all engine and electrical loads (A/C, audio, lights, etc.).

-3. Configure a HIGH-SPEED SNAPSHOT, and select only the MAP SENSOR.

-4. Begin displaying live vehicle data on a line graph.

-5. Configure the MAP SENSOR line graph range for 1.2 V MAX and 0.8 V MIN.

-6. Watch the MAP SENSOR fluctuation. See examples below.

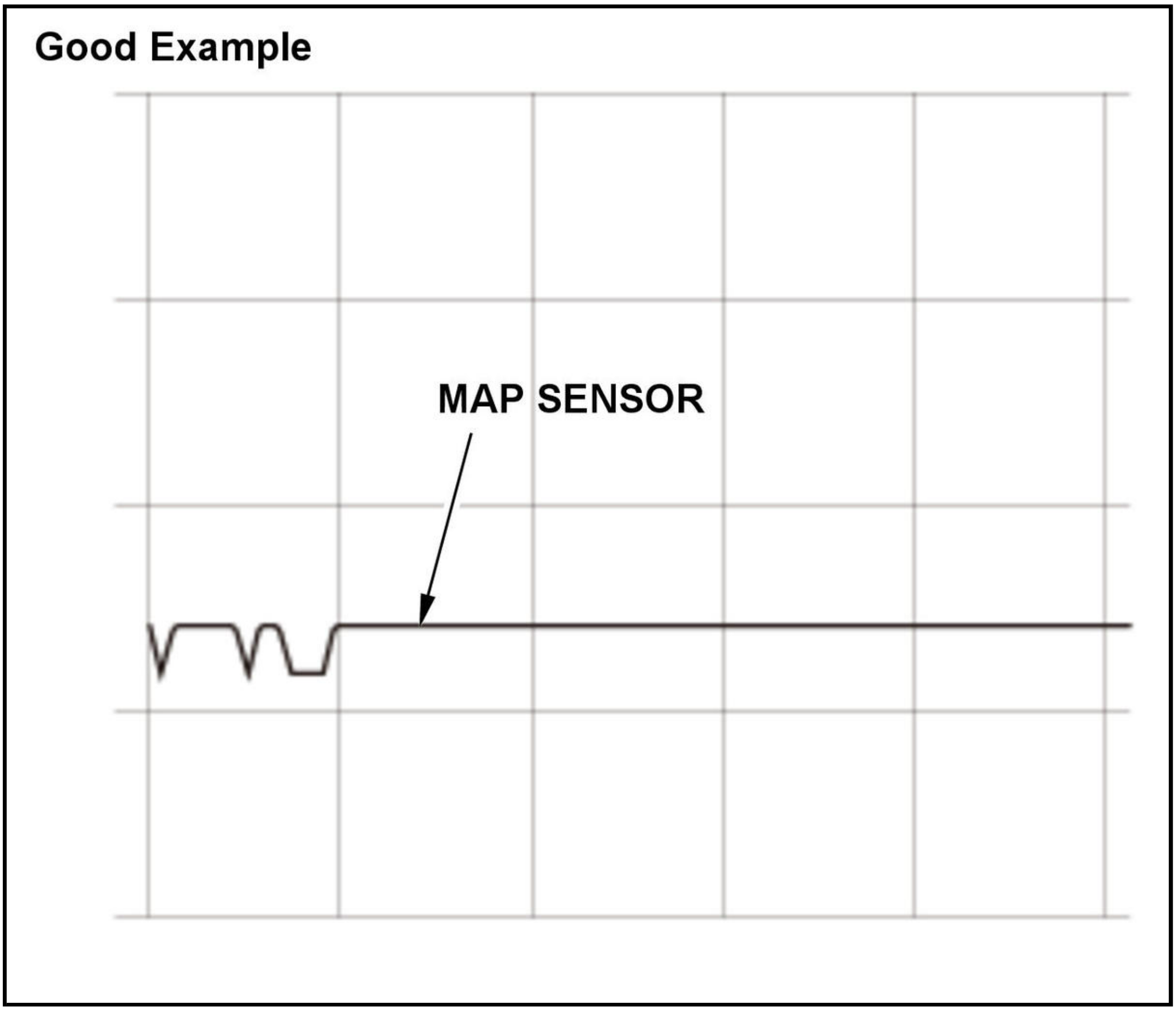

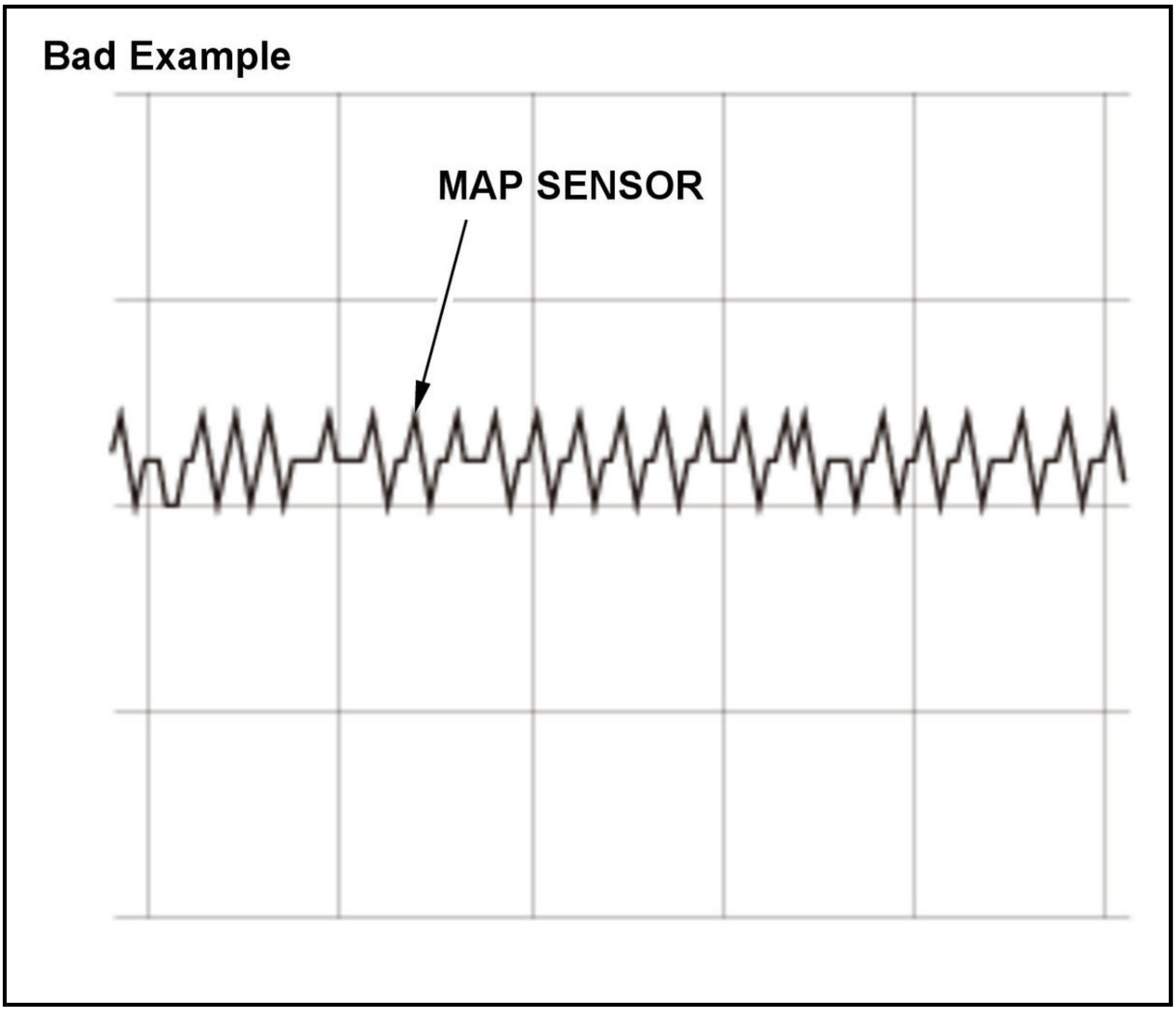

Does the MAP SENSOR continuously fluctuate 0.04 V or more at idle, no loads, engine hot?

YES

The intake manifold pressure fluctuation indicates a mechanical engine failure. Go to step 26.

NO

The intake manifold vacuum fluctuation is OK. Go to step 29.

26. Adjust Valve Clearance

-1. **Adjust the valve clearances** , and inspect the camshaft for excessive wear or grooves.

NOTE: ECT Sensor 1 must read less than 100 deg. F (38 deg. C) before adjusting the valve clearance. Shortcutting this step may cause incorrect valve clearance and engine misfire.

-2. Recheck the MAP SENSOR fluctuation at idle.

Does the MAP SENSOR continuously fluctuate 0.04 V or more at idle, no loads, engine hot?

YES

Adjusting the valve clearance did not correct the excessive MAP sensor fluctuation. Go to step 27.

NO

The excessive MAP sensor fluctuation was caused by incorrect valve clearance.

27. Check Cylinder Compression

-1. **Perform a cylinder compression test** .

-2. Record your test results in a chart similar to the one shown below.

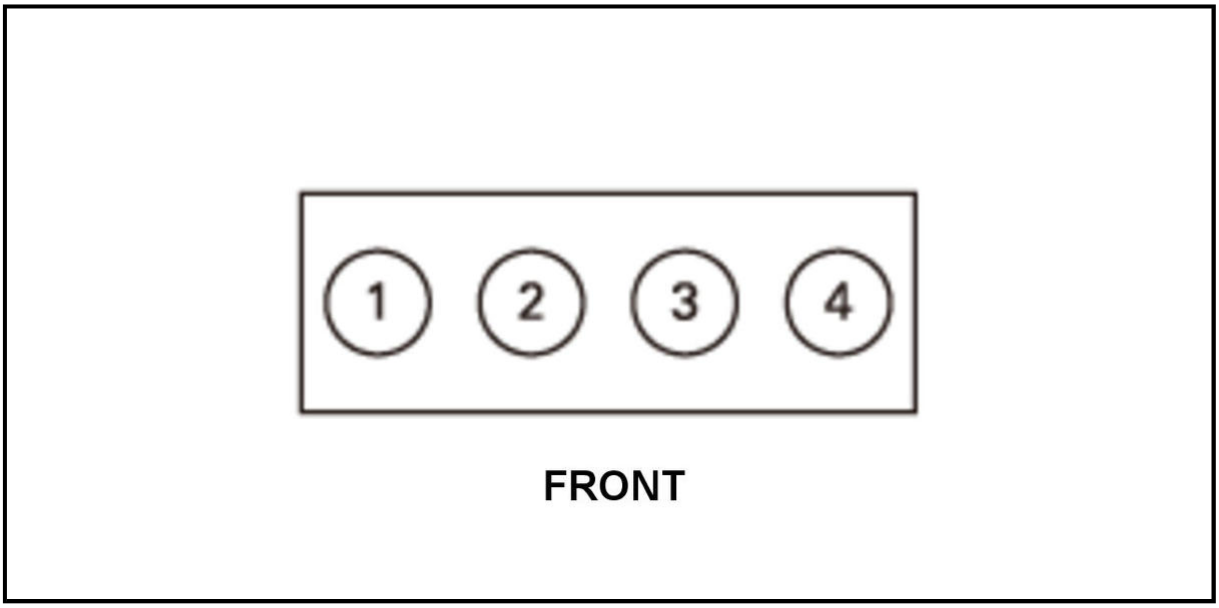

B	Compression (PSI)
No. 1	B
No. 2	B
No. 3	B
No. 4	B

Highest Reading (PSI)	Lowest Reading (PSI)	Variation (%)
B	B	B

Does the compression vary more than 10 % between cylinders, or does any cylinder read below 150 PSI?

1. **YES**

   The cylinder leakage is normal, but the engine compression is low. Check for each of the conditions below and repair as needed.

   - Incorrect camshaft timing.
   - A bent (short) connecting rod.
   - Worn or damaged camshaft lobes.

   NO

   The engine compression and the cylinder leakage are normal. Go to step 28.

28. Check Cylinder Leakage

-1. **Perform a cylinder leakage test** .

-2. Record your test results in the chart shown below.

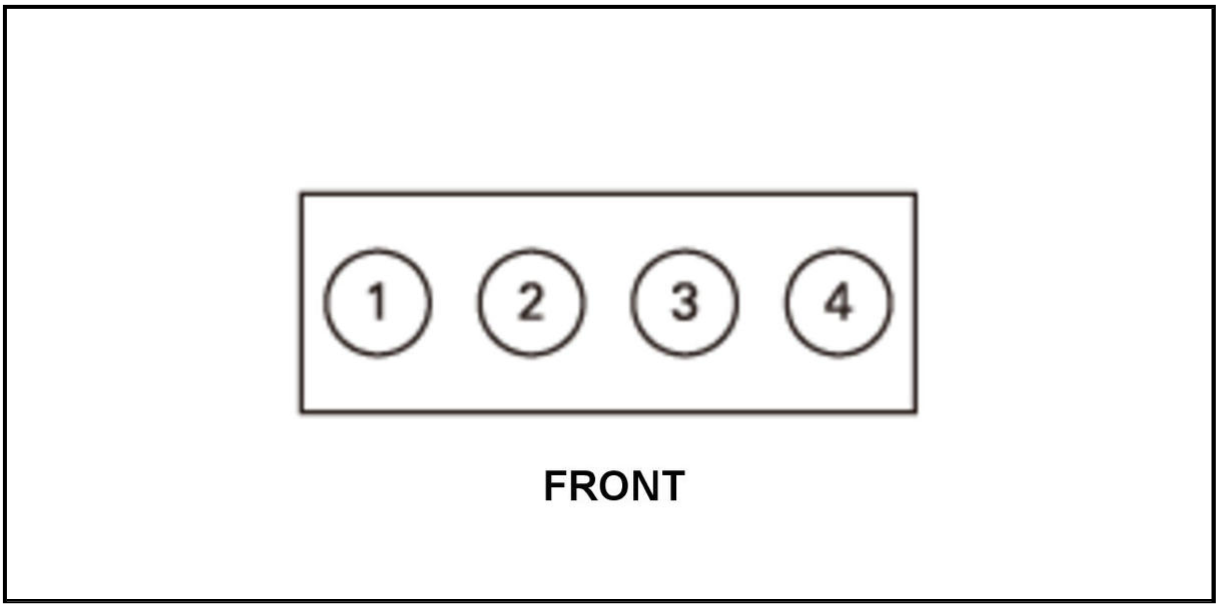

B	Leakage (%)	Leakage Area
No. 1	B	B
No. 2	B	B
No. 3	B	B
No. 4	B	B

Does any cylinder have leakage greater than 10 %?

YES

If the majority of the air is escaping from exhaust pipe or throttle body, check for tight valve clearance and adjust each cylinder as needed, then retest. Determine the cause of the cylinder leakage and repair the engine as needed.

NO

The cylinders are sealing properly. Go to step 29.

29. Exchange Fuel Injector

-1. **Exchange the fuel injector from the problem cylinder with one from another cylinder** .

-2. Drive the vehicle under the conditions when the misfire was duplicated.

-3. Monitor the misfire parameters in the DATA LIST.

Signal	Current conditions	
	Values	Unit
CYL1 MISFIRE	B	B
CYL2 MISFIRE	B	B
CYL3 MISFIRE	B	B
CYL4 MISFIRE	B	B

Do the misfire counts stay on the problem cylinder when the fuel injector is swapped?

YES

The fuel injector is OK. All of the failures have been checked for this type of misfire. Go to step 1 in the Problem verification procedure and ensure you selected the correct troubleshooting procedure.

NO

The fuel injector is faulty. **Replace all fuel injectors as a set** .

30. Inspect Spark Plug

    -1. **Remove the spark plug from the problem cylinder** .

    -2. Inspect the spark plug for signs of failure. Also make sure the spark plugs are the correct part number for the vehicle.

    Does the spark plug show any signs of failure or is it not the correct part number?

    YES

    Replace the spark plug .

    NO

    Go to step 31.

31. Check Ignition Coil Spark

    -1. Turn the vehicle to the OFF (LOCK) mode.

    -2. **Remove the ignition coil from the problem cylinder** .

    -3. Connect a commercially available spark tester between the ignition coil and engine ground.

    -4. Start the engine with the ignition coil connected.

    Does the ignition coil produce a spark?

    YES

    The ignition coil wiring is OK. Go to step 39.

    NO

    There is a problem with the ignition coil, or the Ignition coil circuit. Go to step 32.

32. Exchange Ignition Coil

    -1. **Exchange the ignition coil on the problem cylinder with a normally operating cylinder** .

    -2. Connect a commercially available spark tester between the ignition coil and engine ground.

    -3. Start the engine with the ignition coil connected.

    Does the ignition coil produce a spark?

    YES

    The ignition coil has a failure. **Replace the ignition coil** .

    NO

    There is a problem with the ignition coil circuit. Go to step 33.

33. Check Ignition Coil Power and Ground

    -1. Disconnect the ignition coil 3P connector from the problem cylinder.

-2. Turn the vehicle to the ON mode.

-3. Measure the voltage between ignition coil 3P connector terminals No. 1 (power) and No. 2 (ground).

NOTE: After the vehicle is turned to the OFF (LOCK) mode, this circuit may still show battery voltage for a period of time. This is normal.

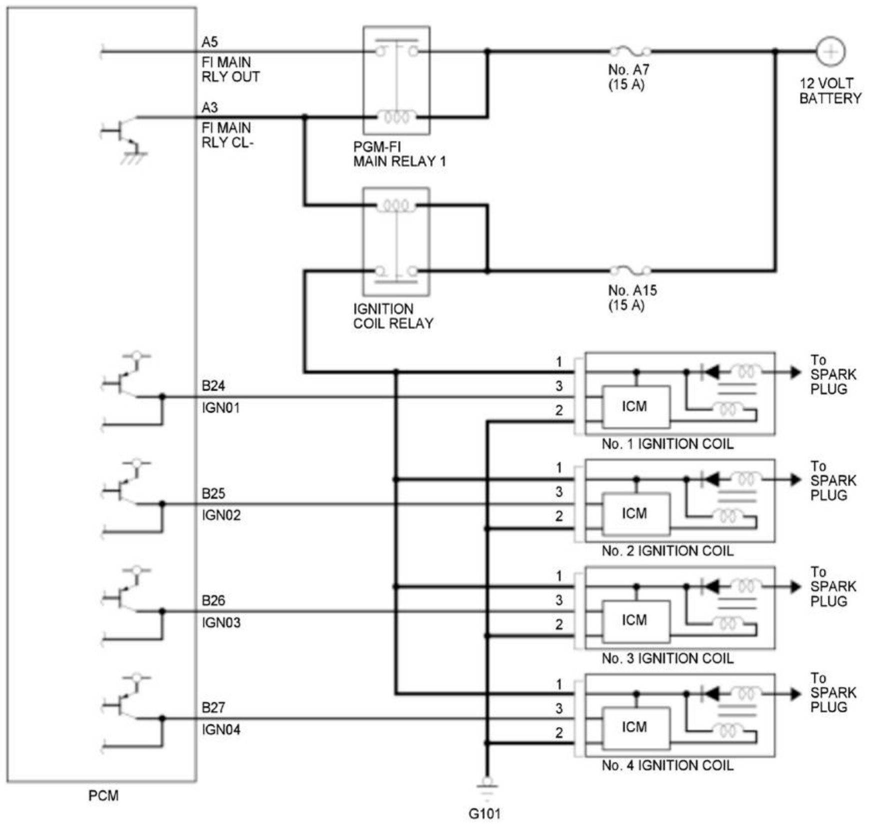
A5
FI MAIN
RLY OUT
A3
FI MAIN
RLY CL-
PGM-FI
MAIN RELAY 1
No. A7
(15 A)
12 VOLT
BATTERY
IGNITION
COIL RELAY
No. A15
(15 A)
B24
IGN01
B25
IGN02
B26
IGN03
B27
IGN04
1
3
2
ICM
To
SPARK
PLUG
No. 1 IGNITION COIL
No. 2 IGNITION COIL
No. 3 IGNITION COIL
No. 4 IGNITION COIL
PCM
G101

Is there battery voltage?

YES

The ignition coil power and ground circuits are OK. Go to step 34.

NO

There is a problem with the ignition coil power or ground circuit. Go to step 38.

34. Check Ignition Coil Control Short to Power

-1. Turn the vehicle to the ON mode.

-2. Measure the voltage between ignition coil 3P connector terminals No. 3 (Ignition Control) and body ground.

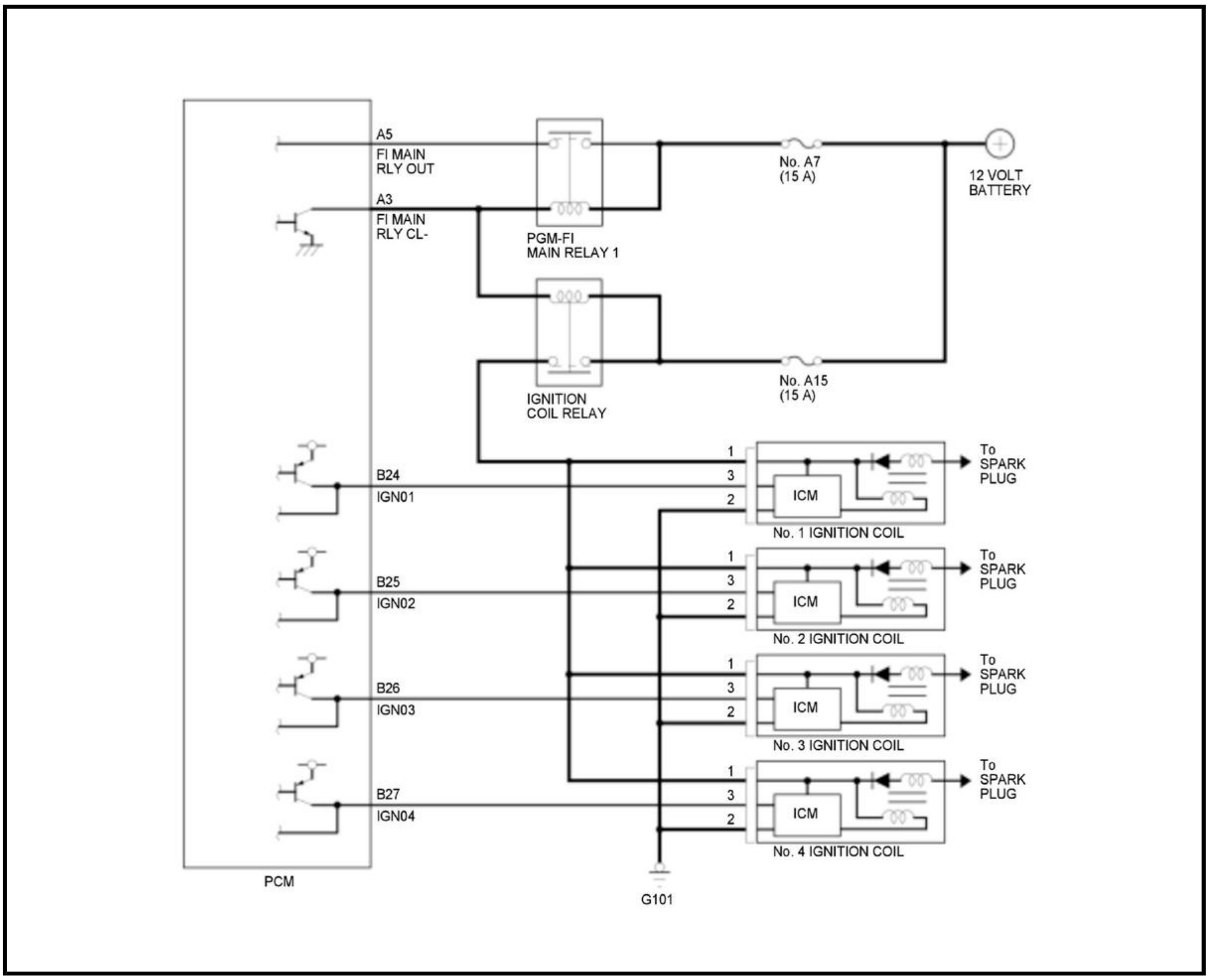
A5
FI MAIN RLY OUT
A3
FI MAIN RLY CL-
PGM-FI MAIN RELAY 1
No. A7 (15 A)
12 VOLT BATTERY
IGNITION COIL RELAY
No. A15 (15 A)
B24
IGN01
1
3
2
ICM
No. 1 IGNITION COIL
To SPARK PLUG
B25
IGN02
1
3
2
ICM
No. 2 IGNITION COIL
To SPARK PLUG
B26
IGN03
1
3
2
ICM
No. 3 IGNITION COIL
To SPARK PLUG
B27
IGN04
1
3
2
ICM
No. 4 IGNITION COIL
To SPARK PLUG
PCM
G101

Is there about 4 V or more?

YES

The ignition coil control circuit is shorted to power. Go to step 35.

NO

The ignition coil control circuit is not shorted to power. Go to step 36.

35. Isolate Ignition Coil Control Short to Power

-1. Jump the SCS line with the HDS, and wait more than 1 minute.

-2. Turn the vehicle to the OFF (LOCK) mode.

-3. Disconnect the PCM connectors.

-4. Turn the vehicle to the ON mode.

-5. Measure the voltage between ignition coil 3P connector terminals No. 3 (Ignition Control) and body ground.

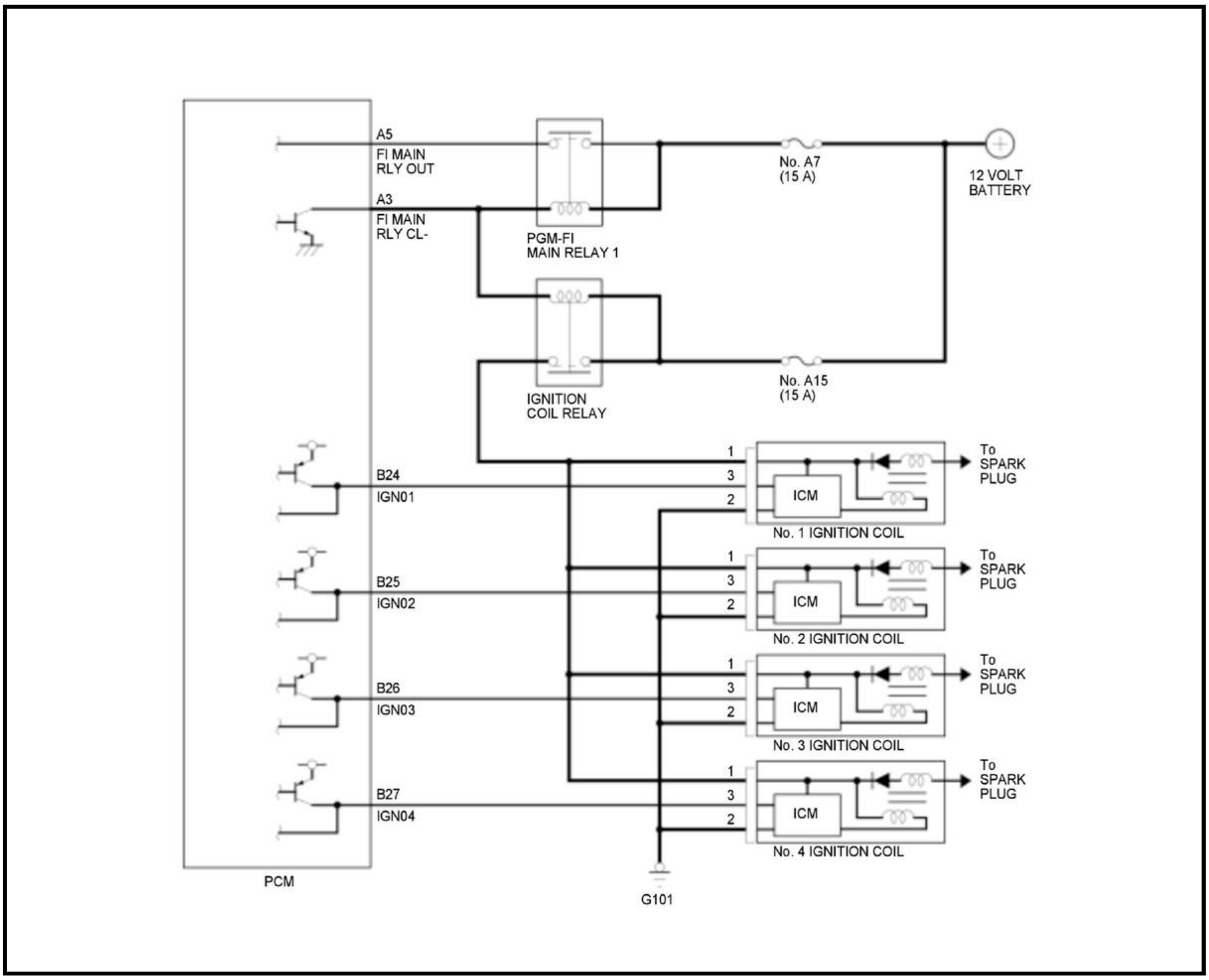
A5
FI MAIN RLY OUT
A3
FI MAIN RLY CL-
PGM-FI MAIN RELAY 1
No. A7 (15 A)
12 VOLT BATTERY
IGNITION COIL RELAY
No. A15 (15 A)
B24
IGN01
B25
IGN02
B26
IGN03
B27
IGN04
1
3
2
ICM
No. 1 IGNITION COIL
No. 2 IGNITION COIL
No. 3 IGNITION COIL
No. 4 IGNITION COIL
To SPARK PLUG
PCM
G101

Is there about 4 V or more?

YES

There is a short to power on the ignition coil control circuit. Find and repair the failure.

NO

The PCM is malfunctioning. **Replace the PCM** .

36. Check Ignition Coil Control Open Circuit

-1. Turn the vehicle to the OFF (LOCK) mode.

-2. Jump the SCS line with the HDS, and wait more than 1 minute.

-3. Disconnect the PCM connectors.

-4. Check for continuity between the ignition coil control terminal at the PCM connector and at the ignition coil 3P connector terminal No. 3.

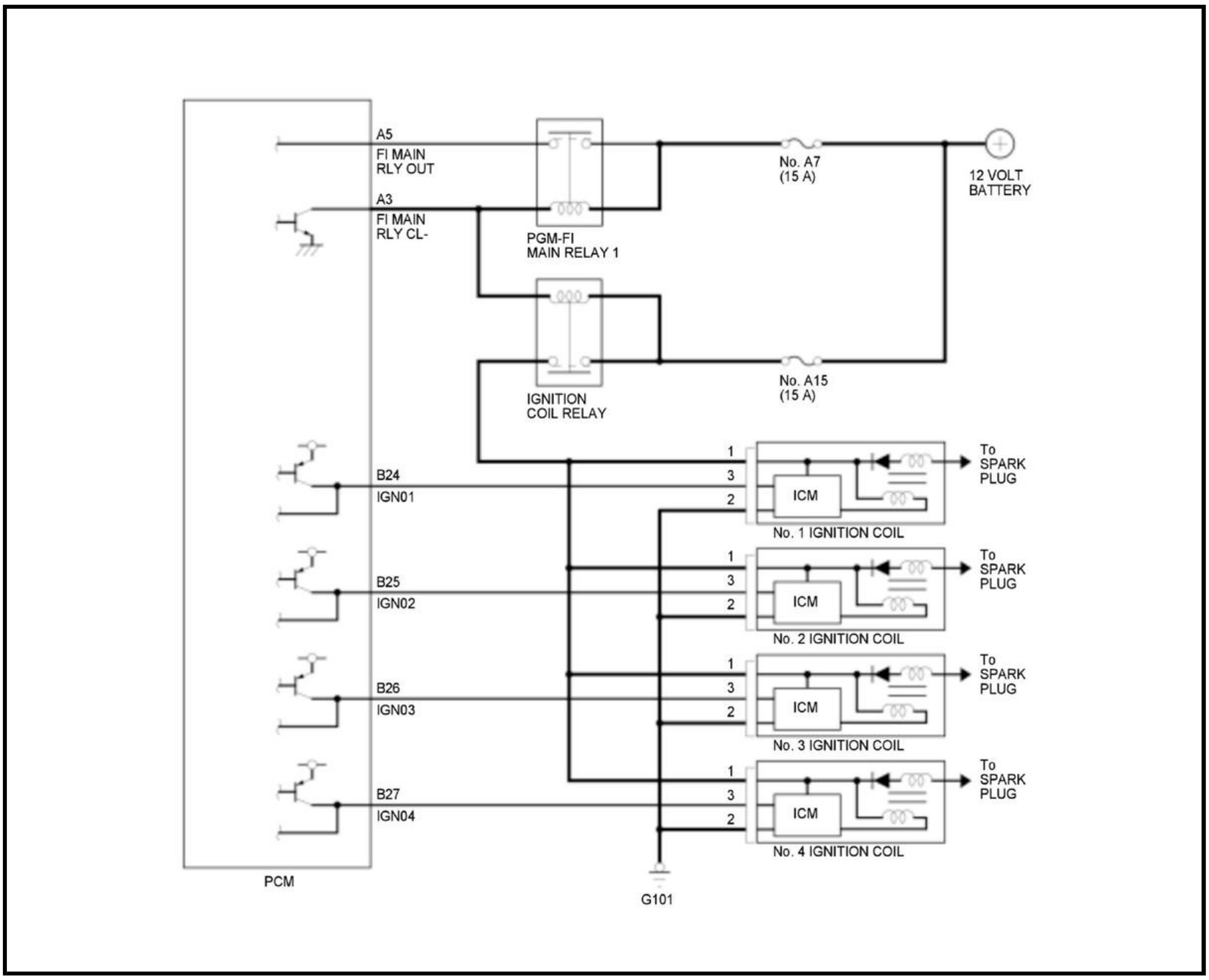
A5
FI MAIN RLY OUT
A3
FI MAIN RLY CL-
PGM-FI MAIN RELAY 1
No. A7 (15 A)
12 VOLT BATTERY
IGNITION COIL RELAY
No. A15 (15 A)
B24
IGN01
B25
IGN02
B26
IGN03
B27
IGN04
1
3
2
ICM
No. 1 IGNITION COIL
No. 2 IGNITION COIL
No. 3 IGNITION COIL
No. 4 IGNITION COIL
To SPARK PLUG
PCM
G101

Is there continuity?

YES

The ignition coil control circuit is not open. Go to step 37.

NO

Repair the open circuit between the ignition coil and the PCM.

37. Check Ignition Coil Control Short to Ground

-1. Check for continuity between ignition coil control terminal at the ignition coil 3P connector terminal No. 3 (Ignition Control) and body ground.

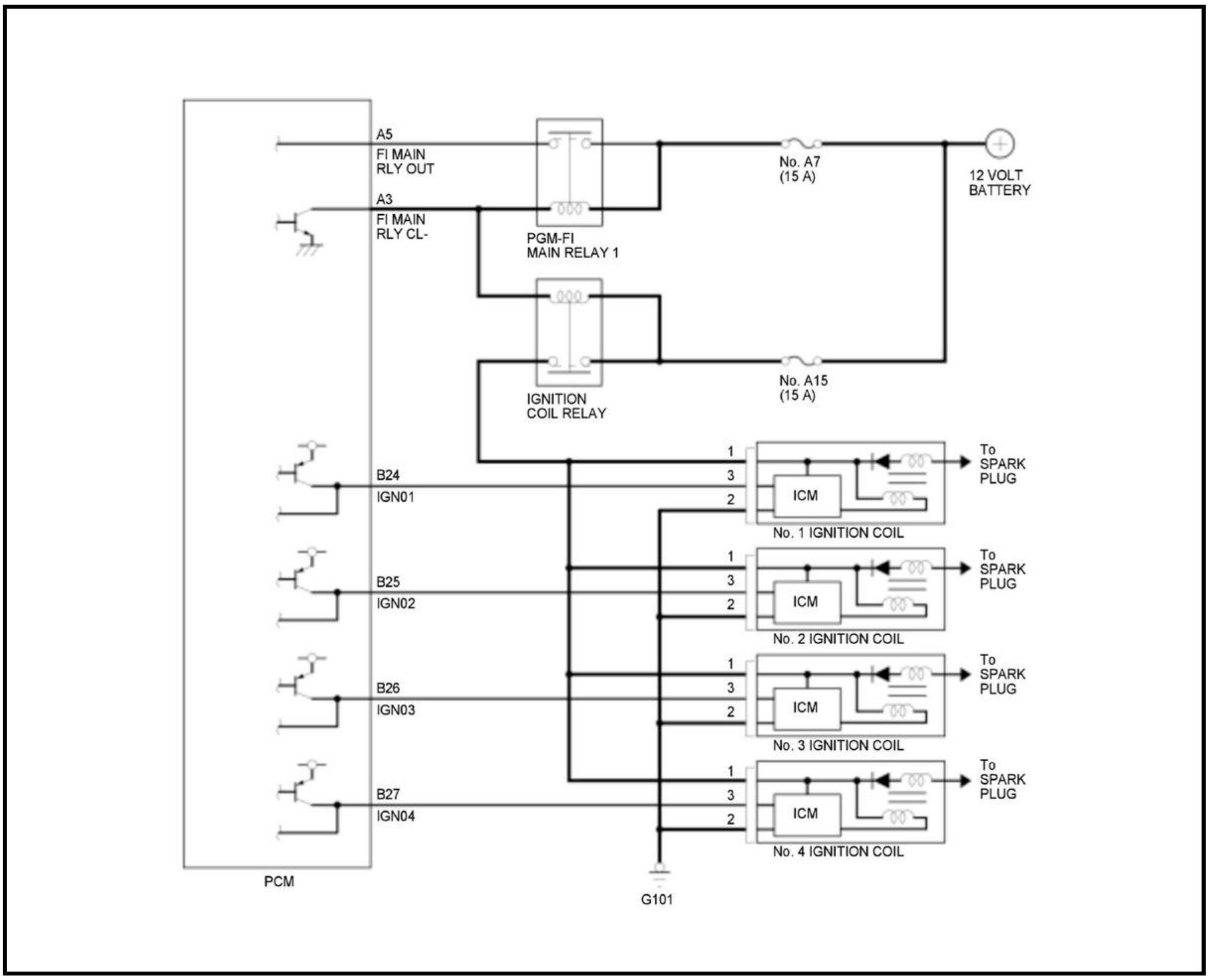
A5
FI MAIN
RLY OUT
A3
FI MAIN
RLY CL-
PGM-FI
MAIN RELAY 1
No. A7
(15 A)
12 VOLT
BATTERY
IGNITION
COIL RELAY
No. A15
(15 A)
B24
IGN01
B25
IGN02
B26
IGN03
B27
IGN04
1
3
2
ICM
No. 1 IGNITION COIL
No. 2 IGNITION COIL
No. 3 IGNITION COIL
No. 4 IGNITION COIL
To
SPARK
PLUG
PCM
G101

Is there continuity?

YES

Repair the short to ground on the ignition coil control wire.

NO

The ignition coil control wiring is OK. **Substitute a known-good PCM** .

38. Check Ignition Coil Power Circuit

-1. Measure the voltage between ignition coil 3P connector terminal No. 1 (power) and a known-good engine ground.

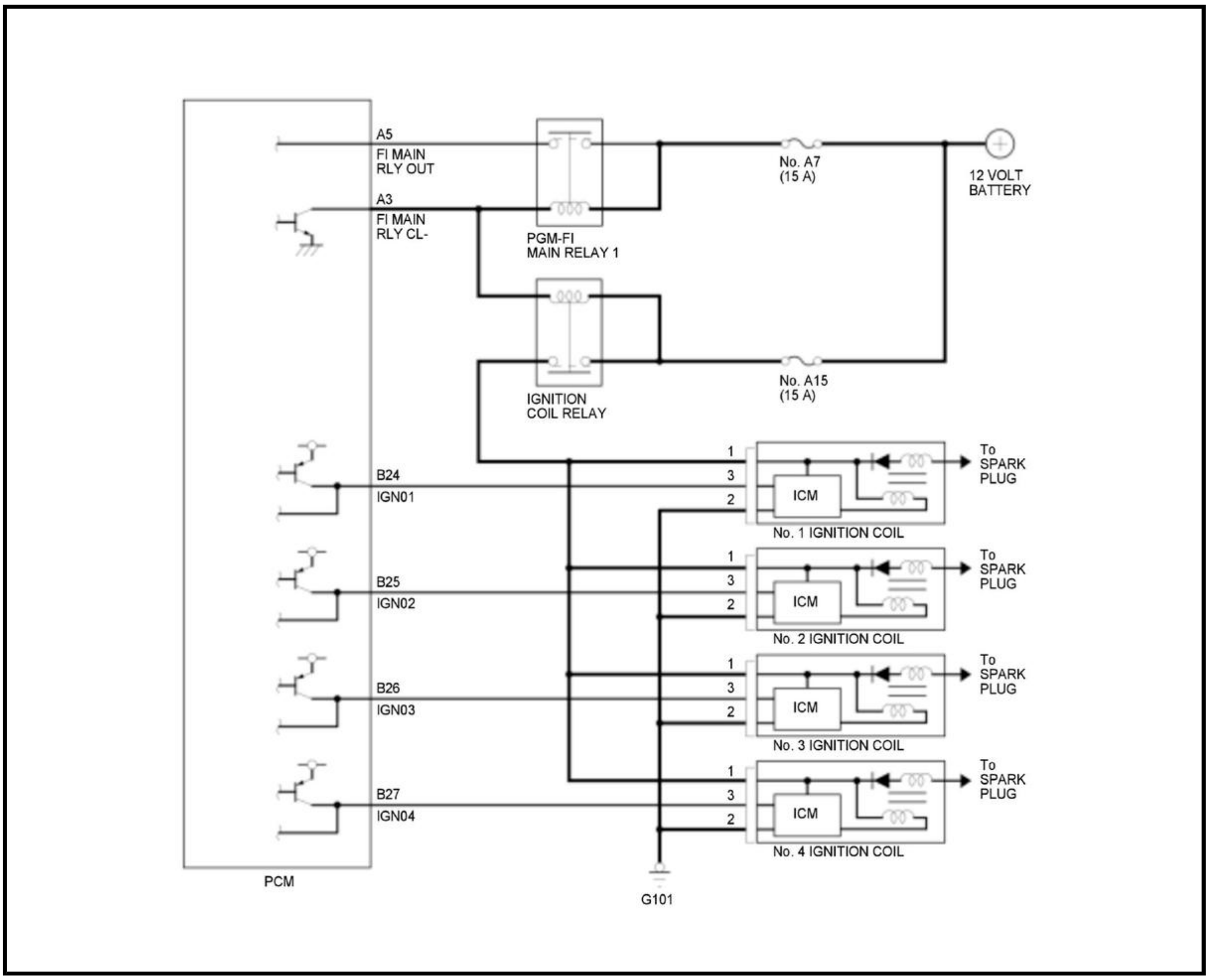
A5
FI MAIN
RLY OUT
A3
FI MAIN
RLY CL-
PGM-FI
MAIN RELAY 1
No. A7
(15 A)
12 VOLT
BATTERY
IGNITION
COIL RELAY
No. A15
(15 A)
B24
IGN01
1
3
2
ICM
No. 1 IGNITION COIL
To
SPARK
PLUG
B25
IGN02
1
3
2
ICM
No. 2 IGNITION COIL
To
SPARK
PLUG
B26
IGN03
1
3
2
ICM
No. 3 IGNITION COIL
To
SPARK
PLUG
B27
IGN04
1
3
2
ICM
No. 4 IGNITION COIL
To
SPARK
PLUG
PCM
G101

Is there battery voltage between the ignition coil power terminal and engine ground?

YES

The power circuit is OK. Repair the open circuit between the ignition coil (3P connector terminal No. 2) and G101.

NO

Repair the open circuit between the ignition coil and the ignition coil relay.

39. Inspect Ignition Coil

-1. Inspect the ignition coil and spark plug tube for engine oil contamination.

Is the ignition coil covered in engine oil?

YES

Clean the oil from the ignition coil and spark plug tube. **Replace the spark plug tube seals in the cylinder head cover** .

NO

Go to step 40.

40. Exchange Spark Plug and Ignition Coil

-1. **Exchange the spark plug and the ignition coil with one from a normally operating cylinder** .

-2. Drive the vehicle under the conditions when the misfire was duplicated.

-3. Monitor the misfire parameters in the DATA LIST.

Signal	Current conditions	
	Values	Unit
CYL1 MISFIRE	B	B
CYL2 MISFIRE	B	B
CYL3 MISFIRE	B	B
CYL4 MISFIRE	B	B

Did the misfire counts stay on the problem cylinder?

YES

The ignition coil and spark plug are OK. Go to step 42.

NO

There is a failure in the ignition coil or the spark plug. Go to step 41.

41. Exchange Ignition Coil

-1. **Exchange the ignition coil on the problem cylinder with a normally operating cylinder** .

-2. Drive the vehicle under the conditions when the misfire was duplicated.

-3. Monitor the misfire parameters in the DATA LIST.

Signal	Current conditions	
	Values	Unit
CYL1 MISFIRE	B	B
CYL2 MISFIRE	B	B
CYL3 MISFIRE	B	B
CYL4 MISFIRE	B	B

Did the misfire counts stay on the problem cylinder?

YES

The spark plug has a failure. **Replace the spark plug** .

NO

The ignition coil has a failure. **Replace the ignition coil** .

42. Check MAP Sensor Fluctuation

-1. Start the engine, and let it idle until the cooling fans cycle twice.

-2. Turn off all engine and electrical loads (A/C, audio, lights, etc.).

-3. Configure a HIGH-SPEED SNAPSHOT, and select only the MAP SENSOR.

-4. Begin displaying live vehicle data on a line graph.

-5. Configure the MAP SENSOR line graph range for 1.2 V MAX and 0.8 V MIN.

-6. Watch the MAP SENSOR fluctuation. See examples below.

Good Example

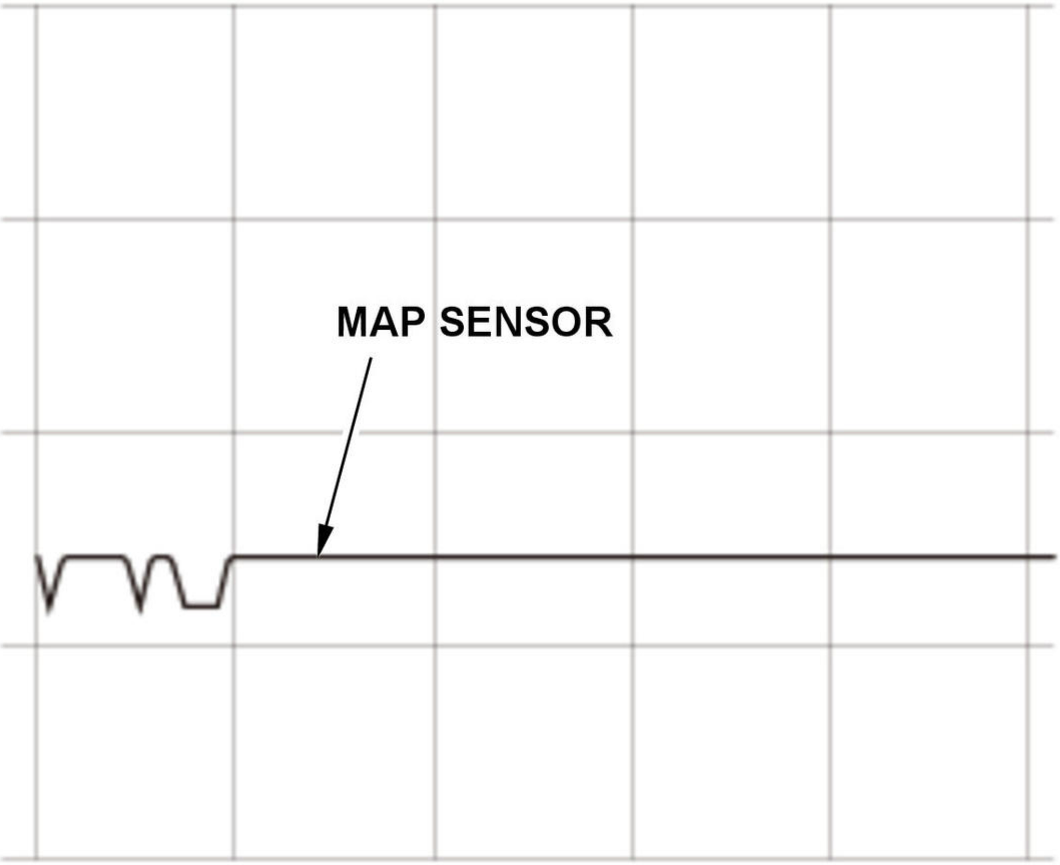

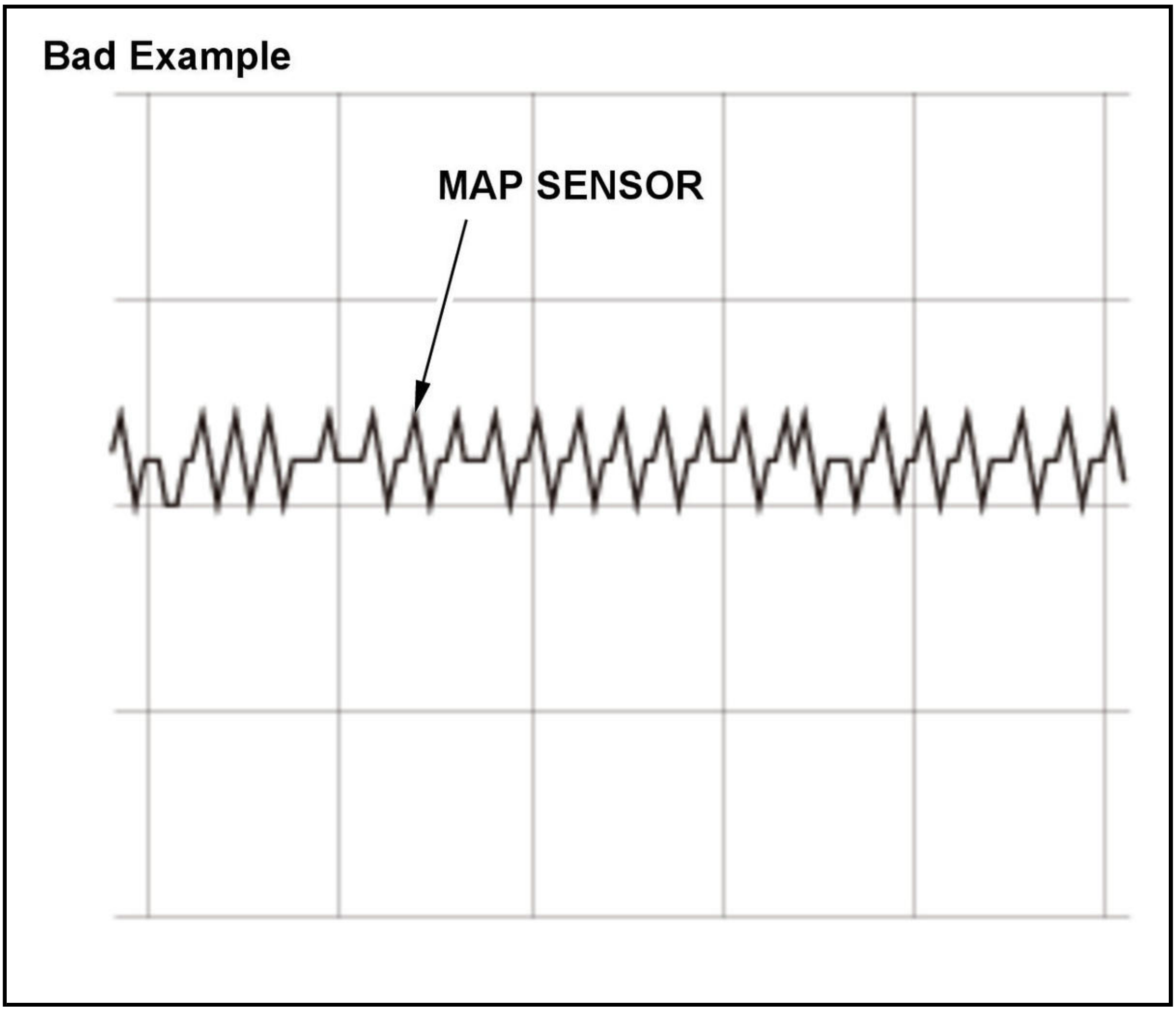

Does the MAP SENSOR continuously fluctuate 0.04 V or more at idle, no loads, engine hot?

YES

The intake manifold pressure fluctuation indicates a mechanical engine failure. Go to step 43.

NO

The intake manifold vacuum fluctuation is OK. Go to step 46.

43. Adjust Valve Clearance

-1. **Adjust the valve clearances** , and inspect the camshaft for excessive wear or grooves.

NOTE: ECT Sensor 1 must read less than 100 deg. F (38 deg. C) before adjusting the valve clearance. Shortcutting this step may cause incorrect valve clearance and engine misfire.

-2. Recheck the MAP SENSOR fluctuation at idle.

Does the MAP SENSOR continuously fluctuate 0.04 V or more at idle, no loads, engine hot?

YES

Adjusting the valve clearance did not correct the excessive MAP sensor fluctuation. Go to step 44.

NO

The excessive MAP sensor fluctuation was caused by incorrect valve clearance.

44. Check Cylinder Compression

-1. **Perform a cylinder compression test** .

-2. Record your test results in a chart similar to the one shown below.

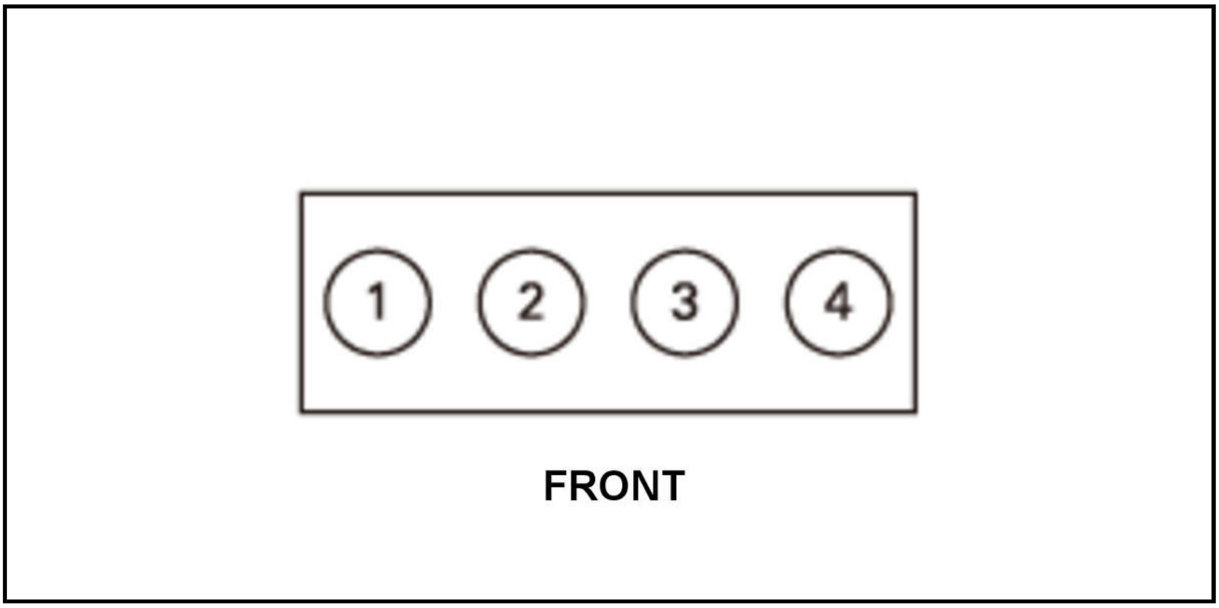

B	Compression (PSI)
No. 1	B
No. 2	B
No. 3	B
No. 4	B

Highest Reading (PSI)	Lowest Reading (PSI)	Variation (%)
B	B	B

Does the compression vary more than 10 % between cylinders, or does any cylinder read below 150 PSI?

1. **YES**

   The cylinder leakage is normal, but the engine compression is low. Check for each of the conditions below and repair as needed.

   - Incorrect camshaft timing.
   - A bent (short) connecting rod.
   - Worn or damaged camshaft lobes.

   NO

   The engine compression and the cylinder leakage are normal. Go to step 45.

45. Check Cylinder Leakage

-1. **Perform a cylinder leakage test** .

-2. Record your test results in the chart shown below.

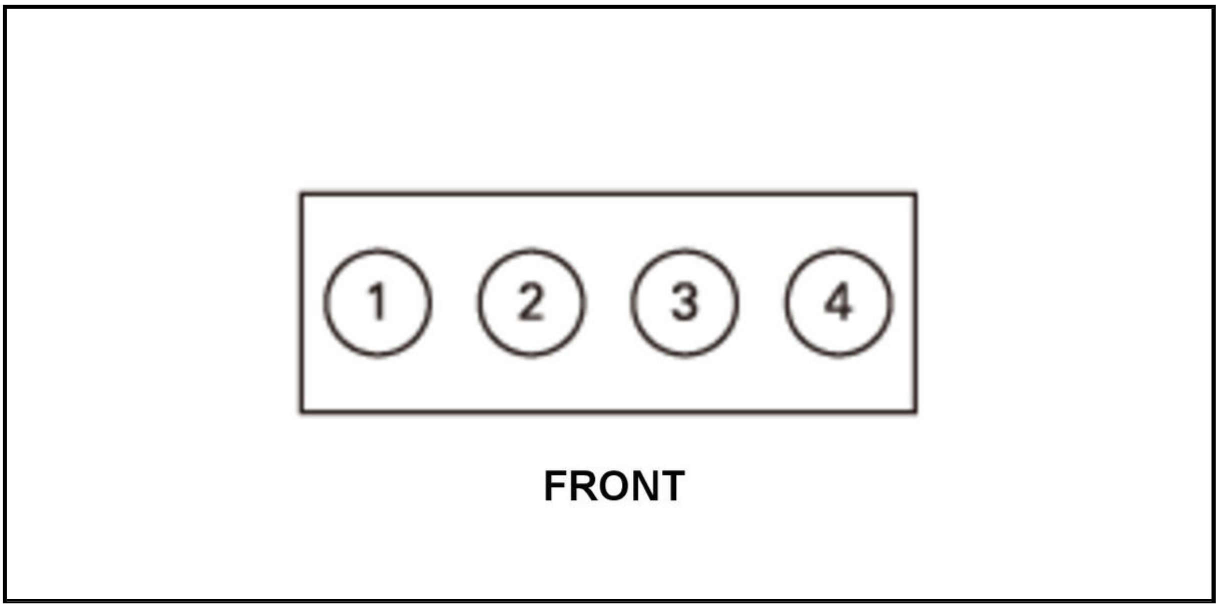

B	Leakage (%)	Leakage Area
No. 1	B	B
No. 2	B	B
No. 3	B	B
No. 4	B	B

Does any cylinder have leakage greater than 10 %?

YES

If the majority of the air is escaping from exhaust pipe or throttle body, check for tight valve clearance and adjust each cylinder as needed, then retest. Determine the cause of the cylinder leakage and repair the engine as needed.

NO

The cylinders are sealing properly. Go to step 46.

46. Exchange Fuel Injector

-1. **Exchange the fuel injector from the problem cylinder with one from another cylinder** .

-2. Drive the vehicle under the conditions when the misfire was duplicated.

-3. Monitor the misfire parameters in the DATA LIST.

Signal	Current conditions	
	Values	Unit
CYL1 MISFIRE	B	B
CYL2 MISFIRE	B	B
CYL3 MISFIRE	B	B
CYL4 MISFIRE	B	B

Do the misfire counts stay on the problem cylinder when the fuel injector is swapped?

YES

The fuel injector is OK. Go to step 47.

NO

The fuel injector is faulty. **Replace all fuel injectors as a set** .

47. CKP Pattern Clear/Pattern Learn

-1. Select CRANK PATTERN in the ADJUSTMENT MENU with the HDS.

-2. **Select CRANK PATTERN CLEAR, and clear the CKP pattern** .

CRANK PATTERN CLEAR

Select CRANK PATTERN LEARNING with the HDS, and follow the screen prompts .

CRANK PATTERN LEARNING

Monitor the misfire parameters in the DATA LIST.

Signal	Current conditions	
	Values	Unit
CYL1 MISFIRE	B	B
CYL2 MISFIRE	B	B
CYL3 MISFIRE	B	B
CYL4 MISFIRE	B	B

Did the misfire counts stay on the problem cylinder?

YES

Check for any authorized service information related to the DTCs or symptoms you are troubleshooting or **substitute a known-good PCM** .

NO

The misfire problem has been fixed.

48. Inspect Spark Plug

-1. **Remove the spark plug from the problem cylinder** .

-2. Inspect the spark plug for signs of failure. Also make sure the spark plugs are the correct part number for the vehicle.

Does the spark plug show any signs of failure or is it not the correct part number?

YES

Replace the spark plug .

NO

Go to step 49.

49. Check MAP Sensor Fluctuation

-1. Start the engine, and let it idle until the cooling fans cycle twice.

-2. Turn off all engine and electrical loads (A/C, audio, lights, etc.).

-3. Configure a HIGH-SPEED SNAPSHOT, and select only the MAP SENSOR.

-4. Begin displaying live vehicle data on a line graph.

-5. Configure the MAP SENSOR line graph range for 1.2 V MAX and 0.8 V MIN.

-6. Watch the MAP SENSOR fluctuation. See examples below.

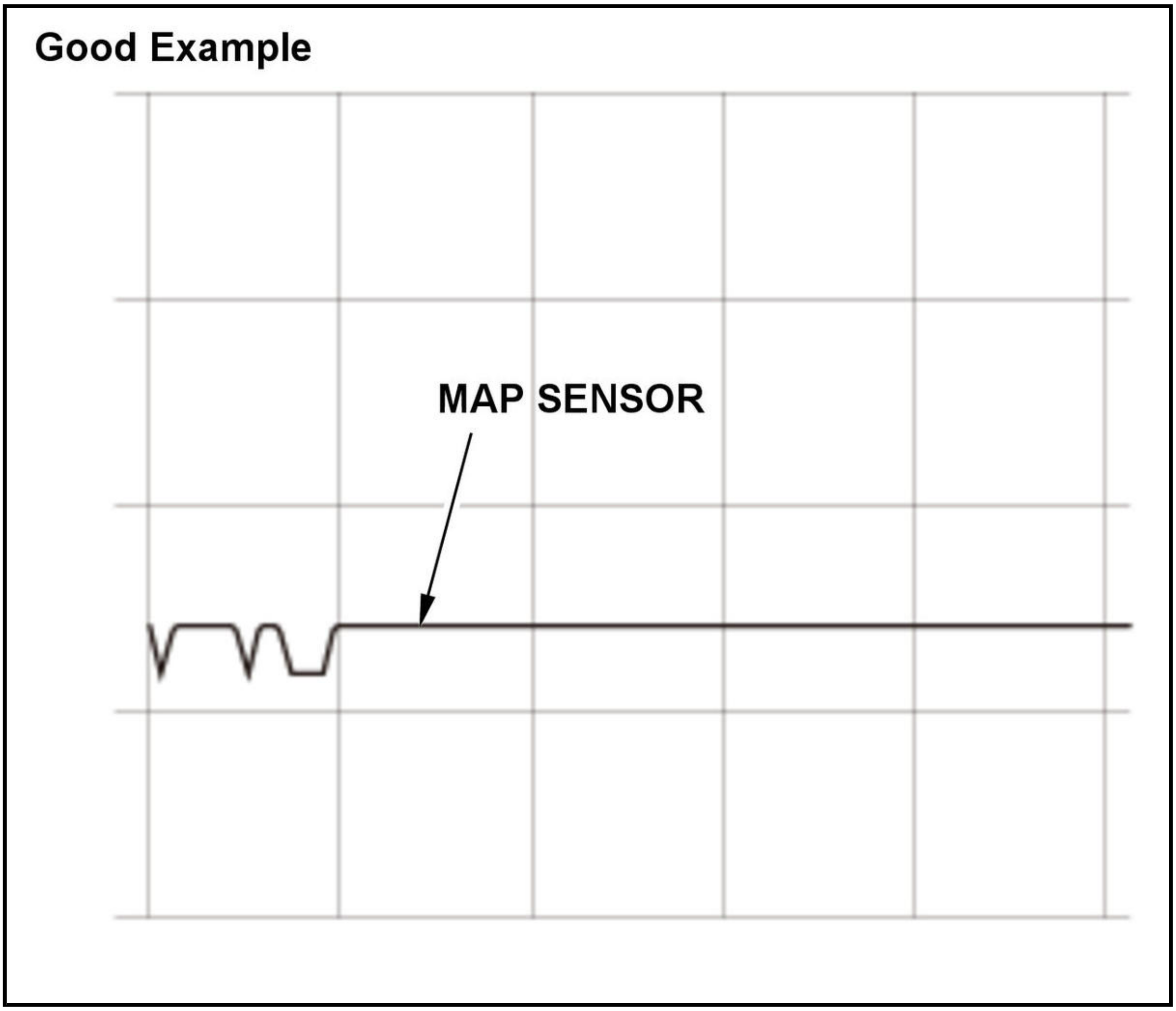

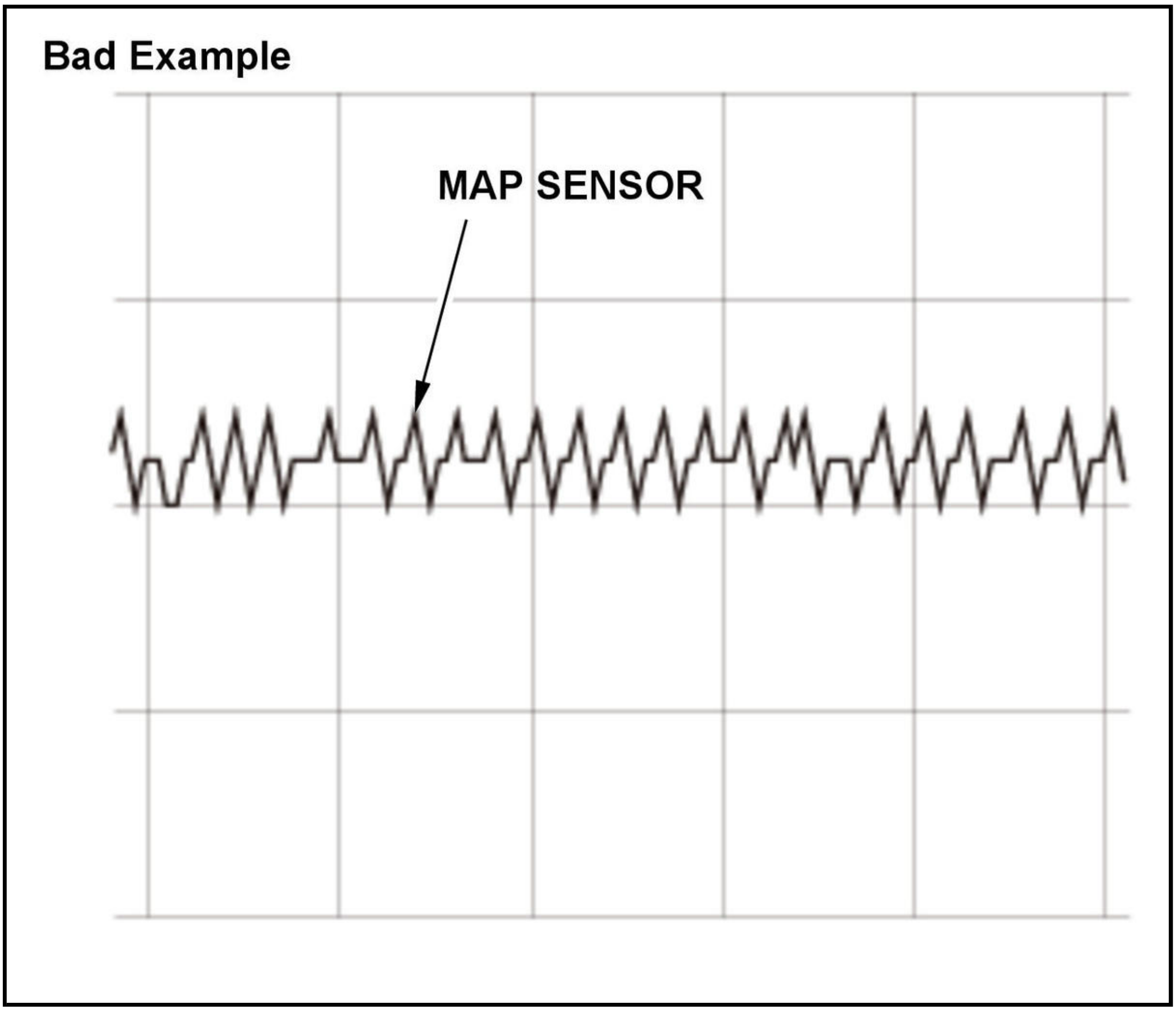

Does the MAP SENSOR continuously fluctuate 0.04 V or more at idle, no loads, engine hot?

YES

The intake manifold pressure fluctuation indicates a mechanical engine failure. Go to step 50.

NO

The intake manifold vacuum fluctuation is OK. Go to step 53.

50. Adjust Valve Clearance

-1. **Adjust the valve clearances** , and inspect the camshaft for excessive wear or grooves.

NOTE: ECT Sensor 1 must read less than 100 deg. F (38 deg. C) before adjusting the valve clearance. Shortcutting this step may cause incorrect valve clearance and engine misfire.

-2. Recheck the MAP SENSOR fluctuation at idle.

Does the MAP SENSOR continuously fluctuate 0.04 V or more at idle, no loads, engine hot?

YES

Adjusting the valve clearance did not correct the excessive MAP sensor fluctuation. Go to step 51.

NO

The excessive MAP sensor fluctuation was caused by incorrect valve clearance.

51. Check Cylinder Compression

-1. **Perform a cylinder compression test** .

-2. Record your test results in a chart similar to the one shown below.

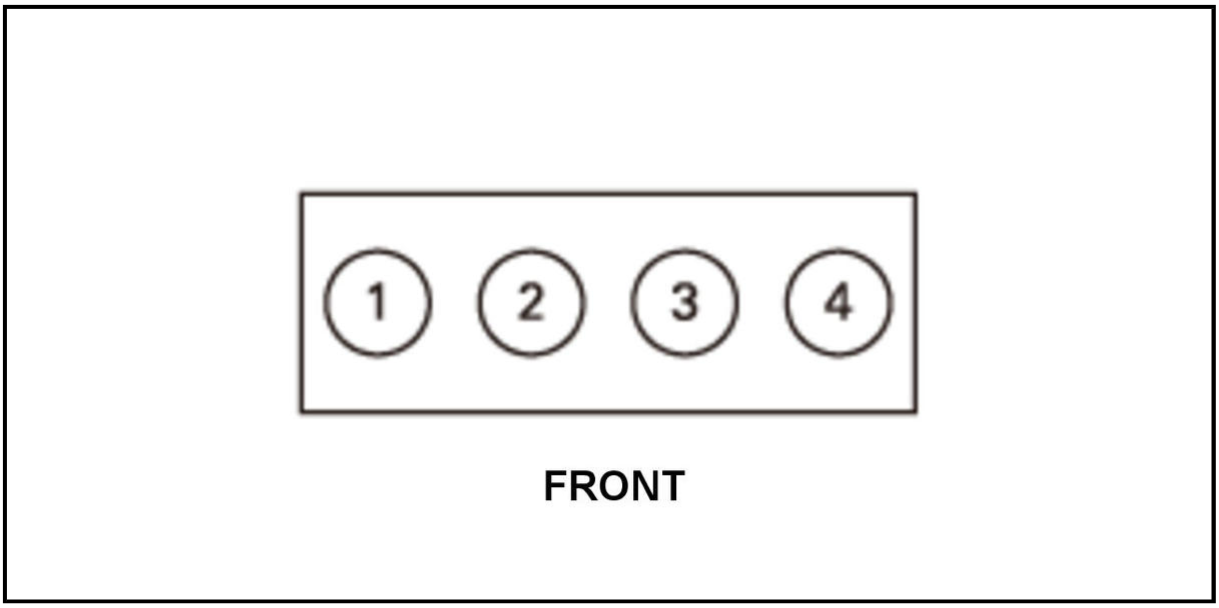

B	Compression (PSI)
No. 1	B
No. 2	B
No. 3	B
No. 4	B

Highest Reading (PSI)	Lowest Reading (PSI)	Variation (%)
B	B	B

Does the compression vary more than 10 % between cylinders, or does any cylinder read below 150 PSI?

1. **YES**

   The cylinder leakage is normal, but the engine compression is low. Check for each of the conditions below and repair as needed.

   - Incorrect camshaft timing.
   - A bent (short) connecting rod.
   - Worn or damaged camshaft lobes.

   NO

   The engine compression and the cylinder leakage are normal. Go to step 52.

52. Check Cylinder Leakage

-1. **Perform a cylinder leakage test** .

-2. Record your test results in the chart shown below.

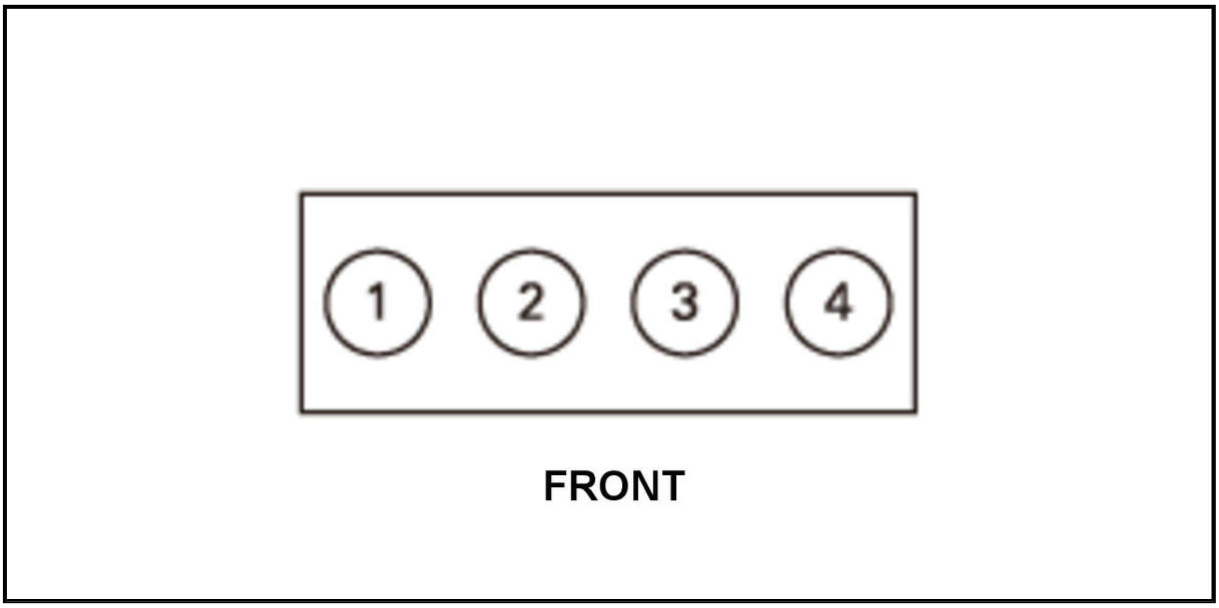

B	Leakage (%)	Leakage Area
No. 1	B	B
No. 2	B	B
No. 3	B	B
No. 4	B	B

Does any cylinder have leakage greater than 10 %?

YES

If the majority of the air is escaping from exhaust pipe or throttle body, check for tight valve clearance and adjust each cylinder as needed, then retest. Determine the cause of the cylinder leakage and repair the engine as needed.

NO

The cylinders are sealing properly. Go to step 53.

53. Check Fuel Pressure

-1. **Relieve the fuel pressure** .

-2. **Attach the fuel pressure gauge set and the fuel pressure gauge** .

-3. Locate and record the fuel pressure specification for your vehicle.

Minimum Pressure (kPa)	Maximum Pressure (kPa)
B	B

-4. Start the engine, and record the fuel pressure under the conditions the misfire was duplicated.

Fuel Pressure (kPa)
B

Is the fuel pressure within specifications?

YES

The fuel pressure is OK. Go to step 54.

NO

Check for pinched or damaged fuel lines. If OK, replace the fuel tank unit .

54. Check Fuel Contamination

-1. Remove the fuel tank unit .

-2. Inspect for evidence of fuel contamination such as diesel fuel, water, rust, or debris.

NOTE: If the misfire occurred shortly after refueling, the likely cause is poor fuel quality. The MIL DIST (MIL distance) value in the DATA LIST, along with the fuel level, can help you make this determination. Incorrect or contaminated fuel typically affects multiple cylinders. But a problem such as water in the fuel can cause a single cylinder misfire that occurs randomly.

Is there evidence of fuel contamination?

YES

Replace the fuel filter and then drain/refill the fuel tank with known-good fuel.

NO

The fuel system has no signs of fuel contamination. Go to step 55.

55. Check MAF Sensor g/s

-1. Locate and record the MAF SENSOR g/s specification for your vehicle. This can be found in troubleshooting procedure for DTC P0171.

Minimum g/s	Maximum g/s	Specified RPM
B	B	B

Ensure the vehicle meets these conditions:

- Engine coolant temperature (ECT SENSOR 1) above 176 deg. F (80 deg. C)
- Transmission in P or N
- All electrical loads off

Signal	Current conditions	
	Values	Unit
ECT SENSOR 1	B	B

-3. Monitor the ENGINE SPEED in the DATA LIST with the HDS. Raise and hold the engine speed steady at the specified rpm.

Signal	Current conditions	
	Values	Unit
ENGINE SPEED	B	B

-4. While holding the rpm steady, check the MAF SENSOR in the DATA LIST.

Signal	Current conditions	
	Values	Unit
MAF SENSOR	B	B

Is the MAF Sensor g/s value within specifications?

YES

The MAF sensor is reading correctly. **Replace all fuel injectors as a set** .

NO

The MAF sensor is not reading correctly. **Replace the MAF sensor/IAT sensor** .

56. Inspect Spark Plug

-1. **Remove the spark plug from the problem cylinder** .

-2. Inspect the spark plug for signs of failure. Also make sure the spark plugs are the correct part number for the vehicle.

Does the spark plug show any signs of failure or is it not the correct part number?

YES

Replace the spark plug .

NO

Go to step 57.

57. Inspect Ignition Coil

-1. Inspect the ignition coil and the spark plug tube for engine oil contamination.

Is the ignition coil covered in engine oil?

YES

Clean the oil from the ignition coil and the spark plug tube. **Replace the spark plug tube seals in the cylinder head cover** .

NO

Go to step 58.

58. Exchange Spark Plug and Ignition Coil

-1. **Exchange the spark plug and the ignition coil with ones from a normally operating cylinder** .

-2. Drive the vehicle under the conditions when the misfire was duplicated.

-3. Monitor the misfire parameters in the DATA LIST.

Signal	Current conditions	
	Values	Unit
CYL1 MISFIRE	B	B
CYL2 MISFIRE	B	B
CYL3 MISFIRE	B	B
CYL4 MISFIRE	B	B

Did the misfire counts stay on the problem cylinder?

YES

The ignition coil and the spark plug are OK. Go to step 60.

NO

There is a failure in the ignition coil or the spark plug. Go to step 59.

59. Exchange Ignition Coil

-1. **Exchange the ignition coil on the problem cylinder with a normally operating cylinder** .

-2. Drive the vehicle under the conditions when the misfire was duplicated.

-3. Monitor the misfire parameters in the DATA LIST.

Signal	**Current conditions**	
	Values	**Unit**
CYL1 MISFIRE	B	B
CYL2 MISFIRE	B	B
CYL3 MISFIRE	B	B
CYL4 MISFIRE	B	B

Did the misfire counts stay on the problem cylinder?

YES

The spark plug has a failure. **Replace the spark plug** .

NO

The ignition coil has a failure. **Replace the ignition coil** .

60. Exchange Fuel Injector

-1. **Exchange the fuel injector from the problem cylinder with one from another cylinder** .

-2. Drive the vehicle under the conditions when the misfire was duplicated.

-3. Monitor the misfire parameters in the DATA LIST.

Signal	**Current conditions**	
	Values	**Unit**
CYL1 MISFIRE	B	B
CYL2 MISFIRE	B	B

Signal	**Current conditions**	
	Values	**Unit**
CYL3 MISFIRE	B	B
CYL4 MISFIRE	B	B

Do the misfire counts stay on the problem cylinder when the fuel injector is swapped?

YES

The fuel injector is OK. Go to step 61.

NO

The fuel injector is faulty. **Replace all fuel injectors as a set** .

61. Inspect VTEC System

-1. **Perform the VTEC rocker arm test** .

Does the engine pass the VTEC rocker arm test?

YES

Go to step 62.

NO

Repair the VTEC system.

62. CKP Pattern Clear/Pattern Learn

-1. Select CRANK PATTERN in the ADJUSTMENT MENU with the HDS.

-2. **Select CRANK PATTERN CLEAR, and clear the CKP pattern** .

CRANK PATTERN CLEAR

Select CRANK PATTERN LEARNING with the HDS, and follow the screen prompts .

CRANK PATTERN LEARNING

Monitor the misfire parameters in the DATA LIST.

Signal	**Current conditions**	
	Values	**Unit**
CYL1 MISFIRE	B	B
CYL2 MISFIRE	B	B
CYL3 MISFIRE	B	B
CYL4 MISFIRE	B	B

Did the misfire counts stay on the problem cylinder?

YES

Check for any authorized service information related to the DTCs or symptoms you are troubleshooting or **substitute a known-good PCM** .

NO

The misfire problem has been fixed.

63. Inspect Spark Plug

-1. **Remove the spark plug from the problem cylinder** .

-2. Inspect the spark plug for signs of failure. Also make sure the spark plugs are the correct part number for the vehicle.

Does the spark plug show any signs of failure or is it not the correct part number?

YES

Replace the spark plug .

NO

Go to step 64.

64. Check Fuel Pressure

-1. **Relieve the fuel pressure** .

-2. **Attach the fuel pressure gauge set and the fuel pressure gauge** .

-3. Locate and record the fuel pressure specification for your vehicle.

Minimum Pressure (kPa)	Maximum Pressure (kPa)
B	B

-4. Start the engine, and record the fuel pressure under the conditions the misfire was duplicated.

Fuel Pressure (kPa)
B

Is the fuel pressure within specifications?

YES

The fuel pressure is OK. Go to step 65.

NO

Check for pinched or damaged fuel lines. If OK, **replace the fuel tank unit** .

65. Check Fuel Contamination

-1. **Remove the fuel tank unit** .

-2. Inspect for evidence of fuel contamination such as diesel fuel, water, rust, or debris.

NOTE: If the misfire occurred shortly after refueling, the likely cause is poor fuel quality. The MIL DIST (MIL distance) value in the DATA LIST, along with the fuel level, can help you make this determination. Incorrect or contaminated fuel typically affects multiple cylinders. But a problem such as water in the fuel can cause a single cylinder misfire that occurs randomly.

Is there evidence of fuel contamination?

YES

Replace the fuel filter and then drain/refill the fuel tank with a known-good fuel.

NO

The fuel system has no signs of fuel contamination. Go to step 66.

66. Exchange Fuel Injector

-1. **Exchange the fuel injector from the problem cylinder with one from another cylinder** .

-2. Drive the vehicle under the conditions when the misfire was duplicated.

-3. Monitor the misfire parameters in the DATA LIST.

Signal	Current conditions	
	Values	Unit
CYL1 MISFIRE	B	B
CYL2 MISFIRE	B	B
CYL3 MISFIRE	B	B
CYL4 MISFIRE	B	B

Do the misfire counts stay on the problem cylinder when the fuel injector is swapped?

YES

The fuel injector is OK. Go to step 67.

NO

The fuel injector is faulty. **Replace all fuel injectors as a set** .

67. Inspect VTEC System

-1. **Perform the VTEC rocker arm test** .

Does the engine pass the VTEC rocker arm test?

YES

Go to step 68.

NO

Repair the VTEC system.

68. Check for Exhaust Restrictions

-1. Reinstall all removed parts, and reconnect all connectors.

-2. Record the MAP SENSOR value while the engine is off.

Signal	Current conditions	
	Values	Unit
MAP SENSOR	B	B

-3. Start the engine, and monitor the ENGINE SPEED and MAP SENSOR in the DATA LIST with the HDS.

Signal	Current conditions	
	Values	Unit
MAP SENSOR	B	B
ENGINE SPEED	B	B

-4. Raise the engine speed to 3, 500 rpm and hold the throttle steady.

Does the MAP SENSOR read near atmospheric pressure (engine off value)?

YES

There is a restriction in the exhaust system. Check for catalyst damage and repair as necessary.

NO

Go to step 69.

69. CKP Pattern Clear/Pattern Learn

-1. Select CRANK PATTERN in the ADJUSTMENT MENU with the HDS.

-2. **Select CRANK PATTERN CLEAR, and clear the CKP pattern** .

CRANK PATTERN CLEAR

Select CRANK PATTERN LEARNING with the HDS, and follow the screen prompts .

CRANK PATTERN LEARNING

Monitor the misfire parameters in the DATA LIST.

Signal	Current conditions	
	Values	**Unit**
CYL1 MISFIRE	B	B
CYL2 MISFIRE	B	B
CYL3 MISFIRE	B	B

Signal	Current conditions	
	Values	**Unit**
CYL4 MISFIRE	B	B

Did the misfire counts stay on the problem cylinder?

YES

Check for any authorized service information related to the DTCs or symptoms you are troubleshooting or **substitute a known-good PCM** .

NO

The misfire problem has been fixed.

70. Check MAP Sensor Fluctuation

-1. Start the engine, and let it idle until the cooling fans cycle twice.

-2. Turn off all engine and electrical loads (A/C, audio, lights, etc.).

-3. Configure a HIGH-SPEED SNAPSHOT, and select only the MAP SENSOR.

-4. Begin displaying live vehicle data on a line graph.

-5. Configure the MAP SENSOR line graph range for 1.2 V MAX and 0.8 V MIN.

-6. Watch the MAP SENSOR fluctuation. See examples below.

Good Example

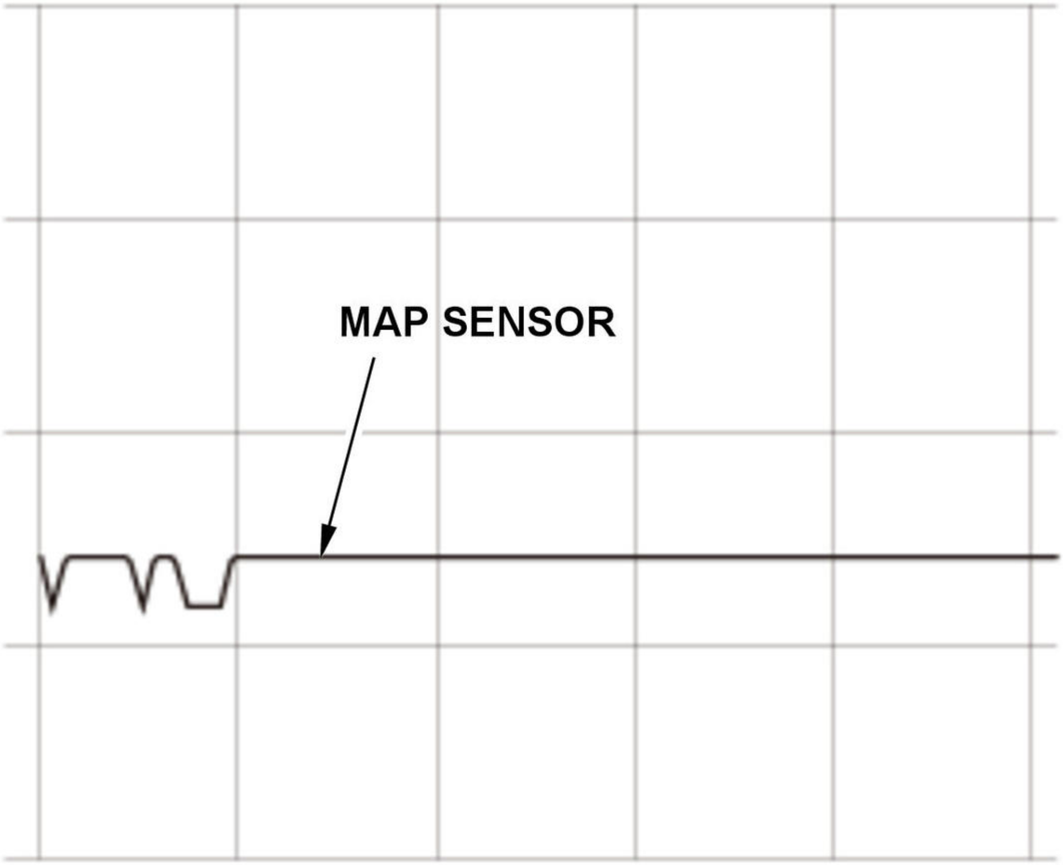

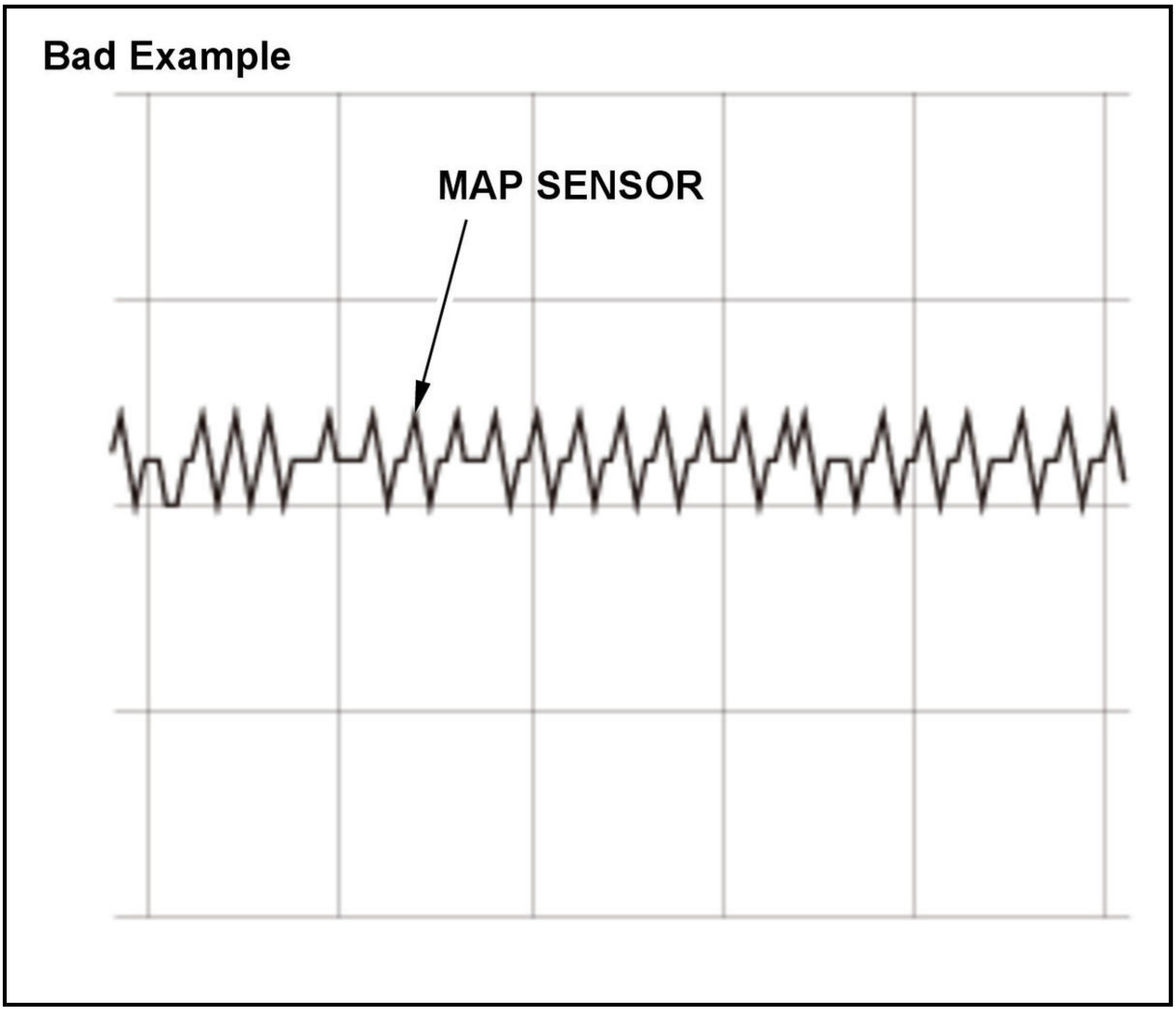

Does the MAP SENSOR continuously fluctuate 0.04 V or more at idle, no loads, engine hot?

YES

The intake manifold pressure fluctuation indicates a mechanical engine failure. Go to step 71.

NO

The intake manifold vacuum fluctuation is OK. Go to step 74.

71. Adjust Valve Clearance

-1. **Adjust the valve clearances** , and inspect the camshaft for excessive wear or grooves.

NOTE: ECT Sensor 1 must read less than 100 deg. F (38 deg. C) before adjusting the valve clearance. Shortcutting this step may cause incorrect valve clearance and engine misfire.

-2. Recheck the MAP SENSOR fluctuation at idle.

Does the MAP SENSOR continuously fluctuate 0.04 V or more at idle, no loads, engine hot?

YES

Adjusting the valve clearance did not correct the excessive MAP sensor fluctuation. Go to step 72.

NO

The excessive MAP sensor fluctuation was caused by incorrect valve clearance.

72. Check Cylinder Compression

-1. **Perform a cylinder compression test** .

-2. Record your test results in a chart similar to the one shown below.

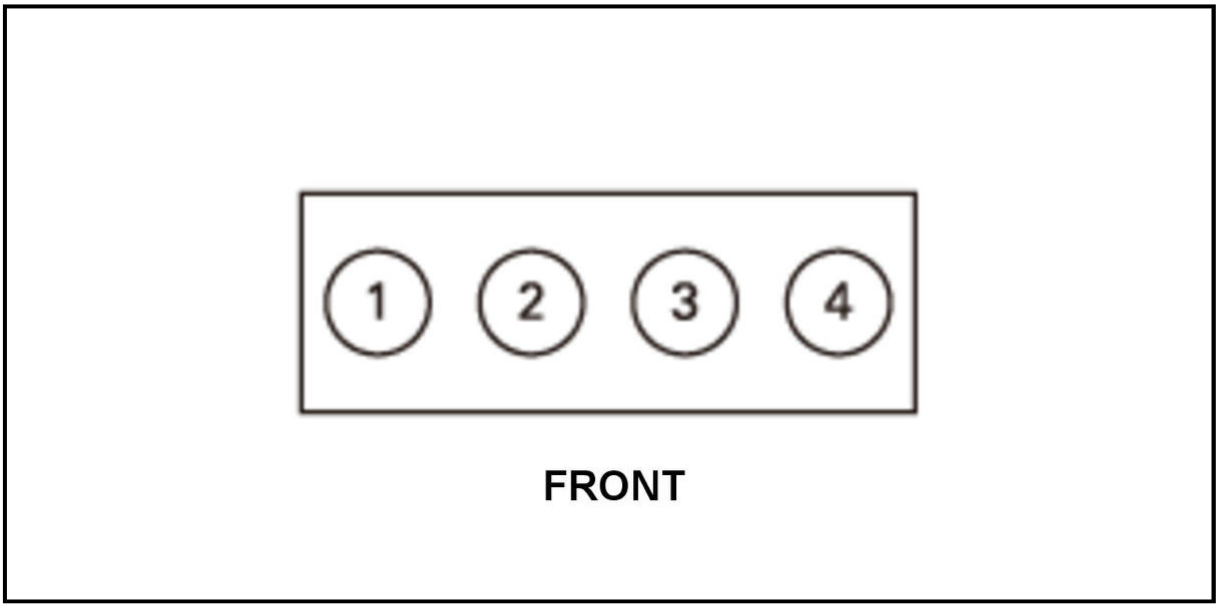

B	Compression (PSI)
No. 1	B
No. 2	B
No. 3	B
No. 4	B

Highest Reading (PSI)	Lowest Reading (PSI)	Variation (%)
B	B	B

Does the compression vary more than 10 % between cylinders, or does any cylinder read below 150 PSI?

1. **YES**

   The cylinder leakage is normal, but the engine compression is low. Check for each of the conditions below and repair as needed.

   - Incorrect camshaft timing.
   - A bent (short) connecting rod.
   - Worn or damaged camshaft lobes.

   NO

   The engine compression and the cylinder leakage are normal. Go to step 73.

73. Check Cylinder Leakage

-1. **Perform a cylinder leakage test** .

-2. Record your test results in the chart shown below.

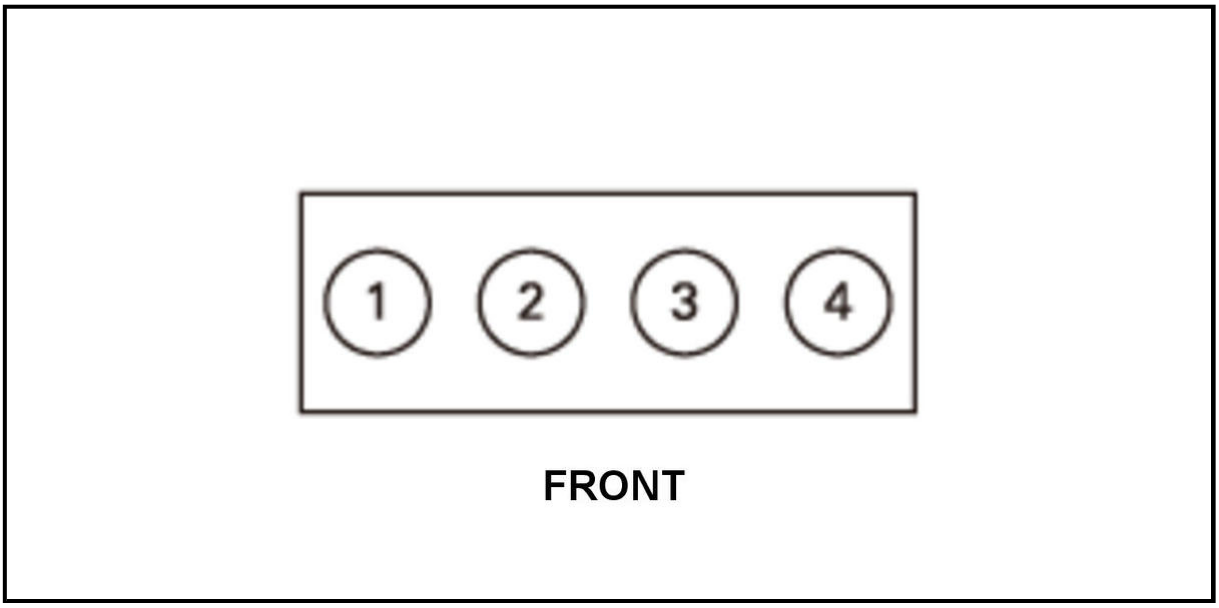

B	Leakage (%)	Leakage Area
No. 1	B	B
No. 2	B	B
No. 3	B	B
No. 4	B	B

Does any cylinder have leakage greater than 10 %?

YES

If the majority of the air is escaping from exhaust pipe or throttle body, check for tight valve clearance and adjust each cylinder as needed, then retest. Determine the cause of the cylinder leakage and repair the engine as needed.

NO

The cylinders are sealing properly. Go to step 74.

74. Check Fuel Injector Leak Down

-1. **Connect the fuel pressure gauge set** .

-2. Ensure that the fuel shut off valve is on the fuel pump side of the pressure gauge.

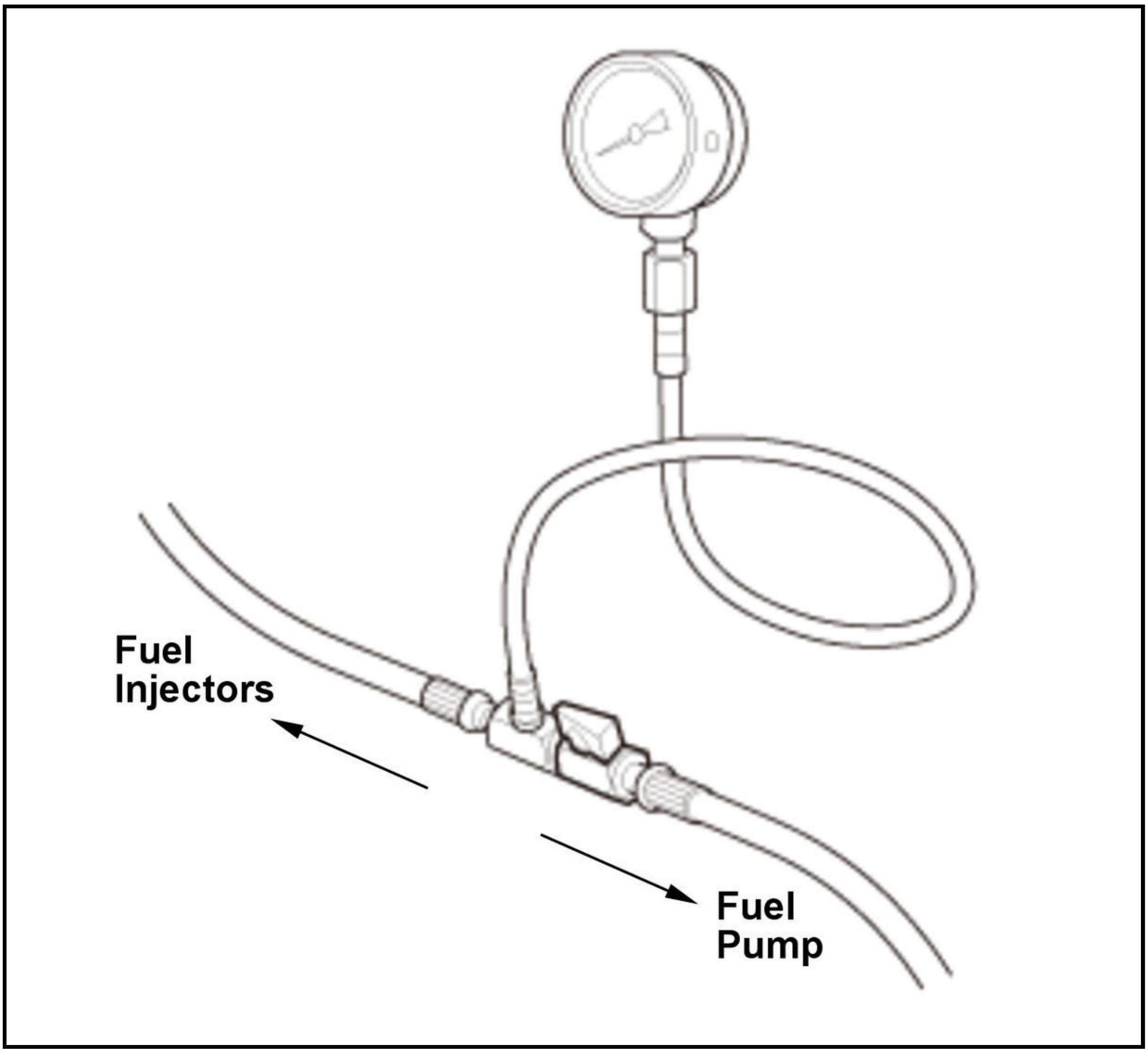

-3. Start the engine, and then shut it off.

-4. Turn the shut off valve 90 deg. to isolate the pressure between the fuel injectors and the fuel pressure gauge.

-5. Record the initial fuel pressure reading.

-6. Let the vehicle sit for 10 minutes.

-7. Check the fuel pressure.

Does the pressure drop more than 10 PSI within 10 minutes?

YES

The fuel injectors are leaking. **Replace all fuel injectors as a set** .

NO

Go to step 75.

75. Inspect Spark Plug

-1. **Remove the spark plug from the problem cylinder** .

-2. Inspect the spark plug for signs of failure. Also make sure the spark plugs are the correct part number for the vehicle.

Does the spark plug show any signs of failure or is it not the correct part number?

YES

Replace the spark plug .

NO

Go to step 76.

76. Exchange Spark Plug and Ignition Coil

-1. **Exchange the spark plug and the ignition coil with ones from a normally operating cylinder** .

-2. Drive the vehicle under the conditions when the misfire was duplicated.

-3. Monitor the misfire parameters in the DATA LIST.

Signal	Current conditions	
	Values	Unit
CYL1 MISFIRE	B	B
CYL2 MISFIRE	B	B
CYL3 MISFIRE	B	B
CYL4 MISFIRE	B	B

Did the misfire counts stay on the problem cylinder?

YES

The ignition coil and the spark plug are OK. Go to step 78.

NO

There is a failure in the ignition coil or the spark plug. Go to step 77.

77. Exchange Ignition Coil

-1. **Exchange the ignition coil on the problem cylinder with a normally operating cylinder** .

-2. Drive the vehicle under the conditions when the misfire was duplicated.

-3. Monitor the misfire parameters in the DATA LIST.

Signal	Current conditions	
	Values	Unit
CYL1 MISFIRE	B	B
CYL2 MISFIRE	B	B
CYL3 MISFIRE	B	B
CYL4 MISFIRE	B	B

Did the misfire counts stay on the problem cylinder?

YES

The spark plug has a failure. **Replace the spark plug** .

NO

The ignition coil has a failure. **Replace the ignition coil** .

78. Engine Carbon Removal

-1. Perform a top engine cleaning following the product manufacturer's instructions.

-2. Drive the vehicle under the conditions when the misfire was duplicated.

-3. Monitor the misfire parameters in the DATA LIST.

Signal	Current conditions	
	Values	Unit
CYL1 MISFIRE	B	B
CYL2 MISFIRE	B	B
CYL3 MISFIRE	B	B
CYL4 MISFIRE	B	B

Did the misfire counts stay?

YES

The carbon removal procedure did not correct the misfire. **Replace all fuel injectors as a set** .

NO

The carbon removal procedure corrected the misfire.

DTC P0326 (1.5 L ENGINE)

DTC P0326 : Knock Sensor Malfunction

NOTE: Before you troubleshoot, **review the general troubleshooting information** .

DTC Description	Confirmed DTC	Pending DTC
P0326 Knock Sensor Malfunction	B	B

DTC (PGM-FI)

1. Problem verification

-1. Turn the vehicle to the ON mode.

-2. Clear the DTC with the HDS.

-3. Turn the vehicle to the OFF (LOCK) mode.

-4. Start the engine, and hold the engine speed at 3, 000 rpm without load (in P or N) until the radiator fan comes on, then let it idle.

-5. Hold the engine speed at 2, 000 rpm or more without load (in P or N) for at least 5 seconds.

-6. Check for Pending or Confirmed DTCs with the HDS.

DTC Description	Confirmed DTC	Pending DTC
P0326 Knock Sensor Malfunction	B	B

Is DTC P0326 indicated?

YES

Go to step 2.

NO

Intermittent failure, the system is OK at this time. Check for poor connections or loose terminals at the knock sensor and the PCM. **If the on-board snapshot of this DTC is recorded, try to reproduce the failure under the same conditions with the on-board snapshot** .

2. Knock sensor installation check

   -1. Check that the knock sensor is installed correctly.

   Is the knock sensor installed correctly?

   YES

   Installation is OK. **Replace the knock sensor** .

   NO

   Installation is not correct, reinstall the knock sensor.

DTC P0326 (2.4 L ENGINE) (2017 2018 2019)

DTC P0326 : Knock Sensor Malfunction

NOTE: Before you troubleshoot, **review the general troubleshooting information** .

DTC Description	Confirmed DTC	Pending DTC
P0326 Knock Sensor Malfunction	B	B

DTC (PGM-FI)

1. Problem verification

   -1. Turn the vehicle to the ON mode.

   -2. Clear the DTC with the HDS.

   -3. Turn the vehicle to the OFF (LOCK) mode.

   -4. Start the engine.

   -5. Hold the engine speed at 1, 500 rpm or more without load (in P or N) for at least 5 seconds.

   -6. Check for Pending or Confirmed DTCs with the HDS.

DTC Description	Confirmed DTC	Pending DTC
P0326 Knock Sensor Malfunction	B	B

   Is DTC P0326 indicated?

   YES

   The failure is duplicated. Go to step 2.

   NO

   Intermittent failure, the system is OK at this time. Check for poor connections or loose terminals at the knock sensor and the PCM. **If the on-board snapshot of this DTC is recorded, try to reproduce the** failure under the same conditions with the on-board snapshot .

2. Knock sensor installation check

 -1. Check that the knock sensor is installed correctly.

 Is the knock sensor installed correctly?

 YES

 Installation is OK. Replace the knock sensor .

 NO

 Installation is not correct, reinstall the knock sensor.

DTC P0327 (1.5 L ENGINE)

DTC P0327 : Knock Sensor Circuit Low Voltage

NOTE: Before you troubleshoot, review the general troubleshooting information .

DTC Description	Confirmed DTC	Pending DTC
P0327 Knock Sensor Circuit Low Voltage	B	B

DTC (PGM-FI)

1. Problem verification

 -1. Turn the vehicle to the ON mode.

 -2. Clear the DTC with the HDS.

 -3. Turn the vehicle to the OFF (LOCK) mode.

 -4. Turn the vehicle to the ON mode.

 -5. Check for Pending or Confirmed DTCs with the HDS.

DTC Description	Confirmed DTC	Pending DTC
P0327 Knock Sensor Circuit Low Voltage	B	B

 Is DTC P0327 indicated?

 YES

 Go to step 2.

 NO

 Intermittent failure, the system is OK at this time. Check for poor connections or loose terminals at the knock sensor and the PCM. If the on-board snapshot of this DTC is recorded, try to reproduce the failure under the same conditions with the on-board snapshot .

2. Determine possible failure area (knock sensor, others)

 -1. Turn the vehicle to the OFF (LOCK) mode.

 -2. Disconnect the following connector.

Knock sensor 2P connector

-3. Turn the vehicle to the ON mode.

-4. Check for Pending or Confirmed DTCs with the HDS.

DTC Description	Confirmed DTC	Pending DTC
P0328 Knock Sensor Circuit High Voltage	B	B

Is DTC P0328 indicated?

YES

Replace the knock sensor .

NO

Go to step 3.

3. Shorted wire check (KS line to KSGND line)

-1. Turn the vehicle to the OFF (LOCK) mode.

-2. Jump the SCS line with the HDS, and wait more than 1 minute.

-3. Disconnect the following connector.

PCM connector E (80P)

-4. Check for continuity between test points 1 and 2.

Test condition	Vehicle OFF (LOCK) mode
	PCM connector E (80P) disconnected
	Knock sensor 2P connector: disconnected
Test point 1	Knock sensor 2P connector (female terminals) No. 1: ①
Test point 2	Knock sensor 2P connector (female terminals) No. 2: ①

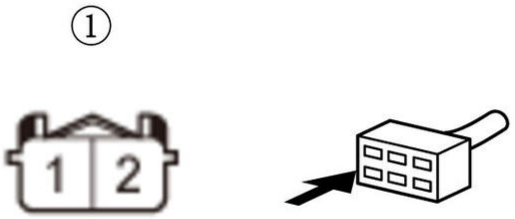

Is there continuity?

YES

Repair a short in the KS wire to the KSGND wire between the PCM (E34, E35) and the knock sensor.

NO

Go to step 4.

4. Shorted wire check (KS line)

-1. Check for continuity between test points 1 and 2.

Test condition	Vehicle OFF (LOCK) mode
	PCM connector E (80P) disconnected
	Knock sensor 2P connector: disconnected
Test point 1	Knock sensor 2P connector (female terminals) No. 2: ①
Test point 2	Body ground

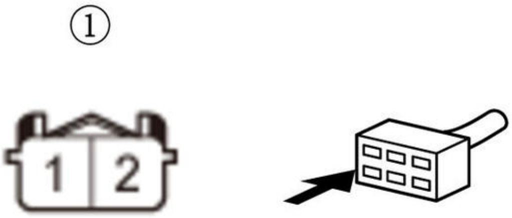

Is there continuity?

YES

Repair a short in the KS wire between the PCM (E35) and the knock sensor.

NO

The KS wire is OK. Check for any authorized service information related to the DTCs or symptoms you are troubleshooting, or **substitute a known-good PCM** .

DTC P0327 (2.4 L ENGINE) (2017 2018 2019)

DTC P0327 : Knock Sensor Circuit Low Voltage

NOTE: Before you troubleshoot, **review the general troubleshooting information** .

DTC Description	Confirmed DTC	Pending DTC
P0327 Knock Sensor Circuit Low Voltage	B	B

DTC (PGM-FI)

1. Problem verification

   -1. Turn the vehicle to the ON mode.

   -2. Clear the DTC with the HDS.

   -3. Turn the vehicle to the OFF (LOCK) mode.

   -4. Turn the vehicle to the ON mode.

   -5. Check for Pending or Confirmed DTCs with the HDS.

DTC Description	Confirmed DTC	Pending DTC
P0327 Knock Sensor Circuit Low Voltage	B	B

   Is DTC P0327 indicated?

   YES

   The failure is duplicated. Go to step 2.

   NO

   Intermittent failure, the system is OK at this time. Check for poor connections or loose terminals at the knock sensor and the PCM. **If the on-board snapshot of this DTC is recorded, try to reproduce the failure under the same conditions with the on-board snapshot** .

2. Determine possible failure area (knock sensor, others)

   -1. Turn the vehicle to the OFF (LOCK) mode.

   -2. Disconnect the following connector.

Knock sensor 2P connector

   -3. Turn the vehicle to the ON mode.

   -4. Check for Pending or Confirmed DTCs with the HDS.

DTC Description	Confirmed DTC	Pending DTC
P0328 Knock Sensor Circuit High Voltage	B	B

   Is DTC P0328 indicated?

   YES

   Replace the knock sensor .

   NO

   Go to step 3.

3. Shorted wire check (KS line to KSGND line)

   -1. Turn the vehicle to the OFF (LOCK) mode.

   -2. Jump the SCS line with the HDS, and wait more than 1 minute.

   -3. Disconnect the following connector.

PCM connector C (51P)

-4. Check for continuity between test points 1 and 2.

Test condition	Vehicle OFF (LOCK) mode
	PCM connector C (51P) disconnected
	Knock sensor 2P connector: disconnected
Test point 1	Knock sensor 2P connector (female terminals) No. 1: ①
Test point 2	Knock sensor 2P connector (female terminals) No. 2: ①

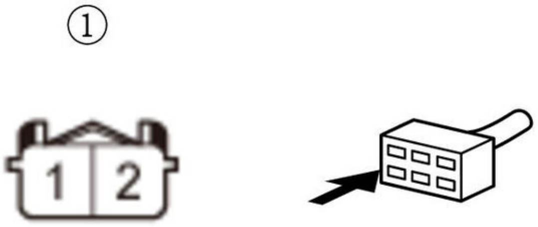

Is there continuity?

YES

Repair a short in the KS wire to the KSGND wire between the PCM and the knock sensor.

NO

Go to step 4.

4. Shorted wire check (KS line)

-1. Check for continuity between test points 1 and 2.

Test condition	Vehicle OFF (LOCK) mode
	PCM connector C (51P) disconnected
	Knock sensor 2P connector: disconnected
Test point 1	Knock sensor 2P connector (female terminals) No. 1: ①
Test point 2	Body ground

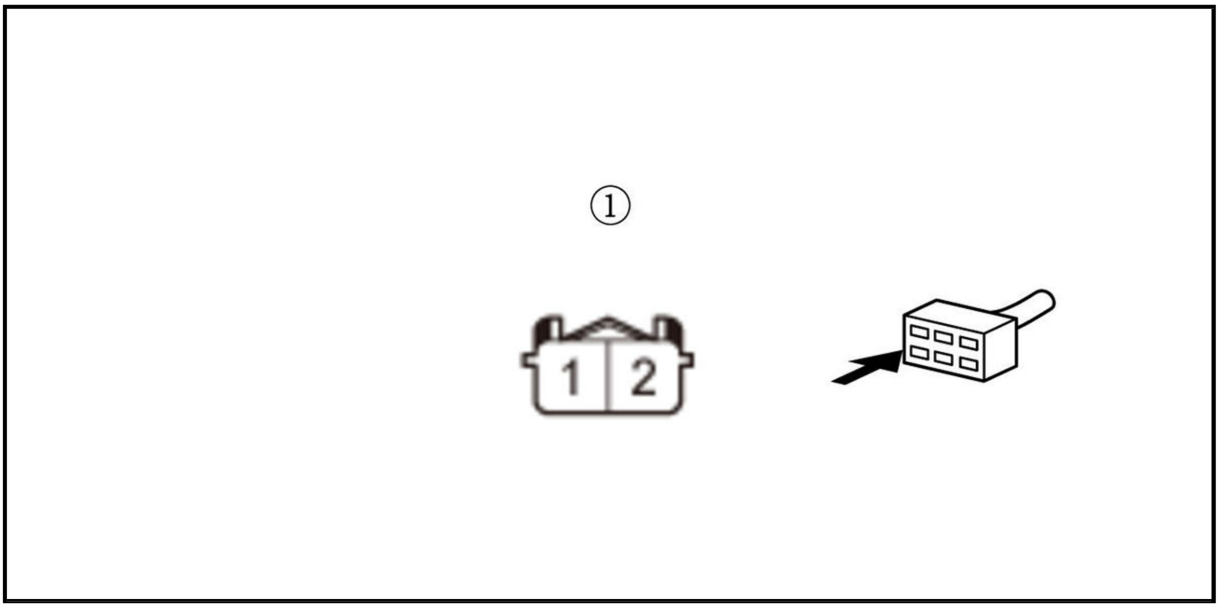

Is there continuity?

YES

Repair a short in the KS wire between the PCM (C29) and the knock sensor.

NO

The KS wire is OK. Check for any authorized service information related to the DTCs or symptoms you are troubleshooting or **substitute a known-good PCM** .

DTC P0328 (1.5 L ENGINE)

DTC P0328 : Knock Sensor Circuit High Voltage

NOTE: Before you troubleshoot, **review the general troubleshooting information** .

DTC Description	Confirmed DTC	Pending DTC
P0328 Knock Sensor Circuit High Voltage	B	B

DTC (PGM-FI)

1. Problem verification

-1. Turn the vehicle to the ON mode.

-2. Clear the DTC with the HDS.

-3. Turn the vehicle to the OFF (LOCK) mode.

-4. Turn the vehicle to the ON mode.

-5. Check for Pending or Confirmed DTCs with the HDS.

DTC Description	Confirmed DTC	Pending DTC
P0328 Knock Sensor Circuit High Voltage	B	B

Is DTC P0328 indicated?

YES

Go to step 2.

NO

Intermittent failure, the system is OK at this time. Check for poor connections or loose terminals at the knock sensor and the PCM. **If the on-board snapshot of this DTC is recorded, try to reproduce the failure under the same conditions with the on-board snapshot** .

2. Determine possible failure area (knock sensor, others)

-1. Turn the vehicle to the OFF (LOCK) mode.

-2. Disconnect the following connector.

Knock sensor 2P connector

-3. Turn the vehicle to the ON mode.

-4. Measure the voltage between test points 1 and 2.

Test condition	Vehicle ON mode
B	Knock sensor 2P connector: disconnected
Test point 1	Knock sensor 2P connector (female terminals) No. 1: ①
Test point 2	Knock sensor 2P connector (female terminals) No. 2: ①

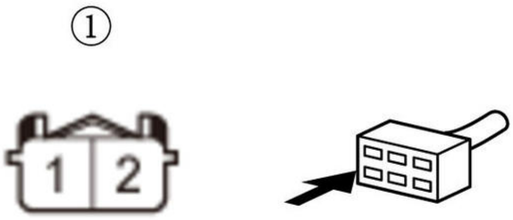

Is there about 5.0 V?

YES

Replace the knock sensor .

NO

Go to step 3.

3. Determine possible failure area (KS line, others)

-1. Measure the voltage between test points 1 and 2.

Test condition	Vehicle ON mode
B	Knock sensor 2P connector: disconnected
Test point 1	Knock sensor 2P connector (female terminals) No. 2: ①
Test point 2	Body ground

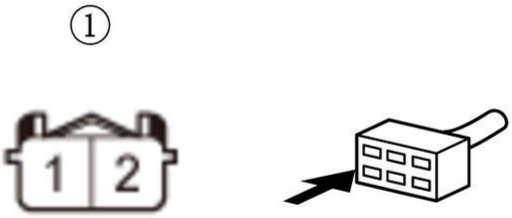

Is there about 5.0 V?

YES

Go to step 5.

NO

Go to step 4.

4. Open wire check (KS line)

-1. Turn the vehicle to the OFF (LOCK) mode.

-2. Jump the SCS line with the HDS, and wait more than 1 minute.

-3. Disconnect the following connector.

PCM connector E (80P)

-4. Check for continuity between test points 1 and 2.

Test condition	Vehicle OFF (LOCK) mode
B	Knock sensor 2P connector: disconnected
B	PCM connector E (80P): disconnected
Test point 1	Knock sensor 2P connector (female terminals) No. 2: ①
Test point 2	**PCM connector E (80P) No. 35**

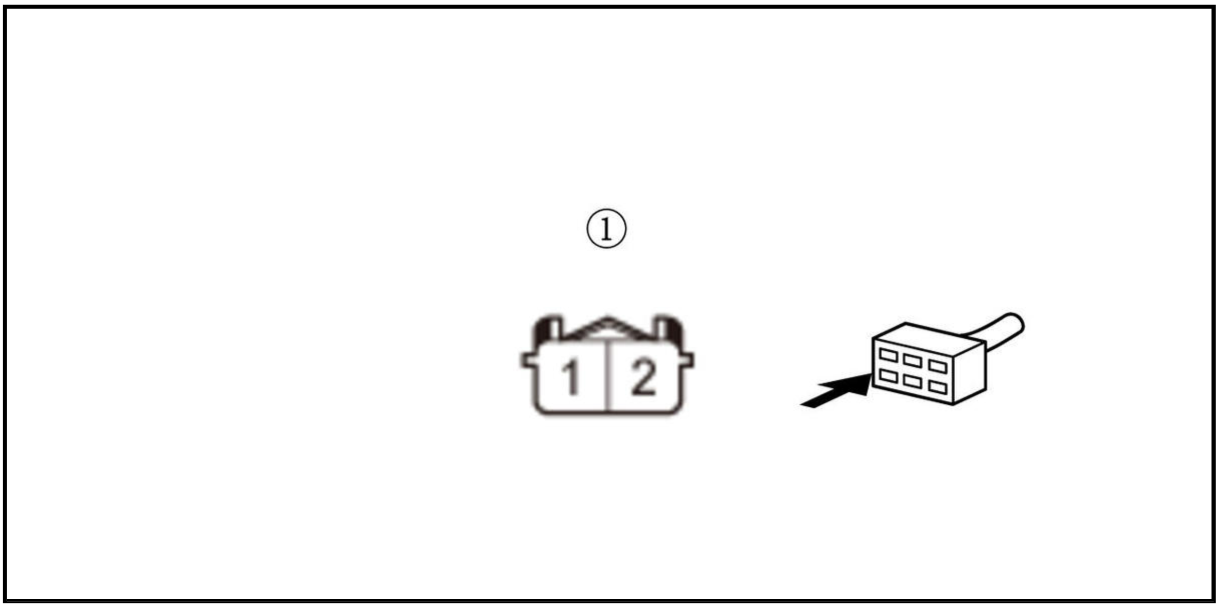

Is there continuity?

YES

The KS wire is OK. Check for any authorized service information related to the DTCs or symptoms you are troubleshooting, or **substitute a known-good PCM** .

NO

Repair an open in the KS wire between the PCM (E35) and the knock sensor.

5. Open wire check (KSGND line)

-1. Turn the vehicle to the OFF (LOCK) mode.

-2. Jump the SCS line with the HDS, and wait more than 1 minute.

-3. Disconnect the following connector.

PCM connector E (80P)

-4. Check for continuity between test points 1 and 2.

Test condition	Vehicle OFF (LOCK) mode
B	Knock sensor 2P connector: disconnected
B	PCM connector E (80P): disconnected
Test point 1	Knock sensor 2P connector (female terminals) No. 1: ①
Test point 2	**PCM connector E (80P) No. 34**

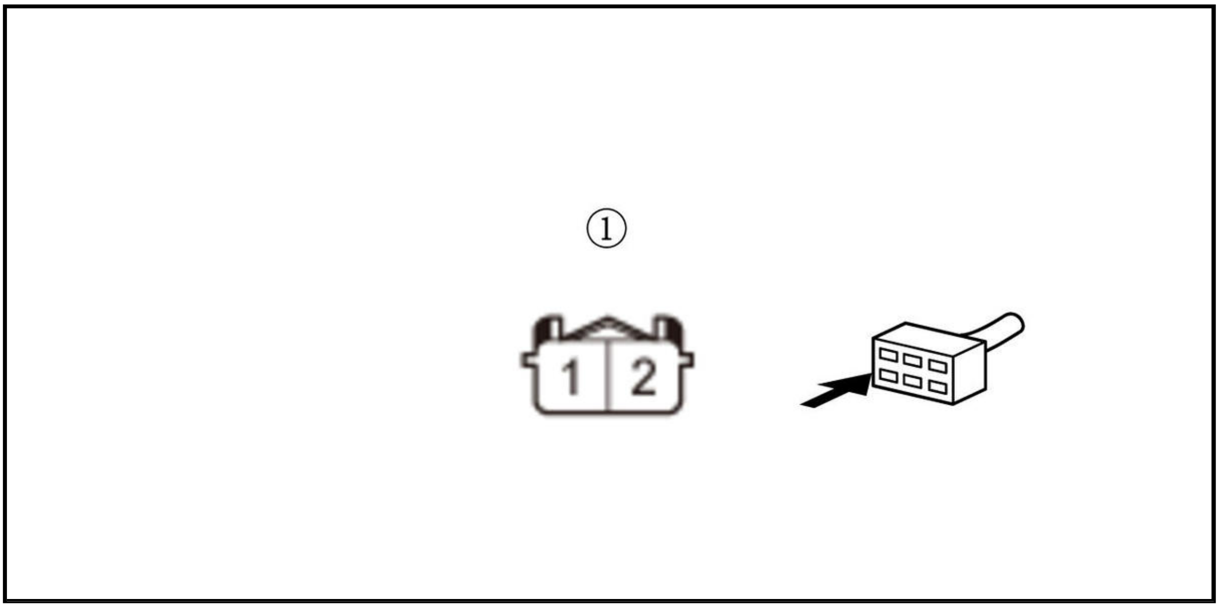

Is there continuity?

YES

The KSGND wire is OK. Check for any authorized service information related to the DTCs or symptoms you are troubleshooting, or **substitute a known-good PCM** .

NO

Repair an open in the KSGND wire between the PCM (E34) and the knock sensor.

DTC TROUBLESHOOTING

DTC P062B (1.5 L ENGINE)

DTC P062B : PCM Internal Circuit Malfunction

NOTE: Before you troubleshoot, **review the general troubleshooting information** .

DTC Description	Confirmed DTC	Pending DTC
P062B PCM Internal Circuit Malfunction	B	B

DTC (PGM-FI)

1. Problem verification

   -1. Turn the vehicle to the ON mode.

   -2. Clear the DTC with the HDS.

   -3. Turn the vehicle to the OFF (LOCK) mode.

   -4. Start the engine.

   -5. Check for Pending or Confirmed DTCs with the HDS.

DTC Description	Confirmed DTC	Pending DTC
P062B PCM Internal Circuit Malfunction	B	B

Is DTC P062B indicated?

YES

The failure is duplicated. Check for any authorized service information related to the DTCs or symptoms you are troubleshooting, or **substitute a known-good PCM** .

NO

Intermittent failure, the system is OK at this time.

DTC P062B (2.4 L ENGINE) (2017 2018 2019)

DTC P062B : PCM Internal Circuit Malfunction

NOTE: Before you troubleshoot, **review the general troubleshooting information** .

DTC Description	Confirmed DTC	Pending DTC
P062B PCM Internal Circuit Malfunction	B	B

DTC (PGM-FI)

1. Problem verification

   -1. Turn the vehicle to the ON mode.

-2. Clear the DTC with the HDS.

-3. Turn the vehicle to the OFF (LOCK) mode.

-4. Start the engine.

-5. Check for Pending or Confirmed DTCs with the HDS.

DTC Description	Confirmed DTC	Pending DTC
P062B PCM Internal Circuit Malfunction	B	B

Is DTC P062B indicated?

YES

The failure is duplicated. Check for any authorized service information related to the DTCs or symptoms you are troubleshooting, or **substitute a known-good PCM** .

NO

Intermittent failure, the system is OK at this time. **If the on-board snapshot of this DTC is recorded, try to reproduce the failure under the same conditions with the on-board snapshot** .

DTC P062F (PGM-FI SYSTEM (1.5 L ENGINE))

DTC P062F : PCM Internal Control Module Keep Alive Memory (KAM) Error

NOTE: Before you troubleshoot, **review the general troubleshooting information** .

DTC Description	Confirmed DTC	Pending DTC
P062F PCM Internal Control Module Keep Alive Memory (KAM) Error	B	B

DTC (PGM-FI)

1. Problem verification

-1. Turn the vehicle to the ON mode.

-2. Clear the DTC with the HDS.

-3. Turn the vehicle to the OFF (LOCK) mode.

-4. Turn the vehicle to the ON mode.

-5. Check for Pending or Confirmed DTCs with the HDS.

DTC Description	Confirmed DTC	Pending DTC
P062F PCM Internal Control Module Keep Alive Memory (KAM) Error	B	B

Is DTC P062F indicated?

YES

The failure is duplicated. Check for any authorized service information related to the DTCs or symptoms you are troubleshooting, or **substitute a known-good PCM** .

NO

Intermittent failure, the system is OK at this time. **If the on-board snapshot of this DTC is recorded, try to reproduce the failure under the same conditions with the on-board snapshot** .

DTC P062F (PGM-FI SYSTEM (2.4 L ENGINE)) (2017 2018 2019)

DTC P062F : PCM Internal Control Module Keep Alive Memory (KAM) Error

NOTE: Before you troubleshoot, **review the general troubleshooting information** .

DTC Description	Confirmed DTC	Pending DTC
P062F PCM Internal Control Module Keep Alive Memory (KAM) Error	B	B

DTC (PGM-FI)

1. Problem verification

   -1. Turn the vehicle to the ON mode.

   -2. Clear the DTC with the HDS.

   -3. Check for Pending or Confirmed DTCs with the HDS.

DTC Description	Confirmed DTC	Pending DTC
P062F PCM Internal Control Module Keep Alive Memory (KAM) Error	B	B

   Is DTC P062F indicated?

   YES

   The failure is duplicated. Check for any authorized service information related to the DTCs or symptoms you are troubleshooting or **substitute a known-good PCM** .

   NO

   Intermittent failure, the system is OK at this time. **If the on-board snapshot of this DTC is recorded, try to reproduce the failure under the same conditions with the on-board snapshot** .

DTC P0630 (1.5 L ENGINE)

DTC P0630 : VIN Not Programmed or Mismatch

NOTE:

- Before you troubleshoot, **review the general troubleshooting information** .
- This DTC is stored only when the PCM does not have the VIN information of the vehicle. Use the HDS to input the missing VIN information.

DTC Description	Confirmed DTC	Pending DTC
P0630 VIN Not Programmed or Mismatch	B	B

DTC (PGM-FI)

1. VIN check

   -1. Turn the vehicle to the ON mode.

   -2. Check the VIN with the HDS.

Does the HDS show the vehicle's VIN?

YES

Go to step 4.

NO

Go to step 2.

2. VIN check (rewrite)

-1. Input the correct VIN to the PCM with the HDS.

Does the HDS show COMPLETE?

YES

Go to step 4.

NO

Go to step 3.

3. DTC check

-1. Check for Pending or Confirmed DTCs with the HDS.

DTC Description	Confirmed DTC	Pending DTC
P062F PCM Internal Control Module Keep Alive Memory (KAM) Error	B	B

Is DTC P062F indicated?

YES

Go to the troubleshooting for DTC P062F.

NO

Go to step 4.

4. PCM check

-1. Clear the DTC with the HDS.

-2. Turn the vehicle to the OFF (LOCK) mode.

-3. Turn the vehicle to the ON mode, and wait 5 seconds.

-4. Check for Pending or Confirmed DTCs with the HDS.

DTC Description	Confirmed DTC	Pending DTC
P0630 VIN Not Programmed or Mismatch	B	B

Is DTC P0630 indicated?

YES

Check for any authorized service information related to the DTCs or symptoms you are troubleshooting, or **substitute a known-good PCM** .

NO

Intermittent failure, the system is OK at this time. If any other Pending or Confirmed DTCs are indicated, go to the indicated DTCs troubleshooting.

DTC P0630 (2.4 L ENGINE) (2017 2018 2019)

DTC P0630 : VIN Not Programmed or Mismatch

NOTE:

- Before you troubleshoot, **review the general troubleshooting information** .
- This DTC is stored only when the PCM does not have the VIN information of the vehicle. Use the HDS to input the missing VIN information.

DTC Description	Confirmed DTC	Pending DTC
P0630 VIN Not Programmed or Mismatch	B	B

DTC (PGM-FI)

1. VIN check

   -1. Turn the vehicle to the ON mode.

   -2. Check the VIN with the HDS.

   Does the HDS show the vehicle's VIN?

   YES

   Go to step 4.

   NO

   Go to step 2.

2. VIN check (rewrite)

   -1. Input the correct VIN to the PCM with the HDS.

   Does the HDS show COMPLETE?

   YES

   Go to step 4.

   NO

   Go to step 3.

3. DTC check

   -1. Check for Pending or Confirmed DTCs with the HDS.

DTC Description	Confirmed DTC	Pending DTC
P0630 VIN Not Programmed or Mismatch	B	B

Is DTC P062F indicated?

YES

Go to the troubleshooting for DTC P062F.

NO

Go to step 4.

4. PCM check

-1. Clear the DTC with the HDS.

-2. Turn the vehicle to the OFF (LOCK) mode.

-3. Turn the vehicle to the ON mode, and wait 5 seconds.

-4. Check for Pending or Confirmed DTCs with the HDS.

DTC Description	Confirmed DTC	Pending DTC
P0630 VIN Not Programmed or Mismatch	B	B

Is DTC P0630 indicated?

YES

Check for any authorized service information related to the DTCs or symptoms you are troubleshooting or substitute a known-good PCM .

NO

Intermittent failure, the system is OK at this time. If any other Pending or Confirmed DTCs are indicated, go to the indicated DTC's troubleshooting.

DTC P0641 (PGM-FI SYSTEM (1.5 L ENGINE))

DTC P0641 : Sensor Reference Voltage A Malfunction

NOTE: Before you troubleshoot, review the general troubleshooting information .

DTC Description	Confirmed DTC	Pending DTC
P0641 Sensor Reference Voltage A Malfunction	B	B

DTC (PGM-FI)

1. Problem verification

-1. Turn the vehicle to the ON mode.

-2. Clear the DTC with the HDS.

-3. Turn the vehicle to the OFF (LOCK) mode.

-4. Turn the vehicle to the ON mode.

-5. Check for Pending or Confirmed DTCs with the HDS.

DTC Description	Confirmed DTC	Pending DTC
P0641 Sensor Reference Voltage A Malfunction	B	B

Is DTC P0641 indicated?

YES

Go to step 2.

NO

Intermittent failure, the system is OK at this time. Check for poor connections or loose terminals at the PCM and these parts. **If the on-board snapshot of this DTC is recorded, try to reproduce the failure under the same conditions with the on-board snapshot** .

- CKP sensor
- MAP sensor
- Fuel rail pressure sensor
- Throttle body
- APP sensor

2. Determine possible failure area (VCC lines, others)

-1. Turn the vehicle to the OFF (LOCK) mode.

-2. Disconnect the following connectors.

CKP sensor 3P connector
MAP sensor 3P connector
Fuel rail pressure sensor 3P connector
Throttle body 6P connector
APP sensor 6P connector

-3. Turn the vehicle to the ON mode.

-4. Clear the DTC with the HDS.

-5. Turn the vehicle to the OFF (LOCK) mode.

-6. Turn the vehicle to the ON mode.

-7. Check for Pending or Confirmed DTCs with the HDS.

DTC Description	Confirmed DTC	Pending DTC
P0641 Sensor Reference Voltage A Malfunction	B	B

Is DTC P0641 indicated?

YES

Go to step 4.

NO

Go to step 3.

3. Shorted part check:

Check for Pending or Confirmed DTCs with the HDS while reconnecting these parts, one at a time:

- CKP sensor

- MAP sensor
- Fuel rail pressure sensor
- Throttle body
- APP sensor

DTC Description	Confirmed DTC	Pending DTC
P0641 Sensor Reference Voltage A Malfunction	B	B

Is DTC P0641 indicated?

YES

Replace the part that caused the DTC when it was reconnected.

NO

Check for poor connections or loose terminals at the PCM and the following parts, then go to step 1.

- CKP sensor
- MAP sensor
- Fuel rail pressure sensor
- Throttle body
- APP sensor

4. Shorted wire check (VCC lines to power)

-1. Turn the vehicle to the OFF (LOCK) mode.

-2. Jump the SCS line with the HDS, and wait more than 1 minute.

-3. Disconnect the following connectors.

PCM connector A (50P)
PCM connector E (80P)

-4. Turn the vehicle to the ON mode.

-5. Measure the voltage between these test points and body ground individually.

Test condition	Vehicle ON mode
	CKP sensor 3P connector: disconnected
	MAP sensor 3P connector: disconnected
	Fuel rail pressure sensor 3P connector: disconnected
	Throttle body 6P connector: disconnected
	APP sensor 6P connector: disconnected
	PCM connector A (50P): disconnected
	PCM connector E (80P): disconnected

Connector	Terminal
PCM connector A (50P)	No. 45
PCM connector E (80P)	No. 70 and No. 75

Is there any voltage?

YES

Repair a short to power in the VCC wire between the PCM (A45, E70, E75) and each part that was disconnected in step 2.

NO

Go to step 5.

5. Shorted wire check (VCC lines to ground)

-1. Turn the vehicle to the OFF (LOCK) mode.

-2. Check for continuity between these test points and body ground individually.

Test condition	Vehicle OFF (LOCK) mode
	CKP sensor 3P connector: disconnected
	MAP sensor 3P connector: disconnected
	Fuel rail pressure sensor 3P connector: disconnected
	Throttle body 6P connector: disconnected
	APP sensor 6P connector: disconnected
	PCM connector A (50P): disconnected
	PCM connector E (80P): disconnected

Connector	Terminal
PCM connector A (50P)	No. 45
PCM connector E (80P)	No. 70 and No. 75

Is there continuity?

YES

Repair a short to ground in the VCC wire between the PCM (A45, E70, E75) and each part that was disconnected in step 2.

NO

The VCC wires are OK. Check for any authorized service information related to the DTCs or symptoms you are troubleshooting, or **substitute a known-good PCM** .

DTC P0641 (PGM-FI SYSTEM (2.4 L ENGINE)) (2017 2018 2019)

DTC P0641 : Sensor Reference Voltage A Malfunction

NOTE: Before you troubleshoot, **review the general troubleshooting information** .

DTC Description	Confirmed DTC	Pending DTC
P0641 Sensor Reference Voltage A Malfunction	B	B

DTC (PGM-FI)

1. Problem verification

-1. Turn the vehicle to the ON mode.

-2. Clear the DTC with the HDS.

-3. Check for Pending or Confirmed DTCs with the HDS.

DTC Description	Confirmed DTC	Pending DTC
P0641 Sensor Reference Voltage A Malfunction	B	B

Is DTC P0641 indicated?

YES

The failure is duplicated. Go to step 2.

NO

Intermittent failure, the system is OK at this time. Check for poor connections or loose terminals at the PCM and these parts. If the freeze data/on-board snapshot of this DTC is recorded, try to reproduce the failure under the same conditions with the freeze data/on-board snapshot.

- MAP sensor
- Fuel rail pressure sensor
- CVT drive pulley speed sensor
- APP sensor
- A/C pressure sensor
- FTP sensor (USA models)

2. Determine possible failure area (VCC lines, others)

-1. Turn the vehicle to the OFF (LOCK) mode.

-2. Disconnect the following connectors.

MAP sensor 3P connector
Fuel rail pressure sensor 3P connector
CVT drive pulley speed sensor 3P connector
APP sensor 6P connector
A/C pressure sensor 3P connector
FTP sensor 3P connector (USA models)

-3. Turn the vehicle to the ON mode.

-4. Clear the DTC with the HDS.

-5. Check for Pending or Confirmed DTCs with the HDS.

DTC Description	Confirmed DTC	Pending DTC
P0641 Sensor Reference Voltage A Malfunction	B	B

Is DTC P0641 indicated?

YES

Go to step 4.

NO

Go to step 3.

3. Shorted part check:

Check for Pending or Confirmed DTCs with the HDS while reconnecting these parts, one at a time:

- MAP sensor
- Fuel rail pressure sensor
- CVT drive pulley speed sensor
- APP sensor
- A/C pressure sensor
- FTP sensor (USA models)

DTC Description	Confirmed DTC	Pending DTC
P0641 Sensor Reference Voltage A Malfunction	B	B

Is DTC P0641 indicated?

YES

Replace the part that caused the DTC when it was reconnected.

NO

Check for poor connections or loose terminals at the PCM and the following parts, then go to step 1.

- MAP sensor
- Fuel rail pressure sensor
- CVT drive pulley speed sensor
- APP sensor
- A/C pressure sensor
- FTP sensor (USA models)

4. Shorted wire check (VCC lines to power)

-1. Turn the vehicle to the OFF (LOCK) mode.

-2. Jump the SCS line with the HDS, and wait more than 1 minute.

-3. Disconnect the following connectors.

PCM connector A (51P)
PCM connector C (51P)

-4. Turn the vehicle to the ON mode.

-5. Measure the voltage between these test points and body ground individually.

Test condition	Vehicle ON mode
	MAP sensor 3P connector: disconnected
	Fuel rail pressure sensor 3P connector: disconnected
	CVT drive pulley speed sensor 3P connector: disconnected
	APP sensor 6P connector: disconnected
	A/C pressure sensor 3P connector: disconnected
	FTP sensor 3P connector: disconnected (USA models)
	PCM connector A (51P): disconnected
	PCM connector C (51P): disconnected

Connector	Terminal
PCM connector A (51P)	No. 29 and No. 31

Connector	Terminal
PCM connector C (51P)	No. 41

Is there any voltage?

YES

Repair a short to power in the VCC wire between the PCM (A29, A31, or C41) and each part that was disconnected in step 2.

NO

Go to step 5.

5. Shorted wire check (VCC lines to ground)

-1. Turn the vehicle to the OFF (LOCK) mode.

-2. Check for continuity between these test points and body ground individually.

Test condition	Vehicle OFF (LOCK) mode
	MAP sensor 3P connector: disconnected
	Fuel rail pressure sensor 3P connector: disconnected
	CVT drive pulley speed sensor 3P connector: disconnected
	APP sensor 6P connector: disconnected
	A/C pressure sensor 3P connector: disconnected
	FTP sensor 3P connector: disconnected (USA models)
	PCM connector A (51P): disconnected
	PCM connector C (51P): disconnected

Connector	Terminal
PCM connector A (51P)	No. 29 and No. 31
PCM connector C (51P)	No. 41

Is there continuity?

YES

Repair a short in the VCC wire between the PCM (A29, A31, or C41) and each part that was disconnected in step 2.

NO

The VCC wires are OK. Check for any authorized service information related to the DTCs or symptoms you are troubleshooting, or **substitute a known-good PCM** .

DTC P0651 (PGM-FI SYSTEM (1.5 L ENGINE))

DTC P0651 : Sensor Reference Voltage B Malfunction

NOTE: Before you troubleshoot, **review the general troubleshooting information** .

DTC Description	Confirmed DTC	Pending DTC
P0651 Sensor Reference Voltage B Malfunction	B	B

DTC (PGM-FI)

1. Problem verification

   -1. Turn the vehicle to the ON mode.

   -2. Clear the DTC with the HDS.

   -3. Turn the vehicle to the OFF (LOCK) mode.

   -4. Turn the vehicle to the ON mode.

   -5. Check for Pending or Confirmed DTCs with the HDS.

DTC Description	Confirmed DTC	Pending DTC
P0651 Sensor Reference Voltage B Malfunction	B	B

   Is DTC P0651 indicated?

   YES

   Go to step 2.

   NO

   Intermittent failure, the system is OK at this time. Check for poor connections or loose terminals at the PCM and these parts. **If the on-board snapshot of this DTC is recorded, try to reproduce the failure under the same conditions with the on-board snapshot** .

   - CMP sensor A
   - CMP sensor B
   - Turbocharger boost sensor
   - Turbocharger
   - APP sensor
   - A/C pressure sensor
   - MAF sensor/IAT sensor 1
   - EVAP leak check module (USA and Canada models)

2. Determine possible failure area (VCC lines, others)

   -1. Turn the vehicle to the OFF (LOCK) mode.

   -2. Disconnect the following connectors.

CMP sensor A 3P connector
CMP sensor B 3P connector
Turbocharger boost sensor 3P connector
Turbocharger 5P connector
APP sensor 6P connector
A/C pressure sensor 3P connector
MAF sensor/IAT sensor 1 4P connector
EVAP leak check module 8P connector (USA and Canada models)

   -3. Turn the vehicle to the ON mode.

   -4. Clear the DTC with the HDS.

   -5. Turn the vehicle to the OFF (LOCK) mode.

-6. Turn the vehicle to the ON mode.

-7. Check for Pending or Confirmed DTCs with the HDS.

DTC Description	Confirmed DTC	Pending DTC
P0651 Sensor Reference Voltage B Malfunction	B	B

Is DTC P0651 indicated?

YES

Go to step 4.

NO

Go to step 3.

3. Shorted part check:

Check for Pending or Confirmed DTCs with the HDS while reconnecting these parts, one at a time:

- CMP sensor A
- CMP sensor B
- Turbocharger boost sensor
- Turbocharger
- APP sensor
- A/C pressure sensor
- MAF sensor/IAT sensor 1
- EVAP leak check module (USA and Canada models)

DTC Description	Confirmed DTC	Pending DTC
P0651 Sensor Reference Voltage B Malfunction	B	B

Is DTC P0651 indicated?

YES

Replace the part that caused the DTC when it was reconnected.

NO

Check for poor connections or loose terminals at the PCM and the following parts, then go to step 1.

- CMP sensor A
- CMP sensor B
- Turbocharger boost sensor
- Turbocharger
- APP sensor
- A/C pressure sensor
- MAF sensor/IAT sensor 1
- EVAP leak check module (USA and Canada models)

4. Shorted wire check (VCC lines to power)

-1. Turn the vehicle to the OFF (LOCK) mode.

-2. Jump the SCS line with the HDS, and wait more than 1 minute.

-3. Disconnect the following connectors.

PCM connector A (50P)
PCM connector E (80P)

-4. Turn the vehicle to the ON mode.

-5. Measure the voltage between these test points and body ground individually.

Test condition	Vehicle ON mode
	CMP sensor A 3P connector: disconnected
	CMP sensor B 3P connector: disconnected
	Turbocharger boost sensor 3P connector: disconnected
	Turbocharger 5P connector: disconnected
	APP sensor 6P connector: disconnected
	A/C pressure sensor 3P connector: disconnected
	MAF sensor/IAT sensor 1 4P connector
	EVAP leak check module 8P connector (USA and Canada models)
	PCM connector A (50P): disconnected
	PCM connector E (80P): disconnected

Connector	Terminal
PCM connector A (50P)	No. 44
PCM connector E (80P)	No. 63 and No. 77

Is there any voltage?

YES

Repair a short to power in the VCC wire between the PCM (A44, E63, E77) and each part that was disconnected in step 2.

NO

Go to step 5.

5. Shorted wire check (VCC lines to ground)

-1. Turn the vehicle to the OFF (LOCK) mode.

-2. Check for continuity between these test points and body ground individually.

Test condition	Vehicle OFF (LOCK) mode
	CMP sensor A 3P connector: disconnected
	CMP sensor B 3P connector: disconnected
	Turbocharger boost sensor 3P connector: disconnected
	Turbocharger 5P connector: disconnected
	APP sensor 6P connector: disconnected
	A/C pressure sensor 3P connector: disconnected
	MAF sensor/IAT sensor 1 4P connector
	EVAP leak check module 8P connector (USA and Canada models)
	PCM connector A (50P): disconnected
	PCM connector E (80P): disconnected

Connector	Terminal
PCM connector A (50P)	No. 44
PCM connector E (80P)	No. 63 and No. 77

Is there continuity?

YES

Repair a short to ground in the VCC wire between the PCM (A44, E63, E77) and each part that was disconnected in step 2.

NO

The VCC wires are OK. Check for any authorized service information related to the DTCs or symptoms you are troubleshooting, or substitute a known-good PCM .

DTC P0651 (PGM-FI SYSTEM (2.4 L ENGINE)) (2017 2018 2019)

DTC P0651 : Sensor Reference Voltage B Malfunction

NOTE: Before you troubleshoot, review the general troubleshooting information .

DTC Description	Confirmed DTC	Pending DTC
P0651 Sensor Reference Voltage B Malfunction	B	B

DTC (PGM-FI)

1. Problem verification

   -1. Turn the vehicle to the ON mode.

   -2. Clear the DTC with the HDS.

   -3. Check for Pending or Confirmed DTCs with the HDS.

DTC Description	Confirmed DTC	Pending DTC
P0651 Sensor Reference Voltage B Malfunction	B	B

   Is DTC P0651 indicated?

   YES

   The failure is duplicated. Go to step 2.

   NO

   Intermittent failure, the system is OK at this time. Check for poor connections or loose terminals at the PCM and these parts. If the freeze data/on-board snapshot of this DTC is recorded, try to reproduce the failure under the same conditions with the freeze data/on-board snapshot.

   - APP sensor
   - Throttle body
   - CVT speed sensor
   - CVT driven pulley pressure sensor
   - Torque converter turbine speed sensor
2. Determine possible failure area (VCC lines, others)

-1. Turn the vehicle to the OFF (LOCK) mode.

-2. Disconnect the following connectors.

APP sensor 6P connector
Throttle body 6P connector
CVT speed sensor 3P connector
CVT driven pulley pressure sensor 3P connector
Torque converter turbine speed sensor 3P connector

-3. Turn the vehicle to the ON mode.

-4. Clear the DTC with the HDS.

-5. Check for Pending or Confirmed DTCs with the HDS.

DTC Description	Confirmed DTC	Pending DTC
P0651 Sensor Reference Voltage B Malfunction	B	B

Is DTC P0651 indicated?

YES

Go to step 4.

NO

Go to step 3.

3. Shorted part check:

Check for Pending or Confirmed DTCs with the HDS while reconnecting these parts, one at a time:

- APP sensor
- Throttle body
- CVT speed sensor
- CVT driven pulley pressure sensor
- Torque converter turbine speed sensor

DTC Description	Confirmed DTC	Pending DTC
P0651 Sensor Reference Voltage B Malfunction	B	B

Is DTC P0651 indicated?

YES

Replace the part that caused the DTC when it was reconnected.

NO

Check for poor connections or loose terminals at the PCM and the following parts, then go to step 1.

- APP sensor
- Throttle body
- CVT speed sensor
- CVT driven pulley pressure sensor

- Torque converter turbine speed sensor

4. Shorted wire check (VCC lines to power)

   -1. Turn the vehicle to the OFF (LOCK) mode.

   -2. Jump the SCS line with the HDS, and wait more than 1 minute.

   -3. Disconnect the following connectors.

PCM connector A (51P)
PCM connector B (51P)
PCM connector C (51P)

   -4. Turn the vehicle to the ON mode.

   -5. Measure the voltage between these test points and body ground individually.

Test condition	Vehicle ON mode
	APP sensor 6P connector: disconnected
	Throttle body 6P connector: disconnected
	CVT speed sensor 3P connector: disconnected
	CVT driven pulley pressure sensor 3P connector: disconnected
	Torque converter turbine speed sensor 3P connector: disconnected
	PCM connector A (51P): disconnected
	PCM connector B (51P): disconnected
	PCM connector C (51P): disconnected

Connector	Terminal
PCM connector A (51P)	No. 40
PCM connector B (51P)	No. 48
PCM connector C (51P)	No. 30

Is there any voltage?

YES

Repair a short to power in the VCC wire between the PCM (A40, B48, or C30) and each part that was disconnected in step 2.

NO

Go to step 5

5. Shorted wire check (VCC lines to ground)

   -1. Turn the vehicle to the OFF (LOCK) mode.

   -2. Check for continuity between these test points and body ground individually.

Test condition	Vehicle OFF (LOCK) mode
	APP sensor 6P connector: disconnected
	Throttle body 6P connector: disconnected
	CVT speed sensor 3P connector: disconnected
	CVT driven pulley pressure sensor 3P connector: disconnected
	Torque converter turbine speed sensor 3P connector: disconnected

	PCM connector A (51P): disconnected
	PCM connector B (51P): disconnected
	PCM connector C (51P): disconnected

Connector	Terminal
PCM connector A (51P)	No. 40
PCM connector B (51P)	No. 48
PCM connector C (51P)	No. 30

Is there continuity?

YES

Repair a short in the VCC wire between the PCM (A40, B48, or C30) and each part that was disconnected in step 2.

NO

The VCC wires are OK. Check for any authorized service information related to the DTCs or symptoms you are troubleshooting, or **substitute a known-good PCM** .

DTC P0657 (1.5 L ENGINE)

DTC P0657 : PCM Power Supply Circuit Malfunction

NOTE: Before you troubleshoot, **review the general troubleshooting information** .

DTC Description	Confirmed DTC	Pending DTC
P0657 PCM Power Supply Circuit Malfunction	B	B

DTC (PGM-FI)

1. Problem verification

   -1. Turn the vehicle to the ON mode.

   -2. Clear the DTC with the HDS.

   -3. Start the engine.

   -4. Check for Pending or Confirmed DTCs with the HDS.

DTC Description	Confirmed DTC	Pending DTC
P0657 PCM Power Supply Circuit Malfunction	B	B

Is DTC P0657 indicated?

YES

The failure is duplicated. Go to step 2.

NO

Intermittent failure, the system is OK at this time. Check for poor connections or loose terminals at the relay circuit board and the PCM. **If the on-board snapshot of this DTC is recorded, try to reproduce the failure under the same conditions with the on-board snapshot** .

2. Relay circuit board check

-1. Turn the vehicle to the OFF (LOCK) mode.

-2. **Remove and test the relay circuit board** .

Is the relay circuit board OK?

YES

Go to step 3.

NO

Replace the relay circuit board .

3. Fuse check

-1. Check the following fuse.

Fuse	No. A7 (15 A)
Location	Under-hood fuse/relay box

Is the fuse OK?

YES

Go to step 7.

NO

Go to step 4.

4. Determine possible failure area (+B IGP line, others)

-1. Remove the blown No. A7 (15 A) fuse from the under-hood fuse/relay box.

-2. **Remove the injector relay** .

-3. Check for continuity the between following test points and body ground individually.

Test condition	Vehicle OFF (LOCK) mode
B	Relay circuit board: removed
B	Injector relay: disconnected

Connector	Terminal
Relay circuit board connector C (18P) (female terminals): ①	No. 18
Injector relay 4P socket (female terminals): ②	No. 3

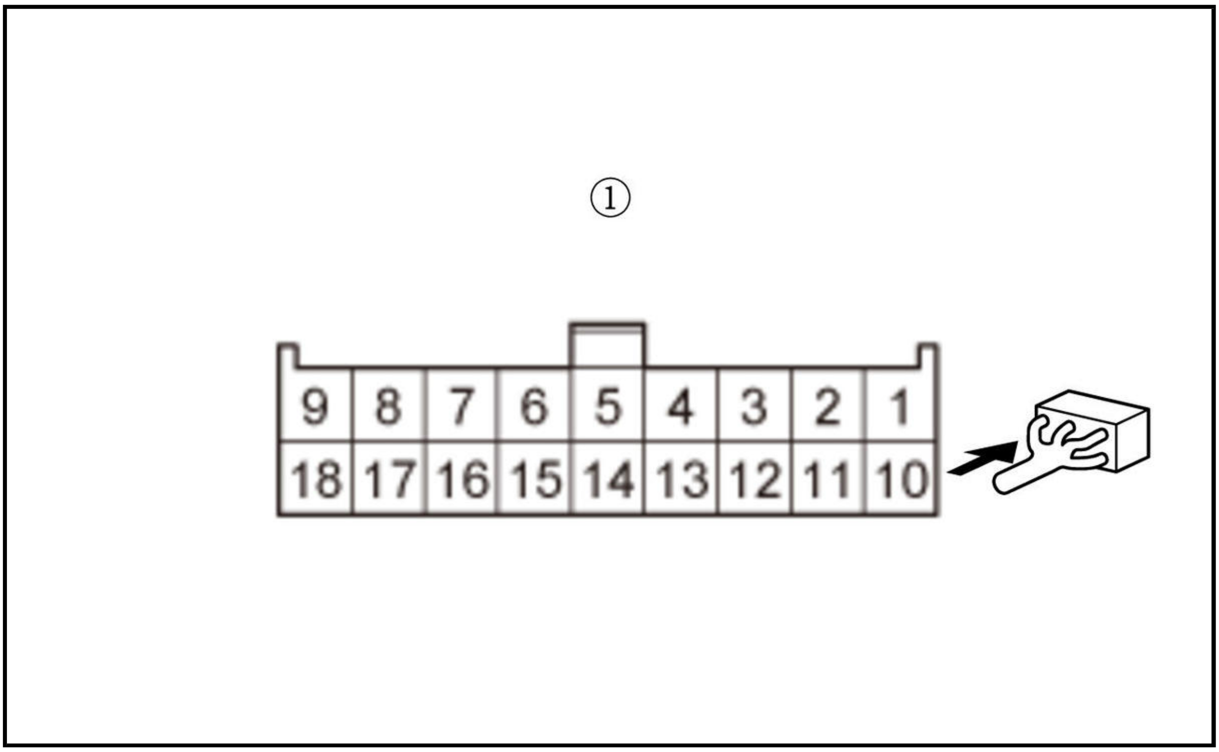

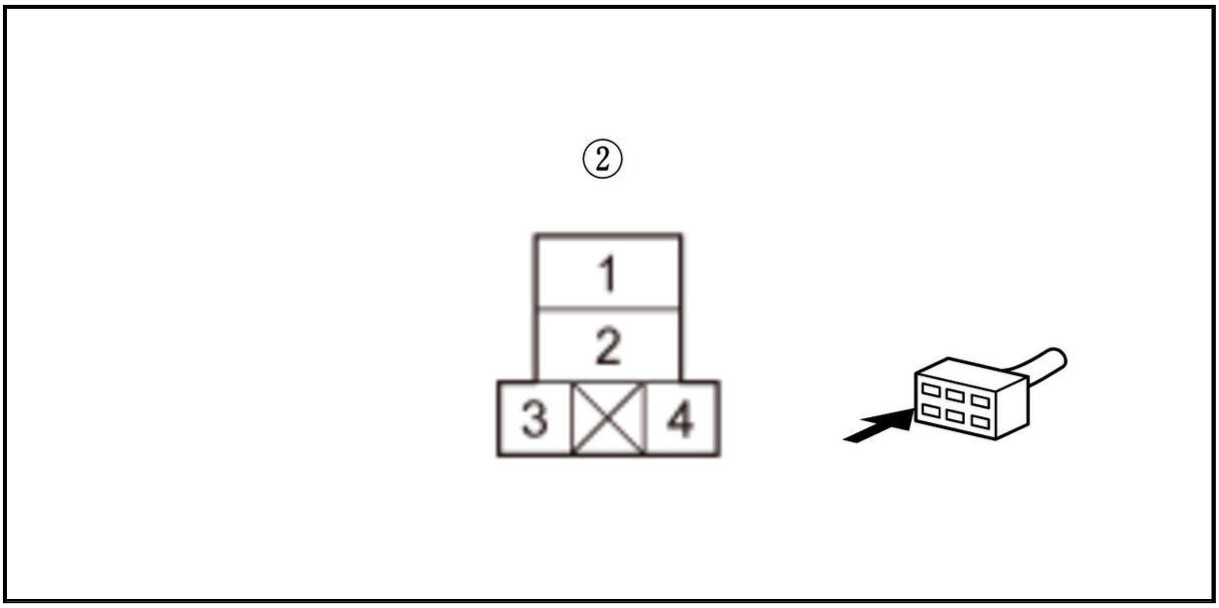

Is there continuity?

YES

Repair a short in the +B IGP wire between the No. A7 (15 A) fuse in the under-hood fuse/relay box and the relay circuit board and the injector relay. Also replace the No. A7 (15 A) fuse.

NO

Go to step 5.

5. Parts internal circuit check

-1. Jump the SCS line with the HDS, and wait more than 1 minute.

Check for continuity between test points 1 and 2 while disconnecting these parts, one at a time:

- PGM-FI main relay 2
- PCM connector A (50P)

Test condition	Vehicle OFF (LOCK) mode
B	Relay circuit board: removed
Test point 1	Relay circuit board connector C (18P) (female terminals) No. 17: ①

Test point 2	Body ground

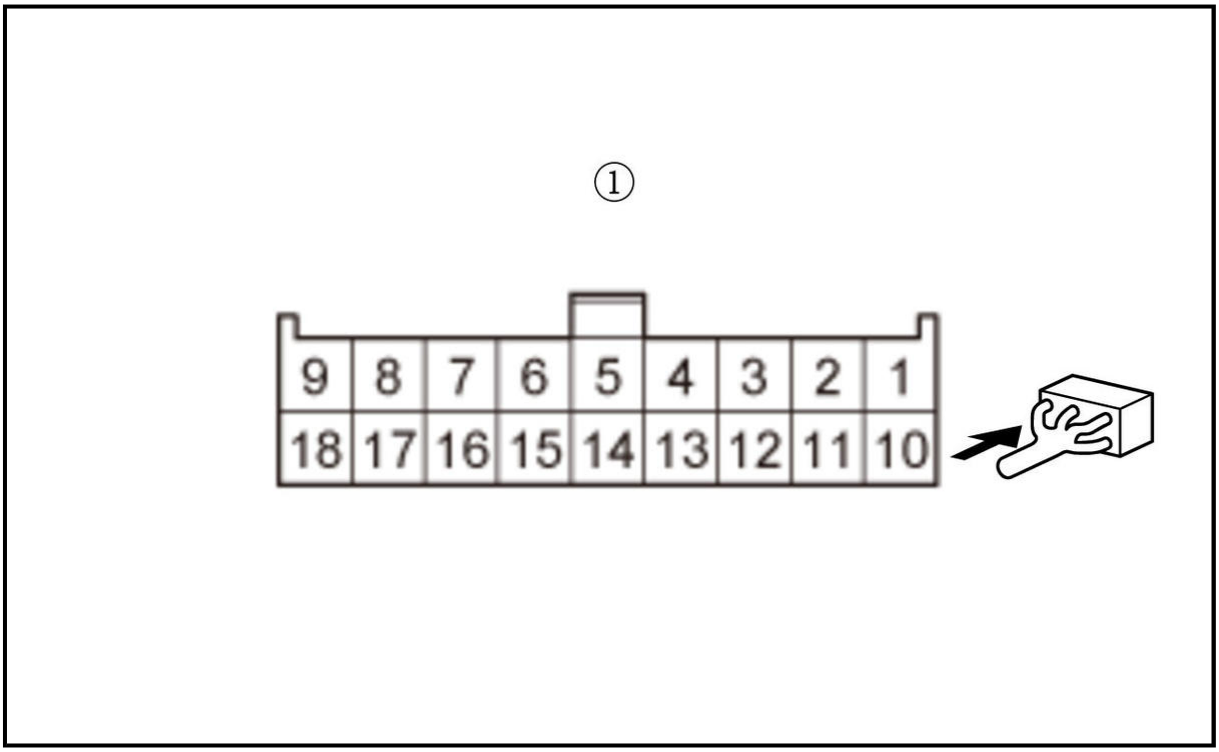

Does continuity go away with the part (s) removed?

YES

Replace the part that continuity goes away when it was disconnected. If the part is PCM, Check for any authorized service information related to the DTCs or symptoms you are troubleshooting, or **substitute a known-good PCM** . Also replace the No. A7 (15 A) fuse.

NO

Go to step 6.

6. Shorted wire check (FI MAIN RLY OUT line)

-1. Disconnect the following connectors.

PGM-FI main relay 2
PCM connector A (50P)

-2. Check for continuity between test points 1 and 2.

Test condition	Vehicle OFF (LOCK) mode
B	Relay circuit board: removed
B	PGM-FI main relay 2: disconnected
B	PCM connector A (50P): disconnected
Test point 1	**PCM connector A (50P) No. 8**
Test point 2	Body ground

Is there continuity?

YES

Repair a short in the FI MAIN RLY OUT line between the relay circuit board, PGM-FI main relay 2, and the PCM (A8). Also replace the No. A7 (15 A) fuse.

NO

Replace the relay circuit board. Also replace the No. A7 (15 A) fuse in the under-hood fuse/relay box.

7. Determine possible failure area (PGM-FI main relay 1 control circuit, others)

-1. Turn the vehicle to the OFF (LOCK) mode.

-2. **Install the relay circuit board** .

-3. Jump the SCS line with the HDS, and wait more than 1 minute.

-4. Disconnect the following connector.

PCM connector A (50P)

-5. Measure the voltage between test points 1 and 2.

Test condition	Vehicle OFF (LOCK) mode

B	PCM connector A (50P): disconnected
Test point 1	**PCM connector A (50P) No. 5**
Test point 2	Body ground

Is there battery voltage?

YES

Go to step 10.

NO

Go to step 8.

8. Determine possible failure area (+B IGP line, others)

-1. Disconnect the following connector.

Relay circuit board connector C (18P)

-2. Measure the voltage between test points 1 and 2.

Test condition	Vehicle OFF (LOCK) mode
B	PCM connector A (50P): disconnected
B	Relay circuit board connector C (18P): disconnected
Test point 1	Relay circuit board connector C (18P) (female terminals) No. 18: ①
Test point 2	Body ground

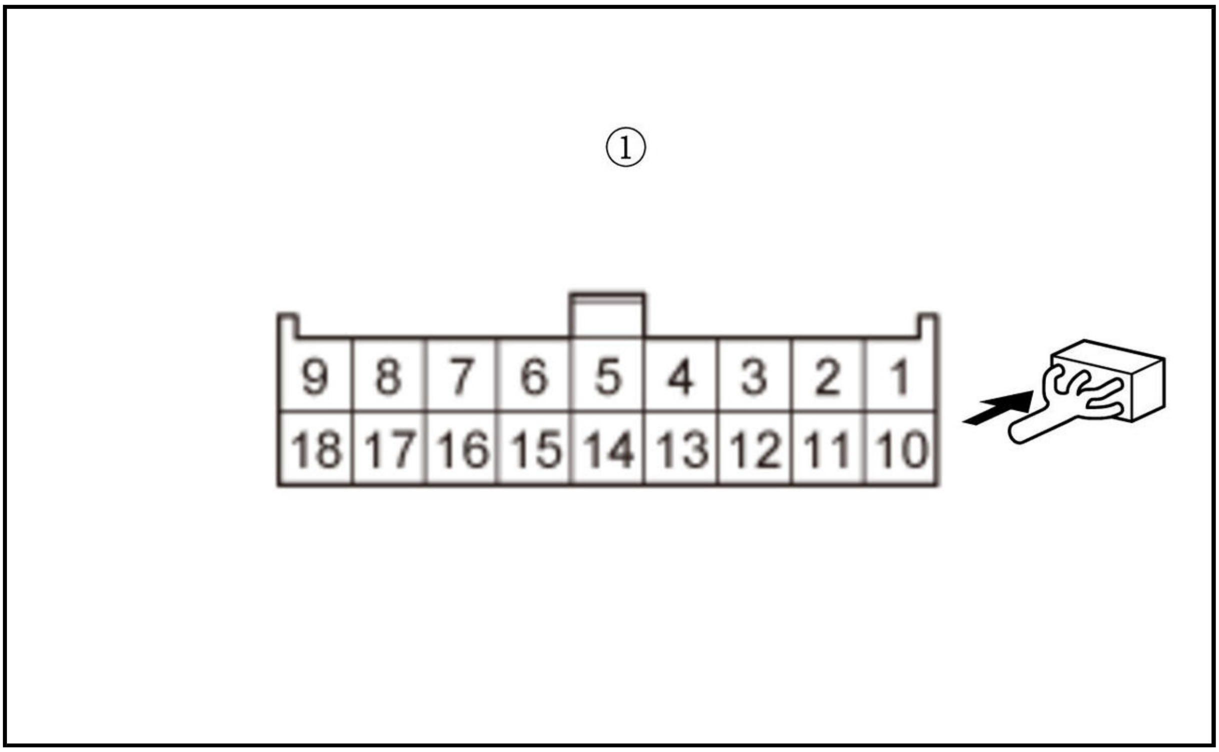

Is there battery voltage?

YES

Go to step 9.

NO

Repair an open in the +B IGP wire between the No. A7 (15 A) fuse in the under-hood fuse/relay box and the relay circuit board.

9. Open wire check (FI MAIN RLY CL- line)

-1. Disconnect the following connector.

Relay circuit board connector A (8P)

-2. Connect terminals A and B with a jumper wire.

Terminal A	Relay circuit board connector A (8P) (female terminals) No. 7: ①
Terminal B	Body ground

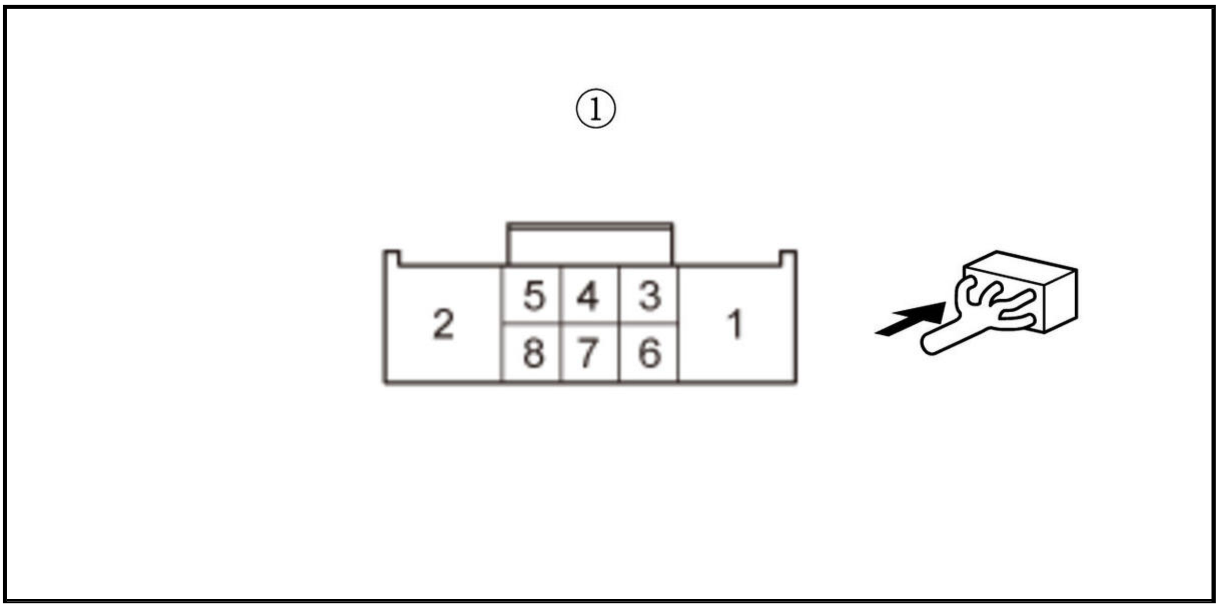

-3. Check for continuity between test points 1 and 2.

Test condition	Vehicle OFF (LOCK) mode
B	PCM connector A (50P): disconnected
B	Relay circuit board connector A (8P): disconnected
B	Relay circuit board connector C (18P): disconnected
B	Relay circuit board connector A (8P) No. 7: jumped to body ground
Test point 1	**PCM connector A (50P) No. 5**
Test point 2	Body ground

Is there continuity?

YES

Check for any authorized service information related to the DTCs or symptoms you are troubleshooting, or **substitute a known-good PCM** .

NO

Repair an open in the FI MAIN RLY CL- wire between the PCM (A5) and the relay circuit board.

10. Open wire check (FI MAIN RLY OUT line)

-1. Disconnect the following connector.

Relay circuit board connector C (18P)

-2. Connect terminals A and B with a jumper wire.

Terminal A	Relay circuit board connector C (18P) (female terminals) No. 17: ①
Terminal B	Body ground

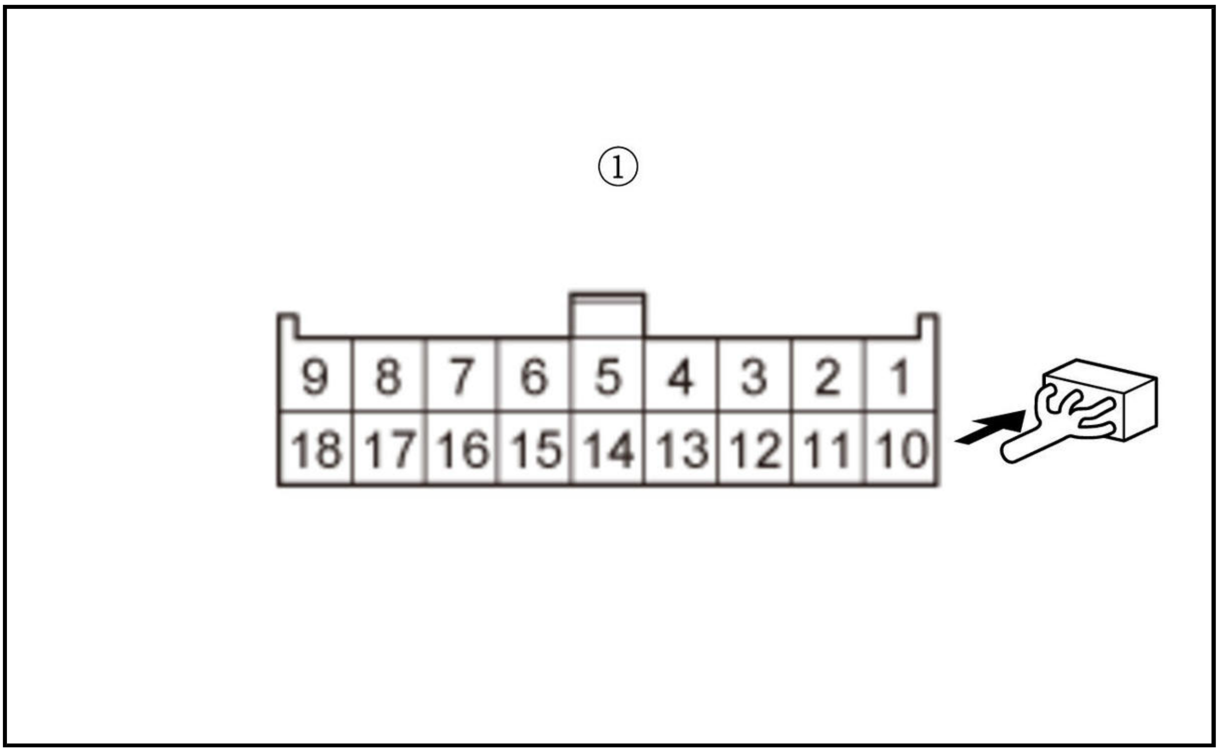

-3. Check for continuity between test points 1 and 2.

Test condition	Vehicle OFF (LOCK) mode
B	PCM connector A (50P): disconnected
B	Relay circuit board connector C (18P): disconnected
B	Relay circuit board connector C (18P) No. 17: jumped to body ground
Test point 1	**PCM connector A (50P) No. 8**
Test point 2	Body ground

Is there continuity?

YES

Check for any authorized service information related to the DTCs or symptoms you are troubleshooting, or **substitute a known-good PCM** .

NO

Repair an open in the FI MAIN RLY OUT wire between the PCM (A8) and relay circuit board.

DTC P065A (1.5 L ENGINE)

DTC P065A : ACG No Charging Malfunction

NOTE: Before you troubleshoot, **review the general troubleshooting information** .

DTC Description	Confirmed DTC	Pending DTC
P065A ACG No Charging Malfunction	B	B

DTC (PGM-FI)

1. DTC check

-1. Turn the vehicle to the ON mode.

-2. Clear the DTC with the HDS.

-3. Turn the vehicle to the OFF (LOCK) mode.

-4. Start the engine, and let it idle for 1 minute.

-5. Check for Pending or Confirmed DTCs with the HDS.

DTC Description	Confirmed DTC	Pending DTC
P0562 Charging System Low Voltage	B	B

Is DTC P0562 indicated?

YES

Go to the troubleshooting for **DTC P0562** .

NO

Go to step 2.

2. Problem verification

-1. Check for Pending or Confirmed DTCs with the HDS.

DTC Description	Confirmed DTC	Pending DTC
P065A ACG No Charging Malfunction	B	B

Is DTC P065A indicated?

YES

Go to step 3.

NO

Intermittent failure, the system is OK at this time. Check the alternator and the drive belt. **If the on-board snapshot of this DTC is recorded, try to reproduce the failure under the same conditions with the on-board snapshot** .

3. Drive belt check

-1. **Inspect the drive belt** .

Is the drive belt OK?

YES

Repair or **replace the alternator** .

NO

Replace the drive belt .

DTC P065A (2.4 L ENGINE) (2017 2018 2019)

DTC P065A : ACG No Charging Malfunction

NOTE: Before you troubleshoot, **review the general troubleshooting information** .

DTC Description	Confirmed DTC	Pending DTC
P065A ACG No Charging Malfunction	B	B

DTC (PGM-FI)

1. DTC check

   -1. Turn the vehicle to the ON mode.

   -2. Clear the DTC with the HDS.

   -3. Turn the vehicle to the OFF (LOCK) mode.

   -4. Start the engine, and let it idle for 1 minute.

   -5. Check for Pending or Confirmed DTCs with the HDS.

DTC Description	Confirmed DTC	Pending DTC
P0562 Charging System Low Voltage	B	B

   Is DTC P0562 indicated?

   YES

   Go to the troubleshooting for **DTC P0562** .

   NO

   Go to step 2.

2. Problem verification

   -1. Check for Pending or Confirmed DTCs with the HDS.

DTC Description	Confirmed DTC	Pending DTC
P065A ACG No Charging Malfunction	B	B

   Is DTC P065A indicated?

   YES

   Go to step 3.

   NO

   Intermittent failure, the system is OK at this time. Check the alternator and the drive belt. **If the on-board snapshot of this DTC is recorded, try to reproduce the failure under the same conditions with the on-board snapshot** .

3. Drive belt check

   -1. **Inspect the drive belt** .

   Is the drive belt OK?

   YES

   Repair or **replace the alternator** .

   NO

   Replace the drive belt .

DTC P0685 (2.4 L ENGINE) (2017 2018 2019)

DTC P0685 : PCM Power Control Circuit/Internal Circuit Malfunction

NOTE:

- Before you troubleshoot, **review the general troubleshooting information** .
- If the problem does not return after you clear the DTC, or if this DTC is stored intermittently, check for loose terminals at the IGP (ECU)/FI MAIIN RLY OUT line connectors before replacing the PCM.

DTC Description	Confirmed DTC	Pending DTC
P0685 PCM Power Control Circuit/Internal Circuit Malfunction	B	B

DTC (PGM-FI)

1. Problem verification

   -1. Turn the vehicle to the ON mode.

   -2. Clear the DTC with the HDS.

   -3. Start the engine, and let it idle for 30 seconds.

   -4. Turn the vehicle to the OFF (LOCK) mode.

   -5. Turn the vehicle to the ON mode.

   -6. Check for Pending or Confirmed DTCs with the HDS.

DTC Description	Confirmed DTC	Pending DTC
P0685 PCM Power Control Circuit/Internal Circuit Malfunction	B	B

   Is DTC P0685 indicated?

   YES

   The failure is duplicated. Check for any authorized service information related to the DTCs or symptoms you are troubleshooting or **substitute a known-good PCM** .

   NO

   Intermittent failure. Check the following items. **If the on-board snapshot of this DTC is recorded, try to reproduce the failure under the same conditions with the on-board snapshot** .

   - PGM-FI main relay 1
   - PGM-FI main fuse
   - Poor connections or loose terminals between the PCM and the under-hood fuse/relay box
   - Poor or loose PCM ground terminals and connections
   - Poor or loose 12 volt battery cables and connections
   - Check the 12 volt battery

DTC P06A8 (PGM-FI SYSTEM (1.5 L ENGINE))

DTC P06A8 : Internal VCC Power Malfunction

NOTE: Before you troubleshoot, review the general troubleshooting information .

DTC Description	Confirmed DTC	Pending DTC
P06A8 Internal VCC Power Malfunction	B	B

DTC (PGM-FI)

1. Problem verification

   -1. Turn the vehicle to the ON mode.

   -2. Reset the PCM with the HDS .

   Reset PCM

   -3. Turn the vehicle to the OFF (LOCK) mode.

   -4. Turn the vehicle to the ON mode.

   -5. Check for Pending or Confirmed DTCs with the HDS.

DTC Description	Confirmed DTC	Pending DTC
P06A8 Internal VCC Power Malfunction	B	B

   Is DTC P06A8 indicated?

   YES

   The failure is duplicated. Check for any authorized service information related to the DTCs or symptoms you are troubleshooting, or substitute a known-good PCM .

   NO

   Intermittent failure, the system is OK at this time.

DTC P06A8 (PGM-FI SYSTEM (2.4 L ENGINE)) (2017 2018 2019)

DTC P06A8 : Internal VCC Power Malfunction

NOTE: Before you troubleshoot, review the general troubleshooting information .

DTC Description	Confirmed DTC	Pending DTC
P06A8 Internal VCC Power Malfunction	B	B

DTC (PGM-FI)

1. Problem verification

   -1. Turn the vehicle to the ON mode.

   -2. Reset the PCM with the HDS .

   Reset PCM

   -3. Turn the vehicle to the OFF (LOCK) mode.

   -4. Turn the vehicle to the ON mode.

   -5. Check for Pending or Confirmed DTCs with the HDS.

DTC Description	Confirmed DTC	Pending DTC
P06A8 Internal VCC Power Malfunction	B	B

Is DTC P06A8 indicated?

YES

The failure is duplicated. Check for any authorized service information related to the DTCs or symptoms you are troubleshooting or **substitute a known-good PCM** .

NO

Intermittent failure, the system is OK at this time. **If the on-board snapshot of this DTC is recorded, try to reproduce the failure under the same conditions with the on-board snapshot**

DTC P0703 (1.5 L ENGINE)

DTC P0703 : Brake Pedal Position Switch (NC) Malfunction

NOTE:

- Before you troubleshoot, **review the general troubleshooting information** .
- If the accelerator pedal is pressed with pressing the brake pedal lightly and continuously for 5 minutes or more, this DTC will be stored.

DTC Description	Confirmed DTC	Pending DTC
P0703 Brake Pedal Position Switch (NC) Malfunction	B	B

DTC (PGM-FI)

1. Brake pedal position switch signal (BKSWNC) check 1

   -1. Turn the vehicle to the ON mode.

   -2. Check the parameter (s) below with the HDS without pressing the brake pedal.

Signal	Threshold		Current conditions	
	Values	Unit	Values	Unit
CRUISE BRAKE SW/IDLE STOP SW	CLOSE	B	B	B

   Do the current condition (s) match the threshold?

   YES

   Go to step 7.

   NO

   Go to step 2.

2. Brake pedal position switch installation check

   -1. Turn the vehicle to the OFF (LOCK) mode.

   -2. **Adjust the brake pedal and the brake pedal position switch** .

   -3. Turn the vehicle to the ON mode.

-4. Check the parameter (s) below with the HDS without pressing the brake pedal.

Signal	Threshold		Current conditions	
	Values	**Unit**	**Values**	**Unit**
CRUISE BRAKE SW/IDLE STOP SW	CLOSE	B	B	B

Do the current condition (s) match the threshold?

YES

The failure is not duplicated.

NO

Go to step 3.

3. Determine possible failure area (brake pedal position switch, others)

-1. Turn the vehicle to the OFF (LOCK) mode.

-2. Disconnect the following connector.

Brake pedal position switch 4P connector

-3. Connect terminals A and B with a jumper wire.

Terminal A	Brake pedal position switch 4P connector (female terminals) No. 3: ①
Terminal B	Brake pedal position switch 4P connector (female terminals) No. 4: ①

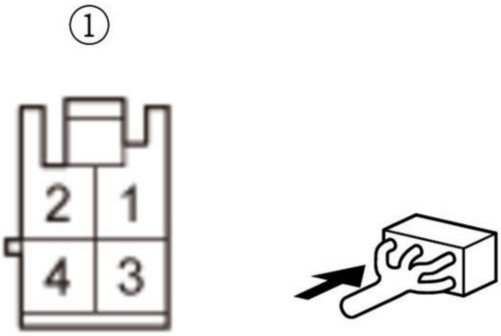

-4. Turn the vehicle to the ON mode.

-5. Check the parameter (s) below with the HDS.

Signal	Threshold		Current conditions	
	Values	Unit	Values	Unit
CRUISE BRAKE SW/IDLE STOP SW	CLOSE	B	B	B

Do the current condition (s) match the threshold?

YES

Replace the brake pedal position switch .

NO

Go to step 4.

4. Determine possible failure area (IG1 ACG line, others)

-1. Turn the vehicle to the OFF (LOCK) mode.

-2. Remove the jumper wire from the brake pedal position switch 4P connector.

-3. Turn the vehicle to the ON mode.

-4. Measure the voltage between test points 1 and 2.

Test condition	Vehicle ON mode Brake pedal position switch 4P connector: disconnected
Test point 1	Brake pedal position switch 4P connector (female terminals) No. 4: ①
Test point 2	Body ground

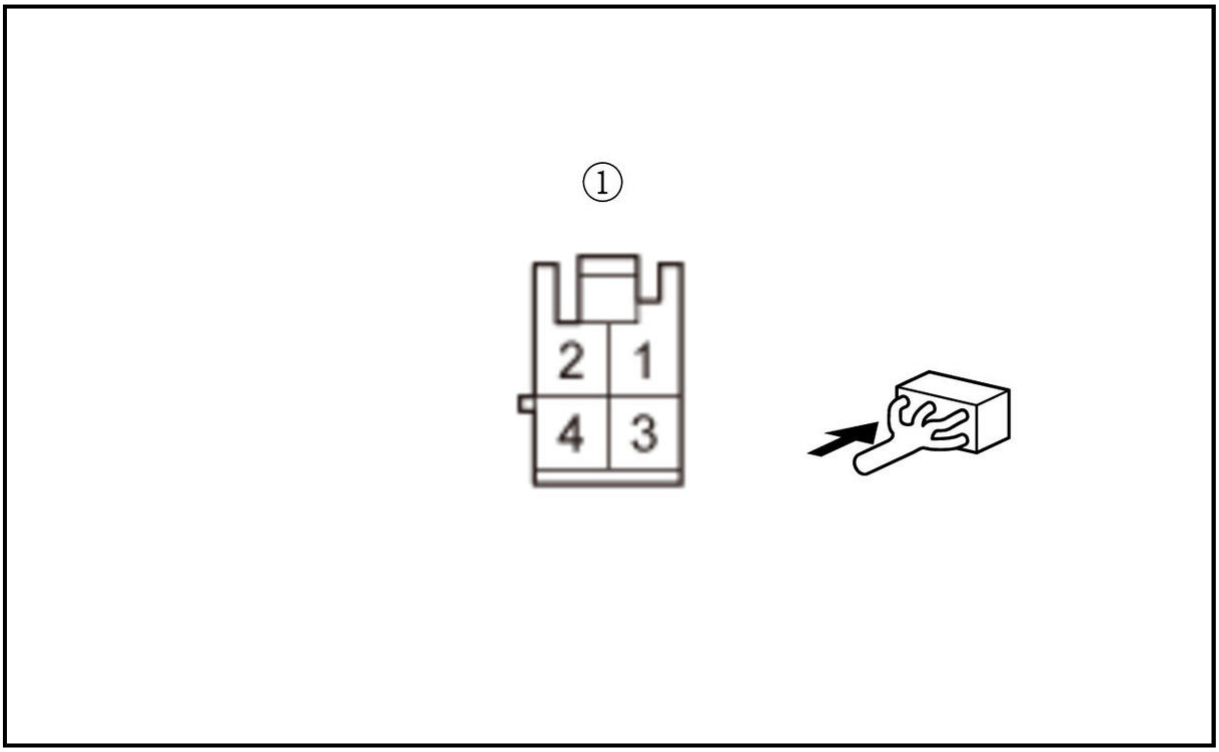

Is there battery voltage?

YES

Go to step 5.

NO

Go to step 6.

5. Open wire check (BKSWNC line)

-1. Turn the vehicle to the OFF (LOCK) mode.

-2. Jump the SCS line with the HDS, and wait more than 1 minute.

-3. Disconnect the following connector.

PCM connector A (50P)

-4. Connect terminals A and B with a jumper wire.

Terminal A	Brake pedal position switch 4P connector (female terminals) No. 3: ①
Terminal B	Brake pedal position switch 4P connector (female terminals) No. 4: ①

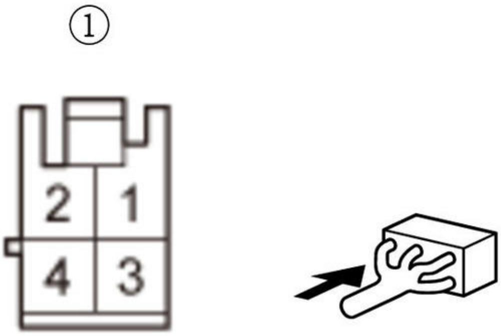

-5. Exit the SCS mode with the HDS.

-6. Turn the vehicle to the ON mode.

-7. Measure the voltage between test points 1 and 2.

Test condition	Vehicle ON mode
	Brake pedal position switch 4P connector: disconnected
	Brake pedal position switch 4P connector No. 3 and No. 4: jumped
	PCM connector A (50P): disconnected
Test point 1	**PCM connector A (50P) No. 49**
Test point 2	Body ground

Is there battery voltage?

YES

The BKSWNC wire is OK. Check for any authorized service information related to the DTCs or symptoms you are troubleshooting, or **substitute a known-good PCM** .

NO

Repair an open in the BKSWNC wire between the PCM (A49) and the brake pedal position switch.

6. Fuse check

   -1. Turn the vehicle to the OFF (LOCK) mode.

   -2. Check the following fuse.

Fuse	No. D21 (10 A)
Location	Under-dash fuse/relay box

   Is the fuse OK?

   YES

   Repair an open in the IG1 ACG wire between the No. D21 (10 A) fuse and the brake pedal position switch.

   NO

   Replace the No. D21 (10 A) fuse. Also check for a short to ground on the No. D21 (10 A) fuse circuit if needed.

7. Brake pedal position switch signal (BKSWNC) check 2

   -1. Turn the vehicle to the ON mode.

   -2. Press the brake pedal.

   -3. Check the parameter (s) below with the HDS while pressing the brake pedal.

Signal	Threshold		Current conditions	
	Values	Unit	Values	Unit
CRUISE BRAKE SW/IDLE STOP SW	OPEN	B	B	B

   Do the current condition (s) match the threshold?

   YES

   Intermittent failure, the system is OK at this time. Check for poor connections or loose terminals at the brake pedal position switch and the PCM. **If the on-board snapshot of this DTC is recorded, try to reproduce the failure under the same conditions with the on-board snapshot** .

   NO

   Go to step 8.

8. Brake pedal position switch check

   -1. **Test the brake pedal position switch** .

   Is the brake pedal position switch OK?

YES

The brake pedal position switch is OK. Repair a short to power in the BKSWNC wire between the PCM (A49) and the brake pedal position switch.

NO

Replace the brake pedal position switch .

DTC P0703 (2.4 L ENGINE) (2017 2018 2019)

DTC P0703 : Brake Pedal Position Switch (NC) Malfunction

NOTE:

- Before you troubleshoot, **review the general troubleshooting information** .
- If the accelerator pedal is pressed with pressing the brake pedal lightly and continuously for 5 minutes or more, this DTC will be stored.

DTC Description	Confirmed DTC	Pending DTC
P0703 Brake Pedal Position Switch (NC) Malfunction	B	B

DTC (PGM-FI)

1. Brake pedal position switch signal (BKSWNC) check 1

   -1. Turn the vehicle to the ON mode.

   -2. Check the parameter (s) below with the HDS without pressing the brake pedal.

Signal	Threshold		Current conditions	
	Values	Unit	Values	Unit
CRUISE BRAKE SW/IDLE STOP SW	CLOSE	B	B	B

   Do the current condition (s) match the threshold?

   YES

   Go to step 7.

   NO

   Go to step 2.

2. Brake pedal position switch installation check

   -1. Turn the vehicle to the OFF (LOCK) mode.

   -2. **Adjust the brake pedal and the brake pedal position switch** .

   -3. Turn the vehicle to the ON mode.

   -4. Check the parameter (s) below with the HDS without pressing the brake pedal.

Signal	Threshold		Current conditions	
	Values	Unit	Values	Unit
CRUISE BRAKE SW/IDLE STOP SW	CLOSE	B	B	B

Do the current condition (s) match the threshold?

YES

The failure is not duplicated.

NO

Go to step 3.

3. Determine possible failure area (brake pedal position switch, others)

-1. Turn the vehicle to the OFF (LOCK) mode.

-2. Disconnect the following connector.

Brake pedal position switch 4P connector

-3. Connect terminals A and B with a jumper wire.

Terminal A	Brake pedal position switch 4P connector (female terminals) No. 3: ①
Terminal B	Brake pedal position switch 4P connector (female terminals) No. 4: ①

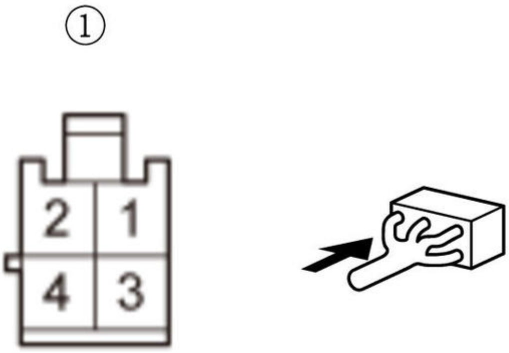

-4. Turn the vehicle to the ON mode.

-5. Check the parameter (s) below with the HDS.

Signal	Threshold		Current conditions	
	Values	Unit	Values	Unit
CRUISE BRAKE SW/IDLE STOP SW	CLOSE	B	B	B

Do the current condition (s) match the threshold?

YES

Replace the brake pedal position switch .

NO

Go to step 4.

4. Determine possible failure area (IG1 ACG line, others)

-1. Turn the vehicle to the OFF (LOCK) mode.

-2. Remove the jumper wire from the brake pedal position switch 4P connector.

-3. Turn the vehicle to the ON mode.

-4. Measure the voltage between test points 1 and 2.

Test condition	Vehicle ON mode Brake pedal position switch 4P connector: disconnected
Test point 1	Brake pedal position switch 4P connector (female terminals) No. 4: ①
Test point 2	Body ground

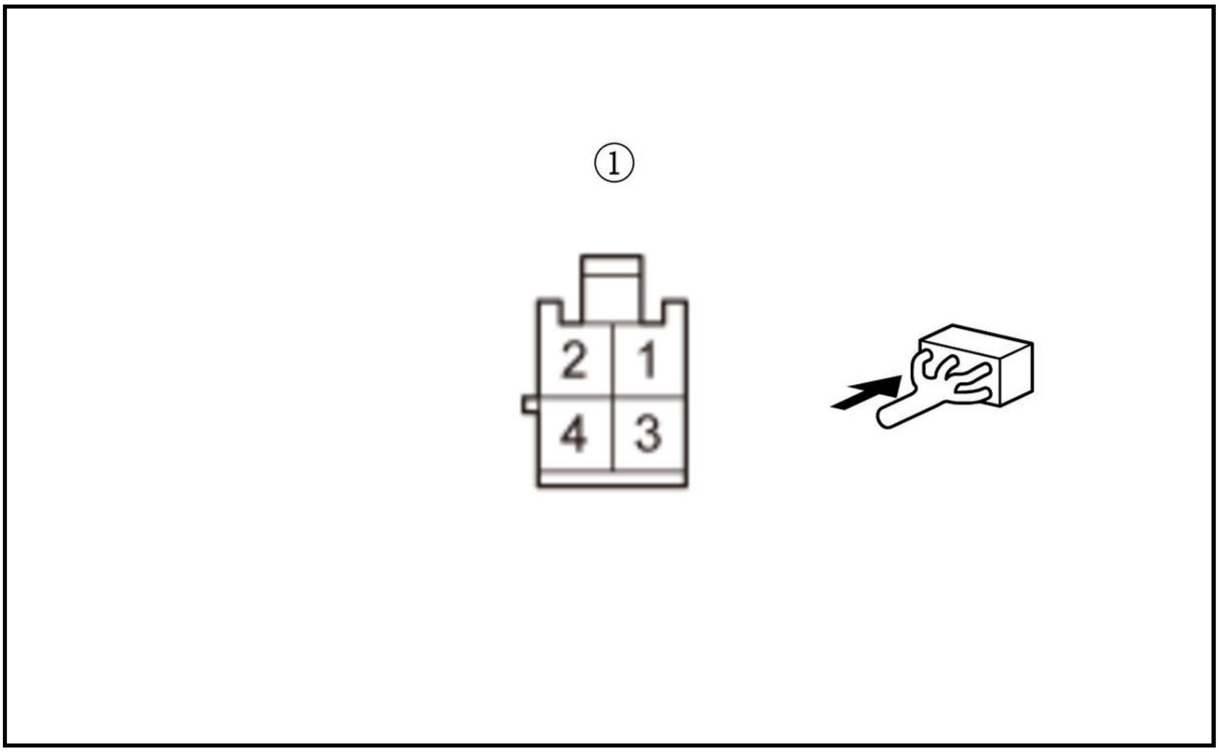

Is there battery voltage?

YES

The IG1 ACG wire is OK. Go to step 5.

NO

Go to step 6.

5. Open wire check (BKSWNC line)

-1. Turn the vehicle to the OFF (LOCK) mode.

-2. Jump the SCS line with the HDS, and wait more than 1 minute.

-3. Disconnect the following connector.

PCM connector A (51P)

-4. Connect terminals A and B with a jumper wire.

Terminal A	Brake pedal position switch 4P connector (female terminals) No. 3: ①
Terminal B	Brake pedal position switch 4P connector (female terminals) No. 4: ①

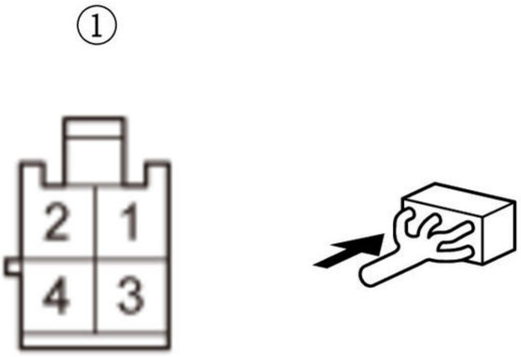

-5. Turn the vehicle to the ON mode.

-6. Measure the voltage between test points 1 and 2.

Test condition	Vehicle ON mode Brake pedal position switch 4P connector: disconnected Brake pedal position switch 4P connector No. 3 and No. 4: jumped PCM connector A (51P): disconnected
Test point 1	**PCM connector A (51P) No. 24**
Test point 2	Body ground

Is there battery voltage?

YES

The BKSWNC wire is OK. Check for any authorized service information related to the DTCs or symptoms you are troubleshooting or **substitute a known-good PCM** .

NO

Repair an open in the BKSWNC wire between the PCM (A24) and the brake pedal position switch.

6. Fuse check

-1. Turn the vehicle to the OFF (LOCK) mode.

-2. Check the following fuse.

Fuse	No. D21 (10 A)
Location	Under-dash fuse/relay box

Is the fuse OK?

YES

Repair an open in the IG1 ACG wire between the No. D21 (10 A) fuse and the brake pedal position switch.

NO

Replace the No. D21 (10 A) fuse. Also check for a short to ground on the No. D21 (10 A) fuse circuit if needed.

7. Brake pedal position switch signal (BKSWNC) check 2

-1. Turn the vehicle to the ON mode.

-2. Press the brake pedal.

-3. Check the parameter (s) below with the HDS while pressing the brake pedal.

Signal	**Threshold**		**Current conditions**	
	Values	**Unit**	**Values**	**Unit**
CRUISE BRAKE SW/IDLE STOP SW	OPEN	B	B	B

Do the current condition (s) match the threshold?

YES

Intermittent failure, the system is OK at this time. Check for poor connections or loose terminals at the brake pedal position switch and the PCM. **If the on-board snapshot of this DTC is recorded, try to reproduce the failure under the same conditions with the on-board snapshot** .

NO

Go to step 8.

8. Brake pedal position switch check

-1. **Test the brake pedal position switch** .

Is the brake pedal position switch OK?

YES

The brake pedal position switch is OK. Repair a short to power in the BKSWNC wire between the PCM (A24) and the brake pedal position switch.

NO

Replace the brake pedal position switch .

DTC P0705 (CVT (ECM/PCM))

DTC P0705 : Transmission Range Switch Multiple Shift Position Input

NOTE:

- Before you troubleshoot, **review the General Troubleshooting Information** .
- This code is caused by an electrical circuit problem and cannot be caused by a mechanical problem in the transmission.

DTC Description	Confirmed DTC	Pending DTC	Freeze Frame
P0705 Transmission Range Switch Multiple Shift Position Input	B	B	B

DTC (CVT)

1. Problem verification

   -1. Turn the vehicle to the ON mode.

   -2. Compare the transmission range switch signal inputs with the HDS to the following table, in each shift lever position.

Signal	Threshold						Current conditions	
	P	R	N	D	S	L	Values	Unit
A/T P Switch	ON	OFF	OFF	OFF	OFF	OFF	B	B
A/T R Switch	OFF	ON	OFF	OFF	OFF	OFF	B	B
A/T N Switch	OFF	OFF	ON	OFF	OFF	OFF	B	B
A/T D Switch	OFF	OFF	OFF	ON	OFF	OFF	B	B

Signal	Threshold						Current conditions	
	P	R	N	D	S	L	Values	Unit
A/T S Switch	OFF	OFF	OFF	OFF	ON	OFF	B	B
A/T L Switch	OFF	OFF	OFF	OFF	OFF	ON	B	B
ATP-FWD	OFF	OFF	OFF	ON	ON	ON	B	B
ATP-RVS	OFF	ON	OFF	OFF	OFF	OFF	B	B

   Do the transmission range switch signals match?

   YES

   Intermittent failure, the system is OK at this time. If the freeze data/on-board snapshot of this DTC is recorded, try to reproduce the failure under the same conditions with the freeze data/on-board snapshot.

   NO

   The failure is duplicated. Go to step 2.

2. Transmission range switch signal check

-1. Compare the transmission range switch signal inputs with the HDS to the following table, in each shift lever position.

Signal	Threshold						Current conditions	
	P	**R**	**N**	**D**	**S**	**L**	**Values**	**Unit**
A/T P Switch	ON	OFF	OFF	OFF	OFF	OFF	B	B
A/T R Switch	OFF	ON	OFF	OFF	OFF	OFF	B	B
A/T N Switch	OFF	OFF	ON	OFF	OFF	OFF	B	B
A/T D Switch	OFF	OFF	OFF	ON	OFF	OFF	B	B
A/T S Switch	OFF	OFF	OFF	OFF	ON	OFF	B	B
A/T L Switch	OFF	OFF	OFF	OFF	OFF	ON	B	B
ATP-FWD	OFF	OFF	OFF	ON	ON	ON	B	B
ATP-RVS	OFF	ON	OFF	OFF	OFF	OFF	B	B

Is any transmission ranges switch signals ON in all shift lever positions?

YES

Go to step 4.

NO

Records the abnormal circuit, then go to step 3.

3. Transmission range switch check

-1. Turn the vehicle to the OFF (LOCK) mode.

-2. Disconnect the following connector.

Transmission range switch 10P connector

-3. Connect the transmission range switch connector terminal that incorrectly indicates ON in step 2 to body ground with a jumper wire.

Signal	Transmission range switch 10P connector (female terminals) : ①
	Terminal number
A/T P Switch	5
A/T R Switch	4
A/T N Switch	9
A/T D Switch	3
A/T S Switch	8
A/T L Switch	2
Forward Switch	6

Signal	Transmission range switch 10P connector (female terminals) : ①
	Terminal number
Reverse Switch	10

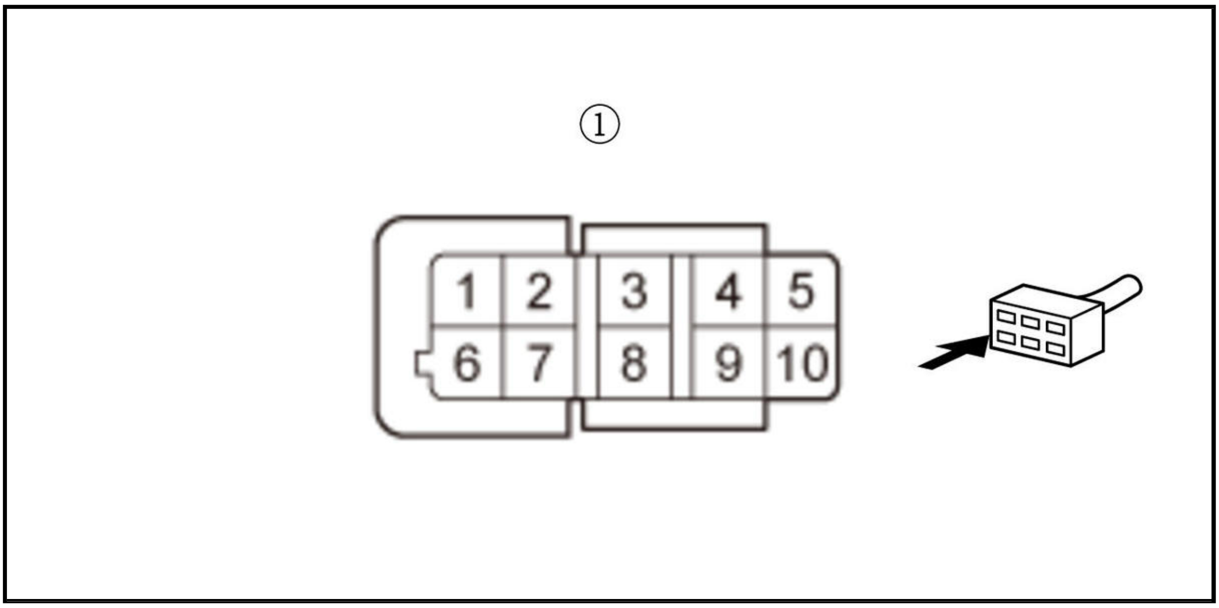

-4. Turn the vehicle to the ON mode.

-5. Compare the transmission range switch signal inputs with the HDS.

Signal	Current conditions	
	Values	Unit
A/T P Switch	B	B
A/T R Switch	B	B
A/T N Switch	B	B
A/T D Switch	B	B
A/T S Switch	B	B
A/T L Switch	B	B
Forward Switch	B	B
Reverse Switch (ATPRVS)	B	B

Do multiple transmission range switch signals indicate ON?

YES

The transmission range switch is OK. Repair a short in the wires between the corresponding transmission range switch connector terminal and the PCM. Refer to the following table.

B	ATP P	ATP R	ATP N	ATP D	ATP S	ATP L	ATP FWD	ATP RVS
PCM	C34	C27	C24	C25	C43	C44	C26	C23
Transmission range switch	5	4	9	3	8	2	6	10

NO

Replace the transmission range switch .

4. Transmission range switch check

-1. Turn the vehicle to the OFF (LOCK) mode.

-2. Disconnect the following connector.

Transmission range switch 10P connector

-3. Turn the vehicle to the ON mode.

-4. Check the transmission range switch signal input that remained ON with the HDS.

Signal	Current conditions	
	Values	**Unit**
A/T P Switch	B	B
A/T R Switch	B	B

Signal	Current conditions	
	Values	**Unit**
A/T N Switch	B	B
A/T D Switch	B	B
A/T S Switch	B	B
A/T L Switch	B	B
Forward Switch	B	B
Reverse Switch (ATPRVS)	B	B

Do any transmission range switch signals remain ON?

YES

The transmission range switch is OK. Go to step 5.

NO

Replace the transmission range switch .

5. Shorted wire check (corresponding line)

-1. Turn the vehicle to the OFF (LOCK) mode.

-2. Jump the SCS line with the HDS, and wait more than 1 minute.

NOTE: This step must be done to protect the PCM from damage.

-3. Disconnect the following connector.

PCM connector C (51P)

-4. Check for continuity between the connector terminal on the circuit that remained ON in step 4 and body ground; refer to the following table.

Signal	Transmission range switch 10P connector (female terminals) : ①
	Terminal number
A/T P Switch	5
A/T R Switch	4
A/T N Switch	9
A/T D Switch	3
A/T S Switch	8
A/T L Switch	2
Forward Switch	6
Reverse Switch	10

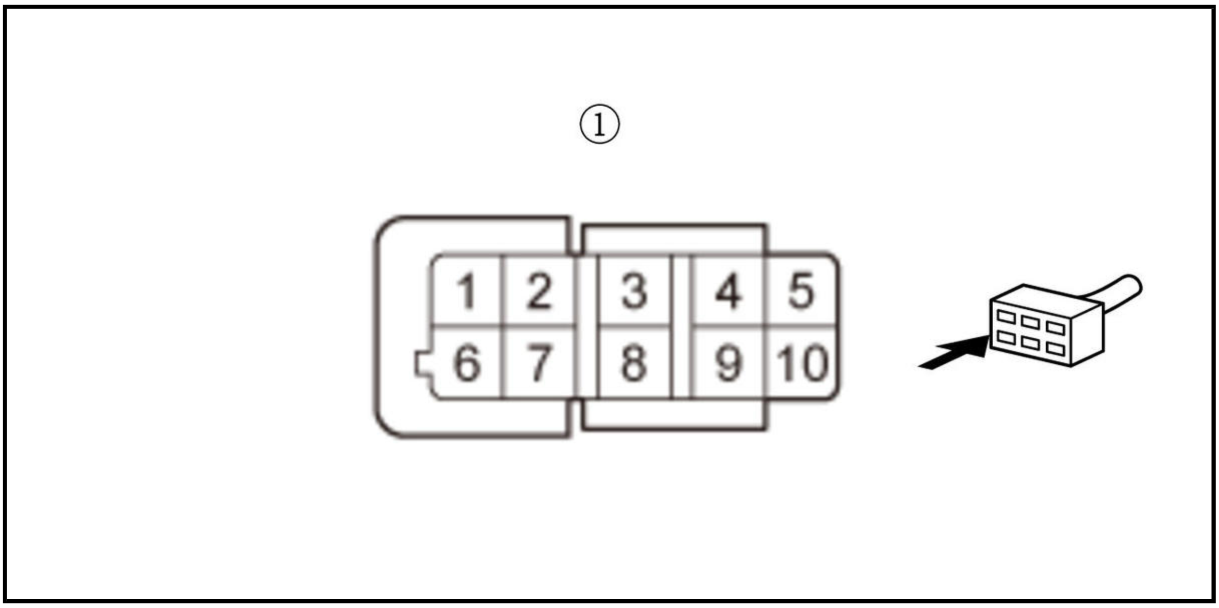

Does the circuit that indicated ON have continuity to body ground?

YES

Repair a short to body ground in the wire between the corresponding transmission range switch connector terminal and the PCM.

NO

The wires are OK. Check for any authorized service information related to the DTCs or symptoms you are troubleshooting, or **replace the original PCM** .

DTC P0706 (CVT (ECM/PCM))

DTC P0706 : Transmission Range Switch Open

NOTE:

- Before you troubleshoot, **review the General Troubleshooting Information** .
- This code is caused by an electrical circuit problem and cannot be caused by a mechanical problem in the transmission.

DTC Description	Confirmed DTC	Pending DTC	Freeze Frame
P0706 Transmission Range Switch Open	B	B	B

DTC (CVT)

1. Problem verification

-1. **Make sure the shift cable is properly adjusted** .

-2. Turn the vehicle to the ON mode.

-3. Clear the DTC with the HDS.

-4. Test-drive the vehicle in D position/mode until the vehicle speed reaches 37 mph (60 km/h), then slow down to 6 mph (10 km/h).

-5. Turn the engine off. Repeat the test-drive in step 1-4 again.

-6. Check for Pending or Confirmed DTCs with the HDS.

DTC Description	Confirmed DTC	Pending DTC	Freeze Frame
P0706 Transmission Range Switch Open	B	B	B

Is DTC P0706 indicated?

YES

The failure is duplicated. Go to step 2.

NO

Intermittent failure, the system is OK at this time. If the freeze data/on-board snapshot of this DTC is recorded, try to reproduce the failure under the same conditions with the freeze data/on-board snapshot.

2. Transmission range switch check

-1. **Do the transmission range switch test** .

Is the transmission range switch OK?

YES

The transmission range switch is OK. Go to step 3.

NO

Check for proper transmission range switch installation, then recheck. If the transmission range switch installation is OK, **replace the transmission range switch** .

3. Open wire check (FWD line)

-1. Turn the vehicle to the OFF (LOCK) mode.

-2. Disconnect the following connector.

Transmission range switch 10P connector

-3. Turn the vehicle to the ON mode.

-4. Measure the voltage between test points 1 and 2.

Test condition	Vehicle ON mode
B	Transmission range switch 10P connector: disconnected
Test point 1	Transmission range switch 10P connector (female terminals) No. 6 : ①
Test point 2	Body ground

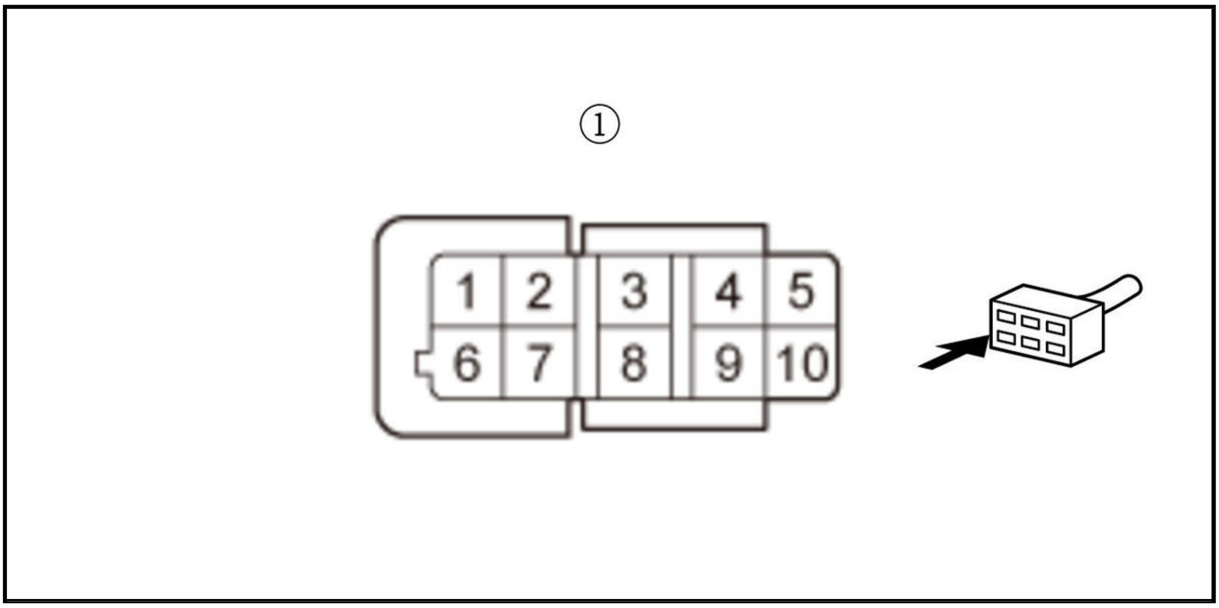

Is there voltage?

YES

The FWD wire is OK. Check for any authorized service information related to the DTCs or symptoms you are troubleshooting, or **replace the original PCM** .

NO

Repair an open in the FWD wire between the transmission range switch and the PCM.

DTC P0710 (CVT (ECM/PCM)) (2018 2019 2020 2021)

DTC P0712 : CVT Fluid Temperature Sensor (Short)

NOTE:

- Before you troubleshoot, **review the General Troubleshooting Information** .
- This code is caused by an electrical circuit problem and cannot be caused by a mechanical problem in the transmission.

DTC Description	Confirmed DTC	Pending DTC	Freeze Frame
P0710 CVT Fluid Temperature Sensor (Out of Range)	B	B	B

DTC (CVT)

1. DTC check

   -1. Turn the vehicle to the ON mode.

   -2. Check for other Pending or Confirmed DTCs indicated along with DTC P0710 with the HDS.

DTC Description	Confirmed DTC	Pending DTC	Freeze Frame
P0712 CVT Fluid Temperature Sensor (Short)	B	B	B
P0713 CVT Fluid Temperature Sensor (Open)	B	B	B

Are there other DTCs indicated at the same time?

YES

Go to the indicated DTC's troubleshooting .

NO

Go to step 2.

2. Problem verification

-1. Check the parameter (s) below with the HDS.

Signal	Threshold		Current conditions	
	Values	**Unit**	**Values**	**Unit**
CVTF Temp Sensor (V)	0.05-0.09	V	B	B
	4.83-4.92	V	B	B

Do the current condition (s) match the threshold?

YES (0.05-0.09 V)

Go to step 3.

YES (4.83-4.92 V)

Go to step 5.

NO

Intermittent failure, the system is OK at this time. Check for poor connections and loose terminals between the transmission fluid temperature sensor and the PCM. If the freeze data/on-board snapshot of this DTC is recorded, try to reproduce the failure under the same conditions with the freeze data/onboard snapshot.

3. Transmission fluid temperature sensor check

-1. Turn the vehicle to the OFF (LOCK) mode.

-2. Disconnect the following connector.

Solenoid wire harness A 8P connector

-3. Turn the vehicle to the ON mode.

-4. Check the parameter (s) below with the HDS.

Signal	Threshold		Current conditions	
	Values	**Unit**	**Values**	**Unit**
CVTF Temp Sensor (V)	Less than 0.09	V	B	B

Do the current condition (s) match the threshold?

YES

The transmission fluid temperature sensor is OK. Go to step 4.

NO

Faulty transmission fluid temperature sensor. **Replace solenoid wire harness A** .

4. Shorted wire check (TATF line)

-1. Turn the vehicle to the OFF (LOCK) mode.

-2. Jump the SCS line with the HDS, and wait more than 1 minute.

NOTE: This step must be done to protect the PCM from damage.

-3. Disconnect the following connector.

PCM connector C (51P)

-4. Check for continuity between test points 1 and 2.

Test condition	Vehicle OFF (LOCK) mode
B	Solenoid wire harness A 8P connector: disconnected
B	PCM connector C (51P): disconnected
Test point 1	**PCM connector C (51P) No. 37**
Test point 2	Body ground

Is there continuity?

YES

Repair a short to ground in the TATF wire between solenoid wire harness A and the PCM.

NO

The TATF wire is OK. Check for any authorized service information related to the DTCs or symptoms you are troubleshooting, or **substitute a known-good PCM** , then recheck. If this DTC goes away and the PCM was substituted, **replace the original PCM** .

5. Determine possible failure area (TATF line, others)

-1. Turn the vehicle to the OFF (LOCK) mode.

-2. Disconnect the following connector.

Solenoid wire harness A 8P connector

-3. Connect terminals A and B with a jumper wire.

Terminal A	Solenoid wire harness A 8P connector (female terminals) No. 7: ①
Terminal B	Body ground

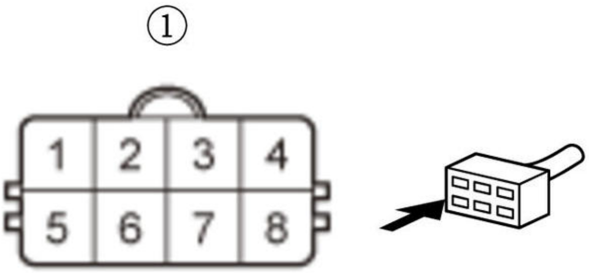

-4. Turn the vehicle to the ON mode.

-5. Check the parameter (s) below with the HDS.

Signal	Threshold		Current conditions	
	Values	**Unit**	**Values**	**Unit**
CVTF Temp Sensor (V)	Less than 0.07	V	B	B

Do the current condition (s) match the threshold?

YES

Go to step 6.

NO

Go to step 7.

6. Transmission fluid temperature sensor check

-1. Turn the vehicle to the OFF (LOCK) mode.

-2. Remove the jumper wire.

-3. Connect terminals A and B with a jumper wire.

Terminal A	Solenoid wire harness A 8P connector (female terminals) No. 6: ①
Terminal B	Solenoid wire harness A 8P connector (female terminals) No. 7: ①

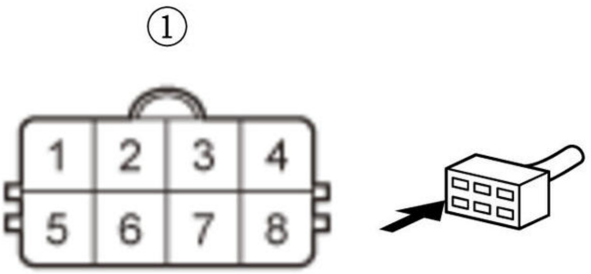

-4. Turn the vehicle to the ON mode.

-5. Check the parameter (s) below with the HDS.

Signal	Threshold		Current conditions	
	Values	**Unit**	**Values**	**Unit**
CVTF Temp Sensor (V)	Less than 0.07	V	B	B

Do the current condition (s) match the threshold?

YES

Faulty transmission fluid temperature sensor. **Replace solenoid wire harness A** .

NO

The transmission fluid temperature sensor is OK. Repair an open in the SG2 wire between solenoid wire harness A and the PCM.

7. Open wire check (TATF line)

-1. Turn the vehicle to the OFF (LOCK) mode.

-2. Remove the jumper wire.

-3. Jump the SCS line with the HDS, and wait more than 1 minute.

NOTE: This step must be done to protect the PCM from damage.

-4. Disconnect the following connector.

PCM connector C (51P)

-5. Check for continuity between test points 1 and 2.

Test condition	Vehicle OFF (LOCK) mode
B	Solenoid wire harness A 8P connector: disconnected
B	PCM connector C (51P): disconnected
Test point 1	Solenoid wire harness A 8P connector (female terminals) No. 7: ①
Test point 2	**PCM connector C (51P) No. 37**

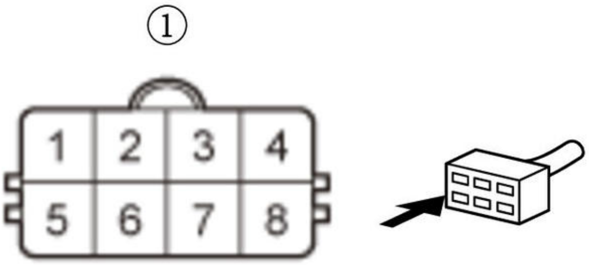

Is there continuity?

YES

The TATF wire is OK. Check for any authorized service information related to the DTCs or symptoms you are troubleshooting, or **substitute a known-good PCM** , then recheck. If this DTC goes away and the PCM was substituted, **replace the original PCM** .

NO

Repair an open in the TATF wire between solenoid wire harness A and the PCM.

DTC P0712 (CVT (ECM/PCM))

DTC P0712 : CVT Fluid Temperature Sensor (Short)

NOTE:

- Before you troubleshoot, **review the General Troubleshooting Information** .

- This code is caused by an electrical circuit problem and cannot be caused by a mechanical problem in the transmission.

DTC Description	Confirmed DTC	Pending DTC	Freeze Frame
P0712 CVT Fluid Temperature Sensor (Short)	B	B	B

DTC (CVT)

1. Problem verification

   -1. Turn the vehicle to the ON mode.

   -2. Check the parameter (s) below with the HDS.

Signal	Threshold		Current conditions	
	Values	Unit	Values	Unit
CVTF Temp Sensor (V)	Less than 0.07	V	B	B

   Do the current condition (s) match the threshold?

   YES

   The failure is duplicated. Go to step 2.

   NO

   Intermittent failure, the system is OK at this time. Check for an intermittent short to ground in the TATF wire between the transmission fluid temperature sensor and the PCM. If the freeze data/on-board snapshot of this DTC is recorded, try to reproduce the failure under the same conditions with the freeze data/on-board snapshot.

2. Transmission fluid temperature sensor check

   -1. Turn the vehicle to the OFF (LOCK) mode.

   -2. Disconnect the following connector.

Solenoid wire harness A 8P connector

   -3. Turn the vehicle to the ON mode.

   -4. Check the parameter (s) below with the HDS.

Signal	Threshold		Current conditions	
	Values	Unit	Values	Unit
CVTF Temp Sensor (V)	Less than 0.07	V	B	B

   Do the current condition (s) match the threshold?

   YES

   The transmission fluid temperature sensor is OK. Go to step 3.

   NO

   Faulty transmission fluid temperature sensor. **Replace solenoid wire harness A** .

3. Shorted wire check (TATF line)

-1. Turn the vehicle to the OFF (LOCK) mode.

-2. Jump the SCS line with the HDS, and wait more than 1 minute.

NOTE: This step must be done to protect the PCM from damage.

-3. Disconnect the following connector.

PCM connector C (51P)

-4. Check for continuity between test points 1 and 2.

Test condition	Vehicle OFF (LOCK) mode
B	Solenoid wire harness A 8P connector: disconnected
B	PCM connector C (51P): disconnected
Test point 1	**PCM connector C (51P) No. 37**
Test point 2	Body ground

Is there continuity?

YES

Repair a short to body ground in the TATF wire between the solenoid wire harness A and the PCM.

NO

The TATF wire is OK. Check for any authorized service information related to the DTCs or symptoms you are troubleshooting, or **replace the original PCM** .

DTC P0713 (CVT (ECM/PCM))

DTC P0713 : CVT Fluid Temperature Sensor (Open)

NOTE:

- This code is caused by an electrical circuit problem and cannot be caused by a mechanical problem in the transmission.
- Before you troubleshoot, **review the General Troubleshooting Information** .

DTC Description	Confirmed DTC	Pending DTC	Freeze Frame
P0713 CVT Fluid Temperature Sensor (Open)	B	B	B

DTC (CVT)

1. Problem verification

-1. Turn the vehicle to the ON mode.

-2. Check the parameter (s) below with the HDS.

Signal	Threshold		Current conditions	
	Values	Unit	Values	Unit
CVTF Temp Sensor (V)	More than 4.93	V	B	B

Do the current condition (s) match the threshold?

YES

The failure is duplicated. Go to step 2.

NO

Intermittent failure, the system is OK at this time. Check for an intermittent short to ground in the TATF wire between the transmission fluid temperature sensor and the PCM. If the freeze data/on-board snapshot of this DTC is recorded, try to reproduce the failure under the same conditions with the freeze data/on-board snapshot.

2. Determine possible failure area (TATF line, others)

-1. Turn the vehicle to the OFF (LOCK) mode.

-2. Disconnect the following connector.

Solenoid wire harness A 8P connector

-3. Connect terminals A and B with a jumper wire.

Terminal A	Solenoid wire harness A 8P connector (female terminals) No. 7 : ①
Terminal B	Body ground

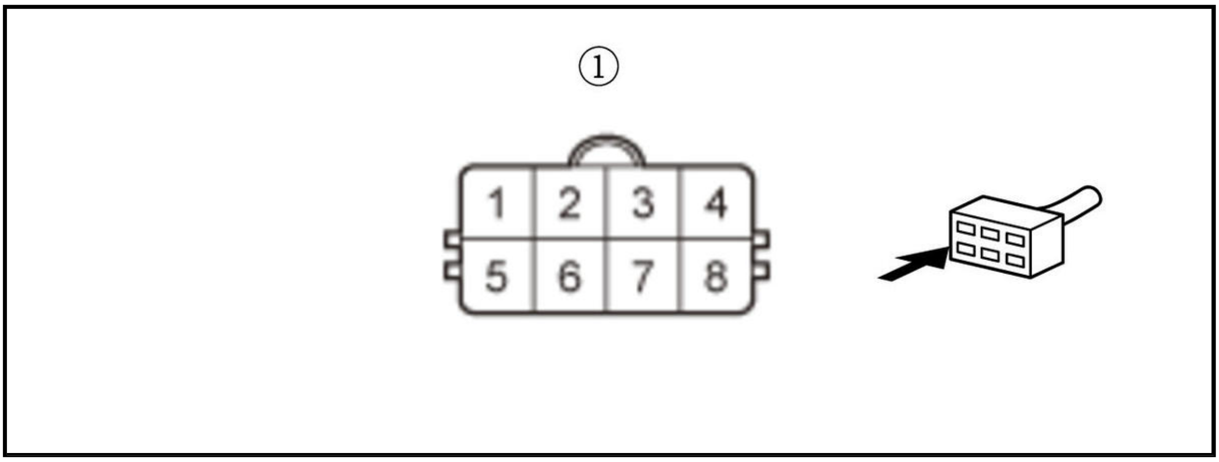

-4. Turn the vehicle to the ON mode.

-5. Check the parameter (s) below with the HDS.

Signal	**Threshold**		**Current conditions**	
	Values	**Unit**	**Values**	**Unit**
CVTF Temp Sensor (V)	Less than 0.07	V	B	B

Do the current condition (s) match the threshold?

YES

Go to step 3.

NO

Go to step 4.

3. Transmission fluid temperature sensor check

-1. Turn the vehicle to the OFF (LOCK) mode.

-2. Remove the jumper wire.

-3. Connect terminals A and B with a jumper wire.

Terminal A	Solenoid wire harness A 8P connector (female terminals) No. 6 : ①
Terminal B	Solenoid wire harness A 8P connector (female terminals) No. 7 : ①

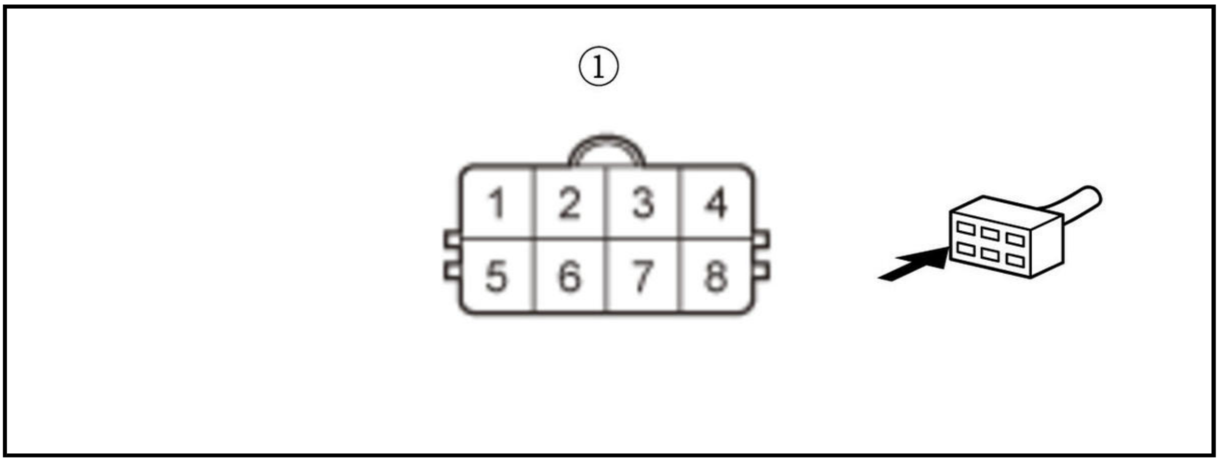

-4. Turn the vehicle to the ON mode.

-5. Check the parameter (s) below with the HDS.

Signal	**Threshold**		**Current conditions**	
	Values	**Unit**	**Values**	**Unit**
CVTF Temp Sensor (V)	Less than 0.07	V	B	B

Do the current condition (s) match the threshold?

YES

Faulty transmission fluid temperature sensor. Replace solenoid wire harness A .

NO

The transmission fluid temperature sensor is OK. Repair an open in the SG2 wire between the solenoid wire harness A and the PCM.

4. Open wire check (TATF line)

-1. Turn the vehicle to the OFF (LOCK) mode.

-2. Jump the SCS line with the HDS, and wait more than 1 minute.

NOTE: This step must be done to protect the PCM from damage.

-3. Disconnect the following connector.

PCM connector C (51P)

-4. Check for continuity between test points 1 and 2.

Test condition	Vehicle OFF (LOCK) mode
B	Solenoid wire harness A 8P connector: disconnected
B	PCM connector C (51P): disconnected

Test point 1	Solenoid wire harness A 8P connector (female terminals) No. 7 : ①
Test point 2	PCM connector C (51P) No. 37

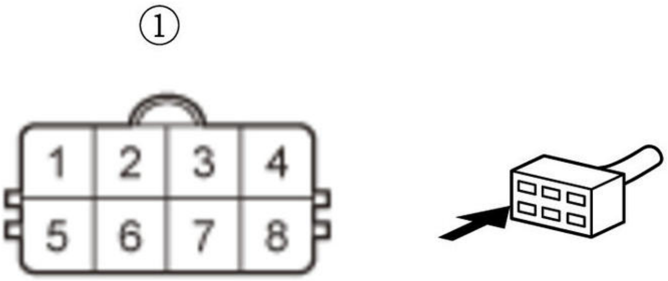

Is there continuity?

YES

The TATF wire is OK. Check for any authorized service information related to the DTCs or symptoms you are troubleshooting, or replace the original PCM .

NO

Repair an open in the TATF wire between the solenoid wire harness A and the PCM.

DTC P0716 (CVT (ECM/PCM))

DTC P0716 : CVT Input Shaft (Drive Pulley) Speed Sensor A Circuit Range/Performance / Input/Turbine Speed Sensor A Circuit Range/Performance

NOTE:

- Before you troubleshoot, review the General Troubleshooting Information .
- This code is caused by an electrical circuit problem and cannot be caused by a mechanical problem in the transmission.

DTC Description	Confirmed DTC	Pending DTC	Freeze Frame
P0716 CVT Input Shaft (Drive Pulley) Speed Sensor A Circuit Range/Performance / Input/Turbine Speed Sensor A Circuit Range/Performance	B	B	B

DTC (CVT)

1. Problem verification

-1. Turn the vehicle to the ON mode.

-2. Clear the DTC with the HDS.

-3. Raise the vehicle on a lift. Make sure it is securely supported, and allow the front wheels to rotate freely.

-4. Start the engine.

-5. **Enter the VSA maintenance mode** .

-6. Test-drive the vehicle at speeds over 19 mph (30 km/h) for at least 30 seconds. Slow down, and stop the wheels.

-7. Check for Pending or Confirmed DTCs with the HDS.

DTC Description	Confirmed DTC	Pending DTC	Freeze Frame
P0716 CVT Input Shaft (Drive Pulley) Speed Sensor A Circuit Range/Performance / Input/Turbine Speed Sensor A Circuit Range/Performance	B	B	B

Is DTC P0716 indicated?

YES

The failure is duplicated. Go to step 2.

NO

Intermittent failure, the system is OK at this time. Check for poor connections or loose terminals between the torque converter turbine speed sensor and the PCM. If the freeze data/on-board snapshot of this DTC is recorded, try to reproduce the failure under the same conditions with the freeze data/on-board snapshot.

2. Torque converter turbine speed sensor check

-1. Rotate the front wheels with the shift lever in D, while monitoring the Torque Converter Turbine Speed rpm and the Input Shaft (Drive Pulley) Speed rpm in the Data List with the HDS.

-2. Compare the parameters below with the HDS.

Signal	Current conditions	
	Values	Unit
Torque Converter Turbine Speed	B	B
Input Shaft (Drive Pulley) Speed rpm	B	B

Are the speeds about the same?

YES

The torque converter turbine speed sensor is OK. Check for any authorized service information related to the DTCs or symptoms you are troubleshooting, or **replace the original PCM** .

NO

Replace the torque converter turbine speed sensor .

DTC P0717 (CVT (ECM/PCM))

DTC P0717 : CVT Input Shaft (Drive Pulley) Speed Sensor A Circuit No Signal / Input/Turbine Speed Sensor A Circuit No Signal

NOTE:

- Before you troubleshoot, **review the General Troubleshooting Information** .
- This code is caused by an electrical circuit problem and cannot be caused by a mechanical problem in the transmission.

DTC Description	Confirmed DTC	Pending DTC	Freeze Frame
P0717 CVT Input Shaft (Drive Pulley) Speed Sensor A Circuit No Signal / Input/Turbine Speed Sensor A Circuit No Signal	B	B	B

DTC (CVT)

1. Problem verification

   -1. Turn the vehicle to the ON mode.

   -2. Clear the DTC with the HDS.

   -3. Raise the vehicle on a lift. Make sure it is securely supported, and allow the front wheels to rotate freely.

   -4. Start the engine.

   -5. Enter the VSA maintenance mode .

   -6. Test-drive the vehicle at speeds over 19 mph (30 km/h) for at least 30 seconds. Slow down, and stop the wheels.

   -7. Check for Pending or Confirmed DTCs with the HDS.

DTC Description	Confirmed DTC	Pending DTC	Freeze Frame
P0717 CVT Input Shaft (Drive Pulley) Speed Sensor A Circuit No Signal / Input/Turbine Speed Sensor A Circuit No Signal	B	B	B

   Is DTC P0717 indicated?

   YES

   The failure is duplicated. Go to step 2.

   NO

   Intermittent failure, the system is OK at this time. Check for poor connections or loose terminals between the torque converter turbine speed sensor and the PCM. If the freeze data/on-board snapshot of this DTC is recorded, try to reproduce the failure under the same conditions with the freeze data/on-board snapshot.

2. Determine possible failure area (NT line, others)

   -1. Turn the vehicle to the OFF (LOCK) mode.

   -2. Disconnect the following connector.

Torque converter turbine speed sensor 3P connector

   -3. Turn the vehicle to the ON mode.

   -4. Measure the voltage between test points 1 and 2.

Test condition	Vehicle ON mode
B	Torque converter turbine speed sensor 3P connector: disconnected

Test point 1	Torque converter turbine speed sensor 3P connector (female terminals) No. 2 : ①
Test point 2	Body ground

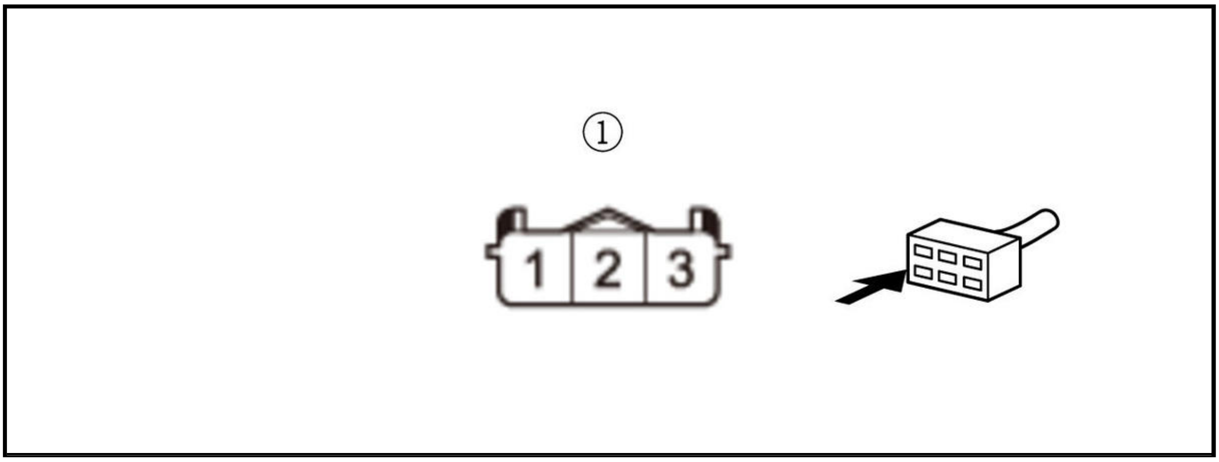

Is there about 5 V?

YES

Go to step 3.

NO

Go to step 5.

3. Open wire check (VCC2 line)

-1. Measure the voltage between test points 1 and 2.

Test condition	Vehicle ON mode
B	Torque converter turbine speed sensor 3P connector: disconnected
Test point 1	Torque converter turbine speed sensor 3P connector (female terminals) No. 3 : ①
Test point 2	Body ground

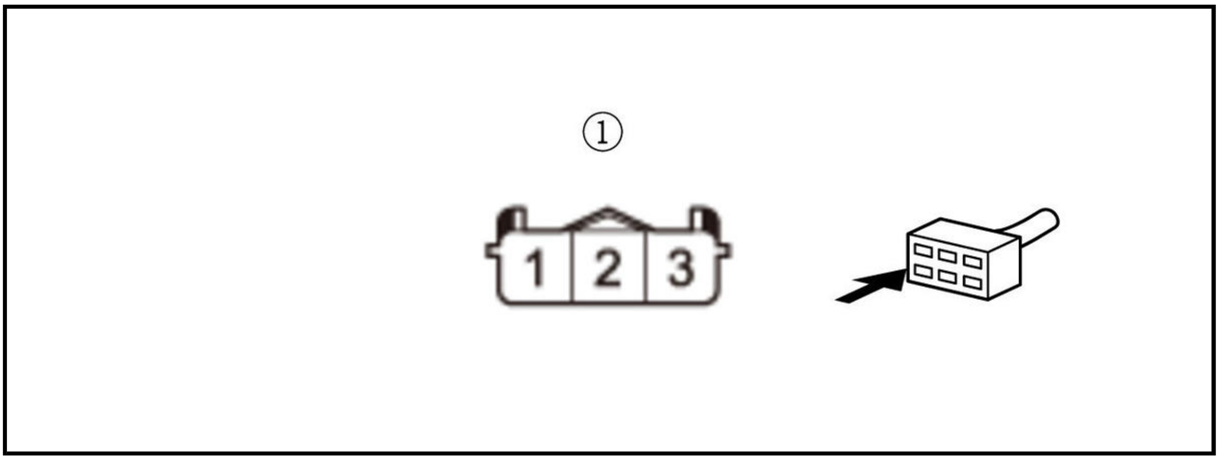

Is there about 5 V?

YES

Go to step 4.

NO

Repair an open in the VCC2 wire between the torque converter turbine speed sensor and the PCM.

4. Torque converter turbine speed sensor check

-1. Measure the voltage between test points 1 and 2.

Test condition	Vehicle ON mode
B	Torque converter turbine speed sensor 3P connector: disconnected
Test point 1	Torque converter turbine speed sensor 3P connector (female terminals) No. 1 : ①
Test point 2	Torque converter turbine speed sensor 3P connector (female terminals) No. 3 : ①

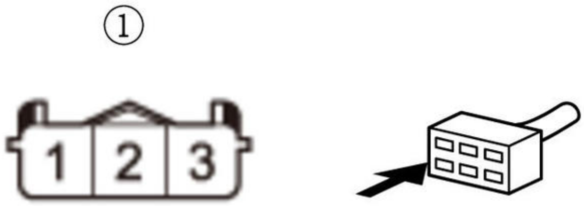

Is there about 5 V?

YES

Replace the torque converter turbine speed sensor .

NO

Repair an open in the SG2 wire between the torque converter turbine speed sensor and the PCM.

5. Shorted wire check (NT line)

-1. Turn the vehicle to the OFF (LOCK) mode.

-2. Jump the SCS line with the HDS, and wait more than 1 minute.

NOTE: This step must be done to protect the PCM from damage.

-3. Disconnect the following connector.

PCM connector C (51P)

-4. Check for continuity between test points 1 and 2.

Test condition	Vehicle OFF (LOCK) mode

B	Torque converter turbine speed sensor 3P connector: disconnected
B	PCM connector C (51P): disconnected
Test point 1	Torque converter turbine speed sensor 3P connector (female terminals) No. 2 : ①
Test point 2	Body ground

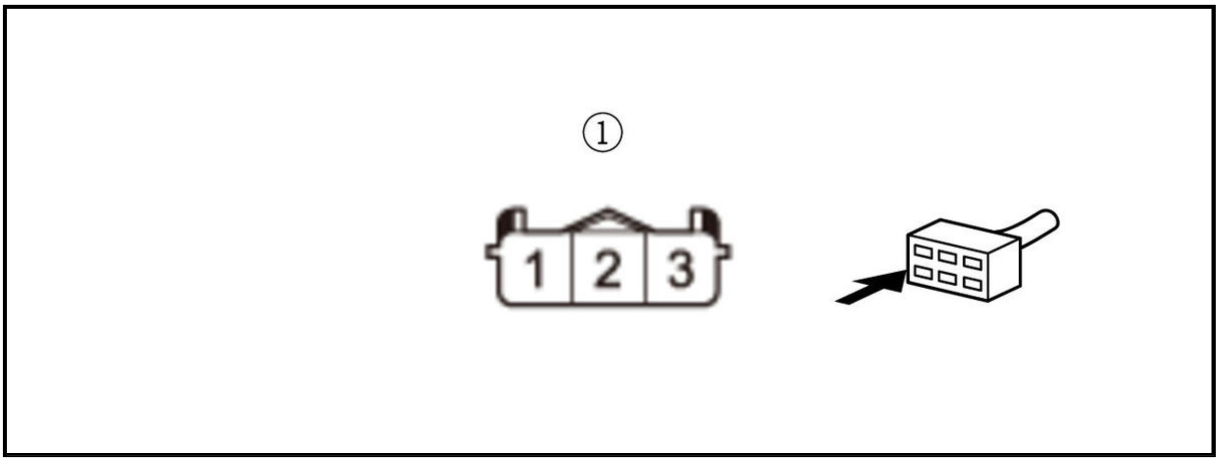

Is there continuity?

YES

Repair a short to body ground in the NT wire between the torque converter turbine speed sensor and the PCM.

NO

The NT wire is not shorted. Go to step 6.

6. Open wire check (NT line)

-1. Check for continuity between test points 1 and 2.

Test condition	Vehicle OFF (LOCK) mode
B	Torque converter turbine speed sensor 3P connector: disconnected
B	PCM connector C (51P): disconnected
Test point 1	Torque converter turbine speed sensor 3P connector (female terminals) No. 2 : ①
Test point 2	**PCM connector C (51P) No. 21**

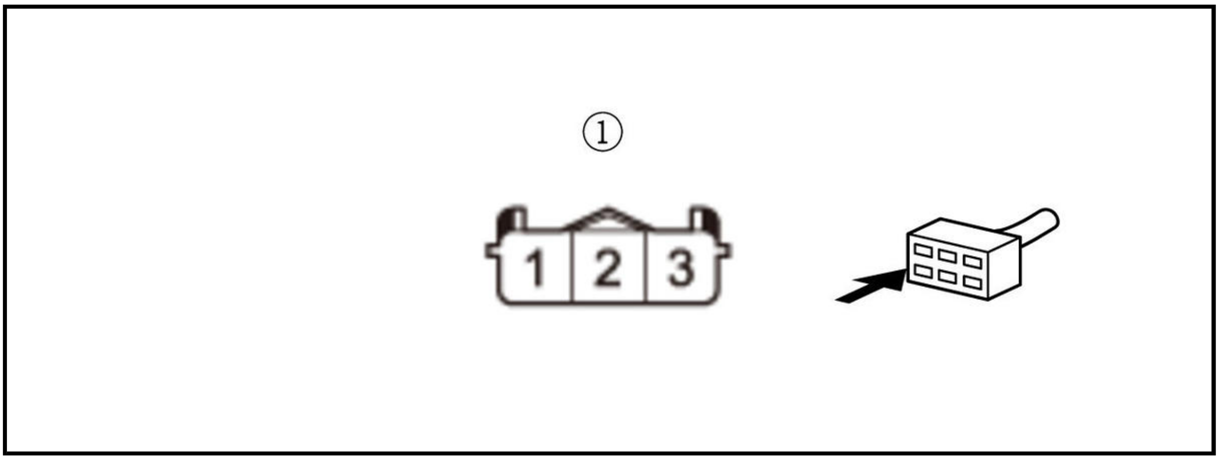

Is there continuity?

YES

The NT wire is OK. Check for any authorized service information related to the DTCs or symptoms you are troubleshooting, or **replace the original PCM** .

NO

Repair an open in the NT wire between the torque converter turbine speed sensor and the PCM.

DTC P0741 (CVT (ECM/PCM))

DTC P0741 : Torque Converter Clutch Circuit Performance or Stuck OFF

NOTE: Before you troubleshoot, **review the General Troubleshooting Information** .

DTC Description	Confirmed DTC	Pending DTC	Freeze Frame
P0741 Torque Converter Clutch Circuit Performance or Stuck OFF	B	B	B

DTC (CVT)

1. DTC check

-1. Turn the vehicle to the ON mode.

-2. Clear the DTC with the HDS.

-3. Start the engine in P position/mode, shift the transmission to N position/mode, then to D position/mode while pressing the brake pedal. Release the brake pedal, start off in D position/mode, and test-drive the vehicle at speeds about 37 mph (60 km/h) on a flat road for at least 1 minute. Slow down and stop the vehicle, and turn the engine off.

-4. Repeat the test-drive in step 1-3 again.

-5. Check for Pending or Confirmed DTCs with the HDS.

DTC Description	Confirmed DTC	Pending DTC	Freeze Frame
P0741 Torque Converter Clutch Circuit Performance or Stuck OFF	B	B	B

Is DTC P0741 indicated?

YES

Go to step 2.

NO

Intermittent failure, the system is OK at this time. If the freeze data/on-board snapshot of this DTC is recorded, try to reproduce the failure under the same conditions with the freeze data/on-board snapshot.

2. Shift solenoid valve B check

-1. **Do the shift solenoid valve B test** .

Does the shift solenoid valve B work properly?

YES

Shift solenoid valve B is OK. Go to step 3.

NO

Faulty shift solenoid valve B. **Replace the valve body assembly** .

3. CVT lock-up clutch control solenoid valve check

-1. **Do the CVT lock-up clutch control solenoid valve test** .

Does the CVT lock-up clutch control solenoid valve work properly?

YES

The CVT lock-up clutch control solenoid valve is OK. **Replace the transmission** , or the torque converter.

NO

Faulty CVT lock-up clutch control solenoid valve. **Replace the valve body assembly** .

DTC P0746 (CVT (ECM/PCM))

DTC P0746 : CVT Drive Pulley Pressure Control Solenoid Valve Stuck OFF

NOTE: Before you troubleshoot, **review the General Troubleshooting Information** .

DTC Description	Confirmed DTC	Pending DTC	Freeze Frame
P0746 CVT Drive Pulley Pressure Control Solenoid Valve Stuck OFF	B	B	B

DTC (CVT)

1. DTC check

-1. Turn the vehicle to the ON mode.

-2. Clear the DTC with the HDS.

-3. Test-drive the vehicle in D position/mode until the vehicle speed reaches 37 mph (60 km/h). Slow down and stop the vehicle. Then accelerate from a stop at full throttle in D position/mode until the vehicle speed reaches 37 mph (60 km/h).

-4. Turn the engine off. Repeat the test-drive in step 1-3 again.

-5. Check for Pending or Confirmed DTCs with the HDS.

DTC Description	Confirmed DTC	Pending DTC	Freeze Frame
P0746 CVT Drive Pulley Pressure Control Solenoid Valve Stuck OFF	B	B	B

Is DTC P0746 indicated?

YES

The failure is duplicated. Faulty CVT drive pulley pressure control solenoid valve. **Replace the valve body assembly** .

NO

Intermittent failure, the system is OK at this time. If the freeze data/on-board snapshot of this DTC is recorded, try to reproduce the failure under the same conditions with the freeze data/on-board snapshot.

DTC P0777 (CVT (ECM/PCM))

DTC P0777 : CVT Driven Pulley Pressure Control Solenoid Valve Stuck ON

NOTE: Before you troubleshoot, **review the General Troubleshooting Information** .

DTC Description	Confirmed DTC	Pending DTC	Freeze Frame
P0777 CVT Driven Pulley Pressure Control Solenoid Valve Stuck ON	B	B	B

DTC (CVT)

1. DTC check

   -1. Turn the vehicle to the ON mode.

   -2. Clear the DTC with the HDS.

   -3. Test-drive the vehicle in D position/mode until the vehicle speed reaches 37 mph (60 km/h). Slow down and stop the vehicle. Then accelerate from a stop at full throttle in D position/mode until the vehicle speed reaches 37 mph (60 km/h).

   -4. Turn the engine off. Repeat the test-drive in step 1-3 again.

   -5. Check for Pending or Confirmed DTCs with the HDS.

DTC Description	Confirmed DTC	Pending DTC	Freeze Frame
P0777 CVT Driven Pulley Pressure Control Solenoid Valve Stuck ON	B	B	B

   Is DTC P0777 indicated?

   YES

   The failure is duplicated. Faulty CVT driven pulley pressure control solenoid valve. **Replace the valve body assembly** .

   NO

   Intermittent failure, the system is OK at this time. If the freeze data/on-board snapshot of this DTC is recorded, try to reproduce the failure under the same conditions with the freeze data/on-board snapshot.

DTC P0780 (CVT (ECM/PCM))

DTC P0780 : Shift Error

NOTE:

- Before you troubleshoot, **review the General Troubleshooting Information** .
- This code is stored whenever DTCs P1898 and P1899 are detected.

DTC Description	Confirmed DTC	Pending DTC	Freeze Frame
P0780 Shift Error	B	B	B

DTC (CVT)

1. DTC check

   -1. Turn the vehicle to the ON mode.

   -2. Clear the DTC with the HDS.

-3. Test-drive the vehicle in D position/mode until the vehicle speed reaches 37 mph (60 km/h). Slow down and stop the vehicle. Then accelerate from a stop at full throttle in D position/mode until the vehicle speed reaches 37 mph (60 km/h).

-4. Turn the engine off. Repeat the test-drive in step 1-3 again.

-5. Check for other Pending or Confirmed DTCs indicated along with DTC P0780 with the HDS.

NOTE: P0780 means there is one or more CVT DTCs regarding the shift control system.

DTC Description	Confirmed DTC	Pending DTC	Freeze Frame
P0780 Shift Error	B	B	B
P1898 CVT Drive Pulley Pressure Control Valve Stuck ON or CVT Driven Pulley Pressure Control Valve Stuck OFF	B	B	B
P1899 CVT Drive Pulley Pressure Control Valve Stuck OFF or CVT Driven Pulley Pressure Control Valve Stuck ON	B	B	B

Are there other DTCs?

1. **YES**

   Go to the indicated DTC's troubleshooting.

   - **P1898**
   - **P1899**

   NO

   There are no DTCs along with DTC P0780. Check for any authorized service information related to the DTCs or symptoms you are troubleshooting, or **replace the original PCM** .

DTC P0792 (CVT (ECM/PCM))

DTC P0792 : Intermediate Shaft Speed Sensor A Circuit Range/Performance

NOTE:

- Before you troubleshoot, **review the General Troubleshooting Information** .
- This code is caused by an electrical circuit problem and cannot be caused by a mechanical problem in the transmission.

DTC Description	Confirmed DTC	Pending DTC	Freeze Frame
P0792 Intermediate Shaft Speed Sensor A Circuit Range/Performance	B	B	B

DTC (CVT)

1. Problem verification

   -1. Turn the vehicle to the ON mode.

   -2. Clear the DTC with the HDS.

   -3. Raise the vehicle on a lift. Make sure it is securely supported, and allow the front wheels to rotate freely.

-4. Start the engine.

-5. **Enter the VSA maintenance mode** .

-6. Test-drive the vehicle with the shift lever in D position/mode, and keep the vehicle at speeds over 19 mph (30 km/h) for at least 30 seconds. Slow down and stop the wheels.

-7. Check for Pending or Confirmed DTCs with the HDS.

DTC Description	Confirmed DTC	Pending DTC	Freeze Frame
P0792 Intermediate Shaft Speed Sensor A Circuit Range/Performance	B	B	B

Is DTC P0792 indicated?

YES

The failure is duplicated. Go to step 2.

NO

Intermittent failure, the system is OK at this time. Check for poor connections or loose terminals between the PCM and the CVT drive pulley speed sensor. If the freeze data/on-board snapshot of this DTC is recorded, try to reproduce the failure under the same conditions with the freeze data/on-board snapshot.

2. CVT drive pulley speed sensor check

-1. Rotate the front wheels with the shift lever in D, while monitoring the Input Shaft (Drive Pulley) Speed rpm and the Torque Converter Turbine Speed rpm in the Data List with the HDS.

-2. Compare the parameters below with the HDS.

Signal	Current conditions	
	Values	Unit
Input Shaft (Drive Pulley) Speed rpm	B	B
Torque Converter Turbine Speed	B	B

Are the speeds about the same?

YES

The CVT drive pulley speed sensor is OK. Check for any authorized service information related to the DTCs or symptoms you are troubleshooting, or **replace the original PCM** .

NO

Replace the CVT drive pulley speed sensor .

DTC P0793 (CVT (ECM/PCM))

DTC P0793 : Intermediate Shaft Speed Sensor A Circuit No Signal

NOTE:

- Before you troubleshoot, **review the General Troubleshooting Information** .
- This code is caused by an electrical circuit problem and cannot be caused by a mechanical problem in the transmission.

DTC Description	Confirmed DTC	Pending DTC	Freeze Frame
P0793 Intermediate Shaft Speed Sensor A Circuit No Signal	B	B	B

DTC (CVT)

1. Problem verification

   -1. Turn the vehicle to the ON mode.

   -2. Clear the DTC with the HDS.

   -3. Raise the vehicle on a lift. Make sure it is securely supported, and allow the front wheels to rotate freely.

   -4. Start the engine.

   -5. **Enter the VSA maintenance mode** .

   -6. Test-drive the vehicle with the shift lever in D position/mode, and keep the vehicle at speeds over 19 mph (30 km/h) for at least 30 seconds. Slow down and stop the wheels.

   -7. Check for Pending or Confirmed DTCs with the HDS.

DTC Description	Confirmed DTC	Pending DTC	Freeze Frame
P0793 Intermediate Shaft Speed Sensor A Circuit No Signal	B	B	B

   Is DTC P0793 indicated?

   YES

   The failure is duplicated. Go to step 2.

   NO

   Intermittent failure, the system is OK at this time. Check for poor connections or loose terminals between the PCM and the CVT drive pulley speed sensor. If the freeze data/on-board snapshot of this DTC is recorded, try to reproduce the failure under the same conditions with the freeze data/on-board snapshot.

2. Determine possible failure area (NDR DD line, others)

   -1. Turn the vehicle to the OFF (LOCK) mode.

   -2. Disconnect the following connector.

CVT drive pulley speed sensor 3P connector

   -3. Turn the vehicle to the ON mode.

   -4. Measure the voltage between test points 1 and 2.

Test condition	Vehicle ON mode
B	CVT drive pulley speed sensor 3P connector: disconnected
Test point 1	CVT drive pulley speed sensor 3P connector (female terminals) No. 1 : ①
Test point 2	Body ground

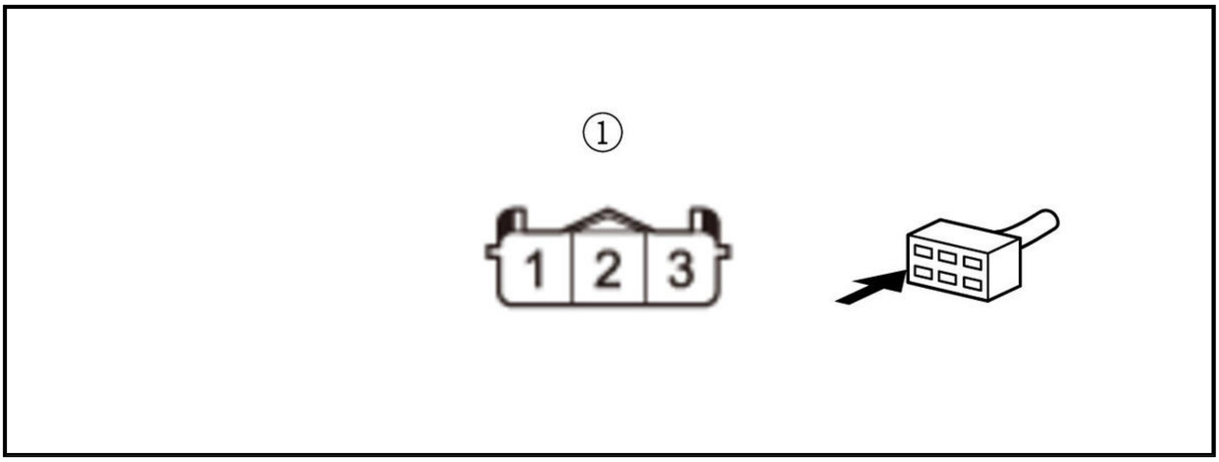

Is there about 5 V?

YES

Go to step 3.

NO

Go to step 5.

3. Open wire check (VCC1 line)

-1. Measure the voltage between test points 1 and 2.

Test condition	Vehicle ON mode
B	CVT drive pulley speed sensor 3P connector: disconnected

Test point 1	CVT drive pulley speed sensor 3P connector (female terminals) No. 3 : ①
Test point 2	Body ground

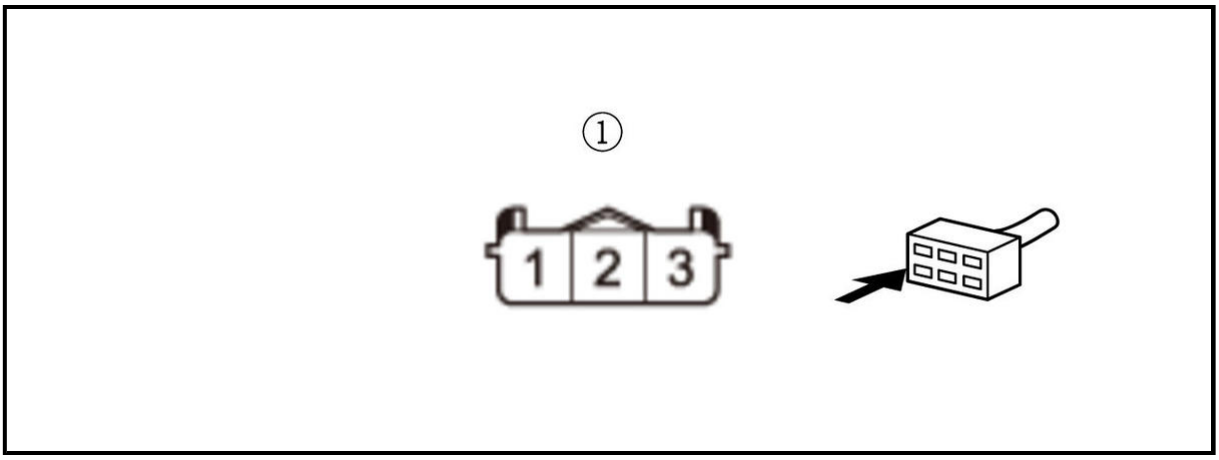

Is there about 5 V?

YES

Go to step 4.

NO

Repair an open in the VCC1 wire between the CVT drive pulley speed sensor and the PCM.

4. CVT drive pulley speed sensor check

-1. Measure the voltage between test points 1 and 2.

Test condition	Vehicle ON mode
B	CVT drive pulley speed sensor 3P connector: disconnected
Test point 1	CVT drive pulley speed sensor 3P connector (female terminals) No. 2 : ①
Test point 2	CVT drive pulley speed sensor 3P connector (female terminals) No. 3 : ①

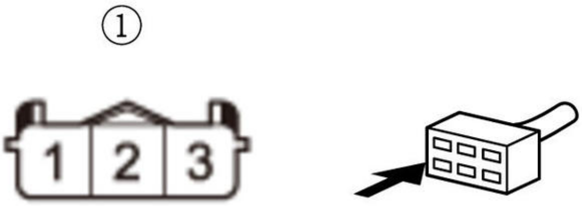

Is there about 5 V?

YES

Replace the CVT drive pulley speed sensor .

NO

Repair an open in the SG1 wire between the CVT drive pulley speed sensor and the PCM.

5. Shorted wire check (NDR DD line)

-1. Turn the vehicle to the OFF (LOCK) mode.

-2. Jump the SCS line with the HDS, and wait more than 1 minute.

NOTE: This step must be done to protect the PCM from damage.

-3. Disconnect the following connector.

PCM connector C (51P)

-4. Check for continuity between test points 1 and 2.

Test condition	Vehicle OFF (LOCK) mode
B	CVT drive pulley speed sensor 3P connector: disconnected
B	PCM connector C (51P): disconnected
Test point 1	CVT drive pulley speed sensor 3P connector (female terminals) No. 1 : ①
Test point 2	Body ground

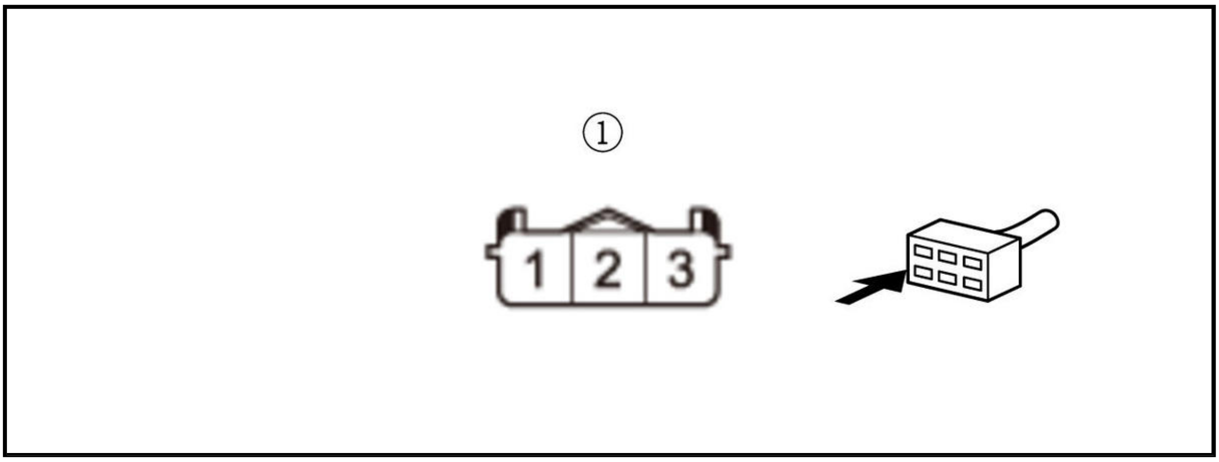

Is there continuity?

YES

Repair a short to body ground in the NDR DD wire between the CVT drive pulley speed sensor and the PCM.

NO

The NDR DD wire is not shorted. Go to step 6.

6. Open wire check (NDR DD line)

-1. Check for continuity between test points 1 and 2.

Test condition	Vehicle OFF (LOCK) mode
B	CVT drive pulley speed sensor 3P connector: disconnected
B	PCM connector C (51P): disconnected
Test point 1	CVT drive pulley speed sensor 3P connector (female terminals) No. 1 : ①
Test point 2	PCM connector C (51P) No. 33

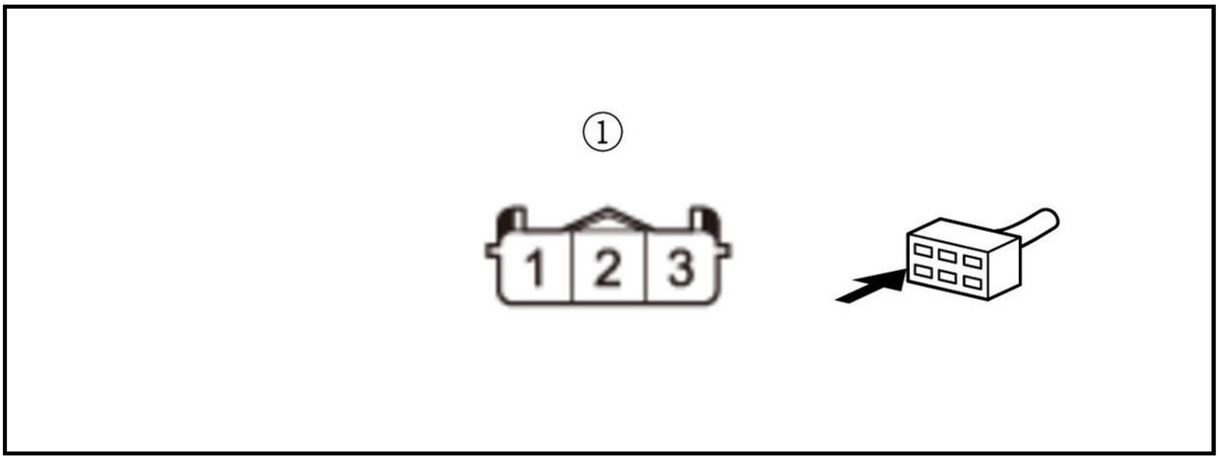

Is there continuity?

YES

The NDR DD wire is OK. Check for any authorized service information related to the DTCs or symptoms you are troubleshooting, or replace the original PCM .

NO

Repair an open in the NDR DD wire between the CVT drive pulley speed sensor and the PCM.

DTC P0796 (CVT (ECM/PCM))

DTC P0796 : Pressure Control Solenoid Valve C Performance or Stuck OFF

NOTE: Before you troubleshoot, **review the General Troubleshooting Information** .

DTC Description	Confirmed DTC	Pending DTC	Freeze Frame
P0796 Pressure Control Solenoid Valve C Performance or Stuck OFF	B	B	B

DTC (CVT)

1. Problem verification

    -1. Turn the vehicle to the ON mode.

    -2. Clear the DTC with the HDS.

    -3. Start the engine in P position/mode. Shift the transmission to N position/mode, then to D position/mode while pressing the brake pedal, and wait for at least 30 seconds.

    -4. Turn the engine off. Repeat the shift lever operational mode in step 1-3 again.

    -5. Check for Pending or Confirmed DTCs with the HDS.

DTC Description	Confirmed DTC	Pending DTC	Freeze Frame
P0796 Pressure Control Solenoid Valve C Performance or Stuck OFF	B	B	B

    Is DTC P0796 indicated?

    YES

    The failure is duplicated. Faulty CVT clutch pressure control solenoid valve. **Replace the valve body assembly** .

    NO

    Intermittent failure, the system is OK at this time. If the freeze data/on-board snapshot of this DTC is recorded, try to reproduce the failure under the same conditions with the freeze data/on-board snapshot.

DTC P0797 (CVT (ECM/PCM))

DTC P0797 : Pressure Control Solenoid Valve C Stuck ON

NOTE: Before you troubleshoot, **review the General Troubleshooting Information** .

DTC Description	Confirmed DTC	Pending DTC	Freeze Frame
P0797 Pressure Control Solenoid Valve C Stuck ON	B	B	B

DTC (CVT)

1. Problem verification

    -1. Turn the vehicle to the ON mode.

    -2. Clear the DTC with the HDS.

-3. With the brake pedal pressed, do the following operational mode of the shift lever five times:

- Start the engine in P position/mode.
- Shift the transmission to N position/mode, then to D position/mode.
- Shift the transmission to N position/mode, and wait for at least 2 seconds.
- Shift the transmission to D position/mode.

-4. Turn the engine off. Repeat the shift lever operational mode in step 1-3 five times.

-5. Check for Pending or Confirmed DTCs with the HDS.

DTC Description	Confirmed DTC	Pending DTC	Freeze Frame
P0797 Pressure Control Solenoid Valve C Stuck ON	B	B	B

Is DTC P0797 indicated?

YES

The failure is duplicated. Faulty CVT clutch pressure control solenoid valve. **Replace the valve body assembly** .

NO

Intermittent failure, the system is OK at this time. If the freeze data/on-board snapshot of this DTC is recorded, try to reproduce the failure under the same conditions with the freeze data/on-board snapshot.

DTC P0842 (CVT (ECM/PCM))

DTC P0842 : Transmission Fluid Pressure Sensor/Switch A Circuit Low

NOTE:

- Before you troubleshoot, **review the General Troubleshooting Information** .
- This code is caused by an electrical circuit problem and cannot be caused by a mechanical problem in the transmission.

DTC Description	Confirmed DTC	Pending DTC	Freeze Frame
P0842 Transmission Fluid Pressure Sensor/Switch A Circuit Low	B	B	B

DTC (CVT)

1. Problem verification

-1. Turn the vehicle to the ON mode.

-2. Clear the DTC with the HDS.

-3. Check the parameter (s) below with the HDS.

Signal	Threshold		Current conditions	
	Values	Unit	Values	Unit
Driven Pulley Pressure Sensor (V)	Less than 0.21	V	B	B

Do the current condition (s) match the threshold?

YES

The failure is duplicated. Go to step 2.

NO

Intermittent failure, the system is OK at this time. Check for an intermittent short to ground in the PDN wire between the CVT driven pulley pressure sensor and the PCM. If the freeze data/on-board snapshot of this DTC is recorded, try to reproduce the failure under the same conditions with the freeze data/on-board snapshot.

2. Determine possible failure area (PDN line, others)

-1. Turn the vehicle to the OFF (LOCK) mode.

-2. Disconnect the following connector.

CVT driven pulley pressure sensor 3P connector

-3. Turn the vehicle to the ON mode.

-4. Check the parameter (s) below with the HDS.

Signal	**Threshold**		**Current conditions**	
	Values	**Unit**	**Values**	**Unit**
Driven Pulley Pressure Sensor (V)	Less than 0.21	V	B	B

Do the current condition (s) match the threshold?

YES

Go to step 3.

NO

Go to step 4.

3. Shorted wire check (PDN line)

-1. Turn the vehicle to the OFF (LOCK) mode.

-2. Jump the SCS line with the HDS, and wait more than 1 minute.

NOTE: This step must be done to protect the PCM from damage.

-3. Disconnect the following connector.

PCM connector C (51P)

-4. Check for continuity between test points 1 and 2.

Test condition	Vehicle OFF (LOCK) mode
B	CVT driven pulley pressure sensor 3P connector: disconnected
B	PCM connector C (51P): disconnected
Test point 1	CVT driven pulley pressure sensor 3P connector (female terminals) No. 2 : ①
Test point 2	Body ground

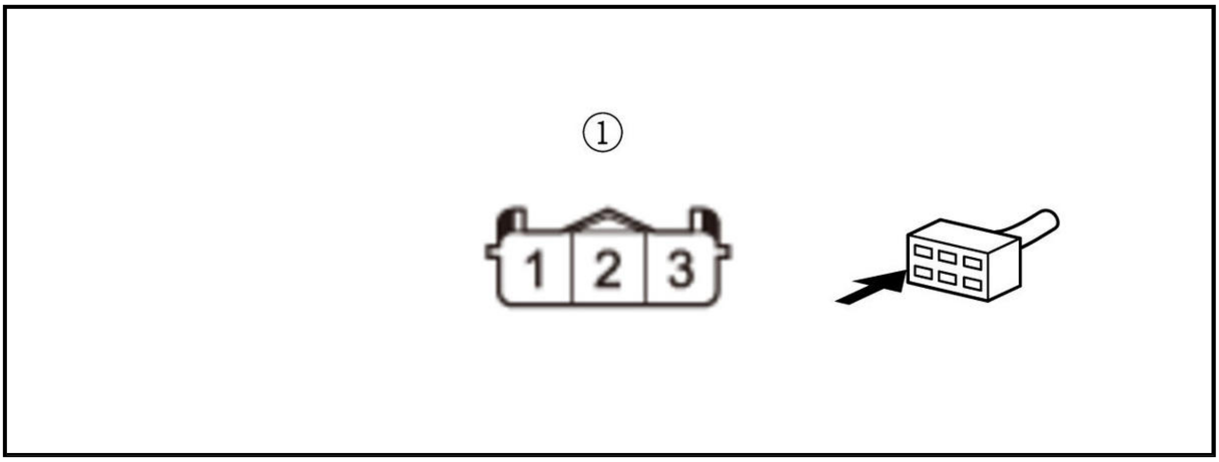

Is there continuity?

YES

Repair a short to body ground in the PDN wire between the CVT driven pulley pressure sensor and the PCM.

NO

The PDN wire is OK. Check for any authorized service information related to the DTCs or symptoms you are troubleshooting, or **replace the original PCM** .

4. Open wire check (VCC2 line)

-1. Measure the voltage between test points 1 and 2.

Test condition	Vehicle ON mode
B	CVT driven pulley pressure sensor 3P connector: disconnected
Test point 1	CVT driven pulley pressure sensor 3P connector (female terminals) No. 3 : ①
Test point 2	Body ground

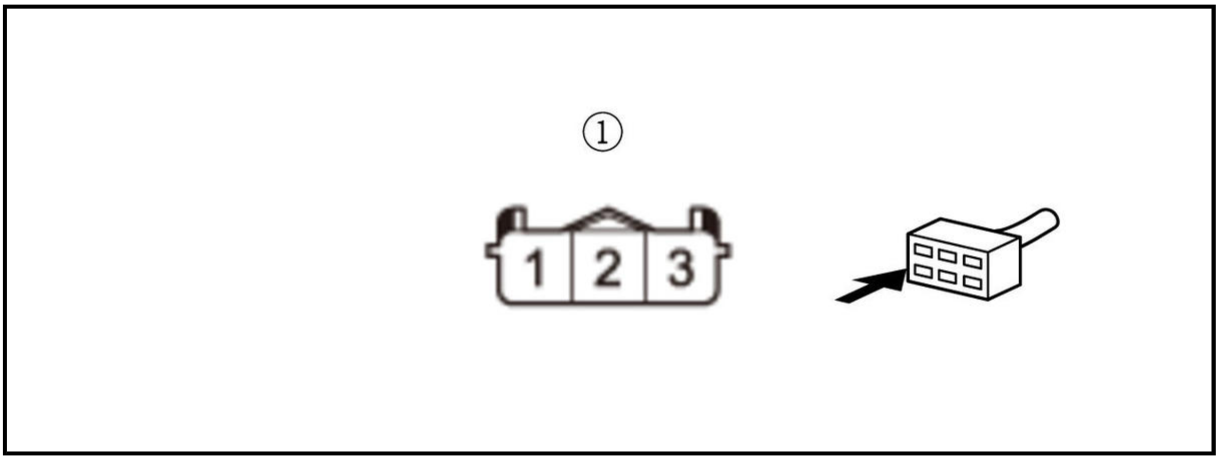

Is there about 5 V?

YES

The VCC2 wire is OK. **Replace the CVT driven pulley pressure sensor** .

NO

Repair an open in the VCC2 wire between the CVT driven pulley pressure sensor and the PCM.

DTC P0843 (CVT (ECM/PCM))

DTC P0843 : Transmission Fluid Pressure Sensor/Switch A Circuit High

NOTE:

- Before you troubleshoot, **review the General Troubleshooting Information** .
- This code is caused by an electrical circuit problem and cannot be caused by a mechanical problem in the transmission.

DTC Description	Confirmed DTC	Pending DTC	Freeze Frame
P0843 Transmission Fluid Pressure Sensor/Switch A Circuit High	B	B	B

DTC (CVT)

1. Problem verification

   -1. Turn the vehicle to the ON mode.

   -2. Clear the DTC with the HDS.

   -3. Check the parameter (s) below with the HDS.

Signal	Threshold		Current conditions	
	Values	Unit	Values	Unit
Driven Pulley Pressure Sensor (V)	More than 4.84	V	B	B

   Do the current condition (s) match the threshold?

   YES

   The failure is duplicated. Go to step 2.

   NO

   Intermittent failure, the system is OK at this time. Check for poor connections or loose terminals between the CVT driven pulley pressure sensor and the PCM. If the freeze data/on-board snapshot of this DTC is recorded, try to reproduce the failure under the same conditions with the freeze data/on-board snapshot.

2. Determine possible failure area (PDN line, others)

   -1. Turn the vehicle to the OFF (LOCK) mode.

   -2. Disconnect the following connector.

CVT driven pulley pressure sensor 3P connector

   -3. Connect terminals A and B with a jumper wire.

Terminal A	CVT driven pulley pressure sensor 3P connector (female terminals) No. 1 : ①
Terminal B	CVT driven pulley pressure sensor 3P connector (female terminals) No. 2 : ①

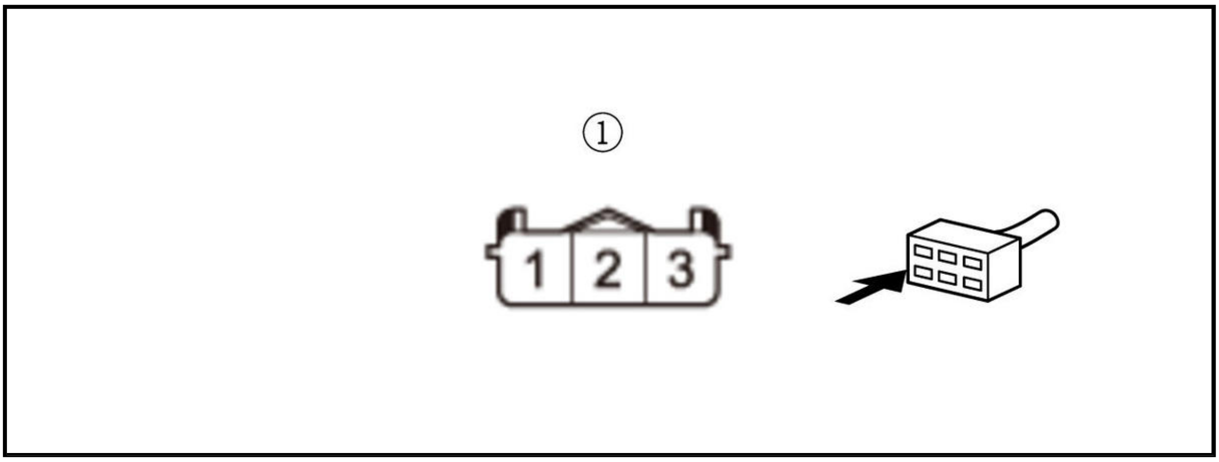

-4. Turn the vehicle to the ON mode.

-5. Check the parameter (s) below with the HDS.

Signal	Threshold		Current conditions	
	Values	Unit	Values	Unit
Driven Pulley Pressure Sensor (V)	More than 4.84	V	B	B

Do the current condition (s) match the threshold?

YES

Go to step 3.

NO

Go to step 4.

3. Open wire check (PDN line)

-1. Turn the vehicle to the OFF (LOCK) mode.

-2. Remove the jumper wire.

-3. Jump the SCS line with the HDS, and wait more than 1 minute.

NOTE: This step must be done to protect the PCM from damage.

-4. Disconnect the following connector.

PCM connector C (51P)

-5. Check for continuity between test points 1 and 2.

Test condition	Vehicle OFF (LOCK) mode
B	CVT driven pulley pressure sensor 3P connector: disconnected
B	PCM connector C (51P): disconnected
Test point 1	CVT driven pulley pressure sensor 3P connector (female terminals) No. 2 : ①
Test point 2	**PCM connector C (51P) No. 49**

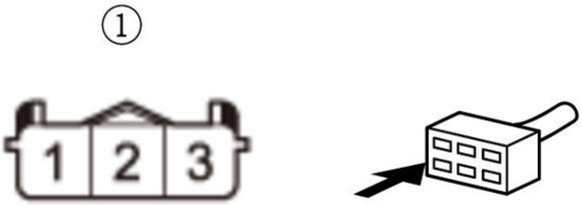

Is there continuity?

YES

The PDN wire is OK. Check for any authorized service information related to the DTCs or symptoms you are troubleshooting, or **replace the original PCM** .

NO

Repair an open in the PDN wire between the CVT driven pulley pressure sensor and the PCM.

4. CVT driven pulley pressure sensor check

-1. Turn the vehicle to the OFF (LOCK) mode.

-2. Remove the jumper wire.

-3. Turn the vehicle to the ON mode.

-4. Measure the voltage between test points 1 and 2.

Test condition	Vehicle ON mode
B	CVT driven pulley pressure sensor 3P connector: disconnected
Test point 1	CVT driven pulley pressure sensor 3P connector (female terminals) No. 1 : ①
Test point 2	CVT driven pulley pressure sensor 3P connector (female terminals) No. 3 : ①

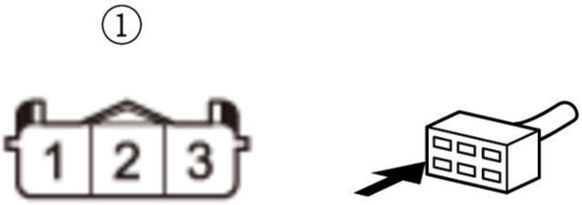

Is there about 5 V?

YES

Replace the CVT driven pulley pressure sensor .

NO

Go to step 5.

5. Power supply circuit check

-1. Measure the voltage between test points 1 and 2.

Test condition	Vehicle ON mode

B	CVT driven pulley pressure sensor 3P connector: disconnected
Test point 1	CVT driven pulley pressure sensor 3P connector (female terminals) No. 3 : ①
Test point 2	Body ground

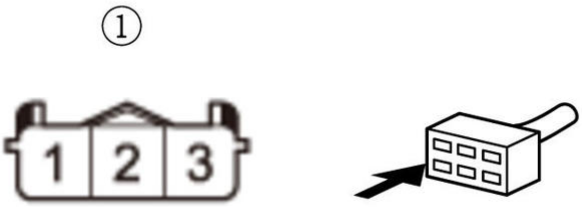

Is there about 5 V?

YES

Repair an open in the SG2 wire between the CVT driven pulley pressure sensor and the PCM.

NO

Repair an open in the VCC2 wire between the CVT driven pulley pressure sensor and the PCM.

DTC P0864 (1.5 L ENGINE)

DTC P0864 : PT-CAN Malfunction (PCM-Transmission Control Module (TCM))

NOTE:

- Before you troubleshoot, review the general troubleshooting information .
- According to the detected DTC (s), check for the power circuit and the ground circuit of the control unit which cannot communicate with the PCM.

DTC Description	Confirmed DTC	Pending DTC
P0864 PT-CAN Malfunction (PCM-Transmission Control Module (TCM))	B	B

DTC (PGM-FI)

1. Problem verification

-1. Turn the vehicle to the ON mode.

-2. Clear the DTC with the HDS.

-3. Turn the vehicle to the OFF (LOCK) mode.

-4. Turn the vehicle to the ON mode.

-5. Check for Pending or Confirmed DTCs with the HDS.

DTC Description	Confirmed DTC	Pending DTC
P0864 PT-CAN Malfunction (PCM-Transmission Control Module (TCM))	B	B

Is DTC P0864 indicated?

YES

Go to step 2.

NO

Intermittent failure, the system is OK at this time. Check for poor connections or loose terminals at the TCM and the PCM. **If the on-board snapshot of this DTC is recorded, try to reproduce the failure under the same conditions with the on-board snapshot** .

2. CVT system check

-1. Check for communication to the CVT system with the HDS.

Does the HDS communicate with the CVT system?

YES

Go to step 3.

NO

Go to the symptom troubleshooting for CVT system .

3. Open wire check (TM-CAN H line)

-1. Turn the vehicle to the OFF (LOCK) mode.

-2. Jump the SCS line with the HDS, and wait more than 1 minute.

-3. Disconnect the following connectors.

PCM connector A (50P)
TCM 50P connector

-4. Check for continuity between test points 1 and 2.

Test condition	Vehicle OFF (LOCK) mode
	PCM connector A (50P): disconnected
	TCM 50P connector: disconnected
Test point 1	**TCM 50P connector No. 4**
Test point 2	**PCM connector A (50P) No. 21**

Is there continuity?

YES

Go to step 4.

NO

Repair an open in the TM-CAN H wire between the PCM (A21) and the TCM.

4. Open wire check (TM-CAN L line)

   -1. Check for continuity between test points 1 and 2.

Test condition	Vehicle OFF (LOCK) mode
	PCM connector A (50P): disconnected
	TCM 50P connector: disconnected
Test point 1	**TCM 50P connector No. 12**
Test point 2	**PCM connector A (50P) No. 20**

Is there continuity?

YES

The TM-CAN L wire is OK. Check for any authorized service information related to the DTCs or symptoms you are troubleshooting, or **substitute a known-good PCM** .

NO

Repair an open in the TM-CAN L wire between the PCM (A20) and the TCM.

DTC P0962 (CVT (ECM/PCM))

DTC P0962 : CVT Drive Pulley Pressure Control Valve Circuit Low

NOTE:

- Before you troubleshoot, **review the General Troubleshooting Information** .
- This code is caused by an electrical circuit problem and cannot be caused by a mechanical problem in the transmission.

DTC Description	Confirmed DTC	Pending DTC	Freeze Frame
P0962 CVT Drive Pulley Pressure Control Valve Circuit Low	B	B	B

DTC (CVT)

1. Problem verification

   -1. Turn the vehicle to the ON mode.

   -2. Clear the DTC with the HDS.

   -3. Start the engine, and wait for at least 1 second.

   -4. Check for Pending or Confirmed DTCs with the HDS.

DTC Description	Confirmed DTC	Pending DTC	Freeze Frame
P0962 CVT Drive Pulley Pressure Control Valve Circuit Low	B	B	B

Is DTC P0962 indicated?

YES

The failure is duplicated. Go to step 2.

NO

Intermittent failure, the system is OK at this time. Check for poor connections or loose terminals between the CVT drive pulley pressure control solenoid valve and the PCM. If the freeze data/on-board snapshot of this DTC is recorded, try to reproduce the failure under the same conditions with the freeze data/on-board snapshot.

2. CVT drive pulley pressure control solenoid valve check

-1. Turn the vehicle to the OFF (LOCK) mode.

-2. Jump the SCS line with the HDS, and wait more than 1 minute.

NOTE: This step must be done to protect the PCM from damage.

-3. Disconnect the following connector.

PCM connector C (51P)

-4. Measure the resistance between test points 1 and 2.

Test condition	Vehicle OFF (LOCK) mode
B	PCM connector C (51P): disconnected
Test point 1	**PCM connector C (51P) No. 4**
Test point 2	Body ground

Is there 5.0-6.3 Ω?

YES

The CVT drive pulley pressure control solenoid valve is OK. Check for any authorized service information related to the DTCs or symptoms you are troubleshooting, or **replace the original PCM** .

NO

Go to step 3.

3. Shorted wire check (DR LS line)

-1. Disconnect the following connector.

Solenoid wire harness A 8P connector

-2. Check for continuity between test points 1 and 2.

Test condition	Vehicle OFF (LOCK) mode
B	Solenoid wire harness A 8P connector: disconnected
B	PCM connector C (51P): disconnected

Test point 1	**PCM connector C (51P) No. 4**
Test point 2	Body ground

Is there continuity?

YES

Repair a short to body ground in the DR LS wire between the solenoid wire harness A 8P connector and the PCM.

NO

Go to step 4.

4. CVT drive pulley pressure control solenoid valve internal resistance check

-1. Disconnect the following connector.

CVT drive pulley pressure control solenoid valve 2P connector

-2. Measure the resistance between test points 1 and 2.

Test condition	Vehicle OFF (LOCK) mode
B	Solenoid wire harness A 8P connector: disconnected
B	CVT drive pulley pressure control solenoid valve 2P connector: disconnected
Test point 1	CVT drive pulley pressure control solenoid valve 2P connector (male terminals) No. 1 : ①
Test point 2	CVT drive pulley pressure control solenoid valve 2P connector (male terminals) No. 2 : ①

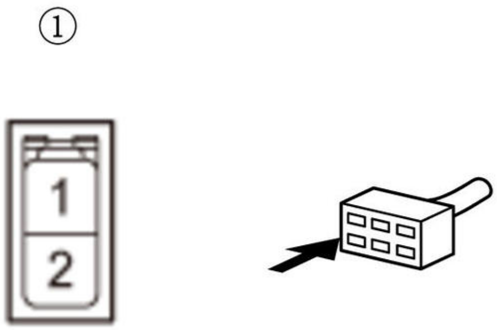

Is there 5.0-6.3 Ω?

YES

Go to step 5.

NO

Faulty CVT drive pulley pressure control solenoid valve. **Replace the valve body assembly** .

5. Determine shorted wire in either solenoid wire harness A or B (DRC+ line)

-1. Disconnect the following connector.

Solenoid wire harness A 6P connector

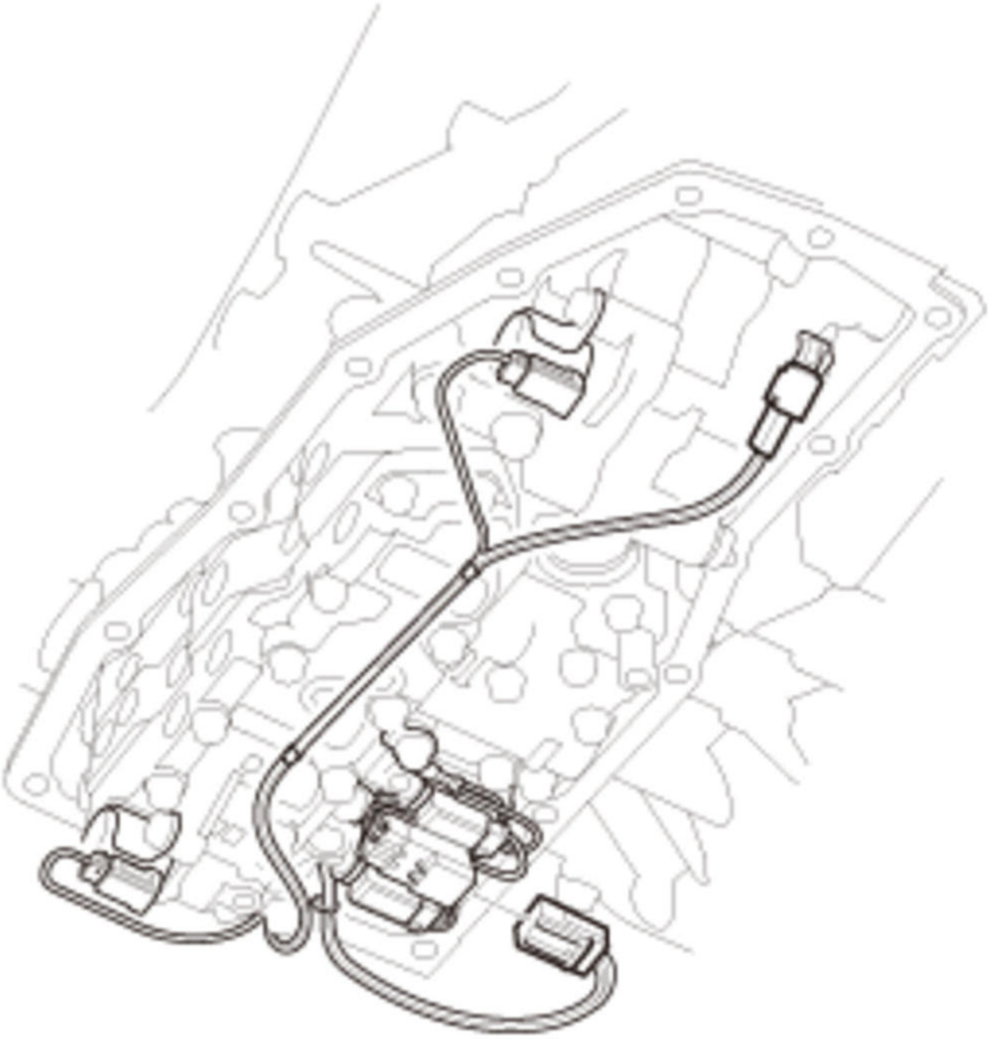

-2. Check for continuity between test points 1 and 2.

Test condition	Vehicle OFF (LOCK) mode
B	Solenoid wire harness A 8P connector: disconnected
B	Solenoid wire harness A 6P connector: disconnected
B	CVT drive pulley pressure control solenoid valve 2P connector: disconnected
Test point 1	Solenoid wire harness A 6P connector (female terminals) No. 1 : ①
Test point 2	Body ground

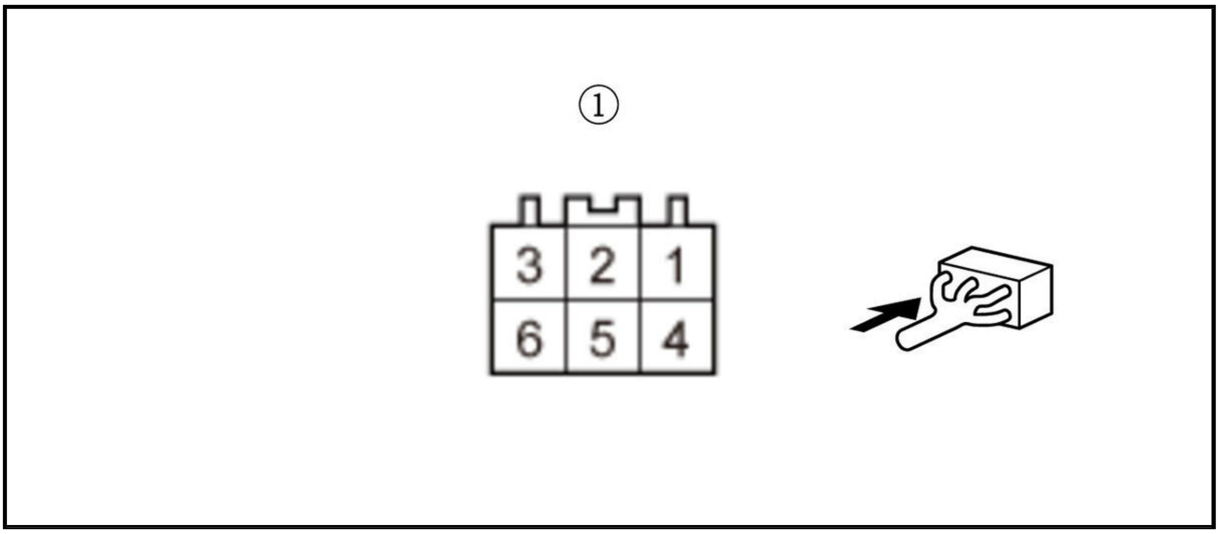

Is there continuity?

YES

Repair a short to body ground in the DRC+ wire between the solenoid wire harness A 6P connector and the solenoid wire harness A 8P connector.

NO

Repair a short to body ground in the DRC+ wire between the CVT drive pulley pressure control solenoid valve and the solenoid wire harness B 6P connector.

DTC P0963 (CVT (ECM/PCM))

DTC P0963 : CVT Drive Pulley Pressure Control Valve Circuit High

NOTE:

- Before you troubleshoot, **review the General Troubleshooting Information** .
- This code is caused by an electrical circuit problem and cannot be caused by a mechanical problem in the transmission.

DTC Description	Confirmed DTC	Pending DTC	Freeze Frame
P0963 CVT Drive Pulley Pressure Control Valve Circuit High	B	B	B

DTC (CVT)

1. Problem verification

-1. Turn the vehicle to the ON mode.

-2. Clear the DTC with the HDS.

-3. Start the engine, and wait for at least 1 second.

-4. Check for Pending or Confirmed DTCs with the HDS.

DTC Description	Confirmed DTC	Pending DTC	Freeze Frame
P0963 CVT Drive Pulley Pressure Control Valve Circuit High	B	B	B

Is DTC P0963 indicated?

YES

The failure is duplicated. Go to step 2.

NO

Intermittent failure, the system is OK at this time. Check for poor connections or loose terminals between the CVT drive pulley pressure control solenoid valve and the PCM. If the freeze data/on-board snapshot of this DTC is recorded, try to reproduce the failure under the same conditions with the freeze data/on-board snapshot.

2. CVT drive pulley pressure control solenoid valve check

-1. Turn the vehicle to the OFF (LOCK) mode.

-2. Jump the SCS line with the HDS, and wait more than 1 minute.

NOTE: This step must be done to protect the PCM from damage.

-3. Disconnect the following connector.

PCM connector C (51P)

-4. Measure the resistance between test points 1 and 2.

Test condition	Vehicle OFF (LOCK) mode
B	PCM connector C (51P): disconnected
Test point 1	**PCM connector C (51P) No. 4**
Test point 2	Body ground

Is there 5.0-6.3 Ω?

YES

The CVT drive pulley pressure control solenoid valve is OK. Check for any authorized service information related to the DTCs or symptoms you are troubleshooting, or **replace the original PCM** .

NO

Go to step 3.

3. Shorted wire check (DR LS line to power)

-1. Disconnect the following connector.

Solenoid wire harness A 8P connector

-2. Turn the vehicle to the ON mode.

-3. Measure the voltage between test points 1 and 2.

Test condition	Vehicle ON mode
B	Solenoid wire harness A 8P connector : disconnected
B	PCM connector C (51P): disconnected
Test point 1	**PCM connector C (51P) No. 4**
Test point 2	Body ground

Is there voltage?

YES

Repair a short to power in the DR LS wire between the solenoid wire harness A 8P connector and the PCM.

NO

The DR LS wire is not shorted to power. Go to step 4.

4. Open wire check (DR LS line)

-1. Turn the vehicle to the OFF (LOCK) mode.

-2. Check for continuity between test points 1 and 2.

Test condition	Vehicle OFF (LOCK) mode
B	Solenoid wire harness A 8P connector: disconnected
B	PCM connector C (51P): disconnected
Test point 1	Solenoid wire harness A 8P connector (female terminals) No. 8 : ①
Test point 2	**PCM connector C (51P) No. 4**

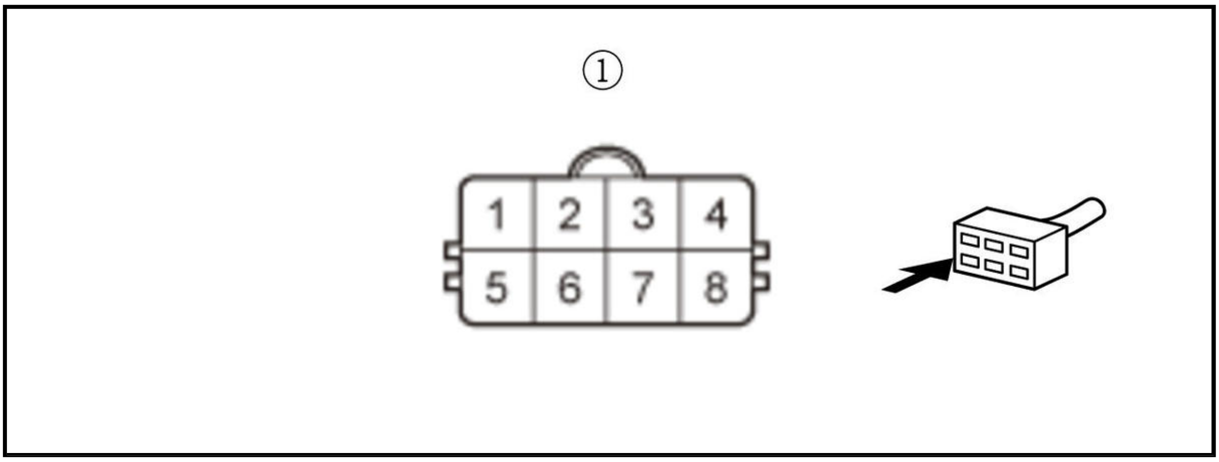

Is there continuity?

YES

Go to step 5.

NO

Repair an open in the DR LS wire between the solenoid wire harness A 8P connector and the PCM.

5. Open wire check (GND line)

-1. Jump the SCS line with the HDS, and wait more than 1 minute.

NOTE: This step must be done to protect the PCM from damage.

-2. Disconnect the following connectors.

PCM connector B (51P)

-3. Check for continuity between test points 1 and 2.

Test condition	Vehicle OFF (LOCK) mode

B	PCM connector B (51P): disconnected
Test Circuit 1	B
Test point 1	**PCM connector B (51P) No. 11**
Test point 2	Body ground
Test Circuit 2	B

Test point 1	**PCM connector B (51P) No. 12**
Test point 2	Body ground

Are there continuity?

YES

Go to step 6.

NO

Repair an open in GND wire between the PCM and body ground (G101), or repair poor body ground (G101).

6. CVT drive pulley pressure control solenoid valve internal resistance check

-1. Disconnect the following connector.

CVT drive pulley pressure control solenoid valve 2P connector

-2. Measure the resistance between test points 1 and 2.

Test condition	Vehicle OFF (LOCK) mode
B	CVT drive pulley pressure control solenoid valve 2P connector: disconnected
Test point 1	CVT drive pulley pressure control solenoid valve 2P connector (male terminals) No. 1 : ①
Test point 2	CVT drive pulley pressure control solenoid valve 2P connector (male terminals) No. 2 : ①

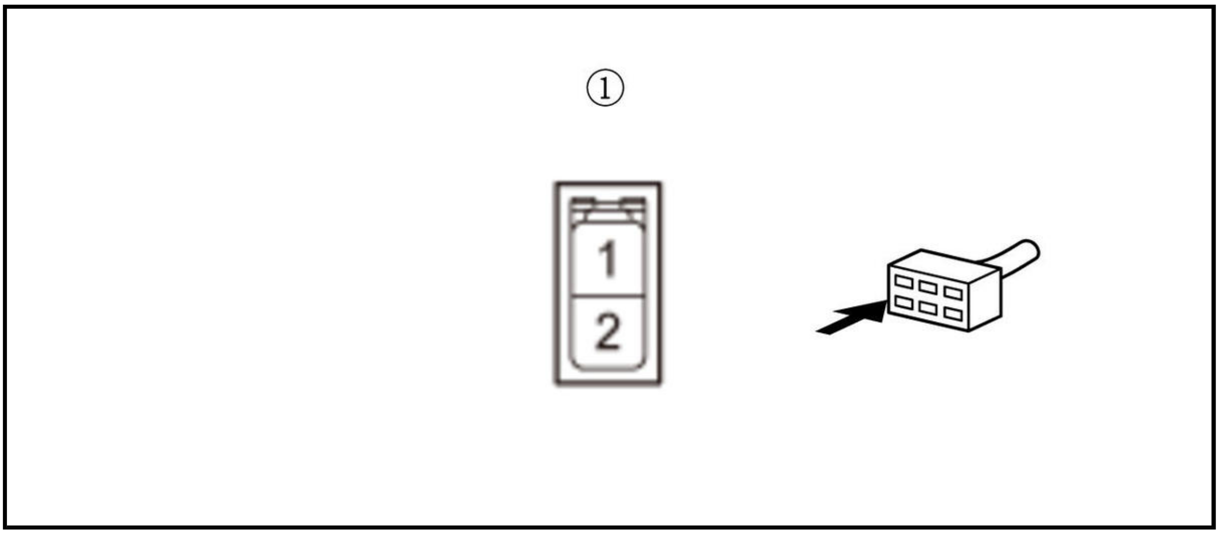

Is there 5.0-6.3 Ω?

YES

Go to step 7.

NO

Faulty CVT drive pulley pressure control solenoid valve. **Replace the valve body assembly** .

7. Open wire check (DRC- line)

-1. Check for continuity between test points 1 and 2.

Test condition	Vehicle OFF (LOCK) mode
B	CVT drive pulley pressure control solenoid valve 2P connector: disconnected
Test point 1	CVT drive pulley pressure control solenoid valve 2P connector (female terminals) No. 1 : ①
Test point 2	Body ground

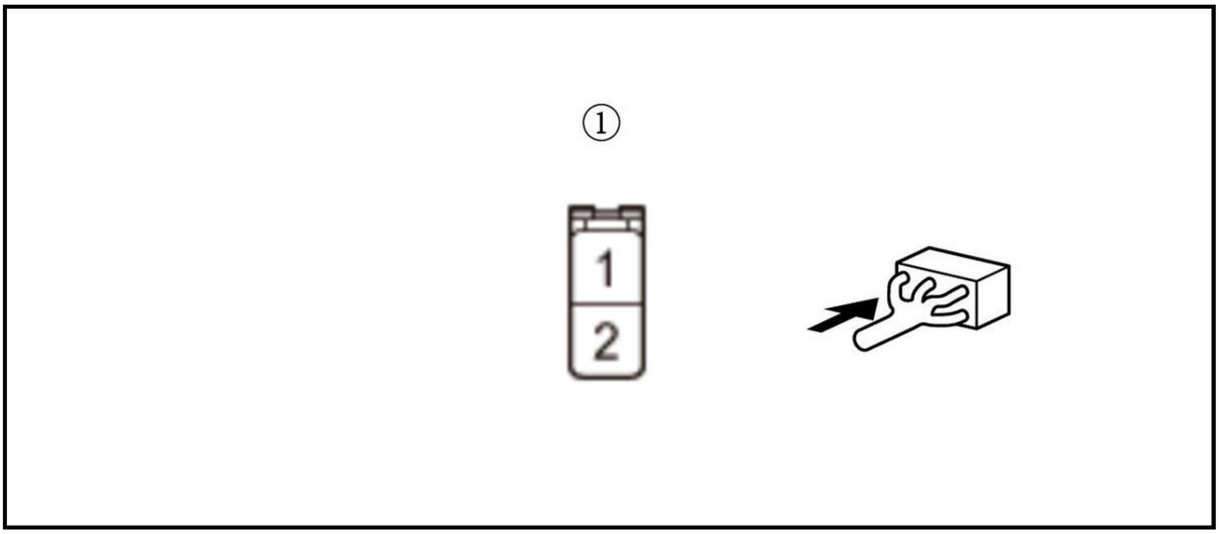

Is there continuity?

YES

Go to step 8.

NO

Repair an open in the DRC- wire between the CVT drive pulley pressure control solenoid valve and body ground (G161), or repair poor body ground (G161).

8. Determine opened wire in either solenoid wire harness A or B (DRC+ line)

-1. Disconnect the following connector.

Solenoid wire harness B 6P connector

-2. Check for continuity between test points 1 and 2.

Test condition	Vehicle OFF (LOCK) mode
B	Solenoid wire harness A 8P connector: disconnected
B	Solenoid wire harness B 6P connector: disconnected
B	CVT drive pulley pressure control solenoid valve 2P connector: disconnected
Test point 1	Solenoid wire harness B 6P connector (male terminals) No. 1 : ①

Test point 2	CVT drive pulley pressure control solenoid valve 2P connector (female terminals) No. 2 : ②

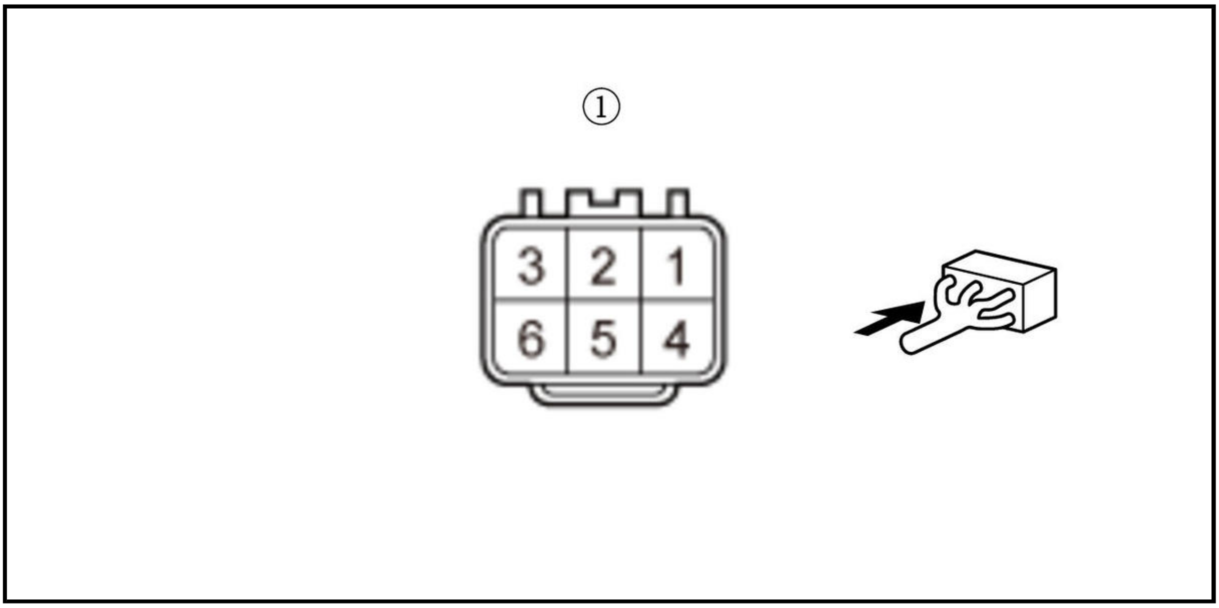

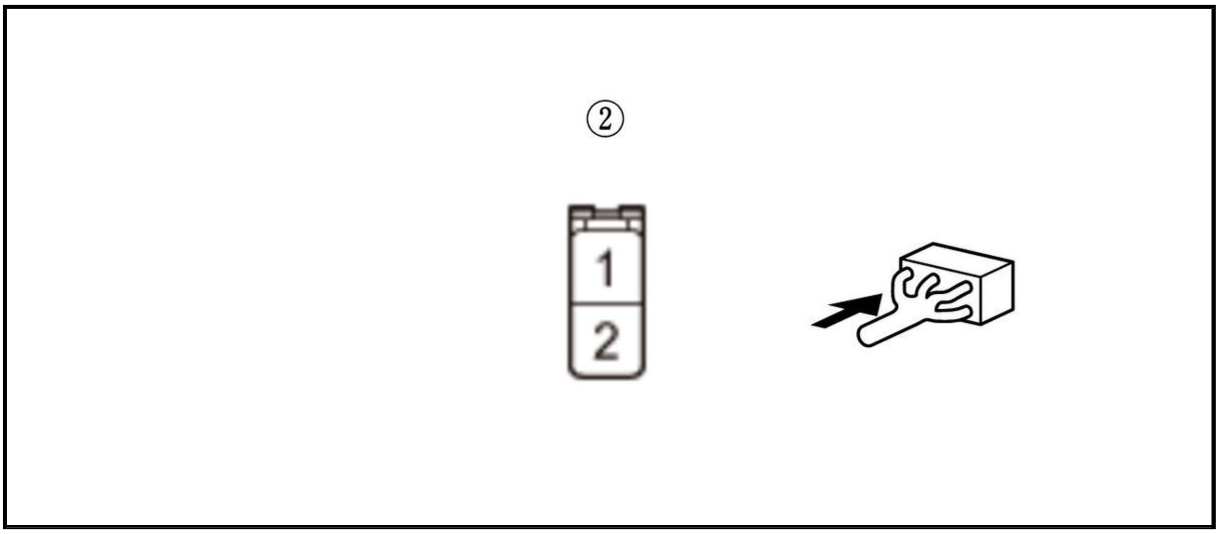

Is there continuity?

YES

Repair an open in the DRC+ wire between the solenoid wire harness A 6P connector and the solenoid wire harness A 8P connector.

NO

Repair an open in the DRC+ wire between the CVT drive pulley pressure control solenoid valve and the solenoid wire harness B 6P connector.

DTC P0966 (CVT (ECM/PCM))

DTC P0966 : CVT Driven Pulley Pressure Control Valve Circuit Low

NOTE:

- Before you troubleshoot, **review the General Troubleshooting Information** .
- This code is caused by an electrical circuit problem and cannot be caused by a mechanical problem in the transmission.

DTC Description	Confirmed DTC	Pending DTC	Freeze Frame
P0966 CVT Driven Pulley Pressure Control Valve Circuit Low	B	B	B

DTC (CVT)

1. Problem verification

   -1. Turn the vehicle to the ON mode.

   -2. Clear the DTC with the HDS.

   -3. Start the engine, and wait for at least 1 second.

   -4. Check for Pending or Confirmed DTCs with the HDS.

DTC Description	Confirmed DTC	Pending DTC	Freeze Frame
P0966 CVT Driven Pulley Pressure Control Valve Circuit Low	B	B	B

   Is DTC P0966 indicated?

   YES

   The failure is duplicated. Go to step 2.

   NO

   Intermittent failure, the system is OK at this time. Check for poor connections or loose terminals between the CVT driven pulley pressure control solenoid valve and the PCM. If the freeze data/on-board snapshot of this DTC is recorded, try to reproduce the failure under the same conditions with the freeze data/on-board snapshot.

2. CVT driven pulley pressure control solenoid valve check

   -1. Turn the vehicle to the OFF (LOCK) mode.

   -2. Jump the SCS line with the HDS, and wait more than 1 minute.

   NOTE: This step must be done to protect the PCM from damage.

   -3. Disconnect the following connector.

PCM connector C (51P)

   -4. Measure the resistance between test points 1 and 2.

Test condition	Vehicle OFF (LOCK) mode
B	PCM connector C (51P): disconnected
Test point 1	**PCM connector C (51P) No. 10**
Test point 2	Body ground

   Is there 5.0-6.3 Ω?

   YES

   The CVT driven pulley pressure control solenoid valve is OK. Check for any authorized service information related to the DTCs or symptoms you are troubleshooting, or **replace the original PCM** .

NO

Go to step 3.

3. Shorted wire check (DN LS line)

-1. Disconnect the following connector.

Solenoid wire harness A 8P connector

-2. Check for continuity between test points 1 and 2.

Test condition	Vehicle OFF (LOCK) mode
B	Solenoid wire harness A 8P connector: disconnected
B	PCM connector C (51P): disconnected
Test point 1	**PCM connector C (51P) No. 10**
Test point 2	Body ground

Is there continuity?

YES

Repair a short to body ground in the DN LS wire between the solenoid wire harness A 8P connector and the PCM.

NO

Go to step 4.

4. CVT driven pulley pressure control solenoid valve internal resistance check

-1. Disconnect the following connector.

CVT driven pulley pressure control solenoid valve 2P connector

-2. Measure the resistance between test points 1 and 2.

Test condition	Vehicle OFF (LOCK) mode
B	Solenoid wire harness A 8P connector: disconnected
B	CVT driven pulley pressure control solenoid valve 2P connector: disconnected
Test point 1	CVT driven pulley pressure control solenoid valve 2P connector (male terminals) No. 1 : ①
Test point 2	CVT driven pulley pressure control solenoid valve 2P connector (male terminals) No. 2 : ①

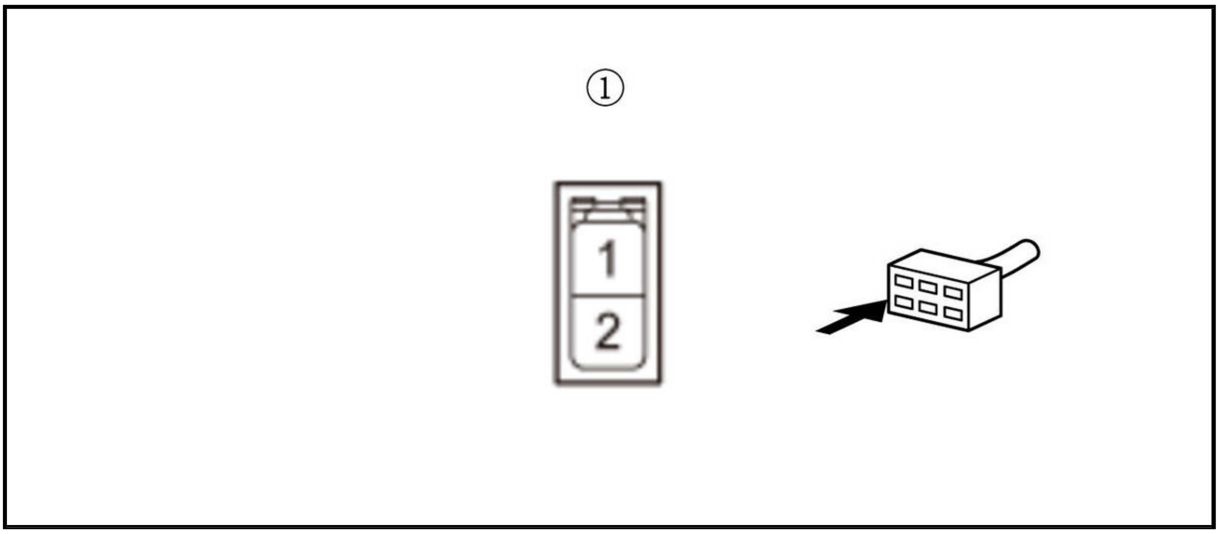

Is there 5.0-6.3 Ω?

YES

Go to step 5.

NO

Faulty CVT driven pulley pressure control solenoid valve. **Replace the valve body assembly** .

5. Determine shorted wire in either solenoid wire harness A or B (DNC+ line)

-1. Disconnect the following connector.

Solenoid wire harness B 6P connector

-2. Check for continuity between test points 1 and 2.

Test condition	Vehicle OFF (LOCK) mode
B	Solenoid wire harness A 8P connector: disconnected
B	Solenoid wire harness B 6P connector: disconnected
Test point 1	Solenoid wire harness A 6P connector (female terminals) No. 2 : ①
Test point 2	Body ground

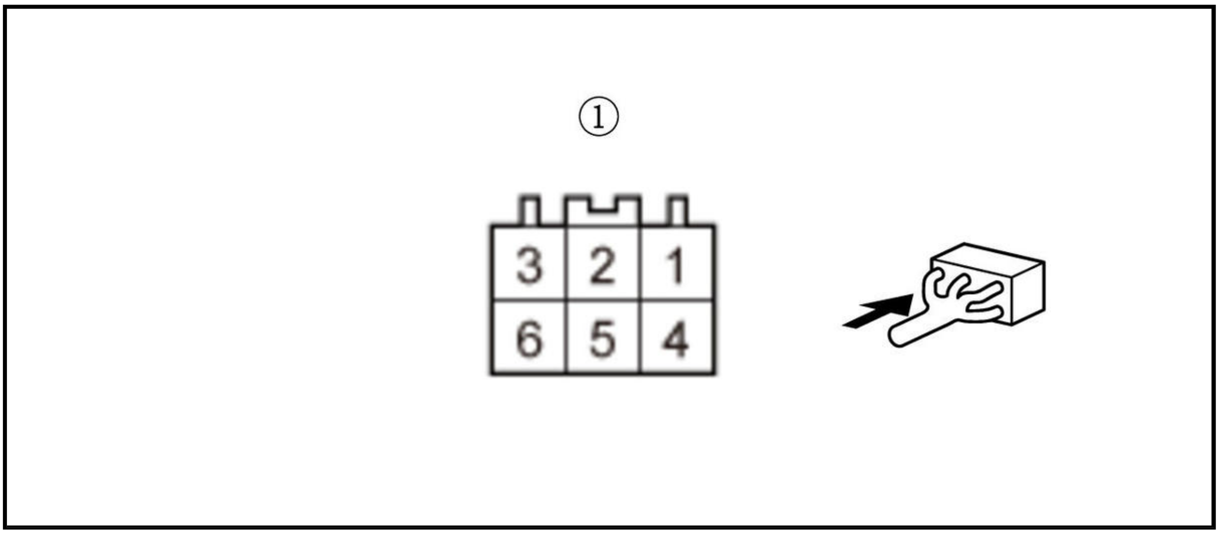

Is there continuity?

YES

Repair a short to body ground in the DNC+ wire between the solenoid wire harness A 6P connector and the solenoid wire harness A 8P connector.

NO

Repair a short to body ground in the DNC+ wire between the CVT driven pulley pressure control solenoid valve and the solenoid wire harness B 6P connector.

DTC P0967 (CVT (ECM/PCM))

DTC P0967 : CVT Driven Pulley Pressure Control Valve Circuit High

NOTE:

- Before you troubleshoot, **review the General Troubleshooting Information** .
- This code is caused by an electrical circuit problem and cannot be caused by a mechanical problem in the transmission.

DTC Description	Confirmed DTC	Pending DTC	Freeze Frame
P0967 CVT Driven Pulley Pressure Control Valve Circuit High	B	B	B

DTC (CVT)

1. Problem verification

   -1. Turn the vehicle to the ON mode.

   -2. Clear the DTC with the HDS.

   -3. Start the engine, and wait for at least 1 second.

   -4. Check for Pending or Confirmed DTCs with the HDS.

DTC Description	Confirmed DTC	Pending DTC	Freeze Frame
P0967 CVT Driven Pulley Pressure Control Valve Circuit High	B	B	B

   Is DTC P0967 indicated?

   YES

   The failure is duplicated. Go to step 2.

   NO

   Intermittent failure, the system is OK at this time. Check for poor connections or loose terminals between the CVT driven pulley pressure control solenoid valve and the PCM. If the freeze data/on-board snapshot of this DTC is recorded, try to reproduce the failure under the same conditions with the freeze data/on-board snapshot.

2. CVT driven pulley pressure control solenoid valve check

   -1. Turn the vehicle to the OFF (LOCK) mode.

   -2. Jump the SCS line with the HDS, and wait more than 1 minute.

NOTE: This step must be done to protect the PCM from damage.

-3. Disconnect the following connector.

PCM connector C (51P)

-4. Measure the resistance between test points 1 and 2.

Test condition	Vehicle OFF (LOCK) mode
B	PCM connector C (51P): disconnected
Test point 1	**PCM connector C (51P) No. 10**
Test point 2	Body ground

Is there 5.0-6.3 Ω?

YES

The CVT driven pulley pressure control solenoid valve is OK. Check for any authorized service information related to the DTCs or symptoms you are troubleshooting, or **replace the original PCM** .

NO

Go to step 3.

3. Shorted wire check (DN LS line to power)

-1. Disconnect the following connector.

Solenoid wire harness A 8P connector

-2. Turn the vehicle to the ON mode.

-3. Measure the voltage between test points 1 and 2.

Test condition	Vehicle ON mode
B	Solenoid wire harness A 8P connector : disconnected
B	PCM connector C (51P): disconnected
Test point 1	**PCM connector C (51P) No. 10**
Test point 2	Body ground

Is there voltage?

YES

Repair a short to power in the DN LS wire between the solenoid wire harness A 8P connector and the PCM.

NO

The DN LS wire is not shorted to power. Go to step 4.

4. Open wire check (DN LS line)

-1. Turn the vehicle to the OFF (LOCK) mode.

-2. Check for continuity between test points 1 and 2.

Test condition	Vehicle OFF (LOCK) mode

B	Solenoid wire harness A 8P connector: disconnected
B	PCM connector C (51P): disconnected
Test point 1	Solenoid wire harness A 8P connector (female terminals) No. 3 : ①
Test point 2	**PCM connector C (51P) No. 10**

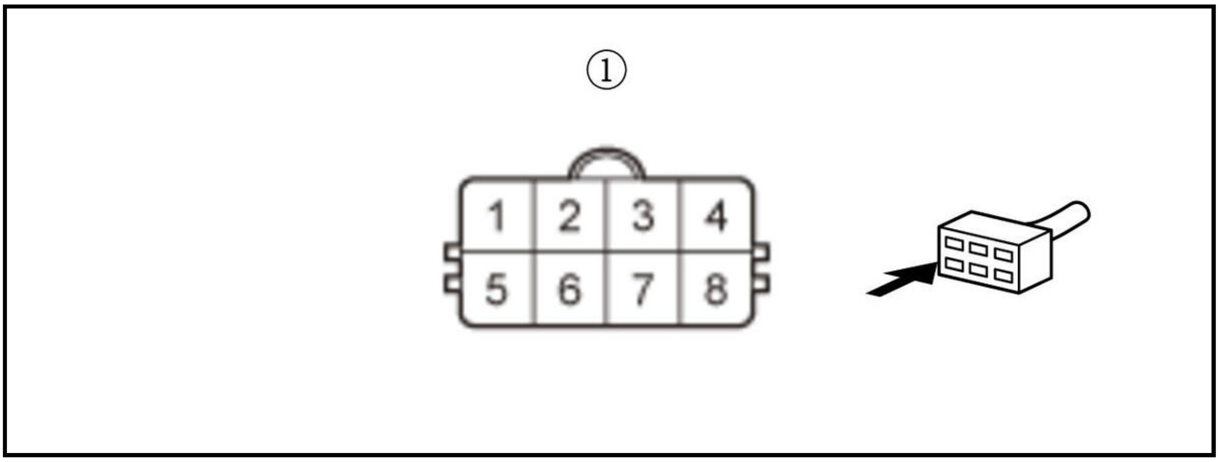

Is there continuity?

YES

Go to step 5.

NO

Repair an open in the DN LS wire between the solenoid wire harness A 8P connector and the PCM.

5. Open wire check (GND1 line, GND2 line)

-1. Check for continuity between test points 1 and 2.

Test condition	Vehicle OFF (LOCK) mode
B	PCM connector B (51P): disconnected
B	PCM connector C (51P): disconnected
Test Circuit 1	B
Test point 1	**PCM connector B (51P) No. 11**
Test point 2	Body ground
Test Circuit 2	B
Test point 1	**PCM connector B (51P) No. 12**
Test point 2	Body ground

Are there continuity?

YES

Go to step 6.

NO

Repair an open in GND1 wire and/or GND2 wire between the PCM and body ground (G101), or repair poor body ground (G101).

6. CVT driven pulley pressure control solenoid valve internal resistance check

-1. Disconnect the following connector.

CVT driven pulley pressure control solenoid valve 2P connector

-2. Measure the resistance between test points 1 and 2.

Test condition	Vehicle OFF (LOCK) mode
B	CVT driven pulley pressure control solenoid valve 2P connector: disconnected
Test point 1	CVT driven pulley pressure control solenoid valve 2P connector (male terminals) No. 1 : ①
Test point 2	CVT driven pulley pressure control solenoid valve 2P connector (male terminals) No. 2 : ①

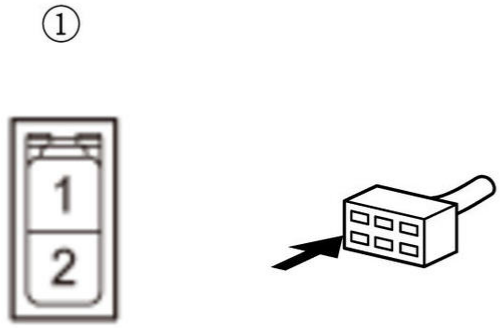

Is there 5.0-6.3 Ω?

YES

Go to step 7.

NO

Faulty CVT driven pulley pressure control solenoid valve. **Replace the valve body assembly** .

7. Open wire check (DNC- line)

-1. Check for continuity between test points 1 and 2.

Test condition	Vehicle OFF (LOCK) mode
B	CVT driven pulley pressure control solenoid valve 2P connector: disconnected
Test point 1	CVT driven pulley pressure control solenoid valve 2P connector (female terminals) No. 1 : ①
Test point 2	Body ground

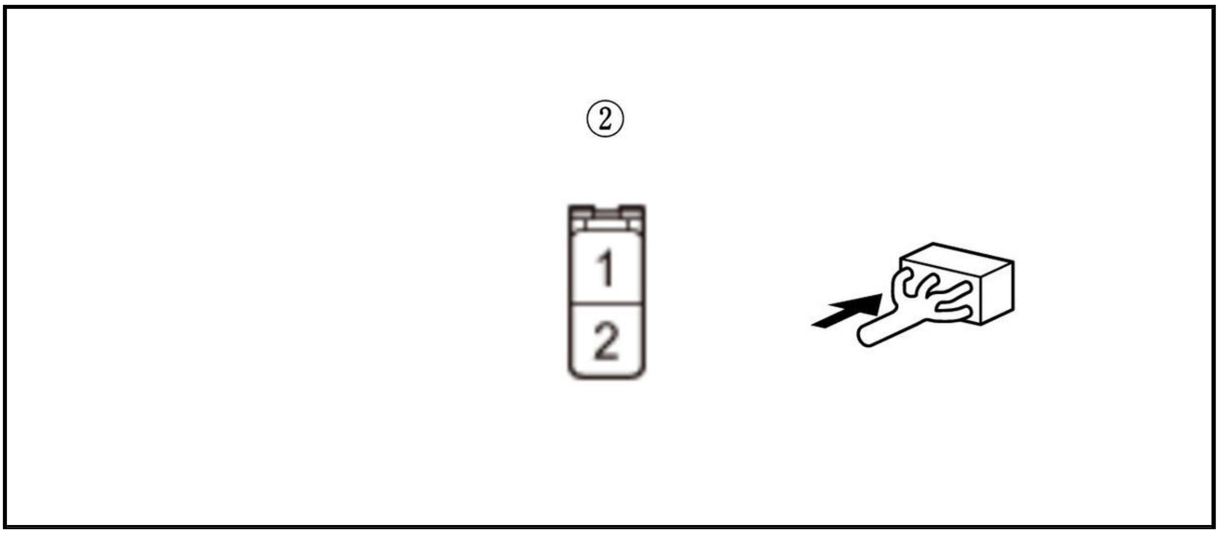

Is there continuity?

YES

Go to step 8.

NO

Repair an open in the DNC- wire between the CVT driven pulley pressure control solenoid valve and body ground (G161), or repair poor body ground (G161).

8. Determine opened wire in either solenoid wire harness A or B (DNC+ line)

-1. Disconnect the following connector.

Solenoid wire harness B 6P connector

-2. Check for continuity between test points 1 and 2.

Test condition	Vehicle OFF (LOCK) mode
B	Solenoid wire harness A 8P connector: disconnected
B	Solenoid wire harness B 6P connector: disconnected
B	CVT driven pulley pressure control solenoid valve 2P connector: disconnected
Test point 1	Solenoid wire harness B 6P connector (male terminals) No. 2 : ①
Test point 2	CVT driven pulley pressure control solenoid valve 2P connector (female terminals) No. 2 : ②

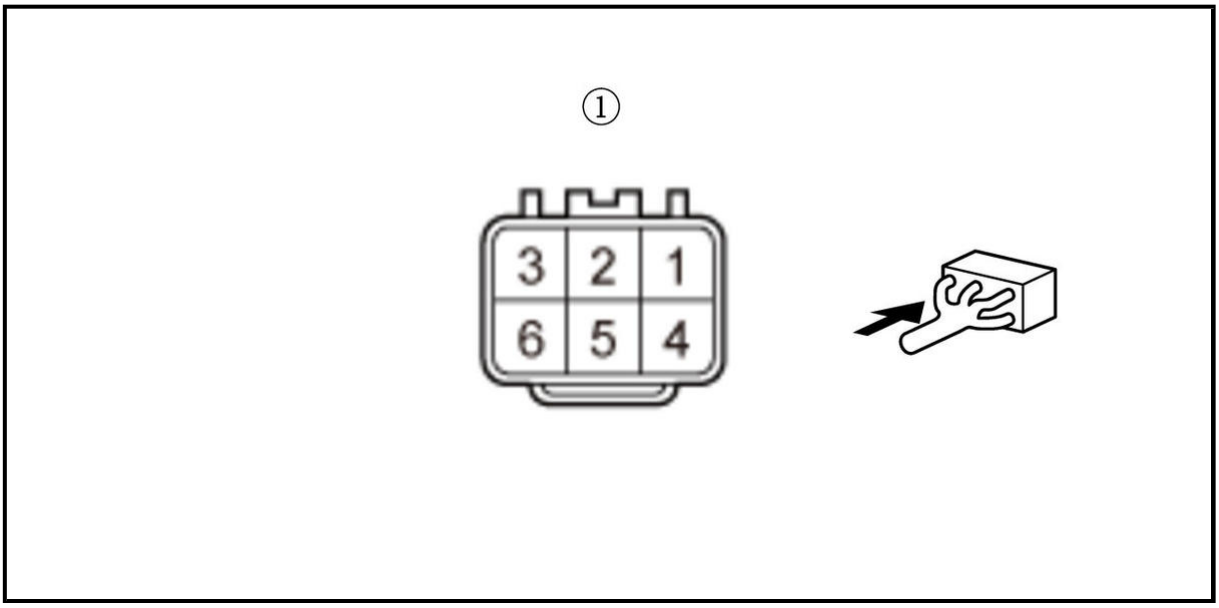

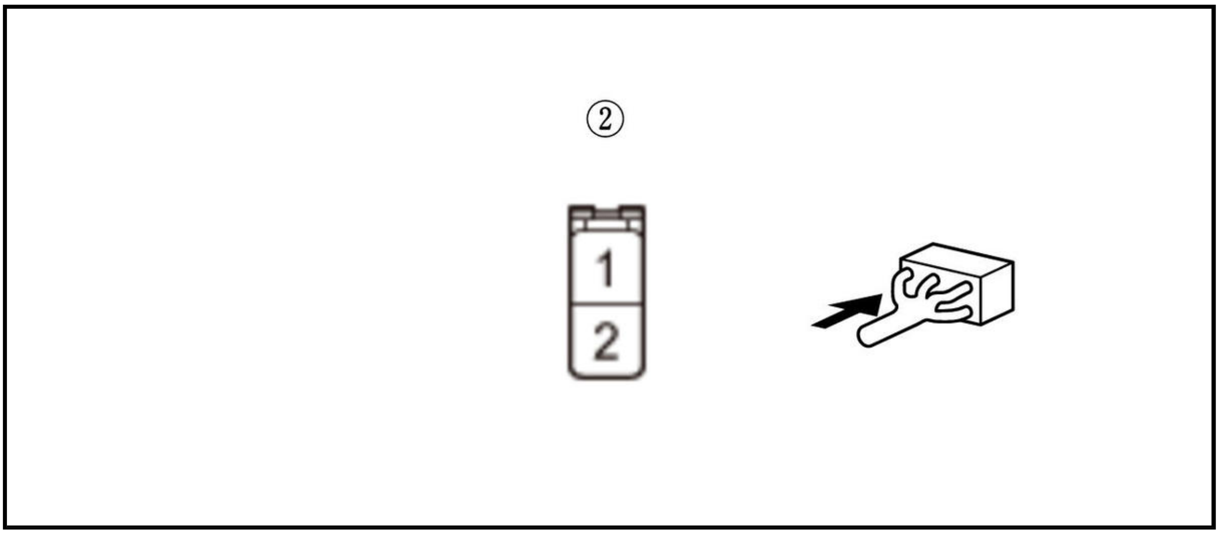

Is there continuity?

YES

Repair an open in the DNC+ wire between the solenoid wire harness A 6P connector and the solenoid wire harness A 8P connector.

NO

Repair an open in the DNC+ wire between the CVT driven pulley pressure control solenoid valve and the solenoid wire harness B 6P connector.

DTC P0970 (CVT (ECM/PCM))

DTC P0970 : Pressure Control Solenoid C Control Circuit Low

NOTE:

- Before you troubleshoot, **review the General Troubleshooting Information** .
- This code is caused by an electrical circuit problem and cannot be caused by a mechanical problem in the transmission.

DTC Description	Confirmed DTC	Pending DTC	Freeze Frame
P0970 Pressure Control Solenoid C Control Circuit Low	B	B	B

DTC (CVT)

1. Problem verification

   -1. Turn the vehicle to the ON mode.

   -2. Clear the DTC with the HDS.

   -3. Start the engine, and wait for at least 1 second.

   -4. Check for Pending or Confirmed DTCs with the HDS.

DTC Description	Confirmed DTC	Pending DTC	Freeze Frame
P0970 Pressure Control Solenoid C Control Circuit Low	B	B	B

   Is DTC P0970 indicated?

   YES

   The failure is duplicated. Go to step 2.

   NO

   Intermittent failure, the system is OK at this time. Check for poor connections or loose terminals between the CVT clutch pressure control solenoid valve and the PCM. If the freeze data/on-board snapshot of this DTC is recorded, try to reproduce the failure under the same conditions with the freeze data/on-board snapshot.

2. CVT clutch pressure control solenoid valve check

   -1. Turn the vehicle to the OFF (LOCK) mode.

   -2. Jump the SCS line with the HDS, and wait more than 1 minute.

   NOTE: This step must be done to protect the PCM from damage.

   -3. Disconnect the following connector.

PCM connector C (51P)

   -4. Measure the resistance between test points 1 and 2.

Test condition	Vehicle OFF (LOCK) mode
B	PCM connector C (51P): disconnected
Test point 1	**PCM connector C (51P) No. 5**
Test point 2	Body ground

   Is there 4.7-5.9 Ω?

   YES

   The CVT clutch pressure control solenoid valve is OK. Check for any authorized service information related to the DTCs or symptoms you are troubleshooting, or **replace the original PCM** .

   NO

   Go to step 3.

3. Shorted wire check (CPC LS line)

-1. Disconnect the following connector.

Solenoid wire harness A 8P connector

-2. Check for continuity between test points 1 and 2.

Test condition	Vehicle OFF (LOCK) mode
B	Solenoid wire harness A 8P connector: disconnected
B	PCM connector C (51P): disconnected
Test point 1	**PCM connector C (51P) No. 5**
Test point 2	Body ground

Is there continuity?

YES

Repair a short to body ground in the CPC LS wire between the solenoid wire harness A 8P connector and the PCM.

NO

Go to step 4.

4. CVT clutch pressure control solenoid valve internal resistance check

-1. **Remove the valve body assembly** .

-2. Disconnect the following connector.

CVT clutch pressure control solenoid valve 2P connector

-3. Measure the resistance between test points 1 and 2.

Test condition	Vehicle OFF (LOCK) mode
B	Lower valve body: removed
B	CVT clutch pressure control solenoid valve 2P connector: disconnected
Test point 1	CVT clutch pressure control solenoid valve 2P connector (male terminals) No. 1 : ①
Test point 2	CVT clutch pressure control solenoid valve 2P connector (male terminals) No. 2 : ①

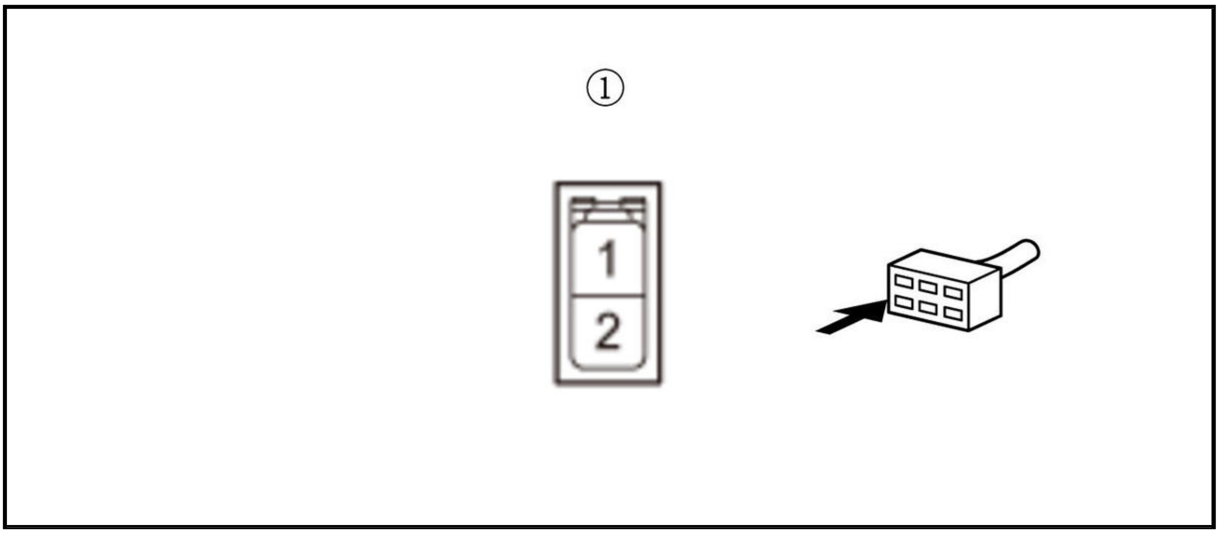

Is there 4.7-5.9 Ω?

YES

Go to step 5.

NO

Faulty CVT clutch pressure control solenoid valve. **Replace the valve body assembly** .

5. Determine shorted wire in either solenoid wire harness A or B (CPC+ line)

-1. Check for continuity between test points 1 and 2.

Test condition	Vehicle OFF (LOCK) mode
B	Valve body assembly: removed
B	Solenoid wire harness B 6P connector: disconnected
B	CVT clutch pressure control solenoid valve 2P connector: disconnected
Test point 1	Solenoid wire harness B 6P connector (male terminals) No. 5 : ①
Test point 2	Body ground (valve body assembly)

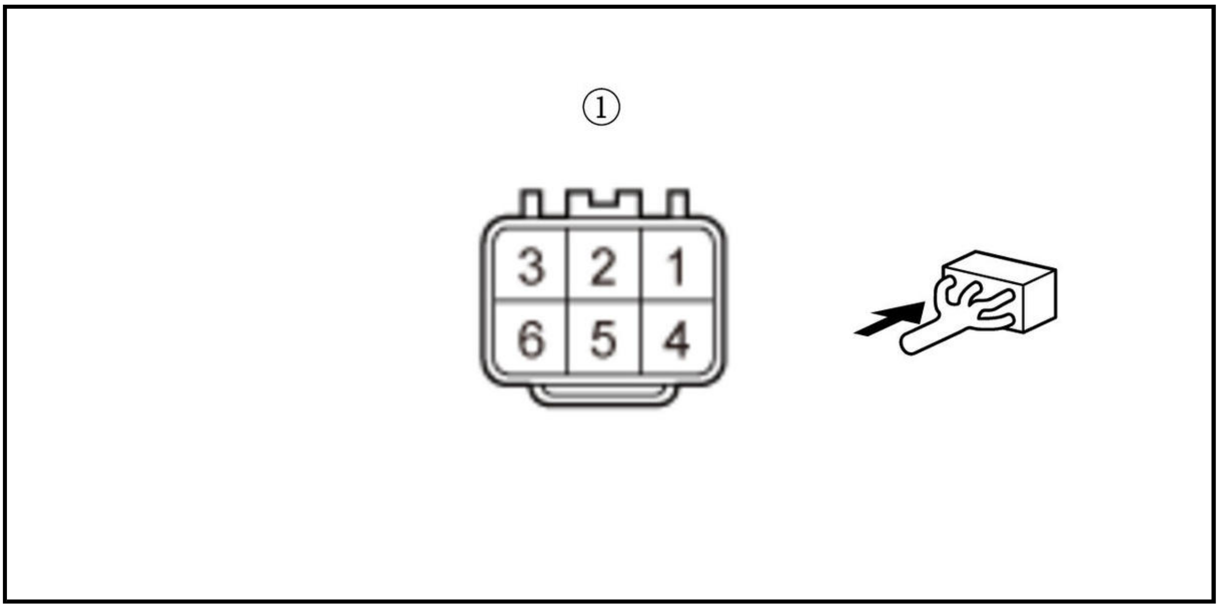

Is there continuity?

YES

Repair a short to body ground in the CPC+ wire between the CVT clutch pressure control solenoid valve and the solenoid wire harness B 6P connector.

NO

Repair a short to body ground in the CPC+ wire between the solenoid wire harness A 6P connector and the solenoid wire harness A 8P connector.

DTC P0971 (CVT (ECM/PCM))

DTC P0971 : Pressure Control Solenoid C Control Circuit High

NOTE:

- Before you troubleshoot, **review the General Troubleshooting Information** .
- This code is caused by an electrical circuit problem and cannot be caused by a mechanical problem in the transmission.

DTC Description	Confirmed DTC	Pending DTC	Freeze Frame
P0971 Pressure Control Solenoid C Control Circuit High	B	B	B

DTC (CVT)

1. Problem verification

   -1. Turn the vehicle to the ON mode.

   -2. Clear the DTC with the HDS.

   -3. Start the engine, and wait for at least 1 second.

   -4. Check for Pending or Confirmed DTCs with the HDS.

DTC Description	Confirmed DTC	Pending DTC	Freeze Frame
P0971 Pressure Control Solenoid C Control Circuit High	B	B	B

   Is DTC P0971 indicated?

   YES

   The failure is duplicated. Go to step 2.

   NO

   Intermittent failure, the system is OK at this time. Check for poor connections or loose terminals between the CVT clutch pressure control solenoid valve and the PCM. If the freeze data/on-board snapshot of this DTC is recorded, try to reproduce the failure under the same conditions with the freeze data/on-board snapshot.

2. CVT clutch pressure control solenoid valve check

   -1. Turn the vehicle to the OFF (LOCK) mode.

   -2. Jump the SCS line with the HDS, and wait more than 1 minute.

   NOTE: This step must be done to protect the PCM from damage.

-3. Disconnect the following connector.

PCM connector C (51P)

-4. Measure the resistance between test points 1 and 2.

Test condition	Vehicle OFF (LOCK) mode
B	PCM connector C (51P): disconnected
Test point 1	**PCM connector C (51P) No. 5**
Test point 2	Body ground

Is there 4.7-5.9 Ω?

YES

The CVT clutch pressure control solenoid valve is OK. Check for any authorized service information related to the DTCs or symptoms you are troubleshooting, or **replace the original PCM** .

NO

Go to step 3.

3. Shorted wire check (CPC LS line to power)

-1. Disconnect the following connector.

Solenoid wire harness A 8P connector

-2. Turn the vehicle to the ON mode.

-3. Measure the voltage between test points 1 and 2.

Test condition	Vehicle ON mode
B	Solenoid wire harness A 8P connector : disconnected
B	PCM connector C (51P): disconnected
Test point 1	**PCM connector C (51P) No. 5**
Test point 2	Body ground

Is there voltage?

YES

Repair a short to power in the CPC LS wire between the solenoid wire harness A 8P connector and the PCM.

NO

The CPC LS wire is not shorted to power. Go to step 4.

4. Open wire check (CPC LS line)

-1. Turn the vehicle to the OFF (LOCK) mode.

-2. Check for continuity between test points 1 and 2.

Test condition	Vehicle OFF (LOCK) mode
B	Solenoid wire harness A 8P connector: disconnected
B	PCM connector C (51P): disconnected

Test point 1	Solenoid wire harness A 8P connector (female terminals) No. 1 : ①
Test point 2	**PCM connector C (51P) No. 5**

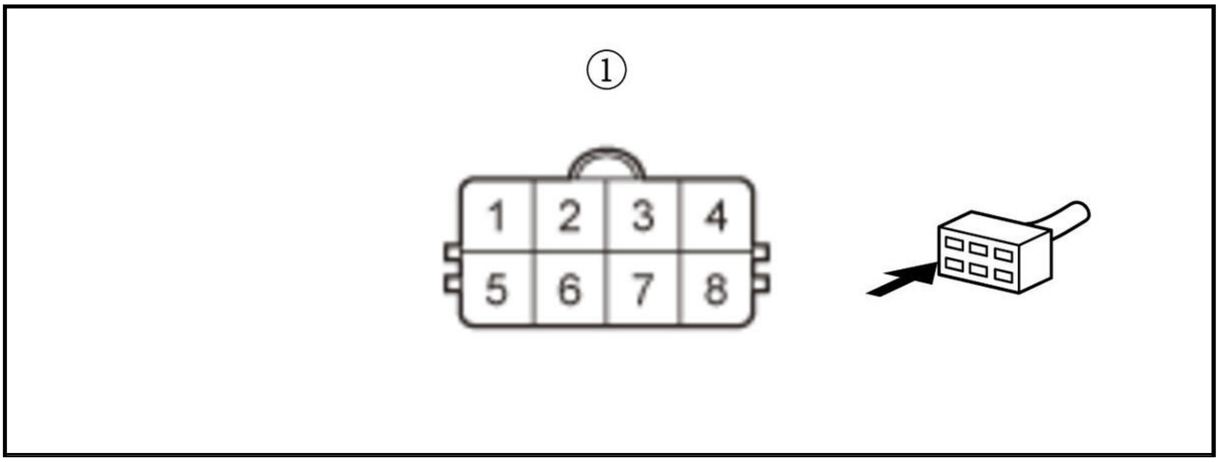

Is there continuity?

YES

Go to step 5.

NO

Repair an open in the CPC LS wire between the solenoid wire harness A 8P connector and the PCM.

5. Open wire check (GND1 line, GND2 line)

-1. Check for continuity between test points 1 and 2.

Test condition	Vehicle OFF (LOCK) mode
B	PCM connector B (51P): disconnected
Test Circuit 1	B
Test point 1	**PCM connector B (51P) No. 11**
Test point 2	Body ground
Test Circuit 2	B
Test point 1	**PCM connector B (51P) No. 12**
Test point 2	Body ground

Are there continuity?

YES

Go to step 6.

NO

Repair an open in GND1 wire and/or GND2 wire between the PCM and body ground (G101), or repair poor body ground (G101).

6. CVT clutch pressure control solenoid valve internal resistance check

-1. **Remove the valve body assembly** .

-2. Disconnect the following connector.

CVT clutch pressure control solenoid valve 2P connector

-3. Measure the resistance between test points 1 and 2.

Test condition	Vehicle OFF (LOCK) mode
B	Lower valve body: removed
B	Solenoid wire harness B 6P connector: disconnected
B	CVT clutch pressure control solenoid valve 2P connector: disconnected
Test point 1	CVT clutch pressure control solenoid valve 2P connector (female terminals) No. 1 : ①
Test point 2	CVT clutch pressure control solenoid valve 2P connector (female terminals) No. 2 : ①

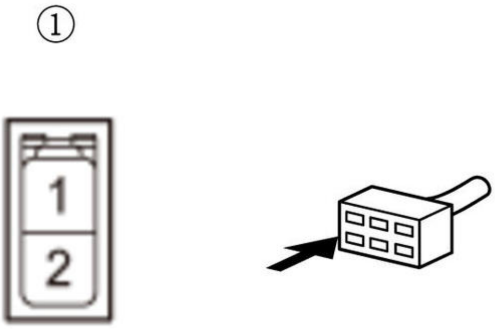

Is there 4.7-5.9 Ω?

YES

Go to step 7.

NO

Faulty CVT clutch pressure control solenoid valve. Replace the valve body assembly .

7. Open wire check (CPC- line)

-1. Check for continuity between test points 1 and 2.

Test condition	Vehicle OFF (LOCK) mode
B	Lower valve body: removed
B	Solenoid wire harness B 6P connector: disconnected
B	CVT clutch pressure control solenoid valve 2P connector: disconnected
Test point 1	CVT clutch pressure control solenoid valve 2P connector (female terminals) No. 1 : ①
Test point 2	Body ground (valve body assembly)

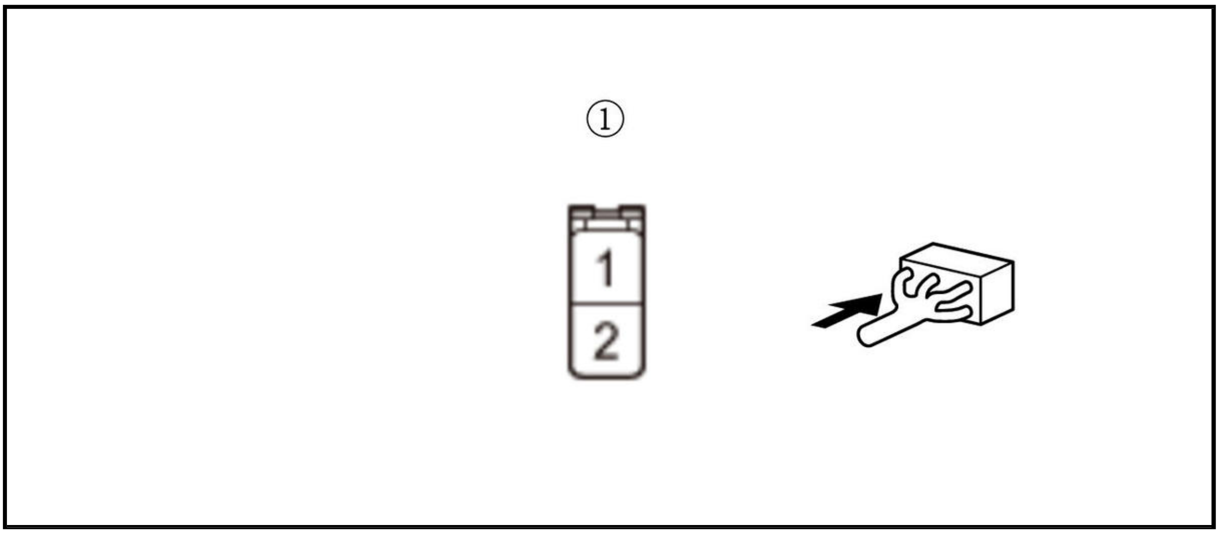

Is there continuity?

YES

Go to step 8.

NO

Repair an open in the CPC- wire between the CVT clutch pressure control solenoid valve and body ground (G162), or repair poor body ground (G162).

8. Determine opened wire in either solenoid wire harness A or B (CPC+ line)

-1. Check for continuity between test points 1 and 2.

Test condition	Vehicle OFF (LOCK) mode
B	Lower valve body: removed
B	Solenoid wire harness B 6P connector: disconnected
B	CVT clutch pressure control solenoid valve 2P connector: disconnected
Test point 1	Solenoid wire harness B 6P connector (male terminals) No. 5 : ①
Test point 2	CVT clutch pressure control solenoid valve 2P connector (female terminals) No. 2 : ②

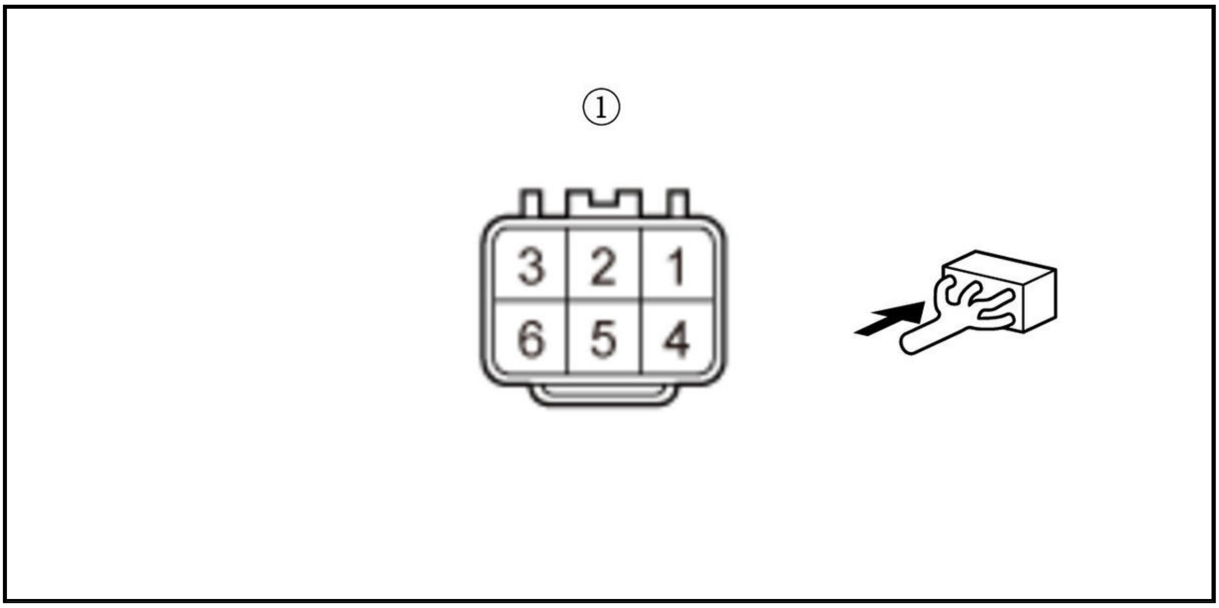

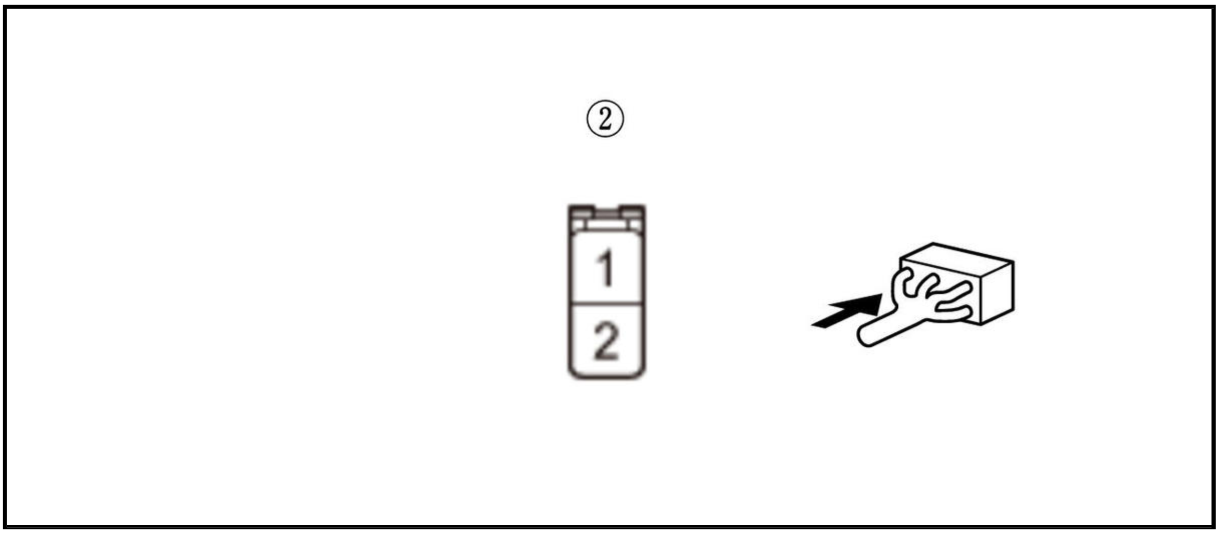

Is there continuity?

YES

Repair an open in the CPC+ wire between the solenoid wire harness A 6P connector and the solenoid wire harness A 8P connector.

NO

Repair an open in the CPC+ wire between the CVT clutch pressure control solenoid valve and the solenoid wire harness B 6P connector.

DTC P0976 (CVT (ECM/PCM))

DTC P0976 : Shift Solenoid Valve B Circuit Low

NOTE:

- Before you troubleshoot, **review the General Troubleshooting Information** .
- This code is caused by an electrical circuit problem and cannot be caused by a mechanical problem in the transmission.

DTC Description	Confirmed DTC	Pending DTC	Freeze Frame
P0976 Shift Solenoid Valve B Circuit Low	B	B	B

DTC (CVT)

1. Problem verification

   -1. Turn the vehicle to the ON mode.

   -2. Clear the DTC with the HDS.

   -3. Start the engine, and warm it up to normal operating temperature (the radiator fan comes on twice).

   -4. Test-drive the vehicle in D on a flat road at speeds about 37 mph (60 km/h) for at least 10 seconds.

   -5. Check for Pending or Confirmed DTCs with the HDS.

DTC Description	Confirmed DTC	Pending DTC	Freeze Frame
P0976 Shift Solenoid Valve B Circuit Low	B	B	B

Is DTC P0976 indicated?

YES

The failure is duplicated. Go to step 2.

NO

Intermittent failure, the system is OK at this time. Check for poor connections or loose terminals between the shift solenoid valve B and the PCM. If the freeze data/on-board snapshot of this DTC is recorded, try to reproduce the failure under the same conditions with the freeze data/on-board snapshot.

2. IG1 MISS SOL line check

-1. Turn the vehicle to the OFF (LOCK) mode.

-2. Jump the SCS line with the HDS, and wait more than 1 minute.

NOTE: This step must be done to protect the PCM from damage.

-3. Disconnect the following connector.

PCM connector A (51P)

-4. Turn the vehicle to the ON mode.

-5. Measure the voltage between test points 1 and 2.

Test condition	Vehicle ON mode
B	PCM connector A (51P): disconnected
Test point 1	**PCM connector A (51P) No. 11**
Test point 2	Body ground

Is there battery voltage?

YES

The IG1 MISS SOL wire is OK. Go to step 3.

NO

Check for a blown No. D4 (10 A) fuse in the under-dash fuse/relay box. If the fuse is blown, replace it. If the fuse blows again, repair a short in the No. D4 (10 A) fuse circuit. If the fuse is OK, repair an open in the IG1 MISS SOL wire between the PCM and the under-dash fuse/relay box.

3. Shift solenoid valve B check

-1. Turn the vehicle to the OFF (LOCK) mode.

-2. Jump the SCS line with the HDS, and wait more than 1 minute.

NOTE: This step must be done to protect the PCM from damage.

-3. Disconnect the following connector.

PCM connector C (51P)

-4. Measure the resistance between test points 1 and 2.

Test condition	Vehicle OFF (LOCK) mode
B	PCM connector C (51P): disconnected

Test point 1	**PCM connector C (51P) No. 19**

Test point 2	Body ground

Is there 10.6-13.5 Ω?

YES

The shift solenoid valve B is OK. Check for any authorized service information related to the DTCs or symptoms you are troubleshooting, or **replace the original PCM** .

NO

Go to step 4.

4. Shorted wire check (SOL B line)

-1. Disconnect the following connector.

Solenoid wire harness A 8P connector

-2. Check for continuity between test points 1 and 2.

Test condition	Vehicle OFF (LOCK) mode
B	Solenoid wire harness A 8P connector: disconnected
B	PCM connector C (51P): disconnected
Test point 1	**PCM connector C (51P) No. 19**
Test point 2	Body ground

Is there continuity?

YES

Repair a short to body ground in the SOL B wire between the solenoid wire harness A 8P connector and the PCM.

NO

Go to step 5.

5. Shift solenoid valve B internal resistance check

-1. Disconnect the following connector.

Shift solenoid valve B 2P connector

-2. Measure the resistance between test points 1 and 2.

Test condition	Vehicle OFF (LOCK) mode
B	Solenoid wire harness A 8P connector: disconnected
B	Shift solenoid valve B 2P connector: disconnected
Test point 1	Shift solenoid valve B 2P connector (male terminals) No. 1 : ①
Test point 2	Body ground

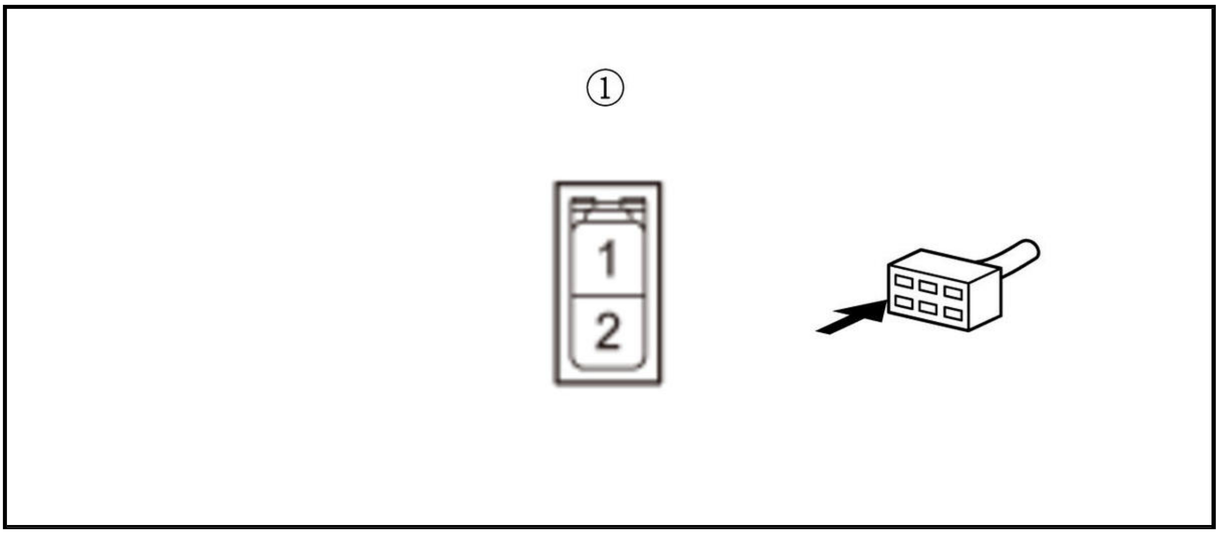

Is there 10.6-13.5 Ω?

YES

Shift solenoid valve B is OK. Repair a short to body ground in the SHB+ wire between the solenoid wire harness A 8P connector and shift solenoid valve B.

NO

Faulty shift solenoid valve B. **Replace the valve body assembly** .

DTC P0977 (CVT (ECM/PCM))

DTC P0977 : Shift Solenoid Valve B Circuit High

NOTE:

- Before you troubleshoot, **review the General Troubleshooting Information** .
- This code is caused by an electrical circuit problem and cannot be caused by a mechanical problem in the transmission.

DTC Description	Confirmed DTC	Pending DTC	Freeze Frame
P0977 Shift Solenoid Valve B Circuit High	B	B	B

DTC (CVT)

1. Problem verification

-1. Turn the vehicle to the ON mode.

-2. Clear the DTC with the HDS.

-3. Start the engine in P, and wait for at least 10 seconds.

-4. Check for Pending or Confirmed DTCs with the HDS.

DTC Description	Confirmed DTC	Pending DTC	Freeze Frame
P0977 Shift Solenoid Valve B Circuit High	B	B	B

Is DTC P0977 indicated?

YES

The failure is duplicated. Go to step 2.

NO

Intermittent failure, the system is OK at this time. Check for poor connections or loose terminals between the shift solenoid valve B and the PCM. If the freeze data/on-board snapshot of this DTC is recorded, try to reproduce the failure under the same conditions with the freeze data/on-board snapshot.

2. Shift solenoid valve B check

-1. Turn the vehicle to the OFF (LOCK) mode.

-2. Jump the SCS line with the HDS, and wait more than 1 minute.

NOTE: This step must be done to protect the PCM from damage.

-3. Disconnect the following connector.

PCM connector C (51P)

-4. Measure the resistance between test points 1 and 2.

Test condition	Vehicle OFF (LOCK) mode
B	PCM connector C (51P): disconnected
Test point 1	**PCM connector C (51P) No. 19**
Test point 2	Body ground

Is there 10.6-13.5 Ω?

YES

The shift solenoid valve B is OK. Check for any authorized service information related to the DTCs or symptoms you are troubleshooting, or **replace the original PCM** .

NO

Go to step 3.

3. Open wire check (SOL B line)

-1. Disconnect the following connector.

Solenoid wire harness A 8P connector

-2. Check for continuity between test points 1 and 2.

Test condition	Vehicle OFF (LOCK) mode
B	Solenoid wire harness A 8P connector: disconnected
B	PCM connector C (51P): disconnected
Test point 1	Solenoid wire harness A 8P connector (female terminals) No. 5 : ①
Test point 2	**PCM connector C (51P) No. 19**

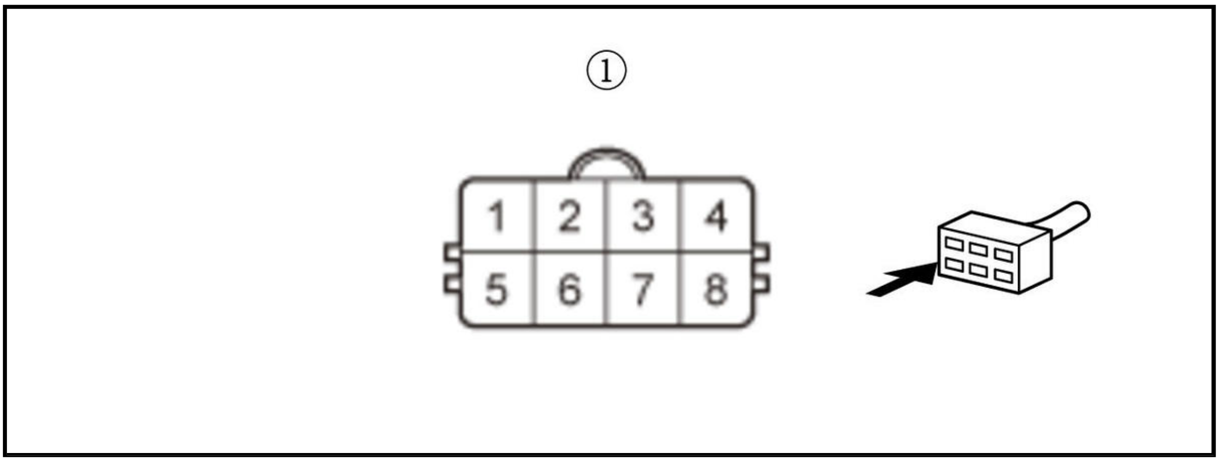

Is there continuity?

YES

Go to step 4.

NO

Repair an open in the SOL B wire between the solenoid wire harness A 8P connector and the PCM.

4. Shift solenoid valve B internal resistance check

-1. Disconnect the following connector.

Shift solenoid valve B 2P connector

-2. Measure the resistance between test points 1 and 2.

Test condition	Vehicle OFF (LOCK) mode
B	Solenoid wire harness A 8P connector: disconnected
B	Shift solenoid valve B 2P connector: disconnected
Test point 1	Shift solenoid valve B 2P connector (male terminals) No. 1 : ①
Test point 2	Body ground

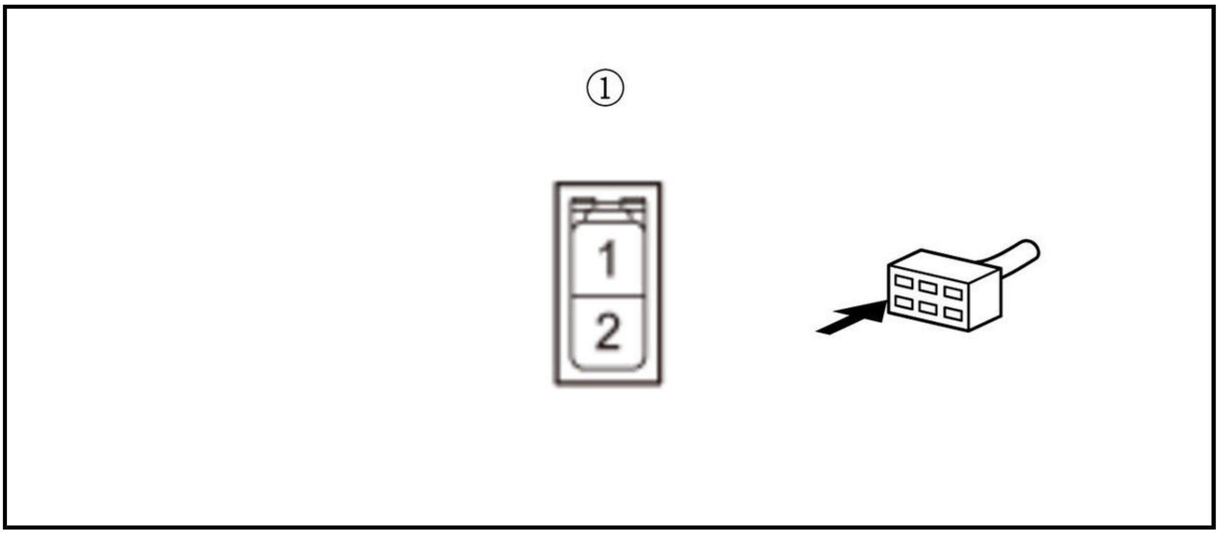

Is there 10.6-13.5 Ω?

YES

Shift solenoid valve B is OK. Repair an open in the SHB+ wire between the solenoid wire harness A 8P connector and shift solenoid valve B.

NO

Faulty shift solenoid valve B. **Replace the valve body assembly** .

DTC P0A11 (1.5 L ENGINE) (2020 2021)

DTC P0A11 : DC-DC Converter Activation Circuit Malfunction

NOTE: Before you troubleshoot, **review the general troubleshooting information** .

DTC Description	Confirmed DTC	Pending DTC
P0A11 DC-DC Converter Activation Circuit Malfunction	B	B

DTC (PGM-FI)

1. Problem verification

   -1. Turn the vehicle to the ON mode.

   -2. Clear the DTC with the HDS.

   -3. Turn the vehicle to the OFF (LOCK) mode.

   -4. **Test-drive the vehicle under the auto idle stop system operating condition, and stop the engine using auto idle stop** .

   -5. Check for Pending or Confirmed DTCs with the HDS.

DTC Description	Confirmed DTC	Pending DTC
P0A11 DC-DC Converter Activation Circuit Malfunction	B	B

   Is DTC P0A11 indicated?

   YES

   Go to step 2.

   NO

   Intermittent failure, the system is OK at this time. Check for poor connections or loose terminals at the DC-DC converter and the PCM. **If the on-board snapshot of this DTC is recorded, try to reproduce the failure under the same conditions with the on-board snapshot** .

2. Determine possible failure area (Open in DCDC STS line, others)

   -1. Turn the vehicle to the OFF (LOCK) mode.

   -2. Jump the SCS line with the HDS, and wait more than 1 minute.

   -3. Disconnect the following connector.

PCM connector A (50P)

   -4. Exit the SCS mode with the HDS.

   -5. Turn the vehicle to the ON mode.

-6. Measure the voltage between test points 1 and 2.

Test condition	Vehicle ON mode
B	PCM connector A (50P): disconnected
Test point 1	**PCM connector A (50P) No. 14**
Test point 2	Body ground

Is there battery voltage?

YES

Go to step 4.

NO

Go to step 3.

3. Open wire check (DCDC STS line)

-1. Turn the vehicle to the OFF (LOCK) mode.

-2. Disconnect the following connector.

DC-DC converter connector A (3P)

-3. Measure the resistance between test points 1 and 2.

Test condition	Vehicle OFF (LOCK) mode
B	PCM connector A (50P): disconnected
B	DC-DC converter connector A (3P): disconnected
Test point 1	DC-DC converter connector A (3P) (female terminals) No. 2: ①
Test point 2	**PCM connector A (50P) No. 14**

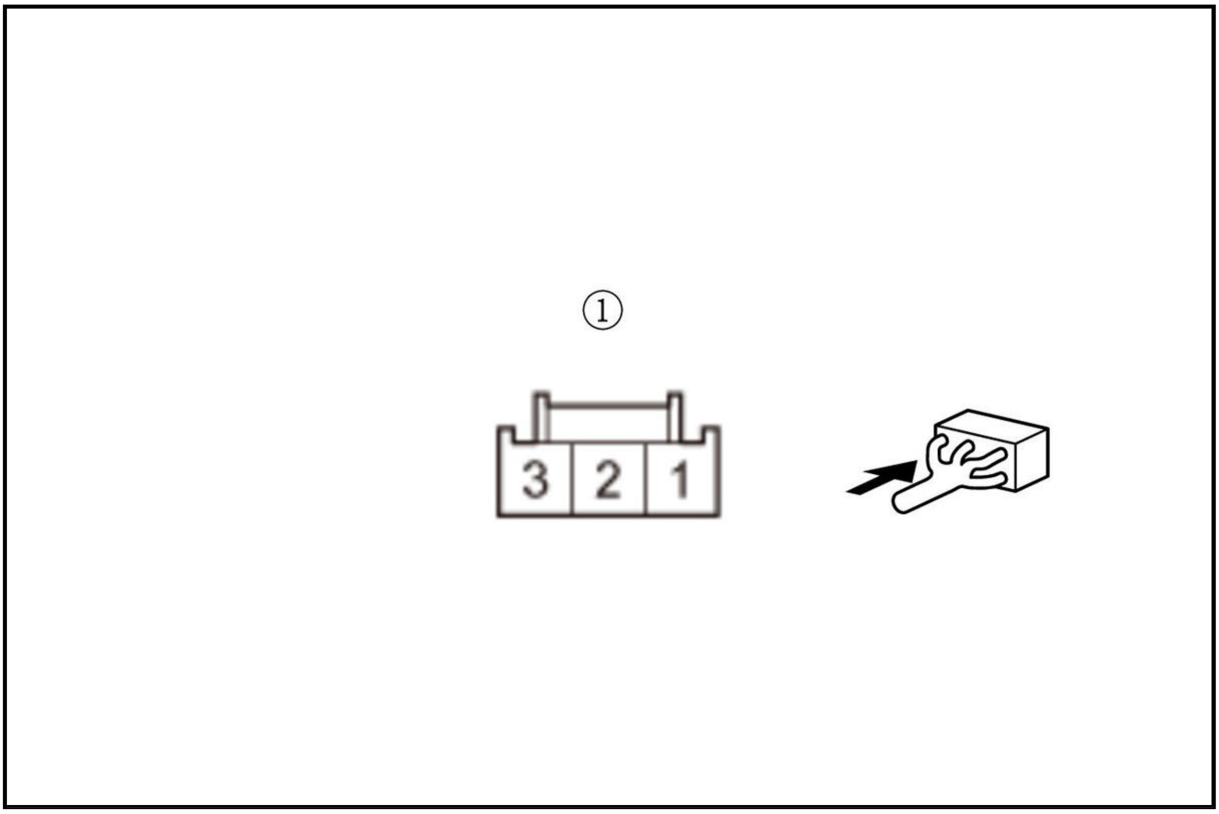

Is there 1.0 Ω or less?

YES

Replace the DC-DC converter .

NO

Repair an open in the DCDC STS wire between the PCM (A14) and the DC-DC converter.

4. Shorted wire check (DCDC STS line to power)

-1. Turn the vehicle to the OFF (LOCK) mode.

-2. Disconnect the following connector.

DC-DC converter connector A (3P)

-3. Turn the vehicle to the ON mode.

-4. Measure the voltage between test points 1 and 2.

Test condition	Vehicle ON mode
B	PCM connector A (50P): disconnected
B	DC-DC converter connector A (3P): disconnected
Test point 1	DC-DC converter connector A (3P) (female terminals) No. 2: ①
Test point 2	Body ground

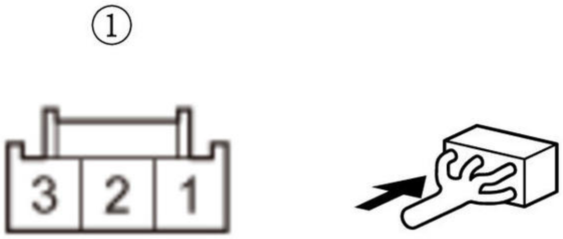

Is there about 5 V or more?

YES

Repair a short to power in the DCDC STS wire between the PCM (A14) and the DC-DC converter.

NO

The DCDC STS wire is OK. **Replace the DC-DC converter** . If DTC P0A11 was indicated after the DC-DC converter was replaced, check for any authorized service information related to the DTCs or symptoms you are troubleshooting, or **substitute a known-good PCM** .

DTC P0A94 (1.5 L ENGINE) (2020 2021)

DTC P0A94 : DC-DC Converter Performance Problem

NOTE: Before you troubleshoot, **review the general troubleshooting information** .

DTC Description	Confirmed DTC	Pending DTC
P0A94 DC-DC Converter Performance Problem	B	B

DTC (PGM-FI)

1. DTC check

   -1. Turn the vehicle to the ON mode.

   -2. Clear the DTC with the HDS.

   -3. Turn the vehicle to the OFF (LOCK) mode.

   -4. **Test-drive the vehicle under the auto idle stop system operating condition, and stop the engine using auto idle stop** .

   NOTE: If the auto idle stop system indicator (amber) blinks and the engine keeps running, go to step 1

   -5. Check for Pending or Confirmed DTCs with the HDS.

DTC Description	Confirmed DTC	Pending DTC
P16E5 LIN Communication Error (PCM-DC-DC Converter)	B	B

   Is DTC P16E5 indicated?

   YES

   Go to the troubleshooting for **DTC P16E5**.

   NO

   Go to step 2.

2. Problem verification

   -1. Check for Pending or Confirmed DTCs with the HDS.

DTC Description	Confirmed DTC	Pending DTC
P0A94 DC-DC Converter Performance Problem	B	B

   Is DTC P0A94 indicated?

   YES

   Go to step 3.

NO

Check the fuses in the auxiliary under-dash fuse/relay box. If the fuse (s) is blown, repair a short in the fuse circuit. If it is OK, intermittent failure, the system is OK at this time. Check for poor connections or loose terminals at the DC-DC converter and the PCM. **If the on-board snapshot of this DTC is recorded, try to reproduce the failure under the same conditions with the on-board snapshot** .

3. Determine possible failure area (DCDC STS line, others)

-1. Check the parameter (s) below with the HDS.

Signal	Threshold		Current conditions	
	Values	Unit	Values	Unit
DC-DC CONVERTER CST ERROR	Normal	B	B	B

Do the current condition (s) match the threshold?

YES

Go to step 5.

NO

Go to step 4.

4. Shorted wire check (DCDC STS line)

-1. Turn the vehicle to the OFF (LOCK) mode.

-2. Jump the SCS line with the HDS, and wait more than 1 minute.

-3. Disconnect the following connectors.

DC-DC converter connector A (3P)
PCM connector A (50P)

-4. Measure the resistance between test points 1 and 2.

Test condition	Vehicle OFF (LOCK) mode
B	DC-DC converter connector A (3P): disconnected
B	PCM connector A (50P): disconnected
Test point 1	DC-DC converter connector A (female terminals) (3P) No. 2: ①
Test point 2	Body ground

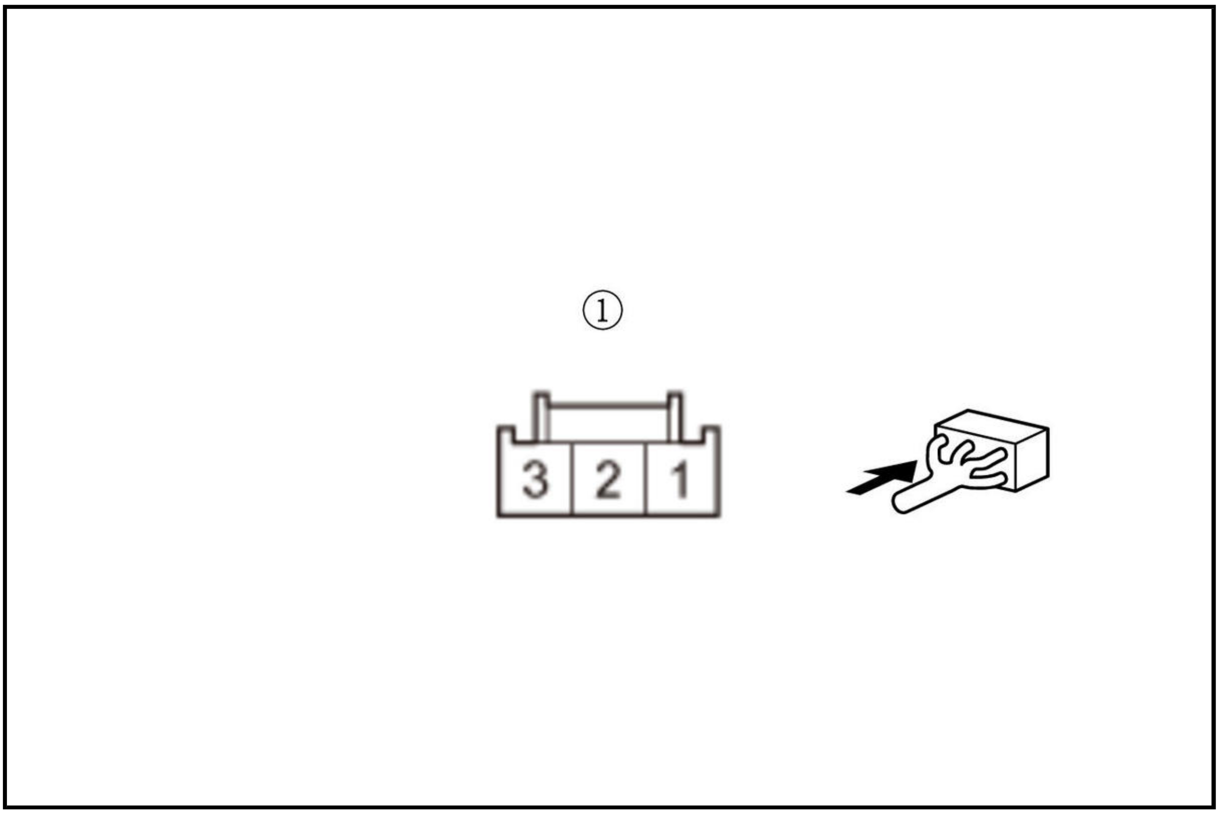

Is there 1 MΩ or more?

YES

The DCDC STS wire is OK. **Replace the DC-DC converter** . If DTC P0A94 was indicated after the DC-DC converter was replaced, check for any authorized service information related to the DTCs or symptoms you are troubleshooting, or **substitute a known-good PCM** .

NO

Repair a short in the DCDC STS wire between the PCM (A14) and the DC-DC converter.

5. Open wire check (GND line)

-1. Turn the vehicle to the OFF (LOCK) mode.

-2. Disconnect the following connector.

DC-DC converter connector B (5P)

-3. Measure the resistance between test points 1 and 2.

Test condition	Vehicle OFF (LOCK) mode
B	DC-DC converter connector B (5P): disconnected
Test point 1	DC-DC converter connector B (5P) (female terminals) No. 4: ①
Test point 2	Body ground

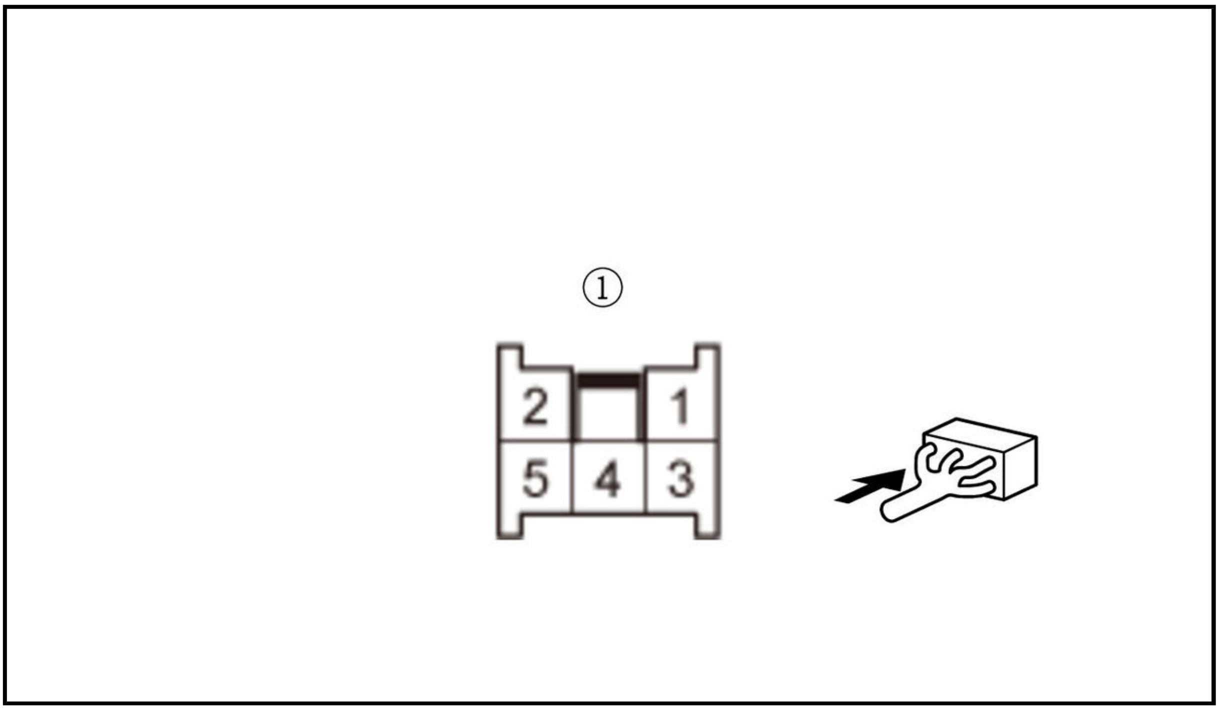

Is there 1.0 Ω or less?

YES

Go to step 6.

NO

Repair an open in the GND wire between the DC-DC converter and G352.

6. Determine possible failure area (DC-DC converter input/output lines)

-1. Reconnect the following connector.

DC-DC converter connector B (5P)

-2. Turn the vehicle to the ON mode.

-3. Check the parameter (s) below with the HDS.

Signal	Current conditions	
	Values	Unit
DC-DC CONVERTER INPUT ERROR 1	B	B
DC-DC CONVERTER INPUT ERROR 2	B	B
DC-DC CONVERTER OUTPUT ERROR 1	B	B
DC-DC CONVERTER OUTPUT ERROR 2	B	B

Do these parameters indicate Malfunction?

DC-DC converter input error 1 indicates Malfunction

Go to step 7.

DC-DC converter input error 2 indicates Malfunction

Go to step 9.

DC-DC converter output error 1 indicates Malfunction

Check for DCDC OUT1 circuit shorted, or aftermarket parts connected to DCDCT OUT1 wire. Repair a short in DCDC OUT1 circuit or remove the aftermarket parts if needed. If DCDC OUT1 wire is OK, **replace the DC-DC converter** .

DC-DC converter output error 2 indicates Malfunction

Check for DCDC OUT2 circuit shorted, or aftermarket parts connected to DCDC OUT2 wire. Repair a short in DCDC OUT2 circuit or remove the aftermarket parts if needed. If DCDC OUT2 wire is OK, **replace the DC-DC converter** .

All parameters indicates Normal

DC-DC converter input and output lines are OK. **Replace the DC-DC converter** .

7. Fuse check

-1. Turn the vehicle to the OFF (LOCK) mode.

-2. Check the following fuse.

Fuse	**No. A1-1**

Is the fuse OK?

YES

Go to step 8.

NO

Check for a short in the +B DC/DC1 wire between the DC-DC converter and the No. A1-1 fuse, the DCDC OUT1 wire between the DC-DC converter and the under-hood fuse/relay box, and repair it if needed. Also replace the No. A1-1 fuse.

8. Open wire check (+B DC/DC1 line)

-1. Disconnect the following connector.

DC-DC converter connector B (5P)

-2. Measure the voltage between test points 1 and 2.

Test condition	Vehicle OFF (LOCK) mode
B	DC-DC converter connector B (5P): disconnected
Test point 1	DC-DC converter connector B (5P) (female terminals) No. 1: ①
Test point 2	Body ground

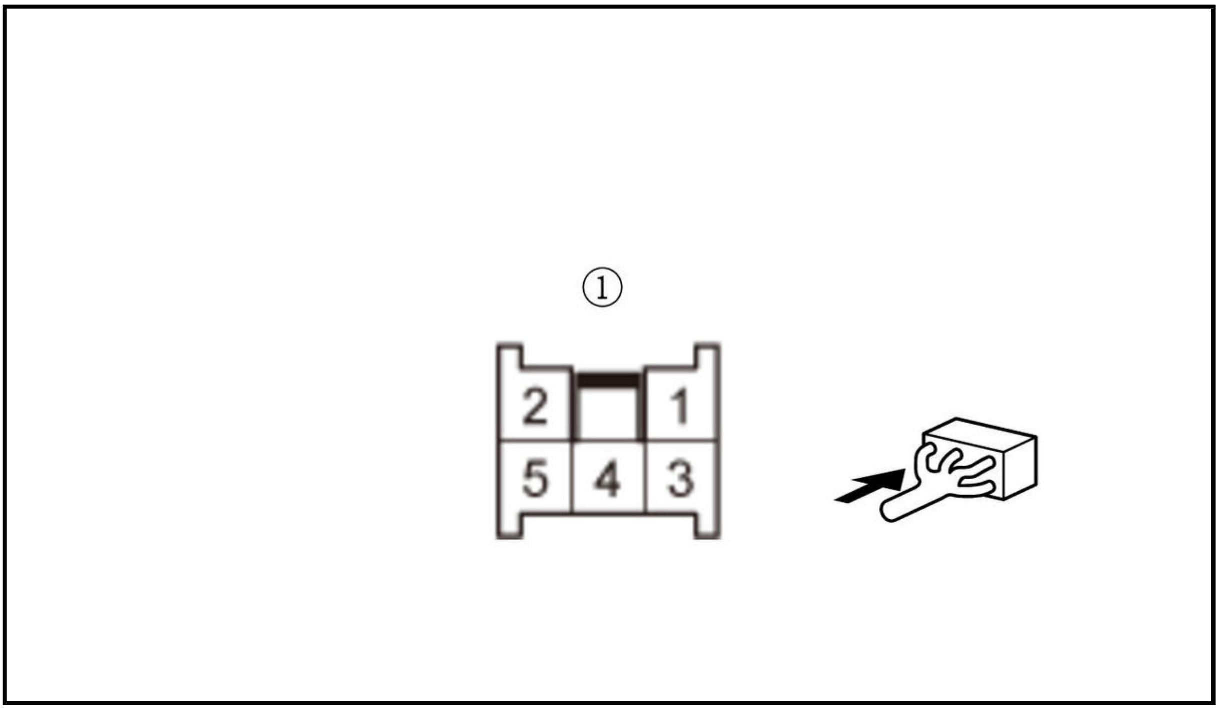

Is there battery voltage?

YES

The +B DC/DC1 wire is OK. **Replace the DC-DC converter** . If DTC P0A94 was indicated after the DC-DC converter was replaced, check for any authorized service information related to the DTCs or symptoms you are troubleshooting, or **substitute a known-good PCM** .

NO

Repair an open in the +B DC/DC1 wire between the DC-DC converter and the **No. A1-1 fuse** .

9. Fuse check

-1. Check the following fuse.

Fuse	**No. A4-3**

Is the fuse OK?

YES

Go to step 10.

NO

Check for a short in the +B DC/DC2 wire between the DC-DC converter and the No. A4-3 fuse, the DCDC OUT2 wire between the DC-DC converter and the under-hood fuse/relay box, and repair it if needed. If the wires are OK, **replace the DC-DC converter** . Also replace the No. A4-3 fuse.

10. Open wire check (+B DC/DC2 line)

-1. Disconnect the following connector.

DC-DC converter connector B (5P)

-2. Measure the voltage between test points 1 and 2.

Test condition	Vehicle OFF (LOCK) mode

B	DC-DC converter connector B (5P): disconnected
Test point 1	DC-DC converter connector B (5P) (female terminals) No. 2: ①
Test point 2	Body ground

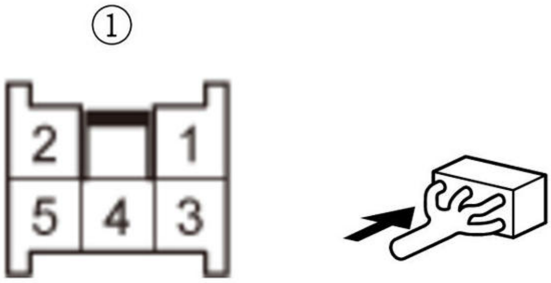

Is there battery voltage?

YES

The +B DC/DC2 wire is OK. **Replace the DC-DC converter** . If DTC P0A94 was indicated after the DC-DC converter was replaced, check for any authorized service information related to the DTCs or symptoms you are troubleshooting, or **substitute a known-good PCM** .

NO

Repair an open in the +B DC/DC2 wire between the DC-DC converter and the **No. A4-3 fuse** .

DTC P1009 (1.5 L ENGINE)

DTC P1009 : VTC A Advance Malfunction

NOTE:

- Before you troubleshoot, **review the general troubleshooting information** .
- If DTC P0341 is stored at the same time as DTC P1009, troubleshoot DTC P1009 first, then recheck for DTC P0341.
- If DTC P1009 set after replacing the VTC actuator, verify that the correct timing marks on the crank pulley were used.

DTC Description	Confirmed DTC	Pending DTC
P1009 VTC A Advance Malfunction	B	B

DTC (PGM-FI)

1. Problem verification

-1. Turn the vehicle to the ON mode.

-2. Clear the DTC with the HDS.

-3. Turn the vehicle to the OFF (LOCK) mode.

-4. Start the engine.

-5. Check for Pending or Confirmed DTCs with the HDS.

DTC Description	Confirmed DTC	Pending DTC
P1009 VTC A Advance Malfunction	B	B

Is DTC P1009 indicated?

YES

Go to step 2.

NO

Intermittent failure, the system is OK at this time. **If the on-board snapshot of this DTC is recorded, try to reproduce the failure under the same conditions with the on-board snapshot** .

2. VTC oil control solenoid valve A operation check

   -1. Turn the vehicle to the OFF (LOCK) mode.

   -2. **Test VTC oil control solenoid valve A** .

   Is the solenoid valve OK?

   YES

   Go to step 3.

   NO

   Replace VTC oil control solenoid valve A .

3. VTC actuator A check

   -1. **Inspect VTC actuator A** .

   Is the actuator OK?

   YES

   Check the VTC system oil passages and clean them if needed.

   NO

   Replace VTC actuator A .

DTC P1009 (2.4 L ENGINE) (2017 2018 2019)

DTC P1009 : VTC Advance Malfunction

NOTE:

- Before you troubleshoot, **review the general troubleshooting information** .
- If DTC P0341 is stored at the same time as DTC P1009, troubleshoot DTC P1009 first, then recheck for DTC P0341.

- If DTC P1009 set after replacing the VTC actuator, verify that the correct timing marks on the crank pulley were used.

DTC Description	Confirmed DTC	Pending DTC
P1009 VTC Advance Malfunction	B	B

DTC (PGM-FI)

1. Problem verification

   -1. Turn the vehicle to the ON mode.

   -2. Clear the DTC with the HDS.

   -3. Start the engine.

   -4. Check for Pending or Confirmed DTCs with the HDS.

DTC Description	Confirmed DTC	Pending DTC
P1009 VTC Advance Malfunction	B	B

   Is DTC P1009 indicated?

   YES

   Go to step 2.

   NO

   Intermittent failure, the system is OK at this time. **If the on-board snapshot of this DTC is recorded, try to reproduce the failure under the same conditions with the on-board snapshot** .

2. VTC oil control solenoid valve operation check

   -1. **Test the VTC oil control solenoid valve** .

   Is the VTC oil control solenoid valve OK?

   YES

   Go to step 3.

   NO

   Replace the VTC oil control solenoid valve .

3. VTC actuator check

   -1. **Inspect the VTC actuator** .

   Is the actuator OK?

   YES

   Check the VTC system oil passages and clean them if needed.

   NO

   Replace the VTC actuator .

DTC P101A (1.5 L ENGINE)

DTC P101A : VTC B Advance Malfunction

NOTE:

- Before you troubleshoot, **review the general troubleshooting information** .
- If DTC P0366 is stored at the same time as DTC P101A, troubleshoot DTC P101A first, then recheck for DTC P0366.
- If DTC P101A set after replacing the VTC actuator, verify that the correct timing marks on the crank pulley were used.

DTC Description	Confirmed DTC	Pending DTC
P101A VTC B Advance Malfunction	B	B

DTC (PGM-FI)

1. Problem verification

   -1. Turn the vehicle to the ON mode.

   -2. Clear the DTC with the HDS.

   -3. Turn the vehicle to the OFF (LOCK) mode.

   -4. Start the engine.

   -5. Check for Pending or Confirmed DTCs with the HDS.

DTC Description	Confirmed DTC	Pending DTC
P101A VTC B Advance Malfunction	B	B

   Is DTC P101A indicated?

   YES

   Go to step 2.

   NO

   Intermittent failure, the system is OK at this time. **If the on-board snapshot of this DTC is recorded, try to reproduce the failure under the same conditions with the on-board snapshot** .

2. VTC oil control solenoid valve B operation check

   -1. Turn the vehicle to the OFF (LOCK) mode.

   -2. **Test VTC oil control solenoid valve B** .

   Is the solenoid valve OK?

   YES

   Go to step 3.

   NO

   Replace VTC oil control solenoid valve B .

3. VTC actuator B check

-1. **Inspect VTC actuator B** .

Is the actuator OK?

YES

Check the VTC system oil passages and clean them if needed.

NO

Replace VTC actuator B .

DTC P1172 (1.5 L ENGINE)

DTC P1172 : A/F Sensor (Sensor 1) Circuit Out of Range High

NOTE: Before you troubleshoot, **review the general troubleshooting information** .

DTC Description	Confirmed DTC	Pending DTC
P1172 A/F Sensor (Sensor 1) Circuit Out of Range High	B	B

DTC (PGM-FI)

1. Problem verification

-1. Turn the vehicle to the ON mode.

-2. Clear the DTC with the HDS.

-3. Start the engine.

-4. Hold the engine speed at 3, 000 rpm without load (in P or N) until the radiator fan comes on, then let it idle.

-5. Monitor the OBD STATUS for P1172 in the DTCs MENU with the HDS.

DTC Description	OBD STATUS
P1172 A/F Sensor (Sensor 1) Circuit Out of Range High	B

Does the HDS indicate FAILED?

YES

The failure is duplicated. **Replace the A/F sensor (Sensor 1)** .

NO

If the HDS indicates PASSED, intermittent failure, the system is OK at this time. Check for poor connections or loose terminals at the A/F Sensor (Sensor 1) and the PCM. **If the on-board snapshot of this DTC is recorded, try to reproduce the failure under the same conditions with the on-board snapshot** . If the HDS indicates EXECUTING, keep driving until a result comes on. If the HDS indicates OUT OF CONDITION, go to step 1-4 and recheck.

DTC P1172 (2.4 L ENGINE) (2017 2018 2019)

DTC P1172 : A/F Sensor (Sensor 1) Circuit Out of Range High

NOTE: Before you troubleshoot, **review the general troubleshooting information** .

DTC Description	Confirmed DTC	Pending DTC
P1172 A/F Sensor (Sensor 1) Circuit Out of Range High	B	B

DTC (PGM-FI)

1. Problem verification

   -1. Turn the vehicle to the ON mode.

   -2. Clear the DTC with the HDS.

   -3. Start the engine.

   -4. Hold the engine speed at 3, 000 rpm without load (in P or N) until the radiator fan comes on, then let it idle.

   -5. Monitor the OBD STATUS for P1172 in the DTCs MENU with the HDS.

DTC Description	OBD STATUS
P1172 A/F Sensor (Sensor 1) Circuit Out of Range High	B

Does the HDS indicate FAILED?

YES

The failure is duplicated. **Replace the A/F sensor (Sensor 1)** .

NO

If the HDS indicates PASSED, intermittent failure, the system is OK at this time. Check for poor connections or loose terminals at the A/F Sensor (Sensor 1) and the PCM. **If the on-board snapshot of this DTC is recorded, try to reproduce the failure under the same conditions with the on-board snapshot** . If the HDS indicates EXECUTING, keep driving until a result comes on. If the HDS indicates OUT OF CONDITION, go to step 1-4 and recheck.

DTC P1320 (1.5 L ENGINE)

DTC P1320 : Super Knock

NOTE:

- Before you troubleshoot, **review the general troubleshooting information** .
- Make sure the spark plugs are genuine parts and have the correct part number for the vehicle. If the plugs are aftermarket's products or they do not have the correct part number, they may cause this DTC.

DTC Description	Confirmed DTC	Pending DTC
P1320 Super Knock	B	B

DTC (PGM-FI)

1. Problem verification

   -1. Record all the on-board snapshots with the HDS.

   -2. Turn the vehicle to the ON mode.

   -3. Clear the DTC with the HDS.

-4. Test-drive the vehicle for several minutes in the range of these recorded on-board snapshot parameters:

- Engine Speed
- Vehicle Speed
- ECT Sensor 1
- MAP Sensor (Hi Res)
- REL TP Sensor
- IAT Sensor (1)

On-board Snapshot

Signal	Current conditions	
	Values	Unit
Engine Speed	B	B
Vehicle Speed	B	B
ECT Sensor 1 Voltage	B	B
MAP Sensor (Hi Res)	B	B
REL TP Sensor	B	B
IAT Sensor (1)	B	B

-5. Check for Pending or Confirmed DTCs with the HDS.

DTC Description	Confirmed DTC	Pending DTC
P1320 Super Knock	B	B

Is DTC P1320 indicated?

YES

The failure is duplicated. **Check for damage of the spark plug (s) and replace them if needed** .

NO

Intermittent failure, the system is OK at this time. Check for poor connections or loose terminals at the PCM. **If the on-board snapshot of this DTC is recorded, try to reproduce the failure under the same conditions with the on-board snapshot** .

DTC P1454, P2422 (2.4 L ENGINE) (2017 2018 2019)

DTC P1454 : FTP Sensor Circuit Range/Performance Problem **DTC P2422** : EVAP Canister Vent Shut Valve Stuck Closed Malfunction

NOTE: Before you troubleshoot, **review the general troubleshooting information** .

DTC Description	Confirmed DTC	Pending DTC
P1454 FTP Sensor Circuit Range/Performance Problem	B	B
P2422 EVAP Canister Vent Shut Valve Stuck Closed Malfunction	B	B

DTC (PGM-FI)

1. EVAP system check

-1. Turn the vehicle to the ON mode.

-2. Clear the DTC with the HDS.

-3. Turn the vehicle to the OFF (LOCK) mode.

-4. Insert the emergency fuel funnel into the fuel filler neck .

NOTE: The emergency fuel funnel is stored under the cargo lining.

-5. Turn the vehicle to the ON mode.

-6. Check the parameter (s) below with the HDS.

Signal	**Threshold**		**Current conditions**	
	Values	**Unit**	**Values**	**Unit**
FTP SENSOR	-0.67-0.67	kPa	B	B

Do the current condition (s) match the threshold?

YES

Go to step 2.

NO

Go to step 5.

2. Problem verification

-1. Remove the emergency fuel funnel from the fuel filler neck.

-2. Clear the DTC with the HDS.

-3. Start the engine, and let it idle without load (in P or N) until the radiator fan comes on.

-4. Monitor the EVAP PC DUTY (purge control duty) in the DATA LIST with the HDS, while holding the engine speed at 3, 000 rpm with the EVAP PC DUTY at 20 % or more for at least 4 minutes, then let the engine idle.

Signal	**Current conditions**	
	Values	**Unit**
EVAP PC DUTY	B	B

-5. Monitor the OBD STATUS for DTC P1454 and/or P2422 in the DTCs MENU with the HDS.

DTC Description	**OBD STATUS**
P1454 FTP Sensor Circuit Range/Performance Problem	B
P2422 EVAP Canister Vent Shut Valve Stuck Closed Malfunction	B

Does the HDS indicate FAILED?

YES

The failure is duplicated. Go to step 3.

NO

If the HDS indicates PASSED, there might be an intermittent failure, and the system is OK at this time. **Check the on-board snapshot, and repeat the driving conditions when the DTC set (fuel level, engine speed, vehicle speed, and outside air temperature)** . If no problem is found, check for poor connections or loose terminals between the FTP sensor and the PCM. Also check for a blockage in the FTP sensor vent port and vent hose, and the EVAP canister vent hose and drain joint. If the HDS indicates NOT COMPLETED, let the engine idle until a result comes on.

3. EVAP canister vent line check

-1. Turn the vehicle to the OFF (LOCK) mode.

-2. Clear the DTC with the HDS.

-3. Disconnect the EVAP canister vent hose (A) from the EVAP canister (B).

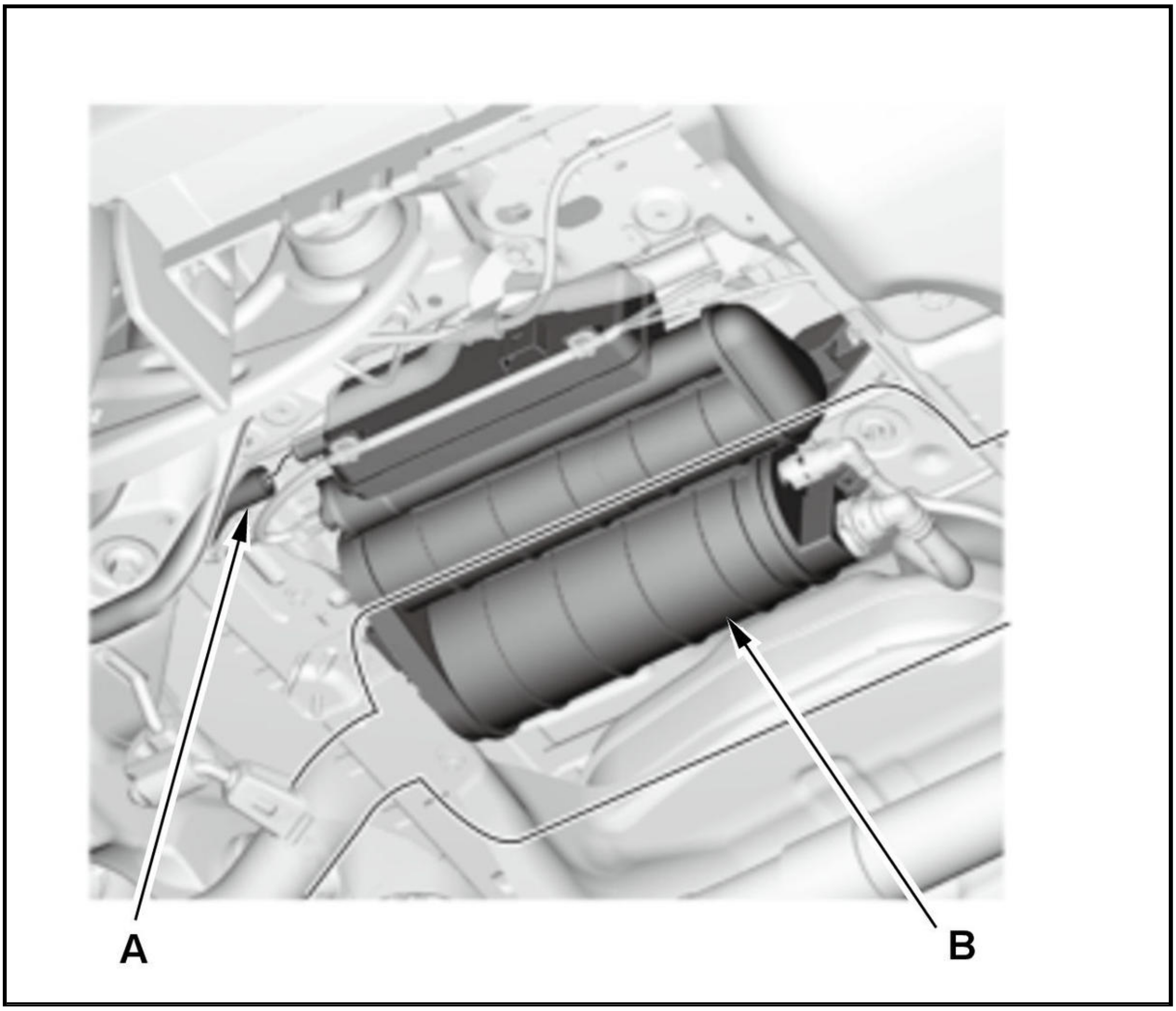

-4. Turn the vehicle to the ON mode.

-5. Check the parameter (s) below with the HDS.

Signal	Threshold		Current conditions	
	Values	Unit	Values	Unit
FTP SENSOR	-0.67-0.67	kPa	B	B

Do the current condition (s) match the threshold?

YES

Check for a blockage in the EVAP canister vent hose or drain tube joint.

NO

Go to step 4.

4. EVAP canister vent shut valve operation check

-1. Turn the vehicle to the OFF (LOCK) mode.

-2. **Remove the EVAP canister vent shut valve** .

-3. Connect the 2P connector to the EVAP canister vent shut valve.

-4. Turn the vehicle to the ON mode.

-5. Select the EVAP TEST in the INSPECTION MENU, and do the EVAP CVS ON in the SINGLE SOLENOID with the HDS.

SINGLE SOLENOID

Check the EVAP canister vent shut valve (A) operation.

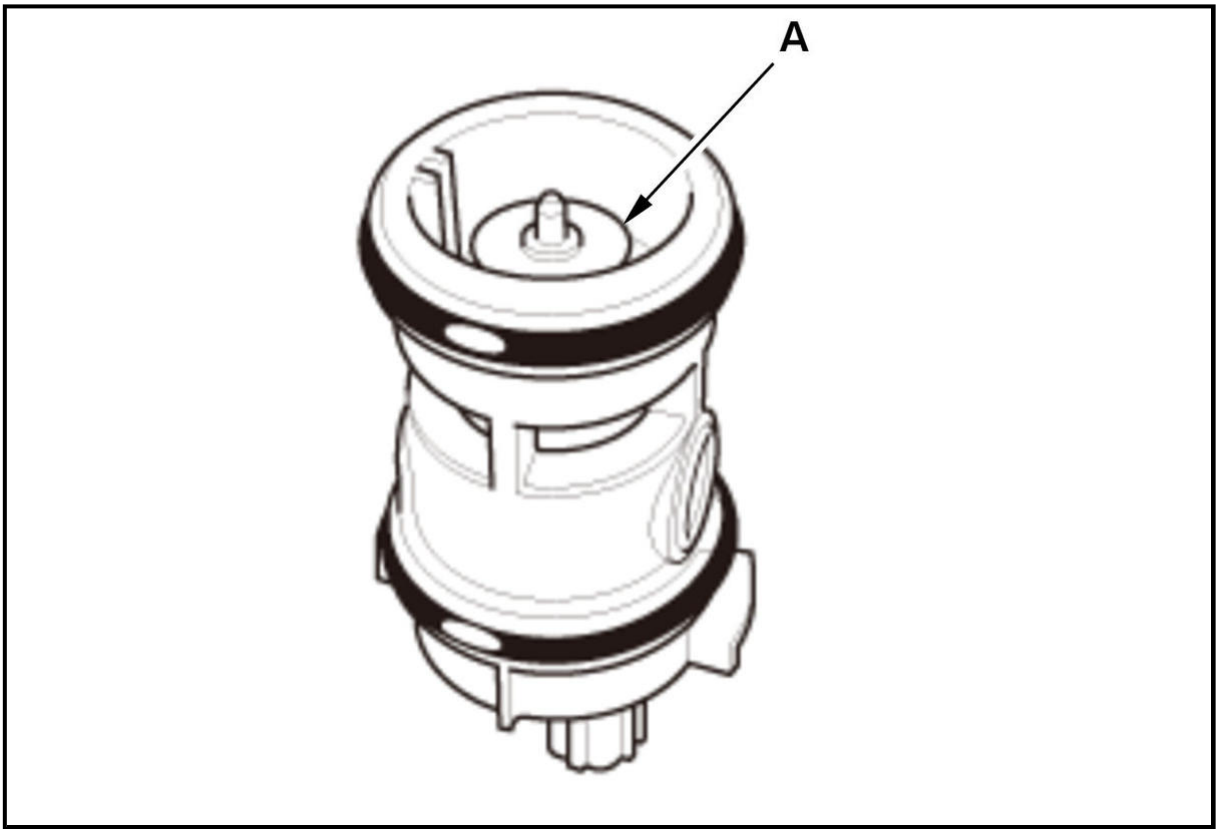

Is the valve free of corrosion, and does it operate properly?

YES

The EVAP canister vent shut valve is OK. Go to step 5.

NO

Replace the EVAP canister vent shut valve .

5. FTP sensor vent hose restriction check

-1. Disconnect the hose (A) from the FTP sensor (B).

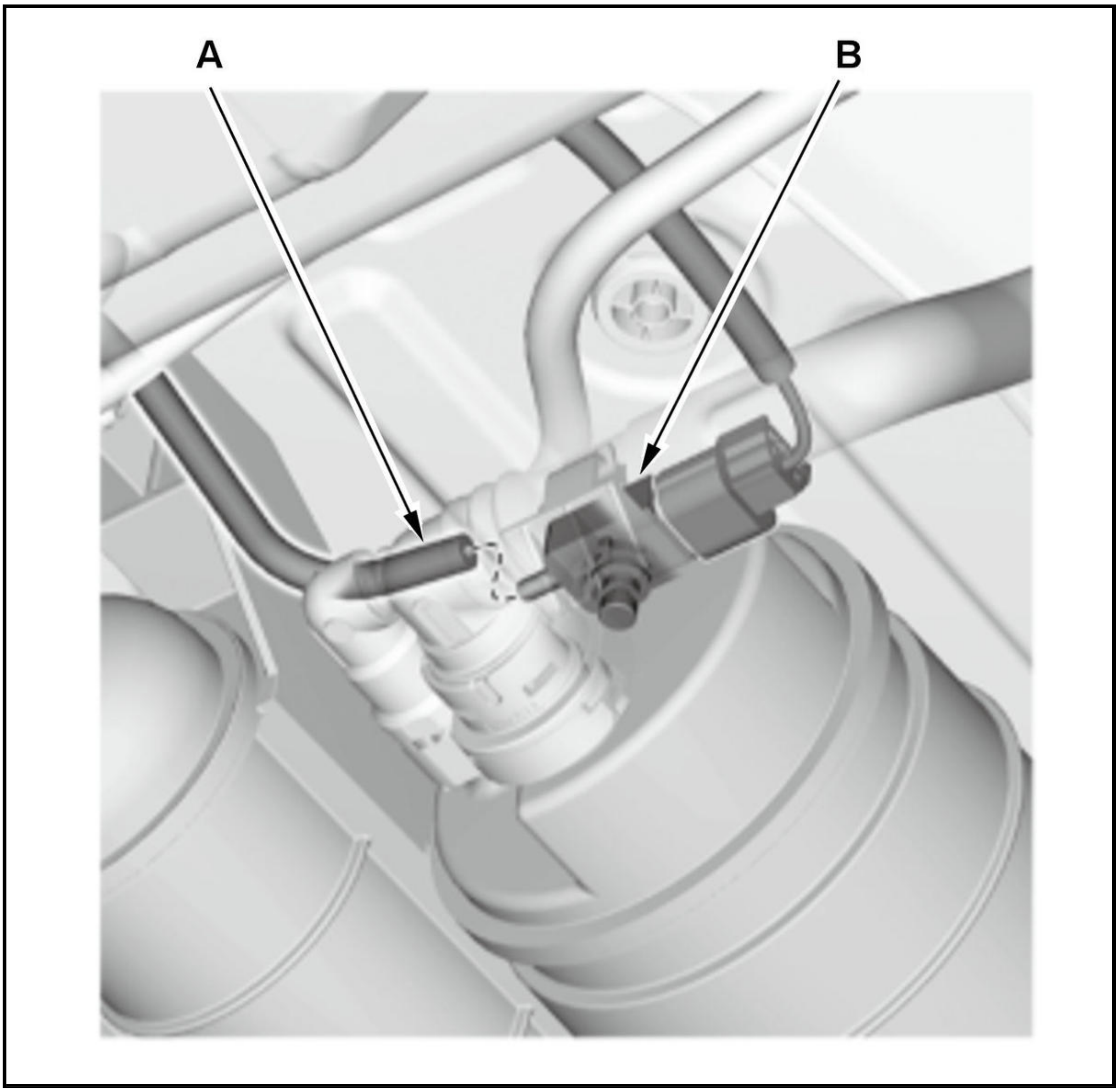

-2. Check the parameter (s) below with the HDS.

Signal	Threshold		Current conditions	
	Values	Unit	Values	Unit
FTP SENSOR	-0.67-0.67	kPa	B	B

Do the current condition (s) match the threshold?

YES

Check for a blockage in the FTP sensor vent hose.

NO

Go to step 6.

6. FTP sensor port restriction check

-1. Turn the vehicle to the OFF (LOCK) mode.

-2. Remove the FTP sensor (A) from the EVAP canister with its connector connected.

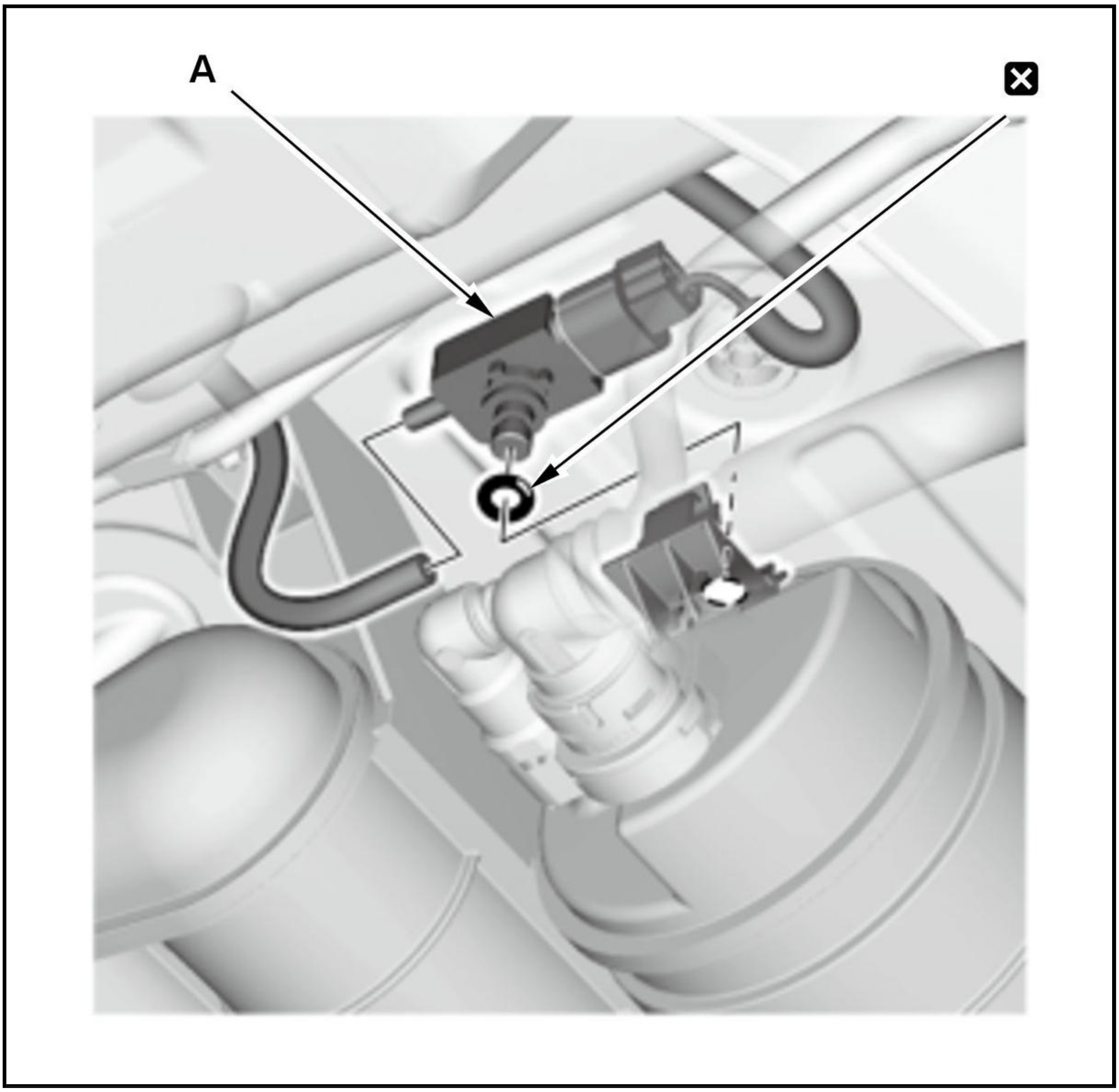

-3. Turn the vehicle to the ON mode.

-4. Check the parameter (s) below with the HDS.

Signal	Threshold		Current conditions	
	Values	Unit	Values	Unit
FTP SENSOR	-0.67-0.67	kPa	B	B

Do the current condition (s) match the threshold?

YES

The FTP sensor port is OK. The EVAP canister has an internal blockage; **replace the EVAP canister** .

NO

Replace the FTP sensor .

DTC P1458 (2.4 L ENGINE) (2017 2018 2019)

DTC P1458 : FTP Sensor Circuit Range/Performance Problem

Special Tools Required

Vacuum Pump/Gauge, 0-30 inHg Snap-on YA4000A or equivalent, commercially available

NOTE:

- Before you troubleshoot, **review the general troubleshooting information** .
- If any of DTCs listed below are indicated at the same time as DTC P1458, troubleshoot those DTCs first, then recheck for P1458.

  P0451, P0452, P0453, P1454: FTP sensor

  P2422: EVAP canister vent shut valve

- Do not start the engine during this troubleshooting.

DTC Description	Confirmed DTC	Pending DTC
P1458 FTP Sensor Circuit Range/Performance Problem	B	B

DTC (PGM-FI)

1. Fuel level check

   -1. Turn the vehicle to the ON mode.

   -2. Note these recorded on-board snapshot parameters with the HDS:

   - MAX Value of FTP SENSOR
   - MIN Value of FTP SENSOR
   - FUEL LEVEL

   On-board Snapshot

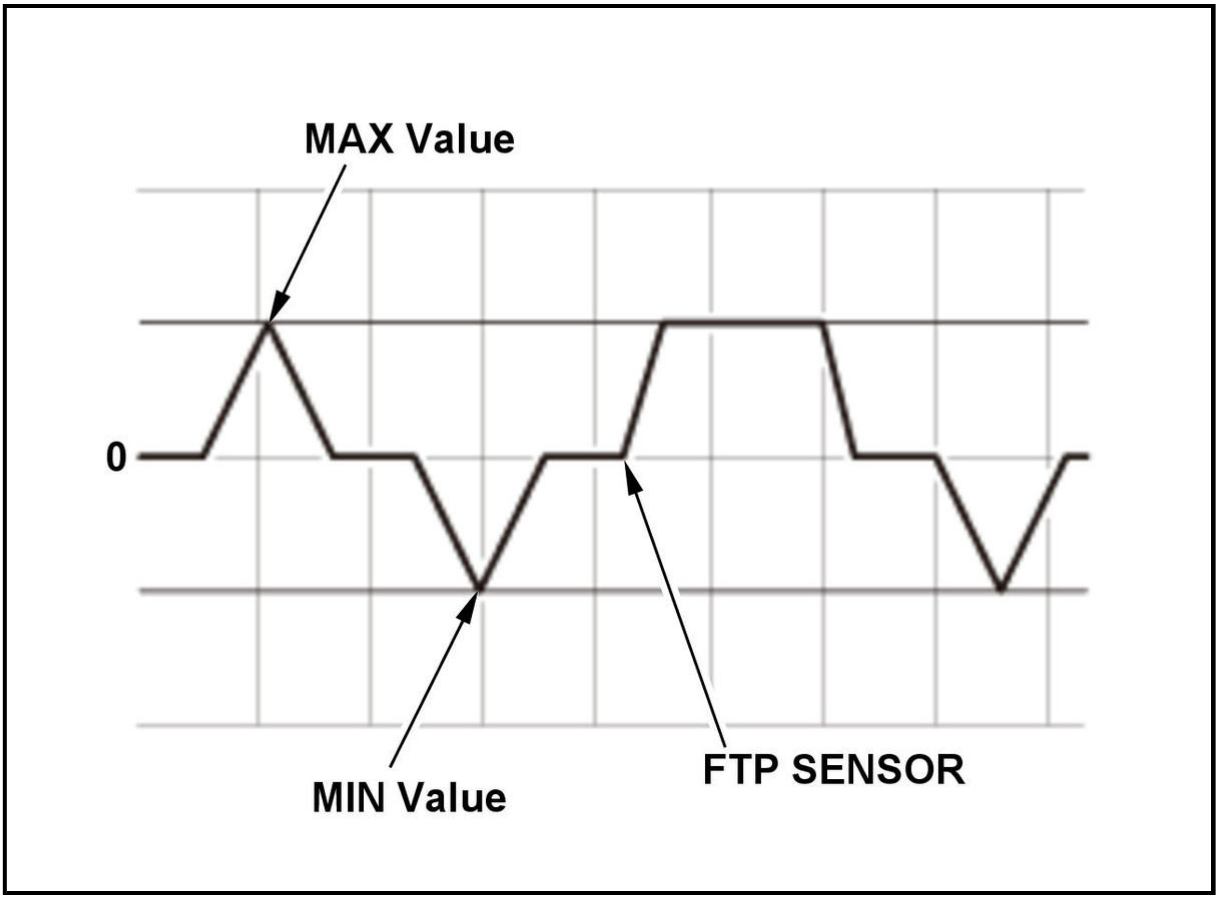

   -3. Check the FUEL LEVEL in the DATA LIST with the HDS.

Signal	Current conditions	
	Values	Unit
FUEL LEVEL	B	B

Is the current FUEL LEVEL less than it is on the on-board snapshot?

YES

Go to step 2.

NO

Drain the fuel until the FUEL LEVEL is less than it is on the on-board snapshot, then go to step 2.

2. Determine possible failure area (FTP sensor, others)

   -1. Select the EVAP TEST in the INSPECTION MENU, then select the EVAP CVS OFF in the SINGLE SOLENOID with the HDS.

   SINGLE SOLENOID

   Take a snapshot with the HDS for 3 minutes without starting the engine.

   Check the recorded snapshot parameter with the HDS:

   - MAX Value of FTP SENSOR (FINE)
   - MIN Value of FTP SENSOR (FINE)

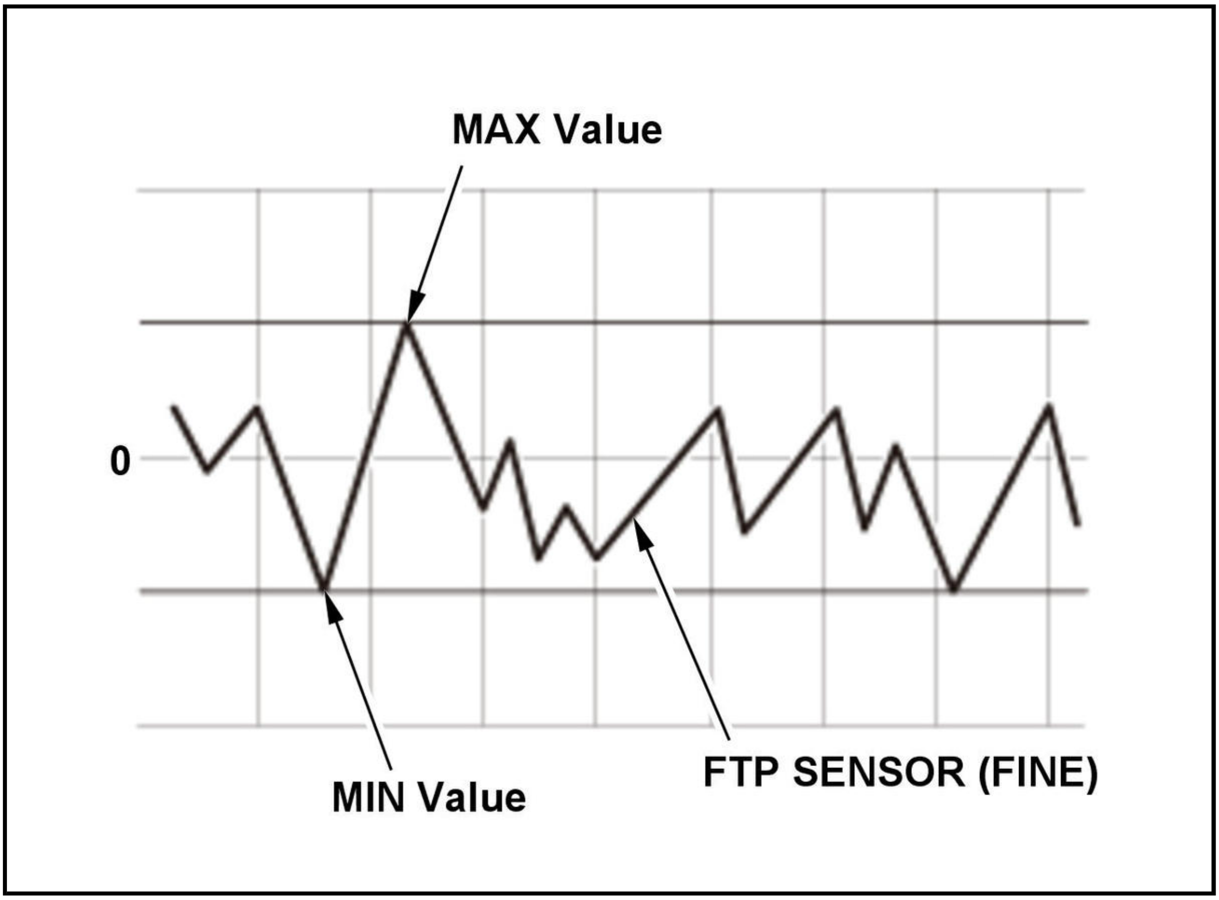

Are the MAX and MIN values of the FTP SENSOR (FINE) within the range of +/-0.67 kPa (0.2 inHg, 5 mmHg)?

YES

Go to step 3.

NO

Go to step 5.

3. FTP sensor performance check 1

-1. Check the FTP SENSOR (FINE) in the recorded snapshot with the HDS.

Does it vary 0.067 kPa (0.02 inHg, 0.5 mmHg) or more within 3 seconds?

YES

Go to step 4.

NO

Intermittent failure, the system is OK at this time. Check for poor connections or loose terminals at the FTP sensor, the EVAP canister vent shut valve, and the PCM. Also check for a blockage in the EVAP vent hose. **If the on-board snapshot of this DTC is recorded, try to reproduce the failure under the same conditions with the on-board snapshot** .

4. FTP sensor performance check 2

-1. Turn the vehicle to the OFF (LOCK) mode.

-2. **Remove the FTP sensor** .

-3. Reconnect the following connector.

FTP sensor 3P connector

-4. Turn the vehicle to the ON mode.

-5. Check the parameter (s) below with the HDS.

Signal	Current conditions	
	Values	Unit
FTP SENSOR (FINE)	B	B

Does it vary 0.067 kPa (0.02 inHg, 0.5 mmHg) or more within 3 seconds?

YES

Replace the FTP sensor .

NO

Intermittent failure, the system is OK at this time. Check for poor connections or loose terminals at the FTP sensor, the EVAP canister vent shut valve, and the PCM. Also check for a blockage in the EVAP vent hose. **If the on-board snapshot of this DTC is recorded, try to reproduce the failure under the same conditions with the on-board snapshot** .

5. Determine possible failure area (EVAP canister vent line, others)

-1. **Insert the emergency fuel funnel into the fuel filler neck** , and wait 1 minute.

NOTE: The emergency fuel funnel is stored under the cargo lining.

-2. Check the parameter (s) below with the HDS.

Signal	Threshold		Current conditions	
	Values	Unit	Values	Unit
FTP SENSOR (FINE)	More than 0.67	kPa	B	B
	Less than -0.67	kPa		

Do the current condition (s) match the threshold?

YES

Go to step 6.

NO

Remove the emergency fuel funnel from the fuel filler neck, then go to step 8.

6. FTP sensor vent hose check

-1. Turn the vehicle to the OFF (LOCK) mode.

-2. **Remove the FTP sensor** .

-3. Reconnect the following connector.

FTP sensor 3P connector

-4. Turn the vehicle to the ON mode.

-5. Check the parameter (s) below with the HDS.

Signal	Threshold		Current conditions	
	Values	Unit	Values	Unit
FTP SENSOR (FINE)	More than 0.67	kPa	B	B
	Less than -0.67	kPa		

Do the current condition (s) match the threshold?

YES

Go to step 7.

NO

Remove the blockage in the FTP sensor vent hose. Replace the hose if needed.

7. FTP sensor port visual check

-1. Turn the vehicle to the OFF (LOCK) mode.

-2. Disconnect the following connector.

FTP sensor 3P connector

-3. Check for a blockage or damage at the FTP sensor ports (EVAP canister side and vent side).

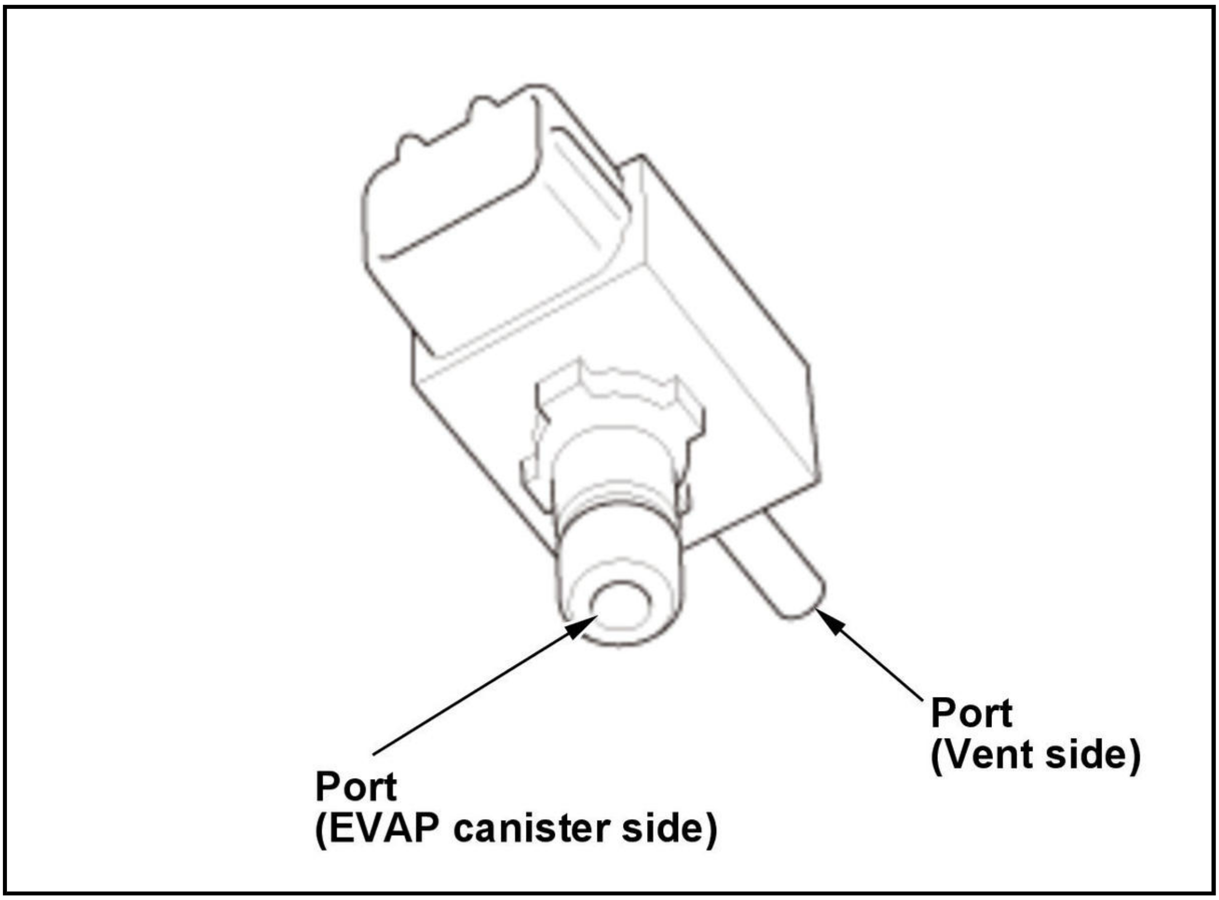
Port
(Vent side)
Port
(EVAP canister side)

Is there any blockage or damage?

YES

Remove the blockage, and **replace the FTP sensor** if needed.

NO

Replace the FTP sensor .

8. EVAP canister vent shut valve check

   -1. Turn the vehicle to the OFF (LOCK) mode.

   -2. Disconnect the EVAP canister vent hose (A) from the EVAP canister (B), then connect a vacuum pump/gauge, 0-30 inHg, to the EVAP canister as shown.

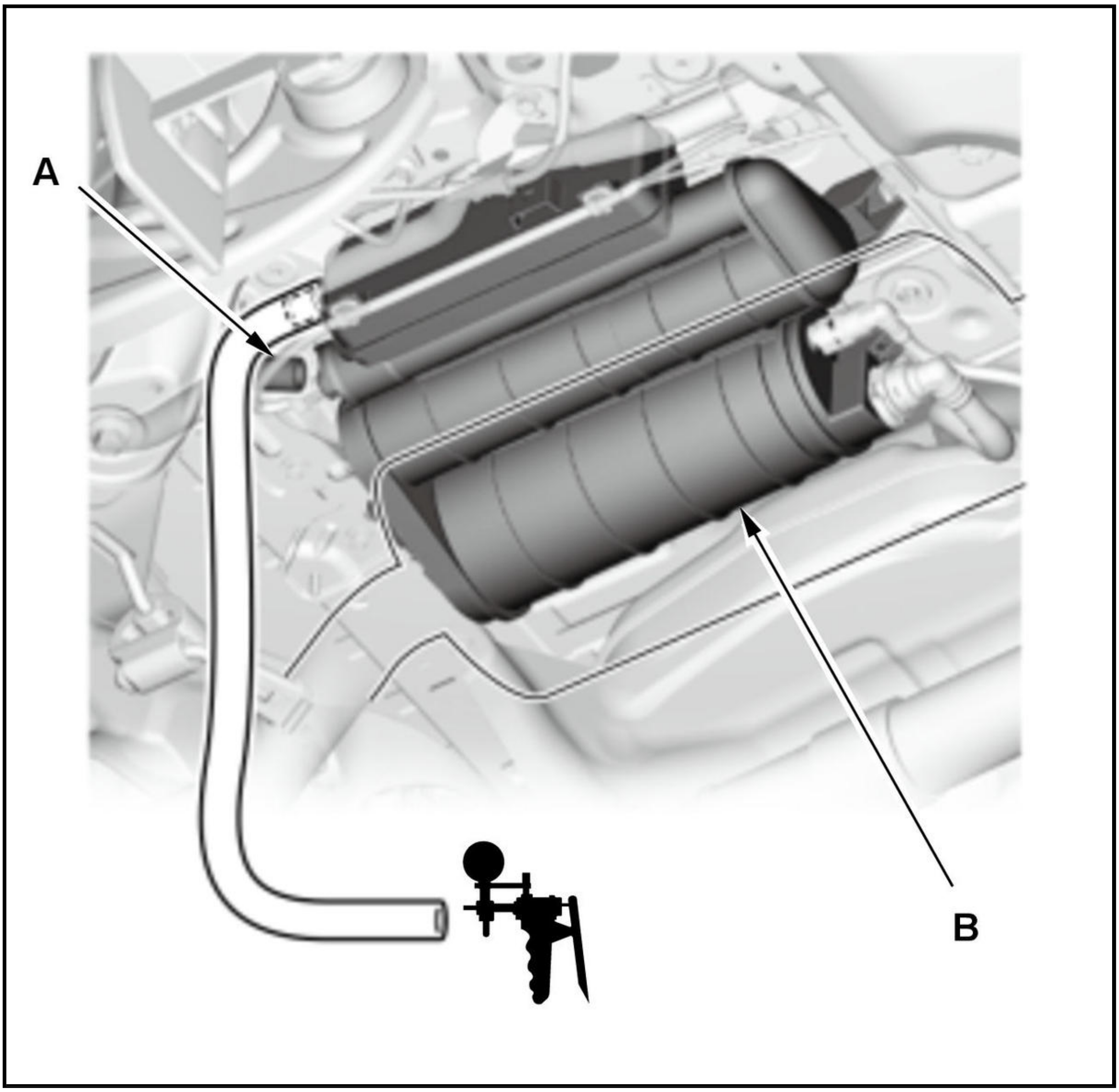

-3. Turn the vehicle to the ON mode.

-4. Select the EVAP TEST in the INSPECTION MENU, then select the EVAP CVS OFF in the SINGLE SOLENOID with the HDS.

SINGLE SOLENOID

-5. Try to apply vacuum to the valve (not more than 5.3 kPa (1.6 inHg, 40 mmHg)) while checking the FTP SENSOR (FINE) in the DATA LIST with the HDS.

NOTE: To avoid damaging the FTP sensor, do not apply more than 5.3 kPa (1.6 inHg, 40 mmHg) of vacuum.

Signal	Current conditions	
	Values	**Unit**
FTP SENSOR (FINE)	B	B

Does the valve hold more than 1.3 kPa (0.4 inHg, 10 mmHg) of vacuum?

YES

Replace the EVAP canister vent shut valve .

NO

The EVAP canister vent shut valve is OK. Remove the blockage in the EVAP canister vent hose. Replace the hose if needed.

DTC P145D (1.5 L ENGINE)

DTC P145D : EVAP System Purge Flow Malfunction at turbocharging

NOTE:

- Before you troubleshoot, review the general troubleshooting information .
- If DTC P145D is indicated alone, do the troubleshooting for DTC P04DF and P04F0 using the on-board snapshot for P145D.
- If DTC P0441, P04F0, P04F1, and P145D are stored at the same time, check for a poor connection, a blockage, or damage at the EVAP canister purge line between the EVAP canister purge valve and the EVAP canister. Also check for a stuck closed EVAP canister purge valve.
- If any of the DTCs listed below are indicated at the same time as DTC P145D, troubleshoot those DTCs first, then recheck for P145D.

  P04DF, P04F0, P04F1: EVAP system purge flow

DTC Description	Confirmed DTC	Pending DTC
P145D EVAP System Purge Flow Malfunction at turbocharging	B	B

DTC (PGM-FI)

1. DTC check

   -1. Turn the vehicle to the ON mode.

   -2. Select the EVAP TEST (ELCM) in the INSPECTION MENU, then select EVAP Purge Flow Check Test with the HDS.

   EVAP TEST (ELCM)

   -3. Check for Pending or Confirmed DTCs with the HDS.

DTC Description	Confirmed DTC	Pending DTC
P04DF EVAP System High Purge Flow Detected	B	B
P04F0 EVAP System Incorrect Purge Flow Detected	B	B
P04F1 EVAP System Low Purge Flow Detected	B	B
P145D EVAP System Purge Flow Malfunction at turbocharging	B	B

   Are DTC P04DF, P04F0, or P04F1 and P145D indicated at the same time?

   YES

   Go to the indicated DTC's troubleshooting.

   NO

   Go to the troubleshooting for DTC P04DF , DTC P04F0 , and DTC P04F1 .

DTC P145F, P1461, P1462, P24C1 (1.5 L ENGINE)

DTC P145F : EVAP Leak Check Module Pressure Sensor Range/Performance Problem **DTC P1461** : EVAP Leak Check Module Pressure Sensor Shifts **DTC P1462** : EVAP Leak Check Module Pressure Decompression

Defect **DTC P24C1** : Canister Change Over Valve Stuck Close

NOTE: Before you troubleshoot, **review the general troubleshooting information** .

DTC Description	Confirmed DTC	Pending DTC
P145F EVAP Leak Check Module Pressure Sensor Range/Performance Problem	B	B
P1461 EVAP Leak Check Module Pressure Sensor Shifts	B	B
P1462 EVAP Leak Check Module Pressure Decompression Defect	B	B
P24C1 Canister Change Over Valve Stuck Close	B	B

DTC (PGM-FI)

1. Problem verification

   -1. Turn the vehicle to the ON mode.

   -2. Clear the DTC with the HDS.

   -3. Turn the vehicle to the OFF (LOCK) mode.

   -4. Turn the vehicle to the ON mode.

   -5. Select the EVAP TEST (ELCM) in the INSPECTION MENU, then select EVAP Leak Check Module Test with the HDS.

   EVAP TEST (ELCM)

   Is the result OK?

   YES

   If the test result is PASSED, intermittent failure, the system is OK at this time. Check for poor connections or loose terminals at the EVAP leak check module and the PCM. **If the on-board snapshot of this DTC is recorded, try to reproduce the failure under the same conditions with the on-board snapshot** .

   NO

   The failure is duplicated. Go to step 2.

2. EVAP leak check module drain hose check

   -1. **Remove the EVAP leak check module** and the **EVAP canister filter** , then check the blockage in the drain hoses and the EVAP canister filter.

   Are the parts OK?

   YES

   Replace the EVAP leak check module .

   NO

   Remove the blockage from them, or replace the part (s) if needed.

DTC P1549 (1.5 L ENGINE)

DTC P1549 : Charging System High Voltage

NOTE:

- Before you troubleshoot, **review the general troubleshooting information** .
- If a high voltage battery (24 V, etc.) is connected to the vehicle, this DTC can be stored.

DTC Description	Confirmed DTC	Pending DTC
P1549 Charging System High Voltage	B	B

DTC (PGM-FI)

1. Problem verification

   -1. Turn the vehicle to the ON mode.

   -2. Clear the DTC with the HDS.

   -3. Turn the vehicle to the OFF (LOCK) mode.

   -4. Start the engine.

   -5. Check under these conditions:

   - A/C off
   - Headlights off
   - Rear window defogger off

   -6. Hold the engine speed at 3, 000 (rpm without load (in P or N) for 1 minute.

   -7. Check for Pending or Confirmed DTCs with the HDS.

DTC Description	Confirmed DTC	Pending DTC
P1549 Charging System High Voltage	B	B

Is DTC P1549 indicated?

YES

The failure is duplicated. **Replace the alternator** .

NO

Intermittent failure, the system is OK at this time. Check for poor connections or loose terminals at the alternator and the under-hood fuse/relay box. **If the on-board snapshot of this DTC is recorded, try to reproduce the failure under the same conditions with the on-board snapshot** .

DTC P1549 (2.4 L ENGINE) (2017 2018 2019)

DTC P1549 : Charging System High Voltage

NOTE:

- Before you troubleshoot, **review the general troubleshooting information** .
- If a high voltage battery (24 V, etc.) is connected to the vehicle, this DTC can be stored.

DTC Description	Confirmed DTC	Pending DTC
P1549 Charging System High Voltage	B	B

DTC (PGM-FI)

1. Problem verification

   -1. Turn the vehicle to the ON mode.

   -2. Clear the DTC with the HDS.

   -3. Start the engine.

   -4. Check under these conditions:

   - A/C off
   - Headlights off
   - Rear window defogger off

   -5. Hold the engine speed at 3, 000 rpm without load (in P or N) for 1 minute.

   -6. Check for Pending or Confirmed DTCs with the HDS.

DTC Description	Confirmed DTC	Pending DTC
P1549 Charging System High Voltage	B	B

Is DTC P1549 indicated?

YES

The failure is duplicated. **Replace the alternator** .

NO

Intermittent failure, the system is OK at this time. Check for poor connections or loose terminals at the alternator and the under-hood fuse/relay box. **If the on-board snapshot of this DTC is recorded, try to reproduce the failure under the same conditions with the on-board snapshot** .

DTC P154A (1.5 L ENGINE)

DTC P154A : Battery Sensor Internal Failure

NOTE: Before you troubleshoot, **review the general troubleshooting information** .

DTC Description	Confirmed DTC	Pending DTC
P154A Battery Sensor Internal Failure	B	B

DTC (PGM-FI)

1. Problem verification

   -1. Turn the vehicle to the ON mode.

   -2. Clear the DTC with the HDS.

   -3. Turn the vehicle to the OFF (LOCK) mode.

   -4. Turn the vehicle to the ON mode, and wait 10 seconds.

   -5. Check for Pending or Confirmed DTCs with the HDS.

DTC Description	Confirmed DTC	Pending DTC
P154A Battery Sensor Internal Failure	B	B

Is DTC P154A indicated?

YES

The failure is duplicated. **Replace the 12 volt battery sensor** .

NO

Intermittent failure, the system is OK at this time. Check for poor connections or loose terminals at the 12 volt battery sensor and the PCM. **If the on-board snapshot of this DTC is recorded, try to reproduce the failure under the same conditions with the on-board snapshot** .

DTC P154A (2.4 L ENGINE) (2017 2018 2019)

DTC P154A : Battery Sensor Internal Failure

NOTE:

- Before you troubleshoot, **review the general troubleshooting information** .
- If the vehicle has an AGM type 12 volt battery, **do the 12 volt battery test** after this troubleshooting procedure to check the 12 volt battery performance.

DTC Description	Confirmed DTC	Pending DTC
P154A Battery Sensor Internal Failure	B	B

DTC (PGM-FI)

1. Problem verification

-1. Turn the vehicle to the ON mode.

-2. Clear the DTC with the HDS, and wait 10 seconds.

-3. Check for Pending or Confirmed DTCs with the HDS.

DTC Description	Confirmed DTC	Pending DTC
P154A Battery Sensor Internal Failure	B	B

Is DTC P154A indicated?

YES

The failure is duplicated. **Replace the 12 volt battery sensor** .

NO

Intermittent failure, the system is OK at this time. Check for poor connections or loose terminals at the 12 volt battery sensor and the gauge control module. **If the on-board snapshot of this DTC is recorded, try to reproduce the failure under the same conditions with the on-board snapshot** .

DTC P154B (1.5 L ENGINE) (2020 2021)

DTC P154B : Battery Sensor Characteristic Abnormal

NOTE: Before you troubleshoot, **review the general troubleshooting information** .

DTC Description	Confirmed DTC	Pending DTC
P154B Battery Sensor Characteristic Abnormal	B	B

DTC (PGM-FI)

1. DTC check

   -1. Turn the vehicle to the ON mode.

   -2. Check the Pending or Confirmed DTCs with the HDS.

DTC Description	Confirmed DTC	Pending DTC
P0112 IAT Sensor 1 Circuit Low Voltage	B	B
P0113 IAT Sensor Circuit High Voltage	B	B

   Is DTC P0112 and/or P0113 indicated?

   YES

   Go to the indicated DTC's troubleshooting.

   NO

   Go to step 2.

2. 12 volt battery temperature check

   -1. Open the hood, and measure the temperature around the 12 volt battery sensor with a thermometer.

   -2. Start the engine, and let it idle for 10 seconds, then check the parameter (s) below with the HDS.

Signal	Current conditions	
	Values	Unit
ESTIMATED BATTERY TEMPERATURE	B	B

   Does the value of ESTIMATED BATTERY TEMPERATURE differ 41 deg. F (23 deg. C) or more from the value of the thermometer?

   YES

   Replace the 12 volt battery sensor .

   NO

   Go to step 3.

3. 12 volt battery sensor signal check

   -1. Turn the vehicle to the OFF (LOCK) mode.

   -2. Turn the vehicle to the ON mode.

   -3. Check the parameter (s) below with the HDS.

Signal	Threshold		Current conditions	
	Values	Unit	Values	Unit
BATTERY CURRENT (BATTERY SENSOR)	More than 0	A	B	B

Do the current condition (s) match the threshold?

YES

Replace the 12 volt battery sensor .

NO

Intermittent failure, the system is OK at this time. Check for poor connections or loose terminals at the 12 volt battery sensor and the PCM. **If the on-board snapshot of this DTC is recorded, try to reproduce the failure under the same conditions with the on-board snapshot** .

DTC P1658 (1.5 L ENGINE)

DTC P1658 : ETCS Control Relay ON Malfunction

NOTE: Before you troubleshoot, **review the general troubleshooting information** .

DTC Description	Confirmed DTC	Pending DTC
P1658 ETCS Control Relay ON Malfunction	B	B

DTC (PGM-FI)

1. Problem verification

   -1. Turn the vehicle to the ON mode.

   -2. Select the ETCS TEST in the INSPECTION MENU with the HDS.

   ETCS TEST

   Is the RELAY circuit OK?

   YES

   Intermittent failure, the system is OK at this time. Check for poor connections or loose terminals at the relay circuit board (PGM-FI subrelay circuit) and the PCM. **If the on-board snapshot of this DTC is recorded, try to reproduce the failure under the same conditions with the on-board snapshot** .

   NO

   Go to step 2.

2. Relay circuit board check

   -1. Turn the vehicle to the OFF (LOCK) mode.

   -2. **Remove and test the relay circuit board** .

   Is the relay circuit board OK?

   YES

   Go to step 3.

   NO

   Replace the relay circuit board .

3. Shorted wire check (FI SUB RLY CL- line)

-1. Jump the SCS line with the HDS, and wait more than 1 minute.

-2. Disconnect the following connector.

PCM connector A (50P)

-3. Check for continuity between test points 1 and 2.

Test condition	Vehicle OFF (LOCK) mode
B	Relay circuit board: removed
B	PCM connector A (50P): disconnected
Test point 1	**PCM connector A (50P) No. 25**
Test point 2	Body ground

Is there continuity?

YES

Repair a short in the FI SUB RLY CL- wire between the PCM (A25) and the relay circuit board (PGM-FI subrelay circuit).

NO

Go to step 4.

4. Shorted wire check (FI SUB RLY OUT line to power)

-1. Exit the SCS mode with the HDS.

-2. Turn the vehicle to the ON mode.

-3. Measure the voltage between test points 1 and 2.

Test condition	Vehicle ON mode
B	Relay circuit board: removed
B	PCM connector A (50P): disconnected
Test point 1	**PCM connector A (50P) No. 16**
Test point 2	Body ground

Is there battery voltage?

YES

Repair a short to power in the FI SUB RLY OUT wire between the PCM (A16) and the relay circuit board (PGM-FI subrelay circuit).

NO

The FI SUB RLY OUT wire is OK. Check for any authorized service information related to the DTCs or symptoms you are troubleshooting, or **substitute a known-good PCM** .

DTC P1658 (2.4 L ENGINE) (2017 2018 2019)

DTC P1658 : ETCS Control Relay ON Malfunction

NOTE: Before you troubleshoot, **review the general troubleshooting information** .

DTC Description	Confirmed DTC	Pending DTC
P1658 ETCS Control Relay ON Malfunction	B	B

DTC (PGM-FI)

1. Problem verification

   -1. Turn the vehicle to the ON mode.

   -2. Select the ETCS TEST in the INSPECTION MENU with the HDS.

   ETCS TEST

   Is the RELAY circuit OK?

   YES

   Intermittent failure, the system is OK at this time. Check for poor connections or loose terminals at the relay circuit board (PGM-FI subrelay circuit) and the PCM. **If the on-board snapshot of this DTC is recorded, try to reproduce the failure under the same conditions with the on-board snapshot** .

   NO

   The failure is duplicated. Go to step 2.

2. Relay circuit board check

   -1. Turn the vehicle to the OFF (LOCK) mode.

   -2. **Remove and test the relay circuit board** .

   Is the relay circuit board OK?

   YES

   Go to step 3.

   NO

   Replace the relay circuit board .

3. Shorted wire check (DBW RLY- line)

   -1. Jump the SCS line with the HDS, and wait more than 1 minute.

   -2. Disconnect the following connector.

PCM connector A (51P)

   -3. Check for continuity between test points 1 and 2.

Test condition	Vehicle OFF (LOCK) mode
B	PCM connector A (51P): disconnected
B	Relay circuit board: removed
Test point 1	**PCM connector A (51P) No. 19**
Test point 2	Body ground

   Is there continuity?

YES

Repair a short in the DBW RLY- wire between the PCM (A19) and the relay circuit board (PGM-FI subrelay circuit).

NO

The DBW RLY- wire is OK. Go to step 4.

4. Shorted wire check (VBDBW/DBW RLY OUT line to power)

   -1. Disconnect the following connector.

PCM connector C (51P)

   -2. Turn the vehicle to the ON mode.

   -3. Measure the voltage between test points 1 and 2.

Test condition	Vehicle ON mode
B	PCM connector A (51P): disconnected
B	Relay circuit board: removed
B	PCM connector C (51P): disconnected
Test point 1	**PCM connector C (51P) No. 2**
Test point 2	Body ground

Is there battery voltage?

YES

Repair a short to power in the VBDBW/DBW RLY OUT wire between the PCM (C2) and the relay circuit board (PGM-FI subrelay circuit).

NO

The VBDBW/DBW RLY OUT wire is OK. Check for any authorized service information related to the DTCs or symptoms you are troubleshooting or **substitute a known-good PCM** .

DTC P1659 (1.5 L ENGINE)

DTC P1659 : ETCS Control Relay OFF Malfunction

NOTE: Before you troubleshoot, **review the general troubleshooting information** .

DTC Description	Confirmed DTC	Pending DTC
P1659 ECTS Control Relay OFF Malfunction	B	B

DTC (PGM-FI)

1. Problem verification

   -1. Turn the vehicle to the ON mode.

   -2. Clear the DTC with the HDS.

   -3. Check for Pending or Confirmed DTCs with the HDS.

DTC Description	Confirmed DTC	Pending DTC
P1659 ECTS Control Relay OFF Malfunction	B	B

Is DTC P1659 indicated?

YES

The failure is duplicated. Go to step 2.

NO

Intermittent failure, the system is OK at this time. Check for poor connections or loose terminals at the relay circuit board (PGM-FI subrelay circuit) and the PCM. **If the on-board snapshot of this DTC is recorded, try to reproduce the failure under the same conditions with the on-board snapshot** .

2. Relay circuit board check

-1. **Remove and test the relay circuit board** .

Is the relay circuit board OK?

YES

Go to step 3.

NO

Replace the relay circuit board .

3. Fuse check

-1. Turn the vehicle to the OFF (LOCK) mode.

-2. Check the following fuse.

Fuse	No. A8 (15 A)
Location	Under-hood fuse/relay box

Is the fuse OK?

YES

Go to step 4.

NO

Go to step 7.

4. Open wire check (+B FI SUB line)

-1. Measure the voltage between test points 1 and 2.

Test condition	Vehicle OFF (LOCK) mode
B	Relay circuit board: removed
Test point 1	Relay circuit board connector C (18P) (female terminals) No. 14: ①
Test point 2	Body ground

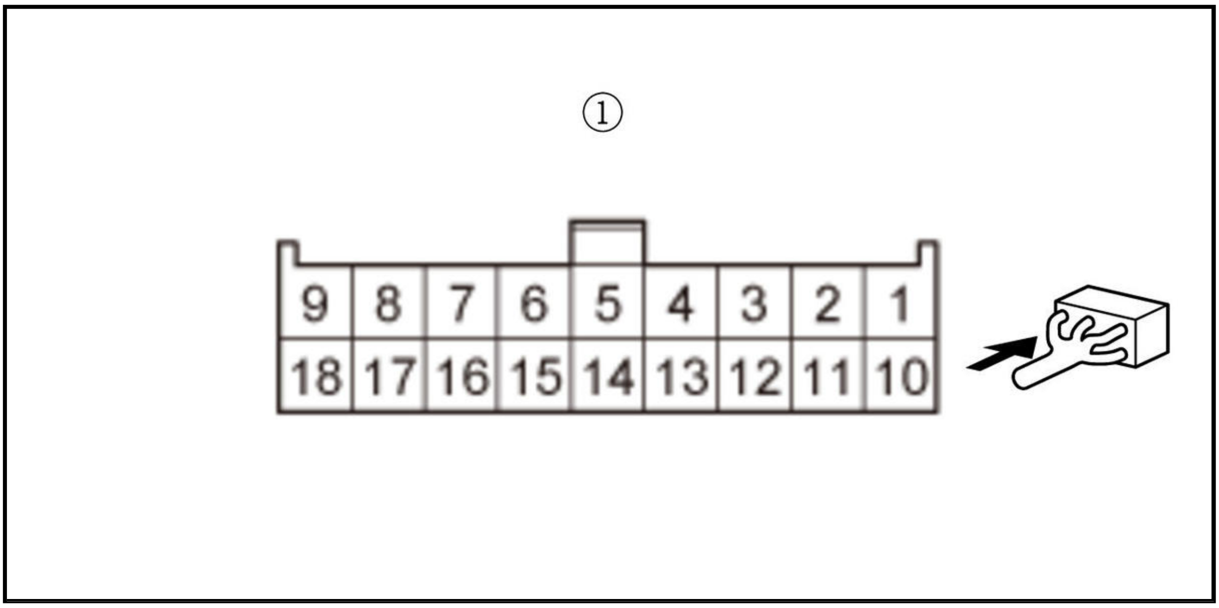

Is there battery voltage?

YES

The +B FI SUB wire is OK. Go to step 5.

NO

Repair an open in the +B FI SUB wire between the No. A8 (15 A) fuse in the under-hood fuse/relay box and the relay circuit board. If needed, **replace the under-hood fuse/relay box** .

5. Open wire check (FI SUB RLY OUT line)

-1. Jump the SCS line with the HDS, and wait more than 1 minute.

-2. Disconnect the following connector.

PCM connector A (50P)

-3. Check for continuity between test points 1 and 2.

Test condition	Vehicle OFF (LOCK) mode
B	Relay circuit board: removed
B	PCM connector A (50P): disconnected
Test point 1	Relay circuit board connector C (18P) (female terminals) No. 1: ①
Test point 2	**PCM connector A (50P) No. 16**

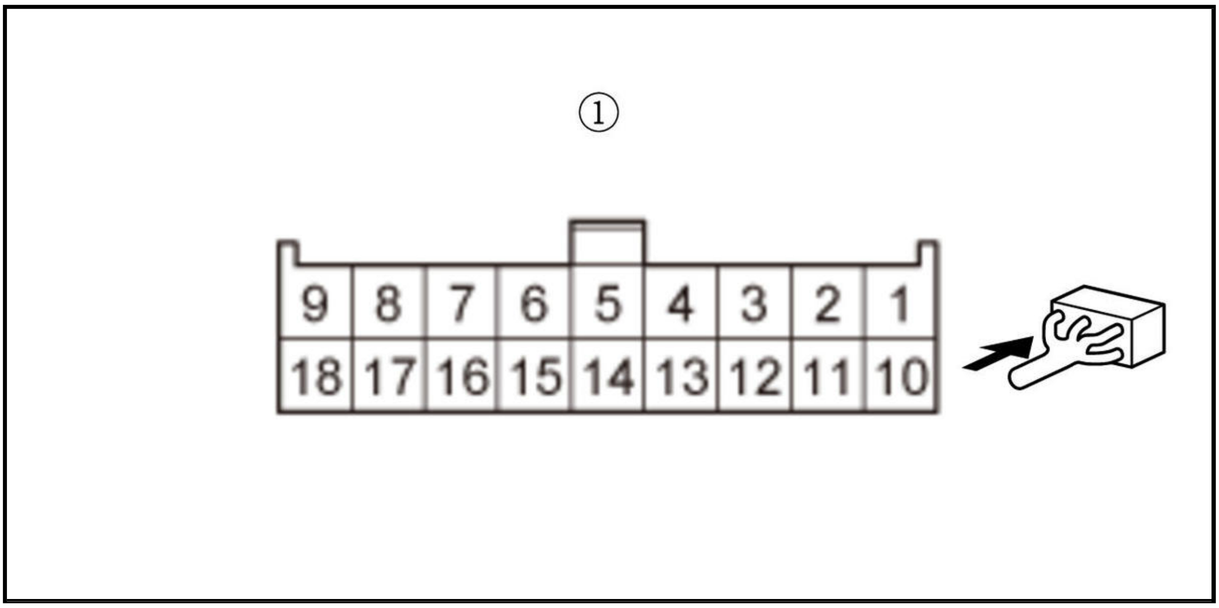

Is there continuity?

YES

The FI SUB RLY OUT wire is OK. Go to step 6.

NO

Repair an open in the FI SUB RLY OUT wire between the PCM (A16) and the relay circuit board (PGM-FI subrelay circuit).

6. Open wire check (FI SUB RLY CL- line)

   -1. Check for continuity between test points 1 and 2.

Test condition	Vehicle OFF (LOCK) mode
B	Relay circuit board: removed
B	PCM connector A (50P): disconnected
Test point 1	Relay circuit board connector A (8P) (female terminals) No. 3: ①
Test point 2	**PCM connector A (50P) No. 25**

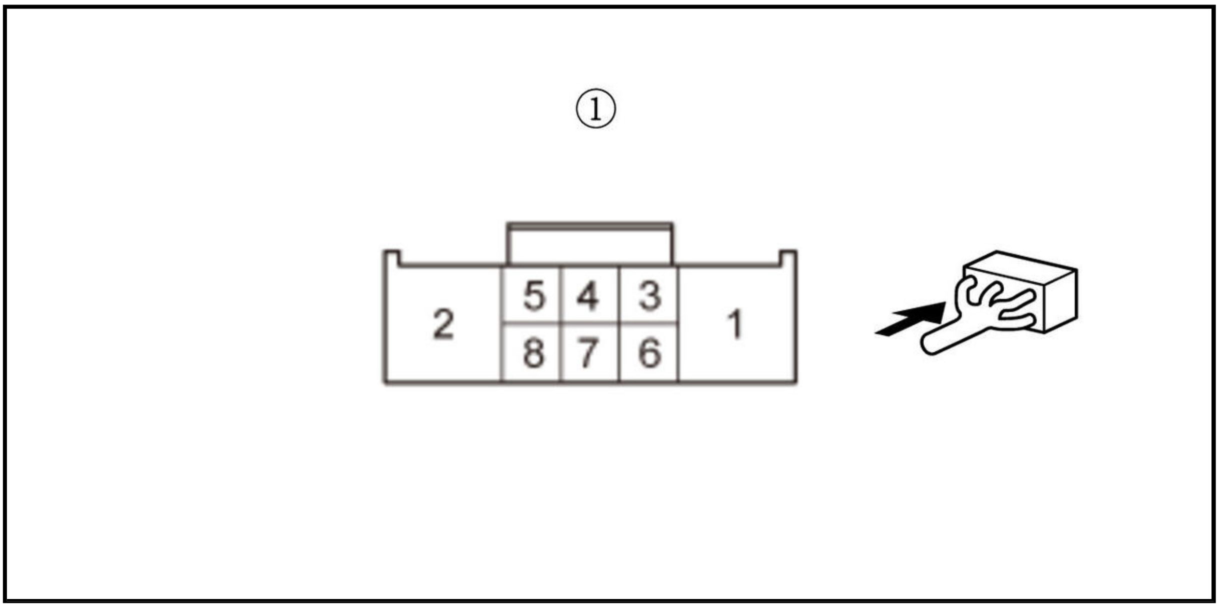

Is there continuity?

YES

The FI SUB RLY CL- wire is OK. Check for any authorized service information related to the DTCs or symptoms you are troubleshooting, or **substitute a known-good PCM** .

NO

Repair an open in the FI SUB RLY CL- wire between the PCM (A25) and the relay circuit board (PGM-FI subrelay circuit).

7. Shorted wire check (FI SUB RLY OUT line)

-1. Jump the SCS line with the HDS, and wait more than 1 minute.

-2. Disconnect the following connectors.

PCM connector A (50P)

-3. Check for continuity between test points 1 and 2.

Test condition	Vehicle OFF (LOCK) mode
B	Relay circuit board: removed
B	PCM connector A (50P): disconnected
Test point 1	**PCM connector A (50P) No. 16**
Test point 2	Body ground

Is there continuity?

YES

Repair a short in the FI SUB RLY OUT wire between the PCM (A16) and the relay circuit board (PGM-FI subrelay circuit). Also replace the No. A8 (15 A) in the under-hood fuse/relay box.

NO

The FI SUB RLY OUT wire is OK. Go to step 8.

8. Shorted wire check (+B FI SUB line)

-1. Check for continuity between test points 1 and 2.

Test condition	Vehicle OFF (LOCK) mode
B	Relay circuit board: removed
B	PCM connector A (50P): disconnected
Test point 1	Relay circuit board connector C (18P) (female terminals) No. 14: ①
Test point 2	Body ground

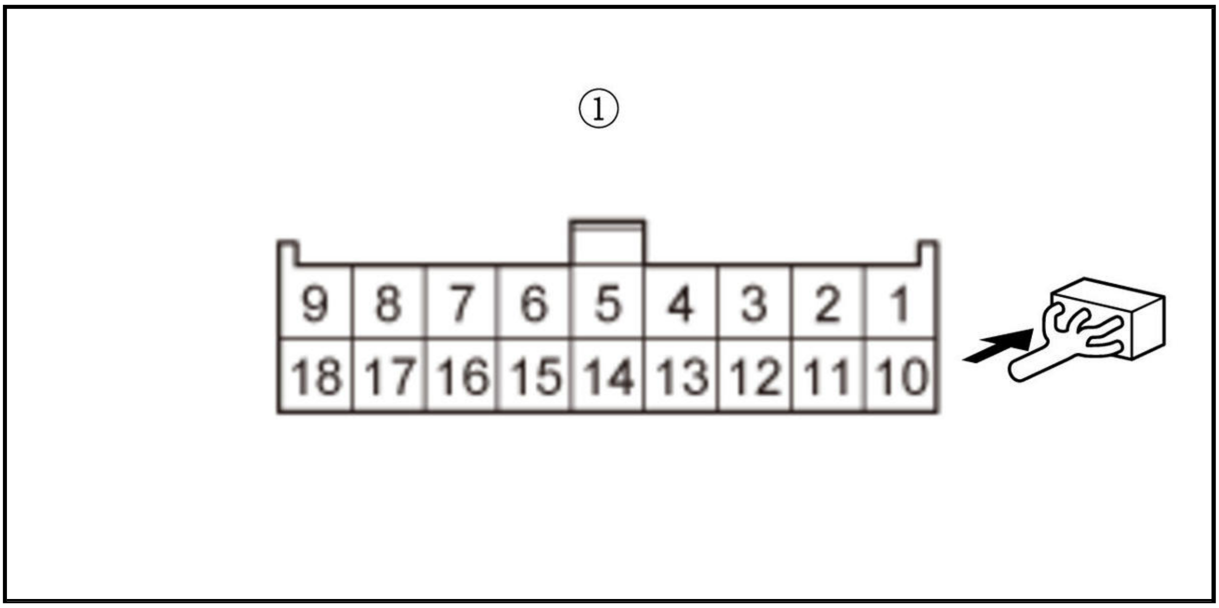

Is there continuity?

YES

Repair a short in the +B FI SUB wire between the No. A8 (15 A) fuse in the under-hood fuse/relay box and the relay circuit board. If needed, **replace the under-hood fuse/relay box** . Also replace the No. A8 (15 A) fuse under-hood fuse/relay box.

NO

The +B FI SUB wire is OK. Check for any authorized service information related to the DTCs or symptoms you are troubleshooting, or **substitute a known-good PCM** . Also replace the No. A8 (15 A) fuse in the under-hood fuse/relay box.

DTC P1659 (2.4 L ENGINE) (2017 2018 2019)

DTC P1659 : ETCS Control Relay OFF Malfunction

NOTE: Before you troubleshoot, **review the general troubleshooting information** .

DTC Description	Confirmed DTC	Pending DTC
P1659 ECTS Control Relay OFF Malfunction	B	B

DTC (PGM-FI)

1. Problem verification

   -1. Turn the vehicle to the ON mode.

   -2. Clear the DTC with the HDS.

   -3. Check for Pending or Confirmed DTCs with the HDS.

DTC Description	Confirmed DTC	Pending DTC
P1659 ECTS Control Relay OFF Malfunction	B	B

Is DTC P1659 indicated?

YES

The failure is duplicated. Go to step 2.

NO

Intermittent failure, the system is OK at this time. Check for poor connections or loose terminals at the relay circuit board (PGM-FI subrelay circuit) and the PCM. **If the on-board snapshot of this DTC is recorded, try to reproduce the failure under the same conditions with the on-board snapshot** .

2. Relay circuit board check

-1. **Remove and test the relay circuit board** .

Is the relay circuit board OK?

YES

Go to step 3.

NO

Replace the relay circuit board .

3. Fuse check

-1. Turn the vehicle to the OFF (LOCK) mode.

-2. Check the following fuse.

Fuse	No. A8 (15 A)
Location	Under-hood fuse/relay box

Is the fuse OK?

YES

Go to step 4.

NO

Go to step 7.

4. Open wire check (+B DBW line)

-1. Measure the voltage between test points 1 and 2.

Test condition	Vehicle OFF (LOCK) mode
B	Relay circuit board: removed
Test point 1	Relay circuit board connector C (18P) (female terminals) No. 14: ①
Test point 2	Body ground

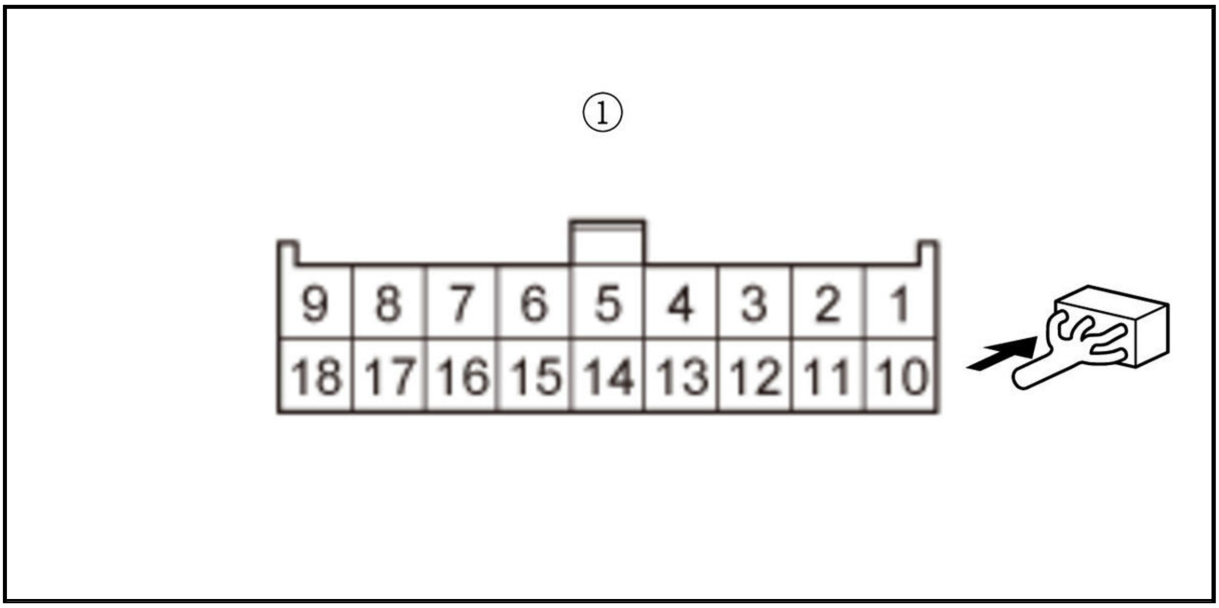

Is there battery voltage?

YES

The +B DBW wire is OK. Go to step 5.

NO

Repair an open in the +B DBW wire between the No. A8 (15 A) fuse in the under-hood fuse/relay box and the relay circuit board. If needed, **replace the under-hood fuse/relay box** .

5. Open wire check (VBDBW/DBW RLY OUT line)

-1. Jump the SCS line with the HDS, and wait more than 1 minute.

-2. Disconnect the following connector.

PCM connector C (51P)

-3. Check for continuity between test points 1 and 2.

Test condition	Vehicle OFF (LOCK) mode
B	Relay circuit board: removed
B	PCM connector C (51P): disconnected
Test point 1	Relay circuit board connector C (18P) (female terminals) No. 1: ①
Test point 2	**PCM connector C (51P) No. 2**

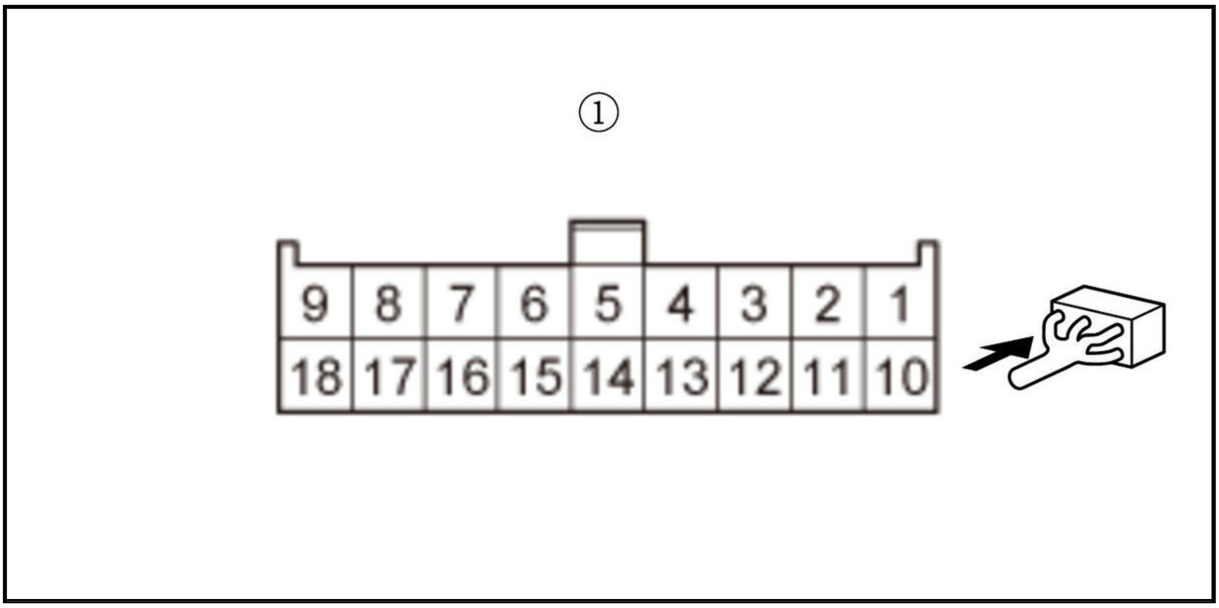
①
9
8
7
6
5
4
3
2
1
18
17
16
15
14
13
12
11
10

Is there continuity?

YES

The VBDBW/DBW RLY OUT wire is OK. Go to step 6.

NO

Repair an open in the VBDBW/DBW RLY OUT wire between the PCM (C2) and the relay circuit board (PGM-FI subrelay circuit).

6. Open wire check (DBW RLY- line)

-1. Check for continuity between test points 1 and 2.

Test condition	Vehicle OFF (LOCK) mode
B	Relay circuit board: removed
B	PCM connector A (51P): disconnected
Test point 1	Relay circuit board connector C (18P) (female terminals) No. 7: ①

Test point 2	**PCM connector A (51P) No. 19**

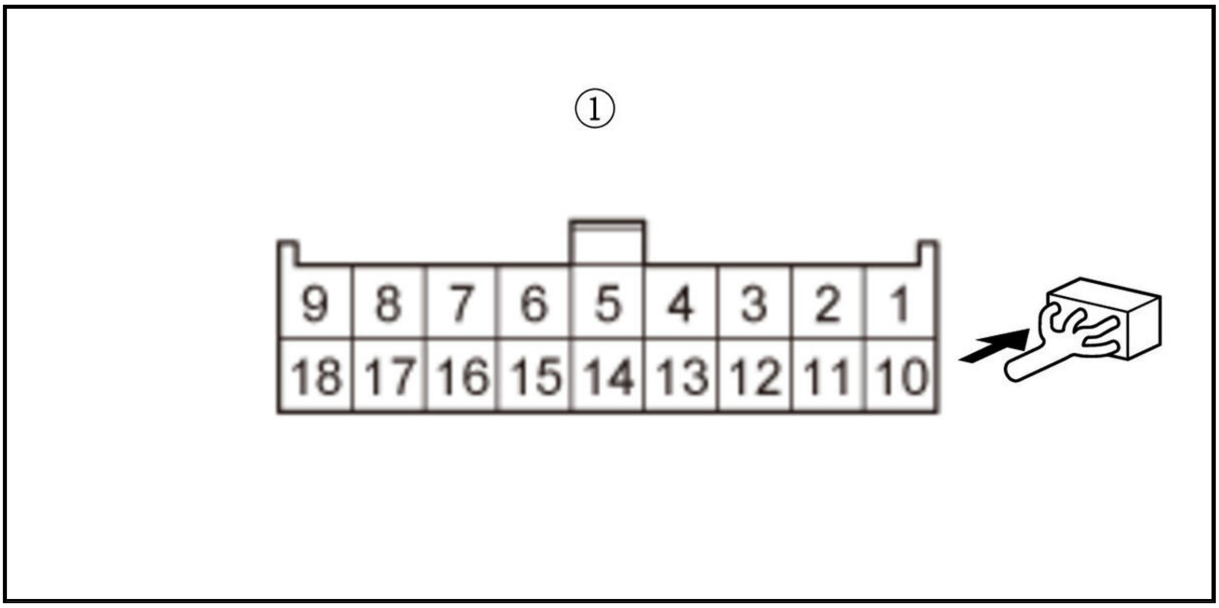
①
9
8
7
6
5
4
3
2
1
18
17
16
15
14
13
12
11
10

Is there continuity?

YES

The DBW RLY- wire is OK. Check for any authorized service information related to the DTCs or symptoms you are troubleshooting, or **substitute a known-good PCM** .

NO

Repair an open in the DBW RLY- wire between the PCM (A19) and the relay circuit board (PGM-FI subrelay circuit).

7. Shorted wire check (VBDBW/DBW RLY OUT line)

-1. Jump the SCS line with the HDS, and wait more than 1 minute.

-2. Disconnect the following connectors.

PCM connector C (51P)

-3. Check for continuity between test points 1 and 2.

Test condition	Vehicle OFF (LOCK) mode
B	Relay circuit board: removed
B	PCM connector C (51P): disconnected
Test point 1	**PCM connector C (51P) No. 2**
Test point 2	Body ground

Is there continuity?

YES

Repair a short in the VBDBW/DBW RLY OUT wire between the PCM (C2) and the relay circuit board (PGM-FI subrelay circuit). Also replace the No. A8 (15 A) in the under-hood fuse/relay box.

NO

The VBDBW/DBW RLY OUT wire is OK. Go to step 8.

8. Shorted wire check (+B DBW line)

-1. Check for continuity between test points 1 and 2.

Test condition	Vehicle OFF (LOCK) mode
B	Relay circuit board: removed
B	PCM connector C (51P): disconnected
Test point 1	Relay circuit board connector C (18P) (female terminals) No. 14: ①
Test point 2	Body ground

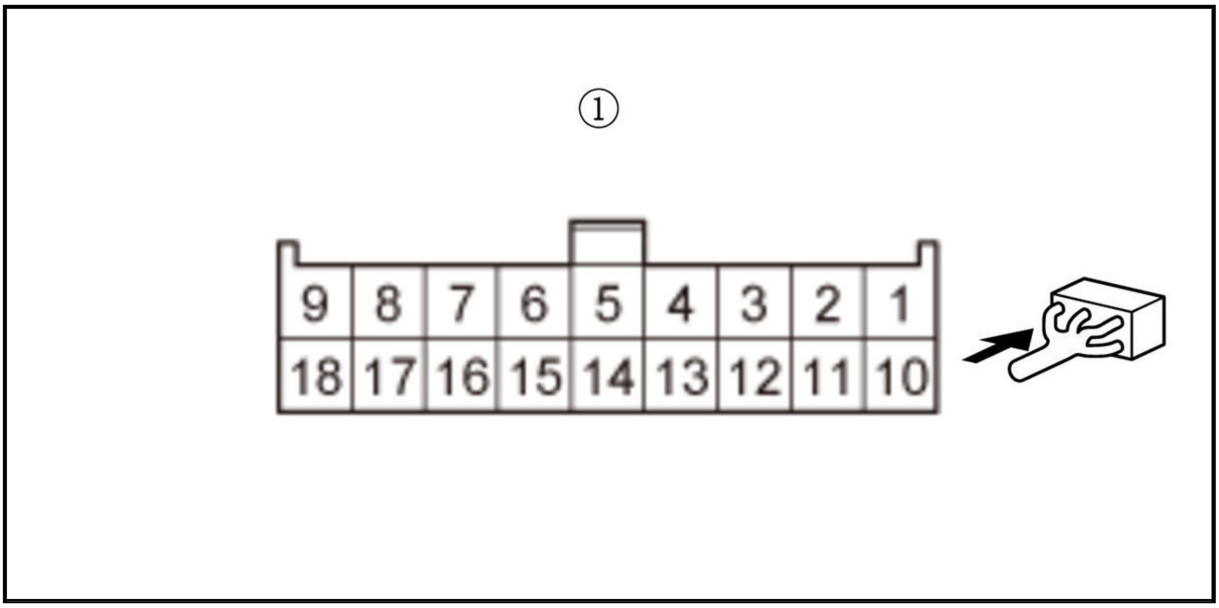

Is there continuity?

YES

Repair a short in the +B DBW wire between the No. A8 (15 A) fuse in the under-hood fuse/relay box and the relay circuit board. If needed, **replace the under-hood fuse/relay box** . Also replace the No. A8 (15 A) fuse under-hood fuse/relay box.

NO

The +B DBW wire is OK. Check for any authorized service information related to the DTCs or symptoms you are troubleshooting, or **substitute a known-good PCM** . Also replace the No. A8 (15 A) fuse in the under-hood fuse/relay box.

DTC P1683 (1.5 L ENGINE)

DTC P1683 : Throttle Valve Default Position Spring Performance Problem

WARNING: **Do not insert your fingers into the installed throttle body when you turn the vehicle to the ON mode, or while the vehicle is in ON mode. If you do, you will seriously injure your fingers if the throttle valve is activated.**

NOTE: Before you troubleshoot, **review the general troubleshooting information** .

DTC Description	Confirmed DTC	Pending DTC
P1683 Throttle Valve Default Position Spring Performance Problem	B	B

DTC (PGM-FI)

1. Problem verification

   -1. Turn the vehicle to the ON mode.

   -2. Clear the DTC with the HDS.

   -3. Turn the vehicle to the OFF (LOCK) mode.

   -4. Start the engine.

-5. Hold the engine speed at 3, 000 rpm without load (in P or N) until the radiator fan comes on, then let it idle.

-6. Turn the vehicle to the OFF (LOCK) mode, and wait 10 seconds.

-7. Turn the vehicle to the ON mode.

-8. Check for Pending or Confirmed DTCs with the HDS.

DTC Description	Confirmed DTC	Pending DTC
P1683 Throttle Valve Default Position Spring Performance Problem	B	B

Is DTC P1683 indicated?

YES

Go to step 2.

NO

Intermittent failure, the system is OK at this time. Check for poor connections or loose terminals at the throttle body and the PCM. **If the on-board snapshot of this DTC is recorded, try to reproduce the failure under the same conditions with the on-board snapshot** .

2. Throttle body default position spring check

-1. Turn the vehicle to the OFF (LOCK) mode.

-2. **Disconnect the throttle body duct from the throttle body** .

-3. Push the throttle valve closed as shown.

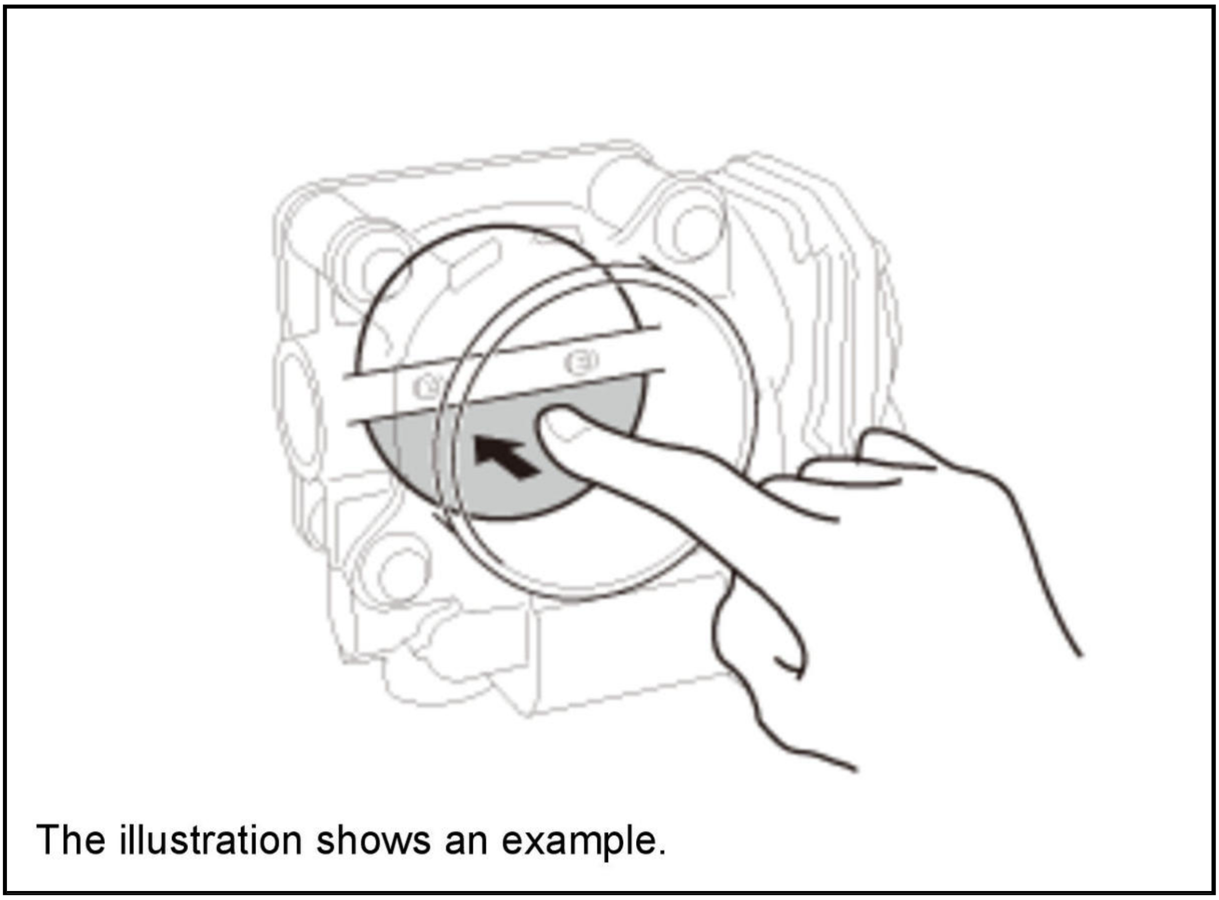

-4. Release the throttle valve.

Does the throttle valve return?

YES

Clean the throttle body . If DTC P1683 is indicated, **replace the throttle body** .

NO

Replace the throttle body .

DTC P1683 (2.4 L ENGINE) (2017 2018 2019)

DTC P1683 : Throttle Valve Default Position Spring Performance Problem

WARNING: **Do not insert your fingers into the installed throttle body when you turn the vehicle to the ON mode, or while the vehicle is in ON mode. If you do, you will seriously injure your fingers if the throttle valve is activated.**

NOTE: Before you troubleshoot, **review the general troubleshooting information** .

DTC Description	Confirmed DTC	Pending DTC
P1683 Throttle Valve Default Position Spring Performance Problem	B	B

DTC (PGM-FI)

1. Problem verification

-1. Turn the vehicle to the ON mode.

-2. Clear the DTC with the HDS.

-3. Start the engine.

-4. Hold the engine speed at 3, 000 rpm without load (in P or N) until the radiator fan comes on, then let it idle.

-5. Turn the vehicle to the OFF (LOCK) mode, and wait 10 seconds.

-6. Turn the vehicle to the ON mode.

-7. Check for Pending or Confirmed DTCs with the HDS.

DTC Description	Confirmed DTC	Pending DTC
P1683 Throttle Valve Default Position Spring Performance Problem	B	B

Is DTC P1683 indicated?

YES

The failure is duplicated. Go to step 2.

NO

Intermittent failure, the system is OK at this time. Check for poor connections or loose terminals at the throttle body and the PCM. **If the on-board snapshot of this DTC is recorded, try to reproduce the failure under the same conditions with the on-board snapshot** .

2. Throttle body default position spring check

-1. Turn the vehicle to the OFF (LOCK) mode.

-2. Disconnect the intake air duct from the throttle body .

-3. Push the throttle valve closed as shown.

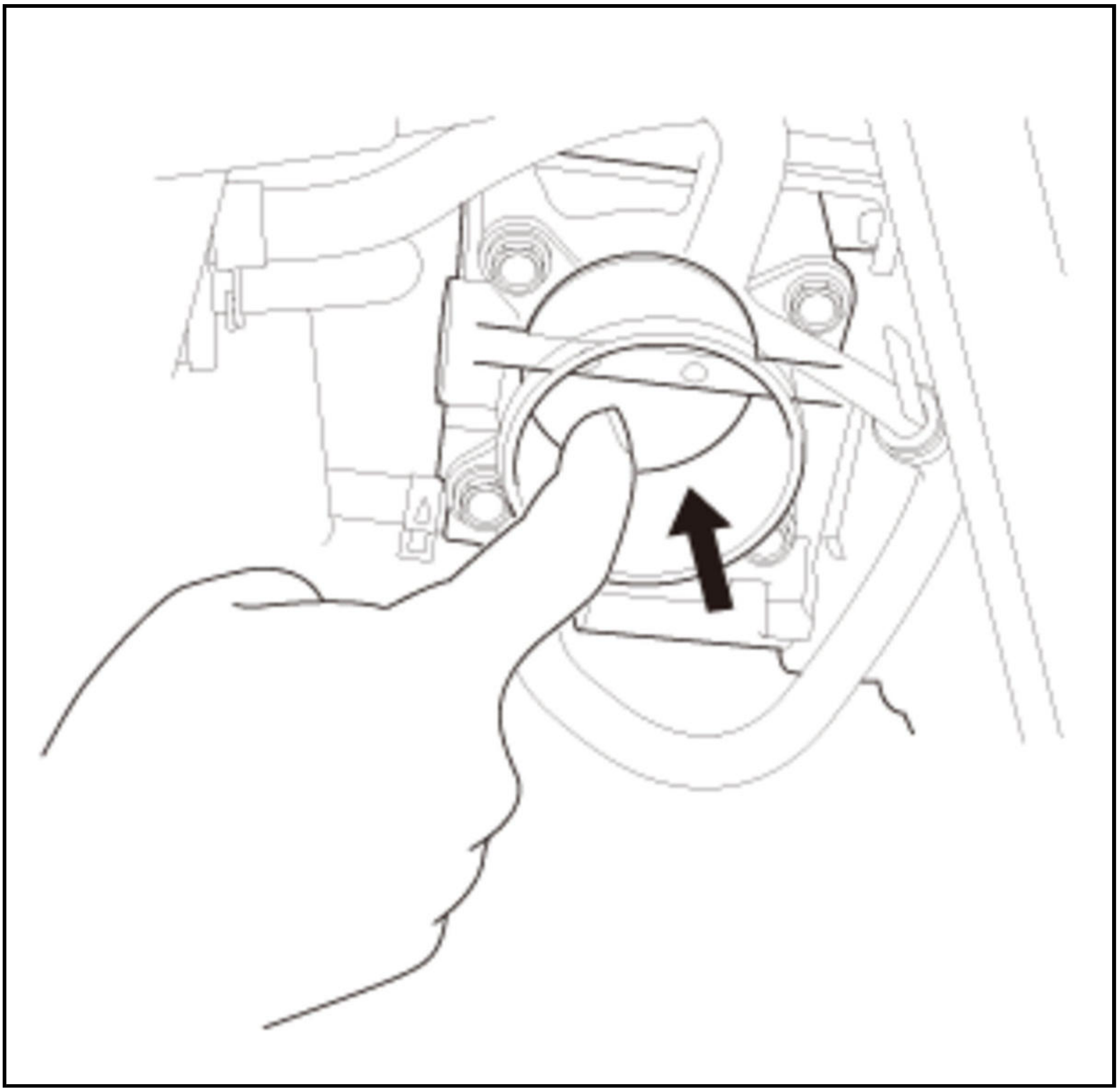

-4. Release the throttle valve.

Does the throttle valve return?

YES

Clean the throttle body . If DTC P1683 is indicated, replace the throttle body .

NO

Replace the throttle body .

DTC P1684 (1.5 L ENGINE)

DTC P1684 : Throttle Valve Return Spring Performance Problem

WARNING: **Do not insert your fingers into the installed throttle body when you turn the vehicle to the ON mode, or while the vehicle is in ON mode. If you do, you will seriously injure your fingers if the throttle valve is activated.**

NOTE: Before you troubleshoot, **review the general troubleshooting information** .

DTC Description	Confirmed DTC	Pending DTC
P1684 Throttle Valve Return Spring Performance Problem	B	B

DTC (PGM-FI)

1. Problem verification

   -1. Turn the vehicle to the ON mode.

   -2. Clear the DTC with the HDS.

   -3. Turn the vehicle to the OFF (LOCK) mode.

   -4. Start the engine.

   -5. Hold the engine speed at 3, 000 rpm without load (in P or N) until the radiator fan comes on, then let it idle.

   -6. Turn the vehicle to the OFF (LOCK) mode, and wait 10 seconds.

   -7. Turn the vehicle to the ON mode.

   -8. Check for Pending or Confirmed DTCs with the HDS.

DTC Description	Confirmed DTC	Pending DTC
P1684 Throttle Valve Return Spring Performance Problem	B	B

   Is DTC P1684 indicated?

   YES

   Go to step 2.

   NO

   Intermittent failure, the system is OK at this time. Check for poor connections or loose terminals at the throttle body and the PCM. **If the on-board snapshot of this DTC is recorded, try to reproduce the failure under the same conditions with the on-board snapshot** .

2. Throttle body condition check

   -1. Turn the vehicle to the OFF (LOCK) mode.

   -2. **Disconnect the throttle body duct from the throttle body** .

   -3. Push the throttle valve open as shown.

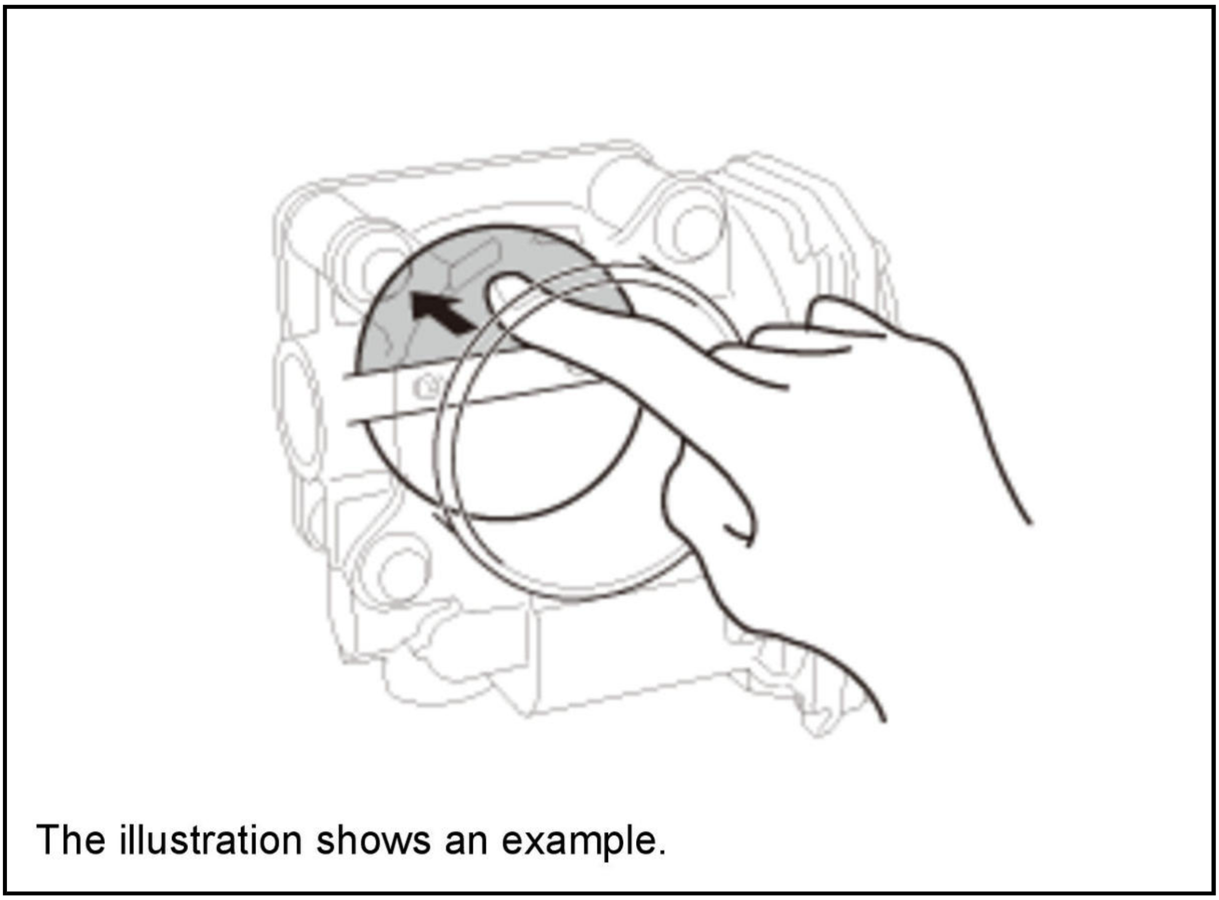

The illustration shows an example.

-4. Release the throttle valve.

Does the throttle valve return?

YES

Clean the throttle body . If DTC P1684 is indicated again, replace the throttle body .

NO

Replace the throttle body .

DTC P1684 (2.4 L ENGINE) (2017 2018 2019)

DTC P1684 : Throttle Valve Return Spring Performance Problem

WARNING: **Do not insert your fingers into the installed throttle body when you turn the vehicle to the ON mode, or while the vehicle is in ON mode. If you do, you will seriously injure your fingers if the throttle valve is activated.**

NOTE: Before you troubleshoot, review the general troubleshooting information .

DTC Description	Confirmed DTC	Pending DTC
P1684 Throttle Valve Return Spring Performance Problem	B	B

DTC (PGM-FI)

1. Problem verification

-1. Turn the vehicle to the ON mode.

-2. Clear the DTC with the HDS.

-3. Start the engine.

-4. Hold the engine speed at 3, 000 rpm without load (in P or N) until the radiator fan comes on, then let it idle.

-5. Turn the vehicle to the OFF (LOCK) mode, and wait 10 seconds.

-6. Turn the vehicle to the ON mode.

-7. Check for Pending or Confirmed DTCs with the HDS.

DTC Description	Confirmed DTC	Pending DTC
P1684 Throttle Valve Return Spring Performance Problem	B	B

Is DTC P1684 indicated?

YES

The failure is duplicated. Go to step 2.

NO

Intermittent failure, the system is OK at this time. Check for poor connections or loose terminals at the throttle body and the PCM. **If the on-board snapshot of this DTC is recorded, try to reproduce the failure under the same conditions with the on-board snapshot** .

2. Throttle body condition check

-1. Turn the vehicle to the OFF (LOCK) mode.

-2. **Disconnect the intake air duct from the throttle body** .

-3. Push the throttle valve open as shown.

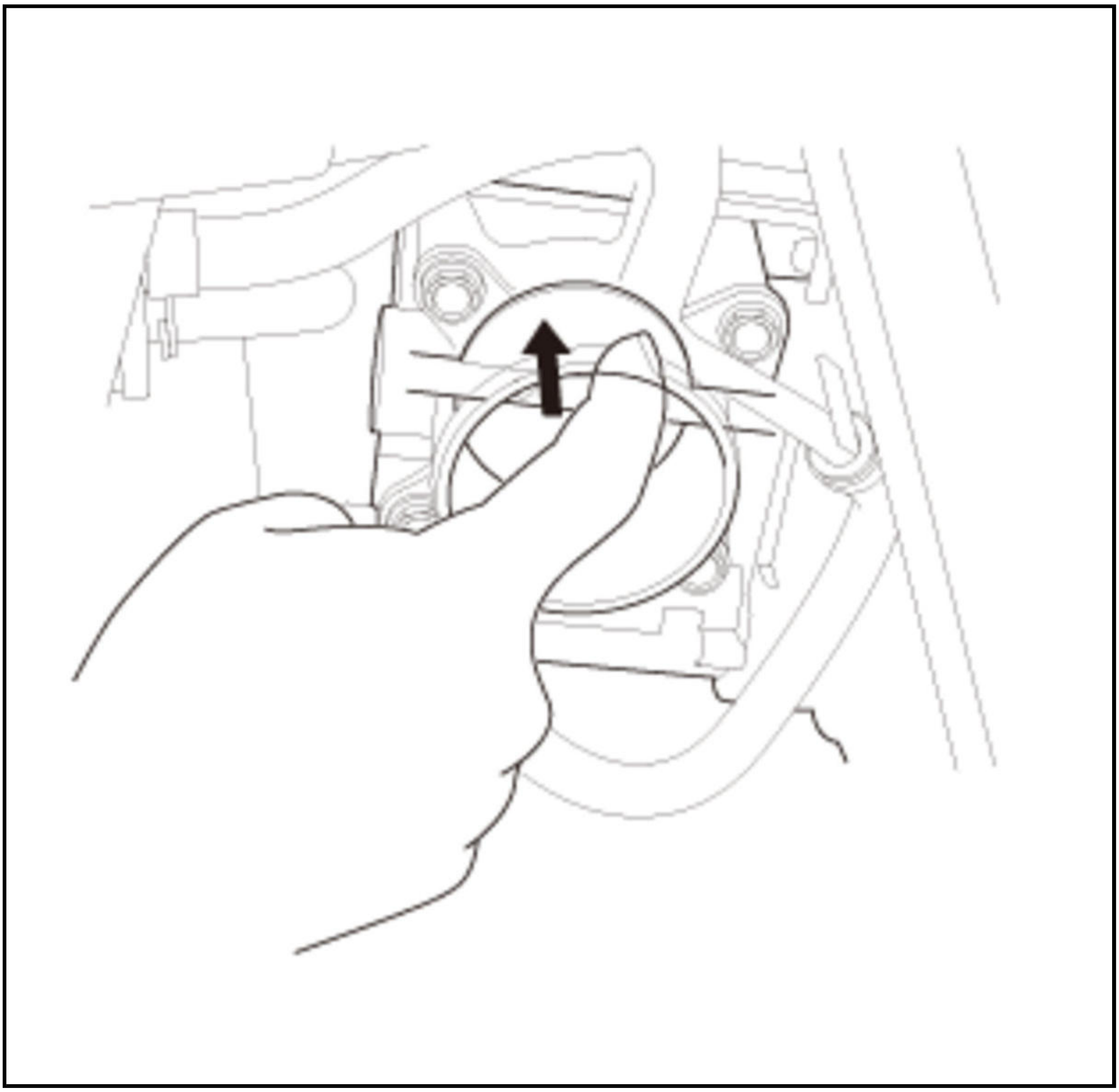

-4. Release the throttle valve.

Does the throttle valve return?

YES

Clean the throttle body . If DTC P1684 is indicated again, **replace the throttle body** .

NO

Replace the throttle body .

DTC P16BB (1.5 L ENGINE)

DTC P16BB : Alternator B Terminal Circuit Low Voltage

NOTE: Before you troubleshoot, **review the general troubleshooting information** .

DTC Description	Confirmed DTC	Pending DTC
P16BB Alternator B Terminal Circuit Low Voltage	B	B

DTC (PGM-FI)

1. Problem verification

-1. Turn the vehicle to the ON mode.

-2. Clear the DTC with the HDS.

-3. Turn the vehicle to the OFF (LOCK) mode.

-4. Start the engine.

-5. Check under these conditions:

- A/C on
- Temperature control at maximum cool
- Blower fan at maximum speed
- Headlights on high beam
- Rear window defogger on

-6. Hold the engine speed at 2, 000 rpm without load (in P or N) for 1 minute.

-7. Check for Pending or Confirmed DTCs with the HDS.

DTC Description	Confirmed DTC	Pending DTC
P16BB Alternator B Terminal Circuit Low Voltage	B	B

Is DTC P16BB indicated?

YES

Go to step 2.

NO

Intermittent failure, the system is OK at this time. Check for poor connections or loose terminals at the alternator and 12 volt battery. **If the on-board snapshot of this DTC is recorded, try to reproduce the failure under the same conditions with the on-board snapshot** . Also **check the 12 volt battery performance** .

2. ACG +B terminal check

-1. Turn the vehicle to the OFF (LOCK) mode.

-2. Check for poor connections or loose terminals at the alternator and the 12 volt battery (ACG +B line).

Are the connections and terminals OK?

YES

Go to step 3.

NO

Repair the connections or the terminals.

3. Open wire check (ACG +B line)

-1. Check for an open in the wire between the alternator and the 12 volt battery at the engine harness (ACG +B line).

Is the harness OK?

YES

Replace the alternator .

NO

Repair an open in the ACG +B wire between the alternator and the 12 volt battery.

DTC P16BB (2.4 L ENGINE) (2017 2018 2019)

DTC P16BB : Alternator B Terminal Circuit Low Voltage

NOTE: Before you troubleshoot, review the general troubleshooting information .

DTC Description	Confirmed DTC	Pending DTC
P16BB Alternator B Terminal Circuit Low Voltage	B	B

DTC (PGM-FI)

1. Problem verification

-1. Turn the vehicle to the ON mode.

-2. Clear the DTC with the HDS.

-3. Start the engine.

-4. Check under these conditions:

- A/C on
- Temperature control at maximum cool
- Blower fan at maximum speed
- Headlights on high beam
- Rear window defogger on

-5. Hold the engine speed at 2, 000 rpm without load (in P or N) for 1 minute.

-6. Check for Pending or Confirmed DTCs with the HDS.

DTC Description	Confirmed DTC	Pending DTC
P16BB Alternator B Terminal Circuit Low Voltage	B	B

Is DTC P16BB indicated?

YES

The failure is duplicated. Go to step 2.

NO

Intermittent failure, the system is OK at this time. Check for poor connections or loose terminals at the alternator and the 12 volt battery. If the on-board snapshot of this DTC is recorded, try to reproduce the failure under the same conditions with the on-board snapshot . Also check the 12 volt battery performance .

2. ACG +B terminal check

-1. Check for poor connections or loose terminals at the alternator and the 12 volt battery (ACG +B line).

Are the connections and terminals OK?

YES

Go to step 3.

NO

Repair the connections or the terminals.

3. Open wire check (ACG +B line)

   -1. Check for an open in the wire between the alternator and the 12 volt battery.

   Is the harness OK?

   YES

   Replace the alternator .

   NO

   Repair an open in the +B wire between the alternator and the 12 volt battery.

DTC P16E2 (1.5 L ENGINE)

DTC P16E2 : PGM-FI-ACG LIN Communication Error

NOTE:

- Before you troubleshoot, **review the general troubleshooting information** .
- Check for a loose terminal on the alternator (ACG +B terminal). If the alternator +B terminal was loose, DTC P16E2 will be stored.

DTC Description	Confirmed DTC	Pending DTC
P16E2 PGM-FI - ACG LIN Communication Error	B	B

DTC (PGM-FI)

1. Problem verification

   -1. Turn the vehicle to the ON mode.

   -2. Clear the DTC with the HDS.

   -3. Turn the vehicle to the OFF (LOCK) mode.

   -4. Turn the vehicle to the ON mode, and wait 10 seconds.

   -5. Check for Pending or Confirmed DTCs with the HDS.

DTC Description	Confirmed DTC	Pending DTC
P16E2 PGM-FI - ACG LIN Communication Error	B	B

   Is DTC P16E2 indicated?

   YES

   Go to step 2.

NO

Intermittent failure, the system is OK at this time. Check for poor connections or loose terminals at the alternator and the PCM. **If the on-board snapshot of this DTC is recorded, try to reproduce the failure under the same conditions with the on-board snapshot** .

2. DTC check 1

-1. Check for Pending or Confirmed DTCs with the HDS.

DTC Description	Confirmed DTC	Pending DTC
P16E3 PGM-FI-Battery Sensor LIN Communication Error	B	B

Is DTC P16E3 indicated?

YES

Go to step 5.

NO

Go to step 3.

3. DTC check 2

-1. Check for Pending or Confirmed DTCs with the HDS.

DTC Description	Confirmed DTC	Pending DTC
P16E8 PGM-FI-Shutter Grille LIN Communication Error	B	B

Is DTC P16E8 indicated?

YES

Go to step 9.

NO

Go to step 4.

4. DTC check 3

-1. Check for Pending or Confirmed DTCs with the HDS.

DTC Description	Confirmed DTC	Pending DTC
P16E5 LIN Communication Error (PCM-DC-DC Converter)	B	B

Is DTC P16E5 indicated?

YES

Go to step 13.

NO

Go to step 17.

5. Determine possible failure area (LIN (BATT SENSOR)/LIN line, others)

-1. Turn the vehicle to the OFF (LOCK) mode.

-2. Disconnect the following connector.

Alternator 1P connector

-3. Measure the resistance between test points 1 and 2.

Test condition	Vehicle OFF (LOCK) mode
B	Alternator 1P connector: disconnected
Test point 1	Alternator 1P connector (female terminal) No. 1: ①
Test point 2	Body ground

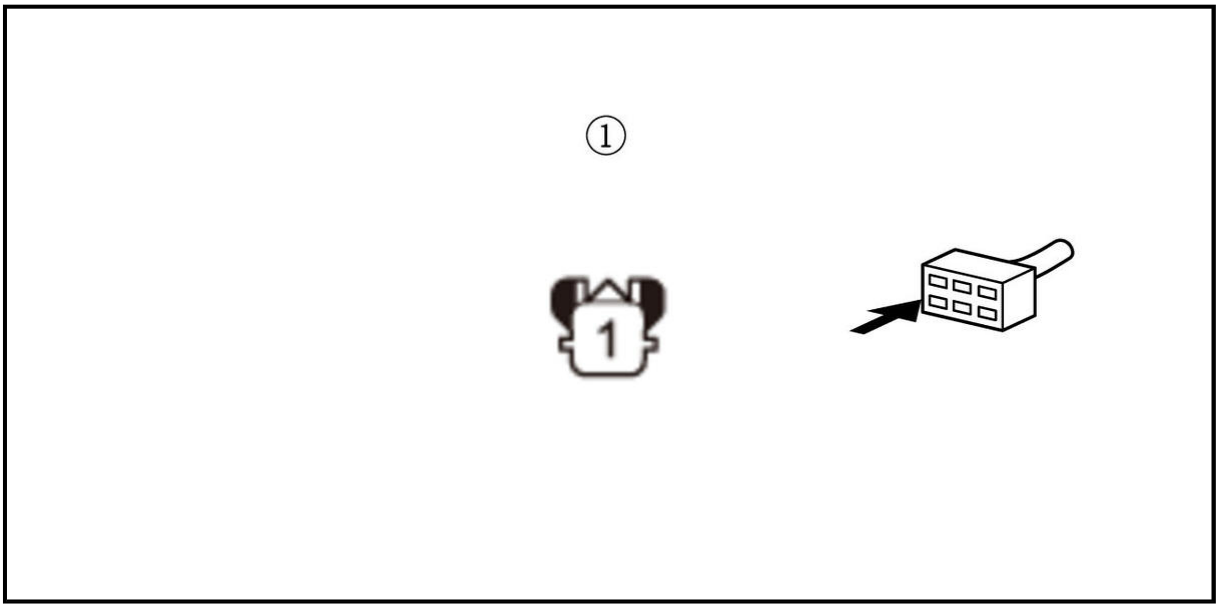

Is there 1 MΩ or more?

YES

Go to step 7.

NO

Go to step 6.

6. Shorted wire check (LIN (BATT SENSOR)/LIN line)

-1. Jump the SCS line with the HDS, and wait more than 1 minute.

Continue to check for continuity between the alternator 1P connector terminal and body ground, while disconnecting these connectors, one at a time:

- PCM connector A (50P)
- 12 volt battery sensor 2P connector
- Shutter grille (upper) 4P connector
- Shutter grille (lower) 4P connector
- DC-DC converter connector A (3P) (with auto idle stop system)

Does continuity go away when one of the above connectors is disconnected?

YES

The LIN (BATT SENSOR)/LIN wire is OK. Replace the part that caused an open when it was disconnected.

NO

Repair a short in the LIN (BATT SENSOR)/LIN wire between the PCM (A10), the alternator, the 12 volt battery sensor, the shutter grille, and the DC-DC converter (with auto idle stop system).

7. Determine possible failure area (alternator, others)

-1. Reconnect the alternator 1P connector.

-2. Disconnect the following connector.

12 volt battery sensor 2P connector

-3. Measure the resistance between test points 1 and 2.

Test condition	Vehicle OFF (LOCK) mode
B	12 volt battery sensor 2P connector: disconnected
Test point 1	12 volt battery sensor 2P connector (female terminals) No. 2: ①
Test point 2	Body ground

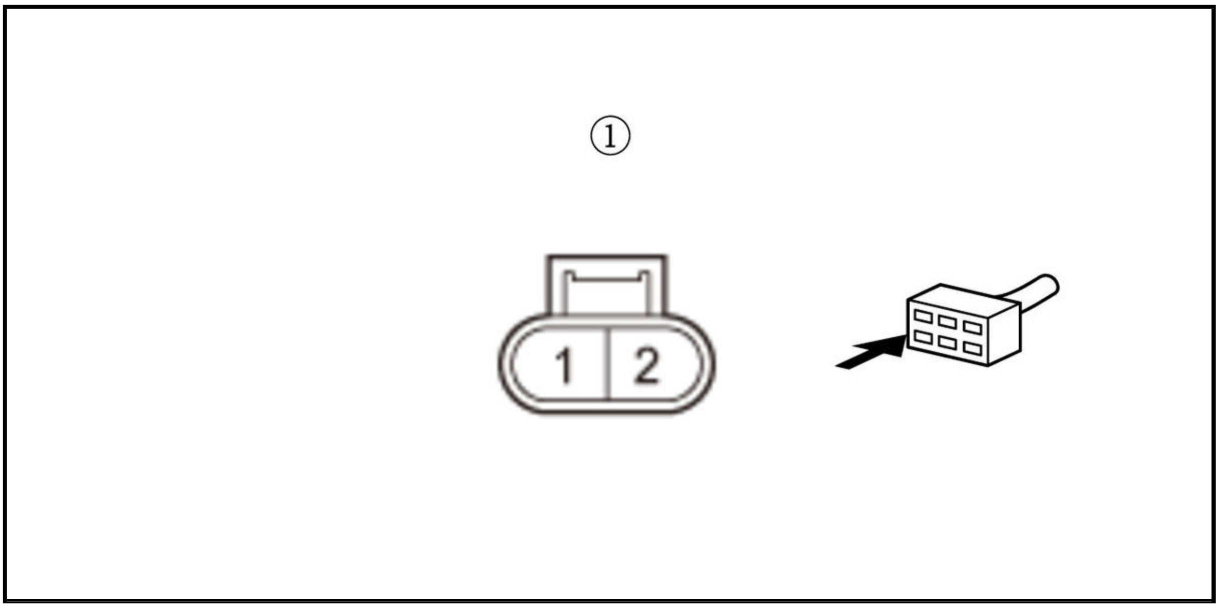

Is there 1 MΩ or more?

YES

Go to step 8.

NO

Replace the alternator .

8. Open wire check (LIN (BATT SENSOR)/LIN line) 1

-1. Jump the SCS line with the HDS, and wait more than 1 minute.

-2. Disconnect the following connectors.

Alternator 1P connector

PCM connector A (50P)

-3. Measure the resistance between test points 1 and 2.

Test condition	Vehicle OFF (LOCK) mode
B	12 volt battery sensor 2P connector: disconnected
B	Alternator 1P connector: disconnected
B	PCM connector A (50P): disconnected
Test point 1	Alternator 1P connector (female terminal) No. 1: ①
Test point 2	**PCM connector A (50P) No. 10**

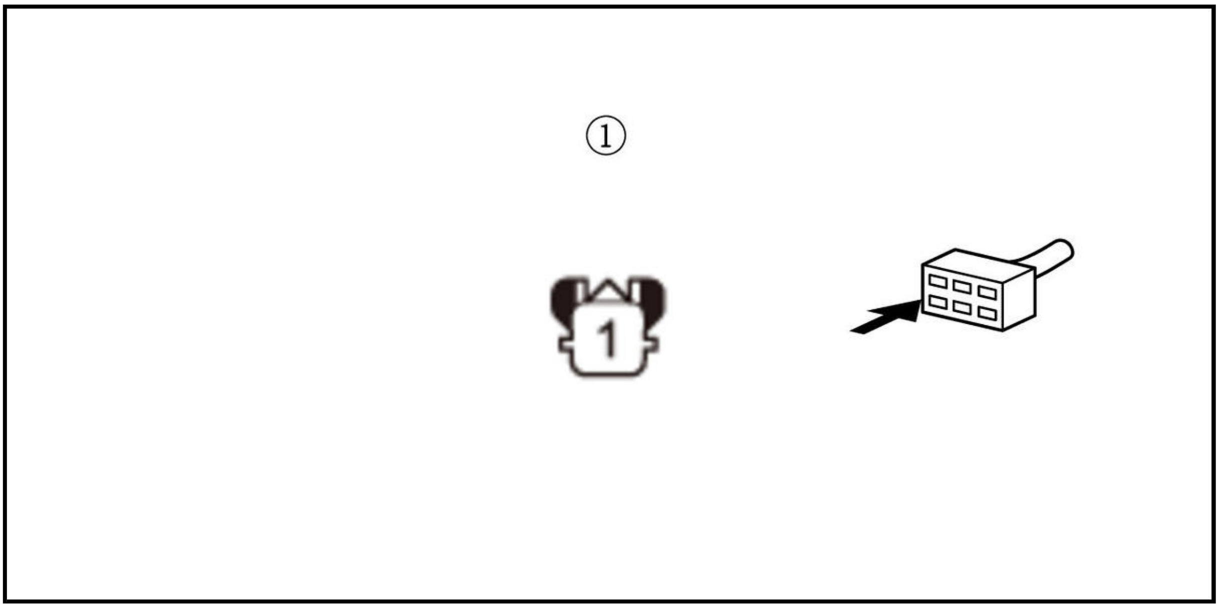

Is there 1.0 Ω or less?

YES

The LIN (BATT SENSOR)/LIN wire is OK. Check for any authorized service information related to the DTCs or symptoms you are troubleshooting, or **substitute a known-good PCM** .

NO

Repair an open in the LIN (BATT SENSOR)/LIN wire between the PCM (A10) and the alternator.

9. Determine possible failure area (LIN (BATT SENSOR)/LIN line, others)

-1. Turn the vehicle to the OFF (LOCK) mode.

-2. Disconnect the following connector.

Alternator 1P connector

-3. Measure the resistance between test points 1 and 2.

Test condition	Vehicle OFF (LOCK) mode
B	Alternator 1P connector: disconnected
Test point 1	Alternator 1P connector (female terminal) No. 1: ①
Test point 2	Body ground

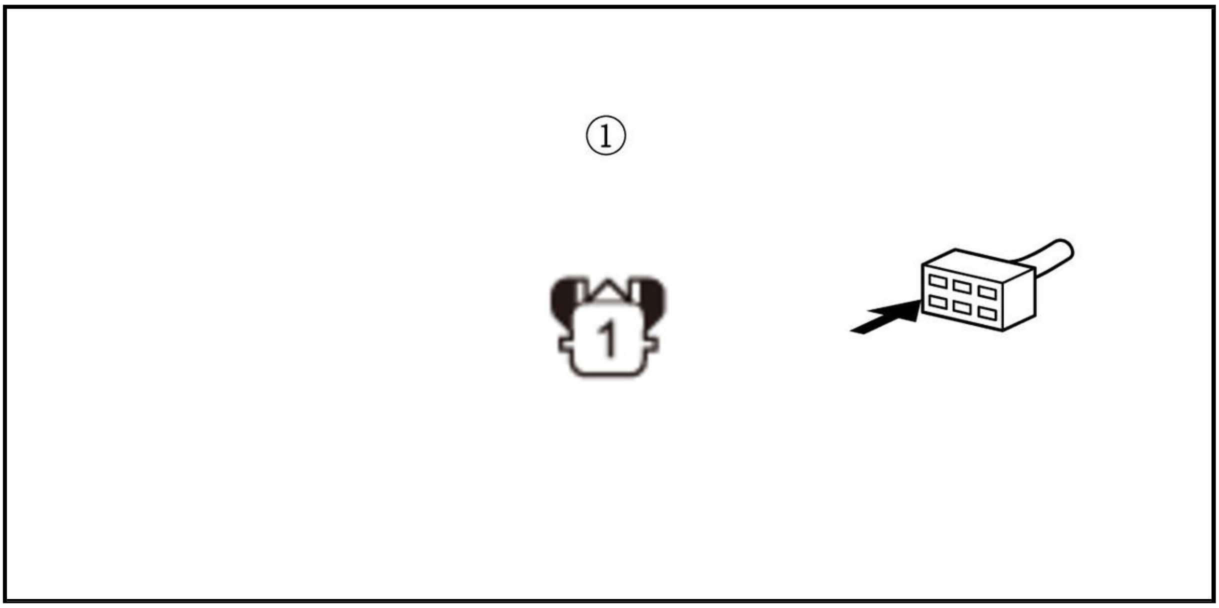

Is there 1 MΩ or more?

YES

Go to step 11.

NO

Go to step 10.

10. Shorted wire check (LIN (BATT SENSOR)/LIN line)

-1. Jump the SCS line with the HDS, and wait more than 1 minute.

Continue to check for continuity between the alternator 1P connector terminal and body ground, while disconnecting these connectors, one at a time:

- PCM connector A (50P)
- 12 volt battery sensor 2P connector
- Shutter grille (upper) 4P connector
- Shutter grille (lower) 4P connector
- DC-DC converter connector A (3P) (with auto idle stop system)

Does continuity go away when one of the above connectors is disconnected?

YES

The LIN (BATT SENSOR)/LIN wire is OK. Replace the part that caused an open when it was disconnected.

NO

Repair a short in the LIN (BATT SENSOR)/LIN wire between the PCM (A10), the alternator, the 12 volt battery sensor, the shutter grille, and the DC-DC converter (with auto idle stop system).

11. Determine possible failure area (alternator, others)

-1. Reconnect the alternator 1P connector.

-2. Disconnect the following connector.

Shutter grille (upper/lower) 4P connector

-3. Measure the resistance between test points 1 and 2.

Test condition	Vehicle OFF (LOCK) mode
B	Shutter grille (upper/lower) 4P connector: disconnected
Test point 1	Shutter grille (upper/lower) 4P connector (female terminals) No. 3: ①
Test point 2	Body ground

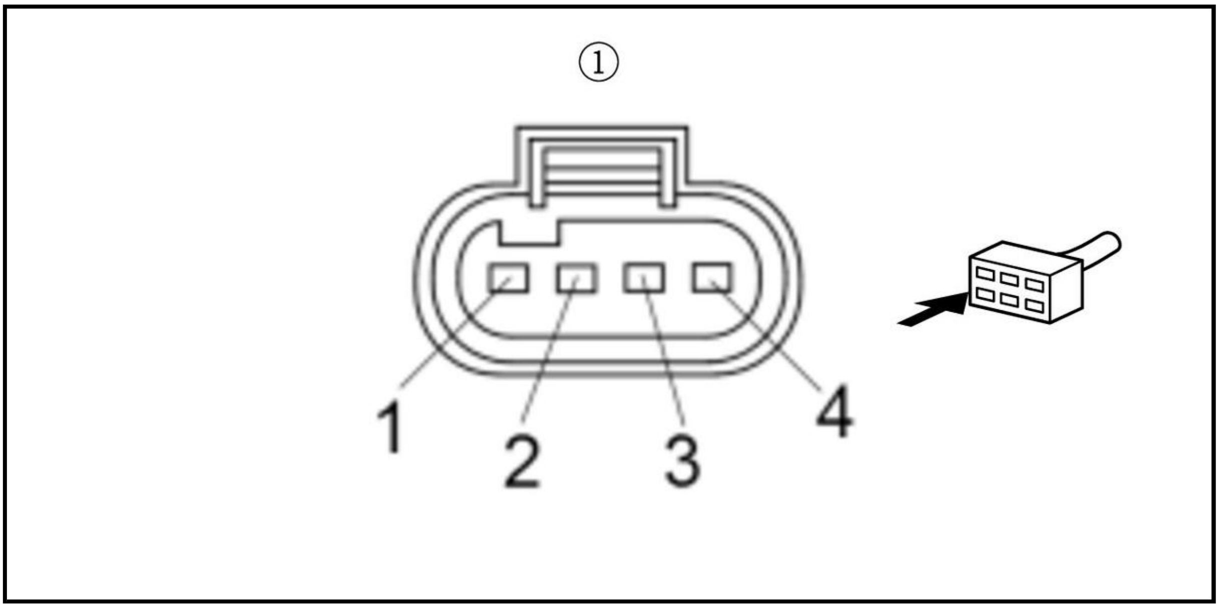

Is there 1 MΩ or more?

YES

Go to step 12.

NO

Replace the alternator .

12. Open wire check (LIN (BATT SENSOR)/LIN line) 1

-1. Jump the SCS line with the HDS, and wait more than 1 minute.

-2. Disconnect the following connectors.

Alternator 1P connector
PCM connector A (50P)

-3. Measure the resistance between test points 1 and 2.

Test condition	Vehicle OFF (LOCK) mode
B	Alternator 1P connector: disconnected
B	Shutter grille (upper/lower) 4P connector: disconnected
B	PCM connector A (50P): disconnected
Test point 1	Alternator 1P connector (female terminal) No. 1: ①
Test point 2	**PCM connector A (50P) No. 10**

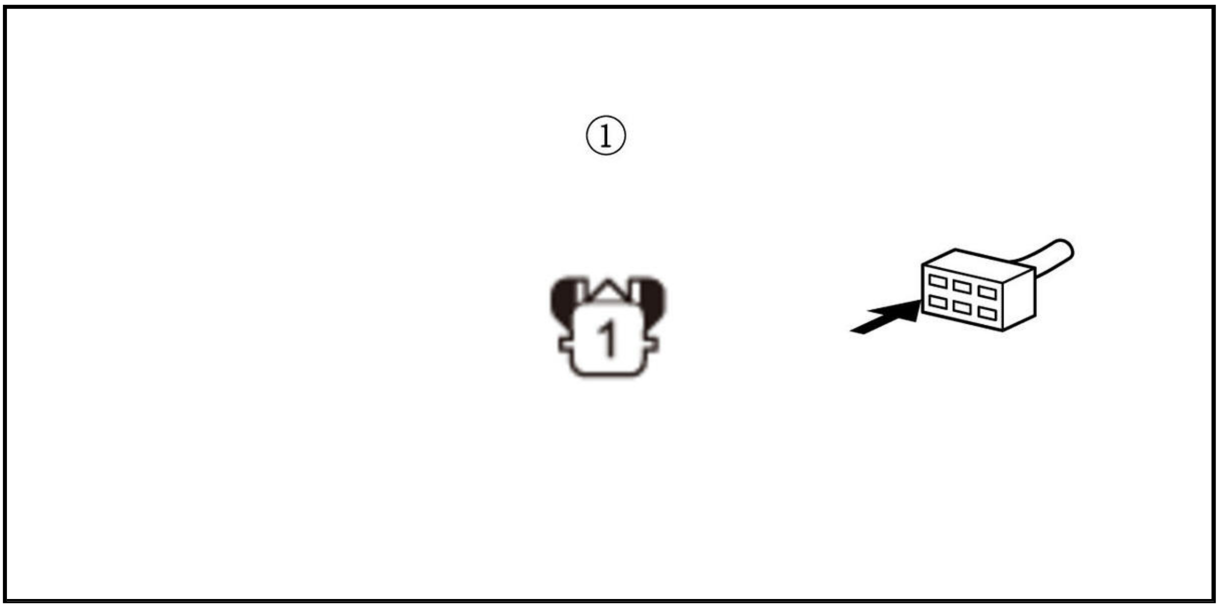

Is there 1.0 Ω or less?

YES

The LIN (BATT SENSOR)/LIN wire is OK. Check for any authorized service information related to the DTCs or symptoms you are troubleshooting, or **substitute a known-good PCM** .

NO

Repair an open in the LIN (BATT SENSOR)/LIN wire between the PCM (A10) and the alternator.

13. Determine possible failure area (LIN (BATT SENSOR)/LIN line, others)

-1. Turn the vehicle to the OFF (LOCK) mode.

-2. Disconnect the following connector.

Alternator 1P connector

-3. Measure the resistance between test points 1 and 2.

Test condition	Vehicle OFF (LOCK) mode
B	Alternator 1P connector: disconnected
Test point 1	Alternator 1P connector (female terminal) No. 1: ①
Test point 2	Body ground

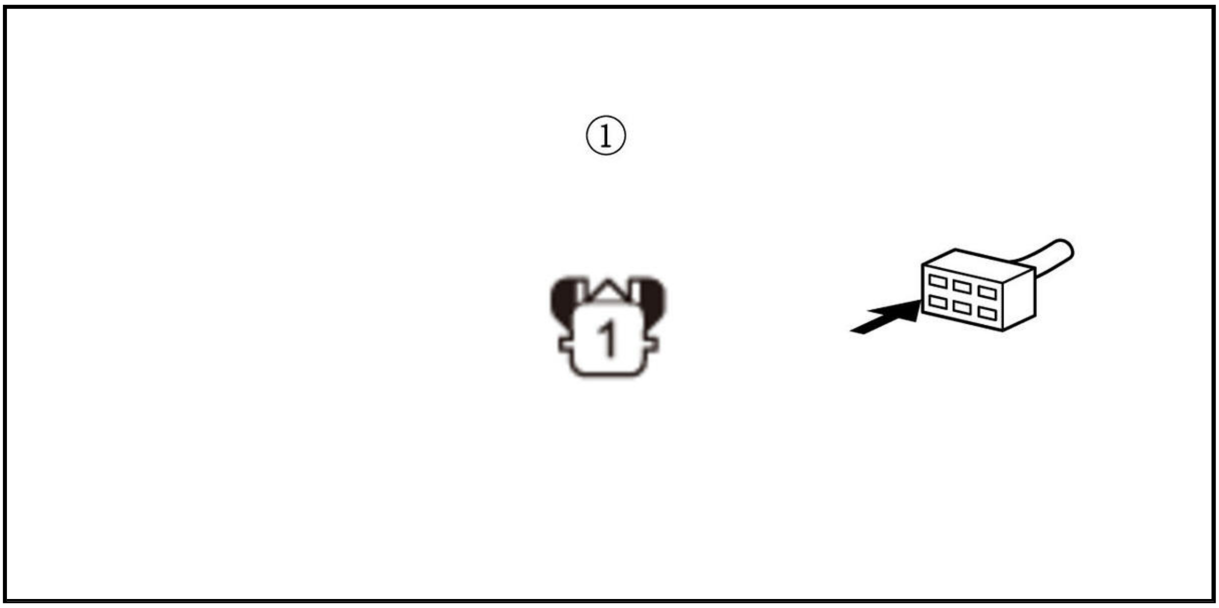

Is there 1 MΩ or more?

YES

Go to step 15.

NO

Go to step 14.

14. Shorted wire check (LIN (BATT SENSOR)/LIN line)

-1. Jump the SCS line with the HDS, and wait more than 1 minute.

Continue to check for continuity between the alternator 1P connector terminal and body ground, while disconnecting these connectors, one at a time:

- PCM connector A (50P)
- 12 volt battery sensor 2P connector
- Shutter grille (upper) 4P connector
- Shutter grille (lower) 4P connector
- DC-DC converter connector A (3P) (with auto idle stop system)

Does continuity go away when one of the above connectors is disconnected?

YES

The LIN (BATT SENSOR)/LIN wire is OK. Replace the part that caused an open when it was disconnected.

NO

Repair a short in the LIN (BATT SENSOR)/LIN wire between the PCM (A10), the alternator, the 12 volt battery sensor, the shutter grille, and the DC-DC converter (with auto idle stop system).

15. Determine possible failure area (alternator, others)

-1. Reconnect the alternator 1P connector.

-2. Disconnect the following connector.

DC-DC converter connector A (3P)

-3. Measure the resistance between test points 1 and 2.

Test condition	Vehicle OFF (LOCK) mode
B	DC-DC converter connector A (3P): disconnected
Test point 1	DC-DC converter connector A (3P) (female terminals) No. 1: ①
Test point 2	Body ground

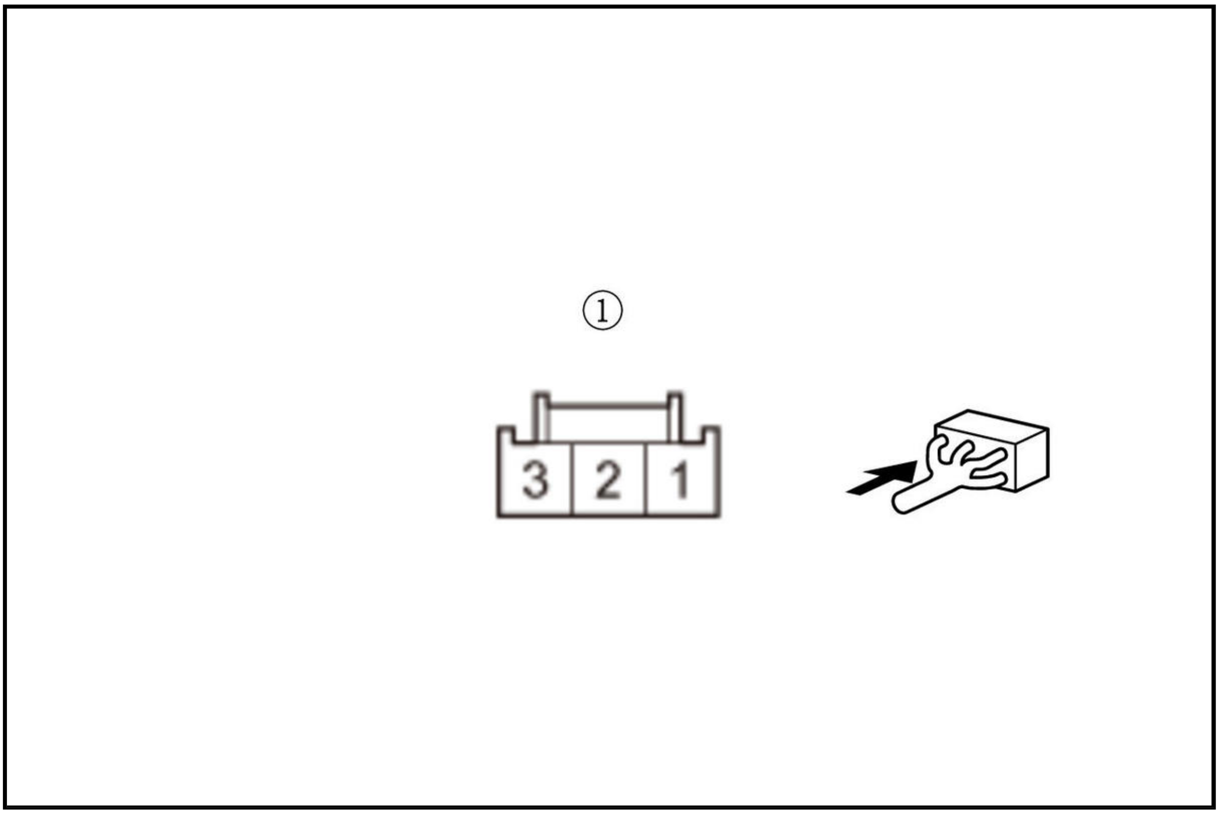

Is there 1 MΩ or more?

YES

Go to step 16.

NO

Replace the alternator .

16. Open wire check (LIN (BATT SENSOR)/LIN line) 1

-1. Jump the SCS line with the HDS, and wait more than 1 minute.

-2. Disconnect the following connectors.

Alternator 1P connector
PCM connector A (50P)

-3. Measure the resistance between test points 1 and 2.

Test condition	Vehicle OFF (LOCK) mode
B	Alternator 1P connector: disconnected
B	DC-DC converter connector A (3P): disconnected

B	PCM connector A (50P): disconnected
Test point 1	Alternator 1P connector (female terminal) No. 1: ①
Test point 2	**PCM connector A (50P) No. 10**

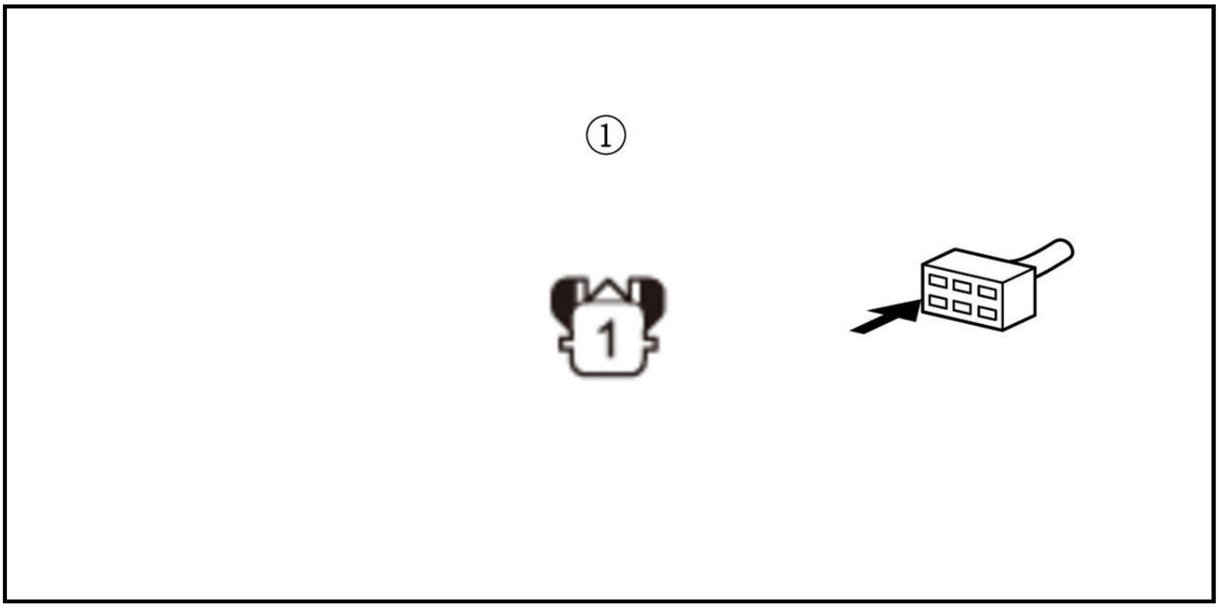

Is there 1.0 Ω or less?

YES

The LIN (BATT SENSOR)/LIN wire is OK. Check for any authorized service information related to the DTCs or symptoms you are troubleshooting, or **substitute a known-good PCM** .

NO

Repair an open in the LIN (BATT SENSOR)/LIN wire between the PCM (A10) and the alternator.

17. Open wire check (LIN (BATT SENSOR)/LIN line) 2

-1. Turn the vehicle to the OFF (LOCK) mode.

-2. Jump the SCS line with the HDS, and wait more than 1 minute.

-3. Disconnect the following connectors.

Alternator 1P connector
PCM connector A (50P)

-4. Measure the resistance between test points 1 and 2.

Test condition	Vehicle OFF (LOCK) mode
B	Alternator 1P connector: disconnected
B	PCM connector A (50P): disconnected
Test point 1	Alternator 1P connector (female terminal) No. 1: ①
Test point 2	**PCM connector A (50P) No. 10**

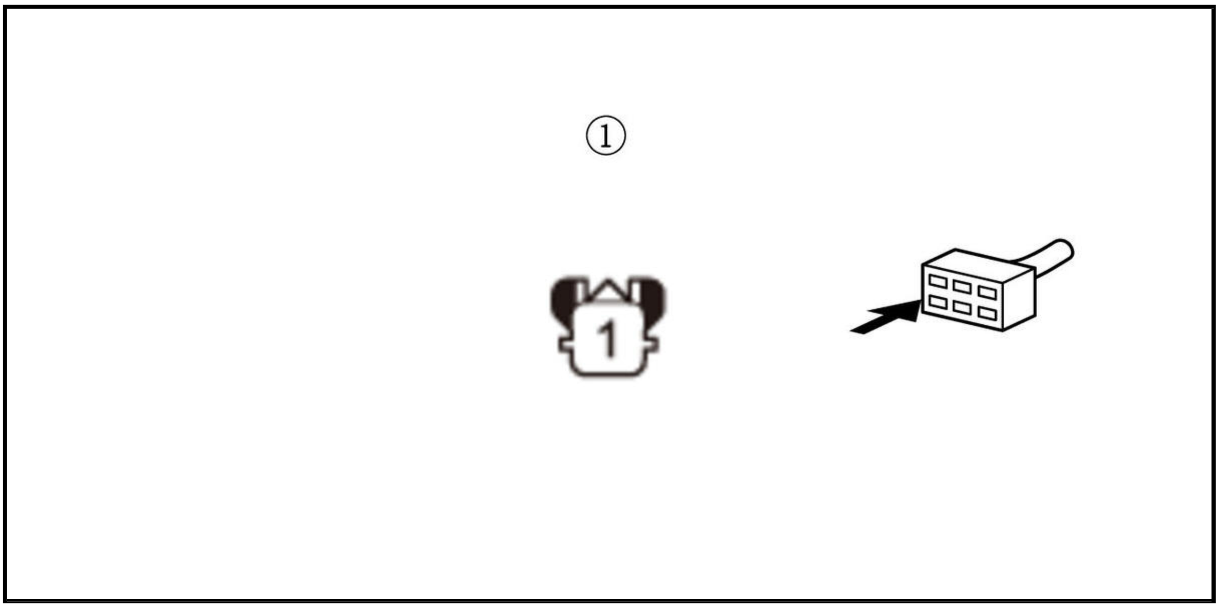

Is there 1.0 Ω or less?

YES

The LIN (BATT SENSOR)/LIN wire is OK. **Replace the alternator** .

NO

Repair an open in the LIN (BATT SENSOR)/LIN wire between the PCM (A10) and the alternator.

DTC P16E2 (2.4 L ENGINE) (2017 2018 2019)

DTC P16E2 : PGM-FI-ACG LIN Communication Error

NOTE:

- Before you troubleshoot, **review the general troubleshooting information** .
- Check for a loose terminal on the alternator (+B terminal). If the alternator +B terminal was loose, DTC P16E2 will be stored.

DTC Description	Confirmed DTC	Pending DTC
P16E2 PGM-FI - ACG LIN Communication Error	B	B

DTC (PGM-FI)

1. Problem verification

   -1. Turn the vehicle to the ON mode.

   -2. Clear the DTC with the HDS.

   -3. Turn the vehicle to the OFF (LOCK) mode.

   -4. Turn the vehicle to the ON mode, and wait 10 seconds.

   -5. Check for Pending or Confirmed DTCs with the HDS.

DTC Description	Confirmed DTC	Pending DTC
P16E2 PGM-FI - ACG LIN Communication Error	B	B

   Is DTC P16E2 indicated?

YES

Go to step 2.

NO

Intermittent failure, the system is OK at this time. Check for poor connections or loose terminals at the alternator and the PCM. **If the on-board snapshot of this DTC is recorded, try to reproduce the failure under the same conditions with the on-board snapshot** .

2. DTC check 1

-1. Check for Pending or Confirmed DTCs with the HDS.

DTC Description	Confirmed DTC	Pending DTC
P16E3 PGM-FI-Battery Sensor LIN Communication Error	B	B

Is DTC P16E3 indicated?

YES

Go to step 4.

NO

Go to step 3.

3. DTC check 2 (with shutter grille)

-1. Check for Pending or Confirmed DTCs with the HDS.

DTC Description	Confirmed DTC	Pending DTC
P16E8 PGM-FI-Shutter Grille LIN Communication Error	B	B

Is DTC P16E8 indicated?

YES

Go to step 8.

NO

Go to step 12.

4. Determine possible failure area (LIN (BATT SENSOR)/LIN line, others)

-1. Turn the vehicle to the OFF (LOCK) mode.

-2. Disconnect the following connector.

Alternator 1P connector

-3. Check for continuity between test points 1 and 2.

Test condition	Vehicle OFF (LOCK) mode
B	Alternator 1P connector: disconnected
Test point 1	Alternator 1P connector (female terminal) No. 1: ①
Test point 2	Body ground

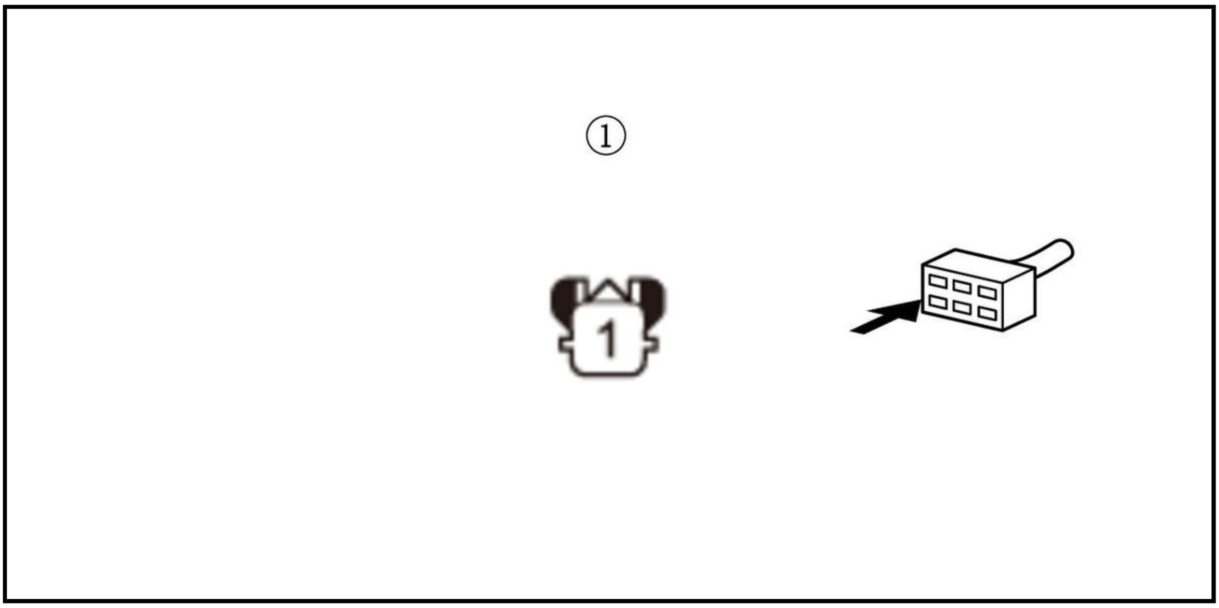

Is there continuity?

YES

Go to step 5.

NO

Go to step 6.

5. Shorted wire check (LIN (BATT SENSOR)/LIN line)

   -1. Jump the SCS line with the HDS, and wait more than 1 minute.

   Continue to check for continuity between the alternator 1P connector terminal and body ground, while disconnecting these connectors, one at a time:

   - PCM connector B (51P)
   - 12 volt battery sensor 2P connector
   - Shutter grille (upper) 4P connector (with shutter grille)
   - Shutter grille (lower) 4P connector (with shutter grille)

   Does continuity go away when one of the above connectors is disconnected?

   YES

   The LIN (BATT SENSOR)/LIN wire is OK. Replace the part that caused an open when it was disconnected.

   NO

   Repair a short in the LIN (BATT SENSOR)/LIN wire between the PCM (B40), the alternator, the 12 volt battery sensor, and the shutter grille (with shutter grille).

6. Determine possible failure area (alternator, others)

   -1. Reconnect the alternator 1P connector.

   -2. Disconnect the following connector.

12 volt battery sensor 2P connector

-3. Check for continuity between test points 1 and 2.

Test condition	Vehicle OFF (LOCK) mode
B	12 volt battery sensor 2P connector: disconnected
Test point 1	12 volt battery sensor 2P connector (female terminals) No. 2: ①
Test point 2	Body ground

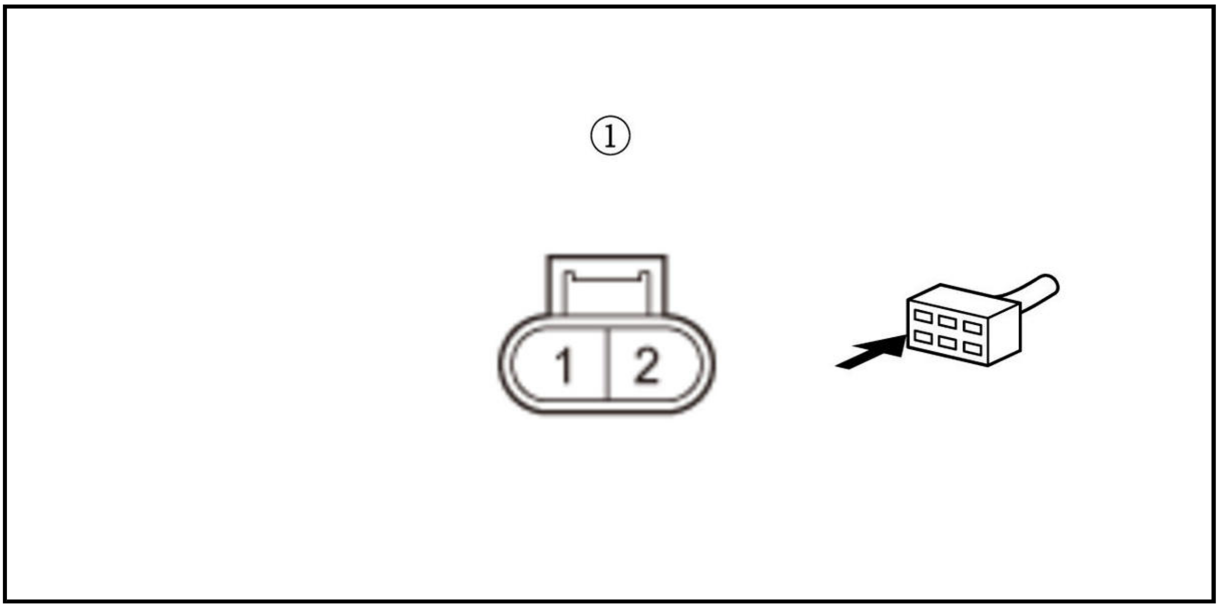

Is there continuity?

YES

Replace the alternator .

NO

Go to step 7.

7. Open wire check (LIN (BATT SENSOR)/LIN line) 1

-1. Jump the SCS line with the HDS, and wait more than 1 minute.

-2. Disconnect the following connectors.

Alternator 1P connector
PCM connector B (51P)

-3. Check for continuity between test points 1 and 2.

Test condition	Vehicle OFF (LOCK) mode
B	12 volt battery sensor 2P connector: disconnected
B	Alternator 1P connector: disconnected
B	PCM connector A (50P): disconnected
Test point 1	Alternator 1P connector (female terminal) No. 1: ①
Test point 2	**PCM connector B (51P) No. 40**

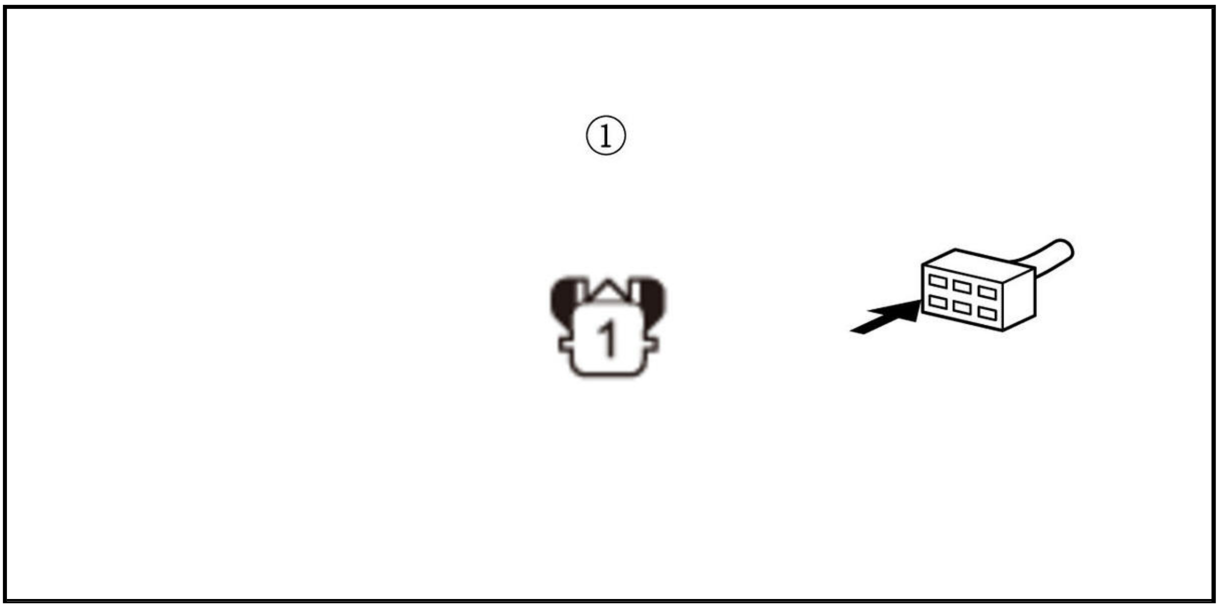

Is there continuity?

YES

The LIN (BATT SENSOR)/LIN wire is OK. Check for any authorized service information related to the DTCs or symptoms you are troubleshooting, or **substitute a known-good PCM** .

NO

Repair an open in the LIN (BATT SENSOR)/LIN wire between the PCM (B40) and the alternator.

8. Determine possible failure area (LIN (BATT SENSOR)/LIN line, others)

-1. Turn the vehicle to the OFF (LOCK) mode.

-2. Disconnect the following connector.

Alternator 1P connector

-3. Check for continuity between test points 1 and 2.

Test condition	Vehicle OFF (LOCK) mode
B	Alternator 1P connector: disconnected
Test point 1	Alternator 1P connector (female terminal) No. 1: ①
Test point 2	Body ground

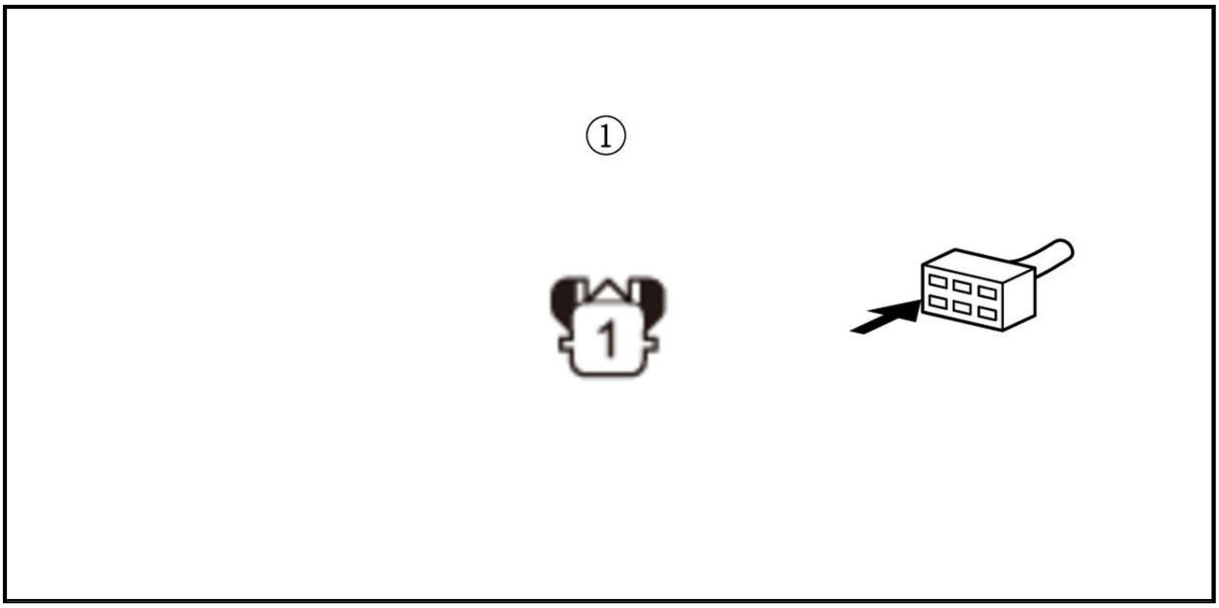

Is there continuity?

YES

Go to step 9.

NO

Go to step 10.

9. Shorted wire check (LIN (BATT SENSOR)/LIN line)

   -1. Jump the SCS line with the HDS, and wait more than 1 minute.

   Continue to check for continuity between the alternator 1P connector terminal and body ground, while disconnecting these connectors, one at a time:

   - PCM connector B (51P)
   - 12 volt battery sensor 2P connector
   - Shutter grille (upper) 4P connector (with shutter grille)
   - Shutter grille (lower) 4P connector (with shutter grille)

   Does continuity go away when one of the above connectors is disconnected?

   YES

   The LIN (BATT SENSOR)/LIN wire is OK. Replace the part that caused an open when it was disconnected.

   NO

   Repair a short in the LIN (BATT SENSOR)/LIN wire between the PCM (B40), the alternator, the 12 volt battery sensor and the shutter grille (with shutter grille).

10. Determine possible failure area (alternator, others)

   -1. Reconnect the alternator 1P connector.

   -2. Disconnect the following connector.

Shutter grille (upper/lower) 4P connector

-3. Check for continuity between test points 1 and 2.

Test condition	Vehicle OFF (LOCK) mode
B	Shutter grille (upper/lower) 4P connector: disconnected
Test point 1	Shutter grille (upper/lower) 4P connector (female terminals) No. 3: ①
Test point 2	Body ground

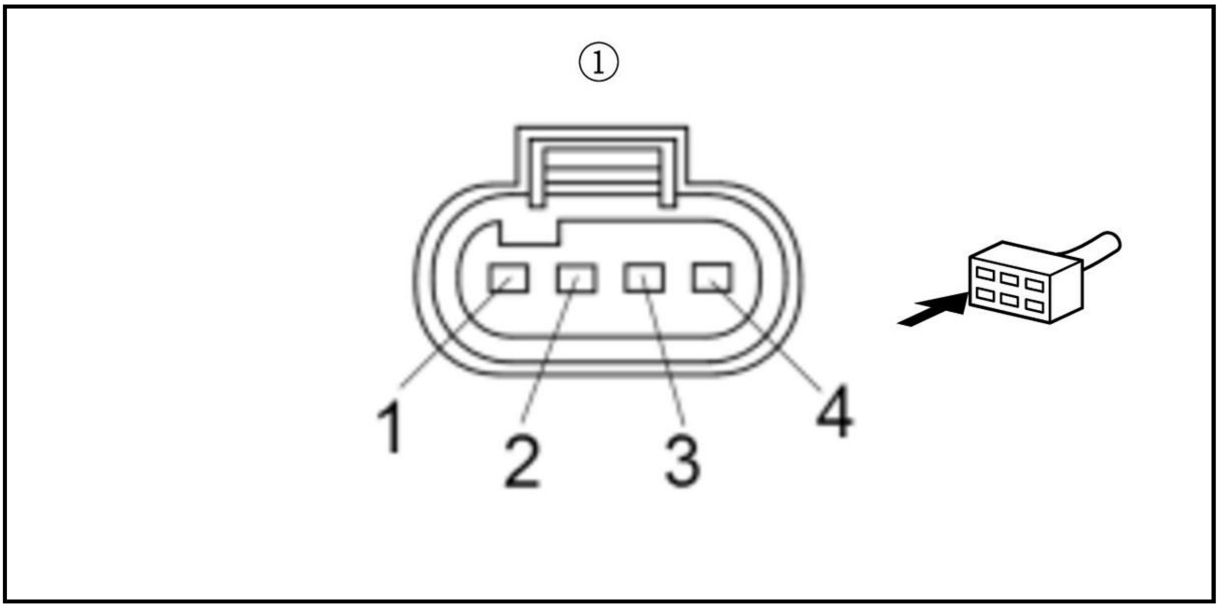

Is there continuity?

YES

Replace the alternator .

NO

Go to step 11.

11. Open wire check (LIN (BATT SENSOR)/LIN line) 1

-1. Jump the SCS line with the HDS, and wait more than 1 minute.

-2. Disconnect the following connectors.

Alternator 1P connector
PCM connector B (51P)

-3. Check for continuity between test points 1 and 2.

Test condition	Vehicle OFF (LOCK) mode
B	Alternator 1P connector: disconnected
B	Shutter grille (upper/lower) 4P connector: disconnected
B	PCM connector B (51P): disconnected
Test point 1	Alternator 1P connector (female terminal) No. 1: ①
Test point 2	**PCM connector B (51P) No. 40**

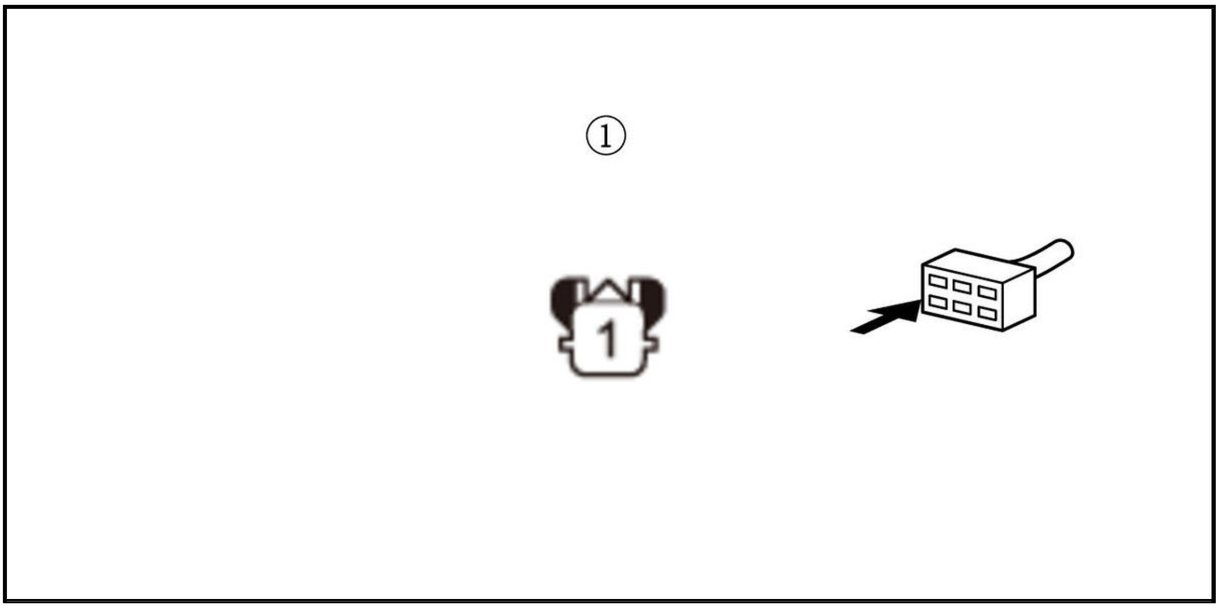

Is there continuity?

YES

The LIN (BATT SENSOR)/LIN wire is OK. Check for any authorized service information related to the DTCs or symptoms you are troubleshooting, or **substitute a known-good PCM** .

NO

Repair an open in the LIN (BATT SENSOR)/LIN wire between the PCM (B40) and the alternator.

12. Open wire check (LIN (BATT SENSOR)/LIN line) 2

-1. Turn the vehicle to the OFF (LOCK) mode.

-2. Jump the SCS line with the HDS, and wait more than 1 minute.

-3. Disconnect the following connectors.

Alternator 1P connector
PCM connector B (51P)

-4. Check for continuity between test points 1 and 2.

Test condition	Vehicle OFF (LOCK) mode
B	Alternator 1P connector: disconnected
B	PCM connector B (51P): disconnected
Test point 1	Alternator 1P connector (female terminal) No. 1: ①
Test point 2	**PCM connector B (51P) No. 40**

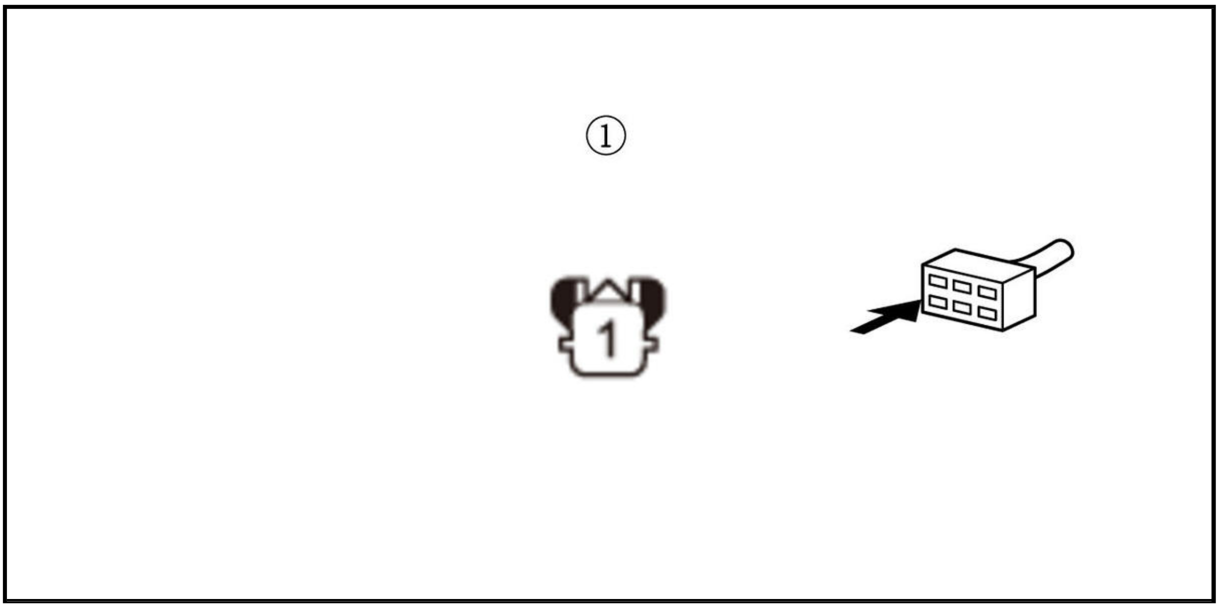

Is there continuity?

YES

The LIN (BATT SENSOR)/LIN wire is OK. **Replace the alternator** .

NO

Repair an open in the LIN (BATT SENSOR)/LIN wire between the PCM (B40) and the alternator.

DTC P16E3 (1.5 L ENGINE)

DTC P16E3 : PGM-FI-Battery Sensor LIN Communication Error

NOTE:

- Before you troubleshoot, **review the general troubleshooting information** .
- Check for loose terminals on the 12 volt battery sensor (12 volt battery negative (-) terminal).

DTC Description	Confirmed DTC	Pending DTC
P16E3 PGM-FI-Battery Sensor LIN Communication Error	B	B

DTC (PGM-FI)

1. Problem verification

   -1. Turn the vehicle to the ON mode.

   -2. Clear the DTC with the HDS.

   -3. Turn the vehicle to the OFF (LOCK) mode.

   -4. Turn the vehicle to the ON mode, and wait 60 seconds.

   -5. Check for Pending or Confirmed DTCs with the HDS.

DTC Description	Confirmed DTC	Pending DTC
P16E3 PGM-FI-Battery Sensor LIN Communication Error	B	B

Is DTC P16E3 indicated?

YES

Go to step 2.

NO

Intermittent failure, the system is OK at this time. Check for poor connections or loose terminals at the 12 volt battery sensor and the PCM. **If the on-board snapshot of this DTC is recorded, try to reproduce the failure under the same conditions with the on-board snapshot** .

2. DTC check 1

   -1. Check for Pending or Confirmed DTCs with the HDS.

DTC Description	Confirmed DTC	Pending DTC
P16E2 PGM-FI-ACG LIN Communication Error	B	B

   Is DTC P16E2 indicated?

   YES

   Go to step 5

   NO

   Go to step 3.

3. DTC check 2

   -1. Check for Pending or Confirmed DTCs with the HDS.

DTC Description	Confirmed DTC	Pending DTC
P16E8 PGM-FI-Shutter Grille LIN Communication Error	B	B

   Is DTC P16E8 indicated?

   YES

   Go to step 9.

   NO

   Go to step 17.

4. DTC check 3

   -1. Check for Pending or Confirmed DTCs with the HDS.

DTC Description	Confirmed DTC	Pending DTC
P16E5 LIN Communication Error (PCM-DC-DC Converter)	B	B

   Is DTC P16E5 indicated?

   YES

   Go to step 13.

   NO

Go to step 17.

5. Determine possible failure area (LIN (BATT SENSOR)/LIN line shorted, others)

-1. Turn the vehicle to the OFF (LOCK) mode.

-2. Disconnect the following connector.

12 volt battery sensor 2P connector

-3. Measure the resistance between test points 1 and 2.

Test condition	Vehicle OFF (LOCK) mode
B	12 volt battery sensor 2P connector: disconnected
Test point 1	12 volt battery sensor 2P connector (female terminals) No. 2: ①
Test point 2	Body ground

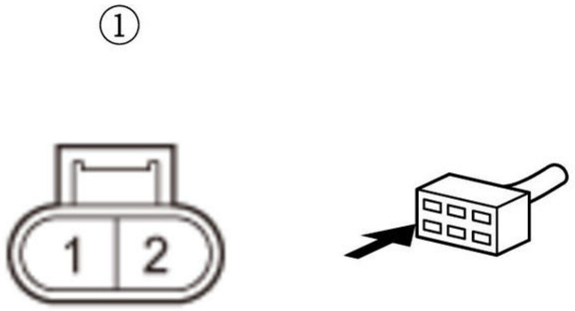

Is there 1 MΩ or more?

YES

Go to step 7.

NO

Go to step 6.

6. Shorted wire check (LIN (BATT SENSOR)/LIN line)

-1. Jump the SCS line with the HDS, and wait more than 1 minute.

Continue to check for continuity between 12 volt battery sensor 2P connector terminal No. 2 and body ground, while disconnecting these connectors, one at a time:

- Alternator 1P connector
- PCM connector A (50P)
- Shutter grille (upper) 4P connector
- Shutter grille (lower) 4P connector
- DC-DC converter connector A (3P) (with auto idle stop system)

Does continuity go away when one of the above connectors is disconnected?

YES

The LIN (BATT SENSOR)/LIN wire is OK. Replace the part that caused an open when it was disconnected.

NO

Repair a short in the LIN (BATT SENSOR)/LIN wire between the 12 volt battery sensor, the alternator, the shutter grille, the DC-DC converter (with auto idle stop system), and the PCM (A10).

7. Determine possible failure area (12 volt battery sensor, others)

-1. Reconnect the 12 volt battery sensor 2P connector.

-2. Disconnect the following connector.

Alternator 1P connector

-3. Measure the resistance between test points 1 and 2.

Test condition	Vehicle OFF (LOCK) mode
B	Alternator 1P connector: disconnected
Test point 1	Alternator 1P connector (female terminal) No. 1: ①
Test point 2	Body ground

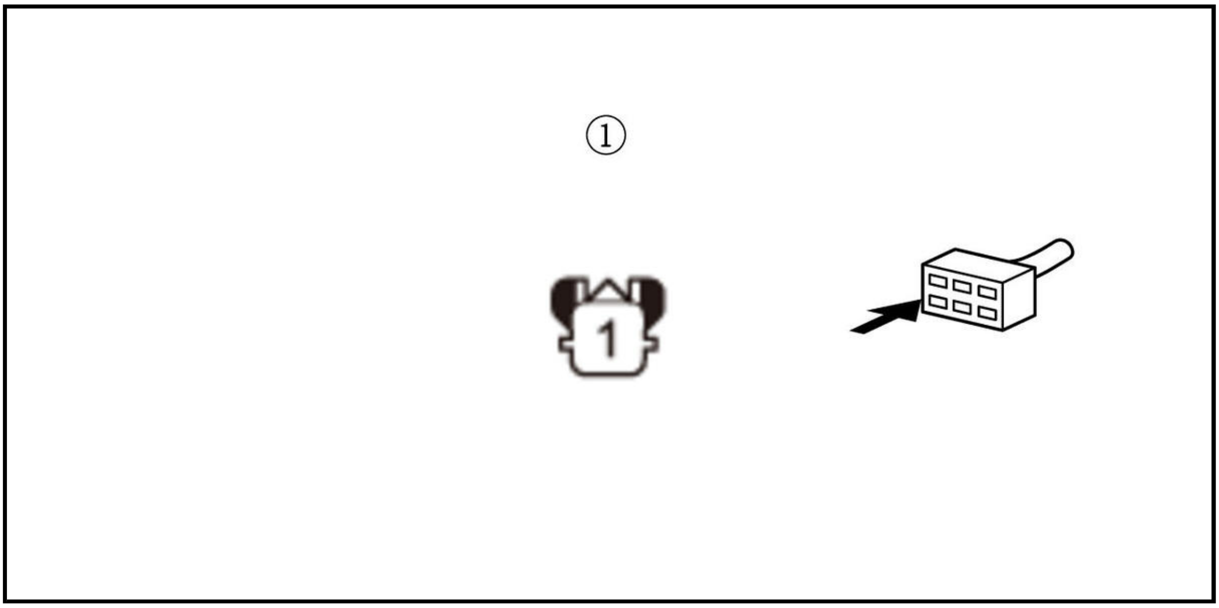

Is there 1 MΩ or more?

YES

Go to step 8.

NO

Replace the 12 volt battery sensor .

8. Open wire check (LIN (BATT SENSOR)/LIN line) 1

-1. Jump the SCS line with the HDS, and wait more than 1 minute.

-2. Disconnect the following connectors.

12 volt battery sensor 2P connector
PCM connector A (50P)

-3. Measure the resistance between test points 1 and 2.

Test condition	Vehicle OFF (LOCK) mode
	Alternator 1P connector: disconnected
	12 volt battery sensor 2P connector: disconnected
	PCM connector A (50P): disconnected
Test point 1	12 volt battery sensor 2P connector (female terminals) No. 2: ①
Test point 2	**PCM connector A (50P) No. 10**

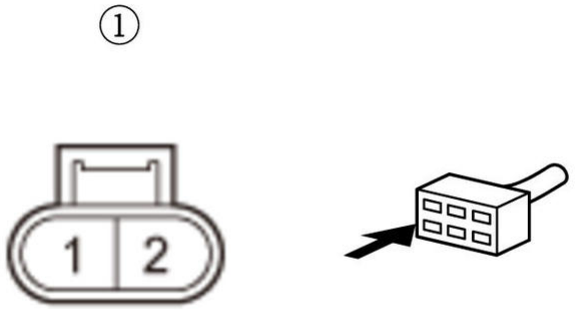

Is there 1.0 Ω or less?

YES

The LIN (BATT SENSOR)/LIN wire is OK. Check for any authorized service information related to the DTCs or symptoms you are troubleshooting, or **substitute a known-good PCM** .

NO

Repair an open in the LIN (BATT SENSOR)/LIN wire between the PCM (A10) and the 12 volt battery sensor.

9. Determine possible failure area (LIN (BATT SENSOR)/LIN line shorted, others)

-1. Turn the vehicle to the OFF (LOCK) mode.

-2. Disconnect the following connector.

12 volt battery sensor 2P connector

-3. Measure the resistance between test points 1 and 2.

Test condition	Vehicle OFF (LOCK) mode
B	12 volt battery sensor 2P connector: disconnected

Test point 1	12 volt battery sensor 2P connector (female terminals) No. 2: ①
Test point 2	Body ground

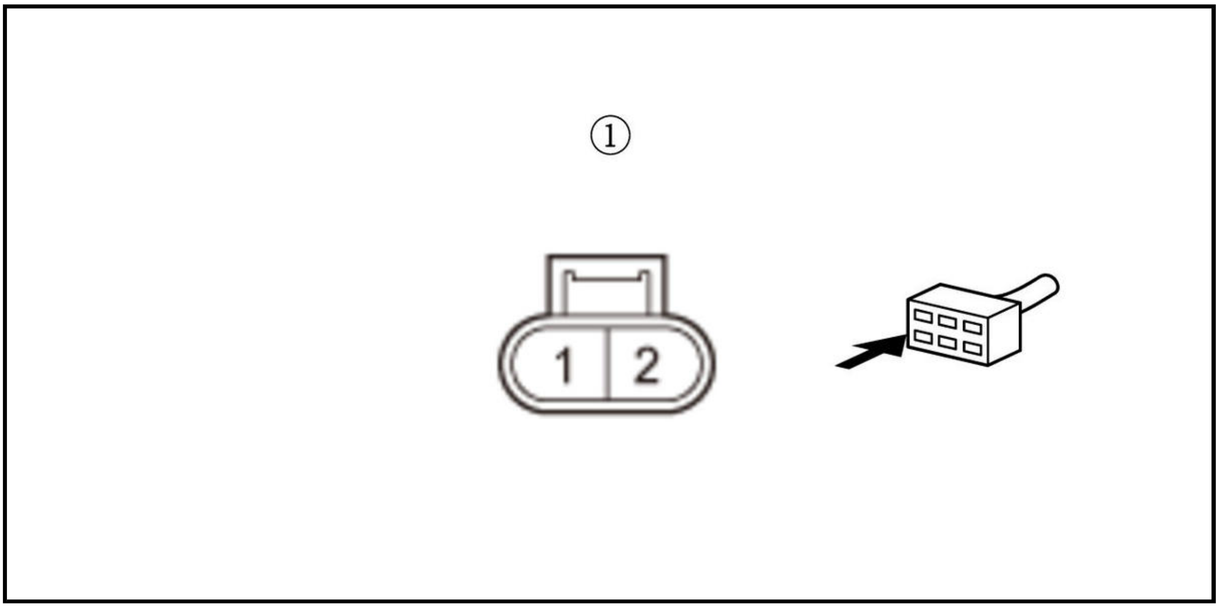

Is there 1 MΩ or more?

YES

Go to step 11.

NO

Go to step 10.

10. Shorted wire check (LIN (BATT SENSOR)/LIN line)

-1. Jump the SCS line with the HDS, and wait more than 1 minute.

Continue to check for continuity between 12 volt battery sensor 2P connector terminal No. 2 and body ground, while disconnecting these connectors, one at a time:

- PCM connector A (50P)
- Alternator 1P connector
- Shutter grille (upper) 4P connector
- Shutter grille (lower) 4P connector
- DC-DC converter connector A (3P) (with auto idle stop system)

Does continuity go away when one of the above connectors is disconnected?

YES

The LIN (BATT SENSOR)/LIN wire is OK. Replace the part that caused an open when it was disconnected.

NO

Repair a short in the LIN (BATT SENSOR)/LIN wire between the 12 volt battery sensor, the alternator, the shutter grille, the DC-DC converter (with auto idle stop system), and the PCM (A10).

11. Determine possible failure area (12 volt battery sensor, others)

-1. Reconnect the 12 volt battery sensor 2P connector.

-2. Disconnect the following connector.

Shutter grille (upper/lower) 4P connector

-3. Measure the resistance between test points 1 and 2.

Test condition	Vehicle OFF (LOCK) mode
B	Shutter grille (upper/lower) 4P connector: disconnected
Test point 1	Shutter grille (upper/lower) 4P connector (female terminals) No. 3: ①
Test point 2	Body ground

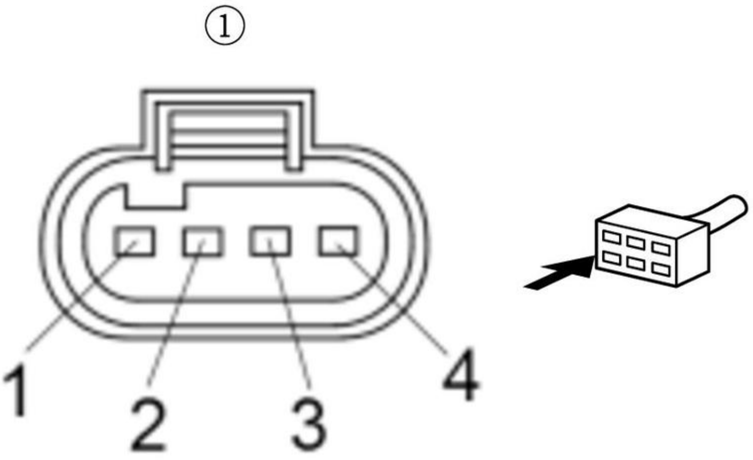

Is there 1 MΩ or more?

YES

Go to step 12.

NO

Replace the 12 volt battery sensor .

12. Open wire check (LIN (BATT SENSOR)/LIN line) 1

-1. Jump the SCS line with the HDS, and wait more than 1 minute.

-2. Disconnect the following connectors.

12 volt battery sensor 2P connector
PCM connector A (50P)

-3. Measure the resistance between test points 1 and 2.

Test condition	Vehicle OFF (LOCK) mode
	12 volt battery sensor 2P connector: disconnected
	Shutter grille (upper/lower) 4P connector: disconnected
	PCM connector A (50P): disconnected

Test point 1	12 volt battery sensor 2P connector (female terminals) No. 2: ①
Test point 2	**PCM connector A (50P) No. 10**

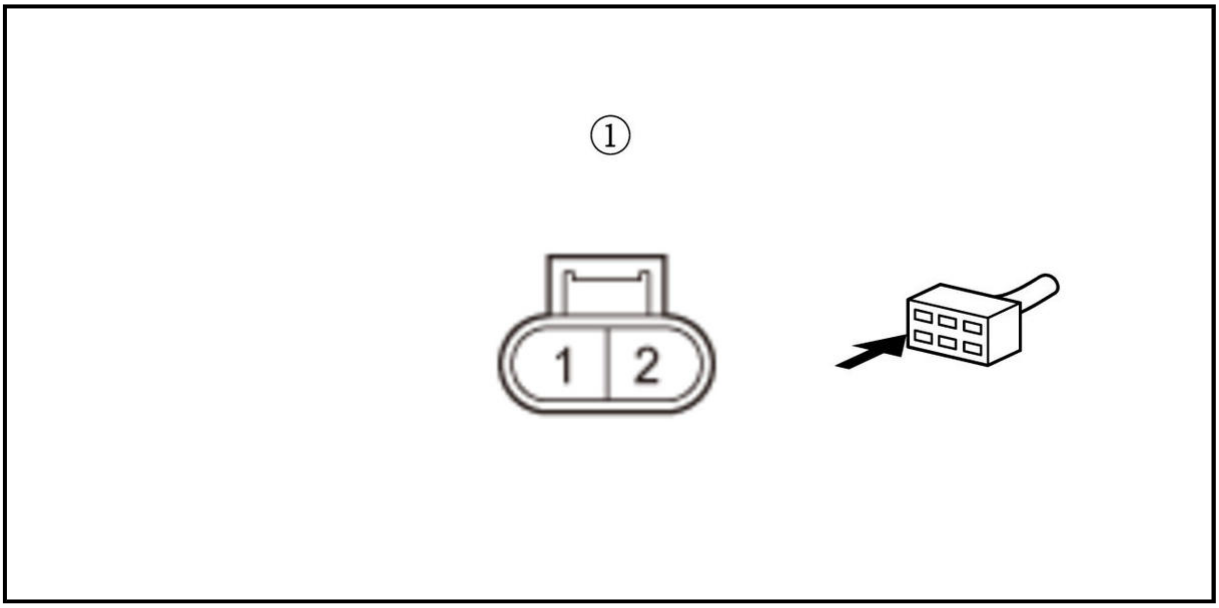

Is there 1.0 Ω or less?

YES

The LIN (BATT SENSOR)/LIN wire is OK. Check for any authorized service information related to the DTCs or symptoms you are troubleshooting, or **substitute a known-good PCM** .

NO

Repair an open in the LIN (BATT SENSOR)/LIN wire between the PCM (A10) and the 12 volt battery sensor.

13. Determine possible failure area (LIN (BATT SENSOR)/LIN line shorted, others)

-1. Turn the vehicle to the OFF (LOCK) mode.

-2. Disconnect the following connector.

12 volt battery sensor 2P connector

-3. Measure the resistance between test points 1 and 2.

Test condition	Vehicle OFF (LOCK) mode
B	12 volt battery sensor 2P connector: disconnected
Test point 1	12 volt battery sensor 2P connector (female terminals) No. 2: ①
Test point 2	Body ground

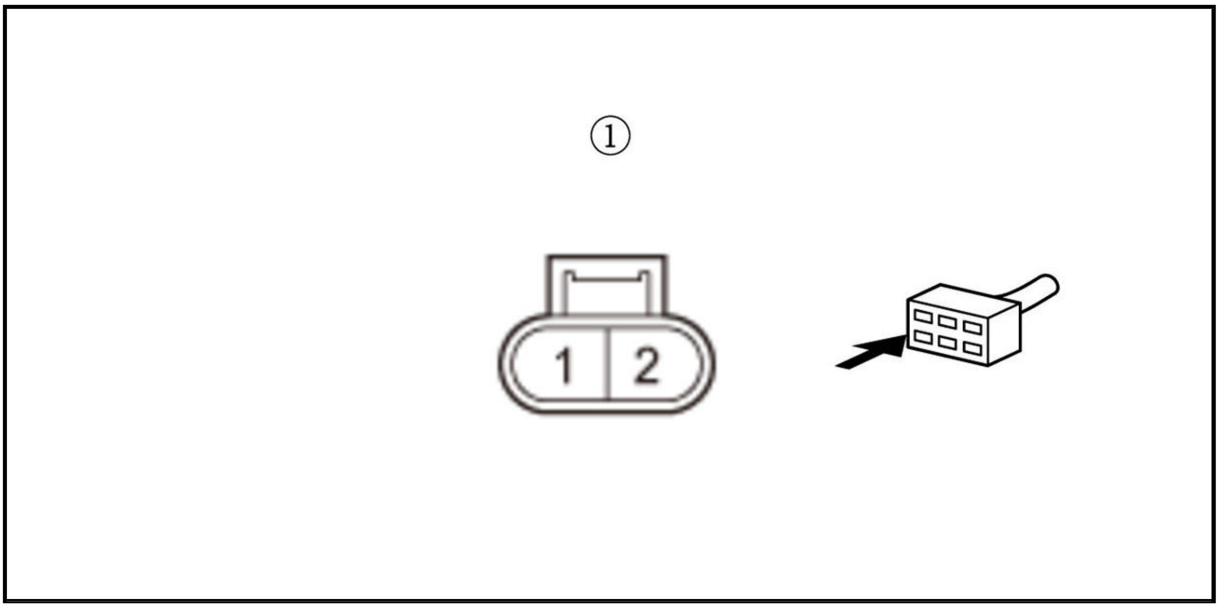

Is there 1 MΩ or more?

YES

Go to step 15.

NO

Go to step 14.

14. Shorted wire check (LIN (BATT SENSOR)/LIN line)

    -1. Jump the SCS line with the HDS, and wait more than 1 minute.

    Continue to check for continuity between 12 volt battery sensor 2P connector terminal No. 2 and body ground, while disconnecting these connectors, one at a time:

    - PCM connector A (50P)
    - Alternator 1P connector
    - Shutter grille (upper) 4P connector
    - Shutter grille (lower) 4P connector
    - DC-DC converter connector A (3P) (with auto idle stop system)

    Does continuity go away when one of the above connectors is disconnected?

    YES

    The LIN (BATT SENSOR)/LIN wire is OK. Replace the part that caused an open when it was disconnected.

    NO

    Repair a short in the LIN (BATT SENSOR)/LIN wire between the 12 volt battery sensor, the alternator, the shutter grille (with shutter grille), the DC-DC converter (with auto idle stop system), and the PCM (A10).

15. Determine possible failure area (12 volt battery sensor, others)

    -1. Reconnect the 12 volt battery sensor 2P connector.

    -2. Disconnect the following connector.

DC-DC converter connector A (3P)

-3. Measure the resistance between test points 1 and 2.

Test condition	Vehicle OFF (LOCK) mode
B	DC-DC converter connector A (3P): disconnected
Test point 1	DC-DC converter connector A (3P) (female terminals) No. 1: ①
Test point 2	Body ground

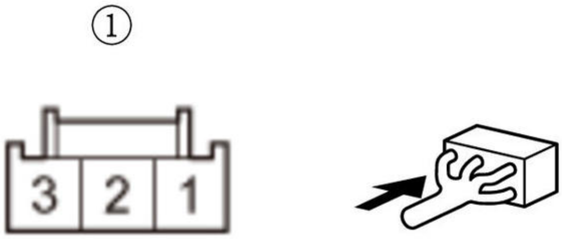

Is there 1 MΩ or more?

YES

Go to step 16.

NO

Replace the 12 volt battery sensor .

16. Open wire check (LIN (BATT SENSOR)/LIN line) 1

-1. Jump the SCS line with the HDS, and wait more than 1 minute.

-2. Disconnect the following connectors.

12 volt battery sensor 2P connector
PCM connector A (50P)

-3. Measure the resistance between test points 1 and 2.

Test condition	Vehicle OFF (LOCK) mode
	12 volt battery sensor 2P connector: disconnected
	DC-DC converter connector A (3P): disconnected

	PCM connector A (50P): disconnected
Test point 1	12 volt battery sensor 2P connector (female terminals) No. 2: ①
Test point 2	**PCM connector A (50P) No. 10**

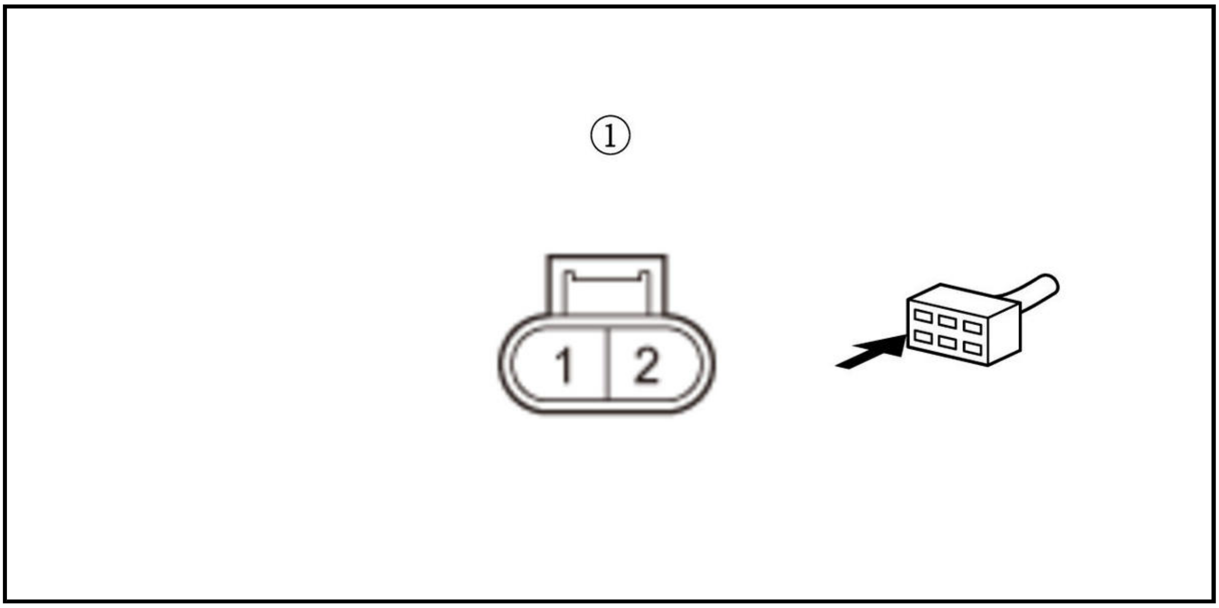

Is there 1.0 Ω or less?

YES

The LIN (BATT SENSOR)/LIN wire is OK. Check for any authorized service information related to the DTCs or symptoms you are troubleshooting, or **substitute a known-good PCM** .

NO

Repair an open in the LIN (BATT SENSOR)/LIN wire between the PCM (A10) and the 12 volt battery sensor.

17. Fuse check

-1. Turn the vehicle to the OFF (LOCK) mode.

-2. Check the following fuse.

Fuse	**No. A24**

Is the fuse OK?

YES

Go to step 18.

NO

Repair a short in the +B HORN wire between the 12 volt battery sensor and the No. A24 fuse. Also replace the No. A24 fuse.

18. Open wire check (+B HORN line)

-1. Disconnect the following connector.

12 volt battery sensor 2P connector

-2. Measure the voltage between test points 1 and 2.

Test condition	Vehicle OFF (LOCK) mode
B	12 volt battery sensor 2P connector: disconnected
Test point 1	12 volt battery sensor 2P connector (female terminals) No. 1: ①
Test point 2	Body ground

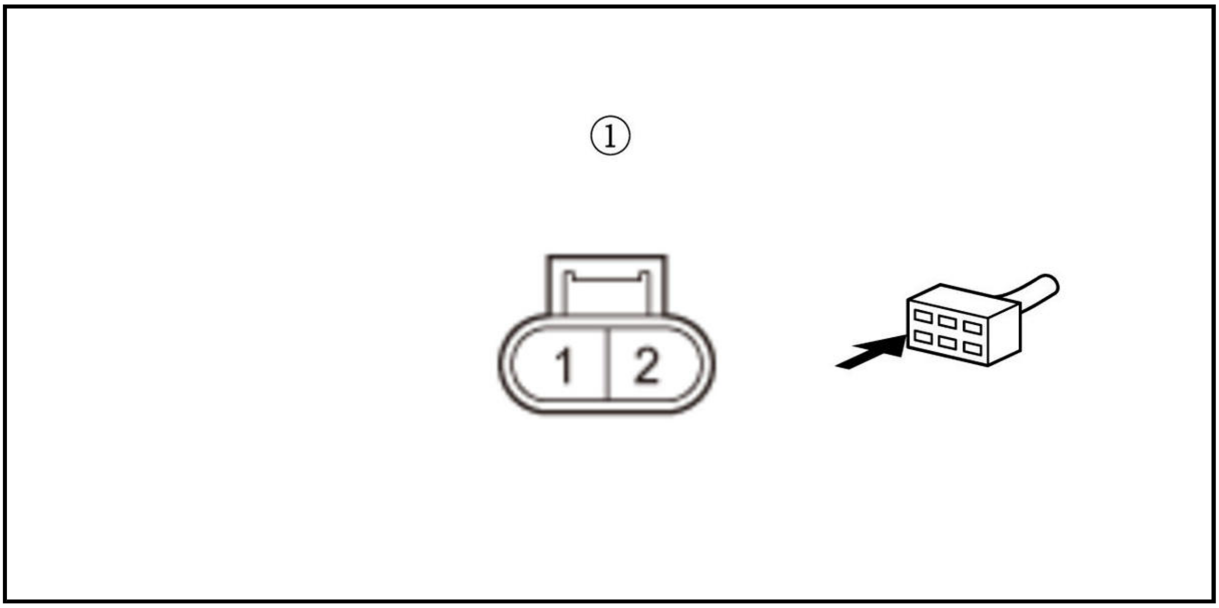

Is there battery voltage?

YES

Go to step 19.

NO

Repair an open in the +B HORN wire between the 12 volt battery sensor and the **No. A24 fuse** .

19. Open wire check (LIN (BATT SENSOR)/LIN line) 2

-1. Jump the SCS line with the HDS, and wait more than 1 minute.

-2. Disconnect the following connector.

PCM connector A (50P)

-3. Measure the resistance between test points 1 and 2.

Test condition	Vehicle OFF (LOCK) mode
B	12 volt battery sensor 2P connector: disconnected
B	PCM connector A (50P): disconnected
Test point 1	12 volt battery sensor 2P connector (female terminals) No. 2: ①
Test point 2	**PCM connector A (50P) No. 10**

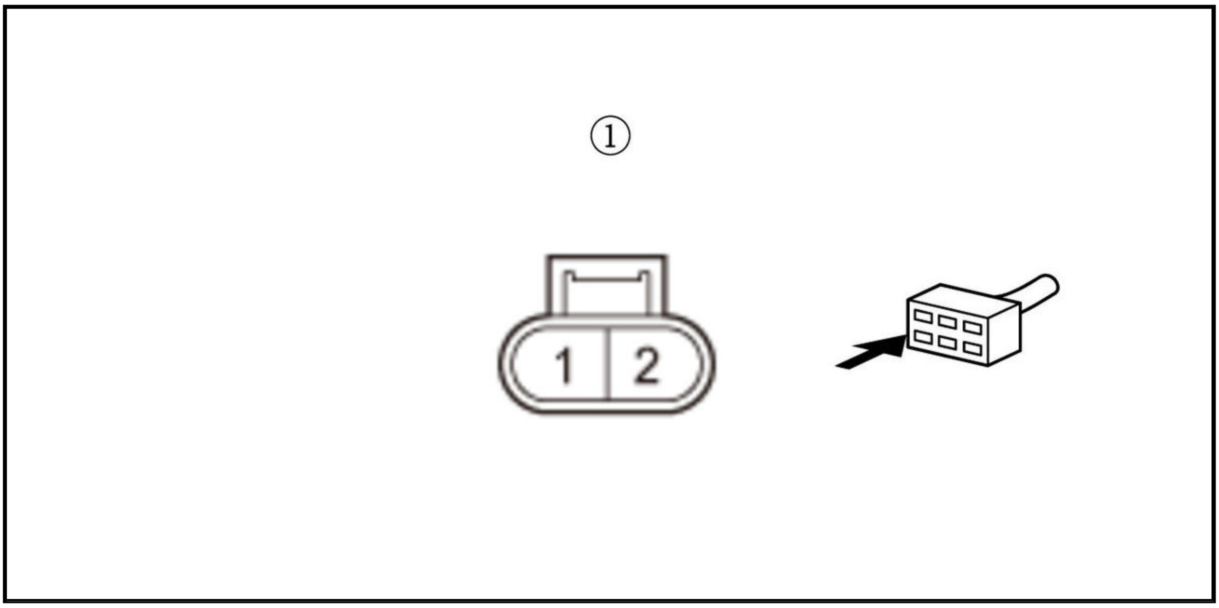

Is there 1.0 Ω or less?

YES

The LIN (BATT SENSOR)/LIN wire is OK. **Replace the 12 volt battery sensor** .

NO

Repair an open in the LIN (BATT SENSOR)/LIN wire between the PCM (A10) and the 12 volt battery sensor.

DTC P16E3 (2.4 L ENGINE) (2017 2018 2019)

DTC P16E3 : PGM-FI-Battery Sensor LIN Communication Error

NOTE:

- Before you troubleshoot, **review the general troubleshooting information** .
- Check for loose terminals on the 12 volt battery sensor (12 volt battery negative (-) terminal).

DTC Description	Confirmed DTC	Pending DTC
P16E3 PGM-FI-Battery Sensor LIN Communication Error	B	B

DTC (PGM-FI)

1. Problem verification

   -1. Turn the vehicle to the ON mode.

   -2. Clear the DTC with the HDS.

   -3. Turn the vehicle to the OFF (LOCK) mode.

   -4. Turn the vehicle to the ON mode, and wait 60 seconds.

   -5. Check for Pending or Confirmed DTCs with the HDS.

DTC Description	Confirmed DTC	Pending DTC
P16E3 PGM-FI-Battery Sensor LIN Communication Error	B	B

Is DTC P16E3 indicated?

YES

Go to step 2.

NO

Intermittent failure, the system is OK at this time. Check for poor connections or loose terminals at the 12 volt battery sensor and the PCM. **If the on-board snapshot of this DTC is recorded, try to reproduce the failure under the same conditions with the on-board snapshot** .

2. DTC check 1

-1. Check for Pending or Confirmed DTCs with the HDS.

DTC Description	Confirmed DTC	Pending DTC
P16E2 PGM-FI-ACG LIN Communication Error	B	B

Is DTC P16E2 indicated?

YES

Go to step 4

NO

Go to step 3.

3. DTC check 2 (with shutter grille)

-1. Check for Pending or Confirmed DTCs with the HDS.

DTC Description	Confirmed DTC	Pending DTC
P16E8 PGM-FI-Shutter Grille LIN Communication Error	B	B

Is DTC P16E8 indicated?

YES

Go to step 8.

NO

Go to step 12.

4. Determine possible failure area (LIN (BATT SENSOR)/LIN line shorted, others)

-1. Turn the vehicle to the OFF (LOCK) mode.

-2. Disconnect the following connector.

12 volt battery sensor 2P connector

-3. Check for continuity between test points 1 and 2.

Test condition	Vehicle OFF (LOCK) mode
B	12 volt battery sensor 2P connector: disconnected
Test point 1	12 volt battery sensor 2P connector (female terminals) No. 2: ①
Test point 2	Body ground

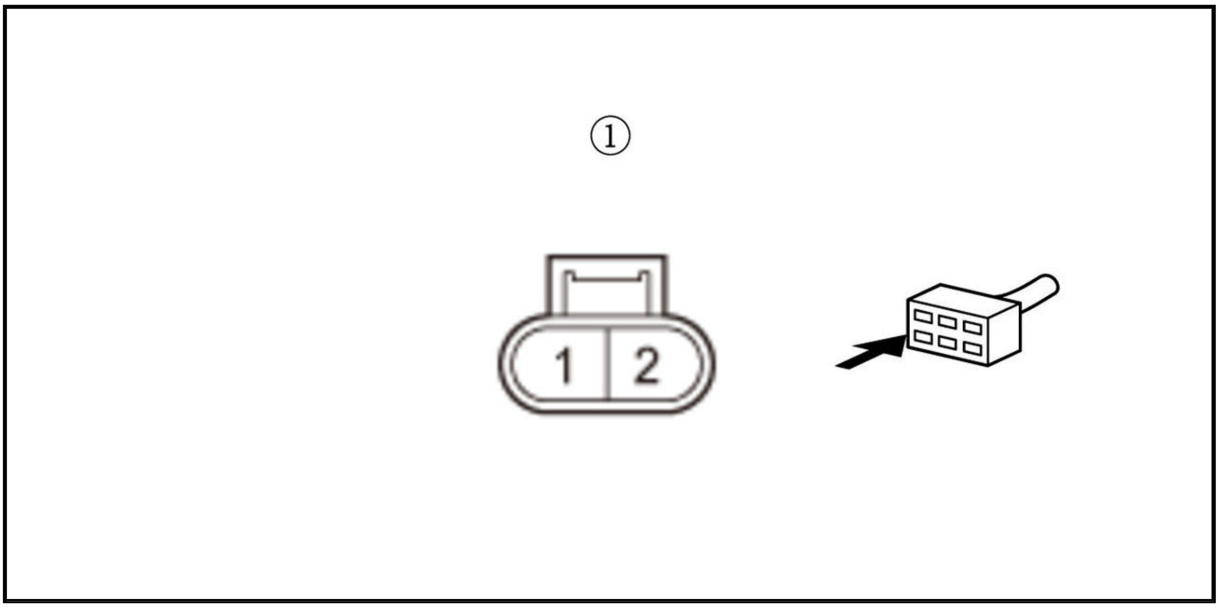

Is there continuity?

YES

Go to step 5.

NO

Go to step 6.

5. Shorted wire check (LIN (BATT SENSOR)/LIN line)

   -1. Jump the SCS line with the HDS, and wait more than 1 minute.

   Continue to check for continuity between 12 volt battery sensor 2P connector terminal No. 2 and body ground, while disconnecting these connectors, one at a time:

   - Alternator 1P connector
   - PCM connector B (51P)
   - Shutter grille (upper) 4P connector (with shutter grille)
   - Shutter grille (lower) 4P connector (with shutter grille)

   Does continuity go away when one of the above connectors is disconnected?

   YES

   The LIN (BATT SENSOR)/LIN wire is OK. Replace the part that caused an open when it was disconnected.

   NO

   Repair a short in the LIN (BATT SENSOR)/LIN wire between the 12 volt battery sensor, the alternator, the shutter grille (with shutter grille), and the PCM (B40).

6. Determine possible failure area (12 volt battery sensor, others)

   -1. Reconnect the 12 volt battery sensor 2P connector.

   -2. Disconnect the following connector.

Alternator 1P connector

-3. Check for continuity between test points 1 and 2.

Test condition	Vehicle OFF (LOCK) mode
B	Alternator 1P connector: disconnected
Test point 1	Alternator 1P connector (female terminal) No. 1: ①
Test point 2	Body ground

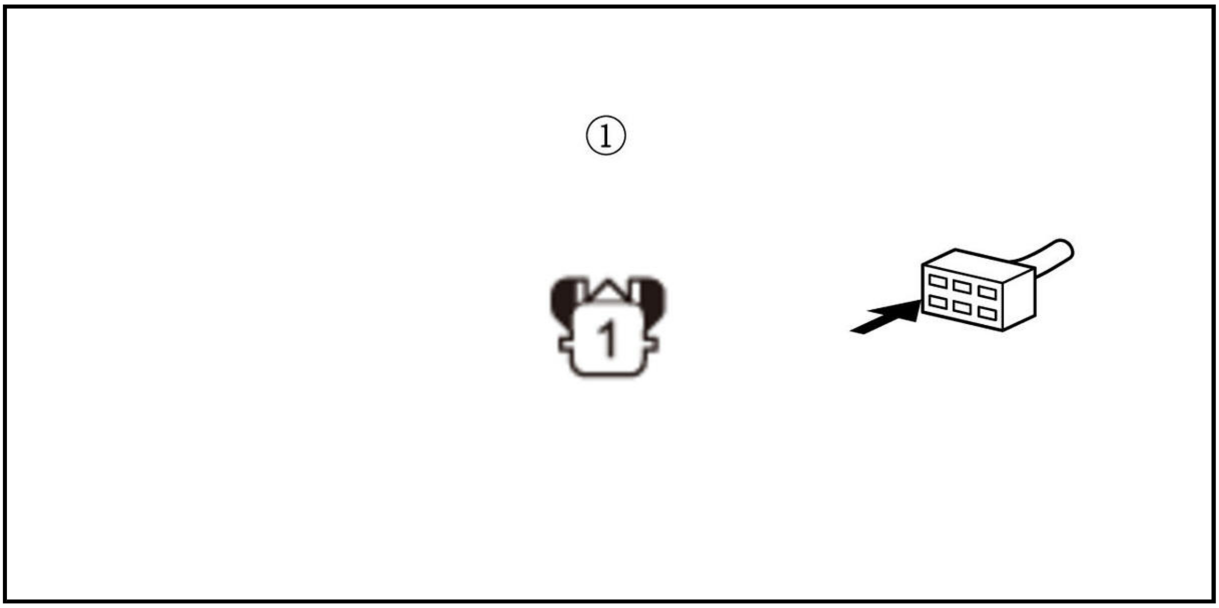

Is there continuity?

YES

Replace the 12 volt battery sensor .

NO

Go to step 7.

7. Open wire check (LIN (BATT SENSOR)/LIN line) 1

-1. Jump the SCS line with the HDS, and wait more than 1 minute.

-2. Disconnect the following connectors.

12 volt battery sensor 2P connector
PCM connector B (51P)

-3. Check for continuity between test points 1 and 2.

Test condition	Vehicle OFF (LOCK) mode
	Alternator 1P connector: disconnected
	12 volt battery sensor 2P connector: disconnected
	PCM connector B (51P): disconnected
Test point 1	12 volt battery sensor 2P connector (female terminals) No. 2: ①
Test point 2	**PCM connector B (51P) No. 40**

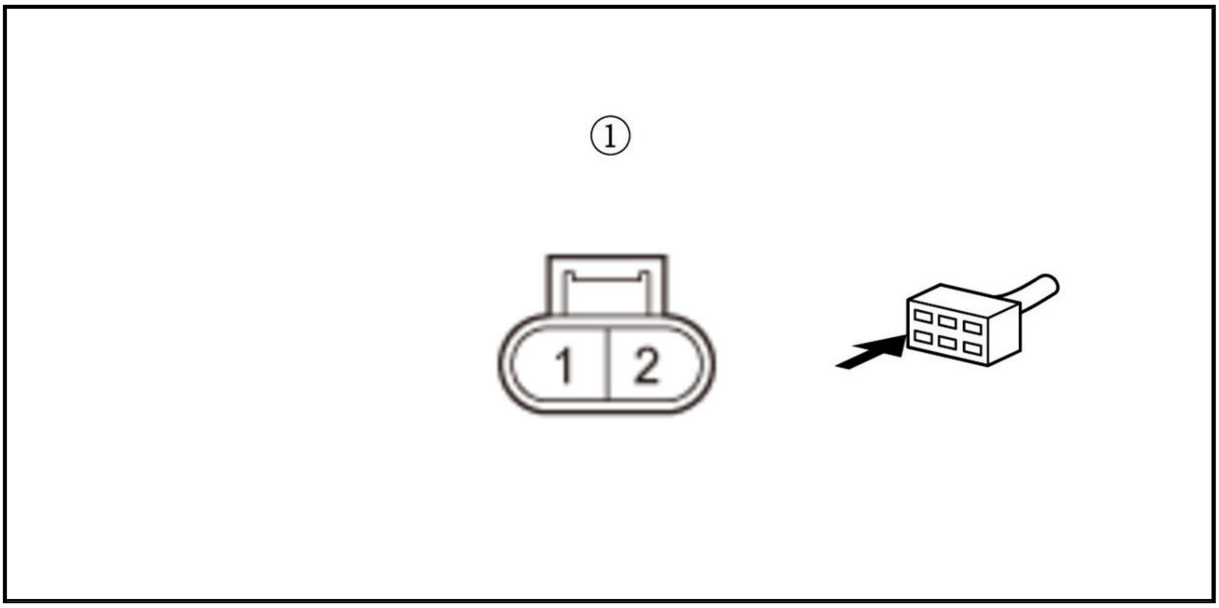

Is there continuity?

YES

The LIN (BATT SENSOR)/LIN wire is OK. Check for any authorized service information related to the DTCs or symptoms you are troubleshooting, or **substitute a known-good PCM** .

NO

Repair an open in the LIN (BATT SENSOR)/LIN wire between the PCM (B40) and the 12 volt battery sensor.

8. Determine possible failure area (LIN (BATT SENSOR)/LIN line shorted, others)

-1. Turn the vehicle to the OFF (LOCK) mode.

-2. Disconnect the following connector.

12 volt battery sensor 2P connector

-3. Check for continuity between test points 1 and 2.

Test condition	Vehicle OFF (LOCK) mode
B	12 volt battery sensor 2P connector: disconnected
Test point 1	12 volt battery sensor 2P connector (female terminals) No. 2: ①
Test point 2	Body ground

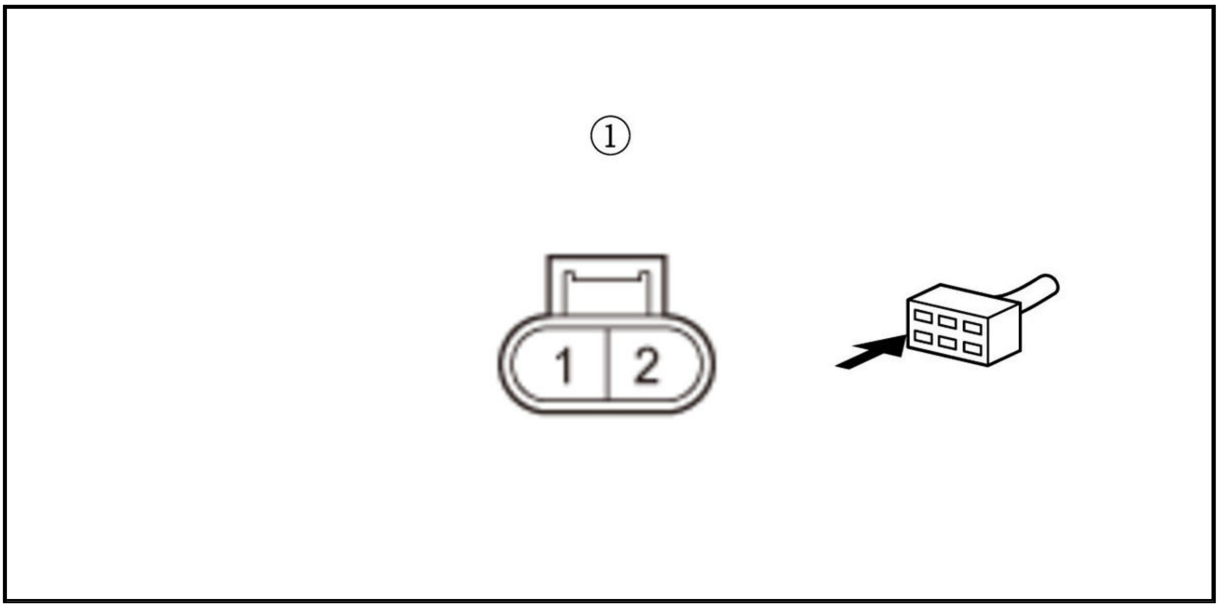

Is there continuity?

YES

Go to step 9.

NO

Go to step 10.

9. Shorted wire check (LIN (BATT SENSOR)/LIN line)

   -1. Jump the SCS line with the HDS, and wait more than 1 minute.

   Continue to check for continuity between 12 volt battery sensor 2P connector terminal No. 2 and body ground, while disconnecting these connectors, one at a time:

   - PCM connector B (51P)
   - Alternator 1P connector
   - Shutter grille (upper) 4P connector
   - Shutter grille (lower) 4P connector

   Does continuity go away when one of the above connectors is disconnected?

   YES

   The LIN (BATT SENSOR)/LIN wire is OK. Replace the part that caused an open when it was disconnected.

   NO

   Repair a short in the LIN (BATT SENSOR)/LIN wire between the 12 volt battery sensor, the alternator, the shutter grille and the PCM (B40).

10. Determine possible failure area (12 volt battery sensor, others)

    -1. Reconnect the 12 volt battery sensor 2P connector.

    -2. Disconnect the following connector.

Shutter grille (upper/lower) 4P connector

-3. Check for continuity between test points 1 and 2.

Test condition	Vehicle OFF (LOCK) mode
B	Shutter grille (upper/lower) 4P connector: disconnected
Test point 1	Shutter grille (upper/lower) 4P connector (female terminals) No. 3: ①
Test point 2	Body ground

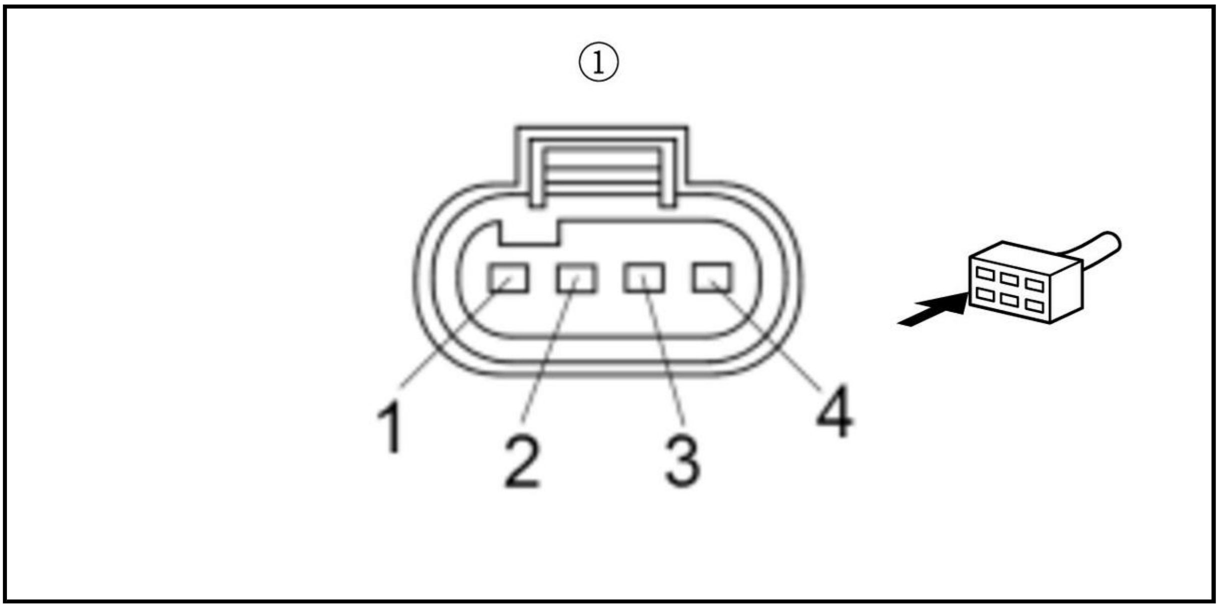

Is there continuity?

YES

Replace the 12 volt battery sensor .

NO

Go to step 11.

11. Open wire check (LIN (BATT SENSOR)/LIN line) 1

-1. Jump the SCS line with the HDS, and wait more than 1 minute.

-2. Disconnect the following connectors.

12 volt battery sensor 2P connector
PCM connector B (51P)

-3. Check for continuity between test points 1 and 2.

Test condition	Vehicle OFF (LOCK) mode
	12 volt battery sensor 2P connector: disconnected
	Shutter grille (upper/lower) 4P connector: disconnected
	PCM connector B (51P): disconnected
Test point 1	12 volt battery sensor 2P connector (female terminals) No. 2: ①
Test point 2	**PCM connector B (51P) No. 40**

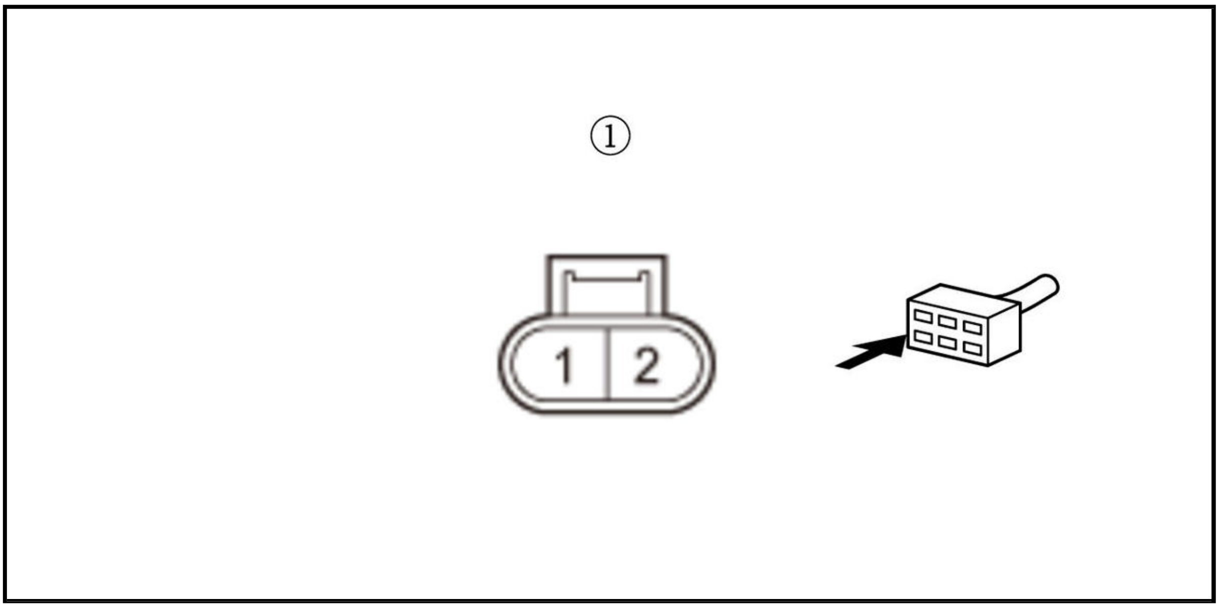

Is there continuity?

YES

The LIN (BATT SENSOR)/LIN wire is OK. Check for any authorized service information related to the DTCs or symptoms you are troubleshooting, or **substitute a known-good PCM** .

NO

Repair an open in the LIN (BATT SENSOR)/LIN wire between the PCM (B40) and the 12 volt battery sensor.

12. Fuse check

-1. Turn the vehicle to the OFF (LOCK) mode.

-2. Check the following fuse.

Fuse	No. A24 (10 A)
Location	Under-hood fuse/relay box

Is the fuse OK?

YES

Go to step 13.

NO

Repair a short in the +B HORN wire between the 12 volt battery sensor and the No. A24 (10 A) fuse. Also replace the No. A24 (10 A) fuse.

13. Open wire check (+B HORN line)

-1. Disconnect the following connector.

12 volt battery sensor 2P connector

-2. Measure the voltage between test points 1 and 2.

Test condition	Vehicle OFF (LOCK) mode

B	12 volt battery sensor 2P connector: disconnected
Test point 1	12 volt battery sensor 2P connector (female terminals) No. 1: ①
Test point 2	Body ground

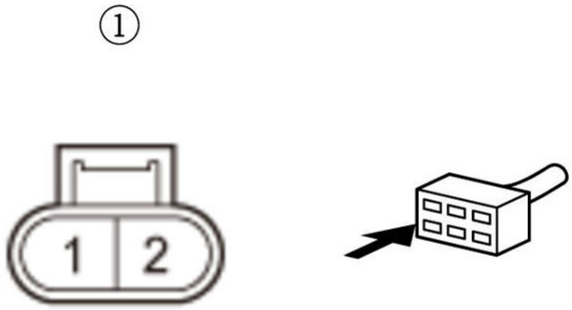

Is there battery voltage?

YES

Go to step 14.

NO

Repair an open in the +B HORN wire between the 12 volt battery sensor and the No. A24 (10 A) fuse in the under-hood fuse/relay box.

14. Open wire check (LIN (BATT SENSOR)/LIN line) 2

-1. Jump the SCS line with the HDS, and wait more than 1 minute.

-2. Disconnect the following connector.

PCM connector B (51P)

-3. Check for continuity between test points 1 and 2.

Test condition	Vehicle OFF (LOCK) mode
B	12 volt battery sensor 2P connector: disconnected
B	PCM connector B (51P): disconnected
Test point 1	12 volt battery sensor 2P connector (female terminals) No. 2: ①
Test point 2	**PCM connector B (51P) No. 40**

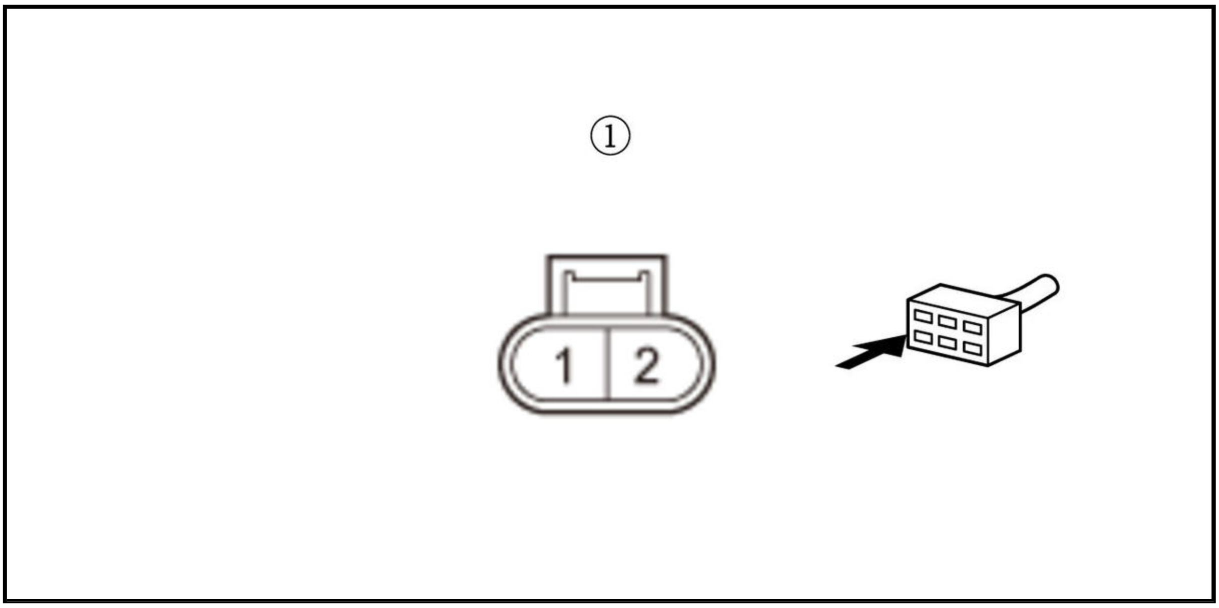

Is there continuity?

YES

The LIN (BATT SENSOR)/LIN wire is OK. **Replace the 12 volt battery sensor** .

NO

Repair an open in the LIN (BATT SENSOR)/LIN wire between the PCM (B40) and the 12 volt battery sensor.

DTC P16E4 (1.5 L ENGINE)

DTC P16E4 : ACG High-temperature

NOTE:

- Before you troubleshoot, **review the general troubleshooting information** .
- This DTC is stored when the alternator temperature is high.

DTC Description	Confirmed DTC	Pending DTC
P16E4 ACG High-temperature	B	B

DTC (PGM-FI)

1. Problem verification

-1. If the temperature of the engine and the alternator is high, open the hood to cool the engine compartment.

-2. Turn the vehicle to the ON mode.

-3. Clear the DTC with the HDS.

-4. Turn the vehicle to the OFF (LOCK) mode.

-5. Turn the vehicle to the ON mode, and wait 1 minute.

-6. Check for Pending or Confirmed DTCs with the HDS.

DTC Description	Confirmed DTC	Pending DTC
P16E4 ACG High-temperature	B	B

Is DTC P16E4 indicated?

YES

The failure is duplicated. **Replace the alternator** .

NO

Intermittent failure, the system is OK at this time. Check the cause of the high temperature, and repair it.

DTC P16E4 (2.4 L ENGINE) (2017 2018 2019)

DTC P16E4 : ACG High-temperature

NOTE:

- Before you troubleshoot, **review the general troubleshooting information** .
- This DTC is stored when the alternator temperature is high.

DTC Description	Confirmed DTC	Pending DTC
P16E4 ACG High-temperature	B	B

DTC (PGM-FI)

1. Problem verification

   -1. If the temperature of the engine and the alternator is high, open the hood to cool the engine compartment.

   -2. Turn the vehicle to the ON mode.

   -3. Clear the DTC with the HDS.

   -4. Check for Pending or Confirmed DTCs with the HDS.

DTC Description	Confirmed DTC	Pending DTC
P16E4 ACG High-temperature	B	B

Is DTC P16E4 indicated?

YES

The failure is duplicated. **Replace the alternator** .

NO

Intermittent failure, the system is OK at this time. **If the on-board snapshot of this DTC is recorded, try to reproduce the failure under the same conditions with the on-board snapshot** . Check the cause of the high temperature, and repair it.

DTC P16E5 (1.5 L ENGINE) (2020 2021)

DTC P16E5 : LIN Communication Error (PCM-DC-DC Converter)

NOTE: Before you troubleshoot, **review the general troubleshooting information** .

DTC Description	Confirmed DTC	Pending DTC
P16E5 LIN Communication Error (PCM-DC-DC Converter)	B	B

DTC (PGM-FI)

1. Problem verification

   -1. Turn the vehicle to the ON mode.

   -2. Clear the DTC with the HDS.

   -3. Turn the vehicle to the OFF (LOCK) mode.

   -4. Turn the vehicle to the ON mode, and wait 10 seconds.

   -5. Check for Pending or Confirmed DTCs with the HDS.

DTC Description	Confirmed DTC	Pending DTC
P16E5 LIN Communication Error (PCM-DC-DC Converter)	B	B

   Is DTC P16E5 indicated?

   YES

   Go to step 2.

   NO

   Intermittent failure, the system is OK at this time. Check for poor connections or loose terminals at the DC-DC converter and the PCM. **If the on-board snapshot of this DTC is recorded, try to reproduce the failure under the same conditions with the on-board snapshot** .

2. DTC check 1

   -1. Check for Pending or Confirmed DTCs with the HDS.

DTC Description	Confirmed DTC	Pending DTC
P16E2 PGM-FI-ACG LIN Communication Error	B	B

   Is DTC P16E2 indicated?

   YES

   Go to step 5

   NO

   Go to step 3.

3. DTC check 2

   -1. Check for Pending or Confirmed DTCs with the HDS.

DTC Description	Confirmed DTC	Pending DTC
P16E3 PGM-FI-Battery Sensor LIN Communication Error	B	B

Is DTC P16E3 indicated?

YES

Go to step 9.

NO

Go to step 4.

4. DTC check 3

-1. Check for Pending or Confirmed DTCs with the HDS.

DTC Description	Confirmed DTC	Pending DTC
P16E8 PGM-FI-Shutter Grille LIN Communication Error	B	B

Is DTC P16E8 indicated?

YES

Go to step 13.

NO

Go to step 17.

5. Determine possible failure area (LIN (BATT SENSOR)/LIN line, others)

-1. Turn the vehicle to the OFF (LOCK) mode.

-2. Disconnect the following connector.

DC-DC converter connector A (3P)

-3. Measure the resistance between test points 1 and 2.

Test condition	Vehicle OFF (LOCK) mode
B	DC-DC converter connector A (3P): disconnected
Test point 1	DC-DC converter connector A (3P) (female terminals) No. 1: ①
Test point 2	Body ground

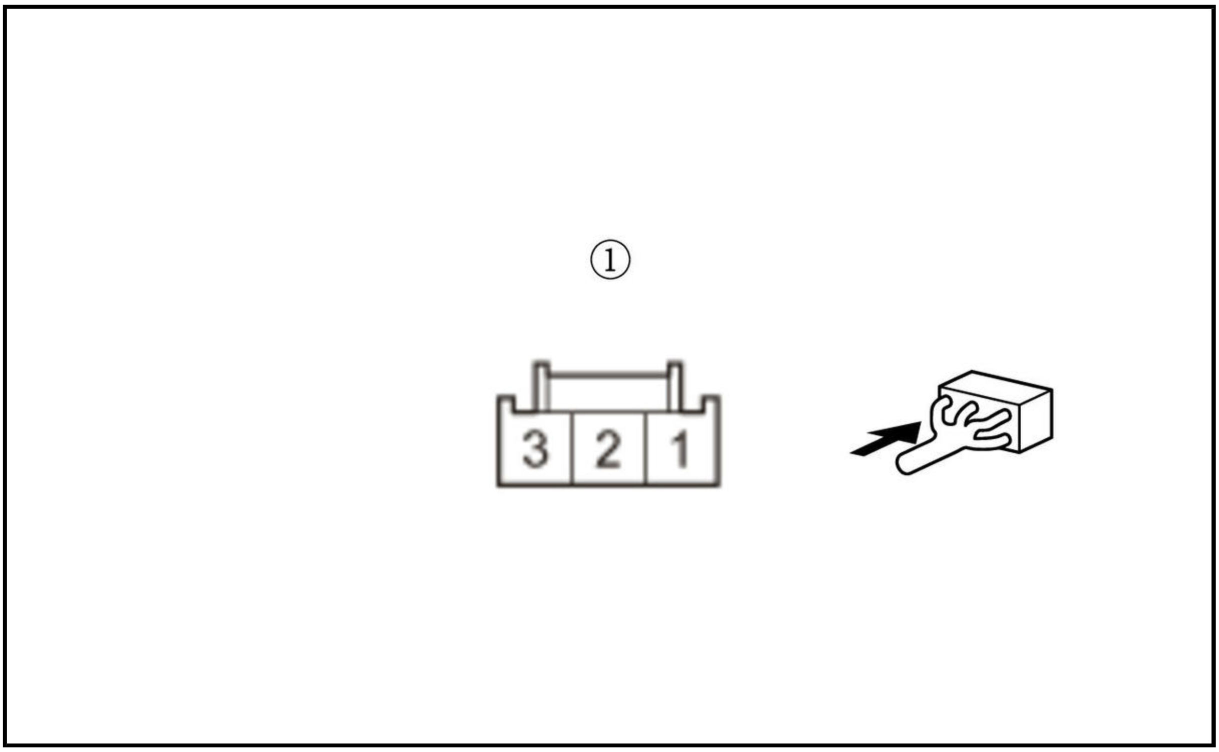

Is there 1 MΩ or more?

YES

Go to step 7.

NO

Go to step 6.

6. Shorted wire check (LIN (BATT SENSOR)/LIN line)

   -1. Jump the SCS line with the HDS, and wait more than 1 minute.

   Continue to check for continuity between DC-DC converter connector A (3P) terminal No. 1 and body ground, while disconnecting these connectors, one at a time:

   - Alternator 1P connector
   - PCM connector A (50P)
   - 12 volt battery sensor 2P connector
   - Shutter grille (upper) 4P connector
   - Shutter grille (lower) 4P connector

   Does continuity go away when one of the above connectors is disconnected?

   YES

   The LIN (BATT SENSOR)/LIN wire is OK. Replace the part that caused an open when it was disconnected.

   NO

   Repair a short in the LIN (BATT SENSOR)/LIN wire between the DC-DC converter, the alternator, the PCM (A10), the shutter grille, and the 12 volt battery sensor.

7. Determine possible failure area (DC-DC converter, others)

-1. Reconnect the following connector.

DC-DC converter connector A (3P)

-2. Disconnect the following connector.

Alternator 1P connector

-3. Measure the resistance between test points 1 and 2.

Test condition	Vehicle OFF (LOCK) mode
B	Alternator 1P connector: disconnected
Test point 1	Alternator 1P connector (female terminal) No. 1: ①
Test point 2	Body ground

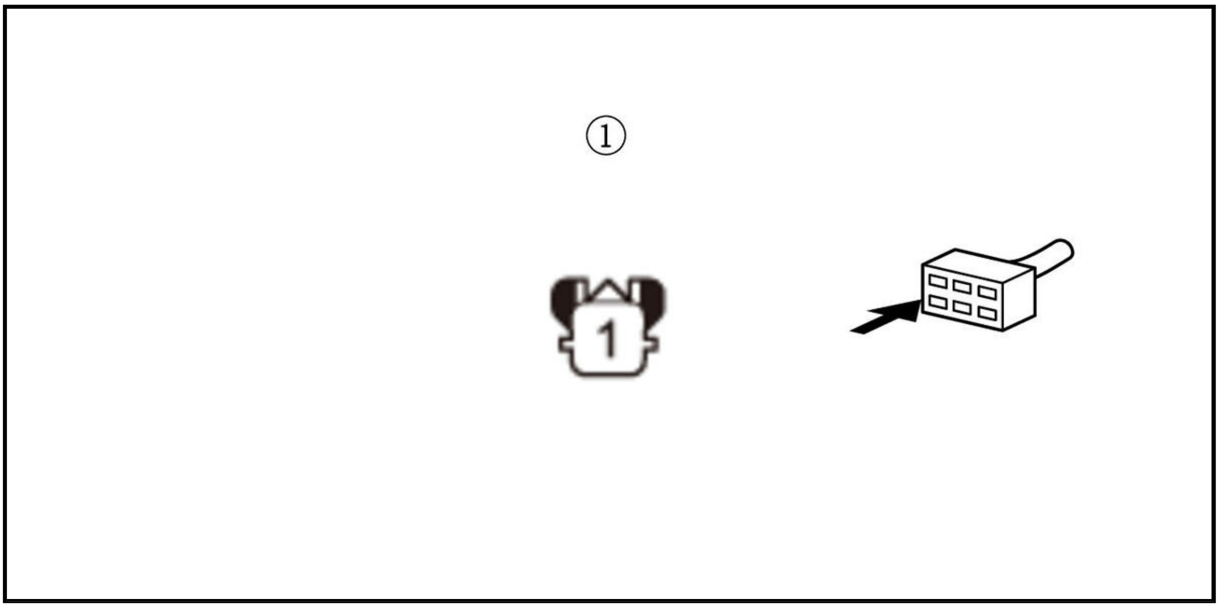

Is there 1 MΩ or more?

YES

Go to step 8.

NO

Replace the DC-DC converter .

8. Open wire check (LIN (BATT SENSOR)/LIN line) 1

-1. Jump the SCS line with the HDS, and wait more than 1 minute.

-2. Disconnect the following connectors.

PCM connector A (50P)
DC-DC converter connector A (3P)

-3. Measure the resistance between test points 1 and 2.

Test condition	Vehicle OFF (LOCK) mode
	Alternator 1P connector: disconnected
	PCM connector A (50P): disconnected

	DC-DC converter connector A (3P): disconnected
Test point 1	DC-DC converter connector A (3P) (female terminals) No. 1: ①
Test point 2	**PCM connector A (50P) No. 10**

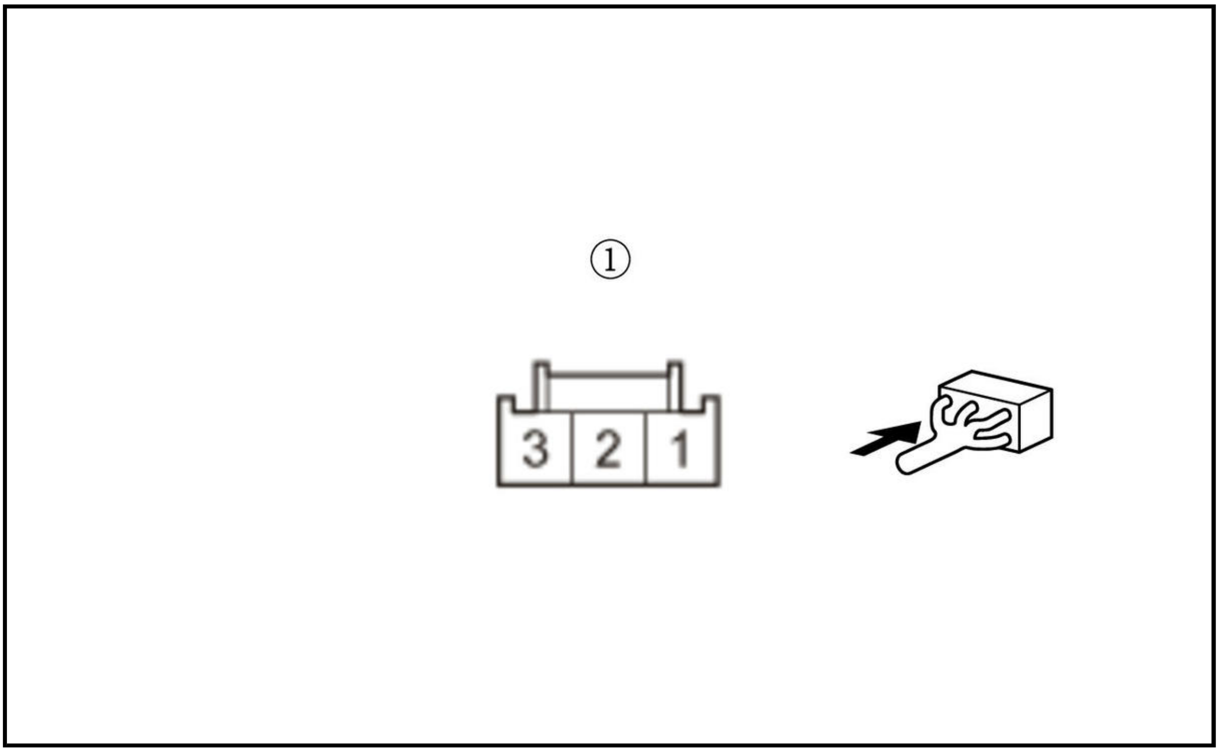

Is there 1.0 Ω or less?

YES

The LIN (BATT SENSOR)/LIN wire is OK. Check for any authorized service information related to the DTCs or symptoms you are troubleshooting, or **substitute a known-good PCM** .

NO

Repair an open in the LIN (BATT SENSOR)/LIN wire between the PCM (A10) and the DC-DC converter.

9. Determine possible failure area (LIN (BATT SENSOR)/LIN line, others)

-1. Turn the vehicle to the OFF (LOCK) mode.

-2. Disconnect the following connector.

DC-DC converter connector A (3P)

-3. Measure the resistance between test points 1 and 2.

Test condition	Vehicle OFF (LOCK) mode
B	DC-DC converter connector A (3P): disconnected
Test point 1	DC-DC converter connector A (3P) (female terminals) No. 1: ①
Test point 2	Body ground

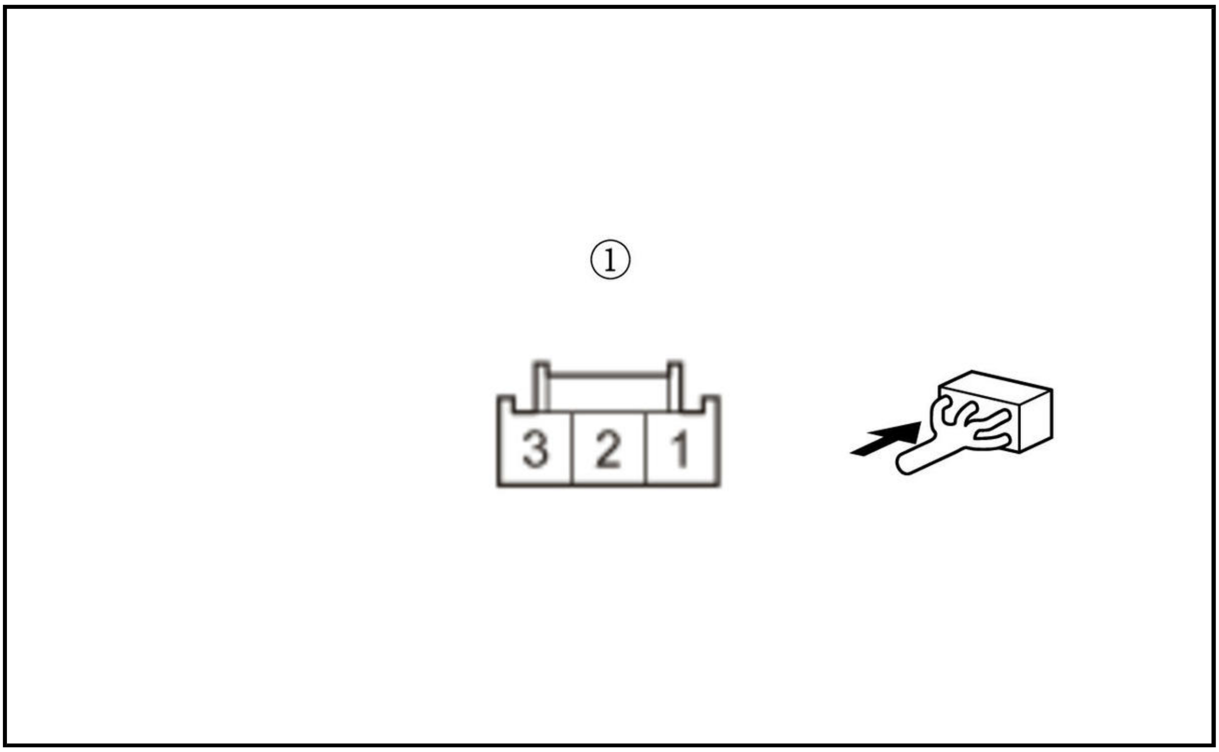

Is there 1 MΩ or more?

YES

Go to step 11.

NO

Go to step 10.

10. Shorted wire check (LIN (BATT SENSOR)/LIN line)

    -1. Jump the SCS line with the HDS, and wait more than 1 minute.

    Continue to check for continuity between DC-DC converter connector A (3P) terminal No. 1 and body ground, while disconnecting these connectors, one at a time:

    - Alternator 1P connector
    - PCM connector A (50P)
    - 12 volt battery sensor 2P connector
    - Shutter grille (upper) 4P connector
    - Shutter grille (lower) 4P connector

    Does continuity go away when one of the above connectors is disconnected?

    YES

    The LIN (BATT SENSOR)/LIN wire is OK. Replace the part that caused an open when it was disconnected.

    NO

    Repair a short in the LIN (BATT SENSOR)/LIN wire between the DC-DC converter, the alternator, the PCM (A10), the shutter grille, and the 12 volt battery sensor.

11. Determine possible failure area (DC-DC converter, others)

-1. Reconnect the following connector.

DC-DC converter connector A (3P)

-2. Disconnect the following connector.

12 volt battery sensor 2P connector

-3. Measure the resistance between test points 1 and 2.

Test condition	Vehicle OFF (LOCK) mode
B	12 volt battery sensor 2P connector: disconnected
Test point 1	12 volt battery sensor 2P connector (female terminals) No. 2: ①
Test point 2	Body ground

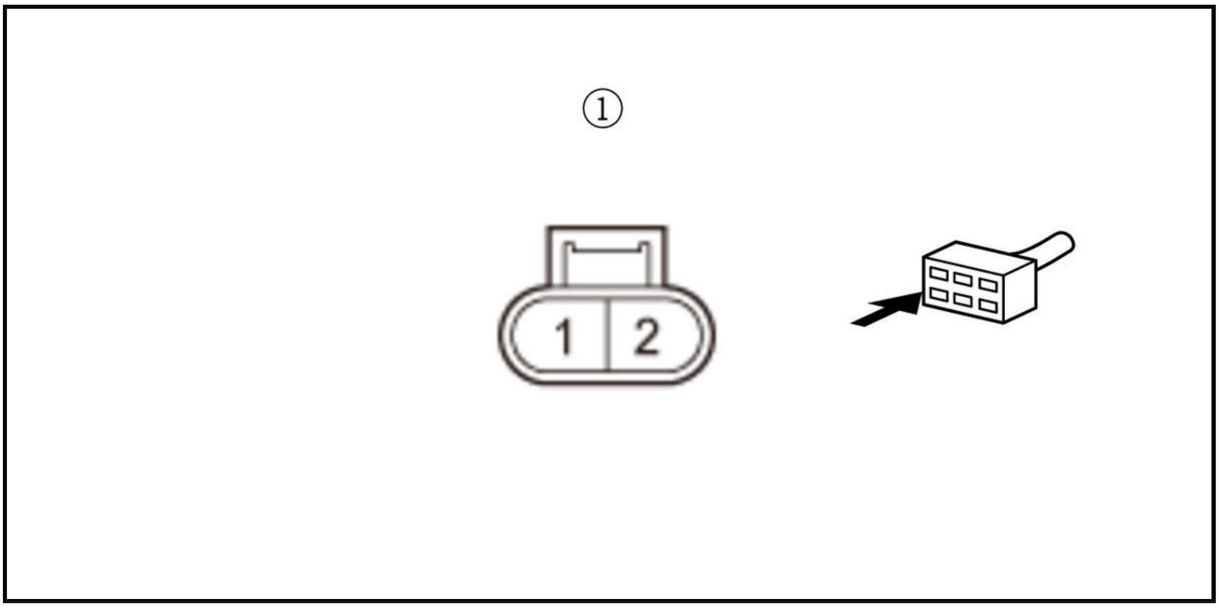

Is there 1 MΩ or more?

YES

Go to step 12.

NO

Replace the DC-DC converter .

12. Open wire check (LIN (BATT SENSOR)/LIN line) 1

-1. Jump the SCS line with the HDS, and wait more than 1 minute.

-2. Disconnect the following connectors.

PCM connector A (50P)
DC-DC converter connector A (3P)

-3. Measure the resistance between test points 1 and 2.

Test condition	Vehicle OFF (LOCK) mode
	12 volt battery sensor 2P connector: disconnected
	PCM connector A (50P): disconnected

	DC-DC converter connector A (3P): disconnected
Test point 1	DC-DC converter connector A (3P) (female terminals) No. 1: ①
Test point 2	**PCM connector A (50P) No. 10**

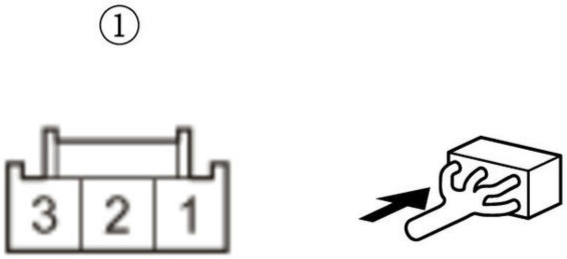

Is there 1.0 Ω or less?

YES

The LIN (BATT SENSOR)/LIN wire is OK. Check for any authorized service information related to the DTCs or symptoms you are troubleshooting, or **substitute a known-good PCM** .

NO

Repair an open in the LIN (BATT SENSOR)/LIN wire between the PCM (A10) and the DC-DC converter.

13. Determine possible failure area (LIN (BATT SENSOR)/LIN line, others)

-1. Turn the vehicle to the OFF (LOCK) mode.

-2. Disconnect the following connector.

DC-DC converter connector A (3P)

-3. Measure the resistance between test points 1 and 2.

Test condition	Vehicle OFF (LOCK) mode
B	DC-DC converter connector A (3P): disconnected
Test point 1	DC-DC converter connector A (3P) (female terminals) No. 1: ①
Test point 2	Body ground

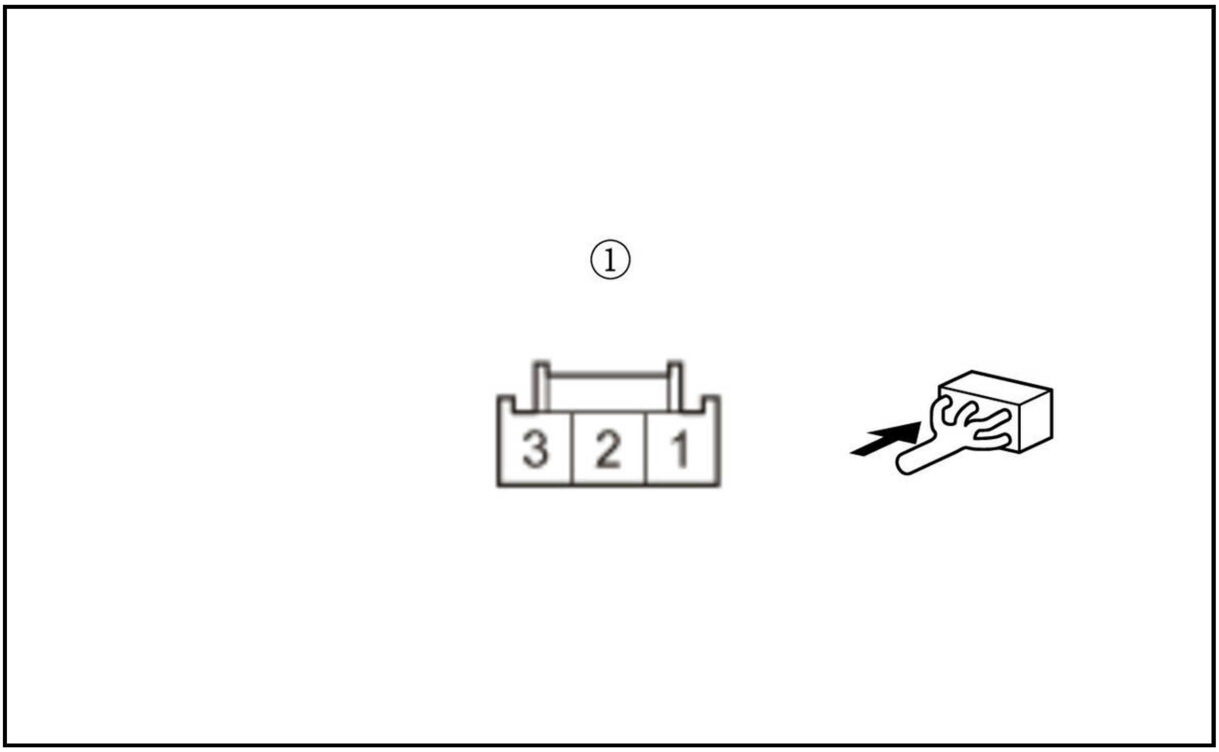

Is there 1 MΩ or more?

YES

Go to step 15.

NO

Go to step 14.

14. Shorted wire check (LIN (BATT SENSOR)/LIN line)

    -1. Jump the SCS line with the HDS, and wait more than 1 minute.

    Continue to check for continuity between DC-DC converter connector A (3P) terminal No. 1 and body ground, while disconnecting these connectors, one at a time:

    - Alternator 1P connector
    - PCM connector A (50P)
    - 12 volt battery sensor 2P connector
    - Shutter grille (upper) 4P connector
    - Shutter grille (lower) 4P connector

    Does continuity go away when one of the above connectors is disconnected?

    YES

    The LIN (BATT SENSOR)/LIN wire is OK. Replace the part that caused an open when it was disconnected.

    NO

    Repair a short in the LIN (BATT SENSOR)/LIN wire between the DC-DC converter, the alternator, the PCM (A10), the shutter grille, and the 12 volt battery sensor.

15. Determine possible failure area (DC-DC converter, others)

-1. Reconnect the following connector.

DC-DC converter connector A (3P)

-2. Disconnect the following connector.

Shutter grille (upper/lower) 4P connector

-3. Measure the resistance between test points 1 and 2.

Test condition	Vehicle OFF (LOCK) mode
B	Shutter grille (upper/lower) 4P connector: disconnected
Test point 1	Shutter grille (upper/lower) 4P connector (female terminals) No. 3: ①
Test point 2	Body ground

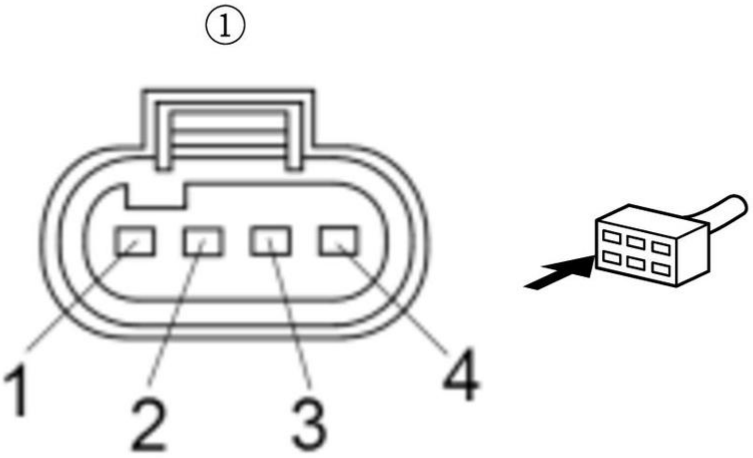

Is there 1 MΩ or more?

YES

Go to step 16.

NO

Replace the DC-DC converter .

16. Open wire check (LIN (BATT SENSOR)/LIN line) 1

-1. Jump the SCS line with the HDS, and wait more than 1 minute.

-2. Disconnect the following connectors.

PCM connector A (50P)
DC-DC converter connector A (3P)

-3. Measure the resistance between test points 1 and 2.

Test condition	Vehicle OFF (LOCK) mode
	Shutter grille (upper/lower) 4P connector: disconnected
	PCM connector A (50P): disconnected

	DC-DC converter connector A (3P): disconnected
Test point 1	DC-DC converter connector A (3P) (female terminals) No. 1: ①
Test point 2	**PCM connector A (50P) No. 10**

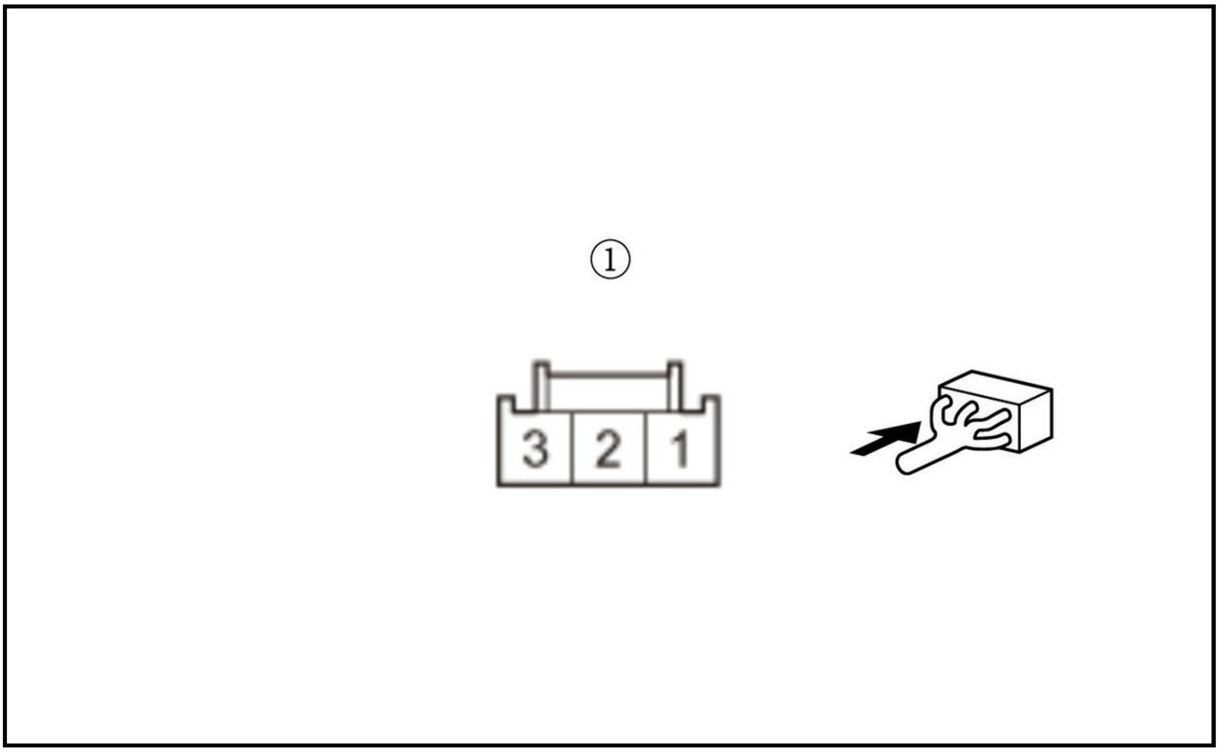

Is there 1.0 Ω or less?

YES

The LIN (BATT SENSOR)/LIN wire is OK. Check for any authorized service information related to the DTCs or symptoms you are troubleshooting, or **substitute a known-good PCM** .

NO

Repair an open in the LIN (BATT SENSOR)/LIN wire between the PCM (A10) and the DC-DC converter.

17. Fuse check

-1. Turn the vehicle to the OFF (LOCK) mode.

-2. Check the following fuse.

Fuse	**No. D21**

Is the fuse OK?

YES

Go to step 18.

NO

Repair a short in the IG1 ACG wire between the DC-DC converter and the No. D21 fuse. Also replace the No. D21 fuse.

18. Open wire check (IG1 ACG line)

-1. Disconnect the following connector.

DC-DC converter connector A (3P)

-2. Turn the vehicle to the ON mode.

-3. Measure the voltage between test points 1 and 2.

Test condition	Vehicle ON mode
B	DC-DC converter connector A (3P): disconnected
Test point 1	DC-DC converter connector A (3P) (female terminals) No. 3: ①
Test point 2	Body ground

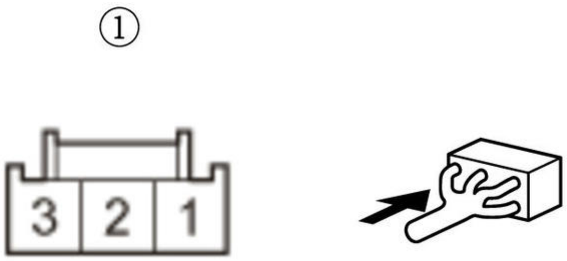

Is there battery voltage?

YES

Go to step 19.

NO

Repair an open in the IG1 ACG wire between the DC-DC converter and the **No. D21 fuse** .

19. Open wire check (LIN (BATT SENSOR)/LIN line) 2

-1. Turn the vehicle to the OFF (LOCK) mode.

-2. Jump the SCS line with the HDS, and wait more than 1 minute.

-3. Disconnect the following connector.

PCM connector A (50P)

-4. Measure the resistance between test points 1 and 2.

Test condition	Vehicle OFF (LOCK) mode

	DC-DC converter connector A (3P): disconnected PCM connector A (50P): disconnected
Test point 1	DC-DC converter connector A (3P) (female terminals) No. 1: ①

Test point 2	**PCM connector A (50P) No. 10**

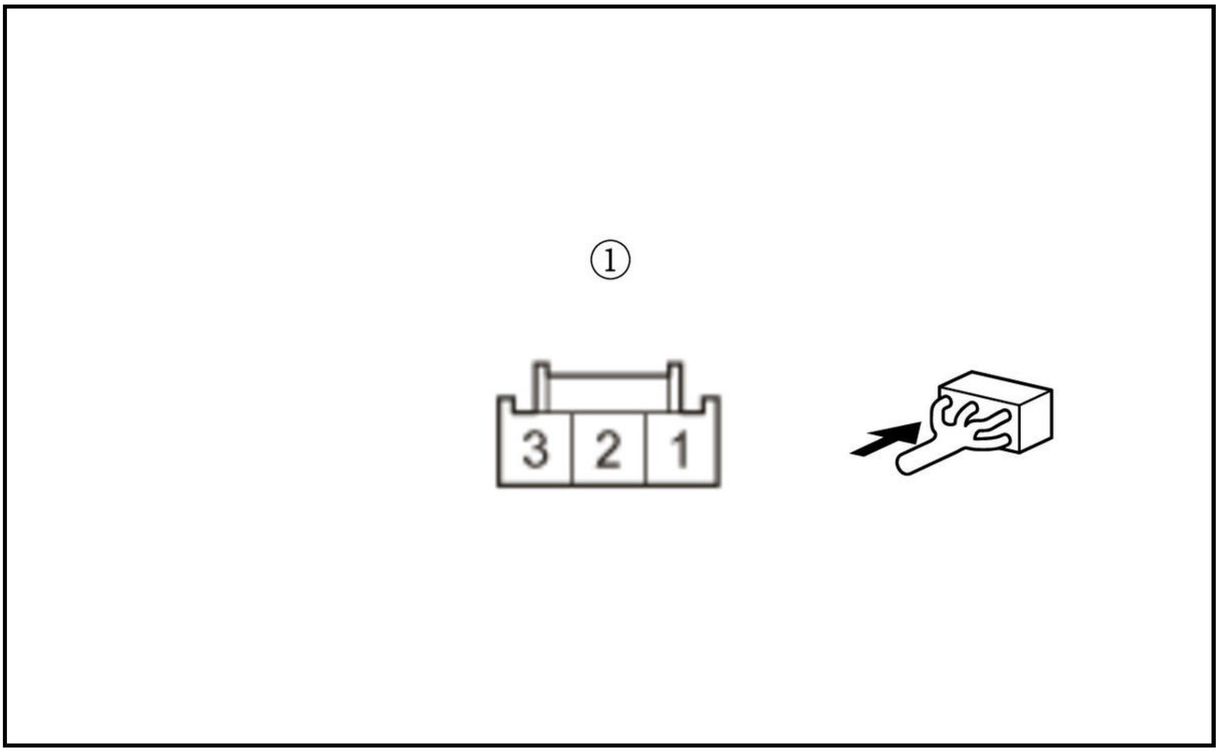

Is there 1.0 Ω or less?

YES

The LIN (BATT SENSOR)/LIN wire is OK. **Replace the DC-DC converter** .

NO

Repair an open in the LIN (BATT SENSOR)/LIN wire between the PCM (A10) and the DC-DC converter.

DTC P16E6 (1.5 L ENGINE)

DTC P16E6 : Transmission Range Switch START Switch Circuit Malfunction

NOTE: Before you troubleshoot, **review the general troubleshooting information** .

DTC Description	Confirmed DTC	Pending DTC
P16E6 Transmission Range Switch START Switch Circuit Malfunction	B	B

DTC (PGM-FI)

1. Problem verification

-1. Turn the vehicle to the ON mode.

-2. Clear the DTC with the HDS.

-3. Shift the transmission to other than P or N position/mode, and wait 5 seconds or more.

-4. Check for Pending or Confirmed DTCs with the HDS.

DTC Description	Confirmed DTC	Pending DTC
P16E6 Transmission Range Switch START Switch Circuit Malfunction	B	B

Is DTC P16E6 indicated?

YES

The failure is duplicated. Go to step 2.

NO

Intermittent failure, the system is OK at this time. Check for poor connections or loose terminals at the transmission range switch and the PCM. **If the on-board snapshot of this DTC is recorded, try to reproduce the failure under the same conditions with the on-board snapshot** .

2. Determine possible failure area (short in ATPST/ATP-ST wire, others)

-1. Turn the vehicle to the OFF (LOCK) mode.

-2. Disconnect the following connector.

Transmission range switch 10P connector

-3. Check for continuity between test points 1 and 2.

Test condition	Vehicle OFF (LOCK) mode
B	Transmission range switch 10P connector: disconnected
Test point 1	Transmission range switch 10P connector (female terminals) No. 7: ①
Test point 2	Body ground

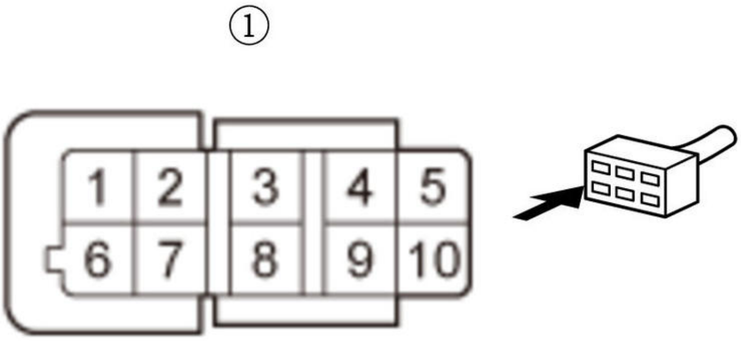

Is there continuity?

YES

Go to step 4.

NO

Go to step 3.

3. Transmission range switch check

-1. Shift the transmission to other than P or N position/mode.

-2. Check for continuity between test points 1 and 2.

Test condition	Vehicle OFF (LOCK) mode
B	Transmission range switch 10P connector: disconnected
Test point 1	Transmission range switch 10P connector (male terminals) No. 7: ① (transmission range switch side)
Test point 2	Transmission range switch 10P connector (male terminals) No. 1: ① (transmission range switch side)

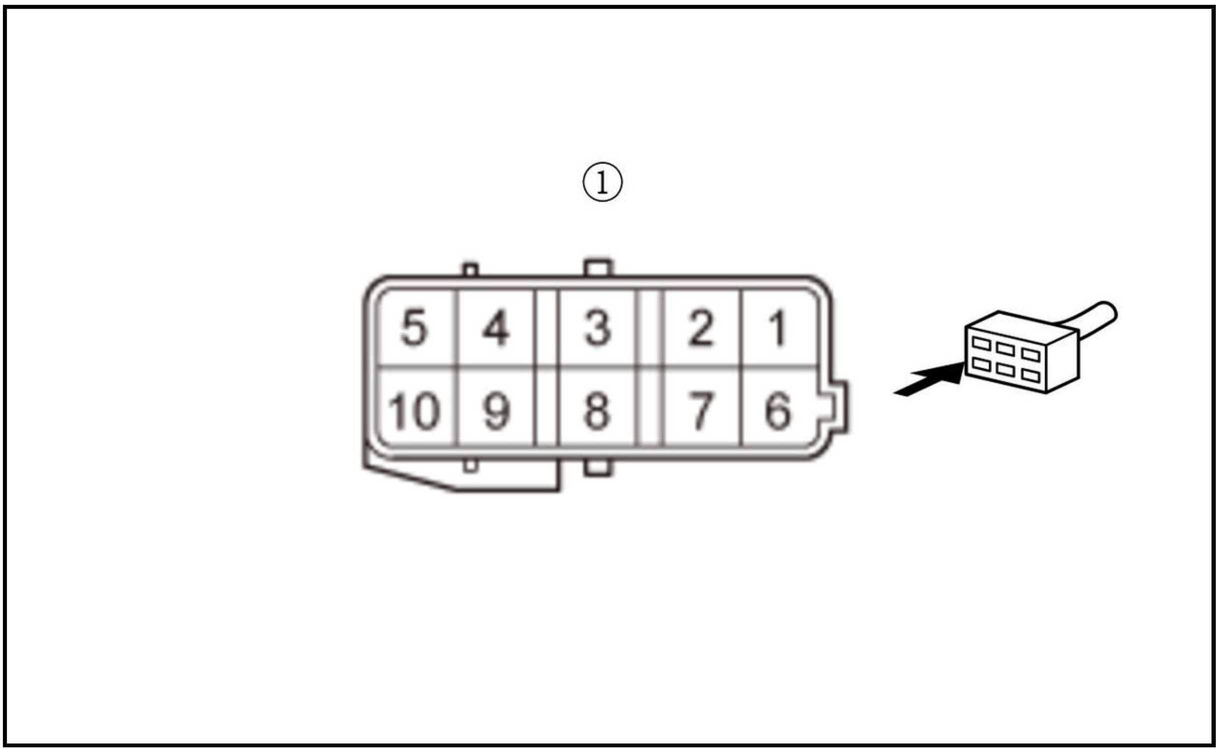

Is there continuity?

YES

Replace the transmission range switch .

NO

Check for poor connections or loose terminals at the transmission range switch and the PCM, and test the transmission range switch . If they are OK, check for any authorized service information related to the DTCs or symptoms you are troubleshooting, or substitute a known-good PCM .

4. Shorted wire check (ATPST/ATP-ST line)

-1. Jump the SCS line with the HDS, and wait more than 1 minute.

-2. Disconnect the following connector.

PCM connector E (80P)

-3. Check for continuity between test points 1 and 2.

Test condition	Vehicle OFF (LOCK) mode
	Transmission range switch 10P connector: disconnected
	PCM connector E (80P): disconnected
Test point 1	**PCM connector E (80P) No. 67**
Test point 2	Body ground

Is there continuity?

YES

Repair a short in the ATPST/ATP-ST wire between the PCM (E67) and the transmission range switch.

NO

The ATPST/ATP-ST wire is OK. Check for any authorized service information related to the DTCs or symptoms you are troubleshooting, or **substitute a known-good PCM** .

DTC P16E8 (1.5 L ENGINE)

DTC P16E8 : PGM-FI-Shutter Grille LIN Communication Error

NOTE: Before you troubleshoot, **review the general troubleshooting information** .

*1: Without wireless charger
*2: With wireless charger

DTC Description	Confirmed DTC	Pending DTC
P16E8 PGM-FI-Shutter Grille LIN Communication Error	B	B

DTC (PGM-FI)

1. Problem verification

-1. Turn the vehicle to the ON mode.

-2. Clear the DTC with the HDS.

-3. Turn the vehicle to the OFF (LOCK) mode.

-4. Turn the vehicle to the ON mode, and wait 10 seconds.

-5. Check for Pending or Confirmed DTCs with the HDS.

DTC Description	Confirmed DTC	Pending DTC
P16E8 PGM-FI-Shutter Grille LIN Communication Error	B	B

Is DTC P16E8 indicated?

YES

Go to step 2.

NO

Intermittent failure, the system is OK at this time. Check for poor connections or loose terminals at the shutter grille and the PCM. **If the on-board snapshot of this DTC is recorded, try to reproduce the failure under the same conditions with the on-board snapshot** .

2. DTC check 1

   -1. Check for Pending or Confirmed DTCs with the HDS.

DTC Description	Confirmed DTC	Pending DTC
P16E2 PGM-FI-ACG LIN Communication Error	B	B

   Is DTC P16E2 indicated?

   YES

   Go to step 5.

   NO

   Go to step 3.

3. DTC check 2

   -1. Check for Pending or Confirmed DTCs with the HDS.

DTC Description	Confirmed DTC	Pending DTC
P16E3 PGM-FI-Battery Sensor LIN Communication Error	B	B

   Is DTC P16E3 indicated?

   YES

   Go to step 10.

   NO (Without auto idle stop system)

   Go to step 23.

   NO (With auto idle stop system)

   Go to step 4.

4. DTC check 3

   -1. Check for Pending or Confirmed DTCs with the HDS.

DTC Description	Confirmed DTC	Pending DTC
P16E5 LIN Communication Error (PCM-DC-DC Converter)	B	B

   Is DTC P16E5 indicated?

   YES

   Go to step 15.

NO

Go to step 20.

5. Determine possible failure area (LIN (BATT SENSOR)/LIN line, others)

   -1. Turn the vehicle to the OFF (LOCK) mode.

   -2. Disconnect the following connectors.

Shutter grille (upper/lower) 4P connector

   -3. Measure the resistance between test points 1 and 2.

Test condition	Vehicle OFF (LOCK) mode
B	Shutter grille (upper/lower) 4P connector: disconnected
Test point 1	Shutter grille (upper/lower) 4P connector (female terminal) No. 3: ①
Test point 2	Body ground

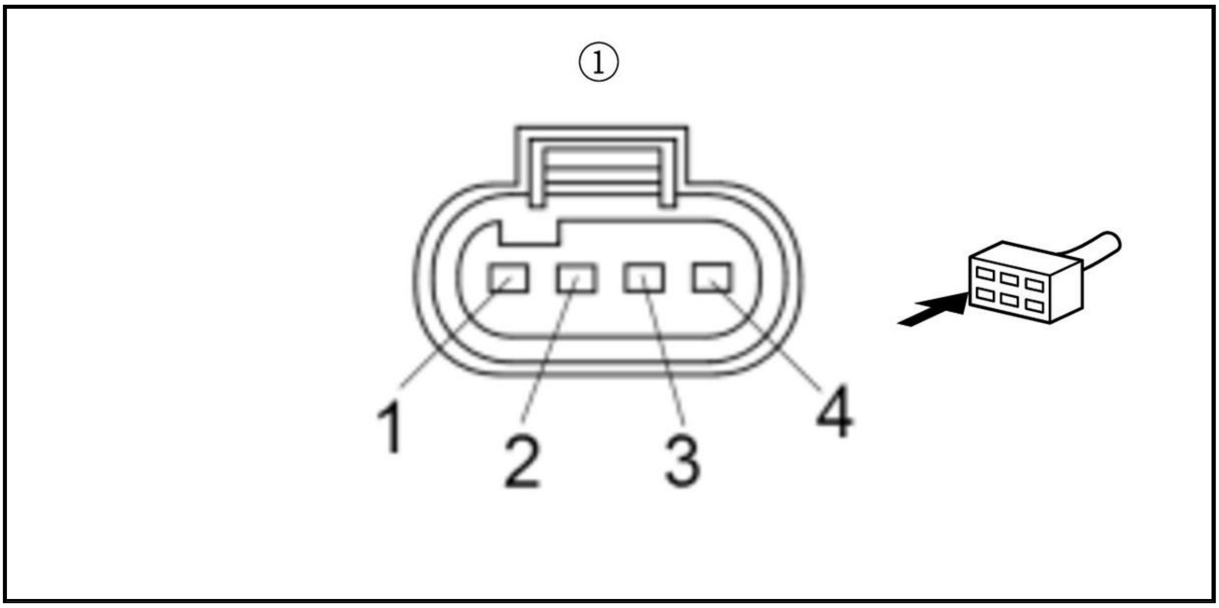

Is there 1 MΩ or more?

YES

Go to step 7.

NO

Go to step 6.

6. Shorted wire check (LIN (BATT SENSOR)/LIN line)

   -1. Jump the SCS line with the HDS, and wait more than 1 minute.

   Continue to check for continuity between the shutter grille (upper/lower) 4P connector terminal and body ground, while disconnecting these connectors, one at a time:

   - PCM connector A (50P)
   - Alternator 1P connector
   - 12 volt battery sensor 2P connector
   - DC-DC converter connector A (3P) (With auto idle stop system)

Does continuity go away when one of the above connectors is disconnected?

YES

The LIN (BATT SENSOR)/LIN wire is OK. Replace the part that caused an open when it was disconnected.

NO

Repair a short in the LIN (BATT SENSOR)/LIN wire between the PCM (A10), the alternator, the 12 volt battery sensor, the DC-DC converter (with auto idle stop system), and the shutter grille.

7. Determine possible failure area (shutter grille (upper), others)

-1. Reconnect the shutter grille (upper) 4P connector.

-2. Disconnect the following connector.

Alternator 1P connector

-3. Measure the resistance between test points 1 and 2.

Test condition	Vehicle OFF (LOCK) mode
B	Alternator 1P connector: disconnected
B	Shutter grille (lower) 4P connector: disconnected
Test point 1	Alternator 1P connector (female terminal) No. 1: ①
Test point 2	Body ground

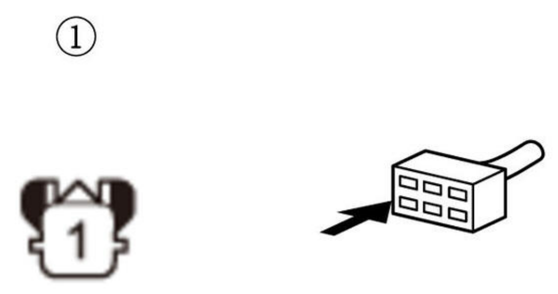

Is there 1 MΩ or more?

YES

Go to step 8.

NO

Replace the shutter grille (upper) .

8. Determine possible failure area (shutter grille (lower), others)

-1. Reconnect the shutter grille (lower) 4P connector.

-2. Measure the resistance between test points 1 and 2.

Test condition	Vehicle OFF (LOCK) mode
B	Alternator 1P connector: disconnected
Test point 1	Alternator 1P connector (female terminal) No. 1: ①

Test point 2	Body ground

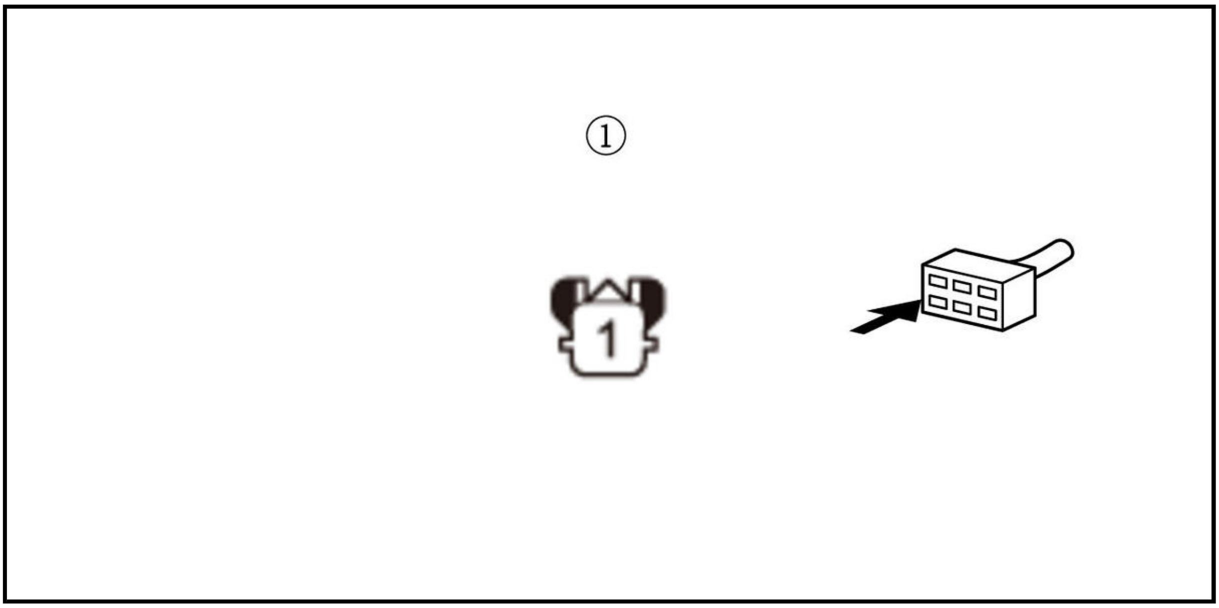

Is there 1 MΩ or more?

YES

Go to step 9.

NO

Replace the shutter grille (lower) .

9. Open wire check (LIN (BATT SENSOR)/LIN line) 1

-1. Jump the SCS line with the HDS, and wait more than 1 minute.

-2. Disconnect the following connectors.

Shutter grille (upper/lower) 4P connector
PCM connector A (50P)

-3. Measure the resistance between test points 1 and 2.

Test condition	Vehicle OFF (LOCK) mode
B	Shutter grille (upper/lower) 4P connector: disconnected
B	Alternator 1P connector: disconnected
B	PCM connector A (50P): disconnected
Test point 1	Shutter grille (upper/lower) 4P connector (female terminal) No. 3: ①
Test point 2	**PCM connector A (50P) No. 10**

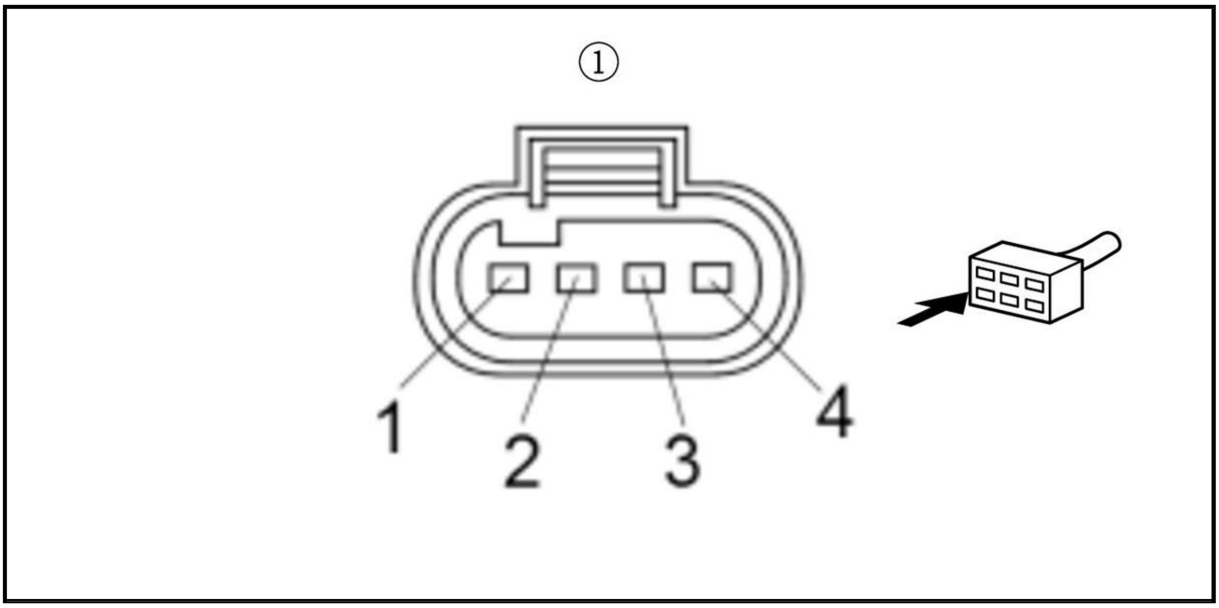

Is there 1.0 Ω or less?

YES

The LIN (BATT SENSOR)/LIN wire is OK. Check for any authorized service information related to the DTCs or symptoms you are troubleshooting, or **substitute a known-good PCM** .

NO

Repair an open in the LIN (BATT SENSOR)/LIN wire between the PCM (A10) and the shutter grille.

10. Determine possible failure area (LIN (BATT SENSOR)/LIN line, others)

-1. Turn the vehicle to the OFF (LOCK) mode.

-2. Disconnect the following connectors.

Shutter grille (upper/lower) 4P connector

-3. Measure the resistance between test points 1 and 2.

Test condition	Vehicle OFF (LOCK) mode
B	Shutter grille (upper/lower) 4P connector: disconnected
Test point 1	Shutter grille (upper/lower) 4P connector (female terminal) No. 3: ①
Test point 2	Body ground

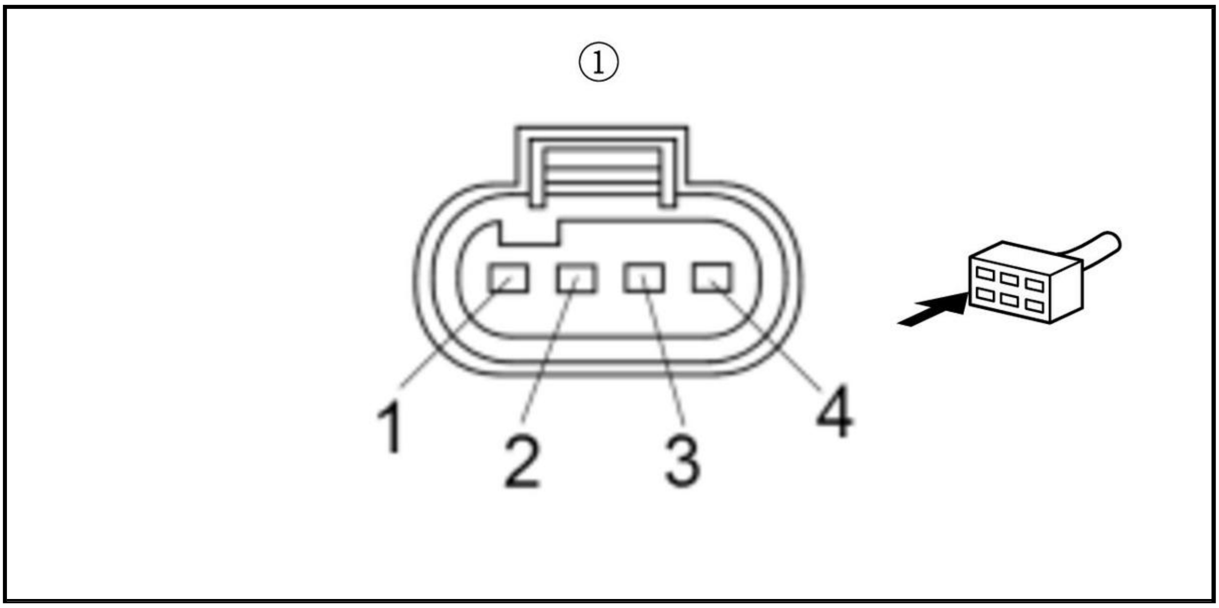

Is there 1 MΩ or more?

YES

Go to step 12.

NO

Go to step 11.

11. Shorted wire check (LIN (BATT SENSOR)/LIN line)

-1. Jump the SCS line with the HDS, and wait more than 1 minute.

Continue to check for continuity between the shutter grille (upper/lower) 4P connector terminal and body ground, while disconnecting these connectors, one at a time:

- PCM connector A (50P)
- 12 volt battery sensor 2P connector
- Alternator 1P connector
- DC-DC converter connector A (3P) (with auto idle stop system)

Does continuity go away when one of the above connectors is disconnected?

YES

The LIN (BATT SENSOR)/LIN wire is OK. Replace the part that caused an open when it was disconnected.

NO

Repair a short in the LIN (BATT SENSOR)/LIN wire between the PCM (A10), the alternator, the 12 volt battery sensor, the DC-DC converter (with auto idle stop system), and the shutter grille.

12. Determine possible failure area (shutter grille (upper), others)

-1. Reconnect the shutter grille (upper) 4P connector.

-2. Disconnect the following connector.

12 volt battery sensor 2P connector

-3. Measure the resistance between test points 1 and 2.

Test condition	Vehicle OFF (LOCK) mode
B	12 volt battery sensor 2P connector: disconnected
B	Shutter grille (lower) 4P connector: disconnected

Test point 1	12 volt battery sensor 2P connector (female terminals) No. 2: ①
Test point 2	Body ground

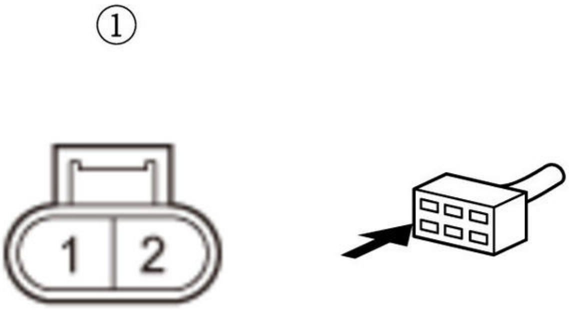

Is there 1 MΩ or more?

YES

Go to step 13.

NO

Replace the shutter grille (upper) .

13. Determine possible failure area (shutter grille (lower), others)

-1. Reconnect the shutter grille (lower) 4P connector.

-2. Measure the resistance between test points 1 and 2.

Test condition	Vehicle OFF (LOCK) mode
B	12 volt battery sensor 2P connector: disconnected
Test point 1	12 volt battery sensor 2P connector (female terminals) No. 2: ①
Test point 2	Body ground

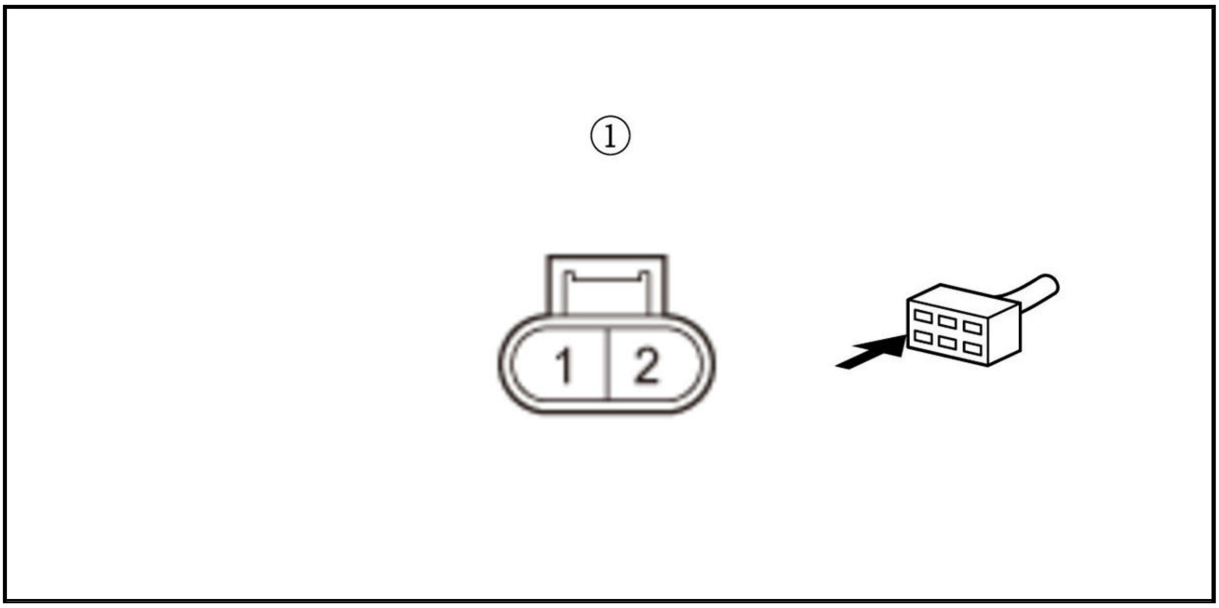

Is there 1 MΩ or more?

YES

Go to step 14.

NO

Replace the shutter grille (lower) .

14. Open wire check (LIN (BATT SENSOR)/LIN line) 1

    -1. Jump the SCS line with the HDS, and wait more than 1 minute.

    -2. Disconnect the following connectors.

Shutter grille (upper/lower) 4P connector
PCM connector A (50P)

    -3. Measure the resistance between test points 1 and 2.

Test condition	Vehicle OFF (LOCK) mode
B	12 volt battery sensor 2P connector: disconnected

B	Shutter grille (upper/lower) 4P connector: disconnected
B	PCM connector A (50P): disconnected
Test point 1	Shutter grille (upper/lower) 4P connector (female terminal) No. 3: ①
Test point 2	**PCM connector A (50P) No. 10**

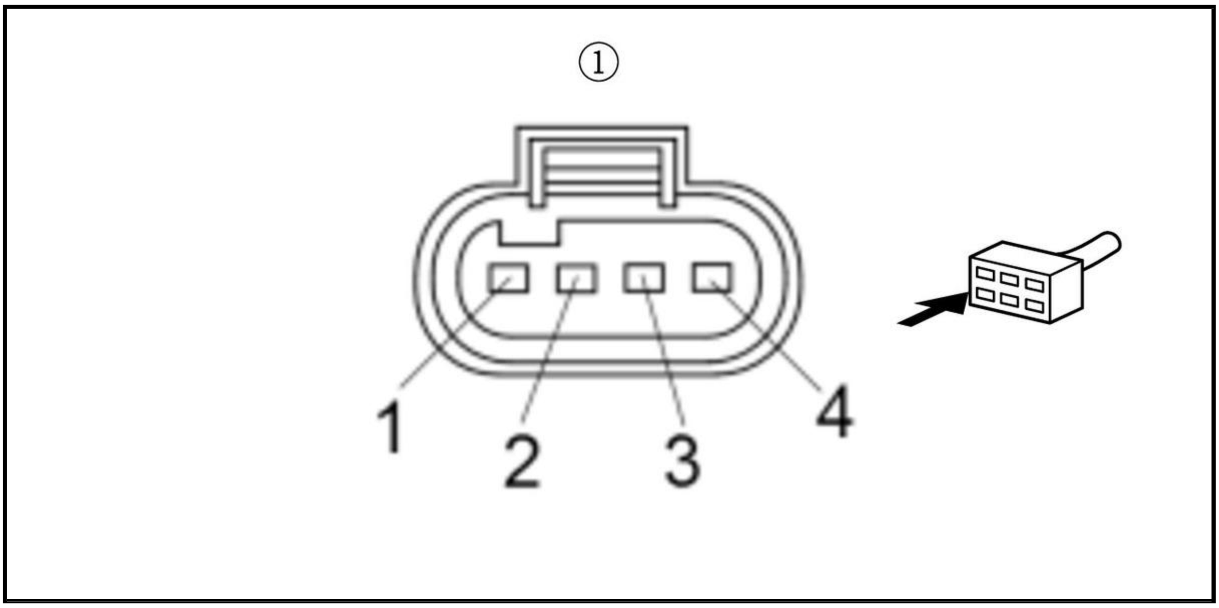

Is there 1.0 Ω or less?

YES

The LIN (BATT SENSOR)/LIN wire is OK. Check for any authorized service information related to the DTCs or symptoms you are troubleshooting, or **substitute a known-good PCM** .

NO

Repair an open in the LIN (BATT SENSOR)/LIN wire between the PCM (A10) and the shutter grille.

15. Determine possible failure area (LIN (BATT SENSOR)/LIN line, others)

-1. Turn the vehicle to the OFF (LOCK) mode.

-2. Disconnect the following connectors.

Shutter grille (upper/lower) 4P connector

-3. Measure the resistance between test points 1 and 2.

Test condition	Vehicle OFF (LOCK) mode
B	Shutter grille (upper/lower) 4P connector: disconnected
Test point 1	Shutter grille (upper/lower) 4P connector (female terminal) No. 3: ①
Test point 2	Body ground

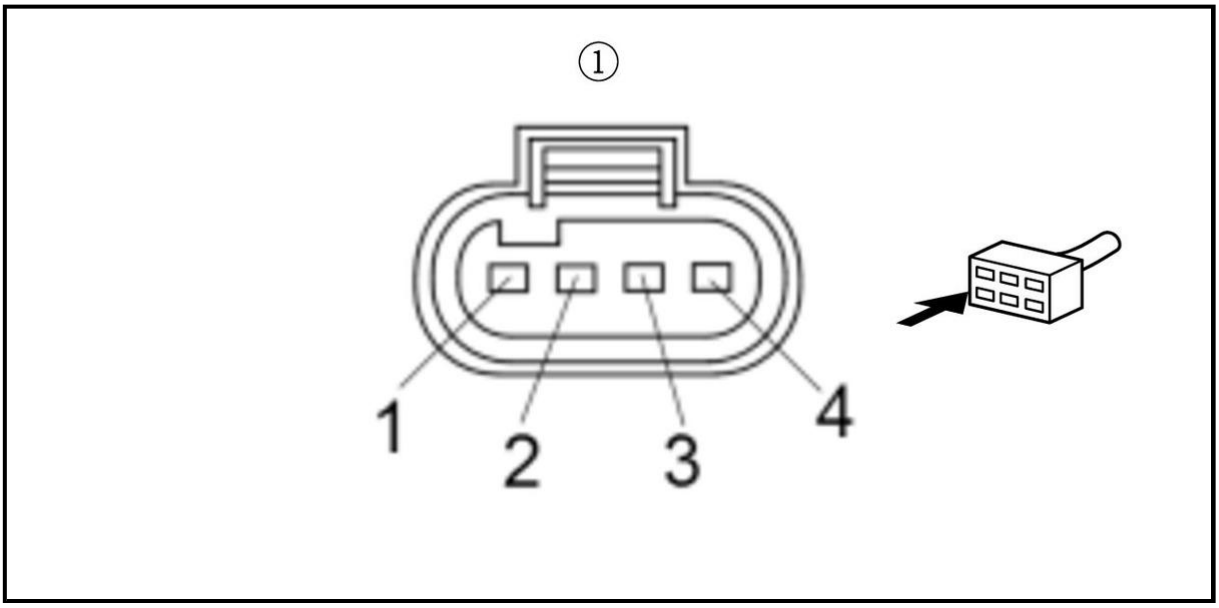

Is there 1 MΩ or more?

YES

Go to step 17.

NO

Go to step 16.

16. Shorted wire check (LIN (BATT SENSOR)/LIN line)

    -1. Jump the SCS line with the HDS, and wait more than 1 minute.

    Continue to check for continuity between the shutter grille (upper/lower) 4P connector terminal and body ground, while disconnecting these connectors, one at a time:

    - PCM connector A (50P)
    - 12 volt battery sensor 2P connector
    - Alternator 1P connector
    - DC-DC converter connector A (3P) (with auto idle stop system)

    Does continuity go away when one of the above connectors is disconnected?

    YES

    The LIN (BATT SENSOR)/LIN wire is OK. Replace the part that caused an open when it was disconnected.

    NO

    Repair a short in the LIN (BATT SENSOR)/LIN wire between the PCM (A10), the alternator, the 12 volt battery sensor, the DC-DC converter (with auto idle stop system), and the shutter grille.

17. Determine possible failure area (shutter grille (upper), others)

    -1. Reconnect the shutter grille (upper) 4P connector.

    -2. Disconnect the following connector.

DC-DC converter connector A (3P)

-3. Measure the resistance between test points 1 and 2.

Test condition	Vehicle OFF (LOCK) mode
B	DC-DC converter connector A (3P): disconnected
B	Shutter grille 4P (lower) connector: disconnected
Test point 1	DC-DC converter connector A (3P) (female terminals) No. 1: ①
Test point 2	Body ground

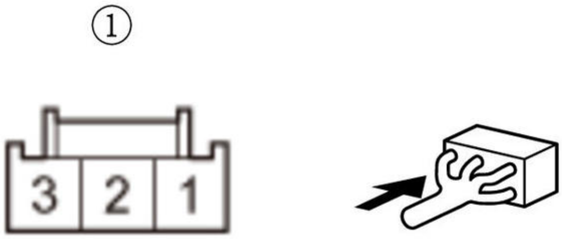

Is there 1 MΩ or more?

YES

Go to step 18.

NO

Replace the shutter grille (upper) .

18. Determine possible failure area (shutter grille (lower), others)

-1. Reconnect the shutter grille (lower) 4P connector.

-2. Disconnect the following connector.

DC-DC converter connector A (3P)

-3. Measure the resistance between test points 1 and 2.

Test condition	Vehicle OFF (LOCK) mode

B	DC-DC converter connector A (3P): disconnected
Test point 1	DC-DC converter connector A (3P) (female terminals) No. 1: ①

Test point 2	Body ground

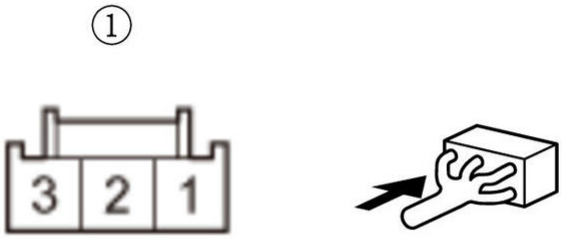

Is there 1 MΩ or more?

YES

Go to step 19.

NO

Replace the shutter grille (lower) .

19. Open wire check (LIN (BATT SENSOR)/LIN line) 1

-1. Jump the SCS line with the HDS, and wait more than 1 minute.

-2. Disconnect the following connectors.

Shutter grille (upper/lower) 4P connector
PCM connector A (50P)

-3. Measure the resistance between test points 1 and 2.

Test condition	Vehicle OFF (LOCK) mode
B	DC-DC converter connector A (3P): disconnected
B	Shutter grille (upper/lower) 4P connector: disconnected
B	PCM connector A (50P): disconnected
Test point 1	Shutter grille (upper/lower) 4P connector (female terminal) No. 3: ①
Test point 2	**PCM connector A (50P) No. 10**

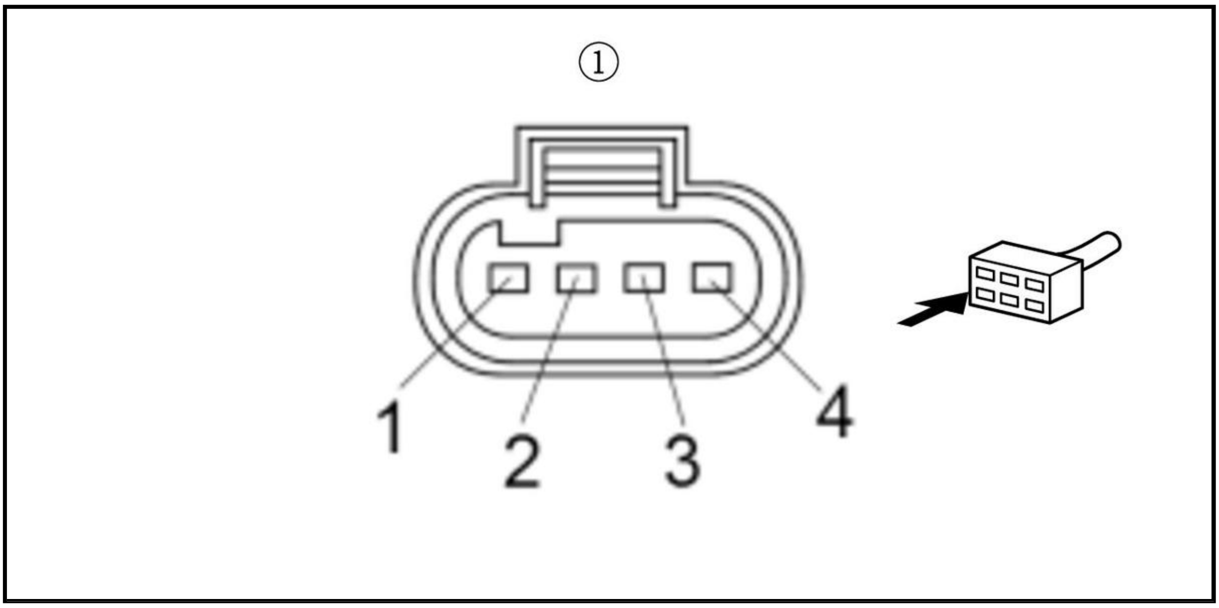

Is there 1.0 Ω or less?

YES

The LIN (BATT SENSOR)/LIN wire is OK. Check for any authorized service information related to the DTCs or symptoms you are troubleshooting, or **substitute a known-good PCM** .

NO

Repair an open in the LIN (BATT SENSOR)/LIN wire between the PCM (A10) and the shutter grille.

20. Fuse check

-1. Turn the vehicle to the OFF (LOCK) mode.

-2. Check the following fuse.

Fuse	**No. G31** shutter grille (upper) *2
Fuse	**No. A23** shutter grille (upper)
Fuse	**No. A22** shutter grille (lower)

Is the fuse OK?

YES

Go to step 21.

NO

- Check for a short in the VMP wire between the No. A23 fuse and the shutter grille (upper). Also replace the No. A23 fuse. *1
- Check for a short in the VMP wire between the No. G31 fuse and the shutter grille (upper). Also replace the No. G31 fuse. *2
- Check for a short in the +B FI ECU MAIN wire between the No. A23 fuse and the G31 fuse. Also replace the No. A23 fuse. *2
- Check for a short in the +B FR FOG/VMP wire between the No. A22 fuse and the shutter grille (lower). Also replace the No. A22 fuse.

21. Determine possible failure area (LIN (BATT SENSOR) line, VMP line *1, +B FI ECU MAIN/VMP line *2, +B FR FOG/VMP line):

-1. Disconnect the following connector.

Shutter grille (upper/lower) 4P connector

-2. Measure the voltage between test points 1 and 2.

Test condition	Vehicle OFF (LOCK) mode
B	Shutter grille (upper/lower) 4P connector: disconnected
Test point 1	Shutter grille (upper/lower) 4P connector (female terminals) No. 1: ①
Test point 2	Shutter grille (upper/lower) 4P connector (female terminals) No. 4: ①

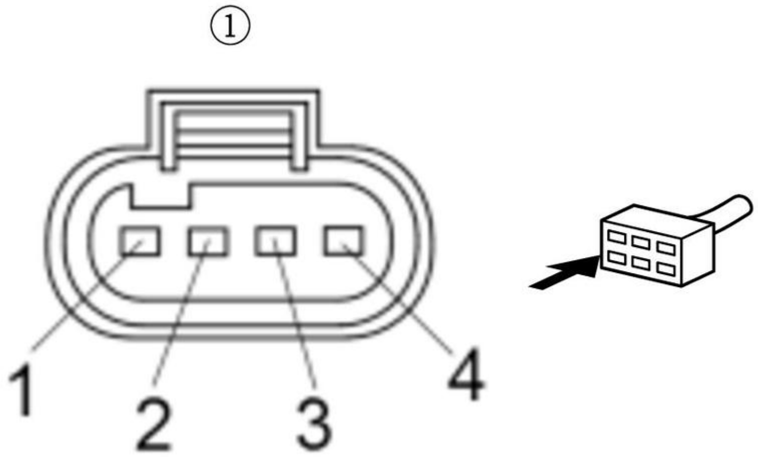

Is there battery voltage?

YES

Go to step 23.

NO

Go to step 22.

22. Open wire check (VMP line *1, +B FI ECU MAIN/VMP line *2, +B FR FOG/VMP line)

-1. Measure the voltage between test points 1 and 2.

Test condition	Vehicle OFF (LOCK) mode
B	Shutter grille (upper/lower) 4P connector: disconnected
Test point 1	Shutter grille (upper/lower) 4P connector (female terminals) No. 1: ①
Test point 2	Body ground

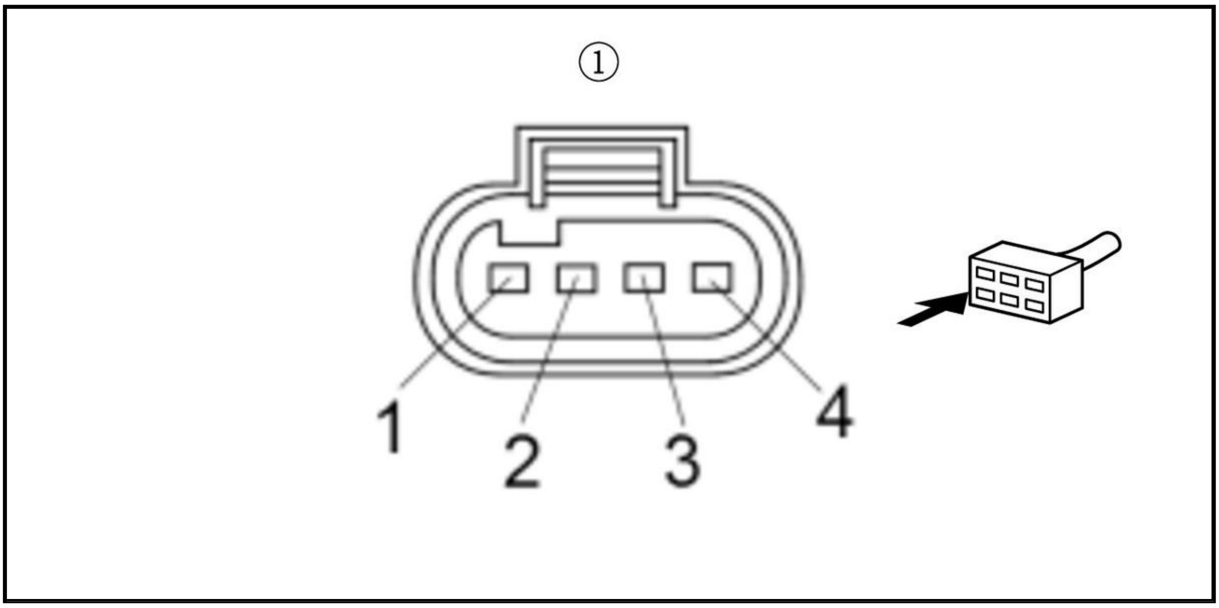

Is there battery voltage?

1. **YES**
    - Repair an open in the GND wire between the shutter grille (upper) and G351.
    - Repair an open in the GND wire between the shutter grille (lower) and G251.

   NO
    - Repair an open in the VMP wire between the shutter grille (upper) and the **No. A23** fuse *1.
    - Repair an open in the VMP wire between the shutter grille (upper) and the **No. G31** fuse. *2
    - Repair an open in the +B FI ECU MAIN wire between the G31 fuse and the **No. A23** fuse. *2
    - Repair an open in the +B FR FOG/VMP wire between the shutter grille (lower) and the **No. A22** fuse.

23. Open wire check (LIN (BATT SENSOR)/LIN line) 2

-1. Jump the SCS line with the HDS, and wait more than 1 minute.

-2. Disconnect the following connectors.

PCM connector A (50P)

-3. Measure the resistance between test points 1 and 2.

Test condition	Vehicle OFF (LOCK) mode
B	Shutter grille (upper/lower) 4P connector: disconnected
B	PCM connector A (50P): disconnected
Test point 1	Shutter grille (upper/lower) 4P connector (female terminal) No. 3: ①
Test point 2	**PCM connector A (50P) No. 10**

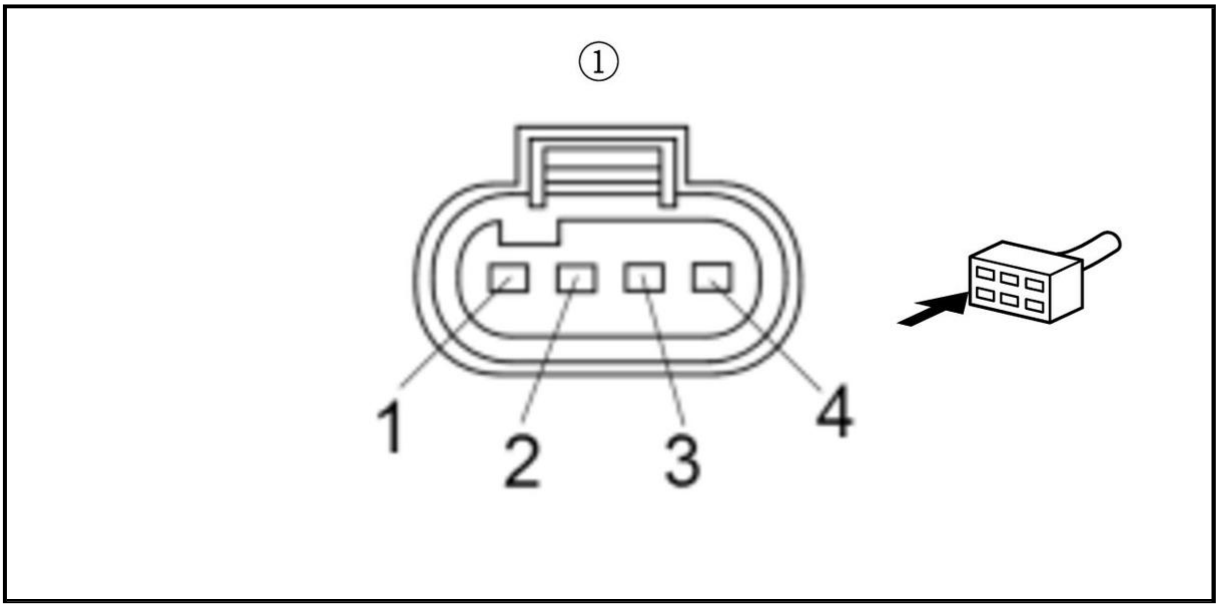

Is there 1.0 Ω or less?

YES

The LIN (BATT SENSOR)/LIN wire is OK. **Replace the shutter grille** .

NO

Repair an open in the LIN (BATT SENSOR)/LIN wire between the PCM (A10) and the shutter grille (upper/lower).

DTC TROUBLESHOOTING

DTC P16E8 (2.4 L ENGINE) (2017 2018 2019)

DTC P16E8 : PGM-FI-Shutter Grille LIN Communication Error

NOTE: Before you troubleshoot, review the general troubleshooting information .

DTC Description	Confirmed DTC	Pending DTC
P16E8 PGM-FI-Shutter Grille LIN Communication Error	B	B

DTC (PGM-FI)

1. Problem verification

   -1. Turn the vehicle to the ON mode.

   -2. Clear the DTC with the HDS.

   -3. Turn the vehicle to the OFF (LOCK) mode.

   -4. Turn the vehicle to the ON mode, and wait 10 seconds.

   -5. Check for Pending or Confirmed DTCs with the HDS.

DTC Description	Confirmed DTC	Pending DTC
P16E8 PGM-FI-Shutter Grille LIN Communication Error	B	B

   Is DTC P16E8 indicated?

   YES

   Go to step 2.

   NO

   Intermittent failure, the system is OK at this time. Check for poor connections or loose terminals at the shutter grille and the PCM. If the on-board snapshot of this DTC is recorded, try to reproduce the failure under the same conditions with the on-board snapshot .

2. DTC check 1

   -1. Check for Pending or Confirmed DTCs with the HDS.

DTC Description	Confirmed DTC	Pending DTC
P16E2 PGM-FI-ACG LIN Communication Error	B	B

   Is DTC P16E2 indicated?

   YES

   Go to step 4.

   NO

Go to step 3.

3. DTC check 2

-1. Check for Pending or Confirmed DTCs with the HDS.

DTC Description	Confirmed DTC	Pending DTC
P16E3 PGM-FI-Battery Sensor LIN Communication Error	B	B

Is DTC P16E3 indicated?

YES

Go to step 9.

NO

Go to step 14.

4. Determine possible failure area (LIN (BATT SENSOR) line, others)

-1. Turn the vehicle to the OFF (LOCK) mode.

-2. Disconnect the following connectors.

Shutter grille (upper/lower) 4P connector

-3. Check for continuity between test points 1 and 2.

Test condition	Vehicle OFF (LOCK) mode
B	Shutter grille (upper/lower) 4P connector: disconnected
Test point 1	Shutter grille (upper/lower) 4P connector (female terminal) No. 3: ①
Test point 2	Body ground

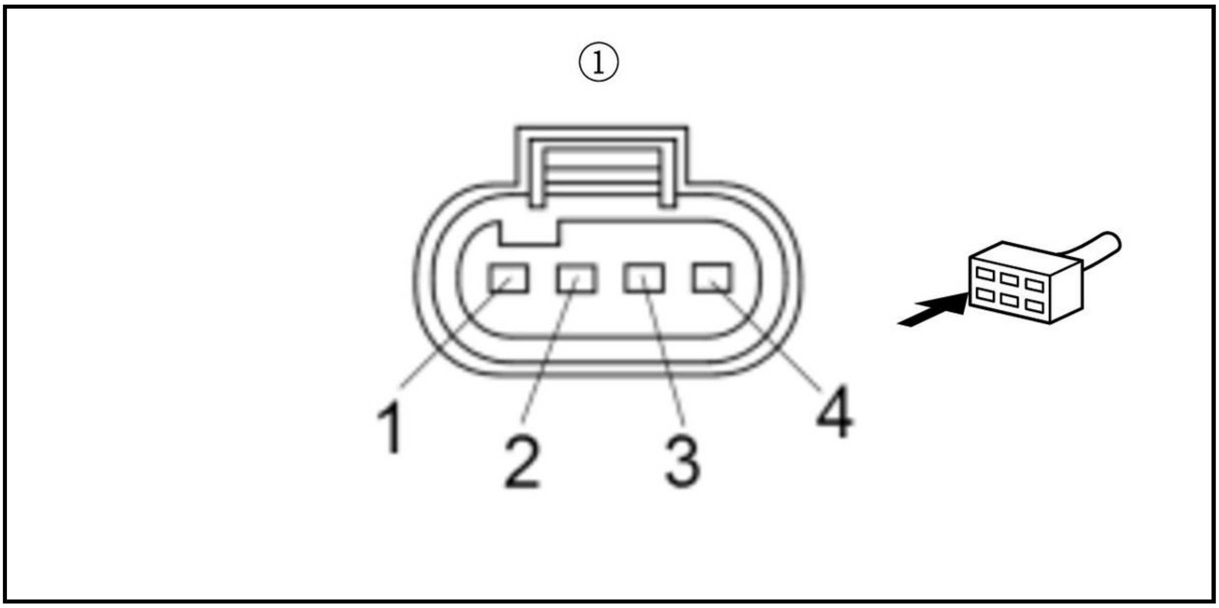

Is there continuity?

YES

Go to step 5.

NO

Go to step 6.

5. Shorted wire check (LIN (BATT SENSOR) line)

   -1. Jump the SCS line with the HDS, and wait more than 1 minute.

   Continue to check for continuity between the shutter grille (upper/lower) 4P connector terminal and body ground, while disconnecting these connectors, one at a time:

   - PCM connector B (51P)
   - Alternator 1P connector
   - 12 volt battery sensor 2P connector

   Does continuity go away when one of the above connectors is disconnected?

   YES

   The LIN (BATT SENSOR) wire is OK. Replace the part that caused an open when it was disconnected.

   NO

   Repair a short in the LIN (BATT SENSOR) wire between the PCM (B40), the alternator, the 12 volt battery sensor, and the shutter grille.

6. Determine possible failure area (shutter grille (upper), others)

   -1. Reconnect the shutter grille (upper) 4P connector.

   -2. Disconnect the following connector.

Alternator 1P connector

   -3. Check for continuity between test points 1 and 2.

Test condition	Vehicle OFF (LOCK) mode
B	Alternator 1P connector: disconnected
B	Shutter grille (lower) 4P connector: disconnected
Test point 1	Alternator 1P connector (female terminal) No. 1: ①
Test point 2	Body ground

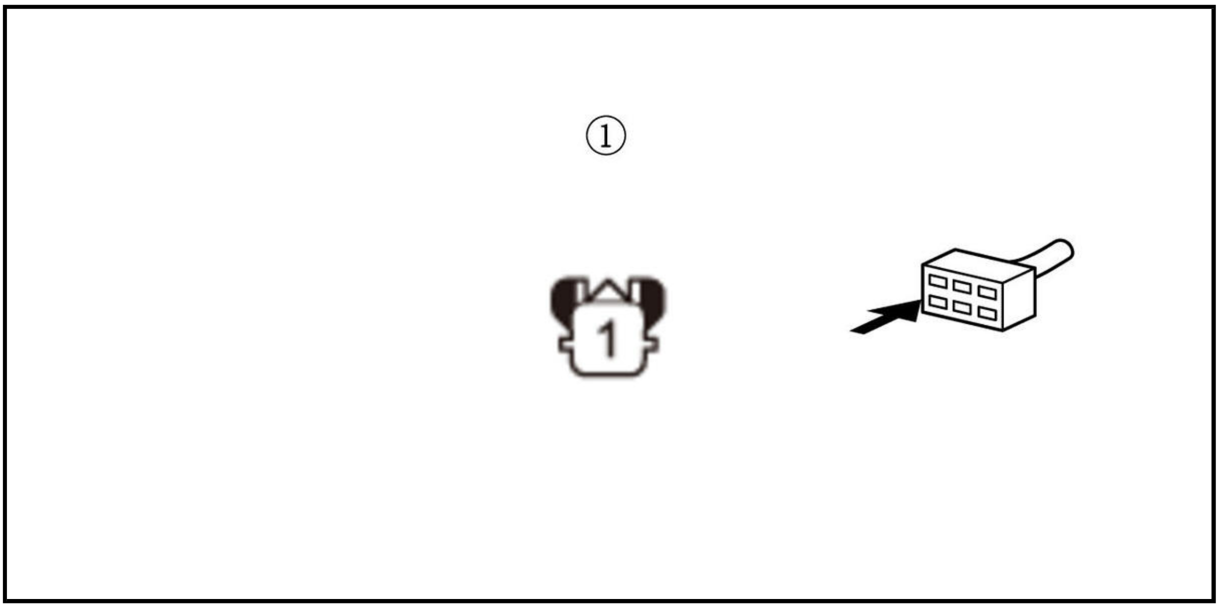

Is there continuity?

YES

Replace the shutter grille (upper) .

NO

Go to step 7.

7. Determine possible failure area (shutter grille (lower), others)

-1. Reconnect the shutter grille (lower) 4P connector.

-2. Check for continuity between test points 1 and 2.

Test condition	Vehicle OFF (LOCK) mode
B	Alternator 1P connector: disconnected
Test point 1	Alternator 1P connector (female terminal) No. 1: ①
Test point 2	Body ground

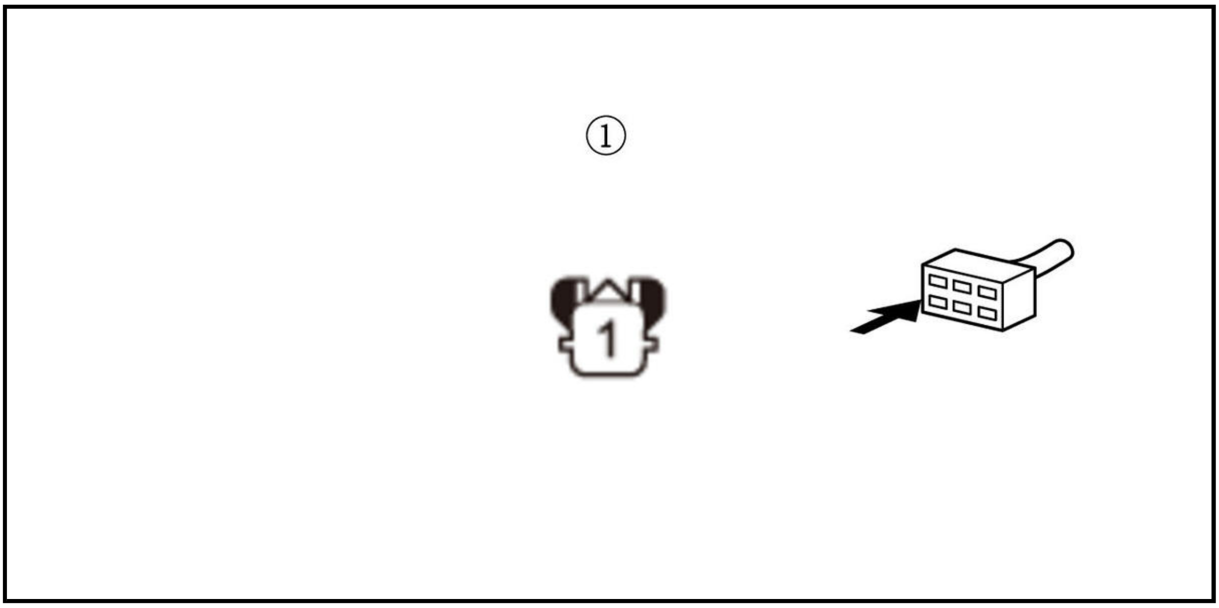

Is there continuity?

YES

Replace the shutter grille (lower) .

NO

Go to step 8.

8. Open wire check (LIN (BATT SENSOR) line) 1

-1. Jump the SCS line with the HDS, and wait more than 1 minute.

-2. Disconnect the following connectors.

Shutter grille (upper/lower) 4P connector
PCM connector B (51P)

-3. Check for continuity between test points 1 and 2.

Test condition	Vehicle OFF (LOCK) mode
B	Shutter grille (upper/lower) 4P connector: disconnected
B	Alternator 1P connector: disconnected
B	PCM connector B (51P): disconnected
Test point 1	Shutter grille (upper/lower) 4P connector (female terminal) No. 3: ①
Test point 2	**PCM connector B (51P) No. 40**

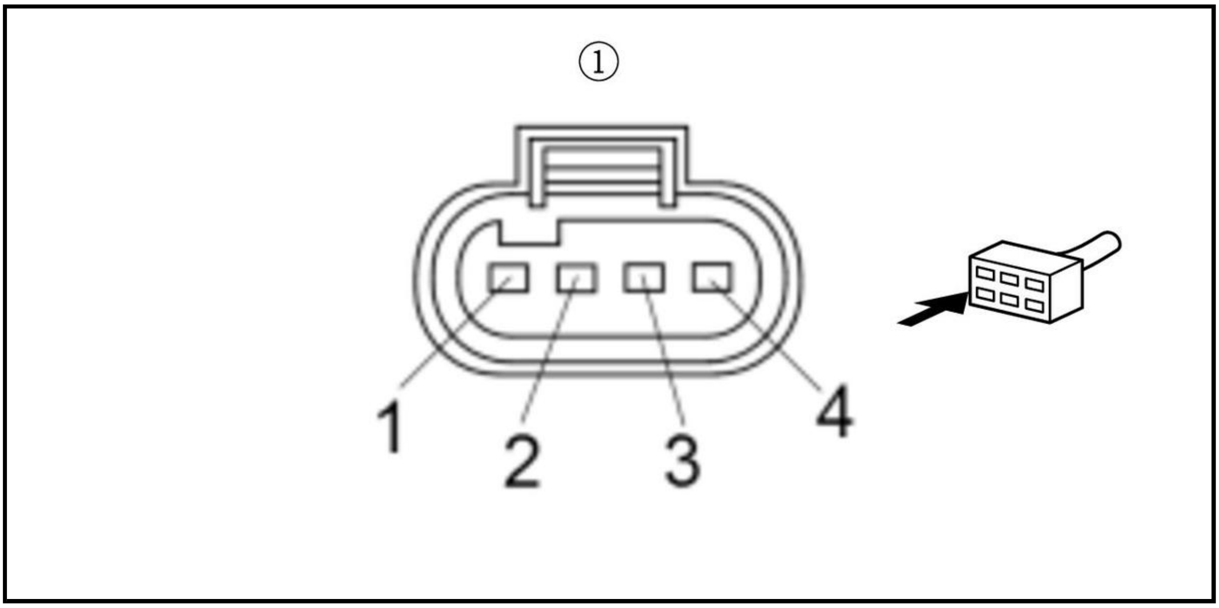

Is there continuity?

YES

The LIN (BATT SENSOR) wire is OK. Check for any authorized service information related to the DTCs or symptoms you are troubleshooting, or **substitute a known-good PCM** .

NO

Repair an open in the LIN (BATT SENSOR) wire between the PCM (B40) and the shutter grille.

9. Determine possible failure area (LIN (BATT SENSOR) line, others)

-1. Turn the vehicle to the OFF (LOCK) mode.

-2. Disconnect the following connectors.

Shutter grille (upper/lower) 4P connector

-3. Check for continuity between test points 1 and 2.

Test condition	Vehicle OFF (LOCK) mode
B	Shutter grille (upper/lower) 4P connector: disconnected
Test point 1	Shutter grille (upper/lower) 4P connector (female terminal) No. 3: ①
Test point 2	Body ground

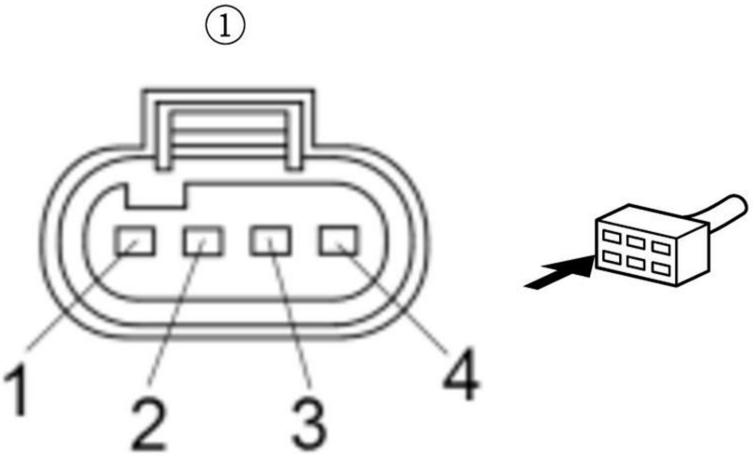

Is there continuity?

YES

Go to step 10.

NO

Go to step 11.

10. Shorted wire check (LIN (BATT SENSOR) line)

-1. Jump the SCS line with the HDS, and wait more than 1 minute.

Continue to check for continuity between the shutter grille (upper/lower) 4P connector terminal and body ground, while disconnecting these connectors, one at a time:

- PCM connector B (51P)
- 12 volt battery sensor 2P connector
- Alternator 1P connector

Does continuity go away when one of the above connectors is disconnected?

YES

The LIN (BATT SENSOR) wire is OK. Replace the part that caused an open when it was disconnected.

NO

Repair a short in the LIN (BATT SENSOR) wire between the PCM (B40), the alternator, the 12 volt battery sensor and the shutter grille.

11. Determine possible failure area (shutter grille (upper), others)

-1. Reconnect the shutter grille (upper) 4P connector.

-2. Disconnect the following connector.

12 volt battery sensor 2P connector

-3. Check for continuity between test points 1 and 2.

Test condition	Vehicle OFF (LOCK) mode
B	12 volt battery sensor 2P connector: disconnected
B	Shutter grille (lower) 4P connector: disconnected
Test point 1	12 volt battery sensor 2P connector (female terminals) No. 2: ①
Test point 2	Body ground

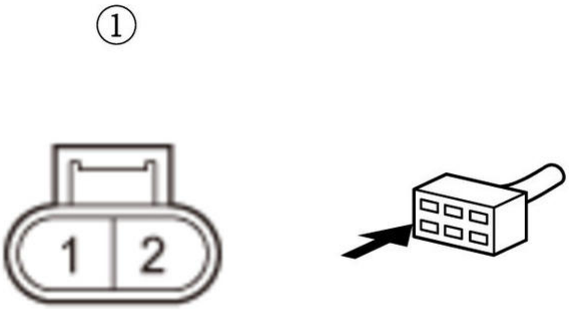

Is there continuity?

YES

Replace the shutter grille (upper) .

NO

Go to step 12.

12. Determine possible failure area (shutter grille (lower), others)

-1. Reconnect the shutter grille (lower) 4P connector.

-2. Check for continuity between test points 1 and 2.

Test condition	Vehicle OFF (LOCK) mode
B	12 volt battery sensor 2P connector: disconnected
Test point 1	12 volt battery sensor 2P connector (female terminals) No. 2: ①

Test point 2	Body ground

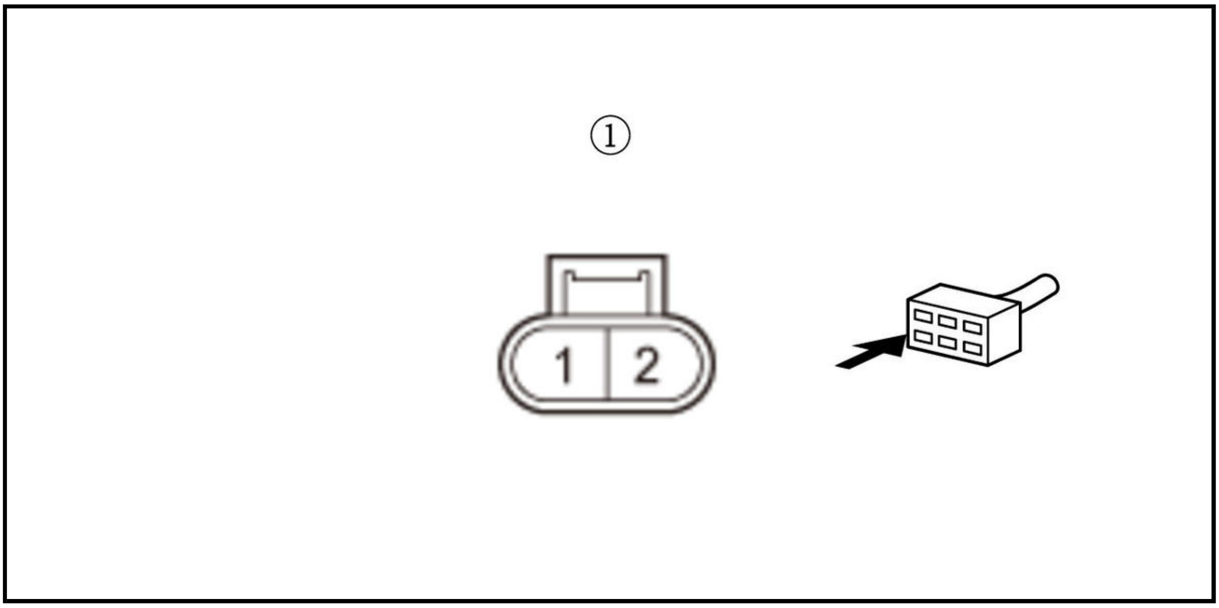

Is there continuity?

YES

Replace the shutter grille (lower) .

NO

Go to step 13.

13. Open wire check (LIN (BATT SENSOR) line) 1

-1. Jump the SCS line with the HDS, and wait more than 1 minute.

-2. Disconnect the following connectors.

Shutter grille (upper/lower) 4P connector
PCM connector B (51P)

-3. Check for continuity between test points 1 and 2.

Test condition	Vehicle OFF (LOCK) mode
B	12 volt battery sensor 2P connector: disconnected
B	Shutter grille (upper/lower) 4P connector: disconnected
B	PCM connector B (51P): disconnected
Test point 1	Shutter grille (upper/lower) 4P connector (female terminal) No. 3: ①
Test point 2	**PCM connector B (51P) No. 40**

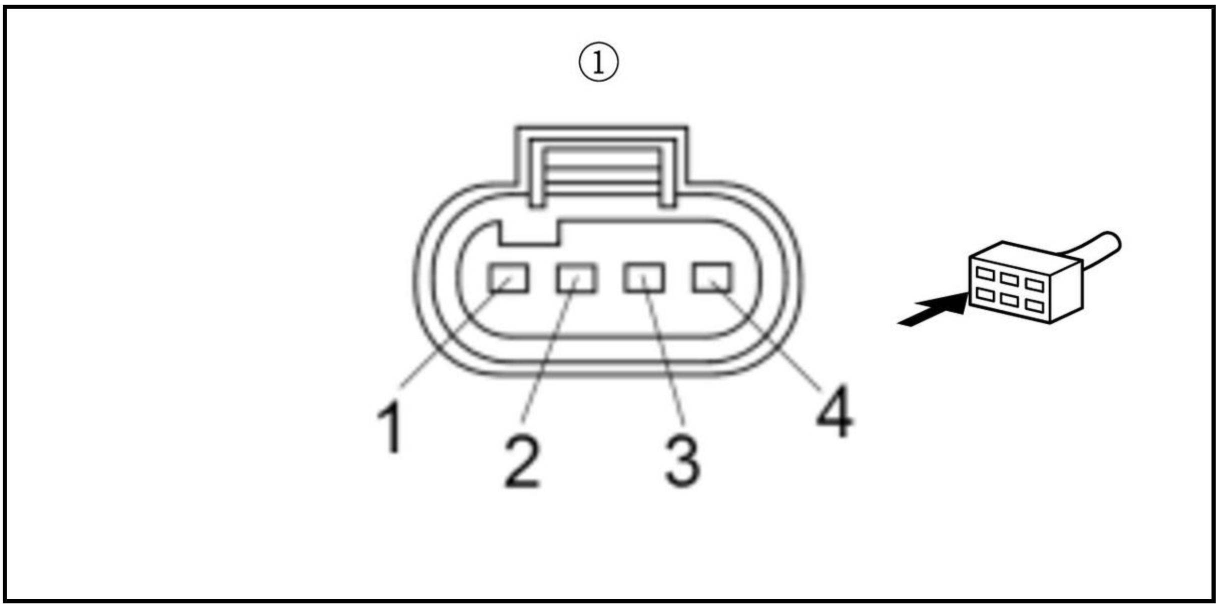

Is there continuity?

YES

The LIN (BATT SENSOR) wire is OK. Check for any authorized service information related to the DTCs or symptoms you are troubleshooting, or **substitute a known-good PCM** .

NO

Repair an open in the LIN (BATT SENSOR) wire between the PCM (B40) and the shutter grille.

14. Fuse check

-1. Turn the vehicle to the OFF (LOCK) mode.

-2. Check the following fuse.

Fuse	**No. A23** shutter grille (upper)
Fuse	**No. A22** shutter grille (lower)

Is the fuse OK?

YES

Go to step 15.

NO

- Check for a short in the VMP wire between the No. A23 fuse and the shutter grille (upper). Also replace the No. A23 fuse.
- Check for a short in the +B FR FOG/VMP wire between the No. A22 fuse and the shutter grille (lower). Also replace the No. A22 fuse.

15. Determine possible failure area (LIN (BATT SENSOR) line, +B FR FOG/VMP line)

-1. Disconnect the following connector.

Shutter grille (upper/lower) 4P connector

-2. Measure the voltage between test points 1 and 2.

Test condition	Vehicle OFF (LOCK) mode

B	Shutter grille (upper/lower) 4P connector: disconnected
Test point 1	Shutter grille (upper/lower) 4P connector (female terminals) No. 1: ①
Test point 2	Shutter grille (upper/lower) 4P connector (female terminals) No. 4: ①

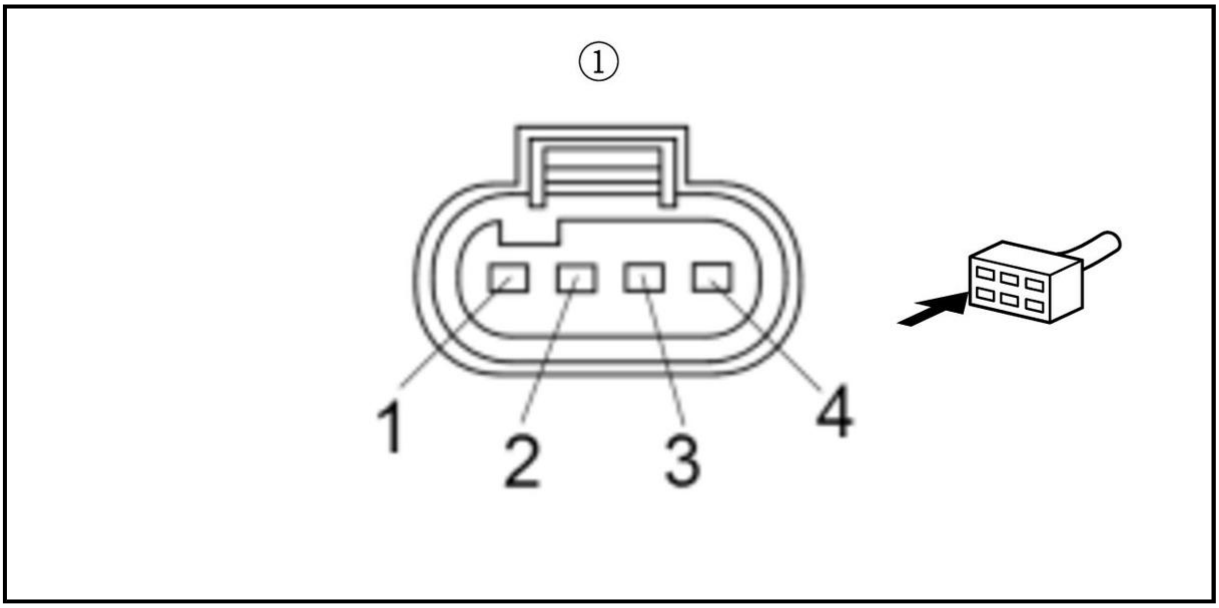

Is there battery voltage?

YES

Go to step 17.

NO

Go to step 16.

16. Open wire check (+B FR FOG/VMP line)

-1. Measure the voltage between test points 1 and 2.

Test condition	Vehicle OFF (LOCK) mode
B	Shutter grille (upper/lower) 4P connector: disconnected
Test point 1	Shutter grille (upper/lower) 4P connector (female terminals) No. 1: ①
Test point 2	Body ground

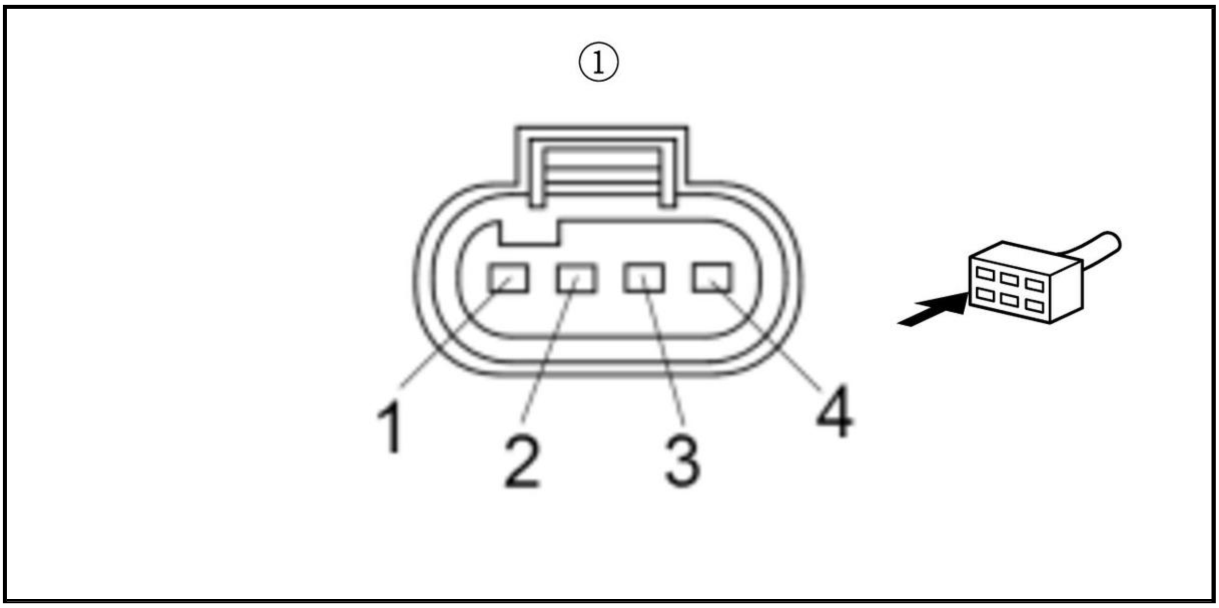

Is there battery voltage?

1. **YES**

   - Repair an open in the GND wire between the shutter grille (upper) and G351.
   - Repair an open in the GND wire between the shutter grille (lower) and G251.

   NO

   - Repair an open in the VMP wire between the shutter grille (upper) and the **No. A23** fuse.
   - Repair an open in the +B FR FOG/VMP wire between the shutter grille (lower) and the **No. A22** fuse.

17. Open wire check (LIN (BATT SENSOR) line) 2

-1. Jump the SCS line with the HDS, and wait more than 1 minute.

-2. Disconnect the following connectors.

PCM connector B (51P)

-3. Check for continuity between test points 1 and 2.

Test condition	Vehicle OFF (LOCK) mode
B	Shutter grille (upper/lower) 4P connector: disconnected
B	PCM connector B (51P): disconnected
Test point 1	Shutter grille (upper/lower) 4P connector (female terminal) No. 3: ①
Test point 2	**PCM connector B (51P) No. 40**

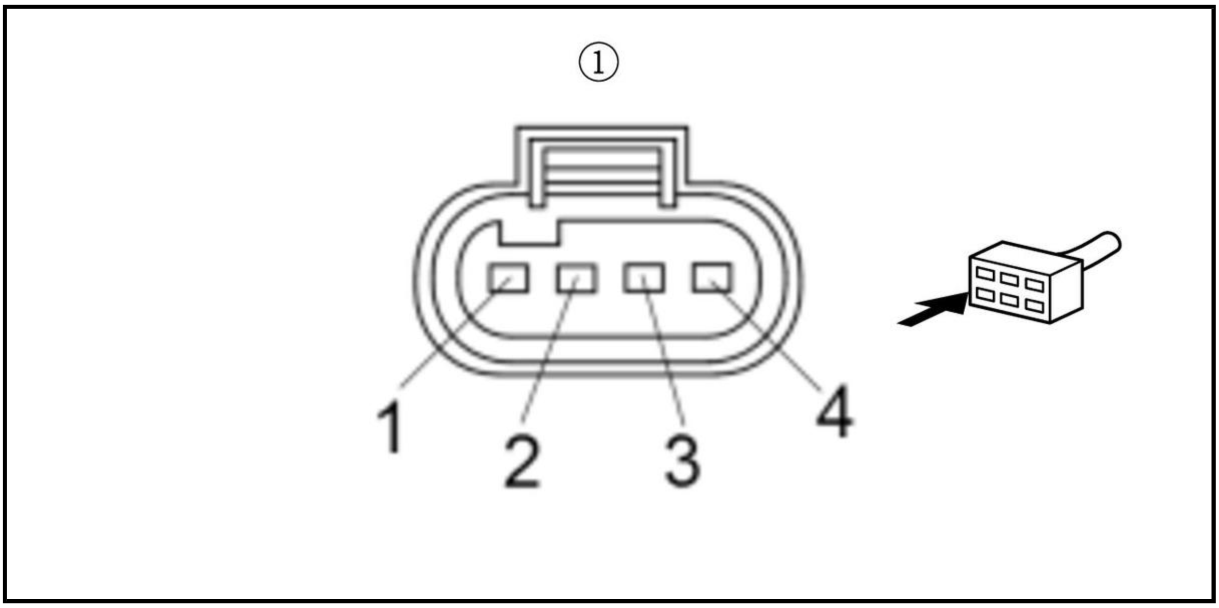

Is there continuity?

YES

The LIN (BATT SENSOR) wire is OK. **Replace the shutter grille** .

NO

Repair an open in the LIN (BATT SENSOR) wire between the PCM (B40) and the shutter grille (upper or lower).

DTC P16F0 (2.4 L ENGINE) (2017 2018 2019)

DTC P16F0 : PCM Internal Circuit Malfunction (Starter Control Circuit Malfunction)

NOTE: Before you troubleshoot, **review the general troubleshooting information** .

DTC Description	Confirmed DTC	Pending DTC
P16F0 PCM Internal Circuit Malfunction (Starter Control Circuit Malfunction)	B	B

DTC (PGM-FI)

1. Problem verification

-1. Turn the vehicle to the ON mode.

-2. Clear the DTC with the HDS.

-3. Start the engine.

-4. Check for Pending or Confirmed DTCs with the HDS.

DTC Description	Confirmed DTC	Pending DTC
P16F0 PCM Internal Circuit Malfunction (Starter Control Circuit Malfunction)	B	B

Is DTC P16F0 indicated?

YES

The failure is duplicated. Check for any authorized service information related to the DTCs or symptoms you are troubleshooting or substitute a known-good PCM .

NO

Intermittent failure, the system is OK at this time. If the on-board snapshot of this DTC is recorded, try to reproduce the failure under the same conditions with the on-board snapshot . Check for poor connections or loose terminals at the PCM.

DTC P16F2 (2.4 L ENGINE) (2017 2018 2019)

DTC P16F2 : PCM Internal Circuit Malfunction (Starter Control Circuit Malfunction)

NOTE: Before you troubleshoot, review the general troubleshooting information .

DTC Description	Confirmed DTC	Pending DTC
P16F2 PCM Internal Circuit Malfunction (Starter Control Circuit Malfunction)	B	B

DTC (PGM-FI)

1. Problem verification

   -1. Turn the vehicle to the ON mode.

   -2. Clear the DTC with the HDS.

   -3. Check for Pending or Confirmed DTCs with the HDS.

DTC Description	Confirmed DTC	Pending DTC
P16F2 PCM Internal Circuit Malfunction (Starter Control Circuit Malfunction)	B	B

Is DTC P16F2 indicated?

YES

The failure is duplicated. Check for any authorized service information related to the DTCs or symptoms you are troubleshooting or substitute a known-good PCM .

NO

Intermittent failure, the system is OK at this time. If the on-board snapshot of this DTC is recorded, try to reproduce the failure under the same conditions with the on-board snapshot . Check for poor connections or loose terminals at the PCM.

DTC P16F3 (1.5 L ENGINE)

DTC P16F3 : Starter Cut Relay 1 Control Circuit Low Voltage

NOTE: Before you troubleshoot, review the general troubleshooting information .

DTC Description	Confirmed DTC	Pending DTC
P16F3 Starter Cut Relay 1 Control Circuit Low Voltage	B	B

DTC (PGM-FI)

1. Engine starting check

-1. Start the engine.

Does the engine start?

YES

Go to step 2.

NO

Go to step 4.

2. Problem verification

-1. Turn the vehicle to the OFF (LOCK) mode.

-2. Turn the vehicle to the ON mode.

-3. Clear the DTC with the HDS.

-4. Check for Pending or Confirmed DTCs with the HDS.

DTC Description	Confirmed DTC	Pending DTC
P16F3 Starter Cut Relay 1 Control Circuit Low Voltage	B	B

Is DTC P16F3 indicated?

YES

The failure is duplicated. Go to step 3.

NO

Intermittent failure, the system is OK at this time. Check for poor connections or loose terminals at the relay circuit board (starter cut relay 1 circuit) and the PCM. **If the on-board snapshot of this DTC is recorded, try to reproduce the failure under the same conditions with the on-board snapshot** .

3. Shorted wire check (ST CUT RLY1 CL- line)

-1. Turn the vehicle to the OFF (LOCK) mode.

-2. Jump the SCS line with the HDS, and wait more than 1 minute.

-3. Disconnect the following connectors.

PCM connector A (50P)
Relay circuit board connector A (8P)

-4. Check for continuity between test points 1 and 2.

Test condition	Vehicle OFF (LOCK) mode
B	Relay circuit board connector A (8P): disconnected
B	PCM connector A (50P): disconnected
Test point 1	**PCM connector A (50P) No. 15**
Test point 2	Body ground

Is there continuity?

YES

Repair a short in the ST CUT RLY1 CL- wire between the PCM (A15) and the relay circuit board (starter cut relay 1 circuit).

NO

The ST CUT RLY1 CL- wire is OK. Check for any authorized service information related to the DTCs or symptoms you are troubleshooting, or **substitute a known-good PCM** .

4. Determine possible failure area (PCM, others)

-1. Turn the vehicle to the OFF (LOCK) mode.

-2. Jump the SCS line with the HDS, and wait more than 1 minute.

-3. Disconnect the following connector.

PCM connector A (50P)

-4. Turn the vehicle to the ON mode.

-5. Measure the voltage between test points 1 and 2.

Test condition	Vehicle ON mode
B	PCM connector A (50P): disconnected
Test point 1	**PCM connector A (50P) No. 15**
Test point 2	Body ground

Is there battery voltage?

YES

Check for any authorized service information related to the DTCs or symptoms you are troubleshooting, or **substitute a known-good PCM** .

NO

Go to step 5.

5. Open wire check (ST CUT RLY1 CL- line)

-1. Turn the vehicle to the OFF (LOCK) mode.

-2. Disconnect the following connector.

Relay circuit board connector A (8P)

-3. Check for continuity between test points 1 and 2.

Test condition	Vehicle OFF (LOCK) mode
	PCM connector A (50P): disconnected
	Relay circuit board connector A (8P): disconnected
Test point 1	Relay circuit board connector A (8P) (female terminals) No. 5: ①
Test point 2	**PCM connector A (50P) No. 15**

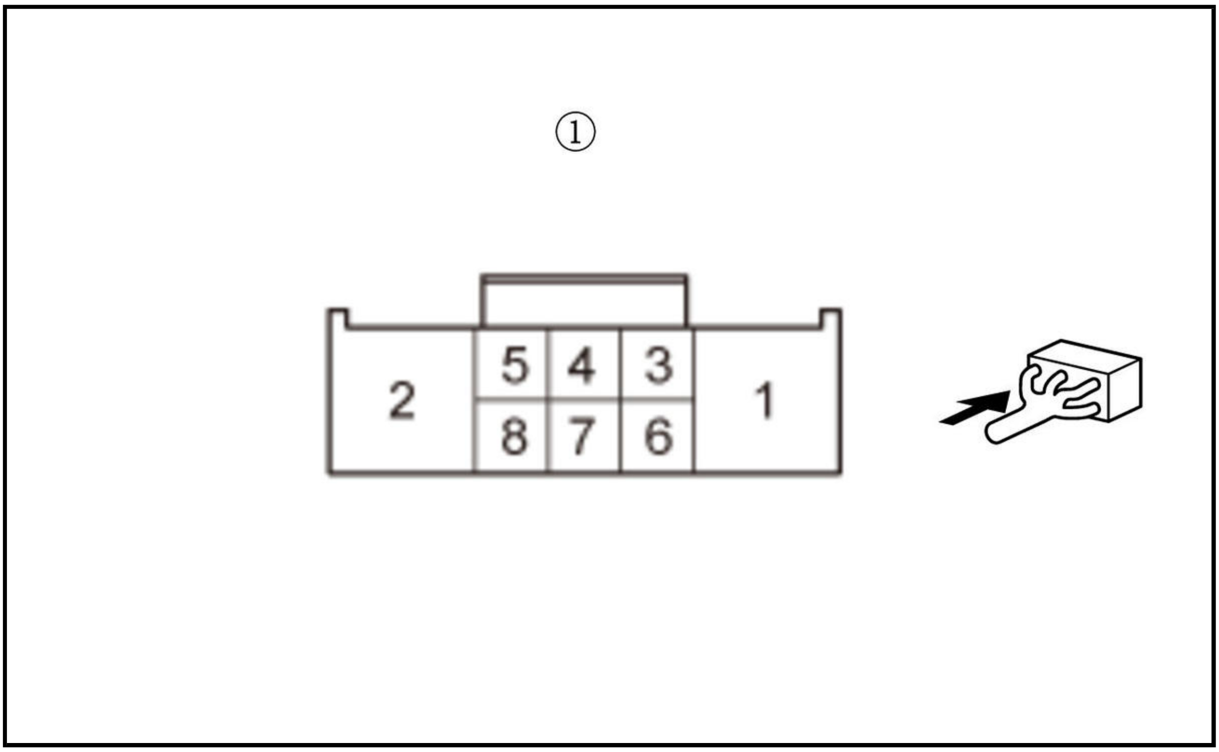

Is there continuity?

YES

The ST CUT RLY1 CL- wire is OK. Go to step 6.

NO

Repair an open in the ST CUT RLY1 CL- wire between the PCM (A15) and the relay circuit board (starter cut relay 1 circuit).

6. Fuse check

-1. Check the following fuse.

Fuse	No. D20 (10 A)

Location	Under-dash fuse/relay box

Is the fuse OK?

YES

Go to step 7.

NO

Check for a short in the IG1 STARTER CUT wire between the No. D20 (10 A) fuse and the relay circuit board, and repair it as needed. Also replace the No. D20 (10 A) fuse.

7. Open wire check (IG1 STARTER CUT line)

-1. Disconnect the following connectors.

Under-dash fuse/relay box connector C (27P)
Relay circuit board connector B (6P)

-2. Connect terminals A and B with a jumper wire.

Terminal A	Under-dash fuse/relay box connector C (27P) (female terminals) No. 23: ①
Terminal B	Body ground

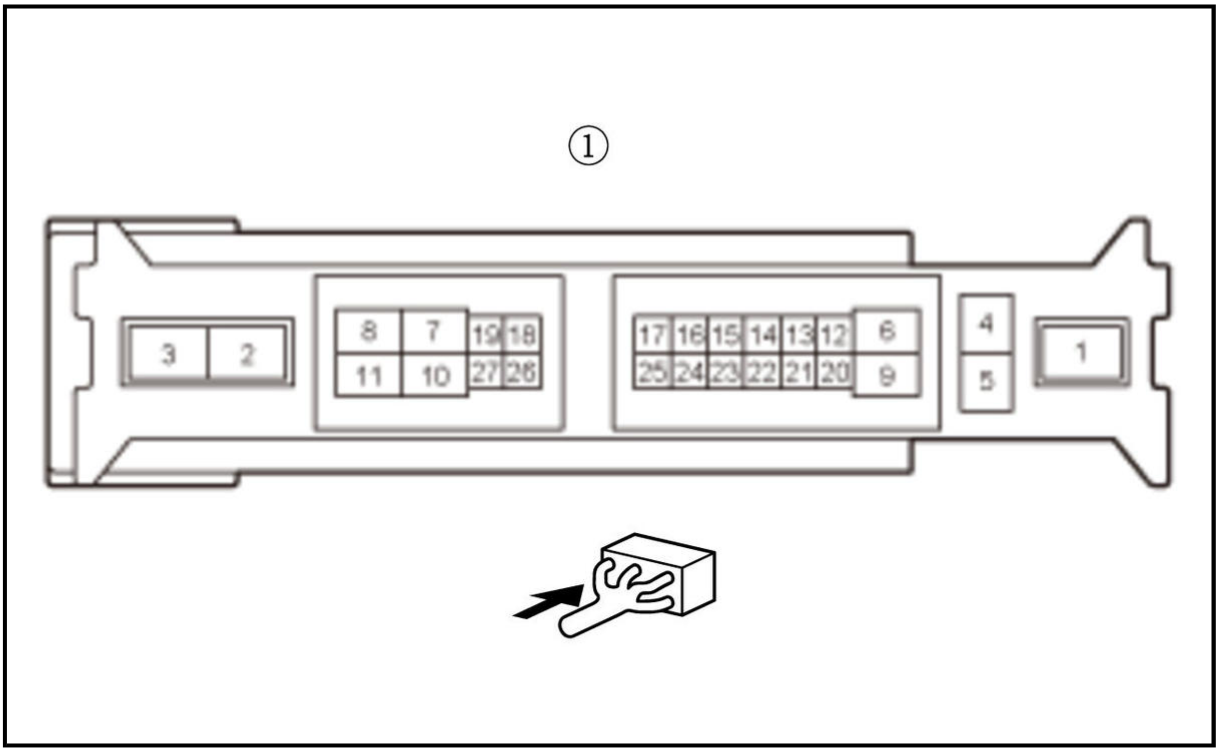

-3. Check for continuity between test points 1 and 2.

Test condition	Vehicle OFF (LOCK) mode
	PCM connector A (50P): disconnected
	Relay circuit board connector A (8P): disconnected
	Relay circuit board connector B (6P): disconnected
	Under-dash fuse/relay box connector C (27P): disconnected
	Under-dash fuse/relay box connector C (27P) No. 23: jumped to body ground
Test point 1	Relay circuit board connector B (6P) (female terminals) No. 4: ①
Test point 2	Body ground

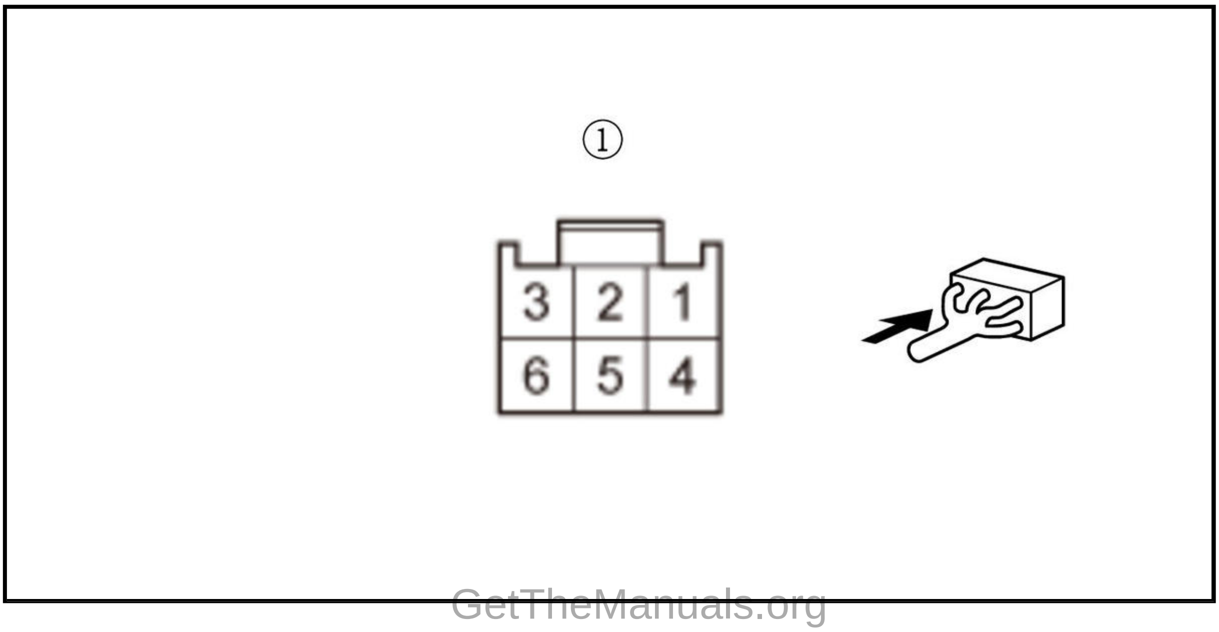

Is there continuity?

YES

The IG1 STARTER CUT wire is OK. **Replace the under-dash fuse/relay box** .

NO

Repair an open in the IG1 STARTER CUT wire between the under-dash fuse/relay box and the relay circuit board (starter cut relay 1 circuit).

DTC P16F3 (2.4 L ENGINE) (2017 2018 2019)

DTC P16F3 : Starter Cut Relay 1 Control Circuit Low Voltage

NOTE: Before you troubleshoot, **review the general troubleshooting information** .

DTC Description	Confirmed DTC	Pending DTC
P16F3 Starter Cut Relay 1 Control Circuit Low Voltage	B	B

DTC (PGM-FI)

1. Engine starting check

   -1. Start the engine.

   Does the engine start?

   YES

   Go to step 2.

   NO

   Go to step 4.

2. Problem verification

   -1. Turn the vehicle to the OFF (LOCK) mode.

   -2. Turn the vehicle to the ON mode.

   -3. Clear the DTC with the HDS.

   -4. Check for Pending or Confirmed DTCs with the HDS.

DTC Description	Confirmed DTC	Pending DTC
P16F3 Starter Cut Relay 1 Control Circuit Low Voltage	B	B

   Is DTC P16F3 indicated?

   YES

   The failure is duplicated. Go to step 3.

   NO

   Intermittent failure, the system is OK at this time. Check for poor connections or loose terminals at the relay circuit board (starter cut relay 1 circuit) and the PCM. **If the on-board snapshot of this DTC is recorded, try to reproduce the failure under the same conditions with the on-board snapshot** .

3. Shorted wire check (ST CUT RLY1 CL- line)

-1. Turn the vehicle to the OFF (LOCK) mode.

-2. Jump the SCS line with the HDS, and wait more than 1 minute.

-3. Disconnect the following connectors.

PCM connector A (51P)
Relay circuit board connector A (8P)

-4. Check for continuity between test points 1 and 2.

Test condition	Vehicle OFF (LOCK) mode
B	Relay circuit board connector A (8P): disconnected
B	PCM connector A (51P): disconnected
Test point 1	**PCM connector A (51P) No. 33**
Test point 2	Body ground

Is there continuity?

YES

Repair a short in the ST CUT RLY1 CL- wire between the PCM (A33) and the relay circuit board (starter cut relay 1 circuit).

NO

The ST CUT RLY1 CL- wire is OK. Check for any authorized service information related to the DTCs or symptoms you are troubleshooting, or **substitute a known-good PCM** .

4. Determine possible failure area (PCM, others)

-1. Turn the vehicle to the OFF (LOCK) mode.

-2. Jump the SCS line with the HDS, and wait more than 1 minute.

-3. Disconnect the following connector.

PCM connector A (51P)

-4. Turn the vehicle to the ON mode.

-5. Measure the voltage between test points 1 and 2.

Test condition	Vehicle ON mode
B	PCM connector A (51P): disconnected
Test point 1	**PCM connector A (51P) No. 33**
Test point 2	Body ground

Is there battery voltage?

YES

Check for any authorized service information related to the DTCs or symptoms you are troubleshooting, or **substitute a known-good PCM** .

NO

Go to step 5.

5. Open wire check (ST CUT RLY1 CL- line)

-1. Turn the vehicle to the OFF (LOCK) mode.

-2. Disconnect the following connector.

Relay circuit board connector A (8P)

-3. Check for continuity between test points 1 and 2.

Test condition	Vehicle OFF (LOCK) mode PCM connector A (51P): disconnected Relay circuit board connector A (8P): disconnected
Test point 1	Relay circuit board connector A (8P) (female terminals) No. 5: ①
Test point 2	**PCM connector A (51P) No. 33**

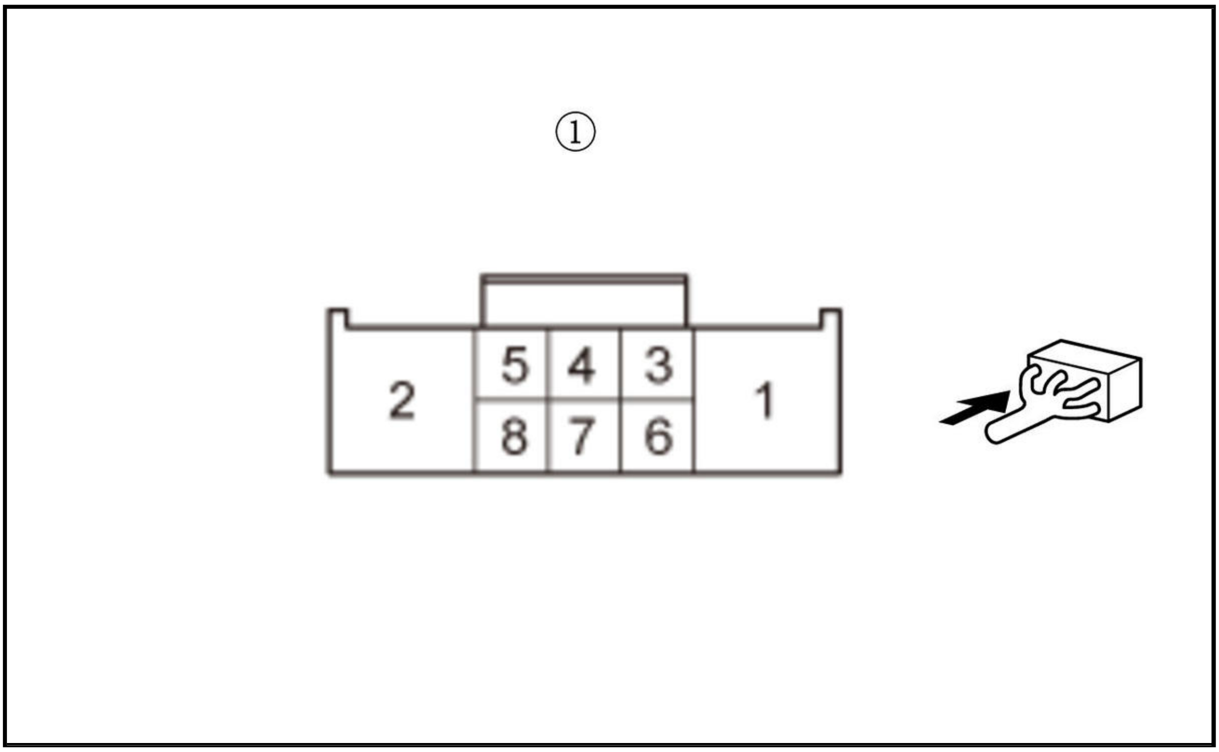

Is there continuity?

YES

The ST CUT RLY1 CL- wire is OK. Go to step 6.

NO

Repair an open in the ST CUT RLY1 CL- wire between the PCM (A33) and the relay circuit board (starter cut relay 1 circuit).

6. Fuse check

-1. Check the following fuse.

Fuse	No. D20 (10 A)

Location	Under-dash fuse/relay box

Is the fuse OK?

YES

Go to step 7.

NO

Check for a short in the IG1 STARTER CUT wire between the No. D20 (10 A) fuse and the relay circuit board, and repair it as needed. Also replace the No. D20 (10 A) fuse.

7. Open wire check (IG1 STARTER CUT line)

-1. Disconnect the following connectors.

Under-dash fuse/relay box connector C (27P)
Relay circuit board connector B (6P)

-2. Connect terminals A and B with a jumper wire.

Terminal A	Under-dash fuse/relay box connector C (27P) (female terminals) No. 23: ①
Terminal B	Body ground

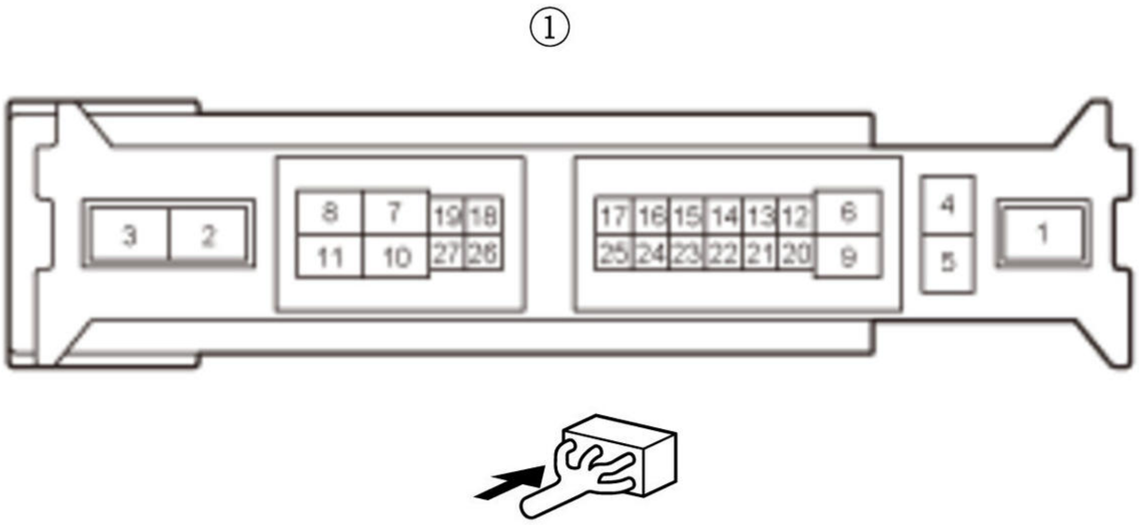

-3. Check for continuity between test points 1 and 2.

Test condition	Vehicle OFF (LOCK) mode PCM connector A (51P): disconnected Relay circuit board connector A (8P): disconnected Relay circuit board connector B (6P): disconnected Under-dash fuse/relay box connector C (27P): disconnected Under-dash fuse/relay box connector C (27P) No. 23: jumped to body ground
Test point 1	Relay circuit board connector B (6P) (female terminals) No. 4: ①
Test point 2	Body ground

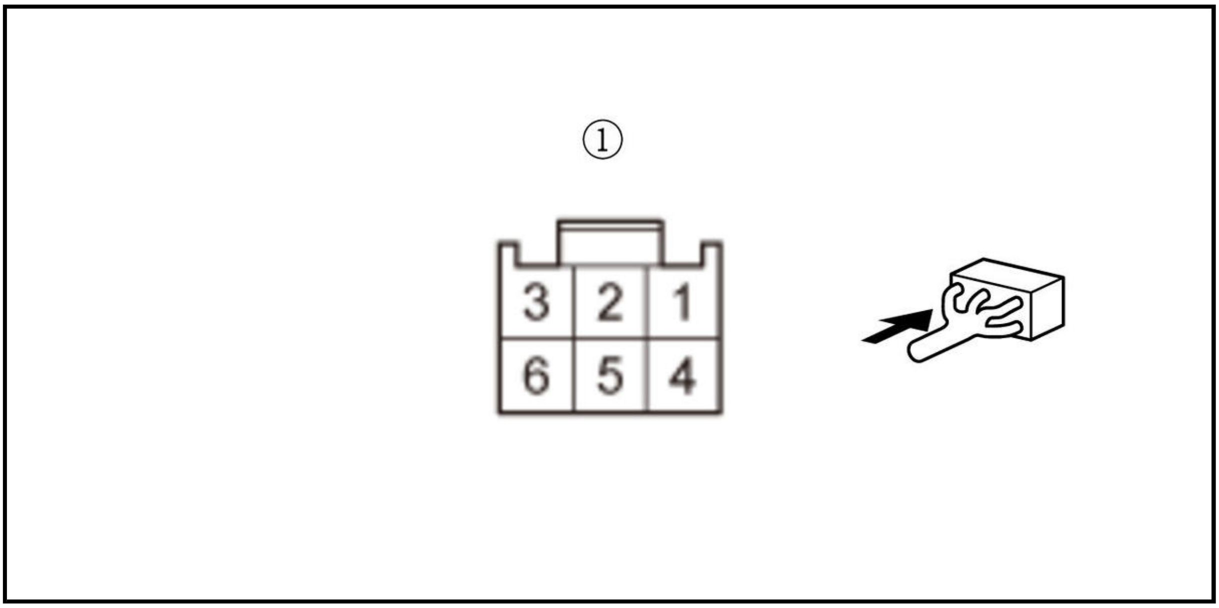

Is there continuity?

YES

The IG1 STARTER CUT wire is OK. **Replace the under-dash fuse/relay box** .

NO

Repair an open in the IG1 STARTER CUT wire between the under-dash fuse/relay box and the relay circuit board (starter cut relay 1 circuit).

DTC P16F4 (1.5 L ENGINE)

DTC P16F4 : Starter Cut Relay 2 Control Circuit Low Voltage

NOTE: Before you troubleshoot, **review the general troubleshooting information** .

DTC Description	Confirmed DTC	Pending DTC
P16F4 Starter Cut Relay 2 Control Circuit Low Voltage	B	B

DTC (PGM-FI)

1. Engine starting check

-1. Start the engine.

Does the engine start?

YES

Go to step 2.

NO

Go to step 4.

2. Problem verification

-1. Turn the vehicle to the OFF (LOCK) mode.

-2. Turn the vehicle to the ON mode.

-3. Clear the DTC with the HDS.

-4. Check for Pending or Confirmed DTCs with the HDS.

DTC Description	Confirmed DTC	Pending DTC
P16F4 Starter Cut Relay 2 Control Circuit Low Voltage	B	B

Is DTC P16F4 indicated?

YES

The failure is duplicated. Go to step 3.

NO

Intermittent failure, the system is OK at this time. Check for poor connections or loose terminals at the relay circuit board (starter cut relay 2 circuit) and the PCM. **If the on-board snapshot of this DTC is recorded, try to reproduce the failure under the same conditions with the on-board snapshot** .

3. Shorted wire check (ST CUT RLY2 CL- line)

-1. Turn the vehicle to the OFF (LOCK) mode.

-2. Jump the SCS line with the HDS, and wait more than 1 minute.

-3. Disconnect the following connectors.

PCM connector A (50P)
Relay circuit board connector A (8P)

-4. Check for continuity between test points 1 and 2.

Test condition	Vehicle OFF (LOCK) mode
B	Relay circuit board connector A (8P): disconnected
B	PCM connector A (50P): disconnected
Test point 1	**PCM connector A (50P) No. 23**
Test point 2	Body ground

Is there continuity?

YES

Repair a short in the ST CUT RLY2 CL- wire between the PCM (A23) and the relay circuit board (starter cut relay 2 circuit).

NO

The ST CUT RLY2 CL- wire is OK. Check for any authorized service information related to the DTCs or symptoms you are troubleshooting, or **substitute a known-good PCM** .

4. Determine possible failure area (PCM, others)

-1. Turn the vehicle to the OFF (LOCK) mode.

-2. Jump the SCS line with the HDS, and wait more than 1 minute.

-3. Disconnect the following connector.

PCM connector A (50P)

-4. Turn the vehicle to the ON mode.

-5. Measure the voltage between test points 1 and 2.

Test condition	Vehicle ON mode
B	PCM connector A (50P): disconnected
Test point 1	**PCM connector A (50P) No. 23**
Test point 2	Body ground

Is there battery voltage?

YES

Check for any authorized service information related to the DTCs or symptoms you are troubleshooting, or **substitute a known-good PCM** .

NO

Go to step 5.

5. Open wire check (ST CUT RLY2 CL- line)

-1. Turn the vehicle to the OFF (LOCK) mode.

-2. Disconnect the following connector.

Relay circuit board connector A (8P)

-3. Check for continuity between test points 1 and 2.

Test condition	Vehicle OFF (LOCK) mode
	PCM connector A (50P): disconnected
	Relay circuit board connector A (8P): disconnected
Test point 1	Relay circuit board connector A (8P) (female terminals) No. 4 ①
Test point 2	**PCM connector A (50P) No. 23**

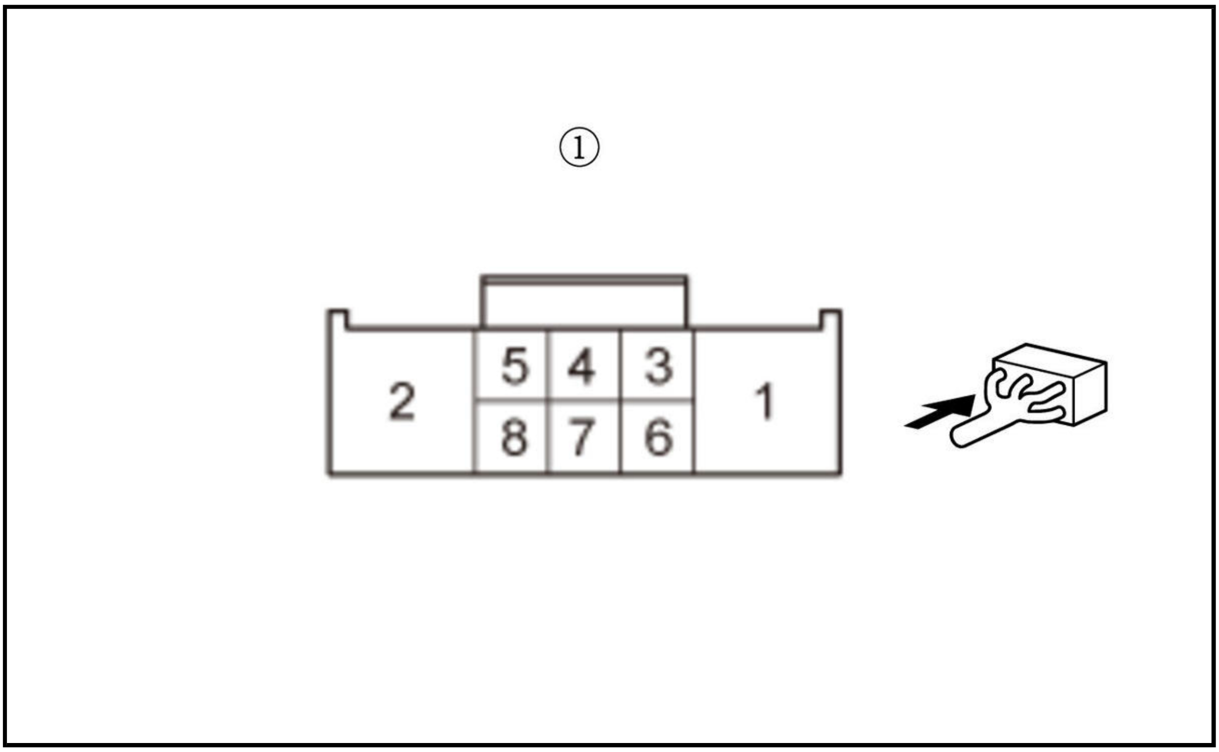

Is there continuity?

YES

The ST CUT RLY2 CL- wire is OK. Go to step 6.

NO

Repair an open in the ST CUT RLY2 CL- wire between the PCM (A23) and the relay circuit board (starter cut relay 2 circuit).

6. Fuse check

-1. Check the following fuse.

Fuse	No. D20 (10 A)

Location	Under-dash fuse/relay box

Is the fuse OK?

YES

Go to step 7.

NO

Check for a short in the IG1 STARTER CUT wire between the No. D20 (10 A) fuse and the relay circuit board, and repair it as needed. Also replace the No. D20 (10 A) fuse.

7. Open wire check (IG1 STARTER CUT line)

-1. Disconnect the following connectors.

Under-dash fuse/relay box connector C (27P)
Relay circuit board connector B (6P)

-2. Connect terminals A and B with a jumper wire.

Terminal A	Under-dash fuse/relay box connector C (27P) (female terminals) No. 23: ①
Terminal B	Body ground

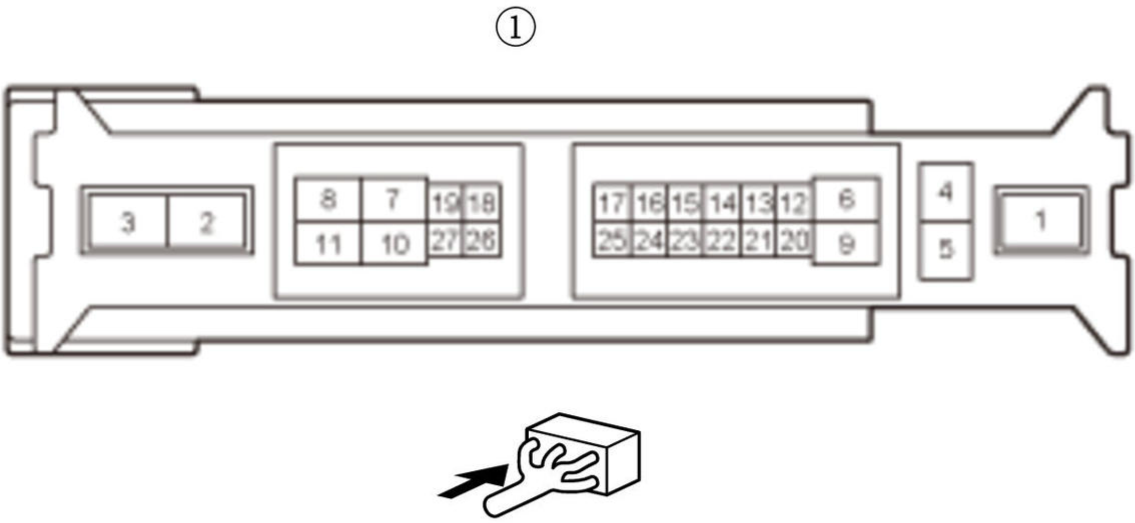

-3. Check for continuity between test points 1 and 2.

Test condition	Vehicle OFF (LOCK) mode
	PCM connector A (50P): disconnected
	Relay circuit board connector A (8P): disconnected
	Relay circuit board connector B (6P): disconnected
	Under-dash fuse/relay box connector C (27P): disconnected
	Under-dash fuse/relay box connector C (27P) No. 23: jumped to body ground
Test point 1	Relay circuit board connector B (6P) (female terminals) No. 4: ①
Test point 2	Body ground

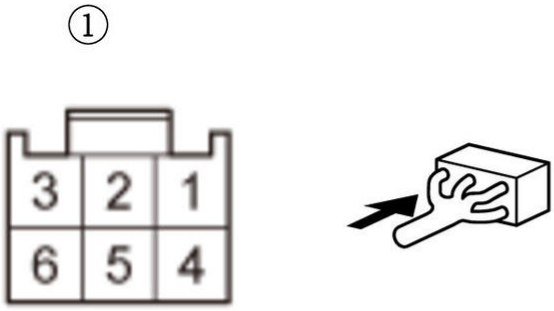

Is there continuity?

YES

The IG1 STARTER CUT wire is OK. **Replace the under-dash fuse/relay box** .

NO

Repair an open in the IG1 STARTER CUT wire between the under-dash fuse/relay box and the relay circuit board (starter cut relay 2 circuit).

DTC P16F4 (2.4 L ENGINE) (2017 2018 2019)

DTC P16F4 : Starter Cut Relay 2 Control Circuit Low Voltage

NOTE: Before you troubleshoot, **review the general troubleshooting information** .

DTC Description	Confirmed DTC	Pending DTC
P16F4 Starter Cut Relay 2 Control Circuit Low Voltage	B	B

DTC (PGM-FI)

1. Engine starting check

   -1. Start the engine.

   Does the engine start?

   YES

   Go to step 2.

   NO

   Go to step 4.

2. Problem verification

   -1. Turn the vehicle to the OFF (LOCK) mode.

   -2. Turn the vehicle to the ON mode.

   -3. Clear the DTC with the HDS.

   -4. Check for Pending or Confirmed DTCs with the HDS.

DTC Description	Confirmed DTC	Pending DTC
P16F4 Starter Cut Relay 2 Control Circuit Low Voltage	B	B

   Is DTC P16F4 indicated?

   YES

   The failure is duplicated. Go to step 3.

   NO

   Intermittent failure, the system is OK at this time. Check for poor connections or loose terminals at the relay circuit board (starter cut relay 2 circuit) and the PCM. **If the on-board snapshot of this DTC is recorded, try to reproduce the failure under the same conditions with the on-board snapshot** .

3. Shorted wire check (ST CUT RLY2 CL- line)

-1. Turn the vehicle to the OFF (LOCK) mode.

-2. Jump the SCS line with the HDS, and wait more than 1 minute.

-3. Disconnect the following connectors.

PCM connector A (51P)
Relay circuit board connector A (8P)

-4. Check for continuity between test points 1 and 2.

Test condition	Vehicle OFF (LOCK) mode
B	Relay circuit board connector A (8P): disconnected
B	PCM connector A (51P): disconnected
Test point 1	**PCM connector A (51P) No. 34**
Test point 2	Body ground

Is there continuity?

YES

Repair a short in the ST CUT RLY2 CL- wire between the PCM (A34) and the relay circuit board (starter cut relay 2 circuit).

NO

The ST CUT RLY2 CL- wire is OK. Check for any authorized service information related to the DTCs or symptoms you are troubleshooting, or **substitute a known-good PCM** .

4. Determine possible failure area (PCM, others)

-1. Turn the vehicle to the OFF (LOCK) mode.

-2. Jump the SCS line with the HDS, and wait more than 1 minute.

-3. Disconnect the following connector.

PCM connector A (51P)

-4. Turn the vehicle to the ON mode.

-5. Measure the voltage between test points 1 and 2.

Test condition	Vehicle ON mode
B	PCM connector A (51P): disconnected
Test point 1	**PCM connector A (51P) No. 34**
Test point 2	Body ground

Is there battery voltage?

YES

Check for any authorized service information related to the DTCs or symptoms you are troubleshooting, or **substitute a known-good PCM** .

NO

Go to step 5.

5. Open wire check (ST CUT RLY2 CL- line)

-1. Turn the vehicle to the OFF (LOCK) mode.

-2. Disconnect the following connector.

Relay circuit board connector A (8P)

-3. Check for continuity between test points 1 and 2.

Test condition	Vehicle OFF (LOCK) mode PCM connector A (51P): disconnected Relay circuit board connector A (8P): disconnected
Test point 1	Relay circuit board connector A (8P) (female terminals) No. 4 ①
Test point 2	PCM connector A (51P) No. 34

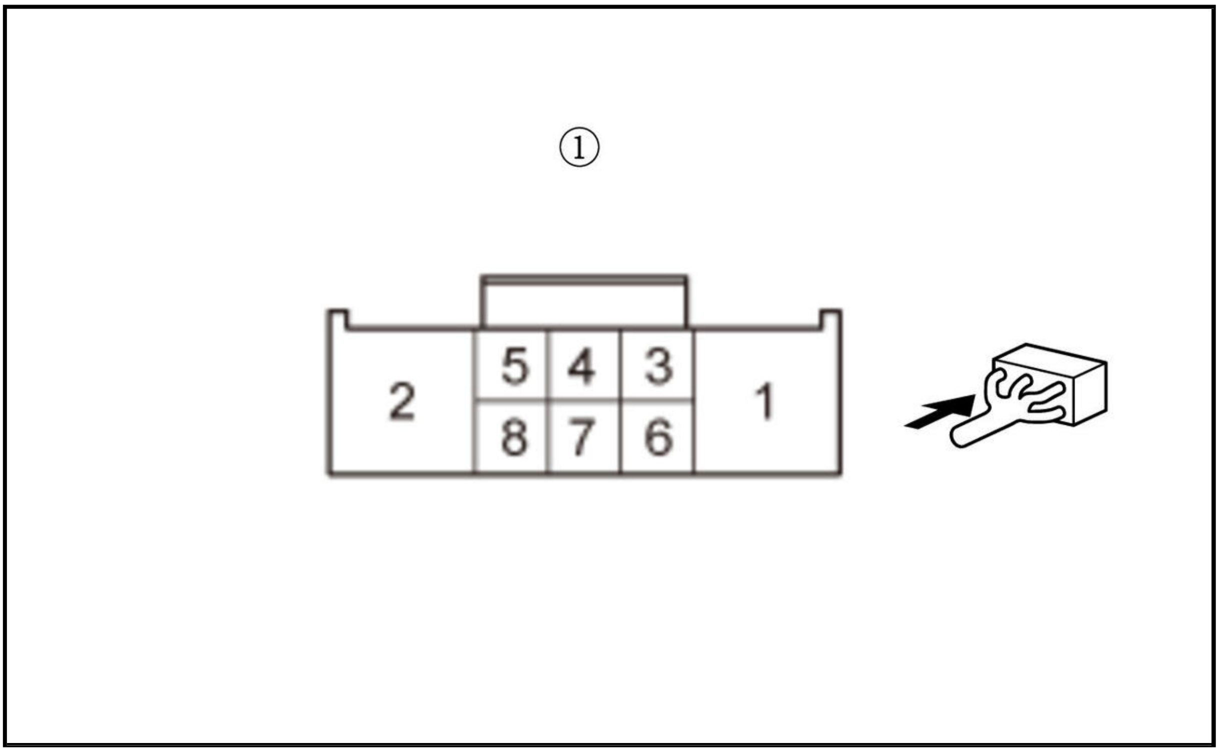

Is there continuity?

YES

The ST CUT RLY2 CL- wire is OK. Go to step 6.

NO

Repair an open in the ST CUT RLY2 CL- wire between the PCM (A34) and the relay circuit board (starter cut relay 2 circuit).

6. Fuse check

-1. Check the following fuse.

Fuse	No. D20 (10 A)

Location	Under-dash fuse/relay box

Is the fuse OK?

YES

Go to step 7.

NO

Check for a short in the IG1 STARTER CUT wire between the No. D20 (10 A) fuse and the relay circuit board, and repair it as needed. Also replace the No. D20 (10 A) fuse.

7. Open wire check (IG1 STARTER CUT line)

-1. Disconnect the following connectors.

Under-dash fuse/relay box connector C (27P)
Relay circuit board connector B (6P)

-2. Connect terminals A and B with a jumper wire.

Terminal A	Under-dash fuse/relay box connector C (27P) (female terminals) No. 23: ①
Terminal B	Body ground

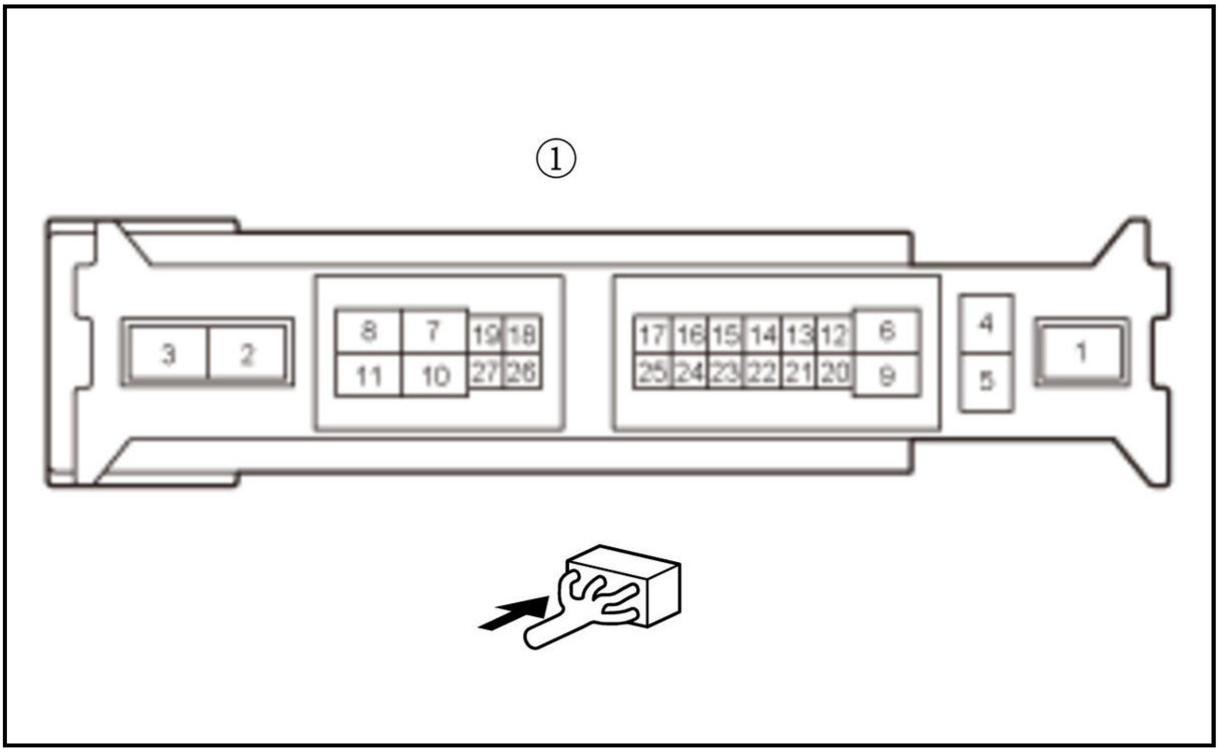

-3. Check for continuity between test points 1 and 2.

Test condition	Vehicle OFF (LOCK) mode
	PCM connector A (51P): disconnected
	Relay circuit board connector A (8P): disconnected
	Relay circuit board connector B (6P): disconnected
	Under-dash fuse/relay box connector C (27P): disconnected
	Under-dash fuse/relay box connector C (27P) No. 23: jumped to body ground
Test point 1	Relay circuit board connector B (6P) (female terminals) No. 4: ①
Test point 2	Body ground

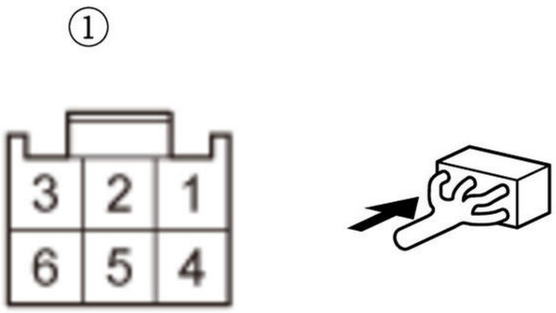

Is there continuity?

YES

The IG1 STARTER CUT wire is OK. Replace the under-dash fuse/relay box .

NO

Repair an open in the IG1 STARTER CUT wire between the under-dash fuse/relay box and the relay circuit board (starter cut relay 2 circuit).

DTC P16F5 (1.5 L ENGINE)

DTC P16F5 : Starter Cut Relay 1 Control Circuit High Voltage

NOTE: Before you troubleshoot, review the general troubleshooting information .

DTC Description	Confirmed DTC	Pending DTC
P16F5 Starter Cut Relay 1 Control Circuit High Voltage	B	B

DTC (PGM-FI)

1. Problem verification

   -1. Turn the vehicle to the ON mode.

   -2. Clear the DTC with the HDS.

   -3. Start the engine.

-4. Check for Pending or Confirmed DTCs with the HDS.

DTC Description	Confirmed DTC	Pending DTC
P16F5 Starter Cut Relay 1 Control Circuit High Voltage	B	B

Is DTC P16F5 indicated?

YES

The failure is duplicated. Go to step 2.

NO

Intermittent failure, the system is OK at this time. Check for poor connections or loose terminals at the relay circuit board (starter cut relay 1 circuit) and the PCM. **If the on-board snapshot of this DTC is recorded, try to reproduce the failure under the same conditions with the on-board snapshot** .

2. Relay circuit board check

-1. Turn the vehicle to the OFF (LOCK) mode.

-2. **Remove and test the relay circuit board** .

Is the relay OK?

YES

Go to step 3.

NO

Replace the relay circuit board .

3. Shorted wire check (ST CUT RLY1 CL- line to power)

-1. Jump the SCS line with the HDS, and wait more than 1 minute.

-2. Disconnect the following connector.

PCM connector A (50P)

-3. Turn the vehicle to the ON mode.

-4. Measure the voltage between test points 1 and 2.

Test condition	Vehicle ON mode
	Relay circuit board: removed
	PCM connector A (50P): disconnected
Test point 1	**PCM connector A (50P) No. 15**
Test point 2	Body ground

Is there 0.1 V or less?

YES

The ST CUT RLY1 CL- wire is OK. Check for any authorized service information related to the DTCs or symptoms you are troubleshooting, or **substitute a known-good PCM** .

NO

Repair a short to power in the ST CUT RLY1 CL- wire between the PCM (A15) and the relay circuit board (starter cut relay 1 circuit).

DTC P16F5 (2.4 L ENGINE) (2017 2018 2019)

DTC P16F5 : Starter Cut Relay 1 Control Circuit High Voltage

NOTE: Before you troubleshoot, **review the general troubleshooting information** .

DTC Description	Confirmed DTC	Pending DTC
P16F5 Starter Cut Relay 1 Control Circuit High Voltage	B	B

DTC (PGM-FI)

1. Problem verification

   -1. Turn the vehicle to the ON mode.

   -2. Clear the DTC with the HDS.

   -3. Start the engine.

   -4. Check for Pending or Confirmed DTCs with the HDS.

DTC Description	Confirmed DTC	Pending DTC
P16F5 Starter Cut Relay 1 Control Circuit High Voltage	B	B

   Is DTC P16F5 indicated?

   YES

   The failure is duplicated. Go to step 2.

   NO

   Intermittent failure, the system is OK at this time. Check for poor connections or loose terminals at the relay circuit board (starter cut relay 1 circuit) and the PCM. **If the on-board snapshot of this DTC is recorded, try to reproduce the failure under the same conditions with the on-board snapshot** .

2. Relay circuit board check

   -1. Turn the vehicle to the OFF (LOCK) mode.

   -2. **Remove and test the relay circuit board** .

   Is the relay OK?

   YES

   Go to step 3.

   NO

   Replace the relay circuit board .

3. Shorted wire check (ST CUT RLY1 CL- line to power)

   -1. Jump the SCS line with the HDS, and wait more than 1 minute.

   -2. Disconnect the following connector.

PCM connector A (51P)

-3. Turn the vehicle to the ON mode.

-4. Measure the voltage between test points 1 and 2.

Test condition	Vehicle ON mode Relay circuit board: removed PCM connector A (51P): disconnected
Test point 1	**PCM connector A (51P) No. 33**
Test point 2	Body ground

Is there 0.1 V or less?

YES

The ST CUT RLY1 CL- wire is OK. Check for any authorized service information related to the DTCs or symptoms you are troubleshooting, or **substitute a known-good PCM** .

NO

Repair a short to power in the ST CUT RLY1 CL- wire between the PCM (A33) and the relay circuit board (starter cut relay 1 circuit).

DTC P16F6 (1.5 L ENGINE)

DTC P16F6 : Starter Cut Relay 2 Control Circuit High Voltage

NOTE: Before you troubleshoot, **review the general troubleshooting information** .

DTC Description	Confirmed DTC	Pending DTC
P16F6 Starter Cut Relay 2 Control Circuit High Voltage	B	B

DTC (PGM-FI)

1. Problem verification

-1. Turn the vehicle to the ON mode.

-2. Clear the DTC with the HDS.

-3. Start the engine.

-4. Check for Pending or Confirmed DTCs with the HDS.

DTC Description	Confirmed DTC	Pending DTC
P16F6 Starter Cut Relay 2 Control Circuit High Voltage	B	B

Is DTC P16F6 indicated?

YES

The failure is duplicated. Go to step 2.

NO

Intermittent failure, the system is OK at this time. Check for poor connections or loose terminals at the relay circuit board (starter cut relay 2 circuit) and the PCM. **If the on-board snapshot of this DTC is**

recorded, try to reproduce the failure under the same conditions with the on-board snapshot .

2. Relay circuit board check

   -1. Turn the vehicle to the OFF (LOCK) mode.

   -2. **Remove and test the relay circuit board** .

   Is the relay circuit board OK?

   YES

   Go to step 3.

   NO

   Replace the relay circuit board .

3. Shorted wire check (ST CUT RLY2 CL- line to power)

   -1. Jump the SCS line with the HDS, and wait more than 1 minute.

   -2. Disconnect the following connector.

PCM connector A (50P)

   -3. Turn the vehicle to the ON mode.

   -4. Measure the voltage between test points 1 and 2.

Test condition	Vehicle ON mode
	Relay circuit board: removed
	PCM connector A (50P): disconnected
Test point 1	**PCM connector A (50P) No. 23**
Test point 2	Body ground

   Is there 0.1 V or less?

   YES

   The ST CUT RLY2 CL- wire is OK. Check for any authorized service information related to the DTCs or symptoms you are troubleshooting, or **substitute a known-good PCM** .

   NG

   Repair a short to power in the ST CUT RLY2 CL- wire between the PCM (A23) and the relay circuit board (starter cut relay 2 circuit).

DTC P16F6 (2.4 L ENGINE) (2017 2018 2019)

DTC P16F6 : Starter Cut Relay 2 Control Circuit High Voltage

NOTE: Before you troubleshoot, **review the general troubleshooting information** .

DTC Description	Confirmed DTC	Pending DTC
P16F6 Starter Cut Relay 2 Control Circuit High Voltage	B	B

DTC (PGM-FI)

1. Problem verification

   -1. Turn the vehicle to the ON mode.

   -2. Clear the DTC with the HDS.

   -3. Start the engine.

   -4. Check for Pending or Confirmed DTCs with the HDS.

DTC Description	Confirmed DTC	Pending DTC
P16F6 Starter Cut Relay 2 Control Circuit High Voltage	B	B

   Is DTC P16F6 indicated?

   YES

   The failure is duplicated. Go to step 2.

   NO

   Intermittent failure, the system is OK at this time. Check for poor connections or loose terminals at the relay circuit board (starter cut relay 2 circuit) and the PCM. **If the on-board snapshot of this DTC is recorded, try to reproduce the failure under the same conditions with the on-board snapshot** .

2. Relay circuit board check

   -1. Turn the vehicle to the OFF (LOCK) mode.

   -2. **Remove and test the relay circuit board** .

   Is the relay circuit board OK?

   YES

   Go to step 3.

   NO

   Replace the relay circuit board .

3. Shorted wire check (ST CUT RLY2 CL- line to power)

   -1. Jump the SCS line with the HDS, and wait more than 1 minute.

   -2. Disconnect the following connector.

PCM connector A (51P)

   -3. Turn the vehicle to the ON mode.

   -4. Measure the voltage between test points 1 and 2.

Test condition	Vehicle ON mode
	Relay circuit board: removed
	PCM connector A (51P): disconnected
Test point 1	**PCM connector A (51P) No. 34**
Test point 2	Body ground

Is there 0.1 V or less?

YES

The ST CUT RLY2 CL- wire is OK. Check for any authorized service information related to the DTCs or symptoms you are troubleshooting, or **substitute a known-good PCM** .

NG

Repair a short to power in the ST CUT RLY2 CL- wire between the PCM (A34) and the relay circuit board (starter cut relay 2 circuit).

DTC P16F9 (2.4 L ENGINE) (2017 2018 2019)

DTC P16F9 : PCM Internal Circuit Malfunction (Starter Control Circuit Malfunction)

NOTE: Before you troubleshoot, **review the general troubleshooting information** .

DTC Description	Confirmed DTC	Pending DTC
P16F9 PCM Internal Circuit Malfunction (Starter Control Circuit Malfunction)	B	B

DTC (PGM-FI)

1. Problem verification

   -1. Turn the vehicle to the ON mode.

   -2. Clear the DTC with the HDS, and wait 5 seconds.

   -3. Start the engine.

   -4. Check for Pending or Confirmed DTCs with the HDS.

DTC Description	Confirmed DTC	Pending DTC
P16F9 PCM Internal Circuit Malfunction (Starter Control Circuit Malfunction)	B	B

Is DTC P16F9 indicated?

YES

The failure is duplicated. Check for any authorized service information related to the DTCs or symptoms you are troubleshooting or **substitute a known-good PCM** .

NO

Intermittent failure, the system is OK at this time. **If the on-board snapshot of this DTC is recorded, try to reproduce the failure under the same conditions with the on-board snapshot** .

DTC P16FA (2.4 L ENGINE) (2017 2018 2019)

DTC P16FA : PCM Internal Circuit Malfunction (Starter Control Circuit Malfunction)

NOTE: Before you troubleshoot, **review the general troubleshooting information** .

DTC Description	Confirmed DTC	Pending DTC
P16FA PCM Internal Circuit Malfunction (Starter Control Circuit Malfunction)	B	B

DTC (PGM-FI)

1. Problem verification

   -1. Turn the vehicle to the ON mode.

   -2. Clear the DTC with the HDS, and wait 5 seconds.

   -3. Start the engine.

   -4. Check for Pending or Confirmed DTCs with the HDS.

DTC Description	Confirmed DTC	Pending DTC
P16FA PCM Internal Circuit Malfunction (Starter Control Circuit Malfunction)	B	B

Is DTC P16FA indicated?

YES

The failure is duplicated. Check for any authorized service information related to the DTCs or symptoms you are troubleshooting or **substitute a known-good PCM** .

NO

Intermittent failure, the system is OK at this time. **If the on-board snapshot of this DTC is recorded, try to reproduce the failure under the same conditions with the on-board snapshot** .

DTC P1717 (CVT (ECM/PCM))

DTC P1717 : Transmission Range Switch ATP RVS Switch (Open or Short)

NOTE:

- Before you troubleshoot, **review the General Troubleshooting Information** .
- This code is caused by an electrical circuit problem and cannot be caused by a mechanical problem in the transmission.

DTC Description	Confirmed DTC	Pending DTC	Freeze Frame
P1717 Transmission Range Switch ATP RVS Switch (Open or Short)	B	B	B

DTC (CVT)

1. Problem verification

   -1. **Make sure the shift cable is properly adjusted** .

   -2. Turn the vehicle to the ON mode.

   -3. Shift the transmission to R position/mode.

   -4. Check the parameter (s) below with the HDS.

Signal	Threshold		Current conditions	
	Values	Unit	Values	Unit
A/T R Switch	ON	B	B	B
Reverse Switch (ATPRVS)	ON	B	B	B

Do the current condition (s) match the threshold?

YES

Intermittent failure, the system is OK at this time. Check for poor connections and loose terminals between the transmission range switch and the PCM. If the freeze data/on-board snapshot of this DTC is recorded, try to reproduce the failure under the same conditions with the freeze data/on-board snapshot.

NO

The failure is duplicated. Go to step 2.

2. Transmission range switch check

   -1. **Do the transmission range switch test** .

   Is the transmission range switch OK?

   YES

   The transmission range switch is OK. Go to step 3.

   NO

   Check for proper transmission range switch installation, then recheck. If the transmission range switch installation is OK, **replace the transmission range switch** .

3. Open wire check (RVS line)

   -1. Turn the vehicle to the OFF (LOCK) mode.

   -2. Disconnect the following connector.

Transmission range switch 10P connector

   -3. Turn the vehicle to the ON mode.

   -4. Measure the voltage between test points 1 and 2.

Test condition	Vehicle ON mode
B	Transmission range switch 10P connector: disconnected
Test point 1	Transmission range switch 10P connector (female terminals) No. 10 : ①
Test point 2	Body ground

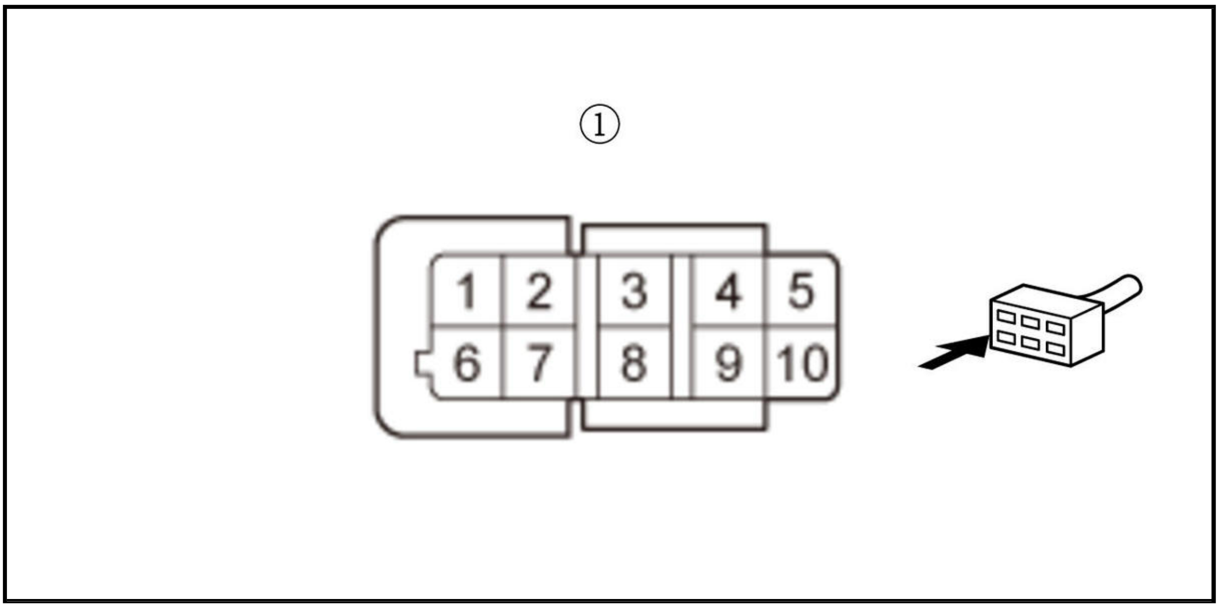

Is there voltage?

YES

The ATP-RVS wire is OK. Check for any authorized service information related to the DTCs or symptoms you are troubleshooting, or **replace the original PCM** .

NO

Repair an open in the RVS wire between the transmission range switch and the PCM.

DTC P1840 (CVT (ECM/PCM))

DTC P1840 : CVT Speed Sensor Circuit Forward Rotation Range/Performance

NOTE:

- Before you troubleshoot, **review the General Troubleshooting Information** .
- This code is caused by an electrical circuit problem and cannot be caused by a mechanical problem in the transmission.

DTC Description	Confirmed DTC	Pending DTC	Freeze Frame
P1840 CVT Speed Sensor Circuit Forward Rotation Range/Performance	B	B	B

DTC (CVT)

1. CVT speed sensor check

   -1. Turn the vehicle to the ON mode.

   -2. Clear the DTC with the HDS.

   -3. Raise the vehicle on a lift. Make sure it is securely supported, and allow the front wheels to rotate freely.

   -4. Start the engine.

   -5. **Enter the VSA maintenance mode** .

-6. Test-drive the vehicle in D position/mode, while monitoring the Direction of Secondary-shaft Rotation in the Data List with the HDS.

-7. Check the parameter below with the HDS.

Signal	Current conditions	
	Values	Unit
Direction of Secondary-shaft Rotation	B	B

Does the HDS indicate forward?

YES

The CVT speed sensor is OK. Check for any authorized service information related to the DTCs or symptoms you are troubleshooting, or **replace the original PCM** .

NO

Replace the CVT speed sensor .

DTC P1841 (CVT (ECM/PCM))

DTC P1841 : CVT Speed Sensor Circuit Reverse Rotation Range/Performance

NOTE:

- Before you troubleshoot, **review the General Troubleshooting Information** .
- This code is caused by an electrical circuit problem and cannot be caused by a mechanical problem in the transmission.

DTC Description	Confirmed DTC	Pending DTC	Freeze Frame
P1841 CVT Speed Sensor Circuit Reverse Rotation Range/Performance	B	B	B

DTC (CVT)

1. CVT speed sensor check

-1. Turn the vehicle to the ON mode.

-2. Clear the DTC with the HDS.

-3. Raise the vehicle on a lift. Make sure it is securely supported, and allow the front wheels to rotate freely.

-4. Start the engine.

-5. **Enter the VSA maintenance mode** .

-6. Test-drive the vehicle in R position/mode, while monitoring the Direction of Secondary-shaft Rotation in the Data List with the HDS.

-7. Check the parameter below with the HDS.

Signal	Current conditions	
	Values	Unit
Direction of Secondary-shaft Rotation	B	B

Does the HDS indicate reverse?

YES

The CVT speed sensor is OK. Check for any authorized service information related to the DTCs or symptoms you are troubleshooting, or **replace the original PCM** .

NO

Replace the CVT speed sensor .

DTC P1844 (CVT (ECM/PCM))

DTC P1844 : CVT Input Shaft Speed Sensor Circuit Forward Rotation Range/Performance

NOTE:

- Before you troubleshoot, **review the General Troubleshooting Information** .
- This code is caused by an electrical circuit problem and cannot be caused by a mechanical problem in the transmission.

DTC Description	Confirmed DTC	Pending DTC	Freeze Frame
P1844 CVT Input Shaft Speed Sensor Circuit Forward Rotation Range/Performance	B	B	B

DTC (CVT)

1. CVT drive pulley speed sensor check

   -1. Turn the vehicle to the ON mode.

   -2. Clear the DTC with the HDS.

   -3. Raise the vehicle on a lift. Make sure it is securely supported, and allow the front wheels to rotate freely.

   -4. Start the engine.

   -5. **Enter the VSA maintenance mode** .

   -6. Test-drive the vehicle in D position/mode, while monitoring the Direction of Drive Pulley Rotation in the Data List with the HDS.

   -7. Check the parameter below with the HDS.

Signal	Current conditions	
	Values	Unit
Direction of Drive Pulley Rotation	B	B

Does the HDS indicate forward?

YES

The CVT drive pulley speed sensor is OK. Check for any authorized service information related to the DTCs or symptoms you are troubleshooting, or **replace the original PCM** .

NO

Replace the CVT drive pulley speed sensor .

DTC P1845 (CVT (ECM/PCM))

DTC P1845 : CVT Input Shaft Speed Sensor Circuit Reverse Rotation Range/Performance

NOTE:

- Before you troubleshoot, **review the General Troubleshooting Information** .
- This code is caused by an electrical circuit problem and cannot be caused by a mechanical problem in the transmission.

DTC Description	Confirmed DTC	Pending DTC	Freeze Frame
P1845 CVT Input Shaft Speed Sensor Circuit Reverse Rotation Range/Performance	B	B	B

DTC (CVT)

1. CVT drive pulley speed sensor check

   -1. Turn the vehicle to the ON mode.

   -2. Clear the DTC with the HDS.

   -3. Raise the vehicle on a lift. Make sure it is securely supported, and allow the front wheels to rotate freely.

   -4. Start the engine.

   -5. **Enter the VSA maintenance mode** .

   -6. Test-drive the vehicle in R position/mode, while monitoring the Direction of Drive Pulley Rotation in the Data List with the HDS.

   -7. Check the parameter below with the HDS.

Signal	Current conditions	
	Values	Unit
Direction of Drive Pulley Rotation	B	B

Does the HDS indicate reverse?

YES

The CVT drive pulley speed sensor is OK. Check for any authorized service information related to the DTCs or symptoms you are troubleshooting, or **replace the original PCM** .

NO

Replace the CVT drive pulley speed sensor .

DTC P1890 (CVT (ECM/PCM))

DTC P1890 : CVT Speed Control System

NOTE: Before you troubleshoot, **review the General Troubleshooting Information** .

DTC Description	Confirmed DTC	Pending DTC	Freeze Frame
P1890 CVT Speed Control System	B	B	B

DTC (CVT)

1. DTC check

   -1. Turn the vehicle to the ON mode.

   -2. Check for Pending or Confirmed DTCs with the HDS.

DTC Description	Confirmed DTC	Pending DTC	Freeze Frame
P1890 CVT Speed Control System	B	B	B

   Is there any DTC (s) other than DTC P1890?

   YES

   Go to the indicated DTC's troubleshooting.

   NO

   Go to step 2.

2. Problem verification

   -1. Turn the vehicle to the ON mode.

   -2. Clear the DTC with the HDS.

   -3. Start the engine, and warm it up to normal operating temperature (the radiator fan comes on twice).

   -4. Test-drive the vehicle in D position/mode, accelerate slowly until the vehicle speed reaches 37 mph (60 km/h) on a flat road, then keep the vehicle at speeds about 37 mph (60 km/h) for at least 60 seconds.

   -5. Monitor the OBD STATUS for P1890 in the DTCs MENU with the HDS.

DTC Description	OBD Status
P1890 CVT Speed Control System	B

   Does the HDS indicate FAILED?

   YES

   The failure is duplicated. **Replace the transmission** .

   NO

   Intermittent failure, the system is OK at this time. If the freeze data/on-board snapshot of this DTC is recorded, try to reproduce the failure under the same conditions with the freeze data/on-board snapshot.

DTC P1898 (CVT (ECM/PCM))

DTC P1898 : CVT Drive Pulley Pressure Control Valve Stuck ON or CVT Driven Pulley Pressure Control Valve Stuck OFF

NOTE: Before you troubleshoot, **review the General Troubleshooting Information** .

DTC Description	Confirmed DTC	Pending DTC	Freeze Frame
P0780 Shift Error	B	B	B
P1898 CVT Drive Pulley Pressure Control Valve Stuck ON or CVT Driven Pulley	B	B	B

DTC Description	Confirmed DTC	Pending DTC	Freeze Frame
Pressure Control Valve Stuck OFF			

DTC (CVT)

1. Problem verification

   -1. Turn the vehicle to the ON mode.

   -2. Clear the DTC with the HDS.

   -3. Start the engine. Test-drive the vehicle in D position/mode until the vehicle speed reaches 37 mph (60 km/h). Slow down and stop the vehicle, then accelerate from a stop at full throttle in D position/mode until the vehicle speed reaches 37 mph (60 km/h).

   -4. Turn the engine off. Repeat the test-drive in step 1-3 again.

   -5. Check for Pending or Confirmed DTCs with the HDS.

DTC Description	Confirmed DTC	Pending DTC	Freeze Frame
P0780 Shift Error	B	B	B
P1898 CVT Drive Pulley Pressure Control Valve Stuck ON or CVT Driven Pulley Pressure Control Valve Stuck OFF	B	B	B

   Are DTC P1898 and P0780 indicated?

   YES

   The failure is duplicated. Faulty CVT drive pulley pressure control solenoid valve and/or CVT driven pulley pressure control solenoid valve. **Replace the valve body assembly** .

   NO

   Intermittent failure, the system is OK at this time. If the freeze data/on-board snapshot of this DTC is recorded, try to reproduce the failure under the same conditions with the freeze data/on-board snapshot.

DTC P1899 (CVT (ECM/PCM))

DTC P1899 : CVT Drive Pulley Pressure Control Valve Stuck OFF or CVT Driven Pulley Pressure Control Valve Stuck ON

NOTE: Before you troubleshoot, **review the General Troubleshooting Information** .

DTC Description	Confirmed DTC	Pending DTC	Freeze Frame
P0780 Shift Error	B	B	B
P1899 CVT Drive Pulley Pressure Control Valve Stuck OFF or CVT Driven Pulley Pressure Control Valve Stuck ON	B	B	B

DTC (CVT)

1. Problem verification

   -1. Turn the vehicle to the ON mode.

   -2. Clear the DTC with the HDS.

-3. Start the engine. Test-drive the vehicle in D position/mode until the vehicle speed reaches 37 mph (60 km/h). Slow down and stop the vehicle, then accelerate from a stop at full throttle in D position/mode until the vehicle speed reaches 37 mph (60 km/h).

-4. Turn the engine off. Repeat the test-drive in step 1-3 again.

-5. Check for Pending or Confirmed DTCs with the HDS.

DTC Description	Confirmed DTC	Pending DTC	Freeze Frame
P0780 Shift Error	B	B	B
P1899 CVT Drive Pulley Pressure Control Valve Stuck OFF or CVT Driven Pulley Pressure Control Valve Stuck ON	B	B	B

Are DTC P1899 and P0780 indicated?

YES

The failure is duplicated. Faulty CVT drive pulley pressure control solenoid valve and/or CVT driven pulley pressure control solenoid valve. **Replace the valve body assembly** .

NO

Intermittent failure, the system is OK at this time. If the freeze data/on-board snapshot of this DTC is recorded, try to reproduce the failure under the same conditions with the freeze data/on-board snapshot.

DTC P2073 (1.5 L ENGINE)

DTC P2073 : MAP Sensor Signal Higher Than Expected

NOTE:

- Before you troubleshoot, **review the general troubleshooting information** .
- Before you begin, check for poor connections or a blockage at the intake air duct.

DTC Description	Confirmed DTC	Pending DTC
P2073 MAP Sensor Signal Higher Than Expected	B	B

DTC (PGM-FI)

1. Vacuum leak check:

   Check for vacuum leaks in these parts:

   - PCV valve
   - PCV hose
   - EVAP canister purge valve
   - Throttle body
   - Intake manifold
   - All parts through the turbocharger joint to the throttle body

   Are there any vacuum leaks?

   YES

   Repair or replace the parts with vacuum or air leaks.

NO

Go to step 2.

2. MAP sensor performance check 1

 -1. Turn the vehicle to the ON mode.

 -2. Compare the value of the parameter (s) below with the HDS.

Signal	Current conditions	
	Values	Unit
MAP Sensor (Hi Res)	B	B
TC Boost Pressure	B	B

Does the vehicle differ more than 26.7 kPa (7.9 inHg, 200 mmHg)?

YES

Replace the MAP sensor .

NO

Go to step 3.

3. MAP sensor performance check 2

 -1. Note the value of MAP Sensor in the DATA LIST with the HDS.

Signal	Current conditions	
	Values	Unit
MAP Sensor (Hi Res)	B	B

 -2. Start the engine and let it idle.

 -3. Check the MAP Sensor in the DATA LIST with the HDS.

Signal	Current conditions	
	Values	Unit
MAP Sensor (Hi Res)	B	B

Does the MAP Sensor change 0.67 kPa (0.2 inHg, 5 mmHg) or more?

YES

Go to step 4.

NO

Replace the MAP sensor .

4. Problem verification

 -1. Clear the DTC with the HDS.

 -2. Start the engine. Hold the engine speed at 3, 000 rpm without load (in P or N) until the radiator fan comes on.

 -3. Test-drive the vehicle under these conditions:

- Engine speed between 1, 700 rpm or more
- Transmission in D
- REL TP SENSOR above 42.2 deg
- Drive 5 seconds or more

Signal	Current conditions	
	Values	**Unit**
Engine Speed	B	B
REL TP Sensor	B	B

-4. Monitor the OBD STATUS for DTC P2073 in the DTCs MENU with the HDS.

DTC Description	OBD STATUS
P2073 MAP Sensor Signal Higher Than Expected	B

Does the HDS indicate FAILED?

YES

The failure is duplicated. **Replace the MAP sensor** .

NO

If the HDS indicates PASSED, intermittent failure, the system is OK at this time. Check for poor connections or loose terminals at the MAP sensor and the PCM. **If the on-board snapshot of this DTC is recorded, try to reproduce the failure under the same conditions with the on-board snapshot** . If the HDS indicates NOT COMPLETED, go to step 4-3 and recheck.

DTC P2073 (2.4 L ENGINE) (2017 2018 2019)

DTC P2073 : MAP Sensor Signal Higher Than Expected

NOTE:

- Before you troubleshoot, **review the general troubleshooting information** .
- Before you begin, check for poor connections or a blockage at the intake air duct.

DTC Description	Confirmed DTC	Pending DTC
P2073 MAP Sensor Signal Higher Than Expected	B	B

DTC (PGM-FI)

1. Vacuum leak check:

   Check for vacuum leaks in these parts:

   - PCV valve
   - PCV hose
   - EVAP canister purge valve
   - Throttle body
   - Intake manifold

   Are there any vacuum leaks?

   YES

Repair or replace the parts with vacuum or air leaks.

NO

Go to step 2.

2. MAP sensor performance check

-1. Start the engine.

-2. Hold the engine speed at 3, 000 rpm without load (CVT in P or N, M/T in neutral) until the radiator fan comes on, then let it idle.

-3. Check the parameter (s) below with the HDS for 5 seconds.

Signal	Threshold		Current conditions	
	Values	Unit	Values	Unit
MAP Sensor	More than 53.3	kPa	B	B
	More than 400.0	mmHg		

Did the value maintain the malfunction threshold for 5 seconds or more?

YES

Replace the MAP sensor .

NO

Go to step 3.

3. Problem verification

-1. Clear the DTC with the HDS.

-2. Test-drive the vehicle under these conditions:

- Engine coolant temperature (ECT SENSOR 1) above 158 deg. F (70 deg. C)
- Engine speed between 1, 400-6, 700 rpm
- Transmission in D
- Drive at a steady speed between 55-75 mph (90-120 km/h) for 10 seconds, then decelerate (with the throttle fully closed) for 2 seconds or more

Signal	Current conditions	
	Values	Unit
ECT SENSOR 1	B	B
ENGINE SPEED	B	B
VEHICLE SPEED	B	B

-3. Monitor the OBD STATUS for DTC P2073 in the DTCs MENU with the HDS.

DTC Description	OBD STATUS
P2073 MAP Sensor Signal Higher Than Expected	B

Does the HDS indicate FAILED?

YES

The failure is duplicated. **Replace the MAP sensor** .

NO

If the HDS indicates PASSED, intermittent failure, the system is OK at this time. Check for poor connections or loose terminals at the MAP sensor and the PCM. **If the on-board snapshot of this DTC is recorded, try to reproduce the failure under the same conditions with the on-board snapshot** . If the HDS indicates NOT COMPLETED, go to step 3-2 and recheck.

DTC P2074 (1.5 L ENGINE)

DTC P2074 : MAP Sensor Signal Lower Than Expected

NOTE: Before you troubleshoot, **review the general troubleshooting information** .

DTC Description	Confirmed DTC	Pending DTC
P2074 MAP Sensor Signal Lower Than Expected	B	B

DTC (PGM-FI)

1. MAP sensor performance check 1

-1. Turn the vehicle to the ON mode.

-2. Compare the value of the parameter (s) below with the HDS.

Signal	Current conditions	
	Values	Unit
MAP Sensor (Hi Res)	B	B
TC Boost Pressure	B	B

Does the value differ more than 26.7 kPa (7.9 inHg, 200 mmHg)?

YES

Replace the MAP sensor .

NO

Go to step 2.

2. MAP sensor performance check 2

-1. Note the value of MAP Sensor in the DATA LIST with the HDS.

Signal	Current conditions	
	Values	Unit
MAP Sensor (Hi Res)	B	B

-2. Start the engine and let it idle.

-3. Check the MAP Sensor in the DATA LIST with the HDS.

Signal	Current conditions	
	Values	Unit
MAP Sensor (Hi Res)	B	B

Does the MAP Sensor change 0.67 kPa (0.2 inHg, 5 mmHg) or more?

YES

Go to step 3.

NO

Replace the MAP sensor .

3. Problem verification

-1. Clear the DTC with the HDS.

-2. Start the engine. Hold the engine speed at 3, 000 rpm without load (in P or N) until the radiator fan comes on.

-3. Test-drive the vehicle under these conditions:

- Engine speed at 1, 700 rpm or more
- Transmission in D
- REL TP SENSOR above 42.2 deg
- Drive 5 seconds or more

Signal	Current conditions	
	Values	**Unit**
Engine Speed	B	B
REL TP Sensor	B	B

-4. Monitor the OBD STATUS for DTC P2074 in the DTCs MENU with the HDS.

DTC Description	OBD STATUS
P2074 MAP Sensor Signal Lower Than Expected	B

Does the HDS indicate FAILED?

YES

The failure is duplicated. **Replace the MAP sensor** .

NO

If the HDS indicates PASSED, intermittent failure, the system is OK at this time. Check for poor connections or loose terminals at the MAP sensor and the PCM. **If the on-board snapshot of this DTC is recorded, try to reproduce the failure under the same conditions with the on-board snapshot** . If the HDS indicates NOT COMPLETED, go to step 3-2 and recheck.

DTC P2074 (2.4 L ENGINE) (2017 2018 2019)

DTC P2074 : MAP Sensor Signal Lower Than Expected

NOTE: Before you troubleshoot, **review the general troubleshooting information** .

DTC Description	Confirmed DTC	Pending DTC
P2074 MAP Sensor Signal Lower Than Expected	B	B

DTC (PGM-FI)

1. MAP sensor performance check

-1. Turn the vehicle to the ON mode.

-2. Check the parameter (s) below with the HDS for 5 seconds.

Signal	Threshold		Current conditions	
	Values	Unit	Values	Unit
MAP Sensor	Less than 54.1	kPa	B	B
	Less than 406.0	mmHg		

Did the value maintain the malfunction threshold for 5 seconds or more?

YES

Replace the MAP sensor .

NO

Go to step 2.

2. Problem verification

-1. Clear the DTC with the HDS.

-2. Start the engine. Hold the engine speed at 3, 000 rpm without load (in P or N) until the radiator fan comes on.

-3. Test-drive the vehicle under these conditions:

- Engine coolant temperature (ECT SENSOR 1) above 158 deg. F (70 deg. C)
- Engine speed at 1, 400 rpm or more
- Transmission in D
- Drive at a steady speed at 15 mph (24 km/h) or more for 2 seconds or more with under half throttle

Signal	Current conditions	
	Values	Unit
ECT SENSOR 1	B	B
ENGINE SPEED	B	B
VEHICLE SPEED	B	B

-4. Monitor the OBD STATUS for DTC P2074 in the DTCs MENU with the HDS.

DTC Description	OBD STATUS
P2074 MAP Sensor Signal Lower Than Expected	B

Does the HDS indicate FAILED?

YES

The failure is duplicated. **Replace the MAP sensor** .

NO

If the HDS indicates PASSED, intermittent failure, the system is OK at this time. Check for poor connections or loose terminals at the MAP sensor and the PCM. **If the on-board snapshot of this DTC is recorded, try to reproduce the failure under the same conditions with the on-board snapshot** . If the HDS indicates NOT COMPLETED, go to step 2-2 and recheck.

DTC P2096, P2097 (1.5 L ENGINE)

DTC P2096 : Post Catalyst Fuel Trim System Too Lean **DTC P2097** : Post Catalyst Fuel Trim System Too Rich

NOTE:

- Before you troubleshoot, **review the general troubleshooting information** .
- If any of the DTCs listed below are stored at the same time as DTC P2096 and/or P2097, troubleshoot those DTCs first, then recheck for P2096 or P2097.

  P0133, P2195, P2237, P2238, P2243, P2245, P2251, P2252, P2A00: A/F sensor (Sensor 1)

  P0134, P0135: A/F sensor (Sensor 1) heater

  P0137, P0138, P0139, P2270: Secondary HO2S (Sensor 2)

  P0141: Secondary HO2S (Sensor 2) heater

  P0171, P0172, P2187: Fuel system

  P0201, P0202, P0203, P0204: No. 1-No. 4 cylinder injector (s)

  P0300: Random misfire

  P0301, P0302, P0303, P0304: No. 1-No. 4 cylinder misfire

  P0351, P0352, P0353, P0354: No. 1-No. 4 cylinder ignition coil (s)

  P219C, P219D, P219E, P219F: No. 1-No. 4 cylinder A/F variation

DTC Description	Confirmed DTC	Pending DTC
P2096 Post Catalyst Fuel Trim System Too Lean	B	B
P2097 Post Catalyst Fuel Trim System Too Rich	B	B

DTC (PGM-FI)

1. Problem verification

   -1. Turn the vehicle to the ON mode.

   -2. Clear the DTC with the HDS.

   -3. Start the engine.

   -4. Hold the engine speed at 3, 000 rpm without load (in P or N) until the radiator fan comes on, then let it idle.

   -5. Test-drive the vehicle under these conditions:

   - Engine coolant temperature (ECT SENSOR 1) above 158 deg. F (70 deg. C)
   - Transmission in D
   - Engine speed below 4, 000 rpm
   - Drive at a steady speed between 15-75 mph (24-120 km/h) for 65 seconds or more

Signal	Current conditions	
	Values	Unit
ECT SENSOR 1	B	B
ENGINE SPEED	B	B

Signal	Current conditions	
	Values	Unit
VEHICLE SPEED	B	B

-6. Monitor the OBD STATUS for DTC P2096 and/or P2097 with the HDS.

DTC Description	OBD STATUS
P2096 Post Catalyst Fuel Trim System Too Lean	B
P2097 Post Catalyst Fuel Trim System Too Rich	B

Does the HDS indicate FAILED?

YES

The failure is duplicated. Go to step 2.

NO

If the HDS indicates PASSED, intermittent failure, the system is OK at this time. Check for poor connections or loose terminals at the A/F sensor (Sensor 1), secondary HO2S (Sensor 2), and the PCM. **If the on-board snapshot of this DTC is recorded, try to reproduce the failure under the same conditions with the on-board snapshot** . If the HDS indicates EXECUTING, keep the test conditions until a result comes on. If the HDS indicates OUT OF CONDITION, go to step 1-5 and recheck.

2. Cylinder A/F variation check

-1. Start the engine.

-2. Hold the engine speed at 3, 000 rpm without load (in P or N) until the radiator fan comes on, then let it idle.

Check under these conditions:

- A/C off
- All electrical loads off

-4. Do the CYLINDER A/F TEST in the INSPECTION MENU three times with the HDS.

CYLINDER A/F TEST

Is the result OK?

YES

Go to step 3.

NO

Go to the troubleshooting for **DTC P219C, DTC P219D, DTC P219E, and/or DTC P219F** .

3. Exhaust system check

-1. Turn the vehicle to the OFF (LOCK) mode.

-2. Check for leakage, clogging, or blockage in the exhaust system.

Is there leakage in the exhaust system between the A/F sensor (Sensor 1) and secondary HO2S (Sensor 2), or any clogging or restrictions in the exhaust system?

YES

Repair or replace the exhaust system .

NO

Go to step 4.

4. A/F sensor (Sensor 1) check

-1. Substitute a known-good A/F sensor (Sensor 1) .

-2. Reconnect all connectors.

-3. Turn the vehicle to the ON mode.

-4. Reset the PCM with the HDS .

Reset PCM

-5. Do the PCM idle learn procedure .

-6. Start the engine.

-7. Hold the engine speed at 3, 000 rpm without load (in P or N) until the radiator fan comes on, then let it idle.

-8. Test-drive the vehicle under these conditions:

- Engine coolant temperature (ECT SENSOR 1) above 158 deg. F (70 deg. C)
- Transmission in D
- Engine speed below 4, 000 rpm
- Drive at a steady speed between 15-75 mph (24-120 km/h) for 65 seconds or more

Signal	Current conditions	
	Values	Unit
ECT SENSOR 1	B	B
ENGINE SPEED	B	B
VEHICLE SPEED	B	B

-9. Monitor the OBD STATUS for DTC P2096 and/or P2097 with the HDS.

DTC Description	OBD STATUS
P2096 Post Catalyst Fuel Trim System Too Lean	B

DTC Description	OBD STATUS
P2097 Post Catalyst Fuel Trim System Too Rich	B

Does the HDS indicate PASSED?

YES

Replace the original A/F sensor (Sensor 1) .

NO

If the HDS indicates FAILED, replace secondary HO2S (Sensor 2) . If the HDS indicates EXECUTING, keep the test conditions until a result comes on. If the HDS indicates OUT OF

CONDITION, go to step 4-8 and recheck.

DTC P2096, P2097 (2.4 L ENGINE) (2017 2018 2019)

DTC P2096 : Post Catalyst Fuel Trim System Too Lean **DTC P2097** : Post Catalyst Fuel Trim System Too Rich

NOTE:

- Before you troubleshoot, **review the general troubleshooting information** .
- If any of the DTCs listed below are stored at the same time as DTC P2096 and/or P2097, troubleshoot those DTCs first, then recheck for P2096 or P2097.

  P0133, P2195, P2237, P2238, P2252, P2A00: A/F sensor (Sensor 1)

  P0134, P0135: A/F sensor (Sensor 1) heater

  P0137, P0138, P0139, P2270: Secondary HO2S (Sensor 2)

  P0141: Secondary HO2S (Sensor 2) heater

  P0171, P0172: Fuel system

  P0201, P0202, P0203, P0204: No. 1-No. 4 cylinder injector (s)

  P0300: Random misfire

  P0301, P0302, P0303, P0304: No. 1-No. 4 cylinder misfire

  P0351, P0352, P0353, P0354: No. 1-No. 4 cylinder ignition coil (s)

  P219A: Air-Fuel Ratio Variation of Cylinder

DTC Description	Confirmed DTC	Pending DTC
P2096 Post Catalyst Fuel Trim System Too Lean	B	B
P2097 Post Catalyst Fuel Trim System Too Rich	B	B

DTC (PGM-FI)

1. Problem verification

   -1. Turn the vehicle to the ON mode.

   -2. Clear the DTC with the HDS.

   -3. Start the engine.

   -4. Hold the engine speed at 3, 000 rpm without load (in P or N) until the radiator fan comes on, then let it idle.

   -5. Test-drive the vehicle under these conditions:

   - Engine coolant temperature (ECT SENSOR 1) above 158 deg. F (70 deg. C)
   - Transmission in D
   - Engine speed below 4, 000 rpm
   - Drive at a steady speed between 15-75 mph (24-120 km/h) for 94 seconds or more

Signal	Current conditions	
	Values	Unit
ECT SENSOR 1	B	B
ENGINE SPEED	B	B
VEHICLE SPEED	B	B

-6. Monitor the OBD STATUS for DTC P2096 and/or P2097 with the HDS.

DTC Description	OBD STATUS
P2096 Post Catalyst Fuel Trim System Too Lean	B
P2097 Post Catalyst Fuel Trim System Too Rich	B

Does the HDS indicate FAILED?

YES

The failure is duplicated. Go to step 2.

NO

If the HDS indicates PASSED, intermittent failure, the system is OK at this time. Check for poor connections or loose terminals at the A/F sensor (Sensor 1), secondary HO2S (Sensor 2), and the PCM. **If the on-board snapshot of this DTC is recorded, try to reproduce the failure under the same conditions with the on-board snapshot** . If the HDS indicates EXECUTING, keep the test conditions until a result comes on. If the HDS indicates OUT OF CONDITION, go to step 1-5 and recheck.

2. Cylinder A/F variation check

-1. Start the engine.

-2. Hold the engine speed at 3, 000 rpm without load (in P or N) until the radiator fan comes on, then let it idle.

-3. Check under these conditions:

- A/C off
- All electrical loads off

-4. Do the CYLINDER A/F TEST in the INSPECTION MENU three times with the HDS.

CYLINDER A/F TEST

Is the result OK?

YES

Go to step 3.

NO

Go to the troubleshooting for **DTC P219A**.

3. Exhaust system check

-1. Turn the vehicle to the OFF (LOCK) mode.

-2. Check for leakage, clogging, or blockage in the exhaust system.

Is there leakage in the exhaust system between the A/F sensor (Sensor 1) and secondary HO2S (Sensor 2), or any clogging or restrictions in the exhaust system?

YES

Repair or replace the exhaust system .

NO

Go to step 4.

4. A/F sensor (Sensor 1) check

-1. **Substitute a known-good A/F sensor (Sensor 1)** .

-2. Reconnect all connectors.

-3. Turn the vehicle to the ON mode.

-4. **Reset the PCM with the HDS** .

Reset PCM

-5. **Do the PCM idle learn procedure** .

-6. Start the engine.

-7. Hold the engine speed at 3, 000 rpm without load (in P or N) until the radiator fan comes on, then let it idle.

-8. Test-drive the vehicle under these conditions:

- Engine coolant temperature (ECT SENSOR 1) above 158 deg. F (70 deg. C)
- Transmission in D
- Engine speed below 4, 000 rpm
- Drive at a steady speed between 15-75 mph (24-120 km/h) for 94 seconds or more

Signal	Current conditions	
	Values	Unit
ECT SENSOR 1	B	B
ENGINE SPEED	B	B
VEHICLE SPEED	B	B

-9. Monitor the OBD STATUS for DTC P2096 and/or P2097 with the HDS.

DTC Description	OBD STATUS
P2096 Post Catalyst Fuel Trim System Too Lean	B
P2097 Post Catalyst Fuel Trim System Too Rich	B

Does the HDS indicate PASSED?

YES

Replace the original A/F sensor (Sensor 1) .

NO

If the HDS indicates FAILED, replace secondary HO2S (Sensor 2) . If the HDS indicates EXECUTING, keep the test conditions until a result comes on. If the HDS indicates OUT OF CONDITION, go to step 4-8 and recheck.

DTC P2101 (1.5 L ENGINE)

DTC P2101 : ETCS Malfunction

WARNING: **Do not insert your fingers into the installed throttle body when you turn the vehicle to the ON mode, or while the vehicle is in ON mode. If you do, you will seriously injure your fingers if the throttle valve is activated.**

NOTE: Before you troubleshoot, review the general troubleshooting information .

DTC Description	Confirmed DTC	Pending DTC
P2101 ETCS Malfunction	B	B

DTC (PGM-FI)

1. ETCS system check

   -1. Turn the vehicle to the ON mode.

   -2. Clear the DTC with the HDS.

   -3. Turn the vehicle to the OFF (LOCK) mode.

   -4. Turn the vehicle to the ON mode.

   -5. Select the ETCS TEST in the INSPECTION MENU with the HDS.

   ETCS TEST

   Check for Pending or Confirmed DTCs with the HDS.

DTC Description	Confirmed DTC	Pending DTC
P2101 ETCS Malfunction	B	B

   Is DTC P2101 indicated?

   YES

   Go to step 3.

   NO

   Go to step 2.

2. Problem verification:

   -1. Test-drive the vehicle for several minutes in the range of these recorded on-board snapshot parameters:

   - ENGINE SPEED
   - VEHICLE SPEED
   - APP SENSOR

   On-board Snapshot

Signal	Current conditions	
	Values	Unit
ENGINE SPEED	B	B
VEHICLE SPEED	B	B
APP SENSOR	B	B

-2. Check for Pending or Confirmed DTCs with the HDS.

DTC Description	Confirmed DTC	Pending DTC
P2101 ETCS Malfunction	B	B

Is DTC P2101 indicated?

YES

Go to step 3.

NO

Intermittent failure, the system is OK at this time. Check for poor connections or loose terminals at the throttle body and the PCM. **If the on-board snapshot of this DTC is recorded, try to reproduce the failure under the same conditions with the on-board snapshot** .

3. Determine possible failure area (throttle body, others)

-1. Turn the vehicle to the OFF (LOCK) mode.

-2. **Disconnect the throttle body duct from the throttle body** .

-3. Turn the vehicle to the ON mode.

-4. Clear the DTC with the HDS.

-5. Turn the vehicle to the OFF (LOCK) mode.

-6. Turn the vehicle to the ON mode.

-7. Visually check the throttle valve operation while doing the ETCS TEST in the INSPECTION MENU with the HDS.

ETCS TEST

Does the throttle valve operate smoothly?

YES

Clean the throttle body . If DTC P2101 is indicated again, **replace the throttle body** .

NO

Go to step 4.

4. Open wire check (MTR1 line, MTR2 line)

-1. Turn the vehicle to the OFF (LOCK) mode.

-2. Jump the SCS line with the HDS, and wait more than 1 minute.

-3. Disconnect the following connectors.

PCM connector E (80P)
Throttle body 6P connector

-4. Connect terminals A and B with a jumper wire.

Terminal A	Throttle body 6P connector (female terminals) No. 1: ①
Terminal B	Throttle body 6P connector (female terminals) No. 2: ①

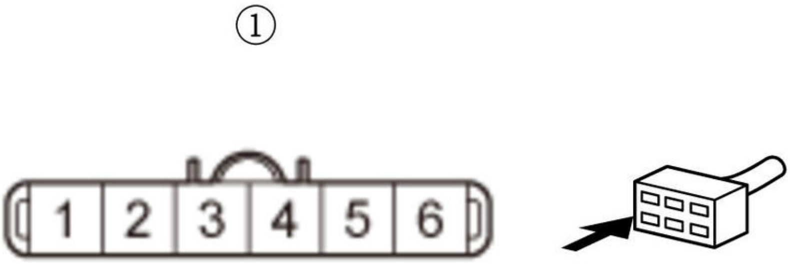

-5. Check for continuity between test points 1 and 2.

Test condition	Vehicle OFF (LOCK) mode
B	PCM connector E (80P): disconnected
B	Throttle body 6P connector: disconnected
B	Throttle body 6P connector No. 1 and No. 2: jumped
Test point 1	**PCM connector E (80P) No. 27**
Test point 2	**PCM connector E (80P) No. 28**

Is there continuity?

YES

Go to step 5.

NO

Repair an open in the MTR1 wire or the MTR2 wire between the PCM (E27, E28) and the throttle body.

5. Throttle body internal circuit check

-1. Remove the jumper wire from the throttle body 6P connector.

-2. At the throttle body side, measure the resistance between test points 1 and 2.

Test condition	Vehicle OFF (LOCK) mode
B	PCM connector E (80P): disconnected
B	Throttle body 6P connector: disconnected

Test point 1	Throttle body 6P connector (male terminals) No. 1 (throttle body side): ①
Test point 2	Throttle body 6P connector (male terminals) No. 2 (throttle body side): ①

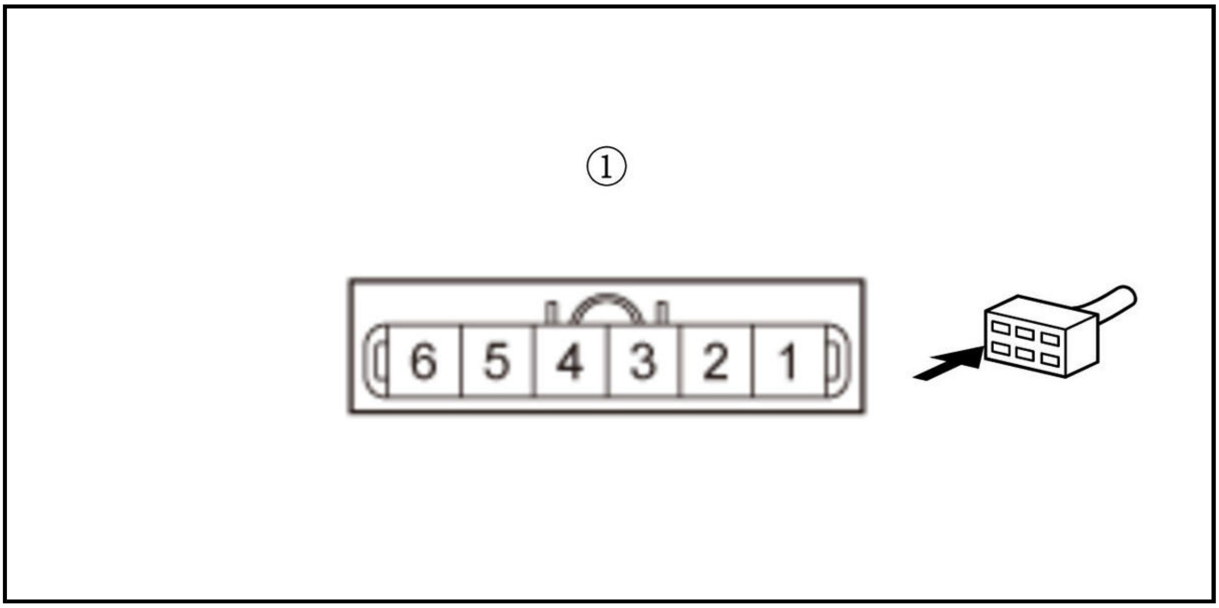

Is there about 1.0 kΩ or more?

YES

Replace the throttle body .

NO

The throttle body internal circuit is OK. Check for any authorized service information related to the DTCs or symptoms you are troubleshooting, or substitute a known-good PCM .

DTC P2101 (2.4 L ENGINE) (2017 2018 2019)

DTC P2101 : ETCS Malfunction

WARNING: **Do not insert your fingers into the installed throttle body when you turn the vehicle to the ON mode, or while the vehicle is in ON mode. If you do, you will seriously injure your fingers if the throttle valve is activated.**

NOTE: Before you troubleshoot, review the general troubleshooting information .

DTC Description	Confirmed DTC	Pending DTC
P2101 ETCS Malfunction	B	B

DTC (PGM-FI)

1. ETCS system check

-1. Turn the vehicle to the ON mode.

-2. Clear the DTC with the HDS.

-3. Select the ETCS TEST in the INSPECTION MENU with the HDS.

ETCS TEST

Check for Pending or Confirmed DTCs with the HDS.

DTC Description	Confirmed DTC	Pending DTC
P2101 ETCS Malfunction	B	B

Is DTC P2101 indicated?

YES

The failure is duplicated. Go to step 3.

NO

The failure is not duplicated. Go to step 2.

2. Problem verification:

-1. Test-drive the vehicle for several minutes in the range of these recorded freeze data parameters:

- ENGINE SPEED
- VEHICLE SPEED
- APP SENSOR

On-board Snapshot

Signal	Current conditions	
	Values	Unit
ENGINE SPEED	B	B
VEHICLE SPEED	B	B
APP SENSOR	B	B

-2. Check for Pending or Confirmed DTCs with the HDS.

DTC Description	Confirmed DTC	Pending DTC
P2101 ETCS Malfunction	B	B

Is DTC P2101 indicated?

YES

The failure is duplicated. Go to step 3.

NO

Intermittent failure, the system is OK at this time. Check for poor connections or loose terminals at the throttle body and the PCM. **If the on-board snapshot of this DTC is recorded, try to reproduce the failure under the same conditions with the on-board snapshot** .

3. Determine possible failure area (throttle body, others)

-1. Turn the vehicle to the OFF (LOCK) mode.

-2. **Disconnect the intake air duct from the throttle body** .

-3. Turn the vehicle to the ON mode.

-4. Clear the DTC with the HDS.

-5. Visually check the throttle valve operation while doing the ETCS TEST in the INSPECTION MENU with the HDS.

ETCS TEST

Does the throttle valve operate smoothly?

YES

Clean the throttle body . If DTC P2101 is indicated again, **replace the throttle body** .

NO

Go to step 4.

4. Open wire check (SG3 line)

-1. Turn the vehicle to the OFF (LOCK) mode.

-2. Jump the SCS line with the HDS, and wait more than 1 minute.

-3. Disconnect the following connectors.

PCM connector B (51P)
Throttle body 6P connector

-4. Check for continuity between test points 1 and 2.

Test condition	Vehicle OFF (LOCK) mode
B	PCM connector B (51P): disconnected
B	Throttle body 6P connector: disconnected
Test point 1	Throttle body 6P connector (female terminals) No. 3: ①
Test point 2	**PCM connector B (51P) No. 49**

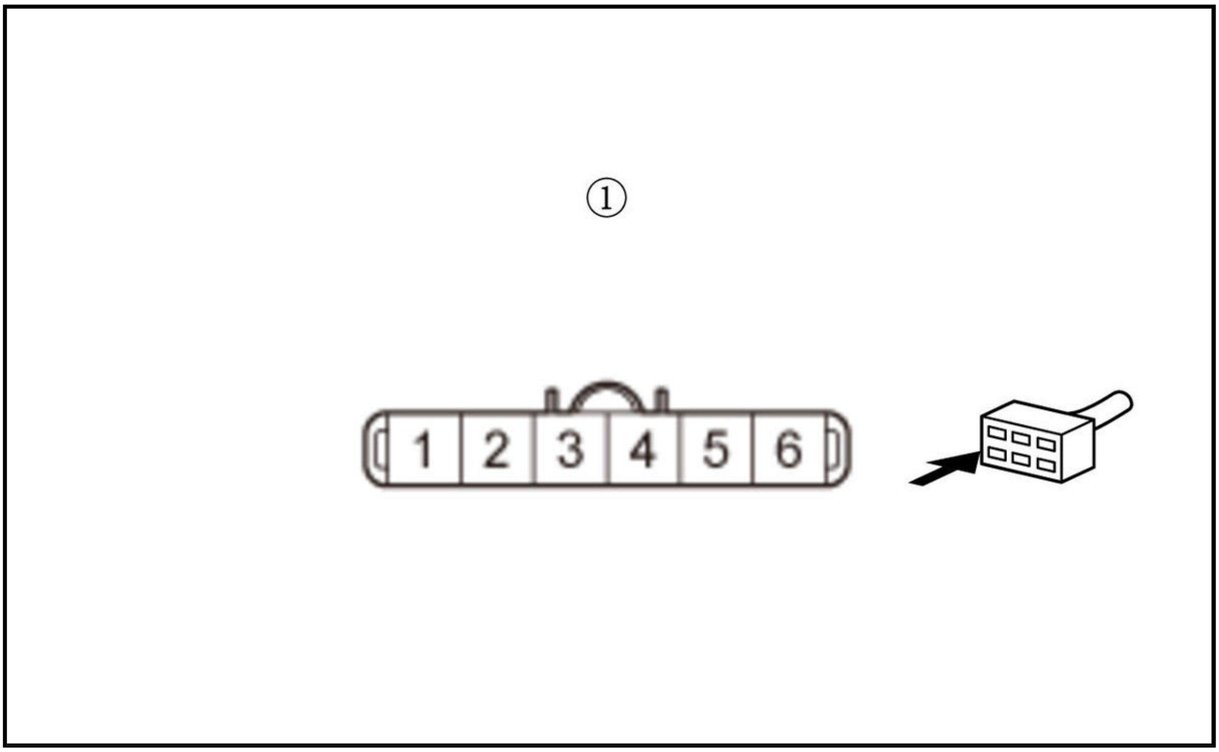

Is there continuity?

YES

The SG3 wire is OK. Go to step 5.

NO

Repair an open in the SG3 wire between the PCM (B49) and the throttle body.

5. Open wire check (MTR 1 line, MTR 2 line)

-1. Disconnect the following connector.

PCM connector C (51P)

-2. Connect terminals A and B with a jumper wire.

Terminal A	Throttle body 6P connector (female terminals) No. 1: ①
Terminal B	Throttle body 6P connector (female terminals) No. 2: ①

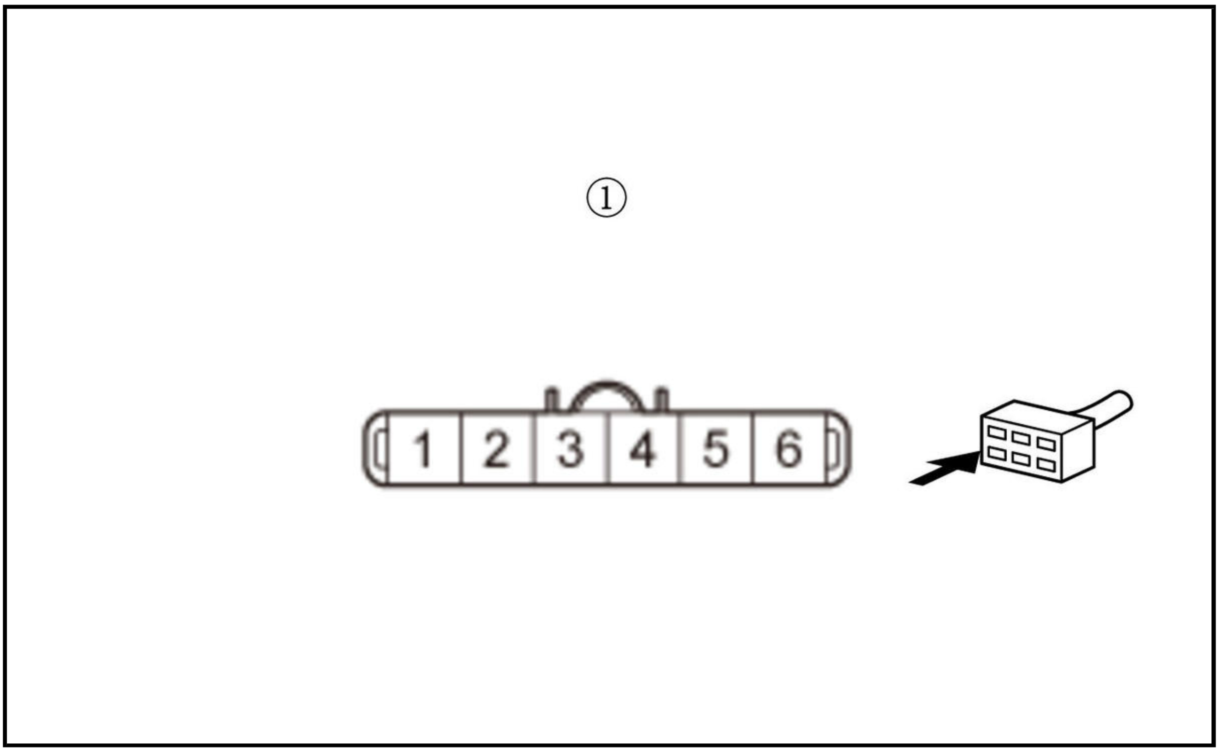

-3. Check for continuity between test points 1 and 2.

Test condition	Vehicle OFF (LOCK) mode
B	PCM connector B (51P): disconnected
B	PCM connector C (51P): disconnected
B	Throttle body 6P connector: disconnected
B	Throttle body 6P connector No. 1 and No. 2: jumped
Test point 1	**PCM connector C (51P) No. 11**
Test point 2	**PCM connector C (51P) No. 12**

Is there continuity?

YES

The MTR 1 and MTR 2 wires are OK. Go to step 6.

NO

Repair an open in the MTR 1 wire or the MTR 2 wire between the PCM (C11, C12) and the throttle body.

6. Throttle body internal circuit check

-1. Remove the jumper wire from the throttle body 6P connector.

-2. At the throttle body side, measure the resistance between test points 1 and 2.

Test condition	Vehicle OFF (LOCK) mode
B	PCM connector B (51P): disconnected
B	PCM connector C (51P): disconnected
B	Throttle body 6P connector: disconnected
Test point 1	Throttle body 6P connector (male terminals) No. 1 (throttle body side): ①
Test point 2	Throttle body 6P connector (male terminals) No. 2 (throttle body side): ①

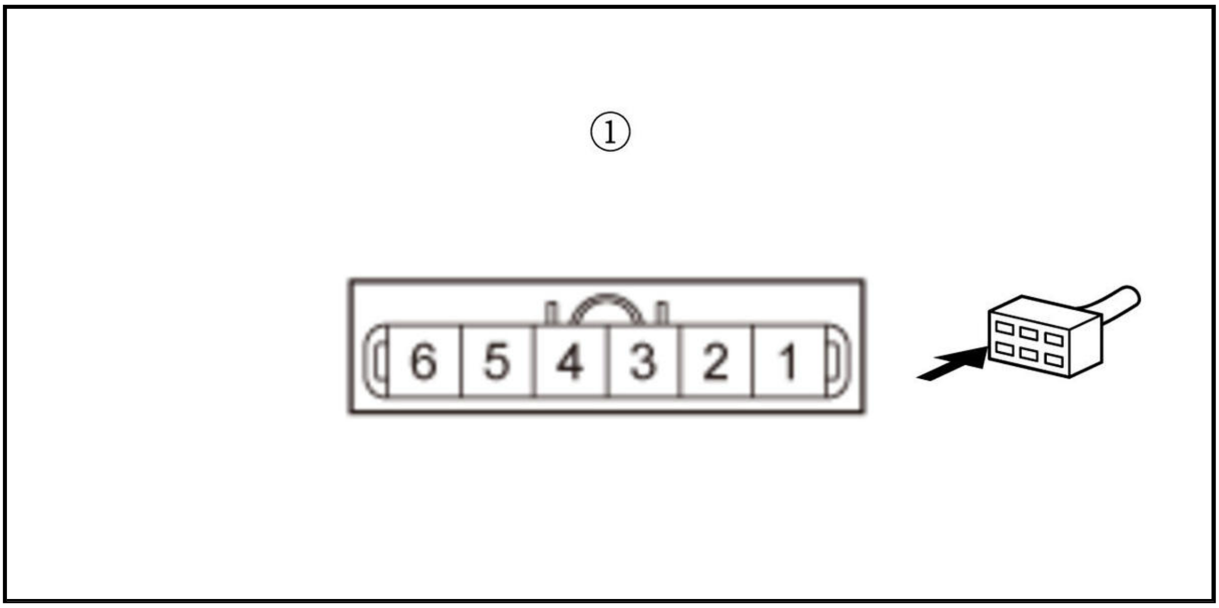

Is there about 1.0 kΩ or more?

YES

Replace the throttle body .

NO

The throttle body internal circuit is OK. Check for any authorized service information related to the DTCs or symptoms you are troubleshooting or **substitute a known-good PCM** .

DTC P2108 (1.5 L ENGINE)

DTC P2108 : Throttle Actuator Control Module Performance

NOTE:

- Before you troubleshoot, **review the general troubleshooting information** .
- If DTC P2108 is indicated alone, do the troubleshooting for DTC P1658 and P1659 using the on-board snapshot data for P2108.

- If any of the DTCs listed below are indicated at the same time as DTC P2108, troubleshoot those DTCs first, then recheck for P2108.
-
  - -

    P1658, P1659: Throttle Actuator Control

DTC Description	Confirmed DTC	Pending DTC
P2108 Throttle Actuator Control Module Performance	B	B

DTC (PGM-FI)

1. DTC check

   -1. Turn the vehicle to the ON mode.

   -2. Check for Pending or Confirmed DTCs with the HDS.

DTC Description	Confirmed DTC	Pending DTC
P1658 ETCS Control Relay ON Malfunction	B	B
P1659 ETCS Control Relay OFF Malfunction	B	B
P2108 Throttle Actuator Control Module Performance	B	B

   Are DTC P1658 or P1659 and P2108 indicated at the same time?

   YES

   Go to the indicated DTC's troubleshooting.

   NO

   Go to the troubleshooting for **DTC P1658** and **DTC P1659** .

DTC P2108 (2.4 L ENGINE) (2017 2018 2019)

DTC P2108 : Throttle Actuator Control Module Performance

NOTE:

- Before you troubleshoot, **review the general troubleshooting information** .
- If DTC P2108 is indicated alone, do the troubleshooting for DTC P1658 and P1659 using the on-board snapshot data for P2108.
- If any of the DTCs listed below are indicated at the same time as DTC P2108, troubleshoot those DTCs first, then recheck for P2108.
-
  - -

    P1658, P1659: Throttle Actuator Control

DTC Description	Confirmed DTC	Pending DTC
P2108 Throttle Actuator Control Module Performance	B	B

DTC (PGM-FI)

1. DTC check

-1. Turn the vehicle to the ON mode.

-2. Check for Pending or Confirmed DTCs with the HDS.

DTC Description	Confirmed DTC	Pending DTC
P1658 ETCS Control Relay ON Malfunction	B	B
P1659 ETCS Control Relay OFF Malfunction	B	B
P2108 Throttle Actuator Control Module Performance	B	B

Are DTC P1658 or P1659 and P2108 indicated at the same time?

YES

Go to the indicated DTC's troubleshooting.

NO

Go to the troubleshooting for **DTC P1658** and **DTC P1659** .

DTC P2118 (1.5 L ENGINE)

DTC P2118 : Throttle Actuator Current Range/Performance Problem

NOTE: Before you troubleshoot, **review the general troubleshooting information** .

DTC Description	Confirmed DTC	Pending DTC
P2118 Throttle Actuator Current Range/Performance Problem	B	B

DTC (PGM-FI)

1. Problem verification

-1. Turn the vehicle to the ON mode.

-2. Clear the DTC with the HDS.

-3. Turn the vehicle to the OFF (LOCK) mode.

-4. Turn the vehicle to the ON mode.

-5. Slowly press the accelerator pedal to the floor.

-6. Check for Pending or Confirmed DTCs with the HDS.

DTC Description	Confirmed DTC	Pending DTC
P2118 Throttle Actuator Current Range/Performance Problem	B	B

Is DTC P2118 indicated?

YES

Go to step 2.

NO

Intermittent failure, the system is OK at this time. Check for poor connections or loose terminals at the throttle body and the PCM, then **clean the throttle body** . **If the on-board snapshot of this DTC is**

recorded, try to reproduce the failure under the same conditions with the on-board snapshot .

2. Open wire check (SG3 line)

-1. Turn the vehicle to the OFF (LOCK) mode.

-2. Jump the SCS line with the HDS, and wait more than 1 minute.

-3. Disconnect the following connectors.

PCM connector E (80P)
Throttle body 6P connector

-4. Check for continuity between test points 1 and 2.

Test condition	Vehicle OFF (LOCK) mode
B	PCM connector E (80P): disconnected
B	Throttle body 6P connector: disconnected
Test point 1	Throttle body 6P connector (female terminals) No. 3: ①
Test point 2	**PCM connector E (80P) No. 76**

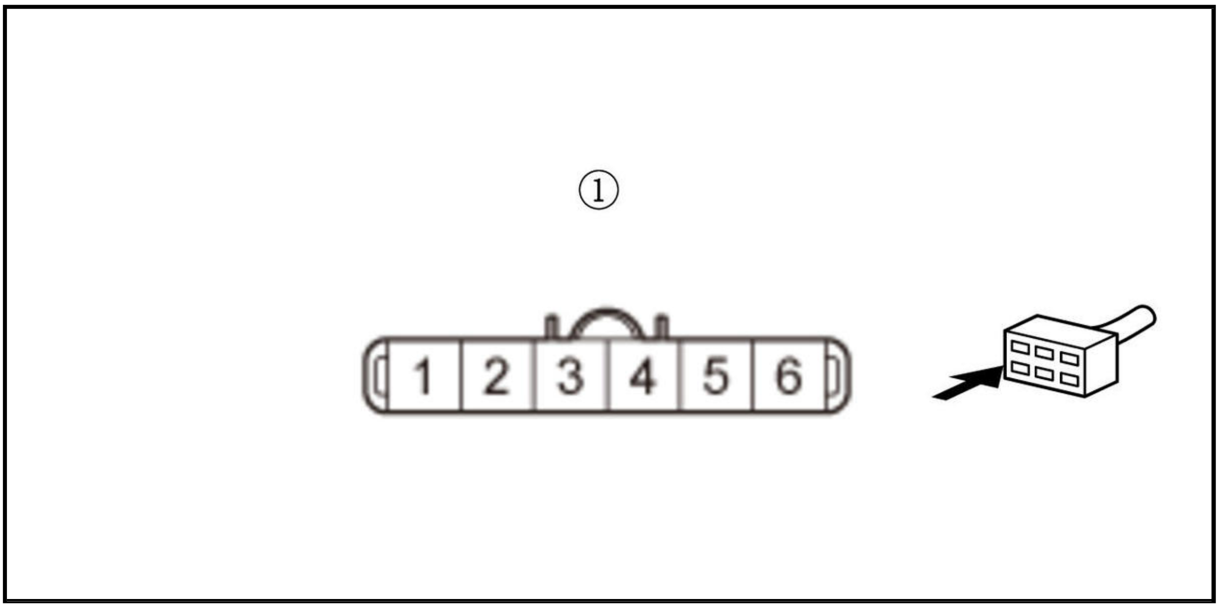

Is there continuity?

YES

Go to step 3.

NO

Repair an open in the SG3 wire between the PCM (E76) and the throttle body.

3. Shorted wire check (MTR1 line to MTR2 line)

-1. Check for continuity between test points 1 and 2.

Test condition	Vehicle OFF (LOCK) mode
B	PCM connector E (80P): disconnected
B	Throttle body 6P connector: disconnected

Test point 1	Throttle body 6P connector (female terminals) No. 1: ①
Test point 2	Throttle body 6P connector (female terminals) No. 2: ①

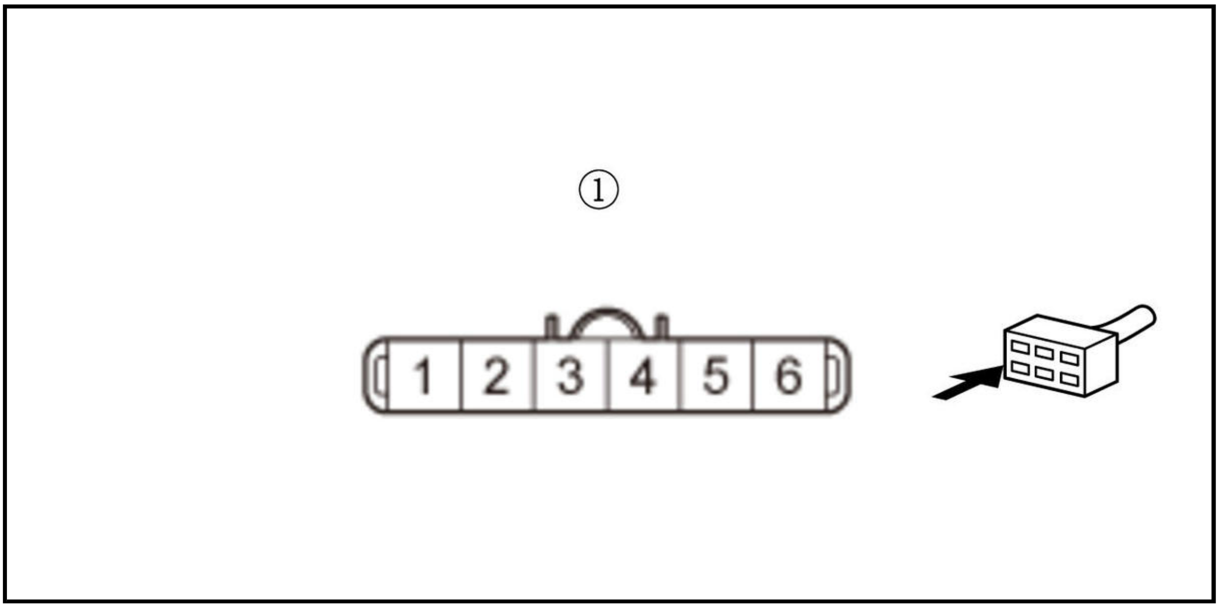

Is there continuity?

YES

Repair a short in the MTR1 wire to the MTR2 wire between the PCM (E27, E28) and the throttle body.

NO

Go to step 4.

4. Shorted wire check (MTR1 line, MTR2 line)

-1. Check for continuity between test points 1 and 2.

Test condition	Vehicle OFF (LOCK) mode
B	PCM connector E (80P): disconnected
B	Throttle body 6P connector: disconnected
Test point 1	Throttle body 6P connector (female terminals) No. 1 and No. 2: ①
Test point 2	Body ground

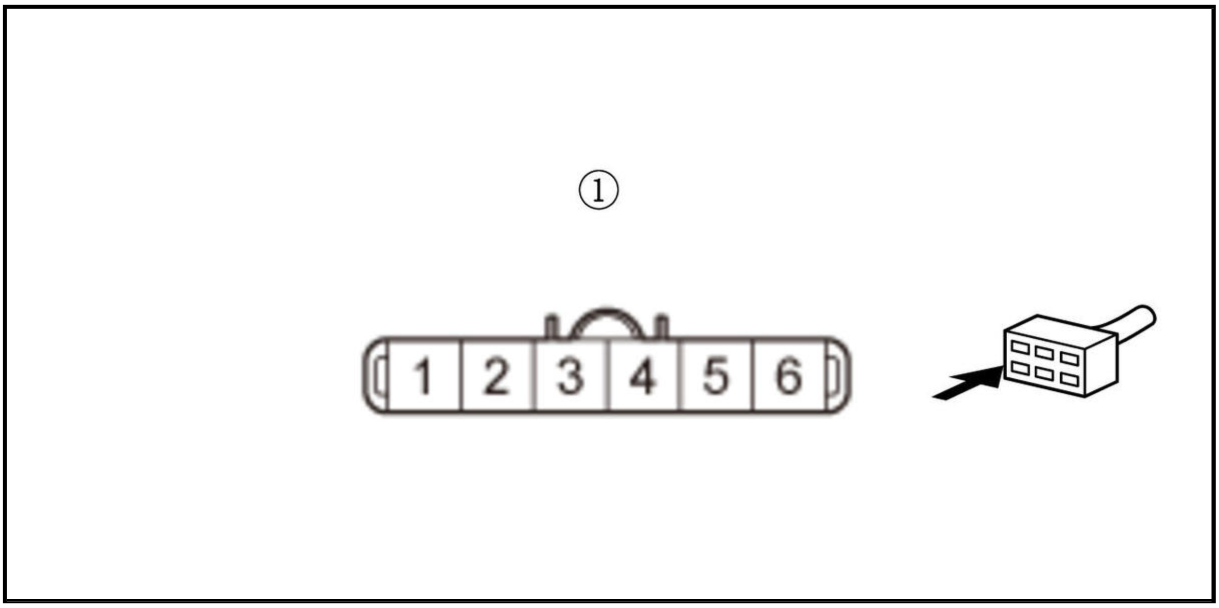

Is there continuity?

YES

Repair a short in the MTR1 wire or the MTR2 wire between the PCM (E27, E28) and the throttle body.

NO

Go to step 5.

5. Throttle body internal circuit check (short in wires)

-1. At the throttle body side, measure the resistance between test points 1 and 2.

Test condition	Vehicle OFF (LOCK) mode
B	PCM connector E (80P): disconnected
B	Throttle body 6P connector: disconnected
Test point 1	Throttle body 6P connector (male terminals) No. 1 (throttle body side): ①
Test point 2	Throttle body 6P connector (male terminals) No. 2 (throttle body side): ①

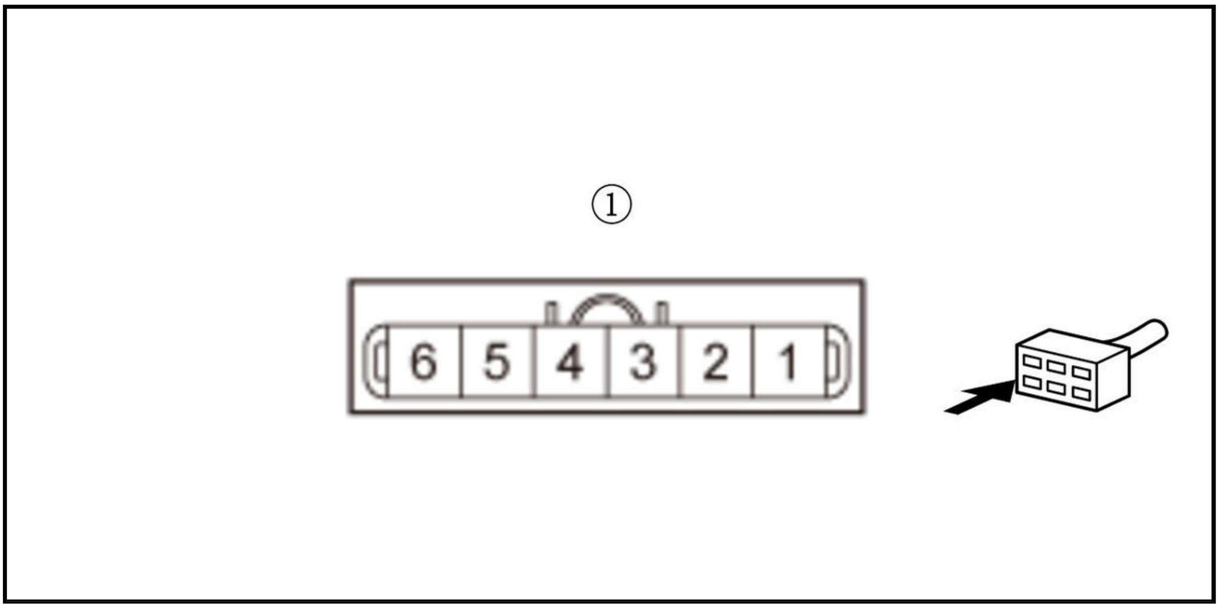

Is there about 1.2 Ω - 1.0 kΩ?

YES

Go to step 6.

NO

Replace the throttle body .

6. Throttle body internal circuit check (short to ground)

-1. At the throttle body side, check for continuity between test points 1 and 2.

Test condition	Vehicle OFF (LOCK) mode
B	PCM connector E (80P): disconnected
B	Throttle body 6P connector: disconnected
Test point 1	Throttle body 6P connector (male terminals) No. 1 and No. 2 (throttle body side): ①
Test point 2	Body ground

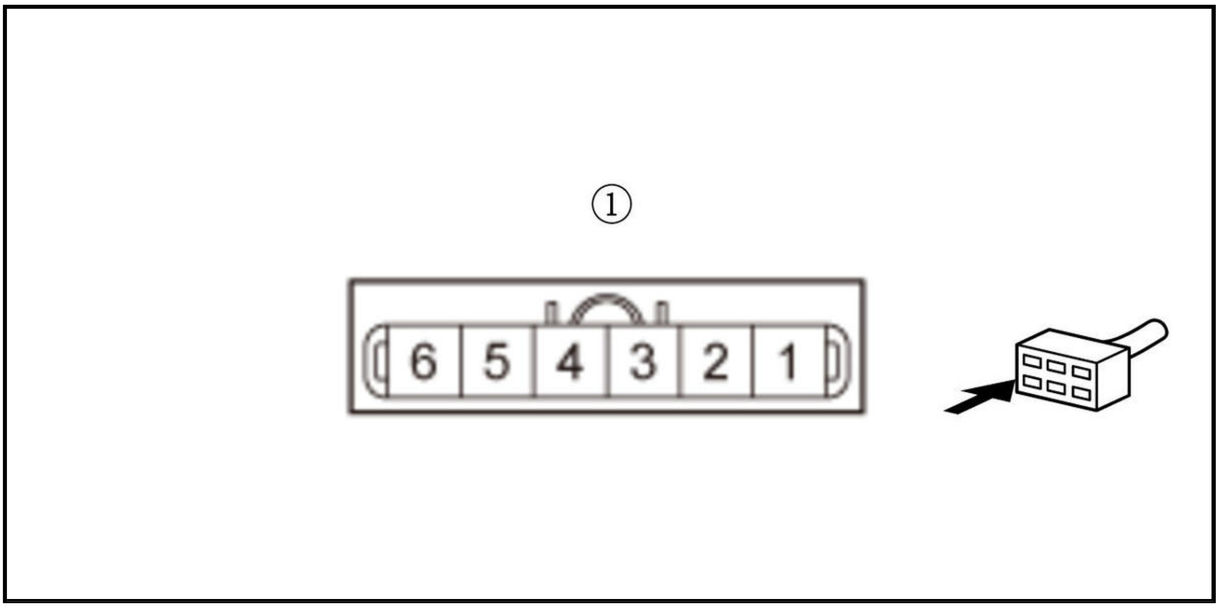

Is there continuity?

YES

Replace the throttle body .

NO

The throttle body internal circuit is OK. Check for any authorized service information related to the DTCs or symptoms you are troubleshooting, or substitute a known-good PCM .

DTC P2118 (2.4 L ENGINE) (2017 2018 2019)

DTC P2118 : Throttle Actuator Current Range/Performance Problem

NOTE: Before you troubleshoot, review the general troubleshooting information .

DTC Description	Confirmed DTC	Pending DTC
P2118 Throttle Actuator Current Range/Performance Problem	B	B

DTC (PGM-FI)

1. Problem verification

    -1. Turn the vehicle to the ON mode.

    -2. Clear the DTC with the HDS.

    -3. Slowly press the accelerator pedal to the floor.

    -4. Check for Pending or Confirmed DTCs with the HDS.

DTC Description	Confirmed DTC	Pending DTC
P2118 Throttle Actuator Current Range/Performance Problem	B	B

Is DTC P2118 indicated?

YES

The failure is duplicated. Go to step 2.

NO

Intermittent failure, the system is OK at this time. Check for poor connections or loose terminals at the throttle body and the PCM, then **clean the throttle body** . **If the on-board snapshot of this DTC is recorded, try to reproduce the failure under the same conditions with the on-board snapshot** .

2. Open wire check (SG3 line)

    -1. Turn the vehicle to the OFF (LOCK) mode.

    -2. Jump the SCS line with the HDS, and wait more than 1 minute.

    -3. Disconnect the following connectors.

PCM connector B (51P)
Throttle body 6P connector

-4. Check for continuity between test points 1 and 2.

Test condition	Vehicle OFF (LOCK) mode
B	PCM connector B (51P): disconnected
B	Throttle body 6P connector: disconnected
Test point 1	Throttle body 6P connector (female terminals) No. 3: ①
Test point 2	**PCM connector B (51P) No. 49**

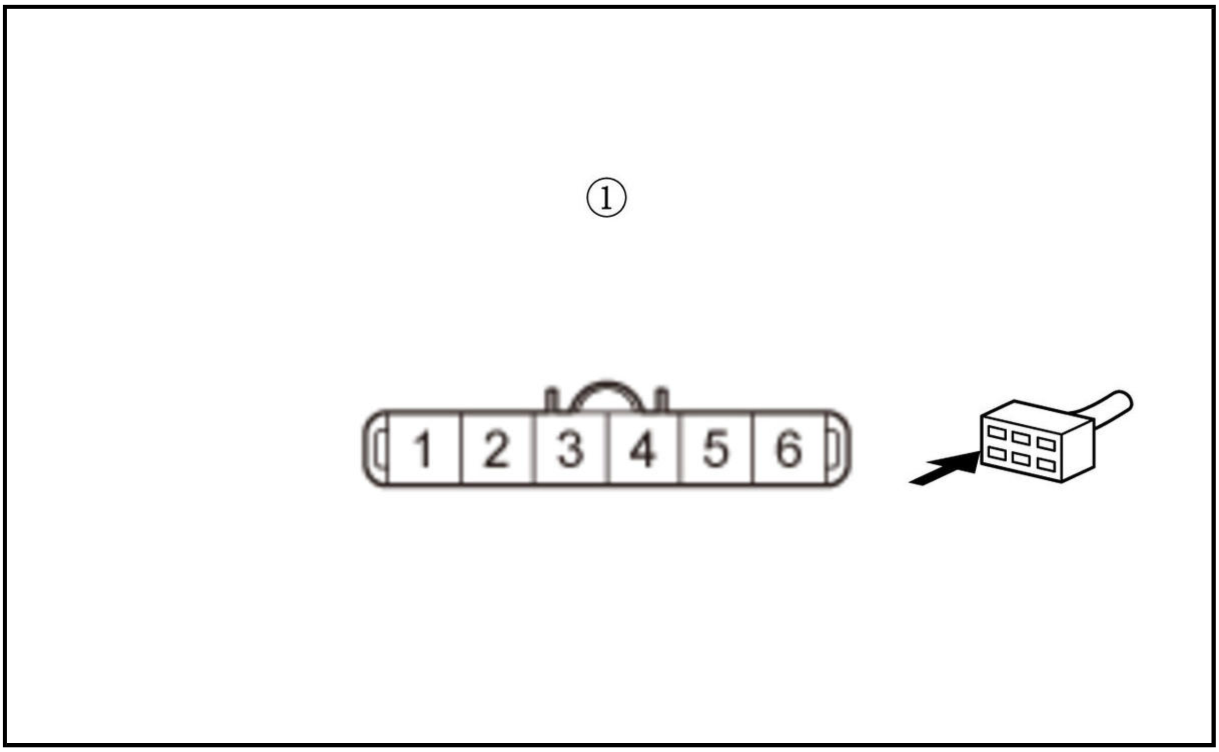

Is there continuity?

YES

The SG3 wire is OK. Go to step 3.

NO

Repair an open in the SG3 wire between the PCM (B49) and the throttle body.

3. Shorted wire check (MTR 1 line to MTR 2 line)

-1. Disconnect the following connector.

PCM connector C (51P)

-2. Check for continuity between test points 1 and 2.

Test condition	Vehicle OFF (LOCK) mode
B	PCM connector B (51P): disconnected
B	PCM connector C (51P): disconnected
B	Throttle body 6P connector: disconnected
Test point 1	Throttle body 6P connector (female terminals) No. 1: ①
Test point 2	Throttle body 6P connector (female terminals) No. 2: ①

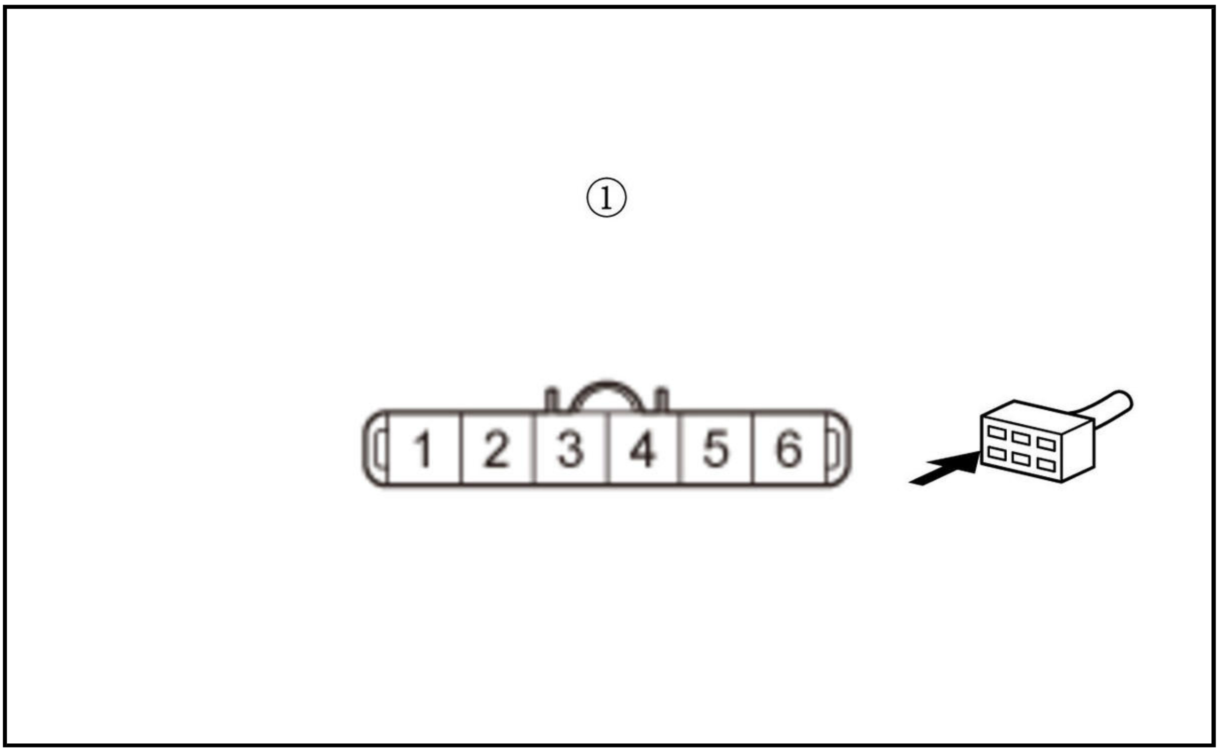

Is there continuity?

YES

Repair a short in the MTR 1 wire to the MTR 2 wire between the PCM (C11, C12) and the throttle body.

NO

Go to step 4.

4. Shorted wire check (MTR 1 line, MTR 2 line)

-1. Check for continuity between test points 1 and 2.

Test condition	Vehicle OFF (LOCK) mode
B	PCM connector B (51P): disconnected
B	PCM connector C (51P): disconnected
B	Throttle body 6P connector: disconnected
Test point 1	Throttle body 6P connector (female terminals) No. 1 and No. 2: ①
Test point 2	Body ground

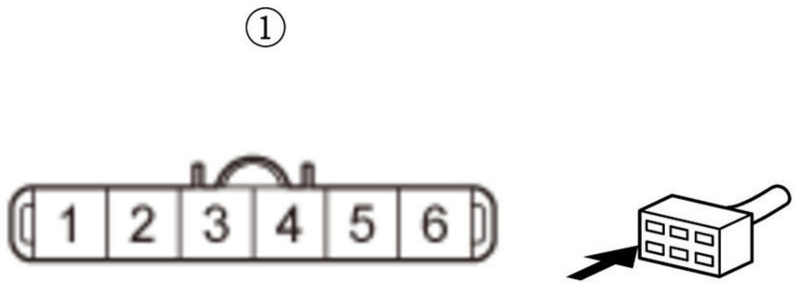

Is there continuity?

YES

Repair a short in the MTR 1 wire or the MTR 2 wire between the PCM (C11, C12) and the throttle body.

NO

The MTR 1 and MTR 2 wires are not shorted. Go to step 5.

5. Open wire check (MTR 1 line, MTR 2 line)

-1. Connect terminals A and B with a jumper wire.

Terminal A	Throttle body 6P connector (female terminals) No. 1: ①

Terminal B	Throttle body 6P connector (female terminals) No. 2: ①

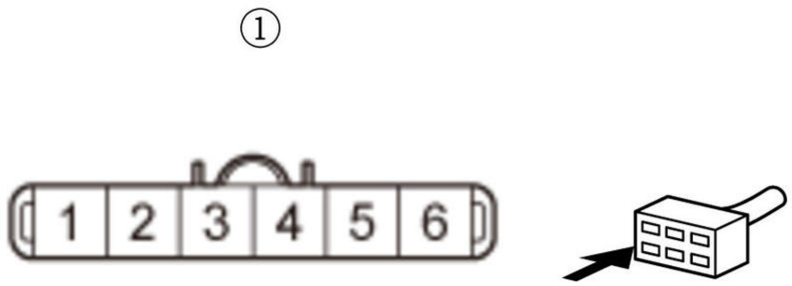

-2. Check for continuity between test points 1 and 2.

Test condition	Vehicle OFF (LOCK) mode

B	PCM connector B (51P): disconnected
B	PCM connector C (51P): disconnected
B	Throttle body 6P connector: disconnected
B	Throttle body 6P connector No. 1 and No. 2: jumped
Test point 1	**PCM connector C (51P) No. 11**
Test point 2	**PCM connector C (51P) No. 12**

Is there continuity?

YES

The MTR 1 and MTR 2 wires are OK. Go to step 6.

NO

Repair an open in the MTR 1 wire or the MTR 2 wire between the PCM (C11, C12) and the throttle body.

6. Throttle body internal circuit check (short in wires)

-1. Remove the jumper wire from the throttle body 6P connector.

-2. At the throttle body side, measure the resistance between test points 1 and 2.

Test condition	Vehicle OFF (LOCK) mode
B	PCM connector C (51P): disconnected
B	Throttle body 6P connector: disconnected
Test point 1	Throttle body 6P connector (male terminals) No. 1 (throttle body side): ①
Test point 2	Throttle body 6P connector (male terminals) No. 2 (throttle body side): ①

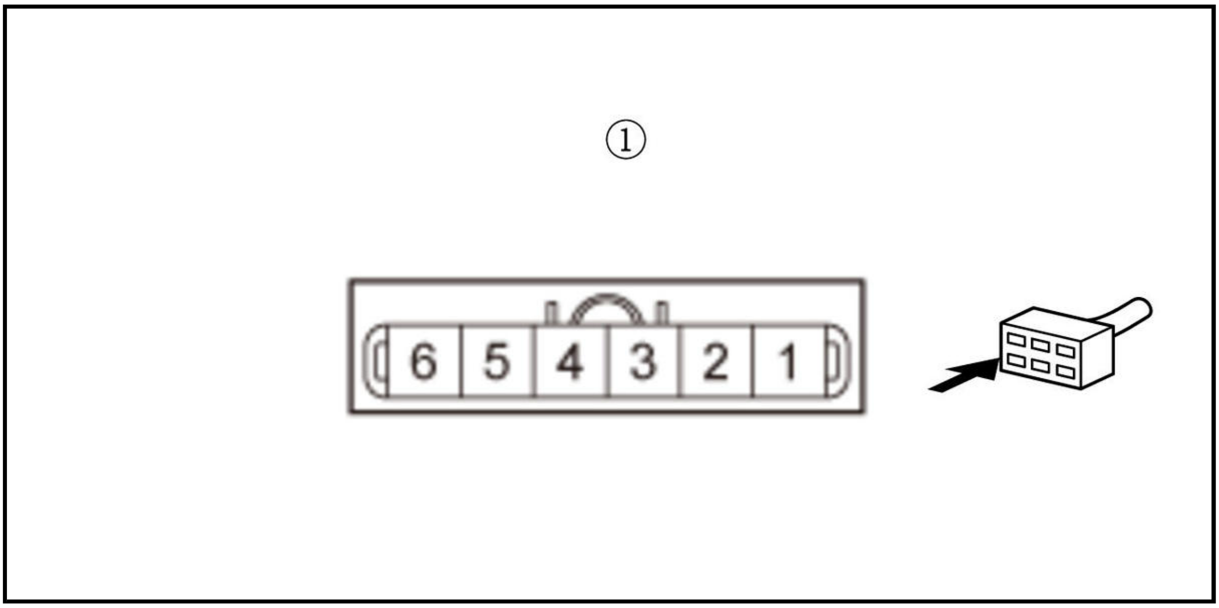

Is there about 1.2 Ω-1.0 kΩ?

YES

Go to step 7.

NO

Replace the throttle body .

7. Throttle body internal circuit check (short to ground)

-1. At the throttle body side, check for continuity between test points 1 and 2.

Test condition	Vehicle OFF (LOCK) mode
B	PCM connector C (51P): disconnected
B	Throttle body 6P connector: disconnected
Test point 1	Throttle body 6P connector (male terminals) No. 1 and No. 2 (throttle body side): ①
Test point 2	Body ground

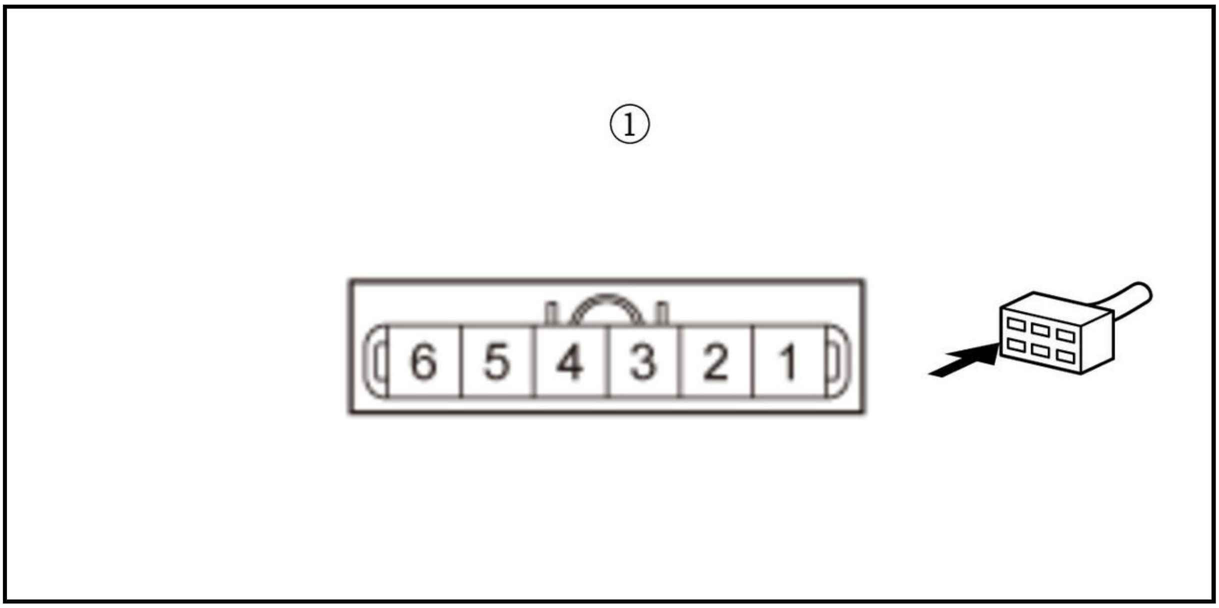

Is there continuity?

YES

Replace the throttle body .

NO

The throttle body internal circuit is OK. Check for any authorized service information related to the DTCs or symptoms you are troubleshooting or **substitute a known-good PCM** .

DTC P2119 (1.5 L ENGINE)

DTC P2119 : Throttle Actuator Control Throttle Body Range/Performance

NOTE:

- Before you troubleshoot, **review the general troubleshooting information** .
- If DTC P2119 is indicated alone, do the troubleshooting for DTC P1683 and P1684 using the on-board snapshot data for P2119.
- If any of the DTCs listed below are indicated at the same time as DTC P2119, troubleshoot those DTCs first, then recheck for P2119.
-
    - -

      P1683, P1684: Throttle Valve Spring

DTC Description	Confirmed DTC	Pending DTC
P2119 Throttle Actuator Control Throttle Body Range/Performance	B	B

DTC (PGM-FI)

1. DTC check

-1. Turn the vehicle to the ON mode.

-2. Check for Pending or Confirmed DTCs with the HDS.

DTC Description	Confirmed DTC	Pending DTC
P1683 Throttle Valve Default Position Spring Performance Problem	B	B
P1684 Throttle Valve Return Spring Performance Problem	B	B
P2119 Throttle Actuator Control Throttle Body Range/Performance	B	B

Are DTC P1683 or P1684 and P2119 indicated at the same time?

YES

Go to the indicated DTC's troubleshooting.

NO

Go to the troubleshooting for **DTC P1683** and **DTC P1684** .

DTC P2119 (2.4 L ENGINE) (2017 2018 2019)

DTC P2119 : Throttle Actuator Control Throttle Body Range/Performance

NOTE:

- Before you troubleshoot, **review the general troubleshooting information** .
- If DTC P2119 is indicated alone, do the troubleshooting for DTC P1683 and P1684 using the on-board snapshot data for P2119.
- If any of the DTCs listed below are indicated at the same time as DTC P2119, troubleshoot those DTCs first, then recheck for P2119.
-
    - -

      P1683, P1684: Throttle Valve Spring

DTC Description	Confirmed DTC	Pending DTC
P2119 Throttle Actuator Control Throttle Body Range/Performance	B	B

DTC (PGM-FI)

1. DTC check

-1. Turn the vehicle to the ON mode.

-2. Check for Pending or Confirmed DTCs with the HDS.

DTC Description	Confirmed DTC	Pending DTC
P1683 Throttle Valve Default Position Spring Performance Problem	B	B
P1684 Throttle Valve Return Spring Performance Problem	B	B
P2119 Throttle Actuator Control Throttle Body Range/Performance	B	B

Are DTC P1683 or P1684 and P2119 indicated at the same time?

YES

Go to the indicated DTC's troubleshooting.

NO

Go to the troubleshooting for **DTC P1683** and **DTC P1684** .

DTC P2121 (1.5 L ENGINE) (2018 2019 2020 2021)

DTC P2121 : APP Sensor A (TP Sensor D) Out of Range

NOTE: Before you troubleshoot, **review the general troubleshooting information** .

DTC Description	Confirmed DTC	Pending DTC
P2121 APP Sensor A (TP Sensor D) Out of Range	B	B

DTC (PGM-FI)

1. Problem verification 1

-1. Turn the vehicle to the ON mode.

-2. Check the parameter (s) below with the HDS.

Signal	Threshold		Current conditions	
	Values	Unit	Values	Unit
APP SENSOR A	Less than 0.69	V	B	B

Do the current condition (s) match the threshold?

YES

The failure is duplicated. Go to step 3.

NO

Go to step 2.

2. Problem verification 2

-1. Check the parameter (s) below with the HDS.

Signal	Threshold		Current conditions	
	Values	Unit	Values	Unit
APP SENSOR A	More than 4.99	V	B	B

Do the current condition (s) match the threshold?

YES

The failure is duplicated. Go to step 8.

NO

Intermittent failure, the system is OK at this time. Check for poor connections or loose terminals at the APP sensor and the PCM. **If the on-board snapshot of this DTC is recorded, try to reproduce the failure under the same conditions with the on-board snapshot** .

3. Determine possible failure area (VCC4 line, others)

-1. Turn the vehicle to the OFF (LOCK) mode.

-2. Disconnect the following connector.

APP sensor 6P connector

-3. Turn the vehicle to the ON mode.

-4. Measure the voltage between test points 1 and 2.

Test condition	Vehicle ON mode
B	APP sensor 6P connector: disconnected
Test point 1	APP sensor 6P connector (female terminals) No. 4: ①
Test point 2	APP sensor 6P connector (female terminals) No. 5: ①

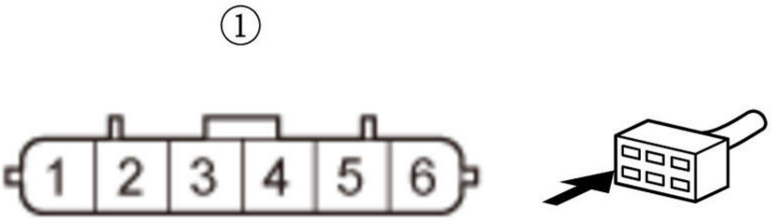

Is there about 5.0 V?

YES

Go to step 4.

NO

Go to step 7.

4. Shorted wire check (APS1 line)

-1. Turn the vehicle to the OFF (LOCK) mode.

-2. Jump the SCS line with the HDS, and wait more than 1 minute.

-3. Disconnect the following connector.

PCM connector A (50P)

-4. Check for continuity between test points 1 and 2.

Test condition	Vehicle OFF (LOCK) mode
B	APP sensor 6P connector: disconnected
B	PCM connector A (50P): disconnected
Test point 1	APP sensor 6P connector (female terminals) No. 6: ①
Test point 2	Body ground

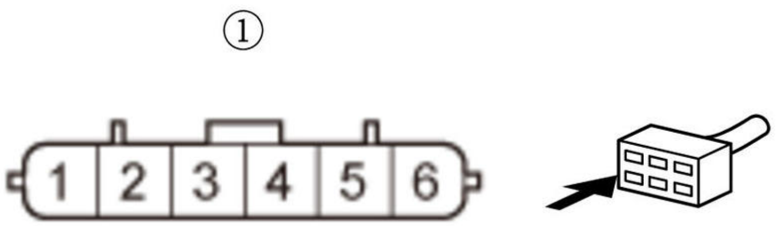

Is there continuity?

YES

Repair a short in the APS1 wire between the PCM (A32) and the APP sensor.

NO

The APS1 wire is not shorted. Go to step 5.

5. Open wire check (APS1 line)

-1. Connect terminals A and B with a jumper wire.

Terminal A	APP sensor 6P connector (female terminals) No. 6: ①
Terminal B	Body ground

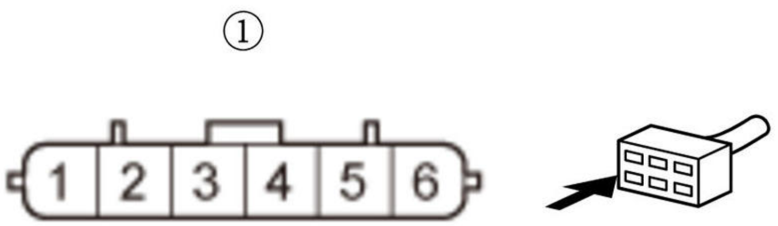

-2. Check for continuity between test points 1 and 2.

Test condition	Vehicle OFF (LOCK) mode
B	APP sensor 6P connector: disconnected
B	PCM connector A (50P): disconnected
B	APP sensor 6P connector No. 6: jumped to body ground
Test point 1	**PCM connector A (50P) No. 32**
Test point 2	Body ground

Is there continuity?

YES

The APS1 wire is OK. Go to step 6.

NO

Repair an open in the APS1 wire between the PCM (A32) and the APP sensor.

6. PCM internal circuit check

-1. Remove the jumper wire from the APP sensor 6P connector.

-2. Reconnect the following connector.

PCM connector A (50P)

-3. Connect terminals A and B with a jumper wire.

Terminal A	APP sensor 6P connector (female terminals) No. 4: ①
Terminal B	APP sensor 6P connector (female terminals) No. 6: ①

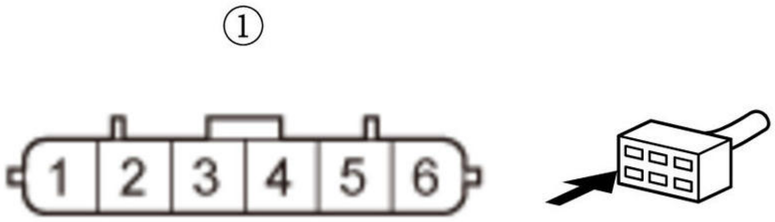

-4. Exit the SCS mode with the HDS.

-5. Turn the vehicle to the ON mode.

-6. Check the parameter (s) below with the HDS.

Signal	Threshold		Current conditions	
	Values	Unit	Values	Unit
APP SENSOR A	Less than 0.69	V	B	B

Do the current condition (s) match the threshold?

YES

Check for any authorized service information related to the DTCs or symptoms you are troubleshooting, or **substitute a known-good PCM** .

NO

Replace the accelerator pedal module .

7. Open wire check (VCC4 line)

-1. Turn the vehicle to the OFF (LOCK) mode.

-2. Jump the SCS line with the HDS, and wait more than 1 minute.

-3. Disconnect the following connector.

PCM connector A (50P)

-4. Connect terminals A and B with a jumper wire.

Terminal A	APP sensor 6P connector (female terminals) No. 4: ①
Terminal B	Body ground

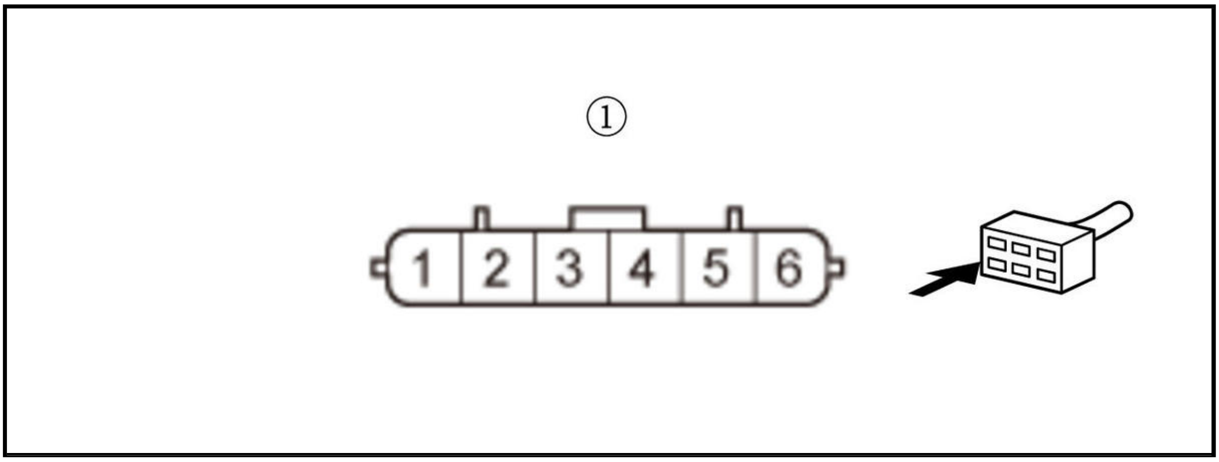

-5. Check for continuity between test points 1 and 2.

Test condition	Vehicle OFF (LOCK) mode
B	APP sensor 6P connector: disconnected
B	PCM connector A (50P): disconnected
B	APP sensor 6P connector No. 4: jumped to body ground
Test point 1	**PCM connector A (50P) No. 45**
Test point 2	Body ground

Is there continuity?

YES

The VCC4 wire is OK. Check for any authorized service information related to the DTCs or symptoms you are troubleshooting, or **substitute a known-good PCM** .

NO

Repair an open in the VCC4 wire between the PCM (A45) and the APP sensor.

8. Determine possible failure area (APP sensor, others)

-1. Turn the vehicle to the OFF (LOCK) mode.

-2. Disconnect the following connector.

APP sensor 6P connector

-3. Turn the vehicle to the ON mode.

-4. Measure the voltage between test points 1 and 2.

Test condition	Vehicle ON mode
B	APP sensor 6P connector: disconnected
Test point 1	APP sensor 6P connector (female terminals) No. 4: ①
Test point 2	APP sensor 6P connector (female terminals) No. 5: ①

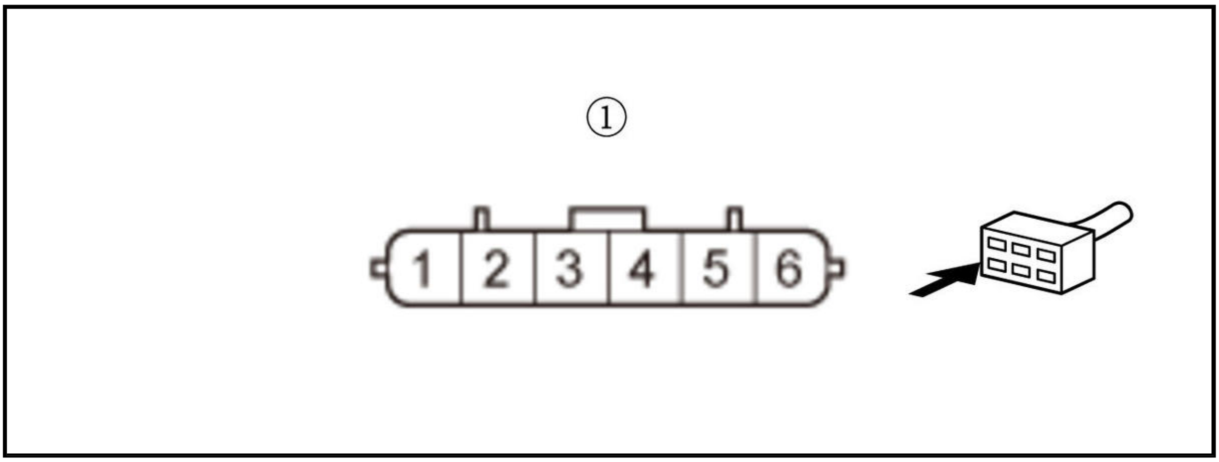

Is there about 5.0 V?

YES

Replace the accelerator pedal module .

NO

Go to step 9.

9. Open wire check (SG4 line)

-1. Turn the vehicle to the OFF (LOCK) mode.

-2. Jump the SCS line with the HDS, and wait more than 1 minute.

-3. Disconnect the following connector.

PCM connector A (50P)

-4. Connect terminals A and B with a jumper wire.

Terminal A	APP sensor 6P connector (female terminals) No. 5: ①
Terminal B	Body ground

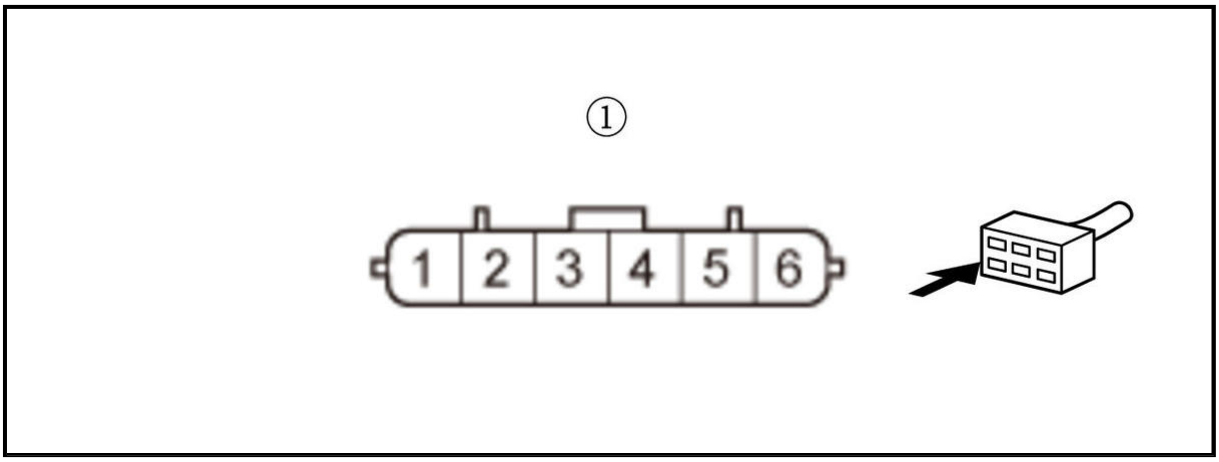

-5. Check for continuity between test points 1 and 2.

Test condition	Vehicle OFF (LOCK) mode
B	APP sensor 6P connector: disconnected
B	PCM connector A (50P): disconnected
B	APP sensor 6P connector No. 5: jumped to body ground
Test point 1	**PCM connector A (50P) No. 46**
Test point 2	Body ground

Is there continuity?

YES

The SG4 wire is OK. Check for any authorized service information related to the DTCs or symptoms you are troubleshooting, or **substitute a known-good PCM** .

NO

Repair an open in the SG4 wire between the PCM (A46) and the APP sensor.

DTC P2121 (2.4 L ENGINE) (2018 2019)

DTC P2121 : APP Sensor A (TP Sensor D) Out of Range

NOTE: Before you troubleshoot, **review the general troubleshooting information** .

DTC Description	Confirmed DTC	Pending DTC
P2121 APP Sensor A (TP Sensor D) Out of Range	B	B

DTC (PGM-FI)

1. Problem verification 1

-1. Turn the vehicle to the ON mode.

-2. Check the parameter (s) below with the HDS.

Signal	Threshold		Current conditions	
	Values	Unit	Values	Unit
APP SENSOR A	Less than 0.66	V	B	B

Do the current condition (s) match the threshold?

YES

The failure is duplicated. Go to step 3.

NO

Go to step 2.

2. Problem verification 2

-1. Check the parameter (s) below with the HDS.

Signal	Threshold		Current conditions	
	Values	**Unit**	**Values**	**Unit**
APP SENSOR A	More than 4.9	V	B	B

Do the current condition (s) match the threshold?

YES

The failure is duplicated. Go to step 8.

NO

Intermittent failure, the system is OK at this time. Check for poor connections or loose terminals at the APP sensor and the PCM. **If the on-board snapshot of this DTC is recorded, try to reproduce the failure under the same conditions with the on-board snapshot** .

3. Determine possible failure area (VCC4 line, others)

-1. Turn the vehicle to the OFF (LOCK) mode.

-2. Disconnect the following connector.

APP sensor 6P connector

-3. Turn the vehicle to the ON mode.

-4. Measure the voltage between test points 1 and 2.

Test condition	Vehicle ON mode
B	APP sensor 6P connector: disconnected
Test point 1	APP sensor 6P connector (female terminals) No. 4: ①
Test point 2	APP sensor 6P connector (female terminals) No. 5: ①

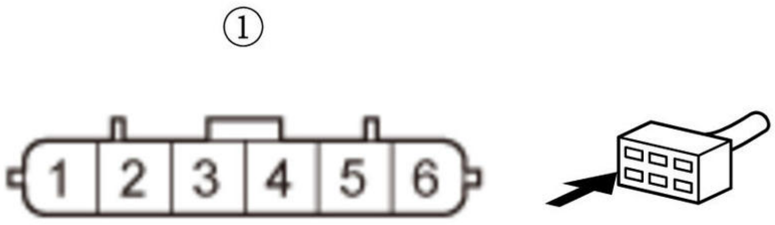

Is there about 5.0 V?

YES

Go to step 4.

NO

Go to step 7.

4. Shorted wire check (APS1 line)

-1. Turn the vehicle to the OFF (LOCK) mode.

-2. Jump the SCS line with the HDS, and wait more than 1 minute.

-3. Disconnect the following connector.

PCM connector A (51P)

-4. Check for continuity between test points 1 and 2.

Test condition	Vehicle OFF (LOCK) mode
B	APP sensor 6P connector: disconnected
B	PCM connector A (51P): disconnected
Test point 1	APP sensor 6P connector (female terminals) No. 6: ①
Test point 2	Body ground

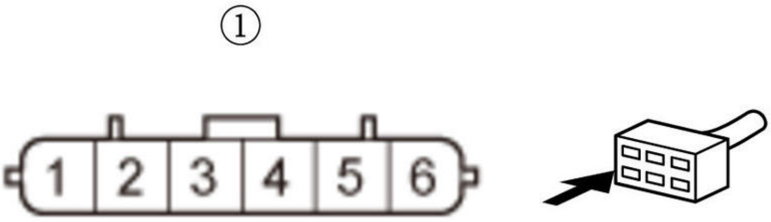

Is there continuity?

YES

Repair a short in the APS1 wire between the PCM (A45) and the APP sensor.

NO

The APS1 wire is not shorted. Go to step 5.

5. Open wire check (APS1 line)

-1. Connect terminals A and B with a jumper wire.

Terminal A	APP sensor 6P connector (female terminals) No. 6: ①

Terminal B	Body ground

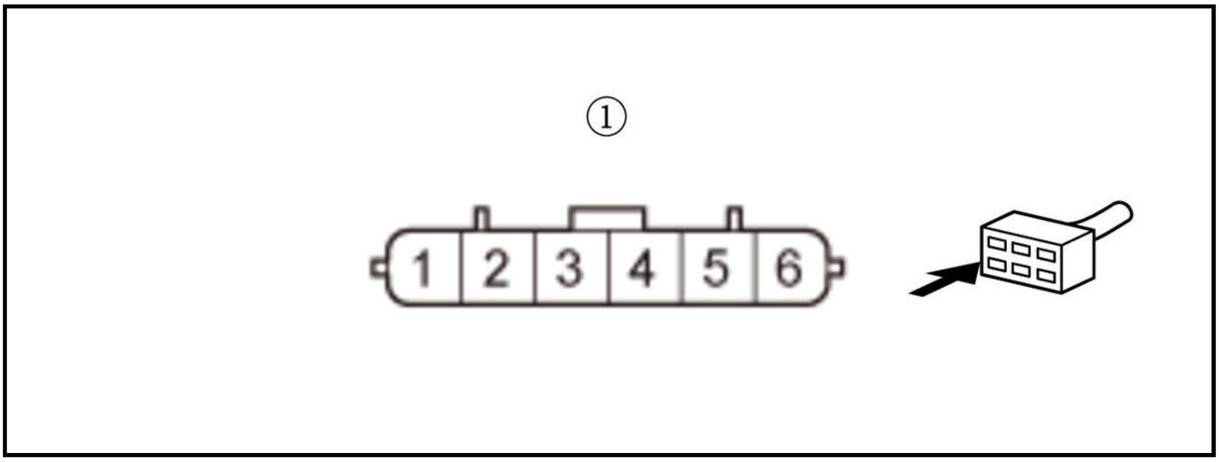

-2. Check for continuity between test points 1 and 2.

Test condition	Vehicle OFF (LOCK) mode
B	APP sensor 6P connector: disconnected
B	PCM connector A (51P): disconnected
B	APP sensor 6P connector No. 6: jumped to body ground
Test point 1	**PCM connector A (51P) No. 45**
Test point 2	Body ground

Is there continuity?

YES

The APS1 wire is OK. Go to step 6.

NO

Repair an open in the APS1 wire between the PCM (A45) and the APP sensor.

6. PCM internal circuit check

-1. Remove the jumper wire from the APP sensor 6P connector.

-2. Reconnect the following connector.

PCM connector A (51P)

-3. Connect terminals A and B with a jumper wire.

Terminal A	APP sensor 6P connector (female terminals) No. 4: ①
Terminal B	APP sensor 6P connector (female terminals) No. 6: ①

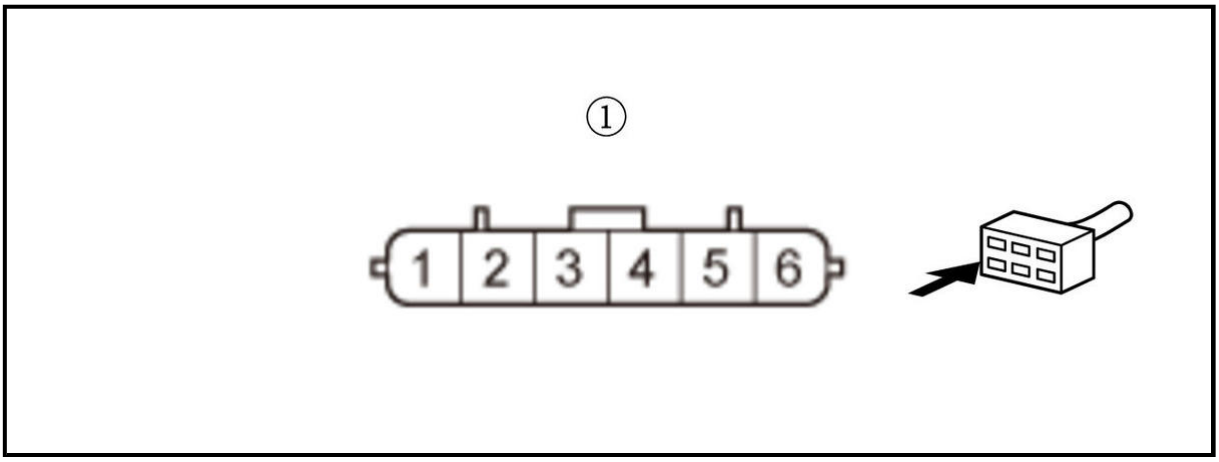

-4. Exit the SCS mode with the HDS.

-5. Turn the vehicle to the ON mode.

-6. Check the parameter (s) below with the HDS.

Signal	Threshold		Current conditions	
	Values	**Unit**	**Values**	**Unit**
APP SENSOR A	Less than 0.66	V	B	B

Do the current condition (s) match the threshold?

YES

Check for any authorized service information related to the DTCs or symptoms you are troubleshooting, or **substitute a known-good PCM** .

NO

Replace the accelerator pedal module .

7. Open wire check (VCC4 line)

-1. Turn the vehicle to the OFF (LOCK) mode.

-2. Jump the SCS line with the HDS, and wait more than 1 minute.

-3. Disconnect the following connector.

PCM connector A (51P)

-4. Connect terminals A and B with a jumper wire.

Terminal A	APP sensor 6P connector (female terminals) No. 4: ①
Terminal B	Body ground

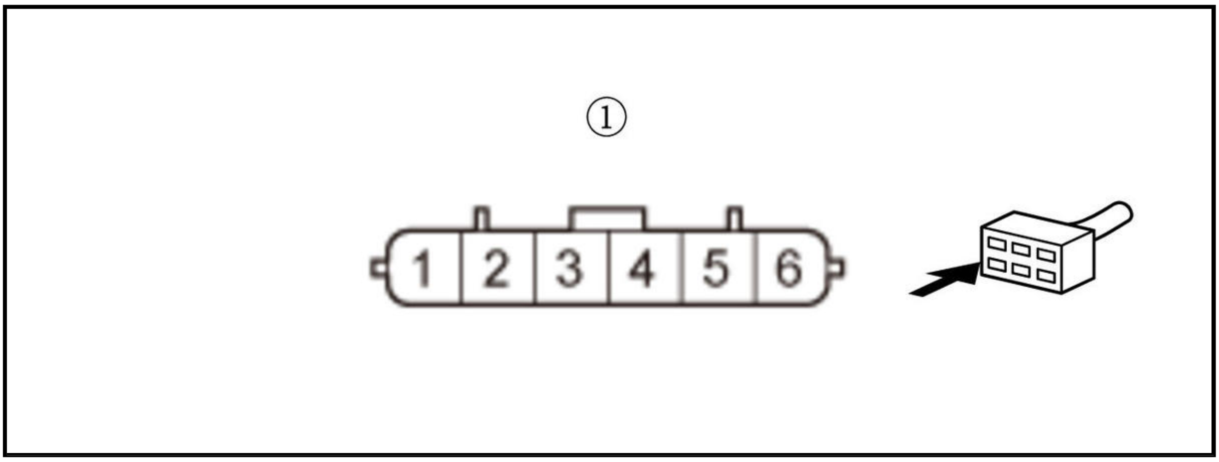

-5. Check for continuity between test points 1 and 2.

Test condition	Vehicle OFF (LOCK) mode
B	APP sensor 6P connector: disconnected
B	PCM connector A (51P): disconnected
B	APP sensor 6P connector No. 4: jumped to body ground
Test point 1	**PCM connector A (51P) No. 31**
Test point 2	Body ground

Is there continuity?

YES

The VCC4 wire is OK. Check for any authorized service information related to the DTCs or symptoms you are troubleshooting, or **substitute a known-good PCM** .

NO

Repair an open in the VCC4 wire between the PCM (A31) and the APP sensor.

8. Determine possible failure area (APP sensor, others)

-1. Turn the vehicle to the OFF (LOCK) mode.

-2. Disconnect the following connector.

APP sensor 6P connector

-3. Turn the vehicle to the ON mode.

-4. Measure the voltage between test points 1 and 2.

Test condition	Vehicle ON mode
B	APP sensor 6P connector: disconnected
Test point 1	APP sensor 6P connector (female terminals) No. 4: ①
Test point 2	APP sensor 6P connector (female terminals) No. 5: ①

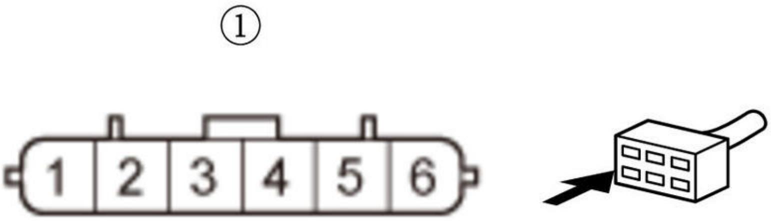

Is there about 5.0 V?

YES

Replace the accelerator pedal module .

NO

Go to step 9.

9. Open wire check (SG4 line)

-1. Turn the vehicle to the OFF (LOCK) mode.

-2. Jump the SCS line with the HDS, and wait more than 1 minute.

-3. Disconnect the following connector.

PCM connector A (51P)

-4. Connect terminals A and B with a jumper wire.

Terminal A	APP sensor 6P connector (female terminals) No. 5: ①
Terminal B	Body ground

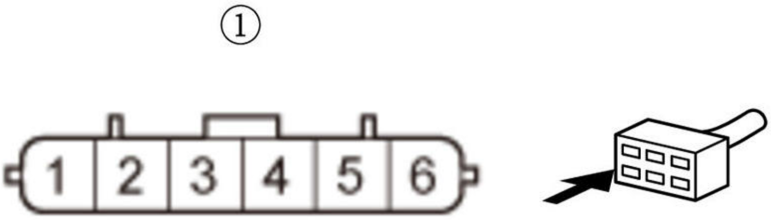

-5. Check for continuity between test points 1 and 2.

Test condition	Vehicle OFF (LOCK) mode
B	APP sensor 6P connector: disconnected
B	PCM connector A (51P): disconnected

B	APP sensor 6P connector No. 5: jumped to body ground
Test point 1	PCM connector A (51P) No. 30
Test point 2	Body ground

Is there continuity?

YES

The SG4 wire is OK. Check for any authorized service information related to the DTCs or symptoms you are troubleshooting, or substitute a known-good PCM .

NO

Repair an open in the SG4 wire between the PCM (A30) and the APP sensor.

DTC P2122 (1.5 L ENGINE)

DTC P2122 : APP Sensor A (TP Sensor D) Circuit Low Voltage

NOTE: Before you troubleshoot, review the general troubleshooting information .

DTC Description	Confirmed DTC	Pending DTC
P2122 APP Sensor A (TP Sensor D) Circuit Low Voltage	B	B

DTC (PGM-FI)

1. Problem verification

   -1. Turn the vehicle to the ON mode.

   -2. Check the parameter (s) below with the HDS.

Signal	Threshold		Current conditions	
	Values	Unit	Values	Unit
APP SENSOR A	Less than 0.2	V	B	B

   Do the current condition (s) match the threshold?

   YES

   Go to step 2.

   NO

   Intermittent failure, the system is OK at this time. Check for poor connections or loose terminals at the APP sensor and the PCM. If the on-board snapshot of this DTC is recorded, try to reproduce the failure under the same conditions with the on-board snapshot .

2. Determine possible failure area (VCC4 line, others)

   -1. Turn the vehicle to the OFF (LOCK) mode.

   -2. Disconnect the following connector.

APP sensor 6P connector

   -3. Turn the vehicle to the ON mode.

-4. Measure the voltage between test points 1 and 2.

Test condition	Vehicle ON mode
B	APP sensor 6P connector: disconnected
Test point 1	APP sensor 6P connector (female terminals) No. 4: ①
Test point 2	APP sensor 6P connector (female terminals) No. 5: ①

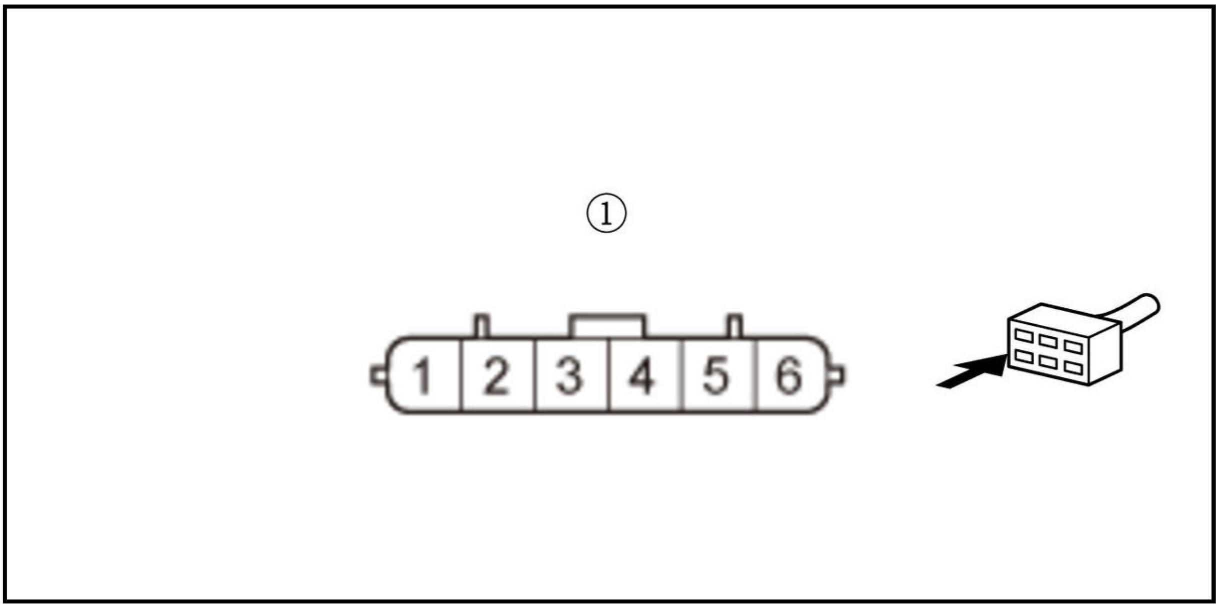

Is there about 5.0 V?

YES

Go to step 3.

NO

Go to step 6.

3. Shorted wire check (APS1 line)

-1. Turn the vehicle to the OFF (LOCK) mode.

-2. Jump the SCS line with the HDS, and wait more than 1 minute.

-3. Disconnect the following connector.

PCM connector A (50P)

-4. Check for continuity between test points 1 and 2.

Test condition	Vehicle OFF (LOCK) mode
B	APP sensor 6P connector: disconnected
B	PCM connector A (50P): disconnected
Test point 1	APP sensor 6P connector (female terminals) No. 6: ①
Test point 2	Body ground

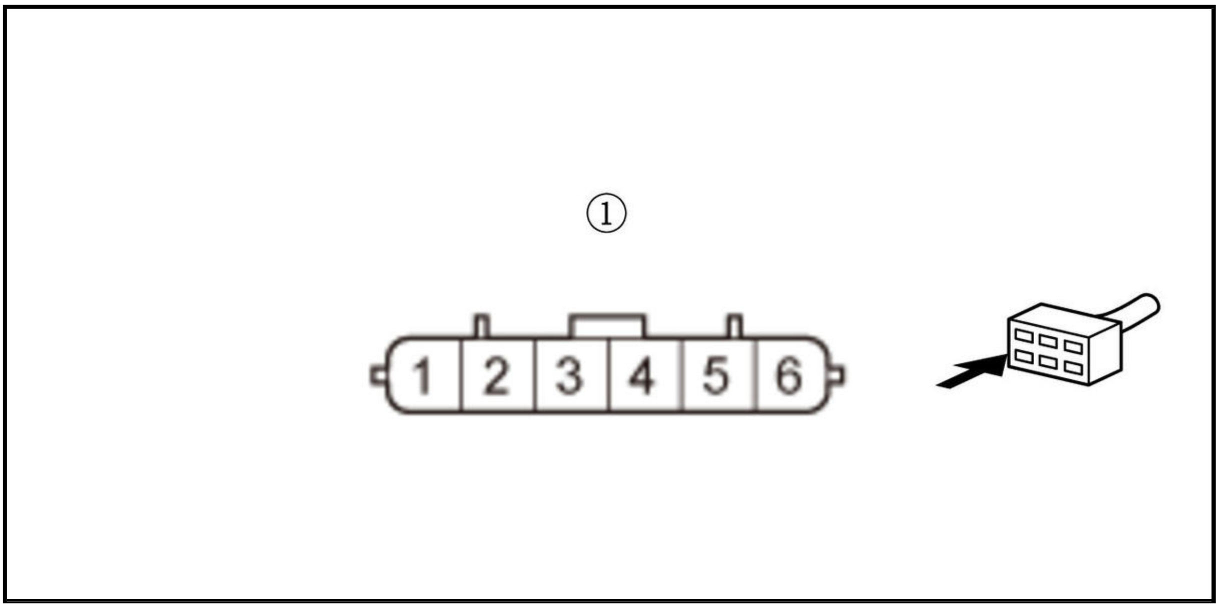

Is there continuity?

YES

Repair a short in the APS1 wire between the PCM (A32) and the APP sensor.

NO

Go to step 4.

4. Open wire check (APS1 line)

-1. Connect terminals A and B with a jumper wire.

Terminal A	APP sensor 6P connector (female terminals) No. 6: ①
Terminal B	Body ground

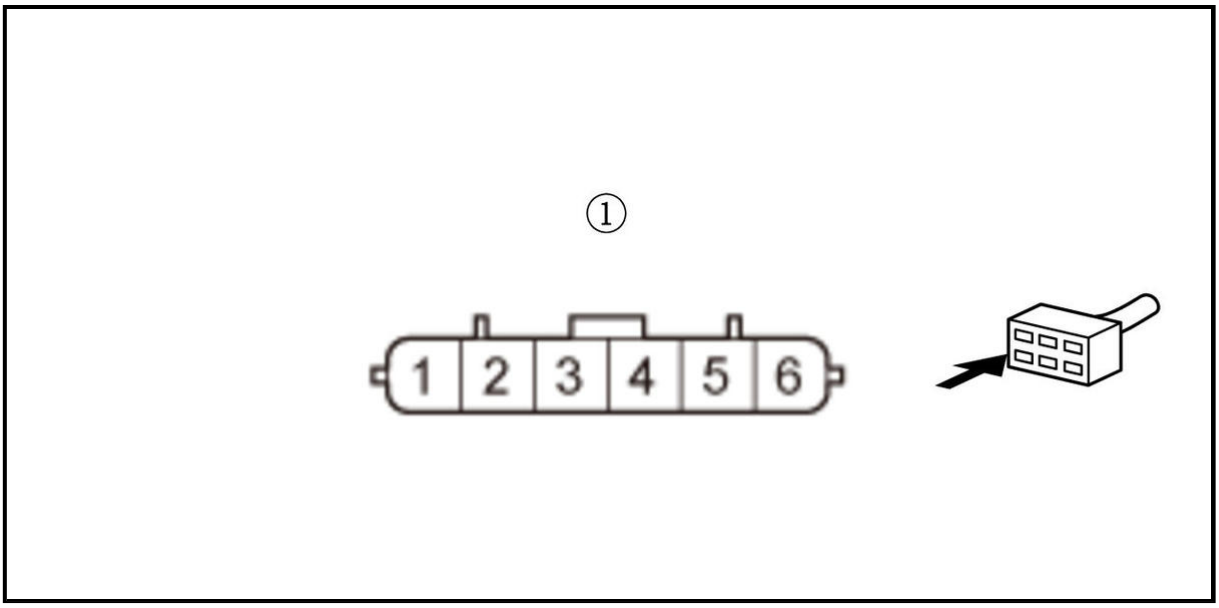

-2. Check for continuity between test points 1 and 2.

Test condition	Vehicle OFF (LOCK) mode
B	APP sensor 6P connector: disconnected
B	APP sensor 6P connector No. 6: jumped to body ground

B	PCM connector A (50P): disconnected
Test point 1	PCM connector A (50P) No. 32
Test point 2	Body ground

Is there continuity?

YES

Go to step 5.

NO

Repair an open in the APS1 wire between the PCM (A32) and the APP sensor.

5. PCM internal circuit check

-1. Remove the jumper wire from the APP sensor 6P connector.

-2. Reconnect the following connector.

PCM connector A (50P)

-3. Connect terminals A and B with a jumper wire.

Terminal A	APP sensor 6P connector (female terminals) No. 4: ①
Terminal B	APP sensor 6P connector (female terminals) No. 6: ①

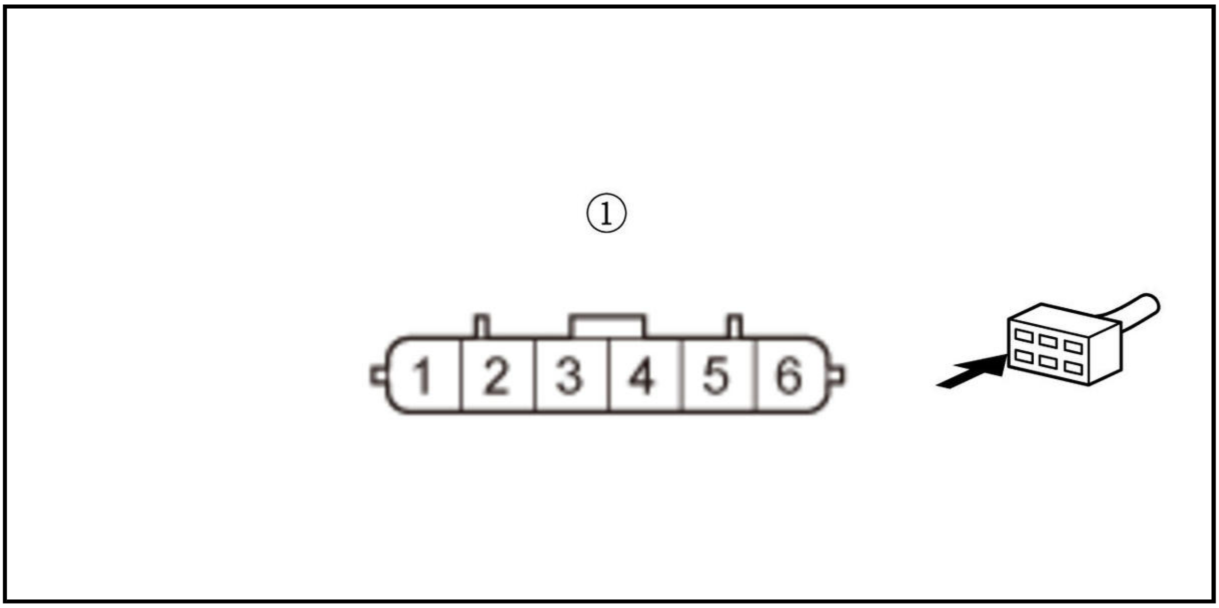

-4. Exit the SCS mode with the HDS.

-5. Turn the vehicle to the ON mode.

-6. Check the parameter (s) below with the HDS.

Signal	**Threshold**		**Current conditions**	
	Values	**Unit**	**Values**	**Unit**
APP SENSOR A	Less than 0.2	V	B	B

Do the current condition (s) match the threshold?

YES

Check for any authorized service information related to the DTCs or symptoms you are troubleshooting, or **substitute a known-good PCM** .

NO

Replace the APP sensor .

6. Open wire check (VCC4 line)

-1. Turn the vehicle to the OFF (LOCK) mode.

-2. Jump the SCS line with the HDS, and wait more than 1 minute.

-3. Disconnect the following connector.

PCM connector A (50P)

-4. Connect terminals A and B with a jumper wire.

Terminal A	APP sensor 6P connector (female terminals) No. 4: ①
Terminal B	Body ground

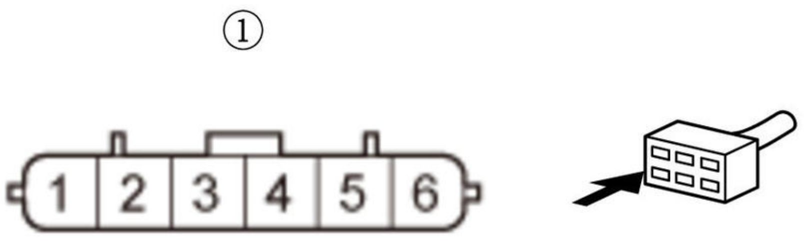

-5. Check for continuity between test points 1 and 2.

Test condition	Vehicle OFF (LOCK) mode
B	APP sensor 6P connector: disconnected

B	APP sensor 6P connector No. 4: jumped to body ground
B	PCM connector A (50P): disconnected
Test point 1	**PCM connector A (50P) No. 45**
Test point 2	Body ground

Is there continuity?

YES

The VCC4 wire is OK. Check for any authorized service information related to the DTCs or symptoms you are troubleshooting, or **substitute a known-good PCM** .

NO

Repair an open in the VCC4 wire between the PCM (A45) and the APP sensor.

DTC P2122 (2.4 L ENGINE) (2017 2018 2019)

DTC P2122 : APP Sensor A (TP Sensor D) Circuit Low Voltage

NOTE: Before you troubleshoot, **review the general troubleshooting information** .

DTC Description	Confirmed DTC	Pending DTC
P2122 APP Sensor A (TP Sensor D) Circuit Low Voltage	B	B

DTC (PGM-FI)

1. Problem verification

-1. Turn the vehicle to the ON mode.

-2. Check the parameter (s) below with the HDS.

Signal	Threshold		Current conditions	
	Values	Unit	Values	Unit
APP SENSOR A	Less than 0.2	V	B	B

Do the current condition (s) match the threshold?

YES

The failure is duplicated. Go to step 2.

NO

Intermittent failure, the system is OK at this time. Check for poor connections or loose terminals at the APP sensor and the PCM. **If the on-board snapshot of this DTC is recorded, try to reproduce the failure under the same conditions with the on-board snapshot** .

2. Determine possible failure area (VCC4 line, others)

-1. Turn the vehicle to the OFF (LOCK) mode.

-2. Disconnect the following connector.

APP sensor 6P connector

-3. Turn the vehicle to the ON mode.

-4. Measure the voltage between test points 1 and 2.

Test condition	Vehicle ON mode
B	APP sensor 6P connector: disconnected
Test point 1	APP sensor 6P connector (female terminals) No. 4: ①
Test point 2	APP sensor 6P connector (female terminals) No. 5: ①

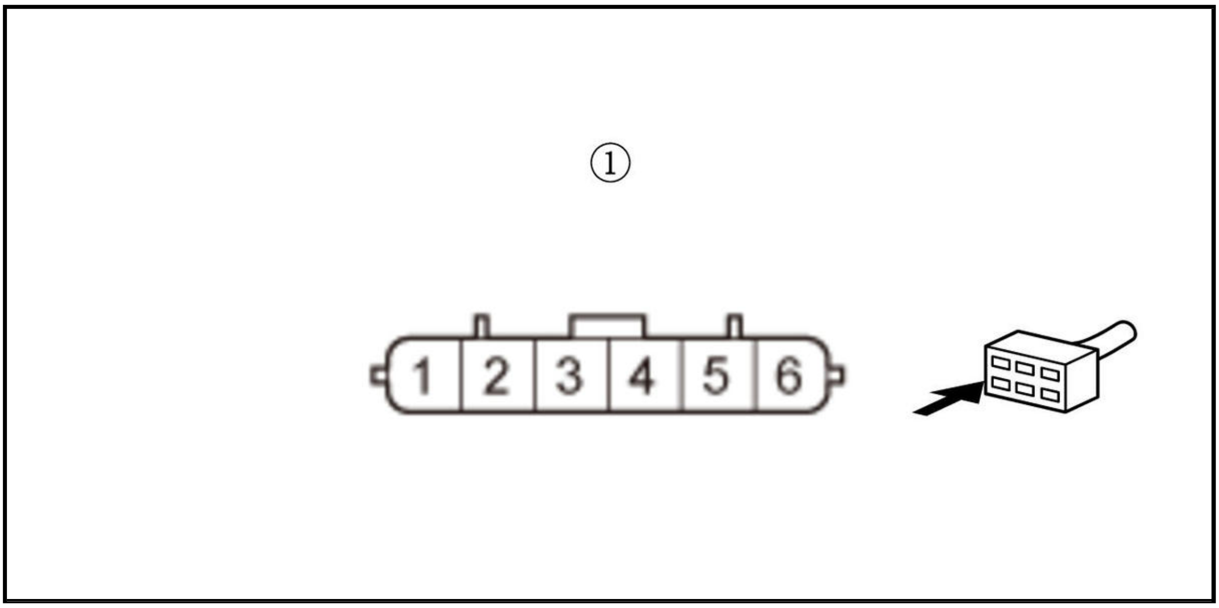

Is there about 5.0 V?

YES

Go to step 3.

NO

Go to step 6.

3. Shorted wire check (APS1 line)

-1. Turn the vehicle to the OFF (LOCK) mode.

-2. Jump the SCS line with the HDS, and wait more than 1 minute.

-3. Disconnect the following connector.

PCM connector A (51P)

-4. Check for continuity between test points 1 and 2.

Test condition	Vehicle OFF (LOCK) mode
B	APP sensor 6P connector: disconnected
B	PCM connector A (51P): disconnected
Test point 1	APP sensor 6P connector (female terminals) No. 6: ①
Test point 2	Body ground

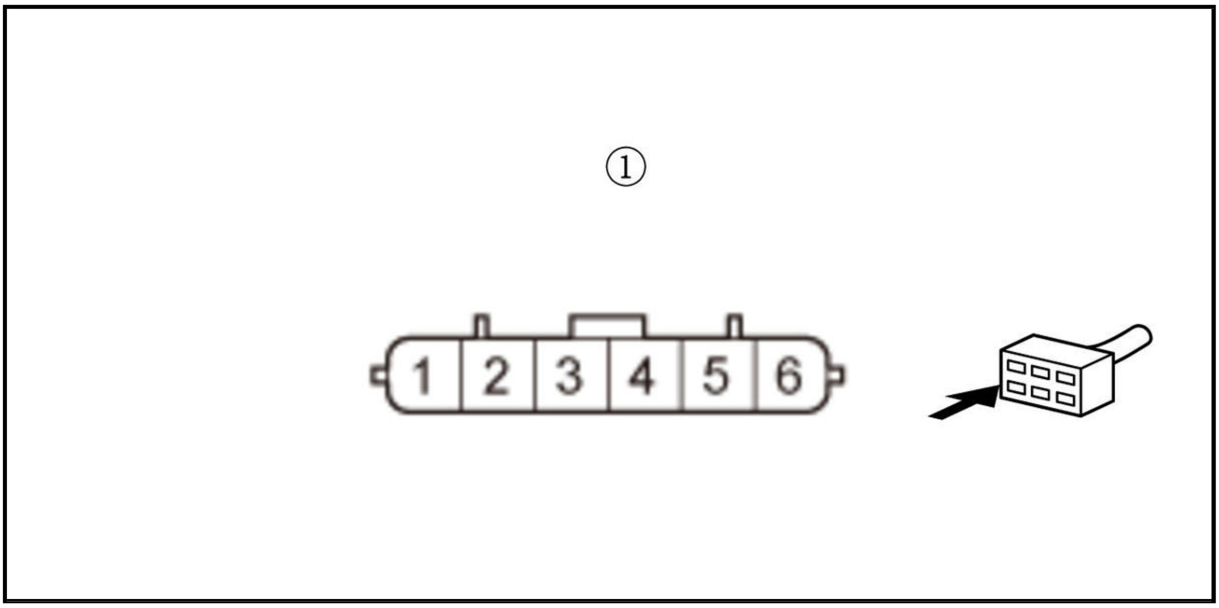

Is there continuity?

YES

Repair a short in the APS1 wire between the PCM (A45) and the APP sensor.

NO

The APS1 wire is not shorted. Go to step 4.

4. Open wire check (APS1 line)

-1. Connect terminals A and B with a jumper wire.

Terminal A	APP sensor 6P connector (female terminals) No. 6: ①
Terminal B	Body ground

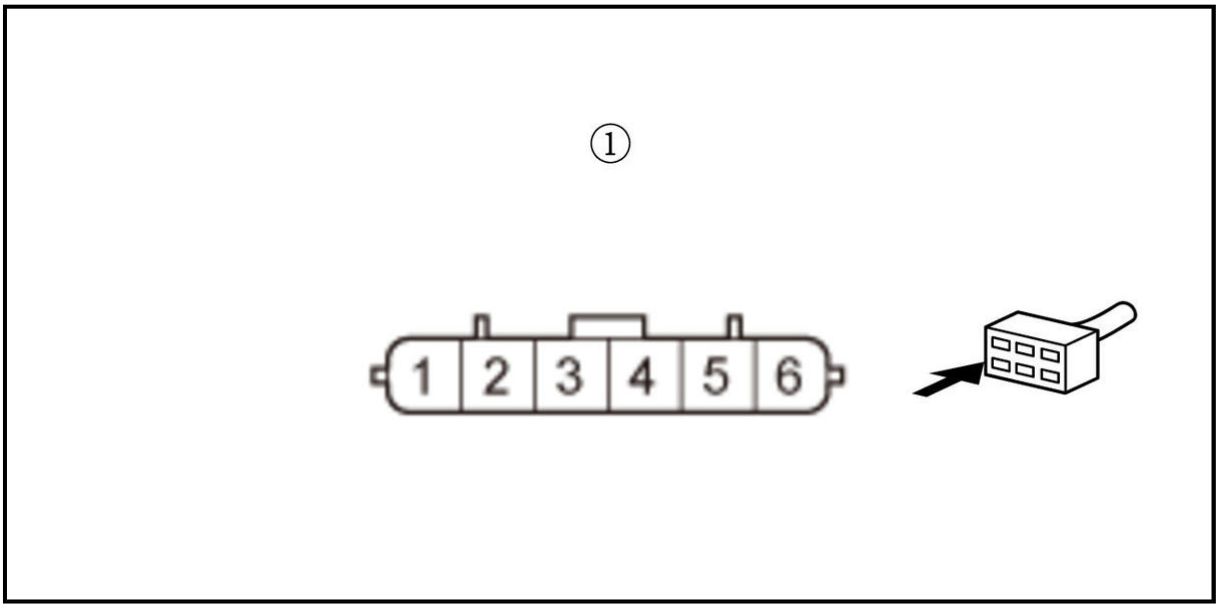

-2. Check for continuity between test points 1 and 2.

Test condition	Vehicle OFF (LOCK) mode
B	APP sensor 6P connector: disconnected
B	APP sensor 6P connector No. 6: jumped to body ground

B	PCM connector A (51P): disconnected
Test point 1	**PCM connector A (51P) No. 45**
Test point 2	Body ground

Is there continuity?

YES

The APS1 wire is OK. Go to step 5.

NO

Repair an open in the APS1 wire between the PCM (A45) and the APP sensor.

5. PCM internal circuit check

-1. Remove the jumper wire from the APP sensor 6P connector.

-2. Reconnect the following connector.

PCM connector A (51P)

-3. Connect terminals A and B with a jumper wire.

Terminal A	APP sensor 6P connector (female terminals) No. 4: ①
Terminal B	APP sensor 6P connector (female terminals) No. 6: ①

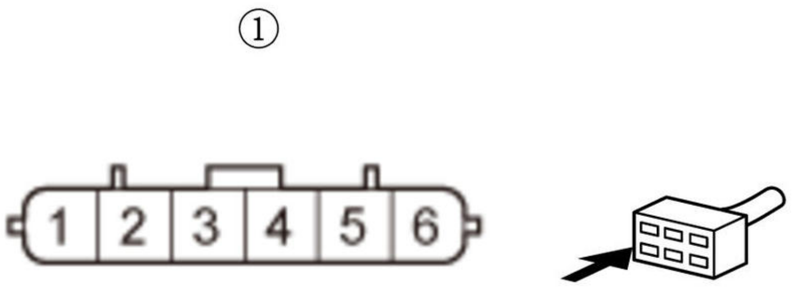

-4. Turn the vehicle to the ON mode.

-5. Check the parameter (s) below with the HDS.

Signal	**Threshold**		**Current conditions**	
	Values	**Unit**	**Values**	**Unit**
APP SENSOR A	Less than 0.2	V	B	B

Do the current condition (s) match the threshold?

YES

Check for any authorized service information related to the DTCs or symptoms you are troubleshooting or **substitute a known-good PCM** .

NO

Replace the APP sensor .

6. Open wire check (VCC4 line)

-1. Turn the vehicle to the OFF (LOCK) mode.

-2. Jump the SCS line with the HDS, and wait more than 1 minute.

-3. Disconnect the following connector.

PCM connector A (51P)

-4. Connect terminals A and B with a jumper wire.

Terminal A	APP sensor 6P connector (female terminals) No. 4: ①
Terminal B	Body ground

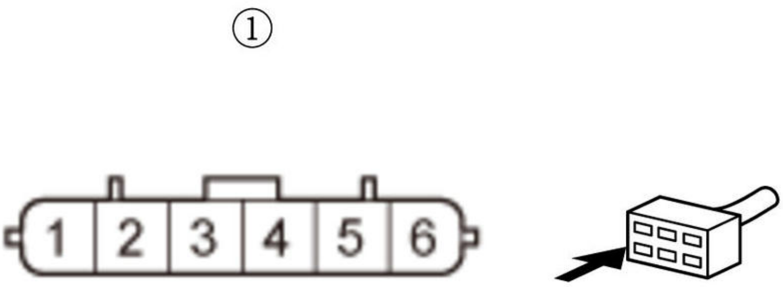

-5. Check for continuity between test points 1 and 2.

Test condition	Vehicle OFF (LOCK) mode
B	APP sensor 6P connector: disconnected
B	APP sensor 6P connector No. 4: jumped to body ground
B	PCM connector A (51P): disconnected
Test point 1	**PCM connector A (51P) No. 31**

Test point 2	Body ground

Is there continuity?

YES

The VCC4 wire is OK. Check for any authorized service information related to the DTCs or symptoms you are troubleshooting or **substitute a known-good PCM** .

NO

Repair an open in the VCC4 wire between the PCM (A31) and the APP sensor.

DTC P2123 (1.5 L ENGINE)

DTC P2123 : APP Sensor A (TP Sensor D) Circuit High Voltage

NOTE: Before you troubleshoot, **review the general troubleshooting information** .

DTC Description	Confirmed DTC	Pending DTC
P2123 APP Sensor A (TP Sensor D) Circuit High Voltage	B	B

DTC (PGM-FI)

1. Problem verification

-1. Turn the vehicle to the ON mode.

-2. Check the parameter (s) below with the HDS.

Signal	Threshold		Current conditions	
	Values	Unit	Values	Unit
APP SENSOR A	More than 4.9	V	B	B

Do the current condition (s) match the threshold?

YES

Go to step 2.

NO

Intermittent failure, the system is OK at this time. Check for poor connections or loose terminals at the APP sensor and the PCM. **If the on-board snapshot of this DTC is recorded, try to reproduce the failure under the same conditions with the on-board snapshot** .

2. Determine possible failure area (APP sensor, others)

-1. Turn the vehicle to the OFF (LOCK) mode.

-2. Disconnect the following connector.

APP sensor 6P connector

-3. Turn the vehicle to the ON mode.

-4. Measure the voltage between test points 1 and 2.

Test condition	Vehicle ON mode
B	APP sensor 6P connector: disconnected
Test point 1	APP sensor 6P connector (female terminals) No. 4: ①
Test point 2	APP sensor 6P connector (female terminals) No. 5: ①

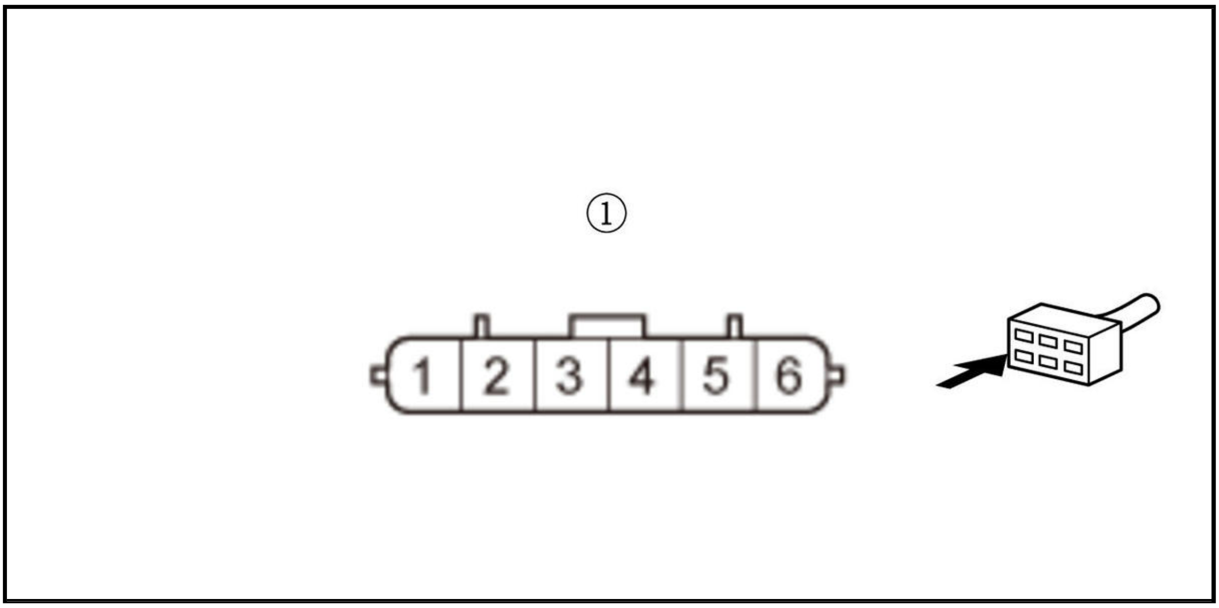

Is there about 5.0 V?

YES

Replace the APP sensor .

NO

Go to step 3.

3. Open wire check (SG4 line)

-1. Turn the vehicle to the OFF (LOCK) mode.

-2. Jump the SCS line with the HDS, and wait more than 1 minute.

-3. Disconnect the following connector.

PCM connector A (50P)

-4. Connect terminals A and B with a jumper wire.

Terminal A	APP sensor 6P connector (female terminals) No. 5: ①
Terminal B	Body ground

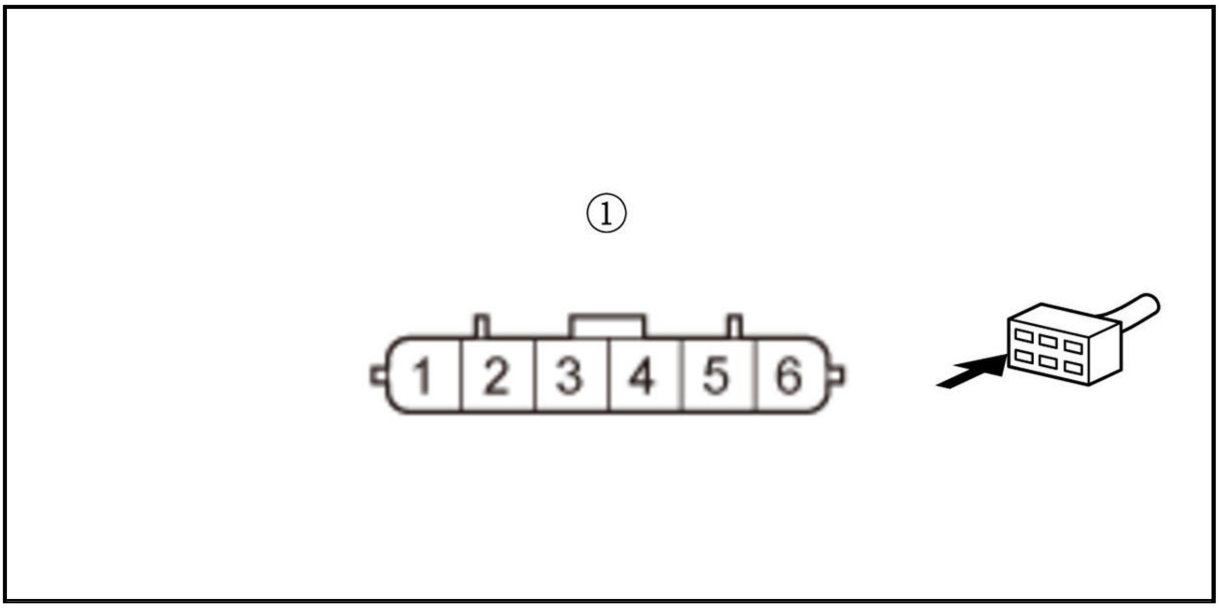

-5. Check for continuity between test points 1 and 2.

Test condition	Vehicle OFF (LOCK) mode
B	APP sensor 6P connector: disconnected
B	APP sensor 6P connector No. 5: jumped to body ground
B	PCM connector A (50P): disconnected
Test point 1	PCM connector A (50P) No. 46
Test point 2	Body ground

Is there continuity?

YES

The SG4 wire is OK. Check for any authorized service information related to the DTCs or symptoms you are troubleshooting, or substitute a known-good PCM .

NO

Repair an open in the SG4 wire between the PCM (A46) and the APP sensor.

DTC P2123 (2.4 L ENGINE) (2017 2018 2019)

DTC P2123 : APP Sensor A (TP Sensor D) Circuit High Voltage

NOTE: Before you troubleshoot, review the general troubleshooting information .

DTC Description	Confirmed DTC	Pending DTC
P2123 APP Sensor A (TP Sensor D) Circuit High Voltage	B	B

DTC (PGM-FI)

1. Problem verification

-1. Turn the vehicle to the ON mode.

-2. Check the parameter (s) below with the HDS.

Signal	Threshold		Current conditions	
	Values	**Unit**	**Values**	**Unit**
APP SENSOR A	More than 4.9	V	B	B

Do the current condition (s) match the threshold?

YES

The failure is duplicated. Go to step 2.

NO

Intermittent failure, the system is OK at this time. Check for poor connections or loose terminals at the APP sensor and the PCM. **If the on-board snapshot of this DTC is recorded, try to reproduce the failure under the same conditions with the on-board snapshot** .

2. Determine possible failure area (APP sensor, others)

-1. Turn the vehicle to the OFF (LOCK) mode.

-2. Disconnect the following connector.

APP sensor 6P connector

-3. Turn the vehicle to the ON mode.

-4. Measure the voltage between test points 1 and 2.

Test condition	Vehicle ON mode
B	APP sensor 6P connector: disconnected
Test point 1	APP sensor 6P connector (female terminals) No. 4: ①
Test point 2	APP sensor 6P connector (female terminals) No. 5: ①

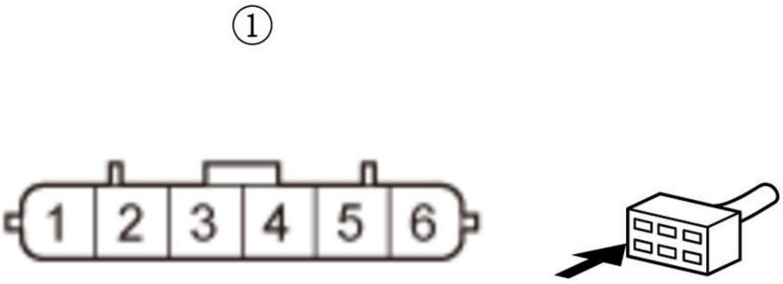

Is there about 5.0 V?

YES

Replace the APP sensor .

NO

Go to step 3.

3. Open wire check (SG4 line)

-1. Turn the vehicle to the OFF (LOCK) mode.

-2. Jump the SCS line with the HDS, and wait more than 1 minute.

-3. Disconnect the following connector.

PCM connector A (51P)

-4. Connect terminals A and B with a jumper wire.

Terminal A	APP sensor 6P connector (female terminals) No. 5: ①
Terminal B	Body ground

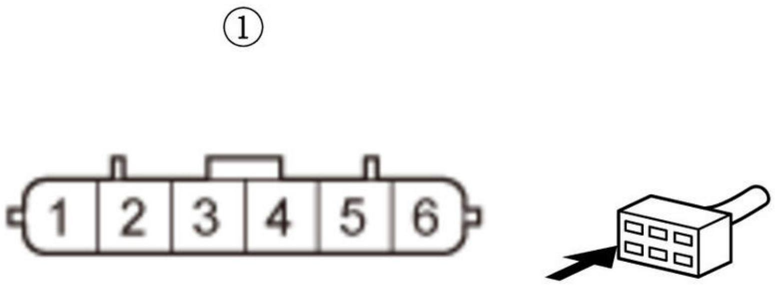

-5. Check for continuity between test points 1 and 2.

Test condition	Vehicle OFF (LOCK) mode
B	APP sensor 6P connector: disconnected
B	APP sensor 6P connector No. 5: jumped to body ground
B	PCM connector A (51P): disconnected
Test point 1	PCM connector A (51P) No. 30
Test point 2	Body ground

Is there continuity?

YES

The SG4 wire is OK. Check for any authorized service information related to the DTCs or symptoms you are troubleshooting or substitute a known-good PCM .

NO

Repair an open in the SG4 wire between the PCM (A30) and the APP sensor.

DTC P2126 : APP Sensor B (TP Sensor E) Out of Range

NOTE: Before you troubleshoot, **review the general troubleshooting information** .

DTC Description	Confirmed DTC	Pending DTC
P2126 APP Sensor B (TP Sensor E) Out of Range	B	B

DTC (PGM-FI)

1. Problem verification 1

   -1. Turn the vehicle to the ON mode.

   -2. Check the parameter (s) below with the HDS.

Signal	Threshold		Current conditions	
	Values	Unit	Values	Unit
APP SENSOR B	Less than 0.19	V	B	B

   Do the current condition (s) match the threshold?

   YES

   The failure is duplicated. Go to step 3.

   NO

   Go to step 2.

2. Problem verification 2

   -1. Check the parameter (s) below with the HDS.

Signal	Threshold		Current conditions	
	Values	Unit	Values	Unit
APP SENSOR B	More than 2.62	V	B	B

   Do the current condition (s) match the threshold?

   YES

   The failure is duplicated. Go to step 8.

   NO

   Intermittent failure, the system is OK at this time. Check for poor connections or loose terminals at the APP sensor and the PCM. **If the on-board snapshot of this DTC is recorded, try to reproduce the failure under the same conditions with the on-board snapshot** .

3. Determine possible failure area (VCC5 line, others)

   -1. Turn the vehicle to the OFF (LOCK) mode.

   -2. Disconnect the following connector.

APP sensor 6P connector

-3. Turn the vehicle to the ON mode.

-4. Measure the voltage between test points 1 and 2.

Test condition	Vehicle ON mode
B	APP sensor 6P connector: disconnected
Test point 1	APP sensor 6P connector (female terminals) No. 1: ①
Test point 2	APP sensor 6P connector (female terminals) No. 2: ①

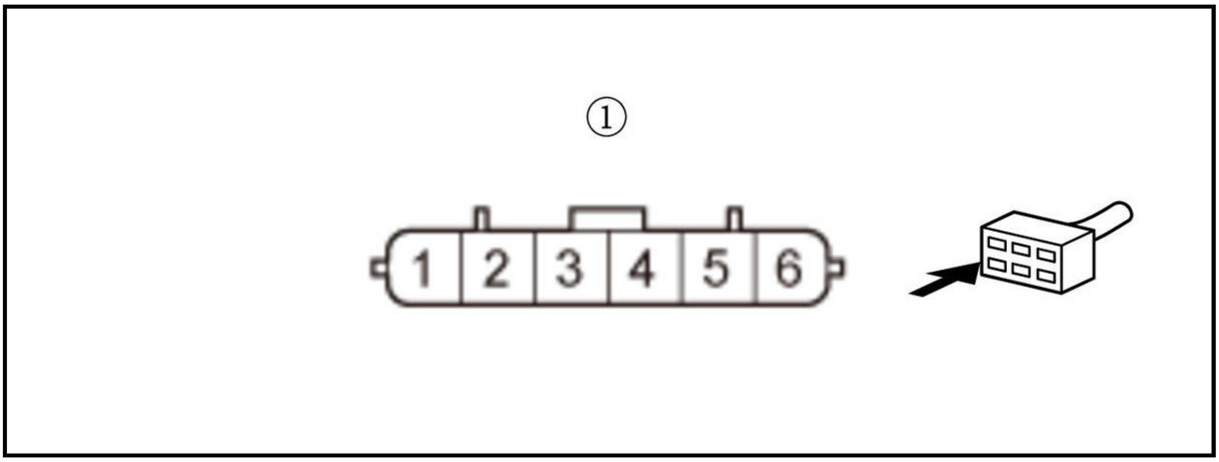

Is there about 5.0 V?

YES

Go to step 4.

NO

Go to step 7.

4. Shorted wire check (APS2 line)

-1. Turn the vehicle to the OFF (LOCK) mode.

-2. Jump the SCS line with the HDS, and wait more than 1 minute.

-3. Disconnect the following connector.

PCM connector A (50P)

-4. Check for continuity between test points 1 and 2.

Test condition	Vehicle OFF (LOCK) mode
B	APP sensor 6P connector: disconnected
B	PCM connector A (50P): disconnected
Test point 1	APP sensor 6P connector (female terminals) No. 3: ①
Test point 2	Body ground

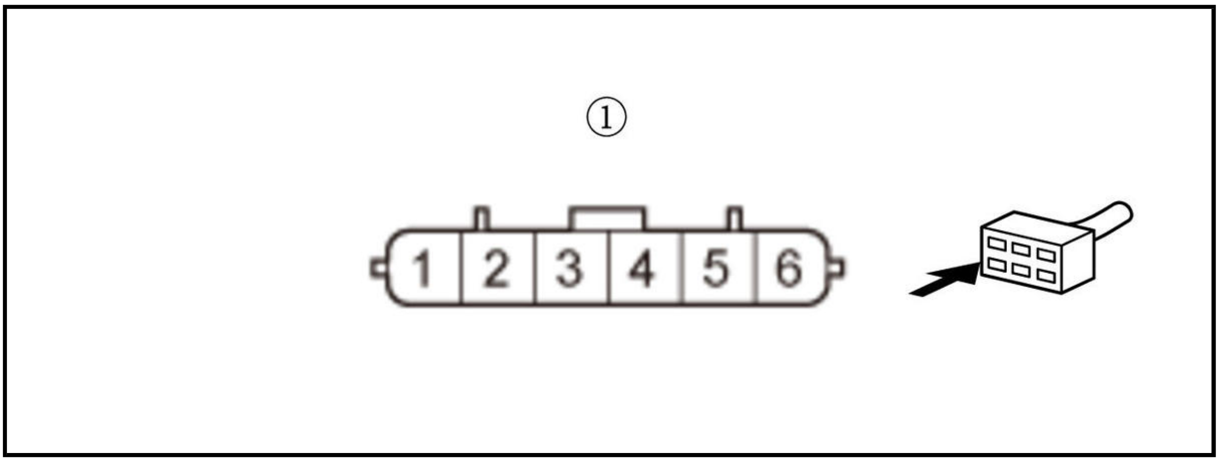

Is there continuity?

YES

Repair a short in the APS2 wire between the PCM (A34) and the APP sensor.

NO

The APS2 wire is not shorted. Go to step 5.

5. Open wire check (APS2 line)

-1. Connect terminals A and B with a jumper wire.

Terminal A	APP sensor 6P connector (female terminals) No. 3: ①
Terminal B	Body ground

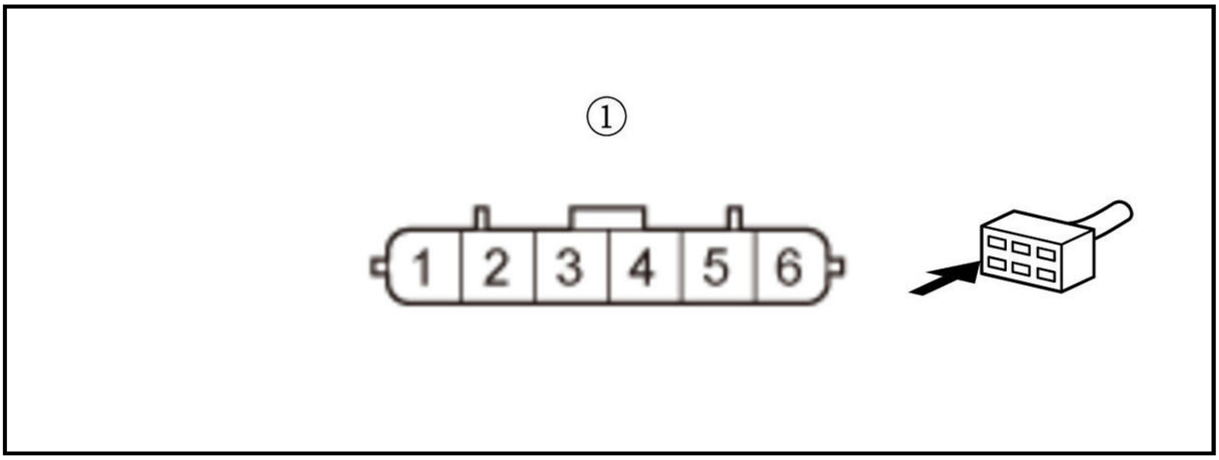

-2. Check for continuity between test points 1 and 2.

Test condition	Vehicle OFF (LOCK) mode
B	APP sensor 6P connector: disconnected
B	APP sensor 6P connector No. 3: jumped to body ground
B	PCM connector A (50P): disconnected
Test point 1	**PCM connector A (50P) No. 34**
Test point 2	Body ground

Is there continuity?

YES

The APS2 wire is OK. Go to step 6.

NO

Repair an open in the APS2 wire between the PCM (A34) and the APP sensor.

6. PCM internal circuit check

-1. Remove the jumper wire from the APP sensor 6P connector.

-2. Reconnect the following connector.

PCM connector A (50P)

-3. Connect terminals A and B with a jumper wire.

Terminal A	APP sensor 6P connector (female terminals) No. 1: ①
Terminal B	APP sensor 6P connector (female terminals) No. 3: ①

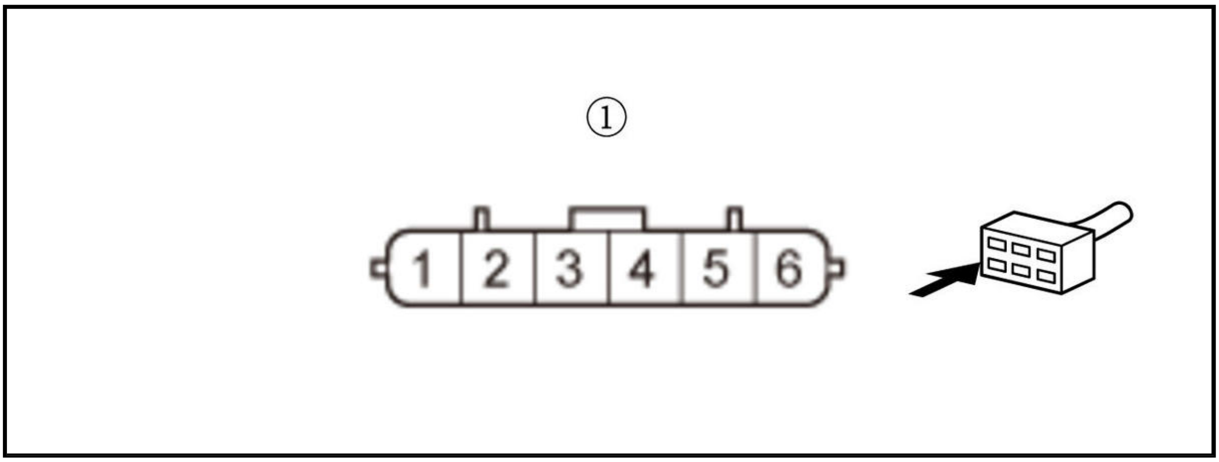

-4. Exit the SCS mode with the HDS.

-5. Turn the vehicle to the ON mode.

-6. Check the parameter (s) below with the HDS.

Signal	Threshold		Current conditions	
	Values	Unit	Values	Unit
APP SENSOR B	Less than 0.19	V	B	B

Do the current condition (s) match the threshold?

YES

Check for any authorized service information related to the DTCs or symptoms you are troubleshooting, or **substitute a known-good PCM** .

NO

Replace the accelerator pedal module .

7. Open wire check (VCC5 line)

-1. Turn the vehicle to the OFF (LOCK) mode.

-2. Jump the SCS line with the HDS, and wait more than 1 minute.

-3. Disconnect the following connector.

PCM connector A (50P)

-4. Connect terminals A and B with a jumper wire.

Terminal A	APP sensor 6P connector (female terminals) No. 1: ①
Terminal B	Body ground

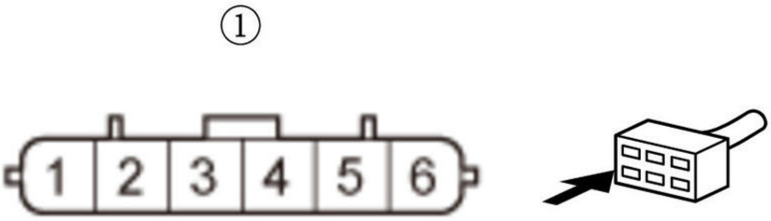

-5. Check for continuity between test points 1 and 2.

Test condition	Vehicle OFF (LOCK) mode
B	APP sensor 6P connector: disconnected
B	APP sensor 6P connector No. 1: jumped to body ground
B	PCM connector A (50P): disconnected
Test point 1	**PCM connector A (50P) No. 44**
Test point 2	Body ground

Is there continuity?

YES

The VCC5 wire is OK. Check for any authorized service information related to the DTCs or symptoms you are troubleshooting, or **substitute a known-good PCM** .

NO

Repair an open in the VCC5 wire between the PCM (A44) and the APP sensor.

8. Determine possible failure area (APP sensor, others)

-1. Turn the vehicle to the OFF (LOCK) mode.

-2. Disconnect the following connector.

APP sensor 6P connector

-3. Turn the vehicle to the ON mode.

-4. Measure the voltage between test points 1 and 2.

Test condition	Vehicle ON mode
B	APP sensor 6P connector: disconnected
Test point 1	APP sensor 6P connector (female terminals) No. 1: ①
Test point 2	APP sensor 6P connector (female terminals) No. 2: ①

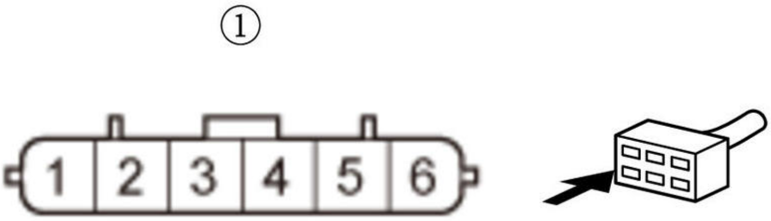

Is there about 5.0 V?

YES

Replace the accelerator pedal module .

NO

Go to step 9.

9. Open wire check (SG5 line)

-1. Turn the vehicle to the OFF (LOCK) mode.

-2. Jump the SCS line with the HDS, and wait more than 1 minute.

-3. Disconnect the following connector.

PCM connector A (50P)

-4. Connect terminals A and B with a jumper wire.

Terminal A	APP sensor 6P connector (female terminals) No. 2: ①
Terminal B	Body ground

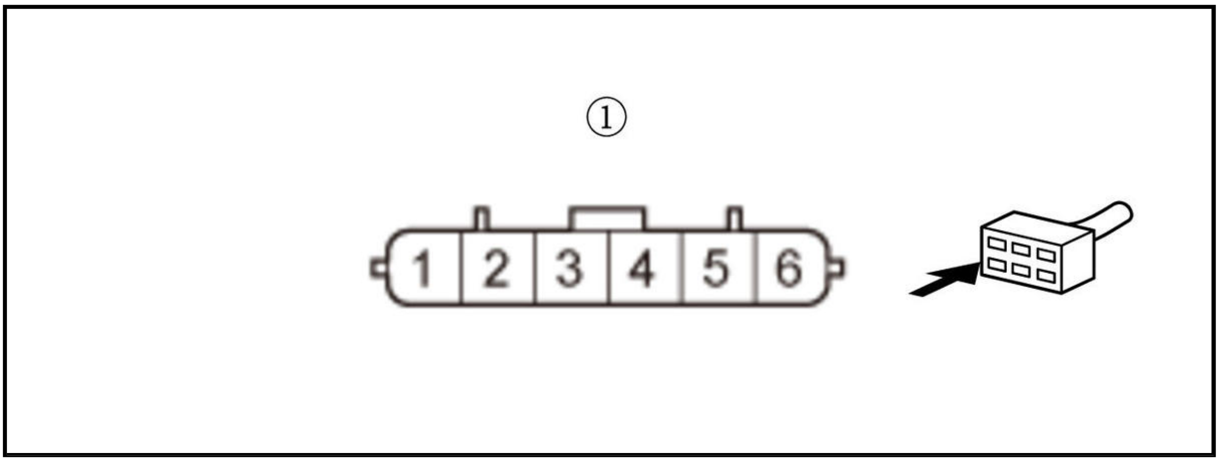

-5. Check for continuity between test points 1 and 2.

Test condition	Vehicle OFF (LOCK) mode
B	APP sensor 6P connector: disconnected
B	PCM connector A (50P): disconnected
B	APP sensor 6P connector No. 2: jumped to body ground
Test point 1	**PCM connector A (50P) No. 43**
Test point 2	Body ground

Is there continuity?

YES

The SG5 wire is OK. Check for any authorized service information related to the DTCs or symptoms you are troubleshooting, or **substitute a known-good PCM** .

NO

Repair an open in the SG5 wire between the PCM (A43) and the APP sensor.

DTC P2126 (2.4 L ENGINE) (2018 2019)

DTC P2126 : APP Sensor B (TP Sensor E) Out of Range

NOTE: Before you troubleshoot, **review the general troubleshooting information** .

DTC Description	Confirmed DTC	Pending DTC
P2126 APP Sensor B (TP Sensor E) Out of Range	B	B

DTC (PGM-FI)

1. Problem verification 1

-1. Turn the vehicle to the ON mode.

-2. Check the parameter (s) below with the HDS.

Signal	Threshold		Current conditions	
	Values	Unit	Values	Unit
APP SENSOR B	Less than 0.22	V	B	B

Do the current condition (s) match the threshold?

YES

The failure is duplicated. Go to step 3.

NO

Go to step 2.

2. Problem verification 2

-1. Check the parameter (s) below with the HDS.

Signal	Threshold		Current conditions	
	Values	Unit	Values	Unit
APP SENSOR B	More than 2.54	V	B	B

Do the current condition (s) match the threshold?

YES

The failure is duplicated. Go to step 8.

NO

Intermittent failure, the system is OK at this time. Check for poor connections or loose terminals at the APP sensor and the PCM. **If the on-board snapshot of this DTC is recorded, try to reproduce the failure under the same conditions with the on-board snapshot** .

3. Determine possible failure area (VCC5 line, others)

-1. Turn the vehicle to the OFF (LOCK) mode.

-2. Disconnect the following connector.

APP sensor 6P connector

-3. Turn the vehicle to the ON mode.

-4. Measure the voltage between test points 1 and 2.

Test condition	Vehicle ON mode
B	APP sensor 6P connector: disconnected
Test point 1	APP sensor 6P connector (female terminals) No. 1: ①
Test point 2	APP sensor 6P connector (female terminals) No. 2: ①

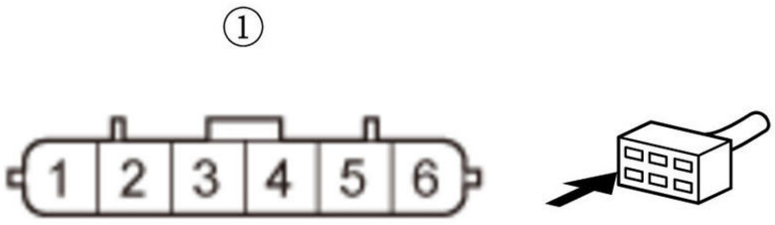

Is there about 5.0 V?

YES

Go to step 4.

NO

Go to step 7.

4. Shorted wire check (APS2 line)

-1. Turn the vehicle to the OFF (LOCK) mode.

-2. Jump the SCS line with the HDS, and wait more than 1 minute.

-3. Disconnect the following connector.

PCM connector A (51P)

-4. Check for continuity between test points 1 and 2.

Test condition	Vehicle OFF (LOCK) mode
B	APP sensor 6P connector: disconnected
B	PCM connector A (51P): disconnected
Test point 1	APP sensor 6P connector (female terminals) No. 3: ①
Test point 2	Body ground

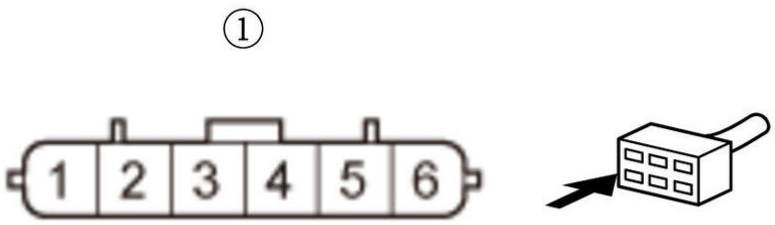

Is there continuity?

YES

Repair a short in the APS2 wire between the PCM (A38) and the APP sensor.

NO

The APS2 wire is not shorted. Go to step 5.

5. Open wire check (APS2 line)

-1. Connect terminals A and B with a jumper wire.

Terminal A	APP sensor 6P connector (female terminals) No. 3: ①

Terminal B	Body ground

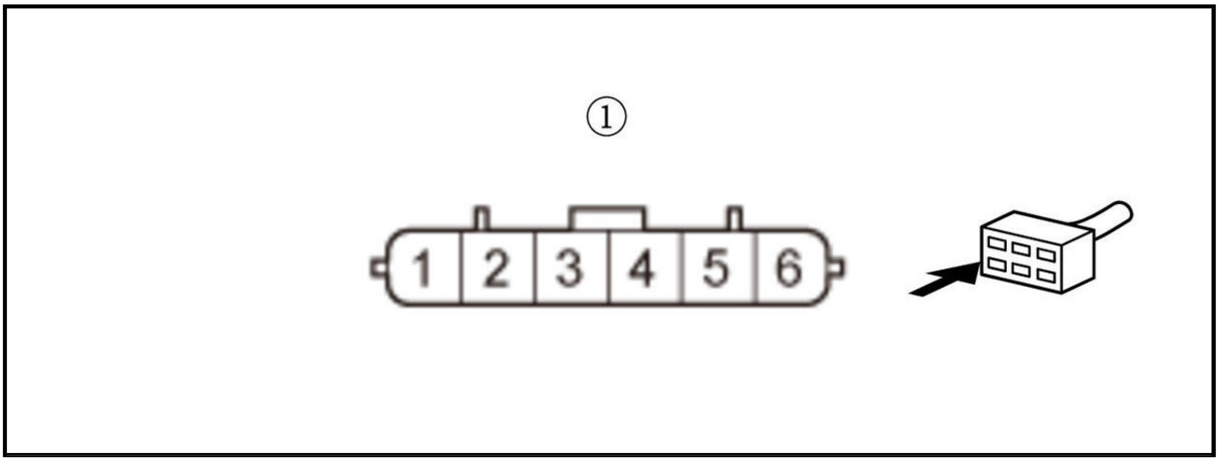

-2. Check for continuity between test points 1 and 2.

Test condition	Vehicle OFF (LOCK) mode
B	APP sensor 6P connector: disconnected
B	APP sensor 6P connector No. 3: jumped to body ground
B	PCM connector A (51P): disconnected
Test point 1	**PCM connector A (51P) No. 38**
Test point 2	Body ground

Is there continuity?

YES

The APS2 wire is OK. Go to step 6.

NO

Repair an open in the APS2 wire between the PCM (A38) and the APP sensor.

6. PCM internal circuit check

-1. Reconnect the following connector.

PCM connector A (51P)

-2. Remove the jumper wire from the APP sensor 6P connector.

-3. Connect terminals A and B with a jumper wire.

Terminal A	APP sensor 6P connector (female terminals) No. 1: ①
Terminal B	APP sensor 6P connector (female terminals) No. 3: ①

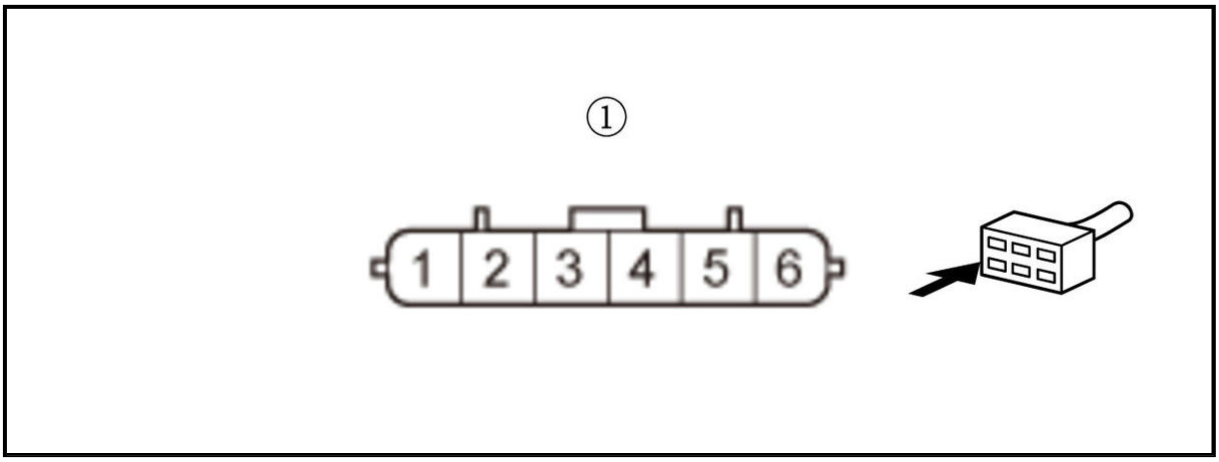

-4. Exit the SCS mode with the HDS.

-5. Turn the vehicle to the ON mode.

-6. Check the parameter (s) below with the HDS.

Signal	Threshold		Current conditions	
	Values	**Unit**	**Values**	**Unit**
APP SENSOR B	Less than 0.22	V	B	B

Do the current condition (s) match the threshold?

YES

Check for any authorized service information related to the DTCs or symptoms you are troubleshooting, or **substitute a known-good PCM** .

NO

Replace the accelerator pedal module .

7. Open wire check (VCC5 line)

-1. Turn the vehicle to the OFF (LOCK) mode.

-2. Jump the SCS line with the HDS, and wait more than 1 minute.

-3. Disconnect the following connector.

PCM connector A (51P)

-4. Connect terminals A and B with a jumper wire.

Terminal A	APP sensor 6P connector (female terminals) No. 1: ①
Terminal B	Body ground

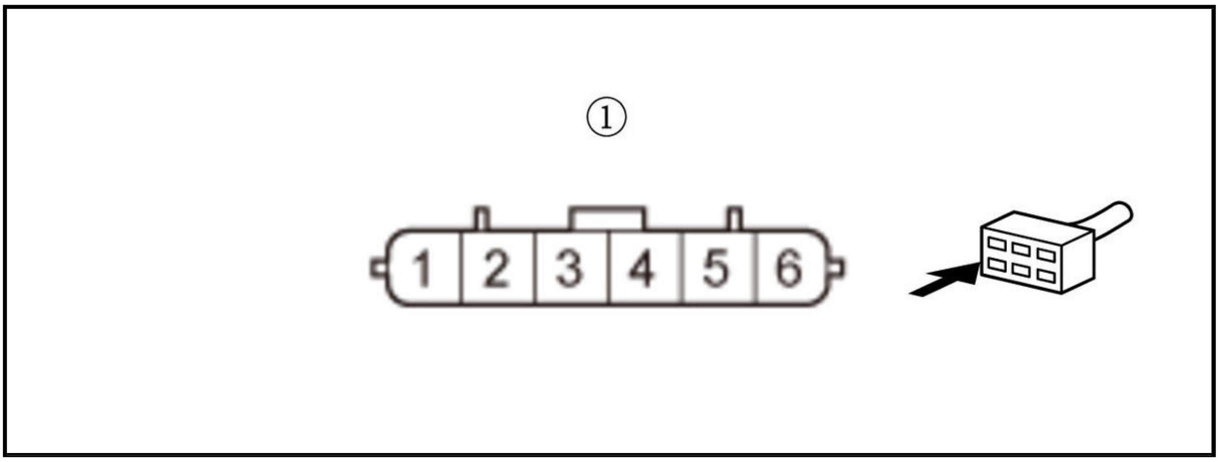

-5. Check for continuity between test points 1 and 2.

Test condition	Vehicle OFF (LOCK) mode
B	APP sensor 6P connector: disconnected
B	APP sensor 6P connector No. 1: jumped to body ground
B	PCM connector A (51P): disconnected
Test point 1	**PCM connector A (51P) No. 40**
Test point 2	Body ground

Is there continuity?

YES

The VCC5 wire is OK. Check for any authorized service information related to the DTCs or symptoms you are troubleshooting, or **substitute a known-good PCM** .

NO

Repair an open in the VCC5 wire between the PCM (A40) and the APP sensor.

8. Determine possible failure area (APP sensor, others)

-1. Turn the vehicle to the OFF (LOCK) mode.

-2. Disconnect the following connector.

APP sensor 6P connector

-3. Turn the vehicle to the ON mode.

-4. Measure the voltage between test points 1 and 2.

Test condition	Vehicle ON mode
B	APP sensor 6P connector: disconnected
Test point 1	APP sensor 6P connector (female terminals) No. 1: ①
Test point 2	APP sensor 6P connector (female terminals) No. 2: ①

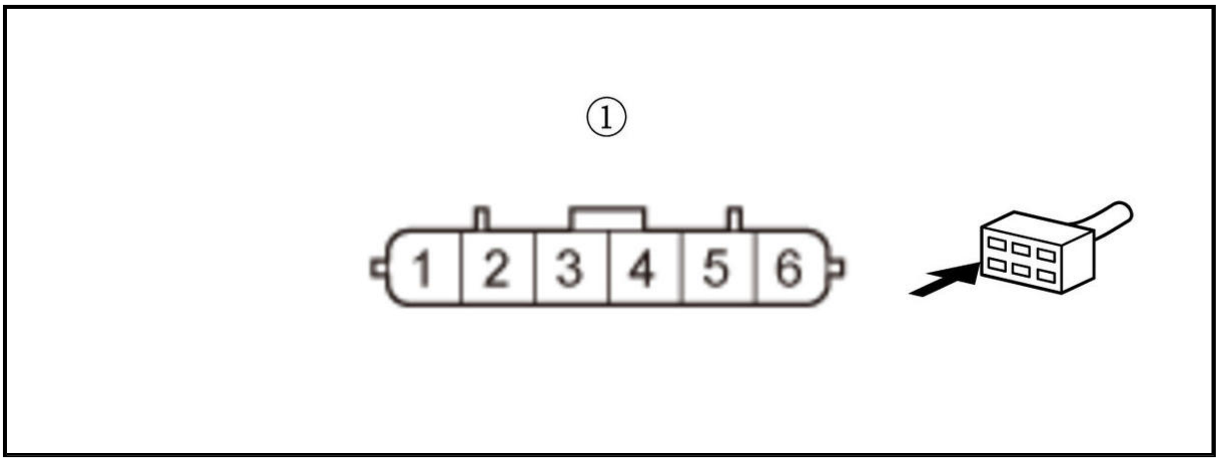

Is there about 5.0 V?

YES

Replace the accelerator pedal module .

NO

Go to step 9.

9. Open wire check (SG5 line)

-1. Turn the vehicle to the OFF (LOCK) mode.

-2. Jump the SCS line with the HDS, and wait more than 1 minute.

-3. Disconnect the following connector.

PCM connector A (51P)

-4. Connect terminals A and B with a jumper wire.

Terminal A	APP sensor 6P connector (female terminals) No. 2: ①
Terminal B	Body ground

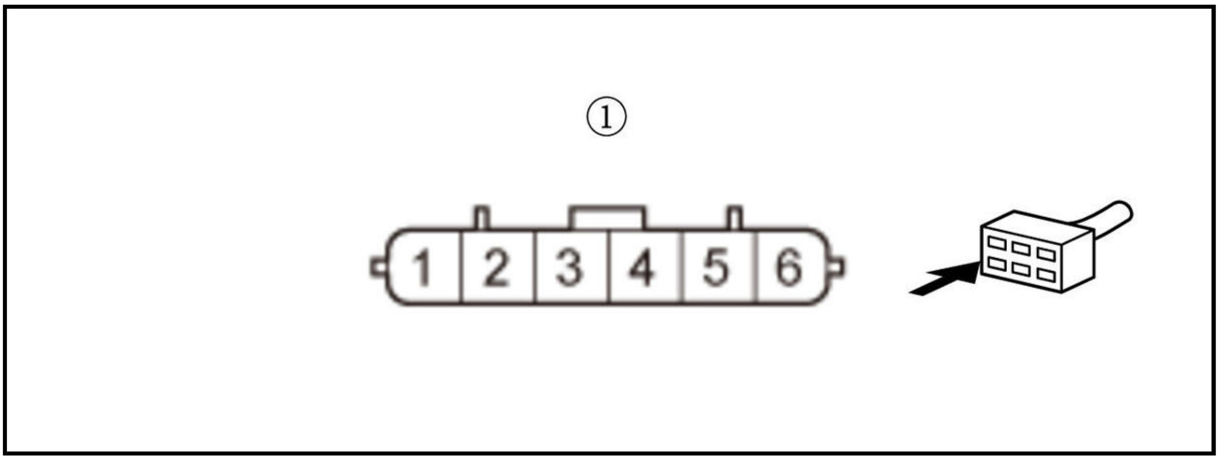

-5. Check for continuity between test points 1 and 2.

Test condition	Vehicle OFF (LOCK) mode
B	APP sensor 6P connector: disconnected
B	PCM connector A (51P): disconnected

B	APP sensor 6P connector No. 2: jumped to body ground
Test point 1	PCM connector A (51P) No. 39
Test point 2	Body ground

Is there continuity?

YES

The SG5 wire is OK. Check for any authorized service information related to the DTCs or symptoms you are troubleshooting, or **substitute a known-good PCM** .

NO

Repair an open in the SG5 wire between the PCM (A39) and the APP sensor.

DTC P2127 (1.5 L ENGINE)

DTC P2127 : APP Sensor B (TP Sensor E) Circuit Low Voltage

NOTE: Before you troubleshoot, **review the general troubleshooting information** .

DTC Description	Confirmed DTC	Pending DTC
P2127 APP Sensor B (TP Sensor E) Circuit Low Voltage	B	B

DTC (PGM-FI)

1. Problem verification

-1. Turn the vehicle to the ON mode.

-2. Check the parameter (s) below with the HDS.

Signal	Threshold		Current conditions	
	Values	Unit	Values	Unit
APP SENSOR B	Less than 0.2	V	B	B

Do the current condition (s) match the threshold?

YES

Go to step 2.

NO

Intermittent failure, the system is OK at this time. Check for poor connections or loose terminals at the APP sensor and the PCM. **If the on-board snapshot of this DTC is recorded, try to reproduce the failure under the same conditions with the on-board snapshot** .

2. Determine possible failure area (VCC5 line, others)

-1. Turn the vehicle to the OFF (LOCK) mode.

-2. Disconnect the following connector.

APP sensor 6P connector

-3. Turn the vehicle to the ON mode.

-4. Measure the voltage between test points 1 and 2.

Test condition	Vehicle ON mode
B	APP sensor 6P connector: disconnected
Test point 1	APP sensor 6P connector (female terminals) No. 1: ①
Test point 2	APP sensor 6P connector (female terminals) No. 2: ①

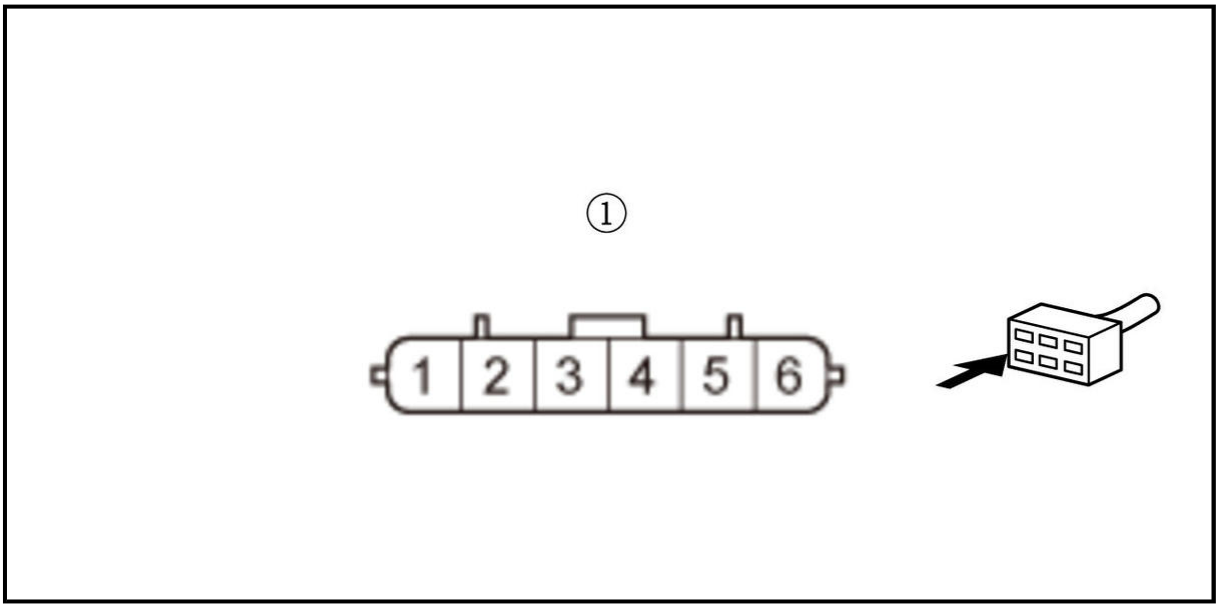

Is there about 5.0 V?

YES

Go to step 3.

NO

Go to step 6.

3. Shorted wire check (APS2 line)

-1. Turn the vehicle to the OFF (LOCK) mode.

-2. Jump the SCS line with the HDS, and wait more than 1 minute.

-3. Disconnect the following connector.

PCM connector A (50P)

-4. Check for continuity between test points 1 and 2.

Test condition	Vehicle OFF (LOCK) mode
B	APP sensor 6P connector: disconnected
B	PCM connector A (50P): disconnected
Test point 1	APP sensor 6P connector (female terminals) No. 3: ①
Test point 2	Body ground

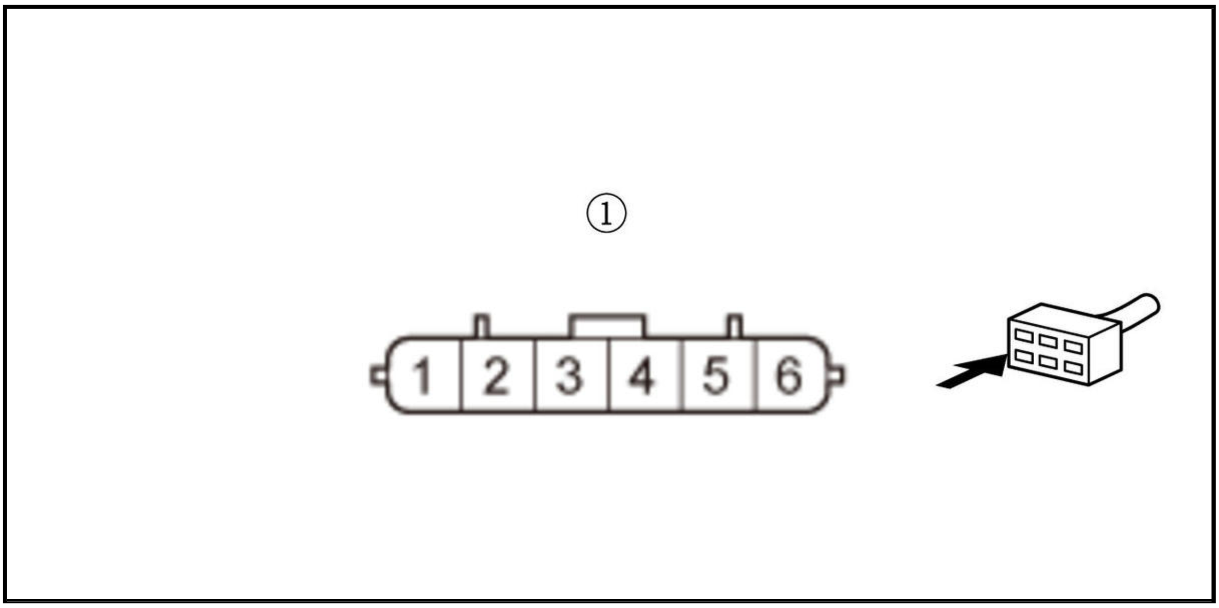

Is there continuity?

YES

Repair a short in the APS2 wire between the PCM (A34) and the APP sensor.

NO

Go to step 4.

4. Open wire check (APS2 line)

-1. Connect terminals A and B with a jumper wire.

Terminal A	APP sensor 6P connector (female terminals) No. 3: ①
Terminal B	Body ground

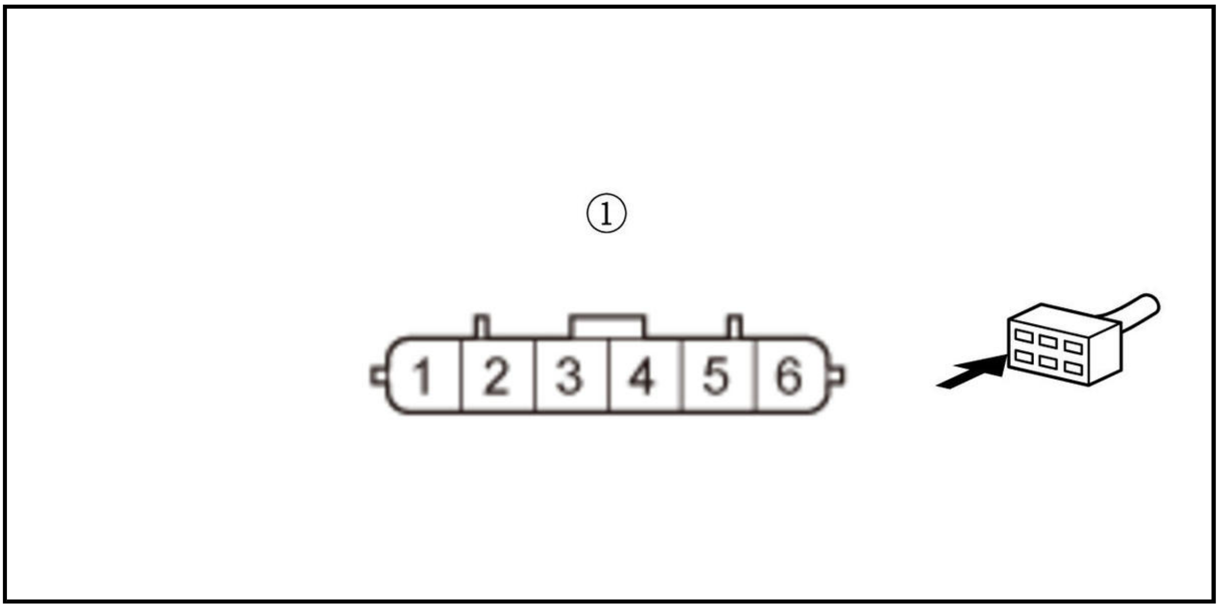

-2. Check for continuity between test points 1 and 2.

Test condition	Vehicle OFF (LOCK) mode
B	APP sensor 6P connector: disconnected
B	APP sensor 6P connector No. 3: jumped to body ground

B	PCM connector A (50P): disconnected
Test point 1	**PCM connector A (50P) No. 34**
Test point 2	Body ground

Is there continuity?

YES

Go to step 5.

NO

Repair an open in the APS2 wire between the PCM (A34) and the APP sensor.

5. PCM internal circuit check

-1. Remove the jumper wire from the APP sensor 6P connector.

-2. Reconnect the following connector.

PCM connector A (50P)

-3. Connect terminals A and B with a jumper wire.

Terminal A	APP sensor 6P connector (female terminals) No. 1: ①
Terminal B	APP sensor 6P connector (female terminals) No. 3: ①

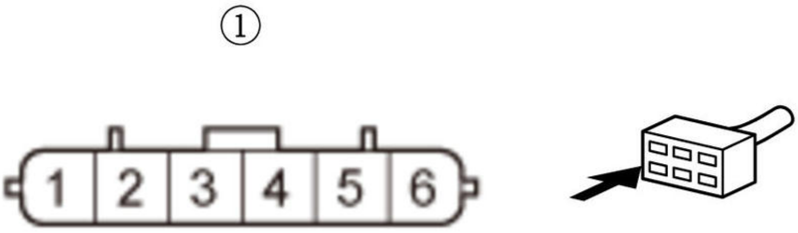

-4. Exit the SCS mode with the HDS.

-5. Turn the vehicle to the ON mode.

-6. Check the parameter (s) below with the HDS.

Signal	Threshold		Current conditions	
	Values	Unit	Values	Unit
APP SENSOR B	Less than 0.2	V	B	B

Do the current condition (s) match the threshold?

YES

Check for any authorized service information related to the DTCs or symptoms you are troubleshooting, or **substitute a known-good PCM** .

NO

Replace the APP sensor .

6. Open wire check (VCC5 line)

-1. Turn the vehicle to the OFF (LOCK) mode.

-2. Jump the SCS line with the HDS, and wait more than 1 minute.

-3. Disconnect the following connector.

PCM connector A (50P)

-4. Connect terminals A and B with a jumper wire.

Terminal A	APP sensor 6P connector (female terminals) No. 1: ①
Terminal B	Body ground

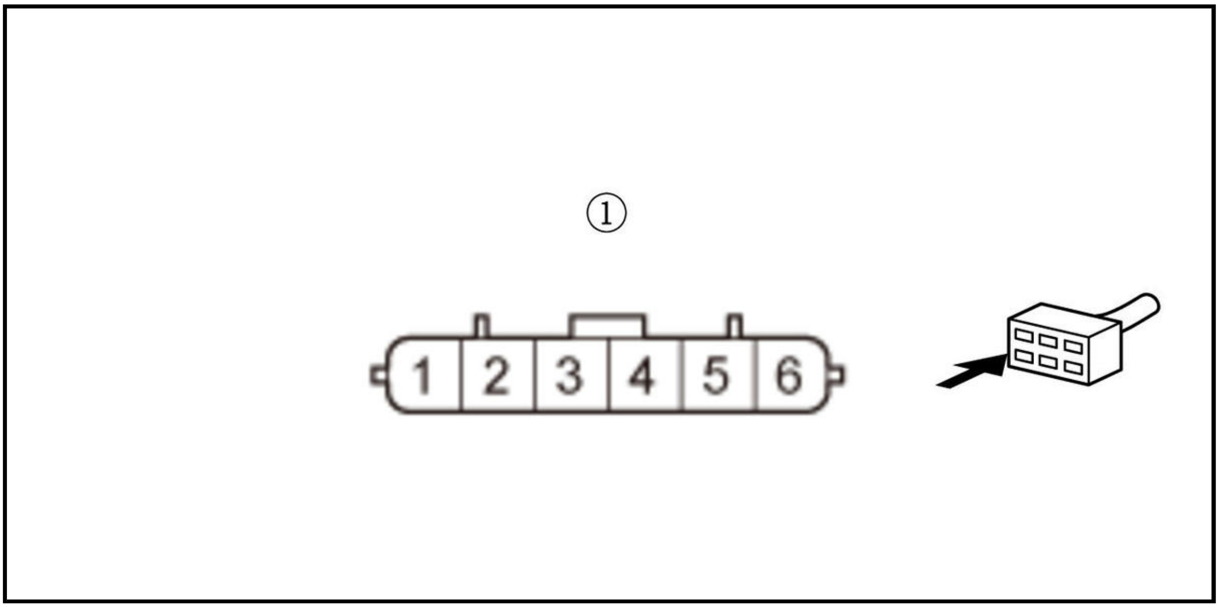

-5. Check for continuity between test points 1 and 2.

Test condition	Vehicle OFF (LOCK) mode
B	APP sensor 6P connector: disconnected

B	APP sensor 6P connector No. 1: jumped to body ground
B	PCM connector A (50P): disconnected
Test point 1	**PCM connector A (50P) No. 44**
Test point 2	Body ground

Is there continuity?

YES

The VCC5 wire is OK. Check for any authorized service information related to the DTCs or symptoms you are troubleshooting, or **substitute a known-good PCM** .

NO

Repair an open in the VCC5 wire between the PCM (A44) and the APP sensor.

DTC P2127 (2.4 L ENGINE) (2017 2018 2019)

DTC P2127 : APP Sensor B (TP Sensor E) Circuit Low Voltage

NOTE: Before you troubleshoot, **review the general troubleshooting information** .

DTC Description	Confirmed DTC	Pending DTC
P2127 APP Sensor B (TP Sensor E) Circuit Low Voltage	B	B

DTC (PGM-FI)

1. Problem verification

-1. Turn the vehicle to the ON mode.

-2. Check the parameter (s) below with the HDS.

Signal	Threshold		Current conditions	
	Values	Unit	Values	Unit
APP SENSOR B	Less than 0.2	V	B	B

Do the current condition (s) match the threshold?

YES

The failure is duplicated. Go to step 2.

NO

Intermittent failure, the system is OK at this time. Check for poor connections or loose terminals at the APP sensor and the PCM. **If the on-board snapshot of this DTC is recorded, try to reproduce the failure under the same conditions with the on-board snapshot** .

2. Determine possible failure area (VCC5 line, others)

-1. Turn the vehicle to the OFF (LOCK) mode.

-2. Disconnect the following connector.

APP sensor 6P connector

-3. Turn the vehicle to the ON mode.

-4. Measure the voltage between test points 1 and 2.

Test condition	Vehicle ON mode
B	APP sensor 6P connector: disconnected
Test point 1	APP sensor 6P connector (female terminals) No. 1: ①
Test point 2	APP sensor 6P connector (female terminals) No. 2: ①

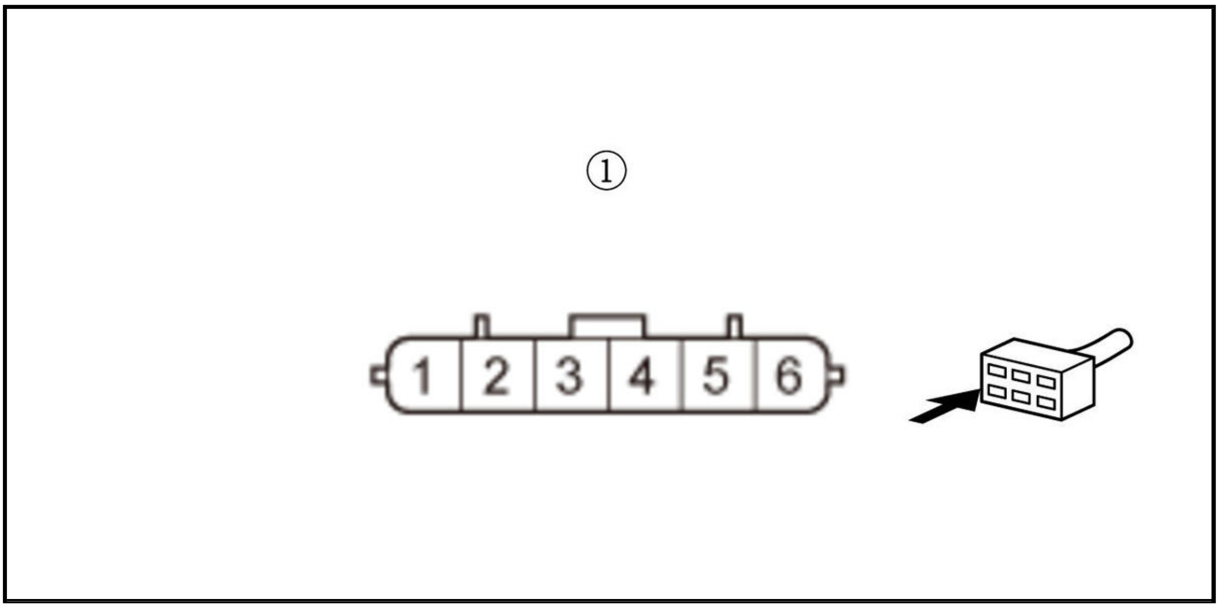

Is there about 5.0 V?

YES

Go to step 3.

NO

Go to step 6.

3. Shorted wire check (APS2 line)

   -1. Turn the vehicle to the OFF (LOCK) mode.

   -2. Jump the SCS line with the HDS, and wait more than 1 minute.

   -3. Disconnect the following connector.

PCM connector A (51P)

   -4. Check for continuity between test points 1 and 2.

Test condition	Vehicle OFF (LOCK) mode
B	APP sensor 6P connector: disconnected
B	PCM connector A (51P): disconnected
Test point 1	APP sensor 6P connector (female terminals) No. 3: ①
Test point 2	Body ground

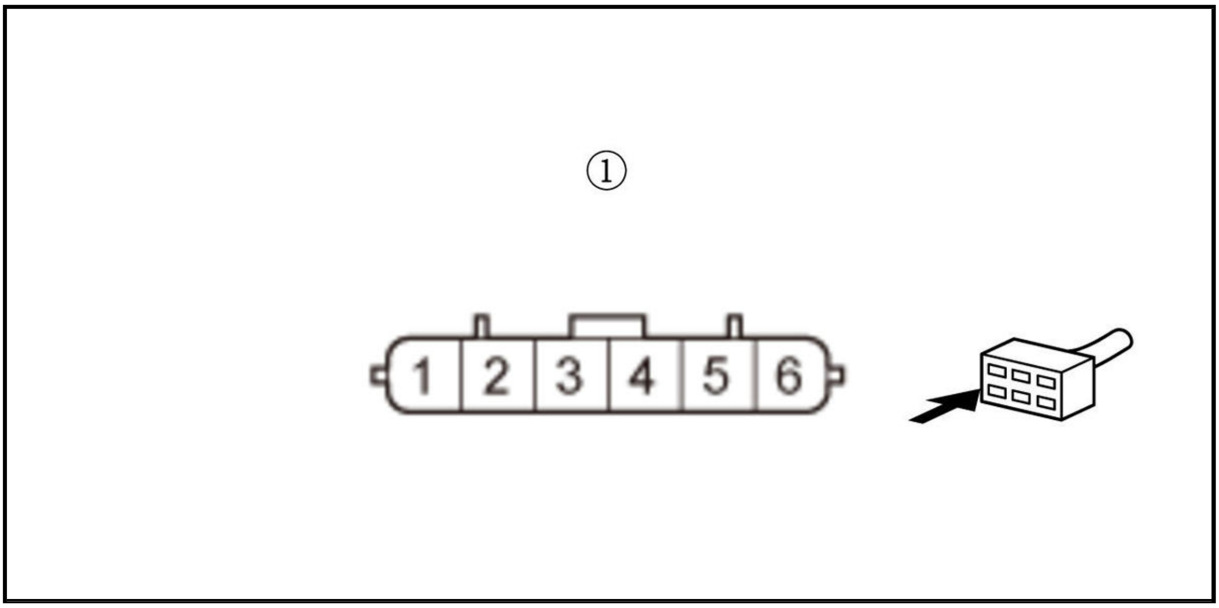

Is there continuity?

YES

Repair a short in the APS2 wire between the PCM (A38) and the APP sensor.

NO

The APS2 wire is not shorted. Go to step 4.

4. Open wire check (APS2 line)

-1. Connect terminals A and B with a jumper wire.

Terminal A	APP sensor 6P connector (female terminals) No. 3: ①
Terminal B	Body ground

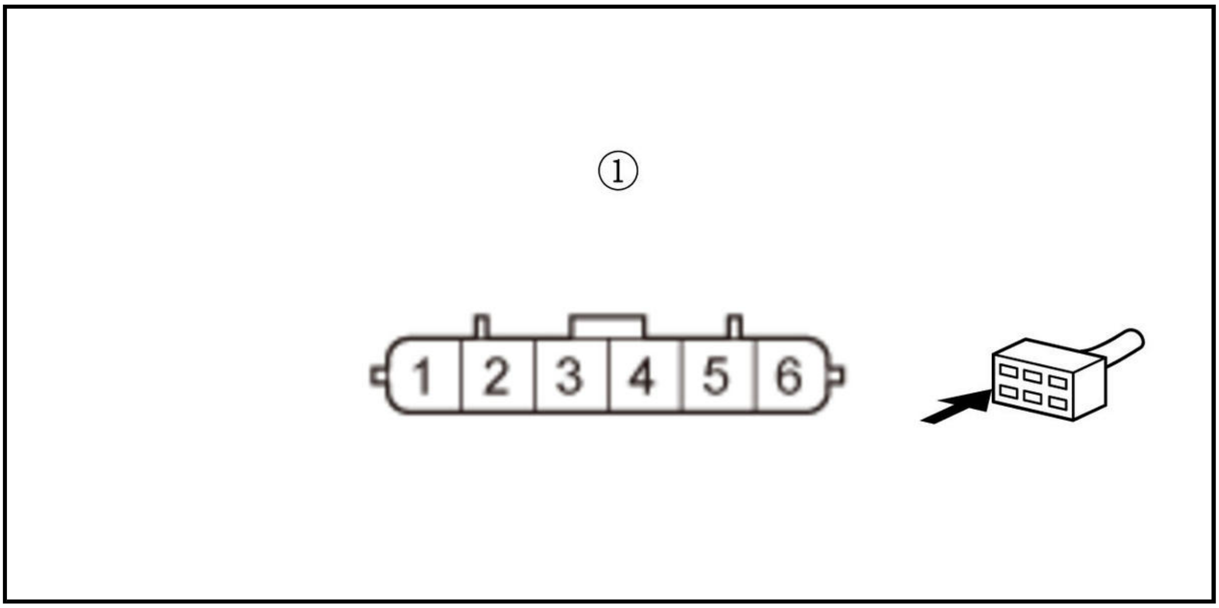

-2. Check for continuity between test points 1 and 2.

Test condition	Vehicle OFF (LOCK) mode
B	APP sensor 6P connector: disconnected
B	APP sensor 6P connector No. 3: jumped to body ground

B	PCM connector A (51P): disconnected
Test point 1	PCM connector A (51P) No. 38
Test point 2	Body ground

Is there continuity?

YES

The APS2 wire is OK. Go to step 5.

NO

Repair an open in the APS2 wire between the PCM (A38) and the APP sensor.

5. PCM internal circuit check

-1. Remove the jumper wire from the APP sensor 6P connector.

-2. Reconnect the following connector.

PCM connector A (51P)

-3. Connect terminals A and B with a jumper wire.

Terminal A	APP sensor 6P connector (female terminals) No. 1: ①
Terminal B	APP sensor 6P connector (female terminals) No. 3: ①

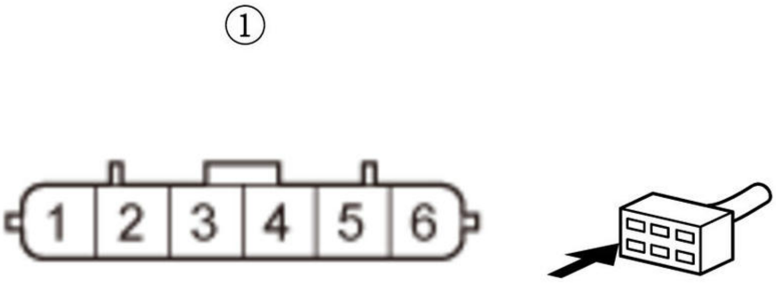

-4. Turn the vehicle to the ON mode.

-5. Check the parameter (s) below with the HDS.

Signal	Threshold		Current conditions	
	Values	Unit	Values	Unit
APP SENSOR B	Less than 0.2	V	B	B

Do the current condition (s) match the threshold?

YES

Check for any authorized service information related to the DTCs or symptoms you are troubleshooting or **substitute a known-good PCM** .

NO

Replace the APP sensor .

6. Open wire check (VCC5 line)

-1. Turn the vehicle to the OFF (LOCK) mode.

-2. Jump the SCS line with the HDS, and wait more than 1 minute.

-3. Disconnect the following connector.

PCM connector A (51P)

-4. Connect terminals A and B with a jumper wire.

Terminal A	APP sensor 6P connector (female terminals) No. 1: ①
Terminal B	Body ground

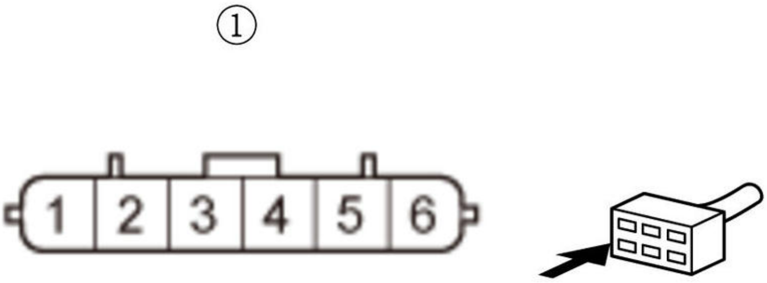

-5. Check for continuity between test points 1 and 2.

Test condition	Vehicle OFF (LOCK) mode
B	APP sensor 6P connector: disconnected
B	APP sensor 6P connector No. 1: jumped to body ground
B	PCM connector A (51P): disconnected
Test point 1	**PCM connector A (51P) No. 40**

Test point 2	Body ground

Is there continuity?

YES

The VCC5 wire is OK. Check for any authorized service information related to the DTCs or symptoms you are troubleshooting or **substitute a known-good PCM** .

NO

Repair an open in the VCC5 wire between the PCM (A40) and the APP sensor.

DTC P2128 (1.5 L ENGINE)

DTC P2128 : APP Sensor B (TP Sensor E) Circuit High Voltage

NOTE: Before you troubleshoot, **review the general troubleshooting information** .

DTC Description	Confirmed DTC	Pending DTC
P2128 APP Sensor B (TP Sensor E) Circuit High Voltage	B	B

DTC (PGM-FI)

1. Problem verification

-1. Turn the vehicle to the ON mode.

-2. Check the parameter (s) below with the HDS.

Signal	Threshold		Current conditions	
	Values	Unit	Values	Unit
APP SENSOR B	More than 4.0	V	B	B

Do the current condition (s) match the threshold?

YES

Go to step 2.

NO

Intermittent failure, the system is OK at this time. Check for poor connections or loose terminals at the APP sensor and the PCM. **If the on-board snapshot of this DTC is recorded, try to reproduce the failure under the same conditions with the on-board snapshot** .

2. Determine possible failure area (APP sensor, others)

-1. Turn the vehicle to the OFF (LOCK) mode.

-2. Disconnect the following connector.

APP sensor 6P connector

-3. Turn the vehicle to the ON mode.

-4. Measure the voltage between test points 1 and 2.

Test condition	Vehicle ON mode
B	APP sensor 6P connector: disconnected
Test point 1	APP sensor 6P connector (female terminals) No. 1: ①
Test point 2	APP sensor 6P connector (female terminals) No. 2: ①

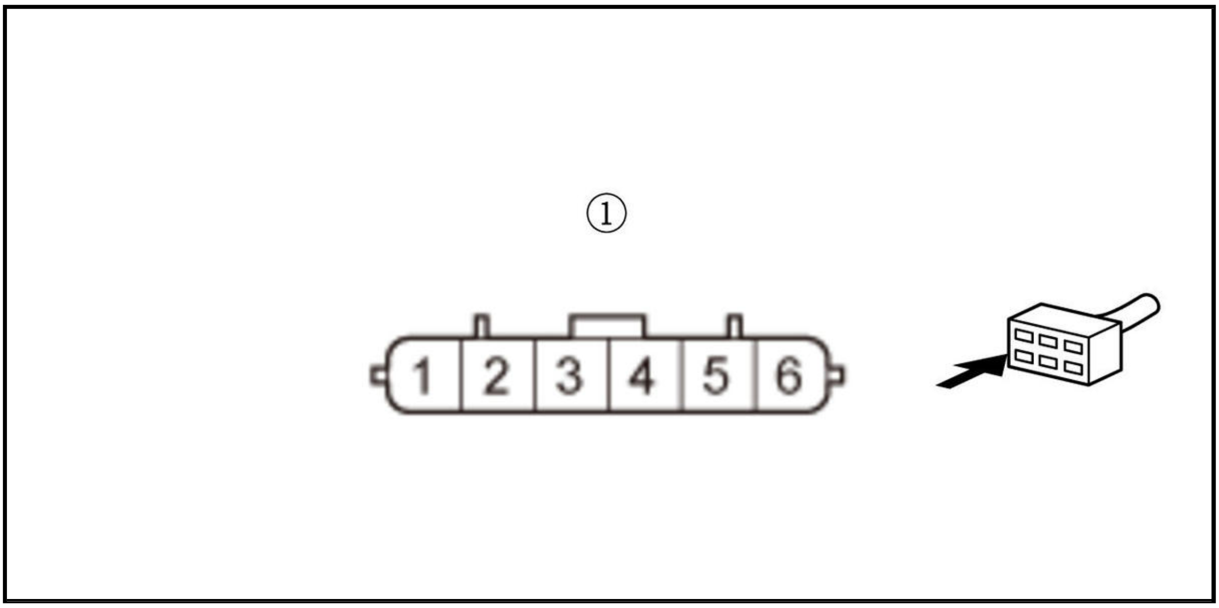

Is there about 5.0 V?

YES

Replace the APP sensor .

NO

Go to step 3.

3. Open wire check (SG5 line)

-1. Turn the vehicle to the OFF (LOCK) mode.

-2. Jump the SCS line with the HDS, and wait more than 1 minute.

-3. Disconnect the following connector.

PCM connector A (50P)

-4. Connect terminals A and B with a jumper wire.

Terminal A	APP sensor 6P connector (female terminals) No. 2: ①
Terminal B	Body ground

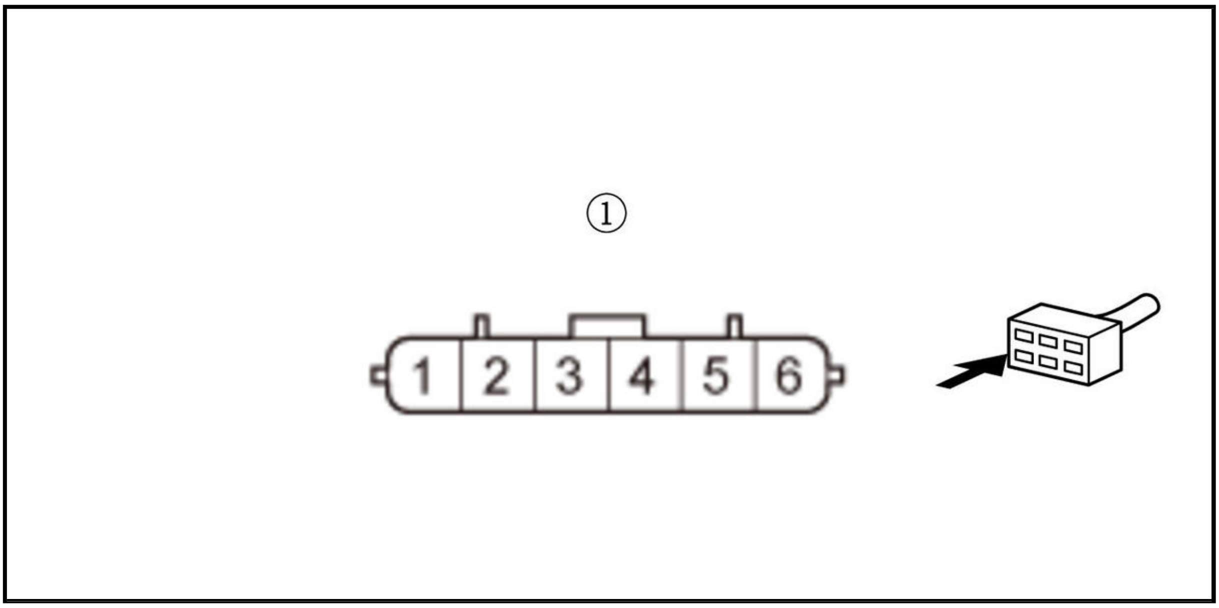

-5. Check for continuity between test points 1 and 2.

Test condition	Vehicle OFF (LOCK) mode
B	APP sensor 6P connector: disconnected
B	APP sensor 6P connector No. 2: jumped to body ground
B	PCM connector A (50P): disconnected
Test point 1	**PCM connector A (50P) No. 43**
Test point 2	Body ground

Is there continuity?

YES

The SG5 wire is OK. Check for any authorized service information related to the DTCs or symptoms you are troubleshooting, or **substitute a known-good PCM** .

NO

Repair an open in the SG5 wire between the PCM (A43) and the APP sensor.

DTC P2128 (2.4 L ENGINE) (2017 2018 2019)

DTC P2128 : APP Sensor B (TP Sensor E) Circuit High Voltage

NOTE: Before you troubleshoot, **review the general troubleshooting information** .

DTC Description	Confirmed DTC	Pending DTC
P2128 APP Sensor B (TP Sensor E) Circuit High Voltage	B	B

DTC (PGM-FI)

1. Problem verification

-1. Turn the vehicle to the ON mode.

-2. Check the parameter (s) below with the HDS.

Signal	Threshold		Current conditions	
	Values	Unit	Values	Unit
APP SENSOR B	More than 4.0	V	B	B

Do the current condition (s) match the threshold?

YES

The failure is duplicated. Go to step 2.

NO

Intermittent failure, the system is OK at this time. Check for poor connections or loose terminals at the APP sensor and the PCM. **If the on-board snapshot of this DTC is recorded, try to reproduce the failure under the same conditions with the on-board snapshot** .

2. Determine possible failure area (APP sensor, others)

-1. Turn the vehicle to the OFF (LOCK) mode.

-2. Disconnect the following connector.

APP sensor 6P connector

-3. Turn the vehicle to the ON mode.

-4. Measure the voltage between test points 1 and 2.

Test condition	Vehicle ON mode
B	APP sensor 6P connector: disconnected
Test point 1	APP sensor 6P connector (female terminals) No. 1: ①
Test point 2	APP sensor 6P connector (female terminals) No. 2: ①

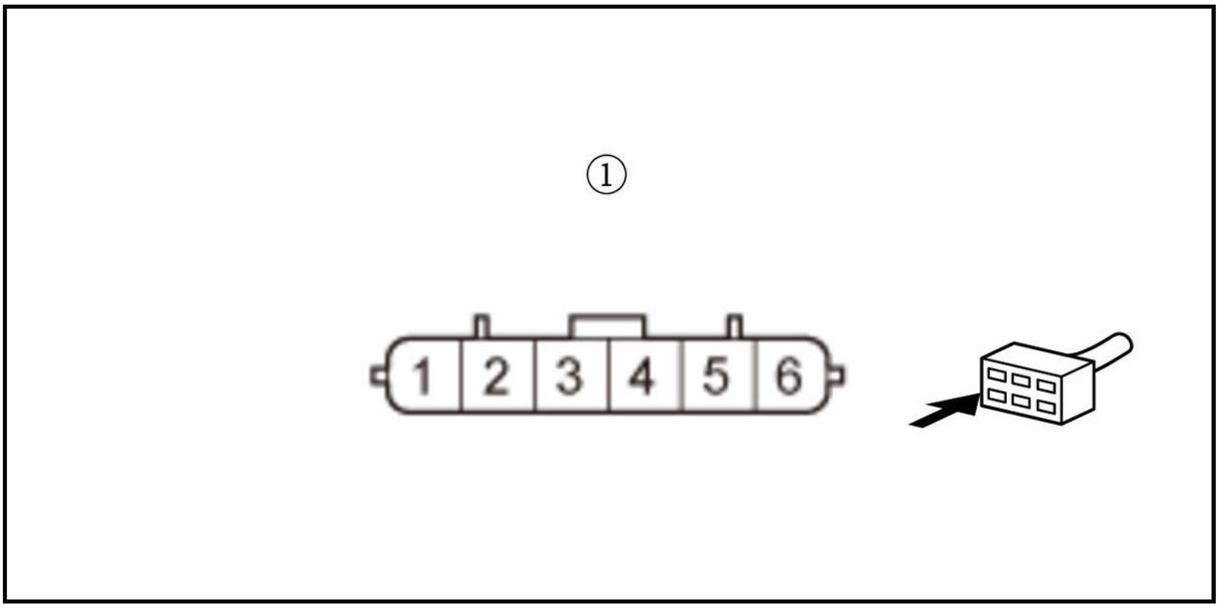

Is there about 5.0 V?

YES

Replace the APP sensor .

NO

Go to step 3.

3. Open wire check (SG5 line)

-1. Turn the vehicle to the OFF (LOCK) mode.

-2. Jump the SCS line with the HDS, and wait more than 1 minute.

-3. Disconnect the following connector.

PCM connector A (51P)

-4. Connect terminals A and B with a jumper wire.

Terminal A	APP sensor 6P connector (female terminals) No. 2: ①
Terminal B	Body ground

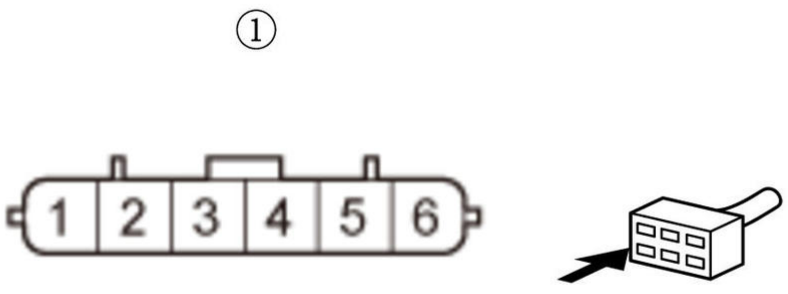

-5. Check for continuity between test points 1 and 2.

Test condition	Vehicle OFF (LOCK) mode
B	APP sensor 6P connector: disconnected
B	APP sensor 6P connector No. 2: jumped to body ground
B	PCM connector A (51P): disconnected
Test point 1	PCM connector A (51P) No. 39
Test point 2	Body ground

Is there continuity?

YES

The SG5 wire is OK. Check for any authorized service information related to the DTCs or symptoms you are troubleshooting or substitute a known-good PCM .

NO

Repair an open in the SG5 wire between the PCM (A39) and the APP sensor.

DTC P2135 (1.5 L ENGINE)

DTC P2135 : TP Sensor A/B Incorrect Voltage Correlation

WARNING: **Do not insert your fingers into the installed throttle body when you turn the vehicle to the ON mode, or while the vehicle is in ON mode. If you do, you will seriously injure your fingers if the throttle valve is activated.**

NOTE: Before you troubleshoot, **review the general troubleshooting information** .

DTC Description	Confirmed DTC	Pending DTC
P2135 TP Sensor A/B Incorrect Voltage Correlation	B	B

DTC (PGM-FI)

1. Problem verification

   -1. Turn the vehicle to the ON mode.

   -2. Clear the DTC with the HDS.

   -3. Turn the vehicle to the OFF (LOCK) mode.

   -4. Turn the vehicle to the ON mode.

   -5. Select the ETCS TEST in the INSPECTION MENU with the HDS.

   ETCS TEST

   Check for Pending or Confirmed DTCs with the HDS.

DTC Description	Confirmed DTC	Pending DTC
P2135 TP Sensor A/B Incorrect Voltage Correlation	B	B

   Is DTC P2135 indicated?

   YES

   Go to step 2.

   NO

   Intermittent failure, the system is OK at this time. Check for poor connections or loose terminals at the throttle body and the PCM. **If the on-board snapshot of this DTC is recorded, try to reproduce the failure under the same conditions with the on-board snapshot** .

2. Throttle body operation check

   -1. Turn the vehicle to the OFF (LOCK) mode.

   -2. **Disconnect the throttle body duct from the throttle body** .

   -3. Turn the vehicle to the ON mode.

   -4. Clear the DTC with the HDS.

   -5. Turn the vehicle to the OFF (LOCK) mode.

   -6. Turn the vehicle to the ON mode.

-7. Visually check the throttle valve operation.

Does the valve temporarily move to its fully closed position?

YES

Replace the throttle body .

NO

Go to step 3.

3. Determine possible failure area (PCM, others)

-1. Turn the vehicle to the OFF (LOCK) mode.

-2. Jump the SCS line with the HDS, and wait more than 1 minute.

-3. Disconnect the following connector.

PCM connector E (80P)

-4. Check for continuity between test points 1 and 2.

Test condition	Vehicle OFF (LOCK) mode
B	PCM connector E (80P): disconnected
Test point 1	**PCM connector E (80P) No. 50**
Test point 2	**PCM connector E (80P) No. 51**

Is there continuity?

YES

Go to step 4.

NO

Check for any authorized service information related to the DTCs or symptoms you are troubleshooting, or **substitute a known-good PCM** .

4. Shorted wire check (THL1 line to THL2 line)

-1. Disconnect the following connector.

Throttle body 6P connector

-2. Check for continuity between test points 1 and 2.

Test condition	Vehicle OFF (LOCK) mode
B	PCM connector E (80P): disconnected
B	Throttle body 6P connector: disconnected
Test point 1	**PCM connector E (80P) No. 50**
Test point 2	**PCM connector E (80P) No. 51**

Is there continuity?

YES

Repair a short in the THL1 wire to the THL2 wire between the PCM connector terminals E50 (THL1 line) and E51 (THL2 line).

NO

The THL1 wire and the THL2 wire are OK. **Replace the throttle body** .

DTC P2135 (2.4 L ENGINE) (2017 2018 2019)

DTC P2135 : TP Sensor A/B Incorrect Voltage Correlation

WARNING: **Do not insert your fingers into the installed throttle body when you turn the vehicle to the ON mode, or while the vehicle is in ON mode. If you do, you will seriously injure your fingers if the throttle valve is activated.**

NOTE: Before you troubleshoot, **review the general troubleshooting information** .

DTC Description	Confirmed DTC	Pending DTC
P2135 TP Sensor A/B Incorrect Voltage Correlation	B	B

DTC (PGM-FI)

1. Problem verification

   -1. Turn the vehicle to the ON mode.

   -2. Clear the DTC with the HDS.

   -3. Select the ETCS TEST in the INSPECTION MENU with the HDS.

   ETCS TEST

   Check for Pending or Confirmed DTCs with the HDS.

DTC Description	Confirmed DTC	Pending DTC
P2135 TP Sensor A/B Incorrect Voltage Correlation	B	B

   Is DTC P2135 indicated?

   YES

   The failure is duplicated. Go to step 2.

   NO

   Intermittent failure, the system is OK at this time. Check for poor connections or loose terminals at the throttle body and the PCM. **If the on-board snapshot of this DTC is recorded, try to reproduce the failure under the same conditions with the on-board snapshot** .

2. Throttle body operation check

   -1. Turn the vehicle to the OFF (LOCK) mode.

   -2. **Disconnect the intake air duct from the throttle body** .

   -3. Turn the vehicle to the ON mode.

   -4. Clear the DTC with the HDS.

-5. Visually check the throttle valve operation.

Does the valve temporarily move to its fully closed position?

YES

Replace the throttle body .

NO

Go to step 3.

3. Determine possible failure area (PCM, others)

-1. Turn the vehicle to the OFF (LOCK) mode.

-2. Jump the SCS line with the HDS, and wait more than 1 minute.

-3. Disconnect the following connector.

PCM connector B (51P)

-4. Check for continuity between test points 1 and 2.

Test condition	Vehicle OFF (LOCK) mode
B	PCM connector B (51P): disconnected
Test point 1	**PCM connector B (51P) No. 46**
Test point 2	**PCM connector B (51P) No. 47**

Is there continuity?

YES

Go to step 4.

NO

Check for any authorized service information related to the DTCs or symptoms you are troubleshooting or **substitute a known-good PCM** .

4. Shorted wire check (THL1 line to THL2 line)

-1. Disconnect the following connector.

Throttle body 6P connector

-2. Check for continuity between test points 1 and 2.

Test condition	Vehicle OFF (LOCK) mode
B	PCM connector B (51P): disconnected
B	Throttle body 6P connector: disconnected
Test point 1	**PCM connector B (51P) No. 46**
Test point 2	**PCM connector B (51P) No. 47**

Is there continuity?

YES

Repair a short in the THL1 wire to the THL2 wire between PCM connector terminals B46 (THL1 line) and B47 (THL2 line).

NO

The THL1 and THL2 wires are OK. Replace the throttle body .

DTC P2138 (1.5 L ENGINE)

DTC P2138 : APP Sensor A/B (TP Sensor D/E) Incorrect Voltage Correlation

NOTE: Before you troubleshoot, review the general troubleshooting information .

DTC Description	Confirmed DTC	Pending DTC
P2138 APP Sensor A/B (TP Sensor D/E) Incorrect Voltage Correlation	B	B

DTC (PGM-FI)

1. Problem verification

   -1. Turn the vehicle to the ON mode.

   -2. Clear the DTC with the HDS.

   -3. Turn the vehicle to the OFF (LOCK) mode.

   -4. Turn the vehicle to the ON mode.

   -5. Press the accelerator pedal to the floor.

   -6. Check for Pending or Confirmed DTCs with the HDS.

DTC Description	Confirmed DTC	Pending DTC
P2138 APP Sensor A/B (TP Sensor D/E) Incorrect Voltage Correlation	B	B

Is DTC P2138 indicated?

YES

Go to step 2.

NO

Intermittent failure, the system is OK at this time. Check for poor connections or loose terminals at the APP sensor and the PCM. If the on-board snapshot of this DTC is recorded, try to reproduce the failure under the same conditions with the on-board snapshot .

2. Determine possible failure area (APP sensor, others)

   -1. Check the parameter (s) below with the HDS.

Signal	Current conditions	
	Values	Unit
APP SENSOR A	B	B
APP SENSOR B	B	B

Are they the same voltage?

YES

Go to step 3.

NO

Replace the APP sensor .

3. Determine possible failure area (PCM, others)

-1. Turn the vehicle to the OFF (LOCK) mode.

-2. Jump the SCS line with the HDS, and wait more than 1 minute.

-3. Disconnect the following connector.

PCM connector A (50P)

-4. Check for continuity between test points 1 and 2.

Test condition	Vehicle OFF (LOCK) mode
B	PCM connector A (50P): disconnected
Test point 1	**PCM connector A (50P) No. 32**
Test point 2	**PCM connector A (50P) No. 34**

Is there continuity?

YES

Go to step 4.

NO

Check for any authorized service information related to the DTCs or symptoms you are troubleshooting, or **substitute a known-good PCM** .

4. Shorted wire check (APS1 line to APS2 line)

-1. Disconnect the following connector.

APP sensor 6P connector

-2. Check for continuity between test points 1 and 2.

Test condition	Vehicle OFF (LOCK) mode
B	PCM connector A (50P): disconnected
B	APP sensor 6P connector: disconnected
Test point 1	**PCM connector A (50P) No. 32**
Test point 2	**PCM connector A (50P) No. 34**

Is there continuity?

YES

Repair a short in the APS1 wire to the APS2 wire between the PCM connector terminals A32 (APS1 line) and A34 (APS2 line).

NO

The APS1 wire and the APS2 wire are OK. **Replace the APP sensor** .

DTC P2138 (2.4 L ENGINE) (2017 2018 2019)

DTC P2138 : APP Sensor A/B (TP Sensor D/E) Incorrect Voltage Correlation

NOTE: Before you troubleshoot, **review the general troubleshooting information** .

DTC Description	Confirmed DTC	Pending DTC
P2138 APP Sensor A/B (TP Sensor D/E) Incorrect Voltage Correlation	B	B

DTC (PGM-FI)

1. Problem verification

   -1. Turn the vehicle to the ON mode.

   -2. Clear the DTC with the HDS.

   -3. Press the accelerator pedal to the floor.

   -4. Check for Pending or Confirmed DTCs with the HDS.

DTC Description	Confirmed DTC	Pending DTC
P2138 APP Sensor A/B (TP Sensor D/E) Incorrect Voltage Correlation	B	B

   Is DTC P2138 indicated?

   YES

   The failure is duplicated. Go to step 2.

   NO

   Intermittent failure, the system is OK at this time. Check for poor connections or loose terminals at the APP sensor and the PCM. **If the on-board snapshot of this DTC is recorded, try to reproduce the failure under the same conditions with the on-board snapshot** .

2. Determine possible failure area (short in APS lines, others)

   -1. Check the parameter (s) below with the HDS.

Signal	Current conditions	
	Values	Unit
APP SENSOR A	B	B
APP SENSOR B	B	B

   Are they the same voltage?

   YES

   Go to step 3.

   NO

Replace the APP sensor .

3. Determine possible failure area (PCM, others)

   -1. Turn the vehicle to the OFF (LOCK) mode.

   -2. Jump the SCS line with the HDS, and wait more than 1 minute.

   -3. Disconnect the following connector.

PCM connector A (51P)

-4. Check for continuity between test points 1 and 2.

Test condition	Vehicle OFF (LOCK) mode
B	PCM connector A (51P): disconnected
Test point 1	**PCM connector A (51P) No. 45**
Test point 2	**PCM connector A (51P) No. 38**

Is there continuity?

YES

Go to step 4.

NO

Check for any authorized service information related to the DTCs or symptoms you are troubleshooting or **substitute a known-good PCM** .

4. Shorted wire check (APS1 line to APS2 line)

   -1. Disconnect the following connector.

APP sensor 6P connector

-2. Check for continuity between test points 1 and 2.

Test condition	Vehicle OFF (LOCK) mode
B	PCM connector A (51P): disconnected
B	APP sensor 6P connector: disconnected
Test point 1	**PCM connector A (51P) No. 45**
Test point 2	**PCM connector A (51P) No. 38**

Is there continuity?

YES

Repair a short in the APS1 wire to the APS2 wire between PCM connector terminals A45 (APS1 line) and A38 (APS2 line).

NO

The APS1 and APS2 wires are OK. **Replace the APP sensor** .

DTC P2148 (1.5 L ENGINE)

DTC P2148 : Injector Power Supply Circuit Malfunction

NOTE: Before you troubleshoot, **review the general troubleshooting information** .

DTC Description	Confirmed DTC	Pending DTC
P2148 Injector Power Supply Circuit Malfunction	B	B

DTC (PGM-FI)

1. Problem verification

   -1. Turn the vehicle to the ON mode.

   -2. Clear the DTC with the HDS.

   -3. Turn the vehicle to the OFF (LOCK) mode.

   -4. Turn the vehicle to the ON mode.

   -5. Check for Pending or Confirmed DTCs with the HDS.

DTC Description	Confirmed DTC	Pending DTC
P2148 Injector Power Supply Circuit Malfunction	B	B

   Is DTC P2148 indicated?

   YES

   The failure is duplicated. Check for any authorized service information related to the DTCs or symptoms you are troubleshooting, or **substitute a known-good PCM** .

   NO

   Intermittent failure, the system is OK at this time. **If the on-board snapshot of this DTC is recorded, try to reproduce the failure under the same conditions with the on-board snapshot** .

DTC P2175 (1.5 L ENGINE) (2020 2021)

DTC P2175 : Throttle Actuator Control System Low Air Flow Detected

NOTE: Before you troubleshoot, **review the general troubleshooting information** .

DTC Description	Confirmed DTC	Pending DTC
P2175 Throttle Actuator Control System Low Air Flow Detected	B	B

DTC (PGM-FI)

1. PGM-FI system check

   -1. Turn the vehicle to the ON mode.

   -2. Check for Pending or Confirmed DTCs with the HDS.

DTC Description	Confirmed DTC	Pending DTC
B	B	B

   Are any Pending or Confirmed DTCs other than P2175 indicated?

   YES

Go to the indicated DTC's troubleshooting.

NO

Go to step 2.

2. Intake air duct visual check

-1. Turn the vehicle to the OFF (LOCK) mode.

-2. Check for poor connection or blockage at the intake air duct.

Is it OK?

YES

Go to step 3.

NO

Reconnect or repair the intake air duct, or **replace it if needed** .

3. Air cleaner housing visual check

-1. **Check for poor connection or blockage at the air cleaner housing** .

Is it OK?

YES

Go to step 4.

NO

Replace the air cleaner housing .

4. Air cleaner element visual check

-1. **Check for dirt or debris on the air cleaner element** .

Is it dirty?

YES

Replace the air cleaner element .

NO

Go to step 5.

5. Problem verification

-1. Turn the vehicle to the ON mode.

-2. Let the engine cool until the value of ECT SENSOR 1 is 122 deg. F (50 deg. C) or less.

Signal	**Current conditions**	
	Values	**Unit**
ECT Sensor 1	B	B

-3. Clear the DTC with the HDS.

-4. Start the engine, and let it idle for 10 seconds or more.

-5. Monitor the OBD STATUS for DTC P2175 in the DTCs MENU with the HDS.

DTC Description	OBD STATUS
P2175 Throttle Actuator Control System Low Air Flow Detected	B

Does the HDS indicate FAILED?

YES

The failure is duplicated. Go to step 6.

NO

If the HDS indicates PASSED, there is an intermittent failure and the system is OK at this time. Check for poor connections or loose terminals at the throttle body, MAF sensor/IAT sensor 1, and the PCM. **If the on-board snapshot of this DTC is recorded, try to reproduce the failure under the same conditions with the on-board snapshot** . If the HDS indicates EXECUTING, keep idling until a result comes on. If the HDS indicates OUT OF CONDITION, go to step 5-2 and recheck.

6. Throttle body test

-1. Select the ETCS (TAC) TEST in the Function Test MENU with the HDS.

ETCS (TAC) TEST

Is the THROTTLE ACTUATOR CONTROL VALVE normal?

YES

Go to step 7.

NO

Replace the throttle body .

7. Throttle body visual check

-1. Turn the vehicle to the OFF (LOCK) mode.

-2. **Disconnect intake air duct from the throttle body** .

-3. Check for dirt, carbon, or damage in the throttle bore.

Is there dirt, carbon, or damage in the throttle bore?

YES

If there is dirt or carbon, **clean the throttle body** . If there is damage in the throttle bore, **replace the throttle body** .

NO

The throttle body is OK. Go to step 8.

8. MAP sensor performance check 1

-1. Turn the vehicle to the ON mode.

-2. Compare the value of the parameter (s) below with the HDS.

Signal	Current conditions	
	Values	Unit
MAP Sensor (Hi Res)	B	B
TC Boost Pressure	B	B

Is the difference in value between the sensors 26.7 kPa (7.9 inHg, 200 mmHg) or more?

YES

Replace the MAP sensor .

NO

Go to step 9.

9. MAP sensor performance check 2

-1. Note the value of MAP Sensor (Hi Res) in the DATA LIST with the HDS.

Signal	Current conditions	
	Values	Unit
MAP Sensor (Hi Res)	B	B

-2. Start the engine, and let it idle.

-3. Check the MAP Sensor (Hi Res) in the DATA LIST with the HDS.

Signal	Current conditions	
	Values	Unit
MAP Sensor (Hi Res)	B	B

Does the MAP Sensor (Hi Res) change 0.67 kPa (0.2 inHg, 5 mmHg) or more?

YES

Go to step 10.

NO

Replace the MAP sensor .

10. Turbocharger boost sensor performance check 1

-1. Turn the vehicle to the OFF (LOCK) mode.

-2. Turn the vehicle to the ON mode.

-3. Compare the value of the parameter (s) below with the HDS.

Signal	Current conditions	
	Values	Unit
TC BOOST PRESSURE	B	B
BARO SENSOR	B	B

Is the difference in value between the sensors 26.7 kPa (7.9 inHg, 200 mmHg) or more?

YES

Replace the turbocharger boost sensor .

NO

Go to step 11.

11. Turbocharger boost sensor performance check 2

    -1. Note the value of TC BOOST PRESSURE in the DATA LIST with the HDS.

Signal	Current conditions	
	Values	Unit
TC BOOST PRESSURE	B	B

-2. Start the engine.

-3. Hold the engine speed at 3, 000 rpm without load (in P or N) until the radiator fan comes on, then let it idle.

-4. Hold the engine speed at 4, 500 rpm without load.

-5. Check the parameter below with the HDS.

Signal	Current conditions	
	Values	Unit
TC BOOST PRESSURE	B	B

Does the value change 0.67 kPa (0.2 inHg, 5 mmHg) or more?

YES

Go to step 12.

NO

Replace the turbocharger boost sensor .

12. MAF sensor performance check

    -1. Hold the engine speed at 3, 000 rpm without load (in P or N) until the radiator fan comes on, then let it idle.

    -2. While holding the engine speed at 2, 500 rpm for 30 seconds, check the parameter (s) below with the HDS.

Signal	Threshold		Current conditions	
	Values	Unit	Values	Unit
MAF SENSOR	4.1-5.7	g/s	B	B

Do the current condition (s) match the threshold?

YES

The MAF sensor is OK. Go to step 13.

NO

Replace MAF sensor/IAT sensor 1 .

13. IAT sensor 1 performance check

-1. Turn the vehicle to the OFF (LOCK) mode.

-2. Allow the engine to cool to ambient temperature.

-3. Note the ambient temperature.

-4. Turn the vehicle to the ON mode.

-5. Quickly note the value of the IAT SENSOR (1) in the DATA LIST with the HDS.

Signal	Current conditions	
	Values	Unit
IAT SENSOR (1)	B	B

-6. Compare the value of the IAT SENSOR (1) with the ambient temperature.

Does the value of the IAT SENSOR (1) differ 5.4 deg. F (3 deg. C) or more from the ambient temperature?

YES

Replace MAF sensor/IAT sensor 1 .

NO

IAT sensor 1 is OK. Check for dirt, carbon, or damage in the throttle bore. If there is dirt or carbon, **clean the throttle body** . If there is damage in the throttle bore, **replace the throttle body** .

DTC P2176 (1.5 L ENGINE)

DTC P2176 : Throttle Actuator Control System Idle Position Not Learned

WARNING: **Do not insert your fingers into the installed throttle body when you turn the vehicle to the ON mode, or while the vehicle is in ON mode. If you do, you will seriously injure your fingers if the throttle valve is activated.**

NOTE:

- Before you troubleshoot, **review the general troubleshooting information** .
- If DTC P2135 is stored at the same time as DTC P2176, troubleshoot DTC P2135 first, then recheck for DTC P2176.

DTC Description	Confirmed DTC	Pending DTC
P2176 Throttle Actuator Control System Idle Position Not Learned	B	B

DTC (PGM-FI)

1. Problem verification

-1. Turn the vehicle to the ON mode.

-2. Clear the DTC with the HDS.

-3. Turn the vehicle to the OFF (LOCK) mode, and wait 10 seconds.

-4. Turn the vehicle to the ON mode.

-5. Check for Pending or Confirmed DTCs with the HDS.

DTC Description	Confirmed DTC	Pending DTC
P2176 Throttle Actuator Control System Idle Position Not Learned	B	B

Is DTC P2176 indicated?

YES

Go to step 2.

NO

Intermittent failure, the system is OK at this time. Check for poor connections or loose terminals at the throttle body and the PCM, then **clean the throttle body** . **If the on-board snapshot of this DTC is recorded, try to reproduce the failure under the same conditions with the on-board snapshot** .

2. Throttle body operation check

-1. Turn the vehicle to the OFF (LOCK) mode.

-2. **Disconnect the throttle body duct from the throttle body** .

-3. Turn the vehicle to the ON mode.

-4. Clear the DTC with the HDS.

-5. Turn the vehicle to the OFF (LOCK) mode.

-6. Turn the vehicle to the ON mode.

-7. Visually check the throttle valve operation while doing the ETCS TEST in the INSPECTION MENU with the HDS.

ETCS TEST

Does the throttle valve move to its fully closed position?

YES

Go to step 3.

NO

Go to step 4.

3. Throttle body condition check

-1. Turn the vehicle to the OFF (LOCK) mode.

-2. **Remove the throttle body** .

-3. Check for sludge or carbon on the throttle valve.

Is there sludge or carbon on the throttle valve?

YES

Clean the throttle body .

NO

Replace the throttle body .

4. Open wire check (MTR1 line, MTR2 line)

-1. Turn the vehicle to the OFF (LOCK) mode.

-2. Jump the SCS line with the HDS, and wait more than 1 minute.

-3. Disconnect the following connectors.

PCM connector E (80P)
Throttle body 6P connector

-4. Connect terminals A and B with a jumper wire.

Terminal A	Throttle body 6P connector (female terminals) No. 1: ①
Terminal B	Throttle body 6P connector (female terminals) No. 2: ①

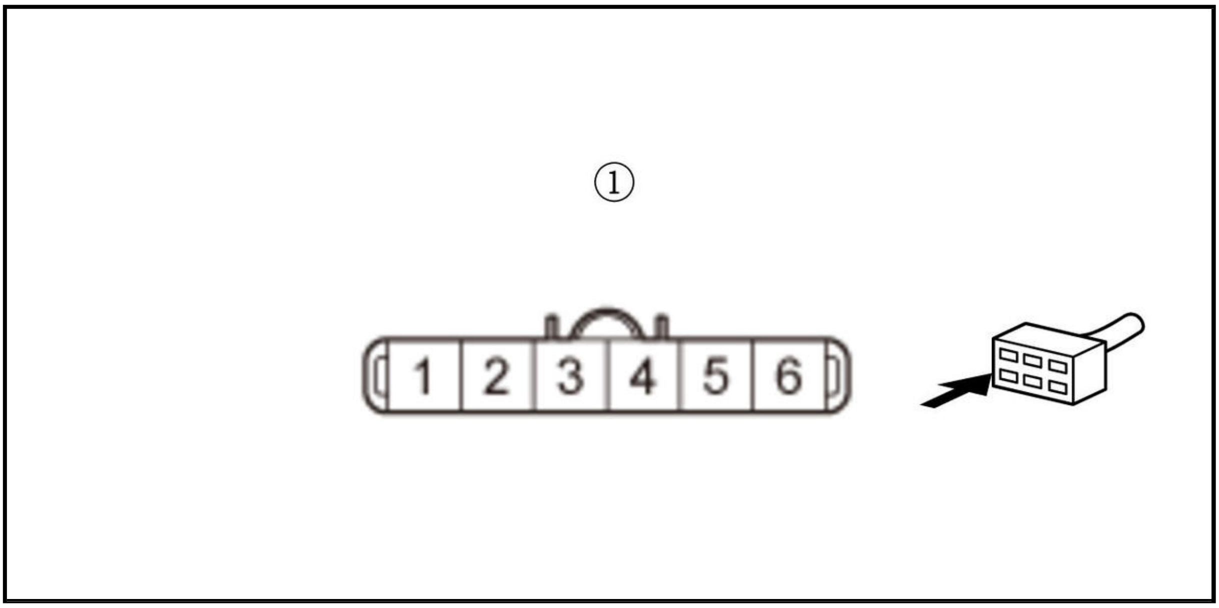

-5. Check for continuity between test points 1 and 2.

Test condition	Vehicle OFF (LOCK) mode
B	PCM connector E (80P): disconnected
B	Throttle body 6P connector: disconnected
B	Throttle body 6P connector No. 1 and No. 2: jumped
Test point 1	**PCM connector E (80P) No. 27**
Test point 2	**PCM connector E (80P) No. 28**

Is there continuity?

1. **YES**

   The MTR1 wire and the MTR2 wire are OK. **Substitute a known-good throttle body** , then recheck:

   - If DTC P2176 is not indicated, **replace the original throttle body** .
   - If DTC P2176 is indicated again, **replace the PCM** .

NO

Repair an open in the MTR1 wire and/or the MTR2 wire between the PCM (E27, E28) and the throttle body.

DTC P2176 (2.4 L ENGINE) (2017 2018 2019)

DTC P2176 : Throttle Actuator Control System Idle Position Not Learned

WARNING: **Do not insert your fingers into the installed throttle body when you turn the vehicle to the ON mode, or while the vehicle is in ON mode. If you do, you will seriously injure your fingers if the throttle valve is activated.**

NOTE:

- Before you troubleshoot, review the general troubleshooting information .
- If DTC P2135 is stored at the same time as DTC P2176, troubleshoot DTC P2135 first, then recheck for DTC P2176.

DTC Description	Confirmed DTC	Pending DTC
P2176 Throttle Actuator Control System Idle Position Not Learned	B	B

DTC (PGM-FI)

1. Problem verification

   -1. Turn the vehicle to the ON mode.

   -2. Clear the DTC with the HDS.

   -3. Turn the vehicle to the OFF (LOCK) mode, and wait 10 seconds.

   -4. Turn the vehicle to the ON mode.

   -5. Check for Pending or Confirmed DTCs with the HDS.

DTC Description	Confirmed DTC	Pending DTC
P2176 Throttle Actuator Control System Idle Position Not Learned	B	B

   Is DTC P2176 indicated?

   YES

   The failure is duplicated. Go to step 2.

   NO

   Intermittent failure, the system is OK at this time. Check for poor connections or loose terminals at the throttle body and the PCM, then clean the throttle body . If the on-board snapshot of this DTC is recorded, try to reproduce the failure under the same conditions with the on-board snapshot .

2. Throttle body operation check

   -1. Turn the vehicle to the OFF (LOCK) mode.

   -2. Disconnect the intake air duct from the throttle body .

-3. Turn the vehicle to the ON mode.

-4. Clear the DTC with the HDS.

-5. Visually check the throttle valve operation while doing the ETCS TEST in the INSPECTION MENU with the HDS.

ETCS TEST

Does the throttle valve move to its fully closed position?

YES

Go to step 3.

NO

Go to step 4.

3. Throttle body condition check

-1. Turn the vehicle to the OFF (LOCK) mode.

-2. **Remove the throttle body** .

-3. Check for sludge or carbon on the throttle valve.

Is there sludge or carbon on the throttle valve?

YES

Clean the throttle body .

NO

Replace the throttle body .

4. Open wire check (MTR 1 line, MTR 2 line)

-1. Turn the vehicle to the OFF (LOCK) mode.

-2. Jump the SCS line with the HDS, and wait more than 1 minute.

-3. Disconnect the following connectors.

PCM connector C (51P)
Throttle body 6P connector

-4. Connect terminals A and B with a jumper wire.

Terminal A	Throttle body 6P connector (female terminals) No. 1: ①
Terminal B	Throttle body 6P connector (female terminals) No. 2: ①

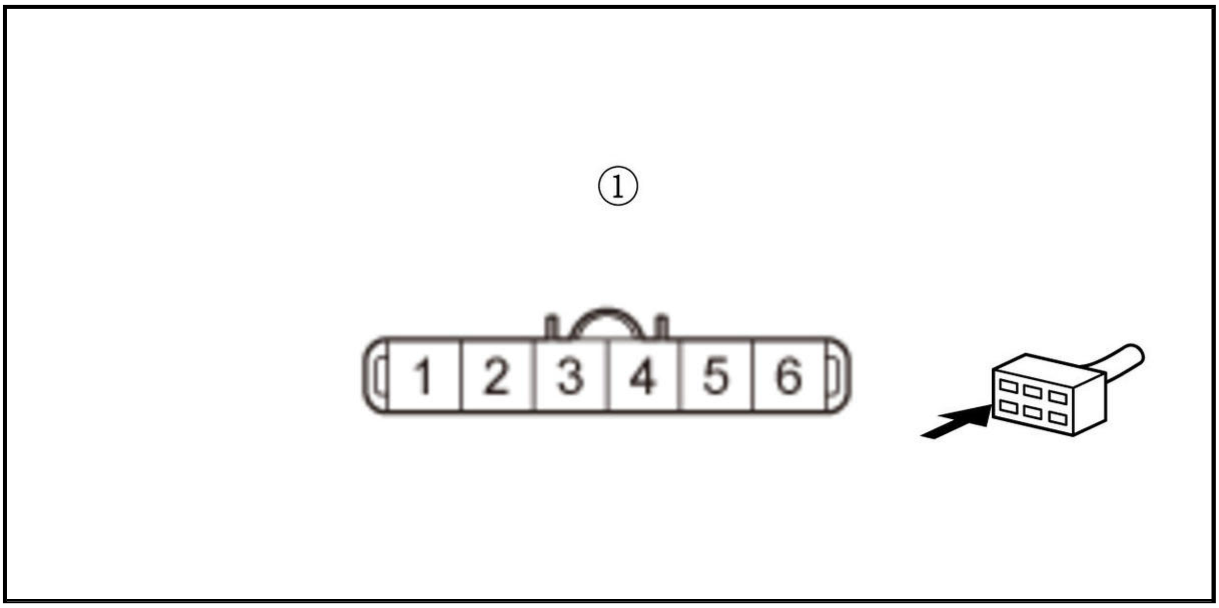

-5. Check for continuity between test points 1 and 2.

Test condition	Vehicle OFF (LOCK) mode
B	PCM connector C (51P): disconnected
B	Throttle body 6P connector: disconnected
B	Throttle body 6P connector No. 1 and No. 2: jumped
Test point 1	**PCM connector C (51P) No. 11**
Test point 2	**PCM connector C (51P) No. 12**

Is there continuity?

1. **YES**

The MTR1 wire and the MTR2 wire are OK. **Substitute a known-good throttle body** , then recheck:

- If DTC P2176 is not indicated, **replace the original throttle body** .
- If DTC P2176 is indicated again, **replace the PCM** .

NO

Repair an open in the MTR 1 wire and/or the MTR 2 wire between the PCM (C11, C12) and the throttle body.

DTC P2182 (1.5 L ENGINE) (2018 2019 2020 2021)

DTC P2182 : ECT Sensor 2 Out of Range

NOTE: Before you troubleshoot, **review the general troubleshooting information** .

DTC Description	Confirmed DTC	Pending DTC
P2182 ECT Sensor 2 Out of Range	B	B

DTC (PGM-FI)

1. Problem verification 1

-1. Turn the vehicle to the ON mode.

-2. Check the parameter (s) below with the HDS.

Signal	Threshold		Current conditions	
	Values	**Unit**	**Values**	**Unit**
ECT SENSOR 2	Less than 0.14	V	B	B

Do the current condition (s) match the threshold?

YES

The failure is duplicated. Go to step 3.

NO

Go to step 2.

2. Problem verification 2

-1. Check the parameter (s) below with the HDS.

Signal	Threshold		Current conditions	
	Values	**Unit**	**Values**	**Unit**
ECT SENSOR 2	More than 4.99	V	B	B

Do the current condition (s) match the threshold?

YES

The failure is duplicated. Go to step 5.

NO

Intermittent failure, the system is OK at this time. Check for poor connections or loose terminals at ECT sensor 2 and the PCM. **If the on-board snapshot of this DTC is recorded, try to reproduce the failure under the same conditions with the on-board snapshot** .

3. Determine possible failure area (ECT sensor 2, others)

-1. Turn the vehicle to the OFF (LOCK) mode.

-2. Disconnect the following connector.

ECT Sensor 2 2P connector

-3. Turn the vehicle to the ON mode.

-4. Check the parameter (s) below with the HDS.

Signal	Threshold		Current conditions	
	Values	**Unit**	**Values**	**Unit**
ECT SENSOR 2	Less than 0.14	V	B	B

Do the current condition (s) match the threshold?

YES

Go to step 4.

NO

Replace ECT sensor 2 .

4. Shorted wire check (TW2/TW2 SENSOR line)

-1. Turn the vehicle to the OFF (LOCK) mode.

-2. Jump the SCS line with the HDS, and wait more than 1 minute.

-3. Disconnect the following connector.

PCM connector E (80P)

-4. Check for continuity between test points 1 and 2.

Test condition	Vehicle OFF (LOCK) mode
B	ECT Sensor 2 2P connector: disconnected
B	PCM connector E (80P): disconnected
Test point 1	ECT sensor 2 2P connector (female terminals) No. 2: ①
Test point 2	Body ground

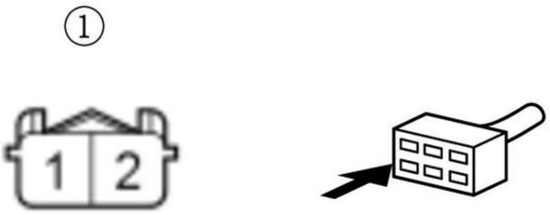

Is there continuity?

YES

Repair a short in the TW2/TW2 SENSOR wire between the PCM (E54) and ECT sensor 2.

NO

The TW2/TW2 SENSOR wire is OK. Check for any authorized service information related to the DTCs or symptoms you are troubleshooting, or **substitute a known-good PCM** .

5. Determine possible failure area (ECT sensor 2, others)

-1. Turn the vehicle to the OFF (LOCK) mode.

-2. Disconnect the following connector.

ECT sensor 2 2P connector

-3. Connect terminals A and B with a jumper wire.

Terminal A	ECT sensor 2 2P connector (female terminals) No. 1: ①
Terminal B	ECT sensor 2 2P connector (female terminals) No. 2: ①

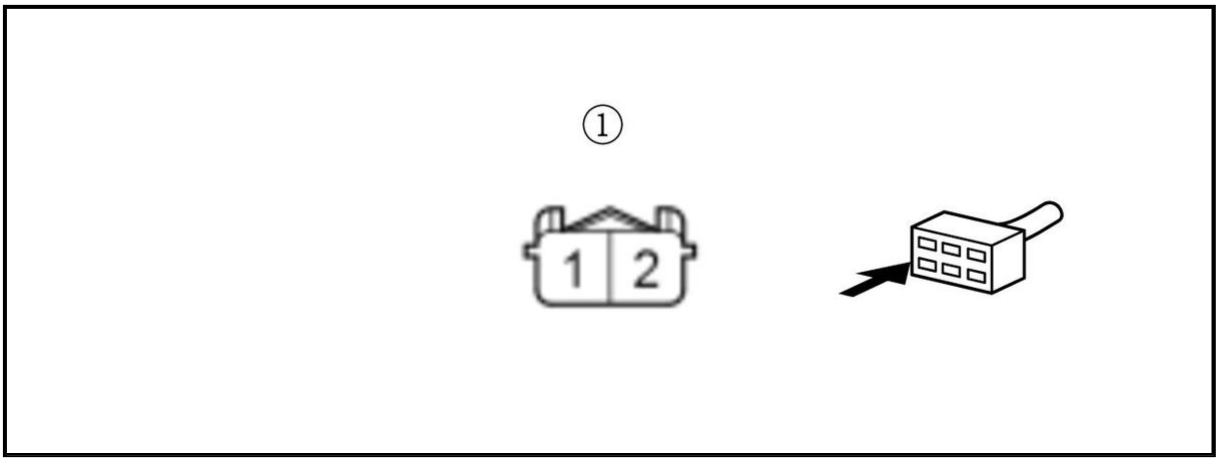

-4. Turn the vehicle to the ON mode.

-5. Check the parameter (s) below with the HDS.

Signal	Threshold		Current conditions	
	Values	**Unit**	**Values**	**Unit**
ECT SENSOR 2	More than 4.99	V	B	B

Do the current condition (s) match the threshold?

YES

Go to step 6.

NO

Replace ECT sensor 2 .

6. Determine possible failure area (TW2/TW2 SENSOR line, others)

-1. Turn the vehicle to the OFF (LOCK) mode.

-2. Remove the jumper wire from the ECT sensor 2 2P connector.

-3. Turn the vehicle to the ON mode.

-4. Measure the voltage between test points 1 and 2.

Test condition	Vehicle ON mode
B	ECT sensor 2 2P connector: disconnected
Test point 1	ECT sensor 2 2P connector (female terminals) No. 2: ①
Test point 2	Body ground

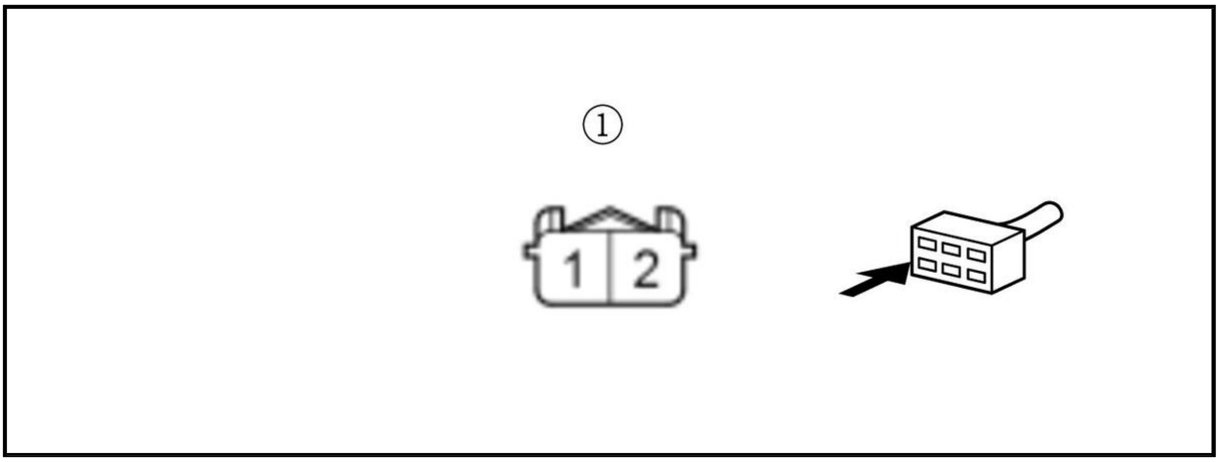

Is there about 5.0 V?

YES

Go to step 7.

NO

Go to step 8.

7. Open wire check (SG6 line)

-1. Turn the vehicle to the OFF (LOCK) mode.

-2. Jump the SCS line with the HDS, and wait more than 1 minute.

-3. Disconnect the following connector.

PCM connector E (80P)

-4. Check for continuity between test points 1 and 2.

Test condition	Vehicle OFF (LOCK) mode
B	ECT sensor 2 2P connector: disconnected
B	PCM connector E (80P): disconnected
Test point 2	ECT sensor 2 2P connector (female terminals) No. 1: ①
Test point 1	**PCM connector E (80P) No. 45**

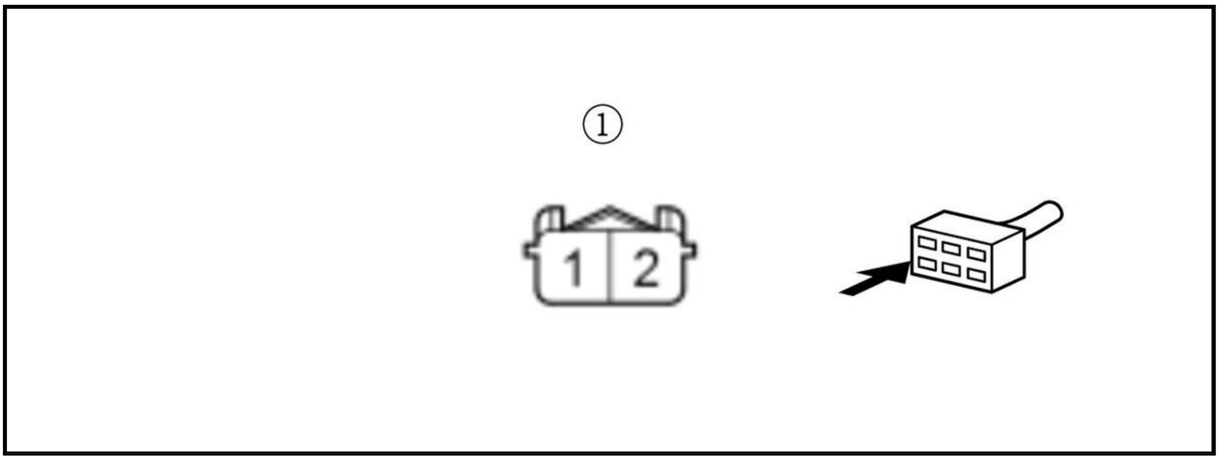

Is there continuity?

YES

The SG6 line is OK. Check for any authorized service information related to the DTCs or symptoms you are troubleshooting, or **substitute a known-good PCM** .

NO

Repair an open in the SG6 wire between the PCM (E45) and ECT sensor 2.

8. Open wire check (TW2/TW2 SENSOR line)

-1. Turn the vehicle to the OFF (LOCK) mode.

-2. Jump the SCS line with the HDS, and wait more than 1 minute.

-3. Disconnect the following connector.

PCM connector E (80P)

-4. Check for continuity between test points 1 and 2.

Test condition	Vehicle OFF (LOCK) mode
B	ECT sensor 2 2P connector: disconnected
B	PCM connector E (80P): disconnected
Test point 1	ECT sensor 2 2P connector (female terminals) No. 2: ①
Test point 2	**PCM connector E (80P) No. 54**

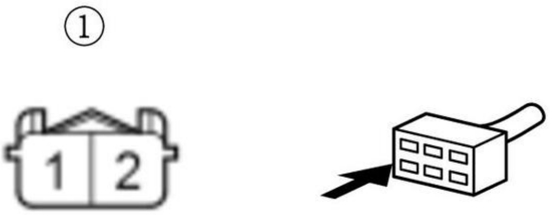

Is there continuity?

YES

The TW2/TW2 SENSOR wire is OK. Check for any authorized service information related to the DTCs or symptoms you are troubleshooting, or **substitute a known-good PCM** .

NO

Repair an open in the TW2/TW2 SENSOR wire between the PCM (E54) and ECT sensor 2.

DTC P2182 (2.4 L ENGINE) (2018 2019)

DTC P2182 : ECT Sensor 2 Out of Range

NOTE: Before you troubleshoot, **review the general troubleshooting information** .

DTC Description	Confirmed DTC	Pending DTC
P2182 ECT Sensor 2 Out of Range	B	B

1. Problem verification 1

   -1. Turn the vehicle to the ON mode.

   -2. Check the parameter (s) below with the HDS.

Signal	Threshold		Current conditions	
	Values	Unit	Values	Unit
ECT SENSOR 2	Less than 0.14	V	B	B

Do the current condition (s) match the threshold?

YES

The failure is duplicated. Go to step 3.

NO

Go to step 2.

2. Problem verification 2

   -1. Check the parameter (s) below with the HDS.

Signal	Threshold		Current conditions	
	Values	Unit	Values	Unit
ECT SENSOR 2	More than 4.92	V	B	B

Do the current condition (s) match the threshold?

YES

The failure is duplicated. Go to step 5.

NO

Intermittent failure, the system is OK at this time. Check for poor connections or loose terminals at ECT sensor 2 and the PCM. **If the on-board snapshot of this DTC is recorded, try to reproduce the failure under the same conditions with the on-board snapshot** .

3. Determine possible failure area (ECT sensor 2, others)

   -1. Turn the vehicle to the OFF (LOCK) mode.

   -2. Disconnect the following connector.

ECT Sensor 2 2P connector

   -3. Turn the vehicle to the ON mode.

   -4. Check the parameter (s) below with the HDS.

Signal	Threshold		Current conditions	
	Values	Unit	Values	Unit
ECT SENSOR 2	Less than 0.14	V	B	B

Do the current condition (s) match the threshold?

YES

Go to step 4.

NO

Replace ECT sensor 2 .

4. Shorted wire check (TW2 SENSOR line)

-1. Turn the vehicle to the OFF (LOCK) mode.

-2. Jump the SCS line with the HDS, and wait more than 1 minute.

-3. Disconnect the following connector.

PCM connector A (51P)

-4. Check for continuity between test points 1 and 2.

Test condition	Vehicle OFF (LOCK) mode
B	ECT Sensor 2 2P connector: disconnected
B	PCM connector A (51P): disconnected
Test point 1	ECT sensor 2 2P connector (female terminals) No. 2: ①
Test point 2	Body ground

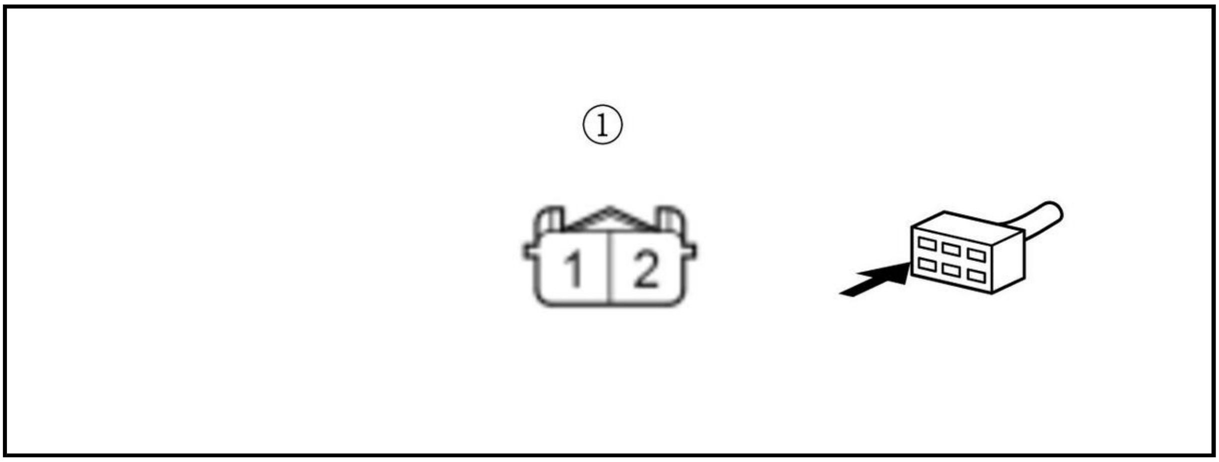

Is there continuity?

YES

Repair a short in the TW2 SENSOR wire between the PCM (A43) and ECT sensor 2.

NO

The TW2 SENSOR wire is OK. Check for any authorized service information related to the DTCs or symptoms you are troubleshooting, or substitute a known-good PCM .

5. Determine possible failure area (ECT sensor 2, others)

-1. Turn the vehicle to the OFF (LOCK) mode.

-2. Disconnect the following connector.

ECT sensor 2 2P connector

-3. Connect terminals A and B with a jumper wire.

Terminal A	ECT sensor 2 2P connector (female terminals) No. 1: ①
Terminal B	ECT sensor 2 2P connector (female terminals) No. 2: ①

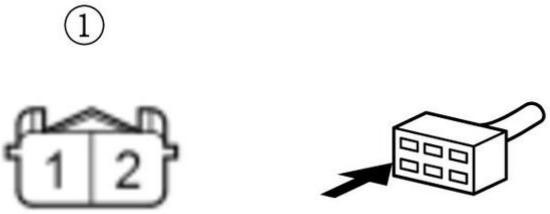

-4. Turn the vehicle to the ON mode.

-5. Check the parameter (s) below with the HDS.

Signal	**Threshold**		**Current conditions**	
	Values	**Unit**	**Values**	**Unit**
ECT SENSOR 2	More than 4.92	V	B	B

Do the current condition (s) match the threshold?

YES

Go to step 6.

NO

Replace ECT sensor 2 .

6. Determine possible failure area (TW2 SENSOR line, others)

-1. Turn the vehicle to the OFF (LOCK) mode.

-2. Remove the jumper wire from the ECT sensor 2 2P connector.

-3. Turn the vehicle to the ON mode.

-4. Measure the voltage between test points 1 and 2.

Test condition	Vehicle ON mode
B	ECT sensor 2 2P connector: disconnected
Test point 1	ECT sensor 2 2P connector (female terminals) No. 2: ①
Test point 2	Body ground

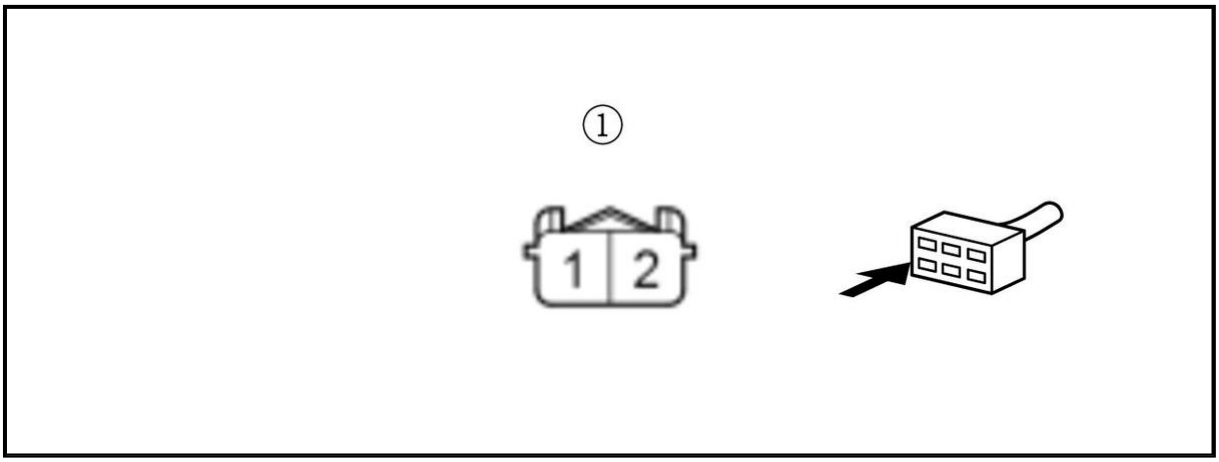

Is there about 5.0 V?

YES

Go to step 7.

NO

Go to step 8.

7. Open wire check (SG6 line)

-1. Turn the vehicle to the OFF (LOCK) mode.

-2. Jump the SCS line with the HDS, and wait more than 1 minute.

-3. Disconnect the following connector.

PCM connector A (51P)

-4. Check for continuity between test points 1 and 2.

Test condition	Vehicle OFF (LOCK) mode
B	ECT sensor 2 2P connector: disconnected
B	PCM connector A (51P): disconnected
Test point 2	ECT sensor 2 2P connector (female terminals) No. 1: ①
Test point 1	**PCM connector A (51P) No. 28**

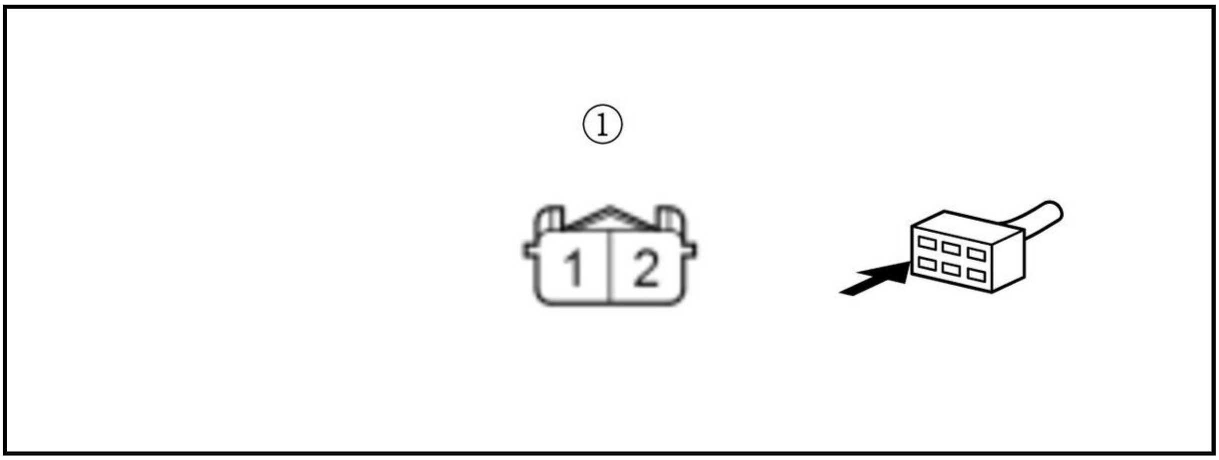

Is there continuity?

YES

The SG6 line is OK. Check for any authorized service information related to the DTCs or symptoms you are troubleshooting, or **substitute a known-good PCM** .

NO

Repair an open in the SG6 wire between the PCM (A28) and ECT sensor 2.

8. Open wire check (TW2 SENSOR line)

-1. Turn the vehicle to the OFF (LOCK) mode.

-2. Jump the SCS line with the HDS, and wait more than 1 minute.

-3. Disconnect the following connector.

PCM connector A (51P)

-4. Check for continuity between test points 1 and 2.

Test condition	Vehicle OFF (LOCK) mode
B	ECT sensor 2 2P connector: disconnected
B	PCM connector A (51P): disconnected
Test point 1	ECT sensor 2 2P connector (female terminals) No. 2: ①
Test point 2	**PCM connector A (51P) No. 43**

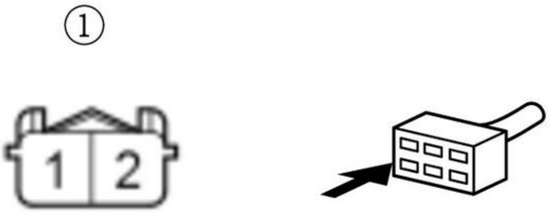

Is there continuity?

YES

The TW2 SENSOR wire is OK. Check for any authorized service information related to the DTCs or symptoms you are troubleshooting, or **substitute a known-good PCM** .

NO

Repair an open in the TW2 SENSOR wire between the PCM (A43) and ECT sensor 2.

DTC P2183 (1.5 L ENGINE)

DTC P2183 : ECT Sensor 2 Circuit Range/Performance Problem

NOTE:

- Before you troubleshoot, **review the general troubleshooting information** .

- If DTC P0111 is stored at the same time as DTC P2183, troubleshoot DTC P0111 first, then recheck for DTC P2183.

DTC Description	Confirmed DTC	Pending DTC
P2183 ECT Sensor 2 Circuit Range/Performance Problem	B	B

DTC (PGM-FI)

1. Connector visual check:

   Check for poor connections or loose terminals and terminals at these sensors:

   - ECT sensor 1
   - ECT sensor 2

   Are the connections and terminals OK?

   YES

   Go to step 2.

   NO

   Repair the connections or terminals.

2. PGM-FI system check

   -1. Turn the vehicle to the ON mode.

   -2. Check for Pending or Confirmed DTCs with the HDS.

DTC Description	Confirmed DTC	Pending DTC
P011A ECT Sensor 1 Circuit Range/Performance Problem	B	B
P2183 ECT Sensor 2 Circuit Range/Performance Problem	B	B

   Are DTC P011A and P2183 indicated at the same time?

   YES

   Go to step 5.

   NO

   Go to step 3.

3. ECT sensor 2 performance check

   -1. Start the engine, and let it idle for 10 minutes.

   -2. Check the parameter (s) below with the HDS.

Signal	Threshold		Current conditions	
	Values	Unit	Values	Unit
ECT SENSOR 2	Less than 120	deg. F	B	B
	Less than 49	deg. C		

   Do the current condition (s) match the threshold?

YES

Replace ECT sensor 2 .

NO

Go to step 4.

4. Problem verification

-1. Turn the vehicle to the OFF (LOCK) mode.

-2. Allow ECT sensor 2 to cool to the ambient temperature.

-3. Note the ambient temperature.

-4. Turn the vehicle to the ON mode.

-5. Quickly note the value of ECT SENSOR 2 in the DATA LIST with the HDS.

Signal	Current conditions	
	Values	Unit
ECT SENSOR 2	B	B

Does the value of ECT SENSOR 2 differ 5.4 deg. F (3 deg. C) or more from the ambient temperature?

YES

The failure is duplicated. Replace ECT sensor 2 .

NO

Intermittent failure, the system is OK at this time. Check for poor connections or loose terminals at ECT sensor 1, ECT sensor 2, and the PCM. If the on-board snapshot of this DTC is recorded, try to reproduce the failure under the same conditions with the on-board snapshot .

5. ECT sensor 1 performance check

-1. Start the engine, and let it idle for 10 minutes.

-2. Check the parameter (s) below with the HDS.

Signal	Threshold		Current conditions	
	Values	Unit	Values	Unit
ECT SENSOR 1	Less than 120	deg. F	B	B
	Less than 49	deg. C		

Do the current condition (s) match the threshold?

YES

Replace ECT sensor 1 .

NO

ECT sensor 1 is OK at this time. Go to step 6.

6. ECT sensor 2 performance check

-1. Let the engine idle for 10 minutes.

-2. Check the parameter (s) below with the HDS.

Signal	Threshold		Current conditions	
	Values	Unit	Values	Unit
ECT SENSOR 2	Less than 120	deg. F	B	B
	Less than 49	deg. C		

Do the current condition (s) match the threshold?

YES

Replace ECT sensor 2 .

NO

Go to step 7.

7. Problem verification

-1. Turn the vehicle to the OFF (LOCK) mode.

-2. Allow the sensors to cool to the ambient temperature.

-3. Note the ambient temperature.

-4. Turn the vehicle to the ON mode.

-5. Quickly note the value of ECT SENSOR 1 and ECT SENSOR 2 in the DATA LIST with the HDS.

Signal	Current conditions	
	Values	Unit
ECT SENSOR 1	B	B
ECT SENSOR 2	B	B

-6. Compare the value of ECT SENSOR 1 to the ambient temperature, and the value of ECT SENSOR 2 to the ambient temperature individually.

Does either sensor differ more than 5.4 deg. F (3 deg. C) from the ambient temperature?

YES

Replace the sensor that differed more than 5.4 deg. F (3 deg. C) from the ambient temperature.

NO

Intermittent failure, the system is OK at this time. Check for poor connections or loose terminals at ECT sensor 1, ECT sensor 2, and the PCM. **If the on-board snapshot of this DTC is recorded, try to reproduce the failure under the same conditions with the on-board snapshot** .

DTC P2183 (2.4 L ENGINE) (2017 2018 2019)

DTC P2183 : ECT Sensor 2 Circuit Range/Performance Problem

NOTE:

- Before you troubleshoot, **review the general troubleshooting information** .
- If DTC P0111 is stored at the same time as DTC P2183, troubleshoot DTC P0111 first, then recheck for DTC P2183.

DTC Description	Confirmed DTC	Pending DTC
P2183 ECT Sensor 2 Circuit Range/Performance Problem	B	B

DTC (PGM-FI)

1. Connector visual check:

   Check for poor connections or loose terminals and terminals at these sensors:

   - ECT sensor 1
   - ECT sensor 2

   Are the connections and terminals OK?

   YES

   Go to step 2.

   NO

   Repair the connections or terminals.

2. PGM-FI system check

   -1. Turn the vehicle to the ON mode.

   -2. Check for Pending or Confirmed DTCs with the HDS.

DTC Description	Confirmed DTC	Pending DTC
P011A ECT Sensor 1 Circuit Range/Performance Problem	B	B
P2183 ECT Sensor 2 Circuit Range/Performance Problem	B	B

   Are DTC P011A and P2183 indicated at the same time?

   YES

   Go to step 5.

   NO

   Go to step 3.

3. ECT sensor 2 performance check

   -1. Start the engine, and let it idle for 10 minutes.

   -2. Check the parameter (s) below with the HDS.

Signal	Threshold		Current conditions	
	Values	Unit	Values	Unit
ECT SENSOR 2	Less than 120	deg. F	B	B
	Less than 49	deg. C		

   Do the current condition (s) match the threshold?

   YES

   Replace ECT sensor 2 .

NO

Go to step 4.

4. Problem verification

   -1. Turn the vehicle to the OFF (LOCK) mode.

   -2. Allow ECT sensor 2 to cool to the ambient temperature.

   -3. Note the ambient temperature.

   -4. Turn the vehicle to the ON mode.

   -5. Quickly note the value of ECT SENSOR 2 in the DATA LIST with the HDS.

Signal	Current conditions	
	Values	Unit
ECT SENSOR 2	B	B

Does the value of ECT SENSOR 2 differ 5.4 deg. F (3 deg. C) or more from the ambient temperature?

YES

The failure is duplicated. **Replace ECT sensor 2** .

NO

Intermittent failure, the system is OK at this time. Check for poor connections or loose terminals at ECT sensor 1, ECT sensor 2, and the PCM. **If the on-board snapshot of this DTC is recorded, try to reproduce the failure under the same conditions with the on-board snapshot** .

5. ECT sensor 1 performance check

   -1. Start the engine, and let it idle for 10 minutes.

   -2. Check the parameter (s) below with the HDS.

Signal	Threshold		Current conditions	
	Values	Unit	Values	Unit
ECT SENSOR 1	Less than 120	deg. F	B	B
	Less than 49	deg. C		

Do the current condition (s) match the threshold?

YES

Replace ECT sensor 1 .

NO

ECT sensor 1 is OK at this time. Go to step 6.

6. ECT sensor 2 performance check

   -1. Let the engine idle for 10 minutes.

   -2. Check the parameter (s) below with the HDS.

Signal	Threshold		Current conditions	
	Values	Unit	Values	Unit
ECT SENSOR 2	Less than 120	deg. F	B	B
	Less than 49	deg. C		

Do the current condition (s) match the threshold?

YES

Replace ECT sensor 2 .

NO

Go to step 7.

7. Problem verification

-1. Turn the vehicle to the OFF (LOCK) mode.

-2. Allow the sensors to cool to the ambient temperature.

-3. Note the ambient temperature.

-4. Turn the vehicle to the ON mode.

-5. Quickly note the value of ECT SENSOR 1 and ECT SENSOR 2 in the DATA LIST with the HDS.

Signal	Current conditions	
	Values	Unit
ECT SENSOR 1	B	B
ECT SENSOR 2	B	B

-6. Compare the value of ECT SENSOR 1 to the ambient temperature, and the value of ECT SENSOR 2 to the ambient temperature individually.

Does either sensor differ more than 5.4 deg. F (3 deg. C) from the ambient temperature?

YES

Replace the sensor that differed more than 5.4 deg. F (3 deg. C) from the ambient temperature.

NO

Intermittent failure, the system is OK at this time. Check for poor connections or loose terminals at ECT sensor 1, ECT sensor 2, and the PCM. **If the on-board snapshot of this DTC is recorded, try to reproduce the failure under the same conditions with the on-board snapshot** .

DTC P2184 (1.5 L ENGINE)

DTC P2184 : ECT Sensor 2 Circuit Low Voltage

NOTE: Before you troubleshoot, **review the general troubleshooting information** .

DTC Description	Confirmed DTC	Pending DTC
P2184 ECT Sensor 2 Circuit Low Voltage	B	B

DTC (PGM-FI)

1. Problem verification

-1. Turn the vehicle to the ON mode.

-2. Check the parameter (s) below with the HDS.

Signal	Threshold		Current conditions	
	Values	Unit	Values	Unit
ECT SENSOR 2	Less than 0.08	V	B	B

Do the current condition (s) match the threshold?

YES

Go to step 2.

NO

Intermittent failure, the system is OK at this time. Check for poor connections or loose terminals at ECT sensor 2 and the PCM. **If the on-board snapshot of this DTC is recorded, try to reproduce the failure under the same conditions with the on-board snapshot** .

2. Determine possible failure area (ECT sensor 2, others)

-1. Turn the vehicle to the OFF (LOCK) mode.

-2. Disconnect the following connector.

ECT Sensor 2 2P connector

-3. Turn the vehicle to the ON mode.

-4. Check the parameter (s) below with the HDS.

Signal	Threshold		Current conditions	
	Values	Unit	Values	Unit
ECT SENSOR 2	Less than 0.08	V	B	B

Do the current condition (s) match the threshold?

YES

Go to step 3.

NO

Replace ECT sensor 2 .

3. Shorted wire check (TW2/TW2 SENSOR line)

-1. Turn the vehicle to the OFF (LOCK) mode.

-2. Jump the SCS line with the HDS, and wait more than 1 minute.

-3. Disconnect the following connector.

PCM connector E (80P)

-4. Check for continuity between test points 1 and 2.

Test condition	Vehicle OFF (LOCK) mode

B	ECT Sensor 2 2P connector: disconnected
B	PCM connector E (80P): disconnected
Test point 1	ECT sensor 2 2P connector (female terminals) No. 2: ①
Test point 2	Body ground

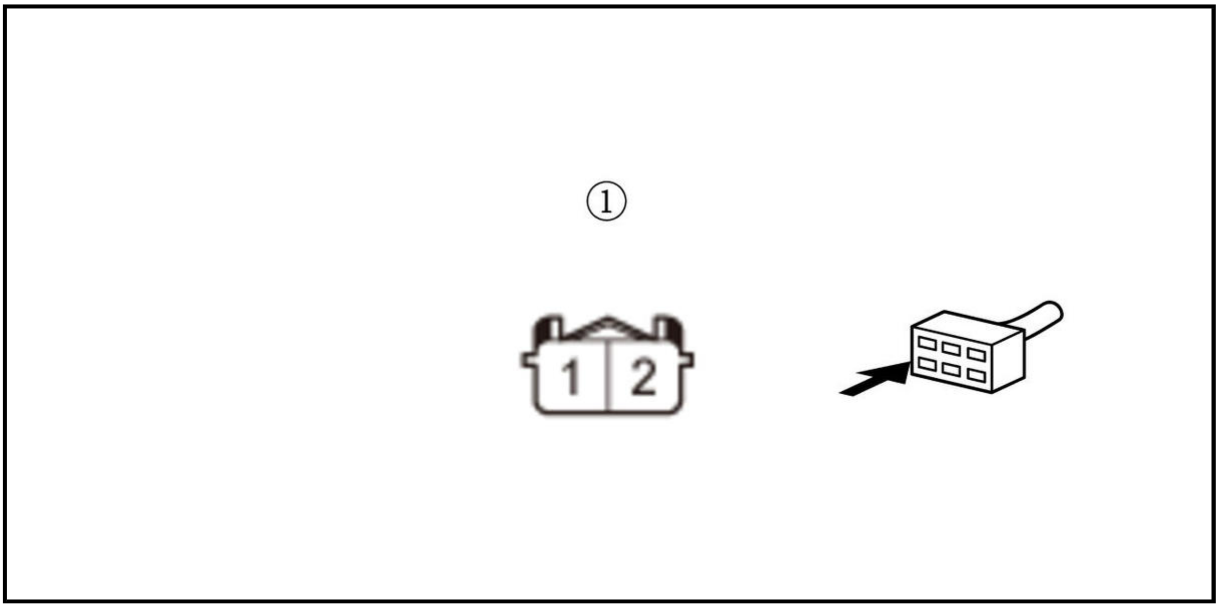

Is there continuity?

YES

Repair a short in the TW2/TW2 SENSOR wire between the PCM (E54) and ECT sensor 2.

NO

The TW2/TW2 SENSOR wire is OK. Check for any authorized service information related to the DTCs or symptoms you are troubleshooting, or **substitute a known-good PCM** .

DTC P2184 (2.4 L ENGINE) (2017 2018 2019)

DTC P2184 : ECT Sensor 2 Circuit Low Voltage

NOTE: Before you troubleshoot, **review the general troubleshooting information** .

DTC Description	Confirmed DTC	Pending DTC
P2184 ECT Sensor 2 Circuit Low Voltage	B	B

DTC (PGM-FI)

1. Problem verification

-1. Turn the vehicle to the ON mode.

-2. Check the parameter (s) below with the HDS.

Signal	Threshold		Current conditions	
	Values	Unit	Values	Unit
ECT SENSOR 2	Less than 0.08	V	B	B

Do the current condition (s) match the threshold?

YES

The failure is duplicated. Go to step 2.

NO

Intermittent failure, the system is OK at this time. Check for poor connections or loose terminals at ECT sensor 2 and the PCM. **If the on-board snapshot of this DTC is recorded, try to reproduce the failure under the same conditions with the on-board snapshot** .

2. ECT sensor 2 check

-1. Turn the vehicle to the OFF (LOCK) mode.

-2. Disconnect the following connector.

ECT Sensor 2 2P connector

-3. Turn the vehicle to the ON mode.

-4. Check the parameter (s) below with the HDS.

Signal	Threshold		Current conditions	
	Values	Unit	Values	Unit
ECT SENSOR 2	Less than 0.08	V	B	B

Do the current condition (s) match the threshold?

YES

Go to step 3.

NO

Replace ECT sensor 2 .

3. Shorted wire check (TW2 SENSOR line)

-1. Turn the vehicle to the OFF (LOCK) mode.

-2. Jump the SCS line with the HDS, and wait more than 1 minute.

-3. Disconnect the following connector.

PCM connector A (51P)

-4. Check for continuity between test points 1 and 2.

Test condition	Vehicle OFF (LOCK) mode
B	ECT Sensor 2 2P connector: disconnected
B	PCM connector A (51P): disconnected
Test point 1	ECT sensor 2 2P connector (female terminals) No. 2: ①
Test point 2	Body ground

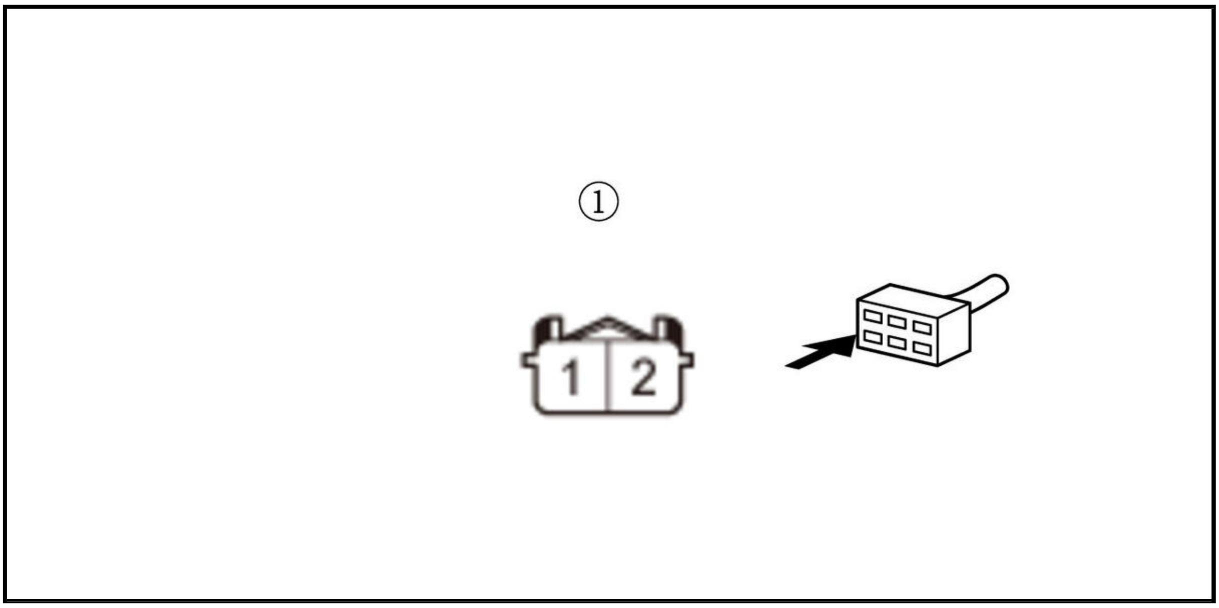

Is there continuity?

YES

Repair a short in the TW2 SENSOR wire between the PCM (A43) and ECT sensor 2.

NO

The TW2 SENSOR wire is OK. Check for any authorized service information related to the DTCs or symptoms you are troubleshooting or substitute a known-good PCM .

DTC P2185 (1.5 L ENGINE)

DTC P2185 : ECT Sensor 2 Circuit High Voltage

NOTE: Before you troubleshoot, review the general troubleshooting information .

DTC Description	Confirmed DTC	Pending DTC
P2185 ECT Sensor 2 Circuit High Voltage	B	B

DTC (PGM-FI)

1. Problem verification

-1. Turn the vehicle to the ON mode.

-2. Check the parameter (s) below with the HDS.

Signal	Threshold		Current conditions	
	Values	Unit	Values	Unit
ECT SENSOR 2	More than 4.92	V	B	B

Do the current condition (s) match the threshold?

YES

Go to step 2.

NO

Intermittent failure, the system is OK at this time. Check for poor connections or loose terminals at ECT sensor 2 and the PCM. **If the on-board snapshot of this DTC is recorded, try to reproduce the failure under the same conditions with the on-board snapshot** .

2. Determine possible failure area (ECT sensor 2, others)

-1. Turn the vehicle to the OFF (LOCK) mode.

-2. Disconnect the following connector.

ECT sensor 2 2P connector

-3. Connect terminals A and B with a jumper wire.

Terminal A	ECT sensor 2 2P connector (female terminals) No. 1: ①
Terminal B	ECT sensor 2 2P connector (female terminals) No. 2: ①

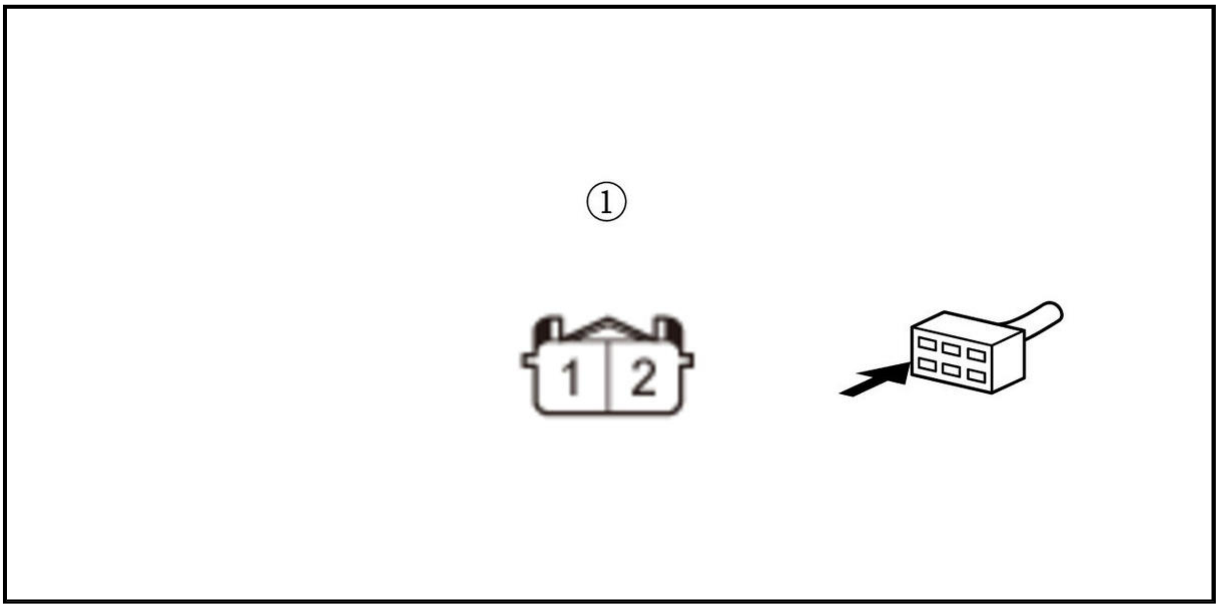

-4. Turn the vehicle to the ON mode.

-5. Check the parameter (s) below with the HDS.

Signal	Threshold		Current conditions	
	Values	Unit	Values	Unit
ECT SENSOR 2	More than 4.92	V	B	B

Do the current condition (s) match the threshold?

YES

Go to step 3.

NO

Replace ECT sensor 2 .

3. Determine possible failure area (TW2/TW2 SENSOR line, others)

-1. Turn the vehicle to the OFF (LOCK) mode.

-2. Remove the jumper wire from the ECT sensor 2 2P connector.

-3. Turn the vehicle to the ON mode.

-4. Measure the voltage between test points 1 and 2.

Test condition	Vehicle ON mode
B	ECT sensor 2 2P connector: disconnected
Test point 1	ECT sensor 2 2P connector (female terminals) No. 2: ①
Test point 2	Body ground

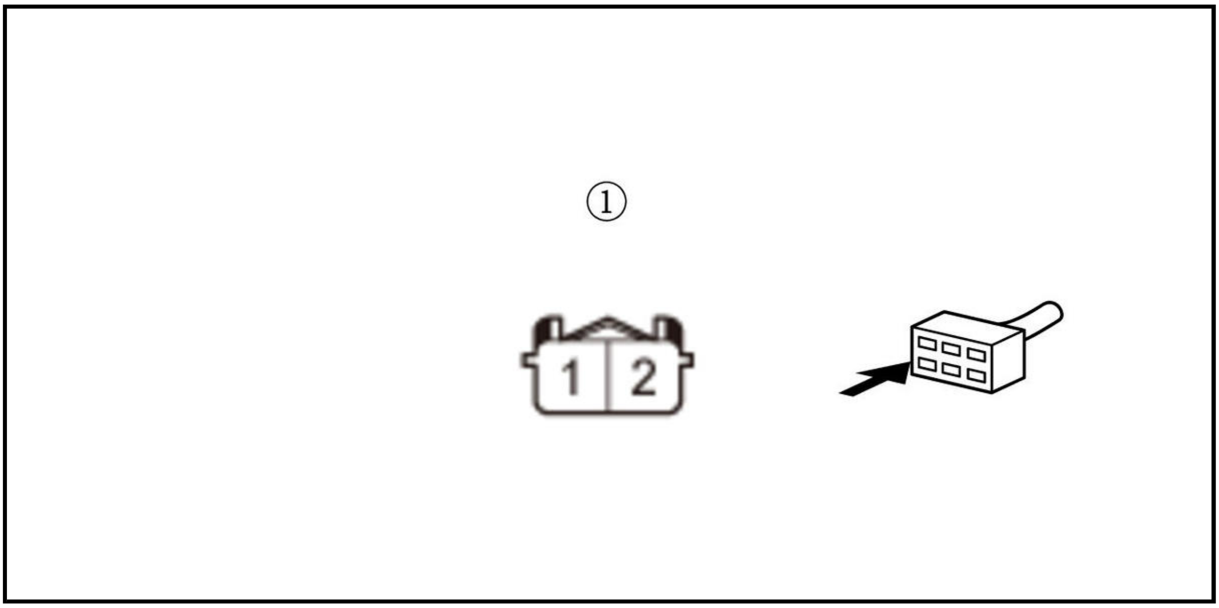

Is there about 5.0 V?

YES

Go to step 4.

NO

Go to step 5.

4. Open wire check (SG6 line)

-1. Turn the vehicle to the OFF (LOCK) mode.

-2. Jump the SCS line with the HDS, and wait more than 1 minute.

-3. Disconnect the following connector.

PCM connector E (80P)

-4. Check for continuity between test points 1 and 2.

Test condition	Vehicle OFF (LOCK) mode
B	ECT sensor 2 2P connector: disconnected
B	PCM connector E (80P): disconnected
Test point 2	ECT sensor 2 2P connector (female terminals) No. 1: ①
Test point 1	**PCM connector E (80P) No. 45**

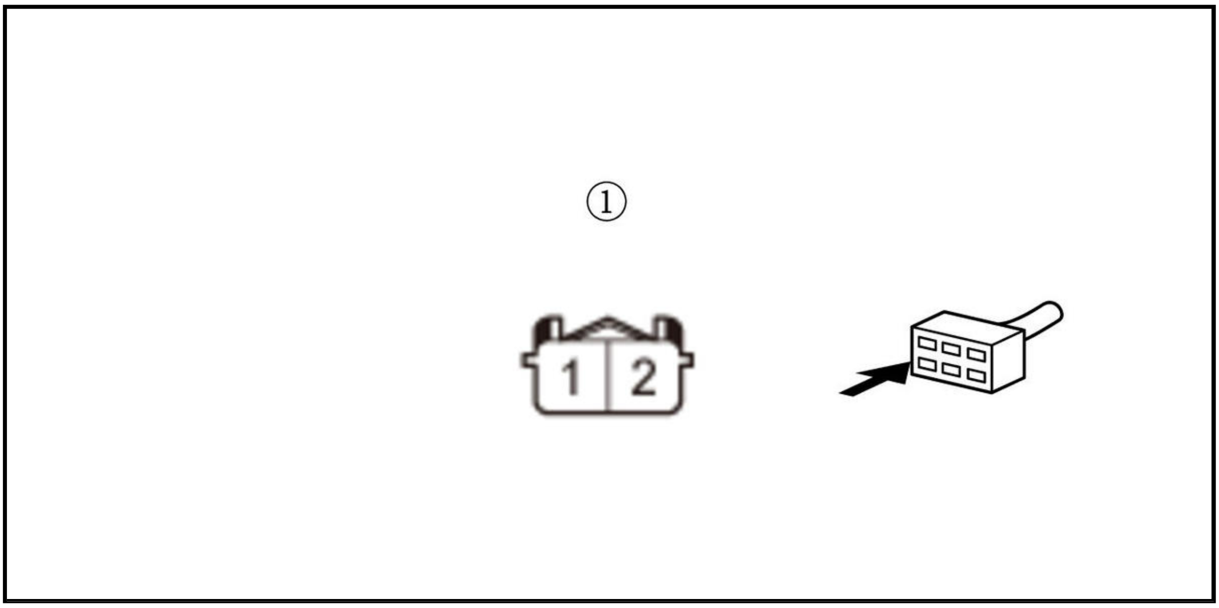

Is there continuity?

YES

The SG6 wire is OK. Check for any authorized service information related to the DTCs or symptoms you are troubleshooting, or **substitute a known-good PCM** .

NO

Repair an open in the SG6 wire between the PCM (E45) and ECT sensor 2.

5. Open wire check (TW2/TW2 SENSOR line)

-1. Turn the vehicle to the OFF (LOCK) mode.

-2. Jump the SCS line with the HDS, and wait more than 1 minute.

-3. Disconnect the following connector.

PCM connector E (80P)

-4. Check for continuity between test points 1 and 2.

Test condition	Vehicle OFF (LOCK) mode
B	ECT sensor 2 2P connector: disconnected
B	PCM connector E (80P): disconnected
Test point 1	ECT sensor 2 2P connector (female terminals) No. 2: ①
Test point 2	**PCM connector E (80P) No. 54**

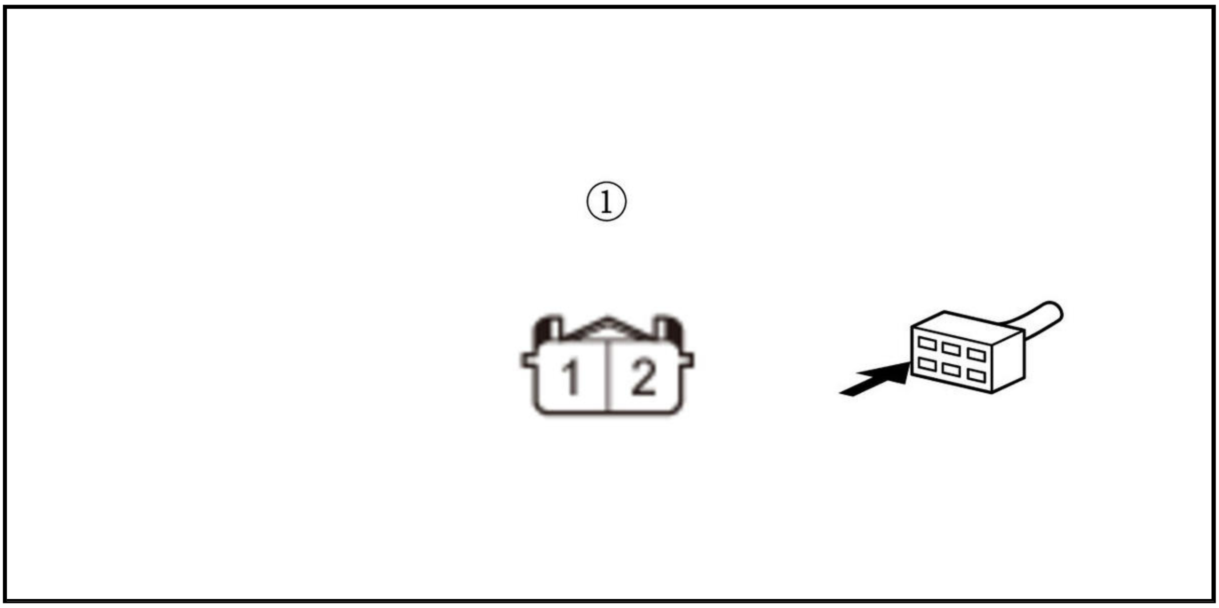

Is there continuity?

YES

The TW2/TW2 SENSOR wire is OK. Check for any authorized service information related to the DTCs or symptoms you are troubleshooting, or **substitute a known-good PCM** .

NO

Repair an open in the TW2/TW2 SENSOR wire between the PCM (E54) and ECT sensor 2.

DTC P2185 (2.4 L ENGINE) (2017 2018 2019)

DTC P2185 : ECT Sensor 2 Circuit High Voltage

NOTE: Before you troubleshoot, **review the general troubleshooting information** .

DTC Description	Confirmed DTC	Pending DTC
P2185 ECT Sensor 2 Circuit High Voltage	B	B

DTC (PGM-FI)

1. Problem verification

-1. Turn the vehicle to the ON mode.

-2. Check the parameter (s) below with the HDS.

Signal	Threshold		Current conditions	
	Values	Unit	Values	Unit
ECT SENSOR 2	More than 4.92	V	B	B

Do the current condition (s) match the threshold?

YES

The failure is duplicated. Go to step 2.

NO

Intermittent failure, the system is OK at this time. Check for poor connections or loose terminals at ECT sensor 2 and the PCM. **If the on-board snapshot of this DTC is recorded, try to reproduce the failure under the same conditions with the on-board snapshot** .

2. Determine possible failure area (ECT sensor 2, others)

-1. Turn the vehicle to the OFF (LOCK) mode.

-2. Disconnect the following connector.

ECT sensor 2 2P connector

-3. Connect terminals A and B with a jumper wire.

Terminal A	ECT sensor 2 2P connector (female terminals) No. 1: ①
Terminal B	ECT sensor 2 2P connector (female terminals) No. 2: ①

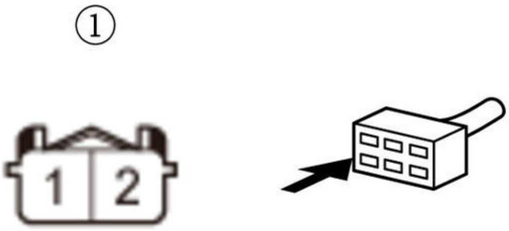

-4. Turn the vehicle to the ON mode.

-5. Check the parameter (s) below with the HDS.

Signal	Threshold		Current conditions	
	Values	**Unit**	**Values**	**Unit**
ECT SENSOR 2	More than 4.92	V	B	B

Do the current condition (s) match the threshold?

YES

Go to step 3.

NO

Replace ECT sensor 2 .

3. Determine possible failure area (TW2 SENSOR line, others)

-1. Turn the vehicle to the OFF (LOCK) mode.

-2. Remove the jumper wire from the ECT sensor 2 2P connector.

-3. Turn the vehicle to the ON mode.

-4. Measure the voltage between test points 1 and 2.

Test condition	Vehicle ON mode
B	ECT sensor 2 2P connector: disconnected
Test point 1	ECT sensor 2 2P connector (female terminals) No. 2: ①
Test point 2	Body ground

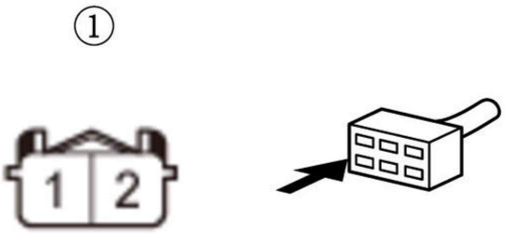

Is there about 5.0 V?

YES

Go to step 4.

NO

Go to step 5.

4. Open wire check (SG6 line)

-1. Turn the vehicle to the OFF (LOCK) mode.

-2. Jump the SCS line with the HDS, and wait more than 1 minute.

-3. Disconnect the following connector.

PCM connector A (51P)

-4. Check for continuity between test points 1 and 2.

Test condition	Vehicle OFF (LOCK) mode
B	ECT sensor 2 2P connector: disconnected
B	PCM connector A (51P): disconnected
Test point 2	ECT sensor 2 2P connector (female terminals) No. 1: ①
Test point 1	PCM connector A (51P) No. 28

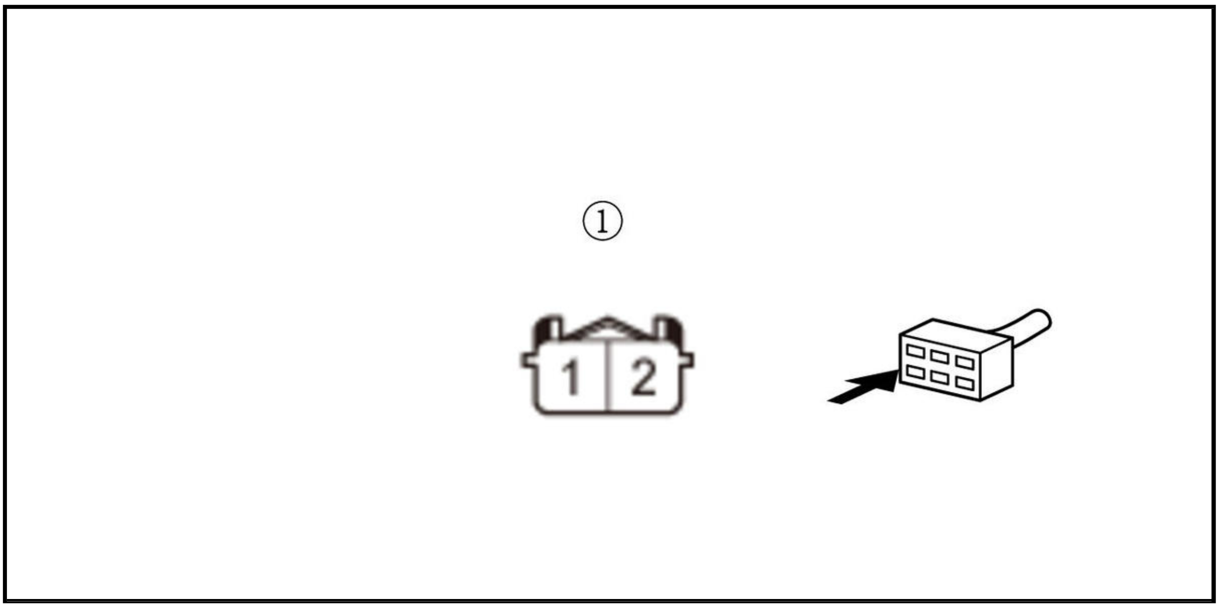

Is there continuity?

YES

The SG6 line is OK. Check for any authorized service information related to the DTCs or symptoms you are troubleshooting or **substitute a known-good PCM** .

NO

Repair an open in the SG6 wire between the PCM (A28) and ECT sensor 2.

5. Open wire check (TW2 SENSOR line)

-1. Turn the vehicle to the OFF (LOCK) mode.

-2. Jump the SCS line with the HDS, and wait more than 1 minute.

-3. Disconnect the following connector.

PCM connector A (51P)

-4. Check for continuity between test points 1 and 2.

Test condition	Vehicle OFF (LOCK) mode
B	ECT sensor 2 2P connector: disconnected
B	PCM connector A (51P): disconnected
Test point 1	ECT sensor 2 2P connector (female terminals) No. 2: ①
Test point 2	**PCM connector A (51P) No. 43**

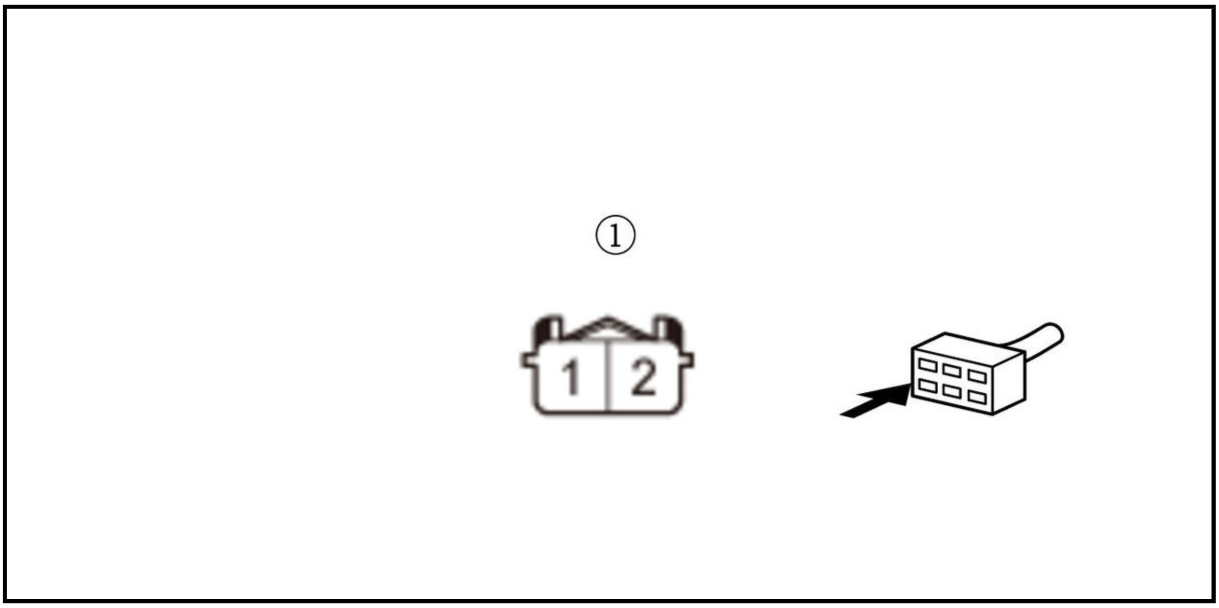

Is there continuity?

YES

The TW2 SENSOR wire is OK. Check for any authorized service information related to the DTCs or symptoms you are troubleshooting or **substitute a known-good PCM** .

NO

Repair an open in the TW2 SENSOR wire between the PCM (A43) and ECT sensor 2.

DTC P2195 (1.5 L ENGINE)

DTC P2195 : A/F Sensor (Sensor 1) Signal Stuck Lean

NOTE:

- Before you troubleshoot, **review the general troubleshooting information** .
- If the vehicle was out of fuel and the engine stalled before this DTC was stored, refuel, then clear the DTC with the HDS.
- If DTC P2101, P2118, P2135, P2138, P2176, or a combination of P2122 and P2127, P2122 and P2138 or P2127 and P2138 is stored at the same time as DTC P2195, troubleshoot those DTCs first, then recheck for DTC P2195.

DTC Description	Confirmed DTC	Pending DTC
P2195 A/F Sensor (Sensor 1) Signal Stuck Lean	B	B

DTC (PGM-FI)

1. MAF sensor/IAT sensor 1 visual check

-1. **Remove MAF sensor/IAT sensor 1** .

-2. Check for dirt or debris in MAF sensor/IAT sensor 1.

Is it dirty?

YES

Remove the debris. If needed, **replace MAF sensor/IAT sensor 1** .

NO

Go to step 2.

2. A/F sensor (Sensor 1) installation check

   -1. Check the installation of the A/F sensor (Sensor 1).

   Is the A/F sensor loose or disconnected from the TWC?

   YES

   Reinstall the A/F sensor (Sensor 1) .

   NO

   Go to step 3.

3. Problem verification

   -1. Turn the vehicle to the ON mode.

   -2. Clear the DTC with the HDS.

   -3. Start the engine.

   -4. Hold the engine speed at 3, 000 rpm without load (in P or N) until the radiator fan comes on.

   -5. Check for Pending or Confirmed DTCs with the HDS.

DTC Description	Confirmed DTC	Pending DTC
P2195 A/F Sensor (Sensor 1) Signal Stuck Lean	B	B

   Is DTC P2195 indicated?

   YES

   Check for poor connections or loose terminals at the A/F sensor (Sensor 1) and the PCM. Check for any authorized service information related to the DTCs or symptoms you are troubleshooting, or **substitute a known-good PCM** .

   NO

   Intermittent failure, the system is OK at this time. Check for poor connections or loose terminals at the A/F sensor (Sensor 1) and the PCM. **If the on-board snapshot of this DTC is recorded, try to reproduce the failure under the same conditions with the on-board snapshot** .

DTC P2195 (2.4 L ENGINE) (2017 2018 2019)

DTC P2195 : A/F Sensor (Sensor 1) Signal Stuck Lean

NOTE:

- Before you troubleshoot, **review the general troubleshooting information** .
- If the vehicle was out of fuel and the engine stalled before this DTC was stored, refuel, then clear the DTC with the HDS.
- If DTC P2101, P2118, P2135, P2138, P2176, or a combination of P2122 and P2127, P2122 and P2138 or P2127 and P2138 is stored at the same time as DTC P2195, troubleshoot those DTCs first, then recheck for DTC P2195.

DTC Description	Confirmed DTC	Pending DTC
P2195 A/F Sensor (Sensor 1) Signal Stuck Lean	B	B

DTC (PGM-FI)

1. MAF sensor/IAT sensor 1 visual check

   -1. **Remove MAF sensor/IAT sensor 1** .

   -2. Check for dirt or debris in MAF sensor/IAT sensor 1.

   Is it dirty?

   YES

   Remove the debris. If needed, **replace MAF sensor/IAT sensor 1** .

   NO

   Go to step 2.

2. A/F sensor (Sensor 1) installation check

   -1. Check the installation of the A/F sensor (Sensor 1).

   Is the A/F sensor loose or disconnected from the TWC?

   YES

   Reinstall the A/F sensor (Sensor 1) .

   NO

   Go to step 3.

3. Problem verification

   -1. Turn the vehicle to the ON mode.

   -2. Clear the DTC with the HDS.

   -3. Start the engine.

   -4. Hold the engine speed at 3, 000 rpm without load (in P or N) until the radiator fan comes on.

   -5. Check for Pending or Confirmed DTCs with the HDS.

DTC Description	Confirmed DTC	Pending DTC
P2195 A/F Sensor (Sensor 1) Signal Stuck Lean	B	B

   Is DTC P2195 indicated?

   YES

   Check for poor connections or loose terminals at the A/F sensor (Sensor 1) and the PCM. Check for any authorized service information related to the DTCs or symptoms you are troubleshooting, or **substitute a known-good PCM** .

   NO

Intermittent failure, the system is OK at this time. Check for poor connections or loose terminals at the A/F sensor (Sensor 1) and the PCM. **If the on-board snapshot of this DTC is recorded, try to reproduce the failure under the same conditions with the on-board snapshot** .

DTC P2199 (1.5 L ENGINE)

DTC P2199 : IAT Sensor 1-2 Incorrect Correlation

NOTE: Before you troubleshoot, **review the general troubleshooting information** .

DTC Description	Confirmed DTC	Pending DTC
P2199 IAT Sensor1-2 Incorrect Correlation	B	B

DTC (PGM-FI)

1. Connector visual check:

   Check for poor connections or loose terminals of these connectors.

   - ECT sensor 1
   - ECT sensor 2
   - MAF sensor/IAT sensor 1
   - IAT sensor 2

   Are the connection and terminals OK?

   YES

   Replace IAT sensor 2 .

   NO

   Repair the connections or terminals, then recheck.

DTC P219A (2.4 L ENGINE) (2017 2018 2019)

DTC P219A : Air-Fuel Ratio Variation of Cylinder

NOTE:

- Before you troubleshoot, **review the general troubleshooting information** .
- If any of the DTCs listed below are indicated at the same time as DTC P219A, troubleshoot those DTCs first, the recheck for P219A.

  P0130, P0133, P1172, P2195, P2237, P2238, P2252, P2A00: A/F sensor (Sensor 1)

  P0134, P0135: A/F sensor (Sensor 1) heater

  P0201, P0202, P0203, P0204: No. 1-No. 4 cylinder injector (s)

  P0300: Random misfire

  P0301, P0302, P0303, P0304: No. 1-No. 4 cylinder misfire

  P0351, P0352, P0353, P0354: No. 1-No. 4 cylinder Ignition coil power circuit

DTC Description	Confirmed DTC	Pending DTC
P219A A/F Ratio Variation of Cylinder	B	B

1. Problem verification (CYLINDER A/F TEST with HDS)

   -1. Turn the vehicle to the ON mode.

   -2. Record the following HDS on-board snapshot parameters:

   - VEHICLE SPEED
   - ENGINE SPEED
   - MAP SENSOR
   - ECT SENSOR 1
   - APP SENSOR
   - AF FB (ST FUEL TRIM)

   On-board Snapshot

   -3. Start the engine.

   -4. Hold the engine speed at 3, 000 rpm without load (in P or N) until the radiator fan comes on, then let it idle.

   Check under these conditions:

   - A/C off
   - All electrical loads off

   -6. Do the CYLINDER A/F TEST three times in the INSPECTION MENU with the HDS.

   CYLINDER A/F TEST

   Is every result OK?

   YES

   Go to step 2.

   NO

   Go to step 3.

2. Problem verification (OBD STATUS check):

   Test-drive the vehicle in the range of these recorded on-board snapshot parameters:

   - VEHICLE SPEED
   - ENGINE SPEED
   - MAP SENSOR
   - ECT SENSOR 1
   - APP SENSOR
   - AF FB (ST FUEL TRIM)

   On-board Snapshot

Signal	Current conditions	
	Values	Unit
VEHICLE SPEED	B	B
ENGINE SPEED	B	B
MAP SENSOR	B	B
ECT SENSOR 1	B	B
APP SENSOR	B	B
AF FB (ST FUEL TRIM)	B	B

-2. Monitor the OBD STATUS for DTC P219A in the DTCs MENU with the HDS.

DTC Description	OBD STATUS
P219A A/F Ratio Variation of Cylinder	B

Does the HDS indicate FAILED?

YES

The failure is duplicated. Go to step 3.

NO

If the HDS indicates PASSED, intermittent failure, the system is OK at this time. If the freeze data/on-board snapshot of this DTC is recorded, try to reproduce the failure under the same conditions with the freeze data/on-board snapshot. If the HDS indicates EXECUTING, continue driving until a result appears. If the HDS indicates OUT OF CONDITION, go to step 2-1 and recheck.

3. Engine compression check

-1. Turn the vehicle to the OFF (LOCK) mode.

-2. Do the cylinder compression test .

Is there a cylinder with lower compression than the other cylinders?

YES

Repair the engine compression problem.

NO

Go to step 4.

4. Valve clearance check

-1. Inspect the valve clearance .

Is the valve clearance OK?

YES

Go to step 5.

NO

Adjust the valve clearance .

5. Problem verification (CYLINDER A/F TEST with HDS)

-1. Start the engine.

-2. Hold the engine speed at 3, 000 rpm without load (in P or N) until the radiator fan comes on, then let it idle.

-3. Check under these conditions:

- A/C off
- All electrical loads off

-4. Do the CYLINDER A/F TEST three times in the INSPECTION MENU with the HDS.

CYLINDER A/F TEST

Is the result OK?

YES

Intermittent failure, the system is OK at this time. If the freeze data/on-board snapshot of this DTC is recorded, try to reproduce the failure under the same conditions with the freeze data/on-board snapshot.

NO

Go to step 6.

6. Injector check

-1. Turn the vehicle to the OFF (LOCK) mode.

-2. **Exchange the injector from the problem cylinder with one from another cylinder** .

-3. Start the engine.

-4. Hold the engine speed at 3, 000 rpm without load (in P or N) until the radiator fan comes on, then let it idle.

-5. Check under these conditions:

- A/C off
- All electrical loads off

-6. Do the CYLINDER A/F TEST three times in the INSPECTION MENU with the HDS.

CYLINDER A/F TEST

Is an injector failure indicated at the cylinder where the injector was exchanged?

YES

Replace all injectors as a set .

NO

Go to step 7.

7. Intake and exhaust manifold visual check

-1. Check for carbon build-up in the intake manifold and the exhaust manifold.

Is there carbon build-up in the intake manifold and/or exhaust manifold?

YES

Check the engine for oil leaks. If needed, repair the engine, also remove the carbon.

NO

Intermittent failure, the system is OK at this time. Check the engine for oil leaks.

DTC P219C, P219D, P219E, P219F (1.5 L ENGINE)

DTC P219C : No. 1 Cylinder Air-Fuel Ratio Variation **DTC P219D** : No. 2 Cylinder Air-Fuel Ratio Variation **DTC P219E** : No. 3 Cylinder Air-Fuel Ratio Variation **DTC P219F** : No. 4 Cylinder Air-Fuel Ratio Variation

NOTE:

- Before you troubleshoot, review the general troubleshooting information .
- If any of the DTCs listed below are indicated at the same time as DTC P219C, P219D, P219E, and/or P219F, troubleshoot those DTCs first, then recheck for P219C, P219D, P219E, and/or P219F.

  P0130, P0133, P1172, P2195, P2237, P2238, P2243, P2245, P2251, P2252, P2A00: A/F sensor (Sensor 1)

  P0134, P0135: A/F sensor (Sensor 1) heater

  P0201, P0202, P0203, P0204: No. 1-No. 4 cylinder injector (s)

  P0300: Random misfire

  P0301, P0302, P0303, P0304: No. 1-No. 4 cylinder misfire

  P0351, P0352, P0353, P0354: No. 1-No. 4 cylinder ignition coil (s)

DTC Description	Confirmed DTC	Pending DTC
P219C No. 1 Cylinder Air-Fuel Ratio Variation	B	B
P219D No. 2 Cylinder Air-Fuel Ratio Variation	B	B
P219E No. 3 Cylinder Air-Fuel Ratio Variation	B	B
P219F No. 4 Cylinder Air-Fuel Ratio Variation	B	B

DTC (PGM-FI)

1. Problem verification 1 (HDS parameter)

   -1. Turn the vehicle to the ON mode.

   -2. Check the parameter (s) below with the HDS.

Signal	Threshold		Current conditions	
	Values	Unit	Values	Unit
Fuel factor study value of No1 cylinder	0.83-1.15	B	B	B
Fuel factor study value of No2 cylinder	0.83-1.15	B	B	B
Fuel factor study value of No3 cylinder	0.83-1.15	B	B	B
Fuel factor study value of No4 cylinder	0.83-1.15	B	B	B

NOTE: If the value of Fuel factor study valve is above the threshold, the PCM may detect an over-lean failure. If the value of Fuel factor study valve is below the threshold, the PCM may detect an over-rich failure.

Do the current condition (s) match the threshold?

YES

Go to step 2.

NO

The failure is duplicated. Go to step 4.

2. On-board snapshot check:

   Check the recorded on-board snapshot parameter (s) with the HDS.

   - Fuel factor study value of No1 cylinder
   - Fuel factor study value of No2 cylinder
   - Fuel factor study value of No3 cylinder
   - Fuel factor study value of No4 cylinder

   Do the parameter (s) of the recorded on-board snapshot match the threshold shown in step 1-2?

   YES

   Go to step 3.

   NO

   The failure is duplicated. Go to step 4.

3. Problem verification 2

   -1. Start the engine.

   -2. Hold the engine speed at 3, 000 rpm without load (in P or N) until the radiator fan comes on, then let it idle.

   -3. Test-drive the vehicle under these conditions:

   - Engine coolant temperature (ECT SENSOR 1) above 158 deg. F (70 deg. C)
   - Transmission in D
   - Drive at a steady engine speed between 1, 000-1, 200 rpm, then accelerate up to 3, 400 rpm at about 10-15 seconds, and repeat this 3 times or more if needed

Signal	Current conditions	
	Values	Unit
ECT Sensor 1	B	B
Engine Speed	B	B

-4. Check the parameter (s) below with the HDS.

Signal	Threshold		Current conditions	
	Values	Unit	Values	Unit
Fuel factor study value of No1 cylinder	0.83-1.15	B	B	B

Signal	Threshold		Current conditions	
	Values	Unit	Values	Unit
Fuel factor study value of No2 cylinder	0.83-1.15	B	B	B
Fuel factor study value of No3 cylinder	0.83-1.15	B	B	B
Fuel factor study value of No4 cylinder	0.83-1.15	B	B	B

Do the current condition (s) match the threshold?

YES

Intermittent failure, the system is OK at this time. **If the on-board snapshot of this DTC is recorded, try to reproduce the failure under the same condition with the on-board snapshot** .

NO

Go to step 4.

4. Engine compression check

-1. Turn the vehicle to the OFF (LOCK) mode.

-2. **Do the cylinder compression test** .

Is there a cylinder with lower compression than the other cylinders?

YES

Repair the engine compression problem.

NO

Go to step 5.

5. Valve clearance check

-1. **Inspect the valve clearance** .

Is the valve clearance OK?

YES

Go to step 6.

NO

Adjust the valve clearance .

6. Injector check

-1. **Exchange the injector from the problem cylinder with one from another cylinder** .

-2. Start the engine.

-3. Hold the engine speed at 3, 000 rpm without load (in P or N) until the radiator fan comes on, then let it idle.

-4. Check under these conditions:

- A/C off
- All electrical loads off

-5. Do the CYLINDER A/F TEST three times in the INSPECTION MENU with the HDS.

CYLINDER A/F TEST

Is an injector failure indicated at the cylinder where the injector was exchanged?

YES

Replace all injector as a set .

NO

Go to step 7.

7. Intake and exhaust manifold visual check

-1. Turn the vehicle to the OFF (LOCK) mode.

-2. Check for carbon build-up in the intake manifold and the exhaust manifold.

Is there carbon build-up in the intake manifold and/or exhaust manifold?

YES

Check the engine for oil leaks. If needed, repair the engine, also remove the carbon.

NO

Intermittent failure, the system is OK at this time. Check the engine for oil leaks.

DTC P2226 (1.5 L ENGINE)

DTC P2226 : BARO Sensor Circuit Malfunction

NOTE: Before you troubleshoot, **review the general troubleshooting information** .

DTC Description	Confirmed DTC	Pending DTC
P2226 BARO Sensor Circuit Malfunction	B	B

DTC (PGM-FI)

1. Problem verification

-1. Turn the vehicle to the ON mode.

-2. Clear the DTC with the HDS, and wait 2 seconds.

-3. Turn the vehicle to the OFF (LOCK) mode.

-4. Turn the vehicle to the ON mode, and wait 2 seconds.

-5. Check for Pending or Confirmed DTCs with the HDS.

DTC Description	Confirmed DTC	Pending DTC
P2226 BARO Sensor Circuit Malfunction	B	B

Is DTC P2226 indicated?

YES

The failure is duplicated. Check for any authorized service information related to the DTCs or symptoms you are troubleshooting, or **substitute a known-good PCM** .

NO

Intermittent failure, the system is OK at this time.

DTC P2227 (2.4 L ENGINE) (2017 2018 2019)

DTC P2227 : BARO Sensor Circuit Out of Range High

NOTE: Before you troubleshoot, **review the general troubleshooting information** .

DTC Description	Confirmed DTC	Pending DTC
P2227 BARO Sensor Circuit Out of Range High	B	B

DTC (PGM-FI)

1. Problem verification

   -1. Turn the vehicle to the ON mode.

   -2. Clear the DTC with the HDS.

   -3. Check for Pending or Confirmed DTCs with the HDS.

DTC Description	Confirmed DTC	Pending DTC
P2227 BARO Sensor Circuit Out of Range High	B	B

Is DTC P2227 indicated?

YES

The failure is duplicated. Check for any authorized service information related to the DTCs or symptoms you are troubleshooting or **substitute a known-good PCM** .

NO

Intermittent failure, the system is OK at this time. Check for poor connections or loose terminals at the PCM. **If the on-board snapshot of this DTC is recorded, try to reproduce the failure under the same conditions with the on-board snapshot** .

DTC P2228 (1.5 L ENGINE)

DTC P2228 : BARO Sensor Circuit Low Voltage

NOTE: Before you troubleshoot, **review the general troubleshooting information** .

DTC Description	Confirmed DTC	Pending DTC
P2228 BARO Sensor Circuit Low Voltage	B	B

DTC (PGM-FI)

1. Problem verification

   -1. Turn the vehicle to the ON mode.

-2. Check the parameter (s) below with the HDS.

Signal	Threshold		Current conditions	
	Values	Unit	Values	Unit
BARO SENSOR	Less than 44	kPa	B	B

Do the current condition (s) match the threshold?

YES

The failure is duplicated. Check for any authorized service information related to the DTCs or symptoms you are troubleshooting, or **substitute a known-good PCM** .

NO

Intermittent failure, the system is OK at this time. **If the on-board snapshot of this DTC is recorded, try to reproduce the failure under the same conditions with the on-board snapshot** .

DTC P2228 (2.4 L ENGINE) (2017 2018 2019)

DTC P2228 : BARO Sensor Circuit Low Voltage

NOTE: Before you troubleshoot, **review the general troubleshooting information** .

DTC Description	Confirmed DTC	Pending DTC
P2228 BARO Sensor Circuit Low Voltage	B	B

DTC (PGM-FI)

1. Problem verification

-1. Turn the vehicle to the ON mode.

-2. Check the parameter (s) below with the HDS.

DTC Description	Confirmed DTC	Pending DTC
P2228 BARO Sensor Circuit Low Voltage	B	B

Do the current condition (s) match the threshold?

YES

The failure is duplicated. Check for any authorized service information related to the DTCs or symptoms you are troubleshooting or **substitute a known-good PCM** .

NO

Intermittent failure, the system is OK at this time. **If the on-board snapshot of this DTC is recorded, try to reproduce the failure under the same conditions with the on-board snapshot** .

DTC P2229 (1.5 L ENGINE)

DTC P2229 : BARO Sensor Circuit High Voltage

NOTE: Before you troubleshoot, **review the general troubleshooting information** .

DTC Description	Confirmed DTC	Pending DTC
P2229 BARO Sensor Circuit High Voltage	B	B

DTC (PGM-FI)

1. Problem verification

   -1. Turn the vehicle to the ON mode.

   -2. Check the parameter (s) below with the HDS.

Signal	Threshold		Current conditions	
	Values	Unit	Values	Unit
BARO SENSOR	More than 116	kPa	B	B

Do the current condition (s) match the threshold?

YES

The failure is duplicated. Check for any authorized service information related to the DTCs or symptoms you are troubleshooting, or **substitute a known-good PCM** .

NO

Intermittent failure, the system is OK at this time. **If the on-board snapshot of this DTC is recorded, try to reproduce the failure under the same conditions with the on-board snapshot** .

DTC P2229 (2.4 L ENGINE) (2017 2018 2019)

DTC P2229 : BARO Sensor Circuit High Voltage

NOTE: Before you troubleshoot, **review the general troubleshooting information** .

DTC Description	Confirmed DTC	Pending DTC
P2229 BARO Sensor Circuit High Voltage	B	B

DTC (PGM-FI)

1. Problem verification

   -1. Turn the vehicle to the ON mode.

   -2. Check the parameter (s) below with the HDS.

Signal	Threshold		Current conditions	
	Values	Unit	Values	Unit
BARO SENSOR	More than 4.89	V	B	B

Do the current condition (s) match the threshold?

YES

The failure is duplicated. Check for any authorized service information related to the DTCs or symptoms you are troubleshooting or **substitute a known-good PCM** .

NO

Intermittent failure, the system is OK at this time. **If the on-board snapshot of this DTC is recorded, try to reproduce the failure under the same conditions with the on-board snapshot** .

DTC P2237 (1.5 L ENGINE)

DTC P2237 : A/F Sensor (Sensor 1) IP Circuit High Voltage

NOTE: Before you troubleshoot, **review the general troubleshooting information** .

DTC Description	Confirmed DTC	Pending DTC
P2237 A/F Sensor (Sensor 1) IP Circuit High Voltage	B	B

DTC (PGM-FI)

1. Problem verification

   -1. Turn the vehicle to the ON mode.

   -2. Clear the DTC with the HDS.

   -3. Turn the vehicle to the OFF (LOCK) mode.

   -4. Start the engine.

   -5. Hold the engine speed at 3, 000 rpm without load (in P or N) until the radiator fan comes on, then let it idle.

   -6. Check for Pending or Confirmed DTCs with the HDS.

DTC Description	Confirmed DTC	Pending DTC
P2237 A/F Sensor (Sensor 1) IP Circuit High Voltage	B	B

   Is DTC P2237 indicated?

   YES

   Go to step 2.

   NO

   Intermittent failure, the system is OK at this time. Check for poor connections or loose terminals at the A/F sensor (Sensor 1) and the PCM. **If the on-board snapshot of this DTC is recorded, try to reproduce the failure under the same conditions with the on-board snapshot** .

2. Open wire check (IP line)

   -1. Turn the vehicle to the OFF (LOCK) mode.

   -2. Jump the SCS line with the HDS, and wait more than 1 minute.

   -3. Disconnect the following connectors.

PCM connector E (80P)
A/F sensor (Sensor 1) 6P connector

   -4. Check for continuity between test points 1 and 2.

Test condition	Vehicle OFF (LOCK) mode
B	PCM connector E (80P): disconnected
B	A/F sensor (Sensor 1) 6P connector: disconnected
Test point 1	A/F sensor (Sensor 1) 6P connector (female terminals) No. 5: ①
Test point 2	**PCM connector E (80P) No. 48**

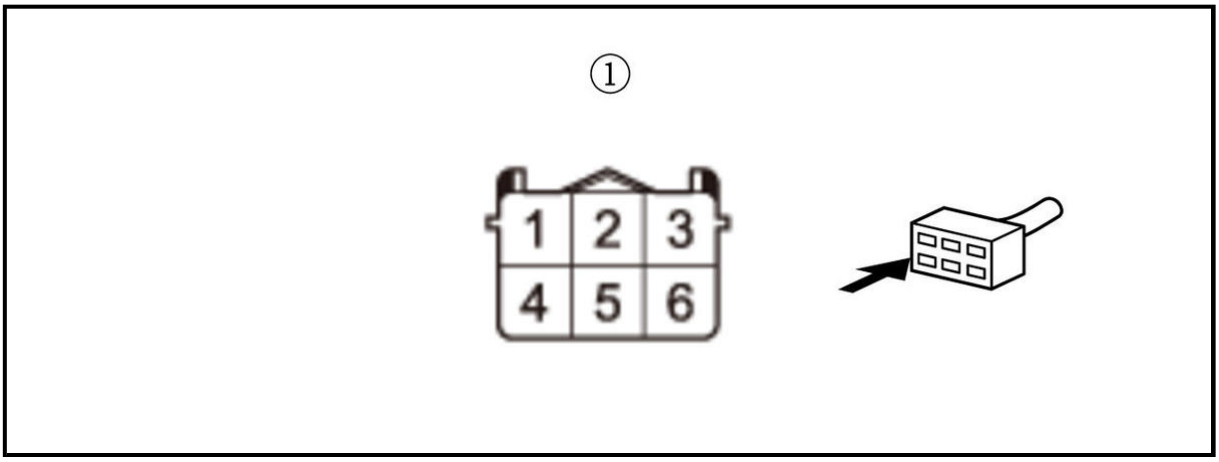

Is there continuity?

YES

Go to step 3.

NO

Repair an open in the IP wire between the PCM (E48) and the A/F sensor (Sensor 1).

3. PCM internal circuit check

-1. Reconnect the following connector.

PCM connector E (80P)

-2. Exit the SCS mode with the HDS.

-3. Start the engine.

-4. Hold the engine speed at 3, 000 rpm without load (in P or N) until the radiator fan comes on, then let it idle.

-5. Measure the voltage between test points 1 and 2.

Test condition	Engine running
B	A/F sensor (Sensor 1) 6P connector: disconnected
Test point 1	A/F sensor (Sensor 1) 6P connector (female terminals) No. 5: ①
Test point 2	Body ground

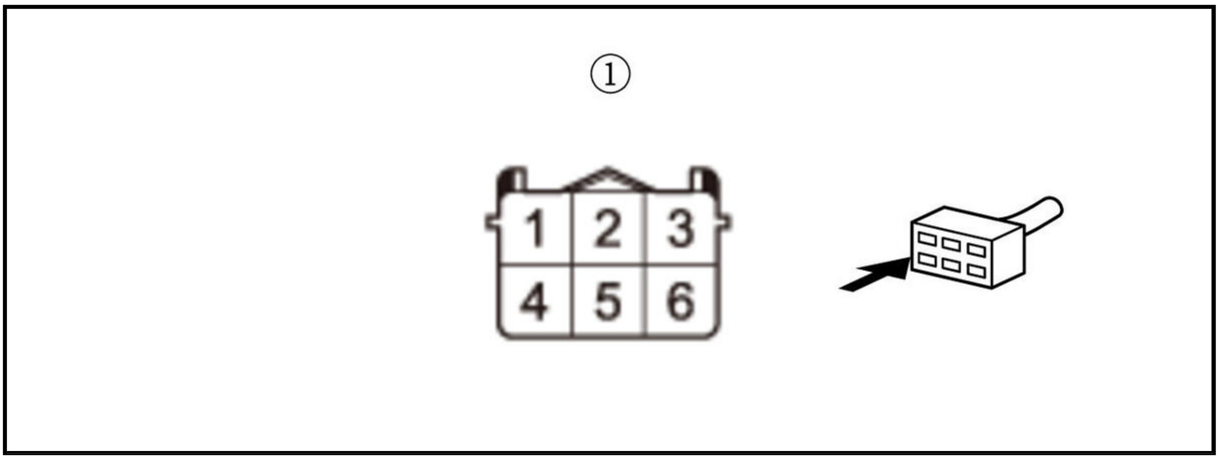

Is there about 0.2 V or less?

YES

Check for any authorized service information related to the DTCs or symptoms you are troubleshooting, or **substitute a known-good PCM** .

NO

The PCM internal circuit is OK. **Replace the A/F sensor (Sensor 1)** .

DTC P2237 (2.4 L ENGINE) (2017 2018 2019)

DTC P2237 : A/F Sensor (Sensor 1) AFS Circuit High Voltage

NOTE: Before you troubleshoot, **review the general troubleshooting information** .

DTC Description	Confirmed DTC	Pending DTC
P2237 A/F Sensor (Sensor 1) AFS Circuit High Voltage	B	B

DTC (PGM-FI)

1. Problem verification

-1. Turn the vehicle to the ON mode.

-2. Clear the DTC with the HDS.

-3. Start the engine.

-4. Hold the engine speed at 3, 000 rpm without load (in P or N) until the radiator fan comes on, then let it idle.

-5. Check for Pending or Confirmed DTCs with the HDS.

DTC Description	Confirmed DTC	Pending DTC
P2237 A/F Sensor (Sensor 1) AFS Circuit High Voltage	B	B

Is DTC P2237 indicated?

YES

The failure is duplicated. Go to step 2.

NO

Intermittent failure, the system is OK at this time. Check for poor connections or loose terminals at the A/F sensor (Sensor 1), the relay circuit board (PGM-FI subrelay circuit), and the PCM. **If the on-board snapshot of this DTC is recorded, try to reproduce the failure under the same conditions with the on-board snapshot** .

2. Open wire check (AFS+ line)

-1. Turn the vehicle to the OFF (LOCK) mode.

-2. Jump the SCS line with the HDS, and wait more than 1 minute.

-3. Disconnect the following connectors.

A/F sensor (Sensor 1) 4P connector	
PCM connector C (51P)	

-4. Check for continuity between test points 1 and 2.

Test condition	Vehicle OFF (LOCK) mode
B	A/F sensor (Sensor 1) 4P connector: disconnected
B	PCM connector C (51P): disconnected
Test point 1	A/F sensor (Sensor 1) 4P connector (female terminals) No. 2: ①
Test point 2	**PCM connector C (51P) No. 48**

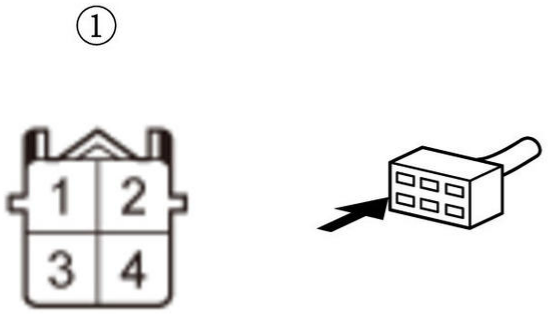

Is there continuity?

YES

The AFS+ wire is OK. Go to step 3.

NO

Repair an open in the AFS+ wire between the PCM (C48) and the A/F sensor (Sensor 1).

3. Open wire check (AFS- line)

-1. Check for continuity between test points 1 and 2.

Test condition	Vehicle OFF (LOCK) mode
B	A/F sensor (Sensor 1) 4P connector: disconnected
B	PCM connector C (51P): disconnected
Test point 1	A/F sensor (Sensor 1) 4P connector (female terminals) No. 1: ①
Test point 2	**PCM connector C (51P) No. 47**

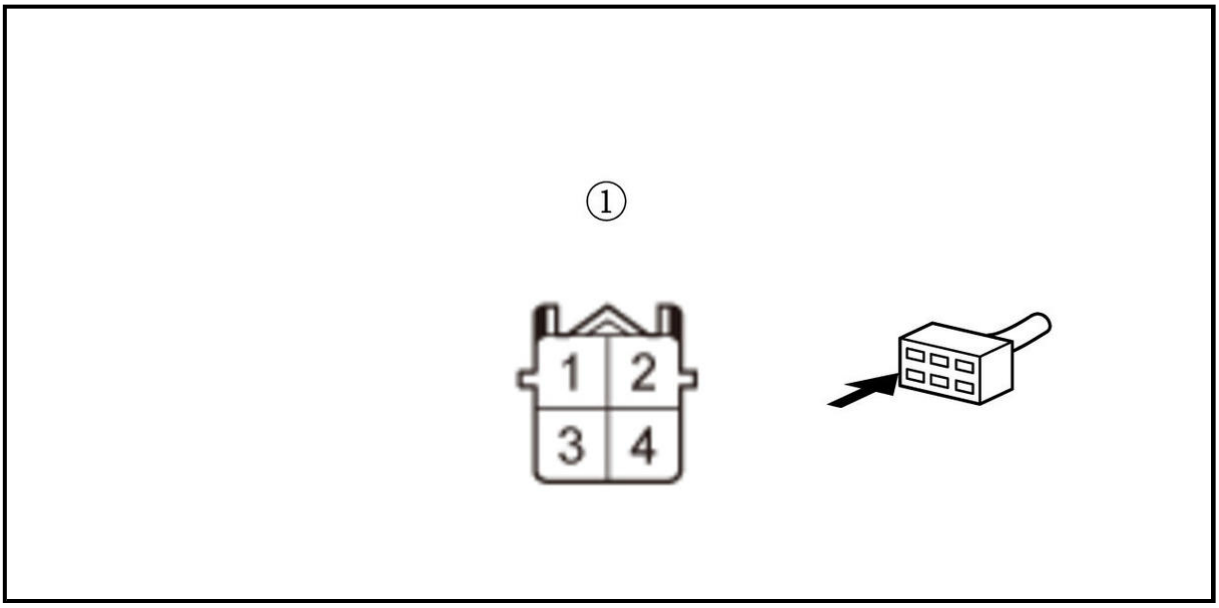

Is there continuity?

YES

The AFS- wire is OK. Go to step 4.

NO

Repair an open in the AFS- wire between the PCM (C47) and the A/F sensor (Sensor 1).

4. A/F sensor (Sensor 1) check

-1. **Substitute a known-good A/F sensor (Sensor 1)** .

-2. Reconnect all connectors.

-3. Turn the vehicle to the ON mode.

-4. **Reset the PCM with the HDS** .

Reset PCM

-5. **Do the PCM idle learn procedure** .

-6. Check for Pending or Confirmed DTCs with the HDS.

DTC Description	Confirmed DTC	Pending DTC
P2237 A/F Sensor (Sensor 1) AFS Circuit High Voltage	B	B

Is DTC P2237 indicated?

YES

The failure is duplicated. Check for any authorized service information related to the DTCs or symptoms you are troubleshooting or **substitute a known-good PCM** .

NO

Replace the original A/F sensor (Sensor 1) .

DTC P2238 (1.5 L ENGINE)

DTC P2238 : A/F Sensor (Sensor 1) IP Circuit Low Voltage

NOTE: Before you troubleshoot, **review the general troubleshooting information** .

DTC Description	Confirmed DTC	Pending DTC
P2238 A/F Sensor (Sensor 1) IP Circuit Low Voltage	B	B

DTC (PGM-FI)

1. Problem verification

   -1. Turn the vehicle to the ON mode.

   -2. Clear the DTC with the HDS.

   -3. Turn the vehicle to the OFF (LOCK) mode.

   -4. Start the engine.

   -5. Hold the engine speed at 3, 000 rpm without load (in P or N) until the radiator fan comes on, then let it idle.

   -6. Check for Pending or Confirmed DTCs with the HDS.

DTC Description	Confirmed DTC	Pending DTC
P2238 A/F Sensor (Sensor 1) IP Circuit Low Voltage	B	B

   Is DTC P2238 indicated?

   YES

   Go to step 2.

   NO

   Intermittent failure, the system is OK at this time. Check for poor connections or loose terminals at the A/F sensor (Sensor 1) and the PCM. **If the on-board snapshot of this DTC is recorded, try to reproduce the failure under the same conditions with the on-board snapshot** .

2. Shorted wire check (IP line)

   -1. Turn the vehicle to the OFF (LOCK) mode.

   -2. Jump the SCS line with the HDS, and wait more than 1 minute.

   -3. Disconnect the following connectors.

PCM connector E (80P)
A/F sensor (Sensor 1) 6P connector

   -4. Check for continuity between test points 1 and 2.

Test condition	Vehicle OFF (LOCK) mode
B	A/F sensor (Sensor 1) 6P connector: disconnected
B	PCM connector E (80P): disconnected
Test point 1	**PCM connector E (80P) No. 48**
Test point 2	Body ground

Is there continuity?

YES

Repair a short in the IP wire between the PCM (E48) and the A/F sensor (Sensor 1).

NO

Go to step 3.

3. A/F sensor (Sensor 1) check

-1. **Substitute a known-good A/F sensor (Sensor 1)** .

-2. Reconnect all connectors.

-3. Exit the SCS mode with the HDS.

-4. Turn the vehicle to the ON mode.

-5. **Reset the PCM with the HDS** .

Reset PCM

-6. **Do the PCM idle learn procedure** .

-7. Check for Pending or Confirmed DTCs with the HDS.

DTC Description	Confirmed DTC	Pending DTC
P2238 A/F Sensor (Sensor 1) IP Circuit Low Voltage	B	B

Is DTC P2238 indicated?

YES

Check for any authorized service information related to the DTCs or symptoms you are troubleshooting, or **substitute a known-good PCM** .

NO

Replace the original A/F sensor (Sensor 1) .

DTC P2238 (2.4 L ENGINE) (2017 2018 2019)

DTC P2238 : A/F Sensor (Sensor 1) AFS+ Circuit Low Voltage

NOTE: Before you troubleshoot, **review the general troubleshooting information** .

DTC Description	Confirmed DTC	Pending DTC
P2238 A/F Sensor (Sensor 1) AFS+ Circuit Low Voltage	B	B

DTC (PGM-FI)

1. Problem verification

-1. Turn the vehicle to the ON mode.

-2. Clear the DTC with the HDS.

-3. Check for Pending or Confirmed DTCs with the HDS.

DTC Description	Confirmed DTC	Pending DTC
P2238 A/F Sensor (Sensor 1) AFS+ Circuit Low Voltage	B	B

Is DTC P2238 indicated?

YES

The failure is duplicated. Go to step 2.

NO

Intermittent failure, the system is OK at this time. Check for poor connections or loose terminals at the A/F sensor (Sensor 1) and the PCM. **If the on-board snapshot of this DTC is recorded, try to reproduce the failure under the same conditions with the on-board snapshot** .

2. Shorted wire check (AFS+ line)

-1. Turn the vehicle to the OFF (LOCK) mode.

-2. Jump the SCS line with the HDS, and wait more than 1 minute.

-3. Disconnect the following connectors.

PCM connector C (51P)
A/F sensor (Sensor 1) 4P connector

-4. Check for continuity between test points 1 and 2.

Test condition	Vehicle OFF (LOCK) mode
B	PCM connector C (51P): disconnected
B	A/F sensor (Sensor 1) 4P connector: disconnected
Test point 1	**PCM connector C (51P) No. 48**
Test point 2	Body ground

Is there continuity?

YES

Repair a short in the AFS+ wire between the PCM (C48) and the A/F sensor (Sensor 1).

NO

The AFS+ wire is OK. Go to step 3.

3. PCM internal circuit check

-1. Reconnect PCM connector C (51P).

-2. Exit the SCS mode with the HDS.

-3. Turn the vehicle to the ON mode.

-4. Measure the voltage between test points 1 and 2.

Test condition	Vehicle ON mode
B	A/F sensor (Sensor 1) 4P connector: disconnected
Test point 1	A/F sensor (Sensor 1) 4P connector (female terminals) No. 2: ①

Test point 2	Body ground

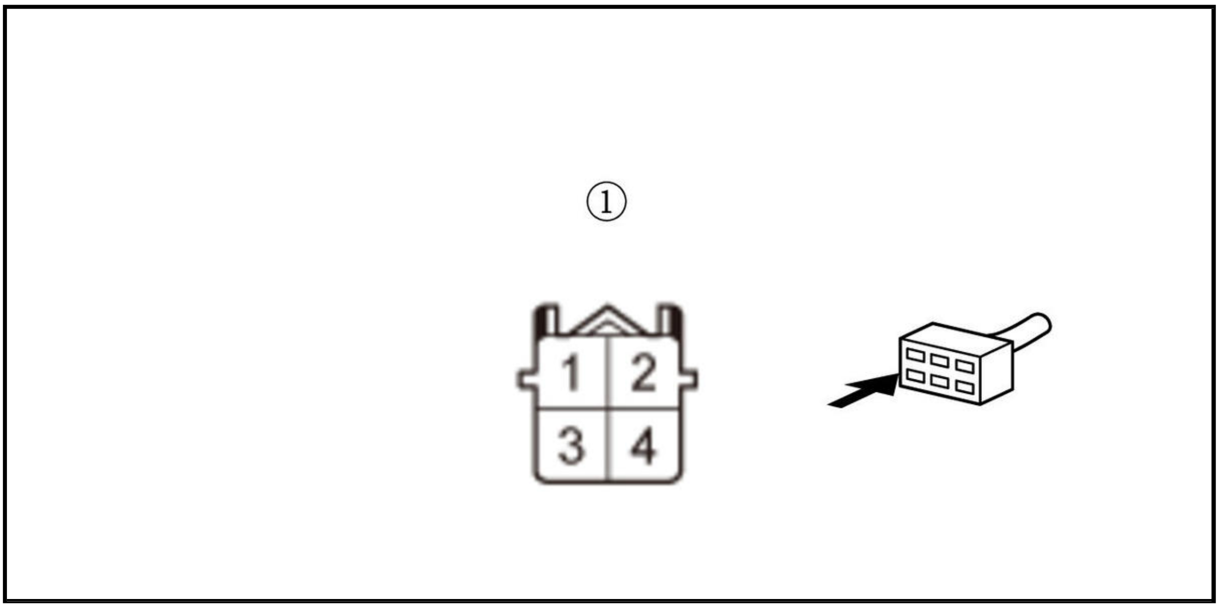

Is there about 0.2 V or less?

YES

Check for any authorized service information related to the DTCs or symptoms you are troubleshooting or **substitute a known-good PCM** .

NO

The PCM internal circuit is OK. **Replace the A/F sensor (Sensor 1)** .

DTC P2243 (1.5 L ENGINE)

DTC P2243 : A/F Sensor (Sensor 1) VCENT Circuit High Voltage

NOTE: Before you troubleshoot, **review the general troubleshooting information** .

DTC Description	Confirmed DTC	Pending DTC
P2243 A/F Sensor (B1) VCENT Circuit High Voltage	B	B

DTC (PGM-FI)

1. Problem verification

-1. Turn the vehicle to the ON mode.

-2. Clear the DTC with the HDS.

-3. Turn the vehicle to the OFF (LOCK) mode.

-4. Start the engine.

-5. Hold the engine speed at 3, 000 rpm without load (in P or N) until the radiator fan comes on, then let it idle.

-6. Check for Pending or Confirmed DTCs with the HDS.

DTC Description	Confirmed DTC	Pending DTC
P2243 A/F Sensor (B1) VCENT Circuit High Voltage	B	B

Is DTC P2243 indicated?

YES

Go to step 2.

NO

Intermittent failure, the system is OK at this time. Check for poor connections or loose terminals at the A/F sensor (Sensor 1) and the PCM. **If the on-board snapshot of this DTC is recorded, try to reproduce the failure under the same conditions with the on-board snapshot** .

2. Open wire check (VCENT line)

-1. Turn the vehicle to the OFF (LOCK) mode.

-2. Jump the SCS line with the HDS, and wait more than 1 minute.

-3. Disconnect the following connectors.

PCM connector E (80P)
A/F sensor (Sensor 1) 6P connector

-4. Check for continuity between test points 1 and 2.

Test condition	Vehicle OFF (LOCK) mode
B	PCM connector E (80P): disconnected
B	A/F sensor (Sensor 1) 6P connector: disconnected
Test point 1	A/F sensor (Sensor 1) 6P connector (female terminals) No. 4: ①
Test point 2	**PCM connector E (80P) No. 74**

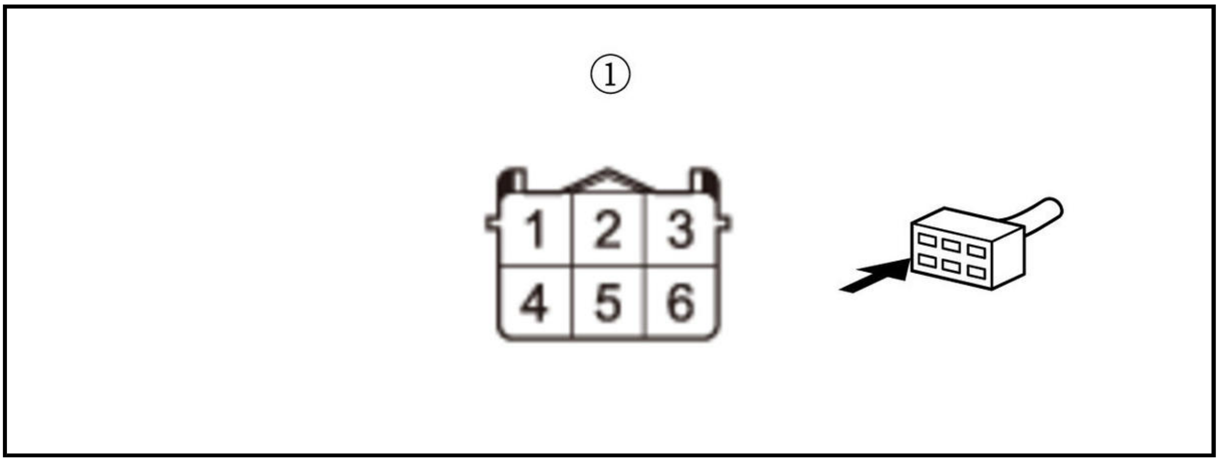

Is there continuity?

YES

Go to step 3.

NO

Repair an open in the VCENT wire between the PCM (E74) and the A/F sensor (Sensor 1).

3. PCM internal circuit check

-1. Reconnect the following connector.

PCM connector E (80P)

-2. Exit the SCS mode with the HDS.

-3. Start the engine.

-4. Hold the engine speed at 3, 000 rpm without load (in P or N) until the radiator fan comes on, then let it idle.

-5. Measure the voltage between test points 1 and 2.

Test condition	Engine running
B	A/F sensor (Sensor 1) 6P connector: disconnected
Test point 1	A/F sensor (Sensor 1) 6P connector (female terminals) No. 4: ①
Test point 2	Body ground

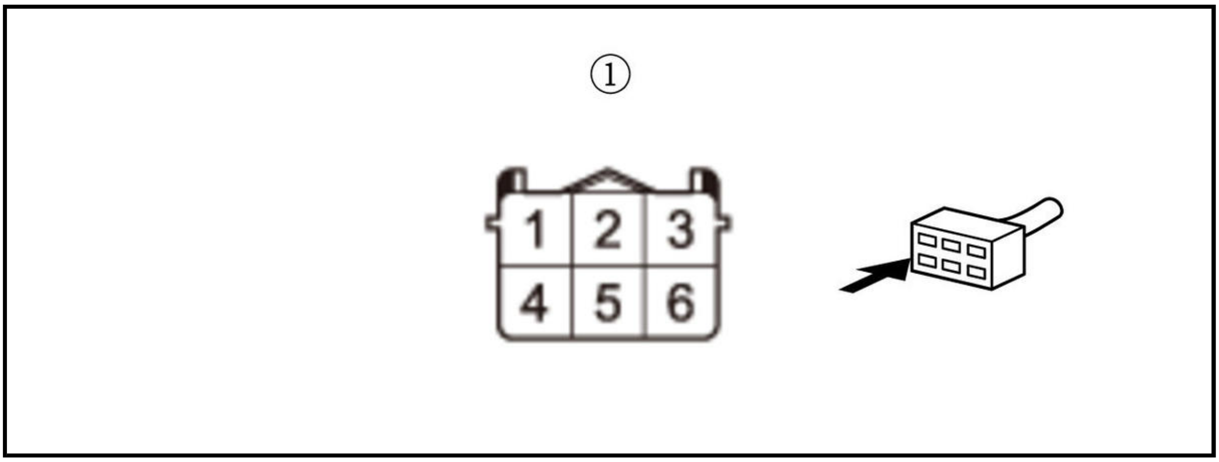

Is there about 0.2 V or less?

YES

Check for any authorized service information related to the DTCs or symptoms you are troubleshooting, or substitute a known-good PCM .

NO

The PCM internal circuit is OK. Replace the A/F sensor (Sensor 1) .

DTC P2245 (1.5 L ENGINE)

DTC P2245 : A/F Sensor (Sensor 1) VCENT Circuit Low Voltage

NOTE: Before you troubleshoot, review the general troubleshooting information .

DTC Description	Confirmed DTC	Pending DTC
P2245 A/F Sensor (Sensor 1) VCENT Circuit Low Voltage	B	B

DTC (PGM-FI)

1. Problem verification

-1. Turn the vehicle to the ON mode.

-2. Clear the DTC with the HDS.

-3. Turn the vehicle to the OFF (LOCK) mode.

-4. Start the engine.

-5. Hold the engine speed at 3, 000 rpm without load (in P or N) until the radiator fan comes on, then let it idle.

-6. Check for Pending or Confirmed DTCs with the HDS.

DTC Description	Confirmed DTC	Pending DTC
P2245 A/F Sensor (Sensor 1) VCENT Circuit Low Voltage	B	B

Is DTC P2245 indicated?

YES

Go to step 2.

NO

Intermittent failure, the system is OK at this time. Check for poor connections or loose terminals at the A/F sensor (Sensor 1) and the PCM. **If the on-board snapshot of this DTC is recorded, try to reproduce the failure under the same conditions with the on-board snapshot** .

2. Shorted wire check (VCENT line)

-1. Turn the vehicle to the OFF (LOCK) mode.

-2. Jump the SCS line with the HDS, and wait more than 1 minute.

-3. Disconnect the following connectors.

PCM connector E (80P)
A/F sensor (Sensor 1) 6P connector

-4. Check for continuity between test points 1 and 2.

Test condition	Vehicle OFF (LOCK) mode
B	A/F sensor (Sensor 1) 6P connector: disconnected
B	PCM connector E (80P): disconnected
Test point 1	**PCM connector E (80P) No. 74**
Test point 2	Body ground

Is there continuity?

YES

Repair a short in the VCENT wire between the PCM (E74) and the A/F sensor (Sensor 1).

NO

Go to step 3.

3. PCM internal circuit check

-1. Reconnect the following connector.

PCM connector E (80P)

-2. Exit the SCS mode with the HDS.

-3. Turn the vehicle to the ON mode.

-4. Measure the voltage between test points 1 and 2.

Test condition	Vehicle ON mode
B	A/F sensor (Sensor 1) 6P connector: disconnected
Test point 1	A/F sensor (Sensor 1) 6P connector (female terminals) No. 4: ①
Test point 2	Body ground

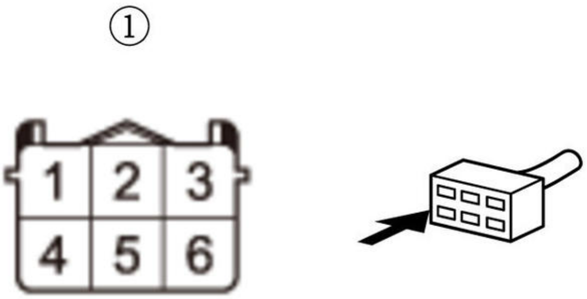

Is there about 0.2 V or less?

YES

Check for any authorized service information related to the DTCs or symptoms you are troubleshooting, or **substitute a known-good PCM** .

NO

The PCM internal circuit is OK. **Replace the A/F sensor (Sensor 1)** .

DTC P2251 (1.5 L ENGINE)

DTC P2251 : A/F Sensor (Sensor 1) VS Circuit High Voltage

NOTE:

- Before you troubleshoot, **review the general troubleshooting information** .
- If DTC P2251 is stored at the same time as DTC P0134, troubleshoot DTC P2251 first, then recheck for P0134.

DTC Description	Confirmed DTC	Pending DTC
P2251 A/F Sensor (Sensor 1) VS Circuit High Voltage	B	B

DTC (PGM-FI)

1. Problem verification

-1. Turn the vehicle to the ON mode.

-2. Clear the DTC with the HDS.

-3. Turn the vehicle to the OFF (LOCK) mode.

-4. Start the engine.

-5. Hold the engine speed at 3, 000 rpm without load (in P or N) until the radiator fan comes on, then let it idle.

-6. Check for Pending or Confirmed DTCs with the HDS.

DTC Description	Confirmed DTC	Pending DTC
P2251 A/F Sensor (Sensor 1) VS Circuit High Voltage	B	B

Is DTC P2251 indicated?

YES

Go to step 2.

NO

Intermittent failure, the system is OK at this time. Check for poor connections or loose terminals at the A/F sensor (Sensor 1) and the PCM. **If the on-board snapshot of this DTC is recorded, try to reproduce the failure under the same conditions with the on-board snapshot** .

2. Open wire check (VS line)

-1. Turn the vehicle to the OFF (LOCK) mode.

-2. Jump the SCS line with the HDS, and wait more than 1 minute.

-3. Disconnect the following connectors.

PCM connector E (80P)
A/F sensor (Sensor 1) 6P connector

-4. Check for continuity between test points 1 and 2.

Test condition	Vehicle OFF (LOCK) mode
B	PCM connector E (80P): disconnected
B	A/F sensor (Sensor 1) 6P connector: disconnected
Test point 1	A/F sensor (Sensor 1) 6P connector (female terminals) No. 6: ①
Test point 2	**PCM connector E (80P) No. 73**

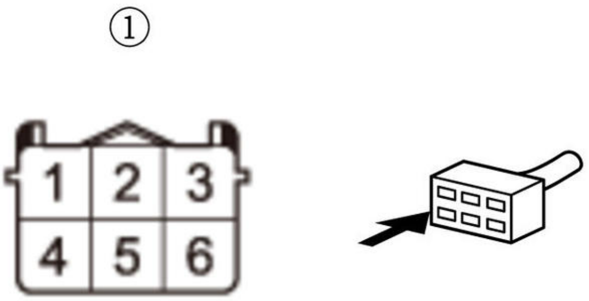

Is there continuity?

YES

Go to step 3.

NO

Repair an open in the VS wire between the PCM (E73) and the A/F sensor (Sensor 1).

3. PCM internal circuit check

-1. Reconnect the following connector.

PCM connector E (80P)

-2. Exit the SCS mode with the HDS.

-3. Start the engine.

-4. Hold the engine speed at 3, 000 rpm without load (in P or N) until the radiator fan comes on, then let it idle.

-5. Measure the voltage between test points 1 and 2.

Test condition	Engine running
B	A/F sensor (Sensor 1) 6P connector: disconnected
Test point 1	A/F sensor (Sensor 1) 6P connector (female terminals) No. 6: ①

Test point 2	Body ground

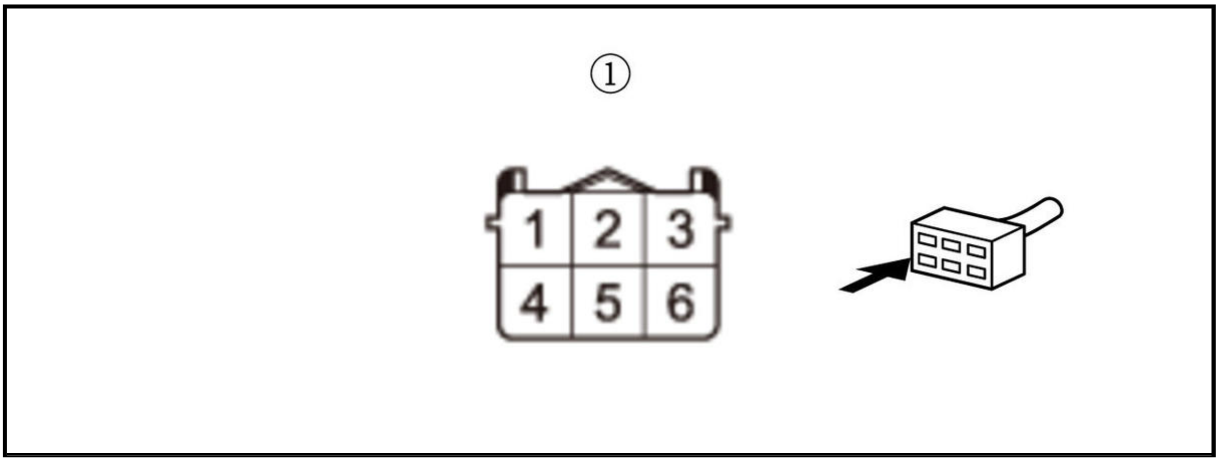

Is there about 0.2 V or less?

YES

Check for any authorized service information related to the DTCs or symptoms you are troubleshooting, or **substitute a known-good PCM** .

NO

The PCM internal circuit is OK. **Replace the A/F sensor (Sensor 1)** .

DTC P2252 (1.5 L ENGINE)

DTC P2252 : A/F Sensor (Sensor 1) VS Circuit Low Voltage

NOTE: Before you troubleshoot, **review the general troubleshooting information** .

DTC Description	Confirmed DTC	Pending DTC
P2252 A/F Sensor (Sensor 1) VS Circuit Low Voltage	B	B

DTC (PGM-FI)

1. Problem verification

   -1. Turn the vehicle to the ON mode.

   -2. Clear the DTC with the HDS.

   -3. Turn the vehicle to the OFF (LOCK) mode.

   -4. Start the engine.

   -5. Hold the engine speed at 3, 000 rpm without load (in P or N) until the radiator fan comes on, then let it idle.

   -6. Check for Pending or Confirmed DTCs with the HDS.

DTC Description	Confirmed DTC	Pending DTC
P2252 A/F Sensor (Sensor 1) VS Circuit Low Voltage	B	B

   Is DTC P2252 indicated?

   YES

   Go to step 2.

   NO

   Intermittent failure, the system is OK at this time. Check for poor connections or loose terminals at the A/F sensor (Sensor 1) and the PCM. **If the on-board snapshot of this DTC is recorded, try to reproduce the failure under the same conditions with the on-board snapshot** .

2. Shorted wire check (VS line)

   -1. Turn the vehicle to the OFF (LOCK) mode.

   -2. Jump the SCS line with the HDS, and wait more than 1 minute.

   -3. Disconnect the following connectors.

PCM connector E (80P)
A/F sensor (Sensor 1) 6P connector

   -4. Check for continuity between test points 1 and 2.

Test condition	Vehicle OFF (LOCK) mode
B	A/F sensor (Sensor 1) 6P connector: disconnected
B	PCM connector E (80P): disconnected
Test point 1	**PCM connector E (80P) No. 73**
Test point 2	Body ground

   Is there continuity?

   YES

Repair a short in the VS wire between the PCM (E73) and the A/F sensor (Sensor 1).

NO

Go to step 3.

3. A/F sensor (Sensor 1) check

-1. **Substitute a known-good A/F sensor (Sensor 1)** .

-2. Reconnect all connectors.

-3. Exit the SCS mode with the HDS.

-4. Turn the vehicle to the ON mode.

-5. **Reset the PCM with the HDS** .

Reset PCM

-6. **Do the PCM idle learn procedure** .

-7. Check for Pending or Confirmed DTCs with the HDS.

DTC Description	Confirmed DTC	Pending DTC
P2252 A/F Sensor (Sensor 1) VS Circuit Low Voltage	B	B

Is DTC P2252 indicated?

YES

Check for any authorized service information related to the DTCs or symptoms you are troubleshooting, or **substitute a known-good PCM** .

NO

Replace the original A/F sensor (Sensor 1) .

DTC P2252 (2.4 L ENGINE) (2017 2018 2019)

DTC P2252 : A/F Sensor (Sensor 1) AFS- Circuit Low Voltage

NOTE: Before you troubleshoot, **review the general troubleshooting information** .

DTC Description	Confirmed DTC	Pending DTC
P2252 A/F Sensor (Sensor 1) AFS- Circuit Low Voltage	B	B

DTC (PGM-FI)

1. Problem verification

-1. Turn the vehicle to the ON mode.

-2. Clear the DTC with the HDS.

-3. Start the engine. Hold the engine speed at 3, 000 rpm without load (in P or N) until the radiator fan comes on, then let it idle.

-4. Check for Pending or Confirmed DTCs with the HDS.

DTC Description	Confirmed DTC	Pending DTC
P2252 A/F Sensor (Sensor 1) AFS- Circuit Low Voltage	B	B

Is DTC P2252 indicated?

YES

The failure is duplicated. Go to step 2.

NO

Intermittent failure, the system is OK at this time. Check for poor connections or loose terminals at the A/F sensor (Sensor 1) and the PCM. **If the on-board snapshot of this DTC is recorded, try to reproduce the failure under the same conditions with the on-board snapshot** .

2. Shorted wire check (AFS- line)

-1. Turn the vehicle to the OFF (LOCK) mode.

-2. Jump the SCS line with the HDS, and wait more than 1 minute.

-3. Disconnect the following connectors.

PCM connector C (51P)
A/F sensor (Sensor 1) 4P connector

-4. Check for continuity between test points 1 and 2.

Test condition	Vehicle OFF (LOCK) mode
B	PCM connector C (51P): disconnected
B	A/F sensor (Sensor 1) 4P connector: disconnected
Test point 1	**PCM connector C (51P) No. 47**
Test point 2	Body ground

Is there continuity?

YES

Repair a short in the AFS- wire between the PCM (C47) and the A/F sensor (Sensor 1).

NO

The AFS- wire is OK. Go to step 3.

3. PCM internal circuit check

-1. Reconnect PCM connector C (51P).

-2. Exit the SCS mode with the HDS.

-3. Start the engine. Hold the engine speed at 3, 000 rpm without load (in P or N) until the radiator fan comes on, then let it idle for 2 minutes.

-4. Measure the voltage between test points 1 and 2.

Test condition	Engine running
B	A/F sensor (Sensor 1) 4P connector: disconnected

Test point 1	A/F sensor (Sensor 1) 4P connector (female terminals) No. 1: ①
Test point 2	Body ground

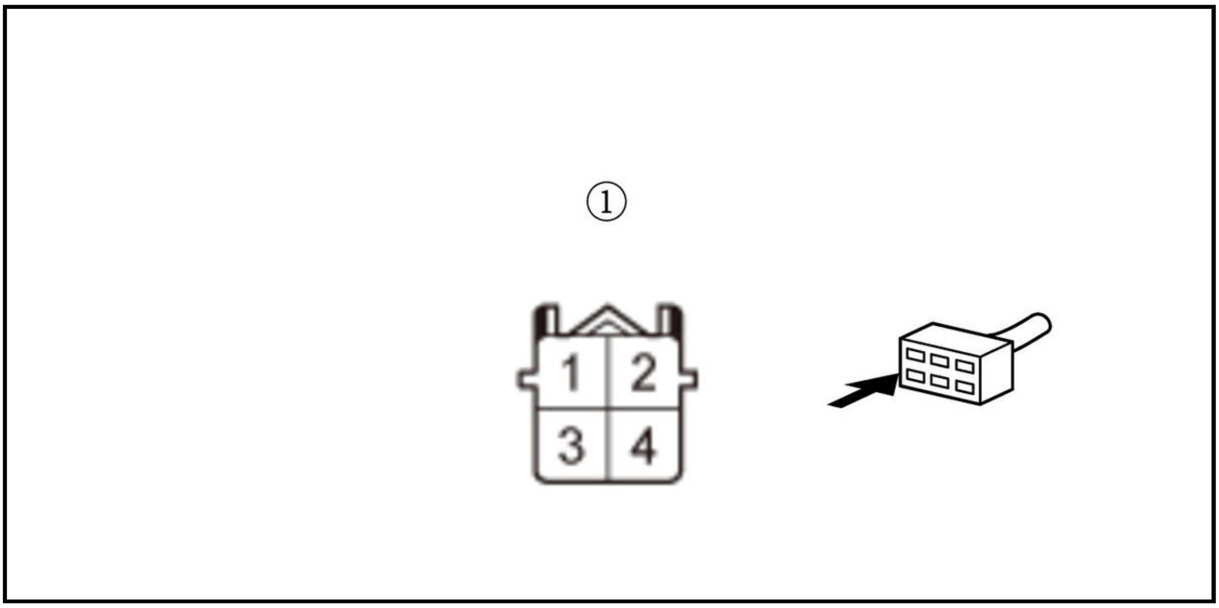

Is there about 0.2 V or less?

YES

Check for any authorized service information related to the DTCs or symptoms you are troubleshooting or **substitute a known-good PCM** .

NO

The PCM internal circuit is OK. **Replace the A/F sensor (Sensor 1)** .

DTC P2270 (1.5 L ENGINE)

DTC P2270 : Secondary HO2S (Sensor 2) Circuit Signal Stuck Lean

NOTE: Before you troubleshoot, **review the general troubleshooting information** .

DTC Description	Confirmed DTC	Pending DTC
P2270 Secondary HO2 (Sensor 2) Circuit Signal Stuck Lean	B	B

DTC (PGM-FI)

1. Problem verification

-1. Turn the vehicle to the ON mode.

-2. Clear the DTC with the HDS.

-3. Turn the vehicle to the OFF (LOCK) mode.

-4. Start the engine.

-5. Hold the engine speed at 3, 000 rpm without load (in P or N) until the radiator fan comes on, then let it idle for 2 minutes.

-6. Test-drive the vehicle under these conditions:

- Engine coolant temperature (ECT SENSOR 1) above 158 deg. F (70 deg. C)
- Transmission in D
- Engine speed between 1, 500 - 3, 000 rpm
- Drive 30 seconds or more

Signal	Current conditions	
	Values	Unit
ECT SENSOR 1	B	B
ENGINE SPEED	B	B

-7. Monitor the OBD STATUS for DTC P2270 in the DTCs MENU with the HDS.

DTC Description	OBD Status
P2270 Secondary HO2 (Sensor 2) Circuit Signal Stuck Lean	B

Does the HDS indicate FAILED?

YES

The failure is duplicated. **Replace the secondary HO2S (Sensor 2)** .

NO

If the HDS indicates PASSED, intermittent failure, the system is OK at this time. Check for poor connections or loose terminals at secondary HO2S (Sensor 2) and the PCM. **If the on-board snapshot of this DTC is recorded, try to reproduce the failure under the same conditions with the on-board snapshot** . If the HDS indicates EXECUTING, keep driving until a result comes on. If the HDS indicates OUT OF CONDITION, go to step 1-4 and recheck.

DTC P2270 (2.4 L ENGINE) (2017 2018 2019)

DTC P2270 : Secondary HO2S (Sensor 2) Circuit Signal Stuck Lean

NOTE: Before you troubleshoot, **review the general troubleshooting information** .

DTC Description	Confirmed DTC	Pending DTC
P2270 Secondary HO2S (Sensor 2) Circuit Signal Stuck Lean	B	B

DTC (PGM-FI)

1. Problem verification

   -1. Turn the vehicle to the ON mode.

   -2. Clear the DTC with the HDS.

   -3. Start the engine.

   -4. Hold the engine speed at 3, 000 rpm without load (in P or N) until the radiator fan comes on, then let it idle.

   -5. Test-drive under these conditions:

   - Engine coolant temperature (ECT SENSOR 1) above 158 deg. F (70 deg. C)
   - Transmission in D

- Engine speed between 1, 500-3, 000 rpm
- Drive 30 seconds or more

Signal	Current conditions	
	Values	Unit
ECT SENSOR 1	B	B
ENGINE SPEED	B	B

-6. Monitor the OBD STATUS for DTC P2270 in the DTCs MENU with the HDS.

DTC Description	OBD Status
P2270 Secondary HO2S (Sensor 2) Circuit Signal Stuck Lean	B

Does the HDS indicate FAILED?

YES

The failure is duplicated. **Replace secondary HO2S (Sensor 2)** .

NO

If the HDS indicates PASSED, intermittent failure, the system is OK at this time. Check for poor connections or loose terminals at secondary HO2S (Sensor 2) and the PCM. **If the on-board snapshot of this DTC is recorded, try to reproduce the failure under the same conditions with the on-board snapshot** . If the HDS indicates EXECUTING, keep driving until a result comes on. If the HDS indicates OUT OF CONDITION, go to step 1-4 and recheck.

DTC P2279 (1.5 L ENGINE)

DTC P2279 : Intake Air System Leak

NOTE:

- Before you troubleshoot, **review the general troubleshooting information** .
- If DTC P0443 is stored at the same time as DTC P2279, troubleshoot DTC P0443 first, then recheck for DTC P2279.

DTC Description	Confirmed DTC	Pending DTC
P2279 Intake Air System Leak	B	B

DTC (PGM-FI)

1. Intake air system visual check:

   Check for vacuum leaks at these parts:

   - PCV valve
   - PCV hose
   - Purge (PCS) line
   - Throttle body
   - Intake manifold
   - All parts through the turbocharger joint to the throttle body

   Are the parts OK?

   YES

Go to step 2.

NO

Repair or replace any leaking part (s).

2. Problem verification

-1. Turn the vehicle to the ON mode.

-2. Clear the DTC with the HDS.

-3. Start the engine. Hold the engine speed at 3, 000 rpm without load (in P or N) until the radiator fan comes on, then let it idle for 1 minute.

-4. Monitor the OBD STATUS for DTC P2279 with the HDS.

DTC Description	OBD Status
P2279 Intake Air System Leak	B

Does the HDS indicate FAILED?

YES

The failure is duplicated. **Check the camshaft timing** and **adjust it if needed** . If the cam timing is OK, **check the valve clearance adjustment and set to specification** .

NO

If the HDS indicates PASSED, intermittent failure, the system is OK at this time. Check for vacuum leaks at the PCV valve, the PCV hose, the purge (PCS) line, the throttle body, and the intake manifold. **If the on-board snapshot of this DTC is recorded, try to reproduce the failure under the same conditions with the on-board snapshot** . If the HDS indicates EXECUTING, keep idling until a result comes on. If the HDS indicates OUT OF CONDITION, go to step 2-1 and recheck.

DTC P2401 (1.5 L ENGINE)

DTC P2401 : EVAP Leak Check Pump Control Circuit Low Voltage

NOTE: Before you troubleshoot, **review the general troubleshooting information** .

DTC Description	Confirmed DTC	Pending DTC
P2401 EVAP Leak Check Pump Control Circuit Low Voltage	B	B

DTC (PGM-FI)

1. Problem verification

-1. Turn the vehicle to the ON mode.

-2. Clear the DTC with the HDS.

-3. Turn the vehicle to the OFF (LOCK) mode.

-4. Turn the vehicle to the ON mode.

-5. Select the EVAP TEST (ELCM) in the INSPECTION MENU, then select EVAP Leak Check Module Test with the HDS.

EVAP TEST (ELCM)

Is the result OK?

YES

If the test result is PASSED, intermittent failure, the system is OK at this time. Check for poor connections or loose terminals at the EVAP leak check module and the PCM. **If the on-board snapshot of this DTC is recorded, try to reproduce the failure under the same conditions with the on-board snapshot** .

NO

The failure is duplicated. Go to step 2.

2. Shorted wire check (ELCMP line)

-1. Turn the vehicle to the OFF (LOCK) mode.

-2. Jump the SCS line with the HDS, and wait more than 1 minute.

-3. Disconnect the following connector.

EVAP leak check module 8P connector
PCM connector E (80P)

-4. Check for continuity between test points 1 and 2.

Test condition	Vehicle OFF (LOCK) mode
B	EVAP leak check module 8P connector: disconnected
B	PCM connector E (80P): disconnected
Test point 1	EVAP leak check module 8P connector (female terminals) No. 3: ①
Test point 2	Body ground

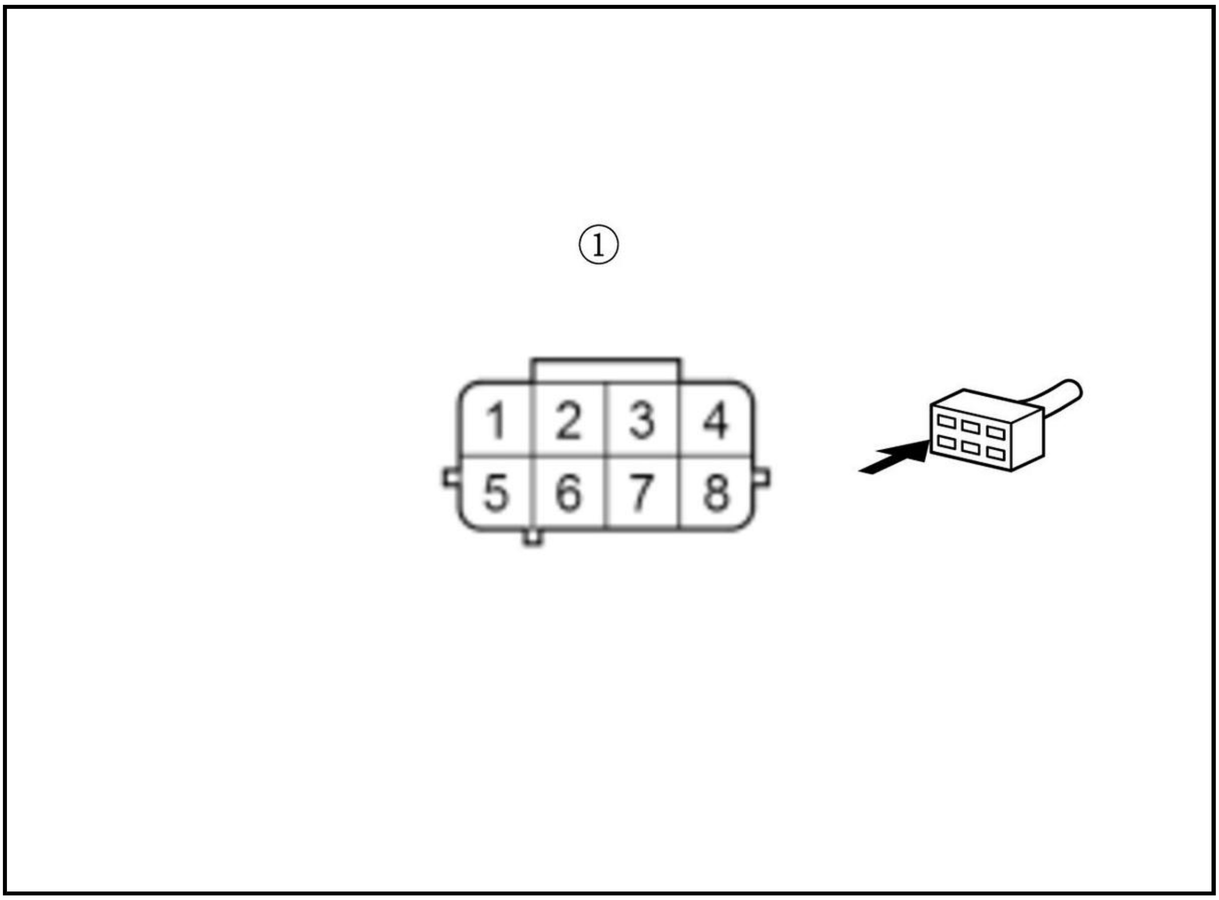

Is there continuity?

YES

Repair a short in the ELCMP wire between the PCM (E47) and the EVAP leak check module.

NO

The ELCMP wire is OK. Check for any authorized service information related to the DTCs or symptoms you are troubleshooting, or **substitute a known-good PCM** .

DTC P2402 (1.5 L ENGINE)

DTC P2402 : EVAP Leak Check Pump Control Circuit High Voltage

NOTE: Before you troubleshoot, **review the general troubleshooting information** .

DTC Description	Confirmed DTC	Pending DTC
P2402 EVAP Leak Check Pump Control Circuit High Voltage	B	B

DTC (PGM-FI)

1. Problem verification

   -1. Turn the vehicle to the ON mode.

   -2. Clear the DTC with the HDS.

   -3. Turn the vehicle to the OFF (LOCK) mode.

   -4. Turn the vehicle to the ON mode.

-5. Select the EVAP TEST (ELCM) in the INSPECTION MENU, then select EVAP Leak Check Module Test with the HDS.

EVAP TEST (ELCM)

Is the result OK?

YES

If the test result is PASSED, intermittent failure, the system is OK at this time. Check for poor connections or loose terminals at the EVAP leak check module and the PCM. **If the on-board snapshot of this DTC is recorded, try to reproduce the failure under the same conditions with the on-board snapshot** .

NO

The failure is duplicated. Go to step 2.

2. Open wire check (GND line)

-1. Turn the vehicle to the OFF (LOCK) mode.

-2. Disconnect the following connector.

EVAP leak check module 8P connector

-3. Check for continuity between test points 1 and 2.

Test condition	Vehicle OFF (LOCK) mode
B	EVAP leak check module 8P connector: disconnected
Test point 1	EVAP leak check module 8P connector (female terminals) No. 4: ①
Test point 2	Body ground

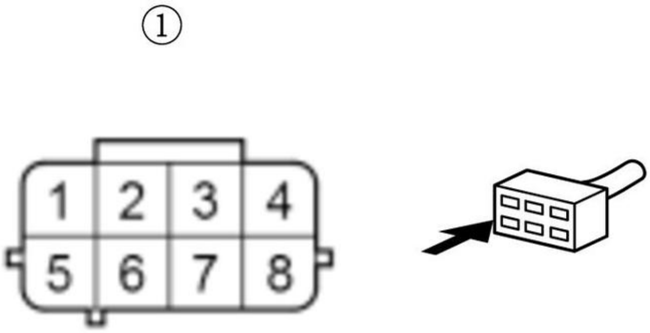

Is there continuity?

YES

Go to step 3.

NO

Repair an open in the GND wire between the EVAP leak check module and body ground (G504).

3. Open wire check (ELCMP line)

-1. Jump the SCS line with the HDS, and wait more than 1 minute.

-2. Disconnect the following connector.

PCM connector E (80P)

-3. Connect terminals A and B with a jumper wire.

Terminal A	EVAP leak check module 8P connector (female terminals) No. 3: ①
Terminal B	Body ground

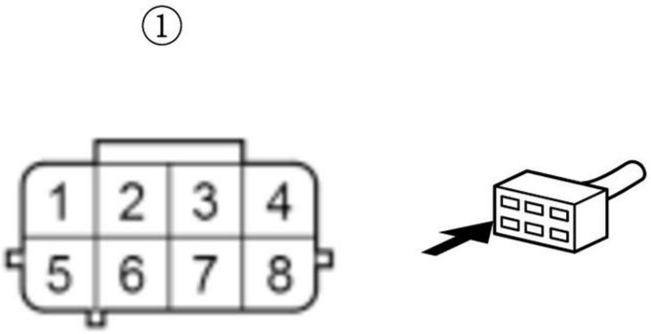

-4. Check for continuity between test points 1 and 2.

Test condition	Vehicle OFF (LOCK) mode
	PCM connector E (80P): disconnected
	EVAP leak check module 8P connector: disconnected
	EVAP leak check module 8P connector No. 3: jumped to body ground
Test point 2	**PCM connector E (80P) No. 47**
Test point 1	Body ground

Is there continuity?

YES

Replace the EVAP leak check module .

NO

Repair an open in the ELCMP wire between the PCM (E47) and the EVAP leak check module.

DTC P2450 (1.5 L ENGINE)

DTC P2450 : EVAP System Purge Line Non-return Valve A Stuck Open

NOTE: Before you troubleshoot, **review the general troubleshooting information** .

DTC Description	Confirmed DTC	Pending DTC
P2450 EVAP System Purge Line Non-return Valve A Stuck Open	B	B

DTC (PGM-FI)

1. Problem verification

   -1. Turn the vehicle to the ON mode.

   -2. Clear the DTC with the HDS.

   -3. Select the EVAP TEST (ELCM) in the INSPECTION MENU, then select EVAP Purge Flow Check Test with the HDS.

   EVAP TEST (ELCM)

   Check for Pending or Confirmed DTCs with the HDS.

DTC Description	Confirmed DTC	Pending DTC
P2450 EVAP System Purge Line Non-return Valve A Stuck Open	B	B

   Is DTC P2450 indicated?

   YES

   Replace the EVAP canister purge valve .

   NO

   Intermittent failure, the system is OK at this time. Check for poor connections or loose terminals at the EVAP leak check module, the EVAP canister purge valve, and the PCM. **If the on-board snapshot of this DTC is recorded, try to reproduce the failure under the same conditions with the on-board snapshot** .

DTC P24B8 (1.5 L ENGINE) (2020 2021)

DTC P24B8 : EVAP Leak Check Module Absolute Pressure Sensor Out of Range

NOTE:

- Before you troubleshoot, **review the general troubleshooting information** .

- If DTC P24BA and/or P24BB are stored at the same time as DTC P24B8, troubleshoot those DTCs first, then recheck for DTC P24B8.

DTC Description	Confirmed DTC	Pending DTC
P24B8 EVAP Leak Check Module Absolute Pressure Sensor Out of Range	B	B

DTC (PGM-FI)

1. Problem verification 1

   -1. Turn the vehicle to the ON mode.

   -2. Clear the DTC with the HDS.

   -3. Turn the vehicle to the OFF (LOCK) mode.

   -4. Turn the vehicle to the ON mode.

   -5. Check the parameter (s) below with the HDS.

Signal	Threshold		Current conditions	
	Values	Unit	Values	Unit
Absolute Pressure of ELCM Pressure Sensor	More than 896	mmHg	B	B

   Do the current condition (s) match the malfunction threshold?

   YES

   Go to step 3.

   NO

   Go to step 2.

2. Problem verification 2

   -1. Check for Pending or Confirmed DTCs with the HDS.

DTC Description	Confirmed DTC	Pending DTC
P24B8 EVAP Leak Check Module Absolute Pressure Sensor Out of Range	B	B

   Is DTC P24B8 indicated?

   YES

   The failure is duplicated. Go to step 3.

   NO

   Intermittent failure, the system is OK at this time. Check for poor connections or loose terminals at the EVAP leak check module and the PCM. **If the on-board snapshot of this DTC is recorded, try to reproduce the failure under the same conditions with the on-board snapshot** .

3. Determine possible failure area (VCC6 line, others)

   -1. Turn the vehicle to the OFF (LOCK) mode.

-2. Disconnect the following connector.

EVAP leak check module 8P connector

-3. Turn the vehicle to the ON mode.

-4. Measure the voltage between test points 1 and 2.

Test condition	Vehicle ON mode
B	EVAP leak check module 8P connector: disconnected
Test point 1	EVAP leak check module 8P connector (female terminals) No. 6: ①
Test point 2	EVAP leak check module 8P connector (female terminals) No. 8: ①

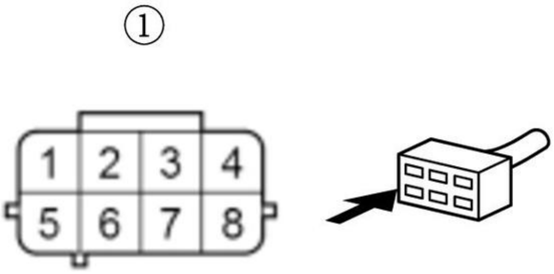

Is there about 5.0 V?

YES

Go to step 4.

NO

Go to step 6.

4. Determine possible failure area (ELCMPA line, others)

-1. Check the parameter (s) below with the HDS.

Signal	**Threshold**		**Current conditions**	
	Values	**Unit**	**Values**	**Unit**
Absolute Pressure of ELCM Pressure Sensor	Less than 331	mmHg	B	B

Do the current condition (s) match the malfunction threshold?

YES

Go to step 8.

NO

Go to step 5.

5. Determine possible failure area (EVAP leak check module, others)

-1. Turn the vehicle to the OFF (LOCK) mode.

-2. Connect terminals A and B with a jumper wire.

Terminal A	EVAP leak check module 8P connector (female terminals) No. 7: ①
Terminal B	EVAP leak check module 8P connector (female terminals) No. 8: ①

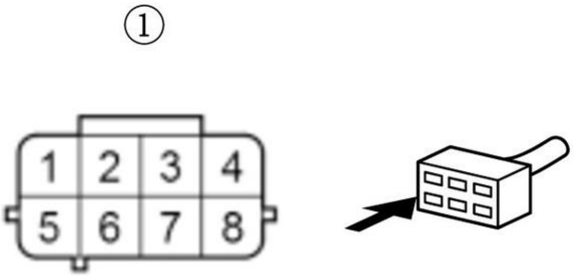

-3. Turn the vehicle to the ON mode.

-4. Check the parameter (s) below with the HDS.

Signal	Threshold		Current conditions	
	Values	**Unit**	**Values**	**Unit**
Absolute Pressure of ELCM Pressure Sensor	More than 896	mmHg	B	B

Do the current condition (s) match the malfunction threshold?

YES

Go to step 9.

NO

Replace the EVAP leak check module .

6. Open wire check (VCC6 line)

-1. Turn the vehicle to the OFF (LOCK) mode.

-2. Jump the SCS line with the HDS, and wait more than 1 minute.

-3. Disconnect the following connector.

PCM connector E (80P)

-4. Measure the resistance between test points 1 and 2.

Test condition	Vehicle OFF (LOCK) mode
	PCM connector E (80P): disconnected
	EVAP leak check module 8P connector: disconnected
Test point 1	**PCM connector E (80P) No. 63**
Test point 2	EVAP leak check module 8P connector (female terminals) No. 6: ①

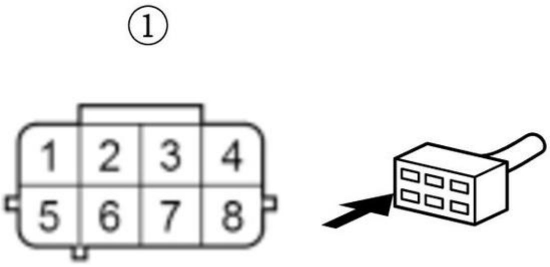

Is there 1.0 Ω or less?

YES

Go to step 7.

NO

Repair an open in the VCC6 wire between the PCM (E63) and the EVAP leak check module.

7. Open wire check (SG6 line)

-1. Measure the resistance between test points 1 and 2.

Test condition	Vehicle OFF (LOCK) mode
	EVAP leak check module 8P connector: disconnected
	PCM connector E (80P): disconnected

Test point 1	**PCM connector E (80P) No. 45**
Test point 2	EVAP leak check module 8P connector (female terminals) No. 8: ①

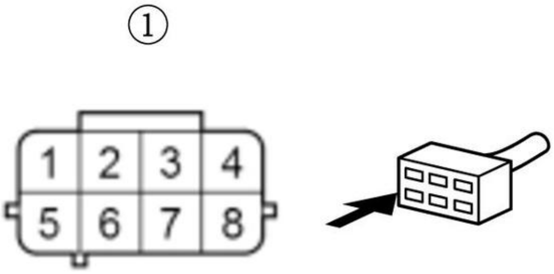

Is there 1.0 Ω or less?

YES

The SG6 wire is OK. Check for any authorized service information related to the DTCs or symptoms you are troubleshooting, or **substitute a known-good PCM** .

NO

Repair an open in the SG6 wire between the PCM (E45) and the EVAP leak check module.

8. Shorted wire check (ELCMPA line)

-1. Turn the vehicle to the OFF (LOCK) mode.

-2. Jump the SCS line with the HDS, and wait more than 1 minute.

-3. Disconnect the following connector.

PCM connector A (50P)

-4. Measure the resistance between test points 1 and 2.

Test condition	Vehicle OFF (LOCK) mode
B	EVAP leak check module 8P connector: disconnected
B	PCM connector A (50P): disconnected
Test point 1	EVAP leak check module 8P connector (female terminals) No. 7: ①
Test point 2	Body ground

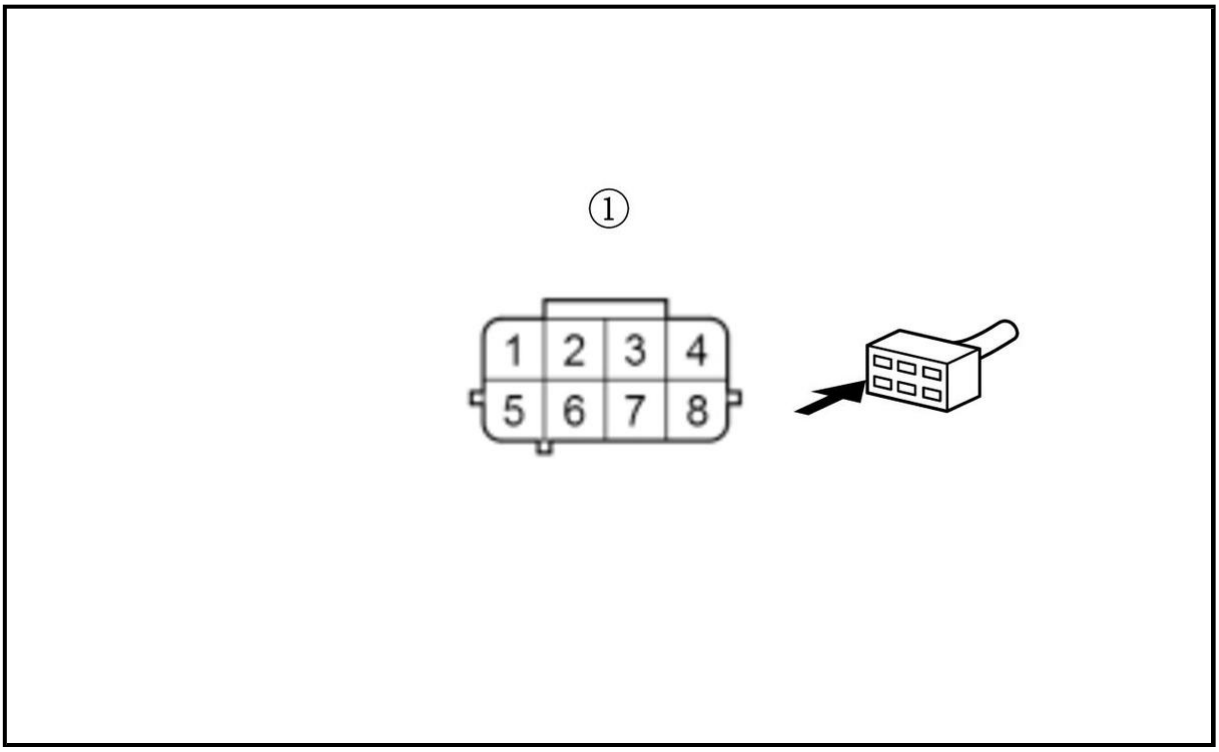

Is there 1 MΩ or more?

YES

The ELCMPA wire is OK. Check for any authorized service information related to the DTCs or symptoms you are troubleshooting, or **substitute a known-good PCM** .

NO

Repair a short in the ELCMPA wire between the PCM (A42) and the EVAP leak check module.

9. Open wire check (ELCMPA line)

-1. Turn the vehicle to the OFF (LOCK) mode.

-2. Remove the jumper wire from the EVAP leak check module 8P connector.

-3. Jump the SCS line with the HDS, and wait more than 1 minute.

-4. Disconnect the following connector.

PCM connector A (50P)

-5. Measure the resistance between test points 1 and 2.

Test condition	Vehicle OFF (LOCK) mode
	EVAP leak check module 8P connector: disconnected
	PCM connector A (50P): disconnected
Test point 1	**PCM connector A (50P) No. 42**
Test point 2	EVAP leak check module 8P connector (female terminals) No. 7: ①

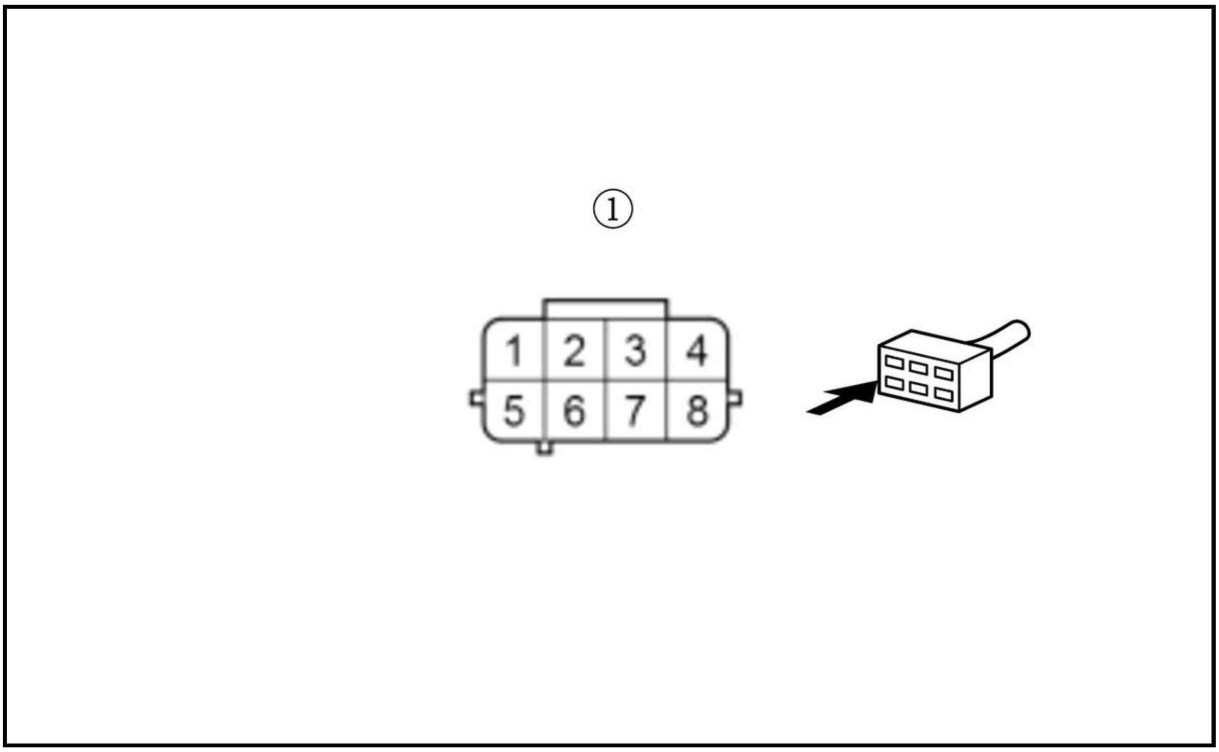

Is there 1.0 Ω or less?

YES

The ELCMPA wire is OK. Check for any authorized service information related to the DTCs or symptoms you are troubleshooting, or **substitute a known-good PCM** .

NO

Repair an open in the ELCMPA wire between the PCM (A42) and the EVAP leak check module.

DTC P24B9 (1.5 L ENGINE)

DTC P24B9 : EVAP Leak Check Module Absolute Pressure Sensor Range/Performance Problem

NOTE:

- Before you troubleshoot, **review the general troubleshooting information** .
- If DTC P24BA and/or P24BB is stored at the same time as DTC P24B9, troubleshoot those DTCs first, then recheck for DTC P24B9.

DTC Description	Confirmed DTC	Pending DTC
P24B9 EVAP Leak Check Module Absolute Pressure Sensor Range/Performance Problem	B	B

DTC (PGM-FI)

1. EVAP leak check module drain hose check

-1. **Remove the EVAP leak check module** and the **EVAP canister filter** , then check the blockage in the hoses and the EVAP canister filter.

Are the parts OK?

YES

Go to step 2.

NO

Remove the blockage from them, or replace the part (s) if needed.

2. Problem verification

-1. Turn the vehicle to the ON mode.

-2. Clear the DTC with the HDS.

-3. Turn the vehicle to the OFF (LOCK) mode.

-4. Turn the vehicle to the ON mode.

-5. Check for Pending or Confirmed DTCs with the HDS.

DTC Description	Confirmed DTC	Pending DTC
P24B9 EVAP Leak Check Module Absolute Pressure Sensor Range/Performance Problem	B	B

Is DTC P24B9 indicated?

YES

Replace the EVAP leak check module .

NO

Intermittent failure, the system is OK at this time. Check for poor connections and loose terminals at the EVAP leak check module and the PCM. **If the on-board snapshot of this DTC is recorded, try to reproduce the failure under the same conditions with the on-board snapshot** .

DTC P24BA (1.5 L ENGINE) (2017)

DTC P24BA : EVAP Leak Check Module Absolute Pressure Sensor Circuit Low Voltage

NOTE: Before you troubleshoot, **review the general troubleshooting information** .

DTC Description	Confirmed DTC	Pending DTC
P24BA EVAP Leak Check Module Absolute Pressure Sensor Circuit Low Voltage	B	B

DTC (PGM-FI)

1. EVAP system check

-1. Turn the vehicle to the ON mode.

-2. Clear the DTC with the HDS.

-3. Turn the vehicle to the OFF (LOCK) mode.

-4. Turn the vehicle to the ON mode.

-5. Check the parameter (s) below with the HDS.

Signal	Threshold		Current conditions	
	Values	Unit	Values	Unit
Absolute Pressure of ELCM	Less than 380	mmHg	B	B

Signal	Threshold		Current conditions	
	Values	Unit	Values	Unit
Pressure Sensor				

Do the current condition (s) match the malfunction threshold?

YES

Go to step 3.

NO

Go to step 2.

2. Problem verification

-1. Check for Pending or Confirmed DTCs with the HDS.

DTC Description	Confirmed DTC	Pending DTC
P24BA EVAP Leak Check Module Absolute Pressure Sensor Circuit Low Voltage	B	B

Is DTC P24BA indicated?

YES

The failure is duplicated. Go to step 3.

NO

Intermittent failure, the system is OK at this time. Check for poor connections or loose terminals at the EVAP leak check module and the PCM. **If the on-board snapshot of this DTC is recorded, try to reproduce the failure under the same conditions with the on-board snapshot** .

3. Determine possible failure area (ELCMPA line, others)

-1. Turn the vehicle to the OFF (LOCK) mode.

-2. Disconnect the following connector.

EVAP leak check module 8P connector

-3. Turn the vehicle to the ON mode.

-4. Check the parameter (s) below with the HDS.

Signal	Threshold		Current conditions	
	Values	Unit	Values	Unit
Absolute Pressure of ELCM Pressure Sensor	Less than 380	mmHg	B	B

Do the current condition (s) match the malfunction threshold?

YES

Go to step 4.

NO

Go to step 5.

4. Shorted wire check (ELCMPA line)

   -1. Turn the vehicle to the OFF (LOCK) mode.

   -2. Jump the SCS line with the HDS, and wait more than 1 minute.

   -3. Disconnect the following connector.

PCM connector A (50P)

   -4. Check for continuity between test points 1 and 2.

Test condition	Vehicle OFF (LOCK) mode
B	EVAP leak check module 8P connector: disconnected
B	PCM connector A (50P): disconnected
Test point 1	EVAP leak check module 8P connector (female terminals) No. 7: ①
Test point 2	Body ground

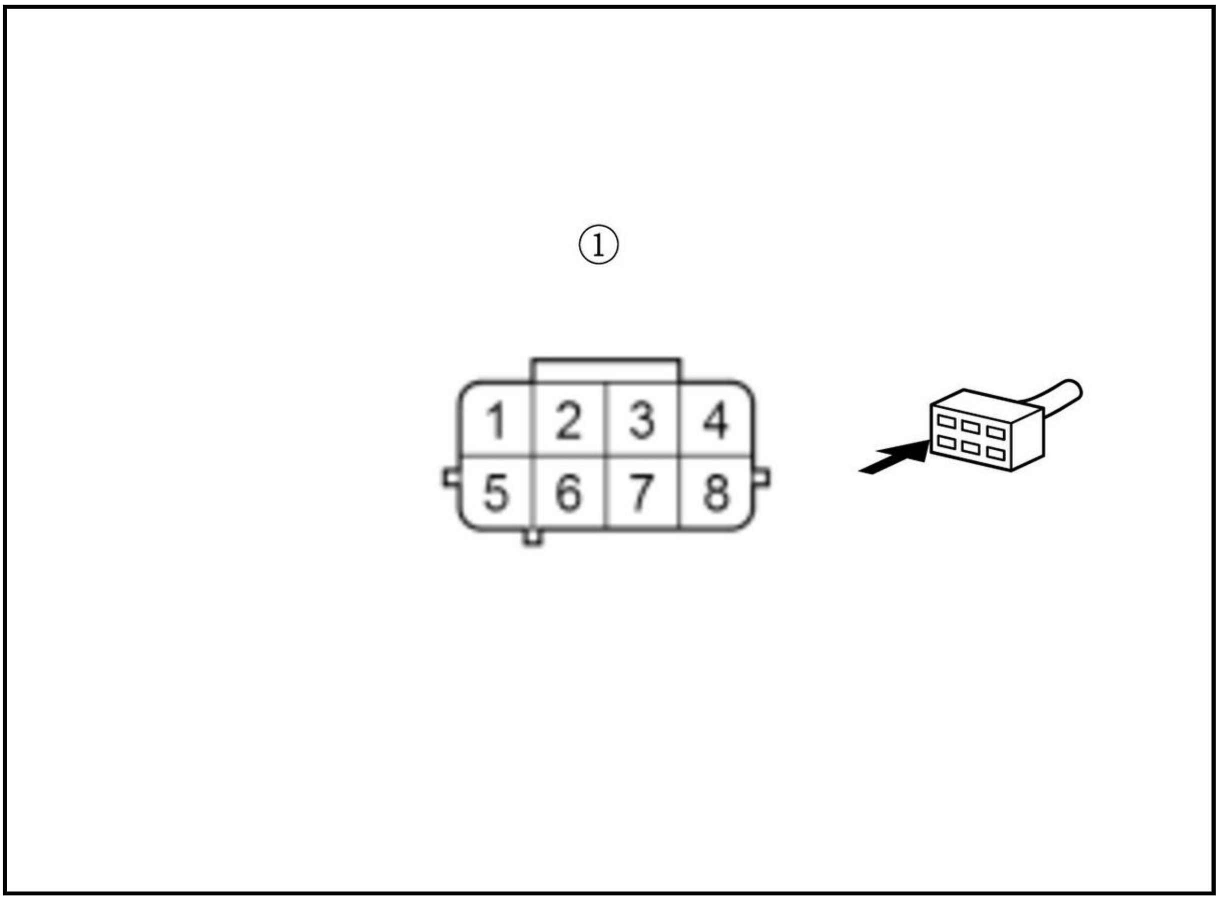

Is there continuity?

YES

Repair a short in the ELCMPA wire between the PCM (A42) and the EVAP leak check module.

NO

The ELCMPA wire is OK. Check for any authorized service information related to the DTCs or symptoms you are troubleshooting, or **substitute a known-good PCM** .

5. Determine possible failure area (EVAP leak check module pressure sensor, others)

-1. Measure the voltage between test points 1 and 2.

Test condition	Vehicle ON mode
B	EVAP leak check module 8P connector: disconnected
Test point 1	EVAP leak check module 8P connector (female terminals) No. 6: ①
Test point 2	Body ground

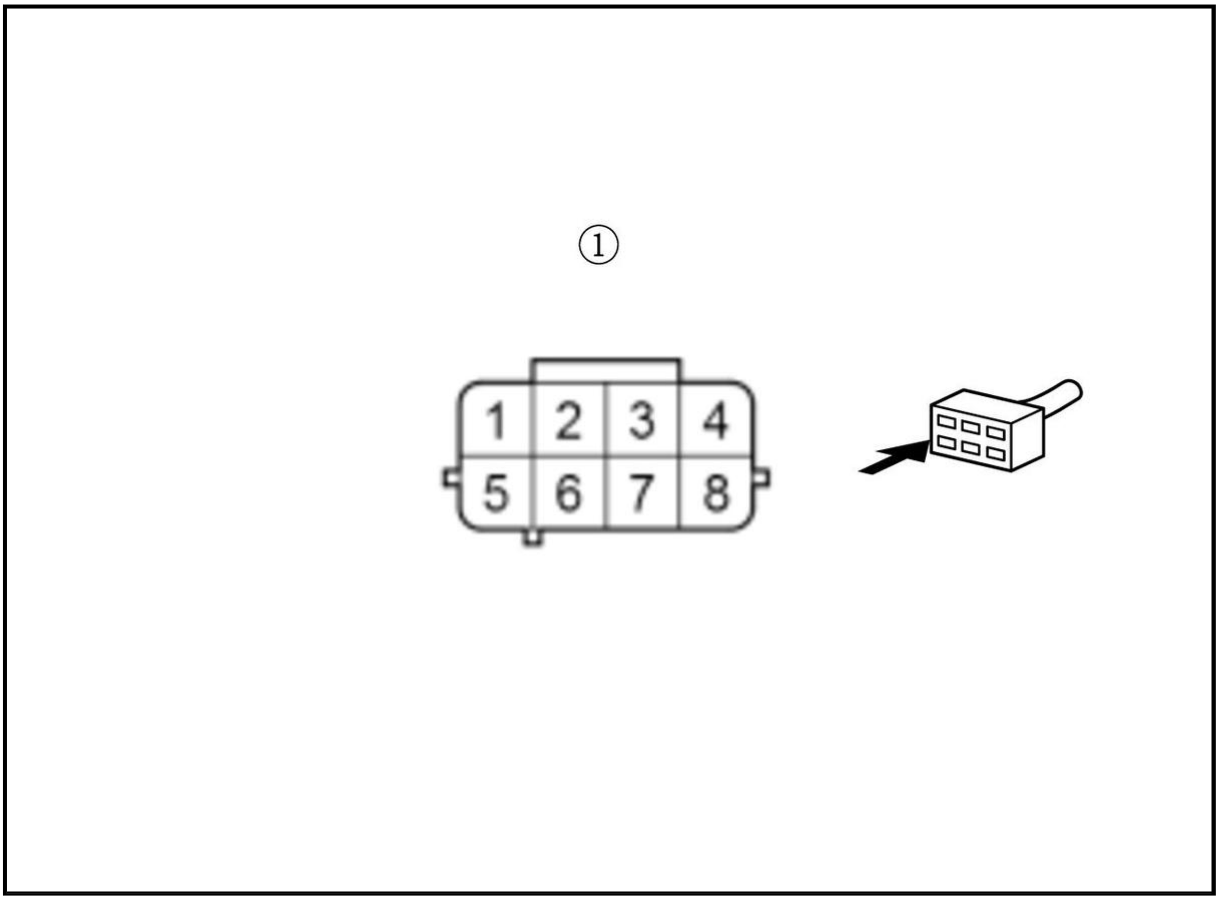

Is there about 5.0 V?

YES

Replace the EVAP leak check module .

NO

Go to step 6.

6. Open wire check (VCC6 line)

-1. Turn the vehicle to the OFF (LOCK) mode.

-2. Jump the SCS line with the HDS, and wait more than 1 minute.

-3. Disconnect the following connector.

PCM connector E (80P)

-4. Connect terminals A and B with a jumper wire.

Terminal A	EVAP leak check module 8P connector (female terminals) No. 6: ①

Terminal B	Body ground

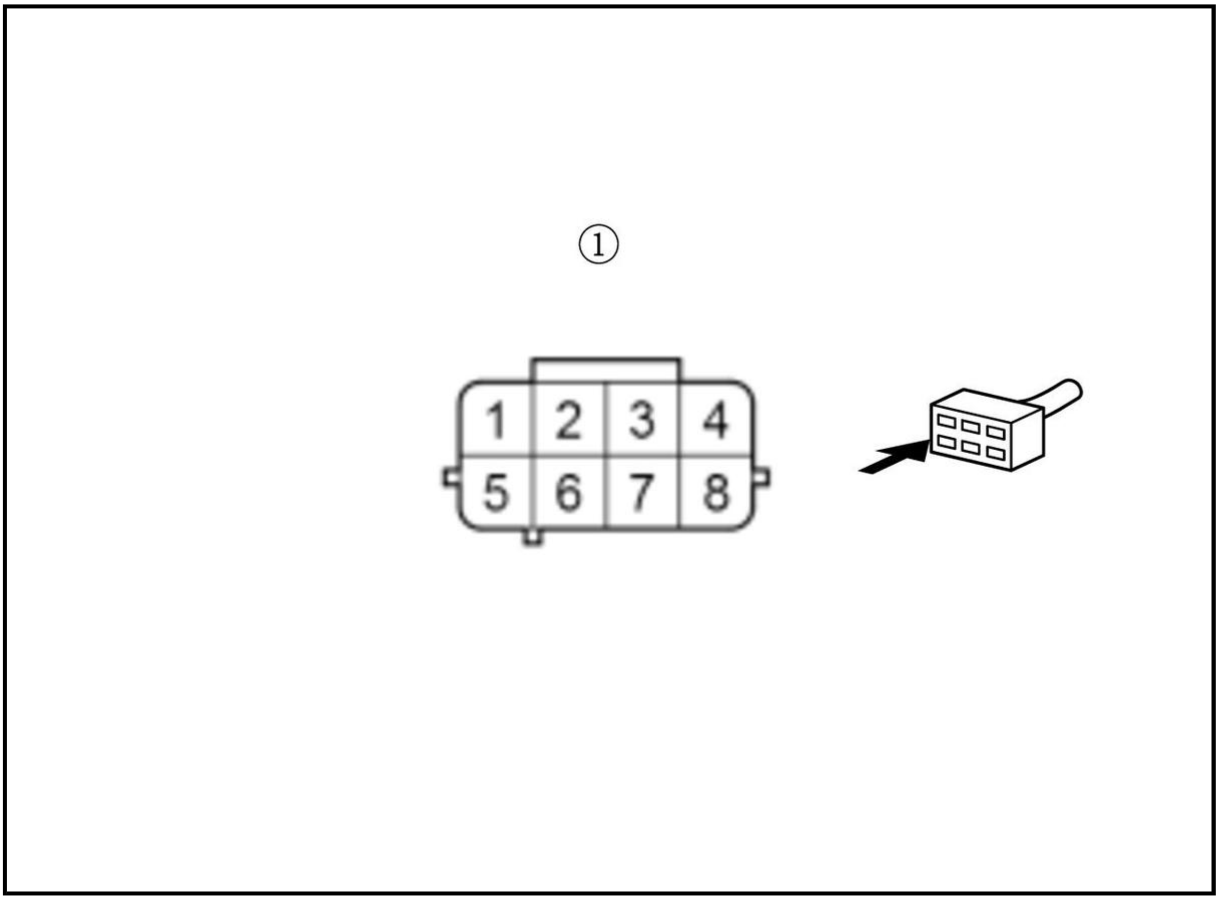

-5. Check for continuity between test points 1 and 2.

Test condition	Vehicle OFF (LOCK) mode EVAP leak check module 8P connector: disconnected EVAP leak check module 8P connector No. 6: jumped to body ground PCM connector E (80P): disconnected
Test point 1	**PCM connector E (80P) No. 63**

Test point 2	Body ground

Is there continuity?

YES

The VCC6 wire is OK. Check for any authorized service information related to the DTCs or symptoms you are troubleshooting, or **substitute a known-good PCM** .

NO

Repair an open in the VCC6 wire between the PCM (E63) and the EVAP leak check module.

DTC TROUBLESHOOTING

DTC P24BA (1.5 L ENGINE) (2018 2019 2020 2021)

DTC P24BA : EVAP Leak Check Module Absolute Pressure Sensor Circuit Low Voltage

NOTE: Before you troubleshoot, review the general troubleshooting information.

DTC Description	Confirmed DTC	Pending DTC
P24BA EVAP Leak Check Module Absolute Pressure Sensor Circuit Low Voltage	B	B

DTC (PGM-FI)

1. EVAP system check

-1. Turn the vehicle to the ON mode.

-2. Clear the DTC with the HDS.

-3. Turn the vehicle to the OFF (LOCK) mode.

-4. Turn the vehicle to the ON mode.

-5. Check the parameter (s) below with the HDS.

Signal	Threshold		Current conditions	
	Values	Unit	Values	Unit
Absolute Pressure of ELCM Pressure Sensor	Less than 331	mmHg	B	B

Do the current condition (s) match the malfunction threshold?

YES

Go to step 3.

NO

Go to step 2.

2. Problem verification

-1. Check for Pending or Confirmed DTCs with the HDS.

DTC Description	Confirmed DTC	Pending DTC
P24BA EVAP Leak Check Module Absolute Pressure Sensor Circuit Low Voltage	B	B

Is DTC P24BA indicated?

YES

The failure is duplicated. Go to step 3.

NO

Intermittent failure, the system is OK at this time. Check for poor connections or loose terminals at the EVAP leak check module and the PCM. **If the on-board snapshot of this DTC is recorded, try to reproduce the failure under the same conditions with the on-board snapshot**.

3. Determine possible failure area (ELCMPA line, others)

-1. Turn the vehicle to the OFF (LOCK) mode.

-2. Disconnect the following connector.

EVAP leak check module 8P connector

-3. Turn the vehicle to the ON mode.

-4. Check the parameter (s) below with the HDS.

Signal	Threshold		Current conditions	
	Values	Unit	Values	Unit
Absolute Pressure of ELCM Pressure Sensor	Less than 331	mmHg	B	B

Do the current condition (s) match the malfunction threshold?

YES

Go to step 4.

NO

Go to step 5.

4. Shorted wire check (ELCMPA line)

-1. Turn the vehicle to the OFF (LOCK) mode.

-2. Jump the SCS line with the HDS, and wait more than 1 minute.

-3. Disconnect the following connector.

PCM connector A (50P)

-4. Check for continuity between test points 1 and 2.

Test condition	Vehicle OFF (LOCK) mode
B	EVAP leak check module 8P connector: disconnected
B	PCM connector A (50P): disconnected
Test point 1	EVAP leak check module 8P connector (female terminals) No. 7: ①
Test point 2	Body ground

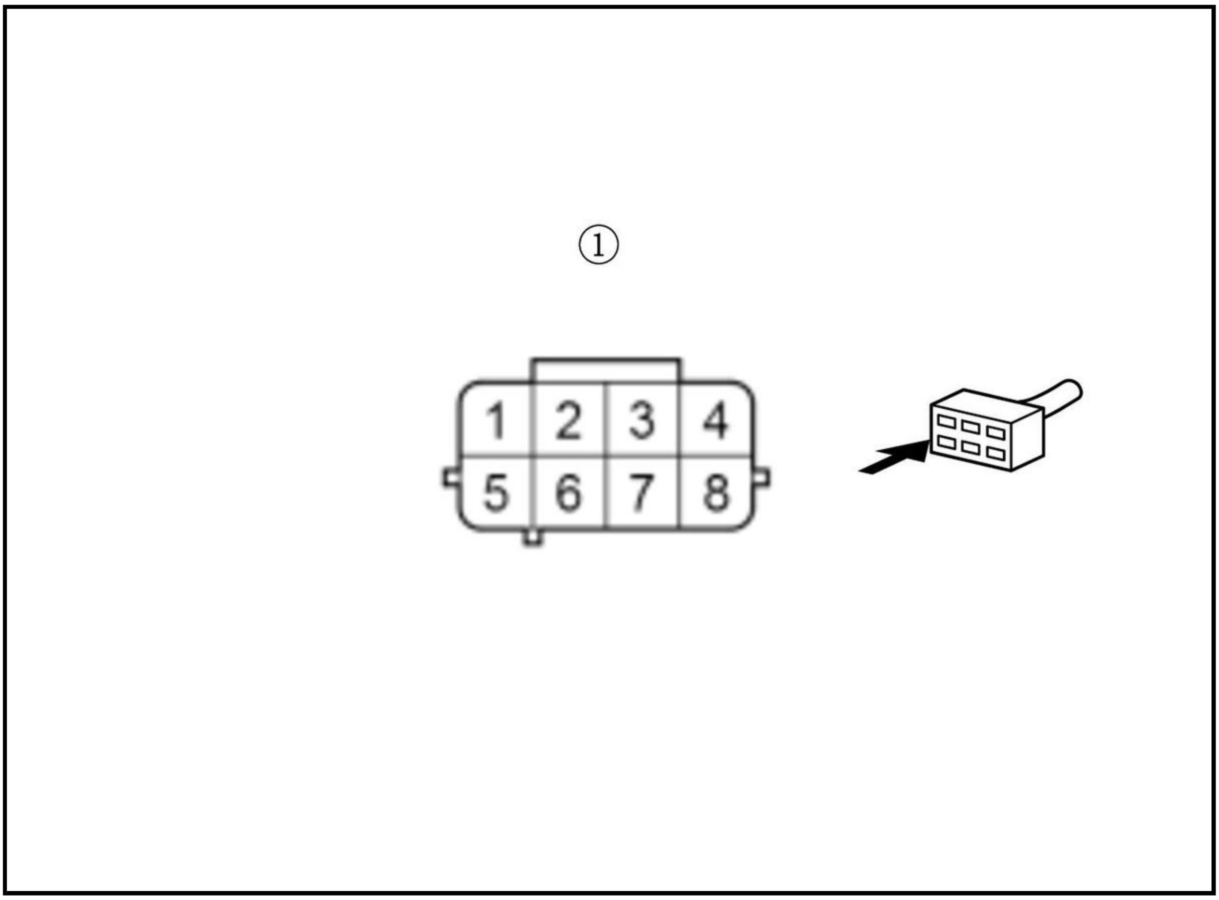

Is there continuity?

YES

Repair a short in the ELCMPA wire between the PCM (A42) and the EVAP leak check module.

NO

The ELCMPA wire is OK. Check for any authorized service information related to the DTCs or symptoms you are troubleshooting, or **substitute a known-good PCM** .

5. Determine possible failure area (EVAP leak check module pressure sensor, others)

-1. Measure the voltage between test points 1 and 2.

Test condition	Vehicle ON mode
B	EVAP leak check module 8P connector: disconnected
Test point 1	EVAP leak check module 8P connector (female terminals) No. 6: ①
Test point 2	Body ground

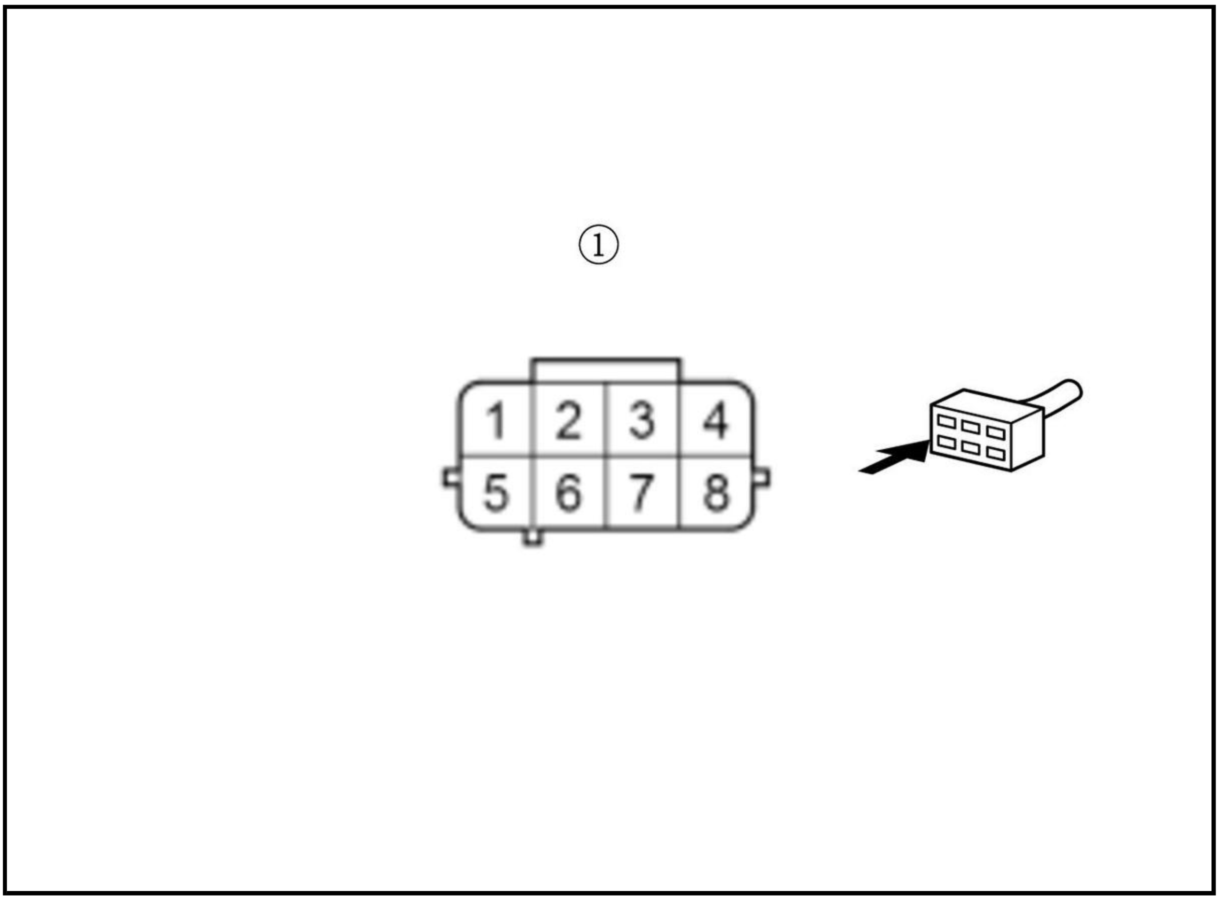

Is there about 5.0 V?

YES

Replace the EVAP leak check module .

NO

Go to step 6.

6. Open wire check (VCC6 line)

-1. Turn the vehicle to the OFF (LOCK) mode.

-2. Jump the SCS line with the HDS, and wait more than 1 minute.

-3. Disconnect the following connector.

PCM connector E (80P)

-4. Connect terminals A and B with a jumper wire.

Terminal A	EVAP leak check module 8P connector (female terminals) No. 6: ①
Terminal B	Body ground

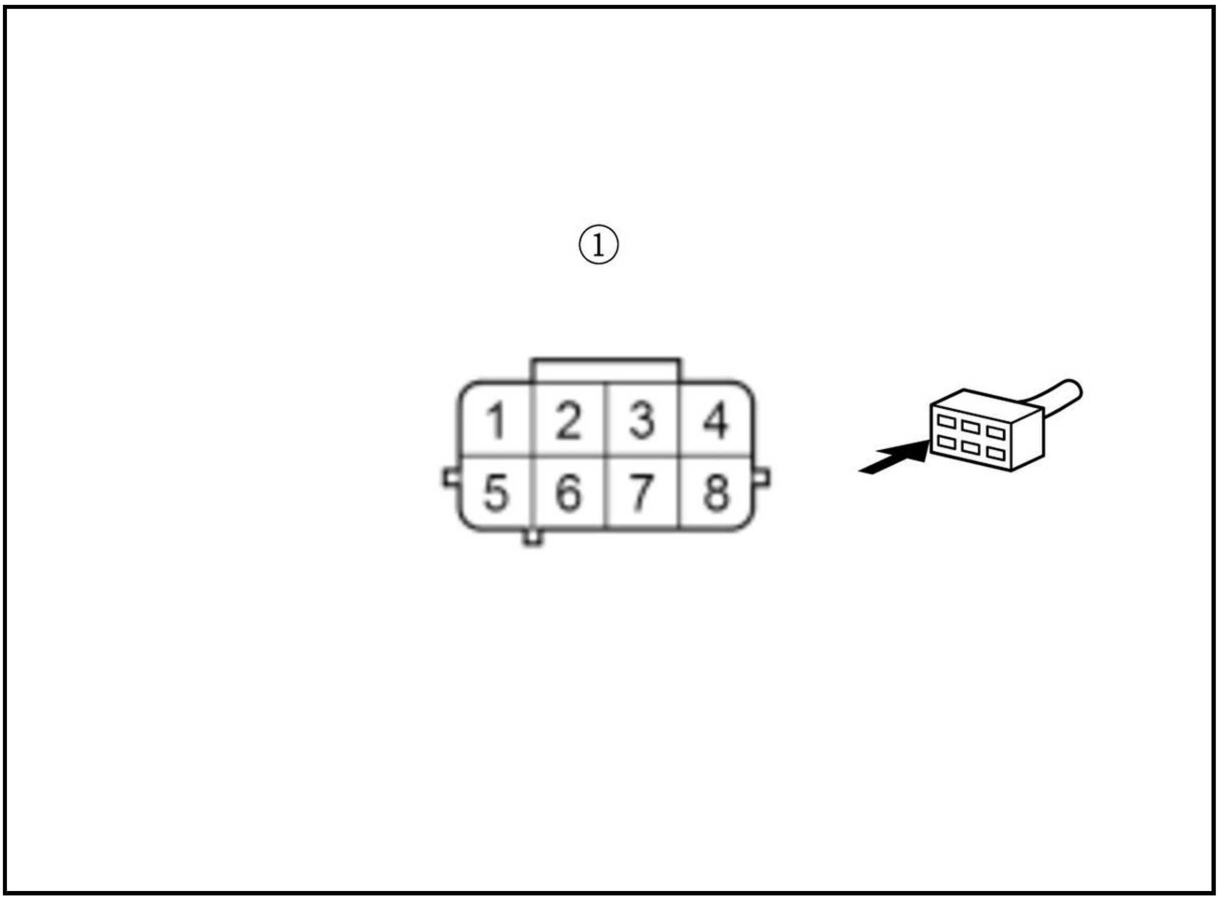

-5. Check for continuity between test points 1 and 2.

Test condition	Vehicle OFF (LOCK) mode
	EVAP leak check module 8P connector: disconnected
	EVAP leak check module 8P connector No. 6: jumped to body ground
	PCM connector E (80P): disconnected
Test point 1	**PCM connector E (80P) No. 63**

Test point 2	Body ground

Is there continuity?

YES

The VCC6 wire is OK. Check for any authorized service information related to the DTCs or symptoms you are troubleshooting, or **substitute a known-good PCM** .

NO

Repair an open in the VCC6 wire between the PCM (E63) and the EVAP leak check module.

DTC P24BB (1.5 L ENGINE) (2017)

DTC P24BB : EVAP Leak Check Module Absolute Pressure Sensor Circuit High Voltage

NOTE:

- Before you troubleshoot, **review the general troubleshooting information**.
- This DTC is stored if there is a blockage in the drain hose of the EVAP leak check module, check the EVAP canister filter and the drain hoses before troubleshooting.

DTC Description	Confirmed DTC	Pending DTC
P24BB EVAP Leak Check Module Absolute Pressure Sensor Circuit High Voltage	B	B

DTC (PGM-FI)

1. EVAP system check

   -1. Turn the vehicle to the ON mode.

   -2. Clear the DTC with the HDS.

   -3. Turn the vehicle to the OFF (LOCK) mode.

   -4. Turn the vehicle to the ON mode.

   -5. Check the parameter (s) below with the HDS.

Signal	Threshold		Current conditions	
	Values	Unit	Values	Unit
Absolute Pressure of ELCM Pressure Sensor	More than 899	mmHg	B	B

   Do the current condition (s) match the malfunction threshold?

   YES

   Go to step 3.

   NO

   Go to step 2.

2. Problem verification

   -1. Check for Pending or Confirmed DTCs with the HDS.

DTC Description	Confirmed DTC	Pending DTC
P24BB EVAP Leak Check Module Absolute Pressure Sensor Circuit High Voltage	B	B

   Is DTC P24BB indicated?

   YES

   The failure is duplicated. Go to step 3.

   NO

   Intermittent failure, the system is OK at this time. Check for poor connections or loose terminals at the EVAP leak check module and the PCM. **If the on-board snapshot of this DTC is recorded, try to reproduce the failure under the same conditions with the on-board snapshot**.

3. Determine possible failure area (EVAP leak check module, others)

   -1. Turn the vehicle to the OFF (LOCK) mode.

   -2. Disconnect the following connector.

EVAP leak check module 8P connector

-3. Connect terminals A and B with a jumper wire.

Terminal A	EVAP leak check module 8P connector (female terminals) No. 7: ①
Terminal B	EVAP leak check module 8P connector (female terminals) No. 8: ①

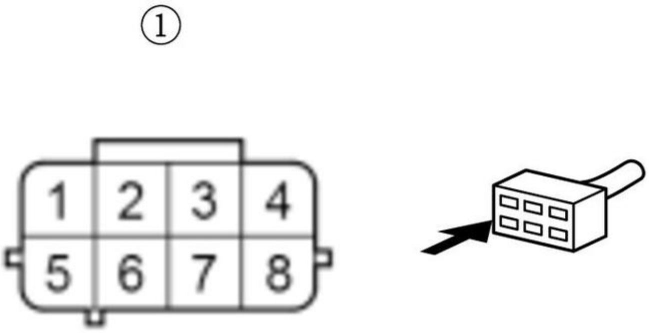

-4. Turn the vehicle to the ON mode.

-5. Check the parameter (s) below with the HDS.

Signal	Threshold		Current conditions	
	Values	**Unit**	**Values**	**Unit**
Absolute Pressure of ELCM Pressure Sensor	More than 899	mmHg	B	B

Do the current condition (s) match the malfunction threshold?

YES

Go to step 4.

NO

Replace the EVAP leak check module .

4. Determine possible failure area (ELCMPA line, others)

-1. Turn the vehicle to the OFF (LOCK) mode.

-2. Remove the jumper wire.

-3. Turn the vehicle to the ON mode.

-4. Measure the voltage between test points 1 and 2.

Test condition	Vehicle ON mode
B	EVAP leak check module 8P connector: disconnected
Test point 1	EVAP leak check module 8P connector (female terminals) No. 6: ①
Test point 2	EVAP leak check module 8P connector (female terminals) No. 8: ①

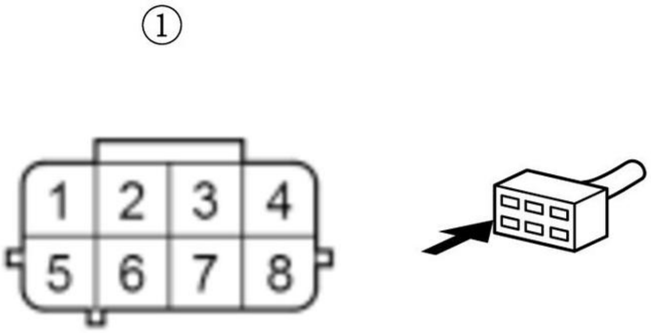

Is there about 5.0 V?

YES

Go to step 5.

NO

Go to step 6.

5. Open wire check (ELCMPA line)

-1. Turn the vehicle to the OFF (LOCK) mode.

-2. Jump the SCS line with the HDS, and wait more than 1 minute.

-3. Disconnect the following connector.

PCM connector A (50P)

-4. Connect terminals A and B with a jumper wire.

Terminal A	EVAP leak check module 8P connector (female terminals) No. 7: ①
Terminal B	Body ground

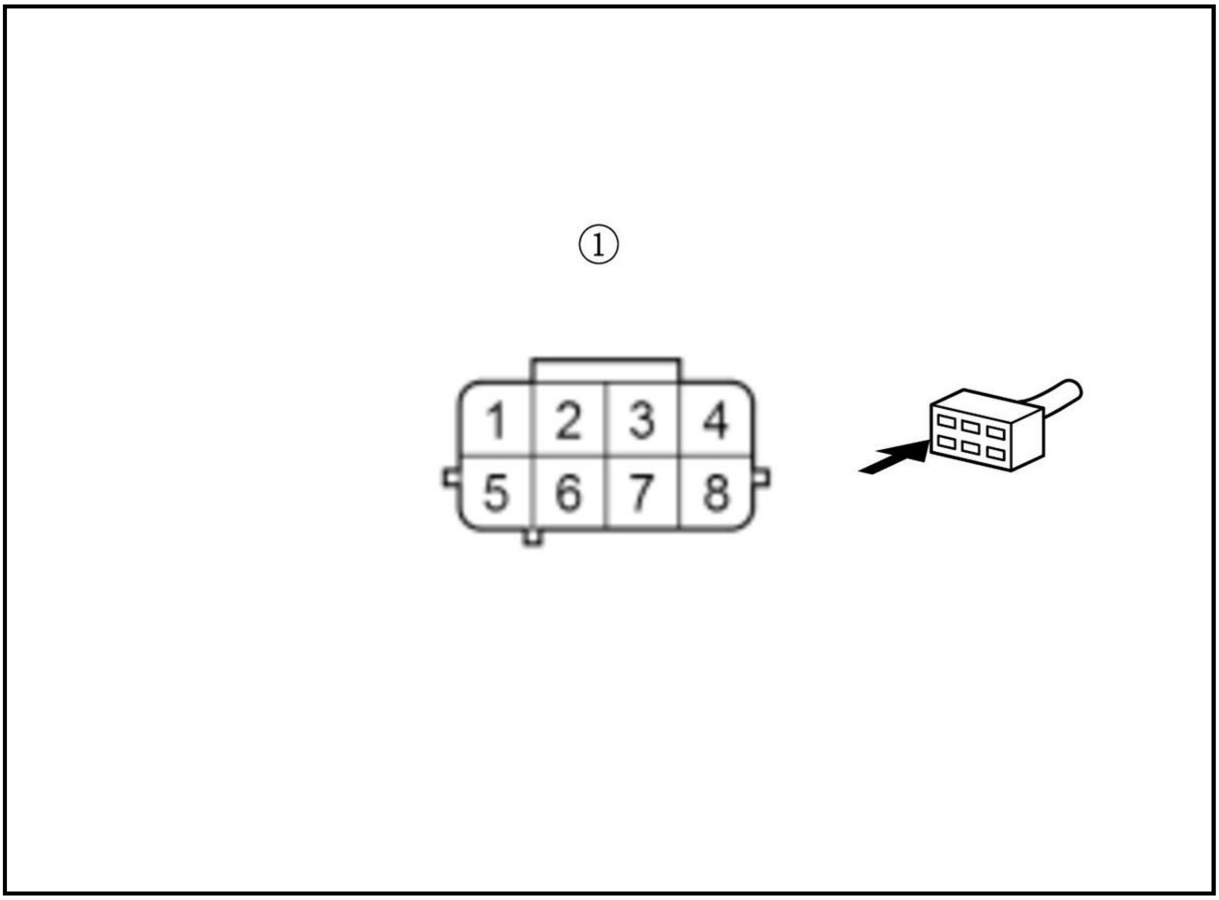

-5. Check for continuity between test points 1 and 2.

Test condition	Vehicle OFF (LOCK) mode EVAP leak check module 8P connector: disconnected EVAP leak check module 8P connector No. 7: jumped to body ground PCM connector A (50P): disconnected
Test point 1	**PCM connector A (50P) No. 42**

Test point 2	Body ground

Is there continuity?

YES

The ELCMPA wire is OK. Check for any authorized service information related to the DTCs or symptoms you are troubleshooting, or **substitute a known-good PCM** .

NO

Repair an open in the ELCMPA wire between the PCM (A42) and the EVAP leak check module.

6. Open wire check (VCC6 line)

-1. Turn the vehicle to the OFF (LOCK) mode.

-2. Jump the SCS line with the HDS, and wait more than 1 minute.

-3. Disconnect the following connector.

PCM connector E (80P)

-4. Connect terminals A and B with a jumper wire.

Terminal A	EVAP leak check module 8P connector (female terminals) No. 6: ①
Terminal B	Body ground

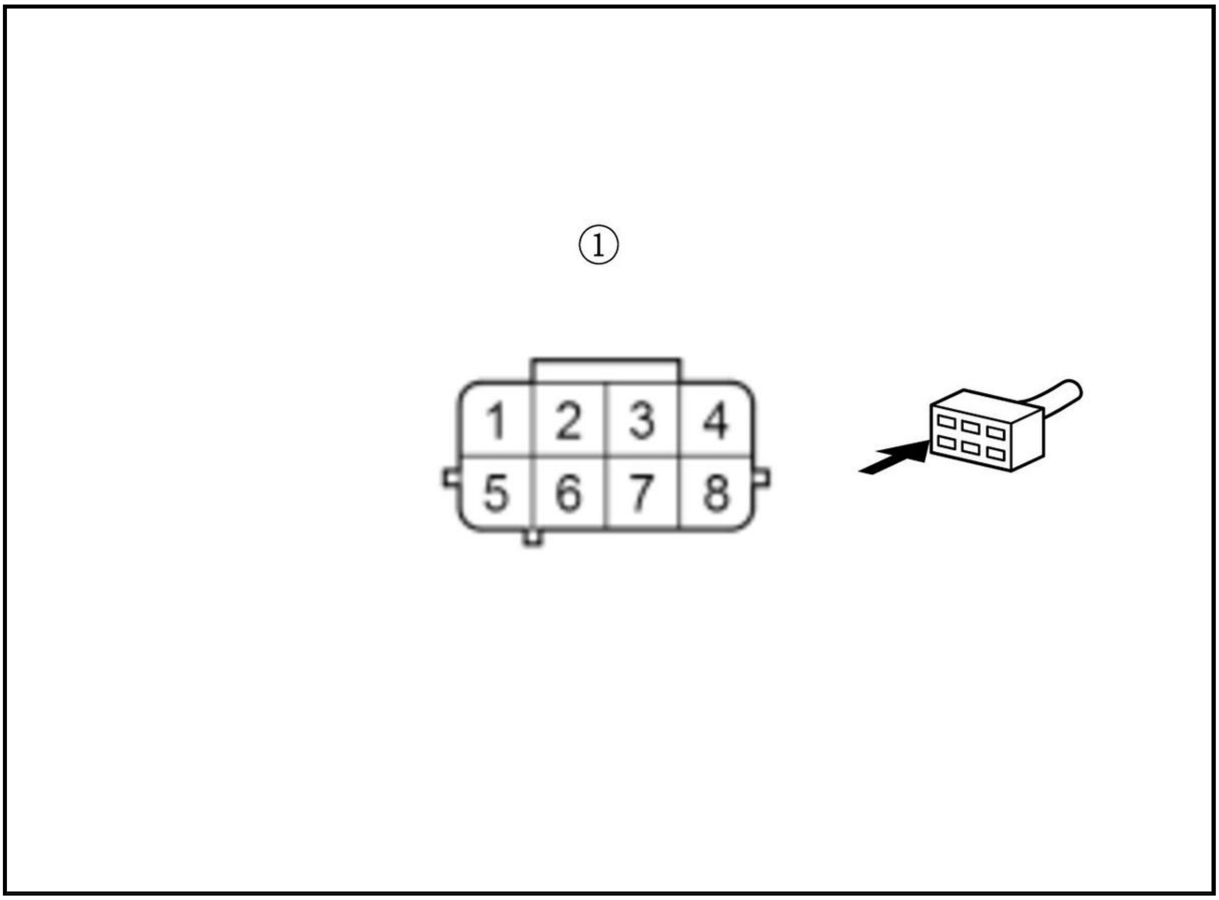

-5. Check for continuity between test points 1 and 2.

Test condition	Vehicle OFF (LOCK) mode
	PCM connector E (80P): disconnected
	EVAP leak check module 8P connector: disconnected
	EVAP leak check module 8P connector No. 6: jumped to body ground
Test point 1	**PCM connector E (80P) No. 63**
Test point 2	body ground

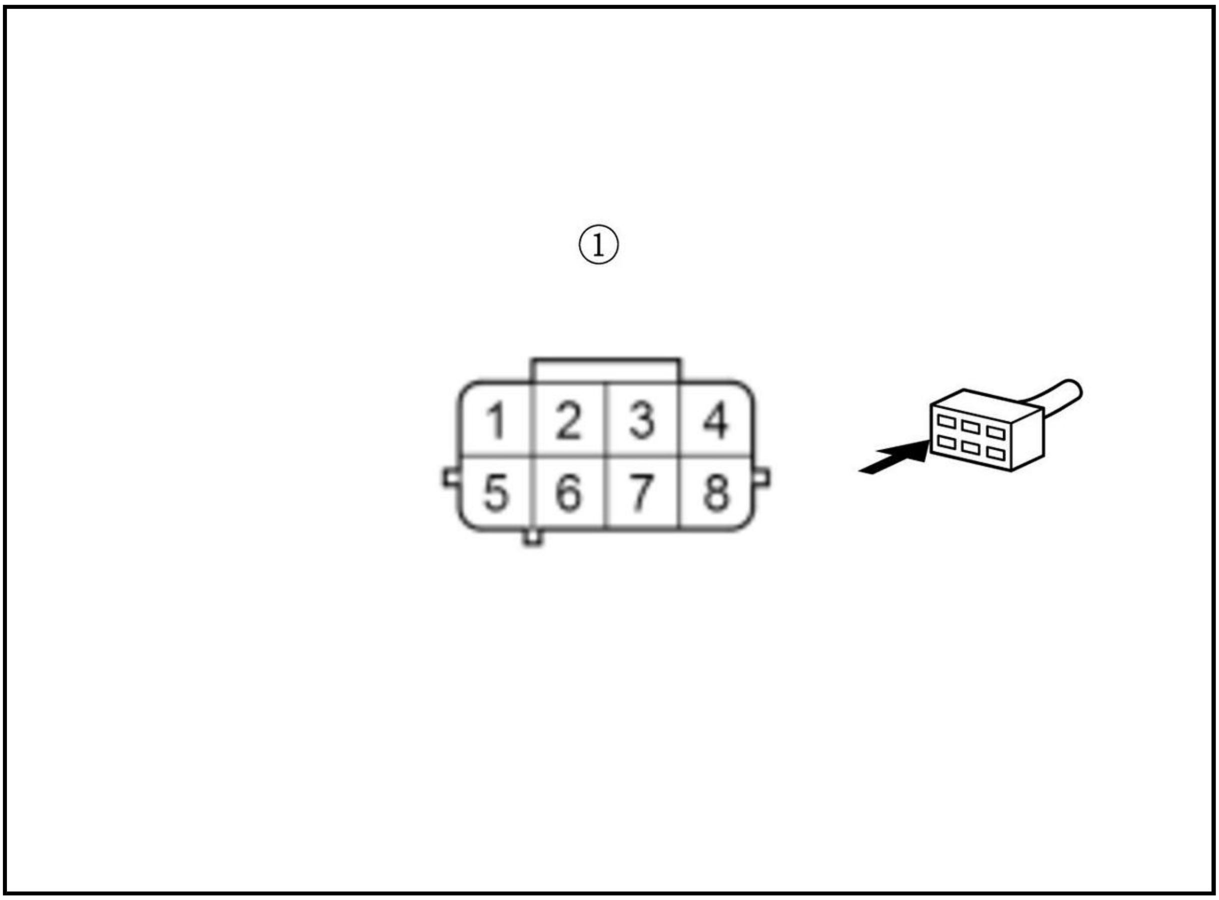

Is there continuity?

YES

Go to step 7.

NO

Repair an open in the VCC6 wire between the PCM (E63) and the EVAP leak check module.

7. Open wire check (SG6 line)

-1. Connect terminals A and B with a jumper wire.

Terminal A	EVAP leak check module 8P connector (female terminals) No. 8: ①
Terminal B	Body ground

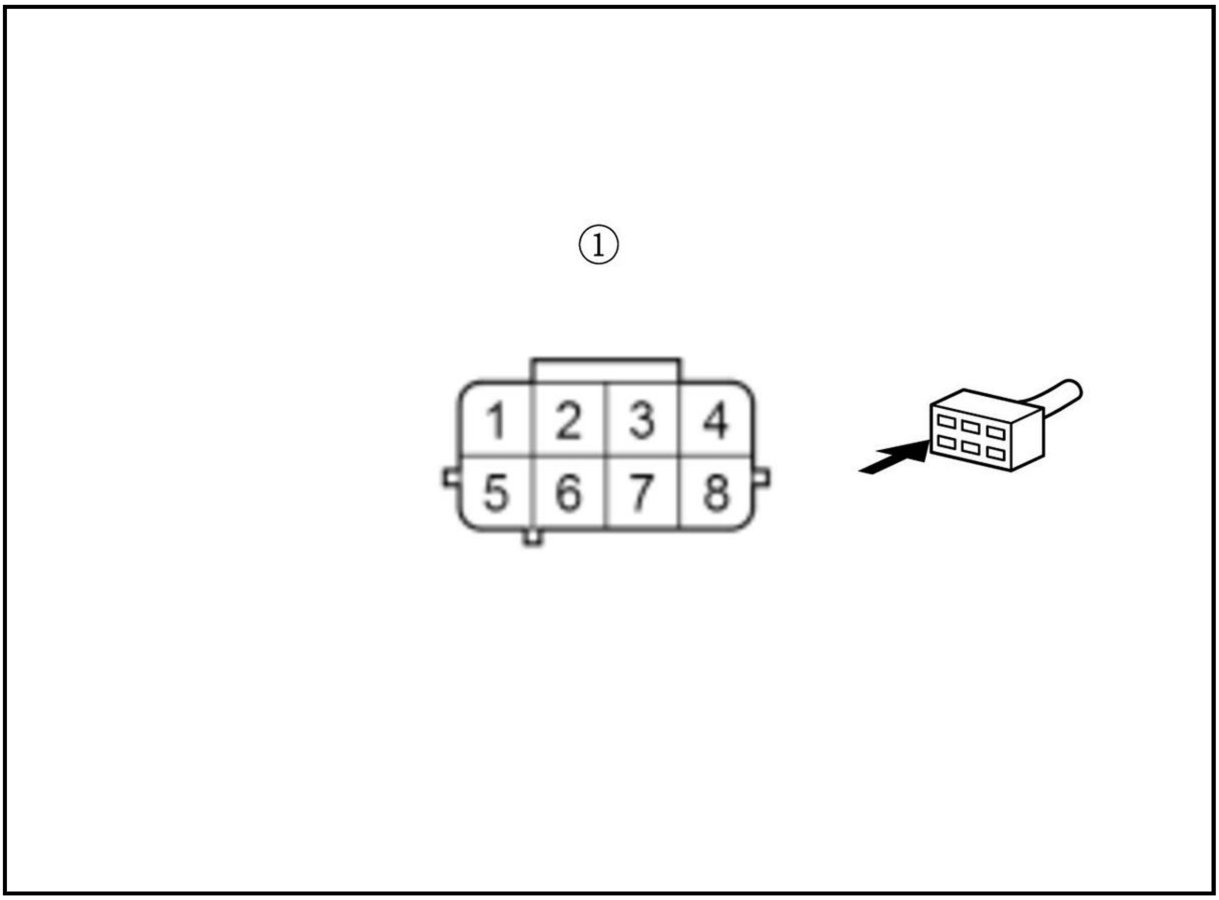

-2. Check for continuity between test points 1 and 2.

Test condition	Vehicle OFF (LOCK) mode
	EVAP leak check module 8P connector: disconnected
	PCM connector E (80P): disconnected
	EVAP leak check module 8P connector No. 8: jumped to body ground
Test point 1	**PCM connector E (80P) No. 45**
Test point 2	Body ground

Is there continuity?

YES

The SG6 wire is OK. Check for any authorized service information related to the DTCs or symptoms you are troubleshooting, or **substitute a known-good PCM** .

NO

Repair an open in the SG6 wire between the PCM (E45) and the EVAP leak check module.

DTC P24BB (1.5 L ENGINE) (2018 2019)

DTC P24BB : EVAP Leak Check Module Absolute Pressure Sensor Circuit High Voltage

NOTE:

- Before you troubleshoot, **review the general troubleshooting information**.
- This DTC is stored if there is a blockage in the drain hose of the EVAP leak check module, check the EVAP canister filter and the drain hoses before troubleshooting.

DTC Description	Confirmed DTC	Pending DTC
P24BB EVAP Leak Check Module Absolute Pressure Sensor Circuit High Voltage	B	B

DTC (PGM-FI)

1. EVAP system check

   -1. Turn the vehicle to the ON mode.

   -2. Clear the DTC with the HDS.

   -3. Turn the vehicle to the OFF (LOCK) mode.

   -4. Turn the vehicle to the ON mode.

   -5. Check the parameter (s) below with the HDS.

Signal	Threshold		Current conditions	
	Values	Unit	Values	Unit
Absolute Pressure of ELCM Pressure Sensor	More than 856	mmHg	B	B

   Do the current condition (s) match the malfunction threshold?

   YES

   Go to step 3.

   NO

   Go to step 2.

2. Problem verification

   -1. Check for Pending or Confirmed DTCs with the HDS.

DTC Description	Confirmed DTC	Pending DTC
P24BB EVAP Leak Check Module Absolute Pressure Sensor Circuit High Voltage	B	B

   Is DTC P24BB indicated?

   YES

   The failure is duplicated. Go to step 3.

   NO

   Intermittent failure, the system is OK at this time. Check for poor connections or loose terminals at the EVAP leak check module and the PCM. **If the on-board snapshot of this DTC is recorded, try to reproduce the failure under the same conditions with the on-board snapshot**.

3. Determine possible failure area (EVAP leak check module, others)

   -1. Turn the vehicle to the OFF (LOCK) mode.

   -2. Disconnect the following connector.

EVAP leak check module 8P connector

-3. Connect terminals A and B with a jumper wire.

Terminal A	EVAP leak check module 8P connector (female terminals) No. 7: ①
Terminal B	EVAP leak check module 8P connector (female terminals) No. 8: ①

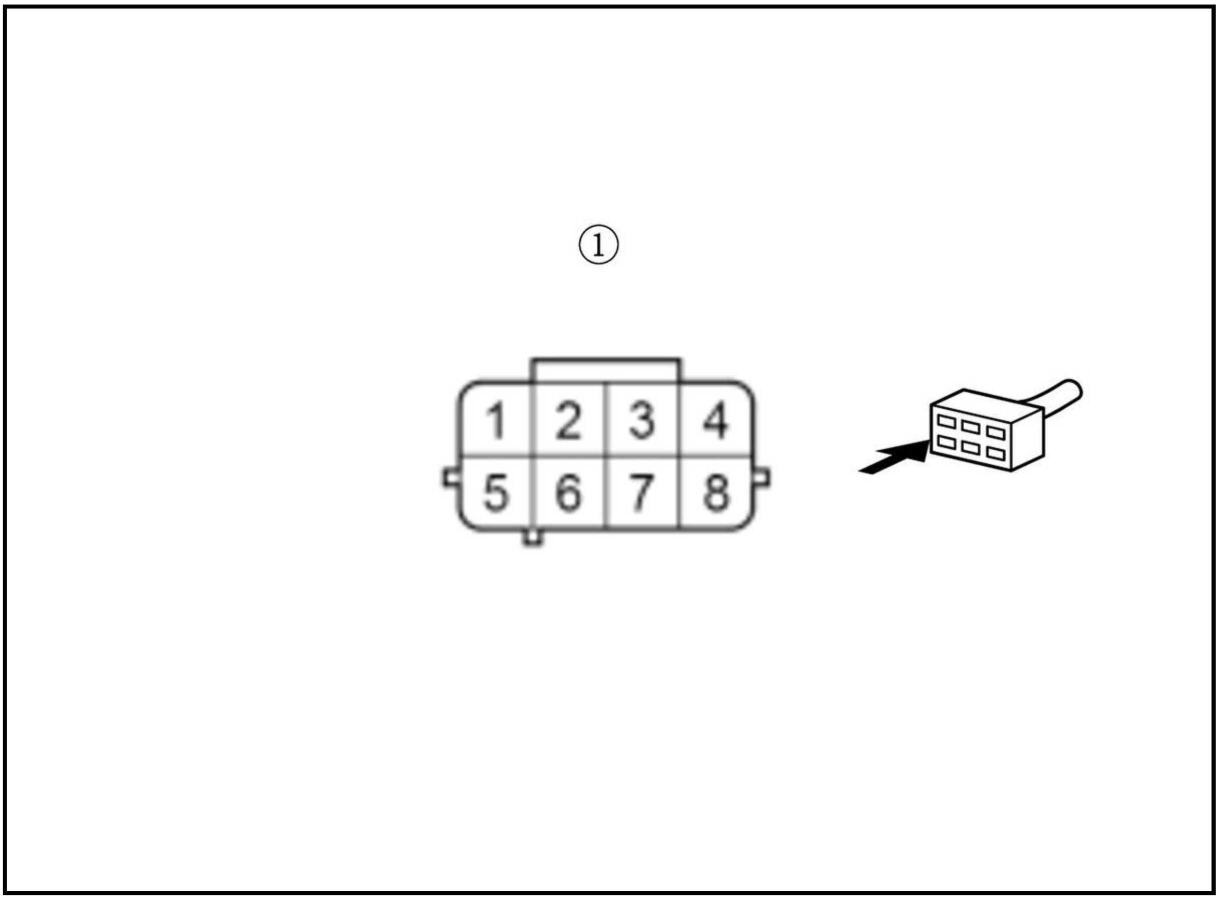

-4. Turn the vehicle to the ON mode.

-5. Check the parameter (s) below with the HDS.

Signal	**Threshold**		**Current conditions**	
	Values	**Unit**	**Values**	**Unit**
Absolute Pressure of ELCM Pressure Sensor	More than 856	mmHg	B	B

Do the current condition (s) match the malfunction threshold?

YES

Go to step 4.

NO

Replace the EVAP leak check module .

4. Determine possible failure area (ELCMPA line, others)

-1. Turn the vehicle to the OFF (LOCK) mode.

-2. Remove the jumper wire.

-3. Turn the vehicle to the ON mode.

-4. Measure the voltage between test points 1 and 2.

Test condition	Vehicle ON mode
B	EVAP leak check module 8P connector: disconnected
Test point 1	EVAP leak check module 8P connector (female terminals) No. 6: ①
Test point 2	EVAP leak check module 8P connector (female terminals) No. 8: ①

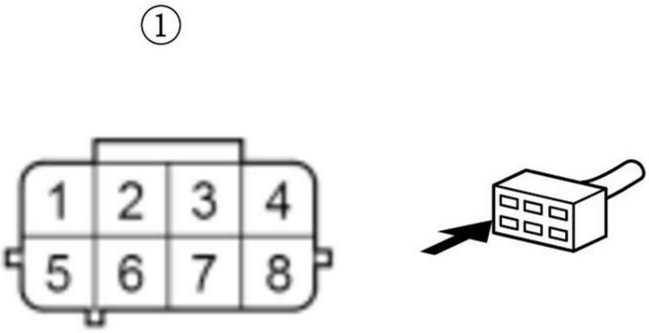

Is there about 5.0 V?

YES

Go to step 5.

NO

Go to step 6.

5. Open wire check (ELCMPA line)

-1. Turn the vehicle to the OFF (LOCK) mode.

-2. Jump the SCS line with the HDS, and wait more than 1 minute.

-3. Disconnect the following connector.

PCM connector A (50P)

-4. Connect terminals A and B with a jumper wire.

Terminal A	EVAP leak check module 8P connector (female terminals) No. 7: ①
Terminal B	Body ground

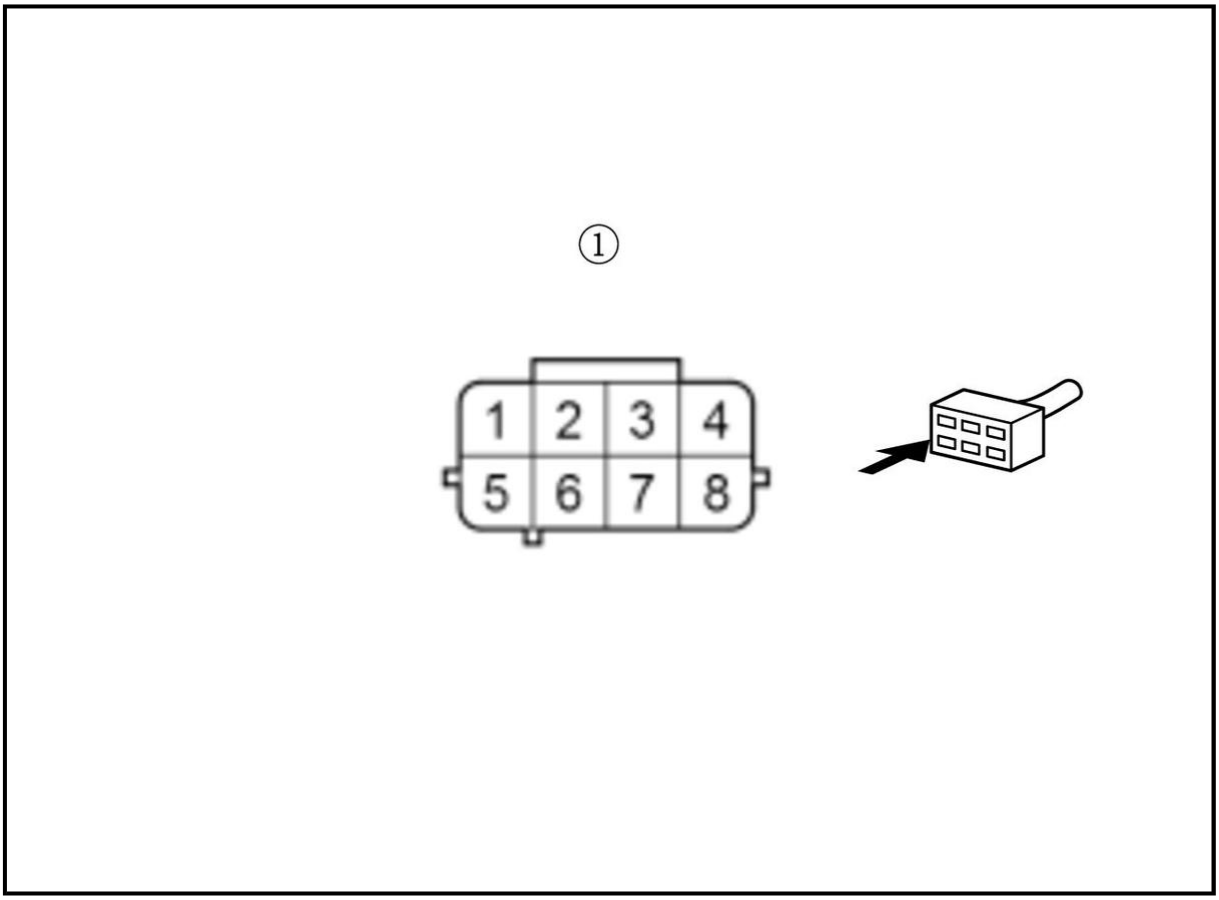

-5. Check for continuity between test points 1 and 2.

Test condition	Vehicle OFF (LOCK) mode
	EVAP leak check module 8P connector: disconnected
	EVAP leak check module 8P connector No. 7: jumped to body ground
	PCM connector A (50P): disconnected
Test point 1	**PCM connector A (50P) No. 42**

Test point 2	Body ground

Is there continuity?

YES

The ELCMPA wire is OK. Check for any authorized service information related to the DTCs or symptoms you are troubleshooting, or **substitute a known-good PCM** .

NO

Repair an open in the ELCMPA wire between the PCM (A42) and the EVAP leak check module.

6. Open wire check (VCC6 line)

-1. Turn the vehicle to the OFF (LOCK) mode.

-2. Jump the SCS line with the HDS, and wait more than 1 minute.

-3. Disconnect the following connector.

PCM connector E (80P)

-4. Connect terminals A and B with a jumper wire.

Terminal A	EVAP leak check module 8P connector (female terminals) No. 6: ①
Terminal B	Body ground

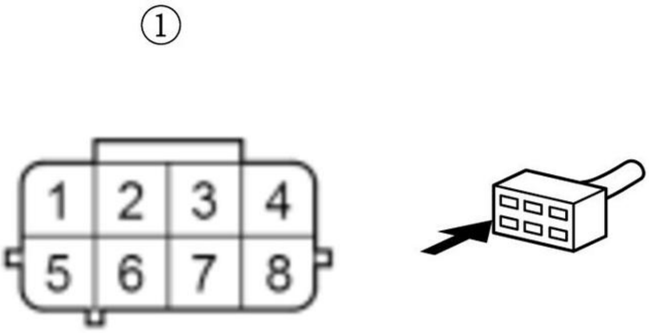

-5. Check for continuity between test points 1 and 2.

Test condition	Vehicle OFF (LOCK) mode
	PCM connector E (80P): disconnected
	EVAP leak check module 8P connector: disconnected
	EVAP leak check module 8P connector No. 6: jumped to body ground
Test point 1	**PCM connector E (80P) No. 63**
Test point 2	body ground

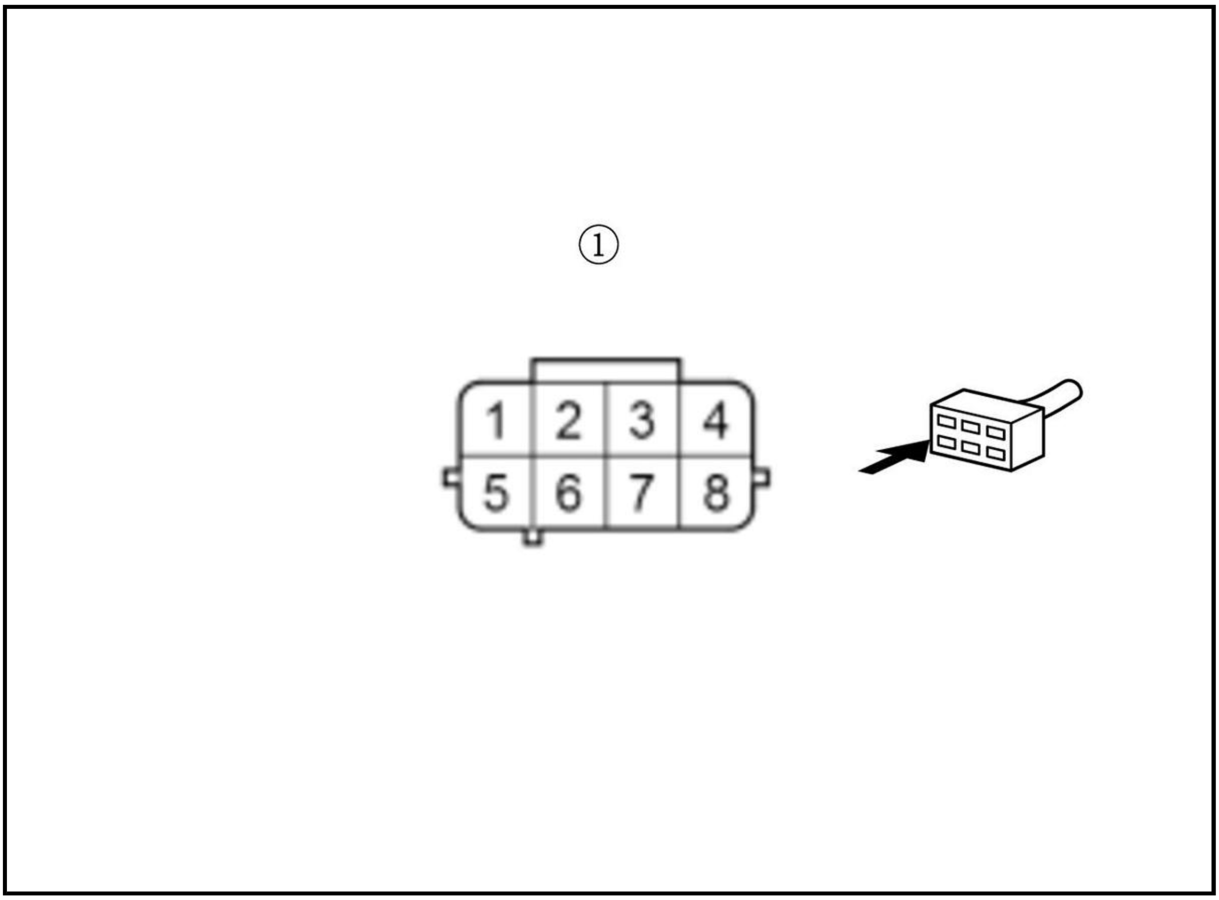

Is there continuity?

YES

Go to step 7.

NO

Repair an open in the VCC6 wire between the PCM (E63) and the EVAP leak check module.

7. Open wire check (SG6 line)

-1. Connect terminals A and B with a jumper wire.

Terminal A	EVAP leak check module 8P connector (female terminals) No. 8: ①
Terminal B	Body ground

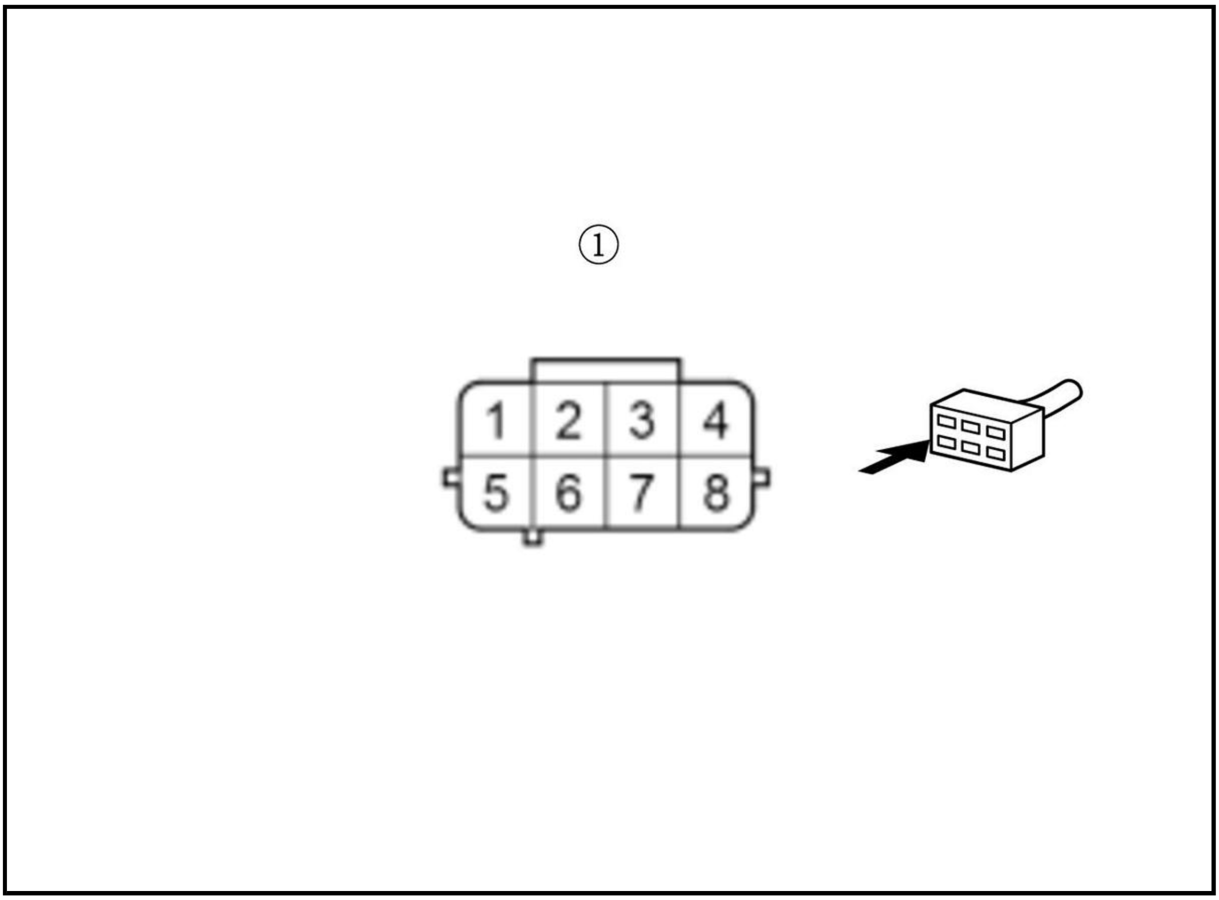

-2. Check for continuity between test points 1 and 2.

Test condition	Vehicle OFF (LOCK) mode
	EVAP leak check module 8P connector: disconnected
	PCM connector E (80P): disconnected
	EVAP leak check module 8P connector No. 8: jumped to body ground
Test point 1	**PCM connector E (80P) No. 45**
Test point 2	Body ground

Is there continuity?

YES

The SG6 wire is OK. Check for any authorized service information related to the DTCs or symptoms you are troubleshooting, or **substitute a known-good PCM** .

NO

Repair an open in the SG6 wire between the PCM (E45) and the EVAP leak check module.

DTC P24BB (1.5 L ENGINE) (2020 2021)

DTC P24BB : EVAP Leak Check Module Absolute Pressure Sensor Circuit High Voltage

NOTE:

- Before you troubleshoot, **review the general troubleshooting information**.
- This DTC is stored if there is a blockage in the drain hose of the EVAP leak check module, check the EVAP canister filter and the drain hoses before troubleshooting.

DTC Description	Confirmed DTC	Pending DTC
P24BB EVAP Leak Check Module Absolute Pressure Sensor Circuit High Voltage	B	B

DTC (PGM-FI)

1. EVAP system check

   -1. Turn the vehicle to the ON mode.

   -2. Clear the DTC with the HDS.

   -3. Turn the vehicle to the OFF (LOCK) mode.

   -4. Turn the vehicle to the ON mode.

   -5. Check the parameter (s) below with the HDS.

Signal	Threshold		Current conditions	
	Values	Unit	Values	Unit
Absolute Pressure of ELCM Pressure Sensor	More than 899	mmHg	B	B

   Do the current condition (s) match the malfunction threshold?

   YES

   Go to step 3.

   NO

   Go to step 2.

2. Problem verification

   -1. Check for Pending or Confirmed DTCs with the HDS.

DTC Description	Confirmed DTC	Pending DTC
P24BB EVAP Leak Check Module Absolute Pressure Sensor Circuit High Voltage	B	B

   Is DTC P24BB indicated?

   YES

   The failure is duplicated. Go to step 3.

   NO

   Intermittent failure, the system is OK at this time. Check for poor connections or loose terminals at the EVAP leak check module and the PCM. **If the on-board snapshot of this DTC is recorded, try to reproduce the failure under the same conditions with the on-board snapshot**.

3. Determine possible failure area (EVAP leak check module, others)

   -1. Turn the vehicle to the OFF (LOCK) mode.

   -2. Disconnect the following connector.

EVAP leak check module 8P connector

-3. Connect terminals A and B with a jumper wire.

Terminal A	EVAP leak check module 8P connector (female terminals) No. 7: ①
Terminal B	EVAP leak check module 8P connector (female terminals) No. 8: ①

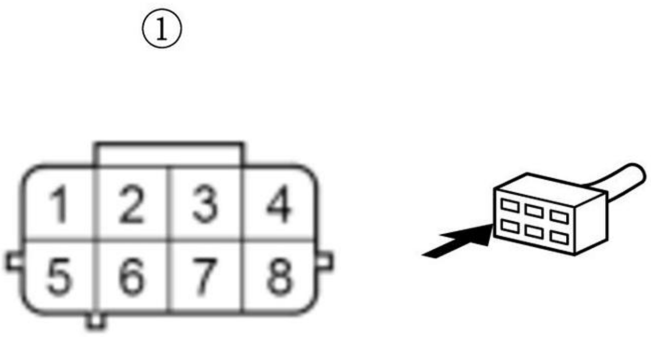

-4. Turn the vehicle to the ON mode.

-5. Check the parameter (s) below with the HDS.

Signal	Threshold		Current conditions	
	Values	Unit	Values	Unit
Absolute Pressure of ELCM Pressure Sensor	More than 899	mmHg	B	B

Do the current condition (s) match the malfunction threshold?

YES

Go to step 4.

NO

Replace the EVAP leak check module .

4. Determine possible failure area (ELCMPA line, others)

-1. Turn the vehicle to the OFF (LOCK) mode.

-2. Remove the jumper wire.

-3. Turn the vehicle to the ON mode.

-4. Measure the voltage between test points 1 and 2.

Test condition	Vehicle ON mode
B	EVAP leak check module 8P connector: disconnected
Test point 1	EVAP leak check module 8P connector (female terminals) No. 6: ①
Test point 2	EVAP leak check module 8P connector (female terminals) No. 8: ①

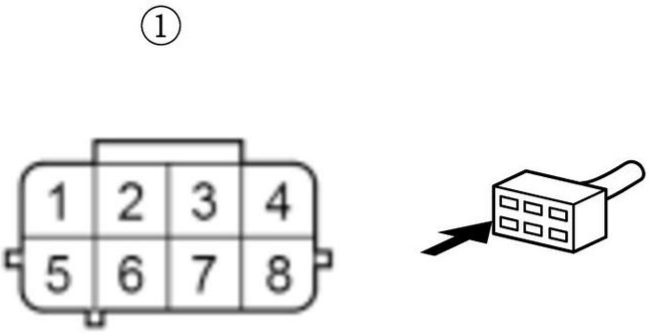

Is there about 5.0 V?

YES

Go to step 5.

NO

Go to step 6.

5. Open wire check (ELCMPA line)

-1. Turn the vehicle to the OFF (LOCK) mode.

-2. Jump the SCS line with the HDS, and wait more than 1 minute.

-3. Disconnect the following connector.

PCM connector A (50P)

-4. Connect terminals A and B with a jumper wire.

Terminal A	EVAP leak check module 8P connector (female terminals) No. 7: ①
Terminal B	Body ground

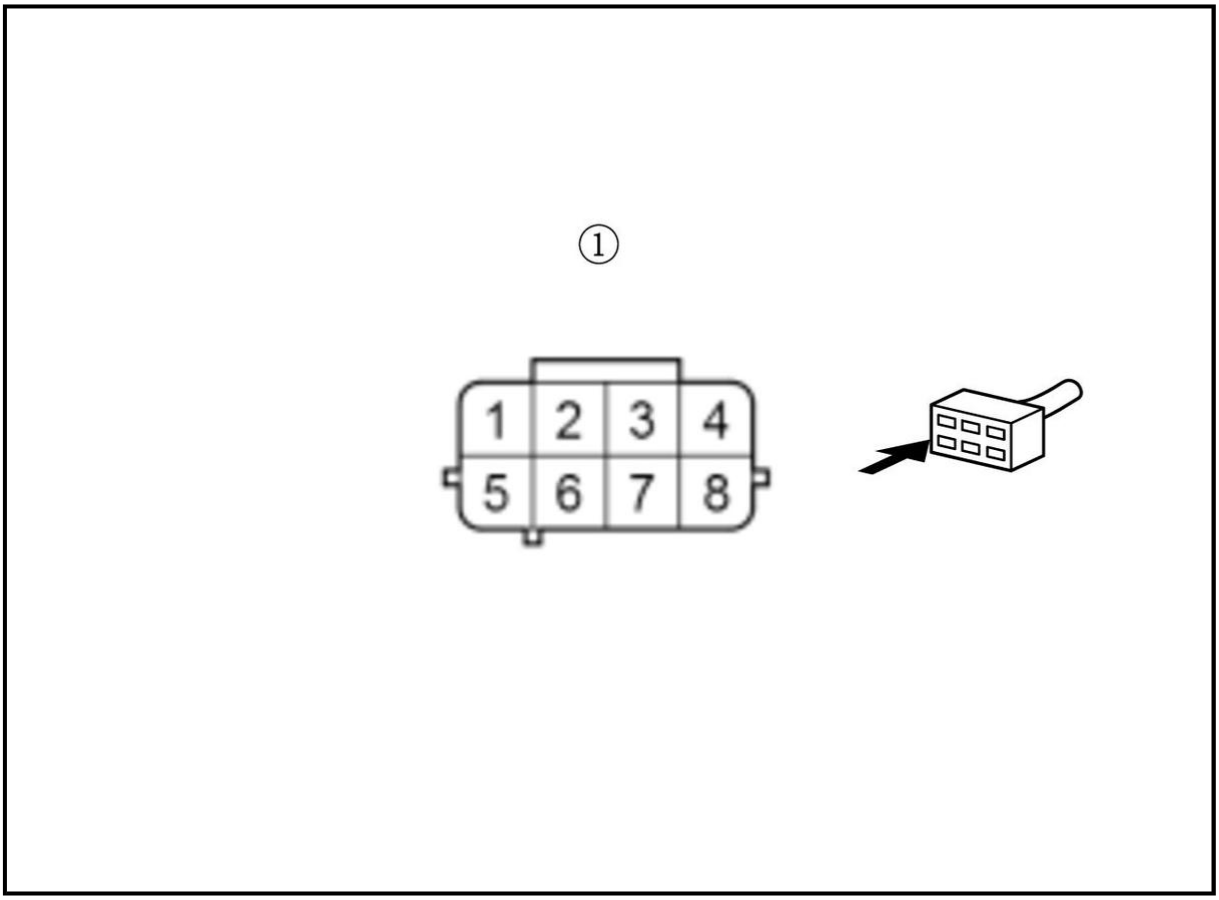

-5. Check for continuity between test points 1 and 2.

Test condition	Vehicle OFF (LOCK) mode
	EVAP leak check module 8P connector: disconnected
	EVAP leak check module 8P connector No. 7: jumped to body ground
	PCM connector A (50P): disconnected
Test point 1	**PCM connector A (50P) No. 42**
Test point 2	Body ground

Is there continuity?

YES

The ELCMPA wire is OK. Check for any authorized service information related to the DTCs or symptoms you are troubleshooting, or **substitute a known-good PCM** .

NO

Repair an open in the ELCMPA wire between the PCM (A42) and the EVAP leak check module.

6. Open wire check (VCC6 line)

-1. Turn the vehicle to the OFF (LOCK) mode.

-2. Jump the SCS line with the HDS, and wait more than 1 minute.

-3. Disconnect the following connector.

PCM connector E (80P)

-4. Connect terminals A and B with a jumper wire.

Terminal A	EVAP leak check module 8P connector (female terminals) No. 6: ①
Terminal B	Body ground

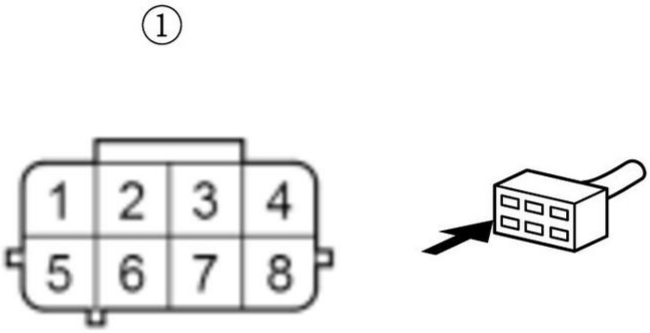

-5. Check for continuity between test points 1 and 2.

Test condition	Vehicle OFF (LOCK) mode
	PCM connector E (80P): disconnected
	EVAP leak check module 8P connector: disconnected
	EVAP leak check module 8P connector No. 6: jumped to body ground
Test point 1	**PCM connector E (80P) No. 63**
Test point 2	body ground

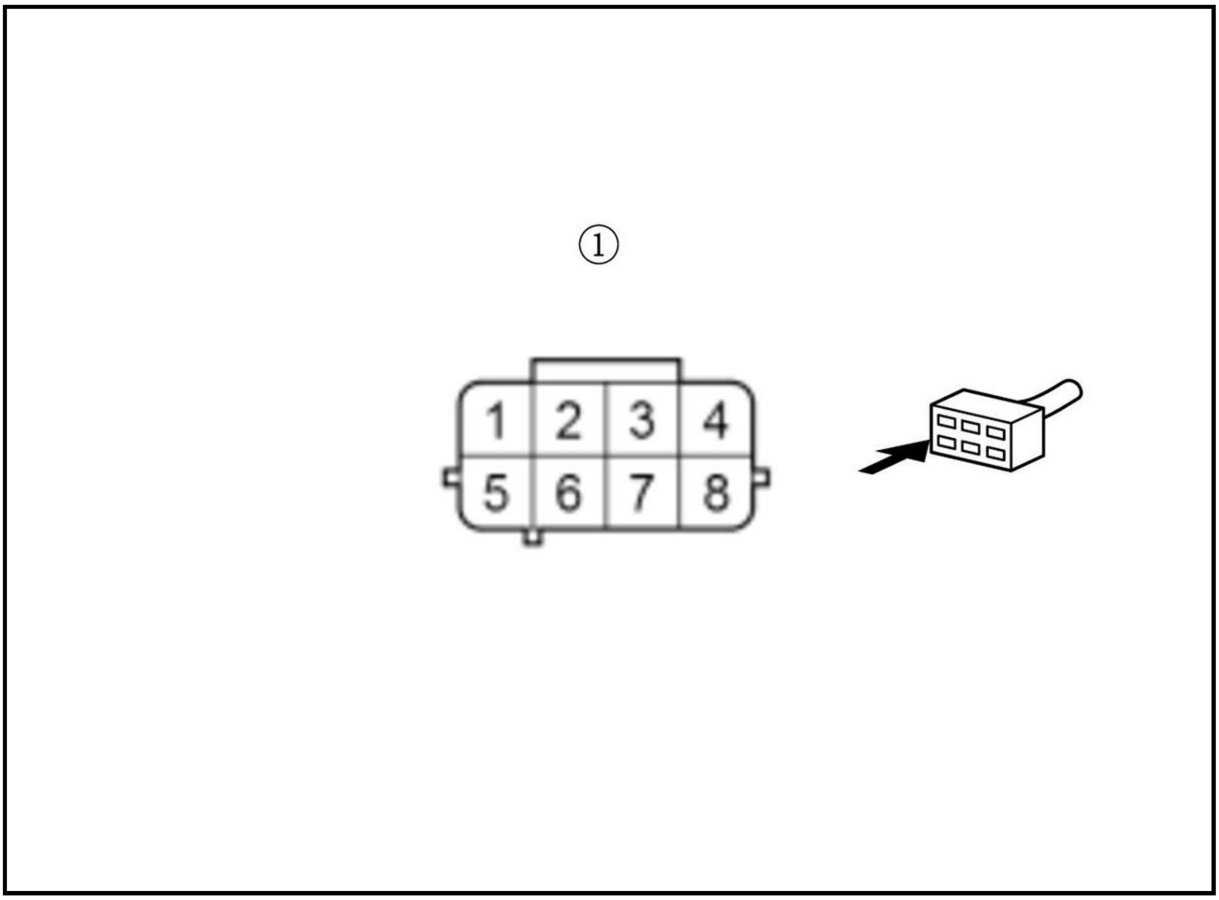

Is there continuity?

YES

Go to step 7.

NO

Repair an open in the VCC6 wire between the PCM (E63) and the EVAP leak check module.

7. Open wire check (SG6 line)

-1. Connect terminals A and B with a jumper wire.

Terminal A	EVAP leak check module 8P connector (female terminals) No. 8: ①
Terminal B	Body ground

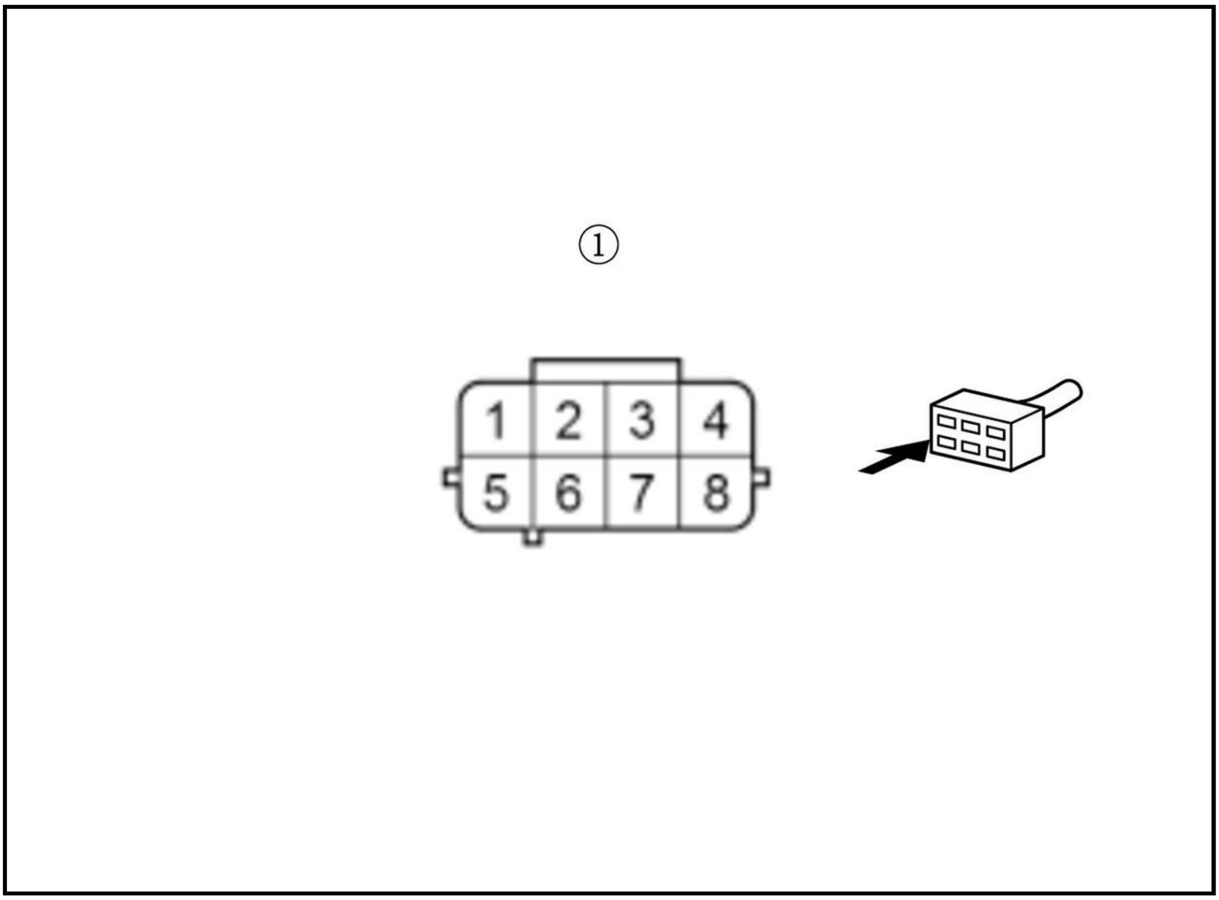

-2. Check for continuity between test points 1 and 2.

Test condition	Vehicle OFF (LOCK) mode EVAP leak check module 8P connector: disconnected PCM connector E (80P): disconnected EVAP leak check module 8P connector No. 8: jumped to body ground
Test point 1	**PCM connector E (80P) No. 45**
Test point 2	Body ground

Is there continuity?

YES

The SG6 wire is OK. Check for any authorized service information related to the DTCs or symptoms you are troubleshooting, or **substitute a known-good PCM** .

NO

Repair an open in the SG6 wire between the PCM (E45) and the EVAP leak check module.

DTC P24BE (1.5 L ENGINE)

DTC P24BE : Canister Change Over Valve Control Circuit Low Voltage

NOTE: Before you troubleshoot, **review the general troubleshooting information**.

DTC Description	Confirmed DTC	Pending DTC
P24BE Canister Change Over Valve Control Circuit Low Voltage	B	B

DTC (PGM-FI)

1. Problem verification

   -1. Turn the vehicle to the ON mode.

   -2. Clear the DTC with the HDS.

   -3. Turn the vehicle to the OFF (LOCK) mode.

   -4. Turn the vehicle to the ON mode.

   -5. Select the EVAP TEST (ELCM) in the INSPECTION MENU, then select EVAP Leak Check Module Test with the HDS.

   EVAP TEST (ELCM)

   Is the result OK?

   YES

   If the test result is PASSED, intermittent failure, the system is OK at this time. Check for poor connections or loose terminals at the EVAP leak check module and the PCM. **If the on-board snapshot of this DTC is recorded, try to reproduce the failure under the same conditions with the on-board snapshot**.

   NO

   The failure is duplicated. Go to step 2.

2. Open wire check (IGPS (LAF) line)

   -1. Turn the vehicle to the OFF (LOCK) mode.

   -2. Disconnect the following connector.

EVAP leak check module 8P connector

   -3. Turn the vehicle to the ON mode.

   -4. Measure the voltage between test points 1 and 2.

Test condition	Vehicle ON mode
B	EVAP leak check module 8P connector: disconnected
Test point 1	EVAP leak check module 8P connector (female terminals) No. 5: ①
Test point 2	Body ground

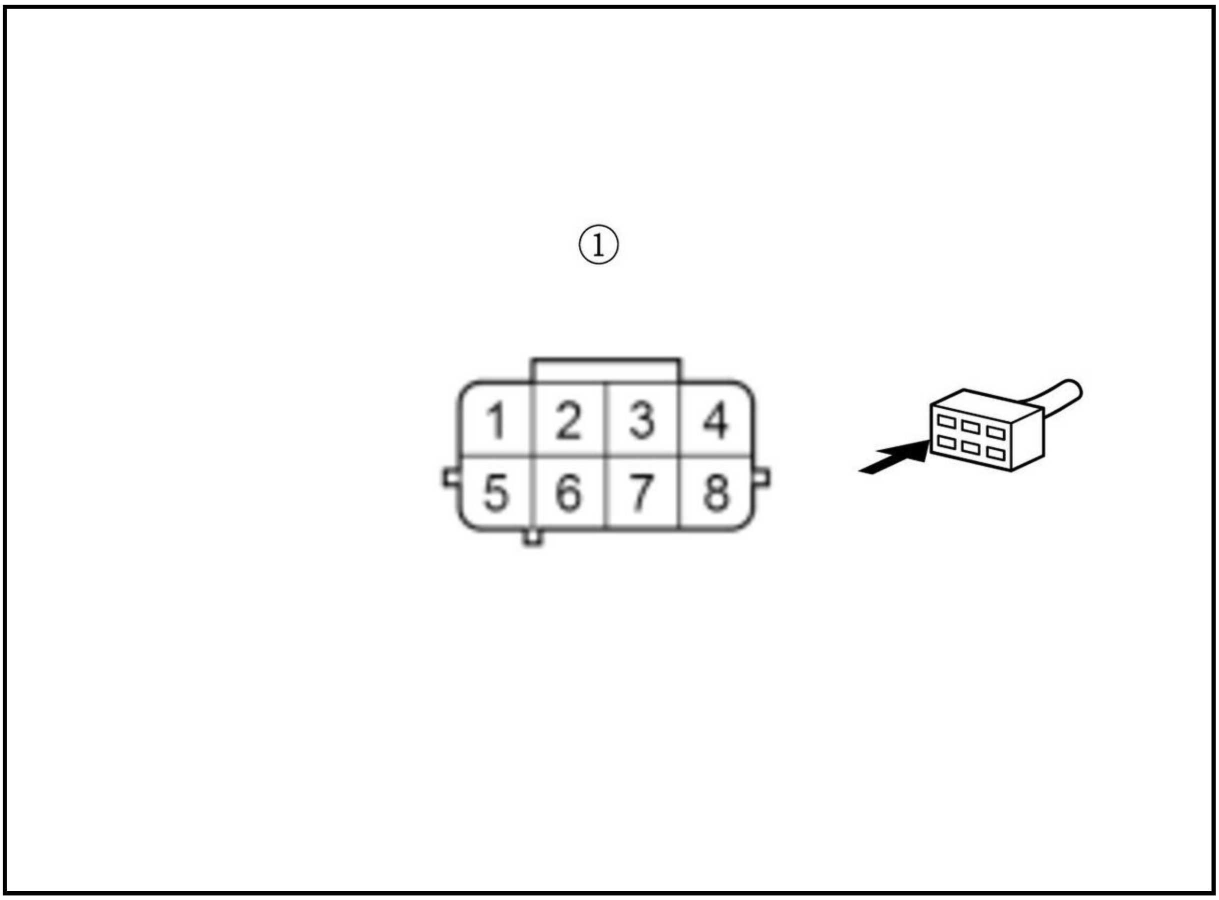

Is there battery voltage?

YES

The IGPS (LAF) wire is OK. Go to step 5.

NO

Go to step 3.

3. Fuse check

-1. Turn the vehicle to the OFF (LOCK) mode.

-2. Check the following fuse.

Fuse	No. A11 (7.5 A)
Location	Under-hood fuse/relay box

Is the fuse OK?

YES

Go to step 4.

NO

Check for a short in IGPS (LAF) wire between the No. A11 (7.5 A) fuse and the EVAP leak check module. If the wire is OK, replace the under-hood fuse/relay box . Also replace the No. A11 (7.5 A) fuse.

4. Relay circuit board check

-1. **Remove and test the relay circuit board** .

Is the relay circuit board OK?

YES

Repair an open in the IGPS (LAF) wire between the EVAP leak check module and the A11 (7.5 A) fuse in the under-hood fuse/relay box, or the FI SUB RLY OUT wire between the relay circuit board (PGM-FI subrelay circuit) and the A11 (7.5 A) fuse in the under-hood fuse/relay box.

NO

Replace the relay circuit board .

5. Shorted wire check (CCV line)

-1. Jump the SCS line with the HDS, and wait more than 1 minute.

-2. Disconnect the following connector.

PCM connector A (50P)

-3. Check for continuity between test points 1 and 2.

Test condition	Vehicle OFF (LOCK) mode
	EVAP leak check module 8P connector: disconnected
	PCM connector A (50P): disconnected
Test point 1	**PCM connector A (50P) No. 6**
Test point 2	Body ground

Is there continuity?

YES

Repair a short in the CCV wire between the PCM (A6) and the EVAP leak check module.

NO

The CCV wire is not shorted. Go to step 6.

6. Open wire check (CCV line)

-1. Connect terminals A and B with a jumper wire.

Terminal A	EVAP leak check module 8P connector (female terminals) No. 1: ①
Terminal B	Body ground

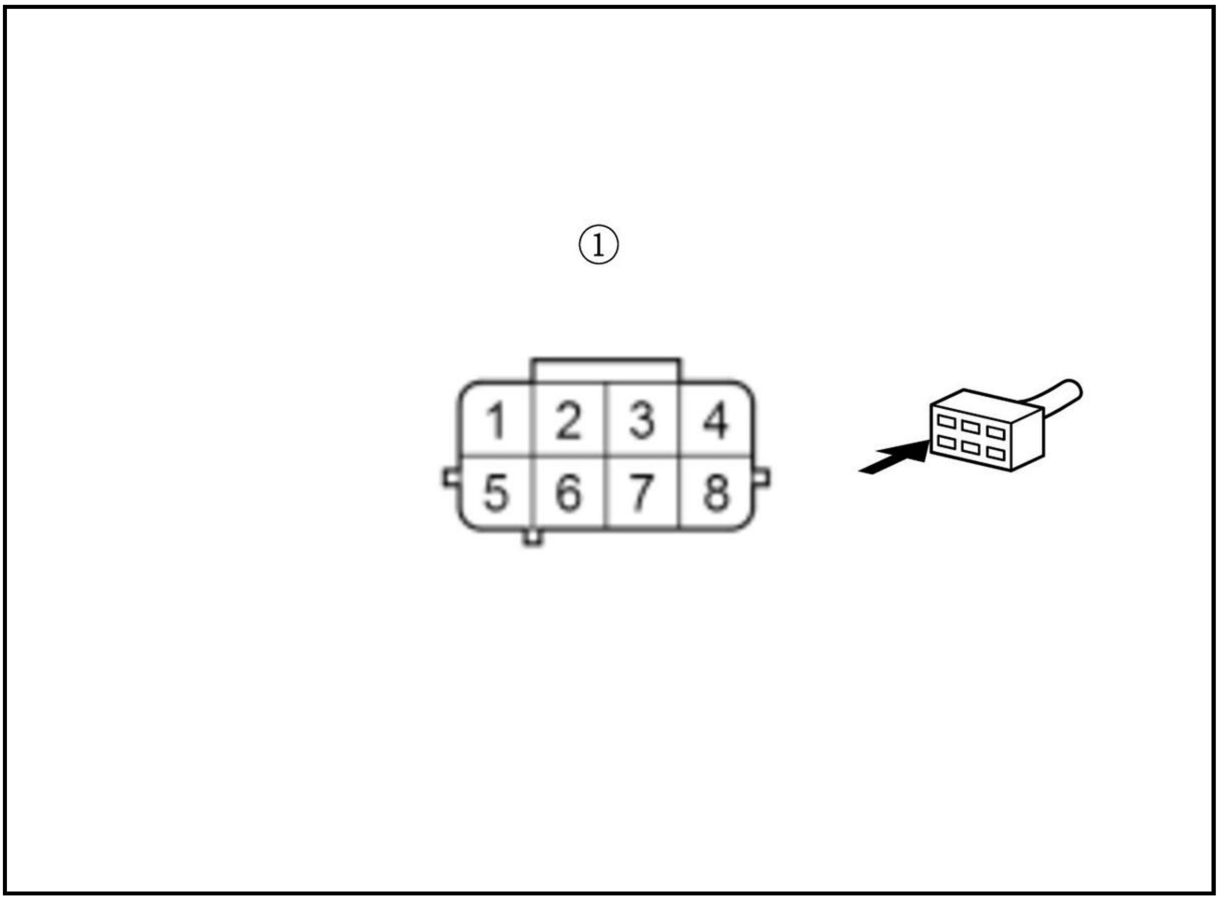

-2. Check for continuity between test points 1 and 2.

Test condition	Vehicle OFF (LOCK) mode
	EVAP leak check module 8P connector: disconnected
	PCM connector A (50P): disconnected
	EVAP leak check module 8P connector No. 1: jumped to body ground
Test point 1	**PCM connector A (50P) No. 6**
Test point 2	Body ground

Is there continuity?

YES

The CCV wire is OK. Go to step 7.

NO

Repair an open in the CCV wire between the PCM (A6) and the EVAP leak check module.

7. EVAP leak check module check

-1. **Substitute a known-good EVAP leak check module** .

-2. Reconnect all connectors.

-3. Exit the SCS mode with the HDS.

-4. Turn the vehicle to the ON mode.

-5. **Reset the PCM with the HDS** .

Reset PCM

-6. Select the EVAP TEST (ELCM) in the INSPECTION MENU, then select EVAP Leak Check Module Test with the HDS.

EVAP TEST (ELCM)

Is the test result of the DTC P24BE Failed?

YES

The failure is duplicated. Check for any authorized service information related to the DTCs or symptoms you are troubleshooting, or **substitute a known-good PCM** .

NO

If the test result is PASSED, **replace the original EVAP leak check module** . If the test result is Not completed, do the test again. **If the on-board snapshot of this DTC is recorded, try to reproduce the failure under the same conditions with the on-board snapshot**.

DTC P24BF (1.5 L ENGINE)

DTC P24BF : Canister Change Over Valve Control Circuit High Voltage

NOTE: Before you troubleshoot, **review the general troubleshooting information**.

DTC Description	Confirmed DTC	Pending DTC
P24BF Canister Change Over Valve Control Circuit High Voltage	B	B

DTC (PGM-FI)

1. Problem verification

-1. Turn the vehicle to the ON mode.

-2. Clear the DTC with the HDS.

-3. Turn the vehicle to the OFF (LOCK) mode.

-4. Turn the vehicle to the ON mode.

-5. Select the EVAP TEST (ELCM) in the INSPECTION MENU, then select EVAP Leak Check Module Test with the HDS.

EVAP TEST (ELCM)

Is the result OK?

YES

If the test result is PASSED, intermittent failure, the system is OK at this time. Check for poor connections or loose terminals at the EVAP leak check module and the PCM. **If the on-board snapshot of this DTC is recorded, try to reproduce the failure under the same conditions with the on-board snapshot**.

NO

The failure is duplicated. Go to step 2.

2. Shorted wire check (CCV line to power)

-1. Turn the vehicle to the OFF (LOCK) mode.

-2. Jump the SCS line with the HDS, and wait more than 1 minute.

-3. Disconnect the following connector.

PCM connector A (50P)
EVAP leak check module 8P connector

-4. Turn the vehicle to the ON mode.

-5. Measure the voltage between test points 1 and 2.

Test condition	Vehicle ON mode
	PCM connector A (50P): disconnected
	EVAP leak check module 8P connector: disconnected
Test point 1	**PCM connector A (50P) No. 6**
Test point 2	Body ground

Is there battery voltage?

YES

Repair a short to power in the CCV wire between the PCM (A6) and the EVAP leak check module.

NO

Go to step 3.

3. EVAP leak check module check

-1. **Substitute a known-good EVAP leak check module** .

-2. Reconnect all connectors.

-3. Exit the SCS mode with the HDS.

-4. Turn the vehicle to the ON mode.

-5. **Reset the PCM with the HDS** .

Reset PCM

-6. Select the EVAP TEST (ELCM) in the INSPECTION MENU, then select EVAP Leak Check Module Test with the HDS.

EVAP TEST (ELCM)

Is the test result of the DTC P24BF Failed?

YES

The failure is duplicated. Check for any authorized service information related to the DTCs or symptoms you are troubleshooting, or **substitute a known-good PCM** .

NO

If the test result is PASSED, **replace the original EVAP leak check module** . If the test result is Not completed, do the test again. **If the on-board snapshot of this DTC is recorded, try to reproduce the failure under the same conditions with the on-board snapshot**.

DTC P24C0 (1.5 L ENGINE)

DTC P24C0 : Canister Change Over Valve Close Malfunction

NOTE: Before you troubleshoot, **review the general troubleshooting information**.

DTC Description	Confirmed DTC	Pending DTC
P24C0 Canister Change Over Valve Close Malfunction	B	B

DTC (PGM-FI)

1. Problem verification

   -1. Turn the vehicle to the ON mode.

   -2. Clear the DTC with the HDS.

   -3. Start the engine, and let it idle without load (in P or N) until the radiator fan comes on.

   -4. Monitor the EVAP PC DUTY (purge control duty) in the DATA LIST with the HDS, while holding the engine speed at 3, 000 rpm with the EVAP PC DUTY at 20 % or more for at least 4 minutes, then let the engine idle.

Signal	Current conditions	
	Values	Unit
EVAP PC DUTY	B	B

   -5. Monitor the OBD STATUS for DTC P24C0 in the DTCs MENU with the HDS.

DTC Description	OBD STATUS
P24C0 Canister Change Over Valve Close Malfunction	B

   Does the HDS indicate FAILED?

   YES

   Go to step 2.

   NO

   If the HDS indicates PASSED, there might be an intermittent failure, and the system is OK at this time. Check for poor connections or loose terminals at the EVAP leak check module and the PCM. **If the on-board snapshot of this DTC is recorded, try to reproduce the failure under the same conditions with the on-board snapshot**.

2. EVAP leak check module drain hose check

   -1. **Remove the EVAP leak check module** and the **EVAP canister filter** , then check the blockage in the hoses and the EVAP canister filter.

   Are the parts OK?

   YES

   Replace the EVAP leak check module .

   NO

   Remove the blockage from them, or replace the part (s) if needed.

DTC P2563 (1.5 L ENGINE) (2018 2019 2020 2021)

DTC P2563 : Turbocharger Wastegate Control Actuator Position Sensor Out of Range

NOTE: Before you troubleshoot, **review the general troubleshooting information**.

DTC Description	Confirmed DTC	Pending DTC
P2563 Turbocharger Wastegate Control Actuator Position Sensor Out of Range	B	B

DTC (PGM-FI)

1. Problem verification 1

   -1. Turn the vehicle to the ON mode.

   -2. Check the parameter (s) below with the HDS.

Signal	Threshold		Current conditions	
	Values	Unit	Values	Unit
EWG VOLTAGE FROM LIFT SENSOR	Less than 0.31	V	B	B

   Do the current condition (s) match the threshold?

   YES

   Go to step 3.

   NO

   Go to step 2.

2. Problem verification 2

   -1. Turn the vehicle to the ON mode.

   -2. Check the parameter (s) below with the HDS.

Signal	Threshold		Current conditions	
	Values	Unit	Values	Unit
EWG VOLTAGE FROM LIFT SENSOR	More than 4.78	V	B	B

   Do the current condition (s) match the threshold?

   YES

   Go to step 7.

   NO

   Intermittent failure, the system is OK at this time. Check for poor connections or loose terminals at the turbocharger and the PCM. **If the on-board snapshot of this DTC is recorded, try to reproduce the failure under the same conditions with the on-board snapshot**.

3. Determine possible failure area (DCWGL line, others)

-1. Turn the vehicle to the OFF (LOCK) mode.

-2. Disconnect the following connector.

Turbocharger 5P connector

-3. Turn the vehicle to the ON mode.

-4. Check the parameter (s) below with the HDS.

Signal	Threshold		Current conditions	
	Values	**Unit**	**Values**	**Unit**
EWG VOLTAGE FROM LIFT SENSOR	Less than 0.31	V	B	B

Do the current condition (s) match the threshold?

YES

Go to step 6.

NO

Go to step 4.

4. Determine possible failure area (turbocharger wastegate control actuator position sensor, others)

-1. Measure the voltage between test points 1 and 2.

Test condition	Vehicle ON mode
B	Turbocharger 5P connector: disconnected
Test point 1	Turbocharger 5P connector (female terminals) No. 2: ①
Test point 2	Turbocharger 5P connector (female terminals) No. 3: ①

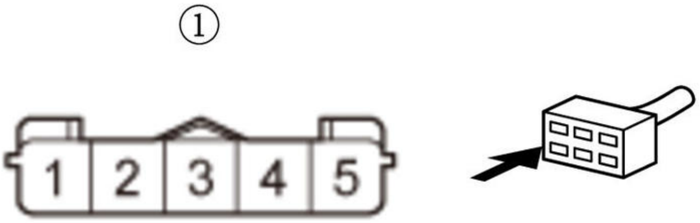

Is there about 5.0 V?

YES

Replace the turbocharger .

NO

Go to step 5.

5. Open wire check (VCC2 line)

-1. Turn the vehicle to the OFF (LOCK) mode.

-2. Jump the SCS line with the HDS, and wait more than 1 minute.

-3. Disconnect the following connector.

PCM connector E (80P)

-4. Check for continuity between test points 1 and 2.

Test condition	Vehicle OFF (LOCK) mode
B	Turbocharger 5P connector: disconnected
B	PCM connector E (80P): disconnected
Test point 1	Turbocharger 5P connector (female terminals) No. 2: ①
Test point 2	**PCM connector E (80P) No. 77**

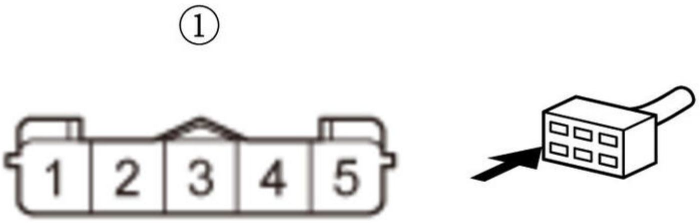

Is there continuity?

YES

The VCC2 wire is OK. Check for any authorized service information related to the DTCs or symptoms you are troubleshooting, or **substitute a known-good PCM** .

NO

Repair an open in the VCC2 wire between the PCM (E77) and the turbocharger.

6. Shorted wire check (DCWGL line)

-1. Turn the vehicle to the OFF (LOCK) mode.

-2. Jump the SCS line with the HDS, and wait more than 1 minute.

-3. Disconnect the following connector.

PCM connector E (80P)

-4. Check for continuity between test points 1 and 2.

Test condition	Vehicle OFF (LOCK) mode
B	Turbocharger 5P connector: disconnected
B	PCM connector E (80P): disconnected
Test point 1	Turbocharger 5P connector (female terminals) No. 4: ①
Test point 2	Body ground

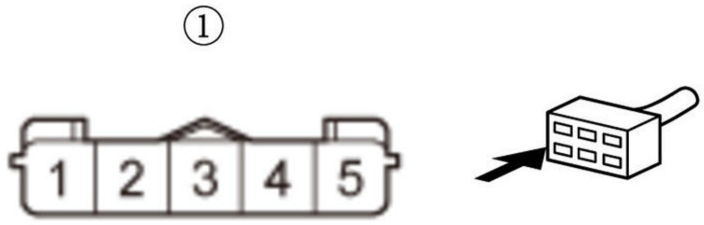

Is there continuity?

YES

Repair a short in the DCWGL wire between the PCM (E60) and the turbocharger.

NO

The DCWGL wire is OK. Check for any authorized service information related to the DTCs or symptoms you are troubleshooting, or **substitute a known-good PCM** .

7. Determine possible failure area (turbocharger wastegate control actuator position sensor, others)

-1. Turn the vehicle to the OFF (LOCK) mode.

-2. Disconnect the following connector.

Turbocharger 5P connector

-3. Connect terminals A and B with a jumper wire.

Terminal A	Turbocharger 5P connector (female terminals) No. 3: ①
Terminal B	Turbocharger 5P connector (female terminals) No. 4: ①

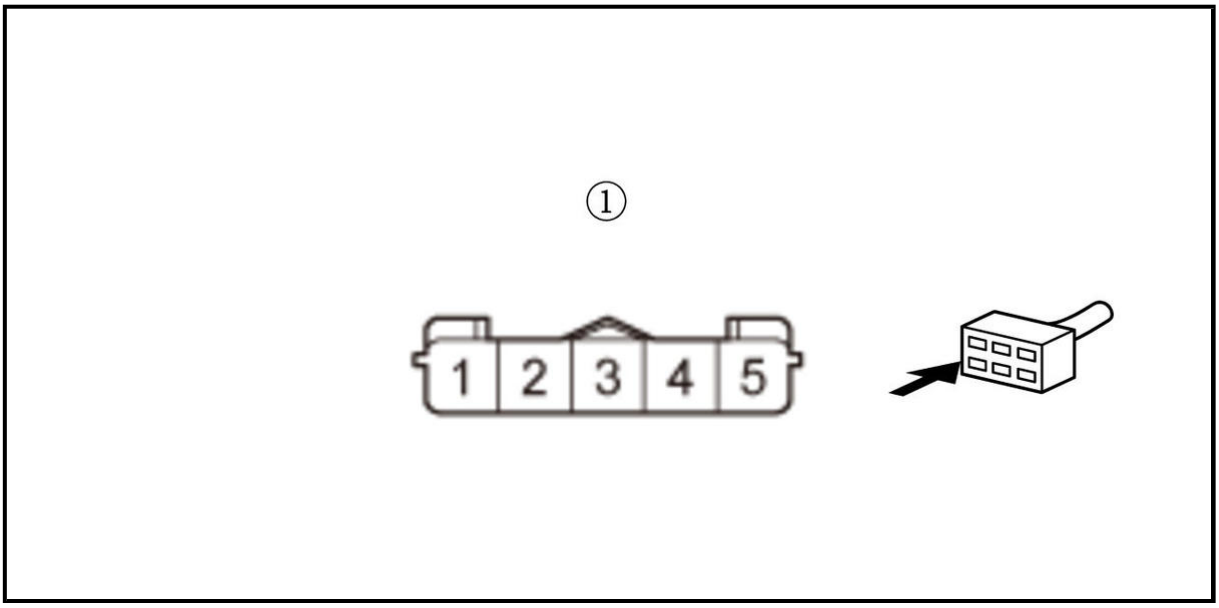

-4. Turn the vehicle to the ON mode.

-5. Check the parameter (s) below with the HDS.

Signal	**Threshold**		**Current conditions**	
	Values	**Unit**	**Values**	**Unit**
EWG VOLTAGE FROM LIFT SENSOR	More than 4.78	V	B	B

Do the current condition (s) match the threshold?

YES

Go to step 8.

NO

Replace the turbocharger .

8. Determine possible failure area (SG2 line, others)

-1. Turn the vehicle to the OFF (LOCK) mode.

-2. Remove the jumper wire from the turbocharger 5P connector.

-3. Turn the vehicle to the ON mode.

-4. Measure the voltage between test points 1 and 2.

Test condition	Vehicle ON mode
B	Turbocharger 5P connector: disconnected
Test point 1	Turbocharger 5P connector (female terminals) No. 2: ①
Test point 2	Turbocharger 5P connector (female terminals) No. 3: ①

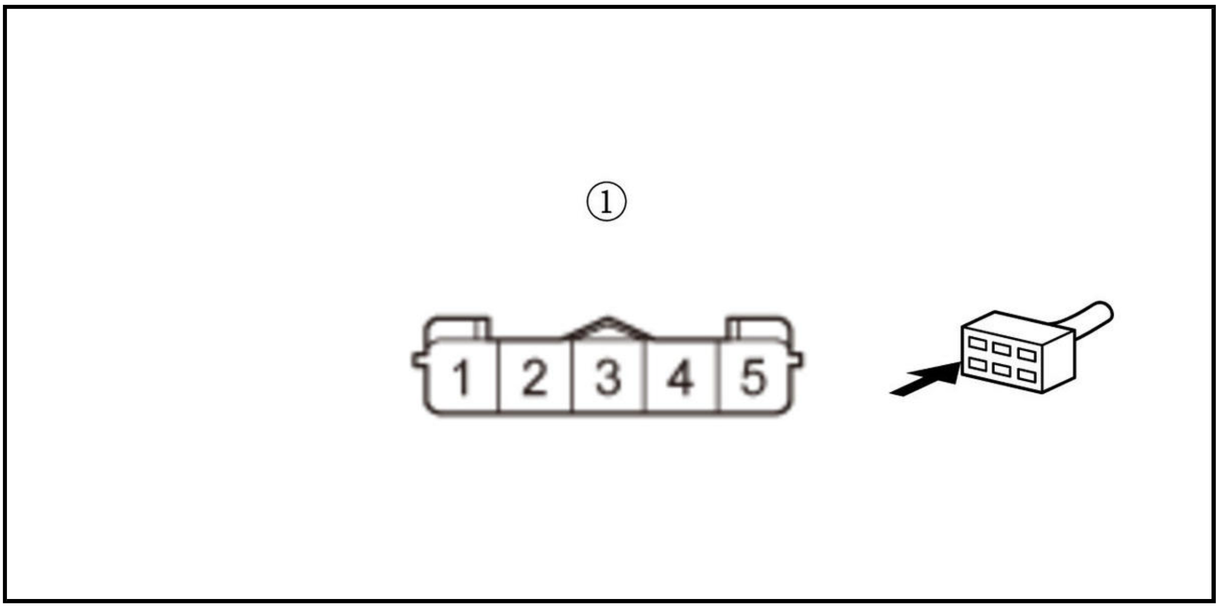

Is there about 5.0 V?

YES

Go to step 10.

NO

Go to step 9.

9. Open wire check (SG2 line)

-1. Turn the vehicle to the OFF (LOCK) mode.

-2. Jump the SCS line with the HDS, and wait more than 1 minute.

-3. Disconnect the following connector.

PCM connector E (80P)

-4. Check for continuity between test points 1 and 2.

Test condition	Vehicle OFF (LOCK) mode
B	Turbocharger 5P connector: disconnected
B	PCM connector E (80P): disconnected
Test point 1	Turbocharger 5P connector (female terminals) No. 3: ①
Test point 2	**PCM connector E (80P) No. 78**

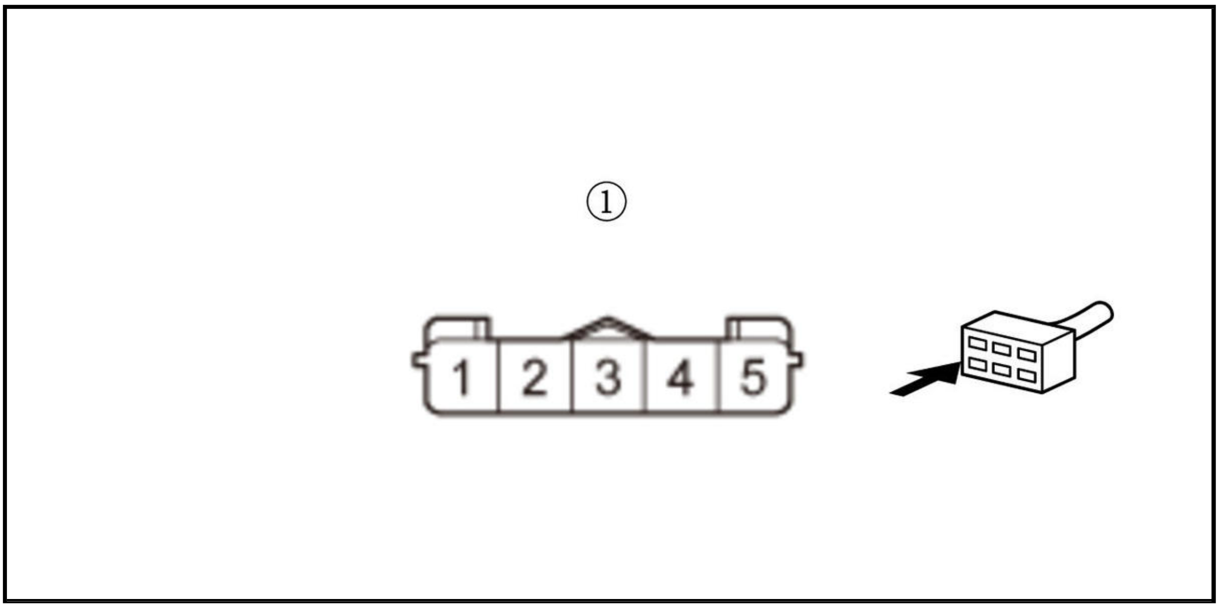

Is there continuity?

YES

The SG2 wire is OK. Check for any authorized service information related to the DTCs or symptoms you are troubleshooting, or **substitute a known-good PCM** .

NO

Repair an open in the SG2 wire between the PCM (E78) and the turbocharger.

10. Open wire check (DCWGL line)

-1. Turn the vehicle to the OFF (LOCK) mode.

-2. Jump the SCS line with the HDS, and wait more than 1 minute.

-3. Disconnect the following connector.

PCM connector E (80P)

-4. Check for continuity between test points 1 and 2.

Test condition	Vehicle OFF (LOCK) mode
B	Turbocharger 5P connector: disconnected
B	PCM connector E (80P): disconnected
Test point 1	Turbocharger 5P connector (female terminals) No. 4: ①
Test point 2	**PCM connector E (80P) No. 60**

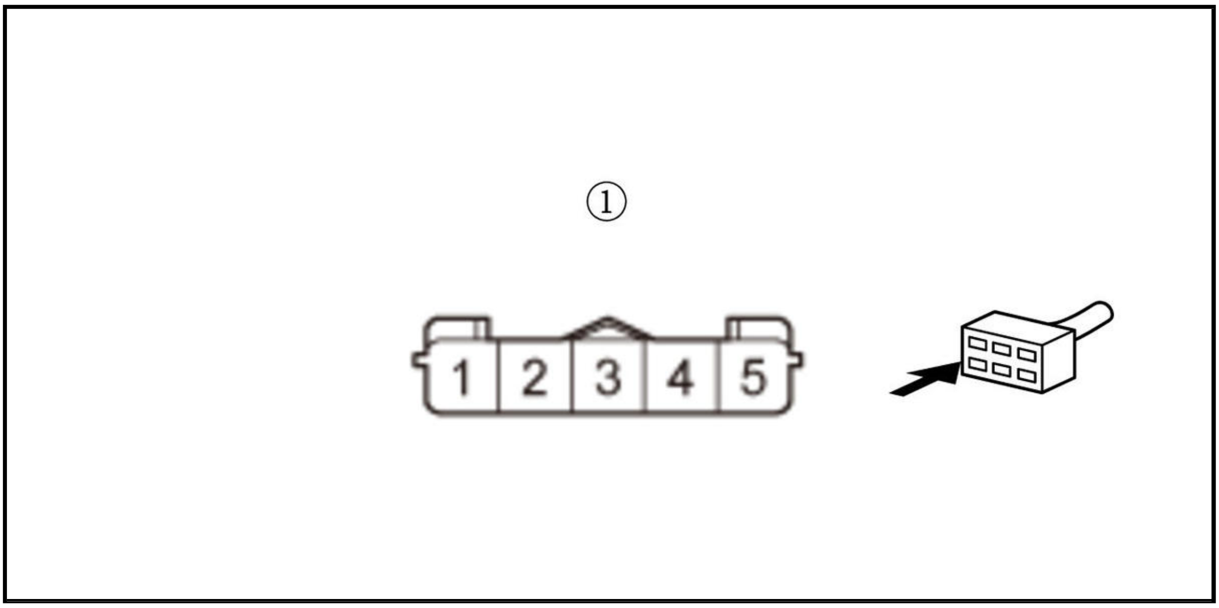

Is there continuity?

YES

The DCWGL wire is OK. Check for any authorized service information related to the DTCs or symptoms you are troubleshooting, or **substitute a known-good PCM** .

NO

Repair an open in the DCWGL wire between the PCM (E60) and the turbocharger.

DTC P2564 (1.5 L ENGINE)

DTC P2564 : Turbocharger Wastegate Control Actuator Position Sensor Circuit Low Voltage

NOTE: Before you troubleshoot, **review the general troubleshooting information**.

DTC Description	Confirmed DTC	Pending DTC
P2564 Turbocharger Wastegate Control Actuator Position Sensor Circuit Low Voltage	B	B

DTC (PGM-FI)

1. Problem verification

-1. Turn the vehicle to the ON mode.

-2. Check the parameter (s) below with the HDS.

Signal	Threshold		Current conditions	
	Values	Unit	Values	Unit
EWG VOLTAGE FROM LIFT SENSOR	Less than 0.16	V	B	B

Do the current condition (s) match the threshold?

YES

Go to step 2.

NO

Intermittent failure, the system is OK at this time. Check for poor connections or loose terminals at the turbocharger and the PCM. **If the on-board snapshot of this DTC is recorded, try to reproduce the failure under the same conditions with the on-board snapshot**.

2. Determine possible failure area (DCWGL line, others)

-1. Turn the vehicle to the OFF (LOCK) mode.

-2. Disconnect the following connector.

Turbocharger 5P connector

-3. Turn the vehicle to the ON mode.

-4. Check the parameter (s) below with the HDS.

Signal	Threshold		Current conditions	
	Values	**Unit**	**Values**	**Unit**
EWG VOLTAGE FROM LIFT SENSOR	Less than 0.16	V	B	B

Do the current condition (s) match the threshold?

YES

Go to step 5.

NO

Go to step 3.

3. Determine possible failure area (turbocharger wastegate control actuator position sensor, others)

-1. Measure the voltage between test points 1 and 2.

Test condition	Vehicle ON mode
B	Turbocharger 5P connector: disconnected
Test point 1	Turbocharger 5P connector (female terminals) No. 2: ①
Test point 2	Turbocharger 5P connector (female terminals) No. 3: ①

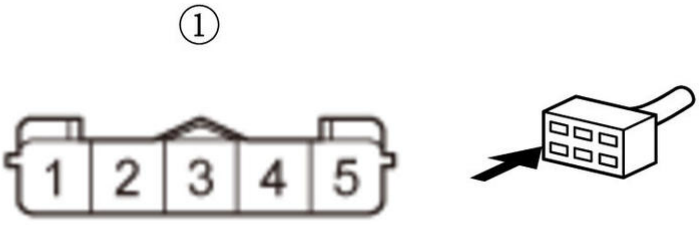

Is there about 5.0 V?

YES

Replace the turbocharger .

NO

Go to step 4.

4. Open wire check (VCC2 line)

-1. Turn the vehicle to the OFF (LOCK) mode.

-2. Jump the SCS line with the HDS, and wait more than 1 minute.

-3. Disconnect the following connector.

PCM connector E (80P)

-4. Check for continuity between test points 1 and 2.

Test condition	Vehicle OFF (LOCK) mode
B	Turbocharger 5P connector: disconnected
B	PCM connector E (80P): disconnected
Test point 1	Turbocharger 5P connector (female terminals) No. 2: ①
Test point 2	**PCM connector E (80P) No. 77**

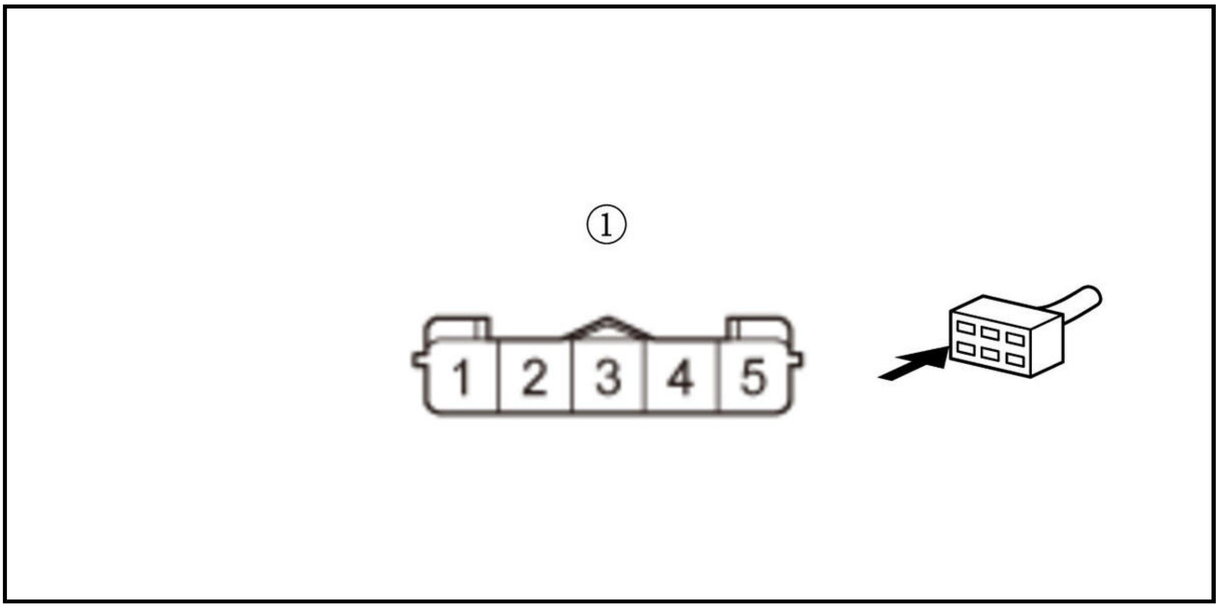

Is there continuity?

YES

The VCC2 wire is OK. Check for any authorized service information related to the DTCs or symptoms you are troubleshooting, or **substitute a known-good PCM** .

NO

Repair an open in the VCC2 wire between the PCM (E77) and the turbocharger.

5. Shorted wire check (DCWGL line)

-1. Turn the vehicle to the OFF (LOCK) mode.

-2. Jump the SCS line with the HDS, and wait more than 1 minute.

-3. Disconnect the following connector.

PCM connector E (80P)

-4. Check for continuity between test points 1 and 2.

Test condition	Vehicle OFF (LOCK) mode
B	Turbocharger 5P connector: disconnected
B	PCM connector E (80P): disconnected
Test point 1	Turbocharger 5P connector (female terminals) No. 4: ①
Test point 2	Body ground

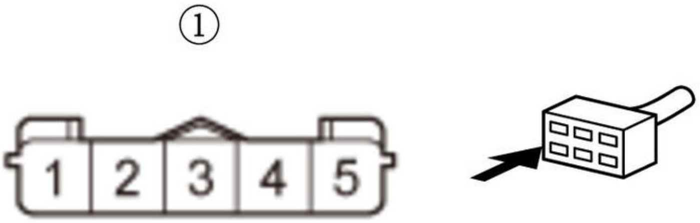

Is there continuity?

YES

Repair a short in the DCWGL wire between the PCM (E60) and the turbocharger.

NO

The DCWGL wire is OK. Check for any authorized service information related to the DTCs or symptoms you are troubleshooting, or **substitute a known-good PCM** .

DTC P2565 (1.5 L ENGINE)

DTC P2565 : Turbocharger Wastegate Control Actuator Position Sensor Circuit High Voltage

NOTE: Before you troubleshoot, **review the general troubleshooting information**.

DTC Description	Confirmed DTC	Pending DTC
P2565 Turbocharger Wastegate Control Actuator Position Sensor Circuit High Voltage	B	B

DTC (PGM-FI)

1. Problem verification

   -1. Turn the vehicle to the ON mode.

   -2. Check the parameter (s) below with the HDS.

Signal	Threshold		Current conditions	
	Values	Unit	Values	Unit
EWG VOLTAGE FROM LIFT SENSOR	More than 4.87	V	B	B

   Do the current condition (s) match the threshold?

   YES

   Go to step 2.

   NO

   Intermittent failure, the system is OK at this time. Check for poor connections or loose terminals at the turbocharger and the PCM. **If the on-board snapshot of this DTC is recorded, try to reproduce the failure under the same conditions with the on-board snapshot**.

2. Determine possible failure area (turbocharger wastegate control actuator position sensor, others)

   -1. Turn the vehicle to the OFF (LOCK) mode.

   -2. Disconnect the following connector.

Turbocharger 5P connector

   -3. Connect terminals A and B with a jumper wire.

Terminal A	Turbocharger 5P connector (female terminals) No. 3: ①
Terminal B	Turbocharger 5P connector (female terminals) No. 4: ①

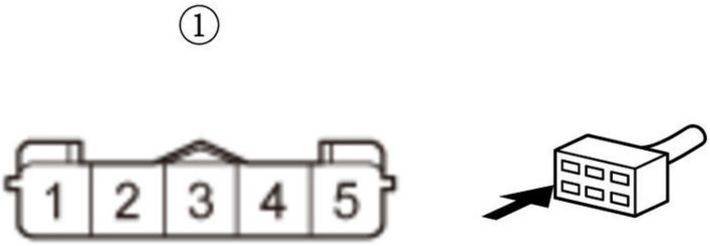

   -4. Turn the vehicle to the ON mode.

-5. Check the parameter (s) below with the HDS.

Signal	Threshold		Current conditions	
	Values	**Unit**	**Values**	**Unit**
EWG VOLTAGE FROM LIFT SENSOR	More than 4.87	V	B	B

Do the current condition (s) match the threshold?

YES

Go to step 3.

NO

Replace the turbocharger .

3. Determine possible failure area (SG2 line, others)

-1. Turn the vehicle to the OFF (LOCK) mode.

-2. Remove the jumper wire from the turbocharger 5P connector.

-3. Turn the vehicle to the ON mode.

-4. Measure the voltage between test points 1 and 2.

Test condition	Vehicle ON mode
B	Turbocharger 5P connector: disconnected
Test point 1	Turbocharger 5P connector (female terminals) No. 2: ①
Test point 2	Turbocharger 5P connector (female terminals) No. 3: ①

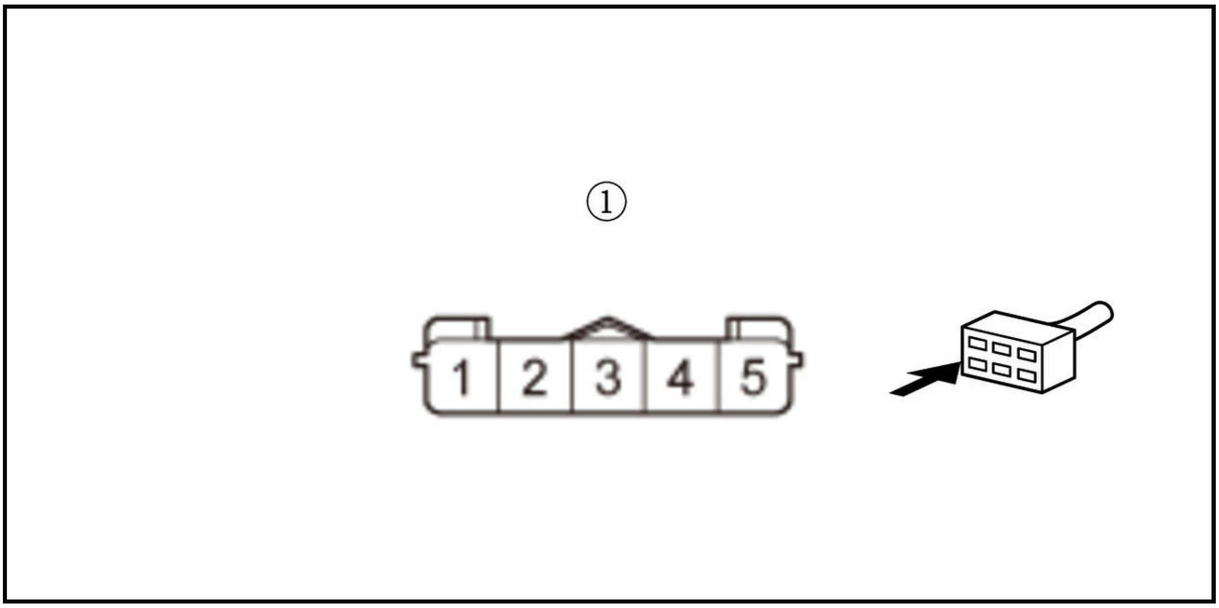

Is there about 5.0 V?

YES

Go to step 5.

NO

Go to step 4.

4. Open wire check (SG2 line)

-1. Turn the vehicle to the OFF (LOCK) mode.

-2. Jump the SCS line with the HDS, and wait more than 1 minute.

-3. Disconnect the following connector.

PCM connector E (80P)

-4. Check for continuity between test points 1 and 2.

Test condition	Vehicle OFF (LOCK) mode
B	Turbocharger 5P connector: disconnected
B	PCM connector E (80P): disconnected
Test point 1	Turbocharger 5P connector (female terminals) No. 3: ①
Test point 2	**PCM connector E (80P) No. 78**

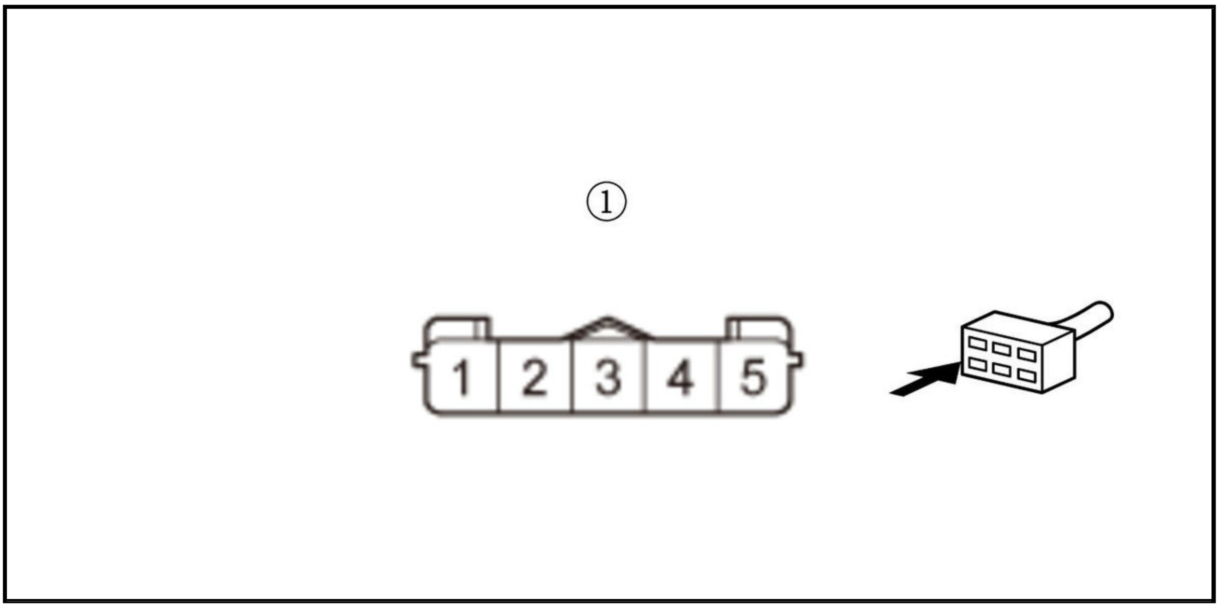

Is there continuity?

YES

The SG2 wire is OK. Check for any authorized service information related to the DTCs or symptoms you are troubleshooting, or **substitute a known-good PCM** .

NO

Repair an open in the SG2 wire between the PCM (E78) and the turbocharger.

5. Open wire check (DCWGL line)

-1. Turn the vehicle to the OFF (LOCK) mode.

-2. Jump the SCS line with the HDS, and wait more than 1 minute.

-3. Disconnect the following connector.

PCM connector E (80P)

-4. Check for continuity between test points 1 and 2.

Test condition	Vehicle OFF (LOCK) mode
B	Turbocharger 5P connector: disconnected
B	PCM connector E (80P): disconnected
Test point 1	Turbocharger 5P connector (female terminals) No. 4: ①
Test point 2	**PCM connector E (80P) No. 60**

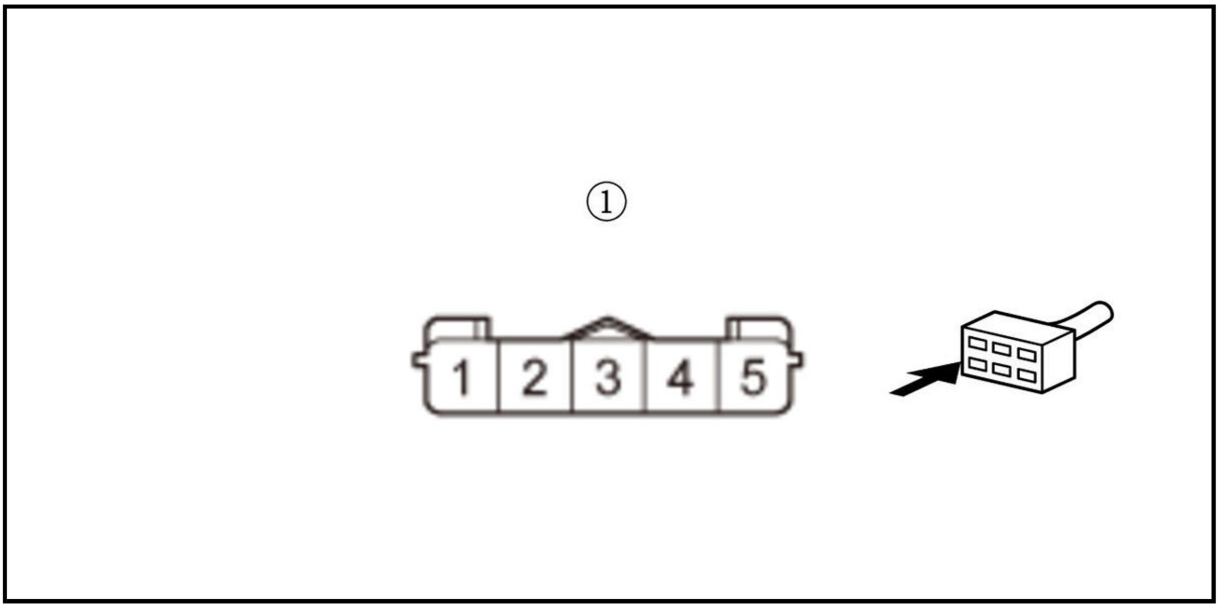

Is there continuity?

YES

The DCWGL wire is OK. Check for any authorized service information related to the DTCs or symptoms you are troubleshooting, or **substitute a known-good PCM** .

NO

Repair an open in the DCWGL wire between the PCM (E60) and the turbocharger.

DTC P2610 (1.5 L ENGINE)

DTC P2610 : PCM Ignition Off Internal Timer Malfunction

NOTE: Before you troubleshoot, **review the general troubleshooting information**.

DTC Description	Confirmed DTC	Pending DTC
P2610 PCM Ignition Off Internal Timer Malfunction	B	B

DTC (PGM-FI)

1. Problem verification

-1. Turn the vehicle to the ON mode.

-2. Clear the DTC with the HDS.

-3. Turn the vehicle to the OFF (LOCK) mode.

-4. Turn the vehicle to the ON mode.

-5. Check for Pending or Confirmed DTCs with the HDS.

DTC Description	Confirmed DTC	Pending DTC
P2610 PCM Ignition Off Internal Timer Malfunction	B	B

Is DTC P2610 indicated?

YES

The failure is duplicated. Check for any authorized service information related to the DTCs or symptoms you are troubleshooting, or **substitute a known-good PCM** .

NO

Intermittent failure, the system is OK at this time. If any other Pending or Confirmed DTCs are indicated, go to the indicated DTC's troubleshooting.

DTC P2610 (2.4 L ENGINE) (2017 2018 2019)

DTC P2610 : PCM Ignition Off Internal Timer Malfunction

NOTE: Before you troubleshoot, **review the general troubleshooting information**.

DTC Description	Confirmed DTC	Pending DTC
P2610 PCM Ignition Off Internal Timer Malfunction	B	B

DTC (PGM-FI)

1. Problem verification

-1. Turn the vehicle to the ON mode.

-2. Clear the DTC with the HDS.

-3. Check for Pending or Confirmed DTCs with the HDS.

DTC Description	Confirmed DTC	Pending DTC
P2610 PCM Ignition Off Internal Timer Malfunction	B	B

Is DTC P2610 indicated?

YES

The failure is duplicated. Check for any authorized service information related to the DTCs or symptoms you are troubleshooting or **substitute a known-good PCM** .

NO

Intermittent failure, the system is OK at this time. If any other Pending or Confirmed DTCs are indicated, go to the indicated DTC's troubleshooting.

DTC P2623 (1.5 L ENGINE)

DTC P2623 : High Pressure Fuel Pump Spill Valve Malfunction

NOTE: Before you troubleshoot, **review the general troubleshooting information**.

DTC Description	Confirmed DTC	Pending DTC
P2623 High Pressure Fuel Pump Spill Valve Malfunction	B	B

DTC (PGM-FI)

1. Problem verification

   -1. Turn the vehicle to the ON mode.

   -2. Clear the DTC with the HDS.

   -3. Turn the vehicle to the OFF (LOCK) mode.

   -4. Start the engine (If the engine does not start, crank the engine for 20 seconds).

   -5. Check for Pending or Confirmed DTCs with the HDS.

DTC Description	Confirmed DTC	Pending DTC
P0201 No. 1 Cylinder Injector Circuit Malfunction	B	B
P0202 No. 2 Cylinder Injector Circuit Malfunction	B	B
P0203 No. 3 Cylinder Injector Circuit Malfunction	B	B
P0204 No. 4 Cylinder Injector Circuit Malfunction	B	B
P2623 High Pressure Fuel Pump Spill Valve Malfunction	B	B

   Are DTC P2623 and P0201, P0202, P0203, or P0204 indicated at the same time?

   YES

   Go to step 2.

   NO

   Go to step 10.

   NO

   Intermittent failure, the system is OK at this time. Check for poor connections or loose terminals at the high pressure fuel pump and the PCM. **If the on-board snapshot of this DTC is recorded, try to reproduce the failure under the same conditions with the on-board snapshot**.

2. Relay check

   -1. Turn the vehicle to the OFF (LOCK) mode.

   -2. **Remove the injector relay** .

   -3. **Test the injector relay** .

   Is the relay OK?

   YES

   Go to step 3.

   NO

   Replace the injector relay.

3. Open wire check (+B IGP line)

-1. Measure the voltage between test points 1 and 2.

Test condition	Vehicle OFF (LOCK) mode Injector relay: disconnected
Test point 1	Injector relay 4P socket (female terminals) No. 3: ①
Test point 2	Body ground

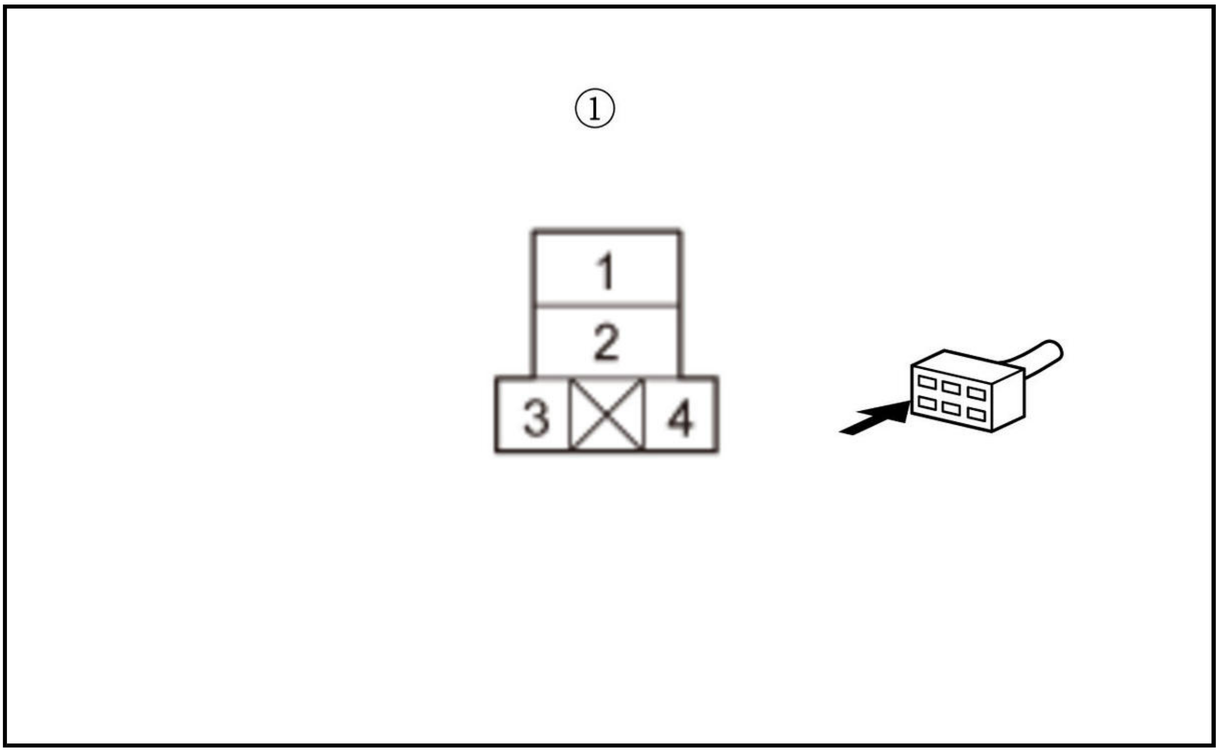

Is there battery voltage?

YES

The +B IGP wire is OK. Go to step 4.

NO

Go to step 6.

4. Open wire check (+B INJ line)

-1. Measure the voltage between test points 1 and 2.

Test condition	Vehicle OFF (LOCK) mode Injector relay: disconnected
Test point 1	Injector relay 4P socket (female terminals) No. 1: ①
Test point 2	Body ground

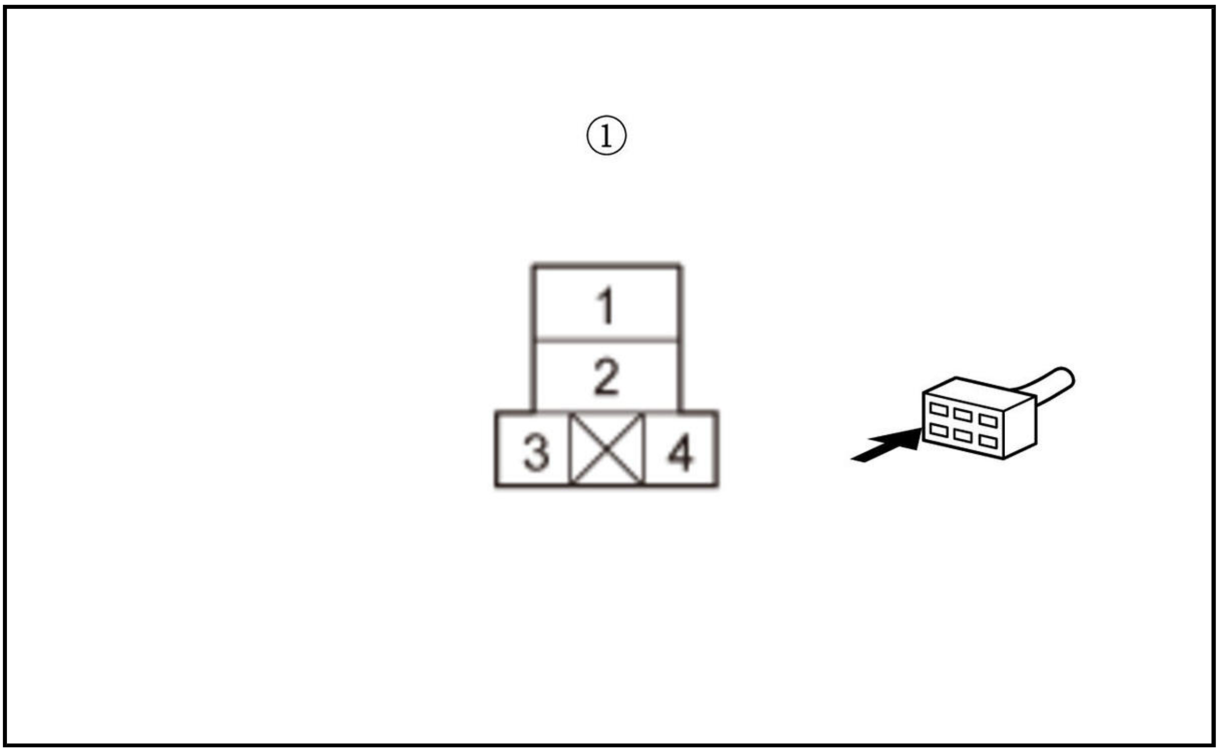

Is there battery voltage?

YES

The +B INJ wire is OK. Go to step 7.

NO

Go to step 5.

5. Fuse check 1

   -1. Check the following fuse.

Fuse	No. A10 (20 A)
Location	Under-hood fuse/relay box

Is the fuse OK?

YES

Repair an open in the +B INJ wire between the No. A10 (20 A) fuse and the injector relay. If needed, **replace the under-hood fuse/relay box** .

NO

Repair a short in the +B INJ wire between the No. A10 (20 A) fuse and the injector relay. Also replace the No. A10 (20 A) fuse. If needed, **replace the under-hood fuse/relay box** .

6. Fuse check 2

   -1. Check the following fuse.

Fuse	No. A7 (15 A)
Location	Under-hood fuse/relay box

Is the fuse OK?

YES

Repair an open in the +B IGP wire between the No. A7 (15 A) fuse and the injector relay. If needed, **replace the under-hood fuse/relay box** .

NO

Repair a short in the +B IGP wire between the No. A7 (15 A) fuse and the injector relay. Also replace the No. A7 (15 A) fuse. If needed, **replace the under-hood fuse/relay box** .

7. Determine possible failure area (FI MAIN RLY CL- line, others)

   -1. Turn the vehicle to the ON mode.

   -2. Measure the voltage between test points 1 and 2.

Test condition	Vehicle in ON mode
	Injector relay: disconnected
Test point 1	Injector relay 4P socket (female terminals) No. 3: ①
Test point 2	Injector relay 4P socket (female terminals) No. 4: ①

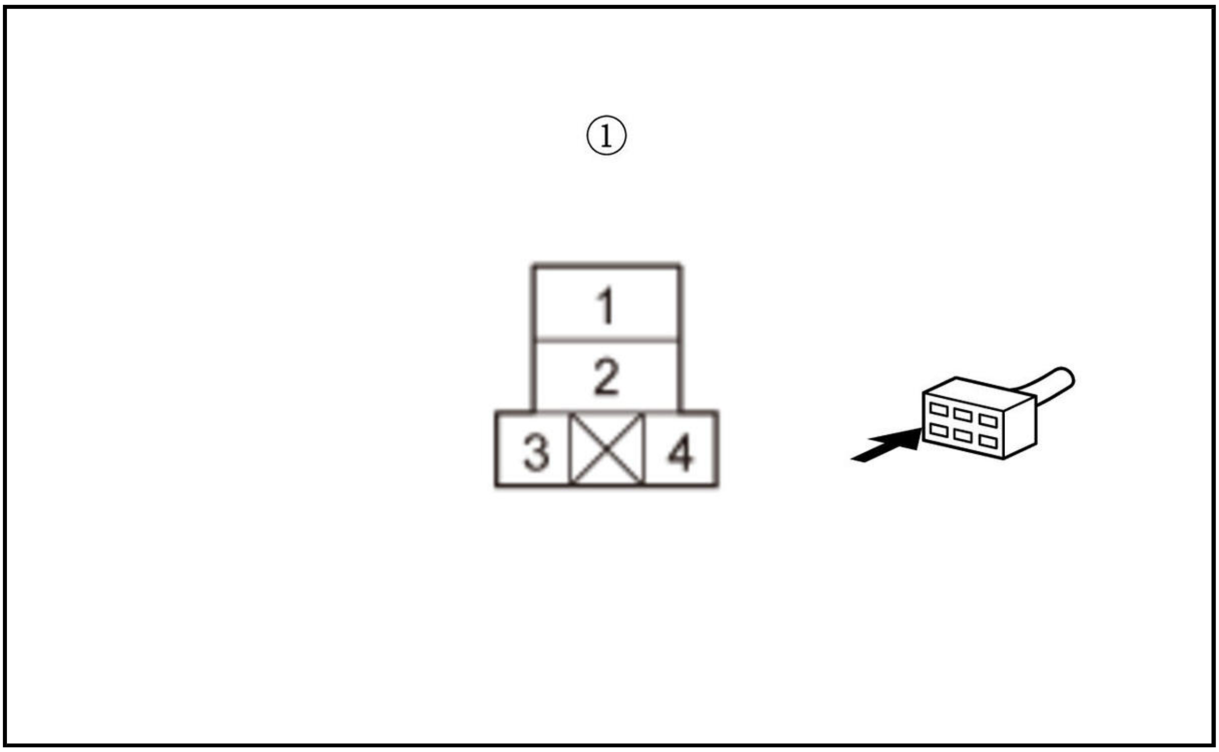

Is there battery voltage?

YES

Go to step 9.

NO

Go to step 8.

8. Open wire check (FI MAIN RLY CL- line)

   -1. Turn the vehicle to the OFF (LOCK) mode.

   -2. Jump the SCS line with the HDS, and wait more than 1 minute.

-3. Disconnect the following connector.

PCM connector A (50P)

-4. Check for continuity between test points 1 and 2.

Test condition	Vehicle OFF (LOCK) mode Injector relay: disconnected PCM connector A (50P): disconnected
Test point 1	Injector relay 4P socket (female terminals) No. 4: ①
Test point 2	**PCM connector A (50P) No. 5**

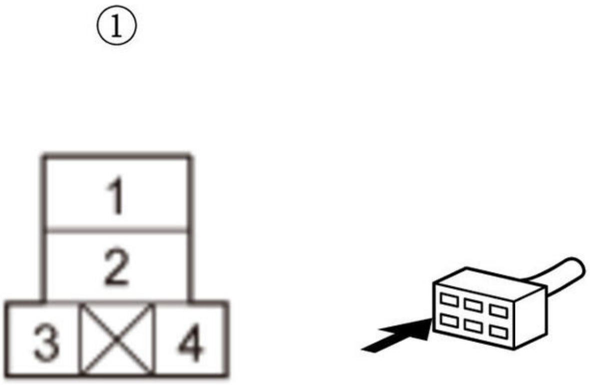

Is there continuity?

YES

The FI MAIN RLY CL- wire is OK. Check for any authorized service information related to the DTCs or symptoms you are troubleshooting, or **substitute a known-good PCM** .

NO

Repair an open in the FI MAIN RLY CL- wire between the PCM (A5) and the injector relay.

9. Open wire check (INJ RLY OUT line)

-1. Turn the vehicle to the OFF (LOCK) mode.

-2. Connect terminals A and B with a jumper wire.

Terminal A	Injector relay 4P socket (female terminals) No. 1: ①
Terminal B	Injector relay 4P socket (female terminals) No. 2: ①

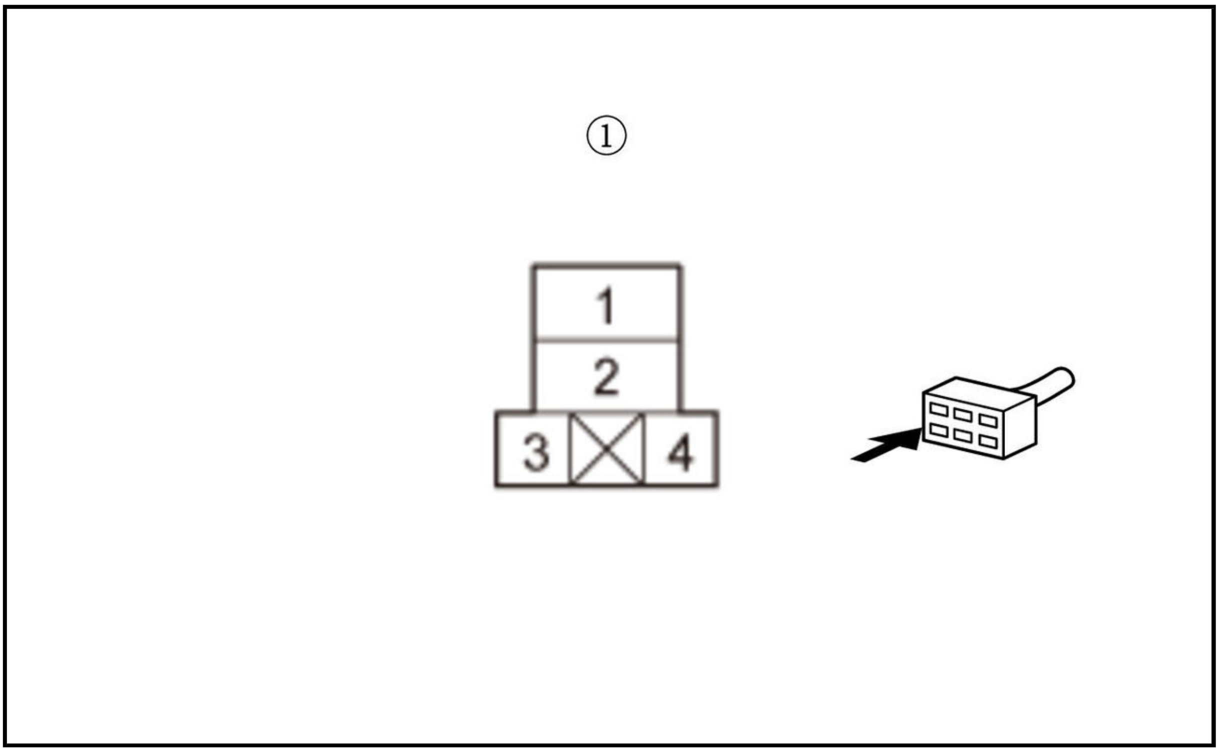

-3. Jump the SCS line with the HDS, and wait more than 1 minute.

-4. Disconnect the following connector.

PCM connector A (50P)

-5. Measure the voltage between test points 1 and 2.

Test condition	Vehicle OFF (LOCK) mode
	Injector relay: disconnected
	Injector relay 4P socket No. 1 and No. 2: jumped
	PCM connector A (50P): disconnected
Test point 1	**PCM connector A (50P) No. 1**
Test point 2	Body ground

Test point 1	**PCM connector A (50P) No. 2**
Test point 2	Body ground

Is there battery voltage?

YES

Go to step 10.

NO

Repair an open in the INJ RLY OUT wire between the PCM (A1, A2) and the injector relay.

10. Open wire check (HPUMP H line, HPUMP L line)

-1. Turn the vehicle to the OFF (LOCK) mode.

-2. Remove the jumper wire from the injector relay 4P socket as needed.

-3. Reinstall the injector relay.

-4. Jump the SCS line with the HDS, and wait more than 1 minute.

-5. Disconnect the following connector.

PCM connector E (80P)

-6. Check for continuity between test points 1 and 2.

Test condition	Vehicle OFF (LOCK) mode
	PCM connector A (50P): disconnected
	PCM connector E (80P): disconnected
Test point 1	**PCM connector E (80P) No. 1**
Test point 2	**PCM connector E (80P) No. 14**

Is there continuity?

YES

Go to step 13.

NO

Go to step 11.

11. Open wire check (HPUMP H line)

-1. Disconnect the following connector.

High pressure fuel pump 2P connector

-2. Check for continuity between test points 1 and 2.

Test condition	Vehicle OFF (LOCK) mode
	PCM connector A (50P): disconnected
	PCM connector E (80P): disconnected
	High pressure fuel pump 2P connector: disconnected
Test point 1	High pressure fuel pump 2P connector (female terminals) No. 1: ①
Test point 2	**PCM connector E (80P) No. 1**

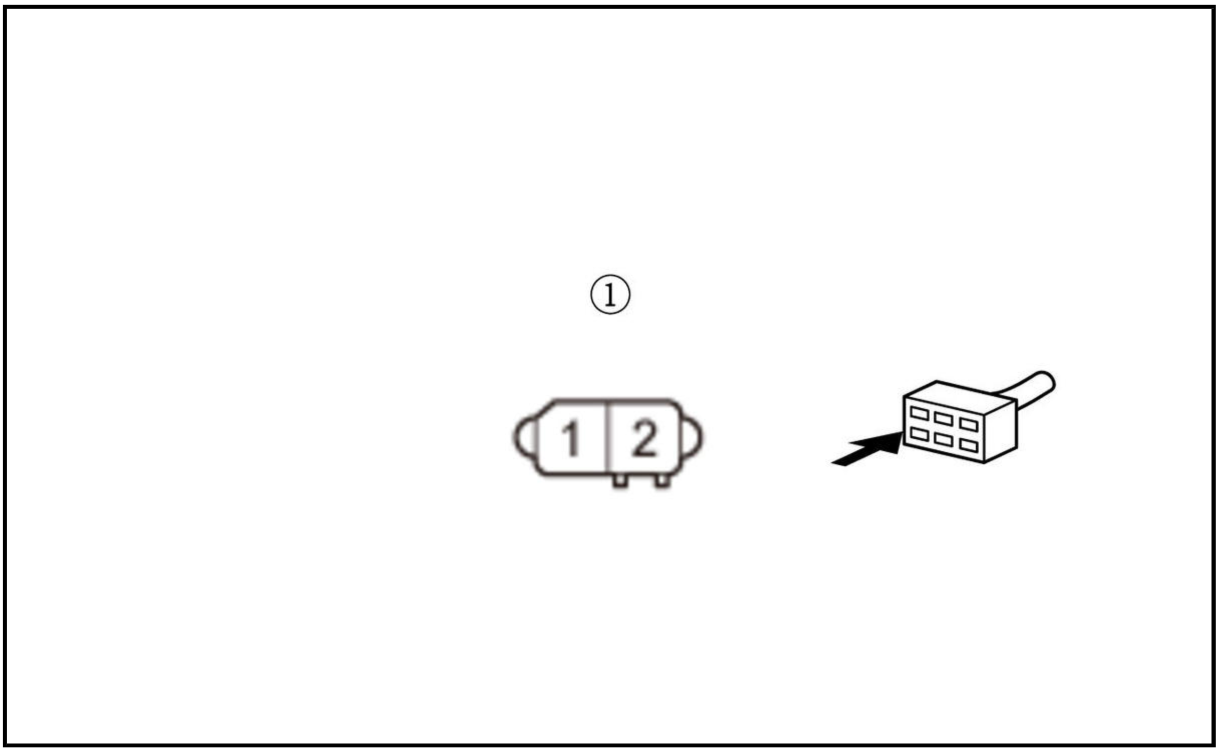

Is there continuity?

YES

Go to step 12.

NO

Repair an open in the HPUMP H wire between the PCM (E1) and the high pressure fuel pump.

12. Open wire check (HPUMP L line)

-1. Check for continuity between test points 1 and 2.

Test condition	Vehicle OFF (LOCK) mode
	PCM connector A (50P): disconnected
	PCM connector E (80P): disconnected
	High pressure fuel pump 2P connector: disconnected
Test point 1	High pressure fuel pump 2P connector (female terminals) No. 2: ①
Test point 2	**PCM connector E (80P) No. 14**

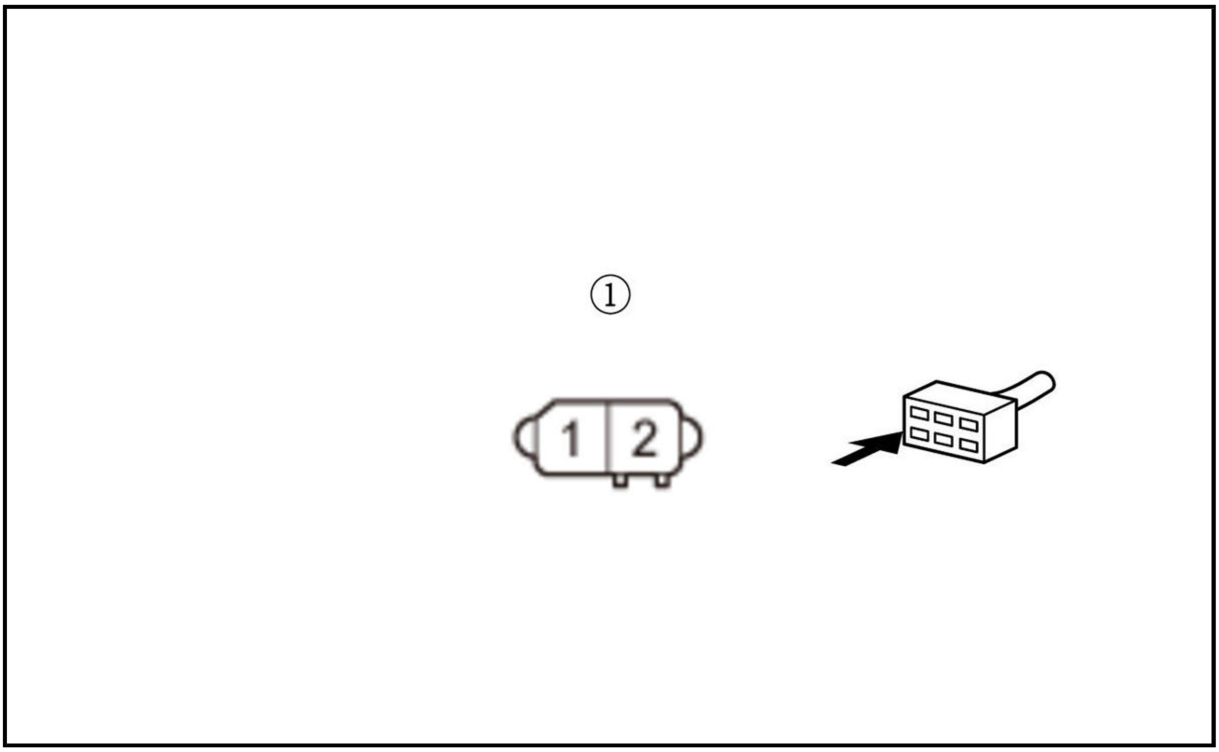

Is there continuity?

YES

The HPUMP L wire is OK. Check for any authorized service information related to the DTCs or symptoms you are troubleshooting, or **substitute a known-good PCM** .

NO

Repair an open in the HPUMP L wire between the PCM (E14) and the high pressure fuel pump.

13. Shorted wire check (HPUMP H line to power)

-1. Disconnect the following connector.

High pressure fuel pump 2P connector

-2. Exit the SCS mode with the HDS.

-3. Turn the vehicle to the ON mode.

-4. Measure the voltage between test points 1 and 2.

Test condition	Vehicle ON mode
	PCM connector A (50P): disconnected
	PCM connector E (80P): disconnected
	High pressure fuel pump 2P connector: disconnected
Test point 1	**PCM connector E (80P) No. 1**
Test point 2	Body ground

Is there any voltage?

YES

Repair a short to power in the HPUMP H wire between the PCM (E1) and the high pressure fuel pump.

NO

Go to step 14.

14. Shorted wire check (HPUMP L line to power)

-1. Measure the voltage between test points 1 and 2.

Test condition	Vehicle ON mode
	PCM connector A (50P): disconnected
	PCM connector E (80P): disconnected
	High pressure fuel pump 2P connector: disconnected
Test point 1	**PCM connector E (80P) No. 14**
Test point 2	Body ground

Is there any voltage?

YES

Repair a short to power in the HPUMP L wire between the PCM (E14) and the high pressure fuel pump.

NO

Go to step 15.

15. Shorted wire check (HPUMP H line to ground)

-1. Turn the vehicle to the OFF (LOCK) mode.

-2. Check for continuity between test points 1 and 2.

Test condition	Vehicle OFF (LOCK) mode
	PCM connector A (50P): disconnected
	PCM connector E (80P): disconnected
	High pressure fuel pump 2P connector: disconnected
Test point 1	**PCM connector E (80P) No. 1**
Test point 2	Body ground

Is there continuity?

YES

Repair a short to ground in the HPUMP H wire between the PCM (E1) and the high pressure fuel pump.

NO

Go to step 16.

16. Shorted wire check (HPUMP L line to ground)

-1. Check for continuity between test points 1 and 2.

Test condition	Vehicle OFF (LOCK) mode
	PCM connector A (50P): disconnected
	PCM connector E (80P): disconnected
	High pressure fuel pump 2P connector: disconnected
Test point 1	**PCM connector E (80P) No. 14**
Test point 2	Body ground

Is there continuity?

YES

Repair a short to ground in the HPUMP L wire between the PCM (E14) and the high pressure fuel pump.

NO

The HPUMP L wire is OK. Check for any authorized service information related to the DTCs or symptoms you are troubleshooting, or **substitute a known-good PCM** .

DTC P2623 (2.4 L ENGINE) (2017 2018 2019)

DTC P2623 : High Pressure Fuel Pump Spill Valve Malfunction

NOTE: Before you troubleshoot, **review the general troubleshooting information**.

DTC Description	Confirmed DTC	Pending DTC
P2623 High Pressure Fuel Pump Spill Valve Malfunction	B	B

DTC (PGM-FI)

1. Problem verification

   -1. Turn the vehicle to the ON mode.

   -2. Clear the DTC with the HDS.

   -3. Turn the vehicle to the OFF (LOCK) mode.

   -4. Start the engine. (If the engine does not start, crank the engine for 20 seconds).

   -5. Check for Pending or Confirmed DTCs with the HDS.

DTC Description	Confirmed DTC	Pending DTC
P0201 No. 1 Cylinder Injector Circuit Malfunction	B	B
P0202 No. 2 Cylinder Injector Circuit Malfunction	B	B
P0203 No. 3 Cylinder Injector Circuit Malfunction	B	B
P0204 No. 4 Cylinder Injector Circuit Malfunction	B	B
P2623 High Pressure Fuel Pump Spill Valve Malfunction	B	B

Are DTC P2623 and P0201, P0202, P0203, or P0204 indicated at the same time?

YES

The failure is duplicated. Go to step 2.

NO

The failure is duplicated. Go to step 9.

NO

Intermittent failure, the system is OK at this time. Check for poor connections or loose terminals at the high pressure fuel pump and the PCM. **If the on-board snapshot of this DTC is recorded, try to reproduce the failure under the same conditions with the on-board snapshot**.

2. Relay check

-1. Turn the vehicle to the OFF (LOCK) mode.

-2. **Remove the injector relay** .

-3. **Test the injector relay** .

Is the relay OK?

YES

The injector relay is OK. Go to step 3.

NO

Replace the injector relay.

3. Open wire check (FI MAIN RLY OUT line)

-1. Turn the vehicle to the ON mode.

-2. Measure the voltage between test points 1 and 2.

Test condition	Vehicle ON mode Injector relay: disconnected
Test point 1	Injector relay 4P socket (female terminals) No. 3: ①
Test point 2	Body ground

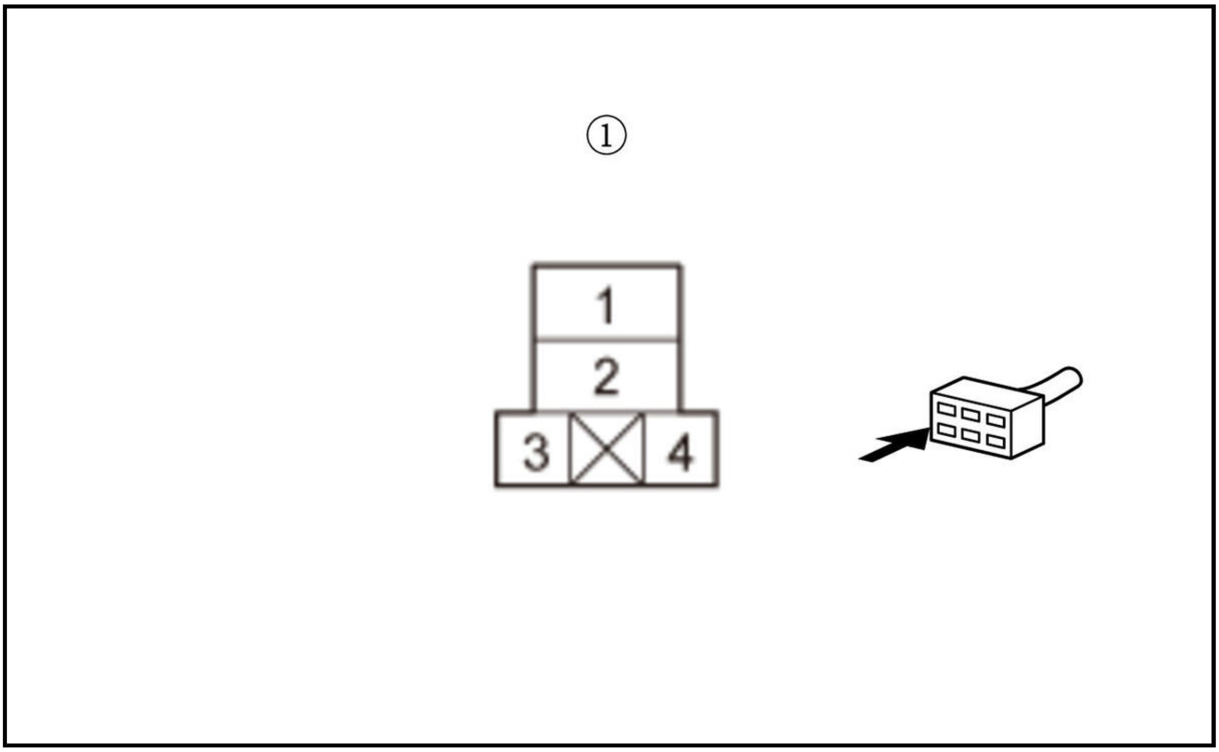

Is there battery voltage?

YES

The FI MAIN RLY OUT wire is OK. Go to step 4.

NO

Repair an open in the FI MAIN RLY OUT wire between PGM-FI main relay 1 and the injector relay.

4. Open wire check (+B INJ line)

-1. Turn the vehicle to the OFF (LOCK) mode.

-2. Measure the voltage between test points 1 and 2.

Test condition	Vehicle OFF (LOCK) mode
	Injector relay: disconnected
Test point 1	Injector relay 4P socket (female terminals) No. 1: ①
Test point 2	Body ground

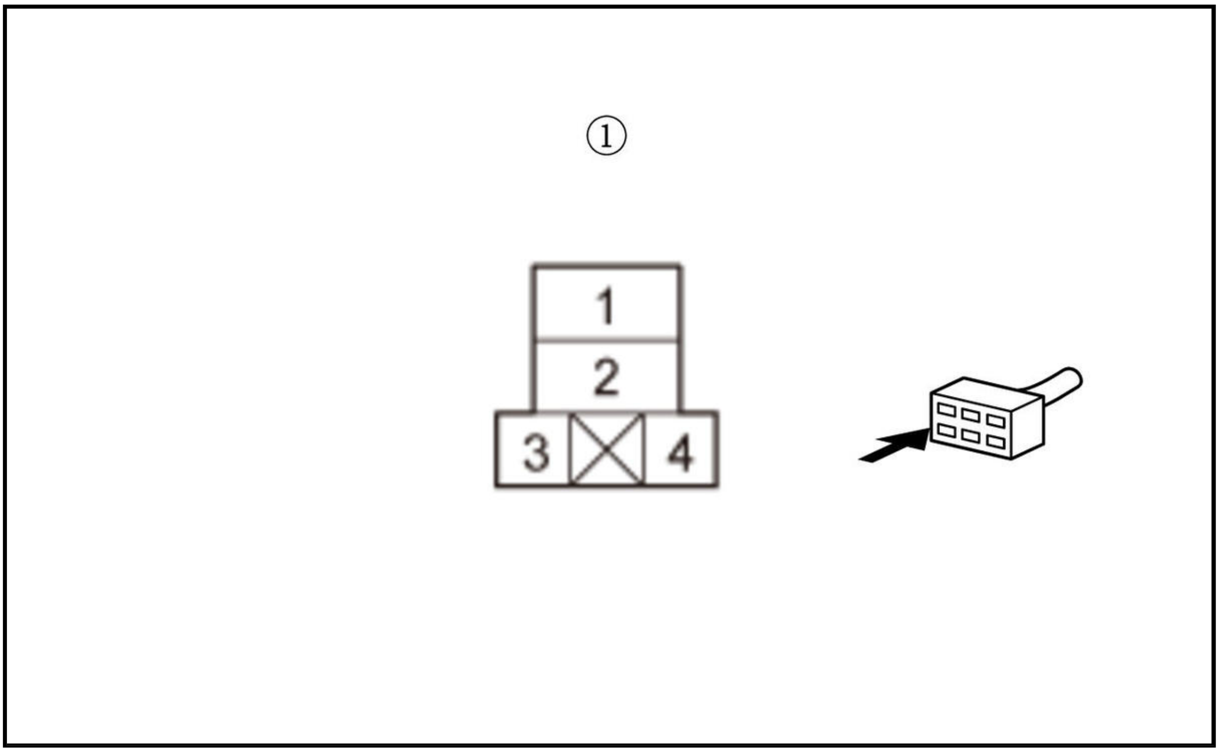

Is there battery voltage?

YES

The +B INJ wire is OK. Go to step 6.

NO

Go to step 5.

5. Fuse check

-1. Check the following fuse.

Fuse	No. A10 (20 A)
Location	Under-hood fuse/relay box

Is the fuse OK?

YES

Repair an open in the +B INJ wire between the No. A10 (20 A) fuse and the injector relay.

NO

Repair a short in the +B INJ wire between the No. A10 (20 A) fuse and the injector relay. Also replace the No. A10 (20 A) fuse. If needed, **replace the under-hood fuse/relay box** .

6. Determine possible failure area (INJ RLY CL- line, others)

-1. Turn the vehicle to the ON mode, and measure the voltage between test points 1 and 2 momentarily.

Test condition	Momentarily after vehicle in ON mode
	Injector relay: disconnected
Test point 1	Injector relay 4P socket (female terminals) No. 3: ①
Test point 2	Injector relay 4P socket (female terminals) No. 4: ①

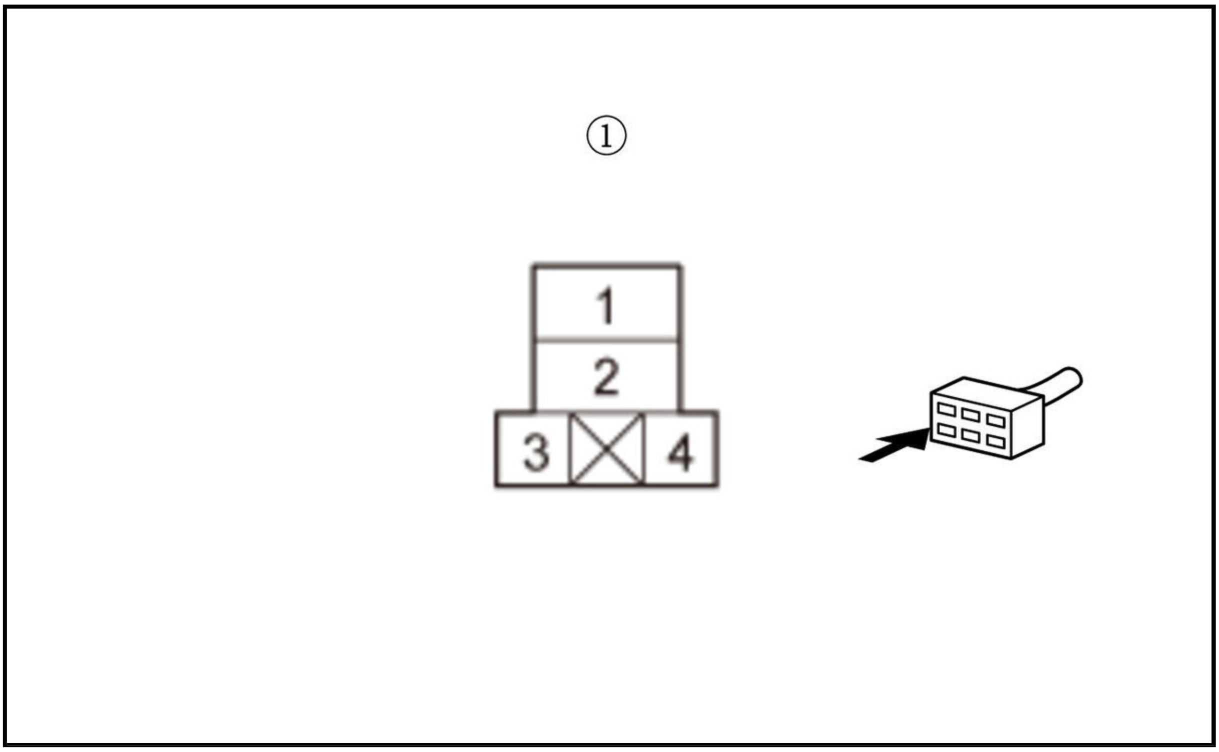

Is there battery voltage momentarily?

YES

Go to step 8.

NO

Go to step 7.

7. Open wire check (INJ RLY CL- line)

-1. Turn the vehicle to the OFF (LOCK) mode.

-2. Jump the SCS line with the HDS, and wait more than 1 minute.

-3. Disconnect the following connector.

PCM connector A (51P)

-4. Check for continuity between test points 1 and 2.

Test condition	Vehicle OFF (LOCK) mode

	PCM connector A (51P): disconnected

Test point 1	Injector relay 4P socket (female terminals) No. 4: ①
Test point 2	**PCM connector A (51P) No. 15**

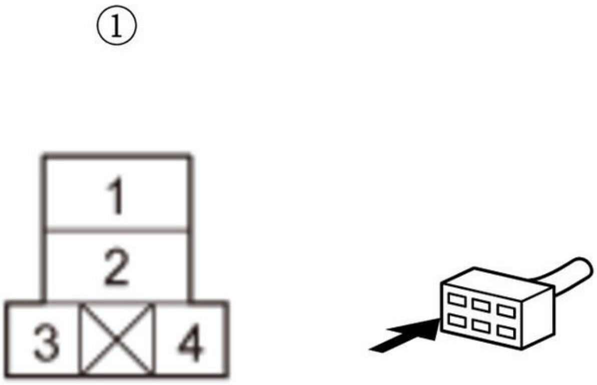

Is there continuity?

YES

The INJ RLY CL- wire is OK. Check for any authorized service information related to the DTCs or symptoms you are troubleshooting, or **substitute a known-good PCM** .

NO

Repair an open in the INJ RLY CL- wire between the PCM (A15) and the injector relay.

8. Open wire check (INJ RLY OUT line)

-1. Turn the vehicle to the OFF (LOCK) mode.

-2. Connect terminals A and B with a jumper wire.

Terminal A	Injector relay 4P socket (female terminals) No. 1: ①
Terminal B	Injector relay 4P socket (female terminals) No. 2: ①

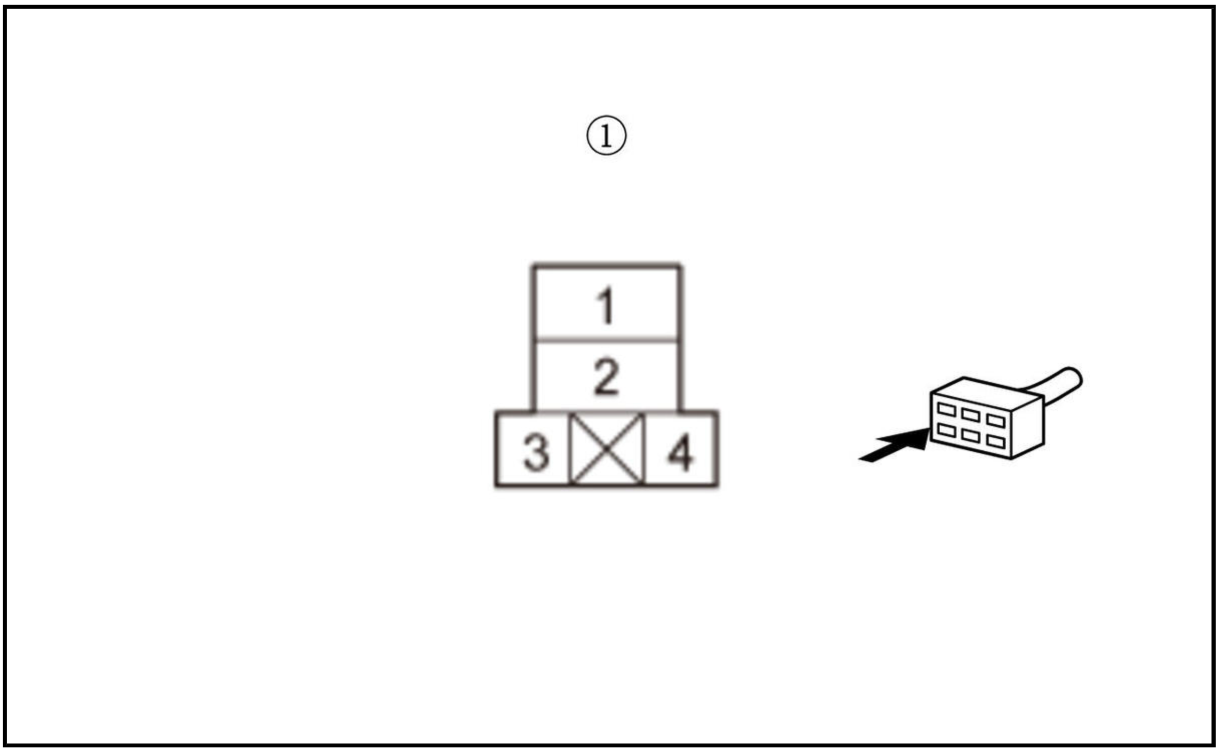

-3. Jump the SCS line with the HDS, and wait more than 1 minute.

-4. Disconnect the following connector.

PCM connector A (51P)

-5. Measure the voltage between test points 1 and 2.

Test condition	Vehicle OFF (LOCK) mode
	Injector relay: disconnected
	Injector relay 4P socket terminal No. 1 and No. 2: jumped
	PCM connector A (51P): disconnected
Test point 1	PCM connector A (51P) No. 6
Test point 2	Body ground

Test point 1	PCM connector A (51P) No. 7
Test point 2	Body ground

Is there battery voltage?

YES

The INJ RLY OUT wire is OK. Go to step 9.

NO

Repair an open in the INJ RLY OUT wire between the PCM (A6, A7) and the injector relay.

9. Open wire check (HPUMP H line, HPUMP L line)

-1. Turn the vehicle to the OFF (LOCK) mode.

-2. Remove the jumper wire from the injector relay 4P socket as needed.

-3. Reinstall the injector relay.

-4. Jump the SCS line with the HDS, and wait more than 1 minute.

-5. Disconnect the following connector.

PCM connector C (51P)

-6. Check for continuity between test points 1 and 2.

Test condition	Vehicle OFF (LOCK) mode
	PCM connector A (51P): disconnected
	PCM connector C (51P): disconnected
Test point 1	**PCM connector C (51P) No. 13**
Test point 2	**PCM connector C (51P) No. 14**

Is there continuity?

YES

The HPUMP H and HPUMP L wires are not open. Go to step 12.

NO

Go to step 10.

10. Open wire check (HPUMP H line)

-1. Disconnect the following connector.

High pressure fuel pump 2P connector

-2. Check for continuity between test points 1 and 2.

Test condition	Vehicle OFF (LOCK) mode
	PCM connector A (51P): disconnected
	PCM connector C (51P): disconnected
	High pressure fuel pump 2P connector: disconnected
Test point 1	High pressure fuel pump 2P connector (female terminals) No. 1: ①
Test point 2	**PCM connector C (51P) No. 13**

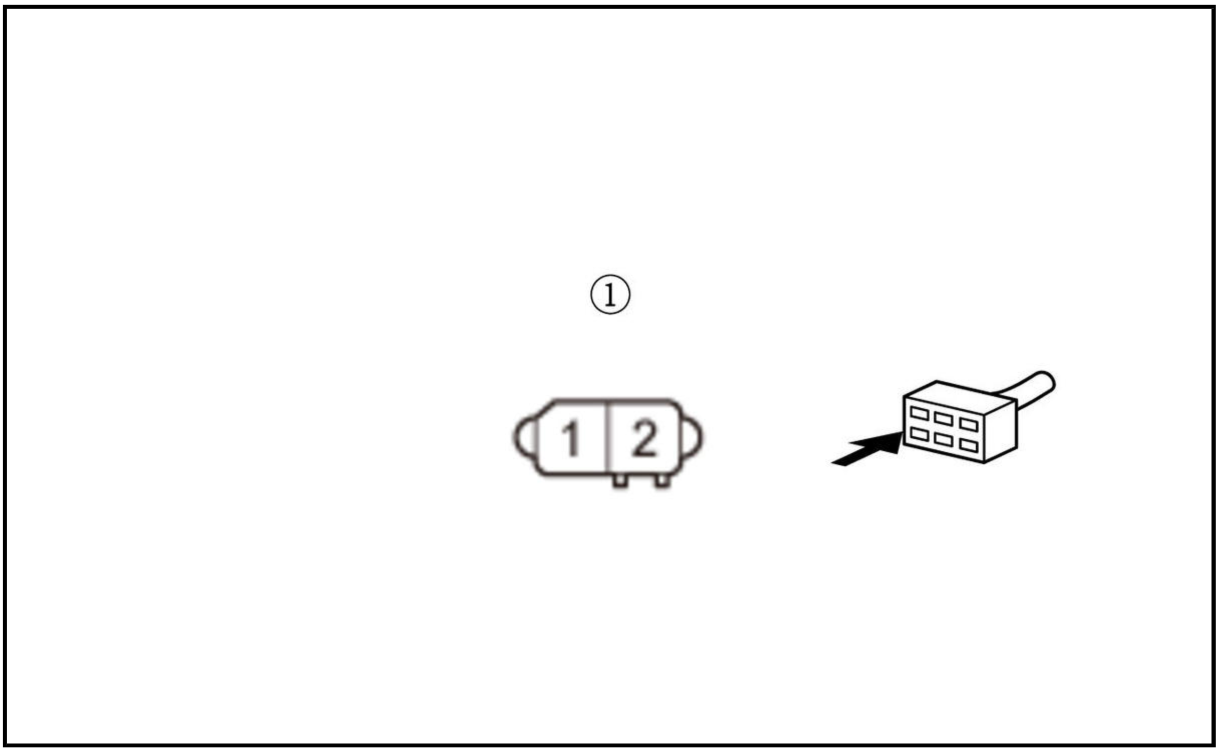

Is there continuity?

YES

The HPUMP H wire is not open. Go to step 11.

NO

Repair an open in the HPUMP H wire between the PCM (C13) and the high pressure fuel pump.

11. Open wire check (HPUMP L line)

-1. Check for continuity between test points 1 and 2.

Test condition	Vehicle OFF (LOCK) mode
	PCM connector A (51P): disconnected
	PCM connector C (51P): disconnected
	High pressure fuel pump 2P connector: disconnected
Test point 1	High pressure fuel pump 2P connector (female terminals) No. 2: ①
Test point 2	**PCM connector C (51P) No. 14**

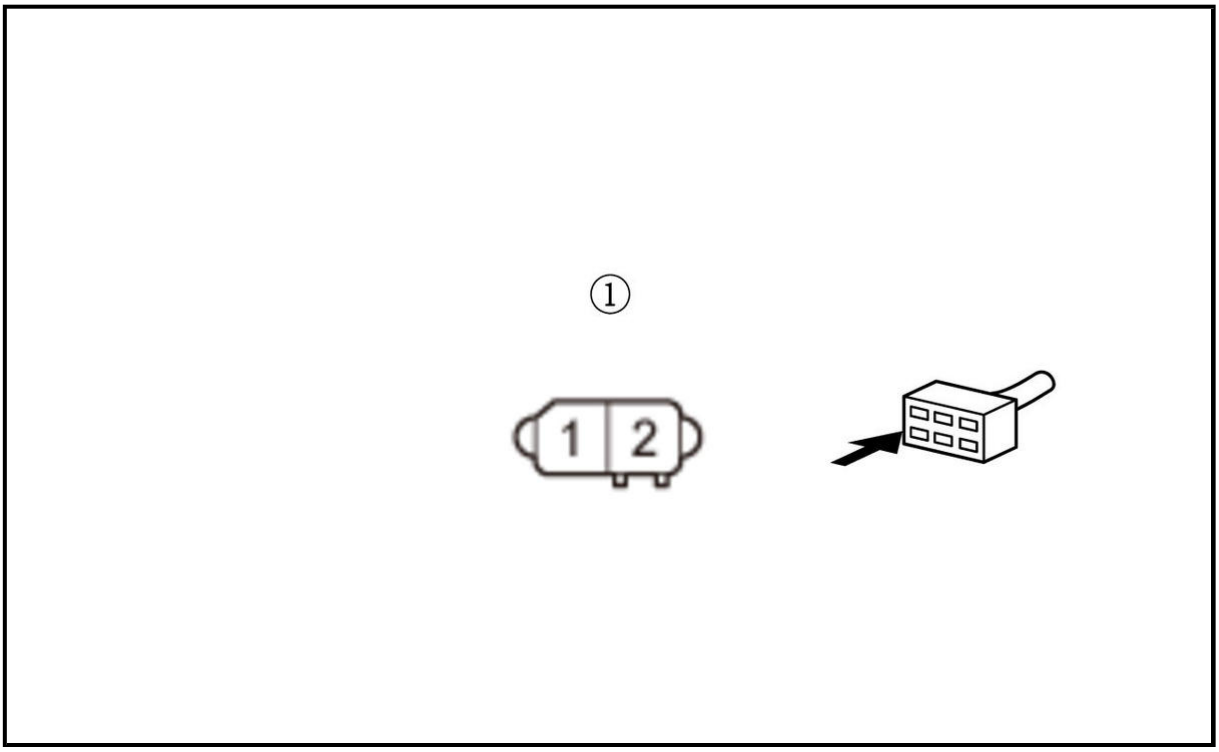

Is there continuity?

YES

The HPUMP L wire is OK. Check for any authorized service information related to the DTCs or symptoms you are troubleshooting, or **substitute a known-good PCM** .

NO

Repair an open in the HPUMP L wire between the PCM (C14) and the high pressure fuel pump.

12. Shorted wire check (HPUMP H line to power)

-1. Disconnect the following connector.

High pressure fuel pump 2P connector

-2. Exit the SCS mode with the HDS.

-3. Turn the vehicle to the ON mode.

-4. Measure the voltage between test points 1 and 2.

Test condition	Vehicle ON mode
	PCM connector A (51P): disconnected
	PCM connector C (51P): disconnected
	High pressure fuel pump 2P connector: disconnected
Test point 1	**PCM connector C (51P) No. 13**
Test point 2	Body ground

Is there any voltage?

YES

Repair a short to power in the HPUMP H wire between the PCM (C13) and the high pressure fuel pump.

NO

Go to step 13.

13. Shorted wire check (HPUMP L line to power)

-1. Measure the voltage between test points 1 and 2.

Test condition	Vehicle ON mode
	PCM connector A (51P): disconnected
	PCM connector C (51P): disconnected
	High pressure fuel pump 2P connector: disconnected
Test point 1	**PCM connector C (51P) No. 14**
Test point 2	Body ground

Is there voltage?

YES

Repair a short to power in the HPUMP L wire between the PCM (C14) and the high pressure fuel pump.

NO

Go to step 14.

14. Shorted wire check (HPUMP H line)

-1. Turn the vehicle to the OFF (LOCK) mode.

-2. Check for continuity between test points 1 and 2.

Test condition	Vehicle OFF (LOCK) mode
	PCM connector A (51P): disconnected
	PCM connector C (51P): disconnected
	High pressure fuel pump 2P connector: disconnected
Test point 1	**PCM connector C (51P) No. 13**
Test point 2	Body ground

Is there continuity?

YES

Repair a short in the HPUMP H wire between the PCM (C13) and the high pressure fuel pump.

NO

Go to step 15.

15. Shorted wire check (HPUMP L line)

-1. Check for continuity between test points 1 and 2.

Test condition	Vehicle OFF (LOCK) mode
	PCM connector A (51P): disconnected
	PCM connector C (51P): disconnected
	High pressure fuel pump 2P connector: disconnected
Test point 1	**PCM connector C (51P) No. 14**
Test point 2	Body ground

Is there continuity?

YES

Repair a short in the HPUMP L wire between the PCM (C14) and the high pressure fuel pump.

NO

The HPUMP L wire is OK. Check for any authorized service information related to the DTCs or symptoms you are troubleshooting, or **substitute a known-good PCM** .

DTC P2646 (2.4 L ENGINE) (2017 2018 2019)

DTC P2646 : Rocker Arm Oil Pressure Switch Circuit Low Voltage

Special Tools Required

Pressure Gauge Adapter 07NAJ-P07010A

A/T Low Pressure Gauge w/Panel 07406-0070301

A/T Pressure Test Hose 07AAJ-PY4A100

A/T Pressure Adapter 07MAJ-PY40120

Oil Pressure Hose 07ZAJ-S5AA200

NOTE:

- **How to read the torque specifications** .
- Before you troubleshoot, **review the general troubleshooting information**.
- If DTC P2648 and/or P2649 are stored at the same time as DTC P2646, troubleshoot those DTCs first, then recheck for DTC P2646.

DTC Description	Confirmed DTC	Pending DTC
P2646 Rocker Arm Oil Pressure Switch Circuit Low Voltage	B	B

DTC (PGM-FI)

1. Oil level check

   -1. **Check the engine oil level** .

   Is the level OK?

   YES

   Go to step 2.

   NO

   Adjust the engine oil to the proper level .

2. Problem verification

   -1. Turn the vehicle to the ON mode.

   -2. Clear the DTC with the HDS.

-3. Do the VTEC TEST in the INSPECTION MENU with the HDS.

VTEC TEST

Is the result OK?

YES

Intermittent failure, the system is OK at this time. Check for poor connections or loose terminals at the rocker arm oil pressure switch and the PCM. **If the on-board snapshot of this DTC is recorded, try to reproduce the failure under the same conditions with the on-board snapshot**.

NO

The failure is duplicated. Go to step 3.

3. Determine possible failure area (VTM line, others)

-1. Turn the vehicle to the OFF (LOCK) mode.

-2. Disconnect the following connector.

Rocker arm oil pressure switch 2P connector

-3. Turn the vehicle to the ON mode.

-4. Check the parameter (s) below with the HDS.

Signal	Threshold		Current conditions	
	Values	Unit	Values	Unit
VTEC PRES SW	ON	B	B	B

Do the current condition (s) match the threshold?

YES

Go to step 5.

NO

Go to step 4.

4. VTEC system oil pressure check

-1. Turn the vehicle to the OFF (LOCK) mode.

-2. Remove the rocker arm oil pressure switch (A), and attach the special tools as shown, then attach the rocker arm oil pressure switch to the oil pressure gauge adapter (B).

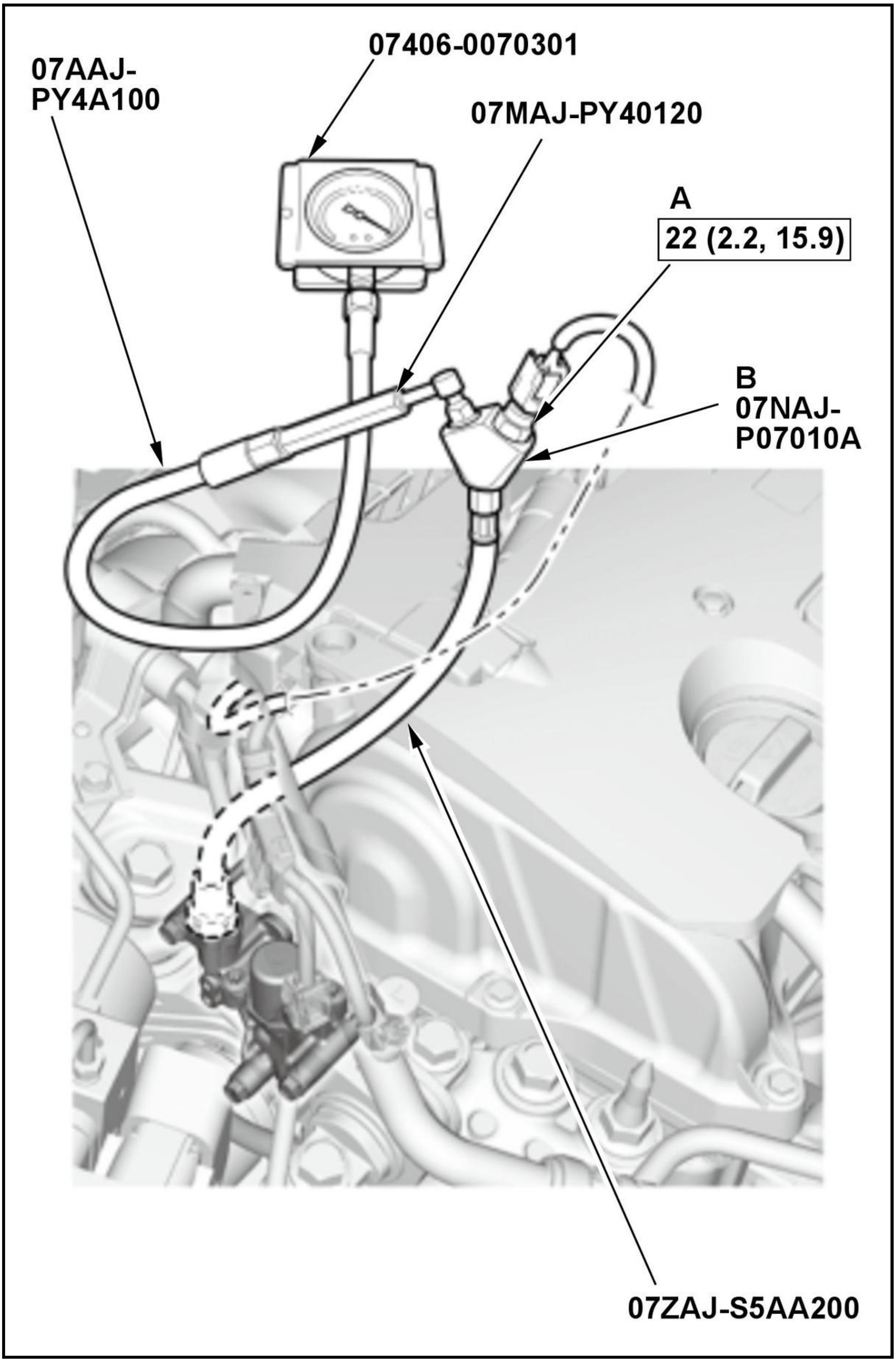
07AAJ-
PY4A100
07406-0070301
07MAJ-PY40120
A
22 (2.2, 15.9)
B
07NAJ-
P07010A
07ZAJ-S5AA200

-3. Reconnect the following connector.

Rocker arm oil pressure switch 2P connector

-4. Start the engine.

-5. Do the VTEC TEST in the INSPECTION MENU with the HDS.

VTEC TEST

Check the oil pressure.

Does the oil pressure increase to 392 kPa (4.00 kgf/cm 2, 56.9 psi)?

YES

Replace the rocker arm oil pressure switch .

NO

Inspect the VTEC system. If it is OK, **replace the rocker arm oil control valve** .

5. Shorted wire check (VTM line)

-1. Turn the vehicle to the OFF (LOCK) mode.

-2. Jump the SCS line with the HDS, and wait more than 1 minute.

-3. Disconnect the following connector.

PCM connector B (51P)

-4. Check for continuity between test points 1 and 2.

Test condition	Vehicle OFF (LOCK) mode
B	Rocker arm oil pressure switch 2P connector: disconnected
B	PCM connector B (51P): disconnected
Test point 1	**PCM connector B (51P) No. 21**
Test point 2	Body ground

Is there continuity?

YES

Repair a short in the VTM wire between the PCM (B21) and the rocker arm oil pressure switch.

NO

The VTM wire is OK. Check for any authorized service information related to the DTCs or symptoms you are troubleshooting, or **substitute a known-good PCM** .

DTC P2647 (2.4 L ENGINE) (2017 2018 2019)

DTC P2647 : Rocker Arm Oil Pressure Switch Circuit High Voltage

NOTE:

- Before you troubleshoot, **review the general troubleshooting information**.
- If DTC P2648 and/or P2649 are stored at the same time as DTC P2647, troubleshoot those DTCs first, then recheck for DTC P2647.

DTC Description	Confirmed DTC	Pending DTC
P2647 Rocker Arm Oil Pressure Switch A (Bank 1) Circuit High Voltage	B	B

DTC (PGM-FI)

1. Oil level check

   -1. **Check the engine oil level** .

   Is the level OK?

   YES

   Go to step 2.

   NO

   Adjust the engine oil to the proper level .

2. Problem verification

   -1. Turn the vehicle to the ON mode.

   -2. Clear the DTC with the HDS.

   -3. Do the VTEC TEST in the INSPECTION MENU with the HDS.

   VTEC TEST

   Is the result OK?

   YES

   Intermittent failure, the system is OK at this time. Check for poor connections or loose terminals at the rocker arm oil pressure switch and the PCM. **If the on-board snapshot of this DTC is recorded, try to reproduce the failure under the same conditions with the on-board snapshot**.

   NO

   The failure is duplicated. Go to step 3.

3. Rocker arm oil pressure switch internal circuit check

   -1. Turn the vehicle to the OFF (LOCK) mode.

   -2. Disconnect the following connector.

Rocker arm oil pressure switch 2P connector

   -3. At the rocker arm oil pressure switch side, check for continuity between test points 1 and 2.

Test condition	Vehicle OFF (LOCK) mode
B	Rocker arm oil pressure switch 2P connector: disconnected
Test point 1	Rocker arm oil pressure switch 2P connector (male terminals) No. 1 (rocker arm oil pressure switch side): ①
Test point 2	Rocker arm oil pressure switch 2P connector (male terminals) No. 2 (rocker arm oil pressure switch side): ①

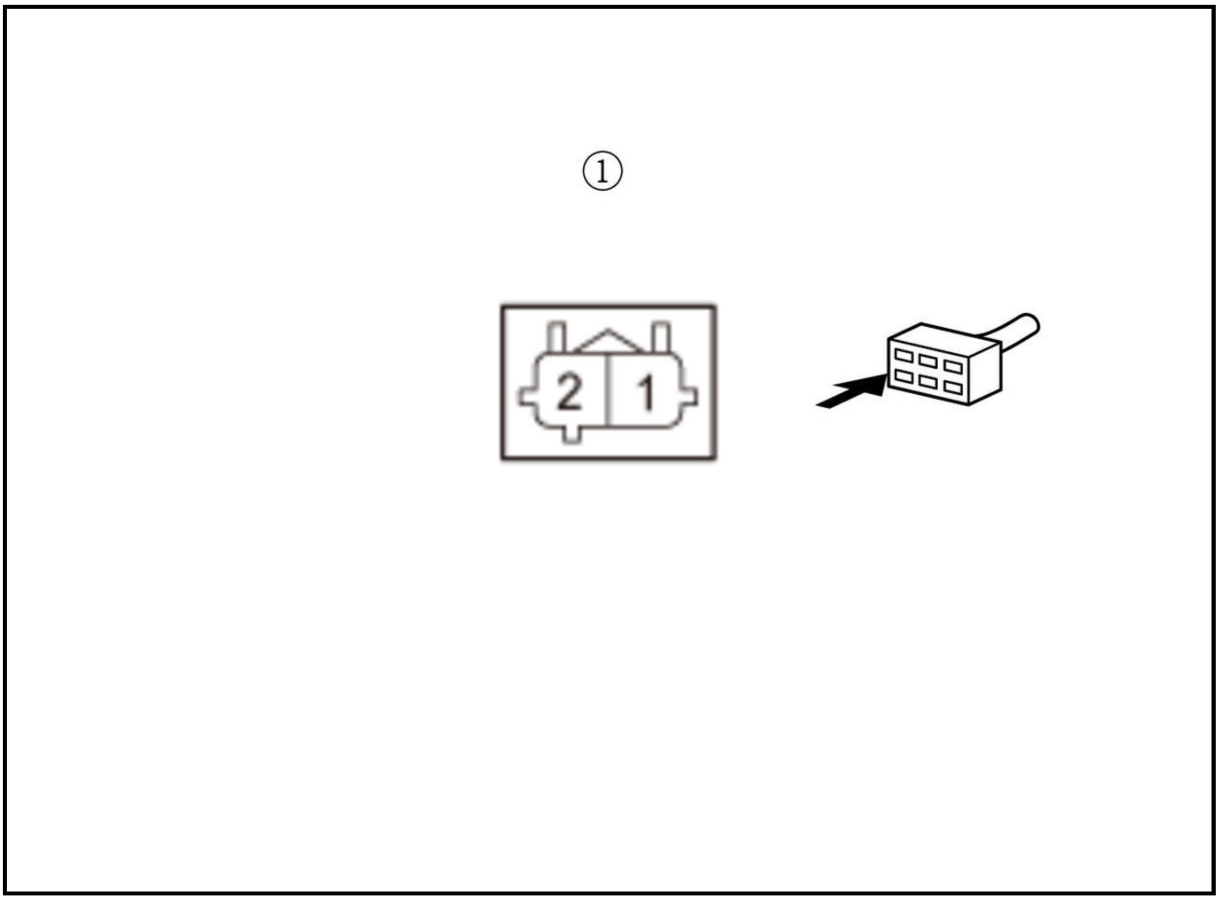

Is there continuity?

YES

Go to step 4.

NO

Replace the rocker arm oil pressure switch .

4. Open wire check (VTM line)

-1. Jump the SCS line with the HDS, and wait more than 1 minute.

-2. Disconnect the following connector.

PCM connector B (51P)

-3. Check for continuity between test points 1 and 2.

Test condition	Vehicle OFF (LOCK) mode
B	Rocker arm oil pressure switch 2P connector: disconnected
B	PCM connector B (51P): disconnected
Test point 1	Rocker arm oil pressure switch 2P connector (female terminals) No. 2: ①
Test point 2	**PCM connector B (51P) No. 21**

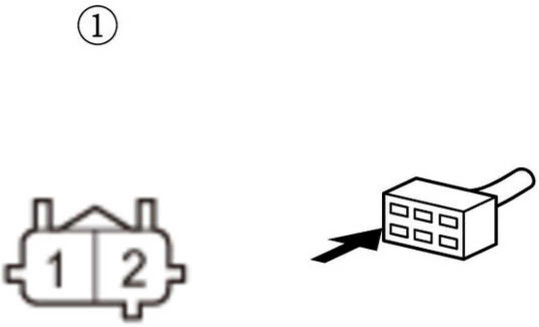

Is there continuity?

YES

Go to step 5.

NO

Repair an open in the VTM wire between the PCM (B21) and the rocker arm oil pressure switch.

5. Open wire check (LG (VTM) line)

-1. Check for continuity between test points 1 and 2.

Test condition	Vehicle OFF (LOCK) mode
	Rocker arm oil pressure switch 2P connector: disconnected
	PCM connector B (51P): disconnected
Test point 1	Rocker arm oil pressure switch 2P connector (female terminals) No. 1: ①
Test point 2	Body ground

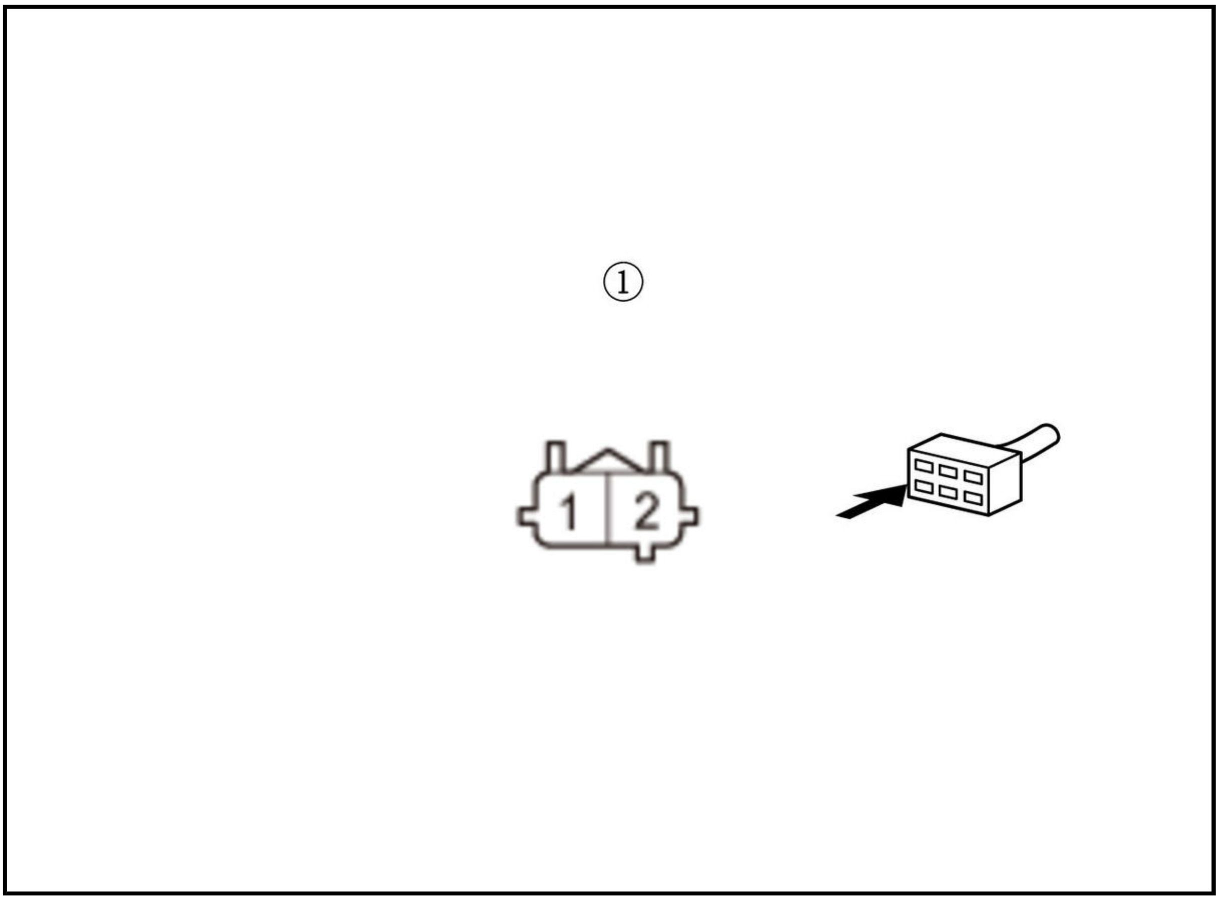

Is there continuity?

YES

The LG (VTM) wire is OK. Check for any authorized service information related to the DTCs or symptoms you are troubleshooting, or **substitute a known-good PCM** .

NO

Repair an open in the LG (VTM) wire between the rocker arm oil pressure switch and G101.

DTC P2648 (2.4 L ENGINE) (2017 2018 2019)

DTC P2648 : Rocker Arm Oil Control Solenoid Circuit Low Voltage

NOTE: Before you troubleshoot, **review the general troubleshooting information**.

DTC Description	Confirmed DTC	Pending DTC
P2648 Rocker Arm Oil Control Solenoid Circuit Low Voltage	B	B

DTC (PGM-FI)

1. Problem verification

-1. Turn the vehicle to the ON mode.

-2. Clear the DTC with the HDS.

-3. Do the VTEC TEST in the INSPECTION MENU with the HDS.

VTEC TEST

Check for Pending or Confirmed DTCs with the HDS.

DTC Description	Confirmed DTC	Pending DTC
P2648 Rocker Arm Oil Control Solenoid Circuit Low Voltage	B	B

Is DTC P2648 indicated?

YES

The failure is duplicated. Go to step 2.

NO

Intermittent failure, the system is OK at this time. Check for poor connections or loose terminals at the rocker arm oil control solenoid and the PCM. **If the on-board snapshot of this DTC is recorded, try to reproduce the failure under the same conditions with the on-board snapshot**.

2. Rocker arm oil control solenoid internal resistance check

-1. Turn the vehicle to the OFF (LOCK) mode.

-2. Disconnect the following connector.

Rocker arm oil control solenoid 2P connector

-3. At the rocker arm oil control solenoid side, measure the resistance between test points 1 and 2.

Test condition	Vehicle OFF (LOCK) mode
B	Rocker arm oil control solenoid 2P connector: disconnected
Test point 1	Rocker arm oil control solenoid 2P connector (male terminals) No. 1 (rocker arm oil control solenoid side): ①
Test point 2	Rocker arm oil control solenoid 2P connector (male terminals) No. 2 (rocker arm oil control solenoid side): ①

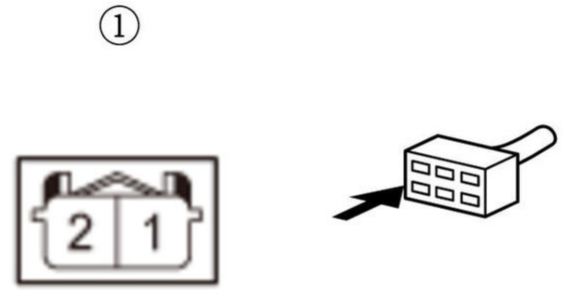

Is there 14-30 Ω at room temperature?

YES

Go to step 3.

NO

Replace the rocker arm oil control valve (rocker arm oil control solenoid) .

3. Shorted wire check (VTS line)

-1. Jump the SCS line with the HDS, and wait more than 1 minute.

-2. Disconnect the following connector.

PCM connector B (51P)

-3. Check for continuity between test points 1 and 2.

Test condition	Vehicle OFF (LOCK) mode
B	Rocker arm oil control solenoid 2P connector: disconnected
B	PCM connector B (51P): disconnected
Test point 1	**PCM connector B (51P) No. 18**
Test point 2	Body ground

Is there continuity?

YES

Repair a short in the VTS wire between the PCM (B18) and the rocker arm oil control solenoid.

NO

The VTS wire is OK. Check for any authorized service information related to the DTCs or symptoms you are troubleshooting or **substitute a known-good PCM** .

DTC P2649 (2.4 L ENGINE) (2017 2018 2019)

DTC P2649 : Rocker Arm Oil Control Solenoid Circuit High Voltage

NOTE: Before you troubleshoot, **review the general troubleshooting information**.

DTC Description	Confirmed DTC	Pending DTC
P2649 Rocker Arm Oil Control Solenoid Circuit High Voltage	B	B

DTC (PGM-FI)

1. Problem verification

-1. Turn the vehicle to the ON mode.

-2. Clear the DTC with the HDS.

-3. Do the VTEC TEST in the INSPECTION MENU with the HDS.

VTEC TEST

Check for Pending or Confirmed DTCs with the HDS.

DTC Description	Confirmed DTC	Pending DTC
P2649 Rocker Arm Oil Control Solenoid Circuit High Voltage	B	B

Is DTC P2649 indicated?

YES

The failure is duplicated. Go to step 2.

NO

Intermittent failure, the system is OK at this time. Check for poor connections or loose terminals at the rocker arm oil control solenoid and the PCM. **If the on-board snapshot of this DTC is recorded, try to reproduce the failure under the same conditions with the on-board snapshot**.

2. Rocker arm oil control solenoid internal resistance check

-1. Turn the vehicle to the OFF (LOCK) mode.

-2. Disconnect the following connector.

Rocker arm oil control solenoid 2P connector

-3. At the rocker arm oil control solenoid side, measure the resistance between test points 1 and 2.

Test condition	Vehicle OFF (LOCK) mode
B	Rocker arm oil control solenoid 2P connector: disconnected
Test point 1	Rocker arm oil control solenoid 2P connector (male terminals) No. 1 (rocker arm oil control solenoid side): ①
Test point 2	Rocker arm oil control solenoid 2P connector (male terminals) No. 2 (rocker arm oil control solenoid side): ①

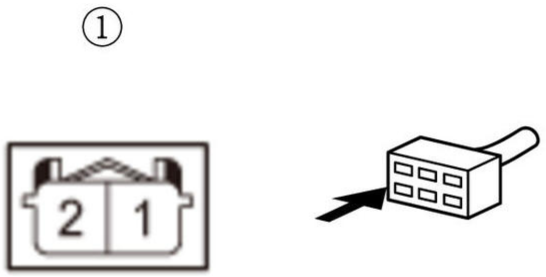

Is there 14-30 Ω at room temperature?

YES

Go to step 3.

NO

Replace the rocker arm oil control valve (rocker arm oil control solenoid) .

3. Open wire check (PG line)

-1. Check for continuity between test points 1 and 2.

Test condition	Vehicle OFF (LOCK) mode
B	Rocker arm oil control solenoid 2P connector: disconnected
Test point 1	Rocker arm oil control solenoid 2P connector (female terminals) No. 2: ①
Test point 2	Body ground

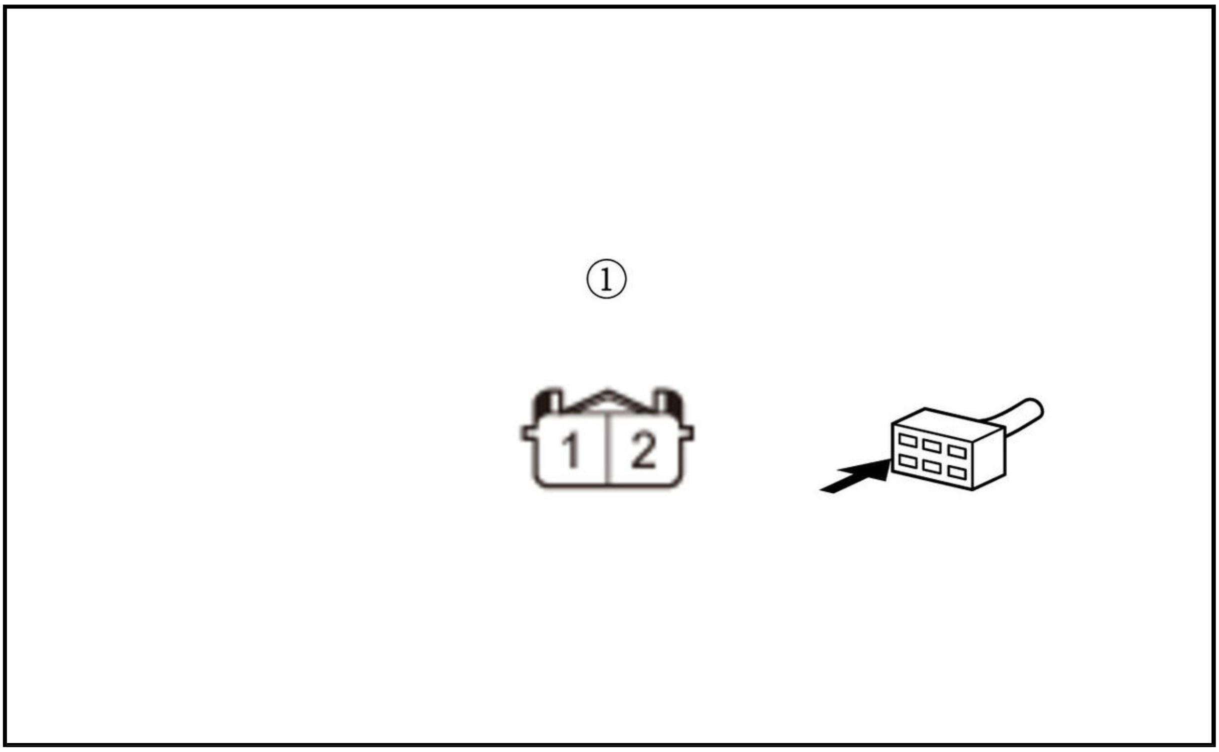

Is there continuity?

YES

The PG line is OK. Go to step 4.

NO

Repair an open in the PG wire between the rocker arm oil control solenoid and G101.

4. Open wire check (VTS line)

-1. Jump the SCS line with the HDS, and wait more than 1 minute.

-2. Disconnect the following connector.

PCM connector B (51P)

-3. Check for continuity between test points 1 and 2.

Test condition	Vehicle OFF (LOCK) mode
B	Rocker arm oil control solenoid 2P connector: disconnected
B	PCM connector B (51P): disconnected

Test point 1	Rocker arm oil control solenoid 2P connector (female terminals) No. 1: ①
Test point 2	**PCM connector B (51P) No. 18**

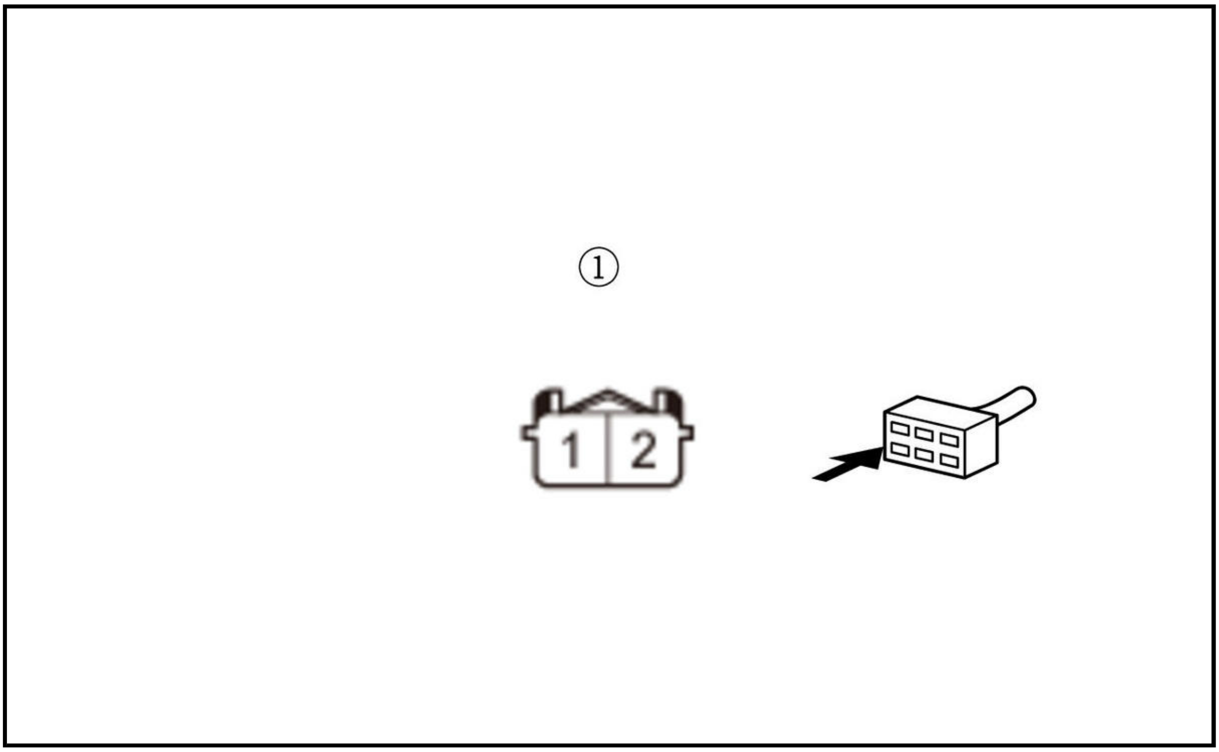

Is there continuity?

YES

The VTS wire is OK. Check for any authorized service information related to the DTCs or symptoms you are troubleshooting or **substitute a known-good PCM** .

NO

Repair an open in the VTS wire between the PCM (B18) and the rocker arm oil control solenoid.

DTC P2715 (CVT (ECM/PCM))

DTC P2715 : Pressure Control Solenoid D Stuck On

NOTE: Before you troubleshoot, **review the General Troubleshooting Information** .

DTC Description	Confirmed DTC	Pending DTC	Freeze Frame
P2715 Pressure Control Solenoid D Stuck On	B	B	B

DTC (CVT)

1. Problem verification

-1. Turn the vehicle to the ON mode.

-2. Clear the DTC with the HDS.

-3. Start the engine. With the brake pedal pressed, Shift the transmission to N position/mode, then shift to D position/mode. Release the brake pedal, and test-drive the vehicle in D position/mode at speeds 12 mph (20 km/h) or below for at least 10 seconds.

-4. Turn the engine off. Repeat the test-drive in step 1-3 again.

-5. Check for Pending or Confirmed DTCs with the HDS.

DTC Description	Confirmed DTC	Pending DTC	Freeze Frame
P2715 Pressure Control Solenoid D Stuck On	B	B	B

Is DTC P2715 indicated?

YES

The failure is duplicated. Faulty CVT lock-up clutch control solenoid valve. **Replace the valve body assembly** .

NO

Intermittent failure, the system is OK at this time. If the freeze data/on-board snapshot of this DTC is recorded, try to reproduce the failure under the same conditions with the freeze data/on-board snapshot.

DTC P2720 (CVT (ECM/PCM))

DTC P2720 : Pressure Control Solenoid D Control Circuit Low

NOTE:

- Before you troubleshoot, **review the General Troubleshooting Information** .
- This code is caused by an electrical circuit problem and cannot be caused by a mechanical problem in the transmission.

DTC Description	Confirmed DTC	Pending DTC	Freeze Frame
P2720 Pressure Control Solenoid D Control Circuit Low	B	B	B

DTC (CVT)

1. Problem verification

-1. Turn the vehicle to the ON mode.

-2. Clear the DTC with the HDS.

-3. Start the engine, and wait for at least 1 second.

-4. Check for Pending or Confirmed DTCs with the HDS.

DTC Description	Confirmed DTC	Pending DTC	Freeze Frame
P2720 Pressure Control Solenoid D Control Circuit Low	B	B	B

Is DTC P2720 indicated?

YES

The failure is duplicated. Go to step 2.

NO

Intermittent failure, the system is OK at this time. Check for poor connections or loose terminals between the CVT lock-up clutch control solenoid valve and the PCM. If the freeze data/on-board snapshot of this

DTC is recorded, try to reproduce the failure under the same conditions with the freeze data/on-board snapshot.

2. IG1 MISS SOL line check

-1. Turn the vehicle to the OFF (LOCK) mode.

-2. Jump the SCS line with the HDS, and wait more than 1 minute.

NOTE: This step must be done to protect the PCM from damage.

-3. Disconnect the following connector.

PCM connector A (51P)

-4. Turn the vehicle to the ON mode.

-5. Measure the voltage between test points 1 and 2.

Test condition	Vehicle ON mode
B	PCM connector A (51P): disconnected
Test point 1	**PCM connector A (51P) No. 11**
Test point 2	Body ground

Is there battery voltage?

YES

The IG1 MISS SOL wire is OK. Go to step 3.

NO

Check for a blown No. D4 (10 A) fuse in the under-dash fuse/relay box. If the fuse is blown, replace it. If the fuse blows again, repair a short in the No. D4 (10 A) fuse circuit. If the fuse is OK, repair an open in the IG1 MISS SOL wire between the PCM and the under-dash fuse/relay box.

3. CVT lock-up clutch control solenoid valve check

-1. Turn the vehicle to the OFF (LOCK) mode.

-2. Jump the SCS line with the HDS, and wait more than 1 minute.

NOTE: This step must be done to protect the PCM from damage.

-3. Disconnect the following connector.

PCM connector C (51P)

-4. Measure the resistance between test points 1 and 2.

Test condition	Vehicle OFF (LOCK) mode
B	PCM connector C (51P): disconnected
Test point 1	**PCM connector C (51P) No. 3**
Test point 2	Body ground

Is there 5.0-6.3 Ω?

YES

The CVT lock-up clutch control solenoid valve is OK. Check for any authorized service information related to the DTCs or symptoms you are troubleshooting, or **replace the original PCM** .

NO

Go to step 4.

4. Shorted wire check (LCC LS line)

-1. Disconnect the following connector.

Solenoid wire harness A 8P connector

-2. Check for continuity between test points 1 and 2.

Test condition	Vehicle OFF (LOCK) mode
B	Solenoid wire harness A 8P connector: disconnected
B	PCM connector C (51P): disconnected
Test point 1	**PCM connector C (51P) No. 3**
Test point 2	Body ground

Is there continuity?

YES

Repair a short to body ground in the LCC LS wire between the solenoid wire harness A 8P connector and the PCM.

NO

Go to step 5.

5. CVT lock-up clutch control solenoid valve internal resistance check

-1. **Remove the valve body assembly** .

-2. Disconnect the following connector.

CVT lock-up clutch control solenoid valve 2P connector

-3. Measure the resistance between test points 1 and 2.

Test condition	Vehicle OFF (LOCK) mode
B	Valve body assembly: removed
B	Solenoid wire harness B 6P connector: disconnected
B	CVT lock-up clutch control solenoid valve 2P connector: disconnected
Test point 1	CVT lock-up clutch control solenoid valve 2P connector (male terminals) No. 1 : ①
Test point 2	CVT lock-up clutch control solenoid valve 2P connector (male terminals) No. 2 : ①

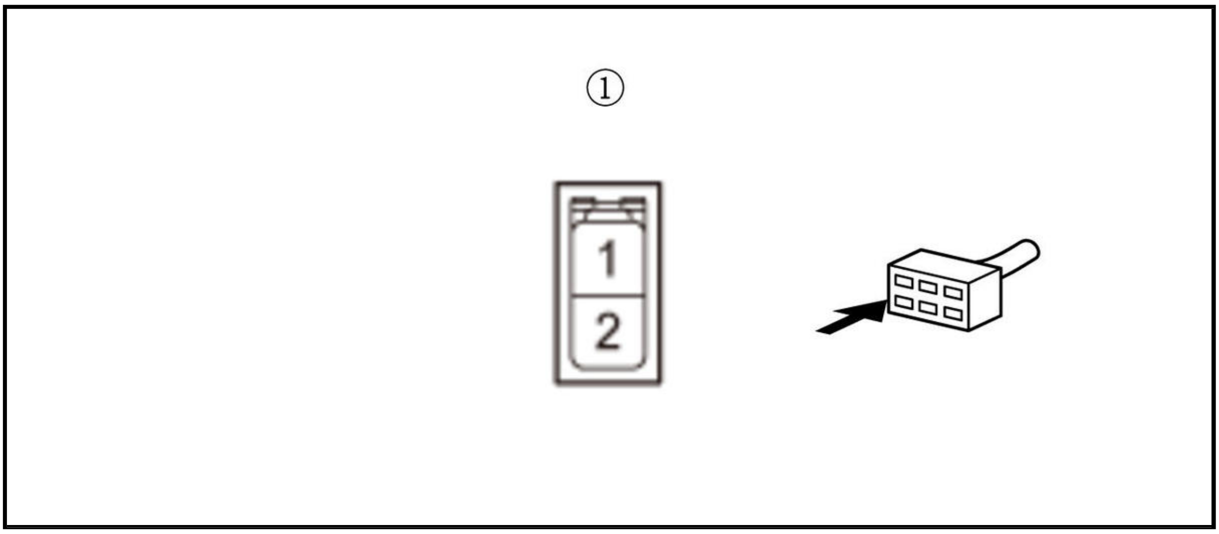

Is there 5.0-6.3 Ω?

YES

Go to step 6.

NO

Faulty CVT lock-up clutch control solenoid valve. **Replace the valve body assembly** .

6. Determine shorted wire in either solenoid wire harness A or B (LCC+ line)

-1. Check for continuity between test points 1 and 2.

Test condition	Vehicle OFF (LOCK) mode
B	Valve body assembly: removed
B	Solenoid wire harness B 6P connector: disconnected
B	CVT lock-up clutch control solenoid valve 2P connector: disconnected
Test point 1	Solenoid wire harness B 6P connector (male terminals) No. 4 : ①
Test point 2	Body ground (valve body assembly)

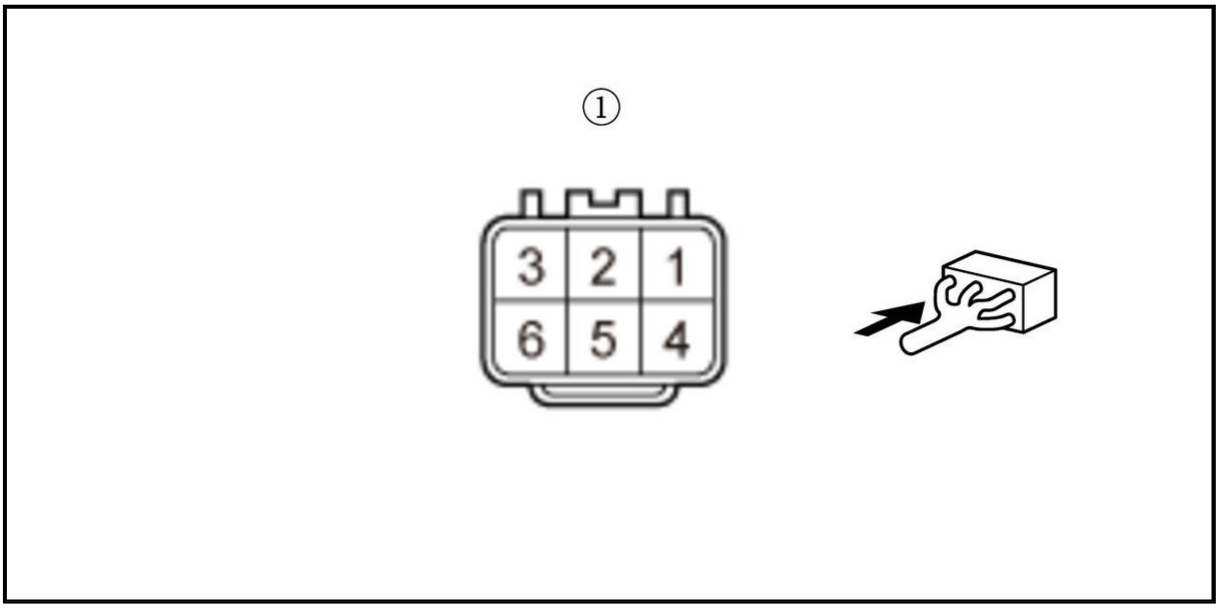

Is there continuity?

YES

Repair a short to body ground in the LCC+ wire between the CVT lock-up clutch control solenoid valve and the solenoid wire harness B 6P connector.

NO

Repair a short to body ground in the LCC+ wire between the solenoid wire harness A 6P connector and the solenoid wire harness A 8P connector.

DTC P2721 (CVT (ECM/PCM))

DTC P2721 : Pressure Control Solenoid D Control Circuit High

NOTE:

- Before you troubleshoot, **review the General Troubleshooting Information** .
- This code is caused by an electrical circuit problem and cannot be caused by a mechanical problem in the transmission.

DTC Description	Confirmed DTC	Pending DTC	Freeze Frame
P2721 Pressure Control Solenoid D Control Circuit High	B	B	B

DTC (CVT)

1. Problem verification

   -1. Turn the vehicle to the ON mode.

   -2. Clear the DTC with the HDS.

   -3. Start the engine, and wait for at least 1 second.

   -4. Check for Pending or Confirmed DTCs with the HDS.

DTC Description	Confirmed DTC	Pending DTC	Freeze Frame
P2721 Pressure Control Solenoid D Control Circuit High	B	B	B

   Is DTC P2721 indicated?

   YES

   The failure is duplicated. Go to step 2.

   NO

   Intermittent failure, the system is OK at this time. Check for poor connections or loose terminals between the CVT lock-up clutch control solenoid valve and the PCM. If the freeze data/on-board snapshot of this DTC is recorded, try to reproduce the failure under the same conditions with the freeze data/on-board snapshot.

2. CVT lock-up clutch control solenoid valve check

   -1. Turn the vehicle to the OFF (LOCK) mode.

   -2. Jump the SCS line with the HDS, and wait more than 1 minute.

   NOTE: This step must be done to protect the PCM from damage.

-3. Disconnect the following connector.

PCM connector C (51P)

-4. Measure the resistance between test points 1 and 2.

Test condition	Vehicle OFF (LOCK) mode
B	PCM connector C (51P): disconnected
Test point 1	**PCM connector C (51P) No. 3**
Test point 2	Body ground

Is there 5.0-6.3 Ω?

YES

The CVT lock-up clutch control solenoid valve is OK. Check for any authorized service information related to the DTCs or symptoms you are troubleshooting, or **replace the original PCM** .

NO

Go to step 3.

3. Shorted wire check (LCC LS line to power)

-1. Disconnect the following connector.

Solenoid wire harness A 8P connector

-2. Turn the vehicle to the ON mode.

-3. Measure the voltage between test points 1 and 2.

Test condition	Vehicle ON mode
B	Solenoid wire harness A 8P connector : disconnected
B	PCM connector C (51P): disconnected
Test point 1	**PCM connector C (51P) No. 3**
Test point 2	Body ground

Is there voltage?

YES

Repair a short to power in the LCC LS wire between the solenoid wire harness A 8P connector and the PCM.

NO

The LCC LS wire is not shorted to power. Go to step 4.

4. Open wire check (LCC LS line)

-1. Check for continuity between test points 1 and 2.

Test condition	Vehicle OFF (LOCK) mode
B	Solenoid wire harness A 8P connector: disconnected
B	PCM connector C (51P): disconnected
Test point 1	Solenoid wire harness A 8P connector (female terminals) No. 4 : ①
Test point 2	**PCM connector C (51P) No. 3**

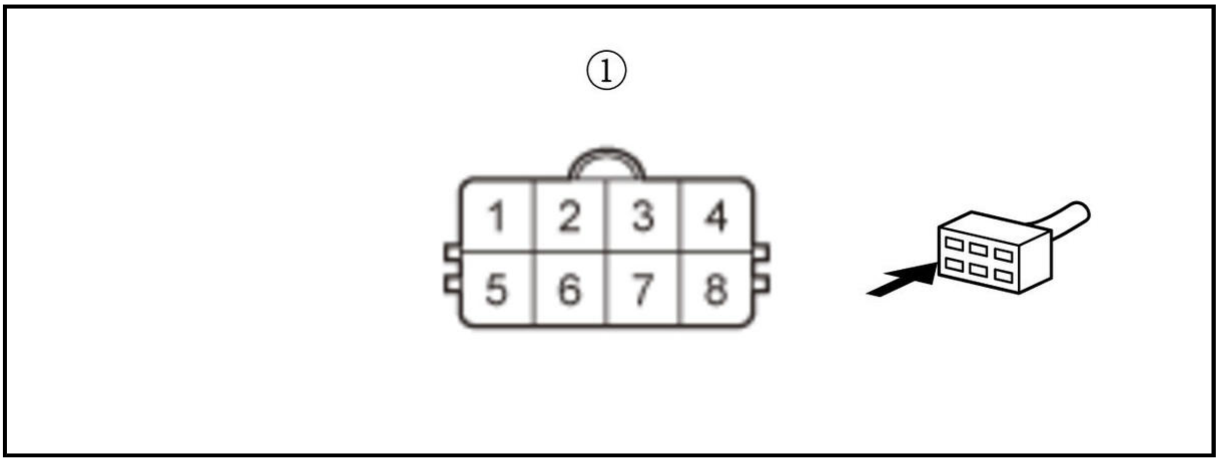

Is there continuity?

YES

Go to step 5.

NO

Repair an open in the LCC LS wire between the solenoid wire harness A 8P connector and the PCM.

5. Open wire check (GND1 line, GND2 line)

-1. Check for continuity between test points 1 and 2.

Test condition	Vehicle OFF (LOCK) mode
B	PCM connector B (51P): disconnected
Test Circuit 1	B
Test point 1	**PCM connector B (51P) No. 11**
Test point 2	Body ground
Test Circuit 2	B
Test point 1	**PCM connector B (51P) No. 12**
Test point 2	Body ground

Are there continuity?

YES

Go to step 6.

NO

Repair an open in GND1 wire and/or GND2 wire between the PCM and body ground (G101), or repair poor body ground (G101).

6. CVT lock-up clutch control solenoid valve internal resistance check

-1. **Remove the valve body assembly** .

-2. Disconnect the following connector.

CVT lock-up clutch control solenoid valve 2P connector

-3. Measure the resistance between test points 1 and 2.

Test condition	Vehicle OFF (LOCK) mode
B	Valve body assembly: removed
B	Solenoid wire harness B 6P connector: disconnected
B	CVT lock-up clutch control solenoid valve 2P connector: disconnected
Test point 1	CVT lock-up clutch control solenoid valve 2P connector (male terminals) No. 1 : ①
Test point 2	CVT lock-up clutch control solenoid valve 2P connector (male terminals) No. 2 : ①

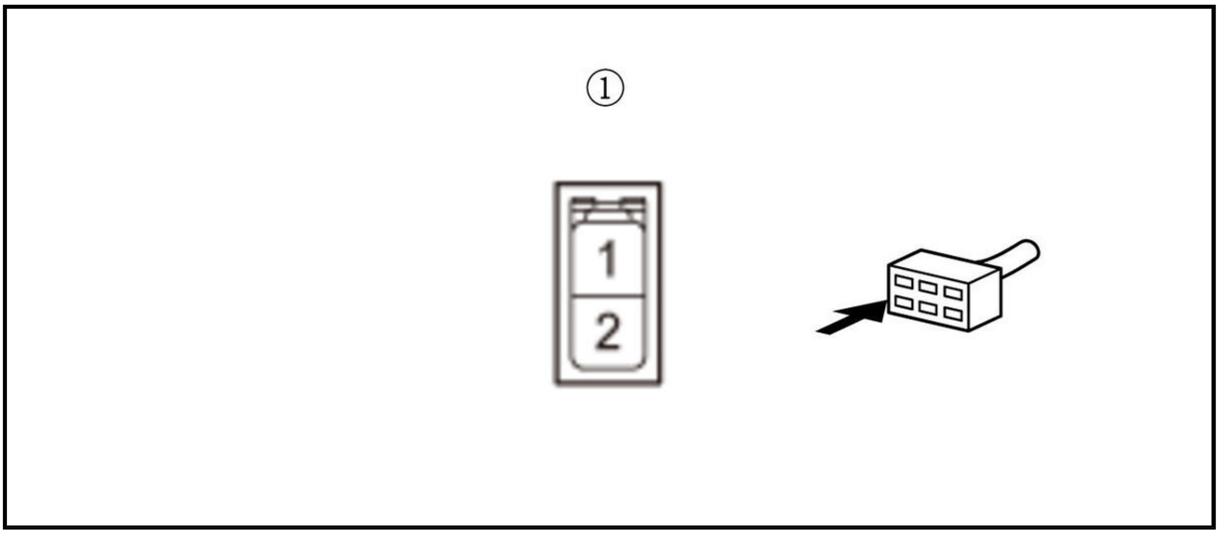

Is there 5.0-6.3 Ω?

YES

Go to step 7.

NO

Faulty CVT lock-up clutch control solenoid valve. Replace the valve body assembly .

7. Open wire check (LCC- line)

-1. Check for continuity between test points 1 and 2.

Test condition	Vehicle OFF (LOCK) mode
B	Valve body assembly: removed
B	Solenoid wire harness B 6P connector: disconnected
B	CVT lock-up clutch control solenoid valve 2P connector: disconnected
Test point 1	CVT lock-up clutch control solenoid valve 2P connector (female terminals) No. 1 : ①
Test point 2	Body ground (valve body assembly)

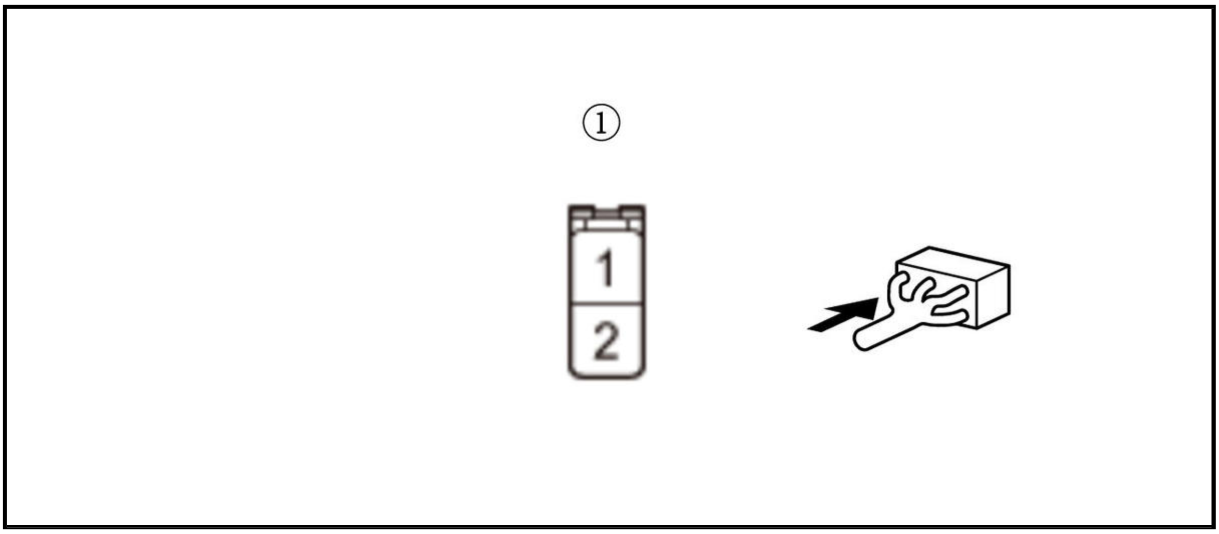

Is there continuity?

YES

Go to step 8.

NO

Repair an open in the LCC- wire between the CVT lock-up clutch control solenoid valve and body ground (G162), or repair poor body ground (G162).

8. Determine opened wire in either solenoid wire harness A or B (LCC+ line)

-1. Check for continuity between test points 1 and 2.

Test condition	Vehicle OFF (LOCK) mode
B	Lower valve body: removed
B	Solenoid wire harness B 6P connector: disconnected
B	CVT lock-up clutch control solenoid valve 2P connector: disconnected
Test point 1	Solenoid wire harness B 6P connector (male terminals) No. 4 : ①
Test point 2	CVT lock-up clutch control solenoid valve 2P connector (female terminals) No. 2 : ②

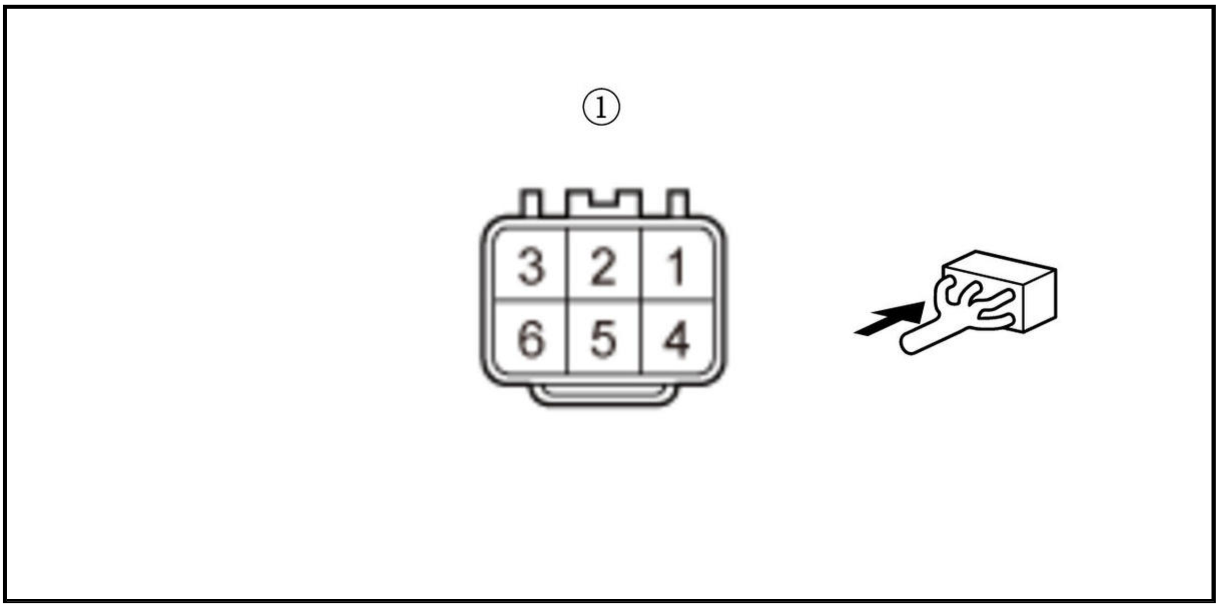

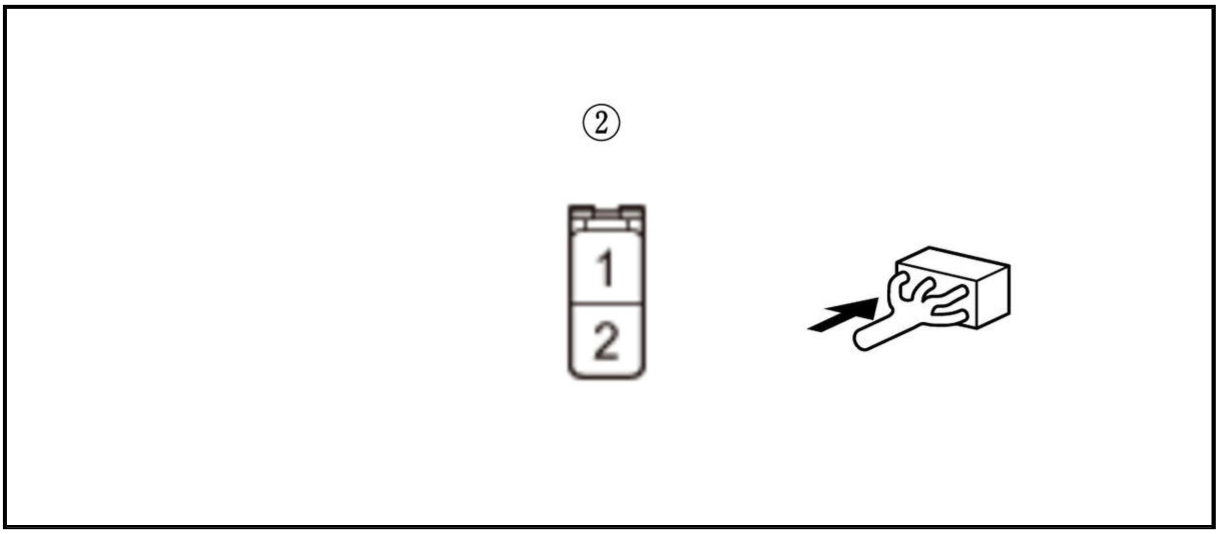

Is there continuity?

YES

Repair an open in the LCC+ wire between the solenoid wire harness A 6P connector and the solenoid wire harness A 8P connector.

NO

Repair an open in the LCC+ wire between the CVT lock-up clutch control solenoid valve and the solenoid wire harness B 6P connector.

DTC P2817 (CVT (ECM/PCM))

DTC P2817 : Shift Solenoid Valve O/P (Pressure Control Solenoid H) Stuck Off

NOTE: Before you troubleshoot, review the General Troubleshooting Information .

DTC Description	Confirmed DTC	Pending DTC	Freeze Frame
P2817 Shift Solenoid Valve O/P (Pressure Control Solenoid H) Stuck Off	B	B	B

DTC (CVT)

1. DTC check

   -1. Turn the vehicle to the ON mode.

   -2. Clear the DTC with the HDS.

   -3. Start the engine. With the brake pedal pressed, Shift the transmission to N position/mode, then shift to D position/mode. Release the brake pedal, and test-drive the vehicle in D position/mode at speeds 12 mph (20 km/h) or below for at least 10 seconds.

   -4. Turn the engine off. Repeat the test-drive in step 1-3 again.

   -5. Check for Pending or Confirmed DTCs with the HDS.

DTC Description	Confirmed DTC	Pending DTC	Freeze Frame
P2817 Shift Solenoid Valve O/P (Pressure Control Solenoid H) Stuck Off	B	B	B

Is DTC P2817 indicated?

YES

The failure is duplicated. Go to step 2.

NO

Intermittent failure, the system is OK at this time. If the freeze data/on-board snapshot of this DTC is recorded, try to reproduce the failure under the same conditions with the freeze data/on-board snapshot.

2. Shift Solenoid Valve O/P operation check

   -1. Select the Shift Solenoid Valve O/P Test in the Miscellaneous Test Menu, and check that the shift solenoid valve O/P operates with the HDS.

   Does the shift solenoid valve O/P work properly?

   YES

   The shift solenoid valve O/P is OK. **Replace the transmission fluid pump** .

   NO

   Faulty the shift solenoid valve O/P. **Replace the shift solenoid valve O/P** .

DTC P2818 (CVT (ECM/PCM))

DTC P2818 : Shift Solenoid Valve O/P (Pressure Control Solenoid H) Stuck On

NOTE: Before you troubleshoot, **review the General Troubleshooting Information** .

DTC Description	Confirmed DTC	Pending DTC	Freeze Frame
P2818 Shift Solenoid Valve O/P (Pressure Control Solenoid H) Stuck On	B	B	B

DTC (CVT)

1. DTC check

   -1. Turn the vehicle to the ON mode.

   -2. Clear the DTC with the HDS.

   -3. Start the engine. With the brake pedal pressed, Shift the transmission to N position/mode, then shift to D position/mode. Release the brake pedal, and test-drive the vehicle in D position/mode at speeds 25 mph (40 km/h) or below for at least 10 seconds.

   -4. Turn the engine off. Repeat the test-drive in step 1-3 again.

   -5. Check for Pending or Confirmed DTCs with the HDS.

DTC Description	Confirmed DTC	Pending DTC	Freeze Frame
P2818 Shift Solenoid Valve O/P (Pressure Control Solenoid H) Stuck On	B	B	B

   Is DTC P2818 indicated?

   YES

   The failure is duplicated. Go to step 2.

NO

Intermittent failure, the system is OK at this time. If the freeze data/on-board snapshot of this DTC is recorded, try to reproduce the failure under the same conditions with the freeze data/on-board snapshot.

2. Shift Solenoid Valve O/P operation check

-1. Select the Shift Solenoid Valve O/P Test in the Miscellaneous Test Menu, and check that the shift solenoid valve O/P operates with the HDS.

Does the shift solenoid valve O/P work properly?

YES

The shift solenoid valve O/P is OK. **Replace the transmission fluid pump** .

NO

Faulty the shift solenoid valve O/P. **Replace the shift solenoid valve O/P** .

DTC P281D, P281E (CVT (ECM/PCM))

DTC P281D : Shift Solenoid Valve O/P (Pressure Control Solenoid H) Control Circuit Low **DTC P281E** : Shift Solenoid Valve O/P (Pressure Control Solenoid H) Control Circuit High

NOTE:

- Before you troubleshoot, **review the General Troubleshooting Information** .
- This code is caused by an electrical circuit problem and cannot be caused by a mechanical problem in the transmission.

DTC Description	Confirmed DTC	Pending DTC	Freeze Frame
P281D Shift Solenoid Valve O/P (Pressure Control Solenoid H) Control Circuit Low	B	B	B
P281E Shift Solenoid Valve O/P (Pressure Control Solenoid H) Control Circuit High	B	B	B

DTC (CVT)

1. Problem verification

-1. Turn the vehicle to the ON mode.

-2. Clear the DTC with the HDS.

-3. Select the Shift Solenoid Valve O/P Test in the Miscellaneous Test Menu, and check that the shift solenoid valve O/P operates with the HDS.

-4. Check for Pending or Confirmed DTCs with the HDS.

DTC Description	Confirmed DTC	Pending DTC	Freeze Frame
P281D Shift Solenoid Valve O/P (Pressure Control Solenoid H) Control Circuit Low	B	B	B
P281E Shift Solenoid Valve O/P (Pressure Control Solenoid H) Control Circuit High	B	B	B

Is DTC P281D indicated?

YES

The failure is duplicated. Go to step 2.

NO

Intermittent failure, the system is OK at this time. Check for poor connections or loose terminals between the shift solenoid valve O/P and the PCM. If the freeze data/on-board snapshot of this DTC is recorded, try to reproduce the failure under the same conditions with the freeze data/on-board snapshot.

2. Shift solenoid valve O/P check

-1. Turn the vehicle to the OFF (LOCK) mode.

-2. Jump the SCS line with the HDS, and wait more than 1 minute.

NOTE: This step must be done to protect the PCM from damage.

-3. Disconnect the following connector.

PCM connector C (51P)

-4. Measure the resistance between test points 1 and 2.

Test condition	Vehicle OFF (LOCK) mode
B	PCM connector C (51P): disconnected
Test point 1	**PCM connector C (51P) No. 17**
Test point 2	Body ground

Is there 10.6-13.5 Ω?

YES

The shift solenoid valve O/P is OK. Check for any authorized service information related to the DTCs or symptoms you are troubleshooting, or **replace the original PCM** .

NO

Go to step 3.

3. Shorted wire check (SOL C line)

-1. Disconnect the following connector.

Solenoid wire harness A 8P connector

-2. Check for continuity between test points 1 and 2.

Test condition	Vehicle OFF (LOCK) mode
B	Solenoid wire harness A 8P connector: disconnected
B	PCM connector C (51P): disconnected
Test point 1	**PCM connector C (51P) No. 17**
Test point 2	Body ground

Is there continuity?

YES

Repair a short to body ground in the SOL C wire between the solenoid wire harness A 8P connector and the PCM.

NO

Go to step 4.

4. Shift solenoid valve O/P internal resistance check

-1. Disconnect the following connector.

Shift solenoid valve O/P 2P connector

-2. Measure the resistance between test points 1 and 2.

Test condition	Vehicle OFF (LOCK) mode
B	Shift solenoid valve O/P 2P connector: disconnected
Test point 1	Shift solenoid valve O/P 2P connector (male terminals) No. 1 : ①
Test point 2	Body ground

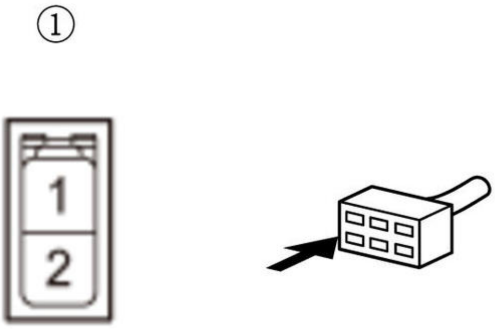

Is there 10.6-13.5 Ω?

YES

The shift solenoid valve O/P is OK. Repair a short to body ground in the SHC+ wire between the solenoid wire harness A 8P connector and the shift solenoid valve O/P.

NO

Replace the shift solenoid valve O/P .

DTC P2A00 (1.5 L ENGINE)

DTC P2A00 : A/F Sensor (Sensor 1) Circuit Range/Performance Problem

NOTE: Before you troubleshoot, **review the general troubleshooting information**.

DTC Description	Confirmed DTC	Pending DTC
P2A00 A/F Sensor (Sensor 1) Circuit Range/Performance Problem	B	B

DTC (PGM-FI)

1. Problem verification

-1. Turn the vehicle to the ON mode.

-2. Clear the DTC with the HDS.

-3. Turn the vehicle to the OFF (LOCK) mode.

-4. Start the engine.

-5. Hold the engine speed at 3, 000 rpm without load (in P or N) until the radiator fan comes on, then let it idle.

-6. Test-drive the vehicle under these conditions:

- Engine coolant temperature (ECT SENSOR 1) above 158 deg. F (70 deg. C)
- Transmission in D
- Vehicle speed between 25 - 55 mph (40 - 90 km/h) for 5 minutes
- Drive at a steady speed between 55 - 75 mph (90 - 120 km/h) for 10 seconds, then decelerate (with throttle fully closed) for 4 seconds or more

Signal	**Current conditions**	
	Values	**Unit**
ECT SENSOR 1	B	B
ENGINE SPEED	B	B

-7. Monitor the OBD STATUS for DTC P2A00 in the DTCs MENU with the HDS.

DTC Description	**OBD Status**
P2A00 A/F Sensor (Sensor 1) Circuit Range/Performance Problem	B

Does the HDS indicate FAILED?

YES

The failure is duplicated. **Replace the A/F sensor (Sensor 1)** .

NO

If the HDS indicates PASSED, intermittent failure, the system is OK at this time. Check for poor connections or loose terminals at the A/F sensor (Sensor 1) and the PCM. **If the on-board snapshot of this DTC is recorded, try to reproduce the failure under the same conditions with the on-board snapshot**. If the HDS indicates EXECUTING, keep driving until a result comes on. If the HDS indicates OUT OF CONDITION, go to step 1-5 and recheck.

DTC P2A00 (2.4 L ENGINE) (2017 2018 2019)

DTC P2A00 : A/F Sensor (Sensor 1) Circuit Range/Performance Problem

NOTE: Before you troubleshoot, **review the general troubleshooting information**.

DTC Description	**Confirmed DTC**	**Pending DTC**
P2A00 A/F Sensor (Sensor 1) Circuit Range/Performance Problem	B	B

DTC (PGM-FI)

1. Problem verification

-1. Turn the vehicle to the ON mode.

-2. Clear the DTC with the HDS.

-3. Start the engine.

-4. Hold the engine speed at 3, 000 rpm without load (in P or N) until the radiator fan comes on, then let it idle.

-5. Test-drive under these conditions:

- Engine coolant temperature (ECT SENSOR 1) above 158 deg. F (70 deg. C)
- Transmission in D
- Vehicle speed between 25 - 55 mph (40 - 90 km/h) for 5 minutes
- Drive at a steady speed between 55 - 75 mph (90 - 120 km/h) for 10 seconds, then decelerate (with throttle fully closed) for 5 seconds or more

Signal	Current conditions	
	Values	Unit
ECT SENSOR 1	B	B
ENGINE SPEED	B	B

-6. Monitor the OBD STATUS for DTC P2A00 in the DTCs MENU with the HDS.

DTC Description	OBD Status
P2A00 A/F Sensor (Sensor 1) Circuit Range/Performance Problem	B

Does the HDS indicate FAILED?

YES

The failure is duplicated. **Replace the A/F sensor (Sensor 1)** .

NO

If the HDS indicates PASSED, intermittent failure, the system is OK at this time. Check for poor connections or loose terminals at the A/F sensor (Sensor 1) and the PCM. **If the on-board snapshot of this DTC is recorded, try to reproduce the failure under the same conditions with the on-board snapshot**. If the HDS indicates EXECUTING, keep driving until a result comes on. If the HDS indicates OUT OF CONDITION, go to step 1-4 and recheck.

DTC P2A01 (1.5 L ENGINE) (2018 2019 2020 2021)

DTC P2A01 : Secondary HO2S (Sensor 2) Circuit Range/Performance Problem

NOTE: Before you troubleshoot, **review the general troubleshooting information**.

DTC Description	Confirmed DTC	Pending DTC
P2A01 Secondary HO2S (Sensor 2) Circuit Range/Performance Problem	B	B

DTC (PGM-FI)

1. Problem verification

-1. Turn the vehicle to the ON mode.

-2. Clear the DTC with the HDS.

-3. Turn the vehicle to the OFF (LOCK) mode.

-4. Start the engine, and let it idle without load (in P or N) until the radiator fan comes on, then let it idle.

-5. Monitor the OBD STATUS for DTC P0137 in the DTCs MENU with the HDS.

DTC Description	OBD STATUS
P2A01 Secondary HO2S (Sensor 2) Circuit Range/Performance Problem	B

Does the HDS indicate FAILED?

YES

Go to step 2.

NO

If the HDS indicates PASSED, intermittent failure, the system is OK at this time. Check for poor connections or loose terminals at secondary HO2S (Sensor 2) and the PCM. **If the on-board snapshot of this DTC is recorded, try to reproduce the failure under the same conditions with the on-board snapshot**. If the HDS indicates EXECUTING, keep idling until a result comes on. If the HDS indicates OUT OF CONDITION, go to step 1-4 and recheck.

2. Determine possible failure area (secondary HO2S (Sensor 2), others)

-1. Turn the vehicle to the OFF (LOCK) mode.

-2. Disconnect the following connector.

Secondary HO2S (Sensor 2) 4P connector

-3. Turn the vehicle to the ON mode.

-4. Check the parameter (s) below with the HDS.

Signal	Threshold		Current conditions	
	Values	Unit	Values	Unit
HO2S S2	Less than 1.54	V	B	B

Do the current condition (s) match the threshold?

YES

Go to step 3.

NO

Replace the secondary HO2S (Sensor 2) .

3. Determine possible failure area (short in SO2 line, short in SO2SG/SO2 SG line)

-1. Turn the vehicle to the OFF (LOCK) mode.

-2. Check for continuity between test points 1 and 2.

Test condition	Vehicle OFF (LOCK) mode
B	Secondary HO2S (Sensor 2) 4P connector: disconnected

Test point 1	Secondary HO2S (Sensor 2) 4P connector (male terminals) No. 1: ①
Test point 2	Body ground

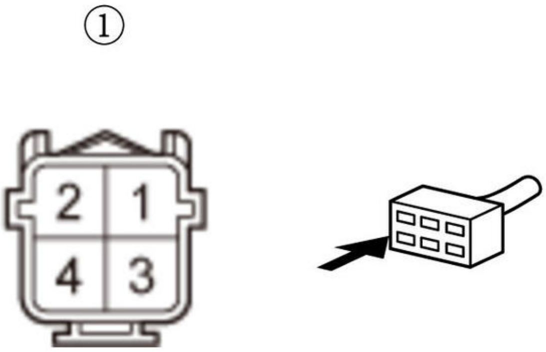

Is there continuity?

YES

Go to step 4.

NO

Go to step 5.

4. Shorted wire check (SO2 line)

-1. Jump the SCS line with the HDS, and wait more than 1 minute.

-2. Disconnect the following connector.

PCM connector A (50P)

-3. Check for continuity between test points 1 and 2.

Test condition	Vehicle OFF (LOCK) mode
B	PCM connector A (50P): disconnected
B	Secondary HO2S (Sensor 2) 4P connector: disconnected
Test point 1	Secondary HO2S (Sensor 2) 4P connector (male terminals) No. 1: ①
Test point 2	Body ground

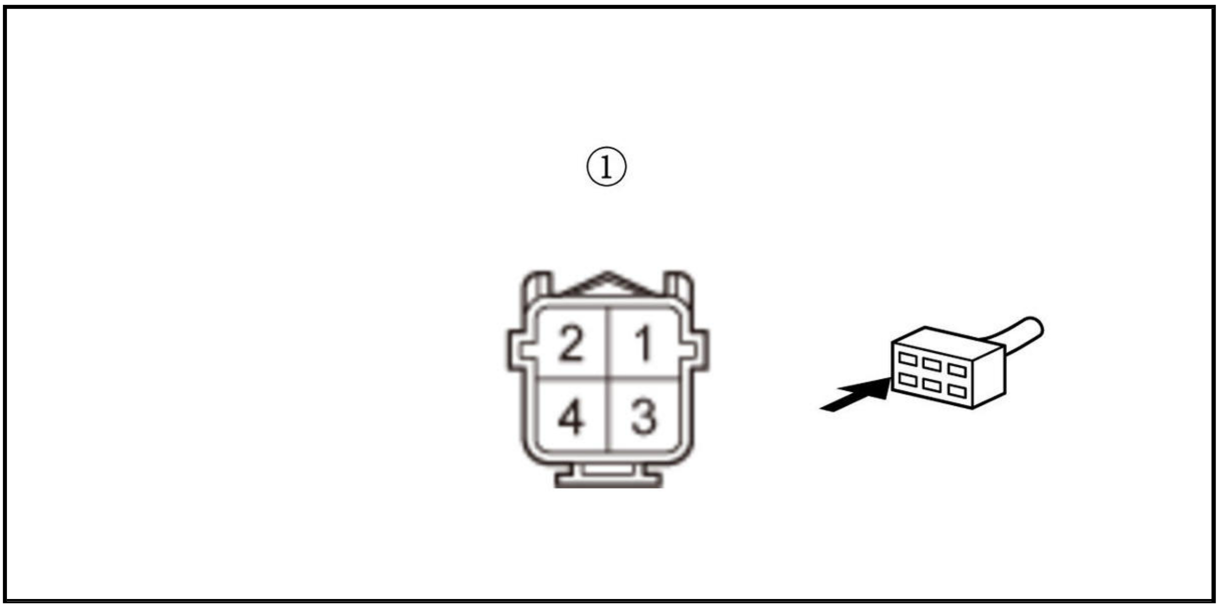

Is there continuity?

YES

Repair a short in the SO2 wire between the PCM (A47) and secondary HO2S (Sensor 2).

NO

The SO2 wire is OK. Check for any authorized service information related to the DTCs or symptoms you are troubleshooting, or **substitute a known-good PCM** .

5. Shorted wire check (SO2SG/SO2 SG line)

-1. Jump the SCS line with the HDS, and wait more than 1 minute.

-2. Disconnect the following connector.

PCM connector A (50P)

-3. Check for continuity between test points 1 and 2.

Test condition	Vehicle OFF (LOCK) mode
B	PCM connector A (50P): disconnected
B	Secondary HO2S (Sensor 2) 4P connector: disconnected
Test point 1	Secondary HO2S (Sensor 2) 4P connector (male terminals) No. 2: ①
Test point 2	Body ground

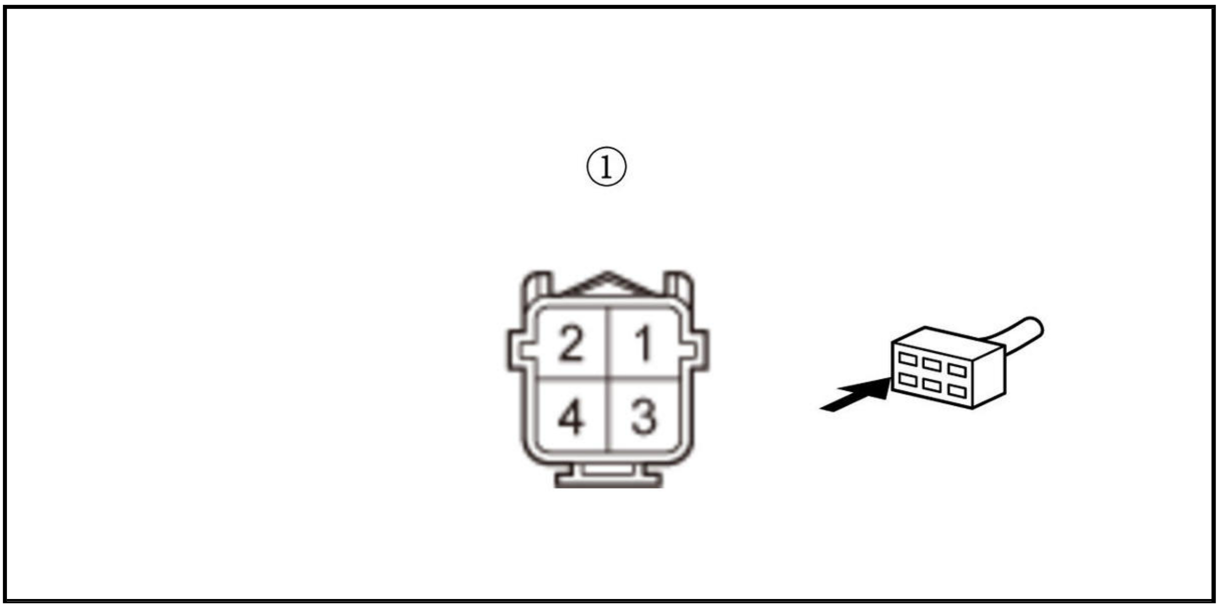

Is there continuity?

YES

Repair a short in the SO2SG/SO2 SG wire between the PCM (A48) and secondary HO2S (Sensor 2).

NO

The SO2SG/SO2 SG wire is OK. Check for any authorized service information related to the DTCs or symptoms you are troubleshooting, or **substitute a known-good PCM** .

DTC P2DE0 (1.5 L ENGINE) (2020 2021)

DTC P2DE0 : Cold Start Air Fuel Ratio Control System Lean

NOTE:

- Before you troubleshoot, **review the general troubleshooting information**.
- If DTC P2DE0 is indicated alone, do the troubleshooting for DTC P0171 using the on-board snapshot for P2DE0.

DTC Description	Confirmed DTC	Pending DTC
P2DE0 Cold Start Air Fuel Ratio Control System Lean	B	B

DTC (PGM-FI)

1. Problem verification

-1. Turn the vehicle to the ON mode.

-2. Let the engine cool until the value of ECT SENSOR 1 is 122 deg. F (50 deg. C) or less.

Signal	Current conditions	
	Values	Unit
ECT Sensor 1	B	B

-3. Clear the DTC with the HDS.

-4. Turn the vehicle to the OFF (LOCK) mode.

-5. Start the engine, and let it idle for 10 seconds or more.

-6. Check for Pending or Confirmed DTCs with the HDS.

DTC Description	Confirmed DTC	Pending DTC
P2DE0 Cold Start Air Fuel Ratio Control System Lean	B	B

Is DTC P2DE0 indicated?

YES

The failure is duplicated. Do the troubleshooting for **DTC P0171** using the on-board snapshot for P2DE0.

NO

Intermittent failure, the system is OK at this time. **If the on-board snapshot of this DTC is recorded, try to reproduce the failure under the same conditions with the on-board snapshot**.

DTC P2DE1 (1.5 L ENGINE) (2020 2021)

DTC P2DE1 : Cold Start Air Fuel Ratio Control System Rich

NOTE:

- Before you troubleshoot, **review the general troubleshooting information**.
- If DTC P2DE1 is indicated alone, do the troubleshooting for DTC P0172 using the on-board snapshot for P2DE1.

DTC Description	Confirmed DTC	Pending DTC
P2DE1 Cold Start Air Fuel Ratio Control System Rich	B	B

DTC (PGM-FI)

1. Problem verification

-1. Turn the vehicle to the ON mode.

-2. Let the engine cool until the value of ECT SENSOR 1 is 122 deg. F (50 deg. C) or less.

Signal	Current conditions	
	Values	Unit
ECT Sensor 1	B	B

-3. Clear the DTC with the HDS.

-4. Turn the vehicle to the OFF (LOCK) mode.

-5. Start the engine, and let it idle for 10 seconds or more.

-6. Check for Pending or Confirmed DTCs with the HDS.

DTC Description	Confirmed DTC	Pending DTC
P2DE1 Cold Start Air Fuel Ratio Control System Rich	B	B

Is DTC P2DE1 indicated?

YES

The failure is duplicated. Do the troubleshooting for DTC P0172 using the on-board snapshot for P2DE1.

NO

Intermittent failure, the system is OK at this time. If the on-board snapshot of this DTC is recorded, try to reproduce the failure under the same conditions with the on-board snapshot.

DTC U0029 (PGM-FI SYSTEM (1.5 L ENGINE))

DTC U0029 : F-CAN Malfunction (BUS-OFF (PCM))

NOTE: Before you troubleshoot, review the general troubleshooting information.

DTC Description	Confirmed DTC	Pending DTC
U0029 F-CAN Malfunction (BUS-OFF (PCM))	B	B

DTC (PGM-FI)

1. CAN gateway system DTC check

   -1. Turn the vehicle to the ON mode.

   -2. Clear the DTC with the HDS.

   -3. Turn the vehicle to the OFF (LOCK) mode.

   -4. Turn the vehicle to the ON mode, and wait 6 seconds.

   -5. Check for CAN gateway system DTCs with the HDS.

DTC Description	DTC
B	B

DTC (CAN gateway)

Are any DTCs indicated?

YES

Go to the troubleshooting for CAN gateway system DTC (s) .

NO

Intermittent failure, the system is OK at this time.

DTC U0029 (PGM-FI SYSTEM (2.4 L ENGINE)) (2017 2018 2019)

DTC U0029 : F-CAN Malfunction (BUS-OFF (PCM))

NOTE: Before you troubleshoot, review the general troubleshooting information.

DTC Description	Confirmed DTC	Pending DTC
U0029 F-CAN Malfunction (BUS-OFF (PCM))	B	B

DTC (PGM-FI)

1. Problem verification

-1. Turn the vehicle to the ON mode.

-2. Clear the DTC with the HDS.

-3. Check for Pending or Confirmed DTCs with the HDS.

DTC Description	Confirmed DTC	Pending DTC
U0029 F-CAN Malfunction (BUS-OFF (PCM))	B	B

Is DTC U0029 indicated?

YES

The failure is duplicated. Check for any authorized service information related to the DTCs or symptoms you are troubleshooting or **substitute a known-good PCM** .

NO

Intermittent failure, the system is OK at this time. **If the on-board snapshot of this DTC is recorded, try to reproduce the failure under the same conditions with the on-board snapshot**.

DTC U0038 (PGM-FI SYSTEM (1.5 L ENGINE))

DTC U0038 : PT-CAN Malfunction (TCM ECU BUS-OFF)

NOTE:

- Before you troubleshoot, **review the general troubleshooting information**.
- According to the detected DTC (s), check for the power circuit and the ground circuit of the control unit which cannot communicate with the PCM.

DTC Description	Confirmed DTC	Pending DTC
U0038 PT-CAN Malfunction (TCM ECU BUS-OFF)	B	B

DTC (PGM-FI)

1. Problem verification

-1. Turn the vehicle to the ON mode.

-2. Clear the DTC with the HDS.

-3. Turn the vehicle to the OFF (LOCK) mode.

-4. Turn the vehicle to the ON mode.

-5. Check for Pending or Confirmed DTCs with the HDS.

DTC Description	Confirmed DTC	Pending DTC
U0038 PT-CAN Malfunction (TCM ECU BUS-OFF)	B	B

Is DTC U0038 indicated?

YES

Go to step 2.

NO

Intermittent failure, the system is OK at this time. Check for poor connections or loose terminals at the TCM and the PCM. **If the on-board snapshot of this DTC is recorded, try to reproduce the failure under the same conditions with the on-board snapshot**.

2. CVT system check

-1. Check for communication to the CVT system with the HDS.

Does the HDS communicate with the CVT system?

YES

Go to step 3.

NO

Go to the symptom troubleshooting for CVT system .

3. Open wire check (TM-CAN H line)

-1. Turn the vehicle to the OFF (LOCK) mode.

-2. Jump the SCS line with the HDS, and wait more than 1 minute.

-3. Disconnect the following connectors.

PCM connector A (50P)
TCM 50P connector

-4. Check for continuity between test points 1 and 2.

Test condition	Vehicle OFF (LOCK) mode
	PCM connector A (50P): disconnected
	TCM 50P connector: disconnected
Test point 1	**TCM 50P connector No. 4**
Test point 2	**PCM connector A (50P) No. 21**

Is there continuity?

YES

Go to step 4.

NO

Repair an open in the TM-CAN H wire between the PCM (A21) and the TCM.

4. Open wire check (TM-CAN L line)

-1. Check for continuity between test points 1 and 2.

Test condition	Vehicle OFF (LOCK) mode
	PCM connector A (50P): disconnected
	TCM 50P connector: disconnected
Test point 1	**TCM 50P connector No. 12**
Test point 2	**PCM connector A (50P) No. 20**

Is there continuity?

YES

The TM-CAN L wire is OK. Check for any authorized service information related to the DTCs or symptoms you are troubleshooting, or **substitute a known-good PCM** .

NO

Repair an open in the TM-CAN L wire between the PCM (A20) and the TCM.

DTC U0047 (PGM-FI SYSTEM (1.5 L ENGINE))

DTC U0047 : F-CAN Malfunction For The Second Channel (BUS-OFF (PCM))

NOTE: Before you troubleshoot, **review the general troubleshooting information**.

DTC Description	Confirmed DTC	Pending DTC
U0047 F-CAN Malfunction For The Second Channel (BUS-OFF (PCM))	B	B

DTC (PGM-FI)

1. CAN gateway system DTC check

   -1. Turn the vehicle to the ON mode.

   -2. Clear the DTC with the HDS.

   -3. Turn the vehicle to the OFF (LOCK) mode.

   -4. Turn the vehicle to the ON mode, and wait 6 seconds.

   -5. Check for CAN gateway system DTCs with the HDS.

DTC Description	DTC
B	B

DTC (CAN gateway)

Are any DTCs indicated?

YES

Go to the troubleshooting for CAN gateway system DTC (s) .

NO

Intermittent failure, the system is OK at this time.

DTC U0101, U0104, U0114, U0122, U0128, U0129, U0131, U0151, U0155, U129E (PGM-FI SYSTEM (1.5 L ENGINE))

DTC U0101 : F-CAN Malfunction (PCM-TCM)**DTC U0104** : F-CAN Malfunction (PCM-Driving Support System Control Unit)**DTC U0114** : F-CAN Malfunction (PCM-AWD Control Unit)**DTC U0122** : F-CAN Malfunction (PCM-VSA Modulator-Control Unit)**DTC U0128** : F-CAN Malfunction (PCM-Electric Parking Brake Control Unit)**DTC U0129** : F-CAN Malfunction (PCM-Electric Brake Booster)**DTC U0131** : F-CAN Malfunction (PCM-EPS Control Unit)**DTC U0151** : F-CAN Malfunction (PCM-SRS Unit)**DTC U0155** : F-CAN Malfunction (PCM-Gauge Control Module)**DTC U129E** : F-CAN Malfunction (PCM-Power Control Unit (PCU))

NOTE:

- Before you troubleshoot, **review the general troubleshooting information**.
- According to the detected DTC (s), confirm the control unit that the PCM lost communication with has the proper power supply and ground connection. Refer to the input testing for that control unit if necessary.
- Before disconnecting the SRS unit connector, **do the 12 volt battery terminal disconnection procedure** , and wait for at least 3 minutes.
- Before disconnecting the TCM connector, jump the SCS line with the HDS, and wait more than 1 minute.
- Before disconnecting the electric brake booster connector, turn the vehicle to the OFF (LOCK) mode with driver's door open, then wait 3 minutes. Do not open and close the driver's door.
- Information marked with an asterisk (*) applies to the CAN gateway (16P connector type).

DTC Description	Confirmed DTC	Pending DTC
U0101 F-CAN Malfunction (PCM-TCM)	B	B
U0104 F-CAN Malfunction (PCM-Driving Support System Control Unit)	B	B
U0114 F-CAN Malfunction (PCM-AWD Control Unit)	B	B
U0122 F-CAN Malfunction (PCM-VSA Control Module Unit)	B	B
U0128 F-CAN Malfunction (PCM-Electric Parking Brake Control Unit)	B	B
U0129 F-CAN Malfunction (PCM-Electric Brake Booster)	B	B
U0131 F-CAN Malfunction (PCM-EPS Control Unit)	B	B
U0151 F-CAN Malfunction (PCM-SRS Unit)	B	B
U0155 F-CAN Malfunction (PCM-Gauge Control Module)	B	B
U129E F-CAN Malfunction (PCM-Power Control Unit (PCU))	B	B

DTC (PGM-FI)

1. CAN gateway system DTC check

   -1. Turn the vehicle to the ON mode, and wait 6 seconds.

   -2. Check for CAN gateway system DTCs with the HDS.

DTC Description	DTC
U0029-00 CAN Gateway F-CAN ch A Bus Off	B
U0047-00 CAN Gateway F-CAN ch B Bus Off	B
U3000-49 CAN Gateway Internal Failure	B

   DTC (CAN gateway)

   Is DTC U0029-00, U0047-00, and/or U3000-49 indicated?

   YES

   Go to the troubleshooting for CAN gateway system DTCs .

   NO

   Go to step 2.

2. F-CAN circuit communication check (Receiving control unit)

-1. Select the FUNCTION TEST in the CAN gateway with the HDS, then select the F-CAN Bus Connected Unit Check.

F-CAN Bus Connected Unit Check

Which result is indicated?

Bus A is Not Available

Go to step 3.

Bus B is Not Available

Go to step 4.

Bus A and B are Available

Go to step 5.

3. Open wire check (F-CAN A H line, F-CAN A L line) 1

-1. Turn the vehicle to the OFF (LOCK) mode.

-2. Jump the SCS line with the HDS, and wait more than 1 minute.

-3. Disconnect the following connectors.

CAN gateway 12P (16P)* connector
PCM connector A (50P)

-4. Measure the resistance between test points 1 and 2.

Test condition	Vehicle OFF (LOCK) mode
B	CAN gateway 12P (16P)* connector: disconnected
B	PCM connector A (50P): disconnected
Test point 1	CAN gateway 12P connector (female terminal) No. 3: ① CAN gateway 16P connector (female terminal) No. 3: ② *
Test point 2	**PCM connector A (50P) No. 37**

Test point 1	CAN gateway 12P connector (female terminal) No. 9: ① CAN gateway 16P connector (female terminals) No. 11: ② *
Test point 2	**PCM connector A (50P) No. 36**

12P Connector Type

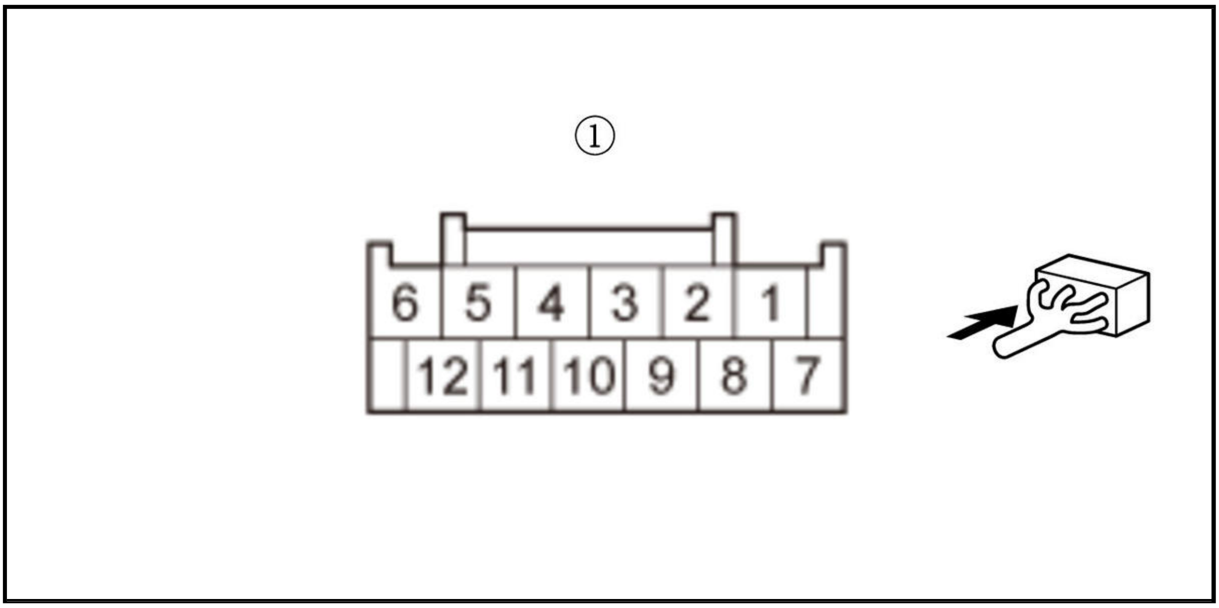

16P Connector Type*

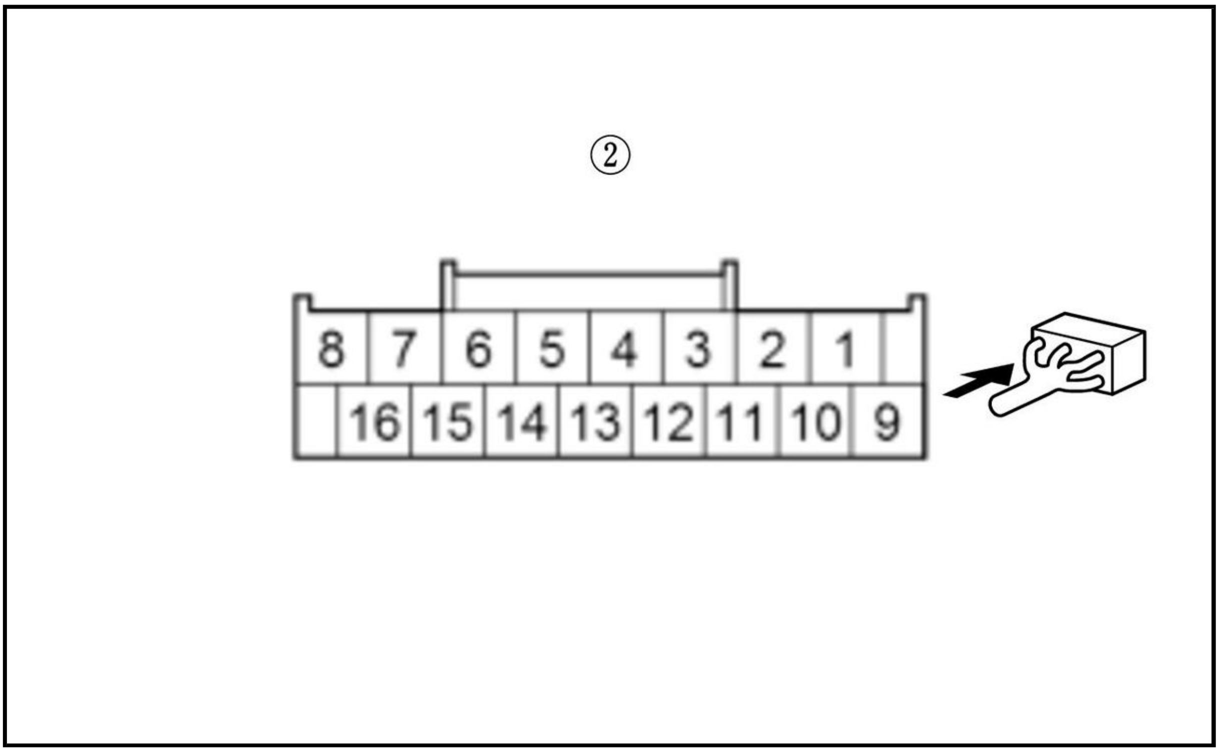

Is there 1.0 Ω or less?

YES

The F-CAN A H wire and the F-CAN A L wire are OK. Check for poor connections or loose terminals at the CAN gateway and the PCM. Check for any authorized service information related to the DTCs or symptoms you are troubleshooting, or **substitute a known-good PCM** .

NO

Repair an open in the F-CAN A H wire or the F-CAN A L wire between the PCM (A36, A37) and the CAN gateway.

4. Open wire check (F-CAN B H line, F-CAN B L line) 1

   -1. Turn the vehicle to the OFF (LOCK) mode.

   -2. Jump the SCS line with the HDS, and wait more than 1 minute.

-3. Disconnect the following connectors.

CAN gateway 12P (16P)* connector
PCM connector A (50P)

-4. Measure the resistance between test points 1 and 2.

Test condition	Vehicle OFF (LOCK) mode
B	CAN gateway 12P (16P)* connector: disconnected
B	PCM connector A (50P): disconnected
Test point 1	CAN gateway 12P connector (female terminal) No. 12: ① CAN gateway 16P connector (female terminals) No. 6: ② *
Test point 2	**PCM connector A (50P) No. 39**

Test point 1	CAN gateway 12P connector (female terminal) No. 5: ① CAN gateway 16P connector (female terminals) No. 14: ② *
Test point 2	**PCM connector A (50P) No. 38**

12P Connector Type

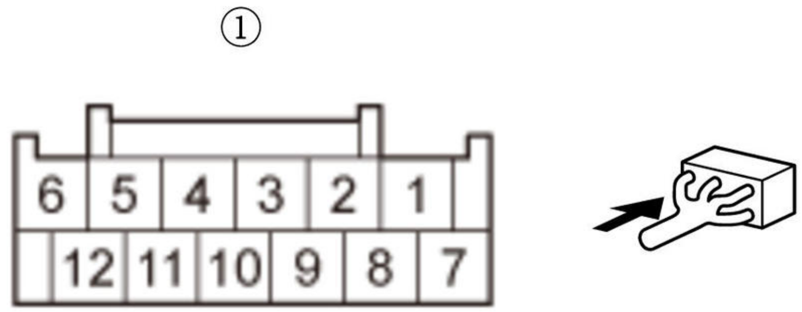

16P Connector Type*

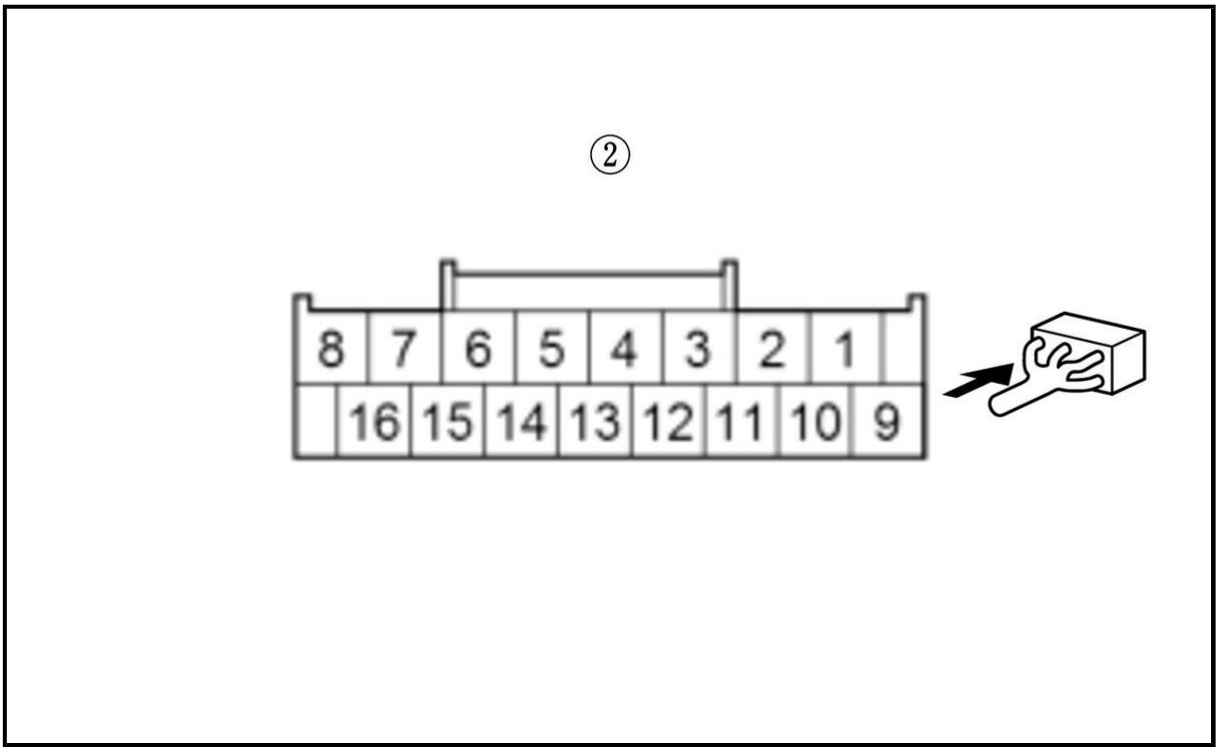

Is there 1.0 Ω or less?

YES

The F-CAN B H wire and the F-CAN B L wire are OK. Check for poor connections or loose terminals at the CAN gateway and the PCM. Check for any authorized service information related to the DTCs or symptoms you are troubleshooting, or **substitute a known-good PCM** .

NO

Repair an open in the F-CAN B H wire or the F-CAN B L wire between the PCM (A38, A39) and the CAN gateway.

5. F-CAN circuit communication check (Transmitting control unit)

   -1. Select the FUNCTION TEST in the CAN gateway with the HDS, then select the F-CAN Bus Connected Unit Check.

   F-CAN Bus Connected Unit Check

   According to the detected DTC on the following table, make sure that the transmitting control unit detects the CAN gateway Bus channel (s) normally.

DTC	Transmitting control unit	Detected CAN gateway Bus channel (s) at normal
U0101	TCM	A
U0104	Millimeter wave radar	B
U0114	Real time AWD control unit	B
U0122	VSA modulator-control unit	A, B
U0128	VSA modulator-control unit (electric parking brake control unit)	A, B
U0129	Electric brake booster	A, B
U0131	EPS control unit	B
U0151	SRS unit	B
U0155	Gauge control module	A
U129E	Body control module	A

Is it detected normally?

Detected normal

Intermittent failure, the system is OK at this time. Check for poor connections or loose terminals at the transmitting control unit and the CAN gateway.

U0101: TCM is Not Available for Bus A

Go to step 6.

U0104: Millimeter wave radar is Not Available for Bus B

Go to step 7.

U0114: Real time AWD control unit is Not Available for Bus B

Go to step 7.

U0122: VSA modulator-control unit is Not Available for Bus A

Go to step 6.

U0122: VSA modulator-control unit is Not Available for Bus B

Go to step 7.

U0128: VSA modulator-control unit (electric parking brake control unit) is Not Available for Bus A

Go to step 6.

U0128: VSA modulator-control unit (electric parking brake control unit) is Not Available for Bus B

Go to step 7.

U0129: Electric brake booster is Not Available for Bus A

Go to step 6.

U0129: Electric brake booster is Not Available for Bus B

Go to step 7.

U0131: EPS control unit connector is Not Available for Bus B

Go to step 7.

U0151: SRS unit connector is Not Available for Bus B

Go to step 7.

U0155: Gauge control module is Not Available for Bus A

Go to step 6.

U129E: Body control module is Not Available for Bus A

Go to step 6.

6. Open wire check (F-CAN A H line, F-CAN A L line) 2

-1. Turn the vehicle to the OFF (LOCK) mode.

-2. According to the detected DTC on the following table, disconnect the transmitting control unit connector (s).

DTC	Connector
-	CAN gateway 12P (16P)* connector
U0101	TCM 50P connector
U0122	VSA modulator-control unit 46P connector
U0128	VSA modulator-control unit 46P connector
U0129	Electric brake booster 26P connector
U0155	Gauge control module connector A (32P)
U129E	Body control module connector B (36P)

-3. Measure the resistance between test points 1 and 2.

Test condition	Vehicle OFF (LOCK) mode
B	CAN gateway 12P (16P)* connector: disconnected
B	Transmitting control unit connector (s) for indicated DTCs: disconnected

DTC	Circuit name	Test point 1 (Receiving control unit)		Test point 2 (Transmitting control unit)	
		Connector	Terminal	Connector	Terminal
U0101	F-CAN A H	CAN gateway 12P connector (female terminals): ① CAN gateway 16P connector (female terminals): ② *	No. 3	TCM 50P connector	No. 3
	F-CAN A L		No. 9 (11)*		No. 11
U0122	F-CAN A H	CAN gateway 12P connector (female terminals): ① CAN gateway 16P connector (female terminals): ② *	No. 3	VSA modulator-control unit 46P connector	No. 40
	F-CAN A L		No. 9 (11)*		No. 28
U0128	F-CAN A H	CAN gateway 12P connector (female terminals): ① CAN gateway 16P connector (female terminals): ② *	No. 3	VSA modulator-control unit 46P connector	No. 40
	F-CAN A L		No. 9 (11)*		No. 28
U0129	F-CAN A H	CAN gateway 12P connector (female terminals): ① CAN gateway 16P connector (female terminals): ② *	No. 3	Electric brake booster 26P connector	No. 26
	F-CAN A L		No. 9 (11)*		No. 18
U0155	F-CAN A H	CAN gateway 12P connector (female	No. 3	Gauge control module connector A (32P)	No. 19

DTC	Circuit name	Test point 1 (Receiving control unit)		Test point 2 (Transmitting control unit)	
		Connector	Terminal	Connector	Terminal
		terminals): ① CAN gateway 16P connector (female terminals): ② *			
	F-CAN A L		No. 9 (11)*		No. 20
U129E	F-CAN A H	CAN gateway 12P connector (female terminals): ① CAN gateway 16P connector (female terminals): ② *	No. 3	Body control module connector B (36P)	No. 22
	F-CAN A L		No. 9 (11)*		No. 23

12P Connector Type

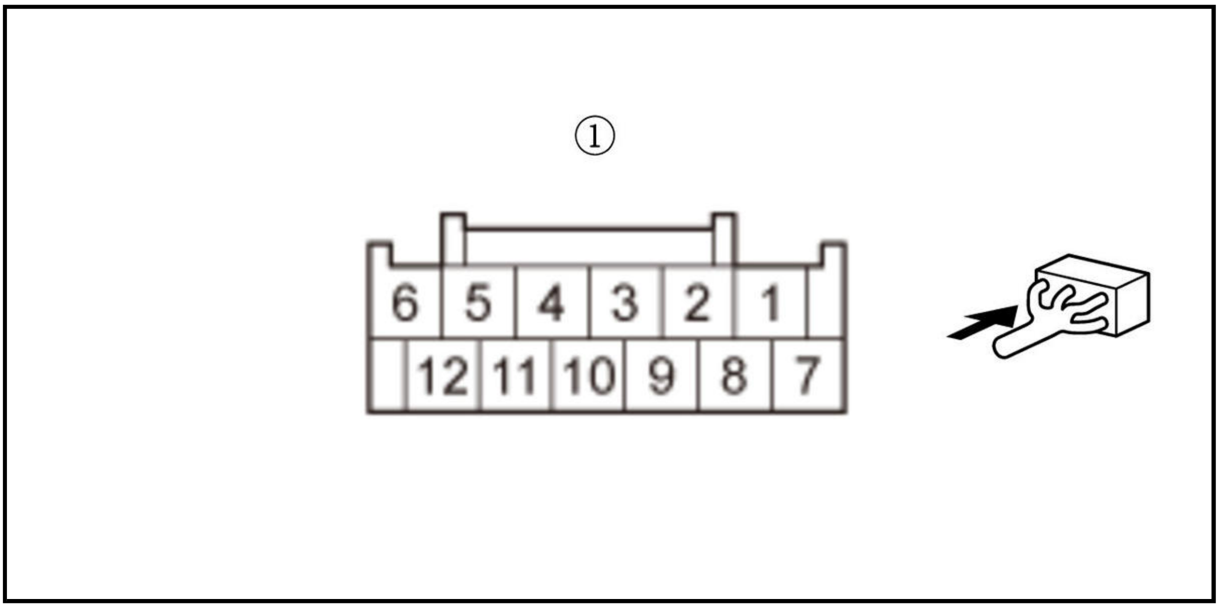

16P Connector Type*

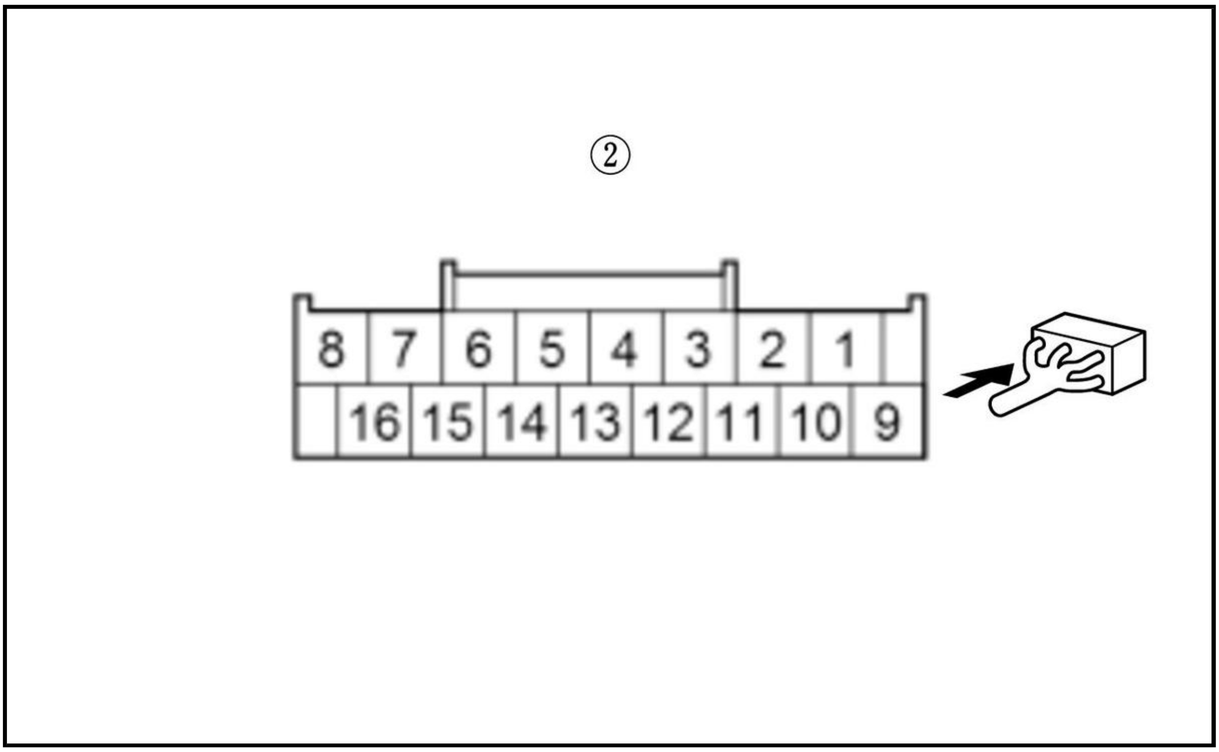

Is there 1.0 Ω or less?

YES

The F-CAN A H wire and the F-CAN A L wire are OK. According to the detected DTC on the following table, update, substitute, or replace the correspond control unit.

DTC	Operation for transmitting control unit
U0101	Check for poor connections or loose terminals at the CAN gateway and the TCM. **Substitute a known-good TCM** .
U0122	Check for poor connections or loose terminals at the CAN gateway and the VSA modulator-control unit. **Replace the VSA modulator-control unit** .
U0128	Check for poor connections or loose terminals at the CAN gateway and the VSA modulator-control unit. **Replace the VSA modulator-control unit** .
U0129	Check for poor connections or loose terminals at the CAN gateway and the electric brake booster. **Replace the electric brake booster** .
U0155	Check for poor connections or loose terminals at the CAN gateway and the gauge control module. **Substitute a known-good gauge control module** .
U129E	Check for poor connections or loose terminals at the CAN gateway and the body control module. **Substitute a known-good body control module** .

NO

Repair an open in the F-CAN A H wire or the F-CAN A L wire between the transmitting control unit and the CAN gateway.

7. Open wire check (F-CAN B H line, F-CAN B L line) 2

-1. Turn the vehicle to the OFF (LOCK) mode.

-2. According to the detected DTC on the following table, disconnect the transmitting control unit connector (s).

DTC	Connector
-	CAN gateway 12P (16P)* connector
U0104	Millimeter wave radar 8P connector

DTC	Connector
U0114	Real time AWD control unit 24P connector
U0122	VSA modulator-control unit 46P connector
U0128	VSA modulator-control unit 46P connector
U0129	Electric brake booster 26P connector
U0131	EPS control unit connector B (6P)
U0151	SRS unit connector A (39P)

-3. Measure the resistance between test points 1 and 2.

Test condition	Vehicle OFF (LOCK) mode
B	CAN gateway 12P (16P)* connector: disconnected
B	Transmitting control unit connector (s) for indicated DTCs: disconnected

DTC	Circuit name	Test point 1 (Receiving control unit)		Test point 2 (Transmitting control unit)	
		Connector	Terminal	Connector	Terminal
U0104	F-CAN B H	CAN gateway 12P connector (female terminals): ① CAN gateway 16P connector (female terminals): ② *	No. 12 (6)*	**Millimeter wave radar 8P connector**	No. 7
	F-CAN B L		No. 5 (14)*		No. 6
U0114	F-CAN B H	CAN gateway 12P connector (female terminals): ① CAN gateway 16P connector (female terminals): ② *	No. 12 (6)*	**Real time AWD control unit 24P connector**	No. 14
	F-CAN B L		No. 5 (14)*		No. 24
U0122	F-CAN B H	CAN gateway 12P connector (female terminals): ① CAN gateway 16P connector (female terminals): ② *	No. 12 (6)*	**VSA modulator-control unit 46P connector**	No. 46
	F-CAN B L		No. 5 (14)*		No. 34

DTC	Circuit name	Test point 1 (Receiving control unit)		Test point 2 (Transmitting control unit)	
		Connector	Terminal	Connector	Terminal
U0128	F-CAN B H	CAN gateway 12P connector (female terminals): ① CAN gateway 16P connector (female terminals): ② *	No. 12 (6)*	**VSA modulator-control unit 46P connector**	No. 46
	F-CAN B L		No. 5 (14)*		No. 34
U0129	F-CAN B H	CAN gateway 12P connector (female	No. 12 (6)*	**Electric brake booster 26P connector**	No. 19

DTC	Circuit name	Test point 1 (Receiving control unit)		Test point 2 (Transmitting control unit)	
		Connector	Terminal	Connector	Terminal
		terminals): ① CAN gateway 16P connector (female terminals): ② *			
	F-CAN B L		No. 5 (14)*		No. 12
U0131	F-CAN B H	CAN gateway 12P connector (female terminals): ① CAN gateway 16P connector (female terminals): ② *	No. 12 (6)*	EPS control unit connector B (6P)	No. 3
	F-CAN B L		No. 5 (14)*		No. 1
U0151	F-CAN B H	CAN gateway 12P connector (female terminals): ① CAN gateway 16P connector (female terminals): ② *	No. 12 (6)*	SRS unit connector A (39P)	No. 34
	F-CAN B L		No. 5 (14)*		No. 35

12P Connector Type

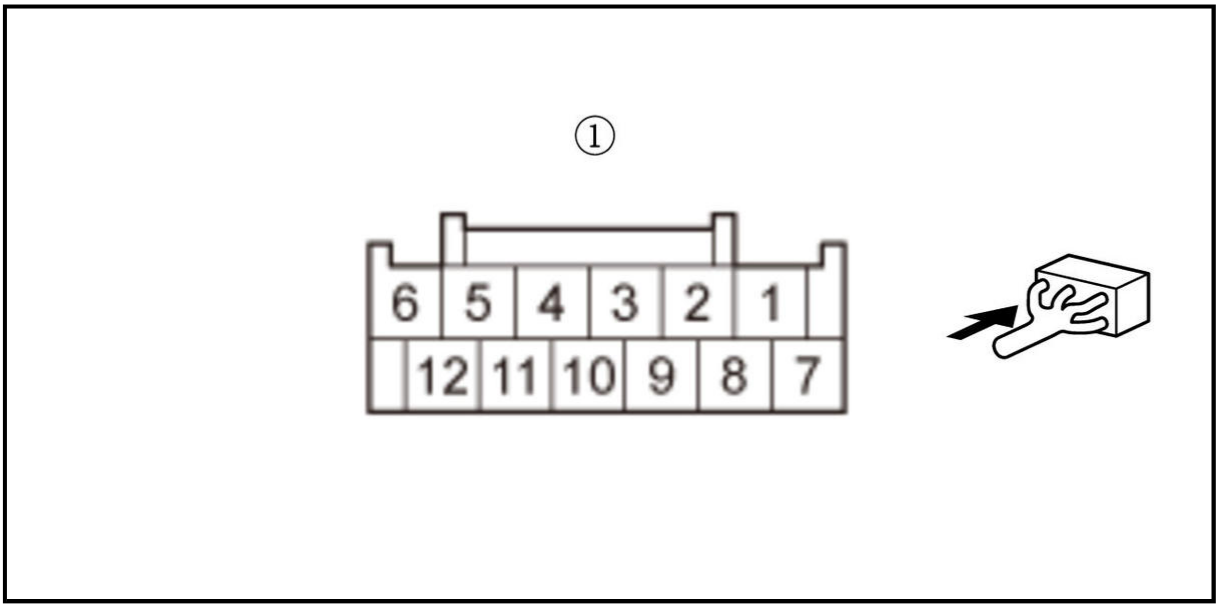

16P Connector Type*

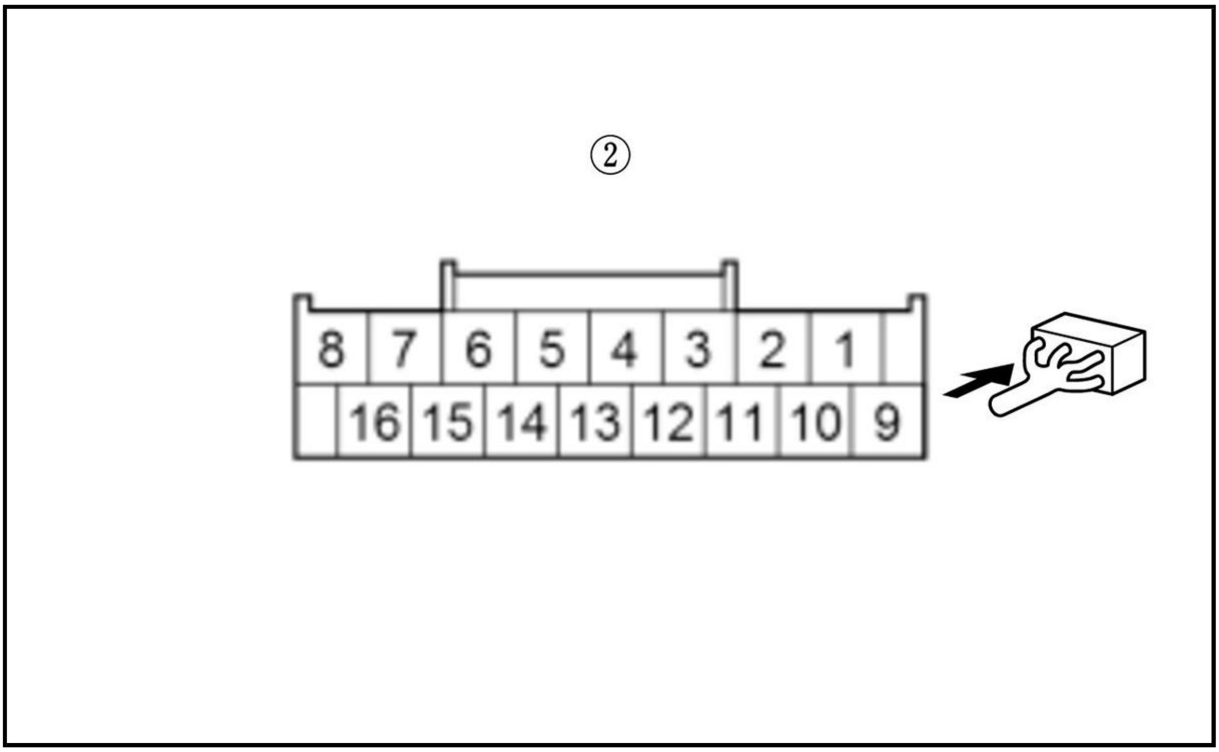

Is there 1.0 Ω or less?

YES

The F-CAN B H wire and the F-CAN B L wire are OK. According to the detected DTC on the following table, update, substitute, or replace the correspond control unit.

DTC	Operation for transmitting control unit
U0104	Check for poor connections or loose terminals at the CAN gateway and the millimeter wave radar. **Substitute a known-good millimeter wave radar** .
U0114	Check for poor connections or loose terminals at the CAN gateway and the AWD control unit. **Substitute a known-good AWD control unit** .
U0122	Check for poor connections or loose terminals at the CAN gateway and the VSA modulator-control unit. **Replace the VSA modulator-control unit** .
U0128	Check for poor connections or loose terminals at the CAN gateway and the VSA modulator-control unit. **Replace the VSA modulator-control unit** .

DTC	Operation for transmitting control unit
U0129	Check for poor connections or loose terminals at the CAN gateway and the electric brake booster. **Replace the electric brake booster** .
U0131	Check for poor connections or loose terminals at the CAN gateway and the EPS control unit. **Substitute a known-good EPS control unit** .
U0151	Check for poor connections or loose terminals at the CAN gateway and the SRS unit. **Substitute a known-good SRS unit** .

NO

Repair an open in the F-CAN B H wire or the F-CAN B L wire between the transmitting control unit and the CAN gateway.

DTC U0114, U0122, U0128, U0129, U0131, U0155 (PGM-FI SYSTEM (2.4 L ENGINE)) (2017 2018 2019)

DTC U0114 : F-CAN Malfunction (PCM-AWD Control Unit)**DTC U0122** : F-CAN Malfunction (PCM-VSA Modulator-Control Unit)**DTC U0128** : F-CAN Malfunction (PCM-Electric Parking Brake Control Unit)**DTC**

U0129 : F-CAN Malfunction (PCM-Electric Brake Booster)**DTC U0131** : F-CAN Malfunction (PCM-EPS Control Unit)**DTC U0155** : F-CAN Malfunction (PCM-Gauge Control Module)

NOTE:

- Before you troubleshoot, **review the general troubleshooting information**.
- According to the detected DTC (s), check for the power circuit and the ground circuit of the control unit which cannot communicate with the PCM.
- Before disconnecting the electric brake booster connector, turn the vehicle to the OFF (LOCK) mode with driver's door open, then wait 3 minutes. Do not open and close the driver's door.

DTC Description	Confirmed DTC	Pending DTC
U0114 F-CAN Malfunction (PCM-AWD Control Unit)	B	B
U0122 F-CAN Malfunction (PCM-VSA Control Module Unit)	B	B
U0128 F-CAN Malfunction (PCM-Electric Parking Brake Control Unit)	B	B
U0129 F-CAN Malfunction (PCM-Electric Brake Booster)	B	B
U0131 F-CAN Malfunction (PCM-EPS Control Unit)	B	B
U0155 F-CAN Malfunction (PCM-Gauge Control Module)	B	B

DTC (PGM-FI)

1. Problem verification

   -1. Turn the vehicle to the ON mode.

   -2. Clear the DTC with the HDS.

   -3. Turn the vehicle to the OFF (LOCK) mode.

   -4. Turn the vehicle to the ON mode.

   -5. Check for Pending or Confirmed DTCs with the HDS.

DTC Description	Confirmed DTC	Pending DTC
U0114 F-CAN Malfunction (PCM-AWD Control Unit)	B	B
U0122 F-CAN Malfunction (PCM-VSA Control Module Unit)	B	B
U0128 F-CAN Malfunction (PCM-Electric Parking Brake Control Unit)	B	B
U0129 F-CAN Malfunction (PCM-Electric Brake Booster)	B	B
U0131 F-CAN Malfunction (PCM-EPS Control Unit)	B	B
U0155 F-CAN Malfunction (PCM-Gauge Control Module)	B	B

   Are any DTCs indicated?

   YES

   The failure is duplicated. Go to step 2.

   NO

   Intermittent failure, the system is OK at this time. Check for poor connections or loose terminals at the transmitting control units and the PCM. **If the on-board snapshot of this DTC is recorded, try to reproduce the failure under the same conditions with the on-board snapshot**.

2. Open wire check (F-CAN H line, F-CAN L line)

-1. Turn the vehicle to the OFF (LOCK) mode.

-2. Disconnect the receiving control unit connector (s).

NOTE: Jump the SCS line with the HDS, and wait more than 1 minute when removing the PCM connector (s).

PCM connector A (51P)

-3. According to the detected DTC on the following table, disconnect the transmitting control unit connector (s).

DTC	Connector
U0114	Real time AWD control unit 24P connector
U0122	VSA modulator-control unit 46P connector
U0128	VSA modulator-control unit 46P connector
U0129	Electric brake booster 26P connector
U0131	EPS control unit connector B (6P)
U0155	Gauge control module connector A (32P)

-4. Check for continuity between test points 1 and 2.

Test condition	Vehicle OFF (LOCK) mode
B	Receiving control unit connector (s): disconnected
B	Transmitting control unit connector (s) for indicated DTCs: disconnected

DTC	Circuit name	Receiving control unit		Transmitting control unit	
		Connector	**Terminal**	**Connector**	**Terminal**
U0114	F-CAN H	PCM connector A (51P)	No. 2	Real time AWD control unit 24P connector	No. 14
	F-CAN L		No. 1		No. 24
U0122	F-CAN H	PCM connector A (51P)	No. 2	VSA modulator-control unit 46P connector	No. 40
	F-CAN L		No. 1		No. 28
U0128	F-CAN H	PCM connector A (51P)	No. 2	VSA modulator-control unit 46P connector	No. 40
	F-CAN L		No. 1		No. 28
U0129	F-CAN H	PCM connector A (51P)	No. 2	Electric brake booster 26P connector	No. 26
	F-CAN L		No. 1		No. 18
U0131	F-CAN H	PCM connector A (51P)	No. 2	EPS control unit connector B (6P)	No. 3
	F-CAN L		No. 1		No. 1
U0155	F-CAN H	PCM connector A (51P)	No. 2	Gauge control module connector A (32P)	No. 19
	F-CAN L		No. 1		No. 20

Is there continuity?

YES

The F-CAN H wire and the F-CAN L wire are OK. Refer to the DTC shown on the display, then substitute or replace the control unit based on the instructions (see table).

DTC	Operation for transmitting control unit
U0114	**Substitute a known-good AWD control unit** .
U0122	**Replace the VSA modulator-control unit** .
U0128	**Replace the VSA modulator-control unit** .
U0129	**Substitute a known-good electric brake booster** .
U0131	**Substitute a known-good EPS control unit** .
U0155	**Substitute a known-good gauge control module** .

NO

Repair an open in the F-CAN H wire or the F-CAN L wire between the transmitting control unit and the transmitting control unit.

DTC U0146 (CAN GATEWAY (KA/KC)) (2020 2021)

DTC U0146 : F-CAN Malfunction (PCM-CAN Gateway)

NOTE: Before you troubleshoot, **review the general troubleshooting information**.

DTC Description	Confirmed DTC	Pending DTC
U0146 F-CAN Malfunction (PCM - CAN Gateway)	B	B

DTC (PGM-FI)

1. Problem verification

-1. Turn the vehicle to the ON mode.

-2. Clear the DTC with the HDS.

-3. Check for Pending or Confirmed DTCs with the HDS.

DTC Description	Confirmed DTC	Pending DTC
U0146 F-CAN Malfunction (PCM - CAN Gateway)	B	B

Is DTC U0146 indicated?

YES

The failure is duplicated. Go to step 2.

NO

Intermittent failure, the system is OK at this time. Check for poor connections or loose terminals at the CAN gateway and the PCM. **If the on-board snapshot of this DTC is recorded, try to reproduce the failure under the same conditions with the on-board snapshot**.

2. CAN gateway system DTC check

-1. Turn the vehicle to the ON mode.

-2. Check for CAN gateway system DTCs with the HDS.

DTC Description	DTC
B	B

Are any DTCs indicated?

YES

Go to the troubleshooting for CAN gateway system DTC (s) .

NO

Go to step 3.

3. F-CAN circuit communication check

-1. Select the FUNCTION TEST in the CAN gateway with the HDS, then select the F-CAN Connection Check.

F-CAN Connection Check

Which result is indicated?

PCM (Bus A) is Not Available

Go to step 4.

PCM (Bus B) is Not Available

Go to step 6.

4. Open wire check (F-CAN A H line)

-1. Turn the vehicle to the OFF (LOCK) mode.

-2. Jump the SCS line with the HDS, and wait more than 1 minute.

-3. Disconnect the following connectors.

CAN gateway 16P connector
PCM connector A (50P): disconnected

-4. Measure the resistance between test points 1 and 2.

Test condition	Vehicle OFF (LOCK) mode

B	CAN gateway 16P connector: disconnected
B	PCM connector A (50P): disconnected
Test point 1	CAN gateway 16P connector (female terminals) No. 3: ①
Test point 2	**PCM connector A (50P) No. 37**

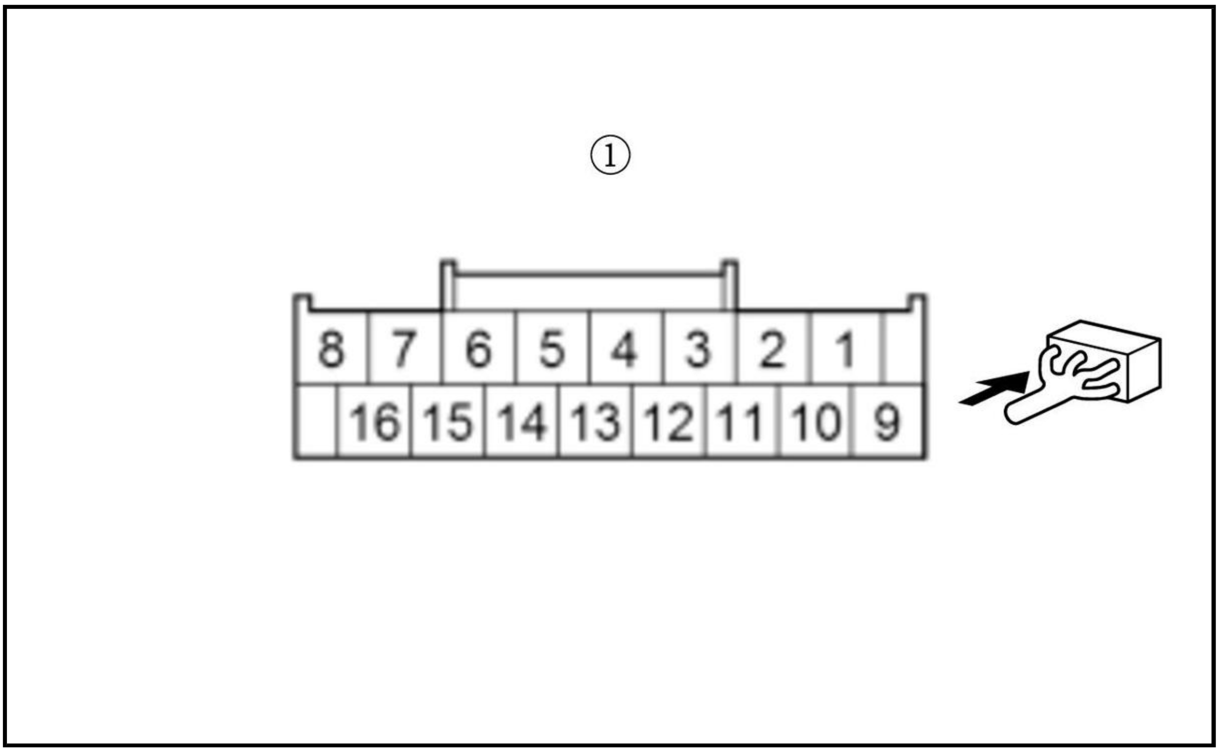

Is there 1.0 Ω or less?

YES

The F-CAN A H wire is OK. Go to step 5.

NO

Repair an open in the F-CAN A H wire between the PCM (A37) and the CAN gateway.

5. Open wire check (F-CAN A L line)

-1. Measure the resistance between test points 1 and 2.

Test condition	Vehicle OFF (LOCK) mode
B	CAN gateway 16P connector: disconnected
B	PCM connector A (50P): disconnected
Test point 1	CAN gateway 16P connector (female terminals) No. 11: ①
Test point 2	**PCM connector A (50P) No. 36**

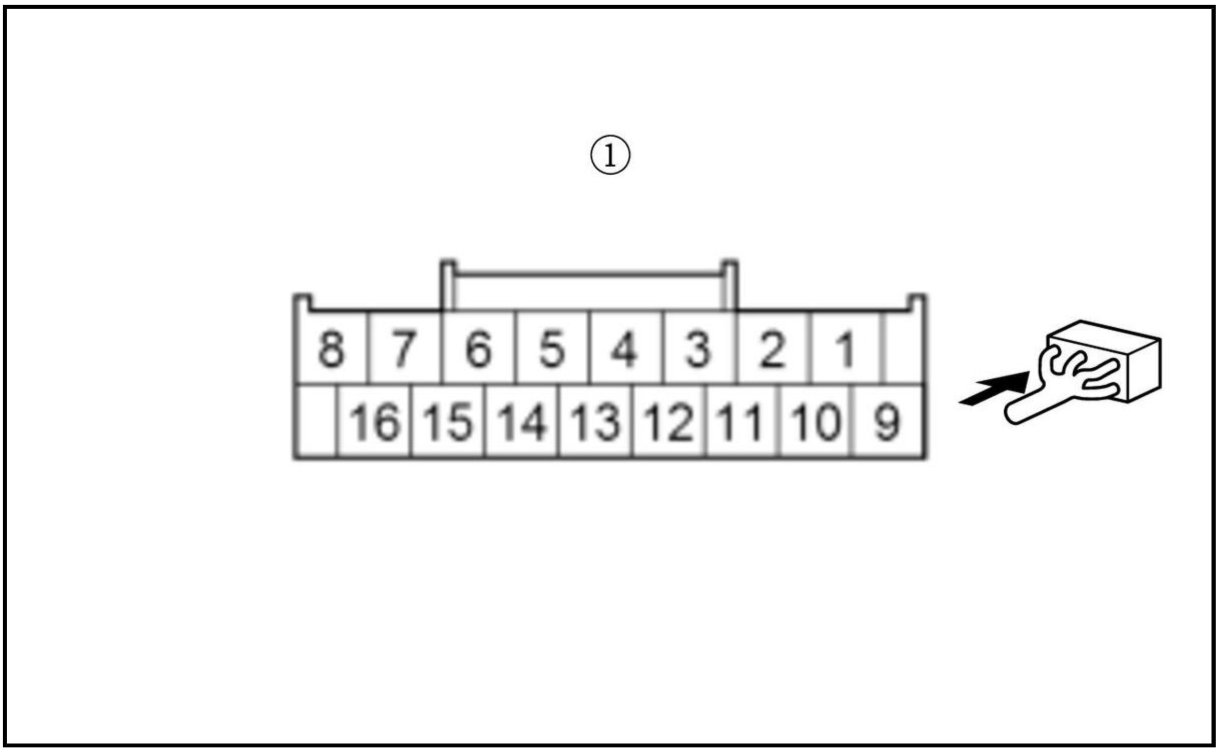

Is there 1.0 Ω or less?

YES

The F-CAN A L wire is OK. Check for poor connections or loose terminals at the CAN gateway and the PCM. Check for any authorized service information related to the DTCs or symptoms you are troubleshooting, or **substitute a known-good PCM** .

NO

Repair an open in the F-CAN A L wire between the PCM (A36) and the CAN gateway.

6. Open wire check (F-CAN B H line)

-1. Turn the vehicle to the OFF (LOCK) mode.

-2. Jump the SCS line with the HDS, and wait more than 1 minute.

-3. Disconnect the following connectors.

CAN gateway 16P connector
PCM connector A (50P): disconnected

-4. Measure the resistance between test points 1 and 2.

Test condition	Vehicle OFF (LOCK) mode
B	CAN gateway 16P connector: disconnected
B	PCM connector A (50P): disconnected
Test point 1	CAN gateway 16P connector (female terminals) No. 6: ①
Test point 2	**PCM connector A (50P) No. 39**

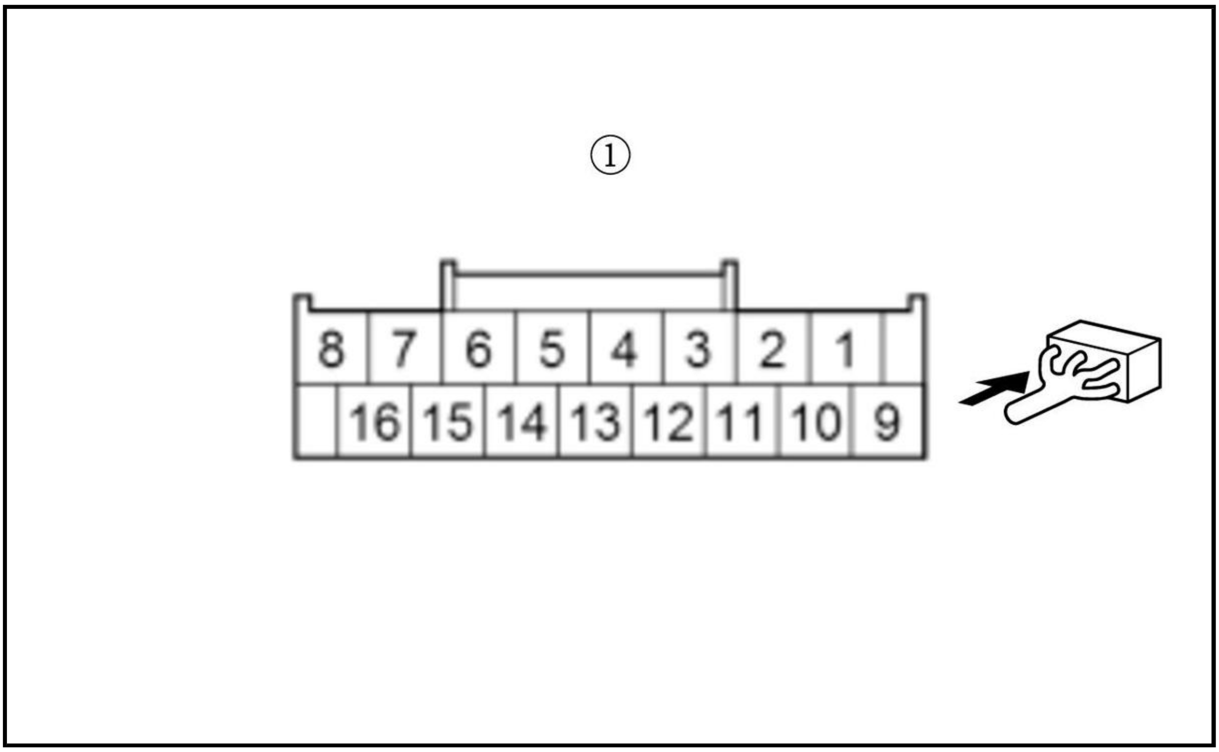

Is there 1.0 Ω or less?

YES

The F-CAN B H wire is OK. Go to step 7.

NO

Repair an open in the F-CAN B H wire between the PCM (A39) and the CAN gateway.

7. Open wire check (F-CAN B L line)

-1. Measure the resistance between test points 1 and 2.

Test condition	Vehicle OFF (LOCK) mode
B	CAN gateway 16P connector: disconnected
B	PCM connector A (50P): disconnected
Test point 1	CAN gateway 16P connector (female terminals) No. 14: ①
Test point 2	**PCM connector A (50P) No. 38**

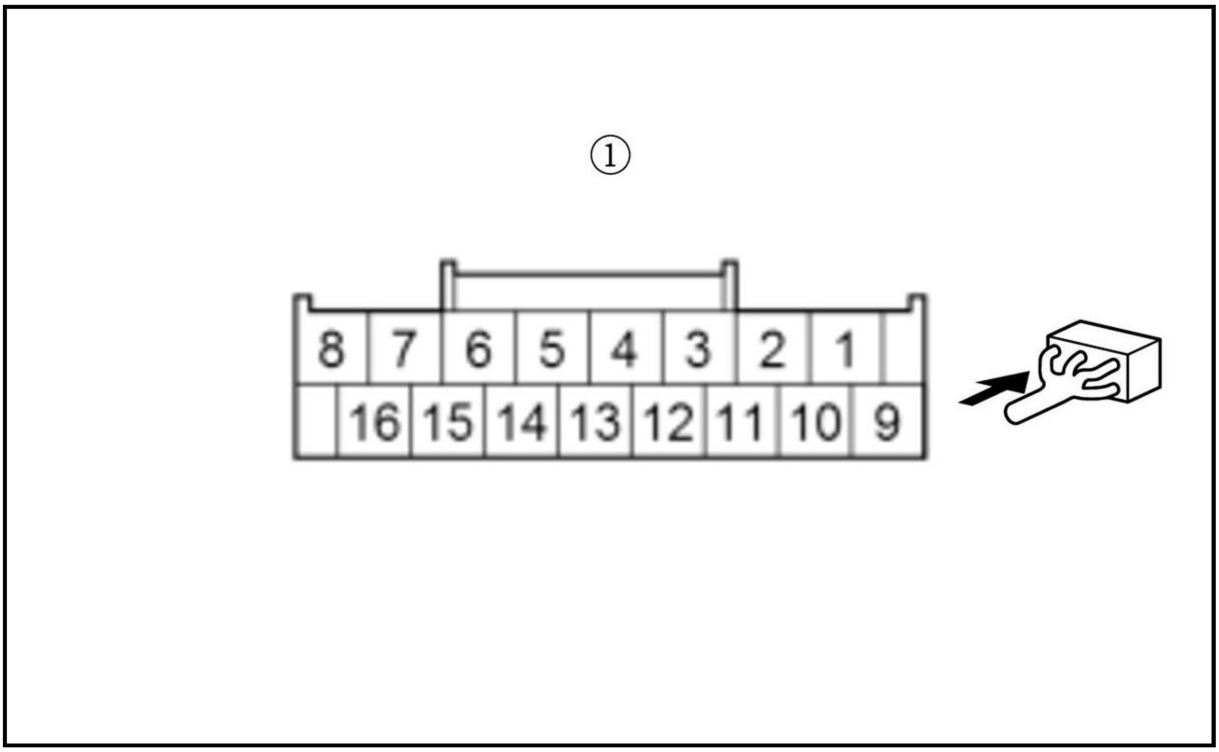

Is there 1.0 Ω or less?

YES

The F-CAN B L wire is OK. Check for poor connections or loose terminals at the CAN gateway and the PCM. Check for any authorized service information related to the DTCs or symptoms you are troubleshooting, or **substitute a known-good PCM** .

NO

Repair an open in the F-CAN B L wire between the PCM (A38) and the CAN gateway.

DTC U0301 (PGM-FI SYSTEM (1.5 L ENGINE))

DTC U0301 : PGM-FI System and Transmission System Program Version Mismatch

NOTE: Before you troubleshoot, **review the general troubleshooting information**.

DTC Description	Confirmed DTC	Pending DTC
U0301 PGM-FI System and Transmission System Program Version Mismatch	B	B

DTC (PGM-FI)

1. Problem verification (update)

   -1. **Update the PCM** .

   -2. Check for Pending or Confirmed DTCs with the HDS.

DTC Description	Confirmed DTC	Pending DTC
U0301 PGM-FI System and Transmission System Program Version Mismatch	B	B

Is DTC U0301 indicated?

YES

Replace the PCM .

NO

Update is complete. If any other Pending or Confirmed DTCs are indicated, go to the indicated DTCs troubleshooting.

DTC TROUBLESHOOTING INDEX

CVT SYSTEM DTC TROUBLESHOOTING INDEX (2.4 L ENGINE) (2017 2018 2019)

NOTE: Before you troubleshoot, record all freeze data and any on-board snapshot with the HDS, and review the General Troubleshooting Information .

KA models

DTC * (1)	Shift Position Indicator	MIL	Detection Item
P0501 (36) * (2)	Blinks	ON	CVT Speed Sensor Circuit Range/Performance
P0502 (36) * (2)	Blinks	ON	CVT Speed Sensor Circuit Open/Short
P0705 (5) * (2)	Blinks	ON	Transmission Range Switch Multiple Shift Position Input
P0706 (6) * (2)	OFF	ON	Transmission Range Switch Open
P0710 (28) * (2)	Blinks	ON	CVT Fluid Temperature Sensor (Out of Range)
P0712 (28) * (2)	Blinks	ON	CVT Fluid Temperature Sensor (Short)
P0713 (28) * (2)	Blinks	ON	CVT Fluid Temperature Sensor (Open)
P0716 (52) * (2)	Blinks	ON	CVT Input Shaft (Drive Pulley) Speed Sensor A Circuit Range/Performance / Input/Turbine Speed Sensor A Circuit Range/Performance
P0717 (52) * (2)	Blinks	ON	CVT Input Shaft (Drive Pulley) Speed Sensor A Circuit No Signal / Input/Turbine Speed Sensor A Circuit No Signal
P0741 (40)	Blinks	ON	Torque Converter Clutch Circuit Performance or Stuck OFF
P0746 (104)	Blinks	ON	CVT Drive Pulley Pressure Control Solenoid Valve Stuck OFF
P0777 (105)	Blinks	ON	CVT Driven Pulley Pressure Control Solenoid Valve Stuck ON
P0780 (100) * (3)	Blinks	ON	Shift Error
P0792 (34) * (2)	Blinks	ON	Intermediate Shaft Speed Sensor A Circuit Range/Performance
P0793 (34) * (2)	Blinks	ON	Intermediate Shaft Speed Sensor A Circuit No Signal
P0796 (106)	Blinks	ON	Pressure Control Solenoid Valve C Performance or Stuck OFF
P0797 (106)	Blinks	ON	Pressure Control Solenoid Valve C Stuck ON
P0842 (56) * (2)	Blinks	OFF	Transmission Fluid Pressure Sensor/Switch A Circuit Low
P0843 (56) * (2)	Blinks	OFF	Transmission Fluid Pressure Sensor/Switch A Circuit High
P0962 (38) * (2)	Blinks	ON	CVT Drive Pulley Pressure Control Valve Circuit Low
P0963 (38) * (2)	Blinks	ON	CVT Drive Pulley Pressure Control Valve Circuit High
P0966 (39) * (2)	Blinks	ON	CVT Driven Pulley Pressure Control Valve Circuit Low

DTC * (1)	Shift Position Indicator	MIL	Detection Item
P0967 (39) * (2)	Blinks	ON	CVT Driven Pulley Pressure Control Valve Circuit High
P0970 (50) * (2)	Blinks	ON	Pressure Control Solenoid C Control Circuit Low
P0971 (50) * (2)	Blinks	ON	Pressure Control Solenoid C Control Circuit High
P0976 (8) * (2)	Blinks	ON	Shift Solenoid Valve B Circuit Low
P0977 (8) * (2)	Blinks	ON	Shift Solenoid Valve B Circuit High
P1717 (62) * (2)	Blinks	OFF	Transmission Range Switch ATP RVS Switch (Open or Short)
P1840 (36) * (2)	Blinks	OFF	CVT Speed Sensor Circuit Forward Rotation Range/Performance
P1841 (36) * (2)	Blinks	OFF	CVT Speed Sensor Circuit Reverse Rotation Range/Performance

DTC * (1)	Shift Position Indicator	MIL	Detection Item
P1844 (34) * (2)	Blinks	OFF	CVT Input Shaft Speed Sensor Circuit Forward Rotation Range/Performance
P1845 (34) * (2)	Blinks	OFF	CVT Input Shaft Speed Sensor Circuit Reverse Rotation Range/Performance
P1890 (42)	Blinks	OFF	CVT Speed Control System
P1898 (100)	Blinks	ON	CVT Drive Pulley Pressure Control Valve Stuck ON or CVT Driven Pulley Pressure Control Valve Stuck OFF
P1899 (100)	Blinks	ON	CVT Drive Pulley Pressure Control Valve Stuck OFF or CVT Driven Pulley Pressure Control Valve Stuck ON
P2715 (102)	Blinks	ON	Pressure Control Solenoid D Stuck On
P2720 (51) * (2)	Blinks	ON	Pressure Control Solenoid D Control Circuit Low
P2721 (51) * (2)	Blinks	ON	Pressure Control Solenoid D Control Circuit High
P2817 (108)	Blinks	OFF	Shift Solenoid Valve O/P (Pressure Control Solenoid H) Stuck Off
P2818 (108)	Blinks	OFF	Shift Solenoid Valve O/P (Pressure Control Solenoid H) Stuck On
P281D (57)	Blinks	OFF	Shift Solenoid Valve O/P (Pressure Control Solenoid H) Control Circuit Low
P281E (57)	Blinks	OFF	Shift Solenoid Valve O/P (Pressure Control Solenoid H) Control Circuit High

NOTE: * (1): The DTC in parentheses is the flash code the shift position indicator indicates when the data link connector (DLC) is connected to the HDS, and in the SCS mode.

* (2): This code is caused by an electrical circuit problem and cannot be caused by a mechanical problem in the transmission.

* (3): This code is stored whenever DTCs P1898 and P1899 are detected.

Except KA models

DTC * (1)	Shift Position Indicator	MIL	Detection Item
P0501 (36) * (2)	Blinks	ON	CVT Speed Sensor Circuit Range/Performance
P0502 (36) * (2)	Blinks	ON	CVT Speed Sensor Circuit Open/Short

DTC * (1)	Shift Position Indicator	MIL	Detection Item
P0705 (5) * (2)	Blinks	ON	Transmission Range Switch Multiple Shift Position Input
P0706 (6) * (2)	OFF	ON	Transmission Range Switch Open
P0712 (28) * (2)	Blinks	OFF	CVT Fluid Temperature Sensor (Short)
P0713 (28) * (2)	Blinks	OFF	CVT Fluid Temperature Sensor (Open)
P0716 (52) * (2)	Blinks	ON	CVT Input Shaft (Drive Pulley) Speed Sensor A Circuit Range/Performance / Input/Turbine Speed Sensor A Circuit Range/Performance
P0717 (52) * (2)	Blinks	ON	CVT Input Shaft (Drive Pulley) Speed Sensor A Circuit No Signal / Input/Turbine Speed Sensor A Circuit No Signal
P0741 (40)	Blinks	OFF	Torque Converter Clutch Circuit Performance or Stuck OFF
P0746 (104)	Blinks	ON	CVT Drive Pulley Pressure Control Solenoid Valve Stuck OFF
P0777 (105)	Blinks	ON	CVT Driven Pulley Pressure Control Solenoid Valve Stuck ON
P0780 (100) * (3)	Blinks	ON	Shift Error
P0792 (34) * (2)	Blinks	ON	Intermediate Shaft Speed Sensor A Circuit Range/Performance

DTC * (1)	Shift Position Indicator	MIL	Detection Item
P0793 (34) * (2)	Blinks	ON	Intermediate Shaft Speed Sensor A Circuit No Signal
P0796 (106)	Blinks	ON	Pressure Control Solenoid Valve C Performance or Stuck OFF
P0797 (106)	Blinks	OFF	Pressure Control Solenoid Valve C Stuck ON
P0842 (56) * (2)	Blinks	OFF	Transmission Fluid Pressure Sensor/Switch A Circuit Low
P0843 (56) * (2)	Blinks	OFF	Transmission Fluid Pressure Sensor/Switch A Circuit High
P0962 (38) * (2)	Blinks	ON	CVT Drive Pulley Pressure Control Valve Circuit Low
P0963 (38) * (2)	Blinks	ON	CVT Drive Pulley Pressure Control Valve Circuit High
P0966 (39) * (2)	Blinks	ON	CVT Driven Pulley Pressure Control Valve Circuit Low
P0967 (39) * (2)	Blinks	ON	CVT Driven Pulley Pressure Control Valve Circuit High
P0970 (50) * (2)	Blinks	ON	Pressure Control Solenoid C Control Circuit Low
P0971 (50) * (2)	Blinks	ON	Pressure Control Solenoid C Control Circuit High
P0976 (8) * (2)	Blinks	OFF	Shift Solenoid Valve B Circuit Low
P0977 (8) * (2)	Blinks	OFF	Shift Solenoid Valve B Circuit High
P1717 (62) * (2)	Blinks	OFF	Transmission Range Switch ATP RVS Switch (Open or Short)
P1840 (36) * (2)	Blinks	OFF	CVT Speed Sensor Circuit Forward Rotation Range/Performance
P1841 (36) * (2)	Blinks	OFF	CVT Speed Sensor Circuit Reverse Rotation Range/Performance
P1844 (34) * (2)	Blinks	OFF	CVT Input Shaft Speed Sensor Circuit Forward Rotation Range/Performance

DTC * (1)	Shift Position Indicator	MIL	Detection Item
P1845 (34) * (2)	Blinks	OFF	CVT Input Shaft Speed Sensor Circuit Reverse Rotation Range/Performance
P1890 (42)	Blinks	OFF	CVT Speed Control System
P1898 (100)	Blinks	ON	CVT Drive Pulley Pressure Control Valve Stuck ON or CVT Driven Pulley Pressure Control Valve Stuck OFF
P1899 (100)	Blinks	ON	CVT Drive Pulley Pressure Control Valve Stuck OFF or CVT Driven Pulley Pressure Control Valve Stuck ON
P2715 (102)	Blinks	OFF	Pressure Control Solenoid D Stuck On
P2720 (51) * (2)	Blinks	OFF	Pressure Control Solenoid D Control Circuit Low
P2721 (51) * (2)	Blinks	OFF	Pressure Control Solenoid D Control Circuit High
P2817 (108)	Blinks	OFF	Shift Solenoid Valve O/P (Pressure Control Solenoid H) Stuck Off
P2818 (108)	Blinks	OFF	Shift Solenoid Valve O/P (Pressure Control Solenoid H) Stuck On
P281D (57)	Blinks	OFF	Shift Solenoid Valve O/P (Pressure Control Solenoid H) Control Circuit Low
P281E (57)	Blinks	OFF	Shift Solenoid Valve O/P (Pressure Control Solenoid H) Control Circuit High

NOTE: * (1): The DTC in parentheses is the flash code the shift position indicator indicates when the data link connector (DLC) is connected to the HDS, and in the SCS mode.

* (2): This code is caused by an electrical circuit problem and cannot be caused by a mechanical problem in the transmission.

* (3): This code is stored whenever DTCs P1898 and P1899 are detected.

FUEL AND EMISSIONS SYSTEMS DTC TROUBLESHOOTING INDEX (1.5 L ENGINE (KA/KC)) (2018 2019 2020 2021)

DTC Troubleshooting Index

DTC (MIL indication *1)	Two DriveCycle Detection	Detection Item	MIL
P0010 (56)	---	Variable Valve Timing Control (VTC) Oil Control Solenoid Valve A Malfunction	ON
P0011 (56)	o	Variable Valve Timing Control (VTC) A System Malfunction	ON
P0013 (141)	---	Variable Valve Timing Control (VTC) Oil Control Solenoid Valve B Malfunction	ON
P0014 (141)	o	Variable Valve Timing Control (VTC) B System Malfunction	ON
P0034 (194) *4	o	Turbocharger Bypass Control Solenoid Valve Circuit Low Voltage	ON
P0034 *5	o	Turbocharger Bypass Control Solenoid Valve Circuit Low Voltage	OFF
P0035 (194) *4	o	Turbocharger Bypass Control Solenoid Valve Circuit High Voltage	ON
P0035 *5	o	Turbocharger Bypass Control Solenoid Valve Circuit High Voltage	OFF

DTC (MIL indication *1)	Two DriveCycle Detection	Detection Item	MIL
P003A (190)	---	Turbocharger Wastegate Control Actuator Position Exceeded Learning Limit	ON
P0045 (190)	---	Turbocharger Wastegate Control Actuator Circuit Malfunction	ON
P0046 (190)	---	Turbocharger Wastegate Control Actuator Circuit Range/Performance Problem	ON
P0069 (13)	o	Barometric Pressure (BARO) Sensor Circuit Range/Performance Problem	ON
P006A (50)	o	Mass Air Flow (MAF) Sensor Circuit Range/Performance Problem	ON
P006E (190)	---	Turbocharger Power Supply Circuit Malfunction	ON
P0087 (197)	---	Fuel Rail Pressure Too Low	ON
P0088 (197)	---	Fuel Rail Pressure Too High	ON
P0096 (10)	o	Intake Air Temperature (IAT) Sensor 2 Circuit Range/Performance Problem	ON
P0097 (10)	o	Intake Air Temperature (IAT) Sensor 2 Circuit Low Voltage	ON
P0098 (10)	o	Intake Air Temperature (IAT) Sensor 2 Circuit High Voltage	ON
P00CF (171)	o	Turbocharger Boost Sensor/Barometric Pressure (BARO) Sensor Incorrect Correlation	ON
P00FE (90) *5	o	Evaporative Emission (EVAP) Vent Line Blockage	ON
P0100 (50)	---	Mass Air Flow (MAF) Sensor Circuit Malfunction	ON
P0101 (50)	o	Mass Air Flow (MAF) Sensor Circuit Range/Performance Problem (Out of Range)	ON
P0107 (3)	---	Manifold Absolute Pressure (MAP) Sensor Circuit Low Voltage	ON
P0108 (3)	---	Manifold Absolute Pressure (MAP) Sensor Circuit High Voltage	ON
P0111 (10)	o	Intake Air Temperature (IAT) Sensor 1 Circuit Range/Performance Problem	ON
P0112 (10)	o	Intake Air Temperature (IAT) Sensor 1 Circuit Low Voltage	ON
P0113 (10)	o	Intake Air Temperature (IAT) Sensor 1 Circuit High Voltage	ON
P0115 (6)	o	Engine Coolant Temperature (ECT) Sensor 1 Out of Range	ON

NOTE: The above DTCs are indicated when the PGM-FI system is selected with the HDS. Some automatic transmission DTCs cause the MIL to come on. If the MIL is on and no DTCs are indicated in the PGM-FI system, select the A/T system, and check for automatic transmission DTCs.

*1: These DTCs are indicated by a blinking MIL when the SCS line is jumped with the HDS. Some DTCs do not cause the MIL to blink when the SCS line is jumped; these DTCs are shown in the gauge display.

*2: With multipurpose camera unit

*3: AWD

*4:'18-19

*5:'20-21

*6: With auto idle stop system

*7: With keyless access system

*8:'17-20

*9:'21

DTC (MIL indication *1)	Two DriveCycle Detection	Detection Item	MIL
P0116 (86)	o	Engine Coolant Temperature (ECT) Sensor 1 Circuit Range/Performance Problem	ON
P0117 (6)	---	Engine Coolant Temperature (ECT) Sensor 1 Circuit Low Voltage	ON
P0118 (6)	---	Engine Coolant Temperature (ECT) Sensor 1 Circuit High Voltage	ON
P011A (86)	o	Engine Coolant Temperature (ECT) Sensor 1 Circuit Range/Performance Problem	ON
P011B (10)	o	Intake Air Temperature (IAT) Sensor 1 Circuit Range/Performance Problem	ON
P0121 (7)	o	Throttle Position (TP) Sensor A Out of Range	ON
P0122 (7)	---	Throttle Position (TP) Sensor A Circuit Low Voltage	ON
P0123 (7)	---	Throttle Position (TP) Sensor A Circuit High Voltage	ON
P0125 (86)	o	Engine Coolant Temperature (ECT) Sensor 1 Malfunction/Slow Response	ON
P0128 (87)	o	Cooling System Malfunction	ON
P0130 (61)	o	Air Fuel Ratio (A/F) Sensor (Sensor 1) Out of Range	ON
P0133 (61)	o	Air/Fuel Ratio (A/F) Sensor (Sensor 1) Malfunction/Slow Response	ON
P0134 (41)	o	Air/Fuel Ratio (A/F) Sensor (Sensor 1) Heater System Malfunction	ON
P0135 (41)	o	Air/Fuel Ratio (A/F) Sensor (Sensor 1) Heater Circuit Malfunction	ON
P0137 (63)	o	Secondary Heated Oxygen Sensor (Secondary HO2S (Sensor 2)) Circuit Low Voltage	ON
P0138 (63)	o	Secondary Heated Oxygen Sensor (Secondary HO2S (Sensor 2)) Circuit High Voltage	ON
P0139 (63)	o	Secondary Heated Oxygen Sensor (Secondary HO2S (Sensor 2)) Slow Response	ON
P0141 (65)	o	Secondary Heated Oxygen Sensor (Secondary HO2S (Sensor 2)) Heater Circuit Malfunction	ON
P0171 (45)	o	Fuel System Too Lean	ON
P0172 (45)	o	Fuel System Too Rich	ON
P0192 (95)	---	Fuel Rail Pressure Sensor Circuit Low Voltage	ON
P0193 (95)	---	Fuel Rail Pressure Sensor Circuit High Voltage	ON
P0201 (16)	---	No. 1 Cylinder Injector Circuit Malfunction	ON
P0202 (16)	---	No. 2 Cylinder Injector Circuit Malfunction	ON
P0203 (16)	---	No. 3 Cylinder Injector Circuit Malfunction	ON
P0204 (16)	---	No. 4 Cylinder Injector Circuit Malfunction	ON
P0221 (7)	o	Throttle Position (TP) Sensor B Out of Range	ON
P0222 (7)	---	Throttle Position (TP) Sensor B Circuit Low Voltage	ON
P0223 (7)	---	Throttle Position (TP) Sensor B Circuit High Voltage	ON
P0234 (26)	---	Turbocharger Overboost Problem	ON

DTC (MIL indication *1)	Two DriveCycle Detection	Detection Item	MIL
P0235 (171)	o	Turbocharger Boost Sensor Out of Range	ON
P0236 (171)	o	Turbocharger Boost Sensor Circuit Range/Performance Problem	ON
P0237 (171)	---	Turbocharger Boost Sensor Circuit Low Voltage	ON
P0238 (171)	---	Turbocharger Boost Sensor Circuit High Voltage	ON
P023D (171)	o	Turbocharger Boost Sensor/Manifold Absolute Pressure (MAP) Sensor Incorrect Correlation	ON

NOTE: The above DTCs are indicated when the PGM-FI system is selected with the HDS. Some automatic transmission DTCs cause the MIL to come on. If the MIL is on and no DTCs are indicated in the PGM-FI system, select the A/T system, and check for automatic transmission DTCs.

*1: These DTCs are indicated by a blinking MIL when the SCS line is jumped with the HDS. Some DTCs do not cause the MIL to blink when the SCS line is jumped; these DTCs are shown in the gauge display.

*2: With multipurpose camera unit

*3: AWD

*4:'18-19

*5:'20-21

*6: With auto idle stop system

*7: With keyless access system

*8:'17-20

*9:'21

DTC (MIL indication *1)	Two DriveCycle Detection	Detection Item	MIL
P027E (167) *5	o	Cold Start Air Fuel Ratio Control System Command Lean	ON
P027F (167) *5	o	Cold Start Air Fuel Ratio Control System Command Rich	ON
P0299 (26)	---	Turbocharger Underboost Problem	ON
P0300 (211) and any combination of the following: P0301 (71) P0302 (72) P0303 (73) P0304 (74)	o	Random Misfire Detected	ON
P0301 (71)	o	No. 1 Cylinder Misfire Detected	ON
P0302 (72)	o	No. 2 Cylinder Misfire Detected	ON
P0303 (73)	o	No. 3 Cylinder Misfire Detected	ON
P0304 (74)	o	No. 4 Cylinder Misfire Detected	ON
P0326 (23)	o	Knock Sensor Malfunction	ON
P0327 (23)	o	Knock Sensor Circuit Low Voltage	ON
P0328 (23)	o	Knock Sensor Circuit High Voltage	ON
P0335 (4)	---	Crankshaft Position (CKP) Sensor No Signal	ON

DTC (MIL indication *1)	Two DriveCycle Detection	Detection Item	MIL
P0339 (4)	---	Crankshaft Position (CKP) Sensor Circuit Intermittent Interruption	ON
P0340 (8)	---	Camshaft Position (CMP) Sensor A No Signal	ON
P0341 (57)	o	Camshaft Position (CMP) Sensor A and Crankshaft Position (CKP) Sensor Incorrect Phase Detected	ON
P0344 (8)	---	Camshaft Position (CMP) Sensor A Circuit Intermittent Interruption	ON
P0351 (71)	---	No. 1 Cylinder Ignition Coil Circuit Malfunction	ON
P0352 (72)	---	No. 2 Cylinder Ignition Coil Circuit Malfunction	ON
P0353 (73)	---	No. 3 Cylinder Ignition Coil Circuit Malfunction	ON
P0354 (74)	---	No. 4 Cylinder Ignition Coil Circuit Malfunction	ON
P0365 (142)	---	Camshaft Position (CMP) Sensor B Circuit No Signal	ON
P0366 (142)	o	Camshaft Position (CMP) Sensor B and Crankshaft Position (CKP) Sensor Incorrect Phase Detected	ON
P0369 (142)	---	Camshaft Position (CMP) Sensor B Circuit Intermittent Interruption	ON
P0420 (67)	o	Catalyst System Efficiency Below Threshold	ON
P043E (94)	o	Evaporative Emission (EVAP) Leak Check Module Standard Pressure Low	ON
P043F (94)	o	Evaporative Emission (EVAP) Leak Check Module Standard Pressure High	ON
P0441 (90)	o	Evaporative Emission (EVAP) System Purge Flow Malfunction	ON
P0443 (92)	o	Evaporative Emission (EVAP) Canister Purge Valve Circuit Malfunction	ON
P0451 (94)	o	Evaporative Emission (EVAP) Leak Check Module Pressure Sensor Range/Performance	ON
P0456 (90)	o	Evaporative Emission (EVAP) System Very Small Leak Detected	ON
P0460 (121) *5	o	Fuel Level Sensor (Fuel Gauge Sending Unit) Out of Range	ON
P0461 *8	---	Fuel Level Sensor (Fuel Gauge Sending Unit) Circuit Range/Performance Problem	OFF

NOTE: The above DTCs are indicated when the PGM-FI system is selected with the HDS. Some automatic transmission DTCs cause the MIL to come on. If the MIL is on and no DTCs are indicated in the PGM-FI system, select the A/T system, and check for automatic transmission DTCs.

*1: These DTCs are indicated by a blinking MIL when the SCS line is jumped with the HDS. Some DTCs do not cause the MIL to blink when the SCS line is jumped; these DTCs are shown in the gauge display.

*2: With multipurpose camera unit

*3: AWD

*4:'18-19

*5:'20-21

*6: With auto idle stop system

*7: With keyless access system

*8:'17-20

*9:'21

DTC (MIL indication *1)	Two DriveCycle Detection	Detection Item	MIL
P0461 (121) *9	o	Fuel Level Sensor (Fuel Gauge Sending Unit) Circuit Range/Performance Problem	ON
P0462 *4	o	Fuel Level Sensor (Fuel Gauge Sending Unit) Circuit Low Voltage	OFF
P0462 (121) *5	o	Fuel Level Sensor (Fuel Gauge Sending Unit) Circuit Low Voltage	ON
P0463 *4	o	Fuel Level Sensor (Fuel Gauge Sending Unit) Circuit High Voltage	OFF
P0463 (121) *5	o	Fuel Level Sensor (Fuel Gauge Sending Unit) Circuit High Voltage	ON
P04DF (92)	o	Evaporative Emission (EVAP) System High Purge Flow Detected	ON
P04F0 (90)	o	Evaporative Emission (EVAP) System Incorrect Purge Flow Detected	ON
P04F1 (90)	o	Evaporative Emission (EVAP) System Low Purge Flow Detected	ON
P0506 (14)	o	Idle Control System RPM Lower than Expected	ON
P0507 (14)	o	Idle Control System RPM Higher than Expected	ON
P050A (167)	o	Cold Start Idle Air Control System Performance Problem	ON
P050B (167) *5	o	Cold Start Ignition Timing Control System Performance Problem	ON
P050D (167)	o	Cold Start Idle Speed Problem	ON
P0532	o	A/C Pressure Sensor Circuit Low Voltage	OFF
P0533	o	A/C Pressure Sensor Circuit High Voltage	OFF
P0562	---	Charging System Low Voltage	OFF
P0563	o	Powertrain Control Module (PCM) Power Source Circuit Unexpected Voltage	OFF
P0571	o	Brake Pedal Position Switch Circuit Malfunction	OFF
P059F	---	Shutter Grille Assembly (Upper) Malfunction	OFF
P05A0	---	Shutter Grille Assembly (Upper) Malfunction	OFF
P05A3	---	Shutter Grille Actuator (Upper) Malfunction	OFF
P05A8	---	Shutter Grille Actuator (Upper) Malfunction	OFF
P05AE	---	Shutter Grille Assembly (Lower) Malfunction	OFF
P05AF	---	Shutter Grille Assembly (Lower) Malfunction	OFF
P05B2	---	Shutter Grille Actuator (Lower) Malfunction	OFF
P05B7	---	Shutter Grille Actuator (Lower) Malfunction	OFF
P05C0	---	Shutter Grille Actuator (Upper) Temperature Malfunction	OFF
P05C1	---	Shutter Grille Actuator (Lower) Temperature Malfunction	OFF
P0600 (131)	---	Powertrain Control Module (PCM) Serial Communication Failure	ON
P0602 (196)	---	Powertrain Control Module (PCM) Programming Error	ON
P060A (131)	---	Powertrain Control Module (PCM) Internal Control	ON

DTC (MIL indication *1)	Two DriveCycle Detection	Detection Item	MIL
		Module Malfunction	
P0615	o	Starter Cut Relay Diagnosis Circuit Malfunction	OFF
P0616	---	Starter Cut Relay Diagnosis Circuit Low Voltage	OFF
P0617	---	Starter Cut Relay Diagnosis Circuit High Voltage	OFF
P061B (131)	---	Powertrain Control Module (PCM) Internal Malfunction (Torque Calculation)	ON
P062B (131)	---	Powertrain Control Module (PCM) Internal Circuit Malfunction	ON

NOTE: The above DTCs are indicated when the PGM-FI system is selected with the HDS. Some automatic transmission DTCs cause the MIL to come on. If the MIL is on and no DTCs are indicated in the PGM-FI system, select the A/T system, and check for automatic transmission DTCs.

*1: These DTCs are indicated by a blinking MIL when the SCS line is jumped with the HDS. Some DTCs do not cause the MIL to blink when the SCS line is jumped; these DTCs are shown in the gauge display.

*2: With multipurpose camera unit

*3: AWD

*4:'18-19

*5:'20-21

*6: With auto idle stop system

*7: With keyless access system

*8:'17-20

*9:'21

DTC (MIL indication *1)	Two DriveCycle Detection	Detection Item	MIL
P062F (131)	---	Powertrain Control Module (PCM) Internal Control Module Keep Alive Memory (KAM) Error	ON
P0630 (139)	---	VIN Not Programmed or Mismatch	ON
P0641 (133)	---	Sensor Reference Voltage A Malfunction	ON
P0651 (134)	---	Sensor Reference Voltage B Malfunction	ON
P0657 (131)	---	Powertrain Control Module (PCM) Power Supply Circuit Malfunction	ON
P065A	---	ACG No Charging Malfunction	OFF
P06A8 (131)	---	Internal VCC Power Malfunction	ON
P0703	o	Brake Pedal Position Switch (NC) Malfunction	OFF
P0864 (126)	---	PT-CAN Malfunction (Powertrain Control Module (PCM)-Transmission Control Module (TCM))	ON
P0A11 *6	o	DC-DC Converter Activation Circuit Malfunction	OFF
P0A94 *6	o	DC-DC Converter Performance Problem	OFF
P1009 (56)	---	Variable Valve Timing Control (VTC) A Advance Malfunction	ON
P101A (141)	---	Variable Valve Timing Control (VTC) B Advance Malfunction	ON

DTC (MIL indication *1)	Two DriveCycle Detection	Detection Item	MIL
P145D (90)	o	Evaporative Emission (EVAP) System Purge Flow Malfunction at turbocharging	ON
P145F (94)	o	Evaporative Emission (EVAP) Leak Check Module Pressure Sensor Range/Performance Problem	ON
P1461 (94)	o	Evaporative Emission (EVAP) Leak Check Module Pressure Sensor Shifts	ON
P1462 (94)	o	Evaporative Emission (EVAP) Leak Check Module Pressure Decompression Defect	ON
P1549	---	Charging System High Voltage	OFF
P154A	---	Battery Sensor Internal Failure	OFF
P154B *6	o	Battery Sensor Characteristic Abnormal	OFF
P1658 (40)	---	Electronic Throttle Control System (ETCS) Control Relay ON Malfunction	ON
P1659 (40)	---	Electronic Throttle Control System (ETCS) Control Relay OFF Malfunction	ON
P1683 (40)	---	Throttle Valve Default Position Spring Performance Problem	ON
P1684 (40)	---	Throttle Valve Return Spring Performance Problem	ON
P16BB	---	Alternator B Terminal Circuit Low Voltage	OFF
P16E2	---	PGM-FI-ACG LIN Communication Error	OFF
P16E3	---	PGM-FI-Battery Sensor LIN Communication Error	OFF
P16E4	---	ACG High-temperature	OFF
P16E5 *6	---	LIN Communication Error (PCM-DC-DC Converter)	OFF
P16E6	---	Transmission Range Switch START Switch Circuit Malfunction	OFF
P16E8	---	PGM-FI-Shutter Grille LIN Communication Error	OFF
P16F3	---	Starter Cut Relay 1 Control Circuit Low Voltage	OFF
P16F4	---	Starter Cut Relay 2 Control Circuit Low Voltage	OFF
P16F5	---	Starter Cut Relay 1 Control Circuit High Voltage	OFF
P16F6	---	Starter Cut Relay 2 Control Circuit High Voltage	OFF
P2073 (5)	o	Manifold Absolute Pressure (MAP) Sensor Signal Higher Than Expected	ON

NOTE: The above DTCs are indicated when the PGM-FI system is selected with the HDS. Some automatic transmission DTCs cause the MIL to come on. If the MIL is on and no DTCs are indicated in the PGM-FI system, select the A/T system, and check for automatic transmission DTCs.

*1: These DTCs are indicated by a blinking MIL when the SCS line is jumped with the HDS. Some DTCs do not cause the MIL to blink when the SCS line is jumped; these DTCs are shown in the gauge display.

*2: With multipurpose camera unit

*3: AWD

*4:'18-19

*5:'20-21

*6: With auto idle stop system

*7: With keyless access system

*8:'17-20

DTC (MIL indication *1)	Two DriveCycle Detection	Detection Item	MIL
P2074 (5)	o	Manifold Absolute Pressure (MAP) Sensor Signal Lower Than Expected	ON
P2096 (45)	o	Post Catalyst Fuel Trim System Too Lean	ON
P2097 (45)	o	Post Catalyst Fuel Trim System Too Rich	ON
P2101 (40)	---	Electronic Throttle Control System (ETCS) Malfunction	ON
P2108 (40)	---	Throttle Actuator Control Module Performance	ON
P2118 (40)	---	Throttle Actuator Current Range/Performance Problem	ON
P2119 (40)	---	Throttle Actuator Control Throttle Body Range/Performance	ON
P2121 (37) *4	o	Accelerator Pedal Position (APP) Sensor A (Throttle Position (TP) Sensor D) Out of Range	ON
P2122 (37)	---	Accelerator Pedal Position (APP) Sensor A (Throttle Position (TP) Sensor D) Circuit Low Voltage	ON
P2123 (37)	---	Accelerator Pedal Position (APP) Sensor A (Throttle Position (TP) Sensor D) Circuit High Voltage	ON
P2126 (37)	o	Accelerator Pedal Position (APP) Sensor B (Throttle Position (TP) Sensor E) Out of Range	ON
P2127 (37)	---	Accelerator Pedal Position (APP) Sensor B (Throttle Position (TP) Sensor E) Circuit Low Voltage	ON
P2128 (37)	---	Accelerator Pedal Position (APP) Sensor B (Throttle Position (TP) Sensor E) Circuit High Voltage	ON
P2135 (7)	---	Throttle Position (TP) Sensor A/B Incorrect Voltage Correlation	ON
P2138 (37)	---	Accelerator Pedal Position (APP) Sensor A/B (Throttle Position (TP) Sensor D/E) Incorrect Voltage Correlation	ON
P2148 (131)	o	Injector Power Supply Circuit Malfunction	ON
P2175 (40) *5	o	Throttle Actuator Control System Low Air Flow Detected	ON
P2176 (40)	---	Throttle Actuator Control System Idle Position Not Learned	ON
P2182 (192)	o	Engine Coolant Temperature (ECT) Sensor 2 Out of Range	ON
P2183 (192)	o	Engine Coolant Temperature (ECT) Sensor 2 Circuit Range/Performance Problem	ON
P2184 (192)	o	Engine Coolant Temperature (ECT) Sensor 2 Circuit Low Voltage	ON
P2185 (192)	o	Engine Coolant Temperature (ECT) Sensor 2 Circuit High Voltage	ON
P2187 (45)	o	Fuel System Too Lean at Idle	ON
P2195 (48)	o	Air Fuel Ratio (A/F) Sensor (Sensor 1) Signal Stuck Lean	ON
P2199 (10)	o	Intake Air Temperature (IAT) Sensor 1-2 Incorrect Correlation	ON
P219C (45)	o	No. 1 Cylinder Air-Fuel Ratio Variation	ON
P219D (45)	o	No. 2 Cylinder Air-Fuel Ratio Variation	ON
P219E (45)	o	No. 3 Cylinder Air-Fuel Ratio Variation	ON
P219F (45)	o	No. 4 Cylinder Air-Fuel Ratio Variation	ON

DTC (MIL indication *1)	Two DriveCycle Detection	Detection Item	MIL
P2226 (13)	o	Barometric Pressure (BARO) Sensor Circuit Malfunction	ON
P2228 (13)	o	Barometric Pressure (BARO) Sensor Circuit Low Voltage	ON
P2229 (13)	o	Barometric Pressure (BARO) Sensor Circuit High Voltage	ON
P2237 (155)	o	Air/Fuel Ratio (A/F) Sensor (Sensor 1) IP Circuit High Voltage	ON
P2238 (155)	o	Air/Fuel Ratio (A/F) Sensor (Sensor 1) IP Circuit Low Voltage	ON

NOTE: The above DTCs are indicated when the PGM-FI system is selected with the HDS. Some automatic transmission DTCs cause the MIL to come on. If the MIL is on and no DTCs are indicated in the PGM-FI system, select the A/T system, and check for automatic transmission DTCs.

*1: These DTCs are indicated by a blinking MIL when the SCS line is jumped with the HDS. Some DTCs do not cause the MIL to blink when the SCS line is jumped; these DTCs are shown in the gauge display.

*2: With multipurpose camera unit

*3: AWD

*4:'18-19

*5:'20-21

*6: With auto idle stop system

*7: With keyless access system

*8:'17-20

*9:'21

DTC (MIL indication *1)	Two DriveCycle Detection	Detection Item	MIL
P2243 (155)	o	Air/Fuel Ratio (A/F) Sensor (Sensor 1) VCENT Circuit High Voltage	ON
P2245 (155)	o	Air/Fuel Ratio (A/F) Sensor (Sensor 1) VCENT Circuit Low Voltage	ON
P2251 (155)	o	Air/Fuel Ratio (A/F) Sensor (Sensor 1) VS Circuit High Voltage	ON
P2252 (155)	o	Air/Fuel Ratio (A/F) Sensor (Sensor 1) VS Circuit Low Voltage	ON
P2270 (63)	o	Secondary Heated Oxygen Sensor (Secondary HO2S (Sensor 2)) Circuit Signal Stuck Lean	ON
P2279 (109)	o	Intake Air System Leak	ON
P2401 (94)	o	Evaporative Emission (EVAP) Leak Check Pump Control Circuit Low Voltage	ON
P2402 (94)	o	Evaporative Emission (EVAP) Leak Check Pump Control Circuit High Voltage	ON
P2450 (90)	o	Evaporative Emission (EVAP) System Purge Line Non-return Valve A Stuck Open	ON

DTC (MIL indication *1)	Two DriveCycle Detection	Detection Item	MIL
P24B8 (94) *5	o	Evaporative Emission (EVAP) Leak Check Module Absolute Pressure Sensor Out of Range	ON
P24B9 (94)	o	Evaporative Emission (EVAP) Leak Check Module Absolute Pressure Sensor Range/Performance Problem	ON
P24BA (94)	o	Evaporative Emission (EVAP) Leak Check Module Absolute Pressure Sensor Circuit Low Voltage	ON
P24BB (94)	o	Evaporative Emission (EVAP) Leak Check Module Absolute Pressure Sensor Circuit High Voltage	ON
P24BE (94)	o	Canister Change Over Valve Control Circuit Low Voltage	ON
P24BF (94)	o	Canister Change Over Valve Control Circuit High Voltage	ON
P24C0 (94)	o	Canister Change Over Valve Close Malfunction	ON
P24C1 (94)	o	Canister Change Over Valve Stuck Close	ON
P2563 (190)	o	Turbocharger Wastegate Control Actuator Position Sensor Out of Range	ON
P2564 (190)	---	Turbocharger Wastegate Control Actuator Position Sensor Circuit Low Voltage	ON
P2565 (190)	---	Turbocharger Wastegate Control Actuator Position Sensor Circuit High Voltage	ON
P2610 (132)	o	Powertrain Control Module (PCM) Ignition Off Internal Timer Malfunction	ON
P2623 (197)	---	High Pressure Fuel Pump Spill Valve Malfunction	ON
P2A00 (61)	o	Air/Fuel Ratio (A/F) Sensor (Sensor 1) Circuit Range/Performance Problem	ON
P2A01 (63)	o	Secondary Heated Oxygen Sensor (Secondary HO2S) (Sensor 2) Circuit Range/Performance Problem	ON
P2DE0 (167) *5	o	Cold Start Air Fuel Ratio Control System Lean	ON
P2DE1 (167) *5	o	Cold Start Air Fuel Ratio Control System Rich	ON
U0029 (126)	---	F-CAN Malfunction (BUS-OFF (Powertrain Control Module (PCM)))	ON
U0038 (126)	---	PT-CAN Malfunction (TCM ECU BUS-OFF)	ON
U0047	---	F-CAN Malfunction For The Second Channel (BUS-OFF (Powertrain Control Module (PCM))	OFF
U0101 (126)	---	F-CAN Malfunction (Powertrain Control Module (PCM)-Transmission Control Module (TCM))	ON

NOTE: The above DTCs are indicated when the PGM-FI system is selected with the HDS. Some automatic transmission DTCs cause the MIL to come on. If the MIL is on and no DTCs are indicated in the PGM-FI system, select the A/T system, and check for automatic transmission DTCs.

*1: These DTCs are indicated by a blinking MIL when the SCS line is jumped with the HDS. Some DTCs do not cause the MIL to blink when the SCS line is jumped; these DTCs are shown in the gauge display.

*2: With multipurpose camera unit

*3: AWD

*4:'18-19

*5:'20-21

*6: With auto idle stop system

*7: With keyless access system

*8:'17-20

*9:'21

DTC (MIL indication *1)	Two DriveCycle Detection	Detection Item	MIL
U0104 *2	---	F-CAN Malfunction (Powertrain Control Module (PCM)-Driving Support System Control Unit)	OFF
U0114 *3	---	F-CAN Malfunction (Powertrain Control Module (PCM)-AWD Control Unit)	OFF
U0122	---	F-CAN Malfunction (Powertrain Control Module (PCM)-VSA Modulator-Control Unit)	OFF
U0128	---	F-CAN Malfunction (Powertrain Control Module (PCM)-Electric Parking Brake Control Unit)	OFF
U0129	---	F-CAN Malfunction (Powertrain Control Module (PCM)-Electric Brake Booster)	OFF
U0131	---	F-CAN Malfunction (Powertrain Control Module (PCM)-EPS Control Unit)	OFF
U0146 (126) *5	---	F-CAN Malfunction (Powertrain Control Module (PCM)-CAN Gateway)	ON
U0151	---	F-CAN Malfunction (Powertrain Control Module (PCM)-SRS Unit)	OFF
U0155 (126)	---	F-CAN Malfunction (Powertrain Control Module (PCM)-Gauge Control Module)	ON
U0301 (131)	---	PGM-FI System and Transmission System Program Version Mismatch	ON
U129E *7	---	F-CAN Malfunction (Powertrain Control Module (PCM)-Power Control Unit (PCU))	OFF

NOTE: The above DTCs are indicated when the PGM-FI system is selected with the HDS. Some automatic transmission DTCs cause the MIL to come on. If the MIL is on and no DTCs are indicated in the PGM-FI system, select the A/T system, and check for automatic transmission DTCs.

*1: These DTCs are indicated by a blinking MIL when the SCS line is jumped with the HDS. Some DTCs do not cause the MIL to blink when the SCS line is jumped; these DTCs are shown in the gauge display.

*2: With multipurpose camera unit

*3: AWD

*4:'18-19

*5:'20-21

*6: With auto idle stop system

*7: With keyless access system

*8:'17-20

*9:'21

FUEL AND EMISSIONS SYSTEMS DTC TROUBLESHOOTING INDEX (1.5 L ENGINE) (2017)

DTC Troubleshooting Index

DTC (MIL indication *1)	Two DriveCycle Detection	Detection Item	MIL
P0010 (56)	---	Variable Valve Timing Control (VTC) Oil Control Solenoid Valve A Malfunction	ON
P0011 (56)	o	Variable Valve Timing Control (VTC) A System Malfunction	ON
P0013 (141)	---	Variable Valve Timing Control (VTC) Oil Control Solenoid Valve B Malfunction	ON
P0014 (141)	o	Variable Valve Timing Control (VTC) B System Malfunction	ON
P0034 (194)	o	Turbocharger Bypass Control Solenoid Valve Circuit Low Voltage	ON
P0035 (194)	o	Turbocharger Bypass Control Solenoid Valve Circuit High Voltage	ON
P003A (190)	---	Turbocharger Wastegate Control Actuator Position Exceeded Learning Limit	ON
P0045 (190)	---	Turbocharger Wastegate Control Actuator Circuit Malfunction	ON
P0046 (190)	---	Turbocharger Wastegate Control Actuator Circuit Range/Performance Problem	ON
P0069 (13) *2	o	Barometric Pressure (BARO) Sensor Circuit Range/Performance Problem	ON
P006A (50) *2	o	Mass Air Flow (MAF) Sensor Circuit Range/Performance Problem	ON
P006E (190)	---	Turbocharger Power Supply Circuit Malfunction	ON
P0087 (197)	---	Fuel Rail Pressure Too Low	ON
P0088 (197)	---	Fuel Rail Pressure Too High	ON
P0096 (10)	o	Intake Air Temperature (IAT) Sensor 2 Circuit Range/Performance Problem	ON
P0097 (10)	o	Intake Air Temperature (IAT) Sensor 2 Circuit Low Voltage	ON
P0098 (10)	o	Intake Air Temperature (IAT) Sensor 2 Circuit High Voltage	ON
P00CF (171) *2	o	Turbocharger Boost Sensor/Barometric Pressure (BARO) Sensor Incorrect Correlation	ON
P0100 (50)	---	Mass Air Flow (MAF) Sensor Circuit Malfunction	ON
P0101 (50)	---	Mass Air Flow (MAF) Sensor Circuit Range/Performance Problem (Out of Range)	ON
P0107 (3)	---	Manifold Absolute Pressure (MAP) Sensor Circuit Low Voltage	ON
P0108 (3)	---	Manifold Absolute Pressure (MAP) Sensor Circuit High Voltage	ON
P0111 (10)	o	Intake Air Temperature (IAT) Sensor 1 Circuit Range/Performance Problem	ON
P0112 (10)	o	Intake Air Temperature (IAT) Sensor 1 Circuit Low Voltage	ON
P0113 (10)	o	Intake Air Temperature (IAT) Sensor 1 Circuit High Voltage	ON
P0116 (86)	o	Engine Coolant Temperature (ECT) Sensor 1 Circuit Range/Performance Problem	ON
P0117 (6)	---	Engine Coolant Temperature (ECT) Sensor 1 Circuit Low Voltage	ON

DTC (MIL indication *1)	Two DriveCycle Detection	Detection Item	MIL
P0118 (6)	---	Engine Coolant Temperature (ECT) Sensor 1 Circuit High Voltage	ON
P011A (86) *2	o	Engine Coolant Temperature (ECT) Sensor 1 Circuit Range/Performance Problem	ON

NOTE: The above DTCs are indicated when the PGM-FI system is selected with the HDS. Some automatic transmission DTCs cause the MIL to come on. If the MIL is on and no DTCs are indicated in the PGM-FI system, select the A/T system, and check for automatic transmission DTCs.

*1: These DTCs are indicated by a blinking MIL when the SCS line is jumped with the HDS. Some DTCs do not cause the MIL to blink when the SCS line is jumped; these DTCs are shown in the gauge display.

*2: USA and Canada models

*3: AWD

*4: With multipurpose camera unit

DTC (MIL indication *1)	Two DriveCycle Detection	Detection Item	MIL
P011B (10) *2	o	Intake Air Temperature (IAT) Sensor 1 Circuit Range/Performance Problem	ON
P0122 (7)	---	Throttle Position (TP) Sensor A Circuit Low Voltage	ON
P0123 (7)	---	Throttle Position (TP) Sensor A Circuit High Voltage	ON
P0125 (86)	o	Engine Coolant Temperature (ECT) Sensor 1 Malfunction/Slow Response	ON
P0128 (87) *2	o	Cooling System Malfunction	ON
P0133 (61)	o	Air/Fuel Ratio (A/F) Sensor (Sensor 1) Malfunction/Slow Response	ON
P0134 (41)	o	Air/Fuel Ratio (A/F) Sensor (Sensor 1) Heater System Malfunction	ON
P0135 (41)	o	Air/Fuel Ratio (A/F) Sensor (Sensor 1) Heater Circuit Malfunction	ON
P0137 (63)	o	Secondary Heated Oxygen Sensor (Secondary HO2S (Sensor 2)) Circuit Low Voltage	ON
P0138 (63)	o	Secondary Heated Oxygen Sensor (Secondary HO2S (Sensor 2)) Circuit High Voltage	ON
P0139 (63)	o	Secondary Heated Oxygen Sensor (Secondary HO2S (Sensor 2)) Slow Response	ON
P0141 (65)	o	Secondary Heated Oxygen Sensor (Secondary HO2S (Sensor 2)) Heater Circuit Malfunction	ON
P0171 (45)	o	Fuel System Too Lean	ON
P0172 (45)	o	Fuel System Too Rich	ON
P0192 (95)	---	Fuel Rail Pressure Sensor Circuit Low Voltage	ON
P0193 (95)	---	Fuel Rail Pressure Sensor Circuit High Voltage	ON
P0201 (16)	---	No. 1 Cylinder Injector Circuit Malfunction	ON
P0202 (16)	---	No. 2 Cylinder Injector Circuit Malfunction	ON
P0203 (16)	---	No. 3 Cylinder Injector Circuit Malfunction	ON
P0204 (16)	---	No. 4 Cylinder Injector Circuit Malfunction	ON
P0222 (7)	---	Throttle Position (TP) Sensor B Circuit Low Voltage	ON
P0223 (7)	---	Throttle Position (TP) Sensor B Circuit High Voltage	ON
P0234 (26)	---	Turbocharger Overboost Problem	ON

DTC (MIL indication *1)	Two DriveCycle Detection	Detection Item	MIL
P0236 (171) *2	o	Turbocharger Boost Sensor Circuit Range/Performance Problem	ON
P0237 (171)	---	Turbocharger Boost Sensor Circuit Low Voltage	ON
P0238 (171)	---	Turbocharger Boost Sensor Circuit High Voltage	ON
P023D (171) *2	o	Turbocharger Boost Sensor/Manifold Absolute Pressure (MAP) Sensor Incorrect Correlation	ON
P0299 (26)	---	Turbocharger Underboost Problem	ON
P0300 (211) and any combination of the following: P0301 (71) P0302 (72) P0303 (73) P0304 (74)	o	Random Misfire Detected	ON
P0301 (71)	o	No. 1 Cylinder Misfire Detected	ON
P0302 (72)	o	No. 2 Cylinder Misfire Detected	ON
P0303 (73)	o	No. 3 Cylinder Misfire Detected	ON
P0304 (74)	o	No. 4 Cylinder Misfire Detected	ON

NOTE: The above DTCs are indicated when the PGM-FI system is selected with the HDS. Some automatic transmission DTCs cause the MIL to come on. If the MIL is on and no DTCs are indicated in the PGM-FI system, select the A/T system, and check for automatic transmission DTCs.

*1: These DTCs are indicated by a blinking MIL when the SCS line is jumped with the HDS. Some DTCs do not cause the MIL to blink when the SCS line is jumped; these DTCs are shown in the gauge display.

*2: USA and Canada models

*3: AWD

*4: With multipurpose camera unit

DTC (MIL indication *1)	Two DriveCycle Detection	Detection Item	MIL
P0326 (23)	o	Knock Sensor Malfunction	ON
P0327 (23)	o	Knock Sensor Circuit Low Voltage	ON
P0328 (23)	o	Knock Sensor Circuit High Voltage	ON
P0335 (4)	---	Crankshaft Position (CKP) Sensor No Signal	ON
P0339 (4)	---	Crankshaft Position (CKP) Sensor Circuit Intermittent Interruption	ON
P0340 (8)	---	Camshaft Position (CMP) Sensor A No Signal	ON
P0341 (57)	o	Camshaft Position (CMP) Sensor A and Crankshaft Position (CKP) Sensor Incorrect Phase Detected	ON
P0344 (8)	---	Camshaft Position (CMP) Sensor A Circuit Intermittent Interruption	ON
P0351 (71)	---	No. 1 Cylinder Ignition Coil Circuit Malfunction	ON
P0352 (72)	---	No. 2 Cylinder Ignition Coil Circuit Malfunction	ON
P0353 (73)	---	No. 3 Cylinder Ignition Coil Circuit Malfunction	ON
P0354 (74)	---	No. 4 Cylinder Ignition Coil Circuit Malfunction	ON
P0365 (142)	---	Camshaft Position (CMP) Sensor B Circuit No Signal	ON
P0366 (142)	o	Camshaft Position (CMP) Sensor B and Crankshaft Position (CKP) Sensor Incorrect Phase Detected	ON

DTC (MIL indication *1)	Two DriveCycle Detection	Detection Item	MIL
P0369 (142)	---	Camshaft Position (CMP) Sensor B Circuit Intermittent Interruption	ON
P0420 (67)	o	Catalyst System Efficiency Below Threshold	ON
P043E (94) *2	o	Evaporative Emission (EVAP) Leak Check Module Standard Pressure Low	ON
P043F (94) *2	o	Evaporative Emission (EVAP) Leak Check Module Standard Pressure High	ON
P0441 (90) *2	o	Evaporative Emission (EVAP) System Purge Flow Malfunction	ON
P0443 (92)	o	Evaporative Emission (EVAP) Canister Purge Valve Circuit Malfunction	ON
P0451 (94) *2	o	Evaporative Emission (EVAP) Leak Check Module Pressure Sensor Range/Performance	ON
P0456 (90) *2	o	Evaporative Emission (EVAP) System Very Small Leak Detected	ON
P0461 *2	---	Fuel Level Sensor (Fuel Gauge Sending Unit) Circuit Range/Performance Problem	OFF
P0462 *2	o	Fuel Level Sensor (Fuel Gauge Sending Unit) Circuit Low Voltage	OFF
P0463 *2	o	Fuel Level Sensor (Fuel Gauge Sending Unit) Circuit High Voltage	OFF
P04DF (92) *2	o	Evaporative Emission (EVAP) System High Purge Flow Detected	ON
P04F0 (90) *2	o	Evaporative Emission (EVAP) System Incorrect Purge Flow Detected	ON
P04F1 (90) *2	o	Evaporative Emission (EVAP) System Low Purge Flow Detected	ON
P0506 (14) *2	o	Idle Control System RPM Lower than Expected	ON
P0507 (14) *2	o	Idle Control System RPM Higher than Expected	ON
P050A (167) *2	o	Cold Start Idle Air Control System Performance Problem	ON
P050D (167) *2	o	Cold Start Idle Speed Problem	ON
P0532	o	A/C Pressure Sensor Circuit Low Voltage	OFF

NOTE: The above DTCs are indicated when the PGM-FI system is selected with the HDS. Some automatic transmission DTCs cause the MIL to come on. If the MIL is on and no DTCs are indicated in the PGM-FI system, select the A/T system, and check for automatic transmission DTCs.

*1: These DTCs are indicated by a blinking MIL when the SCS line is jumped with the HDS. Some DTCs do not cause the MIL to blink when the SCS line is jumped; these DTCs are shown in the gauge display.

*2: USA and Canada models

*3: AWD

*4: With multipurpose camera unit

DTC (MIL indication *1)	Two DriveCycle Detection	Detection Item	MIL
P0533	o	A/C Pressure Sensor Circuit High Voltage	OFF
P0562	---	Charging System Low Voltage	OFF

DTC (MIL indication *1)	Two DriveCycle Detection	Detection Item	MIL
P0563	o	Powertrain Control Module (PCM) Power Source Circuit Unexpected Voltage	OFF
P0571	o	Brake Pedal Position Switch Circuit Malfunction	OFF
P059F	---	Shutter Grille Assembly (Upper) Malfunction	OFF
P05A0	---	Shutter Grille Assembly (Upper) Malfunction	OFF
P05A3	---	Shutter Grille Actuator (Upper) Malfunction	OFF
P05A8	---	Shutter Grille Actuator (Upper) Malfunction	OFF
P05AE	---	Shutter Grille Assembly (Lower) Malfunction	OFF
P05AF	---	Shutter Grille Assembly (Lower) Malfunction	OFF
P05B2	---	Shutter Grille Actuator (Lower) Malfunction	OFF
P05B7	---	Shutter Grille Actuator (Lower) Malfunction	OFF
P05C0	---	Shutter Grille Actuator (Upper) Temperature Malfunction	OFF
P05C1	---	Shutter Grille Actuator (Lower) Temperature Malfunction	OFF
P0600 (131)	---	Powertrain Control Module (PCM) Serial Communication Failure	ON
P0602 (196)	---	Powertrain Control Module (PCM) Programming Error	ON
P060A (131)	---	Powertrain Control Module (PCM) Internal Control Module Malfunction	ON
P0615	o	Starter Cut Relay Diagnosis Circuit Malfunction	OFF
P0616	---	Starter Cut Relay Diagnosis Circuit Low Voltage	OFF
P0617	---	Starter Cut Relay Diagnosis Circuit High Voltage	OFF
P061B (131)	---	Powertrain Control Module (PCM) Internal Malfunction (Torque Calculation)	ON
P062B (131)	---	Powertrain Control Module (PCM) Internal Circuit Malfunction	ON
P062F (131)	---	Powertrain Control Module (PCM) Internal Control Module Keep Alive Memory (KAM) Error	ON
P0630 (139)	---	VIN Not Programmed or Mismatch	ON
P0641 (133)	---	Sensor Reference Voltage A Malfunction	ON
P0651 (134)	---	Sensor Reference Voltage B Malfunction	ON
P0657 (131)	---	Powertrain Control Module (PCM) Power Supply Circuit Malfunction	ON
P065A	---	ACG No Charging Malfunction	OFF
P06A8 (131)	---	Internal VCC Power Malfunction	ON
P0703	o	Brake Pedal Position Switch (NC) Malfunction	OFF
P0864 (126)	---	PT-CAN Malfunction (Powertrain Control Module (PCM)-Transmission Control Module (TCM))	ON
P1009 (56)	---	Variable Valve Timing Control (VTC) A Advance Malfunction	ON
P101A (141)	---	Variable Valve Timing Control (VTC) B Advance Malfunction	ON
P1172 (61) *2	o	Air Fuel Ratio (A/F) Sensor (Sensor 1) Circuit Out of Range High	ON
P1320	---	Super Knock	OFF
P145D (90) *2	o	Evaporative Emission (EVAP) System Purge Flow Malfunction at turbocharging	ON

DTC (MIL indication *1)	Two DriveCycle Detection	Detection Item	MIL
P145F (94) *2	o	Evaporative Emission (EVAP) Leak Check Module Pressure Sensor Range/Performance Problem	ON

NOTE: The above DTCs are indicated when the PGM-FI system is selected with the HDS. Some automatic transmission DTCs cause the MIL to come on. If the MIL is on and no DTCs are indicated in the PGM-FI system, select the A/T system, and check for automatic transmission DTCs.

*1: These DTCs are indicated by a blinking MIL when the SCS line is jumped with the HDS. Some DTCs do not cause the MIL to blink when the SCS line is jumped; these DTCs are shown in the gauge display.

*2: USA and Canada models

*3: AWD

*4: With multipurpose camera unit

DTC (MIL indication *1)	Two DriveCycle Detection	Detection Item	MIL
P1461 (94) *2	o	Evaporative Emission (EVAP) Leak Check Module Pressure Sensor Shifts	ON
P1462 (94) *2	o	Evaporative Emission (EVAP) Leak Check Module Pressure Decompression Defect	ON
P1549	---	Charging System High Voltage	OFF
P154A	---	Battery Sensor Internal Failure	OFF
P1658 (40)	---	Electronic Throttle Control System (ETCS) Control Relay ON Malfunction	ON
P1659 (40)	---	Electronic Throttle Control System (ETCS) Control Relay OFF Malfunction	ON
P1683 (40)	---	Throttle Valve Default Position Spring Performance Problem	ON
P1684 (40)	---	Throttle Valve Return Spring Performance Problem	ON
P16BB	---	Alternator B Terminal Circuit Low Voltage	OFF
P16E2	---	PGM-FI-ACG LIN Communication Error	OFF
P16E3	---	PGM-FI-Battery Sensor LIN Communication Error	OFF
P16E4	---	ACG High-temperature	OFF
P16E6	---	Transmission Range Switch START Switch Circuit Malfunction	OFF
P16E8	---	PGM-FI-Shutter Grille LIN Communication Error	OFF
P16F3	---	Starter Cut Relay 1 Control Circuit Low Voltage	OFF
P16F4	---	Starter Cut Relay 2 Control Circuit Low Voltage	OFF
P16F5	---	Starter Cut Relay 1 Control Circuit High Voltage	OFF
P16F6	---	Starter Cut Relay 2 Control Circuit High Voltage	OFF
P2073 (5) *2	o	Manifold Absolute Pressure (MAP) Sensor Signal Higher Than Expected	ON
P2074 (5) *2	o	Manifold Absolute Pressure (MAP) Sensor Signal Lower Than Expected	ON
P2096 (45) *2	o	Post Catalyst Fuel Trim System Too Lean	ON
P2097 (45) *2	o	Post Catalyst Fuel Trim System Too Rich	ON
P2101 (40)	---	Electronic Throttle Control System (ETCS) Malfunction	ON
P2108 (40)	---	Throttle Actuator Control Module Performance	ON

DTC (MIL indication *1)	Two DriveCycle Detection	Detection Item	MIL
P2118 (40)	---	Throttle Actuator Current Range/Performance Problem	ON
P2119 (40)	---	Throttle Actuator Control Throttle Body Range/Performance	ON
P2122 (37)	---	Accelerator Pedal Position (APP) Sensor A (Throttle Position (TP) Sensor D) Circuit Low Voltage	ON
P2123 (37)	---	Accelerator Pedal Position (APP) Sensor A (Throttle Position (TP) Sensor D) Circuit High Voltage	ON
P2127 (37)	---	Accelerator Pedal Position (APP) Sensor B (Throttle Position (TP) Sensor E) Circuit Low Voltage	ON
P2128 (37)	---	Accelerator Pedal Position (APP) Sensor B (Throttle Position (TP) Sensor E) Circuit High Voltage	ON
P2135 (7)	---	Throttle Position (TP) Sensor A/B Incorrect Voltage Correlation	ON
P2138 (37)	---	Accelerator Pedal Position (APP) Sensor A/B (Throttle Position (TP) Sensor D/E) Incorrect Voltage Correlation	ON
P2148 (131)	o	Injector Power Supply Circuit Malfunction	ON
P2176 (40)	---	Throttle Actuator Control System Idle Position Not Learned	ON
P2183 (192) *2	o	Engine Coolant Temperature (ECT) Sensor 2 Circuit Range/Performance Problem	ON

NOTE: The above DTCs are indicated when the PGM-FI system is selected with the HDS. Some automatic transmission DTCs cause the MIL to come on. If the MIL is on and no DTCs are indicated in the PGM-FI system, select the A/T system, and check for automatic transmission DTCs.

*1: These DTCs are indicated by a blinking MIL when the SCS line is jumped with the HDS. Some DTCs do not cause the MIL to blink when the SCS line is jumped; these DTCs are shown in the gauge display.

*2: USA and Canada models

*3: AWD

*4: With multipurpose camera unit

DTC (MIL indication *1)	Two DriveCycle Detection	Detection Item	MIL
P2184 (192)	o	Engine Coolant Temperature (ECT) Sensor 2 Circuit Low Voltage	ON
P2185 (192)	o	Engine Coolant Temperature (ECT) Sensor 2 Circuit High Voltage	ON
P2187 (45) *2	o	Fuel System Too Lean at Idle	ON
P2195 (48) *2	o	Air Fuel Ratio (A/F) Sensor (Sensor 1) Signal Stuck Lean	ON
P2199 (10) *2	o	Intake Air Temperature (IAT) Sensor 1-2 Incorrect Correlation	ON
P219C (45) *2	o	No. 1 Cylinder Air-Fuel Ratio Variation	ON
P219D (45) *2	o	No. 2 Cylinder Air-Fuel Ratio Variation	ON
P219E (45) *2	o	No. 3 Cylinder Air-Fuel Ratio Variation	ON
P219F (45) *2	o	No. 4 Cylinder Air-Fuel Ratio Variation	ON
P2226 (13)	o	Barometric Pressure (BARO) Sensor Circuit Malfunction	ON

DTC (MIL indication *1)	Two DriveCycle Detection	Detection Item	MIL
P2228 (13)	o	Barometric Pressure (BARO) Sensor Circuit Low Voltage	ON
P2229 (13)	o	Barometric Pressure (BARO) Sensor Circuit High Voltage	ON
P2237 (155)	o	Air/Fuel Ratio (A/F) Sensor (Sensor 1) IP Circuit High Voltage	ON
P2238 (155)	o	Air/Fuel Ratio (A/F) Sensor (Sensor 1) IP Circuit Low Voltage	ON
P2243 (155)	o	Air/Fuel Ratio (A/F) Sensor (Sensor 1) VCENT Circuit High Voltage	ON
P2245 (155)	o	Air/Fuel Ratio (A/F) Sensor (Sensor 1) VCENT Circuit Low Voltage	ON
P2251 (155)	o	Air/Fuel Ratio (A/F) Sensor (Sensor 1) VS Circuit High Voltage	ON
P2252 (155)	o	Air/Fuel Ratio (A/F) Sensor (Sensor 1) VS Circuit Low Voltage	ON
P2270 (63)	o	Secondary Heated Oxygen Sensor (Secondary HO2S (Sensor 2)) Circuit Signal Stuck Lean	ON
P2279 (109) *2	o	Intake Air System Leak	ON
P2401 (94) *2	o	Evaporative Emission (EVAP) Leak Check Pump Control Circuit Low Voltage	ON
P2402 (94) *2	o	Evaporative Emission (EVAP) Leak Check Pump Control Circuit High Voltage	ON
P2450 (90) *2	o	Evaporative Emission (EVAP) System Purge Line Non-return Valve A Stuck Open	ON
P24B9 (94) *2	o	Evaporative Emission (EVAP) Leak Check Module Absolute Pressure Sensor Range/Performance Problem	ON
P24BA (94) *2	o	Evaporative Emission (EVAP) Leak Check Module Absolute Pressure Sensor Circuit Low Voltage	ON
P24BB (94) *2	o	Evaporative Emission (EVAP) Leak Check Module Absolute Pressure Sensor Circuit High Voltage	ON
P24BE (94) *2	o	Canister Change Over Valve Control Circuit Low Voltage	ON
P24BF (94) *2	o	Canister Change Over Valve Control Circuit High Voltage	ON
P24C0 (94) *2	o	Canister Change Over Valve Close Malfunction	ON
P24C1 (94) *2	o	Canister Change Over Valve Stuck Close	ON
P2564 (190)	---	Turbocharger Wastegate Control Actuator Position Sensor Circuit Low Voltage	ON

NOTE: The above DTCs are indicated when the PGM-FI system is selected with the HDS. Some automatic transmission DTCs cause the MIL to come on. If the MIL is on and no DTCs are indicated in the PGM-FI system, select the A/T system, and check for automatic transmission DTCs.

*1: These DTCs are indicated by a blinking MIL when the SCS line is jumped with the HDS. Some DTCs do not cause the MIL to blink when the SCS line is jumped; these DTCs are shown in the gauge display.

*2: USA and Canada models

*3: AWD

*4: With multipurpose camera unit

DTC (MIL indication *1)	Two DriveCycle Detection	Detection Item	MIL
P2565 (190)	---	Turbocharger Wastegate Control Actuator Position Sensor Circuit High Voltage	ON
P2610 (132)	o	Powertrain Control Module (PCM) Ignition Off Internal Timer Malfunction	ON
P2623 (197)	---	High Pressure Fuel Pump Spill Valve Malfunction	ON
P2A00 (61)	o	Air/Fuel Ratio (A/F) Sensor (Sensor 1) Circuit Range/Performance Problem	ON
U0029 (126)	---	F-CAN Malfunction (BUS-OFF (Powertrain Control Module (PCM)))	ON
U0038 (126)	---	PT-CAN Malfunction (TCM ECU BUS-OFF)	ON
U0047	---	F-CAN Malfunction For The Second Channel (BUS-OFF (Powertrain Control Module (PCM))	OFF
U0101 (126)	---	F-CAN Malfunction (Powertrain Control Module (PCM)-Transmission Control Module (TCM))	ON
U0104 *4	---	F-CAN Malfunction (Powertrain Control Module (PCM)-Driving Support System Control Unit)	OFF
U0114 *3	---	F-CAN Malfunction (Powertrain Control Module (PCM)-AWD Control Unit)	OFF
U0122	---	F-CAN Malfunction (Powertrain Control Module (PCM)-VSA Modulator-Control Unit)	OFF
U0128	---	F-CAN Malfunction (Powertrain Control Module (PCM)-Electric Parking Brake Control Unit)	OFF
U0129	---	F-CAN Malfunction (Powertrain Control Module (PCM)-Electric Brake Booster)	OFF
U0131	---	F-CAN Malfunction (Powertrain Control Module (PCM)-EPS Control Unit)	OFF
U0151	---	F-CAN Malfunction (Powertrain Control Module (PCM)-SRS Unit)	OFF
U0155 (126)	---	F-CAN Malfunction (Powertrain Control Module (PCM)-Gauge Control Module)	ON
U0301 (131)	---	PGM-FI System and Transmission System Program Version Mismatch	ON
U129E	---	F-CAN Malfunction (Powertrain Control Module (PCM)-Power Control Unit (PCU))	OFF

NOTE: The above DTCs are indicated when the PGM-FI system is selected with the HDS. Some automatic transmission DTCs cause the MIL to come on. If the MIL is on and no DTCs are indicated in the PGM-FI system, select the A/T system, and check for automatic transmission DTCs.

*1: These DTCs are indicated by a blinking MIL when the SCS line is jumped with the HDS. Some DTCs do not cause the MIL to blink when the SCS line is jumped; these DTCs are shown in the gauge display.

*2: USA and Canada models

*3: AWD

*4: With multipurpose camera unit

FUEL AND EMISSIONS SYSTEMS DTC TROUBLESHOOTING INDEX (2.4 L ENGINE (KA)) (2018 2019)

DTC Troubleshooting Index

DTC (MIL indication *1)	Two DriveCycle Detection	Detection Item	MIL
P0010 (56)	---	Variable Valve Timing Control (VTC) Oil Control Solenoid Valve Malfunction	ON
P0011 (56)	o	Variable Valve Timing Control (VTC) System Malfunction	ON
P0069 (13)	o	Barometric Pressure (BARO) Sensor Circuit Range/Performance Problem	ON
P006A (50)	o	Mass Air Flow (MAF) Sensor Circuit Range/Performance Problem	ON
P0087 (197)	---	Fuel Rail Pressure Too Low	ON
P0088 (197)	---	Fuel Rail Pressure Too High	ON
P0101 (50)	o	Mass Air Flow (MAF) Sensor Circuit Range/Performance Problem	ON
P0102 (50)	---	Mass Air Flow (MAF) Sensor Circuit Low Voltage	ON
P0103 (50)	---	Mass Air Flow (MAF) Sensor Circuit High Voltage	ON
P0105 (3)	o	Manifold Absolute Pressure (MAP) Sensor Out of Range	ON
P0107 (3)	---	Manifold Absolute Pressure (MAP) Sensor Circuit Low Voltage	ON
P0108 (3)	---	Manifold Absolute Pressure (MAP) Sensor Circuit High Voltage	ON
P0111 (10)	o	Intake Air Temperature (IAT) Sensor Circuit Range/Performance Problem	ON
P0112 (10)	o	Intake Air Temperature (IAT) Sensor Circuit Low Voltage	ON
P0113 (10)	o	Intake Air Temperature (IAT) Sensor Circuit High Voltage	ON
P0115 (6)	o	Engine Coolant Temperature (ECT) Sensor 1 Out of Range	ON
P0116 (86)	o	Engine Coolant Temperature (ECT) Sensor 1 Circuit Range/Performance Problem	ON
P0117 (6)	---	Engine Coolant Temperature (ECT) Sensor 1 Circuit Low Voltage	ON
P0118 (6)	---	Engine Coolant Temperature (ECT) Sensor 1 Circuit High Voltage	ON
P011A (86)	o	Engine Coolant Temperature (ECT) Sensor 1 Circuit Range/Performance Problem	ON
P011B (10)	o	Intake Air Temperature (IAT) Sensor 1 Circuit Range/Performance Problem	ON
P0121 (7)	o	Throttle Position (TP) Sensor A Out of Range	ON
P0122 (7)	---	Throttle Position (TP) Sensor A Circuit Low Voltage	ON
P0123 (7)	---	Throttle Position (TP) Sensor A Circuit High Voltage	ON
P0125 (86)	o	Engine Coolant Temperature (ECT) Sensor 1 Malfunction/Slow Response	ON
P0128 (87)	o	Cooling System Malfunction	ON
P0130 (61)	o	Air Fuel Ratio (A/F) Sensor (Sensor 1) Out of Range	ON
P0133 (61)	o	Air Fuel Ratio (A/F) Sensor (Sensor 1) Malfunction/Slow Response	ON
P0134 (41)	o	Air Fuel Ratio (A/F) Sensor (Sensor 1) Heater System Malfunction	ON

DTC (MIL indication *1)	Two DriveCycle Detection	Detection Item	MIL
P0135 (41)	o	Air Fuel Ratio (A/F) Sensor (Sensor 1) Heater Circuit Malfunction	ON

NOTE: The above DTCs are indicated when the PGM-FI system is selected with the HDS. Some automatic transmission DTCs cause the MIL to come on. If the MIL is on and no DTCs are indicated in the PGM-FI system, select the A/T system, and check for automatic transmission DTCs.

*1: These DTCs are indicated by a blinking MIL when the SCS line is jumped with the HDS. Some DTCs do not cause the MIL to blink when the SCS line is jumped; these DTCs are shown in the gauge display.

*2: AWD

DTC (MIL indication *1)	Two DriveCycle Detection	Detection Item	MIL
P0137 (63)	o	Secondary Heated Oxygen Sensor (Secondary HO2S (Sensor 2)) Circuit Low Voltage	ON
P0138 (63)	o	Secondary Heated Oxygen Sensor (Secondary HO2S (Sensor 2)) Circuit High Voltage	ON
P0139 (63)	o	Secondary Heated Oxygen Sensor (Secondary HO2S (Sensor 2)) Slow Response	ON
P0141 (65)	o	Secondary Heated Oxygen Sensor (Secondary HO2S (Sensor 2)) Heater Circuit Malfunction	ON
P0171 (45)	o	Fuel System Too Lean	ON
P0172 (45)	o	Fuel System Too Rich	ON
P0191 (95)	o	Fuel Rail Pressure Sensor Out of Range	ON
P0192 (95)	---	Fuel Rail Pressure Sensor Circuit Low Voltage	ON
P0193 (95)	---	Fuel Rail Pressure Sensor Circuit High Voltage	ON
P0201 (16)	---	No. 1 Cylinder Injector Circuit Malfunction	ON
P0202 (16)	---	No. 2 Cylinder Injector Circuit Malfunction	ON
P0203 (16)	---	No. 3 Cylinder Injector Circuit Malfunction	ON
P0204 (16)	---	No. 4 Cylinder Injector Circuit Malfunction	ON
P0221 (7)	o	Throttle Position (TP) Sensor B Out of Range	ON
P0222 (7)	---	Throttle Position (TP) Sensor B Circuit Low Voltage	ON
P0223 (7)	---	Throttle Position (TP) Sensor B Circuit High Voltage	ON
P0300 (211) and any combination of the following: P0301 (71) P0302 (72) P0303 (73) P0304 (74)	o	Random Misfire Detected	ON
P0301 (71)	o	No. 1 Cylinder Misfire Detected	ON
P0302 (72)	o	No. 2 Cylinder Misfire Detected	ON
P0303 (73)	o	No. 3 Cylinder Misfire Detected	ON
P0304 (74)	o	No. 4 Cylinder Misfire Detected	ON
P0326 (23)	o	Knock Sensor Malfunction	ON
P0327 (23)	o	Knock Sensor Circuit Low Voltage	ON
P0328 (23)	o	Knock Sensor Circuit High Voltage	ON
P0335 (4)	---	Crankshaft Position (CKP) Sensor No Signal	ON
P0339 (4)	---	Crankshaft Position (CKP) Sensor Circuit Intermittent Interruption	ON
P0340 (57)	o	Camshaft Position (CMP) Sensor A No Signal	ON

DTC (MIL indication *1)	Two DriveCycle Detection	Detection Item	MIL
P0341 (57)	o	Camshaft Position (CMP) Sensor A and Crankshaft Position (CKP) Sensor Incorrect Phase Detected	ON
P0344 (57)	o	Camshaft Position (CMP) Sensor A Circuit Intermittent Interruption	ON
P0351 (71)	---	No. 1 Cylinder Ignition Coil Circuit Malfunction	ON
P0352 (72)	---	No. 2 Cylinder Ignition Coil Circuit Malfunction	ON
P0353 (73)	---	No. 3 Cylinder Ignition Coil Circuit Malfunction	ON
P0354 (74)	---	No. 4 Cylinder Ignition Coil Circuit Malfunction	ON
P0365 (8)	---	Camshaft Position (CMP) Sensor B No Signal	ON
P0369 (8)	---	Camshaft Position (CMP) Sensor B Circuit Intermittent Interruption	ON

NOTE: The above DTCs are indicated when the PGM-FI system is selected with the HDS. Some automatic transmission DTCs cause the MIL to come on. If the MIL is on and no DTCs are indicated in the PGM-FI system, select the A/T system, and check for automatic transmission DTCs.

*1: These DTCs are indicated by a blinking MIL when the SCS line is jumped with the HDS. Some DTCs do not cause the MIL to blink when the SCS line is jumped; these DTCs are shown in the gauge display.

*2: AWD

DTC (MIL indication *1)	Two DriveCycle Detection	Detection Item	MIL
P0420 (67)	o	Catalyst System Efficiency Below Threshold	ON
P0441 (90)	o	Evaporative Emission (EVAP) System Purge Flow Malfunction	ON
P0443 (92)	o	Evaporative Emission (EVAP) Canister Purge Valve Circuit Malfunction	ON
P0451 (91)	o	Fuel Tank Pressure (FTP) Sensor Circuit Range/Performance Problem	ON
P0452 (91)	o	Fuel Tank Pressure (FTP) Sensor Circuit Low Voltage	ON
P0453 (91)	o	Fuel Tank Pressure (FTP) Sensor Circuit High Voltage	ON
P0455 (90)	o	Evaporative Emission (EVAP) System Large Leak Detected	ON
P0456 (90)	o	Evaporative Emission (EVAP) System Very Small Leak Detected	ON
P0461	---	Fuel Level Sensor (Fuel Gauge Sending Unit) Circuit Range/Performance Problem	OFF
P0462	o	Fuel Level Sensor (Fuel Gauge Sending Unit) Circuit Low Voltage	OFF
P0463	o	Fuel Level Sensor (Fuel Gauge Sending Unit) Circuit High Voltage	OFF
P0498 (117)	o	Evaporative Emission (EVAP) Canister Vent Shut Valve Circuit Low Voltage	ON
P0499 (117)	o	Evaporative Emission (EVAP) Canister Vent Shut Valve Circuit High Voltage	ON
P04DF (92)	o	Evaporative Emission (EVAP) System High Purge Flow Detected	ON
P04F1 (90)	o	Evaporative Emission (EVAP) System Low Purge Flow Detected	ON
P0506 (14)	o	Idle Control System RPM Lower than Expected	ON

DTC (MIL indication *1)	Two DriveCycle Detection	Detection Item	MIL
P0507 (14)	o	Idle Control System RPM Higher than Expected	ON
P050A (167)	o	Cold Start Idle Air Control System Performance Problem	ON
P050D (167)	o	Cold Start Idle Speed Problem	ON
P0532	o	A/C Pressure Sensor Circuit Low Voltage	OFF
P0533	o	A/C Pressure Sensor Circuit High Voltage	OFF
P0562	---	Charging System Low Voltage	OFF
P0563	o	Powertrain Control Module (PCM) Power Source Circuit Unexpected Voltage	OFF
P0571	o	Brake Pedal Position Switch Circuit Malfunction	OFF
P059F	---	Shutter Grille Assembly (Upper) Malfunction	OFF
P05A0	---	Shutter Grille Assembly (Upper) Malfunction	OFF
P05A3	---	Shutter Grille Actuator (Upper) Malfunction	OFF
P05A8	---	Shutter Grille Actuator (Upper) Malfunction	OFF
P05AE	---	Shutter Grille Assembly (Lower) Malfunction	OFF
P05AF	---	Shutter Grille Assembly (Lower) Malfunction	OFF
P05B2	---	Shutter Grille Actuator (Lower) Malfunction	OFF
P05B7	---	Shutter Grille Actuator (Lower) Malfunction	OFF
P05C0	---	Shutter Grille Actuator (Upper) Temperature Malfunction	OFF
P05C1	---	Shutter Grille Actuator (Lower) Temperature Malfunction	OFF
P0602 (196)	---	Powertrain Control Module (PCM) Programming Error	ON
P0607 (131)	---	Powertrain Control Module (PCM) Internal Circuit Malfunction	ON

NOTE: The above DTCs are indicated when the PGM-FI system is selected with the HDS. Some automatic transmission DTCs cause the MIL to come on. If the MIL is on and no DTCs are indicated in the PGM-FI system, select the A/T system, and check for automatic transmission DTCs.

*1: These DTCs are indicated by a blinking MIL when the SCS line is jumped with the HDS. Some DTCs do not cause the MIL to blink when the SCS line is jumped; these DTCs are shown in the gauge display.

*2: AWD

DTC (MIL indication *1)	Two DriveCycle Detection	Detection Item	MIL
P060A (131)	---	Powertrain Control Module (PCM) Internal Control Module Malfunction	ON
P0615	o	Starter Cut Relay Diagnosis Circuit Malfunction	OFF
P0616	---	Starter Cut Relay Diagnosis Circuit Low Voltage	OFF
P0617	---	Starter Cut Relay Diagnosis Circuit High Voltage	OFF
P062B (131)	---	Powertrain Control Module (PCM) Internal Circuit Malfunction	ON
P062F (131)	---	Powertrain Control Module (PCM) Internal Control Module Keep Alive Memory (KAM) Error	ON
P0630 (139)	---	VIN Not Programmed or Mismatch	ON
P0641 (133)	---	Sensor Reference Voltage A Malfunction	ON
P0651 (134)	---	Sensor Reference Voltage B Malfunction	ON
P065A	---	ACG No Charging Malfunction	OFF

DTC (MIL indication *1)	Two DriveCycle Detection	Detection Item	MIL
P0685 (135)	o	Powertrain Control Module (PCM) Power Control Circuit/Internal Circuit Malfunction	ON
P06A8 (131)	---	Internal VCC Power Malfunction	ON
P0703	o	Brake Pedal Position Switch (NC) Malfunction	OFF
P1009 (56)	---	Variable Valve Timing Control (VTC) Advance Malfunction	ON
P1454 (91)	o	Fuel Tank Pressure (FTP) Sensor Circuit Range/Performance Problem	ON
P1458 (91)	o	Fuel Tank Pressure (FTP) Sensor Circuit Range/Performance Problem	ON
P1549	---	Charging System High Voltage	OFF
P154A	---	Battery Sensor Internal Failure	OFF
P1658 (40)	---	Electronic Throttle Control System (ETCS) Control Relay ON Malfunction	ON
P1659 (40)	---	Electronic Throttle Control System (ETCS) Control Relay OFF Malfunction	ON
P1683 (40)	---	Throttle Valve Default Position Spring Performance Problem	ON
P1684 (40)	---	Throttle Valve Return Spring Performance Problem	ON
P16BB	---	Alternator B Terminal Circuit Low Voltage	OFF
P16E2	---	PGM-FI-ACG LIN Communication Error	OFF
P16E3	---	PGM-FI-Battery Sensor LIN Communication Error	OFF
P16E4	---	ACG High-temperature	OFF
P16E8	---	PGM-FI-Shutter Grille LIN Communication Error	OFF
P16F0 (131)	---	Powertrain Control Module (PCM) Internal Circuit Malfunction (Starter Control Circuit Malfunction)	ON
P16F2 (131)	---	Powertrain Control Module (PCM) Internal Circuit Malfunction (Starter Control Circuit Malfunction)	ON
P16F3	---	Starter Cut Relay 1 Control Circuit Low Voltage	OFF
P16F4	---	Starter Cut Relay 2 Control Circuit Low Voltage	OFF
P16F5	---	Starter Cut Relay 1 Control Circuit High Voltage	OFF
P16F6	---	Starter Cut Relay 2 Control Circuit High Voltage	OFF
P16F9 (131)	---	Powertrain Control Module (PCM) Internal Circuit Malfunction (Starter Control Circuit Malfunction)	ON
P16FA (131)	---	Powertrain Control Module (PCM) Internal Circuit Malfunction (Starter Control Circuit Malfunction)	ON
P2073 (5)	o	Manifold Absolute Pressure (MAP) Sensor Signal Higher Than Expected	ON

NOTE: The above DTCs are indicated when the PGM-FI system is selected with the HDS. Some automatic transmission DTCs cause the MIL to come on. If the MIL is on and no DTCs are indicated in the PGM-FI system, select the A/T system, and check for automatic transmission DTCs.

*1: These DTCs are indicated by a blinking MIL when the SCS line is jumped with the HDS. Some DTCs do not cause the MIL to blink when the SCS line is jumped; these DTCs are shown in the gauge display.

*2: AWD

DTC (MIL indication *1)	Two DriveCycle Detection	Detection Item	MIL
P2074 (5)	o	Manifold Absolute Pressure (MAP) Sensor Signal Lower Than Expected	ON
P2096 (45)	o	Post Catalyst Fuel Trim System Too Lean	ON
P2097 (45)	o	Post Catalyst Fuel Trim System Too Rich	ON
P2101 (40)	---	Electronic Throttle Control System (ETCS) Malfunction	ON
P2108 (40)	---	Throttle Actuator Control Module Performance	ON
P2118 (40)	---	Throttle Actuator Current Range/Performance Problem	ON
P2119 (40)	---	Throttle Actuator Control Throttle Body Range/Performance	ON
P2121 (37)	o	Accelerator Pedal Position (APP) Sensor A (Throttle Position (TP) Sensor D) Out of Range	ON
P2122 (37)	---	Accelerator Pedal Position (APP) Sensor A (Throttle Position (TP) Sensor D) Circuit Low Voltage	ON
P2123 (37)	---	Accelerator Pedal Position (APP) Sensor A (Throttle Position (TP) Sensor D) Circuit High Voltage	ON
P2126 (37)	o	Accelerator Pedal Position (APP) Sensor B (Throttle Position (TP) Sensor E) Out of Range	ON
P2127 (37)	---	Accelerator Pedal Position (APP) Sensor B (Throttle Position (TP) Sensor E) Circuit Low Voltage	ON
P2128 (37)	---	Accelerator Pedal Position (APP) Sensor B (Throttle Position (TP) Sensor E) Circuit High Voltage	ON
P2135 (7)	---	Throttle Position (TP) Sensor A/B Incorrect Voltage Correlation	ON
P2138 (37)	---	Accelerator Pedal Position (APP) Sensor A/B (Throttle Position (TP) Sensor D/E) Incorrect Voltage Correlation	ON
P2176 (40)	---	Throttle Actuator Control System Idle Position Not Learned	ON
P2182 (192)	o	Engine Coolant Temperature (ECT) Sensor 2 Out of Range	ON
P2183 (192)	o	Engine Coolant Temperature (ECT) Sensor 2 Circuit Range/Performance Problem	ON
P2184 (192)	o	Engine Coolant Temperature (ECT) Sensor 2 Circuit Low Voltage	ON
P2185 (192)	o	Engine Coolant Temperature (ECT) Sensor 2 Circuit High Voltage	ON
P2195 (48)	o	Air Fuel Ratio (A/F) Sensor (Sensor 1) Signal Stuck Lean	ON
P219A (45)	o	Air-Fuel Ratio Variation of Cylinder	ON
P2227 (13)	o	Barometric Pressure (BARO) Sensor Circuit Out of Range High	ON
P2228 (13)	o	Barometric Pressure (BARO) Sensor Circuit Low Voltage	ON
P2229 (13)	o	Barometric Pressure (BARO) Sensor Circuit High Voltage	ON
P2237 (48)	o	Air Fuel Ratio (A/F) Sensor (Sensor 1) AFS Circuit High Voltage	ON
P2238 (48)	o	Air Fuel Ratio (A/F) Sensor (Sensor 1) AFS+ Circuit Low Voltage	ON

DTC (MIL indication *1)	Two DriveCycle Detection	Detection Item	MIL
P2252 (48)	o	Air Fuel Ratio (A/F) Sensor (Sensor 1) AFS- Circuit Low Voltage	ON
P2270 (63)	o	Secondary Heated Oxygen Sensor (Secondary HO2S (Sensor 2)) Circuit Signal Stuck Lean	ON
P2422 (117)	o	Evaporative Emission (EVAP) Canister Vent Shut Valve Stuck Closed Malfunction	ON
P2610 (132)	o	Powertrain Control Module (PCM) Ignition Off Internal Timer Malfunction	ON
P2623 (197)	---	High Pressure Fuel Pump Spill Valve Malfunction	ON

NOTE: The above DTCs are indicated when the PGM-FI system is selected with the HDS. Some automatic transmission DTCs cause the MIL to come on. If the MIL is on and no DTCs are indicated in the PGM-FI system, select the A/T system, and check for automatic transmission DTCs.

*1: These DTCs are indicated by a blinking MIL when the SCS line is jumped with the HDS. Some DTCs do not cause the MIL to blink when the SCS line is jumped; these DTCs are shown in the gauge display.

*2: AWD

DTC (MIL indication *1)	Two DriveCycle Detection	Detection Item	MIL
P2646 (22)	o	Rocker Arm Oil Pressure Switch Circuit Low Voltage	ON
P2647 (22)	o	Rocker Arm Oil Pressure Switch Circuit High Voltage	ON
P2648 (21)	---	Rocker Arm Oil Control Solenoid A Circuit Low Voltage	ON
P2649 (21)	---	Rocker Arm Oil Control Solenoid A Circuit High Voltage	ON
P2A00 (61)	o	Air Fuel Ratio (A/F) Sensor (Sensor 1) Circuit Range/Performance Problem	ON
U0029 (126)	---	F-CAN Malfunction (BUS-OFF (Powertrain Control Module (PCM)))	ON
U0114 *2	---	F-CAN Malfunction (Powertrain Control Module (PCM)-AWD Control Unit)	OFF
U0122	---	F-CAN Malfunction (Powertrain Control Module (PCM)-VSA Modulator-Control Unit)	OFF
U0128	---	F-CAN Malfunction (Powertrain Control Module (PCM)-Electric Parking Brake Control Unit)	OFF
U0129	---	F-CAN Malfunction (Powertrain Control Module (PCM)-Electric Brake Booster)	OFF
U0131	---	F-CAN Malfunction (Powertrain Control Module (PCM)-EPS Control Unit)	OFF
U0155 (126)	---	F-CAN Malfunction (Powertrain Control Module (PCM)-Gauge Control Module)	ON

NOTE: The above DTCs are indicated when the PGM-FI system is selected with the HDS. Some automatic transmission DTCs cause the MIL to come on. If the MIL is on and no DTCs are indicated in the PGM-FI system, select the A/T system, and check for automatic transmission DTCs.

*1: These DTCs are indicated by a blinking MIL when the SCS line is jumped with the HDS. Some DTCs do not cause the MIL to blink when the SCS line is jumped; these DTCs are shown in the gauge display.

*2: AWD

HOW TO INFORMATION

HOW TO TROUBLESHOOT THE FUEL AND EMISSIONS SYSTEMS

Intermittent Failures

The term intermittent failure means a system may have had a failure, but it checks OK now. If the malfunction indicator lamp (MIL) on the dash does not come on, check for poor connections or loose terminals at all connectors related to the circuit that you are troubleshooting. If the MIL was on but then went off, the original problem may have been intermittent.

Service Information

Periodically, new PCM software or new service procedures may become available. Always check online for the latest software or service information related to the DTCs or symptoms you are troubleshooting.

Opens and Shorts

Open and short are common electrical terms. An open is a break in a wire or at a connection. A short is an accidental connection of a wire to power, ground, or to another wire. In simple electronics, this usually means something won't work at all. With complex electronics (such as PCMs) this can sometimes mean something works, but not the way it's supposed to.

CHECK SYSTEM Display Indication (CHECK STARTING SYSTEM)

1. If this indicator comes on in the gauge control module, the starting system may have had a failure. Connect the HDS to the data link connector located under the driver's side of the dashboard. Check the diagnostic trouble code (DTC) and note it. Then refer to the indicated DTCs troubleshooting, and begin the appropriate troubleshooting procedure.

USA models

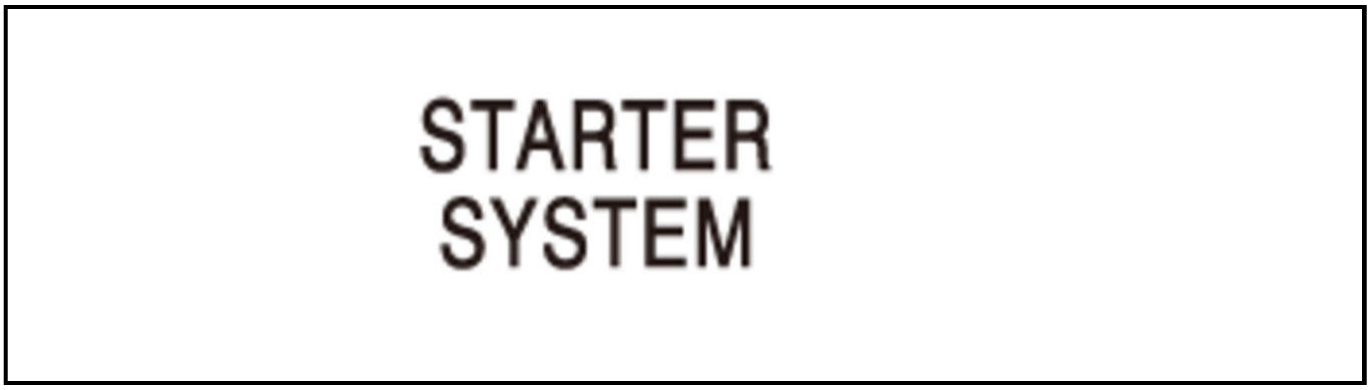

Except USA models

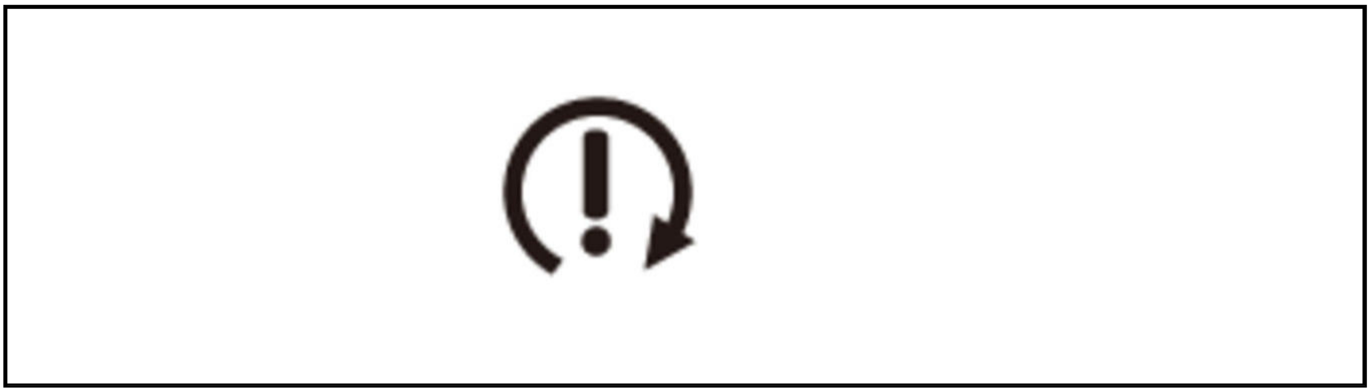

How to Use the HDS (Honda Diagnostic System)

1. Start the engine, and check the MIL in the gauge control module.

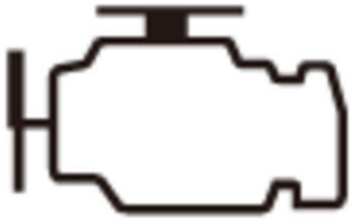

2. If the MIL stays on, **connect the HDS to the data link connector**

3. Turn the vehicle to the ON mode.

4. Make sure the HDS communicates with the PCM and other vehicle systems. If it does not, **go to the DLC circuit troubleshooting**

5. Check the diagnostic trouble code (DTC) and note it. Also check the on-board snapshot data, and download any data found. Then refer to the indicated DTCs troubleshooting, and begin the appropriate troubleshooting procedure.

NOTE:

- On-board snapshot indicates the engine conditions when the first malfunction, misfire, or fuel trim malfunction was detected.
- The HDS can read the DTC, the on-board snapshot, the current data, and other PCM data.
- For specific operations, refer to the user's manual that came with the HDS.

6. If no DTCs are found, **go to the MIL circuit troubleshooting** .

If the MIL did not stay on

If the MIL did not stay on but there is a driveability problem, do the symptom troubleshooting.

If you cannot duplicate the DTC

Some of the troubleshooting requires you to reset the PCM and try to duplicate the DTC. If the problem is intermittent and you cannot duplicate the DTC, do not continue through the procedure. To do so will only result in confusion and possibly, a needlessly replaced PCM.

On-Board Snapshot

When a DTC troubleshooting results in intermittent failure, try to reproduce the failure under the same conditions with the on-board snapshot if the on-board snapshot has been recorded.

HDS Clear Command

The PCM stores various specific data to correct the system even if there is no electrical power such as when the 12 volt battery negative terminal is disconnected. Stored data based on failed parts should be cleared by using the CLEAR COMMAND of the HDS, if parts are replaced.

The HDS has three kinds of clear commands to meet this purpose. They are DTC clear, PCM reset, and CKP pattern clear. The DTC clear command erases all stored DTCs, freeze data, on-board snapshot, and readiness codes. This must be done with the HDS after reproducing the DTC during troubleshooting. The PCM reset command erases all stored DTCs, freeze data, on-board snapshot, readiness codes, and all specific data to correct the system except CKP pattern. If the CKP pattern data in the PCM was cleared, you must do the CKP pattern learn procedure. The CKP pattern clear command erases only CKP pattern data. This command is for repair of a misfire or the CKP sensor.

Scan Tool Clear Command

If you are using a generic scan tool to clear commands, be aware that there is only one setting for clearing the PCM, and it clears all commands at the same time (CKP pattern learn, idle learn, readiness codes, freeze data, on-board snapshot, and DTCs). After you clear all commands, you then need to do these procedures, in this order: **PCM idle learn procedure** ; **CKP pattern learn procedure** ; **test-drive to set readiness codes to complete** .

DTC Clear

1. Clear the DTC with the HDS while the engine is stopped.

2. Turn the vehicle to the OFF (LOCK) mode.

3. Turn the vehicle to the ON mode, and wait 30 seconds.

4. Turn the vehicle to the OFF (LOCK) mode, and disconnect the HDS from the data link connector.

How to End a Troubleshooting Session (required after any troubleshooting)

1. **Reset the PCM with the HDS** .

2. **Do the PCM idle learn procedure**

3. Turn the vehicle to the OFF (LOCK) mode.

4. Disconnect the HDS from the data link connector.

NOTE: The PCM is part of the immobilizer system. If you replace the PCM, you must register the PCM to the keyless access system.

How to Troubleshoot Circuits at the PCM Connectors

Special Tools Required (for some models)

Pin Probe Male 07ZAJ-RDJA110

NOTE: The PCM stays on for up to an hour after the vehicle is turned to the OFF (LOCK) mode. Jumping the SCS line after turning the vehicle to the OFF (LOCK) mode cancels this function. Disconnecting the PCM during this function, without jumping the SCS line first, can damage the PCM.

1. Jump the SCS line with the HDS, and wait more than 1 minute.

2. **Disconnect PCM connectors**

3. When diagnosis/troubleshooting is done at the PCM connectors, use the terminal test port (A) above the terminal you need to check.

1.5 L engine

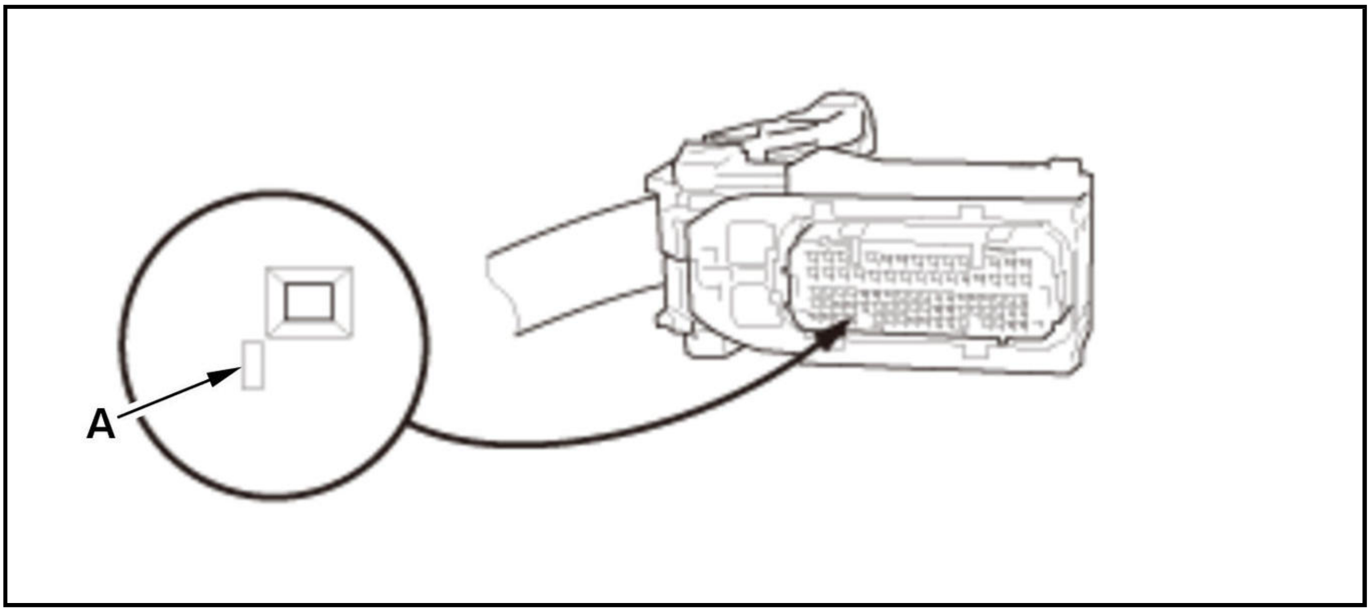

2.4 L engine

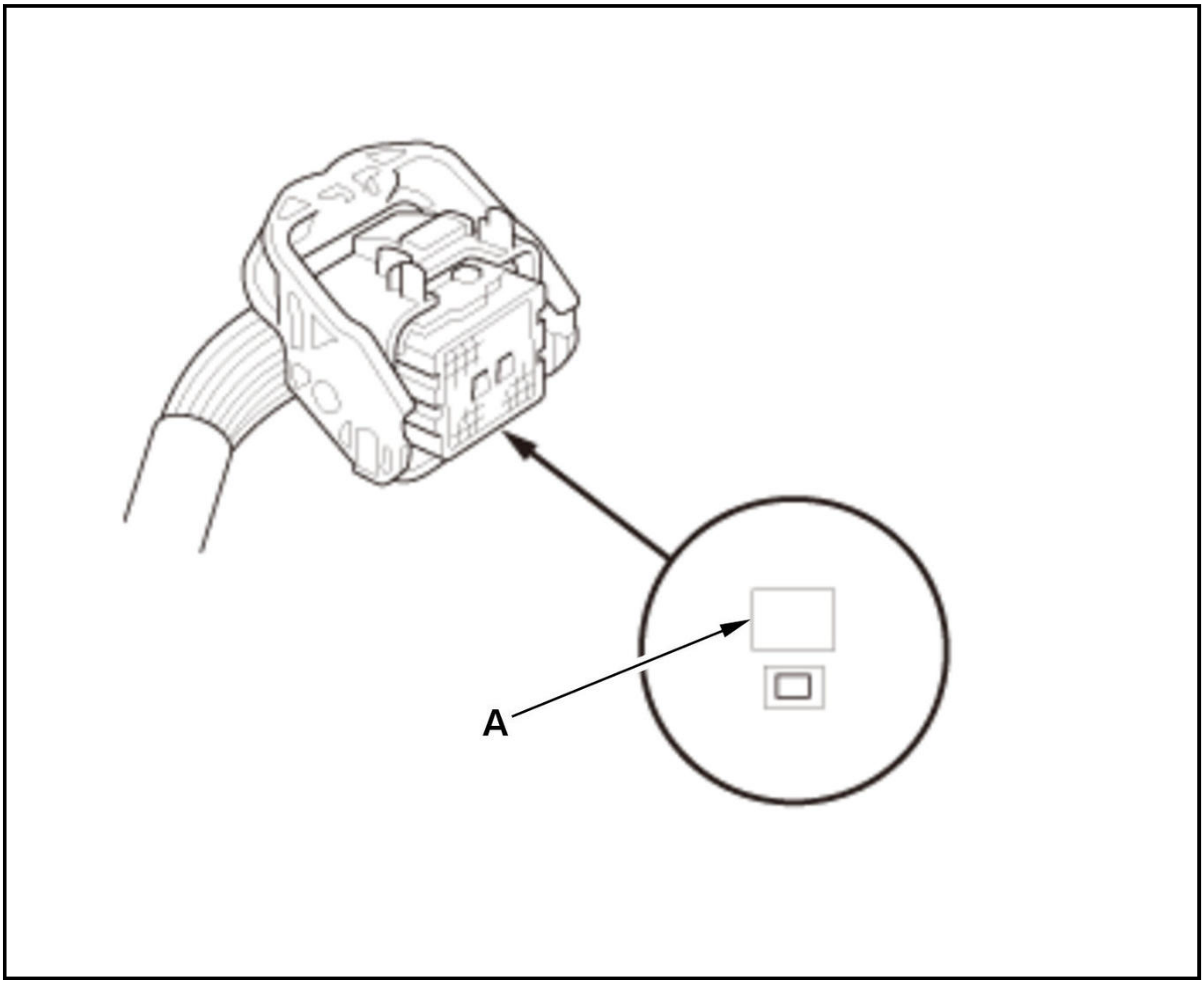

4. For some models: Connect one side of the patch cord terminals (A) to a commercially available digital multimeter (B), and connect the other side of the terminal (C) to the pin probe male.

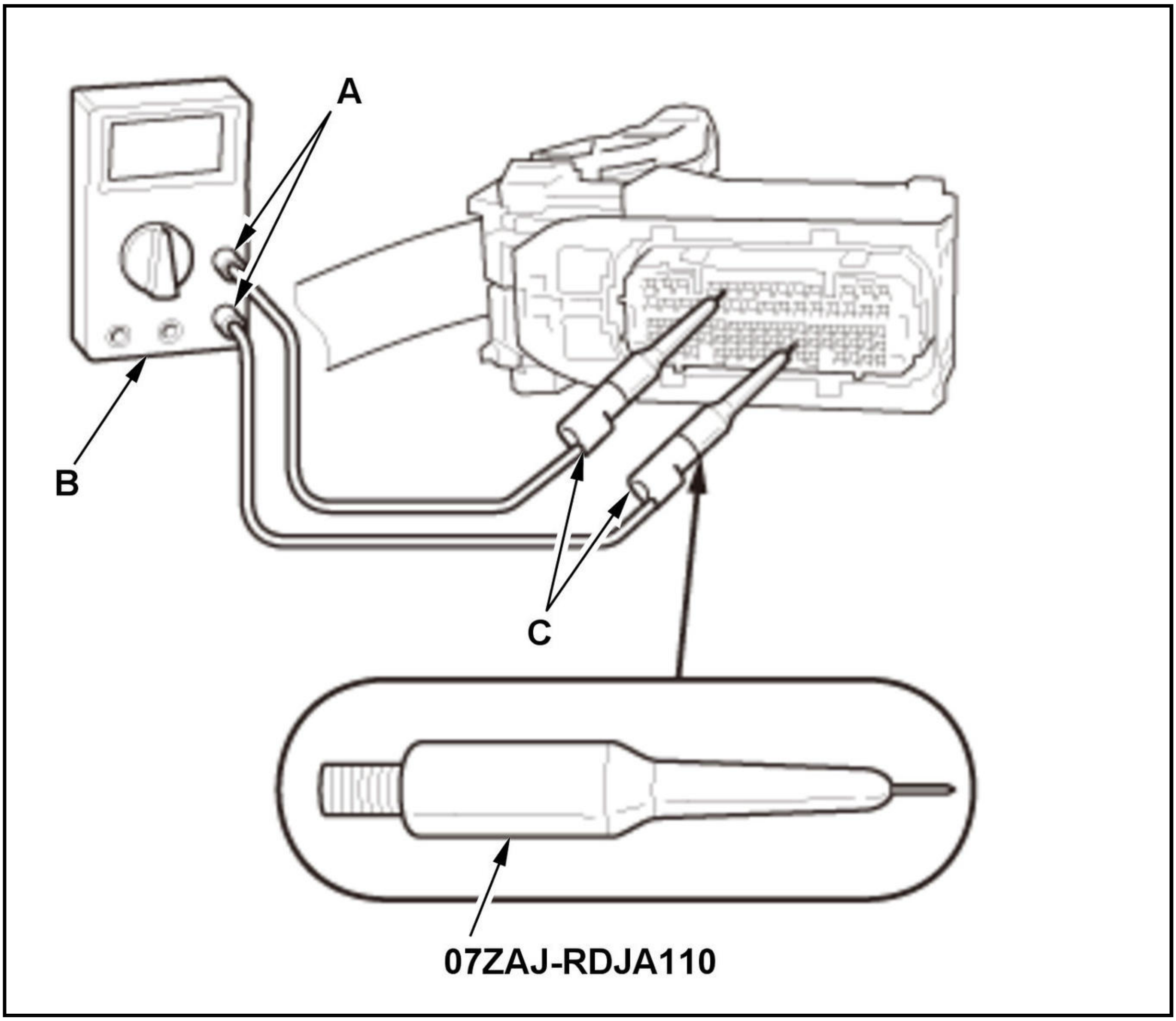

5. For some models: Connect one side of the patch cord terminals (A) to a commercially available digital multimeter (B), and connect the other side of the terminal (C) to a commercially available banana jack (Pomona Electronics Tool No. 3563 or equivalent) (D).

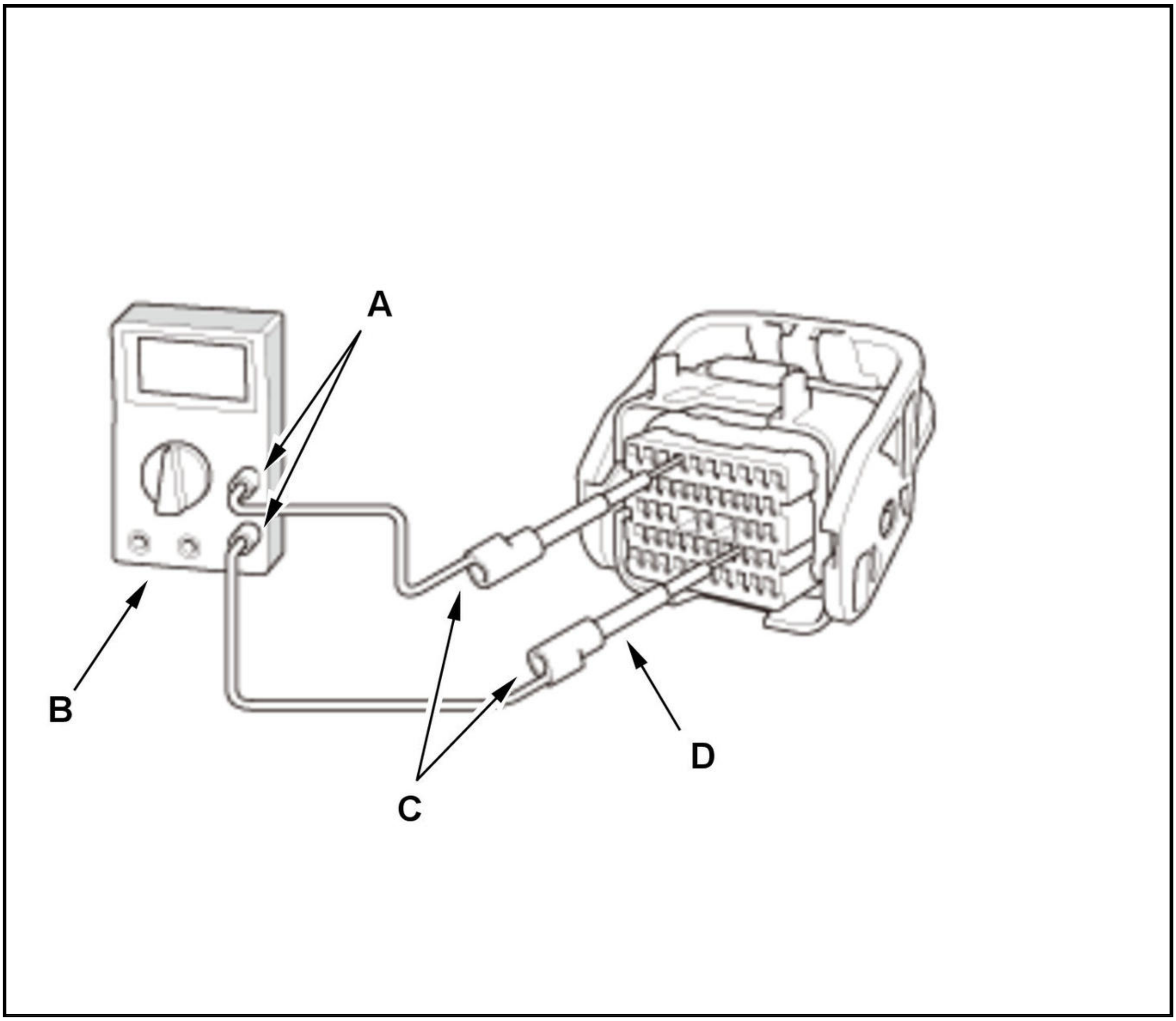

Gently contact the pin probe (male) at the terminal test port from the terminal side. Do not force the tips into the terminals.

NOTE:

- For accurate results, always use the pin probe (male).
- To prevent damage to the connector terminals, do not insert test equipment probes, paper clips, or other substitutes as they can damage the terminals. Damaged terminals cause a poor connection and an incorrect measurement.
- Do not puncture the insulation on a wire. Punctures can cause or eventually lead to poor or intermittent electrical connections.

OBD Status

The OBD status shows the current system status of each DTC and all of the parameters. This function is used to see if the repair was successfully completed. The results of diagnostic tests for the DTC are displayed as:

- PASSED: The on-board diagnosis is successfully finished.
- FAILED: The on-board diagnosis has finished but failed.
- EXECUTING: The vehicle is in enable criteria conditions of the DTC, and the on board diagnosis is running.
- NOT COMPLETED: The on-board diagnosis was running but is out of the enable conditions of the DTC.
- OUT OF CONDITION: The vehicle has stayed out of the enable conditions of the DTC.

DTC TROUBLESHOOTING INDEX

FUEL AND EMISSIONS SYSTEMS DTC TROUBLESHOOTING INDEX

DTC	Detection Item	Troubleshooting	Advanced Diagnostics	Note
P0010	Variable Valve Timing Control (VTC) Malfunction	**TRS**	**AD**	B
P0011	Variable Valve Timing Control (VTC) System Malfunction	**TRS**	**AD**	B
P0069	Barometric Pressure (BARO) Sensor Circuit Range/Performance Problem	**TRS**	**AD**	B
P006A	Mass Air Flow (MAF) Sensor Circuit Range/Performance Problem	**TRS**	**AD**	B
P0096	Intake Air Temperature (IAT) Sensor 2 Circuit Range/Performance Problem	**TRS**	**AD**	B
P0097	Intake Air Temperature (IAT) Sensor 2 Circuit Low Voltage	**TRS**	**AD**	B
P0098	Intake Air Temperature (IAT) Sensor 2 Circuit High Voltage	**TRS**	**AD**	B
P00FE	Evaporative Emission (EVAP) Vent Line Blockage	**TRS**	**AD**	B
P0101	Mass Air Flow (MAF) Sensor Circuit Range/Performance Problem (Out of Range)	**TRS**	**AD**	B
P0102	Mass Air Flow (MAF) Sensor Circuit Low Voltage	**TRS**	**AD**	B
P0103	Mass Air Flow (MAF) Sensor Circuit High Voltage	**TRS**	**AD**	B
P0105	Manifold Absolute Pressure (MAP) Sensor Out of Range	**TRS**	**AD**	B
P0106	Manifold Absolute Pressure (MAP) Sensor Range/Performance Problem	**TRS**	**AD**	B
P0107	Manifold Absolute Pressure (MAP) Sensor Circuit Low Voltage	**TRS**	**AD**	B
P0108	Manifold Absolute Pressure (MAP) Sensor Circuit High Voltage	**TRS**	**AD**	B
P0111	Intake Air Temperature (IAT) Sensor 1 Circuit Range/Performance Problem	**TRS**	**AD**	B
P0112	Intake Air Temperature (IAT) Sensor 1 Circuit Low Voltage	**TRS**	**AD**	B
P0113	Intake Air Temperature (IAT) Sensor 1 Circuit High Voltage	**TRS**	**AD**	B
P0115	Engine Coolant Temperature (ECT) Sensor 1 Out of Range	**TRS**	**AD**	B
P0116	Engine Coolant Temperature (ECT) Sensor 1 Circuit Range/Performance Problem	**TRS**	**AD**	B
P0117	Engine Coolant Temperature (ECT) Sensor 1 Circuit Low Voltage	**TRS**	**AD**	B

DTC	Detection Item	Troubleshooting	Advanced Diagnostics	Note
P0118	Engine Coolant Temperature (ECT) Sensor 1 Circuit High Voltage	TRS	AD	B
P011A	Engine Coolant Temperature (ECT) Sensor 1 Circuit Range/Performance Problem	TRS	AD	B
P011B	Intake Air Temperature (IAT) Sensor 1 Circuit Range/Performance Problem	TRS	AD	B
P0121	Throttle Position (TP) Sensor A Out of Range	TRS	AD	B
P0122	Throttle Position (TP) Sensor A Circuit Low Voltage	TRS	AD	B
P0123	Throttle Position (TP) Sensor A Circuit High Voltage	TRS	AD	B
P0125	Engine Coolant Temperature (ECT) Sensor 1 Malfunction/Slow Response	TRS	AD	B
P0128	Cooling System Malfunction	TRS	AD	B
P0130	Air Fuel Ratio (A/F) Sensor (Sensor 1) Out of Range	TRS	AD	B
P0133	Air Fuel Ratio (A/F) Sensor (Sensor 1) Malfunction/Slow Response	TRS	AD	B
P0134	Air Fuel Ratio (A/F) Sensor (Sensor 1) Heater System Malfunction	TRS	AD	B
P0135	Air Fuel Ratio (A/F) Sensor (Sensor 1) Heater Circuit Malfunction	TRS	AD	B
P0137	Secondary Heated Oxygen Sensor (Secondary HO2S (Sensor 2)) Circuit Low Voltage	TRS	AD	B
P0138	Secondary Heated Oxygen Sensor (Secondary HO2S (Sensor 2)) Circuit High Voltage	TRS	AD	B
P0139	Secondary Heated Oxygen Sensor (Secondary HO2S (Sensor 2)) Slow Response	TRS	AD	B
P0141	Secondary Heated Oxygen Sensor (Secondary HO2S (Sensor 2)) Heater Circuit Malfunction	TRS	AD	B

NOTE: The above DTCs are indicated when the PGM-FI system is selected with the HDS.*1:'20 *2:'21

DTC	Detection Item	Troubleshooting	Advanced Diagnostics	Note
P0171	Fuel System Too Lean	TRS	AD	B
P0172	Fuel System Too Rich	TRS	AD	B
P0201	No. 1 Cylinder Injector Circuit Malfunction	TRS	AD	B
P0202	No. 2 Cylinder Injector Circuit Malfunction	TRS	AD	B
P0203	No. 3 Cylinder Injector Circuit Malfunction	TRS	AD	B
P0204	No. 4 Cylinder Injector Circuit Malfunction	TRS	AD	B

DTC	Detection Item	Troubleshooting	Advanced Diagnostics	Note
P0221	Throttle Position (TP) Sensor B Out of Range	TRS	AD	B
P0222	Throttle Position (TP) Sensor B Circuit Low Voltage	TRS	AD	B
P0223	Throttle Position (TP) Sensor B Circuit High Voltage	TRS	AD	B
P027E	Cold Start Air Fuel Ratio Control System Command Lean	TRS	AD	*2
P027F	Cold Start Air Fuel Ratio Control System Command Rich	TRS	AD	*2
P0300	Random Misfire Detected	TRS	AD	B
P0301	No. 1 Cylinder Misfire Detected	TRS	AD	B
P0302	No. 2 Cylinder Misfire Detected	TRS	AD	B
P0303	No. 3 Cylinder Misfire Detected	TRS	AD	B
P0304	No. 4 Cylinder Misfire Detected	TRS	AD	B
P0326	Knock Sensor Malfunction	TRS	AD	B
P0327	Knock Sensor Circuit Low Voltage	TRS	AD	B
P0328	Knock Sensor Circuit High Voltage	TRS	AD	B
P032F	Engine Stall	TRS	AD	*2
P0335	Crankshaft Position (CKP) Sensor No Signal	TRS	AD	B
P0339	Crankshaft Position (CKP) Sensor Circuit Intermittent Interruption	TRS	AD	B
P0340	Camshaft Position (CMP) Sensor A No Signal	TRS	AD	B
P0341	Camshaft Position (CMP) Sensor A and Crankshaft Position (CKP) Sensor Incorrect Phase Detected	TRS	AD	B
P0344	Camshaft Position (CMP) Sensor A Circuit Intermittent Interruption	TRS	AD	B
P0351	No. 1 Cylinder Ignition Coil Circuit Malfunction	TRS	AD	B
P0352	No. 2 Cylinder Ignition Coil Circuit Malfunction	TRS	AD	B
P0353	No. 3 Cylinder Ignition Coil Circuit Malfunction	TRS	AD	B
P0354	No. 4 Cylinder Ignition Coil Circuit Malfunction	TRS	AD	B
P0365	Camshaft Position (CMP) Sensor B Circuit No Signal	TRS	AD	B
P0369	Camshaft Position (CMP) Sensor B Circuit Intermittent Interruption	TRS	AD	B
P0400	Exhaust Gas Recirculation (EGR) System Leak Detected	TRS	AD	B
P0401	Exhaust Gas Recirculation (EGR) Insufficient Flow	TRS	AD	B
P0404	Exhaust Gas Recirculation (EGR) Valve Circuit Range/Performance Problem	TRS	AD	B
P0405	Exhaust Gas Recirculation (EGR) Valve Position Sensor Circuit Low Voltage	TRS	AD	B

DTC	Detection Item	Troubleshooting	Advanced Diagnostics	Note
P0406	Exhaust Gas Recirculation (EGR) Valve Position Sensor Circuit High Voltage	TRS	AD	B
P0420	Catalyst System Efficiency Below Threshold	TRS	AD	B
P043E	Evaporative Emission (EVAP) Leak Check Module Standard Pressure Low	TRS	AD	B
P043F	Evaporative Emission (EVAP) Leak Check Module Standard Pressure High	TRS	AD	B
P0441	Evaporative Emission (EVAP) System Purge Flow Malfunction	TRS	AD	B
P0443	Evaporative Emission (EVAP) Canister Purge Valve Circuit Malfunction	TRS	AD	B
P0451	Evaporative Emission (EVAP) Leak Check Module Pressure Sensor Range/Performance	TRS	AD	B
P0456	Evaporative Emission (EVAP) System Very Small Leak Detected	TRS	AD	B

NOTE: The above DTCs are indicated when the PGM-FI system is selected with the HDS.*1:'20 *2:'21

DTC	Detection Item	Troubleshooting	Advanced Diagnostics	Note
P0460	Fuel Level Sensor (Fuel Gauge Sending Unit) Out of Range	TRS	AD	B
P0461	Fuel Level Sensor (Fuel Gauge Sending Unit) Circuit Range/Performance Problem	TRS	AD	B
P0462	Fuel Level Sensor (Fuel Gauge Sending Unit) Circuit Low Voltage	TRS	AD	B
P0463	Fuel Level Sensor (Fuel Gauge Sending Unit) Circuit High Voltage	TRS	AD	B
P046C	Exhaust Gas Recirculation (EGR) Valve Position Sensor Out of Range	TRS	AD	B
P0480	Radiator Fan Control (RFC) System Malfunction	TRS	AD	B
P049D	Exhaust Gas Recirculation (EGR) Control Position Exceeded Learning Limit	TRS	AD	B
P04AB	Evaporative Emission (EVAP) Canister Purge Valve Circuit Malfunction 2	TRS	AD	B
P04AE	Evaporative Emission (EVAP) System High Purge Flow Detected 2	TRS	AD	B
P04DF	Evaporative Emission (EVAP) System High Purge Flow Detected	TRS	AD	B
P04E0	Evaporative Emission (EVAP) Canister Purge Valve Stuck Closed	TRS	AD	B
P04F1	Evaporative Emission (EVAP) System Low Purge Flow Detected	TRS	AD	B
P050A	Cold Start Idle Air Control System Performance Problem	TRS	AD	B
P050B	Cold Start Ignition Timing Control System Performance Problem	TRS	AD	*1

DTC	Detection Item	Troubleshooting	Advanced Diagnostics	Note
P050D	Cold Start Idle Speed Problem	TRS	AD	B
P0522	Engine Oil Pressure Sensor Circuit Low Voltage	TRS	AD	B
P0523	Engine Oil Pressure Sensor Circuit High Voltage	TRS	AD	B
P0532	A/C Pressure Sensor Circuit Low Voltage	TRS	AD	B
P0533	A/C Pressure Sensor Circuit High Voltage	TRS	AD	B
P055B	Rocker Arm Oil Pressure Sensor Out of Range	TRS	AD	B
P055C	Rocker Arm Oil Pressure Sensor Circuit Low Voltage	TRS	AD	B
P055D	Rocker Arm Oil Pressure Sensor Circuit High Voltage	TRS	AD	B
P0560	Powertrain Control Module (PCM) Power Source Circuit Unexpected Voltage	TRS	AD	B
P0563	Powertrain Control Module (PCM) Power Source Circuit Unexpected Voltage	TRS	AD	B
P0571	Brake Pedal Position Switch Circuit Malfunction	TRS	AD	B
P059F	Shutter Grille Assembly (Upper) Malfunction	TRS	AD	B
P05A0	Shutter Grille Assembly (Upper) Malfunction	TRS	AD	B
P05A3	Shutter Grille Actuator (Upper) Malfunction	TRS	AD	B
P05A8	Shutter Grille Actuator (Upper) Malfunction	TRS	AD	B
P05C0	Shutter Grille Actuator (Upper) Temperature Malfunction	TRS	AD	B
P05CC	Cold Start VTC System Malfunction	TRS	AD	*2
P0600	Powertrain Control Module (PCM) Serial Communication Failure	TRS	AD	B
P0602	Powertrain Control Module (PCM) Programming Error	TRS	AD	B
P0606	Powertrain Control Module (PCM) Processor Malfunction	TRS	AD	B
P060A	Powertrain Control Module (PCM) Internal Control Module Malfunction	TRS	AD	B
P061B	Powertrain Control Module (PCM) Internal Malfunction (Torque Calculation)	TRS	AD	B
P062F	Powertrain Control Module (PCM) Internal Control Module Keep Alive Memory (KAM) Error	TRS	AD	B
P0630	VIN Not Programmed or Mismatch	TRS	AD	B
P0641	Sensor Reference Voltage A Malfunction	TRS	AD	B
P0651	Sensor Reference Voltage B Malfunction	TRS	AD	B

DTC	Detection Item	Troubleshooting	Advanced Diagnostics	Note
P0657	Powertrain Control Module (PCM) Power Supply Circuit Malfunction	TRS	AD	B
P06A8	Internal VCC Power Malfunction	TRS	AD	B
P06AF	Engine Stall	TRS	AD	*1

NOTE: The above DTCs are indicated when the PGM-FI system is selected with the HDS.*1:'20 *2:'21

DTC	Detection Item	Troubleshooting	Advanced Diagnostics	Note
P0700	Transmission Control System (MIL Reqest)	TRS	AD	*2
P0703	Brake Pedal Position Switch (NC) Malfunction	TRS	AD	B
P0C2F	GEN-ENG Angular Speed Correlation Malfunction	TRS	AD	B
P100A	Electric VTC Motor Circuit Malfunction	TRS	AD	B
P100B	Electric VTC Motor Control Module Malfunction	TRS	AD	B
P100C	Electric VTC Motor Speed Signal Circuit Malfunction	TRS	AD	B
P100D	Electric VTC Motor Power Relay Circuit Stuck On	TRS	AD	B
P145E	Evaporative Emission (EVAP) System Purge Flow Malfunction 2	TRS	AD	B
P145F	Evaporative Emission (EVAP) Leak Check Module Pressure Sensor Range/Performance Problem	TRS	AD	B
P1461	Evaporative Emission (EVAP) Leak Check Module Pressure Sensor Shifts	TRS	AD	B
P1462	Evaporative Emission (EVAP) Leak Check Module Pressure Decompression Defect	TRS	AD	B
P14A0	Engine Abnormal Vibration	TRS	AD	*1
P154A	Battery Sensor Internal Failure	TRS	AD	B
P1658	Electronic Throttle Control System (ETCS) Control Relay ON Malfunction	TRS	AD	B
P1659	Electronic Throttle Control System (ETCS) Control Relay OFF Malfunction	TRS	AD	B
P1683	Throttle Valve Default Position Spring Performance Problem	TRS	AD	B
P1684	Throttle Valve Return Spring Performance Problem	TRS	AD	B
P16E3	PGM-FI-Battery Sensor LIN Communication Error	TRS	AD	B
P16E8	PGM-FI-Shutter Grille LIN Communication Error	TRS	AD	B
P16EA	Electric Engine Coolant Pump Relay Stuck On	TRS	AD	B
P1A48	Powertrain Control Module (PCM) Internal Malfunction (SBW Different Run)	TRS	AD	B

DTC	Detection Item	Troubleshooting	Advanced Diagnostics	Note
P1A49	Powertrain Control Module (PCM) Internal Malfunction (SBW Parking Position)	TRS	AD	B
P1A4A	Powertrain Control Module (PCM) Internal Malfunction (SBW Display Position)	TRS	AD	B
P1A51	Powertrain Control Module (PCM) Internal Malfunction (Torque Calculation Acceleration)	TRS	AD	B
P1A52	Powertrain Control Module (PCM) Internal Malfunction (Torque Calculation Deceleration)	TRS	AD	B
P1A53	Powertrain Control Module (PCM) Internal Malfunction (Torque Calculation Different Run)	TRS	AD	B
P2096	Post Catalyst Fuel Trim System Too Lean	TRS	AD	B
P2097	Post Catalyst Fuel Trim System Too Rich	TRS	AD	B
P2101	Electronic Throttle Control System (ETCS) Malfunction	TRS	AD	B
P2108	Throttle Actuator Control Module Performance	TRS	AD	B
P2118	Throttle Actuator Current Range/Performance Problem	TRS	AD	B
P2119	Throttle Actuator Control Throttle Body Range/Performance	TRS	AD	B
P2121	Accelerator Pedal Position (APP) Sensor A (Throttle Position (TP) Sensor D) Out of Range	TRS	AD	B
P2122	Accelerator Pedal Position (APP) Sensor A (Throttle Position (TP) Sensor D) Circuit Low Voltage	TRS	AD	B
P2123	Accelerator Pedal Position (APP) Sensor A (Throttle Position (TP) Sensor D) Circuit High Voltage	TRS	AD	B
P2126	Accelerator Pedal Position (APP) Sensor B (Throttle Position (TP) Sensor E) Out of Range	TRS	AD	B
P2127	Accelerator Pedal Position (APP) Sensor B (Throttle Position (TP) Sensor E) Circuit Low Voltage	TRS	AD	B

NOTE: The above DTCs are indicated when the PGM-FI system is selected with the HDS.*1:'20 *2:'21

DTC	Detection Item	Troubleshooting	Advanced Diagnostics	Note
P2128	Accelerator Pedal Position (APP) Sensor B (Throttle Position (TP) Sensor E) Circuit High Voltage	TRS	AD	B
P2135	Throttle Position (TP) Sensor A/B Incorrect Voltage Correlation	TRS	AD	B

DTC	Detection Item	Troubleshooting	Advanced Diagnostics	Note
P2138	Accelerator Pedal Position (APP) Sensor A/B (Throttle Position (TP) Sensor D/E) Incorrect Voltage Correlation	TRS	AD	B
P2175	Throttle Actuator Control System Low Air Flow Detected	TRS	AD	*2
P2176	Throttle Actuator Control System Idle Position Not Learned	TRS	AD	B
P2182	Engine Coolant Temperature (ECT) Sensor 2 Out of Range	TRS	AD	B
P2183	Engine Coolant Temperature (ECT) Sensor 2 Circuit Range/Performance Problem	TRS	AD	B
P2184	Engine Coolant Temperature (ECT) Sensor 2 Circuit Low Voltage	TRS	AD	B
P2185	Engine Coolant Temperature (ECT) Sensor 2 Circuit High Voltage	TRS	AD	B
P2195	Air Fuel Ratio (A/F) Sensor (Sensor 1) Signal Stuck Lean	TRS	AD	B
P2199	Intake Air Temperature (IAT) Sensor 1-2 Incorrect Correlation	TRS	AD	B
P219C	No. 1 Cylinder Air-Fuel Ratio Variation	TRS	AD	B
P219D	No. 2 Cylinder Air-Fuel Ratio Variation	TRS	AD	B
P219E	No. 3 Cylinder Air-Fuel Ratio Variation	TRS	AD	B
P219F	No. 4 Cylinder Air-Fuel Ratio Variation	TRS	AD	B
P2226	Barometric Pressure (BARO) Sensor Circuit Malfunction	TRS	AD	B
P2228	Barometric Pressure (BARO) Sensor Circuit Low Voltage	TRS	AD	B
P2229	Barometric Pressure (BARO) Sensor Circuit High Voltage	TRS	AD	B
P2237	Air Fuel Ratio (A/F) Sensor (Sensor 1) IP Circuit High Voltage	TRS	AD	B
P2238	Air Fuel Ratio (A/F) Sensor (Sensor 1) IP Circuit Low Voltage	TRS	AD	B
P2243	Air Fuel Ratio (A/F) Sensor (Sensor 1) VCENT Circuit High Voltage	TRS	AD	B
P2245	Air Fuel Ratio (A/F) Sensor (Sensor 1) VCENT Circuit Low Voltage	TRS	AD	B
P2251	Air Fuel Ratio (A/F) Sensor (Sensor 1) VS Circuit High Voltage	TRS	AD	B
P2252	Air Fuel Ratio (A/F) Sensor (Sensor 1) VS Circuit Low Voltage	TRS	AD	B
P2270	Secondary Heated Oxygen Sensor (Secondary HO2S (Sensor 2)) Circuit Signal Stuck Lean	TRS	AD	B
P2279	Intake Air System Leak	TRS	AD	B
P2401	Evaporative Emission (EVAP) Leak Check Pump Control Circuit Low Voltage	TRS	AD	B
P2402	Evaporative Emission (EVAP) Leak Check Pump Control Circuit High	TRS	AD	B

DTC	Detection Item	Troubleshooting	Advanced Diagnostics	Note
	Voltage			
P2413	Exhaust Gas Recirculation (EGR) System Malfunction	TRS	AD	B
P24B8	Evaporative Emission (EVAP) Leak Check Module Absolute Pressure Sensor Out of Range	TRS	AD	B
P24B9	Evaporative Emission (EVAP) Leak Check Module Pressure Sensor Range/Performance Problem	TRS	AD	B
P24BA	Evaporative Emission (EVAP) Leak Check Module Pressure Sensor Circuit Low Voltage	TRS	AD	B
P24BB	Evaporative Emission (EVAP) Leak Check Module Pressure Sensor Circuit High Voltage	TRS	AD	B
P24BE	Canister Change Over Valve Control Circuit Low Voltage	TRS	AD	B
P24BF	Canister Change Over Valve Control Circuit High Voltage	TRS	AD	B
P24C0	Canister Change Over Valve Close Malfunction	TRS	AD	B
P24C1	Canister Change Over Valve Stuck Close	TRS	AD	B
P2601	Electric Engine Coolant Pump Range/Performance Problem	TRS	AD	B
P2602	Electric Engine Coolant Pump Circuit Low Voltage	TRS	AD	B
P2603	Electric Engine Coolant Pump Circuit High Voltage	TRS	AD	B

NOTE: The above DTCs are indicated when the PGM-FI system is selected with the HDS.*1:'20 *2:'21

DTC	Detection Item	Troubleshooting	Advanced Diagnostics	Note
P2610	Powertrain Control Module (PCM) Ignition Off Internal Timer Malfunction	TRS	AD	B
P2646	Rocker Arm Oil Pressure Stuck Off	TRS	AD	B
P2647	Rocker Arm Oil Pressure Stuck On	TRS	AD	B
P2648	Rocker Arm Oil Control Solenoid Circuit Low Voltage	TRS	AD	B
P2649	Rocker Arm Oil Control Solenoid Circuit High Voltage	TRS	AD	B
P2A00	Air Fuel Ratio (A/F) Sensor (Sensor 1) Circuit Range/Performance Problem	TRS	AD	B
P2A01	Secondary Heated Oxygen Sensor (Secondary HO2S) (Sensor 2) Circuit Range/Performance Problem	TRS	AD	B
P2DE0	Cold Start Air Fuel Ratio Control System Lean	TRS	AD	*2
P2DE1	Cold Start Air Fuel Ratio Control System Rich	TRS	AD	*2
P2EA4	Cold Start Ignition Timing Problem	TRS	AD	*2

DTC	Detection Item	Troubleshooting	Advanced Diagnostics	Note
P2EC7	Cold Start Rocker Arm Oil Control System Problem	TRS	AD	*2
U0029	F-CAN Malfunction (BUS-OFF (Powertrain Control Module (PCM)))	TRS	AD	B
U0038	EP-CAN Malfunction (BUS-OFF (Powertrain Control Module (PCM)))	TRS	AD	B
U0047	F-CAN Malfunction For The Second Channel (BUS-OFF (Powertrain Control Module (PCM)))	TRS	AD	B
U0103	F-CAN Malfunction (Powertrain Control Module (PCM) -SBW Shifter)	TRS	AD	B
U0104	F-CAN Malfunction (Powertrain Control Module (PCM) -Driving Support System Control Unit)	TRS	AD	B
U0110	EP-CAN Malfunction (Powertrain Control Module (PCM) -Motor Control Module)	TRS	AD	B
U0111	EP-CAN Malfunction (Powertrain Control Module (PCM) -Battery Condition Monitor Module)	TRS	AD	B
U0114	F-CAN Malfunction (Powertrain Control Module (PCM) -AWD Control Unit)	TRS	AD	B
U0122	F-CAN Malfunction (Powertrain Control Module (PCM) -VSA Modulator-Control Unit)	TRS	AD	B
U0129	F-CAN Malfunction (Powertrain Control Module (PCM) -Electric Servo Brake Control Unit)	TRS	AD	B
U012D	EP-CAN Malfunction (Powertrain Control Module (PCM) -Motor Control Module)	TRS	AD	B
U0146	F-CAN Malfunction (Powertrain Control Module (PCM) -CAN Gateway)	TRS	AD	B
U0151	F-CAN Malfunction (Powertrain Control Module (PCM) -SRS Unit)	TRS	AD	B
U0155	F-CAN Malfunction (Powertrain Control Module (PCM) -Gauge Control Module)	TRS	AD	B
U0301	PGM-FI System and Transmission System Program Version Mismatch	TRS	AD	B
U1205	EP-CAN Malfunction (Powertrain Control Module (PCM) -Motor Control Module)	TRS	AD	B
U1206	EP-CAN Malfunction (Powertrain Control Module (PCM) -Battery Condition Monitor Module)	TRS	AD	B
U1207	F-CAN Malfunction (Powertrain Control Module (PCM) -A/C Compressor Driver)	TRS	AD	B
U129E	F-CAN Malfunction (Powertrain Control Module (PCM) -Power Control Unit (PCU))	TRS	AD	B

DTC	Detection Item	Troubleshooting	Advanced Diagnostics	Note
U12A5	EP-CAN Malfunction (Powertrain Control Module (PCM) -Motor Control Module)	TRS	AD	B
U12AA	EP-CAN Malfunction (Powertrain Control Module (PCM) -SBW Shifter)	TRS	AD	B
U12B4	EP-CAN Malfunction (Powertrain Control Module (PCM) -Park Pawl Actuator Driver Unit)	TRS	AD	B
U1603	F-CAN Malfunction (Powertrain Control Module (PCM) -Battery Condition Monitor Module)	TRS	AD	B

NOTE: The above DTCs are indicated when the PGM-FI system is selected with the HDS.*1:'20 *2:'21

DTC	Detection Item	Troubleshooting	Advanced Diagnostics	Note
U1604	F-CAN Malfunction (Powertrain Control Module (PCM) -Motor Control Module)	TRS	AD	B
U1605	F-CAN Malfunction (Powertrain Control Module (PCM) -Motor Control Module)	TRS	AD	B

NOTE: The above DTCs are indicated when the PGM-FI system is selected with the HDS.*1:'20 *2:'21

GEAR UNIT CONTROL SYSTEM DTC TROUBLESHOOTING INDEX

NOTE: Before you troubleshoot, record all freeze data and any on-board snapshot with the HDS, and **review the General Troubleshooting Information**.

DTC	Detection Item	Troubleshooting	Note
P0751	Shift Solenoid Valve A Stuck OFF	TRS	B
P0752	Shift Solenoid Valve A Stuck ON	TRS	B
P0756	Shift Solenoid Valve B Stuck OFF	TRS	B
P0757	Shift Solenoid Valve B Stuck ON	TRS	B
P07B3	Transmission Park Position Sensor/Switch A Circuit Low	TRS	*1
P07B4	Transmission Park Position Sensor/Switch A Circuit High	TRS	*1
P07B9	Transmission Park Position Sensor/Switch B Circuit Low	TRS	*1
P07BA	Transmission Park Position Sensor/Switch B Circuit High	TRS	*1
P07BE	Transmission Park Position Sensor/Switch A/B Incorrect Voltage Correlation	TRS	*1
P0811	Excessive Clutch A Slippage	TRS	B
P0840	Transmission Fluid Pressure Sensor Malfunction	TRS	B
P0842	Transmission Fluid Pressure Switch A (2nd Clutch) Circuit Low/Transmission Fluid Pressure Sensor Circuit Low Input	TRS	*1
P0843	Transmission Fluid Pressure Switch A (2nd Clutch) Circuit High/Transmission Fluid Pressure	TRS	*1

DTC	Detection Item	Troubleshooting	Note
	Sensor Circuit High Input		
P084F	Park/Neutral Switch Output Circuit	TRS	*1
P0973	Shift Solenoid Valve A Control Circuit Low (Short)	TRS	*1
P0974	Shift Solenoid Valve A Control Circuit High (Open)	TRS	*1
P0976	Shift Solenoid Valve B Control Circuit Low (Short)	TRS	*1
P0977	Shift Solenoid Valve B Control Circuit High (Open)	TRS	*1
P161B	Park Pawl Control Module Programming Error	TRS	B
P170E	Park Pawl Motor Power Relay Circuit High	TRS	*1
P170F	Park Pawl Unit Communication Circuit (PWM)	TRS	*1
P1711	Park Pawl Unit Malfunction	TRS	B
P1719	Park Pawl System Stuck Malfunction	TRS	B
P171A	Park Pawl System Position Control Error	TRS	B
P171C	Park Pawl System Multiple Sensor Correlation	TRS	B
P171E	Park Pawl System Malfunction of learning mode	TRS	B
P171F	Park Pawl System Stuck Malfunction After learning mode/Time-out	TRS	B
P1720	Park Pawl Motor Current Range/Performance	TRS	*1
P1721	Park Pawl Unit IG1 SW No Signal	TRS	*1
P1722	Park Pawl Motor Torque Malfunction of learning mode	TRS	B
P1723	Park Pawl System Initial Check Error	TRS	B
P172A	KEY-Release Wake-up Output Circuit Malfunction	TRS	*1
P172B	KEY-Release Switch Input Circuit Malfunction	TRS	*1
P173A	Transmission Fluid Pressure Sensor Performance High	TRS	B
P173B	Transmission Fluid Pressure Sensor Performance Low	TRS	B
P26C3	Internal Control Module Transmission Range Sensor Performance	TRS	B
P271A	Park Pawl Position Sensor A Circuit Low	TRS	*1
P272C	Park Pawl Motor Control Circuit	TRS	*1
P272D	Park Pawl Motor Control Circuit Current Too High	TRS	*1

*1: This code is caused by an electrical circuit problem and cannot be caused by a mechanical problem in the transmission (e-CVT).

HOW TO INFORMATION

HOW TO TROUBLESHOOT THE FUEL AND EMISSIONS SYSTEMS

Intermittent Failures

The term intermittent failure means a system may have had a failure, but it checks OK now. If the malfunction indicator lamp (MIL) on the dash does not come on, check for poor connections or loose terminals at all connectors related to the circuit that you are troubleshooting. If the MIL was on but then went off, the original problem may have been intermittent.

Service Information

Periodically, new PCM software or new service procedures may become available. Always check online for the latest software or service information related to the DTCs or symptoms you are troubleshooting.

Opens and Shorts

Open and short are common electrical terms. An open is a break in a wire or at a connection. A short is an accidental connection of a wire to ground or to another wire. In simple electronics, this usually means something won't work at all. With complex electronics (such as PCMs) this can sometimes mean something works, but not the way it's supposed to.

CHECK SYSTEM Display Indication (CHECK STARTING SYSTEM)

1. If this indicator comes on in the gauge control module, the starting system may have had a failure. Connect the HDS to the data link connector located under the driver's side of the dashboard. Check the diagnostic trouble code (DTC) and note it. Then refer to the indicated DTCs troubleshooting, and begin the appropriate troubleshooting procedure.

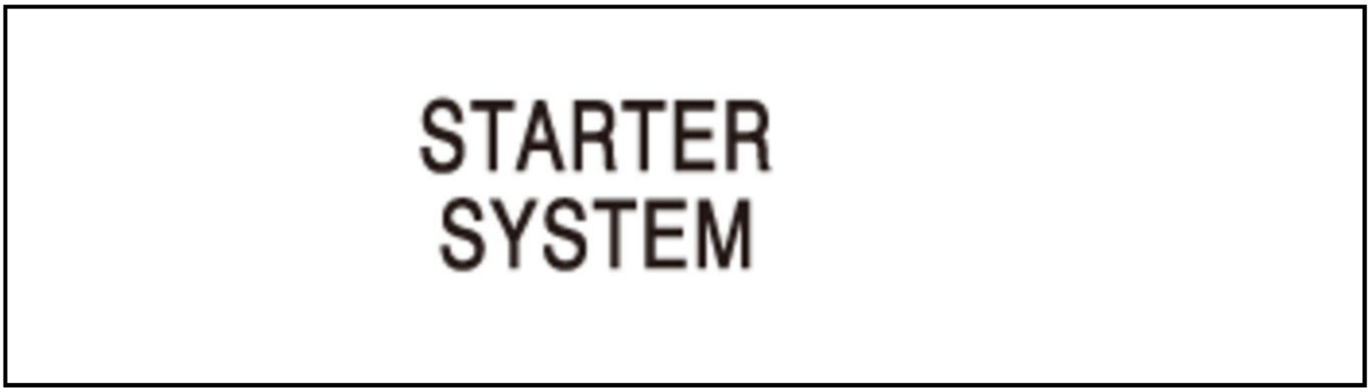

How to Use the HDS (Honda Diagnostic System)

1. **Enter the maintenance mode, then start the engine** , and check the MIL in the gauge control module.

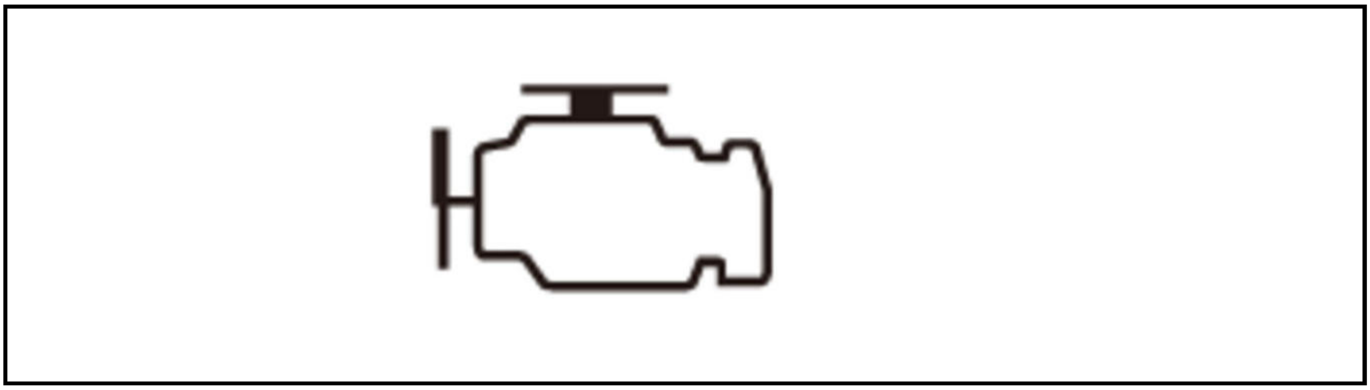

2. If the MIL stays on, turn the vehicle to the OFF (LOCK) mode, and **connect the HDS to the data link connector (DLC)**

3. Turn the vehicle to the ON mode.

4. Make sure the HDS communicates with the PCM and other vehicle systems. If it does not, **go to the DLC circuit troubleshooting**

Check the diagnostic trouble code (DTC) and note it. Also check the on-board snapshot data, and download any data found. Then refer to the indicated DTC's troubleshooting, and begin the appropriate troubleshooting procedure.

NOTE:

- On-board snapshot indicates the engine conditions when the first malfunction, misfire, or fuel trim malfunction was detected.
- The HDS can read the DTC, the on-board snapshot, the current data, and other PCM data.
- For specific operations, refer to the user's manual that came with the HDS.

6. If no DTCs are found, **go to the MIL circuit troubleshooting** .

If the MIL did not stay on

If the MIL did not stay on but there is a driveability problem, do the symptom troubleshooting.

If you cannot duplicate the DTC

Some of the troubleshooting requires you to reset the PCM and try to duplicate the DTC. If the problem is intermittent and you can't duplicate the DTC, do not continue through the procedure. To do so will only result in confusion and possibly, a needlessly replaced PCM.

On-Board Snapshot

When a DTC troubleshooting results in intermittent failure, try to reproduce the failure under the same conditions with the on-board snapshot if the on-board snapshot has been recorded.

HDS Clear Command

The PCM stores various specific data to correct the system even if there is no electrical power such as when the 12 volt battery negative terminal or **No. A12 fuse** is disconnected. Stored data based on failed parts should be cleared by using the CLEAR COMMAND of the HDS, if parts are replaced.

The HDS has three kinds of clear commands to meet this purpose. They are DTC clear, PCM reset, and CKP pattern clear. The DTC clear command erases all stored DTCs, freeze data, on-board snapshot, and readiness codes. This must be done with the HDS after reproducing the DTC during troubleshooting. The PCM reset command erases all stored DTCs, freeze data, on-board snapshot, readiness codes, and all specific data to correct the system except CKP pattern. If the CKP pattern data in the PCM was cleared, you must do the CKP pattern learn procedure. The CKP pattern clear command erases only CKP pattern data. This command is for repair of a misfire or the CKP sensor.

Scan Tool Clear Command

If you are using a generic scan tool to clear commands, be aware that there is only one setting for clearing the PCM, and it clears all commands at the same time (CKP pattern learn, freeze data, on-board snapshot, readiness codes, and DTCs). After you clear all commands, you then need to do the **CKP pattern learn procedure** ; **test-drive to set readiness codes to complete** .

DTC Clear

1. Clear the DTC with the HDS while the engine is stopped.

2. Turn the vehicle to the OFF (LOCK) mode.

3. Turn the vehicle to the ON mode, and wait 30 seconds.

4. Turn the vehicle to the OFF (LOCK) mode, and disconnect the HDS from the DLC.

How to End a Troubleshooting Session (required after any troubleshooting)

1. Reset the PCM with the HDS.

2. Turn the vehicle to the OFF (LOCK) mode.

3. Disconnect the HDS from the DLC.

NOTE: The PCM is part of the immobilizer system. If you replace the PCM, you must register the keyless access system.

How to Troubleshoot Circuits at the PCM Connectors

NOTE: The PCM stays on for up to an hour after the vehicle is turned to OFF (LOCK) mode. Jumping the SCS line after turning the vehicle to OFF (LOCK) mode cancels this function. Disconnecting the PCM during this function, without jumping the SCS line first, can damage the PCM.

1. Jump the SCS line with the HDS, and wait more than 1 minute.

2. Disconnect PCM connectors A and E.

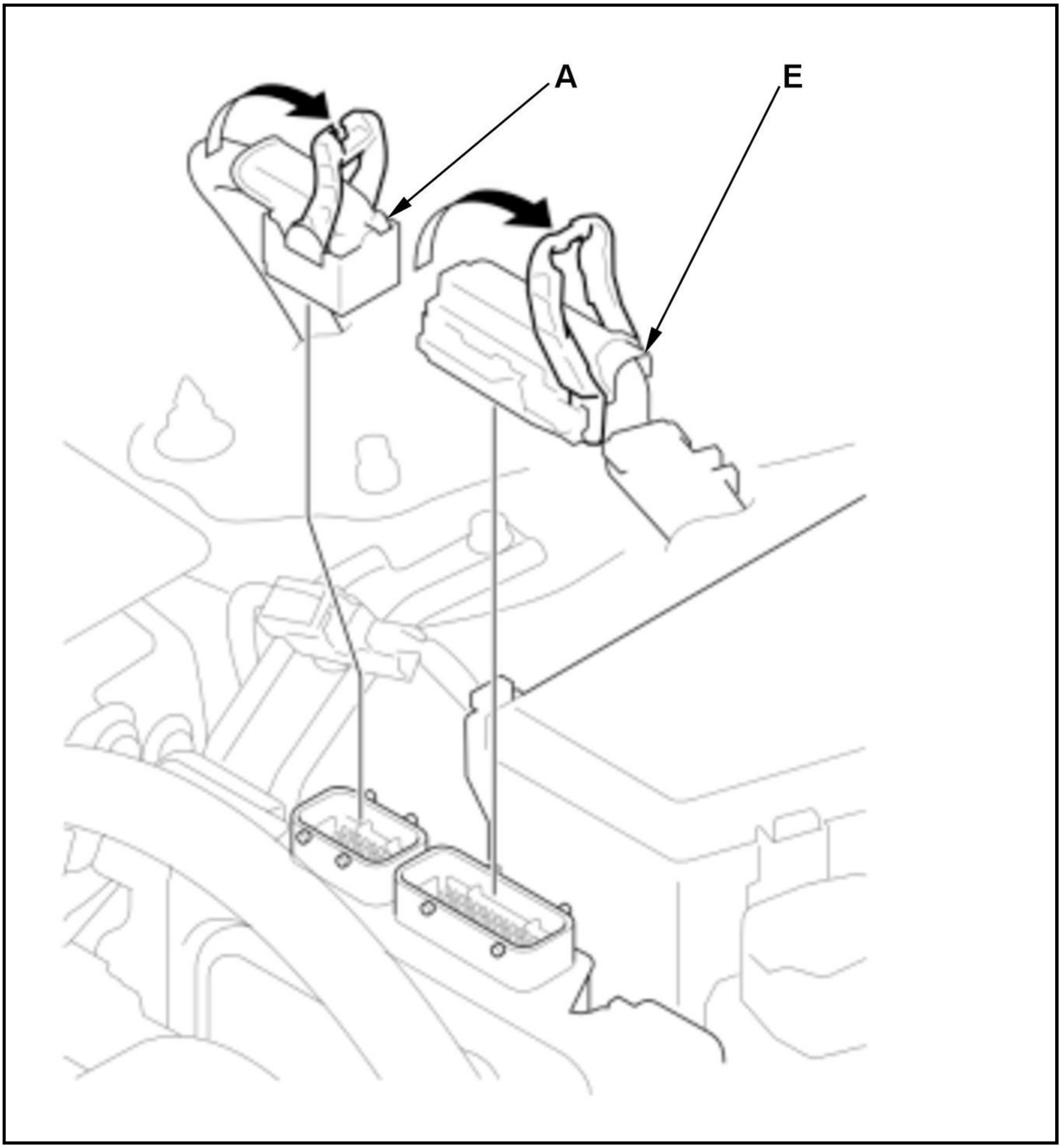

3. When diagnosis/troubleshooting is done at the PCM connectors, use the terminal test port (A) above the terminal you need to check.

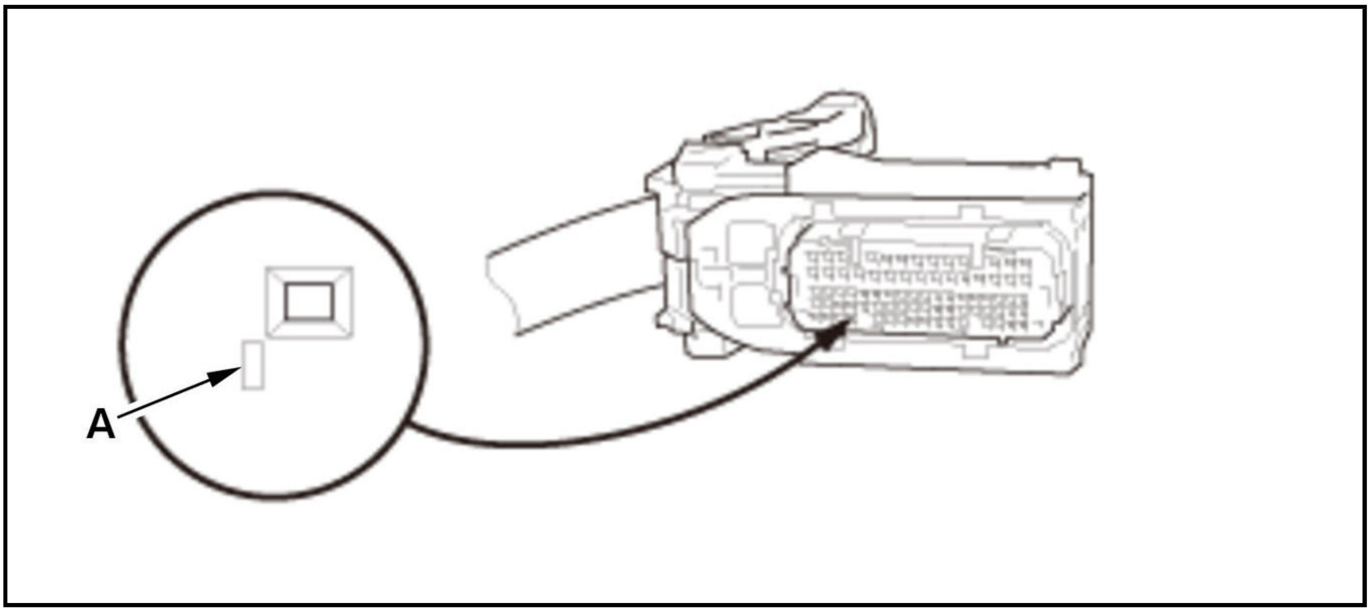

4. Connect one side of the patch cord terminals (A) to a commercially available digital multimeter (B), and connect the other side of the terminal (C) to the pin probe male.

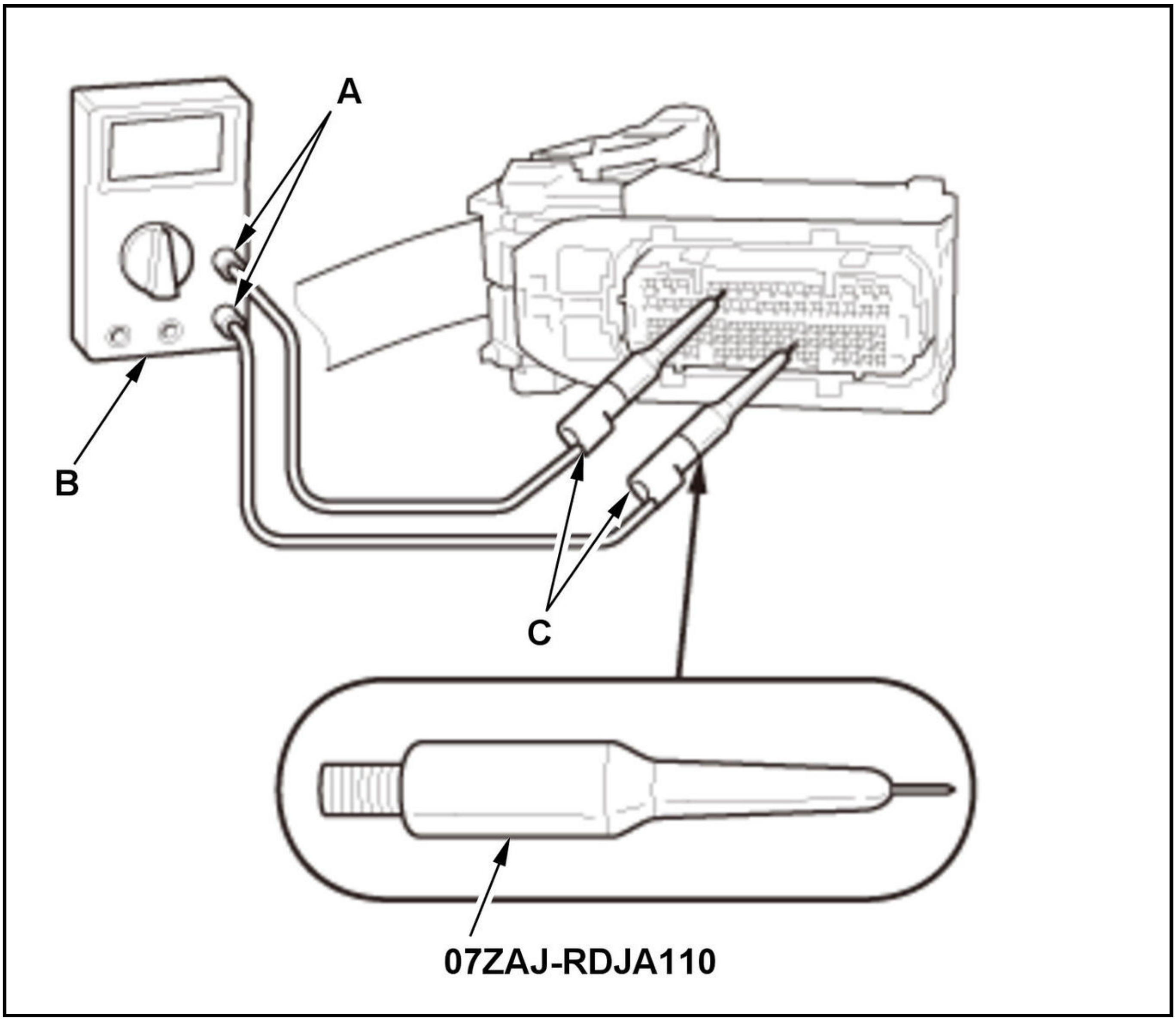

Gently contact the pin probe (male) at the terminal test port from the terminal side. Do not force the tips into the terminals.

WARNING:

- **For accurate results, always use the pin probe (male).**
- **To prevent damage to the connector terminals, do not insert test equipment probes, paper clips, or other substitutes as they can damage the terminals. Damaged terminals cause a poor connection and an incorrect measurement.**
- **Do not puncture the insulation on a wire. Punctures can cause or eventually lead to poor or intermittent electrical connections.**

OBD Status

The OBD status shows the current system status of each DTC and all of the parameters. This function is used to see if the repair was successfully completed. The results of diagnostic tests for the DTC are displayed as:

- PASSED: The on-board diagnosis is successfully finished.
- FAILED: The on-board diagnosis has finished but failed.
- EXECUTING: The vehicle is in enable criteria conditions of the DTC, and the on board diagnosis is running.
- NOT COMPLETED: The on-board diagnosis was running but is out of the enable conditions of the DTC.
- OUT OF CONDITION: The vehicle has stayed out of the enable conditions of the DTC.

HOW TO TROUBLESHOOT THE GEAR UNIT CONTROL SYSTEM

How to Check for DTCs with the Honda Diagnostic System (HDS)

When the powertrain control module (PCM) senses an abnormality in the input or output system, the shift position indicator (A) will usually blink as shown.

NOTE: When an abnormality occurs, the shift position indicator will blink.

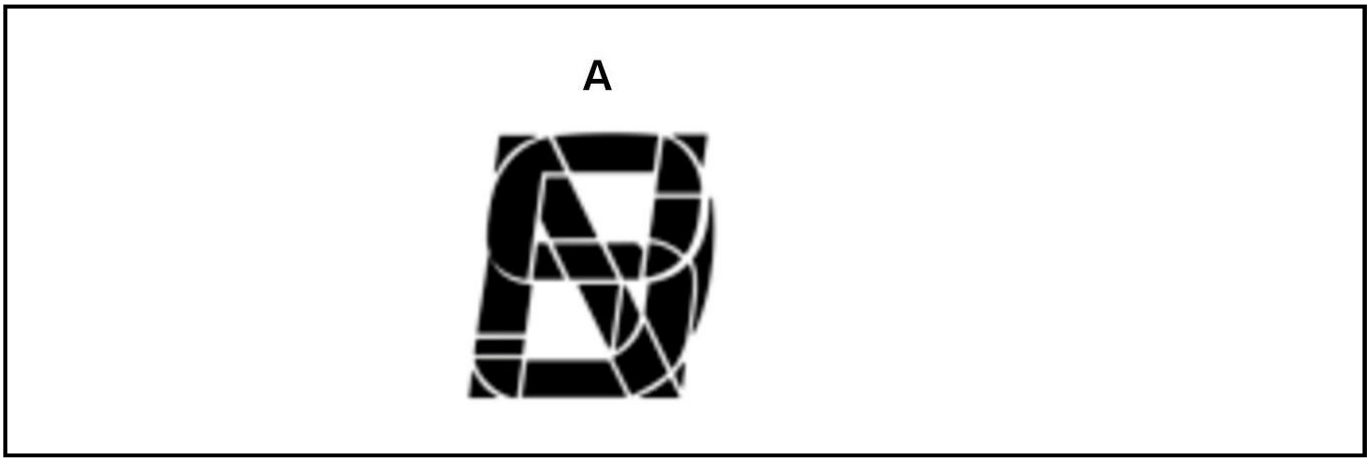

When the Honda Diagnostic System (HDS) is connected to the data link connector (DLC) located under the driver's side of the dashboard, and then the vehicle is turned to the ON mode and the appropriate menu is selected, it will indicate the diagnostic trouble code (DTC).

If the shift position indicator or the malfunction indicator lamp (MIL) has been reported on, or if a driveability problem is suspected, follow this procedure:

1. Connect the HDS to the DLC

2. Check for Pending or Confirmed DTCs with the HDS.

3. Record the freeze data and the on-board snapshots for all PGM-FI DTCs and gear DTCs.

4. If there is a PGM-FI DTC, first check the PGM-FI system as indicated by the DTC.

5. Clear the DTC and the data.

6. Drive the vehicle for several minutes under the same conditions as those indicated by the freeze data or the on-board snapshot, and then recheck for the DTC. If the gear DTC returns, go to the indicated DTC's troubleshooting. If the DTC does not return, there was an intermittent problem within the circuit. Make sure all pins and terminals in the circuit are tight.

Symptom Troubleshooting Versus DTC Troubleshooting

Some symptoms will not set DTCs or cause the shift position indicator to blink. If the MIL was reported ON or the shift position indicator has been blinking, check for DTCs. If the vehicle has an abnormal symptom, and there are no DTCs stored, do the symptom troubleshooting. Check the list of probable cause (s) for the symptom, in the sequence listed, until you find the problem.

How to Troubleshoot Circuits at the PCM Connectors

Special Tools Required

Male Pin Probe 07ZAJ-RDJA110

NOTE: The PCM stays on for up to an hour after the vehicle is turned to the OFF (LOCK) mode. Jumping the SCS line after turning the vehicle to the OFF (LOCK) mode cancels this function. Disconnecting the PCM during this function, without jumping the SCS line first, can damage the PCM.

1. Jump the SCS line with the HDS, and wait more than 1 minute.

2. Disconnect PCM connectors A and E

3. When diagnosis/troubleshooting is done at the PCM connectors, use the terminal test port (A) above the terminal you need to check.

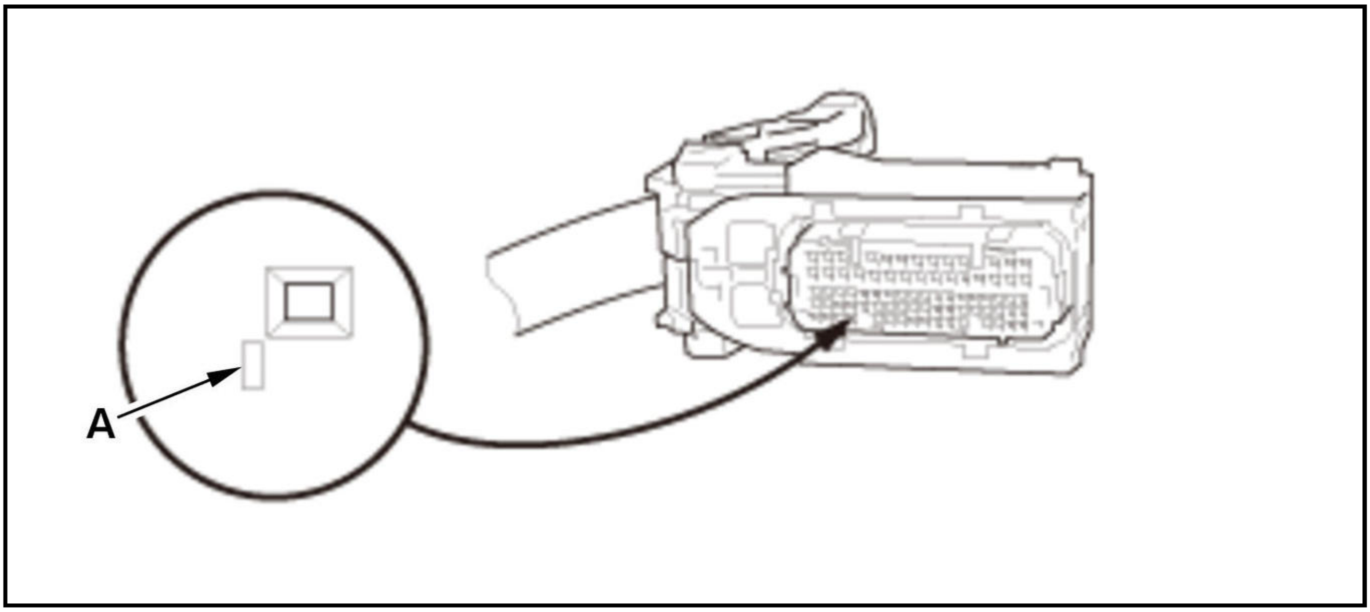

4. Connect one side of the patch cord terminals (A) to a commercially available digital multimeter (B), and connect the other side of the terminals (C) to the male pin probe.

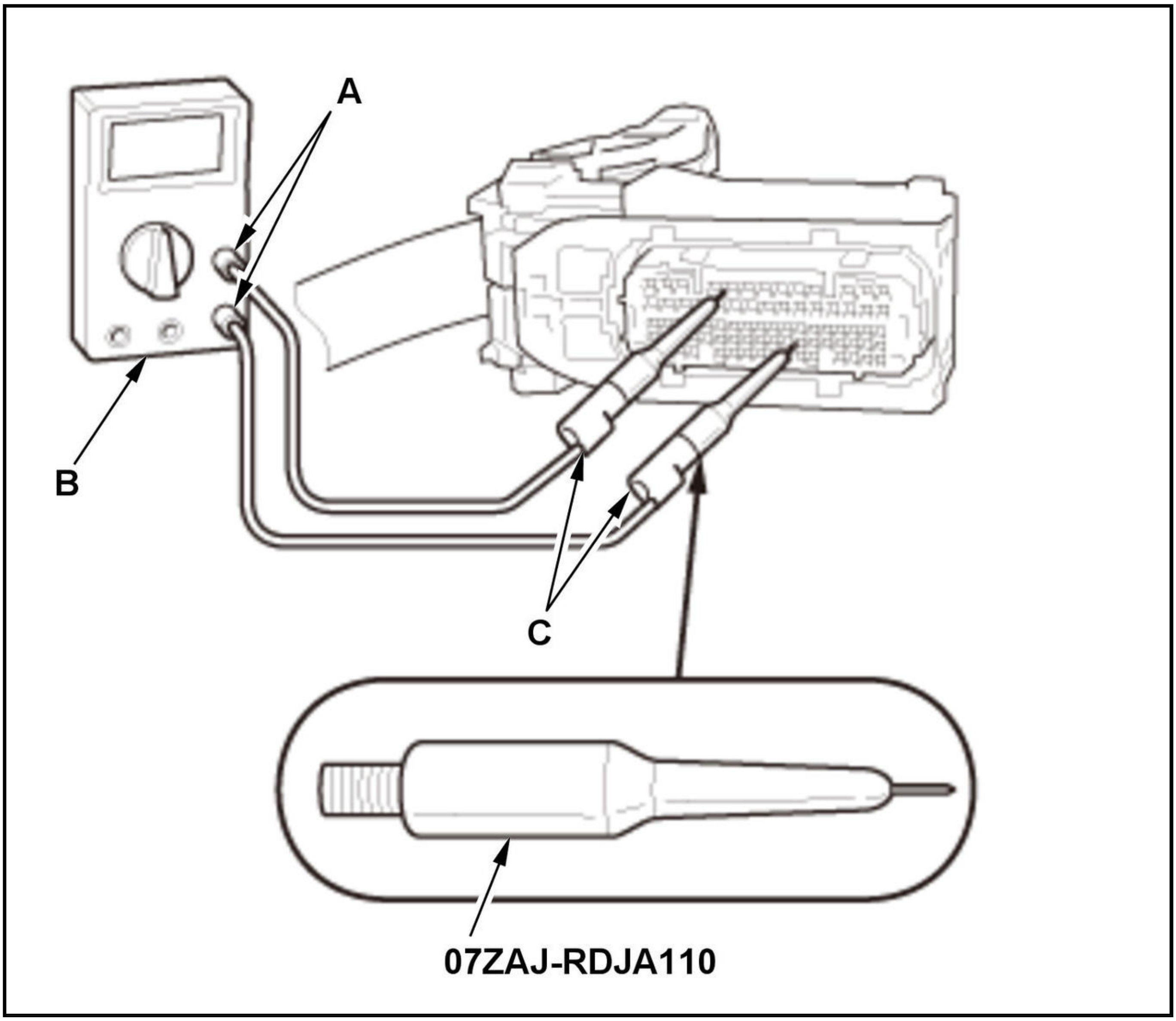

Gently contact the male pin probe at the terminal test port from the terminal side. Do not force the tips into the terminals.

WARNING:

- **For accurate results, always use the male pin probe.**
- **To prevent damage to the connector terminals, do not insert test equipment probes, paper clips, or other substitutes as they can damage the terminals. Damaged terminals cause a poor connection and an incorrect measurement.**
- **Do not puncture the insulation on a wire. Punctures can cause or eventually lead to poor or intermittent electrical connections.**

Clear Gear Unit Control System DTCs Procedure

1. Connect the HDS to the DLC .

2. Clear the DTC (s) on the HDS screen.

OBD Status

The OBD STATUS shows the current system status of each DTC and all of the parameters. This function is used to see if the repair was successfully completed. The results of diagnostic tests for the DTC are displayed as:

- PASSED: The on-board diagnosis is successfully completed.
- FAILED: The on-board diagnosis has completed but failed.
- NOT COMPLETED: The on-board diagnosis was running but is out of the enable conditions of the DTC.

How to End a Troubleshooting Session (required after any troubleshooting)

1. **Reset the PCM**

2. Turn the vehicle to the OFF (LOCK) mode.

3. Disconnect the HDS from the DLC.

4. **Enter the maintenance mode, then start the engine**

Hold the engine speed at 3, 000 rpm without load (in P or N position/mode) until the cooling fan comes on, then let it idle.

5. To verify that the problem is repaired, test-drive the vehicle for several minutes at speeds over 44 mph (70 km/h) or under the same conditions as those indicated by the freeze data.

Failure Reproduction Technique

NOTE: Follow these rules while the vehicle is raised on a lift for the test-drive.

- In case of the vehicle speed below 31 mph (50 km/h) : Disable the VSA by pressing the VSA OFF button.
- In case of the vehicle speed above 31 mph (50 km/h) : **Enter the VSA maintenance mode** .
- VSA DTC (s) may come on when test-driving on a lift. If the VSA system sets a DTC (s), clear the DTC (s) with the HDS.

Self-Diagnosis

If the PCM detects the failure of a signal from a sensor, a switch, a solenoid valve, or from another control unit, it stores a Pending or Confirmed DTC. Depending on the failure, a DTC is stored in either the first or second drive cycle. When a Confirmed DTC is stored, the PCM blinks the shift position indicator and/or turns on the MIL by a signal sent to the gauge control module via F-CAN.

- One Drive Cycle Detection Method:

  When an abnormality occurs in the signal from a sensor, a switch, a solenoid valve, or from another control unit, the PCM stores a Pending or Confirmed DTC for the failure and blinks the shift position indicator and/or turns on the MIL immediately.

- Two Drive Cycle Detection Method:

  When an abnormality occurs in the signal from a sensor, a switch, a solenoid valve, or from another control unit in the first drive cycle, the PCM stores a Pending DTC. The shift position indicator and the MIL do not turn on at this time. If the failure continues in the second drive cycle, the PCM stores a Confirmed DTC and blinks the shift position indicator and/or turns on the MIL.

Fail-Safe Function

When an abnormality occurs in the signal from a sensor, a switch, a solenoid valve, or from another control unit, the PCM ignores that signal and substitutes a pre-programmed value for that signal to allow the powertrain to continue operating. This causes a DTC to be stored and the shift position indicator to blink and/or the MIL to come on. The powertrain may not operate normally during fail-safe operation. Do not run the test-driving diagnosis when the MIL is ON, or the shift position indicator is blinking.

DTC TROUBLESHOOTING

DTC P0010

DTC P0010 : VTC Malfunction

NOTE:

- Before you troubleshoot, **review the general troubleshooting information**.
- If DTC P0010 is indicated alone, do the troubleshooting for DTC P100A, P100B, and P100C using the on-board snapshot for P0010.
- If any of the DTCs listed below are indicated at the same time as DTC P0010, troubleshoot those DTCs first, then recheck for P0010.
-
    - -

      P100A, P100B, P100C: Electric VTC motor

DTC Description	Confirmed DTC	Pending DTC
P0010 VTC Malfunction	B	B

DTC (PGM-FI)

1. DTC check

   -1. Turn the vehicle to the ON mode.

   -2. Check for Pending or Confirmed DTCs with the HDS.

DTC Description	Confirmed DTC	Pending DTC
P100A Electric VTC Motor Circuit Malfunction	B	B
P100B Electric VTC Motor Control Module Malfunction	B	B
P100C Electric VTC Motor Speed Signal Circuit Malfunction	B	B
P0010 VTC Malfunction	B	B

   Are DTC P100A, P100B, or P100C and P0010 indicated at the same time?

   YES

   Go to the indicated DTC's troubleshooting.

   NO

   Go to the troubleshooting for **DTC P100A** , **DTC P100B** , and **DTC P100C** using the on-board snapshot for DTC P0010.

DTC P0011

DTC P0011 : VTC System Malfunction

NOTE:

- Before you troubleshoot, **review the general troubleshooting information**.
- If DTC P0010 and/or P0341 are stored at the same time as DTC P0011, troubleshoot those DTCs first, then recheck for DTC P0011.

- This DTC will be stored when the DC-DC converter output voltage is higher than the specified voltage (DC-DC converter failure).

DTC Description	Confirmed DTC	Pending DTC
P0011 VTC System Malfunction	B	B

DTC (PGM-FI)

1. Electric powertrain system DTC check

   -1. Turn the vehicle to the ON mode.

   -2. Clear the DTC with the HDS.

   Enter the maintenance mode, then start the engine , and wait for 2 minutes under these conditions:

   - Headlights on high beam
   - Blower fan at maximum speed
   - Rear window defogger on
   - A/C switch ON, heater on, max hot

   -4. Check for Pending or Confirmed DTCs with the HDS.

DTC Description	Confirmed DTC	Pending DTC	Freeze Frame
P0A94 DC-DC Converter Performance	B	B	B

   Is DTC P0A94 indicated?

   YES

   Go to the troubleshooting for **DTC P0A94** .

   NO

   Go to step 2.

2. Problem verification (DTC check)

   -1. Turn the vehicle to the OFF (LOCK) mode.

   -2. Turn the vehicle to the ON mode.

   -3. Clear the DTC with the HDS.

   -4. Turn the vehicle to the OFF (LOCK) mode.

   -5. Turn the vehicle to the ON mode.

   -6. Select the VTC TEST in the Function Test Menu with the HDS.

   VTC TEST

   Check for Pending or Confirmed DTCs with the HDS.

DTC Description	Confirmed DTC	Pending DTC
P0011 VTC System Malfunction	B	B

   Is DTC P0011 indicated?

YES

The failure is duplicated. Go to step 4.

NO

Go to step 3.

3. Problem verification (Test-drive)

-1. **Enter the maintenance mode, then start the engine** .

-2. Hold the engine speed at 3, 000 rpm without load (in P or N) until the radiator fan comes on, then let it idle.

-3. Test-drive the vehicle at a steady speed between 25-75 mph (40-120 km/h) for 15 seconds.

-4. Check for Pending or Confirmed DTCs with the HDS.

DTC Description	Confirmed DTC	Pending DTC
P0011 VTC System Malfunction	B	B

Is DTC P0011 indicated?

YES

The failure is duplicated. Go to step 4.

NO

Intermittent failure, the system is OK at this time. Check for poor connections or loose terminals at the electric VTC motor and the PCM. **If the on-board snapshot of this DTC is recorded, try to reproduce the failure under the same conditions with the on-board snapshot**.

4. VTC actuator installation check

-1. **Check the installation of the VTC actuator** .

Is the VTC actuator installed correctly?

YES

Replace the electric VTC motor .

NO

Reinstall the VTC actuator, or replace it if it is worn or damaged .

DTC P0069

DTC P0069 : BARO Sensor Circuit Range/Performance Problem

NOTE: Before you troubleshoot, **review the general troubleshooting information**.

DTC Description	Confirmed DTC	Pending DTC
P0069 BARO Sensor Circuit Range/Performance Problem	B	B

DTC (PGM-FI)

1. Problem verification

-1. Turn the vehicle to the ON mode.

-2. Clear the DTC with the HDS.

-3. **Enter the maintenance mode, then start the engine** .

-4. Hold the engine speed at 3, 000 rpm without load (in P or N) until the radiator fan comes on, then let it idle.

Test-drive the vehicle under these conditions:

- Engine speed above 1, 200 rpm and REL TP SENSOR above 14.1 deg (or engine speed above 4, 000 rpm and REL TP SENSOR above 29.6 deg)
- Drive 2.5 seconds or more

Signal	**Current conditions**	
	Values	**Unit**
Engine Speed	B	B
ECT Sensor 1	B	B
REL TP Sensor	B	B

-6. Check for Pending or Confirmed DTCs with the HDS.

DTC Description	**Confirmed DTC**	**Pending DTC**
P0069 BARO Sensor Circuit Range/Performance Problem	B	B

Is DTC P0069 indicated?

YES

The failure is duplicated. Check for any authorized service information related to the DTCs or symptoms you are troubleshooting, or **substitute a known-good PCM** .

NO

Intermittent failure, the system is OK at this time. **If the on-board snapshot of this DTC is recorded, try to reproduce the failure under the same conditions with the on-board snapshot**.

DTC P006A

DTC P006A : MAF Sensor Circuit Range/Performance Problem

NOTE:

- Before you troubleshoot, **review the general troubleshooting information**.
- If DTC P2228 and/or P2229 are stored at the same time as DTC P006A, troubleshoot those DTCs first, then recheck for DTC P006A.

DTC Description	**Confirmed DTC**	**Pending DTC**
P006A MAF Sensor Circuit Range/Performance Problem	B	B

DTC (PGM-FI)

1. Parts condition check:

Check for poor connections or damage to these parts:

- PCV valve

- PCV hose
- Intake air duct
- Air cleaner
- Purge (PCS) line

Are the parts OK?

YES

Go to step 2.

NO

Repair or replace the damaged part (s).

2. Intake air duct visual check

-1. Check for damage or looseness of the intake air duct from the throttle body to the air cleaner.

Is it OK?

YES

Go to step 3.

NO

Reconnect or replace the intake air duct from the throttle body to the air cleaner.

3. Air cleaner element visual check

-1. Check for a dirty air cleaner element.

Is it dirty?

YES

Replace the air cleaner element .

NO

Go to step 4.

4. MAF sensor signal check (without engine running)

-1. Turn the vehicle to the OFF (LOCK) mode.

-2. Turn the vehicle to the ON mode.

-3. Check the parameter (s) below with the HDS.

Signal	Threshold		Current conditions	
	Values	Unit	Values	Unit
MAF Sensor	About 0.2	g/s	B	B

Do the current condition (s) match the threshold?

YES

Go to step 5.

NO

Replace MAF sensor/IAT sensor 1 .

5. MAF sensor signal check (with engine running)

-1. Enter the maintenance mode, then start the engine .

-2. Vary the engine speed between 2, 000 rpm and 3, 000 rpm.

-3. Check the parameter (s) below with the HDS.

Signal	Current conditions	
	Values	Unit
MAF Sensor	B	B

Does the MAF Sensor reading change?

YES

Go to step 6.

NO

Replace MAF sensor/IAT sensor 1 .

6. MAF sensor check

-1. Hold the engine speed at 3, 000 rpm without load (in P or N) until the radiator fan comes on, then let it idle.

Test-drive the vehicle for several minutes in the range of these recorded on-board snapshot parameters:

- Engine Speed
- Vehicle Speed
- MAP Sensor
- TP Sensor

On-board Snapshot

Signal	Current conditions	
	Values	Unit
Engine Speed	B	B
Vehicle Speed	B	B
MAP Sensor	B	B
TP Sensor	B	B

-3. Monitor the OBD STATUS for DTC P006A with the HDS.

DTC Description	OBD STATUS
P006A MAF Sensor Circuit Range/Performance Problem	B

Does the HDS indicate FAILED?

YES

Replace MAF sensor/IAT sensor 1 .

NO

If the HDS indicates PASSED, there is an intermittent failure and the system is OK at this time. Check for poor connections or loose terminals at MAF sensor/IAT sensor 1 and the PCM. **If the on-board snapshot of this DTC is recorded, try to reproduce the failure under the same conditions with the on-board snapshot**. If the HDS indicates NOT COMPLETED, go to step 6-2 and recheck.

DTC P0096

DTC P0096 : IAT Sensor 2 Circuit Range/Performance Problem

NOTE: Before you troubleshoot, **review the general troubleshooting information**.

DTC Description	Confirmed DTC	Pending DTC
P0096 IAT Sensor 2 Circuit Range/Performance Problem	B	B

DTC (PGM-FI)

1. Problem verification

-1. Turn the vehicle to the ON mode.

-2. Check the parameter (s) below with the HDS.

Signal	Threshold		Current conditions	
	Values	Unit	Values	Unit
IAT Sensor (2) Voltage	Less than 0.21	V	B	B

Do the current condition (s) match the threshold?

YES

The failure is duplicated. Go to step 2.

NO

Intermittent failure, the system is OK at this time. Check for poor connections or loose terminals at IAT sensor 2 and the PCM. **If the on-board snapshot of this DTC is recorded, try to reproduce the failure under the same conditions with the on-board snapshot**.

2. Determine possible failure area (IAT sensor 2, others)

-1. Turn the vehicle to the OFF (LOCK) mode.

-2. Disconnect the following connector.

IAT sensor 2 2P connector

-3. Turn the vehicle to the ON mode.

-4. Check the parameter (s) below with the HDS.

Signal	Threshold		Current conditions	
	Values	Unit	Values	Unit
IAT Sensor (2) Voltage	Less than 0.21	V	B	B

Do the current condition (s) match the threshold?

YES

Go to step 3.

NO

Replace IAT sensor 2 .

3. Shorted wire check (INTA line)

-1. Turn the vehicle to the OFF (LOCK) mode.

-2. Jump the SCS line with the HDS, and wait more than 1 minute.

-3. Disconnect the following connector.

PCM connector E (80P)

-4. Measure the resistance between test points 1 and 2.

Test condition	Vehicle OFF (LOCK) mode
B	IAT sensor 2 2P connector: disconnected
B	PCM connector E (80P) : disconnected
Test point 1	IAT sensor 2 2P connector (female terminals) No. 1: ①
Test point 2	Body ground

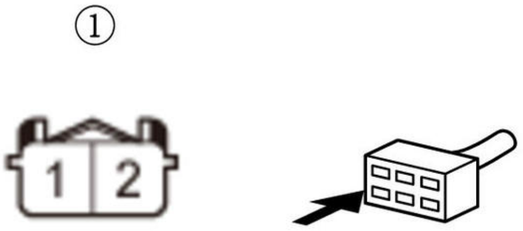

Is there 1 MΩ or more?

YES

The INTA wire is OK. Check for any authorized service information related to the DTCs or symptoms you are troubleshooting, or **substitute a known-good PCM** .

NO

Repair a short in the INTA wire between the PCM (E55) and IAT sensor 2.

DTC P0097

DTC P0097 : IAT Sensor 2 Circuit Low Voltage

NOTE: Before you troubleshoot, **review the general troubleshooting information**.

DTC Description	Confirmed DTC	Pending DTC
P0097 IAT Sensor2 Circuit Low Voltage	B	B

DTC (PGM-FI)

1. Problem verification

   -1. Turn the vehicle to the ON mode.

   -2. Check the parameter (s) below with the HDS.

Signal	Threshold		Current conditions	
	Values	Unit	Values	Unit
IAT Sensor (2) Voltage	Less than 0.08	V	B	B

   Do the current condition (s) match the threshold?

   YES

   The failure is duplicated. Go to step 2.

   NO

   Intermittent failure, the system is OK at this time. Check for poor connections or loose terminals at IAT sensor 2 and the PCM. **If the on-board snapshot of this DTC is recorded, try to reproduce the failure under the same conditions with the on-board snapshot**.

2. Determine possible failure area (IAT sensor 2, others)

   -1. Turn the vehicle to the OFF (LOCK) mode.

   -2. Disconnect the following connector.

IAT sensor 2 2P connector

   -3. Turn the vehicle to the ON mode.

   -4. Check the parameter (s) below with the HDS.

Signal	Threshold		Current conditions	
	Values	Unit	Values	Unit
IAT Sensor (2) Voltage	Less than 0.08	V	B	B

   Do the current condition (s) match the threshold?

   YES

   Go to step 3.

   NO

   Replace IAT sensor 2 .

3. Shorted wire check (INTA line)

   -1. Turn the vehicle to the OFF (LOCK) mode.

   -2. Jump the SCS line with the HDS, and wait more than 1 minute.

-3. Disconnect the following connector.

PCM connector E (80P)

-4. Measure the resistance between test points 1 and 2.

Test condition	Vehicle OFF (LOCK) mode
B	IAT sensor 2 2P connector: disconnected
B	PCM connector E (80P) : disconnected
Test point 1	IAT sensor 2 2P connector (female terminals) No. 1: ①
Test point 2	Body ground

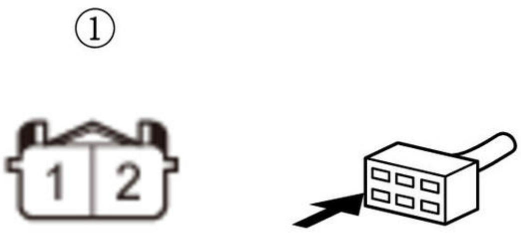

Is there 1 MΩ or more?

YES

The INTA wire is OK. Check for any authorized service information related to the DTCs or symptoms you are troubleshooting, or **substitute a known-good PCM** ,

NO

Repair a short in the INTA wire between the PCM (E55) and IAT sensor 2.

DTC P0098

DTC P0098 : IAT Sensor 2 Circuit High Voltage

NOTE: Before you troubleshoot, **review the general troubleshooting information**.

DTC Description	Confirmed DTC	Pending DTC
P0098 IAT Sensor2 Circuit High Voltage	B	B

DTC (PGM-FI)

1. Problem verification

-1. Turn the vehicle to the ON mode.

-2. Check the parameter (s) below with the HDS.

Signal	Threshold		Current conditions	
	Values	Unit	Values	Unit
IAT Sensor (2) Voltage	More than 4.92	V	B	B

Do the current condition (s) match the threshold?

YES

The failure is duplicated. Go to step 2.

NO

Intermittent failure, the system is OK at this time. Check for poor connections or loose terminals at IAT sensor 2 and the PCM. **If the on-board snapshot of this DTC is recorded, try to reproduce the failure under the same conditions with the on-board snapshot**.

2. Determine possible failure area (IAT sensor 2, others)

-1. Turn the vehicle to the OFF (LOCK) mode.

-2. Disconnect the following connector.

IAT sensor 2 2P connector

-3. Connect terminals A and B with a jumper wire.

Terminal A	IAT sensor 2 2P connector (female terminals) No. 1: ①
Terminal B	IAT sensor 2 2P connector (female terminals) No. 2: ①

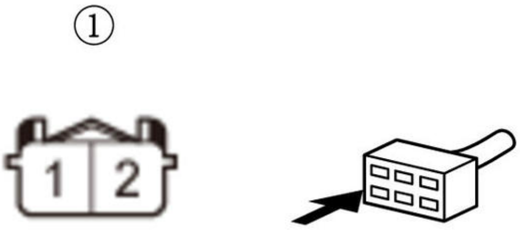

-4. Turn the vehicle to the ON mode.

-5. Check the parameter (s) below with the HDS.

Signal	Threshold		Current conditions	
	Values	Unit	Values	Unit
IAT Sensor (2) Voltage	More than 4.92	V	B	B

Do the current condition (s) match the threshold?

YES

Go to step 3.

NO

Replace IAT sensor 2 .

3. Determine possible failure area (INTA line, others)

-1. Turn the vehicle to the OFF (LOCK) mode.

-2. Remove the jumper wire from IAT sensor 2 2P connector.

-3. Turn the vehicle to the ON mode.

-4. Measure the voltage between test points 1 and 2.

Test condition	Vehicle ON mode
B	IAT sensor 2 2P connector: disconnected
Test point 1	IAT sensor 2 2P connector (female terminals) No. 1: ①
Test point 2	Body ground

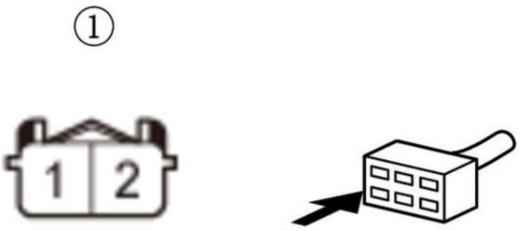

Is there about 5.0 V?

YES

Go to step 4.

NO

Go to step 5.

4. Open wire check (SG2 line)

-1. Turn the vehicle to the OFF (LOCK) mode.

-2. Jump the SCS line with the HDS, and wait more than 1 minute.

-3. Disconnect the following connector.

PCM connector E (80P)

-4. Measure the resistance between test points 1 and 2.

Test condition	Vehicle OFF (LOCK) mode
B	IAT sensor 2 2P connector: disconnected
B	PCM connector E (80P) : disconnected
Test point 1	IAT sensor 2 2P connector (female terminals) No. 2: ①
Test point 2	**PCM connector E (80P) No. 78**

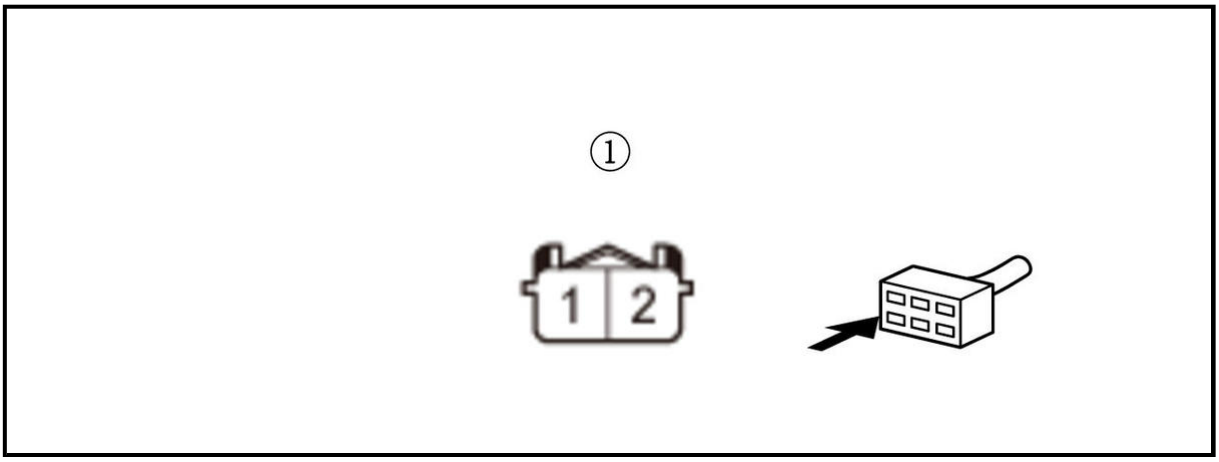

Is there 1.0 Ω or less?

YES

The SG2 wire is OK. Check for any authorized service information related to the DTCs or symptoms you are troubleshooting, or **substitute a known-good PCM** .

NO

Repair an open in the SG2 wire between the PCM (E78) and IAT sensor 2.

5. Open wire check (INTA line)

-1. Turn the vehicle to the OFF (LOCK) mode.

-2. Jump the SCS line with the HDS, and wait more than 1 minute.

-3. Disconnect the following connector.

PCM connector E (80P)

-4. Measure the resistance between test points 1 and 2.

Test condition	Vehicle OFF (LOCK) mode
B	IAT sensor 2 2P connector: disconnected
B	PCM connector E (80P) : disconnected
Test point 1	IAT sensor 2 2P connector (female terminals) No. 1: ①
Test point 2	**PCM connector E (80P) No. 55**

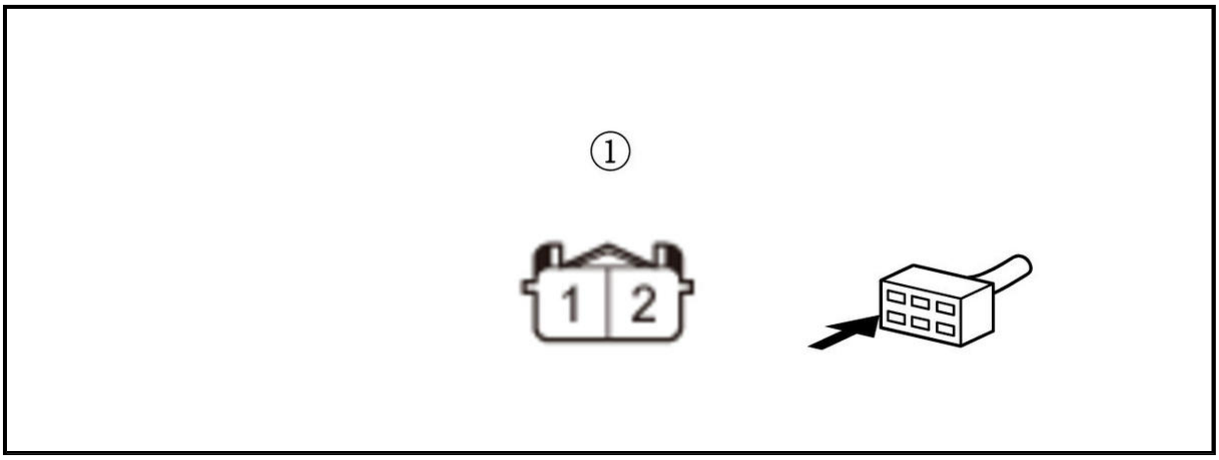

Is there 1.0 Ω or less?

YES

The INTA wire is OK. Check for any authorized service information related to the DTCs or symptoms you are troubleshooting, or **substitute a known-good PCM** .

NO

Repair an open in the INTA wire between the PCM (E55) and IAT sensor 2.

DTC P00FE

DTC P00FE : EVAP Vent Line Blockage

Special Tools Required

Vacuum Pump/Gauge, 0-30 inHg Snap-on YA4000A or equivalent, commercially available

NOTE: Before you troubleshoot, **review the general troubleshooting information**.

DTC Description	Confirmed DTC	Pending DTC
P00FE EVAP Vent Line Blockage	B	B

DTC (PGM-FI)

1. Fuel tank vapor control valve/fuel vent tube check

   -1. Turn the vehicle to the OFF (LOCK) mode.

   -2. **Insert the emergency fuel funnel into the fuel filler neck** .

   -3. **Remove the heat shield** .

   -4. Disconnect the fuel vent tube (A) from the EVAP canister (B), and connect a vacuum pump/gauge, 0-30 inHg, to the fuel vent tube as shown.

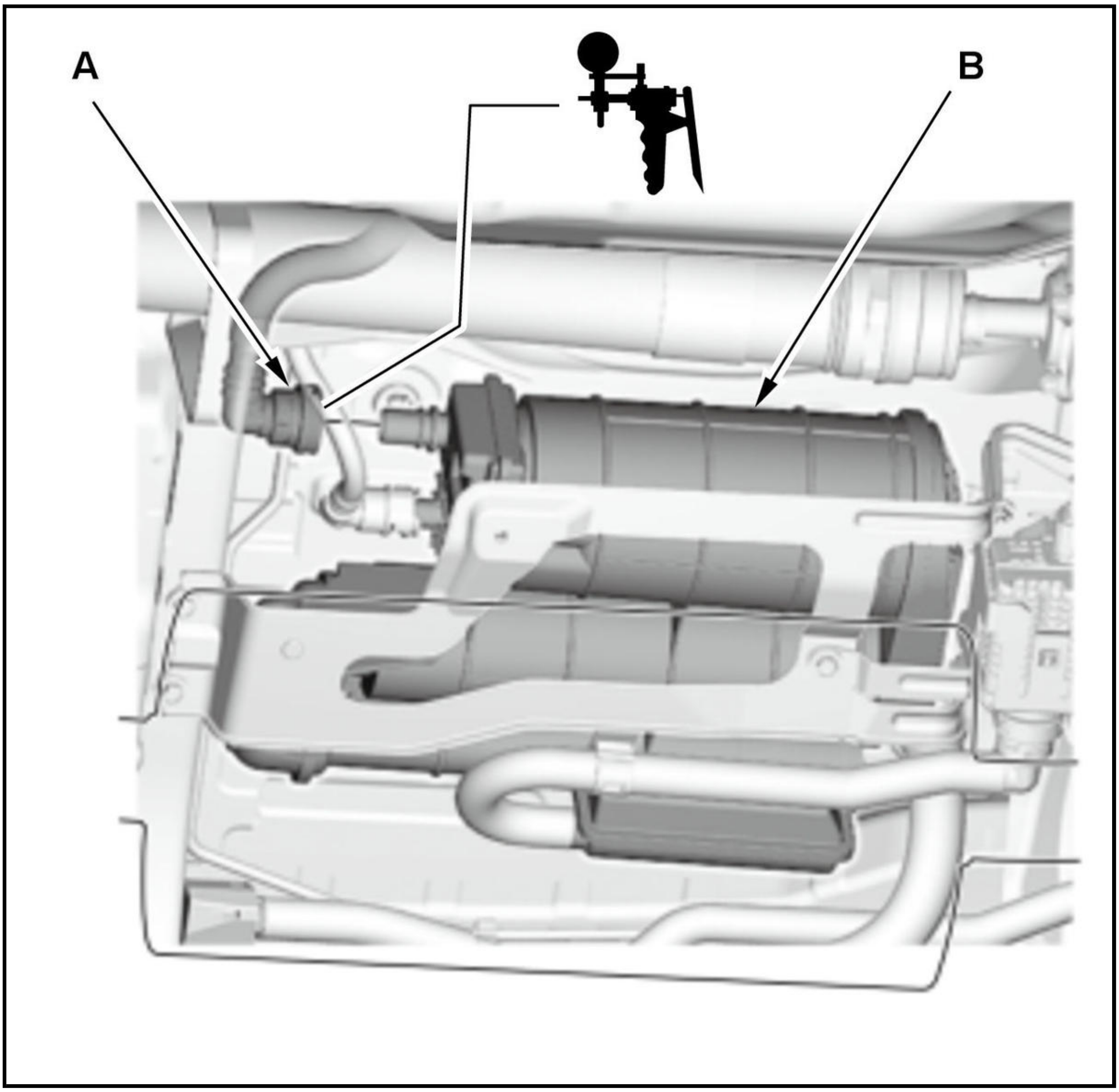

-5. Apply vacuum to the fuel vent tube.

Does it hold the vacuum?

YES

Replace the fuel tank .

NO

Go to step 2.

2. EVAP canister check 1

-1. Disconnect drain hose A from the EVAP canister (B), then plug the drain tube port (C).

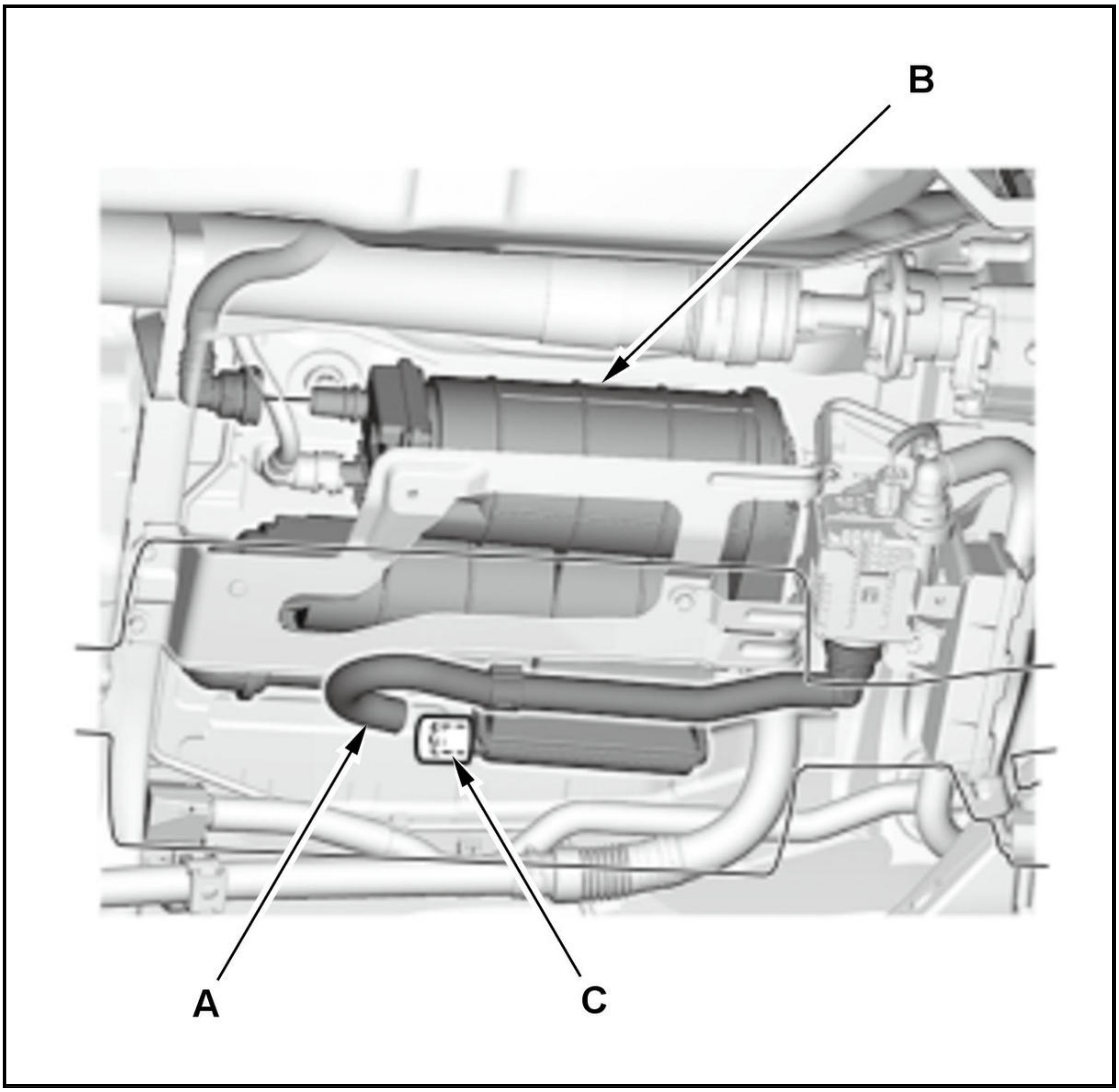

-2. Disconnect the EVAP canister purge hose (A) from the EVAP canister (B), then connect the vacuum pump/gauge, 0-30 inHg, to the EVAP canister as shown.

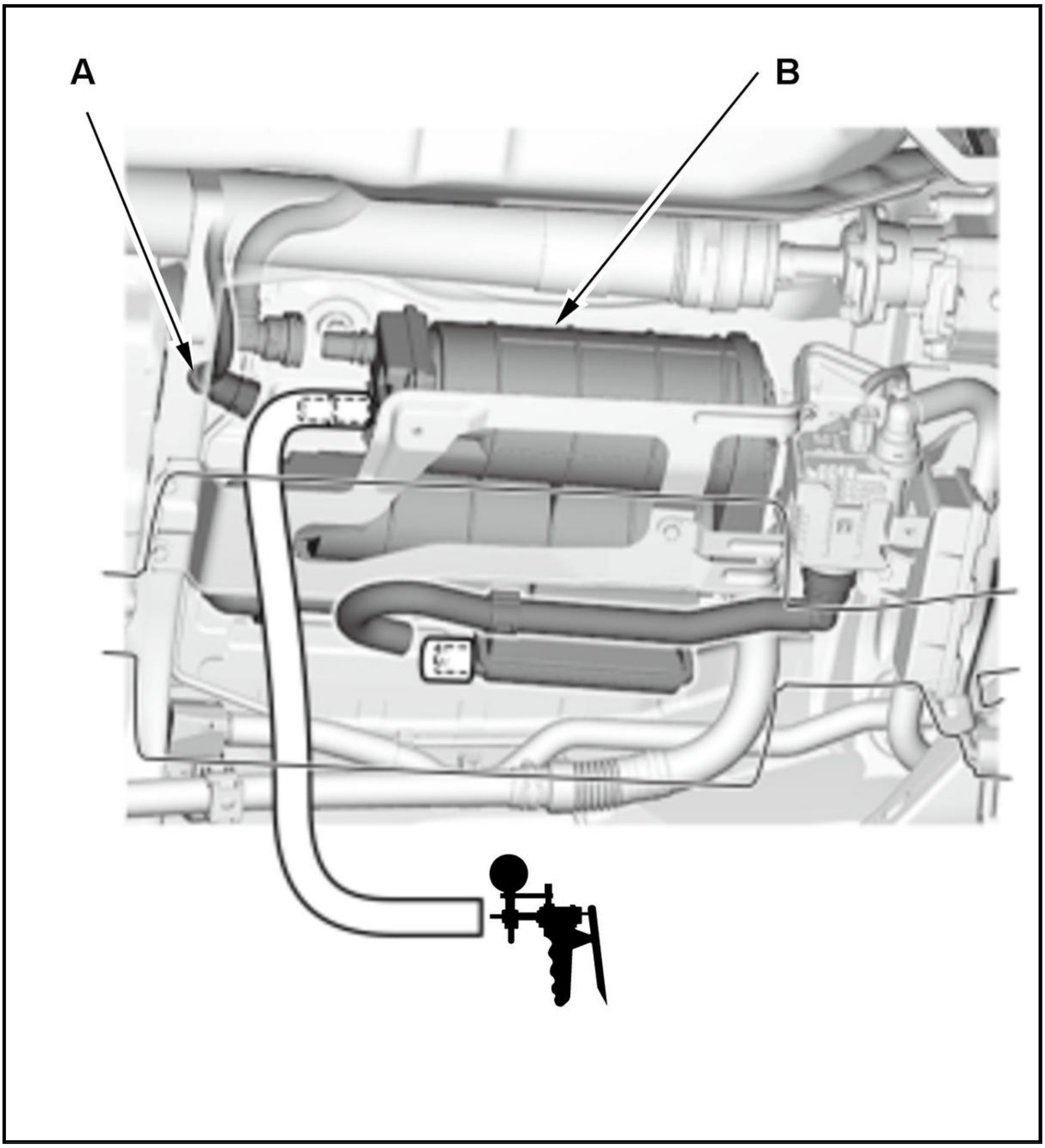

-3. Apply vacuum to the EVAP canister.

Does it hold the vacuum?

YES

Replace the EVAP canister .

NO

Go to step 3.

3. EVAP canister check 2

-1. Remove the plug from the drain tube port (A) and plug the fuel vent tube port (B), then connect the vacuum pump/gauge, 0-30 inHg, to the EVAP canister as shown.

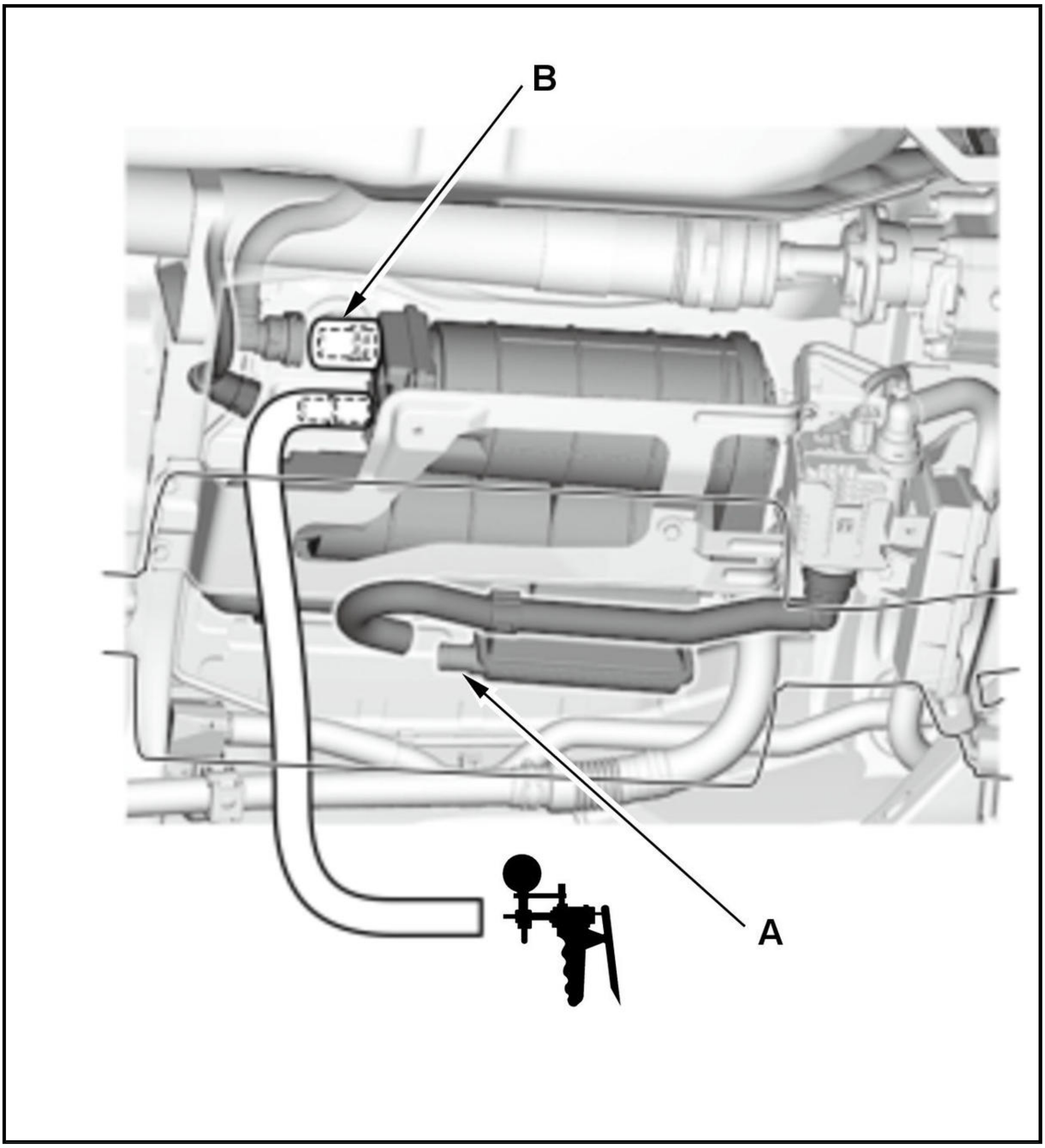

-2. Apply vacuum to the EVAP canister.

Does it hold the vacuum?

YES

Replace the EVAP canister .

NO

Go to step 4.

4. Drain hose A visual check

-1. Disconnect drain hose A from the EVAP leak check module (B).

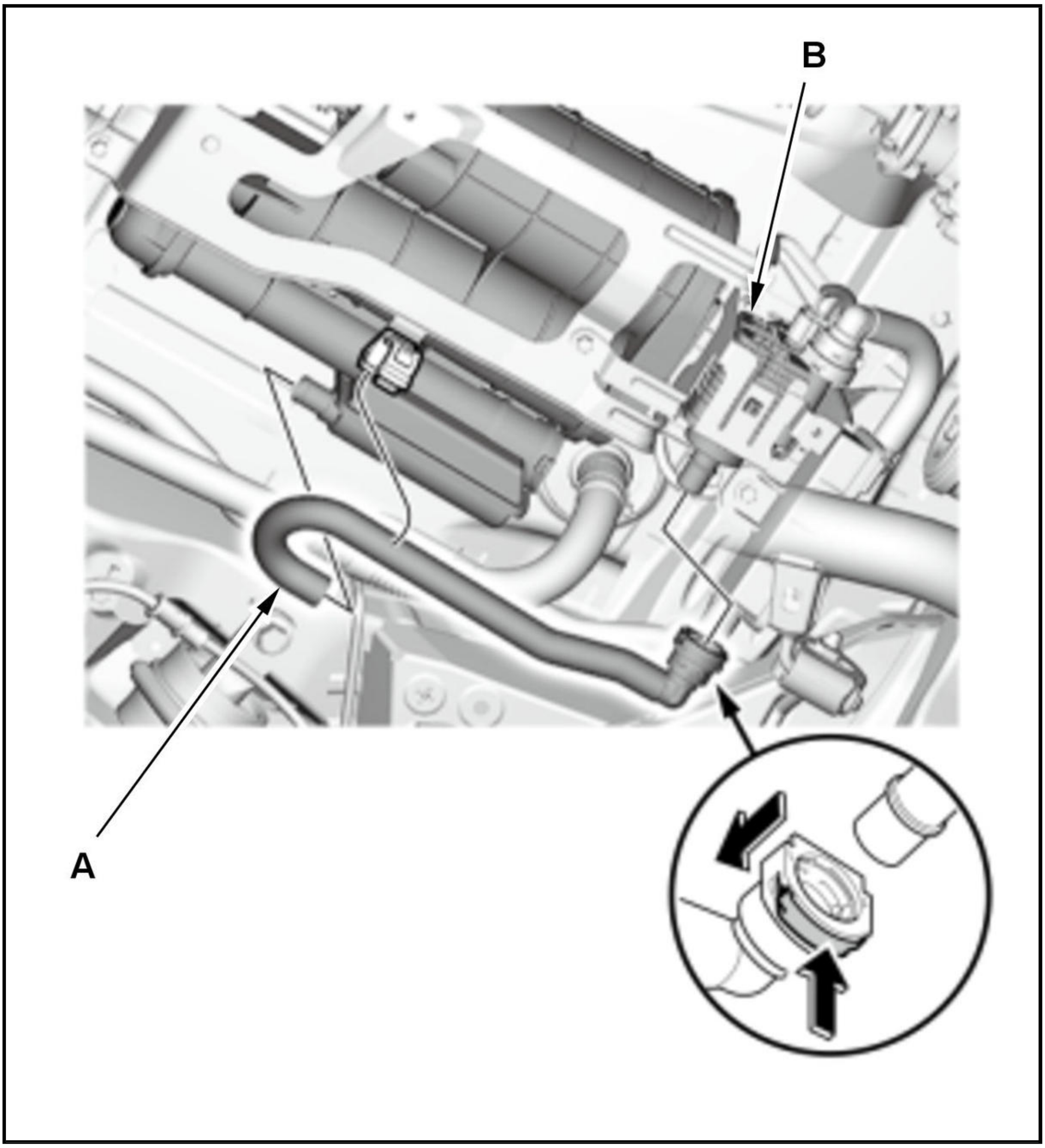

-2. Visually check drain hose A for deformation, foreign object clogged, or restrictions.

Is the hose OK?

YES

Replace the EVAP leak check module .

NO

Replace drain hose A .

DTC P0101

DTC P0101 : MAF Sensor Circuit Range/Performance Problem (Out of Range)

NOTE: Before you troubleshoot, **review the general troubleshooting information**.

DTC Description	Confirmed DTC	Pending DTC
P0101 MAF Sensor Circuit Range/Performance Problem	B	B

DTC Description	Confirmed DTC	Pending DTC
(Out of Range)		

DTC (PGM-FI)

1. Problem verification

   -1. Turn the vehicle to the ON mode.

   -2. Check the parameter (s) below with the HDS.

Signal	Threshold		Current conditions	
	Values	Unit	Values	Unit
MAF Sensor Voltage	Less than 0.14	V	B	B

   Do the current condition (s) match the threshold?

   YES

   The failure is duplicated. Go to step 2.

   NO

   Intermittent failure, the system is OK at this time. Check for poor connections or loose terminals at MAF sensor/IAT sensor 1 and the PCM. **If the on-board snapshot of this DTC is recorded, try to reproduce the failure under the same conditions with the on-board snapshot**.

2. Open wire check (IG1 (AFM) /IG1 (MAIN) /IG1_ACG line)

   -1. Turn the vehicle to the OFF (LOCK) mode.

   -2. Disconnect the following connector.

MAF sensor/IAT sensor 1 5P connector

   -3. Turn the vehicle to the ON mode.

   -4. Measure the voltage between test points 1 and 2.

Test condition	Vehicle ON mode
B	MAF sensor/IAT sensor 1 5P connector: disconnected
Test point 1	MAF sensor/IAT sensor 1 5P connector (female terminals) No. 1: ①
Test point 2	Body ground

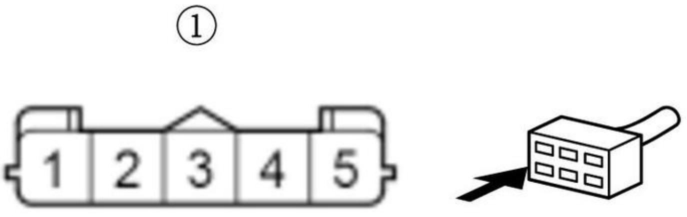

Is there battery voltage?

YES

Go to step 3.

NO

Repair an open in the IG1 (AFM) /IG1 (MAIN) /IG1_ACG wire between the No. D21 fuse and MAF sensor/IAT sensor 1.

3. Determine possible failure area (VGP line, others)

-1. Turn the vehicle to the OFF (LOCK) mode.

-2. Measure the resistance between test points 1 and 2.

Test condition	Vehicle OFF (LOCK) mode
B	MAF sensor/IAT sensor 1 5P connector: disconnected
Test point 1	MAF sensor/IAT sensor 1 5P connector (female terminals) No. 3: ①
Test point 2	Body ground

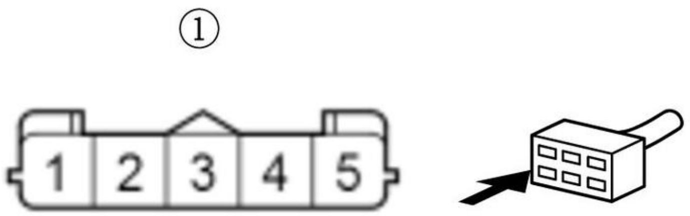

Is there 190-210 kΩ?

YES

Go to step 6.

NO

Go to step 4.

4. Shorted wire check (VGP line)

-1. Jump the SCS line with the HDS, and wait more than 1 minute.

-2. Disconnect the following connector.

PCM connector E (80P)

-3. Measure the resistance between test points 1 and 2.

Test condition	Vehicle OFF (LOCK) mode
B	MAF sensor/IAT sensor 1 5P connector: disconnected

B	PCM connector E (80P) : disconnected
Test point 1	MAF sensor/IAT sensor 1 5P connector (female terminals) No. 3: ①
Test point 2	Body ground

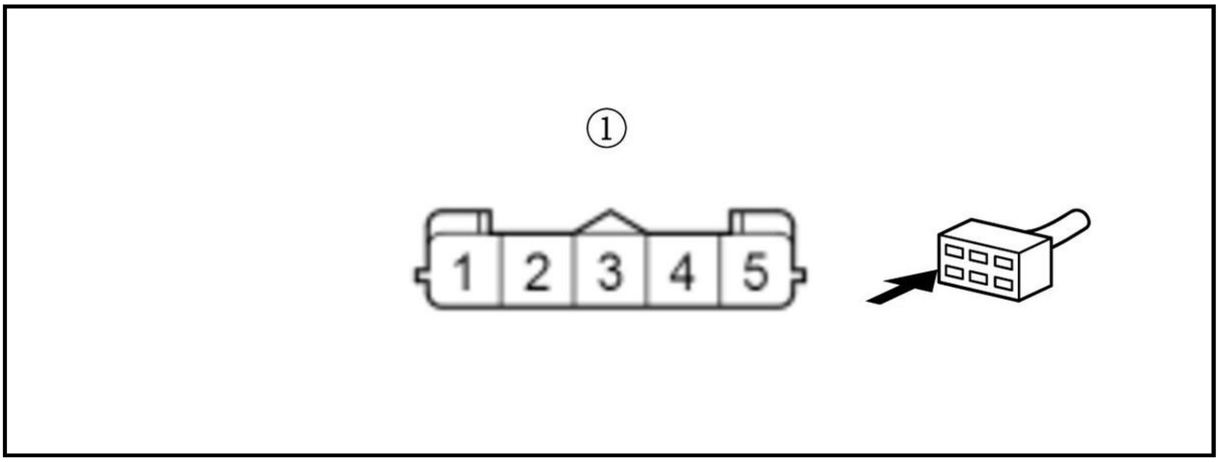

Is there 1 MΩ or more?

YES

The VGP wire is not shorted. Go to step 5.

NO

Repair a short in the VGP wire between the PCM (E61) and MAF sensor/IAT sensor 1.

5. Open wire check (VGP line)

-1. Measure the resistance between test points 1 and 2.

Test condition	Vehicle OFF (LOCK) mode
B	MAF sensor/IAT sensor 1 5P connector: disconnected
B	PCM connector E (80P) : disconnected
Test point 1	MAF sensor/IAT sensor 1 5P connector (female terminals) No. 3: ①
Test point 2	**PCM connector E (80P) No. 61**

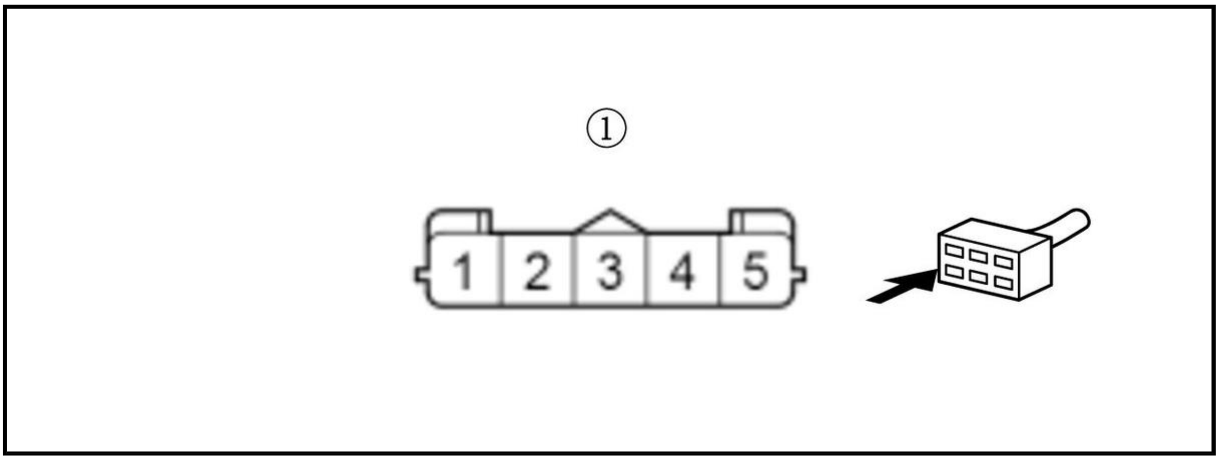

Is there 1.0 Ω or less?

YES

The VGP wire is OK. Check for any authorized service information related to the DTCs or symptoms you are troubleshooting, or **substitute a known-good PCM** .

NO

Repair an open in the VGP wire between the PCM (E61) and MAF sensor/IAT sensor 1.

6. MAF sensor/IAT sensor 1 check

   -1. **Substitute known-good MAF sensor/IAT sensor 1** .

   -2. Reconnect all connectors.

   -3. Turn the vehicle to the ON mode.

   -4. Clear the DTC with the HDS.

   -5. **Enter the maintenance mode, then start the engine** .

   -6. Hold the engine speed at 2, 000 rpm without load (in P or N).

   -7. Check for Pending or Confirmed DTCs with the HDS.

DTC Description	Confirmed DTC	Pending DTC
P0101 MAF Sensor Circuit Range/Performance Problem (Out of Range)	B	B

Is DTC P0101 indicated?

YES

MAF sensor/IAT sensor 1 is OK. Check for any authorized service information related to the DTCs or symptoms you are troubleshooting, or **substitute a known-good PCM** .

NO

Replace original MAF sensor/IAT sensor 1 .

DTC P0102

DTC P0102 : MAF Sensor Circuit Low Voltage

NOTE: Before you troubleshoot, **review the general troubleshooting information**.

DTC Description	Confirmed DTC	Pending DTC
P0102 MAF Sensor Circuit Low Voltage	B	B

DTC (PGM-FI)

1. Problem verification

   -1. Turn the vehicle to the ON mode.

   -2. Check the parameter (s) below with the HDS.

Signal	Threshold		Current conditions	
	Values	Unit	Values	Unit
MAF Sensor Voltage	Less than 0.10	V	B	B

Do the current condition (s) match the threshold?

YES

The failure is duplicated. Go to step 2.

NO

Intermittent failure, the system is OK at this time. Check for poor connections or loose terminals at MAF sensor/IAT sensor 1 and the PCM. **If the on-board snapshot of this DTC is recorded, try to reproduce the failure under the same conditions with the on-board snapshot**.

2. Open wire check (IG1 (AFM) /IG1 (MAIN) /IG1_ACG line)

-1. Turn the vehicle to the OFF (LOCK) mode.

-2. Disconnect the following connector.

MAF sensor/IAT sensor 1 5P connector

-3. Turn the vehicle to the ON mode.

-4. Measure the voltage between test points 1 and 2.

Test condition	Vehicle ON mode
B	MAF sensor/IAT sensor 1 5P connector: disconnected
Test point 1	MAF sensor/IAT sensor 1 5P connector (female terminals) No. 1: ①
Test point 2	Body ground

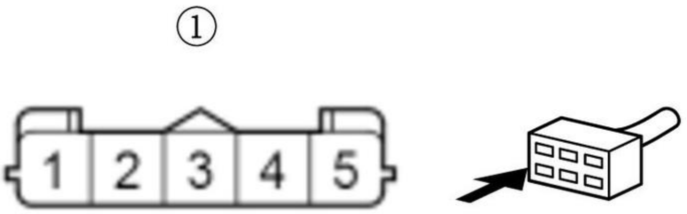

Is there battery voltage?

YES

Go to step 3.

NO

Repair an open in the IG1 (AFM) /IG1 (MAIN) /IG1_ACG wire between **No. D21 fuse** and MAF sensor/IAT sensor 1.

3. Determine possible failure area (VGP line, others)

-1. Turn the vehicle to the OFF (LOCK) mode.

-2. Measure the resistance between test points 1 and 2.

Test condition	Vehicle OFF (LOCK) mode
B	MAF sensor/IAT sensor 1 5P connector: disconnected
Test point 1	MAF sensor/IAT sensor 1 5P connector (female terminals) No. 3: ①
Test point 2	Body ground

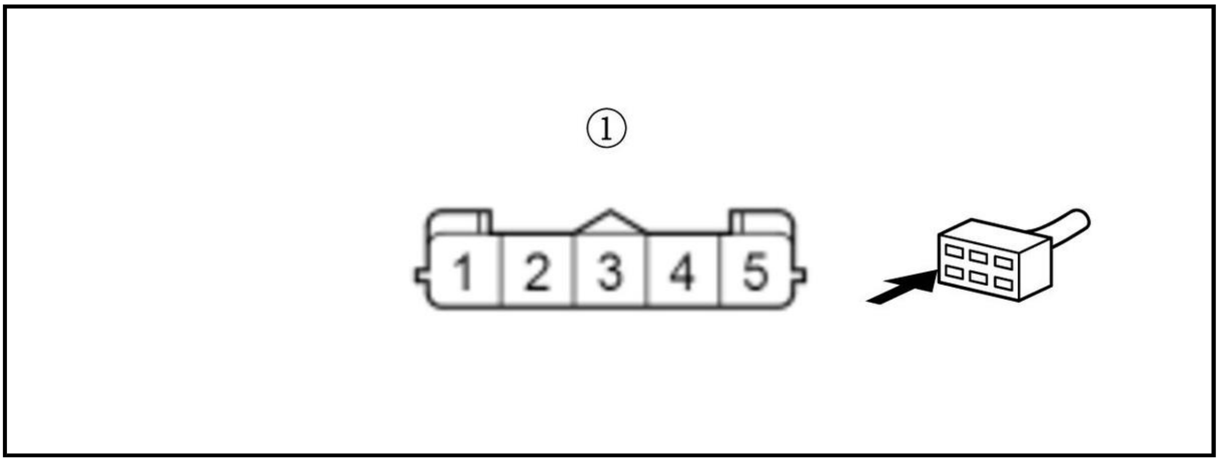

Is there 190-210 kΩ?

YES

Go to step 6.

NO

Go to step 4.

4. Shorted wire check (VGP line)

-1. Jump the SCS line with the HDS, and wait more than 1 minute.

-2. Disconnect the following connector.

PCM connector E (80P)

-3. Measure the resistance between test points 1 and 2.

Test condition	Vehicle OFF (LOCK) mode
B	MAF sensor/IAT sensor 1 5P connector: disconnected
B	PCM connector E (80P) : disconnected
Test point 1	MAF sensor/IAT sensor 1 5P connector (female terminals) No. 3: ①
Test point 2	Body ground

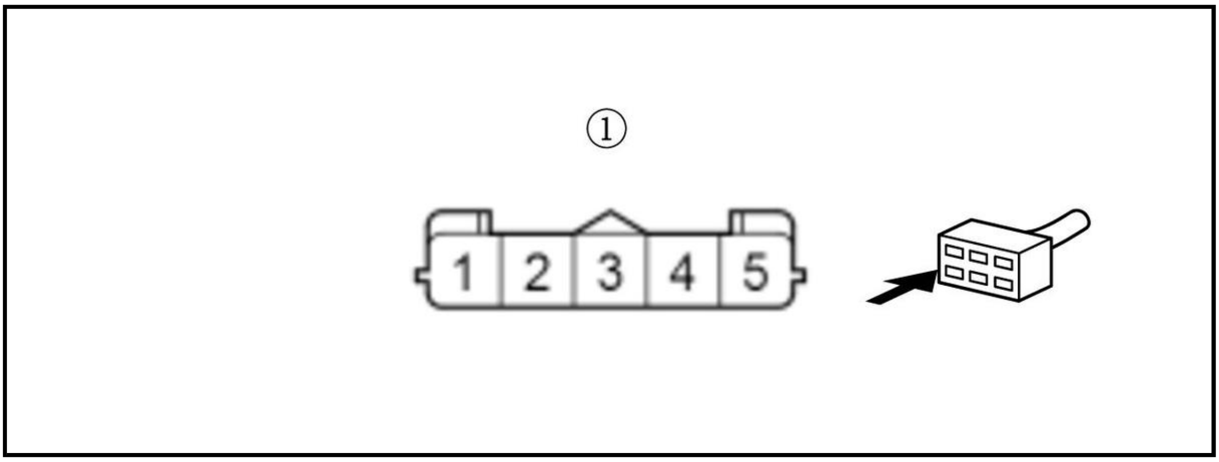

Is there 1 MΩ or more?

YES

The VGP wire is not shorted. Go to step 5.

NO

Repair a short in the VGP wire between the PCM (E61) and MAF sensor/IAT sensor 1.

5. Open wire check (VGP line)

-1. Measure the resistance between test points 1 and 2.

Test condition	Vehicle OFF (LOCK) mode
B	MAF sensor/IAT sensor 1 5P connector: disconnected
B	PCM connector E (80P) : disconnected
Test point 1	MAF sensor/IAT sensor 1 5P connector (female terminals) No. 3: ①
Test point 2	**PCM connector E (80P) No. 61**

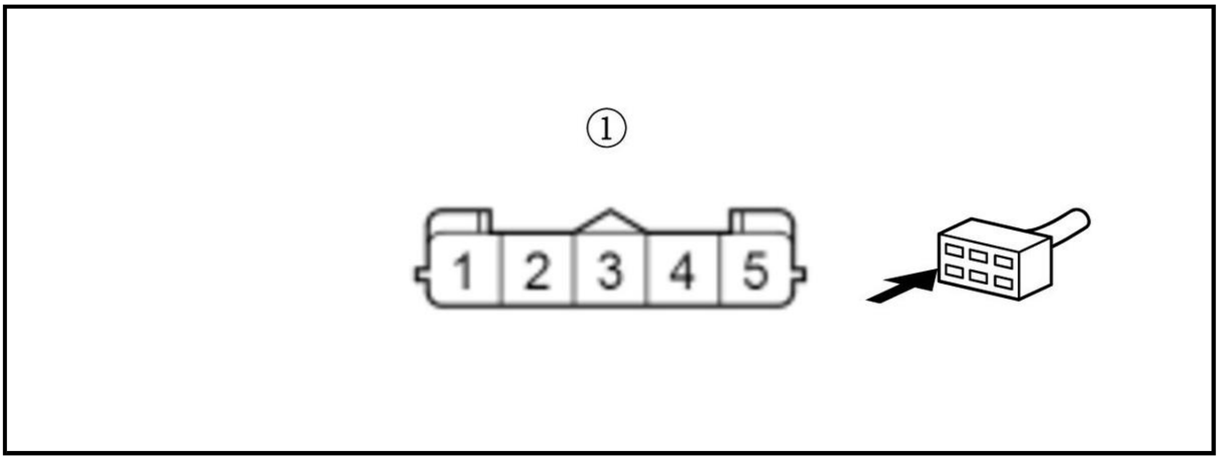

Is there 1.0 Ω or less?

YES

The VGP wire is OK. Check for any authorized service information related to the DTCs or symptoms you are troubleshooting, or **substitute a known-good PCM** .

NO

Repair an open in the VGP wire between the PCM (E61) and MAF sensor/IAT sensor 1.

6. MAF sensor/IAT sensor 1 check

   -1. **Substitute a known-good MAF sensor/IAT sensor 1** .

   -2. Reconnect all connectors.

   -3. Turn the vehicle to the ON mode.

   -4. Clear the DTC with the HDS.

   -5. **Enter the maintenance mode, then start the engine** .

   -6. Hold the engine speed at 2, 000 rpm without load (in P or N).

   -7. Check for Pending or Confirmed DTCs with the HDS.

DTC Description	Confirmed DTC	Pending DTC
P0102 MAF Sensor Circuit Low Voltage	B	B

   Is DTC P0102 indicated?

   YES

   MAF sensor/IAT sensor 1 is OK. Check for any authorized service information related to the DTCs or symptoms you are troubleshooting, or **substitute a known-good PCM** .

   NO

   Replace original MAF sensor/IAT sensor 1 .

DTC P0103

DTC P0103 : MAF Sensor Circuit High Voltage

NOTE: Before you troubleshoot, **review the general troubleshooting information**.

DTC Description	Confirmed DTC	Pending DTC
P0103 MAF Sensor Circuit High Voltage	B	B

DTC (PGM-FI)

1. Problem verification

   -1. Turn the vehicle to the ON mode.

   -2. Check the parameter (s) below with the HDS.

Signal	Threshold		Current conditions	
	Values	Unit	Values	Unit
MAF Sensor Voltage	More than 4.89	V	B	B

   Do the current condition (s) match the threshold?

   YES

   The failure is duplicated. Go to step 2.

   NO

Intermittent failure, the system is OK at this time. Check for poor connections or loose terminals at MAF sensor/IAT sensor 1 and the PCM. **If the on-board snapshot of this DTC is recorded, try to reproduce the failure under the same conditions with the on-board snapshot**.

2. Open wire check (VGM line)

-1. Turn the vehicle to the OFF (LOCK) mode.

-2. Jump the SCS line with the HDS, and wait more than 1 minute.

-3. Disconnect the following connectors.

MAF sensor/IAT sensor 1 5P connector
PCM connector E (80P)

-4. Measure the resistance between test points 1 and 2.

Test condition	Vehicle OFF (LOCK) mode
B	MAF sensor/IAT sensor 1 5P connector: disconnected
B	PCM connector E (80P) : disconnected
Test point 1	MAF sensor/IAT sensor 1 5P connector (female terminals) No. 2: ①
Test point 2	**PCM connector E (80P) No. 62**

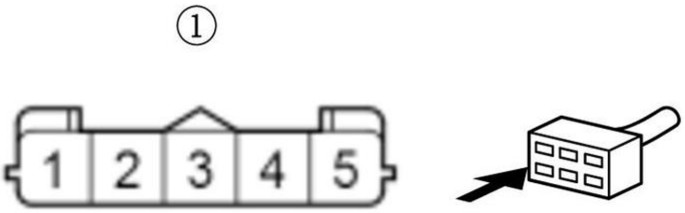

Is there 1.0 Ω or less?

YES

Go to step 3.

NO

Repair an open in the VGM wire between the PCM (E62) and MAF sensor/IAT sensor 1.

3. PCM internal circuit check

-1. Reconnect the PCM connector E (80P).

-2. Measure the resistance between test points 1 and 2.

Test condition	Vehicle OFF (LOCK) mode
B	MAF sensor/IAT sensor 1 5P connector: disconnected
Test point 1	MAF sensor/IAT sensor 1 5P connector (female terminals) No. 2: ①

Test point 2	Body ground

Is there 1.0 Ω or less?

YES

The PCM internal circuit is OK. Replace MAF sensor/IAT sensor 1 .

NO

Check for any authorized service information related to the DTCs or symptoms you are troubleshooting or substitute a known-good PCM .

DTC P0105

DTC P0105 : MAP Sensor Out of Range

NOTE: Before you troubleshoot, review the general troubleshooting information.

DTC Description	Confirmed DTC	Pending DTC
P0105 MAP Sensor Out of Range	B	B

DTC (PGM-FI)

1. Problem verification

   -1. Turn the vehicle to the ON mode.

   -2. Check the parameter (s) below with the HDS.

Signal	Threshold		Current conditions	
	Values	Unit	Values	Unit
MAP Sensor Voltage	More than 3.29	V	B	B

   Do the current condition (s) match the threshold?

   YES

   The failure is duplicated. Go to step 2.

   NO

   Intermittent failure, the system is OK at this time. Check for poor connections or loose terminals at the MAP sensor and the PCM. If the on-board snapshot of this DTC is recorded, try to reproduce the failure under the same conditions with the on-board snapshot.

2. Determine possible failure area (MAP sensor, others)

   -1. Turn the vehicle to the OFF (LOCK) mode.

   -2. Disconnect the following connector.

MAP sensor 3P connector

   -3. Connect terminals A and B with a jumper wire.

Terminal A	MAP sensor 3P connector (female terminals) No. 1: ①

Terminal B	MAP sensor 3P connector (female terminals) No. 2: ①

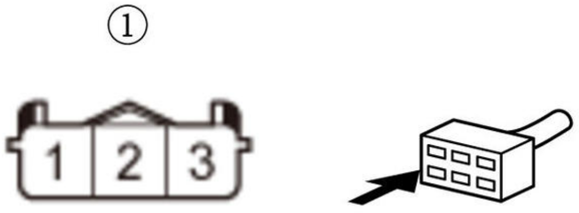

-4. Turn the vehicle to the ON mode.

-5. Check the parameter (s) below with the HDS.

Signal	Threshold		Current conditions	
	Values	Unit	Values	Unit
MAP Sensor Voltage	More than 3.29	V	B	B

Do the current condition (s) match the threshold?

YES

Go to step 3.

NO

Replace the MAP sensor .

3. Determine possible failure area (SG1 line, others)

-1. Turn the vehicle to the OFF (LOCK) mode.

-2. Remove the jumper wire from the MAP sensor 3P connector.

-3. Turn the vehicle to the ON mode.

-4. Measure the voltage between test points 1 and 2.

Test condition	Vehicle ON mode
B	MAP sensor 3P connector: disconnected
Test point 1	MAP sensor 3P connector (female terminals) No. 1: ①
Test point 2	MAP sensor 3P connector (female terminals) No. 3: ①

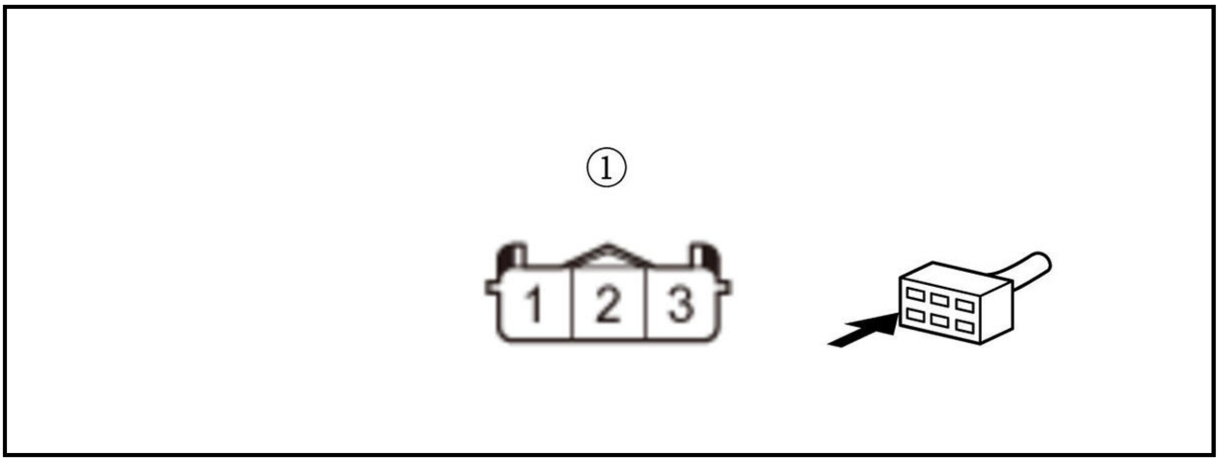

Is there about 5.0 V?

YES

Go to step 5.

NO

Go to step 4.

4. Open wire check (SG1 line)

-1. Turn the vehicle to the OFF (LOCK) mode.

-2. Jump the SCS line with the HDS, and wait more than 1 minute.

-3. Disconnect the following connector.

PCM connector E (80P)

-4. Measure the resistance between test points 1 and 2.

Test condition	Vehicle OFF (LOCK) mode
B	MAP sensor 3P connector: disconnected
B	PCM connector E (80P) : disconnected
Test point 1	MAP sensor 3P connector (female terminals) No. 1: ①
Test point 2	**PCM connector E (80P) No. 71**

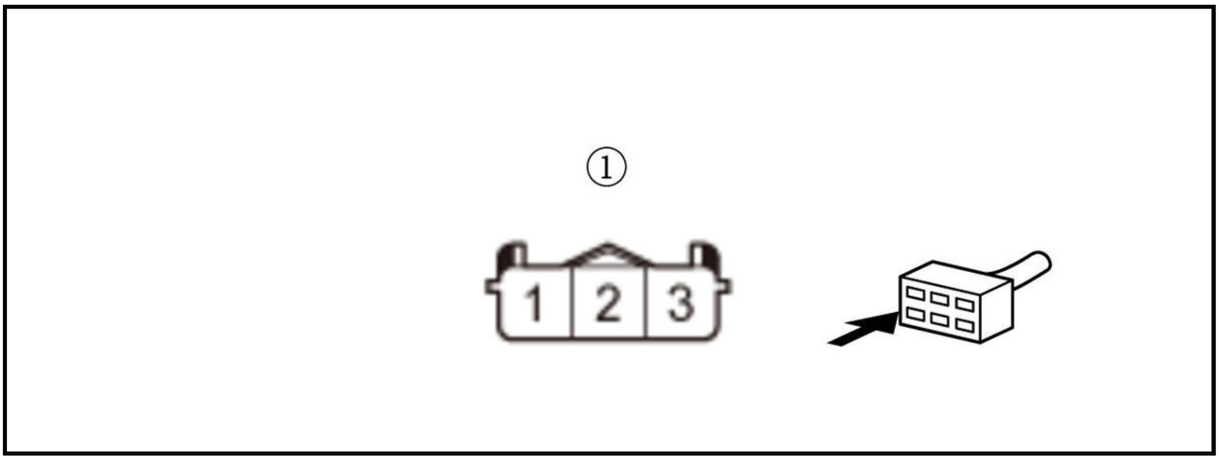

Is there 1.0 Ω or less?

YES

The SG1 wire is OK. Check for any authorized service information related to the DTCs or symptoms you are troubleshooting, or **substitute a known-good PCM** .

NO

Repair an open in the SG1 wire between the PCM (E71) and the MAP sensor.

5. Open wire check (MAP (PB) line)

-1. Turn the vehicle to the OFF (LOCK) mode.

-2. Jump the SCS line with the HDS, and wait more than 1 minute.

-3. Disconnect the following connector.

PCM connector E (80P)

-4. Measure the resistance between test points 1 and 2.

Test condition	Vehicle OFF (LOCK) mode
B	MAP sensor 3P connector: disconnected
B	PCM connector E (80P) : disconnected
Test point 1	MAP sensor 3P connector (female terminals) No. 2: ①
Test point 2	**PCM connector E (80P) No. 56**

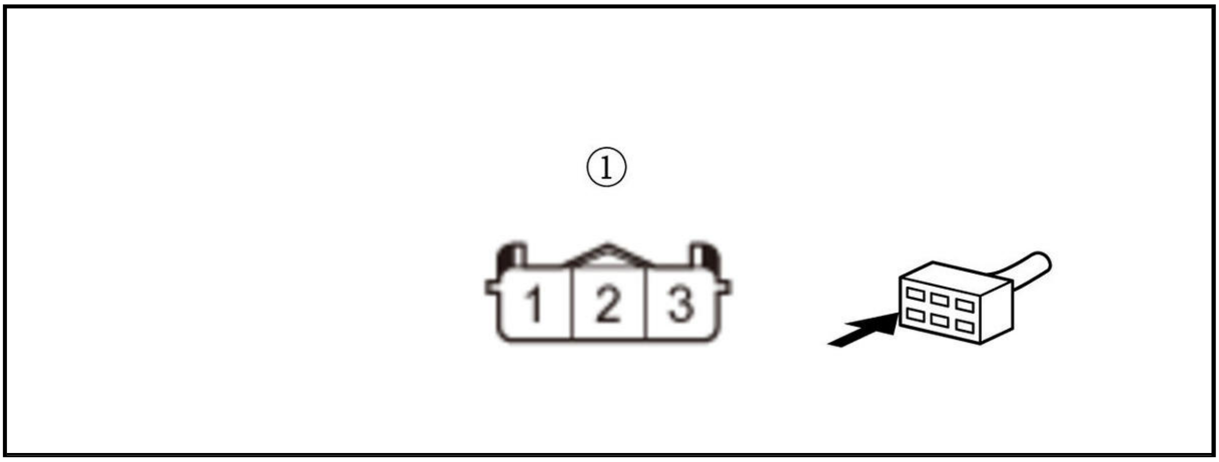

Is there 1.0 Ω or less?

YES

The MAP (PB) wire is OK. Check for any authorized service information related to the DTCs or symptoms you are troubleshooting, or **substitute a known-good PCM** .

NO

Repair an open in the MAP (PB) wire between the PCM (E56) and the MAP sensor.

DTC P0106

DTC P0106 : MAP Sensor Range/Performance Problem

NOTE: Before you troubleshoot, **review the general troubleshooting information**.

DTC Description	Confirmed DTC	Pending DTC
P0106 MAP Sensor Range/Performance Problem	B	B

DTC (PGM-FI)

1. Parts condition check:

   Check for poor connections or damage to these parts:

   - PCV hose
   - Purge (PCS) line
   - Air cleaner
   - Intake air duct
   - Intake manifold
   - Throttle body

   Are the parts OK?

   YES

   Go to step 2.

   NO

   Repair or replace the damaged part (s).

2. MAP sensor visual check

   -1. **Remove the MAP sensor** .

   -2. Check the MAP sensor port for clogging or restrictions (foreign material, carbon or sludge, etc.).

   Is the MAP sensor port clogged or restricted?

   YES

   Remove the clog or restriction from the MAP sensor port.

   NO

   Go to step 3.

3. Problem verification 1

   -1. Turn the vehicle to the ON mode.

   -2. Clear the DTC with the HDS.

   -3. Turn the vehicle to the OFF (LOCK) mode.

   -4. Turn the vehicle to the ON mode.

   -5. Check for Pending or Confirmed DTCs with the HDS.

DTC Description	Confirmed DTC	Pending DTC
P0106 MAP Sensor Range/Performance Problem	B	B

   Is DTC P0106 indicated?

   YES

   The failure is duplicated. **Replace the MAP sensor** .

NO

Go to step 4.

4. Problem verification 2

-1. **Enter the maintenance mode, then start the engine** .

-2. Hold the engine speed at 3, 000 rpm without load (in P or N) until the radiator fan comes on, then let it idle.

Test-drive the vehicle under these conditions:

- Engine coolant temperature (ECT SENSOR 1) above 158 deg.F (70 deg.C)
- Transmission in D
- Hold the engine speed at 1, 100 rpm or slightly higher without load (in P or N) for at least 5 seconds.
- Drive the vehicle at a steady speed of 40 mph (64 km/h) or more and engine speed between 1, 100 - 5, 500 rpm for at least 5 seconds.

Signal	Current conditions	
	Values	Unit
ECT Sensor 1	B	B
Engine Speed	B	B
Vehicle Speed	B	B

-4. Monitor the OBD STATUS for DTC P0106 in the DTCs MENU with the HDS.

DTC Description	OBD STATUS
P0106 MAP Sensor Range/Performance Problem	B

Does the HDS indicate FAILED?

YES

The failure is duplicated. **Replace the MAP sensor** .

NO

If the HDS indicates PASSED, there is an intermittent failure and the system is OK at this time. **If the on-board snapshot of this DTC is recorded, try to reproduce the failure under the same conditions with the on-board snapshot**. If the HDS indicates NOT COMPLETED, go to step 4-3 and recheck.

DTC P0107

DTC P0107 : MAP Sensor Circuit Low Voltage

NOTE: Before you troubleshoot, **review the general troubleshooting information**.

DTC Description	Confirmed DTC	Pending DTC
P0107 MAP Sensor Circuit Low Voltage	B	B

DTC (PGM-FI)

1. Problem verification

-1. Turn the vehicle to the ON mode.

-2. Check the parameter (s) below with the HDS.

Signal	Threshold		Current conditions	
	Values	**Unit**	**Values**	**Unit**
MAP Sensor Voltage	Less than 0.23	V	B	B

Do the current condition (s) match the threshold?

YES

The failure is duplicated. Go to step 2.

NO

Intermittent failure, the system is OK at this time. Check for poor connections or loose terminals at the MAP sensor and the PCM. **If the on-board snapshot of this DTC is recorded, try to reproduce the failure under the same conditions with the on-board snapshot**.

2. Determine possible failure area (MAP (PB) line, others)

-1. Turn the vehicle to the OFF (LOCK) mode.

-2. Disconnect the following connector.

MAP sensor 3P connector

-3. Turn the vehicle to the ON mode.

-4. Check the parameter (s) below with the HDS.

Signal	Threshold		Current conditions	
	Values	**Unit**	**Values**	**Unit**
MAP Sensor Voltage	Less than 0.23	V	B	B

Do the current condition (s) match the threshold?

YES

Go to step 5.

NO

Go to step 3.

3. Determine possible failure area (MAP sensor, others)

-1. Measure the voltage between test points 1 and 2.

Test condition	Vehicle ON mode
B	MAP sensor 3P connector: disconnected
Test point 1	MAP sensor 3P connector (female terminals) No. 1: ①
Test point 2	MAP sensor 3P connector (female terminals) No. 3: ①

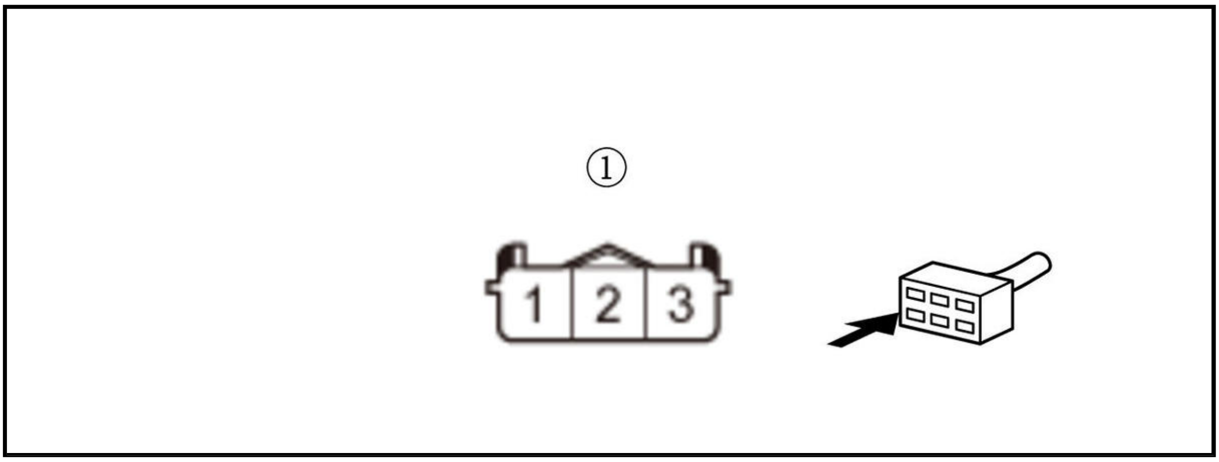

Is there about 5.0 V?

YES

Replace the MAP sensor .

NO

Go to step 4.

4. Open wire check (VCC1 line)

-1. Turn the vehicle to the OFF (LOCK) mode.

-2. Jump the SCS line with the HDS, and wait more than 1 minute.

-3. Disconnect the following connector.

PCM connector E (80P)

-4. Measure the resistance between test points 1 and 2.

Test condition	Vehicle OFF (LOCK) mode
B	MAP sensor 3P connector: disconnected
B	PCM connector E (80P) : disconnected
Test point 1	MAP sensor 3P connector (female terminals) No. 3: ①
Test point 2	**PCM connector E (80P) No. 70**

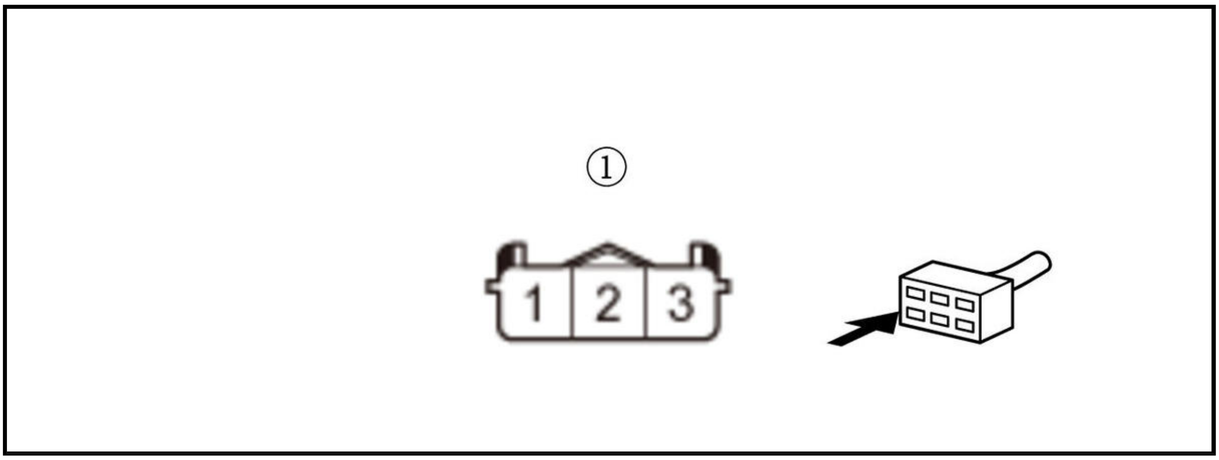

Is there 1.0 Ω or less?

YES

The VCC1 wire is OK. Check for any authorized service information related to the DTCs or symptoms you are troubleshooting, or **substitute a known-good PCM** .

NO

Repair an open in the VCC1 wire between the PCM (E70) and the MAP sensor.

5. Shorted wire check (MAP (PB) line)

-1. Turn the vehicle to the OFF (LOCK) mode.

-2. Jump the SCS line with the HDS, and wait more than 1 minute.

-3. Disconnect the following connector.

PCM connector E (80P)

-4. Measure the resistance between test points 1 and 2.

Test condition	Vehicle OFF (LOCK) mode
B	MAP sensor 3P connector: disconnected
B	PCM connector E (80P) : disconnected
Test point 1	MAP sensor 3P connector (female terminals) No. 2: ①
Test point 2	Body ground

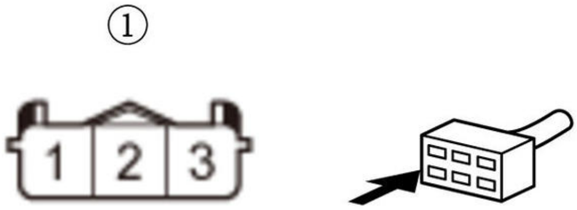

Is there 1 MΩ or more?

YES

Check for any authorized service information related to the DTCs or symptoms you are troubleshooting, or **substitute a known-good PCM** .

NO

Repair a short in the MAP (PB) wire between the PCM (E56) and the MAP sensor.

DTC P0108

DTC P0108 : MAP Sensor Circuit High Voltage

NOTE: Before you troubleshoot, **review the general troubleshooting information**.

DTC Description	Confirmed DTC	Pending DTC
P0108 MAP Sensor Circuit High Voltage	B	B

1. Problem verification

 -1. Turn the vehicle to the ON mode.

 -2. Check the parameter (s) below with the HDS.

Signal	**Threshold**		**Current conditions**	
	Values	**Unit**	**Values**	**Unit**
MAP Sensor Voltage	More than 4.49	V	B	B

Do the current condition (s) match the threshold?

YES

The failure is duplicated. Go to step 2.

NO

Intermittent failure, the system is OK at this time. Check for poor connections or loose terminals at the MAP sensor and the PCM. **If the on-board snapshot of this DTC is recorded, try to reproduce the failure under the same conditions with the on-board snapshot**.

2. Determine possible failure area (MAP sensor, others)

 -1. Turn the vehicle to the OFF (LOCK) mode.

 -2. Disconnect the following connector.

MAP sensor 3P connector

 -3. Connect terminals A and B with a jumper wire.

Terminal A	MAP sensor 3P connector (female terminals) No. 1: ①
Terminal B	MAP sensor 3P connector (female terminals) No. 2: ①

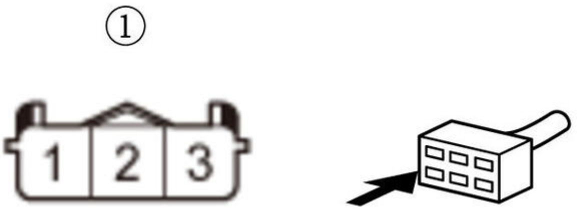

 -4. Turn the vehicle to the ON mode.

 -5. Check the parameter (s) below with the HDS.

Signal	Threshold		Current conditions	
	Values	Unit	Values	Unit
MAP Sensor Voltage	More than 4.49	V	B	B

Do the current condition (s) match the threshold?

YES

Go to step 3.

NO

Replace the MAP sensor .

3. Determine possible failure area (SG1 line, others)

-1. Turn the vehicle to the OFF (LOCK) mode.

-2. Remove the jumper wire from the MAP sensor 3P connector.

-3. Turn the vehicle to the ON mode.

-4. Measure the voltage between test points 1 and 2.

Test condition	Vehicle ON mode
B	MAP sensor 3P connector: disconnected
Test point 1	MAP sensor 3P connector (female terminals) No. 1: ①
Test point 2	MAP sensor 3P connector (female terminals) No. 3: ①

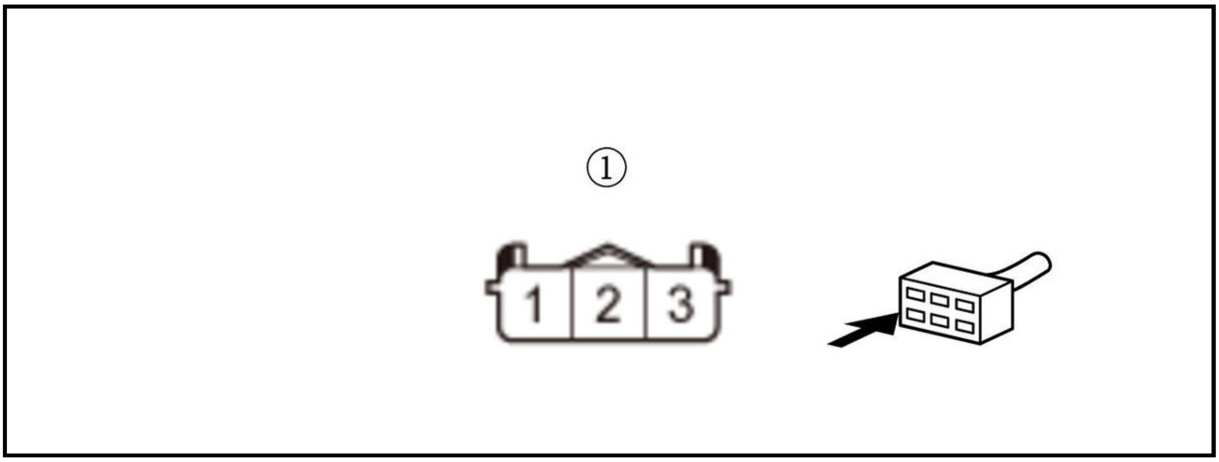

Is there about 5.0 V?

YES

Go to step 5.

NO

Go to step 4.

4. Open wire check (SG1 line)

-1. Turn the vehicle to the OFF (LOCK) mode.

-2. Jump the SCS line with the HDS, and wait more than 1 minute.

-3. Disconnect the following connector.

PCM connector E (80P)

-4. Measure the resistance between test points 1 and 2.

Test condition	Vehicle OFF (LOCK) mode
B	MAP sensor 3P connector: disconnected
B	PCM connector E (80P) : disconnected
Test point 1	MAP sensor 3P connector (female terminals) No. 1: ①
Test point 2	**PCM connector E (80P) No. 71**

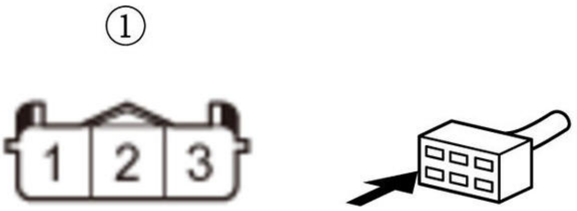

Is there 1.0 Ω or less?

YES

The SG1 wire is OK. Check for any authorized service information related to the DTCs or symptoms you are troubleshooting, or **substitute a known-good PCM** .

NO

Repair an open in the SG1 wire between the PCM (E71) and the MAP sensor.

5. Open wire check (MAP (PB) line)

-1. Turn the vehicle to the OFF (LOCK) mode.

-2. Jump the SCS line with the HDS, and wait more than 1 minute.

-3. Disconnect the following connector.

PCM connector E (80P)

-4. Measure the resistance between test points 1 and 2.

Test condition	Vehicle OFF (LOCK) mode
B	MAP sensor 3P connector: disconnected
B	PCM connector E (80P) : disconnected
Test point 1	MAP sensor 3P connector (female terminals) No. 2: ①
Test point 2	**PCM connector E (80P) No. 56**

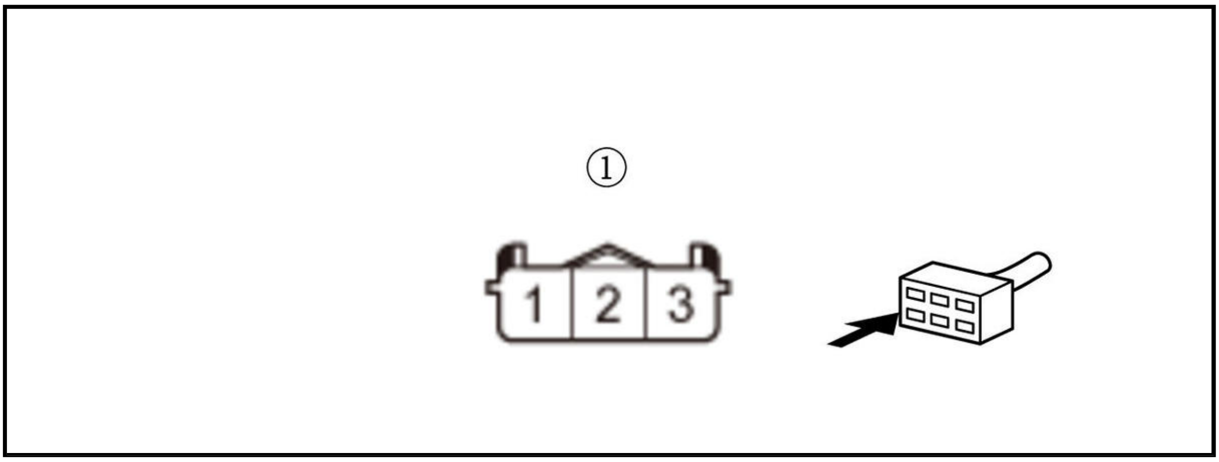

Is there 1.0 Ω or less?

YES

The MAP (PB) wire is OK. Check for any authorized service information related to the DTCs or symptoms you are troubleshooting, or **substitute a known-good PCM** .

NO

Repair an open in the MAP (PB) wire between the PCM (E56) and the MAP sensor.

DTC P0111

DTC P0111 : IAT Sensor 1 Circuit Range/Performance Problem

NOTE: Before you troubleshoot, **review the general troubleshooting information**.

DTC Description	Confirmed DTC	Pending DTC
P0111 IAT Sensor 1 Circuit Range/Performance Problem	B	B

DTC (PGM-FI)

1. Problem verification

   -1. Turn the vehicle to the ON mode.

   -2. Check the parameter (s) below with the HDS.

Signal	Threshold		Current conditions	
	Values	Unit	Values	Unit
IAT Sensor (1) Voltage	Less than 0.28	V	B	B

   Do the current condition (s) match the threshold?

   YES

   The failure is duplicated. Go to step 2.

   NO

   Intermittent failure, the system is OK at this time. Check for poor connections or loose terminals at MAF sensor/IAT sensor 1 and the PCM. **If the on-board snapshot of this DTC is recorded, try to reproduce the failure under the same conditions with the on-board snapshot**.

2. Determine possible failure area (MAF sensor/IAT sensor 1, others)

-1. Turn the vehicle to the OFF (LOCK) mode.

-2. Disconnect the following connector.

MAF sensor/IAT sensor 1 5P connector

-3. Turn the vehicle to the ON mode.

-4. Check the parameter (s) below with the HDS.

Signal	**Threshold**		**Current conditions**	
	Values	**Unit**	**Values**	**Unit**
IAT Sensor (1) Voltage	Less than 0.28	V	B	B

Do the current condition (s) match the threshold?

YES

Go to step 3.

NO

Replace MAF sensor/IAT sensor 1 .

3. Shorted wire check (TA line)

-1. Turn the vehicle to the OFF (LOCK) mode.

-2. Jump the SCS line with the HDS, and wait more than 1 minute.

-3. Disconnect the following connector.

PCM connector E (80P)

-4. Measure the resistance between test points 1 and 2.

Test condition	Vehicle OFF (LOCK) mode
B	MAF sensor/IAT sensor 1 5P connector: disconnected
B	PCM connector E (80P) : disconnected
Test point 1	MAF sensor/IAT sensor 1 5P connector (female terminals) No. 4: ①
Test point 2	Body ground

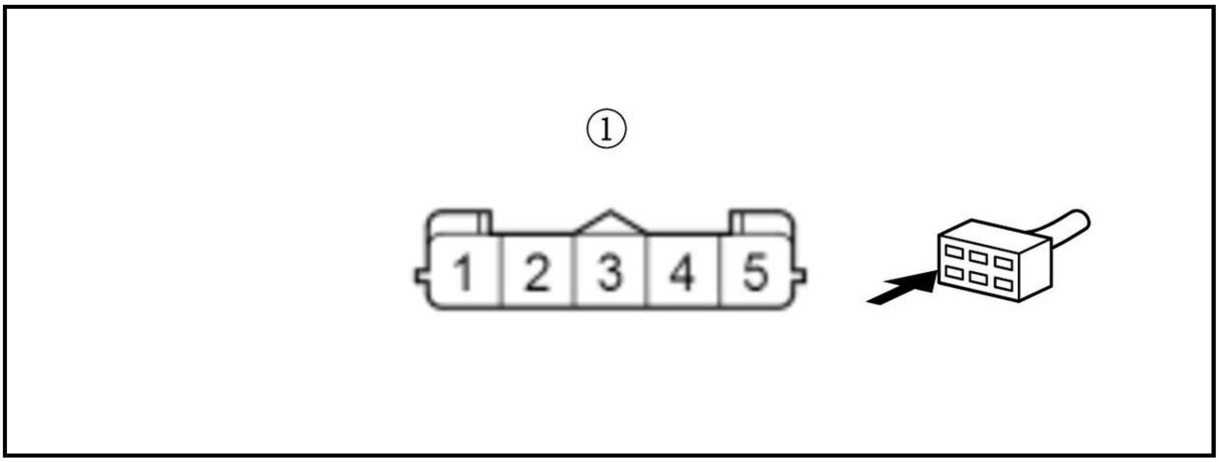

Is there 1 MΩ or more?

YES

The TA wire is OK. Check for any authorized service information related to the DTCs or symptoms you are troubleshooting, or **substitute a known-good PCM** .

NO

Repair a short in the TA wire between the PCM (E53) and MAF sensor/IAT sensor 1.

DTC P0112

DTC P0112 : IAT Sensor 1 Circuit Low Voltage

NOTE: Before you troubleshoot, **review the general troubleshooting information**.

DTC Description	Confirmed DTC	Pending DTC
P0112 IAT Sensor 1 Circuit Low Voltage	B	B

DTC (PGM-FI)

1. Problem verification

   -1. Turn the vehicle to the ON mode.

   -2. Check the parameter (s) below with the HDS.

Signal	Threshold		Current conditions	
	Values	Unit	Values	Unit
IAT Sensor (1) Voltage	Less than 0.08	V	B	B

   Do the current condition (s) match the threshold?

   YES

   The failure is duplicated. Go to step 2.

   NO

   Intermittent failure, the system is OK at this time. Check for poor connections or loose terminals at MAF sensor/IAT sensor 1 and the PCM. **If the on-board snapshot of this DTC is recorded, try to reproduce the failure under the same conditions with the on-board snapshot**.

2. Determine possible failure area (MAF sensor/IAT sensor 1, others)

   -1. Turn the vehicle to the OFF (LOCK) mode.

   -2. Disconnect the following connector.

MAF sensor/IAT sensor 1 5P connector

   -3. Turn the vehicle to the ON mode.

   -4. Check the parameter (s) below with the HDS.

Signal	Threshold		Current conditions	
	Values	Unit	Values	Unit
IAT Sensor (1) Voltage	Less than 0.08	V	B	B

Do the current condition (s) match the threshold?

YES

Go to step 3.

NO

Replace MAF sensor/IAT sensor 1 .

3. Shorted wire check (TA line)

-1. Turn the vehicle to the OFF (LOCK) mode.

-2. Jump the SCS line with the HDS, and wait more than 1 minute.

-3. Disconnect the following connector.

PCM connector E (80P)

-4. Measure the resistance between test points 1 and 2.

Test condition	Vehicle OFF (LOCK) mode
B	MAF sensor/IAT sensor 1 5P connector: disconnected
B	PCM connector E (80P) : disconnected
Test point 1	MAF sensor/IAT sensor 1 5P connector (female terminals) No. 4: ①
Test point 2	Body ground

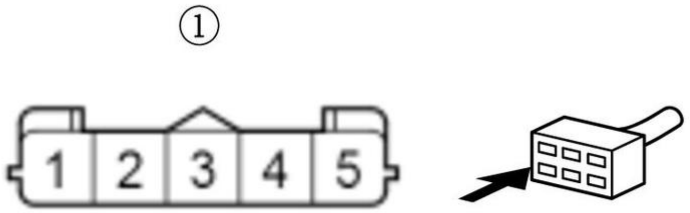

Is there 1 MΩ or more?

YES

The TA wire is OK. Check for any authorized service information related to the DTCs or symptoms you are troubleshooting, or **substitute a known-good PCM** .

NO

Repair a short in the TA wire between the PCM (E53) and MAF sensor/IAT sensor 1.

DTC P0113

DTC P0113 : IAT Sensor 1 Circuit High Voltage

NOTE: Before you troubleshoot, **review the general troubleshooting information**.

DTC Description	Confirmed DTC	Pending DTC
P0113 IAT Sensor 1 Circuit High Voltage	B	B

DTC (PGM-FI)

1. Problem verification

   -1. Turn the vehicle to the ON mode.

   -2. Check the parameter (s) below with the HDS.

Signal	Threshold		Current conditions	
	Values	Unit	Values	Unit
IAT Sensor (1) Voltage	More than 4.92	V	B	B

   Do the current condition (s) match the threshold?

   YES

   The failure is duplicated. Go to step 2.

   NO

   Intermittent failure, the system is OK at this time. Check for poor connections or loose terminals at MAF sensor/IAT sensor 1 and the PCM. **If the on-board snapshot of this DTC is recorded, try to reproduce the failure under the same conditions with the on-board snapshot**.

2. Determine possible failure area (MAF sensor/IAT sensor 1, others)

   -1. Turn the vehicle to the OFF (LOCK) mode.

   -2. Disconnect the following connector.

MAF sensor/IAT sensor 1 5P connector

   -3. Connect terminals A and B with a jumper wire.

Terminal A	MAF sensor/IAT sensor 1 5P connector (female terminals) No. 4: ①
Terminal B	MAF sensor/IAT sensor 1 5P connector (female terminals) No. 5: ①

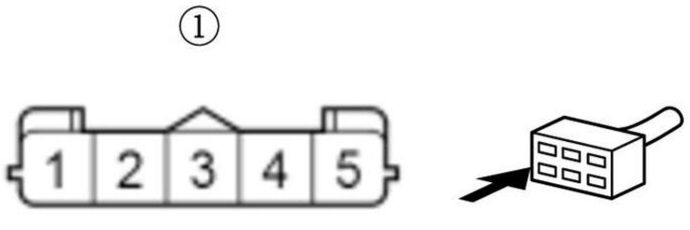

   -4. Turn the vehicle to the ON mode.

-5. Check the parameter (s) below with the HDS.

Signal	Threshold		Current conditions	
	Values	Unit	Values	Unit
IAT Sensor (1) Voltage	More than 4.92	V	B	B

Do the current condition (s) match the threshold?

YES

Go to step 3.

NO

Replace MAF sensor/IAT sensor 1 .

3. Determine possible failure area (TA line, others)

-1. Turn the vehicle to the OFF (LOCK) mode.

-2. Remove the jumper wire from the MAF sensor/IAT sensor 1 5P connector.

-3. Turn the vehicle to the ON mode.

-4. Measure the voltage between test points 1 and 2.

Test condition	Vehicle ON mode
B	MAF sensor/IAT sensor 1 5P connector: disconnected
Test point 1	MAF sensor/IAT sensor 1 5P connector (female terminals) No. 4: ①
Test point 2	Body ground

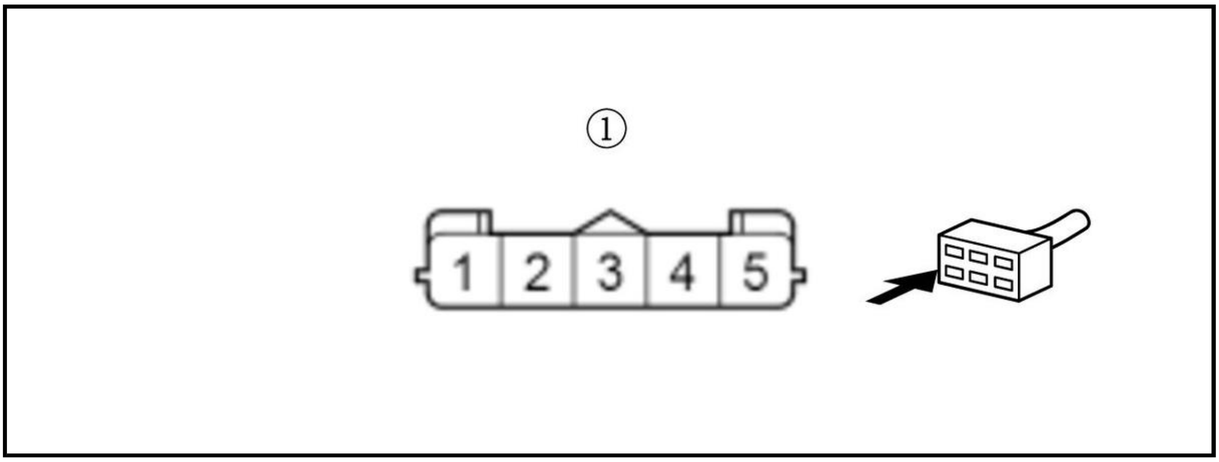

Is there about 5.0 V?

YES

Go to step 4.

NO

Go to step 5.

4. Open wire check (SG2 line)

-1. Turn the vehicle to the OFF (LOCK) mode.

-2. Jump the SCS line with the HDS, and wait more than 1 minute.

-3. Disconnect the following connector.

PCM connector E (80P)

-4. Measure the resistance between test points 1 and 2.

Test condition	Vehicle OFF (LOCK) mode
B	MAF sensor/IAT sensor 1 5P connector: disconnected
B	PCM connector E (80P) : disconnected
Test point 1	MAF sensor/IAT sensor 1 5P connector (female terminals) No. 5: ①
Test point 2	**PCM connector E (80P) No. 78**

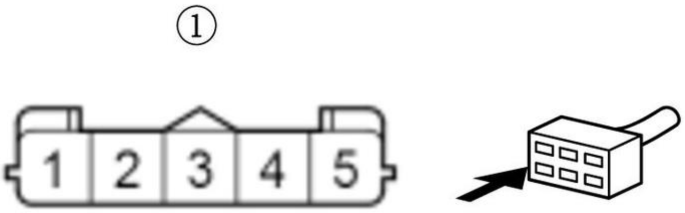

Is there 1.0 Ω or less?

YES

The SG2 wire is OK. Check for any authorized service information related to the DTCs or symptoms you are troubleshooting, or **substitute a known-good PCM** .

NO

Repair an open in the SG2 wire between the PCM (E78) and MAF sensor/IAT sensor 1.

5. Open wire check (TA line)

-1. Turn the vehicle to the OFF (LOCK) mode.

-2. Jump the SCS line with the HDS, and wait more than 1 minute.

-3. Disconnect the following connector.

PCM connector E (80P)

-4. Measure the resistance between test points 1 and 2.

Test condition	Vehicle OFF (LOCK) mode
B	MAF sensor/IAT sensor 1 5P connector: disconnected
B	PCM connector E (80P) : disconnected
Test point 1	MAF sensor/IAT sensor 1 5P connector (female terminals) No. 4: ①
Test point 2	**PCM connector E (80P) No. 53**

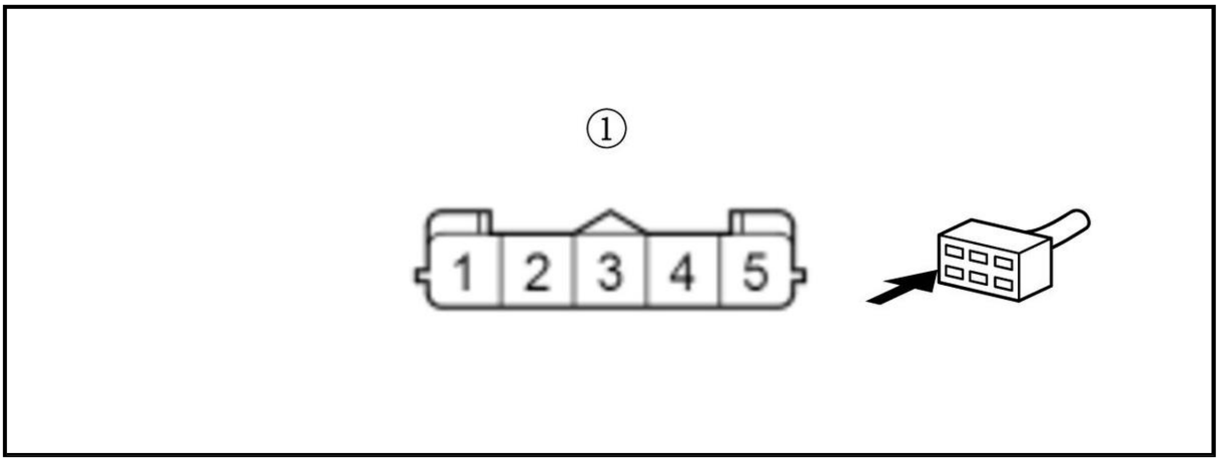

Is there 1.0 Ω or less?

YES

The TA wire is OK. Check for any authorized service information related to the DTCs or symptoms you are troubleshooting, or **substitute a known-good PCM** .

NO

Repair an open in the TA wire between the PCM (E53) and MAF sensor/IAT sensor 1.

DTC P0115

DTC P0115 : ECT Sensor 1 Out of Range

NOTE: Before you troubleshoot, **review the general troubleshooting information**.

DTC Description	Confirmed DTC	Pending DTC
P0115 ECT Sensor 1 Out of Range	B	B

DTC (PGM-FI)

1. Problem verification

   -1. Turn the vehicle to the ON mode.

   -2. Check the parameter (s) below with the HDS.

Signal	Threshold		Current conditions	
	Values	Unit	Values	Unit
ECT Sensor 1 Voltage	Less than 0.14	V	B	B

   Do the current condition (s) match the threshold?

   YES

   The failure is duplicated. Go to step 2.

   NO

   Intermittent failure, the system is OK at this time. Check for poor connections or loose terminals at ECT sensor 1 and the PCM. **If the on-board snapshot of this DTC is recorded, try to reproduce the failure under the same conditions with the on-board snapshot**.

2. Determine possible failure area (ECT sensor 1, others)

-1. Turn the vehicle to the OFF (LOCK) mode.

-2. Disconnect the following connector.

ECT sensor 1 2P connector

-3. Turn the vehicle to the ON mode.

-4. Check the parameter (s) below with the HDS.

Signal	Threshold		Current conditions	
	Values	**Unit**	**Values**	**Unit**
ECT Sensor 1 Voltage	Less than 0.14	V	B	B

Do the current condition (s) match the threshold?

YES

Go to step 3.

NO

Replace ECT sensor 1 .

3. Shorted wire check (TW line)

-1. Turn the vehicle to the OFF (LOCK) mode.

-2. Jump the SCS line with the HDS, and wait more than 1 minute.

-3. Disconnect the following connector.

PCM connector E (80P)

-4. Measure the resistance between test points 1 and 2.

Test condition	Vehicle OFF (LOCK) mode
B	ECT sensor 1 2P connector: disconnected
B	PCM connector E (80P) : disconnected
Test point 1	ECT sensor 1 2P connector (female terminals) No. 2: ①
Test point 2	Body ground

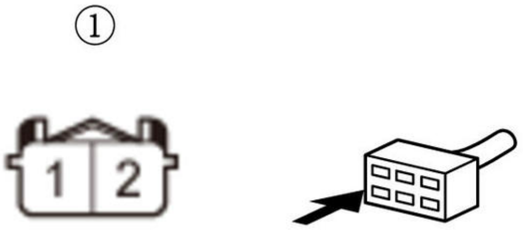

Is there 1 MΩ or more?

YES

The TW wire is OK. Check for any authorized service information related to the DTCs or symptoms you are troubleshooting, or **substitute a known-good PCM** .

NO

Repair a short in the TW wire between the PCM (E52) and ECT sensor 1.

DTC P0116

DTC P0116 : ECT Sensor 1 Circuit Range/Performance Problem

NOTE: Before you troubleshoot, **review the general troubleshooting information**.

DTC Description	Confirmed DTC	Pending DTC
P0116 ECT Sensor 1 Circuit Range/Performance Problem	B	B

DTC (PGM-FI)

1. ECT sensor 1 check

-1. Turn the vehicle to the ON mode.

-2. Check the parameter (s) below with the HDS.

Signal	Threshold		Current conditions	
	Values	Unit	Values	Unit
ECT Sensor 1	More than 80	deg.C	B	B
	More than 176	deg.F		

Do the current condition (s) match the threshold?

YES

Note the value of ECT SENSOR 1, then go to step 3.

NO

Note the value of ECT SENSOR 1, then go to step 2.

2. Problem verification (low temperature)

-1. **Enter the maintenance mode, then start the engine** .

-2. Hold the engine speed at 3, 000 rpm without load (in P or N) until the radiator fan comes on, then let it idle.

-3. Check the parameter (s) below with the HDS.

Signal	Current conditions	
	Values	Unit
ECT Sensor 1	B	B

Does ECT Sensor 1 change 18 deg.F (10 deg.C) or more?

YES

Intermittent failure, the system is OK at this time. Check for poor connections or loose terminals at ECT sensor 1 and the PCM. **If the on-board snapshot of this DTC is recorded, try to reproduce the failure under the same conditions with the on-board snapshot**.

NO

The failure is duplicated. **Replace ECT sensor 1** .

3. Problem verification (high temperature)

-1. Turn the vehicle to the OFF (LOCK) mode.

-2. Open the hood, and let the engine cool for 3 hours.

-3. Turn the vehicle to the ON mode.

-4. Check the parameter (s) below with the HDS.

Signal	Current conditions	
	Values	Unit
ECT Sensor 1	B	B

Does ECT Sensor 1 change 18 deg.F (10 deg.C) or more?

YES

Intermittent failure, the system is OK at this time. Check for poor connections or loose terminals at ECT sensor 1 and the PCM. **If the on-board snapshot of this DTC is recorded, try to reproduce the failure under the same conditions with the on-board snapshot**.

NO

The failure is duplicated. **Replace ECT sensor 1** .

DTC P0117

DTC P0117 : ECT Sensor 1 Circuit Low Voltage

NOTE: Before you troubleshoot, **review the general troubleshooting information**.

DTC Description	Confirmed DTC	Pending DTC
P0117 ECT Sensor 1 Circuit Low Voltage	B	B

DTC (PGM-FI)

1. Problem verification

-1. Turn the vehicle to the ON mode.

-2. Check the parameter (s) below with the HDS.

Signal	Threshold		Current conditions	
	Values	Unit	Values	Unit
ECT Sensor 1 Voltage	Less than 0.08	V	B	B

Do the current condition (s) match the threshold?

YES

The failure is duplicated. Go to step 2.

NO

Intermittent failure, the system is OK at this time. Check for poor connections or loose terminals at ECT sensor 1 and the PCM. **If the on-board snapshot of this DTC is recorded, try to reproduce the failure under the same conditions with the on-board snapshot**.

2. Determine possible failure area (ECT sensor 1, others)

-1. Turn the vehicle to the OFF (LOCK) mode.

-2. Disconnect the following connector.

ECT sensor 1 2P connector

-3. Turn the vehicle to the ON mode.

-4. Check the parameter (s) below with the HDS.

Signal	Threshold		Current conditions	
	Values	**Unit**	**Values**	**Unit**
ECT Sensor 1 Voltage	Less than 0.08	V	B	B

Do the current condition (s) match the threshold?

YES

Go to step 3.

NO

Replace ECT sensor 1 .

3. Shorted wire check (TW line)

-1. Turn the vehicle to the OFF (LOCK) mode.

-2. Jump the SCS line with the HDS, and wait more than 1 minute.

-3. Disconnect the following connector.

PCM connector E (80P)

-4. Measure the resistance between test points 1 and 2.

Test condition	Vehicle OFF (LOCK) mode
B	ECT sensor 1 2P connector: disconnected
B	PCM connector E (80P) : disconnected
Test point 1	ECT sensor 1 2P connector (female terminals) No. 2: ①
Test point 2	Body ground

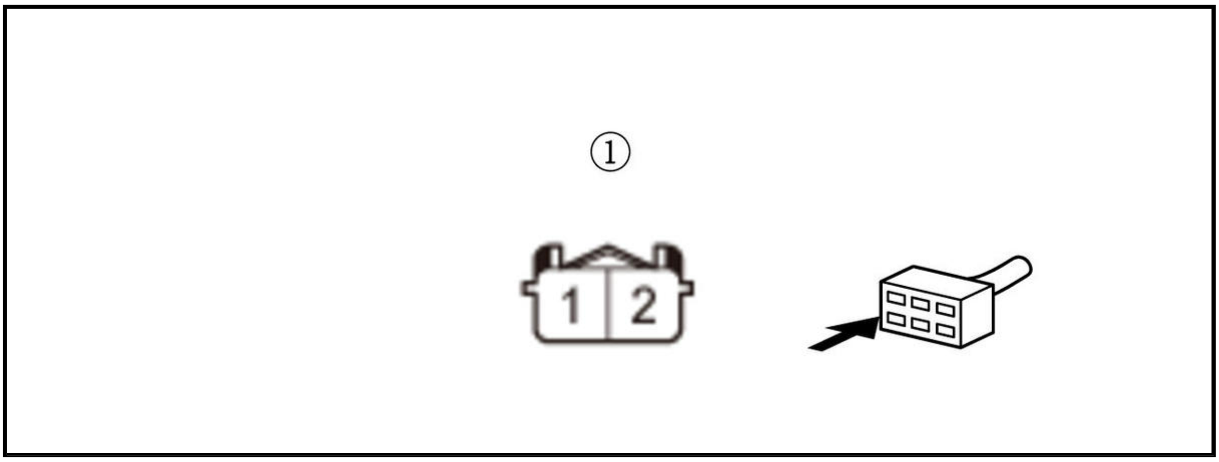

Is there 1 MΩ or more?

YES

The TW wire is OK. Check for any authorized service information related to the DTCs or symptoms you are troubleshooting, or **substitute a known-good PCM** .

NO

Repair a short in the TW wire between the PCM (E52) and ECT sensor 1.

DTC P0118

DTC P0118 : ECT Sensor 1 Circuit High Voltage

NOTE: Before you troubleshoot, **review the general troubleshooting information**.

DTC Description	Confirmed DTC	Pending DTC
P0118 ECT Sensor 1 Circuit High Voltage	B	B

DTC (PGM-FI)

1. Problem verification

   -1. Turn the vehicle to the ON mode.

   -2. Check the parameter (s) below with the HDS.

Signal	Threshold		Current conditions	
	Values	Unit	Values	Unit
ECT Sensor 1 Voltage	More than 4.92	V	B	B

   Do the current condition (s) match the threshold?

   YES

   The failure is duplicated. Go to step 2.

   NO

   Intermittent failure, the system is OK at this time. Check for poor connections or loose terminals at ECT sensor 1 and the PCM. **If the on-board snapshot of this DTC is recorded, try to reproduce the failure under the same conditions with the on-board snapshot**.

2. Determine possible failure area (ECT sensor 1, others)

-1. Turn the vehicle to the OFF (LOCK) mode.

-2. Disconnect the following connector.

ECT sensor 1 2P connector

-3. Connect terminals A and B with a jumper wire.

Terminal A	ECT sensor 1 2P connector (female terminals) No. 1: ①
Terminal B	ECT sensor 1 2P connector (female terminals) No. 2: ①

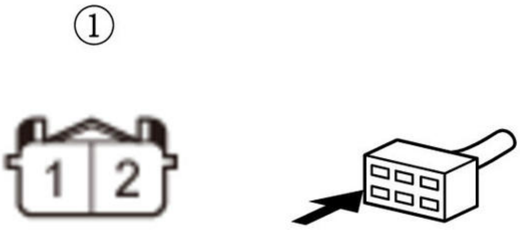

-4. Turn the vehicle to the ON mode.

-5. Check the parameter (s) below with the HDS.

Signal	**Threshold**		**Current conditions**	
	Values	**Unit**	**Values**	**Unit**
ECT Sensor 1 Voltage	More than 4.92	V	B	B

Do the current condition (s) match the threshold?

YES

Go to step 3.

NO

Replace ECT sensor 1 .

3. Determine possible failure area (TW line, others)

-1. Turn the vehicle to the OFF (LOCK) mode.

-2. Remove the jumper wire from ECT sensor 1 2P connector.

-3. Turn the vehicle to the ON mode.

-4. Measure the voltage between test points 1 and 2.

Test condition	Vehicle ON mode
B	ECT sensor 1 2P connector: disconnected
Test point 1	ECT sensor 1 2P connector (female terminals) No. 2: ①

Test point 2	Body ground

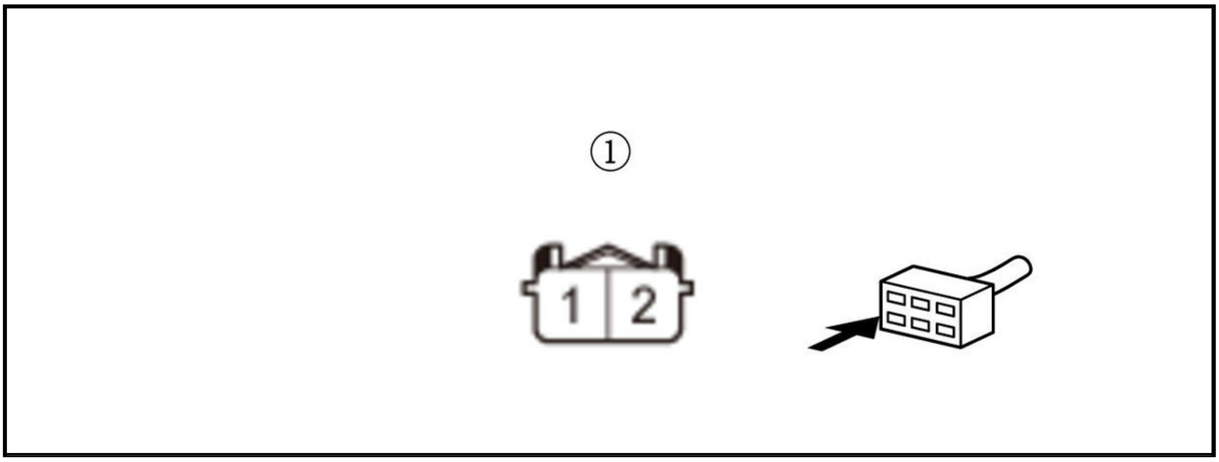

Is there about 5.0 V?

YES

Go to step 4.

NO

Go to step 5.

4. Open wire check (SG2 line)

-1. Turn the vehicle to the OFF (LOCK) mode.

-2. Jump the SCS line with the HDS, and wait more than 1 minute.

-3. Disconnect the following connector.

PCM connector E (80P)

-4. Measure the resistance between test points 1 and 2.

Test condition	Vehicle OFF (LOCK) mode
B	ECT sensor 1 2P connector: disconnected
B	PCM connector E (80P) : disconnected
Test point 1	ECT sensor 1 2P connector (female terminals) No. 1: ①
Test point 2	**PCM connector E (80P) No. 78**

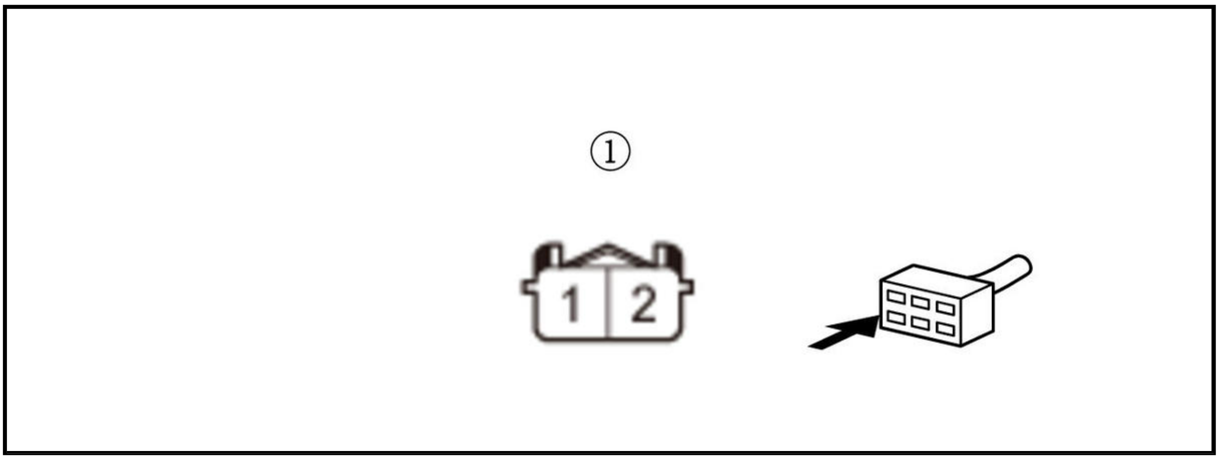

Is there 1.0 Ω or less?

YES

The SG2 wire is OK. Check for any authorized service information related to the DTCs or symptoms you are troubleshooting, or **substitute a known-good PCM** .

NO

Repair an open in the SG2 wire between the PCM (E78) and ECT sensor 1.

5. Open wire check (TW line)

-1. Turn the vehicle to the OFF (LOCK) mode.

-2. Jump the SCS line with the HDS, and wait more than 1 minute.

-3. Disconnect the following connector.

PCM connector E (80P)

-4. Measure the resistance between test points 1 and 2.

Test condition	Vehicle OFF (LOCK) mode
B	ECT sensor 1 2P connector: disconnected
B	PCM connector E (80P) : disconnected
Test point 1	ECT sensor 1 2P connector (female terminals) No. 2: ①
Test point 2	**PCM connector E (80P) No. 52**

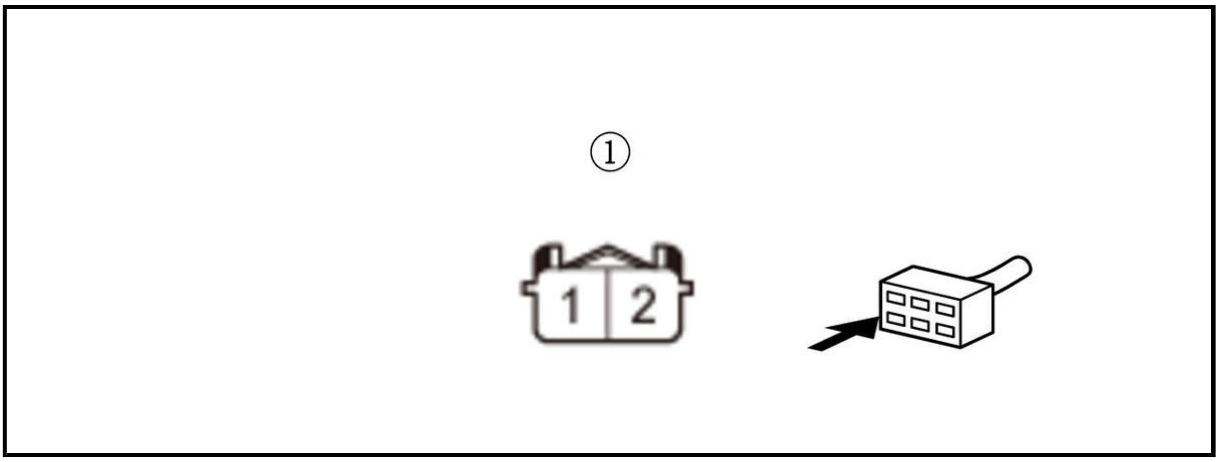

Is there 1.0 Ω or less?

YES

The TW wire is OK. Check for any authorized service information related to the DTCs or symptoms you are troubleshooting, or **substitute a known-good PCM** .

NO

Repair an open in the TW wire between the PCM (E52) and ECT sensor 1.

DTC P011A

DTC P011A : ECT Sensor 1 Circuit Range/Performance Problem

NOTE: Before you troubleshoot, **review the general troubleshooting information**.

DTC Description	Confirmed DTC	Pending DTC
P011A ECT Sensor1 Circuit Range/Performance Problem	B	B

DTC (PGM-FI)

1. Connector visual check:

   Check for poor connections or loose terminals of these connectors.

   - ECT sensor 1
   - ECT sensor 2
   - MAF sensor/IAT sensor 1

   Are the connections and terminals OK?

   YES

   Replace ECT sensor 1 .

   NO

   Repair the connections or terminals, then recheck.

DTC P011B

DTC P011B : IAT Sensor 1 Circuit Range/Performance Problem

NOTE: Before you troubleshoot, **review the general troubleshooting information**.

DTC Description	Confirmed DTC	Pending DTC
P011B IAT Sensor 1 Circuit Range/Performance Problem	B	B

DTC (PGM-FI)

1. Connector visual check:

   Check for poor connections or loose terminals at these locations:

   - MAF sensor/IAT sensor 1
   - ECT sensor 1
   - ECT sensor 2

   Are the connections and terminals OK?

   YES

   Go to step 2.

   NO

   Repair the connections or terminals.

2. IAT sensor performance check (low temperature)

   -1. **Remove MAF sensor/IAT sensor 1** .

   -2. Allow MAF sensor/IAT sensor 1 to cool to the ambient temperature.

-3. Note the ambient temperature.

-4. Connect MAF sensor/IAT sensor 1 to its 5P connector, but do not install it.

-5. Turn the vehicle to the ON mode.

-6. Quickly note the value of IAT Sensor (1) in the DATA LIST with the HDS.

Signal	Current conditions	
	Values	**Unit**
IAT Sensor (1)	B	B

-7. Compare the value of IAT Sensor (1) to the ambient temperature.

Does the value of IAT Sensor (1) differ 5.4 deg.F (3 deg.C) or more from the ambient temperature?

YES

Replace MAF sensor/IAT sensor 1 .

NO

Go to step 3.

3. IAT sensor performance check (high temperature)

-1. Turn the vehicle to the OFF (LOCK) mode.

-2. Disconnect the following connector.

MAF sensor/IAT sensor 1 5P connector

-3. Using a heat gun, blow hot air on MAF sensor/IAT sensor 1 for a few seconds. Do not apply the heat longer than a few seconds or you will damage the sensor.

-4. Connect MAF sensor/IAT sensor 1 to its 5P connector, but do not install it.

-5. Check the parameter (s) below with the HDS.

Signal	Current conditions	
	Values	**Unit**
IAT Sensor (1)	B	B

Does IAT Sensor (1) change 76 deg.F (42 deg.C) or more?

YES

Intermittent failure, the system is OK at this time. Check for poor connections or loose terminals at MAF sensor/IAT sensor 1 and the PCM. **If the on-board snapshot of this DTC is recorded, try to reproduce the failure under the same conditions with the on-board snapshot**.

NO

Replace MAF sensor/IAT sensor 1 .

DTC P0121

DTC P0121 : TP Sensor A Out of Range

NOTE: Before you troubleshoot, **review the general troubleshooting information**.

DTC Description	Confirmed DTC	Pending DTC
P0121 TP Sensor A Out of Range	B	B

DTC (PGM-FI)

1. Problem verification 1

   -1. Turn the vehicle to the ON mode.

   -2. Clear the DTC with the HDS.

   -3. Check the parameter (s) below with the HDS.

Signal	Threshold		Current conditions	
	Values	Unit	Values	Unit
TP Sensor A	Less than 0.37	V	B	B

   Do the current condition (s) match the threshold?

   YES

   The failure is duplicated. Go to step 3.

   NO

   Go to step 2.

2. Problem verification 2

   -1. Check the parameter (s) below with the HDS.

Signal	Threshold		Current conditions	
	Values	Unit	Values	Unit
TP Sensor A	More than 4.50	V	B	B

   Do the current condition (s) match the threshold?

   YES

   The failure is duplicated. Go to step 7.

   NO

   Intermittent failure, the system is OK at this time. Check for poor connections or loose terminals at the throttle body and the PCM. **If the on-board snapshot of this DTC is recorded, try to reproduce the failure under the same conditions with the on-board snapshot**.

3. Determine possible failure area (THL1 line, others)

   -1. Check for Pending or Confirmed DTCs with the HDS.

DTC Description	Confirmed DTC	Pending DTC
P0121 TP Sensor A Out of Range	B	B
P0221 TP Sensor B Out of Range	B	B

   Are DTC P0121 and P0221 indicated at the same time?

YES

Go to step 5.

NO

Go to step 4.

4. Shorted wire check (THL1 line)

-1. Turn the vehicle to the OFF (LOCK) mode.

-2. Jump the SCS line with the HDS, and wait more than 1 minute.

-3. Disconnect the following connectors.

PCM connector E (80P)
Throttle body 6P connector

-4. Measure the resistance between test points 1 and 2.

Test condition	Vehicle OFF (LOCK) mode
B	PCM connector E (80P) : disconnected
B	Throttle body 6P connector: disconnected
Test point 1	Throttle body 6P connector (female terminals) No. 6: ①
Test point 2	Body ground

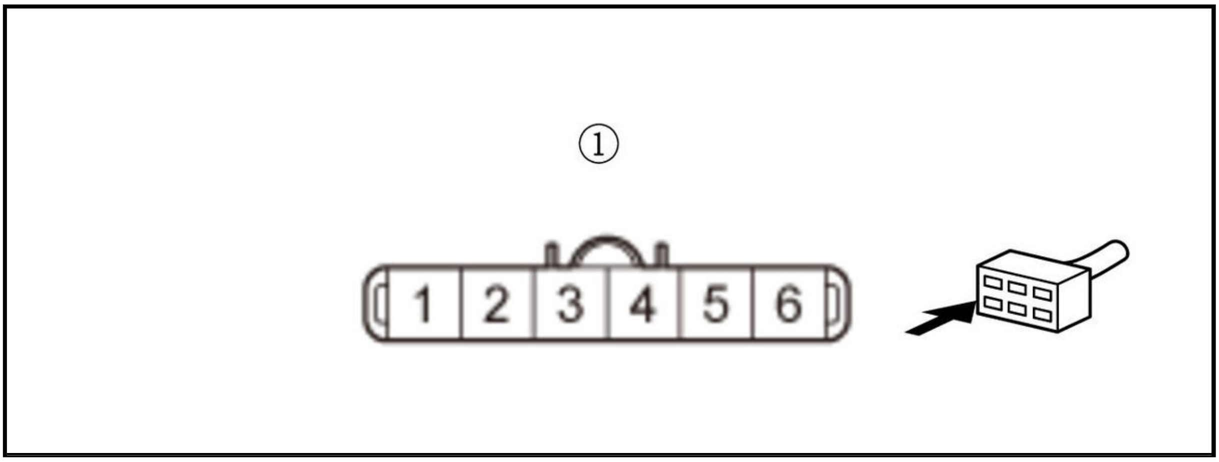

Is there 1 MΩ or more?

YES

The THL1 wire is OK. Check for any authorized service information related to the DTCs or symptoms you are troubleshooting, or **substitute a known-good PCM** .

NO

Repair a short in the THL1 wire between the PCM (E50) and the throttle body.

5. Determine possible failure area (throttle body, others)

-1. Turn the vehicle to the OFF (LOCK) mode.

-2. Disconnect the following connector.

Throttle body 6P connector

-3. Turn the vehicle to the ON mode.

-4. Measure the voltage between test points 1 and 2.

Test condition	Vehicle ON mode
B	Throttle body 6P connector: disconnected
Test point 1	Throttle body 6P connector (female terminals) No. 5: ①
Test point 2	Body ground

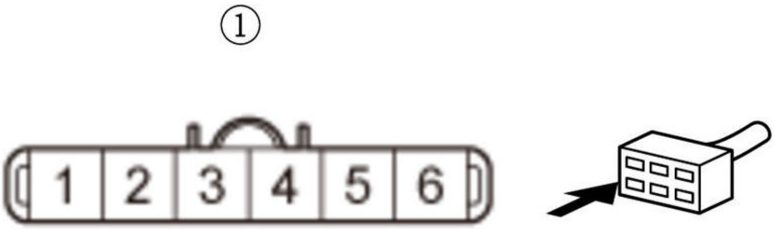

Is there about 5.0 V?

YES

Replace the throttle body .

NO

Go to step 6.

6. Open wire check (VCC3 (DBW) line)

-1. Turn the vehicle to the OFF (LOCK) mode.

-2. Jump the SCS line with the HDS, and wait more than 1 minute.

-3. Disconnect the following connector.

PCM connector E (80P)

-4. Measure the resistance between test points 1 and 2.

Test condition	Vehicle OFF (LOCK) mode
B	Throttle body 6P connector: disconnected
B	PCM connector E (80P) : disconnected
Test point 1	Throttle body 6P connector (female terminals) No. 5: ①
Test point 2	**PCM connector E (80P) No. 75**

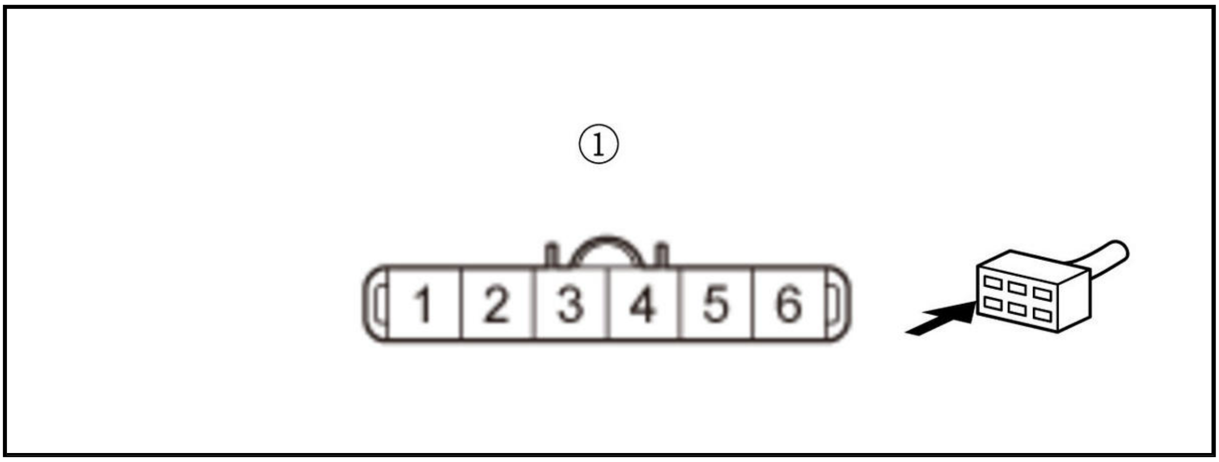

Is there 1.0 Ω or less?

YES

The VCC3 (DBW) wire is OK. Check for any authorized service information related to the DTCs or symptoms you are troubleshooting, or **substitute a known-good PCM** .

NO

Repair an open in the VCC3 (DBW) wire between the PCM (E75) and the throttle body.

7. Determine possible failure area (SG3 (DBW) line, others)

-1. Check for Pending or Confirmed DTCs with the HDS.

DTC Description	Confirmed DTC	Pending DTC
P0121 TP Sensor A Out of Range	B	B
P0221 TP Sensor B Out of Range	B	B

Are DTC P0121 and P0221 indicated at the same time?

YES

Go to step 10.

NO

Go to step 8.

8. Determine possible failure area (throttle body, others)

-1. Turn the vehicle to the OFF (LOCK) mode.

-2. Disconnect the following connector.

Throttle body 6P connector

-3. Turn the vehicle to the ON mode.

-4. Measure the voltage between test points 1 and 2.

Test condition	Vehicle ON mode
B	Throttle body 6P connector: disconnected
Test point 1	Throttle body 6P connector (female terminals) No. 6: ①

Test point 2	Body ground

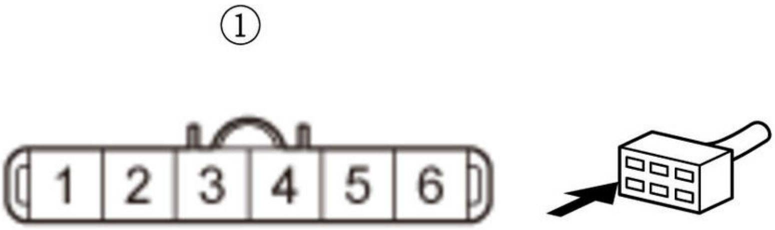

Is there about 5.0 V?

YES

Replace the throttle body .

NO

Go to step 9.

9. Open wire check (THL1 line)

-1. Turn the vehicle to the OFF (LOCK) mode.

-2. Jump the SCS line with the HDS, and wait more than 1 minute.

-3. Disconnect the following connector.

PCM connector E (80P)

-4. Measure the resistance between test points 1 and 2.

Test condition	Vehicle OFF (LOCK) mode
B	Throttle body 6P connector: disconnected
B	PCM connector E (80P) : disconnected
Test point 1	Throttle body 6P connector (female terminals) No. 6: ①
Test point 2	PCM connector E (80P) No. 50

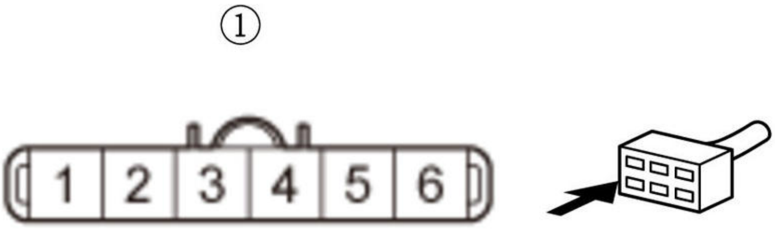

Is there 1.0 Ω or less?

YES

The THL1 wire is OK. Check for any authorized service information related to the DTCs or symptoms you are troubleshooting, or **substitute a known-good PCM** .

NO

Repair an open in the THL1 wire between the PCM (E50) and the throttle body.

10. Open wire check (SG3 (DBW) line)

-1. Turn the vehicle to the OFF (LOCK) mode.

-2. Jump the SCS line with the HDS, and wait more than 1 minute.

-3. Disconnect the following connectors.

PCM connector E (80P)
Throttle body 6P connector

-4. Measure the resistance between test points 1 and 2.

Test condition	Vehicle OFF (LOCK) mode
B	PCM connector E (80P) : disconnected
B	Throttle body 6P connector: disconnected
Test point 1	Throttle body 6P connector (female terminals) No. 3: ①
Test point 2	**PCM connector E (80P) No. 76**

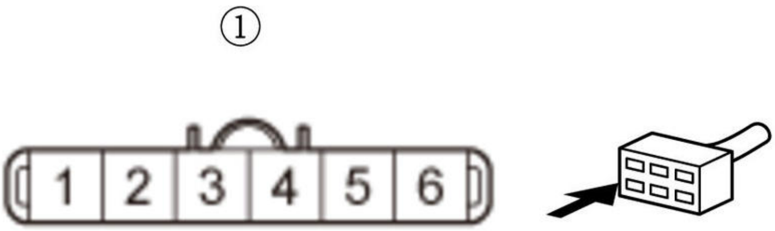

Is there 1.0 Ω or less?

YES

The SG3 (DBW) wire is OK. Check for any authorized service information related to the DTCs or symptoms you are troubleshooting, or **substitute a known-good PCM** .

NO

Repair an open in the SG3 (DBW) wire between the PCM (E76) and the throttle body.

DTC P0122

DTC P0122 : TP Sensor A Circuit Low Voltage

NOTE: Before you troubleshoot, **review the general troubleshooting information**.

DTC Description	Confirmed DTC	Pending DTC
P0122 TP Sensor A Circuit Low Voltage	B	B

DTC (PGM-FI)

1. Problem verification

   -1. Turn the vehicle to the ON mode.

   -2. Clear the DTC with the HDS.

   -3. Check the parameter (s) below with the HDS.

Signal	Threshold		Current conditions	
	Values	Unit	Values	Unit
TP Sensor A	Less than 0.3	V	B	B

   Do the current condition (s) match the threshold?

   YES

   The failure is duplicated. Go to step 2.

   NO

   Intermittent failure, the system is OK at this time. Check for poor connections or loose terminals at the throttle body and the PCM. **If the on-board snapshot of this DTC is recorded, try to reproduce the failure under the same conditions with the on-board snapshot**.

2. Determine possible failure area (THL1 line, others)

   -1. Check for Pending or Confirmed DTCs with the HDS.

DTC Description	Confirmed DTC	Pending DTC
P0122 TP Sensor A Circuit Low Voltage	B	B
P0222 TP Sensor B Circuit Low Voltage	B	B

   Are DTC P0122 and P0222 indicated at the same time?

   YES

   Go to step 4.

   NO

   Go to step 3.

3. Shorted wire check (THL1 line)

   -1. Turn the vehicle to the OFF (LOCK) mode.

   -2. Jump the SCS line with the HDS, and wait more than 1 minute.

   -3. Disconnect the following connectors.

PCM connector E (80P)

Throttle body 6P connector

-4. Measure the resistance between test points 1 and 2.

Test condition	Vehicle OFF (LOCK) mode
B	PCM connector E (80P) : disconnected
B	Throttle body 6P connector: disconnected
Test point 1	Throttle body 6P connector (female terminals) No. 6: ①
Test point 2	Body ground

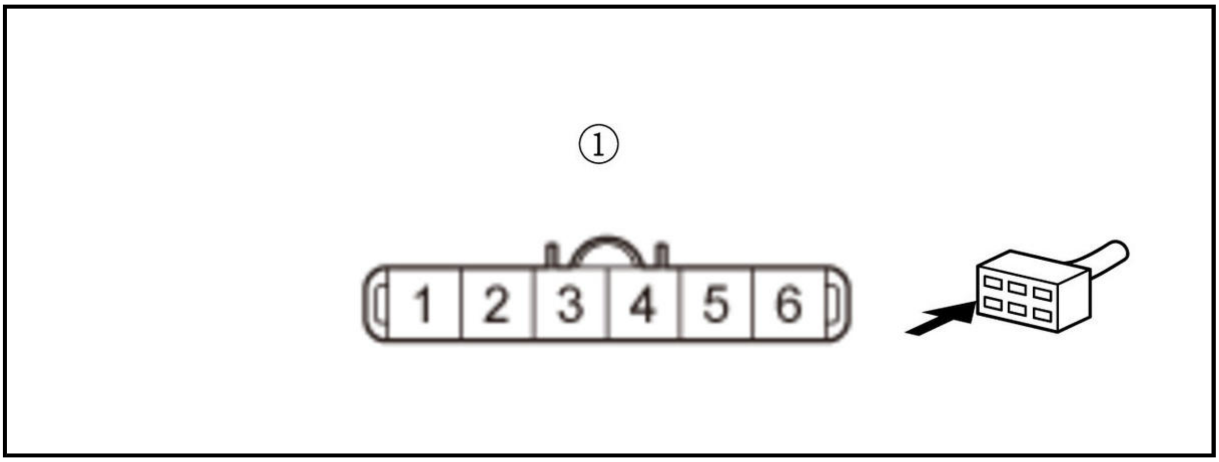

Is there 1 MΩ or more?

YES

The THL1 wire is OK. Check for any authorized service information related to the DTCs or symptoms you are troubleshooting, or **substitute a known-good PCM** .

NO

Repair a short in the THL1 wire between the PCM (E50) and the throttle body.

4. Determine possible failure area (throttle body, others)

-1. Turn the vehicle to the OFF (LOCK) mode.

-2. Disconnect the following connector.

Throttle body 6P connector

-3. Turn the vehicle to the ON mode.

-4. Measure the voltage between test points 1 and 2.

Test condition	Vehicle ON mode
B	Throttle body 6P connector: disconnected
Test point 1	Throttle body 6P connector (female terminals) No. 5: ①
Test point 2	Body ground

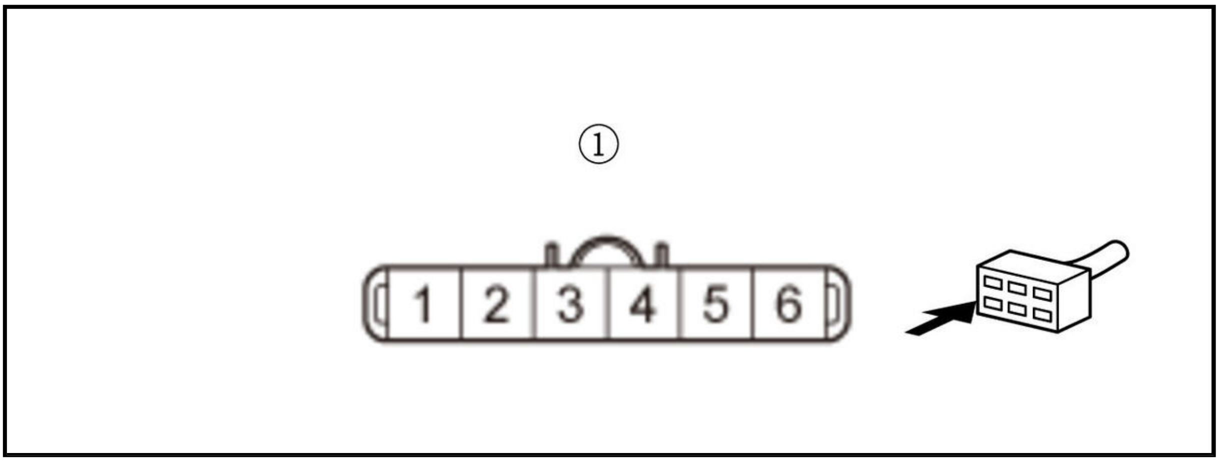

Is there about 5.0 V?

YES

Replace the throttle body .

NO

Go to step 5.

5. Open wire check (VCC3 (DBW) line)

-1. Turn the vehicle to the OFF (LOCK) mode.

-2. Jump the SCS line with the HDS, and wait more than 1 minute.

-3. Disconnect the following connector.

PCM connector E (80P)

-4. Measure the resistance between test points 1 and 2.

Test condition	Vehicle OFF (LOCK) mode
B	Throttle body 6P connector: disconnected
B	PCM connector E (80P) : disconnected
Test point 1	Throttle body 6P connector (female terminals) No. 5: ①
Test point 2	PCM connector E (80P) No. 75

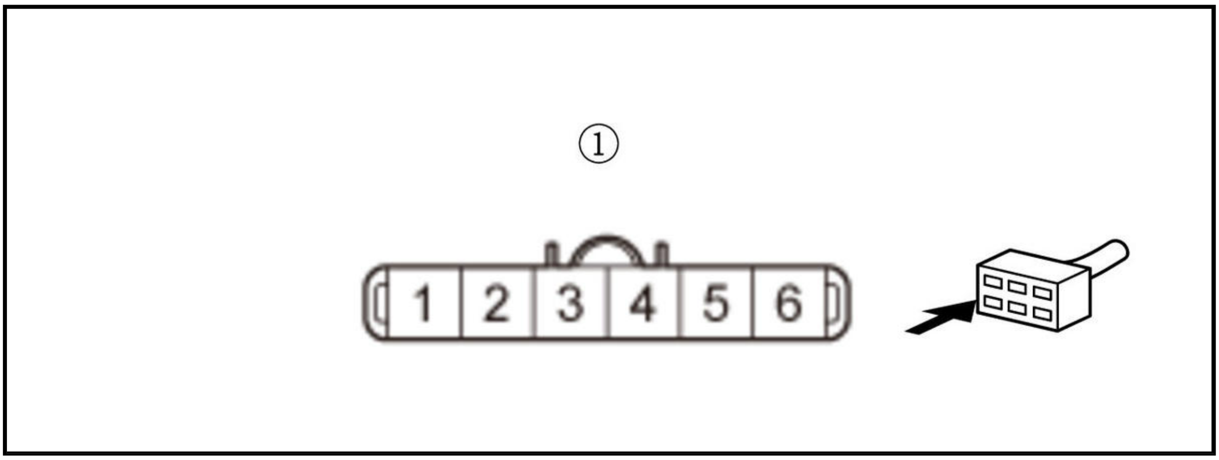

Is there 1.0 Ω or less?

YES

The VCC3 (DBW) wire is OK. Check for any authorized service information related to the DTCs or symptoms you are troubleshooting, or substitute a known-good PCM .

NO

Repair an open in the VCC3 (DBW) wire between the PCM (E75) and the throttle body.

DTC P0123

DTC P0123 : TP Sensor A Circuit High Voltage

NOTE: Before you troubleshoot, review the general troubleshooting information.

DTC Description	Confirmed DTC	Pending DTC
P0123 TP Sensor A Circuit High Voltage	B	B

DTC (PGM-FI)

1. Problem verification

   -1. Turn the vehicle to the ON mode.

   -2. Clear the DTC with the HDS.

   -3. Check the parameter (s) below with the HDS.

Signal	Threshold		Current conditions	
	Values	Unit	Values	Unit
TP Sensor A	More than 4.8	V	B	B

   Do the current condition (s) match the threshold?

   YES

   The failure is duplicated. Go to step 2.

   NO

   Intermittent failure, the system is OK at this time. Check for poor connections or loose terminals at the throttle body and the PCM. If the on-board snapshot of this DTC is recorded, try to reproduce the failure under the same conditions with the on-board snapshot.

2. Determine possible failure area (SG3 (DBW) line, others)

   -1. Check for Pending or Confirmed DTCs with the HDS.

DTC Description	Confirmed DTC	Pending DTC
P0123 TP Sensor A Circuit High Voltage	B	B
P0223 TP Sensor B Circuit High Voltage	B	B

   Are DTC P0123 and P0223 indicated at the same time?

   YES

   Go to step 5.

   NO

   Go to step 3.

3. Determine possible failure area (throttle body, others)

-1. Turn the vehicle to the OFF (LOCK) mode.

-2. Disconnect the following connector.

Throttle body 6P connector

-3. Turn the vehicle to the ON mode.

-4. Measure the voltage between test points 1 and 2.

Test condition	Vehicle ON mode
B	Throttle body 6P connector: disconnected
Test point 1	Throttle body 6P connector (female terminals) No. 6: ①
Test point 2	Body ground

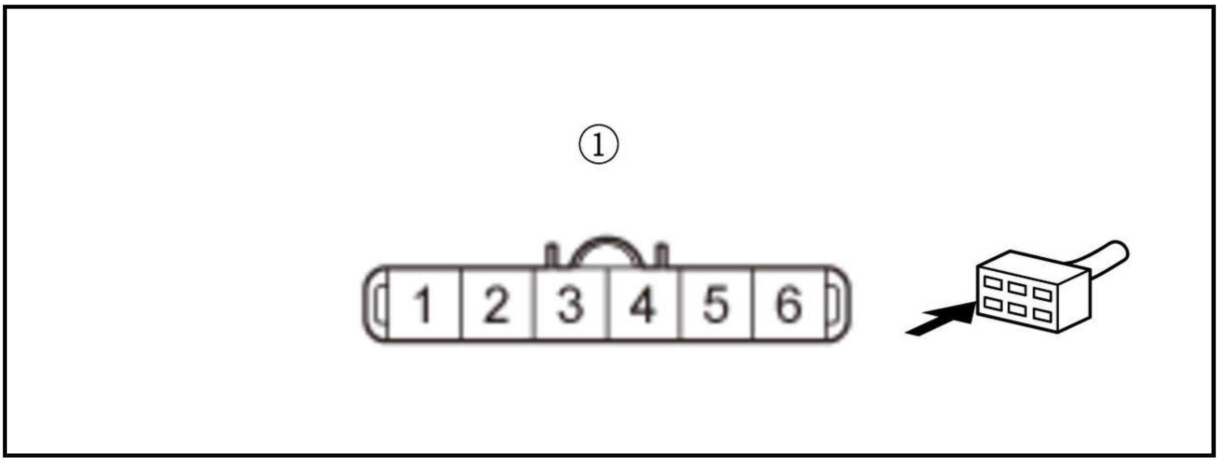

Is there about 5.0 V?

YES

Replace the throttle body .

NO

Go to step 4.

4. Open wire check (THL1 line)

-1. Turn the vehicle to the OFF (LOCK) mode.

-2. Jump the SCS line with the HDS, and wait more than 1 minute.

-3. Disconnect the following connector.

PCM connector E (80P)

-4. Measure the resistance between test points 1 and 2.

Test condition	Vehicle OFF (LOCK) mode
B	Throttle body 6P connector: disconnected
B	PCM connector E (80P) : disconnected

Test point 1	Throttle body 6P connector (female terminals) No. 6: ①
Test point 2	**PCM connector E (80P) No. 50**

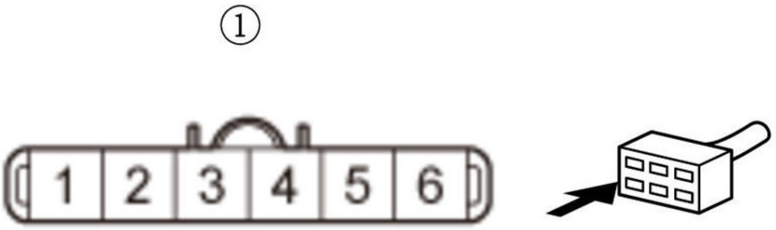

Is there 1.0 Ω or less?

YES

The THL1 wire is OK. Check for any authorized service information related to the DTCs or symptoms you are troubleshooting, or **substitute a known-good PCM** .

NO

Repair an open in the THL1 wire between the PCM (E50) and the throttle body.

5. Open wire check (SG3 (DBW) line)

-1. Turn the vehicle to the OFF (LOCK) mode.

-2. Jump the SCS line with the HDS, and wait more than 1 minute.

-3. Disconnect the following connectors.

PCM connector E (80P)
Throttle body 6P connector

-4. Measure the resistance between test points 1 and 2.

Test condition	Vehicle OFF (LOCK) mode
B	PCM connector E (80P) : disconnected
B	Throttle body 6P connector: disconnected
Test point 1	Throttle body 6P connector (female terminals) No. 3: ①
Test point 2	**PCM connector E (80P) No. 76**

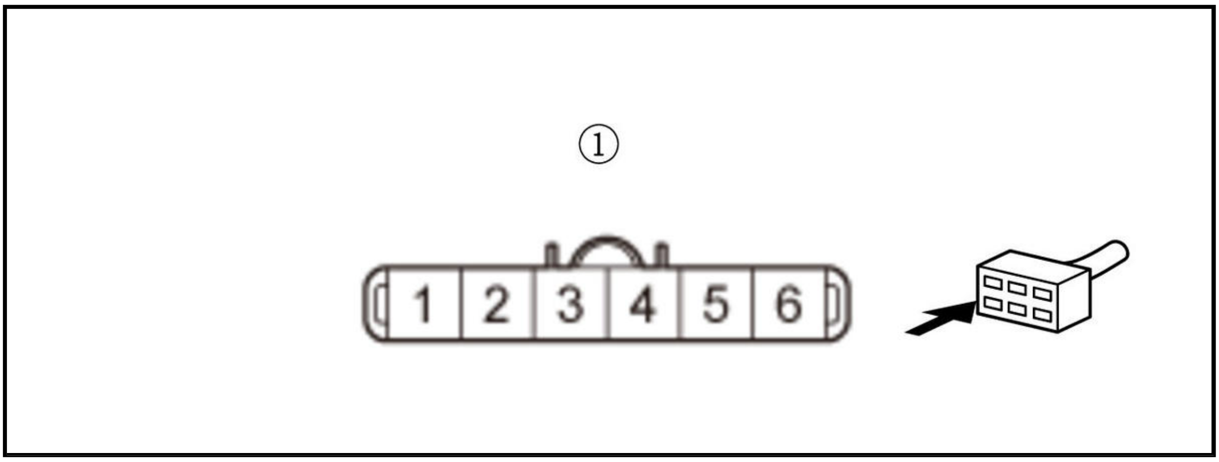

Is there 1.0 Ω or less?

YES

The SG3 (DBW) wire is OK. Check for any authorized service information related to the DTCs or symptoms you are troubleshooting, or **substitute a known-good PCM** .

NO

Repair an open in the SG3 (DBW) wire between the PCM (E76) and the throttle body.

DTC P0125

DTC P0125 : ECT Sensor 1 Malfunction/Slow Response

NOTE: Before you troubleshoot, **review the general troubleshooting information**.

DTC Description	Confirmed DTC	Pending DTC
P0125 ECT Sensor 1 Malfunction/Slow Response	B	B

DTC (PGM-FI)

1. ECT sensor 1 check

-1. **Enter the maintenance mode, then start the engine** .

-2. Let it idle for 10 minutes or more.

-3. Check the parameter (s) below with the HDS.

Signal	Threshold		Current conditions	
	Values	Unit	Values	Unit
ECT Sensor 1	Less than -18	deg.C	B	B
	Less than 0	deg.F		

Do the current condition (s) match the threshold?

YES

Check for poor connections or loose terminals at ECT sensor 1, ECT sensor 2, and the PCM. If they are OK, **replace ECT sensor 1** .

NO

Go to step 2.

2. Problem verification

-1. Turn the vehicle to the OFF (LOCK) mode.

-2. Allow the engine to cool to 104 deg.F (40 deg.C) or less.

-3. Enter the maintenance mode, then start the engine .

-4. Let it idle until ECT SENSOR 1 goes up to about 158 deg.F (70 deg.C).

Signal	Current conditions	
	Values	Unit
ECT Sensor 1	B	B

-5. Check the parameter (s) below with the HDS.

Signal	Threshold		Current conditions	
	Values	Unit	Values	Unit
ECT Sensor 2	About 70	deg.C	B	B
	About 158	deg.F		

Do the current condition (s) match the threshold?

YES

The failure is duplicated. Go to step 3.

NO

Intermittent failure, the system is OK at this time. Check for poor connections or loose terminals at ECT sensor 1, ECT sensor 2, and the PCM. If the on-board snapshot of this DTC is recorded, try to reproduce the failure under the same conditions with the on-board snapshot.

3. Thermostat check

-1. Check the thermostat .

Is the thermostat OK?

YES

Check for poor connections or loose terminals at ECT sensor 1, ECT sensor 2, and the PCM. If the connections and terminals are OK, replace ECT sensor 1 .

NO

Replace the thermostat .

DTC P0128

DTC P0128 : Cooling System Malfunction

NOTE: Before you troubleshoot, review the general troubleshooting information.

DTC Description	Confirmed DTC	Pending DTC
P0128 Cooling System Malfunction	B	B

DTC (PGM-FI)

1. Cooling fan control command check

   -1. Turn the vehicle to the ON mode.

   -2. Clear the DTC with the HDS.

   -3. Turn the blower switch off.

   -4. Check the parameter (s) below with the HDS.

Signal	Threshold		Current conditions	
	Values	**Unit**	**Values**	**Unit**
Radiator Fan Control	About 0	%	B	B

   Do the current condition (s) match the threshold?

   YES

   Go to step 2.

   NO

   Wait until the Radiator Fan Control is about 0 %, then go to step 2.

2. Cooling fan operation check

   -1. Check the cooling fan operation.

   Does the cooling fan keep running?

   YES

   Go to step 3.

   NO

   Go to step 4.

3. Cooling fan circuit and RFC relay check

   -1. Turn the vehicle to the ON mode.

   -2. Check the cooling fan circuit and the RFC relay.

   Is it OK?

   YES

   Check for any authorized service information related to the DTCs or symptoms you are troubleshooting, or **substitute a known-good PCM** .

   NO

   Check the cooling fan circuit and the RFC relay, if they are OK, **replace the cooling fan motor** .

4. Problem verification

   -1. Turn the vehicle to the ON mode.

   -2. Let the engine cool until the coolant temperature is 104 deg.F (40 deg.C) or less.

-3. Note the value of ECT Sensor 1 and ECT Sensor 2 in the DATA LIST with the HDS.

Signal	Current conditions	
	Values	Unit
ECT Sensor 1	B	B
ECT Sensor 2	B	B

-4. **Enter the maintenance mode, then start the engine** .

-5. Let the engine idle until ECT Sensor 1 goes up 40 deg.F (22 deg.C) or more from the recorded start temperature.

Signal	Current conditions	
	Values	Unit
ECT Sensor 1	B	B

-6. Check ECT Sensor 2 in the DATA LIST with the HDS.

Signal	Current conditions	
	Values	Unit
ECT Sensor 2	B	B

-7. Compare the recorded start value of ECT Sensor 2 and the present value of ECT Sensor 2.

Did the temperature rise 14.4 deg.F (8.0 deg.C) or more?

YES

Test the thermostat and replace it if needed .

NO

Intermittent failure, the system is OK at this time. Check for poor connections or loose terminals at ECT sensor 1, ECT sensor 2, and the PCM. **If the on-board snapshot of this DTC is recorded, try to reproduce the failure under the same conditions with the on-board snapshot**.

DTC P0130

DTC P0130 : A/F Sensor (Sensor 1) Out of Range

NOTE: Before you troubleshoot, **review the general troubleshooting information**.

DTC Description	Confirmed DTC	Pending DTC
P0130 A/F Sensor (Sensor 1) Out of Range	B	B

DTC (PGM-FI)

1. Problem verification

-1. Turn the vehicle to the ON mode.

-2. Clear the DTC with the HDS.

-3. **Enter the maintenance mode, then start the engine** .

-4. Hold the engine speed at 3, 000 rpm without load (in P or N) until the radiator fan comes on, then let it idle.

-5. Monitor the OBD STATUS for DTC P0130 in the DTCs MENU with the HDS.

DTC Description	OBD STATUS
P0130 A/F Sensor (Sensor 1) Out of Range	B

Does the HDS indicate FAILED?

YES

Replace the A/F sensor (Sensor 1) .

NO

If the HDS indicates PASSED, there is an intermittent failure and the system is OK at this time. Check for poor connections or loose terminals at the A/F sensor (Sensor 1) and the PCM. **If the on-board snapshot of this DTC is recorded, try to reproduce the failure under the same conditions with the on-board snapshot**. If the HDS indicates EXECUTING, keep idling until a result comes on. If the HDS indicates OUT OF CONDITION, go to step 1-3 on this step and recheck.

DTC P0133

DTC P0133 : A/F Sensor (Sensor 1) Malfunction/Slow Response

NOTE: Before you troubleshoot, **review the general troubleshooting information**.

DTC Description	Confirmed DTC	Pending DTC
P0133 A/F Sensor (Sensor 1) Malfunction/Slow Response	B	B

DTC (PGM-FI)

1. DTC check

-1. Turn the vehicle to the ON mode.

-2. Check for Pending or Confirmed DTCs with the HDS.

DTC Description	Confirmed DTC	Pending DTC
P0133 A/F Sensor (Sensor 1) Malfunction/Slow Response	B	B

Is Confirmed DTC P0133 indicated?

YES (Confirmed DTC is indicated)

Replace the A/F sensor (Sensor 1) .

NO (Pending DTC is indicated)

Check for poor connections or loose terminals at the A/F sensor (Sensor 1) and the PCM, and the installation of the A/F sensor (Sensor 1), then recheck.

DTC P0134

DTC P0134 : A/F Sensor (Sensor 1) Heater System Malfunction

NOTE:

- Before you troubleshoot, **review the general troubleshooting information**.
- If DTC P0135 is stored at the same time as DTC P0134, troubleshoot DTC P0135 first, then recheck for P0134.

DTC Description	Confirmed DTC	Pending DTC
P0134 A/F Sensor (Sensor 1) Heater System Malfunction	B	B

DTC (PGM-FI)

1. Problem verification

   -1. Turn the vehicle to the ON mode.

   -2. Clear the DTC with the HDS.

   -3. **Enter the maintenance mode, then start the engine** , and let it idle without load (in P or N) for at least 1 minute.

   -4. Check for Pending or Confirmed DTCs with the HDS.

DTC Description	Confirmed DTC	Pending DTC
P0134 A/F Sensor (Sensor 1) Heater System Malfunction	B	B

   Is DTC P0134 indicated?

   YES

   The failure is duplicated. Go to step 2.

   NO

   Intermittent failure, the system is OK at this time. Check for poor connections or loose terminals at the A/F sensor (Sensor 1) and the PCM. **If the on-board snapshot of this DTC is recorded, try to reproduce the failure under the same conditions with the on-board snapshot**.

2. Open wire check (VS line)

   -1. Turn the vehicle to the OFF (LOCK) mode.

   -2. Jump the SCS line with the HDS, and wait more than 1 minute.

   -3. Disconnect the following connectors.

A/F sensor (Sensor 1) 6P connector
PCM connector E (80P)

   -4. Measure the resistance between test points 1 and 2.

Test condition	Vehicle OFF (LOCK) mode
B	A/F sensor (Sensor 1) 6P connector: disconnected
B	PCM connector E (80P) : disconnected
Test point 1	A/F sensor (Sensor 1) 6P connector (male terminals) No. 4: ①
Test point 2	**PCM connector E (80P) No. 73**

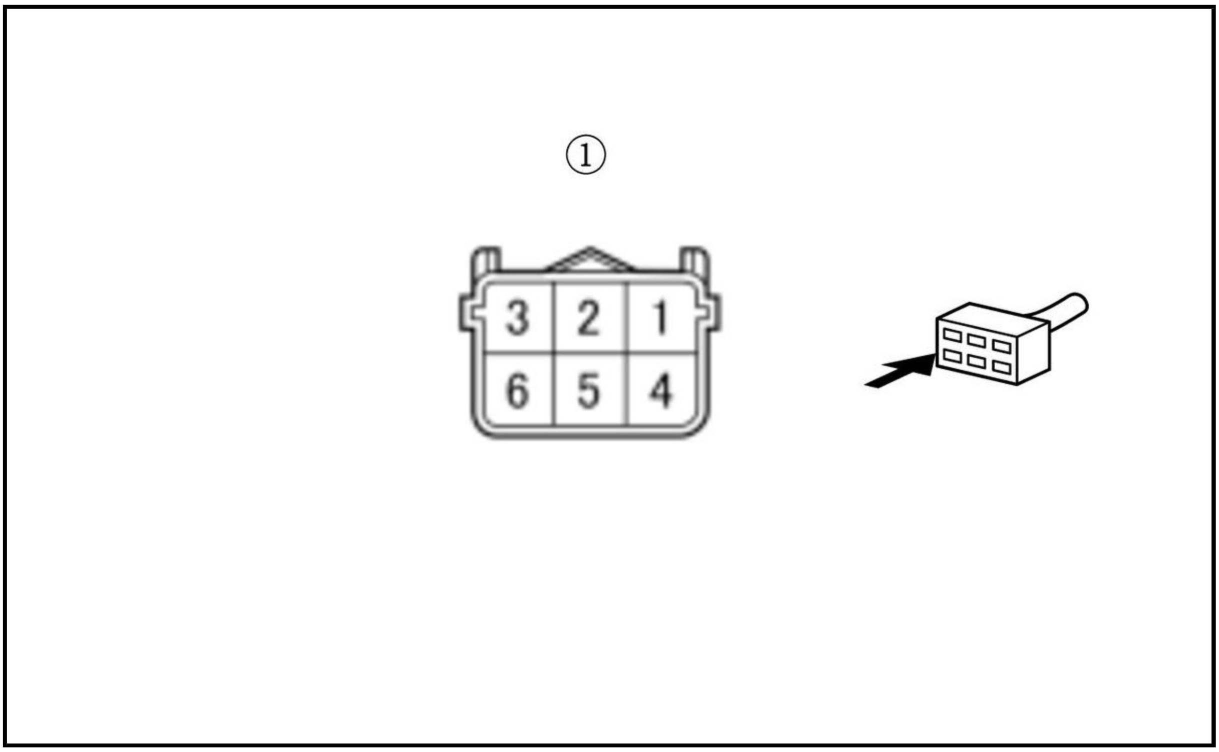

Is there 1.0 Ω or less?

YES

Go to step 3.

NO

Repair an open in the VS wire between the PCM (E73) and the A/F sensor (Sensor 1).

3. PCM internal circuit check

-1. Reconnect the following connector.

PCM connector E (80P)

-2. Exit the SCS mode with the HDS.

-3. **Enter the maintenance mode, then start the engine** , and let it idle without load (in P or N) for at least 1 minute.

-4. Measure the voltage between test point 1 and 2.

Test condition	Engine running
B	A/F sensor (Sensor 1) 6P connector: disconnected
Test point 1	A/F sensor (Sensor 1) 6P connector (male terminals) No. 4: ①
Test point 2	Body ground

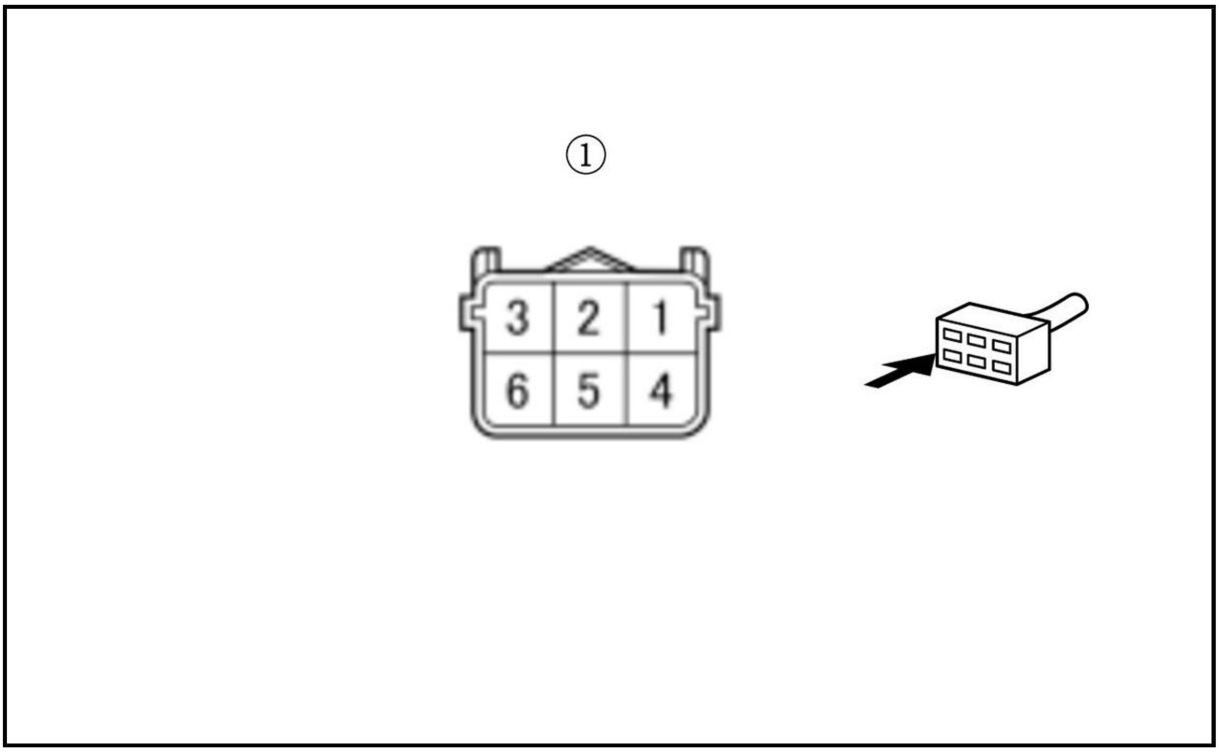

Is there about 0.2 V or less?

YES

Check for any authorized service information related to the DTCs or symptoms you are troubleshooting, or **substitute a known-good PCM** .

NO

Replace the A/F sensor (Sensor 1) .

DTC P0135

DTC P0135 : A/F Sensor (Sensor 1) Heater Circuit Malfunction

NOTE: Before you troubleshoot, **review the general troubleshooting information**.

DTC Description	Confirmed DTC	Pending DTC
P0135 A/F Sensor (Sensor 1) Heater Circuit Malfunction	B	B

DTC (PGM-FI)

1. Problem verification

-1. Turn the vehicle to the ON mode.

-2. Clear the DTC with the HDS.

-3. **Enter the maintenance mode, then start the engine** .

-4. Hold the engine speed at 3, 000 rpm without load (in P or N) until the radiator fan comes on, then let it idle.

-5. Check for Pending or Confirmed DTCs with the HDS.

DTC Description	Confirmed DTC	Pending DTC
P0135 A/F Sensor (Sensor 1) Heater Circuit Malfunction	B	B

Is DTC P0135 indicated?

YES

The failure is duplicated. Go to step 2.

NO

Intermittent failure, the system is OK at this time. Check for poor connections or loose terminals at the A/F sensor (Sensor 1) and the PCM. **If the on-board snapshot of this DTC is recorded, try to reproduce the failure under the same conditions with the on-board snapshot**.

2. DTC check

-1. Check for Pending or Confirmed DTCs with the HDS.

DTC Description	Confirmed DTC	Pending DTC
P1658 ETCS Control Relay ON Malfunction	B	B
P1659 ETCS Control Relay OFF Malfunction	B	B

Is DTC P1658 and/or P1659 indicated?

YES

Go to the indicated DTC's troubleshooting.

NO

Go to step 3.

3. Fuse check

-1. Turn the vehicle to the OFF (LOCK) mode.

-2. Check the following fuse.

Fuse	**No. A11**

Is the fuse OK?

YES

Go to step 4.

NO

Repair a short in the IGPS (LAF) wire between the No. A11 fuse and the A/F sensor 1 (Sensor 1). Also replace the No. A11 fuse.

4. A/F sensor (Sensor 1) internal heater resistance check

-1. Disconnect the following connector.

A/F sensor (Sensor 1) 6P connector

-2. At the A/F sensor (Sensor 1) side, measure the resistance between test points 1 and 2.

Test condition	Vehicle OFF (LOCK) mode
B	A/F sensor (Sensor 1) 6P connector: disconnected

Test point 1	A/F sensor (Sensor 1) 6P connector (female terminals) No. 1 (sensor side) : ①
Test point 2	A/F sensor (Sensor 1) 6P connector (female terminals) No. 2 (sensor side) : ①

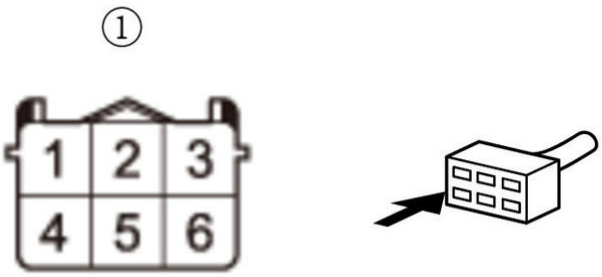

Is there 2.8-4.5 Ω at room temperature?

YES

Go to step 5.

NO

Replace the A/F sensor (Sensor 1) .

5. A/F sensor (Sensor 1) internal circuit check 1

-1. Measure the resistance between the following test points and body ground individually.

Test condition	Vehicle OFF (LOCK) mode
B	A/F sensor (Sensor 1) 6P connector: disconnected

Connector	Terminal
A/F sensor (Sensor 1) 6P connector (female terminals) (sensor side) : ①	No. 1
	No. 2
	No. 4
	No. 5
	No. 6

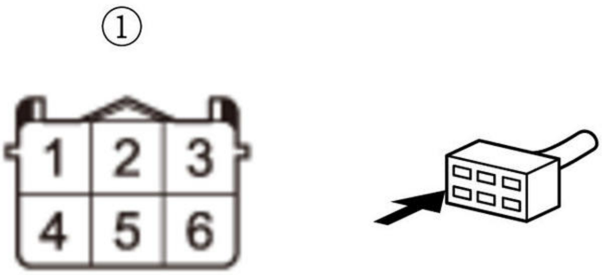

Is there 1 MΩ or more?

YES

Go to step 6.

NO

Replace the A/F sensor (Sensor 1) .

6. A/F sensor (Sensor 1) internal circuit check 2

-1. Measure the resistance between the following test points and the A/F sensor (Sensor 1) 6P connector No. 1 individually.

Test condition	Vehicle OFF (LOCK) mode
B	A/F sensor (Sensor 1) 6P connector: disconnected

Connector	Terminal
A/F sensor (Sensor 1) 6P connector (female terminals) (sensor side) : ①	No. 2
	No. 4
	No. 5
	No. 6

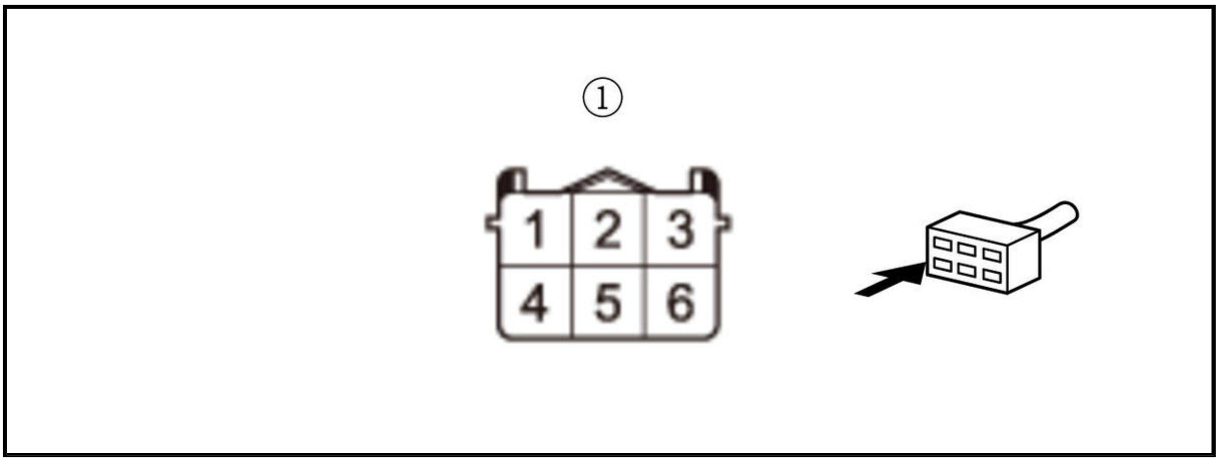

Is there 1 MΩ or more?

YES

Go to step 7.

NO

Replace the A/F sensor (Sensor 1) .

7. Shorted wire check (AFHT line)

-1. Jump the SCS line with the HDS, and wait more than 1 minute.

-2. Disconnect the following connector.

PCM connector E (80P)

-3. Measure the resistance between test points 1 and 2.

Test condition	Vehicle OFF (LOCK) mode
B	A/F sensor (Sensor 1) 6P connector: disconnected

B	PCM connector E (80P) : disconnected
Test point 1	**PCM connector E (80P) No. 13**
Test point 2	Body ground

Is there 1 MΩ or more?

YES

The AFHT wire is not shorted. Go to step 8.

NO

Repair a short in the AFHT wire between the PCM (E13) and the A/F sensor (Sensor 1).

8. Open wire check (AFHT line)

-1. Measure the resistance between test points 1 and 2.

Test condition	Vehicle OFF (LOCK) mode
B	A/F sensor (Sensor 1) 6P connector: disconnected
B	PCM connector E (80P) : disconnected
Test point 1	A/F sensor (Sensor 1) 6P connector (male terminals) No. 2: ①
Test point 2	**PCM connector E (80P) No. 13**

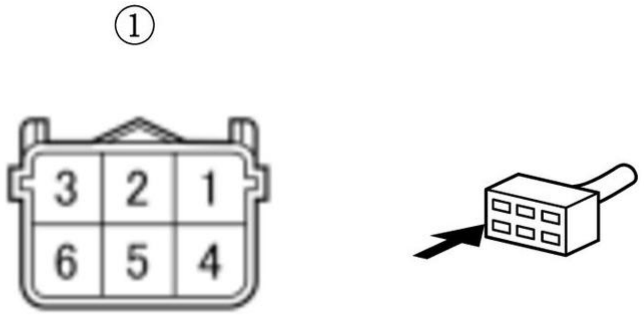

Is there 1.0 Ω or less?

YES

The AFHT wire is OK. Go to step 9.

NO

Repair an open in the AFHT wire between the PCM (E13) and the A/F sensor (Sensor 1).

9. Open wire check (IGPS (LAF) line)

-1. Turn the vehicle to the ON mode.

-2. Measure the voltage between test points 1 and 2.

Test condition	Vehicle ON mode
B	A/F sensor (Sensor 1) 6P connector: disconnected
B	PCM connector E (80P) : disconnected
Test point 1	A/F sensor (Sensor 1) 6P connector (male terminals) No. 1: ①
Test point 2	Body ground

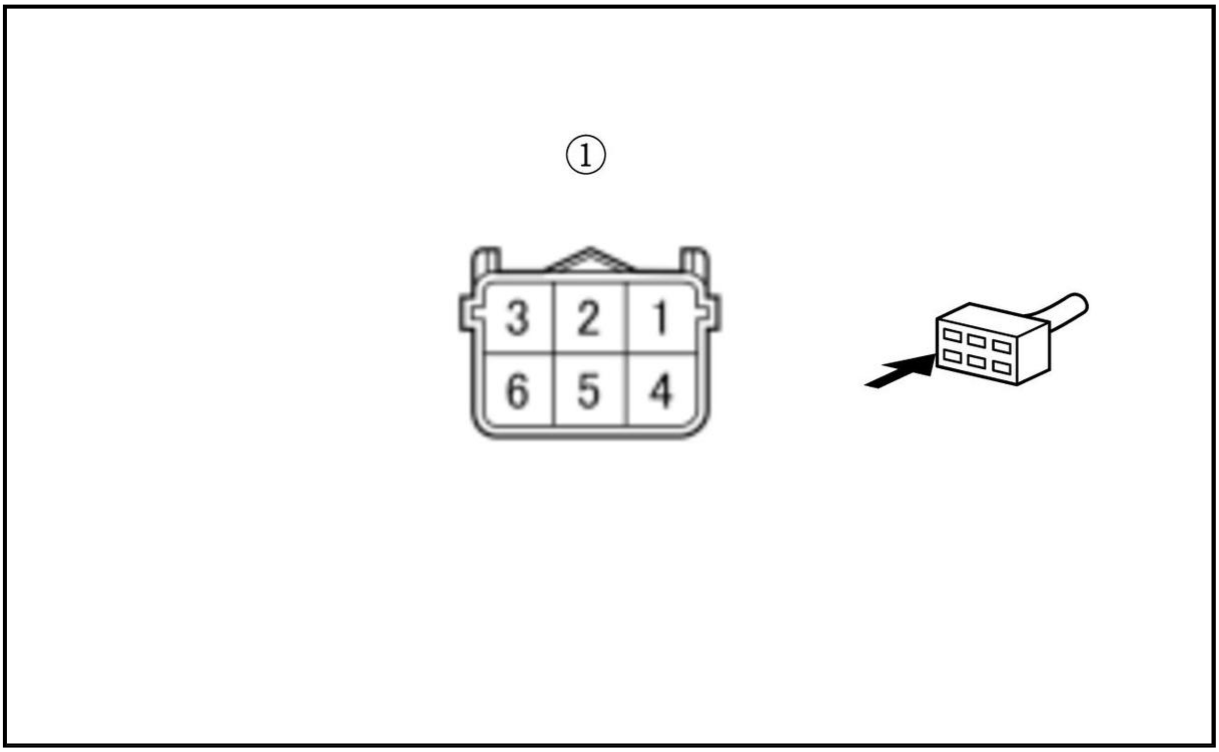

Is there battery voltage?

YES

The IGPS (LAF) wire is OK. Check for any authorized service information related to the DTCs or symptoms you are troubleshooting, or **substitute a known-good PCM** .

NO

Repair an open in the IGPS (LAF) wire between the A/F sensor (Sensor 1) and the **No. A11 fuse** .

DTC P0137

DTC P0137 : Secondary HO2S (Sensor 2) Circuit Low Voltage

NOTE: Before you troubleshoot, **review the general troubleshooting information**.

DTC Description	Confirmed DTC	Pending DTC
P0137 Secondary HO2S (Sensor 2) Circuit Low Voltage	B	B

DTC (PGM-FI)

1. Problem verification

-1. Turn the vehicle to the ON mode.

-2. Clear the DTC with the HDS.

-3. **Enter the maintenance mode, then start the engine** .

-4. Hold the engine speed at 3, 000 rpm without load (in P or N) until the radiator fan comes on, then let it idle.

-5. Monitor the OBD STATUS for DTC P0137 in the DTCs MENU with the HDS.

DTC Description	OBD STATUS
P0137 Secondary HO2S (Sensor 2) Circuit Low Voltage	B

Does the HDS indicate FAILED?

YES

The failure is duplicated. Go to step 2.

NO

If the HDS indicates PASSED, there is an intermittent failure and the system is OK at this time. Check for poor connections or loose terminals at the secondary HO2S (Sensor 2) and the PCM. **If the on-board snapshot of this DTC is recorded, try to reproduce the failure under the same conditions with the on-board snapshot**. If the HDS indicates EXECUTING, keep idling until a result comes on. If the HDS indicates OUT OF CONDITION, go to step 1-4 and recheck.

2. Determine possible failure area (secondary HO2S (Sensor 2), others)

-1. Turn the vehicle to the OFF (LOCK) mode.

-2. Disconnect the following connector.

Secondary HO2S (Sensor 2) 4P connector

-3. Turn the vehicle to the ON mode.

-4. Check the parameter (s) below with the HDS.

Signal	Threshold		Current conditions	
	Values	Unit	Values	Unit
HO2S S2	Less than 0.15	V	B	B

Do the current condition (s) match the threshold?

YES

Go to step 3.

NO

Replace the secondary HO2S (Sensor 2) .

3. Determine possible failure area (short in SO2 line, short in SO2SG/SO2_SG line)

-1. Turn the vehicle to the OFF (LOCK) mode.

-2. Measure the resistance between test points 1 and 2.

Test condition	Vehicle OFF (LOCK) mode

B	Secondary HO2S (Sensor 2) 4P connector: disconnected
Test point 1	Secondary HO2S (Sensor 2) 4P connector (male terminals) No. 1: ①
Test point 2	Body ground

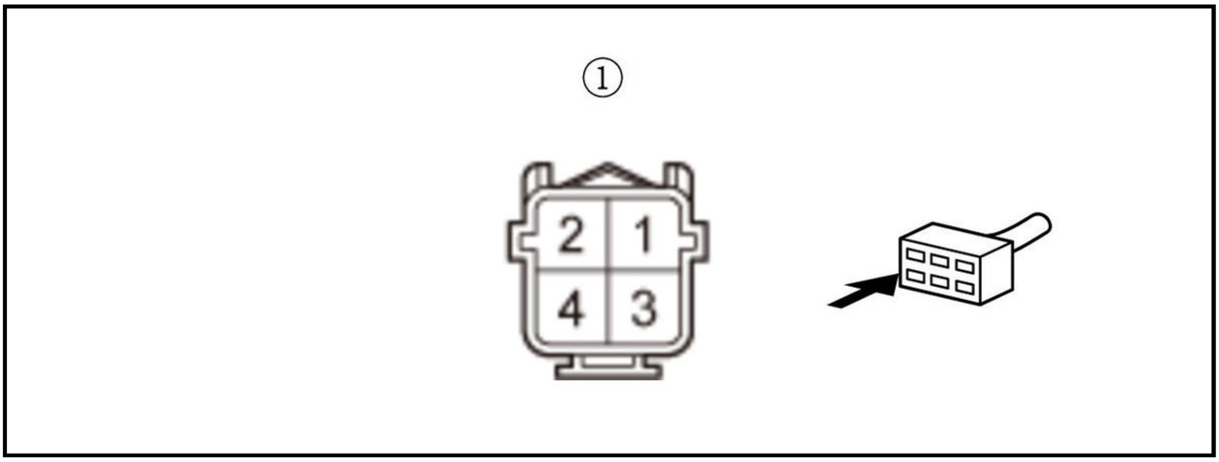

Is there 1 MΩ or more?

YES

Go to step 5.

NO

Go to step 4.

4. Shorted wire check (SO2 line)

-1. Jump the SCS line with the HDS, and wait more than 1 minute.

-2. Disconnect the following connector.

PCM connector A (50P)

-3. Measure the resistance between test points 1 and 2.

Test condition	Vehicle OFF (LOCK) mode
B	Secondary HO2S (Sensor 2) 4P connector: disconnected
B	PCM connector A (50P) : disconnected
Test point 1	Secondary HO2S (Sensor 2) 4P connector (male terminals) No. 1: ①
Test point 2	Body ground

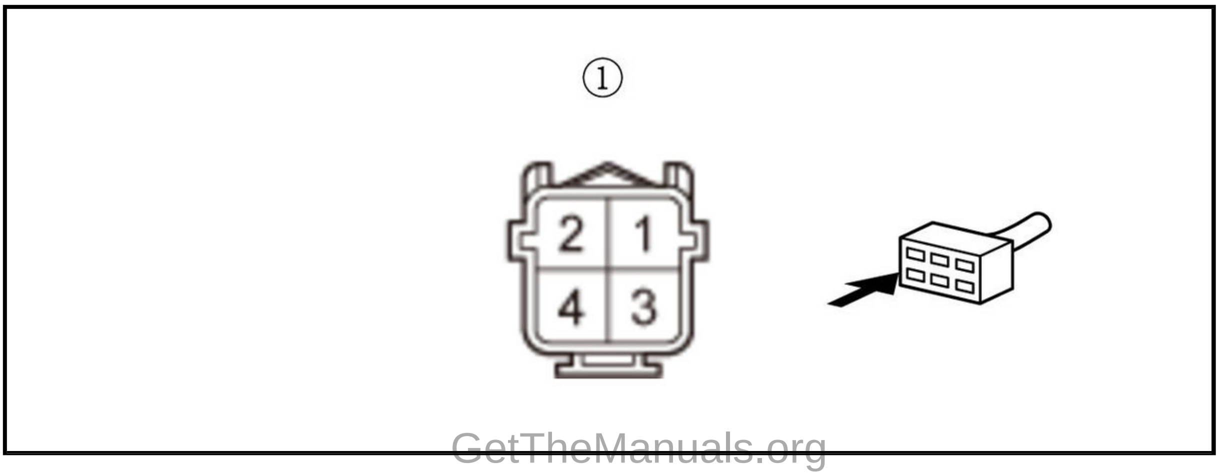

Is there 1 MΩ or more?

YES

The SO2 wire is OK. Check for any authorized service information related to the DTCs or symptoms you are troubleshooting, or **substitute a known-good PCM** .

NO

Repair a short in the SO2 wire between the PCM (A47) and the secondary HO2S (Sensor 2).

5. Shorted wire check (SO2SG/SO2_SG line)

-1. Jump the SCS line with the HDS, and wait more than 1 minute.

-2. Disconnect the following connector.

PCM connector A (50P)

-3. Measure the resistance between test points 1 and 2.

Test condition	Vehicle OFF (LOCK) mode
B	Secondary HO2S (Sensor 2) 4P connector: disconnected
B	PCM connector A (50P) : disconnected
Test point 1	Secondary HO2S (Sensor 2) 4P connector (male terminals) No. 2: ①
Test point 2	Body ground

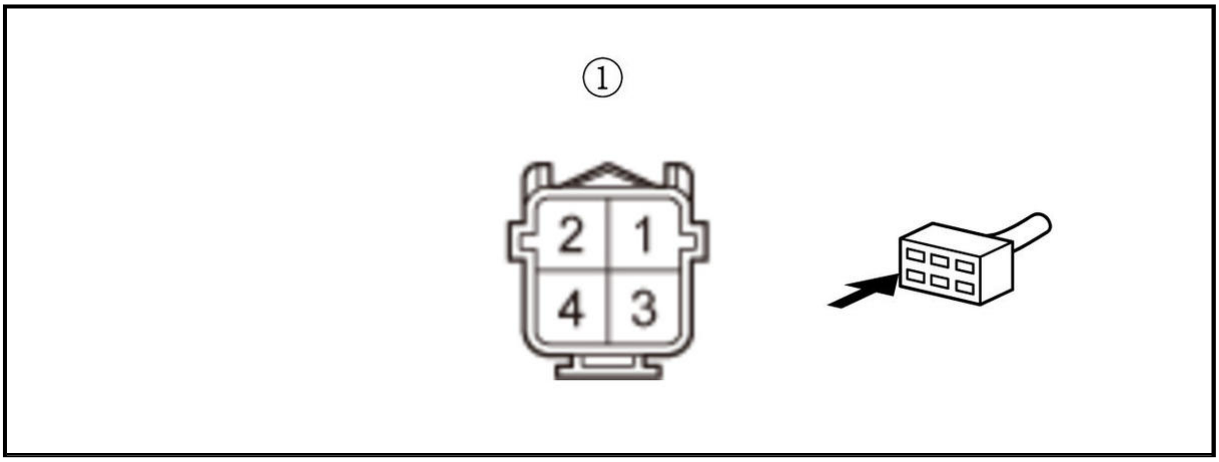

Is there 1 MΩ or more?

YES

The SO2SG/SO2_SG wire is OK. Check for any authorized service information related to the DTCs or symptoms you are troubleshooting, or **substitute a known-good PCM** .

NO

Repair a short in the SO2SG/SO2_SG wire between the PCM (A48) and the secondary HO2S (Sensor 2).

DTC P0138

DTC P0138 : Secondary HO2S (Sensor 2) Circuit High Voltage

Before you troubleshoot, **review the general troubleshooting information**.

DTC Description	Confirmed DTC	Pending DTC
P0138 Secondary HO2S (Sensor 2) Circuit High Voltage	B	B

DTC (PGM-FI)

1. Problem verification

   -1. Turn the vehicle to the ON mode.

   -2. Clear the DTC with the HDS.

   -3. **Enter the maintenance mode, then start the engine** .

   -4. Hold the engine speed at 3, 000 rpm without load (in P or N) until the radiator fan comes on, then let it idle.

   -5. Check for Pending or Confirmed DTCs with the HDS.

DTC Description	Confirmed DTC	Pending DTC
P0138 Secondary HO2S (Sensor 2) Circuit High Voltage	B	B

   Is DTC P0138 is indicated?

   YES

   The failure is duplicated. Go to step 2.

   NO

   Intermittent failure, the system is OK at this time. Check for poor connections or loose terminals at the secondary HO2S (Sensor 2) and the PCM. **If the on-board snapshot of this DTC is recorded, try to reproduce the failure under the same conditions with the on-board snapshot**.

2. Determine possible failure area (short to power in SO2SG/SO2_SG line, others)

   -1. Turn the vehicle to the OFF (LOCK) mode.

   -2. Disconnect the following connector.

Secondary HO2S (Sensor 2) 4P connector

   -3. Connect terminals A and B with a jumper wire.

Terminal A	Secondary HO2S (Sensor 2) 4P connector (male terminals) No. 1: ①
Terminal B	Secondary HO2S (Sensor 2) 4P connector (male terminals) No. 2: ①

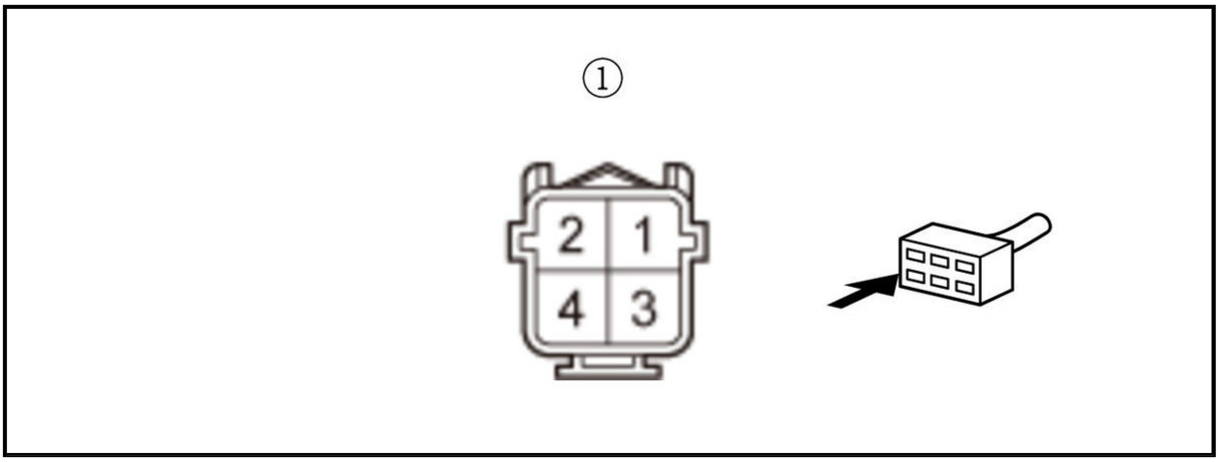

-4. Turn the vehicle to the ON mode.

-5. Check the parameter (s) below with the HDS.

Signal	Threshold		Current conditions	
	Values	**Unit**	**Values**	**Unit**
HO2S S2	More than 3.22	V	B	B

Do the current condition (s) match the threshold?

YES

Go to step 3.

NO

Go to step 5.

3. Open wire check (SO2SG/SO2_SG line)

-1. Turn the vehicle to the OFF (LOCK) mode.

-2. Remove the jumper wire from the secondary HO2S (Sensor 2) 4P connector.

-3. Connect terminals A and B with a jumper wire.

Terminal A	Secondary HO2S (Sensor 2) 4P connector (male terminals) No. 1: ①
Terminal B	Body ground

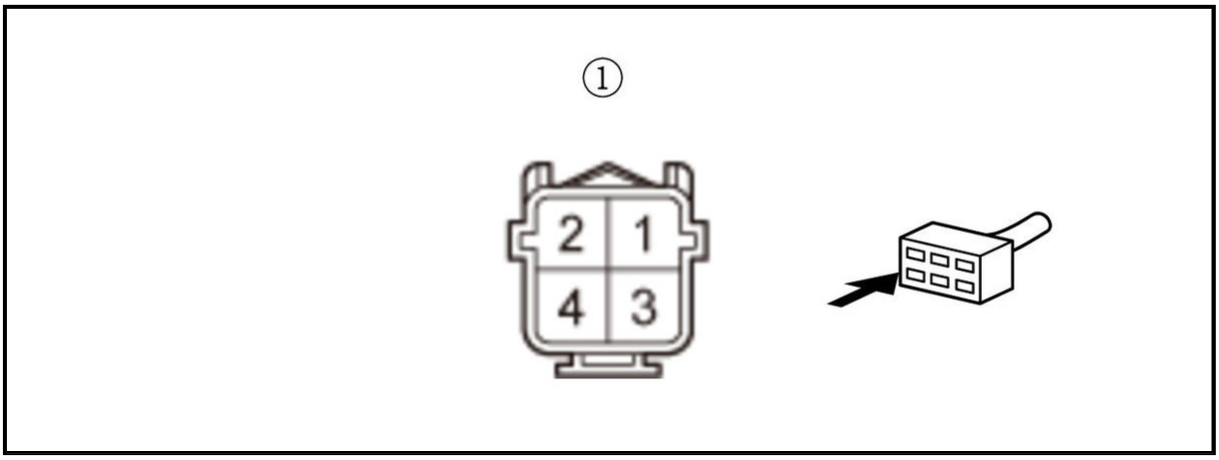

-4. Turn the vehicle to the ON mode.

-5. Check the parameter (s) below with the HDS.

Signal	Threshold		Current conditions	
	Values	**Unit**	**Values**	**Unit**
HO2S S2	More than 3.22	V	B	B

Do the current condition (s) match the threshold?

YES

The SO2SG/SO2_SG wire is OK. Go to step 4.

NO

Repair an open in the SO2SG/SO2_SG wire between the PCM (A48) and the secondary HO2S (Sensor 2).

4. Open wire check (SO2 line)

-1. Turn the vehicle to the OFF (LOCK) mode.

-2. Jump the SCS line with the HDS, and wait more than 1 minute.

-3. Disconnect the following connector.

PCM connector A (50P)

-4. Measure the resistance between test points 1 and 2.

Test condition	Vehicle OFF (LOCK) mode
B	Secondary HO2S (Sensor 2) 4P connector: disconnected
B	PCM connector A (50P) : disconnected
B	Secondary HO2S (Sensor 2) 4P connector No. 1: jumped to body ground
Test point 1	**PCM connector A (50P) No. 47**
Test point 2	Body ground

Is there 1.0 Ω or less?

YES

The SO2 wire is OK. Check for any authorized service information related to the DTCs or symptoms you are troubleshooting, or **substitute a known-good PCM** .

NO

Repair an open in the SO2 wire between the PCM (A47) and the secondary HO2S (Sensor 2).

5. Shorted wire check (SO2SG/SO2_SG line to power)

-1. Turn the vehicle to the OFF (LOCK) mode.

-2. Remove the jumper wire from the secondary HO2S (Sensor 2) 4P connector.

-3. Jump the SCS line with the HDS, and wait more than 1 minute.

-4. Disconnect the following connector.

PCM connector A (50P)

-5. Turn the vehicle to the ON mode.

-6. Measure the voltage between test points 1 and 2.

Test condition	Vehicle ON mode
B	Secondary HO2S (Sensor 2) 4P connector: disconnected
B	PCM connector A (50P) : disconnected
Test point 1	**PCM connector A (50P) No. 48**
Test point 2	Body ground

Is there about 5 V or more?

YES

Repair a short to power in the SO2SG/SO2_SG wire between the PCM (A48) and the secondary HO2S (Sensor 2).

NO

The SO2SG/SO2_SG wire is OK. **Replace the secondary HO2S (Sensor 2)** .

DTC P0139

DTC P0139 : Secondary HO2S (Sensor 2) Slow Response

NOTE:

- Before you troubleshoot, **review the general troubleshooting information**.
- If there are leaks from the exhaust system, this DTC will be set. Check for damage in the exhaust pipe and repair it if needed.

DTC Description	Confirmed DTC	Pending DTC
P0139 Secondary HO2S (Sensor 2) Slow Response	B	B

DTC (PGM-FI)

1. DTC check

-1. Turn the vehicle to the ON mode.

-2. Check for Pending or Confirmed DTCs with the HDS.

DTC Description	Confirmed DTC	Pending DTC
P0139 Secondary HO2S (Sensor 2) Slow Response	B	B

Is Confirmed DTC P0139 indicated?

YES (Confirmed DTC is indicated)

Replace the secondary HO2S (Sensor 2) .

NO (Pending DTC is indicated)

Check for poor connections or loose terminals at the secondary HO2S (Sensor 2) and the PCM, and the installation of the secondary HO2S (Sensor 2), then recheck.

DTC P0141

DTC P0141 : Secondary HO2S (Sensor 2) Heater Circuit Malfunction

NOTE: Before you troubleshoot, **review the general troubleshooting information**.

DTC Description	Confirmed DTC	Pending DTC
P0141 Secondary HO2S (Sensor 2) Heater Circuit Malfunction	B	B

DTC (PGM-FI)

1. Problem verification

   -1. Turn the vehicle to the ON mode.

   -2. Clear the DTC with the HDS.

   -3. **Enter the maintenance mode, then start the engine** , and let it idle.

   -4. Check for Pending or Confirmed DTCs with the HDS.

DTC Description	Confirmed DTC	Pending DTC
P0141 Secondary HO2S (Sensor 2) Heater Circuit Malfunction	B	B

   Is DTC P0141 indicated?

   YES

   The failure is duplicated. Go to step 2.

   NO

   Intermittent failure, the system is OK at this time. Check for poor connections or loose terminals at the secondary HO2S (Sensor 2) and the PCM. **If the on-board snapshot of this DTC is recorded, try to reproduce the failure under the same conditions with the on-board snapshot**.

2. Fuse check

   -1. Turn the vehicle to the OFF (LOCK) mode.

   -2. Check the following fuse.

Fuse	**No. D21**

   Is the fuse OK?

   YES

   Go to step 3.

   NO

   Repair a short in the IG1_ACG/IG1 (MAIN) /IG1 (SO2) wire between the No. D21 fuse and the secondary HO2S (Sensor 2). Also replace the No. D21 fuse.

3. Secondary HO2S (Sensor 2) internal heater resistance check

   -1. Disconnect the following connector.

Secondary HO2S (Sensor 2) 4P connector

-2. At the secondary HO2S (Sensor 2) side, measure the resistance between test points 1 and 2.

Test condition	Vehicle OFF (LOCK) mode
B	Secondary HO2S (Sensor 2) 4P connector: disconnected
Test point 1	Secondary HO2S (Sensor 2) 4P connector (female terminals) No. 3 (sensor side) : ①
Test point 2	Secondary HO2S (Sensor 2) 4P connector (female terminals) No. 4 (sensor side) : ①

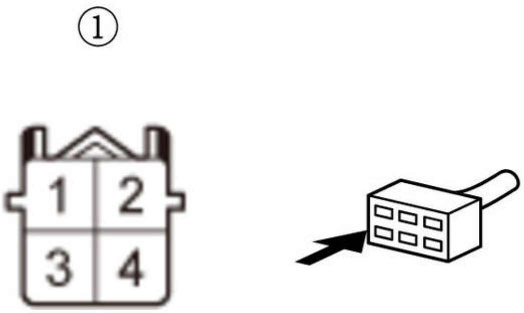

Is there 4.2-6.6 Ω at room temperature?

YES

Go to step 4.

NO

Replace the secondary HO2S (Sensor 2) .

4. Secondary HO2S (Sensor 2) internal circuit check

-1. At the sensor side, measure the resistance between test point 1 and 2.

Test condition	Vehicle OFF (LOCK) mode

B	Secondary HO2S (Sensor 2) 4P connector: disconnected
Test point 1	Secondary HO2S (Sensor 2) 4P connector (female terminals) No. 3 (sensor side) and No. 4 (sensor side) : ①
Test point 2	Body ground

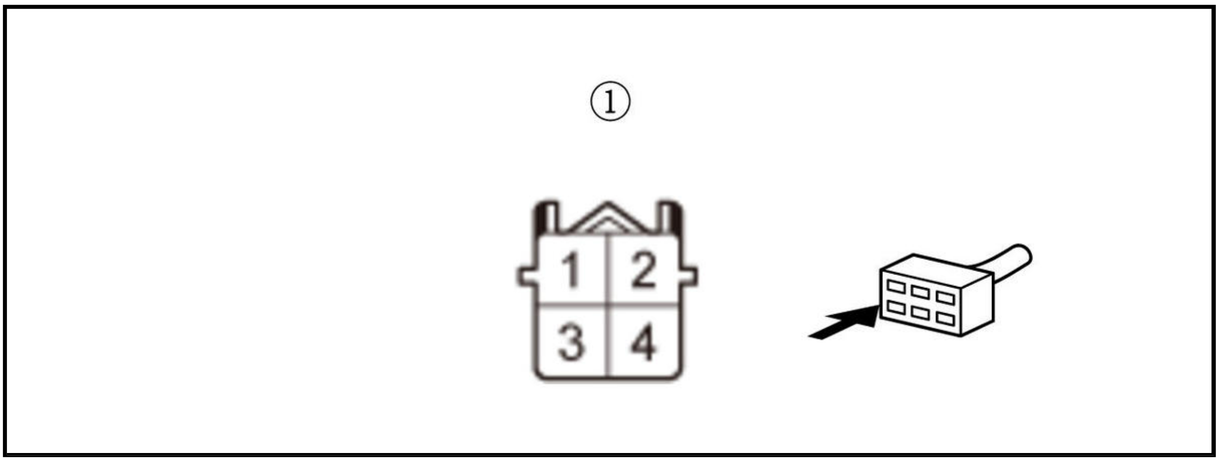

Is there 1 MΩ or more?

YES

Go to step 5.

NO

Replace the secondary HO2S (Sensor 2) .

5. Shorted wire check (SO2HT line)

-1. Jump the SCS line with the HDS, and wait more than 1 minute.

-2. Disconnect the following connector.

PCM connector A (50P)

-3. Measure the resistance between test points 1 and 2.

Test condition	Vehicle OFF (LOCK) mode
B	Secondary HO2S (Sensor 2) 4P connector: disconnected
B	PCM connector A (50P) : disconnected
Test point 1	PCM connector A (50P) No. 4
Test point 2	Body ground

Is there 1 MΩ or more?

YES

The SO2HT wire is not shorted. Go to step 6.

NO

Repair a short in the SO2HT wire between the PCM (A4) and the secondary HO2S (Sensor 2).

6. Open wire check (SO2HT line)

-1. Measure the resistance between test points 1 and 2.

Test condition	Vehicle OFF (LOCK) mode
B	Secondary HO2S (Sensor 2) 4P connector: disconnected
B	PCM connector A (50P) : disconnected
Test point 1	Secondary HO2S (Sensor 2) 4P connector (male terminals) No. 3: ①

Test point 2	PCM connector A (50P) No. 4

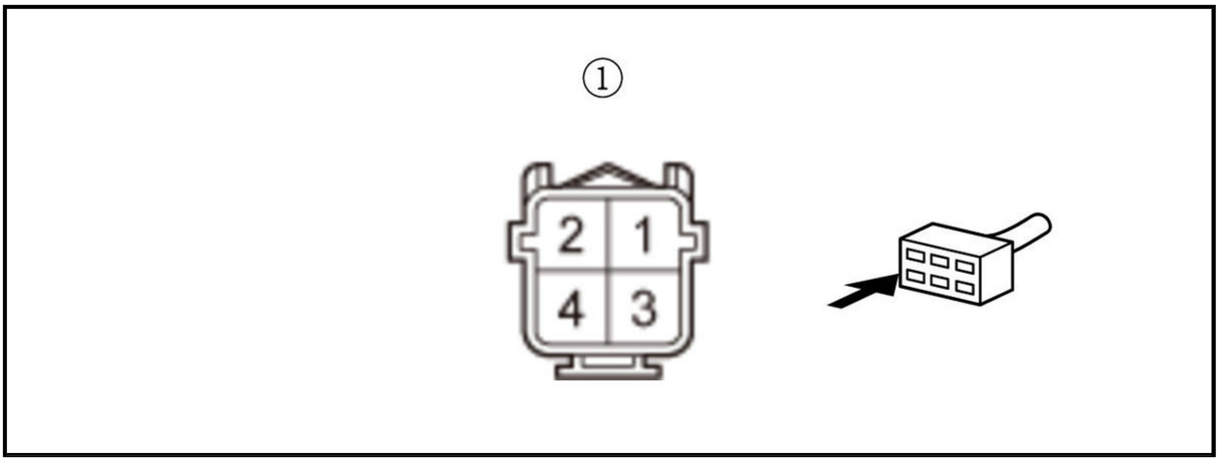

Is there 1.0 Ω or less?

YES

The SO2HT wire is OK. Go to step 7.

NO

Repair an open in the SO2HT wire between the PCM (A4) and the secondary HO2S (Sensor 2).

7. Open wire check (IG1_ACG/IG1 (MAIN) /IG1 (SO2) line)

-1. Turn the vehicle to the ON mode.

-2. Measure the voltage between test points 1 and 2.

Test condition	Vehicle ON mode
B	Secondary HO2S (Sensor 2) 4P connector: disconnected
B	PCM connector A (50P) : disconnected
Test point 1	Secondary HO2S (Sensor 2) 4P connector (male terminals) No. 4: ①
Test point 2	Body ground

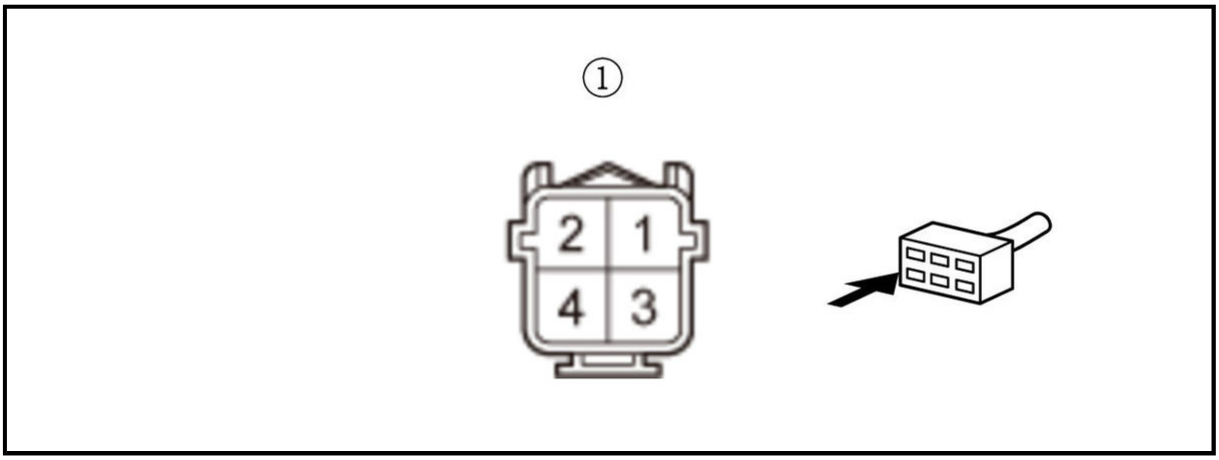

Is there battery voltage?

YES

The IG1_ACG/IG1 (MAIN) /IG1 (SO2) wire is OK. Check for any authorized service information related to the DTCs or symptoms you are troubleshooting, or **substitute a known-good PCM** .

NO

Repair an open in the IG1_ACG/IG1 (MAIN) /IG1 (SO2) wire between the **No. D21 fuse** and the secondary HO2S (Sensor 2).

DTC P0171

DTC P0171 : Fuel System Too Lean

NOTE:

- Before you troubleshoot, **review the general troubleshooting information**.
- Do not clear the DTC or reset the PCM before beginning this troubleshooting procedure until instructed to clear it. Clearing the DTC or resetting the PCM can delete valuable diagnostic information, even if the on-board snapshot is saved.
- Inspect for aftermarket fuel system and engine components before beginning troubleshooting.
- If any of the DTCs listed below are stored at the same time as DTC P0171, troubleshoot those DTCs first, then recheck for P0171.

  P0010, P0011, P100A, P100B, P100C, P100D: VTC system

  P006A, P0101, P0102, P0103: MAF sensor

  P0105, P0106, P0107, P0108: MAP sensor

  P0130, P0133, P2195, P2237, P2238, P2243, P2245, P2251, P2252, P2A00: A/F sensor (Sensor 1)

  P0134, P0135: A/F sensor (Sensor 1) heater

  P0137, P0138, P0139, P2270, P2A01: Secondary HO2S (Sensor 2)

  P0141: Secondary HO2S (Sensor 2) heater

  P0201, P0202, P0203, P0204: No. 1 - No. 4 cylinder injector (s)

  P0400, P0401, P0404, P0405, P0406, P046C, P049D, P2413: EGR system

  P0443, P04AB: EVAP canister purge valve

  P2279: Intake air leakage

  P2646, P2647, P2648, P2649: VTEC system

DTC Description	Confirmed DTC	Pending DTC
P0171 Fuel System Too Lean	B	B

DTC (PGM-FI)

1. Problem verification - Idle

   -1. **Enter the maintenance mode, then start the engine** , and let it idle without load (in P or N).

   -2. Check the parameter (s) below with the HDS.

Signal	Threshold		Current conditions	
	Values	Unit	Values	Unit
AF FB (ST Fuel Trim)	More than 1.30	B	B	B

Do the current condition (s) match the threshold?

YES

The AF FB (ST FUEL TRIM) is too high at idle. Go to step 3.

NO

The AF FB (ST FUEL TRIM) is OK at idle. Go to step 2.

2. Problem verification - On-board Snapshot

-1. Review the on-board snapshot and record the value of the parameters below when AF FB (ST FUEL TRIM) was at its highest point.

Engine Speed	B
Vehicle Speed	B
REL TP Sensor	B
APP Sensor	B

On-board Snapshot

-2. Drive the vehicle according to the conditions determined above.

Signal	**Current conditions**	
	Values	**Unit**
Engine Speed	B	B
Vehicle Speed	B	B
REL TP Sensor	B	B
APP Sensor	B	B

-3. With the help of an assistant, check the parameter (s) below with the HDS while driving.

Signal	**Threshold**		**Current conditions**	
	Values	**Unit**	**Values**	**Unit**
AF FB (ST Fuel Trim)	More than 1.30	B	B	B

Do the current condition (s) match the threshold under the on-board snapshot conditions?

YES

AF FB (ST FUEL TRIM) is too high under the conditions above. Go to step 3.

NO

AF FB (ST FUEL TRIM) is OK under the same conditions as the on-board snapshot. The system is normal at this time. **If the on-board snapshot of this DTC is recorded, try to reproduce the failure under the same conditions with the on-board snapshot**.

3. Check for debris in MAF sensor

-1. Turn the vehicle to the OFF (LOCK) mode.

-2. **Remove MAF sensor/IAT sensor 1** .

-3. Check for lint, bugs, and other foreign objects in the sensor.

Is there debris in MAF sensor/IAT sensor 1?

YES

Remove the debris from MAF sensor/IAT sensor 1 and then use a vacuum cleaner to remove any debris from the air cleaner housing.

NO

Reinstall MAF sensor/IAT sensor 1 , then go to step 4.

4. Check for disconnected or damaged components:

   Visually inspect each of the components below for disconnected hoses, cracks, or damage:

   - Breather hose (A)
   - Air cleaner housing (B)
   - Oil cap (C) and dipstick (D)

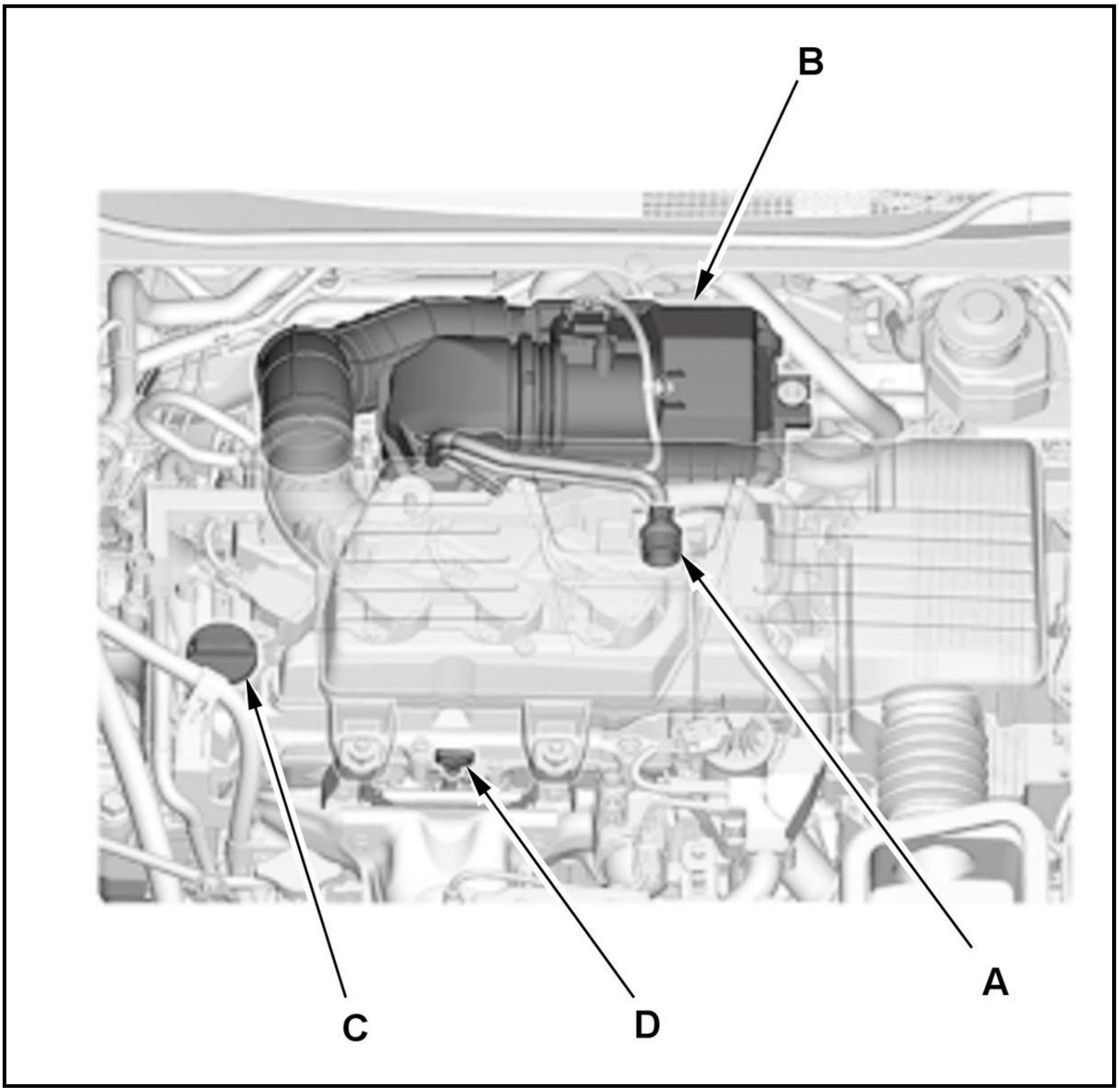

Are any components disconnected or damaged?

YES

Repair the connection or replace damaged part (s).

NO

Go to step 5.

5. Check PCV system

-1. **Enter the maintenance mode, then start the engine** .

-2. Gently pinch the PCV hose (A).

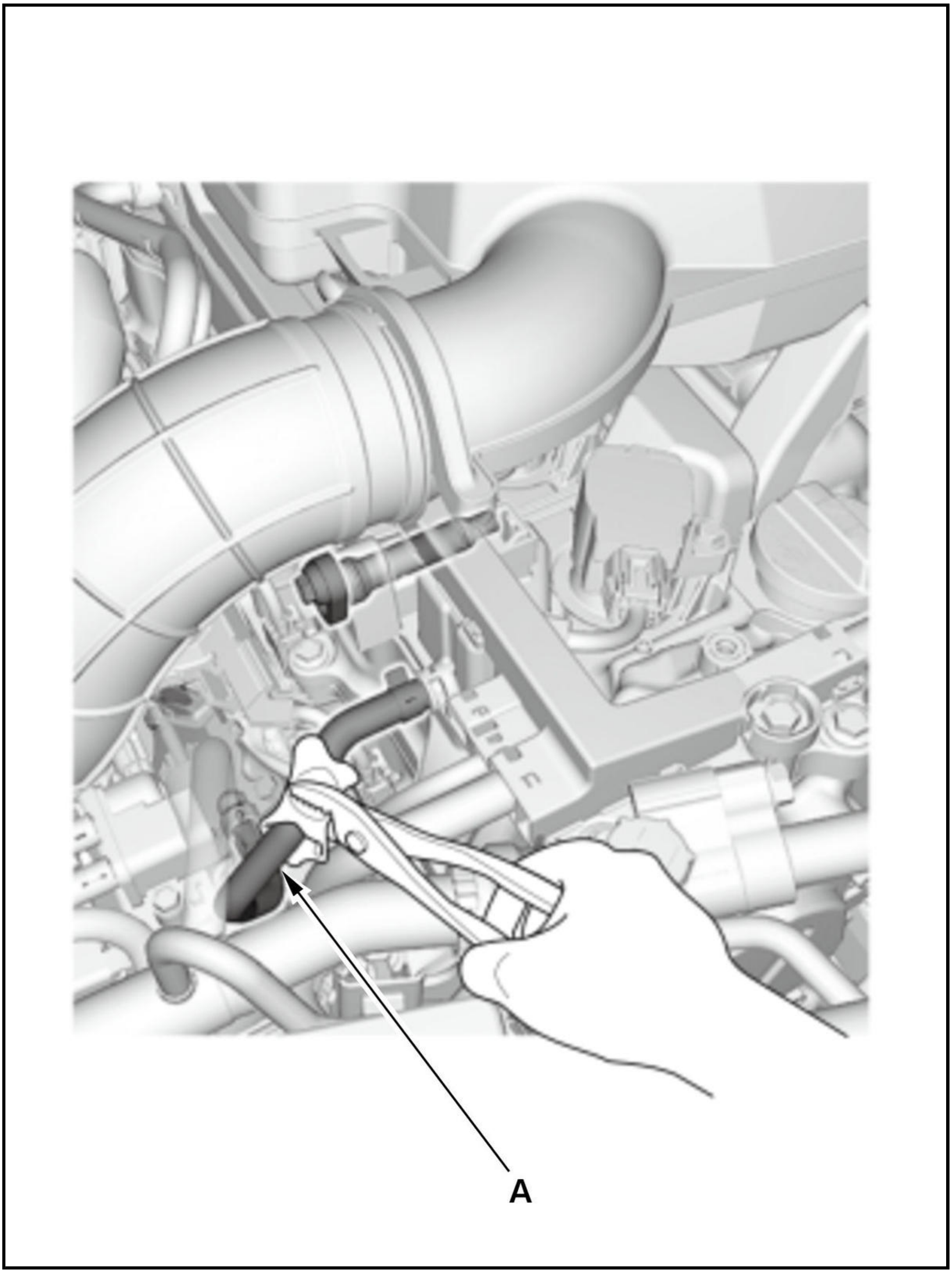

-3. Check the parameter (s) below with the HDS with the PCV hose pinched.

Signal	Threshold		Current conditions	
	Values	Unit	Values	Unit
AF FB (ST Fuel Trim)	More than 1.30	B	B	B

Do the current condition (s) match the threshold?

YES

The PCV system is not leaking. Go to step 6.

NO

There is a leak in the PCV system. Check the PCV hose for leaks and repair as needed. If the hose is OK, **replace the PCV valve** .

6. Check MAF sensor reading

-1. Hold the engine speed at 3, 000 rpm without load (in P or N) until the radiator fan comes on, then let it idle.

Make sure the following conditions are met:

- ECT Sensor 1 above 158 deg.F (70 deg.C)
- Transmission in P or N
- All engine and electrical loads turned off

Signal	Current conditions	
	Values	Unit
ECT Sensor 1	B	B

-3. Monitor the Engine Speed in the DATA LIST with the HDS, then hold the engine speed at 2, 500 rpm with the accelerator pedal held steady.

Signal	Current conditions	
	Values	Unit
Engine Speed	B	B

-4. While holding the engine speed at 2, 500 rpm for 30 seconds, check the parameter (s) below with the HDS.

Signal	Threshold		Current conditions	
	Values	Unit	Values	Unit
MAF Sensor	7.5 - 10.5	g/s	B	B

Do the current condition (s) match the threshold?

YES

The MAF sensor read value is OK. Go to step 7.

NO

The MAF sensor read value is incorrect. Inspect for a cracked, damaged, or incorrectly installed air cleaner assembly. If OK, **replace MAF sensor/IAT sensor 1** .

7. Check for intake manifold vacuum leaks

-1. Turn the vehicle to the OFF (LOCK) mode.

-2. Disconnect the intake air duct from the air cleaner housing.

-3. Connect a large intake manifold adapter cone into the intake air duct from the OTC LeakMaster evaporative emissions system tester kit.

-4. Use the OTC LeakMaster evaporative emissions system tester to direct smoke into the intake manifold.

Inspect each of the areas below for signs of leaks:

- Intake manifold and gaskets
- Throttle body and gasket
- Air intake ducting
- All vacuum and air hoses

Are there any leaks?

YES

Repair the vacuum leak.

NO

Reconnect any disconnected components, then go to step 8.

8. Check fuel pressure

-1. **Check the fuel pressure** under the conditions when AF FB (ST FUEL TRIM) is 1.30 or more.

Signal	Current conditions	
	Values	Unit
AF FB (ST Fuel Trim)	B	B

Is the fuel pressure within a specified range of **fuel pressure test** ?

YES

The fuel pressure is OK. Go to step 9.

NO

Check the correct power supply and ground for the fuel pump and if both are OK, **replace the fuel tank unit** .

9. Replace fuel:

NOTE: There is an increased likelihood of a fuel related issue if the lean condition appeared shortly after refueling. The MIL DIST (MIL Distance) value in the DATA LIST in combination with the fuel level may help you make this determination.

-1. Turn the vehicle to the OFF (LOCK) mode.

-2. Drain the fuel from the fuel tank unit, and refill the fuel tank with known-good fuel.

-3. **Enter the maintenance mode, then start the engine** .

-4. Operate the vehicle under the same conditions where AF FB (ST FUEL TRIM) was 1.30 or more.

Engine Speed	B
Vehicle Speed	B
REL TP Sensor	B
APP Sensor	B

On-board Snapshot

Signal	Current conditions	
	Values	**Unit**
Engine Speed	B	B
Vehicle Speed	B	B
REL TP Sensor	B	B
APP Sensor	B	B

-5. With the help of an assistant, check the parameter (s) below with the HDS while driving.

Signal	Threshold		Current conditions	
	Values	**Unit**	**Values**	**Unit**
AF FB (ST Fuel Trim)	More than 1.30	B	B	B

Do the current condition (s) match the threshold under the on-board snapshot conditions?

YES

The fuel is not the cause of the high AF FB (ST FUEL TRIM) value. Go to step 10.

NO

The fuel was causing the high AF FB (ST FUEL TRIM) value.

10. Replace A/F sensor (Sensor 1)

-1. Turn the vehicle to the OFF (LOCK) mode.

-2. **Replace the A/F sensor (Sensor 1) with a known-good sensor** .

-3. **Enter the maintenance mode, then start the engine** .

-4. Operate the vehicle under the same conditions where AF FB (ST FUEL TRIM) was 1.30 or more.

Engine Speed	B
Vehicle Speed	B
REL TP Sensor	B
APP Sensor	B

On-board Snapshot

Signal	Current conditions	
	Values	**Unit**
Engine Speed	B	B
Vehicle Speed	B	B
REL TP Sensor	B	B
APP Sensor	B	B

-5. With the help of an assistant, check the parameter (s) below with the HDS while driving.

Signal	Threshold		Current conditions	
	Values	**Unit**	**Values**	**Unit**
AF FB (ST Fuel Trim)	More than 1.30	B	B	B

Do the current condition (s) match the threshold under the on-board snapshot conditions?

YES

The A/F sensor (Sensor 1) is not the cause of the high AF FB (ST FUEL TRIM) value. Reinstall the original A/F sensor (Sensor 1), then go to step 11.

NO

The A/F sensor (Sensor 1) was causing the high AF FB (ST FUEL TRIM) value. **Replace the original A/F sensor (Sensor 1)** .

11. Replace injectors

-1. Turn the vehicle to the OFF (LOCK) mode.

-2. **Replace the injectors with known-good injectors** .

-3. **Enter the maintenance mode, then start the engine** .

-4. Operate the vehicle under the same conditions where AF FB (ST FUEL TRIM) was 1.30 or more.

Engine Speed	B
Vehicle Speed	B
REL TP Sensor	B
APP Sensor	B

On-board Snapshot

Signal	Current conditions	
	Values	**Unit**
Engine Speed	B	B
Vehicle Speed	B	B
REL TP Sensor	B	B
APP Sensor	B	B

-5. With the help of an assistant, check the parameter (s) below with the HDS while driving.

Signal	Threshold		Current conditions	
	Values	**Unit**	**Values**	**Unit**
AF FB (ST Fuel Trim)	More than 1.30	B	B	B

Do the current condition (s) match the threshold under the on-board snapshot conditions?

YES

The injectors are not the cause of the high AF FB (ST FUEL TRIM) value. **Substitute a known-good PCM** , then recheck.

NO

The injectors were causing the high AF FB (ST FUEL TRIM) value. **Replace the original injectors** .

DTC P0172

DTC P0172 : Fuel System Too Rich

Special Tools Required

Vacuum Pump/Gauge, 0-30 inHg Snap-on YA4000A or equivalent, commercially available

NOTE:

- Before you troubleshoot, **review the general troubleshooting information**.
- Do not clear the DTC or reset the PCM before beginning this troubleshooting procedure until instructed to clear it. Clearing the DTC or resetting the PCM can delete valuable diagnostic information, even if the on-board snapshot is saved.
- Inspect for aftermarket fuel system and engine components before beginning troubleshooting.
- If any of the DTCs listed below are stored at the same time as P0172, troubleshoot those DTCs first, then recheck for P0172.

  P0010, P0011, P100A, P100B, P100C, P100D: VTC system

  P006A, P0101, P0102, P0103: MAF sensor

  P0105, P0106, P0107, P0108: MAP sensor

  P0130, P0133, P2195, P2237, P2238, P2243, P2245, P2251, P2252, P2A00: A/F sensor (Sensor 1)

  P0134, P0135: A/F sensor (Sensor 1) heater

  P0137, P0138, P0139, P2270, P2A01: Secondary HO2S (Sensor 2)

  P0141: Secondary HO2S (Sensor 2) heater

  P0201, P0202, P0203, P0204: No. 1 - No. 4 cylinder injector (s)

  P0400, P0401, P0404, P0405, P0406, P046C, P049D, P2413: EGR system

  P0443, P04AB: EVAP canister purge valve

  P2279: Intake air leakage

  P2646, P2647, P2648, P2649: VTEC system

DTC Description	Confirmed DTC	Pending DTC
P0172 Fuel System Too Rich	B	B

DTC (PGM-FI)

1. Problem verification - Idle

   -1. **Enter the maintenance mode, then start the engine** .

   -2. Hold the engine speed at 3, 000 rpm without load (in P or N) until the radiator fan comes on, then let it idle.

   -3. Check the parameter (s) below with the HDS.

Signal	Threshold		Current conditions	
	Values	**Unit**	**Values**	**Unit**
AF FB (ST Fuel Trim)	Less than 0.79	B	B	B

Do the current condition (s) match the threshold?

YES

The AF FB (ST FUEL TRIM) is too low at idle. Go to step 3.

NO

The AF FB (ST FUEL TRIM) is OK at idle. Go to step 2.

2. Problem verification - On-board Snapshot

   -1. Review the on-board snapshot and record the value of the parameters below when AF FB (ST FUEL TRIM) was at its lowest point.

Engine Speed	B
Vehicle Speed	B
REL TP Sensor	B
APP Sensor	B

   On-board Snapshot

   -2. Drive the vehicle according to the conditions determined above.

Signal	Current conditions	
	Values	**Unit**
Engine Speed	B	B
Vehicle Speed	B	B
REL TP Sensor	B	B

Signal	Current conditions	
	Values	**Unit**
APP Sensor	B	B

   -3. With the help of an assistant, check the parameter (s) below with the HDS while driving.

Signal	Threshold		Current conditions	
	Values	**Unit**	**Values**	**Unit**
AF FB (ST Fuel Trim)	Less than 0.79	B	B	B

   Do the current condition (s) match the threshold under the on-board snapshot conditions?

   YES

   AF FB (ST FUEL TRIM) is too low under the conditions above. Go to step 3.

   NO

   AF FB (ST FUEL TRIM) is OK under the same conditions as the on-board snapshot. The system is normal at this time. **If the on-board snapshot of this DTC is recorded, try to reproduce the failure under the same conditions with the on-board snapshot**.

3. Check fuel pressure

-1. **Enter the maintenance mode, then start the engine** , and let it idle.

-2. **Check the fuel pressure** under the conditions when AF FB (ST FUEL TRIM) is 0.79 or less.

Signal	**Current conditions**	
	Values	**Unit**
AF FB (ST Fuel Trim)	B	B

Is the fuel pressure within a specified range of **fuel pressure test** ?

YES

The fuel pressure is OK. Go to step 4.

NO

Replace the fuel pressure regulator and the fuel tank unit .

4. Replace fuel:

NOTE: There is an increased likelihood of a fuel related issue if the rich condition appeared shortly after refueling. The MIL DIST (MIL Distance) value in the DATA LIST in combination with the fuel level may help you make this determination.

-1. Turn the vehicle to the OFF (LOCK) mode.

-2. Drain the fuel from the fuel tank unit, and refill the fuel tank with known-good fuel.

-3. **Enter the maintenance mode, then start the engine** , and let it idle.

-4. Operate the vehicle under the same conditions where AF FB (ST FUEL TRIM) was 0.79 or less.

Engine Speed	B
Vehicle Speed	B
REL TP Sensor	B
APP Sensor	B

On-board Snapshot

Signal	**Current conditions**	
	Values	**Unit**
Engine Speed	B	B
Vehicle Speed	B	B
REL TP Sensor	B	B
APP Sensor	B	B

-5. With the help of an assistant, check the parameter (s) below with the HDS while driving.

Signal	**Threshold**		**Current conditions**	
	Values	**Unit**	**Values**	**Unit**
AF FB (ST Fuel Trim)	Less than 0.79	B	B	B

Do the current condition (s) match the threshold under the on-board snapshot conditions?

YES

The fuel is not the cause of the low AF FB (ST FUEL TRIM) value. Go to step 5.

NO

The fuel was causing the low AF FB (ST FUEL TRIM) value.

5. Check MAF sensor reading

-1. Continue to let the engine idle.

Make sure the following conditions are met:

- ECT Sensor 1 above 158 deg.F (70 deg.C)
- Transmission in P or N
- All engine and electrical loads turned off

Signal	Current conditions	
	Values	Unit
ECT Sensor 1	B	B

-3. Monitor the Engine Speed in the DATA LIST with the HDS, then hold the engine speed at 2, 500 rpm with the accelerator pedal held steady.

Signal	Current conditions	
	Values	Unit
Engine Speed	B	B

-4. While holding the engine speed at 2, 500 rpm for 30 seconds, check the parameter (s) below with the HDS.

Signal	Threshold		Current conditions	
	Values	Unit	Values	Unit
MAF Sensor	7.5-10.5	g/s	B	B

Do the current condition (s) match the threshold?

YES

The MAF sensor read value is OK. Go to step 6.

NO

The MAF sensor read value is incorrect. Inspect for a cracked, damaged, or incorrectly installed air cleaner assembly. If OK, **replace MAF sensor/IAT sensor 1** .

6. Check engine oil

-1. Continue to let the engine idle.

-2. Gently pinch the PCV hose (A).

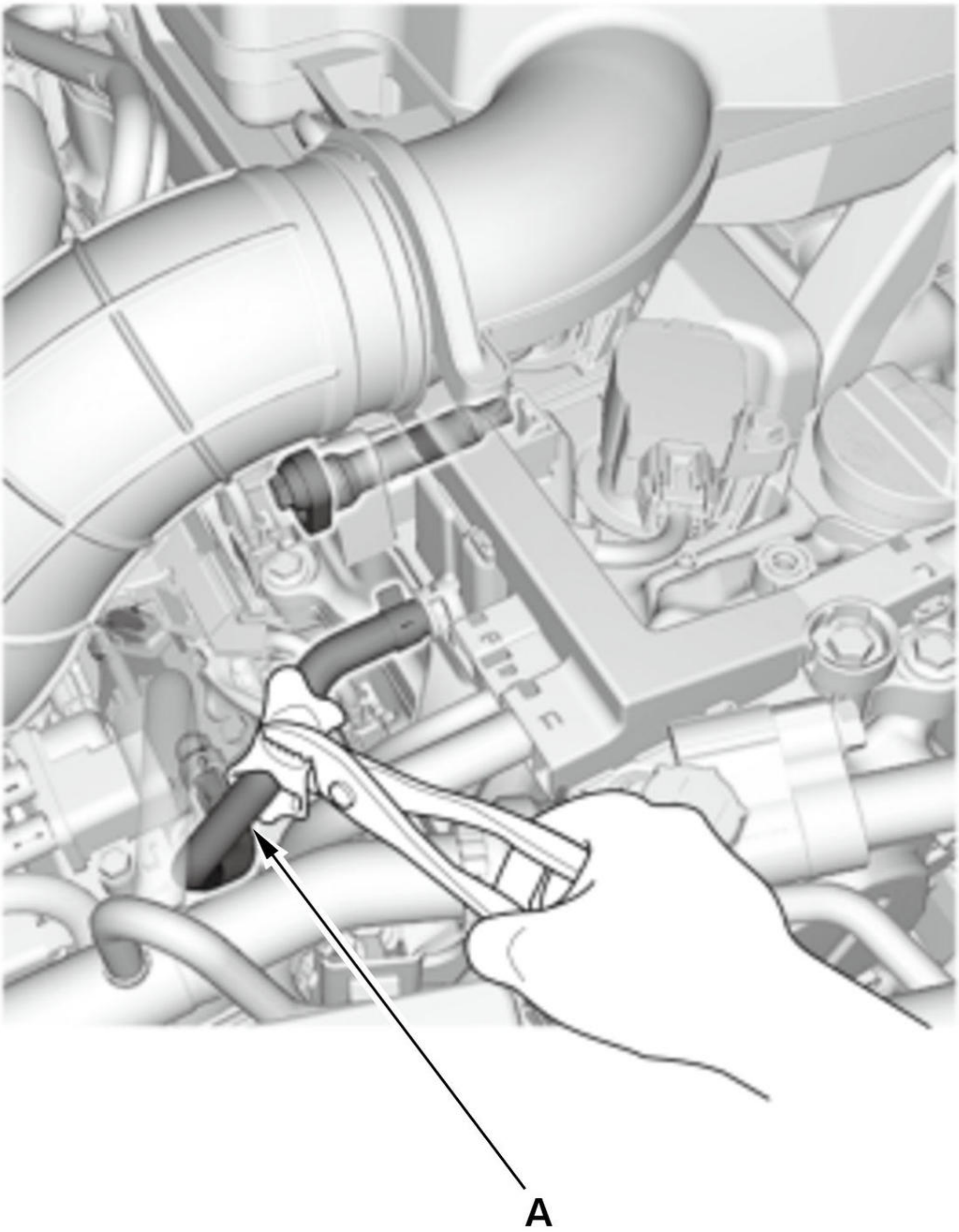

-3. Check the parameter (s) below with the HDS with the PCV hose pinched.

Signal	Threshold		Current conditions	
	Values	Unit	Values	Unit
AF FB (ST Fuel Trim)	Less than 0.79	B	B	B

Do the current condition (s) match the threshold?

YES

The engine oil is OK. Go to step 7.

NO

The engine oil is contaminated. Determine the cause of the contaminated oil (faulty injectors, etc.), then **replace the engine oil** and **oil filter** .

7. Check EVAP canister purge valve

-1. Turn the vehicle to the OFF (LOCK) mode.

-2. Disconnect the following connectors.

EVAP canister purge valve 1 2P connector
EVAP canister purge valve 2 2P connector

-3. Disconnect the vacuum hose (purge line) (A) from the 3-way joint (B) in the engine compartment, and connect a vacuum pump/gauge, 0-30 inHg to the 3-way joint as shown.

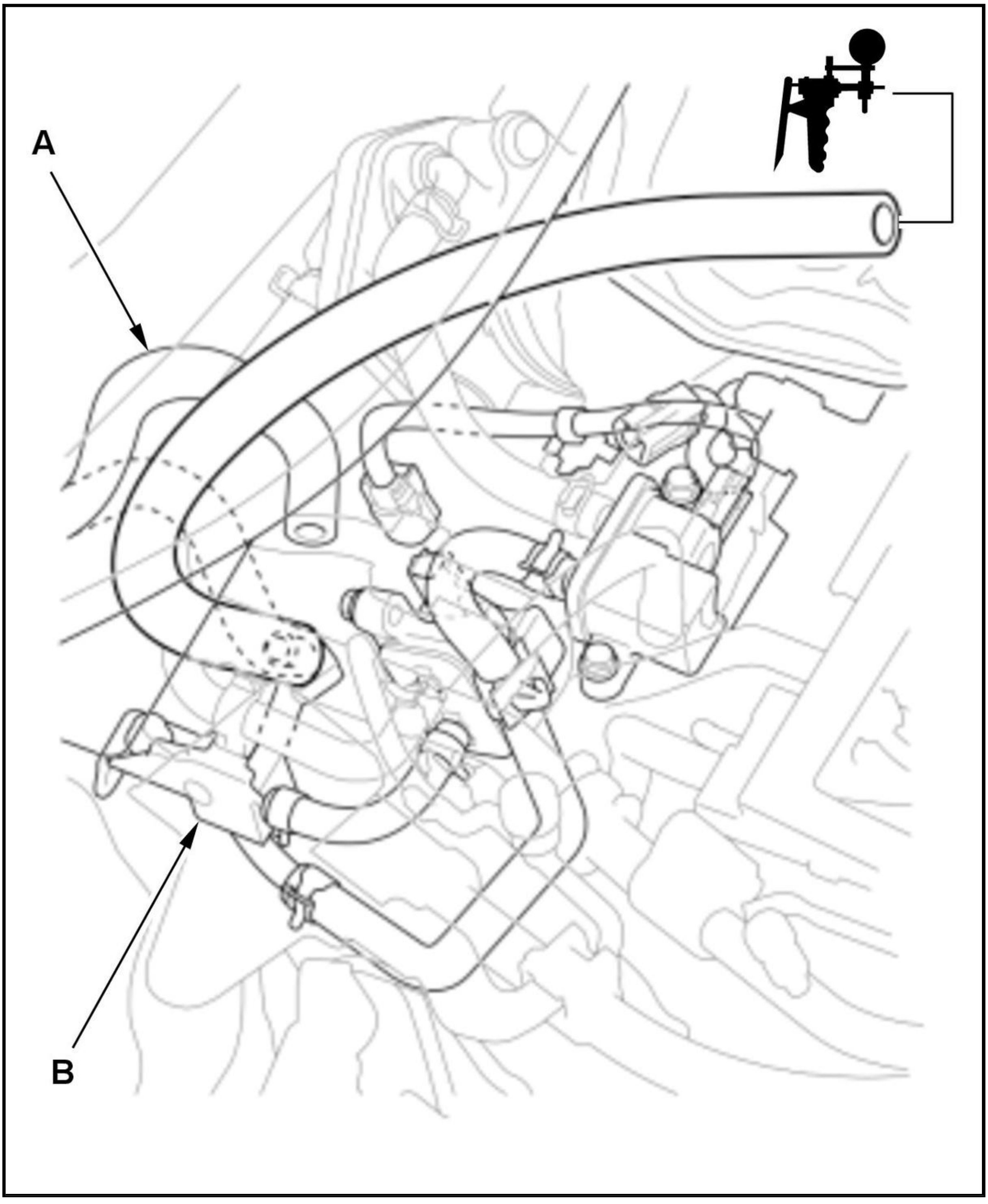

-4. **Enter the maintenance mode, then start the engine** , and let it idle.

Is there vacuum?

YES

When the climate is warm, fuel vapor from the canister line to the fuel tank enters intake manifold, enriching mixture (excessively rich), causing the engine to stall in some cases. If needed, **replace EVAP canister purge valve 1 and/or EVAP canister purge valve 2** .

NO

Go to step 8.

8. Replace A/F sensor (Sensor 1)

   -1. Turn the vehicle to the OFF (LOCK) mode.

   -2. **Replace the A/F sensor (Sensor 1) with a known-good sensor** .

   -3. **Enter the maintenance mode, then start the engine** , and let it idle.

   -4. Operate the vehicle under the same conditions where AF FB (ST FUEL TRIM) was 0.79 or less.

Engine Speed	B
Vehicle Speed	B
REL TP Sensor	B
APP Sensor	B

On-board Snapshot

Signal	Current conditions	
	Values	Unit
Engine Speed	B	B
Vehicle Speed	B	B
REL TP Sensor	B	B
APP Sensor	B	B

-5. With the help of an assistant, check the parameter (s) below with the HDS while driving.

Signal	Threshold		Current conditions	
	Values	Unit	Values	Unit
AF FB (ST Fuel Trim)	Less than 0.79	B	B	B

Do the current condition (s) match the threshold under the on-board snapshot conditions?

YES

The A/F sensor (Sensor 1) is not the cause of the low AF FB (ST FUEL TRIM) value. Reinstall the original A/F sensor (Sensor 1), then go to step 9.

NO

The A/F sensor (Sensor 1) was causing the low AF FB (ST FUEL TRIM) value. **Replace the original A/F sensor (Sensor 1)** .

9. Replace injectors

-1. Turn the vehicle to the OFF (LOCK) mode.

-2. Replace the injectors with known-good injectors .

-3. Enter the maintenance mode, then start the engine , and let it idle.

-4. Operate the vehicle under the same conditions where AF FB (ST FUEL TRIM) was 0.79 or less.

Engine Speed	B
Vehicle Speed	B
REL TP Sensor	B
APP Sensor	B

On-board Snapshot

Signal	Current conditions	
	Values	Unit
Engine Speed	B	B
Vehicle Speed	B	B
REL TP Sensor	B	B
APP Sensor	B	B

-5. With the help of an assistant, check the parameter (s) below with the HDS while driving.

Signal	Threshold		Current conditions	
	Values	Unit	Values	Unit
AF FB (ST Fuel Trim)	Less than 0.79	B	B	B

Do the current condition (s) match the threshold under the on-board snapshot conditions?

YES

The injectors are not the cause of the low AF FB (ST FUEL TRIM) value. Substitute a known-good PCM , then recheck.

NO

The injectors were causing the low AF FB (ST FUEL TRIM) value. Replace the original injectors .

DTC P0201, P0202, P0203, P0204

DTC P0201 : No. 1 Cylinder Injector Circuit Malfunction

DTC P0202 : No. 2 Cylinder Injector Circuit Malfunction

DTC P0203 : No. 3 Cylinder Injector Circuit Malfunction

DTC P0204 : No. 4 Cylinder Injector Circuit Malfunction

NOTE: Before you troubleshoot, review the general troubleshooting information.

DTC Description	Confirmed DTC	Pending DTC
P0201 No. 1 Cylinder Injector Circuit Malfunction	B	B
P0202 No. 2 Cylinder Injector Circuit Malfunction	B	B
P0203 No. 3 Cylinder Injector Circuit Malfunction	B	B
P0204 No. 4 Cylinder Injector Circuit Malfunction	B	B

DTC (PGM-FI)

1. Problem verification

-1. Turn the vehicle to the ON mode.

-2. Clear the DTC with the HDS.

-3. **Enter the maintenance mode, then start the engine** .

-4. Check for Pending or Confirmed DTCs with the HDS.

DTC Description	Confirmed DTC	Pending DTC
P0201 No. 1 Cylinder Injector Circuit Malfunction	B	B
P0202 No. 2 Cylinder Injector Circuit Malfunction	B	B
P0203 No. 3 Cylinder Injector Circuit Malfunction	B	B
P0204 No. 4 Cylinder Injector Circuit Malfunction	B	B

Is DTC P0201, P0202, P0203, and/or P0204 indicated?

YES

The failure is duplicated. Go to step 2.

NO

Intermittent failure, the system is OK at this time. Check for poor connections or loose terminals at the injector and the PCM. **If the on-board snapshot of this DTC is recorded, try to reproduce the failure under the same conditions with the on-board snapshot**.

2. Injector internal resistance check

-1. Turn the vehicle to the OFF (LOCK) mode.

-2. Disconnect the following connector (s).

Injector 2P connector (problem cylinder)

-3. At the injector side, measure the resistance between test points 1 and 2.

Test condition	Vehicle OFF (LOCK) mode
B	Injector 2P connector (problem cylinder) : disconnected
Test point 1	Injector 2P connector (male terminals) No. 1 (injector side) : ①
Test point 2	Injector 2P connector (male terminals) No. 2 (injector side) : ①

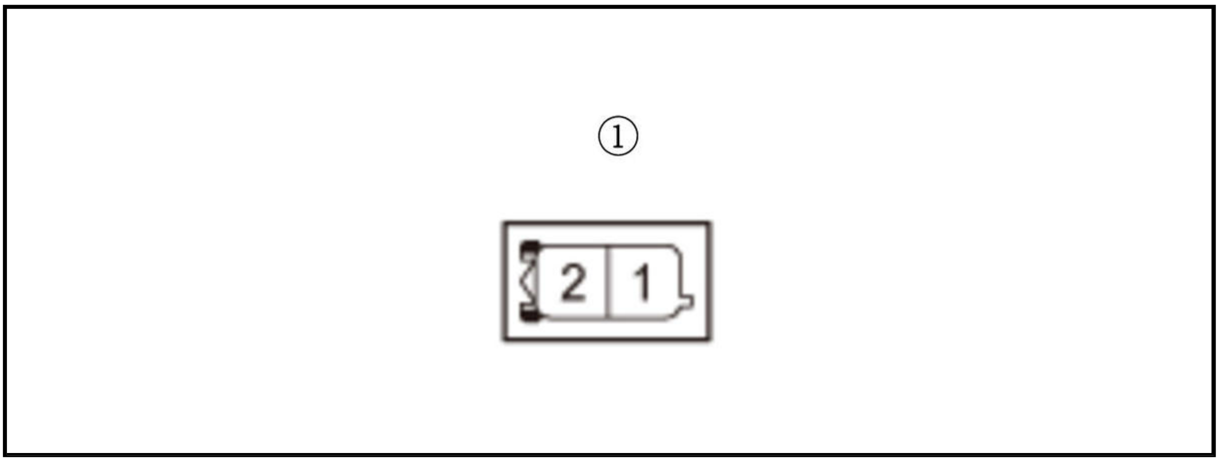

Is there 9.8 - 11 Ω at room temperature?

YES

The injector is OK. Go to step 3.

NO

Replace the problem injector .

3. Open wire check (IGP (INJ) //IGP (MAIN) /FI_MAIN_RLY_OUT line)

-1. Turn the vehicle to the ON mode.

-2. Measure the voltage between test points 1 and 2.

Test condition	Vehicle ON mode
B	Injector 2P connector (problem cylinder) : disconnected
Test point 1	Injector 2P connector (female terminals) No. 1: ①
Test point 2	Body ground

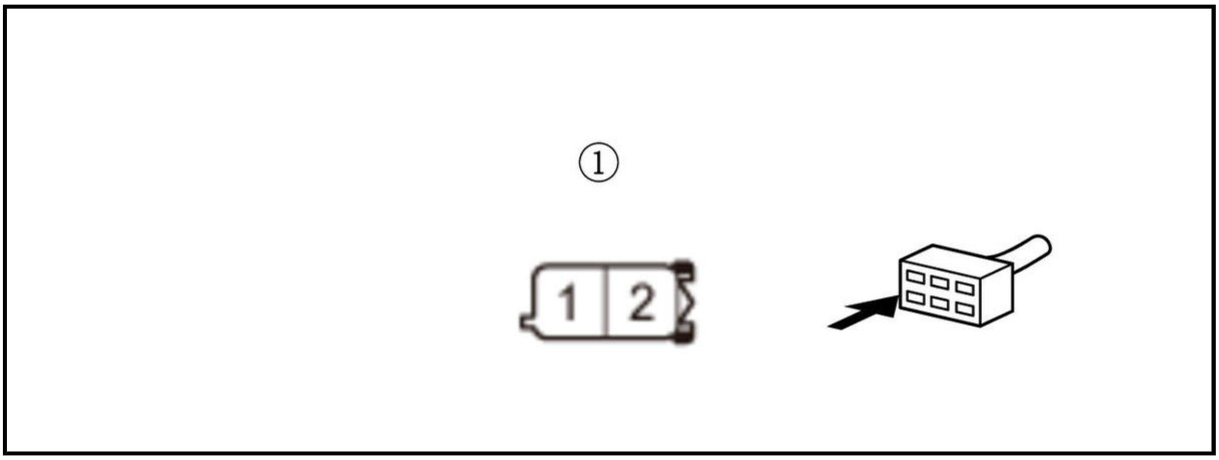

Is there battery voltage?

YES

Go to step 4.

NO

Repair an open in the IGP (INJ) //IGP (MAIN) /FI_MAIN_RLY_OUT wire between the injector and the relay circuit board.

4. Determine possible failure area (short in INJ line, open in INJ line)

-1. Turn the vehicle to the OFF (LOCK) mode.

-2. Measure the resistance between body ground and the appropriate injector 2P connector terminal No. 2 of the problem cylinder (see table).

Test condition	Vehicle OFF (LOCK) mode
B	Injector 2P connector (problem cylinder) : disconnected

Problem cylinder	DTC	Connector	Terminal
No. 1	P0201	Injector 2P connector (female terminals) : ①	No. 1
No. 2	P0202		
No. 3	P0203		
No. 4	P0204		

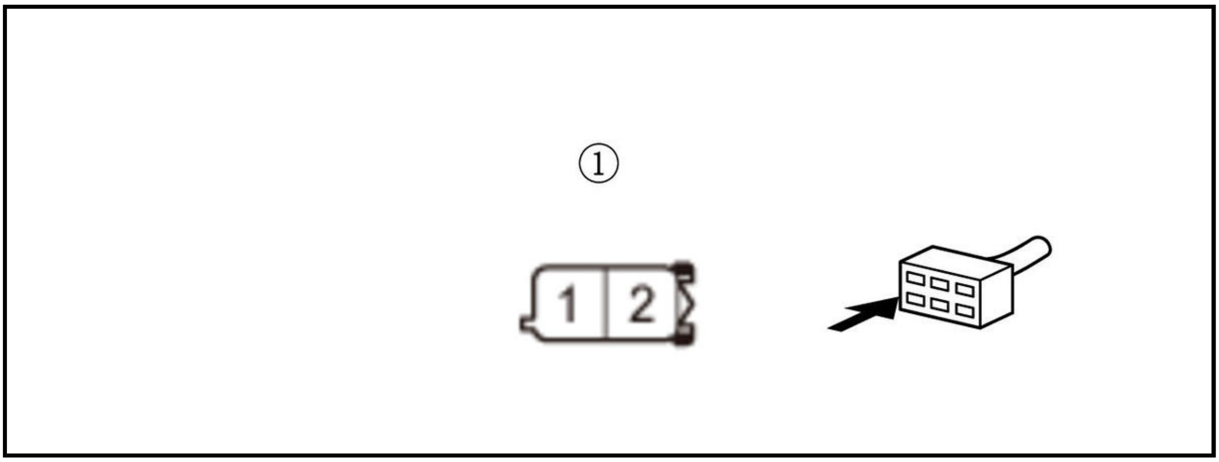

Is there 1 MΩ or more?

YES

Go to step 6.

NO

Go to step 5.

5. Shorted wire check (INJ lines)

-1. Jump the SCS line with the HDS, and wait more than 1 minute.

-2. Disconnect the following connector.

PCM connector E (80P)

-3. Measure the resistance between body ground and the appropriate injector 2P connector terminal No. 1 of the problem cylinder (see table).

Test condition	Vehicle OFF (LOCK) mode
B	Injector 2P connector (problem cylinder) : disconnected
B	PCM connector E (80P) : disconnected

Problem cylinder	DTC	Connector	Terminal
No. 1	P0201	Injector 2P connector (female terminals) : ①	No. 2
No. 2	P0202		
No. 3	P0203		
No. 4	P0204		

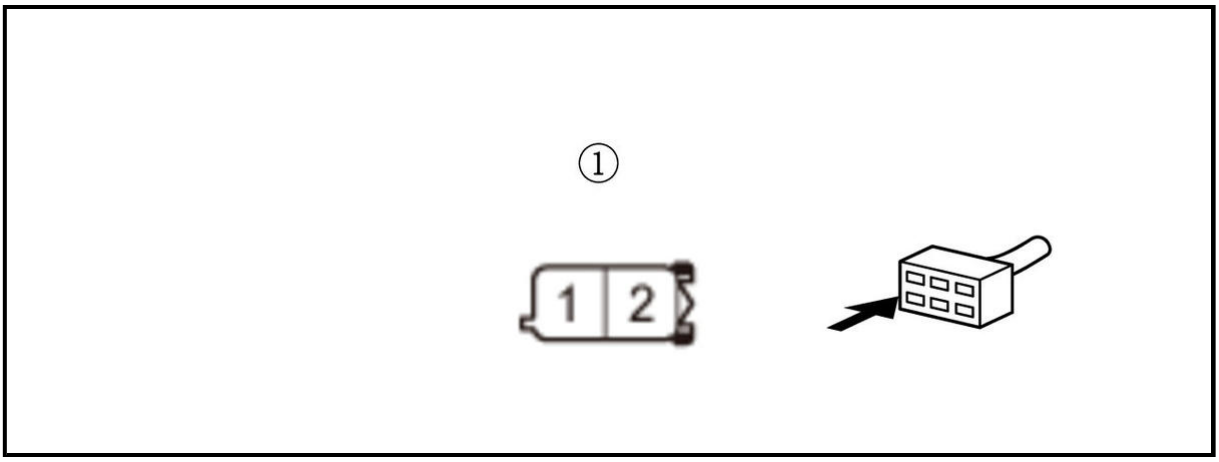

Is there 1 MΩ or more?

YES

The INJ wire is OK. Check for any authorized service information related to the DTCs or symptoms you are troubleshooting, or **substitute a known-good PCM** .

NO

Repair a short in the INJ wire between the PCM and the injector.

6. Open wire check (INJ lines)

   -1. Jump the SCS line with the HDS, and wait more than 1 minute.

   -2. Disconnect the following connector.

PCM connector E (80P)

   -3. Measure the resistance between appropriate injector 2P connector terminal No. 2: ① and the appropriate PCM connector terminal of the problem cylinder (see table).

Test condition	Vehicle OFF (LOCK) mode
B	Injector 2P connector (problem cylinder) : disconnected
B	PCM connector E (80P) : disconnected

Problem cylinder	DTC	Connector	Terminal
No. 1	P0201	**PCM connector E (80P)**	No. 18
No. 2	P0202		No. 21
No. 3	P0203		No. 20
No. 4	P0204		No. 19

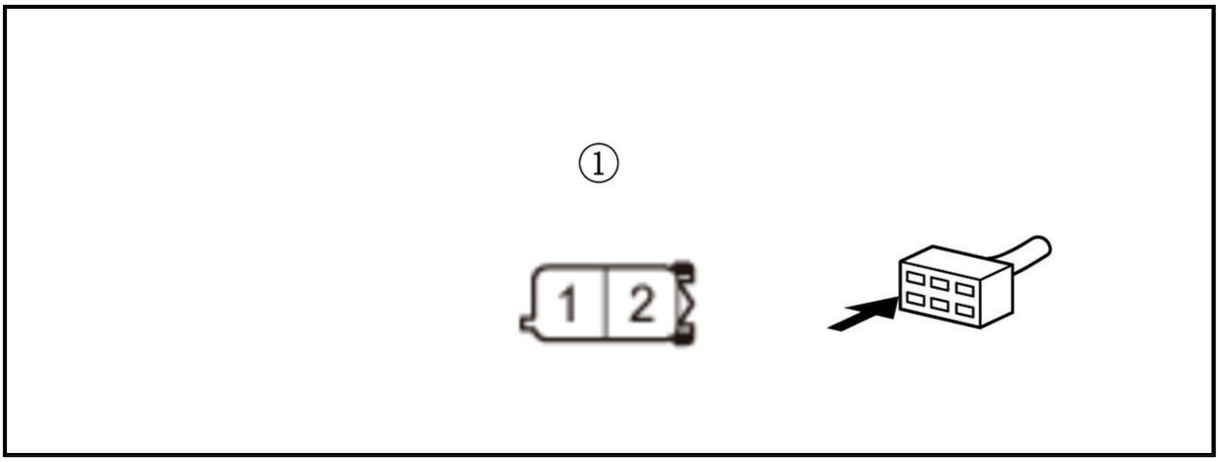

Is there 1.0 Ω or less?

YES

The INJ wire is OK. Check for any authorized service information related to the DTCs or symptoms you are troubleshooting, or **substitute a known-good PCM** .

NO

Repair an open in the INJ wire between the PCM and the injector.

DTC P0221

DTC P0221 : TP Sensor B Out of Range

NOTE: Before you troubleshoot, **review the general troubleshooting information**.

DTC Description	Confirmed DTC	Pending DTC
P0221 TP Sensor B Out of Range	B	B

DTC (PGM-FI)

1. Problem verification 1

   -1. Turn the vehicle to the ON mode.

   -2. Clear the DTC with the HDS.

   -3. Check the parameter (s) below with the HDS.

Signal	Threshold		Current conditions	
	Values	Unit	Values	Unit
TP Sensor B	Less than 0.50	V	B	B

   Do the current condition (s) match the threshold?

   YES

   The failure is duplicated. Go to step 3.

   NO

   Go to step 2.

2. Problem verification 2

-1. Check the parameter (s) below with the HDS.

Signal	Threshold		Current conditions	
	Values	**Unit**	**Values**	**Unit**
TP Sensor B	More than 4.63	V	B	B

Do the current condition (s) match the threshold?

YES

The failure is duplicated. Go to step 7.

NO

Intermittent failure, the system is OK at this time. Check for poor connections or loose terminals at the throttle body and the PCM. **If the on-board snapshot of this DTC is recorded, try to reproduce the failure under the same conditions with the on-board snapshot**.

3. Determine possible failure area (THL2 line, others)

-1. Check for Pending or Confirmed DTCs with the HDS.

DTC Description	Confirmed DTC	Pending DTC
P0121 TP Sensor A Out of Range	B	B
P0221 TP Sensor B Out of Range	B	B

Are DTC P0121 and P0221 indicated at the same time?

YES

Go to step 5.

NO

Go to step 4.

4. Shorted wire check (THL2 line)

-1. Turn the vehicle to the OFF (LOCK) mode.

-2. Jump the SCS line with the HDS, and wait more than 1 minute.

-3. Disconnect the following connectors.

PCM connector E (80P)
Throttle body 6P connector

-4. Measure the resistance between test points 1 and 2.

Test condition	Vehicle OFF (LOCK) mode
B	PCM connector E (80P) : disconnected
B	Throttle body 6P connector: disconnected
Test point 1	Throttle body 6P connector (female terminals) No. 4: ①
Test point 2	Body ground

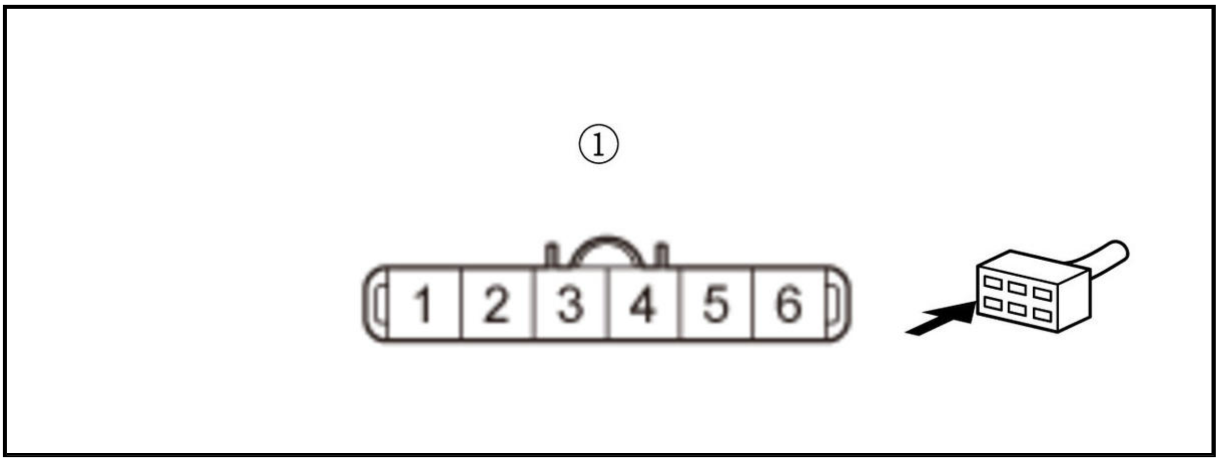

Is there 1 MΩ or more?

YES

The THL2 wire is OK. Check for any authorized service information related to the DTCs or symptoms you are troubleshooting, or **substitute a known-good PCM** .

NO

Repair a short in the THL2 wire between the PCM (E51) and the throttle body.

5. Determine possible failure area (throttle body, others)

-1. Turn the vehicle to the OFF (LOCK) mode.

-2. Disconnect the following connector.

Throttle body 6P connector

-3. Turn the vehicle to the ON mode.

-4. Measure the voltage between test points 1 and 2.

Test condition	Vehicle ON mode
B	Throttle body 6P connector: disconnected
Test point 1	Throttle body 6P connector (female terminals) No. 5: ①
Test point 2	Body ground

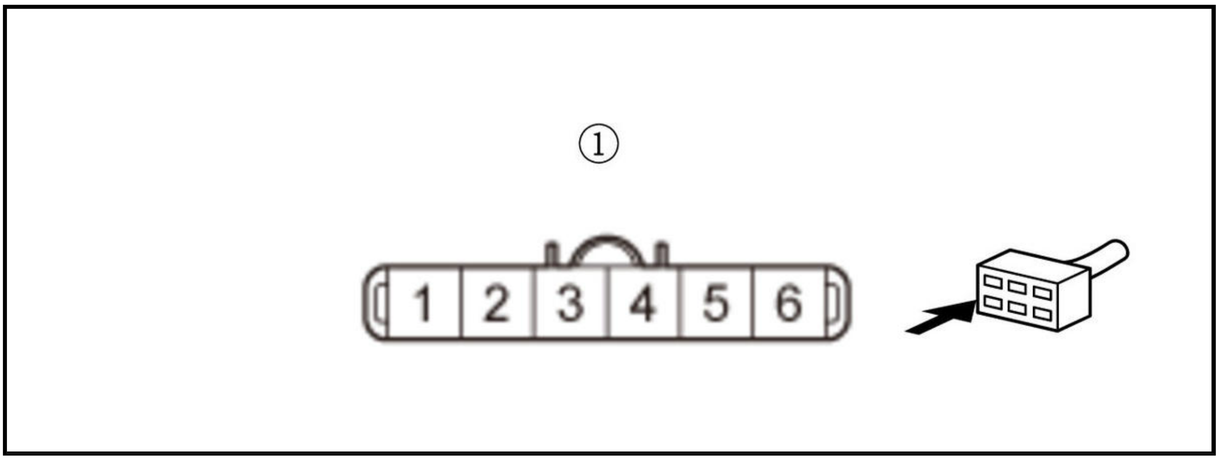

Is there about 5.0 V?

YES

Replace the throttle body .

NO

Go to step 6.

6. Open wire check (VCC3 (DBW) line)

-1. Turn the vehicle to the OFF (LOCK) mode.

-2. Jump the SCS line with the HDS, and wait more than 1 minute.

-3. Disconnect the following connector.

PCM connector E (80P)

-4. Measure the resistance between test points 1 and 2.

Test condition	Vehicle OFF (LOCK) mode
B	Throttle body 6P connector: disconnected
B	PCM connector E (80P) : disconnected
Test point 1	Throttle body 6P connector (female terminals) No. 5: ①
Test point 2	PCM connector E (80P) No. 75

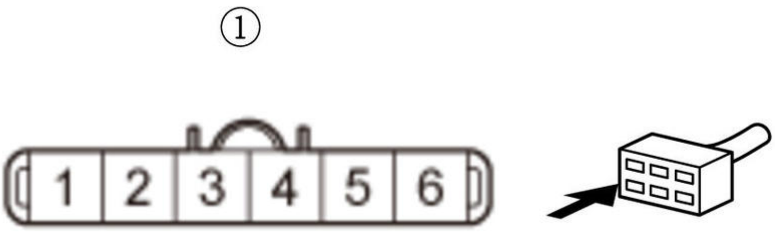

Is there 1.0 Ω or less?

YES

The VCC3 (DBW) wire is OK. Check for any authorized service information related to the DTCs or symptoms you are troubleshooting, or substitute a known-good PCM .

NO

Repair an open in the VCC3 (DBW) wire between the PCM (E75) and the throttle body.

7. Determine possible failure area (SG3 (DBW) line, others)

-1. Check for Pending or Confirmed DTCs with the HDS.

DTC Description	Confirmed DTC	Pending DTC
P0121 TP Sensor A Out of Range	B	B
P0221 TP Sensor B Out of Range	B	B

Are DTC P0121 and P0221 indicated at the same time?

YES

Go to step 10.

NO

Go to step 8.

8. Determine possible failure area (throttle body, others)

-1. Turn the vehicle to the OFF (LOCK) mode.

-2. Disconnect the following connector.

Throttle body 6P connector

-3. Turn the vehicle to the ON mode.

-4. Measure the voltage between test points 1 and 2.

Test condition	Vehicle ON mode
B	Throttle body 6P connector: disconnected
Test point 1	Throttle body 6P connector (female terminals) No. 4: ①
Test point 2	Body ground

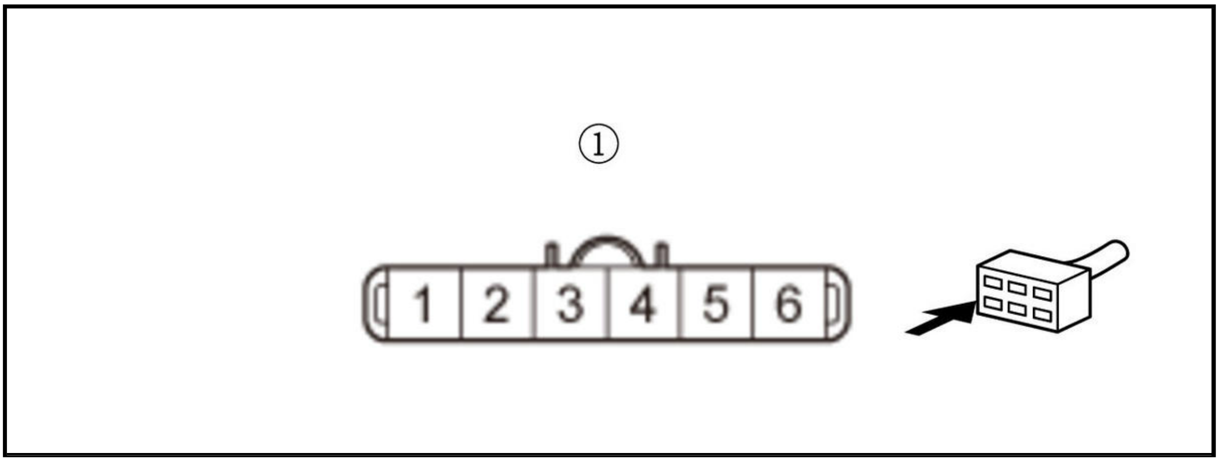

Is there about 5.0 V?

YES

Replace the throttle body .

NO

Go to step 9.

9. Open wire check (THL2 line)

-1. Turn the vehicle to the OFF (LOCK) mode.

-2. Jump the SCS line with the HDS, and wait more than 1 minute.

-3. Disconnect the following connector.

PCM connector E (80P)

-4. Measure the resistance between test points 1 and 2.

Test condition	Vehicle OFF (LOCK) mode
B	Throttle body 6P connector: disconnected
B	PCM connector E (80P) : disconnected
Test point 1	Throttle body 6P connector (female terminals) No. 4: ①
Test point 2	**PCM connector E (80P) No. 51**

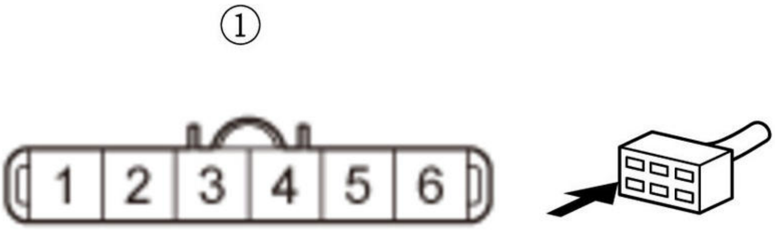

Is there 1.0 Ω or less?

YES

The THL2 wire is OK. Check for any authorized service information related to the DTCs or symptoms you are troubleshooting, or **substitute a known-good PCM** .

NO

Repair an open in the THL2 wire between the PCM (E51) and the throttle body.

10. Open wire check (SG3 (DBW) line)

-1. Turn the vehicle to the OFF (LOCK) mode.

-2. Jump the SCS line with the HDS, and wait more than 1 minute.

-3. Disconnect the following connectors.

PCM connector E (80P)
Throttle body 6P connector

-4. Measure the resistance between test points 1 and 2.

Test condition	Vehicle OFF (LOCK) mode
B	PCM connector E (80P) : disconnected
B	Throttle body 6P connector: disconnected
Test point 1	Throttle body 6P connector (female terminals) No. 3: ①
Test point 2	**PCM connector E (80P) No. 76**

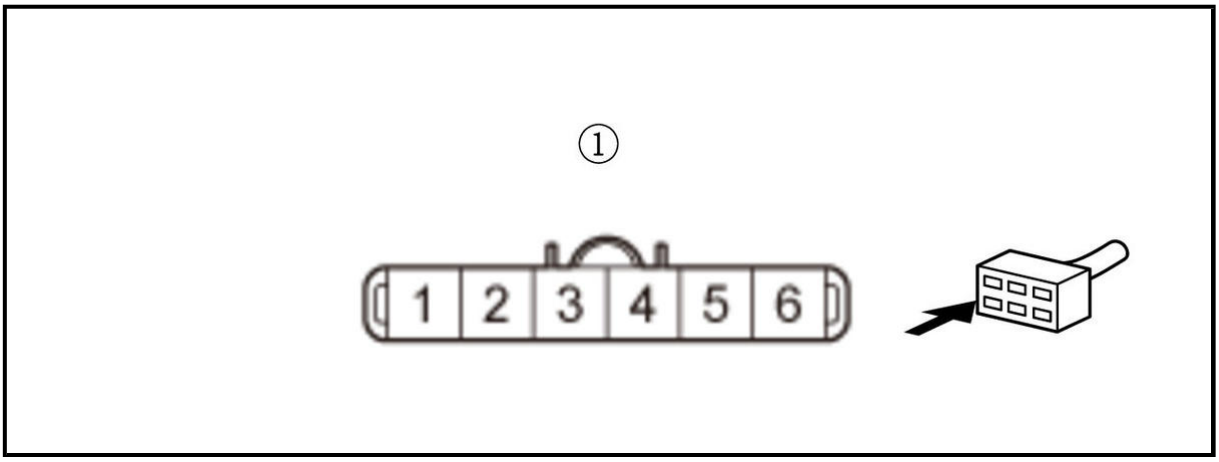

Is there 1.0 Ω or less?

YES

The SG3 (DBW) wire is OK. Check for any authorized service information related to the DTCs or symptoms you are troubleshooting, or **substitute a known-good PCM** .

NO

Repair an open in the SG3 (DBW) wire between the PCM (E76) and the throttle body.

DTC P0222

DTC P0222 : TP Sensor B Circuit Low Voltage

NOTE: Before you troubleshoot, **review the general troubleshooting information**.

DTC Description	Confirmed DTC	Pending DTC
P0222 TP Sensor B Circuit Low Voltage	B	B

DTC (PGM-FI)

1. Problem verification

-1. Turn the vehicle to the ON mode.

-2. Clear the DTC with the HDS.

-3. Check the parameter (s) below with the HDS.

Signal	Threshold		Current conditions	
	Values	Unit	Values	Unit
TP Sensor B	Less than 0.3	V	B	B

Do the current condition (s) match the threshold?

YES

The failure is duplicated. Go to step 2.

NO

Intermittent failure, the system is OK at this time. Check for poor connections or loose terminals at the throttle body and the PCM. **If the on-board snapshot of this DTC is recorded, try to reproduce the failure under the same conditions with the on-board snapshot**.

2. Determine possible failure area (THL2 line, others)

-1. Check for Pending or Confirmed DTCs with the HDS.

DTC Description	Confirmed DTC	Pending DTC
P0122 TP Sensor A Circuit Low Voltage	B	B
P0222 TP Sensor B Circuit Low Voltage	B	B

Are DTC P0122 and P0222 indicated at the same time?

YES

Go to step 4.

NO

Go to step 3.

3. Shorted wire check (THL2 line)

-1. Turn the vehicle to the OFF (LOCK) mode.

-2. Jump the SCS line with the HDS, and wait more than 1 minute.

-3. Disconnect the following connectors.

PCM connector E (80P)
Throttle body 6P connector

-4. Measure the resistance between test points 1 and 2.

Test condition	Vehicle OFF (LOCK) mode
B	PCM connector E (80P) : disconnected
B	Throttle body 6P connector: disconnected
Test point 1	Throttle body 6P connector (female terminals) No. 4: ①
Test point 2	Body ground

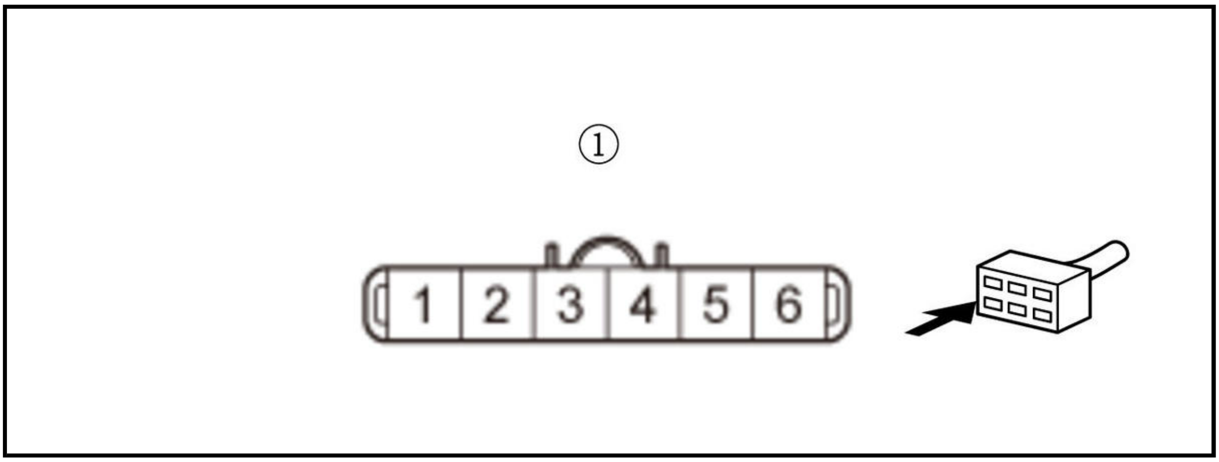

Is there 1 MΩ or more?

YES

The THL2 wire is OK. Check for any authorized service information related to the DTCs or symptoms you are troubleshooting, or substitute a known-good PCM .

NO

Repair a short in the THL2 wire between the PCM (E51) and the throttle body.

4. Determine possible failure area (throttle body, others)

-1. Turn the vehicle to the OFF (LOCK) mode.

-2. Disconnect the following connector.

Throttle body 6P connector

-3. Turn the vehicle to the ON mode.

-4. Measure the voltage between test points 1 and 2.

Test condition	Vehicle ON mode
B	Throttle body 6P connector: disconnected
Test point 1	Throttle body 6P connector (female terminals) No. 5: ①
Test point 2	Body ground

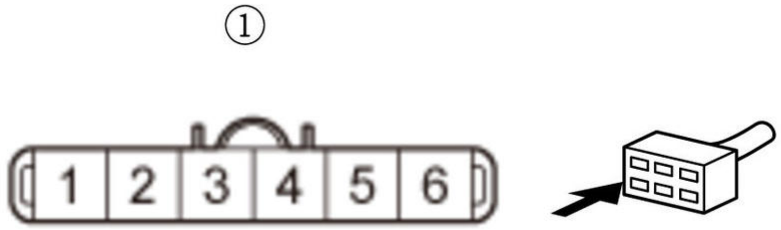

Is there about 5.0 V?

YES

Replace the throttle body .

NO

Go to step 5.

5. Open wire check (VCC3 (DBW) line)

-1. Turn the vehicle to the OFF (LOCK) mode.

-2. Jump the SCS line with the HDS, and wait more than 1 minute.

-3. Disconnect the following connector.

PCM connector E (80P)

-4. Measure the resistance between test points 1 and 2.

Test condition	Vehicle OFF (LOCK) mode

B	Throttle body 6P connector: disconnected
B	PCM connector E (80P) : disconnected
Test point 1	Throttle body 6P connector (female terminals) No. 5: ①
Test point 2	**PCM connector E (80P) No. 75**

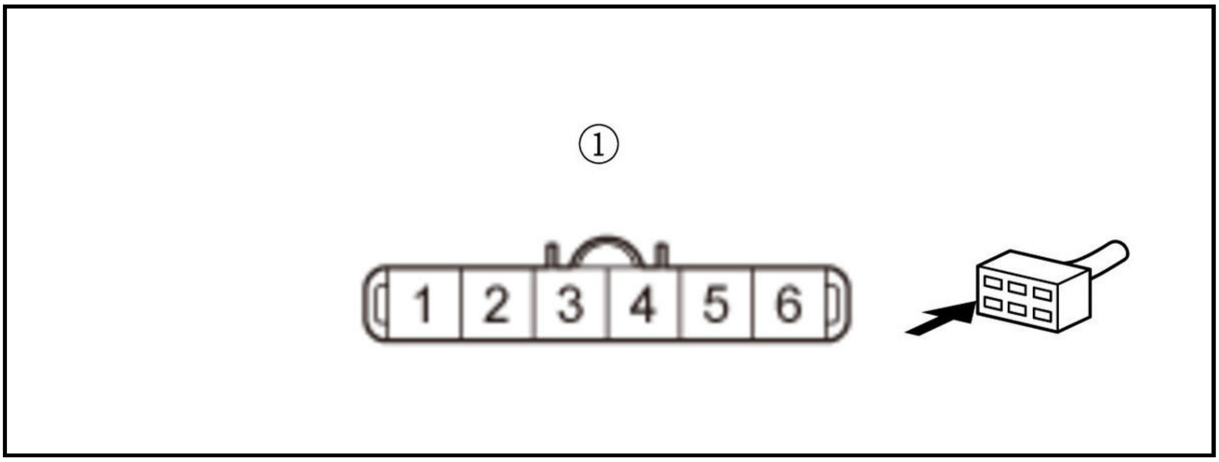

Is there 1.0 Ω or less?

YES

The VCC3 (DBW) wire is OK. Check for any authorized service information related to the DTCs or symptoms you are troubleshooting, or **substitute a known-good PCM** .

NO

Repair an open in the VCC3 (DBW) wire between the PCM (E75) and the throttle body.

DTC P0223

DTC P0223 : TP Sensor B Circuit High Voltage

NOTE: Before you troubleshoot, **review the general troubleshooting information**.

DTC Description	Confirmed DTC	Pending DTC
P0223 TP Sensor B Circuit High Voltage	B	B

DTC (PGM-FI)

1. Problem verification

-1. Turn the vehicle to the ON mode.

-2. Clear the DTC with the HDS.

-3. Check the parameter (s) below with the HDS.

Signal	Threshold		Current conditions	
	Values	Unit	Values	Unit
TP Sensor B	More than 4.8	V	B	B

Do the current condition (s) match the threshold?

YES

The failure is duplicated. Go to step 2.

NO

Intermittent failure, the system is OK at this time. Check for poor connections or loose terminals at the throttle body and the PCM. **If the on-board snapshot of this DTC is recorded, try to reproduce the failure under the same conditions with the on-board snapshot**.

2. Determine possible failure area (SG3 (DBW) line, others)

-1. Check for Pending or Confirmed DTCs with the HDS.

DTC Description	Confirmed DTC	Pending DTC
P0123 TP Sensor A Circuit High Voltage	B	B
P0223 TP Sensor B Circuit High Voltage	B	B

Are DTC P0123 and P0223 indicated at the same time?

YES

Go to step 5.

NO

Go to step 3.

3. Determine possible failure area (throttle body, others)

-1. Turn the vehicle to the OFF (LOCK) mode.

-2. Disconnect the following connector.

Throttle body 6P connector

-3. Turn the vehicle to the ON mode.

-4. Measure the voltage between test points 1 and 2.

Test condition	Vehicle ON mode
B	Throttle body 6P connector: disconnected
Test point 1	Throttle body 6P connector (female terminals) No. 4: ①
Test point 2	Body ground

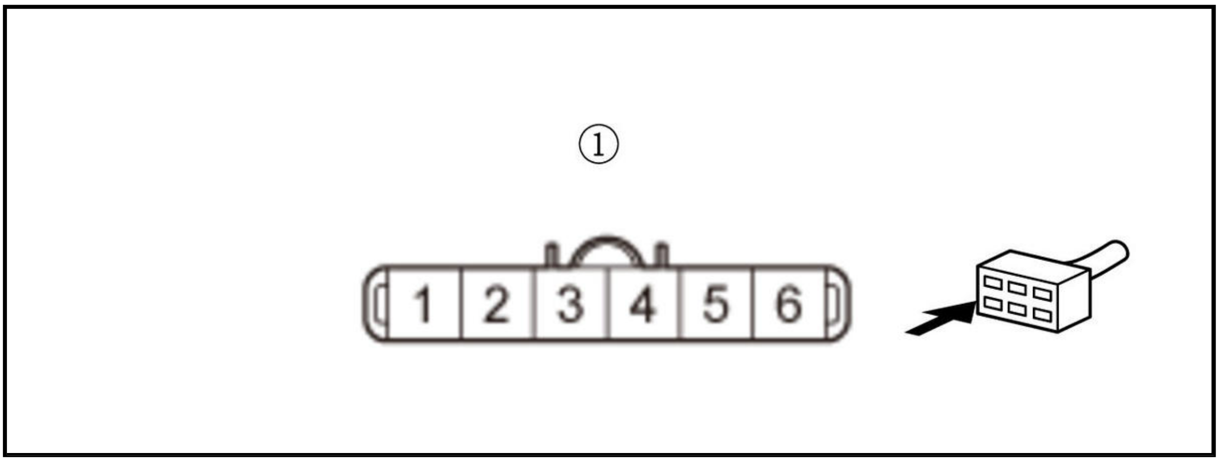

Is there about 5.0 V?

YES

Replace the throttle body .

NO

Go to step 4.

4. Open wire check (THL2 line)

-1. Turn the vehicle to the OFF (LOCK) mode.

-2. Jump the SCS line with the HDS, and wait more than 1 minute.

-3. Disconnect the following connector.

PCM connector E (80P)

-4. Measure the resistance between test points 1 and 2.

Test condition	Vehicle OFF (LOCK) mode
B	Throttle body 6P connector: disconnected
B	PCM connector E (80P) : disconnected
Test point 1	Throttle body 6P connector (female terminals) No. 4: ①
Test point 2	PCM connector E (80P) No. 51

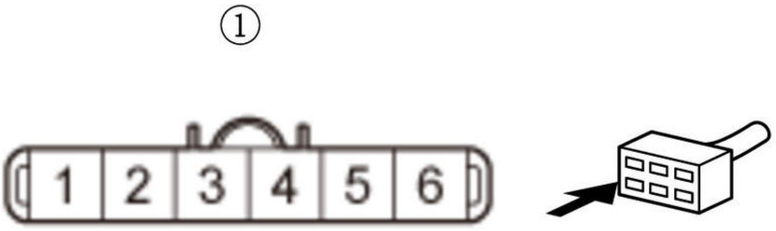

Is there 1.0 Ω or less?

YES

The THL2 wire is OK. Check for any authorized service information related to the DTCs or symptoms you are troubleshooting, or substitute a known-good PCM .

NO

Repair an open in the THL2 wire between the PCM (E51) and the throttle body.

5. Open wire check (SG3 (DBW) line)

-1. Turn the vehicle to the OFF (LOCK) mode.

-2. Jump the SCS line with the HDS, and wait more than 1 minute.

-3. Disconnect the following connectors.

PCM connector E (80P)
Throttle body 6P connector

-4. Measure the resistance between test points 1 and 2.

Test condition	Vehicle OFF (LOCK) mode
B	PCM connector E (80P) : disconnected
B	Throttle body 6P connector: disconnected
Test point 1	Throttle body 6P connector (female terminals) No. 3: ①
Test point 2	**PCM connector E (80P) No. 76**

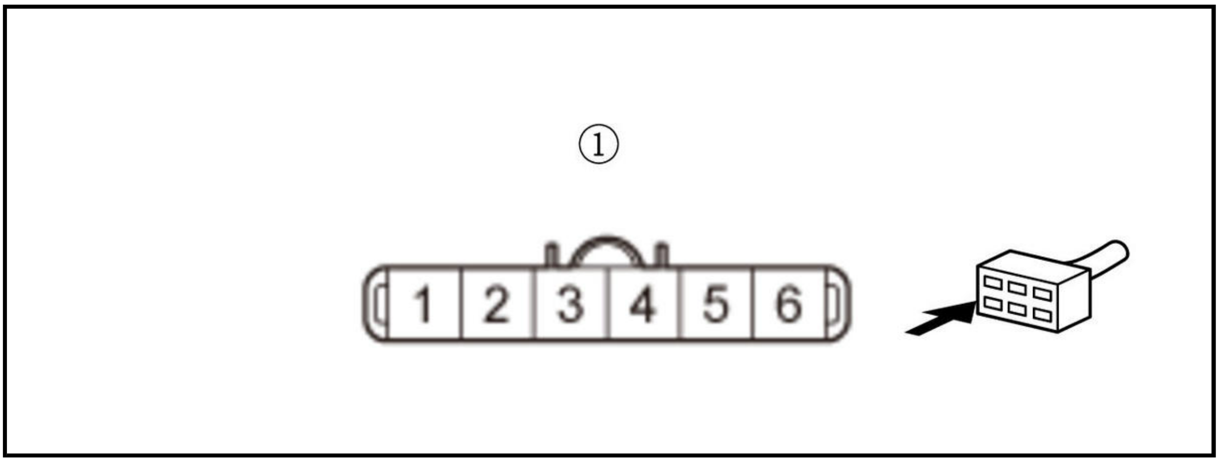

Is there 1.0 Ω or less?

YES

The SG3 (DBW) wire is OK. Check for any authorized service information related to the DTCs or symptoms you are troubleshooting, or **substitute a known-good PCM** .

NO

Repair an open in the SG3 (DBW) wire between the PCM (E76) and the throttle body.

DTC P027E (2021)

DTC P027E : Cold Start Air Fuel Ratio Control System Command Lean

NOTE: Before you troubleshoot, **review the general troubleshooting information**.

DTC Description	Confirmed DTC	Pending DTC
P027E Cold Start Air Fuel Ratio Control System Command Lean	B	B

DTC (PGM-FI)

1. Problem verification

-1. Turn the vehicle to the ON mode.

-2. Let the engine cool until the value of ECT SENSOR 1 is 77 deg.F (25 deg.C) or less.

Signal	Current conditions	
	Values	Unit
ECT Sensor 1	B	B

-3. Clear the DTC with the HDS.

-4. Turn the vehicle to the OFF (LOCK) mode.

-5. **Enter the maintenance mode, then start the engine** , and let it idle for 10 seconds or more.

-6. Check for Pending or Confirmed DTCs with the HDS.

DTC Description	Confirmed DTC	Pending DTC
P027E Cold Start Air Fuel Ratio Control System Command Lean	B	B

Is DTC P027E indicated?

YES

The failure is duplicated. Check for any authorized service information related to the DTCs or symptoms you are troubleshooting, or **substitute a known-good PCM** ,

NO

Intermittent failure, the system is OK at this time. **If the on-board snapshot of this DTC is recorded, try to reproduce the failure under the same conditions with the on-board snapshot**.

DTC P027F (2021)

DTC P027F : Cold Start Air Fuel Ratio Control System Command Rich

NOTE: Before you troubleshoot, **review the general troubleshooting information**.

DTC Description	Confirmed DTC	Pending DTC
P027F Cold Start Air Fuel Ratio Control System Command Rich	B	B

DTC (PGM-FI)

1. Problem verification

-1. Turn the vehicle to the ON mode.

-2. Let the engine cool until the value of ECT SENSOR 1 is 77 deg.F (25 deg.C) or less.

Signal	Current conditions	
	Values	Unit
ECT Sensor 1	B	B

-3. Clear the DTC with the HDS.

-4. Turn the vehicle to the OFF (LOCK) mode.

-5. **Enter the maintenance mode, then start the engine** , and let it idle for 10 seconds or more.

-6. Check for Pending or Confirmed DTCs with the HDS.

DTC Description	Confirmed DTC	Pending DTC
P027F Cold Start Air Fuel Ratio Control System Command Rich	B	B

Is DTC P027F indicated?

YES

The failure is duplicated. Check for any authorized service information related to the DTCs or symptoms you are troubleshooting, or **substitute a known-good PCM** .

NO

Intermittent failure, the system is OK at this time. **If the on-board snapshot of this DTC is recorded, try to reproduce the failure under the same conditions with the on-board snapshot**.

DTC P0300, P0301, P0302, P0303, P0304

DTC P0300 : Random Misfire

DTC P0301 : No. 1 Cylinder Misfire

DTC P0302 : No. 2 Cylinder Misfire

DTC P0303 : No. 3 Cylinder Misfire

DTC P0304 : No. 4 Cylinder Misfire

NOTE:

- Before you troubleshoot, **review the general troubleshooting information**.
- If the misfire is frequent enough to trigger detection of increased emissions during two consecutive driving cycles, the MIL will come on, and DTC P0300 (and some combination of P0301 through P0304) will be stored.
- If the misfire is frequent enough to damage the catalyst, the MIL will flash whenever the misfire occurs, and DTC P0300 (and some combination of P0301 through P0304) will be stored. When the misfire stops, the MIL will remain on.
- Troubleshoot the following DTCs first, if any of them were stored along with the random misfire DTC (s) (Because parts can sometimes fail without setting DTCs you should also do a physical inspection of the systems listed below) :

  P0010, P0011, P100A, P100B, P100C, P100D: VTC system

  P006A, P0101, P0102, P0103: MAF sensor

  P0105, P0106, P0107, P0108: MAP sensor

  P0201, P0202, P0203, P0204: No. 1-No. 4 cylinder injector (s)

  P0335, P0339: CKP sensor

  P0365, P0369: CMP sensor B

  P0351, P0352, P0353, P0354 : No. 1-No. 4 cylinder ignition coil (s)

  P0400, P0401, P0404, P0405, P0406, P046C, P049D, P2413: EGR system

  P2646, P2647, P2648, P2649: VTEC system

DTC Description	Confirmed DTC	Pending DTC
P0300 Random Misfire	B	B
P0301 No1 Cylinder Misfire	B	B
P0302 No2 Cylinder Misfire	B	B
P0303 No3 Cylinder Misfire	B	B
P0304 No4 Cylinder Misfire	B	B

DTC (PGM-FI)

1. Problem verification - Idle

-1. Record the On-board Snapshot with the HDS.

-2. **Enter the maintenance mode, then start the engine** , and let it idle.

-3. Monitor these parameters in the DATA LIST:

Signal	Current conditions	
	Values	Unit
Cyl1 Misfire	B	B
Cyl2 Misfire	B	B
Cyl3 Misfire	B	B
Cyl4 Misfire	B	B

Are the misfire counts increasing on any cylinder at idle?

YES

The engine is misfiring at idle, go to step 2.

NO

The engine does not misfire at idle, go to step 3.

2. Determine Affected Cylinders

-1. Continue to monitor the misfire parameters in the DATA LIST.

Signal	Current conditions	
	Values	Unit
Cyl1 Misfire	B	B
Cyl2 Misfire	B	B
Cyl3 Misfire	B	B
Cyl4 Misfire	B	B

Are the misfire counts generally isolated to a single cylinder?

YES (The misfire is isolated to a single cylinder.)

Go to Single Cylinder Continuous Misfire at Idle troubleshooting on step 6.

YES (The misfire is isolated to a single cylinder.)

Go to Single Cylinder Non-Continuous Misfire at Idle troubleshooting on step 21.

NO (The misfire affects multiple cylinders.)

Go to Multiple Cylinder Continuous Misfire at Idle troubleshooting on step 30.

NO (The misfire affects multiple cylinders.)

Go to Multiple Cylinder Non-Continuous Misfire at Idle troubleshooting on step 48.

3. Problem verification - Static Load

   -1. Increase the engine speed to 3, 500 rpm.

   -2. Hold the engine speed steady, and monitor the misfire parameters in the DATA LIST.

Signal	Current conditions	
	Values	Unit
Cyl1 Misfire	B	B
Cyl2 Misfire	B	B
Cyl3 Misfire	B	B
Cyl4 Misfire	B	B

   Are the misfire counts increasing on any cylinder?

   YES

   The engine is misfiring under load. Go to step 4.

   NO

   The engine does not misfire under a static load. Go to step 5.

4. Determine Affected Cylinders

   -1. Continue to monitor the misfire parameters in the DATA LIST.

Signal	Current conditions	
	Values	Unit
Cyl1 Misfire	B	B
Cyl2 Misfire	B	B
Cyl3 Misfire	B	B
Cyl4 Misfire	B	B

   Are misfire counts generally isolated to a single cylinder?

   YES

   The misfire is isolated to a single cylinder, go to Single Cylinder Misfire. Under Load troubleshooting on step 56.

   NO

   The misfire affects multiple cylinders, go to Multiple Cylinder Misfire. Under Load troubleshooting on step 63.

5. Problem verification - On-board Snapshot

   -1. Open the On-board Snapshot with the HDS.

   -2. Scroll through the snapshot, and find when the MISFIRE value begins to increase.

-3. Record the value of these parameters as the MISFIRE value increases:

Signal	Values	Unit
ECT Sensor 1	B	deg.F
Engine Speed	B	RPM
Vehicle Speed	B	MPH
MAP Sensor	B	V
TP Sensor	B	V

On-board Snapshot

-4. Drive the vehicle according to the conditions you identified above while monitoring the misfire counts.

Signal	Current conditions	
	Values	Unit
ECT Sensor 1	B	B
Engine Speed	B	B
Vehicle Speed	B	B
MAP Sensor Voltage	B	B
TP Sensor Voltage	B	B

Signal	Current conditions	
	Values	Unit
Cyl1 Misfire	B	B
Cyl2 Misfire	B	B
Cyl3 Misfire	B	B
Cyl4 Misfire	B	B

Are the misfire counts increasing on any cylinder?

YES

The engine is misfiring under the specific operating conditions above.

- If the misfire occurred when the engine was cold, go to Misfire When Cold troubleshooting on step 70.
- If the misfire occurred when the engine was loaded, go to step 4.

NO

Intermittent failure; the engine is not misfiring at this time.

NOTE: If the misfire cannot be reproduced, there is a possibility that the problem may have been caused by poor quality fuel. The problem may have disappeared after refueling with fresh fuel. The MIL DIST (MIL Distance) value in the Data List in combination with the fuel level may help you make this determination.

6. Check Ignition Coil Spark

-1. Turn the vehicle to the OFF (LOCK) mode.

-2. Remove the ignition coil from the problem cylinder .

-3. Connect a commercially available spark tester between the ignition coil and engine ground.

-4. **Enter the maintenance mode, then start the engine** with the ignition coil connected.

Does the ignition coil produce a sparkΩ

YES

The ignition coil wiring is OK. Go to step 14.

NO

There is a problem with the ignition coil, or the ignition coil circuit. Go to step 7.

7. Ignition Coil Check

-1. **Exchange the ignition coil on the problem cylinder with a normally operating cylinder** .

-2. Connect a commercially available spark tester between the ignition coil and engine ground.

-3. **Enter the maintenance mode, then start the engine** with the ignition coil connected.

Does the ignition coil produce a sparkΩ

YES

The ignition coil has a failure. **Replace the ignition coil** .

NO

There is a problem with the ignition coil circuit. Go to step 8.

8. Check Ignition Coil Power and Ground

-1. Disconnect the ignition coil 3P connector from the problem cylinder.

-2. Turn the vehicle to the ON mode.

-3. Measure the voltage between ignition coil 3P connector terminals No. 1 (power) and No. 2 (ground).

NOTE: After the vehicle is turned to the OFF (LOCK) mode, this circuit may still show battery voltage for a period of time. This is normal.

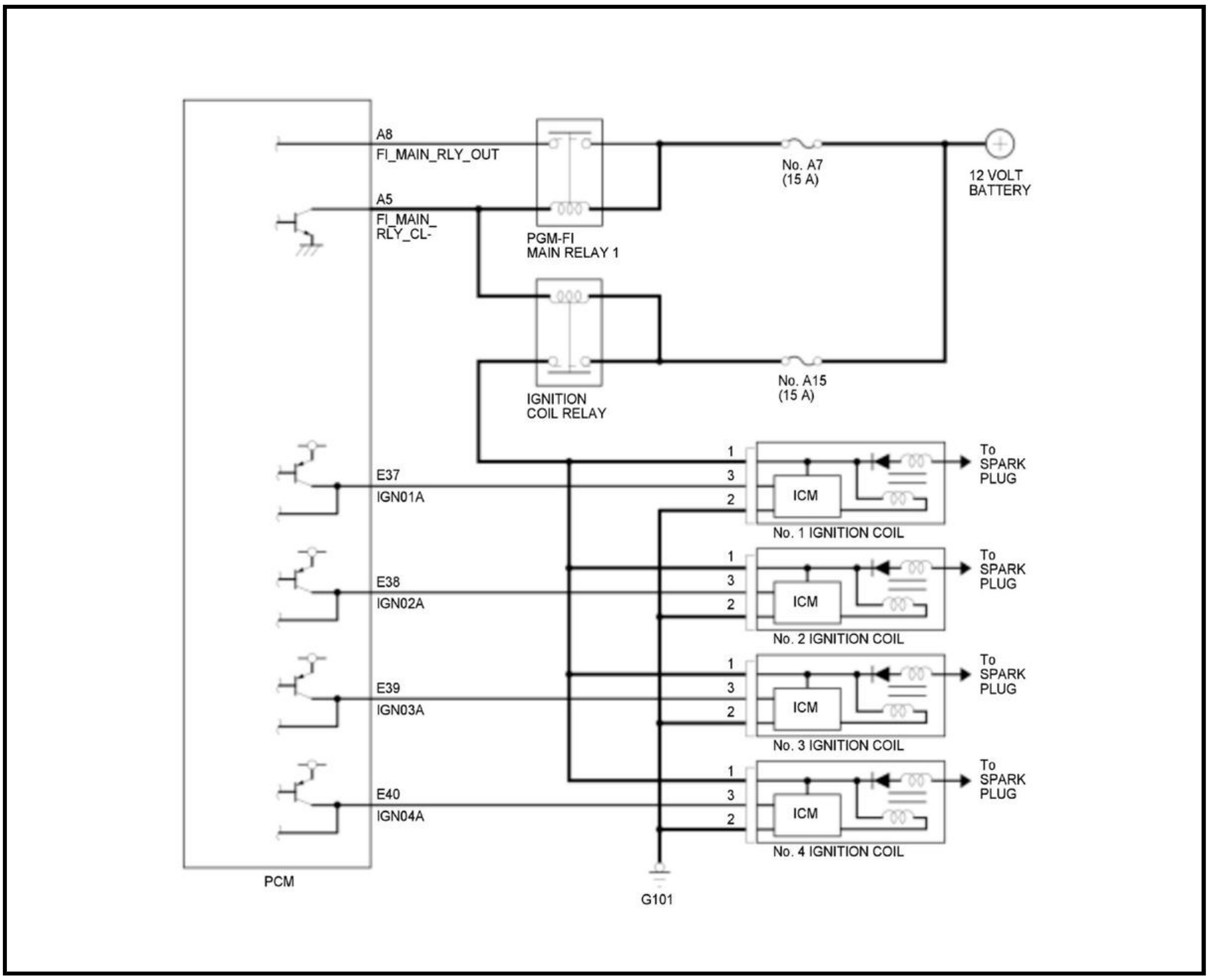
A8
FI_MAIN_RLY_OUT
A5
FI_MAIN_
RLY_CL-
PGM-FI
MAIN RELAY 1
No. A7
(15 A)
12 VOLT
BATTERY
IGNITION
COIL RELAY
No. A15
(15 A)
E37
IGN01A
E38
IGN02A
E39
IGN03A
E40
IGN04A
1
3
2
ICM
No. 1 IGNITION COIL
No. 2 IGNITION COIL
No. 3 IGNITION COIL
No. 4 IGNITION COIL
To
SPARK
PLUG
PCM
G101

Is there battery voltage?

YES

The ignition coil power and ground circuits are OK. Go to step 9.

NO

There is a problem with the ignition coil power or ground circuit. Go to step 13.

9. Check Ignition Coil Control Short to Power

-1. Turn the vehicle to the ON mode.

-2. Measure the voltage between ignition coil 3P connector terminals No. 3 (Ignition Control) and body ground.

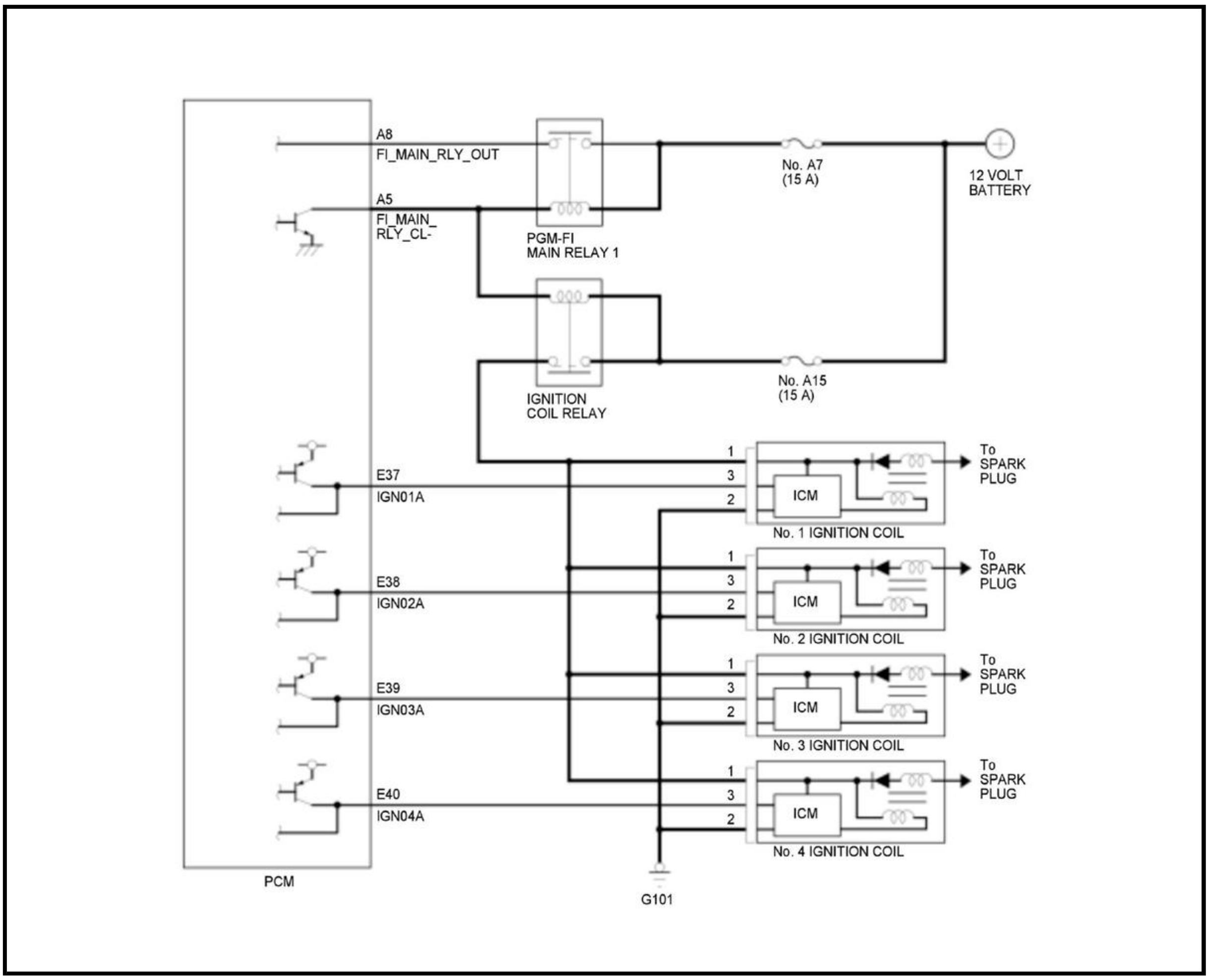
A8
FI_MAIN_RLY_OUT
A5
FI_MAIN_
RLY_CL-
PGM-FI
MAIN RELAY 1
No. A7
(15 A)
12 VOLT
BATTERY
IGNITION
COIL RELAY
No. A15
(15 A)
E37
IGN01A
1
3
2
ICM
No. 1 IGNITION COIL
To
SPARK
PLUG
E38
IGN02A
No. 2 IGNITION COIL
E39
IGN03A
No. 3 IGNITION COIL
E40
IGN04A
No. 4 IGNITION COIL
PCM
G101

Is there about 4 V or more?

YES

The ignition coil control circuit is shorted to power. Go to step 10.

NO

The ignition coil control circuit is not shorted to power. Go to step 11.

10. Isolate Ignition Coil Control Short to Power

    -1. Turn the vehicle to the OFF (LOCK) mode.

    -2. Jump the SCS line with the HDS, and wait more than 1 minute.

    -3. Disconnect the PCM connectors.

    -4. Turn the vehicle to the ON mode.

    -5. Measure the voltage between ignition coil 3P connector terminals No. 3 (Ignition Control) and body ground.

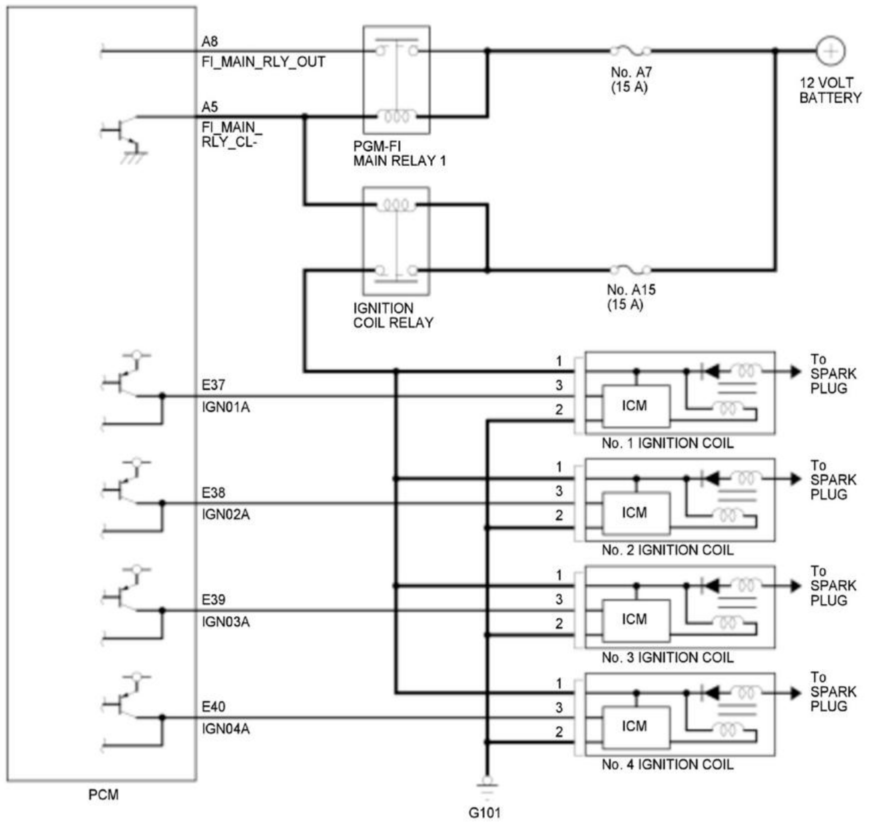
A8
FI_MAIN_RLY_OUT
A5
FI_MAIN_
RLY_CL-
PGM-FI
MAIN RELAY 1
No. A7
(15 A)
12 VOLT
BATTERY
IGNITION
COIL RELAY
No. A15
(15 A)
E37
IGN01A
1
3
2
ICM
No. 1 IGNITION COIL
To
SPARK
PLUG
E38
IGN02A
No. 2 IGNITION COIL
E39
IGN03A
No. 3 IGNITION COIL
E40
IGN04A
No. 4 IGNITION COIL
PCM
G101

Is there about 4 V or more?

YES

There is a short to power on the ignition coil control circuit. Find and repair the failure.

NO

The PCM is malfunctioning. **Replace the PCM** .

11. Check Ignition Coil Control Open Circuit

-1. Turn the vehicle to the OFF (LOCK) mode.

-2. Jump the SCS line with the HDS, and wait more than 1 minute.

-3. Disconnect the PCM connectors.

-4. Measure the resistance between the ignition coil control terminal at the PCM connector and at ignition coil 3P connector terminal No. 3.

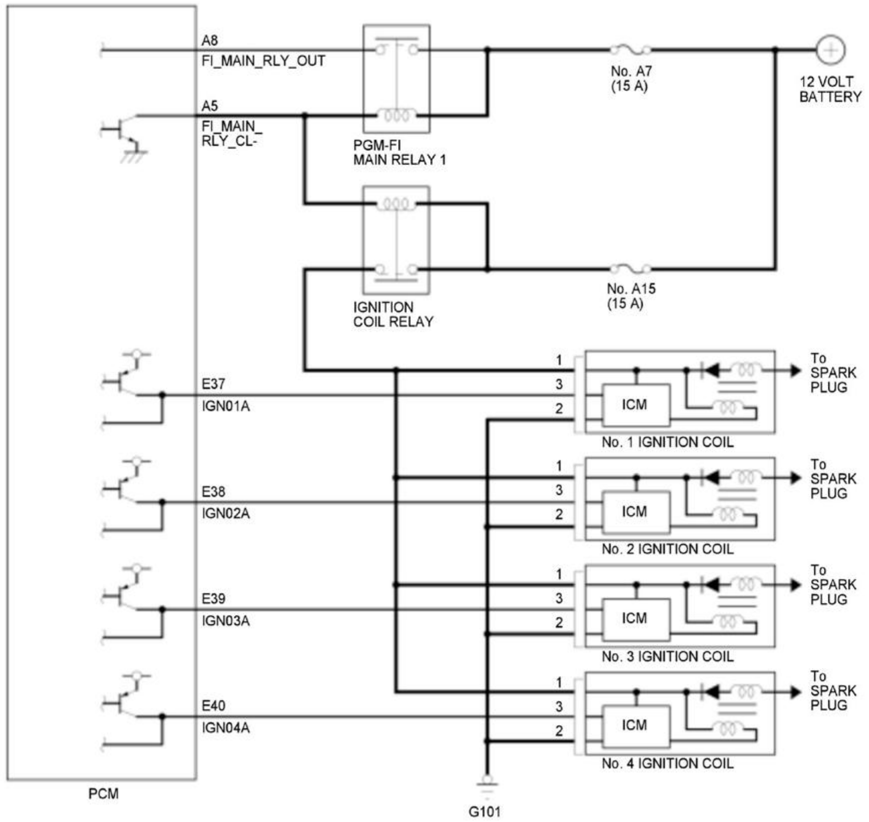
A8
FI_MAIN_RLY_OUT
A5
FI_MAIN_
RLY_CL-
PGM-FI
MAIN RELAY 1
No. A7
(15 A)
12 VOLT
BATTERY
IGNITION
COIL RELAY
No. A15
(15 A)
E37
IGN01A
E38
IGN02A
E39
IGN03A
E40
IGN04A
1
3
2
ICM
No. 1 IGNITION COIL
No. 2 IGNITION COIL
No. 3 IGNITION COIL
No. 4 IGNITION COIL
To
SPARK
PLUG
PCM
G101

Is there 1.0 Ω or less?

YES

The ignition coil control circuit is not open. Go to step 12.

NO

Repair the open circuit between the ignition coil and the PCM.

12. Check Ignition Coil Control Short to Ground

-1. Measure the resistance between the ignition coil control terminal at ignition coil 3P connector terminal No. 3 and body ground.

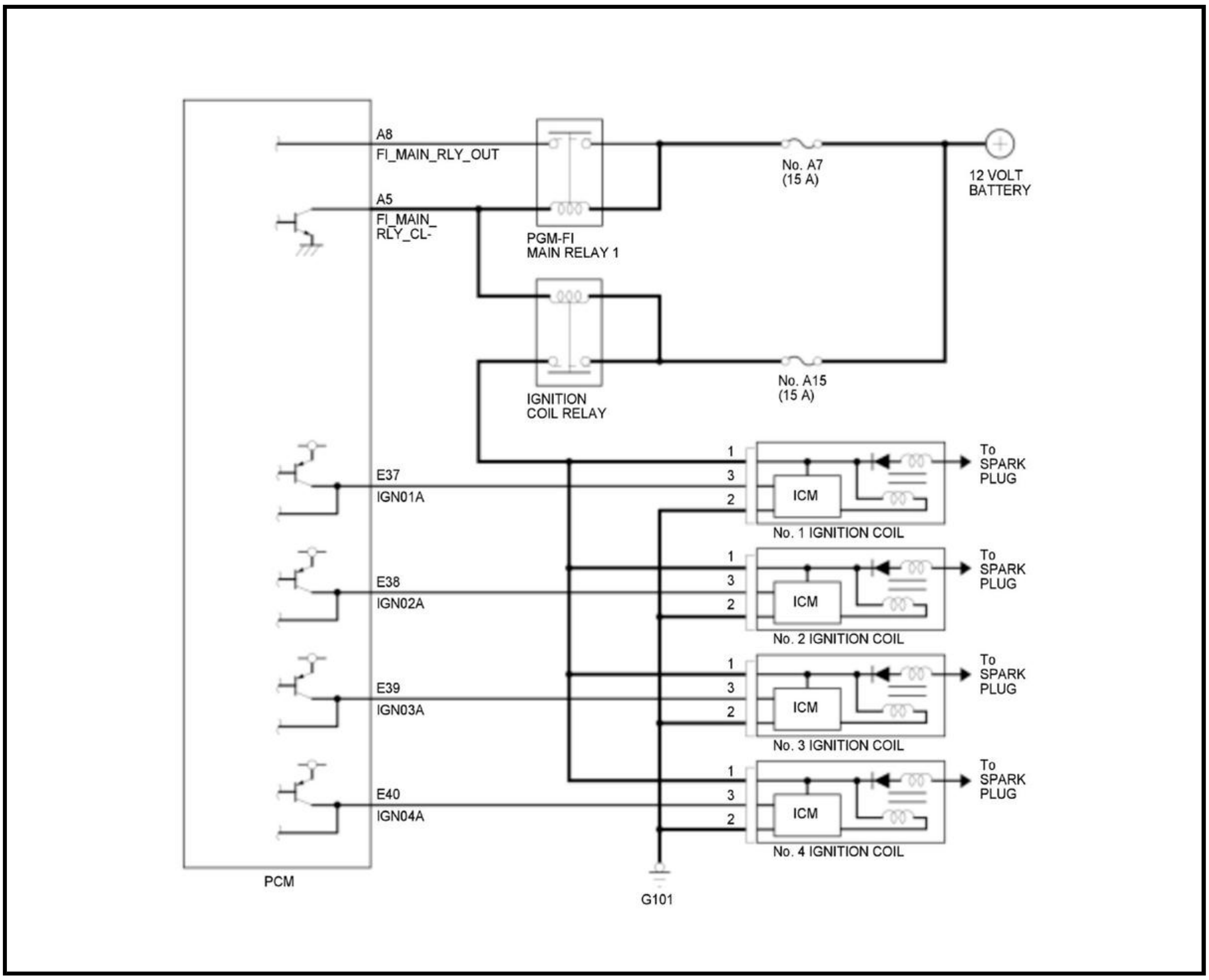
A8
FI_MAIN_RLY_OUT
A5
FI_MAIN_
RLY_CL-
PGM-FI
MAIN RELAY 1
No. A7
(15 A)
12 VOLT
BATTERY
IGNITION
COIL RELAY
No. A15
(15 A)
E37
IGN01A
E38
IGN02A
E39
IGN03A
E40
IGN04A
1
3
2
ICM
No. 1 IGNITION COIL
No. 2 IGNITION COIL
No. 3 IGNITION COIL
No. 4 IGNITION COIL
To
SPARK
PLUG
PCM
G101

Is there 1 MΩ or more?

YES

The ignition coil control wiring is OK. **Substitute a known-good PCM** .

NO

Repair the short to ground on the ignition coil control wire.

13. Check Ignition Coil Power Circuit

    -1. Measure the voltage between ignition coil 3P connector terminal No. 1 (power) and a known-good engine ground.

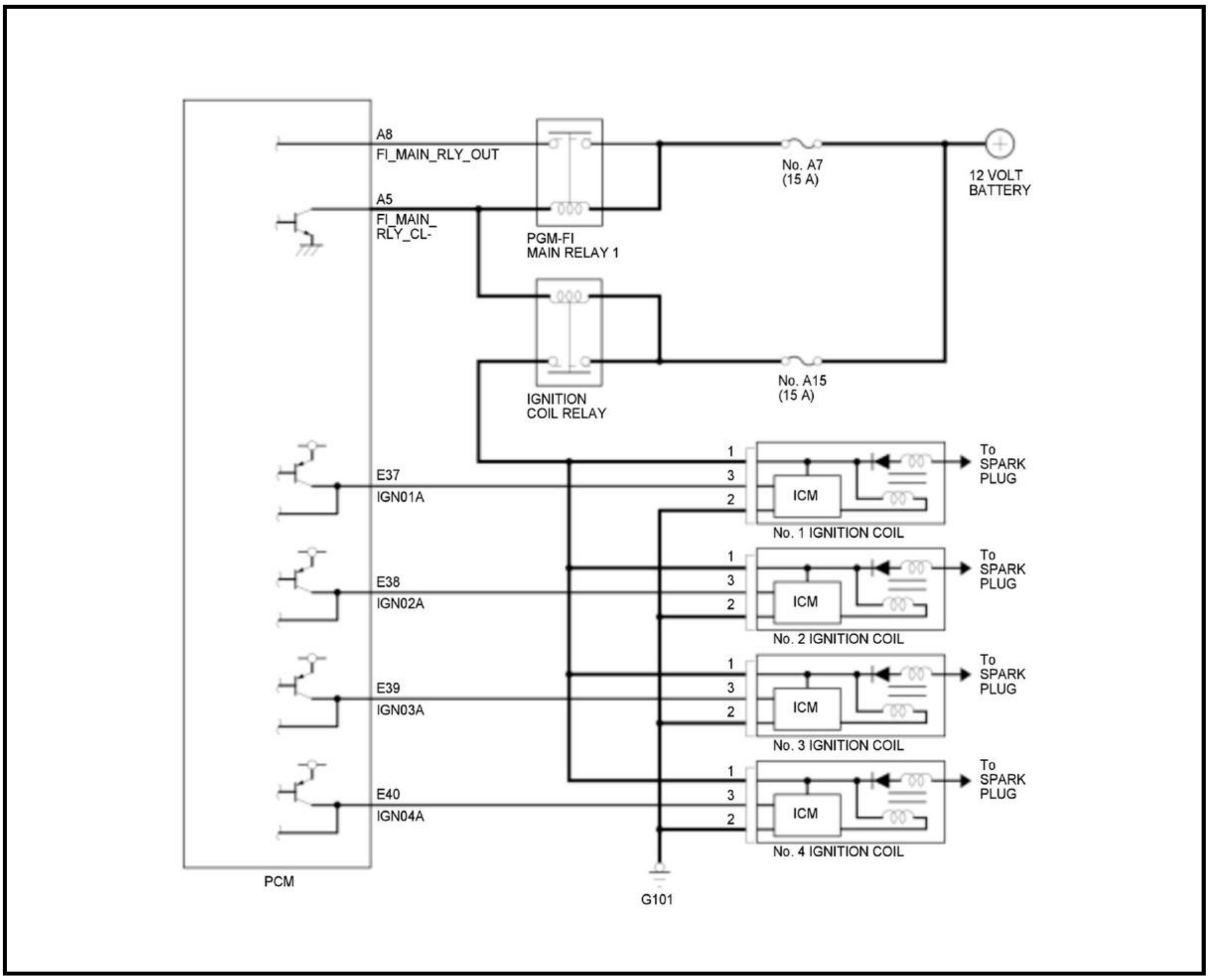
A8
FI_MAIN_RLY_OUT
A5
FI_MAIN_
RLY_CL-
PGM-FI
MAIN RELAY 1
No. A7
(15 A)
12 VOLT
BATTERY
IGNITION
COIL RELAY
No. A15
(15 A)
E37
IGN01A
E38
IGN02A
E39
IGN03A
E40
IGN04A
1
3
2
ICM
No. 1 IGNITION COIL
No. 2 IGNITION COIL
No. 3 IGNITION COIL
No. 4 IGNITION COIL
To
SPARK
PLUG
PCM
G101

Is there battery voltage between the ignition coil power terminal and engine ground?

YES

The power circuit is OK. Repair the open circuit between the ignition coil (3P connector terminal No. 2) and G101.

NO

Repair the open circuit between the ignition coil and the ignition coil relay.

14. Inspect Ignition Coil

-1. Inspect the ignition coil and spark plug tube for engine oil contamination.

Is the ignition coil covered in engine oil?

YES

Clean the oil from the ignition coil and spark plug tube. Replace the spark plug tube seals in the cylinder head cover .

NO

Go to step 15.

15. Exchange Spark Plug and Ignition Coil

-1. Exchange the spark plug and the ignition coil with one from a normally operating cylinder .

-2. Drive the vehicle under the conditions when the misfire was duplicated.

-3. Monitor the misfire parameters in the DATA LIST.

Signal	Current conditions	
	Values	Unit
Cyl1 Misfire	B	B
Cyl2 Misfire	B	B
Cyl3 Misfire	B	B
Cyl4 Misfire	B	B

Did the misfire counts stay on the problem cylinder?

YES

The ignition coil and spark plug are OK. Go to step 17.

NO

There is a failure in the ignition coil or the spark plug. Go to step 16.

16. Exchange Ignition Coil

-1. **Exchange the ignition coil on the problem cylinder with a normally operating cylinder** .

-2. Drive the vehicle under the conditions when the misfire was duplicated.

-3. Monitor the misfire parameters in the DATA LIST.

Signal	Current conditions	
	Values	Unit
Cyl1 Misfire	B	B
Cyl2 Misfire	B	B
Cyl3 Misfire	B	B
Cyl4 Misfire	B	B

Did the misfire counts stay on the problem cylinder?

YES

The spark plug has a failure. **Replace the spark plug** .

NO

The ignition coil has a failure. **Replace the ignition coil** .

17. Check Cylinder Compression

-1. **Perform a cylinder compression test** .

-2. Record your test results in a chart similar to the one shown below.

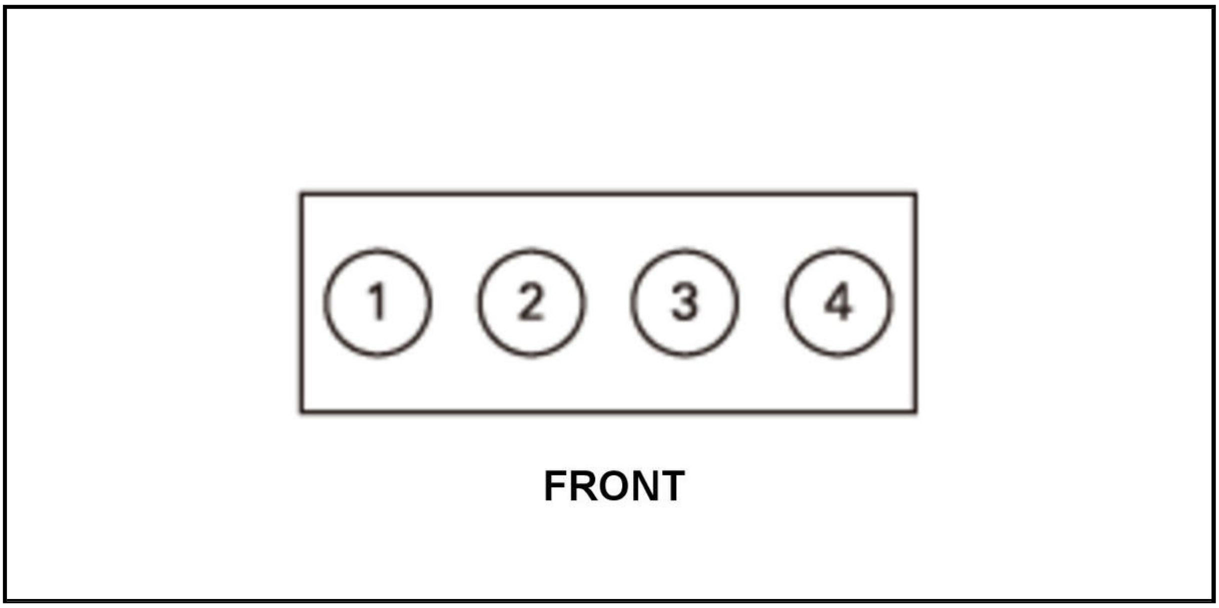

B	Compression (PSI)
No. 1	B
No. 2	B
No. 3	B
No. 4	B

Highest Reading (PSI)	Lowest Reading (PSI)	Variation (%)
B	B	B

Does the compression vary more than 10 % between cylinders, or does any cylinder read below 150 PSI?

1. **YES**

   The cylinder leakage is normal, but the engine compression is low. Check for each of the conditions below and repair as needed.

   - Incorrect camshaft timing.
   - A bent (short) connecting rod.
   - Worn or damaged camshaft lobes.

   NO

   The engine compression and the cylinder leakage are normal. Go to step 18.

18. Check Cylinder Leakage

-1. **Perform a cylinder leakage test** .

-2. Record your test results in the chart shown below.

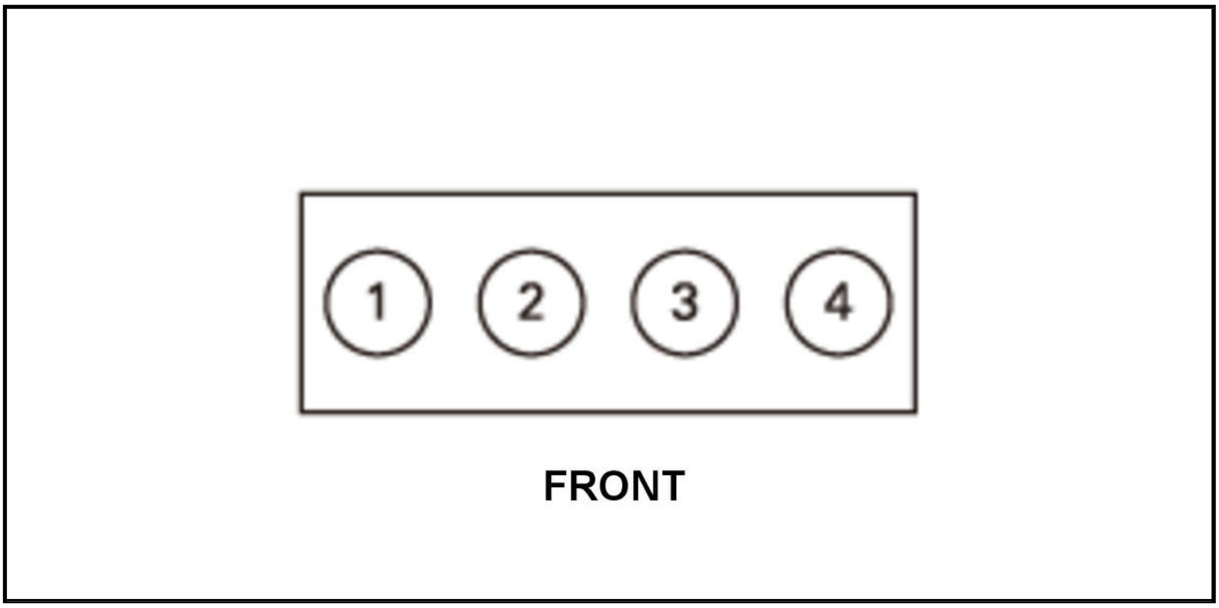

B	Leakage (%)	Leakage Area
No. 1	B	B
No. 2	B	B
No. 3	B	B
No. 4	B	B

Does any cylinder have leakage greater than 10 %?

YES

If the majority of the air is escaping from exhaust pipe or throttle body, check for tight valve clearance and adjust valve clearance to specification (cold), then retest. Determine the cause of the cylinder leakage and repair the engine as needed.

NO

The cylinders are sealing properly. Go to step 19.

19. Exchange Fuel Injector

-1. Exchange the fuel injector from the problem cylinder with one from another cylinder .

-2. Drive the vehicle under the conditions when the misfire was duplicated.

-3. Monitor the misfire parameters in the DATA LIST.

Signal	Current conditions	
	Values	Unit
Cyl1 Misfire	B	B
Cyl2 Misfire	B	B
Cyl3 Misfire	B	B

Signal	Current conditions	
	Values	Unit
Cyl4 Misfire	B	B

Do the misfire counts stay on the problem cylinder when the fuel injector is swapped?

YES

The fuel injector is OK. Go to step 20.

NO

The fuel injector is faulty. **Replace the fuel injector** .

20. CKP Pattern Clear/Pattern Learn

-1. Select CRANK (CKP) PATTERN in the Adjustment Menu with the HDS.

-2. **Select CRANK (CKP) PATTERN CLEAR, and clear the CKP pattern** .

CRANK (CKP) PATTERN CLEAR

Select CRANK (CKP) PATTERN LEARNING with the HDS, and follow the screen prompts .

CRANK (CKP) PATTERN LEARNING

Monitor the misfire parameters in the DATA LIST.

Signal	Current conditions	
	Values	Unit
Cyl1 Misfire	B	B
Cyl2 Misfire	B	B
Cyl3 Misfire	B	B
Cyl4 Misfire	B	B

Did the misfire counts stay on the problem cylinder?

YES

Check for any authorized service information related to the DTCs or symptoms you are troubleshooting or **substitute a known-good PCM** .

NO

The misfire problem has been fixed.

21. Inspect Spark Plug

-1. **Remove the spark plug from the problem cylinder** .

-2. Inspect the spark plug for signs of failure. Also make sure the spark plugs are the correct part number for the vehicle.

Does the spark plug show any signs of failure or is it not the correct part number?

YES

Replace the spark plug .

NO

Go to step 22.

22. Inspect Ignition Coil

-1. Inspect the ignition coil and the spark plug tube for engine oil contamination.

Is the ignition coil covered in engine oil?

YES

Clean the oil from the ignition coil and the spark plug tube. **Replace the spark plug tube seals in the cylinder head cover** .

NO

Go to step 23.

23. Exchange Spark Plug and Ignition Coil

-1. **Exchange the spark plug and the ignition coil with ones from a normally operating cylinder** .

-2. Drive the vehicle under the conditions when the misfire was duplicated.

-3. Monitor the misfire parameters in the DATA LIST.

Signal	Current conditions	
	Values	Unit
Cyl1 Misfire	B	B
Cyl2 Misfire	B	B
Cyl3 Misfire	B	B
Cyl4 Misfire	B	B

Did the misfire counts stay on the problem cylinder?

YES

The ignition coil and spark plug are OK. Go to step 25.

NO

There is a failure in the ignition coil or the spark plug. Go to step 24.

24. Exchange Ignition Coil

-1. **Exchange the ignition coil on the problem cylinder with a normally operating cylinder** .

-2. Drive the vehicle under the conditions when the misfire was duplicated.

-3. Monitor the misfire parameters in the DATA LIST.

Signal	Current conditions	
	Values	Unit
Cyl1 Misfire	B	B
Cyl2 Misfire	B	B
Cyl3 Misfire	B	B
Cyl4 Misfire	B	B

Did the misfire counts stay on the problem cylinder?

YES

The spark plug has a failure. **Replace the spark plug** .

NO

The ignition coil has a failure. **Replace the ignition coil** .

25. Check MAP Sensor Fluctuation

-1. **Enter the maintenance mode, then start the engine** , and let it idle until the cooling fans cycle twice.

-2. Turn off all engine and electrical loads (A/C, audio, lights, etc.).

-3. Configure a HIGH-SPEED SNAPSHOT, and select only the MAP SENSOR.

-4. Begin displaying live vehicle data on a line graph.

-5. Configure the MAP SENSOR line graph range for 1.2 V MAX and 0.8 V MIN.

-6. Watch the MAP SENSOR fluctuation. See examples below.

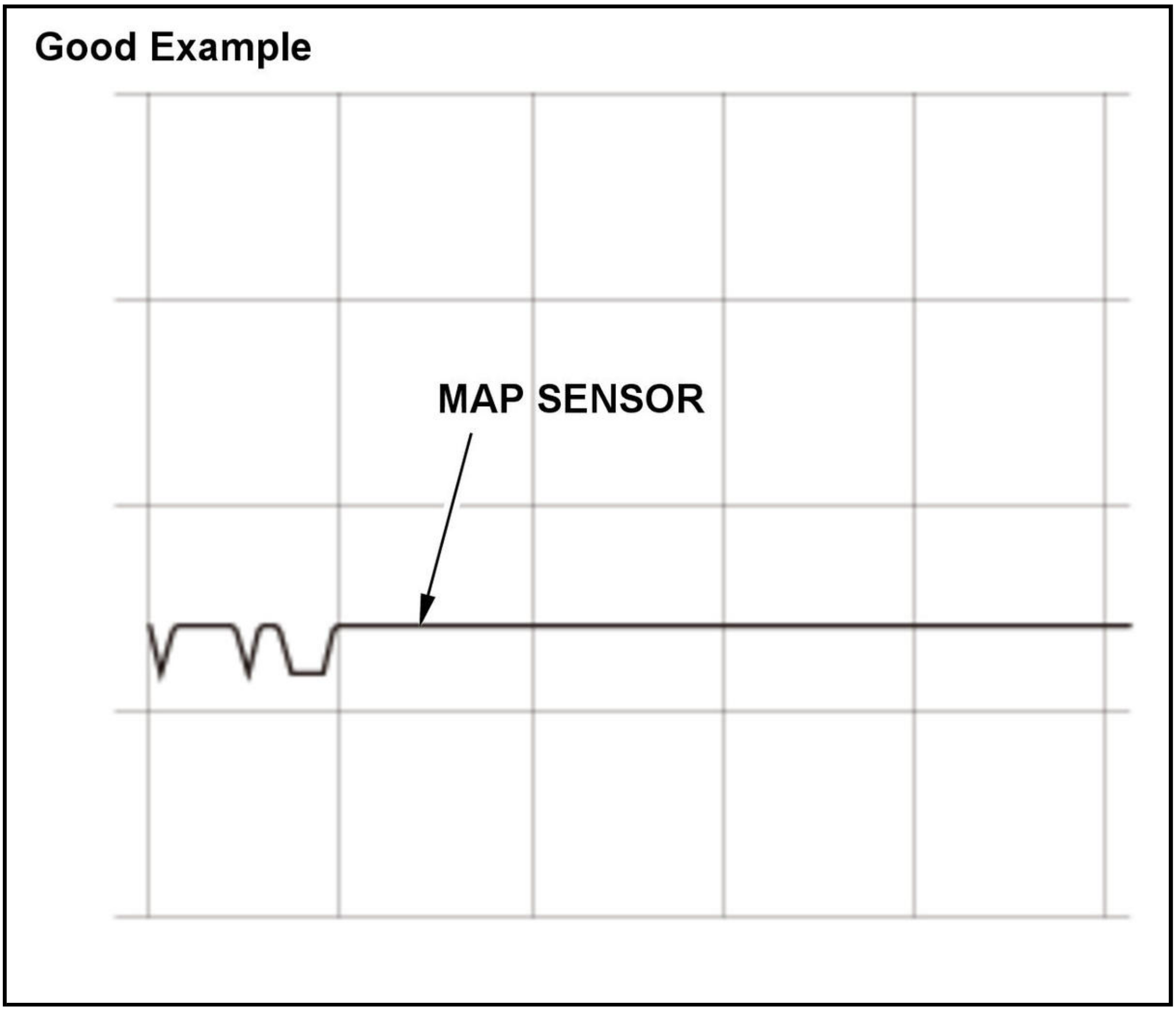

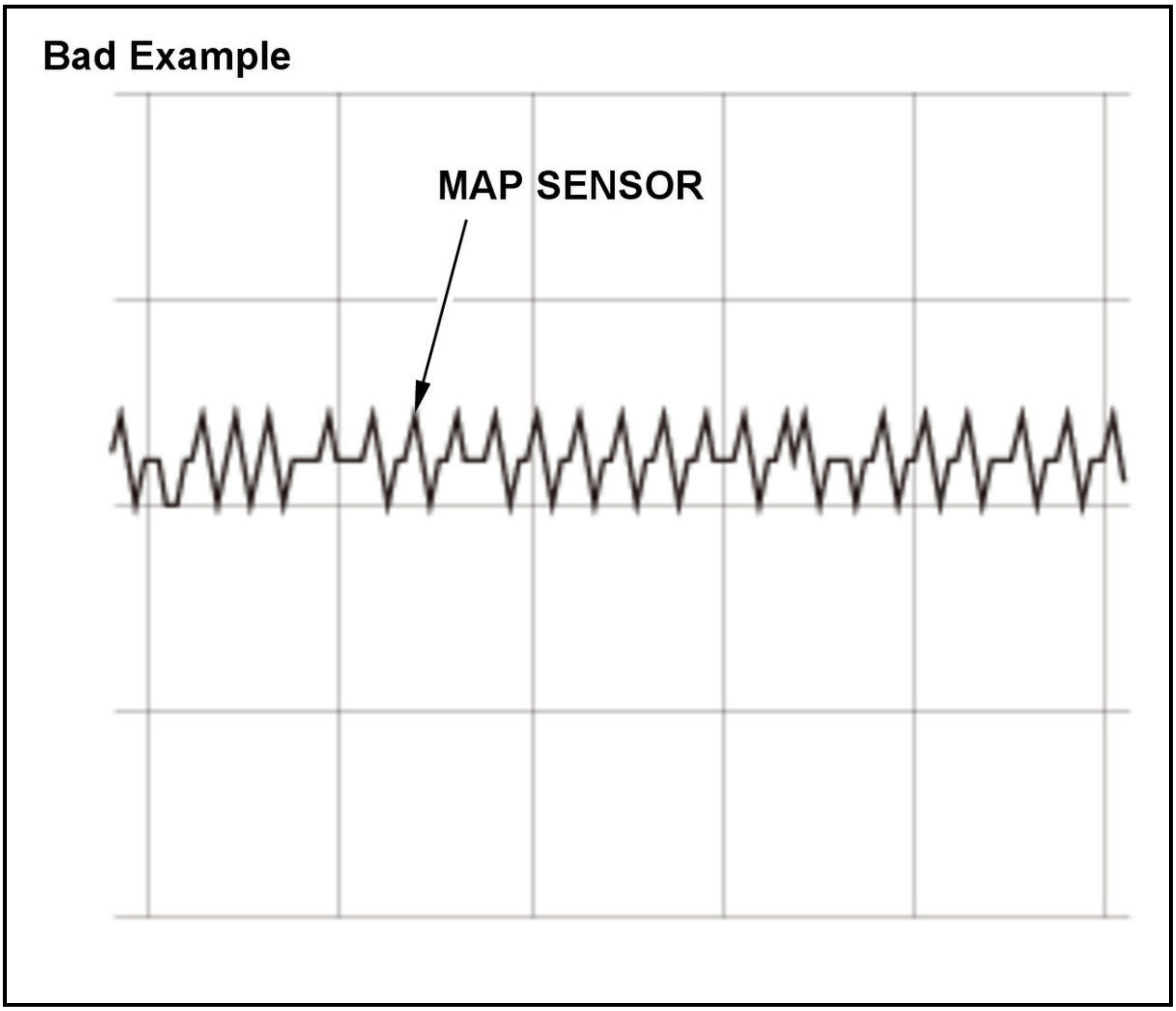

Does the MAP SENSOR continuously fluctuate 0.04 V or more at idle, no loads, engine hot?

YES

The intake manifold pressure fluctuation indicates a mechanical engine failure. Go to step 26.

NO

The intake manifold vacuum fluctuation is OK. Go to step 29.

26. Adjust Valve Clearance

-1. **Adjust the valve clearances** , and inspect the camshaft for excessive wear or grooves.

NOTE: ECT Sensor 1 must read less than 100 deg.F (38 deg.C) before adjusting the valve clearance. Shortcutting this step may cause incorrect valve clearance and engine misfire.

-2. Recheck the MAP SENSOR fluctuation at idle.

Does the MAP SENSOR continuously fluctuate 0.04 V or more at idle, no loads, engine hot?

YES

Adjusting the valve clearance did not correct the excessive MAP sensor fluctuation. Go to step 27.

NO

The excessive MAP sensor fluctuation was caused by incorrect valve clearance.

27. Check Cylinder Compression

-1. **Perform a cylinder compression test** .

-2. Record your test results in a chart similar to the one shown below.

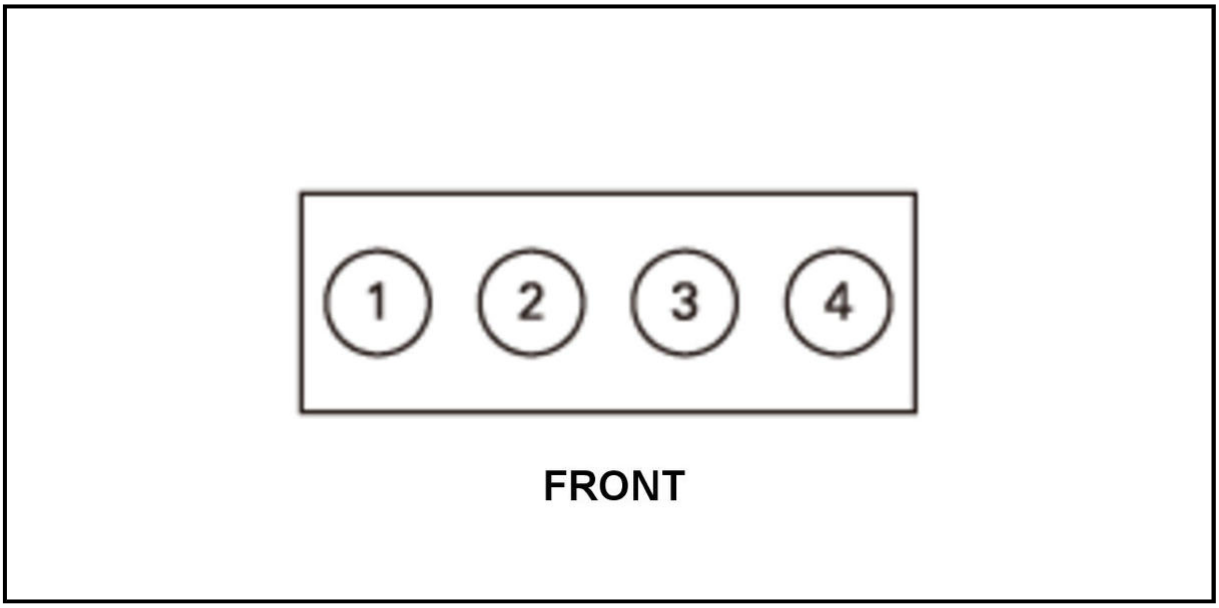

B	Compression (PSI)
No. 1	B
No. 2	B
No. 3	B
No. 4	B

Highest Reading (PSI)	Lowest Reading (PSI)	Variation (%)
B	B	B

Does the compression vary more than 10 % between cylinders, or does any cylinder read below 150 PSI?

1. **YES**

   The cylinder leakage is normal, but the engine compression is low. Check for each of the conditions below and repair as needed.

   - Incorrect camshaft timing.
   - A bent (short) connecting rod.
   - Worn or damaged camshaft lobes.

   NO

   The engine compression and the cylinder leakage are normal. Go to step 28.

28. Check Cylinder Leakage

-1. **Perform a cylinder leakage test** .

-2. Record your test results in the chart shown below.

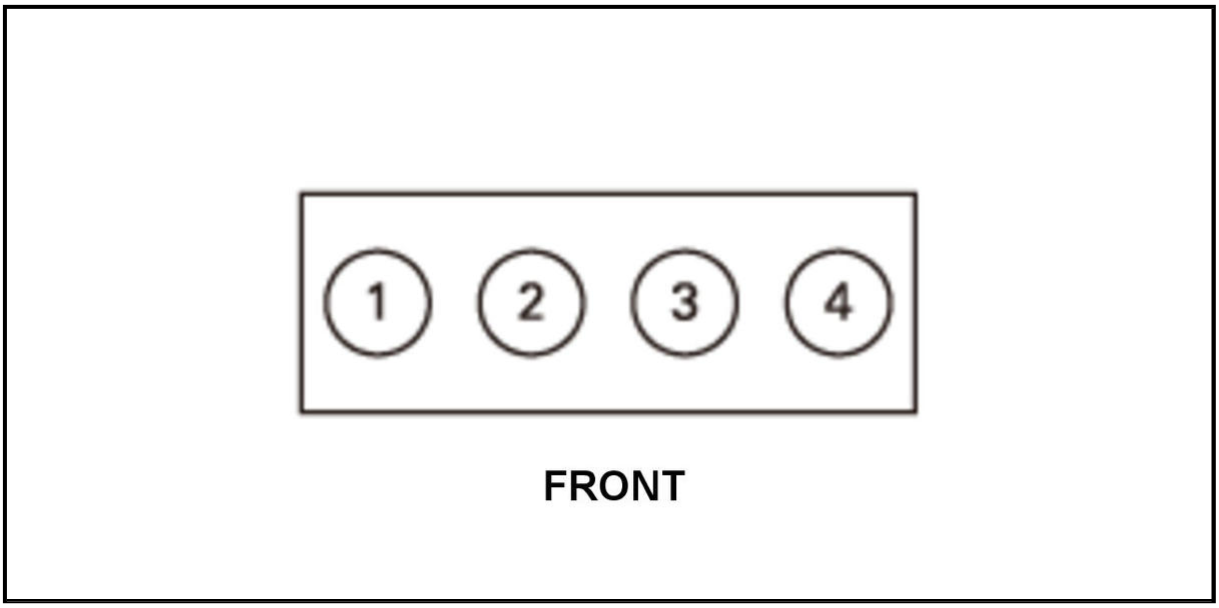

B	Leakage (%)	Leakage Area
No. 1	B	B
No. 2	B	B
No. 3	B	B
No. 4	B	B

Does any cylinder have leakage greater than 10 %?

YES

If the majority of the air is escaping from exhaust pipe or throttle body, check for tight valve clearance and adjust each cylinder as needed, then retest. Determine the cause of the cylinder leakage and repair the engine as needed.

NO

The cylinders are sealing properly. Go to step 29.

29. Exchange Fuel Injector

-1. **Exchange the fuel injector from the problem cylinder with one from another cylinder** .

-2. Drive the vehicle under the conditions when the misfire was duplicated.

-3. Monitor the misfire parameters in the DATA LIST.

Signal	Current conditions	
	Values	Unit
Cyl1 Misfire	B	B
Cyl2 Misfire	B	B
Cyl3 Misfire	B	B
Cyl4 Misfire	B	B

Do the misfire counts stay on the problem cylinder when the fuel injector is swapped?

YES

The fuel injector is OK. All of the failures have been checked for this type of misfire. Go to step 1 in the Problem verification procedure and ensure you selected the correct troubleshooting procedure.

NO

The fuel injector is faulty. **Replace the fuel injector** .

30. Inspect Spark Plug

-1. **Remove the spark plug from the problem cylinder** .

-2. Inspect the spark plug for signs of failure. Also make sure the spark plugs are the correct part number for the vehicle.

Does the spark plug show any signs of failure or is it not the correct part number?

YES

Replace the spark plug .

NO

Go to step 31.

31. Check Ignition Coil Spark

-1. Turn the vehicle to the OFF (LOCK) mode.

-2. **Remove the ignition coil from the problem cylinder** .

-3. Connect a commercially available spark tester between the ignition coil and engine ground.

-4. **Enter the maintenance mode, then start the engine** with the ignition coil connected.

Does the ignition coil produce a sparkΩ

YES

The ignition coil wiring is OK. Go to step 39.

NO

There is a problem with the ignition coil, or the Ignition coil circuit. Go to step 32.

32. Exchange Ignition Coil

-1. **Exchange the ignition coil on the problem cylinder with a normally operating cylinder** .

-2. Connect a commercially available spark tester between the ignition coil and engine ground.

-3. **Enter the maintenance mode, then start the engine** with the ignition coil connected.

Does the ignition coil produce a sparkΩ

YES

The ignition coil has a failure. **Replace the ignition coil** .

NO

There is a problem with the ignition coil circuit. Go to step 33.

33. Check Ignition Coil Power and Ground

-1. Disconnect the ignition coil 3P connector from the problem cylinder.

-2. Turn the vehicle to the ON mode.

-3. Measure the voltage between ignition coil 3P connector terminals No. 1 (power) and No. 2 (ground).

NOTE: After the vehicle is turned to the OFF (LOCK) mode, this circuit may still show battery voltage for a period of time. This is normal.

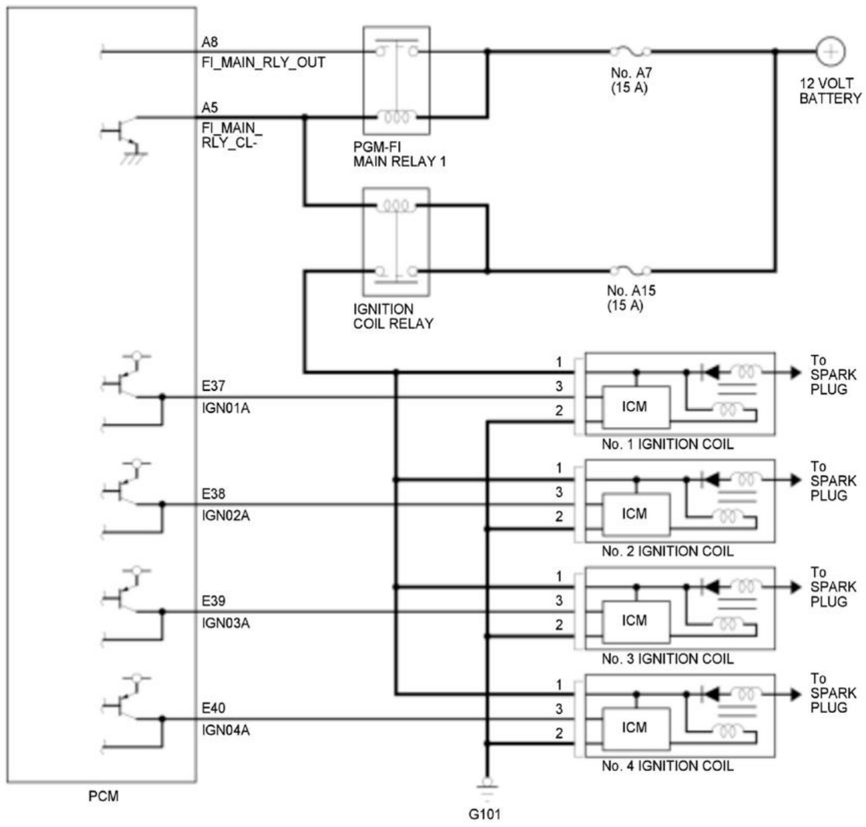
A8
FI_MAIN_RLY_OUT
A5
FI_MAIN_
RLY_CL-
PGM-FI
MAIN RELAY 1
No. A7
(15 A)
12 VOLT
BATTERY
IGNITION
COIL RELAY
No. A15
(15 A)
E37
IGN01A
E38
IGN02A
E39
IGN03A
E40
IGN04A
1
3
2
ICM
No. 1 IGNITION COIL
No. 2 IGNITION COIL
No. 3 IGNITION COIL
No. 4 IGNITION COIL
To
SPARK
PLUG
PCM
G101

Is there battery voltage?

YES

The ignition coil power and ground circuits are OK. Go to step 34.

NO

There is a problem with the ignition coil power or ground circuit. Go to step 38.

34. Check Ignition Coil Control Short to Power

-1. Turn the vehicle to the ON mode.

-2. Measure the voltage between ignition coil 3P connector terminals No. 3 (Ignition Control) and body ground.

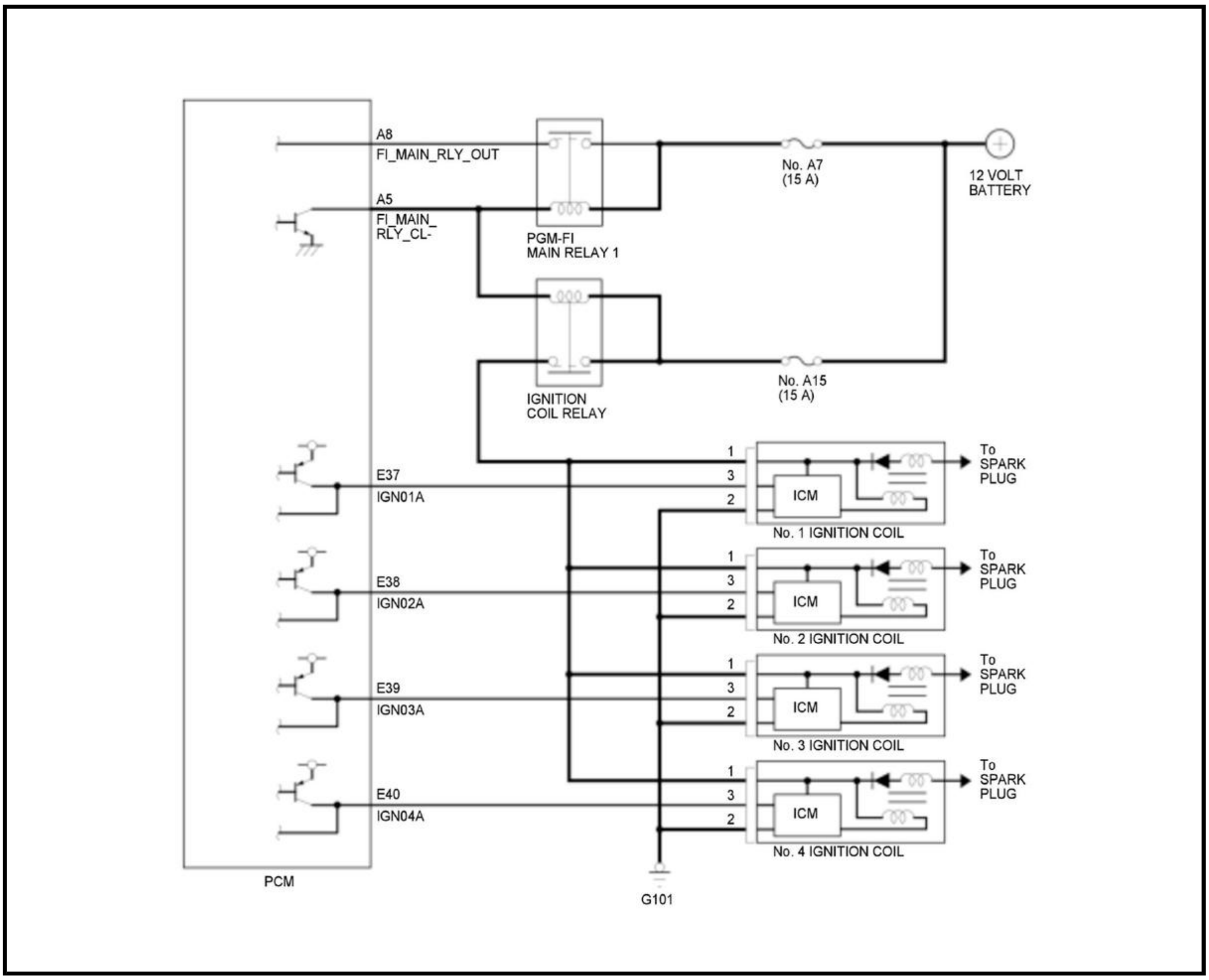
A8
FI_MAIN_RLY_OUT
A5
FI_MAIN_
RLY_CL-
PGM-FI
MAIN RELAY 1
No. A7
(15 A)
12 VOLT
BATTERY
IGNITION
COIL RELAY
No. A15
(15 A)
E37
IGN01A
E38
IGN02A
E39
IGN03A
E40
IGN04A
1
3
2
ICM
No. 1 IGNITION COIL
No. 2 IGNITION COIL
No. 3 IGNITION COIL
No. 4 IGNITION COIL
To
SPARK
PLUG
PCM
G101

Is there about 4 V or more?

YES

The ignition coil control circuit is shorted to power. Go to step 35.

NO

The ignition coil control circuit is not shorted to power. Go to step 36.

35. Isolate Ignition Coil Control Short to Power

-1. Turn the vehicle to the OFF (LOCK) mode.

-2. Jump the SCS line with the HDS, and wait more than 1 minute.

-3. Disconnect the PCM connectors.

-4. Turn the vehicle to the ON mode.

-5. Measure the voltage between ignition coil 3P connector terminals No. 3 (Ignition Control) and body ground.

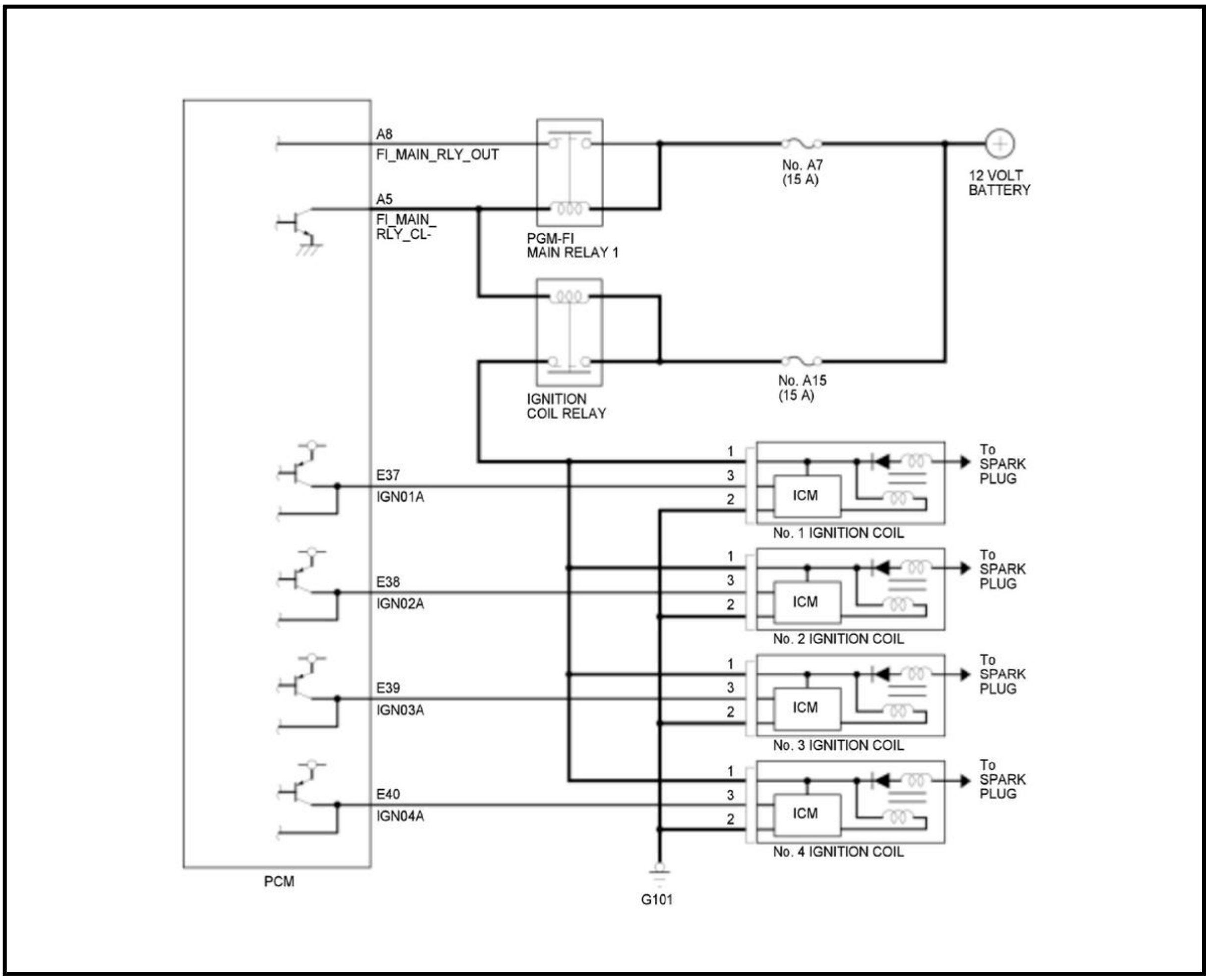
A8
FI_MAIN_RLY_OUT
A5
FI_MAIN_
RLY_CL-
PGM-FI
MAIN RELAY 1
No. A7
(15 A)
12 VOLT
BATTERY
IGNITION
COIL RELAY
No. A15
(15 A)
E37
IGN01A
E38
IGN02A
E39
IGN03A
E40
IGN04A
1
3
2
ICM
No. 1 IGNITION COIL
No. 2 IGNITION COIL
No. 3 IGNITION COIL
No. 4 IGNITION COIL
To
SPARK
PLUG
PCM
G101

Is there about 4 V or more?

YES

There is a short to power on the ignition coil control circuit. Find and repair the failure.

NO

The PCM is malfunctioning. **Replace the PCM** .

36. Check Ignition Coil Control Open Circuit

-1. Turn the vehicle to the OFF (LOCK) mode.

-2. Jump the SCS line with the HDS, and wait more than 1 minute.

-3. Disconnect the PCM connectors.

-4. Measure the resistance between the ignition coil control terminal at the PCM connector and at the ignition coil 3P connector terminal No. 3.

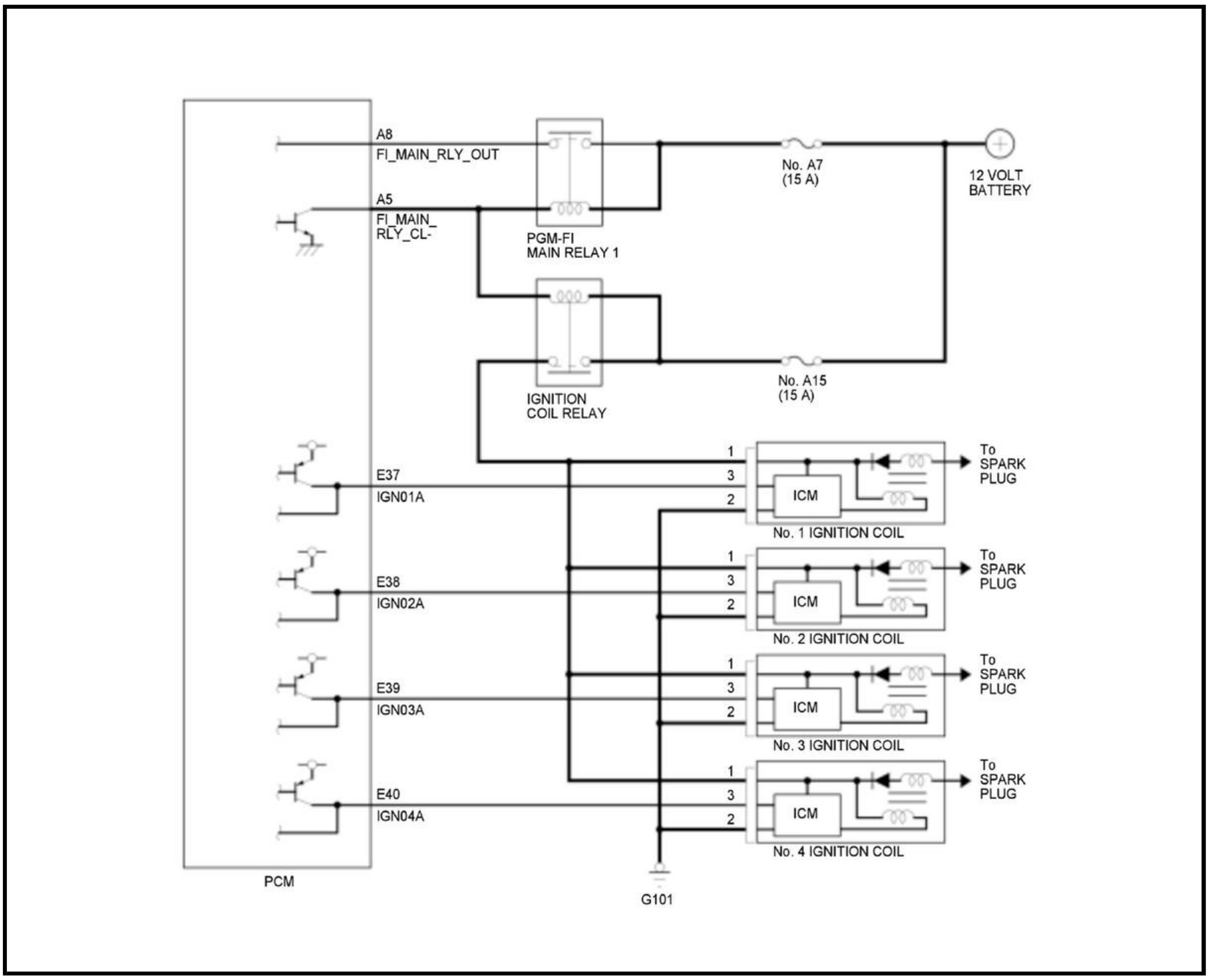
A8
FI_MAIN_RLY_OUT
A5
FI_MAIN_
RLY_CL-
PGM-FI
MAIN RELAY 1
No. A7
(15 A)
12 VOLT
BATTERY
IGNITION
COIL RELAY
No. A15
(15 A)
E37
IGN01A
E38
IGN02A
E39
IGN03A
E40
IGN04A
1
3
2
ICM
No. 1 IGNITION COIL
No. 2 IGNITION COIL
No. 3 IGNITION COIL
No. 4 IGNITION COIL
To
SPARK
PLUG
PCM
G101

Is there 1.0 Ω or less?

YES

The ignition coil control circuit is not open. Go to step 37.

NO

Repair the open circuit between the ignition coil and the PCM.

37. Check Ignition Coil Control Short to Ground

-1. Measure the resistance between ignition coil control terminal at the ignition coil 3P connector terminal No. 3 (Ignition Control) and body ground.

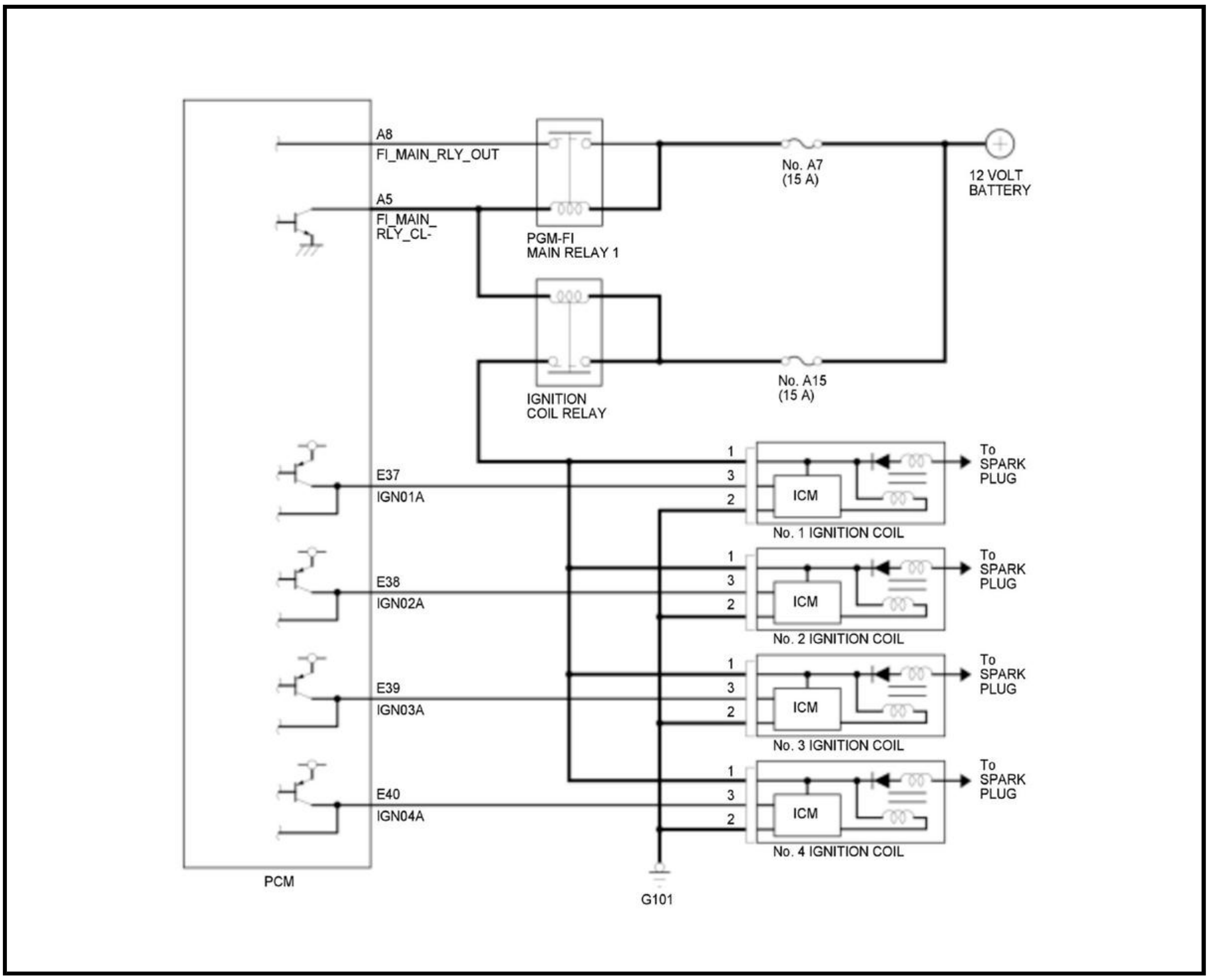
A8
FI_MAIN_RLY_OUT
A5
FI_MAIN_
RLY_CL-
PGM-FI
MAIN RELAY 1
No. A7
(15 A)
12 VOLT
BATTERY
IGNITION
COIL RELAY
No. A15
(15 A)
E37
IGN01A
E38
IGN02A
E39
IGN03A
E40
IGN04A
1
3
2
ICM
No. 1 IGNITION COIL
No. 2 IGNITION COIL
No. 3 IGNITION COIL
No. 4 IGNITION COIL
To
SPARK
PLUG
PCM
G101

Is there 1 MΩ or more?

YES

The ignition coil control wiring is OK. **Substitute a known-good PCM** .

NO

Repair the short to ground on the ignition coil control wire.

38. Check Ignition Coil Power Circuit

-1. Measure the voltage between ignition coil 3P connector terminal No. 1 (power) and a known-good engine ground.

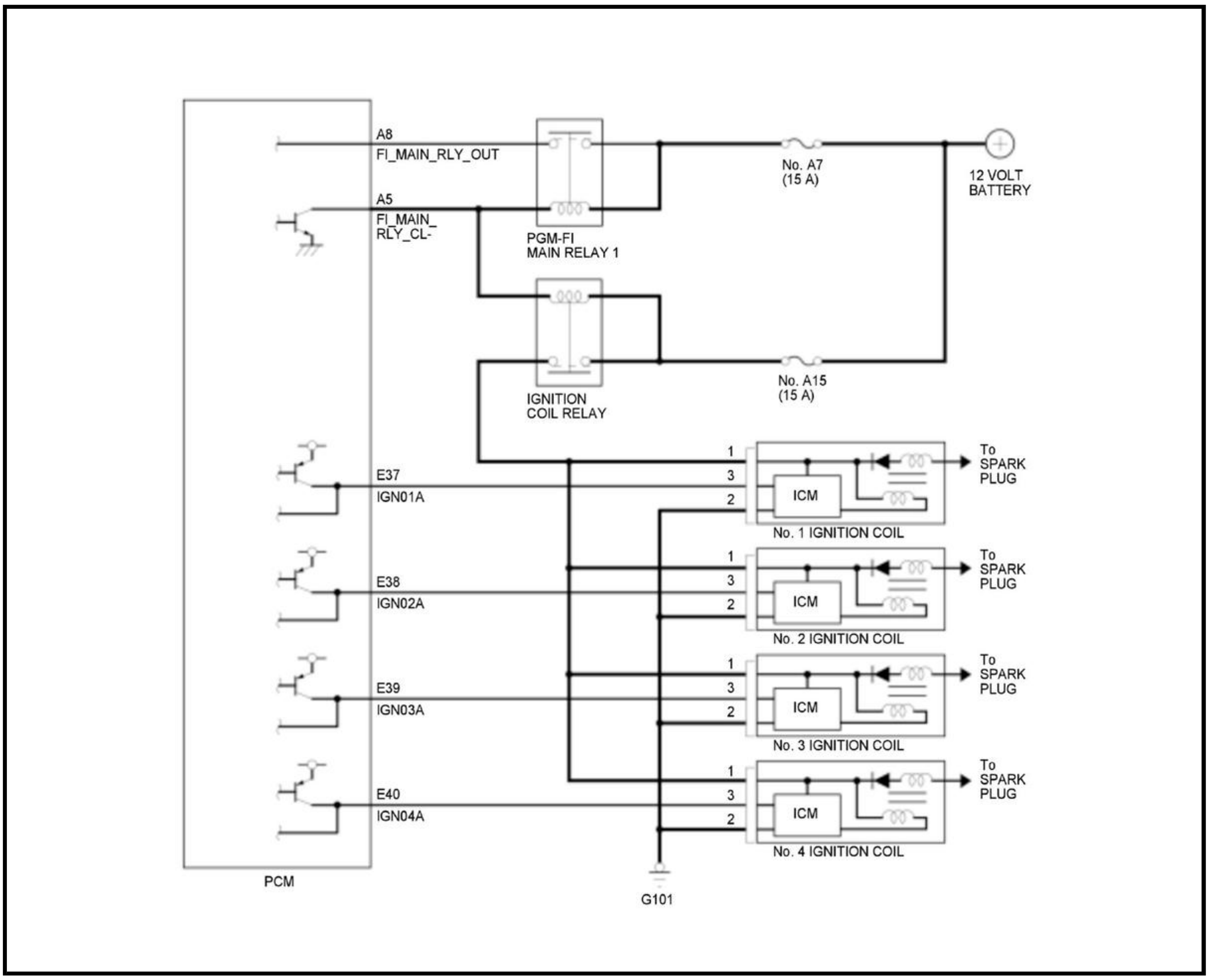
A8
FI_MAIN_RLY_OUT
A5
FI_MAIN_
RLY_CL-
PGM-FI
MAIN RELAY 1
No. A7
(15 A)
12 VOLT
BATTERY
IGNITION
COIL RELAY
No. A15
(15 A)
E37
IGN01A
1
3
2
ICM
No. 1 IGNITION COIL
To
SPARK
PLUG
E38
IGN02A
ICM
No. 2 IGNITION COIL
To
SPARK
PLUG
E39
IGN03A
ICM
No. 3 IGNITION COIL
To
SPARK
PLUG
E40
IGN04A
ICM
No. 4 IGNITION COIL
To
SPARK
PLUG
PCM
G101

Is there battery voltage between the ignition coil power terminal and engine ground?

YES

The power circuit is OK. Repair the open circuit between the ignition coil (3P connector terminal No. 2) and G101.

NO

Repair the open circuit between the ignition coil and the ignition coil relay.

39. Inspect Ignition Coil

-1. Inspect the ignition coil and spark plug tube for engine oil contamination.

Is the ignition coil covered in engine oil?

YES

Clean the oil from the ignition coil and spark plug tube. **Replace the spark plug tube seals in the cylinder head cover** .

NO

Go to step 40.

40. Exchange Spark Plug and Ignition Coil

-1. **Exchange the spark plug and the ignition coil with one from a normally operating cylinder** .

-2. Drive the vehicle under the conditions when the misfire was duplicated.

-3. Monitor the misfire parameters in the DATA LIST.

Signal	Current conditions	
	Values	Unit
Cyl1 Misfire	B	B
Cyl2 Misfire	B	B
Cyl3 Misfire	B	B
Cyl4 Misfire	B	B

Did the misfire counts stay on the problem cylinder?

YES

The ignition coil and spark plug are OK. Go to step 42.

NO

There is a failure in the ignition coil or the spark plug. Go to step 41.

41. Exchange Ignition Coil

-1. **Exchange the ignition coil on the problem cylinder with a normally operating cylinder** .

-2. Drive the vehicle under the conditions when the misfire was duplicated.

-3. Monitor the misfire parameters in the DATA LIST.

Signal	Current conditions	
	Values	Unit
Cyl1 Misfire	B	B
Cyl2 Misfire	B	B
Cyl3 Misfire	B	B
Cyl4 Misfire	B	B

Did the misfire counts stay on the problem cylinder?

YES

The spark plug has a failure. **Replace the spark plug** .

NO

The ignition coil has a failure. **Replace the ignition coil** .

42. Check MAP Sensor Fluctuation

-1. **Enter the maintenance mode, then start the engine** , and let it idle until the cooling fans cycle twice.

-2. Turn off all engine and electrical loads (A/C, audio, lights, etc.).

-3. Configure a HIGH-SPEED SNAPSHOT, and select only the MAP SENSOR.

-4. Begin displaying live vehicle data on a line graph.

-5. Configure the MAP SENSOR line graph range for 1.2 V MAX and 0.8 V MIN.

-6. Watch the MAP SENSOR fluctuation. See examples below.

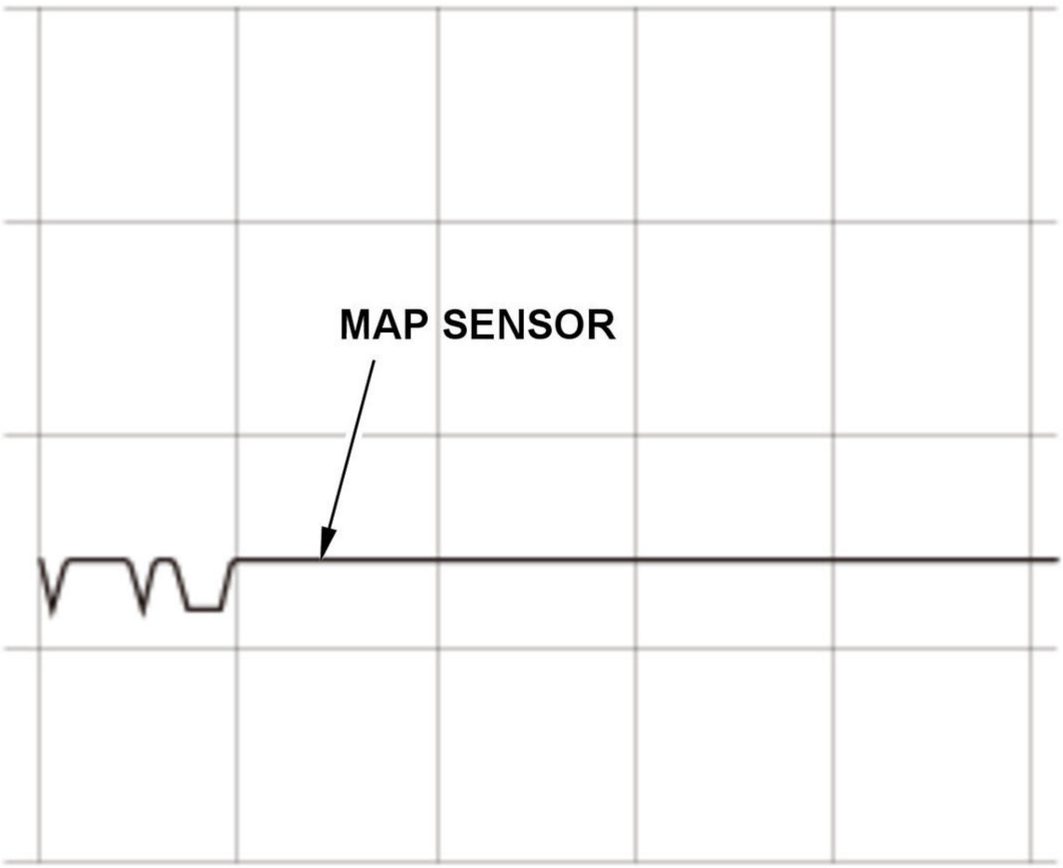

Good Example

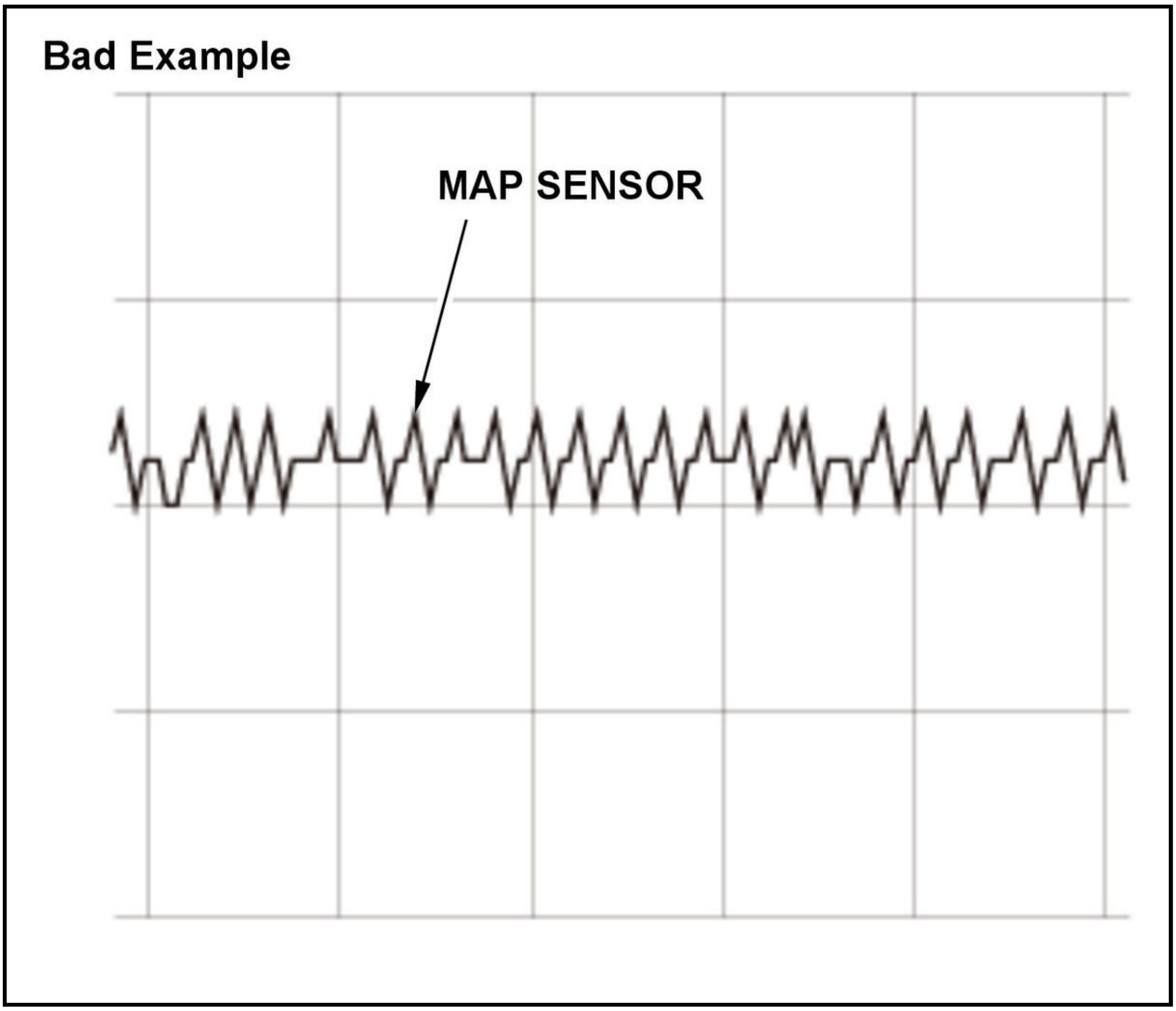

Does the MAP SENSOR continuously fluctuate 0.04 V or more at idle, no loads, engine hot?

YES

The intake manifold pressure fluctuation indicates a mechanical engine failure. Go to step 43.

NO

The intake manifold vacuum fluctuation is OK. Go to step 46.

43. Adjust Valve Clearance

-1. **Adjust the valve clearances** , and inspect the camshaft for excessive wear or grooves.

NOTE: ECT Sensor 1 must read less than 100 deg.F (38 deg.C) before adjusting the valve clearance. Shortcutting this step may cause incorrect valve clearance and engine misfire.

-2. Recheck the MAP SENSOR fluctuation at idle.

Does the MAP SENSOR continuously fluctuate 0.04 V or more at idle, no loads, engine hot?

YES

Adjusting the valve clearance did not correct the excessive MAP sensor fluctuation. Go to step 44.

NO

The excessive MAP sensor fluctuation was caused by incorrect valve clearance.

44. Check Cylinder Compression

-1. **Perform a cylinder compression test** .

-2. Record your test results in a chart similar to the one shown below.

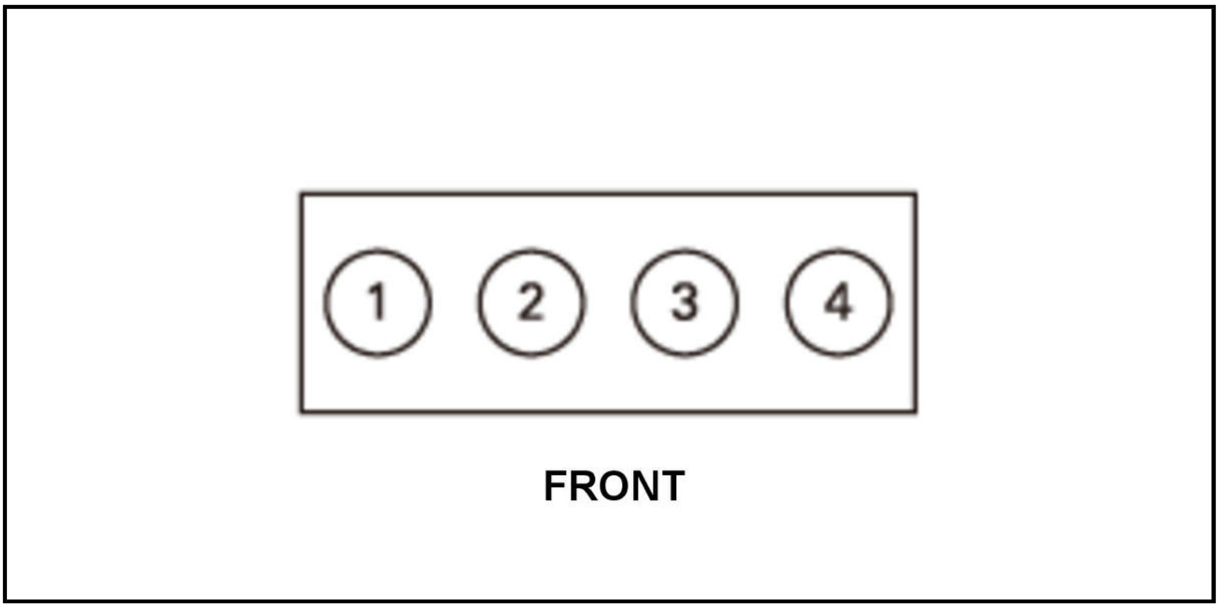

B	Compression (PSI)
No. 1	B
No. 2	B
No. 3	B
No. 4	B

Highest Reading (PSI)	Lowest Reading (PSI)	Variation (%)
B	B	B

Does the compression vary more than 10 % between cylinders, or does any cylinder read below 150 PSI?

1. **YES**

   The cylinder leakage is normal, but the engine compression is low. Check for each of the conditions below and repair as needed.

   - Incorrect camshaft timing.
   - A bent (short) connecting rod.
   - Worn or damaged camshaft lobes.

   NO

   The engine compression and the cylinder leakage are normal. Go to step 45.

45. Check Cylinder Leakage

-1. **Perform a cylinder leakage test** .

-2. Record your test results in the chart shown below.

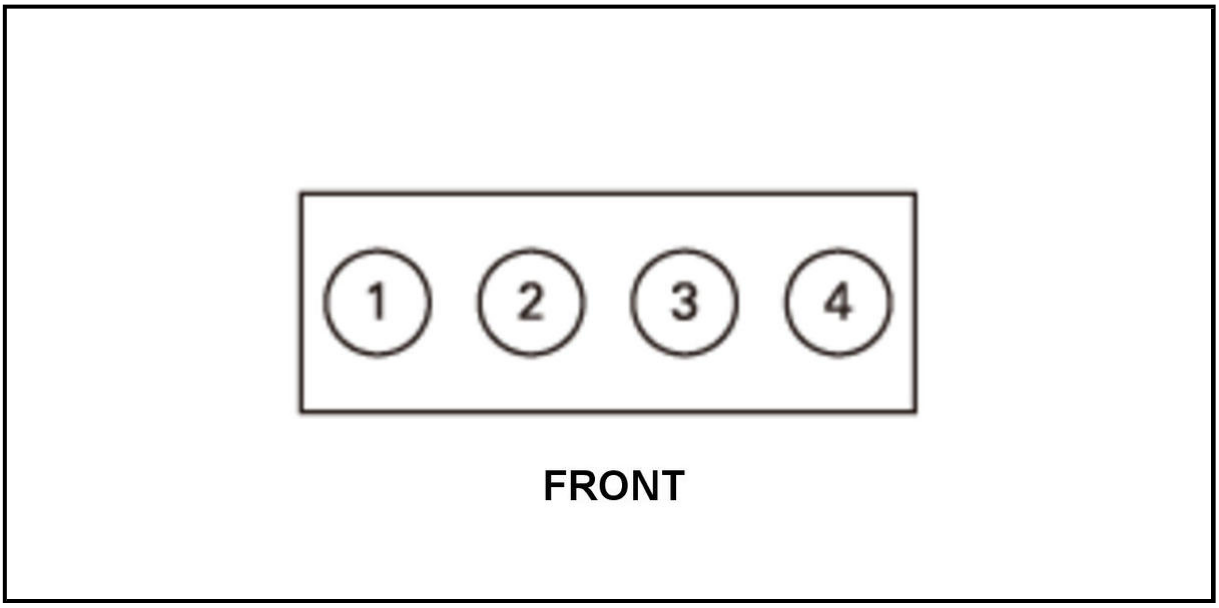

B	Leakage (%)	Leakage Area
No. 1	B	B
No. 2	B	B
No. 3	B	B
No. 4	B	B

Does any cylinder have leakage greater than 10 %?

YES

If the majority of the air is escaping from exhaust pipe or throttle body, check for tight valve clearance and adjust each cylinder as needed, then retest. Determine the cause of the cylinder leakage and repair the engine as needed.

NO

The cylinders are sealing properly. Go to step 46.

46. Exchange Fuel Injector

-1. **Exchange the fuel injector from the problem cylinder with one from another cylinder** .

-2. Drive the vehicle under the conditions when the misfire was duplicated.

-3. Monitor the misfire parameters in the DATA LIST.

Signal	Current conditions	
	Values	Unit
Cyl1 Misfire	B	B
Cyl2 Misfire	B	B
Cyl3 Misfire	B	B
Cyl4 Misfire	B	B

Do the misfire counts stay on the problem cylinder when the fuel injector is swapped?

YES

The fuel injector is OK. Go to step 47.

NO

The fuel injector is faulty. **Replace the fuel injector** .

47. CKP Pattern Clear/Pattern Learn

-1. Select CRANK (CKP) PATTERN in the Adjustment Menu with the HDS.

-2. **Select CRANK (CKP) PATTERN CLEAR, and clear the CKP pattern** .

CRANK (CKP) PATTERN CLEAR

Select CRANK (CKP) PATTERN LEARNING with the HDS, and follow the screen prompts .

CRANK (CKP) PATTERN LEARNING

Monitor the misfire parameters in the DATA LIST.

Signal	Current conditions	
	Values	Unit
Cyl1 Misfire	B	B
Cyl2 Misfire	B	B
Cyl3 Misfire	B	B
Cyl4 Misfire	B	B

Did the misfire counts stay on the problem cylinder?

YES

Check for any authorized service information related to the DTCs or symptoms you are troubleshooting or **substitute a known-good PCM** .

NO

The misfire problem has been fixed.

48. Inspect Spark Plug

-1. **Remove the spark plug from the problem cylinder** .

-2. Inspect the spark plug for signs of failure. Also make sure the spark plugs are the correct part number for the vehicle.

Does the spark plug show any signs of failure or is it not the correct part number?

YES

Replace the spark plug .

NO

Go to step 49.

49. Check MAP Sensor Fluctuation

-1. **Enter the maintenance mode, then start the engine** , and let it idle until the cooling fans cycle twice.

-2. Turn off all engine and electrical loads (A/C, audio, lights, etc.).

-3. Configure a HIGH-SPEED SNAPSHOT, and select only the MAP SENSOR.

-4. Begin displaying live vehicle data on a line graph.

-5. Configure the MAP SENSOR line graph range for 1.2 V MAX and 0.8 V MIN.

-6. Watch the MAP SENSOR fluctuation. See examples below.

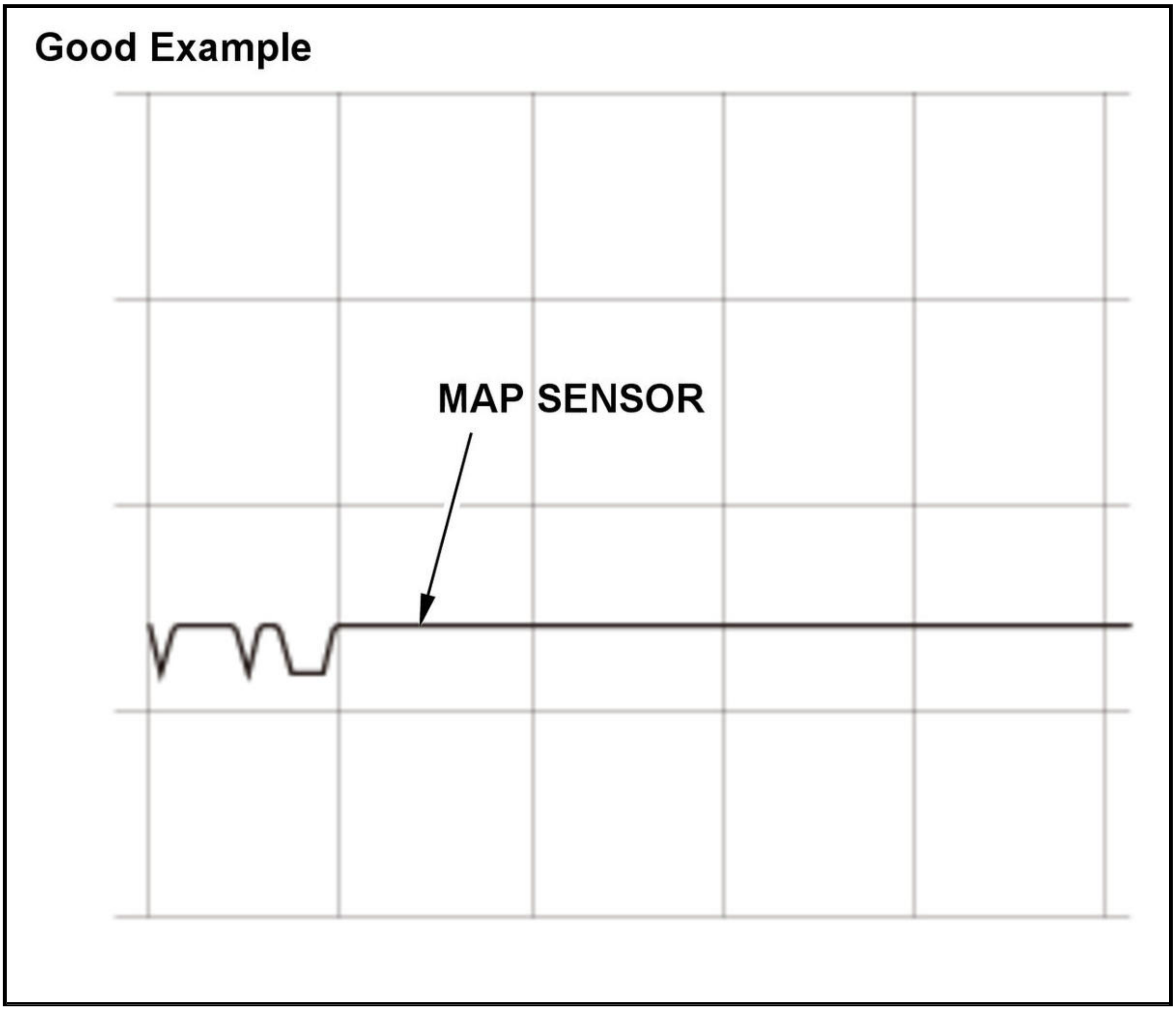

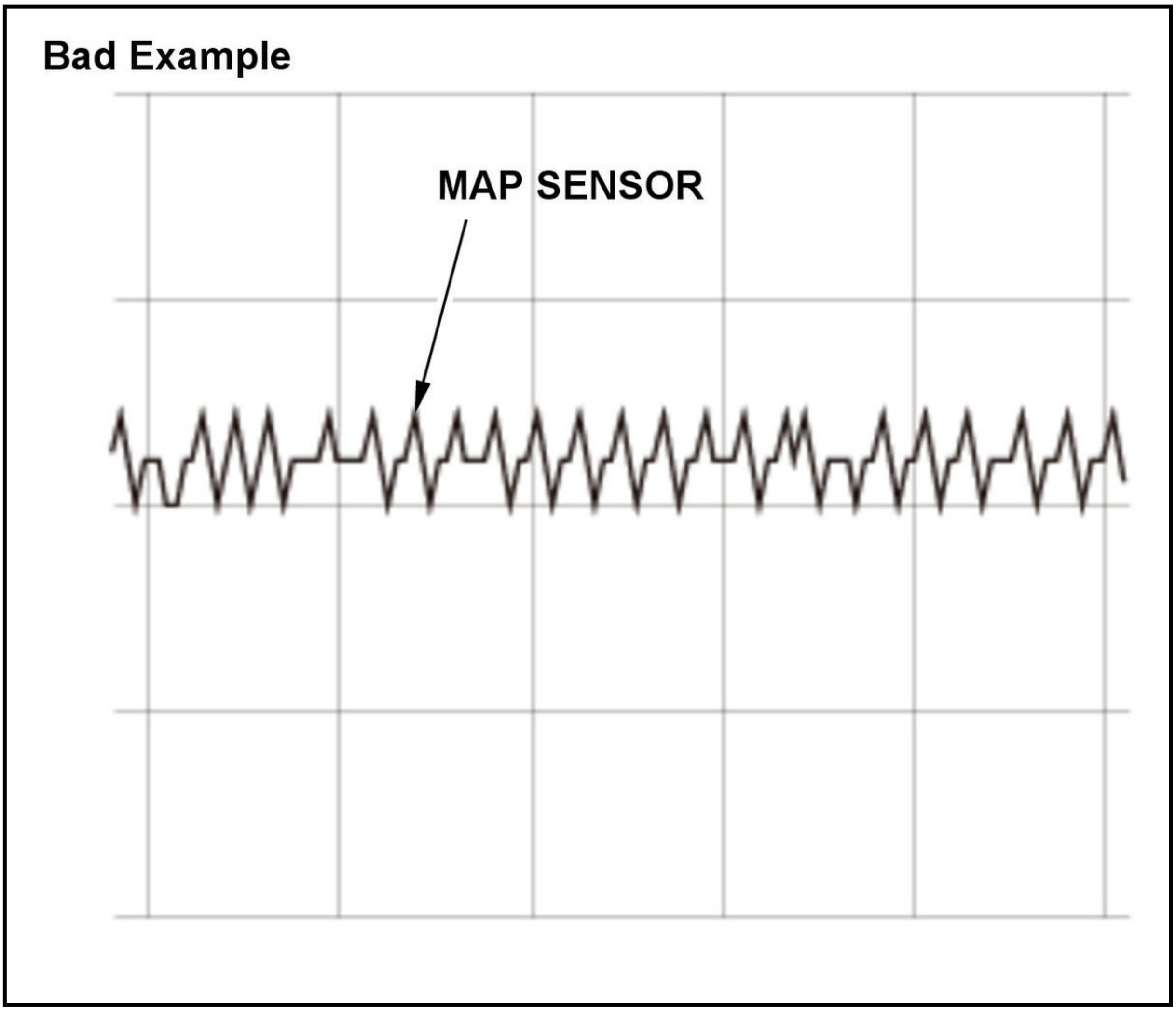

Does the MAP SENSOR continuously fluctuate 0.04 V or more at idle, no loads, engine hot?

YES

The intake manifold pressure fluctuation indicates a mechanical engine failure. Go to step 50.

NO

The intake manifold vacuum fluctuation is OK. Go to step 53.

50. Adjust Valve Clearance

-1. **Adjust the valve clearances** , and inspect the camshaft for excessive wear or grooves.

NOTE: ECT Sensor 1 must read less than 100 deg.F (38 deg.C) before adjusting the valve clearance. Shortcutting this step may cause incorrect valve clearance and engine misfire.

-2. Recheck the MAP SENSOR fluctuation at idle.

Does the MAP SENSOR continuously fluctuate 0.04 V or more at idle, no loads, engine hot?

YES

Adjusting the valve clearance did not correct the excessive MAP sensor fluctuation. Go to step 51.

NO

The excessive MAP sensor fluctuation was caused by incorrect valve clearance.

51. Check Cylinder Compression

-1. **Perform a cylinder compression test** .

-2. Record your test results in a chart similar to the one shown below.

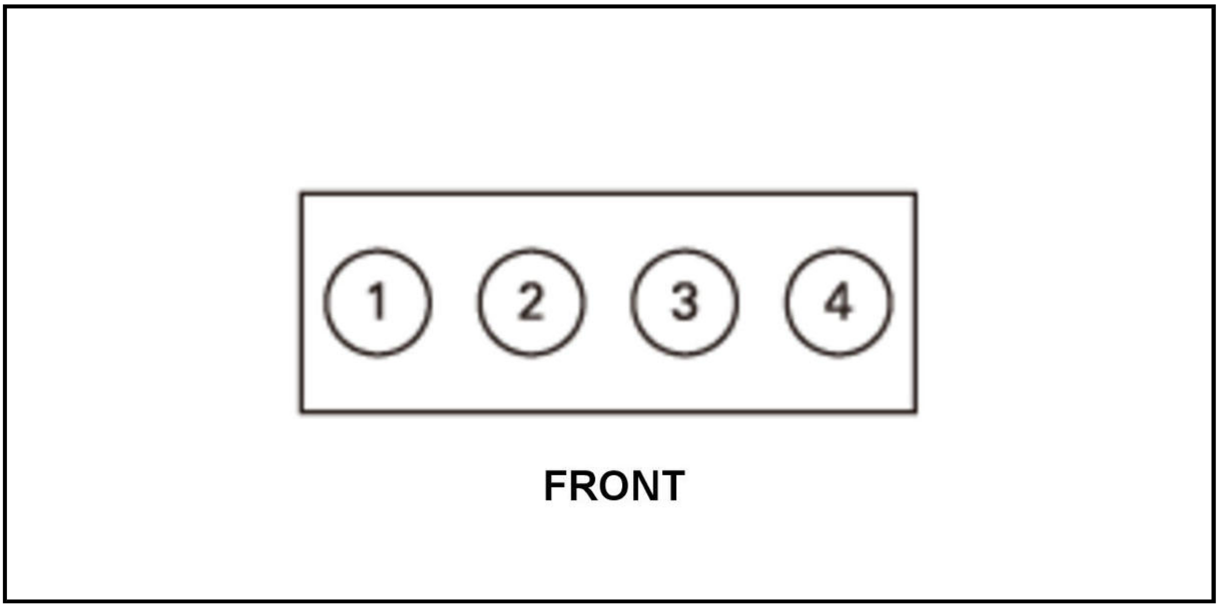

B	Compression (PSI)
No. 1	B
No. 2	B
No. 3	B
No. 4	B

Highest Reading (PSI)	Lowest Reading (PSI)	Variation (%)
B	B	B

Does the compression vary more than 10 % between cylinders, or does any cylinder read below 150 PSI?

1. **YES**

   The cylinder leakage is normal, but the engine compression is low. Check for each of the conditions below and repair as needed.

   - Incorrect camshaft timing.
   - A bent (short) connecting rod.
   - Worn or damaged camshaft lobes.

   NO

   The engine compression and the cylinder leakage are normal. Go to step 52.

52. Check Cylinder Leakage

-1. **Perform a cylinder leakage test** .

-2. Record your test results in the chart shown below.

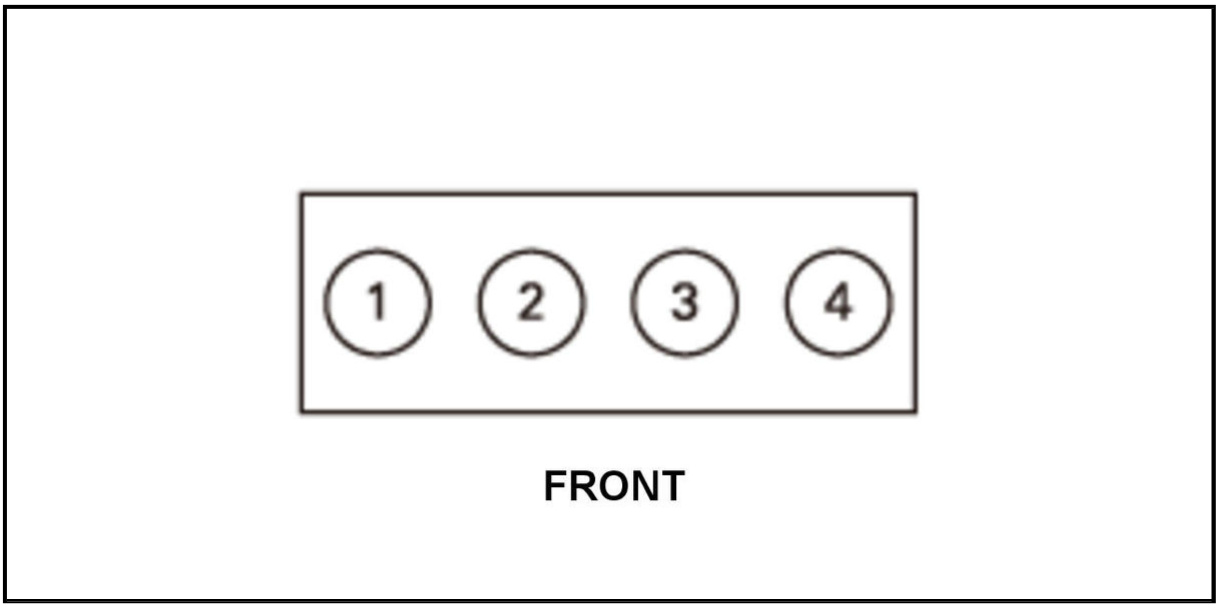

B	Leakage (%)	Leakage Area
No. 1	B	B
No. 2	B	B
No. 3	B	B
No. 4	B	B

Does any cylinder have leakage greater than 10 %?

YES

If the majority of the air is escaping from exhaust pipe or throttle body, check for tight valve clearance and adjust each cylinder as needed, then retest. Determine the cause of the cylinder leakage and repair the engine as needed.

NO

The cylinders are sealing properly. Go to step 53.

53. Check Fuel Pressure

-1. **Relieve the fuel pressure** .

-2. **Attach the fuel pressure gauge set and the fuel pressure gauge** .

-3. Locate and record the fuel pressure specification for your vehicle.

Minimum Pressure (kPa)	Maximum Pressure (kPa)
B	B

-4. **Enter the maintenance mode, then start the engine** , and record the fuel pressure under the conditions the misfire was duplicated.

Fuel Pressure (kPa)
B

Is the fuel pressure within specifications?

YES

The fuel pressure is OK. Go to step 54.

NO

Check for pinched or damaged fuel lines. If OK, **replace the fuel tank unit** .

54. Check Fuel Contamination

-1. **Remove the fuel tank unit** .

-2. Inspect for evidence of fuel contamination such as diesel fuel, water, rust, or debris.

NOTE: If the misfire occurred shortly after refueling, the likely cause is poor fuel quality. The MIL DIST (MIL distance) value in the DATA LIST, along with the fuel level, can help you make this determination. Incorrect or contaminated fuel typically affects multiple cylinders. But a problem such as water in the fuel can cause a single cylinder misfire that occurs randomly.

Is there evidence of fuel contamination?

YES

Replace the fuel filter and then drain/refill the fuel tank with known-good fuel.

NO

The fuel system has no signs of fuel contamination. Go to step 55.

55. Check MAF Sensor g/s

-1. Locate and record the MAF SENSOR g/s specification for your vehicle. This can be found in troubleshooting procedure for DTC P0171.

Minimum g/s	Maximum g/s	Specified RPM
B	B	B

Ensure the vehicle meets these conditions:

- Engine coolant temperature (ECT SENSOR 1) above 176 deg.F (80 deg.C)
- Transmission in P or N
- All electrical loads off

Signal	Current conditions	
	Values	Unit
ECT Sensor 1	B	B

-3. Monitor the ENGINE SPEED in the DATA LIST with the HDS. Raise and hold the engine speed steady at the specified rpm.

Signal	Current conditions	
	Values	Unit
Engine Speed	B	B

-4. While holding the rpm steady, check the MAF SENSOR in the DATA LIST.

Signal	Current conditions	
	Values	Unit
MAF Sensor	B	B

Is the MAF Sensor g/s value within specifications?

YES

The MAF sensor is reading correctly. **Replace the fuel injector** .

NO

The MAF sensor is not reading correctly. **Replace MAF sensor/IAT sensor 1** .

56. Inspect Spark Plug

-1. **Remove the spark plug from the problem cylinder** .

-2. Inspect the spark plug for signs of failure. Also make sure the spark plugs are the correct part number for the vehicle.

Does the spark plug show any signs of failure or is it not the correct part number?

YES

Replace the spark plug .

NO

Go to step 57.

57. Inspect Ignition Coil

-1. Inspect the ignition coil and the spark plug tube for engine oil contamination.

Is the ignition coil covered in engine oil?

YES

Clean the oil from the ignition coil and the spark plug tube. **Replace the spark plug tube seals in the cylinder head cover** .

NO

Go to step 58.

58. Exchange Spark Plug and Ignition Coil

-1. **Exchange the spark plug and the ignition coil with ones from a normally operating cylinder** .

-2. Drive the vehicle under the conditions when the misfire was duplicated.

-3. Monitor the misfire parameters in the DATA LIST.

Signal	Current conditions	
	Values	Unit
Cyl1 Misfire	B	B
Cyl2 Misfire	B	B
Cyl3 Misfire	B	B
Cyl4 Misfire	B	B

Did the misfire counts stay on the problem cylinder?

YES

The ignition coil and the spark plug are OK. Go to step 60.

NO

There is a failure in the ignition coil or the spark plug. Go to step 59.

59. Exchange Ignition Coil

-1. **Exchange the ignition coil on the problem cylinder with a normally operating cylinder** .

-2. Drive the vehicle under the conditions when the misfire was duplicated.

-3. Monitor the misfire parameters in the DATA LIST.

Signal	Current conditions	
	Values	Unit
Cyl1 Misfire	B	B
Cyl2 Misfire	B	B
Cyl3 Misfire	B	B
Cyl4 Misfire	B	B

Did the misfire counts stay on the problem cylinder?

YES

The spark plug has a failure. **Replace the spark plug** .

NO

The ignition coil has a failure. **Replace the ignition coil** .

60. Exchange Fuel Injector

-1. **Exchange the fuel injector from the problem cylinder with one from another cylinder** .

-2. Drive the vehicle under the conditions when the misfire was duplicated.

-3. Monitor the misfire parameters in the DATA LIST.

Signal	Current conditions	
	Values	Unit
Cyl1 Misfire	B	B
Cyl2 Misfire	B	B
Cyl3 Misfire	B	B
Cyl4 Misfire	B	B

Do the misfire counts stay on the problem cylinder when the fuel injector is swapped?

YES

The fuel injector is OK. Go to step 61.

NO

The fuel injector is faulty. **Replace the fuel injector** .

61. Inspect VTEC System

-1. **Perform the VTEC rocker arm test** .

Does the engine pass the VTEC rocker arm test?

YES

Go to step 62.

NO

Repair the VTEC system.

62. CKP Pattern Clear/Pattern Learn

-1. Select CRANK (CKP) PATTERN in the Adjustment Menu with the HDS.

-2. **Select CRANK (CKP) PATTERN CLEAR, and clear the CKP pattern** .

CRANK (CKP) PATTERN CLEAR

Select CRANK (CKP) PATTERN LEARNING with the HDS, and follow the screen prompts .

CRANK (CKP) PATTERN LEARNING

Monitor the misfire parameters in the DATA LIST.

Signal	**Current conditions**	
	Values	**Unit**
Cyl1 Misfire	B	B
Cyl2 Misfire	B	B
Cyl3 Misfire	B	B
Cyl4 Misfire	B	B

Did the misfire counts stay on the problem cylinder?

YES

Check for any authorized service information related to the DTCs or symptoms you are troubleshooting or **substitute a known-good PCM** .

NO

The misfire problem has been fixed.

63. Inspect Spark Plug

-1. **Remove the spark plug from the problem cylinder** .

-2. Inspect the spark plug for signs of failure. Also make sure the spark plugs are the correct part number for the vehicle.

Does the spark plug show any signs of failure or is it not the correct part number?

YES

Replace the spark plug .

NO

Go to step 64.

64. Check Fuel Pressure

-1. **Relieve the fuel pressure** .

-2. **Attach the fuel pressure gauge set and the fuel pressure gauge** .

-3. Locate and record the fuel pressure specification for your vehicle.

Minimum Pressure (kPa)	Maximum Pressure (kPa)
B	B

-4. **Enter the maintenance mode, then start the engine** , and record the fuel pressure under the conditions the misfire was duplicated.

Fuel Pressure (kPa)
B

Is the fuel pressure within specifications?

YES

The fuel pressure is OK. Go to step 65.

NO

Check for pinched or damaged fuel lines. If OK, **replace the fuel tank unit** .

65. Check Fuel Contamination

-1. **Remove the fuel tank unit** .

-2. Inspect for evidence of fuel contamination such as diesel fuel, water, rust, or debris.

NOTE: If the misfire occurred shortly after refueling, the likely cause is poor fuel quality. The MIL DIST (MIL distance) value in the DATA LIST, along with the fuel level, can help you make this determination. Incorrect or contaminated fuel typically affects multiple cylinders. But a problem such as water in the fuel can cause a single cylinder misfire that occurs randomly.

Is there evidence of fuel contamination?

YES

Replace the fuel filter and then drain/refill the fuel tank with a known-good fuel.

NO

The fuel system has no signs of fuel contamination. Go to step 66.

66. Exchange Fuel Injector

-1. **Exchange the fuel injector from the problem cylinder with one from another cylinder** .

-2. Drive the vehicle under the conditions when the misfire was duplicated.

-3. Monitor the misfire parameters in the DATA LIST.

Signal	Current conditions	
	Values	Unit
Cyl1 Misfire	B	B

Signal	Current conditions	
	Values	Unit
Cyl2 Misfire	B	B

Signal	Current conditions	
	Values	Unit
Cyl3 Misfire	B	B
Cyl4 Misfire	B	B

Do the misfire counts stay on the problem cylinder when the fuel injector is swapped?

YES

The fuel injector is OK. Go to step 67.

NO

The fuel injector is faulty. **Replace the fuel injector** .

67. Inspect VTEC System

-1. **Perform the VTEC rocker arm test** .

Does the engine pass the VTEC rocker arm test?

YES

Go to step 68.

NO

Repair the VTEC system.

68. Check for Exhaust Restrictions

-1. Reinstall all removed parts, and reconnect all connectors.

-2. Record the MAP SENSOR value while the engine is off.

Signal	Current conditions	
	Values	Unit
MAP Sensor	B	B

-3. **Enter the maintenance mode, then start the engine** , and monitor the ENGINE SPEED and MAP SENSOR in the DATA LIST with the HDS.

Signal	Current conditions	
	Values	Unit
MAP Sensor	B	B
Engine Speed	B	B

-4. Raise the engine speed to 3, 500 rpm and hold the throttle steady.

Does the MAP SENSOR read near atmospheric pressure (engine off value) ?

YES

There is a restriction in the exhaust system. Check for catalyst damage and repair as necessary.

NO

Go to step 69.

69. CKP Pattern Clear/Pattern Learn

-1. Select CRANK (CKP) PATTERN in the Adjustment Menu with the HDS.

-2. **Select CRANK (CKP) PATTERN CLEAR, and clear the CKP pattern** .

CRANK (CKP) PATTERN CLEAR

Select CRANK (CKP) PATTERN LEARNING with the HDS, and follow the screen prompts .

CRANK (CKP) PATTERN LEARNING

Monitor the misfire parameters in the DATA LIST.

Signal	Current conditions	
	Values	Unit
Cyl1 Misfire	B	B
Cyl2 Misfire	B	B
Cyl3 Misfire	B	B
Cyl4 Misfire	B	B

Did the misfire counts stay on the problem cylinder?

YES

Check for any authorized service information related to the DTCs or symptoms you are troubleshooting or **substitute a known-good PCM** .

NO

The misfire problem has been fixed.

70. Check MAP Sensor Fluctuation

-1. **Enter the maintenance mode, then start the engine** , and let it idle until the cooling fans cycle twice.

-2. Turn off all engine and electrical loads (A/C, audio, lights, etc.).

-3. Configure a HIGH-SPEED SNAPSHOT, and select only the MAP SENSOR.

-4. Begin displaying live vehicle data on a line graph.

-5. Configure the MAP SENSOR line graph range for 1.2 V MAX and 0.8 V MIN.

-6. Watch the MAP SENSOR fluctuation. See examples below.

Good Example

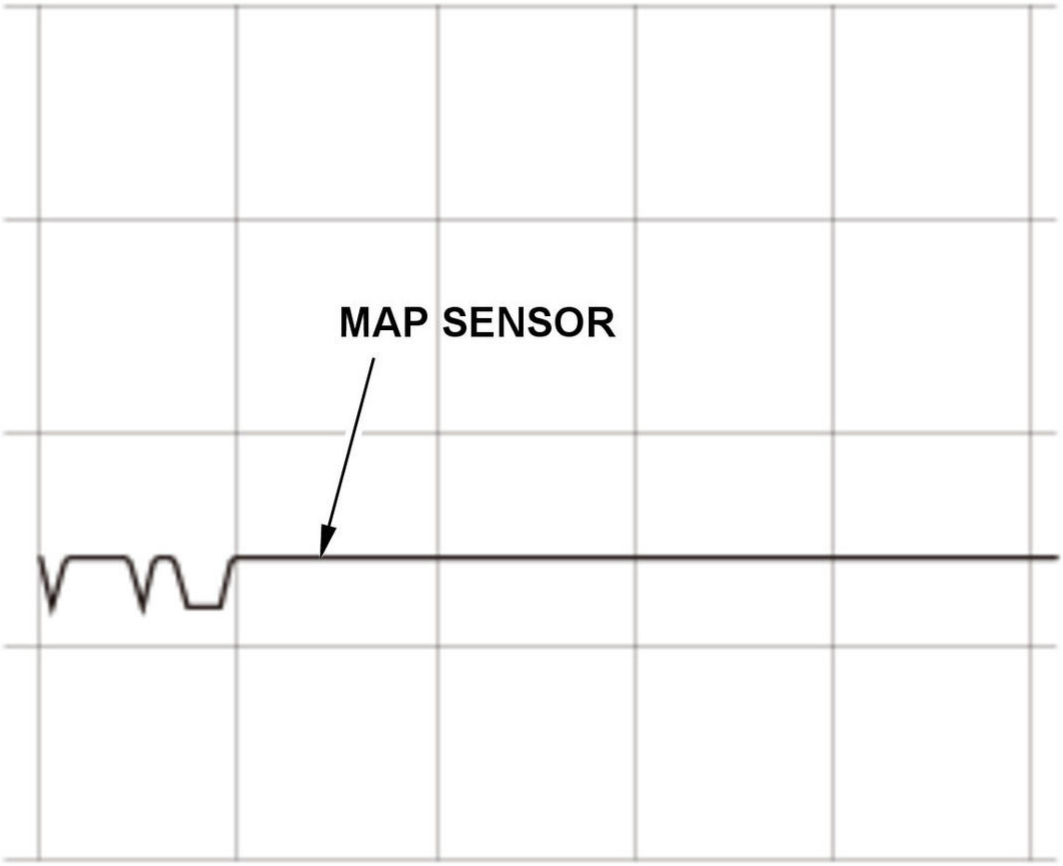

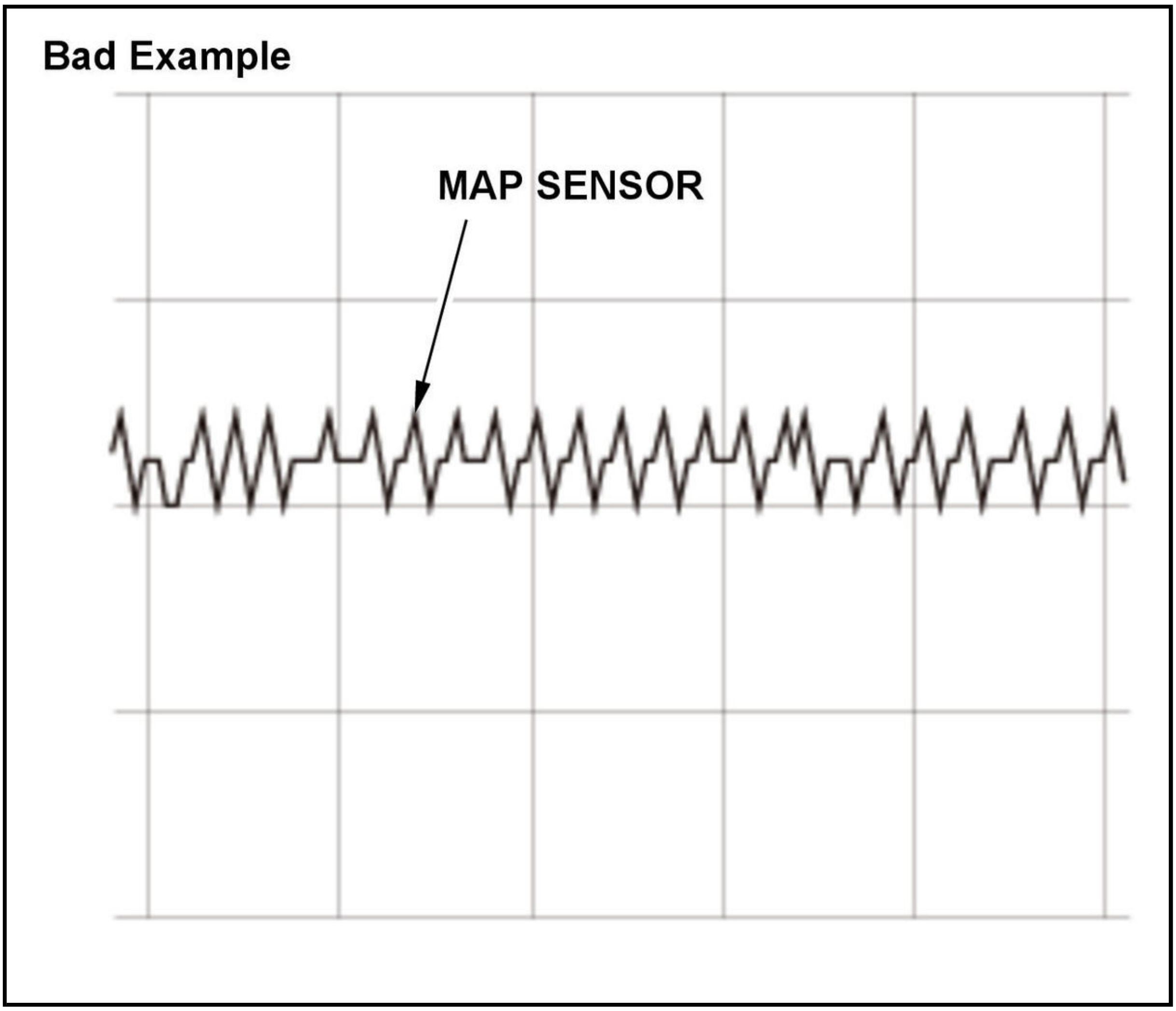

Does the MAP SENSOR continuously fluctuate 0.04 V or more at idle, no loads, engine hot?

YES

The intake manifold pressure fluctuation indicates a mechanical engine failure. Go to step 71.

NO

The intake manifold vacuum fluctuation is OK. Go to step 74.

71. Adjust Valve Clearance

-1. **Adjust the valve clearances** , and inspect the camshaft for excessive wear or grooves.

NOTE: ECT Sensor 1 must read less than 100 deg.F (38 deg.C) before adjusting the valve clearance. Shortcutting this step may cause incorrect valve clearance and engine misfire.

-2. Recheck the MAP SENSOR fluctuation at idle.

Does the MAP SENSOR continuously fluctuate 0.04 V or more at idle, no loads, engine hot?

YES

Adjusting the valve clearance did not correct the excessive MAP sensor fluctuation. Go to step 72.

NO

The excessive MAP sensor fluctuation was caused by incorrect valve clearance.

72. Check Cylinder Compression

-1. **Perform a cylinder compression test** .

-2. Record your test results in a chart similar to the one shown below.

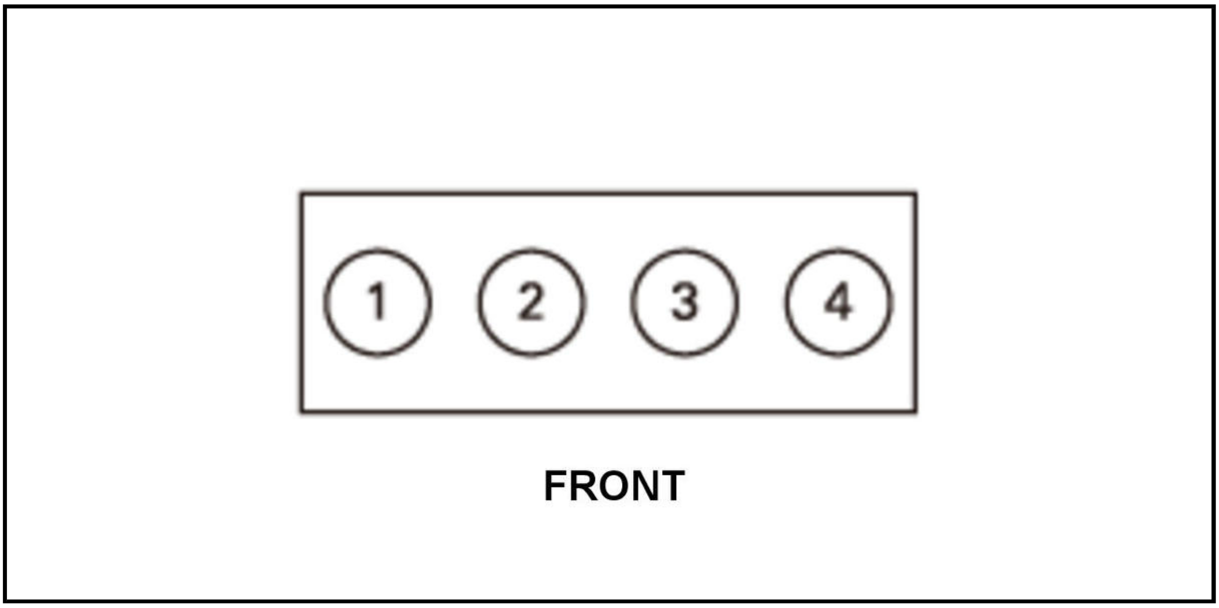

B	Compression (PSI)
No. 1	B
No. 2	B
No. 3	B
No. 4	B

Highest Reading (PSI)	Lowest Reading (PSI)	Variation (%)
B	B	B

Does the compression vary more than 10 % between cylinders, or does any cylinder read below 150 PSI?

1. **YES**

   The cylinder leakage is normal, but the engine compression is low. Check for each of the conditions below and repair as needed.

   - Incorrect camshaft timing.
   - A bent (short) connecting rod.
   - Worn or damaged camshaft lobes.

   NO

   The engine compression and the cylinder leakage are normal. Go to step 73.

73. Check Cylinder Leakage

-1. **Perform a cylinder leakage test** .

-2. Record your test results in the chart shown below.

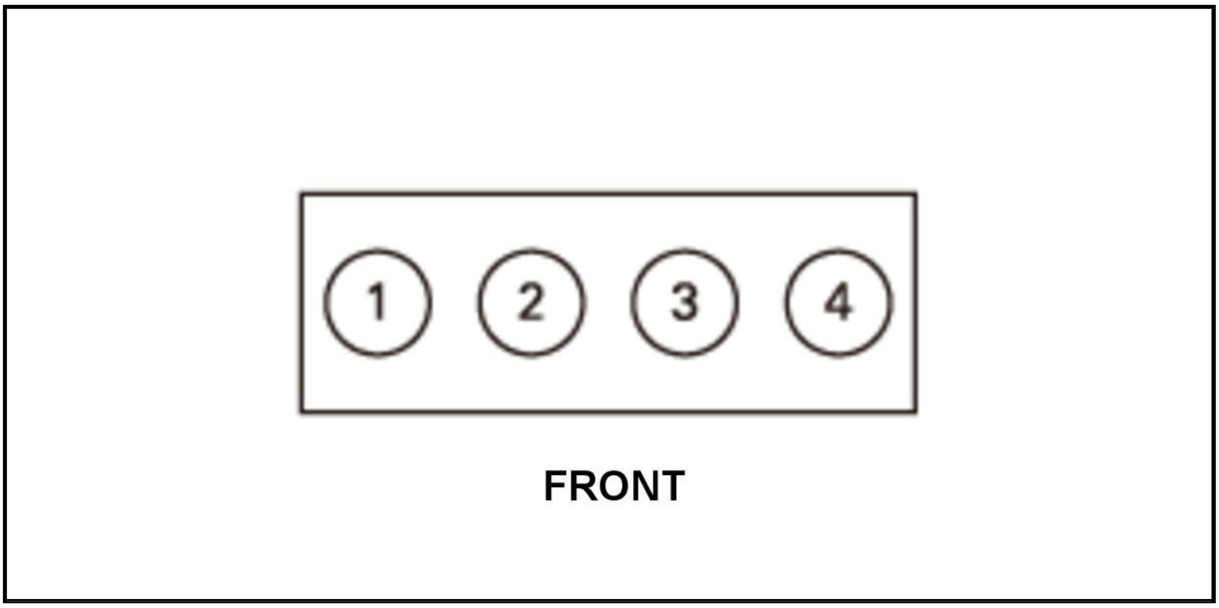

B	Leakage (%)	Leakage Area
No. 1	B	B
No. 2	B	B
No. 3	B	B
No. 4	B	B

Does any cylinder have leakage greater than 10 %?

YES

If the majority of the air is escaping from exhaust pipe or throttle body, check for tight valve clearance and adjust each cylinder as needed, then retest. Determine the cause of the cylinder leakage and repair the engine as needed.

NO

The cylinders are sealing properly. Go to step 74.

74. Check Fuel Injector Leak Down

-1. **Connect the fuel pressure gauge set** .

-2. Ensure that the fuel shut off valve is on the fuel pump side of the pressure gauge.

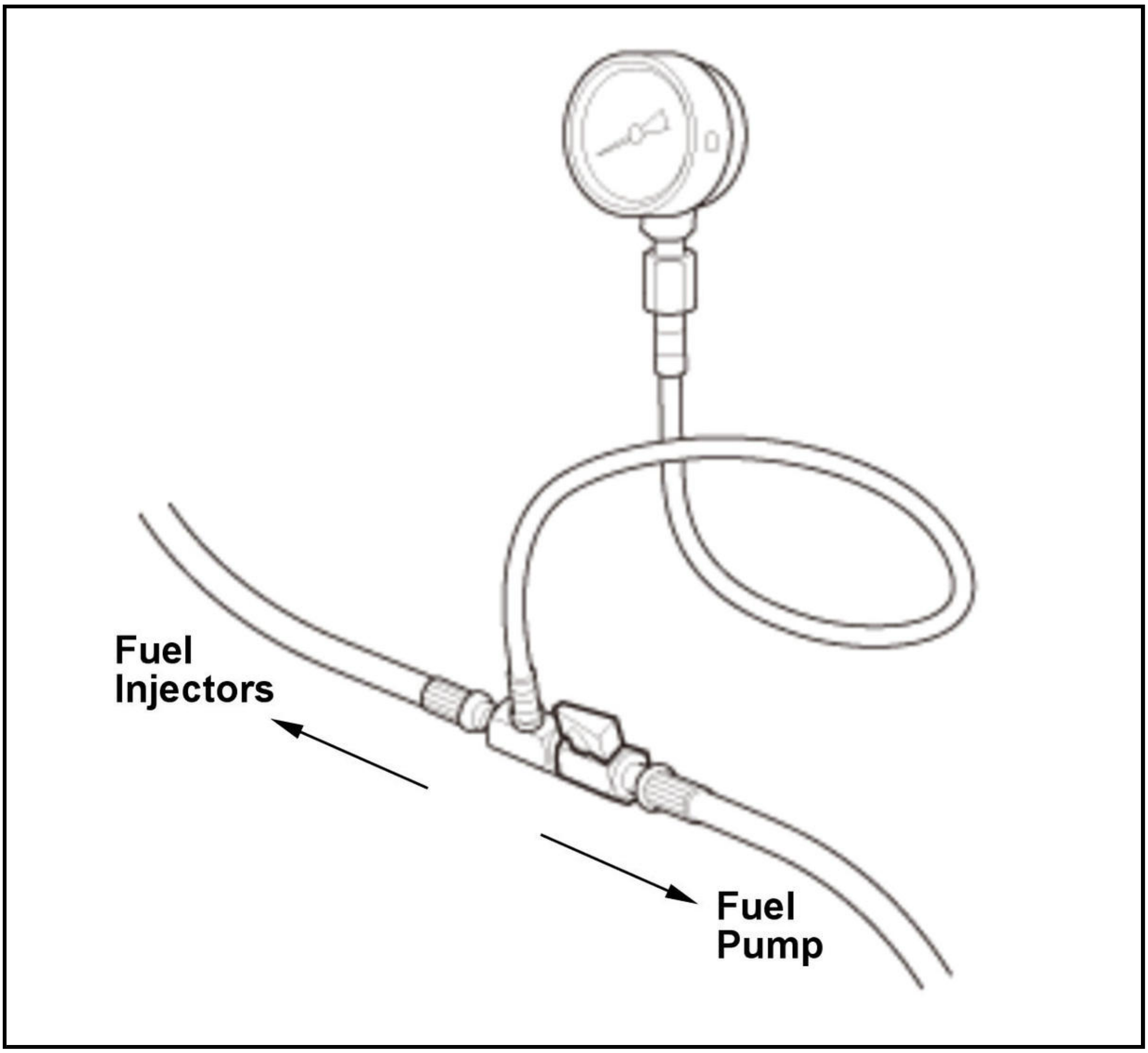

-3. **Enter the maintenance mode, then start the engine** , and then shut it off.

-4. Turn the shut off valve 90 deg. to isolate the pressure between the fuel injectors and the fuel pressure gauge.

-5. Record the initial fuel pressure reading.

-6. Let the vehicle sit for 10 minutes.

-7. Check the fuel pressure.

Does the pressure drop more than 10 PSI within 10 minutes?

YES

The fuel injectors are leaking. **Replace thel fuel injector** .

NO

Go to step 75.

75. Inspect Spark Plug

-1. **Remove the spark plug from the problem cylinder** .

-2. Inspect the spark plug for signs of failure. Also make sure the spark plugs are the correct part number for the vehicle.

Does the spark plug show any signs of failure or is it not the correct part number?

YES

Replace the spark plug .

NO

Go to step 76.

76. Exchange Spark Plug and Ignition Coil

-1. **Exchange the spark plug and the ignition coil with ones from a normally operating cylinder** .

-2. Drive the vehicle under the conditions when the misfire was duplicated.

-3. Monitor the misfire parameters in the DATA LIST.

Signal	Current conditions	
	Values	Unit
Cyl1 Misfire	B	B
Cyl2 Misfire	B	B
Cyl3 Misfire	B	B
Cyl4 Misfire	B	B

Did the misfire counts stay on the problem cylinder?

YES

The ignition coil and the spark plug are OK. Go to step 78.

NO

There is a failure in the ignition coil or the spark plug. Go to step 77.

77. Exchange Ignition Coil

-1. **Exchange the ignition coil on the problem cylinder with a normally operating cylinder** .

-2. Drive the vehicle under the conditions when the misfire was duplicated.

-3. Monitor the misfire parameters in the DATA LIST.

Signal	Current conditions	
	Values	Unit
Cyl1 Misfire	B	B
Cyl2 Misfire	B	B
Cyl3 Misfire	B	B
Cyl4 Misfire	B	B

Did the misfire counts stay on the problem cylinder?

YES

The spark plug has a failure. **Replace the spark plug** .

NO

The ignition coil has a failure. **Replace the ignition coil** .

78. Engine Carbon Removal

-1. Perform a top engine cleaning following the product manufacturer's instructions.

-2. Drive the vehicle under the conditions when the misfire was duplicated.

-3. Monitor the misfire parameters in the DATA LIST.

Signal	**Current conditions**	
	Values	**Unit**
Cyl1 Misfire	B	B
Cyl2 Misfire	B	B
Cyl3 Misfire	B	B
Cyl4 Misfire	B	B

Did the misfire counts stay?

YES

The carbon removal procedure did not correct the misfire. **Replace the fuel injector** .

NO

The carbon removal procedure corrected the misfire.

DTC P0326

DTC P0326 : Knock Sensor Malfunction

NOTE: Before you troubleshoot, **review the general troubleshooting information**.

DTC Description	**Confirmed DTC**	**Pending DTC**
P0326 Knock Sensor Malfunction	B	B

DTC (PGM-FI)

1. Problem verification

-1. Turn the vehicle to the ON mode.

-2. Clear the DTC with the HDS.

-3. Turn the vehicle to the OFF (LOCK) mode.

-4. **Enter the maintenance mode, then start the engine** .

-5. Hold the engine speed at 3, 000 rpm without load (in P or N) until the radiator fan comes on, then let it idle.

-6. Hold the engine speed at 1, 800 rpm or more without load (in P or N) for at least 5 seconds.

-7. Check for Pending or Confirmed DTCs with the HDS.

DTC Description	**Confirmed DTC**	**Pending DTC**
P0326 Knock Sensor Malfunction	B	B

Is DTC P0326 indicated?

YES

The failure is duplicated. Go to step 2.

NO

Intermittent failure, the system is OK at this time. Check for poor connections or loose terminals at the knock sensor and the PCM. **If the on-board snapshot of this DTC is recorded, try to reproduce the failure under the same conditions with the on-board snapshot**.

2. Knock sensor installation check

   -1. Check that the knock sensor is installed correctly.

   Is the knock sensor installed correctly?

   YES

   Installation is OK. **Replace the knock sensor** .

   NO

   Installation is not correct, reinstall the knock sensor.

DTC P0327

DTC P0327 : Knock Sensor Circuit Low Voltage

NOTE: Before you troubleshoot, **review the general troubleshooting information**.

DTC Description	Confirmed DTC	Pending DTC
P0327 Knock Sensor Circuit Low Voltage	B	B

DTC (PGM-FI)

1. Problem verification

   -1. Turn the vehicle to the ON mode.

   -2. Clear the DTC with the HDS.

   -3. Turn the vehicle to the OFF (LOCK) mode.

   -4. Turn the vehicle to the ON mode.

   -5. Check for Pending or Confirmed DTCs with the HDS.

DTC Description	Confirmed DTC	Pending DTC
P0327 Knock Sensor Circuit Low Voltage	B	B

   Is DTC P0327 indicated?

   YES

   The failure is duplicated. Go to step 2.

   NO

   Intermittent failure, the system is OK at this time. Check for poor connections or loose terminals at the knock sensor and the PCM. **If the on-board snapshot of this DTC is recorded, try to reproduce the**

failure under the same conditions with the on-board snapshot.

2. Determine possible failure area (knock sensor, others)

-1. Turn the vehicle to the OFF (LOCK) mode.

-2. Disconnect the following connector.

Knock sensor 2P connector

-3. Turn the vehicle to the ON mode.

-4. Check for Pending or Confirmed DTCs with the HDS.

DTC Description	Confirmed DTC	Pending DTC
P0328 Knock Sensor Circuit High Voltage	B	B

Is DTC P0328 indicated?

YES

Replace the knock sensor .

NO

Go to step 3.

3. Shorted wire check (KS line to KSGND line)

-1. Turn the vehicle to the OFF (LOCK) mode.

-2. Jump the SCS line with the HDS, and wait more than 1 minute.

-3. Disconnect the following connector.

PCM connector E (80P)

-4. Measure the resistance between test points 1 and 2.

Test condition	Vehicle OFF (LOCK) mode
B	Knock sensor 2P connector: disconnected
B	PCM connector E (80P) disconnected
Test point 1	Knock sensor 2P connector (female terminals) No. 1: ①
Test point 2	Knock sensor 2P connector (female terminals) No. 2: ①

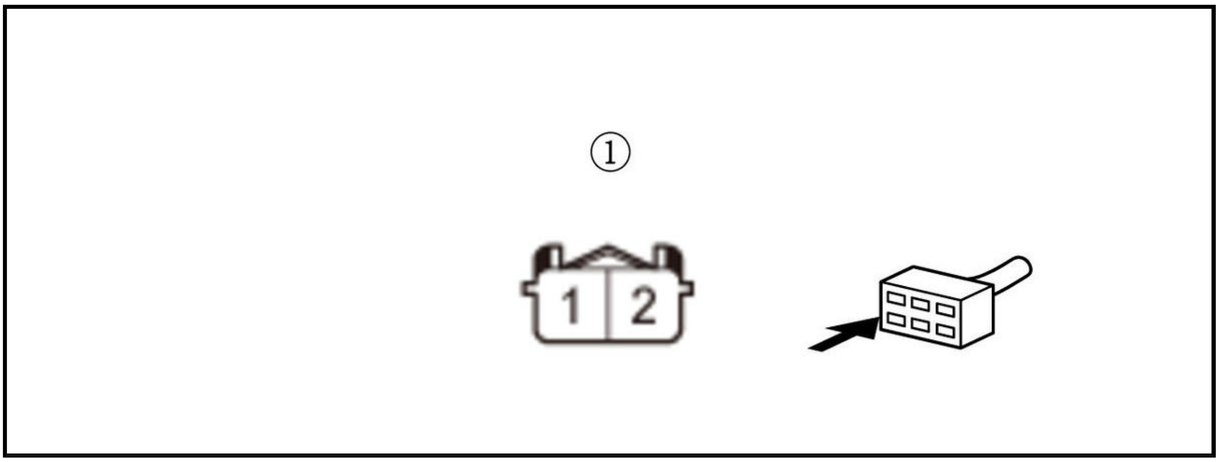

Is there 1 MΩ or more?

YES

Go to step 4.

NO

Repair a short in the KS wire to the KSGND wire between the PCM and the knock sensor.

4. Shorted wire check (KS line)

-1. Measure the resistance between test points 1 and 2.

Test condition	Vehicle OFF (LOCK) mode
B	Knock sensor 2P connector: disconnected

B	PCM connector E (80P) disconnected
Test point 1	Knock sensor 2P connector (female terminals) No. 2: ①
Test point 2	Body ground

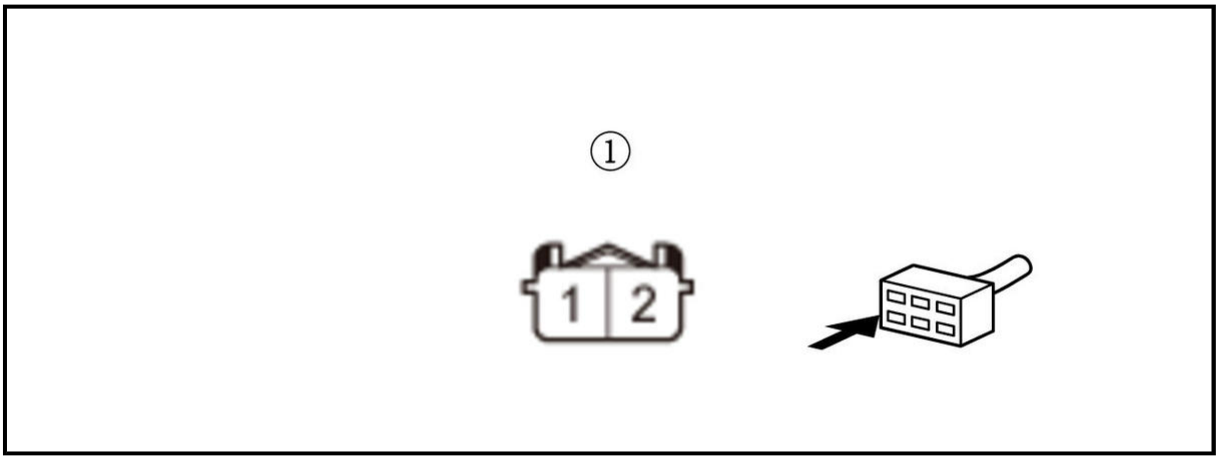

Is there 1 MΩ or more?

YES

The KS wire is OK. Check for any authorized service information related to the DTCs or symptoms you are troubleshooting, or **substitute a known-good PCM** .

NO

Repair a short in the KS wire between the PCM (E35) and the knock sensor.

DTC P0328

DTC P0328 : Knock Sensor Circuit High Voltage

NOTE: Before you troubleshoot, **review the general troubleshooting information**.

DTC Description	Confirmed DTC	Pending DTC
P0328 Knock Sensor Circuit High Voltage	B	B

DTC (PGM-FI)

1. Problem verification

   -1. Turn the vehicle to the ON mode.

   -2. Clear the DTC with the HDS.

   -3. Turn the vehicle to the OFF (LOCK) mode.

   -4. Turn the vehicle to the ON mode.

   -5. Check for Pending or Confirmed DTCs with the HDS.

DTC Description	Confirmed DTC	Pending DTC
P0328 Knock Sensor Circuit High Voltage	B	B

   Is DTC P0328 indicated?

   YES

   The failure is duplicated. Go to step 2.

   NO

   Intermittent failure, the system is OK at this time. Check for poor connections or loose terminals at the knock sensor and the PCM. **If the on-board snapshot of this DTC is recorded, try to reproduce the failure under the same conditions with the on-board snapshot**.

2. Determine possible failure area (knock sensor, others)

   -1. Turn the vehicle to the OFF (LOCK) mode.

   -2. Disconnect the following connector.

Knock sensor 2P connector

   -3. Turn the vehicle to the ON mode.

   -4. Measure the voltage between test points 1 and 2.

Test condition	Vehicle ON mode
B	Knock sensor 2P connector: disconnected
Test point 1	Knock sensor 2P connector (female terminals) No. 1: ①
Test point 2	Knock sensor 2P connector (female terminals) No. 2: ①

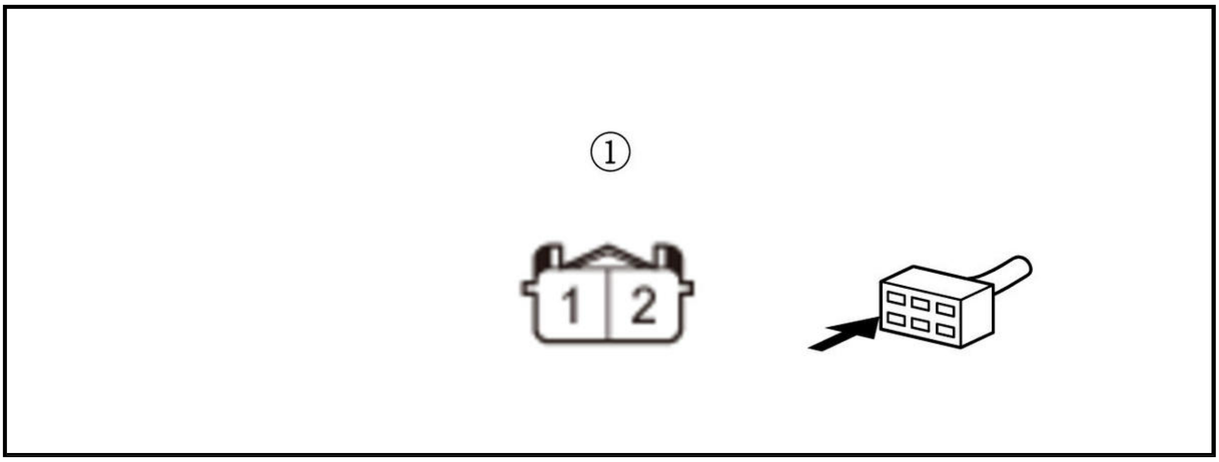

Is there about 5.0 V?

YES

[Replace the knock sensor](#) .

NO

Go to step 3.

3. Determine possible failure area (KS line, others)

-1. Measure the voltage between test points 1 and 2.

Test condition	Vehicle ON mode
B	Knock sensor 2P connector: disconnected
Test point 1	Knock sensor 2P connector (female terminals) No. 2: ①
Test point 2	Body ground

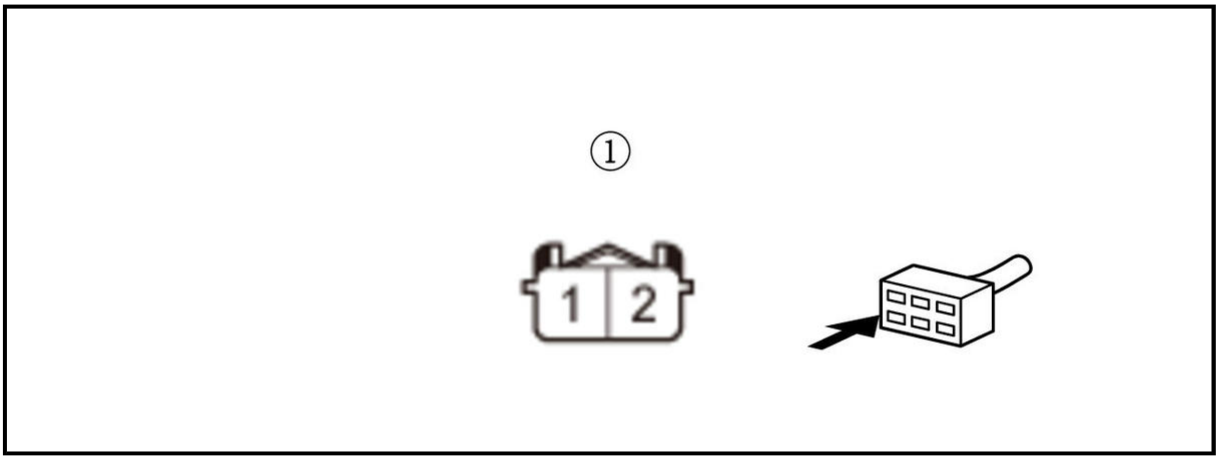

Is there about 5.0 V?

YES

Go to step 4.

NO

Go to step 5.

4. Open wire check (KSGND line)

-1. Turn the vehicle to the OFF (LOCK) mode.

-2. Jump the SCS line with the HDS, and wait more than 1 minute.

-3. Disconnect the following connector.

PCM connector E (80P)

-4. Measure the resistance between test points 1 and 2.

Test condition	Vehicle OFF (LOCK) mode
B	Knock sensor 2P connector: disconnected
B	PCM connector E (80P) : disconnected
Test point 1	Knock sensor 2P connector (female terminals) No. 1: ①
Test point 2	**PCM connector E (80P) No. 34**

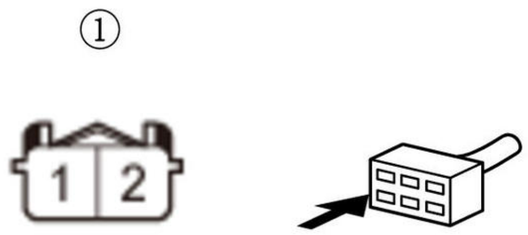

Is there 1.0 Ω or less?

YES

The KSGND wire is OK. Check for any authorized service information related to the DTCs or symptoms you are troubleshooting, or **substitute a known-good PCM** .

NO

Repair an open in the KSGND wire between the PCM (E34) and the knock sensor.

5. Open wire check (KS line)

-1. Turn the vehicle to the OFF (LOCK) mode.

-2. Jump the SCS line with the HDS, and wait more than 1 minute.

-3. Disconnect the following connectors.

PCM connector E (80P)

-4. Measure the resistance between test points 1 and 2.

Test condition	Vehicle OFF (LOCK) mode
B	Knock sensor 2P connector: disconnected
B	PCM connector E (80P) : disconnected

Test point 1	Knock sensor 2P connector (female terminals) No. 2: ①

Test point 2	**PCM connector E (80P) No. 35**

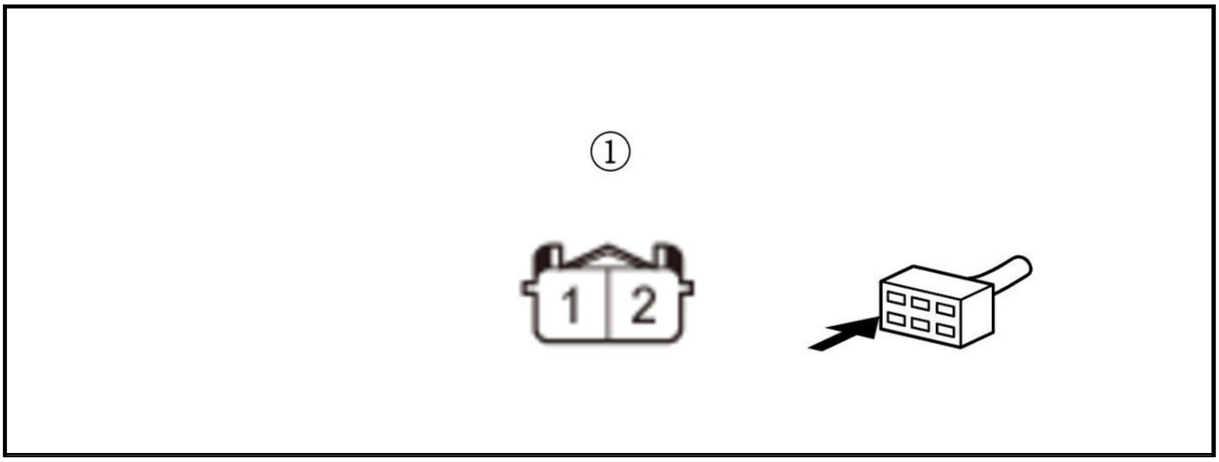

Is there 1.0 Ω or less?

YES

The KS wire is OK. Check for any authorized service information related to the DTCs or symptoms you are troubleshooting, or **substitute a known-good PCM** .

NO

Repair an open in the KS wire between the PCM (E35) and the knock sensor.

DTC TROUBLESHOOTING

DTC P032F, P06AF

DTC P032F : Engine Stall

DTC P06AF : Engine Stall

Special Tools Required

Vacuum Pump/Gauge, 0-30 inHg Snap-on YA4000A or equivalent, commercially available

NOTE:

- Before you troubleshoot, **review the general troubleshooting information** .
- Do this troubleshooting when the POWER SYSTEM indicator comes on and the battery condition monitor module DTC P1DFD is stored.
- If the 12 VOLT CHARGING SYSTEM indicator comes on, **do the electric powertrain system troubleshooting** first.
- Before beginning this troubleshooting, **do a customer diagnostic interview** .
-
    - -

      If the symptom cannot be duplicated, **you can do the troubleshooting using the on-board snapshot information in this procedure** . Refer to any available customer questionnaires and estimate the mileage when the failure occurred. Make sure the date when the failure occurred corresponds with the estimated mileage. If it does not, the on-board snapshot cannot be used for troubleshooting.
- If the engine stall occurred after refueling, the likely cause is poor fuel quality. Also if the fuel is old, the engine stall will occur.
- Before beginning this troubleshooting:
-
    - -

      Make sure the 12 volt battery is fully charged.
    - -

      Make sure the fuel tank is at least 1/4 full.
    - -

      Make sure the engine oil level is correct.
- After the troubleshooting, **reset the PCM with the HDS** to erase the on-board snapshot information recorded on the PCM.

DTC Description	Confirmed DTC	Pending DTC
P032F Engine Stall	B	B
P06AF Engine Stall	B	B

DTC (PGM-FI)

1. DTC check

   -1. Turn the vehicle to the ON mode.

   -2. Check for Pending or Confirmed DTCs with the HDS.

DTC Description	Confirmed DTC	Pending DTC
B	B	B

   Are any Pending or Confirmed DTCs other than DTC P032F or P06AF indicated?

   YES

   Go to the indicated DTC's troubleshooting.

   NO

   Go to step 2.

2. Body electrical system DTC check

   -1. Check for body electrical system DTCs with the HDS.

DTC Description	Confirmed DTC
B	B

   Are any DTCs indicated?

   YES

   Go to the troubleshooting for the body electrical system DTC(s) .

   NO

   Go to step 3.

3. Problem verification (snapshot sampling):

   Set the HDS to record a SNAPSHOT of following parameters for 30 seconds.

   - Engine Speed
   - Battery
   - ECT Sensor 1
   - MAP Sensor
   - MAF Sensor
   - CMP B No Pulse
   - CMP B Noise
   - CKP No Pulse
   - CKP Noise
   - EGR valve position sensor (EGR Vls)
   - EGR L Command
   - Misfire
   - Fuel Level

Data List

-2. Begin the snapshot, then **enter the maintenance mode and start the engine** , and let it idle without load in P or N.

NOTE: Do not press the accelerator pedal while the motor cranking.

Did the engine stall?

YES

Go to step 5 (diagnosis by parameter (FUEL LEVEL)).

NO

Go to step 4.

4. On-board snapshot check

-1. Check the recorded on-board snapshot with the HDS.

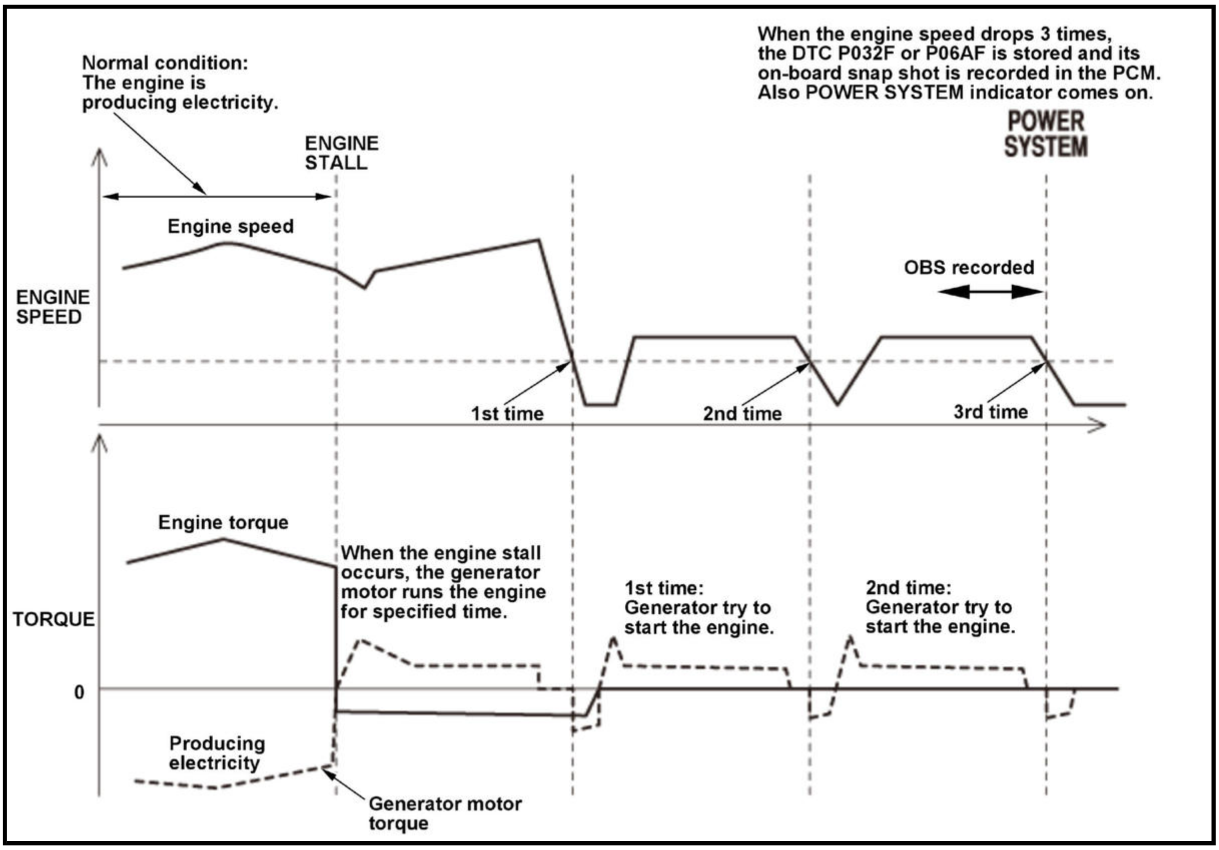

Is the on-board snapshot recorded?

YES

Go to step 6 (diagnosis by parameter (Battery)).

NO

Go to step 18 (fuel system troubleshooting).

NOTE: **If the 12 volt battery is weak, dead, or replaced, the on-board snapshot is cleared.**

5. On-board snapshot or snapshot check (FUEL LEVEL):

NOTE: Use the on-board snapshot in the case of an intermittent failure, or use the snapshot in the case of a reproducible failure.

-1. Check for a record of the on-board snapshot or the recorded snapshot with the HDS.

On-board Snapshot

-2. Select the FUEL LEVEL and ENGINE SPEED in the configuration list.

Check the recorded snapshot or on-board snapshot parameters at the time of the engine stall, then compare those snapshots to the FUEL LEVEL pattern from the charts, and determine the problem.

Pattern	Symptom (Diagnosis by parameter)	Additional remarks
Pattern 1	Engine stalls when FUEL LEVEL is lower than 30 % 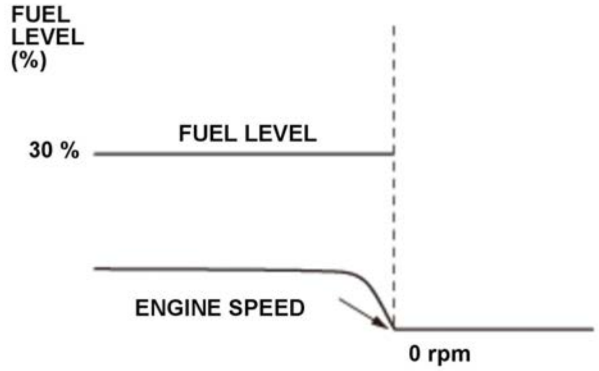 	If the FUEL LEVEL is lower than 30 %, the engine may have run out of fuel, causing the engine to stall.
Pattern 2	FUEL LEVEL is high 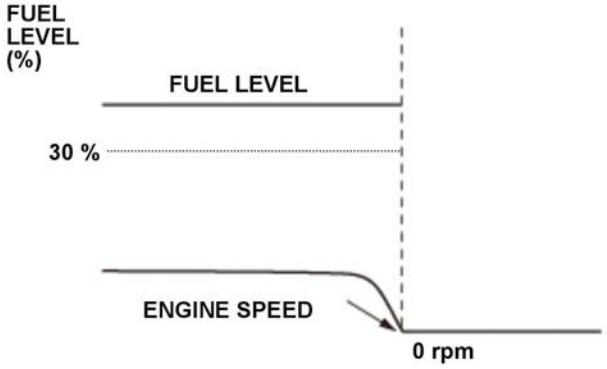 	If the FUEL LEVEL is higher than 30 % when the engine stalled, the engine stall was not caused by the fuel level.

Which pattern is indicated?

Pattern 1

Refuel and recheck.

NOTE: If the fuel is old or of poor fuel quality, the engine stall will occur.

Pattern 2

Go to step 6 (diagnosis by parameter (BATTERY)).

6. On-board snapshot or snapshot check (Battery):

NOTE: Use the on-board snapshot in the case of an intermittent failure, or use the snapshot in the case of a reproducible failure.

-1. Check for a record of the on-board snapshot or the recorded snapshot with the HDS.

On-Board Snapshot

Select the Battery and Engine Speed in the configuration list.

Check the recorded snapshot or on-board snapshot parameters at the time of the engine stall, then compare the Battery pattern from the charts, and determine the problem.

Pattern	Symptom (Diagnosis by parameter)	Additional remarks
Pattern 1	Battery voltage low 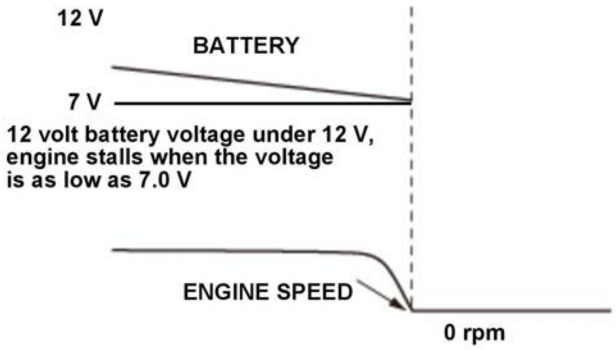 12 volt battery voltage under 12 V, engine stalls when the voltage is as low as 7.0 V	- When the battery voltage is excessively low, the PCM or control unit stops functioning, causing a engine stall. - For the PCM or each control unit to start (functioning), more than 7.0 V is needed.
Pattern 2	Battery voltage normal 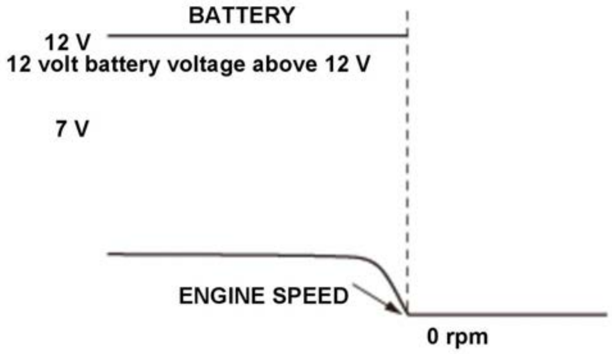 12 volt battery voltage above 12 V	If the battery voltage is above 12 V when the engine stalls, the 12 volt battery is normal.

Which pattern is indicated?

Pattern 1

Test the 12 volt battery , and check its battery cables and terminals.

Pattern 2

The 12 volt battery is OK. Go to step 7 (diagnosis by parameter (ECT Sensor 1)).

7. On-board snapshot or snapshot check (ECT SENSOR 1):

NOTE: Use the on-board snapshot in the case of an intermittent failure, or use the snapshot in the case of a reproducible failure.

-1. Check for a record of the on-board snapshot or the recorded snapshot with the HDS.

On-Board Snapshot

-2. Select the ECT Sensor 1 and Engine Speed in the configuration list.

Check the recorded snapshot or on-board snapshot parameters at the time of the engine stall, then compare ECT Sensor 1 pattern from the charts, and determine the problem.

Pattern	Symptom (Diagnosis by parameter)	Additional remarks
Pattern 1	ECT Sensor 1 high 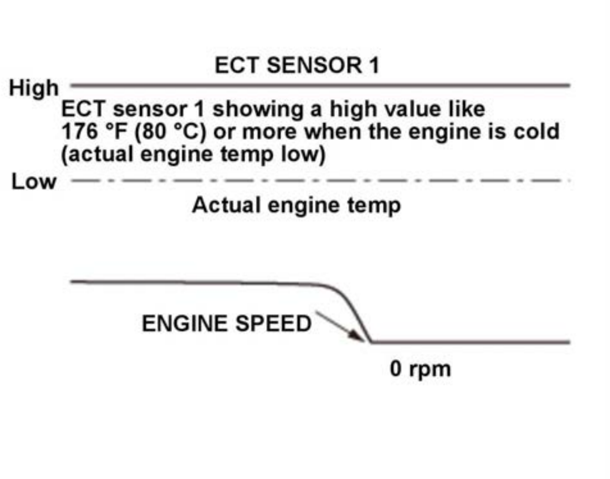	When ECT Sensor 1 indicates about 176 deg.F (80 deg.C) or more when the engine is actually cold, ECT sensor 1 signal may be stuck high. If this occurs, the PCM may not properly compensate for a cold engine operation, causing the engine to stall.
Pattern 2	ECT Sensor 1 normal 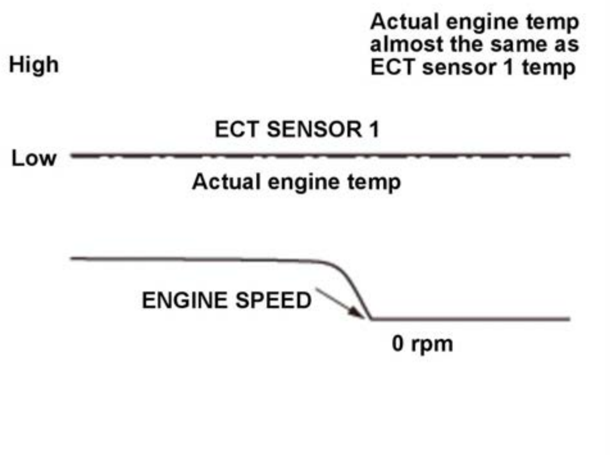	If the actual engine temp is similar to ECT Sensor 1, ECT sensor 1 is normal.

Which pattern is indicated?

Pattern 1

Check for a short in ECT sensor 1 circuit and a failure in ECT sensor 1.

Pattern 2

Go to step 8.

8. ECT sensor 1 check

-1. Turn the vehicle to the OFF (LOCK) mode.

-2. Let the engine cool for 24 hours.

-3. Measure the ambient temperature of the engine with the thermometer.

-4. Turn the vehicle to the ON mode, but do not start the engine.

-5. Check the parameter(s) below with the HDS.

Signal	Current conditions	
	Values	Unit
ECT Sensor 1	B	B
ECT Sensor 2	B	B

Are the values of ECT SENSOR 1, ECT SENSOR 2, and the ambient temperature almost the same?

YES

ECT sensor 1 is OK. Go to step 9 (diagnosis by parameter (MAP Sensor)).

NO

If the value of ECT Sensor 1 is much higher (or lower) than that of ECT Sensor 2 and the ambient temperature, check for the ECT sensor 1 circuit and a failure in ECT sensor 1.

9. On-board snapshot or snapshot check (MAP Sensor):

NOTE: Use the on-board snapshot in the case of an intermittent failure, or use the snapshot in the case of a reproducible failure.

-1. Check for a record of the on-board snapshot or the recorded snapshot with the HDS.

On-Board Snapshot

-2. Select the MAP Sensor and Engine Speed in the configuration list.

Check the recorded snapshot parameters while motor cranking, then compare the MAP Sensor pattern to the pattern from the chart below, and determine the problem.

Pattern	Symptom (Diagnosis by parameter)	Additional remarks
Pattern 1	MAP Sensor detects no change of pressure when motor cranking 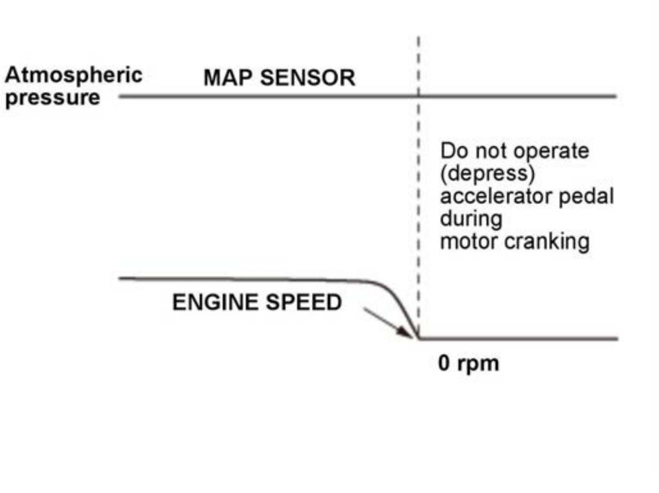	When the MAP Sensor detects no change of pressure when the engine stall or motor cranking, the pressure measurement port may be clogged. The PCM decides the basic duration time of fuel injection from engine speed, ECT sensor signal, and the MAP sensor signal when the motor cranking.

Pattern	Symptom (Diagnosis by parameter)	Additional remarks
Pattern 2	Normal when MAP Sensor detects vacuum when motor cranking 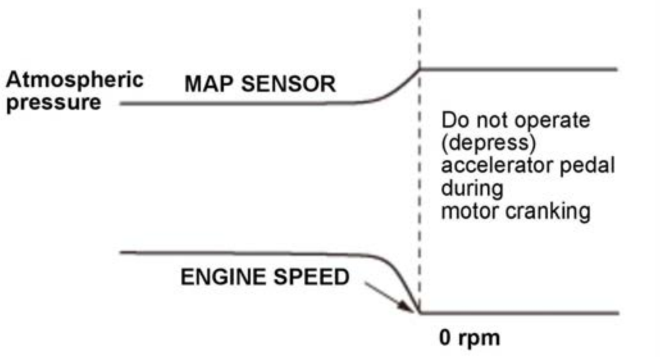	When the MAP Sensor detects vacuum while the motor is cranking, the condition is normal and the MAP sensor pressure port is clear.

Which pattern is indicated?

Pattern 1

Check the pressure measurement port of the MAP sensor for clogging, foreign objects, etc.

Pattern 2

The MAP sensor is OK. Go to step 10 (diagnosis by parameter (MAF Sensor)).

10. On-board snapshot or snapshot check (MAF Sensor):

    NOTE: Use the on-board snapshot in the case of an intermittent failure, or use the snapshot in the case of a reproducible failure.

    -1. Check for a record of the on-board snapshot or the recorded snapshot with the HDS.

    On-Board Snapshot

    -2. Select the MAF Sensor and Engine Speed in the configuration list.

    Check the recorded snapshot or on-board snapshot parameters at the time of the engine stall, then compare the MAF Sensor pattern from the charts, and determine the problem.

Pattern	Symptom (Diagnosis by parameter)	Additional remarks
Pattern 1	Poor connection of MAF Sensor 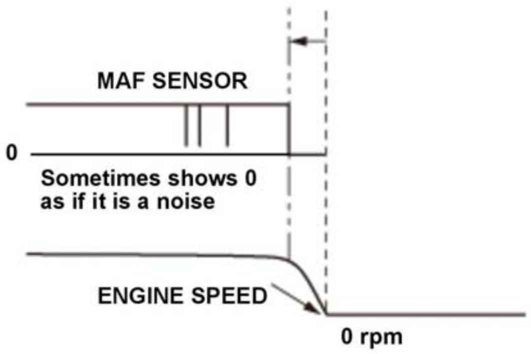	If the engine stalls 1-2 seconds after MAF Sensor shows the "0" g/s the engine stall may be caused by a faulty MAF sensor, poor connection, or electrical noise in the MAF sensor signal.

Pattern	Symptom (Diagnosis by parameter)	Additional remarks
Pattern 2	MAF Sensor normal 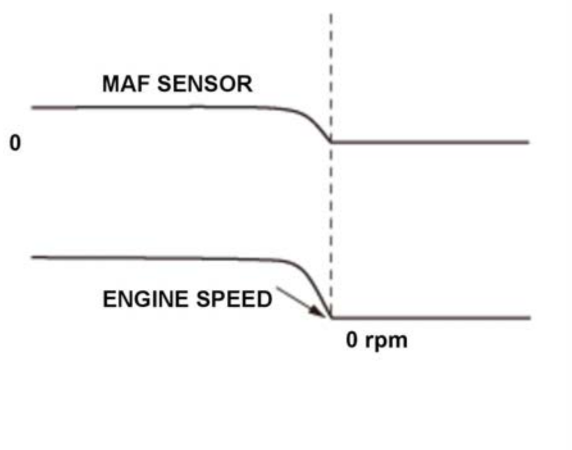	When the MAF Sensor pattern matches the Engine Speed, the MAF sensor is normal.

Which pattern is indicated?

Pattern 1

Check MAF sensor/IAT sensor 1 for loose terminals or poor connections. If the terminals and connections are OK, **substitute a known-good MAF sensor/IAT sensor 1** .

Pattern 2

MAF sensor/IAT sensor 1 is OK. Go to step 11 (diagnosis by parameter (CMP B No Pulse)).

11. On-board snapshot or snapshot check (CMP B No Pulse):

NOTE: Use the on-board snapshot in the case of an intermittent failure, or use the snapshot in the case of a reproducible failure.

-1. Check for a record of the on-board snapshot or the recorded snapshot with the HDS.

On-Board Snapshot

-2. Select the CMP B No Pulse and Engine Speed in the configuration list.

Check the recorded snapshot or on-board snapshot parameters at the time of the engine stall, then compare the CMP B No Pulse pattern from the charts, and determine the problem.

Pattern	Symptom (Diagnosis by parameter)	Additional remarks
Pattern 1	There are many CMP B No Pulse counts or CMP B No Pulse count 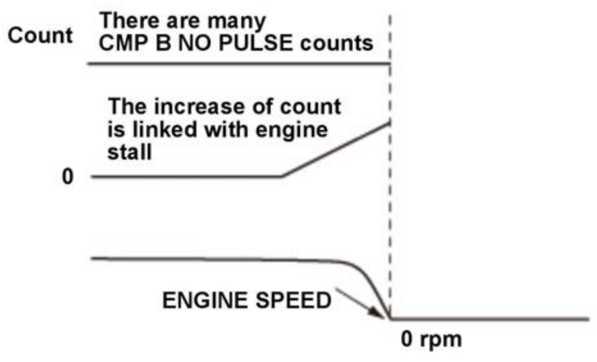 increases	When there are many CMP B No Pulse counts or if the CMP B No Pulse count increases, no CMP pulse is received. If the CMP pulse is not received, the PCM cannot detect the cylinder to be ignited.

Pattern	Symptom (Diagnosis by parameter)	Additional remarks
Pattern 2	The CMP B No Pulse indicates the pulse is normal 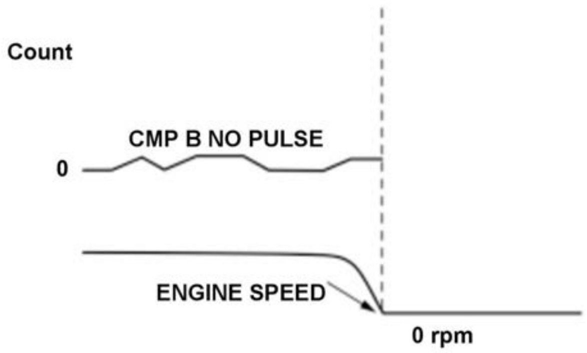 	The CMP B No Pulse signal is OK when the CMP B No Pulse count does not increase, or goes up and down but does not increase continuously.

Which pattern is indicated?

Pattern 1

Go to the troubleshooting for DTC P0365. If the CMP B No Pulse count reaches the malfunction threshold, DTC P0365 will set. Check for poor connections and loose terminals at CMP sensor B.

Pattern 2

Go to step 12 (diagnosis by parameter (CMP B Noise)).

12. On-board snapshot or snapshot check (CMP B Noise):

NOTE: Use the on-board snapshot in the case of an intermittent failure, or use the snapshot in the case of a reproducible failure.

-1. Check for a record of the on-board snapshot or the recorded snapshot with the HDS.

On-Board Snapshot

-2. Select the CMP B Noise and Engine Speed in the configuration list.

Check the recorded snapshot or on-board snapshot parameters at the time of the engine stall, then compare the CMP B Noise pattern from the charts, and determine the problem.

Pattern	Symptom (Diagnosis by parameter)	Additional remarks
Pattern 1	There are many CMP B Noise counts or CMP B Noise count 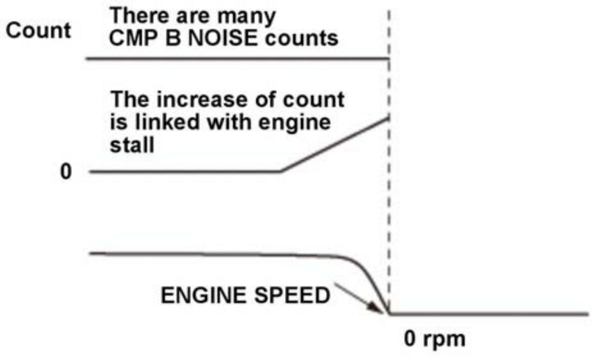 increases	When there are many CMP B Noise counts or if the CMP B Noise count increases, there is noise in the CMP signal. When CMP signal has noise, the PCM cannot detect the cylinder to be ignited.

Pattern	Symptom (Diagnosis by parameter)	Additional remarks
Pattern 2	The CMP B Noise indicates the pulse is normal 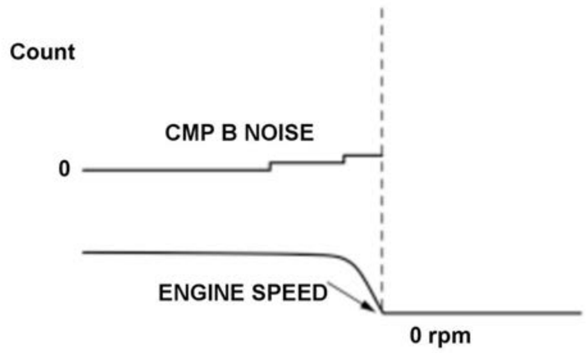	It is normal when CMP B Noise count does not increase, or increases but intermittently while the motor cranking.

Which pattern is indicated?

Pattern 1

Go to the troubleshooting for **DTC P0369**. If the CMP B Noise count reaches the malfunction threshold, DTC P0369 will set. Check for poor connections and loose terminals at CMP sensor B.

Pattern 2

CMP sensor B is OK. Go to step 13 (diagnosis by parameter (CKP No Pulse)).

13. On-board snapshot or snapshot check (CKP No Pulse):

NOTE: Use the on-board snapshot in the case of an intermittent failure, or use the snapshot in the case of a reproducible failure.

-1. Check for a record of the on-board snapshot or the recorded snapshot with the HDS.

On-Board Snapshot

-2. Select the CKP No Pulse and Engine Speed in the configuration list.

Check the recorded snapshot or on-board snapshot parameters at the time of the engine stall, then compare the CKP No Pulse pattern from the charts, and determine the problem.

Pattern	Symptom (Diagnosis by parameter)	Additional remarks
Pattern 1	There are many CKP No Pulse counts or CKP No Pulse count 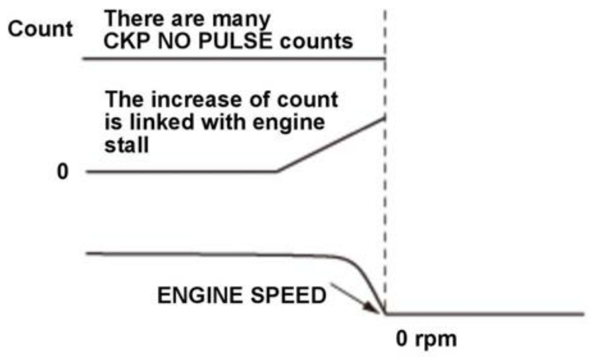 increases	When there are many CKP No Pulse counts or if the CKP No Pulse count increases, the PCM is not receiving the CKP sensor signal.

Pattern	Symptom (Diagnosis by parameter)	Additional remarks
Pattern 2	The CKP No Pulse indicates the pulse is normal 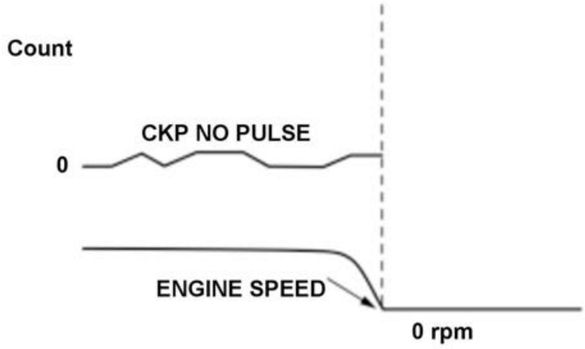	The CKP sensor signal is OK when the CKP No Pulse count does not increase, or goes up and down but does not increase continuously.

Which pattern is indicated?

Pattern 1

Go to the troubleshooting for **DTC P0335**.

Pattern 2

Go to step 14 (diagnosis by parameter (CKP Noise)).

14. On-board snapshot or snapshot check (CKP Noise):

NOTE: Use the on-board snapshot in the case of an intermittent failure, or use the snapshot in the case of a reproducible failure.

-1. Check for a record of the on-board snapshot or the recorded snapshot with the HDS.

On-Board Snapshot

-2. Select the CKP Noise and Engine Speed in the configuration list.

Check the recorded snapshot or on-board snapshot parameters at the time of the engine stall, then compare the CKP Noise pattern from these charts, and determine the problem.

Pattern	Symptom (Diagnosis by parameter)	Additional remarks
Pattern 1	There are many CKP Noise counts or CKP Noise count increases 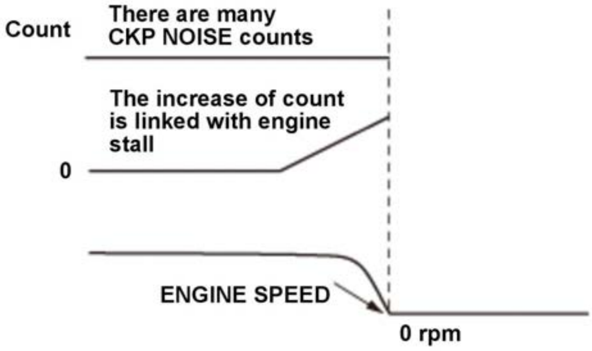	When there are many CKP Noise counts or if the CKP Noise count increases, the PCM is receiving electrical noise along with the CKP sensor signal.

Pattern	Symptom (Diagnosis by parameter)	Additional remarks
Pattern 2	Normal when CKP Noise count does not go up 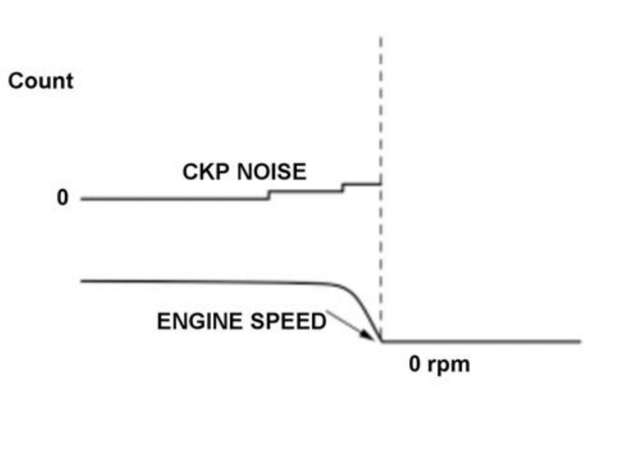 	The CKP sensor signal is OK when the CKP Noise count does not increase, or increases but intermittently.

Which pattern is indicated?

Pattern 1

Go to the troubleshooting for **DTC P0339**.

Pattern 2

The CKP sensor is OK. Go to step 15 (diagnosis by parameter (EGR valve position sensor (EGR Vls)).

15. On-board snapshot or snapshot check (EGR valve position sensor (EGR Vls)):

NOTE: Use the on-board snapshot in the case of an intermittent failure, or use the snapshot in the case of a reproducible failure.

-1. Check for a record of the on-board snapshot or the recorded snapshot with the HDS.

On-Board Snapshot

-2. Select the EGR valve position sensor (EGR Vls), EGR L Command, and Engine Speed in the configuration list.

Check the recorded snapshot or on-board snapshot parameters at the time of engine stall, then compare the EGR valve position sensor (EGR Vls) pattern from the charts, and determine the problem.

Pattern	Symptom (Diagnosis by parameter)	Additional remarks
Pattern 1	EGR valve position sensor (EGR Vls) is 1.3 V or more 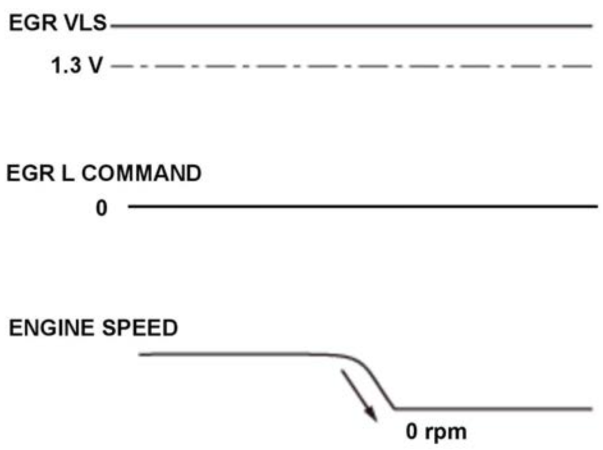 	If the EGR L COMMAND is 0 and the EGR valve position sensor (EGR Vls) voltage is about 1.3 V or more when the engine stalls, the EGR valve may be stuck open.

Pattern	Symptom (Diagnosis by parameter)	Additional remarks
Pattern 2	EGR is normal if EGR valve position sensor (EGR Vls) is 1.3 V or 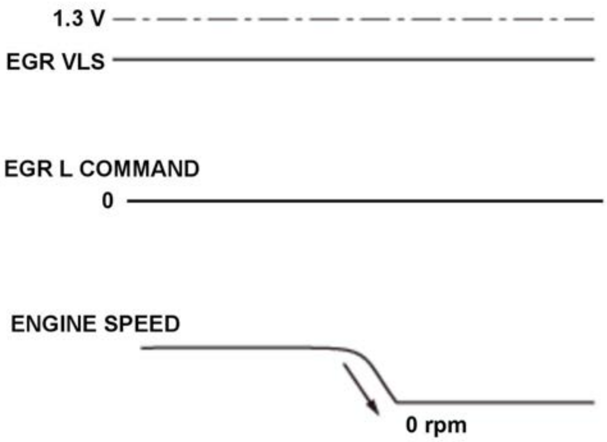 less	If the EGR L COMMAND is 0 and the EGR valve position sensor (EGR Vls) voltage should be less than 1.3 V.

Which pattern is indicated?

Pattern 1

Loosen the EGR valve mounting bolts , then install a metal plate between the EGR valve and the engine to shut out the EGR port, and recheck. If it is OK, **replace the EGR valve** .

Pattern 2

The EGR valve is OK. Go to step 16 (diagnosis by parameter (Misfire)).

16. On-board snapshot or snapshot check (Misfire): failure.

NOTE: Use the on-board snapshot in the case of an intermittent failure, or use the snapshot in the case of a reproducible failure.

-1. Check for a record of the on-board snapshot or the recorded snapshot with the HDS.

On-Board Snapshot

-2. Select the Misfire and Engine Speed in the configuration list.

Check the recorded snapshot or on-board snapshot parameters at the time of the engine stall, then compare those snapshots to the Misfire pattern from the charts, and determine the problem.

Pattern	Symptom (Diagnosis by parameter)	Additional remarks
Pattern 1	Engine stalls if there are many Misfire counts or after Misfire count 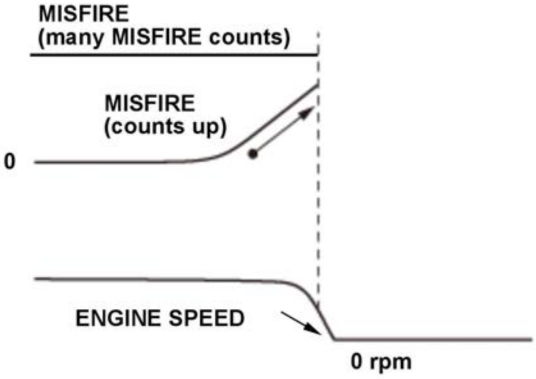 increases	When engine stalls after Misfire counts increase, the engine stall may be caused by misfire.

Pattern	Symptom (Diagnosis by parameter)	Additional remarks
Pattern 2	Normal when engine stalls with Misfire count remaining constant 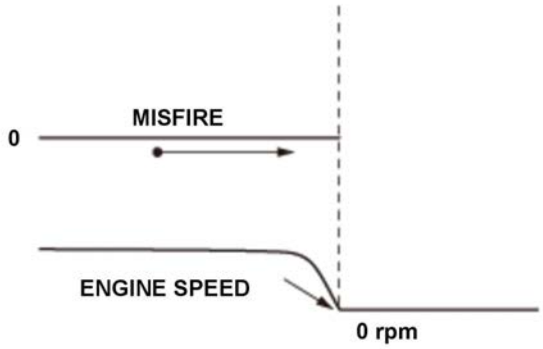	If the Misfire count remains constant when the engine stalls, the engine stall was not caused by a misfire.

Which pattern is indicated?

Pattern 1

Diagnostic procedure:

- If misfire counts go up without storing misfire DTC P0300-P0304, go to the troubleshooting for **DTC P0300-P0304** .
- If the misfire count reaches the malfunction threshold, DTC P0300-P0304 is stored. Go to the troubleshooting for **DTC P0300-P0304** .

Pattern 2

Go to step 17 (diagnosis by parameter (FUEL LEVEL)).

17. On-board snapshot or snapshot check (Fuel Level):

    NOTE: Use the on-board snapshot in the case of an intermittent failure, or use the snapshot in the case of a reproducible failure.

    -1. Check for a record of the on-board snapshot or the recorded snapshot with the HDS.

    On-Board Snapshot

    -2. Select the Fuel Level and Engine Speed in the configuration list.

    Check the recorded snapshot or on-board snapshot parameters at the time of the engine stall, then compare those snapshots to the Fuel Level pattern from the charts, and determine the problem.

Pattern	Symptom (Diagnosis by parameter)	Additional remarks
Pattern 1	Engine stalls when Fuel Level is lower than 30 % 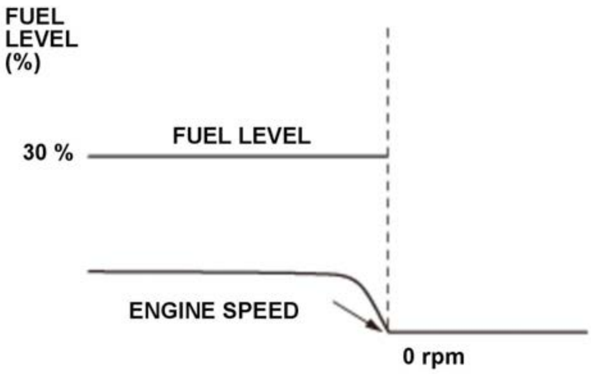	If the Fuel Level is lower than 30 %, there is a possibility that the vehicle is running of fuel, causing the engine to stall.
Pattern 2	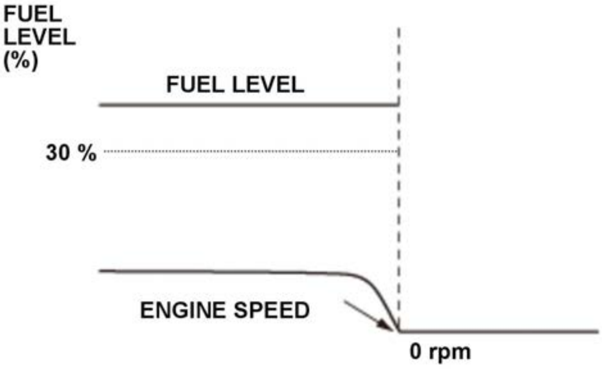 Fuel Level is high	If the Fuel Level is higher than 30 % when the engine stalls, the engine stall was not caused by the fuel level.

Which pattern is indicated?

Pattern 1

Refuel and recheck.

NOTE: If the fuel is old or of poor fuel quality, the engine stall will occur.

Pattern 2

Go to step 18 (fuel system troubleshooting).

18. Fuel pressure check

-1. **Do the fuel pressure test** .

Is the fuel pressure OK?

YES

Go to step 19.

NO

Check for following parts:

- **Fuel pump circuit**
- **Fuel pressure regulator**
- **Fuel filter**

19. Spark plug visual check

-1. Turn the vehicle to the OFF (LOCK) mode.

-2. **Remove the spark plugs** .

-3. **Check the condition of the spark plug electrodes** .

NOTE: Make sure the spark plugs are the correct part number for the vehicle. If the plugs are aftermarket or they are not the correct part number, replace all of the plugs and retest.

Is the electrode damaged or wet?

1. YES (wet)

   Check the following conditions. If those conditions do not apply, go to step 20.

   - In very cold conditions, multiple very short trips can cause the spark plug to foul. If this is the case, drive the vehicle a longer distance and recheck.
   - Incorrect, poor quality, or old fuel can cause a wet spark plug. Replace the fuel and recheck.

   YES (damaged)

   Replace the damaged spark plugs , determine the cause of the spark plug damage.

   NO

   Go to step 20.

20. Determine possible failure area (ignition system, others)

-1. Turn the vehicle to the OFF (LOCK) mode.

-2. Fit a spark plug to the ignition coil and ground it to the engine.

-3. Turn the vehicle to the ON mode.

-4. Select ALL INJECTORS STOP in the Function Test Menu with the HDS, and stop fuel injection from the injector.

ALL INJECTORS STOP

Enter the maintenance mode, then start the engine . During the motor cranking, watch for spark at the spark plugs.

Do the spark plugs sparkΩ

YES

The ignition system is OK. Select PCM reset in the PGM-FI Function Test Menu to cancel ALL INJECTORS STOP with the HDS, then go to step 22 (engine compression troubleshooting).

NO

Select PCM reset in the PGM-FI Function Test Menu to cancel ALL INJECTORS STOP with the HDS, then go to step 21.

21. Ignition coil power circuit check

-1. Turn the vehicle to the OFF (LOCK) mode.

-2. Disconnect the following connector(s).

Ignition coil(s) 3P connector from the problem cylinder

-3. Turn the vehicle to the ON mode.

-4. Measure the voltage between test points 1 and 2.

Test condition	Vehicle ON mode
B	Ignition coil 3P connector (problem cylinder): disconnected
Test point 1	Ignition coil 3P connector (female terminals) No. 1: ①
Test point 2	Body ground

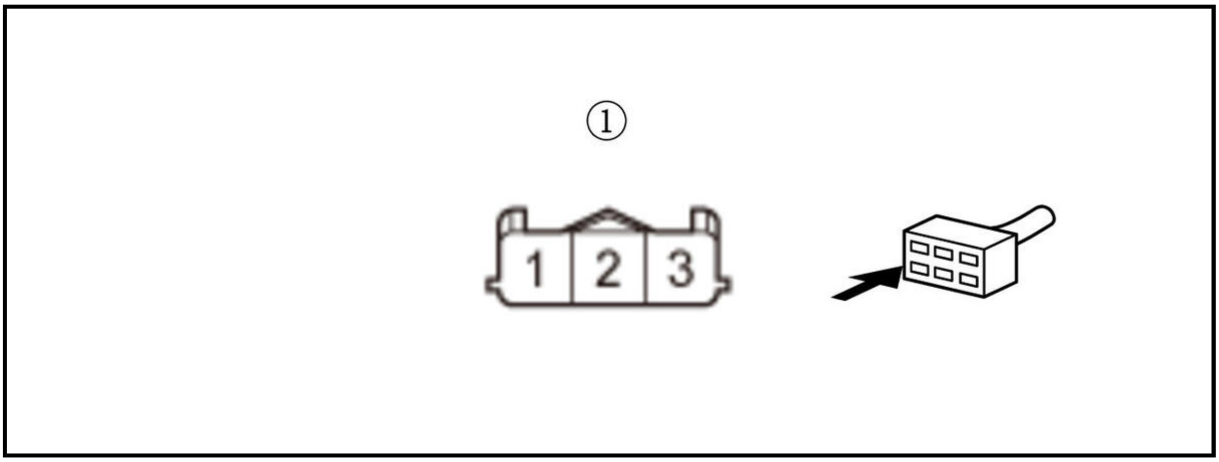

Is there battery voltage?

YES

The ignition coil power circuit is OK. **Replace the ignition coil(s)** .

NO

Repair an open in the IG_COIL_RLY_OUT/IG1(COIL)/IG1(IGN COIL) wire between the relay circuit board and the ignition coil.

22. Engine compression check

-1. **Do an engine compression inspection** .

NOTE: When removing the spark plugs, make sure the spark plugs are the correct part number for the vehicle. If the plugs are aftermarket or they are not the correct part number, replace all of the plugs and retest.

Is the engine compression OK?

YES

Go to step 23 (EVAP canister purge valve check).

NO

Check for wear or damage to these parts:

- Incorrect valve clearance
- Confirmation of cam timing

- Oil pressure relief valve
- Damage or worn cam lobes
- Damage or worn valve and seats
- Damage cylinder head gasket
- Damage or worn piston rings
- Damage or worn piston and cylinder bore
- Hydraulic tappet stuck

23. EVAP canister purge valve check

-1. Turn the vehicle to the OFF (LOCK) mode.

-2. Disconnect the following connectors.

EVAP canister purge valve 1 2P connector
EVAP canister purge valve 2 2P connector

-3. Disconnect the vacuum hose (purge line) (A) from the 3-way joint (B) in the engine compartment, and connect a vacuum pump/gauge, 0-30 inHg to the 3-way joint as shown.

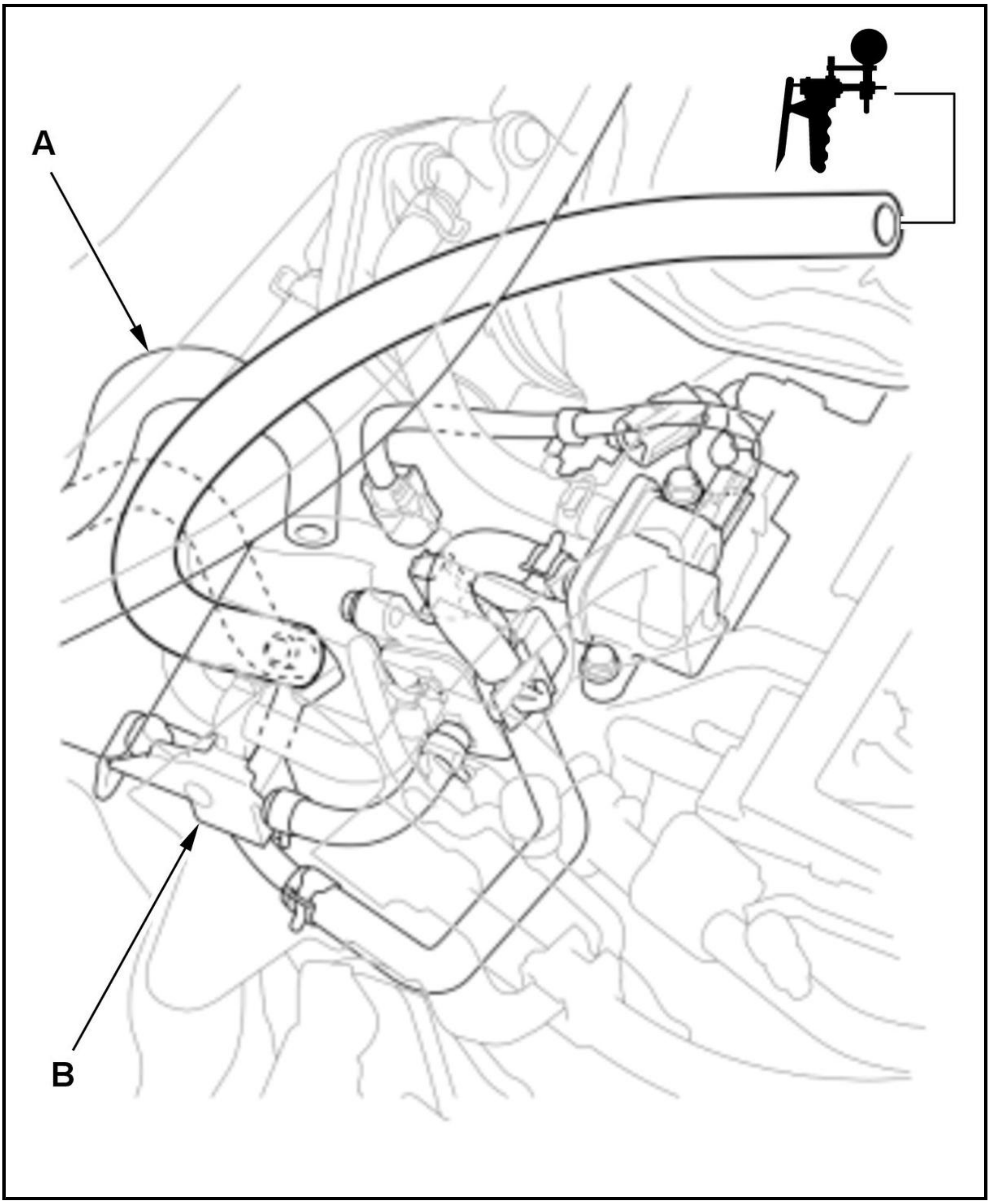

-4. **Enter the maintenance mode, then start the engine** , and let it idle.

Is there vacuum?

YES

When the climate is warm, fuel vapor from the canister line to the fuel tank enters the intake manifold, enriching the mixture (excessively rich), causing the engine to stall in some cases. If needed, **replace the EVAP canister purge valve** .

NO (Reproducible failure)

Go to step 24 (fuse check).

NO (Intermittent failure)

Go to step 25 (relay check).

24. Fuse check

-1. Check the following fuses.

Fuse	**No. A7** to the relay circuit board (PGM-FI main relay 1 circuit)
	No. A8 to the relay circuit board (PGM-FI subrelay circuit)
	No. A15 to the relay circuit board (ignition coil relay circuit)
	No. C1-4 to the relay circuit board (electric VTC relay circuit)
B	**No. D8** to PGM-FI main relay 2

Are the fuses OK?

YES

Go to step 25.

NO

Replace the blown fuse(s).

25. Relay check:

Test the following relays.

NOTE: In situations where the failure is difficult to reproduce, the following relays may have an intermittent failure.

- **Relay circuit board** (includes PGM-FI main relay 1 circuit, PGM-FI subrelay circuit, ignition coil relay circuit, and electric VTC relay circuit)
- **PGM-FI main relay 2**

Are the relays OK?

YES

Go to step 26.

NO

Replace any damaged relay.

26. Power and ground terminal check:

Check the corrosion and looseness at the following terminals:

- 12 volt battery terminals
- Ground cable terminals between the engine and the body ground, and the transmission and the body ground
- Engine wire harness ground (G101, G102)

Are the terminals OK?

YES

Go to step 27.

NO

Repair any terminal(s) as needed.

27. Connector terminal check:

    Check the foreign objects clogged and corrosion at the following connector terminals:

    - **PCM connectors**
    -
        - -

          FI_MAIN_RLY_OUT, FI_MAIN_RLY_CL-
        - -

          FUEL_PUMP_RLY_CL-
        - -

          FI_SUB_RLY_OUT, FI_SUB_RLY_CL-
        - -

          GND_2, GND_3, GND_4, FI_ECU_GND
        - -

          INJ_1, INJ_2, INJ_3, INJ_4
        - -

          IGN01A, IGN02A, IGN03A, IGN04A
        - -

          TDC
        - -

          CRKP
        - -

          MAP(PB)
        - -

          VGP, VGM
        - -

          TW
        - -

          EEGR, EGRL
        - -

          PCS1, PCS2
        - -

MTR1, MTR2, THL1, THL2

- CMP sensor B
- CKP sensor
- Ignition coils
- Injectors
- EGR valve
- ECT sensor
- MAF sensor/IAT sensor 1
- MAP sensor
- Throttle body
- EVAP canister purge valve 1, EVAP canister purge valve 2
- Fuel tank unit

Are the terminals OK?

YES

Go to the diagnostic interview for engine stalls .

NO

Repair any terminal(s) as needed.

DTC P0335

DTC P0335 : CKP Sensor No Signal

NOTE: Before you troubleshoot, **review the general troubleshooting information** .

DTC Description	Confirmed DTC	Pending DTC
P0335 CKP Sensor No Signal	B	B

DTC (PGM-FI)

1. Problem verification

-1. Turn the vehicle to the ON mode.

-2. Clear the DTC with the HDS.

-3. **Enter the maintenance mode, then start the engine, and let it idle** .

-4. Check for Pending or Confirmed DTCs with the HDS.

DTC Description	Confirmed DTC	Pending DTC
P0335 CKP Sensor No Signal	B	B

Is DTC P0335 indicated?

YES

The failure is duplicated. Go to step 2.

NO

Intermittent failure, the system is OK at this time. Check for poor connections or loose terminals at the CKP sensor and the PCM. **If the on-board snapshot of this DTC is recorded, try to reproduce the failure under the same conditions with the on-board snapshot** .

2. Determine possible failure area (VCC1 line, others)

   -1. Turn the vehicle to the OFF (LOCK) mode.

   -2. Disconnect the following connector.

CKP sensor 3P connector

   -3. Turn the vehicle to the ON mode.

   -4. Measure the voltage between test points 1 and 2.

Test condition	Vehicle ON mode
B	CKP sensor 3P connector: disconnected
Test point 1	CKP sensor 3P connector (female terminals) No. 3: ①
Test point 2	Body ground

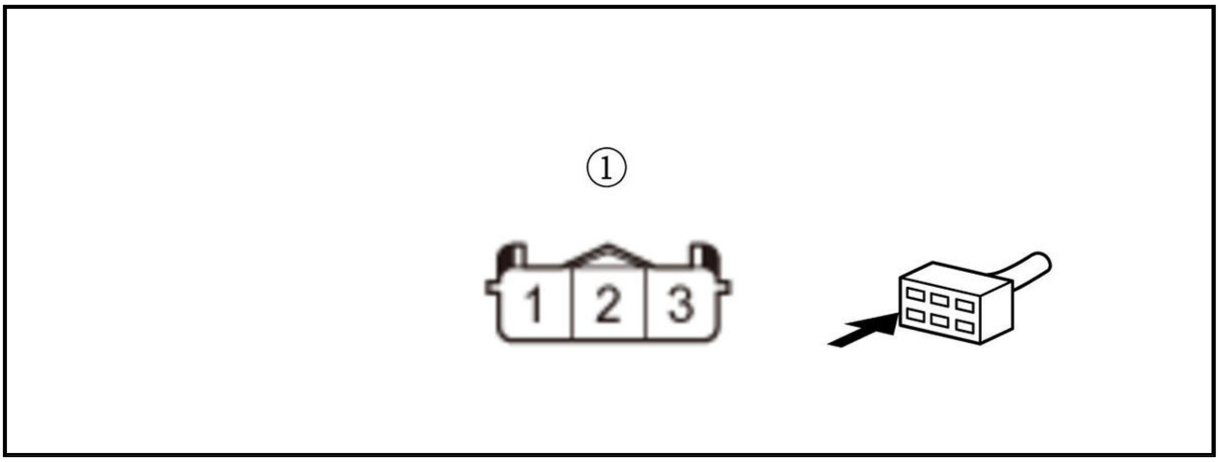

   Is there about 5.0 V?

   YES

   Go to step 4.

   NO

   Go to step 3.

3. Open wire check (VCC1 line)

   -1. Turn the vehicle to the OFF (LOCK) mode.

   -2. Jump the SCS line with the HDS, and wait more than 1 minute.

   -3. Disconnect the following connector.

PCM connector E (80P)

   -4. Measure the resistance between test points 1 and 2.

Test condition	Vehicle OFF (LOCK) mode

	CKP sensor 3P connector: disconnected
	PCM connector E (80P): disconnected
Test point 1	CKP sensor 3P connector (female terminals) No. 3: ①
Test point 2	**PCM connector E (80P) No. 70**

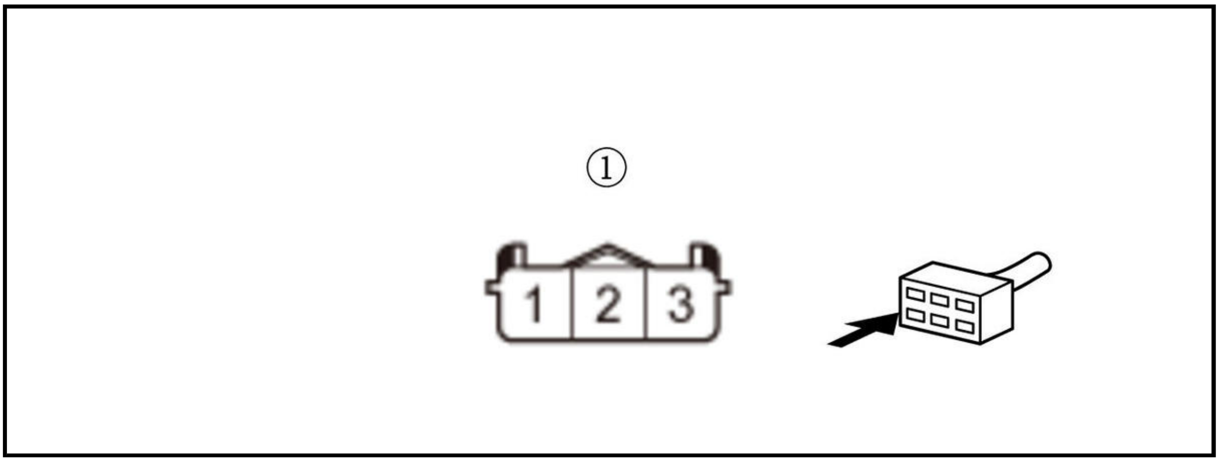

Is there 1.0 Ω or less?

YES

The VCC1 wire is OK. Check for any authorized service information related to the DTCs or symptoms you are troubleshooting, or **substitute a known-good PCM** .

NO

Repair an open in the VCC1 wire between the PCM (E70) and the CKP sensor.

4. Determine possible failure area (CRKP line, others)

-1. Measure the voltage between test points 1 and 2.

Test condition	Vehicle ON mode
B	CKP sensor 3P connector: disconnected
Test point 1	CKP sensor 3P connector (female terminals) No. 1: ①
Test point 2	Body ground

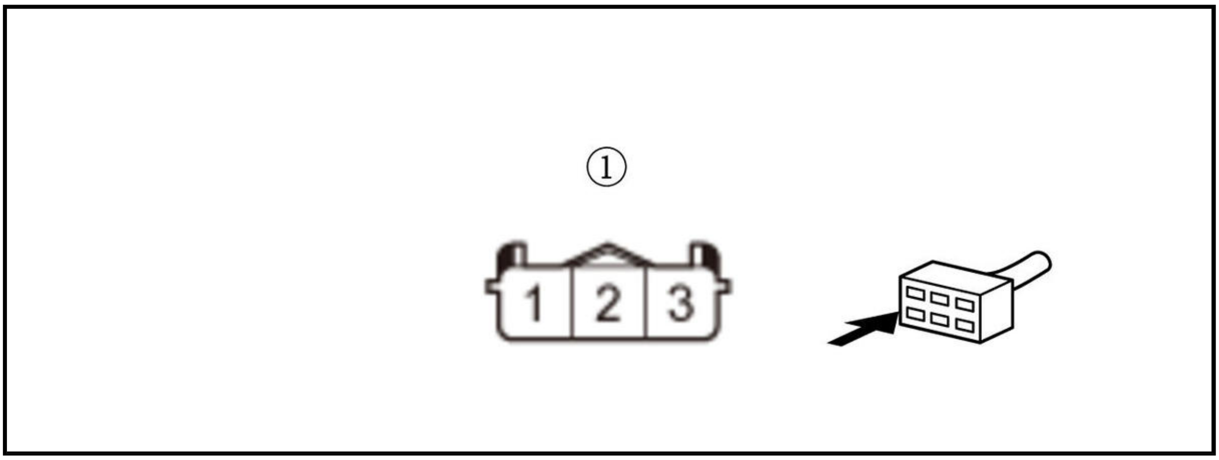

Is there about 5.0 V?

YES

Go to step 5.

NO

Go to step 7.

5. Determine possible failure area (CKP sensor, others)

-1. Measure the voltage between test points 1 and 2.

Test condition	Vehicle ON mode
B	CKP sensor 3P connector: disconnected
Test point 1	CKP sensor 3P connector (female terminals) No. 2: ①
Test point 2	CKP sensor 3P connector (female terminals) No. 3: ①

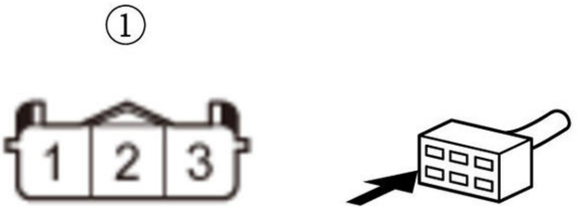

Is there about 5.0 V?

YES

The SG1 wire is OK. **Replace the CKP sensor** .

NO

Go to step 6.

6. Open wire check (SG1 line)

-1. Turn the vehicle to the OFF (LOCK) mode.

-2. Jump the SCS line with the HDS, and wait more than 1 minute.

-3. Disconnect the following connector.

PCM connector E (80P)

-4. Measure the resistance between test points 1 and 2.

Test condition	Vehicle OFF (LOCK) mode
B	CKP sensor 3P connector: disconnected
B	PCM connector E (80P): disconnected
Test point 1	CKP sensor 3P connector (female terminals) No. 2: ①
Test point 2	**PCM connector E (80P) No. 71**

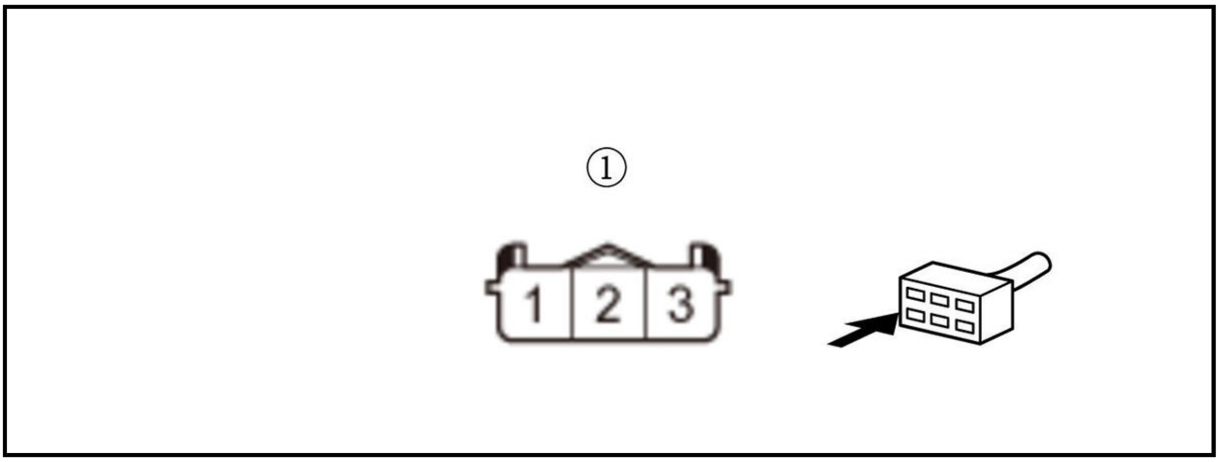

Is there 1.0 Ω or less?

YES

The SG1 wire is OK. Check for any authorized service information related to the DTCs or symptoms you are troubleshooting, or **substitute a known-good PCM** .

NO

Repair an open in the SG1 wire between the PCM (E71) and the CKP sensor.

7. Shorted wire check (CRKP line)

-1. Turn the vehicle to the OFF (LOCK) mode.

-2. Jump the SCS line with the HDS, and wait more than 1 minute.

-3. Disconnect the following connector.

PCM connector E (80P)

-4. Measure the resistance between test points 1 and 2.

Test condition	Vehicle OFF (LOCK) mode
B	CKP sensor 3P connector: disconnected
B	PCM connector E (80P): disconnected
Test point 1	**PCM connector E (80P) No. 44**
Test point 2	Body ground

Is there 1 MΩ or more?

YES

The CRKP wire is not shorted. Go to step 8.

NO

Repair a short in the CRKP wire between the PCM (E44) and the CKP sensor.

8. Open wire check (CRKP line)

-1. Connect terminals A and B with a jumper wire.

Terminal A	CKP sensor 3P connector (female terminals) No. 1: ①

Terminal B	Body ground

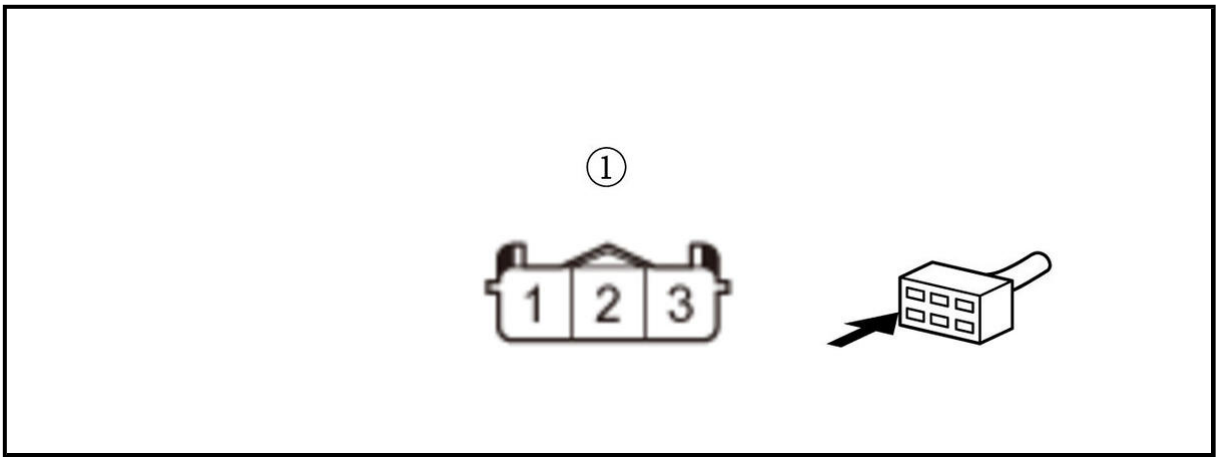

-2. Measure the resistance between test points 1 and 2.

Test condition	Vehicle OFF (LOCK) mode
B	CKP sensor 3P connector: disconnected
B	PCM connector E (80P): disconnected
B	CKP sensor 3P connector No. 1: jumped to body ground
Test point 1	**PCM connector E (80P) No. 44**
Test point 2	Body ground

Is there 1.0 Ω or less?

YES

The CRKP wire is OK. Check for any authorized service information related to the DTCs or symptoms you are troubleshooting, or **substitute a known-good PCM** .

NO

Repair an open in the CRKP wire between the PCM (E44) and the CKP sensor.

DTC P0339

DTC P0339 : CKP Sensor Circuit Intermittent Interruption

NOTE: Before you troubleshoot, **review the general troubleshooting information** .

DTC Description	Confirmed DTC	Pending DTC
P0339 CKP Sensor Circuit Intermittent Interruption	B	B

DTC (PGM-FI)

1. Problem verification (idling)

-1. Turn the vehicle to the ON mode.

-2. Clear the DTC with the HDS.

-3. **Enter the maintenance mode, then start the engine** , and let it idle for 10 seconds.

-4. Monitor the OBD STATUS for DTC P0339 in the DTCs MENU with the HDS.

DTC Description	OBD STATUS
P0339 CKP Sensor Circuit Intermittent Interruption	B

Does the HDS indicate FAILED?

YES

The failure is duplicated. Go to step 3.

NO

If the HDS indicates PASSED, go to step 2. If the HDS indicates NOT COMPLETED, keep idling until a result comes on.

2. Problem verification (test-drive):

   Test-drive the vehicle for several minutes in the range of these recorded on-board snapshot parameters:

   - ENGINE SPEED
   - VEHICLE SPEED

   On-board Snapshot

   -2. Monitor the OBD STATUS for DTC P0339 in the DTCs MENU with the HDS.

DTC Description	OBD STATUS
P0339 CKP Sensor Circuit Intermittent Interruption	B

Does the HDS indicate FAILED?

YES

Go to step 3.

NO

If the HDS indicates PASSED, there is an intermittent failure and the system is OK at this time. Check for poor connections or loose terminals at the CKP sensor and the PCM. **If the on-board snapshot of this DTC is recorded, try to reproduce the failure under the same conditions with the on-board snapshot** . If the HDS indicates NOT COMPLETED, retest and check the OBD STATUS again.

3. CKP sensor circuit connectors and terminals condition check:

   Check for poor connections or loose terminals at these locations:

   - CKP sensor
   - PCM
   - Engine ground
   - Body ground

   Are the connections and terminals OK?

YES

Go to step 4.

NO

Repair the connections or terminals.

4. CKP pulse plate visual check

   -1. **Remove the CKP sensor** , and check for damage to the CKP pulse plate.

   Is the pulse plate damaged or loose?

   YES

   Replace the CKP pulse plate .

   NO

   Replace the CKP sensor .

DTC P0340

DTC P0340 : CMP Sensor A No Signal

NOTE: Before you troubleshoot, **review the general troubleshooting information** .

DTC Description	Confirmed DTC	Pending DTC
P0340 CMP Sensor A No Signal	B	B

DTC (PGM-FI)

1. Problem verification

   -1. Turn the vehicle to the ON mode.

   -2. Clear the DTC with the HDS.

   -3. **Enter the maintenance mode, then start the engine** , and let it idle.

   -4. Check for Pending or Confirmed DTCs with the HDS.

DTC Description	Confirmed DTC	Pending DTC
P0340 CMP Sensor A No Signal	B	B

   Is DTC P0340 indicated?

   YES

   The failure is duplicated. Go to step 2.

   NO

   Intermittent failure, the system is OK at this time. Check for poor connections or loose terminals at CMP sensor A and the PCM. **If the on-board snapshot of this DTC is recorded, try to reproduce the failure under the same conditions with the on-board snapshot** .

2. Determine possible failure area (VCC2 line, others)

   -1. Turn the vehicle to the OFF (LOCK) mode.

   -2. Disconnect the following connector.

CMP sensor A 3P connector

   -3. Turn the vehicle to the ON mode.

-4. Measure the voltage between test points 1 and 2.

Test condition	Vehicle ON mode
B	CMP sensor A 3P connector: disconnected
Test point 1	CMP sensor A 3P connector (female terminals) No. 1: ①
Test point 2	Body ground

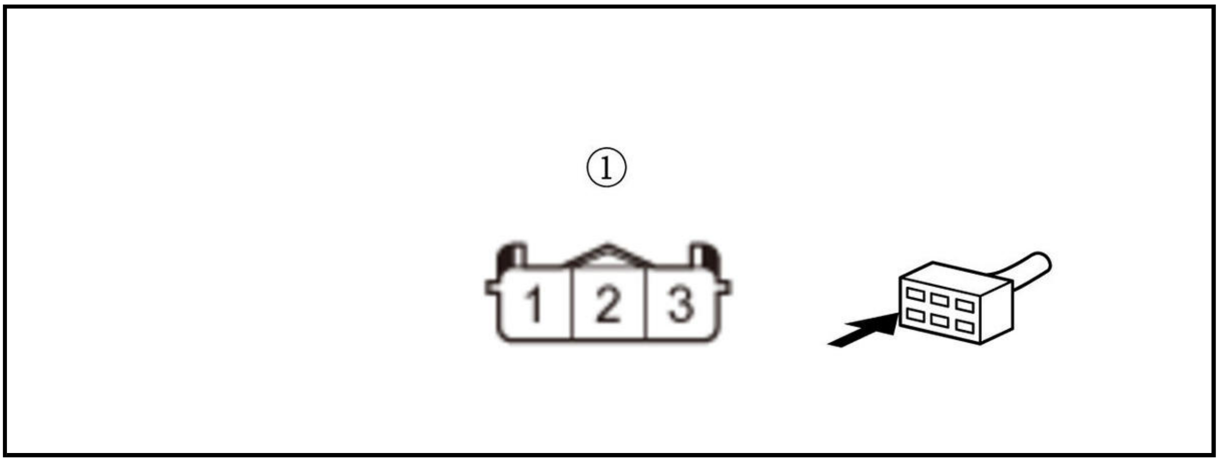

Is there about 5.0 V?

YES

Go to step 4.

NO

Go to step 3.

3. Open wire check (VCC2 line)

-1. Turn the vehicle to the OFF (LOCK) mode.

-2. Jump the SCS line with the HDS, and wait more than 1 minute.

-3. Disconnect the following connector.

PCM connector E (80P)

-4. Measure the resistance between test points 1 and 2.

Test condition	Vehicle OFF (LOCK) mode
	CMP sensor A 3P connector: disconnected
	PCM connector E (80P): disconnected
Test point 1	CMP sensor A 3P connector (female terminals) No. 1: ①
Test point 2	**PCM connector E (80P) No. 77**

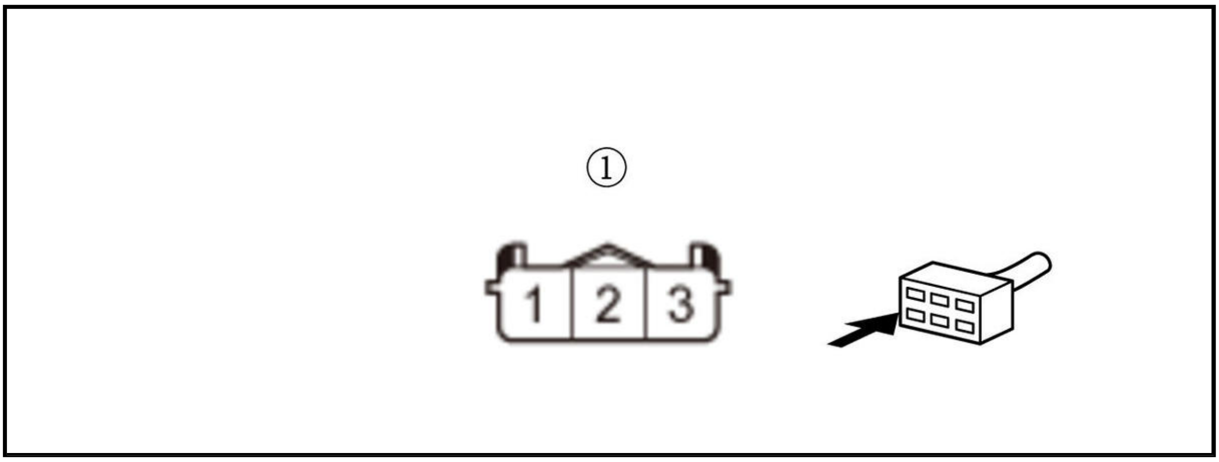

Is there 1.0 Ω or less?

YES

The VCC2 wire is OK. Check for any authorized service information related to the DTCs or symptoms you are troubleshooting, or **substitute a known-good PCM** .

NO

Repair an open in the VCC2 wire between the PCM (E77) and CMP sensor A.

4. Determine possible failure area (CAM line, others)

-1. Measure the voltage between test points 1 and 2.

Test condition	Vehicle ON mode
B	CMP sensor A 3P connector: disconnected
Test point 1	CMP sensor A 3P connector (female terminals) No. 3: ①
Test point 2	Body ground

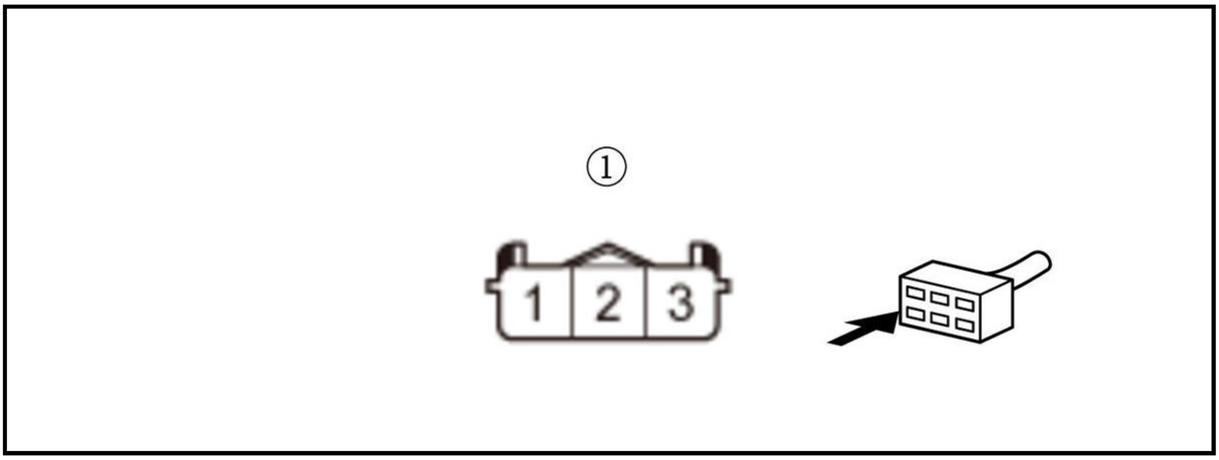

Is there about 5.0 V?

YES

Go to step 5.

NO

Go to step 7.

5. Determine possible failure area (CMP sensor A, others)

-1. Measure the voltage between test points 1 and 2.

Test condition	Vehicle ON mode
B	CMP sensor A 3P connector: disconnected
Test point 1	CMP sensor A 3P connector (female terminals) No. 1: ①
Test point 2	CMP sensor A 3P connector (female terminals) No. 2: ①

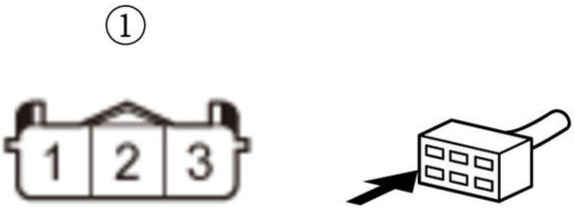

Is there about 5.0 V?

YES

The SG2 wire is OK. **Replace CMP sensor A** .

NO

Go to step 6.

6. Open wire check (SG2 line)

-1. Turn the vehicle to the OFF (LOCK) mode.

-2. Jump the SCS line with the HDS, and wait more than 1 minute.

-3. Disconnect the following connector.

PCM connector E (80P)

-4. Measure the resistance between test points 1 and 2.

Test condition	Vehicle OFF (LOCK) mode
B	CMP sensor A 3P connector: disconnected
B	PCM connector E (80P): disconnected
Test point 1	CMP sensor A 3P connector (female terminals) No. 2: ①
Test point 2	**PCM connector E (80P) No. 78**

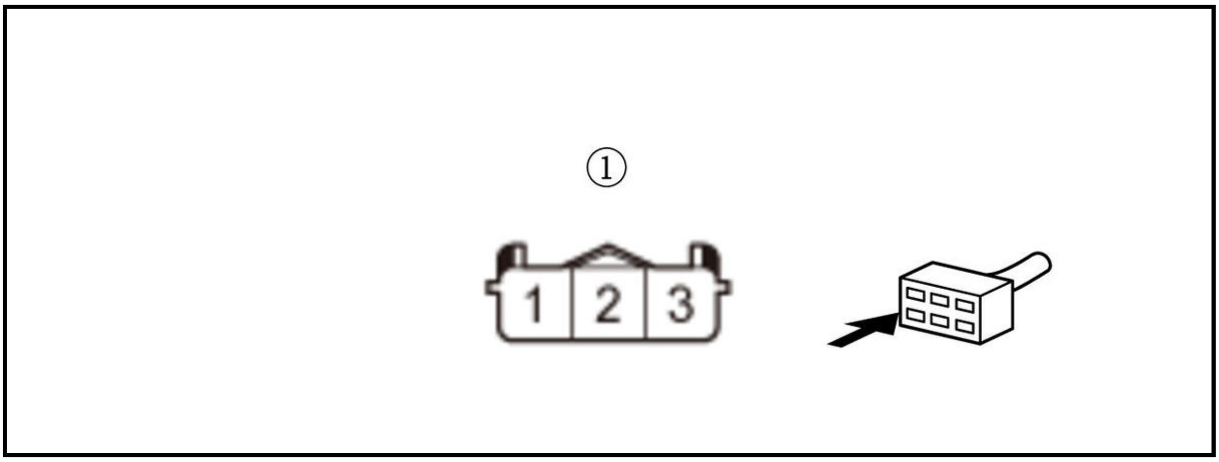

Is there 1.0 Ω or less?

YES

The SG2 wire is OK. Check for any authorized service information related to the DTCs or symptoms you are troubleshooting, or **substitute a known-good PCM** .

NO

Repair an open in the SG2 wire between the PCM (E78) and CMP sensor A.

7. Shorted wire check (CAM line)

-1. Turn the vehicle to the OFF (LOCK) mode.

-2. Jump the SCS line with the HDS, and wait more than 1 minute.

-3. Disconnect the following connector.

PCM connector E (80P)

-4. Measure the resistance between test points 1 and 2.

Test condition	Vehicle OFF (LOCK) mode
B	CMP sensor A 3P connector: disconnected
B	PCM connector E (80P): disconnected
Test point 1	**PCM connector E (80P) No. 41**
Test point 2	Body ground

Is there 1 MΩ or more?

YES

The CAM wire is not shorted. Go to step 8.

NO

Repair a short in the CAM wire between the PCM (E41) and CMP sensor A.

8. Open wire check (CAM line)

-1. Measure the resistance between test points 1 and 2.

Test condition	Vehicle OFF (LOCK) mode
B	CMP sensor A 3P connector: disconnected

B	PCM connector E (80P): disconnected
Test point 1	CMP sensor A 3P connector (female terminals) No. 3: ①
Test point 2	**PCM connector E (80P) No. 41**

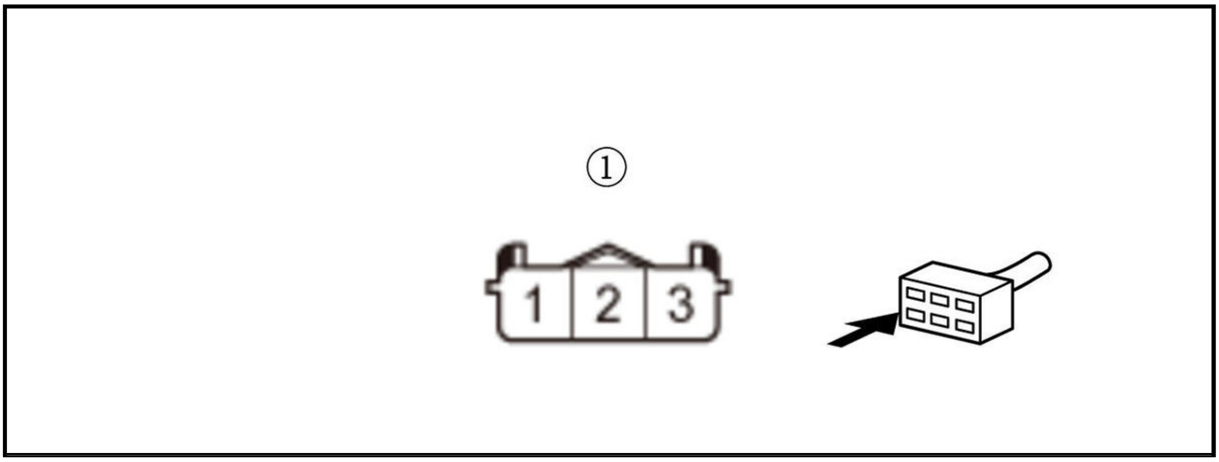

Is there 1.0 Ω or less?

YES

The CAM wire is OK. Check for any authorized service information related to the DTCs or symptoms you are troubleshooting, or **substitute a known-good PCM** .

NO

Repair an open in the CAM wire between the PCM (E41) and CMP sensor A.

DTC P0341

DTC P0341 : CMP Sensor A and CKP Sensor Incorrect Phase Detected

NOTE:

- Before you troubleshoot, **review the general troubleshooting information** .
- If the 12 volt battery voltage is higher than the nominal voltage (DC-DC converter failure), this DTC will be stored.

DTC Description	Confirmed DTC	Pending DTC
P0341 CMP Sensor A and CKP Sensor Incorrect Phase Detected	B	B

DTC (PGM-FI)

1. Electric powertrain system DTC check

   -1. Turn the vehicle to the ON mode.

   -2. Clear the DTCs with the HDS.

   Enter the maintenance mode, then start the engine , and let it idle under these conditions:

   - Headlights on high beam
   - Blower fan at maximum speed
   - Rear window defogger on
   - A/C switch ON, heater on, max hot

-4. Monitor the OBD STATUS for DTC P0A94 in the DTCs MENU with the HDS.

DTC Description	OBD STATUS
P0A94 DC-DC Converter Performance	B

Does the HDS indicate FAILED?

YES

Go to the troubleshooting for **DTC P0A94** .

NO

If the HDS indicates PASSED, go to step 2. If the HDS indicates EXECUTING, keep idling until a result comes on.

2. Problem verification (idling)

-1. Turn the vehicle to the ON mode.

-2. Clear the DTC with the HDS.

-3. Turn the vehicle to the OFF (LOCK) mode.

-4. Allow the engine to cool to 104 deg.F (40 deg.C) or less.

-5. **Enter the maintenance mode, then start the engine** , and let it idle.

-6. Check for Pending or Confirmed DTCs with the HDS.

DTC Description	Confirmed DTC	Pending DTC
P0341 CMP Sensor A and CKP Sensor Incorrect Phase Detected	B	B

Is DTC P0341 indicated?

YES

The failure is duplicated. Go to step 4.

NO

Go to step 3.

3. Problem verification (DTC check)

-1. Clear the DTC with the HDS.

-2. Turn the vehicle to the OFF (LOCK) mode.

-3. Turn the vehicle to the ON mode.

-4. Select the VTC TEST in the Function Test Menu with the HDS.

VTC TEST

Check for Pending or Confirmed DTCs with the HDS.

DTC Description	Confirmed DTC	Pending DTC
P0341 CMP Sensor A and CKP Sensor Incorrect Phase Detected	B	B

Is DTC P0341 indicated?

YES

Go to step 4.

NO

Intermittent failure, the system is OK at this time. Check for poor connections or loose terminals at CMP sensor A, the CKP sensor, and the PCM. **If the on-board snapshot of this DTC is recorded, try to reproduce the failure under the same conditions with the on-board snapshot** .

4. Camshaft timing check

-1. Turn the vehicle to the OFF (LOCK) mode.

-2. **Check the camshaft timing** .

Is the camshaft timing OK?

YES

Go to step 5.

NO

Reset the camshaft timing .

5. Cam chain check

-1. **Check for damage or stretch at the cam chain** .

Is the cam chain damaged or stretched?

YES

Replace the cam chain .

NO

Go to step 6.

6. CMP pulse plate A visual check

-1. **Check for damage to CMP pulse plate A** .

Is the pulse plate damaged?

YES

Replace CMP pulse plate A .

NO

Go to step 7.

7. VTC actuator installation check

-1. **Check the installation of the VTC actuator** .

Is the VTC actuator installed correctly?

YES

Go to step 8.

NO

Reinstall the VTC actuator .

8. CKP pulse plate visual check

-1. **Remove the CKP sensor** , and check for damage to the CKP pulse plate.

Is the pulse plate damaged?

YES

Replace the CKP pulse plate .

NO

Go to step 9.

9. PGM-FI system check (DTC check)

-1. Turn the vehicle to the ON mode.

-2. Clear the DTC with the HDS.

-3. Turn the vehicle to the OFF (LOCK) mode.

-4. Allow the engine to cool to 104 deg.F (40 deg.C) or less.

-5. **Enter the maintenance mode, then start the engine** , and let it idle.

-6. Check for Pending or Confirmed DTCs with the HDS.

DTC Description	Confirmed DTC	Pending DTC
P0341 CMP Sensor A and CKP Sensor Incorrect Phase Detected	B	B

Is DTC P0341 indicated?

YES

Replace the electric VTC motor .

NO

Intermittent failure, the system is OK at this time. Check for poor connections or loose terminals at CMP sensor A, the CKP sensor, and the PCM. **If the on-board snapshot of this DTC is recorded, try to reproduce the failure under the same conditions with the on-board snapshot** .

DTC P0344

DTC P0344 : CMP Sensor A Circuit Intermittent Interruption

NOTE: Before you troubleshoot, **review the general troubleshooting information** .

DTC Description	Confirmed DTC	Pending DTC
P0344 CMP Sensor A Circuit Intermittent Interruption	B	B

DTC (PGM-FI)

1. Problem verification (idling)

   -1. Turn the vehicle to the ON mode.

   -2. Clear the DTC with the HDS.

   -3. **Enter the maintenance mode, then start the engine, and let it idle** for 10 seconds.

   -4. Monitor the OBD STATUS for DTC P0344 in the DTCs MENU with the HDS.

DTC Description	OBD STATUS
P0344 CMP Sensor A Circuit Intermittent Interruption	B

   Does the HDS indicate FAILED?

   YES

   The failure is duplicated. Go to step 3.

   NO

   If the HDS indicates PASSED, go to step 2. If the HDS indicates NOT COMPLETED, keep idling until a result comes on.

2. Problem verification (test-drive):

   Test-drive the vehicle for several minutes in the range of these recorded on-board snapshot parameters:

   - ENGINE SPEED
   - VEHICLE SPEED

   On-board Snapshot

   -2. Monitor the OBD STATUS for DTC P0344 in the DTCs MENU with the HDS.

DTC Description	OBD STATUS
P0344 CMP Sensor A Circuit Intermittent Interruption	B

   Does the HDS indicate FAILED?

   YES

   The failure is duplicated. Go to step 3.

   NO

   If the HDS indicates PASSED, there is an intermittent failure and the system is OK at this time. Check for poor connections or loose terminals at CMP sensor A and the PCM. **If the on-board snapshot of this DTC is recorded, try to reproduce the failure under the same conditions with the on-board snapshot** . If the HDS indicates NOT COMPLETED, retest and check the OBD STATUS again.

3. CMP sensor A circuit connectors and terminals condition check:

   Check for poor connections or loose terminals at these locations:

- CMP sensor A
- PCM
- Engine ground
- Body ground

Are the connections and terminals OK?

YES

Go to step 4.

NO

Repair the connections or terminals.

4. CMP pulse plate A visual check

-1. **Check for damage to CMP pulse plate A** .

Is the pulse plate damaged or loose?

YES

Replace CMP pulse plate A .

NO

Replace CMP sensor A , then recheck. If DTC P0344 is indicated again, **replace the PCM** .

DTC P0351, P0352, P0353, P0354

DTC P0351 : No. 1 Cylinder Ignition Coil Circuit Malfunction

DTC P0352 : No. 2 Cylinder Ignition Coil Circuit Malfunction

DTC P0353 : No. 3 Cylinder Ignition Coil Circuit Malfunction

DTC P0354 : No. 4 Cylinder Ignition Coil Circuit Malfunction

NOTE: Before you troubleshoot, **review the general troubleshooting information** .

DTC Description	Confirmed DTC	Pending DTC
P0351 No. 1 Cylinder Ignition Coil Circuit Malfunction	B	B
P0352 No. 2 Cylinder Ignition Coil Circuit Malfunction	B	B
P0353 No. 3 Cylinder Ignition Coil Circuit Malfunction	B	B
P0354 No. 4 Cylinder Ignition Coil Circuit Malfunction	B	B

DTC (PGM-FI)

1. Problem verification

-1. Turn the vehicle to the ON mode.

-2. Clear the DTC with the HDS.

-3. **Enter the maintenance mode, then start the engine** .

-4. Check for Pending or Confirmed DTCs with the HDS.

DTC Description	Confirmed DTC	Pending DTC
P0351 No. 1 Cylinder Ignition Coil Circuit Malfunction	B	B
P0352 No. 2 Cylinder Ignition Coil Circuit Malfunction	B	B
P0353 No. 3 Cylinder Ignition Coil Circuit Malfunction	B	B
P0354 No. 4 Cylinder Ignition Coil Circuit Malfunction	B	B

Is DTC P0351, P0352, P0353, and/or P0354 indicated?

YES

The failure is duplicated. Go to step 2.

NO

Intermittent failure, the system is OK at this time. Check for poor connections or loose terminals at the ignition coil and the PCM. **If the on-board snapshot of this DTC is recorded, try to reproduce the failure under the same conditions with the on-board snapshot** .

2. Ignition coil check

-1. Turn the vehicle to the OFF (LOCK) mode.

-2. **Exchange the ignition coil from the problem cylinder with one from another cylinder** .

-3. **Enter the maintenance mode, then start the engine** .

-4. Check for Pending or Confirmed DTCs with the HDS.

DTC Description	Confirmed DTC	Pending DTC
P0351 No. 1 Cylinder Ignition Coil Circuit Malfunction	B	B
P0352 No. 2 Cylinder Ignition Coil Circuit Malfunction	B	B

DTC Description	Confirmed DTC	Pending DTC
P0353 No. 3 Cylinder Ignition Coil Circuit Malfunction	B	B
P0354 No. 4 Cylinder Ignition Coil Circuit Malfunction	B	B

Is DTC indicated at the exchanged position?

YES

Replace the faulty ignition coil .

NO

Go to step 3.

3. Fuse check

-1. Turn the vehicle to the OFF (LOCK) mode.

-2. Check the following fuse.

Fuse	**No. A15**

Is the fuse OK?

YES

Go to step 4.

NO

Check for a short in the IG_COIL_RLY_OUT/IG1(COIL)/IG1(IGN_COIL) wire between the relay circuit board and the ignition coil, and the +B_IG_COIL wire between the No. A15 fuse and the relay circuit board, and repair it if needed. Also replace the No. A15 fuse.

4. Relay circuit board check

-1. **Remove and test the relay circuit board** .

Is the relay circuit board OK?

YES

Go to step 5.

NO

Replace the relay circuit board .

5. Open wire check (+B_IG_COIL line)

-1. Measure the voltage between test points 1 and 2.

Test condition	Vehicle OFF (LOCK) mode
B	Relay circuit board: removed
Test point 1	Relay circuit board connector C (18P) (female terminals) No. 9: ①
Test point 2	Body ground

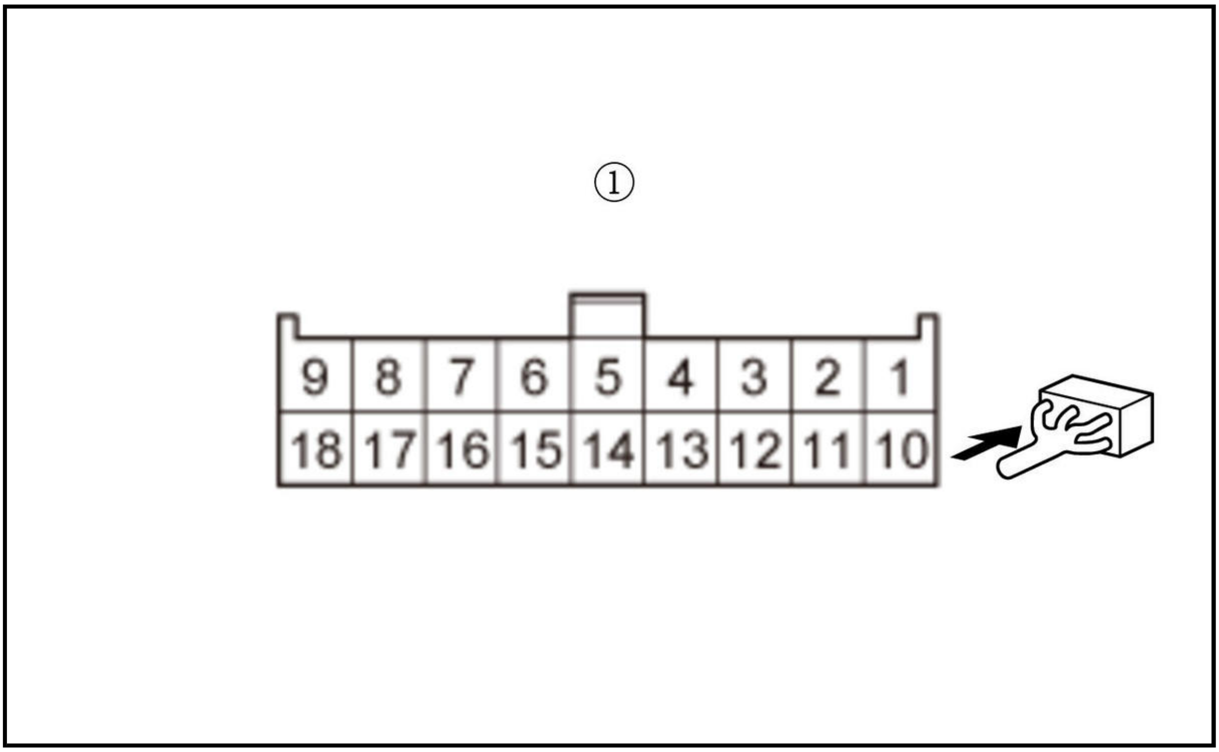

Is there battery voltage?

YES

Go to step 6.

NO

Check for an open in the +B_IG_COIL wire between the **No. A15 fuse** and the relay circuit board.

6. Open wire check (IG_COIL_RLY_OUT/IG1(COIL)/IG1(IGN_COIL) line)

-1. **Reinstall the relay circuit board** .

-2. Disconnect the following connector(s).

Ignition coil 3P connector (problem cylinder)

-3. Turn the vehicle to the ON mode.

-4. Measure the voltage between test points 1 and 2.

Test condition	Vehicle ON mode
B	Ignition coil 3P connector (problem cylinder): disconnected
Test point 1	Ignition coil 3P connector (female terminals) No. 1: ①
Test point 2	Body ground

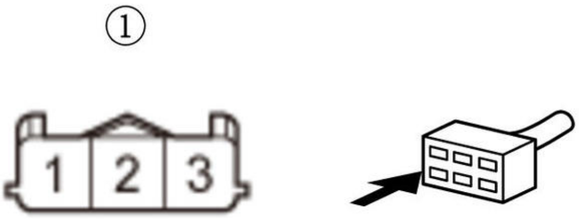

Is there battery voltage?

YES

Go to step 7.

NO

Repair an open in the IG_COIL_RLY_OUT/IG1(COIL)/IG1(IGN_COIL) wire between the relay circuit board and the ignition coil.

7. Open wire check (PG(COIL) line)

-1. Turn the vehicle to the OFF (LOCK) mode.

-2. Measure the resistance between test points 1 and 2.

Test condition	Vehicle OFF (LOCK) mode
B	Ignition coil 3P connector (problem cylinder): disconnected
Test point 1	Ignition coil 3P connector (female terminals) No. 2: ①
Test point 2	Body ground

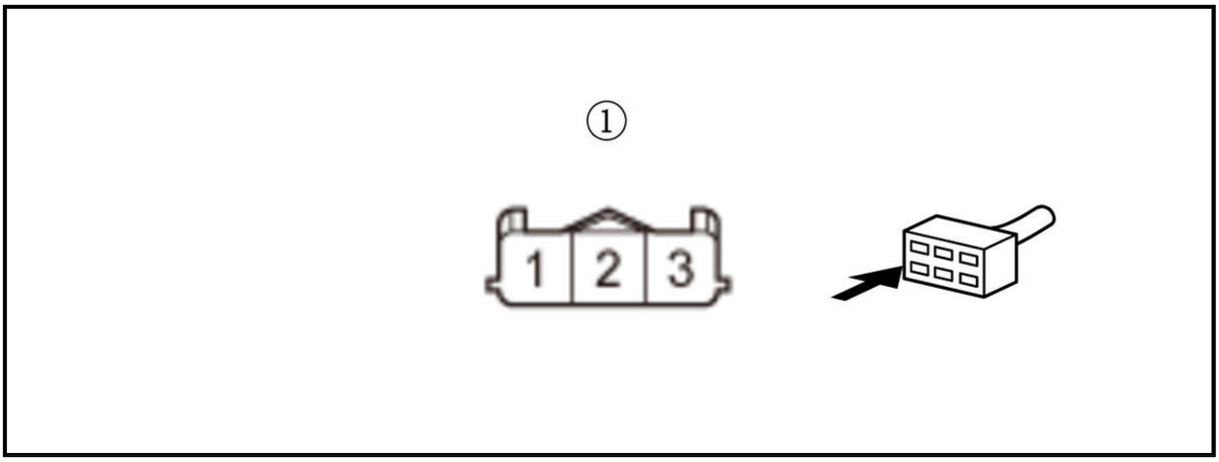

Is there 1.0 Ω or less?

YES

Go to step 8.

NO

Repair an open in the PG(COIL) wire between the ignition coil and G101.

8. Shorted wire check (IGN lines)

-1. Jump the SCS line with the HDS, and wait more than 1 minute.

-2. Disconnect the following connector.

PCM connector E (80P)

-3. Measure the resistance between body ground and the appropriate PCM connector terminal of the problem ignition coil (see table).

Test condition	Vehicle OFF (LOCK) mode
B	Ignition coil 3P connector (problem cylinder): disconnected
B	PCM connector E (80P): disconnected

Problem cylinder	DTC	Connector	Terminal
No. 1	P0351	PCM connector E (80P)	No. 37
No. 2	P0352		No. 38
No. 3	P0353		No. 39
No. 4	P0354		No. 40

Is there 1 MΩ or more?

YES

The IGN wires are not shorted. Go to step 9.

NO

Repair a short in the IGN wire(s) between the PCM and the ignition coil.

9. Open wire check (IGN lines)

-1. Measure the resistance between appropriate ignition coil 3P connector (female terminals) terminal No. 3: ① and the appropriate PCM connector terminal of the problem ignition coil (see table).

Test condition	Vehicle OFF (LOCK) mode
B	Ignition coil 3P connector (problem cylinder): disconnected
B	PCM connector E (80P): disconnected

Problem cylinder	DTC	Connector	Terminal
No. 1	P0351	**PCM connector E (80P)**	No. 37
No. 2	P0352		No. 38
No. 3	P0353		No. 39
No. 4	P0354		No. 40

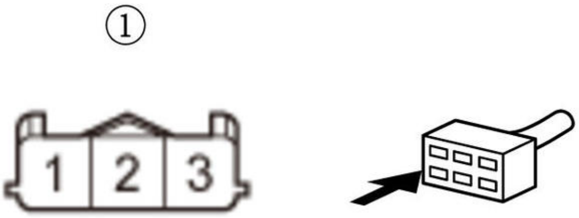

Is there 1.0 Ω or less?

YES

The IGN wires are OK. Check for any authorized service information related to the DTCs or symptoms you are troubleshooting, or **substitute a known-good PCM** .

NO

Repair an open in the IGN wire(s) between the PCM and the ignition coil.

DTC P0365

DTC P0365 : CMP Sensor B Circuit No Signal

NOTE: Before you troubleshoot, **review the general troubleshooting information** .

DTC Description	Confirmed DTC	Pending DTC
P0365 CMP Sensor B Circuit No Signal	B	B

DTC (PGM-FI)

1. Problem verification

-1. Turn the vehicle to the ON mode.

-2. Clear the DTC with the HDS.

-3. **Enter the maintenance mode, then start the engine, then let it idle** .

-4. Check for Pending or Confirmed DTCs with the HDS.

DTC Description	Confirmed DTC	Pending DTC
P0365 CMP Sensor B Circuit No Signal	B	B

Is DTC P0365 indicated?

YES

The failure is duplicated. Go to step 2.

NO

Intermittent failure, the system is OK at this time. Check for poor connections or loose terminals at CMP sensor B and the PCM. **If the on-board snapshot of this DTC is recorded, try to reproduce the failure under the same conditions with the on-board snapshot** .

2. Determine possible failure area (VCC2 line, others)

-1. Turn the vehicle to the OFF (LOCK) mode.

-2. Disconnect the following connector.

CMP sensor B 3P connector

-3. Turn the vehicle to the ON mode.

-4. Measure the voltage between test points 1 and 2.

Test condition	Vehicle ON mode
B	CMP sensor B 3P connector: disconnected
Test point 1	CMP sensor B 3P connector (female terminals) No. 1: ①
Test point 2	Body ground

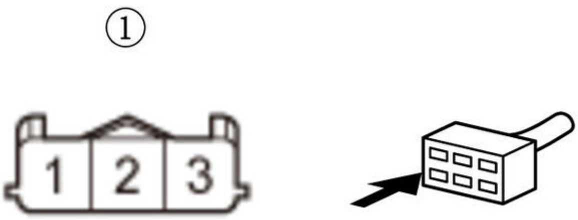

Is there about 5.0 V?

YES

Go to step 4.

NO

Go to step 3.

3. Open wire check (VCC2 line)

-1. Turn the vehicle to the OFF (LOCK) mode.

-2. Jump the SCS line with the HDS, and wait more than 1 minute.

-3. Disconnect the following connector.

PCM connector E (80P)

-4. Measure the resistance between test points 1 and 2.

Test condition	Vehicle OFF (LOCK) mode
	CMP sensor B 3P connector: disconnected
	PCM connector E (80P): disconnected
Test point 1	CMP sensor B 3P connector (female terminals) No. 1: ①
Test point 2	**PCM connector E (80P) No. 77**

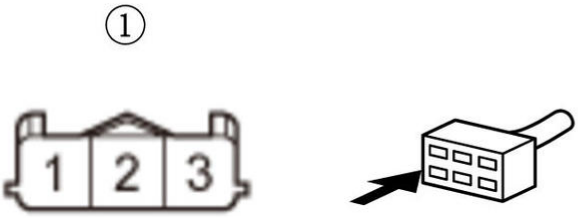

Is there 1.0 Ω or less?

YES

The VCC2 wire is OK. Check for any authorized service information related to the DTCs or symptoms you are troubleshooting, or **substitute a known-good PCM** .

NO

Repair an open in the VCC2 wire between the PCM (E77) and CMP sensor B.

4. Determine possible failure area (TDC line, others)

-1. Measure the voltage between test points 1 and 2.

Test condition	Vehicle ON mode
B	CMP sensor B 3P connector: disconnected
Test point 1	CMP sensor B 3P connector (female terminals) No. 3: ①
Test point 2	Body ground

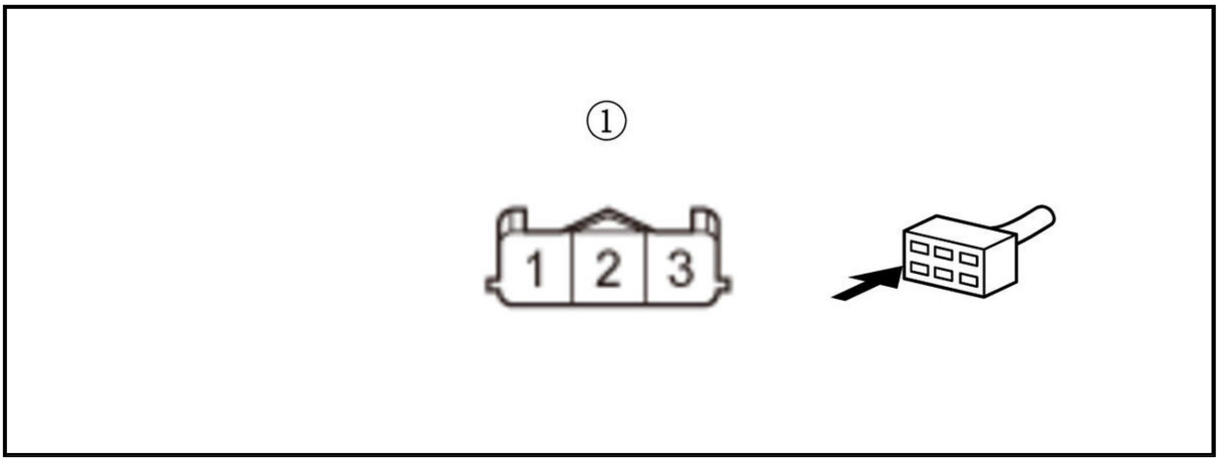

Is there about 5.0 V?

YES

Go to step 5.

NO

Go to step 7.

5. Determine possible failure area (CMP sensor B, others)

-1. Measure the voltage between test points 1 and 2.

Test condition	Vehicle ON mode
B	CMP sensor B 3P connector: disconnected
Test point 1	CMP sensor B 3P connector (female terminals) No. 1: ①
Test point 2	CMP sensor B 3P connector (female terminals) No. 2: ①

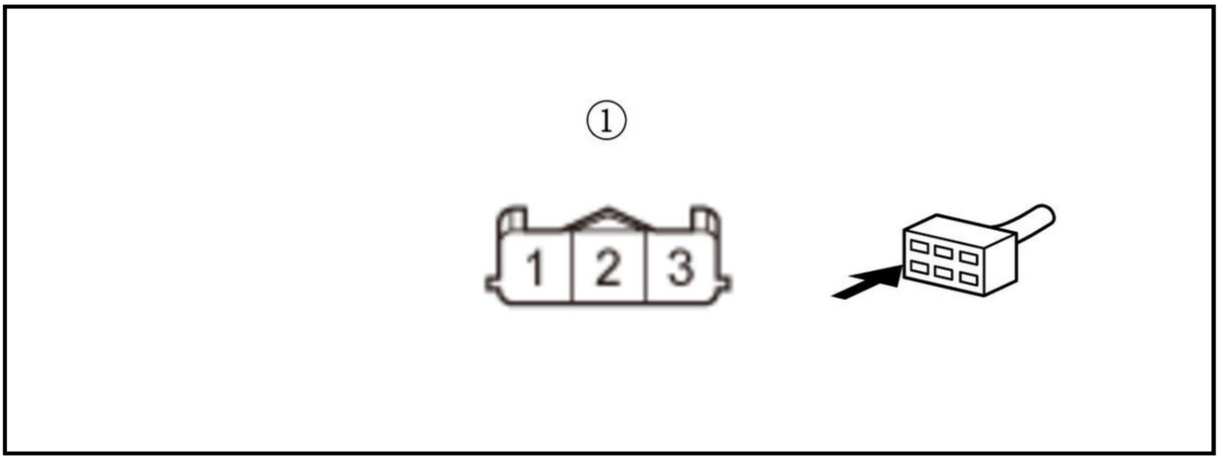

Is there about 5.0 V?

YES

The SG2 wire is OK. **Replace CMP sensor B** .

NO

Go to step 6.

6. Open wire check (SG2 line)

-1. Turn the vehicle to the OFF (LOCK) mode.

-2. Jump the SCS line with the HDS, and wait more than 1 minute.

-3. Disconnect the following connector.

PCM connector E (80P)

-4. Measure the resistance between test points 1 and 2.

Test condition	Vehicle OFF (LOCK) mode
B	CMP sensor B 3P connector: disconnected
B	PCM connector E (80P): disconnected
Test point 1	CMP sensor B 3P connector (female terminals) No. 2: ①
Test point 2	**PCM connector E (80P) No. 78**

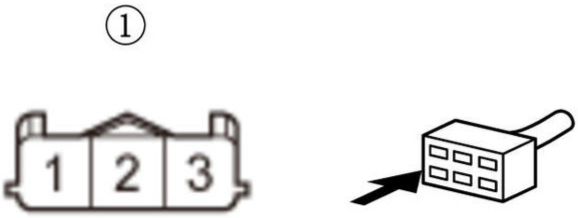

Is there 1.0 Ω or less?

YES

The SG2 wire is OK. Check for any authorized service information related to the DTCs or symptoms you are troubleshooting, or **substitute a known-good PCM** .

NO

Repair an open in the SG2 wire between the PCM (E78) and CMP sensor B.

7. Shorted wire check (TDC line)

-1. Turn the vehicle to the OFF (LOCK) mode.

-2. Jump the SCS line with the HDS, and wait more than 1 minute.

-3. Disconnect the following connector.

PCM connector E (80P)

-4. Measure the resistance between test points 1 and 2.

Test condition	Vehicle OFF (LOCK) mode
B	CMP sensor B 3P connector: disconnected
B	PCM connector E (80P): disconnected
Test point 1	**PCM connector E (80P) No. 43**

Test point 2	Body ground

Is there 1 MΩ or more?

YES

The TDC wire is not shorted. Go to step 8.

NO

Repair a short in the TDC wire between the PCM (E43) and CMP sensor B.

8. Open wire check (TDC line)

-1. Measure the resistance between test points 1 and 2.

Test condition	Vehicle OFF (LOCK) mode
B	CMP sensor B 3P connector: disconnected
B	PCM connector E (80P): disconnected
Test point 1	CMP sensor B 3P connector (female terminals) No. 3: ①
Test point 2	**PCM connector E (80P) No. 43**

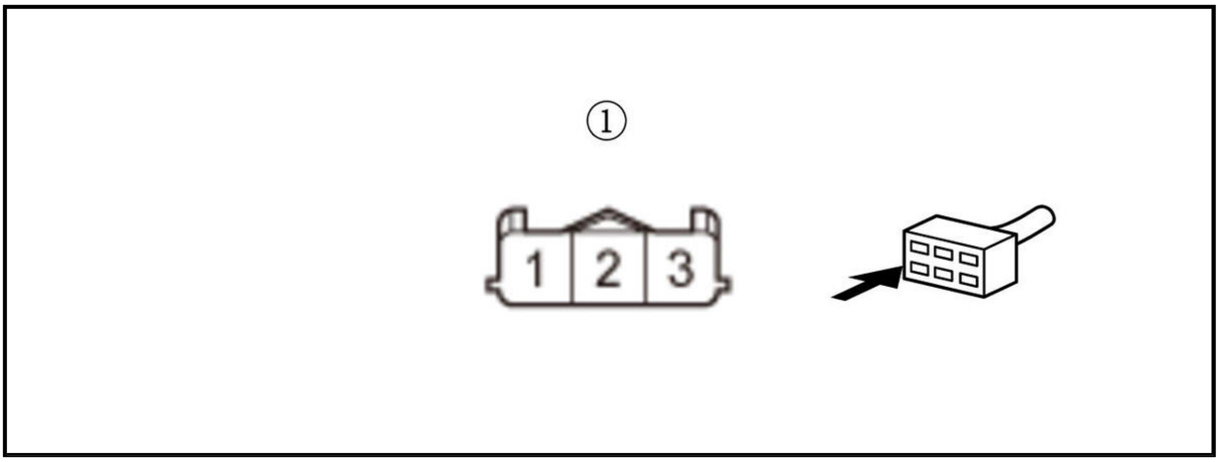

Is there 1.0 Ω or less?

YES

The TDC wire is OK. Check for any authorized service information related to the DTCs or symptoms you are troubleshooting, or **substitute a known-good PCM** .

NO

Repair an open in the TDC wire between the PCM (E43) and CMP sensor B.

DTC P0369

DTC P0369 : CMP Sensor B Circuit Intermittent Interruption

NOTE: Before you troubleshoot, **review the general troubleshooting information** .

DTC Description	Confirmed DTC	Pending DTC
P0369 CMP Sensor B Circuit Intermittent Interruption	B	B

DTC (PGM-FI)

1. Problem verification (idling)

   -1. Turn the vehicle to the ON mode.

   -2. Clear the DTC with the HDS.

   -3. **Enter the maintenance mode, then start the engine** , then let it idle for 10 seconds.

   -4. Monitor the OBD STATUS for DTC P0369 in the DTCs MENU with the HDS.

DTC Description	OBD STATUS
P0369 CMP Sensor B Circuit Intermittent Interruption	B

   Does the HDS indicate FAILED?

   YES

   The failure is duplicated. Go to step 3.

   NO

   If the HDS indicates PASSED, go to step 2. If the HDS indicates NOT COMPLETED, keep idling until a result comes on.

2. Problem verification (test-drive):

   Test-drive the vehicle for several minutes in the range of these recorded on-board snapshot parameters:

   - ENGINE SPEED
   - VEHICLE SPEED

   On-board Snapshot

   -2. Monitor the OBD STATUS for DTC P0369 in the DTCs MENU with the HDS.

DTC Description	OBD STATUS
P0369 CMP Sensor B Circuit Intermittent Interruption	B

   Does the HDS indicate FAILED?

   YES

   The failure is duplicated. Go to step 3.

   NO

   If the HDS indicates PASSED, there is an intermittent failure and the system is OK at this time. Check for poor connections or loose terminals at CMP sensor B and the PCM. **If the on-board snapshot of this DTC is recorded, try to reproduce the failure under the same conditions with the on-board snapshot** . If the HDS indicates NOT COMPLETED, retest and check the OBD STATUS again.

3. CMP sensor B circuit connectors and terminals condition check:

   Check for poor connections or loose terminals at these locations:

   - CMP sensor B
   - PCM
   - Engine ground

- Body ground

Are the connections and terminals OK?

YES

Go to step 4.

NO

Repair the connections or terminals.

4. CMP pulse plate B visual check

-1. **Check for damage to CMP pulse plate B** .

Is the pulse plate damaged or loose?

YES

Replace CMP pulse plate B .

NO

Replace CMP sensor B , then recheck. If DTC P0369 is indicated again, **replace the PCM** .

DTC P0400

DTC P0400 : EGR System Leak Detected

NOTE: Before you troubleshoot, **review the general troubleshooting information** .

DTC Description	Confirmed DTC	Pending DTC
P0400 EGR System Leak Detected	B	B

DTC (PGM-FI)

1. EGR pipe visual check

-1. Check for a loose or damaged EGR pipe.

Is the EGR pipe OK?

YES

Go to step 2.

NO

Reconnect or replace the EGR pipe .

2. Problem verification

-1. **Enter the maintenance mode, then start the engine** .

-2. Hold the engine speed at 3, 000 rpm without load (in P or N) until the radiator fan comes on, then let it idle.

Test-drive the vehicle under these conditions:

- Engine coolant temperature (ECT SENSOR 1) above 158 deg.F (70 deg.C)

- Transmission in D
- Drive the vehicle at 25 mph (40 km/h) or less for 5 minutes
- Maintain the vehicle speed at 50 mph (80 km/h) or more and the engine speed between 1, 750-3, 000 rpm for at least 10 seconds

Signal	Current conditions	
	Values	Unit
ECT Sensor 1	B	B
Vehicle Speed	B	B
Engine Speed	B	B

-4. Monitor the OBD STATUS for DTC P0400 in the DTCs MENU with the HDS.

DTC Description	OBD STATUS
P0400 EGR System Leak Detected	B

Does the HDS indicate FAILED?

YES

The failure is duplicated. **Replace the EGR valve** .

NO

If the HDS indicates PASSED, there is an intermittent failure and the system is OK at this time. Check for leakage between the EGR pipe and the EGR valve. **If the on-board snapshot of this DTC is recorded, try to reproduce the failure under the same conditions with the on-board snapshot** . If the HDS indicates NOT COMPLETED, go to step 2-3 and recheck.

DTC P0401

DTC P0401 : EGR Insufficient Flow

NOTE: Before you troubleshoot, **review the general troubleshooting information** .

DTC Description	Confirmed DTC	Pending DTC
P0401 EGR Insufficient Flow	B	B

DTC (PGM-FI)

1. EGR valve check

-1. Turn the vehicle to the ON mode.

-2. Clear the DTC with the HDS.

-3. **Enter the maintenance mode, then start the engine** .

-4. Hold the engine speed at 3, 000 rpm without load (in P or N) until the radiator fan comes on, then let it idle.

-5. Select the EGR TEST in the Function Test Menu with the HDS

EGR Test

Is the result OK?

YES

Go to step 2.

NO

Replace the EGR valve .

2. Problem verification:

   Test-drive the vehicle under these conditions:

   - Engine coolant temperature (ECT SENSOR 1) above 158 deg.F (70 deg.C)
   - Transmission in D
   - Drive the vehicle at a steady speed between 15-75 mph (24-120 km/h) for at least 5 seconds
   - Drive the vehicle at a steady speed between 55-75 mph (90-120 km/h) for at least 10 seconds
   - During the drive, decelerate (with the throttle fully closed) for at least 4 seconds

Signal	Current conditions	
	Values	Unit
ECT Sensor 1	B	B
Vehicle Speed	B	B

-2. Monitor the OBD STATUS for DTC P0401 in the DTCs MENU with the HDS.

DTC Description	OBD STATUS
P0401 EGR Insufficient Flow	B

Does the HDS indicate FAILED?

YES

Clean the intake manifold EGR port with throttle plate cleaner. Also, clean the passage inside the EGR valve with throttle plate cleaner.

NO

If the HDS indicates PASSED, there is an intermittent failure and the system is OK at this time. Check for poor connections or loose terminals at the EGR valve and the PCM. **If the on-board snapshot of this DTC is recorded, try to reproduce the failure under the same conditions with the on-board snapshot** . If the HDS indicates EXECUTING, keep driving until a result comes on. If the HDS indicates OUT OF CONDITION, meet the test condition and recheck.

DTC P0404

DTC P0404 : EGR Valve Circuit Range/Performance Problem

NOTE: Before you troubleshoot, **review the general troubleshooting information** .

DTC Description	Confirmed DTC	Pending DTC
P0404 EGR Valve Circuit Range/Performance Problem	B	B

DTC (PGM-FI)

1. Problem verification

   -1. Turn the vehicle to the ON mode.

   -2. Clear the DTC with the HDS.

-3. **Enter the maintenance mode, then start the engine** .

-4. Hold the engine speed at 3, 000 rpm without load (in P or N) until the radiator fan comes on, then let it idle.

-5. Select the EGR TEST in the Function Test Menu with the HDS.

EGR Test

Is the result OK?

YES

Intermittent failure, the system is OK at this time. Clean any carbon build-up on the EGR valve with throttle plate cleaner. **If the on-board snapshot of this DTC is recorded, try to reproduce the failure under the same conditions with the on-board snapshot** .

NO

The failure is duplicated. Go to step 2.

2. EGR valve position sensor internal circuit check 1

-1. Turn the vehicle to the OFF (LOCK) mode.

-2. Disconnect the following connector.

EGR valve 5P connector

-3. At the EGR valve side, measure the resistance between test points 1 and 2.

Test condition	Vehicle OFF (LOCK) mode
B	EGR 5P connector: disconnected
Test point 1	EGR valve 5P connector (male terminals) No. 3 (valve side): ①
Test point 2	EGR valve 5P connector (male terminals) No. 4 (valve side): ①

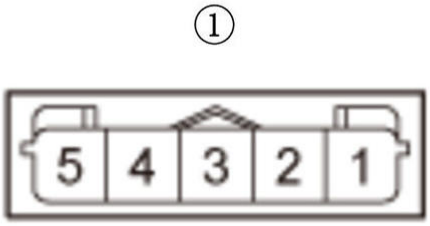

Is there 100 kΩ or more?

YES

Replace the EGR valve .

NO

Go to step 3.

3. EGR valve position sensor internal circuit check 2

-1. At the EGR valve side, measure the resistance between test point 1 and 2.

Test condition	Vehicle OFF (LOCK) mode EGR 5P connector: disconnected
Test point 1	EGR valve 5P connector (male terminals) No. 2 (valve side): ①
Test point 2	EGR valve 5P connector (male terminals) No. 4 (valve side): ①

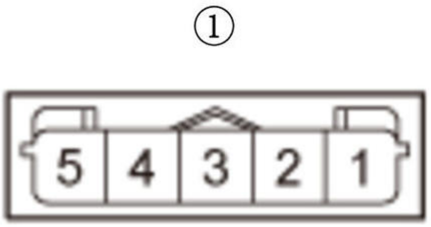

Is there 100 kΩ or more?

YES

Replace the EGR valve .

NO

Go to step 4.

4. Open wire check (PG line)

-1. Measure the resistance between test point 1 and 2.

Test condition	Vehicle OFF (LOCK) mode EGR 5P connector: disconnected
Test point 1	EGR valve 5P connector (female terminals) No. 1: ①
Test point 2	Body ground

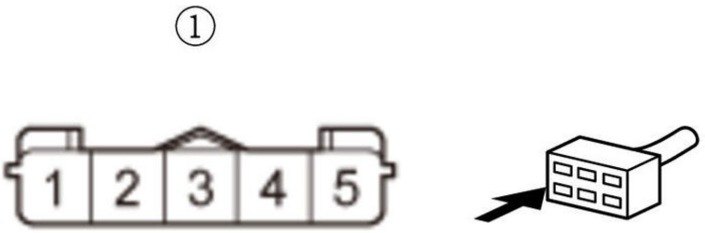

Is there 1.0 Ω or less?

YES

Go to step 5.

NO

Repair an open in the PG wire between the EGR valve and G101.

5. Shorted wire check (EEGR line)

-1. Jump the SCS line with the HDS, and wait more than 1 minute.

-2. Disconnect the following connector.

PCM connector E (80P)

-3. Measure the resistance between test point 1 and 2.

Test condition	Vehicle OFF (LOCK) mode
	EGR 5P connector: disconnected
	PCM connector E (80P): disconnected
Test point 1	EGR valve 5P connector (female terminals) No. 5: ①
Test point 2	Body ground

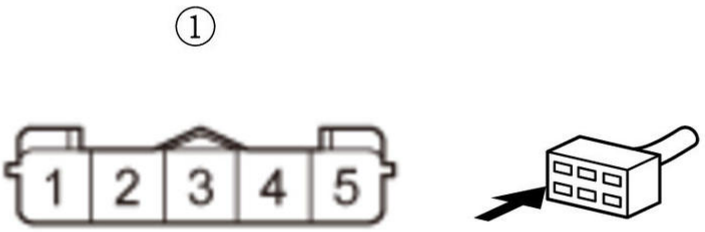

Is there 1 MΩ or more?

YES

Go to step 6.

NO

Repair a short in the EEGR wire between the PCM (E10) and the EGR valve.

6. Open wire check (EEGR line)

-1. Measure the resistance between test point 1 and 2.

Test condition	Vehicle OFF (LOCK) mode
	EGR 5P connector: disconnected
	PCM connector E (80P): disconnected
Test point 1	EGR valve 5P connector (female terminals) No. 5: ①
Test point 2	**PCM connector E (80P) No. 10**

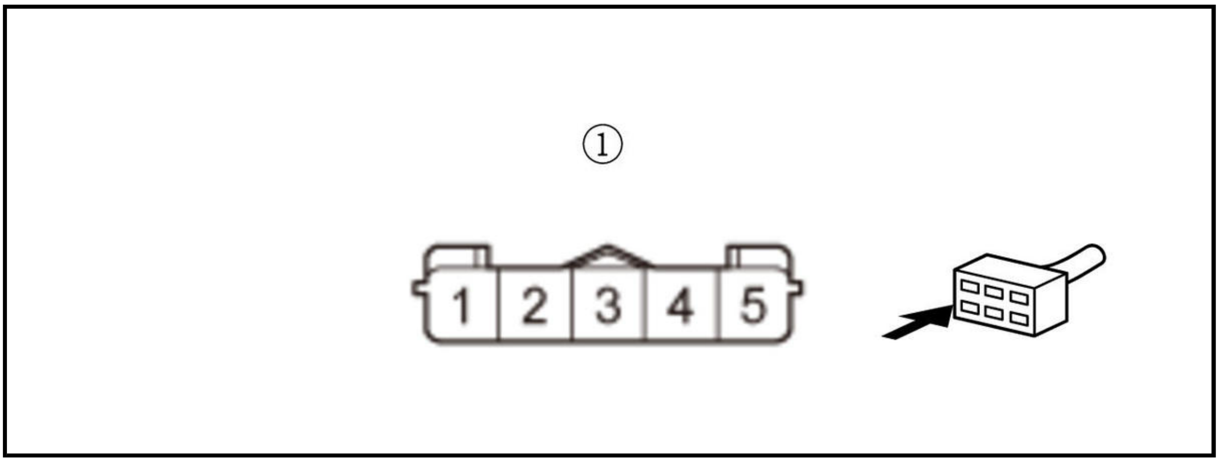

Is there 1.0 Ω or less?

YES

Go to step 7.

NO

Repair an open in the EEGR wire between the PCM (E10) and the EGR valve.

7. EGR port and passage cleaning

-1. **Remove the EGR valve** .

-2. Clean the intake manifold EGR port with throttle plate cleaner. Also, clean the passage inside the EGR valve with throttle plate cleaner.

-3. **Install the EGR valve** .

-4. Reconnect all connectors.

-5. Exit the SCS mode with the HDS.

-6. Turn the vehicle to the ON mode.

-7. **Reset the PCM with the HDS** .

Reset PCM

-8. Select the EGR TEST in the Function Test Menu with the HDS.

EGR Test

Is the result OK?

YES

The failure is not duplicated. The troubleshooting is complete.

NO

Go to step 8.

8. EGR valve check

-1. Turn the vehicle to the OFF (LOCK) mode.

-2. **Substitute a known-good EGR valve** .

-3. Turn the vehicle to the ON mode.

-4. **Reset the PCM with the HDS** .

Reset PCM

-5. Select the EGR TEST in the Function Test Menu with the HDS.

EGR Test

Is the result OK?

YES

Replace the original EGR valve .

NO

Check for any authorized service information related to the DTCs or symptoms you are troubleshooting, or **substitute a known-good PCM** .

DTC P0405

DTC P0405 : EGR Valve Position Sensor Circuit Low Voltage

NOTE: Before you troubleshoot, **review the general troubleshooting information** .

DTC Description	Confirmed DTC	Pending DTC
P0405 EGR Valve Position Sensor Circuit Low Voltage	B	B

DTC (PGM-FI)

1. Problem verification

-1. Turn the vehicle to the ON mode.

-2. Check the parameter(s) below with the HDS.

Signal	Threshold		Current conditions	
	Values	Unit	Values	Unit
EGR Valve Position Sensor (EGR Vls)	Less than 0.31	V	B	B

Do the current condition(s) match the threshold?

YES

The failure is duplicated. Go to step 2.

NO

Intermittent failure, the system is OK at this time. Check for poor connections or loose terminals at the EGR valve and the PCM. **If the on-board snapshot of this DTC is recorded, try to reproduce the failure under the same conditions with the on-board snapshot** .

2. Open wire check (VCC2 line)

-1. Turn the vehicle to the OFF (LOCK) mode.

-2. Disconnect the following connector.

EGR valve 5P connector

-3. Turn the vehicle to the ON mode.

-4. Measure the voltage between test points 1 and 2.

Test condition	Vehicle ON mode
B	EGR valve 5P connector: disconnected
Test point 1	EGR valve 5P connector (female terminals) No. 2: ①
Test point 2	EGR valve 5P connector (female terminals) No. 3: ①

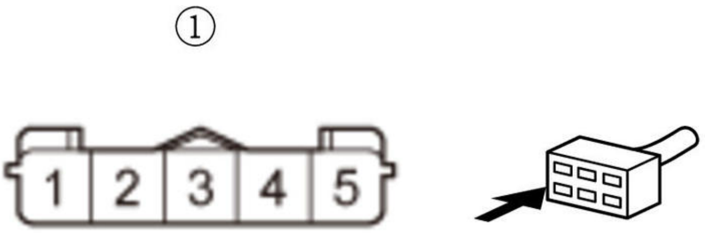

Is there about 5.0 V?

YES

The VCC2 wire is OK. Go to step 3.

NO

Repair an open in the VCC2 wire between the PCM (E77) and the EGR valve.

3. Shorted wire check (EGRL line)

-1. Turn the vehicle to the OFF (LOCK) mode.

-2. Jump the SCS line with the HDS, and wait more than 1 minute.

-3. Disconnect the following connector.

PCM connector E (80P)

-4. Measure the resistance between test points 1 and 2.

Test condition	Vehicle OFF (LOCK) mode
B	EGR valve 5P connector: disconnected
B	PCM connector E (80P): disconnected
Test point 1	EGR valve 5P connector (female terminals) No. 4: ①
Test point 2	Body ground

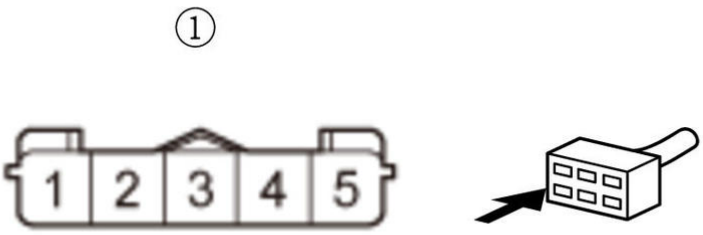

Is there 1 MΩ or more?

YES

Go to step 4.

NO

Repair a short in the EGRL wire between the PCM (E69) and the EGR valve.

4. Open wire check (EGRL line)

-1. Measure the resistance between test points 1 and 2.

Test condition	Vehicle OFF (LOCK) mode
B	EGR valve 5P connector: disconnected
B	PCM connector E (80P): disconnected
Test point 1	EGR valve 5P connector (female terminals) No. 4: ①
Test point 2	**PCM connector E (80P) No. 69**

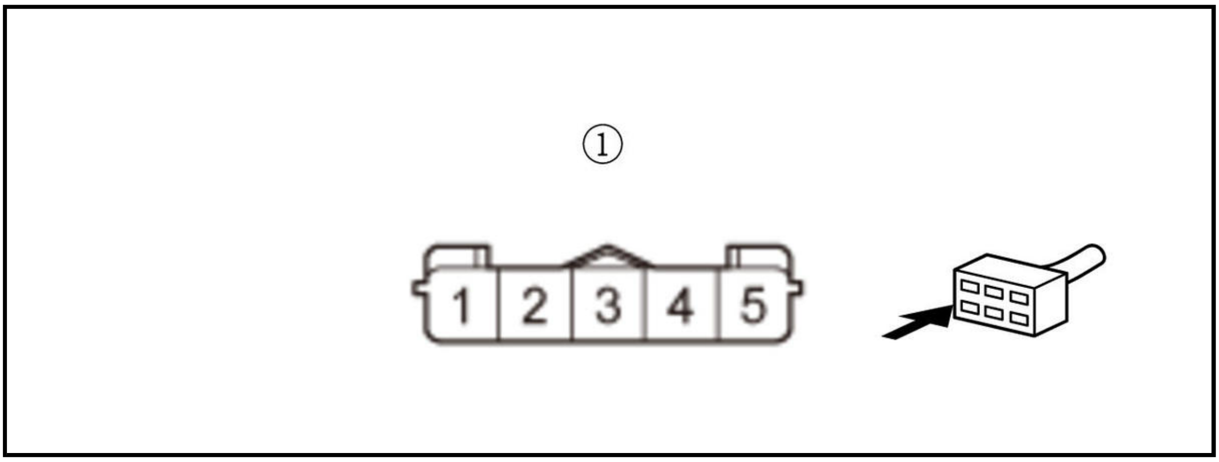

Is there 1.0 Ω or less?

YES

The EGRL wire is OK. Go to step 5.

NO

Repair an open in the EGRL wire between the PCM (E69) and the EGR valve.

5. PCM internal circuit check

-1. Connect terminals A and B with a jumper wire.

Terminal A	EGR valve 5P connector (female terminals) No. 2: ①
Terminal B	EGR valve 5P connector (female terminals) No. 4: ①

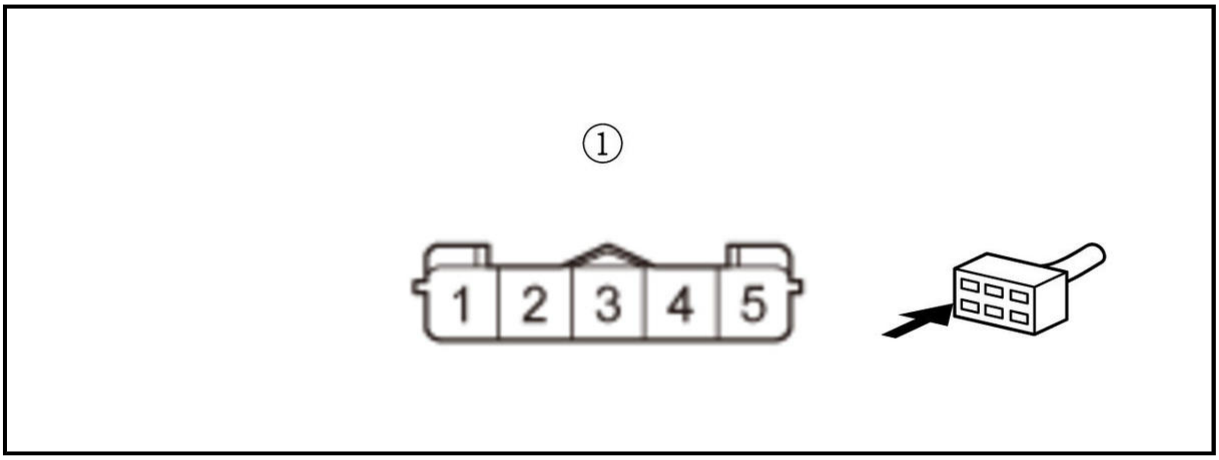

-2. Reconnect the following connector.

PCM connector E (80P)

-3. Exit the SCS mode with the HDS.

-4. Turn the vehicle to the ON mode.

-5. Check the parameter(s) below with the HDS.

Signal	Threshold		Current conditions	
	Values	Unit	Values	Unit
EGR Valve Position Sensor (EGR Vls)	Less than 0.31	V	B	B

Do the current condition(s) match the threshold?

YES

Check for any authorized service information related to the DTCs or symptoms you are troubleshooting, or **substitute a known-good PCM** .

NO

The PCM internal circuit is OK. **Replace the EGR valve** .

DTC P0406

DTC P0406 : EGR Valve Position Sensor Circuit High Voltage

NOTE: Before you troubleshoot, **review the general troubleshooting information** .

DTC Description	Confirmed DTC	Pending DTC
P0406 EGR Valve Position Sensor Circuit High Voltage	B	B

DTC (PGM-FI)

1. Problem verification

-1. Turn the vehicle to the ON mode.

-2. Check the parameter(s) below with the HDS.

Signal	Threshold		Current conditions	
	Values	Unit	Values	Unit
EGR Valve Position Sensor (EGR Vls)	More than 4.89	V	B	B

Do the current condition(s) match the threshold?

YES

The failure is duplicated. Go to step 2.

NO

Intermittent failure, the system is OK at this time. Check for poor connections or loose terminals at the EGR valve and the PCM. **If the on-board snapshot of this DTC is recorded, try to reproduce the failure under the same conditions with the on-board snapshot** .

2. Determine possible failure area (EGR valve, others)

-1. Turn the vehicle to the OFF (LOCK) mode.

-2. Disconnect the following connector.

EGR valve 5P connector

-3. Turn the vehicle to the ON mode.

-4. Measure the voltage between test points 1 and 2.

Test condition	Vehicle ON mode
B	EGR valve 5P connector: disconnected
Test point 1	EGR valve 5P connector (female terminals) No. 2: ①
Test point 2	EGR valve 5P connector (female terminals) No. 3: ①

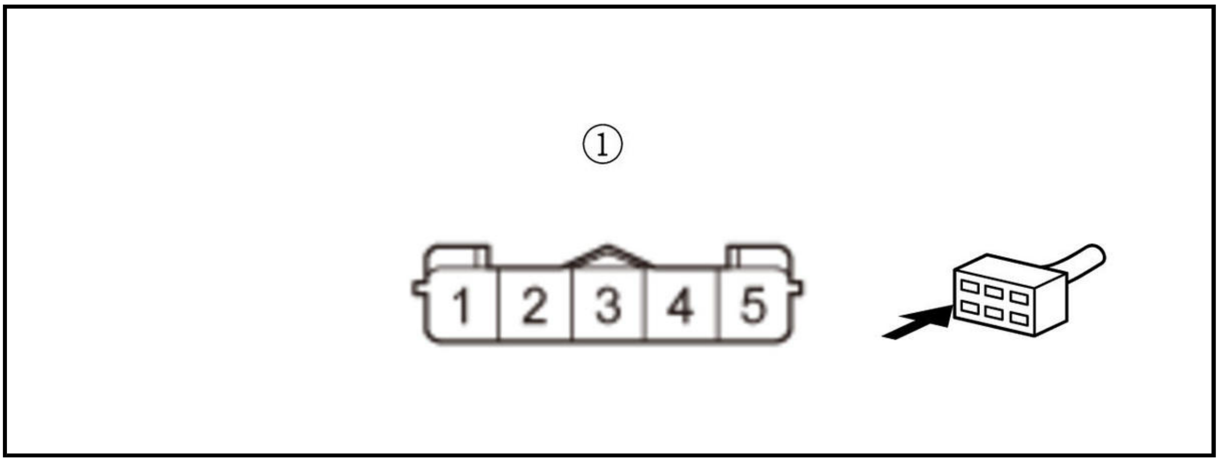

Is there about 5.0 V?

YES

Replace the EGR valve .

NO

Go to step 3.

3. Open wire check (SG2 line)

-1. Turn the vehicle to the OFF (LOCK) mode.

-2. Jump the SCS line with the HDS, and wait more than 1 minute.

-3. Disconnect the following connector.

PCM connector E (80P)

-4. Measure the resistance between test points 1 and 2.

Test condition	Vehicle OFF (LOCK) mode
B	EGR valve 5P connector: disconnected
B	PCM connector E (80P): disconnected
Test point 1	EGR valve 5P connector (female terminals) No. 3: ①
Test point 2	**PCM connector E (80P) No. 78**

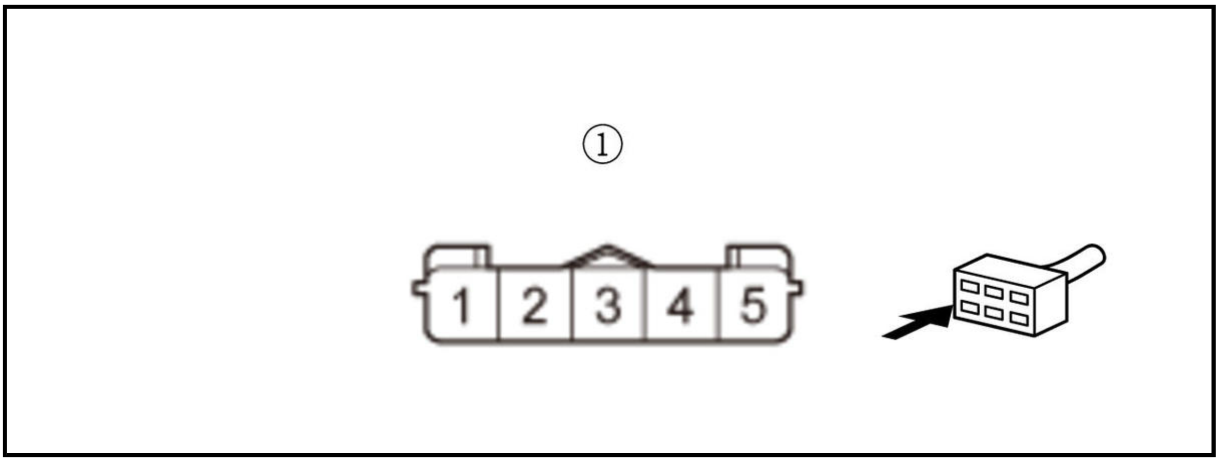

Is there 1.0 Ω or less?

YES

The SG2 wire is OK. Check for any authorized service information related to the DTCs or symptoms you are troubleshooting, or **substitute a known-good PCM** .

NO

Repair an open in the SG2 wire between the PCM (E78) and the EGR valve.

DTC P0420

DTC P0420 : Catalyst System Efficiency Below Threshold

NOTE:

- Before you troubleshoot, **review the general troubleshooting information** .
- If some of the DTCs listed below are stored at the same time as DTC P0420, troubleshoot them first, then recheck for DTC P0420.
-
    - -

      P0137, P0138, P0139, P2270, P2A01: Secondary HO2S (Sensor 2)
    - -

      P0141: Secondary HO2S (Sensor 2) heater
    - -

      P0300: Random misfire
    - -

      P0301, P0302, P0303, P0304: No. 1, No. 2, No. 3, No. 4 cylinder misfire detected
- Poor quality fuel may cause this DTC.

DTC Description	Confirmed DTC	Pending DTC
P0420 Catalyst System Efficiency Below Threshold	B	B

DTC (PGM-FI)

1. DTC check

-1. Turn the vehicle to the ON mode.

-2. Check for Pending or Confirmed DTCs with the HDS.

DTC Description	Confirmed DTC	Pending DTC
P0420 Catalyst System Efficiency Below Threshold	B	B

Is Confirmed DTC P0420 indicated?

YES (Confirmed DTC is indicated)

Replace the catalytic converter .

NO (Pending DTC is indicated)

Check the installation of the catalytic converter, then recheck.

DTC P043E, P043F

DTC P043E : EVAP Leak Check Module Standard Pressure Low

DTC P043F : EVAP Leak Check Module Standard Pressure High

NOTE: Before you troubleshoot, **review the general troubleshooting information** .

DTC Description	Confirmed DTC	Pending DTC
P043E EVAP Leak Check Module Standard Pressure Low	B	B
P043F EVAP Leak Check Module Standard Pressure High	B	B

DTC (PGM-FI)

1. Problem verification

-1. Turn the vehicle to the ON mode.

-2. Clear the DTC with the HDS.

-3. Turn the vehicle to the OFF (LOCK) mode.

-4. Turn the vehicle to the ON mode.

-5. Select the EVAP TEST in the Function Test Menu, then select EVAP Leak Check Module Test with the HDS.

EVAP TEST

Is the result OK?

YES

Intermittent failure, the system is OK at this time. Check for poor connections or loose terminals at the EVAP leak check module and the PCM. **If the on-board snapshot of this DTC is recorded, try to reproduce the failure under the same conditions with the on-board snapshot** .

NO

The failure is duplicated. Go to step 2.

2. EVAP leak check module drain hose check

-1. **Remove the EVAP leak check module** and the **EVAP canister filter** , then check the blockage in the drain hoses and the EVAP canister filter.

Are the parts OK?

YES

Replace the EVAP leak check module .

NO

Remove the blockage from them, or replace the part(s) if needed.

DTC P0441

DTC P0441 : EVAP System Purge Flow Malfunction

NOTE:

- Before you troubleshoot, **review the general troubleshooting information** .
- If DTC P0441 is indicated alone, do the troubleshooting for DTC P04DF and P04F1 using the on-board snapshot for P0441.
- If DTC P04DF, P04F1, and P0441 are stored at the same time, check for a poor connection, a blockage, or damage at the EVAP canister purge line between the EVAP canister purge valve 1 and the EVAP canister. Also check for a stuck closed EVAP canister purge valve 1.
- If any of the DTCs listed below are indicated at the same time as DTC P0441, troubleshoot those DTCs first, then recheck for P0441.

  P04DF, P04F1: EVAP system purge flow

DTC Description	Confirmed DTC	Pending DTC
P0441 EVAP System Purge Flow Malfunction	B	B

DTC (PGM-FI)

1. DTC check

   -1. Turn the vehicle to the ON mode.

   -2. Select the EVAP TEST in the Function Test Menu, then select the FUNCTION TEST with the HDS.

   EVAP TEST

   Check for Pending or Confirmed DTCs with the HDS.

DTC Description	Confirmed DTC	Pending DTC
P0441 EVAP System Purge Flow Malfunction	B	B
P04DF EVAP System High Purge Flow Detected	B	B
P04F1 EVAP System Low Purge Flow Detected	B	B

Are DTC P0441 and P04DF or P04F1 indicated at the same time?

YES

Go to the indicated DTC's troubleshooting.

NO

Go to the troubleshooting for **DTC P04DF** and **DTC P04F1** using the on-board snapshot for DTC P0441.

DTC P0443

DTC P0443 : EVAP Canister Purge Valve Circuit Malfunction

NOTE: Before you troubleshoot, **review the general troubleshooting information** .

DTC Description	Confirmed DTC	Pending DTC
P0443 EVAP Canister Purge Valve Circuit Malfunction	B	B

DTC (PGM-FI)

1. Problem verification

   -1. Turn the vehicle to the ON mode.

   -2. Clear the DTC with the HDS.

   -3. **Enter the maintenance mode, then start the engine** .

   -4. Hold the engine speed at 3, 000 rpm without load (in P or N) until the radiator fan comes on, then let it idle.

   -5. Check for Pending or Confirmed DTCs with the HDS.

DTC Description	Confirmed DTC	Pending DTC
P0443 EVAP Canister Purge Valve Circuit Malfunction	B	B

   Is DTC P0443 indicated?

   YES

   The failure is duplicated. Go to step 2.

   NO

   Intermittent failure, the system is OK at this time. Check for poor connections or loose terminals at EVAP canister purge valve 1 and the PCM. **If the on-board snapshot of this DTC is recorded, try to reproduce the failure under the same conditions with the on-board snapshot** .

2. Fuse check

   -1. Turn the vehicle to the OFF (LOCK) mode.

   -2. Check the following fuse.

Fuse	**No. A11**

   Is the fuse OK?

   YES

   Go to step 3.

   NO

Repair a short in the IGPS(PCS1)/IGPS(LAF) wire between the No. A11 fuse and EVAP canister purge valve 1. Also replace the No. A11 fuse.

3. Open wire check (IGPS(PCS1)/IGPS(LAF) line)

-1. Disconnect the following connector.

EVAP canister purge valve 1 2P connector

-2. Turn the vehicle to the ON mode.

-3. Measure the voltage between test points 1 and 2.

Test condition	Vehicle ON mode
B	EVAP canister purge valve 1 2P connector: disconnected
Test point 1	EVAP canister purge valve 1 2P connector (female terminals) No. 1: ①
Test point 2	Body ground

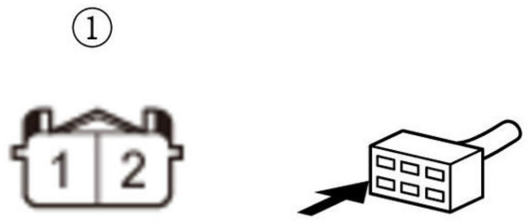

Is there battery voltage?

YES

The IGPS(PCS1)/IGPS(LAF) wire is OK. Go to step 4.

NO

Repair an open in the IGPS(PCS1)/IGPS(LAF) wire between the **No. A11 fuse** and EVAP canister purge valve 1.

4. EVAP canister purge valve 1 internal resistance check

-1. Turn the vehicle to the OFF (LOCK) mode.

-2. At EVAP canister purge valve 1 side, measure the resistance between test points 1 and 2.

Test condition	Vehicle OFF (LOCK) mode
B	EVAP canister purge valve 1 2P connector: disconnected
Test point 1	EVAP canister purge valve 1 2P connector (male terminals) No. 1 (valve side): ①
Test point 2	EVAP canister purge valve 1 2P connector (male terminals) No. 2 (valve side): ①

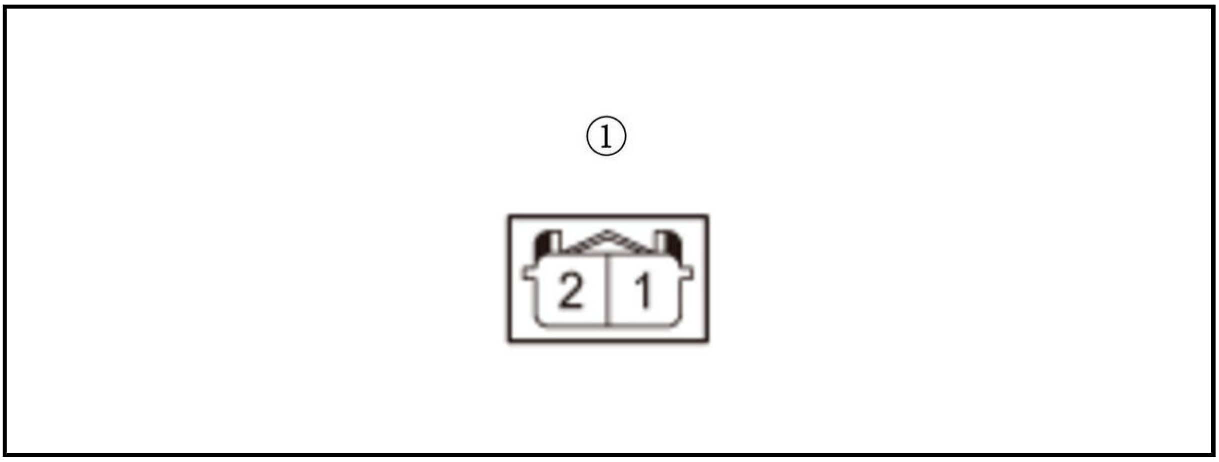

Is there about 23-26 Ω at room temperature?

YES

The EVAP canister purge valve 1 internal circuit is OK. Go to step 5.

NO

Replace EVAP canister purge valve 1 .

5. Shorted wire check (PCS1 line)

-1. Jump the SCS line with the HDS.

-2. Disconnect the following connector.

PCM connector E (80P)

-3. Measure the resistance between test points 1 and 2.

Test condition	Vehicle OFF (LOCK) mode
B	EVAP canister purge valve 1 2P connector: disconnected
B	PCM connector E (80P): disconnected
Test point 1	EVAP canister purge valve 1 2P connector (female terminals) No. 2: ①
Test point 2	Body ground

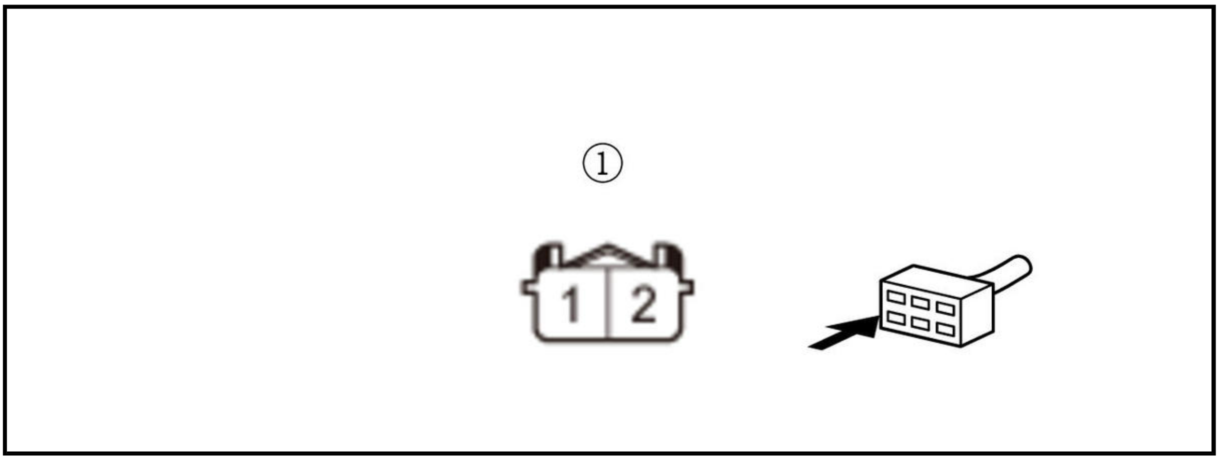

Is there 1 MΩ or more?

YES

The PCS1 wire is not shorted. Go to step 6.

NO

Repair a short in the PCS1 wire between the PCM (E80) and EVAP canister purge valve 1.

6. Open wire check (PCS1 line)

-1. Measure the resistance between test points 1 and 2.

Test condition	Vehicle OFF (LOCK) mode
B	EVAP canister purge valve 1 2P connector: disconnected
B	PCM connector E (80P): disconnected
Test point 1	EVAP canister purge valve 1 2P connector (female terminals) No. 2: ①
Test point 2	**PCM connector E (80P) No. 80**

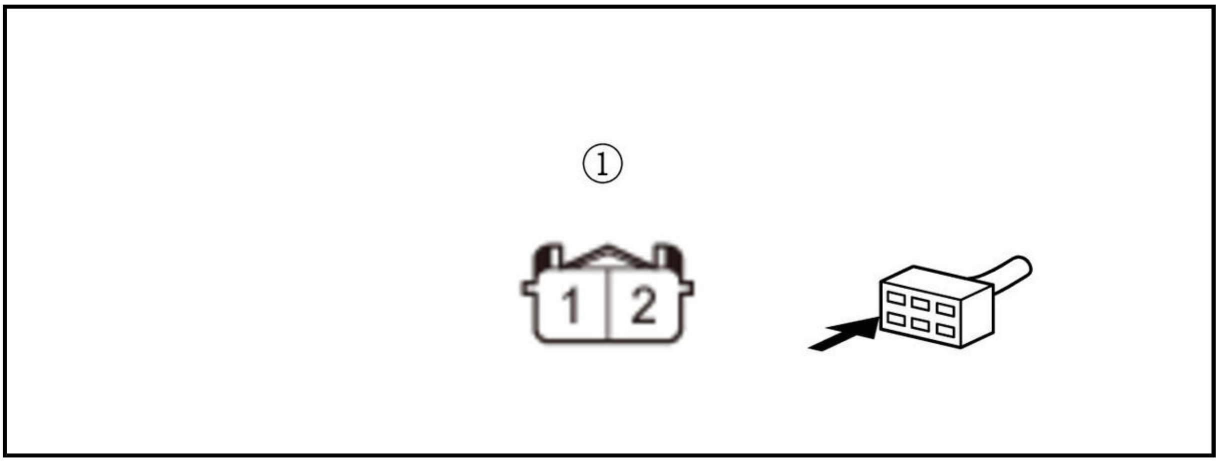

Is there 1.0 Ω or less?

YES

The PCS1 wire is OK. Go to step 7.

NO

Repair an open in the PCS1 wire between the PCM (E80) and EVAP canister purge valve 1.

7. EVAP canister purge valve 1 check

-1. **Substitute known-good EVAP canister purge valve 1** .

-2. Reconnect all connectors.

-3. Exit the SCS mode with the HDS.

-4. Turn the vehicle to the ON mode.

-5. Clear the DTC with the HDS.

-6. **Enter the maintenance mode, then start the engine** .

-7. Hold the engine speed at 3, 000 rpm without load (in P or N) until the radiator fan comes on, then let it idle.

-8. Check for Pending or Confirmed DTCs with the HDS.

DTC Description	Confirmed DTC	Pending DTC
P0443 EVAP Canister Purge Valve Circuit Malfunction	B	B

Is DTC P0443 indicated?

YES

EVAP canister purge valve 1 is OK. Check for any authorized service information related to the DTCs or symptoms you are troubleshooting, or **substitute a known-good PCM** .

NO

Replace original EVAP canister purge valve 1 .

DTC P0451

DTC P0451 : EVAP Leak Check Module Pressure Sensor Range/Performance

NOTE:

- Before you troubleshoot, **review the general troubleshooting information** .
- If DTC P24BA or P24BB is stored at the same time as DTC P0451, troubleshoot DTC P24BA or P24BB first, then recheck for DTC P0451.

DTC Description	Confirmed DTC	Pending DTC
P0451 EVAP Leak Check Module Pressure Sensor Range/Performance	B	B

DTC (PGM-FI)

1. Problem verification

-1. Turn the vehicle to the ON mode.

-2. Clear the DTC with the HDS.

-3. **Enter the maintenance mode, then start the engine** , and let it idle for 1 minute.

-4. Monitor the OBD STATUS for DTC P0451 in the DTCs MENU with the HDS.

DTC Description	OBD STATUS
P0451 EVAP Leak Check Module Pressure Sensor Range/Performance	B

Does the HDS indicate FAILED?

YES

The failure is duplicated. **Replace the EVAP leak check module** .

NO

If the HDS indicates PASSED, there is an intermittent failure and the system is OK at this time. Check for poor connections or loose terminals at the EVAP leak check module and the PCM. **If the on-board snapshot of this DTC is recorded, try to reproduce the failure under the same conditions with the on-board snapshot** . If the HDS indicates NOT COMPLETED, keep idling until a result comes on.

DTC P0456

DTC P0456 : EVAP System Very Small Leak Detected

Special Tools Required

Vacuum Pump/Gauge, 0-30 inHg Snap-on YA4000A or equivalent, commercially available

Vacuum/Pressure Gauge, 0-4 inHg 07JAZ-001000B

WARNING: **The fuel system is designed to allow specified maximum vacuum and pressure conditions. Do not deviate from the vacuum and pressure tests as indicated in these procedures. Excessive pressure/vacuum would damage the EVAP components or cause eventual fuel tank failure.**

NOTE:

- Before you troubleshoot, **review the general troubleshooting information** .
- Fresh fuel has a higher volatility that will create greater pressure/vacuum. The best condition for testing is less than a full tank of fresh fuel. If possible, to assist in leak detection, add 1 gallon of fresh fuel to the tank (as long as it will not fill the tank), just before starting these procedures.

DTC Description	Confirmed DTC	Pending DTC
P0456 EVAP System Very Small Leak Detected	B	B

DTC (PGM-FI)

1. Problem verification

   -1. Turn the vehicle to the ON mode.

   -2. Clear the DTC with the HDS.

   -3. Select the EVAP TEST in the Function Test Menu, then select EVAP Leak Check Module Test with the HDS.

   EVAP TEST

   Is the result OK?

   YES

   Intermittent failure, the system is OK at this time. Check for poor connections or loose terminals at the EVAP leak check module, the EVAP canister purge valve(s), and the PCM. **If the on-board snapshot of this DTC is recorded, try to reproduce the failure under the same conditions with the on-board snapshot** . If the vehicle returns with the same DTC, continue with step 2.

   NO

   The failure is duplicated. Go to step 2.

2. EVAP canister drain hose check

   -1. Turn the vehicle to the OFF (LOCK) mode.

   -2. **Remove the heat shield** .

   -3. Check the EVAP canister drain hose A for a blockage or a restriction.

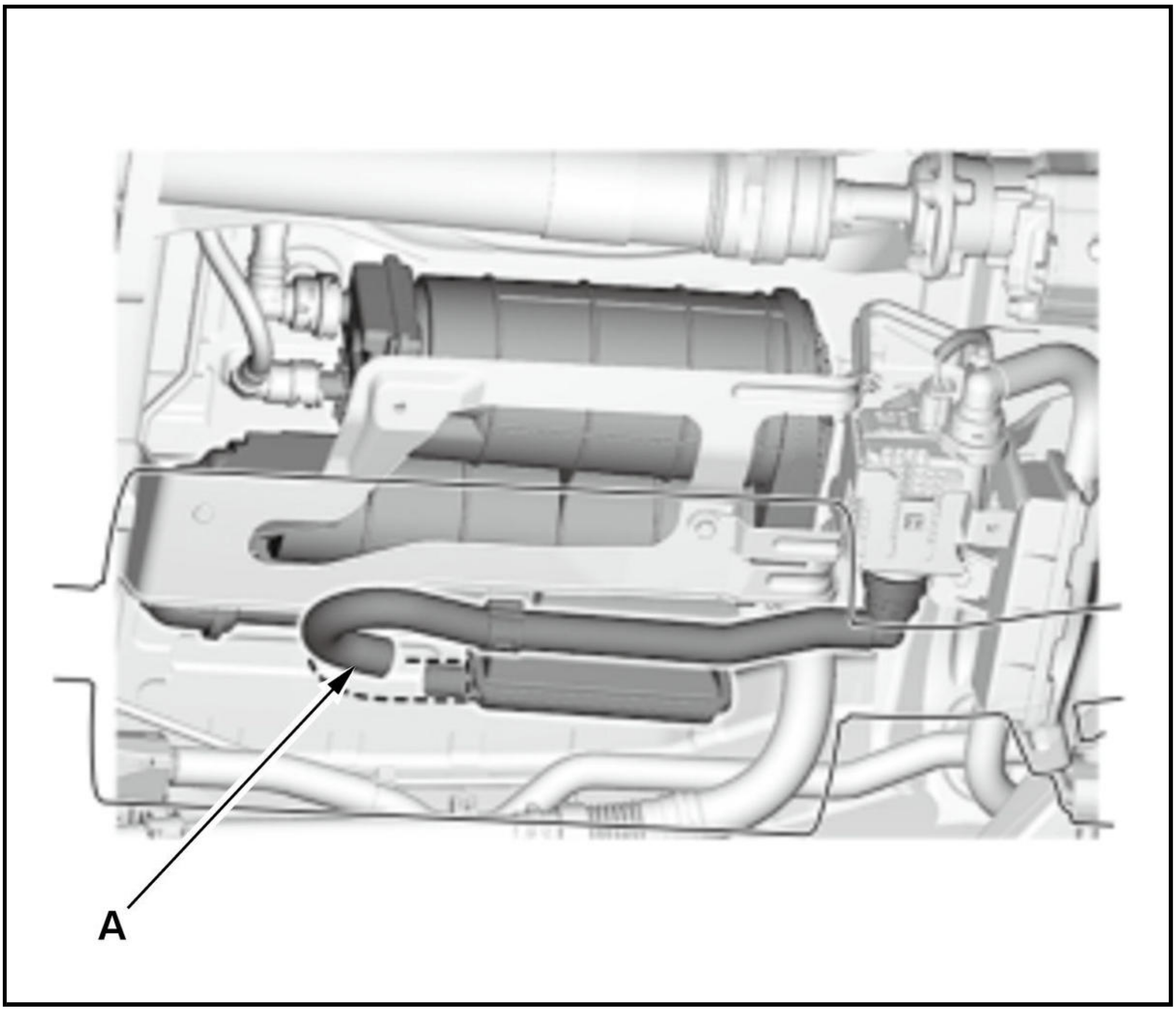

Is there a blockage or a restriction in the hose?

YES

Remove a blockage or a restriction, if needed, replace the EVAP canister drain hose A.

NO

Reconnect the hose, then go to step 3.

3. EVAP leak check module drain hose check

-1. **Check the blockage in the hoses and the EVAP canister filter** .

Are the parts OK?

YES

Go to step 4.

NO

Remove the blockage from them, or replace the part(s) if needed.

4. EVAP canister purge valve leak check

-1. Disconnect the vacuum hose (purge line) (A) from the 3-way joint (B) in the engine compartment, then connect the T-fitting (C), the vacuum gauge, and the vacuum pump/gauge, 0-30 inHg as shown.

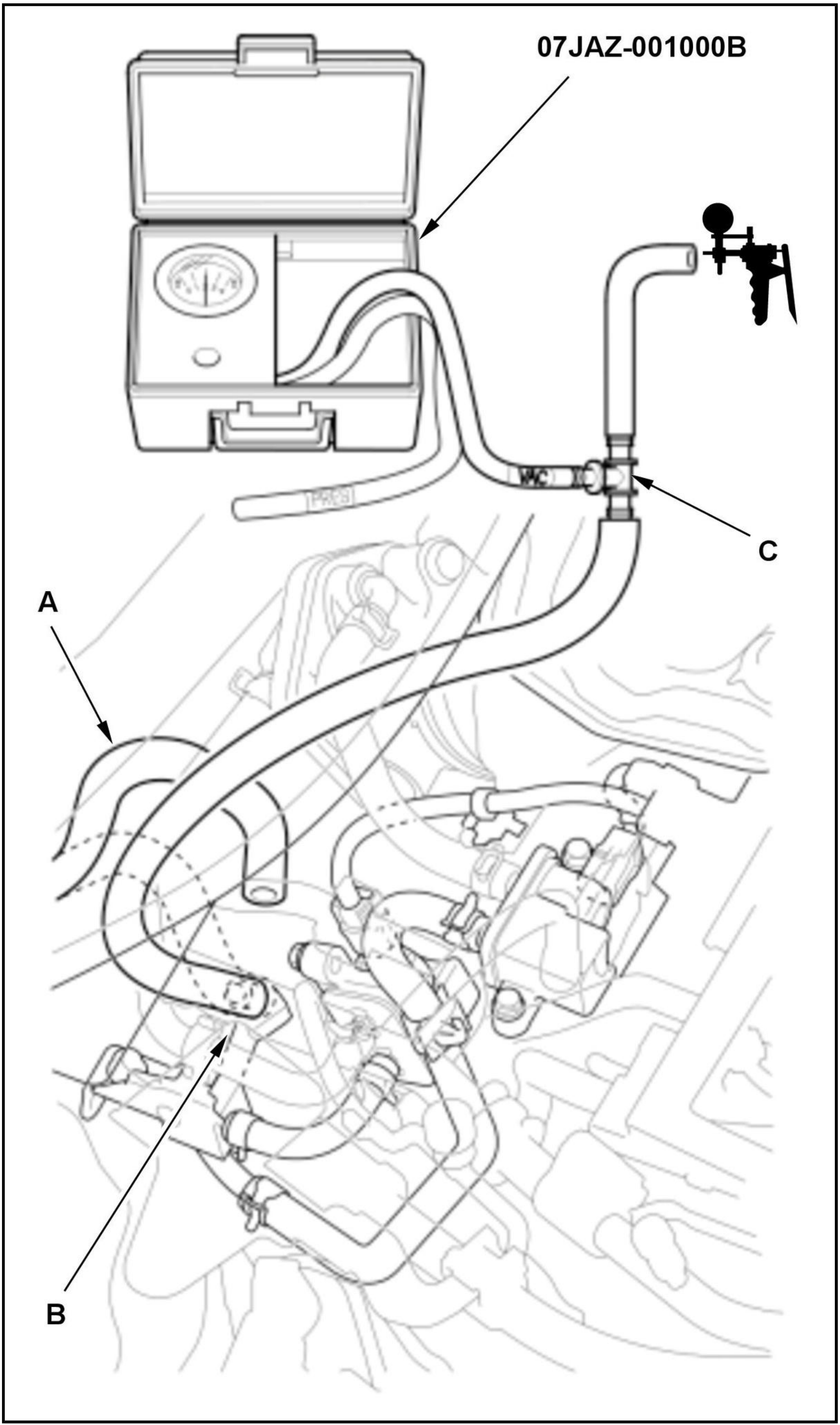
07JAZ-001000B
VAC
PRES
A
B
C

-2. Slowly apply about 2 kPa (15 mmHg, 0.6 inHg) of vacuum to the hose.

Does it hold vacuum for 1 minute?

YES

Leak is not detected between the 3-way joint and EVAP canister purge valves. Go to step 5.

NO

Go to step 10.

5. Determine possible failure area (EVAP canister, others)

-1. Disconnect the fuel vent tube (A) from the EVAP canister (B), and plug the EVAP canister port (C).

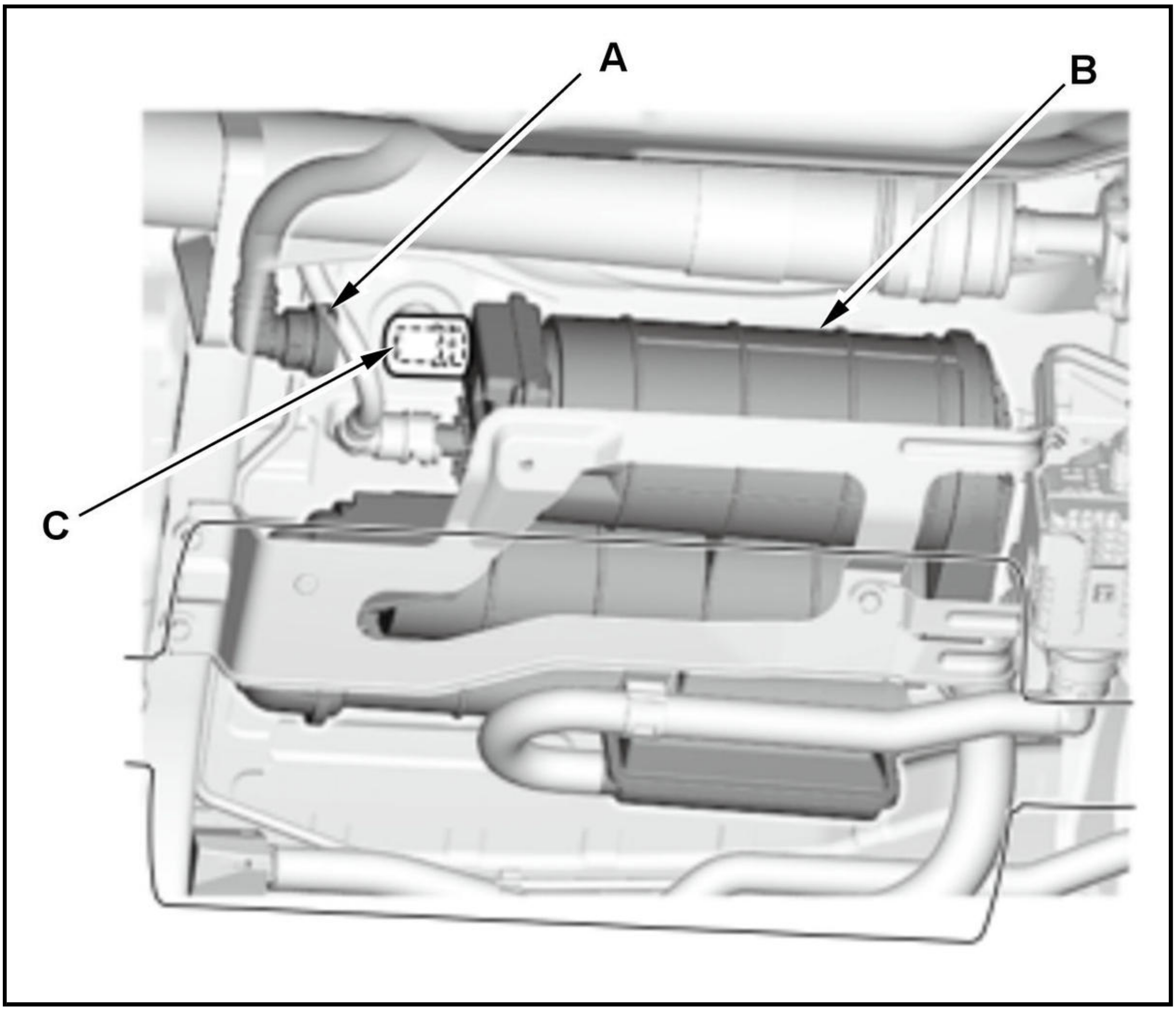

-2. Disconnect the vacuum gauge, the tube joint adapter, and the vacuum pump/gauge from the hose.

-3. Connect the vacuum pump/gauge, 0-30 inHg to the hose as shown.

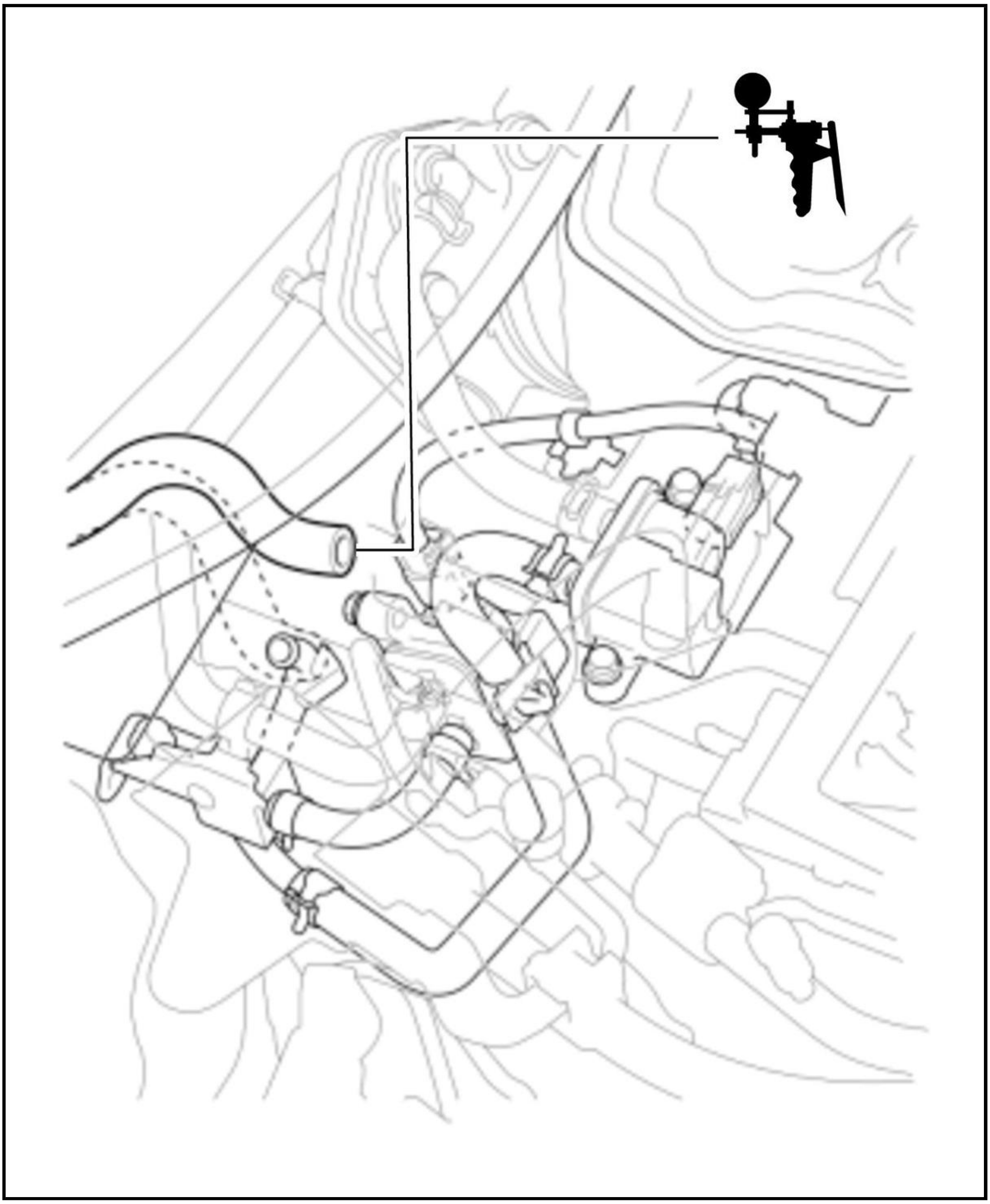

-4. Turn the vehicle to the ON mode.

-5. Select the EVAP TEST in the Function Test Menu, then select CCV ON in the Single Solenoid Test with the HDS.

EVAP TEST

Apply vacuum to the hose until the Absolute Pressure of ELCM Pressure Sensor is 2 kPa (15 mmHg, 0.6 inHg).

NOTE: Be careful not to exceed the vacuum. If you do, the EVAP leak check module can be damaged.

Signal	Current conditions	
	Values	Unit
Absolute Pressure of ELCM Pressure Sensor	B	B

-7. Check the parameter(s) below with the HDS for 1 minute.

Signal	Current conditions	
	Values	**Unit**
Absolute Pressure of ELCM Pressure Sensor	B	B

Does it hold a vacuum?

YES

Go to step 7.

NO

Go to step 6.

6. EVAP canister check

-1. Turn the vehicle to the OFF (LOCK) mode.

-2. Disconnect the EVAP canister drain hose A from the EVAP canister port (B), and plug it.

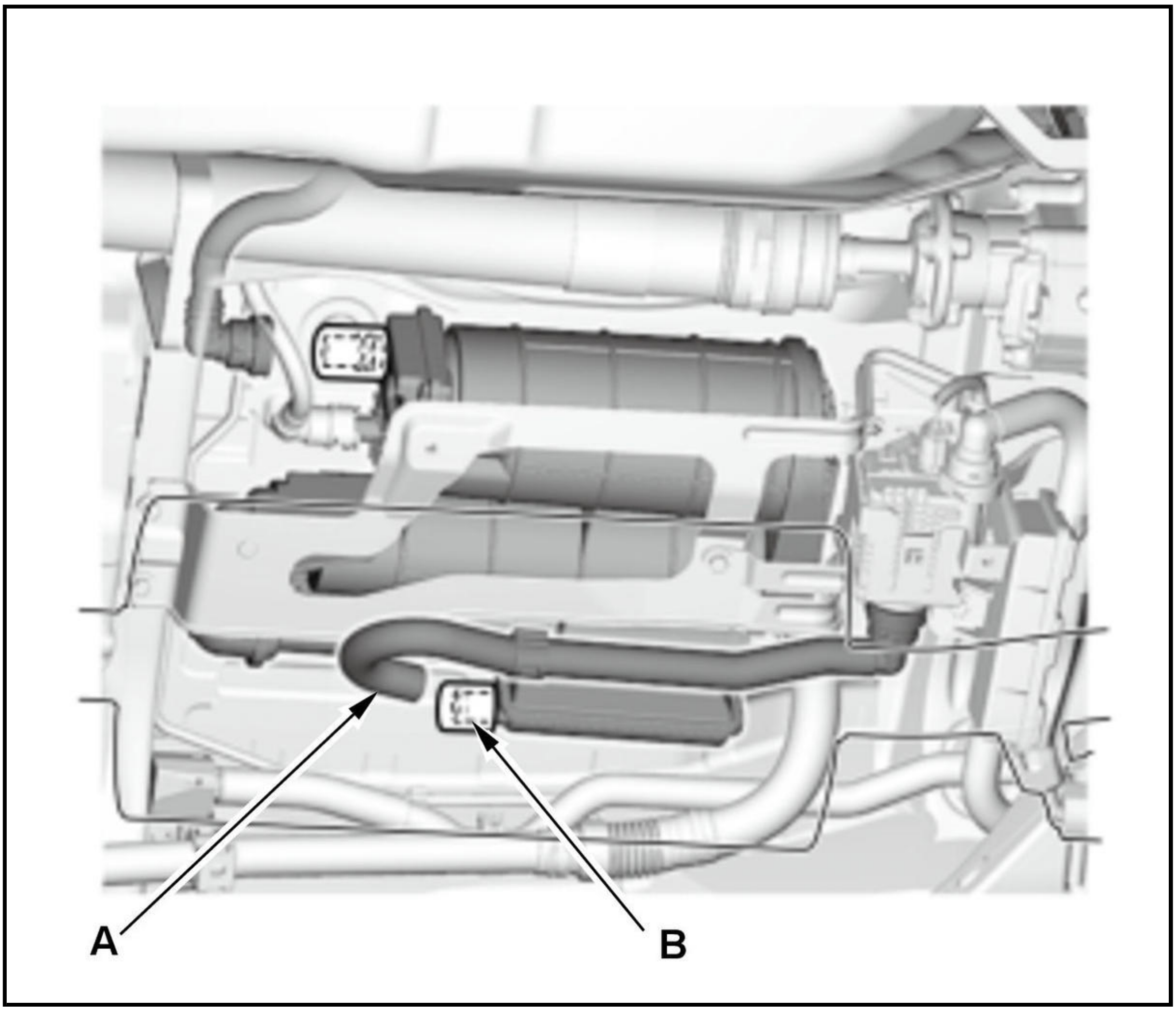

-3. Connect the T-fitting (A), the vacuum gauge, and the vacuum pump/gauge, 0-30 inHg as shown, then slow apply about 2 kPa (15 mmHg, 0.6 inHg) of vacuum to the hose.

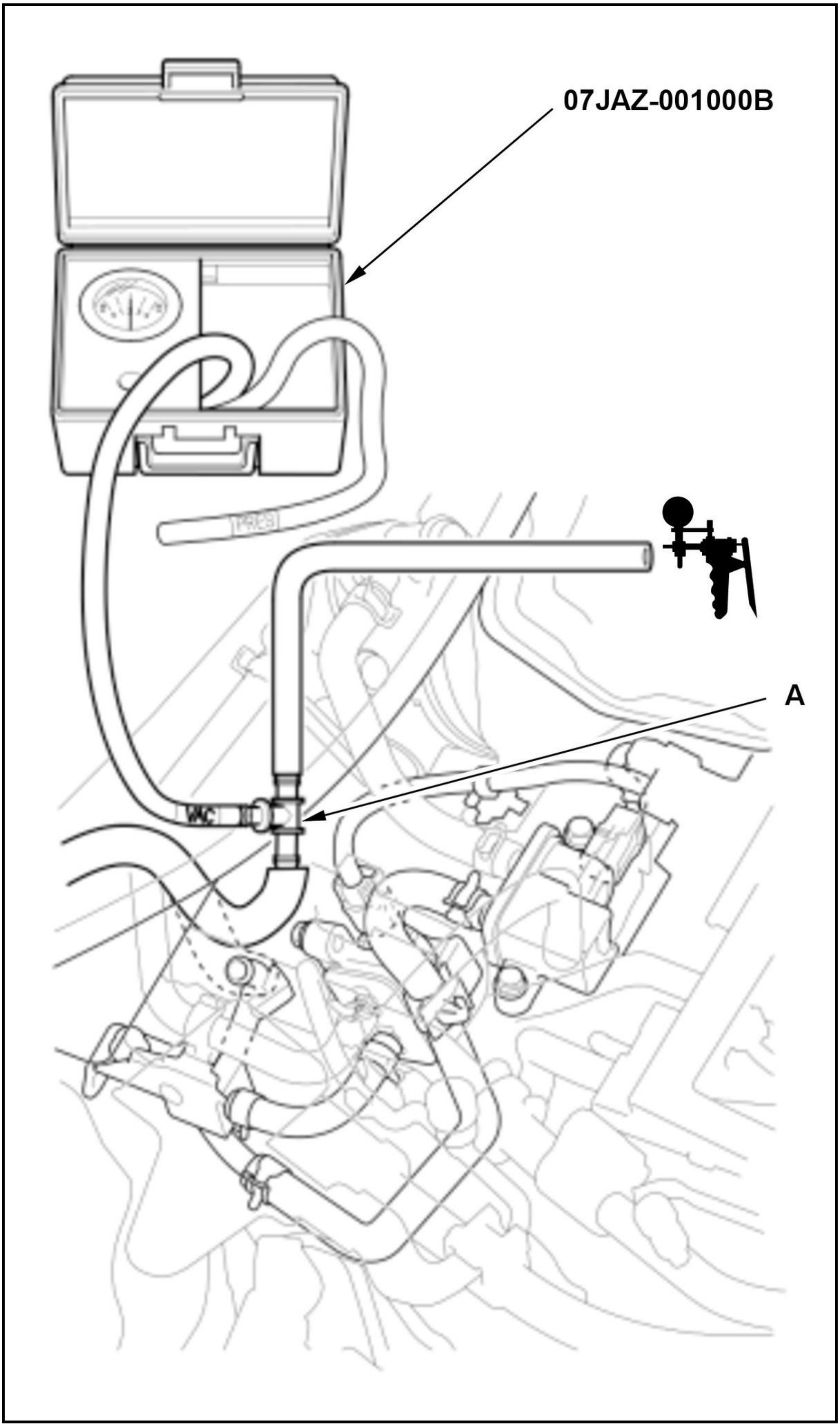
07JAZ-001000B
A
PRES
VAC

Does it hold vacuum?

YES

The EVAP canister is OK. **Replace the EVAP leak check module** .

NO

Check for a poor connection or damage to the EVAP purge line between the 3-way joint and the EVAP canister, then **replace the EVAP canister** .

7. Fuel fill pipe and fuel tank vapor recirculation tube visual check

   -1. Check for a poor connection or damage to the fuel fill pipe and the fuel tank vapor recirculation tube.

   Are the parts and connections OK?

   YES

   The fuel fill pipe and fuel tank vapor recirculation tube are OK. Go to step 8.

   NO

   Replace the fuel tank .

8. Shut-off valve check

   -1. Turn the vehicle to the OFF (LOCK) mode.

   -2. Check the flap of the shut-off valve (A).

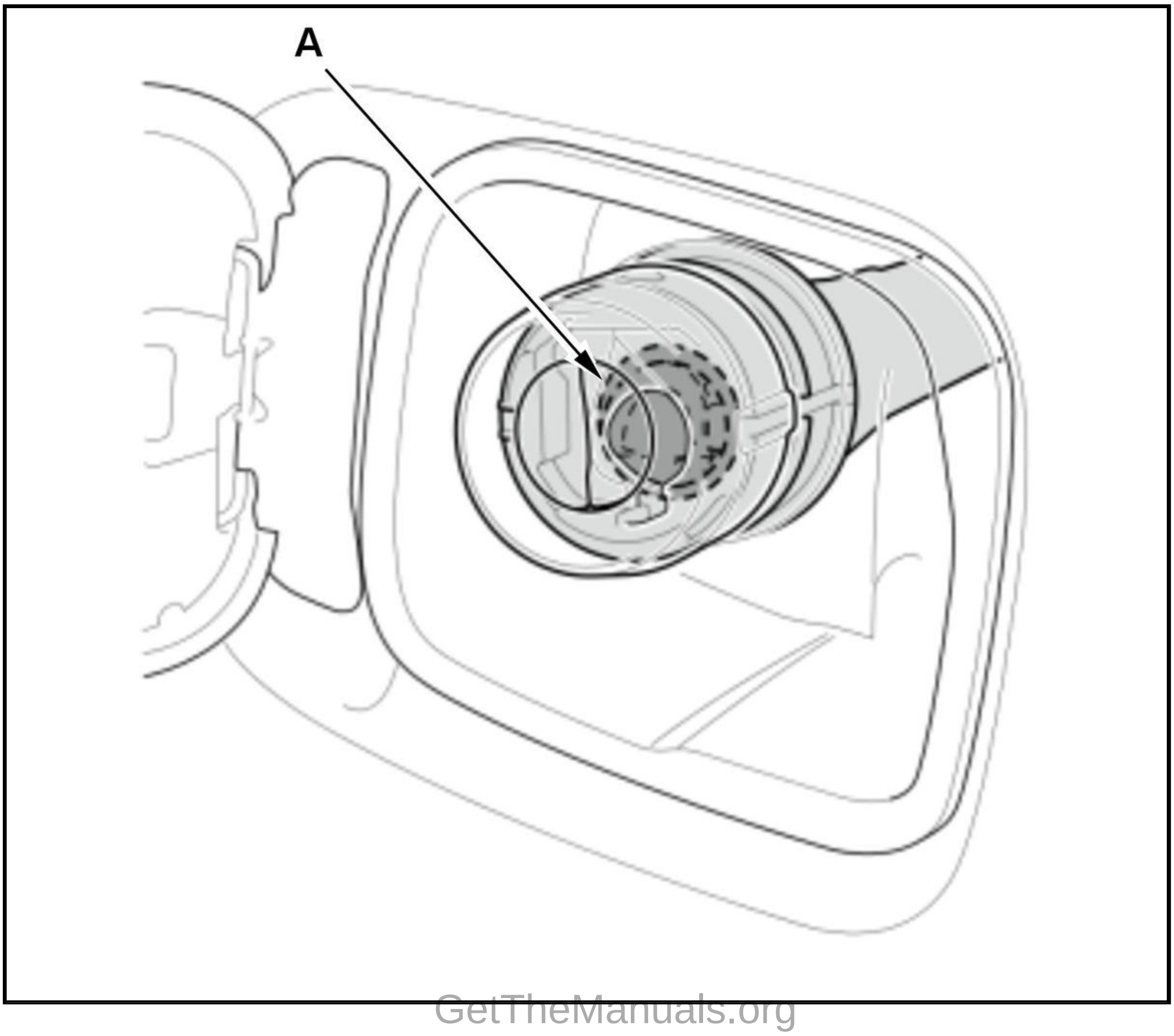

Is the flap closed?

YES

Go to step 9.

NO

Replace the main flap unit .

9. Shut-off valve seal check

-1. Check the flap seal of the shut-off valve (A) and the mating surface.

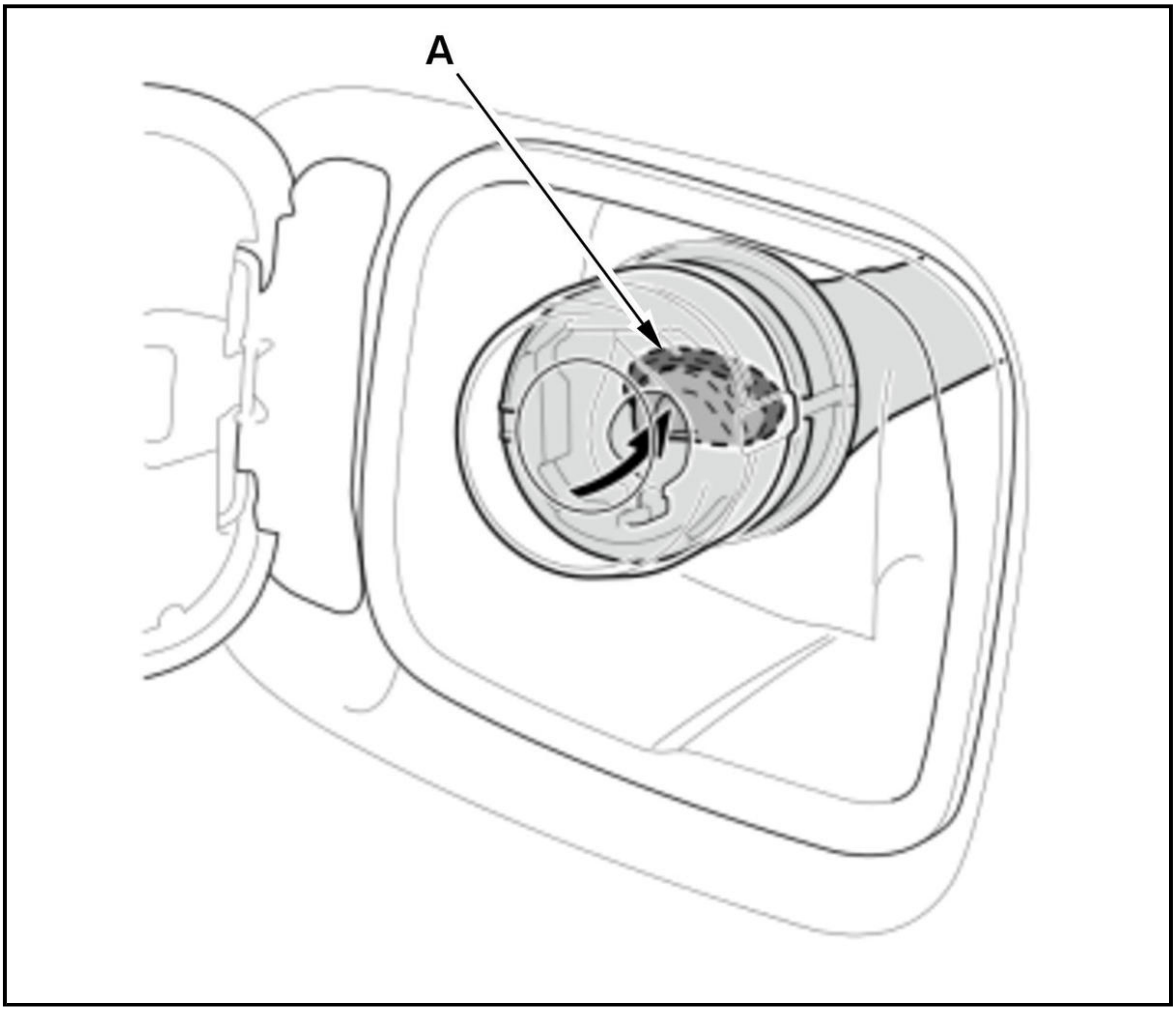

Is the flap seal missing or damaged, is the shut-off valve mating surface damaged?

YES

Replace the main flap unit .

NO

The shut-off valve is OK. Check the fuel tank unit base gasket and fuel tank.

10. EVAP canister purge valve 1 leak check

-1. Remove the vacuum gauge, the tube joint adapter, and the vacuum pump/gauge from the 3-way joint, then reconnect the hose.

-2. Disconnect the hose (A) of EVAP canister purge valve 1 (B) from the intake manifold (C), then connect the T-fitting (D), the vacuum gauge, and the vacuum pump/gauge, 0-30 inHg as shown.

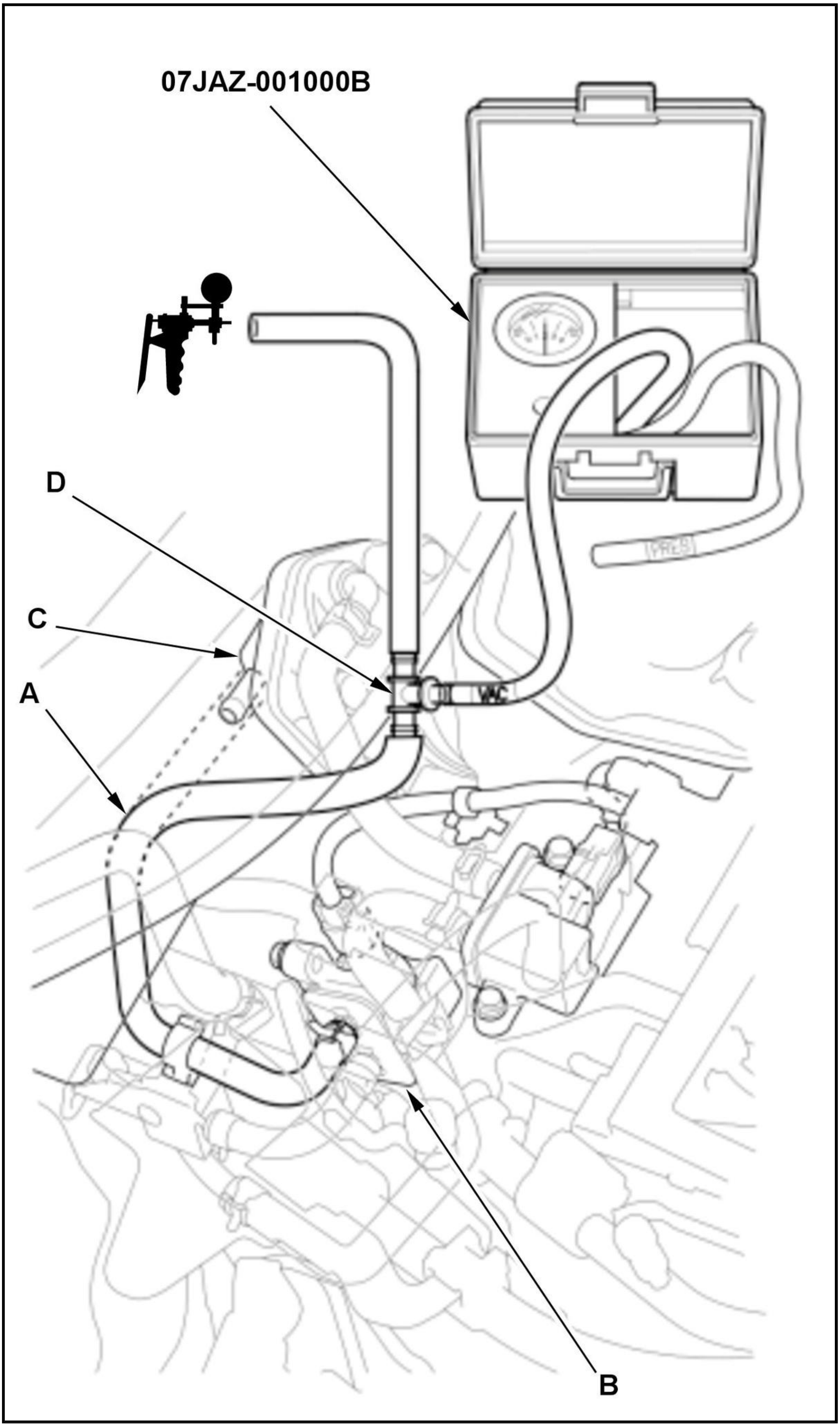
07JAZ-001000B
D
C
A
VAC
PRES
B

-3. Slowly apply about 2 kPa (15 mmHg, 0.6 inHg) of vacuum to the hose.

Does it hold vacuum for 1 minute?

YES

Leak is not detected at EVAP canister purge valve 1. Go to step 11.

NO

Replace EVAP canister purge valve 1 .

11. EVAP canister purge valve 2 leak check

    -1. Remove the vacuum gauge, the tube joint adapter, and the vacuum pump/gauge from EVAP canister purge valve 1, then reconnect the hose.

    -2. Disconnect the hose (A) of EVAP canister purge valve 2 (B) from the throttle body (C), then connect the T-fitting (D), the vacuum gauge, and the vacuum pump/gauge, 0-30 inHg as shown.

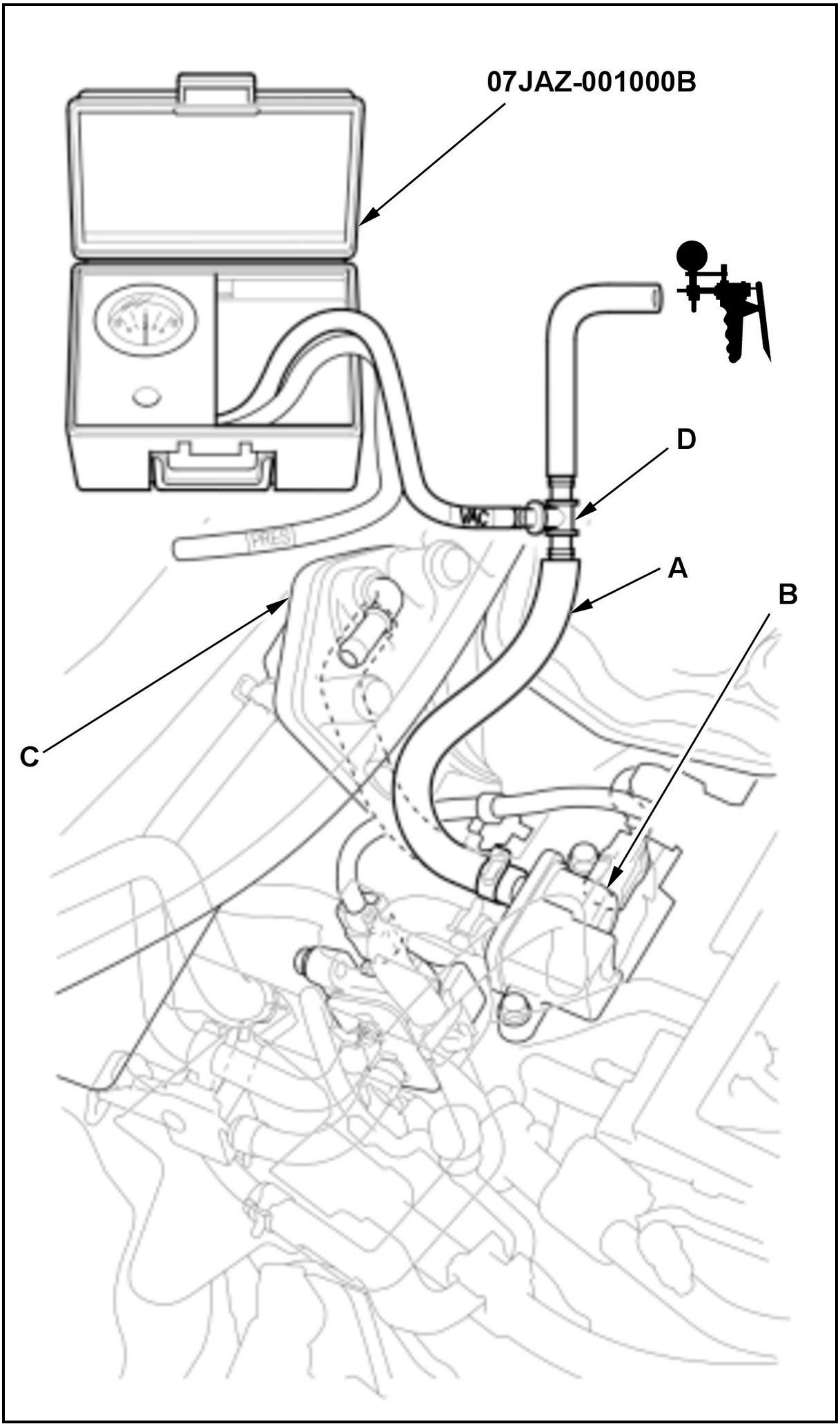
07JAZ-001000B
D
A
B
C
VAC
PRES

-3. Slowly apply about 2 kPa (15 mmHg, 0.6 inHg) of vacuum to the hose.

Does it hold vacuum for 1 minute?

YES

Leak is not detected at EVAP canister purge valve 2. Check for a leakage at the 3-way joint and the hoses between the 3-way joint and each EVAP canister purge valve.

NO

Replace EVAP canister purge valve 2 .

DTC P0460

DTC P0460 : Fuel Level Sensor (Fuel Gauge Sending Unit) Out of Range

NOTE:

- Before you troubleshoot, **review the general troubleshooting information** .
- If DTC P0462 and/or P0463 are stored at the same time as DTC P0460, troubleshoot those DTCs first, then recheck for DTC P0460.

DTC Description	Confirmed DTC	Pending DTC
P0460 Fuel Level Sensor (Fuel Gauge Sending Unit) Out of Range	B	B

DTC (PGM-FI)

1. Problem verification

-1. Turn the vehicle to the ON mode.

-2. Clear the DTC with the HDS.

-3. Turn the vehicle to the OFF (LOCK) mode.

-4. Turn the vehicle to the ON mode.

-5. Wait 30 seconds.

-6. Check for Pending or Confirmed DTCs with the HDS.

DTC Description	Confirmed DTC	Pending DTC
P0460 Fuel Level Sensor (Fuel Gauge Sending Unit) Out of Range	B	B

Is DTC P0460 indicated?

YES

The failure is duplicated. Go to step 2.

NO

Intermittent failure, the system is OK at this time. Check for poor connections or loose terminals at the gauge control module and the fuel tank unit. **If the on-board snapshot of this DTC is recorded, try to reproduce the failure under the same conditions with the on-board snapshot** .

2. Shorted wire check (FUEL_GAUGE+ line)

-1. Turn the vehicle to the OFF (LOCK) mode.

-2. **Remove the gauge control module** .

-3. Disconnect the following connectors.

Fuel tank unit 4P connector
Gauge control module connector A (32P)

-4. Measure the resistance between test points 1 and 2.

Test condition	Vehicle OFF (LOCK) mode
	Fuel tank unit 4P connector: disconnected
	Gauge control module connector A (32P): disconnected
Test point 1	Fuel tank unit 4P connector (female terminals) No. 2: ①
Test point 2	Body ground

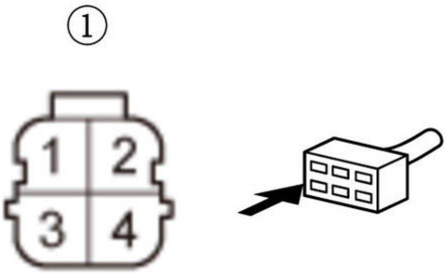

Is there 1 MΩ or more?

YES

Go to step 3.

NO

Repair a short in the FUEL_GAUGE+ wire between the gauge control module and the fuel tank unit.

3. Open wire check (FUEL_GAUGE+ line)

-1. Connect terminals A and B with a jumper wire.

Terminal A	Fuel tank unit 4P connector (female terminals) No. 2: ①
Terminal B	Body ground

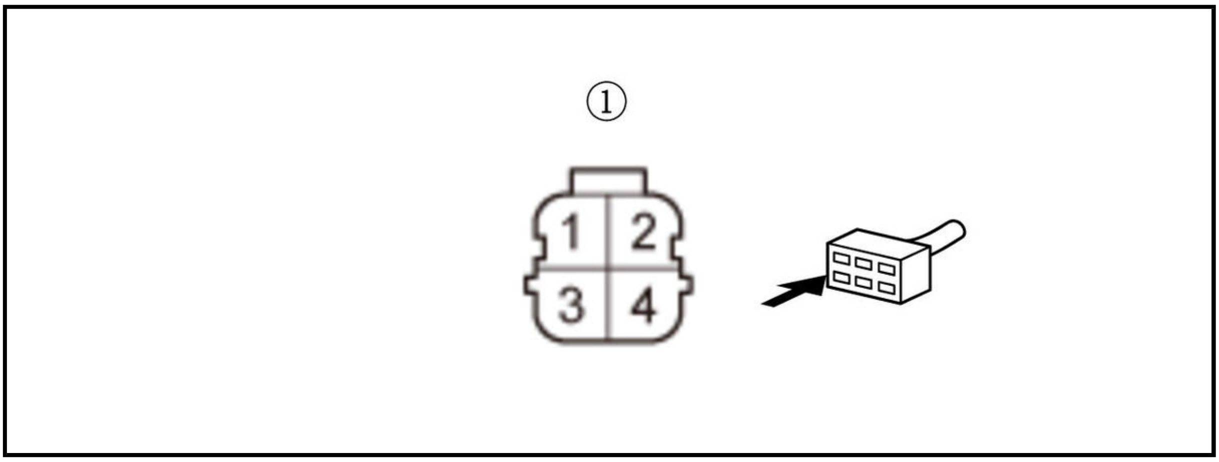

-2. Measure the resistance between test points 1 and 2.

Test condition	Vehicle OFF (LOCK) mode
B	Fuel tank unit 4P connector: disconnected
B	Gauge control module connector A (32P): disconnected
B	Fuel tank unit 4P connector No. 2: jumped to body ground
Test point 1	**Gauge control module connector A (32P) No. 22**
Test point 2	Body ground

Is there 1.0 Ω or less?

YES

Go to step 4.

NO

Repair an open in the FUEL_GAUGE+ wire between the gauge control module and the fuel tank unit.

4. Open wire check (FUEL_GAUGE- line)

-1. Remove the jumper wire from the fuel tank unit 4P connector.

-2. Connect terminals A and B with a jumper wire.

Terminal A	Fuel tank unit 4P connector (female terminals) No. 4: ①
Terminal B	Body ground

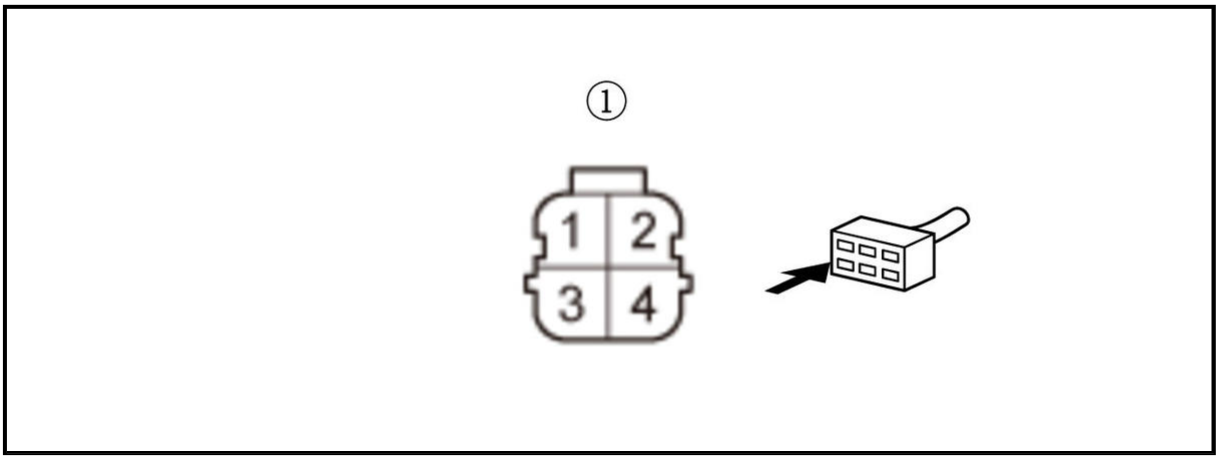

-3. Measure the resistance between test points 1 and 2.

Test condition	Vehicle OFF (LOCK) mode
B	Fuel tank unit 4P connector: disconnected
B	Gauge control module connector A (32P): disconnected
B	Fuel tank unit 4P connector No. 4: jumped to body ground
Test point 1	**Gauge control module connector A (32P) No. 21**
Test point 2	Body ground

Is there 1.0 Ω or less?

YES

Go to step 5.

NO

Repair an open in the FUEL_GAUGE- wire between the gauge control module and the fuel tank unit.

5. Fuel gauge sending unit check

-1. Remove the jumper wire from the fuel tank unit 4P connector.

-2. **Test the fuel gauge sending unit** .

Is the fuel gauge sending unit OK?

YES

Replace the gauge control module .

NO

Replace the fuel gauge sending unit .

DTC P0461 (2020)

DTC P0461 : Fuel Level Sensor (Fuel Gauge Sending Unit) Circuit Range/Performance Problem

NOTE:

- Before you troubleshoot, **review the general troubleshooting information** .
- Because it requires 143 miles (230 km) of driving without refueling to complete this diagnosis, DTC P0461 cannot be duplicated during this troubleshooting.

DTC Description	Confirmed DTC	Pending DTC
P0461 Fuel Level Sensor (Fuel Gauge Sending Unit) Circuit Range/Performance Problem	B	B

DTC (PGM-FI)

1. Fuel gauge sending unit performance check

-1. **Test the fuel gauge sending unit** .

Is the fuel gauge sending unit OK?

YES

Check for poor connections or loose terminals at the fuel gauge sending unit and the gauge control module. **If the on-board snapshot of this DTC is recorded, try to reproduce the failure under the** same conditions with the on-board snapshot .

NO

Replace the fuel gauge sending unit .

DTC P0461 (2021)

DTC P0461 : Fuel Level Sensor (Fuel Gauge Sending Unit) Circuit Range/Performance Problem

NOTE:

- Before you troubleshoot, review the general troubleshooting information .
- Because it requires 4.7 US gal (17.7L) of fuel consumption without refueling to complete this diagnosis, DTC P0461 cannot be duplicated during this troubleshooting.
- DTC P0461 may be stored due to the following:
-
    - -

      Repeated small amounts of refueling
    - -

      Fuel draining during repairs
    - -

      Constant cornering or driving on a sloping road for a certain period of time

DTC Description	Confirmed DTC	Pending DTC
P0461 Fuel Level Sensor (Fuel Gauge Sending Unit) Circuit Range/Performance Problem	B	B

DTC (PGM-FI)

1. Customer usage check

   -1. Ask the customer about their refueling method.

   Has the vehicle been repeatedly refilled with less than 1.3 US gal (5.0 L) at each refuel?

   YES

   Direct the customer on the proper refilling conditions in the How to Refuel section of the owner's manual.

   NO

   Go to step 2.

2. Fuel gauge sending unit performance check

   -1. Test the fuel gauge sending unit .

   Is the fuel gauge sending unit OK?

   YES

Check for poor connections or loose terminals at the fuel gauge sending unit and the gauge control module. **If the on-board snapshot of this DTC is recorded, try to reproduce the failure under the same conditions with the on-board snapshot** .

NO

Replace the fuel gauge sending unit .

DTC P0462

DTC P0462 : Fuel Level Sensor (Fuel Gauge Sending Unit) Circuit Low Voltage

NOTE: Before you troubleshoot, **review the general troubleshooting information** .

DTC Description	Confirmed DTC	Pending DTC
P0462 Fuel Level Sensor (Fuel Gauge Sending Unit) Circuit Low Voltage	B	B

DTC (PGM-FI)

1. Problem verification

   -1. Turn the vehicle to the ON mode.

   -2. Clear the DTC with the HDS.

   -3. Turn the vehicle to the OFF (LOCK) mode.

   -4. Turn the vehicle to the ON mode.

   -5. Wait 30 seconds.

   -6. Check for Pending or Confirmed DTCs with the HDS.

DTC Description	Confirmed DTC	Pending DTC
P0462 Fuel Level Sensor (Fuel Gauge Sending Unit) Circuit Low Voltage	B	B

   Is DTC P0462 indicated?

   YES

   The failure is duplicated. Go to step 2.

   NO

   Intermittent failure, the system is OK at this time. Check for poor connections or loose terminals at the gauge control module and the fuel tank unit. **If the on-board snapshot of this DTC is recorded, try to reproduce the failure under the same conditions with the on-board snapshot** .

2. Shorted wire check (FUEL_GAUGE+ line)

   -1. Turn the vehicle to the OFF (LOCK) mode.

   -2. **Remove the gauge control module** .

   -3. Disconnect the following connector.

Fuel tank unit 4P connector

Gauge control module connector A (32P)

-4. Measure the resistance between test points 1 and 2.

Test condition	Vehicle OFF (LOCK) mode Fuel tank unit 4P connector: disconnected Gauge control module connector A (32P): disconnected
Test point 1	Fuel tank unit 4P connector (female terminals) No. 2: ①
Test point 2	Body ground

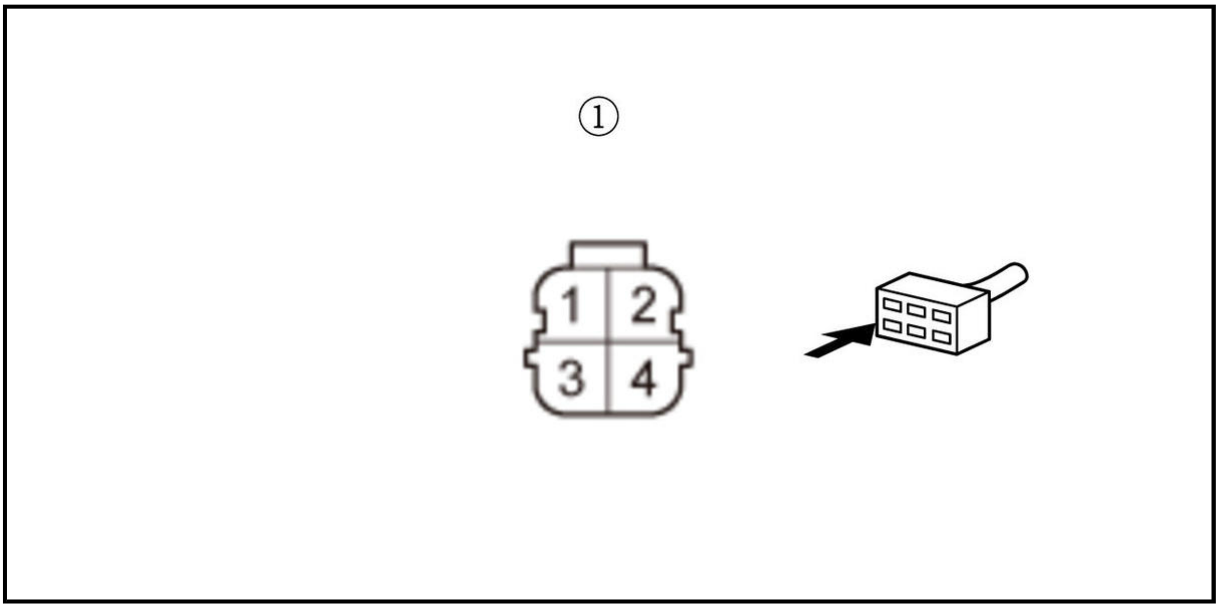

Is there 1 MΩ or more?

YES

Go to step 3.

NO

Repair a short in the FUEL_GAUGE+ wire between the gauge control module and the fuel tank unit.

3. Fuel gauge sending unit check

-1. **Test the fuel gauge sending unit** .

Is the fuel gauge sending unit OK?

YES

Replace the gauge control module .

NO

Replace the fuel gauge sending unit .

DTC P0463

DTC P0463 : Fuel Level Sensor (Fuel Gauge Sending Unit) Circuit High Voltage

NOTE: Before you troubleshoot, **review the general troubleshooting information** .

DTC Description	Confirmed DTC	Pending DTC
P0463 Fuel Level Sensor (Fuel Gauge Sending Unit) Circuit High Voltage	B	B

DTC (PGM-FI)

1. Problem verification

   -1. Turn the vehicle to the ON mode.

   -2. Clear the DTC with the HDS.

   -3. Turn the vehicle to the OFF (LOCK) mode.

   -4. Turn the vehicle to the ON mode.

   -5. Wait 30 seconds.

   -6. Check for Pending or Confirmed DTCs with the HDS.

DTC Description	Confirmed DTC	Pending DTC
P0463 Fuel Level Sensor (Fuel Gauge Sending Unit) Circuit High Voltage	B	B

   Is DTC P0463 indicated?

   YES

   The failure is duplicated. Go to step 2.

   NO

   Intermittent failure, the system is OK at this time. Check for poor connections or loose terminals at the gauge control module and the fuel tank unit. **If the on-board snapshot of this DTC is recorded, try to reproduce the failure under the same conditions with the on-board snapshot** .

2. Open wire check (FUEL_GAUGE- line)

   -1. Turn the vehicle to the OFF (LOCK) mode.

   -2. **Remove the gauge control module** .

   -3. Disconnect the following connector.

Fuel tank unit 4P connector
Gauge control module connector A (32P)

   -4. Connect terminals A and B with a jumper wire.

Terminal A	Fuel tank unit 4P connector (female terminals) No. 4: ①
Terminal B	Body ground

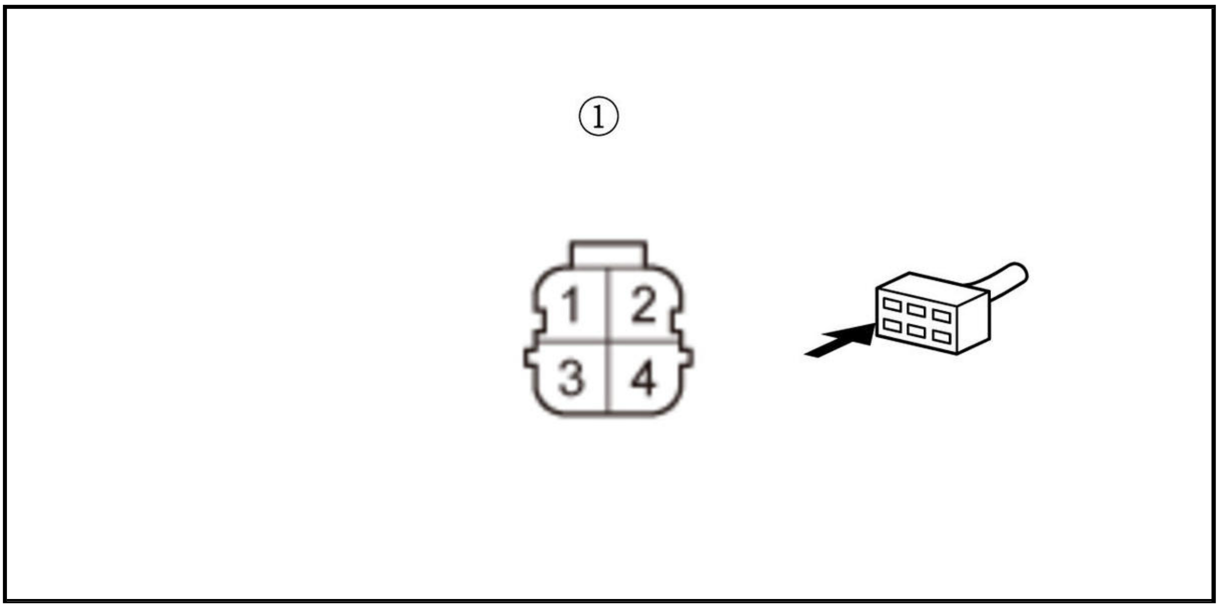

-5. Measure the resistance between test points 1 and 2.

Test condition	Vehicle OFF (LOCK) mode
	Fuel tank unit 4P connector: disconnected
	Fuel tank unit 4P connector No. 4: jumped to body ground
	Gauge control module connector A (32P): disconnected
Test point 1	**Gauge control module connector A (32P) No. 21**
Test point 2	Body ground

Is there 1.0 Ω or less?

YES

Go to step 3.

NO

Repair an open in the FUEL_GAUGE- wire between the gauge control module and the fuel tank unit.

3. Open wire check (FUEL_GAUGE+ line)

-1. Remove the jumper wire from the fuel tank unit 4P connector.

-2. Connect terminals A and B with a jumper wire.

Terminal A	Fuel tank unit 4P connector (female terminals) No. 2: ①
Terminal B	Body ground

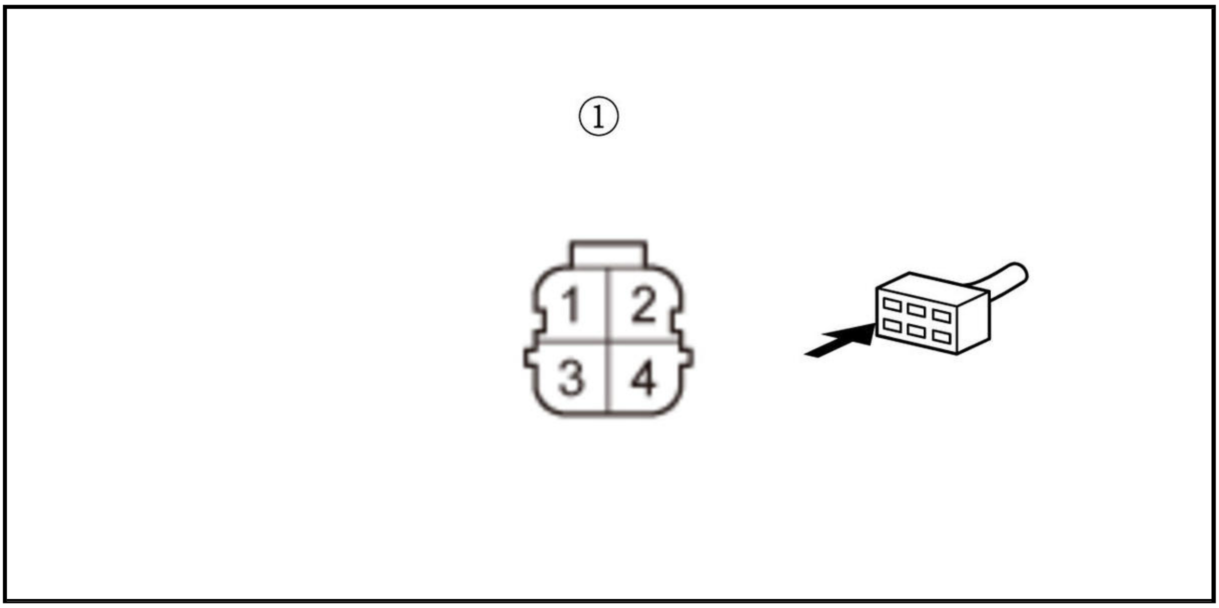

-3. Measure the resistance between test points 1 and 2.

Test condition	Vehicle OFF (LOCK) mode
	Fuel tank unit 4P connector: disconnected
	Fuel tank unit 4P connector No. 2: jumped to body ground
	Gauge control module connector A (32P): disconnected
Test point 1	**Gauge control module connector A (32P) No. 22**
Test point 2	Body ground

Is there 1.0 Ω or less?

YES

Go to step 4.

NO

Repair an open in the FUEL_GAUGE+ wire between the gauge control module and the fuel tank unit.

4. Fuel gauge sending unit check

-1. Remove the jumper wire from the fuel tank unit 4P connector.

-2. **Test the fuel gauge sending unit** .

Is the fuel gauge sending unit OK?

YES

Replace the gauge control module .

NO

Replace the fuel gauge sending unit .

DTC P046C

DTC P046C : EGR Valve Position Sensor Out of Range

NOTE: Before you troubleshoot, **review the general troubleshooting information** .

DTC Description	Confirmed DTC	Pending DTC
P046C EGR Valve Position Sensor Out of Range	B	B

DTC (PGM-FI)

1. Problem verification

   -1. Turn the vehicle to the ON mode.

   -2. Check the parameter(s) below with the HDS.

Signal	Threshold		Current conditions	
	Values	Unit	Values	Unit
EGR Valve Position Sensor (EGR Vls)	More than 4.40	V	B	B

Do the current condition(s) match the threshold?

YES

The failure is duplicated. Go to step 2.

NO

Intermittent failure, the system is OK at this time. Check for poor connections or loose terminals at the EGR valve and the PCM. **If the on-board snapshot of this DTC is recorded, try to reproduce the failure under the same conditions with the on-board snapshot** .

2. Determine possible failure area (EGR valve, others)

   -1. Turn the vehicle to the OFF (LOCK) mode.

   -2. Disconnect the following connector.

EGR valve 5P connector

-3. Turn the vehicle to the ON mode.

-4. Measure the voltage between test points 1 and 2.

Test condition	Vehicle ON mode
B	EGR valve 5P connector: disconnected
Test point 1	EGR valve 5P connector (female terminals) No. 2: ①
Test point 2	EGR valve 5P connector (female terminals) No. 3: ①

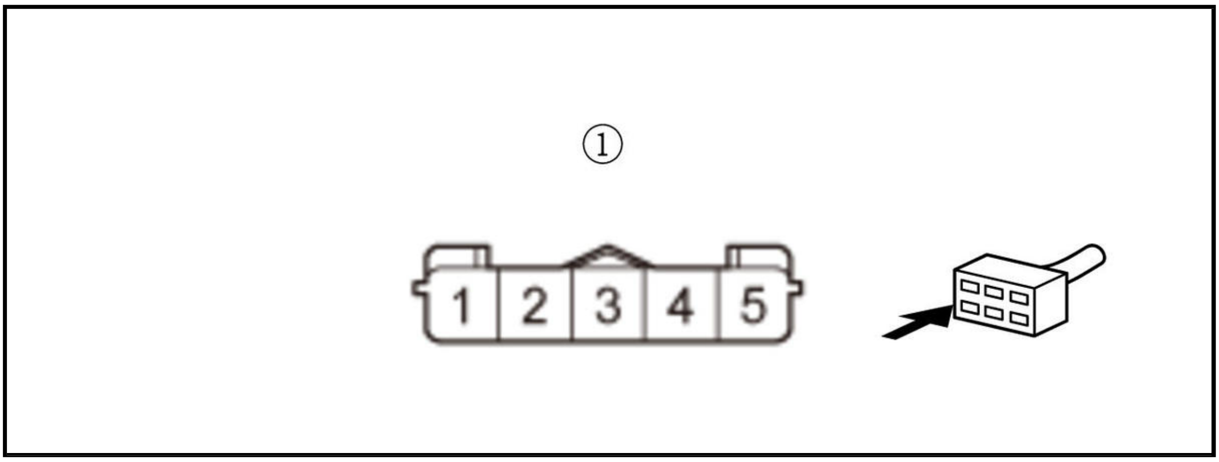

Is there about 5.0 V?

YES

Replace the EGR valve .

NO

Go to step 3.

3. Open wire check (SG2 line)

-1. Turn the vehicle to the OFF (LOCK) mode.

-2. Jump the SCS line with the HDS, and wait more than 1 minute.

-3. Disconnect the following connector.

PCM connector E (80P)

-4. Measure the resistance between test points 1 and 2.

Test condition	Vehicle OFF (LOCK) mode
B	EGR valve 5P connector: disconnected
B	PCM connector E (80P): disconnected
Test point 1	EGR valve 5P connector (female terminals) No. 3: ①
Test point 2	**PCM connector E (80P) No. 78**

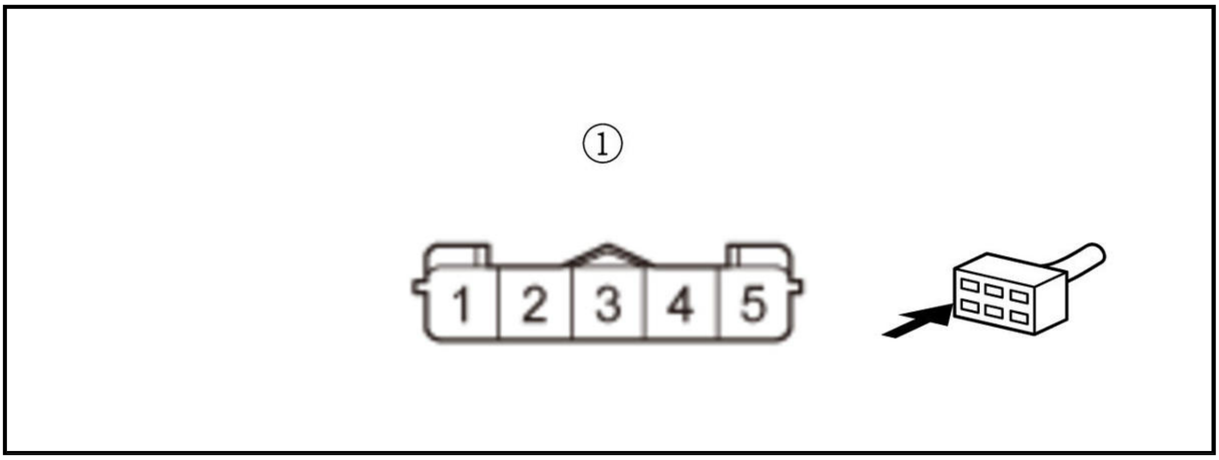

Is there 1.0 Ω or less?

YES

The SG2 wire is OK. Check for any authorized service information related to the DTCs or symptoms you are troubleshooting, or **substitute a known-good PCM** .

NO

Repair an open in the SG2 wire between the PCM (E78) and the EGR valve.

DTC P0480

DTC P0480 : RFC System Malfunction

NOTE: Before you troubleshoot, **review the general troubleshooting information** .

DTC Description	Confirmed DTC	Pending DTC
P0480 RFC System Malfunction	B	B

DTC (PGM-FI)

1. Problem verification

   -1. Turn the vehicle to the ON mode.

   -2. Clear the DTC with the HDS.

   -3. Select the RADIATOR FAN in the Function Test Menu with the HDS.

   RADIATOR FAN

   Check for Pending or Confirmed DTCs with the HDS.

DTC Description	Confirmed DTC	Pending DTC
P0480 RFC System Malfunction	B	B

   Is DTC P0480 indicated?

   YES

   The failure is duplicated. Go to step 2.

   NO

   Intermittent failure, the system is OK at this time. Check for poor connections or loose terminals at the RFC unit, the RFC relay, and the PCM. **If the on-board snapshot of this DTC is recorded, try to reproduce the failure under the same conditions with the on-board snapshot** .

2. Fan shroud assembly visual check

   -1. Turn the vehicle to the OFF (LOCK) mode.

   Check for these conditions at the fan shroud assembly:

   - Interference with fan shroud
   - Debris in the fan
   - Ice on the fan blades
   - Broken or deformed radiator fan
   - Broken or deformed fan shroud

   Are the conditions OK?

YES

Go to step 3.

NO

Repair or replace the damaged parts .

3. Fuse check 1

-1. Check the following fuse.

Fuse	**No. C1-5**

Is the fuse OK?

YES

Go to step 7.

NO

Go to step 4.

4. Shorted wire check (+B_MAIN_FAN line)

-1. Remove the blown **No. C1-5 fuse** .

-2. **Remove the RFC relay** .

-3. Measure the resistance between test points 1 and 2.

Test condition	Vehicle OFF (LOCK) mode RFC relay: disconnected
Test point 1	RFC relay 4P socket (female terminals) No. 1: ①
Test point 2	Body ground

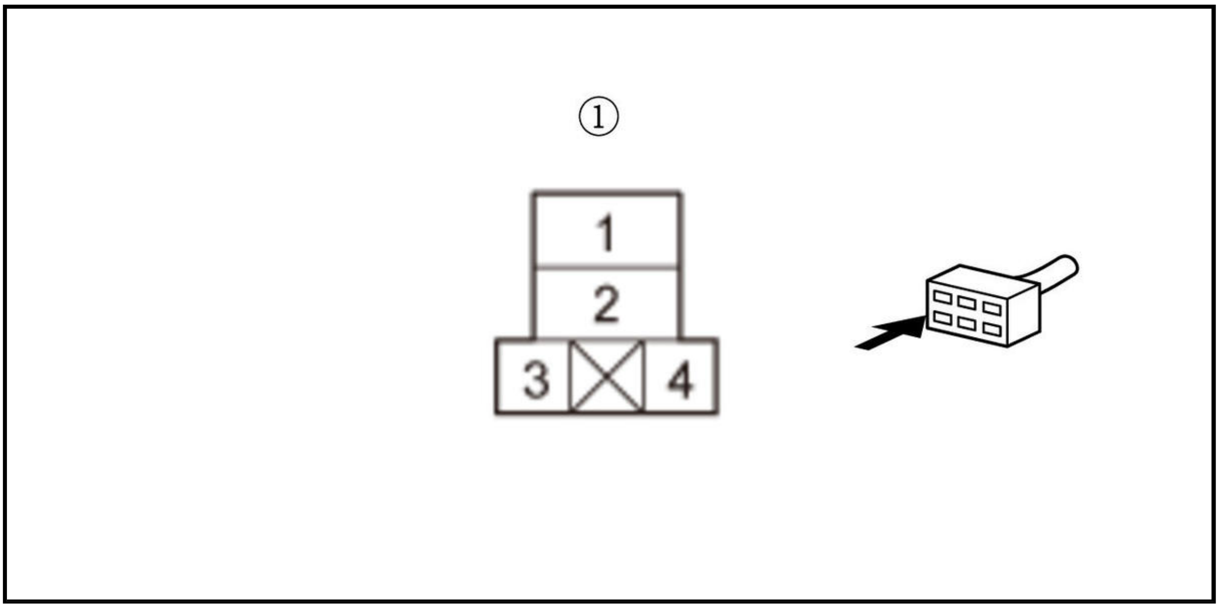

Is there 1 MΩ or more?

YES

The +B_MAIN_FAN wire is OK. Go to step 5.

NO

Repair a short in the +B_MAIN_FAN wire between the No. C1-5 fuse and the RFC relay. Also replace the No. C1-5 fuse.

5. Shorted wire check (MAIN_FAN_MOTOR line)

-1. Disconnect the following connector.

RFC unit connector A (2P)

-2. Measure the resistance between test points 1 and 2.

Test condition	Vehicle OFF (LOCK) mode
B	RFC relay: disconnected
B	RFC unit connector A (2P): disconnected
Test point 1	RFC relay 4P socket (female terminals) No. 2: ①
Test point 2	Body ground

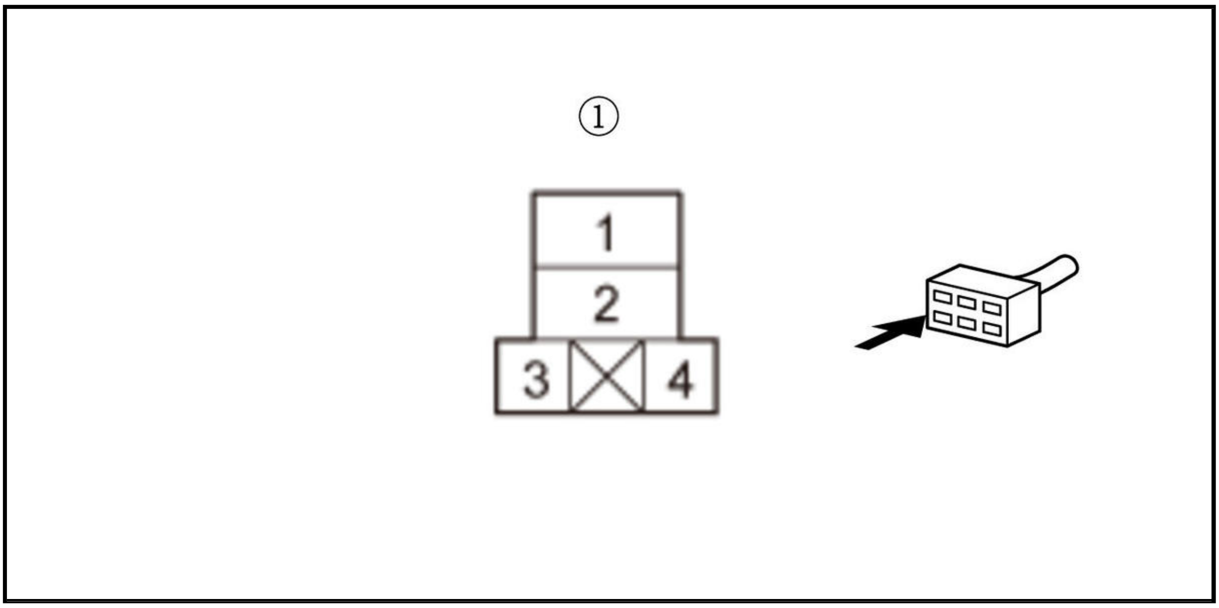

Is there 1 MΩ or more?

YES

The MAIN_FAN_MOTOR wire is OK. Go to step 6.

NO

Repair a short in the MAIN_FAN_MOTOR wire between the RFC relay and the RFC unit. Also replace the **No. C1-5 fuse** .

6. Relay check

-1. **Test the RFC relay** .

Is the relay OK?

YES

Replace the **No. C1-5 fuse** , then recheck. If the fuse is blown again, **replace the RFC unit** .

NO

Replace the RFC relay.

7. Determine possible failure area (RFC relay control circuit, others)

   -1. Jump the SCS line with the HDS, and wait more than 1 minute.

   -2. Disconnect the following connector.

PCM connector A (50P)

   -3. Measure the voltage between test points 1 and 2.

Test condition	Vehicle OFF (LOCK) mode
B	PCM connector A (50P): disconnected
Test point 1	**PCM connector A (50P) No. 18**
Test point 2	Body ground

   Is there battery voltage?

   YES

   Go to step 12.

   NO

   Go to step 8.

8. Open wire check (FAN_LO_SIGNAL line)

   -1. Disconnect the following connector.

Relay circuit board connector A (8P)

   -2. Measure the resistance between test points 1 and 2.

Test condition	Vehicle OFF (LOCK) mode
B	PCM connector A (50P): disconnected
B	Relay circuit board connector A (8P): disconnected
Test point 1	Relay circuit board connector A (8P) (female terminals) No. 2: ①
Test point 2	**PCM connector A (50P) No. 18**

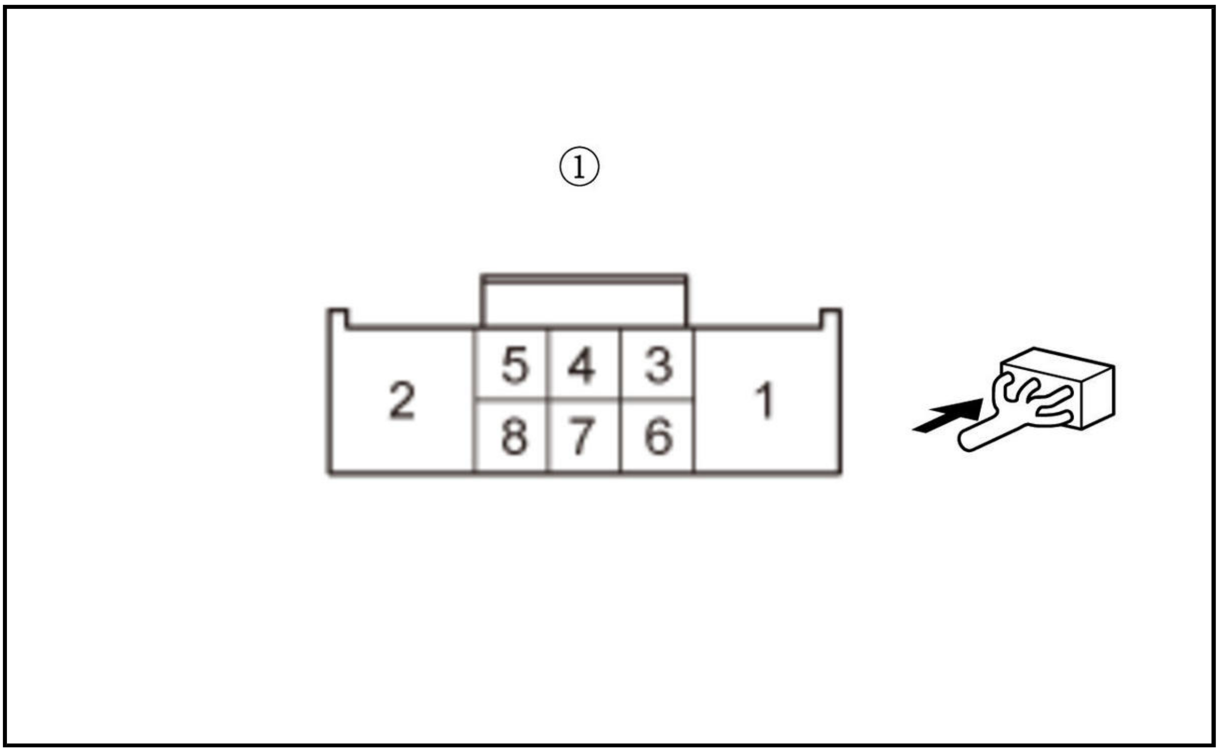

Is there 1.0 Ω or less?

YES

The FAN_LO_SIGNAL wire is OK. Go to step 9.

NO

Repair an open in the FAN_LO_SIGNAL wire between the PCM (A18) and the relay circuit board.

9. Open wire check (FAN_LO_SIGNAL_CL- line)

-1. **Remove the RFC relay** .

-2. Measure the resistance between test points 1 and 2.

Test condition	Vehicle OFF (LOCK) mode
B	PCM connector A (50P): disconnected
B	Relay circuit board connector A (8P): disconnected
B	RFC relay: disconnected
Test point 1	RFC relay 4P socket (female terminals) No. 4: ①
Test point 2	Relay circuit board connector A (8P) (female terminals) No. 1: ②

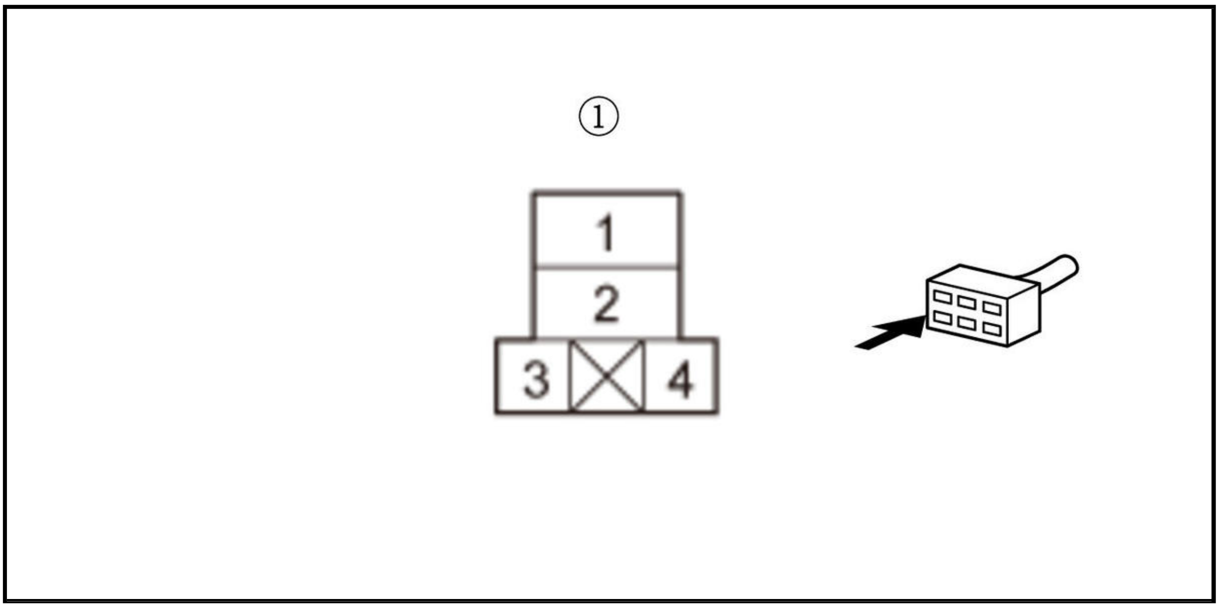

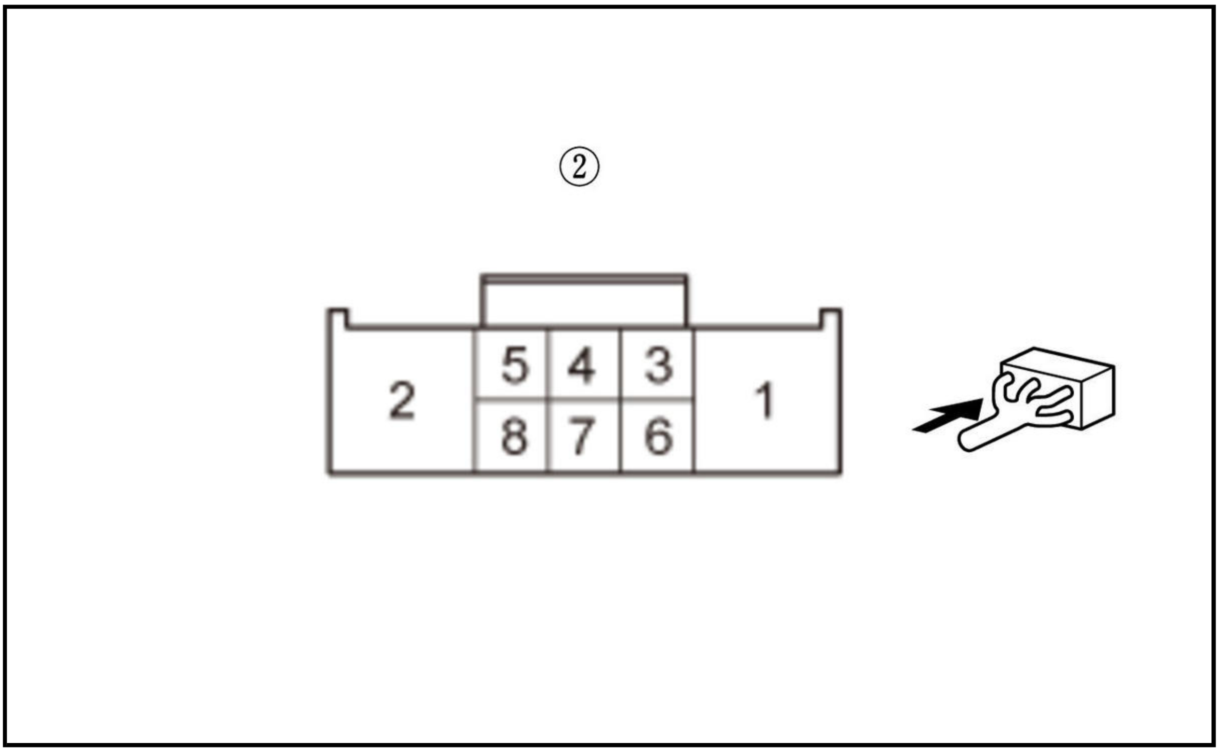

Is there 1.0 Ω or less?

YES

The FAN_LO_SIGNAL_CL- wire is OK. Go to step 10.

NO

Repair an open in the FAN_LO_SIGNAL_CL- wire between the relay circuit board and the RFC relay.

10. Relay check

-1. Test the RFC relay .

Is the relay OK?

YES

Go to step 11.

NO

Replace the RFC relay.

11. Fuse check 2

-1. Check the following fuse.

Fuse	**No. A16**

Is the fuse OK?

YES

Repair an open in the +B_RFC_RLY_COIL+ wire between the No. A16 fuse and the RFC relay. If the wire is OK, **replace the relay circuit board** .

NO

Repair a short in the +B_RFC_RLY_COIL+ wire between the No. A16 fuse and the RFC relay. Also replace the No. A16 fuse.

12. Shorted wire check (FAN_CONTROL line)

-1. Disconnect the following connector.

RFC unit connector B (3P)

-2. Measure the resistance between test points 1 and 2.

Test condition	Vehicle OFF (LOCK) mode
	PCM connector A (50P): disconnected
B	RFC unit connector B (3P): disconnected
Test point 1	**PCM connector A (50P) No. 17**
Test point 2	Body ground

Is there 1 MΩ or more?

YES

The FAN_CONTROL wire is not shorted. Go to step 13.

NO

Repair a short in the FAN_CONTROL wire between the PCM (A17) and the RFC unit.

13. Open wire check (FAN_CONTROL line)

-1. Measure the resistance between test points 1 and 2.

Test condition	Vehicle OFF (LOCK) mode
	PCM connector A (50P): disconnected
	RFC unit connector B (3P): disconnected
Test point 1	RFC unit connector B (3P) (female terminals) No. 1: ①
Test point 2	**PCM connector A (50P) No. 17**

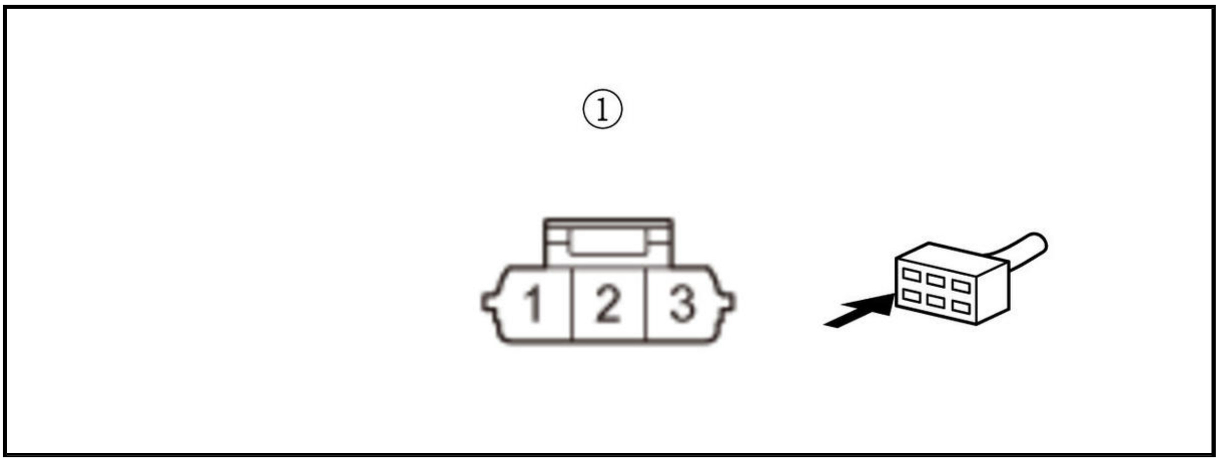

Is there 1.0 Ω or less?

YES

The FAN_CONTROL wire is OK. Go to step 14.

NO

Repair an open in the FAN_CONTROL wire between the PCM (A17) and the RFC unit.

14. Open wire check (+B_MAIN_FAN line)

-1. **Remove the RFC relay** .

-2. Measure the voltage between test points 1 and 2.

Test condition	Vehicle OFF (LOCK) mode
	PCM connector A (50P): disconnected
B	RFC unit connector B (3P): disconnected
B	RFC relay: disconnected
Test point 1	RFC relay 4P socket (female terminals) No. 1: ①
Test point 2	Body ground

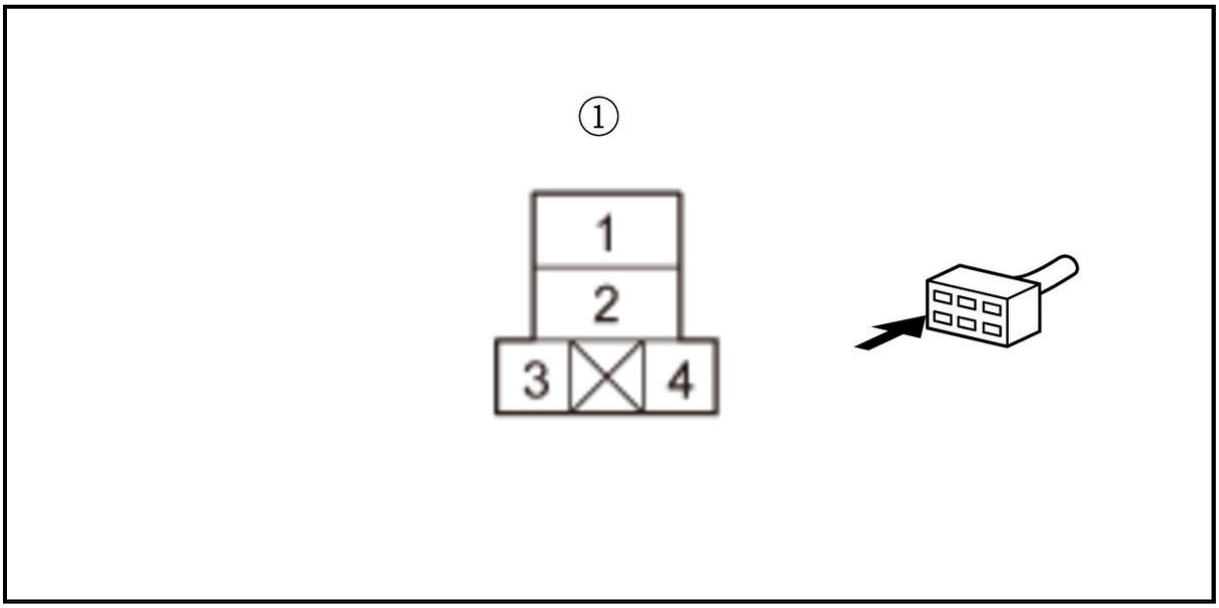

Is there battery voltage?

YES

The +B_MAIN_FAN wire is OK. Go to step 15.

NO

Repair an open in the +B_MAIN_FAN wire between the **No. C1-5 fuse** and the RFC relay.

15. Relay check

-1. **Test the RFC relay** .

Is the relay OK?

YES

Go to step 16.

NO

Replace the RFC relay.

16. Open wire check (MAIN_FAN_MOTOR line)

-1. **Reinstall the RFC relay** .

-2. Reconnect PCM connector A (50P).

-3. Exit the SCS mode with the HDS.

-4. Disconnect the following connector.

RFC unit connector A (2P)

-5. Turn the vehicle to the ON mode.

-6. Measure the voltage between test points 1 and 2.

Test condition	Vehicle ON mode
B	RFC unit connector B (3P): disconnected
B	RFC unit connector A (2P): disconnected
Test point 1	RFC unit connector A (2P) (female terminals) No. 1: ①
Test point 2	Body ground

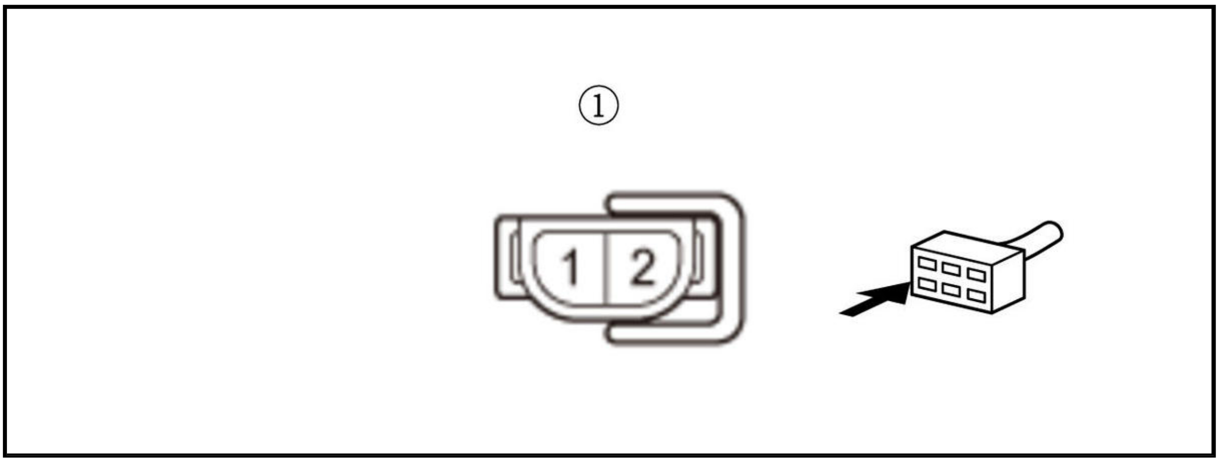

Is there battery voltage?

YES

The MAIN_FAN_MOTOR wire is OK. Go to step 17.

NO

Repair an open in the MAIN_FAN_MOTOR wire between the RFC relay and the RFC unit.

17. Open wire check (GND line)

-1. Turn the vehicle to the OFF (LOCK) mode.

-2. Measure the resistance between test points 1 and 2.

Test condition	Vehicle OFF (LOCK) mode
B	RFC unit connector B (3P): disconnected
B	RFC unit connector A (2P): disconnected
Test point 1	RFC unit connector A (2P) (female terminals) No. 2: ①
Test point 2	Body ground

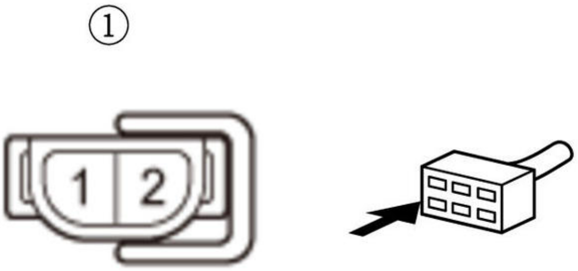

Is there 1.0 Ω or less?

YES

The GND wire is OK. Go to step 18.

NO

Repair an open in the GND wire between the RFC unit and G351.

18. RFC unit check

-1. **Substitute a known-good RFC unit** .

-2. Reconnect all connectors.

-3. Turn the vehicle to the ON mode.

-4. Clear the DTC with the HDS.

-5. Select the RADIATOR FAN in the Function Test Menu with the HDS.

RADIATOR FAN

Check for Pending or Confirmed DTCs with the HDS.

DTC Description	Confirmed DTC	Pending DTC
P0480 RFC System Malfunction	B	B

Is DTC P0480 indicated?

YES

Check for any authorized service information related to the DTCs or symptoms you are troubleshooting, or substitute a known-good PCM .

NO

Replace the original RFC unit .

DTC P049D

DTC P049D : EGR Control Position Exceeded Learning Limit

NOTE: Before you troubleshoot, review the general troubleshooting information .

DTC Description	Confirmed DTC	Pending DTC
P049D EGR Control Position Exceeded Learning Limit	B	B

DTC (PGM-FI)

1. Problem verification

   -1. Turn the vehicle to the ON mode.

   -2. Clear the DTC with the HDS.

   -3. Turn the vehicle to the OFF (LOCK) mode.

   -4. Turn the vehicle to the ON mode, and wait 10 seconds.

   -5. Check for Pending or Confirmed DTCs with the HDS.

DTC Description	Confirmed DTC	Pending DTC
P049D EGR Control Position Exceeded Learning Limit	B	B

   Is DTC P049D indicated?

   YES

   The failure is duplicated. Go to step 2.

   NO

   Intermittent failure, the system is OK at this time. Check for poor connections or loose terminals at the EGR valve and the PCM. If the on-board snapshot of this DTC is recorded, try to reproduce the failure under the same conditions with the on-board snapshot .

2. EGR valve operation check

   -1. Clear the DTC with the HDS.

   -2. Turn the vehicle to the OFF (LOCK) mode.

   -3. Remove the EGR valve .

-4. Reconnect the EGR valve 5P connector.

-5. Turn the vehicle to the ON mode.

-6. Visually check the EGR valve operation.

Does the EGR valve move to its fully closed position?

YES

Go to step 3.

NO

Go to step 4.

3. EGR valve condition check

-1. Turn the vehicle to the OFF (LOCK) mode.

-2. Disconnect the following connector.

EGR valve 5P connector

-3. Check for sludge or carbon on the EGR valve.

Is there sludge or carbon on the EGR valve?

YES

Clean the EGR valve and recheck. If DTC P049D is indicated again, **replace the EGR valve** .

NO

Replace the EGR valve .

4. Open wire check (PG line)

-1. Turn the vehicle to the OFF (LOCK) mode.

-2. Disconnect the following connector.

EGR valve 5P connector

-3. Measure the resistance between test points 1 and 2.

Test condition	Vehicle OFF (LOCK) mode
B	EGR valve 5P connector: disconnected
Test point 1	EGR valve 5P connector (female terminals) No. 1: ①
Test point 2	Body ground

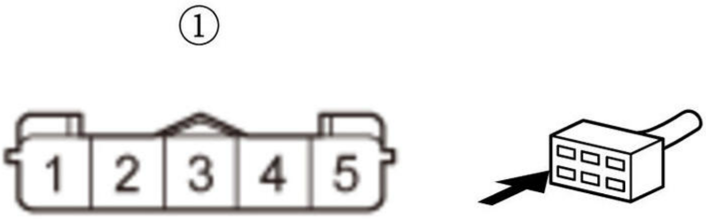

Is there 1.0 Ω or less?

YES

Go to step 5.

NO

Repair an open in the PG wire between the EGR valve and G101.

5. Open wire check (EEGR line)

-1. Jump the SCS line with the HDS, and wait more than 1 minute.

-2. Disconnect the following connector.

PCM connector E (80P)

-3. Measure the resistance between test points 1 and 2.

Test condition	Vehicle OFF (LOCK) mode
B	EGR valve 5P connector: disconnected
B	PCM connector E (80P): disconnected
Test point 1	EGR valve 5P connector (female terminals) No. 5: ①
Test point 2	**PCM connector E (80P) No. 10**

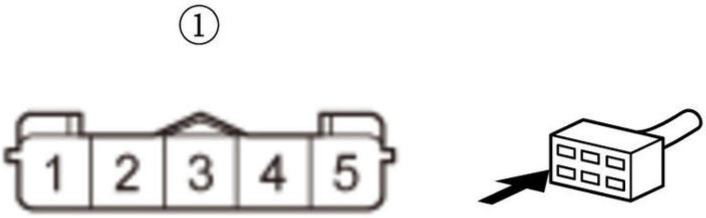

Is there 1.0 Ω or less?

YES

The EEGR wire is OK. Check for any authorized service information related to the DTCs or symptoms you are troubleshooting, or **substitute a known-good PCM** .

NO

Repair an open in the EEGR wire between the PCM (E10) and the EGR valve.

DTC P04AB

DTC P04AB : EVAP Canister Purge Valve Circuit Malfunction 2

NOTE: Before you troubleshoot, **review the general troubleshooting information** .

DTC Description	Confirmed DTC	Pending DTC
P04AB EVAP Canister Purge Valve Circuit Malfunction 2	B	B

DTC (PGM-FI)

1. Problem verification

   -1. Turn the vehicle to the ON mode.

   -2. Clear the DTC with the HDS.

   -3. **Enter the maintenance mode, then start the engine** .

   -4. Hold the engine speed at 3, 000 rpm without load (in P or N) until the radiator fan comes on, then let it idle.

   -5. Check for Pending or Confirmed DTCs with the HDS.

DTC Description	Confirmed DTC	Pending DTC
P04AB EVAP Canister Purge Valve Circuit Malfunction 2	B	B

   Is DTC P04AB indicated?

   YES

   The failure is duplicated. Go to step 2.

   NO

   Intermittent failure, the system is OK at this time. Check for poor connections or loose terminals at EVAP canister purge valve 2 and the PCM. **If the on-board snapshot of this DTC is recorded, try to reproduce the failure under the same conditions with the on-board snapshot** .

2. Fuse check

   -1. Turn the vehicle to the OFF (LOCK) mode.

   -2. Check the following fuse.

Fuse	**No. A11**

   Is the fuse OK?

   YES

   Go to step 3.

NO

Repair a short in the IGPS(PCS2)/IGPS(LAF) wire between the No. A11 fuse and EVAP canister purge valve 2. Also replace the No. A11 fuse.

3. Open wire check (IGPS(PCS2)/IGPS(LAF) line)

-1. Disconnect the following connector.

EVAP canister purge valve 2 2P connector

-2. Turn the vehicle to the ON mode.

-3. Measure the voltage between test points 1 and 2.

Test condition	Vehicle ON mode
B	EVAP canister purge valve 2 2P connector: disconnected
Test point 1	EVAP canister purge valve 2 2P connector (female terminals) No. 1: ①
Test point 2	Body ground

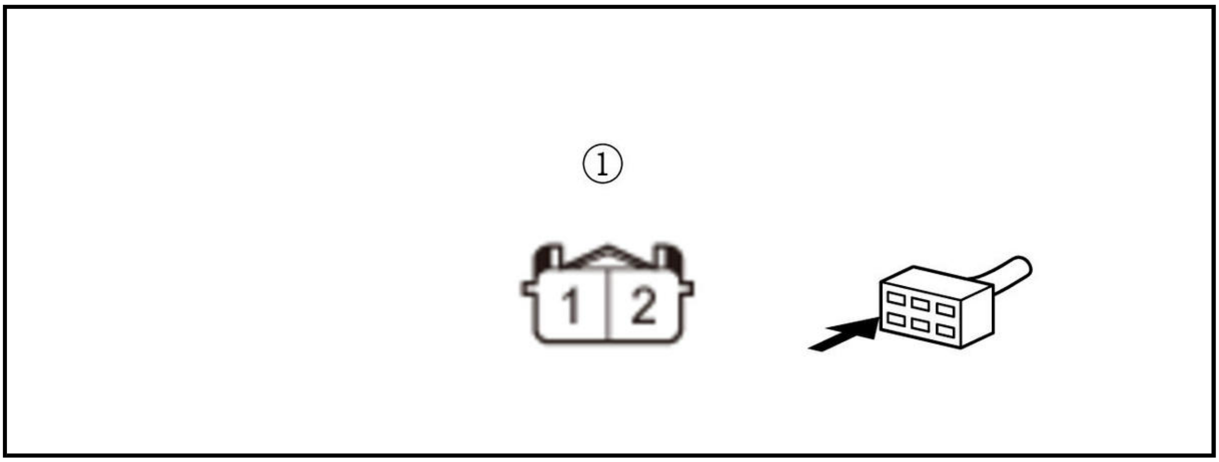

Is there battery voltage?

YES

The IGPS(PCS2)/IGPS(LAF) wire is OK. Go to step 4.

NO

Repair an open in the IGPS(PCS2)/IGPS(LAF) wire between the **No. A11 fuse** and EVAP canister purge valve 2.

4. EVAP canister purge valve 2 internal resistance check

-1. Turn the vehicle to the OFF (LOCK) mode.

-2. At EVAP canister purge valve 2 side, measure the resistance between test points 1 and 2.

Test condition	Vehicle OFF (LOCK) mode
B	EVAP canister purge valve 2 2P connector: disconnected
Test point 1	EVAP canister purge valve 2 2P connector (male terminals) No. 1 (valve side): ①

Test point 2	EVAP canister purge valve 2 2P connector (male terminals) No. 2 (valve side): ①

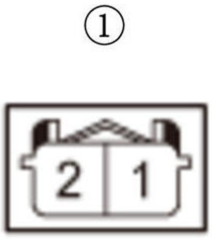

Is there about 23-26 Ω at room temperature?

YES

The EVAP canister purge valve 2 internal circuit is OK. Go to step 5.

NO

Replace EVAP canister purge valve 2 .

5. Shorted wire check (PCS2 line)

-1. Jump the SCS line with the HDS, and wait more than 1 minute.

-2. Disconnect the following connector.

PCM connector E (80P)

-3. Measure the resistance between test points 1 and 2.

Test condition	Vehicle OFF (LOCK) mode
B	EVAP canister purge valve 2 2P connector: disconnected
B	PCM connector E (80P): disconnected
Test point 1	EVAP canister purge valve 2 2P connector (female terminals) No. 2: ①
Test point 2	Body ground

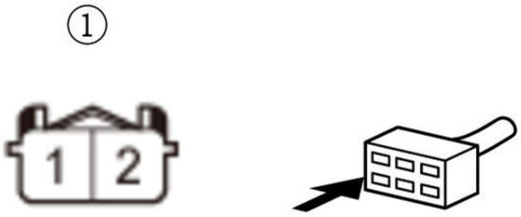

Is there 1 MΩ or more?

YES

The PCS2 wire is not shorted. Go to step 6.

NO

Repair a short in the PCS2 wire between the PCM (E79) and EVAP canister purge valve 2.

6. Open wire check (PCS2 line)

-1. Measure the resistance between test points 1 and 2.

Test condition	Vehicle OFF (LOCK) mode
B	EVAP canister purge valve 2 2P connector: disconnected
B	PCM connector E (80P): disconnected
Test point 1	EVAP canister purge valve 2 2P connector (female terminals) No. 2: ①
Test point 2	**PCM connector E (80P) No. 79**

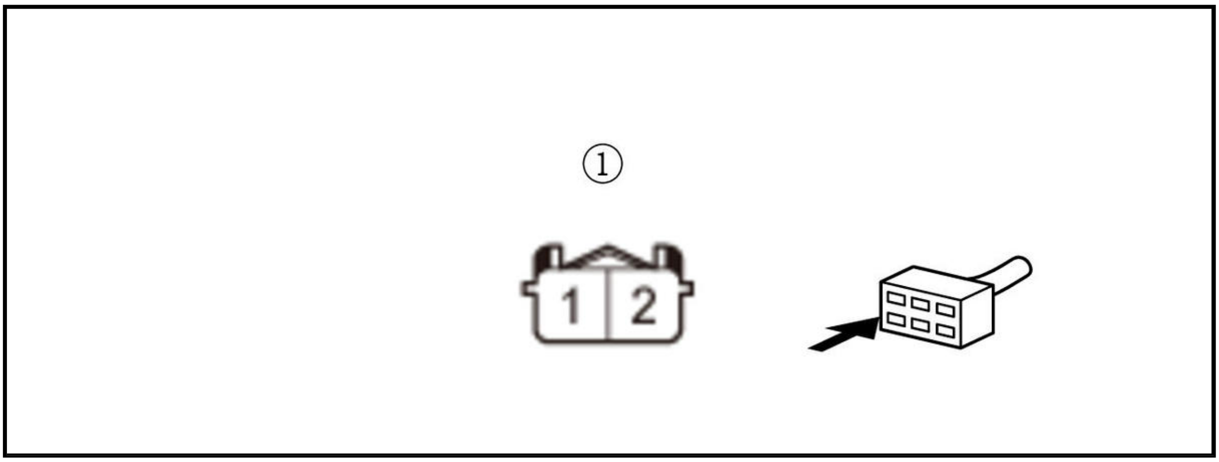

Is there 1.0 Ω or less?

YES

The PCS2 wire is OK. Go to step 7.

NO

Repair an open in the PCS2 wire between the PCM (E79) and EVAP canister purge valve 2.

7. EVAP canister purge valve 2 check

-1. **Substitute known-good EVAP canister purge valve 2** .

-2. Reconnect all connectors.

-3. Exit the SCS mode with the HDS.

-4. Turn the vehicle to the ON mode.

-5. Clear the DTC with the HDS.

-6. **Enter the maintenance mode, then start the engine** .

-7. Hold the engine speed at 3, 000 rpm without load (in P or N) until the radiator fan comes on, then let it idle.

-8. Check for Pending or Confirmed DTCs with the HDS.

DTC Description	Confirmed DTC	Pending DTC
P04AB EVAP Canister Purge Valve Circuit Malfunction 2	B	B

Is DTC P04AB indicated?

YES

EVAP canister purge valve 2 is OK. Check for any authorized service information related to the DTCs or symptoms you are troubleshooting, or **substitute a known-good PCM** .

NO

Replace original EVAP canister purge valve 2 .

DTC P04AE

DTC P04AE : EVAP System High Purge Flow Detected 2

Special Tools Required

Vacuum Pump/Gauge, 0-30 inHg Snap-on YA4000A or equivalent, commercially available

Vacuum/Pressure Gauge, 0-4 inHg 07JAZ-001000B

NOTE: Before you troubleshoot, **review the general troubleshooting information** .

DTC Description	Confirmed DTC	Pending DTC
P04AE EVAP System High Purge Flow Detected 2	B	B

DTC (PGM-FI)

1. Problem verification

-1. Turn the vehicle to the ON mode.

-2. Clear the DTC with the HDS.

-3. Select the EVAP TEST in the Function Test Menu, then select EVAP Leak Check Module Test with the HDS.

NOTE: If the test could not be completed because of another DTC, do the troubleshooting for that DTC.

EVAP TEST

Is the result OK?

YES

Intermittent failure, the system is OK at this time. Check EVAP canister purge valve 2 for debris that may cause it to stick open intermittently. **If the on-board snapshot of this DTC is recorded, try to reproduce the failure under the same conditions with the on-board snapshot** .

NO

The failure is duplicated. Go to step 2.

2. EVAP canister purge valve 2 open stuck check

-1. Turn the vehicle to the OFF (LOCK) mode.

-2. Disconnect the hose (A) of EVAP canister purge valve 2 (B) from the throttle body (C), then connect the T-fitting (D), the vacuum gauge, and the vacuum pump/gauge, 0-30 inHg as shown.

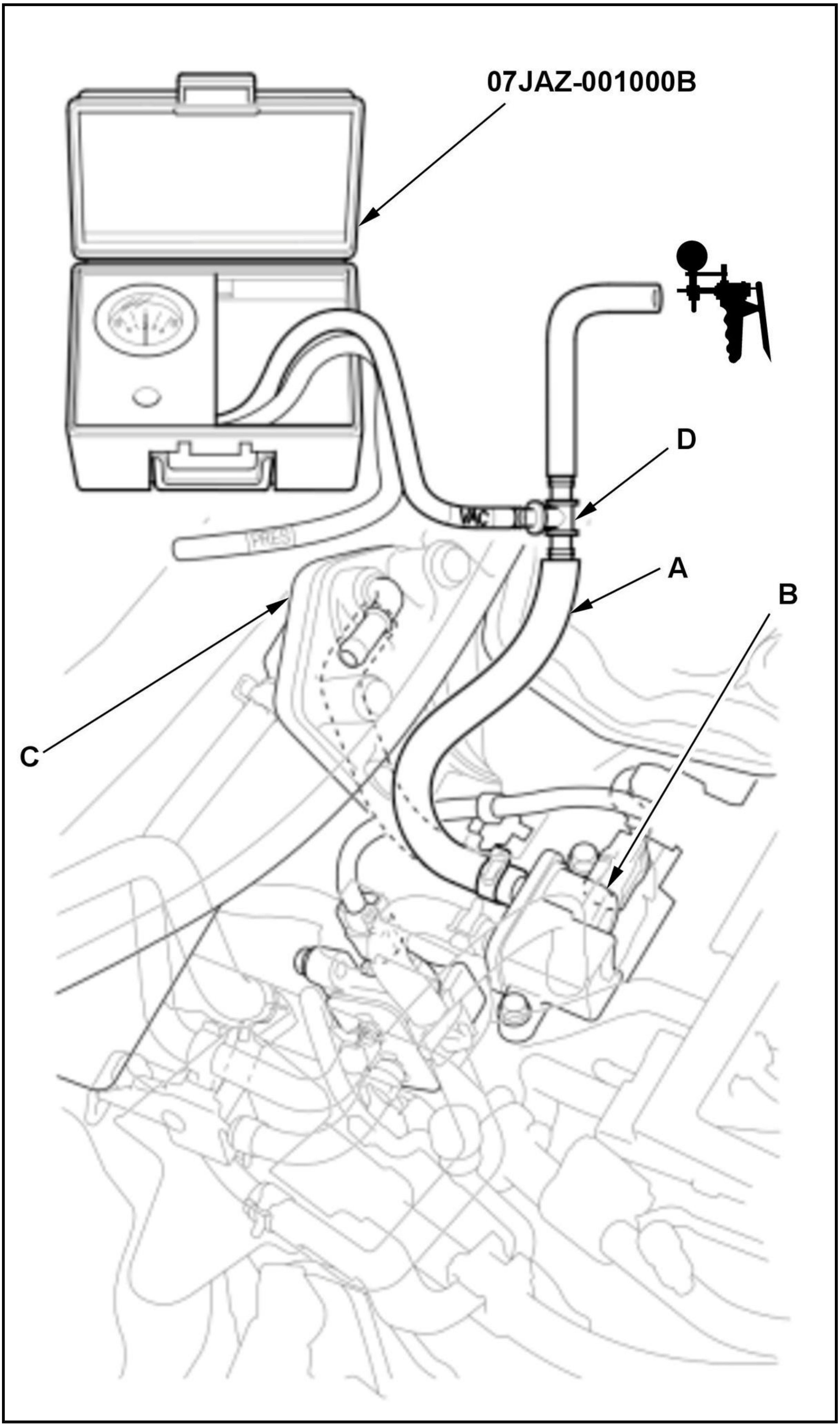
07JAZ-001000B
D
A
B
C
VAC
PRES

-3. Apply about 2 kPa (15 mmHg, 0.6 inHg) of vacuum to the hose.

Does it hold vacuum?

YES

Replace the EVAP leak check module .

NO

Check the hose leakage. If the hose is OK, **replace EVAP canister purge valve 2** .

DTC P04DF

DTC P04DF : EVAP System High Purge Flow Detected

Special Tools Required

Vacuum Pump/Gauge, 0-30 inHg Snap-on YA4000A or equivalent, commercially available

Vacuum/Pressure Gauge, 0-4 inHg 07JAZ-001000B

NOTE: Before you troubleshoot, **review the general troubleshooting information** .

DTC Description	Confirmed DTC	Pending DTC
P04DF EVAP System High Purge Flow Detected	B	B

DTC (PGM-FI)

1. Problem verification

-1. Turn the vehicle to the ON mode.

-2. Clear the DTC with the HDS.

-3. Select the EVAP TEST in the Function Test Menu, then select EVAP Leak Check Module Test with the HDS.

NOTE: If the test could not be completed because of another DTC, do the troubleshooting for that DTC.

EVAP TEST

Is the result OK?

YES

Intermittent failure, the system is OK at this time. Check EVAP canister purge valve 1 for debris that may cause it to stick open intermittently. **If the on-board snapshot of this DTC is recorded, try to reproduce the failure under the same conditions with the on-board snapshot** .

NO

The failure is duplicated. Go to step 2.

2. EVAP canister purge valve 1 open stuck check

-1. Turn the vehicle to the OFF (LOCK) mode.

-2. Disconnect the hose (A) of EVAP canister purge valve 1 (B) from the intake manifold (C), then connect the T-fitting (D), the vacuum gauge, and the vacuum pump/gauge, 0-30 inHg as shown.

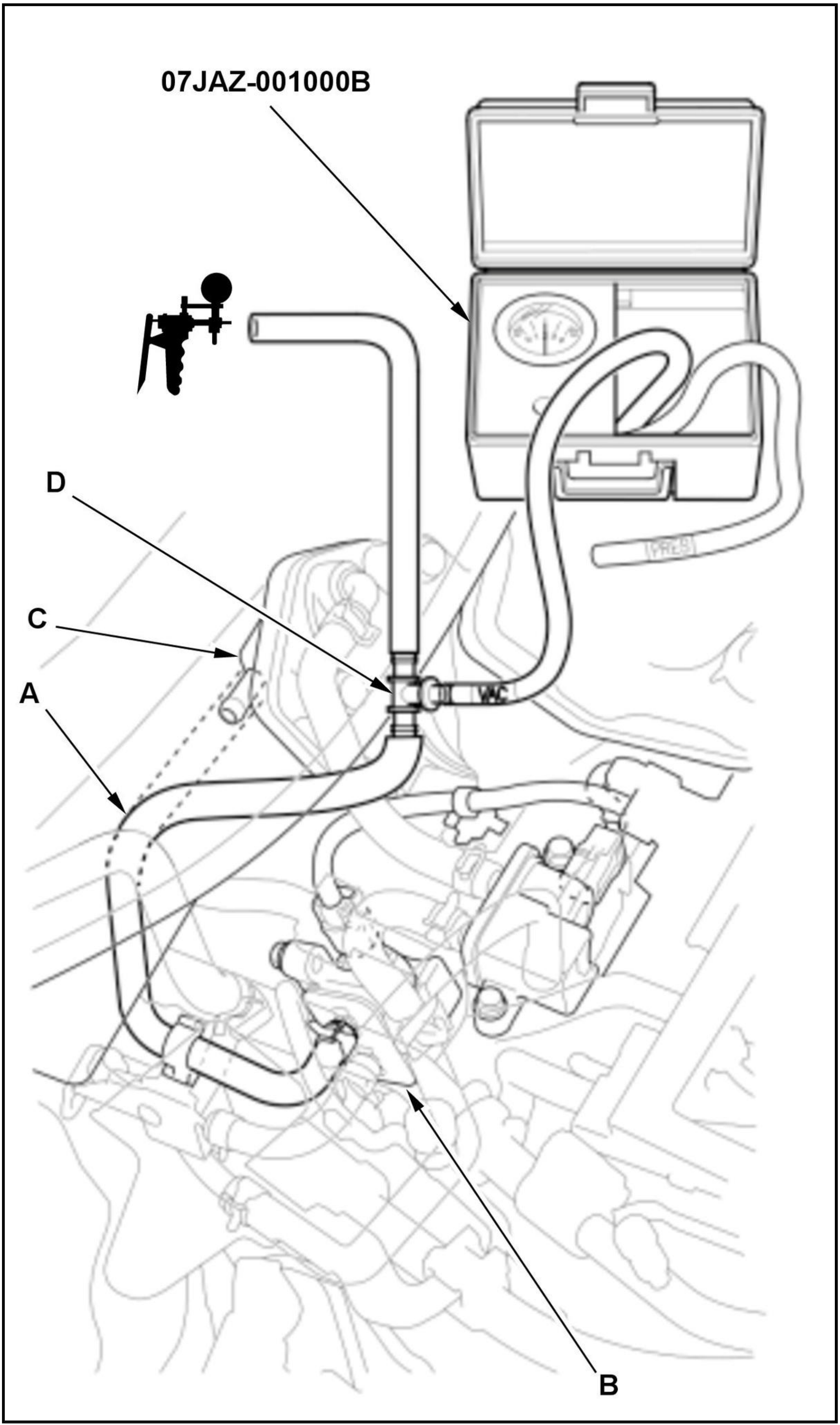
07JAZ-001000B
D
C
A
VAC
PRES
B

-3. Apply about 2 kPa (15 mmHg, 0.6 inHg) of vacuum to the hose.

Does it hold vacuum?

YES

Replace the EVAP leak check module .

NO

Check the hose leakage. If the hose is OK, **replace EVAP canister purge valve 1** .

DTC P04E0

DTC P04E0 : EVAP Canister Purge Valve Stuck Closed

Special Tools Required

Vacuum Pump/Gauge, 0-30 inHg Snap-on YA4000A or equivalent, commercially available

NOTE: Before you troubleshoot, **review the general troubleshooting information** .

DTC Description	Confirmed DTC	Pending DTC
P04E0 EVAP Canister Purge Valve Stuck Closed	B	B

DTC(PGM-FI)

1. Problem verification

-1. Turn the vehicle to the ON mode.

-2. Clear the DTC with the HDS.

-3. Turn the vehicle to the OFF (LOCK) mode.

-4. Turn the vehicle to the ON mode.

-5. Select the EVAP TEST in the Function Test Menu, then select the EVAP Purge Flow Check Test with the HDS.

EVAP TEST

Is the result OK?

YES

If the test result is PASSED, there is an intermittent failure and the system is OK at this time. Check for poor connections or loose terminals at the fuel vapor containment valve and the PCM. **If the on-board snapshot of this DTC is recorded, try to reproduce the failure under the same conditions with the on-board snapshot** .

NO

Go to step 2.

2. EVAP canister purge valve check (closed stuck)

-1. **Remove the heat shield** .

-2. Disconnect the EVAP canister purge hose (A) from the EVAP canister (B), and connect a vacuum pump/gauge, 0-30 inHg, to the hose.

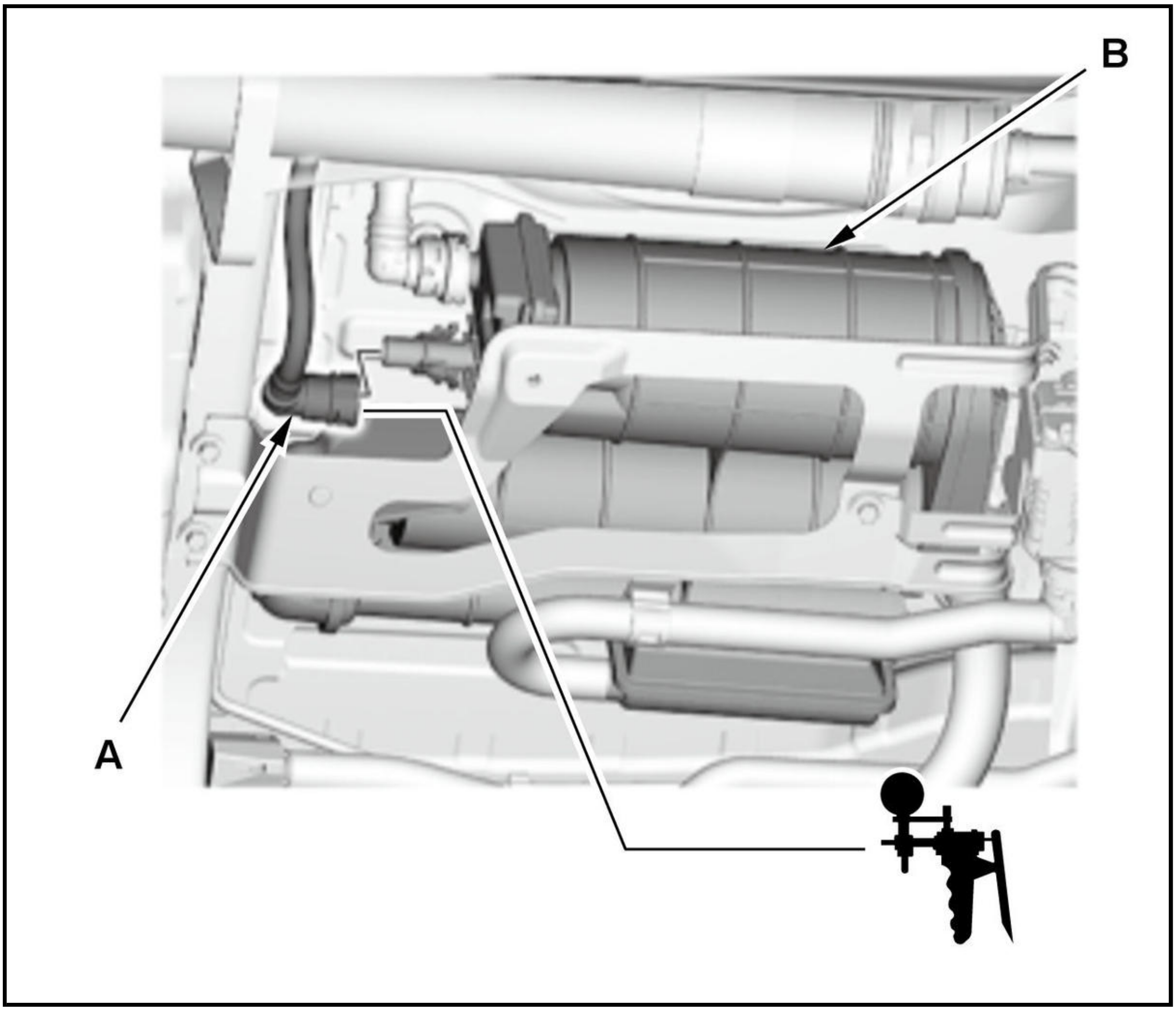

-3. **Enter the maintenance mode, then start the engine** .

-4. Hold the engine speed at 3, 000 rpm without load (in P or N) until the radiator fan comes on, then continue to hold the engine speed at 3, 000 rpm.

Is there vacuum?

YES

Replace the EVAP canister .

NO

Inspect the purge hose routing. If OK, **replace the EVAP canister purge valve 1** .

DTC P04F1

DTC P04F1 : EVAP System Low Purge Flow Detected

Special Tools Required

Vacuum Pump/Gauge, 0-30 inHg Snap-on YA4000A or equivalent, commercially available

Vacuum/Pressure Gauge, 0-4 inHg 07JAZ-001000B

NOTE: Before you troubleshoot, **review the general troubleshooting information** .

DTC Description	Confirmed DTC	Pending DTC
P04F1 EVAP System Low Purge Flow Detected	B	B

DTC (PGM-FI)

1. Problem verification

   -1. Turn the vehicle to the ON mode.

   -2. Clear the DTC with the HDS.

   -3. Select the EVAP TEST in the Function Test Menu, then select EVAP Leak Check Module Test with the HDS.

   EVAP TEST

   Is the result OK?

   YES

   Intermittent failure, the system is OK at this time. Check for poor connections or loose terminals at EVAP canister purge valve 1, EVAP canister purge valve 2, the EVAP leak check module, and the PCM. **If the on-board snapshot of this DTC is recorded, try to reproduce the failure under the same conditions with the on-board snapshot** . If the result of the EVAP Leak Check Module Test is OK, but the DTC P04F1 is stored again, go to step 2.

   NO

   The failure is duplicated. Go to step 2.

2. EVAP canister purge port check 1

   -1. Turn the vehicle to the OFF (LOCK) mode.

   -2. Disconnect the hose (A) of EVAP canister purge valve 1 (B) from the intake manifold (C), then connect the vacuum pump/gauge, 0-30 inHg to the intake manifold as shown.

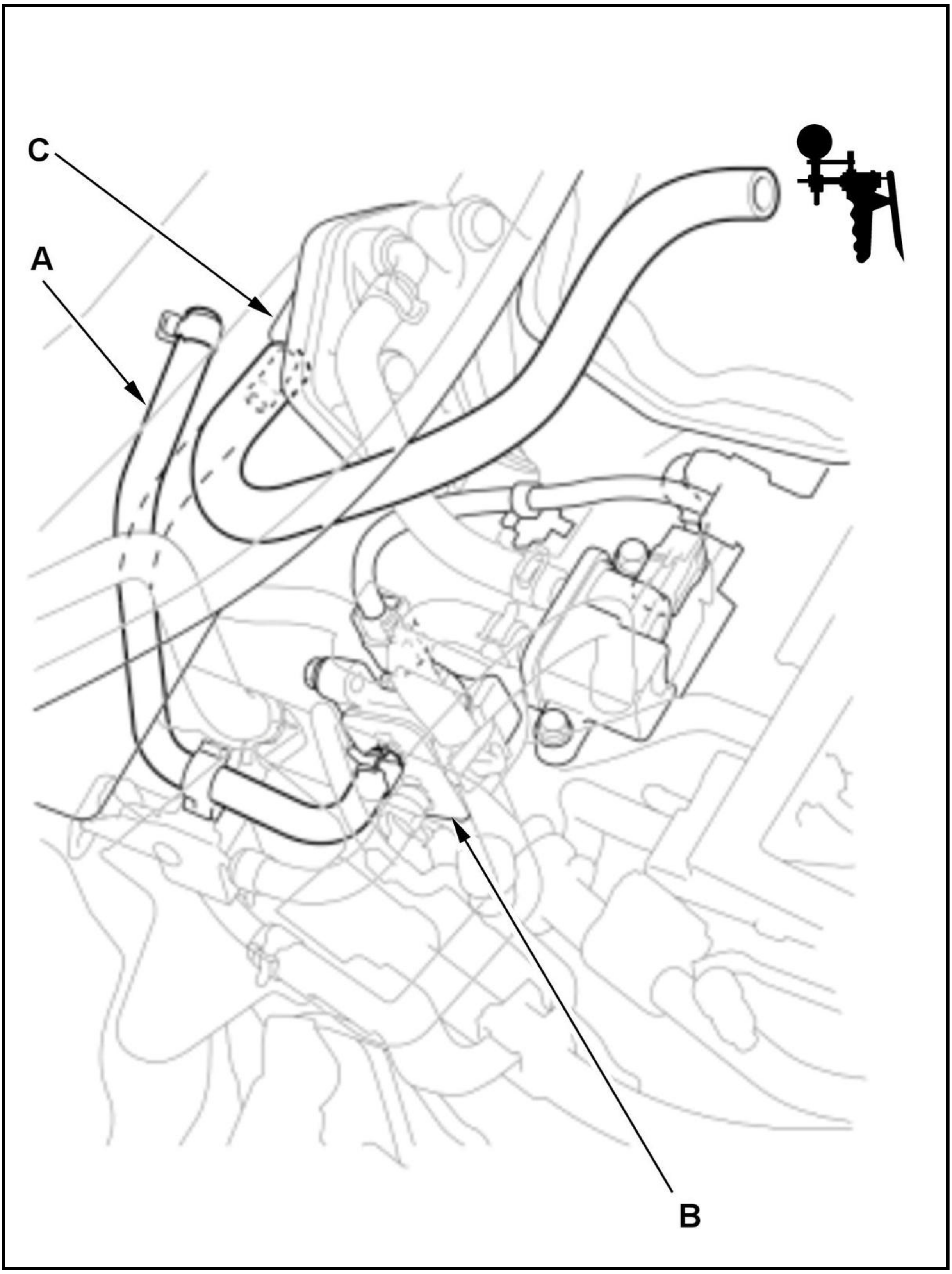

-3. Apply vacuum to the hose.

Does it hold vacuum?

YES

Remove the blockage from the EVAP canister purge port on the intake manifold.

NO

Go to step 3.

3. EVAP canister purge port check 2

-1. Disconnect the hose (A) of EVAP canister purge valve 2 (B) from the throttle body (C), then connect the vacuum pump/gauge, 0-30 inHg to the throttle body as shown.

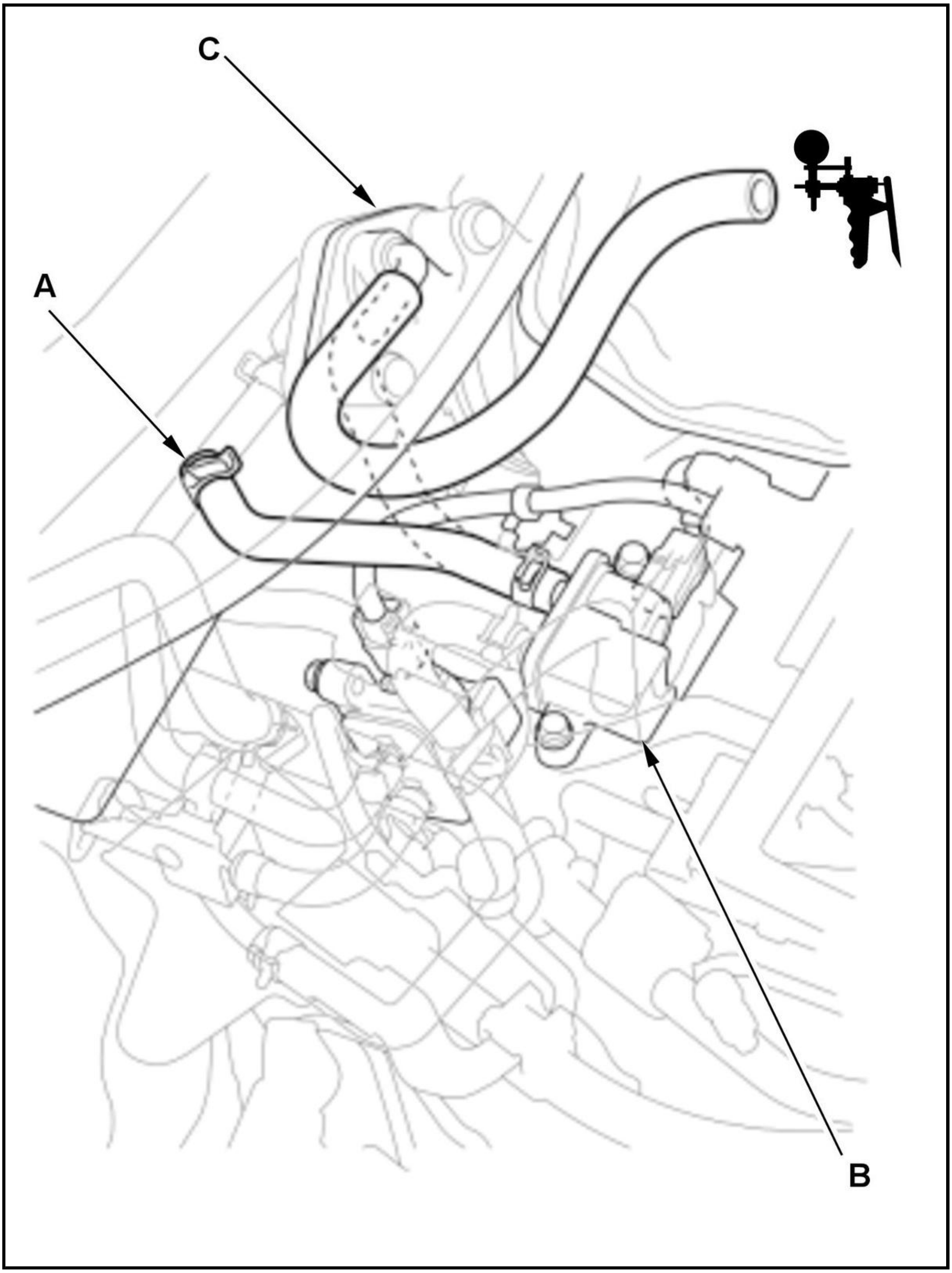

-2. Apply vacuum to the hose.

Does it hold vacuum?

YES

Remove the blockage from the EVAP canister purge port on the throttle body.

NO

Go to step 4.

4. EVAP canister purge valve 1 check

   -1. Connect the T-fitting (A), the vacuum gauge, and the vacuum pump/gauge, 0-30 inHg to the hose (B) of EVAP canister purge valve 1 (C) as shown.

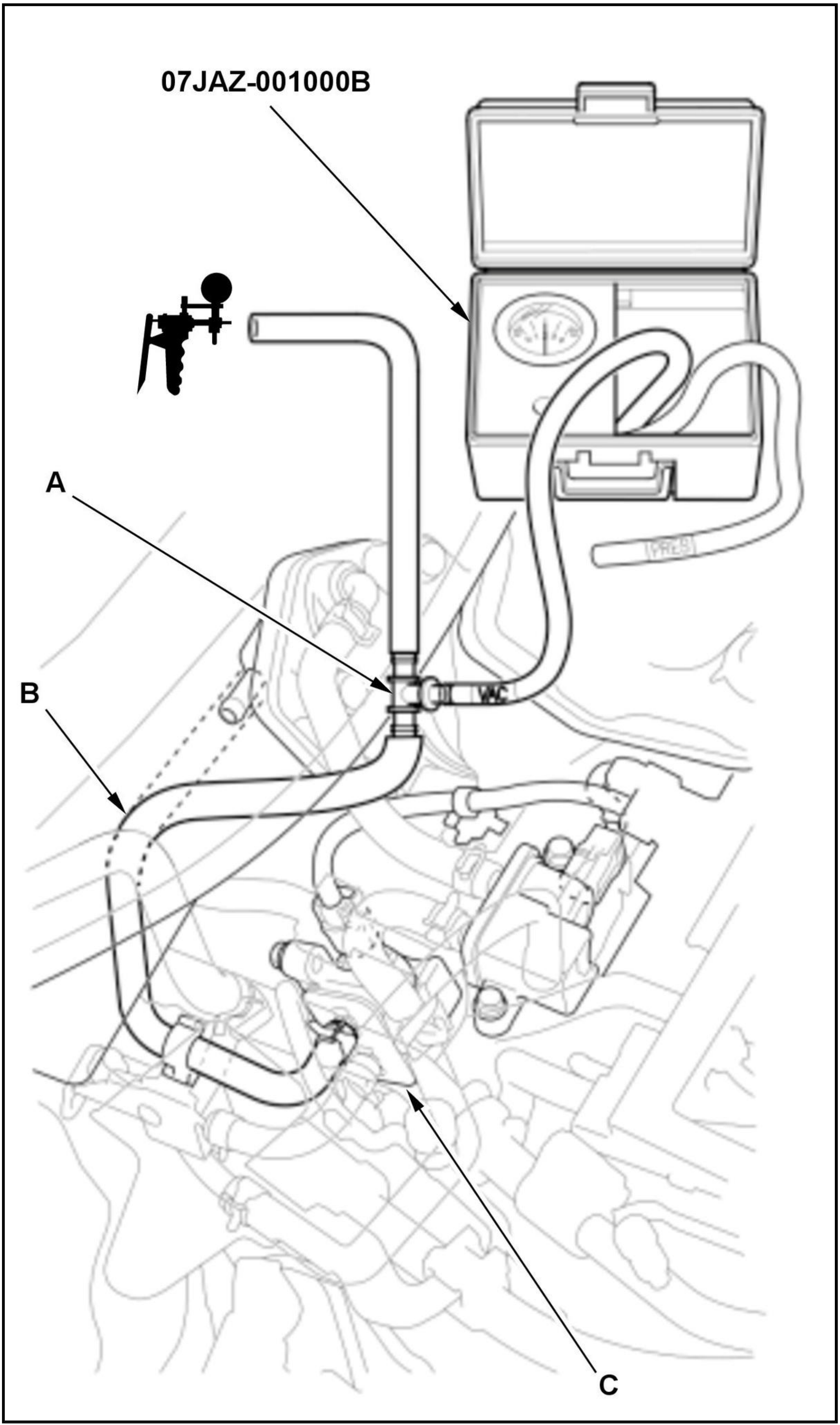
07JAZ-001000B
A
B
C
VAC
PRES

-2. Turn the vehicle to the ON mode.

-3. Apply about 2 kPa (15 mmHg, 0.6 inHg) of vacuum to the hose, and wait for a minute.

-4. Select the EVAP TEST in the Function Test Menu, and do the PCS 1 ON in the SOLENOID TEST with the HDS.

EVAP TEST

Does it hold vacuum, then release?

YES

EVAP canister purge valve 1 is OK, go to step 5.

NO (Does not hold vacuum)

Check for leakage of the hose between EVAP canister purge valve 1 and the intake manifold. If the hose is OK, **replace EVAP canister purge valve 1** .

NO (Does not release vacuum)

Check for a blockage in the hose between EVAP canister purge valve 1 and the intake manifold. If the hose is OK, **replace EVAP canister purge valve 1** .

5. EVAP canister purge valve 2 check

-1. Select the EVAP TEST in the Function Test Menu, and do the PCS 1 OFF in the SOLENOID TEST with the HDS.

EVAP TEST

Remove the vacuum gauge, the tube joint adapter, and the vacuum pump/gauge, and reconnect the hose to EVAP canister purge valve 1.

-3. Connect the T-fitting (A), the vacuum gauge, and the vacuum pump/gauge, 0-30 inHg to the hose (B) of EVAP canister purge valve 2 (C) as shown.

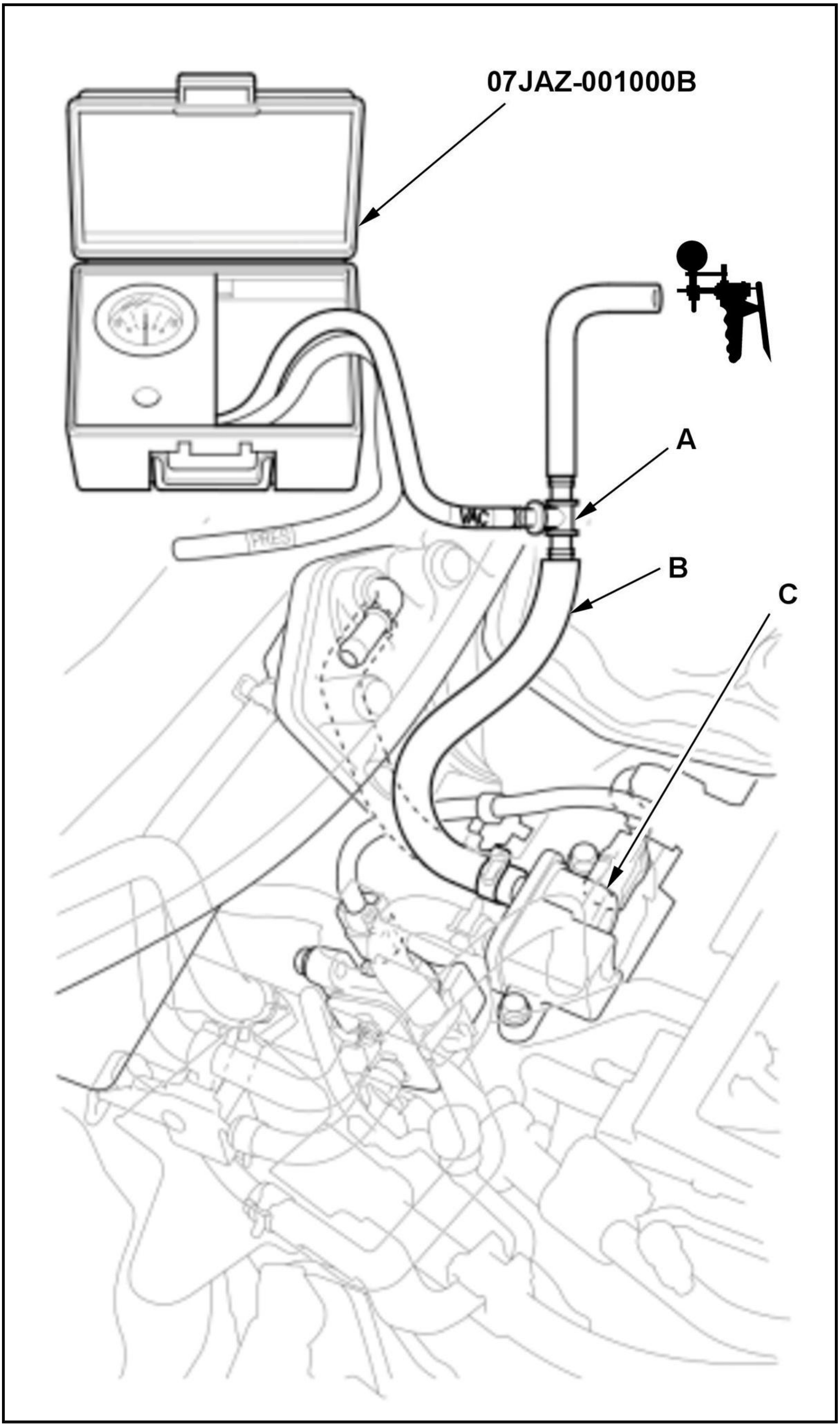
07JAZ-001000B
A
B
C
VAC
PRES

-4. Apply about 2 kPa (15 mmHg, 0.6 inHg) of vacuum to the hose, and wait for a minute.

-5. Select the EVAP TEST in the Function Test Menu, and do the PCS 2 ON in the SOLENOID TEST with the HDS.

EVAP TEST

Does it hold vacuum, then release?

YES

EVAP canister purge valve 2 is OK, go to step 6.

NO (Does not hold vacuum)

Check for leakage of the hose between EVAP canister purge valve 2 and the throttle body. If the hose is OK, **replace EVAP canister purge valve 2** .

NO (Does not release vacuum)

Check for a blockage in the hose between EVAP canister purge valve 2 and the throttle body. If the hose is OK, **replace EVAP canister purge valve 2** .

6. EVAP canister purge line check 1

-1. Select the EVAP TEST in the Function Test Menu, and do the PCS 2 OFF in the SOLENOID TEST with the HDS.

EVAP TEST

Remove the vacuum gauge, the tube joint adapter, and the vacuum pump/gauge, and reconnect the hose to EVAP canister purge valve 2.

-3. Disconnect the hose (A) from the 3-way joint (B), then connect the T-fitting (C), the vacuum gauge, and the vacuum pump/gauge, 0-30 inHg to the 3-way joint as shown.

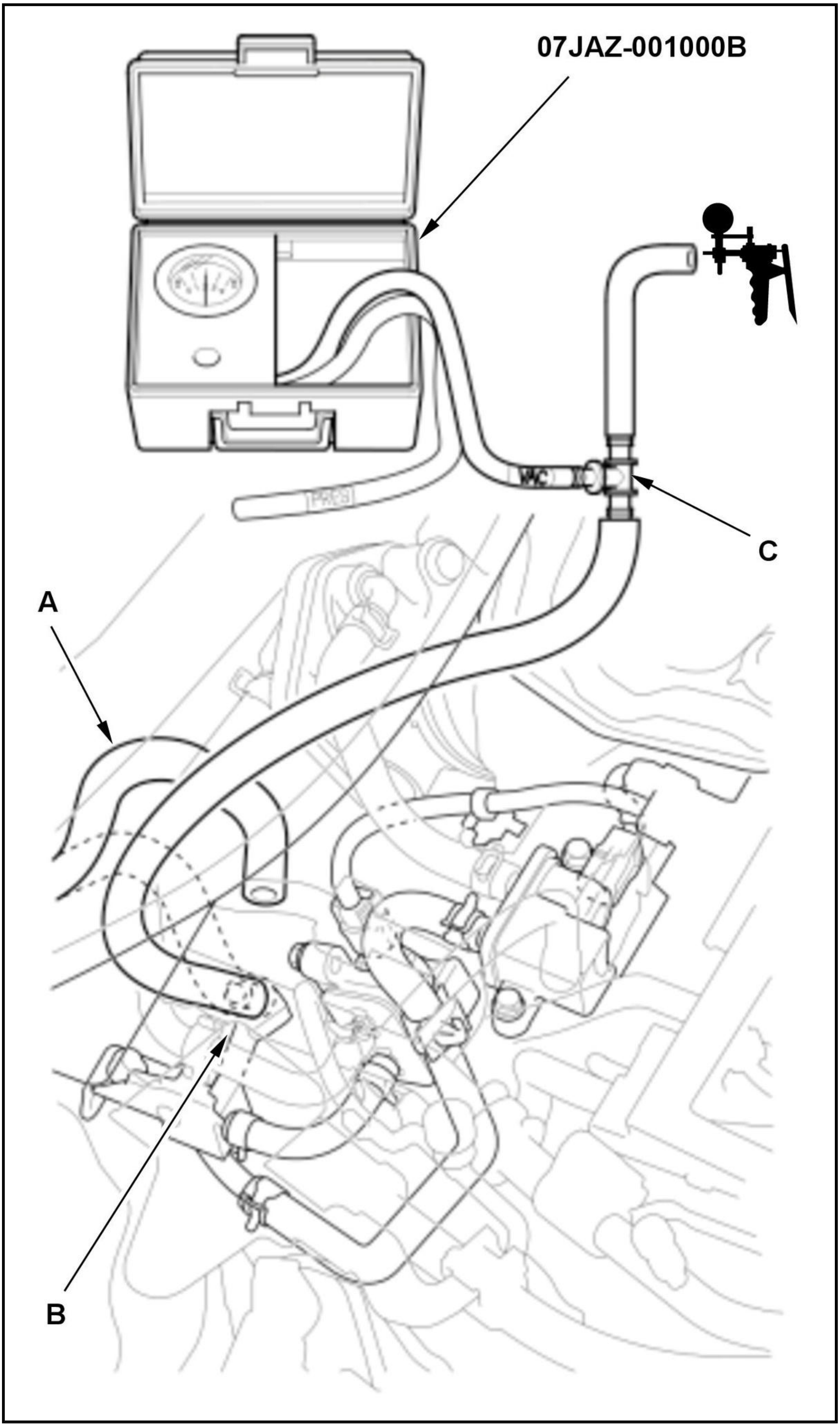
07JAZ-001000B
VAC
PRES
C
A
B

-4. Apply about 2 kPa (15 mmHg, 0.6 inHg) of vacuum to the hose, and wait for a minute.

-5. Select the EVAP TEST in the Function Test Menu, and do the PCS 1 ON in the SOLENOID TEST with the HDS.

EVAP TEST

Does it hold vacuum, then release?

YES

Go to step 7.

NO (Does not hold vacuum)

Check for leakage between the 3-way joint and EVAP canister purge valve 1.

NO (Does not release vacuum)

Check for a blockage between the 3-way joint and EVAP canister purge valve 1.

7. EVAP canister purge line check 2

-1. Select the EVAP TEST in the Function Test Menu, and do the PCS 1 OFF in the SOLENOID TEST with the HDS.

EVAP TEST

Apply about 2 kPa (15 mmHg, 0.6 inHg) of vacuum to the hose, and wait for a minute.

-3. Select the EVAP TEST in the Function Test Menu, and do the PCS 2 ON in the SOLENOID TEST with the HDS.

EVAP TEST

Does it hold vacuum, then release?

YES

Go to step 8.

NO (Does not hold vacuum)

Check for leakage between the 3-way joint and EVAP canister purge valve 2.

NO (Does not release vacuum)

Check for a blockage between the 3-way joint and EVAP canister purge valve 2.

8. EVAP canister purge line check 3

-1. Select the EVAP TEST in the Function Test Menu, and do the PCS 2 OFF in the SOLENOID TEST with the HDS.

EVAP TEST

Remove the vacuum gauge, the tube joint adapter, and the vacuum pump/gauge, and reconnect the hose to the 3-way joint.

-3. Remove the heat shield .

-4. Disconnect the EVAP canister purge line (A) from the EVAP canister (B), then connect the T-fitting (C), the vacuum gauge, and the vacuum pump/gauge, 0-30 inHg to the EVAP canister purge line as shown.

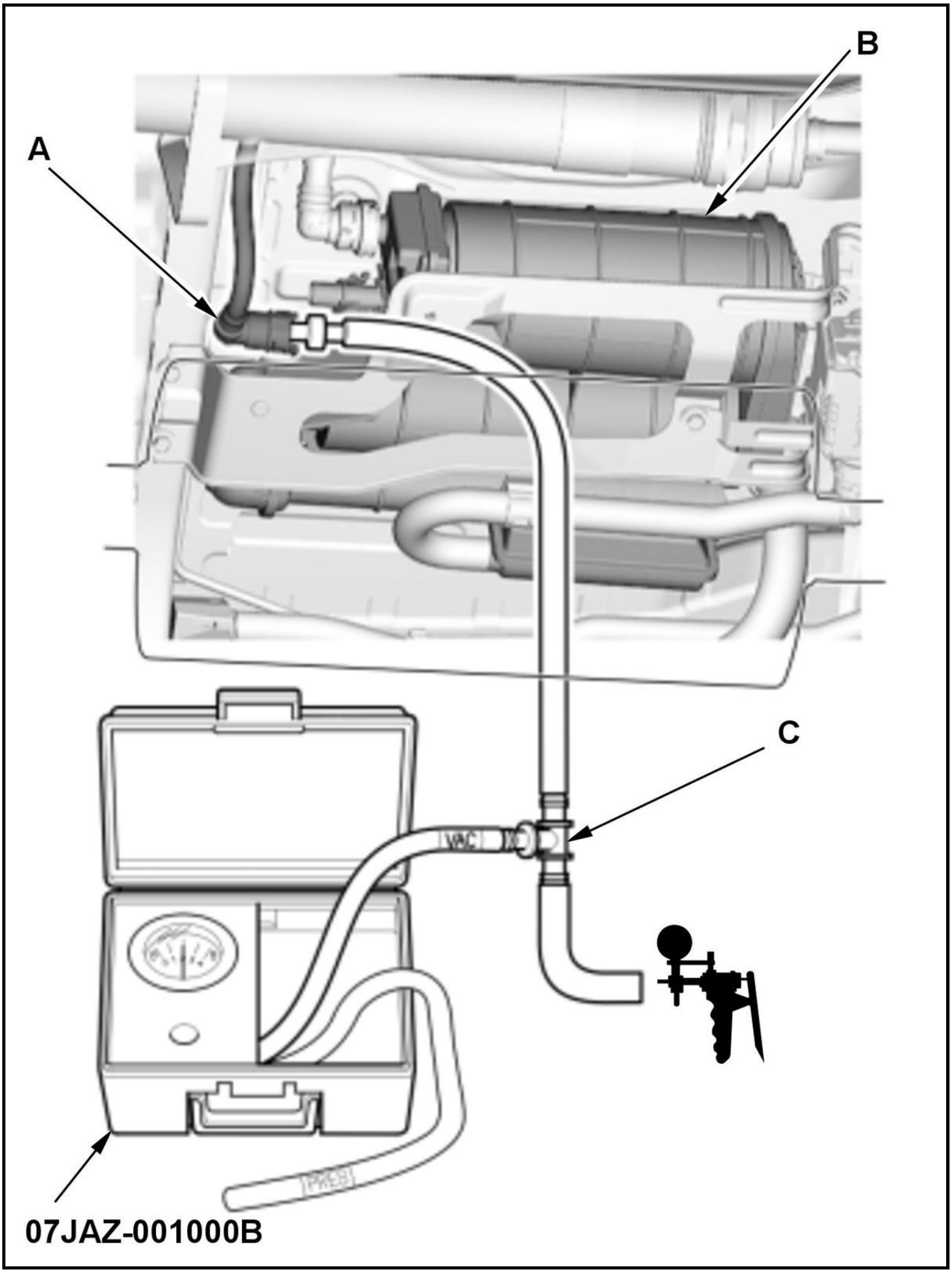

-5. Apply about 2 kPa (15 mmHg, 0.6 inHg) of vacuum to the hose, and wait for a minute.

-6. Select the EVAP TEST in the Function Test Menu, then do the PCS 1 and PCS 2 ON in the SOLENOID TEST with the HDS.

EVAP TEST

Does it hold vacuum, then release?

YES

Go to step 9.

NO (Does not hold vacuum)

Check for leakage between the EVAP canister and the 3-way joint.

NO (Does not release vacuum)

Check for a blockage between the EVAP canister and the 3-way joint.

9. EVAP canister vent line check

-1. Turn the vehicle to the OFF (LOCK) mode.

-2. Disconnect the fuel vent hose (B) and the EVAP canister drain hose A from the EVAP canister (C), and plug the EVAP canister port (D) and (E).

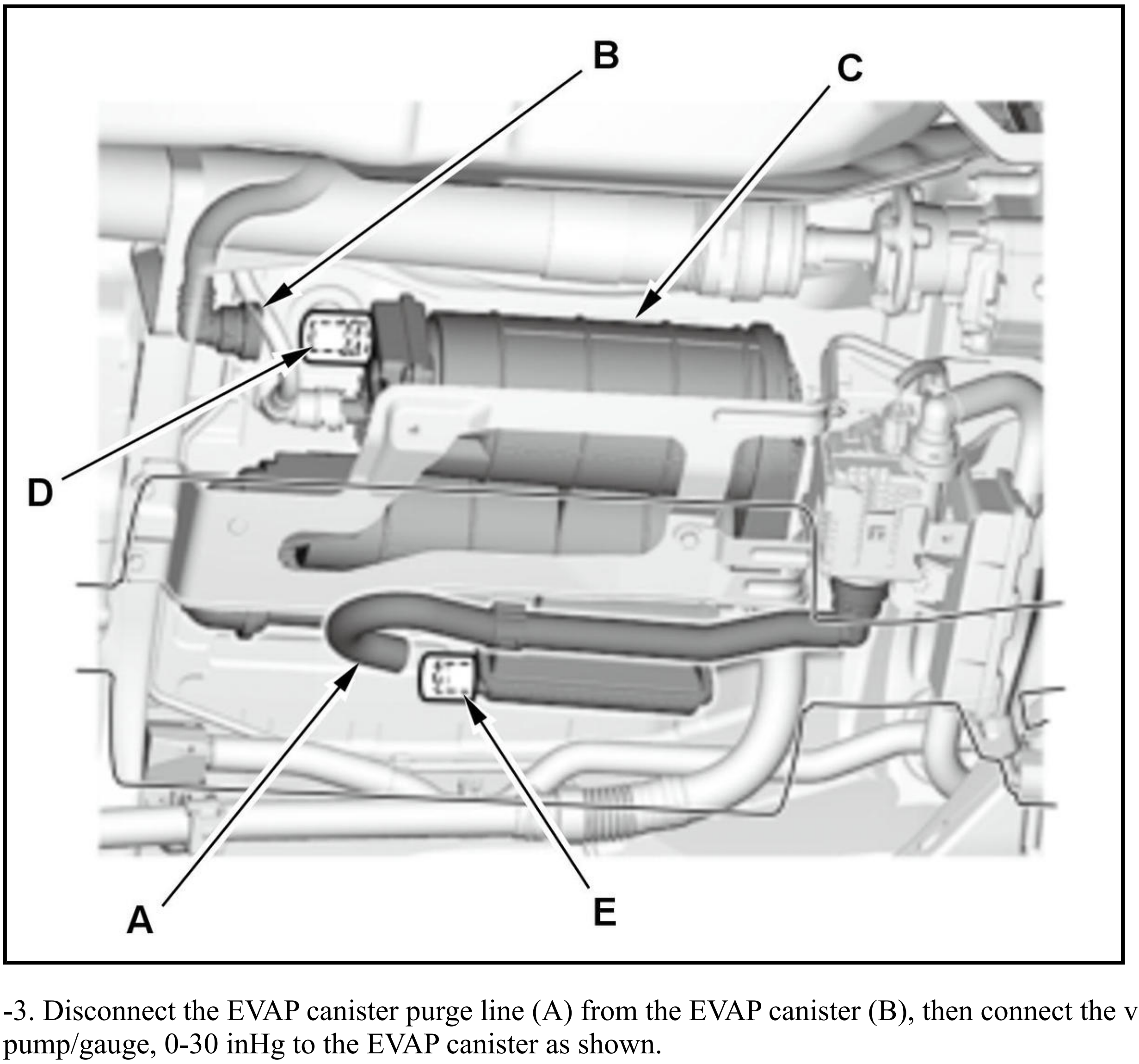

-3. Disconnect the EVAP canister purge line (A) from the EVAP canister (B), then connect the vacuum pump/gauge, 0-30 inHg to the EVAP canister as shown.

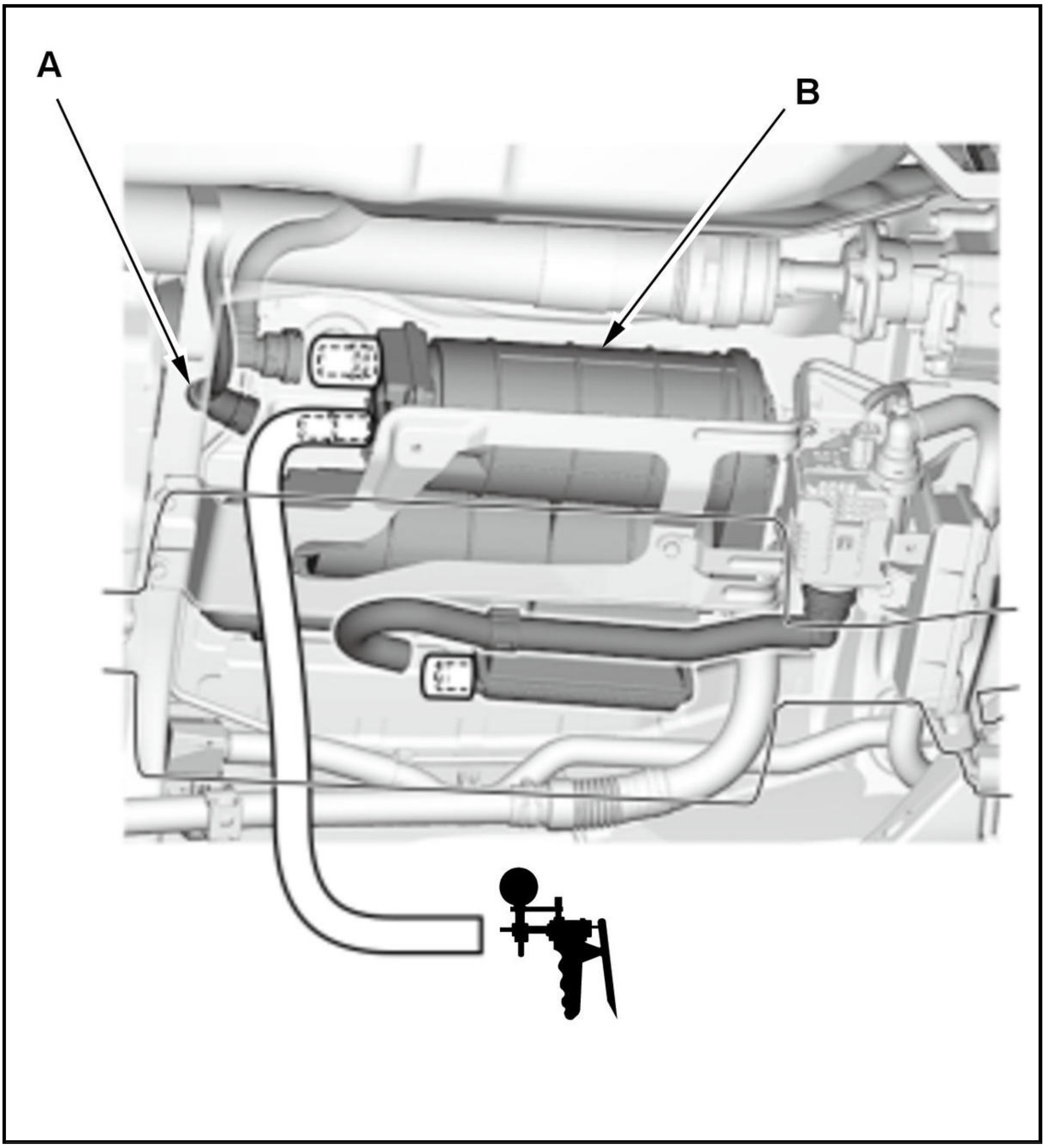

-4. Slowly apply the vacuum to the EVAP canister.

Does it hold vacuum?

YES

Go to step 10.

NO

Replace the EVAP canister .

10. EVAP leak check module performance check

    -1. Connect the EVAP canister drain hose A to the EVAP canister (B).

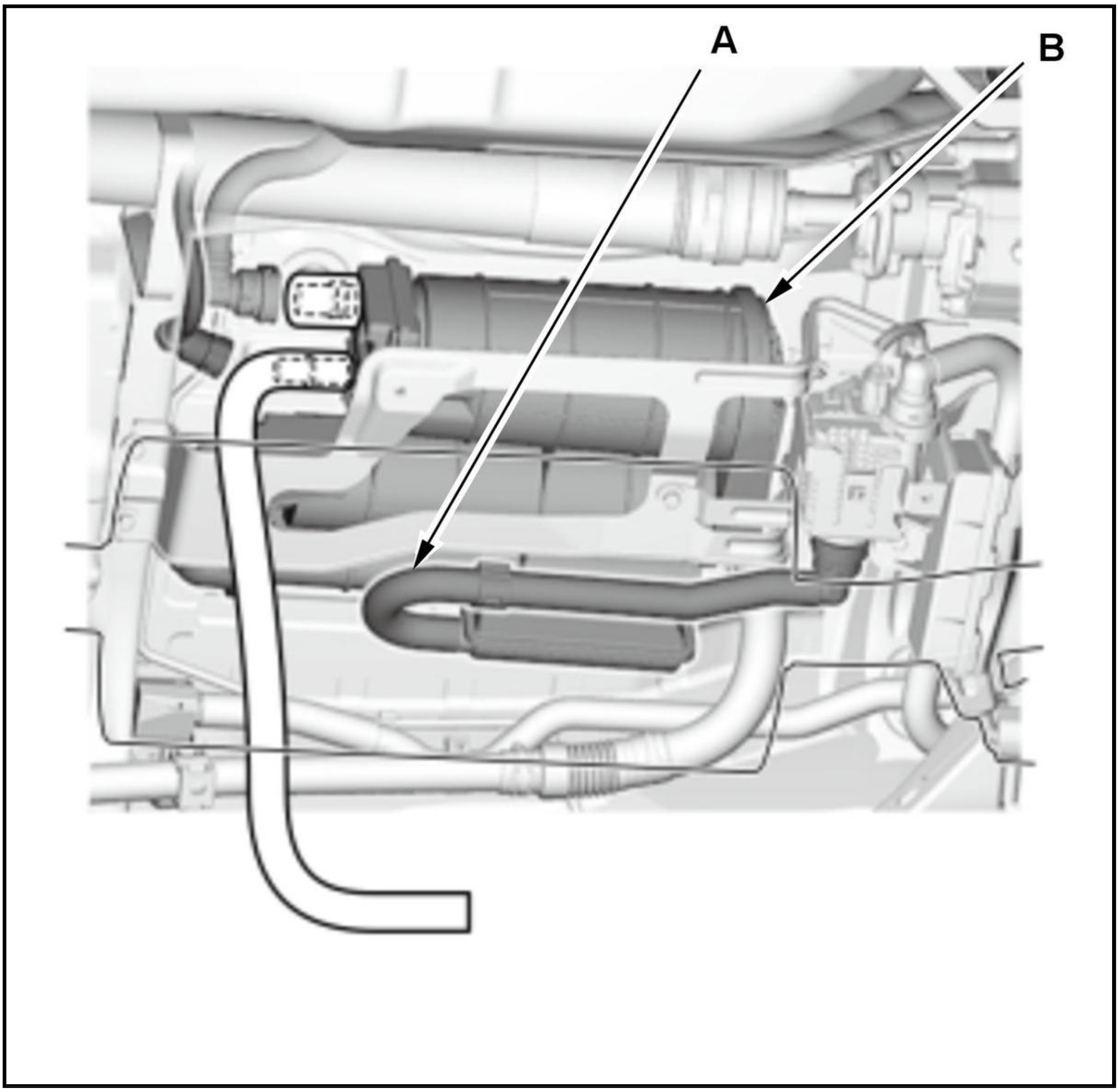

-2. Turn the vehicle to the ON mode.

-3. Select the EVAP TEST in the Function Test Menu, then select the CCV ON in the Single Solenoid Test with the HDS.

EVAP TEST

Check and record the Absolute Pressure of ELCM Pressure Sensor reading in the DATA LIST with the HDS.

Signal	Current conditions	
	Values	Unit
Absolute Pressure of ELCM Pressure Sensor	B	B

-5. Connect the T-fitting (A), the vacuum gauge, and the vacuum pump/gauge, 0-30 inHg to the EVAP canister as shown.

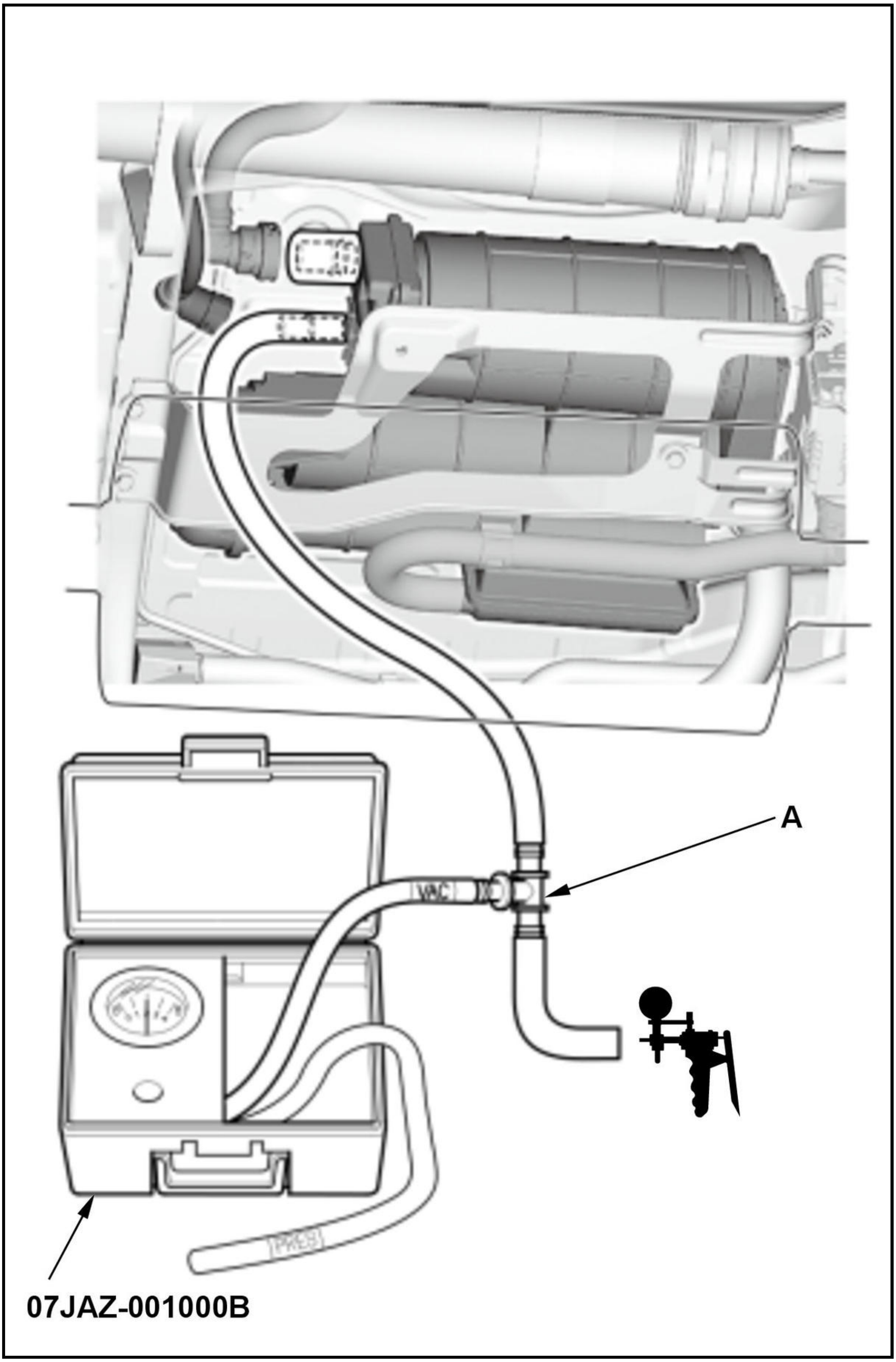
A
VAC
PRES
07JAZ-001000B

-6. Slowly apply about 1.3 kPa (10 mmHg, 0.4 inHg) of vacuum to the hose.

NOTE: Be careful not to exceed the vacuum. If you do, the EVAP leak check module can be damaged.

-7. Check the parameter(s) below with the HDS.

Signal	Current conditions	
	Values	Unit
Absolute Pressure of ELCM Pressure Sensor	B	B

Does the value change?

YES

Check for blockage in the EVAP canister purge line port.

NO

Replace the EVAP leak check module .

DTC P050A

DTC P050A : Cold Start Idle Air Control System Performance Problem

NOTE: Before you troubleshoot, **review the general troubleshooting information** .

DTC Description	Confirmed DTC	Pending DTC
P050A Cold Start Idle Air Control System Performance Problem	B	B

DTC (PGM-FI)

1. PGM-FI system check

   -1. Turn the vehicle to the ON mode.

   -2. Check for Pending or Confirmed DTCs with the HDS.

DTC Description	Confirmed DTC	Pending DTC
B	B	B

   Are any Pending or Confirmed DTCs other than P050A indicated?

   YES

   Go to the indicated DTC's troubleshooting.

   NO

   Go to step 2.

2. Intake air tube visual check

   -1. Turn the vehicle to the OFF (LOCK) mode.

   -2. **Check for a poor connection or blockage at the intake air tube** .

   Is it OK?

   YES

   Go to step 3.

   NO

Reconnect or repair the intake air tube.

3. Air cleaner housing visual check

-1. Check for a poor connection or blockage at the air cleaner housing .

Is it OK?

YES

Go to step 4.

NO

Replace the air cleaner housing .

4. Air cleaner element visual check

-1. Check for dirt or debris on the air cleaner element .

Is it dirty?

YES

Replace the air cleaner element .

NO

Go to step 5.

5. Problem verification

-1. Let the engine cool until the value of ECT Sensor 1 is 122 deg.F (50 deg.C) or less.

Signal	**Current conditions**	
	Values	**Unit**
ECT Sensor 1	B	B

-2. Clear the DTC with the HDS.

-3. Enter the maintenance mode, then start the engine , and let it idle for 10 seconds or more.

-4. Monitor the OBD STATUS for DTC P050A in the DTCs MENU with the HDS.

DTC Description	**OBD STATUS**
P050A Cold Start Idle Air Control System Performance Problem	B

Does the HDS indicate FAILED?

YES

The failure is duplicated. Go to step 6.

NO

If the HDS indicates PASSED, there is an intermittent failure and the system is OK at this time. Check for poor connections or loose terminals at the throttle body, MAF sensor/IAT sensor 1, and the PCM. If the on-board snapshot of this DTC is recorded, try to reproduce the failure under the same conditions with the on-board snapshot . If the HDS indicates EXECUTING, keep idling until a result comes on. If the HDS indicates OUT OF CONDITION, go to step 5-1 and recheck.

6. Throttle body check

-1. Select the ETCS(TAC) TEST in the Function Test Menu with the HDS.

ETCS(TAC) TEST

Is the THROTTLE ACTUATOR CONTROL VALVE normal?

YES

Go to step 7.

NO

Replace the throttle body .

7. MAF sensor performance check

-1. **Enter the maintenance mode, then start the engine** .

-2. Hold the engine speed at 3, 000 rpm without load (in P or N) until the radiator fan comes on, then let it idle.

-3. While holding the engine speed at 2, 500 rpm for 30 seconds, check the parameter(s) below with the HDS.

Signal	Threshold		Current conditions	
	Values	Unit	Values	Unit
MAF Sensor	7.5 - 10.5	g/s	B	B

Do the current condition(s) match the malfunction threshold?

YES

Go to step 8.

NO

Replace MAF sensor/IAT sensor 1 .

8. IAT sensor 1 performance check

-1. Turn the vehicle to the OFF (LOCK) mode.

-2. Allow the engine to cool to ambient temperature.

-3. Note the ambient temperature.

-4. Turn the vehicle to the ON mode.

-5. Quickly note the value of the IAT Sensor (1) in the DATA LIST with the HDS.

Signal	Current conditions	
	Values	Unit
IAT Sensor (1)	B	B

-6. Compare the value of the IAT Sensor (1) with the ambient temperature.

Does the value of the IAT Sensor (1) differ 5.4 deg.F (3 deg.C) or more from the ambient temperature?

YES

Replace MAF sensor/IAT sensor 1 .

NO

MAF sensor/IAT sensor 1 is OK. Check for dirt, carbon, or damage in the throttle bore. If there is dirt or carbon, **clean the throttle body** . If there is damage in the throttle bore, **replace the throttle body** .

DTC P050B

DTC P050B : Cold Start Ignition Timing Control System Performance Problem

NOTE: Before you troubleshoot, **review the general troubleshooting information** .

DTC Description	Confirmed DTC	Pending DTC
P050B Cold Start Ignition Timing Control System Performance Problem	B	B

DTC (PGM-FI)

1. PGM-FI system check

   -1. Turn the vehicle to the ON mode.

   -2. Check for Pending or Confirmed DTCs with the HDS.

DTC Description	Confirmed DTC	Pending DTC
B	B	B

   Are any Pending or Confirmed DTCs other than P050B indicated?

   YES

   Go to the indicated DTC's troubleshooting.

   NO

   Go to step 2.

2. Intake air tube visual check

   -1. Turn the vehicle to the OFF (LOCK) mode.

   -2. **Check for a poor connection or blockage at the intake air tube** .

   Is it OK?

   YES

   Go to step 3.

   NO

   Reconnect or repair the intake air tube.

3. Air cleaner housing visual check

   -1. **Check for a poor connection or blockage at the air cleaner housing** .

Is it OK?

YES

Go to step 4.

NO

Replace the air cleaner housing .

4. Air cleaner element visual check

-1. **Check for dirt or debris on the air cleaner element** .

Is it dirty?

YES

Replace the air cleaner element .

NO

Go to step 5.

5. Problem verification

-1. Let the engine cool until the value of ECT Sensor 1 is 122 deg.F (50 deg.C) or less.

Signal	Current conditions	
	Values	Unit
ECT Sensor 1	B	B

-2. Clear the DTC with the HDS.

-3. **Enter the maintenance mode, then start the engine** , and let it idle for 10 seconds or more.

-4. Monitor the OBD STATUS for DTC P050B in the DTCs MENU with the HDS.

DTC Description	OBD STATUS
P050B Cold Start Ignition Timing Control System Performance Problem	B

Does the HDS indicate FAILED?

YES

The failure is duplicated. Go to step 6.

NO

If the HDS indicates PASSED, there is an intermittent failure and the system is OK at this time. Check for poor connections or loose terminals at the CKP sensor, the throttle body, MAF sensor/IAT sensor 1, ECT sensor 1, ECT sensor 2, and the PCM. **If the on-board snapshot of this DTC is recorded, try to reproduce the failure under the same conditions with the on-board snapshot** . If the HDS indicates EXECUTING, keep idling until a result comes on. If the HDS indicates OUT OF CONDITION, go to step 5-1 and recheck.

6. Determine possible failure area (CKP sensor, others)

-1. **Check the ignition timing** .

Is the ignition timing OK?

YES

Go to step 8.

NO

Go to step 7.

7. CKP sensor and CKP pulse plate visual check

   -1. Turn the vehicle to the OFF (LOCK) mode.

   -2. **Remove the CKP sensor** .

   -3. Check for damage at the CKP sensor and CKP pulse plate.

   Is the CKP sensor and CKP pulse plate damaged?

   YES

   Replace the CKP sensor and/or **the CKP pulse plate** .

   NO

   The CKP sensor and the CKP pulse plate are OK. Check for any authorized service information related to the DTCs or symptoms you are troubleshooting, or **substitute a known-good PCM** .

8. Throttle body check

   -1. Select the ETCS(TAC) TEST in the Function Test Menu with the HDS.

   ETCS(TAC) TEST

   Is the THROTTLE ACTUATOR CONTROL VALVE normal?

   YES

   Go to step 9.

   NO

   Replace the throttle body .

9. MAF sensor performance check

   -1. **Enter the maintenance mode, then start the engine** .

   -2. Hold the engine speed at 3, 000 rpm without load (in P or N) until the radiator fan comes on, then let it idle.

   -3. While holding the engine speed at 2, 500 rpm for 30 seconds, check the parameter(s) below with the HDS.

Signal	Threshold		Current conditions	
	Values	Unit	Values	Unit
MAF Sensor	7.5 - 10.5	g/s	B	B

   Do the current condition(s) match the malfunction threshold?

YES

Go to step 10.

NO

Replace MAF sensor/IAT sensor 1 .

10. ECT sensor 1 and ECT sensor 2 performance check

-1. Turn the vehicle to the OFF (LOCK) mode.

-2. Allow the engine to cool to ambient temperature.

-3. Note the ambient temperature.

-4. Turn the vehicle to the ON mode.

-5. Quickly note the value of the ECT Sensor 1 and ECT Sensor 2 in the DATA LIST with the HDS.

Signal	Current conditions	
	Values	Unit
ECT Sensor 1	B	B
ECT Sensor 2	B	B

-6. Compare the value of ECT Sensor 1 and the value of ECT Sensor 2 with the ambient temperature individually.

Does either sensor differ more than 5.4 deg.F (3 deg.C) from the ambient temperature?

YES

Replace the sensor that differed more than 3 deg.C (5.4 deg.F) from the ambient temperature.

NO

ECT sensor 1 and ECT sensor 2 are OK. Check and repair any problems with the following items. Repair or replace them if needed. If every item is OK, check for any authorized service information related to the DTCs or symptoms you are troubleshooting, or **substitute a known-good PCM** .

- Engine compression and cylinder leakdown
- Engine oil
- A/C system

DTC P050D

DTC P050D : Cold Start Idle Speed Problem

NOTE: Before you troubleshoot, **review the general troubleshooting information** .

DTC Description	Confirmed DTC	Pending DTC
P050D Cold Start Idle Speed Problem	B	B

DTC (PGM-FI)

1. PGM-FI system check

-1. Turn the vehicle to the ON mode.

-2. Check for Pending or Confirmed DTCs with the HDS.

DTC Description	Confirmed DTC	Pending DTC
B	B	B

Are any Pending or Confirmed DTCs other than P050D indicated?

YES

Go to the indicated DTC's troubleshooting.

NO

Go to step 2.

2. Electric powertrain system DTC check

-1. Check for electric powertrain system DTCs with the HDS.

Battery Condition Monitor Module

DTC Description	Confirmed DTC	Pending DTC	Freeze Frame
B	B	B	B

Motor Control Module (Generator Motor)

DTC Description	Confirmed DTC	Pending DTC	Freeze Frame
B	B	B	B

Motor Control Module (Traction Motor)

DTC Description	Confirmed DTC	Pending DTC	Freeze Frame
B	B	B	B

Are any Pending or Confirmed DTCs indicated?

YES

Go to the indicated DTC's troubleshooting.

NO

Go to step 3.

3. Intake air tube visual check

-1. Turn the vehicle to the OFF (LOCK) mode.

-2. Check for a poor connection or blockage at the intake air tube .

Is it OK?

YES

Go to step 4.

NO

Reconnect or repair the intake air tube.

4. Air cleaner housing visual check

-1. **Check for a poor connection or blockage at the air cleaner housing** .

Is it OK?

YES

Go to step 5.

NO

Replace the air cleaner housing .

5. Air cleaner element visual check

-1. **Check for dirt or debris on the air cleaner element** .

Is it dirty?

YES

Replace the air cleaner element .

NO

Go to step 6.

6. Problem verification

-1. Turn the vehicle to the ON mode.

-2. Let the engine cool until the value of ECT Sensor 1 is 122 deg.F (50 deg.C) or less.

Signal	Current conditions	
	Values	Unit
ECT Sensor 1	B	B

-3. Clear the DTC with the HDS.

-4. **Enter the maintenance mode, then start the engine** , and let it idle for 10 seconds or more.

-5. Monitor the OBD STATUS for DTC P050D in the DTCs MENU with the HDS.

DTC Description	OBD STATUS
P050D Cold Start Idle Speed Problem	B

Does the HDS indicate FAILED?

YES

The failure is duplicated. Go to step 7.

NO

If the HDS indicates PASSED, there is an intermittent failure and the system is OK at this time. Check for poor connections or loose terminals at the CKP sensor, the throttle body, MAF sensor/IAT sensor 1, IAT sensor 2, ECT sensor 1, ECT sensor 2, and the PCM. **If the on-board snapshot of this DTC is recorded, try to reproduce the failure under the same conditions with the on-board snapshot** . If the

HDS indicates EXECUTING, keep idling until a result comes on. If the HDS indicates OUT OF CONDITION, go to step 6-2 and recheck.

7. MAF sensor performance check

   -1. **Enter the maintenance mode, then start the engine** .

   -2. Hold the engine speed at 3, 000 rpm without load (in P or N) until the radiator fan comes on, then let it idle.

   -3. While holding the engine speed at 2, 500 rpm for 30 seconds, check the parameter(s) below with the HDS.

Signal	Threshold		Current conditions	
	Values	Unit	Values	Unit
MAF Sensor	7.5 - 10.5	g/s	B	B

   Do the current condition(s) match the malfunction threshold?

   YES

   Go to step 8.

   NO

   Replace MAF sensor/IAT sensor 1 .

8. IAT sensor 1 performance check

   -1. Turn the vehicle to the OFF (LOCK) mode.

   -2. Allow the engine to cool to ambient temperature.

   -3. Note the ambient temperature.

   -4. Turn the vehicle to the ON mode.

   -5. Quickly note the value of the IAT Sensor (1) in the DATA LIST with the HDS.

Signal	Current conditions	
	Values	Unit
IAT Sensor (1)	B	B

   -6. Compare the value of the IAT Sensor (1) with the ambient temperature.

   Does the value of the IAT Sensor (1) differ 5.4 deg.F (3 deg.C) or more from the ambient temperature?

   YES

   Replace MAF sensor/IAT sensor 1 .

   NO

   MAF sensor/IAT sensor 1 is OK. Check for dirt, carbon, or damage in the throttle bore. If there is dirt or carbon, **clean the throttle body** . If there is damage in the throttle bore, **replace the throttle body** .

DTC P0522

DTC P0522 : Engine Oil Pressure Sensor Circuit Low Voltage

NOTE: Before you troubleshoot, **review the general troubleshooting information** .

DTC Description	Confirmed DTC	Pending DTC
P0522 Engine Oil Pressure Sensor Circuit Low Voltage	B	B

DTC (PGM-FI)

1. Problem verification

   -1. Turn the vehicle to the ON mode.

   -2. Check the parameter(s) below with the HDS.

Signal	Malfunction Threshold		Current conditions	
	Values	Unit	Values	Unit
Rocker Arm Oil Pressure Sensor Voltage	Less than 0.18	V	B	B

   Do the current condition(s) match the threshold?

   YES

   The failure is duplicated. Go to step 2.

   NO

   Intermittent failure, the system is OK at this time. Check for poor connections or loose terminals at the engine oil pressure sensor and the PCM. **If the on-board snapshot of this DTC is recorded, try to reproduce the failure under the same conditions with the on-board snapshot** .

2. Determine possible failure area (OPSEN line, others)

   -1. Turn the vehicle to the OFF (LOCK) mode.

   -2. Disconnect the following connector.

Engine oil pressure sensor 3P connector

   -3. Turn the vehicle to the ON mode.

   -4. Check the parameter(s) below with the HDS.

Signal	Malfunction Threshold		Current conditions	
	Values	Unit	Values	Unit
Rocker Arm Oil Pressure Sensor Voltage	Less than 0.18	V	B	B

   Do the current condition(s) match the threshold?

   YES

   Go to step 5.

   NO

   Go to step 3.

3. Determine possible failure area (engine oil pressure sensor, others)

-1. Measure the voltage between test points 1 and 2.

Test condition	Vehicle ON mode
B	Engine oil pressure sensor 3P connector: disconnected
Test point 1	Engine oil pressure sensor 3P connector (female terminals) No. 1: ①
Test point 2	Engine oil pressure sensor 3P connector (female terminals) No. 3: ①

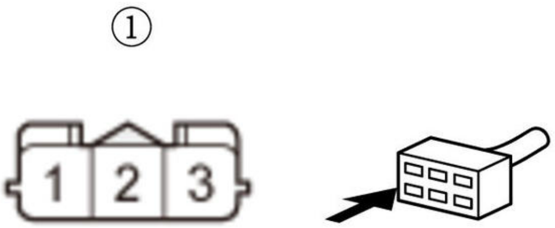

Is there about 5.0 V?

YES

Replace the engine oil pressure sensor .

NO

Go to step 4.

4. Open wire check (VCC2 line)

-1. Turn the vehicle to the OFF (LOCK) mode.

-2. Jump the SCS line with the HDS, and wait more than 1 minute.

-3. Disconnect the following connector.

PCM connector E (80P)

-4. Measure the resistance between test points 1 and 2.

Test condition	Vehicle OFF (LOCK) mode
	Engine oil pressure sensor 3P connector: disconnected
	PCM connector E (80P): disconnected
Test point 1	Engine oil pressure sensor 3P connector (female terminals) No. 3: ①
Test point 2	**PCM connector E (80P) No. 77**

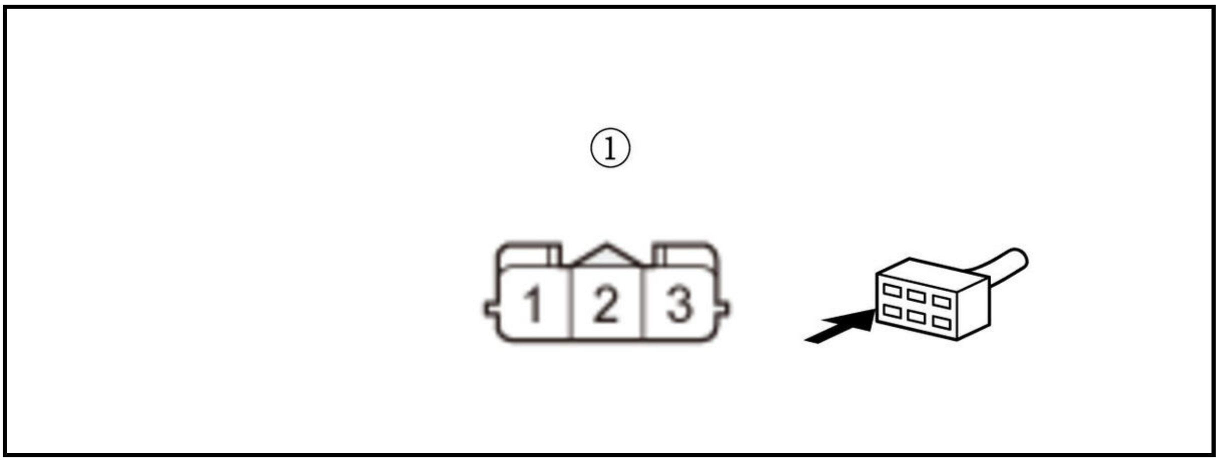

Is there 1.0 Ω or less?

YES

The VCC2 wire is OK. Check for any authorized service information related to the DTCs or symptoms you are troubleshooting, or **substitute a known-good PCM** .

NO

Repair an open in the VCC2 wire between the PCM (E77) and the engine oil pressure sensor.

5. Shorted wire check (OPSEN line)

-1. Turn the vehicle to the OFF (LOCK) mode.

-2. Jump the SCS line with the HDS, and wait more than 1 minute.

-3. Disconnect the following connector.

PCM connector E (80P)

-4. Measure the resistance between test points 1 and 2.

Test condition	Vehicle OFF (LOCK) mode
	Engine oil pressure sensor 3P connector: disconnected
	PCM connector E (80P): disconnected
Test point 1	Engine oil pressure sensor 3P connector (female terminals) No. 2: ①
Test point 2	Body ground

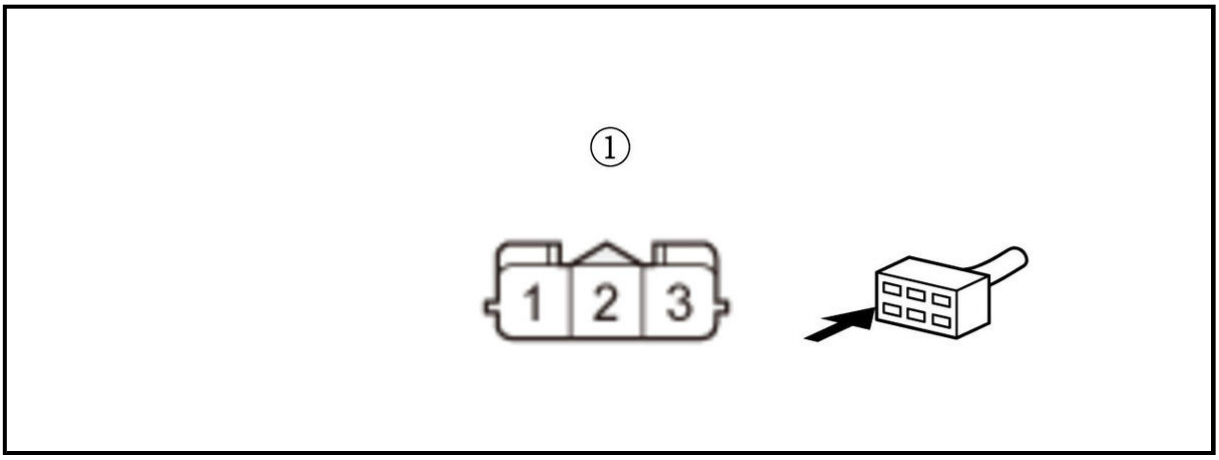

Is there 1 MΩ or more?

YES

The OPSEN wire is OK. Check for any authorized service information related to the DTCs or symptoms you are troubleshooting, or **substitute a known-good PCM** .

NO

Repair a short in the OPSEN wire between the PCM (E58) and the engine oil pressure sensor.

DTC P0523

DTC P0523 : Engine Oil Pressure Sensor Circuit High Voltage

NOTE: Before you troubleshoot, **review the general troubleshooting information** .

DTC Description	Confirmed DTC	Pending DTC
P0523 Engine Oil Pressure Sensor Circuit High Voltage	B	B

DTC (PGM-FI)

1. Problem verification

   -1. Turn the vehicle to the ON mode.

   -2. Check the parameter(s) below with the HDS.

Signal	Malfunction Threshold		Current conditions	
	Values	Unit	Values	Unit
Rocker Arm Oil Pressure Sensor Voltage	More than 4.79	V	B	B

   Do the current condition(s) match the threshold?

   YES

   The failure is duplicated. Go to step 2.

   NO

   Intermittent failure, the system is OK at this time. Check for poor connections or loose terminals at the engine oil pressure sensor and the PCM. **If the on-board snapshot of this DTC is recorded, try to reproduce the failure under the same conditions with the on-board snapshot** .

2. Determine possible failure area (engine oil pressure sensor, others)

   -1. Turn the vehicle to the OFF (LOCK) mode.

   -2. Disconnect the following connector.

Engine oil pressure sensor 3P connector

   -3. Connect terminals A and B with a jumper wire.

Terminal A	Engine oil pressure sensor 3P connector (female terminals) No. 1: ①
Terminal B	Engine oil pressure sensor 3P connector (female terminals) No. 2: ①

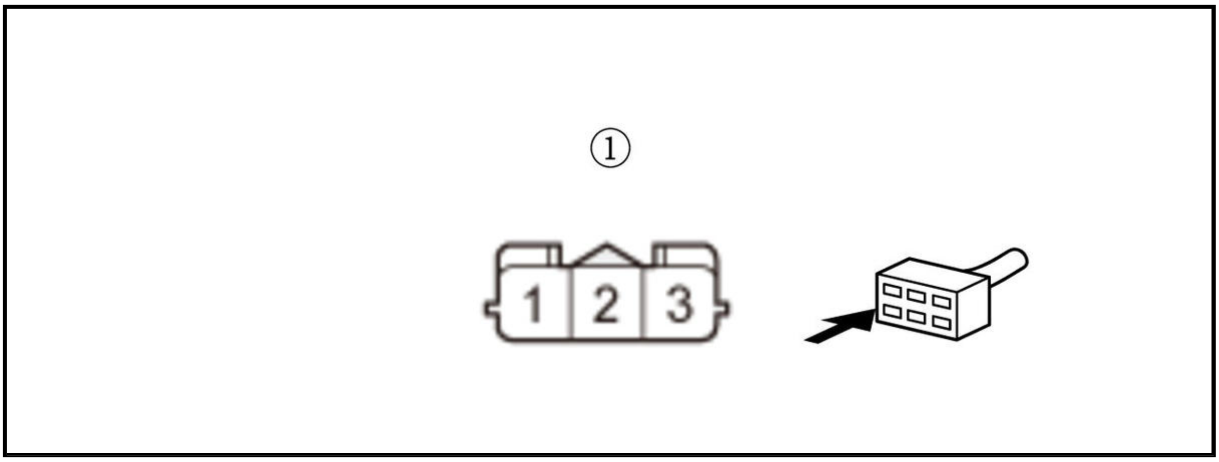

-4. Turn the vehicle to the ON mode.

-5. Check the parameter(s) below with the HDS.

Signal	Malfunction Threshold		Current conditions	
	Values	**Unit**	**Values**	**Unit**
Rocker Arm Oil Pressure Sensor Voltage	More than 4.79	V	B	B

Do the current condition(s) match the threshold?

YES

Go to step 3.

NO

Replace the engine oil pressure sensor .

3. Determine possible failure area (SG2 line, others)

-1. Turn the vehicle to the OFF (LOCK) mode.

-2. Remove the jumper wire from the engine oil pressure sensor 3P connector.

-3. Turn the vehicle to the ON mode.

-4. Measure the voltage between test points 1 and 2.

Test condition	Vehicle ON mode
B	Engine oil pressure sensor 3P connector: disconnected
Test point 1	Engine oil pressure sensor 3P connector (female terminals) No. 1: ①
Test point 2	Engine oil pressure sensor 3P connector (female terminals) No. 3: ①

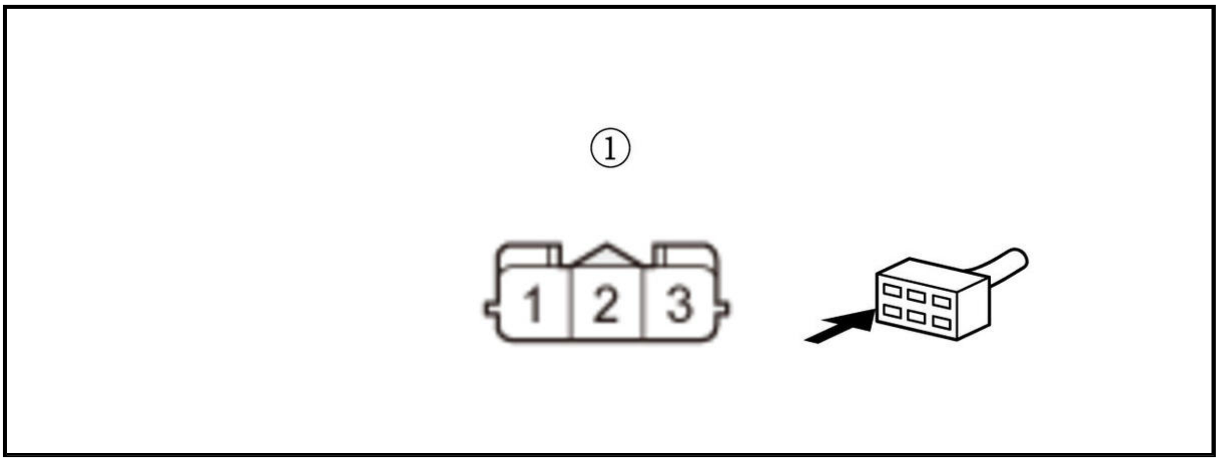

Is there about 5.0 V?

YES

Go to step 4.

NO

Go to step 5.

4. Open wire check (OPSEN line)

-1. Turn the vehicle to the OFF (LOCK) mode.

-2. Jump the SCS line with the HDS, and wait more than 1 minute.

-3. Disconnect the following connector.

PCM connector E (80P)

-4. Measure the resistance between test points 1 and 2.

Test condition	Vehicle OFF (LOCK) mode
	Engine oil pressure sensor 3P connector: disconnected
	PCM connector E (80P): disconnected
Test point 1	Engine oil pressure sensor 3P connector (female terminals) No. 2: ①
Test point 2	**PCM connector E (80P) No. 58**

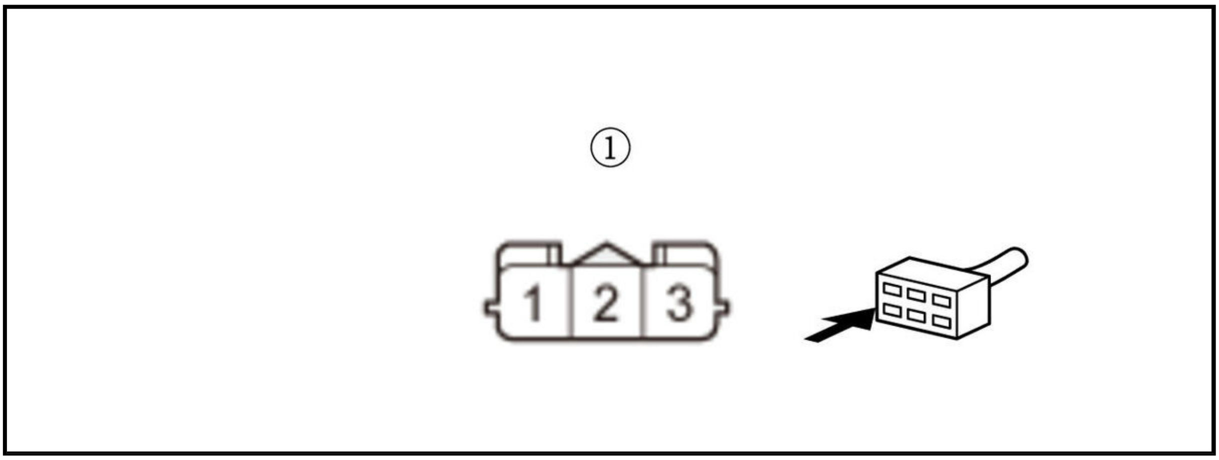

Is there 1.0 Ω or less?

YES

The OPSEN wire is OK. Check for any authorized service information related to the DTCs or symptoms you are troubleshooting, or **substitute a known-good PCM** .

NO

Repair an open in the OPSEN wire between the PCM (E58) and the engine oil pressure sensor.

5. Open wire check (SG2 line)

-1. Turn the vehicle to the OFF (LOCK) mode.

-2. Jump the SCS line with the HDS, and wait more than 1 minute.

-3. Disconnect the following connector.

PCM connector E (80P)

-4. Measure the resistance between test points 1 and 2.

Test condition	Vehicle OFF (LOCK) mode
	Engine oil pressure sensor 3P connector: disconnected
	PCM connector E (80P): disconnected
Test point 1	Engine oil pressure sensor 3P connector (female terminals) No. 1: ①
Test point 2	**PCM connector E (80P) No. 78**

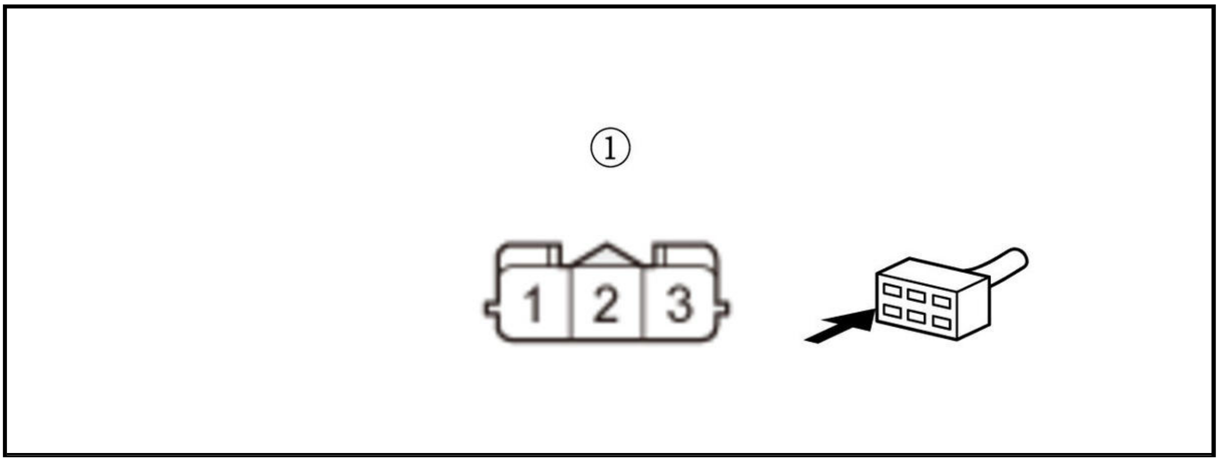

Is there 1.0 Ω or less?

YES

The SG2 wire is OK. Check for any authorized service information related to the DTCs or symptoms you are troubleshooting, or **substitute a known-good PCM** .

NO

Repair an open in the SG2 wire between the PCM (E78) and the engine oil pressure sensor.

DTC P0532

DTC P0532 : A/C Pressure Sensor Circuit Low Voltage

NOTE: Before you troubleshoot, **review the general troubleshooting information** .

DTC Description	Confirmed DTC	Pending DTC
P0532 A/C Pressure Sensor Circuit Low Voltage	B	B

1. Problem verification

   -1. Turn the vehicle to the ON mode.

   -2. Turn the blower switch on.

   -3. Turn the A/C switch on.

   -4. Check the parameter(s) below with the HDS.

Signal	Threshold		Current conditions	
	Values	**Unit**	**Values**	**Unit**
A/C Pressure Sensor Voltage	Less than 0.24	V	B	B

   Do the current condition(s) match the threshold?

   YES

   The failure is duplicated. Go to step 2.

   NO

   Intermittent failure, the system is OK at this time. Check for poor connections or loose terminals at the A/C pressure sensor and the PCM. **If the on-board snapshot of this DTC is recorded, try to reproduce the failure under the same conditions with the on-board snapshot** .

2. Determine possible failure area (PD_SENSOR line, others)

   -1. Turn the vehicle to the OFF (LOCK) mode.

   -2. Disconnect the following connector.

A/C pressure sensor 3P connector

   -3. Turn the vehicle to the ON mode.

   -4. Check the parameter(s) below with the HDS.

Signal	Threshold		Current conditions	
	Values	**Unit**	**Values**	**Unit**
A/C Pressure Sensor Voltage	Less than 0.24	V	B	B

   Do the current condition(s) match the threshold?

   YES

   Go to step 5.

   NO

   Go to step 3.

3. Determine possible failure area (A/C pressure sensor, others)

   -1. Measure the voltage between test points 1 and 2.

Test condition	Vehicle ON mode

B	A/C pressure sensor 3P connector: disconnected
Test point 1	A/C pressure sensor 3P connector (female terminals) No. 1: ①
Test point 2	A/C pressure sensor 3P connector (female terminals) No. 3: ①

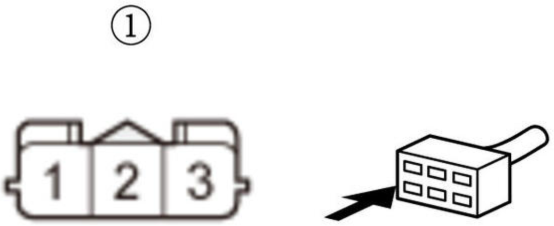

Is there about 5.0 V?

YES

Replace the A/C pressure sensor .

NO

Go to step 4.

4. Open wire check (VCC6 line)

-1. Turn the vehicle to the OFF (LOCK) mode.

-2. Jump the SCS line with the HDS, and wait more than 1 minute.

-3. Disconnect the following connector.

PCM connector E (80P)

-4. Measure the resistance between test points 1 and 2.

Test condition	Vehicle OFF (LOCK) mode
B	A/C pressure sensor 3P connector: disconnected
B	PCM connector E (80P): disconnected
Test point 1	A/C pressure sensor 3P connector (female terminals) No. 3: ①
Test point 2	**PCM connector E (80P) No. 63**

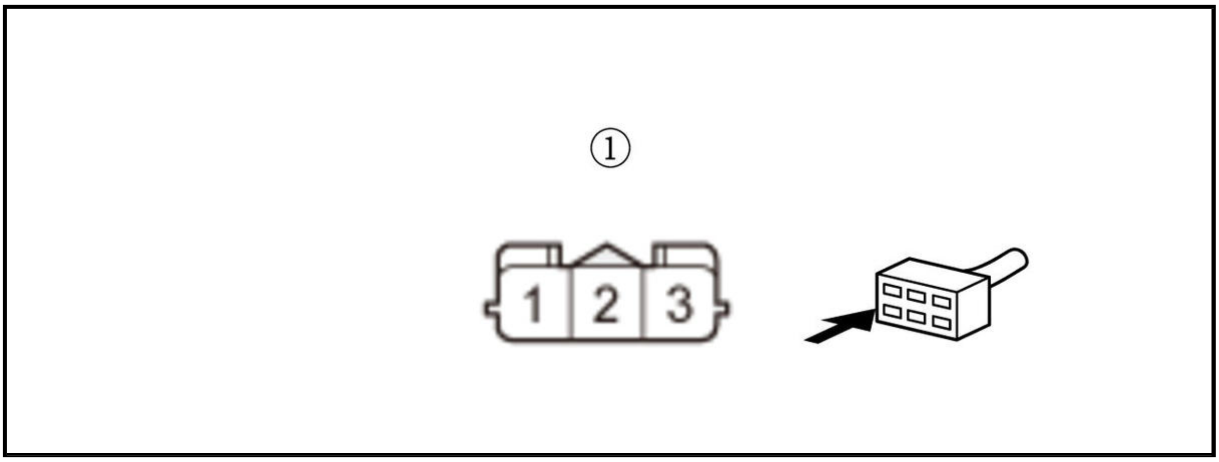

Is there 1.0 Ω or less?

YES

The VCC6 wire is OK. Check for any authorized service information related to the DTCs or symptoms you are troubleshooting, or **substitute a known-good PCM** .

NO

Repair an open in the VCC6 wire between the PCM (E63) and the A/C pressure sensor.

5. Shorted wire check (PD_SENSOR line)

-1. Turn the vehicle to the OFF (LOCK) mode.

-2. Jump the SCS line with the HDS, and wait more than 1 minute.

-3. Disconnect the following connector.

PCM connector A (50P)

-4. Measure the resistance between test points 1 and 2.

Test condition	Vehicle OFF (LOCK) mode
B	A/C pressure sensor 3P connector: disconnected
B	PCM connector A (50P): disconnected
Test point 1	A/C pressure sensor 3P connector (female terminals) No. 2: ①
Test point 2	Body ground

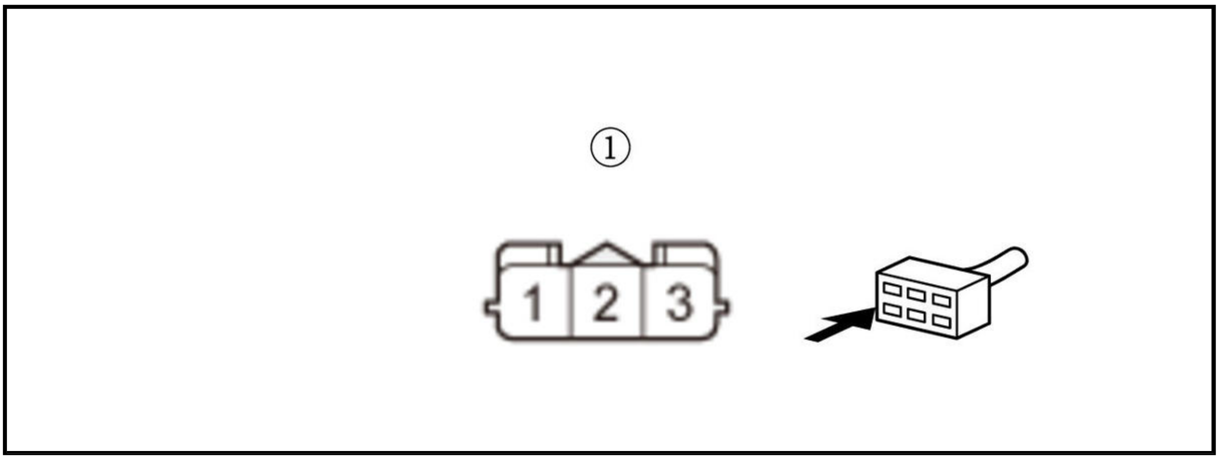

Is there 1 MΩ or more?

YES

The PD_SENSOR wire is OK. Check for any authorized service information related to the DTCs or symptoms you are troubleshooting, or **substitute a known-good PCM** .

NO

Repair a short in the PD_SENSOR wire between the PCM (A33) and the A/C pressure sensor.

DTC P0533

DTC P0533 : A/C Pressure Sensor Circuit High Voltage

NOTE: Before you troubleshoot, **review the general troubleshooting information** .

DTC Description	Confirmed DTC	Pending DTC
P0533 A/C Pressure Sensor Circuit High Voltage	B	B

DTC (PGM-FI)

1. Problem verification

   -1. Turn the vehicle to the ON mode.

   -2. Turn the blower switch on.

   -3. Turn the A/C switch on.

   -4. Check the parameter(s) below with the HDS.

Signal	Threshold		Current conditions	
	Values	Unit	Values	Unit
A/C Pressure Sensor Voltage	More than 4.76	V	B	B

   Do the current condition(s) match the threshold?

   YES

   The failure is duplicated. Go to step 2.

   NO

   Intermittent failure, the system is OK at this time. Check for poor connections or loose terminals at the A/C pressure sensor and the PCM. **If the on-board snapshot of this DTC is recorded, try to reproduce the failure under the same conditions with the on-board snapshot** .

2. Determine possible failure area (A/C pressure sensor, others)

   -1. Turn the vehicle to the OFF (LOCK) mode.

   -2. Disconnect the following connector.

A/C pressure sensor 3P connector

   -3. Connect terminals A and B with a jumper wire.

Terminal A	A/C pressure sensor 3P connector (female terminals) No. 1: ①

Terminal B	A/C pressure sensor 3P connector (female terminals) No. 2: ①

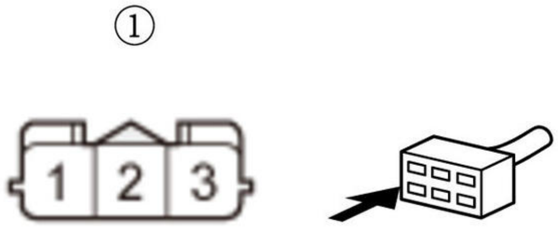

-4. Turn the vehicle to the ON mode.

-5. Check the parameter(s) below with the HDS.

Signal	**Threshold**		**Current conditions**	
	Values	**Unit**	**Values**	**Unit**
A/C Pressure Sensor Voltage	More than 4.76	V	B	B

Do the current condition(s) match the threshold?

YES

Go to step 3.

NO

Replace the A/C pressure sensor .

3. Determine possible failure area (SG6 line, others)

-1. Turn the vehicle to the OFF (LOCK) mode.

-2. Remove the jumper wire from the A/C pressure sensor 3P connector.

-3. Turn the vehicle to the ON mode.

-4. Measure the voltage between test points 1 and 2.

Test condition	Vehicle ON mode
B	A/C pressure sensor 3P connector: disconnected
Test point 1	A/C pressure sensor 3P connector (female terminals) No. 1: ①
Test point 2	A/C pressure sensor 3P connector (female terminals) No. 3: ①

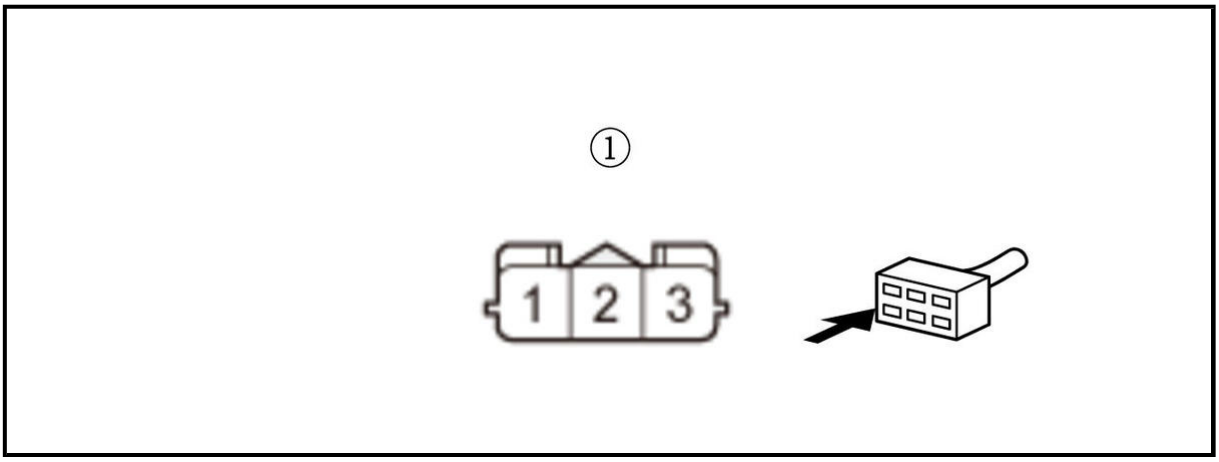

Is there about 5.0 V?

YES

Go to step 4.

NO

Go to step 5.

4. Open wire check (PD_SENSOR line)

-1. Turn the vehicle to the OFF (LOCK) mode.

-2. Jump the SCS line with the HDS, and wait more than 1 minute.

-3. Disconnect the following connector.

PCM connector A (50P)

-4. Measure the voltage between test points 1 and 2.

Test condition	Vehicle OFF (LOCK) mode
B	A/C pressure sensor 3P connector: disconnected
B	PCM connector A (50P): disconnected
Test point 1	A/C pressure sensor 3P connector (female terminals) No. 2: ①
Test point 2	**PCM connector A (50P) No. 33**

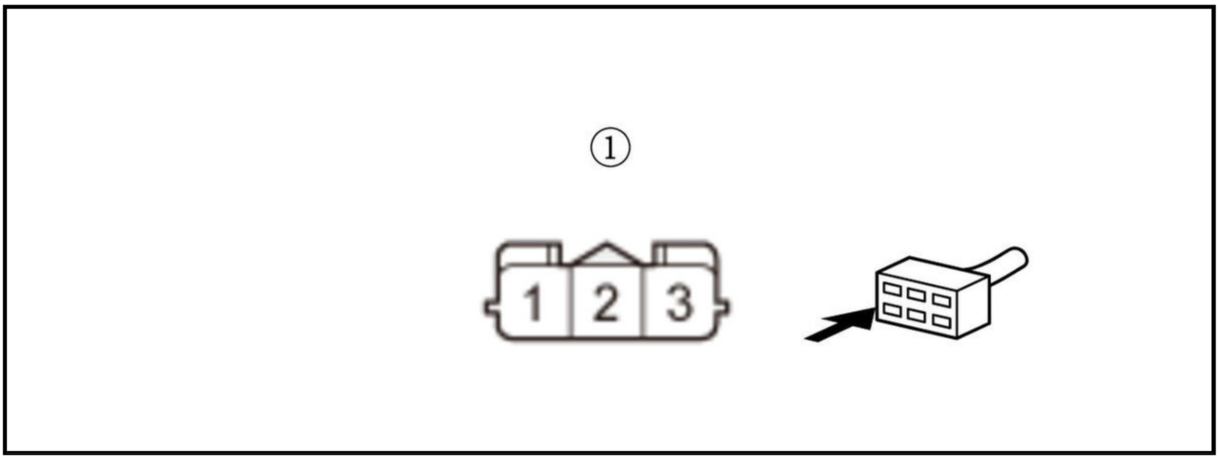

Is there 1.0 Ω or less?

YES

The PD_SENSOR wire is OK. Check for any authorized service information related to the DTCs or symptoms you are troubleshooting, or **substitute a known-good PCM** .

NO

Repair an open in the PD_SENSOR wire between the PCM (A33) and the A/C pressure sensor.

5. Open wire check (SG6 line)

-1. Turn the vehicle to the OFF (LOCK) mode.

-2. Jump the SCS line with the HDS, and wait more than 1 minute.

-3. Disconnect the following connector.

PCM connector E (80P)

-4. Measure the voltage between test points 1 and 2.

Test condition	Vehicle OFF (LOCK) mode
B	A/C pressure sensor 3P connector: disconnected
B	PCM connector E (80P): disconnected
Test point 1	A/C pressure sensor 3P connector (female terminals) No. 1: ①
Test point 2	**PCM connector E (80P) No. 45**

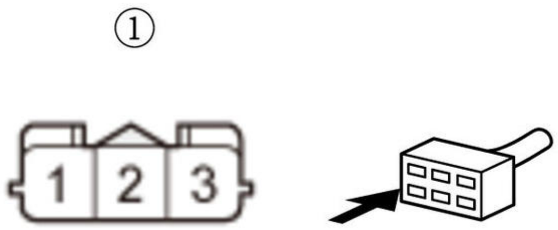

Is there 1.0 Ω or less?

YES

The SG6 wire is OK. Check for any authorized service information related to the DTCs or symptoms you are troubleshooting, or **substitute a known-good PCM** .

NO

Repair an open in the SG6 wire between the PCM (E45) and the A/C pressure sensor.

DTC P055B

DTC P055B : Rocker Arm Oil Pressure Sensor Out of Range

NOTE: Before you troubleshoot, **review the general troubleshooting information** .

DTC Description	Confirmed DTC	Pending DTC
P055B Rocker Arm Oil Pressure Sensor Out of Range	B	B

DTC (PGM-FI)

1. Problem verification

 -1. Turn the vehicle to the ON mode.

 -2. Check the parameter(s) below with the HDS.

Signal	Threshold		Current conditions	
	Values	**Unit**	**Values**	**Unit**
(Rocker Arm) Oil Pressure Sensor (B) Voltage	Less than 0.28	V	B	B

 Do the current condition(s) match the threshold?

 YES

 The failure is duplicated. Go to step 2.

 NO

 Intermittent failure, the system is OK at this time. Check for poor connections or loose terminals at the rocker arm oil pressure sensor and the PCM. **If the on-board snapshot of this DTC is recorded, try to reproduce the failure under the same conditions with the on-board snapshot** .

2. Determine possible failure area (POIL line, others)

 -1. Turn the vehicle to the OFF (LOCK) mode.

 -2. Disconnect the following connector.

Rocker arm oil pressure sensor 3P connector

 -3. Turn the vehicle to the ON mode.

 -4. Check the parameter(s) below with the HDS.

Signal	Threshold		Current conditions	
	Values	**Unit**	**Values**	**Unit**
(Rocker Arm) Oil Pressure Sensor (B) Voltage	Less than 0.28	V	B	B

 Do the current condition(s) match the threshold?

 YES

 Go to step 5.

 NO

 Go to step 3.

3. Determine possible failure area (rocker arm oil pressure sensor, others)

 -1. Measure the voltage between test points 1 and 2.

Test condition	Vehicle ON mode
B	Rocker arm oil pressure sensor 3P connector: disconnected

Test point 1	Rocker arm oil pressure sensor 3P connector (female terminals) No. 1: ①
Test point 2	Rocker arm oil pressure sensor 3P connector (female terminals) No. 3: ①

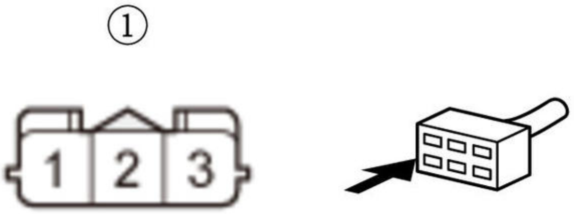

Is there about 5.0 V?

YES

Replace the rocker arm oil pressure sensor .

NO

Go to step 4.

4. Open wire check (VCC2 line)

-1. Turn the vehicle to the OFF (LOCK) mode.

-2. Jump the SCS line with the HDS, and wait more than 1 minute.

-3. Disconnect the following connector.

PCM connector E (80P)

-4. Measure the resistance between test points 1 and 2.

Test condition	Vehicle OFF (LOCK) mode
	Rocker arm oil pressure sensor 3P connector: disconnected
	PCM connector E (80P): disconnected
Test point 1	Rocker arm oil pressure sensor 3P connector (female terminals) No. 3: ①
Test point 2	**PCM connector E (80P) No. 77**

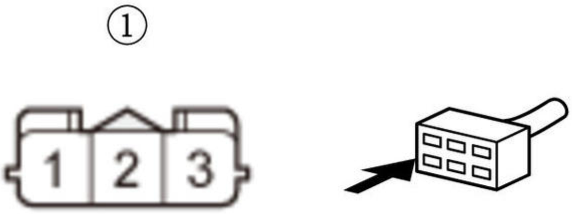

Is there 1.0 Ω or less?

YES

The VCC2 wire is OK. Check for any authorized service information related to the DTCs or symptoms you are troubleshooting, or **substitute a known-good PCM** .

NO

Repair an open in the VCC2 wire between the PCM (E77) and the rocker arm oil pressure sensor.

5. Shorted wire check (POIL line)

-1. Turn the vehicle to the OFF (LOCK) mode.

-2. Jump the SCS line with the HDS, and wait more than 1 minute.

-3. Disconnect the following connector.

PCM connector E (80P)

-4. Measure the resistance between test points 1 and 2.

Test condition	Vehicle OFF (LOCK) mode
	Rocker arm oil pressure sensor 3P connector: disconnected
	PCM connector E (80P): disconnected
Test point 1	Rocker arm oil pressure sensor 3P connector (female terminals) No. 2: ①
Test point 2	Body ground

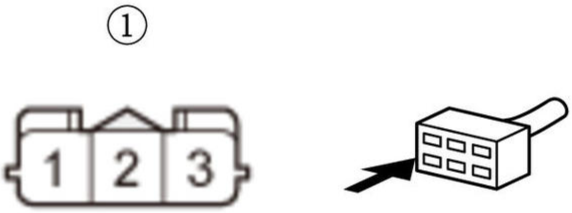

Is there 1 MΩ or more?

YES

The POIL wire is OK. Check for any authorized service information related to the DTCs or symptoms you are troubleshooting, or **substitute a known-good PCM** .

NO

Repair a short in the POIL wire between the PCM (E59) and the rocker arm oil pressure sensor.

DTC P055C

DTC P055C : Rocker Arm Oil Pressure Sensor Circuit Low Voltage

NOTE: Before you troubleshoot, **review the general troubleshooting information** .

DTC Description	Confirmed DTC	Pending DTC
P055C Rocker Arm Oil Pressure Sensor Circuit Low Voltage	B	B

DTC (PGM-FI)

1. Problem verification

-1. Turn the vehicle to the ON mode.

-2. Check the parameter(s) below with the HDS.

Signal	Threshold		Current conditions	
	Values	Unit	Values	Unit
(Rocker Arm) Oil Pressure Sensor (B) Voltage	Less than 0.18	V	B	B

Do the current condition(s) match the threshold?

YES

The failure is duplicated. Go to step 2.

NO

Intermittent failure, the system is OK at this time. Check for poor connections or loose terminals at the rocker arm oil pressure sensor and the PCM. **If the on-board snapshot of this DTC is recorded, try to reproduce the failure under the same conditions with the on-board snapshot** .

2. Determine possible failure area (POIL line, others)

-1. Turn the vehicle to the OFF (LOCK) mode.

-2. Disconnect the following connector.

Rocker arm oil pressure sensor 3P connector

-3. Turn the vehicle to the ON mode.

-4. Check the parameter(s) below with the HDS.

Signal	Threshold		Current conditions	
	Values	Unit	Values	Unit
(Rocker Arm) Oil Pressure Sensor (B) Voltage	Less than 0.18	V	B	B

Do the current condition(s) match the threshold?

YES

Go to step 5.

NO

Go to step 3.

3. Determine possible failure area (rocker arm oil pressure sensor, others)

-1. Measure the voltage between test points 1 and 2.

Test condition	Vehicle ON mode
B	Rocker arm oil pressure sensor 3P connector: disconnected
Test point 1	Rocker arm oil pressure sensor 3P connector (female terminals) No. 1: ①
Test point 2	Rocker arm oil pressure sensor 3P connector (female terminals) No. 3: ①

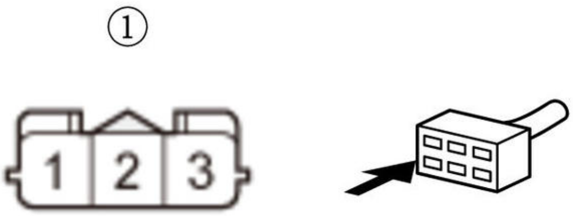

Is there about 5.0 V?

YES

Replace the rocker arm oil pressure sensor .

NO

Go to step 4.

4. Open wire check (VCC2 line)

-1. Turn the vehicle to the OFF (LOCK) mode.

-2. Jump the SCS line with the HDS, and wait more than 1 minute.

-3. Disconnect the following connector.

PCM connector E (80P)

-4. Measure the resistance between test points 1 and 2.

Test condition	Vehicle OFF (LOCK) mode
	Rocker arm oil pressure sensor 3P connector: disconnected
	PCM connector E (80P): disconnected
Test point 1	Rocker arm oil pressure sensor 3P connector (female terminals) No. 3: ①
Test point 2	**PCM connector E (80P) No. 77**

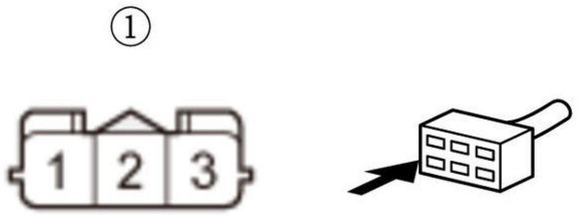

Is there 1.0 Ω or less?

YES

The VCC2 wire is OK. Check for any authorized service information related to the DTCs or symptoms you are troubleshooting, or **substitute a known-good PCM** .

NO

Repair an open in the VCC2 wire between the PCM (E77) and the rocker arm oil pressure sensor.

5. Shorted wire check (POIL line)

-1. Turn the vehicle to the OFF (LOCK) mode.

-2. Jump the SCS line with the HDS, and wait more than 1 minute.

-3. Disconnect the following connector.

PCM connector E (80P)

-4. Measure the resistance between test points 1 and 2.

Test condition	Vehicle OFF (LOCK) mode
	Rocker arm oil pressure sensor 3P connector: disconnected
	PCM connector E (80P): disconnected
Test point 1	Rocker arm oil pressure sensor 3P connector (female terminals) No. 2: ①
Test point 2	Body ground

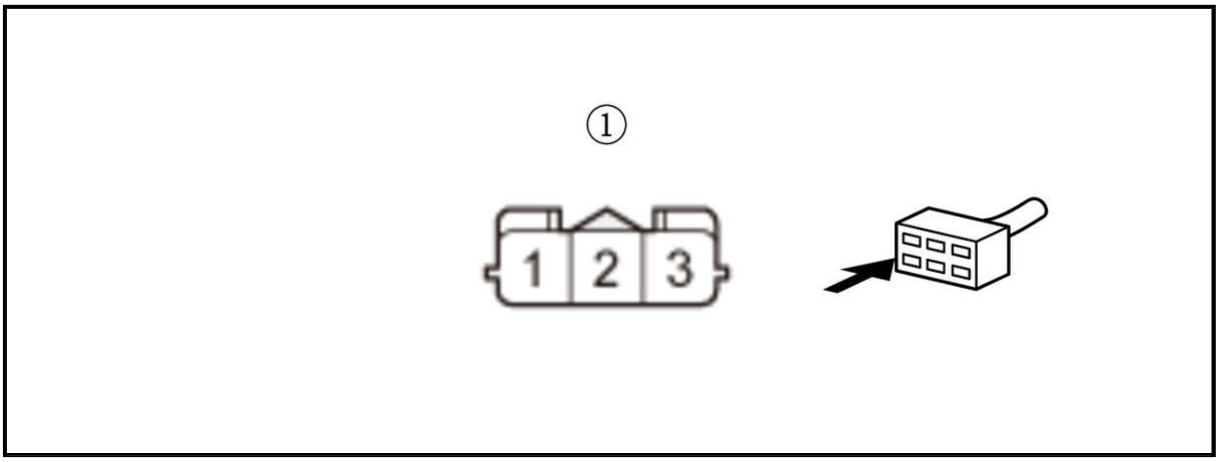

Is there 1 MΩ or more?

YES

The POIL wire is OK. Check for any authorized service information related to the DTCs or symptoms you are troubleshooting, or **substitute a known-good PCM** .

NO

Repair a short in the POIL wire between the PCM (E59) and the rocker arm oil pressure sensor.

DTC P055D

DTC P055D : Rocker Arm Oil Pressure Sensor Circuit High Voltage

NOTE: Before you troubleshoot, **review the general troubleshooting information** .

DTC Description	Confirmed DTC	Pending DTC
P055D Rocker Arm Oil Pressure Sensor Circuit High Voltage	B	B

DTC (PGM-FI)

1. Problem verification

-1. Turn the vehicle to the ON mode.

-2. Check the parameter(s) below with the HDS.

Signal	Threshold		Current conditions	
	Values	Unit	Values	Unit
(Rocker Arm) Oil Pressure Sensor (B) Voltage	More than 4.79	V	B	B

Do the current condition(s) match the threshold?

YES

The failure is duplicated. Go to step 2.

NO

Intermittent failure, the system is OK at this time. Check for poor connections or loose terminals at the rocker arm oil pressure sensor and the PCM. **If the on-board snapshot of this DTC is recorded, try to reproduce the failure under the same conditions with the on-board snapshot** .

2. Determine possible failure area (rocker arm oil pressure sensor, others)

-1. Turn the vehicle to the OFF (LOCK) mode.

-2. Disconnect the following connector.

Rocker arm oil pressure sensor 3P connector

-3. Connect terminals A and B with a jumper wire.

Terminal A	Rocker arm oil pressure sensor 3P connector (female terminals) No. 1: ①
Terminal B	Rocker arm oil pressure sensor 3P connector (female terminals) No. 2: ①

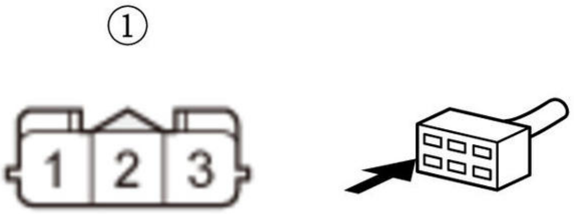

-4. Turn the vehicle to the ON mode.

-5. Check the parameter(s) below with the HDS.

Signal	Threshold		Current conditions	
	Values	Unit	Values	Unit
(Rocker Arm) Oil Pressure Sensor (B) Voltage	More than 4.79	V	B	B

Do the current condition(s) match the threshold?

YES

Go to step 3.

NO

Replace the rocker arm oil pressure sensor .

3. Determine possible failure area (SG2 line, others)

-1. Turn the vehicle to the OFF (LOCK) mode.

-2. Remove the jumper wire from the rocker arm oil pressure sensor 3P connector.

-3. Turn the vehicle to the ON mode.

-4. Measure the voltage between test points 1 and 2.

Test condition	Vehicle ON mode

B	Rocker arm oil pressure sensor 3P connector: disconnected
Test point 1	Rocker arm oil pressure sensor 3P connector (female terminals) No. 1: ①
Test point 2	Rocker arm oil pressure sensor 3P connector (female terminals) No. 3: ①

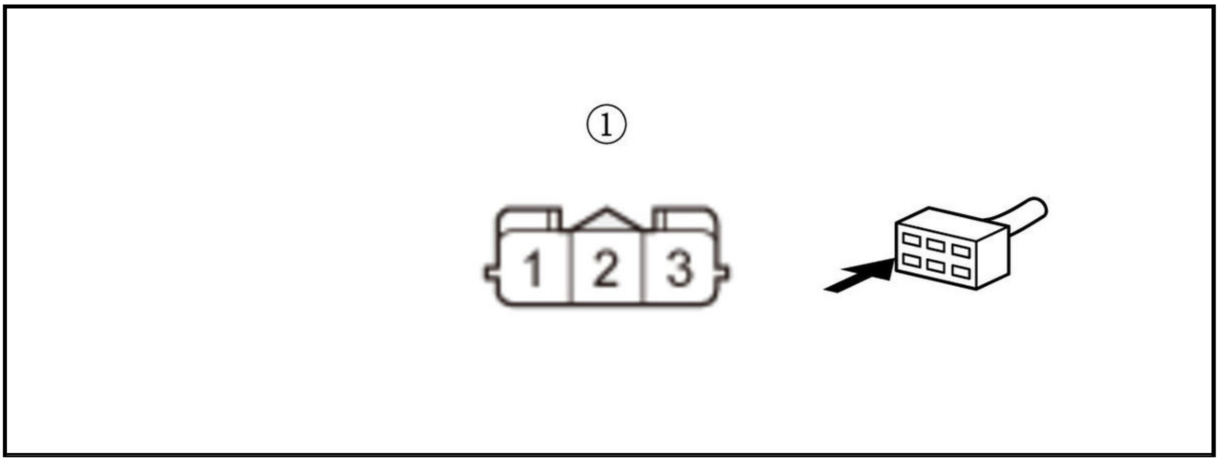

Is there about 5.0 V?

YES

Go to step 5.

NO

Go to step 4.

4. Open wire check (SG2 line)

-1. Turn the vehicle to the OFF (LOCK) mode.

-2. Jump the SCS line with the HDS, and wait more than 1 minute.

-3. Disconnect the following connector.

PCM connector E (80P)

-4. Measure the resistance between test points 1 and 2.

Test condition	Vehicle OFF (LOCK) mode
	Rocker arm oil pressure sensor 3P connector: disconnected
	PCM connector E (80P): disconnected
Test point 1	Rocker arm oil pressure sensor 3P connector (female terminals) No. 1: ①
Test point 2	**PCM connector E (80P) No. 78**

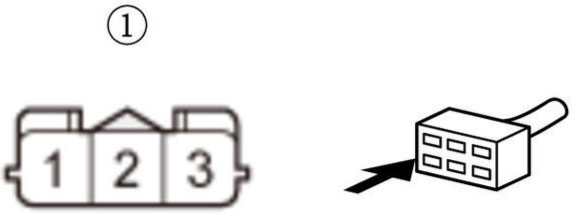

Is there 1.0 Ω or less?

YES

The SG2 wire is OK. Check for any authorized service information related to the DTCs or symptoms you are troubleshooting, or **substitute a known-good PCM** .

NO

Repair an open in the SG2 wire between the PCM (E78) and the rocker arm oil pressure sensor.

5. Open wire check (POIL line)

-1. Turn the vehicle to the OFF (LOCK) mode.

-2. Jump the SCS line with the HDS, and wait more than 1 minute.

-3. Disconnect the following connector.

PCM connector E (80P)

-4. Measure the resistance between test points 1 and 2.

Test condition	Vehicle OFF (LOCK) mode
	Rocker arm oil pressure sensor 3P connector: disconnected
	PCM connector E (80P): disconnected
Test point 1	Rocker arm oil pressure sensor 3P connector (female terminals) No. 2: ①
Test point 2	**PCM connector E (80P) No. 59**

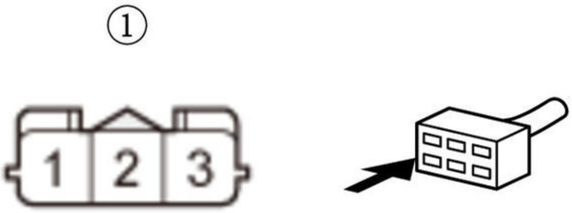

Is there 1.0 Ω or less?

YES

The POIL wire is OK. Check for any authorized service information related to the DTCs or symptoms you are troubleshooting, or **substitute a known-good PCM** .

NO

Repair an open in the POIL wire between the PCM (E59) and the rocker arm oil pressure sensor.

DTC P0560

DTC P0560 : PCM Power Source Circuit Unexpected Voltage

NOTE: Before you troubleshoot, **review the general troubleshooting information** .

DTC Description	Confirmed DTC	Pending DTC
P0560 PCM Power Source Circuit Unexpected Voltage	B	B

DTC (PGM-FI)

1. Problem verification

   -1. Turn the vehicle to the ON mode.

   -2. Clear the DTC with the HDS.

   -3. Wait 5 seconds or more.

   -4. Check for Pending or Confirmed DTCs with the HDS.

DTC Description	Confirmed DTC	Pending DTC
P0560 PCM Power Source Circuit Unexpected Voltage	B	B

Is DTC P0560 indicated?

YES

The failure is duplicated. Go to step 2.

NO

Intermittent failure, the system is OK at this time. Check for poor connections or loose terminals at the **No. A12 fuse** and the PCM. **If the on-board snapshot of this DTC is recorded, try to reproduce the failure under the same conditions with the on-board snapshot** .

2. Fuse check

   -1. Turn the vehicle to the OFF (LOCK) mode.

   -2. Check the following fuse.

Fuse	**No. A12**

Is the fuse OK?

YES

Go to step 3.

NO

Repair a short in the +B_BACKUP_FI-ECU wire between the PCM (A7) and the No. A12 fuse. Also replace the No. A12 fuse.

3. Open wire check (+B_BACKUP_FI-ECU line)

-1. Jump the SCS line with the HDS, and wait more than 1 minute.

-2. Disconnect the following connector.

PCM connector A (50P)

-3. Measure the voltage between test points 1 and 2.

Test condition	Vehicle OFF (LOCK) mode
B	PCM connector A (50P): disconnected
Test point 1	**PCM connector A (50P) No. 7**
Test point 2	Body ground

Is there battery voltage?

YES

The +B_BACKUP_FI-ECU wire is OK. Check for any authorized service information related to the DTCs or symptoms you are troubleshooting, or **substitute a known-good PCM** .

NO

Repair an open in the +B_BACKUP_FI-ECU wire between the PCM (A7) and the **No. A12 fuse** .

DTC P0563

DTC P0563 : PCM Power Source Circuit Unexpected Voltage

NOTE: Before you troubleshoot, **review the general troubleshooting information** .

DTC Description	Confirmed DTC	Pending DTC
P0563 PCM Power Source Circuit Unexpected Voltage	B	B

DTC (PGM-FI)

1. Problem verification

-1. Turn the vehicle to the ON mode.

-2. Clear the DTC with the HDS.

-3. Turn the vehicle to the OFF (LOCK) mode.

-4. Wait 10 seconds.

-5. Turn the vehicle to the ON mode.

-6. Check for Pending or Confirmed DTCs with the HDS.

DTC Description	Confirmed DTC	Pending DTC
P0563 PCM Power Source Circuit Unexpected Voltage	B	B

Is DTC P0563 indicated?

YES

The failure is duplicated. Go to step 2.

NO

Intermittent failure, the system is OK at this time. Check for poor connections or loose terminals at PGM-FI main relay 1 and the PCM. **If the on-board snapshot of this DTC is recorded, try to reproduce the failure under the same conditions with the on-board snapshot** .

2. Determine possible failure area (FI_MAIN_RLY_OUT line, others)

-1. Turn the vehicle to the OFF (LOCK) mode.

-2. Jump the SCS line with the HDS, and wait more than 1 minute.

-3. Disconnect the following connector.

PCM connector A (50P)

-4. Measure the voltage between test points 1 and 2.

Test condition	Vehicle OFF (LOCK) mode
B	PCM connector A (50P): disconnected
Test point 1	**PCM connector A (50P) No. 8**
Test point 2	Body ground

Is there battery voltage?

YES

Go to step 4.

NO

Go to step 3.

3. Shorted wire check (FI_MAIN_RLY_CL- line)

-1. Disconnect the following connector.

Relay circuit board connector C (18P)

-2. Measure the resistance between test points 1 and 2.

Test condition	Vehicle OFF (LOCK) mode
B	PCM connector A (50P): disconnected
B	Relay circuit board connector C (18P): disconnected
Test point 1	**PCM connector A (50P) No. 5**
Test point 2	Body ground

Is there 1 MΩ or more?

YES

Go to step 5.

NO

Repair a short in the FI_MAIN_RLY_CL- wire between the PCM (A5) and the relay circuit board.

4. Shorted wire check (FI_MAIN_RLY_OUT line to power)

-1. Disconnect the following connector.

Relay circuit board connector C (18P)

-2. Measure the voltage between test points 1 and 2.

Test condition	Vehicle OFF (LOCK) mode PCM connector A (50P): disconnected Relay circuit board connector C (18P): disconnected
Test point 1	**PCM connector A (50P) No. 8**
Test point 2	Body ground

Is there battery voltage?

YES

Repair a short to power in the FI_MAIN_RLY_OUT wire between the PCM (A8) and the relay circuit board.

NO

Go to step 5.

5. Relay circuit board check

-1. **Remove and test the relay circuit board** .

Is the relay circuit board OK?

YES

Check for any authorized service information related to the DTCs or symptoms you are troubleshooting, or **substitute a known-good PCM** .

NO

Replace the relay circuit board .

DTC P0571

DTC P0571 : Brake Pedal Position Switch Circuit Malfunction

NOTE:

- Before you troubleshoot, **review the general troubleshooting information** .
- If the accelerator pedal is pressed with pressing the brake pedal lightly and continuously for 5 minutes or more, this DTC will be stored.

DTC Description	Confirmed DTC	Pending DTC
P0571 Brake Pedal Position Switch Circuit Malfunction	B	B

DTC (PGM-FI)

1. Brake lights check 1

-1. Check the brake lights without the brake pedal pressed.

Do the brake lights stay on?

YES

Go to step 9.

NO

Go to step 2

2. Brake lights check 2

-1. Check the brake lights with the brake pedal pressed.

Do the brake lights come on?

YES

Go to step 3.

NO

Go to step 5.

3. Brake pedal position switch signal check

-1. Turn the vehicle to the ON mode.

-2. Check the parameter(s) below with the HDS.

Signal	**Current conditions**	
	Values	**Unit**
Brake Switch	B	B

Does the signal change ON and OFF when the brake pedal is pressed and released?

YES

Intermittent failure, the system is OK at this time. Check for poor connections or loose terminals at the brake pedal position switch and the PCM. **If the on-board snapshot of this DTC is recorded, try to reproduce the failure under the same conditions with the on-board snapshot** .

NO

Go to step 4.

4. Open wire check (STOP_SW line)

-1. Turn the vehicle to the OFF (LOCK) mode.

-2. Jump the SCS line with the HDS, and wait more than 1 minute.

-3. Disconnect the following connector.

PCM connector A (50P)

-4. Press the brake pedal and measure the voltage between test points 1 and 2.

Test condition	Vehicle OFF (LOCK) mode
	PCM connector A (50P): disconnected
	Brake pedal: pressed
Test point 1	**PCM connector A (50P) No. 26**
Test point 2	Body ground

Is there battery voltage?

YES

The STOP_SW wire is OK. Check for any authorized service information related to the DTCs or symptoms you are troubleshooting, or **substitute a known-good PCM** .

NO

Repair an open in the STOP_SW wire between the PCM (A26) and the brake pedal position switch.

5. Brake pedal position switch check

-1. **Test the brake pedal position switch** .

Is the brake pedal position switch normal?

YES

Go to step 6.

NO

Replace the brake pedal position switch .

6. Fuse check

-1. Check the following fuse.

Fuse	**No. A9**

Is the fuse OK?

YES

Go to step 7.

NO

Replace the No. A9 fuse. Also check for a short to ground on the No. A9 fuse circuit if needed.

7. Open wire check (+B_STOP line)

-1. Measure the voltage between test points 1 and 2.

Test condition	Vehicle OFF (LOCK) mode
Test point 1	Brake pedal position switch 4P connector (female terminals) No. 4: ①
Test point 2	Body ground

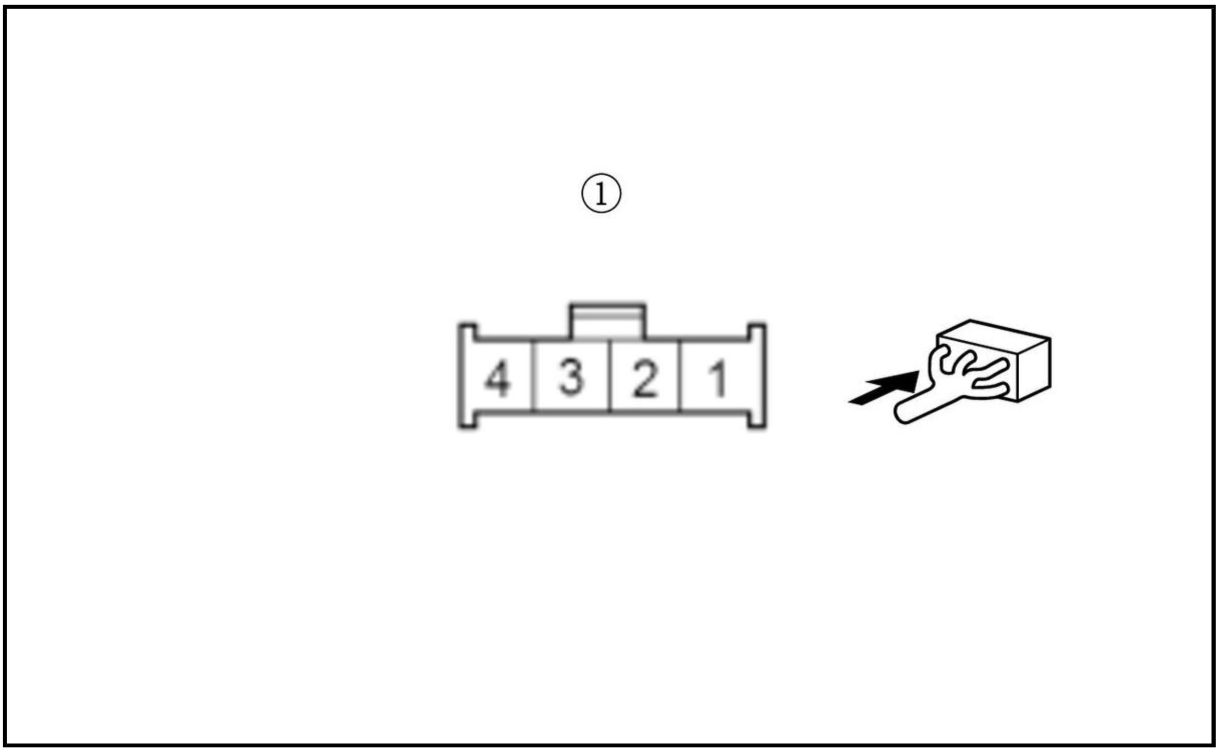

Is there battery voltage?

YES

Go to step 8.

NO

Repair an open in the +B_STOP wire between the **No. A9 fuse** and the brake pedal position switch.

8. Open wire check (STOP_SW line)

-1. Jump the SCS line with the HDS, and wait more than 1 minute.

-2. Disconnect the following connector.

PCM connector A (50P)

-3. Press the brake pedal and measure the voltage between test points 1 and 2.

Test condition	Vehicle OFF (LOCK) mode
	PCM connector A (50P): disconnected
	Brake pedal: pressed
Test point 1	**PCM connector A (50P) No. 26**
Test point 2	Body ground

Is there battery voltage?

YES

The STOP_SW wire is OK. Check for any authorized service information related to the DTCs or symptoms you are troubleshooting, or **substitute a known-good PCM** .

NO

Repair an open in the STOP_SW wire between the PCM (A26) and the brake pedal position switch.

9. Brake pedal position switch installation check

   -1. **Remove the brake pedal position switch with the connector connected** .

   -2. Check the brake lights with the rod of the brake pedal position switch pressed.

   Do the brake lights go off?

   YES

   The brake pedal position switch installation is incorrect, **install the brake pedal position switch** and **adjust the pedal height.**

   NO

   Go to step 10.

10. Brake pedal position switch check

   -1. **Test the brake pedal position switch** .

   Is the switch normal?

   YES

   The brake pedal position switch is OK, repair a short to power in the STOP_SW wire between the PCM (A26) and the brake pedal position switch.

   NO

   Replace the brake pedal position switch .

DTC P059F, P05A3, P05A8, P05C0

DTC P059F : Shutter Grille Assembly (Upper) Malfunction

DTC P05A3 : Shutter Grille Actuator (Upper) Malfunction

DTC P05A8 : Shutter Grille Actuator (Upper) Malfunction

DTC P05C0 : Shutter Grille Actuator (Upper) Temperature Malfunction

NOTE: Before you troubleshoot, **review the general troubleshooting information** .

DTC Description	Confirmed DTC	Pending DTC
P059F Shutter Grille Assembly (Upper) Malfunction	B	B
P05A3 Shutter Grille Actuator (Upper) Malfunction	B	B
P05A8 Shutter Grille Actuator (Upper) Malfunction	B	B
P05C0 Shutter Grille Actuator (Upper) Temperature Malfunction	B	B

DTC (PGM-FI)

1. Problem verification

   -1. Turn the vehicle to the ON mode.

   -2. Clear the DTC with the HDS.

   -3. Turn the vehicle to the OFF (LOCK) mode.

-4. **Enter the maintenance mode, then start the engine** , and let it idle.

-5. Check for Pending or Confirmed DTCs with the HDS.

DTC Description	Confirmed DTC	Pending DTC
P059F Shutter Grille Assembly (Upper) Malfunction	B	B
P05A3 Shutter Grille Actuator (Upper) Malfunction	B	B
P05A8 Shutter Grille Actuator (Upper) Malfunction	B	B
P05C0 Shutter Grille Actuator (Upper) Temperature Malfunction	B	B

Is DTC P059F, P05A3, P05A8, or P05C0 is indicated?

YES

The failure is duplicated. Go to step 2.

NO

Intermittent failure, the system is OK at this time. Check for poor connections or loose terminals at the shutter grille and the PCM. **If the on-board snapshot of this DTC is recorded, try to reproduce the failure under the same conditions with the on-board snapshot** .

2. Shutter grille condition check

-1. Check for condition (damage, fixation, foreign material, etc.) at shutter grille.

Is the shutter grille OK?

YES

Go to step 3.

NO

Reassembly or repair the shutter grille if needed.

3. Fuse check

-1. Turn the vehicle to the OFF (LOCK) mode.

-2. Check the following fuse.

Fuse	**No. A22**

Is the fuse OK?

YES

Go to step 4.

NO

Repair a short in the +B_FR_FOG/VMP wire between the No. A22 fuse and the shutter grille. Also replace the No. A22 fuse.

4. Open wire check (+B_FR_FOG/VMP line)

-1. Disconnect the following connector.

Shutter grille 4P connector

-2. Measure the voltage between test points 1 and 2.

Test condition	Vehicle OFF (LOCK) mode
B	Shutter grille 4P connector: disconnected
Test point 1	Shutter grille 4P connector (female terminals) No. 1: ①
Test point 2	Body ground

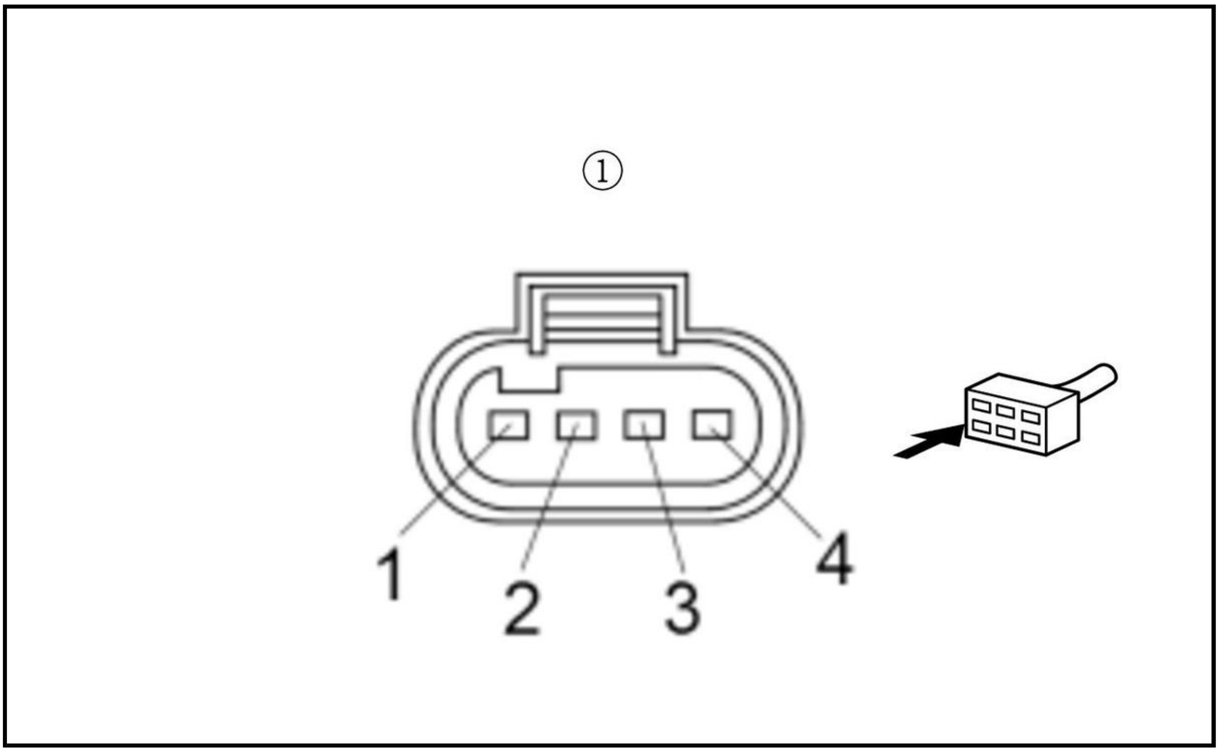

Is there battery voltage?

YES

The +B_FR_FOG/VMP wire is OK. Go to step 5.

NO

Repair an open in the +B_FR_FOG/VMP wire between the shutter grille and the **No. A22 fuse** .

5. Open wire check (GND line)

-1. Measure the resistance between test points 1 and 2.

Test condition	Vehicle OFF (LOCK) mode
B	Shutter grille 4P connector: disconnected
Test point 1	Shutter grille 4P connector (female terminals) No. 4: ①
Test point 2	Body ground

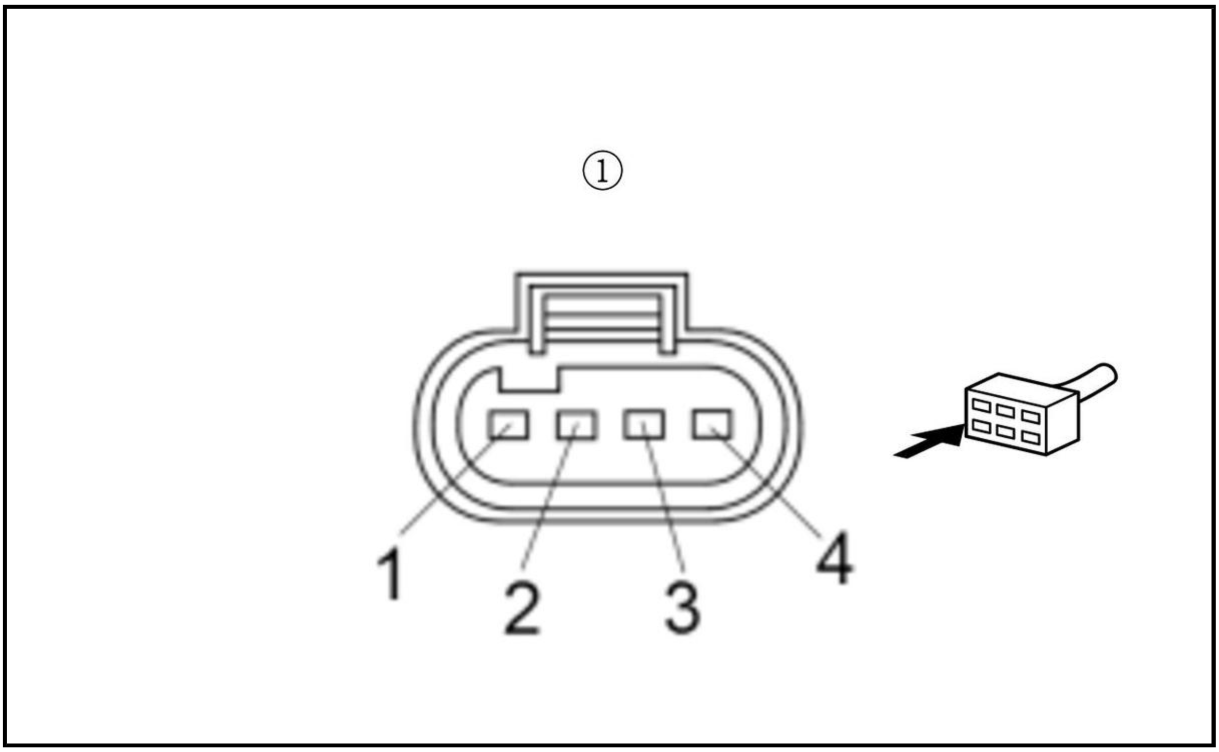

Is there 1.0 Ω or less?

YES

The GND wire is OK. **Replace the shutter grille** .

NO

Repair an open in the GND wire between the shutter grille and G351.

DTC P05A0

DTC P05A0 : Shutter Grille Assembly (Upper) Malfunction

NOTE: Before you troubleshoot, **review the general troubleshooting information** .

DTC Description	Confirmed DTC	Pending DTC
P05A0 Shutter Grille Assembly (Upper) Malfunction	B	B

DTC (PGM-FI)

1. Problem verification

   -1. Turn the vehicle to the ON mode.

   -2. Clear the DTC with the HDS.

   -3. Turn the vehicle to the OFF (LOCK) mode.

   -4. **Enter the maintenance mode, then start the engine** , and let it idle.

   -5. Check the parameter(s) below with the HDS.

Signal	Threshold		Current conditions	
	Values	Unit	Values	Unit
Upper shutter grille block error	Normal	B	B	B

Signal	Threshold		Current conditions	
	Values	Unit	Values	Unit
Upper shutter grille initial learning error	Completed	B	B	B

Do the current condition(s) match the threshold?

YES

Intermittent failure, the system is OK at this time. Check for poor connections or loose terminals at the shutter grille and the PCM. **If the on-board snapshot of this DTC is recorded, try to reproduce the failure under the same conditions with the on-board snapshot** .

NO

The failure is duplicated. Go to step 2.

2. Shutter grille condition check

-1. Check for condition (damage, fixation, foreign material, etc.) at shutter grille.

Is the shutter grille OK?

YES

Go to step 3.

NO

Reassembly or repair the shutter grille if needed.

3. Fuse check

-1. Turn the vehicle to the OFF (LOCK) mode.

-2. Check the following fuse.

Fuse	**No. A22**

Is the fuse OK?

YES

Go to step 4.

NO

Repair a short in the +B_FR_FOG/VMP wire between the No. A22 fuse and the shutter grille. Also replace the No. A22 fuse.

4. Open wire check (+B_FR_FOG/VMP line)

-1. Disconnect the following connector.

Shutter grille 4P connector

-2. Measure the voltage between test points 1 and 2.

Test condition	Vehicle OFF (LOCK) mode

B	Shutter grille 4P connector: disconnected
Test point 1	Shutter grille 4P connector (female terminals) No. 1: ①
Test point 2	Body ground

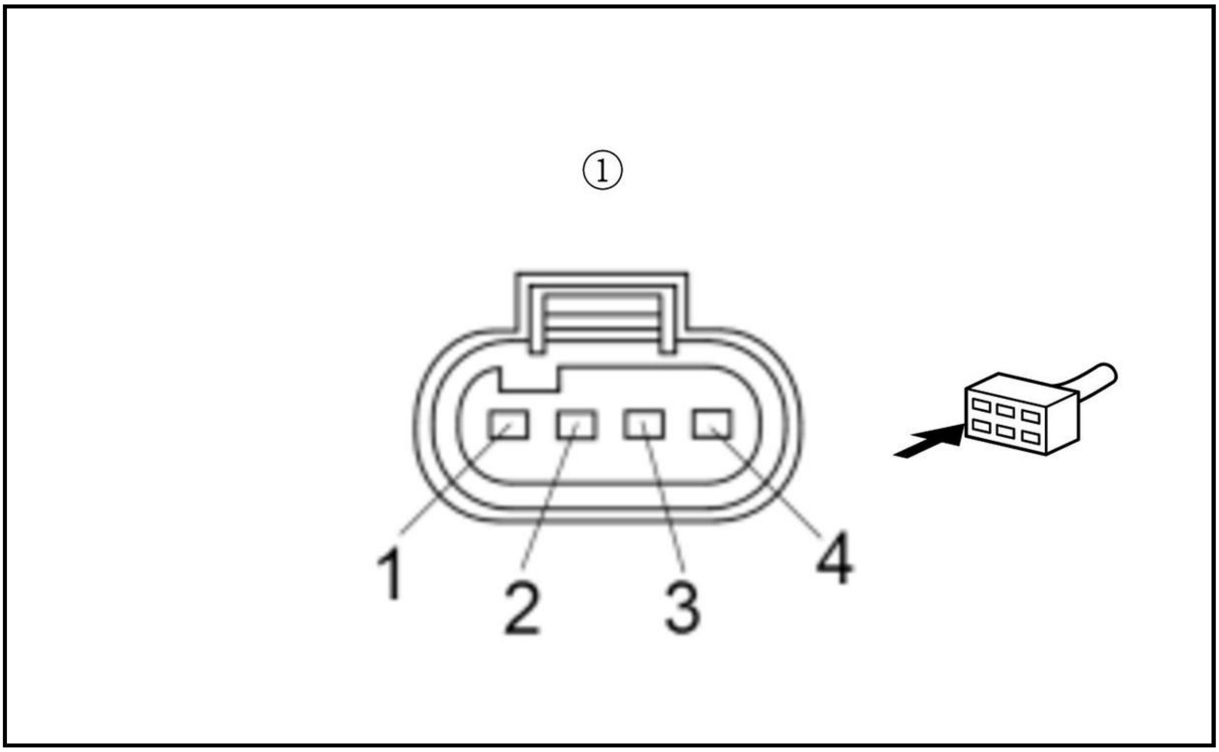

Is there battery voltage?

YES

The +B_FR_FOG/VMP wire is OK. Go to step 5.

NO

Repair an open in the +B_FR_FOG/VMP wire between the shutter grille and the **No. A22 fuse** .

5. Open wire check (GND line)

-1. Measure the resistance between test points 1 and 2.

Test condition	Vehicle OFF (LOCK) mode
B	Shutter grille 4P connector: disconnected
Test point 1	Shutter grille 4P connector (female terminals) No. 4: ①
Test point 2	Body ground

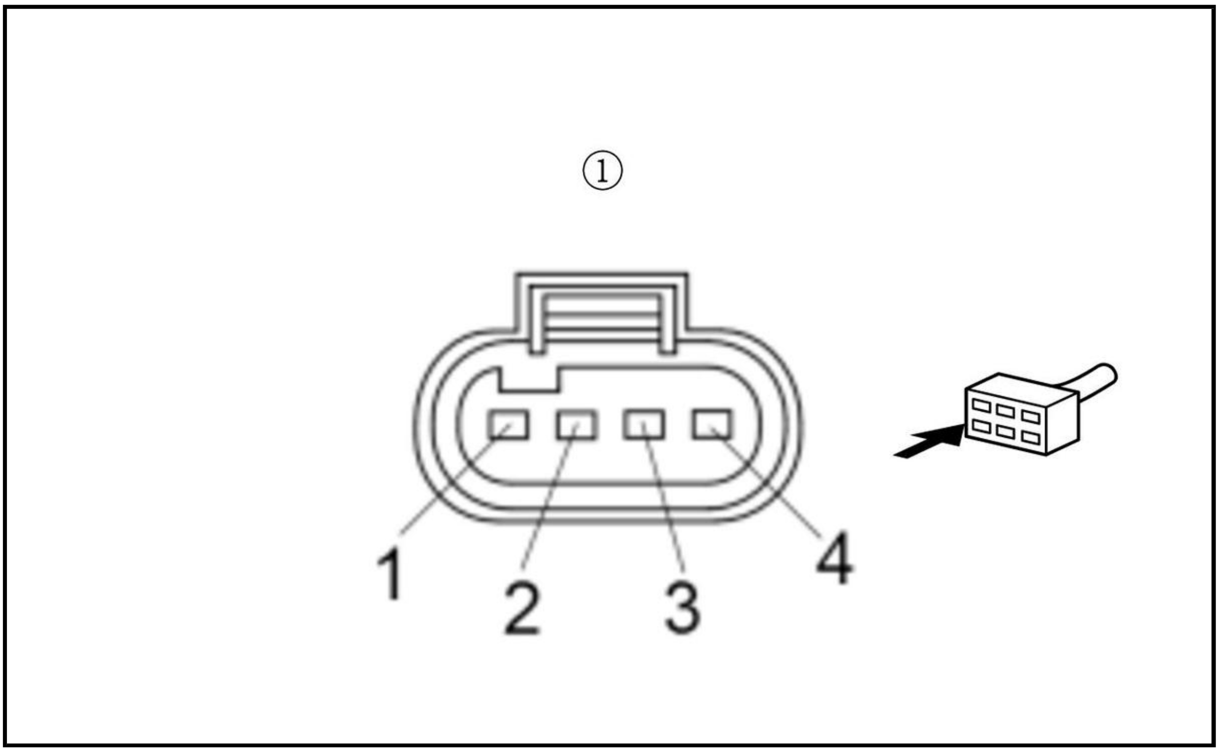

Is there 1.0 Ω or less?

YES

The GND wire is OK. **Replace the shutter grille** .

NO

Repair an open in the GND wire between the shutter grille and G351.

DTC P05CC (2021)

DTC P05CC : Cold Start VTC System Malfunction

NOTE:

- Before you troubleshoot, **review the general troubleshooting information** .
- This DTC will be stored when the DC-DC converter output voltage is higher than the specified voltage (DC-DC converter failure).

DTC Description	Confirmed DTC	Pending DTC
P05CC Cold Start VTC System Malfunction	B	B

DTC (PGM-FI)

1. Electric powertrain system DTC check

   -1. Turn the vehicle to the ON mode.

   -2. Select Electric Powertrain system, and clear the DTC with the HDS.

   -3. Turn the vehicle to the OFF (LOCK) mode.

   Enter the maintenance mode, then start the engine , and wait for 2 minutes under these conditions:

   - Headlights on high beam
   - Blower fan at maximum speed

- Rear window defogger on
- A/C switch ON, heater on, max hot

-5. Select Electric Powertrain system, and check for Pending or Confirmed DTCs with the HDS.

DTC Description	Confirmed DTC	Pending DTC	Freeze Frame
P0A94 DC-DC Converter Performance	B	B	B

DTC (Electric Powertrain)

Is DTC P0A94 indicated?

YES

Go to the troubleshooting for **DTC P0A94** .

NO

Go to step 2.

2. Problem verification

-1. Turn the vehicle to the OFF (LOCK) mode.

-2. Turn the vehicle to the ON mode.

-3. Leave the vehicle to cool the engine.

Signal	Current conditions	
	Values	Unit
ECT Sensor 1	B	B

-4. Clear the DTC with the HDS.

-5. Turn the vehicle to the OFF (LOCK) mode.

-6. **Enter the maintenance mode, then start the engine** , and let it idle for 10 seconds or more.

-7. Monitor the OBD STATUS for DTC P05CC with the HDS.

DTC Description	OBD STATUS
P05CC Cold Start VTC System Malfunction	B

Does the HDS indicate FAILED?

YES

The failure is duplicated. Go to step 3.

NO

If the HDS indicates PASSED, it is an intermittent failure and the system is OK at this time. Check for poor connections or loose terminals at the electric VTC motor and the PCM. **If the on-board snapshot of this DTC is recorded, try to reproduce the failure under the same conditions with the on-board snapshot** .

3. VTC actuator installation check

-1. **Check the installation of the VTC actuator** .

Is the VTC actuator installed correctly?

YES

Replace the electric VTC motor .

NO

Reinstall the VTC actuator, or replace it if it is worn or damaged .

DTC P0600

DTC P0600 : PCM Serial Communication Failure

NOTE: Before you troubleshoot, **review the general troubleshooting information** .

DTC Description	Confirmed DTC	Pending DTC
P0600 PCM Serial Communication Failure	B	B

DTC (PGM-FI)

1. Problem verification

   -1. Turn the vehicle to the ON mode.

   -2. Clear the DTC with the HDS.

   -3. **Enter the maintenance mode, then start the engine** , and let it idle for 5 seconds or more.

   -4. Check for Pending or Confirmed DTCs with the HDS.

DTC Description	Confirmed DTC	Pending DTC
P0600 PCM Serial Communication Failure	B	B

Is DTC P0600 indicated?

YES

Check for any authorized service information related to the DTCs or symptoms you are troubleshooting, or **substitute a known-good PCM** .

NO

Intermittent failure, the system is OK at this time. **If the on-board snapshot of this DTC is recorded, try to reproduce the failure under the same conditions with the on-board snapshot** .

DTC P0602 (PGM-FI SYSTEM)

DTC P0602 : PCM Programming Error

NOTE:

- Before you troubleshoot, **review the general troubleshooting information** .
- This DTC is indicated when the PCM update procedure is not completed.
- Do not press the power button while updating the PCM. If you do, the PCM can be damaged.

DTC Description	Confirmed DTC	Pending DTC
P0602 PCM Programming Error	B	B

DTC (PGM-FI)

1. Problem verification (update)

   -1. Update the PCM .

   -2. Check for Pending or Confirmed DTCs with the HDS.

DTC Description	Confirmed DTC	Pending DTC
P0602 PCM Programming Error	B	B

Is DTC P0602 indicated?

YES

Replace the PCM .

NO

Update is complete. If any other Pending or Confirmed DTCs are indicated, go to the indicated DTC's troubleshooting.

DTC P0606 (PGM-FI SYSTEM)

DTC P0606 : PCM Processor Malfunction

NOTE:

- Before you troubleshoot, review the general troubleshooting information .
- If DTC P0606 is indicated alone, do the troubleshooting for DTC P1A48, P1A49, and P1A4A using the on-board snapshot for P0606.
- If any of the DTCs listed below are indicated at the same time as DTC P0606, troubleshoot those DTCs first, then recheck for P0606.
-
    - -

      P1A48, P1A49, P1A4A: PCM internal circuit

DTC Description	Confirmed DTC	Pending DTC
P0606 PCM Processor Malfunction	B	B

DTC (PGM-FI)

1. DTC check

   -1. Turn the vehicle to the ON mode.

   -2. Check for Pending or Confirmed DTCs with the HDS.

DTC Description	Confirmed DTC	Pending DTC
P1A48 PCM Internal Malfunction (SBW Different Run)	B	B
P1A49 PCM Internal Malfunction (SBW Parking Position)	B	B
P1A4A PCM Internal Malfunction (SBW Display Position)	B	B
P0606 PCM Processor Malfunction	B	B

Are DTC P1A48, P1A49, or P1A4A and P0606 indicated at the same time?

YES

Go to the indicated DTC's troubleshooting.

NO

Go to the troubleshooting for **DTC P1A48** , **DTC P1A49** , and **DTC P1A4A** using the on-board snapshot for DTC P0606.

DTC P060A

DTC P060A : PCM Internal Control Module Malfunction

NOTE: Before you troubleshoot, **review the general troubleshooting information** .

DTC Description	Confirmed DTC	Pending DTC
P060A PCM Internal Control Module Malfunction	B	B

DTC (PGM-FI)

1. Problem verification

   -1. Turn the vehicle to the ON mode.

   -2. Clear the DTC with the HDS.

   -3. Turn the vehicle to the OFF (LOCK) mode.

   -4. Turn the vehicle to the ON mode.

   -5. Check for Pending or Confirmed DTCs with the HDS.

DTC Description	Confirmed DTC	Pending DTC
P060A PCM Internal Control Module Malfunction	B	B

Is DTC P060A indicated?

YES

Check for any authorized service information related to the DTCs or symptoms you are troubleshooting, or **substitute a known-good PCM** .

NO

Intermittent failure, the system is OK at this time. Check for poor connections or loose terminals at the PCM. **If the on-board snapshot of this DTC is recorded, try to reproduce the failure under the same conditions with the on-board snapshot** .

DTC P061B (PGM-FI SYSTEM)

DTC P061B : PCM Internal Malfunction (Torque Calculation)

NOTE:

- Before you troubleshoot, **review the general troubleshooting information** .
- If DTC P061B is indicated alone, do the troubleshooting for DTC P1A51, P1A52, and P1A53 using the on-board snapshot for P061B.
- If any of the DTCs listed below are indicated at the same time as DTC P061B, troubleshoot those DTCs first, then recheck for P061B.

-
    - -

      P1A51, P1A52, P1A53: PCM internal circuit

DTC Description	Confirmed DTC	Pending DTC
P061B PCM Internal Malfunction (Torque Calculation)	B	B

DTC (PGM-FI)

1. DTC check

   -1. Turn the vehicle to the ON mode.

   -2. Check for Pending or Confirmed DTCs with the HDS.

DTC Description	Confirmed DTC	Pending DTC
P1A51 PCM Internal Malfunction (Torque Calculation Acceleration)	B	B
P1A52 PCM Internal Malfunction (Torque Calculation Deceleration)	B	B
P1A53 PCM Internal Malfunction (Torque Calculation Different Run)	B	B
P061B PCM Internal Malfunction (Torque Calculation)	B	B

   Are DTC P1A51, P1A52, or P1A53 and P061B indicated at the same time?

   YES

   Go to the indicated DTC's troubleshooting.

   NO

   Go to the troubleshooting for **DTC P1A51** , **DTC P1A52** , and **DTC P1A53** using the on-board snapshot for DTC P061B.

DTC P062F (PGM-FI SYSTEM)

DTC P062F : PCM Internal Control Module Keep Alive Memory (KAM) Error

NOTE: Before you troubleshoot, **review the general troubleshooting information** .

DTC Description	Confirmed DTC	Pending DTC
P062F PCM Internal Control Module Keep Alive Memory (KAM) Error	B	B

DTC (PGM-FI)

1. Problem verification

   -1. Turn the vehicle to the ON mode.

   -2. Clear the DTC with the HDS.

   -3. Check for Pending or Confirmed DTCs with the HDS.

DTC Description	Confirmed DTC	Pending DTC
P062F PCM Internal Control Module Keep Alive Memory (KAM) Error	B	B

Is DTC P062F indicated?

YES

Check for any authorized service information related to the DTCs or symptoms you are troubleshooting, or **substitute a known-good PCM** .

NO

Intermittent failure, the system is OK at this time. Check for poor connections or loose terminals at the PCM. **If the on-board snapshot of this DTC is recorded, try to reproduce the failure under the same conditions with the on-board snapshot** .

DTC P0630

DTC P0630 : VIN Not Programmed or Mismatch

NOTE:

- Before you troubleshoot, **review the general troubleshooting information** .
- This DTC is stored only when the PCM does not have the VIN information of the vehicle. Use the HDS to input the missing VIN information.

DTC Description	Confirmed DTC	Pending DTC
P0630 VIN Not Programmed or Mismatch	B	B

DTC (PGM-FI)

1. VIN check

   -1. Turn the vehicle to the ON mode.

   -2. Check the VIN with the HDS.

   Does the HDS show the vehicle's VIN?

   YES

   Go to step 4.

   NO

   Go to step 2.

2. VIN check (rewrite)

   -1. Input the VIN to the PCM with the HDS.

   Does the HDS show COMPLETE?

   YES

   Go to step 4.

   NO

Go to step 3.

3. DTC check

-1. Check for Pending or Confirmed DTCs with the HDS.

DTC Description	Confirmed DTC	Pending DTC
P062F PCM Internal Control Module Keep Alive Memory (KAM) Error	B	B

Is DTC P062F indicated?

YES

Go to the troubleshooting for **DTC P062F**.

NO

Go to step 4.

4. PCM check

-1. Clear the DTC with the HDS.

-2. Turn the vehicle to the OFF (LOCK) mode.

-3. Turn the vehicle to the ON mode, and wait 5 seconds or more.

-4. Check for Pending or Confirmed DTCs with the HDS.

DTC Description	Confirmed DTC	Pending DTC
P0630 VIN Not Programmed or Mismatch	B	B

Is DTC P0630 indicated?

YES

Check for any authorized service information related to the DTCs or symptoms you are troubleshooting, or **substitute a known-good PCM** .

NO

Intermittent failure, the system is OK at this time. If any other Pending or Confirmed DTCs are indicated, go to the indicated DTC's troubleshooting.

DTC P0641

DTC P0641 : Sensor Reference Voltage A Malfunction

NOTE: Before you troubleshoot, **review the general troubleshooting information** .

DTC Description	Confirmed DTC	Pending DTC
P0641 Sensor Reference Voltage A Malfunction	B	B

DTC (PGM-FI)

1. Problem verification

-1. Turn the vehicle to the ON mode.

-2. Clear the DTC with the HDS.

-3. Check for Pending or Confirmed DTCs with the HDS.

DTC Description	Confirmed DTC	Pending DTC
P0641 Sensor Reference Voltage A Malfunction	B	B

Is DTC P0641 indicated?

YES

The failure is duplicated. Go to step 2.

NO

Intermittent failure, the system is OK at this time. Check for poor connections or loose terminals at the PCM and these parts. **If the on-board snapshot of this DTC is recorded, try to reproduce the failure under the same conditions with the on-board snapshot** :

- CKP sensor
- MAP sensor
- Throttle body
- APP sensor

2. Determine possible failure area (VCC lines, others)

-1. Turn the vehicle to the OFF (LOCK) mode.

-2. Disconnect the connectors from these parts:

CKP sensor 3P connector
MAP sensor 3P connector
Throttle body 6P connector
APP sensor 6P connector

-3. Turn the vehicle to the ON mode.

-4. Clear the DTC with the HDS.

-5. Check for Pending or Confirmed DTCs with the HDS.

DTC Description	Confirmed DTC	Pending DTC
P0641 Sensor Reference Voltage A Malfunction	B	B

Is DTC P0641 indicated?

YES

Go to step 5.

NO

Go to step 3.

3. Shorted part check:

Check for Pending or Confirmed DTCs with the HDS while reconnecting these parts, one at a time:

- CKP sensor 3P connector
- MAP sensor 3P connector
- Throttle body 6P connector
- APP sensor 6P connector

DTC Description	Confirmed DTC	Pending DTC
P0641 Sensor Reference Voltage A Malfunction	B	B

Is DTC P0641 indicated?

YES

Replace the part that caused the DTC when it was reconnected.

NO

Check for poor connections or loose terminals at the PCM and the following parts, then go to step 1.

- CKP sensor
- MAP sensor
- Throttle body
- APP sensor

4. Shorted wire check (VCC lines to power)

-1. Turn the vehicle to the OFF (LOCK) mode.

-2. Jump the SCS line with the HDS, and wait more than 1 minute.

-3. Disconnect the following connectors.

PCM connector A (50P)
PCM connector E (80P)

-4. Turn the vehicle to the ON mode.

-5. Measure the voltage between these test points and body ground individually.

Test condition	Vehicle ON mode
	CKP sensor 3P connector: disconnected
	MAP sensor 3P connector: disconnected
	Throttle body 6P connector: disconnected
	APP sensor 6P connector: disconnected
	PCM connector A (50P): disconnected
	PCM connector E (80P): disconnected

Connector	Terminal
PCM connector A (50P)	No. 45
PCM connector E (80P)	No. 70 and No. 75

Is there any voltage?

YES

Repair a short to power in the VCC wire(s) between the PCM (A45, E70, E75) and each part that was disconnected in step 2.

NO

Go to step 5.

5. Shorted wire check (VCC lines to ground)

-1. Turn the vehicle to the OFF (LOCK) mode.

-2. Measure the resistance between these test points and body ground individually.

Test condition	Vehicle OFF (LOCK) mode
	CKP sensor 3P connector: disconnected
	MAP sensor 3P connector: disconnected
	Throttle body 6P connector: disconnected
	APP sensor 6P connector: disconnected
	PCM connector A (50P): disconnected
	PCM connector E (80P): disconnected

Connector	Terminal
PCM connector A (50P)	No. 45
PCM connector E (80P)	No. 70 and No. 75

Is there 1 MΩ or more?

YES

The VCC wires are OK. Check for any authorized service information related to the DTCs or symptoms you are troubleshooting, or **substitute a known-good PCM** .

NO

Repair a short to ground in the VCC wire(s) between the PCM (A45, E70, E75) and each part that was disconnected in step 2.

DTC P0651

DTC P0651 : Sensor Reference Voltage B Malfunction

NOTE: Before you troubleshoot, **review the general troubleshooting information** .

DTC Description	Confirmed DTC	Pending DTC
P0651 Sensor Reference Voltage B Malfunction	B	B

DTC (PGM-FI)

1. Problem verification

-1. Turn the vehicle to the ON mode.

-2. Clear the DTC with the HDS.

-3. Check for Pending or Confirmed DTCs with the HDS.

DTC Description	Confirmed DTC	Pending DTC
P0651 Sensor Reference Voltage B Malfunction	B	B

Is DTC P0651 indicated?

YES

The failure is duplicated. Go to step 2.

NO

Intermittent failure, the system is OK at this time. Check for poor connections or loose terminals at the PCM and these parts. **If the on-board snapshot of this DTC is recorded, try to reproduce the failure under the same conditions with the on-board snapshot** :

- CMP sensor A
- CMP sensor B
- EGR valve
- Rocker arm oil pressure sensor
- Engine oil pressure sensor
- Transmission fluid pressure sensor
- APP sensor
- A/C pressure sensor
- EVAP leak check module

2. Determine possible failure area (VCC lines, others)

-1. Turn the vehicle to the OFF (LOCK) mode.

-2. Disconnect the following connectors.

CMP sensor A 3P connector
CMP sensor B 3P connector
EGR valve 5P connector
Rocker arm oil pressure sensor 3P connector
Engine oil pressure sensor 3P connector
Transmission fluid pressure sensor 3P connector
APP sensor 6P connector
A/C pressure sensor 3P connector
EVAP leak check module 8P connector

-3. Turn the vehicle to the ON mode.

-4. Clear the DTC with the HDS.

-5. Check for Pending or Confirmed DTCs with the HDS.

DTC Description	Confirmed DTC	Pending DTC
P0651 Sensor Reference Voltage B Malfunction	B	B

Is DTC P0651 indicated?

YES

Go to step 5.

NO

Go to step 3.

3. Shorted part check:

   Check for Pending or Confirmed DTCs with the HDS while reconnecting these parts, one at a time:

   - CMP sensor A
   - CMP sensor B
   - EGR valve
   - Rocker arm oil pressure sensor
   - Engine oil pressure sensor
   - Transmission fluid pressure sensor
   - APP sensor
   - A/C pressure sensor
   - EVAP leak check module

DTC Description	Confirmed DTC	Pending DTC
P0651 Sensor Reference Voltage B Malfunction	B	B

   Is DTC P0651 indicated?

   YES

   Replace the part that caused the DTC when it was reconnected.

   NO

   Check for poor connections or loose terminals at the PCM and the following parts, then go to step 1.

   - CMP sensor A
   - CMP sensor B
   - EGR valve
   - Rocker arm oil pressure sensor
   - Engine oil pressure sensor
   - Transmission fluid pressure sensor
   - APP sensor
   - A/C pressure sensor
   - EVAP leak check module
4. Shorted wire check (VCC lines to power)

   -1. Turn the vehicle to the OFF (LOCK) mode.

   -2. Jump the SCS line with the HDS, and wait more than 1 minute.

   -3. Disconnect the following connectors.

PCM connector A (50P)
PCM connector E (80P)

   -4. Turn the vehicle to the ON mode.

   -5. Measure the voltage between these test points and body ground individually.

Test condition	Vehicle ON mode

B	CMP sensor A 3P connector: disconnected
B	CMP sensor B 3P connector: disconnected
B	EGR valve 5P connector: disconnected
B	Rocker arm oil pressure sensor 3P connector: disconnected
B	Engine oil pressure sensor 3P connector: disconnected
B	Transmission fluid pressure sensor 3P connector: disconnected
B	APP sensor 6P connector: disconnected
B	A/C pressure sensor 3P connector: disconnected
B	EVAP leak check module 8P connector: disconnected
B	PCM connector A (50P): disconnected
B	PCM connector E (80P): disconnected

Connector	Terminal
PCM connector A (50P)	No. 44
PCM connector E (80P)	No. 63 and No. 77

Is there any voltage?

YES

Repair a short to power in the VCC wire(s) between the PCM (A44, E63, E77) and each part that was disconnected in step 2.

NO

Go to step 5

5. Shorted wire check (VCC lines to ground)

-1. Turn the vehicle to the OFF (LOCK) mode.

-2. Measure the resistance between these test points and body ground individually.

Test condition	Vehicle OFF (LOCK) mode
B	CMP sensor A 3P connector: disconnected
B	CMP sensor B 3P connector: disconnected
B	EGR valve 5P connector: disconnected
B	Rocker arm oil pressure sensor 3P connector: disconnected
B	Engine oil pressure sensor 3P connector: disconnected
B	Transmission fluid pressure sensor 3P connector: disconnected
B	APP sensor 6P connector: disconnected
B	A/C pressure sensor 3P connector: disconnected
B	EVAP leak check module 8P connector: disconnected
B	PCM connector A (50P): disconnected
B	PCM connector E (80P): disconnected

Connector	Terminal
PCM connector A (50P)	No. 44
PCM connector E (80P)	No. 63 and No. 77

Is there 1 MΩ or more?

YES

The VCC wires are OK. Check for any authorized service information related to the DTCs or symptoms you are troubleshooting, or **substitute a known-good PCM** .

NO

Repair a short to ground in the VCC(s) wire between the PCM (A44, E63, E77) and each part that was disconnected in step 2.

DTC P0657

DTC P0657 : PCM Power Supply Circuit Malfunction

NOTE: Before you troubleshoot, **review the general troubleshooting information** .

DTC Description	Confirmed DTC	Pending DTC
P0657 PCM Power Supply Circuit Malfunction	B	B

DTC (PGM-FI)

1. Problem verification

   -1. Turn the vehicle to the ON mode.

   -2. Clear the DTC with the HDS.

   -3. **Enter the maintenance mode, then start the engine** .

   -4. Check for Pending or Confirmed DTCs with the HDS.

DTC Description	Confirmed DTC	Pending DTC
P0657 PCM Power Supply Circuit Malfunction	B	B

   Is DTC P0657 indicated?

   YES

   The failure is duplicated. Go to step 2.

   NO

   Intermittent failure, the system is OK at this time. Check for poor connections or loose terminals at the relay circuit board and the PCM. **If the on-board snapshot of this DTC is recorded, try to reproduce the failure under the same conditions with the on-board snapshot** .

2. Relay circuit board check

   -1. Turn the vehicle to the OFF (LOCK) mode.

   -2. **Remove and test the relay circuit board** .

   Is the relay circuit board OK?

   YES

   Go to step 3.

   NO

   Replace the relay circuit board .

3. Fuse check

-1. Check the following fuse.

Fuse	**No. A7**

Is the fuse OK?

YES

Go to step 7.

NO

Go to step 4.

4. Determine possible failure area (+B_IGP line, others)

-1. Remove the blown **No. A7 fuse** .

-2. Measure the resistance between test points 1 and 2.

Test condition	Vehicle OFF (LOCK) mode
B	Relay circuit board: removed
Test point 1	Relay circuit board connector C (18P) (female terminals) No. 18: ①
Test point 2	Body ground

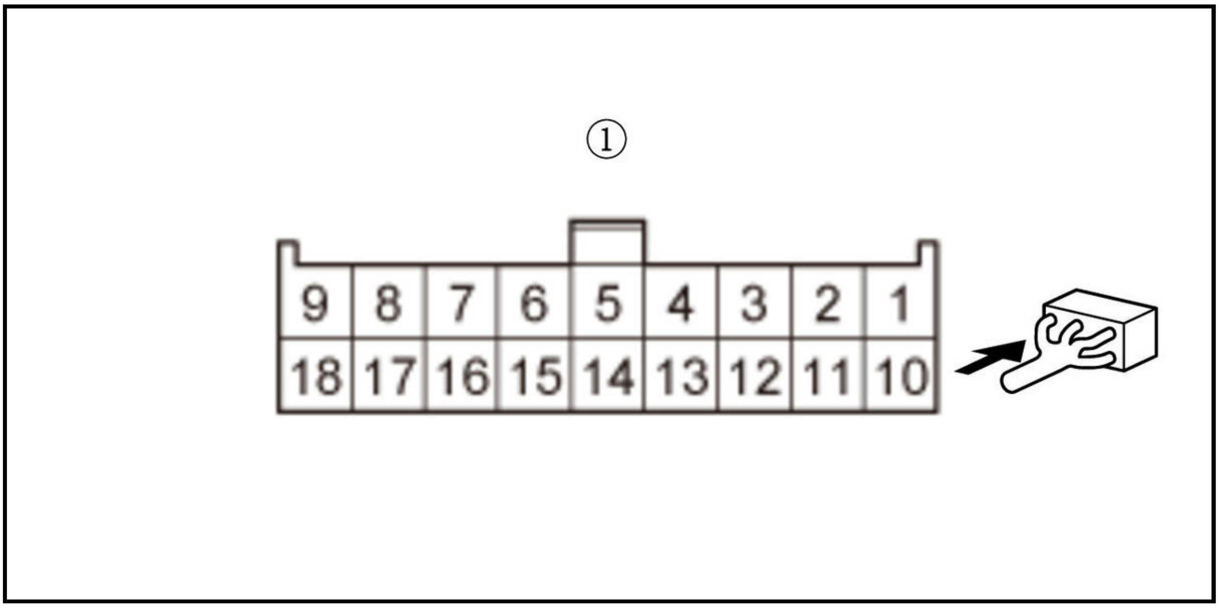

Is there 1 MΩ or more?

YES

Go to step 5.

NO

Repair a short in the +B_IGP wire between the No. A7 fuse and the relay circuit board. Also replace the No. A7 fuse.

5. Parts internal circuit check

-1. Jump the SCS line with the HDS, and wait more than 1 minute.

Check for continuity between test points 1 and 2 while disconnecting these parts or connectors, one at a time:

- PGM-FI main relay 2
- PCM connector A (50P)
- Each injector 2P connector

Test condition	Vehicle OFF (LOCK) mode
B	Relay circuit board: removed
Test point 1	Relay circuit board connector C (18P) (female terminals) No. 17: ①
Test point 2	Body ground

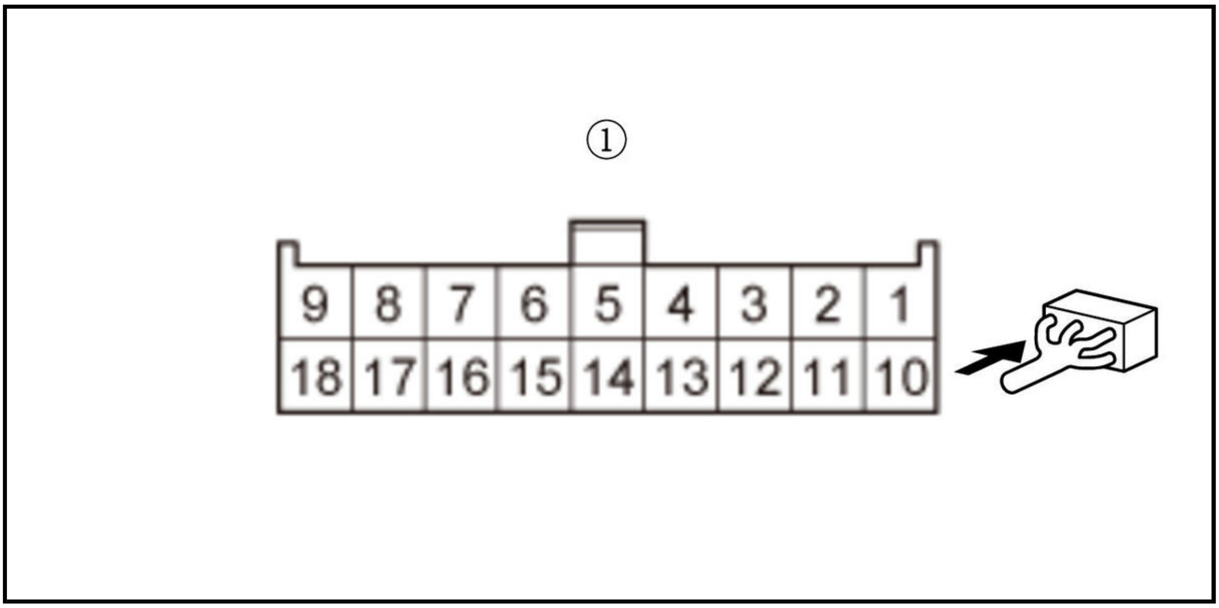

Does continuity go away with the part(s) removed?

YES

Replace the part that continuity goes away when it was disconnected. If the part is PCM, Check for any authorized service information related to the DTCs or symptoms you are troubleshooting, or **substitute a known-good PCM** . Also replace the **No. A7 fuse** .

NO

Go to step 6.

6. Shorted wire check (FI_MAIN_RLY_OUT line)

-1. Disconnect the following parts and connectors.

PGM-FI main relay 2
PCM connector A (50P)
Each injector 2P connector

-2. Measure the resistance between test points 1 and 2.

Test condition	Vehicle OFF (LOCK) mode
	Relay circuit board: removed
	PGM-FI main relay 2: disconnected

	PCM connector A (50P): disconnected
	Each injector 2P connector: disconnected
Test point 1	Relay circuit board connector C (18P) (female terminals) No. 17: ①
Test point 2	Body ground

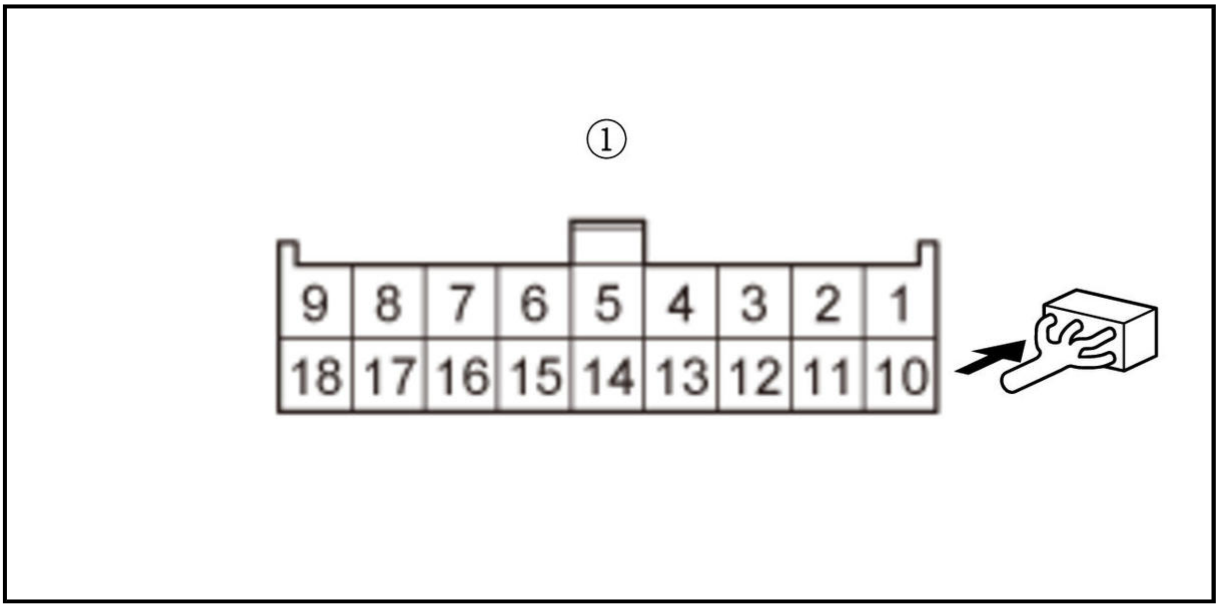

Is there 1 MΩ or more?

YES

Replace the relay circuit board . Also replace the **No. A7 fuse** .

NO

Repair a short in the FI_MAIN_RLY_OUT wire between the PCM (A8), PGM-FI main relay 2, the injectors, and the relay circuit board. Also replace the No. A7 fuse.

7. Open wire check (+B_IGP line)

-1. Measure the voltage between test points 1 and 2.

Test condition	Vehicle OFF (LOCK) mode
B	Relay circuit board: removed
Test point 1	Relay circuit board connector C (18P) (female terminals) No. 18: ①
Test point 2	Body ground

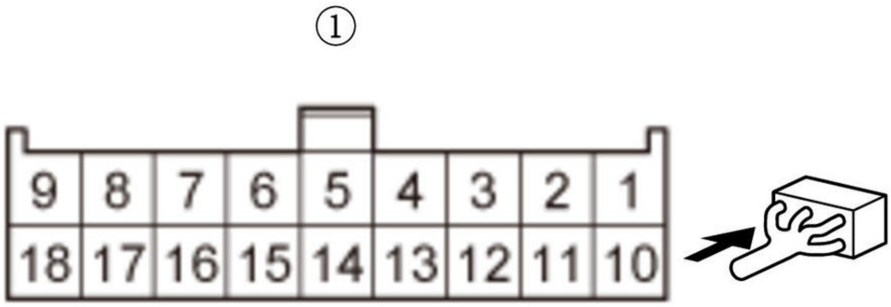

Is there battery voltage?

YES

The +B_IGP wire is OK. Go to step 8.

NO

Repair an open in the +B_IGP wire between the **No. A7 fuse** and the relay circuit board.

8. Open wire check (FI_MAIN_RLY_CL- line)

-1. Jump the SCS line with the HDS, and wait more than 1 minute.

-2. Disconnect the following connector.

PCM connector A (50P)

-3. Measure the resistance between test points 1 and 2.

Test condition	Vehicle OFF (LOCK) mode
B	Relay circuit board: removed
B	PCM connector A (50P): disconnected
Test point 1	Relay circuit board connector C (18P) (female terminals) No. 5: ①
Test point 2	**PCM connector A (50P) No. 5**

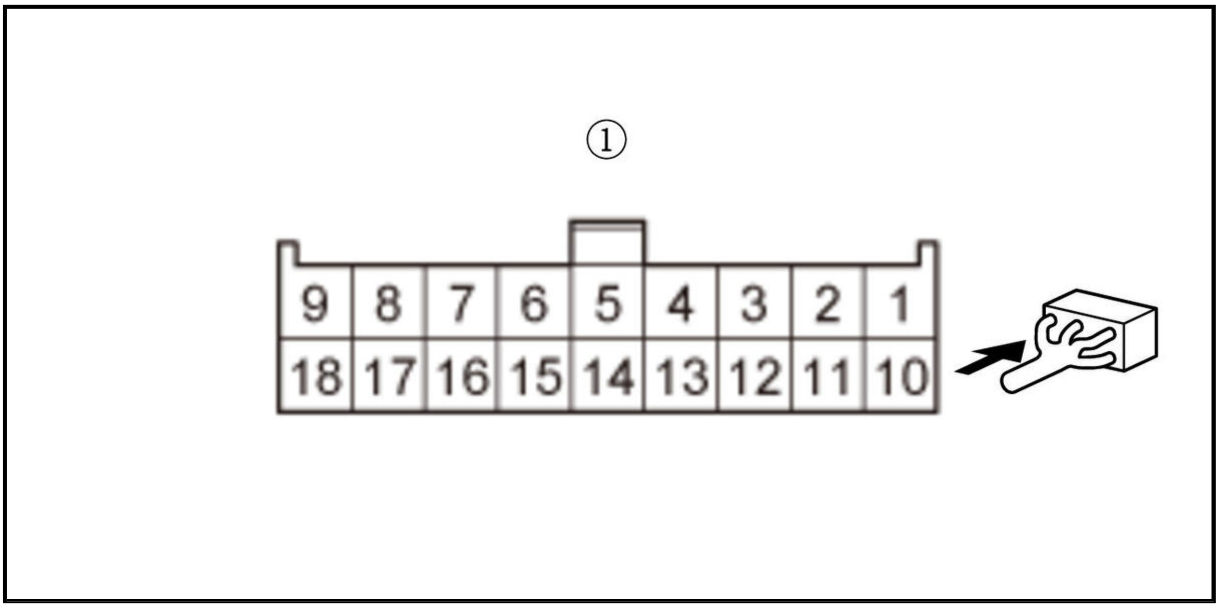
①
9
8
7
6
5
4
3
2
1
18
17
16
15
14
13
12
11
10

Is there 1.0 Ω or less?

YES

The FI_MAIN_RLY_CL- wire is OK. Go to step 9.

NO

Repair an open in the FI_MAIN_RLY_CL- wire between the PCM (A5) and the relay circuit board.

9. Open wire check (FI_MAIN_RLY_OUT line)

-1. Measure the resistance between test points 1 and 2.

Test condition	Vehicle OFF (LOCK) mode
B	Relay circuit board: removed
B	PCM connector A (50P): disconnected
Test point 1	Relay circuit board connector C (18P) (female terminals) No. 17: ①
Test point 2	**PCM connector A (50P) No. 8**

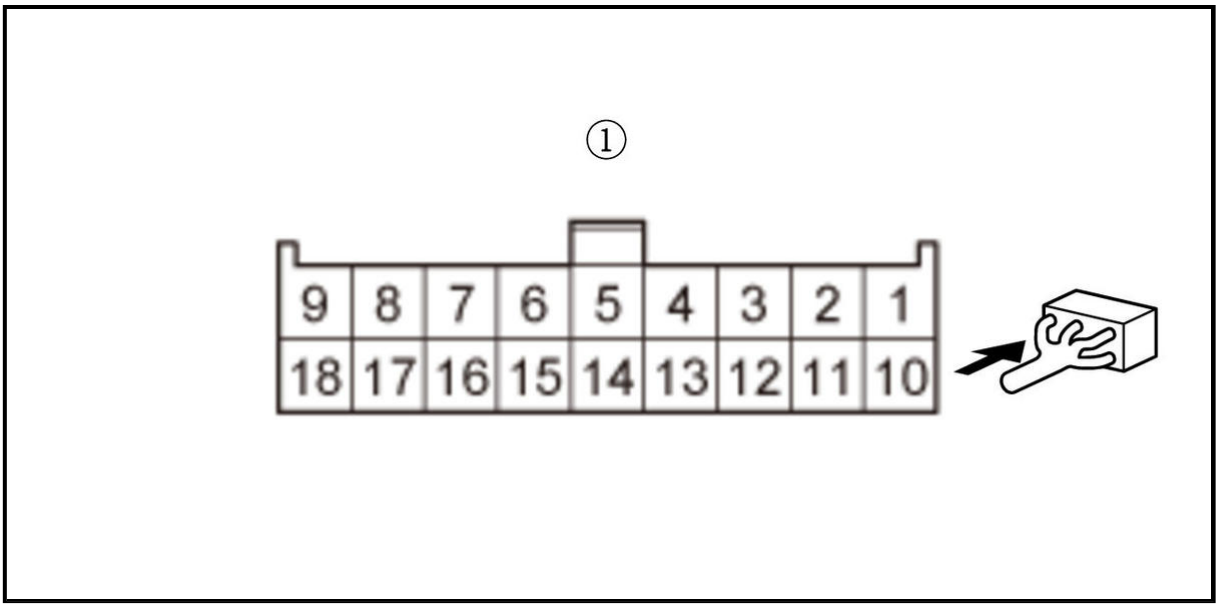
①
9
8
7
6
5
4
3
2
1
18
17
16
15
14
13
12
11
10

Is there 1.0 Ω or less?

YES

The FI_MAIN_RLY_OUT wire is OK. Check for any authorized service information related to the DTCs or symptoms you are troubleshooting, or **substitute a known-good PCM** .

NO

Repair an open in the FI_MAIN_RLY_OUT wire between the PCM (A8) and the relay circuit board.

DTC P06A8

DTC P06A8 : Internal VCC Power Malfunction

NOTE: Before you troubleshoot, **review the general troubleshooting information** .

DTC Description	Confirmed DTC	Pending DTC
P06A8 Internal VCC Power Malfunction	B	B

DTC (PGM-FI)

1. Problem verification

-1. Turn the vehicle to the ON mode.

-2. **Reset the PCM with the HDS** .

Reset PCM

-3. Check for Pending or Confirmed DTCs with the HDS.

DTC Description	Confirmed DTC	Pending DTC
P06A8 Internal VCC Power Malfunction	B	B

Is DTC P06A8 indicated?

YES

The failure is duplicated. Check for any authorized service information related to the DTCs or symptoms you are troubleshooting, or **substitute a known-good PCM** .

NO

Intermittent failure, the system is OK at this time.

DTC P0700, P14A0

DTC P0700 : Transmission Control System (MIL Reqest)

DTC P14A0 : Engine Abnormal Vibration

NOTE: Before you troubleshoot, **review the general troubleshooting information** .

DTC Description	Confirmed DTC	Pending DTC
P0700 Transmission Control System (MIL Reqest)/A/T SYSTEM MALFUNCTION	B	B
P14A0 Engine Abnormal Vibration	B	B

DTC (PGM-FI)

1. DTC check

   -1. Turn the vehicle to the ON mode.

   -2. Check for Pending or Confirmed DTCs with the HDS.

DTC Description	Confirmed DTC	Pending DTC
B	B	B

   Are any Pending or Confirmed DTCs indicated?

   YES

   Go to the indicated DTC's troubleshooting .

   NO

   Go to step 2.

2. Electric powertrain system DTC check

   -1. Check for electric powertrain system DTCs with the HDS.

   Motor Control Module (Generator motor)

DTC Description	Confirmed DTC	Pending DTC	Freeze Frame
B	B	B	B

   Motor Control Module (Traction motor)

DTC Description	Confirmed DTC	Pending DTC	Freeze Frame
B	B	B	B

   Are any Pending or Confirmed DTCs indicated?

   YES

   Go to the indicated DTC troubleshooting..

   NO

   Go to step 3.

3. Problem verification

   -1. Clear the DTC with the HDS.

   -2. Turn the vehicle to the OFF (LOCK) mode.

   -3. **Enter the maintenance mode, then start the engine** .

   -4. Check for Pending or Confirmed DTCs with the HDS.

DTC Description	Confirmed DTC	Pending DTC
P0700 Transmission Control System (MIL Reqest)/A/T SYSTEM MALFUNCTION	B	B
P14A0 Engine Abnormal Vibration	B	B

Is DTC P0700, or P14A0 is indicated?

YES

Check the installation of the engine and transmission mounts, then recheck.

NO

Intermittent failure, the system is OK at this time. **If the on-board snapshot of this DTC is recorded, try to reproduce the failure under the same conditions with the on-board snapshot** .

DTC P0703

DTC P0703 : Brake Pedal Position Switch (NC) Malfunction

NOTE:

- Before you troubleshoot, **review the general troubleshooting information** .
- If the accelerator pedal is pressed with pressing the brake pedal lightly and continuously for 5 minutes or more, this DTC will be stored.

DTC Description	Confirmed DTC	Pending DTC
P0703 Brake Pedal Position Switch (NC) Malfunction	B	B

DTC (PGM-FI)

1. Brake pedal position switch signal (BKSWNC) check 1

   -1. Turn the vehicle to the ON mode.

   -2. Check the parameter(s) below with the HDS without pressing the brake pedal.

Signal	Threshold		Current conditions	
	Values	Unit	Values	Unit
Cruise Brake Sw/Idle Stop Sw	CLOSE	B	B	B

   Do the current condition(s) match the malfunction threshold?

   YES

   Go to step 7.

   NO

   Go to step 2.

2. Brake pedal position switch installation check

   -1. Turn the vehicle to the OFF (LOCK) mode.

   -2. **Adjust the brake pedal and the brake pedal position switch** .

   -3. Turn the vehicle to the ON mode.

   -4. Check the parameter(s) below with the HDS without pressing the brake pedal.

Signal	Threshold		Current conditions	
	Values	Unit	Values	Unit
Cruise Brake Sw/Idle Stop Sw	CLOSE	B	B	B

Do the current condition(s) match the threshold?

YES

The failure is not duplicated.

NO

Go to step 3.

3. Determine possible failure area (brake pedal position switch, others)

-1. Turn the vehicle to the OFF (LOCK) mode.

-2. Disconnect the following connector.

Brake pedal position switch 4P connector

-3. Connect terminals A and B with a jumper wire.

Terminal A	Brake pedal position switch 4P connector (female terminals) No. 2: ①
Terminal B	Brake pedal position switch 4P connector (female terminals) No. 3: ①

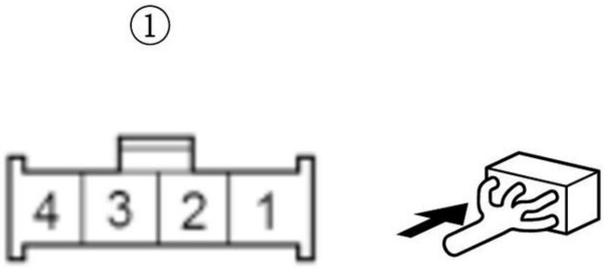

-4. Turn the vehicle to the ON mode.

-5. Check the parameter(s) below with the HDS.

Signal	Threshold		Current conditions	
	Values	Unit	Values	Unit
Cruise Brake Sw/Idle Stop Sw	CLOSE	B	B	B

Do the current condition(s) match the malfunction threshold?

YES

Replace the brake pedal position switch .

NO

Go to step 4.

4. Determine possible failure area (IG1_ACG line, others)

-1. Turn the vehicle to the OFF (LOCK) mode.

-2. Remove the jumper wire from the brake pedal position switch 4P connector.

-3. Turn the vehicle to the ON mode.

-4. Measure the voltage between test points 1 and 2.

Test condition	Vehicle ON mode
B	Brake pedal position switch 4P connector: disconnected
Test point 1	Brake pedal position switch 4P connector (female terminals) No. 3: ①
Test point 2	Body ground

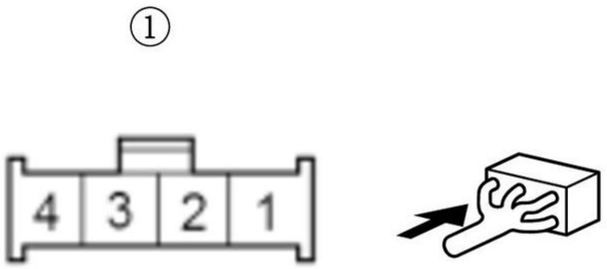

Is there battery voltage?

YES

Go to step 5.

NO

Go to step 6.

5. Open wire check (BKSWNC line)

-1. Turn the vehicle to the OFF (LOCK) mode.

-2. Jump the SCS line with the HDS, and wait more than 1 minute.

-3. Disconnect the following connector.

PCM connector A (50P)

-4. Connect terminals A and B with a jumper wire.

Terminal A	Brake pedal position switch 4P connector (female terminals) No. 2: ①
Terminal B	Brake pedal position switch 4P connector (female terminals) No. 3: ①

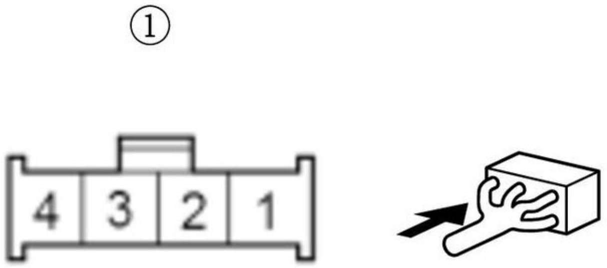

-5. Turn the vehicle to the ON mode.

-6. Measure the voltage between test points 1 and 2.

Test condition	Vehicle ON mode
	Brake pedal position switch 4P connector: disconnected
	PCM connector A (50P): disconnected
	Brake pedal position switch 4P connector No. 2 and No. 3: jumped
Test point 1	**PCM connector A (50P) No. 49**
Test point 2	Body ground

Is there battery voltage?

YES

The BKSWNC wire is OK. Check for any authorized service information related to the DTCs or symptoms you are troubleshooting, or **substitute a known-good PCM** .

NO

Repair an open in the BKSWNC wire between the PCM (A49) and the brake pedal position switch.

6. Fuse check

-1. Turn the vehicle to the OFF (LOCK) mode.

-2. Check the following fuse.

Fuse	No. D21

Is the fuse OK?

YES

Repair an open in the IG1_ACG wire between the No. D21 fuse and the brake pedal position switch.

NO

Replace the No. D21 fuse. Also check for a short to ground on the No. D21 fuse circuit if needed.

7. Brake pedal position switch signal (BKSWNC) check 2

-1. Press the brake pedal.

-2. Check the parameter(s) below with the HDS while pressing the brake pedal.

Signal	Threshold		Current conditions	
	Values	Unit	Values	Unit
Cruise Brake Sw/Idle Stop Sw	OPEN	B	B	B

Do the current condition(s) match the malfunction threshold?

YES

Intermittent failure, the system is OK at this time. Check for poor connections or loose terminals at the brake pedal position switch and the PCM. **If the on-board snapshot of this DTC is recorded, try to reproduce the failure under the same conditions with the on-board snapshot** .

NO

Go to step 8.

8. Brake pedal position switch check

-1. **Test the brake pedal position switch** .

Is the switch OK?

YES

The brake pedal position switch is OK. Repair a short to power in the BKSWNC wire between the PCM (A49) and the brake pedal position switch.

NO

Replace the brake pedal position switch .

DTC P0751

DTC P0751 : Shift Solenoid Valve A Stuck OFF

NOTE: Before you troubleshoot, **review the General Troubleshooting Information** .

DTC Description	Confirmed DTC	Pending DTC	Freeze Frame
P0751 Shift Solenoid Valve A Stuck OFF	B	B	B

DTC (Gear)

1. ATF check

   -1. Check the ATF level to make sure that the transmission is filled to the proper level, and check for fluid leaks.

   -2. Drain the ATF through a strainer. Inspect the strainer for metal debris or excessive clutch material.

   Does the strainer have metal debris or excessive clutch material?

   YES

   Replace the transmission (e-CVT) .

   NO

   Replace the ATF , then go to step 2.

2. Problem verification

   -1. Turn the vehicle to the ON mode.

   -2. Clear the DTC with the HDS.

   -3. Raise the vehicle on a lift. Make sure it is securely supported, and allow all four wheels to rotate freely.

   -4. Select the ENERGY FLOW screen on the MID.

   -5. Enter the VSA maintenance mode .

   -6. Run the vehicle in the engine drive mode for at least 10 seconds. Apply the brakes, and slowly bring the wheels to a stop.

   WARNING: **Do not brake hard when working on a running vehicle on a lift. It may cause some damage to the drive-line.**

   -7. Check for Pending or Confirmed DTCs with the HDS.

DTC Description	Confirmed DTC	Pending DTC	Freeze Frame
P0751 Shift Solenoid Valve A Stuck OFF	B	B	B

   Is DTC P0751 indicated?

   YES

   The failure is duplicated. Go to step 3.

   NO

   Intermittent failure, the system is OK at this time. If the freeze data/on-board snapshot of this DTC is recorded, try to reproduce the failure under the same conditions with the freeze data/on-board snapshot.

3. Shift solenoid valve A check

-1. Select Shift Solenoid Valve A in the Miscellaneous Test Menu with the HDS, and check that shift solenoid valve A operates.

Shift Solenoid Test

Is a clicking sound heard?

YES

Shift solenoid valve A is OK. Faulty shift valve A. **Replace the valve body assembly** .

NO

Replace shift solenoid valve A .

DTC P0752 (2020)

DTC P0752 : Shift Solenoid Valve A Stuck ON

NOTE: Before you troubleshoot, **review the General Troubleshooting Information** .

DTC Description	Confirmed DTC	Pending DTC	Freeze Frame
P0752 Shift Solenoid Valve A Stuck ON	B	B	B

DTC (Gear)

1. ATF check

   -1. **Check the ATF level** to make sure that the transmission is filled to the proper level, and check for fluid leaks.

   -2. **Drain the ATF** through a strainer. Inspect the strainer for metal debris or excessive clutch material.

   Does the strainer have metal debris or excessive clutch material?

   YES

   Replace the transmission (e-CVT) .

   NO

   Replace the ATF , then go to step 2.

2. Problem verification

   -1. Turn the vehicle to the ON mode.

   -2. Clear the DTC with the HDS.

   -3. Raise the vehicle on a lift. Make sure it is securely supported, and allow all four wheels to rotate freely.

   -4. Select the ENERGY FLOW screen on the MID.

   -5. **Enter the VSA maintenance mode** .

   -6. Run the vehicle in the engine drive mode for at least 10 seconds. Apply the brakes, and slowly bring the wheels to a stop.

WARNING: **Do not brake hard when working on a running vehicle on a lift. It may cause some damage to the drive-line.**

-7. Check for Pending or Confirmed DTCs with the HDS.

DTC Description	Confirmed DTC	Pending DTC	Freeze Frame
P0752 Shift Solenoid Valve A Stuck ON	B	B	B

Is DTC P0752 indicated?

YES

The failure is duplicated. Go to step 3.

NO

Intermittent failure, the system is OK at this time. If the freeze data/on-board snapshot of this DTC is recorded, try to reproduce the failure under the same conditions with the freeze data/on-board snapshot.

3. Shift solenoid valve A check

-1. Select Shift Solenoid Valve A in the Miscellaneous Test Menu with the HDS, and check that shift solenoid valve A operates.

Shift Solenoid Test

Is a clicking sound heard?

YES

Shift solenoid valve A is OK. Faulty shift valve A. **Replace the valve body assembly** .

NO

Replace shift solenoid valve A .

DTC P0752 (2021)

DTC P0752 : Shift Solenoid Valve A Stuck ON

NOTE:

- Before you troubleshoot, **review the General Troubleshooting Information** .
- If DTC P2872 is stored at the same time as DTC P0752, troubleshoot DTC P2872 first, then recheck for P0752.

DTC Description	Confirmed DTC	Pending DTC	Freeze Frame
P0752 Shift Solenoid Valve A Stuck ON	B	B	B

DTC (Gear)

1. ATF check

-1. **Check the ATF level** to make sure that the transmission is filled to the proper level, and check for fluid leaks.

-2. **Drain the ATF** through a strainer. Inspect the strainer for metal debris or excessive clutch material.

Does the strainer have metal debris or excessive clutch material?

YES

Replace the transmission (e-CVT) .

NO

Replace the ATF , then go to step 2.

2. Problem verification

-1. Turn the vehicle to the ON mode.

-2. Clear the DTC with the HDS.

-3. Raise the vehicle on a lift. Make sure it is securely supported, and allow all four wheels to rotate freely.

-4. Select the ENERGY FLOW screen on the MID.

-5. **Enter the VSA maintenance mode** .

-6. Select the HV mode by pressing the HV button.

NOTE: The HV indicator in the gauge assembly comes on.

-7. Run the vehicle in the engine drive mode for at least 10 seconds. Apply the brakes, and slowly bring the wheels to a stop.

WARNING: **Do not brake hard when working on a running vehicle on a lift. It may cause some damage to the drive-line.**

-8. Check for Pending or Confirmed DTCs with the HDS.

DTC Description	Confirmed DTC	Pending DTC	Freeze Frame
P0752 Shift Solenoid Valve A Stuck ON	B	B	B

Is DTC P0752 indicated?

YES

The failure is duplicated. Go to step 3.

NO

Intermittent failure, the system is OK at this time. If the freeze data/on-board snapshot of this DTC is recorded, try to reproduce the failure under the same conditions with the freeze data/on-board snapshot.

3. Shift solenoid valve A check

-1. Select Shift Solenoid Valve A in the Function Test Menu with the HDS, and check that shift solenoid valve A operates.

Shift Solenoid Test

Is a clicking sound heard?

YES

Shift solenoid valve A is OK. Faulty shift valve A. **Replace the valve body assembly** .

NO

Replace shift solenoid valve A .

DTC P0756

DTC P0756 : Shift Solenoid Valve B Stuck OFF

NOTE: Before you troubleshoot, review the General Troubleshooting Information .

DTC Description	Confirmed DTC	Pending DTC	Freeze Frame
P0756 Shift Solenoid Valve B Stuck OFF	B	B	B

DTC (Gear)

1. ATF check

-1. Check the ATF level to make sure that the transmission is filled to the proper level, and check for fluid leaks.

-2. Drain the ATF through a strainer. Inspect the strainer for metal debris or excessive clutch material.

Does the strainer have metal debris or excessive clutch material?

YES

Replace the transmission (e-CVT) .

NO

Replace the ATF , then go to step 2.

2. Problem verification

-1. Turn the vehicle to the ON mode.

-2. Clear the DTC with the HDS.

-3. Raise the vehicle on a lift. Make sure it is securely supported, and allow all four wheels to rotate freely.

-4. Select the ENERGY FLOW screen on the MID.

-5. Enter the VSA maintenance mode .

-6. Run the vehicle in the engine drive mode for at least 10 seconds. Apply the brakes, and slowly bring the wheels to a stop.

WARNING: **Do not brake hard when working on a running vehicle on a lift. It may cause some damage to the drive-line.**

-7. Check for Pending or Confirmed DTCs with the HDS.

DTC Description	Confirmed DTC	Pending DTC	Freeze Frame
P0756 Shift Solenoid Valve B Stuck OFF	B	B	B

Is DTC P0756 indicated?

YES

The failure is duplicated. Go to step 3.

NO

Intermittent failure, the system is OK at this time. If the freeze data/on-board snapshot of this DTC is recorded, try to reproduce the failure under the same conditions with the freeze data/on-board snapshot.

3. Shift solenoid valve B check

-1. Select Shift Solenoid Valve B in the Miscellaneous Test Menu with the HDS, and check that shift solenoid valve B operates.

Shift Solenoid Test

Is a clicking sound heard?

YES

Shift solenoid valve B is OK. Faulty shift valve B. **Replace the valve body assembly** .

NO

Replace shift solenoid valve B .

DTC P0757 (2020)

DTC P0757 : Shift Solenoid Valve B Stuck ON

NOTE: Before you troubleshoot, **review the General Troubleshooting Information** .

DTC Description	Confirmed DTC	Pending DTC	Freeze Frame
P0757 Shift Solenoid Valve B Stuck ON	B	B	B

DTC (Gear)

1. ATF check

-1. **Check the ATF level** to make sure that the transmission is filled to the proper level, and check for fluid leaks.

-2. **Drain the ATF** through a strainer. Inspect the strainer for metal debris or excessive clutch material.

Does the strainer have metal debris or excessive clutch material?

YES

Replace the transmission (e-CVT) .

NO

Replace the ATF , then go to step 2.

2. Problem verification

-1. Turn the vehicle to the ON mode.

-2. Clear the DTC with the HDS.

-3. Raise the vehicle on a lift. Make sure it is securely supported, and allow all four wheels to rotate freely.

-4. Select the ENERGY FLOW screen on the MID.

-5. **Enter the VSA maintenance mode** .

-6. Run the vehicle in the engine drive mode for at least 10 seconds. Apply the brakes, and slowly bring the wheels to a stop.

WARNING: **Do not brake hard when working on a running vehicle on a lift. It may cause some damage to the drive-line.**

-7. Check for Pending or Confirmed DTCs with the HDS.

DTC Description	Confirmed DTC	Pending DTC	Freeze Frame
P0757 Shift Solenoid Valve B Stuck ON	B	B	B

Is DTC P0757 indicated?

YES

The failure is duplicated. Go to step 3.

NO

Intermittent failure, the system is OK at this time. If the freeze data/on-board snapshot of this DTC is recorded, try to reproduce the failure under the same conditions with the freeze data/on-board snapshot.

3. Shift solenoid valve B check

-1. Select Shift Solenoid Valve B in the Miscellaneous Test Menu with the HDS, and check that shift solenoid valve B operates.

Shift Solenoid Test

Is a clicking sound heard?

YES

Shift solenoid valve B is OK. Faulty shift valve B. **Replace the valve body assembly** .

NO

Replace shift solenoid valve B .

DTC P0757 (2021)

DTC P0757 : Shift Solenoid Valve B Stuck ON

NOTE:

- Before you troubleshoot, **review the General Troubleshooting Information** .
- If DTC P2872 is stored at the same time as DTC P0757, troubleshoot DTC P2872 first, then recheck for P0757.

DTC Description	Confirmed DTC	Pending DTC	Freeze Frame
P0757 Shift Solenoid Valve B Stuck ON	B	B	B

DTC (Gear)

1. ATF check

-1. Check the ATF level to make sure that the transmission is filled to the proper level, and check for fluid leaks.

-2. Drain the ATF through a strainer. Inspect the strainer for metal debris or excessive clutch material.

Does the strainer have metal debris or excessive clutch material?

YES

Replace the transmission (e-CVT) .

NO

Replace the ATF , then go to step 2.

2. Problem verification

-1. Turn the vehicle to the ON mode.

-2. Clear the DTC with the HDS.

-3. Raise the vehicle on a lift. Make sure it is securely supported, and allow all four wheels to rotate freely.

-4. Select the ENERGY FLOW screen on the MID.

-5. Enter the VSA maintenance mode .

-6. Select the HV mode by pressing the HV button.

NOTE: The HV indicator in the gauge assembly comes on.

-7. Run the vehicle in the engine drive mode for at least 10 seconds. Apply the brakes, and slowly bring the wheels to a stop.

WARNING: **Do not brake hard when working on a running vehicle on a lift. It may cause some damage to the drive-line.**

-8. Check for Pending or Confirmed DTCs with the HDS.

DTC Description	Confirmed DTC	Pending DTC	Freeze Frame
P0757 Shift Solenoid Valve B Stuck ON	B	B	B

Is DTC P0757 indicated?

YES

The failure is duplicated. Go to step 3.

NO

Intermittent failure, the system is OK at this time. If the freeze data/on-board snapshot of this DTC is recorded, try to reproduce the failure under the same conditions with the freeze data/on-board snapshot.

3. Shift solenoid valve B check

-1. Select Shift Solenoid Valve B in the Function Test Menu with the HDS, and check that shift solenoid valve B operates.

Shift Solenoid Test

Is a clicking sound heard?

YES

Shift solenoid valve B is OK. Faulty shift valve B. **Replace the valve body assembly** .

NO

Replace shift solenoid valve B .

DTC P07B3

DTC P07B3 : Transmission Park Position Sensor/Switch A Circuit Low

NOTE: Before you troubleshoot, **review the General Troubleshooting Information** .

DTC Description	Confirmed DTC	Pending DTC	Freeze Frame
P07B3 Transmission Park Position Sensor/Switch A Circuit Low	B	B	B

DTC (Gear)

1. Problem verification

   -1. Turn the vehicle to the ON mode.

   -2. Clear the DTC with the HDS.

   -3. Turn the vehicle to the OFF (LOCK) mode.

   -4. Turn the vehicle to the ON mode, and wait for at least 10 seconds.

   -5. Monitor the OBD STATUS for P07B3 and P07B9 in the DTCs MENU with the HDS.

DTC Description	OBD Status
P07B3 Transmission Park Position Sensor/Switch A Circuit Low	B
P07B9 Transmission Park Position Sensor/Switch B Circuit Low	B

   Does the HDS indicate FAILED?

   DTC P07B3 and P07B9 indicate FAILED

   The failure is duplicated. Go to step 2.

   Only DTC P07B3 indicates FAILED

   The failure is duplicated. Go to step 5.

   DTC P07B3 and P07B9 indicate PASSED

   If the HDS indicates PASSED, intermittent failure, the system is OK at this time. Check for poor connections and loose terminals between the park position sensor and the SBW shifter control module. If the freeze data/on-board snapshot of this DTC is recorded, try to reproduce the failure under the same conditions with the freeze data/on-board snapshot.

2. Determine possible failure area (park position sensor, others)

   -1. Turn the vehicle to the OFF (LOCK) mode.

-2. Disconnect the following connector.

Park position sensor 4P connector

-3. Turn the vehicle to the ON mode.

-4. Measure the voltage between test points 1 and 2.

Test condition	Vehicle ON mode
B	Park position sensor 4P connector: disconnected
Test point 1	Park position sensor 4P connector (female terminals) No. 1: ①
Test point 2	Park position sensor 4P connector (female terminals) No. 2: ①

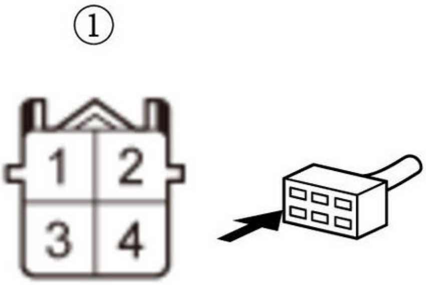

Is there about 5 V?

YES

Replace the park position sensor .

NO

Go to step 3.

3. Open wire check (VCC/SBW_VCC line)

-1. Turn the vehicle to the OFF (LOCK) mode.

-2. Disconnect the following connector.

SBW shifter control module 20P connector

-3. Measure the resistance between test points 1 and 2.

Test condition	Vehicle OFF (LOCK) mode
B	Park position sensor 4P connector: disconnected
B	SBW shifter control module 20P connector: disconnected
Test point 1	Park position sensor 4P connector (female terminals) No. 1: ①
Test point 2	**SBW shifter control module 20P connector No. 12**

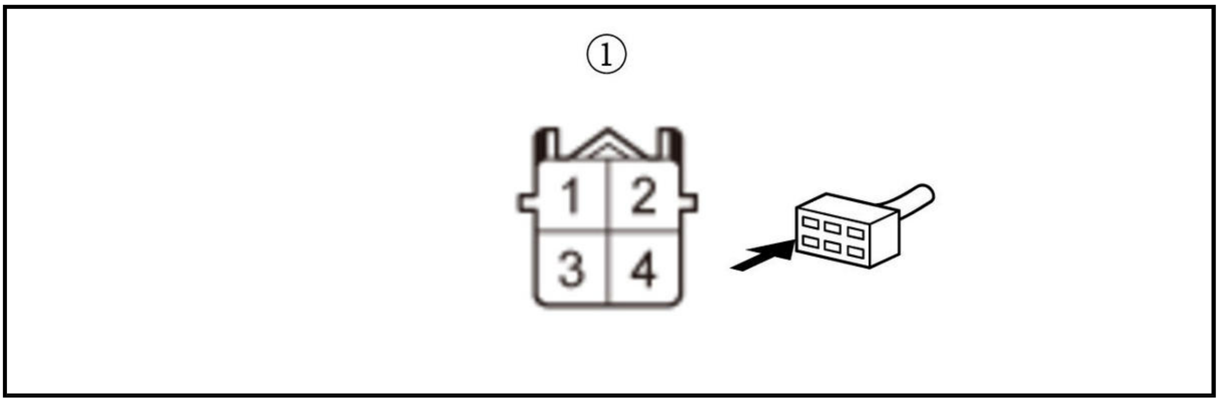

Is there 1.0 Ω or less?

YES

The VCC/SBW_VCC wire is OK. Go to step 4.

NO

Repair an open in the VCC/SBW_VCC wire between the park position sensor and the SBW shifter control module.

4. Open wire check (GND/SBW SG line)

-1. Measure the resistance between test points 1 and 2.

Test condition	Vehicle OFF (LOCK) mode
B	Park position sensor 4P connector: disconnected
B	SBW shifter control module 20P connector: disconnected
Test point 1	Park position sensor 4P connector (female terminals) No. 2: ①
Test point 2	**SBW shifter control module 20P connector No. 2**

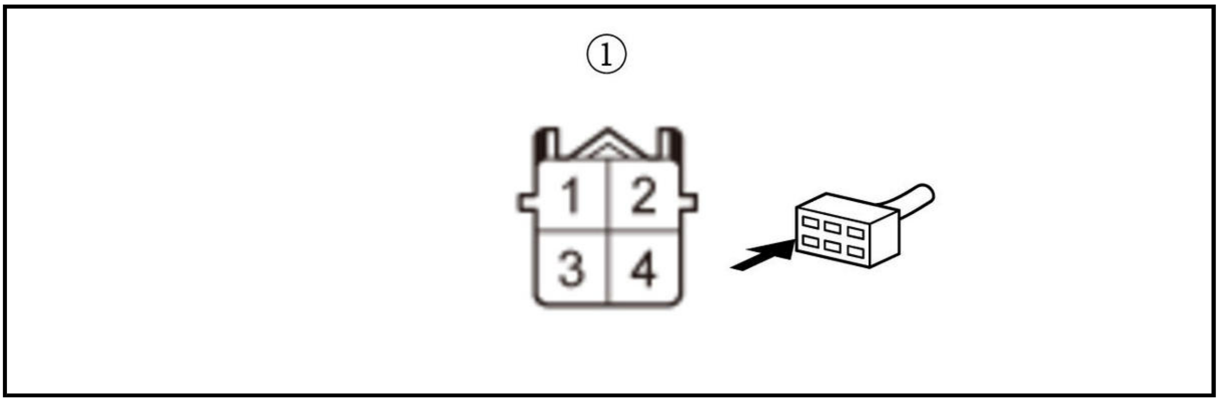

Is there 1.0 Ω or less?

YES

The GND/SBW SG wire is OK. Faulty SBW shifter control module. **Replace the SBW shifter assembly** .

NO

Repair an open in the GND/SBW SG wire between the park position sensor and the SBW shifter control module.

5. Shorted wire check (PSEN1/SBW PPOS1 line)

-1. Turn the vehicle to the OFF (LOCK) mode.

-2. Disconnect the following connectors.

Park position sensor 4P connector
SBW shifter control module 20P connector

-3. Measure the resistance between test points 1 and 2.

Test condition	Vehicle OFF (LOCK) mode
B	Park position sensor 4P connector: disconnected
B	SBW shifter control module 20P connector: disconnected
Test point 1	Park position sensor 4P connector (female terminals) No. 3: ①
Test point 2	Body ground

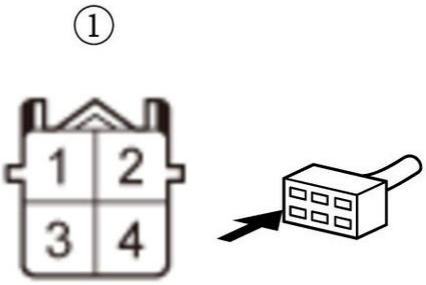

Is there 1 MΩ or more?

YES

The PSEN1/SBW PPOS1 wire is not shorted. Go to step 6.

NO

Repair a short to ground in the PSEN1/SBW PPOS1 wire between the park position sensor and the SBW shifter control module.

6. Open wire check (PSEN1/SBW PPOS1 line)

-1. Measure the resistance between test points 1 and 2.

Test condition	Vehicle OFF (LOCK) mode
B	Park position sensor 4P connector: disconnected
B	SBW shifter control module 20P connector: disconnected
Test point 1	Park position sensor 4P connector (female terminals) No. 3: ①
Test point 2	**SBW shifter control module 20P connector No. 11**

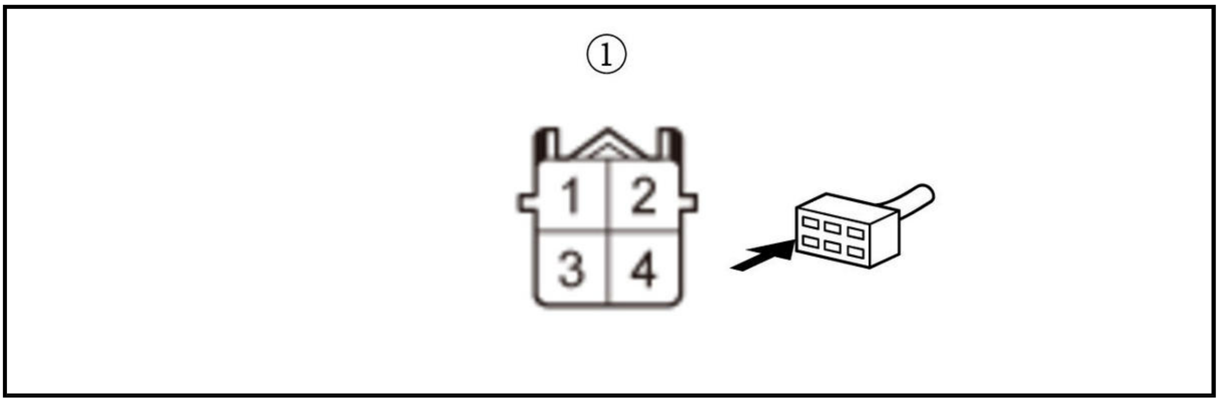

Is there 1.0 Ω or less?

YES

The PSEN1/SBW PPOS1 wire is OK. Go to step 7.

NO

Repair an open in the PSEN1/SBW PPOS1 wire between the park position sensor and the SBW shifter control module.

7. Determine possible failure area (park position sensor, SBW shifter control module)

-1. Reconnect all connectors.

-2. Turn the vehicle to the ON mode.

-3. Measure the voltage between test points 1 and 2.

Test condition	Vehicle ON mode
Test point 1	**SBW shifter control module 20P connector No. 2**
Test point 2	**SBW shifter control module 20P connector No. 11**

Is there 0.1 V or more?

YES

Faulty SBW shifter control module. **Replace the SBW shifter assembly** .

NO

Replace the park position sensor .

DTC P07B4

DTC P07B4 : Transmission Park Position Sensor/Switch A Circuit High

NOTE: Before you troubleshoot, **review the General Troubleshooting Information** .

DTC Description	Confirmed DTC	Pending DTC	Freeze Frame
P07B4 Transmission Park Position Sensor/Switch A Circuit High	B	B	B

DTC (Gear)

1. Problem verification

-1. Turn the vehicle to the ON mode.

-2. Clear the DTC with the HDS.

-3. Turn the vehicle to the OFF (LOCK) mode.

-4. Turn the vehicle to the ON mode, and wait for at least 10 seconds.

-5. Monitor the OBD STATUS for P07B4 in the DTCs MENU with the HDS.

DTC Description	**OBD Status**
P07B4 Transmission Park Position Sensor/Switch A Circuit High	B

Does the HDS indicate FAILED?

DTC P07B4 indicates FAILED

The failure is duplicated. Go to step 2.

DTC P07B4 indicates PASSED

If the HDS indicates PASSED, intermittent failure, the system is OK at this time. Check for poor connections and loose terminals between the park position sensor and the SBW shifter control module. If the freeze data/on-board snapshot of this DTC is recorded, try to reproduce the failure under the same conditions with the freeze data/on-board snapshot.

2. Shorted wire check (PSEN1 line to power)

-1. Turn the vehicle to the OFF (LOCK) mode.

-2. Disconnect the following connectors.

Park position sensor 4P connector
SBW shifter control module 20P connector

-3. Measure the resistance between test points 1 and 2.

Test condition	Vehicle OFF (LOCK) mode
B	Park position sensor 4P connector: disconnected
B	SBW shifter control module 20P connector: disconnected
Test point 1	Park position sensor 4P connector (female terminals) No. 1: ①
Test point 2	Park position sensor 4P connector (female terminals) No. 3: ①

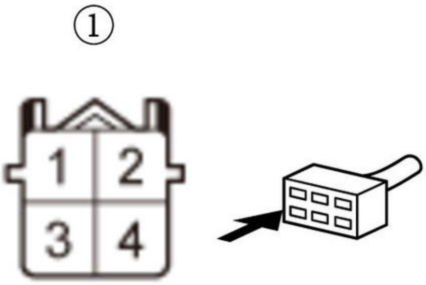

Is there 1 MΩ or more?

YES

The PSEN1 wire is OK. Go to step 3.

NO

Repair a short to power in the PSEN1 wire between the park position sensor and the SBW shifter control module.

3. Park position sensor check

-1. Reconnect all connectors.

-2. Turn the vehicle to the ON mode.

-3. Measure the voltage between test points 1 and 2.

Test condition	Vehicle ON mode
Test point 1	**SBW shifter control module 20P connector No. 2**
Test point 2	**SBW shifter control module 20P connector No. 11**

Is there 4.8 V or more?

YES

Check for any authorized service information related to the DTCs or symptoms you are troubleshooting, or **replace the original park position sensor** . If the DTC does not clear, **replace the SBW shifter assembly** .

NO

The park position sensor is OK. Faulty SBW shifter control module. **Replace the SBW shifter assembly** .

DTC P07B9

DTC P07B9 : Transmission Park Position Sensor/Switch B Circuit Low

NOTE: Before you troubleshoot, **review the General Troubleshooting Information** .

DTC Description	Confirmed DTC	Pending DTC	Freeze Frame
P07B9 Transmission Park Position Sensor/Switch B Circuit Low	B	B	B

DTC (Gear)

1. Problem verification

-1. Turn the vehicle to the ON mode.

-2. Clear the DTC with the HDS.

-3. Turn the vehicle to the OFF (LOCK) mode.

-4. Turn the vehicle to the ON mode, and wait for at least 10 seconds.

-5. Monitor the OBD STATUS for P07B3 and P07B9 in the DTCs MENU with the HDS.

DTC Description	OBD Status
P07B3 Transmission Park Position Sensor/Switch A Circuit Low	B
P07B9 Transmission Park Position Sensor/Switch B Circuit Low	B

Does the HDS indicate FAILED?

DTC P07B3 and P07B9 indicate FAILED

The failure is duplicated. Go to step 2.

Only DTC P07B9 indicates FAILED

The failure is duplicated. Go to step 5.

DTC P07B3 and P07B9 indicate PASSED

If the HDS indicates PASSED, intermittent failure, the system is OK at this time. Check for poor connections and loose terminals between the park position sensor and the SBW shifter control module. If the freeze data/on-board snapshot of this DTC is recorded, try to reproduce the failure under the same conditions with the freeze data/on-board snapshot.

2. Determine possible failure area (park position sensor, others)

   -1. Turn the vehicle to the OFF (LOCK) mode.

   -2. Disconnect the following connector.

Park position sensor 4P connector

   -3. Turn the vehicle to the ON mode.

   -4. Measure the voltage between test points 1 and 2.

Test condition	Vehicle ON mode
B	Park position sensor 4P connector: disconnected
Test point 1	Park position sensor 4P connector (female terminals) No. 1: ①
Test point 2	Park position sensor 4P connector (female terminals) No. 2: ①

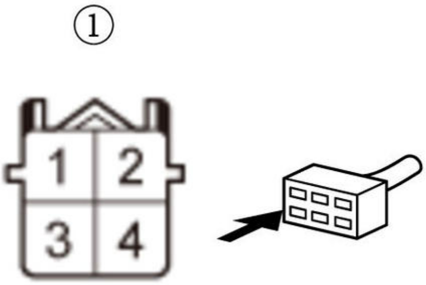

Is there about 5 V?

YES

Replace the park position sensor .

NO

Go to step 3.

3. Open wire check (VCC/SBW_VCC line)

-1. Turn the vehicle to the OFF (LOCK) mode.

-2. Disconnect the following connector.

SBW shifter control module 20P connector

-3. Measure the resistance between test points 1 and 2.

Test condition	Vehicle OFF (LOCK) mode
B	Park position sensor 4P connector: disconnected
B	SBW shifter control module 20P connector: disconnected
Test point 1	Park position sensor 4P connector (female terminals) No. 1: ①
Test point 2	**SBW shifter control module 20P connector No. 12**

①

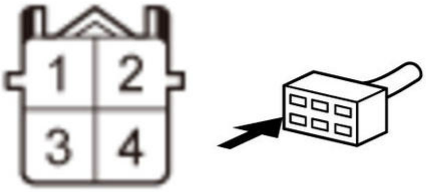

Is there 1.0 Ω or less?

YES

The VCC/SBW_VCC wire is OK. Go to step 4.

NO

Repair an open in the VCC/SBW_VCC wire between the park position sensor and the SBW shifter control module.

4. Open wire check (GND/SBW SG line)

-1. Measure the resistance between test points 1 and 2.

Test condition	Vehicle OFF (LOCK) mode
B	Park position sensor 4P connector: disconnected
B	SBW shifter control module 20P connector: disconnected
Test point 1	Park position sensor 4P connector (female terminals) No. 2: ①
Test point 2	**SBW shifter control module 20P connector No. 2**

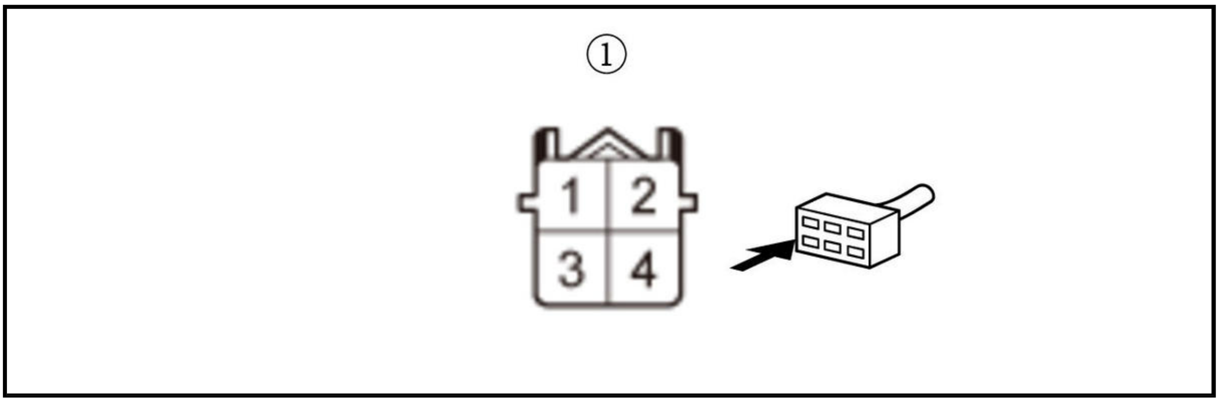

Is there 1.0 Ω or less?

YES

The GND/SBW SG wire is OK. Faulty SBW shifter control module. Replace the SBW shifter assembly
.

NO

Repair an open in the GND/SBW SG wire between the park position sensor and the SBW shifter control module.

5. Shorted wire check (PSEN2/SBW PPOS2 line)

   -1. Turn the vehicle to the OFF (LOCK) mode.

   -2. Disconnect the following connectors.

Park position sensor 4P connector
SBW shifter control module 20P connector

   -3. Measure the resistance between test points 1 and 2.

Test condition	Vehicle OFF (LOCK) mode
B	Park position sensor 4P connector: disconnected
B	SBW shifter control module 20P connector: disconnected
Test point 1	Park position sensor 4P connector (female terminals) No. 4: ①
Test point 2	Body ground

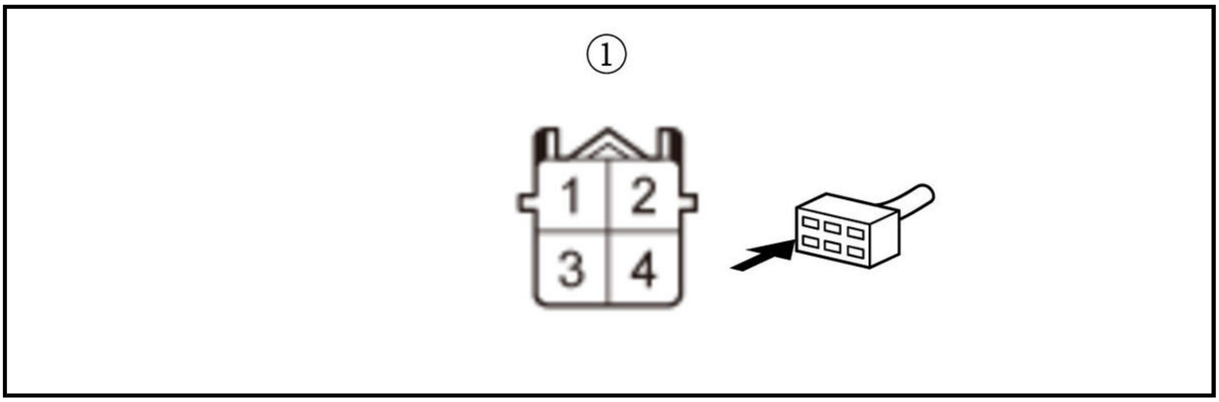

Is there 1 MΩ or more?

YES

The PSEN2 wire is not shorted. Go to step 6.

NO

Repair a short to ground in the PSEN2/SBW PPOS2 wire between the park position sensor and the SBW shifter control module.

6. Open wire check (PSEN2/SBW PPOS2 line)

-1. Measure the resistance between test points 1 and 2.

Test condition	Vehicle OFF (LOCK) mode
B	Park position sensor 4P connector: disconnected
B	SBW shifter control module 20P connector: disconnected
Test point 1	Park position sensor 4P connector (female terminals) No. 4: ①
Test point 2	**SBW shifter control module 20P connector No. 4**

Is there 1.0 Ω or less?

YES

The PSEN2/SBW PPOS2 wire is OK. Go to step 7.

NO

Repair an open in the PSEN2/SBW PPOS2 wire between the park position sensor and the SBW shifter control module.

7. Determine possible failure area (park position sensor, SBW shifter control module)

-1. Reconnect all connectors.

-2. Turn the vehicle to the ON mode.

-3. Measure the voltage between test points 1 and 2.

Test condition	Vehicle ON mode
Test point 1	**SBW shifter control module 20P connector No. 2**
Test point 2	**SBW shifter control module 20P connector No. 4**

Is there 0.1 V or more?

YES

Faulty SBW shifter control module. **Replace the SBW shifter assembly** .

NO

Replace the park position sensor .

DTC P07BA

DTC P07BA : Transmission Park Position Sensor/Switch B Circuit High

NOTE: Before you troubleshoot, **review the General Troubleshooting Information** .

DTC Description	Confirmed DTC	Pending DTC	Freeze Frame
P07BA Transmission Park Position Sensor/Switch B Circuit High	B	B	B

DTC (Gear)

1. Problem verification

   -1. Turn the vehicle to the ON mode.

   -2. Clear the DTC with the HDS.

   -3. Turn the vehicle to the OFF (LOCK) mode.

   -4. Turn the vehicle to the ON mode, and wait for at least 10 seconds.

   -5. Monitor the OBD STATUS for P07BA in the DTCs MENU with the HDS.

DTC Description	**OBD Status**
P07BA Transmission Park Position Sensor/Switch B Circuit High	B

Does the HDS indicate FAILED?

DTC P07BA indicates FAILED

The failure is duplicated. Go to step 2.

DTC P07BA indicates PASSED

If the HDS indicates PASSED, intermittent failure, the system is OK at this time. Check for poor connections and loose terminals between the park position sensor and the SBW shifter control module. If the freeze data/on-board snapshot of this DTC is recorded, try to reproduce the failure under the same conditions with the freeze data/on-board snapshot.

2. Shorted wire check (PSEN2/SBW PPOS2 line to power)

   -1. Turn the vehicle to the OFF (LOCK) mode.

   -2. Disconnect the following connectors.

Park position sensor 4P connector
SBW shifter control module 20P connector

-3. Measure the resistance between test points 1 and 2.

Test condition	Vehicle OFF (LOCK) mode
B	Park position sensor 4P connector: disconnected
B	SBW shifter control module 20P connector: disconnected
Test point 1	Park position sensor 4P connector (female terminals) No. 1: ①
Test point 2	Park position sensor 4P connector (female terminals) No. 4: ①

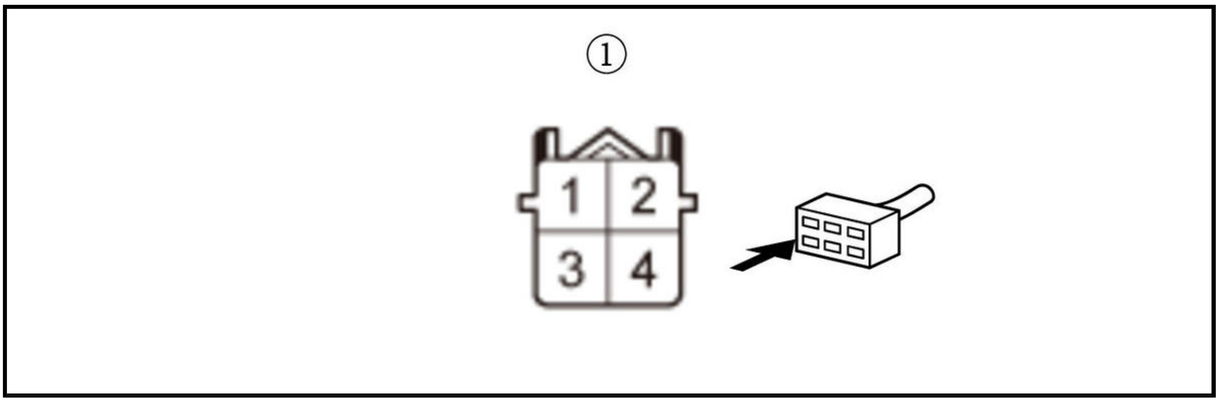

Is there 1 MΩ or more?

YES

The PSEN2/SBW PPOS2 wire is OK. Go to step 3.

NO

Repair a short to power in the PSEN2/SBW PPOS2 wire between the park position sensor and the SBW shifter control module.

3. Park position sensor check

-1. Reconnect all connectors.

-2. Turn the vehicle to the ON mode.

-3. Measure the voltage between test points 1 and 2.

Test condition	Vehicle ON mode
Test point 1	**SBW shifter control module 20P connector No. 2**
Test point 2	**SBW shifter control module 20P connector No. 4**

Is there 4.8 V or more?

YES

Check for any authorized service information related to the DTCs or symptoms you are troubleshooting, or **replace the original park position sensor** . If the DTC does not clear, **replace the SBW shifter assembly** .

NO

The park position sensor is OK. Faulty SBW shifter control module. **Replace the SBW shifter assembly** .

DTC P07BE

DTC P07BE : Transmission Park Position Sensor/Switch A/B Incorrect Voltage Correlation

NOTE: Before you troubleshoot, **review the General Troubleshooting Information** .

DTC Description	Confirmed DTC	Pending DTC	Freeze Frame
P07BE Transmission Park Position Sensor/Switch A/B Incorrect Voltage Correlation	B	B	B

DTC (Gear)

1. Problem verification

   -1. Turn the vehicle to the ON mode.

   -2. Clear the DTC with the HDS.

   -3. Turn the vehicle to the OFF (LOCK) mode.

   -4. Turn the vehicle to the ON mode, and wait for at least 2 seconds.

   -5. While pressing the brake pedal, shift the transmission to N position/mode, then shift to P position/mode.

   -6. Monitor the OBD STATUS for P07BE in the DTCs MENU with the HDS.

DTC Description	**OBD Status**
P07BE Transmission Park Position Sensor/Switch A/B Incorrect Voltage Correlation	B

   Does the HDS indicate FAILED?

   DTC P07BE indicates FAILED

   The failure is duplicated. Go to step 2.

   DTC P07BE indicates PASSED

   If the HDS indicates PASSED, intermittent failure, the system is OK at this time. Check for poor connections and loose terminals between the park position sensor and the SBW shifter control module. If the freeze data/on-board snapshot of this DTC is recorded, try to reproduce the failure under the same conditions with the freeze data/on-board snapshot.

2. Shorted wire check (PSEN1/SBW PPOS1 line to PSEN2/SBW PPOS2 line)

   -1. Turn the vehicle to the OFF (LOCK) mode.

   -2. Disconnect the following connectors.

Park position sensor 4P connector
SBW shifter control module 20P connector

   -3. Measure the resistance between test points 1 and 2.

Test condition	Vehicle OFF (LOCK) mode
B	Park position sensor 4P connector: disconnected
B	SBW shifter control module 20P connector: disconnected
Test point 1	Park position sensor 4P connector (female terminals) No. 3: ①
Test point 2	Park position sensor 4P connector (female terminals) No. 4: ①

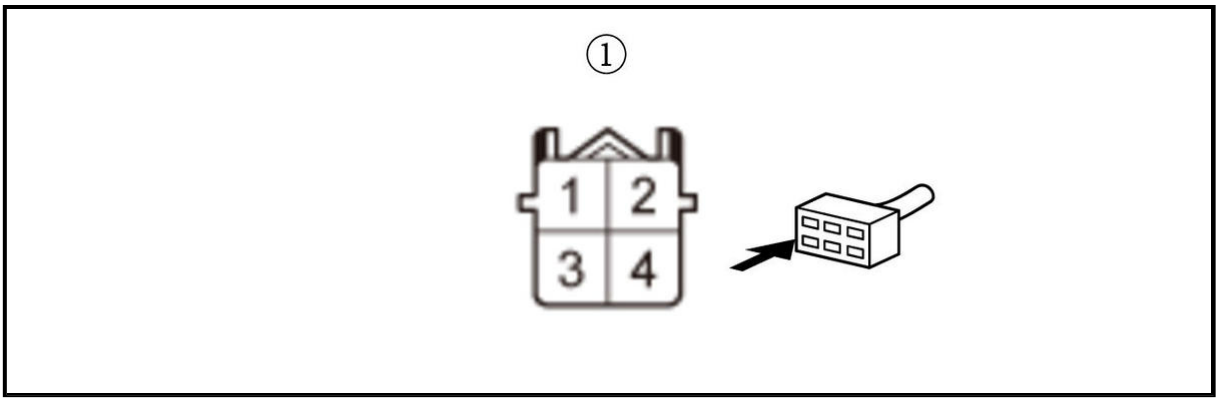

Is there 1 MΩ or more?

YES

The PSEN1/SBW PPOS1 wire and the PSEN2/SBW PPOS2 wire are OK. Go to step 3.

NO

Repair a short in the PSEN1/SBW PPOS1 wire to the PSEN2/SBW PPOS2 wire between the park position sensor and the SBW shifter control module.

3. Park position sensor check

-1. Reconnect all connectors.

-2. Turn the vehicle to the ON mode.

-3. Measure the voltage between test points 1 and 2 individually.

Test condition	Vehicle ON mode
Test point 1	**SBW shifter control module 20P connector No. 2**
Test point 2	**SBW shifter control module 20P connector No. 11**
B	B
Test point 1	**SBW shifter control module 20P connector No. 2**
Test point 2	**SBW shifter control module 20P connector No. 4**

Are these voltages matched?

YES

Check for any authorized service information related to the DTCs or symptoms you are troubleshooting, or **replace the original park position sensor** . If the DTC does not clear, **replace the SBW shifter assembly** .

NO

The park position sensor is OK. Faulty SBW shifter control module. **Replace the SBW shifter assembly** .

DTC P0811

DTC P0811 : Excessive Clutch A Slippage

NOTE: Before you troubleshoot, **review the General Troubleshooting Information** .

DTC Description	Confirmed DTC	Pending DTC	Freeze Frame
P0811 Excessive Clutch A Slippage	B	B	B

DTC (Gear)

1. Problem verification

   -1. Turn the vehicle to the ON mode.

   -2. Clear the DTC with the HDS.

   -3. Raise the vehicle on a lift. Make sure it is securely supported, and allow all four wheels to rotate freely.

   -4. Select the ENERGY FLOW screen on the MID.

   -5. **Enter the VSA maintenance mode** .

   -6. Run the vehicle in the engine drive mode for at least 10 seconds. Apply the brakes, and slowly bring the wheels to a stop.

   WARNING: **Do not brake hard when working on a running vehicle on a lift. It may cause some damage to the drive-line.**

   -7. Check for Pending or Confirmed DTCs with the HDS.

DTC Description	Confirmed DTC	Pending DTC	Freeze Frame
P0811 Excessive Clutch A Slippage	B	B	B

   Is DTC P0811 indicated?

   YES

   The failure is duplicated. Go to step 2.

   NO

   Intermittent failure, the system is OK at this time. If the freeze data/on-board snapshot of this DTC is recorded, try to reproduce the failure under the same conditions with the freeze data/on-board snapshot.

2. Over drive clutch pressure check

   -1. **Measure the over drive clutch pressure** .

   Is the over drive clutch pressure within the service limit?

   YES

   The over drive clutch pressure is OK. **Replace the over drive clutch** or **replace the transmission (e-CVT)** .

   NO

   Go to step 3.

3. Over drive clutch hydraulic circuit check

   -1. **Measure the line pressure** .

   Is the line pressure within the service limits?

   YES

Clogged over drive clutch hydraulic circuit. **Replace the transmission (e-CVT)** .

NO

The over drive clutch hydraulic circuit is OK. Faulty ATF pump or main regulator valve. **Replace the valve body assembly** , or **replace the transmission (e-CVT)** .

DTC P0840 (2020)

DTC P0840 : Transmission Fluid Pressure Sensor Malfunction

NOTE: Before you troubleshoot, **review the General Troubleshooting Information** .

DTC Description	Confirmed DTC	Pending DTC	Freeze Frame
P0840 Transmission Fluid Pressure Sensor Malfunction	B	B	B

DTC (Gear)

1. Problem verification

-1. Turn the vehicle to the ON mode.

-2. Clear the DTC with the HDS.

-3. **Enter the maintenance mode** , then start the engine until the cooling fan comes on.

-4. Turn the vehicle to the OFF (LOCK) mode.

-5. Turn the vehicle to the ON mode.

-6. Raise the vehicle on a lift. Make sure it is securely supported, and allow all four wheels to rotate freely.

-7. Select the ENERGY FLOW screen on the MID.

-8. **Enter the VSA maintenance mode** .

-9. Run the vehicle in the engine drive mode for at least 10 seconds. Apply the brakes, and slowly bring the wheels to a stop.

WARNING: **Do not brake hard when working on a running vehicle on a lift. It may cause some damage to the drive-line.**

-10.

Check for Pending or Confirmed DTCs with the HDS.

DTC Description	Confirmed DTC	Pending DTC	Freeze Frame
P0840 Transmission Fluid Pressure Sensor Malfunction	B	B	B

DTC Description	Confirmed DTC	Pending DTC	Freeze Frame
P173A Transmission Fluid Pressure Sensor Performance High	B	B	B
P173B Transmission Fluid Pressure Sensor Performance Low	B	B	B

Is DTC P0840, P173A, or P173B indicated?

DTC P0840 is indicated

Check for any authorized service information related to the DTCs or symptoms you are troubleshooting, or **replace the original PCM** .

DTC P173A is indicated

Do the troubleshooting for DTC P173A .

DTC P173B is indicated

Do the troubleshooting for DTC P173B .

DTC P0840 (2021)

DTC P0840 : Transmission Fluid Pressure Sensor Malfunction

NOTE: Before you troubleshoot, **review the General Troubleshooting Information** .

DTC Description	Confirmed DTC	Pending DTC	Freeze Frame
P0840 Transmission Fluid Pressure Sensor Malfunction	B	B	B

DTC (Gear)

1. Problem verification

   -1. Turn the vehicle to the ON mode.

   -2. Check the parameter(s) below with the HDS.

Signal	Threshold		Current conditions	
	Values	Unit	Values	Unit
Oil Pressure Sensor 1 Voltage	0.34 or less	V	B	B

   Do the current condition(s) match the threshold?

   YES

   The failure is duplicated. Go to step 2.

   NO

   Intermittent failure, the system is OK at this time. Check for poor connections and loose terminals between the transmission fluid pressure sensor and the PCM. If the freeze data/on-board snapshot of this DTC is recorded, try to reproduce the failure under the same conditions with the freeze data/on-board snapshot.

2. Determine possible failure area (PODCL line, others)

   -1. Turn the vehicle to the OFF (LOCK) mode.

   -2. Disconnect the following connector.

Transmission fluid pressure sensor 3P connector

   -3. Turn the vehicle to the ON mode.

-4. Check the parameter(s) below with the HDS.

Signal	Threshold		Current conditions	
	Values	Unit	Values	Unit
Oil Pressure Sensor 1 Voltage	0.34 or less	V	B	B

Do the current condition(s) match the threshold?

YES

Go to step 3.

NO

Go to step 4.

3. Shorted wire check (PODCL line)

-1. Turn the vehicle to the OFF (LOCK) mode.

-2. Jump the SCS line with the HDS, and wait more than 1 minute.

-3. Disconnect the following connector.

PCM connector E (80P)

-4. Check for continuity between test points 1 and 2.

Test condition	Vehicle OFF (LOCK) mode
B	Transmission fluid pressure sensor 3P connector: disconnected
B	PCM connector E (80P): disconnected
Test point 1	Transmission fluid pressure sensor 3P connector (female terminals) No. 2: ①
Test point 2	Body ground

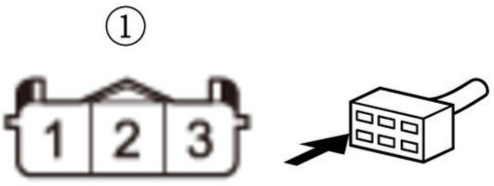

Is there continuity?

YES

Repair a short to ground in the PODCL wire between the transmission fluid pressure sensor and the PCM.

NO

The PODCL wire is OK. Check for any authorized service information related to the DTCs or symptoms you are troubleshooting, or **replace the original PCM** .

4. Open wire check (VCC2 line)

-1. Measure the voltage between test points 1 and 2.

Test condition	Vehicle ON mode
B	Transmission fluid pressure sensor 3P connector: disconnected
Test point 1	Transmission fluid pressure sensor 3P connector (female terminals) No. 3: ①
Test point 2	Body ground

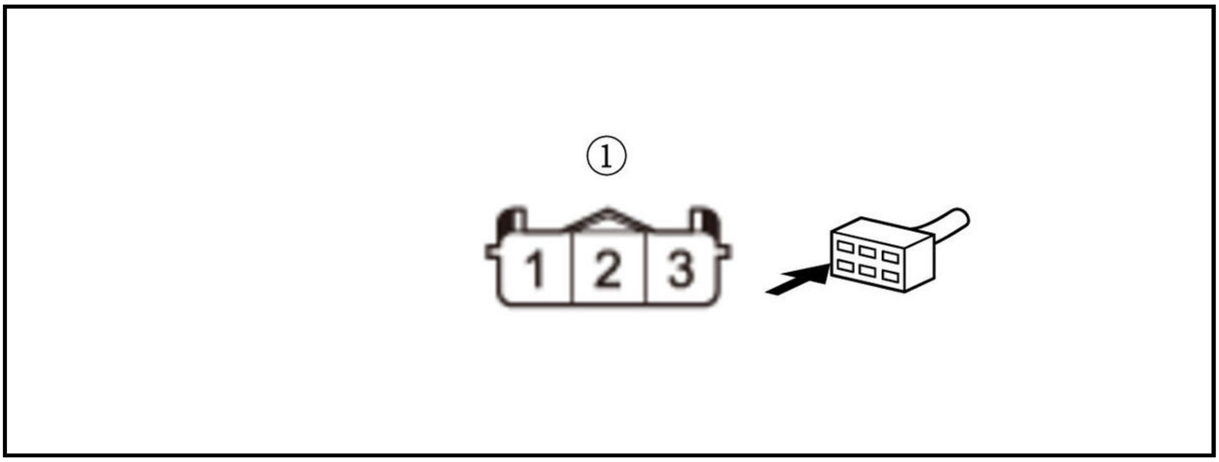

Is there about 5 V?

YES

The VCC2 wire is OK. **Replace the transmission fluid pressure sensor** .

NO

Repair an open in the VCC2 wire between transmission fluid pressure sensor and the PCM.

DTC P0841 (2021)

DTC P0841 : Transmission Fluid Pressure Sensor Performance

NOTE: Before you troubleshoot, **review the General Troubleshooting Information** .

DTC Description	Confirmed DTC	Pending DTC	Freeze Frame
P0841 Transmission Fluid Pressure Sensor Performance	B	B	B

DTC (Gear)

1. DTC check

-1. Turn the vehicle to the ON mode.

-2. Check for Pending or Confirmed DTCs with the HDS.

DTC Description	Confirmed DTC	Pending DTC	Freeze Frame
P0841 Transmission Fluid Pressure Sensor Performance	B	B	B

DTC Description	Confirmed DTC	Pending DTC	Freeze Frame
P173A Transmission Fluid Pressure Sensor Performance High	B	B	B
P173B Transmission Fluid Pressure Sensor Performance Low	B	B	B

Is DTC P173A or P173B indicated?

DTC P173A is indicated

Do the troubleshooting for DTC P173A .

DTC P173B is indicated

Do the troubleshooting for DTC P173B .

DTC P0842

DTC P0842 : Transmission Fluid Pressure Switch A (2nd Clutch) Circuit Low/Transmission Fluid Pressure Sensor Circuit Low Input

NOTE: Before you troubleshoot, **review the General Troubleshooting Information** .

DTC Description	Confirmed DTC	Pending DTC	Freeze Frame
P0842 Transmission Fluid Pressure Switch A (2nd Clutch) Circuit Low/Transmission Fluid Pressure Sensor Circuit Low Input	B	B	B

DTC (Gear)

1. Problem verification

   -1. Turn the vehicle to the ON mode.

   -2. Check the parameter(s) below with the HDS.

Signal	Threshold		Current conditions	
	Values	Unit	Values	Unit
Oil pressure sensor 1 voltage	0.25 or less	V	B	B

   Do the current condition(s) match the threshold?

   YES

   The failure is duplicated. Go to step 2.

   NO

   Intermittent failure, the system is OK at this time. Check for poor connections and loose terminals between the transmission fluid pressure sensor and the PCM. If the freeze data/on-board snapshot of this DTC is recorded, try to reproduce the failure under the same conditions with the freeze data/on-board snapshot.

2. Determine possible failure area (PODCL line, others)

   -1. Turn the vehicle to the OFF (LOCK) mode.

   -2. Disconnect the following connector.

Transmission fluid pressure sensor 3P connector

-3. Turn the vehicle to the ON mode.

-4. Check the parameter(s) below with the HDS.

Signal	Threshold		Current conditions	
	Values	Unit	Values	Unit
Oil pressure sensor 1 voltage	0.25 or less	V	B	B

Do the current condition(s) match the threshold?

YES

Go to step 3.

NO

Go to step 4.

3. Shorted wire check (PODCL line)

-1. Turn the vehicle to the OFF (LOCK) mode.

-2. Jump the SCS line with the HDS, and wait more than 1 minute.

-3. Disconnect the following connector.

PCM connector E (80P)

-4. Measure the resistance between test points 1 and 2.

Test condition	Vehicle OFF (LOCK) mode
B	Transmission fluid pressure sensor 3P connector: disconnected
B	PCM connector E (80P): disconnected
Test point 1	Transmission fluid pressure sensor 3P connector (female terminals) No. 2: ①
Test point 2	Body ground

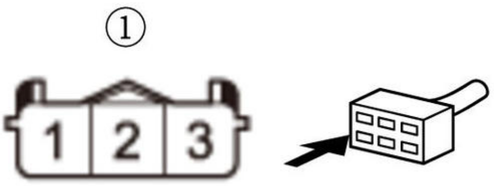

Is there 1 MΩ or more?

YES

The PODCL wire is OK. Check for any authorized service information related to the DTCs or symptoms you are troubleshooting, or **replace the original PCM** .

NO

Repair a short to ground in the PODCL wire between the transmission fluid pressure sensor and the PCM.

4. Open wire check (VCC2 line)

-1. Measure the voltage between test points 1 and 2.

Test condition	Vehicle ON mode
B	Transmission fluid pressure sensor 3P connector: disconnected

Test point 1	Transmission fluid pressure sensor 3P connector (female terminals) No. 3: ①
Test point 2	Body ground

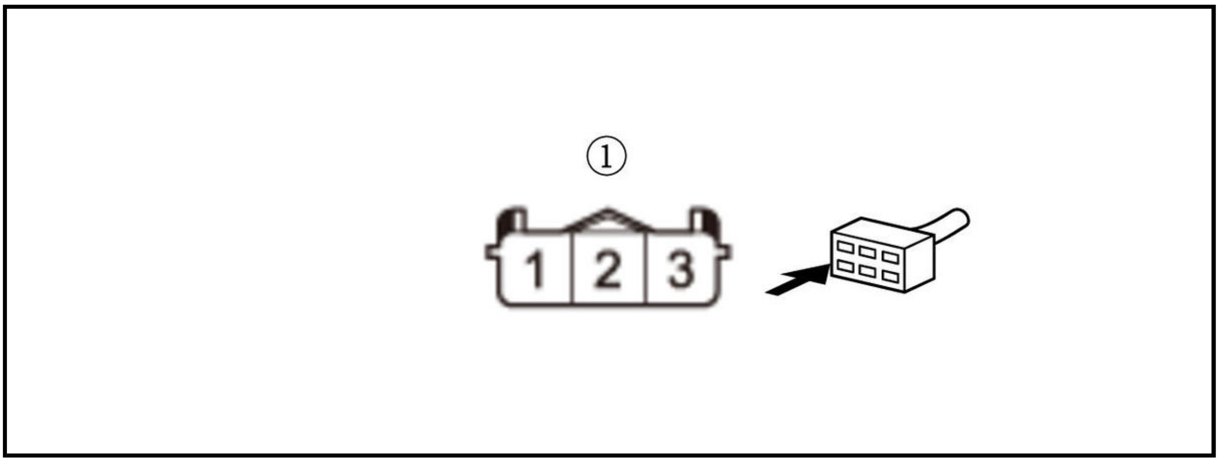

Is there about 5 V?

YES

The VCC2 wire is OK. **Replace the transmission fluid pressure sensor** .

NO

Repair an open in the VCC2 wire between transmission fluid pressure sensor and the PCM.

DTC P0843

DTC P0843 : Transmission Fluid Pressure Switch A (2nd Clutch) Circuit High/Transmission Fluid Pressure Sensor Circuit High Input

NOTE: Before you troubleshoot, **review the General Troubleshooting Information** .

DTC Description	Confirmed DTC	Pending DTC	Freeze Frame
P0843 Transmission Fluid Pressure Switch A (2nd Clutch) Circuit High/Transmission Fluid Pressure Sensor Circuit High Input	B	B	B

DTC (Gear)

1. Problem verification

-1. Turn the vehicle to the ON mode.

-2. Check the parameter(s) below with the HDS.

Signal	Threshold		Current conditions	
	Values	Unit	Values	Unit
Oil pressure sensor 1 voltage	4.65 or more	V	B	B

Do the current condition(s) match the threshold?

YES

The failure is duplicated. Go to step 2.

NO

Intermittent failure, the system is OK at this time. Check for poor connections and loose terminals between the transmission fluid pressure sensor and the PCM. If the freeze data/on-board snapshot of this DTC is recorded, try to reproduce the failure under the same conditions with the freeze data/on-board snapshot.

2. Determine possible failure area (PODCL line, others)

-1. Turn the vehicle to the OFF (LOCK) mode.

-2. Disconnect the following connector.

Transmission fluid pressure sensor 3P connector

-3. Connect terminals A and B with a jumper wire.

Terminal A	Transmission fluid pressure sensor 3P connector (female terminals) No. 1: ①
Terminal B	Transmission fluid pressure sensor 3P connector (female terminals) No. 2: ①

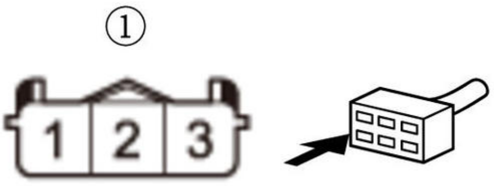

-4. Turn the vehicle to the ON mode.

-5. Check the parameter(s) below with the HDS.

Signal	Threshold		Current conditions	
	Values	Unit	Values	Unit
Oil pressure sensor 1 voltage	4.65 or more	V	B	B

Do the current condition(s) match the threshold?

YES

Go to step 3.

NO

Go to step 4.

3. Open wire check (PODCL line)

-1. Turn the vehicle to the OFF (LOCK) mode.

-2. Remove the jumper wire.

-3. Jump the SCS line with the HDS, and wait more than 1 minute.

-4. Disconnect the following connector.

PCM connector E (80P)

-5. Measure the resistance between test points 1 and 2.

Test condition	Vehicle OFF (LOCK) mode
B	Transmission fluid pressure sensor 3P connector: disconnected
B	PCM connector E (80P): disconnected
Test point 1	Transmission fluid pressure sensor 3P connector (female terminals) No. 2: ①
Test point 2	**PCM connector E (80P) No. 33**

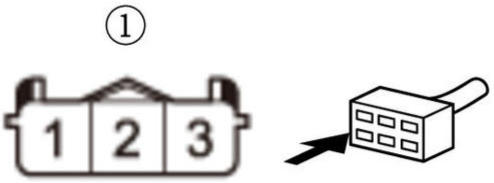

Is there 1.0 Ω or less?

YES

The PODCL wire is OK. Check for any authorized service information related to the DTCs or symptoms you are troubleshooting, or **replace the original PCM** .

NO

Repair an open in the PODCL wire between the transmission fluid pressure sensor and the PCM.

4. Transmission fluid pressure sensor check

-1. Turn the vehicle to the OFF (LOCK) mode.

-2. Remove the jumper wire.

-3. Turn the vehicle to the ON mode.

-4. Measure the voltage between test points 1 and 2.

Test condition	Vehicle ON mode
B	Transmission fluid pressure sensor 3P connector: disconnected
Test point 1	Transmission fluid pressure sensor 3P connector (female terminals) No. 1: ①
Test point 2	Transmission fluid pressure sensor 3P connector (female terminals) No. 3: ①

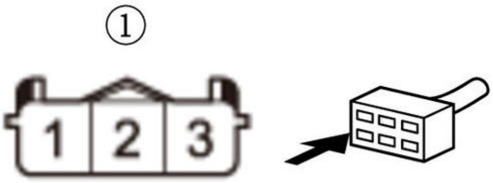

Is there about 5 V?

YES

Replace the transmission fluid pressure sensor .

NO

Transmission fluid pressure sensor is OK, go to step 5.

5. Open wire check (VCC2 line)

-1. Measure the voltage between test points 1 and 2.

Test condition	Vehicle ON mode
B	Transmission fluid pressure sensor 3P connector: disconnected
Test point 1	Transmission fluid pressure sensor 3P connector (female terminals) No. 3: ①
Test point 2	Body ground

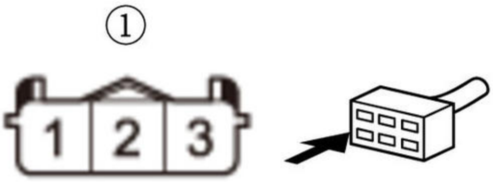

Is there about 5 V?

YES

The VCC2 wire is OK. Repair an open in the SG2 wire between the transmission fluid pressure sensor and the PCM.

NO

Repair an open in the VCC2 wire between the transmission fluid pressure sensor and the PCM.

DTC P084F

DTC P084F : Park/Neutral Switch Output Circuit

NOTE: Before you troubleshoot, **review the General Troubleshooting Information** .

DTC Description	Confirmed DTC	Pending DTC	Freeze Frame
P084F Park/Neutral Switch Output Circuit	B	B	B

DTC (Gear)

1. Problem verification

   -1. Turn the vehicle to the ON mode.

   -2. Clear the DTC with the HDS.

   -3. Turn the vehicle to the OFF (LOCK) mode.

   -4. Turn the vehicle to the READY TO DRIVE mode.

   -5. While pressing the brake pedal, shift the transmission to N position/mode, and wait for at least 10 seconds.

   -6. While pressing the brake pedal, shift the transmission to P position/mode, and wait for at least 10 seconds.

   -7. Check for Pending or Confirmed DTCs with the HDS.

DTC Description	Confirmed DTC	Pending DTC	Freeze Frame
P084F Park/Neutral Switch Output Circuit	B	B	B

   Is DTC P084F indicated?

   YES

   The failure is duplicated. Go to step 2.

   NO

   Intermittent failure, the system is OK at this time. Check for poor connections and loose terminals between the SBW shifter control module and the body control module. If the freeze data/on-board snapshot of this DTC is recorded, try to reproduce the failure under the same conditions with the freeze data/on-board snapshot.

2. SBW shifter control module internal ATP-P line check

   -1. Measure the voltage between test points 1 and 2.

Test condition	Vehicle ON mode
Test point 1	SBW shifter control module 20P connector No. 14
Test point 2	Body ground

Is there battery voltage?

YES

Faulty SBW shifter control module. Replace the SBW shifter assembly .

NO

The SBW shifter control module internal ATP-P line is OK. Go to step 3.

3. Shorted wire check (ATP-P line)

-1. Turn the vehicle to the OFF (LOCK) mode.

-2. Disconnect the following connector.

SBW shifter control module 20P connector

-3. Check for continuity between test points 1 and 2 while disconnecting following connector.

Body control module connector C (28P)
Power tailgate control unit connector A (24P) (With power tailgate)
Power seat control unit connector A (20P) (With DPMS)

Test condition	Vehicle OFF (LOCK) mode
B	SBW shifter control module 20P connector: disconnected
Test point 1	SBW shifter control module 20P connector No. 14
Test point 2	Body ground

Does continuity go away when the connector is disconnected?

YES

Replace the part that any resistance was detected when it was disconnected.

NO

Repair a short to ground in the ATP-P wire between the SBW shifter control module and the body control module.

DTC P0973

DTC P0973 : Shift Solenoid Valve A Control Circuit Low (Short)

NOTE: Before you troubleshoot, review the General Troubleshooting Information .

DTC Description	Confirmed DTC	Pending DTC	Freeze Frame
P0973 Shift Solenoid Valve A Control Circuit Low (Short)	B	B	B

DTC (Gear)

1. Problem verification

-1. Turn the vehicle to the ON mode.

-2. Clear the DTC with the HDS.

-3. Raise the vehicle on a lift. Make sure it is securely supported, and allow all four wheels to rotate freely.

-4. Select the ENERGY FLOW screen on the MID.

-5. **Enter the VSA maintenance mode** .

-6. Run the vehicle in the engine drive mode for at least 10 seconds. Apply the brakes, and slowly bring the wheels to a stop.

WARNING: **Do not brake hard when working on a running vehicle on a lift. It may cause some damage to the drive-line.**

-7. Check for Pending or Confirmed DTCs with the HDS.

DTC Description	Confirmed DTC	Pending DTC	Freeze Frame
P0973 Shift Solenoid Valve A Control Circuit Low (Short)	B	B	B

Is DTC P0973 indicated?

YES

The failure is duplicated. Go to step 2.

NO

Intermittent failure, the system is OK at this time. Check for poor connections and loose terminals between shift solenoid valve A and the PCM. If the freeze data/on-board snapshot of this DTC is recorded, try to reproduce the failure under the same conditions with the freeze data/on-board snapshot.

2. Determine possible failure area (shift solenoid valve A, others)

-1. Turn the vehicle to the OFF (LOCK) mode.

-2. Disconnect the following connector.

Shift solenoid valve A 2P connector

-3. Turn the vehicle to the ON mode.

-4. Clear the DTC with the HDS.

-5. **Enter the VSA maintenance mode** .

-6. Run the vehicle in the engine drive mode for at least 10 seconds. Apply the brakes, and slowly bring the wheels to a stop.

WARNING: **Do not brake hard when working on a running vehicle on a lift. It may cause some damage to the drive-line.**

-7. Check for Pending or Confirmed DTCs with the HDS.

DTC Description	Confirmed DTC	Pending DTC	Freeze Frame
P0973 Shift Solenoid Valve A Control Circuit Low (Short)	B	B	B

Is DTC P0973 indicated?

YES

Go to step 3.

NO

Replace shift solenoid valve A .

3. Shorted wire check (SHA line)

-1. Turn the vehicle to the OFF (LOCK) mode.

-2. Jump the SCS line with the HDS, and wait more than 1 minute.

-3. Disconnect the following connector.

PCM connector E (80P)

-4. Measure the resistance between test points 1 and 2.

Test condition	Vehicle OFF (LOCK) mode
B	Shift solenoid valve A 2P connector: disconnected
B	PCM connector E (80P): disconnected
Test point 1	**PCM connector E (80P) No. 26**

Test point 2	Body ground

Is there 1 MΩ or more?

YES

The SHA wire is OK. Check for any authorized service information related to the DTCs or symptoms you are troubleshooting, or **replace the original PCM** .

NO

Repair a short to ground in the SHA wire between shift solenoid valve A and the PCM.

DTC P0974

DTC P0974 : Shift Solenoid Valve A Control Circuit High (Open)

NOTE: Before you troubleshoot, **review the General Troubleshooting Information** .

DTC Description	Confirmed DTC	Pending DTC	Freeze Frame
P0974 Shift Solenoid Valve A Control Circuit High (Open)	B	B	B

DTC (Gear)

1. Problem verification

-1. Turn the vehicle to the ON mode.

-2. Clear the DTC with the HDS.

-3. Turn the vehicle to the READY TO DRIVE mode, and wait for at least 1 second.

-4. Check for Pending or Confirmed DTCs with the HDS.

DTC Description	Confirmed DTC	Pending DTC	Freeze Frame
P0974 Shift Solenoid Valve A Control Circuit High (Open)	B	B	B

Is DTC P0974 indicated?

YES

The failure is duplicated. Go to step 2.

NO

Intermittent failure, the system is OK at this time. Check for poor connections and loose terminals between shift solenoid valve A and the PCM. If the freeze data/on-board snapshot of this DTC is recorded, try to reproduce the failure under the same conditions with the freeze data/on-board snapshot.

2. Determine possible failure area (shift solenoid valve A, others)

-1. Turn the vehicle to the OFF (LOCK) mode.

-2. Disconnect the following connector.

Shift solenoid valve A 2P connector

-3. Connect terminals A and B with a jumper wire.

Terminal A	Shift solenoid valve A 2P connector (female terminals) No. 1: ①
Terminal B	Body ground

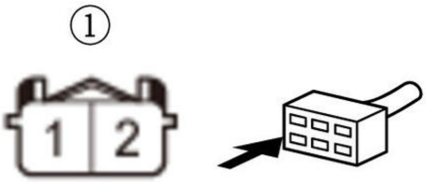

-4. Turn the vehicle to the ON mode.

-5. Clear the DTC with the HDS.

-6. Raise the vehicle on a lift. Make sure it is securely supported, and allow all four wheels to rotate freely.

-7. Select the ENERGY FLOW screen on the MID.

-8. **Enter the VSA maintenance mode**.

-9. Run the vehicle in the engine drive mode for at least 10 seconds. Apply the brakes, and slowly bring the wheels to a stop.

WARNING: **Do not brake hard when working on a running vehicle on a lift. It may cause some damage to the drive-line.**

-10.

Check for Pending or Confirmed DTCs with the HDS.

DTC Description	Confirmed DTC	Pending DTC	Freeze Frame
P0973 Shift Solenoid Valve A Control Circuit Low (Short)	B	B	B

Is DTC P0973 indicated?

YES

Go to step 3.

NO

Go to step 4.

3. Shift solenoid valve A check

-1. Turn the vehicle to the OFF (LOCK) mode.

-2. Remove the jumper wire.

-3. Measure the resistance between test points 1 and 2.

Test condition	Vehicle OFF (LOCK) mode
B	Shift solenoid valve A 2P connector: disconnected
Test point 1	Shift solenoid valve A 2P connector (female terminals) No. 2: ①
Test point 2	Body ground

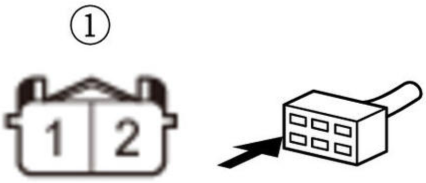

Is there 1.0 Ω or less?

YES

Replace shift solenoid valve A .

NO

Shift solenoid valve A is OK. Repair an open in the PG wire between shift solenoid valve A and ground (G101), or repair poor ground (G101).

4. Open wire check (SHA line)

-1. Turn the vehicle to the OFF (LOCK) mode.

-2. Remove the jumper wire.

-3. Jump the SCS line with the HDS, and wait more than 1 minute.

-4. Disconnect the following connector.

PCM connector E (80P)

-5. Measure the resistance between test points 1 and 2.

Test condition	Vehicle OFF (LOCK) mode
B	Shift solenoid valve A 2P connector: disconnected
B	PCM connector E (80P): disconnected
Test point 1	Shift solenoid valve A 2P connector (female terminals) No. 1: ①
Test point 2	**PCM connector E (80P) No. 26**

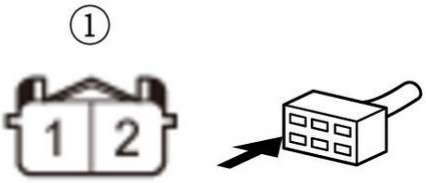

Is there 1.0 Ω or less?

YES

The SHA wire is OK. Check for any authorized service information related to the DTCs or symptoms you are troubleshooting, or **replace the original PCM** .

NO

Repair an open in the SHA wire between shift solenoid valve A and the PCM.

DTC P0976

DTC P0976 : Shift Solenoid Valve B Control Circuit Low (Short)

NOTE: Before you troubleshoot, **review the General Troubleshooting Information** .

DTC Description	Confirmed DTC	Pending DTC	Freeze Frame
P0976 Shift Solenoid Valve B Control Circuit Low (Short)	B	B	B

DTC (Gear)

1. Problem verification

-1. Turn the vehicle to the ON mode.

-2. Clear the DTC with the HDS.

-3. Raise the vehicle on a lift. Make sure it is securely supported, and allow all four wheels to rotate freely.

-4. Select the ENERGY FLOW screen on the MID.

-5. **Enter the VSA maintenance mode** .

-6. Run the vehicle in the engine drive mode for at least 10 seconds. Apply the brakes, and slowly bring the wheels to a stop.

WARNING: **Do not brake hard when working on a running vehicle on a lift. It may cause some damage to the drive-line.**

-7. Check for Pending or Confirmed DTCs with the HDS.

DTC Description	Confirmed DTC	Pending DTC	Freeze Frame
P0976 Shift Solenoid Valve B Control Circuit Low (Short)	B	B	B

Is DTC P0976 indicated?

YES

The failure is duplicated. Go to step 2.

NO

Intermittent failure, the system is OK at this time. Check for poor connections and loose terminals between shift solenoid valve B and the PCM. If the freeze data/on-board snapshot of this DTC is recorded, try to reproduce the failure under the same conditions with the freeze data/on-board snapshot.

2. Determine possible failure area (shift solenoid valve B, others)

-1. Turn the vehicle to the OFF (LOCK) mode.

-2. Disconnect the following connector.

Shift solenoid valve B 2P connector

-3. Turn the vehicle to the ON mode.

-4. Clear the DTC with the HDS.

-5. **Enter the VSA maintenance mode** .

-6. Run the vehicle in the engine drive mode for at least 10 seconds. Bring the wheels to a complete halt after more than 10 seconds.

WARNING: **Do not brake hard when working on a running vehicle on a lift. It may cause some damage to the drive-line.**

-7. Check for Pending or Confirmed DTCs with the HDS.

DTC Description	Confirmed DTC	Pending DTC	Freeze Frame
P0976 Shift Solenoid Valve B Control Circuit Low (Short)	B	B	B

Is DTC P0976 indicated?

YES

Go to step 3.

NO

Replace shift solenoid valve B .

3. Shorted wire check (SHB line)

-1. Turn the vehicle to the OFF (LOCK) mode.

-2. Jump the SCS line with the HDS, and wait more than 1 minute.

-3. Disconnect the following connector.

PCM connector E (80P)

-4. Measure the resistance between test points 1 and 2.

Test condition	Vehicle OFF (LOCK) mode
B	Shift solenoid valve B 2P connector: disconnected
B	PCM connector E (80P): disconnected
Test point 1	**PCM connector E (80P) No. 25**

Test point 2	Body ground

Is there 1 MΩ or more?

YES

The SHB wire is OK. Check for any authorized service information related to the DTCs or symptoms you are troubleshooting, or **replace the original PCM** .

NO

Repair a short to ground in the SHB wire between shift solenoid valve B and the PCM.

DTC P0977

DTC P0977 : Shift Solenoid Valve B Control Circuit High (Open)

NOTE: Before you troubleshoot, **review the General Troubleshooting Information** .

DTC Description	Confirmed DTC	Pending DTC	Freeze Frame
P0977 Shift Solenoid Valve B Control Circuit High (Open)	B	B	B

DTC (Gear)

1. Problem verification

-1. Turn the vehicle to the ON mode.

-2. Clear the DTC with the HDS.

-3. Turn the vehicle to the READY TO DRIVE mode, and wait for at least 1 second.

-4. Check for Pending or Confirmed DTCs with the HDS.

DTC Description	Confirmed DTC	Pending DTC	Freeze Frame
P0977 Shift Solenoid Valve B Control Circuit High (Open)	B	B	B

Is DTC P0977 indicated?

YES

The failure is duplicated. Go to step 2.

NO

Intermittent failure, the system is OK at this time. Check for poor connections and loose terminals between shift solenoid valve B and the PCM. If the freeze data/on-board snapshot of this DTC is recorded, try to reproduce the failure under the same conditions with the freeze data/on-board snapshot.

2. Determine possible failure area (shift solenoid valve B, others)

-1. Turn the vehicle to the OFF (LOCK) mode.

-2. Disconnect the following connector.

Shift solenoid valve B 2P connector

-3. Connect terminals A and B with a jumper wire.

Terminal A	Shift solenoid valve B 2P connector (female terminals) No. 1: ①
Terminal B	Body ground

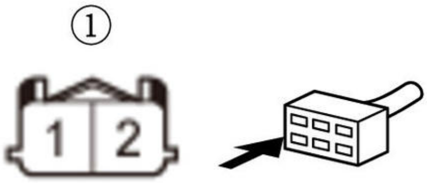

-4. Turn the vehicle to the ON mode.

-5. Clear the DTC with the HDS.

-6. Raise the vehicle on a lift. Make sure it is securely supported, and allow all four wheels to rotate freely.

-7. Select the ENERGY FLOW screen on the MID.

-8. Enter the VSA maintenance mode .

-9. Run the vehicle in the engine drive mode for at least 10 seconds. Apply the brakes, and slowly bring the wheels to a stop.

WARNING: **Do not brake hard when working on a running vehicle on a lift. It may cause some damage to the drive-line.**

-10.

Check for Pending or Confirmed DTCs with the HDS.

DTC Description	Confirmed DTC	Pending DTC	Freeze Frame
P0976 Shift Solenoid Valve B Control Circuit Low (Short)	B	B	B

Is DTC P0976 indicated?

YES

Go to step 3.

NO

Go to step 4.

3. Shift solenoid valve B check

-1. Turn the vehicle to the OFF (LOCK) mode.

-2. Remove the jumper wire.

-3. Measure the resistance between test points 1 and 2.

Test condition	Vehicle OFF (LOCK) mode
B	Shift solenoid valve B 2P connector: disconnected
Test point 1	Shift solenoid valve B 2P connector (female terminals) No. 2: ①
Test point 2	Body ground

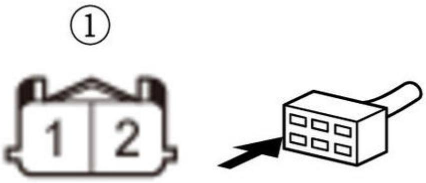

Is there 1.0 Ω or less?

YES

Replace shift solenoid valve B .

NO

Shift solenoid valve B is OK. Repair an open in the PG wire between shift solenoid valve B and ground (G101), or repair poor ground (G101).

4. Open wire check (SHB line)

-1. Turn the vehicle to the OFF (LOCK) mode.

-2. Remove the jumper wire.

-3. Jump the SCS line with the HDS, and wait more than 1 minute.

-4. Disconnect the following connector.

PCM connector E (80P)

-5. Measure the resistance between test points 1 and 2.

Test condition	Vehicle OFF (LOCK) mode
B	Shift solenoid valve B 2P connector: disconnected
B	PCM connector E (80P): disconnected
Test point 1	Shift solenoid valve B 2P connector (female terminals) No. 1: ①
Test point 2	**PCM connector E (80P) No. 25**

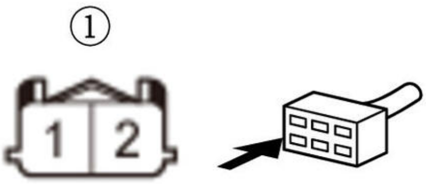

Is there 1.0 Ω or less?

YES

The SHB wire is OK. Check for any authorized service information related to the DTCs or symptoms you are troubleshooting, or **replace the original PCM** .

NO

Repair an open in the SHB wire between shift solenoid valve B and the PCM.

DTC P0C2F

DTC P0C2F : GEN-ENG Angular Speed Correlation Malfunction

NOTE: Before you troubleshoot, **review the general troubleshooting information** .

DTC Description	Confirmed DTC	Pending DTC
P0C2F GEN-ENG Angular Speed Correlation Malfunction	B	B

DTC (PGM-FI)

1. Problem verification

   -1. Turn the vehicle to the ON mode.

   -2. Clear the DTC with the HDS.

   -3. Turn the vehicle to the OFF (LOCK) mode.

   -4. **Enter the maintenance mode, then start the engine** , and let it idle for 30 seconds or more.

   -5. Check for Pending or Confirmed DTCs with the HDS.

DTC Description	Confirmed DTC	Pending DTC
P0C2F GEN-ENG Angular Speed Correlation Malfunction	B	B

   Is DTC P0C2F indicated?

   YES

   The failure is duplicated. Go to step 2.

   NO

   Intermittent failure, the system is OK at this time. Check for poor connections or loose terminals at the PCU and the PCM. **If the on-board snapshot of this DTC is recorded, try to reproduce the failure under the same conditions with the on-board snapshot** .

2. Electric powertrain system DTC check

   -1. Check for electric powertrain system DTCs with the HDS.

DTC Description	Confirmed DTC	Pending DTC	Freeze Frame
P0A4B Generator Motor Rotor Position Sensor Circuit	B	B	B

   Is DTC P0A4B indicated?

   YES

   Go to the troubleshooting for **DTC P0A4B** .

   NO

   Go to step 3.

3. CKP sensor DTC check

   -1. Check for Pending or Confirmed DTCs with the HDS.

DTC Description	Confirmed DTC	Pending DTC
P0335 CKP Sensor No Signal	B	B
P0339 CKP Sensor Circuit Intermittent Interruption	B	B

   Is DTC P0335 and/or P0339 indicated?

   YES

Replace the CKP sensor .

NO

Go to step 4.

4. Shorted wire check (NGENPLS/NOTPLS line)

-1. Turn the vehicle to the OFF (LOCK) mode.

-2. Jump the SCS line with the HDS, and wait more than 1 minute.

-3. Disconnect the following connectors.

PCU 33P connector
PCM connector E (80P)

-4. Measure the resistance between test points 1 and 2.

Test condition	Vehicle OFF (LOCK) mode
B	PCU 33P connector: disconnected

B	PCM connector E (80P): disconnected
Test point 1	PCM connector E (80P) No. 66
Test point 2	Body ground

Is there 1 MΩ or more?

YES

The NGENPLS/NOTPLS wire is not shorted. Go to step 5.

NO

Repair a short in the NGENPLS/NOTPLS wire between the PCM (E66) and the PCU.

5. Open wire check (NGENPLS/NOTPLS line)

-1. Connect terminals A and B with a jumper wire.

Terminal A	PCU 33P connector No. 29
Terminal B	Body ground

-2. Measure the resistance between test points 1 and 2.

Test condition	Vehicle OFF (LOCK) mode
	PCU 33P connector: disconnected
	PCM connector E (80P): disconnected
	PCU 33P connector No. 29: jumped to body ground
Test point 1	PCM connector E (80P) No. 66
Test point 2	Body ground

Is there 1.0 Ω or less?

YES

The NGENPLS/NOTPLS wire is OK. Check for any authorized service information related to the DTCs or symptoms you are troubleshooting, or **substitute a known-good PCM** .

NO

Repair an open in the NGENPLS/NOTPLS wire between the PCM (E66) and the PCU.

DTC P100A

DTC P100A : Electric VTC Motor Circuit Malfunction

NOTE: Before you troubleshoot, **review the general troubleshooting information** .

DTC Description	Confirmed DTC	Pending DTC
P100A Electric VTC Motor Circuit Malfunction	B	B

DTC (PGM-FI)

1. Problem verification

-1. Turn the vehicle to the ON mode.

-2. Clear the DTC with the HDS.

-3. Turn the vehicle to the OFF (LOCK) mode.

-4. Turn the vehicle to the ON mode.

-5. Select the VTC TEST in the Function Test Menu with the HDS.

VTC TEST

Check for Pending or Confirmed DTCs with the HDS.

DTC Description	Confirmed DTC	Pending DTC
P100A Electric VTC Motor Circuit Malfunction	B	B

Is DTC P100A indicated?

YES

The failure is duplicated. Go to step 2.

NO

Intermittent failure, the system is OK at this time. Check for poor connections or loose terminals at the electric VTC motor and the PCM. **If the on-board snapshot of this DTC is recorded, try to reproduce the failure under the same conditions with the on-board snapshot** .

2. Fuse check

-1. Turn the vehicle to the OFF (LOCK) mode.

-2. Check the following fuse.

Fuse	**No. C1-4**

Is the fuse OK?

YES

Go to step 6.

NO

Go to step 3.

3. Shorted wire check (+B_EVTC line)

-1. Remove the blown **No. C1-4 fuse** .

-2. Disconnect the following connector.

Relay circuit board connector B (6P)

-3. Measure the resistance between test points 1 and 2.

Test condition	Vehicle OFF (LOCK) mode Relay circuit board connector B (6P): disconnected
Test point 1	Relay circuit board connector B (6P) (female terminals) No. 4: ①
Test point 2	Body ground

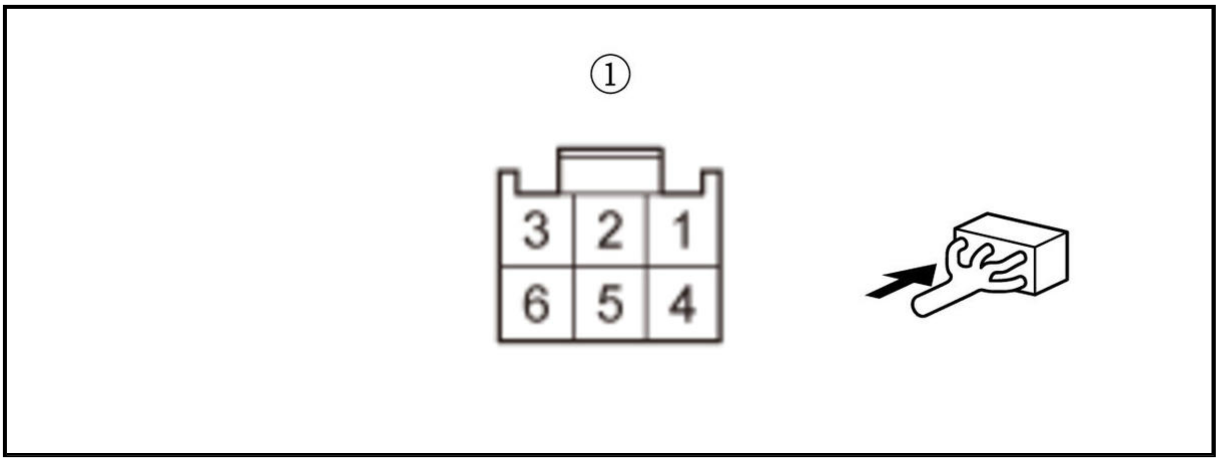

Is there 1 MΩ or more?

YES

Go to step 4.

NO

Repair a short in the +B_EVTC wire between No. C1-4 fuse and the relay circuit board. Also replace the No. C1-4 fuse.

4. Shorted wire check (IG_COIL_RLY_OUT/VB1 line, IG_COIL_RLY_OUT/VB2 line)

-1. Disconnect the following connectors.

Electric VTC motor connector A (2P)
Electric VTC motor connector B (5P)

-2. Measure the resistance between test points 1 and 2.

Test condition	Vehicle OFF (LOCK) mode

	Relay circuit board connector B (6P): disconnected
	Electric VTC motor connector A (2P): disconnected
	Electric VTC motor connector B (5P): disconnected
Test point 1	Relay circuit board connector B (6P) (female terminals) No. 5: ①
Test point 2	Body ground

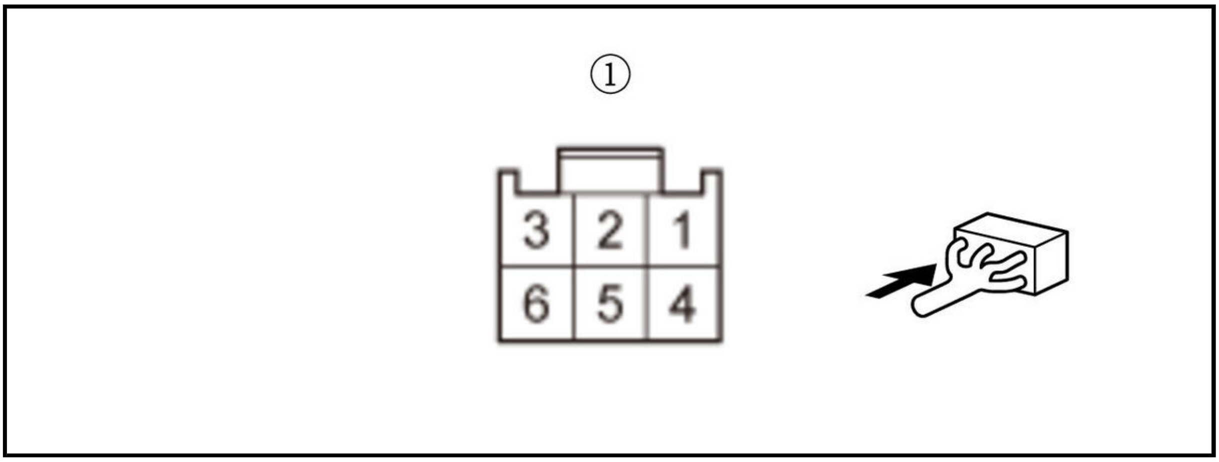

Is there 1 MΩ or more?

YES

Go to step 5.

NO

Repair a short in the IG_COIL_RLY_OUT/VB1 wire and/or the IG_COIL_RLY_OUT/VB2 wire between the relay circuit board and the electric VTC motor. Also replace the **No. C1-4 fuse** .

5. Relay circuit board check

-1. **Remove and test the relay circuit board** .

Is the relay circuit board OK?

YES

Replace the electric VTC motor . Also replace the **No. C1-4 fuse** .

NO

Replace the relay circuit board . Also replace the **No. C1-4 fuse** .

6. Relay circuit board check

-1. **Remove and test the relay circuit board** .

Is the relay circuit board OK?

YES

Go to step 7.

NO

Replace the relay circuit board .

7. Open wire check (+B_EVTC line)

-1. Measure the voltage between test points 1 and 2.

Test condition	Vehicle OFF (LOCK) mode
	Relay circuit board: removed
Test point 1	Relay circuit board connector B (6P) (female terminals) No. 4: ①
Test point 2	Body ground

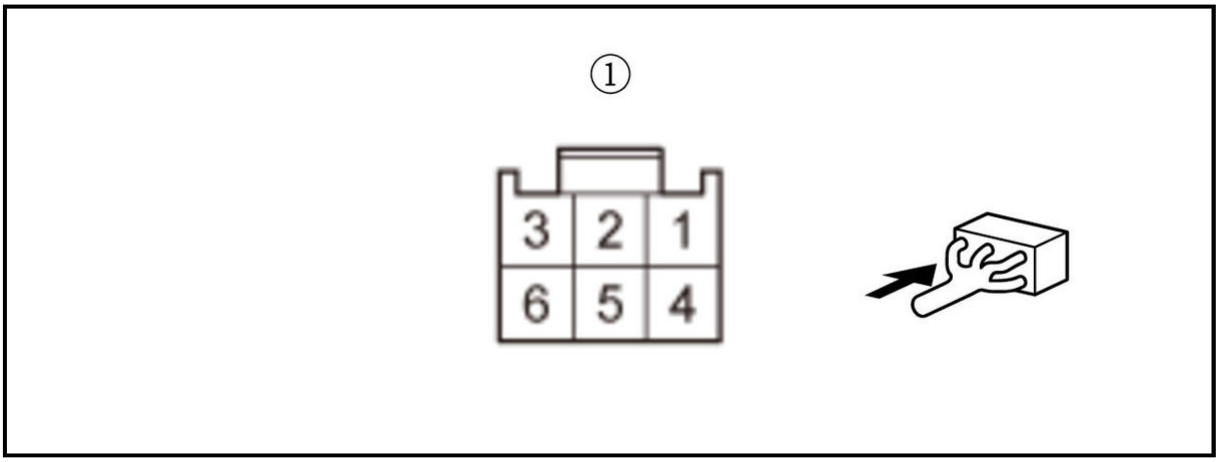

Is there battery voltage?

YES

The +B_EVTC wire is OK. Go to step 8.

NO

Repair an open in the +B_EVTC wire between the **No. C1-4 fuse** and the relay circuit board.

8. Open wire check (EVTC_RLY_CL- line)

-1. Jump the SCS line with the HDS, and wait more than 1 minute.

-2. Disconnect the following connector.

PCM connector A (50P)

-3. Measure the resistance between test points 1 and 2.

Test condition	Vehicle OFF (LOCK) mode
B	Relay circuit board: removed
B	PCM connector A (50P): disconnected
Test point 1	Relay circuit board connector C (18P) (female terminals) No. 2: ①
Test point 2	**PCM connector A (50P) No. 30**

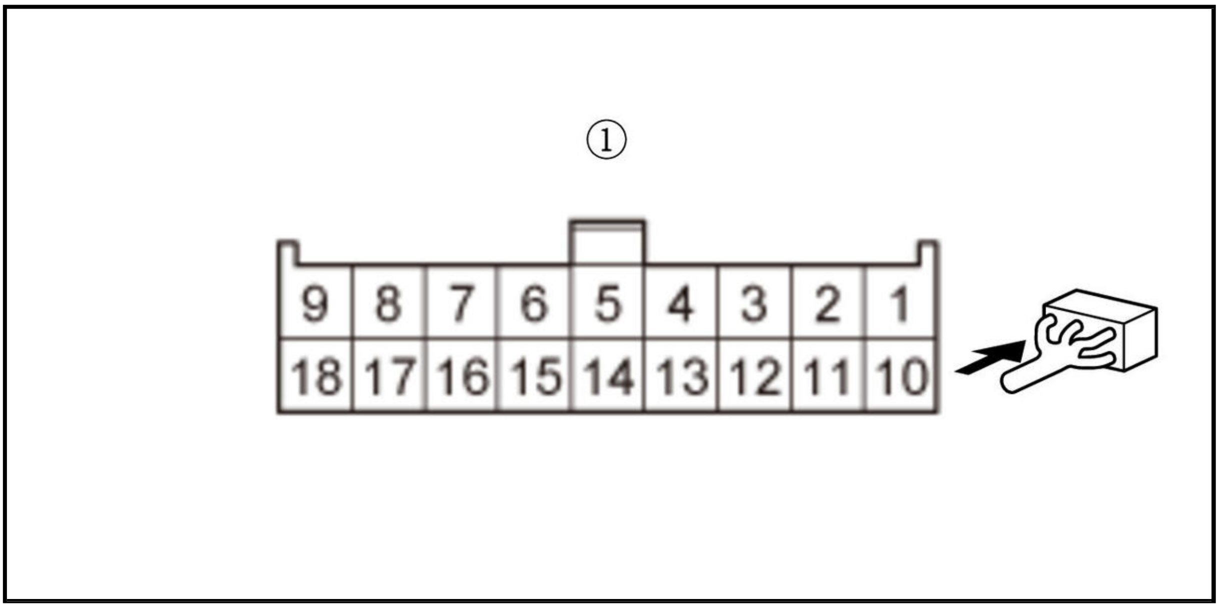

Is there 1.0 Ω or less?

YES

The EVTC_RLY_CL- wire is OK. Go to step 9.

NO

Repair an open in the EVTC_RLY_CL- wire between the PCM (A30) and the relay circuit board.

9. Open wire check (IG_COIL_RLY_OUT/VB1 line)

-1. Disconnect the following connector.

Electric VTC motor connector B (5P)

-2. Measure the resistance between test points 1 and 2.

Test condition	Vehicle OFF (LOCK) mode
B	Relay circuit board: removed
B	PCM connector A (50P): disconnected
B	Electric VTC motor connector B (5P): disconnected
Test point 1	Relay circuit board connector B (6P) (female terminals) No. 5: ①
Test point 2	Electric VTC motor connector B (5P) (female terminals) No. 5: ②

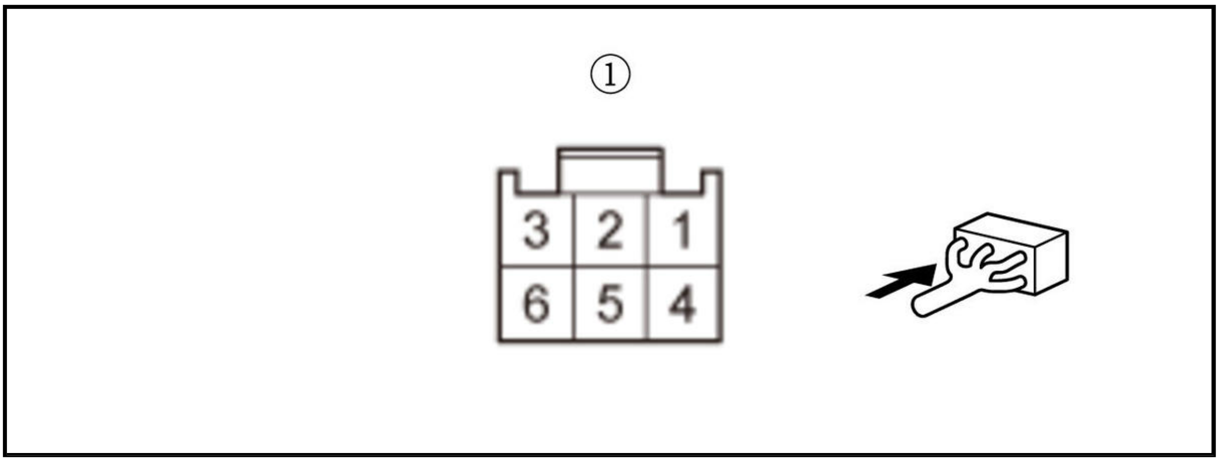

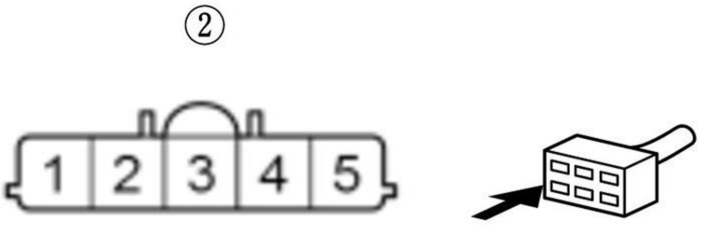

Is there 1.0 Ω or less?

YES

The IG_COIL_RLY_OUT/VB1 wire is OK. Go to step 10

NO

Repair an open in the IG_COIL_RLY_OUT/VB1 wire between the relay circuit board and the electric VTC motor.

10. Shorted wire check (EVTP line)

-1. Disconnect the following connector.

PCM connector E (80P)

-2. Measure the resistance between test points 1 and 2.

Test condition	Vehicle OFF (LOCK) mode
B	Relay circuit board: removed
B	PCM connector A (50P): disconnected
B	Electric VTC motor connector B (5P): disconnected
B	PCM connector E (80P): disconnected
Test point 1	Electric VTC motor connector B (5P) (female terminals) No. 4: ①
Test point 2	Body ground

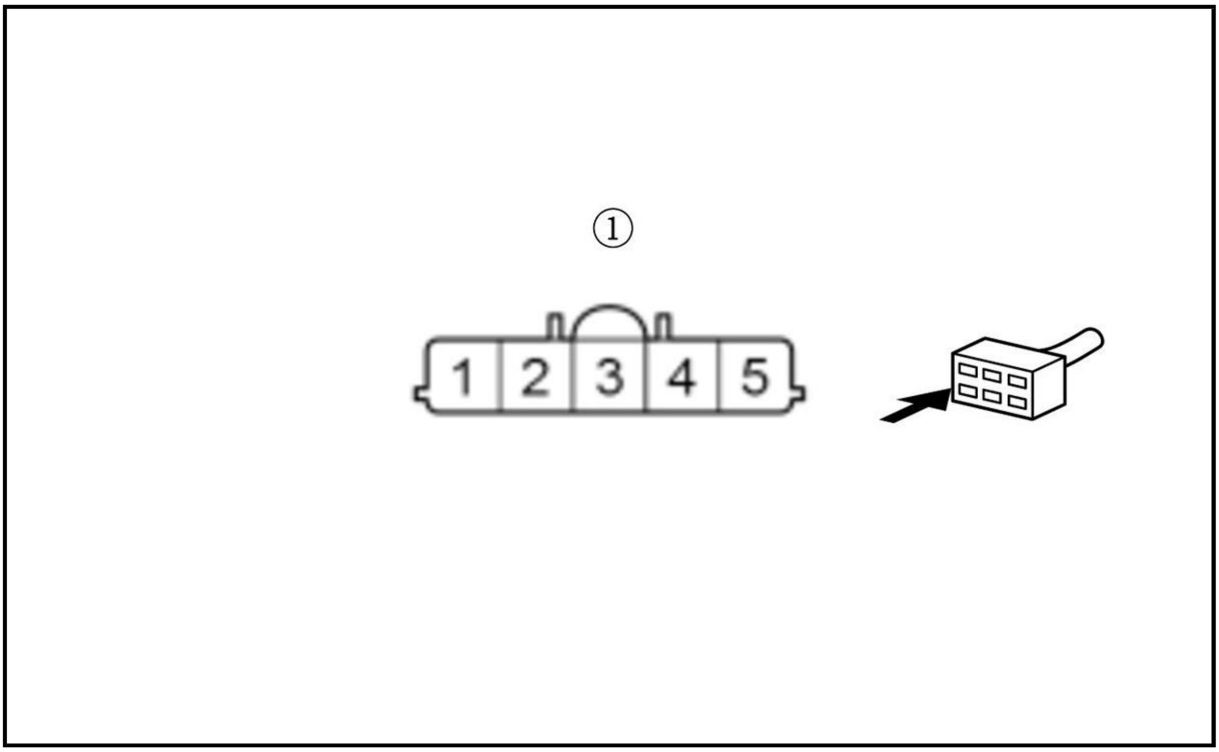

Is there 1 MΩ or more?

YES

The EVTP wire is not shorted. Go to step 11.

NO

Repair a short in the EVTP wire between the PCM (E31) and the electric VTC motor.

11. Open wire check (EVTP line)

-1. Measure the resistance between test points 1 and 2.

Test condition	Vehicle OFF (LOCK) mode
B	Relay circuit board: removed
B	PCM connector A (50P): disconnected
B	Electric VTC motor connector B (5P): disconnected
B	PCM connector E (80P): disconnected
Test point 1	Electric VTC motor connector B (5P) (female terminals) No. 4: ①
Test point 2	**PCM connector E (80P) No. 31**

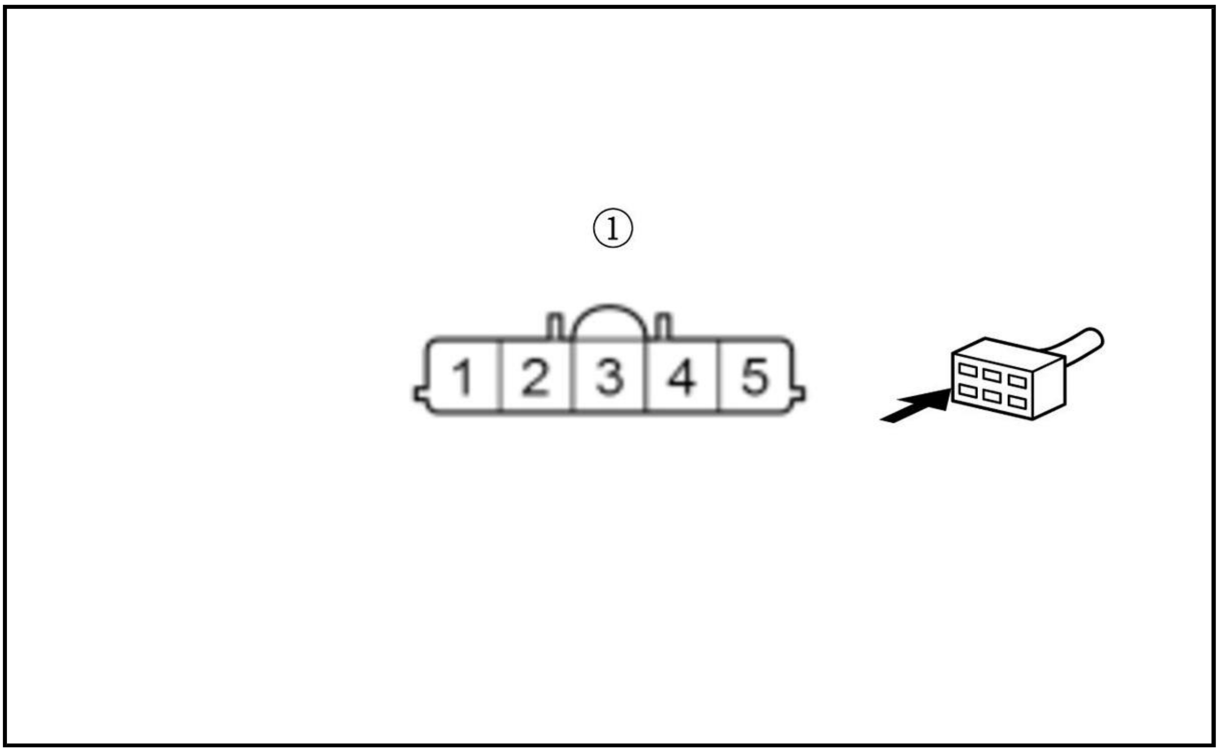

Is there 1.0 Ω or less?

YES

The EVTP wire is OK. Go to step 12.

NO

Repair an open in the EVTP wire between the PCM (E31) and the electric VTC motor.

12. Shorted wire check (EVTM line)

-1. Measure the resistance between test points 1 and 2.

Test condition	Vehicle OFF (LOCK) mode
B	Relay circuit board: removed
B	PCM connector A (50P): disconnected
B	Electric VTC motor connector B (5P): disconnected
B	PCM connector E (80P): disconnected
Test point 1	Electric VTC motor connector B (5P) (female terminals) No. 1: ①
Test point 2	Body ground

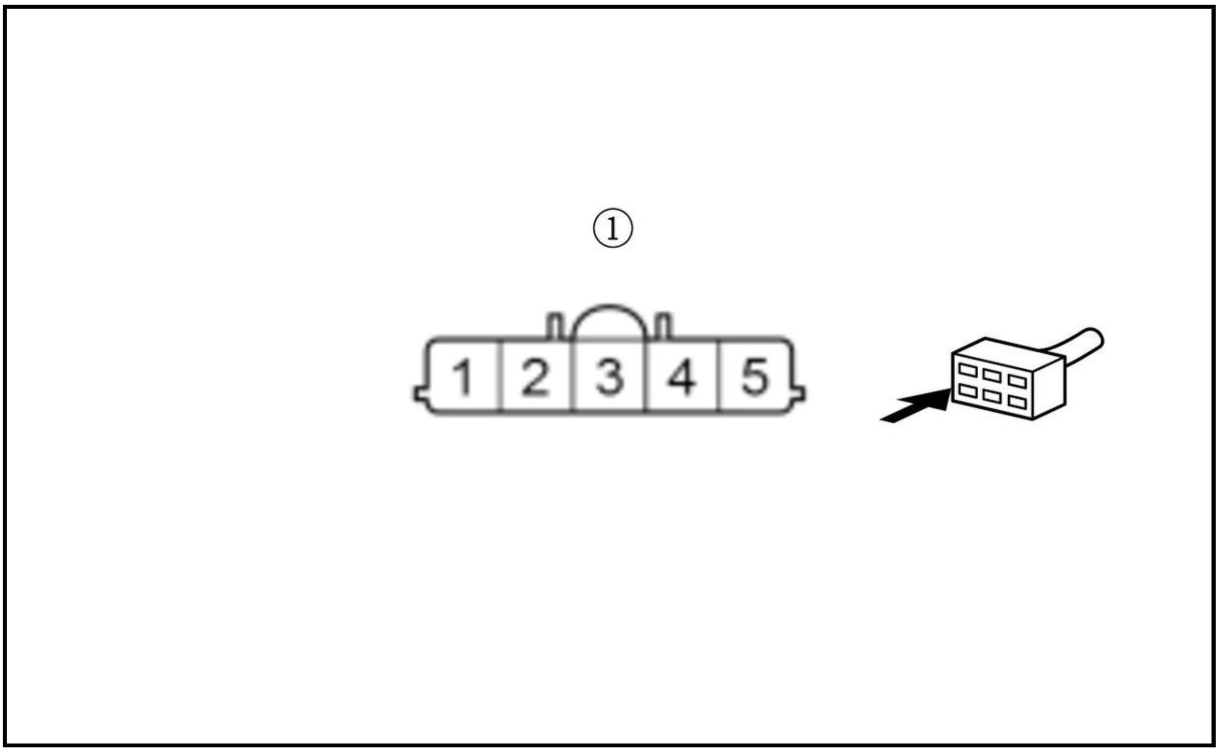

Is there 1 MΩ or more?

YES

The EVTM wire is not shorted. Go to step 13.

NO

Repair a short in the EVTM wire between the PCM (E57) and the electric VTC motor.

13. Open wire check (EVTM line)

-1. Measure the resistance between test points 1 and 2.

Test condition	Vehicle OFF (LOCK) mode
B	Relay circuit board: removed
B	PCM connector A (50P): disconnected
B	Electric VTC motor connector B (5P): disconnected
B	PCM connector E (80P): disconnected
Test point 1	Electric VTC motor connector B (5P) (female terminals) No. 1: ①
Test point 2	**PCM connector E (80P) No. 57**

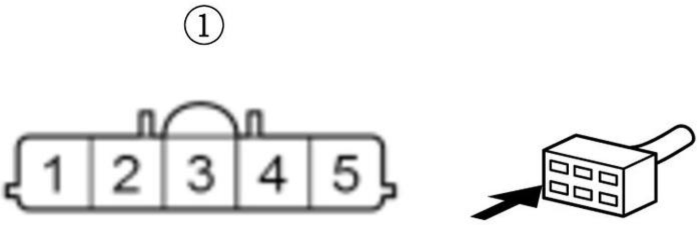

Is there 1.0 Ω or less?

YES

The EVTM wire is OK. Go to step 14.

NO

Repair an open in the EVTM wire between the PCM (E57) and the electric VTC motor.

14. Open wire check (EVTC_GND line)

-1. Disconnect the following connector.

Electric VTC motor connector A (2P)

-2. Measure the resistance between test points 1 and 2.

Test condition	Vehicle OFF (LOCK) mode
B	Relay circuit board: removed
B	PCM connector A (50P): disconnected
B	Electric VTC motor connector B (5P): disconnected
B	PCM connector E (80P): disconnected
B	Electric VTC motor connector A (2P): disconnected
Test point 1	Electric VTC motor connector A (2P) (female terminals) No. 1: ①
Test point 2	Body ground

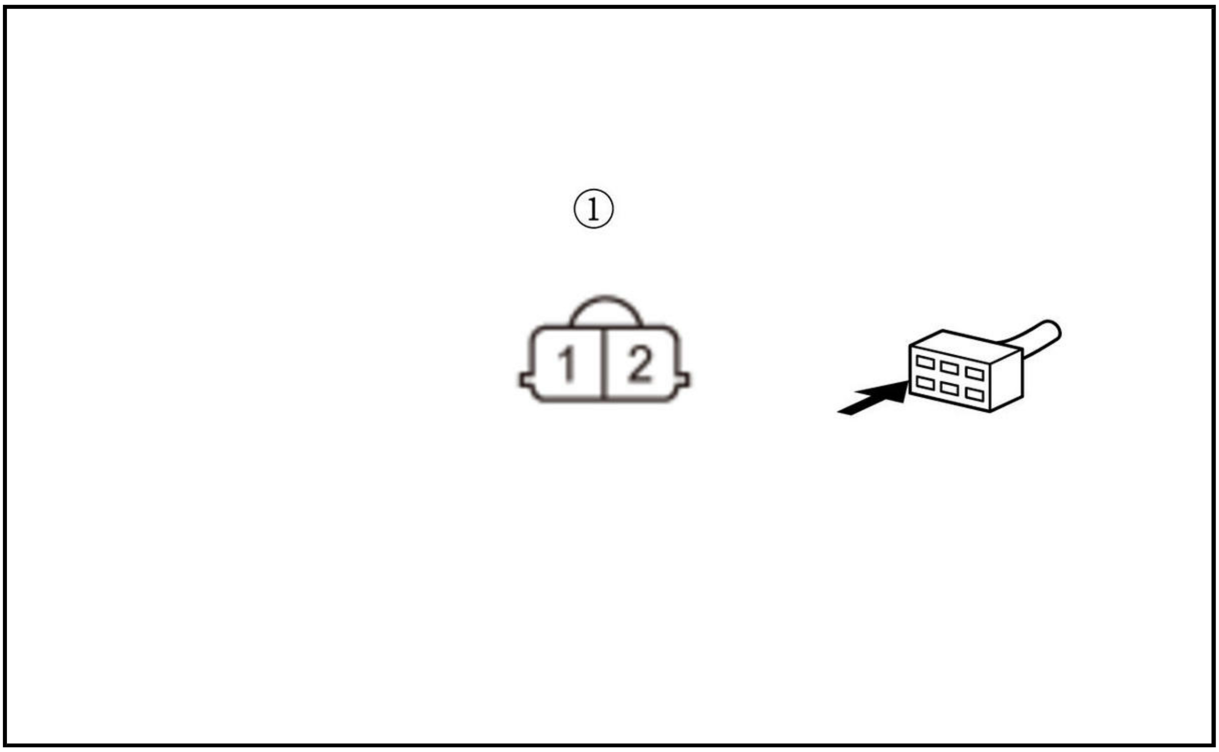

Is there 1.0 Ω or less?

YES

The EVTC_GND wire is OK. Check for any authorized service information related to the DTCs or symptoms you are troubleshooting, or **substitute a known-good PCM** .

NO

Repair an open in the EVTC_GND wire between the electric VTC motor and G102.

DTC P100B

DTC P100B : Electric VTC Motor Control Module Malfunction

NOTE: Before you troubleshoot, **review the general troubleshooting information** .

DTC Description	Confirmed DTC	Pending DTC
P100B Electric VTC Motor Control Module Malfunction	B	B

DTC (PGM-FI)

1. Problem verification

-1. Turn the vehicle to the ON mode.

-2. Clear the DTC with the HDS.

-3. Turn the vehicle to the OFF (LOCK) mode.

-4. Turn the vehicle to the ON mode, and wait 5 seconds or more.

-5. Check for Pending or Confirmed DTCs with the HDS.

DTC Description	Confirmed DTC	Pending DTC
P100B Electric VTC Motor Control Module Malfunction	B	B

Is DTC P100B indicated?

YES

The failure is duplicated. **Replace the electric VTC motor** .

NO

Intermittent failure, the system is OK at this time. Check for poor connections or loose terminals at the electric VTC motor and the PCM. **If the on-board snapshot of this DTC is recorded, try to reproduce the failure under the same conditions with the on-board snapshot** .

DTC P100C

DTC P100C : Electric VTC Motor Speed Signal Circuit Malfunction

NOTE: Before you troubleshoot, **review the general troubleshooting information** .

DTC Description	Confirmed DTC	Pending DTC
P100C Electric VTC Motor Speed Signal Circuit Malfunction	B	B

DTC (PGM-FI)

1. Problem verification

   -1. Turn the vehicle to the ON mode.

   -2. Clear the DTC with the HDS.

   -3. Turn the vehicle to the OFF (LOCK) mode.

   -4. Turn the vehicle to the ON mode.

   -5. Select the VTC TEST in the Function Test Menu with the HDS.

   VTC TEST

   Check for Pending or Confirmed DTCs with the HDS.

DTC Description	Confirmed DTC	Pending DTC
P100C Electric VTC Motor Speed Signal Circuit Malfunction	B	B

   Is DTC P100C indicated?

   YES

   The failure is duplicated. Go to step 2.

   NO

   Intermittent failure, the system is OK at this time. Check for poor connections or loose terminals at the electric VTC motor and the PCM. **If the on-board snapshot of this DTC is recorded, try to reproduce the failure under the same conditions with the on-board snapshot** .

2. Shorted wire check (EVTS line)

   -1. Turn the vehicle to the OFF (LOCK) mode.

-2. Jump the SCS line with the HDS, and wait more than 1 minute.

-3. Disconnect the following connectors.

Electric VTC motor connector B (5P)
PCM connector E (80P)

-4. Measure the resistance between test points 1 and 2.

Test condition	Vehicle OFF (LOCK) mode
B	Electric VTC motor connector B (5P): disconnected
B	PCM connector E (80P): disconnected
Test point 1	Electric VTC motor connector B (5P) (female terminals) No. 3: ①
Test point 2	Body ground

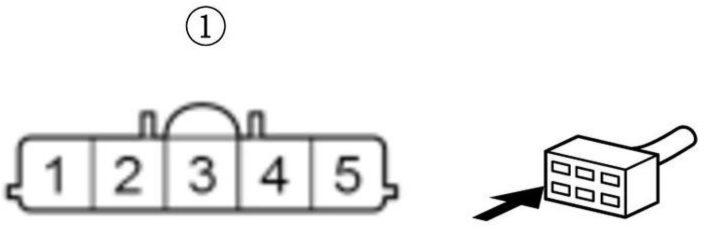

Is there 1 MΩ or more?

YES

The EVTS wire is not shorted. Go to step 3.

NO

Repair a short in the EVTS wire between the PCM (E30) and the electric VTC motor.

3. Open wire check (EVTS line)

-1. Measure the resistance between test points 1 and 2.

Test condition	Vehicle OFF (LOCK) mode
B	Electric VTC motor connector B (5P): disconnected
B	PCM connector E (80P): disconnected

Test point 1	Electric VTC motor connector B (5P) (female terminals) No. 3: ①

Test point 2	**PCM connector E (80P) No. 30**

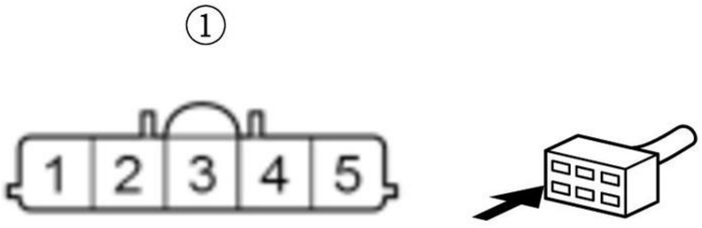

Is there 1.0 Ω or less?

YES

The EVTS wire is OK. Go to step 4.

NO

Repair an open in the EVTS wire between the PCM (E30) and the electric VTC motor.

4. Shorted wire check (EVTD line)

-1. Measure the resistance between test points 1 and 2.

Test condition	Vehicle OFF (LOCK) mode
B	Electric VTC motor connector B (5P): disconnected
B	PCM connector E (80P): disconnected
Test point 1	Electric VTC motor connector B (5P) (female terminals) No. 2: ①
Test point 2	Body ground

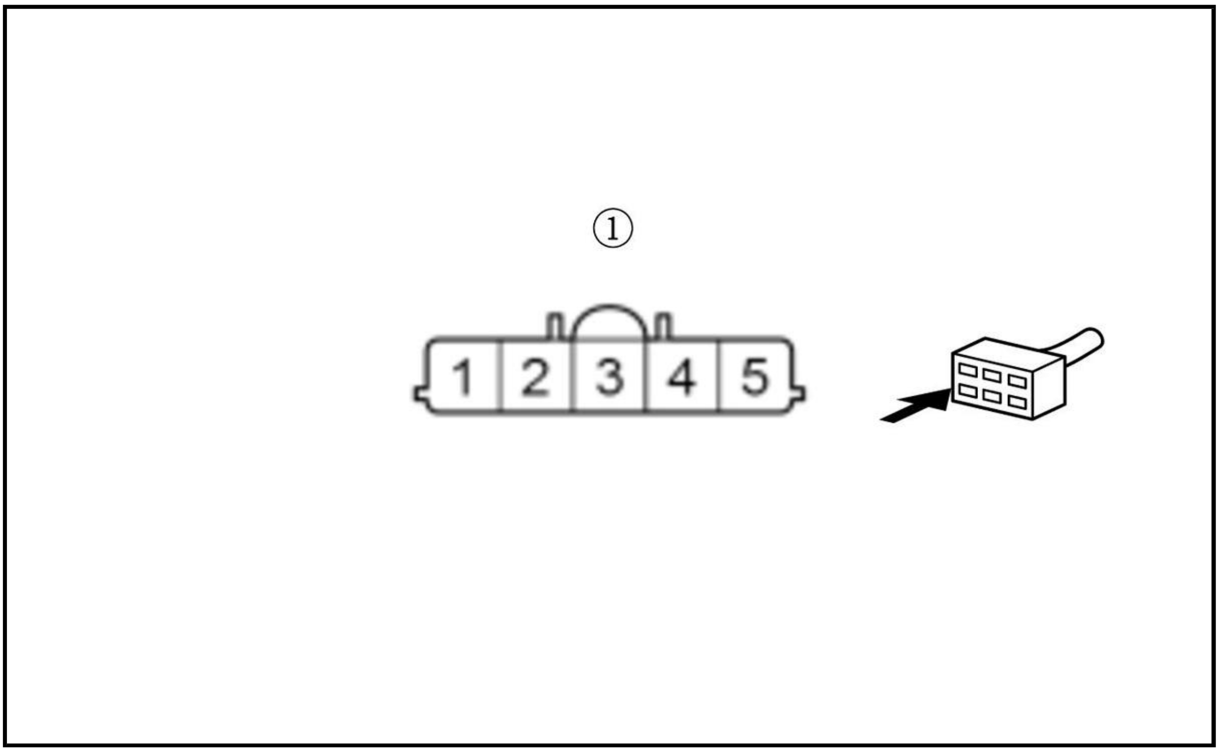

Is there 1 MΩ or more?

YES

The EVTD wire is not shorted. Go to step 5.

NO

Repair a short in the EVTD wire between the PCM (E46) and the electric VTC motor.

5. Open wire check (EVTD line)

-1. Measure the resistance between test points 1 and 2.

Test condition	Vehicle OFF (LOCK) mode
B	Electric VTC motor connector B (5P): disconnected
B	PCM connector E (80P): disconnected
Test point 1	Electric VTC motor connector B (5P) (female terminals) No. 2: ①
Test point 2	**PCM connector E (80P) No. 46**

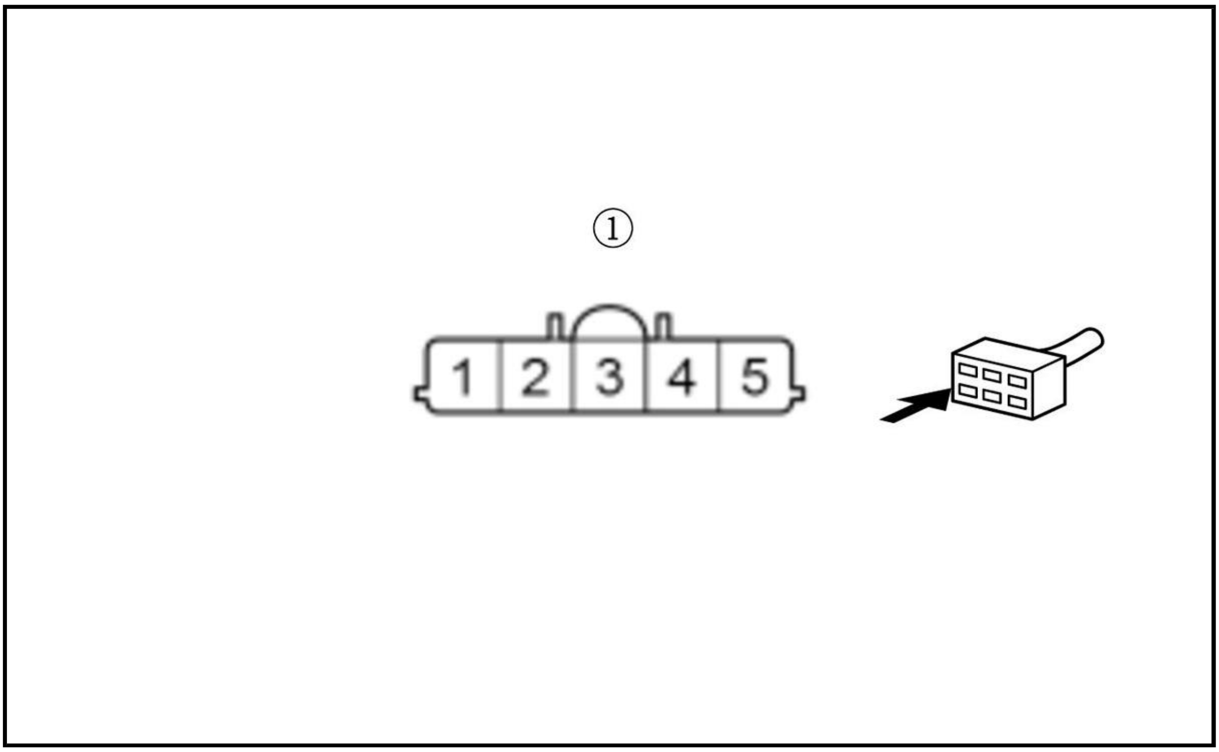

Is there 1.0 Ω or less?

YES

The EVTD wire is OK. Go to step 6.

NO

Repair an open in the EVTD wire between the PCM (E46) and the electric VTC motor.

6. PCM internal circuit check

-1. Reconnect PCM connector E (80P).

-2. Turn the vehicle to the ON mode.

-3. Measure the voltage between test points 1 and 2.

Test condition	Vehicle ON mode
B	Electric VTC motor connector B (5P): disconnected
Test point 1	Electric VTC motor connector B (5P) (female terminals) No. 2 and No. 3: ①
Test point 2	Body ground

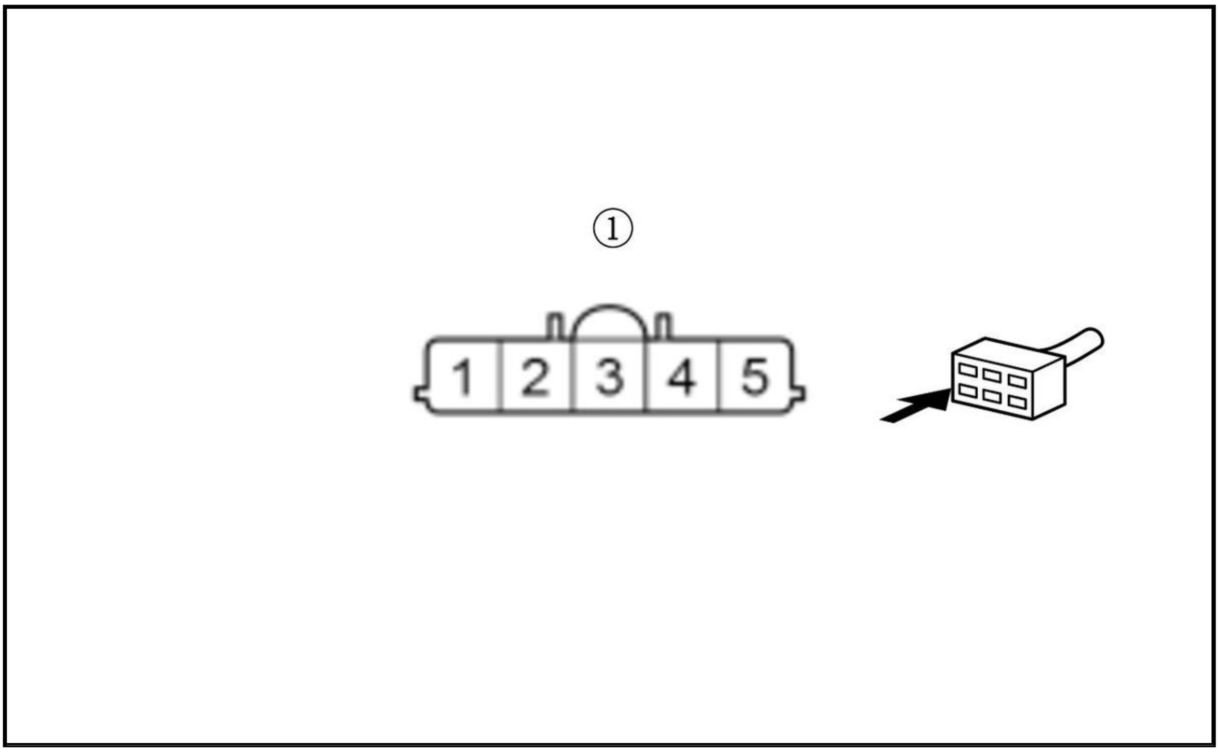

Is there any voltage?

YES

The PCM internal circuit is OK. **Replace the electric VTC motor** .

NO

Check for any authorized service information related to the DTCs or symptoms you are troubleshooting, or **substitute a known-good PCM** .

DTC P100D

DTC P100D : Electric VTC Motor Power Relay Circuit Stuck On

NOTE: Before you troubleshoot, **review the general troubleshooting information** .

DTC Description	Confirmed DTC	Pending DTC
P100D Electric VTC Motor Power Relay Circuit Stuck On	B	B

DTC (PGM-FI)

1. Problem verification

   -1. Turn the vehicle to the ON mode.

   -2. Clear the DTC with the HDS.

   -3. Turn the vehicle to the OFF (LOCK) mode.

   -4. Turn the vehicle to the ON mode, and wait 5 seconds or more.

   -5. Check for Pending or Confirmed DTCs with the HDS.

DTC Description	Confirmed DTC	Pending DTC
P100D Electric VTC Motor Power Relay Circuit Stuck On	B	B

Is DTC P100D indicated?

YES

The failure is duplicated. Go to step 2.

NO

Intermittent failure, the system is OK at this time. Check for poor connections or loose terminals at the electric VTC motor and the PCM. **If the on-board snapshot of this DTC is recorded, try to reproduce the failure under the same conditions with the on-board snapshot** .

2. Relay circuit board check

-1. Turn the vehicle to the OFF (LOCK) mode.

-2. **Remove and test the relay circuit board** .

Is the relay circuit board OK?

YES

Go to step 3.

NO

Replace the relay circuit board .

3. Shorted wire check (EVTC_RLY_CL- line)

-1. Jump the SCS line with the HDS, and wait more than 1 minute.

-2. Disconnect the following connector.

PCM connector A (50P)

-3. Measure the resistance between test points 1 and 2.

Test condition	Vehicle OFF (LOCK) mode
B	Relay circuit board: removed
B	PCM connector A (50P): disconnected
Test point 1	**PCM connector A (50P) No. 30**
Test point 2	Body ground

Is there 1 MΩ or more?

YES

Go to step 4

NO

Repair a short in the EVTC_RLY_CL- wire between the PCM (A30) and the relay circuit board.

4. Shorted wire check (IG_COIL_RLY_OUT/VB1 line to power)

-1. Disconnect the following connector.

Electric VTC motor connector B (5P)

-2. Turn the vehicle to the ON mode.

-3. Measure the voltage between test points 1 and 2.

Test condition	Vehicle ON mode
B	Relay circuit board: removed
B	PCM connector A (50P): disconnected
B	Electric VTC motor connector B (5P): disconnected
Test point 1	Electric VTC motor connector B (5P) (female terminals) No. 5: ①
Test point 2	Body ground

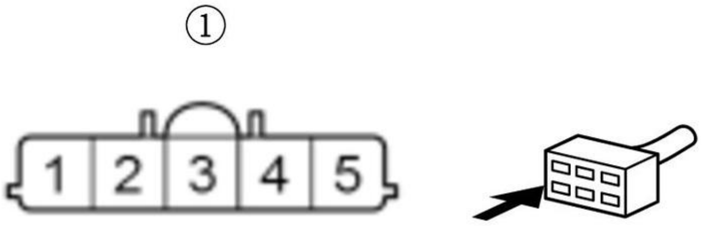

Is there battery voltage?

YES

Repair a short to power in the IG_COIL_RLY_OUT/VB1 wire between the relay circuit board and the electric VTC motor.

NO

Go to step 5

5. Shorted wire check (EVTM line)

-1. Turn the vehicle to the OFF (LOCK) mode.

-2. Jump the SCS line with the HDS, and wait more than 1 minute.

-3. Disconnect the following connector.

PCM connector E (80P)

-4. Measure the resistance between test points 1 and 2.

Test condition	Vehicle OFF (LOCK) mode

B	Relay circuit board: removed
B	PCM connector A (50P): disconnected
B	Electric VTC motor connector B (5P): disconnected
B	PCM connector E (80P): disconnected
Test point 1	Electric VTC motor connector B (5P) (female terminals) No. 1: ①
Test point 2	Body ground

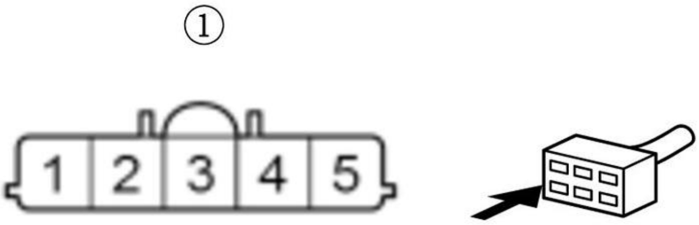

Is there 1 MΩ or more?

YES

The EVTM wire is OK. Check for any authorized service information related to the DTCs or symptoms you are troubleshooting, or **substitute a known-good PCM** .

NO

Repair a short in the EVTM wire between the PCM (E57) and the electric VTC motor.

DTC P145E

DTC P145E : EVAP System Purge Flow Malfunction 2

NOTE:

- Before you troubleshoot, **review the general troubleshooting information** .
- If DTC P145E is indicated alone, do the troubleshooting for DTC P04AE and P04F1 using the on-board snapshot for P145E.
- If DTC P04AE, P04F1, and P145E are stored at the same time, check for a poor connection, a blockage, or damage at the EVAP canister purge line between EVAP canister purge valve 2 and the EVAP canister. Also check for a stuck closed EVAP canister purge valve 2.
- If any of the DTCs listed below are indicated at the same time as DTC P145E, troubleshoot those DTCs first, then recheck for P145E.

  P04AE, P04F1: EVAP system purge flow

DTC Description	Confirmed DTC	Pending DTC
P145E EVAP System Purge Flow Malfunction 2	B	B

DTC (PGM-FI)

1. DTC check

   -1. Turn the vehicle to the ON mode.

   -2. Select the EVAP TEST in the Function Test, then select the FUNCTION TEST with the HDS.

   EVAP TEST

   Check for Pending or Confirmed DTCs with the HDS.

DTC Description	Confirmed DTC	Pending DTC
P04AE EVAP System High Purge Flow Detected 2	B	B
P04F1 EVAP System Low Purge Flow Detected	B	B
P145E EVAP System Purge Flow Malfunction 2	B	B

   Are DTC P145E and P04AE or P04F1 indicated at the same time?

   YES

   Go to the indicated DTC's troubleshooting.

   NO

   Go to the troubleshooting for **DTC P04AE** and **DTC P04F1** using the on-board snapshot for DTC P145E.

DTC P145F, P1461, P1462, P24C1

DTC P145F : EVAP Leak Check Module Pressure Sensor Range/Performance Problem

DTC P1461 : EVAP Leak Check Module Pressure Sensor Shifts

DTC P1462 : EVAP Leak Check Module Pressure Decompression Defect

DTC P24C1 : Canister Change Over Valve Stuck Close

NOTE: Before you troubleshoot, **review the general troubleshooting information** .

DTC Description	Confirmed DTC	Pending DTC
P145F EVAP Leak Check Module Pressure Sensor Range/Performance Problem	B	B
P1461 EVAP Leak Check Module Pressure Sensor Shifts	B	B
P1462 EVAP Leak Check Module Pressure Decompression Defect	B	B
P24C1 Canister Change Over Valve Stuck Close	B	B

DTC (PGM-FI)

1. Problem verification

   -1. Turn the vehicle to the ON mode.

   -2. Clear the DTC with the HDS.

-3. Turn the vehicle to the OFF (LOCK) mode.

-4. Turn the vehicle to the ON mode.

-5. Select the EVAP TEST in the Function Test Menu, then select EVAP Leak Check Module Test with the HDS.

EVAP TEST

Is the result OK?

YES

Intermittent failure, the system is OK at this time. Check for poor connections or loose terminals at the EVAP leak check module and the PCM. **If the on-board snapshot of this DTC is recorded, try to reproduce the failure under the same conditions with the on-board snapshot** .

NO

The failure is duplicated. Go to step 2.

2. EVAP leak check module drain hose check

-1. **Remove the EVAP leak check module** and the **EVAP canister filter** , then check the blockage in the drain hoses and the EVAP canister filter.

Are the parts OK?

YES

Replace the EVAP leak check module .

NO

Remove the blockage from them, or replace the part(s) if needed.

DTC P154A

DTC P154A : Battery Sensor Internal Failure

NOTE: Before you troubleshoot, **review the general troubleshooting information** .

DTC Description	Confirmed DTC	Pending DTC
P154A Battery Sensor Internal Failure	B	B

DTC (PGM-FI)

1. Problem verification

-1. Turn the vehicle to the ON mode.

-2. Clear the DTC with the HDS.

-3. Turn the vehicle to the OFF (LOCK) mode.

-4. Turn the vehicle to the ON mode, and wait more than 10 seconds.

-5. Check for Pending or Confirmed DTCs with the HDS.

DTC Description	Confirmed DTC	Pending DTC
P154A Battery Sensor Internal Failure	B	B

Is DTC P154A indicated?

YES

The failure is duplicated. **Replace the 12 volt battery sensor** .

NO

Intermittent failure, the system is OK at this time. Check for poor connections or loose terminals at the 12 volt battery sensor and the PCM. **If the on-board snapshot of this DTC is recorded, try to reproduce the failure under the same conditions with the on-board snapshot** .

DTC P161B

DTC P161B : Park Pawl Control Module Programming Error

WARNING: **If the vehicle cannot be turned to the ACCESSORY and ON modes when the DTC P161B is stored, troubleshoot "Security indicator blinks" Symptom Troubleshooting in the Keyless Access System first, then do this troubleshooting.**

NOTE:

- Before you troubleshoot, **review the General Troubleshooting Information** .
- DTC P161B is stored when the park pawl actuator driver unit updated incomplete.

DTC Description	Confirmed DTC	Pending DTC	Freeze Frame
P161B Park Pawl Control Module Programming Error	B	B	B

DTC (Gear)

1. Problem verification

-1. Turn the vehicle to the ON mode.

-2. Clear the DTC with the HDS.

-3. Turn the vehicle to the OFF (LOCK) mode.

-4. Turn the vehicle to the ON mode, and wait for at least 5 seconds.

-5. Check for Pending or Confirmed DTCs with the HDS.

DTC Description	Confirmed DTC	Pending DTC	Freeze Frame
P161B Park Pawl Control Module Programming Error	B	B	B

Is DTC P161B indicated?

YES

The failure is duplicated. Go to step 2.

NO

Intermittent failure, the system is OK at this time. If the freeze data/on-board snapshot of this DTC is recorded, try to reproduce the failure under the same conditions with the freeze data/on-board snapshot.

2. Park pawl actuator driver unit check

-1. Update the park pawl actuator driver unit .

WARNING: **Do not turn the vehicle to the OFF (LOCK) mode. Turning the vehicle to the OFF (LOCK) mode during an update can damage the park pawl actuator driver unit.**

-2. Clear the DTC with the HDS.

-3. Turn the vehicle to the OFF (LOCK) mode.

-4. Turn the vehicle to the ON mode, and wait for at least 5 seconds.

-5. Check for Pending or Confirmed DTCs with the HDS.

DTC Description	Confirmed DTC	Pending DTC	Freeze Frame
P161B Park Pawl Control Module Programming Error	B	B	B

Is DTC P161B indicated?

YES

Check for any authorized service information related to the DTCs or symptoms you are troubleshooting, or replace the original park pawl actuator driver unit .

NO

Update is complete.

DTC P1658

DTC P1658 : ETCS Control Relay ON Malfunction

NOTE: Before you troubleshoot, review the general troubleshooting information .

DTC Description	Confirmed DTC	Pending DTC
P1658 ETCS Control Relay ON Malfunction	B	B

DTC (PGM-FI)

1. Problem verification

-1. Turn the vehicle to the ON mode.

-2. Select the ETCS(TAC) TEST in the Function Test Menu with the HDS.

ETCS(TAC) TEST

Is the RELAY circuit OK?

YES

Intermittent failure, the system is OK at this time. Check for poor connections or loose terminals at the relay circuit board and the PCM. If the on-board snapshot of this DTC is recorded, try to reproduce the failure under the same conditions with the on-board snapshot .

NO

The failure is duplicated. Go to step 2.

2. Relay circuit board check

   -1. Turn the vehicle to the OFF (LOCK) mode.

   -2. **Remove and test the relay circuit board** .

   Is the relay circuit board OK?

   YES

   Go to step 3.

   NO

   Replace the relay circuit board .

3. Shorted wire check (FI_SUB_RLY_CL- line)

   -1. Jump the SCS line with the HDS, and wait more than 1 minute.

   -2. Disconnect the following connector.

PCM connector A (50P)

-3. Measure the resistance between test points 1 and 2.

Test condition	Vehicle OFF (LOCK) mode
B	Relay circuit board: removed
B	PCM connector A (50P): disconnected
Test point 1	**PCM connector A (50P) No. 25**
Test point 2	Body ground

Is there 1 MΩ or more?

YES

Go to step 4.

NO

Repair a short in the FI_SUB_RLY_CL- wire between the PCM (A25) and the relay circuit board.

4. Shorted wire check (FI_SUB_RLY_OUT line to power)

   -1. Turn the vehicle to the ON mode.

   -2. Measure the voltage between test points 1 and 2.

Test condition	Vehicle ON mode
B	Relay circuit board: removed
B	PCM connector A (50P): disconnected
Test point 1	**PCM connector A (50P) No. 16**
Test point 2	Body ground

Is there battery voltage?

YES

Repair a short to power in the FI_SUB_RLY_OUT wire between the PCM (A16) and the relay circuit board.

NO

The FI_SUB_RLY_OUT wire is OK. Check for any authorized service information related to the DTCs or symptoms you are troubleshooting, or **substitute a known-good PCM** .

DTC P1659

DTC P1659 : ETCS Control Relay OFF Malfunction

NOTE: Before you troubleshoot, **review the general troubleshooting information** .

DTC Description	Confirmed DTC	Pending DTC
P1659 ETCS Control Relay OFF Malfunction	B	B

DTC (PGM-FI)

1. Problem verification

   -1. Turn the vehicle to the ON mode.

   -2. Clear the DTC with the HDS.

   -3. Check for Pending or Confirmed DTCs with the HDS.

DTC Description	Confirmed DTC	Pending DTC
P1659 ETCS Control Relay OFF Malfunction	B	B

   Is DTC P1659 indicated?

   YES

   The failure is duplicated. Go to step 2.

   NO

   Intermittent failure, the system is OK at this time. Check for poor connections or loose terminals at the relay circuit board and the PCM. **If the on-board snapshot of this DTC is recorded, try to reproduce the failure under the same conditions with the on-board snapshot** .

2. Fuse check

   -1. Turn the vehicle to the OFF (LOCK) mode.

   -2. Check the following fuse.

Fuse	**No. A8**

   Is the fuse OK?

   YES

   Go to step 3.

   NO

Go to step 7.

3. Relay circuit board check

-1. **Remove and test the relay circuit board** .

Is the relay circuit board OK?

YES

Go to step 4.

NO

Replace the relay circuit board .

4. Open wire check (+B_FI_SUB line)

-1. Measure the voltage between test points 1 and 2.

Test condition	Vehicle OFF (LOCK) mode
B	Relay circuit board: removed
Test point 1	Relay circuit board connector C (18P) (female terminals) No. 14: ①
Test point 2	Body ground

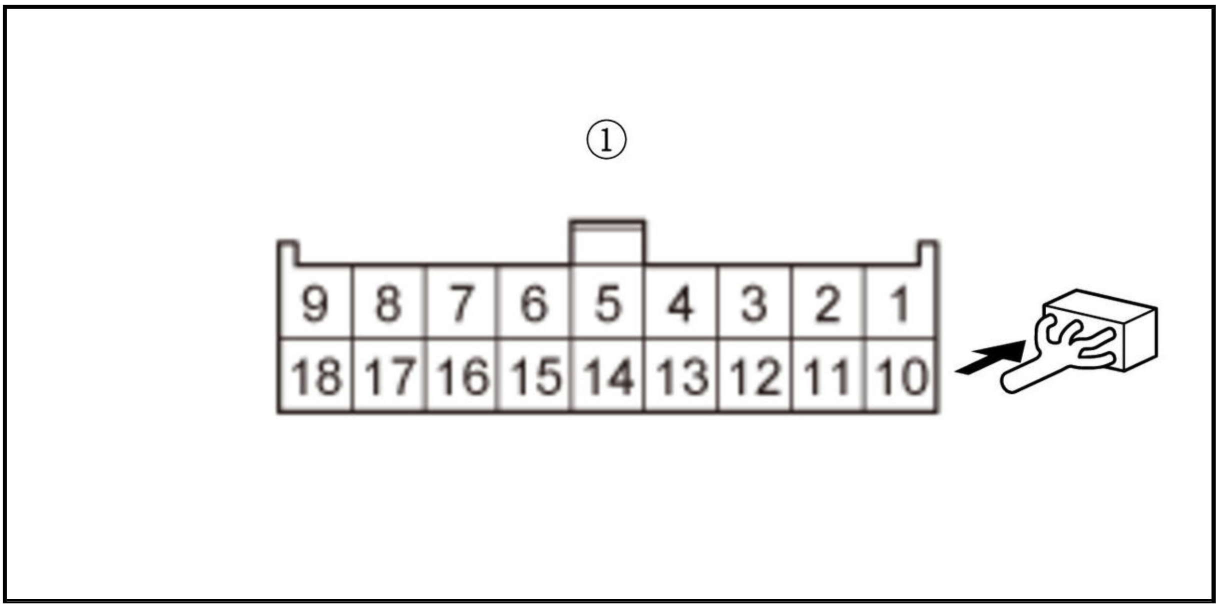

Is there battery voltage?

YES

Go to step 5.

NO

Repair an open in the +B_FI_SUB wire between the **No. A8 fuse** and the relay circuit board.

5. Open wire check (FI_SUB_RLY_OUT line)

-1. Jump the SCS line with the HDS, and wait more than 1 minute.

-2. Disconnect the following connector.

PCM connector A (50P)

-3. Measure the resistance between test points 1 and 2.

Test condition	Vehicle OFF (LOCK) mode
B	Relay circuit board: removed
B	PCM connector A (50P): disconnected
Test point 1	Relay circuit board connector B (6P) (female terminals) No. 3: ①
Test point 2	**PCM connector A (50P) No. 16**

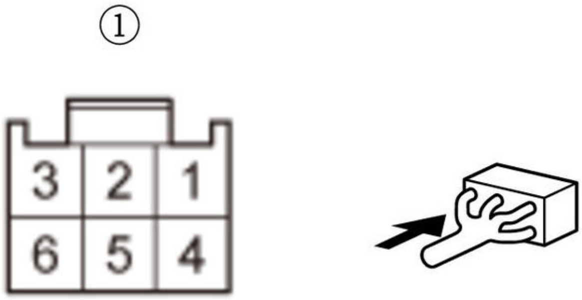

Is there 1.0 Ω or less?

YES

Go to step 6.

NO

Repair an open in the FI_SUB_RLY_OUT wire between the PCM (A16) and the relay circuit board.

6. Open wire check (FI_SUB_RLY_CL- line)

-1. Measure the resistance between test points 1 and 2.

Test condition	Vehicle OFF (LOCK) mode
B	Relay circuit board: removed
B	PCM connector A (50P): disconnected
Test point 1	Relay circuit board connector B (6P) (female terminals) No. 2: ①
Test point 2	**PCM connector A (50P) No. 25**

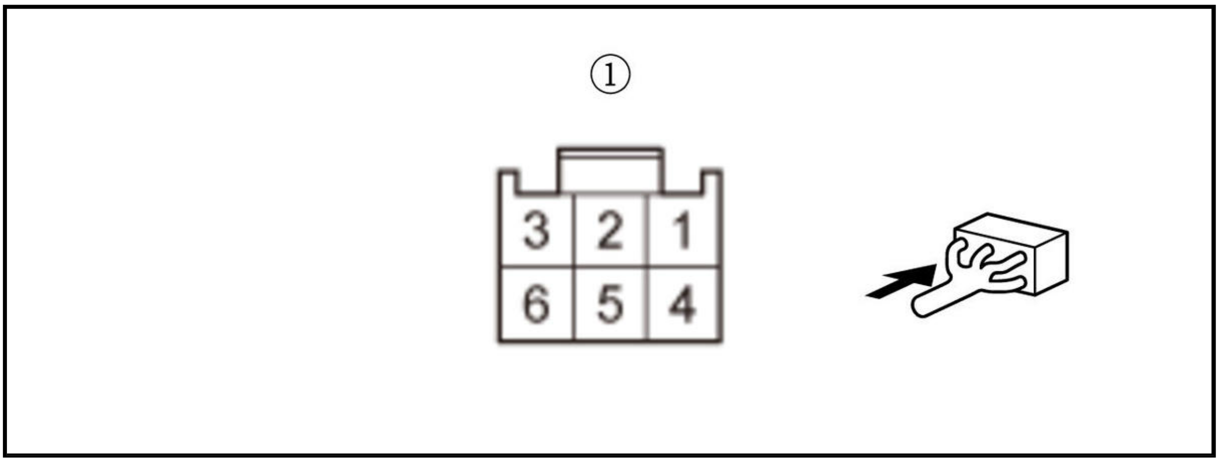

Is there 1.0 Ω or less?

YES

The FI_SUB_RLY_CL- wire is OK. Check for any authorized service information related to the DTCs or symptoms you are troubleshooting, or **substitute a known-good PCM** .

NO

Repair an open in the FI_SUB_RLY_CL- wire between the PCM (A25) and the relay circuit board.

7. Shorted wire check (FI_SUB_RLY_OUT line)

   -1. Remove the **No. A11 fuse** .

   -2. Jump the SCS line with the HDS, and wait more than 1 minute.

   -3. Disconnect the following connectors.

PCM connector A (50P)
Relay circuit board connector B (6P)

   -4. Measure the resistance between test points 1 and 2.

Test condition	Vehicle OFF (LOCK) mode
B	No. A11 fuse: removed
B	PCM connector A (50P): disconnected
B	Relay circuit board connector B (6P): disconnected
Test point 1	Relay circuit board connector B (6P) (female terminals) No. 3: ①
Test point 2	Body ground

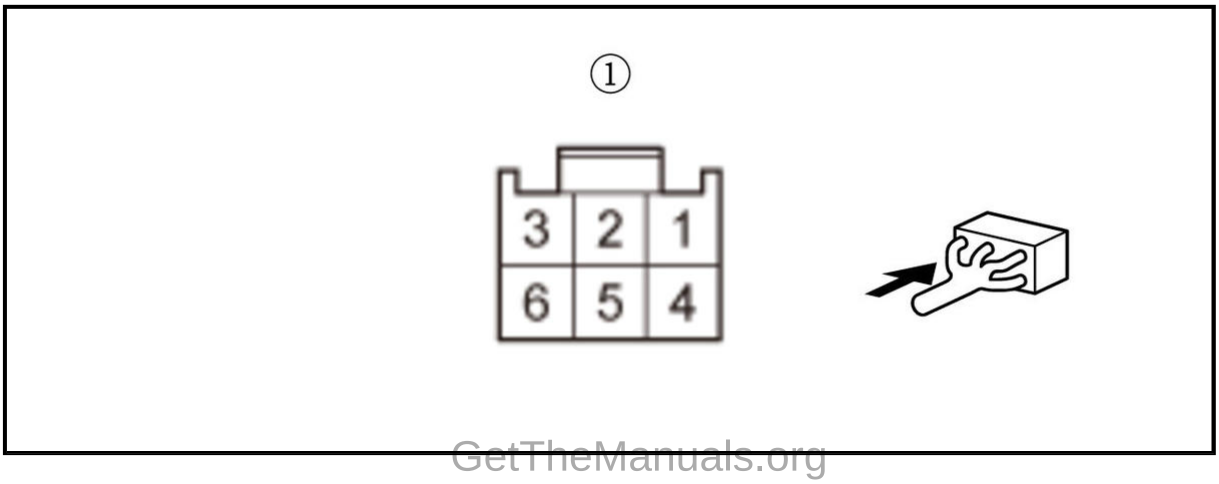

Is there 1 MΩ or more?

YES

The FI_SUB_RLY_OUT wire is OK. Go to step 8.

NO

Repair a short in the FI_SUB_RLY_OUT wire between the PCM (A16), No. A11 fuse, and the relay circuit board. Also replace the No. A8 fuse.

8. Shorted wire check (+B_FI_SUB line)

-1. Disconnect the following connector.

Relay circuit board connector C (18P)

-2. Measure the resistance between test points 1 and 2.

Test condition	Vehicle OFF (LOCK) mode
B	No. A11 fuse: removed
B	PCM connector A (50P): disconnected
B	Relay circuit board connector B (6P): disconnected
B	Relay circuit board connector C (18P): disconnected
Test point 1	Relay circuit board connector C (18P) (female terminals) No. 14: ①
Test point 2	Body ground

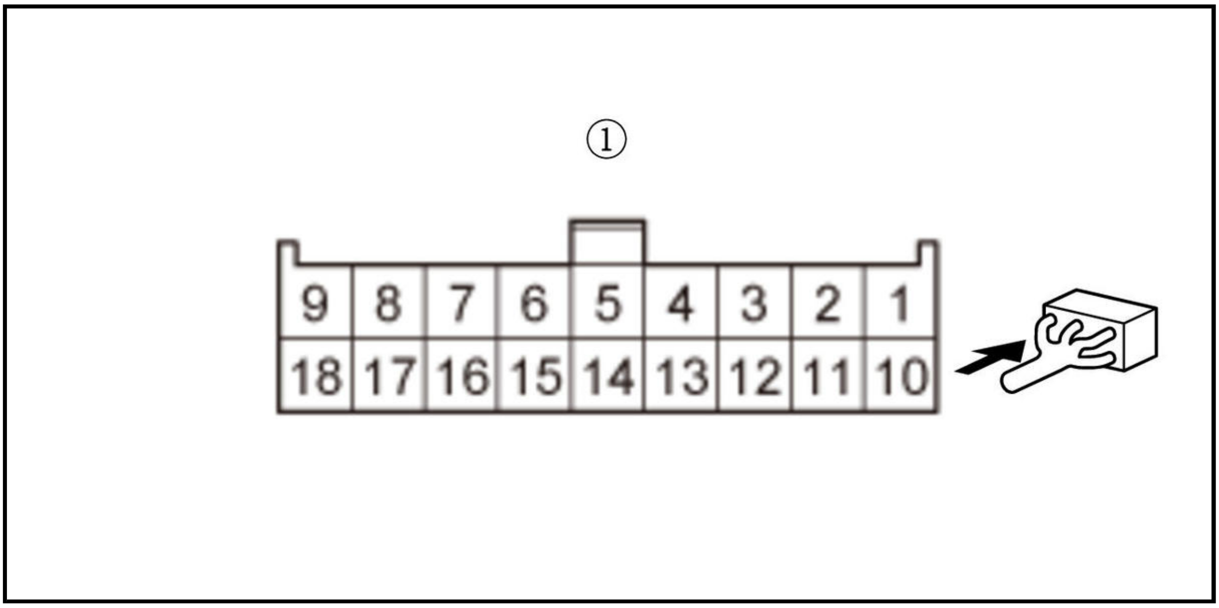

Is there 1 MΩ or more?

YES

The +B_FI_SUB wire is OK. Check for any authorized service information related to the DTCs or symptoms you are troubleshooting, or **substitute a known-good PCM** .

NO

Repair a short in the +B_FI_SUB wire between the **No. A8 fuse** and the relay circuit board. Also replace the No. A8 fuse

DTC P1683 : Throttle Valve Default Position Spring Performance Problem

WARNING: **Do not insert your fingers into the installed throttle body when you turn the vehicle to the ON mode, or while the vehicle is in ON mode. If you do, you will seriously injure your fingers if the throttle valve is activated.**

NOTE: Before you troubleshoot, **review the general troubleshooting information** .

DTC Description	Confirmed DTC	Pending DTC
P1683 Throttle Valve Default Position Spring Performance Problem	B	B

DTC (PGM-FI)

1. Problem verification

   -1. Turn the vehicle to the ON mode.

   -2. Clear the DTC with the HDS.

   -3. **Enter the maintenance mode, then start the engine** .

   -4. Hold the engine speed at 3, 000 rpm without load (in P or N) until the radiator fan comes on, then let it idle.

   -5. Turn the vehicle to the OFF (LOCK) mode, and wait 10 seconds.

   -6. Turn the vehicle to the ON mode.

   -7. Check for Pending or Confirmed DTCs with the HDS.

DTC Description	Confirmed DTC	Pending DTC
P1683 Throttle Valve Default Position Spring Performance Problem	B	B

   Is DTC P1683 indicated?

   YES

   The failure is duplicated. Go to step 2.

   NO

   Intermittent failure, the system is OK at this time. Check for poor connections or loose terminals at the throttle body and the PCM. **If the on-board snapshot of this DTC is recorded, try to reproduce the failure under the same conditions with the on-board snapshot** .

2. Throttle body default position spring check

   -1. Turn the vehicle to the OFF (LOCK) mode.

   -2. **Remove the air cleaner** .

   -3. Push the throttle valve closed as shown.

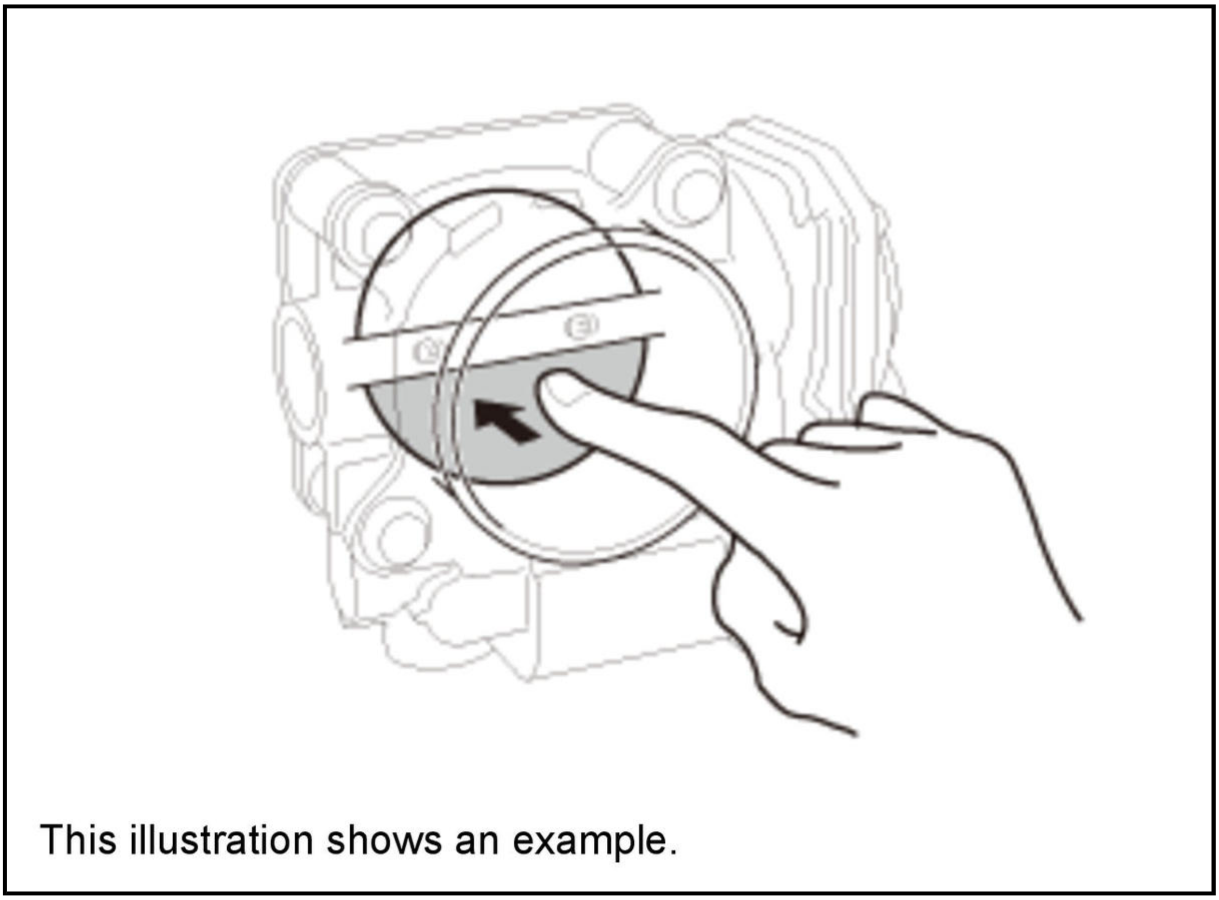
This illustration shows an example.

-4. Release the throttle valve.

Does the throttle valve return?

YES

Clean the throttle body , and recheck. If DTC P1683 is indicated again, **replace the throttle body** .

NO

Replace the throttle body .

DTC TROUBLESHOOTING

DTC P1684

DTC P1684 : Throttle Valve Return Spring Performance Problem

WARNING: Do not insert your fingers into the installed throttle body when you turn the vehicle to the ON mode, or while the vehicle is in ON mode. If you do, you will seriously injure your fingers if the throttle valve is activated.

NOTE: Before you troubleshoot, **review the general troubleshooting information** .

DTC Description	Confirmed DTC	Pending DTC
P1684 Throttle Valve Return Spring Performance Problem	B	B

DTC (PGM-FI)

1. Problem verification

   -1. Turn the vehicle to the ON mode.

   -2. Clear the DTC with the HDS.

   -3. **Enter the maintenance mode, then start the engine** .

   -4. Hold the engine speed at 3, 000 rpm without load (in P or N) until the radiator fan comes on, then let it idle.

   -5. Turn the vehicle to the OFF (LOCK) mode, and wait for 10 seconds.

   -6. Turn the vehicle to the ON mode.

   -7. Check for Pending or Confirmed DTCs with the HDS.

DTC Description	Confirmed DTC	Pending DTC
P1684 Throttle Valve Return Spring Performance Problem	B	B

   Is DTC P1684 indicated?

   YES

   The failure is duplicated. Go to step 2.

   NO

   Intermittent failure, the system is OK at this time. Check for poor connections or loose terminals at the throttle body and the PCM. **If the on-board snapshot of this DTC is recorded, try to reproduce the failure under the same conditions with the on-board snapshot** .

2. Throttle body condition check

   -1. Turn the vehicle to the OFF (LOCK) mode.

   -2. **Remove the air cleaner** .

-3. Push the throttle valve open as shown.

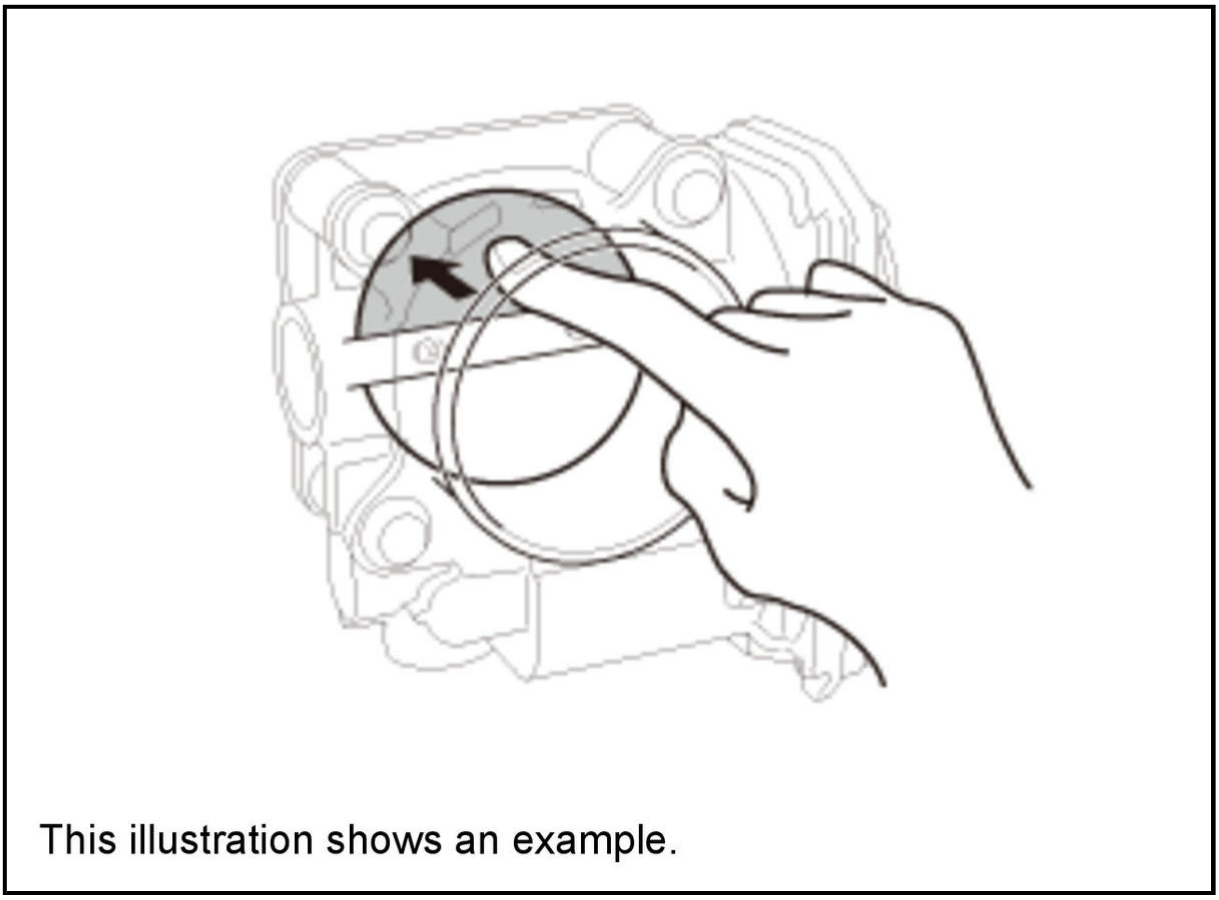

This illustration shows an example.

-4. Release the throttle valve.

Does the throttle valve return?

YES

Clean the throttle body , and recheck. If DTC P1684 is indicated again, **replace the throttle body** .

NO

Replace the throttle body .

DTC P16E3

DTC P16E3 : PGM-FI-Battery Sensor LIN Communication Error

NOTE:

- Before you troubleshoot, **review the general troubleshooting information** .
- Check for loose terminals on the 12 volt battery sensor (12 volt battery negative (-) terminal).

DTC Description	Confirmed DTC	Pending DTC
P16E3 PGM-FI-Battery Sensor LIN Communication Error	B	B

DTC (PGM-FI)

1. Problem verification

    -1. Turn the vehicle to the ON mode.

    -2. Clear the DTC with the HDS.

-3. Turn the vehicle to the OFF (LOCK) mode.

-4. Turn the vehicle to the ON mode, and wait 10 seconds.

-5. Check for Pending or Confirmed DTCs with the HDS.

DTC Description	Confirmed DTC	Pending DTC
P16E3 PGM-FI-Battery Sensor LIN Communication Error	B	B

Is DTC P16E3 indicated?

YES

The failure is duplicated. Go to step 2.

NO

Intermittent failure, the system is OK at this time. Check for poor connections or loose terminals at the 12 volt battery sensor and the PCM. **If the on-board snapshot of this DTC is recorded, try to reproduce the failure under the same conditions with the on-board snapshot** .

2. DTC check

-1. Check for Pending or Confirmed DTCs with the HDS.

DTC Description	Confirmed DTC	Pending DTC
P16E8 PGM-FI-Shutter Grille LIN Communication Error	B	B

Is DTC P16E8 indicated?

YES

Go to step 3.

NO

Go to step 7.

3. Determine possible failure area (short in LIN(BATT_SENSOR) line, others)

-1. Turn the vehicle to the OFF (LOCK) mode.

-2. Disconnect the following connector.

12 volt battery sensor 2P connector

-3. Measure the resistance between test points 1 and 2.

Test condition	Vehicle OFF (LOCK) mode
B	12 volt battery sensor 2P connector: disconnected
Test point 1	12 volt battery sensor 2P connector (female terminals) No. 2: ①
Test point 2	Body ground

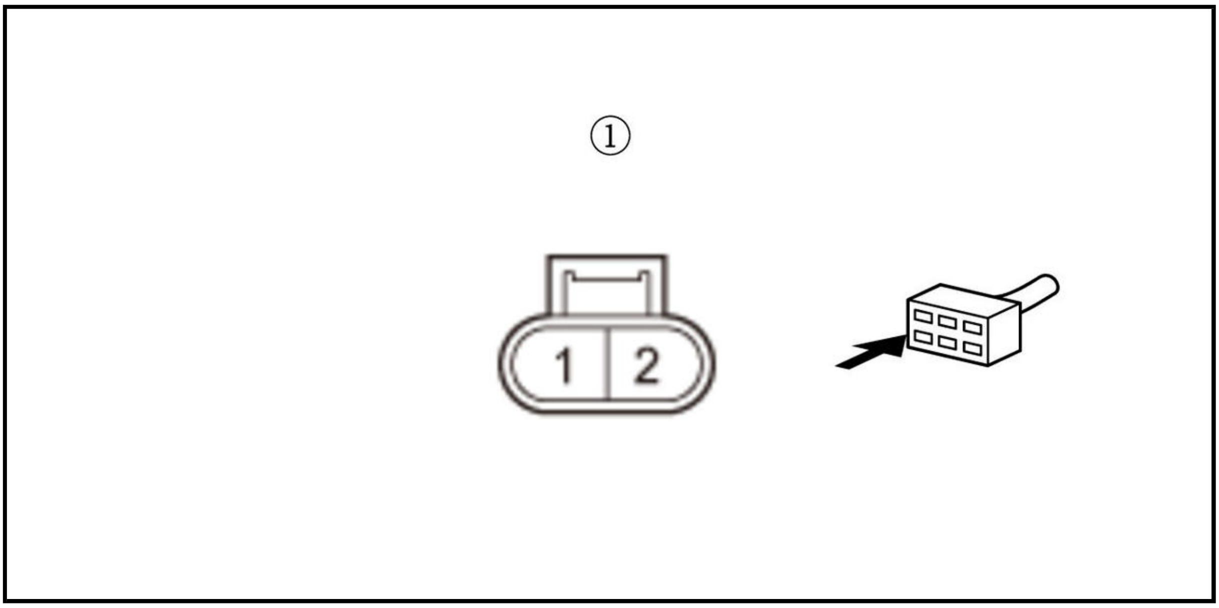

Is there 1 MΩ or more?

YES

Go to step 5.

NO

Go to step 4.

4. Shorted wire check (LIN(BATT_SENSOR) line)

   -1. Jump the SCS line with the HDS, and wait more than 1 minute.

   Continue to check for continuity between 12 volt battery sensor 2P connector (female terminals) terminal No. 2 and body ground, while disconnecting these connectors, one at a time:

   - PCM connector A (50P)
   - Shutter grille 4P connector

   Does continuity go away when one of the above connectors is disconnected?

   YES

   The LIN(BATT_SENSOR) wire is OK. Replace the part that caused an open when it was disconnected.

   NO

   Repair a short in the LIN(BATT_SENSOR) wire between the PCM (A10), the 12 volt battery sensor, and the shutter grille.

5. Determine possible failure area (12 volt battery sensor, others)

   -1. Reconnect the 12 volt battery sensor 2P connector.

   -2. Disconnect the following connector.

Shutter grille 4P connector

   -3. Measure the resistance between test points 1 and 2.

Test condition	Vehicle OFF (LOCK) mode

B	Shutter grille 4P connector: disconnected
Test point 1	Shutter grille 4P connector (female terminals) No. 3: ①
Test point 2	Body ground

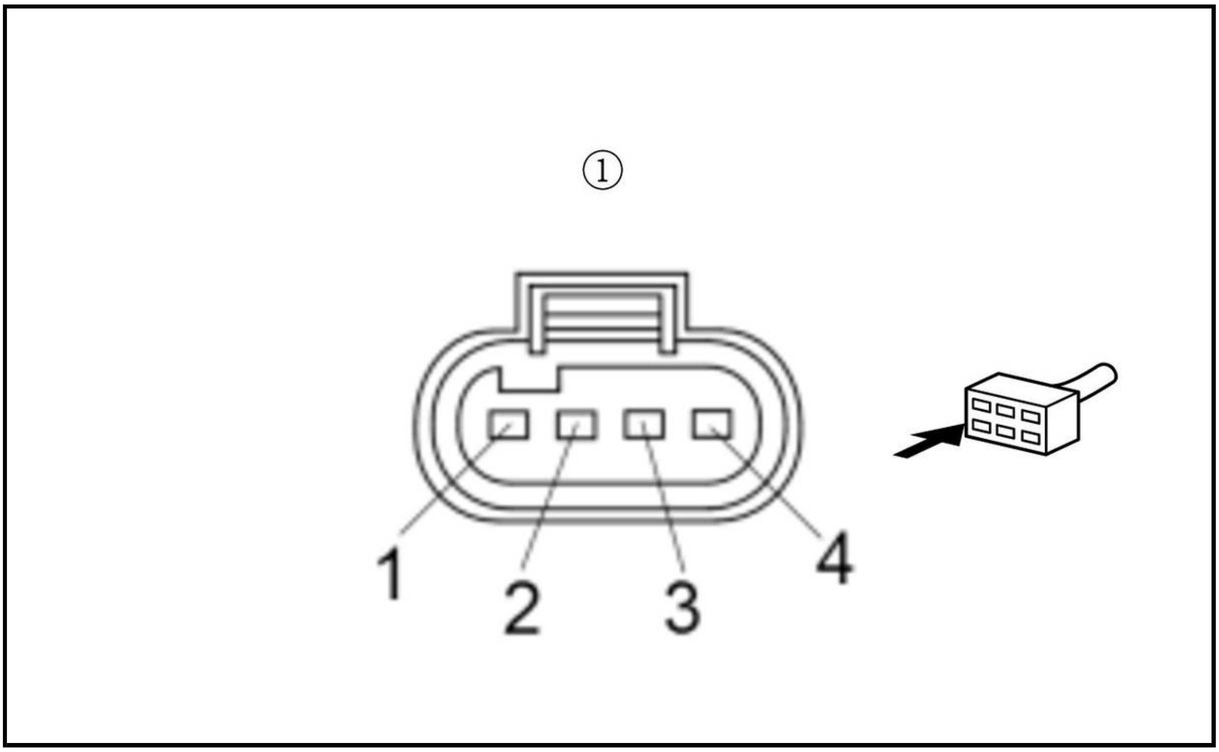

Is there 1 MΩ or more?

YES

Go to step 6.

NO

Replace the 12 volt battery sensor .

6. Open wire check (LIN(BATT_SENSOR) line)

-1. Jump the SCS line with the HDS, and wait more than 1 minute.

-2. Disconnect the following connectors.

PCM connector A (50P)
12 volt battery sensor 2P connector

-3. Measure the resistance between test points 1 and 2.

Test condition	Vehicle OFF (LOCK) mode
B	Shutter grille 4P connector: disconnected
B	PCM connector A (50P): disconnected
B	12 volt battery sensor 2P connector: disconnected
Test point 1	12 volt battery sensor 2P connector (female terminals) No. 2: ①
Test point 2	**PCM connector A (50P) No. 10**

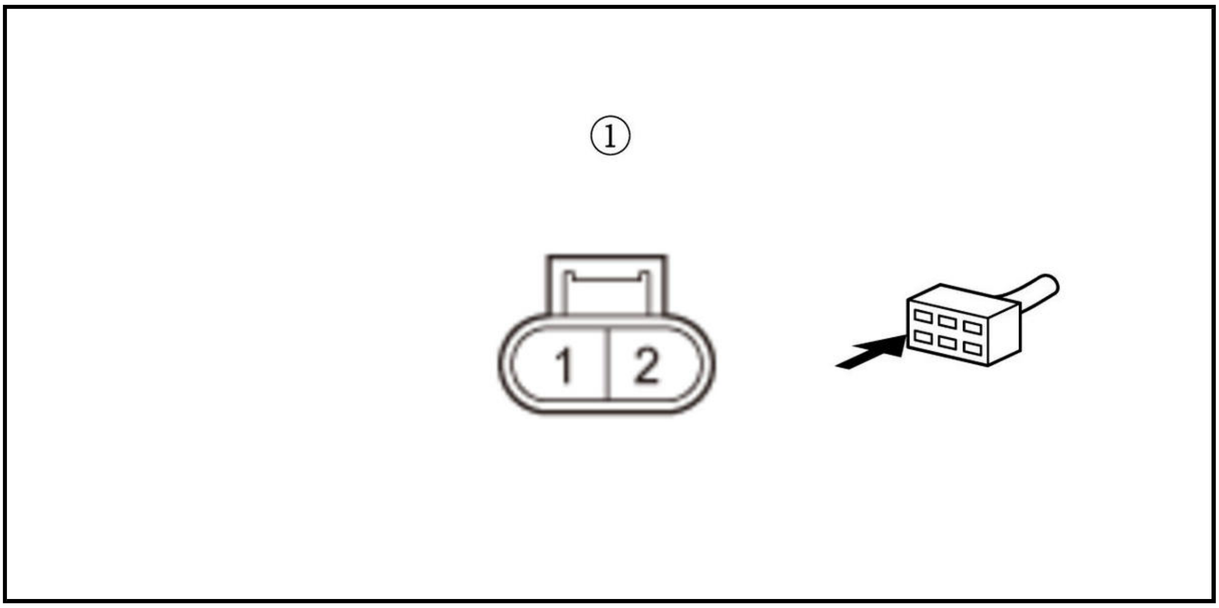

Is there 1.0 Ω or less?

YES

The LIN(BATT_SENSOR) wire is OK. Check for any authorized service information related to the DTCs or symptoms you are troubleshooting, or **substitute a known-good PCM** .

NO

Repair an open in the LIN(BATT_SENSOR) wire between the PCM (A10) and the 12 volt battery sensor.

7. Fuse check

-1. Turn the vehicle to the OFF (LOCK) mode.

-2. Check the following fuse.

Fuse	**No. A24**

Is the fuse OK?

YES

Go to step 8.

NO

Repair a short in the +B_HORN wire between the No. A24 fuse and the 12 volt battery sensor. Also replace the No. A24 fuse.

8. Open wire check (+B_HORN line)

-1. Disconnect the following connector.

12 volt battery sensor 2P connector

-2. Measure the voltage between test points 1 and 2.

Test condition	Vehicle OFF (LOCK) mode
B	12 volt battery sensor 2P connector: disconnected
Test point 1	12 volt battery sensor 2P connector (female terminals) No. 1: ①
Test point 2	Body ground

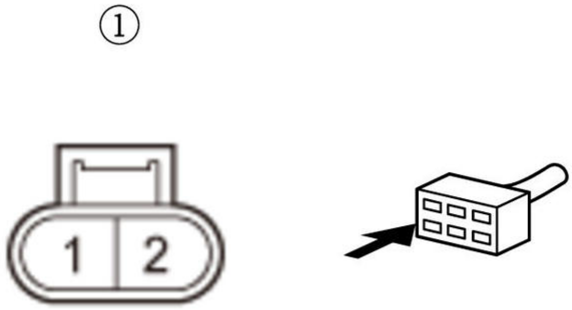

Is there battery voltage?

YES

Go to step 9.

NO

Repair an open in the +B_HORN wire between the **No. A24 fuse** and the 12 volt battery sensor.

9. Open wire check (LIN(BATT_SENSOR) line)

-1. Jump the SCS line with the HDS, and wait more than 1 minute.

-2. Disconnect the following connector.

PCM connector A (50P)

-3. Measure the resistance between test points 1 and 2.

Test condition	Vehicle OFF (LOCK) mode
B	12 volt battery sensor 2P connector: disconnected
B	PCM connector A (50P): disconnected
Test point 1	12 volt battery sensor 2P connector (female terminals) No. 2: ①
Test point 2	**PCM connector A (50P) No. 10**

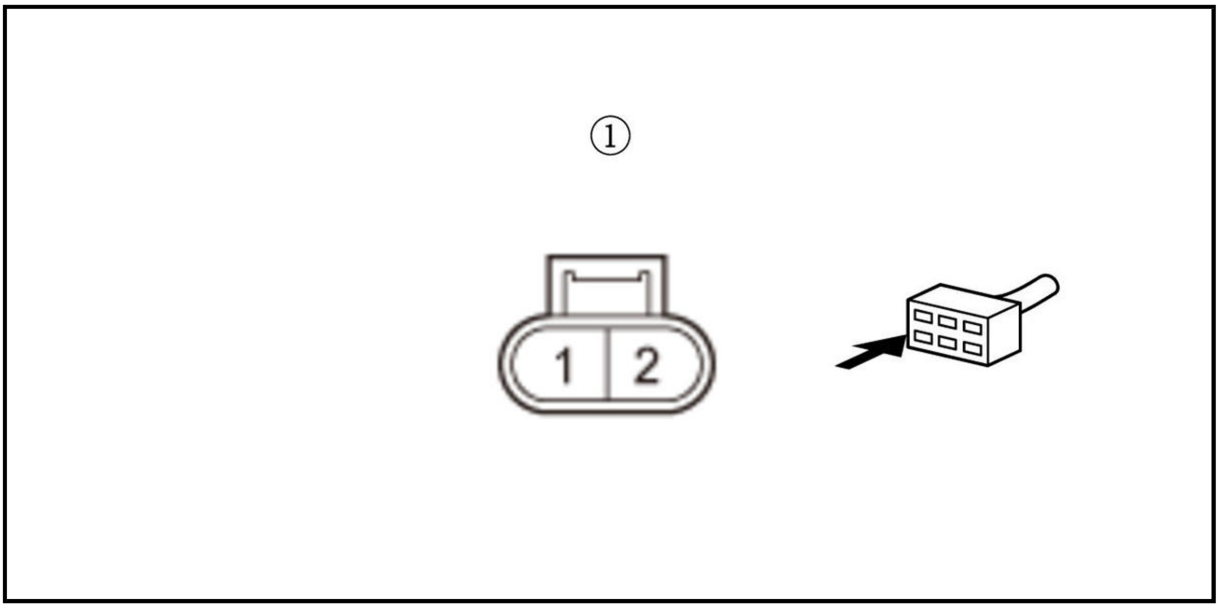

Is there 1.0 Ω or less?

YES

The LIN(BATT_SENSOR) wire is OK. **Replace the 12 volt battery sensor** .

NO

Repair an open in the LIN(BATT_SENSOR) wire between the PCM (A10) and the 12 volt battery sensor.

DTC P16E8

DTC P16E8 : PGM-FI-Shutter Grille LIN Communication Error

NOTE: Before you troubleshoot, **review the general troubleshooting information** .

DTC Description	Confirmed DTC	Pending DTC
P16E8 PGM-FI-Shutter Grille LIN Communication Error	B	B

DTC (PGM-FI)

1. Problem verification

-1. Turn the vehicle to the ON mode.

-2. Clear the DTC with the HDS.

-3. Turn the vehicle to the OFF (LOCK) mode.

-4. Turn the vehicle to the ON mode, and wait 10 seconds.

-5. Check for Pending or Confirmed DTCs with the HDS.

DTC Description	Confirmed DTC	Pending DTC
P16E8 PGM-FI-Shutter Grille LIN Communication Error	B	B

Is DTC P16E8 indicated?

YES

The failure is duplicated. Go to step 2.

NO

Intermittent failure, the system is OK at this time. Check for poor connections or loose terminals at the shutter grille and the PCM. **If the on-board snapshot of this DTC is recorded, try to reproduce the failure under the same conditions with the on-board snapshot** .

2. DTC check

-1. Check for Pending or Confirmed DTCs with the HDS.

DTC Description	Confirmed DTC	Pending DTC
P16E3 PGM-FI-Battery Sensor LIN Communication Error	B	B

Is DTC P16E3 indicated?

YES

Go to step 3.

NO

Go to step 7.

3. Determine possible failure area (LIN(BATT_SENSOR) line, others)

-1. Turn the vehicle to the OFF (LOCK) mode.

-2. Disconnect the following connector.

Shutter grille 4P connector

-3. Measure the resistance between test points 1 and 2.

Test condition	Vehicle OFF (LOCK) mode

B	Shutter grille 4P connector: disconnected
Test point 1	Shutter grille 4P connector (female terminal) No. 3: ①
Test point 2	Body ground

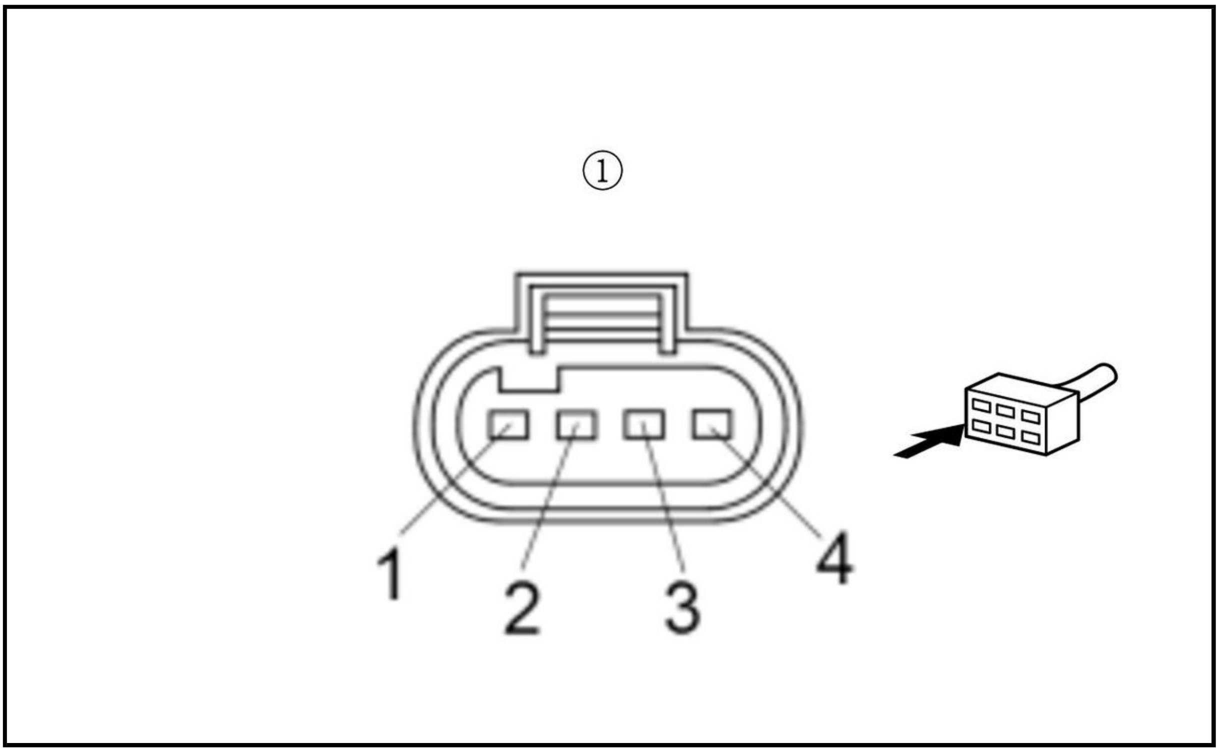

Is there 1 MΩ or more?

YES

Go to step 5.

NO

Go to step 4.

4. Shorted wire check (LIN(BATT_SENSOR) line)

   -1. Jump the SCS line with the HDS, and wait more than 1 minute.

   Continue to check for continuity between the shutter grille 4P connector (female terminals) terminal No. 3 and body ground, while disconnecting these connectors, one at a time:

   - PCM connector A (50P)
   - 12 volt battery sensor 2P connector

   Does continuity go away when one of the above connectors is disconnected?

   YES

   The LIN(BATT_SENSOR) wire is OK. Replace the part that caused an open when it was disconnected.

   NO

   Repair a short in the LIN(BATT_SENSOR) wire between the PCM (A10), the 12 volt battery sensor and the shutter grille.

5. Determine possible failure area (shutter grille, others)

   -1. Reconnect the shutter grille 4P connector.

   -2. Disconnect the following connector.

12 volt battery sensor 2P connector

-3. Measure the resistance between test points 1 and 2.

Test condition	Vehicle OFF (LOCK) mode
B	12 volt battery sensor 2P connector: disconnected
Test point 1	12 volt battery sensor 2P connector (female terminals) No. 2: ①
Test point 2	Body ground

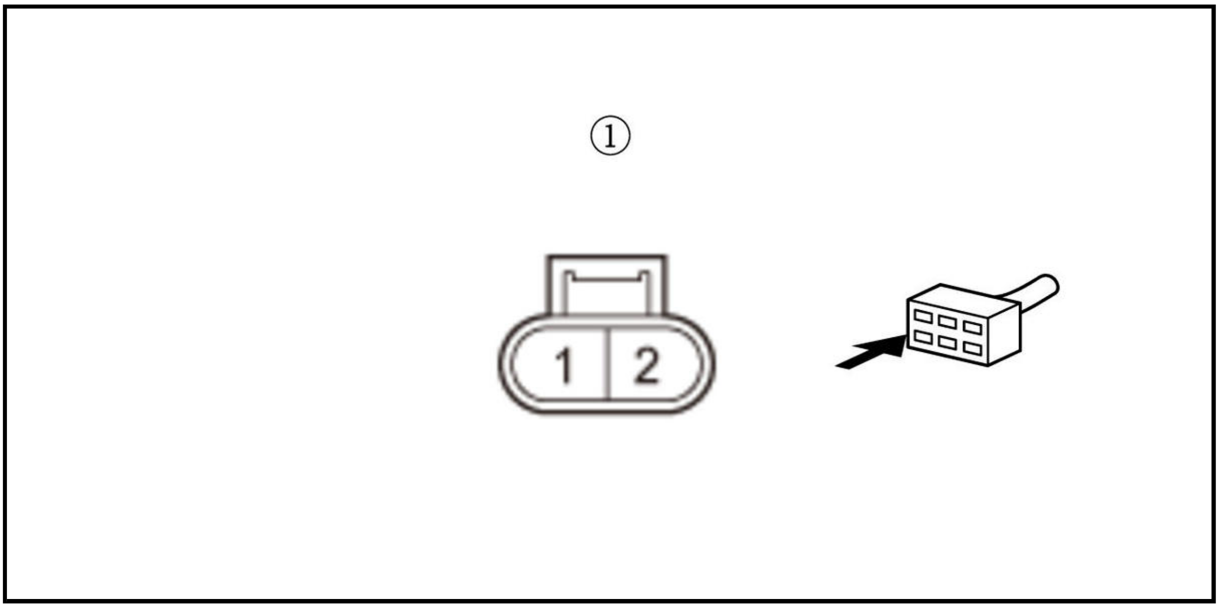

Is there 1 MΩ or more?

YES

Go to step 6.

NO

Replace the shutter grille .

6. Open wire check (LIN(BATT_SENSOR) line)

-1. Jump the SCS line with the HDS, and wait more than 1 minute.

-2. Disconnect the following connectors.

Shutter grille 4P connector
PCM connector A (50P)

-3. Measure the resistance between test points 1 and 2.

Test condition	Vehicle OFF (LOCK) mode
B	12 volt battery sensor 2P connector: disconnected
B	Shutter grille 4P connector: disconnected
B	PCM connector A (50P): disconnected
Test point 1	Shutter grille 4P connector (female terminal) No. 3: ①
Test point 2	**PCM connector A (50P) No. 10**

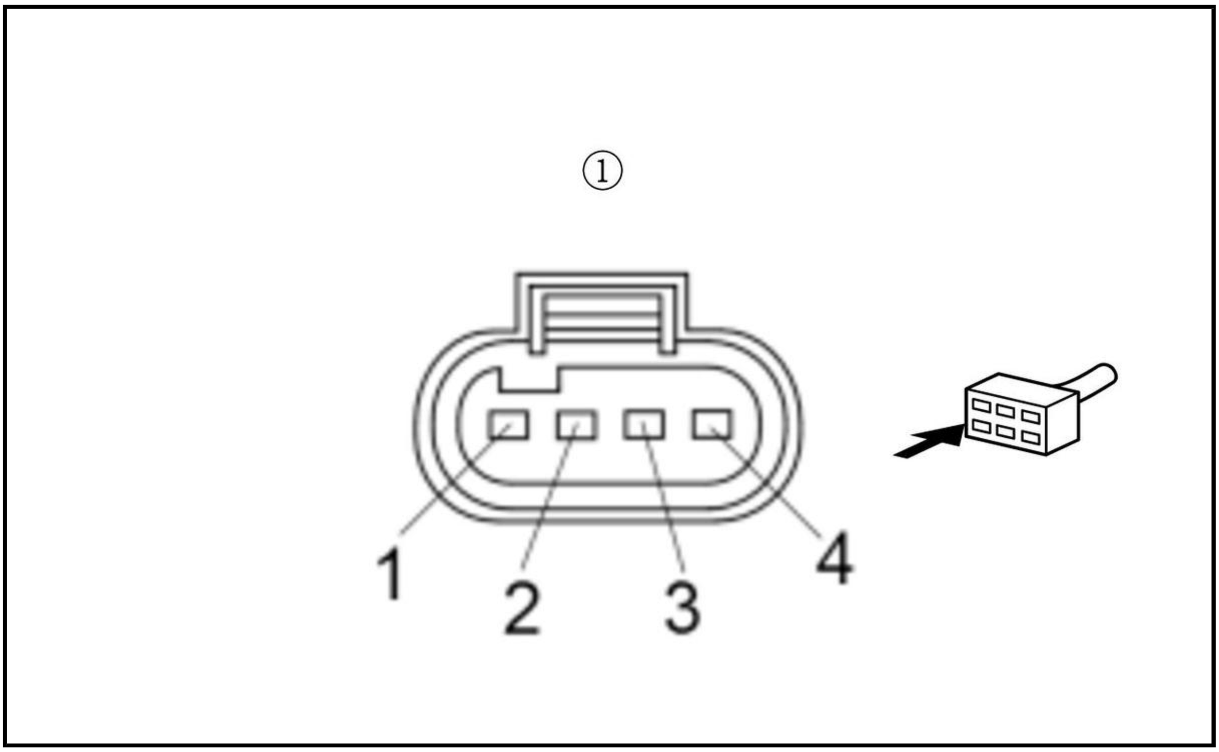

Is there 1.0 Ω or less?

YES

The LIN(BATT_SENSOR) wire is OK. Check for any authorized service information related to the DTCs or symptoms you are troubleshooting, or **substitute a known-good PCM** .

NO

Repair an open in the LIN(BATT_SENSOR) wire between the PCM (A10) and the shutter grille.

7. Fuse check

-1. Turn the vehicle to the OFF (LOCK) mode.

-2. Check the following fuse.

Fuse	**No. A22**

Is the fuse OK?

YES

Go to step 8.

NO

Check for a short in the VMP/+B_FR_FOG wire between the No. A22 fuse and the shutter grille. Also replace the No. A22 fuse.

8. Determine possible failure area (LIN(BATT_SENSOR) line, others)

-1. Disconnect the following connector.

Shutter grille 4P connector

-2. Measure the voltage between test points 1 and 2.

Test condition	Vehicle OFF (LOCK) mode
B	Shutter grille 4P connector: disconnected
Test point 1	Shutter grille 4P connector (female terminals) No. 1: ①
Test point 2	Shutter grille 4P connector (female terminals) No. 4: ①

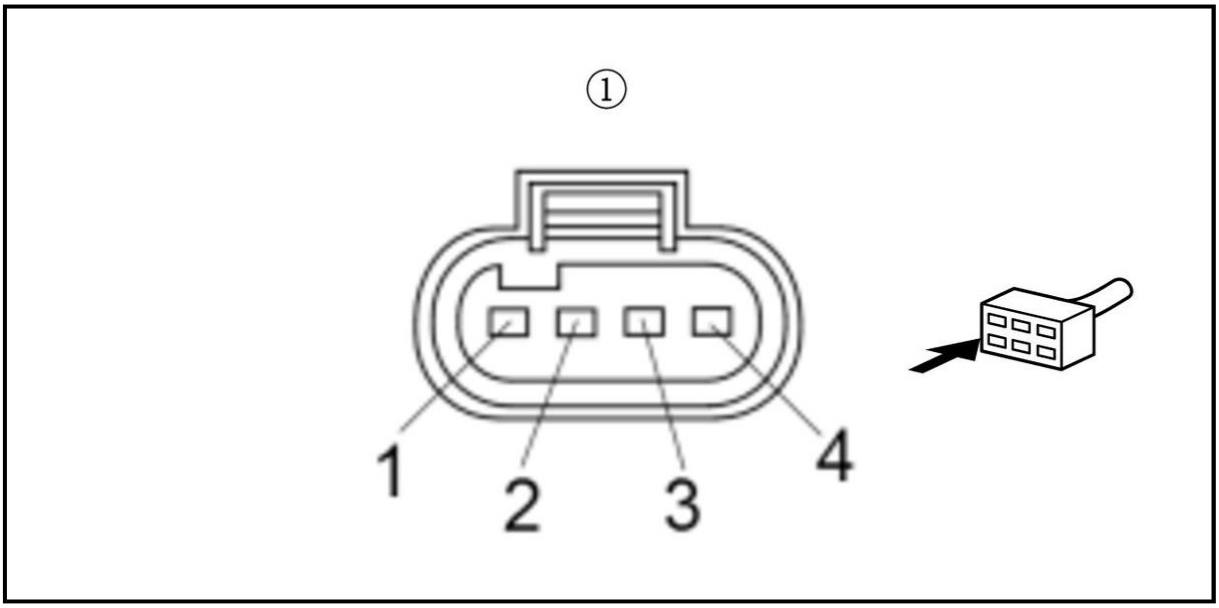

Is there battery voltage?

YES

Go to step 10.

NO

Go to step 9.

9. Open wire check (VMP/+B_FR_FOG line)

-1. Measure the voltage between test points 1 and 2.

Test condition	Vehicle OFF (LOCK) mode
B	Shutter grille 4P connector: disconnected
Test point 1	Shutter grille 4P connector (female terminals) No. 1: ①
Test point 2	Body ground

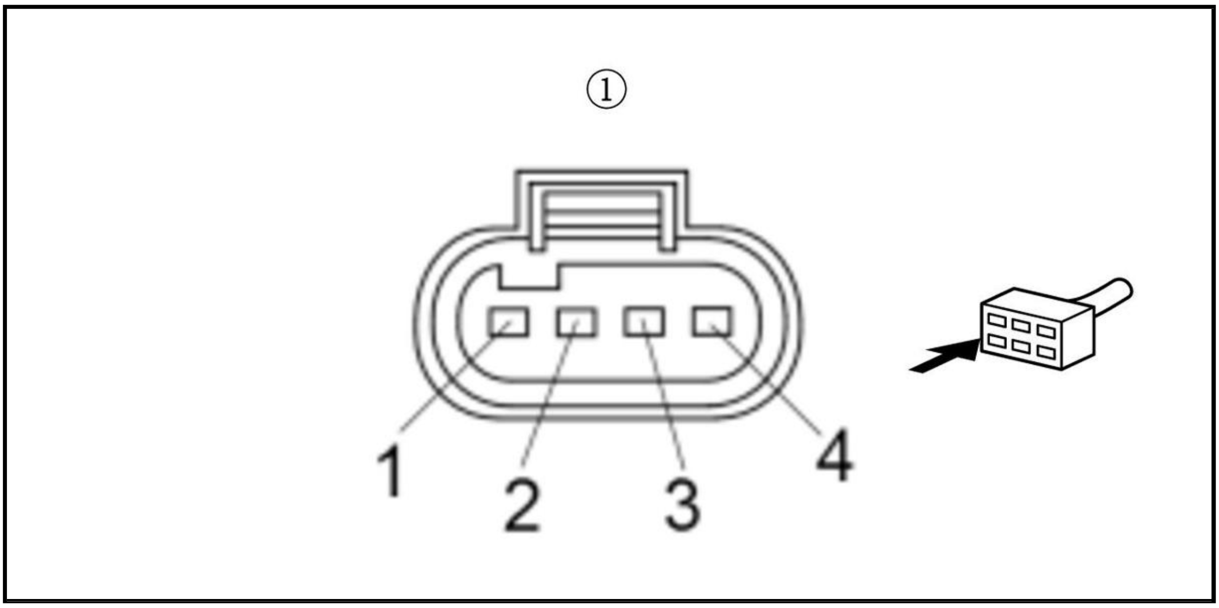

Is there battery voltage?

YES

Repair an open in the GND wire between the shutter grille and G351.

NO

Repair an open in the VMP/+B_FR_FOG wire between the shutter grille and the **No. A22 fuse** .

10. Open wire check (LIN(BATT_SENSOR) line)

-1. Turn the vehicle to the OFF (LOCK) mode.

-2. Jump the SCS line with the HDS, and wait more than 1 minute.

-3. Disconnect the following connectors.

Shutter grille 4P connector
PCM connector A (50P)

-4. Measure the resistance between test points 1 and 2.

Test condition	Vehicle OFF (LOCK) mode
B	Shutter grille 4P connector: disconnected
B	PCM connector A (50P): disconnected
Test point 1	Shutter grille 4P connector (female terminal) No. 3: ①
Test point 2	**PCM connector A (50P) No. 10**

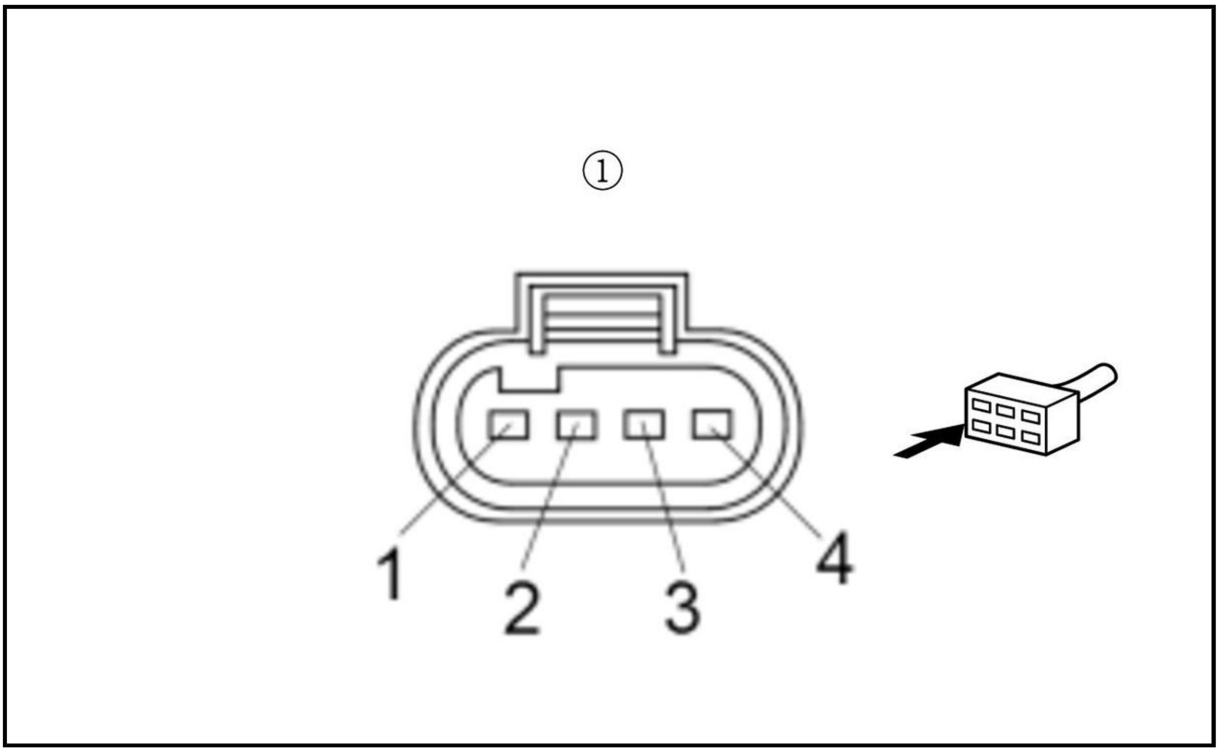

Is there 1.0 Ω or less?

YES

The LIN(BATT_SENSOR) wire is OK. **Replace the shutter grille** .

NO

Repair an open in the LIN(BATT_SENSOR) wire between the PCM (A10) and the shutter grille.

DTC P16EA

DTC P16EA : Electric Engine Coolant Pump Relay Stuck On

NOTE: Before you troubleshoot, **review the general troubleshooting information** .

DTC Description	Confirmed DTC	Pending DTC
P16EA Electric Engine Coolant Pump Relay Stuck On	B	B

DTC (PGM-FI)

1. Problem verification

-1. Turn the vehicle to the ON mode.

-2. Clear the DTC with the HDS.

-3. Turn the vehicle to the OFF (LOCK) mode, and wait 10 seconds.

-4. Turn the vehicle to the ON mode.

-5. Check for Pending or Confirmed DTCs with the HDS.

DTC Description	Confirmed DTC	Pending DTC
P16EA Electric Engine Coolant Pump Relay Stuck On	B	B

Is DTC P16EA indicated?

YES

The failure is duplicated. Go to step 2.

NO

Intermittent failure, the system is OK at this time. Check for poor connections or loose terminals at the engine EWP relay and the PCM. **If the on-board snapshot of this DTC is recorded, try to reproduce the failure under the same conditions with the on-board snapshot** .

2. Relay check

-1. Turn the vehicle to the OFF (LOCK) mode.

-2. **Remove the engine EWP relay** .

-3. **Test the engine EWP relay** .

Is the relay OK?

YES

Check for any authorized service information related to the DTCs or symptoms you are troubleshooting, or **substitute a known-good PCM** .

NO

Replace the engine EWP relay.

DTC P170E

DTC P170E : Park Pawl Motor Power Relay Circuit High

NOTE: Before you troubleshoot, **review the General Troubleshooting Information** .

DTC Description	Confirmed DTC	Pending DTC	Freeze Frame
P170E Park Pawl Motor Power Relay Circuit High	B	B	B

DTC (Gear)

1. Problem verification

-1. Turn the vehicle to the ON mode.

-2. Clear the DTC with the HDS.

-3. Turn the vehicle to the OFF (LOCK) mode.

-4. Turn the vehicle to the ON mode, and wait for at least 10 seconds.

-5. Check for Pending or Confirmed DTCs with the HDS.

DTC Description	Confirmed DTC	Pending DTC	Freeze Frame
P170E Park Pawl Motor Power Relay Circuit High	B	B	B
P272C Park Pawl Motor Control Circuit	B	B	B

Is DTC P170E and/or P272C indicated?

Only DTC P170E is indicated

The failure is duplicated. Go to step 2

DTC P272C is indicated

The failure is duplicated. **Do the troubleshooting for DTC P272C**.

No DTCs are indicated

Intermittent failure, the system is OK at this time. Check for poor connections and loose terminals between the park pawl actuator relay, the park pawl actuator, and the park pawl actuator driver unit. If the freeze data/on-board snapshot of this DTC is recorded, try to reproduce the failure under the same conditions with the freeze data/on-board snapshot.

2. Park pawl actuator relay check

-1. Turn the vehicle to the OFF (LOCK) mode.

-2. **Remove the park pawl actuator relay** .

-3. **Test the park pawl actuator relay** .

Is the relay OK?

YES

The park pawl actuator relay is OK. Keep the relay removed, and go to step 3.

NO

Replace the park pawl actuator relay.

3. Shorted wire check (P-ACT_RLY_CL- line)

-1. Disconnect the following connector.

Park pawl actuator driver unit 26P connector

-2. Measure the resistance between test points 1 and 2.

Test condition	Vehicle OFF (LOCK) mode
B	Park pawl actuator relay: disconnected
B	Park pawl actuator driver unit 26P connector: disconnected
Test point 1	**Park pawl actuator driver unit 26P connector No. 23**
Test point 2	Body ground

Is there 1 MΩ or more?

YES

Repair a short to ground in the P-ACT_RLY_CL- wire between the park pawl actuator relay and the park pawl actuator driver unit.

NO

Repair a short to power in the BMA/P-ACT RLY OUT wire between the park pawl actuator relay and the park pawl actuator.

DTC P170F

DTC P170F : Park Pawl Unit Communication Circuit (PWM)

NOTE: Before you troubleshoot, **review the General Troubleshooting Information** .

DTC Description	Confirmed DTC	Pending DTC	Freeze Frame
P170F Park Pawl Unit Communication Circuit (PWM)	B	B	B

DTC (Gear)

1. Problem verification

   -1. Turn the vehicle to the ON mode.

   -2. Clear the DTC with the HDS.

   -3. Turn the vehicle to the OFF (LOCK) mode.

   -4. Turn the vehicle to the ON mode, and wait for at least 10 seconds.

   -5. Check for Pending or Confirmed DTCs with the HDS.

DTC Description	Confirmed DTC	Pending DTC	Freeze Frame
P170F Park Pawl Unit Communication Circuit (PWM)	B	B	B
P1721 Park Pawl Unit IG1 SW No Signal	B	B	B

   Is DTC P170F and/or P1721 indicated?

   Only DTC P170F is indicated

   The failure is duplicated. Go to step 2.

   DTC P170F and P1721 are indicated

   The failure is duplicated. **Do the troubleshooting for DTC P1721**. After troubleshooting, recheck for DTC P170F.

   No DTCs are indicated

   Intermittent failure, the system is OK at this time. Check for poor connections and loose terminals between the under-hood fuse/relay box, the park pawl actuator driver unit, and the PCM. If the freeze data/on-board snapshot of this DTC is recorded, try to reproduce the failure under the same conditions with the freeze data/on-board snapshot.

2. Open wire check (PARKCMD line, PARKBUSY line)

   -1. Turn the vehicle to the OFF (LOCK) mode.

   -2. Jump the SCS line with the HDS, and wait more than 1 minute.

   -3. Disconnect the following connector.

PCM connector E (80P)

   -4. Measure the resistance between test points 1 and 2.

Test condition	Vehicle OFF (LOCK) mode

B	Park pawl actuator driver unit 26P connector: disconnected
B	PCM connector E (80P): disconnected
Test point 1	**Park pawl actuator driver unit 26P connector No. 10**
Test point 2	**PCM connector E (80P) No. 64**

Test point 1	**Park pawl actuator driver unit 26P connector No. 11**
Test point 2	**PCM connector E (80P) No. 32**

Is there 1.0 Ω or less?

YES

The PARKCMD wire and the PARKBUSY wire are OK. Go to step 3.

NO

Repair an open in the PARKCMD wire and/or the PARKBUSY wire between the park pawl actuator driver unit and the PCM.

3. Shorted wire check (PARKCMD line, PARKBUSY line to ground)

-1. Measure the resistance between the following test points and body ground individually.

Test condition	Vehicle OFF (LOCK) mode
B	Park pawl actuator driver unit 26P connector: disconnected
B	PCM connector E (80P): disconnected

Connector	Terminal
Park pawl actuator driver unit 26P connector	No. 10
	No. 11

Is there 1 MΩ or more?

YES

The PARKCMD wire and the PARKBUSY wire are not shorted to ground. Go to step 4.

NO

Repair a short to ground in the PARKCMD wire and/or the PARKBUSY wire between the park pawl actuator driver unit and the PCM.

4. Shorted wire check (PARKCMD line, PARKBUSY line to power)

-1. Reconnect all connectors.

-2. Turn the vehicle to the ON mode.

-3. Measure the voltage between the following test points and body ground individually.

Test condition	Vehicle ON mode

Connector	Terminal
Park pawl actuator driver unit 26P connector	No. 10
	No. 11

Is there 5 V or more?

YES

Repair a short to power in the PARKCMD wire and/or the PARKBUSY wire between the park pawl actuator driver unit and the PCM.

NO

The PARKCMD wire and the PARKBUSY wire are not shorted to power. Go to step 5.

5. Park pawl actuator driver unit check

-1. Turn the vehicle to the OFF (LOCK) mode.

-2. **Substitute a known-good park pawl actuator driver unit** .

-3. Connect the following connectors.

Park pawl actuator driver unit 26P connector
PCM connector E (80P)

-4. Turn the vehicle to the ON mode.

-5. **Update the park pawl actuator driver unit** .

WARNING: **Do not turn the vehicle to the OFF (LOCK) mode. Turing the vehicle to the OFF (LOCK) mode during an update can damage the park pawl actuator driver unit.**

-6. Clear the DTC with the HDS.

-7. Turn the vehicle to the OFF (LOCK) mode.

-8. Turn the vehicle to the ON mode, and wait for at least 10 seconds.

-9. Check for Pending or Confirmed DTCs with the HDS.

DTC Description	Confirmed DTC	Pending DTC	Freeze Frame
P170F Park Pawl Unit Communication Circuit (PWM)	B	B	B

Is DTC P170F indicated?

YES

The park pawl actuator driver unit is OK. Check for any authorized service information related to the DTCs or symptoms you are troubleshooting, or **replace the original PCM** .

NO

Replace the original park pawl actuator driver unit .

DTC P1711

DTC P1711 : Park Pawl Unit Malfunction

NOTE: Before you troubleshoot, **review the General Troubleshooting Information** .

DTC Description	Confirmed DTC	Pending DTC	Freeze Frame
P1711 Park Pawl Unit Malfunction	B	B	B

DTC (Gear)

1. Problem verification

    -1. Turn the vehicle to the ON mode.

    -2. Clear the DTC with the HDS.

    -3. Turn the vehicle to the OFF (LOCK) mode.

    -4. Turn the vehicle to the ON mode, and wait for at least 10 seconds.

    -5. Check for Pending or Confirmed DTCs with the HDS.

DTC Description	Confirmed DTC	Pending DTC	Freeze Frame
P1711 Park Pawl Unit Malfunction	B	B	B

Is DTC P1711 indicated?

YES

The failure is duplicated. Check for any authorized service information related to the DTCs or symptoms you are troubleshooting, or **replace the original park pawl actuator driver unit** .

NO

Intermittent failure, the system is OK at this time. If the freeze data/on-board snapshot of this DTC is recorded, try to reproduce the failure under the same conditions with the freeze data/on-board snapshot.

DTC P1719

DTC P1719 : Park Pawl System Stuck Malfunction

Special Tools Required

SPLINE HOLDER, DETENT SHAFT 070AB-5M50100

NOTE: Before you troubleshoot, **review the General Troubleshooting Information** .

DTC Description	Confirmed DTC	Pending DTC	Freeze Frame
P1719 Park Pawl System Stuck Malfunction	B	B	B

DTC (Gear)

1. Problem verification

    -1. Turn the vehicle to the ON mode.

    -2. Clear the DTC with the HDS.

    -3. Turn the vehicle to the OFF (LOCK) mode.

    -4. Turn the vehicle to the ON mode, and wait for at least 10 seconds.

    -5. With the brake pedal pressed and the accelerator released, shift the transmission to N position/mode, then shift back to P position/mode, and wait for at least 5 seconds.

    -6. Check for Pending or Confirmed DTCs with the HDS.

DTC Description	Confirmed DTC	Pending DTC	Freeze Frame
P1719 Park Pawl System Stuck Malfunction	B	B	B
P271A Park Pawl Position Sensor A Circuit Low	B	B	B

Is DTC P1719 or P271A indicated?

DTC P1719 is indicated

The failure is duplicated. Go to step 2.

DTC P271A is indicated

The failure is duplicated. **Do the troubleshooting for DTC P271A**.

No DTCs are indicated

Intermittent failure, the system is OK at this time. If the freeze data/on-board snapshot of this DTC is recorded, try to reproduce the failure under the same conditions with the freeze data/on-board snapshot.

2. Transmission park mechanism check

-1. Turn the vehicle to the OFF (LOCK) mode.

-2. **Remove the park pawl actuator** .

-3. Set the detent shaft spline holder (A) to the detent shaft (B).

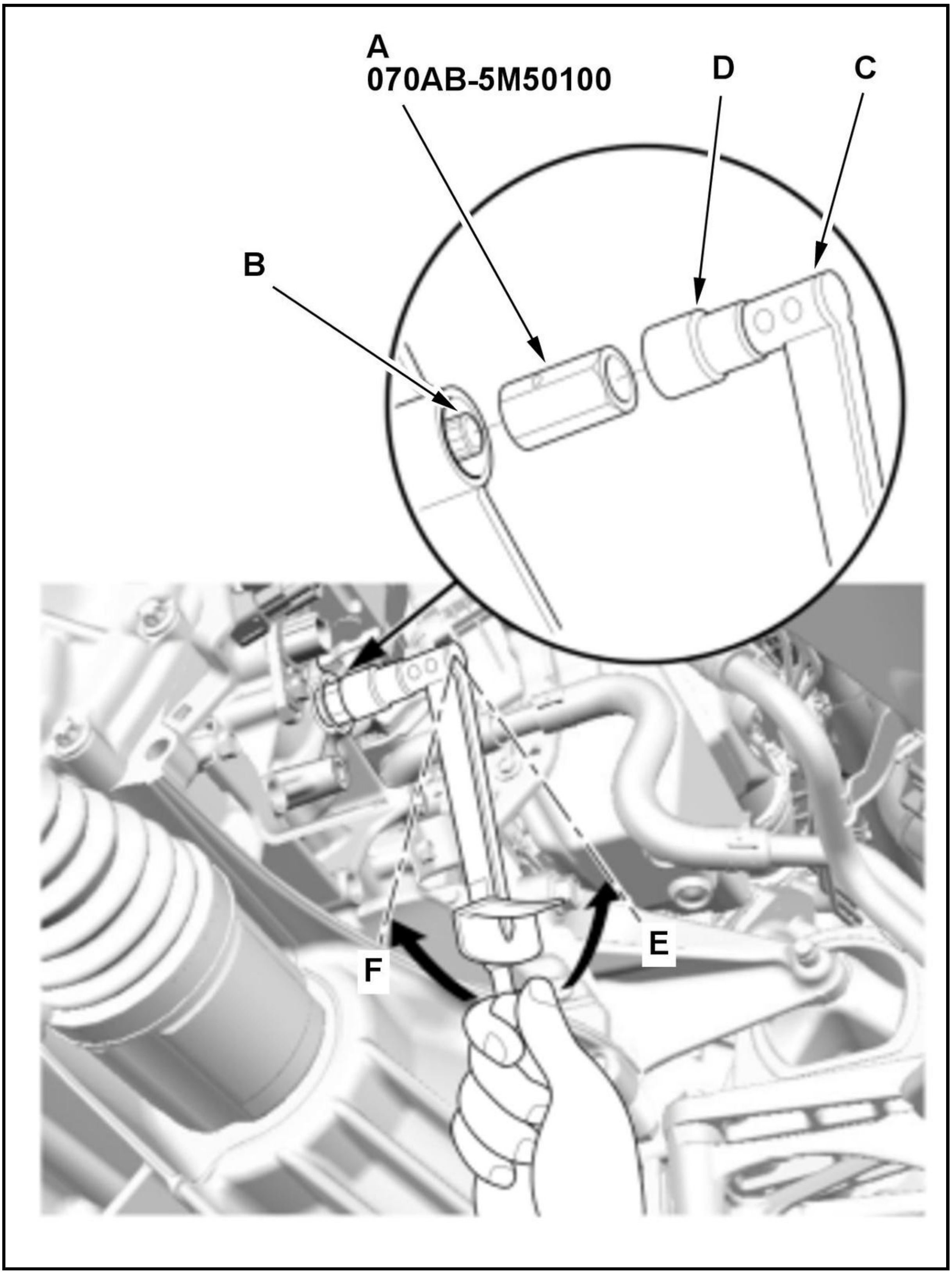

-4. Use a torque wrench (C) and the socket (D) to rotate the detent shaft, and check that the detent shaft moves smoothly. Move it back and forth between the P position (E) and the P released position (F) several times.

- -

  Operation angle: approx. 21 deg.

- -

  Operation torque: approx. 4.0 N.m (0.41 kgf.m, 3.0 lbf.ft)

-5. Check that the wheels are locked when putting the detent shaft in the P position. Additionally, check that the wheels rotate when putting the detent shaft in the P released position.

Is the transmission park mechanism OK?

YES

The transmission park mechanism is OK. Put the detent shaft in the P position, and **replace the park pawl actuator** .

NO

Faulty transmission park mechanism. **Replace the transmission (e-CVT)** .

DTC P171A

DTC P171A : Park Pawl System Position Control Error

Special Tools Required

SPLINE HOLDER, DETENT SHAFT 070AB-5M50100

NOTE: Before you troubleshoot, **review the General Troubleshooting Information** .

DTC Description	Confirmed DTC	Pending DTC	Freeze Frame
P171A Park Pawl System Position Control Error	B	B	B

DTC (Gear)

1. Problem verification

-1. Turn the vehicle to the ON mode.

-2. Clear the DTC with the HDS.

-3. Turn the vehicle to the OFF (LOCK) mode.

-4. Turn the vehicle to the ON mode, and wait for at least 10 seconds.

-5. With the brake pedal pressed and the accelerator released, shift the transmission to N position/mode, then shift back to P position/mode, and wait for at least 5 seconds.

-6. Check for Pending or Confirmed DTCs with the HDS.

DTC Description	Confirmed DTC	Pending DTC	Freeze Frame
P171A Park Pawl System Position Control Error	B	B	B
P271A Park Pawl Position Sensor A Circuit Low	B	B	B

Is DTC P171A or P271A indicated?

DTC P171A is indicated

The failure is duplicated. Go to step 2.

DTC P271A is indicated

The failure is duplicated. **Do the troubleshooting for DTC P271A**.

No DTCs are indicated

Intermittent failure, the system is OK at this time. If the freeze data/on-board snapshot of this DTC is recorded, try to reproduce the failure under the same conditions with the freeze data/on-board snapshot.

2. Transmission park mechanism check

   -1. Turn the vehicle to the OFF (LOCK) mode.

   -2. **Remove the park pawl actuator** .

   -3. Set the detent shaft spline holder (A) to the detent shaft (B).

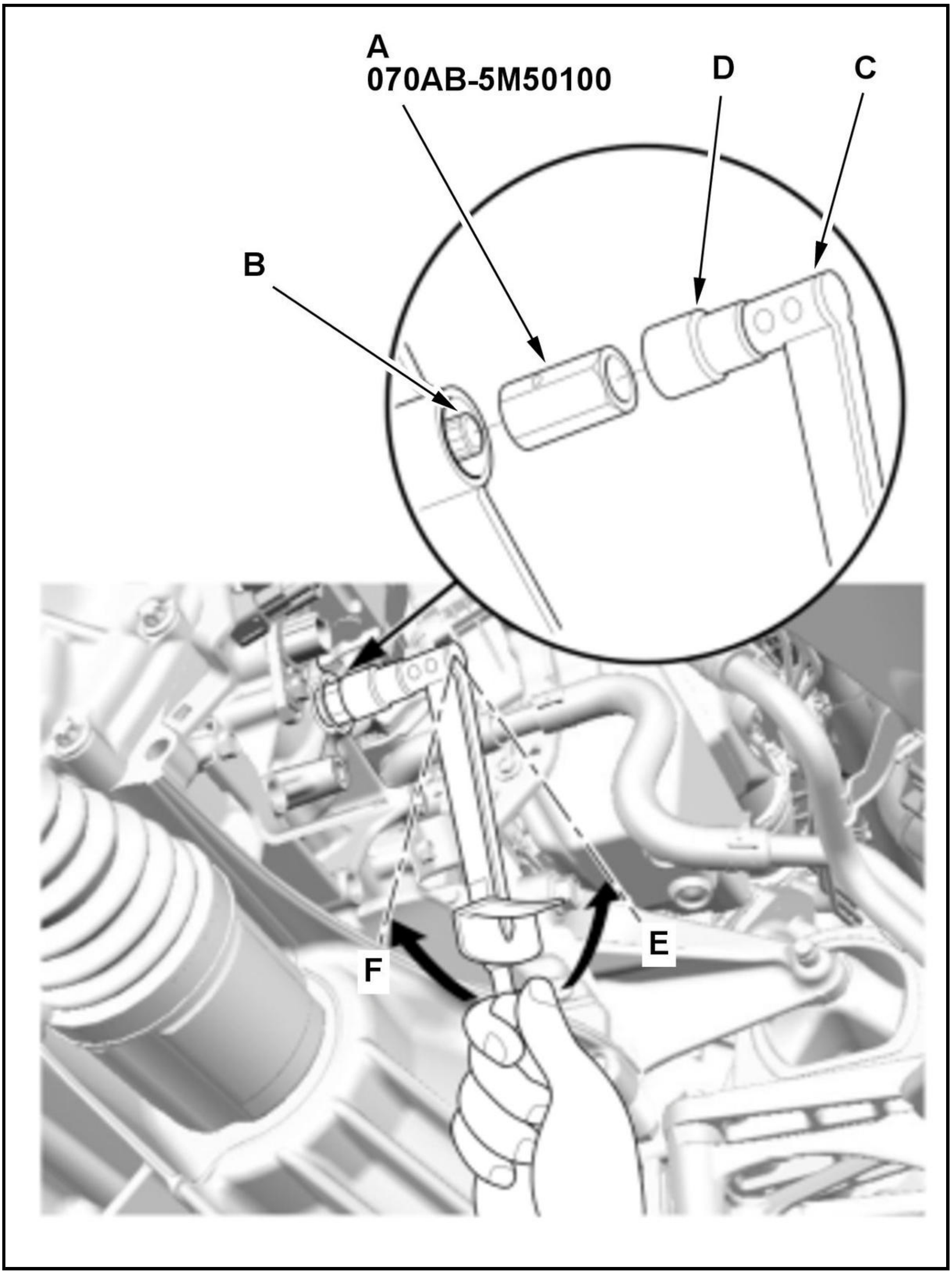

-4. Use a torque wrench (C) and the socket (D) to rotate the detent shaft, and check that the detent shaft moves smoothly. Move it back and forth between the P position (E) and the P released position (F) several times.

- -

  Operation angle: approx. 21 deg.

- -

  Operation torque: approx. 4.0 N.m (0.41 kgf.m, 3.0 lbf.ft)

-5. Check that the wheels are locked when putting the detent shaft in the P position. Additionally, check that the wheels rotate when putting the detent shaft in the P released position.

Is the transmission park mechanism OK?

YES

The transmission park mechanism is OK. Put the detent shaft in the P position, and **replace the park pawl actuator** .

NO

Faulty transmission park mechanism. **Replace the transmission (e-CVT)** .

DTC P171C

DTC P171C : Park Pawl System Multiple Sensor Correlation

NOTE: Before you troubleshoot, **review the General Troubleshooting Information** .

DTC Description	Confirmed DTC	Pending DTC	Freeze Frame
P171C Park Pawl System Multiple Sensor Correlation	B	B	B

DTC (Gear)

1. Problem verification

-1. Turn the vehicle to the ON mode.

-2. Clear the DTC with the HDS.

-3. Turn the vehicle to the OFF (LOCK) mode.

-4. Turn the vehicle to the ON mode, and wait for at least 10 seconds.

-5. With the brake pedal pressed and the accelerator released, shift the transmission to N position/mode, then shift back to P position/mode, and wait for at least 5 seconds.

-6. Check for Pending or Confirmed DTCs with the HDS.

DTC Description	Confirmed DTC	Pending DTC	Freeze Frame
P07B3 Transmission Park Position Sensor/Switch A Circuit Low	B	B	B
P07B4 Transmission Park Position Sensor/Switch A Circuit High	B	B	B
P07B9 Transmission Park Position Sensor/Switch B Circuit Low	B	B	B
P07BA Transmission Park Position Sensor/Switch B Circuit High	B	B	B

DTC Description	Confirmed DTC	Pending DTC	Freeze Frame
P07BE Transmission Park Position Sensor/Switch A/B Incorrect Voltage Correlation	B	B	B
P171C Park Pawl System Multiple Sensor Correlation	B	B	B

Is DTC P07B3, P07B4, P07B9, P07BA, P07BE, and/or P171C indicated?

Only DTC P171C is indicated

The failure is duplicated. Go to step 2.

Except DTC P171C is indicated

The failure is duplicated. Go to the indicated DTC's troubleshooting.

- **DTC P07B3**
- **DTC P07B4**
- **DTC P07B9**
- **DTC P07BA**
- **DTC P07BE**

No DTCs are indicated

Intermittent failure, the system is OK at this time. If the freeze data/on-board snapshot of this DTC is recorded, try to reproduce the failure under the same conditions with the freeze data/on-board snapshot.

2. Park pawl actuator check

-1. Turn the vehicle to the OFF (LOCK) mode.

-2. **Substitute a known-good park pawl actuator** .

-3. Turn the vehicle to the ON mode.

-4. Clear the DTC with the HDS.

-5. Turn the vehicle to the OFF (LOCK) mode.

-6. Turn the vehicle to the ON mode, and wait for at least 10 seconds.

-7. With the brake pedal pressed and the accelerator released, shift the transmission to N position/mode, then shift back to P position/mode, and wait for at least 5 seconds.

-8. Check for Pending or Confirmed DTCs with the HDS.

DTC Description	Confirmed DTC	Pending DTC	Freeze Frame
P171C Park Pawl System Multiple Sensor Correlation	B	B	B

Is DTC P171C indicated?

YES

The park pawl actuator is OK. Go to step 3.

NO

Replace the original park pawl actuator .

3. Park mechanism component part check

-1. **Remove the transmission (e-CVT)** .

-2. **Disassemble the transmission (e-CVT)** .

Check the following park mechanism component parts on the transmission housing for wear and damage.

- Parking gear
- Parking pawl spring
- Parking brake pawl
- Parking shaft
- Parking brake rod holder and its lock washer

Is there any worn or damaged part?

YES

Replace the worn or damaged component part on the transmission housing.

NO

The park mechanism component parts are OK. Faulty transmission park mechanism. **Replace the transmission (e-CVT)** .

DTC P171E

DTC P171E : Park Pawl System Malfunction of learning mode

Special Tools Required

SPLINE HOLDER, DETENT SHAFT 070AB-5M50100

NOTE: Before you troubleshoot, **review the General Troubleshooting Information** .

DTC Description	Confirmed DTC	Pending DTC	Freeze Frame
P171E Park Pawl System Malfunction of learning mode	B	B	B

DTC (Gear)

1. Problem verification

   -1. Clear the DTC with the HDS.

   -2. Turn the vehicle to the OFF (LOCK) mode.

   -3. Turn the vehicle to the ON mode, and wait for at least 10 seconds.

   -4. With the brake pedal pressed and the accelerator released, shift the transmission to N position/mode, then shift back to P position/mode, and wait for at least 5 seconds.

   -5. Check for Pending or Confirmed DTCs with the HDS.

   Gear System

DTC Description	Confirmed DTC	Pending DTC	Freeze Frame
P07B3 Transmission Park Position Sensor/Switch A Circuit Low	B	B	B
P07B4 Transmission Park Position Sensor/Switch A Circuit High	B	B	B
P07B9 Transmission Park Position Sensor/Switch B Circuit Low	B	B	B

DTC Description	Confirmed DTC	Pending DTC	Freeze Frame
P07BA Transmission Park Position Sensor/Switch B Circuit High	B	B	B
P07BE Transmission Park Position Sensor/Switch A/B Incorrect Voltage Correlation	B	B	B

DTC Description	Confirmed DTC	Pending DTC	Freeze Frame
P171E Park Pawl System Malfunction of learning mode	B	B	B
P271A Park Pawl Position Sensor A Circuit Low	B	B	B

PGM-FI System

DTC Description	Confirmed DTC	Pending DTC
U0103 F-CAN Malfunction (ECM/PCM-Shifter)	B	B
U12AA EP-CAN Malfunction (PCM-SBW Shifter)	B	B

Is DTC P07B3, P07B4, P07B9, P07BA, P07BE, P171E, P271A, U0103, or U12AA indicated?

DTC P171E is indicated

The failure is duplicated. Go to step 2.

Except DTC P171E is indicated

The failure is duplicated. Go to the indicated DTC's troubleshooting.

- **DTC P07B3**
- **DTC P07B4**
- **DTC P07B9**
- **DTC P07BA**
- **DTC P07BE**
- **DTC P271A**
- **DTC U0103**
- **DTC U12AA**

No DTCs are indicated

Intermittent failure, the system is OK at this time. If the freeze data/on-board snapshot of this DTC is recorded, try to reproduce the failure under the same conditions with the freeze data/on-board snapshot.

2. Transmission park mechanism check

-1. Turn the vehicle to the OFF (LOCK) mode.

-2. **Remove the park pawl actuator** .

-3. Set the detent shaft spline holder (A) to the detent shaft (B).

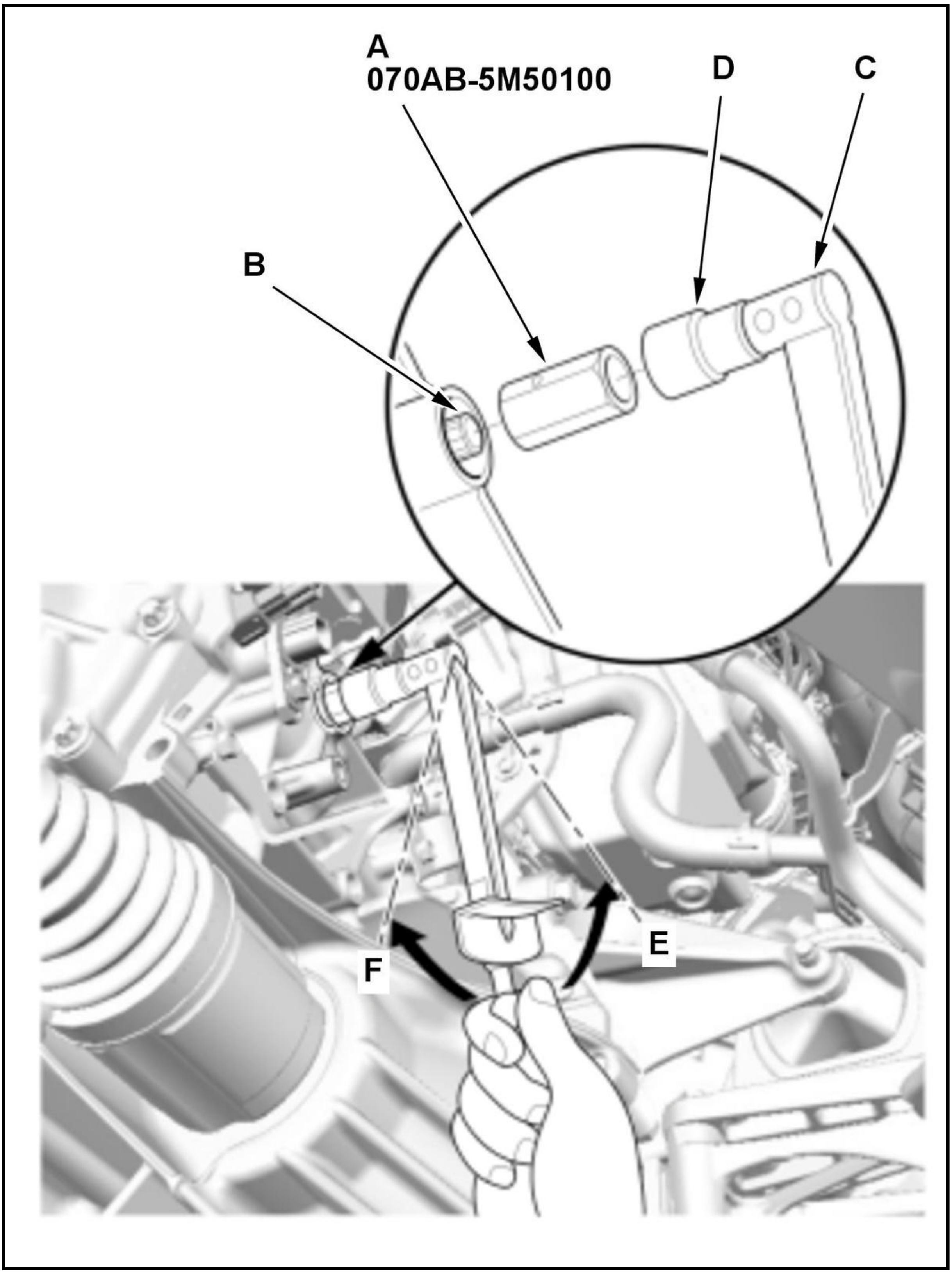

-4. Use a torque wrench (C) and the socket (D) to rotate the detent shaft, and check that the detent shaft moves smoothly. Move it back and forth between the P position (E) and the P released position (F) several times.

- -

  Operation angle: approx. 21 deg.

- -

  Operation torque: approx. 4.0 N.m (0.41 kgf.m, 3.0 lbf.ft)

-5. Check that the wheels are locked when putting the detent shaft in the P position. Additionally, check that the wheels rotate when putting the detent shaft in the P released position.

Is the transmission park mechanism OK?

YES

The transmission park mechanism is OK. Put the detent shaft in the P position, and **replace the park pawl actuator** .

NO

Faulty transmission park mechanism. **Replace the transmission (e-CVT)** .

DTC P171F

DTC P171F : Park Pawl System Stuck Malfunction After learning mode/Time-out

Special Tools Required

SPLINE HOLDER, DETENT SHAFT 070AB-5M50100

NOTE: Before you troubleshoot, **review the General Troubleshooting Information** .

DTC Description	Confirmed DTC	Pending DTC	Freeze Frame
P171F Park Pawl System Stuck Malfunction After learning mode/Time-out	B	B	B

DTC (Gear)

1. Problem verification

-1. Clear the DTC with the HDS.

-2. Turn the vehicle to the OFF (LOCK) mode.

-3. Turn the vehicle to the ON mode, and wait for at least 10 seconds.

-4. With the brake pedal pressed and the accelerator released, shift the transmission to N position/mode, then shift back to P position/mode, and wait for at least 5 seconds.

-5. Check for Pending or Confirmed DTCs with the HDS.

Gear System

DTC Description	Confirmed DTC	Pending DTC	Freeze Frame
P07B3 Transmission Park Position Sensor/Switch A Circuit Low	B	B	B
P07B4 Transmission Park Position Sensor/Switch A Circuit High	B	B	B
P07B9 Transmission Park Position Sensor/Switch B Circuit Low	B	B	B
P07BA Transmission Park Position Sensor/Switch B Circuit High	B	B	B
P07BE Transmission Park Position Sensor/Switch A/B Incorrect Voltage Correlation	B	B	B

DTC Description	Confirmed DTC	Pending DTC	Freeze Frame
P171F Park Pawl System Stuck Malfunction After learning mode/Time-out	B	B	B
P271A Park Pawl Position Sensor A Circuit Low	B	B	B

PGM-FI System

DTC Description	Confirmed DTC	Pending DTC
U0103 F-CAN Malfunction (PCM-SBW Shifter)	B	B
U12AA EP-CAN Malfunction (PCM-SBW Shifter)	B	B

Is DTC P07B3, P07B4, P07B9, P07BA, P07BE, P171F, P1720, U0103, or U12AA indicated?

DTC P171F is indicated

The failure is duplicated. Go to step 2.

Except DTC P171F is indicated

The failure is duplicated. Go to the indicated DTC's troubleshooting.

- **DTC P07B3**
- **DTC P07B4**
- **DTC P07B9**
- **DTC P07BA**
- **DTC P07BE**
- **DTC P271A**
- **DTC U0103**
- **DTC U12AA**

No DTCs are indicated

Intermittent failure, the system is OK at this time. If the freeze data/on-board snapshot of this DTC is recorded, try to reproduce the failure under the same conditions with the freeze data/on-board snapshot.

2. Transmission park mechanism check

-1. Turn the vehicle to the OFF (LOCK) mode.

-2. **Remove the park pawl actuator** .

-3. Set the detent shaft spline holder (A) to the detent shaft (B).

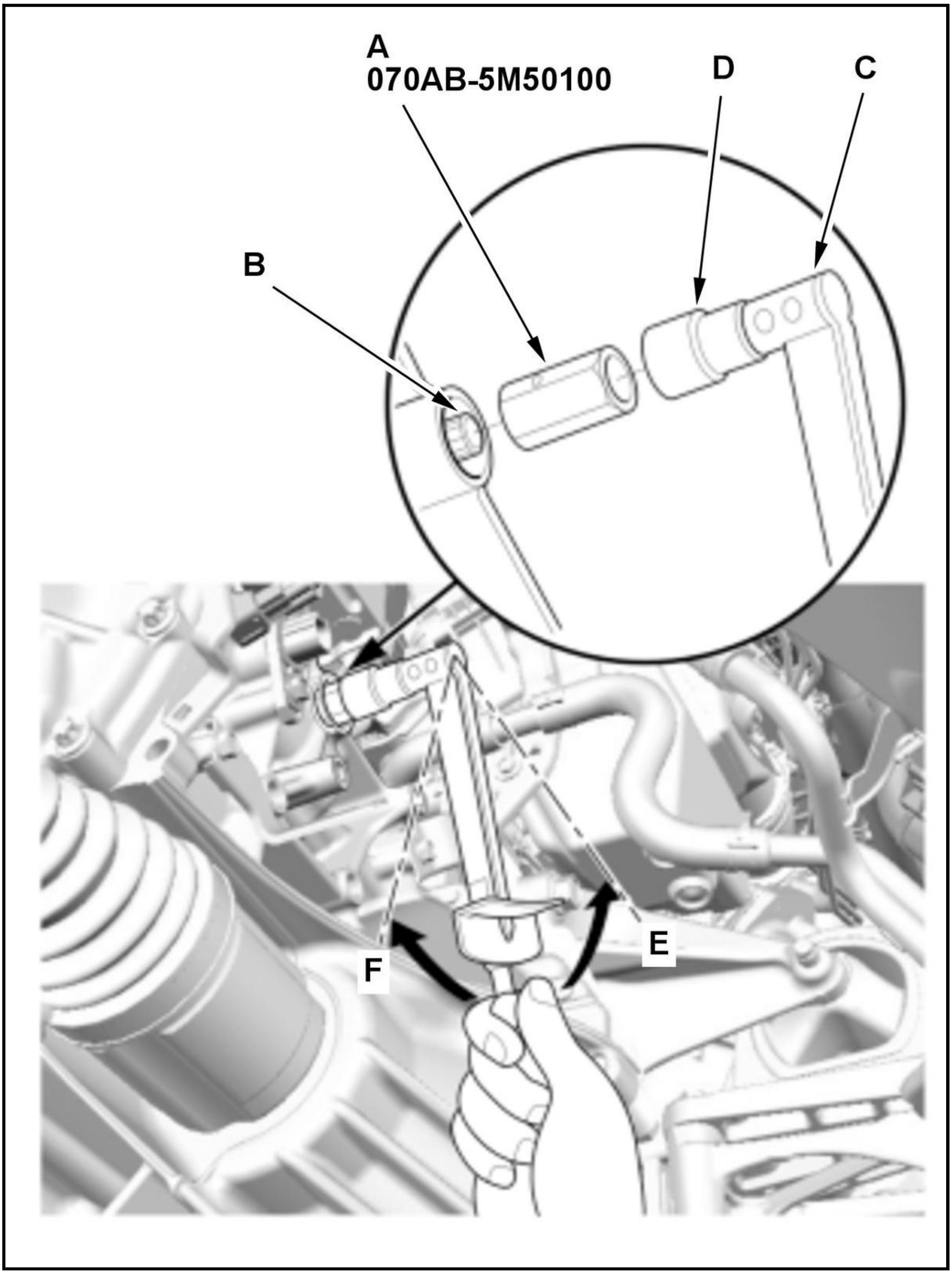

-4. Use a torque wrench (C) and the socket (D) to rotate the detent shaft, and check that the detent shaft moves smoothly. Move it back and forth between the P position (E) and the P released position (F) several times.

- -

  Operation angle: approx. 21 deg.

- -

  Operation torque: approx. 4.0 N.m (0.41 kgf.m, 3.0 lbf.ft)

-5. Check that the wheels are locked when putting the detent shaft in the P position. Additionally, check that the wheels rotate when putting the detent shaft in the P released position.

Is the transmission park mechanism OK?

YES

The transmission park mechanism is OK. Put the detent shaft in the P position, and **replace the park pawl actuator** .

NO

Faulty transmission park mechanism. **Replace the transmission (e-CVT)** .

DTC P1720

DTC P1720 : Park Pawl Motor Current Range/Performance

NOTE: Before you troubleshoot, **review the General Troubleshooting Information** .

DTC Description	Confirmed DTC	Pending DTC	Freeze Frame
P1720 Park Pawl Motor Current Range/Performance	B	B	B

DTC (Gear)

1. Problem verification

   -1. Turn the vehicle to the ON mode.

   -2. Clear the DTC with the HDS.

   -3. Turn the vehicle to the OFF (LOCK) mode.

   -4. Turn the vehicle to the ON mode, and wait for at least 10 seconds.

   -5. Check for Pending or Confirmed DTCs with the HDS.

DTC Description	Confirmed DTC	Pending DTC	Freeze Frame
P1720 Park Pawl Motor Current Range/Performance	B	B	B

   Is DTC P1720 indicated?

   YES

   The failure is duplicated. Go to step 2.

   NO

   Intermittent failure, the system is OK at this time. Check for poor connections and loose terminals between the park pawl actuator and the park pawl actuator driver unit. If the freeze data/on-board snapshot of this DTC is recorded, try to reproduce the failure under the same conditions with the freeze data/on-board snapshot.

2. Shorted wire check (MAU/P-ACT MTR U line, MAV/P-ACT MTR V line, MAW/P-ACT MTR W line to power)

   -1. Turn the vehicle to the OFF (LOCK) mode.

-2. Disconnect the following connectors.

Park pawl actuator 10P connector
Park pawl actuator driver unit 26P connector

-3. Measure the voltage between test points 1 and 2.

Test condition	Vehicle OFF (LOCK) mode
B	Park pawl actuator 10P connector: disconnected
B	Park pawl actuator driver unit 26P connector: disconnected
Test point 1	Park pawl actuator 10P connector (female terminals) No. 1: ①
Test point 2	Body ground
B	B
Test point 1	Park pawl actuator 10P connector (female terminals) No. 6: ①
Test point 2	Body ground
B	B
Test point 1	Park pawl actuator 10P connector (female terminals) No. 7 ①
Test point 2	Body ground

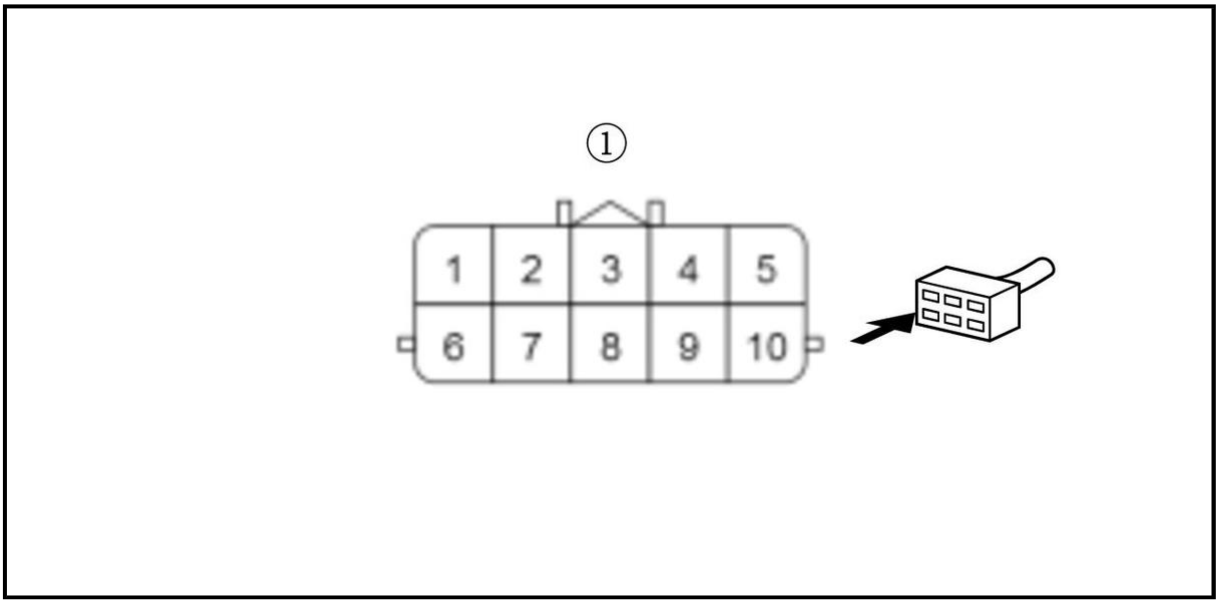

Is there voltage?

YES

Repair a short to power in the MAU/P-ACT MTR U wire, the MAV/P-ACT MTR V wire, and/or the MAW/P-ACT MTR W wire between the park pawl actuator and the park pawl actuator driver unit. .

NO

The MAU/P-ACT MTR U wire, MAV/P-ACT MTR V wire, and/or MAW/P-ACT MTR W wire are not shorted to power. Go to step 3.

3. Park pawl actuator driver unit check

-1. **Substitute a known-good park pawl actuator driver unit** .

-2. Connect the following connectors.

Park pawl actuator 10P connector
Park pawl actuator driver unit 26P connector

-3. Turn the vehicle to the ON mode.

-4. Update the park pawl actuator driver unit .

WARNING: **Do not turn the vehicle to the OFF (LOCK) mode. Turing the vehicle to the OFF (LOCK) mode during an update can damage the park pawl actuator driver unit.**

-5. Clear the DTC with the HDS.

-6. Turn the vehicle to the OFF (LOCK) mode.

-7. Turn the vehicle to the ON mode, and wait for at least 5 seconds.

-8. Check for Pending or Confirmed DTCs with the HDS.

DTC Description	Confirmed DTC	Pending DTC	Freeze Frame
P1720 Park Pawl Motor Current Range/Performance	B	B	B

Is DTC P1720 indicated?

YES

The park pawl actuator driver unit is OK. Replace the park pawl actuator .

NO

Replace the original park pawl actuator driver unit .

DTC P1721

DTC P1721 : Park Pawl Unit IG1 SW No Signal

NOTE: Before you troubleshoot, review the General Troubleshooting Information .

DTC Description	Confirmed DTC	Pending DTC	Freeze Frame
P1721 Park Pawl Unit IG1 SW No Signal	B	B	B

DTC (Gear)

1. Problem verification

-1. Turn the vehicle to the ON mode.

-2. Clear the DTC with the HDS.

-3. Turn the vehicle to the OFF (LOCK) mode.

-4. Turn the vehicle to the ON mode, and wait for at least 10 seconds.

-5. Check for Pending or Confirmed DTCs with the HDS

DTC Description	Confirmed DTC	Pending DTC	Freeze Frame
P1721 Park Pawl Unit IG1 SW No Signal	B	B	B

Is DTC P1721 indicated?

YES

The failure is duplicated. Go to step 2.

NO

Intermittent failure, the system is OK at this time. Check for poor connections and loose terminals between the under-dash fuse/relay box and the park pawl actuator driver unit. If the freeze data/on-board snapshot of this DTC is recorded, try to reproduce the failure under the same conditions with the freeze data/on-board snapshot.

2. Fuse check

-1. Turn the vehicle to the OFF (LOCK) mode.

-2. Check the following fuse.

Fuse	**No. D6**

Is the fuse OK?

YES

The fuse is OK. Reinstall the fuse, then go to step 3.

NO

Replace the fuse, and recheck. If the fuse blows again, repair a short to ground in the fuse circuit.

3. Open wire check (IG1_SRS2 line)

-1. Disconnect the following connector.

Park pawl actuator driver unit 26P connector

-2. Turn the vehicle to the ON mode.

-3. Measure the voltage between test points 1 and 2.

Test condition	Vehicle ON mode
B	Park pawl actuator driver unit 26P connector: disconnected
Test point 1	**Park pawl actuator driver unit 26P connector No. 15**
Test point 2	Body ground

Is there battery voltage?

YES

IG1_SRS2 wire is OK, go to step 4.

NO

Repair an open in the IG1_SRS2 wire between the **No. D6** fuse and the park pawl actuator driver unit.

4. Park pawl actuator driver unit check

-1. Turn the vehicle to the OFF (LOCK) mode.

-2. Substitute a known-good park pawl actuator driver unit .

-3. Connect the following connectors.

Park pawl actuator driver unit 26P connector

-4. Turn the vehicle to the ON mode.

-5. Update the park pawl actuator driver unit .

WARNING: **Do not turn the vehicle to the OFF (LOCK) mode. Turing the vehicle to the OFF (LOCK) mode during an update can damage the park pawl actuator driver unit.**

-6. Clear the DTC with the HDS.

-7. Turn the vehicle to the OFF (LOCK) mode.

-8. Turn the vehicle to the ON mode, and wait for at least 5 seconds.

-9. Check for Pending or Confirmed DTCs with the HDS.

DTC Description	Confirmed DTC	Pending DTC	Freeze Frame
P1721 Park Pawl Unit IG1 SW No Signal	B	B	B

Is DTC P1721 indicated?

YES

The park pawl actuator driver unit is OK. Check for any authorized service information related to the DTCs or symptoms you are troubleshooting, or replace the original PCM .

NO

Replace the original park pawl actuator driver unit .

DTC P1722

DTC P1722 : Park Pawl Motor Torque Malfunction of learning mode

NOTE: Before you troubleshoot, review the General Troubleshooting Information .

DTC Description	Confirmed DTC	Pending DTC	Freeze Frame
P1722 Park Pawl Motor Torque Malfunction of learning mode	B	B	B

DTC (Gear)

1. Problem verification

-1. Turn the vehicle to the ON mode.

-2. Clear the DTC with the HDS.

-3. Turn the vehicle to the OFF (LOCK) mode.

-4. Turn the vehicle to the ON mode, and wait for at least 10 seconds.

-5. Check for Pending or Confirmed DTCs with the HDS.

DTC Description	Confirmed DTC	Pending DTC	Freeze Frame
P1722 Park Pawl Motor Torque Malfunction of learning mode	B	B	B

Is DTC P1722 indicated?

YES

The failure is duplicated. Check for any authorized service information related to the DTCs or symptoms you are troubleshooting, or **replace the original park pawl actuator driver unit** .

NO

Intermittent failure, the system is OK at this time. If the freeze data/on-board snapshot of this DTC is recorded, try to reproduce the failure under the same conditions with the freeze data/on-board snapshot.

DTC P1723

DTC P1723 : Park Pawl System Initial Check Error

Special Tools Required

SPLINE HOLDER, DETENT SHAFT 070AB-5M50100

NOTE: Before you troubleshoot, **review the General Troubleshooting Information** .

DTC Description	Confirmed DTC	Pending DTC	Freeze Frame
P1723 Park Pawl System Initial Check Error	B	B	B

DTC (Gear)

1. Problem verification

-1. Turn the vehicle to the ON mode.

-2. Clear the DTC with the HDS.

-3. Turn the vehicle to the OFF (LOCK) mode.

-4. Turn the vehicle to the ON mode, and wait for at least 10 seconds.

-5. With the brake pedal pressed and the accelerator released, shift the transmission to N position/mode, then shift back to P position/mode, and wait for at least 5 seconds.

-6. Check for Pending or Confirmed DTCs with the HDS.

DTC Description	Confirmed DTC	Pending DTC	Freeze Frame
P1723 Park Pawl System Initial Check Error	B	B	B
P271A Park Pawl Position Sensor A Circuit Low	B	B	B

Is DTC P1723 or P271A indicated?

Only DTC P1723 is indicated

The failure is duplicated. Go to step 2.

DTC P1723 and P271A are indicated

The failure is duplicated. **Do the troubleshooting for DTC P271A**.

No DTCs are indicated

Intermittent failure, the system is OK at this time. If the freeze data/on-board snapshot of this DTC is recorded, try to reproduce the failure under the same conditions with the freeze data/on-board snapshot.

2. Transmission park mechanism check

   -1. Turn the vehicle to the OFF (LOCK) mode.

   -2. **Remove the park pawl actuator** .

   -3. Set the detent shaft spline holder (A) to the detent shaft (B).

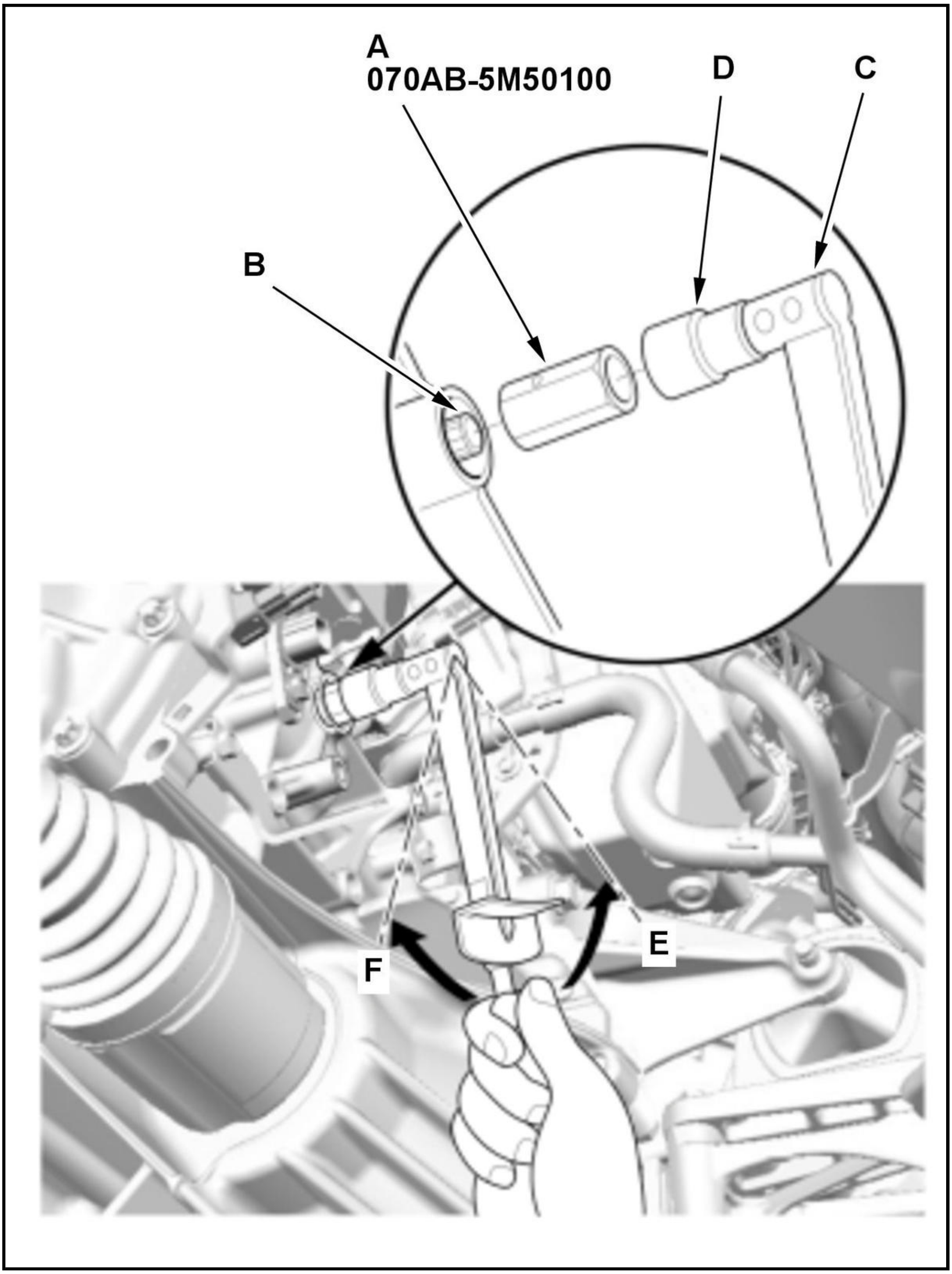

-4. Use a torque wrench (C) and the socket (D) to rotate the detent shaft, and check that the detent shaft moves smoothly. Move it back and forth between the P position (E) and the P released position (F) several times.

- -

  Operation angle: approx. 21 deg.

- -

  Operation torque: approx. 4.0 N.m (0.41 kgf.m, 3.0 lbf.ft)

-5. Check that the wheels are locked when putting the detent shaft in the P position. Additionally, check that the wheels rotate when putting the detent shaft in the P released position.

Is the transmission park mechanism OK?

YES

The transmission park mechanism is OK. Put the detent shaft in the P position, and **replace the park pawl actuator** .

NO

Faulty transmission park mechanism. **Replace the transmission (e-CVT)** .

DTC P172A

DTC P172A : KEY-Release Wake-up Output Circuit Malfunction

NOTE: Before you troubleshoot, **review the General Troubleshooting Information** .

DTC Description	Confirmed DTC	Pending DTC	Freeze Frame
P172A KEY-Release Wake-up Output Circuit Malfunction	B	B	B

DTC (Gear)

1. Problem verification

   -1. Turn the vehicle to the ON mode.

   -2. Clear the DTC with the HDS.

   -3. Turn the vehicle to the OFF (LOCK) mode.

   -4. Turn the vehicle to the ON mode, and wait for at least 10 seconds.

   -5. Monitor the OBD STATUS for P172A in the DTCs MENU with the HDS.

DTC Description	OBD Status
P172A KEY-Release Wake-up Output Circuit Malfunction	B

   Does the HDS indicate FAILED?

   YES

   The failure is duplicated. Go to step 2.

   NO

   If the HDS indicates PASSED, intermittent failure, the system is OK at this time. Check for poor connections and loose terminals between the SBW shifter control module and the body control module. If the freeze data/on-board snapshot of this DTC is recorded, try to reproduce the failure under the same conditions with the freeze data/on-board snapshot. If the HDS indicates NOT COMPLETED, go to step 1

2. Determine possible failure area (SBW shifter control module, others)

   -1. Turn the vehicle to the OFF (LOCK) mode.

   -2. Disconnect the following connector.

SBW shifter control module 20P connector

-3. Measure the voltage between test points 1 and 2.

Test condition	Vehicle OFF (LOCK) mode
B	SBW shifter control module 20P connector: disconnected
Test point 1	**SBW shifter control module 20P connector No. 7**
Test point 2	Body ground

Is there voltage?

YES

SBW shifter control module is OK, go to step 3.

NO

Faulty SBW shifter control module. **Replace the SBW shifter assembly** .

3. Shorted wire check (MTR_CUT2(IG1) line to power)

-1. Disconnect the following connector.

Body control module connector G (32P)

-2. Measure the voltage between test points 1 and 2.

Test condition	Vehicle OFF (LOCK) mode
B	SBW shifter control module 20P connector: disconnected
B	Body control module connector G (32P): disconnected
Test point 1	**SBW shifter control module 20P connector No. 7**
Test point 2	Body ground

Is there voltage?

YES

Repair a short to power in the MTR_CUT2(IG1) wire between the SBW shifter control module and the body control module.

NO

The MTR_CUT2(IG1) wire is OK. **Replace the body control module** .

DTC P172B

DTC P172B : KEY-Release Switch Input Circuit Malfunction

NOTE: Before you troubleshoot, **review the General Troubleshooting Information** .

DTC Description	Confirmed DTC	Pending DTC	Freeze Frame
P172B KEY-Release Switch Input Circuit Malfunction	B	B	B

DTC (Gear)

1. Problem verification

-1. Turn the vehicle to the ON mode.

-2. Clear the DTC with the HDS.

-3. Turn the vehicle to the OFF (LOCK) mode.

-4. Turn the vehicle to the ON mode and wait for at least 1 minute.

-5. Monitor the OBD STATUS for P172B in the DTCs MENU with the HDS.

DTC Description	OBD Status
P172B KEY-Release Switch Input Circuit Malfunction	B

Does the HDS indicate FAILED?

YES

The failure is duplicated. Faulty SBW shifter control module. **Replace the SBW shifter assembly** .

NO

If the HDS indicates PASSED, intermittent failure, the system is OK at this time. If the freeze data/on-board snapshot of this DTC is recorded, try to reproduce the failure under the same conditions with the freeze data/on-board snapshot. If the HDS indicates NOT COMPLETED, go to step 1

DTC P173A (2020)

DTC P173A : Transmission Fluid Pressure Sensor Performance High

NOTE: Before you troubleshoot, **review the General Troubleshooting Information** .

DTC Description	Confirmed DTC	Pending DTC	Freeze Frame
P173A Transmission Fluid Pressure Sensor Performance High	B	B	B

DTC (Gear)

1. Problem verification

-1. Turn the vehicle to the ON mode.

-2. Clear the DTC with the HDS.

-3. **Enter the maintenance mode** , then start the engine until the cooling fan comes on.

-4. Turn the vehicle to the OFF (LOCK) mode.

-5. Turn the vehicle to the ON mode.

-6. Raise the vehicle on a lift. Make sure it is securely supported, and allow all four wheels to rotate freely.

-7. Select the ENERGY FLOW screen on the MID.

-8. **Enter the VSA maintenance mode** .

-9. Run the vehicle in the engine drive mode for at least 10 seconds. Apply the brakes, and slowly bring the wheels to a stop.

WARNING: **Do not turn the vehicle to the OFF (LOCK) mode. Turing the vehicle to the OFF (LOCK) mode during an update can damage the park pawl actuator driver unit.**

-10.

Check for Pending or Confirmed DTCs with the HDS.

DTC Description	Confirmed DTC	Pending DTC	Freeze Frame
P173A Transmission Fluid Pressure Sensor Performance High	B	B	B

Is DTC P173A indicated?

YES

The failure is duplicated. **Replace the transmission fluid pressure sensor** .

NO

Check for any authorized service information related to the DTCs or symptoms you are troubleshooting, or **replace the original PCM** .

DTC P173A, P2872 (2021)

DTC P173A : Transmission Fluid Pressure Sensor Performance High

DTC P2872 : Over Drive Clutch Stuck Engaged

NOTE: Before you troubleshoot, **review the General Troubleshooting Information** .

DTC Description	Confirmed DTC	Pending DTC	Freeze Frame
P173A Transmission Fluid Pressure Sensor Performance High	B	B	B
P2872 Over Drive Clutch Stuck Engaged	B	B	B

DTC (Gear)

1. DTC check

   -1. Check for Pending or Confirmed DTCs with the HDS.

DTC Description	Confirmed DTC	Pending DTC	Freeze Frame
P173A Transmission Fluid Pressure Sensor Performance High	B	B	B

   Is DTC P173A indicated?

   YES

   The failure is duplicated. Go to step 2

   NO

   The failure is not duplicated. Go to step 3

2. Problem verification

-1. Turn the vehicle to the ON mode.

-2. Clear the DTC with the HDS.

-3. **Enter the maintenance mode** , then start the engine until the cooling fan comes on.

-4. Turn the vehicle to the OFF (LOCK) mode.

-5. Turn the vehicle to the ON mode.

-6. Raise the vehicle on a lift. Make sure it is securely supported, and allow all four wheels to rotate freely.

-7. Select the ENERGY FLOW screen on the MID.

-8. **Enter the VSA maintenance mode** .

-9. Select the HV mode by pressing the HV button.

NOTE: The HV indicator in the gauge assembly comes on.

-10.

Run the vehicle in the engine drive mode for at least 10 seconds. Apply the brakes, and slowly bring the wheels to a stop.

WARNING: **Do not brake hard when working on a running vehicle on a lift. It may cause some damage to the drive-line.**

-11.

Check for Pending or Confirmed DTCs with the HDS.

DTC Description	Confirmed DTC	Pending DTC	Freeze Frame
P173A Transmission Fluid Pressure Sensor Performance High	B	B	B

Is DTC P173A indicated?

YES

Check for any authorized service information related to the DTCs or symptoms you are troubleshooting, or **substitute a known-good transmission fluid pressure sensor** , then recheck. If this DTC goes away and the transmission fluid pressure sensor was substituted, **replace the original transmission fluid pressure sensor** . If the DTC does not clear, **replace the original PCM** .

NO

Intermittent failure, the system is OK at this time. If the freeze data/on-board snapshot of this DTC is recorded, try to reproduce the failure under the same conditions with the freeze data/on-board snapshot.

3. Problem verification

-1. Turn the vehicle to the ON mode.

-2. Clear the DTC with the HDS.

-3. **Enter the maintenance mode** .

WARNING: **If multiple failure exists during the problem verification, the engine may stall when entering the maintenance mode.**

-4. Turn the vehicle to the OFF (LOCK) mode.

-5. Turn the vehicle to the ON mode.

-6. Check for Pending or Confirmed DTCs with the HDS.

DTC Description	Confirmed DTC	Pending DTC	Freeze Frame
P2872 Over Drive Clutch Stuck Engaged	B	B	B
P0752 Shift Solenoid Valve A Stuck ON	B	B	B
P0757 Shift Solenoid Valve B Stuck ON	B	B	B

Is DTC P2872, P0752, P0757 indicated?

YES

The failure is duplicated. Go to step 4

NO

Intermittent failure, the system is OK at this time. If the freeze data/on-board snapshot of this DTC is recorded, try to reproduce the failure under the same conditions with the freeze data/on-board snapshot.

4. ATF check

-1. **Check the ATF level** to make sure that the transmission is filled to the proper level, and check for fluid leaks.

-2. **Drain the ATF** through a strainer. Inspect the strainer for metal debris or excessive clutch material.

Does the strainer have metal debris or excessive clutch material?

YES

Replace the transmission (e-CVT) .

NO

Replace shift solenoid valve A and shift solenoid valve B and **the valve body assembly** .

DTC P173B

DTC P173B : Transmission Fluid Pressure Sensor Performance Low

NOTE: Before you troubleshoot, **review the General Troubleshooting Information** .

DTC Description	Confirmed DTC	Pending DTC	Freeze Frame
P173B Transmission Fluid Pressure Sensor Performance Low	B	B	B

DTC (Gear)

1. Problem verification

-1. Turn the vehicle to the ON mode.

-2. Clear the DTC with the HDS.

-3. **Enter the maintenance mode** , then start the engine until the cooling fan comes on.

-4. Turn the vehicle to the OFF (LOCK) mode.

-5. Turn the vehicle to the ON mode.

-6. Raise the vehicle on a lift. Make sure it is securely supported, and allow all four wheels to rotate freely.

-7. Select the ENERGY FLOW screen on the MID.

-8. **Enter the VSA maintenance mode** .

-9. Run the vehicle in the engine drive mode for at least 10 seconds. Apply the brakes, and slowly bring the wheels to a stop.

WARNING: **Do not brake hard when working on a running vehicle on a lift. It may cause some damage to the drive-line.**

-10.

Check for Pending or Confirmed DTCs with the HDS.

DTC Description	Confirmed DTC	Pending DTC	Freeze Frame
P173B Transmission Fluid Pressure Sensor Performance Low	B	B	B

Is DTC P173B indicated?

YES

The failure is duplicated. **Replace the transmission fluid pressure sensor** .

NO

Check for any authorized service information related to the DTCs or symptoms you are troubleshooting, or **replace the original PCM** .

DTC P1A48, P1A49, P1A4A

DTC P1A48 : PCM Internal Malfunction (SBW Different Run)

DTC P1A49 : PCM Internal Malfunction (SBW Parking Position)

DTC P1A4A : PCM Internal Malfunction (SBW Display Position)

NOTE: Before you troubleshoot, **review the general troubleshooting information** .

DTC Description	Confirmed DTC	Pending DTC
P1A48 PCM Internal Malfunction (SBW Different Run)	B	B
P1A49 PCM Internal Malfunction (SBW Parking Position)	B	B
P1A4A PCM Internal Malfunction (SBW Display Position)	B	B

DTC (PGM-FI)

1. Problem verification

-1. Turn the vehicle to the ON mode.

-2. Clear the DTC with the HDS.

-3. Turn the vehicle to the OFF (LOCK) mode.

-4. Turn the vehicle to the READY TO DRIVE mode.

-5. Wait 10 seconds or more with the shift position in P.

-6. Wait 10 seconds or more with each shift position in R, N, D.

-7. Check for Pending or Confirmed DTCs with the HDS.

DTC Description	Confirmed DTC	Pending DTC
P1A48 PCM Internal Malfunction (SBW Different Run)	B	B
P1A49 PCM Internal Malfunction (SBW Parking Position)	B	B
P1A4A PCM Internal Malfunction (SBW Display Position)	B	B

Is DTC P1A48, P1A49, and/or P1A4A indicated?

YES

The failure is duplicated. Check for any authorized service information related to the DTCs or symptoms you are troubleshooting, or **substitute a known-good PCM** .

NO

Intermittent failure, the system is OK at this time. **If the on-board snapshot of this DTC is recorded, try to reproduce the failure under the same conditions with the on-board snapshot** .

DTC P1A51, P1A52, P1A53

DTC P1A51 : PCM Internal Malfunction (Torque Calculation Acceleration)

DTC P1A52 : PCM Internal Malfunction (Torque Calculation Deceleration)

DTC P1A53 : PCM Internal Malfunction (Torque Calculation Different Run)

NOTE: Before you troubleshoot, **review the general troubleshooting information** .

DTC Description	Confirmed DTC	Pending DTC
P1A51 PCM Internal Malfunction (Torque Calculation Acceleration)	B	B
P1A52 PCM Internal Malfunction (Torque Calculation Deceleration)	B	B
P1A53 PCM Internal Malfunction (Torque Calculation Different Run)	B	B

DTC (PGM-FI)

1. Problem verification

-1. Turn the vehicle to the ON mode.

-2. Clear the DTC with the HDS.

-3. Turn the vehicle to the OFF (LOCK) mode.

-4. Turn the vehicle to the READY TO DRIVE mode.

-5. Wait 5 seconds or more with the shift position in P.

-6. With the brake pedal pressed, change the shift position to R, N, and D, and wait 5 seconds in each shift position.

Test-drive the vehicle under these conditions:

- Accelerate 5 seconds or more, then decelerate 5 seconds or more with depressing the brake pedal.

-8. Check for Pending or Confirmed DTCs with the HDS.

DTC Description	Confirmed DTC	Pending DTC
P1A51 PCM Internal Malfunction (Torque Calculation Acceleration)	B	B
P1A52 PCM Internal Malfunction (Torque Calculation Deceleration)	B	B

DTC Description	Confirmed DTC	Pending DTC
P1A53 PCM Internal Malfunction (Torque Calculation Different Run)	B	B

Is DTC P1A51, P1A52, and/or P1A53 indicated?

YES

The failure is duplicated. Check for any authorized service information related to the DTCs or symptoms you are troubleshooting, or **substitute a known-good PCM** .

NO

Intermittent failure, the system is OK at this time. **If the on-board snapshot of this DTC is recorded, try to reproduce the failure under the same conditions with the on-board snapshot** .

DTC P2096, P2097

DTC P2096 : Post Catalyst Fuel Trim System Too Lean

DTC P2097 : Post Catalyst Fuel Trim System Too Rich

NOTE:

- Before you troubleshoot, **review the general troubleshooting information** .
- If any of the DTCs listed below are stored at the same time as DTC P2096 and/or P2097, troubleshoot those DTCs first, then recheck for P2096 or P2097.

  P0130, P0133, P2237, P2238, P2243, P2245, P2251, P2252, P2A00: A/F sensor (Sensor 1)

  P0134, P0135: A/F sensor (Sensor 1) heater

  P0137, P0138, P0139, P2270, P2A01: Secondary HO2S (Sensor 2)

  P0141: Secondary HO2S (Sensor 2) heater

  P0171, P0172: Fuel system

  P0201, P0202, P0203, P0204: No. 1-No. 4 cylinder injector(s)

  P0300: Random misfire

P0301, P0302, P0303, P0304: No. 1-No. 4 cylinder misfire

P0351, P0352, P0353, P0354: No. 1-No. 4 cylinder ignition coil(s)

DTC Description	Confirmed DTC	Pending DTC
P2096 Post Catalyst Fuel Trim System Too Lean	B	B
P2097 Post Catalyst Fuel Trim System Too Rich	B	B

DTC (PGM-FI)

1. Problem verification

-1. Turn the vehicle to the ON mode.

-2. Clear the DTC with the HDS.

-3. **Enter the maintenance mode, then start the engine** .

-4. Hold the engine speed at 3, 000 rpm without load (in P or N) until the radiator fan comes on, then let it idle.

Test-drive the vehicle under these conditions:

- ECT Sensor 1 above 158 deg.F (70 deg.C)
- Transmission in D
- Engine speed below 4, 000 rpm
- Drive at a steady speed between 15-75 mph (24-120 km/h) for 1 minute or more

Signal	Current conditions	
	Values	Unit
ECT Sensor 1	B	B
Engine Speed	B	B
Vehicle Speed	B	B

-6. Monitor the OBD STATUS for DTC P2096 and/or P2097 with the HDS.

DTC Description	OBD STATUS
P2096 Post Catalyst Fuel Trim System Too Lean	B
P2097 Post Catalyst Fuel Trim System Too Rich	B

Does the HDS indicate FAILED?

YES

The failure is duplicated. Go to step 2.

NO

If the HDS indicates PASSED, there is an intermittent failure and the system is OK at this time. Check for poor connections or loose terminals at the A/F sensor (Sensor 1), the secondary HO2S (Sensor 2), and the PCM. **If the on-board snapshot of this DTC is recorded, try to reproduce the failure under the same conditions with the on-board snapshot** . If the HDS indicates EXECUTING, keep the test conditions until a result comes on. If the HDS indicates OUT OF CONDITION, go to step 1-5 and recheck.

2. Exhaust system check

-1. Turn the vehicle to the OFF (LOCK) mode.

-2. Check for leakage, clogging, or blockage in the exhaust system.

Is there leakage in the exhaust system between the A/F sensor (Sensor 1) and the secondary HO2S (Sensor 2), or any clogging or restrictions in the exhaust system?

YES

Repair or replace the exhaust system .

NO

Go to step 3.

3. A/F sensor (Sensor 1) check

-1. **Substitute a known-good A/F sensor (Sensor 1)** .

-2. Reconnect all connectors.

-3. Turn the vehicle to the ON mode.

-4. **Reset the PCM with the HDS** .

Reset PCM

-5. **Enter the maintenance mode, then start the engine** .

-6. Hold the engine speed at 3, 000 rpm without load (in P or N) until the radiator fan comes on, then let it idle.

Test-drive the vehicle under these conditions:

- ECT Sensor 1 above 158 deg.F (70 deg.C)
- Transmission in D
- Engine speed below 4, 000 rpm
- Drive at a steady speed between 15-75 mph (24-120 km/h) for 1 minute or more

Signal	Current conditions	
	Values	Unit
ECT Sensor 1	B	B
Engine Speed	B	B
Vehicle Speed	B	B

-8. Monitor the OBD STATUS for DTC P2096 and/or P2097 with the HDS.

DTC Description	OBD STATUS
P2096 Post Catalyst Fuel Trim System Too Lean	B
P2097 Post Catalyst Fuel Trim System Too Rich	B

Does the HDS indicate PASSED?

YES

Replace the original A/F sensor (Sensor 1) .

NO

If the HDS indicates FAILED, replace the secondary HO2S (Sensor 2) . If the HDS indicates EXECUTING, keep the test conditions until a result comes on. If the HDS indicates OUT OF CONDITION, go to step 3-7 and recheck.

DTC P2101

DTC P2101 : ETCS Malfunction

WARNING: Do not insert your fingers into the installed throttle body when you turn the vehicle to the ON mode, or while the vehicle is in ON mode. If you do, you will seriously injure your fingers if the throttle valve is activated.

NOTE: Before you troubleshoot, review the general troubleshooting information .

DTC Description	Confirmed DTC	Pending DTC
P2101 ETCS Malfunction	B	B

DTC (PGM-FI)

1. ETCS system check

   -1. Turn the vehicle to the ON mode.

   -2. Clear the DTC with the HDS.

   -3. Select the ETCS (TAC) TEST in the Function Test Menu with the HDS.

   ETCS (TAC) TEST

   Check for Pending or Confirmed DTCs with the HDS.

DTC Description	Confirmed DTC	Pending DTC
P2101 ETCS Malfunction	B	B

   Is DTC P2101 indicated?

   YES

   The failure is duplicated. Go to step 3.

   NO

   The failure is not duplicated. Go to step 2.

2. Problem verification:

   Test-drive the vehicle for several minutes in the range of these recorded on-board snapshot parameters:

   - ENGINE SPEED
   - VEHICLE SPEED
   - APP SENSOR

   On-board Snapshot

Signal	Current conditions	
	Values	Unit
Engine Speed	B	B
Vehicle Speed	B	B

Signal	Current conditions	
	Values	Unit
APP Sensor	B	B

-2. Check for Pending or Confirmed DTCs with the HDS.

DTC Description	Confirmed DTC	Pending DTC
P2101 ETCS Malfunction	B	B

Is DTC P2101 indicated?

YES

The failure is duplicated. Go to step 3.

NO

Intermittent failure, the system is OK at this time. Check for poor connections or loose terminals at the throttle body and the PCM. **If the on-board snapshot of this DTC is recorded, try to reproduce the failure under the same conditions with the on-board snapshot** .

3. Determine possible failure area (throttle body, others)

-1. Turn the vehicle to the OFF (LOCK) mode.

-2. **Remove the air cleaner** .

-3. Turn the vehicle to the ON mode.

-4. Clear the DTC with the HDS.

-5. Visually check the throttle valve operation while doing the ETCS (TAC) TEST in the Function Test Menu with the HDS.

ETCS (TAC) TEST

Does the throttle valve operate smoothly?

YES

Clean the throttle body , and recheck. If DTC P2101 is indicated, **replace the throttle body** .

NO

Go to step 4.

4. Open wire check (MTR1 line, MTR2 line)

-1. Turn the vehicle to the OFF (LOCK) mode.

-2. Jump the SCS line with the HDS, and wait more than 1 minute.

-3. Disconnect the following connectors.

PCM connector E (80P)
Throttle body 6P connector

-4. Connect terminals A and B with a jumper wire.

Terminal A	Throttle body 6P connector (female terminals) No. 1: ①
Terminal B	Throttle body 6P connector (female terminals) No. 2: ①

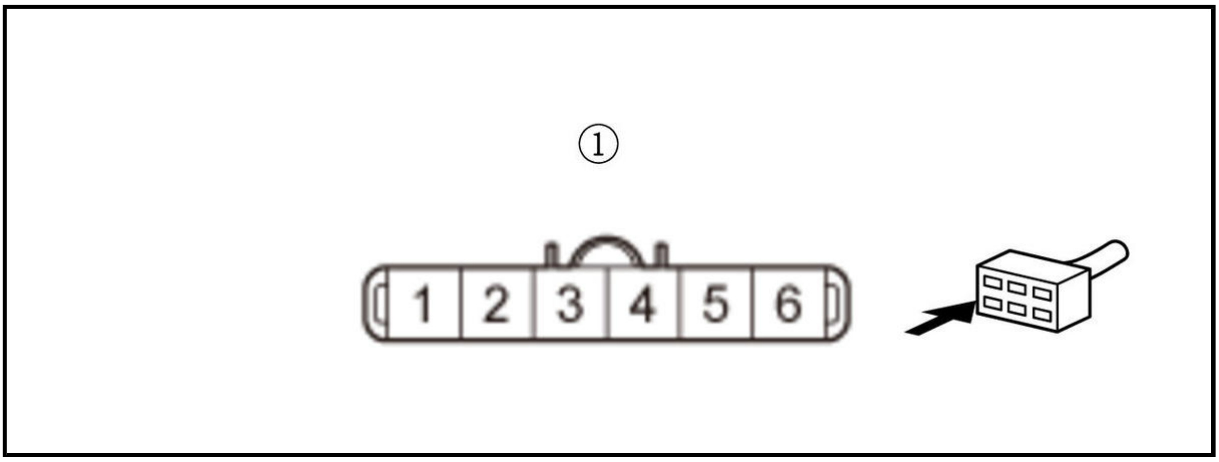

-5. Measure the resistance between test points 1 and 2.

Test condition	Vehicle OFF (LOCK) mode
B	PCM connector E (80P): disconnected
B	Throttle body 6P connector: disconnected
B	Throttle body 6P connector No. 1 and No. 2: jumped
Test point 1	**PCM connector E (80P) No. 27**
Test point 2	**PCM connector E (80P) No. 28**

Is there 1.0 Ω or less?

YES

Go to step 5.

NO

Repair an open in the MTR1 wire or the MTR2 wire between the PCM (E27, E28) and the throttle body.

5. Throttle body internal circuit check

-1. Remove the jumper wire from the throttle body 6P connector.

-2. At the throttle body side, measure the resistance between test points 1 and 2.

Test condition	Vehicle OFF (LOCK) mode
B	PCM connector E (80P): disconnected
B	Throttle body 6P connector: disconnected
Test point 1	Throttle body 6P connector (male terminals) No. 1 (throttle body side): ①
Test point 2	Throttle body 6P connector (male terminals) No. 2 (throttle body side): ①

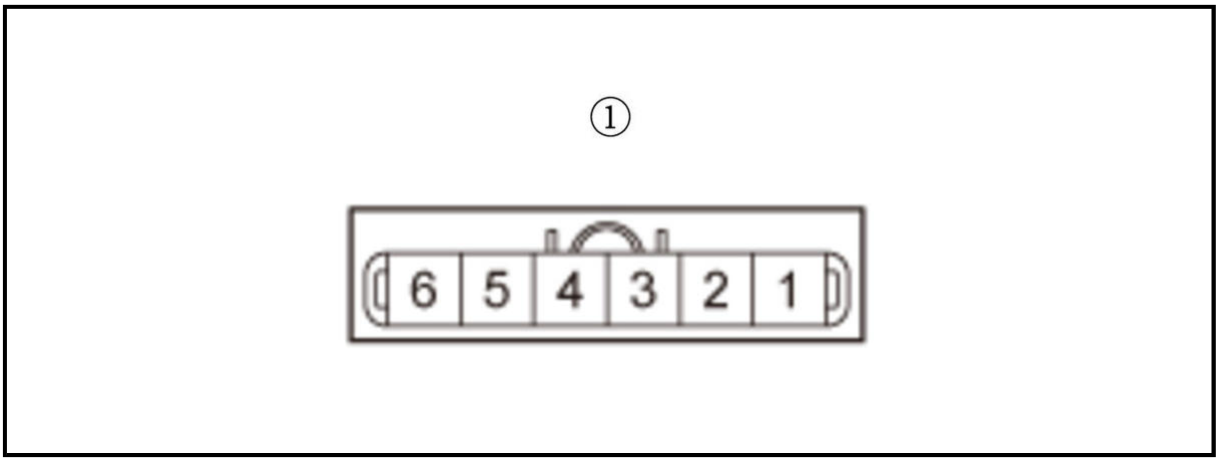

Is there about 1.0 kΩ or more?

YES

Replace the throttle body .

NO

Check for any authorized service information related to the DTCs or symptoms you are troubleshooting, or **substitute a known-good PCM** .

DTC P2108

DTC P2108 : Throttle Actuator Control Module Performance

NOTE:

- Before you troubleshoot, **review the general troubleshooting information** .
- If DTC P2108 is indicated alone, do the troubleshooting for DTC P1658 and P1659 using the on-board snapshot for P2108.
- If any of the DTCs listed below are indicated at the same time as DTC P2108, troubleshoot those DTCs first, then recheck for P2108.
-
    - -

      P1658, P1659: Throttle Actuator Control

DTC Description	Confirmed DTC	Pending DTC
P2108 Throttle Actuator Control Module Performance	B	B

DTC (PGM-FI)

1. DTC check

   -1. Turn the vehicle to the ON mode.

   -2. Check for Pending or Confirmed DTCs with the HDS.

DTC Description	Confirmed DTC	Pending DTC
P1658 ETCS Control Relay ON Malfunction	B	B
P1659 ETCS Control Relay OFF Malfunction	B	B
P2108 Throttle Actuator Control Module Performance	B	B

Are DTC P1658 or P1659 and P2108 indicated at the same time?

YES

Go to the indicated DTC's troubleshooting.

NO

Go to the troubleshooting for **DTC P1658** and **DTC P1659** using the on-board snapshot for DTC P2108.

DTC P2118

DTC P2118 : Throttle Actuator Current Range/Performance Problem

NOTE: Before you troubleshoot, **review the general troubleshooting information** .

DTC Description	Confirmed DTC	Pending DTC
P2118 Throttle Actuator Current Range/Performance Problem	B	B

DTC (PGM-FI)

1. Problem verification

   -1. Turn the vehicle to the ON mode.

   -2. Clear the DTC with the HDS.

   -3. Slowly press the accelerator pedal to the floor.

   -4. Check for Pending or Confirmed DTCs with the HDS.

DTC Description	Confirmed DTC	Pending DTC
P2118 Throttle Actuator Current Range/Performance Problem	B	B

   Is DTC P2118 indicated?

   YES

   The failure is duplicated. Go to step 2.

   NO

   Intermittent failure, the system is OK at this time. Check for poor connections or loose terminals at the throttle body and the PCM, then **clean the throttle body** . **If the on-board snapshot of this DTC is recorded, try to reproduce the failure under the same conditions with the on-board snapshot** .

2. Open wire check (SG3(DBW) line)

   -1. Turn the vehicle to the OFF (LOCK) mode.

   -2. Jump the SCS line with the HDS, and wait more than 1 minute.

   -3. Disconnect the following connectors.

PCM connector E (80P)
Throttle body 6P connector

   -4. Measure the resistance between test points 1 and 2.

Test condition	Vehicle OFF (LOCK) mode
B	PCM connector E (80P): disconnected
B	Throttle body 6P connector: disconnected
Test point 1	Throttle body 6P connector (female terminals) No. 3: ①
Test point 2	**PCM connector E (80P) No. 76**

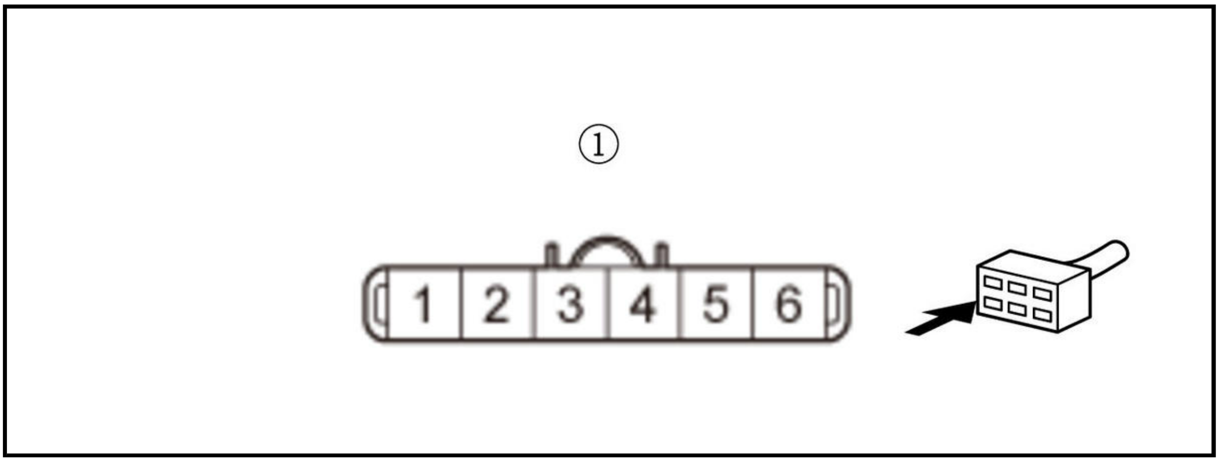

Is there 1.0 Ω or less?

YES

Go to step 3.

NO

Repair an open in the SG3(DBW) wire between the PCM (E76) and the throttle body.

3. Shorted wire check (MTR1 line to MTR2 line)

-1. Measure the resistance between test points 1 and 2.

Test condition	Vehicle OFF (LOCK) mode
B	PCM connector E (80P): disconnected
B	Throttle body 6P connector: disconnected
Test point 1	Throttle body 6P connector (female terminals) No. 1: ①
Test point 2	Throttle body 6P connector (female terminals) No. 2: ①

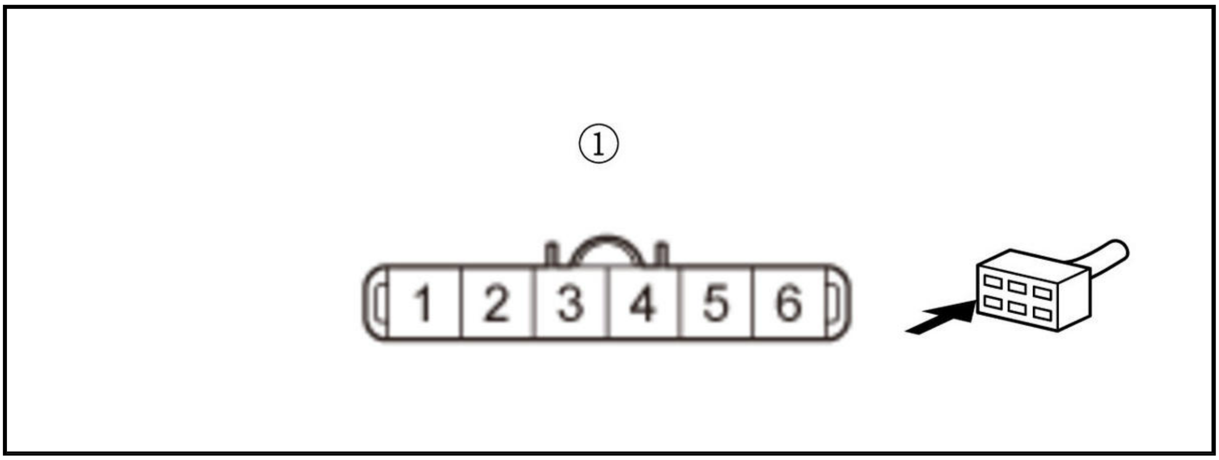

Is there 1 MΩ or more?

YES

Go to step 4.

NO

Repair a short in the MTR1 wire to the MTR2 wire between the PCM (E27, E28) and the throttle body.

4. Shorted wire check (MTR1 line, MTR2 line)

-1. Measure the resistance between test points 1 and 2.

Test condition	Vehicle OFF (LOCK) mode
B	PCM connector E (80P): disconnected
B	Throttle body 6P connector: disconnected
Test point 1	Throttle body 6P connector (female terminals) No. 1 and No. 2: ①
Test point 2	Body ground

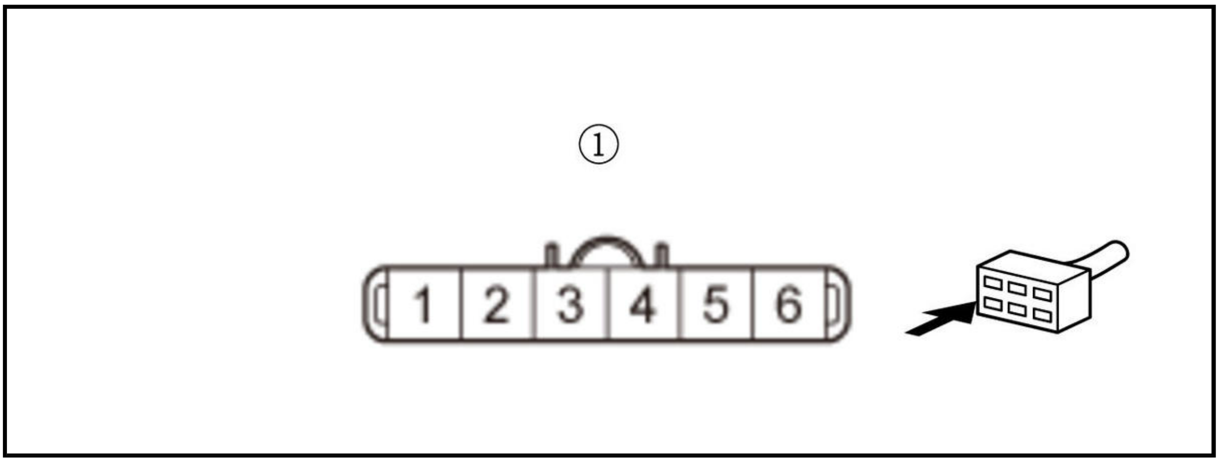

Is there 1 MΩ or more?

YES

The MTR1 wire and the MTR2 wire are OK. Go to step 5.

NO

Repair a short in the MTR1 wire or the MTR2 wire between the PCM (E27, E28) and the throttle body.

5. Throttle body internal circuit check (short in wires)

-1. At the throttle body side, measure the resistance between test points 1 and 2.

Test condition	Vehicle OFF (LOCK) mode
B	PCM connector E (80P): disconnected
B	Throttle body 6P connector: disconnected
Test point 1	Throttle body 6P connector (male terminals) No. 1 (throttle body side): ①
Test point 2	Throttle body 6P connector (male terminals) No. 2 (throttle body side): ①

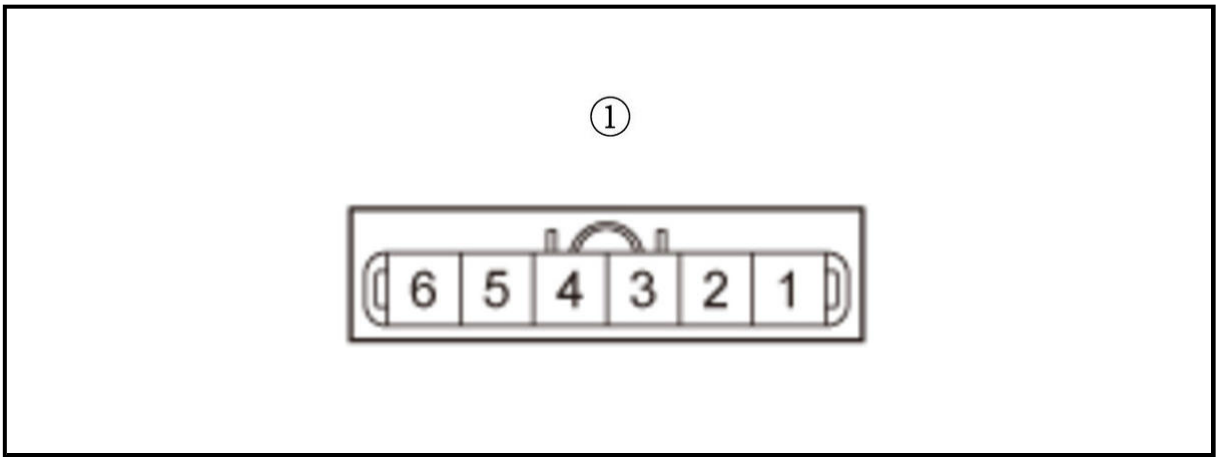

Is there about 1.2 - 1.0 kΩ?

YES

Go to step 6.

NO

Replace the throttle body .

6. Throttle body internal circuit check (short to ground)

-1. At the throttle body side, measure the resistance between test points 1 and 2.

Test condition	Vehicle OFF (LOCK) mode
B	PCM connector E (80P): disconnected
B	Throttle body 6P connector: disconnected
Test point 1	Throttle body 6P connector (male terminals) No. 1 (throttle body side) and No. 2 (throttle body side): ①
Test point 2	Body ground

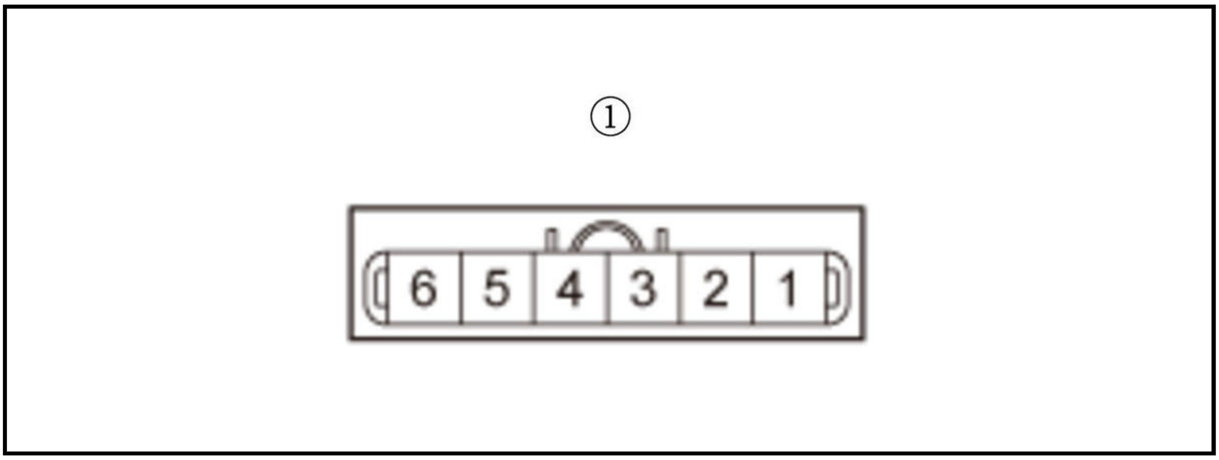

Is there 1 MΩ or more?

YES

Check for any authorized service information related to the DTCs or symptoms you are troubleshooting, or **substitute a known-good PCM** .

NO

Replace the throttle body .

DTC P2119

DTC P2119 : Throttle Actuator Control Throttle Body Range/Performance

NOTE:

- Before you troubleshoot, **review the general troubleshooting information** .
- If DTC P2119 is indicated alone, do the troubleshooting for DTC P1683 and P1684 using the on-board snapshot for P2119.
- If any of the DTCs listed below are indicated at the same time as DTC P2119, troubleshoot those DTCs first, then recheck for P2119.
-
    - -

      P1683, P1684: Throttle Valve Spring

DTC Description	Confirmed DTC	Pending DTC
P2119 Throttle Actuator Control Throttle Body Range/Performance	B	B

DTC (PGM-FI)

1. DTC check

   -1. Turn the vehicle to the ON mode.

   -2. Check for Pending or Confirmed DTCs with the HDS.

DTC Description	Confirmed DTC	Pending DTC
P1683 Throttle Valve Default Position Spring Performance Problem	B	B
P1684 Throttle Valve Return Spring Performance Problem	B	B
P2119 Throttle Actuator Control Throttle Body Range/Performance	B	B

   Are DTC P1683 or P1684 and P2119 indicated at the same time?

   YES

   Go to the indicated DTC's troubleshooting.

   NO

   Go to the troubleshooting for **DTC P1683** and **DTC P1684** using the on-board snapshot for DTC P2119.

DTC P2121

DTC P2121 : APP Sensor A (TP Sensor D) Out of Range

NOTE: Before you troubleshoot, **review the general troubleshooting information** .

DTC Description	Confirmed DTC	Pending DTC
P2121 APP Sensor A (TP Sensor D) Out of Range	B	B

DTC (PGM-FI)

1. Problem verification

-1. Turn the vehicle to the ON mode.

-2. Check the parameter(s) below with the HDS.

Signal	Threshold		Current conditions	
	Values	Unit	Values	Unit
APP Sensor A Voltage	Less than 0.69	V	B	B

Do the current condition(s) match the threshold?

YES

The failure is duplicated. Go to step 2.

NO

Intermittent failure, the system is OK at this time. Check for poor connections or loose terminals at the APP sensor and the PCM. **If the on-board snapshot of this DTC is recorded, try to reproduce the failure under the same conditions with the on-board snapshot** .

2. Determine possible failure area (VCC4 line, others)

-1. Turn the vehicle to the OFF (LOCK) mode.

-2. Disconnect the following connector.

APP sensor 6P connector

-3. Turn the vehicle to the ON mode.

-4. Measure the voltage between test points 1 and 2.

Test condition	Vehicle ON mode
B	APP sensor 6P connector: disconnected
Test point 1	APP sensor 6P connector (female terminals) No. 4: ①
Test point 2	APP sensor 6P connector (female terminals) No. 5: ①

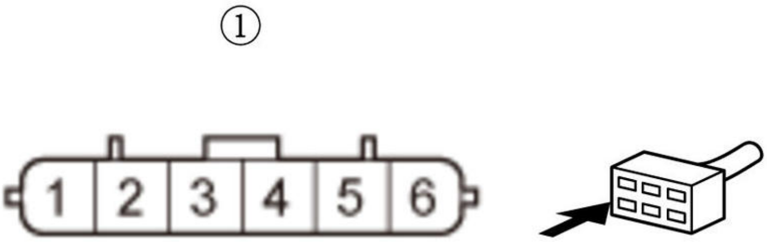

Is there about 5.0 V?

YES

Go to step 3.

NO

Go to step 6.

3. Shorted wire check (APS1 line)

-1. Turn the vehicle to the OFF (LOCK) mode.

-2. Jump the SCS line with the HDS, and wait more than 1 minute.

-3. Disconnect the following connector.

PCM connector A (50P)

-4. Measure the resistance between test points 1 and 2.

Test condition	Vehicle OFF (LOCK) mode
B	APP sensor 6P connector: disconnected
B	PCM connector A (50P): disconnected
Test point 1	APP sensor 6P connector (female terminals) No. 6: ①
Test point 2	Body ground

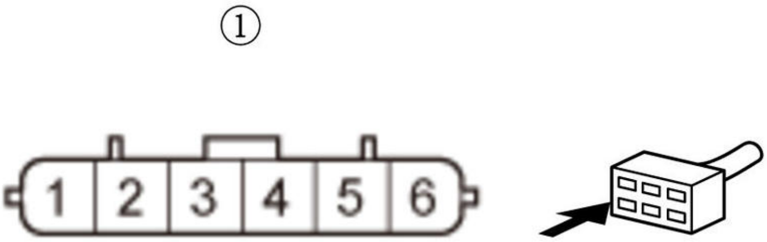

Is there 1 MΩ or more?

YES

The APS1 wire is not shorted. Go to step 4.

NO

Repair a short in the APS1 wire between the PCM (A32) and the APP sensor.

4. Open wire check (APS1 line)

-1. Connect terminals A and B with a jumper wire.

Terminal A	APP sensor 6P connector (female terminals) No. 6: ①
Terminal B	Body ground

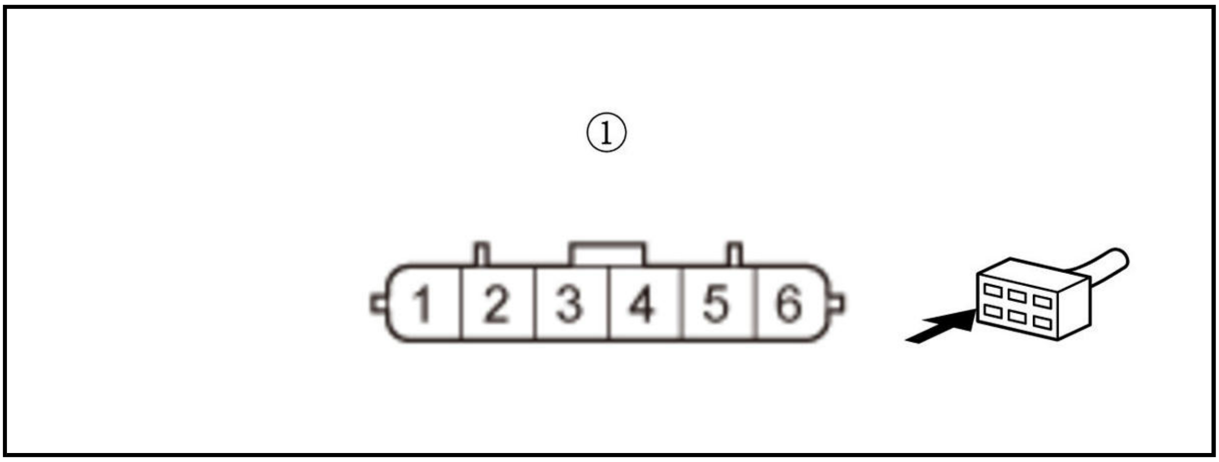

-2. Measure the resistance between test points 1 and 2.

Test condition	Vehicle OFF (LOCK) mode
B	APP sensor 6P connector: disconnected
B	PCM connector A (50P): disconnected
B	APP sensor 6P connector No. 6: jumped to body ground
Test point 1	**PCM connector A (50P) No. 32**
Test point 2	Body ground

Is there 1.0 Ω or less?

YES

The APS1 wire is OK. Go to step 5.

NO

Repair an open in the APS1 wire between the PCM (A32) and the APP sensor.

5. PCM internal circuit check

-1. Remove the jumper wire from the APP sensor 6P connector.

-2. Reconnect the following connector.

PCM connector A (50P)

-3. Connect terminals A and B with a jumper wire.

Terminal A	APP sensor 6P connector (female terminals) No. 4: ①
Terminal B	APP sensor 6P connector (female terminals) No. 6: ①

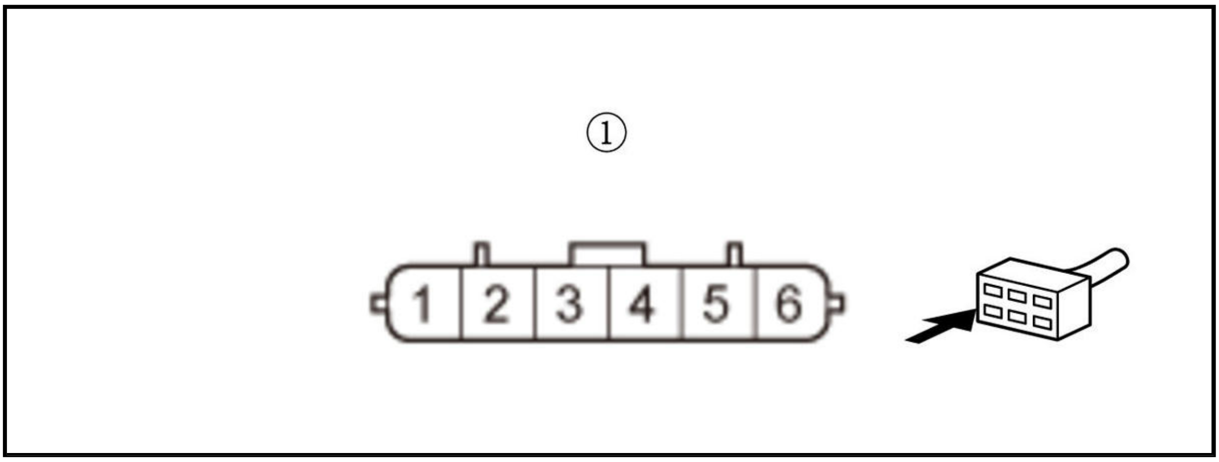

-4. Exit the SCS mode with the HDS.

-5. Turn the vehicle to the ON mode.

-6. Check the parameter(s) below with the HDS.

Signal	Threshold		Current conditions	
	Values	Unit	Values	Unit
APP Sensor A Voltage	Less than 0.69	V	B	B

Do the current condition(s) match the threshold?

YES

Check for any authorized service information related to the DTCs or symptoms you are troubleshooting, or **substitute a known-good PCM** .

NO

Replace the accelerator pedal module .

6. Open wire check (VCC4 line)

-1. Turn the vehicle to the OFF (LOCK) mode.

-2. Jump the SCS line with the HDS, and wait more than 1 minute.

-3. Disconnect the following connector.

PCM connector A (50P)

-4. Connect terminals A and B with a jumper wire.

Terminal A	APP sensor 6P connector (female terminals) No. 4: ①
Terminal B	Body ground

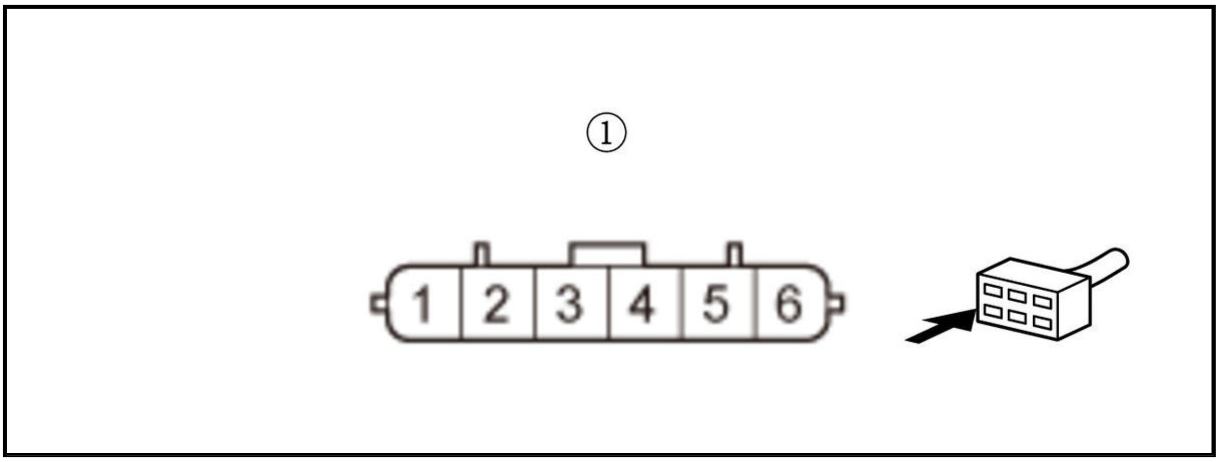

-5. Measure the resistance between test points 1 and 2.

Test condition	Vehicle OFF (LOCK) mode
B	APP sensor 6P connector: disconnected
B	PCM connector A (50P): disconnected
B	APP sensor 6P connector No. 4: jumped to body ground
Test point 1	**PCM connector A (50P) No. 45**

Test point 2	Body ground

Is there 1.0 Ω or less?

YES

The VCC4 wire is OK. Check for any authorized service information related to the DTCs or symptoms you are troubleshooting, or **substitute a known-good PCM** .

NO

Repair an open in the VCC4 wire between the PCM (A45) and the APP sensor.

DTC P2122

DTC P2122 : APP Sensor A (TP Sensor D) Circuit Low Voltage

NOTE: Before you troubleshoot, **review the general troubleshooting information** .

DTC Description	Confirmed DTC	Pending DTC
P2122 APP Sensor A (TP Sensor D) Circuit Low Voltage	B	B

DTC (PGM-FI)

1. Problem verification

-1. Turn the vehicle to the ON mode.

-2. Check the parameter(s) below with the HDS.

Signal	Threshold		Current conditions	
	Values	Unit	Values	Unit
APP Sensor A Voltage	Less than 0.2	V	B	B

Do the current condition(s) match the threshold?

YES

The failure is duplicated. Go to step 2.

NO

Intermittent failure, the system is OK at this time. Check for poor connections or loose terminals at the APP sensor and the PCM. **If the on-board snapshot of this DTC is recorded, try to reproduce the failure under the same conditions with the on-board snapshot** .

2. Determine possible failure area (VCC4 line, others)

-1. Turn the vehicle to the OFF (LOCK) mode.

-2. Disconnect the following connector.

APP sensor 6P connector

-3. Turn the vehicle to the ON mode.

-4. Measure the voltage between test points 1 and 2.

Test condition	Vehicle ON mode
B	APP sensor 6P connector: disconnected
Test point 1	APP sensor 6P connector (female terminals) No. 4: ①
Test point 2	APP sensor 6P connector (female terminals) No. 5: ①

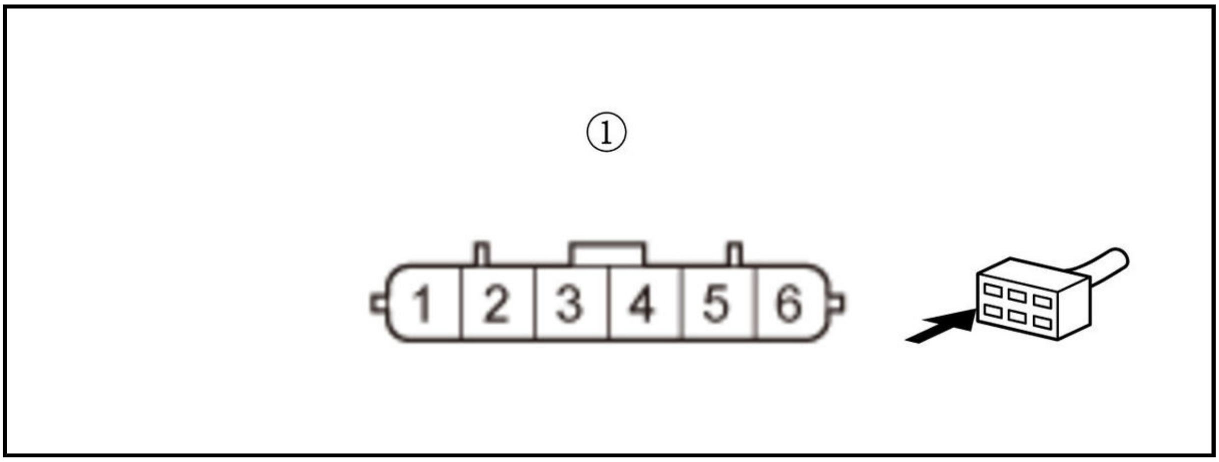

Is there about 5.0 V?

YES

Go to step 3.

NO

Go to step 6.

3. Shorted wire check (APS1 line)

-1. Turn the vehicle to the OFF (LOCK) mode.

-2. Jump the SCS line with the HDS, and wait more than 1 minute.

-3. Disconnect the following connector.

PCM connector A (50P)

-4. Measure the resistance between test points 1 and 2.

Test condition	Vehicle OFF (LOCK) mode
B	APP sensor 6P connector: disconnected
B	PCM connector A (50P): disconnected
Test point 1	APP sensor 6P connector (female terminals) No. 6: ①
Test point 2	Body ground

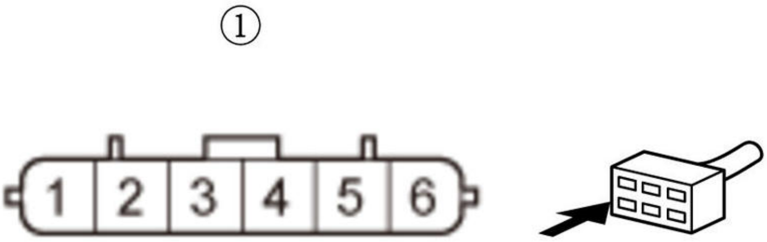

Is there 1 MΩ or more?

YES

The APS1 wire is not shorted. Go to step 4.

NO

Repair a short in the APS1 wire between the PCM (A32) and the APP sensor.

4. Open wire check (APS1 line)

-1. Connect terminals A and B with a jumper wire.

Terminal A	APP sensor 6P connector (female terminals) No. 6: ①
Terminal B	Body ground

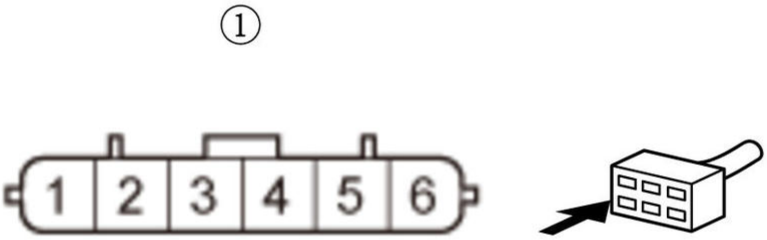

-2. Measure the resistance between test points 1 and 2.

Test condition	Vehicle OFF (LOCK) mode
B	APP sensor 6P connector: disconnected
B	PCM connector A (50P): disconnected
B	APP sensor 6P connector No. 6: jumped to body ground
Test point 1	**PCM connector A (50P) No. 32**
Test point 2	Body ground

Is there 1.0 Ω or less?

YES

The APS1 wire is OK. Go to step 5.

NO

Repair an open in the APS1 wire between the PCM (A32) and the APP sensor.

5. PCM internal circuit check

-1. Remove the jumper wire from the APP sensor 6P connector.

-2. Reconnect the following connector.

PCM connector A (50P)

-3. Connect terminals A and B with a jumper wire.

Terminal A	APP sensor 6P connector (female terminals) No. 4: ①
Terminal B	APP sensor 6P connector (female terminals) No. 6: ①

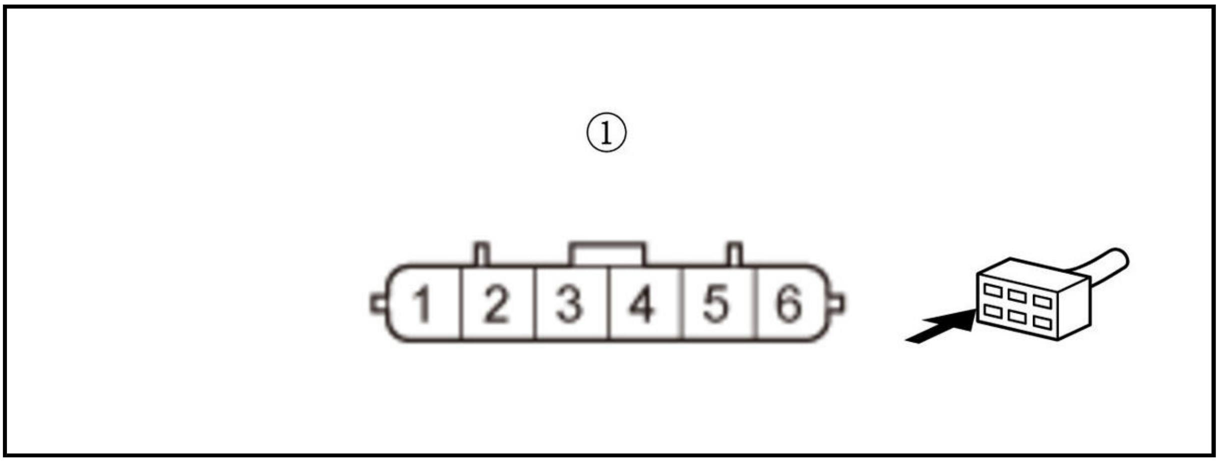

-4. Exit the SCS mode with the HDS.

-5. Turn the vehicle to the ON mode.

-6. Check the parameter(s) below with the HDS.

Signal	Threshold		Current conditions	
	Values	**Unit**	**Values**	**Unit**
APP Sensor A Voltage	Less than 0.2	V	B	B

Do the current condition(s) match the threshold?

YES

Check for any authorized service information related to the DTCs or symptoms you are troubleshooting, or **substitute a known-good PCM** .

NO

Replace the accelerator pedal module .

6. Open wire check (VCC4 line)

-1. Turn the vehicle to the OFF (LOCK) mode.

-2. Jump the SCS line with the HDS, and wait more than 1 minute.

-3. Disconnect the following connector.

PCM connector A (50P)

-4. Connect terminals A and B with a jumper wire.

Terminal A	APP sensor 6P connector (female terminals) No. 4: ①
Terminal B	Body ground

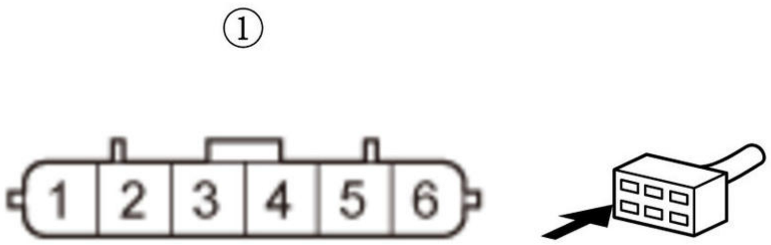

-5. Measure the resistance between test points 1 and 2.

Test condition	Vehicle OFF (LOCK) mode
B	APP sensor 6P connector: disconnected
B	PCM connector A (50P): disconnected
B	APP sensor 6P connector No. 4: jumped to body ground
Test point 1	**PCM connector A (50P) No. 45**

Test point 2	Body ground

Is there 1.0 Ω or less?

YES

The VCC4 wire is OK. Check for any authorized service information related to the DTCs or symptoms you are troubleshooting, or **substitute a known-good PCM** .

NO

Repair an open in the VCC4 wire between the PCM (A45) and the APP sensor.

DTC P2123

DTC P2123 : APP Sensor A (TP Sensor D) Circuit High Voltage

NOTE: Before you troubleshoot, **review the general troubleshooting information** .

DTC Description	Confirmed DTC	Pending DTC
P2123 APP Sensor A (TP Sensor D) Circuit High Voltage	B	B

DTC (PGM-FI)

1. Problem verification

   -1. Turn the vehicle to the ON mode.

   -2. Check the parameter(s) below with the HDS.

Signal	Threshold		Current conditions	
	Values	Unit	Values	Unit
APP Sensor A Voltage	More than 4.9	V	B	B

   Do the current condition(s) match the threshold?

   YES

   The failure is duplicated. Go to step 2.

   NO

   Intermittent failure, the system is OK at this time. Check for poor connections or loose terminals at the APP sensor and the PCM. **If the on-board snapshot of this DTC is recorded, try to reproduce the failure under the same conditions with the on-board snapshot** .

2. Determine possible failure area (APP sensor, others)

   -1. Turn the vehicle to the OFF (LOCK) mode.

   -2. Disconnect the following connector.

APP sensor 6P connector

   -3. Turn the vehicle to the ON mode.

   -4. Measure the voltage between test points 1 and 2.

Test condition	Vehicle ON mode
B	APP sensor 6P connector: disconnected
Test point 1	APP sensor 6P connector (female terminals) No. 4: ①
Test point 2	APP sensor 6P connector (female terminals) No. 5: ①

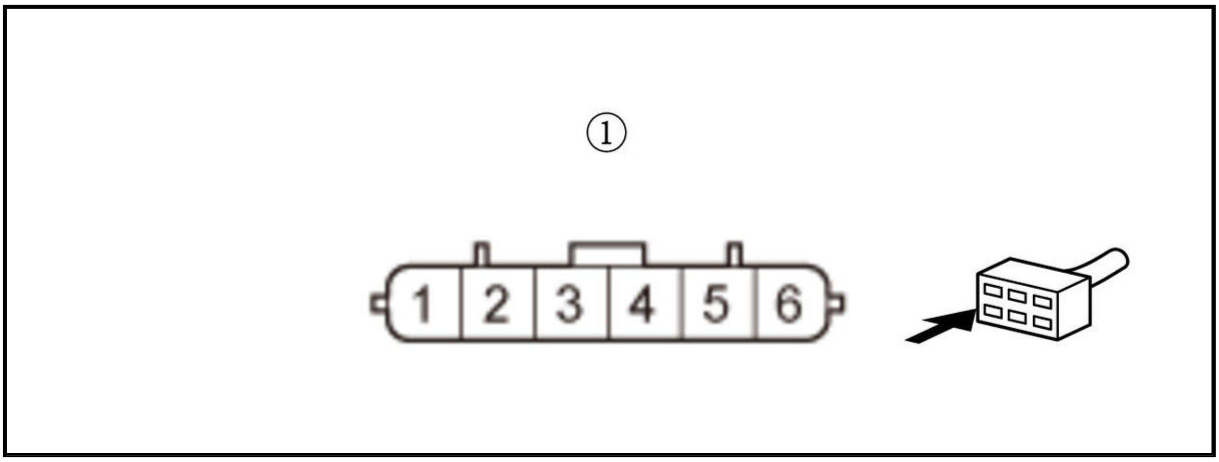

Is there about 5.0 V?

YES

Replace the accelerator pedal module .

NO

Go to step 3.

3. Open wire check (SG4 line)

-1. Turn the vehicle to the OFF (LOCK) mode.

-2. Jump the SCS line with the HDS, and wait more than 1 minute.

-3. Disconnect the following connector.

PCM connector A (50P)

-4. Connect terminals A and B with a jumper wire.

Terminal A	APP sensor 6P connector (female terminals) No. 5: ①
Terminal B	Body ground

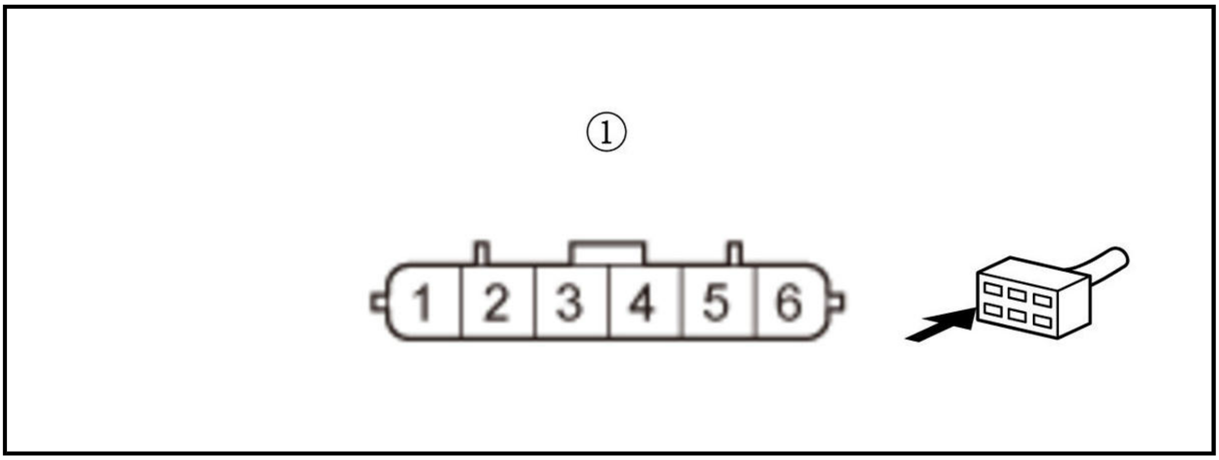

-5. Measure the resistance between test points 1 and 2.

Test condition	Vehicle OFF (LOCK) mode
B	APP sensor 6P connector: disconnected
B	PCM connector A (50P): disconnected

B	APP sensor 6P connector No. 5: jumped to body ground
Test point 1	**PCM connector A (50P) No. 46**
Test point 2	Body ground

Is there 1.0 Ω or less?

YES

The SG4 wire is OK. Check for any authorized service information related to the DTCs or symptoms you are troubleshooting, or **substitute a known-good PCM** .

NO

Repair an open in the SG4 wire between the PCM (A46) and the APP sensor.

DTC P2126

DTC P2126 : APP Sensor B (TP Sensor E) Out of Range

NOTE: Before you troubleshoot, **review the general troubleshooting information** .

DTC Description	Confirmed DTC	Pending DTC
P2126 APP Sensor B (TP Sensor E) Out of Range	B	B

DTC (PGM-FI)

1. Problem verification 1

-1. Turn the vehicle to the ON mode.

-2. Check the parameter(s) below with the HDS.

Signal	Threshold		Current conditions	
	Values	Unit	Values	Unit
APP Sensor B Voltage	Less than 0.23	V	B	B

Do the current condition(s) match the threshold?

YES

The failure is duplicated. Go to step 3.

NO

Go to step 2.

2. Problem verification 2

-1. Check the parameter(s) below with the HDS.

Signal	Threshold		Current conditions	
	Values	Unit	Values	Unit
APP Sensor B Voltage	More than 2.66	V	B	B

Do the current condition(s) match the threshold?

YES

The failure is duplicated. Go to step 8.

NO

Intermittent failure, the system is OK at this time. Check for poor connections or loose terminals at the APP sensor and the PCM. **If the on-board snapshot of this DTC is recorded, try to reproduce the failure under the same conditions with the on-board snapshot** .

3. Determine possible failure area (VCC5 line, others)

-1. Turn the vehicle to the OFF (LOCK) mode.

-2. Disconnect the following connector.

APP sensor 6P connector

-3. Turn the vehicle to the ON mode.

-4. Measure the voltage between test points 1 and 2.

Test condition	Vehicle ON mode
B	APP sensor 6P connector: disconnected
Test point 1	APP sensor 6P connector (female terminals) No. 1: ①
Test point 2	APP sensor 6P connector (female terminals) No. 2: ①

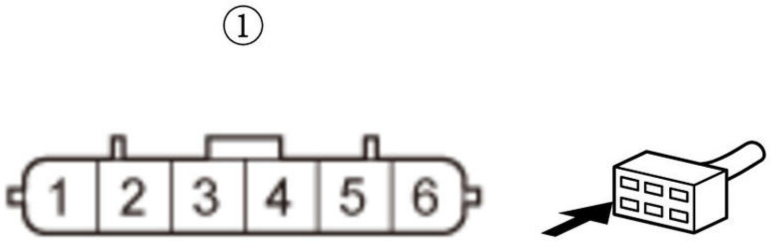

Is there about 5.0 V?

YES

Go to step 4.

NO

Go to step 7.

4. Shorted wire check (APS2 line)

-1. Turn the vehicle to the OFF (LOCK) mode.

-2. Jump the SCS line with the HDS, and wait more than 1 minute.

-3. Disconnect the following connector.

PCM connector A (50P)

-4. Measure the resistance between test points 1 and 2.

Test condition	Vehicle OFF (LOCK) mode
B	APP sensor 6P connector: disconnected
B	PCM connector A (50P): disconnected
Test point 1	APP sensor 6P connector (female terminals) No. 3: ①
Test point 2	Body ground

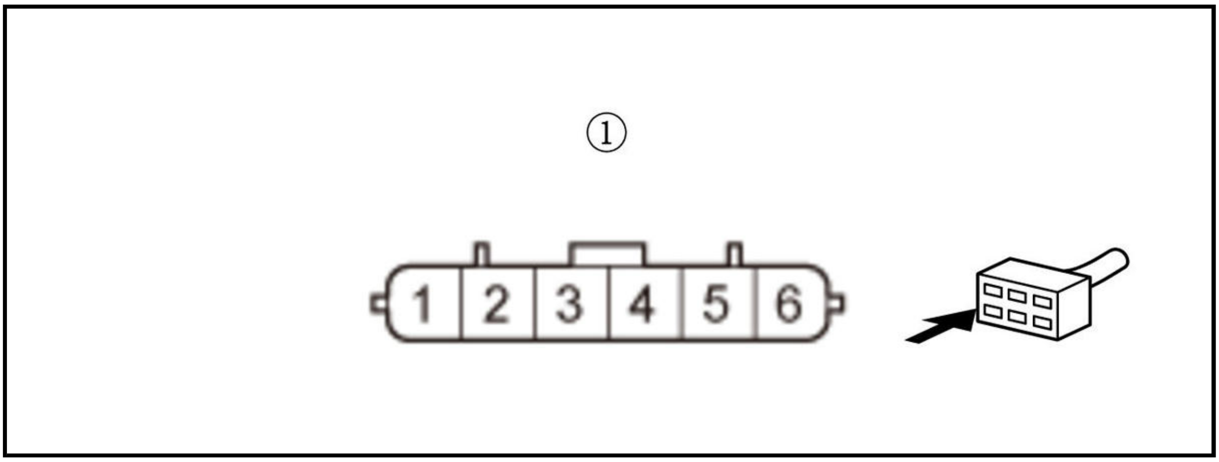

Is there 1 MΩ or more?

YES

Go to step 5.

NO

Repair a short in the APS2 wire between the PCM (A34) and the APP sensor.

5. Open wire check (APS2 line)

-1. Connect terminals A and B with a jumper wire.

Terminal A	APP sensor 6P connector (female terminals) No. 3: ①
Terminal B	Body ground

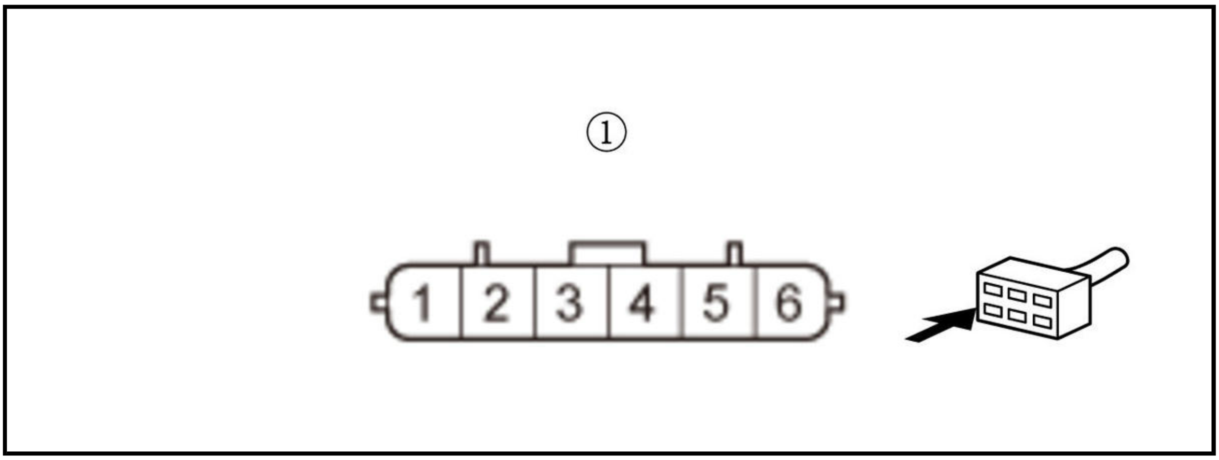

-2. Measure the resistance between test points 1 and 2.

Test condition	Vehicle OFF (LOCK) mode
B	APP sensor 6P connector: disconnected
B	PCM connector A (50P): disconnected
B	APP sensor 6P connector No. 3: jumped to body ground
Test point 1	**PCM connector A (50P) No. 34**
Test point 2	Body ground

Is there 1.0 Ω or less?

YES

Go to step 6.

NO

Repair an open in the APS2 wire between the PCM (A34) and the APP sensor.

6. PCM internal circuit check

-1. Remove the jumper wire from the APP sensor 6P connector.

-2. Reconnect the following connector.

PCM connector A (50P)

-3. Connect terminals A and B with a jumper wire.

Terminal A	APP sensor 6P connector (female terminals) No. 1: ①
Terminal B	APP sensor 6P connector (female terminals) No. 3: ①

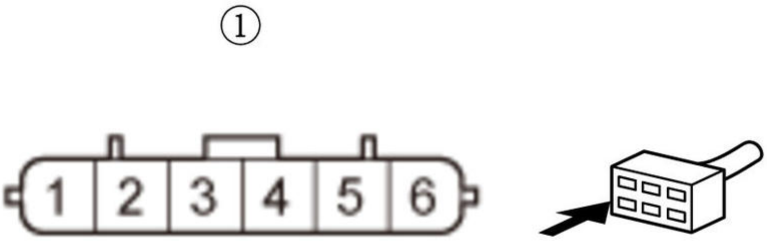

-4. Exit the SCS mode with the HDS.

-5. Turn the vehicle to the ON mode.

-6. Check the parameter(s) below with the HDS.

Signal	**Threshold**		**Current conditions**	
	Values	**Unit**	**Values**	**Unit**
APP Sensor B Voltage	Less than 0.23	V	B	B

Do the current condition(s) match the threshold?

YES

Check for any authorized service information related to the DTCs or symptoms you are troubleshooting, or **substitute a known-good PCM** .

NO

Replace the accelerator pedal module .

7. Open wire check (VCC5 line)

-1. Turn the vehicle to the OFF (LOCK) mode.

-2. Jump the SCS line with the HDS, and wait more than 1 minute.

-3. Disconnect the following connector.

PCM connector A (50P)

-4. Connect terminals A and B with a jumper wire.

Terminal A	APP sensor 6P connector (female terminals) No. 1: ①
Terminal B	Body ground

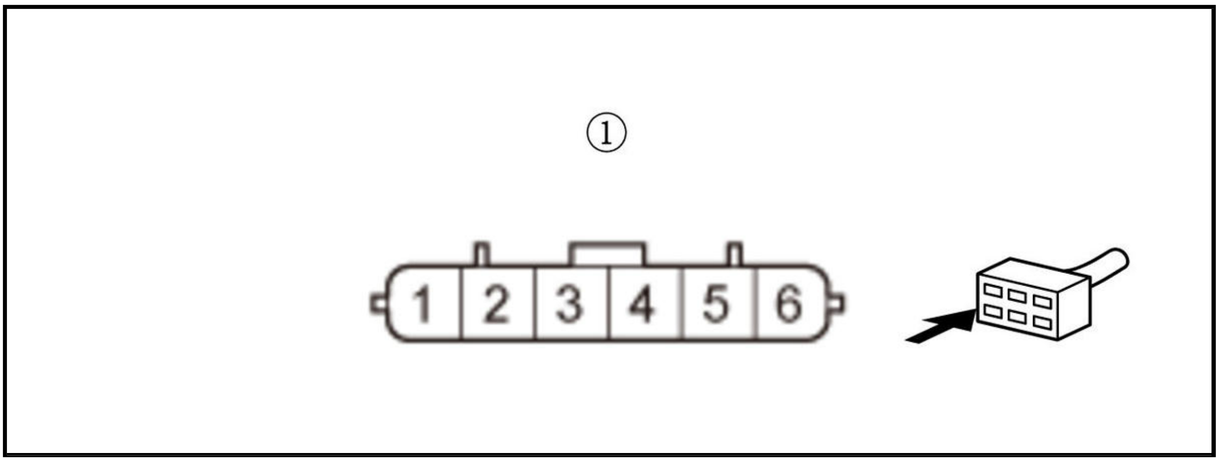

-5. Measure the resistance between test points 1 and 2.

Test condition	Vehicle OFF (LOCK) mode
B	APP sensor 6P connector: disconnected
B	PCM connector A (50P): disconnected
B	APP sensor 6P connector No. 1: jumped to body ground
Test point 1	**PCM connector A (50P) No. 44**
Test point 2	Body ground

Is there 1.0 Ω or less?

YES

The VCC5 wire is OK. Check for any authorized service information related to the DTCs or symptoms you are troubleshooting, or **substitute a known-good PCM** .

NO

Repair an open in the VCC5 wire between the PCM (A44) and the APP sensor.

8. Determine possible failure area (APP sensor, others)

-1. Turn the vehicle to the OFF (LOCK) mode.

-2. Disconnect the following connector.

APP sensor 6P connector

-3. Turn the vehicle to the ON mode.

-4. Measure the voltage between test points 1 and 2.

Test condition	Vehicle ON mode
B	APP sensor 6P connector: disconnected
Test point 1	APP sensor 6P connector (female terminals) No. 1: ①
Test point 2	APP sensor 6P connector (female terminals) No. 2: ①

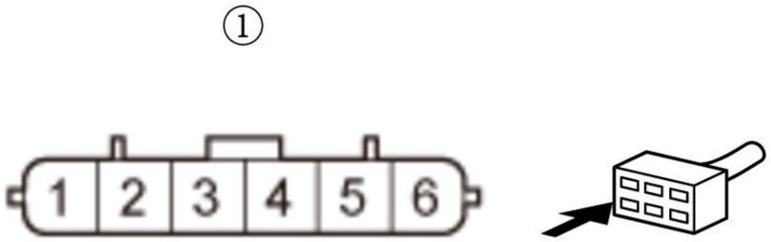

Is there about 5.0 V?

YES

Replace the accelerator pedal module .

NO

Go to step 9.

9. Open wire check (SG5 line)

-1. Turn the vehicle to the OFF (LOCK) mode.

-2. Jump the SCS line with the HDS, and wait more than 1 minute.

-3. Disconnect the following connector.

PCM connector A (50P)

-4. Connect terminals A and B with a jumper wire.

Terminal A	APP sensor 6P connector (female terminals) No. 2: ①
Terminal B	Body ground

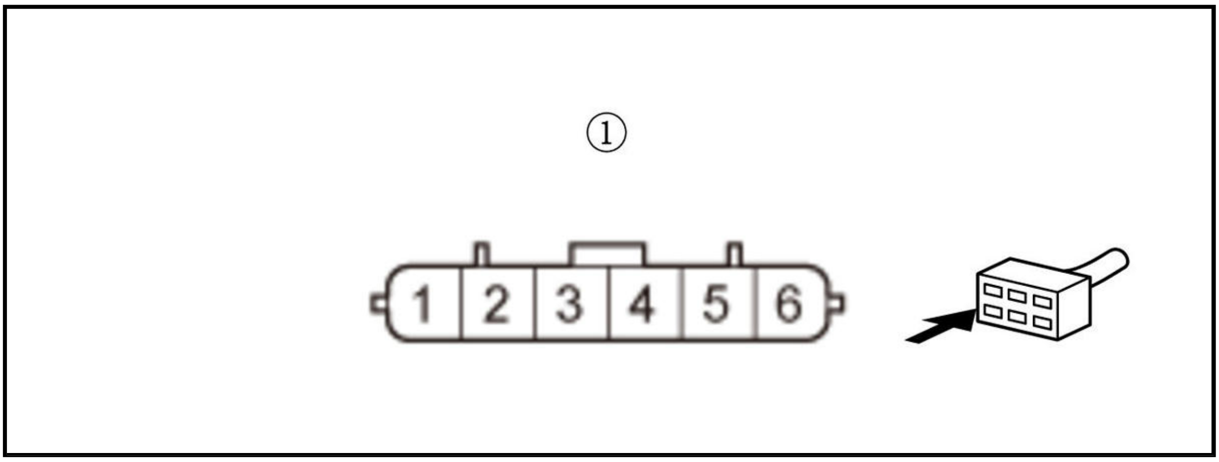

-5. Measure the resistance between test points 1 and 2.

Test condition	Vehicle OFF (LOCK) mode
B	APP sensor 6P connector: disconnected
B	PCM connector A (50P): disconnected
B	APP sensor 6P connector No. 2: jumped to body ground
Test point 1	**PCM connector A (50P) No. 43**
Test point 2	Body ground

Is there 1.0 Ω or less?

YES

The SG5 wire is OK. Check for any authorized service information related to the DTCs or symptoms you are troubleshooting, or **substitute a known-good PCM** .

NO

Repair an open in the SG5 wire between the PCM (A43) and the APP sensor.

DTC P2127

DTC P2127 : APP Sensor B (TP Sensor E) Circuit Low Voltage

NOTE: Before you troubleshoot, **review the general troubleshooting information** .

DTC Description	Confirmed DTC	Pending DTC
P2127 APP Sensor B (TP Sensor E) Circuit Low Voltage	B	B

DTC (PGM-FI)

1. Problem verification

-1. Turn the vehicle to the ON mode.

-2. Check the parameter(s) below with the HDS.

Signal	Threshold		Current conditions	
	Values	Unit	Values	Unit
APP Sensor B Voltage	Less than 0.2	V	B	B

Do the current condition(s) match the threshold?

YES

The failure is duplicated. Go to step 2.

NO

Intermittent failure, the system is OK at this time. Check for poor connections or loose terminals at the APP sensor and the PCM. **If the on-board snapshot of this DTC is recorded, try to reproduce the failure under the same conditions with the on-board snapshot** .

2. Determine possible failure area (VCC5 line, others)

-1. Turn the vehicle to the OFF (LOCK) mode.

-2. Disconnect the following connector.

APP sensor 6P connector

-3. Turn the vehicle to the ON mode.

-4. Measure the voltage between test points 1 and 2.

Test condition	Vehicle ON mode
B	APP sensor 6P connector: disconnected
Test point 1	APP sensor 6P connector (female terminals) No. 1: ①
Test point 2	APP sensor 6P connector (female terminals) No. 2: ①

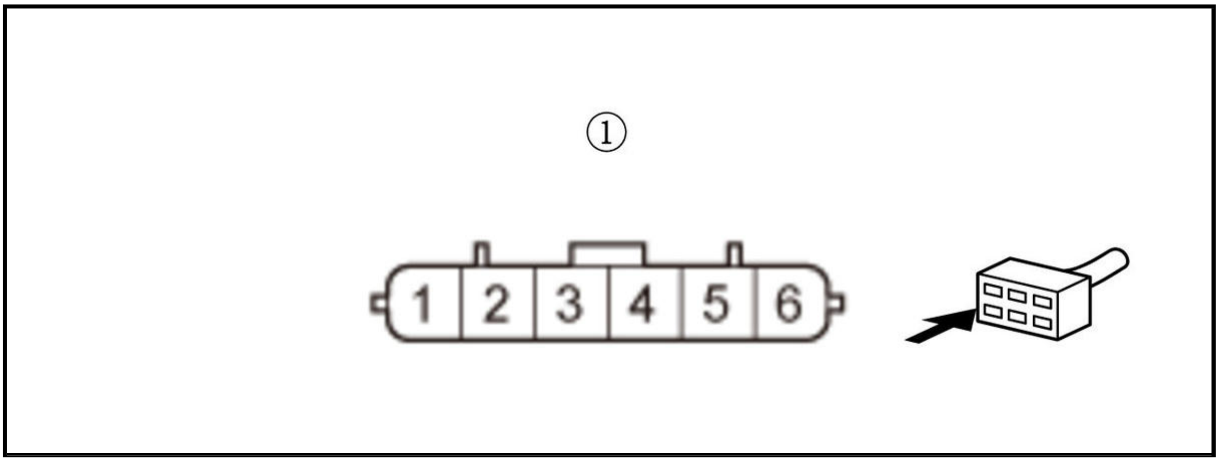

Is there about 5.0 V?

YES

Go to step 3.

NO

Go to step 6.

3. Shorted wire check (APS2 line)

-1. Turn the vehicle to the OFF (LOCK) mode.

-2. Jump the SCS line with the HDS, and wait more than 1 minute.

-3. Disconnect the following connector.

PCM connector A (50P)

-4. Measure the resistance between test points 1 and 2.

Test condition	Vehicle OFF (LOCK) mode
B	APP sensor 6P connector: disconnected
B	PCM connector A (50P): disconnected
Test point 1	APP sensor 6P connector (female terminals) No. 3: ①
Test point 2	Body ground

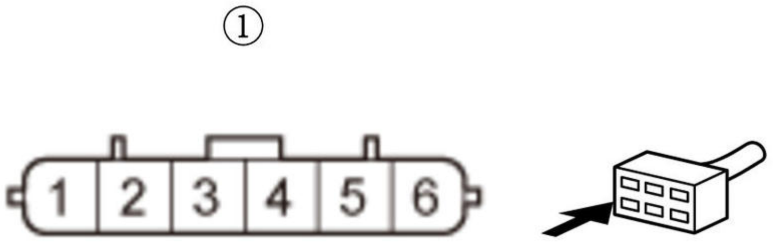

Is there 1 MΩ or more?

YES

Go to step 4.

NO

Repair a short in the APS2 wire between the PCM (A34) and the APP sensor.

4. Open wire check (APS2 line)

-1. Connect terminals A and B with a jumper wire.

Terminal A	APP sensor 6P connector (female terminals) No. 3: ①
Terminal B	Body ground

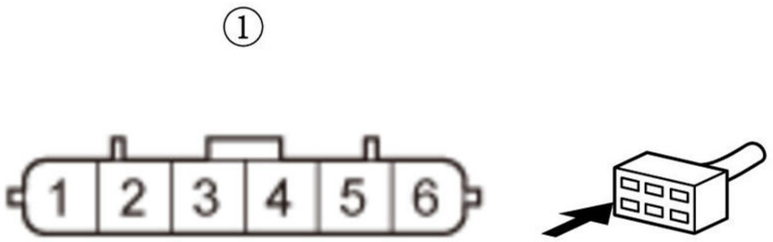

-2. Measure the resistance between test points 1 and 2.

Test condition	Vehicle OFF (LOCK) mode
B	APP sensor 6P connector: disconnected
B	PCM connector A (50P): disconnected
B	APP sensor 6P connector No. 3: jumped to body ground
Test point 1	**PCM connector A (50P) No. 34**
Test point 2	Body ground

Is there 1.0 Ω or less?

YES

Go to step 5.

NO

Repair an open in the APS2 wire between the PCM (A34) and the APP sensor.

5. PCM internal circuit check

-1. Remove the jumper wire from the APP sensor 6P connector.

-2. Reconnect the following connector.

PCM connector A (50P)

-3. Connect terminals A and B with a jumper wire.

Terminal A	APP sensor 6P connector (female terminals) No. 1: ①
Terminal B	APP sensor 6P connector (female terminals) No. 3: ①

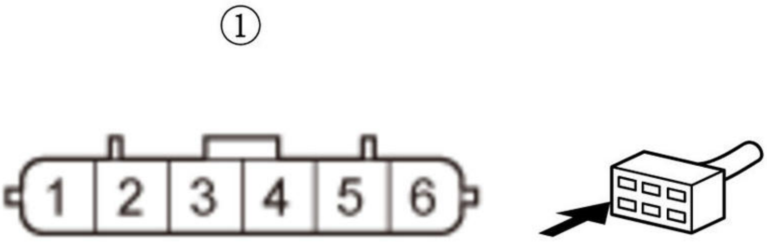

-4. Exit the SCS mode with the HDS.

-5. Turn the vehicle to the ON mode.

-6. Check the parameter(s) below with the HDS.

Signal	Threshold		Current conditions	
	Values	Unit	Values	Unit
APP Sensor B Voltage	Less than 0.2	V	B	B

Do the current condition(s) match the threshold?

YES

Check for any authorized service information related to the DTCs or symptoms you are troubleshooting, or **substitute a known-good PCM** .

NO

Replace the accelerator pedal module .

6. Open wire check (VCC5 line)

-1. Turn the vehicle to the OFF (LOCK) mode.

-2. Jump the SCS line with the HDS, and wait more than 1 minute.

-3. Disconnect the following connector.

PCM connector A (50P)

-4. Connect terminals A and B with a jumper wire.

Terminal A	APP sensor 6P connector (female terminals) No. 1: ①
Terminal B	Body ground

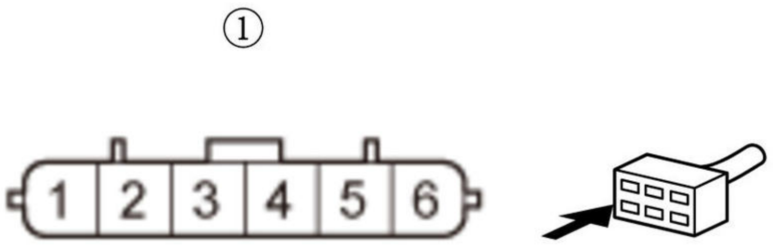

-5. Measure the resistance between test points 1 and 2.

Test condition	Vehicle OFF (LOCK) mode
B	APP sensor 6P connector: disconnected
B	PCM connector A (50P): disconnected
B	APP sensor 6P connector No. 1: jumped to body ground
Test point 1	**PCM connector A (50P) No. 44**

Test point 2	Body ground

Is there 1.0 Ω or less?

YES

The VCC5 wire is OK. Check for any authorized service information related to the DTCs or symptoms you are troubleshooting, or **substitute a known-good PCM** .

NO

Repair an open in the VCC5 wire between the PCM (A44) and the APP sensor.

DTC P2128

DTC P2128 : APP Sensor B (TP Sensor E) Circuit High Voltage

NOTE: Before you troubleshoot, **review the general troubleshooting information** .

DTC Description	Confirmed DTC	Pending DTC
P2128 APP Sensor B (TP Sensor E) Circuit High Voltage	B	B

DTC (PGM-FI)

1. Problem verification

   -1. Turn the vehicle to the ON mode.

   -2. Check the parameter(s) below with the HDS.

Signal	Threshold		Current conditions	
	Values	Unit	Values	Unit
APP Sensor B Voltage	More than 4.0	V	B	B

   Do the current condition(s) match the threshold?

   YES

   The failure is duplicated. Go to step 2.

   NO

   Intermittent failure, the system is OK at this time. Check for poor connections or loose terminals at the APP sensor and the PCM. **If the on-board snapshot of this DTC is recorded, try to reproduce the failure under the same conditions with the on-board snapshot** .

2. Determine possible failure area (APP sensor, others)

   -1. Turn the vehicle to the OFF (LOCK) mode.

   -2. Disconnect the following connector.

APP sensor 6P connector

   -3. Turn the vehicle to the ON mode.

   -4. Measure the voltage between test points 1 and 2.

Test condition	Vehicle ON mode
B	APP sensor 6P connector: disconnected
Test point 1	APP sensor 6P connector (female terminals) No. 1: ①
Test point 2	APP sensor 6P connector (female terminals) No. 2: ①

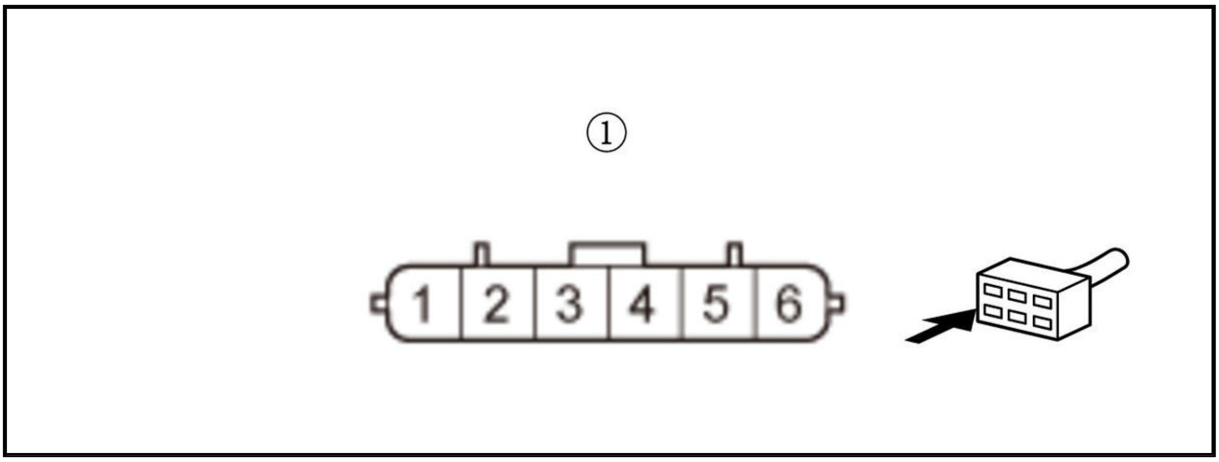

Is there about 5.0 V?

YES

Replace the accelerator pedal module .

NO

Go to step 3.

3. Open wire check (SG5 line)

-1. Turn the vehicle to the OFF (LOCK) mode.

-2. Jump the SCS line with the HDS, and wait more than 1 minute.

-3. Disconnect the following connector.

PCM connector A (50P)

-4. Connect terminals A and B with a jumper wire.

Terminal A	APP sensor 6P connector (female terminals) No. 2: ①
Terminal B	Body ground

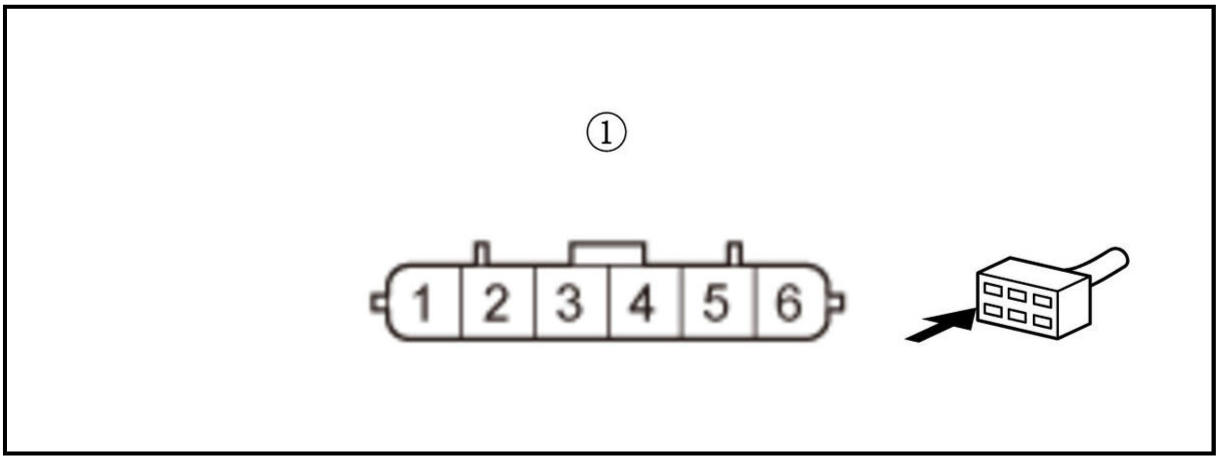

-5. Measure the resistance between test points 1 and 2.

Test condition	Vehicle OFF (LOCK) mode
B	APP sensor 6P connector: disconnected
B	PCM connector A (50P): disconnected

B	APP sensor 6P connector No. 2: jumped to body ground
Test point 1	**PCM connector A (50P) No. 43**
Test point 2	Body ground

Is there 1.0 Ω or less?

YES

The SG5 wire is OK. Check for any authorized service information related to the DTCs or symptoms you are troubleshooting, or **substitute a known-good PCM** .

NO

Repair an open in the SG5 wire between the PCM (A43) and the APP sensor.

DTC P2135

DTC P2135 : TP Sensor A/B Incorrect Voltage Correlation

NOTE: Before you troubleshoot, **review the general troubleshooting information** .

DTC Description	Confirmed DTC	Pending DTC
P2135 TP Sensor A/B Incorrect Voltage Correlation	B	B

DTC (PGM-FI)

1. Problem verification

   -1. Turn the vehicle to the ON mode.

   -2. Clear the DTC with the HDS.

   -3. Select the ETCS (TAC) TEST in the Function Test Menu with the HDS.

   ETCS (TAC) TEST

   Check for Pending or Confirmed DTCs with the HDS.

DTC Description	Confirmed DTC	Pending DTC
P2135 TP Sensor A/B Incorrect Voltage Correlation	B	B

   Is DTC P2135 indicated?

   YES

   The failure is duplicated. Go to step 2.

   NO

   Intermittent failure, the system is OK at this time. Check for poor connections or loose terminals at the throttle body and the PCM. **If the on-board snapshot of this DTC is recorded, try to reproduce the failure under the same conditions with the on-board snapshot** .

2. Determine possible failure area (PCM, others)

   -1. Turn the vehicle to the OFF (LOCK) mode.

   -2. Jump the SCS line with the HDS, and wait more than 1 minute.

-3. Disconnect the following connector.

PCM connector E (80P)

-4. Measure the resistance between test points 1 and 2.

Test condition	Vehicle OFF (LOCK) mode
B	PCM connector E (80P): disconnected
Test point 1	**PCM connector E (80P) No. 50**
Test point 2	**PCM connector E (80P) No. 51**

Is there 1 MΩ or more?

YES

Check for any authorized service information related to the DTCs or symptoms you are troubleshooting, or **substitute a known-good PCM** .

NO

Go to step 3.

3. Shorted wire check (THL1 line to THL2 line)

-1. Disconnect the following connector.

Throttle body 6P connector

-2. Measure the resistance between test points 1 and 2.

Test condition	Vehicle OFF (LOCK) mode
B	PCM connector E (80P): disconnected
B	Throttle body 6P connector: disconnected
Test point 1	**PCM connector E (80P) No. 50**
Test point 2	**PCM connector E (80P) No. 51**

Is there 1 MΩ or more?

YES

The THL1 wire and the THL2 wire are OK. **Replace the throttle body** .

NO

Repair a short in the THL1 wire to the THL2 wire between the PCM (E50, E51) and the throttle body.

DTC P2138

DTC P2138 : APP Sensor A/B (TP Sensor D/E) Incorrect Voltage Correlation

NOTE: Before you troubleshoot, **review the general troubleshooting information** .

DTC Description	Confirmed DTC	Pending DTC
P2138 APP Sensor A/B (TP Sensor D/E) Incorrect Voltage Correlation	B	B

DTC (PGM-FI)

1. Problem verification

   -1. Turn the vehicle to the ON mode.

   -2. Clear the DTC with the HDS.

   -3. Press the accelerator pedal to the floor.

   -4. Check for Pending or Confirmed DTCs with the HDS.

DTC Description	Confirmed DTC	Pending DTC
P2138 APP Sensor A/B (TP Sensor D/E) Incorrect Voltage Correlation	B	B

   Is DTC P2138 indicated?

   YES

   The failure is duplicated. Go to step 2.

   NO

   Intermittent failure, the system is OK at this time. Check for poor connections or loose terminals at the APP sensor and the PCM. **If the on-board snapshot of this DTC is recorded, try to reproduce the failure under the same conditions with the on-board snapshot** .

2. Determine possible failure area (APP sensor, others)

   -1. Check the parameter(s) below with the HDS.

Signal	Current conditions	
	Values	Unit
APP Sensor A Voltage	B	B
APP Sensor B Voltage	B	B

   Are they the same voltage?

   YES

   Go to step 3.

   NO

   Replace the accelerator pedal module .

3. Determine possible failure area (PCM, others)

   -1. Turn the vehicle to the OFF (LOCK) mode.

   -2. Jump the SCS line with the HDS, and wait more than 1 minute.

   -3. Disconnect the following connector.

PCM connector A (50P)

   -4. Measure the resistance between test points 1 and 2.

Test condition	Vehicle OFF (LOCK) mode

B	PCM connector A (50P): disconnected
Test point 1	**PCM connector A (50P) No. 32**
Test point 2	**PCM connector A (50P) No. 34**

Is there 1 MΩ or more?

YES

Check for any authorized service information related to the DTCs or symptoms you are troubleshooting, or **substitute a known-good PCM** .

NO

Go to step 4.

4. Shorted wire check (APS1 line to APS2 line)

-1. Disconnect the following connector.

APP sensor 6P connector

-2. Measure the resistance between test points 1 and 2.

Test condition	Vehicle OFF (LOCK) mode
B	PCM connector A (50P): disconnected
B	APP sensor 6P connector: disconnected
Test point 1	**PCM connector A (50P) No. 32**
Test point 2	**PCM connector A (50P) No. 34**

Is there 1 MΩ or more?

YES

The APS1 wire and the APS2 wire are OK. **Replace the accelerator pedal module** .

NO

Repair a short in the APS1 wire to the APS2 wire between the PCM (A32, A34) and the APP sensor.

DTC P2175 (2021)

DTC P2175 : Throttle Actuator Control System Low Air Flow Detected

NOTE: Before you troubleshoot, **review the general troubleshooting information** .

DTC Description	Confirmed DTC	Pending DTC
P2175 Throttle Actuator Control System Low Air Flow Detected	B	B

DTC (PGM-FI)

1. PGM-FI system check

-1. Turn the vehicle to the ON mode.

-2. Check for Pending or Confirmed DTCs with the HDS.

DTC Description	Confirmed DTC	Pending DTC
B	B	B

Are any Pending or Confirmed DTCs other than P2175 indicated?

YES

Go to the indicated DTC's troubleshooting.

NO

Go to step 2.

2. Intake air duct visual check

   -1. Turn the vehicle to the OFF (LOCK) mode.

   -2. Check for poor connection or blockage at the intake air duct.

   Is it OK?

   YES

   Go to step 3.

   NO

   Reconnect or repair the intake air duct, or **replace it if needed** .

3. Air cleaner housing visual check

   -1. **Check for poor connection or blockage at the air cleaner housing** .

   Is it OK?

   YES

   Go to step 4.

   NO

   Replace the air cleaner housing .

4. Air cleaner element visual check

   -1. **Check for dirt or debris on the air cleaner element** .

   Is it dirty?

   YES

   Replace the air cleaner element .

   NO

   Go to step 5.

5. Problem verification

   -1. Turn the vehicle to the ON mode.

-2. Leave the vehicle to cool the engine.

Signal	Current conditions	
	Values	**Unit**
ECT Sensor 1	B	B

-3. Clear the DTC with the HDS.

-4. **Enter the maintenance mode, then start the engine** , and let it idle for 10 seconds or more.

-5. Monitor the OBD STATUS for DTC P2175 in the DTCs MENU with the HDS.

DTC Description	OBD STATUS
P2175 Throttle Actuator Control System Low Air Flow Detected	B

Does the HDS indicate FAILED?

YES

The failure is duplicated. Go to step 6.

NO

If the HDS indicates PASSED, intermittent failure, the system is OK at this time. Check for poor connections or loose terminals at the throttle body, the MAF sensor/IAT sensor 1, and the PCM. **If the on-board snapshot of this DTC is recorded, try to reproduce the failure under the same conditions with the on-board snapshot** . If the HDS indicates EXECUTING, keep idling until a result comes on. If the HDS indicates OUT OF CONDITION, go to step 5-2 and recheck.

6. Throttle body test

-1. Select the ETCS (TAC) TEST in the Function Test with the HDS.

ETCS (TAC) TEST

Is the throttle actuator control valve normal?

YES

Go to step 7.

NO

Replace the throttle body .

7. Throttle body visual check

-1. Turn the vehicle to the OFF (LOCK) mode.

-2. **Remove the air cleaner** .

-3. Check for dirt, carbon, or damage in the throttle bore.

Is there dirt, carbon, or damage in the throttle bore?

YES

If there is dirt or carbon, **clean the throttle body** . If there is damage in the throttle bore, **replace the throttle body** .

NO

The throttle body is OK. Go to step 8.

8. MAP sensor performance check

-1. Note the value of MAP Sensor (Hi Res) in the DATA LIST with the HDS.

Signal	Current conditions	
	Values	Unit
MAP Sensor (Hi Res)	B	B

-2. **Enter the maintenance mode, then start the engine** , and let it idle.

-3. Check the MAP Sensor (Hi Res) in the DATA LIST with the HDS.

Signal	Current conditions	
	Values	Unit
MAP Sensor (Hi Res)	B	B

Does the MAP Sensor (Hi Res) change 0.67 kPa (0.2 inHg, 5 mmHg) or more?

YES

Go to step 9.

NO

Replace the MAP sensor .

9. MAF sensor performance check

-1. Hold the engine speed at 3, 000 rpm without load (in P or N) until the radiator fan comes on, then let it idle.

-2. While holding the engine speed at 2, 500 rpm for 30 seconds, check the parameter(s) below with the HDS.

Signal	Threshold		Current conditions	
	Values	Unit	Values	Unit
MAF Sensor	7.5-10.5	g/s	B	B

Do the current condition(s) match the threshold?

YES

The MAF sensor is OK. Go to step 10.

NO

Replace MAF sensor/IAT sensor 1 .

10. IAT sensor 1 performance check

-1. Turn the vehicle to the OFF (LOCK) mode.

-2. Allow the engine to cool to ambient temperature.

-3. Note the ambient temperature.

-4. Turn the vehicle to the ON mode.

-5. Quickly note the value of the IAT Sensor (1) in the DATA LIST with the HDS.

Signal	Current conditions	
	Values	Unit
IAT Sensor (1)	B	B

-6. Compare the value of the IAT Sensor (1) with the ambient temperature.

Does the value of the IAT Sensor (1) differ 5.4 deg.F (3 deg.C) or more from the ambient temperature?

YES

Replace MAF sensor/IAT sensor 1 .

NO

IAT sensor 1 is OK. Check for dirt, carbon, or damage in the throttle bore. If there is dirt or carbon, **clean the throttle body** . If there is damage in the throttle bore, **replace the throttle body** .

DTC P2176

DTC P2176 : Throttle Actuator Control System Idle Position Not Learned

WARNING: **Do not insert your fingers into the installed throttle body when you turn the vehicle to the ON mode, or while the vehicle is in ON mode. If you do, you will seriously injure your fingers if the throttle valve is activated.**

NOTE:

- Before you troubleshoot, **review the general troubleshooting information** .
- If DTC P2135 is stored at the same time as DTC P2176, troubleshoot DTC P2135 first, then recheck for DTC P2176.

DTC Description	Confirmed DTC	Pending DTC
P2176 Throttle Actuator Control System Idle Position Not Learned	B	B

DTC (PGM-FI)

1. Problem verification

-1. Turn the vehicle to the ON mode.

-2. Clear the DTC with the HDS.

-3. Turn the vehicle to the OFF (LOCK) mode, and wait 10 seconds.

-4. Turn the vehicle to the ON mode.

-5. Check for Pending or Confirmed DTCs with the HDS.

DTC Description	Confirmed DTC	Pending DTC
P2176 Throttle Actuator Control System Idle Position Not Learned	B	B

Is DTC P2176 indicated?

YES

The failure is duplicated. Go to step 2.

NO

Intermittent failure, the system is OK at this time. Check for poor connections or loose terminals at the throttle body and the PCM. **If the on-board snapshot of this DTC is recorded, try to reproduce the failure under the same conditions with the on-board snapshot** .

2. Throttle body operation check

   -1. Turn the vehicle to the OFF (LOCK) mode.

   -2. **Remove the air cleaner** .

   -3. Turn the vehicle to the ON mode.

   -4. Clear the DTC with the HDS.

   -5. Visually check the throttle valve operation while doing the ETCS (TAC) TEST in the Function Test Menu with the HDS.

   ETCS (TAC) TEST

   Does the throttle valve move to its fully closed position?

   YES

   Go to step 3.

   NO

   Go to step 4.

3. Throttle body condition check

   -1. Turn the vehicle to the OFF (LOCK) mode.

   -2. **Remove the throttle body** .

   -3. Check for sludge or carbon on the throttle valve.

   Is there sludge or carbon on the throttle valve?

   YES

   Clean the throttle body .

   NO

   Replace the throttle body .

4. Open wire check (MTR1 line, MTR2 line)

   -1. Turn the vehicle to the OFF (LOCK) mode.

   -2. Jump the SCS line with the HDS, and wait more than 1 minute.

   -3. Disconnect the following connectors.

PCM connector E (80P)
Throttle body 6P connector

-4. Connect terminals A and B with a jumper wire.

Terminal A	Throttle body 6P connector (female terminals) No. 1: ①
Terminal B	Throttle body 6P connector (female terminals) No. 2: ①

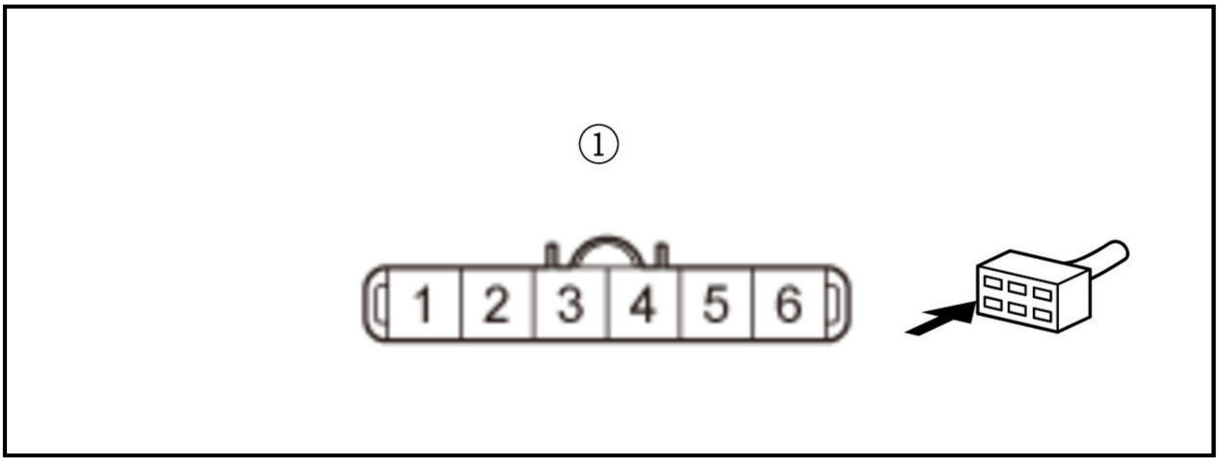

-5. Measure the resistance between test points 1 and 2.

Test condition	Vehicle OFF (LOCK) mode
B	PCM connector E (80P): disconnected
B	Throttle body 6P connector: disconnected
B	Throttle body 6P connector No. 1 and No. 2: jumped
Test point 1	**PCM connector E (80P) No. 27**
Test point 2	**PCM connector E (80P) No. 28**

Is there 1.0 Ω or less?

1. **YES**

   The MTR1 wire and the MTR2 wire are OK. **Substitute a known-good throttle body** , then recheck:

   - If DTC P2176 is not indicated, **replace the original throttle body** .
   - If DTC P2176 is indicated again, **replace the PCM** .

   NO

   Repair an open in the MTR1 wire and/or the MTR2 wire between the PCM (E27, E28) and the throttle body.

DTC P2182

DTC P2182 : ECT Sensor 2 Out of Range

NOTE: Before you troubleshoot, **review the general troubleshooting information** .

DTC Description	Confirmed DTC	Pending DTC
P2182 ECT Sensor 2 Out of Range	B	B

1. Problem verification

   -1. Turn the vehicle to the ON mode.

   -2. Check the parameter(s) below with the HDS.

Signal	Threshold		Current conditions	
	Values	**Unit**	**Values**	**Unit**
ECT Sensor 2 Voltage	Less than 0.14	V	B	B

Do the current condition(s) match the threshold?

YES

The failure is duplicated. Go to step 2.

NO

Intermittent failure, the system is OK at this time. Check for poor connections or loose terminals at ECT sensor 2 and the PCM. **If the on-board snapshot of this DTC is recorded, try to reproduce the failure under the same conditions with the on-board snapshot** .

2. Determine possible failure area (ECT sensor 2, others)

   -1. Turn the vehicle to the OFF (LOCK) mode.

   -2. Disconnect the following connector.

ECT Sensor 2 2P connector

   -3. Turn the vehicle to the ON mode.

   -4. Check the parameter(s) below with the HDS.

Signal	Threshold		Current conditions	
	Values	**Unit**	**Values**	**Unit**
ECT Sensor 2 Voltage	Less than 0.14	V	B	B

Do the current condition(s) match the threshold?

YES

Go to step 3.

NO

Replace ECT sensor 2 .

3. Shorted wire check (TW2/TW2_SENSOR line)

   -1. Turn the vehicle to the OFF (LOCK) mode.

   -2. Jump the SCS line with the HDS, and wait more than 1 minute.

   -3. Disconnect the following connector.

PCM connector E (80P)

-4. Measure the resistance between test points 1 and 2.

Test condition	Vehicle OFF (LOCK) mode
B	ECT Sensor 2 2P connector: disconnected
B	PCM connector E (80P): disconnected
Test point 1	ECT sensor 2 2P connector (female terminals) No. 2: ①
Test point 2	Body ground

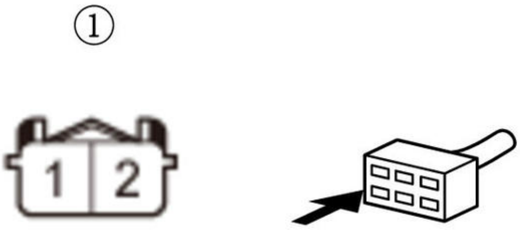

Is there 1 MΩ or more?

YES

The TW2/TW2_SENSOR wire is OK. Check for any authorized service information related to the DTCs or symptoms you are troubleshooting, or **substitute a known-good PCM** .

NO

Repair a short in the TW2/TW2_SENSOR wire between the PCM (E54) and ECT sensor 2.

DTC P2183

DTC P2183 : ECT Sensor 2 Circuit Range/Performance Problem

NOTE:

- Before you troubleshoot, **review the general troubleshooting information** .
- If DTC P0111 is stored at the same time as DTC P2183, troubleshoot DTC P0111 first, then recheck for DTC P2183.

DTC Description	Confirmed DTC	Pending DTC
P2183 ECT Sensor 2 Circuit Range/Performance Problem	B	B

DTC (PGM-FI)

1. Connector visual check:

   Check for poor connections or loose terminals and terminals at these sensors:

   - ECT sensor 1
   - ECT sensor 2

   Are the connections and terminals OK?

YES

Go to step 2.

NO

Repair the connections or terminals.

2. PGM-FI system check

-1. Turn the vehicle to the ON mode.

-2. Check for Pending or Confirmed DTCs with the HDS.

DTC Description	Confirmed DTC	Pending DTC
P011A ECT Sensor 1 Circuit Range/Performance Problem	B	B
P2183 ECT Sensor 2 Circuit Range/Performance Problem	B	B

Are DTC P011A and P2183 indicated at the same time?

YES

Go to step 5.

NO

Go to step 3.

3. ECT sensor 2 performance check

-1. **Enter the maintenance mode, then start the engine** , and let it idle for 10 minutes.

-2. Check the parameter(s) below with the HDS.

Signal	Threshold		Current conditions	
	Values	Unit	Values	Unit
ECT Sensor 2	Less than 49	deg.C	B	B
	Less than 120	deg.F		

Do the current condition(s) match the threshold?

YES

Replace ECT sensor 2 .

NO

Go to step 4.

4. Problem verification

-1. Turn the vehicle to the OFF (LOCK) mode.

-2. Allow ECT sensor 2 to cool to the ambient temperature.

-3. Note the ambient temperature.

-4. Turn the vehicle to the ON mode.

-5. Quickly note the value of ECT Sensor 2 in the DATA LIST with the HDS.

Signal	Current conditions	
	Values	Unit
ECT Sensor 2	B	B

Does the value of ECT Sensor 2 differ 5.4 deg.F (3 deg.C) or more from the ambient temperature?

YES

The failure is duplicated. **Replace ECT sensor 2** .

NO

Intermittent failure, the system is OK at this time. Check for poor connections or loose terminals at ECT sensor 1, ECT sensor 2, and the PCM. **If the on-board snapshot of this DTC is recorded, try to reproduce the failure under the same conditions with the on-board snapshot** .

5. ECT sensor 1 performance check

-1. **Enter the maintenance mode, then start the engine** , and let it idle for 10 minutes.

-2. Check the parameter(s) below with the HDS.

Signal	Threshold		Current conditions	
	Values	Unit	Values	Unit
ECT Sensor 1	Less than 49	deg.C	B	B
	Less than 120	deg.F		

Do the current condition(s) match the threshold?

YES

Replace ECT sensor 1 .

NO

ECT sensor 1 is OK at this time. Go to step 6.

6. ECT sensor 2 performance check

-1. Let the engine idle for 10 minutes.

-2. Check the parameter(s) below with the HDS.

Signal	Threshold		Current conditions	
	Values	Unit	Values	Unit
ECT Sensor 2	Less than 49	deg.C	B	B
	Less than 120	deg.F		

Do the current condition(s) match the threshold?

YES

Replace ECT sensor 2 .

NO

Go to step 7.

7. Problem verification

-1. Turn the vehicle to the OFF (LOCK) mode.

-2. Allow the sensors to cool to the ambient temperature.

-3. Note the ambient temperature.

-4. Turn the vehicle to the ON mode.

-5. Quickly note the value of ECT Sensor 1 and ECT Sensor 2 in the DATA LIST with the HDS.

Signal	Current conditions	
	Values	Unit
ECT Sensor 1	B	B
ECT Sensor 2	B	B

-6. Compare the value of ECT Sensor 1 to the ambient temperature, and the value of ECT Sensor 2 to the ambient temperature individually.

Does either sensor differ more than 5.4 deg.F (3 deg.C) from the ambient temperature?

YES

Replace the sensor that differed more than 5.4 deg.F (3 deg.C) from the ambient temperature.

NO

Intermittent failure, the system is OK at this time. Check for poor connections or loose terminals at ECT sensor 1, ECT sensor 2, and the PCM. **If the on-board snapshot of this DTC is recorded, try to reproduce the failure under the same conditions with the on-board snapshot** .

DTC P2184

DTC P2184 : ECT Sensor 2 Circuit Low Voltage

NOTE: Before you troubleshoot, **review the general troubleshooting information** .

DTC Description	Confirmed DTC	Pending DTC
P2184 ECT Sensor 2 Circuit Low Voltage	B	B

DTC (PGM-FI)

1. Problem verification

-1. Turn the vehicle to the ON mode.

-2. Check the parameter(s) below with the HDS.

Signal	Threshold		Current conditions	
	Values	Unit	Values	Unit
ECT Sensor 2 Voltage	Less than 0.08	V	B	B

Do the current condition(s) match the threshold?

YES

The failure is duplicated. Go to step 2.

NO

Intermittent failure, the system is OK at this time. Check for poor connections or loose terminals at ECT sensor 2 and the PCM. **If the on-board snapshot of this DTC is recorded, try to reproduce the failure under the same conditions with the on-board snapshot** .

2. Determine possible failure area (ECT sensor 2, others)

-1. Turn the vehicle to the OFF (LOCK) mode.

-2. Disconnect the following connector.

ECT Sensor 2 2P connector

-3. Turn the vehicle to the ON mode.

-4. Check the parameter(s) below with the HDS.

Signal	Threshold		Current conditions	
	Values	Unit	Values	Unit
ECT Sensor 2 Voltage	Less than 0.08	V	B	B

Do the current condition(s) match the threshold?

YES

Go to step 3.

NO

Replace ECT sensor 2 .

3. Shorted wire check (TW2/TW2_SENSOR line)

-1. Turn the vehicle to the OFF (LOCK) mode.

-2. Jump the SCS line with the HDS, and wait more than 1 minute.

-3. Disconnect the following connector.

PCM connector E (80P)

-4. Measure the resistance between test points 1 and 2.

Test condition	Vehicle OFF (LOCK) mode
B	ECT Sensor 2 2P connector: disconnected
B	PCM connector E (80P): disconnected
Test point 1	ECT sensor 2 2P connector (female terminals) No. 2: ①
Test point 2	Body ground

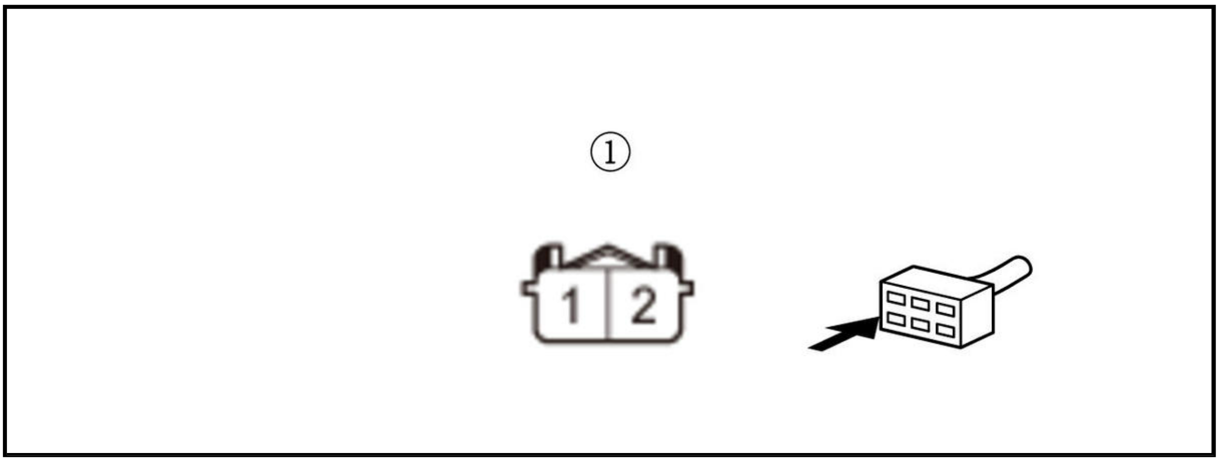

Is there 1 MΩ or more?

YES

The TW2/TW2_SENSOR wire is OK. Check for any authorized service information related to the DTCs or symptoms you are troubleshooting, or **substitute a known-good PCM** .

NO

Repair a short in the TW2/TW2_SENSOR wire between the PCM (E54) and ECT sensor 2.

DTC P2185

DTC P2185 : ECT Sensor 2 Circuit High Voltage

NOTE: Before you troubleshoot, **review the general troubleshooting information** .

DTC Description	Confirmed DTC	Pending DTC
P2185 ECT Sensor 2 Circuit High Voltage	B	B

DTC (PGM-FI)

1. Problem verification

   -1. Turn the vehicle to the ON mode.

   -2. Check the parameter(s) below with the HDS.

Signal	Threshold		Current conditions	
	Values	Unit	Values	Unit
ECT Sensor 2 Voltage	More than 4.92	V	B	B

   Do the current condition(s) match the threshold?

   YES

   The failure is duplicated. Go to step 2.

   NO

   Intermittent failure, the system is OK at this time. Check for poor connections or loose terminals at ECT sensor 2 and the PCM. **If the on-board snapshot of this DTC is recorded, try to reproduce the failure under the same conditions with the on-board snapshot** .

2. Determine of possible failure area (ECT sensor 2, others)

-1. Turn the vehicle to the OFF (LOCK) mode.

-2. Disconnect the following connector.

ECT sensor 2 2P connector

-3. Connect terminals A and B with a jumper wire.

Terminal A	ECT sensor 2 2P connector (female terminals) No. 1: ①
Terminal B	ECT sensor 2 2P connector (female terminals) No. 2: ①

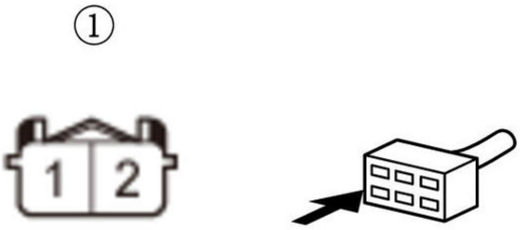

-4. Turn the vehicle to the ON mode.

-5. Check the parameter(s) below with the HDS.

Signal	**Threshold**		**Current conditions**	
	Values	**Unit**	**Values**	**Unit**
ECT Sensor 2 Voltage	More than 4.92	V	B	B

Do the current condition(s) match the threshold?

YES

Go to step 3.

NO

Replace ECT sensor 2 .

3. Determine possible failure area (TW2/TW2_SENSOR line, others)

-1. Turn the vehicle to the OFF (LOCK) mode.

-2. Remove the jumper wire from the ECT sensor 2 2P connector.

-3. Turn the vehicle to the ON mode.

-4. Measure the voltage between test points 1 and 2.

Test condition	Vehicle ON mode
B	ECT sensor 2 2P connector: disconnected
Test point 1	ECT sensor 2 2P connector (female terminals) No. 2: ①

Test point 2	Body ground

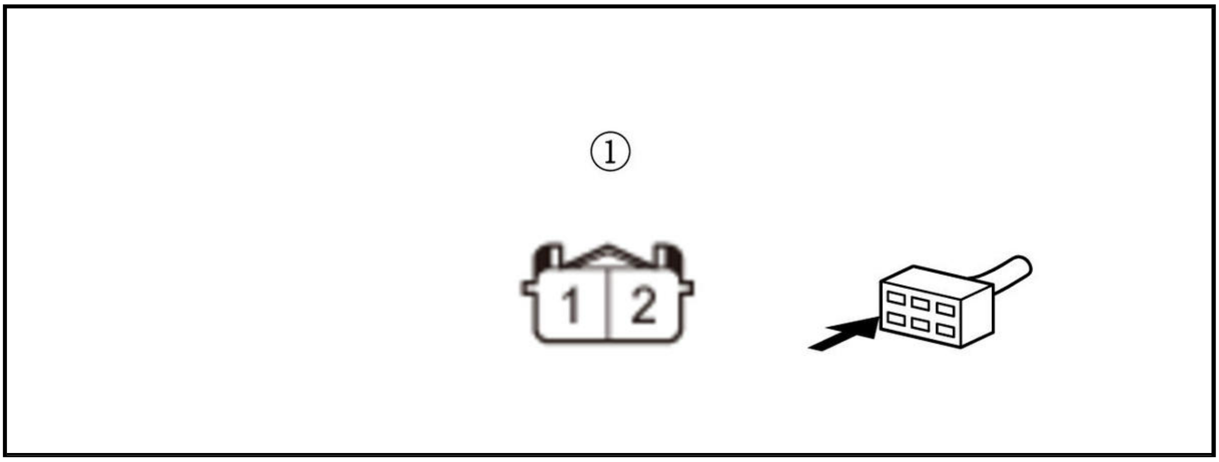

Is there about 5.0 V?

YES

Go to step 4.

NO

Go to step 5.

4. Open wire check (SG6 line)

-1. Turn the vehicle to the OFF (LOCK) mode.

-2. Jump the SCS line with the HDS, and wait more than 1 minute.

-3. Disconnect the following connector.

PCM connector E (80P)

-4. Measure the resistance between test points 1 and 2.

Test condition	Vehicle OFF (LOCK) mode
B	ECT sensor 2 2P connector: disconnected
B	PCM connector E (80P): disconnected
Test point 1	ECT sensor 2 2P connector (female terminals) No. 1: ①
Test point 2	**PCM connector E (80P) No. 45**

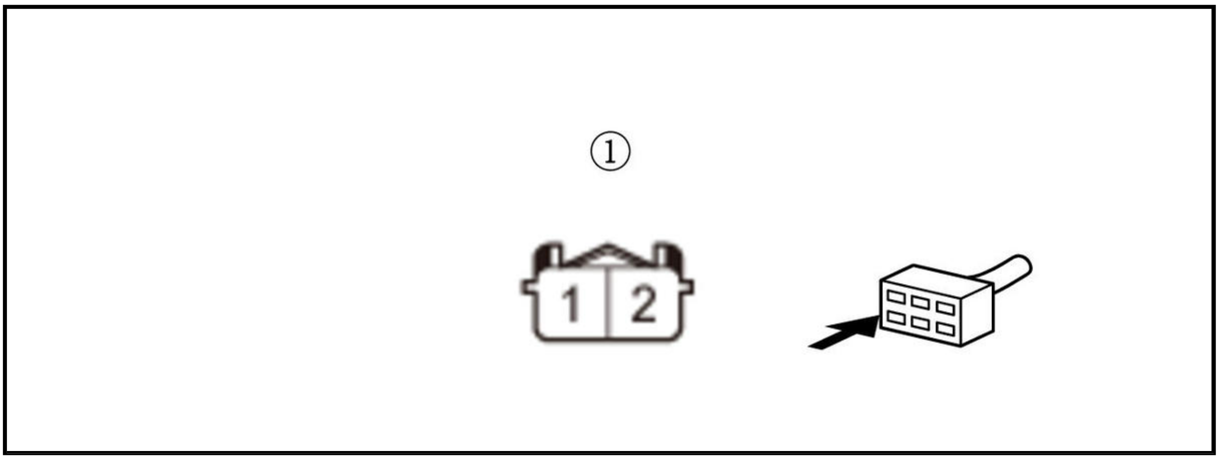

Is there 1.0 Ω or less?

YES

The SG6 wire is OK. Check for any authorized service information related to the DTCs or symptoms you are troubleshooting, or **substitute a known-good PCM** .

NO

Repair an open in the SG6 wire between the PCM (E45) and ECT sensor 2.

5. Open wire check (TW2/TW2_SENSOR line)

-1. Turn the vehicle to the OFF (LOCK) mode.

-2. Jump the SCS line with the HDS, and wait more than 1 minute.

-3. Disconnect the following connector.

PCM connector E (80P)

-4. Measure the resistance between test points 1 and 2.

Test condition	Vehicle OFF (LOCK) mode
B	ECT sensor 2 2P connector: disconnected
B	PCM connector E (80P): disconnected
Test point 1	ECT sensor 2 2P connector (female terminals) No. 2: ①
Test point 2	**PCM connector E (80P) No. 54**

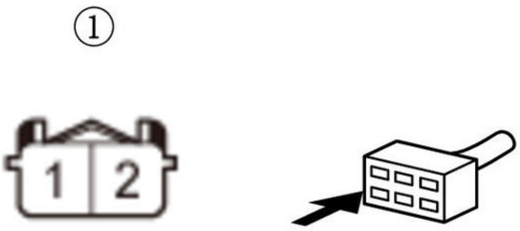

Is there 1.0 Ω or less?

YES

The TW2/TW2_SENSOR wire is OK. Check for any authorized service information related to the DTCs or symptoms you are troubleshooting, or **substitute a known-good PCM** .

NO

Repair an open in the TW2/TW2_SENSOR wire between the PCM (E54) and ECT sensor 2.

DTC P2195

DTC P2195 : A/F Sensor (Sensor 1) Signal Stuck Lean

NOTE:

- Before you troubleshoot, **review the general troubleshooting information** .
- If the vehicle was out of fuel and the engine stalled before this DTC was stored, refuel, then clear the DTC with the HDS.
- If DTC P2101, P2118, P2135, P2138, P2176, or a combination of P2122 and P2127, P2122 and P2138 or P2127 and P2138 is stored at the same time as DTC P2195, troubleshoot those DTCs first, then recheck for DTC P2195.

DTC Description	Confirmed DTC	Pending DTC
P2195 A/F Sensor (Sensor 1) Signal Stuck Lean	B	B

DTC (PGM-FI)

1. MAF sensor/IAT sensor 1 visual check

   -1. **Remove MAF sensor/IAT sensor 1** .

   -2. Check for dirt or debris in MAF sensor/IAT sensor 1.

   Is it dirty?

   YES

   Remove the debris. If needed, **replace MAF sensor/IAT sensor 1** .

   NO

   Go to step 2.

2. A/F sensor (Sensor 1) installation check

   -1. Check the installation of the A/F sensor (Sensor 1).

   Is the A/F sensor loose or disconnected from the TWC?

   YES

   Reinstall the A/F sensor (Sensor 1) .

   NO

   Go to step 3.

3. Problem verification

   -1. Turn the vehicle to the ON mode.

   -2. Clear the DTC with the HDS.

   -3. **Enter the maintenance mode, then start the engine** .

   -4. Hold the engine speed at 3, 000 rpm without load (in P or N) until the radiator fan comes on.

   -5. Check for Pending or Confirmed DTCs with the HDS.

DTC Description	Confirmed DTC	Pending DTC
P2195 A/F Sensor (Sensor 1) Signal Stuck Lean	B	B

   Is DTC P2195 indicated?

YES

Check for poor connections or loose terminals at the A/F sensor (Sensor 1) and the PCM. Check for any authorized service information related to the DTCs or symptoms you are troubleshooting, or **substitute a known-good PCM** .

NO

Intermittent failure, the system is OK at this time. Check for poor connections or loose terminals at the A/F sensor (Sensor 1) and the PCM. **If the on-board snapshot of this DTC is recorded, try to reproduce the failure under the same conditions with the on-board snapshot** .

DTC P2199

DTC P2199 : IAT Sensor 1-2 Incorrect Correlation

NOTE: Before you troubleshoot, **review the general troubleshooting information** .

DTC Description	Confirmed DTC	Pending DTC
P2199 IAT Sensor1-2 Incorrect Correlation	B	B

DTC (PGM-FI)

1. Connector visual check:

   Check for poor connections or loose terminals of these connectors.

   - ECT sensor 1
   - ECT sensor 2
   - MAF sensor/IAT sensor 1
   - IAT sensor 2

   Are the connection and terminals OK?

   YES

   Replace IAT sensor 2 .

   NO

   Repair the connections or terminals, then recheck.

DTC P219C, P219D, P219E, P219F

DTC P219C : No. 1 Cylinder Air-Fuel Ratio Variation

DTC P219D : No. 2 Cylinder Air-Fuel Ratio Variation

DTC P219E : No. 3 Cylinder Air-Fuel Ratio Variation

DTC P219F : No. 4 Cylinder Air-Fuel Ratio Variation

NOTE:

- Before you troubleshoot, **review the general troubleshooting information** .
- If any of the DTCs listed below are indicated at the same time as DTC P219C, P219D, P219E, and/or P219F, troubleshoot those DTCs first, then recheck for P219C, P219D, P219E, and/or P219F.

  P0130, P0133, P2195, P2237, P2238, P2243, P2245, P2251, P2252, P2A00: A/F sensor (Sensor 1)

P0134, P0135: A/F sensor (Sensor 1) heater

P0201, P0202, P0203, P0204: No. 1-No. 4 cylinder injector(s)

P0300: Random misfire

P0301, P0302, P0303, P0304: No. 1-No. 4 cylinder misfire

P0351, P0352, P0353, P0354: No. 1-No. 4 cylinder ignition coil(s)

DTC Description	Confirmed DTC	Pending DTC
P219C No. 1 Cylinder Air-Fuel Ratio Variation	B	B
P219D No. 2 Cylinder Air-Fuel Ratio Variation	B	B
P219E No. 3 Cylinder Air-Fuel Ratio Variation	B	B
P219F No. 4 Cylinder Air-Fuel Ratio Variation	B	B

DTC (PGM-FI)

1. Problem verification 1 (HDS parameter)

   -1. Turn the vehicle to the ON mode.

   -2. Check the parameter(s) below with the HDS.

Signal	Threshold		Current conditions	
	Values	Unit	Values	Unit
Fuel factor study valve of No1 cylinder	0.83-1.15	B	B	B
Fuel factor study valve of No2 cylinder	0.83-1.15	B	B	B
Fuel factor study valve of No3 cylinder	0.83-1.15	B	B	B
Fuel factor study valve of No4 cylinder	0.83-1.15	B	B	B

NOTE: If the value of Fuel factor study valve is above the threshold, the PCM may detect an over-lean failure. If the value of Fuel factor study valve is below the threshold, the PCM may detect an over-rich failure.

Do the current condition(s) match the threshold?

YES

Go to step 2.

NO

The failure is duplicated. Go to step 4.

2. On-board snapshot check:

   Check the recorded on-board snapshot parameter(s) with the HDS.

   - Fuel factor study valve of No1 cylinder
   - Fuel factor study valve of No2 cylinder
   - Fuel factor study valve of No3 cylinder
   - Fuel factor study valve of No4 cylinder

Do the parameter(s) of the recorded on-board snapshot match the threshold shown in step1-2?

YES

Go to step 3.

NO

The failure is duplicated. Go to step 4.

3. Problem verification 2

-1. **Enter the maintenance mode, then start the engine** .

-2. Hold the engine speed at 3, 000 rpm without load (in P or N) until the radiator fan comes on, then let it idle.

Test-drive the vehicle under these conditions:

- Engine coolant temperature (ECT SENSOR 1) above 158 deg.F (70 deg.C)
- Transmission in D
- Drive at a steady engine speed between 1, 000-1, 200 rpm, then accelerate up to 3, 400 rpm at about 10-15 seconds, and repeat this 3 times or more if needed

Signal	**Current conditions**	
	Values	**Unit**
ECT Sensor 1	B	B
Engine Speed	B	B

-4. Check the parameter(s) below with the HDS.

Signal	**Threshold**		**Current conditions**	
	Values	**Unit**	**Values**	**Unit**
Fuel factor study valve of No1 cylinder	0.83-1.15	B	B	B
Fuel factor study valve of No2 cylinder	0.83-1.15	B	B	B
Fuel factor study valve of No3 cylinder	0.83-1.15	B	B	B
Fuel factor study valve of No4 cylinder	0.83-1.15	B	B	B

Do the current condition(s) match the threshold?

YES

Intermittent failure, the system is OK at this time. **If the on-board snapshot of this DTC is recorded, try to reproduce the failure under the same condition with the on-board snapshot** .

NO

Go to step 4.

4. Engine compression check

-1. Turn the vehicle to the OFF (LOCK) mode.

-2. **Do the cylinder compression test** .

Is there a cylinder with lower compression than the other cylinders?

YES

Repair the engine compression problem.

NO

Go to step 5.

5. Valve clearance check

-1. **Inspect the valve clearance** .

Is the valve clearance OK?

YES

Go to step 6.

NO

Adjust the valve clearance .

6. Injector check

-1. **Exchange the injector from the problem cylinder with one from another cylinder** .

-2. **Enter the maintenance mode, then start the engine** .

-3. Hold the engine speed at 3, 000 rpm without load (in P or N) until the radiator fan comes on, then let it idle.

Check under these conditions:

- A/C off
- All electrical loads off

-5. Do the CYLINDER A/F TEST three times in the Function Test Menu with the HDS.

CYLINDER A/F TEST

Is an injector failure indicated at the cylinder where the injector was exchanged?

YES

Replace the problem injector .

NO

Go to step 7.

7. Intake and exhaust manifold visual check

-1. Turn the vehicle to the OFF (LOCK) mode.

-2. Check for carbon build-up in the intake manifold and the exhaust manifold.

Is there carbon build-up in the intake manifold and/or exhaust manifold?

YES

Check the engine for oil leaks. If needed, repair the engine, also remove the carbon.

NO

Intermittent failure, the system is OK at this time. Check the engine for oil leaks.

DTC P2226

DTC P2226 : BARO Sensor Circuit Malfunction

NOTE: Before you troubleshoot, **review the general troubleshooting information** .

DTC Description	Confirmed DTC	Pending DTC
P2226 BARO Sensor Circuit Malfunction	B	B

DTC (PGM-FI)

1. Problem verification

   -1. Turn the vehicle to the ON mode.

   -2. Clear the DTC with the HDS.

   -3. Turn the vehicle to the OFF (LOCK) mode.

   -4. Turn the vehicle to the ON mode, and wait 2 seconds or more.

   -5. Check for Pending or Confirmed DTCs with the HDS.

DTC Description	Confirmed DTC	Pending DTC
P2226 BARO Sensor Circuit Malfunction	B	B

Is DTC P2226 indicated?

YES

The failure is duplicated. Check for any authorized service information related to the DTCs or symptoms you are troubleshooting, or **substitute a known-good PCM** .

NO

Intermittent failure, the system is OK at this time. **If the on-board snapshot of this DTC is recorded, try to reproduce the failure under the same conditions with the on-board snapshot** .

DTC P2228

DTC P2228 : BARO Sensor Circuit Low Voltage

NOTE: Before you troubleshoot, **review the general troubleshooting information** .

DTC Description	Confirmed DTC	Pending DTC
P2228 BARO Sensor Circuit Low Voltage	B	B

DTC (PGM-FI)

1. Problem verification

   -1. Turn the vehicle to the ON mode.

-2. Check the parameter(s) below with the HDS.

Signal	Threshold		Current conditions	
	Values	**Unit**	**Values**	**Unit**
Baro Sensor	Less than 371	mmHg	B	B

Do the current condition(s) match the threshold?

YES

The failure is duplicated. Check for any authorized service information related to the DTCs or symptoms you are troubleshooting, or **substitute a known-good PCM** .

NO

Intermittent failure, the system is OK at this time. **If the on-board snapshot of this DTC is recorded, try to reproduce the failure under the same conditions with the on-board snapshot** .

DTC P2229

DTC P2229 : BARO Sensor Circuit High Voltage

NOTE: Before you troubleshoot, **review the general troubleshooting information** .

DTC Description	Confirmed DTC	Pending DTC
P2229 BARO Sensor Circuit High Voltage	B	B

DTC (PGM-FI)

1. Problem verification

-1. Turn the vehicle to the ON mode.

-2. Check the parameter(s) below with the HDS.

Signal	Threshold		Current conditions	
	Values	**Unit**	**Values**	**Unit**
Baro Sensor	More than 855	mmHg	B	B

Do the current condition(s) match the threshold?

YES

The failure is duplicated. Check for any authorized service information related to the DTCs or symptoms you are troubleshooting, or **substitute a known-good PCM** .

NO

Intermittent failure, the system is OK at this time. **If the on-board snapshot of this DTC is recorded, try to reproduce the failure under the same conditions with the on-board snapshot** .

DTC P2237

DTC P2237 : A/F Sensor (Sensor 1) IP Circuit High Voltage

NOTE: Before you troubleshoot, **review the general troubleshooting information** .

DTC Description	Confirmed DTC	Pending DTC
P2237 A/F Sensor (Sensor 1) IP Circuit High Voltage	B	B

DTC (PGM-FI)

1. Problem verification

   -1. Turn the vehicle to the ON mode.

   -2. Clear the DTC with the HDS.

   -3. **Enter the maintenance mode, then start the engine** .

   -4. Hold the engine speed at 3, 000 rpm without load (in P or N) until the radiator fan comes on, then let it idle.

   -5. Check for Pending or Confirmed DTCs with the HDS.

DTC Description	Confirmed DTC	Pending DTC
P2237 A/F Sensor (Sensor 1) IP Circuit High Voltage	B	B

   Is DTC P2237 indicated?

   YES

   The failure is duplicated. Go to step 2.

   NO

   Intermittent failure, the system is OK at this time. Check for poor connections or loose terminals at the A/F sensor (Sensor 1) and the PCM. **If the on-board snapshot of this DTC is recorded, try to reproduce the failure under the same conditions with the on-board snapshot** .

2. Open wire check (IP line)

   -1. Turn the vehicle to the OFF (LOCK) mode.

   -2. Jump the SCS line with the HDS, and wait more than 1 minute.

   -3. Disconnect the following connectors.

PCM connector E (80P)
A/F sensor (Sensor 1) 6P connector

   -4. Measure the resistance between test points 1 and 2.

Test condition	Vehicle OFF (LOCK) mode
B	PCM connector E (80P): disconnected
B	A/F sensor (Sensor 1) 6P connector: disconnected
Test point 1	A/F sensor (Sensor 1) 6P connector (male terminals) No. 5: ①
Test point 2	**PCM connector E (80P) No. 48**

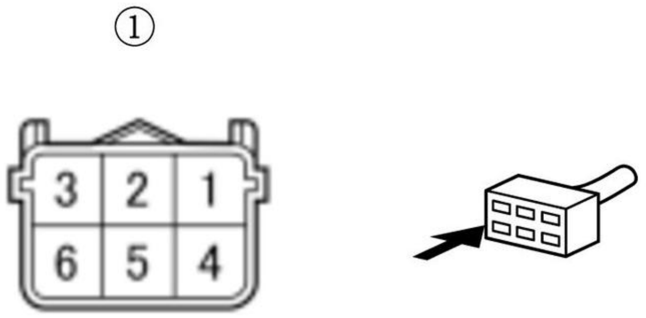

Is there 1.0 Ω or less?

YES

Go to step 3.

NO

Repair an open in the IP wire between the PCM (E48) and the A/F sensor (Sensor 1).

3. PCM internal circuit check

-1. Reconnect the following connector.

PCM connector E (80P)

-2. Exit the SCS mode with the HDS.

-3. **Enter the maintenance mode, then start the engine** .

-4. Hold the engine speed at 3, 000 rpm without load (in P or N) until the radiator fan comes on, then let it idle.

-5. Measure the voltage between test points 1 and 2.

Test condition	Engine running
B	A/F sensor (Sensor 1) 6P connector: disconnected
Test point 1	A/F sensor (Sensor 1) 6P connector (male terminals) No. 5: ①
Test point 2	Body ground

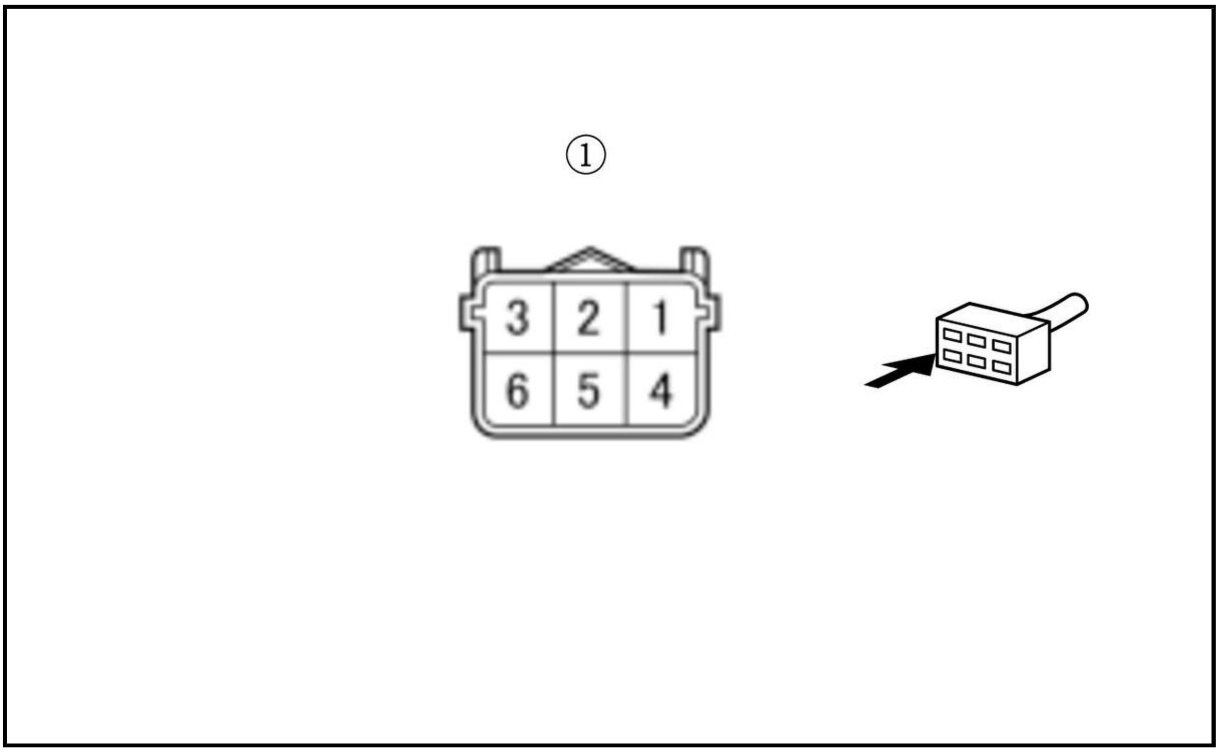

Is there about 0.2 V or less?

YES

Check for any authorized service information related to the DTCs or symptoms you are troubleshooting, or **substitute a known-good PCM** .

NO

The PCM internal circuit is OK. **Replace the A/F sensor (Sensor 1)** .

DTC P2238

DTC P2238 : A/F Sensor (Sensor 1) IP Circuit Low Voltage

NOTE: Before you troubleshoot, **review the general troubleshooting information** .

DTC Description	Confirmed DTC	Pending DTC
P2238 A/F Sensor (Sensor 1) IP Circuit Low Voltage	B	B

DTC (PGM-FI)

1. Problem verification

-1. Turn the vehicle to the ON mode.

-2. Clear the DTC with the HDS.

-3. **Enter the maintenance mode, then start the engine** .

-4. Hold the engine speed at 3, 000 rpm without load (in P or N) until the radiator fan comes on, then let it idle.

-5. Check for Pending or Confirmed DTCs with the HDS.

DTC Description	Confirmed DTC	Pending DTC
P2238 A/F Sensor (Sensor 1) IP Circuit Low Voltage	B	B

Is DTC P2238 indicated?

YES

The failure is duplicated. Go to step 2.

NO

Intermittent failure, the system is OK at this time. Check for poor connections or loose terminals at the A/F sensor (Sensor 1) and the PCM. **If the on-board snapshot of this DTC is recorded, try to reproduce the failure under the same conditions with the on-board snapshot** .

2. Shorted wire check (IP line)

-1. Turn the vehicle to the OFF (LOCK) mode.

-2. Jump the SCS line with the HDS, and wait more than 1 minute.

-3. Disconnect the following connectors.

PCM connector E (80P)
A/F sensor (Sensor 1) 6P connector

-4. Measure the resistance between test points 1 and 2.

Test condition	Vehicle OFF (LOCK) mode
B	PCM connector E (80P): disconnected
B	A/F sensor (Sensor 1) 6P connector: disconnected
Test point 1	**PCM connector E (80P) No. 48**
Test point 2	Body ground

Is there 1 MΩ or more?

YES

Go to step 3.

NO

Repair a short in the IP wire between the PCM (E48) and the A/F sensor (Sensor 1).

3. A/F sensor (Sensor 1) check

-1. **Substitute a known-good A/F sensor (Sensor 1)** .

-2. Reconnect all connectors.

-3. Exit the SCS mode with the HDS.

-4. Turn the vehicle to the ON mode.

-5. **Reset the PCM with the HDS** .

Reset PCM

-6. **Enter the maintenance mode, then start the engine** .

-7. Hold the engine speed at 3, 000 rpm without load (in P or N) until the radiator fan comes on, then let it idle.

-8. Check for Pending or Confirmed DTCs with the HDS.

DTC Description	Confirmed DTC	Pending DTC
P2238 A/F Sensor (Sensor 1) IP Circuit Low Voltage	B	B

Is DTC P2238 indicated?

YES

Check for any authorized service information related to the DTCs or symptoms you are troubleshooting, or **substitute a known-good PCM** .

NO

Replace the original A/F sensor (Sensor 1) .

DTC P2243

DTC P2243 : A/F Sensor (Sensor 1) VCENT Circuit High Voltage

NOTE: Before you troubleshoot, **review the general troubleshooting information** .

DTC Description	Confirmed DTC	Pending DTC
P2243 A/F Sensor (Sensor 1) VCENT Circuit High Voltage	B	B

DTC (PGM-FI)

1. Problem verification

-1. Turn the vehicle to the ON mode.

-2. Clear the DTC with the HDS.

-3. **Enter the maintenance mode, then start the engine** .

-4. Hold the engine speed at 3, 000 rpm without load (in P or N) until the radiator fan comes on, then let it idle.

-5. Check for Pending or Confirmed DTCs with the HDS.

DTC Description	Confirmed DTC	Pending DTC
P2243 A/F Sensor (Sensor 1) VCENT Circuit High Voltage	B	B

Is DTC P2243 indicated?

YES

The failure is duplicated. Go to step 2.

NO

Intermittent failure, the system is OK at this time. Check for poor connections or loose terminals at the A/F sensor (Sensor 1) and the PCM. **If the on-board snapshot of this DTC is recorded, try to reproduce the failure under the same conditions with the on-board snapshot** .

2. Open wire check (VCENT line)

-1. Turn the vehicle to the OFF (LOCK) mode.

-2. Jump the SCS line with the HDS, and wait more than 1 minute.

-3. Disconnect the following connectors.

PCM connector E (80P)
A/F sensor (Sensor 1) 6P connector

-4. Measure the resistance between test points 1 and 2.

Test condition	Vehicle OFF (LOCK) mode
B	PCM connector E (80P): disconnected
B	A/F sensor (Sensor 1) 6P connector: disconnected
Test point 1	A/F sensor (Sensor 1) 6P connector (male terminals) No. 6: ①
Test point 2	**PCM connector E (80P) No. 74**

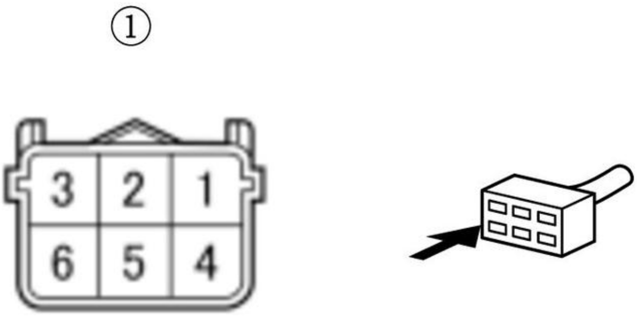

Is there 1.0 Ω or less?

YES

Go to step 3.

NO

Repair an open in the VCENT wire between the PCM (E74) and the A/F sensor (Sensor 1).

3. PCM internal circuit check

-1. Reconnect the following connector.

PCM connector E (80P)

-2. Exit the SCS mode with the HDS.

-3. **Enter the maintenance mode, then start the engine** .

-4. Hold the engine speed at 3, 000 rpm without load (in P or N) until the radiator fan comes on, then let it idle.

-5. Measure the voltage between test points 1 and 2.

Test condition	Engine running
B	A/F sensor (Sensor 1) 6P connector: disconnected
Test point 1	A/F sensor (Sensor 1) 6P connector (male terminals) No. 6: ①
Test point 2	Body ground

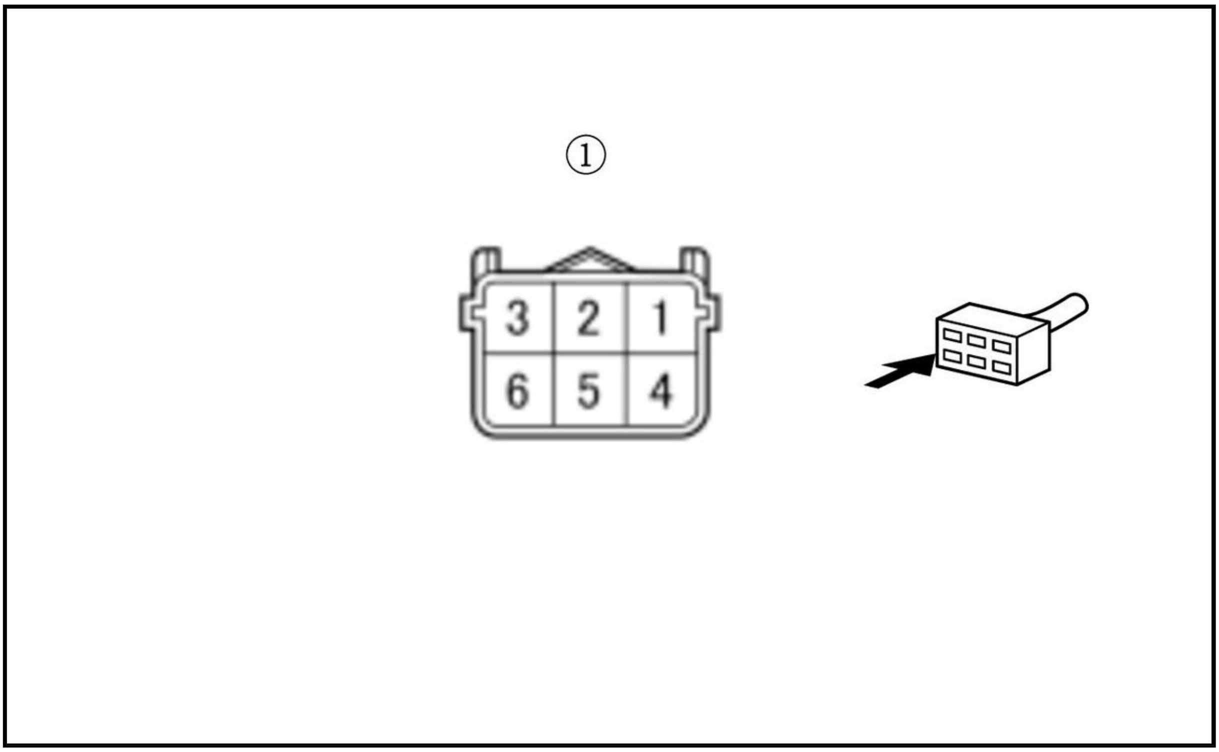

Is there about 0.2 V or less?

YES

Check for any authorized service information related to the DTCs or symptoms you are troubleshooting, or **substitute a known-good PCM** .

NO

The PCM internal circuit is OK. **Replace the A/F sensor (Sensor 1)** .

DTC P2245

DTC P2245 : A/F Sensor (Sensor 1) VCENT Circuit Low Voltage

NOTE: Before you troubleshoot, **review the general troubleshooting information** .

DTC Description	Confirmed DTC	Pending DTC
P2245 A/F Sensor (Sensor 1) VCENT Circuit Low Voltage	B	B

DTC (PGM-FI)

1. Problem verification

-1. Turn the vehicle to the ON mode.

-2. Clear the DTC with the HDS.

-3. **Enter the maintenance mode, then start the engine** .

-4. Hold the engine speed at 3, 000 rpm without load (in P or N) until the radiator fan comes on, then let it idle.

-5. Check for Pending or Confirmed DTCs with the HDS.

DTC Description	Confirmed DTC	Pending DTC
P2245 A/F Sensor (Sensor 1) VCENT Circuit Low Voltage	B	B

Is DTC P2245 indicated?

YES

The failure is duplicated. Go to step 2.

NO

Intermittent failure, the system is OK at this time. Check for poor connections or loose terminals at the A/F sensor (Sensor 1) and the PCM. **If the on-board snapshot of this DTC is recorded, try to reproduce the failure under the same conditions with the on-board snapshot** .

2. Shorted wire check (VCENT line)

-1. Turn the vehicle to the OFF (LOCK) mode.

-2. Jump the SCS line with the HDS, and wait more than 1 minute.

-3. Disconnect the following connectors.

PCM connector E (80P)
A/F sensor (Sensor 1) 6P connector

-4. Measure the resistance between test points 1 and 2.

Test condition	Vehicle OFF (LOCK) mode
B	PCM connector E (80P): disconnected
B	A/F sensor (Sensor 1) 6P connector: disconnected
Test point 1	**PCM connector E (80P) No. 74**
Test point 2	Body ground

Is there 1 MΩ or more?

YES

Go to step 3.

NO

Repair a short in the VCENT wire between the PCM (E74) and the A/F sensor (Sensor 1).

3. PCM internal circuit check

-1. Reconnect the following connector.

PCM connector E (80P)

-2. Exit the SCS mode with the HDS.

-3. Turn the vehicle to the ON mode.

-4. Measure the voltage between test points 1 and 2.

Test condition	Vehicle ON mode
B	A/F sensor (Sensor 1) 6P connector: disconnected
Test point 1	A/F sensor (Sensor 1) 6P connector (male terminals) No. 6: ①
Test point 2	Body ground

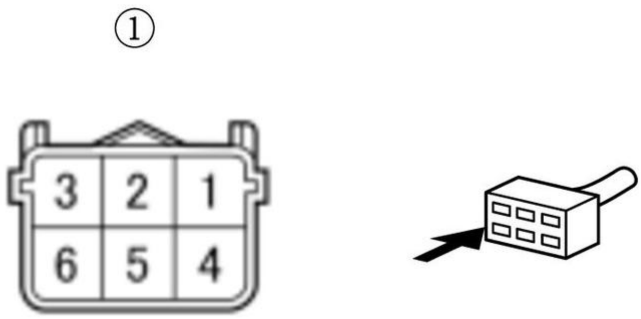

Is there about 0.2 V or less?

YES

Check for any authorized service information related to the DTCs or symptoms you are troubleshooting, or **substitute a known-good PCM** .

NO

The PCM internal circuit is OK. **Replace the A/F sensor (Sensor 1)** .

DTC P2251

DTC P2251 : A/F Sensor (Sensor 1) VS Circuit High Voltage

NOTE:

- Before you troubleshoot, **review the general troubleshooting information** .
- If DTC P2251 is stored at the same time as DTC P0134, troubleshoot DTC P2251 first, then recheck for P0134.

DTC Description	Confirmed DTC	Pending DTC
P2251 A/F Sensor (Sensor 1) VS Circuit High Voltage	B	B

DTC (PGM-FI)

1. Problem verification

-1. Turn the vehicle to the ON mode.

-2. Clear the DTC with the HDS.

-3. **Enter the maintenance mode, then start the engine** .

-4. Hold the engine speed at 3, 000 rpm without load (in P or N) until the radiator fan comes on, then let it idle.

-5. Check for Pending or Confirmed DTCs with the HDS.

DTC Description	Confirmed DTC	Pending DTC
P2251 A/F Sensor (Sensor 1) VS Circuit High Voltage	B	B

Is DTC P2251 indicated?

YES

The failure is duplicated. Go to step 2.

NO

Intermittent failure, the system is OK at this time. Check for poor connections or loose terminals at the A/F sensor (Sensor 1) and the PCM. **If the on-board snapshot of this DTC is recorded, try to reproduce the failure under the same conditions with the on-board snapshot** .

2. Open wire check (VS line)

-1. Turn the vehicle to the OFF (LOCK) mode.

-2. Jump the SCS line with the HDS, and wait more than 1 minute.

-3. Disconnect the following connectors.

PCM connector E (80P)
A/F sensor (Sensor 1) 6P connector

-4. Measure the resistance between test points 1 and 2.

Test condition	Vehicle OFF (LOCK) mode
B	PCM connector E (80P): disconnected
B	A/F sensor (Sensor 1) 6P connector: disconnected
Test point 1	A/F sensor (Sensor 1) 6P connector (male terminals) No. 4: ①
Test point 2	**PCM connector E (80P) No. 73**

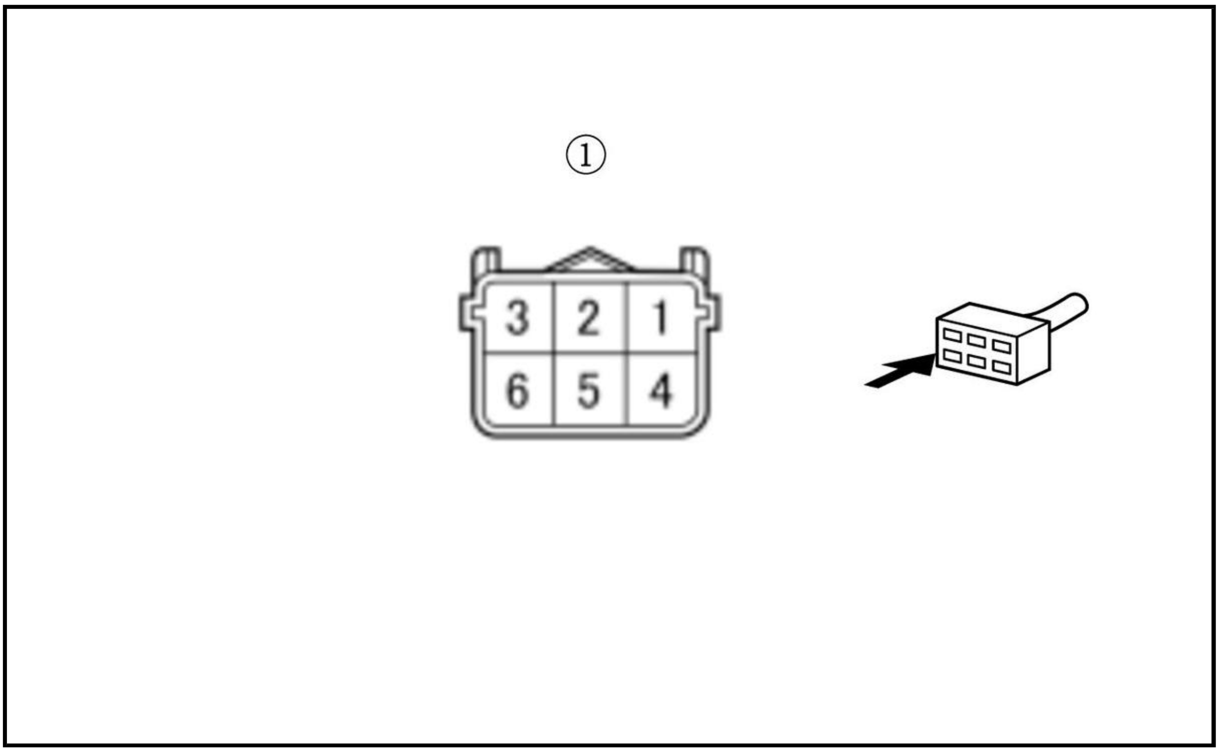

Is there 1.0 Ω or less?

YES

Go to step 3.

NO

Repair an open in the VS wire between the PCM (E73) and the A/F sensor (Sensor 1).

3. PCM internal circuit check

-1. Reconnect the following connector.

PCM connector E (80P)

-2. Exit the SCS mode with the HDS.

-3. Enter the maintenance mode, then start the engine .

-4. Hold the engine speed at 3, 000 rpm without load (in P or N) until the radiator fan comes on, then let it idle.

-5. Measure the voltage between test points 1 and 2.

Test condition	Engine running
B	A/F sensor (Sensor 1) 6P connector: disconnected
Test point 1	A/F sensor (Sensor 1) 6P connector (male terminals) No. 4: ①
Test point 2	Body ground

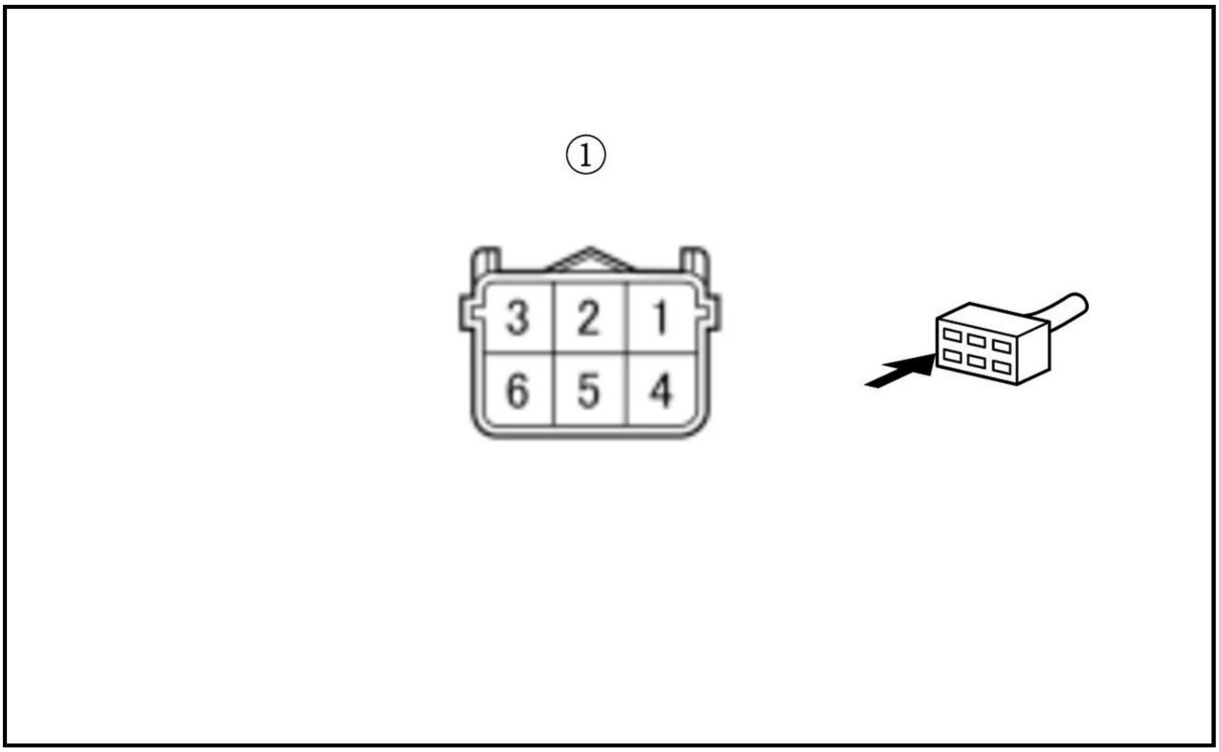

Is there about 0.2 V or less?

YES

Check for any authorized service information related to the DTCs or symptoms you are troubleshooting, or **substitute a known-good PCM** .

NO

The PCM internal circuit is OK. **Replace the A/F sensor (Sensor 1)** .

DTC P2252

DTC P2252 : A/F Sensor (Sensor 1) VS Circuit Low Voltage

NOTE: Before you troubleshoot, **review the general troubleshooting information** .

DTC Description	Confirmed DTC	Pending DTC
P2252 A/F Sensor (Sensor 1) VS Circuit Low Voltage	B	B

DTC (PGM-FI)

1. Problem verification

-1. Turn the vehicle to the ON mode.

-2. Clear the DTC with the HDS.

-3. **Enter the maintenance mode, then start the engine** .

-4. Hold the engine speed at 3, 000 rpm without load (in P or N) until the radiator fan comes on, then let it idle.

-5. Check for Pending or Confirmed DTCs with the HDS.

DTC Description	Confirmed DTC	Pending DTC
P2252 A/F Sensor (Sensor 1) VS Circuit Low Voltage	B	B

Is DTC P2252 indicated?

YES

The failure is duplicated. Go to step 2.

NO

Intermittent failure, the system is OK at this time. Check for poor connections or loose terminals at the A/F sensor (Sensor 1) and the PCM. **If the on-board snapshot of this DTC is recorded, try to reproduce the failure under the same conditions with the on-board snapshot** .

2. Shorted wire check (VS line)

-1. Turn the vehicle to the OFF (LOCK) mode.

-2. Jump the SCS line with the HDS, and wait more than 1 minute.

-3. Disconnect the following connectors.

PCM connector E (80P)
A/F sensor (Sensor 1) 6P connector

-4. Measure the resistance between test points 1 and 2.

Test condition	Vehicle OFF (LOCK) mode
B	PCM connector E (80P): disconnected
B	A/F sensor (Sensor 1) 6P connector: disconnected
Test point 1	**PCM connector E (80P) No. 73**
Test point 2	Body ground

Is there 1 MΩ or more?

YES

Go to step 3.

NO

Repair a short in the VS wire between the PCM (E73) and the A/F sensor (Sensor 1).

3. A/F sensor (Sensor 1) check

-1. **Substitute a known-good A/F sensor (Sensor 1)** .

-2. Reconnect all connectors.

-3. Exit the SCS mode with the HDS.

-4. Turn the vehicle to the ON mode.

-5. **Reset the PCM with the HDS** .

Reset PCM

-6. **Enter the maintenance mode, then start the engine** .

-7. Hold the engine speed at 3, 000 rpm without load (in P or N) until the radiator fan comes on, then let it idle.

-8. Check for Pending or Confirmed DTCs with the HDS.

DTC Description	Confirmed DTC	Pending DTC
P2252 A/F Sensor (Sensor 1) VS Circuit Low Voltage	B	B

Is DTC P2252 indicated?

YES

Check for any authorized service information related to the DTCs or symptoms you are troubleshooting, or **substitute a known-good PCM** .

NO

Replace the original A/F sensor (Sensor 1) .

DTC P2270

DTC P2270 : Secondary HO2S (Sensor 2) Circuit Signal Stuck Lean

NOTE: Before you troubleshoot, **review the general troubleshooting information** .

DTC Description	Confirmed DTC	Pending DTC
P2270 Secondary HO2S (Sensor 2) Circuit Signal Stuck Lean	B	B

DTC (PGM-FI)

1. DTC check

-1. Turn the vehicle to the ON mode.

-2. Check for Pending or Confirmed DTCs with the HDS.

DTC Description	Confirmed DTC	Pending DTC
P2270 Secondary HO2S (Sensor 2) Circuit Signal Stuck Lean	B	B

Is Confirmed DTC P2270 indicated?

YES (Confirmed DTC is indicated)

Replace the secondary HO2S (Sensor 2) .

NO (Pending DTC is indicated)

Check for poor connections or loose terminals at the secondary HO2S (Sensor 2) and the PCM, and the installation of the secondary HO2S (Sensor 2), then recheck.

DTC P2279

DTC P2279 : Intake Air System Leak

NOTE:

- Before you troubleshoot, **review the general troubleshooting information** .
- If DTC P0443 is stored at the same time as DTC P2279, troubleshoot DTC P0443 first, then recheck for DTC P2279.

DTC Description	Confirmed DTC	Pending DTC
P2279 Intake Air System Leak	B	B

DTC (PGM-FI)

1. Intake air system visual check:

   Check for vacuum leaks at these parts:

   - PCV valve
   - PCV hose
   - Purge (PCS) line
   - Throttle body
   - Intake manifold

   Are the parts OK?

   YES

   Go to step 2.

   NO

   Repair or replace any leaking part(s).

2. Problem verification

   -1. Turn the vehicle to the ON mode.

   -2. Clear the DTC with the HDS.

   -3. **Enter the maintenance mode, then start the engine** .

   -4. Hold the engine speed at 3, 000 rpm without load (in P or N) until the radiator fan comes on, then let it idle for 1 minute.

   -5. Monitor the OBD STATUS for DTC P2279 in the DTCs MENU with the HDS.

DTC Description	OBD STATUS
P2279 Intake Air System Leak	B

   Does the HDS indicate FAILED?

   YES

   The failure is duplicated. **Check the camshaft timing** and **adjust it if needed** . If the cam timing is OK, **check the valve clearance adjustment and set to specification** .

   NO

   If the HDS indicates PASSED, there is an intermittent failure and the system is OK at this time. Check for vacuum leaks at the PCV valve, the PCV hose, the purge (PCS) line, the throttle body, and the intake manifold. **If the on-board snapshot of this DTC is recorded, try to reproduce the failure under the same conditions with the on-board snapshot** . If the HDS indicates EXECUTING, keep idling until a result comes on. If the HDS indicates OUT OF CONDITION, go to step 2-1 and recheck.

DTC P2401

DTC P2401 : EVAP Leak Check Pump Control Circuit Low Voltage

NOTE: Before you troubleshoot, **review the general troubleshooting information** .

DTC Description	Confirmed DTC	Pending DTC
P2401 EVAP Leak Check Pump Control Circuit Low Voltage	B	B

DTC (PGM-FI)

1. Problem verification

   -1. Turn the vehicle to the ON mode.

   -2. Clear the DTC with the HDS.

   -3. Turn the vehicle to the OFF (LOCK) mode.

   -4. Turn the vehicle to the ON mode.

   -5. Select the EVAP TEST in the Function Test Menu, then select EVAP Leak Check Module Test with the HDS.

   EVAP TEST

   Is the result OK?

   YES

   If the test result is PASSED, there is an intermittent failure and the system is OK at this time. Check for poor connections or loose terminals at the EVAP leak check module and the PCM. **If the on-board snapshot of this DTC is recorded, try to reproduce the failure under the same conditions with the on-board snapshot** .

   NO

   The failure is duplicated. Go to step 2.

2. Shorted wire check (ELCMP line)

   -1. Turn the vehicle to the OFF (LOCK) mode.

   -2. Jump the SCS line with the HDS, and wait more than 1 minute.

   -3. Disconnect the following connector.

EVAP leak check module 8P connector
PCM connector A (50P)

   -4. Measure the resistance between test points 1 and 2.

Test condition	Vehicle OFF (LOCK) mode
B	EVAP leak check module 8P connector: disconnected
B	PCM connector A (50P): disconnected
Test point 1	EVAP leak check module 8P connector (female terminals) No. 3: ①
Test point 2	Body ground

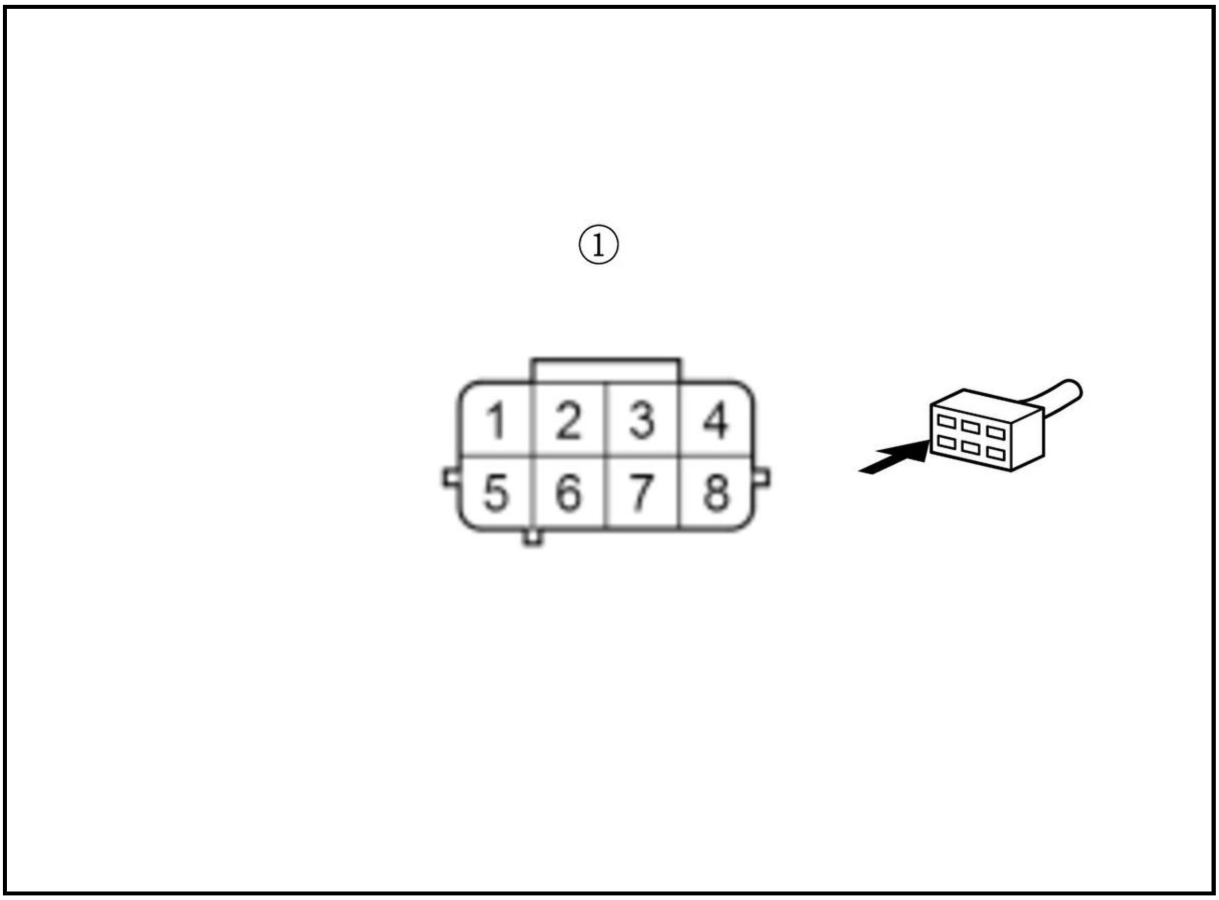

Is there 1 MΩ or more?

YES

The ELCMP wire is OK. Check for any authorized service information related to the DTCs or symptoms you are troubleshooting, or **substitute a known-good PCM** .

NO

Repair a short in the ELCMP wire between the PCM (A19) and the EVAP leak check module.

DTC P2402

DTC P2402 : EVAP Leak Check Pump Control Circuit High Voltage

NOTE: Before you troubleshoot, **review the general troubleshooting information** .

DTC Description	Confirmed DTC	Pending DTC
P2402 EVAP Leak Check Pump Control Circuit High Voltage	B	B

DTC (PGM-FI)

1. Problem verification

-1. Turn the vehicle to the ON mode.

-2. Clear the DTC with the HDS.

-3. Turn the vehicle to the OFF (LOCK) mode.

-4. Turn the vehicle to the ON mode.

-5. Select the EVAP TEST in the Function Test Menu, then select EVAP Leak Check Module Test with the HDS.

EVAP TEST

Is the result OK?

YES

If the test result is PASSED, intermittent failure, the system is OK at this time. Check for poor connections or loose terminals at the EVAP leak check module and the PCM. **If the on-board snapshot of this DTC is recorded, try to reproduce the failure under the same conditions with the on-board snapshot** .

NO

The failure is duplicated. Go to step 2.

2. Open wire check (GND line)

-1. Turn the vehicle to the OFF (LOCK) mode.

-2. Disconnect the following connector.

EVAP leak check module 8P connector

-3. Measure the resistance between test points 1 and 2.

Test condition	Vehicle OFF (LOCK) mode
B	EVAP leak check module 8P connector: disconnected
Test point 1	EVAP leak check module 8P connector (female terminals) No. 4: ①
Test point 2	Body ground

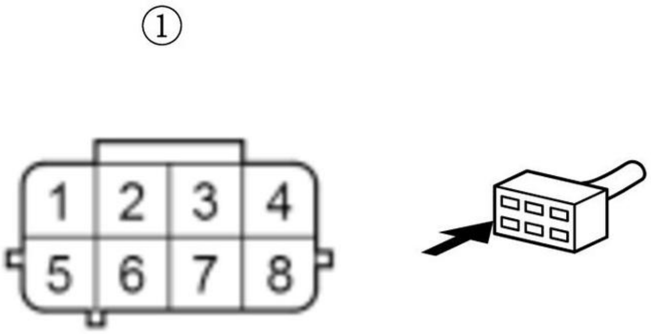

Is there 1.0 Ω or less?

YES

Go to step 3.

NO

Repair an open in the GND wire between the EVAP leak check module and G503.

3. Open wire check (ELCMP line)

-1. Jump the SCS line with the HDS, and wait more than 1 minute.

-2. Disconnect the following connector.

PCM connector A (50P)

-3. Connect terminals A and B with a jumper wire.

Terminal A	EVAP leak check module 8P connector (female terminals) No. 3: ①
Terminal B	Body ground

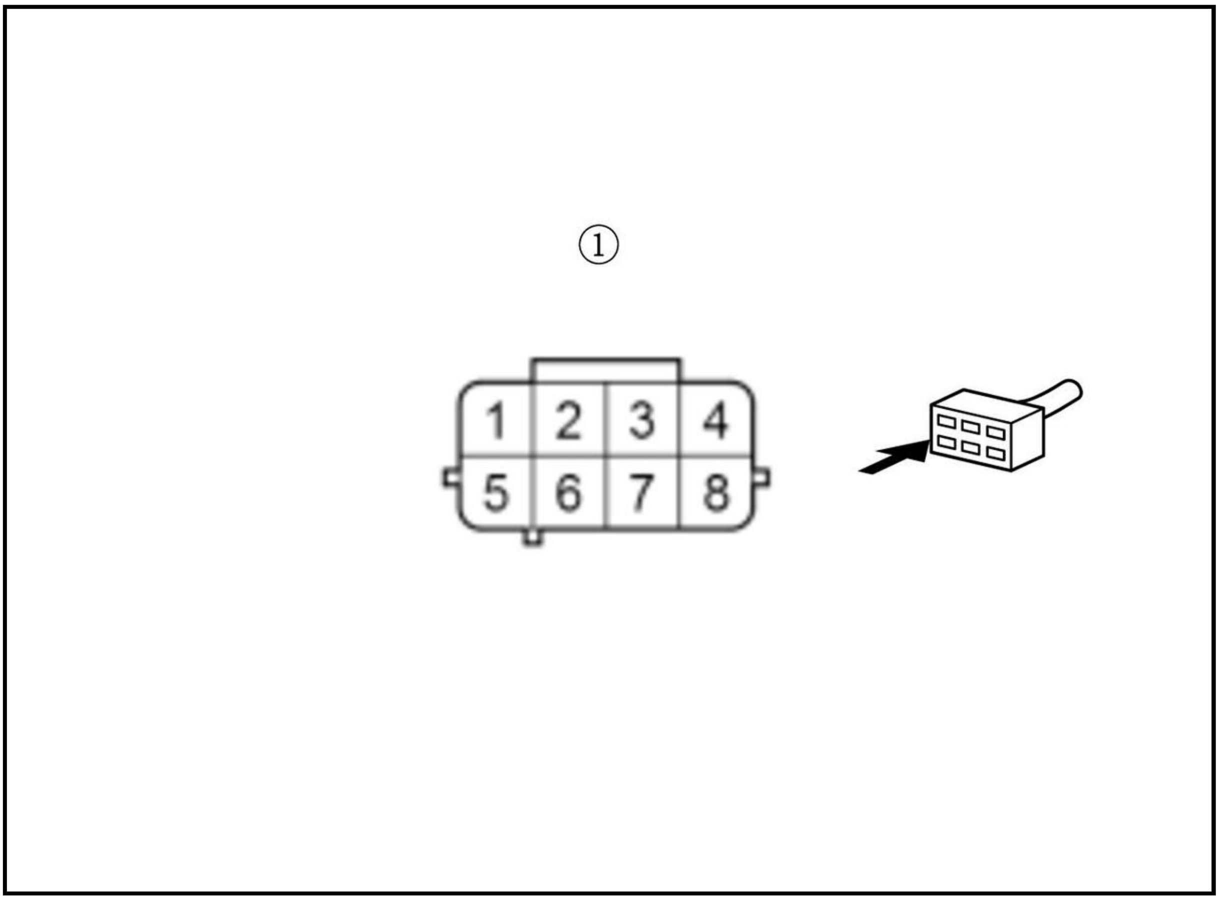

-4. Measure the resistance between test points 1 and 2.

Test condition	Vehicle OFF (LOCK) mode
	PCM connector A (50P): disconnected
	EVAP leak check module 8P connector: disconnected
	EVAP leak check module 8P connector No. 3: jumped to body ground
Test point 1	**PCM connector A (50P) No. 19**
Test point 2	Body ground

Is there 1.0 Ω or less?

YES

Replace the EVAP leak check module .

NO

Repair an open in the ELCMP wire between the PCM (A19) and the EVAP leak check module.

DTC P2413

DTC P2413 : EGR System Malfunction

NOTE: Before you troubleshoot, **review the general troubleshooting information** .

DTC Description	Confirmed DTC	Pending DTC
P2413 EGR System Malfunction	B	B

DTC (PGM-FI)

1. Problem verification

   -1. Turn the vehicle to the ON mode.

   -2. Clear the DTC with the HDS.

   -3. **Enter the maintenance mode, then start the engine** .

   -4. Hold the engine speed at 3, 000 rpm without load (in P or N) until the radiator fan comes on, then let it idle.

   -5. Select the EGR TEST in the Function Test Menu with the HDS.

   EGR Test

   Is the result OK?

   YES

   Intermittent failure, the system is OK at this time. Check for poor connections or loose terminals at the EGR valve and the PCM. **If the on-board snapshot of this DTC is recorded, try to reproduce the failure under the same conditions with the on-board snapshot** .

   NO

   The failure is duplicated. Go to step 2.

2. Determine possible failure area (EGR valve position sensor, others)

   -1. Turn the vehicle to the OFF (LOCK) mode.

   -2. Turn the vehicle to the ON mode.

   -3. Check the parameter(s) below with the HDS.

Signal	Threshold		Current DTC	
	Values	Unit	Values	Unit
EGR Valve Position Sensor (EGR	about 0	V	B	B

Signal	Threshold		Current DTC	
	Values	Unit	Values	Unit
Vls)				

Do the current condition(s) match the threshold?

YES

Go to step 3.

NO

Go to step 7.

3. Determine possible failure area (VCC2 line, others)

-1. Turn the vehicle to the OFF (LOCK) mode.

-2. Disconnect the following connector.

EGR valve 5P connector

-3. Turn the vehicle to the ON mode.

-4. Measure the voltage between test points 1 and 2.

Test condition	Vehicle ON mode
B	EGR valve 5P connector: disconnected
Test point 1	EGR valve 5P connector (female terminals) No. 2: ①
Test point 2	Body ground

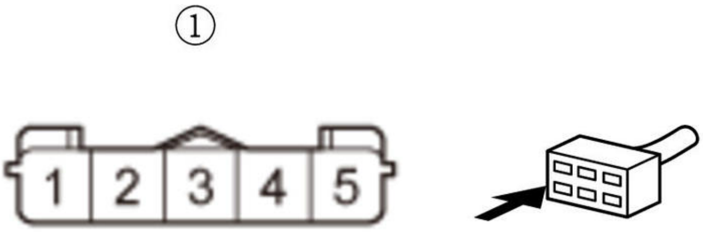

Is there about 5.0 V?

YES

Go to step 5.

NO

Go to step 4.

4. Open wire check (VCC2 line)

-1. Turn the vehicle to the OFF (LOCK) mode.

-2. Jump the SCS line with the HDS, and wait more than 1 minute.

-3. Disconnect the following connector.

PCM connector E (80P)

-4. Measure the resistance between test points 1 and 2.

Test condition	Vehicle OFF (LOCK) mode
B	EGR valve 5P connector: disconnected
B	PCM connector E (80P): disconnected
Test point 1	EGR valve 5P connector (female terminals) No. 2: ①
Test point 2	**PCM connector E (80P) No. 77**

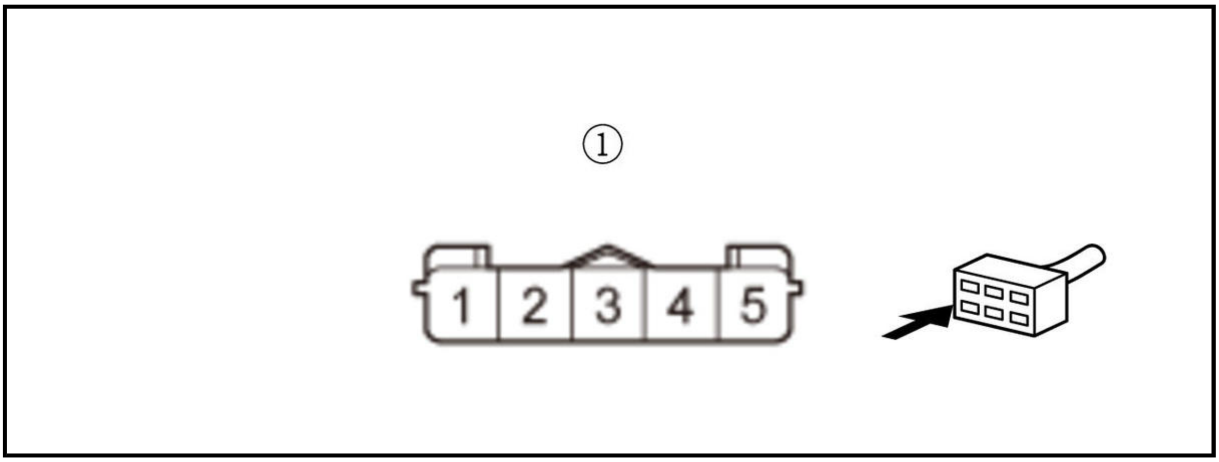

Is there 1.0 Ω or less?

YES

The VCC2 wire is OK. Check for any authorized service information related to the DTCs or symptoms you are troubleshooting, or **substitute a known-good PCM** .

NO

Repair an open in the VCC2 wire between the PCM (E77) and the EGR valve.

5. Shorted wire check (EGRL line)

-1. Turn the vehicle to the OFF (LOCK) mode.

-2. Jump the SCS line with the HDS, and wait more than 1 minute.

-3. Disconnect the following connector.

PCM connector E (80P)

-4. Measure the resistance between test points 1 and 2.

Test condition	Vehicle OFF (LOCK) mode
B	EGR valve 5P connector: disconnected
B	PCM connector E (80P): disconnected
Test point 1	EGR valve 5P connector (female terminals) No. 4: ①
Test point 2	Body ground

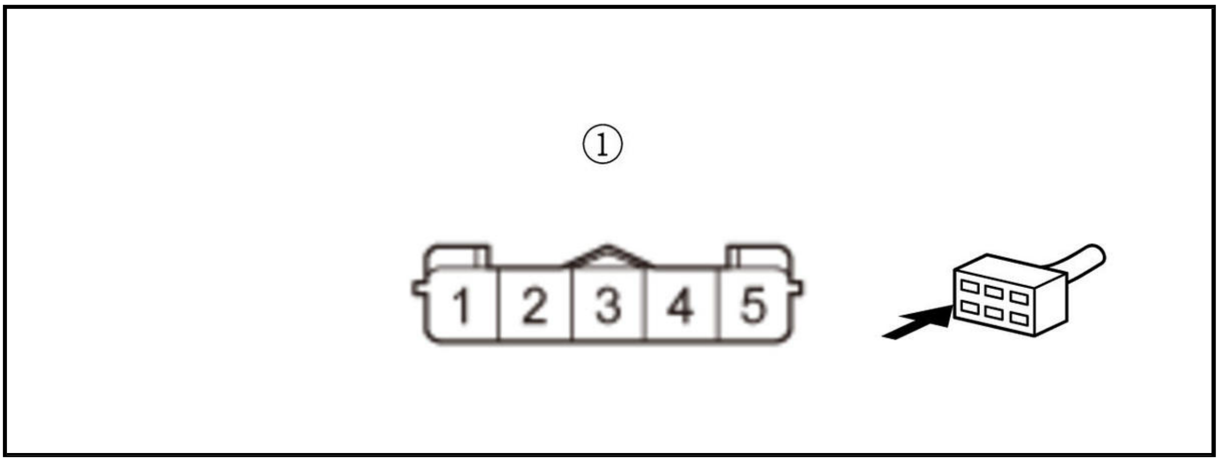

Is there 1 MΩ or more?

YES

The EGRL wire is not shorted. Go to step 6.

NO

Repair a short in the EGRL wire between the PCM (E69) and the EGR valve.

6. Open wire check (EGRL line)

-1. Measure the resistance between test points 1 and 2.

Test condition	Vehicle OFF (LOCK) mode
B	EGR valve 5P connector: disconnected
B	PCM connector E (80P): disconnected
Test point 1	EGR valve 5P connector (female terminals) No. 4: ①
Test point 2	**PCM connector E (80P) No. 69**

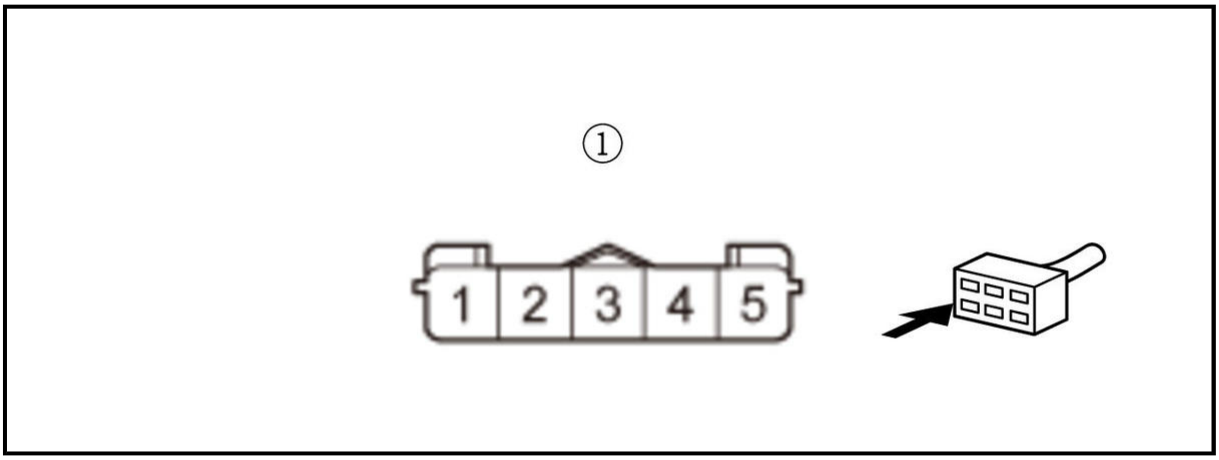

Is there 1.0 Ω or less?

YES

The EGRL wire is OK. Go to step 7.

NO

Repair an open in the EGRL wire between the PCM (E69) and the EGR valve.

7. EGR valve position sensor internal circuit check 1

-1. Turn the vehicle to the OFF (LOCK) mode.

-2. If not already done, disconnect the following connector.

EGR valve 5P connector

-3. At the EGR valve side, measure the resistance between test points 1 and 2.

Test condition	Vehicle OFF (LOCK) mode
B	EGR valve 5P connector: disconnected
Test point 1	EGR valve 5P connector (male terminals) No. 3 (valve side): ①
Test point 2	EGR valve 5P connector (male terminals) No. 4 (valve side): ①

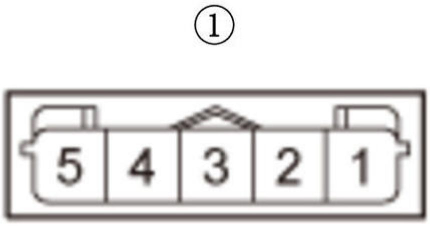

Is there 100 kΩ or more?

YES

Replace the EGR valve .

NO

Go to step 8.

8. EGR valve position sensor internal circuit check 2

-1. At the EGR valve side, measure the resistance between test points 1 and 2.

Test condition	Vehicle OFF (LOCK) mode
B	EGR valve 5P connector: disconnected
Test point 1	EGR valve 5P connector (male terminals) No. 2 (valve side): ①
Test point 2	EGR valve 5P connector (male terminals) No. 4 (valve side): ①

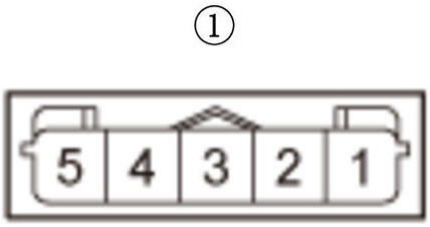

Is there 100 kΩ or more?

YES

Replace the EGR valve .

NO

Go to step 9.

9. Shorted wire check (EEGR line)

-1. Jump the SCS line with the HDS, and wait more than 1 minute.

-2. If not already done, disconnect the following connector.

PCM connector E (80P)

-3. Measure the resistance between test points 1 and 2.

Test condition	Vehicle OFF (LOCK) mode
B	EGR valve 5P connector: disconnected
B	PCM connector E (80P): disconnected
Test point 1	EGR valve 5P connector (female terminals) No. 5: ①
Test point 2	Body ground

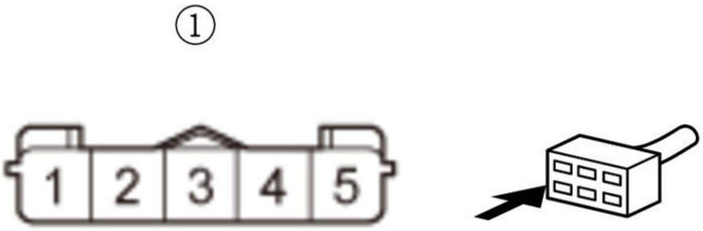

Is there 1 MΩ or more?

YES

The EEGR wire is not shorted. Go to step 10.

NO

Repair a short in the EEGR wire between the PCM (E10) and the EGR valve.

10. Open wire check (EEGR line)

-1. Measure the resistance between test points 1 and 2.

Test condition	Vehicle OFF (LOCK) mode
B	EGR valve 5P connector: disconnected
B	PCM connector E (80P): disconnected
Test point 1	EGR valve 5P connector (female terminals) No. 5: ①
Test point 2	**PCM connector E (80P) No. 10**

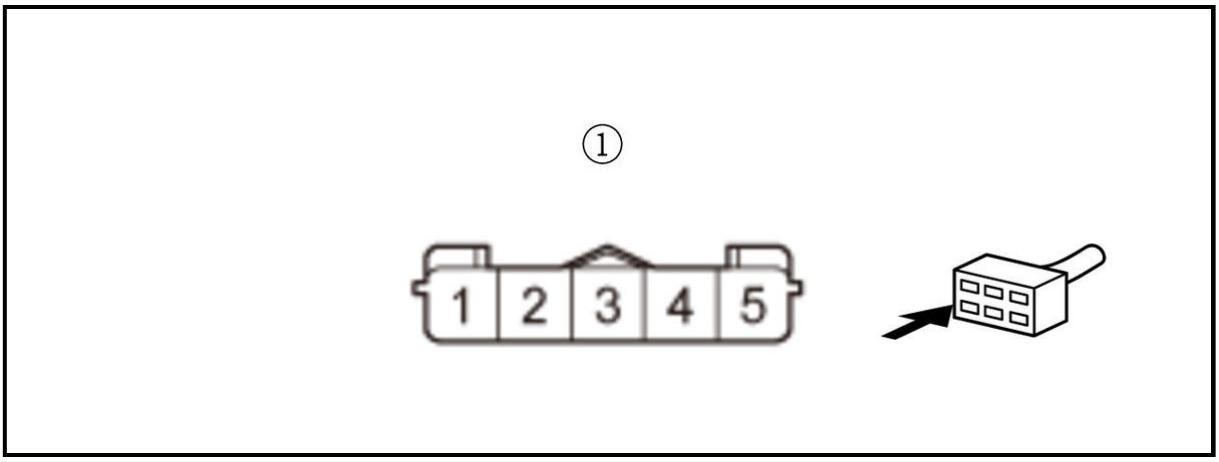

Is there 1.0 Ω or less?

YES

The EEGR wire is OK. Go to step 11.

NO

Repair an open in the EEGR wire between the PCM (E10) and the EGR valve.

11. Open wire check (PG line)

-1. Measure the resistance between test points 1 and 2.

Test condition	Vehicle OFF (LOCK) mode
B	EGR valve 5P connector: disconnected
B	PCM connector E (80P): disconnected
Test point 1	EGR valve 5P connector (female terminals) No. 1: ①
Test point 2	Body ground

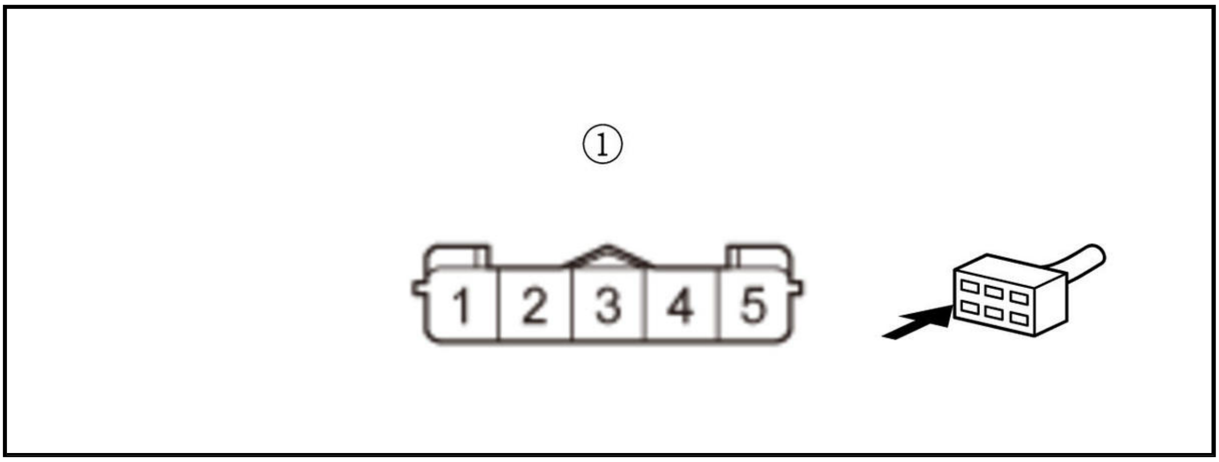

Is there 1.0 Ω or less?

YES

The PG wire is OK. Go to step 12.

NO

Repair an open in the PG wire between the EGR valve and G101.

12. EGR valve operation check

-1. Reconnect the following connector.

PCM connector E (80P)

-2. At the EGR valve side, connect terminals A and B with a jumper wire.

Terminal A	EGR valve 5P connector (male terminals) No. 5 (valve side): ①
Terminal B	12 volt battery positive terminal: ②

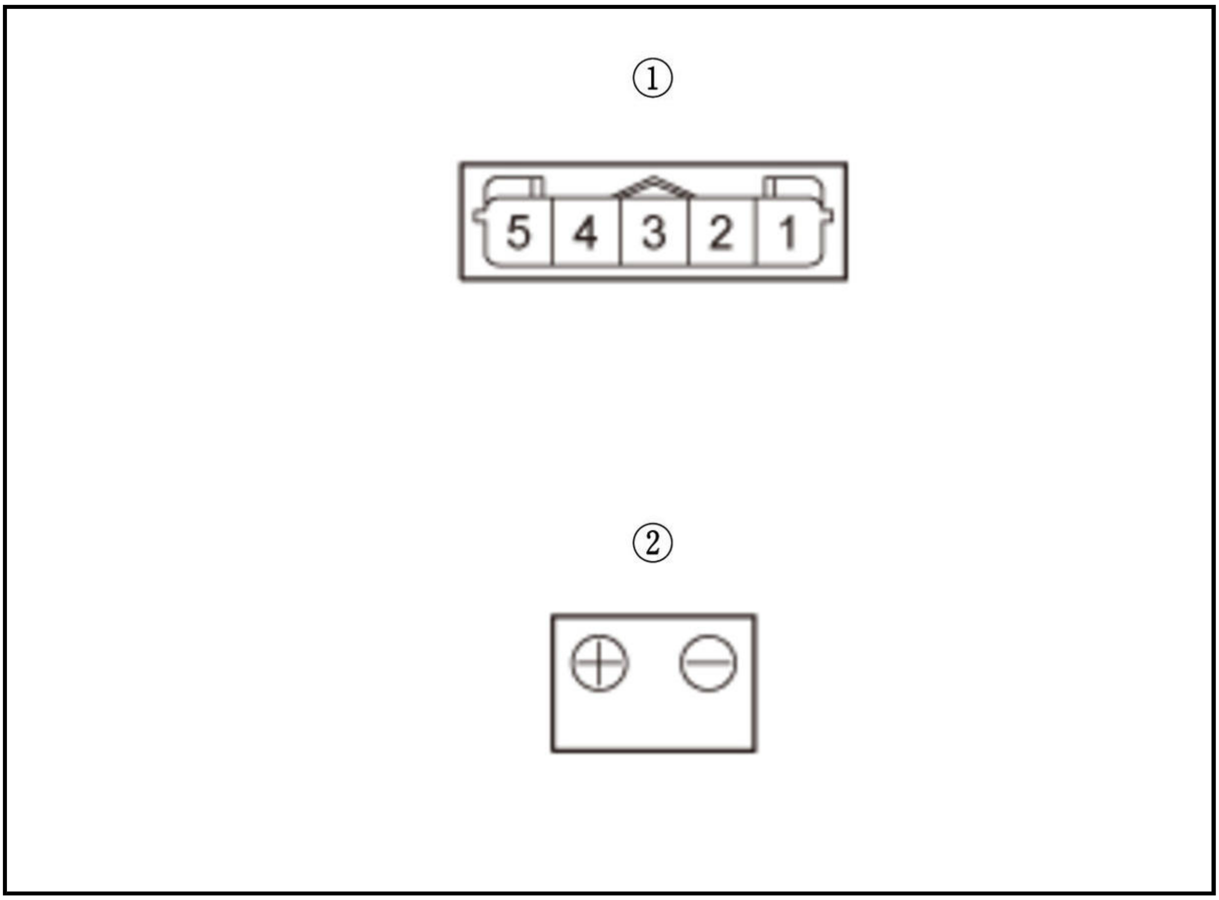

-3. Exit the SCS mode with the HDS.

-4. **Enter the maintenance mode, then start the engine** , and let it idle.

-5. At the EGR valve side, connect terminals A and B with a jumper wire.

Terminal A	EGR valve 5P connector (male terminals) No. 1 (valve side): ①
Terminal B	12 volt battery negative terminal: ②

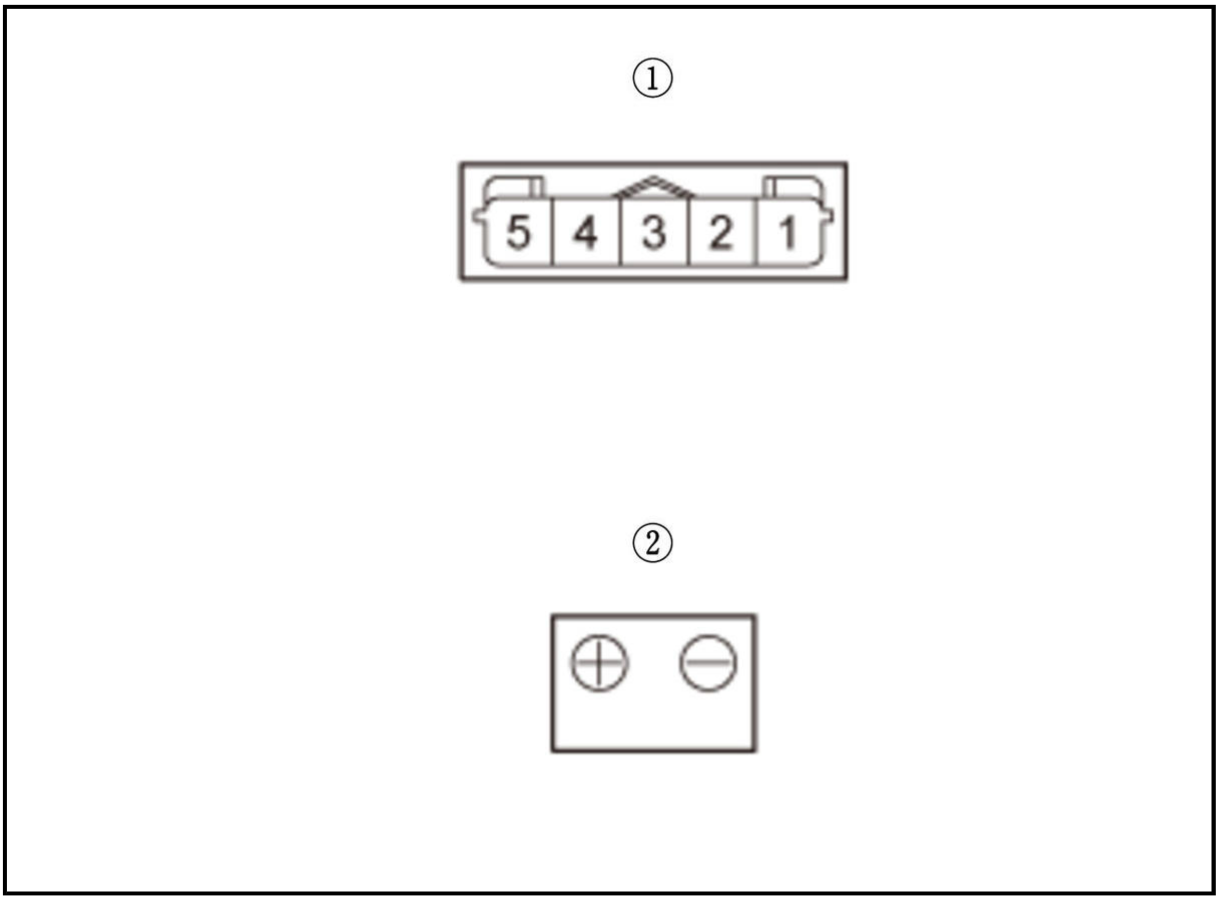

Does the engine stall or run roughly?

YES

Check for any authorized service information related to the DTCs or symptoms you are troubleshooting, or **substitute a known-good PCM** .

NO

Go to step 13.

13. EGR port and passage cleaning

-1. Turn the vehicle to the OFF (LOCK) mode.

-2. **Remove the EGR valve** .

-3. Clean the intake manifold EGR port and the passage inside the EGR valve with throttle plate cleaner.

-4. **Install the EGR valve** .

-5. Reconnect all connectors.

-6. Turn the vehicle to the ON mode.

-7. **Reset the PCM with the HDS** .

Reset PCM

-8. Select the EGR TEST in the Function Test Menu with the HDS.

EGR Test

Is the result OK?

YES

The troubleshooting is complete.

NO

Replace the EGR valve .

DTC P24B8

DTC P24B8 : EVAP Leak Check Module Absolute Pressure Sensor Out of Range

NOTE:

- Before you troubleshoot, **review the general troubleshooting information** .
- If DTC P24BA and/or P24BB are stored at the same time as DTC P24B8, troubleshoot those DTCs first, then recheck for DTC P24B8.

DTC Description	Confirmed DTC	Pending DTC
P24B8 EVAP Leak Check Module Absolute Pressure Sensor Out of Range	B	B

DTC (PGM-FI)

1. Problem verification 1

   -1. Turn the vehicle to the ON mode.

   -2. Clear the DTC with the HDS.

   -3. Turn the vehicle to the OFF (LOCK) mode.

   -4. Turn the vehicle to the ON mode.

   -5. Check the parameter(s) below with the HDS.

Signal	Threshold		Current conditions	
	Values	Unit	Values	Unit
Absolute Pressure of ELCM Pressure Sensor	More than 857	mmHg	B	B

   Do the current condition(s) match the malfunction threshold?

   YES

   Go to step 3.

   NO

   Go to step 2.

2. Problem verification 2

   -1. Check for Pending or Confirmed DTCs with the HDS.

DTC Description	Confirmed DTC	Pending DTC
P24B8 EVAP Leak Check Module Absolute Pressure Sensor Out of Range	B	B

Is DTC P24B8 indicated?

YES

The failure is duplicated. Go to step 3.

NO

Intermittent failure, the system is OK at this time. Check for poor connections or loose terminals at the EVAP leak check module and the PCM. **If the on-board snapshot of this DTC is recorded, try to reproduce the failure under the same conditions with the on-board snapshot** .

3. Determine possible failure area (VCC6 line, others)

-1. Turn the vehicle to the OFF (LOCK) mode.

-2. Disconnect the following connector.

EVAP leak check module 8P connector

-3. Turn the vehicle to the ON mode.

-4. Measure the voltage between test points 1 and 2.

Test condition	Vehicle ON mode
B	EVAP leak check module 8P connector: disconnected
Test point 1	EVAP leak check module 8P connector (female terminals) No. 6: ①
Test point 2	EVAP leak check module 8P connector (female terminals) No. 8: ①

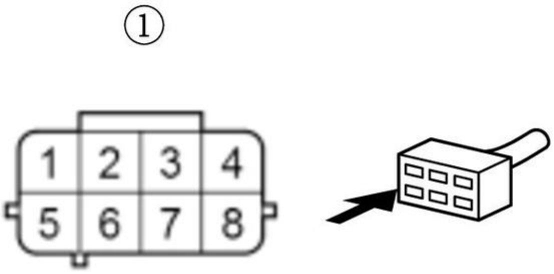

Is there about 5.0 V?

YES

Go to step 4.

NO

Go to step 6.

4. Determine possible failure area (ELCMPA line, others)

    -1. Check the parameter(s) below with the HDS.

Signal	Threshold		Current conditions	
	Values	Unit	Values	Unit
Absolute Pressure of ELCM Pressure Sensor	Less than 331	mmHg	B	B

Do the current condition(s) match the malfunction threshold?

YES

Go to step 8.

NO

Go to step 5.

5. Determine possible failure area (EVAP leak check module, others)

    -1. Turn the vehicle to the OFF (LOCK) mode.

    -2. Connect terminals A and B with a jumper wire.

Terminal A	EVAP leak check module 8P connector (female terminals) No. 7: ①
Terminal B	EVAP leak check module 8P connector (female terminals) No. 8: ①

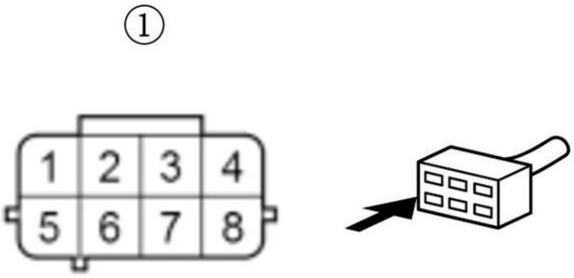

    -3. Turn the vehicle to the ON mode.

    -4. Check the parameter(s) below with the HDS.

Signal	**Threshold**		**Current conditions**	
	Values	**Unit**	**Values**	**Unit**
Absolute Pressure of ELCM Pressure Sensor	More than 857	mmHg	B	B

Do the current condition(s) match the malfunction threshold?

YES

Go to step 9.

NO

Replace the EVAP leak check module .

6. Open wire check (VCC6 line)

-1. Turn the vehicle to the OFF (LOCK) mode.

-2. Jump the SCS line with the HDS, and wait more than 1 minute.

-3. Disconnect the following connector.

PCM connector E (80P)

-4. Measure the resistance between test points 1 and 2.

Test condition	Vehicle OFF (LOCK) mode
	PCM connector E (80P): disconnected
	EVAP leak check module 8P connector: disconnected
Test point 1	**PCM connector E (80P) No. 63**
Test point 2	EVAP leak check module 8P connector (female terminals) No. 6: ①

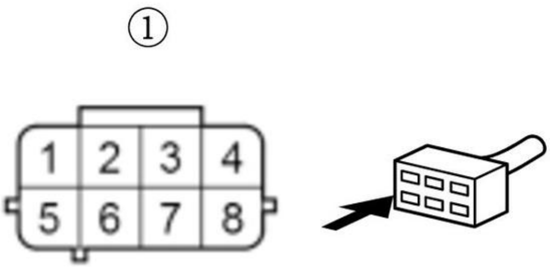

Is there 1.0 Ω or less?

YES

Go to step 7.

NO

Repair an open in the VCC6 wire between the PCM (E63) and the EVAP leak check module.

7. Open wire check (SG6 line)

-1. Measure the resistance between test points 1 and 2.

Test condition	Vehicle OFF (LOCK) mode
	EVAP leak check module 8P connector: disconnected
	PCM connector E (80P): disconnected
Test point 1	**PCM connector E (80P) No. 45**
Test point 2	EVAP leak check module 8P connector (female terminals) No. 8: ①

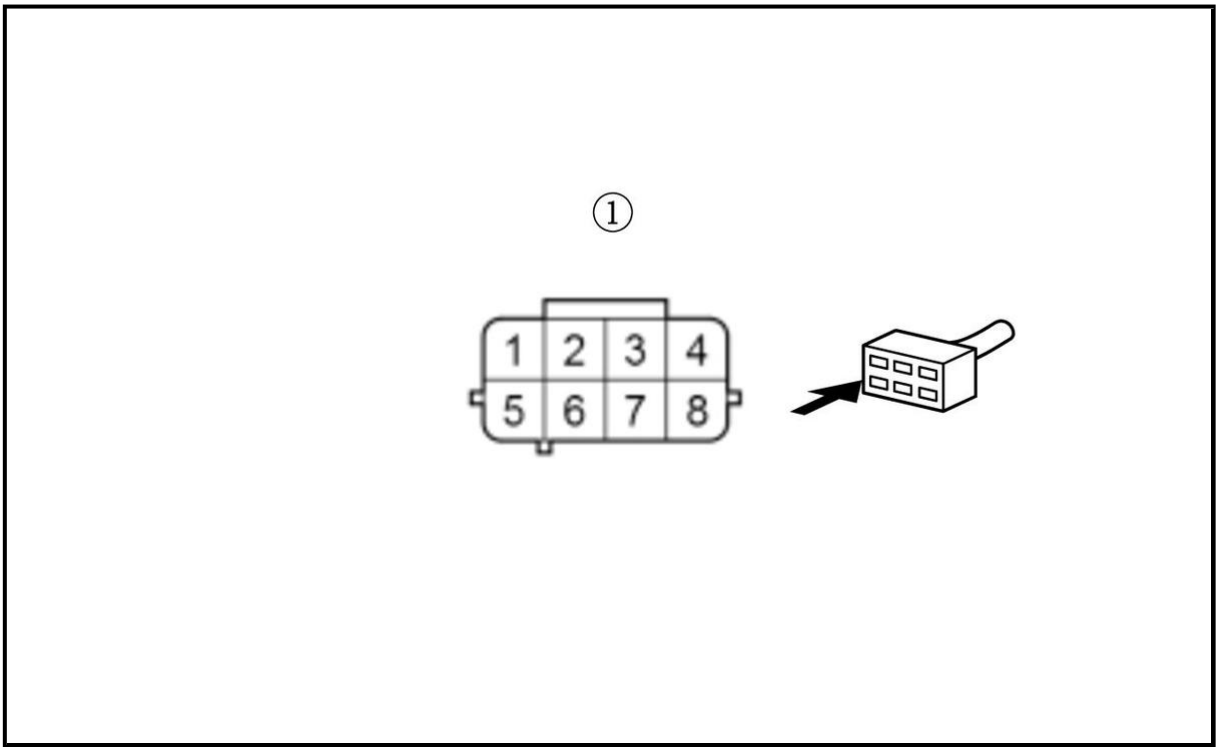

Is there 1.0 Ω or less?

YES

The SG6 wire is OK. Check for any authorized service information related to the DTCs or symptoms you are troubleshooting, or **substitute a known-good PCM** .

NO

Repair an open in the SG6 wire between the PCM (E45) and the EVAP leak check module.

8. Shorted wire check (ELCMPA line)

-1. Turn the vehicle to the OFF (LOCK) mode.

-2. Jump the SCS line with the HDS, and wait more than 1 minute.

-3. Disconnect the following connector.

PCM connector A (50P)

-4. Measure the resistance between test points 1 and 2.

Test condition	Vehicle OFF (LOCK) mode
B	EVAP leak check module 8P connector: disconnected
B	PCM connector A (50P): disconnected
Test point 1	EVAP leak check module 8P connector (female terminals) No. 7: ①
Test point 2	Body ground

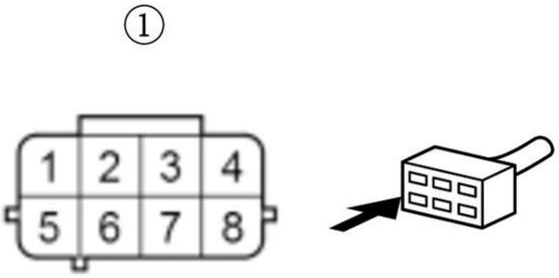

Is there 1 MΩ or more?

YES

The ELCMPA wire is OK. Check for any authorized service information related to the DTCs or symptoms you are troubleshooting, or **substitute a known-good PCM** .

NO

Repair a short in the ELCMPA wire between the PCM (A42) and the EVAP leak check module.

9. Open wire check (ELCMPA line)

-1. Turn the vehicle to the OFF (LOCK) mode.

-2. Remove the jumper wire from the EVAP leak check module 8P connector.

-3. Jump the SCS line with the HDS, and wait more than 1 minute.

-4. Disconnect the following connector.

PCM connector A (50P)

-5. Measure the resistance between test points 1 and 2.

Test condition	Vehicle OFF (LOCK) mode EVAP leak check module 8P connector: disconnected PCM connector A (50P): disconnected
Test point 1	**PCM connector A (50P) No. 42**
Test point 2	EVAP leak check module 8P connector (female terminals) No. 7: ①

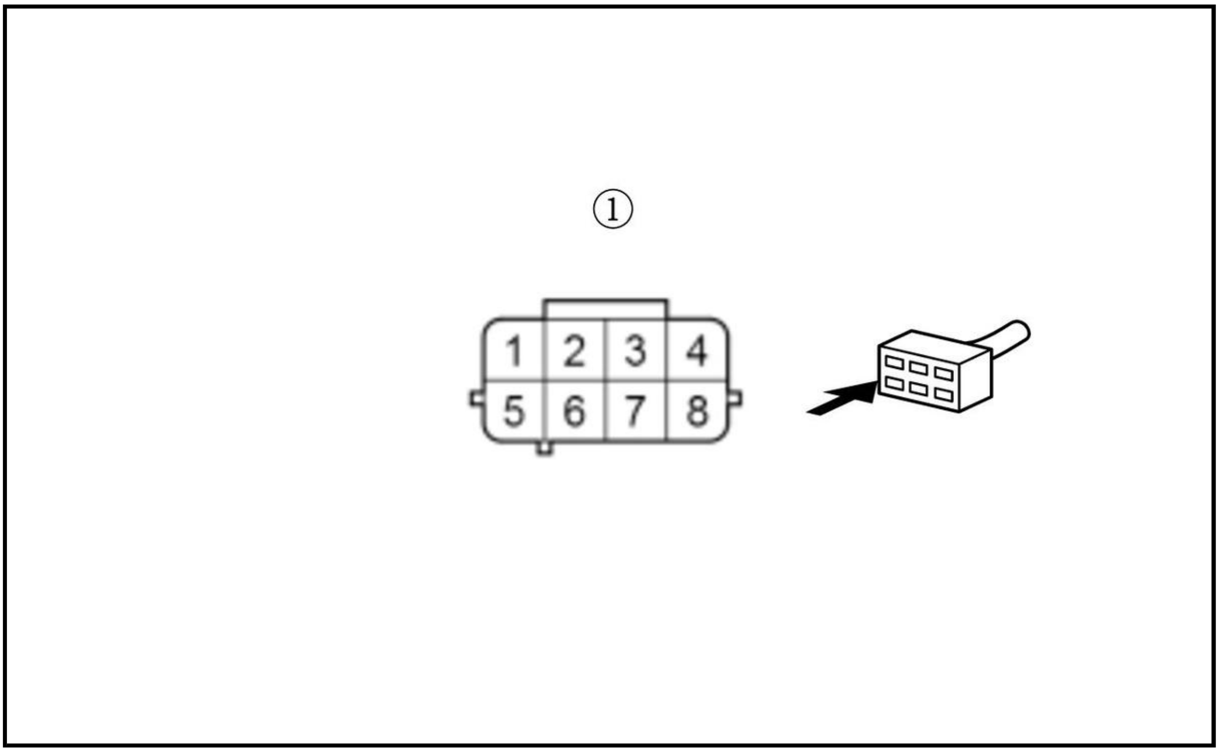

Is there 1.0 Ω or less?

YES

The ELCMPA wire is OK. Check for any authorized service information related to the DTCs or symptoms you are troubleshooting, or **substitute a known-good PCM** .

NO

Repair an open in the ELCMPA wire between the PCM (A42) and the EVAP leak check module.

DTC P24B9

DTC P24B9 : EVAP Leak Check Module Pressure Sensor Range/Performance Problem

NOTE:

- Before you troubleshoot, **review the general troubleshooting information** .
- If DTC P24BA and/or P24BB is stored at the same time as DTC P24B9, troubleshoot those DTCs first, then recheck for DTC P24B9.

DTC Description	Confirmed DTC	Pending DTC
P24B9 EVAP Leak Check Module Pressure Sensor Range/Performance Problem	B	B

DTC (PGM-FI)

1. EVAP leak check module drain hose check

-1. **Remove the EVAP leak check module** and the **EVAP canister filter** , then check the blockage in the hoses and the EVAP canister filter.

Are the parts OK?

YES

Go to step 2.

NO

Remove the blockage from them, or replace the part(s) if needed.

2. Problem verification

-1. Turn the vehicle to the ON mode.

-2. Clear the DTC with the HDS.

-3. Turn the vehicle to the OFF (LOCK) mode.

-4. Turn the vehicle to the ON mode.

-5. Check for Pending or Confirmed DTCs with the HDS.

DTC Description	Confirmed DTC	Pending DTC
P24B9 EVAP Leak Check Module Pressure Sensor Range/Performance Problem	B	B

Is DTC P24B9 indicated?

YES

The failure is duplicated. **Replace the EVAP leak check module** .

NO

Intermittent failure, the system is OK at this time. Check for poor connections and loose terminals at the EVAP leak check module and the PCM. **If the on-board snapshot of this DTC is recorded, try to reproduce the failure under the same conditions with the on-board snapshot** .

DTC P24BA

DTC P24BA : EVAP Leak Check Module Pressure Sensor Circuit Low Voltage

NOTE: Before you troubleshoot, **review the general troubleshooting information** .

DTC Description	Confirmed DTC	Pending DTC
P24BA EVAP Leak Check Module Pressure Sensor Circuit Low Voltage	B	B

DTC (PGM-FI)

1. EVAP system check

-1. Turn the vehicle to the ON mode.

-2. Clear the DTC with the HDS.

-3. Turn the vehicle to the OFF (LOCK) mode.

-4. Turn the vehicle to the ON mode, and wait for 3 seconds.

-5. Check the parameter(s) below with the HDS.

Signal	Threshold		Current conditions	
	Values	Unit	Values	Unit
Absolute Pressure of ELCM Pressure Sensor	Less than 331	mmHg	B	B

Do the current condition(s) match the malfunction threshold?

YES

Go to step 3.

NO

Go to step 2.

2. Problem verification

-1. Check for Pending or Confirmed DTCs with the HDS.

DTC Description	Confirmed DTC	Pending DTC
P24BA EVAP Leak Check Module Pressure Sensor Circuit Low Voltage	B	B

Is DTC P24BA indicated?

YES

The failure is duplicated. Go to step 3.

NO

Intermittent failure, the system is OK at this time. Check for poor connections or loose terminals at the EVAP leak check module and the PCM. **If the on-board snapshot of this DTC is recorded, try to reproduce the failure under the same conditions with the on-board snapshot** .

3. Determine possible failure area (ELCMPA line, others)

-1. Turn the vehicle to the OFF (LOCK) mode.

-2. Disconnect the following connector.

EVAP leak check module 8P connector

-3. Turn the vehicle to the ON mode.

-4. Check the parameter(s) below with the HDS.

Signal	Threshold		Current conditions	
	Values	Unit	Values	Unit
Absolute Pressure of ELCM Pressure Sensor	Less than 331	mmHg	B	B

Do the current condition(s) match the malfunction threshold?

YES

Go to step 4.

NO

Go to step 5.

4. Shorted wire check (ELCMPA line)

-1. Turn the vehicle to the OFF (LOCK) mode.

-2. Jump the SCS line with the HDS, and wait more than 1 minute.

-3. Disconnect the following connector.

PCM connector A (50P)

-4. Measure the resistance between test points 1 and 2.

Test condition	Vehicle OFF (LOCK) mode
B	EVAP leak check module 8P connector: disconnected
B	PCM connector A (50P): disconnected
Test point 1	EVAP leak check module 8P connector (female terminals) No. 7: ①
Test point 2	Body ground

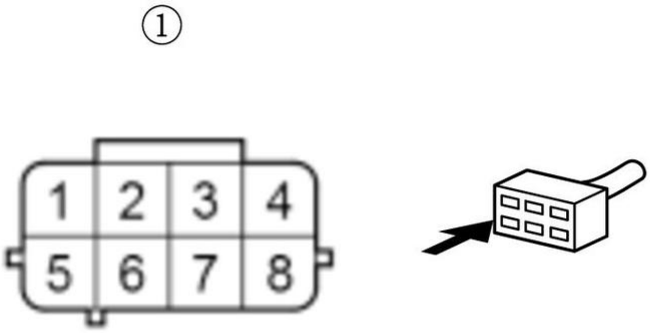

Is there 1 MΩ or more?

YES

The ELCMPA wire is OK. Check for any authorized service information related to the DTCs or symptoms you are troubleshooting, or substitute a known-good PCM .

NO

Repair a short in the ELCMPA wire between the PCM (A42) and the EVAP leak check module.

5. Determine possible failure area (EVAP leak check module pressure sensor, others)

-1. Measure the voltage between test points 1 and 2.

Test condition	Vehicle ON mode
B	EVAP leak check module 8P connector: disconnected
Test point 1	EVAP leak check module 8P connector (female terminals) No. 6: ①
Test point 2	Body ground

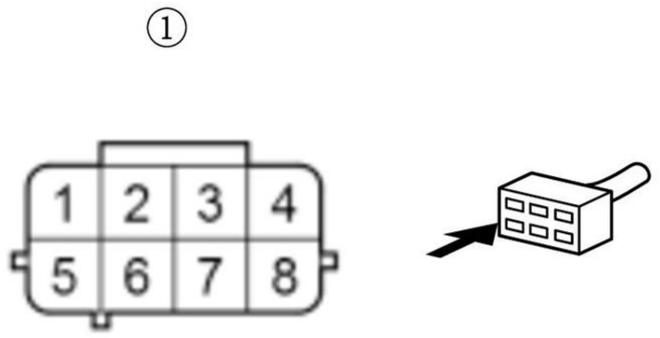

Is there about 5.0 V?

YES

Replace the EVAP leak check module .

NO

Go to step 6.

6. Open wire check (VCC6 line)

-1. Turn the vehicle to the OFF (LOCK) mode.

-2. Jump the SCS line with the HDS, and wait more than 1 minute.

-3. Disconnect the following connector.

PCM connector E (80P)

-4. Connect terminals A and B with a jumper wire.

Terminal A	EVAP leak check module 8P connector (female terminals) No. 6: ①
Terminal B	Body ground

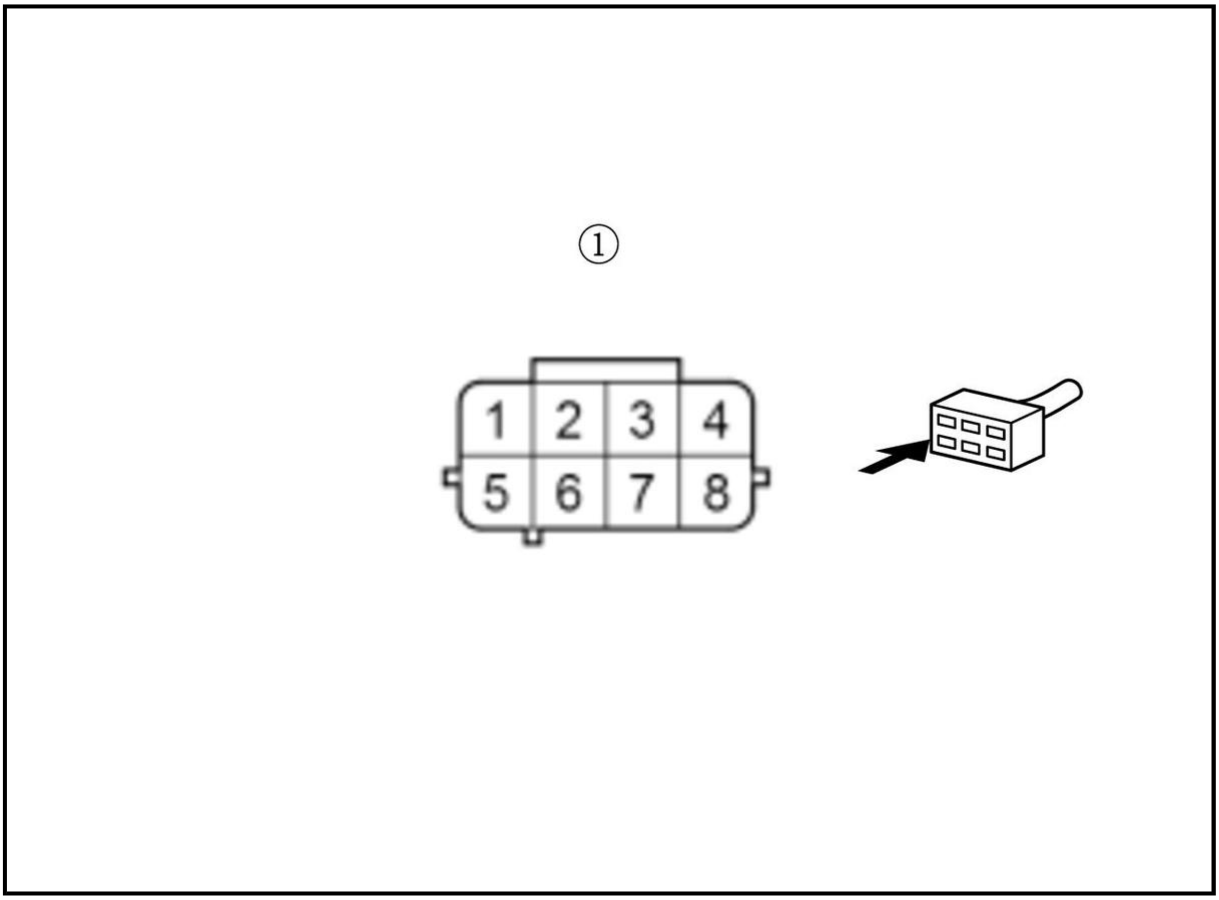

-5. Measure the resistance between test points 1 and 2.

Test condition	Vehicle OFF (LOCK) mode
B	EVAP leak check module 8P connector: disconnected
B	PCM connector E (80P): disconnected
B	EVAP leak check module 8P connector No. 6: jumped to body ground
Test point 1	**PCM connector E (80P) No. 63**
Test point 2	Body ground

Is there 1.0 Ω or less?

YES

The VCC6 wire is OK. Check for any authorized service information related to the DTCs or symptoms you are troubleshooting, or **substitute a known-good PCM** .

NO

Repair an open in the VCC6 wire between the PCM (E63) and the EVAP leak check module.

DTC P24BB

DTC P24BB : EVAP Leak Check Module Pressure Sensor Circuit High Voltage

NOTE:

- Before you troubleshoot, **review the general troubleshooting information** .

- This DTC is stored if there is a blockage in the drain hose of the EVAP leak check module. Check the EVAP canister filter and the drain hoses before troubleshooting.

DTC Description	Confirmed DTC	Pending DTC
P24BB EVAP Leak Check Module Pressure Sensor Circuit High Voltage	B	B

DTC (PGM-FI)

1. EVAP system check

   -1. Turn the vehicle to the ON mode.

   -2. Clear the DTC with the HDS.

   -3. Turn the vehicle to the OFF (LOCK) mode.

   -4. Turn the vehicle to the ON mode.

   -5. Check the parameter(s) below with the HDS.

Signal	Threshold		Current conditions	
	Values	Unit	Values	Unit
Absolute Pressure of ELCM Pressure Sensor	More than 893	mmHg	B	B

   Do the current condition(s) match the malfunction threshold?

   YES

   Go to step 3.

   NO

   Go to step 2.

2. Problem verification

   -1. Check for Pending or Confirmed DTCs with the HDS.

DTC Description	Confirmed DTC	Pending DTC
P24BB EVAP Leak Check Module Pressure Sensor Circuit High Voltage	B	B

   Is DTC P24BB indicated?

   YES

   The failure is duplicated. Go to step 3.

   NO

   Intermittent failure, the system is OK at this time. Check for poor connections or loose terminals at the EVAP leak check module and the PCM. **If the on-board snapshot of this DTC is recorded, try to reproduce the failure under the same conditions with the on-board snapshot** .

3. Determine possible failure area (EVAP leak check module pressure sensor, others)

   -1. Turn the vehicle to the OFF (LOCK) mode.

-2. Disconnect the following connector.

EVAP leak check module 8P connector

-3. Connect terminals A and B with a jumper wire.

Terminal A	EVAP leak check module 8P connector (female terminals) No. 7: ①
Terminal B	EVAP leak check module 8P connector (female terminals) No. 8: ①

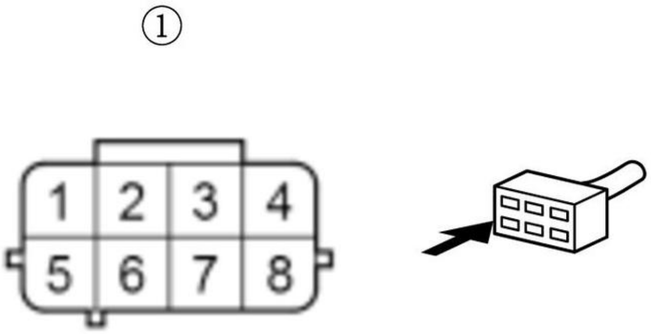

-4. Turn the vehicle to the ON mode.

-5. Check the parameter(s) below with the HDS.

Signal	Threshold		Current conditions	
	Values	Unit	Values	Unit
Absolute Pressure of ELCM Pressure Sensor	More than 893	mmHg	B	B

Do the current condition(s) match the malfunction threshold?

YES

Go to step 4.

NO

Replace the EVAP leak check module .

4. Determine possible failure area (ELCMPA line, others)

-1. Turn the vehicle to the OFF (LOCK) mode.

-2. Remove the jumper wire from the EVAP leak check module 8P connector.

-3. Turn the vehicle to the ON mode.

-4. Measure the voltage between test points 1 and 2.

Test condition	Vehicle ON mode
B	EVAP leak check module 8P connector: disconnected
Test point 1	EVAP leak check module 8P connector (female terminals) No. 6: ①
Test point 2	EVAP leak check module 8P connector (female terminals) No. 8: ①

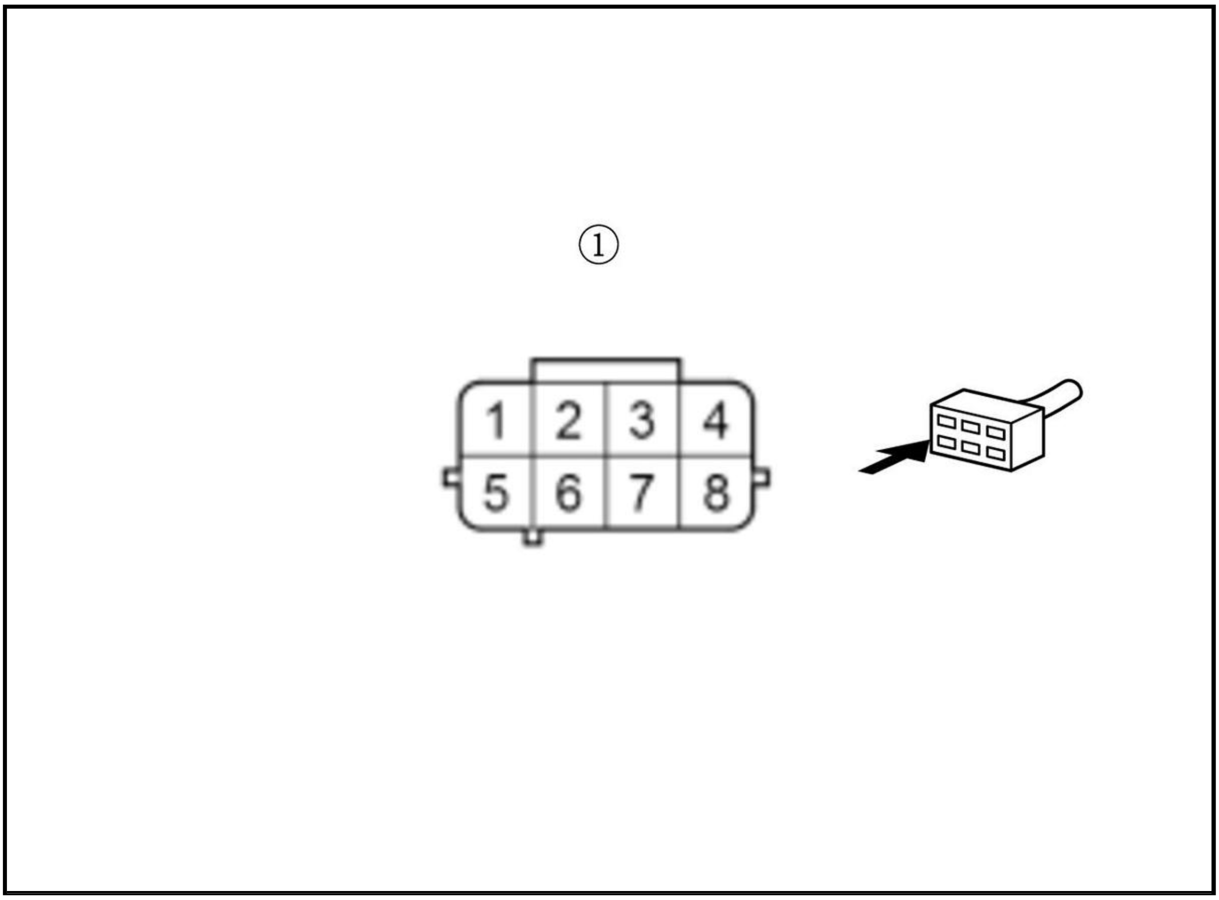

Is there about 5.0 V?

YES

Go to step 5.

NO

Go to step 6.

5. Open wire check (ELCMPA line)

-1. Turn the vehicle to the OFF (LOCK) mode.

-2. Jump the SCS line with the HDS, and wait more than 1 minute.

-3. Disconnect the following connector.

PCM connector A (50P)

-4. Connect terminals A and B with a jumper wire.

Terminal A	EVAP leak check module 8P connector (female terminals) No. 7: ①
Terminal B	Body ground

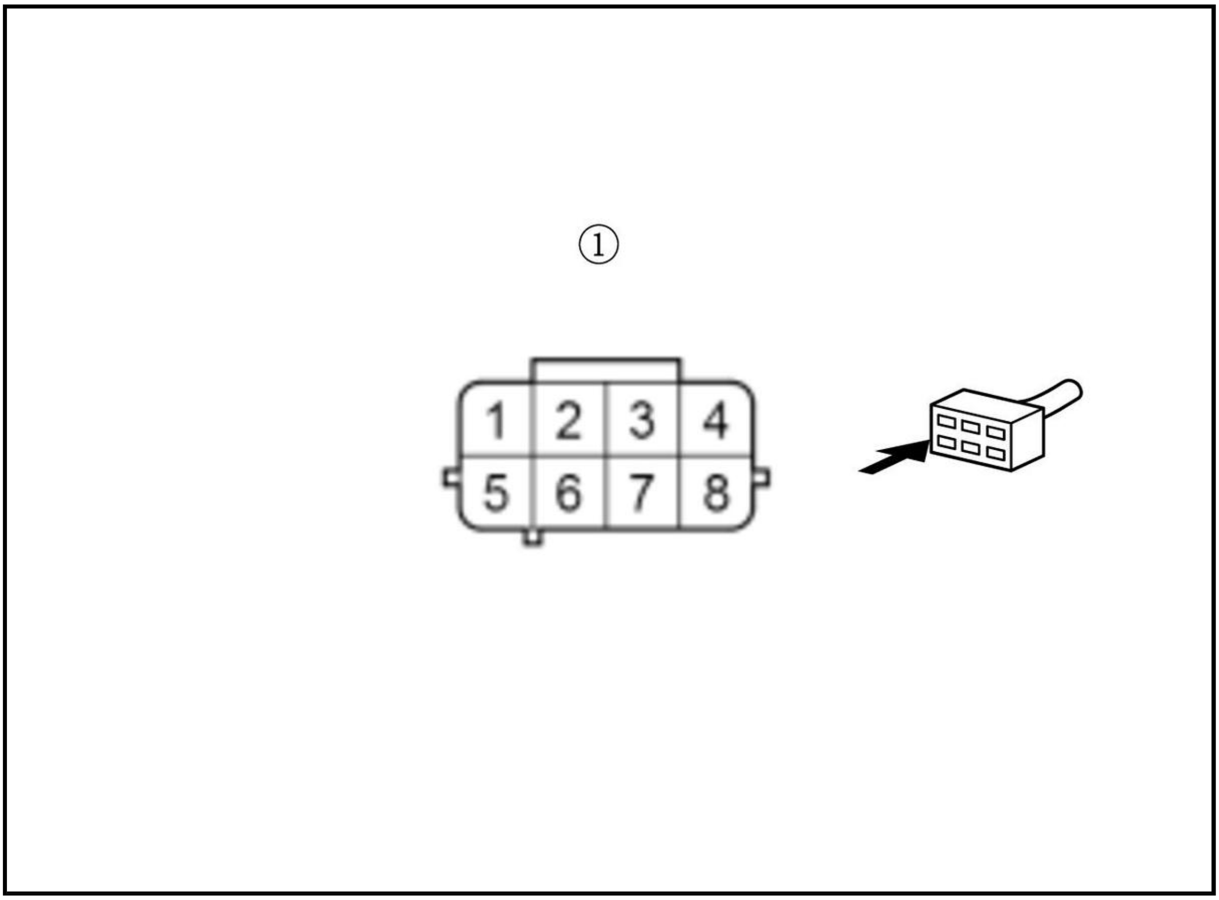

-5. Measure the resistance between test points 1 and 2.

Test condition	Vehicle OFF (LOCK) mode
B	EVAP leak check module 8P connector: disconnected
B	PCM connector A (50P): disconnected
B	EVAP leak check module 8P connector No. 7: jumped to body ground
Test point 1	**PCM connector A (50P) No. 42**
Test point 2	Body ground

Is there 1.0 Ω or less?

YES

The ELCMPA wire is OK. Check for any authorized service information related to the DTCs or symptoms you are troubleshooting, or **substitute a known-good PCM** .

NO

Repair an open in the ELCMPA wire between the PCM (A42) and the EVAP leak check module.

6. Open wire check (VCC6 line)

-1. Turn the vehicle to the OFF (LOCK) mode.

-2. Jump the SCS line with the HDS, and wait more than 1 minute.

-3. Disconnect the following connector.

PCM connector E (80P)

-4. Connect terminals A and B with a jumper wire.

Terminal A	EVAP leak check module 8P connector (female terminals) No. 6: ①
Terminal B	Body ground

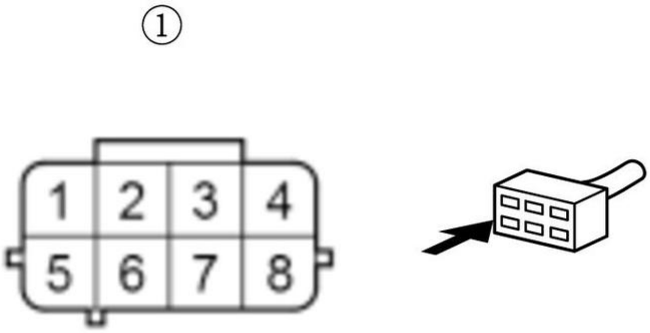

-5. Measure the resistance between test points 1 and 2.

Test condition	Vehicle OFF (LOCK) mode
B	EVAP leak check module 8P connector: disconnected
B	PCM connector E (80P): disconnected
B	EVAP leak check module 8P connector No. 6: jumped to body ground
Test point 1	**PCM connector E (80P) No. 63**
Test point 2	body ground

Is there 1.0 Ω or less?

YES

Go to step 7.

NO

Repair an open in the VCC6 wire between the PCM (E63) and the EVAP leak check module.

7. Open wire check (SG6 line)

-1. Remove the jumper wire from the EVAP leak check module 8P connector.

-2. Connect terminals A and B with a jumper wire.

Terminal A	EVAP leak check module 8P connector (female terminals) No. 8: ①
Terminal B	Body ground

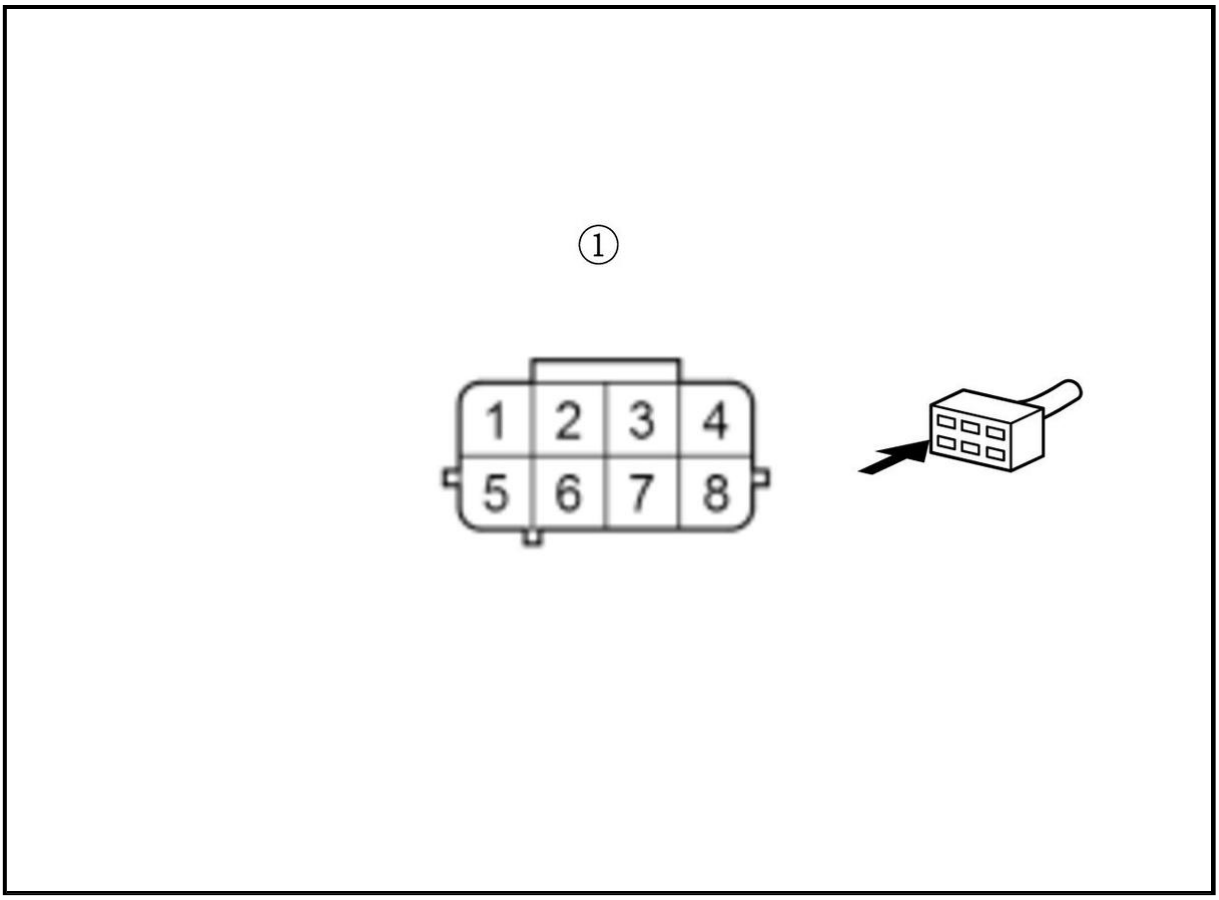

-3. Measure the resistance between test points 1 and 2.

Test condition	Vehicle OFF (LOCK) mode
	EVAP leak check module 8P connector: disconnected
	PCM connector E (80P): disconnected
	EVAP leak check module 8P connector No. 8: jumped to body ground
Test point 1	**PCM connector E (80P) No. 45**
Test point 2	Body ground

Is there 1.0 Ω or less?

YES

The SG6 wire is OK. Check for any authorized service information related to the DTCs or symptoms you are troubleshooting, or **substitute a known-good PCM** .

NO

Repair an open in the SG6 wire between the PCM (E45) and the EVAP leak check module.

DTC P24BE

DTC P24BE : Canister Change Over Valve Control Circuit Low Voltage

NOTE: Before you troubleshoot, **review the general troubleshooting information** .

DTC Description	Confirmed DTC	Pending DTC
P24BE Canister Change Over Valve Control Circuit Low Voltage	B	B

DTC (PGM-FI)

1. Problem verification

   -1. Turn the vehicle to the ON mode.

   -2. Clear the DTC with the HDS.

   -3. Turn the vehicle to the OFF (LOCK) mode.

   -4. Turn the vehicle to the ON mode.

   -5. Select the EVAP TEST in the Function Test Menu, then select EVAP Leak Check Module Test with the HDS.

   EVAP TEST

   Is the result OK?

   YES

   Intermittent failure, the system is OK at this time. Check for poor connections or loose terminals at the EVAP leak check module and the PCM. **If the on-board snapshot of this DTC is recorded, try to reproduce the failure under the same conditions with the on-board snapshot** .

   NO

   The failure is duplicated. Go to step 2.

2. Open wire check (IGPS(LAF) line)

   -1. Turn the vehicle to the OFF (LOCK) mode.

   -2. Disconnect the following connector.

EVAP leak check module 8P connector

   -3. Turn the vehicle to the ON mode.

   -4. Measure the voltage between test points 1 and 2.

Test condition	Vehicle ON mode
B	EVAP leak check module 8P connector: disconnected
Test point 1	EVAP leak check module 8P connector (female terminals) No. 5: ①
Test point 2	Body ground

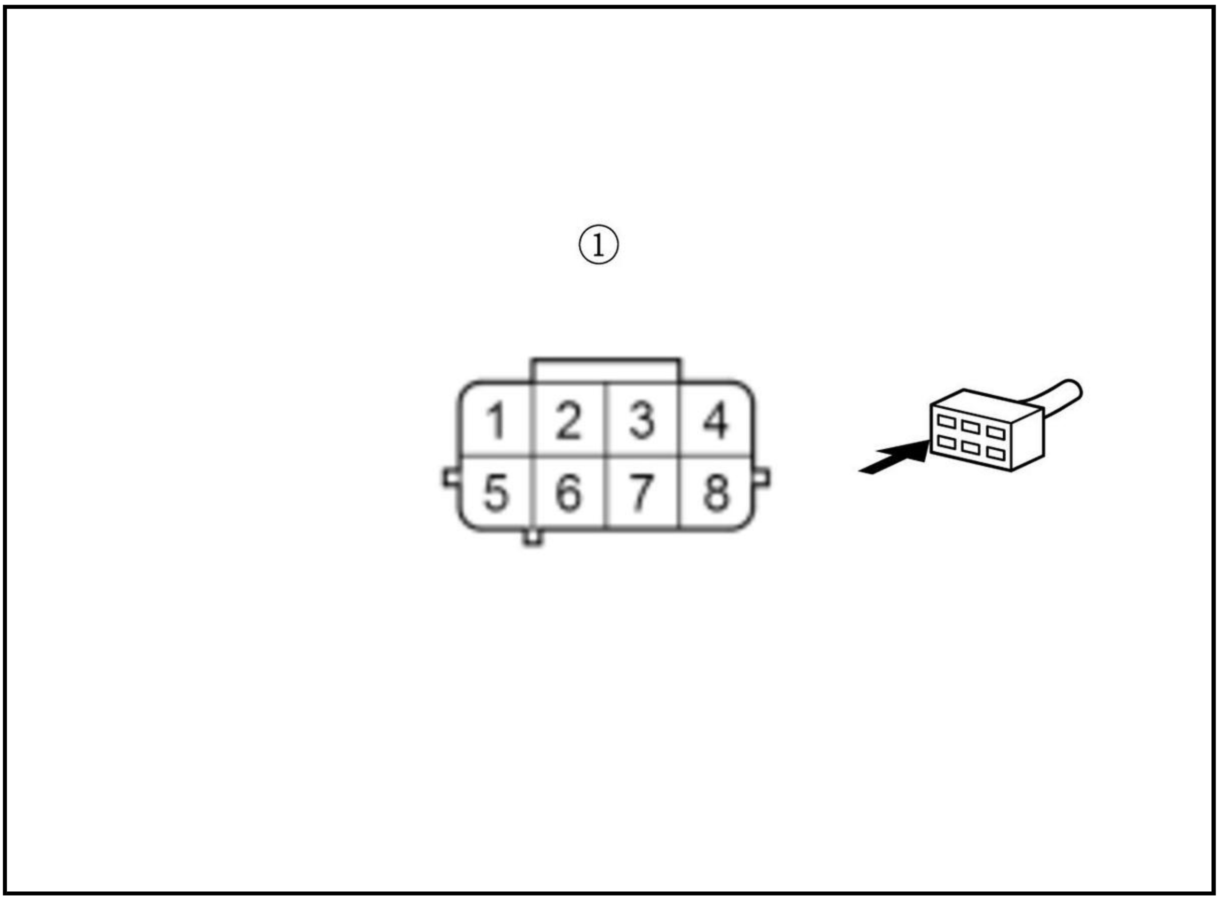

Is there battery voltage?

YES

The IGPS(LAF) wire is OK. Go to step 5.

NO

Go to step 3.

3. Fuse check

-1. Turn the vehicle to the OFF (LOCK) mode.

-2. Check the following fuse.

Fuse	**No. A11**

Is the fuse OK?

YES

Go to step 4.

NO

Check for a short in IGPS(LAF) wire between the No. A11 fuse and the EVAP leak check module. If the wire is OK, **replace the under-hood fuse/relay box** . Also replace the No. A11 fuse.

4. Relay circuit board check

-1. **Remove and test the relay circuit board** .

Is the relay circuit board OK?

YES

Repair an open in the IGPS(LAF) wire between the **No. A11 fuse** and the EVAP leak check module, or the FI_SUB_RLY_OUT wire between the No. A11 fuse and the relay circuit board (PGM-FI subrelay circuit).

NO

Replace the relay circuit board .

5. Shorted wire check (CCV line)

-1. Jump the SCS line with the HDS, and wait more than 1 minute.

-2. Disconnect the following connector.

PCM connector A (50P)

-3. Measure the resistance between test points 1 and 2.

Test condition	Vehicle OFF (LOCK) mode
	EVAP leak check module 8P connector: disconnected
	PCM connector A (50P): disconnected
Test point 1	**PCM connector A (50P) No. 6**
Test point 2	Body ground

Is there 1 MΩ or more?

YES

The CCV wire is not shorted. Go to step 6.

NO

Repair a short in the CCV wire between the PCM (A6) and the EVAP leak check module.

6. Open wire check (CCV line)

-1. Connect terminals A and B with a jumper wire.

Terminal A	EVAP leak check module 8P connector (female terminals) No. 1: ①
Terminal B	Body ground

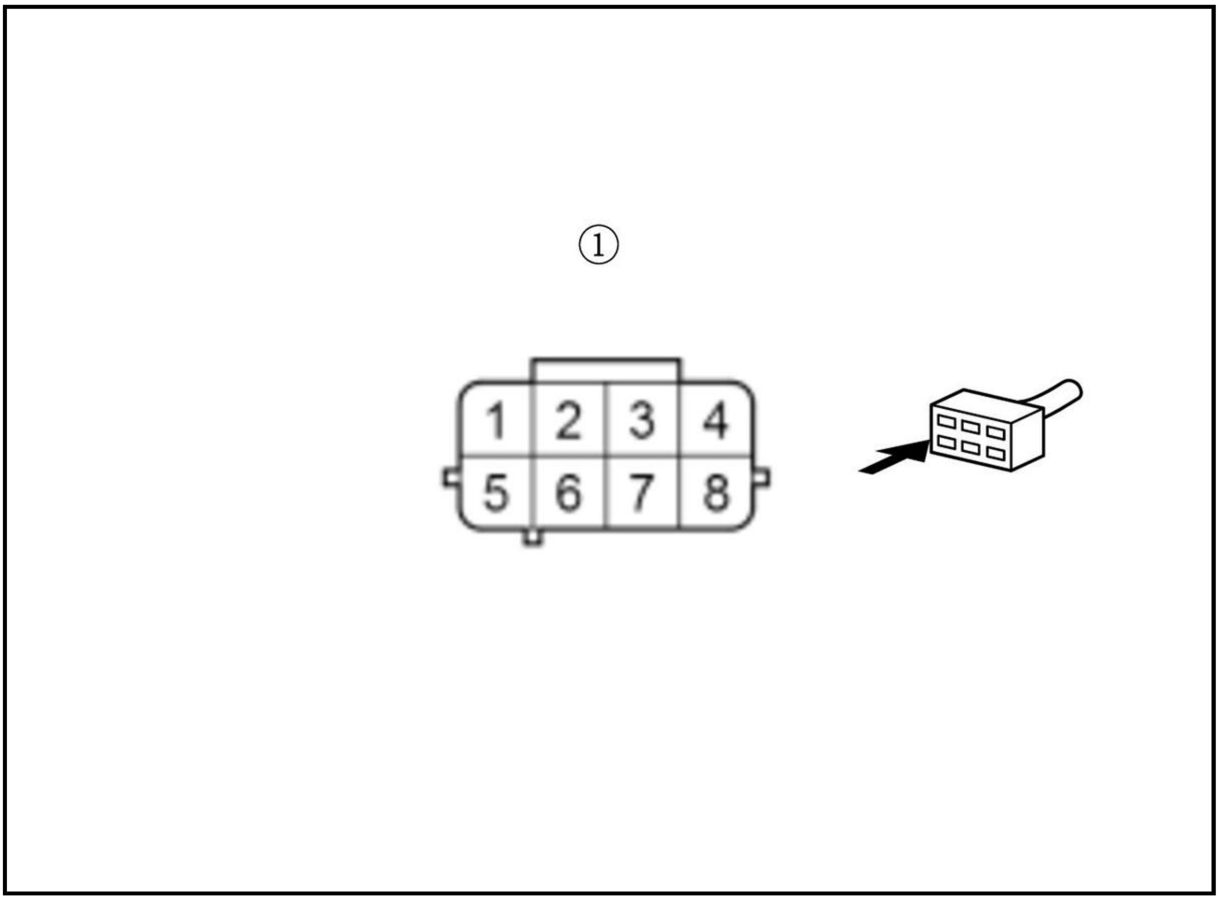

-2. Measure the resistance between test points 1 and 2.

Test condition	Vehicle OFF (LOCK) mode
	EVAP leak check module 8P connector: disconnected
	PCM connector A (50P): disconnected
	EVAP leak check module 8P connector No. 1: jumped to body ground
Test point 1	**PCM connector A (50P) No. 6**
Test point 2	Body ground

Is there 1.0 Ω or less?

YES

The CCV wire is OK. Go to step 7.

NO

Repair an open in the CCV wire between the PCM (A6) and the EVAP leak check module.

7. EVAP leak check module check

-1. **Substitute a known-good EVAP leak check module** .

-2. Reconnect all connectors.

-3. Exit the SCS mode with the HDS.

-4. Turn the vehicle to the ON mode.

-5. **Reset the PCM with the HDS** .

Reset PCM

-6. Select the EVAP TEST in the Function Test Menu, then select EVAP Leak Check Module Test with the HDS.

EVAP TEST

Is the result Failed?

YES

The EVAP leak check module is OK. Check for any authorized service information related to the DTCs or symptoms you are troubleshooting, or **substitute a known-good PCM** .

NO

Replace the original EVAP leak check module .

DTC P24BF

DTC P24BF : Canister Change Over Valve Control Circuit High Voltage

NOTE: Before you troubleshoot, **review the general troubleshooting information** .

DTC Description	Confirmed DTC	Pending DTC
P24BF Canister Change Over Valve Control Circuit High Voltage	B	B

DTC (PGM-FI)

1. Problem verification

   -1. Turn the vehicle to the ON mode.

   -2. Clear the DTC with the HDS.

   -3. Turn the vehicle to the OFF (LOCK) mode.

   -4. Turn the vehicle to the ON mode.

   -5. Select the EVAP TEST in the Function Test Menu, then select EVAP Leak Check Module Test with the HDS.

   EVAP TEST

   Is the result OK?

   YES

   Intermittent failure, the system is OK at this time. Check for poor connections or loose terminals at the EVAP leak check module and the PCM. **If the on-board snapshot of this DTC is recorded, try to reproduce the failure under the same conditions with the on-board snapshot** .

   NO

   The failure is duplicated. Go to step 2.

2. Shorted wire check (CCV line to power)

   -1. Turn the vehicle to the OFF (LOCK) mode.

   -2. Jump the SCS line with the HDS, and wait more than 1 minute.

-3. Disconnect the following connectors.

PCM connector A (50P)
EVAP leak check module 8P connector

-4. Turn the vehicle to the ON mode.

-5. Measure the voltage between test points 1 and 2.

Test condition	Vehicle ON mode
	PCM connector A (50P): disconnected
	EVAP leak check module 8P connector: disconnected
Test point 1	**PCM connector A (50P) No. 6**
Test point 2	Body ground

Is there battery voltage?

YES

Repair a short to power in the CCV wire between the PCM (A6) and the EVAP leak check module.

NO

Go to step 3.

3. EVAP leak check module check

-1. **Substitute a known-good EVAP leak check module** .

-2. Reconnect all connectors.

-3. Exit the SCS mode with the HDS.

-4. Turn the vehicle to the ON mode.

-5. **Reset the PCM with the HDS** .

Reset PCM

-6. Select the EVAP TEST in the Function Test Menu, then select EVAP Leak Check Module Test with the HDS.

EVAP TEST

Is the result Failed?

YES

The EVAP leak check module is OK. Check for any authorized service information related to the DTCs or symptoms you are troubleshooting, or **substitute a known-good PCM** .

NO

Replace the original EVAP leak check module .

DTC P24C0

DTC P24C0 : Canister Change Over Valve Close Malfunction

NOTE: Before you troubleshoot, **review the general troubleshooting information** .

DTC Description	Confirmed DTC	Pending DTC
P24C0 Canister Change Over Valve Close Malfunction	B	B

DTC (PGM-FI)

1. Problem verification

   -1. Turn the vehicle to the ON mode.

   -2. Clear the DTC with the HDS.

   -3. **Enter the maintenance mode, then start the engine** , and let it idle without load (in P or N) until the radiator fan comes on.

   -4. Monitor the EVAP PC Duty in the DATA LIST with the HDS, while holding the engine speed at 3, 000 rpm with the EVAP PC Duty at 20 % or more.

Signal	Current conditions	
	Values	Unit
EVAP PC Duty	B	B

   -5. Monitor the OBD STATUS for DTC P24C0 in the DTCs MENU with the HDS.

DTC Description	OBD STATUS
P24C0 Canister Change Over Valve Close Malfunction	B

   Does the HDS indicate FAILED?

   YES

   The failure is duplicated. Go to step 2.

   NO

   Intermittent failure, and the system is OK at this time. Check for poor connections or loose terminals at the EVAP leak check module and the PCM. **If the on-board snapshot of this DTC is recorded, try to reproduce the failure under the same conditions with the on-board snapshot** .

2. EVAP leak check module drain hose check

   -1. **Remove the EVAP leak check module** and the **EVAP canister filter** , then check the blockage in the hoses and the EVAP canister filter.

   Are the parts OK?

   YES

   Replace the EVAP leak check module .

   NO

   Remove the blockage from them, or replace the part(s) if needed.

DTC P2601

DTC P2601 : Electric Engine Coolant Pump Range/Performance Problem

NOTE: Before you troubleshoot, **review the general troubleshooting information** .

DTC Description	Confirmed DTC	Pending DTC
P2601 Electric Engine Coolant Pump Range/Performance Problem	B	B

DTC (PGM-FI)

1. Problem verification

   -1. Turn the vehicle to the ON mode.

   -2. Clear the DTC with the HDS.

   -3. Enter the maintenance mode, then start the engine .

   -4. Select the Electric Water Pump TEST in the Function Test Menu with the HDS.

   Electric Water Pump TEST

   Check for Pending or Confirmed DTCs with the HDS.

DTC Description	Confirmed DTC	Pending DTC
P2601 Electric Engine Coolant Pump Range/Performance Problem	B	B

   Is DTC P2601 indicated?

   YES

   Go to step 2.

   NO

   Intermittent failure, the system is OK at this time. Check for poor connections or loose terminals at the electric engine coolant pump and the PCM. If the on-board snapshot of this DTC is recorded, try to reproduce the failure under the same conditions with the on-board snapshot .

2. Engine coolant level check

   -1. Turn the vehicle to the OFF (LOCK) mode.

   -2. Check the engine coolant level .

   Is the coolant level appropriate?

   YES

   Replace the electric engine coolant pump .

   NO

   Check the engine coolant leaks .

DTC P2602

DTC P2602 : Electric Engine Coolant Pump Circuit Low Voltage

NOTE: Before you troubleshoot, review the general troubleshooting information .

DTC Description	Confirmed DTC	Pending DTC
P2602 Electric Engine Coolant Pump Circuit Low Voltage	B	B

DTC (PGM-FI)

1. Problem verification

   -1. Turn the vehicle to the ON mode.

   -2. Clear the DTC with the HDS.

   -3. **Enter the maintenance mode, then start the engine** .

   -4. Select the Electric Water Pump TEST in the Function Test Menu with the HDS.

   Electric Water Pump TEST

   Check for Pending or Confirmed DTCs with the HDS.

DTC Description	Confirmed DTC	Pending DTC
P2602 Electric Engine Coolant Pump Circuit Low Voltage	B	B

   Is DTC P2602 indicated?

   YES

   The failure is duplicated. Go to step 2.

   NO

   Intermittent failure, the system is OK at this time. Check for poor connections or loose terminals at the electric engine coolant pump and the PCM. **If the on-board snapshot of this DTC is recorded, try to reproduce the failure under the same conditions with the on-board snapshot** .

2. Fuse check

   -1. Turn the vehicle to the OFF (LOCK) mode.

   -2. Check the following fuse.

Fuse	**No. C1-6**

   Is the fuse OK?

   YES

   Go to step 6.

   NO

   Go to step 3.

3. Relay check

   -1. **Remove the engine EWP relay** .

   -2. **Test the engine EWP relay** .

   Is the relay OK?

YES

Go to step 4.

NO

Replace the engine EWP relay. Also replace the **No. C1-6 fuse** .

4. Shorted wire check (+B_ENG_WATER_PUMP line)

-1. Remove the blown **No. C1-6 fuse** .

-2. Measure the resistance between test points 1 and 2.

Test condition	Vehicle OFF (LOCK) mode
B	Engine EWP relay: disconnected
Test point 1	Engine EWP relay 4P socket (female terminals) No. 1 and No. 3: ①
Test point 2	Body ground

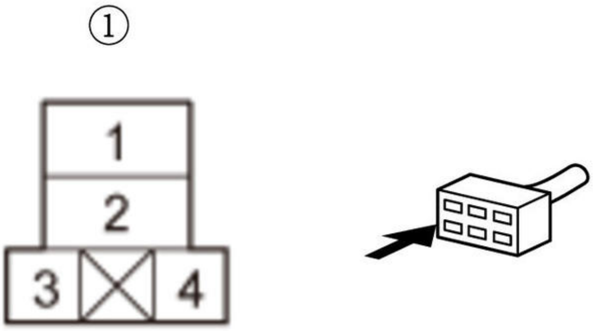

Is there 1 MΩ or more?

YES

Go to step 5.

NO

Repair a short in the +B_ENG_WATER_PUMP wire between the No. C1-6 fuse and the engine EWP relay. Also replace the No. C1-6 fuse.

5. Shorted wire check (IG1(EWP)/ENG W/PUMP RLY OUT line)

-1. Disconnect the following connector.

Electric engine coolant pump 5P connector

-2. Measure the resistance between test points 1 and 2.

Test condition	Vehicle OFF (LOCK) mode
B	Engine EWP relay: disconnected

B	Electric engine coolant pump 5P connector: disconnected
Test point 1	Engine EWP relay 4P socket (female terminals) No. 2: ①
Test point 2	Body ground

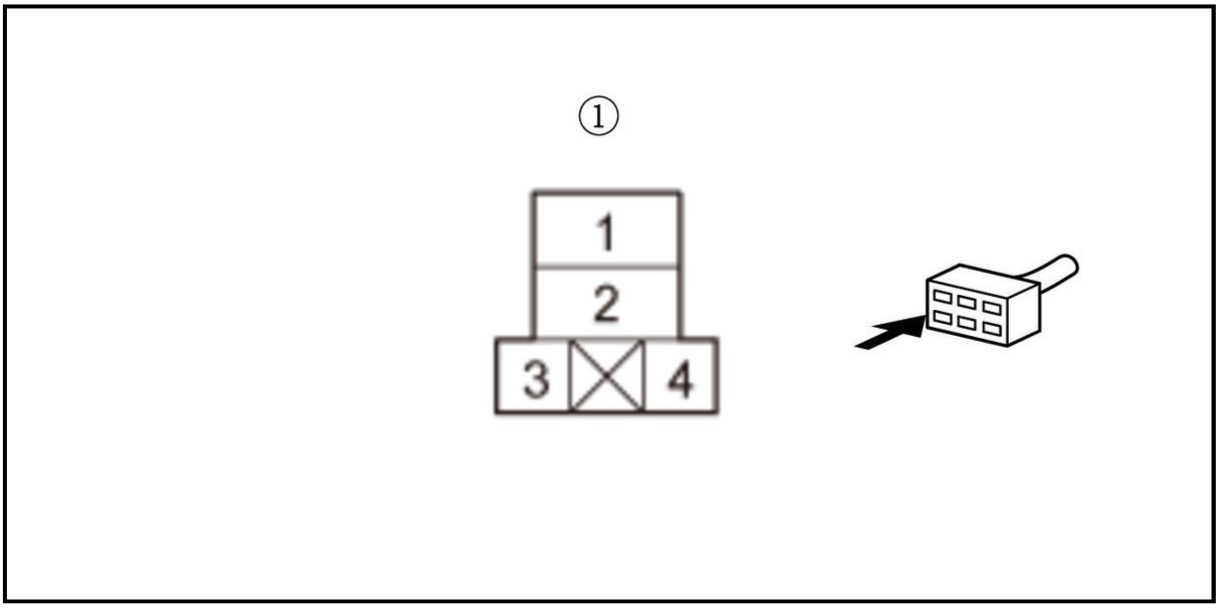

Is there 1 MΩ or more?

YES

Replace the electric engine coolant pump . Also replace the **No. C1-6 fuse** .

NO

Repair a short in the IG1(EWP)/ENG W/PUMP RLY OUT wire between the engine EWP relay and the electric engine coolant pump. Also replace the No. C1-6 fuse.

6. Relay check

-1. **Remove the engine EWP relay** .

-2. **Test the engine EWP relay** .

Is the relay OK?

YES

Go to step 7.

NO

Replace the engine EWP relay.

7. Open wire check (ENG W/PUMP RLY CL- line)

-1. Jump the SCS line with the HDS, and wait more than 1 minute.

-2. Disconnect the following connector.

PCM connector A (50P)

-3. Measure the resistance between test points 1 and 2.

Test condition	Vehicle OFF (LOCK) mode
B	Engine EWP relay: disconnected
B	PCM connector A (50P): disconnected
Test point 1	Engine EWP relay 4P socket (female terminals) No. 4: ①
Test point 2	**PCM connector A (50P) No. 24**

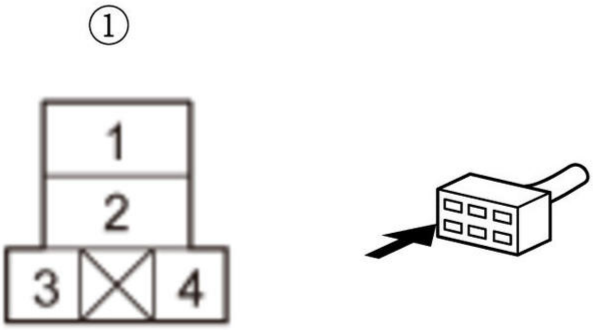

Is there 1.0 Ω or less?

YES

Go to step 8.

NO

Repair an open in the ENG W/PUMP RLY CL- wire between the PCM (A24) and the engine EWP relay.

8. Open wire check (+B_ENG_WATER_PUMP line)

-1. Measure the voltage between test points 1 and 2.

Test condition	Vehicle OFF (LOCK) mode
B	Engine EWP relay: disconnected
B	PCM connector A (50P): disconnected
Test point 1	Engine EWP relay 4P socket (female terminals) No. 1 and No. 3: ①
Test point 2	Body ground

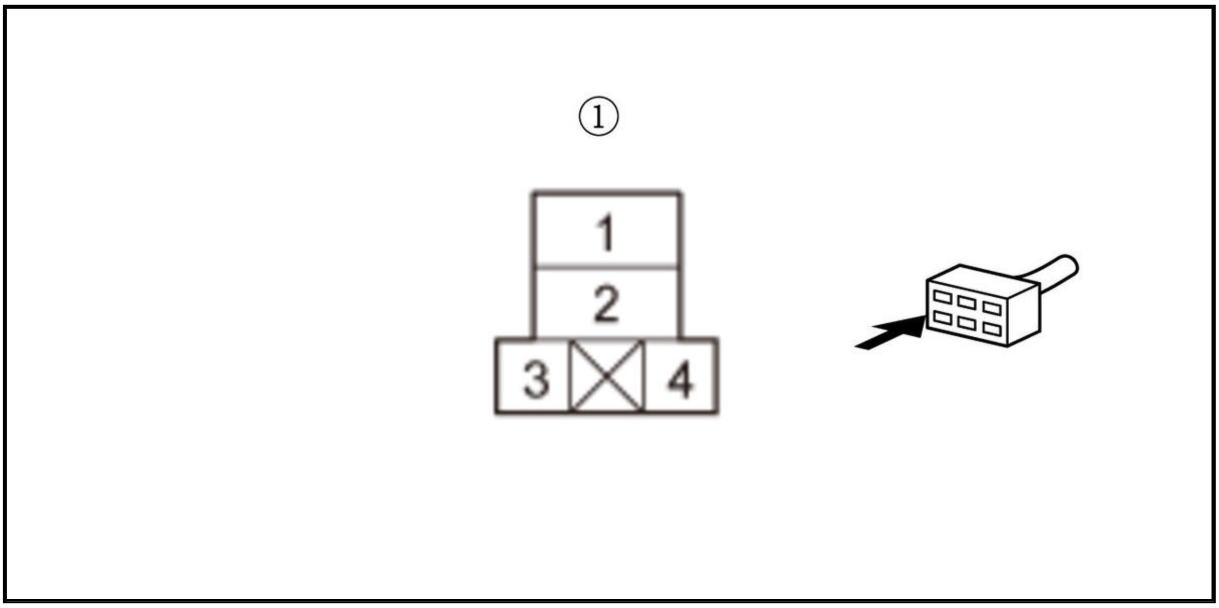

Is there battery voltage?

YES

Go to step 9.

NO

Repair an open in the +B_ENG_WATER_PUMP wire between the **No. C1-6 fuse** and the engine EWP relay.

9. Open wire check (IG1(EWP)/ENG W/PUMP RLY OUT line)

-1. Disconnect the following connector.

Electric engine coolant pump 5P connector

-2. Measure the resistance between test points 1 and 2.

Test condition	Vehicle OFF (LOCK) mode
B	Engine EWP relay: disconnected
B	PCM connector A (50P): disconnected
B	Electric engine coolant pump 5P connector: disconnected
Test point 1	Engine EWP relay 4P socket (female terminals) No. 2: ①
Test point 2	Electric engine coolant pump 5P connector (female terminals) No. 1: ②

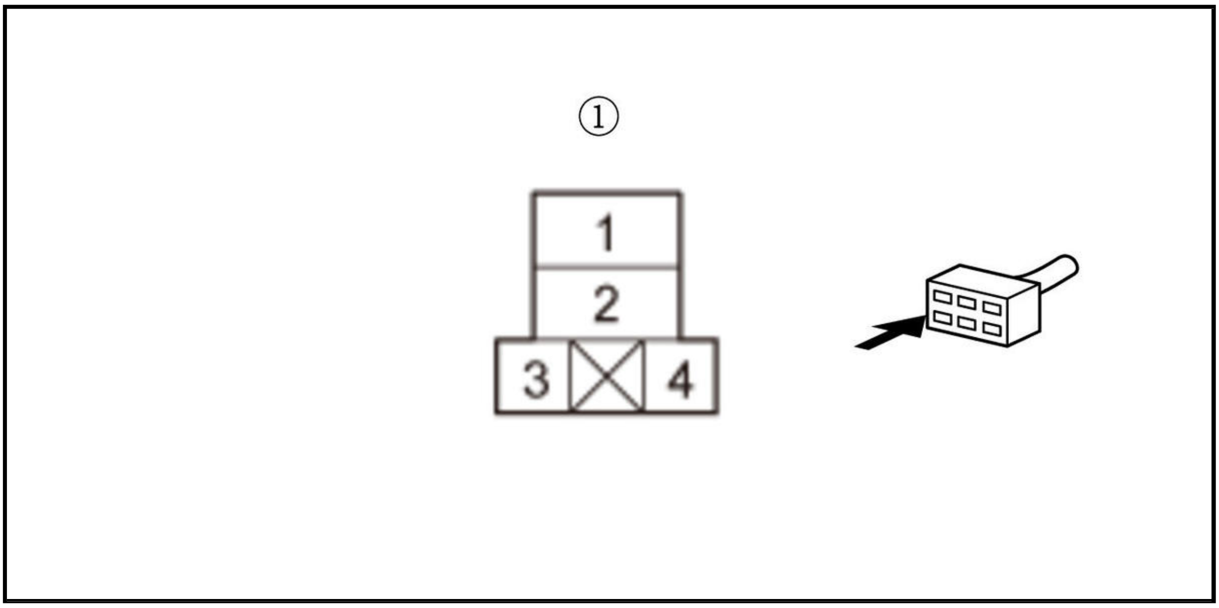

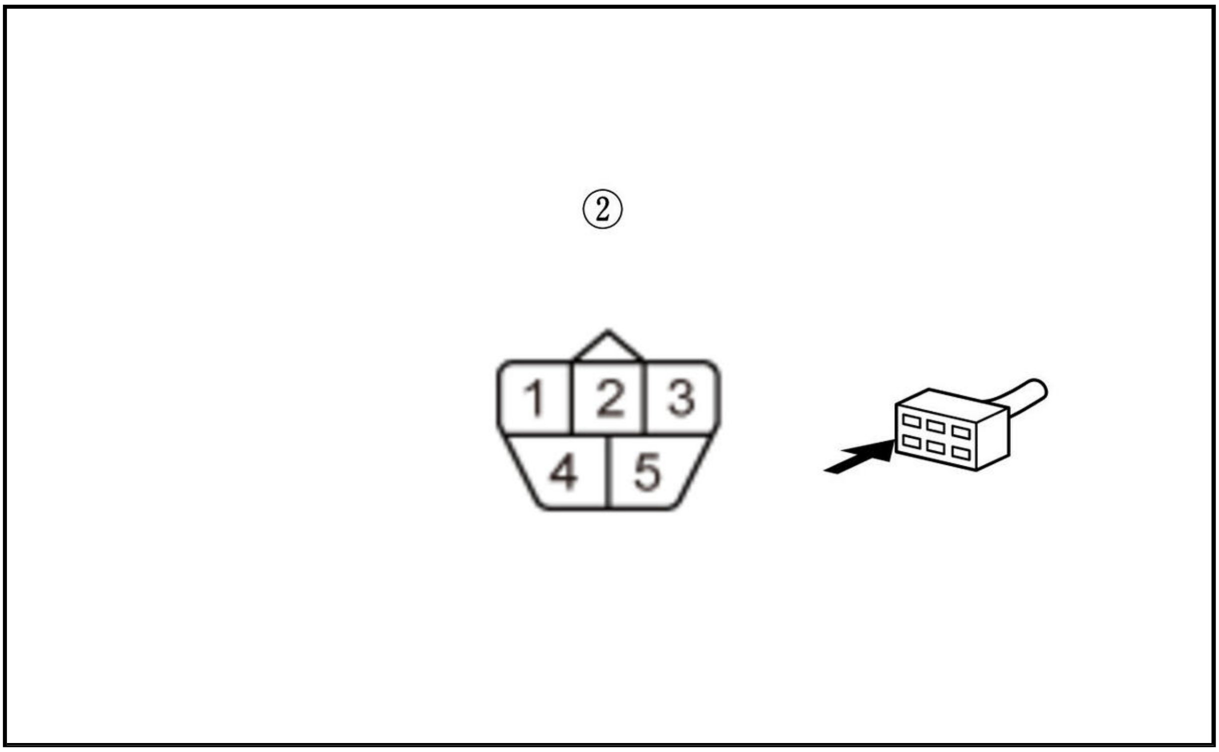

Is there 1.0 Ω or less?

YES

Go to step 10.

NO

Repair an open in the IG1(EWP)/ENG W/PUMP RLY OUT wire between the engine EWP relay and the electric engine coolant pump.

10. Open wire check (EWP_PG line)

-1. Measure the resistance between test points 1 and 2.

Test condition	Vehicle OFF (LOCK) mode
B	Engine EWP relay: disconnected
B	PCM connector A (50P): disconnected
B	Electric engine coolant pump 5P connector: disconnected

Test point 1	Electric engine coolant pump 5P connector (female terminals) No. 5: ①
Test point 2	Body ground

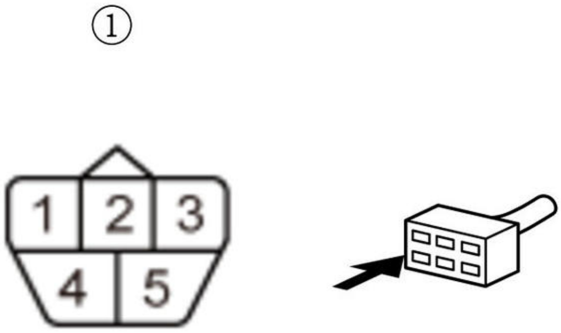

Is there 1.0 Ω or less?

YES

Go to step 11.

NO

Repair an open in the EWP_PG wire between the electric engine coolant pump and G102.

11. Shorted wire check (EWP_C(SWP) line)

-1. Disconnect the following connector.

PCM connector E (80P)

-2. Measure the resistance between test points 1 and 2.

Test condition	Vehicle OFF (LOCK) mode
B	Engine EWP relay: disconnected
B	PCM connector A (50P): disconnected
B	Electric engine coolant pump 5P connector: disconnected
B	PCM connector E (80P): disconnected
Test point 1	**PCM connector E (80P) No. 29**
Test point 2	Body ground

Is there 1 MΩ or more?

YES

Go to step 12.

NO

Repair a short in the EWP_C(SWP) wire between the PCM (E29) and the electric engine coolant pump.

12. Shorted wire check (EWP_REV(NWP) line)

-1. Measure the resistance between test points 1 and 2.

Test condition	Vehicle OFF (LOCK) mode
B	Engine EWP relay: disconnected
B	PCM connector A (50P): disconnected
B	Electric engine coolant pump 5P connector: disconnected
B	PCM connector E (80P): disconnected

Test point 1	**PCM connector E (80P) No. 60**
Test point 2	Body ground

Is there 1 MΩ or more?

YES

The EWP_REV(NWP) wire is not shorted, go to step 13.

NO

Repair a short in the EWP_REV(NWP) wire between the PCM (E60) and the electric engine coolant pump.

13. Open wire check (EWP_REV(NWP) line)

-1. Measure the resistance between test points 1 and 2.

Test condition	Vehicle OFF (LOCK) mode
B	Engine EWP relay: disconnected
B	PCM connector A (50P): disconnected
B	Electric engine coolant pump 5P connector: disconnected
B	PCM connector E (80P): disconnected
Test point 1	Electric engine coolant pump 5P connector (female terminals) No. 2: ①
Test point 2	**PCM connector E (80P) No. 60**

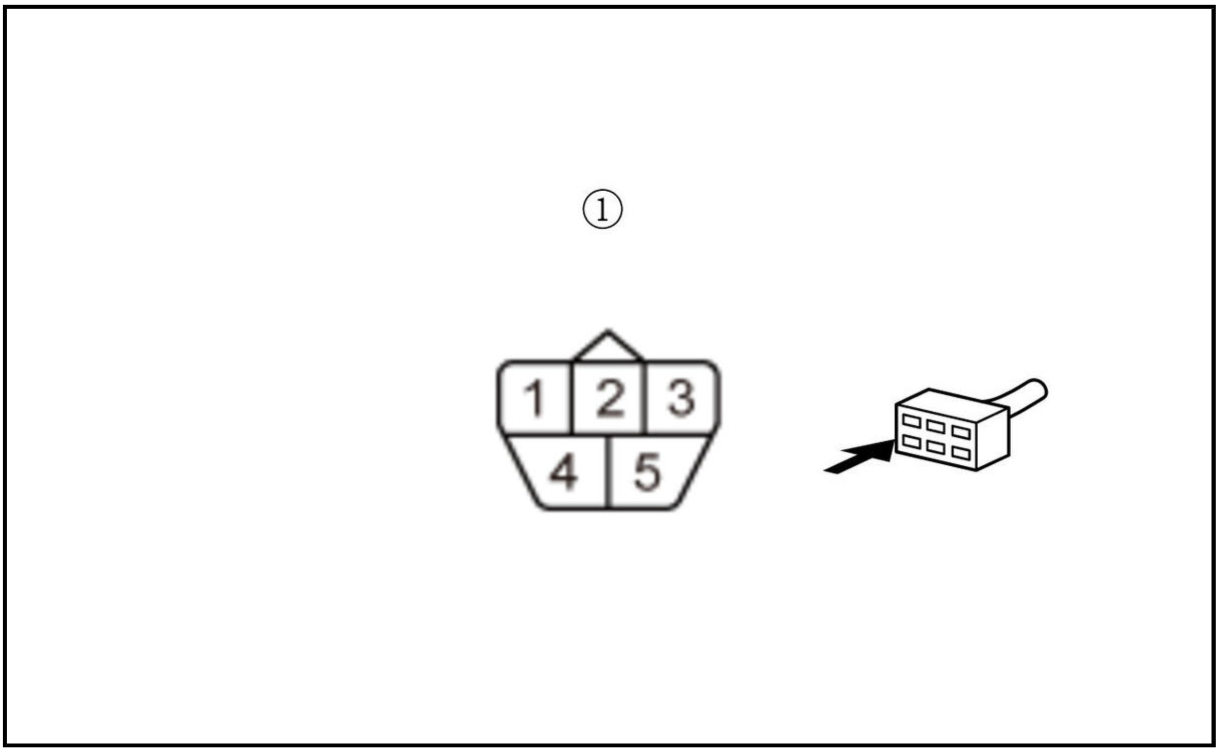

Is there 1.0 Ω or less?

YES

The EWP_REV(NWP) wire is OK. Go to step 14.

NO

Repair an open in the EWP_REV(NWP) wire between the PCM (E60) and the electric engine coolant pump.

14. Electric engine coolant pump check

-1. **Substitute a known-good electric engine coolant pump** .

-2. Reconnect all connectors.

-3. Exit the SCS mode with the HDS.

-4. Turn the vehicle to the ON mode.

-5. Clear the DTC with the HDS.

-6. **Enter the maintenance mode, then start the engine** .

-7. Select the Electric Water Pump TEST in the Function Test Menu with the HDS.

Electric Water Pump TEST

Check for Pending or Confirmed DTCs with the HDS.

DTC Description	Confirmed DTC	Pending DTC
P2602 Electric Engine Coolant Pump Circuit Low Voltage	B	B

Is DTC P2602 indicated?

YES

Check for any authorized service information related to the DTCs or symptoms you are troubleshooting, or **substitute a known-good PCM** .

NO

Replace the original electric engine coolant pump .

DTC P2603

DTC P2603 : Electric Engine Coolant Pump Circuit High Voltage

NOTE: Before you troubleshoot, **review the general troubleshooting information** .

DTC Description	Confirmed DTC	Pending DTC
P2603 Electric Engine Coolant Pump Circuit High Voltage	B	B

DTC (PGM-FI)

1. Problem verification

-1. Turn the vehicle to the ON mode.

-2. Clear the DTC with the HDS.

-3. **Enter the maintenance mode, then start the engine** .

-4. Select the Electric Water Pump TEST in the Function Test Menu with the HDS.

Electric Water Pump TEST

Check for Pending or Confirmed DTCs with the HDS.

DTC Description	Confirmed DTC	Pending DTC
P2603 Electric Engine Coolant Pump Circuit High Voltage	B	B

Is DTC P2603 indicated?

YES

The failure is duplicated. Go to step 2.

NO

Intermittent failure, the system is OK at this time. Check for poor connections or loose terminals at the electric engine coolant pump and the PCM. **If the on-board snapshot of this DTC is recorded, try to reproduce the failure under the same conditions with the on-board snapshot** .

2. Open wire check (EWP_C(SWP) line)

-1. Turn the vehicle to the OFF (LOCK) mode.

-2. Jump the SCS line with the HDS, and wait more than 1 minute.

-3. Disconnect the following connectors.

Electric engine coolant pump 5P connector
PCM connector E (80P)

-4. Measure the resistance between test points 1 and 2.

Test condition	Vehicle OFF (LOCK) mode
B	Electric engine coolant pump 5P connector: disconnected
B	PCM connector E (80P): disconnected
Test point 1	Electric water pump 5P connector (female terminals) No. 4: ①
Test point 2	**PCM connector E (80P) No. 29**

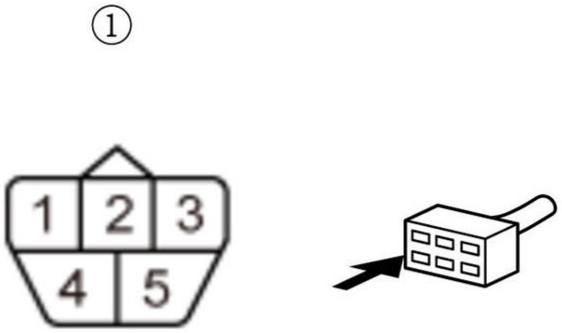

Is there 1.0 Ω or less?

YES

Go to step 3.

NO

Repair an open in the EWP_C(SWP) wire between the PCM (E29) and the electric engine coolant pump.

3. Electric engine coolant pump check

-1. **Substitute a known-good electric engine coolant pump** .

-2. Reconnect all connectors.

-3. Exit the SCS mode with the HDS.

-4. Turn the vehicle to the ON mode.

-5. Clear the DTC with the HDS.

-6. **Enter the maintenance mode, then start the engine** .

-7. Select the Electric Water Pump TEST in the Function Test Menu with the HDS.

Electric Water Pump TEST

Check for Pending or Confirmed DTCs with the HDS.

DTC Description	Confirmed DTC	Pending DTC
P2603 Electric Engine Coolant Pump Circuit High Voltage	B	B

Is DTC P2603 indicated?

YES

Check for any authorized service information related to the DTCs or symptoms you are troubleshooting, or **substitute a known-good PCM** .

NO

Replace the original electric engine coolant pump .

DTC P2610

DTC P2610 : PCM Ignition Off Internal Timer Malfunction

NOTE: Before you troubleshoot, **review the general troubleshooting information** .

DTC Description	Confirmed DTC	Pending DTC
P2610 PCM Ignition Off Internal Timer Malfunction	B	B

DTC (PGM-FI)

1. Problem verification

   -1. Turn the vehicle to the ON mode.

   -2. Clear the DTC with the HDS.

   -3. Turn the vehicle to the OFF (LOCK) mode, and wait more than 10 seconds.

   -4. Turn the vehicle to the ON mode.

   -5. Check for Pending or Confirmed DTCs with the HDS.

DTC Description	Confirmed DTC	Pending DTC
P2610 PCM Ignition Off Internal Timer Malfunction	B	B

Is DTC P2610 indicated?

YES

The failure is duplicated. Check for any authorized service information related to the DTCs or symptoms you are troubleshooting, or **substitute a known-good PCM** .

NO

Intermittent failure, the system is OK at this time. If any other Pending or Confirmed DTCs are indicated, go to the indicated DTC's troubleshooting.

DTC P2646

DTC P2646 : Rocker Arm Oil Pressure Stuck Off

Special Tools Required

Pressure Gauge Adapter 07NAJ-P07010A

A/T Low Pressure Gauge w/Panel 07406-0070301

A/T Pressure Test Hose 07AAJ-PY4A100

A/T Pressure Adapter 07MAJ-PY40120

Oil Pressure Hose 07ZAJ-S5AA200

NOTE:

- **How to read the torque specifications** .
- Before you troubleshoot, **review the general troubleshooting information** .
- If DTC P055C, P2648, and/or P2649 are stored at the same time as DTC P2646, troubleshoot those DTCs first, then recheck for DTC P2646.

DTC Description	Confirmed DTC	Pending DTC
P2646 Rocker Arm Oil Pressure Stuck Off	B	B

DTC (PGM-FI)

1. Oil level check

   -1. **Check the engine oil level** .

   Is the level OK?

   YES

   Go to step 2.

   NO

   Adjust the engine oil to the proper level .

2. Problem verification

   -1. Turn the vehicle to the ON mode.

   -2. Clear the DTC with the HDS.

   -3. **Enter the maintenance mode, then start the engine** .

   -4. Hold the engine speed at 3, 000 rpm without load (in P or N) until the radiator fan comes on, then let it idle.

   -5. Select the VTEC TEST in the Function Test Menu with the HDS.

   VTEC TEST

   Is the result OK?

   YES

   Intermittent failure, the system is OK at this time. Check for poor connections or loose terminals at the rocker arm oil pressure sensor and the PCM. **If the on-board snapshot of this DTC is recorded, try to reproduce the failure under the same conditions with the on-board snapshot** .

   NO

The failure is duplicated. Go to step 3.

3. DTC check

   -1. Check for Pending or Confirmed DTCs with the HDS.

DTC Description	Confirmed DTC	Pending DTC
P055C Rocker Arm Oil Pressure Sensor Low Voltage	B	B
P2648 Rocker Arm Oil Control Solenoid Circuit Low Voltage	B	B

   Is DTC P055C and/or P2648 indicated?

   YES

   Go to the indicated DTC's troubleshooting.

   NO

   Go to step 4.

4. VTEC system oil pressure check

   -1. Turn the vehicle to the OFF (LOCK) mode.

   -2. Remove the rocker arm oil pressure sensor (A), and attach the special tools as shown, then attach the rocker arm oil pressure sensor to the oil pressure gauge adapter (B).

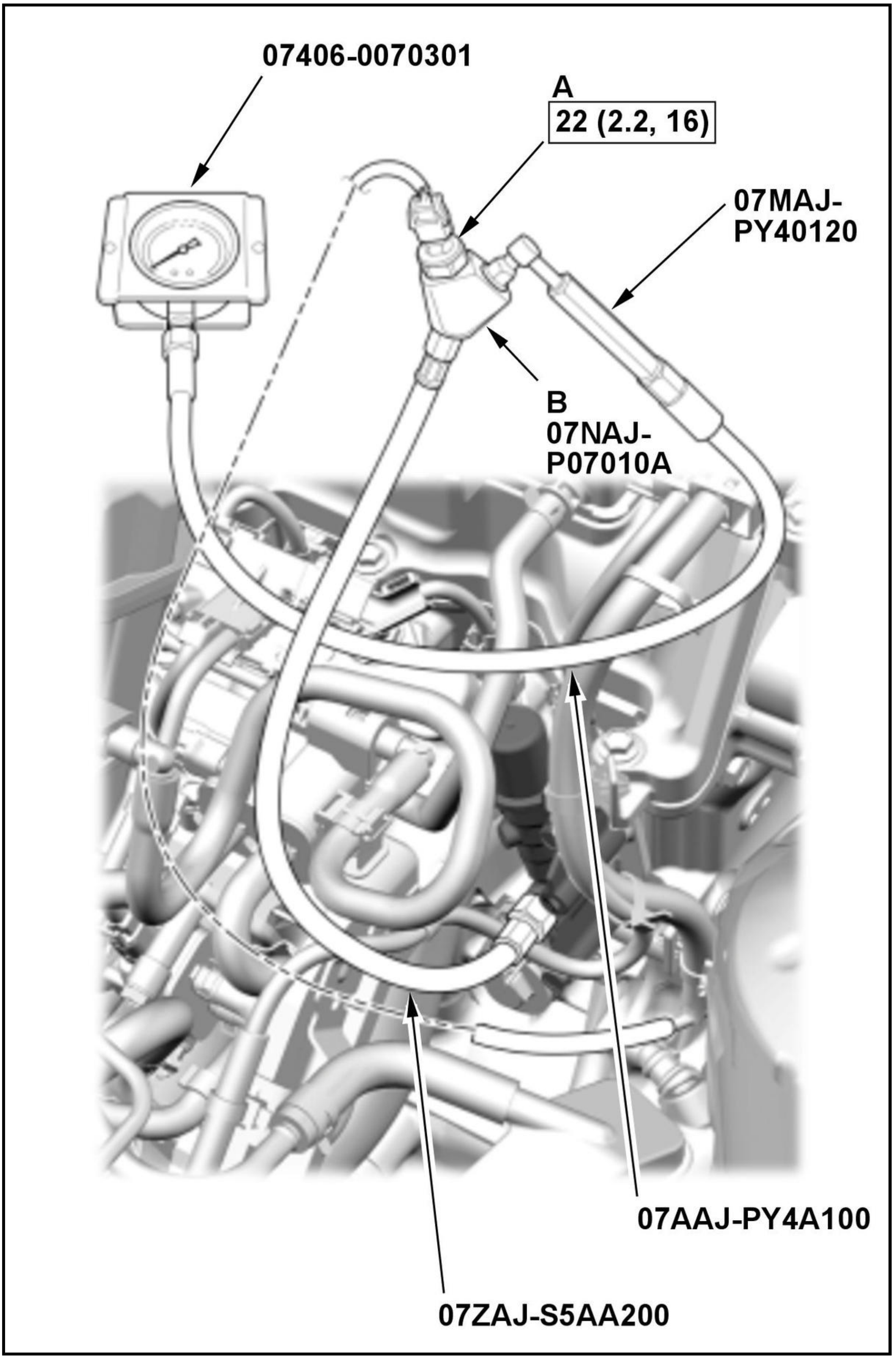
07406-0070301
A
22 (2.2, 16)
07MAJ-
PY40120
B
07NAJ-
P07010A
07AAJ-PY4A100
07ZAJ-S5AA200

-3. Reconnect the following connector.

Rocker arm oil pressure sensor 3P connector

-4. **Enter the maintenance mode, then start the engine** .

-5. Hold the engine speed at 3, 000 rpm without load (in P or N) until the radiator fan comes on, then let it idle.

-6. Select the VTEC TEST in the Function Test Menu with the HDS.

VTEC TEST

Check the oil pressure while the status of VTEC solenoid valve on the HDS display is ON.

Is the oil pressure 49 kPa (0.50 kgf/cm 2, 7.1 psi) or more?

YES

Replace the rocker arm oil pressure sensor .

NO

Inspect the VTEC system oil passage. If it is OK, **replace the rocker arm oil control valve** .

DTC P2647

DTC P2647 : Rocker Arm Oil Pressure Stuck On

Special Tools Required

Pressure Gauge Adapter 07NAJ-P07010A

A/T Low Pressure Gauge w/Panel 07406-0070301

A/T Pressure Test Hose 07AAJ-PY4A100

A/T Pressure Adapter 07MAJ-PY40120

Oil Pressure Hose 07ZAJ-S5AA200

NOTE:

- **How to read the torque specifications** .
- Before you troubleshoot, **review the general troubleshooting information** .
- If DTC P055D, P2648, and/or P2649 are stored at the same time as DTC P2647, troubleshoot those DTCs first, then recheck for DTC P2647.

DTC Description	Confirmed DTC	Pending DTC
P2647 Rocker Arm Oil Pressure Stuck On	B	B

DTC (PGM-FI)

1. Oil level check

-1. **Check the engine oil level** .

Is the level OK?

YES

Go to step 2.

NO

Adjust the engine oil to the proper level .

2. Problem verification

-1. Turn the vehicle to the ON mode.

-2. Clear the DTC with the HDS.

-3. **Enter the maintenance mode, then start the engine** .

-4. Hold the engine speed at 3, 000 rpm without load (in P or N) until the radiator fan comes on, then let it idle.

-5. Select the VTEC TEST in the Function Test Menu with the HDS.

VTEC TEST

Is the result OK?

YES

Intermittent failure, the system is OK at this time. Check for poor connections or loose terminals at the rocker arm oil pressure sensor and the PCM. **If the on-board snapshot of this DTC is recorded, try to reproduce the failure under the same conditions with the on-board snapshot** .

NO

The failure is duplicated. Go to step 3.

3. DTC check

-1. Check for Pending or Confirmed DTCs with the HDS.

DTC Description	Confirmed DTC	Pending DTC
P055D Rocker Arm Oil Pressure Sensor High Voltage	B	B
P2649 Rocker Arm Oil Control Solenoid Circuit High Voltage	B	B

Is DTC P055D and/or P2649 indicated?

YES

Go to the indicated DTC's troubleshooting.

NO

Go to step 4.

4. VTEC system oil pressure check

-1. Turn the vehicle to the OFF (LOCK) mode.

-2. Remove the rocker arm oil pressure sensor (A), and attach the special tools as shown, then attach the rocker arm oil pressure sensor to the oil pressure gauge adapter (B).

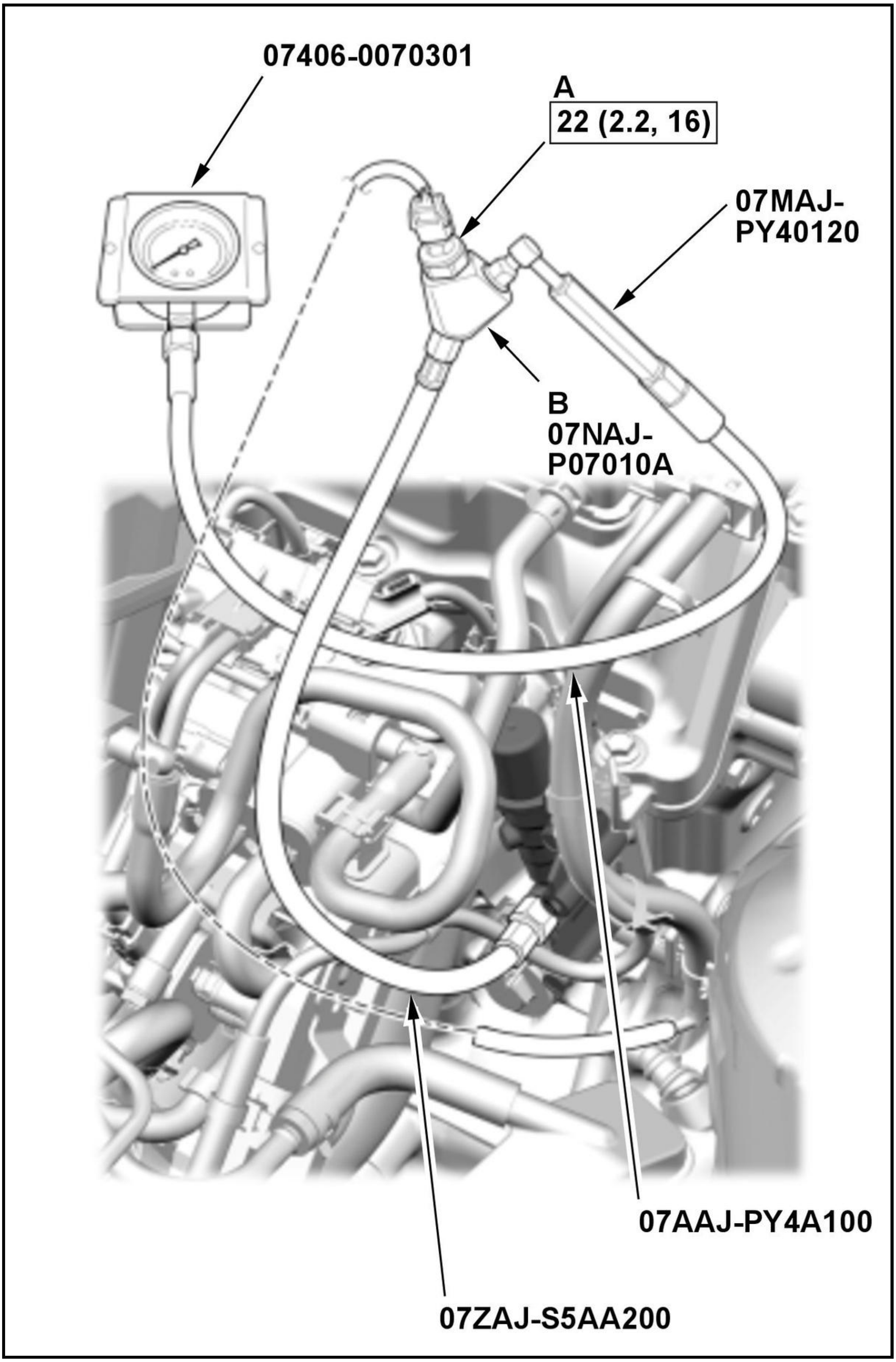
07406-0070301
A
22 (2.2, 16)
07MAJ-
PY40120
B
07NAJ-
P07010A
07AAJ-PY4A100
07ZAJ-S5AA200

-3. Reconnect the following connector.

Rocker arm oil pressure sensor 3P connector

-4. **Enter the maintenance mode, then start the engine** .

-5. Hold the engine speed at 3, 000 rpm without load (in P or N) until the radiator fan comes on, then let it idle.

-6. Select the VTEC TEST in the Function Test Menu with the HDS.

VTEC TEST

Check the oil pressure while the status of VTEC solenoid valve on the HDS display is OFF.

Is the oil pressure 49 kPa (0.50 kgf/cm 2, 7.1 psi) or more?

YES

Inspect the VTEC system oil passage. If it is OK, **replace the rocker arm oil control valve** .

NO

Replace the rocker arm oil pressure sensor .

DTC P2648

DTC P2648 : Rocker Arm Oil Control Solenoid Circuit Low Voltage

NOTE: Before you troubleshoot, **review the general troubleshooting information** .

DTC Description	Confirmed DTC	Pending DTC
P2648 Rocker Arm Oil Control Solenoid Circuit Low Voltage	B	B

DTC (PGM-FI)

1. Problem verification

-1. Turn the vehicle to the ON mode.

-2. Clear the DTC with the HDS.

-3. **Enter the maintenance mode, then start the engine** .

-4. Hold the engine speed at 3, 000 rpm without load (in P or N) until the radiator fan comes on, then let it idle.

-5. Select the VTEC TEST in the Function Test Menu with the HDS.

VTEC TEST

Check for Pending or Confirmed DTCs with the HDS.

DTC Description	Confirmed DTC	Pending DTC
P2648 Rocker Arm Oil Control Solenoid Circuit Low Voltage	B	B

Is DTC P2648 indicated?

YES

The failure is duplicated. Go to step 2.

NO

Intermittent failure, the system is OK at this time. Check for poor connections or loose terminals at the rocker arm oil control solenoid and the PCM. **If the on-board snapshot of this DTC is recorded, try to reproduce the failure under the same conditions with the on-board snapshot** .

2. Rocker arm oil control solenoid internal resistance check

-1. Turn the vehicle to the OFF (LOCK) mode.

-2. Disconnect the following connector.

Rocker arm oil control solenoid 2P connector

-3. At the rocker arm oil control solenoid side, measure the resistance between test points 1 and 2.

Test condition	Vehicle OFF (LOCK) mode
B	Rocker arm oil control solenoid 2P connector: disconnected
Test point 1	Rocker arm oil control solenoid 2P connector (male terminals) No. 1 (solenoid side): ①
Test point 2	Rocker arm oil control solenoid 2P connector (male terminals) No. 2 (solenoid side): ①

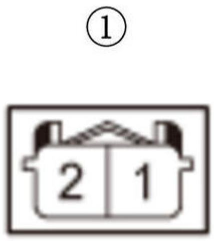

Is there 14.6-16.2 Ω at room temperature?

YES

Go to step 3.

NO

Replace the rocker arm oil control valve .

3. Shorted wire check (VTS line)

-1. Jump the SCS line with the HDS, and wait more than 1 minute.

-2. Disconnect the following connector.

PCM connector E (80P)

-3. Measure the resistance between test points 1 and 2.

Test condition	Vehicle OFF (LOCK) mode
B	Rocker arm oil control solenoid 2P connector: disconnected

B	PCM connector E (80P): disconnected
Test point 1	**PCM connector E (80P) No. 65**
Test point 2	Body ground

Is there 1 MΩ or more?

YES

The VTS wire is OK. Check for any authorized service information related to the DTCs or symptoms you are troubleshooting, or **substitute a known-good PCM** .

NO

Repair a short in the VTS wire between the PCM (E65) and the rocker arm oil control solenoid.

DTC P2649

DTC P2649 : Rocker Arm Oil Control Solenoid Circuit High Voltage

NOTE: Before you troubleshoot, **review the general troubleshooting information** .

DTC Description	Confirmed DTC	Pending DTC
P2649 Rocker Arm Oil Control Solenoid Circuit High Voltage	B	B

DTC (PGM-FI)

1. Problem verification

-1. Turn the vehicle to the ON mode.

-2. Clear the DTC with the HDS.

-3. **Enter the maintenance mode, then start the engine** .

-4. Hold the engine speed at 3, 000 rpm without load (in P or N) until the radiator fan comes on, then let it idle.

-5. Select the VTEC TEST in the Function Test Menu with the HDS.

VTEC TEST

Check for Pending or Confirmed DTCs with the HDS.

DTC Description	Confirmed DTC	Pending DTC
P2649 Rocker Arm Oil Control Solenoid Circuit High Voltage	B	B

Is DTC P2649 indicated?

YES

The failure is duplicated. Go to step 2.

NO

Intermittent failure, the system is OK at this time. Check for poor connections or loose terminals at the rocker arm oil control solenoid and the PCM. **If the on-board snapshot of this DTC is recorded, try to reproduce the failure under the same conditions with the on-board snapshot** .

2. Rocker arm oil control solenoid internal resistance check

-1. Turn the vehicle to the OFF (LOCK) mode.

-2. Disconnect the following connector.

Rocker arm oil control solenoid 2P connector

-3. At the rocker arm oil control solenoid side, measure the resistance between test points 1 and 2.

Test condition	Vehicle OFF (LOCK) mode
B	Rocker arm oil control solenoid 2P connector: disconnected
Test point 1	Rocker arm oil control solenoid 2P connector (male terminals) No. 1 (solenoid side): ①
Test point 2	Rocker arm oil control solenoid 2P connector (male terminals) No. 2 (solenoid side): ①

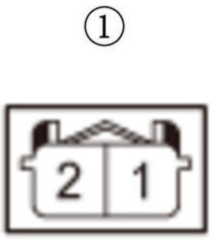

Is there 14.6-16.2 Ω at room temperature?

YES

Go to step 3.

NO

Replace the rocker arm oil control valve .

3. Open wire check (PG line)

-1. Measure the resistance between test points 1 and 2.

Test condition	Vehicle OFF (LOCK) mode
B	Rocker arm oil control solenoid 2P connector: disconnected
Test point 1	Rocker arm oil control solenoid 2P connector (female terminals) No. 2: ①
Test point 2	Body ground

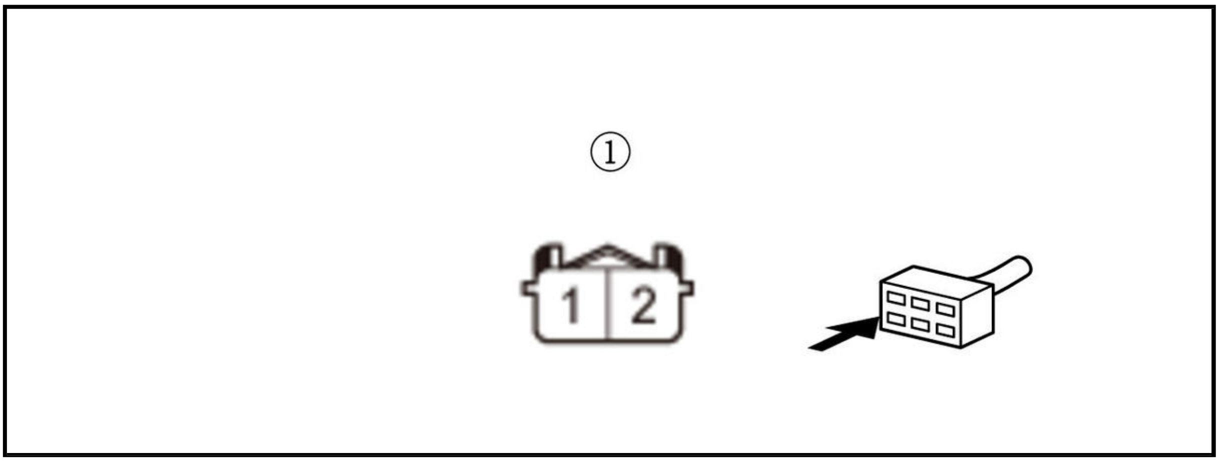

Is there 1.0 Ω or less?

YES

Go to step 4.

NO

Repair an open in the PG wire between the rocker arm oil control solenoid and the G101.

4. Open wire check (VTS line)

-1. Jump the SCS line with the HDS, and wait more than 1 minute.

-2. Disconnect the following connector.

PCM connector E (80P)

-3. Measure the resistance between test points 1 and 2.

Test condition	Vehicle OFF (LOCK) mode
B	Rocker arm oil control solenoid 2P connector: disconnected
B	PCM connector E (80P): disconnected
Test point 1	Rocker arm oil control solenoid 2P connector (female terminals) No. 1: ①
Test point 2	**PCM connector E (80P) No. 65**

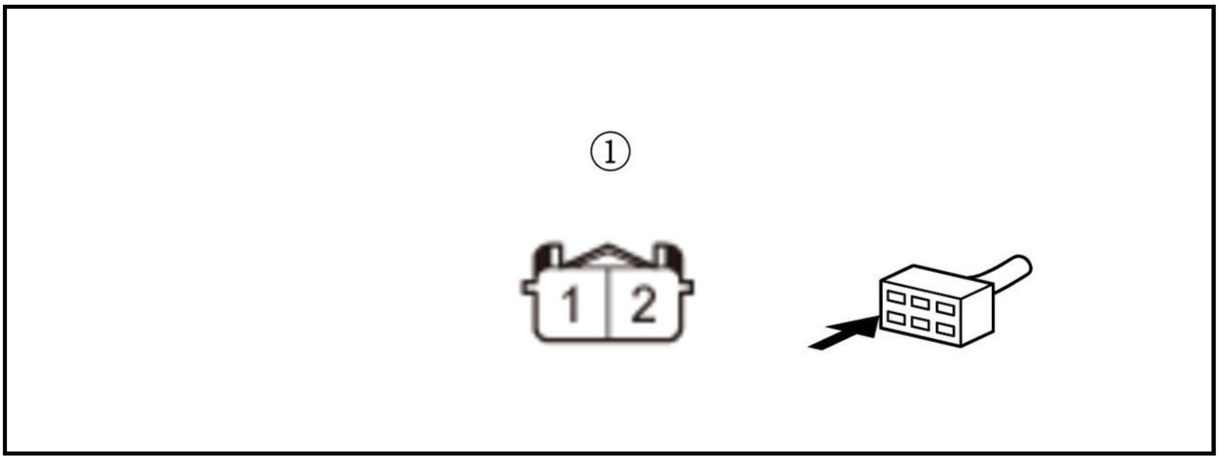

Is there 1.0 Ω or less?

YES

The VTS wire is OK. Check for any authorized service information related to the DTCs or symptoms you are troubleshooting, or **substitute a known-good PCM** .

NO

Repair an open in the VTS wire between the PCM (E65) and the rocker arm oil control solenoid.

DTC P26C3

DTC P26C3 : Internal Control Module Transmission Range Sensor Performance

NOTE: Before you troubleshoot, **review the General Troubleshooting Information** .

DTC Description	Confirmed DTC	Pending DTC	Freeze Frame
P26C3 Internal Control Module Transmission Range Sensor Performance	B	B	B

DTC (Gear)

1. Problem verification

-1. Turn the vehicle to the ON mode.

-2. Clear the DTC with the HDS.

-3. While depressing the brake pedal, test the electronic gear selector switches as follows:

- Shift the transmission position/mode to other than R, and wait for at least 1 minute.
- Switch position/mode back and forth between other than R and R at least 10 times.
- Shift the transmission position/mode to other than N, and wait for at least 1 minute.
- Switch position/mode back and forth between other than N and N at least 10 times.
- Shift the transmission position/mode to other than D, and wait for at least 1 minute.
- Switch position/mode back and forth between other than D and D at least 10 times.

-4. Monitor the OBD STATUS for P26C3 in the DTCs MENU with the HDS.

DTC Description	OBD Status
P26C3 Internal Control Module Transmission Range Sensor Performance	B

Does the HDS indicate FAILED?

YES

The failure is duplicated. Faulty SBW shifter control module. **Replace the SBW shifter assembly** .

NO

If the HDS indicates PASSED, intermittent failure, the system is OK at this time. If the freeze data/on-board snapshot of this DTC is recorded, try to reproduce the failure under the same conditions with the freeze data/on-board snapshot. If the HDS indicates NOT COMPLETED, go to step 1

DTC P271A

DTC P271A : Park Pawl Position Sensor A Circuit Low

Special Tools Required

SPLINE HOLDER, DETENT SHAFT 070AB-5M50100

NOTE: Before you troubleshoot, **review the General Troubleshooting Information** .

DTC Description	Confirmed DTC	Pending DTC	Freeze Frame
P271A Park Pawl Position Sensor A Circuit Low	B	B	B

DTC (Gear)

1. Problem verification

   -1. Turn the vehicle to the ON mode.

   -2. Clear the DTC with the HDS.

   -3. Turn the vehicle to the OFF (LOCK) mode.

   -4. Turn the vehicle to the ON mode, and wait for at least 10 seconds.

   -5. With the brake pedal pressed and the accelerator released, shift the transmission to N position/mode, then shift back to P position/mode, and wait for at least 5 seconds.

   -6. Check for Pending or Confirmed DTCs with the HDS.

DTC Description	Confirmed DTC	Pending DTC	Freeze Frame
P271A Park Pawl Position Sensor A Circuit Low	B	B	B

   Is DTC P271A indicated?

   YES

   The failure is duplicated. Go to step 2.

   NO

   Intermittent failure, the system is OK at this time. Check for poor connections and loose terminals between the park pawl actuator and the park pawl actuator driver unit. If the freeze data/on-board snapshot of this DTC is recorded, try to reproduce the failure under the same conditions with the freeze data/on-board snapshot.

2. Shorted wire check (RA line, RB line to power)

   -1. Turn the vehicle to the OFF (LOCK) mode.

   -2. Disconnect the following connectors.

Park pawl actuator 10P connector
Park pawl actuator driver unit 26P connector

   -3. Measure the voltage between the following test points and body ground individually.

Test condition	Vehicle OFF (LOCK) mode
B	Park pawl actuator 10P connector: disconnected
B	Park pawl actuator driver unit 26P connector: disconnected

Connector	Terminal
Park pawl actuator 10P connector (female terminals): ①	No. 3

Connector	Terminal
	No. 5

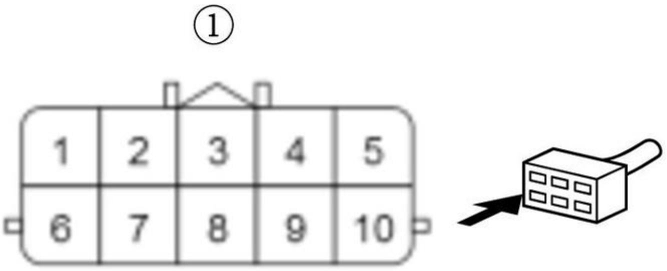

Is there voltage?

YES

Repair a short to power in the RA wire and/or the RB wire between the park pawl actuator and the park pawl actuator driver unit.

NO

The RA wire and/or the RB wire are not shorted to power. Go to step 3.

3. Shorted wire check (RA line, RB line to ground)

-1. Measure the resistance between the following test points and body ground individually.

Test condition	Vehicle OFF (LOCK) mode
B	Park pawl actuator 10P connector: disconnected
B	Park pawl actuator driver unit 26P connector: disconnected

Connector	Terminal
Park pawl actuator 10P connector (female terminals): ①	No. 3
	No. 5

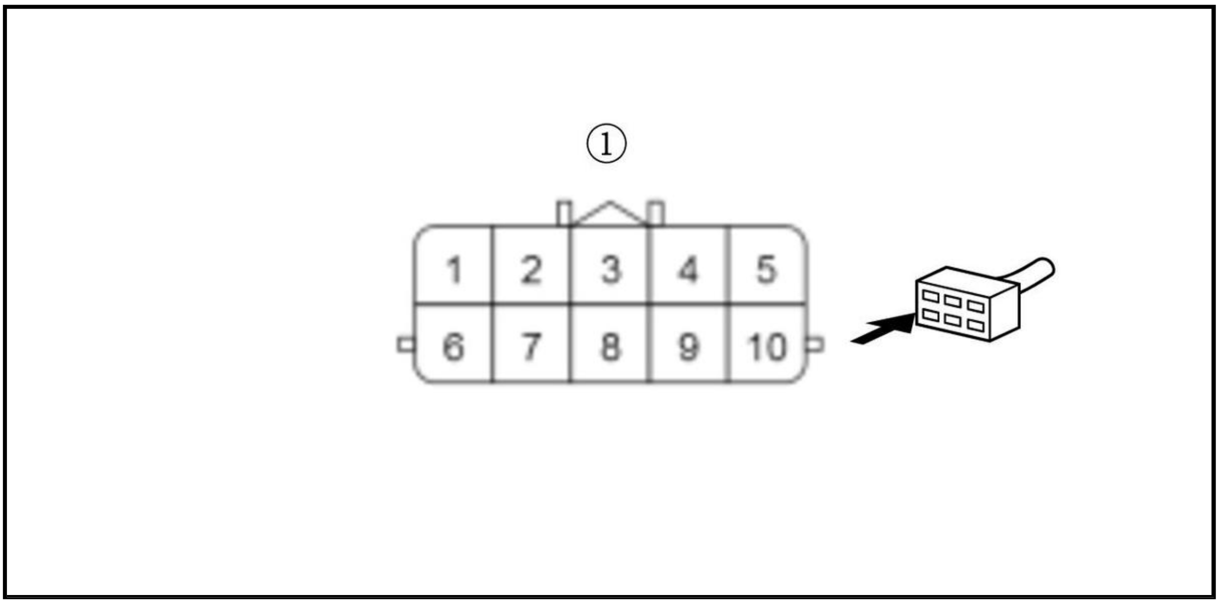

Is there 1 MΩ or more?

YES

The RA wire and/or the RB wire are not shorted to ground. Go to step 4.

NO

Repair a short to ground in the RA wire and/or the RB wire between the park pawl actuator and the park pawl actuator driver unit.

4. Open wire check (RA/P-ACT_RA line, RB/P-ACT_RB line)

-1. Measure the resistance between test points 1 and 2.

Test condition	Vehicle OFF (LOCK) mode
B	Park pawl actuator 10P connector: disconnected
B	Park pawl actuator driver unit 26P connector: disconnected
Test point 1	Park pawl actuator 10P connector (female terminals) No. 3: ①
Test point 2	**Park pawl actuator driver unit 26P connector No. 22**

Test point 1	Park pawl actuator 10P connector (female terminals) No. 5: ①
Test point 2	**Park pawl actuator driver unit 26P connector No. 21**

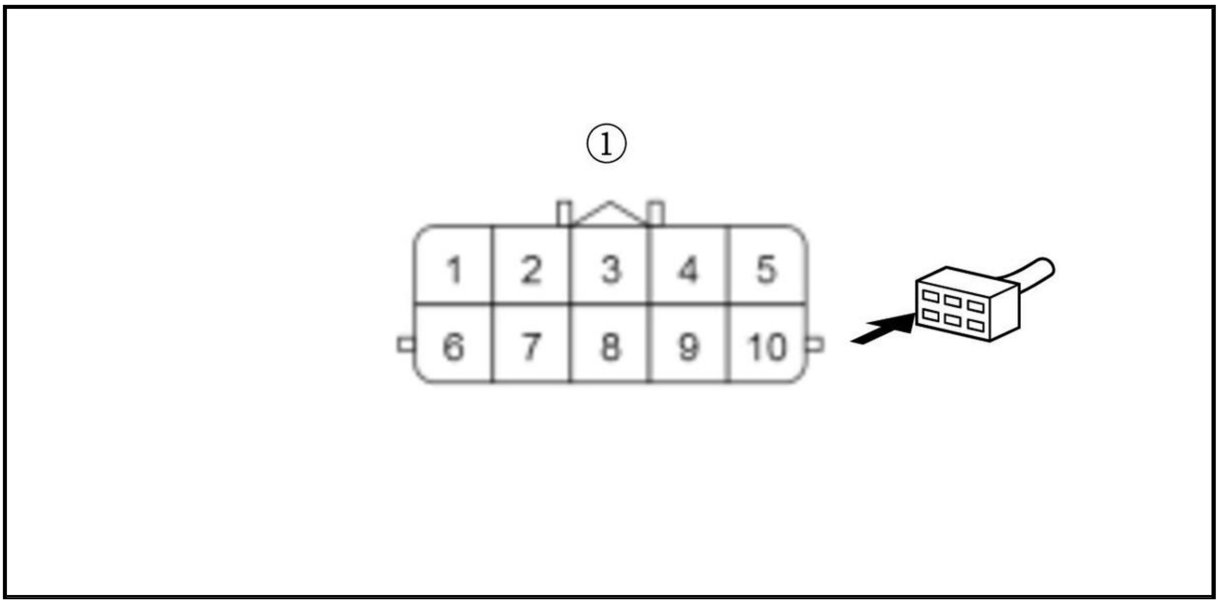

Is there 1.0 Ω or less?

YES

The RA/P-ACT_RA wire and the RB/P-ACT_RB wire are OK. Go to step 5.

NO

Repair an open in the RA/P-ACT_RA wire and/or the RB/P-ACT_RB wire between the park pawl actuator and the park pawl actuator driver unit.

5. Shorted wire check (EENC/P-ACT EENC line to power)

-1. Connect the following connector.

Park pawl actuator driver unit 26P connector

-2. Turn the vehicle to the ON mode.

-3. Measure the voltage between test points 1 and 2.

Test condition	Vehicle ON mode
B	Park pawl actuator 10P connector: disconnected
Test point 1	Park pawl actuator 10P connector (female terminals) No. 8: ①
Test point 2	Body ground

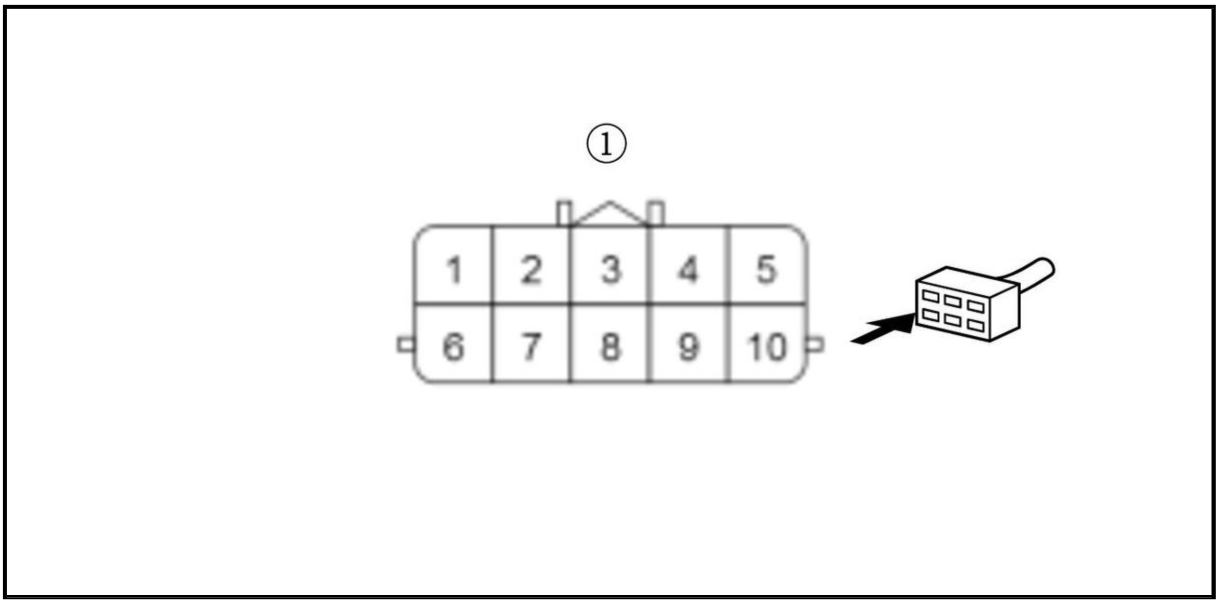

Is there voltage?

YES

Repair a short to power in the EENC/P-ACT EENC wire between the park pawl actuator and the park pawl actuator driver unit.

NO

The EENC/P-ACT EENC wire is not shorted to power. Go to step 6.

6. Open wire check (EENC/P-ACT_EENC line, VENC/P-ACT_VENC line)

-1. Turn the vehicle to the OFF (LOCK) mode.

-2. Disconnect the following connector.

Park pawl actuator driver unit 26P connector

-3. Measure the resistance between test points 1 and 2.

Test condition	Vehicle OFF (LOCK) mode
B	Park pawl actuator 10P connector: disconnected
B	Park pawl actuator driver unit 26P connector: disconnected
Test point 1	Park pawl actuator 10P connector (female terminals) No. 8: ①

Test point 2	**Park pawl actuator driver unit 26P connector No. 19**

Test point 1	Park pawl actuator 10P connector (female terminals) No. 9: ①
Test point 2	**Park pawl actuator driver unit 26P connector No. 20**

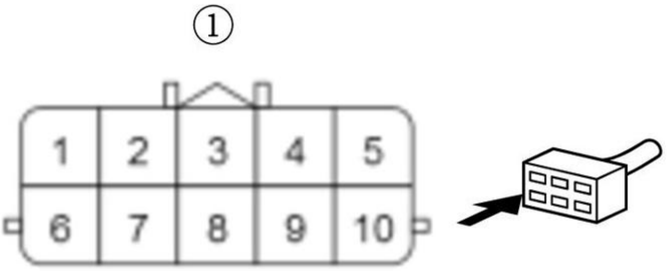

Is there 1.0 Ω or less?

YES

The EENC/P-ACT_EENC wire and the VENC/P-ACT_VENC wire are not open. Go to step 7.

NO

Repair an open in the EENC/P-ACT_EENC wire and/or the VENC/P-ACT_VENC wire between the park pawl actuator and the park pawl actuator driver unit.

7. Shorted wire check (EENC line, VENC line)

-1. Measure the resistance between the following test points and body ground individually.

Test condition	Vehicle OFF (LOCK) mode
B	Park pawl actuator 10P connector: disconnected
B	Park pawl actuator driver unit 26P connector: disconnected

Connector	Terminal
Park pawl actuator 10P connector (female terminals): ①	No. 8
	No. 9

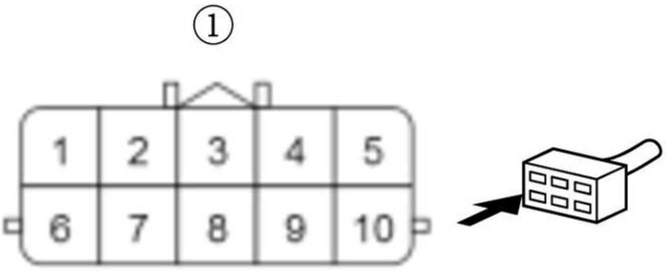

Is there 1 MΩ or more?

YES

The EENC wire and the VENC wire are OK. Go to step 8.

NO

Repair a short to ground in the EENC wire and/or the VENC wire between the park pawl actuator and the park pawl actuator driver unit.

8. Park pawl actuator driver unit check

-1. **Substitute a known-good park pawl actuator driver unit** .

-2. Connect the following connectors.

Park pawl actuator 10P connector
Park pawl actuator driver unit 26P connector

-3. Turn the vehicle to the ON mode.

-4. **Update the park pawl actuator driver unit** .

WARNING: **Do not turn the vehicle to the OFF (LOCK) mode. Turing the vehicle to the OFF (LOCK) mode during an update can damage the park pawl actuator driver unit.**

-5. Clear the DTC with the HDS.

-6. Turn the vehicle to the OFF (LOCK) mode.

-7. Turn the vehicle to the ON mode, and wait for at least 5 seconds.

-8. Check for Pending or Confirmed DTCs with the HDS.

DTC Description	Confirmed DTC	Pending DTC	Freeze Frame
P271A Park Pawl Position Sensor A Circuit Low	B	B	B

Is DTC P271A indicated?

YES

The park pawl actuator driver unit is OK. Go to step 9.

NO

Replace the original park pawl actuator driver unit .

9. Transmission park mechanism check

-1. Turn the vehicle to the OFF (LOCK) mode.

-2. **Remove the park pawl actuator** .

-3. Set the detent shaft spline holder (A) to the detent shaft (B).

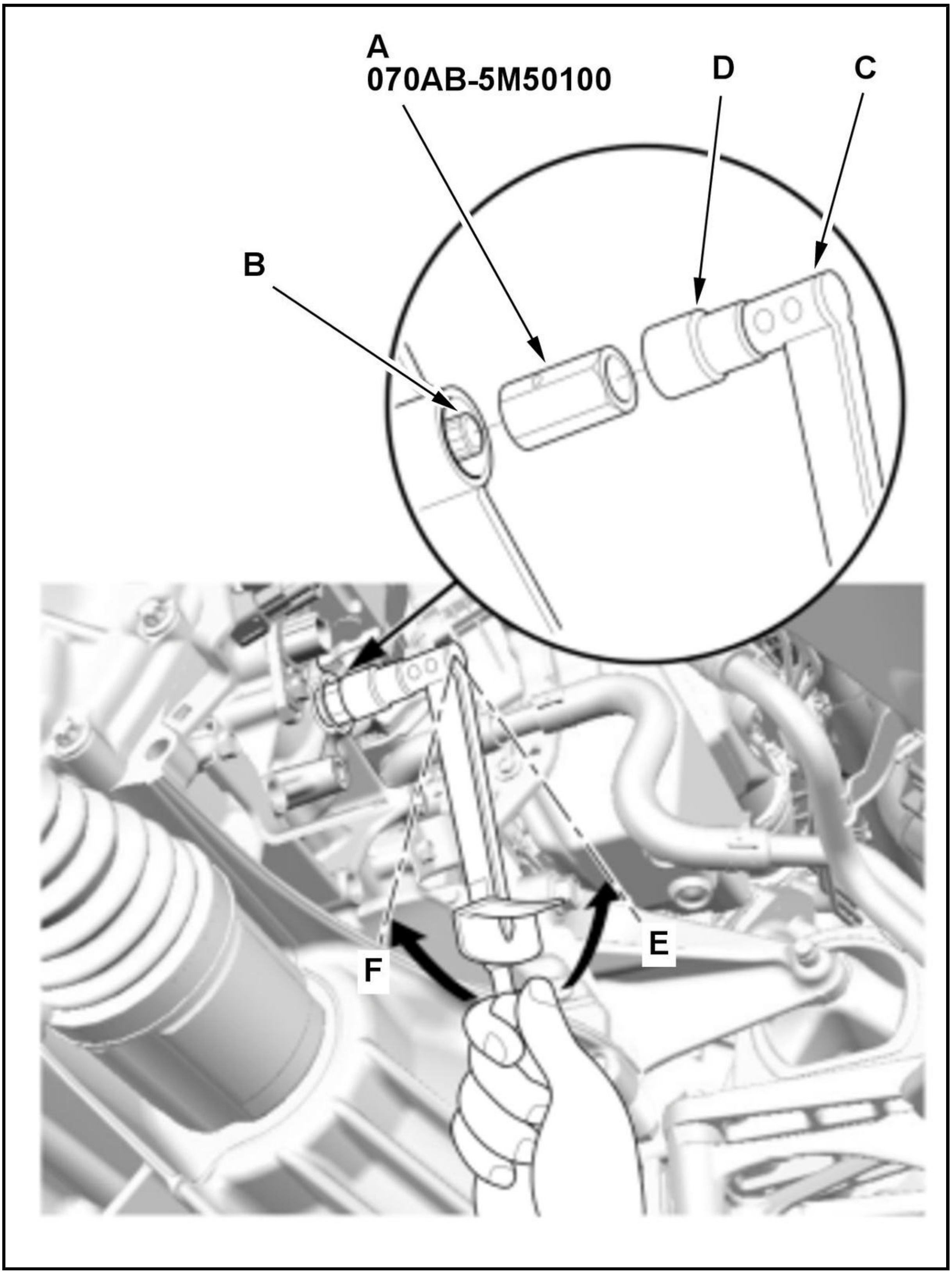

-4. Use a torque wrench (C) and the socket (D) to rotate the detent shaft, and check that the detent shaft moves smoothly. Move it back and forth between the P position (E) and the P released position (F) several times.

- -

  Operation angle: approx. 21 deg.

- -

  Operation torque: approx. 4.0 N.m (0.41 kgf.m, 3.0 lbf.ft)

-5. Check that the wheels are locked when putting the detent shaft in the P position. Additionally, check that the wheels rotate when putting the detent shaft in the P released position.

Is the transmission park mechanism OK?

YES

The transmission park mechanism is OK. Put the detent shaft in the P position, and **replace the park pawl actuator** .

NO

Faulty transmission park mechanism. **Replace the transmission (e-CVT)** .

DTC P272C

DTC P272C : Park Pawl Motor Control Circuit

NOTE: Before you troubleshoot, **review the General Troubleshooting Information** .

DTC Description	Confirmed DTC	Pending DTC	Freeze Frame
P272C Park Pawl Motor Control Circuit	B	B	B

DTC (Gear)

1. Problem verification

-1. Turn the vehicle to the ON mode.

-2. Clear the DTC with the HDS.

-3. Turn the vehicle to the OFF (LOCK) mode.

-4. Turn the vehicle to the ON mode, and wait for at least 10 seconds.

-5. Check for Pending or Confirmed DTCs with the HDS.

DTC Description	Confirmed DTC	Pending DTC	Freeze Frame
P272C Park Pawl Motor Control Circuit	B	B	B

Is DTC P272C indicated?

YES

The failure is duplicated. Go to step 2.

NO

Intermittent failure, the system is OK at this time. Check for poor connections and loose terminals between the park pawl actuator and the park pawl actuator driver unit. If the freeze data/on-board snapshot of this DTC is recorded, try to reproduce the failure under the same conditions with the freeze data/on-board snapshot.

2. Shorted wire check (MAU/P-ACT MTR U line, MAV/P-ACT MTR V line, MAW/P-ACT MTR W line to power)

-1. Turn the vehicle to the OFF (LOCK) mode.

-2. Disconnect the following connectors.

Park pawl actuator 10P connector
Park pawl actuator driver unit 26P connector

-3. Measure the voltage between the following test points and body ground individually.

Test condition	Vehicle OFF (LOCK) mode
B	Park pawl actuator 10P connector: disconnected
B	Park pawl actuator driver unit 26P connector: disconnected

Connector	Terminal
Park pawl actuator 10P connector (female terminals): ①	No. 1
	No. 6
	No. 7

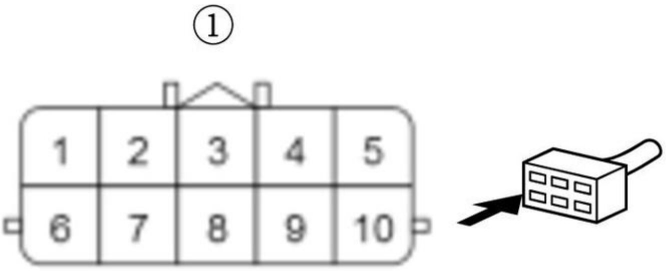

Is there voltage?

YES

Repair a short to power in the MAU/P-ACT MTR U wire, the MAV/P-ACT MTR V wire, and/or the MAW/P-ACT MTR W wire between the park pawl actuator and the park pawl actuator driver unit.

NO

The MAU/P-ACT MTR U wire, MAV/P-ACT MTR V wire, and/or MAW/P-ACT MTR W wire are not shorted to power. Go to step 3.

3. Park pawl actuator driver unit check

-1. **Substitute a known-good park pawl actuator driver unit** .

-2. Connect the following connectors.

Park pawl actuator 10P connector
Park pawl actuator driver unit 26P connector

-3. Turn the vehicle to the ON mode.

-4. **Update the park pawl actuator driver unit** .

WARNING: **Do not turn the vehicle to the OFF (LOCK) mode. Turing the vehicle to the OFF (LOCK) mode during an update can damage the park pawl actuator driver unit.**

-5. Clear the DTC with the HDS.

-6. Turn the vehicle to the OFF (LOCK) mode.

-7. Turn the vehicle to the ON mode, and wait for at least 10 seconds.

-8. Check for Pending or Confirmed DTCs with the HDS.

DTC Description	Confirmed DTC	Pending DTC	Freeze Frame
P272C Park Pawl Motor Control Circuit	B	B	B

Is DTC P272C indicated?

YES

The park pawl actuator driver unit is OK. Replace the park pawl actuator .

NO

Replace the original park pawl actuator driver unit .

DTC P272D

DTC P272D : Park Pawl Motor Control Circuit Current Too High

NOTE: Before you troubleshoot, review the General Troubleshooting Information .

DTC Description	Confirmed DTC	Pending DTC	Freeze Frame
P272D Park Pawl Motor Control Circuit Current Too High	B	B	B

DTC (Gear)

1. Problem verification

-1. Turn the vehicle to the ON mode.

-2. Clear the DTC with the HDS.

-3. Turn the vehicle to the OFF (LOCK) mode.

-4. Turn the vehicle to the ON mode, and wait for at least 10 seconds.

-5. Check for Pending or Confirmed DTCs with the HDS.

DTC Description	Confirmed DTC	Pending DTC	Freeze Frame
P272D Park Pawl Motor Control Circuit Current Too High	B	B	B

Is DTC P272D indicated?

YES

The failure is duplicated. Go to step 2.

NO

Intermittent failure, the system is OK at this time. Check for poor connections and loose terminals between the park pawl actuator and the park pawl actuator driver unit. If the freeze data/on-board snapshot of this DTC is recorded, try to reproduce the failure under the same conditions with the freeze data/on-board snapshot.

2. Fuse check

-1. Turn the vehicle to the OFF (LOCK) mode.

-2. Check the following fuse.

Fuse	No. A2-6

Is the fuse OK?

YES

The fuse is OK. Reinstall the fuse, then go to step 3.

NO

Replace the fuse, and recheck. If the fuse blows again, repair a short to ground in the fuse circuit.

3. Determine possible failure area (park pawl actuator relay circuit, others)

-1. Disconnect the following connector.

Park pawl actuator 10P connector

-2. Turn the vehicle to the ON mode.

-3. Measure the voltage between test points 1 and 2.

Test condition	Vehicle ON mode
B	Park pawl actuator 10P connector: disconnected
Test point 1	Park pawl actuator 10P connector (female terminals) No. 2: ①
Test point 2	Body ground

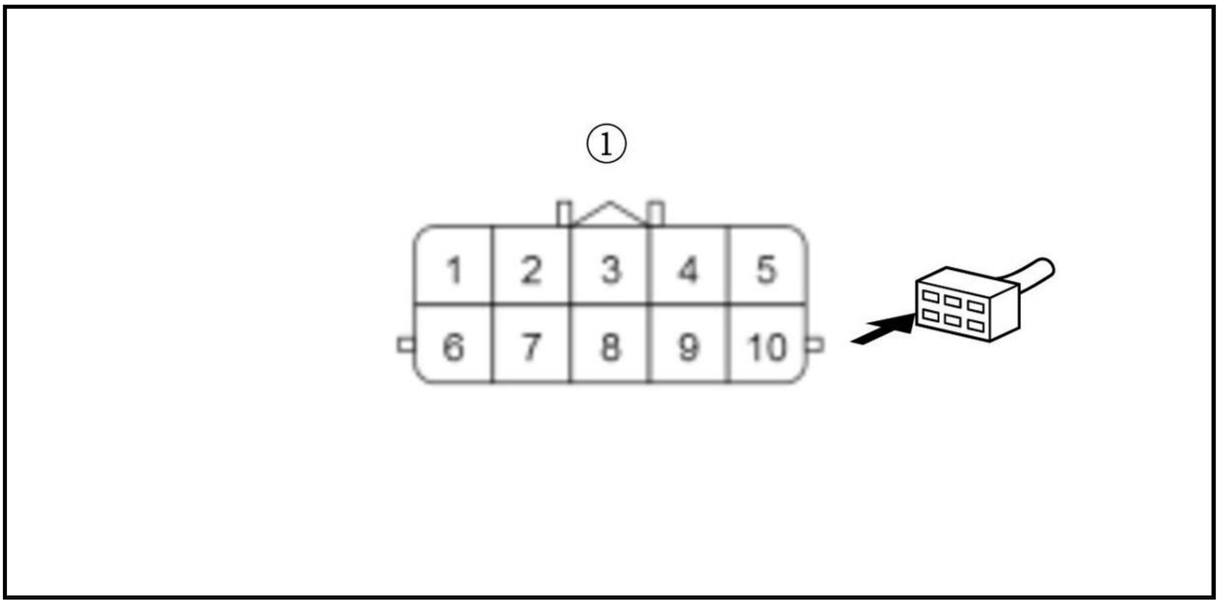

Is there battery voltage?

YES

Go to step 4.

NO

Go to step 7.

4. Shorted wire check (MAU/P-ACT MTR U line, MAV/P-ACT MTR V line, MAW/P-ACT MTR W line)

-1. Turn the vehicle to the OFF (LOCK) mode.

-2. Disconnect the following connector.

Park pawl actuator driver unit 26P connector

-3. Measure the resistance between the following test points and body ground individually.

Test condition	Vehicle OFF (LOCK) mode
B	Park pawl actuator 10P connector: disconnected
B	Park pawl actuator driver unit 26P connector: disconnected

Connector	Terminal
Park pawl actuator 10P connector (female terminals): ①	No. 1
	No. 6
	No. 7

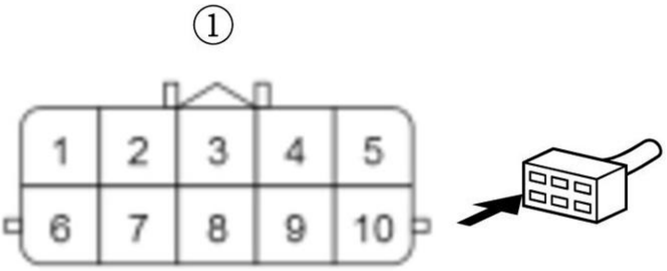

Is there 1 MΩ or more?

YES

The MAU/P-ACT MTR U wire, MAV/P-ACT MTR V wire, and/or MAW/P-ACT MTR W wire are not shorted to ground. Go to step 5.

NO

Repair a short to ground in the MAU wire, the MAV wire, and/or the MAW wire between the park pawl actuator and the park pawl actuator driver unit.

5. Open wire check (MAU/P-ACT_MTR_U line, MAV/P-ACT_MTR_V line, MAW/P-ACT_MTR_W line)

-1. Measure the resistance between test points 1 and 2.

Test condition	Vehicle OFF (LOCK) mode
B	Park pawl actuator 10P connector: disconnected
B	Park pawl actuator driver unit 26P connector: disconnected
Test point 1	Park pawl actuator 10P connector (female terminals) No. 1: ①
Test point 2	**Park pawl actuator driver unit 26P connector No. 6**

Test point 1	Park pawl actuator 10P connector (female terminals) No. 6: ①
Test point 2	**Park pawl actuator driver unit 26P connector No. 5**

Test point 1	Park pawl actuator 10P connector (female terminals) No. 7: ①
Test point 2	**Park pawl actuator driver unit 26P connector No. 4**

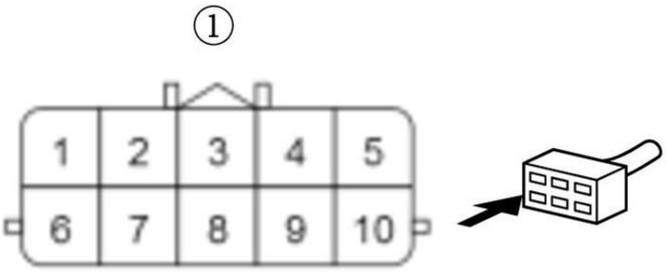

Is there 1.0 Ω or less?

YES

The MAU/P-ACT_MTR_U wire, the MAV/P-ACT_MTR_V wire, and the MAW/P-ACT_MTR_W wire are OK. Go to step 6.

NO

Repair an open in the MAU/P-ACT_MTR_U wire, the MAV/P-ACT_MTR_V wire, and/or the MAW/P-ACT_MTR_W wire between the park pawl actuator and the park pawl actuator driver unit.

6. Park pawl actuator check

-1. Measure the resistance between test points 1 and 2.

Test condition	Vehicle OFF (LOCK) mode
B	Park pawl actuator 10P connector: disconnected
B	Park pawl actuator driver unit 26P connector: disconnected

Test point 1	Park pawl actuator 10P connector (male terminals) No. 2: ①
Test point 2	Park pawl actuator 10P connector (male terminals) No. 1: ①

Test point 1	Park pawl actuator 10P connector (male terminals) No. 2: ①
Test point 2	Park pawl actuator 10P connector (male terminals) No. 6: ①

Test point 1	Park pawl actuator 10P connector (male terminals) No. 2: ①
Test point 2	Park pawl actuator 10P connector (male terminals) No. 7: ①

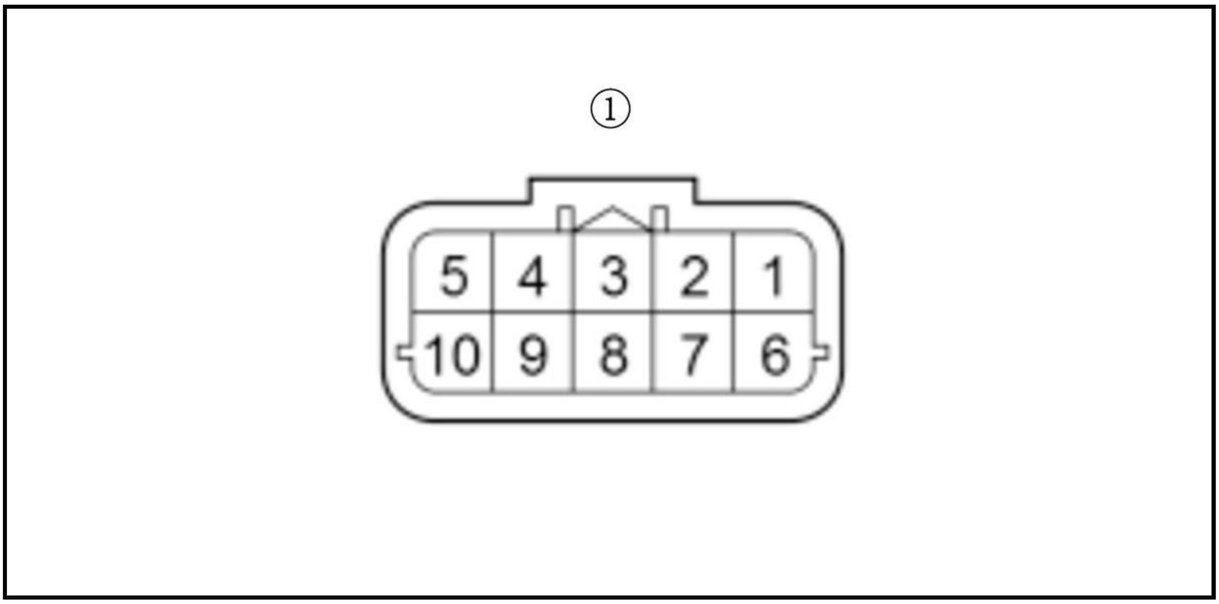

Is there 10 kΩ or more?

YES

Replace the park pawl actuator .

NO

The park pawl actuator is OK. Check for any authorized service information related to the DTCs or symptoms you are troubleshooting, or **replace the park pawl actuator driver unit** .

7. Park pawl actuator relay check

-1. Turn the vehicle to the OFF (LOCK) mode.

-2. **Remove the park pawl actuator relay** .

-3. **Test the park pawl actuator relay** .

Is the relay OK?

YES

The park pawl actuator relay is OK. Keep the relay removed, and go to step 8.

NO

Replace the park pawl actuator relay.

8. Open wire check (+B_P-ACT line)

-1. Measure the voltage between the following test points and body ground individually.

Test condition	Vehicle OFF (LOCK) mode
B	Park pawl actuator relay: disconnected
B	Park pawl actuator 10P connector: disconnected

Connector	**Terminal**
Park pawl actuator relay 4P socket (female terminals): ①	No. 3
	No. 7

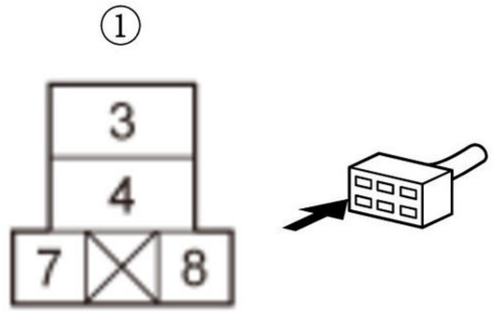

Is there battery voltage?

YES

The +B_P-ACT wire is OK. Go to step 9.

NO

Repair an open in the +B_P-ACT wire between the park pawl actuator relay and the under-hood fuse/relay box.

9. Open wire check (P-ACT_RLY_OUT/BMA line)

-1. Measure the resistance between test points 1 and 2.

Test condition	Vehicle OFF (LOCK) mode
B	Park pawl actuator relay: disconnected
B	Park pawl actuator 10P connector: disconnected
Test point 1	Park pawl actuator relay 4P socket (female terminals) No. 4: ①
Test point 2	Park pawl actuator 10P connector (female terminals) No. 2: ②

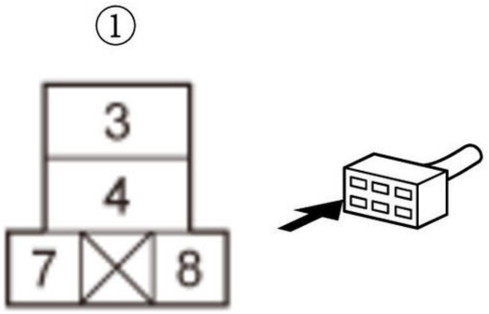

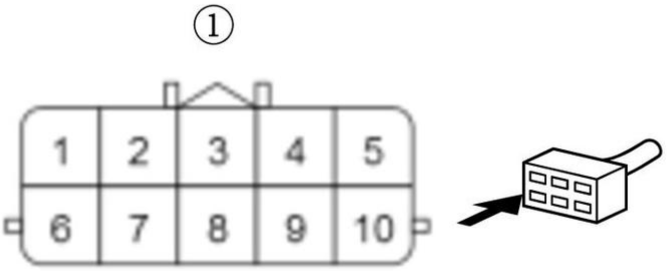

Is there 1.0 Ω or less?

YES

The P-ACT_RLY_OUT/BMA wire is OK. Go to step 10.

NO

Repair an open in the P-ACT_RLY OUT/BMA wire between the park pawl actuator relay and the park pawl actuator.

10. Open wire check (P-ACT_RLY_CL- line)

-1. Disconnect the following connector.

Park pawl actuator driver unit 26P connector

-2. Measure the resistance between test points 1 and 2.

Test condition	Vehicle OFF (LOCK) mode
B	Park pawl actuator relay: disconnected
B	Park pawl actuator 10P connector: disconnected
B	Park pawl actuator driver unit 26P connector: disconnected
Test point 1	Park pawl actuator relay 4P socket (female terminals) No. 8: ①
Test point 2	**Park pawl actuator driver unit 26P connector No. 23**

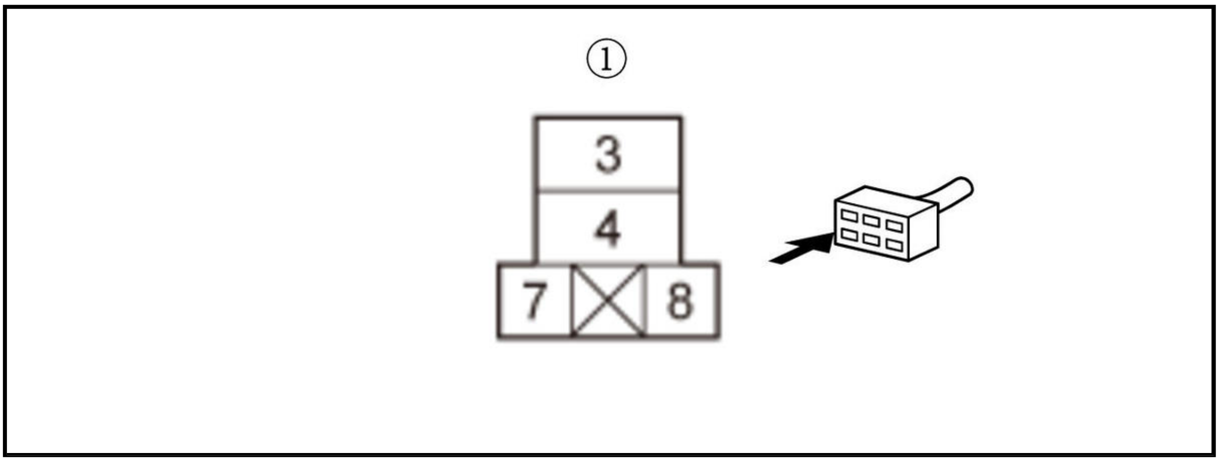

Is there 1.0 Ω or less?

YES

The P-ACT_RLY_CL- wire is not open. Go to step 11.

NO

Repair an open in the P-ACT_RLY_CL- wire between the park pawl actuator relay and the park pawl actuator driver unit.

11. Shorted wire check (P-ACT_RLY_CL- line to power)

-1. Measure the voltage between test points 1 and 2.

Test condition	Vehicle OFF (LOCK) mode
B	Park pawl actuator relay: disconnected
B	Park pawl actuator 10P connector: disconnected
B	Park pawl actuator driver unit 26P connector: disconnected

Test point 1	**Park pawl actuator driver unit 26P connector No. 23**
Test point 2	Body ground

Is there battery voltage?

YES

Repair a short to power in the P-ACT_RLY_CL- wire between the park pawl actuator relay and the park pawl actuator driver unit.

NO

The P-ACT_RLY_CL- wire is OK. Check for any authorized service information related to the DTCs or symptoms you are troubleshooting, or **replace the park pawl actuator driver unit** .

DTC P2A00

DTC P2A00 : A/F Sensor (Sensor 1) Circuit Range/Performance Problem

NOTE: Before you troubleshoot, **review the general troubleshooting information** .

DTC Description	Confirmed DTC	Pending DTC
P2A00 A/F Sensor (Sensor 1) Circuit Range/Performance Problem	B	B

DTC (PGM-FI)

1. DTC check

   -1. Turn the vehicle to the ON mode.

   -2. Check for Pending or Confirmed DTCs with the HDS.

DTC Description	Confirmed DTC	Pending DTC
P2A00 A/F Sensor (Sensor 1) Circuit Range/Performance Problem	B	B

Is Confirmed DTC P2A00 indicated?

YES (Confirmed DTC is indicated)

Replace the A/F sensor (Sensor 1) .

NO (Pending DTC is indicated)

Check for poor connections or loose terminals at the A/F sensor (Sensor 1) and the PCM, and the installation of the A/F sensor (Sensor 1), then recheck.

DTC P2A01

DTC P2A01 : Secondary HO2S (Sensor 2) Circuit Range/Performance Problem

Before you troubleshoot, **review the general troubleshooting information** .

DTC Description	Confirmed DTC	Pending DTC
P2A01 Secondary HO2S (Sensor 2) Circuit Range/Performance Problem	B	B

DTC (PGM-FI)

1. Problem verification

   -1. Turn the vehicle to the ON mode.

   -2. Clear the DTC with the HDS.

   -3. **Enter the maintenance mode, then start the engine** .

   -4. Hold the engine speed at 3, 000 rpm without load (in P or N) until the radiator fan comes on, then let it idle.

   -5. Check the parameter(s) below with the HDS.

Signal	Threshold		Current conditions	
	Values	Unit	Values	Unit
HO2S S2	More than 1.51	V	B	B

Do the current condition(s) match the threshold?

YES

The failure is duplicated. Go to step 2.

NO

Intermittent failure, the system is OK at this time. Check for poor connections or loose terminals at the secondary HO2S (Sensor 2) and the PCM. **If the on-board snapshot of this DTC is recorded, try to reproduce the failure under the same conditions with the on-board snapshot** .

2. Determine possible failure area (secondary HO2S (Sensor 2), others)

-1. Turn the vehicle to the OFF (LOCK) mode.

-2. Disconnect the following connector.

Secondary HO2S (Sensor 2) 4P connector

-3. Connect terminals A and B with a jumper wire.

Terminal A	Secondary HO2S (Sensor 2) 4P connector (male terminals) No. 1: ①
Terminal B	Secondary HO2S (Sensor 2) 4P connector (male terminals) No. 2: ①

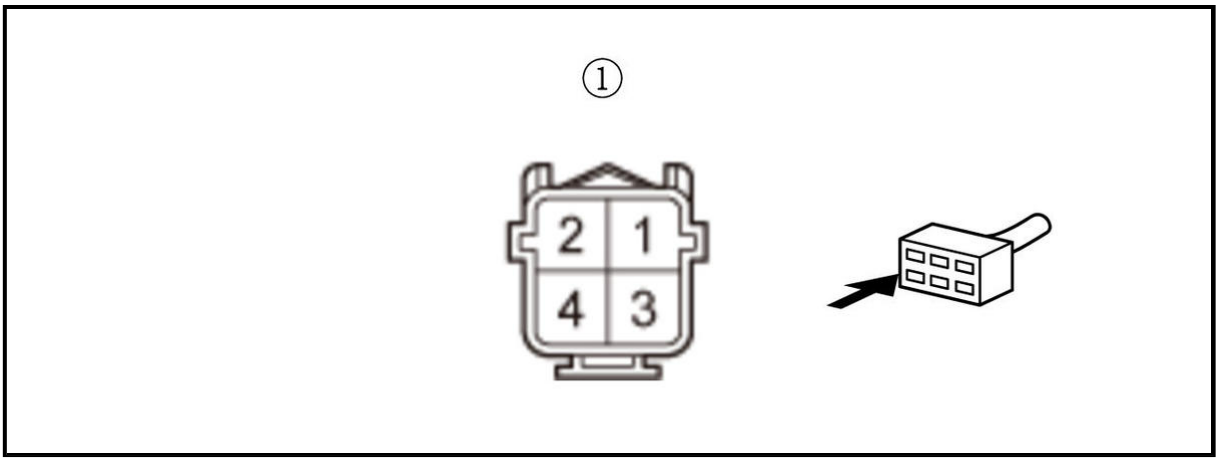

-4. Turn the vehicle to the ON mode.

-5. Check the parameter(s) below with the HDS.

Signal	Threshold		Current conditions	
	Values	Unit	Values	Unit
HO2S S2	More than 1.51	V	B	B

Do the current condition(s) match the threshold?

YES

Go to step 3.

NO

Replace the secondary HO2S (Sensor 2) .

3. Open wire check (SO2SG/SO2_SG line)

-1. Turn the vehicle to the OFF (LOCK) mode.

-2. Remove the jumper wire from the secondary HO2S (Sensor 2) 4P connector.

-3. Connect terminals A and B with a jumper wire.

Terminal A	Secondary HO2S (Sensor 2) 4P connector (male terminals) No. 1: ①
Terminal B	Body ground

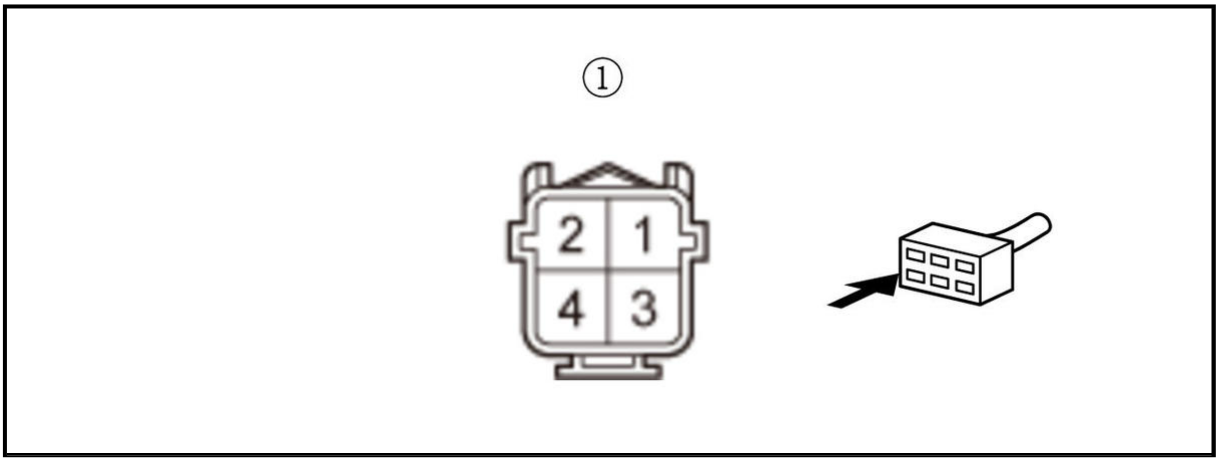

-4. Turn the vehicle to the ON mode.

-5. Check the parameter(s) below with the HDS.

Signal	**Threshold**		**Current conditions**	
	Values	**Unit**	**Values**	**Unit**
HO2S S2	More than 1.51	V	B	B

Do the current condition(s) match the threshold?

YES

The SO2SG/SO2_SG wire is OK. Go to step 4.

NO

Repair an open in the SO2SG/SO2_SG wire between the PCM (A48) and the secondary HO2S (Sensor 2).

4. Open wire check (SO2 line)

-1. Turn the vehicle to the OFF (LOCK) mode.

-2. Jump the SCS line with the HDS, and wait more than 1 minute.

-3. Disconnect the following connector.

PCM connector A (50P)

-4. Measure the resistance between test points 1 and 2.

Test condition	Vehicle OFF (LOCK) mode
B	Secondary HO2S (Sensor 2) 4P connector: disconnected
B	PCM connector A (50P): disconnected
B	Secondary HO2S (Sensor 2) 4P connector No. 1: jumped to body ground
Test point 1	**PCM connector A (50P) No. 47**
Test point 2	Body ground

Is there 1.0 Ω or less?

YES

The SO2 wire is OK. Check for any authorized service information related to the DTCs or symptoms you are troubleshooting, or substitute a known-good PCM .

NO

Repair an open in the SO2 wire between the PCM (A47) and the secondary HO2S (Sensor 2).

DTC P2DE0 (2021)

DTC P2DE0 : Cold Start Air Fuel Ratio Control System Lean

NOTE:

- Before you troubleshoot, review the general troubleshooting information .
- If DTC P2DE0 is indicated alone, do the troubleshooting for DTC P0171 using the on-board snapshot for P2DE0.

DTC Description	Confirmed DTC	Pending DTC
P2DE0 Cold Start Air Fuel Ratio Control System Lean	B	B

DTC (PGM-FI)

1. Problem verification

-1. Turn the vehicle to the ON mode.

-2. Leave the vehicle to cool the engine.

Signal	Current conditions	
	Values	Unit
ECT Sensor 1	B	B

-3. Clear the DTC with the HDS.

-4. Turn the vehicle to the OFF (LOCK) mode.

-5. Enter the maintenance mode, then start the engine , and let it idle for 10 seconds or more.

-6. Check for Pending or Confirmed DTCs with the HDS.

DTC Description	Confirmed DTC	Pending DTC
P2DE0 Cold Start Air Fuel Ratio Control System Lean	B	B

Is DTC P2DE0 indicated?

YES

The failure is duplicated. Do the troubleshooting for DTC P0171 using the on-board snapshot for P2DE0.

NO

Intermittent failure, the system is OK at this time. If the on-board snapshot of this DTC is recorded, try to reproduce the failure under the same conditions with the on-board snapshot .

DTC P2DE1 (2021)

DTC P2DE1 : Cold Start Air Fuel Ratio Control System Rich

NOTE:

- Before you troubleshoot, **review the general troubleshooting information** .
- If DTC P2DE1 is indicated alone, do the troubleshooting for DTC P0172 using the on-board snapshot for P2DE1.

DTC Description	Confirmed DTC	Pending DTC
P2DE1 Cold Start Air Fuel Ratio Control System Rich	B	B

DTC (PGM-FI)

1. Problem verification

-1. Turn the vehicle to the ON mode.

-2. Leave the vehicle to cool the engine.

Signal	Current conditions	
	Values	Unit
ECT Sensor 1	B	B

-3. Clear the DTC with the HDS.

-4. Turn the vehicle to the OFF (LOCK) mode.

-5. **Enter the maintenance mode, then start the engine** , and let it idle for 10 seconds or more.

-6. Check for Pending or Confirmed DTCs with the HDS.

DTC Description	Confirmed DTC	Pending DTC
P2DE1 Cold Start Air Fuel Ratio Control System Rich	B	B

Is DTC P2DE1 indicated?

YES

The failure is duplicated. Do the troubleshooting for **DTC P0172** using the on-board snapshot for P2DE1.

NO

Intermittent failure, the system is OK at this time. **If the on-board snapshot of this DTC is recorded, try to reproduce the failure under the same conditions with the on-board snapshot** .

DTC P2EA4 (2021)

DTC P2EA4 : Cold Start Ignition Timing Problem

NOTE: Before you troubleshoot, **review the general troubleshooting information** .

DTC Description	Confirmed DTC	Pending DTC
P2EA4 Cold Start Ignition Timing Problem	B	B

DTC (PGM-FI)

1. PGM-FI system check

-1. Turn the vehicle to the ON mode.

-2. Check for Pending or Confirmed DTCs with the HDS.

DTC Description	Confirmed DTC	Pending DTC
B	B	B

DTC (PGM-FI)

Are any Pending or Confirmed DTCs other than P2EA4 indicated?

YES

Go to the indicated DTC's troubleshooting.

NO

Go to step 2.

2. Intake air duct visual check

-1. Turn the vehicle to the OFF (LOCK) mode.

-2. **Check for poor connection or blockage at the intake air duct** .

Is it OK?

YES

Go to step 3.

NO

Reconnect or repair the intake air duct, or **replace it if needed** .

3. Air cleaner housing visual check

-1. **Check for poor connection or blockage at the air cleaner housing** .

Is it OK?

YES

Go to step 4.

NO

Replace the air cleaner housing .

4. Air cleaner element visual check

-1. **Check for dirt or debris on the air cleaner element** .

Is it dirty?

YES

Replace the air cleaner element .

NO

Go to step 5.

5. Problem verification

-1. Turn the vehicle to the ON mode.

-2. Let the engine cool until the value of ECT Sensor 1 is 122 deg.F (50 deg.C) or less.

Signal	Current conditions	
	Values	Unit
ECT Sensor 1	B	B

-3. Clear the DTC with the HDS.

-4. Turn the vehicle to the OFF (LOCK) mode.

-5. **Enter the maintenance mode, then start the engine** , and let it idle for 10 seconds or more.

-6. Monitor the OBD STATUS for DTC P2EA4 in the DTCs MENU with the HDS.

DTC Description	OBD STATUS
P2EA4 Cold Start Ignition Timing Problem	B

Does the HDS indicate FAILED?

YES

The failure is duplicated. Go to step 6.

NO

If the HDS indicates PASSED, intermittent failure, the system is OK at this time. Check for poor connections or loose terminals at the CKP sensor, the throttle body, MAF/IAT sensor 1, ECT sensor 1, ECT sensor 2, and the PCM. **If the on-board snapshot of this DTC is recorded, try to reproduce the failure under the same conditions with the on-board snapshot** . If the HDS indicates EXECUTING, keep idling until a result comes on. If the HDS indicates OUT OF CONDITION, go to step 5-2 and recheck.

6. MAF sensor performance check

-1. Hold the engine speed at 3, 000 rpm without load (in P or N) until the radiator fan comes on, then let it idle.

-2. While holding the engine speed at 2, 500 rpm for 30 seconds, check the parameter(s) below with the HDS.

Signal	Threshold		Current conditions	
	Values	Unit	Values	Unit
MAF Sensor	7.5-10.5	g/s	B	B

Do the current condition(s) match the malfunction threshold?

YES

The MAF sensor is OK. Go to step 7.

NO

Replace MAF sensor/IAT sensor 1 .

7. IAT sensor 1 performance check

-1. Turn the vehicle to the OFF (LOCK) mode.

-2. Allow the engine to cool to ambient temperature.

-3. Note the ambient temperature.

-4. Turn the vehicle to the ON mode.

-5. Quickly note the value of IAT SENSOR (1) in the DATA LIST with the HDS.

Signal	Current conditions	
	Values	Unit
IAT Sensor (1)	B	B

-6. Compare the value of the IAT SENSOR with the ambient temperature.

Does the value of the IAT SENSOR (1) differ 5.4 deg.F (3 deg.C) or more from the ambient temperature?

YES

Replace MAF sensor/IAT sensor 1 .

NO

The IAT sensor 1 is OK. Check for dirt, carbon, or damage in the throttle bore. If there is dirt or carbon, **clean the throttle body** . If there is damage in the throttle bore, **replace the throttle body** .

DTC P2EC7 (2021)

DTC P2EC7 : Cold Start Rocker Arm Oil Control System Problem

Special Tools Required

Pressure Gauge Adapter 07NAJ-P07010A

A/T Low Pressure Gauge w/Panel 07406-0070301

A/T Pressure Test Hose 07AAJ-PY4A100

A/T Pressure Adapter 07MAJ-PY40120

Oil Pressure Hose 07ZAJ-S5AA200

NOTE:

- **How to read the torque specifications** .
- Before you troubleshoot, **review the general troubleshooting information** .
- If DTC P055D, P2648, and/or P2649 are stored at the same time as DTC P2EC7, troubleshoot those DTCs first, then recheck for DTC P2EC7.

DTC Description	Confirmed DTC	Pending DTC
P2EC7 Cold Start Rocker Arm Oil Control System Problem	B	B

DTC (PGM-FI)

1. Oil level check

-1. **Check the engine oil level** .

Is the level OK?

YES

Go to step 2.

NO

Adjust the engine oil to the proper level .

2. Problem verification

-1. Turn the vehicle to the ON mode.

-2. Let the engine cool until the value of ECT Sensor 1 is 77 deg.F (25 deg.C) or less.

Signal	Current conditions	
	Values	Unit
ECT Sensor 1	B	B

-3. Clear the DTC with the HDS.

-4. Turn the vehicle to the OFF (LOCK) mode.

-5. **Enter the maintenance mode, then start the engine** , and let it idle for 10 seconds or more.

-6. Check for Pending or Confirmed DTCs with the HDS.

DTC Description	Confirmed DTC	Pending DTC
P2EC7 Cold Start Rocker Arm Oil Control System Problem	B	B

Is DTC P2EC7 indicated?

YES

The failure is duplicated. Go to step 3.

NO

Intermittent failure, the system is OK at this time. Check for poor connections or loose terminals at the rocker arm oil pressure sensor and the PCM. **If the on-board snapshot of this DTC is recorded, try to reproduce the failure under the same conditions with the on-board snapshot** .

3. DTC check

-1. Check for Pending or Confirmed DTCs with the HDS.

DTC Description	Confirmed DTC	Pending DTC
P055D Rocker Arm Oil Pressure Sensor High Voltage	B	B
P2649 Rocker Arm Oil Control Solenoid Circuit High Voltage	B	B

Is DTC P055D and/or P2649 indicated?

YES

Go to the indicated DTC's troubleshooting .

NO

Go to step 4.

4. VTEC system oil pressure check

   -1. Turn the vehicle to the OFF (LOCK) mode.

   -2. Remove the rocker arm oil pressure sensor (A), and attach the special tools as shown, then attach the rocker arm oil pressure sensor to the oil pressure gauge adapter (B).

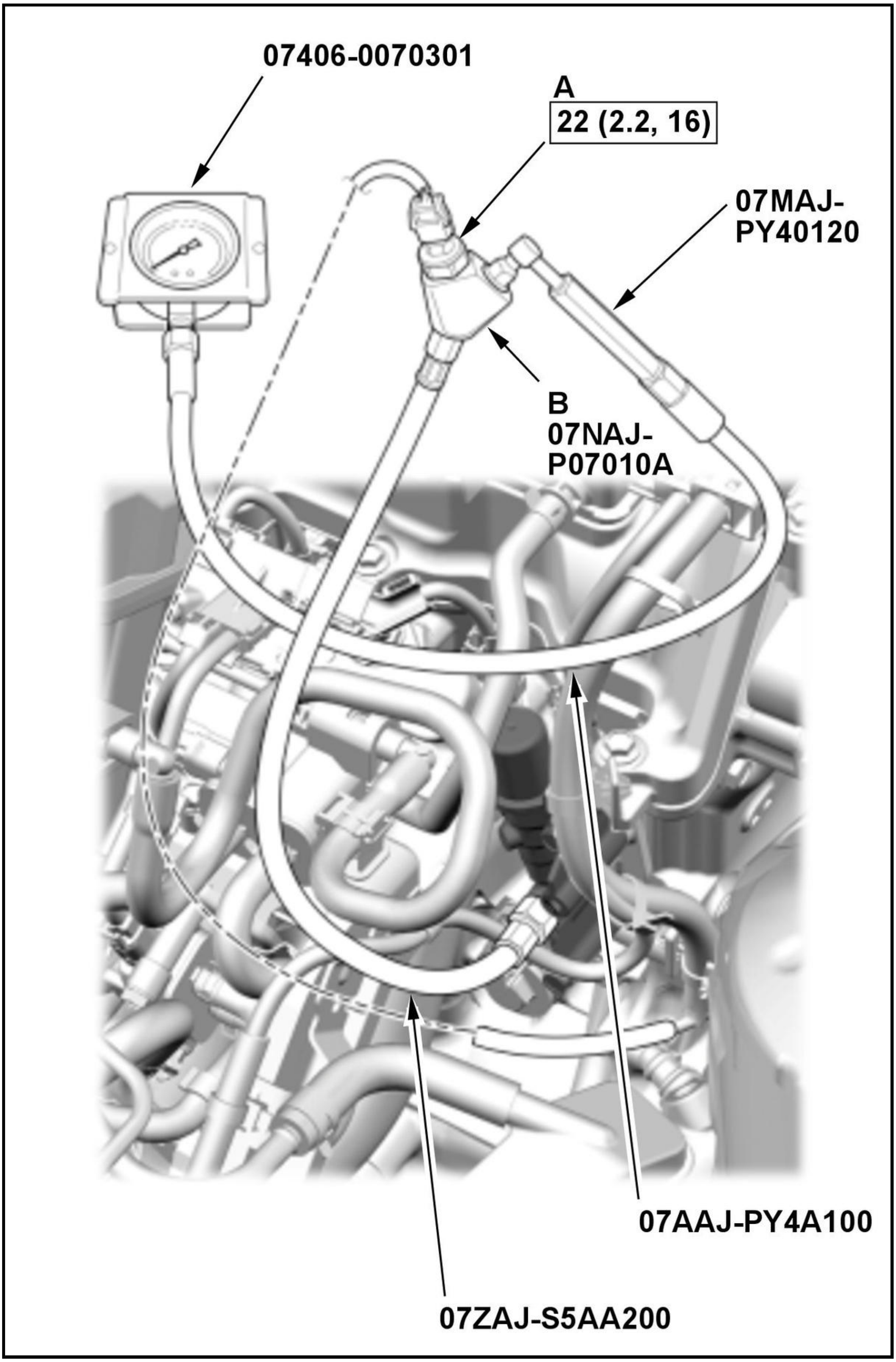
07406-0070301
A
22 (2.2, 16)
07MAJ-PY40120
B
07NAJ-P07010A
07AAJ-PY4A100
07ZAJ-S5AA200

-3. Reconnect the following connector.

Rocker arm oil pressure sensor 3P connector

-4. **Enter the maintenance mode, then start the engine** .

-5. Hold the engine speed at 3, 000 rpm without load (in P or N) until the radiator fan comes on, then let it idle.

-6. Select the VTEC TEST in the Function Test Menu with the HDS.

VTEC TEST

Check the oil pressure while the status of VTEC solenoid valve on the HDS display is OFF.

Is the oil pressure 49 kPa (0.50 kgf/cm 2, 7.1 psi) or more?

YES

Inspect the VTEC system oil passage. If it is OK, **replace the rocker arm oil control valve** .

NO

Replace the rocker arm oil pressure sensor .

DTC U0029 (PGM-FI SYSTEM)

DTC U0029 : F-CAN Malfunction (BUS-OFF (PCM))

NOTE: Before you troubleshoot, **review the general troubleshooting information** .

DTC Description	Confirmed DTC	Pending DTC
U0029 F-CAN Malfunction (BUS-OFF (PCM))	B	B

DTC (PGM-FI)

1. CAN gateway system DTC check

-1. Turn the vehicle to the ON mode.

-2. Clear the DTC with the HDS.

-3. Turn the vehicle to the OFF (LOCK) mode.

-4. Turn the vehicle to the ON mode.

-5. Check for CAN gateway system DTCs with the HDS.

DTC Description	DTC
B	B

Are any DTCs indicated?

YES

The failure is duplicated. **Go to the troubleshooting for CAN gateway system DTC(s)** .

NO

Intermittent failure, the system is OK at this time. **If the on-board snapshot of this DTC is recorded, try to reproduce the failure under the same conditions with the on-board snapshot** .

DTC U0038 (PGM-FI SYSTEM)

DTC U0038 : EP-CAN Malfunction (BUS-OFF(PCM))

NOTE: Before you troubleshoot, **review the general troubleshooting information** .

DTC Description	Confirmed DTC	Pending DTC
U0038 EP-CAN Malfunction (BUS-OFF(PCM))	B	B

DTC (PGM-FI)

1. CAN gateway system DTC check

   -1. Turn the vehicle to the ON mode.

   -2. Clear the DTC with the HDS.

   -3. Turn the vehicle to the OFF (LOCK) mode.

   -4. Turn the vehicle to the ON mode.

   -5. Check for CAN gateway system DTCs with the HDS.

DTC Description	DTC
B	B

   Are any DTCs indicated?

   YES

   The failure is duplicated. **Go to the troubleshooting for CAN gateway system DTC(s)** .

   NO

   Intermittent failure, the system is OK at this time. **If the on-board snapshot of this DTC is recorded, try to reproduce the failure under the same conditions with the on-board snapshot** .

DTC U0047 (PGM-FI SYSTEM)

DTC U0047 : F-CAN Malfunction for The Second Channel (BUS-OFF (PCM))

NOTE: Before you troubleshoot, **review the general troubleshooting information** .

DTC Description	Confirmed DTC	Pending DTC
U0047 F-CAN Malfunction for The Second Channel (BUS-OFF (PCM))	B	B

DTC (PGM-FI)

1. CAN gateway system DTC check

   -1. Turn the vehicle to the ON mode.

   -2. Clear the DTC with the HDS.

   -3. Turn the vehicle to the OFF (LOCK) mode.

   -4. Turn the vehicle to the ON mode.

   -5. Check for CAN gateway system DTCs with the HDS.

DTC Description	DTC
B	B

Are any DTCs indicated?

YES

The failure is duplicated. **Go to the troubleshooting for CAN gateway system DTC(s)** .

NO

Intermittent failure, the system is OK at this time. **If the on-board snapshot of this DTC is recorded, try to reproduce the failure under the same conditions with the on-board snapshot** .

DTC U0103, U0104, U0114, U0122, U0129, U0151, U0155, U1207, U129E, U1603, U1604, U1605 (PGM-FI SYSTEM)

DTC U0103 : F-CAN Malfunction (PCM-SBW Shifter)

DTC U0104 : F-CAN Malfunction (PCM-Driving Support System Control Unit)

DTC U0114 : F-CAN Malfunction (PCM-AWD Control Unit)

DTC U0122 : F-CAN Malfunction (PCM-VSA Modulator-Control Unit)

DTC U0129 : F-CAN Malfunction (PCM-Electric Servo Brake Control Unit)

DTC U0151 : F-CAN Malfunction (PCM-SRS Unit)

DTC U0155 : F-CAN Malfunction (PCM-Gauge Control Module)

DTC U1207 : F-CAN Malfunction (PCM-A/C Compressor Driver)

DTC U129E : F-CAN Malfunction (PCM-Power Control Unit (PCU))

DTC U1603 : F-CAN Malfunction (PCM-Battery Condition Monitor Module)

DTC U1604 : F-CAN Malfunction (PCM-Motor Control Module)

DTC U1605 : F-CAN Malfunction (PCM-Motor Control Module)

NOTE:

- Before you troubleshoot, **review the general troubleshooting information** .
- If the power system indicator flashes, **go to the electric powertrain system general troubleshooting information** .
- According to the detected DTC(s), check for the power circuit and the ground circuit of the control unit which cannot communicate with the PCM.

DTC Description	Confirmed DTC	Pending DTC
U0103 F-CAN Malfunction (PCM- SBW Shifter)	B	B
U0104 F-CAN Malfunction (PCM-Driving Support System Control Unit)	B	B
U0114 F-CAN Malfunction (PCM-AWD Control Unit)	B	B
U0122 F-CAN Malfunction (PCM-VSA Modulator-Control Unit)	B	B
U0129 F-CAN Malfunction (PCM-Electric Servo Brake Control Unit)	B	B
U0151 F-CAN Malfunction (PCM-SRS Unit)	B	B
U0155 F-CAN Malfunction (PCM-Gauge Control Module)	B	B

DTC Description	Confirmed DTC	Pending DTC
U1207 F-CAN Malfunction (PCM-A/C Compressor Driver)	B	B
U129E F-CAN Malfunction (PCM-Power Control Unit (PCU))	B	B
U1603 F-CAN Malfunction (PCM-Battery Condition Monitor Module)	B	B
U1604 F-CAN Malfunction (PCM-Motor Control Module)	B	B
U1605 F-CAN Malfunction (PCM-Motor Control Module)	B	B

DTC (PGM-FI)

1. CAN gateway system DTC check

   -1. Turn the vehicle to the ON mode.

   -2. Check for CAN gateway system DTCs with the HDS.

DTC Description	DTC
B	B

   Are any DTCs indicated?

   YES

   Go to the troubleshooting for CAN gateway system DTC(s) .

   NO

   Go to step 2.

2. F-CAN circuit communication check (Receiving control unit)

   -1. Select the FUNCTION TEST in the CAN gateway with the HDS, then select the F-CAN Bus Connected Unit Check.

   F-CAN Bus Connected Unit Check

   Which result is indicated?

   Bus A is Not Available

   Go to step 3.

   Bus B is Not Available

   Go to step 4.

   Bus A and B are Available

   Go to step 5.

3. Open wire check (F-CAN A_H line, F-CAN A_L line)

   -1. Turn the vehicle to the OFF (LOCK) mode.

   -2. Jump the SCS line with the HDS, and wait more than 1 minute.

   -3. Disconnect the following connectors.

CAN gateway 16P connector
PCM connector A (50P)

-4. Measure the resistance between test points 1 and 2.

Test condition	Vehicle OFF (LOCK) mode
B	CAN gateway 16P connector: disconnected
B	PCM connector A (50P): disconnected
Test point 1	CAN gateway 16P connector (female terminals) No. 3: ①
Test point 2	**PCM connector A (50P) No. 37**

Test point 1	CAN gateway 16P connector (female terminals) No. 11: ①
Test point 2	**PCM connector A (50P) No. 36**

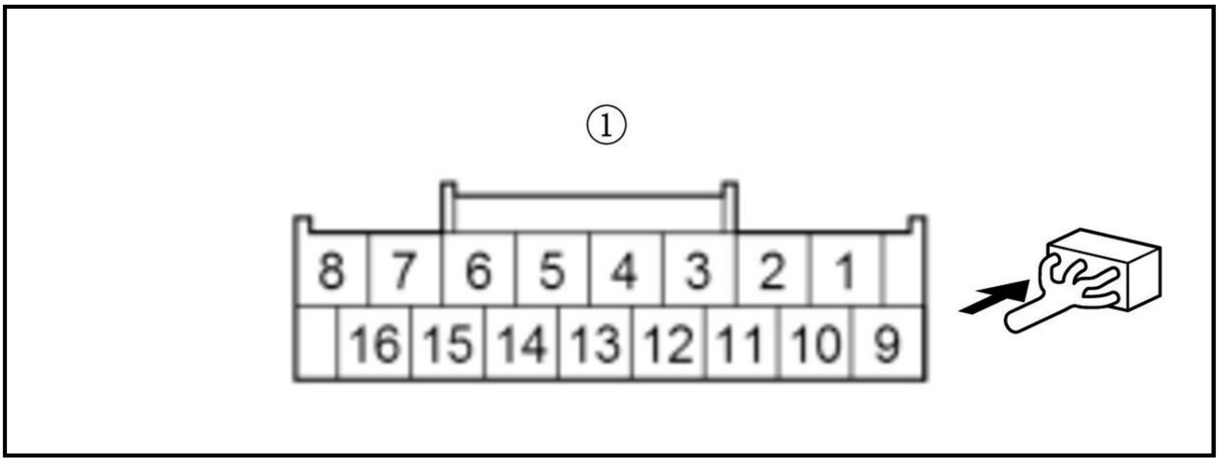

Is there 1.0 Ω or less?

YES

The F-CAN A_H wire and the F-CAN A_L wire are OK. Check for poor connections or loose terminals at the CAN gateway and the PCM. Check for any authorized service information related to the DTCs or symptoms you are troubleshooting, or **substitute a known-good PCM** .

NO

Repair an open in the F-CAN A_H wire or the F-CAN A_L wire between the PCM (A36, A37) and the CAN gateway.

4. Open wire check (F-CAN B_H line, F-CAN B_L line)

-1. Turn the vehicle to the OFF (LOCK) mode.

-2. Jump the SCS line with the HDS, and wait more than 1 minute.

-3. Disconnect the following connectors.

CAN gateway 16P connector
PCM connector A (50P)

-4. Measure the resistance between test points 1 and 2.

Test condition	Vehicle OFF (LOCK) mode
B	CAN gateway 16P connector: disconnected

B	PCM connector A (50P): disconnected
Test point 1	CAN gateway 16P connector (female terminals) No. 6: ①
Test point 2	**PCM connector A (50P) No. 39**

Test point 1	CAN gateway 16P connector (female terminals) No. 14: ①
Test point 2	**PCM connector A (50P) No. 38**

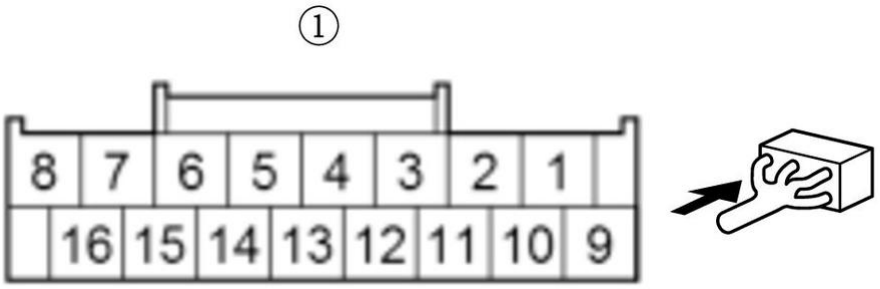

Is there 1.0 Ω or less?

YES

The F-CAN B_H wire and the F-CAN B_L wire are OK. Check for poor connections or loose terminals at the CAN gateway and the PCM. Check for any authorized service information related to the DTCs or symptoms you are troubleshooting, or **substitute a known-good PCM** .

NO

Repair an open in the F-CAN B_H wire or the F-CAN B_L wire between the PCM (A38, A39) and the CAN gateway.

5. F-CAN circuit communication check (Transmitting control unit)

   -1. Select the FUNCTION TEST in the CAN gateway with the HDS, then select the F-CAN Bus Connected Unit Check.

   F-CAN Bus Connected Unit Check

   According to the detected DTC on the following table, make sure that the transmitting control unit detects the CAN gateway Bus channel(s) normally.

DTC	Transmitting control unit	Detected CAN gateway Bus channel(s) at normal
U0103	SBW shifter control module	A
U0104	Millimeter wave radar	C
U0114	Real time AWD control unit	D
U0122	VSA modulator-control unit	B, C
U0129	Electric servo brake control unit	B, C
U0151	SRS unit	C
U0155	Gauge control module	D

DTC	Transmitting control unit	Detected CAN gateway Bus channel(s) at normal
U1207	Electric A/C compressor	D
U129E	Body control module	B
U1603	Battery condition monitor module	A
U1604	PCU (motor control module)	A
U1605	PCU (motor control module)	A

Is it detected normally?

Detected normal

Intermittent failure, the system is OK at this time. Check for poor connections or loose terminals at the transmitting control unit and the CAN gateway.

U0103: SBW shifter control module is Not Available for Bus A

Go to step 6.

U0104: Millimeter wave radar is Not Available for Bus C

Go to step 8.

U0114: Real time AWD control unit is Not Available for Bus D

Go to step 9.

U0122: VSA modulator-control unit is Not Available for Bus B

Go to step 7.

U0122: VSA modulator-control unit is Not Available for Bus C

Go to step 8.

U0129: Electric servo brake control unit is Not Available for Bus B

Go to step 7.

U0129: Electric servo brake control unit is Not Available for Bus C

Go to step 8.

U0151: SRS unit is Not Available for Bus C

Go to step 8.

U0155: Gauge control module is Not Available for Bus D

Go to step 9.

U1207: Electric A/C compressor is Not Available for Bus D

Go to step 9.

U129E: Body control module is Not Available for Bus B

Go to step 7.

U1603: Battery condition monitor module is Not Available for Bus A

Go to step 6.

U1604: Motor control module is Not Available for Bus A

Go to step 6.

U1605: Motor control module is Not Available for Bus A

Go to step 6.

6. Open wire check (F-CAN A_H line, F-CAN A_L line)

-1. Turn the vehicle to the OFF (LOCK) mode.

-2. According to the detected DTC on the following table, disconnect the transmitting control unit connector(s).

NOTE: Before disconnecting the PCU connector and/or the battery condition monitor module connector, **do the 12 volt battery terminal disconnection procedure** , and **turn off the service plug** .

DTC	Connector
-	CAN gateway 16P connector
U0103	SBW shifter control module 20P connector
U1603	Battery condition monitor module connector E (32P)
U1604	PCU 33P connector
U1605	PCU 33P connector

-3. Measure the resistance between test points 1 and 2.

Test condition	Vehicle OFF (LOCK) mode
B	CAN gateway 16P connector: disconnected
B	Transmitting control unit connector(s) for indicated DTCs: disconnected

DTC	Circuit name	Test point 1 (Receiving control unit)		Test point 2 (Transmitting control unit)	
		Connector	Terminal	Connector	Terminal
U0103	F-CAN A_H	CAN gateway 16P connector (female terminals): ①	No. 3	**SBW shifter control module 20P connector**	No. 5
	F-CAN A_L		No. 11		No. 6
U1603	F-CAN A_H	CAN gateway 16P connector (female terminals): ①	No. 3	**Battery condition monitor module connector E (32P)**	No. 9
	F-CAN A_L		No. 11		No. 8
U1604	F-CAN A_H	CAN gateway 16P connector (female terminals): ①	No. 3	**PCU 33P connector**	No. 5
	F-CAN A_L		No. 11		No. 6
U1605	F-CAN A_H	CAN gateway 16P connector (female terminals): ①	No. 3	**PCU 33P connector**	No. 5
	F-CAN A_L		No. 11		No. 6

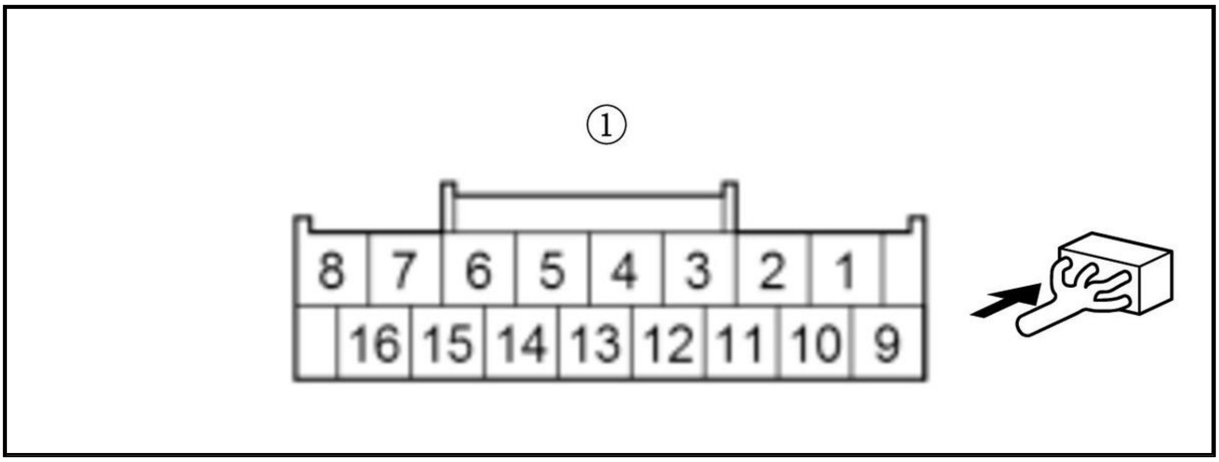

Is there 1.0 Ω or less?

YES

The F-CAN A_H wire and the F-CAN A_L wire are OK. Check for any authorized service information related to the DTCs or symptoms you are troubleshooting. According to the detected DTC on the following table, substitute or replace the correspond control unit.

DTC	Operation for transmitting control unit
U0103	Check for poor connections or loose terminals at the CAN gateway and the SBW shifter control module. **Substitute a known-good SBW shifter control module** .
U1603	Check for poor connections or loose terminals at the CAN gateway and the battery condition monitor module. **Substitute a known-good battery condition monitor module** .
U1604	Check for poor connections or loose terminals at the CAN gateway and the PCU. **Substitute a known-good PCU** .
U1605	Check for poor connections or loose terminals at the CAN gateway and the PCU. **Substitute a known-good PCU** .

NO

Repair an open in the F-CAN A_H wire or the F-CAN A_L wire between the transmitting control unit and the CAN gateway.

7. Open wire check (F-CAN B_H line, F-CAN B_L line)

-1. Turn the vehicle to the OFF (LOCK) mode.

-2. According to the detected DTC on the following table, disconnect the transmitting control unit connector(s).

NOTE: Before disconnecting the electric servo brake control unit connector, open the driver's door and wait for at least 3 minutes.

DTC	Connector
-	CAN gateway 16P connector
U0122	VSA modulator-control unit 46P connector
U0129	Electric servo brake control unit 22P connector
U129E	Body control module connector B (36P)

-3. Measure the resistance between test points 1 and 2.

Test condition	Vehicle OFF (LOCK) mode
B	CAN gateway 16P connector: disconnected

B	Transmitting control unit connector(s) for indicated DTCs: disconnected

DTC	Circuit name	Test point 1 (Receiving control unit)		Test point 2 (Transmitting control unit)	
		Connector	Terminal	Connector	Terminal
U0122	F-CAN B_H	CAN gateway 16P connector (female terminals): ①	No. 6	**VSA modulator-control unit 46P connector**	No. 40
	F-CAN B_L		No. 14		No. 28
U0129	F-CAN B_H	CAN gateway 16P connector (female terminals): ①	No. 6	**Electric servo brake control unit 22P connector**	No. 15
	F-CAN B_L		No. 14		No. 14
U129E	F-CAN B_H	CAN gateway 16P connector (female terminals): ①	No. 6	**Body control module connector B (36P)**	No. 22
	F-CAN B_L		No. 14		No. 23

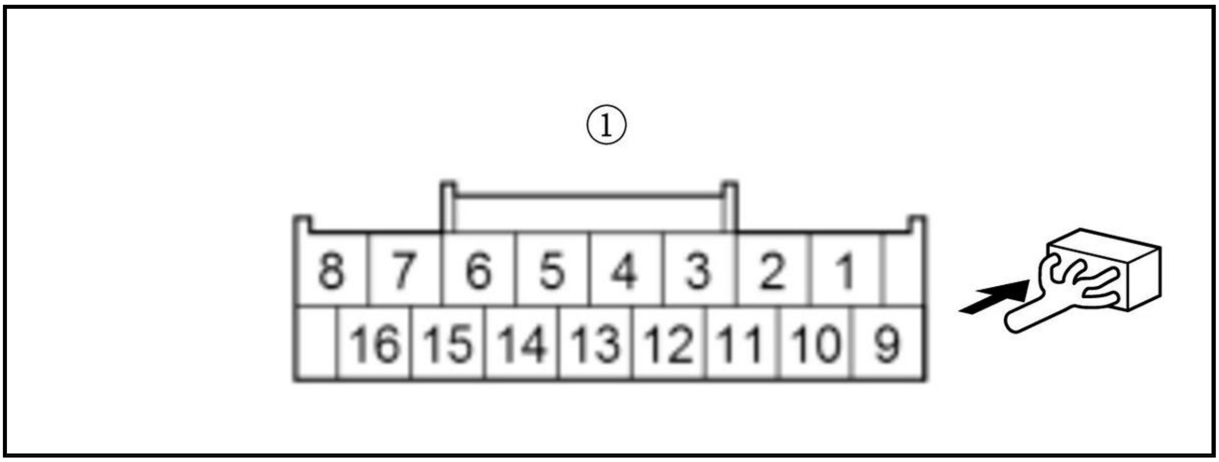

Is there 1.0 Ω or less?

YES

The F-CAN B_H wire and the F-CAN B_L wire are OK. Check for any authorized service information related to the DTCs or symptoms you are troubleshooting. According to the detected DTC on the following table, substitute or replace the correspond control unit.

DTC	Operation for transmitting control unit
U0122	Check for poor connections or loose terminals at the CAN gateway and the VSA modulator-control unit. **Replace the VSA modulator-control unit** .
U0129	Check for poor connections or loose terminals at the CAN gateway and the electric servo brake control unit. **Replace the electric servo brake control unit** .
U129E	Check for poor connections or loose terminals at the CAN gateway and the body control module. **Substitute a known-good body control module** .

NO

Repair an open in the F-CAN B_H wire or the F-CAN B_L wire between the transmitting control unit and the CAN gateway.

8. Open wire check (F-CAN C_H line, F-CAN C_L line)

-1. Turn the vehicle to the OFF (LOCK) mode.

-2. According to the detected DTC on the following table, disconnect the transmitting control unit connector(s).

NOTE: Before disconnecting the SRS unit connector, do the 12 volt battery terminal disconnection procedure , and wait for at least 3 minutes.

DTC	Connector
-	CAN gateway 16P connector
U0104	Millimeter wave radar 8P connector
U0122	VSA modulator-control unit 46P connector
U0129	Electric servo brake control unit 22P connector
U0151	SRS unit connector A (39P)

-3. Measure the resistance between test points 1 and 2.

Test condition	Vehicle OFF (LOCK) mode
B	CAN gateway 16P connector: disconnected

B	Transmitting control unit connector(s) for indicated DTCs: disconnected

DTC	**Circuit name**	**Test point 1 (Receiving control unit)**		**Test point 2 (Transmitting control unit)**	
		Connector	**Terminal**	**Connector**	**Terminal**
U0104	F-CAN C_H	CAN gateway 16P connector (female terminals): ①	No. 5	Millimeter wave radar 8P connector	No. 7
	F-CAN C_L		No. 13		No. 6
U0122	F-CAN C_H	CAN gateway 16P connector (female terminals): ①	No. 5	VSA modulator-control unit 46P connector	No. 46
	F-CAN C_L		No. 13		No. 34
U0129	F-CAN C_H	CAN gateway 16P connector (female terminals): ①	No. 5	Electric servo brake control unit 22P connector	No. 19
	F-CAN C_L		No. 13		No. 18
U0151	F-CAN C_H	CAN gateway 16P connector (female terminals): ①	No. 5	SRS unit connector A (39P)	No. 34
	F-CAN C_L		No. 13		No. 35

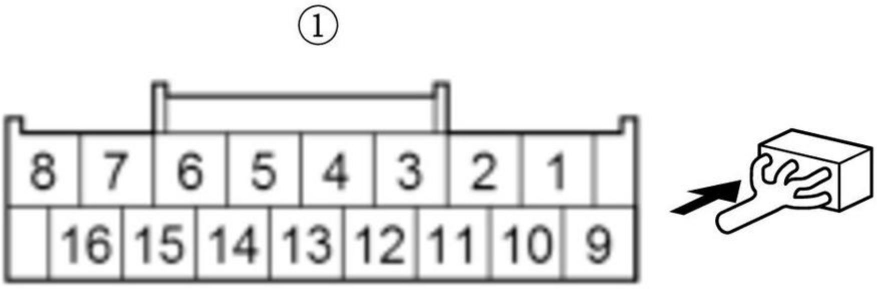

Is there 1.0 Ω or less?

YES

The F-CAN C_H wire and the F-CAN C_L wire are OK. Check for any authorized service information related to the DTCs or symptoms you are troubleshooting. According to the detected DTC on the following table, substitute or replace the correspond control unit.

DTC	Operation for transmitting control unit
U0104	Check for poor connections or loose terminals at the CAN gateway and the millimeter wave radar. **Substitute a known-good millimeter wave radar** .
U0122	Check for poor connections or loose terminals at the CAN gateway and the VSA modulator-control unit. **Replace the VSA modulator-control unit** .
U0129	Check for poor connections or loose terminals at the CAN gateway and the electric servo brake control unit. **Replace the electric servo brake control unit** .
U0151	Check for poor connections or loose terminals at the CAN gateway and the SRS unit. **Substitute a known-good SRS unit** .

NO

Repair an open in the F-CAN C_H wire or the F-CAN C_L wire between the transmitting control unit and the CAN gateway.

9. Open wire check (F-CAN D_H line, F-CAN D_L line)

-1. Turn the vehicle to the OFF (LOCK) mode.

-2. According to the detected DTC on the following table, disconnect the transmitting control unit connector(s).

NOTE: Before disconnecting the A/C compressor connector, **do the 12 volt battery terminal disconnection procedure** , and **turn off the service plug** .

DTC	Connector
-	CAN gateway 16P connector
U0114	Real time AWD control unit 24P connector
U0155	Gauge control module connector A (32P)
U1207	Electric A/C compressor 4P connector

-3. Measure the resistance between test points 1 and 2.

Test condition	Vehicle OFF (LOCK) mode
B	CAN gateway 16P connector: disconnected
B	Transmitting control unit connector(s) for indicated DTCs: disconnected

DTC	Circuit name	Test point 1 (Receiving control unit)		Test point 2 (Transmitting control unit)	
		Connector	Terminal	Connector	Terminal
U0114	F-CAN D_H	CAN gateway 16P connector (female terminals): ①	No. 7	**Real time AWD control unit 24P connector**	No. 14
	F-CAN D_L		No. 15		No. 24
U0155	F-CAN D_H	CAN gateway 16P connector (female terminals): ①	No. 7	**Gauge control module connector A (32P)**	No. 19
	F-CAN D_L		No. 15		No. 20
U1207	F-CAN D_H	CAN gateway 16P connector (female	No. 7	A/C compressor 4P connector (female	No. 4

DTC	Circuit name	Test point 1 (Receiving control unit)		Test point 2 (Transmitting control unit)	
		Connector	Terminal	Connector	Terminal
	F-CAN D_L	terminals): ①	No. 15	terminals): ②	No. 3

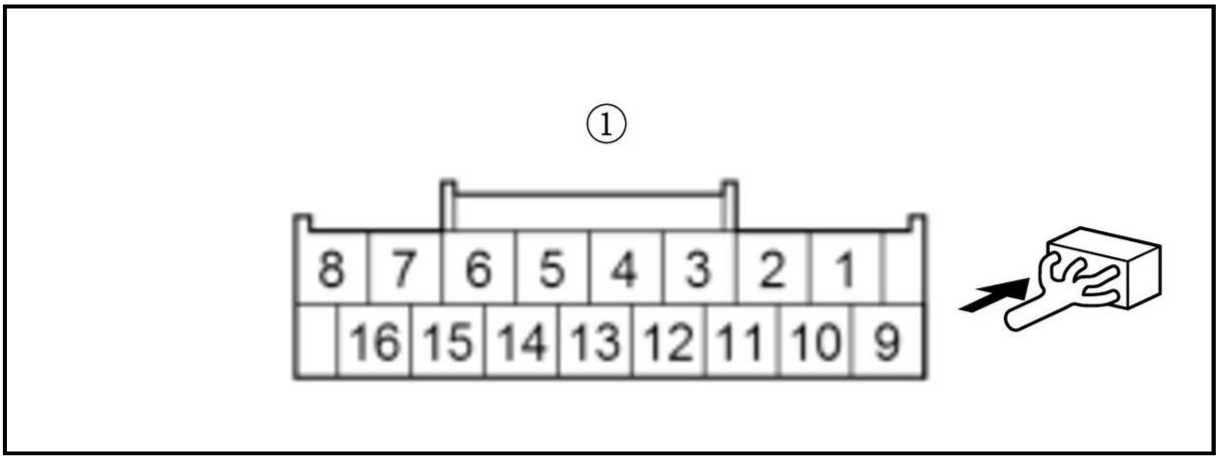

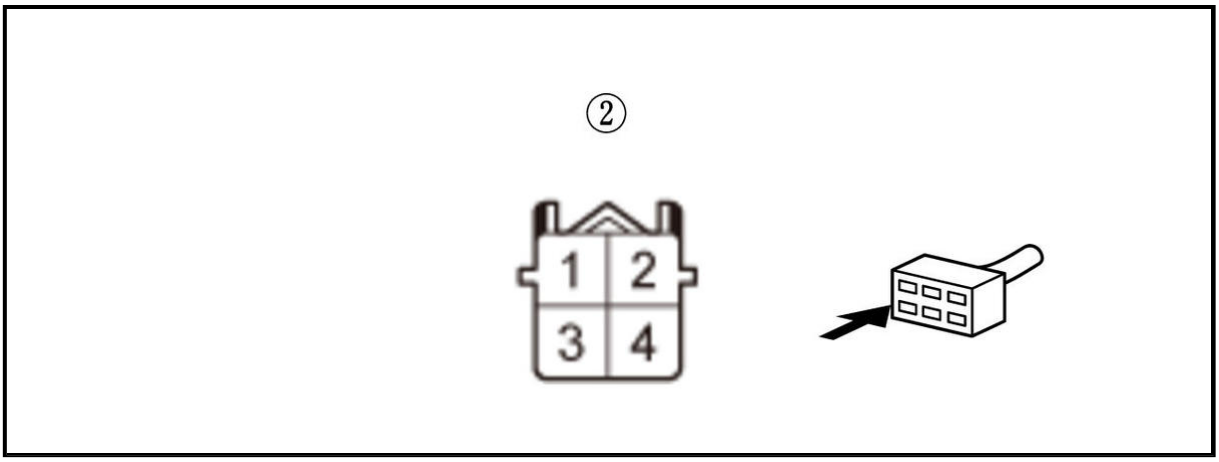

Is there 1.0 Ω or less?

YES

The F-CAN D_H wire and the F-CAN D_L wire are OK. Check for any authorized service information related to the DTCs or symptoms you are troubleshooting. According to the detected DTC on the following table, substitute or replace the correspond control unit.

DTC	Operation for transmitting control unit
U0114	Check for poor connections or loose terminals at the CAN gateway and the real time AWD control unit. **Substitute a known-good real time AWD control unit** .
U0155	Check for poor connections or loose terminals at the CAN gateway and the gauge control module. **Substitute a known-good gauge control module** .
U1207	Check for poor connections or loose terminals at the CAN gateway and the electric A/C compressor. **Substitute a known-good A/C compressor** .

NO

Repair an open in the F-CAN D_H wire or the F-CAN D_L wire between the transmitting control unit and the CAN gateway.

DTC U0110 (PGM-FI SYSTEM)

DTC U0110 : EP-CAN Malfunction (PCM-Motor Control Module)

NOTE:

- Before you troubleshoot, **review the general troubleshooting information** .
- If DTC U0110 is indicated alone, do the troubleshooting for DTC U1205 using the on-board snapshot for U0110.
- If any of the DTCs listed below are indicated at the same time as DTC U0110, troubleshoot those DTCs first, then recheck for U0110.
-
    - -

      U1205: Motor control module

DTC Description	Confirmed DTC	Pending DTC
U0110 EP-CAN Malfunction (PCM-Motor Control Module)	B	B

DTC (PGM-FI)

1. DTC check

   -1. Turn the vehicle to the ON mode.

   -2. Check for Pending or Confirmed DTCs with the HDS.

DTC Description	Confirmed DTC	Pending DTC
U0110 EP-CAN Malfunction (PCM-Motor Control Module)	B	B
U1205 EP-CAN Malfunction (PCM-Motor Control Module)	B	B

   Are DTC U1205 and U0110 indicated at the same time?

   YES

   Go to the indicated DTC's troubleshooting.

   NO

   Go to the troubleshooting for **DTC U1205** using the on-board snapshot for DTC U0110.

DTC U0111 (PGM-FI SYSTEM)

DTC U0111 : EP-CAN Malfunction (PCM-Battery Condition Monitor Module)

NOTE:

- Before you troubleshoot, **review the general troubleshooting information** .
- If DTC U0111 is indicated alone, do the troubleshooting for DTC U1206 using the on-board snapshot for U0111.
- If any of the DTCs listed below are indicated at the same time as DTC U0111, troubleshoot those DTCs first, then recheck for U0111.
-
    - -

      U1206: Battery condition monitor module

DTC Description	Confirmed DTC	Pending DTC
U0111 EP-CAN Malfunction (PCM-Battery Condition Monitor Module)	B	B

DTC (PGM-FI)

1. DTC check

   -1. Turn the vehicle to the ON mode.

   -2. Check for Pending or Confirmed DTCs with the HDS.

DTC Description	Confirmed DTC	Pending DTC
U0111 EP-CAN Malfunction (PCM-Battery Condition Monitor Module)	B	B
U1206 EP-CAN Malfunction (PCM-Battery Condition Monitor Module)	B	B

   Are DTC U1206 and U0111 indicated at the same time?

   YES

   Go to the indicated DTC's troubleshooting.

   NO

   Go to the troubleshooting for **DTC U1206** using the on-board snapshot for DTC U0111.

DTC U012D (PGM-FI SYSTEM)

DTC U012D : EP-CAN Malfunction (PCM-Motor Control Module)

NOTE:

- Before you troubleshoot, **review the general troubleshooting information** .
- If DTC U012D is indicated alone, do the troubleshooting for DTC U12A5 using the on-board snapshot for U012D.
- If any of the DTCs listed below are indicated at the same time as DTC U012D, troubleshoot those DTCs first, then recheck for U012D.
-
    - -

      U12A5: Motor control module

DTC Description	Confirmed DTC	Pending DTC
U012D EP-CAN Malfunction (PCM-Motor Control Module)	B	B

DTC (PGM-FI)

1. DTC check

   -1. Turn the vehicle to the ON mode.

   -2. Check for Pending or Confirmed DTCs with the HDS.

DTC Description	Confirmed DTC	Pending DTC
U012D EP-CAN Malfunction (PCM-Motor Control Module)	B	B
U12A5 EP-CAN Malfunction (Motor Control Module-PCM)	B	B

Are DTC U12A5 and U012D indicated at the same time?

YES

Go to the indicated DTC's troubleshooting.

NO

Go to the troubleshooting for **DTC U12A5** using the on-board snapshot for DTC U012D.

DTC U0146 (PGM-FI SYSTEM)

DTC U0146 : F-CAN Malfunction (PCM-CAN Gateway)

NOTE: Before you troubleshoot, **review the general troubleshooting information** .

DTC Description	Confirmed DTC	Pending DTC
U0146 F-CAN Malfunction (ECM/PCM-CAN Gateway)	B	B

DTC (PGM-FI)

1. CAN gateway system DTC check

   -1. Turn the vehicle to the ON mode.

   -2. Check for CAN gateway system DTCs with the HDS.

DTC Description	DTC
B	B

   Are any DTCs indicated?

   YES

   Go to the troubleshooting for CAN gateway system DTC(s) .

   NO

   Go to step 2.

2. F-CAN circuit communication check

   -1. Select the FUNCTION TEST in the CAN gateway with the HDS, then select the F-CAN Bus Connected Unit Check.

   F-CAN Bus Connected Unit Check

   Which result is indicated?

   PCM (Bus A) is Not Available

   Go to step 3.

PCM (Bus B) is Not Available

Go to step 4.

PCM is Detected

Intermittent failure, the system is OK at this time. Check for poor connections or loose terminals at the CAN gateway and the PCM. **If the on-board snapshot of this DTC is recorded, try to reproduce the failure under the same conditions with the on-board snapshot** .

3. Open wire check (F-CAN A_H line, F-CAN A_L line)

-1. Turn the vehicle to the OFF (LOCK) mode.

-2. Jump the SCS line with the HDS, and wait more than 1 minute.

-3. Disconnect the following connectors.

CAN gateway 16P connector
PCM connector A (50P)

-4. Measure the resistance between test points 1 and 2.

Test condition	Vehicle OFF (LOCK) mode
B	CAN gateway 16P connector: disconnected
B	PCM connector A (50P): disconnected
Test point 1	CAN gateway 16P connector (female terminals) No. 3: ①
Test point 2	**PCM connector A (50P) No. 37**

Test point 1	CAN gateway 16P connector (female terminals) No. 11: ①
Test point 2	**PCM connector A (50P) No. 36**

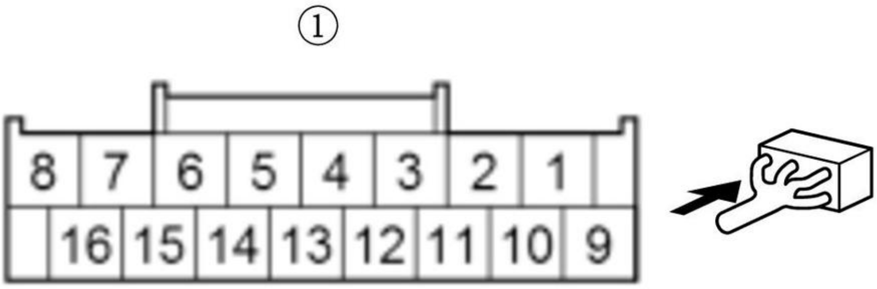

Is there 1.0 Ω or less?

YES

The F-CAN A_H wire and the F-CAN A_L wire are OK. Check for poor connections or loose terminals at the CAN gateway and the PCM. Check for any authorized service information related to the DTCs or symptoms you are troubleshooting, or **substitute a known-good PCM** .

NO

Repair an open in the F-CAN A_H wire and/or the F-CAN A_L wire between the PCM (A36, A37) and the CAN gateway.

4. Open wire check (F-CAN B_H line, F-CAN B_L line)

-1. Turn the vehicle to the OFF (LOCK) mode.

-2. Jump the SCS line with the HDS, and wait more than 1 minute.

-3. Disconnect the following connectors.

CAN gateway 16P connector
PCM connector A (50P)

-4. Measure the resistance between test points 1 and 2.

Test condition	Vehicle OFF (LOCK) mode
B	CAN gateway 16P connector: disconnected
B	PCM connector A (50P): disconnected
Test point 1	CAN gateway 16P connector (female terminals) No. 6: ①
Test point 2	**PCM connector A (50P) No. 39**

Test point 1	CAN gateway 16P connector (female terminals) No. 14: ①
Test point 2	**PCM connector A (50P) No. 38**

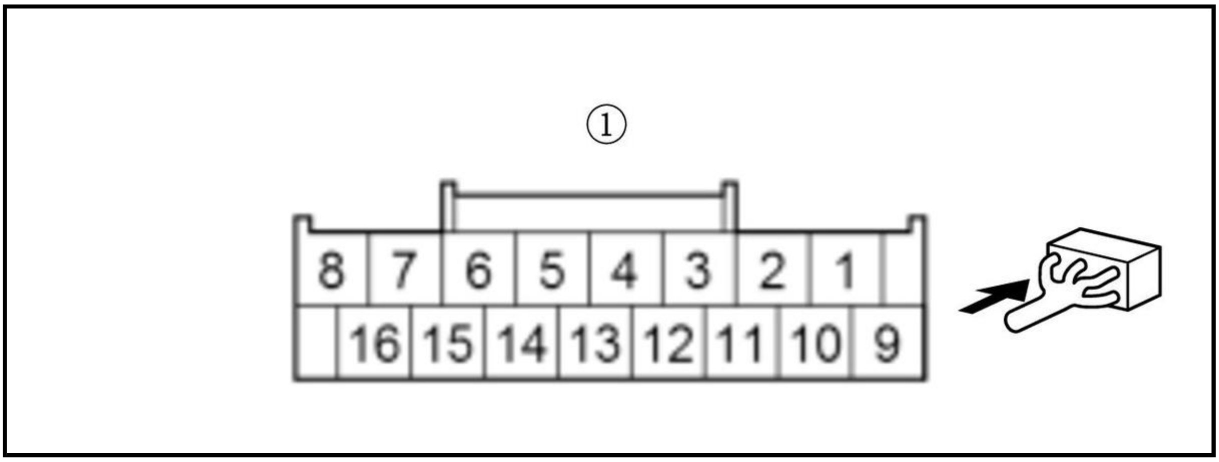

Is there 1.0 Ω or less?

YES

The F-CAN B_H wire and the F-CAN B_L wire are OK. Check for poor connections or loose terminals at the CAN gateway and the PCM. Check for any authorized service information related to the DTCs or symptoms you are troubleshooting, or **substitute a known-good PCM** .

NO

Repair an open in the F-CAN B_H wire and/or the F-CAN B_L wire between the PCM (A38, A39) and the CAN gateway.

DTC U0301(PGM-FI SYSTEM)

DTC U0301 : PGM-FI System and Transmission System Program Version Mismatch

NOTE: Before you troubleshoot, **review the general troubleshooting information** .

DTC Description	Confirmed DTC	Pending DTC
U0301 PGM-FI System and Transmission System Program Version Mismatch	B	B

DTC (PGM-FI)

1. Problem verification (update)

   -1. **Update the PCM** .

   -2. Check for Pending or Confirmed DTCs with the HDS.

DTC Description	Confirmed DTC	Pending DTC
U0301 PGM-FI System and Transmission System Program Version Mismatch	B	B

   Is DTC U0301 indicated?

   YES

   Replace the PCM .

   NO

   Update is complete. If any other Pending or Confirmed DTCs are indicated, go to the indicated DTC's troubleshooting.

DTC U1205, U1206, U12A5, U12AA, U12B4 (PGM-FI SYSTEM)

DTC U1205 : EP-CAN Malfunction (PCM-Motor Control Module)

DTC U1206 : EP-CAN Malfunction (PCM-Battery Condition Monitor Module)

DTC U12A5 : EP-CAN Malfunction (PCM-Motor Control Module)

DTC U12AA : EP-CAN Malfunction (PCM-SBW Shifter)

DTC U12B4 : EP-CAN Malfunction (PCM-Park Pawl Actuator Driver Unit)

NOTE:

- Before you troubleshoot, **review the general troubleshooting information** .
- If the power system indicator flashes, **go to the electric powertrain system general troubleshooting information** .
- According to the detected DTC(s), check for the power circuit and the ground circuit of the control unit which cannot communicate with the PCM.

DTC Description	Confirmed DTC	Pending DTC
U1205 EP-CAN Malfunction (PCM-Motor Control Module)	B	B
U1206 EP-CAN Malfunction (PCM-Battery Condition Monitor Module)	B	B
U12A5 EP-CAN Malfunction (PCM-Motor Control Module)	B	B

DTC Description	Confirmed DTC	Pending DTC
U12AA EP-CAN Malfunction (PCM- SBW Shifter)	B	B

DTC Description	Confirmed DTC	Pending DTC
U12B4 EP-CAN Malfunction (PCM-Park Pawl Actuator Driver Unit)	B	B

DTC (PGM-FI)

1. CAN gateway system DTC check

   -1. Turn the vehicle to the ON mode.

   -2. Check for CAN gateway system DTCs with the HDS.

DTC Description	DTC
B	B

   Are any DTCs indicated?

   YES

   Go to the troubleshooting for CAN gateway system DTC(s) .

   NO

   Go to step 2.

2. F-CAN circuit communication check (Receiving control unit)

   -1. Select the FUNCTION TEST in the CAN gateway with the HDS, then select the F-CAN Bus Connected Unit Check.

   F-CAN Bus Connected Unit Check

   Which result is indicated?

   Bus E is Not Available

   Go to step 3.

   Bus E is Available

   Go to step 4.

3. Open wire check (EP-CAN A_H line, EP-CAN A_L line)

   -1. Turn the vehicle to the OFF (LOCK) mode.

   -2. Jump the SCS line with the HDS, and wait more than 1 minute.

   -3. Disconnect the following connectors.

CAN gateway 16P connector
PCM connector A (50P)

   -4. Measure the resistance between test points 1 and 2.

Test condition	Vehicle OFF (LOCK) mode
B	CAN gateway 16P connector: disconnected
B	PCM connector A (50P): disconnected

Test point 1	CAN gateway 16P connector (female terminals) No. 16: ①
Test point 2	**PCM connector A (50P) No. 21**

Test point 1	CAN gateway 16P connector (female terminals) No. 8: ①
Test point 2	**PCM connector A (50P) No. 20**

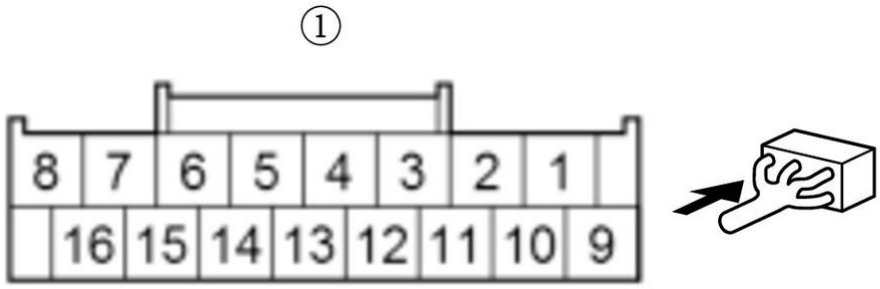

Is there 1.0 Ω or less?

YES

The EP-CAN A_H wire and the EP-CAN A_L wire are OK. Check for poor connections or loose terminals at the CAN gateway and the PCM. Check for any authorized service information related to the DTCs or symptoms you are troubleshooting, or **substitute a known-good PCM** .

NO

Repair an open in the EP-CAN A_H wire or the EP-CAN A_L wire between the PCM (A20, A21) and the CAN gateway.

4. Open wire check (EP-CAN A_H line, EP-CAN A_L line)

-1. Turn the vehicle to the OFF (LOCK) mode.

-2. Disconnect the receiving control unit connector(s).

NOTE: Jump the SCS line with the HDS, and wait more than 1 minute when disconnecting the PCM connector(s).

PCM connector A (50P)

-3. According to the detected DTC on the following table, disconnect the transmitting control unit connector(s).

NOTE: Before disconnecting the PCU connector and/or the battery condition monitor module connector, **do the 12 volt battery terminal disconnection procedure** , and **turn off the service plug** .

DTC	Connector
-	CAN gateway 16P connector
U1205	PCU 33P connector
U1206	Battery condition monitor module connector E (32P)
U12A5	PCU 33P connector
U12AA	SBW shifter control module 20P connector

DTC	Connector
U12B4	Park pawl actuator driver unit 26P connector

-4. Measure the resistance between the receiving control unit and the transmitting control unit on the EP-CAN A_H circuit and the EP-CAN A_L circuit.

Test condition	Vehicle OFF (LOCK) mode
B	Receiving control unit connector(s): disconnected
B	Transmitting control unit connector(s) for indicated DTCs: disconnected

DTC	Circuit name	Receiving control unit		Transmitting control unit	
		Connector	Terminal	Connector	Terminal
U1205	EP-CAN A_H	CAN gateway 16P connector (female terminals): ①	No. 16	**PCU 33P connector**	No. 27
	EP-CAN A_L		No. 8		No. 28
U1206	EP-CAN A_H	CAN gateway 16P connector (female terminals): ①	No. 16	**Battery condition monitor module connector E (32P)**	No. 11
	EP-CAN A_L		No. 8		No. 10
U12A5	EP-CAN A_H	CAN gateway 16P connector (female terminals): ①	No. 16	**PCU 33P connector**	No. 27
	EP-CAN A_L		No. 8		No. 28

DTC	Circuit name	Receiving control unit		Transmitting control unit	
		Connector	Terminal	Connector	Terminal
U12AA	EP-CAN A_H	CAN gateway 16P connector (female terminals): ①	No. 16	**SBW shifter control module 20P connector**	No. 9
	EP-CAN A_L		No. 8		No. 10
U12B4	EP-CAN A_H	CAN gateway 16P connector (female terminals): ①	No. 16	**Park pawl actuator driver unit 26P connector**	No. 8
	EP-CAN A_L		No. 8		No. 7

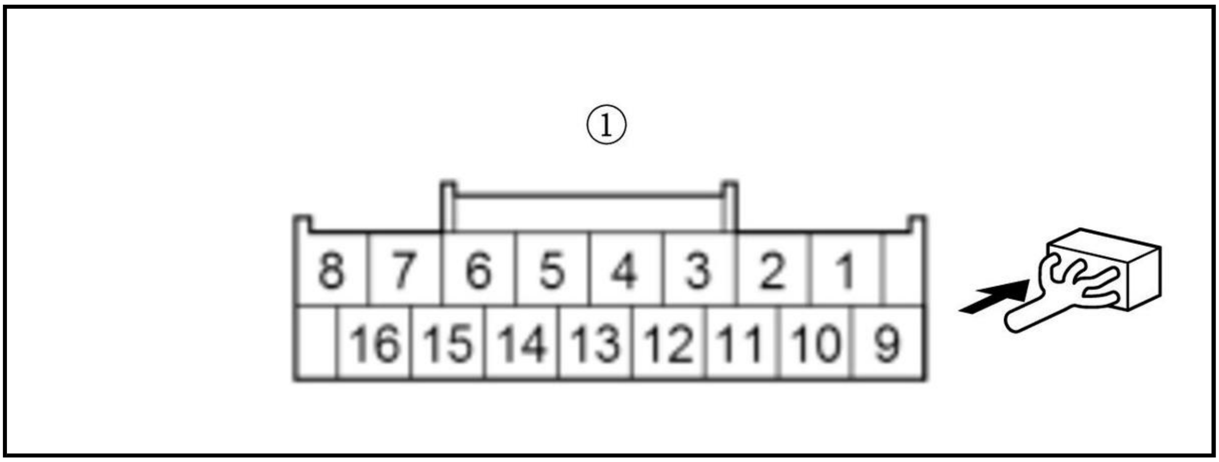

Is there 1.0 Ω or less?

YES

The EP-CAN A_H wire and the EP-CAN A_L wire are OK. Check for any authorized service information related to the DTCs or symptoms you are troubleshooting. According to the detected DTC on the following table, substitute or replace the correspond control unit.

DTC	Operation for transmitting control unit
U1205	Check for poor connections or loose terminals at the CAN gateway and the PCU. **Substitute a known-good PCU** .
U1206	Check for poor connections or loose terminals at the CAN gateway and the battery condition monitor module. **Substitute a known-good battery condition monitor module** .
U12A5	Check for poor connections or loose terminals at the CAN gateway and the PCU. **Substitute a known-good PCU** .
U12AA	Check for poor connections or loose terminals at the CAN gateway and the SBW shifter control module. **Substitute a known-good SBW shifter control module** .
U12B4	Check for poor connections or loose terminals at the CAN gateway and the park pawl actuator driver unit. **Substitute a known-good park pawl actuator driver unit** .

NO

Repair an open in the EP-CAN A_H wire and/or the EP-CAN A_L wire between the receiving control unit and the transmitting control unit.

FIRING ORDER & CYLINDER IDENTIFICATION

NOTE: **This information is intended as a quick reference for firing order and cylinder identification only. The information provided covers many vehicles and may include some information that does not apply to the vehicle you have currently selected.**

3 CYLINDER ENGINE

Engine Configuation	Firing Order	Cylinder Identification
In-Line 3	1-3-2	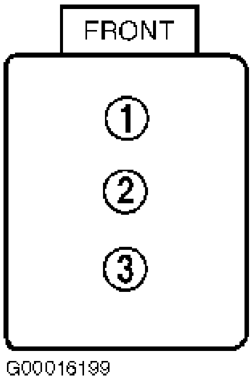

4 CYLINDER ENGINE

Engine Configuation	Firing Order	Cylinder Identification
In-Line 4	1-3-4-2	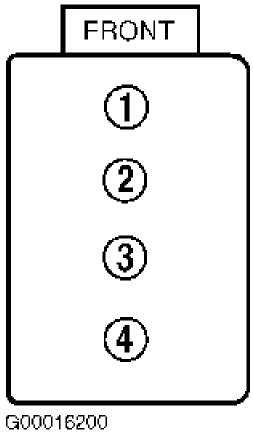

V6 ENGINE

3.0L & 3.5L V6 Engines

Engine Configuation	Firing Order	Cylinder Identification
3.0L & 3.5L	1-4-2-5-3-6	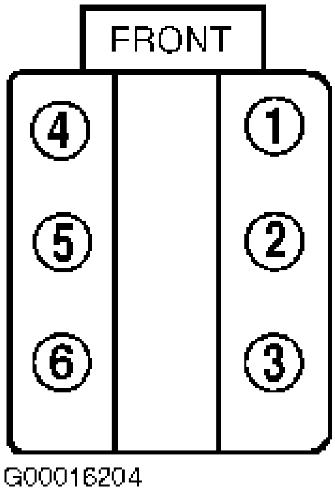 FRONT 4 5 6 1 2 3 G00016204

3.2L V6 Engine

Engine Configuation	Firing Order	Cylinder Identification
3.2L	1-2-3-4-5-6	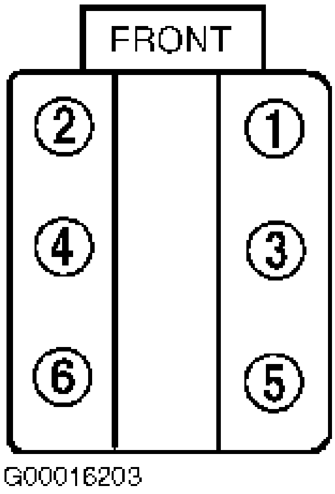 FRONT 2 4 6 1 3 5 G00016203

REMOVAL & INSTALLATION TEST

STARTER REMOVAL, INSTALLATION, AND PERFORMANCE TEST (1.5 L ENGINE)

Removal and Installation

NOTE:

- ℹ Where icon is shown, further information shown below.
- With auto idle stop system: If the starter is replaced, replace the oil pressure switch and the relay circuit board at the same time.

1

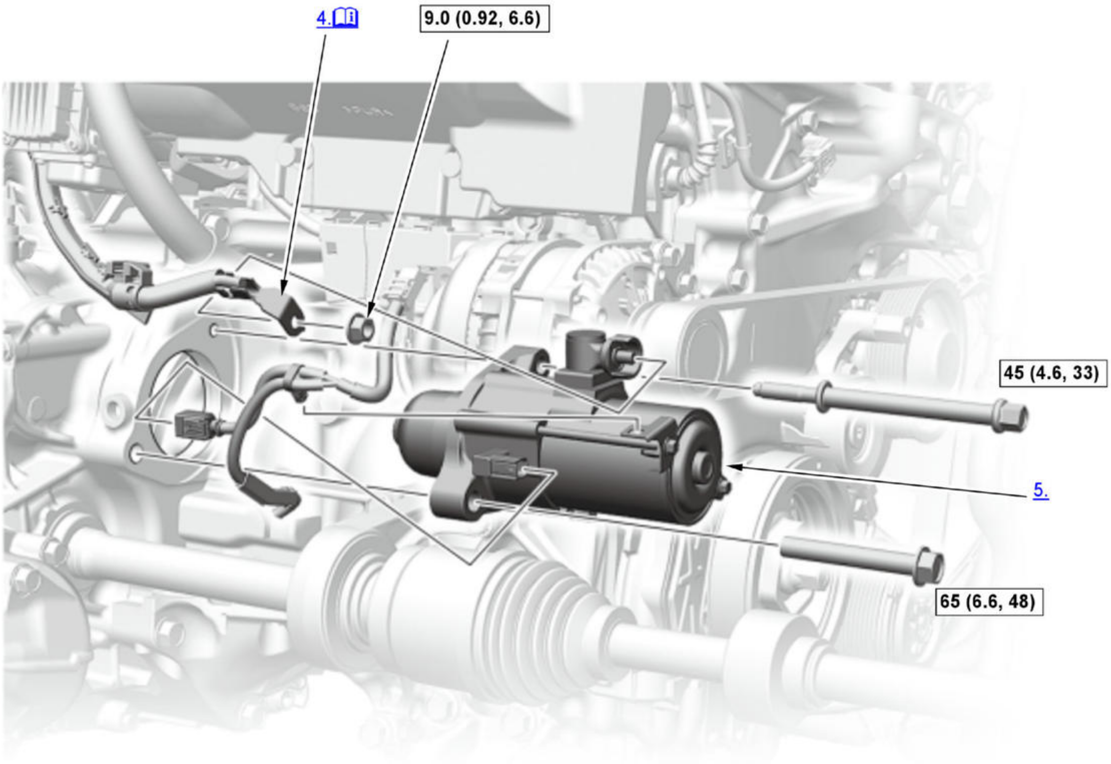

ℹ	Detailed information, notes, and precautions
☐	Torque: N.m (kgf.m, lbf.ft)

1. 12 Volt Battery Terminal - Disconnect
2. Engine Undercover - Remove
3. Exhaust Pipe A - Remove
4. Positive Starter Cable - Disconnect

Note for installation

Make sure the crimped side of the ring terminal faces away from the starter when you connect the positive starter cable.

5. Starter - Remove
6. All Removed Parts - Install

1. Install the parts in the reverse order of removal.

7. Starter Counter - Clear (When the Starter Replaced) (With Auto Idle Stop System)

Starter Counter Clear Procedure

NOTE:

- If the starter is replaced, do this procedure.
- Make sure the HDS is loaded with the latest software version.

1. If the starter is replaced, you must replace the **the relay circuit board** and **the oil pressure switch** .

2. **Connect the HDS to the DLC** .

3. Select IDLE STOP STARTER COUNTER CLEAR in Adjustment.

Test

1. Starter Performance - Test

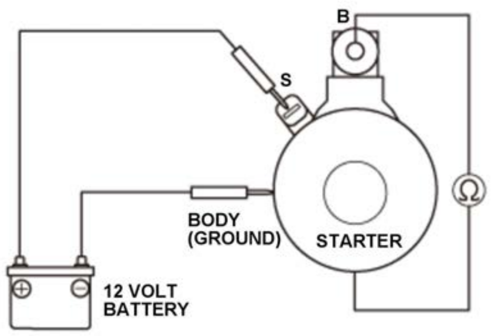 B S Ω BODY (GROUND) STARTER ⊕ ⊖ 12 VOLT BATTERY	1. Clamp the starter firmly in a vise. 2. Make the connections for this test using the thickest (gauge) wire possible (preferably the same gauge as used on the vehicle). **NOTE:** **To avoid damaging the starter, never leave the 12 volt battery connected for more than 5 seconds.** 3. Connect the 12 volt battery as shown, and check for continuity between the B terminal and the starter body. If there is continuity, it is working properly.

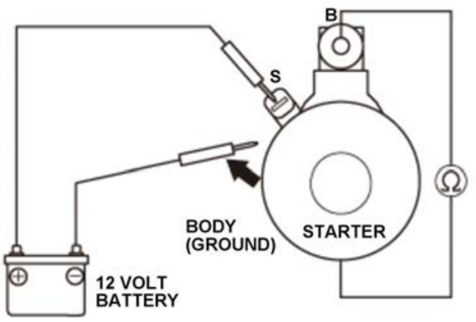 B S Ω BODY (GROUND) STARTER 12 VOLT BATTERY	4. Disconnect the 12 volt battery from the starter body, and check for continuity between the B terminal and the starter body. If there is no continuity, it is working properly.

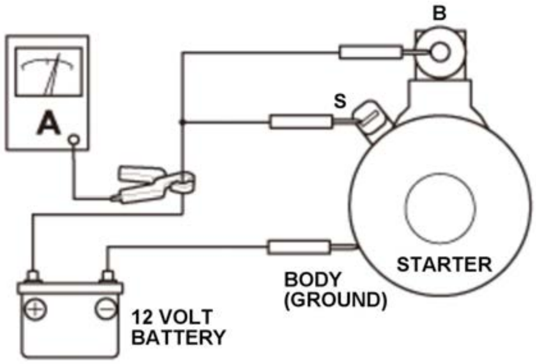 A B S STARTER BODY (GROUND) 12 VOLT BATTERY	5. Connect the starter to the 12 volt battery as shown, and confirm that the motor runs. 6. If the electric current meets the specification when the 12 volt battery voltage is at 11.5 V, the starter is working properly.

Specification
Electric Current: 80 A or less

STARTER REMOVAL, INSTALLATION, AND PERFORMANCE TEST (2.4 L ENGINE) (2017 2018 2019)

Removal and Installation

1

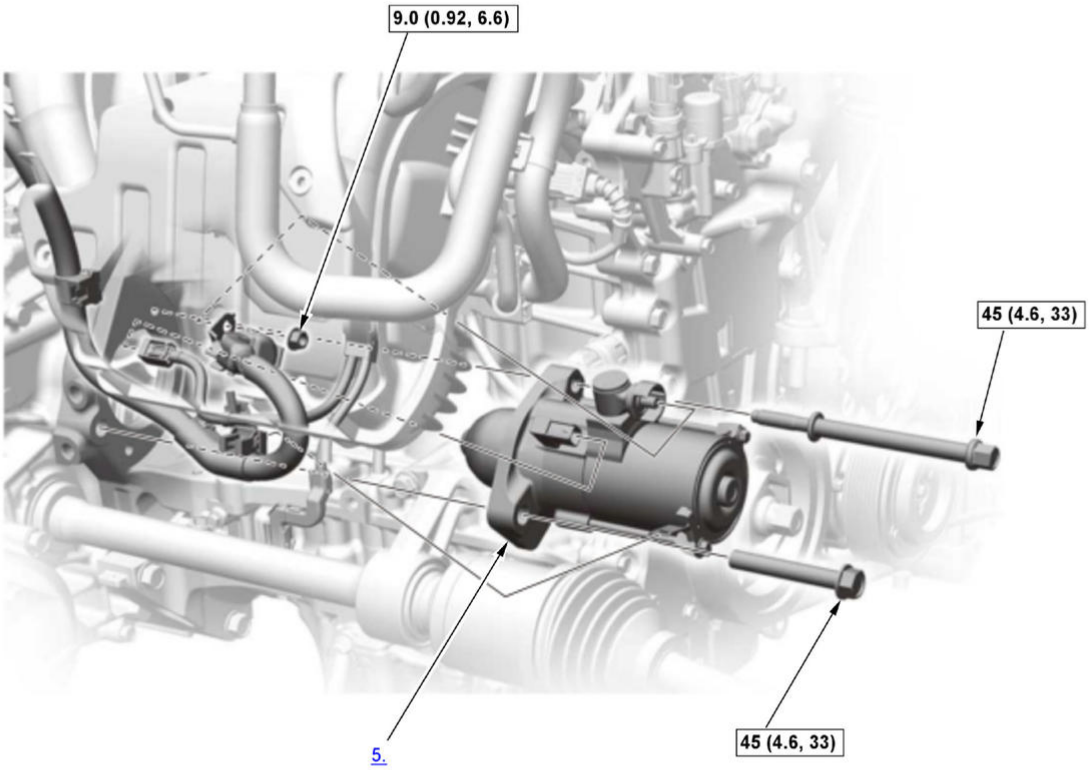
9.0 (0.92, 6.6)
45 (4.6, 33)
5.
45 (4.6, 33)

[Fig. 1: Starter Bolts With Torque Specifications]

Courtesy of HONDA, U.S.A., INC.

▭	Torque: N.m (kgf.m, lbf.ft)

1. 12 Volt Battery Terminal - Disconnect
2. Engine Undercover - Remove
3. Exhaust Pipe A - Remove
4. Intake Manifold Bracket - Remove
5. Starter - Remove
6. All Removed Parts - Install

1. Install the parts in the reverse order of removal.

NOTE:

Make sure the crimped side of the ring terminal faces away from the starter when you connect the positive starter cable.

Test

1. Starter Performance - Test

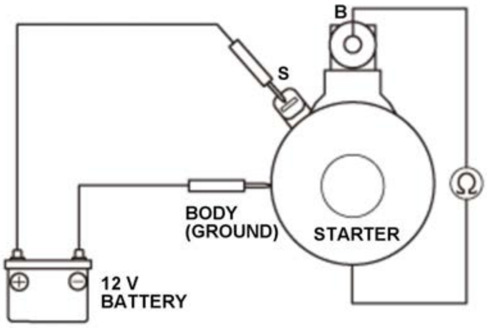

1. Clamp the starter firmly in a vise.

2. Make the connections for this test using the thickest (gauge) wire possible (preferably the same gauge as used on the vehicle).

NOTE:

To avoid damaging the starter, never leave the 12 volt battery connected for more than 5 seconds.

3. Connect the 12 volt battery as shown, and check for continuity between the B terminal and the starter body. If there is continuity, it is working properly.

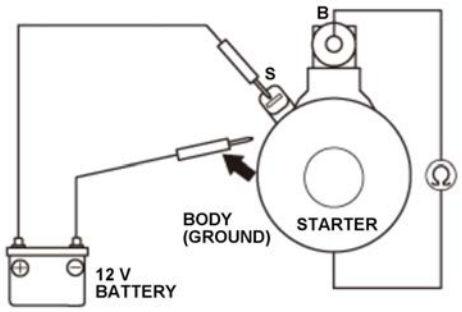 B S BODY (GROUND) STARTER Ω 12 V BATTERY	4. Disconnect the 12 volt battery from the starter body as shown, and check for continuity between the B terminal and the starter body. If there is no continuity, it is working properly.

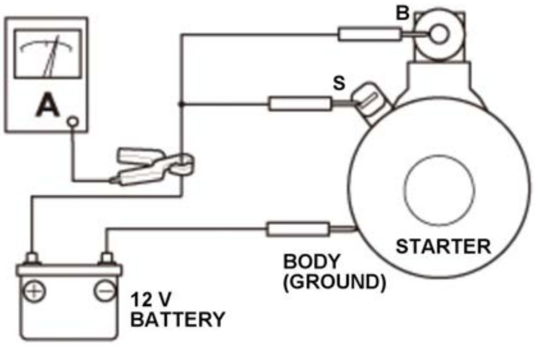 A B S STARTER BODY (GROUND) 12 V BATTERY	5. Connect the starter to the 12 volt battery as shown, and confirm that the motor runs. 6. If the electric current meets the specification when the 12 volt battery voltage is at 11.5 V, the starter is working properly.

Specification
Electric Current: 80 A or less

OVERHAUL

STARTER OVERHAUL (2.4 L ENGINE) (2017 2018 2019)

Disassembly

1

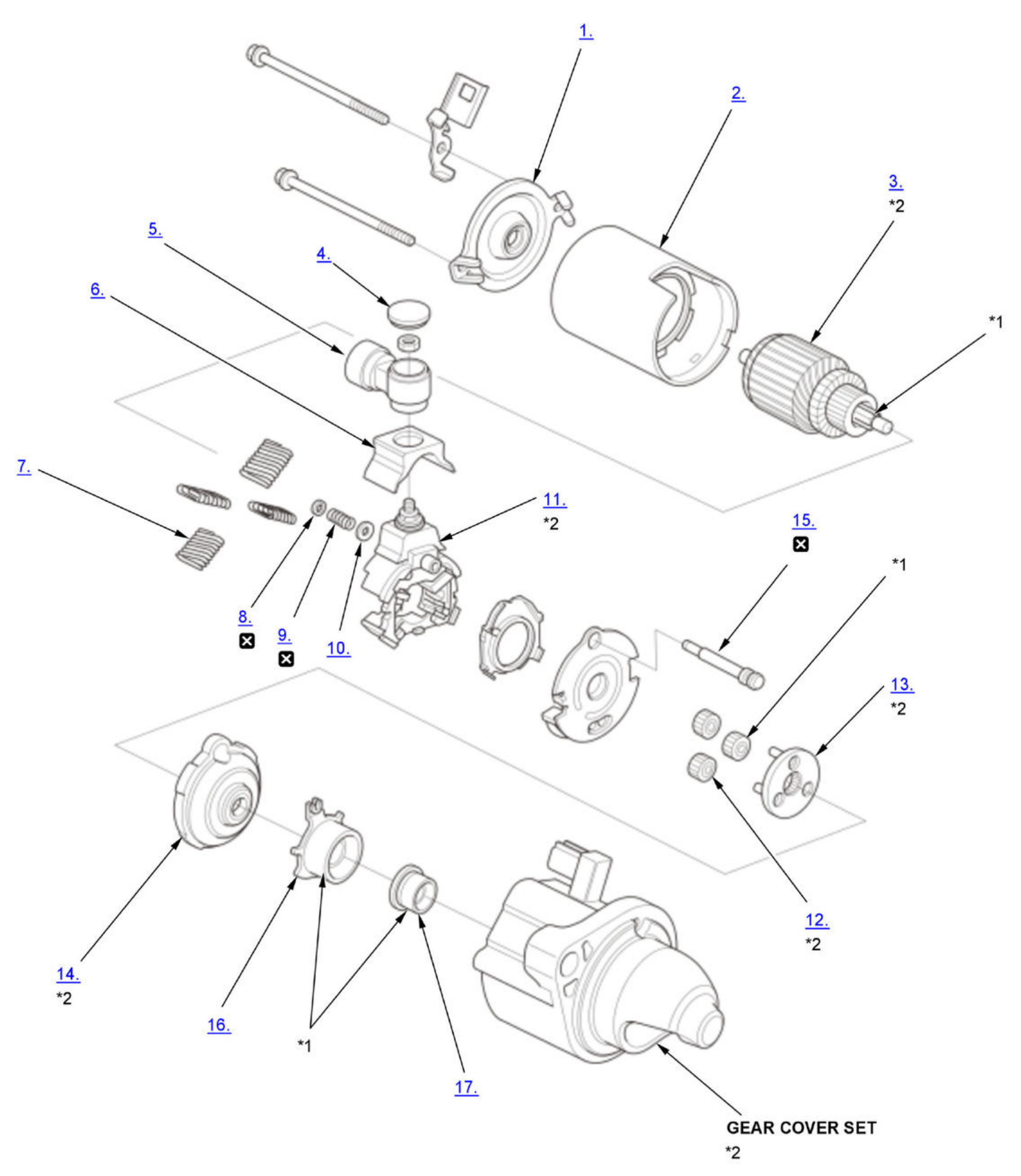
1.
2.
3.
*2
*1
5.
4.
6.
7.
11.
*2
15.
☒
*1
8.
☒
9.
☒
10.
13.
*2
14.
*2
16.
*1
17.
12.
*2
GEAR COVER SET
*2

☒	Replace
*1	Do not wipe off the special grease applied to the area of the starter when you disassemble or assemble it.

*2	These parts have inspection items.

1. End Cover - Remove
2. Armature Housing - Remove
3. Armature - Remove
4. Terminal Cap - Remove
5. Terminal - Remove
6. Switch Cover - Remove
7. Brush Spring - Remove
8. Push Nut - Remove

9. Contact Spring - Remove
10. Moving Contact - Remove
11. Brush Holder Assembly - Remove
12. Planetary Gear - Remove
13. Drive Plate - Remove
14. Internal Gear - Remove
15. Switch Shaft - Remove
16. Switch Plunger - Remove
17. Gear Plunger - Remove

Reassembly

NOTE: Where icon is shown, further information shown below.

1

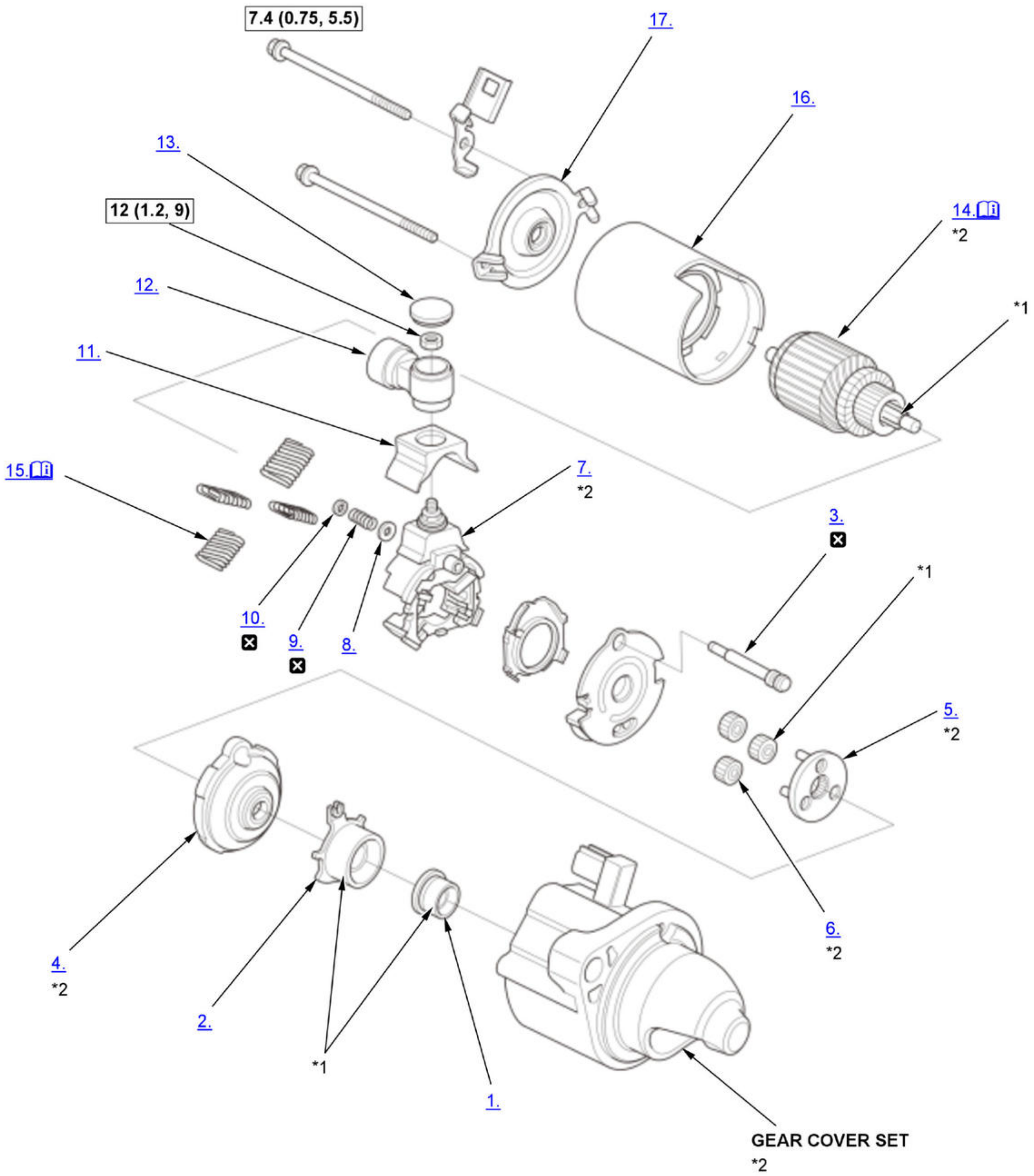
7.4 (0.75, 5.5)
17.
16.
13.
12 (1.2, 9)
14.
*2
*1
12.
11.
15.
7.
*2
3.
☒
*1
10.
☒
9.
☒
8.
5.
*2
6.
*2
4.
*2
2.
*1
1.
GEAR COVER SET
*2

Fig. 2: Starter Overhaul Bolts With Torque Specifications
Courtesy of HONDA, U.S.A., INC.

ℹ	Detailed information, notes, and precautions
☐	Torque: N.m (kgf.m, lbf.ft)
☒	Replace
*1	Do not wipe off the special grease applied to the area of the starter when you disassemble or assemble it.
*2	These parts have inspection items.

1. Gear Plunger - Install
2. Switch Plunger - Install
3. Switch Shaft - Install
4. Internal Gear - Install
5. Drive Plate - Install
6. Planetary Gear - Install
7. Brush Holder Assembly - Install
8. Moving Contact - Install
9. Contact Spring - Install
10. Push Nut - Install
11. Switch Cover - Install
12. Terminal - Install
13. Terminal Cap - Install
14. Armature - Install

    NOTE: To seat the new brushes, slip a strip of #500 or #600 sandpaper, with the grit side up, between the commutator and each brush, and smoothly turn the armature. The contact surface of the brushes will be sanded to the same contour as the commutator.

15. Brush Spring - Install

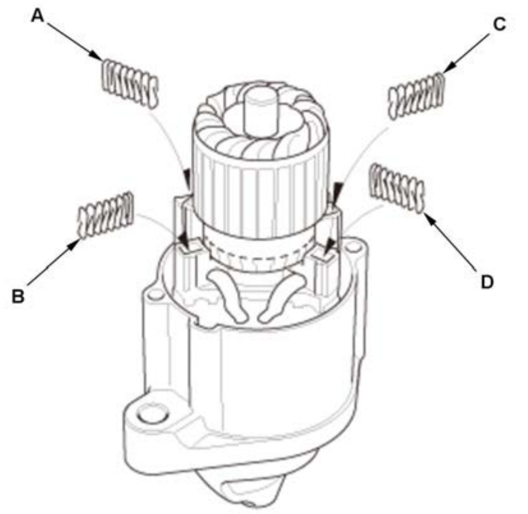	1. While squeezing a spring (A), insert it in the hole on the brush holder, and push it until it bottoms. Repeat this for the other three springs (B, C, and D).

16. Armature Housing - Install
17. End Cover - Install

Inspection

Armature

1. Armature - Inspect

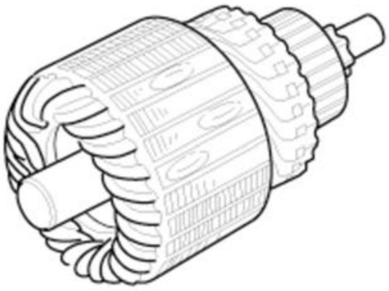

1. Inspect the armature for wear or damage from contact with the permanent magnet. If there is wear or damage, replace the armature.

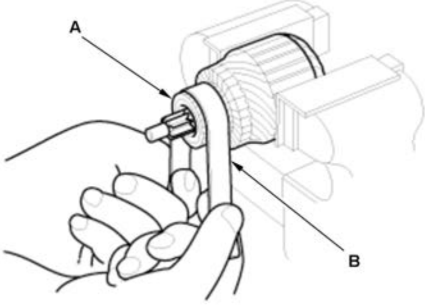

2. Check the commutator (A) surface. If the surface is dirty or burnt, resurface it with an emery cloth or a lathe to the specifications in step 3, or recondition with #500 or #600 sandpaper (B).

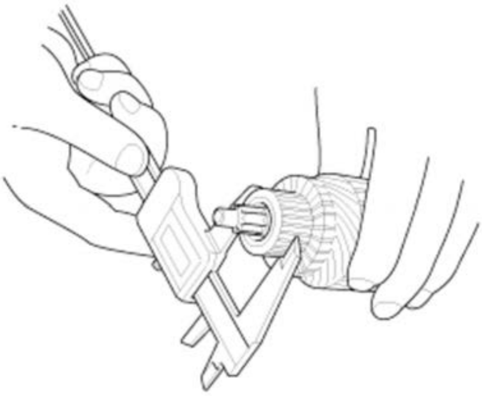

3. Check the commutator diameter with a digital caliper or dial type caliper. If the diameter is below the service limit, replace the armature.

Commutator Diameter	
Standard (New):	**28.0-28.1 mm (1.102-1.106 in)**
Service Limit:	**27.5 mm (1.083 in)**

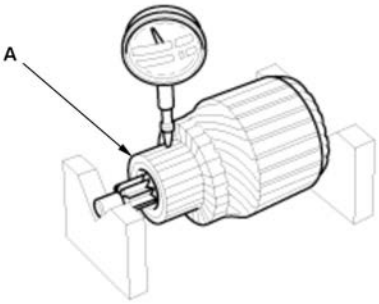

4. Measure the commutator (A) runout:
- If the commutator runout is within the service limit, check the commutator for carbon dust or brass chips between the segments.
- If the commutator runout is not within the service limit, replace the armature.

Commutator Runout	
Standard (New):	**0.02 mm (0.0008 in) max.**

Service Limit:	**0.05 mm (0.0020 in)**

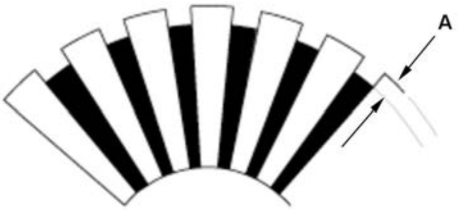	5. Use a digital caliper or dial type caliper to check the mica depth (A). If the mica depth is below the service limit, replace the armature.

Standard (New):	**0.40-0.50 mm (0.0157-0.0197 in)**
Service Limit:	**0.15 mm (0.0059 in)**

Commutator Mica Depth

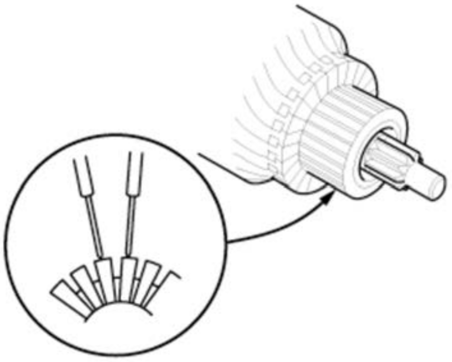	6. Use an ohmmeter to check for continuity between the segments of the commutator. If there is an open circuit between any of the segments, replace the armature.

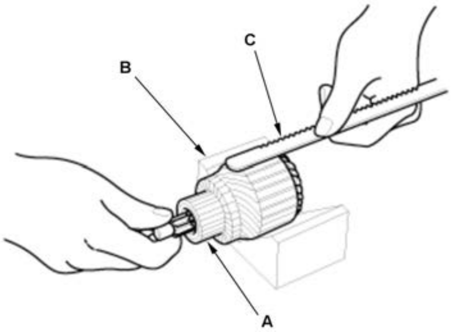	7. Place the armature (A) on an armature tester (B). Hold a hacksaw blade (C) on the armature core. If the blade is attracted to the core while the core is turned, the armature is shorted. Replace the armature.

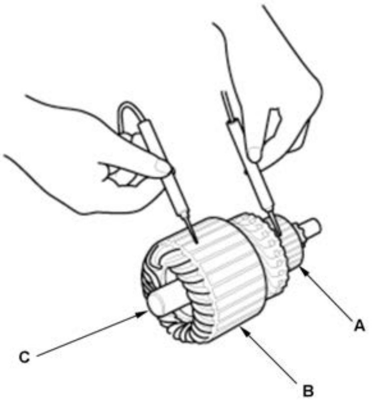	8. Use an ohmmeter to check for continuity between the commutator (A) and the armature coil core (B), and between the commutator and the armature shaft (C). If there is continuity, replace the armature.

Brush Holder

2. Brush Holder Assembly - Inspect

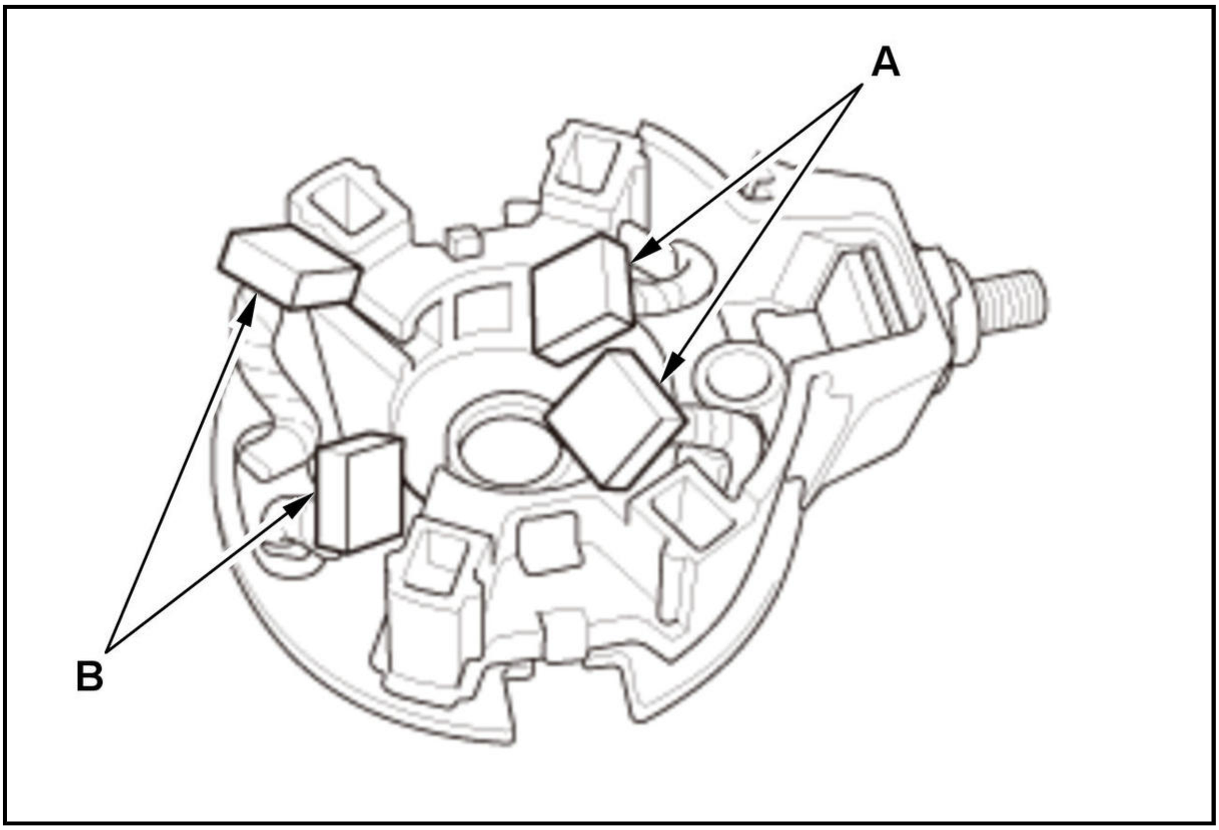

Brush Holder Test

1. Check for continuity between the (+) brushes (A) and the (-) brushes (B). If there is continuity, replace the brush holder assembly.

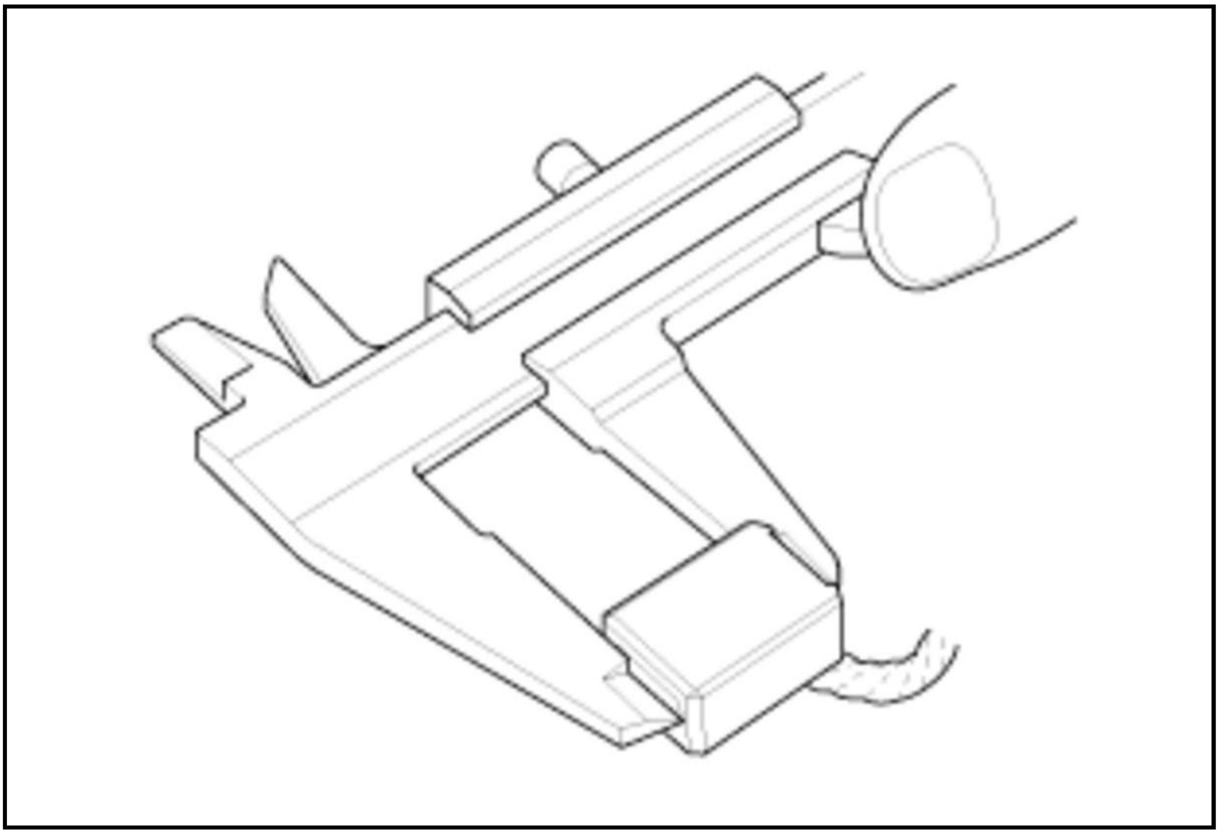

Brush Inspect

1. Measure the brush length. If it is shorter than the service limit, replace the brush holder assembly.

Brush Length

Standard (New):	**11.1-11.5 mm (0.437-0.453 in)**
Service Limit:	**4.3 mm (0.169 in)**

Internal Gear Unit

3. Planetary Gear - Inspect

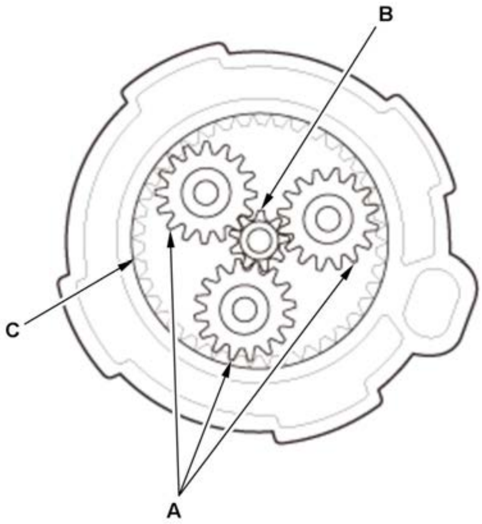	1. Check the planetary gears (A), the gear shaft (B), and the internal ring gear (C). Replace them if they are worn or damaged.

Gear Cover Set

4. Overrunning Clutch - Inspect

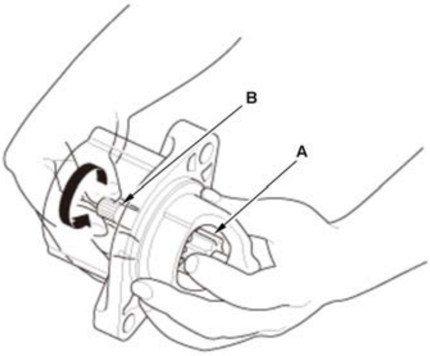	1. Hold the drive gear (A), turn the gear shaft (B) counterclockwise. Check that the drive gear comes out to the other end. If the drive gear does not move smoothly, replace the gear cover set. 2. Hold the drive gear, turn the gear shaft clockwise. The gear shaft should turn freely. If the gear shaft does not turn freely, replace the gear cover set. 3. If the drive gear is worn or damaged, replace the overrunning clutch assembly; the gear is not available separately.

TROUBLESHOOTING

STARTER SYSTEM CIRCUIT TROUBLESHOOTING (WITH KEYLESS ACCESS SYSTEM)

Special Tools Required

Alternator, Regulator, Battery, and Starter Tester OTC3131*

*: Available through the Honda Tool and Equipment Program 888-424-6857

NOTE:

- Air temperature must be between 59-100B°F (15-38B°C) during this procedure.
- After the inspection, you must **reset the PCM** . Otherwise, the PCM will continue to stop the fuel injectors from operating.
- The 12 volt battery must be in good condition and fully charged.

1. PGM-FI, CVT, and Keyless Access system DTC check

   -1. **Connect the HDS to the DLC** .

   -2. Check for PGM-FI, CVT, and Keyless Access system DTCs with the HDS. If you fail to enter the SYSTEM SELECTION MENU with the HDS, go to the keyless access system symptom troubleshooting **"Cannot select ON mode with keyless access and with the keyless remote touching the engine start/stop switch"** .

   PGM-FI system

DTC Description	Confirmed DTC	Pending DTC
B	B	B

   CVT system

DTC Description	Confirmed DTC	Pending DTC	Freeze Frame
B	B	B	B

   Keyless Access system

DTC Description	DTC
B	B

   Are any DTCs indicated?

   YES

   Go to the indicated DTC's troubleshooting.

   NO

   Go to step 2.

2. Starting system check 1

   -1. Select All INJECTORS STOP in the PGM-FI INSPECTION menu with the HDS.

ALL INJECTORS

With the transmission in P or N position/mode, and with the brake pedal pressed, turn the vehicle to the START mode to crank the engine.

Did the starter crank the engine?

YES

Do the PCM reset in the PGM-FI MODE menu to cancel All INJECTORS STOP with the HDS.

NO

Go to step 3.

3. Starting system check 2

   -1. Turn the vehicle to the OFF (LOCK) mode.

   -2. **Check the 12 volt battery condition** . Check the electrical connections at the 12 volt battery, the 12 volt battery negative cable to the body, the engine ground cables, and the starter for looseness and corrosion. Then try starting the engine again.

   Did the starter crank the engine?

   Starter cranks normally

   Repairing the loose connection corrected the problem. **Do the PCM reset** in the PGM-FI MODE menu to All INJECTORS STOP with the HDS.

   Starter does not crank engine at all

   If the starter does not crank the engine at all, go to step 4.

   Starter cranks abnormally

   If the starter cranks the engine erratically or too slowly, go to step 6.

   Starter overruns

   If the starter does not disengage from the torque converter ring gear when you release the button, **remove the starter** , and check for the following:

   - Dirty drive gear or damaged overrunning clutch
   - Damaged torque converter ring gear

4. Fuse check

   -1. Check the following fuses.

Fuse	Location
No. A9 (10 A)	Under-hood fuse/relay box
No. A3-5 (30 A)	
No. D20 (10 A)	Under-dash fuse/relay box

Are the fuses OK?

YES

Reinstall the fuses, then go to step 5.

NO

Replace the fuse(s), and recheck. If the fuse(s) blows again, repair the short to ground on the No. A9 (10 A) fuse, the No. A3-5 (30 A) fuse, and/or the No. D20 (10 A) fuse circuit(s).

5. Determine possible failure area (starter, others)

-1. Make sure the transmission is in P or N position/mode.

-2. Disconnect the following connector.

Starter S terminal 1P connector (A)

-3. Connect terminals A and B with a jumper wire.

Terminal A	Starter S terminal 1P connector (male terminals) No. 1: ①
Terminal B	12 volt battery positive terminal: ②

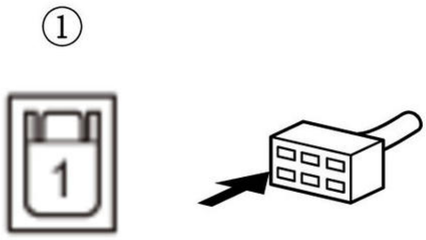

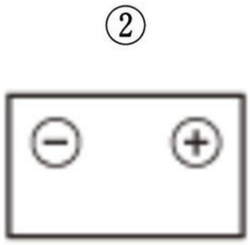

Did the starter crank the engine?

YES

Check the following items in the order listed until you find the problem in the circuit:

- Check for an open or short in the wire and connectors between the under-hood fuse/relay box and the relay circuit board.
- Check for an open or short in the wire and connectors between the under-dash fuse/relay box and the relay circuit board.

- Check for an open or short in the wire and connectors between the relay circuit board and the PCM.
- Check for an open or short in the wire and connectors between the relay circuit board and the starter.
- Check for an open or short in the wire and connectors between the body control module and the PCM (STS line).
- Check for an open or short in the wire and connectors between the under-hood fuse/relay box and the brake pedal position switch.
- Check for an open or short in the wire and connectors between the brake pedal position switch, the body control module, and the PCM.
- Check for an open or short in the wire and connectors between the transmission range switch, the body control module, and the TCM.
- Check for an open or short in the wire and connectors between the transmission range switch and the TCM.
- Check for poor connections or loose terminals at the transmission range switch and body ground G151.
- **Check for a faulty relay circuit board** .
- **Check for a faulty engine start/stop switch** .
- **Check for faulty transmission range switch** .
- **Check for a faulty brake pedal position switch** .

NO

Check for an open or short in the wire and connectors between the 12 volt battery and the starter. **Test or replace the starter** .

NOTE: **Do not inspect the component parts inside the starter if disassembly is prohibited.**

6. Starter test

-1. Connect the alternator, regulator, battery, and starter tester to the battery.

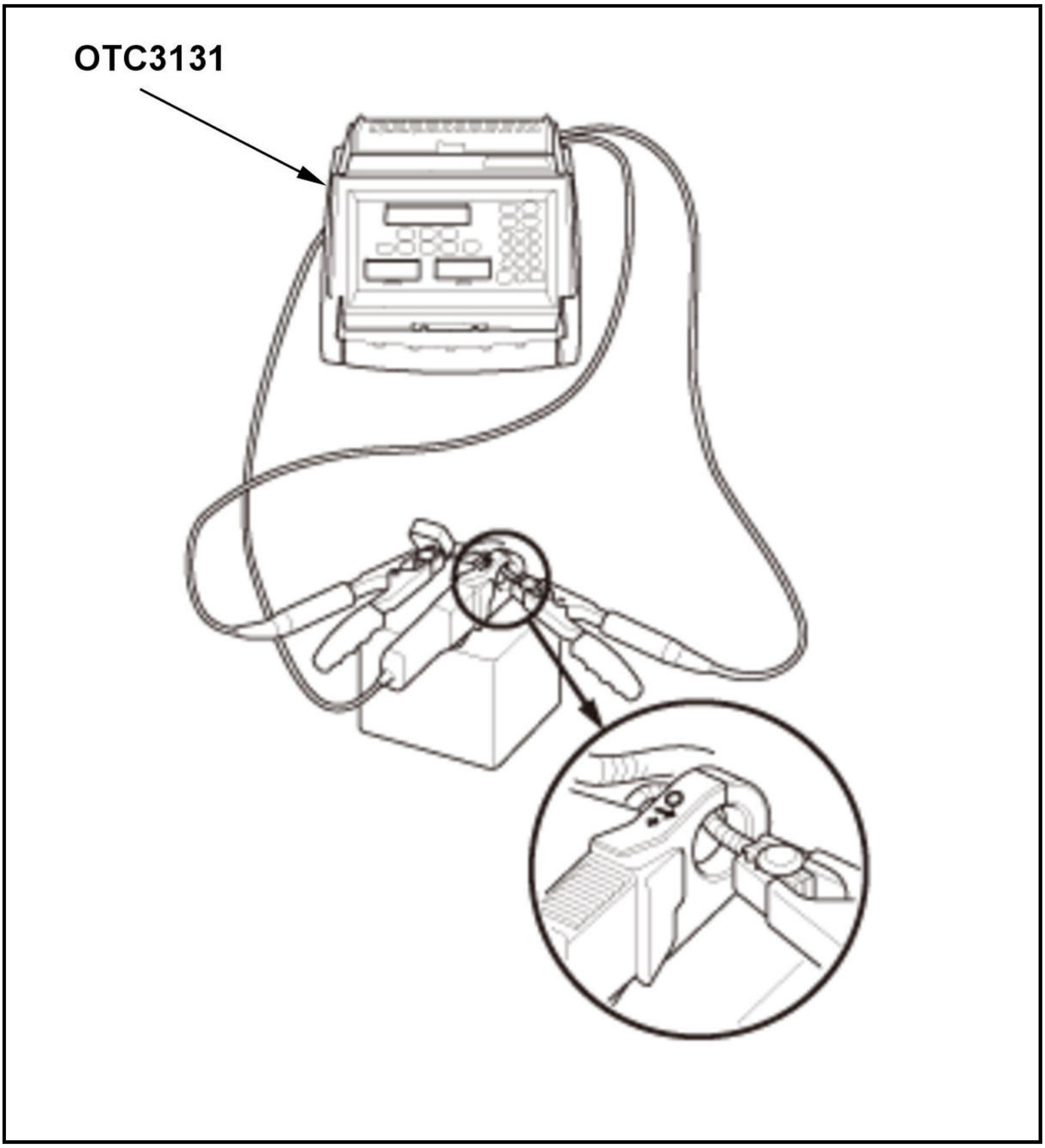

-2. Do the STARTING TEST, check the cranking voltage and the current draw from the following service limit table.

Voltage (V)	Current (A)
8.5 or more	380 or less

Are the cranking voltage and the current draw within the service limits?

YES

Remove the starter , and inspect its drive gear and torque converter ring gear for damage. Replace any damaged parts.

NO

Check the starter and if there is no problem, check the engine rotational load:

- Drag in the starter armature
- Shorted armature winding
- Open circuit in the starter armature commutator segments

- Excessively worn starter brushes
- Open circuit in the starter brushes
- Dirty or damaged helical splines or drive gear
- Faulty overrunning clutch

STARTER SYSTEM CIRCUIT TROUBLESHOOTING (WITHOUT KEYLESS ACCESS SYSTEM)

Special Tools Required

Alternator, Regulator, Battery, and Starter Tester OTC3131*

*: Available through the Honda Tool and Equipment Program 888-424-6857

NOTE:

- Air temperature must be between 59-100B°F (15-38B°C) during this procedure.
- After the inspection, you must **reset the PCM** . Otherwise, the PCM will continue to stop the fuel injectors from operating.
- The 12 volt battery must be in good condition and fully charged.

1. PGM-FI and CVT system DTC check

   -1. **Connect the HDS to the DLC** .

   -2. Check for PGM-FI and CVT system DTCs with the HDS.

   PGM-FI system

DTC Description	Confirmed DTC	Pending DTC
B	B	B

   CVT system

DTC Description	Confirmed DTC	Pending DTC	Freeze Frame
B	B	B	B

   Are any DTCs indicated?

   YES

   Go to the indicated DTC's troubleshooting.

   NO

   Go to step 2.

2. Starting system check 1

   -1. Select All INJECTORS STOP in the PGM-FI INSPECTION menu with the HDS.

   ALL INJECTORS

   With the transmission in P or N position/mode, and with the brake pedal pressed, turn the vehicle to the START mode to crank the engine.

   Did the starter crank the engine?

   YES

Do the PCM reset in the PGM-FI mode menu to cancel All INJECTORS STOP with the HDS.

NO

Go to step 3.

3. Starting system check 2

-1. Turn the vehicle to the OFF (LOCK) mode.

-2. **Check the 12 volt battery condition** . Check the electrical connections at the 12 volt battery, the 12 volt battery negative cable to the body, the engine ground cables, and the starter for looseness and corrosion. Then try starting the engine again.

Did the starter crank the engine?

Starter cranks normally

Repairing the loose connection corrected the problem. **Do the PCM reset** in the PGM-FI MODE menu to All INJECTORS STOP with the HDS.

Starter does not crank engine at all

If the starter does not crank the engine at all, go to step 4.

Starter cranks abnormally

If the starter cranks the engine erratically or too slowly, go to step 6.

Starter overruns

If the starter does not disengage from the torque converter ring gear when you release the key, **remove the starter** , and check for the following:

- Dirty drive gear or damaged overrunning clutch
- Damaged torque converter ring gear

4. Fuse check

-1. Check the following fuses.

Fuse	**No. A3-5**

B	**No. D20**
B	**No. D30**

Are the fuses OK?

YES

Reinstall the fuses, then go to step 5.

NO

Replace the fuse(s), and recheck. If the fuse(s) blows again, repair the short to ground on the No. A3-5 fuse, the No. D20 fuse, and/or the No. D30 fuse circuit(s).

5. Determine possible failure area (starter, others)

-1. Make sure the transmission is in P or N position/mode.

-2. Disconnect the following connector.

Starter S terminal 1P connector (A)

-3. Connect terminals A and B with a jumper wire.

Terminal A	Starter S terminal 1P connector (male terminals) No. 1: ①
Terminal B	12 volt battery positive terminal: ②

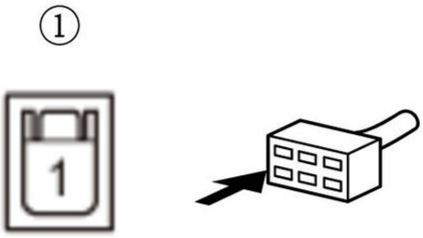

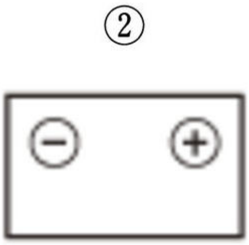

Did the starter crank the engine?

YES

Check the following items in the order listed until you find the problem in the circuit:

- Check for an open or short in the wire and connectors between the under-hood fuse/relay box and the relay circuit board.
- Check for an open or short in the wire and connectors between the under-dash fuse/relay box and the relay circuit board.
- Check for an open or short in the wire and connectors between the relay circuit board and the PCM.
- Check for an open or short in the wire and connectors between the relay circuit board and the starter.
- Check for an open or short in the wire and connectors between the under-dash fuse/relay box and the PCM (STS line).
- Check for an open or short in the wire and connectors between the transmission range switch and the PCM.

- Check for poor connections or loose terminals at the transmission range switch and body ground G101 or G151.
- Check for a faulty relay circuit board .
- Check for a faulty ignition switch .
- Check for faulty transmission range switch .

NO

Check for an open or short in the wire and connectors between the 12 volt battery and the starter. Test or replace the starter .

NOTE: **Do not inspect the component parts inside the starter if disassembly is prohibited.**

6. Starter test

-1. Connect the alternator, regulator, battery, and starter tester to the battery.

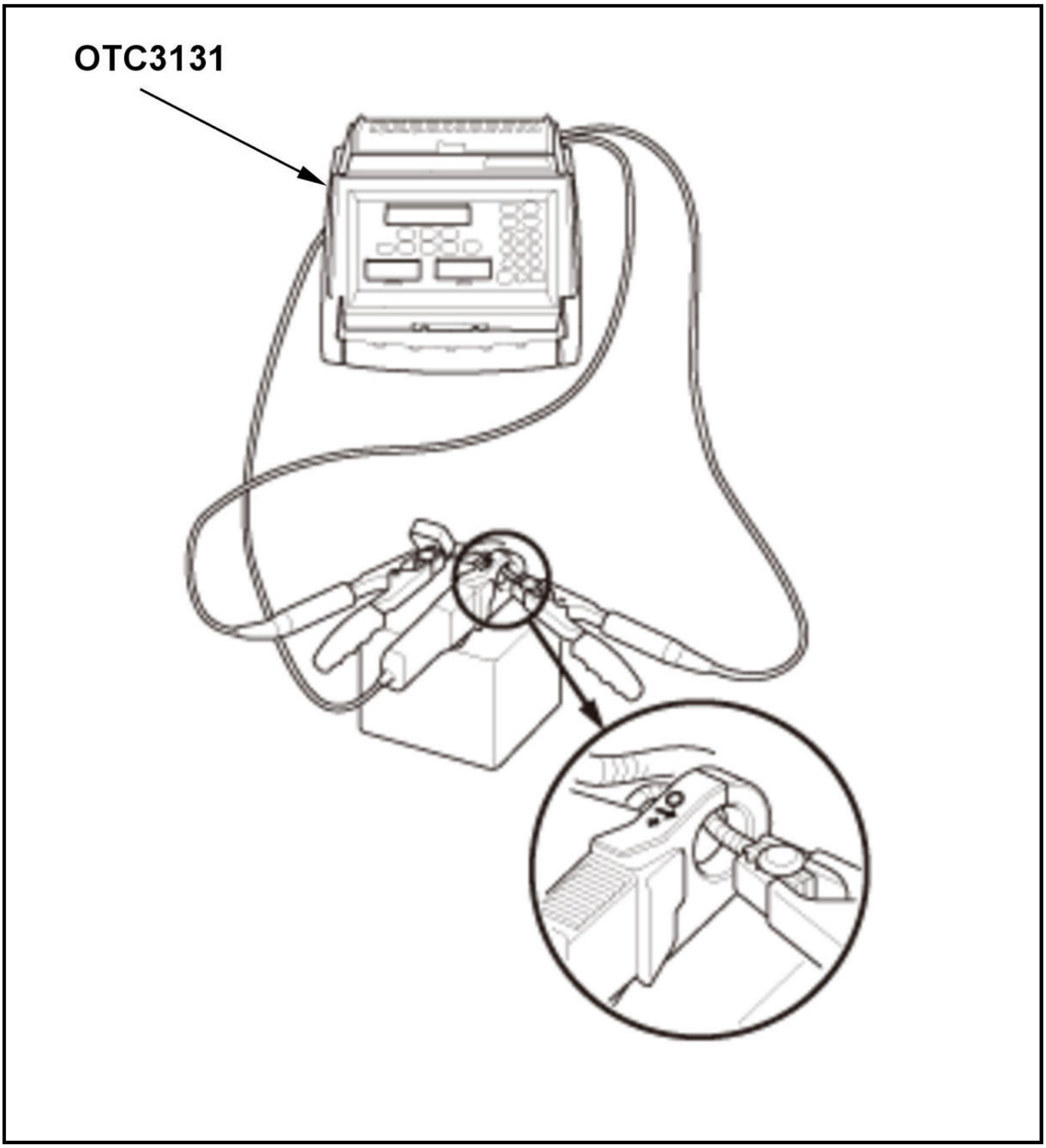

-2. Do the STARTING TEST, check the cranking voltage and the current draw from the following service limit table.

Voltage (V)	Current (A)
8.5 or more	380 or less

Are the cranking voltage and the current draw within the service limits?

YES

Remove the starter , and inspect its drive gear and the torque converter ring gear for damage. Replace any damaged parts.

NO

Check the starter and if there is no problem, check the engine rotational load:

NOTE: **The following are assumed as abnormalities of the starter.**

- **Drag in the starter armature**
- **Shorted armature winding**
- **Open circuit in the starter armature commutator segments**
- **Excessively worn starter brushes**
- **Open circuit in the starter brushes**
- **Dirty or damaged helical splines or drive gear**
- **Faulty overrunning clutch**

CIRCUIT DIAGRAM

STARTING SYSTEM CIRCUIT DIAGRAM (1.5 L ENGINE (WITH KEYLESS ACCESS SYSTEM)) (2020 2021)

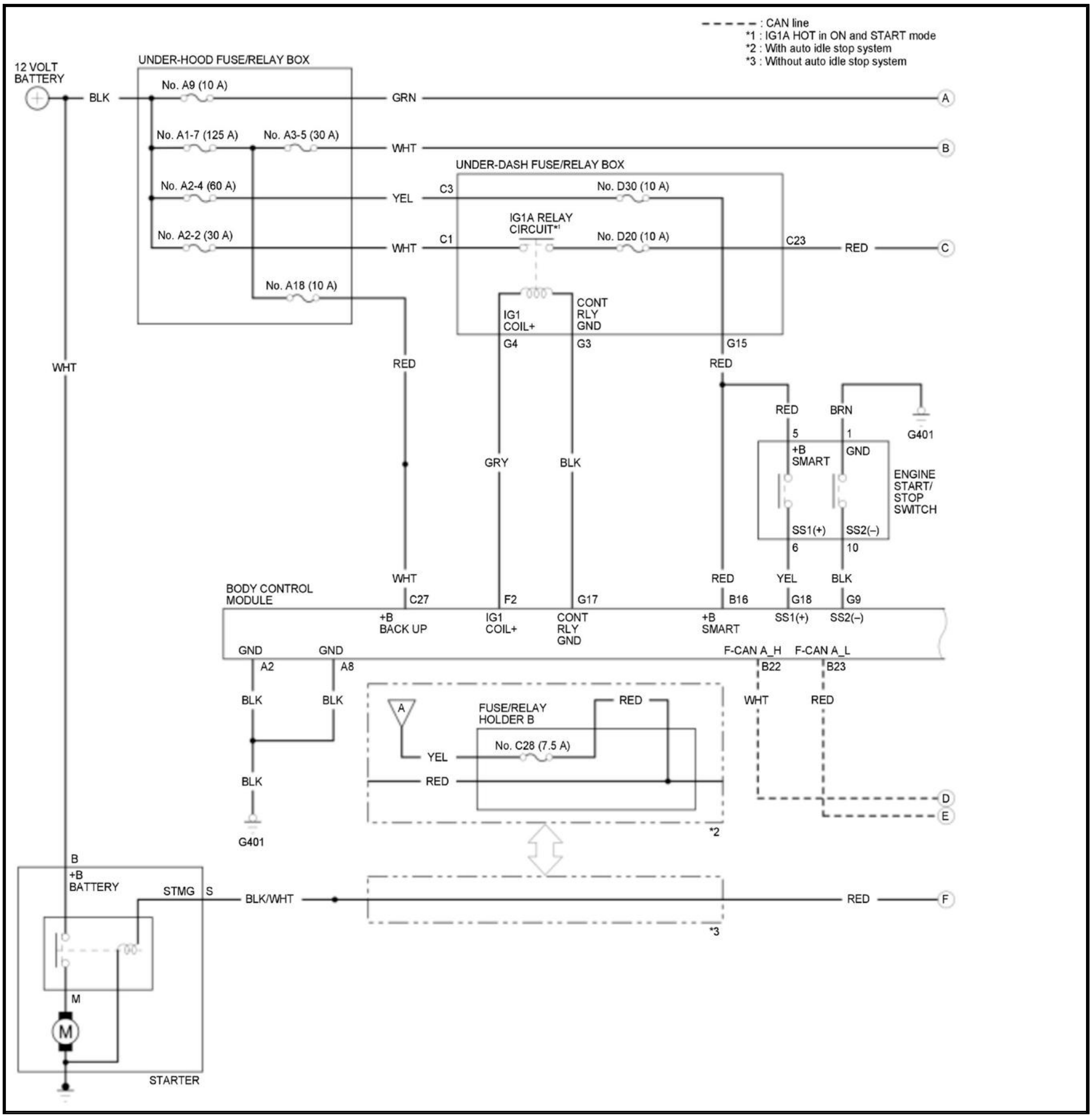
- - - - : CAN line
*1 : IG1A HOT in ON and START mode
*2 : With auto idle stop system
*3 : Without auto idle stop system
12 VOLT BATTERY
BLK
UNDER-HOOD FUSE/RELAY BOX
No. A9 (10 A)
GRN
A
No. A1-7 (125 A)
No. A3-5 (30 A)
WHT
B
UNDER-DASH FUSE/RELAY BOX
No. A2-4 (60 A)
YEL
C3
No. D30 (10 A)
IG1A RELAY CIRCUIT*1
No. A2-2 (30 A)
WHT
C1
No. D20 (10 A)
C23
RED
C
No. A18 (10 A)
IG1 COIL+
CONT RLY GND
G4
G3
G15
WHT
RED
RED
RED
BRN
G401
5
1
+B SMART
GND
ENGINE START/ STOP SWITCH
GRY
BLK
SS1(+)
SS2(–)
6
10
WHT
RED
YEL
BLK
BODY CONTROL MODULE
C27
F2
G17
B16
G18
G9
+B BACK UP
IG1 COIL+
CONT RLY GND
+B SMART
SS1(+)
SS2(–)
GND
GND
F-CAN A_H
F-CAN A_L
A2
A8
B22
B23
BLK
BLK
WHT
RED
A
FUSE/RELAY HOLDER B
RED
No. C28 (7.5 A)
YEL
RED
BLK
D
E
G401
*2
B
+B BATTERY
STMG
S
BLK/WHT
RED
F
*3
M
STARTER

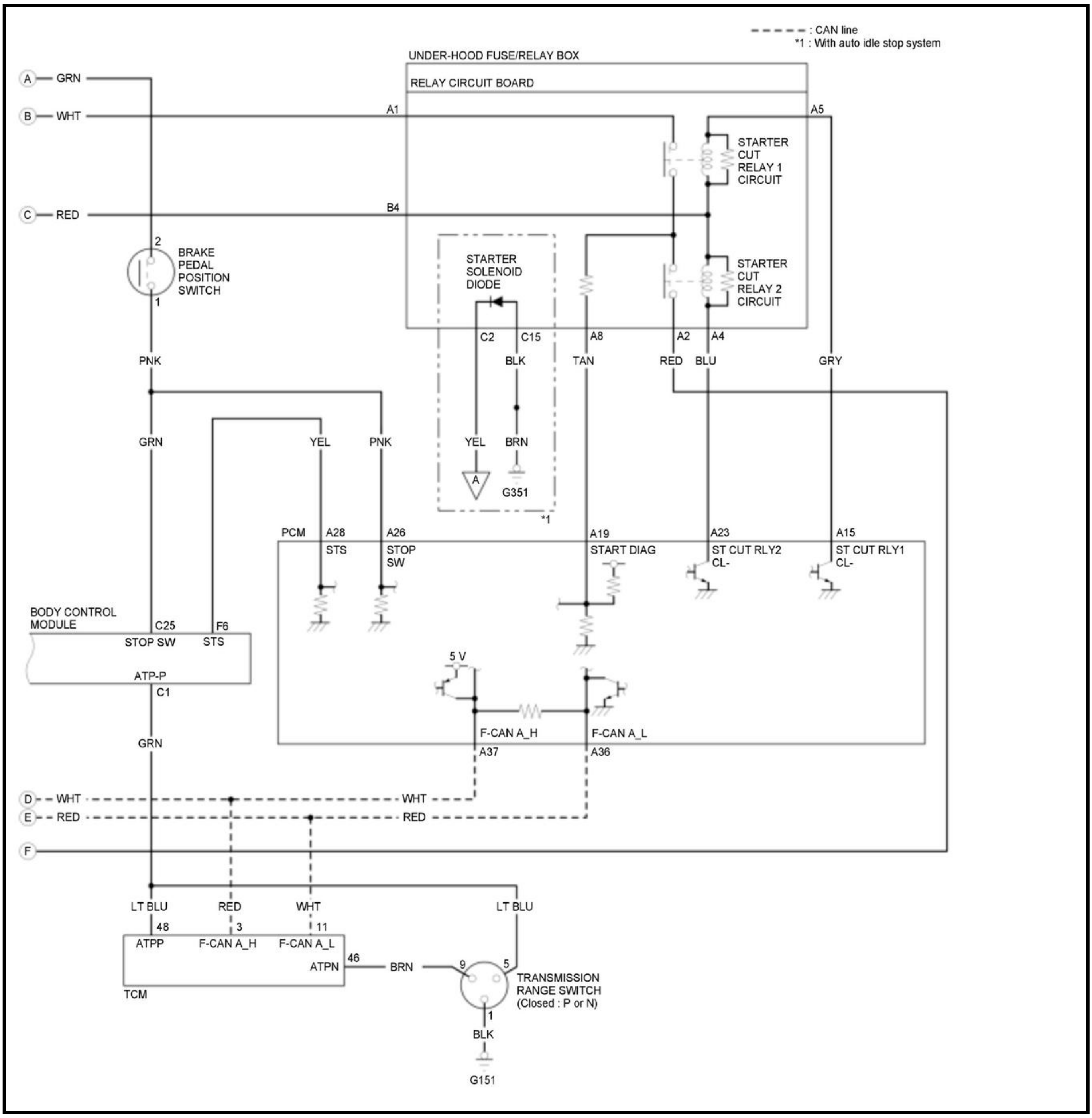
- - - - - : CAN line
*1 : With auto idle stop system
UNDER-HOOD FUSE/RELAY BOX
RELAY CIRCUIT BOARD
A GRN
B WHT
C RED
A1
A5
B4
STARTER CUT RELAY 1 CIRCUIT
STARTER CUT RELAY 2 CIRCUIT
STARTER SOLENOID DIODE
2
BRAKE PEDAL POSITION SWITCH
1
C2
C15
A8
A2
A4
PNK
BLK
TAN
RED
BLU
GRY
GRN
YEL
PNK
YEL
BRN
A
G351
*1
PCM
A28
STS
A26
STOP SW
A19
START DIAG
A23
ST CUT RLY2 CL-
A15
ST CUT RLY1 CL-
BODY CONTROL MODULE
C25
F6
STOP SW
STS
ATP-P
C1
5 V
F-CAN A_H
A37
F-CAN A_L
A36
GRN
D WHT
E RED
WHT
RED
F
LT BLU
RED
WHT
LT BLU
48
3
11
ATPP
F-CAN A_H
F-CAN A_L
46
ATPN
BRN
9
5
TCM
TRANSMISSION RANGE SWITCH (Closed : P or N)
1
BLK
G151

STARTING SYSTEM CIRCUIT DIAGRAM (1.5 L ENGINE (WITHOUT KEYLESS ACCESS SYSTEM)) (2020 2021)

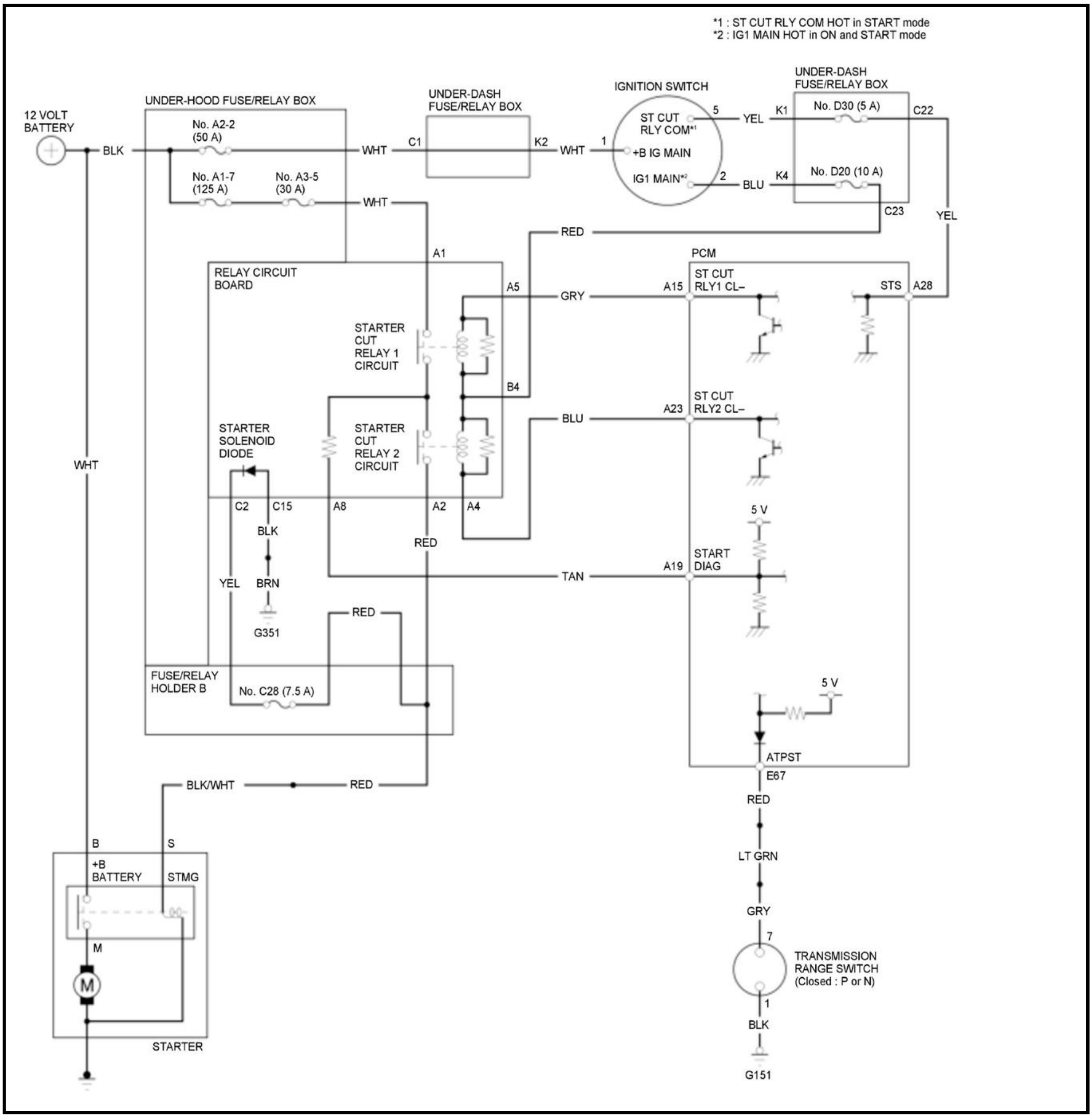
*1 : ST CUT RLY COM HOT in START mode
*2 : IG1 MAIN HOT in ON and START mode
12 VOLT BATTERY
BLK
UNDER-HOOD FUSE/RELAY BOX
No. A2-2 (50 A)
No. A1-7 (125 A)
No. A3-5 (30 A)
WHT
UNDER-DASH FUSE/RELAY BOX
C1
K2
IGNITION SWITCH
ST CUT RLY COM*1
+B IG MAIN
IG1 MAIN*2
5
1
2
YEL
BLU
K1
K4
No. D30 (5 A)
No. D20 (10 A)
C22
C23
RED
A1
RELAY CIRCUIT BOARD
A5
GRY
STARTER CUT RELAY 1 CIRCUIT
B4
STARTER SOLENOID DIODE
STARTER CUT RELAY 2 CIRCUIT
C2
C15
A8
A2
A4
PCM
A15
ST CUT RLY1 CL–
STS
A28
A23
ST CUT RLY2 CL–
5 V
A19
START DIAG
TAN
ATPST
E67
RED
LT GRN
GRY
7
TRANSMISSION RANGE SWITCH (Closed : P or N)
1
BLK
G151
BRN
G351
FUSE/RELAY HOLDER B
No. C28 (7.5 A)
BLK/WHT
B
S
+B BATTERY
STMG
M
STARTER

STARTING SYSTEM CIRCUIT DIAGRAM (1.5 L ENGINE)

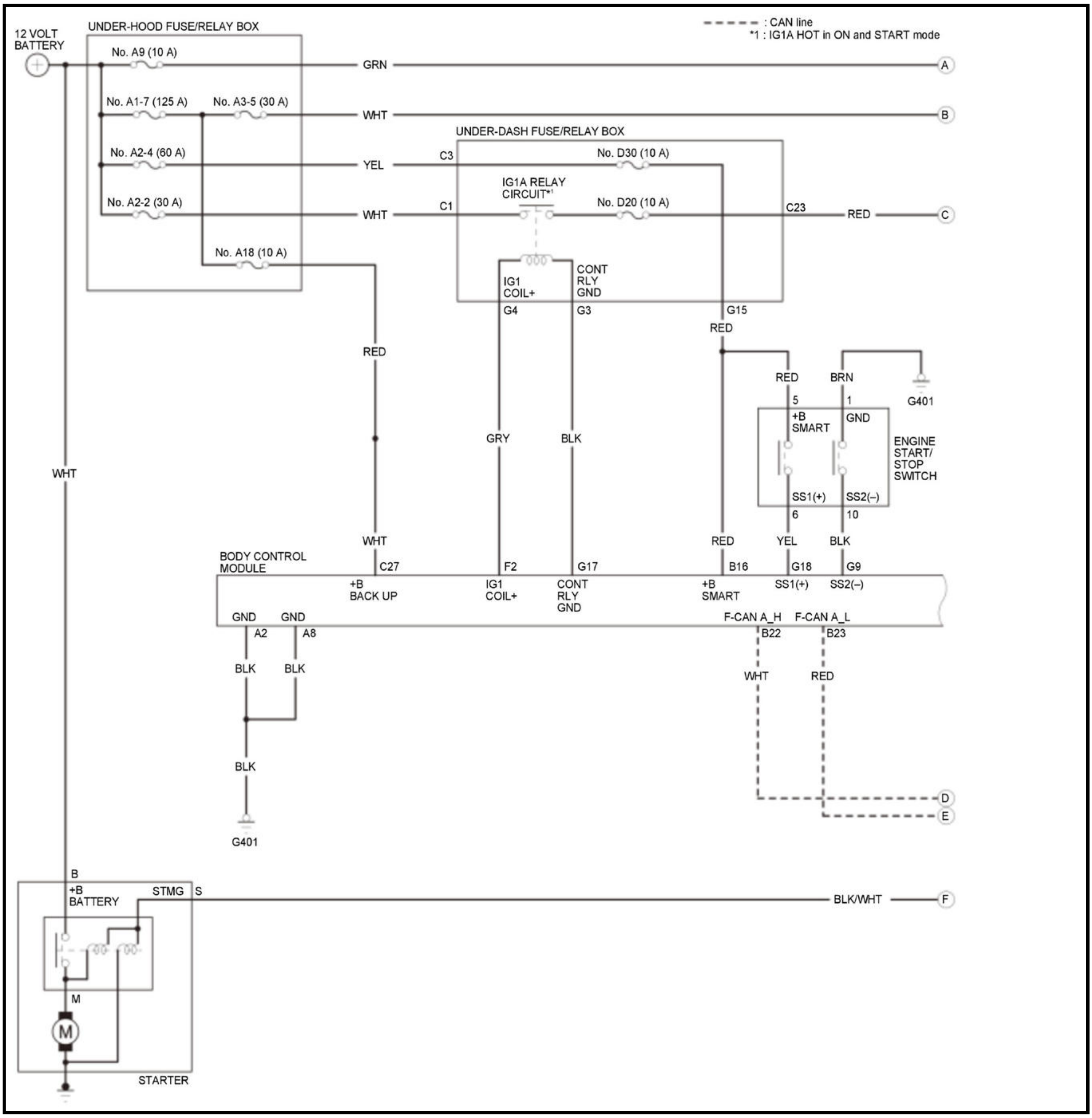

- - - - : CAN line
*1 : IG1A HOT in ON and START mode
12 VOLT BATTERY
UNDER-HOOD FUSE/RELAY BOX
No. A9 (10 A)
GRN
A
No. A1-7 (125 A)
No. A3-5 (30 A)
WHT
B
No. A2-4 (60 A)
YEL
No. A2-2 (30 A)
WHT
No. A18 (10 A)
UNDER-DASH FUSE/RELAY BOX
C3
No. D30 (10 A)
IG1A RELAY CIRCUIT*1
C1
No. D20 (10 A)
C23
RED
C
IG1 COIL+
CONT RLY GND
G4
G3
G15
RED
RED
BRN
5
1
G401
+B SMART
GND
ENGINE START/ STOP SWITCH
SS1(+)
SS2(–)
6
10
WHT
GRY
BLK
RED
WHT
RED
YEL
BLK
BODY CONTROL MODULE
C27
F2
G17
B16
G18
G9
+B BACK UP
IG1 COIL+
CONT RLY GND
+B SMART
SS1(+)
SS2(–)
GND
GND
F-CAN A_H
F-CAN A_L
A2
A8
B22
B23
BLK
BLK
WHT
RED
BLK
D
E
G401
B
+B BATTERY
STMG
S
BLK/WHT
F
M
M
STARTER

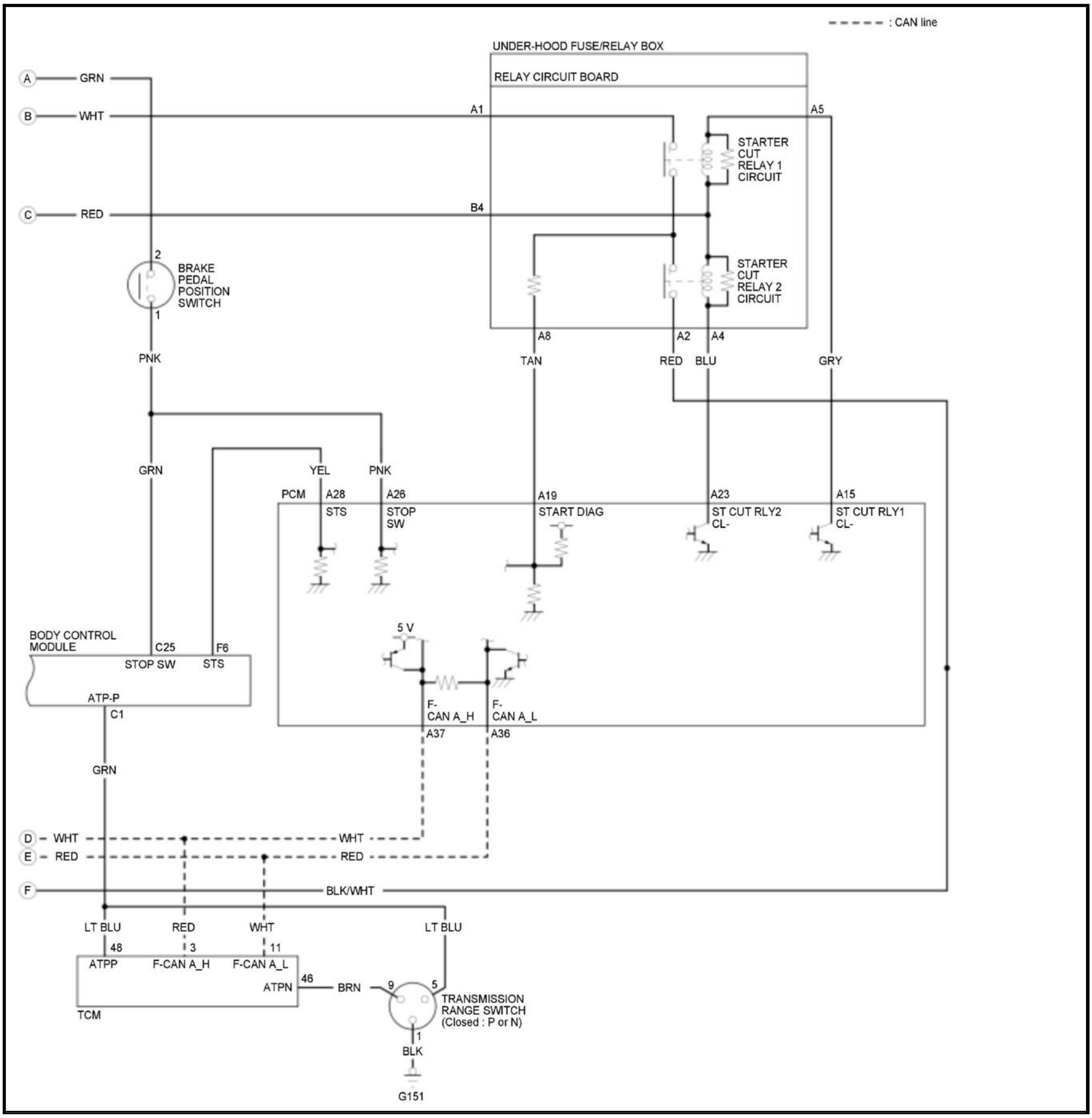
: CAN line
UNDER-HOOD FUSE/RELAY BOX
RELAY CIRCUIT BOARD
A
GRN
B
WHT
A1
A5
STARTER CUT RELAY 1 CIRCUIT
C
RED
B4
2
BRAKE PEDAL POSITION SWITCH
1
STARTER CUT RELAY 2 CIRCUIT
A8
A2
A4
PNK
TAN
RED
BLU
GRY
GRN
YEL
PNK
PCM
A28
STS
A26
STOP SW
A19
START DIAG
A23
ST CUT RLY2 CL-
A15
ST CUT RLY1 CL-
5 V
BODY CONTROL MODULE
C25
STOP SW
F6
STS
ATP-P
C1
F-CAN A_H
F-CAN A_L
A37
A36
GRN
D
WHT
E
RED
WHT
RED
F
BLK/WHT
LT BLU
RED
WHT
LT BLU
48
3
11
ATPP
F-CAN A_H
F-CAN A_L
46
ATPN
BRN
9
5
TCM
TRANSMISSION RANGE SWITCH (Closed : P or N)
1
BLK
G151

STARTING SYSTEM CIRCUIT DIAGRAM (2.4 L ENGINE) (2017 2018 2019)

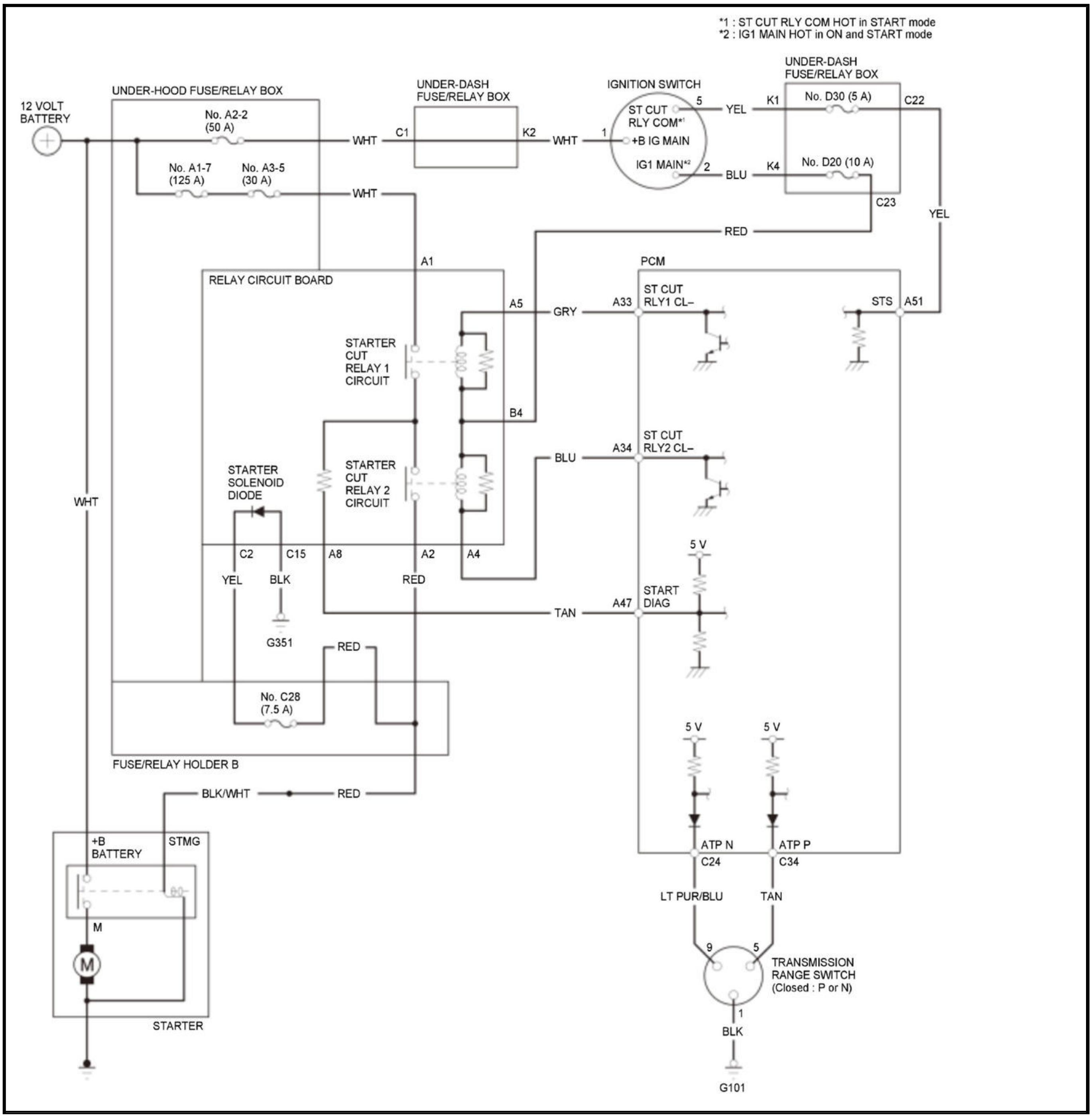
*1 : ST CUT RLY COM HOT in START mode
*2 : IG1 MAIN HOT in ON and START mode
12 VOLT BATTERY
UNDER-HOOD FUSE/RELAY BOX
No. A2-2 (50 A)
No. A1-7 (125 A)
No. A3-5 (30 A)
WHT
UNDER-DASH FUSE/RELAY BOX
C1
K2
IGNITION SWITCH
ST CUT RLY COM*1
+B IG MAIN
IG1 MAIN*2
5
1
2
YEL
BLU
UNDER-DASH FUSE/RELAY BOX
K1
No. D30 (5 A)
C22
K4
No. D20 (10 A)
C23
RED
YEL
A1
RELAY CIRCUIT BOARD
PCM
A5
GRY
A33
ST CUT RLY1 CL–
STS
A51
STARTER CUT RELAY 1 CIRCUIT
B4
STARTER CUT RELAY 2 CIRCUIT
A34
ST CUT RLY2 CL–
STARTER SOLENOID DIODE
C2
C15
A8
A2
A4
5 V
YEL
BLK
RED
TAN
A47
START DIAG
G351
No. C28 (7.5 A)
FUSE/RELAY HOLDER B
BLK/WHT
+B BATTERY
STMG
M
STARTER
ATP N
C24
ATP P
C34
LT PUR/BLU
9
TRANSMISSION RANGE SWITCH (Closed : P or N)
BLK
G101

GENERAL INFORMATION

HOW TO RUN THE STARTER

In order to prevent damage of the starter, crank the starter according to the cycle shown in the table below.

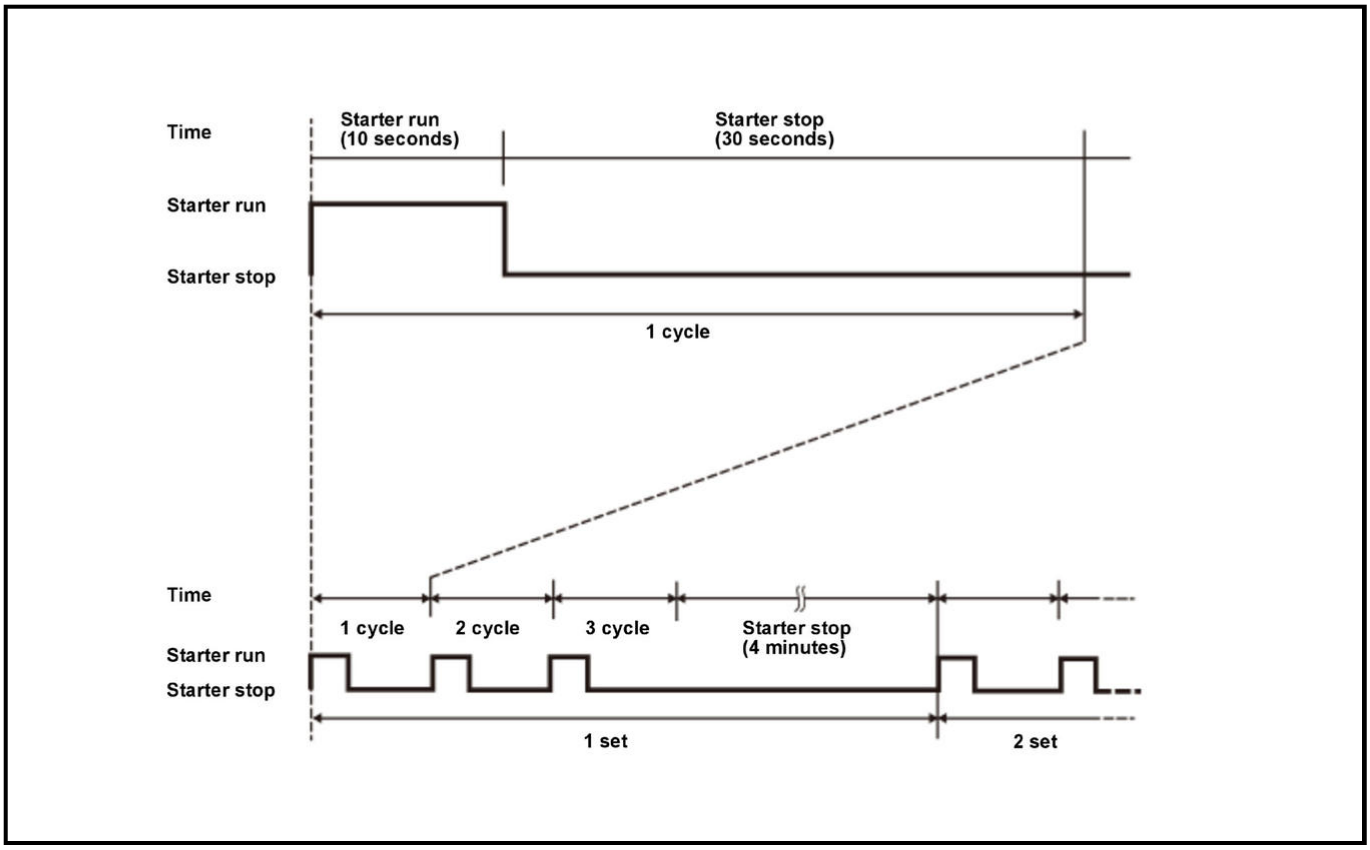
Time
Starter run
(10 seconds)
Starter stop
(30 seconds)
Starter run
Starter stop
1 cycle
Time
1 cycle
2 cycle
3 cycle
Starter stop
(4 minutes)
Starter run
Starter stop
1 set
2 set

COMPONENT LOCATION INDEX

STARTING SYSTEM COMPONENT LOCATION INDEX (1.5 L ENGINE)

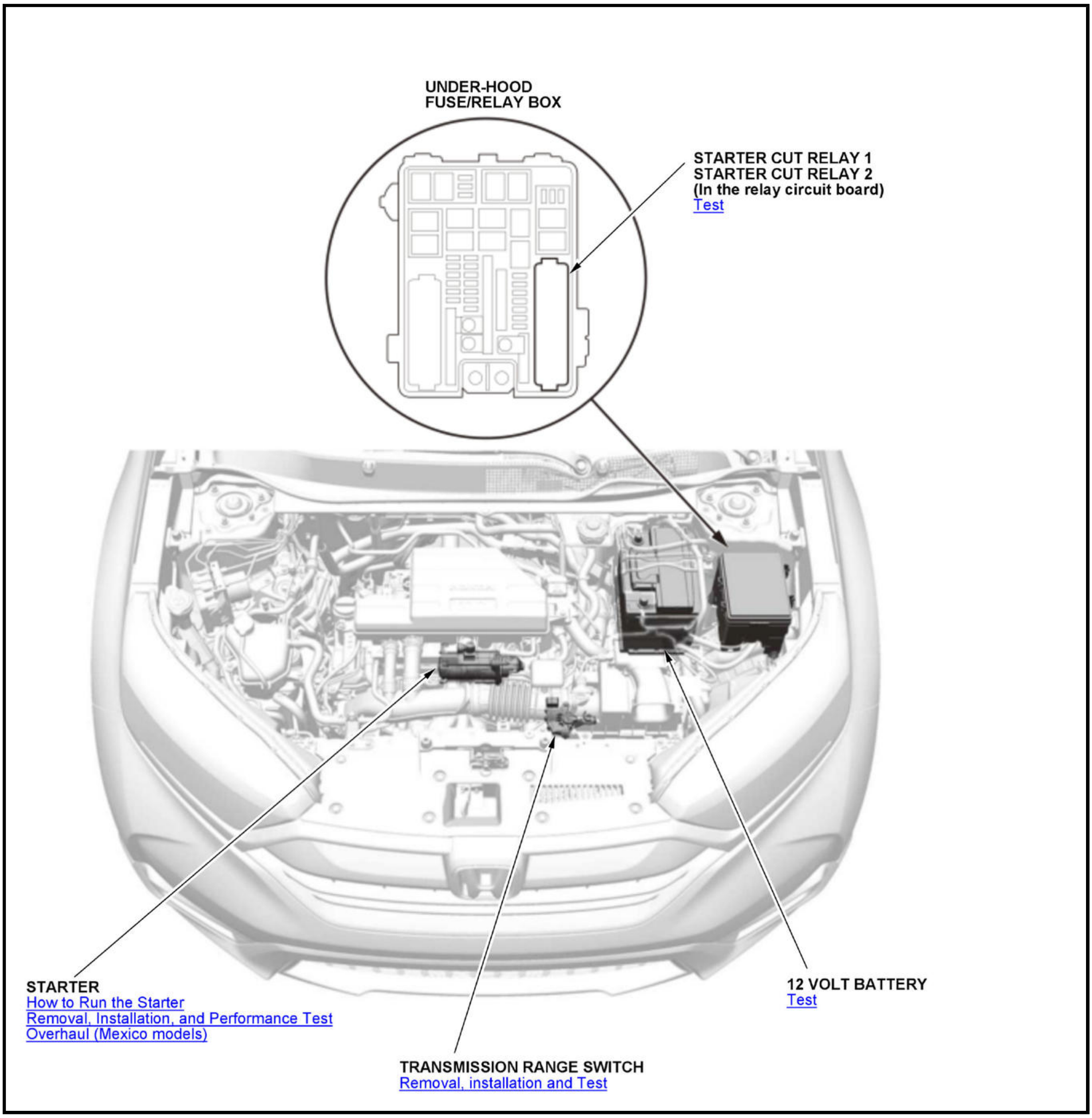
UNDER-HOOD
FUSE/RELAY BOX
STARTER CUT RELAY 1
STARTER CUT RELAY 2
(In the relay circuit board)
Test
STARTER
How to Run the Starter
Removal, Installation, and Performance Test
Overhaul (Mexico models)
12 VOLT BATTERY
Test
TRANSMISSION RANGE SWITCH
Removal, installation and Test

STARTING SYSTEM COMPONENT LOCATION INDEX (2.4 L ENGINE) (2017 2018 2019)

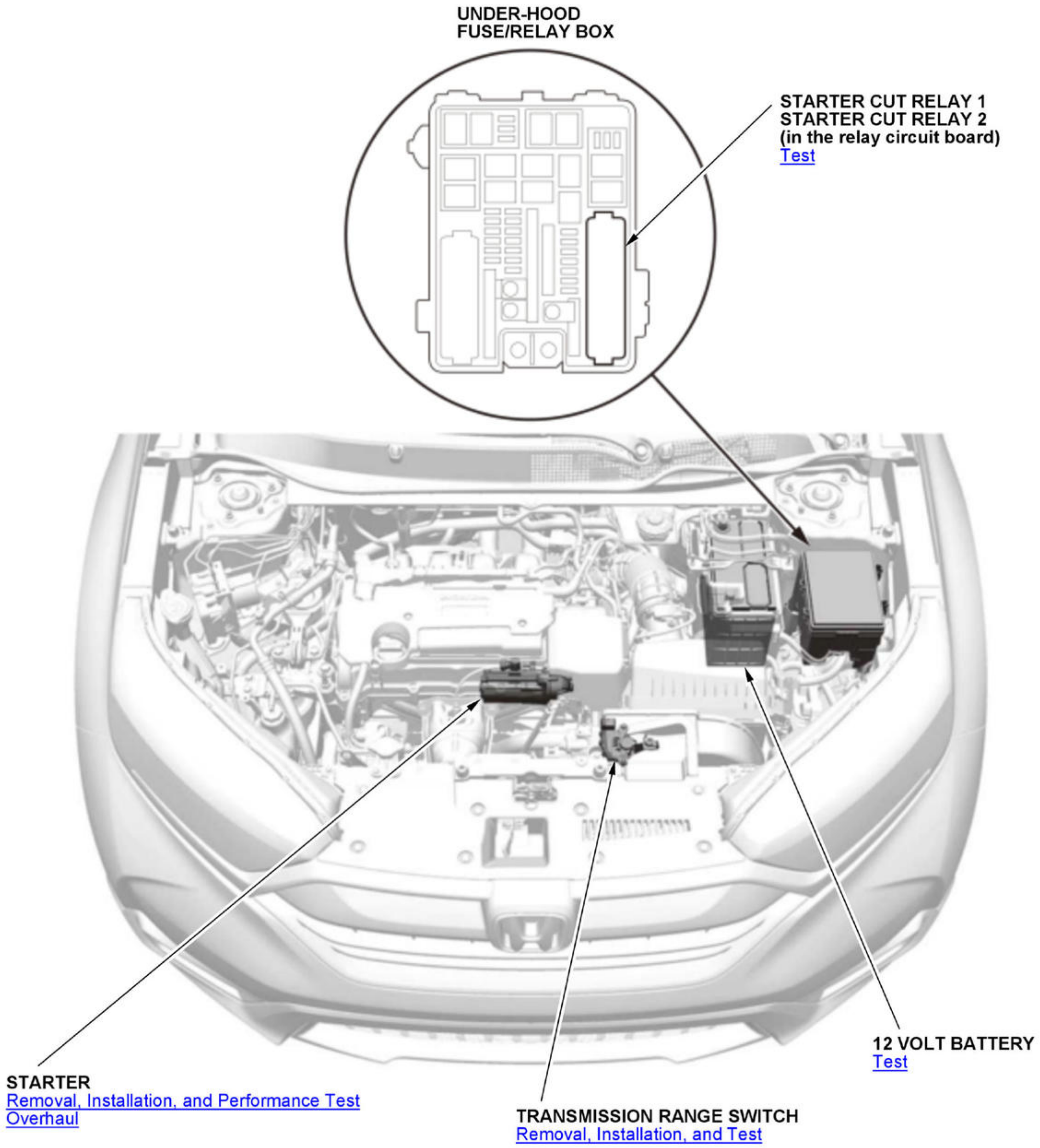
UNDER-HOOD FUSE/RELAY BOX
STARTER CUT RELAY 1
STARTER CUT RELAY 2
(in the relay circuit board)
Test
12 VOLT BATTERY
Test
STARTER
Removal, Installation, and Performance Test
Overhaul
TRANSMISSION RANGE SWITCH
Removal, Installation, and Test

SYMPTOM TROUBLESHOOTING INDEX

STARTING SYSTEM SYMPTOM TROUBLESHOOTING INDEX

Symptom	Diagnostic procedure	Also check for
Engine does not crank	Check the starter system circuit troubleshooting.	Seized engine
Engine cranks, but does not start	• Check for PGM-FI DTCs . • Check the relay circuit board and PGM-FI main relay 2. • Without keyless access system: Check for IMMOBI status and function . • With keyless access system: Check for keyless access system symptom troubleshooting information . • Check the fuel pressure . • Check for a plugged or damaged fuel line .	• Fuel level in tank • Weak or fouled spark plugs

Symptom	Diagnostic procedure	Also check for
	- **Check for a plugged fuel filter** . - **Check the throttle body** . - **Check for low engine compression** . - **Check the camshaft timing** . - **Do the PCM reset** in the PGM-FI System to cancel ALL INJECTORS STOP with the HDS.	
Engine is hard to start	**Do the symptom troubleshooting for Engine will not start, engine starts but stalls immediately, or engine is hard to start** .	Weak or fouled spark plugs
Engine cranks slowly	- Check for loose 12 volt battery terminals or connections. - **Test the 12 volt battery for a low state of charge** . - **Check the starter for binding** . - Check for excessive drag in the engine.	B

SYMPTOM TROUBLESHOOTING INDEX FOR VIEWER

ENGINE CRANKS SLOWLY

Diagnostic procedure

- Check for loose 12 volt battery terminals or connections.
- **Test the 12 volt battery for a low state of charge** .
- **Check the starter for binding** .
- Check for excessive drag in the engine.

ENGINE CRANKS, BUT DOES NOT START

Diagnostic procedure

- **Check for PGM-FI DTCs** .
- Check **the relay circuit board** and **PGM-FI main relay 2.**
- Without keyless access system: **Check for IMMOBI status and function** .
- With keyless access system: **Check for keyless access system symptom troubleshooting information** .
- **Check the fuel pressure** .
- **Check for a plugged or damaged fuel line** .
- **Check for a plugged fuel filter** .
- **Check the throttle body** .
- **Check for low engine compression** .
- **Check the camshaft timing** .
- **Do the PCM reset** in the PGM-FI System to cancel ALL INJECTORS STOP with the HDS.

Also check for

- Fuel level in tank
- Weak or fouled spark plugs

ENGINE DOES NOT CRANK

Diagnostic procedure

- Check the starter system circuit troubleshooting.

Also check for

Seized engine

ENGINE IS HARD TO START

Diagnostic procedure

- Do the symptom troubleshooting for Engine will not start, engine starts but stalls immediately, or engine is hard to start .

Also check for

Weak or fouled spark plugs

GENERAL INFORMATION

Anti-Lock Brake Safety Precautions

* PLEASE READ THIS FIRST *

This article is intended for general information purposes only. This information may not apply to all makes and models. If vehicle is equipped with Anti-Lock Brake System (ABS), refer to appropriate ANTI-LOCK BRAKE SYSTEM article in the BRAKES section for description, operation, depressurizing, testing, system bleeding, trouble shooting and servicing of specific system.

ANTI-LOCK BRAKE SAFETY PRECAUTIONS

WARNING: **Failure to depressurize ABS could lead to physical injury.**

- NEVER open a bleeder valve or loosen a hydraulic line while ABS is pressurized.
- NEVER disconnect or reconnect any electrical connectors while ignition is on. Damage to ABS control unit may result.
- **DO NOT** attempt to bleed hydraulic system without first referring to the appropriate ANTI-LOCK BRAKE SYSTEM article in the BRAKES section.
- Only use specially designed brake hoses/lines on ABS equipped vehicles.
- **DO NOT** tap on speed sensor components (sensor, sensor rings). Sensor rings must be pressed into hubs, NOT hammered into hubs. Striking these components can cause demagnetization or a loss of polarization, affecting the accuracy of the speed signal returning to the ABS control unit.
- **DO NOT** mix tire sizes. Increasing the width, as long as tires remain close to the original diameter, is acceptable. Rolling diameter must be identical for all 4 tires. Some manufacturers recommend tires of the same brand, style and type. Failure to follow this precaution may cause inaccurate wheel speed readings.
- **DO NOT** contaminate speed sensor components with grease. Only use recommended coating, when system calls for an anti-corrosion coating.
- When speed sensor components have been removed, ALWAYS check sensor-to-ring air gaps when applicable. These specifications can be found in each appropriate article.
- ONLY use recommended brake fluids. **DO NOT** use silicone brake fluids in an ABS equipped vehicle.
- When installing transmission devices (CB's, telephones, etc.) on ABS equipped vehicles, **DO NOT** locate the antenna near the ABS control unit (or any control unit).
- Disconnect all on-board computers, when using electric welding equipment.
- **DO NOT** expose the ABS control unit to prolonged periods of high heat (185 B°F/85B°C for 2 hours is generally considered a maximum limit).

* PLEASE READ THIS FIRST *

NOTE: **This is GENERAL information. This article is not intended to be specific to any unique situation or individual vehicle configuration. For model-specific information see appropriate articles where available.**

ALL MODELS

NOTE: **This is GENERAL information. This article is not intended to be specific to any unique situation or individual vehicle configuration. For model-specific information see appropriate articles where available.**

CLUTCH TROUBLE SHOOTING

Problem & Possible Cause	Action
Clutch Chatters/Grabs	
Incorrect Pedal Adjustment	Adjust Free Play
Worn Input Shaft Spline	Replace Input Shaft
Binding Pressure Plate	Replace Pressure Plate
Binding Throw-Out Lever	Check Throw-Out Lever, Check Throw-Out Bearing, Check Bearing Retainer
Uneven Pressure Plate Contact With Flywheel	Align/Replace Worn Parts
Transmission Misaligned	Align Transmission
Worn Pressure Plate	Replace Clutch Assembly
Oil-Saturated Disc	Replace Clutch Assembly, Repair Oil Leak
Loose Engine Mounts	Replace Engine Mounts
Clutch Pedal Sticks Down	
Clutch Cable Binding	Replace Clutch Cable
Weak Pressure Plate Springs	Replace Clutch Assembly
Binding Clutch Linkage	Lubricate Linkage
Broken Clutch Pedal Return Spring	Replace Return Spring
Clutch Will Not Release	
Oil-Saturated Disc	Replace Clutch Assembly, Repair Oil Leak
Defective Disc Face	Replace Clutch Assembly
Disc Sticking on Input Shaft Splines	Replace Disc/Input Shaft
Binding Pilot Bearing	Replace Pilot Bearing
Faulty Clutch Master Cylinder	Replace Master Cylinder
Faulty Clutch Slave Cylinder	Replace Slave Cylinder
Blown Clutch Hose	Replace Hose
Sticky Throw-Out Bearing Sleeve	Clean/Lube Sleeve
Clutch Cable Binding	Replace Clutch Cable
Broken/Loose Bellhousing	Check Bellhousing
Rattling/Squeaking	
Broken Throw-Out Lever Return Spring	Replace Return Spring
Faulty Throw-Out Bearing	Replace Throw-Out Bearing
Faulty Clutch Disc	Replace Clutch Disc

Problem & Possible Cause	**Action**
Faulty Pilot Bearing	Replace Pilot Bearing
Worn Throw-Out Bearing	Replace Throw-Out Bearing
Dry Bearing Retainer Slide For Throw-Out Bearing Sleeve	Lubricate Slide
Slipping	
Faulty Pressure Plate	Replace Clutch Assembly
Worn Clutch Disc	Replace Clutch Assembly
Incorrect Alignment	Realign Clutch Assembly
Faulty Clutch Slave Cylinder	Replace Slave Cylinder
No Pedal Pressure	
Leaky Hydraulic System	Check Clutch Master Cylinder, Check Clutch Slave Cylinder
	Check Clutch Hose
Broken Clutch Cable	Replace Clutch Cable
Faulty Throw-Out Lever	Replace Throw-Out Lever
Broken Clutch Linkage	Repair Clutch Linkage
Noisy Clutch Pedal	
Faulty Safety Switch	Check/Replace Switch
Noisy Self-Adj. Ratchet	Replace Ratchet
Dry Throw-Out Bearing	Replace Throw-Out Bearing
Dry Pilot Bearing	Replace Pilot Bearing
Worn Input Shaft	Replace Input Shaft

GENERAL INFORMATION

Commonly Used Abbreviations

* PLEASE READ THIS FIRST *

NOTE: **This article is intended for general information purposes only. This information may not apply to all makes and models. Not all abbreviations are covered as manufacturers add new ones every day.**

"A"

A

Amperes

ABS

Anti-Lock Brakes

ABRS

Air Bag Restraint System

AC

Alternating Current

A/C

Air Conditioning

ACCS

A/C Cycling Switch

ACCUM

Accumulator

ACCY

Accessory

ACT

Air Charge Temperature Sensor

ADJ

Adjust or Adjustable

ADV

Advance

AFS

Airflow Sensor

AI

Air Injection

AIR or A.I.R.

Air Injection Reactor

AIS

Air Injection System

Alt.

Alternator or Altitude

Amp./amp/amps

Ampere

ASCS

Air Suction Control Solenoid

ASD

Auto Shutdown

ASDM

Air Bag System Diagnostic Module

ASV

Air Suction Valve

A/T

Automatic Transmission/Transaxle

ATC

Automatic Temperature Control

ATDC

After Top Dead Center

ATF

Automatic Transmission Fluid

ATS

Air Temperature Sensor

Aux.

Auxiliary

Avg.

Average

AXOD

Automatic Transaxle Overdrive (Ford Models Only)

"B"

BAC

By-Pass Air Control

BAP

Barometric Absolute Pressure Sensor

BARO

Barometric

Batt.

Battery

Bbl.

Barrel (Example: 4-Bbl.)

BCM

Body Control Module

BHP

Brake Horsepower

BMAP

Barometric and Manifold Absolute Pressure Sensor

BOO

Brake On-Off Switch

B/P

Backpressure

BPS

Barometric Pressure Sensor

BPT

Backpressure Transducer

BTDC

Before Top Dead Center

BTSI

Brake Transmission Shift Interlock

BTU

British Thermal Unit

BVSV

Bimetallic Vacuum Switching Valve

"C"

B° C

Celsius (Degrees)

Calif.

California

CANP

Canister Purge

CARB

California Air Resources Board

CAT

Catalytic Converter

CB

Circuit Breaker

CBD

Closed Bowl Distributor

cc

cubic centimeter

CCC

Close Coupled Catalyst

CCC

Computer Command Control

CCD

Computer Controlled Dwell

CCOT

Cycling Clutch Orifice Tube

CCW

Counterclockwise

CDI

Capacitor Discharge Ignition

CEC

Computerized Engine Control

CID

Cubic Inch Displacement

cm

Centimeter

CMP

Camshaft Position Sensor

CO

Carbon Monoxide

CO_2

Carbon Dioxide

Cont.

Continued

CONV

Convertible

CP

Canister Purge

CKP

Crankshaft Position Sensor

CTS

Coolant Temperature Sensor

Cu. In.

Cubic Inch

CVC

Constant Vacuum Control

CV

Check Valve or Constant Velocity

CW

Clockwise

CYL or Cyl.

Cylinder

C^3 I

Computer Controlled Coil Ignition

C^4

Computer Controlled Catalytic Converter

"D"

"D"

Drive

DC

Direct Current Or Discharge

DDD

Dual Diaphragm Distributor

Def.

Defrost

Defog.

Defogger

DERM

Diagnostic Energy Reserve Module

DFI

Digital Fuel Injection

Diag.

Diagnostic

DTC

Diagnostic Trouble Code

DIC

Driver Information Center

DIS

Distributorless Ignition System

DIST

Distribution

DLC

Data Link Connector

DOC

Diesel Oxidation Catalyst

DOHC

Double Overhead Cam

DOT

Department of Transportation

DPF

Diesel Particulate Filter

DRB-II

Diagnostic Readout Box

DVOM

Digital Volt-Ohmmeter

"E"

EACV

Electric Air Control Valve

EATX

Electronic Automatic Transaxle

EBCM

Electronic Brake Control Module

EBL

Electronic Back Light

ECM

Engine Control Module

ECT

Engine Coolant Temperature Sensor

EDIS

Electronic Distributorless Ignition System

EEC

Electronic Engine Control

EECS

Evaporative Emission Control System

EEPROM

Electronically Erasable PROM

EFE

Early Fuel Evaporation

EGO

Exhaust Gas Oxygen Sensor

EGR

Exhaust Gas Recirculation

EOT

Engine Oil Temperature

ESA

Electronic Spark Advance

ESC

Electronic Spark Control

EST

Electronic Spark Timing

EVAP

Fuel Evaporative System

EVIC

Electronic Vehicle Information Center

EVP

EGR Valve Position Sensor

EWMA

Exponentially Weighted Moving Average (MODE 6)

Exc.

Except

"F"

B° F

Fahrenheit (Degrees)

F/B

Fuse Block

Fed.

Federal

FI

Fuel Injection

FICU

Fuel Injection Control Unit

FIPL

Fuel Injector Pump Lever

FLI

Fuel Level Indicator

FPR-VSV

Fuel Pressure Regulator Vacuum Switching Valve

Ft. Lbs.

Foot Pounds

FWD

Front Wheel Drive

"G"

g

grams

Gals.

gallons

GND or GRND

Ground

"H"

HAC

High Altitude Compensation

HC

Hydrocarbons

H/D

Heavy Duty

HO2S

Heated Exhaust Gas Oxygen Sensor

Hg

Mercury

Hgt.

Height

HLDT

Headlight

HO

High Output

HO2S

Heated Oxygen Sensor

HP

High Performance

HSC

High Swirl Combustion

HSO

High Specific Output

HTR

Heater

Hz

Hertz (Cycles Per Second)

"I"

IAC

Idle Air Control

IACV

Idle Air Control Valve

IAT

Intake Air Temperature

IC

Integrated Circuit

ID

Identification

I.D.

Inside Diameter

IFS

Independant Front Suspension

IFS

Inertia Fuel Shutoff (Ford)

Ign.

Ignition

IMRC

Intake Manifold Runner Control

In.

Inches

INCH Lbs.

Inch Pounds

in. Hg

Inches of Mercury

Inj.

Injector

IP

Instrument Panel

IRS

Independant Rear Suspension

ISC

Idle Speed Control

IVD

Interactive Vehicle Dynamics (Ford)

IVSV

Idle Vacuum Switching Valve

"J"

J/B

Junction Block

"K"

KAPWR

Keep Alive Power

k/ohms

kilo-ohms (1000 ohms)

kg

Kilograms (weight)

kg/cm^2

Kilograms Per Square Centimeter

KM/H

Kilometers Per Hour

KOEO

Key On, Engine Off

KOER

Key On, Engine Running

KS

Knock Sensor

kW

Kilowatt

kV

Kilovolt

"L"

L

Liter

lbs. (Lbs. when used in table)

Pounds

LCD

Liquid Crystal Display

L/D

Light Duty

LDP

Leak Detection Pump (Part of EVAP system.)

LED

Light Emitting Diode

LH

Left Hand

"M"

mA

Milliamps

MA or MAF

Mass Airflow

MAFS

Mass Airflow Sensor

MAP

Manifold Absolute Pressure

MAT

Manifold Air Temperature

Mem.

Memory

MEM-CAL

Memory Calibration Chip

mfd.

Microfarads

MFI

Multiport Fuel Injection

MICU

Multiplex Integrated Control Unit (Acura/Honda)

MIL

Malfunction Indicator Light

MPI

Multi-Point (Fuel) Injection

mm

Millimeters

MPH

Miles Per Hour

mV

Millivolts

"N"

NA

Not Available

NAC

NOx Adsorber Catalyst

NCA

No Color Available (Wiring Diagrams)

NGS

New Generation Star

N.m

Newton Meter

No.

Number

Nos.

Numbers

NOx

Oxides of Nitrogen

"O"

O_2

Oxygen

OBD

On-Board Diagnostics

OC

Oxidation Catalyst

OD

Overdrive

O.D.

Outside Diameter

OHC

Overhead Camshaft

OSS

Output Speed Sensor

O/S

Oversize

oz.

Ounce

ozs.

Ounces

"P"

"P"

Park

P/C

Printed Circuit

PCM

Powertrain Control Module

PCS

Purge Control Solenoid

PC-SOL

Purge Control Solenoid

PCV

Positive Crankcase Ventilation

PFI

Port Fuel Injection

PGM-FI

Programmed Fuel Injection

PID

Parameter Identification

PIP

Profile Ignition Pick-up

PNP

Park Neutral Position Switch

P/N

Park/Neutral

PRNDL

Park Reverse Neutral Drive Low

PROM

Programmable Read-Only Memory

psi

Pounds Per Square Inch

P/S

Power Steering

PSPS

Power Steering Pressure Switch

PTC

Positive Temperature Coefficient

PTO

Power Take-Off

Pts.

Pints

Pwr.

Power

"Q"

Qts.

Quarts

"R"

RABS

Rear Anti-Lock Brake System

RECIRC

Recirculation

RH

Right Hand

RPM

Revolutions Per Minute

RWAL

Rear Wheel Anti-Lock Brake

RWD

Rear Wheel Drive

"S"

SAS

Steering Angle Sensor

SBC

Single Bed Converter

SBEC

Single Board Engine Controller

SDARS

Satellite Digital Audio Radio Service

SES

Service Engine Soon

SFI

Sequential (Port) Fuel Injection

SIL

Shift Indicator Light

SIR

Supplemental Inflatable Restraint

SOHC

Single Overhead Cam

SOL or Sol.

Solenoid

SPFI

Sequential Port Fuel Injection

SPK

Spark Control

SPOUT

Spark Output

SRI

Service Reminder Indicator

SRS

Supplemental Restraint System (Air Bag)

STAR

Self-Test Automatic Readout

STO

Self-Test Output

SUB-O_2

Sub Oxygen Sensor

Sw.

Switch

Sys.

System

"T"

TAB

Thermactor Air By-Pass

TAC

Throttle Actuator Module

TAD

Thermactor Air Diverter

TBC

Body Control Module (General Motors)

TBI

Throttle Body Injection

TCC

Torque Converter Clutch

TDC

Top Dead Center

Temp.

Temperature

TFI

Thick Film Ignition

THERMAC

Thermostatic Air Cleaner

TPM

Tire Pressure Monitor

TPMS

Tire Pressure Monitor System

TPS

Throttle Position Sensor/Switch

TS

Temperature Sensor

TV

Thermovalve

TWC

Three-Way Catalyst

"V"

V

Valve

Vac.

Vacuum

VAF

Vane Airflow

VAPS

Variable Assist Power Steering

VCC

Viscous Converter Clutch

VCRM

Variable Control Relay Module

VIN

Vehicle Identification Number

VM

Vacuum Modulator

Volt.

Voltage

VOM

Volt-Ohmmeter (Analog)

VRV

Vacuum Regulator Valve

VSS

Vehicle Speed Sensor

VSV

Vacuum Switching Valve

"W"

W/

With

W/O

Without

WAC

Wide Open Throttle A/C Switch

WOT

Wide Open Throttle

GENERAL INFORMATION

Drive Axle Noise Diagnosis

* PLEASE READ THIS FIRST *

NOTE: **This is GENERAL information. This article is not intended to be specific to any unique situation or individual vehicle configuration. For model-specific information see appropriate articles where available.**

UNRELATED NOISES

NOTE: **This is GENERAL information. This article is not intended to be specific to any unique situation or individual vehicle configuration. For model-specific information see appropriate articles where available.**

Some driveline trouble symptoms are also common to the engine, transmission, wheel bearings, tires and other parts of the vehicle. Make sure that cause of trouble actually is in the drive axle before adjusting, repairing, or replacing any parts.

NON-DRIVE AXLE NOISES

NOTE: **This is GENERAL information. This article is not intended to be specific to any unique situation or individual vehicle configuration. For model-specific information see appropriate articles where available.**

A few conditions can sound just like drive axle noise and have to be considered in pre-diagnosis. The 4 most common noises are exhaust, tires, CV/universal joints and trim moldings.

In certain conditions, the pitch of exhaust gases may sound like gear whine. At other times, it may be mistaken for a wheel bearing rumble.

Tires, especially radial and snow tires, can have a high-pitched tread whine or roar, similar to gear noise. Also, some non-standard tires with an unusual tread construction may emit a roar or whine.

Defective CV/universal joints may cause clicking noises or excessive driveline play that can be improperly diagnosed as drive axle problems.

Trim and moldings can also cause a whistling or whining noise. Ensure that none of these components are causing the noise before disassembling the drive axle.

GEAR NOISE

NOTE: **This is GENERAL information. This article is not intended to be specific to any unique situation or individual vehicle configuration. For model-specific information see appropriate articles where available.**

A "howling" or "whining" noise from the ring and pinion gear can be caused by an improper gear pattern, gear damage, or improper bearing preload. It can occur at various speeds and driving conditions, or it can be continuous.

Before disassembling axle to diagnose and correct gear noise, make sure that tires, exhaust, and vehicle trim have been checked as possible causes.

CHUCKLE

NOTE: **This is GENERAL information. This article is not intended to be specific to any unique situation or individual vehicle configuration. For model-specific information see appropriate articles where available.**

This is a particular rattling noise that sounds like a stick against the spokes of a spinning bicycle wheel. It occurs while decelerating from 40 MPH and usually can be heard until vehicle comes to a complete stop. The frequency varies with the speed of the vehicle.

A chuckle that occurs on the driving phase is usually caused by excessive clearance due to differential gear wear, or by a damaged tooth on the coast side of the pinion or ring gear. Even a very small tooth nick or a ridge on the edge of a gear tooth is enough to cause the noise.

This condition can be corrected simply by cleaning the gear tooth nick or ridge with a small grinding wheel. If either gear is damaged or scored badly, the gear set must be replaced. If metal has broken loose, the carrier and housing must be cleaned to remove particles that could cause damage.

KNOCK

NOTE: **This is GENERAL information. This article is not intended to be specific to any unique situation or individual vehicle configuration. For model-specific information see appropriate articles where available.**

This is very similar to a chuckle, though it may be louder, and occur on acceleration of deceleration. Knock can be caused by a gear tooth that is damaged on the drive side of the ring and pinion gears. Ring gear bolts that are hitting the carrier casting can cause knock. Knock can also be due to excessive end play in the axle shafts.

CLUNK

NOTE: **This is GENERAL information. This article is not intended to be specific to any unique situation or individual vehicle configuration. For model-specific information see appropriate articles where available.**

Clunk is a metallic noise heard when an automatic transmission is engaged in Reverse or Drive, or when throttle is applied or released. It is caused by backlash somewhere in the driveline, but not necessarily in the axle. To determine whether driveline clunk is caused by the axle, check the total axle backlash as follows:

1. Raise vehicle on a frame or twinpost hoist so that drive wheels are free. Clamp a bar between axle companion flange and a part of the frame or body so that flange cannot move.
2. On conventional drive axles, lock the left wheel to keep it from turning. On all models, turn the right wheel slowly until it is felt to be in drive condition. Hold a chalk marker on side of tire about 12" from center of wheel. Turn wheel in the opposite direction until it is again felt to be in drive condition.
3. Measure the length of the chalk mark, which is the total axle backlash. If backlash is one inch or less, clunk will not be eliminated by overhauling drive axle.

BEARING WHINE

NOTE: **This is GENERAL information. This article is not intended to be specific to any unique situation or individual vehicle configuration. For model-specific information see appropriate articles where available.**

Bearing whine is a high-pitched sound similar to a whistle. It is usually caused by malfunctioning pinion bearings. Pinion bearings operate at driveshaft speed. Roller wheel bearings may whine in a similar manner if they run completely dry of lubricant. Bearing noise will occur at all driving speeds. This distinguishes it from gear whine, which usually comes and goes as speed changes.

BEARING RUMBLE

NOTE: **This is GENERAL information. This article is not intended to be specific to any unique situation or individual vehicle configuration. For model-specific information see appropriate articles where available.**

Bearing rumble sounds like marbles being tumbled. It is usually caused by a malfunctioning wheel bearing. The lower pitch is because the wheel bearing turns at only about 1/3 of driveshaft speed.

CHATTER ON TURNS

NOTE: **This is GENERAL information. This article is not intended to be specific to any unique situation or individual vehicle configuration. For model-specific information see appropriate articles where available.**

This is a condition where the whole front or rear vibrates when vehicle is moving. The vibration is easily felt and heard. Extra differential thrust washers installed during axle repair can cause a condition of partial lock-up that creates the chatter.

AXLE SHAFT NOISE

NOTE: **This is GENERAL information. This article is not intended to be specific to any unique situation or individual vehicle configuration. For model-specific information see appropriate articles where available.**

Axle shaft noise is similar to gear noise and pinion bearing whine. Axle shaft bearing noise will normally distinguish itself from gear noise by occurring in all driving modes. Noise will persist with transmission in neutral while vehicle is moving at problem speed.

If vehicle displays this noise condition, remove suspect axle shafts and replace axle bearings. Re-evaluate vehicle for noise before removing any internal components.

VIBRATION

NOTE: **This is GENERAL information. This article is not intended to be specific to any unique situation or individual vehicle configuration. For model-specific information see appropriate articles where available.**

Vibration is a high-frequency trembling, shaking or grinding condition (felt or heard) that may be constant or variable in level and con occur during the total operating speed range of the vehicle.

The types of vibrations that can be felt in the vehicle can be divided into 3 main groups:

- Vibrations of various unbalanced rotating parts of the vehicle.
- Resonance vibrations of the body and frame structures caused by rotating of unbalance parts.
- Tip-in moans of resonance vibrations from stressed engine or exhaust system mounts or driveline flexing modes.

Electrostatic Discharge (ESD) Warning - Basic Information

* PLEASE READ THIS FIRST *

NOTE: **This article is intended for general information purposes only. Contents are generic in nature and all information may or may not apply to all vehicles.**

INTRODUCTION

NOTE: **This article is intended for general information purposes only. Contents are generic in nature and all information may or may not apply to all vehicles.**

All Electrostatic Discharge (ESD) sensitive components contain solid state circuits (transistors, diodes, semiconductors) that may become damaged when contacted with an electrostatic charge. The following information applies to all ESD sensitive devices. The ESD symbol shown in Fig. **Fig. 1** may be used on schematics to indicate which components are ESD sensitive. See **Fig. 1**. Although different manufactures may display different symbols to represent ESD sensitive devices, the handling and measuring precautions and procedures are the same.

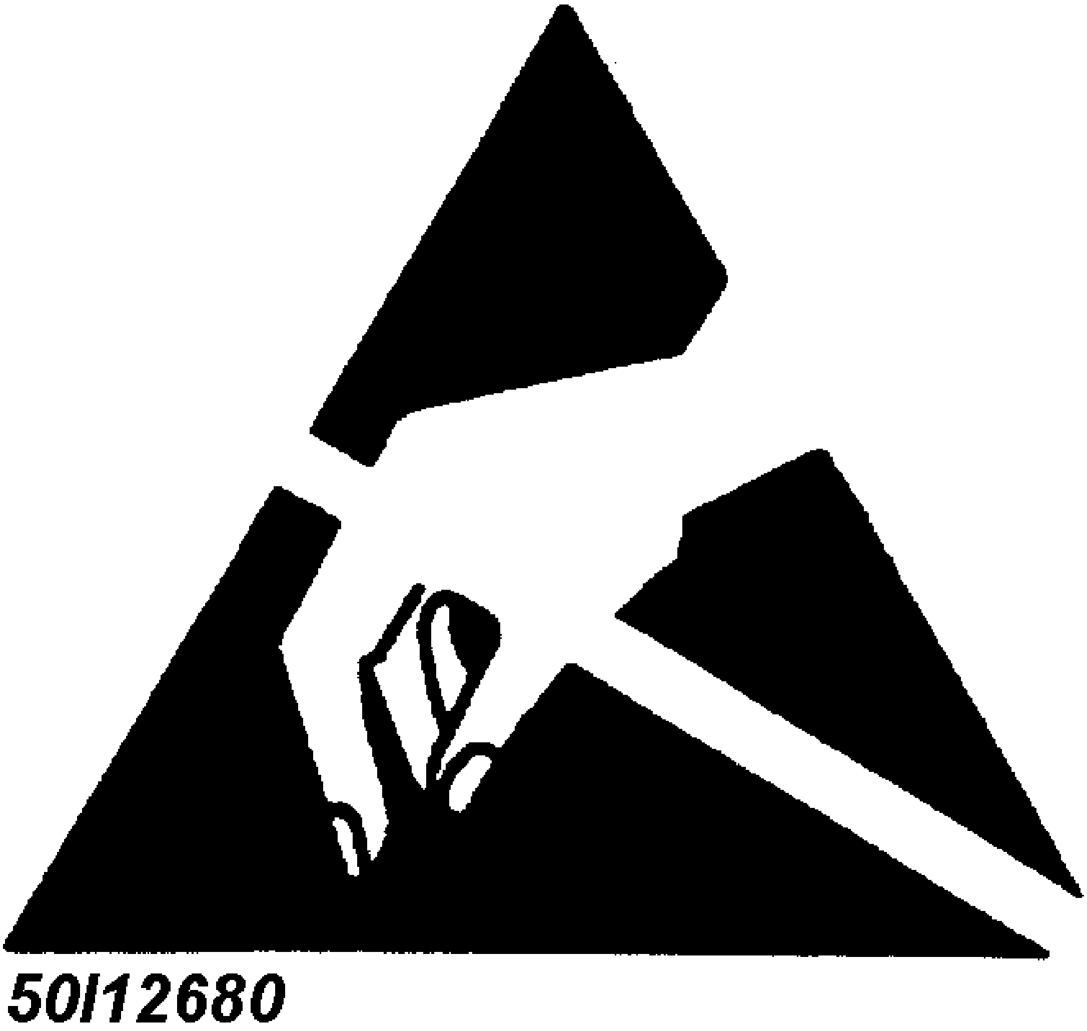

Fig. 1: Sample ESD Symbol

HANDLING STATIC-SENSITIVE CIRCUITS/DEVICES

NOTE: **This article is intended for general information purposes only. Contents are generic in nature and all information may or may not apply to all vehicles.**

When handling an electronic part that is ESD sensitive, the technician should follow these guidelines to reduce any possible electrostatic charge build-up on the technician's body and the electronic part.

1. Always touch a known good ground source before handling the part. This should be repeated while handling the part and more frequently after sitting down from a standing position, sliding across the seat or walking a distance.
2. Avoid touching electrical terminals of the part, unless instructed by a diagnostic procedure.
3. DO NOT open the package of a new part until it is time to install the part.
4. Before removing the part from its package, ground the package to a known good ground source.

CHECKING STATIC-SENSITIVE CIRCUITS/DEVICES

NOTE: **This article is intended for general information purposes only. Contents are generic in nature and all information may or may not apply to all vehicles.**

1. Solid State circuits in electronic devices are shown greatly simplified in schematics. See Fig. 2. Due to the simplification of the electronic devices on the schematic, resistance measurements could be misleading or could lead to an electrostatic discharge. Always follow the recommended diagnostic procedure.

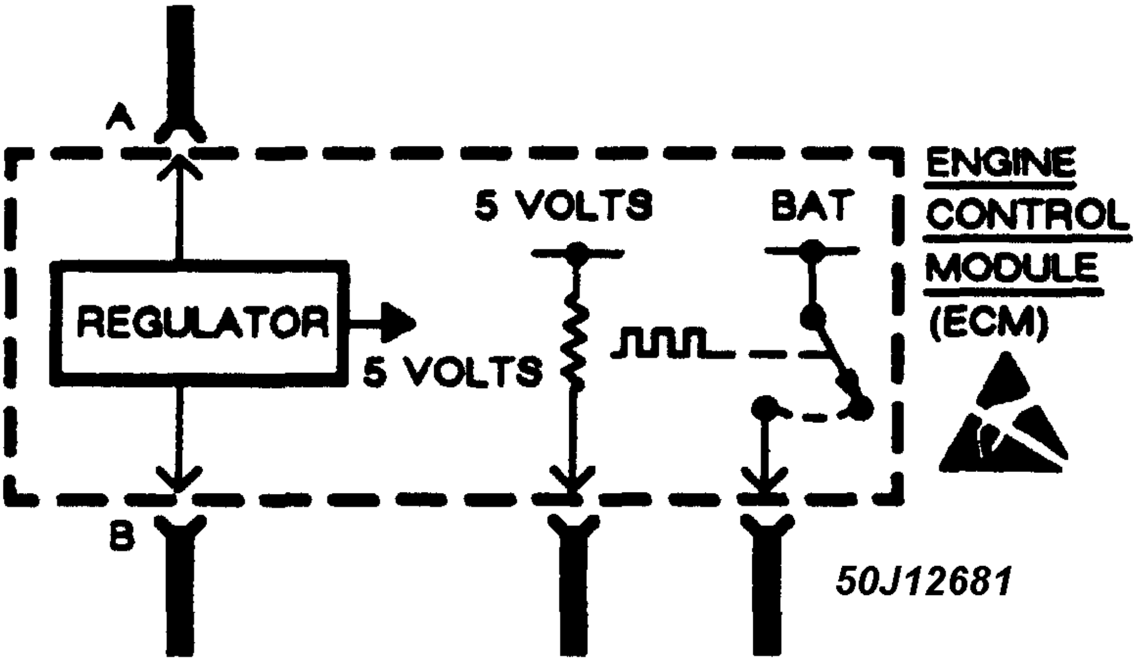

Fig. 2: Sample Schematic Showing Typical ESD Sensitive Device

2. Only measure resistance at the terminals of the devices when instructed by the recommended diagnostic procedure.
3. When using a voltmeter, be sure to connect the ground lead first.

CONVERSION TABLE

LITER/CID CONVERSION

Liter	CID
1.0	59
1.0	60
1.0	61
1.1	66
1.1	68
1.1	70
1.2	71
1.2	72
1.2	73
1.2	76
1.3	77
1.3	78
1.3	79
1.3	80
1.3	81
1.3	82
1.4	85
1.4	85
1.4	86
1.5	89
1.5	90
1.5	91
1.6	94
1.6	95
1.6	96
1.6	97
1.6	98
1.6	99
1.7	102
1.7	103
1.7	105
1.8	107
1.8	109
1.8	110
1.8	111
1.8	112
1.9	113
1.9	114
1.9	116
1.9	119
2.0	119
2.0	120

Liter	**CID**
2.0	121
2.0	122
2.1	125
2.1	126
2.1	128
2.1	129
2.1	130
2.1	131
2.2	132
2.2	133
2.2	134
2.2	135
2.2	136
2.2	137
2.3	138
2.3	140
2.3	141
2.3	143
2.4	143
2.4	144
2.4	145
2.4	146
2.4	147
2.4	149
2.5	150
2.5	151
2.5	152
2.5	153
2.6	155
2.6	156
2.6	157
2.6	158
2.6	159
2.7	162
2.7	163
2.7	164
2.7	167
2.8	168
2.8	170
2.8	171
2.8	173
2.9	174
2.9	179
3.0	180
3.0	181
3.0	182
3.0	183
3.0	184

Liter	**CID**
3.1	191
3.1	192
3.2	193
3.2	194
3.2	195
3.2	196
3.2	197
3.2	198
3.3	199
3.3	200
3.3	201
3.3	204
3.4	206
3.4	207
3.4	209
3.5	210
3.5	211
3.5	212
3.5	213
3.5	214
3.5	215
3.6	219
3.6	220
3.7	225
3.7	226
3.7	229
3.8	229
3.8	230
3.8	231
3.8	232
3.8	234
3.8	238
3.9	239
3.9	240
3.9	241
4.0	241
4.0	242
4.0	243
4.0	244
4.1	250
4.1	252
4.2	255
4.2	258
4.3	259
4.3	260
4.3	262
4.3	263
4.3	266

Liter	**CID**
4.4	266
4.4	267
4.4	268
4.5	273
4.5	274
4.5	276
4.6	278
4.6	279
4.6	281
4.6	283
4.7	284
4.7	285
4.7	287
4.7	289
4.8	290
4.8	292
4.9	300
4.9	301
4.9	302
5.0	302
5.0	304
5.0	305
5.0	307
5.1	310
5.2	315
5.2	318
5.3	326
5.4	327
5.4	328
5.4	330
5.5	334
5.5	335
5.6	340
5.6	343
5.7	345
5.7	348
5.7	350
5.8	351
5.8	352
5.9	359
5.9	360
5.9	361
5.9	362
6.0	366
6.0	368
6.1	370
6.1	372
6.2	379

Liter	**CID**
6.2	381
6.3	383
6.4	389
6.4	390
6.4	392
6.5	396
6.6	400
6.6	401
6.6	402
6.6	403
6.7	410
6.8	412
6.8	413
6.8	414
6.8	415
6.9	420
6.9	421
7.0	425
7.0	426
7.0	427
7.0	428
7.0	429
7.0	430
7.1	432
7.2	440
7.4	454
7.5	455
7.5	460
7.6	462
8.0	488
8.2	500
8.8	534
8.8	537
8.8	538
8.9	540
9.0	549
9.1	555
9.3	568
9.3	570
9.6	588
9.8	600
9.9	605
10.0	611

* PLEASE READ THIS FIRST *

NOTE: **Examples used in this article are general in nature and do not necessarily relate to a specific engine or system. Illustrations and procedures have been chosen to guide mechanic through engine overhaul process. Descriptions of processes of cleaning, inspection, assembly and machine shop practice are included.**

Always refer to appropriate engine overhaul article, if available, in the ENGINES section for complete overhaul procedures and specifications for the vehicle being repaired.

DESCRIPTION

Examples used in this article are general in nature and do not necessarily relate to a specific engine or system. Illustrations and procedures have been chosen to guide mechanic through engine overhaul process. Descriptions of cleaning, inspection, and assembly processes are included.

ENGINE IDENTIFICATION

Engine may be identified from Vehicle Identification Number (VIN) stamped on a metal tab. Metal tab may be located in different locations depending on manufacturer. Engine identification number or serial number is located on cylinder block. Location varies with each manufacturer.

INSPECTION PROCEDURES

* PLEASE READ THIS FIRST *

NOTE: **Examples used in this article are general in nature and do not necessarily relate to a specific engine or system. Illustrations and procedures have been chosen to guide mechanic through engine overhaul process. Descriptions of processes of cleaning, inspection, assembly and machine shop practice are included.**

Always refer to appropriate engine overhaul article, if available, in the ENGINES section for complete overhaul procedures and specifications for the vehicle being repaired.

GENERAL

NOTE: **Examples used in this article are general in nature and do not necessarily relate to a specific engine or system. Illustrations and procedures have been chosen to guide mechanic through engine overhaul process. Descriptions of processes of cleaning, inspection, assembly and machine shop practice are included.**

Always refer to appropriate engine overhaul article, if available, in the ENGINES section for complete overhaul procedures and specifications for the vehicle being repaired.

Engine components must be inspected to meet manufacturer's specifications and tolerances during overhaul. Proper dimensions and tolerances must be met to obtain proper performance and maximum engine life.

Micrometers, depth gauges and dial indicator are used for checking tolerances during engine overhaul. Magnaflux, Magnaglo, dye-check, ultrasonic and x-ray inspection procedures are used for parts inspection.

MAGNETIC PARTICLE INSPECTION

NOTE: **Examples used in this article are general in nature and do not necessarily relate to a specific engine or system. Illustrations and procedures have been chosen to guide mechanic through engine overhaul process. Descriptions of processes of cleaning, inspection, assembly and machine shop practice are included.**

Always refer to appropriate engine overhaul article, if available, in the ENGINES section for complete overhaul procedures and specifications for the vehicle being repaired.

Magnaflux & Magnaglo

Magnaflux is an inspection technique used to locate material flaws and stress cracks. Component is subjected to a strong magnetic field. Entire component or a localized area can be magnetized. Component is coated with either a wet or dry material that contains fine magnetic particles.

Cracks which are outlined by the particles cause an interruption of magnetic field. Dry powder method of Magnaflux can be used in normal lighting and crack appears as a bright line.

Fluorescent liquid is used along with a Black light in the Magnaglo Magnaflux system. Darkened room is required for this procedure. The crack will appear as a glowing line. Complete demagnetizing of component upon completion is required on both procedures. Magnetic particle inspection applies to ferrous materials only.

PENETRANT INSPECTION

NOTE: **Examples used in this article are general in nature and do not necessarily relate to a specific engine or system. Illustrations and procedures have been chosen to guide mechanic through engine overhaul process. Descriptions of processes of cleaning, inspection, assembly and machine shop practice are included.**

Always refer to appropriate engine overhaul article, if available, in the ENGINES section for complete overhaul procedures and specifications for the vehicle being repaired.

Zyglo

The Zyglo process coats material with a fluorescent dye penetrant. Component is often warmed to expand cracks that will be penetrated by the dye. Using darkened room and Black light, component is inspected for cracks. Crack will glow brightly.

Developing solution is often used to enhance results. Parts made of any material, such as aluminum cylinder heads or plastics, may be tested using this process.

Dye Check

Penetrating dye is sprayed on the previously cleaned component. Dye is left on component for 5-45 minutes, depending upon material density. Component is then wiped clean and sprayed with a developing solution. Surface cracks will show up as a bright line.

ULTRASONIC INSPECTION

NOTE: **Examples used in this article are general in nature and do not necessarily relate to a specific engine or system. Illustrations and procedures have been chosen**

to guide mechanic through engine overhaul process. Descriptions of processes of cleaning, inspection, assembly and machine shop practice are included.

Always refer to appropriate engine overhaul article, if available, in the ENGINES section for complete overhaul procedures and specifications for the vehicle being repaired.

If an expensive part is suspected of internal cracking, ultrasonic testing is used. Sound waves are used for component inspection.

X-RAY INSPECTION

NOTE: **Examples used in this article are general in nature and do not necessarily relate to a specific engine or system. Illustrations and procedures have been chosen to guide mechanic through engine overhaul process. Descriptions of processes of cleaning, inspection, assembly and machine shop practice are included.**

Always refer to appropriate engine overhaul article, if available, in the ENGINES section for complete overhaul procedures and specifications for the vehicle being repaired.

This form of inspection is used on highly stressed components. X-ray inspection may be used to detect internal and external flaws in any material.

PRESSURE TESTING

NOTE: **Examples used in this article are general in nature and do not necessarily relate to a specific engine or system. Illustrations and procedures have been chosen to guide mechanic through engine overhaul process. Descriptions of processes of cleaning, inspection, assembly and machine shop practice are included.**

Always refer to appropriate engine overhaul article, if available, in the ENGINES section for complete overhaul procedures and specifications for the vehicle being repaired.

Cylinder heads can be tested for cracks using a pressure tester. Pressure testing is performed by plugging all but one of the holes of cylinder head and injecting air or water into the open passage.

Leaks are indicated by the appearance of wet or damp areas when using water. When air is used, it is necessary to spray the head surface with a soap solution. Bubbles will indicate a leak. Cylinder head may also be submerged in water heated to specified temperature to check for cracks created during heat expansion.

CLEANING PROCEDURES

* PLEASE READ THIS FIRST *

NOTE: **Examples used in this article are general in nature and do not necessarily relate to a specific engine or system. Illustrations and procedures have been chosen to guide mechanic through engine overhaul process. Descriptions of processes of cleaning, inspection, assembly and machine shop practice are included.**

Always refer to appropriate engine overhaul article, if available, in the ENGINES section for complete overhaul procedures and specifications for the vehicle being repaired.

GENERAL

NOTE: **Examples used in this article are general in nature and do not necessarily relate to a specific engine or system. Illustrations and procedures have been chosen to guide mechanic through engine overhaul process. Descriptions of processes of cleaning, inspection, assembly and machine shop practice are included.**

Always refer to appropriate engine overhaul article, if available, in the ENGINES section for complete overhaul procedures and specifications for the vehicle being repaired.

All components of an engine do not have the same cleaning requirements. Physical methods include bead blasting and manual removal. Chemical methods include solvent blast, solvent tank, hot tank, cold tank and steam cleaning of components.

BEAD BLASTING

NOTE: **Examples used in this article are general in nature and do not necessarily relate to a specific engine or system. Illustrations and procedures have been chosen to guide mechanic through engine overhaul process. Descriptions of processes of cleaning, inspection, assembly and machine shop practice are included.**

Always refer to appropriate engine overhaul article, if available, in the ENGINES section for complete overhaul procedures and specifications for the vehicle being repaired.

Manual removal of deposits may be required prior to bead blasting, followed by some other cleaning method. Carbon, paint and rust may be removed using bead blasting method. Components must be free of oil and grease prior to bead blasting. Beads will stick to grease or oil soaked areas causing area not to be cleaned.

Use air pressure to remove all trapped residual beads from component after cleaning. After cleaning internal engine parts made of aluminum, wash thoroughly with hot soapy water. Component must be thoroughly cleaned as glass beads will enter engine oil resulting in bearing damage.

CHEMICAL CLEANING

NOTE: **Examples used in this article are general in nature and do not necessarily relate to a specific engine or system. Illustrations and procedures have been chosen to guide mechanic through engine overhaul process. Descriptions of processes of cleaning, inspection, assembly and machine shop practice are included.**

Always refer to appropriate engine overhaul article, if available, in the ENGINES section for complete overhaul procedures and specifications for the vehicle being repaired.

Solvent tank is used for cleaning oily residue from components. Solvent blasting sprays solvent through a siphon gun using compressed air.

The hot tank, using heated caustic solvents, is used for cleaning ferrous materials only. DO NOT clean aluminum parts such as cylinder heads, bearings or other soft metals using the hot tank. After cleaning, flush parts with hot water.

A non-ferrous part will be ruined and caustic solution will be diluted if placed in the hot tank. Always use eye protection and gloves when using the hot tank.

Use of a cold tank is for cleaning aluminum cylinder heads, carburetors and other soft metals. A less caustic and unheated solution is used. Parts may be left in the tank for several hours without damage. After cleaning, flush parts with hot water.

Steam cleaning, with boiling hot water sprayed at high pressure, is recommended as the final cleaning process when using either hot or cold tank cleaning.

COMPONENT CLEANING

* PLEASE READ THIS FIRST *

NOTE: **Examples used in this article are general in nature and do not necessarily relate to a specific engine or system. Illustrations and procedures have been chosen to guide mechanic through engine overhaul process. Descriptions of processes of cleaning, inspection, assembly and machine shop practice are included.**

Always refer to appropriate engine overhaul article, if available, in the ENGINES section for complete overhaul procedures and specifications for the vehicle being repaired.

SHEET METAL PARTS

NOTE: **Examples used in this article are general in nature and do not necessarily relate to a specific engine or system. Illustrations and procedures have been chosen to guide mechanic through engine overhaul process. Descriptions of processes of cleaning, inspection, assembly and machine shop practice are included.**

Always refer to appropriate engine overhaul article, if available, in the ENGINES section for complete overhaul procedures and specifications for the vehicle being repaired.

Examples of sheet metal parts are rocker covers, front and side covers, oil pan and bellhousing dust cover. Glass bead blasting or hot tank may be used for cleaning.

Ensure all mating surfaces are flat. Deformed surfaces should be straightened. Check all sheet metal parts for cracks and dents.

INTAKE & EXHAUST MANIFOLDS

NOTE: **Examples used in this article are general in nature and do not necessarily relate to a specific engine or system. Illustrations and procedures have been chosen to guide mechanic through engine overhaul process. Descriptions of processes of cleaning, inspection, assembly and machine shop practice are included.**

Always refer to appropriate engine overhaul article, if available, in the ENGINES section for complete overhaul procedures and specifications for the vehicle being repaired.

Using solvent cleaning or bead blasting, clean manifolds for inspection. If intake manifold has an exhaust crossover, all carbon deposits must be removed. Inspect manifolds for cracks, burned or eroded areas, corrosion and damage to fasteners.

Exhaust heat and products of combustion cause threads of fasteners to corrode. Replace studs and bolts as necessary. On "V" type intake manifolds, sheet metal oil shield must be removed for proper cleaning and inspection. Ensure all manifold parting surfaces are flat and free of burrs.

CYLINDER HEAD REPLACEMENT

* PLEASE READ THIS FIRST *

NOTE: **Examples used in this article are general in nature and do not necessarily relate to a specific engine or system. Illustrations and procedures have been chosen to guide mechanic through engine overhaul process. Descriptions of processes of cleaning, inspection, assembly and machine shop practice are included.**

Always refer to appropriate engine overhaul article, if available, in the ENGINES section for complete overhaul procedures and specifications for the vehicle being repaired.

REMOVAL

NOTE: **Examples used in this article are general in nature and do not necessarily relate to a specific engine or system. Illustrations and procedures have been chosen to guide mechanic through engine overhaul process. Descriptions of processes of cleaning, inspection, assembly and machine shop practice are included.**

Always refer to appropriate engine overhaul article, if available, in the ENGINES section for complete overhaul procedures and specifications for the vehicle being repaired.

Remove intake and exhaust manifolds and valve cover. Cylinder head and camshaft carrier bolts (if equipped) should be removed only when engine is cold. On many aluminum cylinder heads, removal while hot will cause cylinder head warpage. Mark rocker arm or overhead cam components for location.

Remove rocker arm components or overhead cam components. Components must be installed in original location. Individual design rocker arms may utilize shafts, ball-type pedestal mounts or no rocker arms. For all design types, wire components together and identify according to corresponding valve. Remove cylinder head bolts. Note length and location. Some applications require cylinder head bolts be removed in proper sequence to prevent cylinder head damage. See **Fig. 1**. Remove cylinder head.

INSTALLATION

NOTE: **Examples used in this article are general in nature and do not necessarily relate to a specific engine or system. Illustrations and procedures have been chosen to guide mechanic through engine overhaul process. Descriptions of processes of cleaning, inspection, assembly and machine shop practice are included.**

Always refer to appropriate engine overhaul article, if available, in the ENGINES section for complete overhaul procedures and specifications for the vehicle being repaired.

Ensure all surfaces and head bolts are clean. Check that head bolt holes of cylinder block are clean and dry to prevent block damage when bolts are tightened. Clean threads with tap to ensure accurate bolt torque.

Install head gasket on cylinder block. Some manufacturers may recommend sealant be applied to head gasket prior to installation. Note that all holes are aligned. Some gasket applications may be marked so that certain area faces upward. Install cylinder head using care not to damage head gasket. Ensure cylinder head is fully seated on cylinder block.

Some applications require head bolts be coated with sealant prior to installation. This is done if head bolts are exposed to coolant passages. Some applications require head bolts be coated with light coat of engine oil.

Install head bolts. Head bolts should be tightened in proper steps and sequence to specification. See Fig. 1. Install remaining components. Tighten all bolts to specification. Adjust valves if required. See VALVE ADJUSTMENT.

NOTE: **Some manufacturers require that head bolts be retightened after specified amount of operation. This must be done to prevent head gasket failure.**

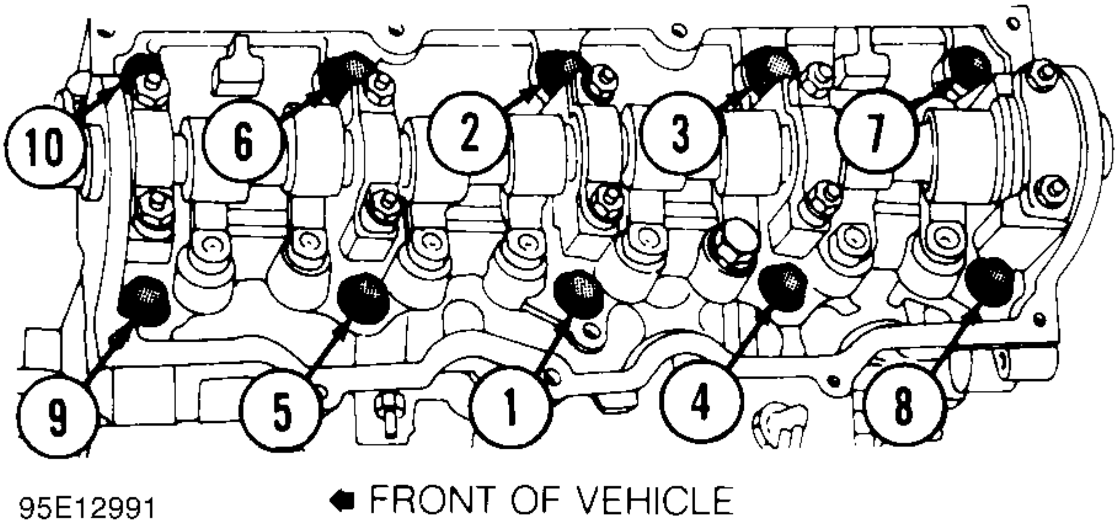

Fig. 1: Typical Cylinder Head Tightening or Loosening Sequence

VALVE ADJUSTMENT

NOTE: **Examples used in this article are general in nature and do not necessarily relate to a specific engine or system. Illustrations and procedures have been chosen to guide mechanic through engine overhaul process. Descriptions of processes of cleaning, inspection, assembly and machine shop practice are included.**

Always refer to appropriate engine overhaul article, if available, in the ENGINES section for complete overhaul procedures and specifications for the vehicle being repaired.

Engine specifications will indicate valve train clearance and temperature at which adjustment is to be made on most models. In most cases, adjustment will be made with a cold engine. In some cases, both a cold and a hot clearance will be given for maintenance convenience.

On some models, adjustment is not required. Rocker arms are tightened to specification and valve lash is automatically set. On some models with push rod actuated valve train, adjustment is made at push rod end of rocker arm while other models do not require adjustment.

Clearance will be checked between tip of rocker arm and tip of valve stem in proper sequence using a feeler gauge. Adjustment is made by rotating adjusting screw until proper clearance is obtained. Lock nut is then tightened. Engine will be rotated to obtain all valve adjustments to manufacturer's specifications.

Some models require hydraulic lifter to be bled down and clearance measured. Push rods of different length can be used to obtain proper clearance. Clearance will be checked between tip of rocker arm and tip of valve stem in proper sequence using a feeler gauge.

Overhead cam engines designed without rocker arms actuate valves directly on a cam follower. A hardened, removable disc is installed between the cam lobe and lifter. Clearance will be checked between cam heel and adjusting disc in proper sequence using a feeler gauge. Engine will be rotated to obtain all valve adjustments.

On overhead cam engines designed with rocker arms, adjustment is made at valve end of rocker arm. Ensure valve to be adjusted is riding on heel of cam on all engines. Clearance will be checked between tip of rocker arm and tip of valve stem in proper sequence using a feeler gauge. Adjustment is made by rotating adjusting screw until proper clearance is obtained. Lock nut is then tightened. Engine will be rotated to obtain all valve adjustments to manufacturer's specifications.

CYLINDER HEAD OVERHAUL

* PLEASE READ THIS FIRST *

NOTE: **Examples used in this article are general in nature and do not necessarily relate to a specific engine or system. Illustrations and procedures have been chosen to guide mechanic through engine overhaul process. Descriptions of processes of cleaning, inspection, assembly and machine shop practice are included.**

Always refer to appropriate engine overhaul article, if available, in the ENGINES section for complete overhaul procedures and specifications for the vehicle being repaired.

CYLINDER HEAD DISASSEMBLY

NOTE: **Examples used in this article are general in nature and do not necessarily relate to a specific engine or system. Illustrations and procedures have been chosen to guide mechanic through engine overhaul process. Descriptions of processes of cleaning, inspection, assembly and machine shop practice are included.**

Always refer to appropriate engine overhaul article, if available, in the ENGINES section for complete overhaul procedures and specifications for the vehicle being repaired.

Mark valves for location. Using valve spring compressor, compress valve springs. Remove valve locks. Carefully release spring compressor. Remove retainer or rotator, valve spring, spring seat and valve. See **Fig. 2**.

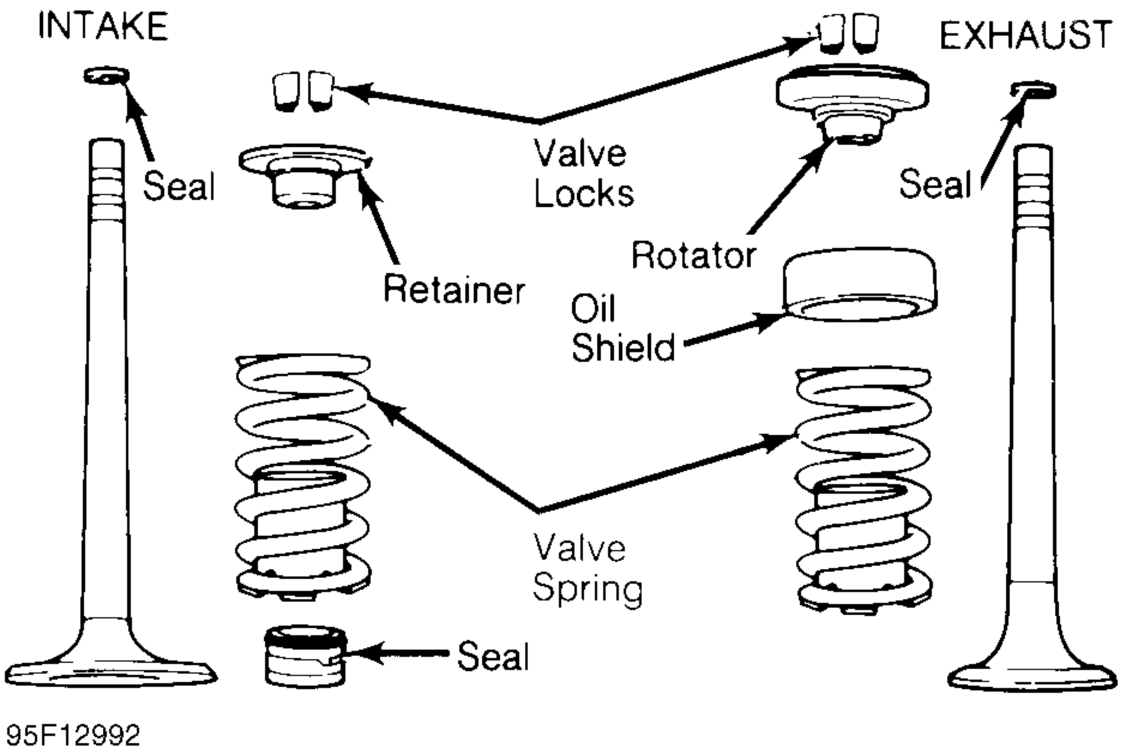

Fig. 2: Exploded View of Valve Assemblies

CYLINDER HEAD CLEANING & INSPECTION

NOTE: **Examples used in this article are general in nature and do not necessarily relate to a specific engine or system. Illustrations and procedures have been chosen to guide mechanic through engine overhaul process. Descriptions of processes of cleaning, inspection, assembly and machine shop practice are included.**

Always refer to appropriate engine overhaul article, if available, in the ENGINES section for complete overhaul procedures and specifications for the vehicle being repaired.

Clean cylinder head and valve components using approved cleaning methods. Inspect cylinder head for cracks, damage or warped gasket surface. Place straightedge across gasket surface. Determine clearance at center of straightedge. Measure across both diagonals, longitudinal center line and across cylinder head at several points. See Fig. 3.

On cast iron cylinder heads, if warpage exceeds .003" (.08 mm) in a 6" span, or .006" (.15 mm) over total length, cylinder head must be resurfaced. On most aluminum cylinder heads, if warpage exceeds .002" (.05 mm) in any area, cylinder head must be resurfaced. Warpage specification may vary by manufacturer. If warpage exceeds specification on some cylinder heads, cylinder head must be replaced.

Cylinder head thickness should be measured to determine amount of material which can be removed before replacement is required. Cylinder head thickness must not be less than the manufacturer's specification.

If cylinder head required resurfacing, it may not align properly with intake manifold. On "V" type engines, misalignment is corrected by machining intake manifold surface that contacts cylinder head. Cylinder head may be machined on surface that contacts intake manifold. Using oil stone, remove burrs or scratches from all sealing surfaces.

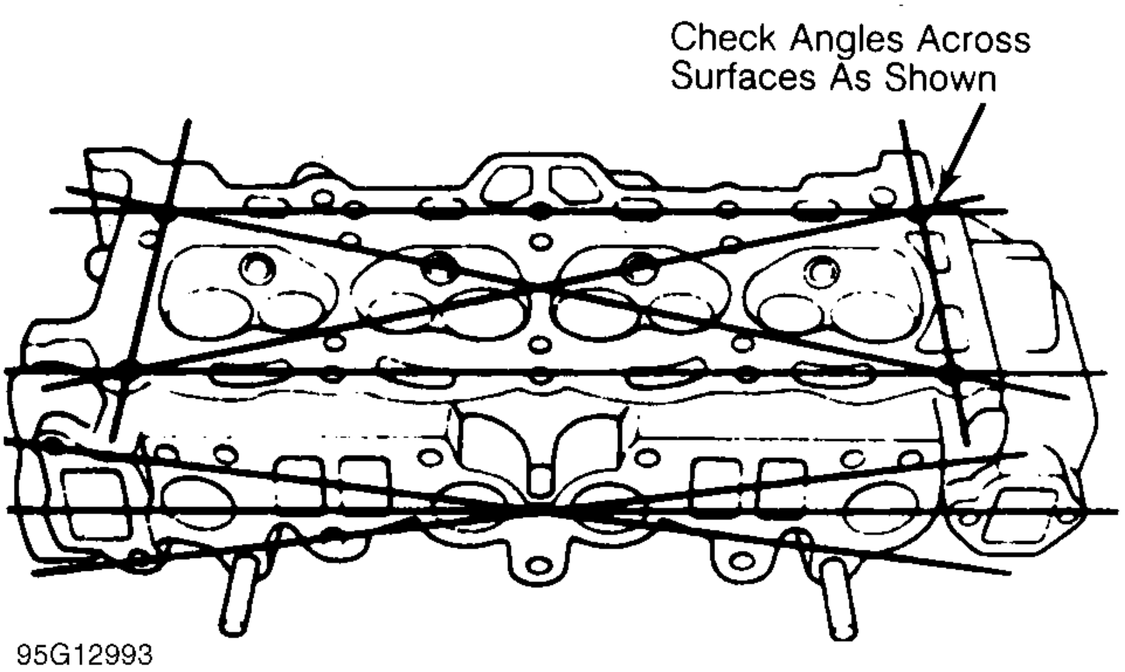

Fig. 3: Checking Cylinder Head for Warpage

VALVE SPRINGS

NOTE: **Examples used in this article are general in nature and do not necessarily relate to a specific engine or system. Illustrations and procedures have been chosen to guide mechanic through engine overhaul process. Descriptions of processes of cleaning, inspection, assembly and machine shop practice are included.**

Always refer to appropriate engine overhaul article, if available, in the ENGINES section for complete overhaul procedures and specifications for the vehicle being repaired.

Inspect valve springs for corroded or pitted valve spring surfaces which may lead to breakage. Polished spring ends caused by a rotating spring indicate that spring surge has occurred. Replace springs showing evidence of these conditions.

Inspect valve springs for squareness using a 90-degree straightedge. See Fig. 4. Replace valve spring if out-of-square exceeds manufacturer's specification.

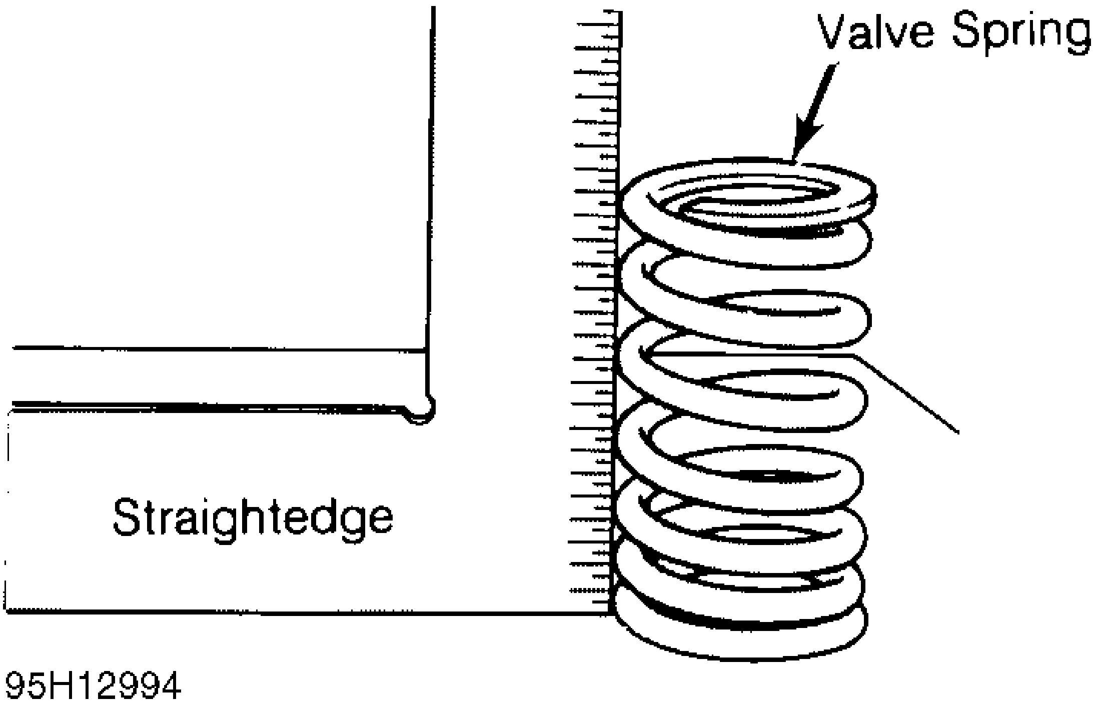

Fig. 4: Checking Valve Spring Squareness

Using vernier caliper, measure free length of all valve springs. Replace springs if not within specification. Using valve spring tester, test valve spring pressure at installed and compressed heights. See **Fig. 5**.

Usually compressed height is installed height minus valve lift. Replace valve spring if not within specification. It is recommended to replace all valve springs when overhauling cylinder head. Valve springs may need to be installed with color coded end or small coils at specified area according to manufacturer.

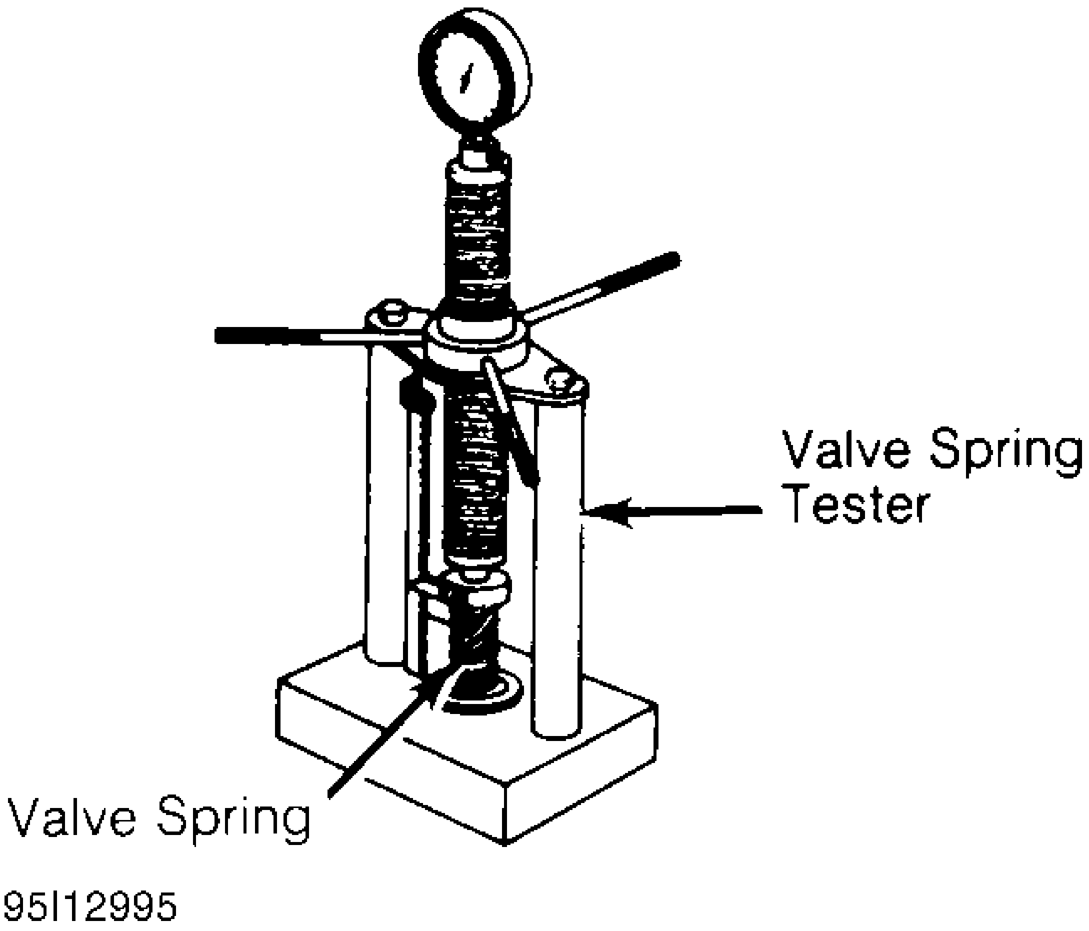

Fig. 5: Checking Valve Spring Pressure

VALVE GUIDE

NOTE:	**Examples used in this article are general in nature and do not necessarily relate to a specific engine or system. Illustrations and procedures have been chosen to guide mechanic through engine overhaul process. Descriptions of processes of cleaning, inspection, assembly and machine shop practice are included.** **Always refer to appropriate engine overhaul article, if available, in the ENGINES section for complete overhaul procedures and specifications for the vehicle being repaired.**

Measuring Valve Guide Clearance

Check valve stem-to-guide clearance. Ensure valve stem diameter is within specification. Install valve in valve guide. Install dial indicator assembly on cylinder head with tip resting against valve stem just above valve guide. See Fig. 6.

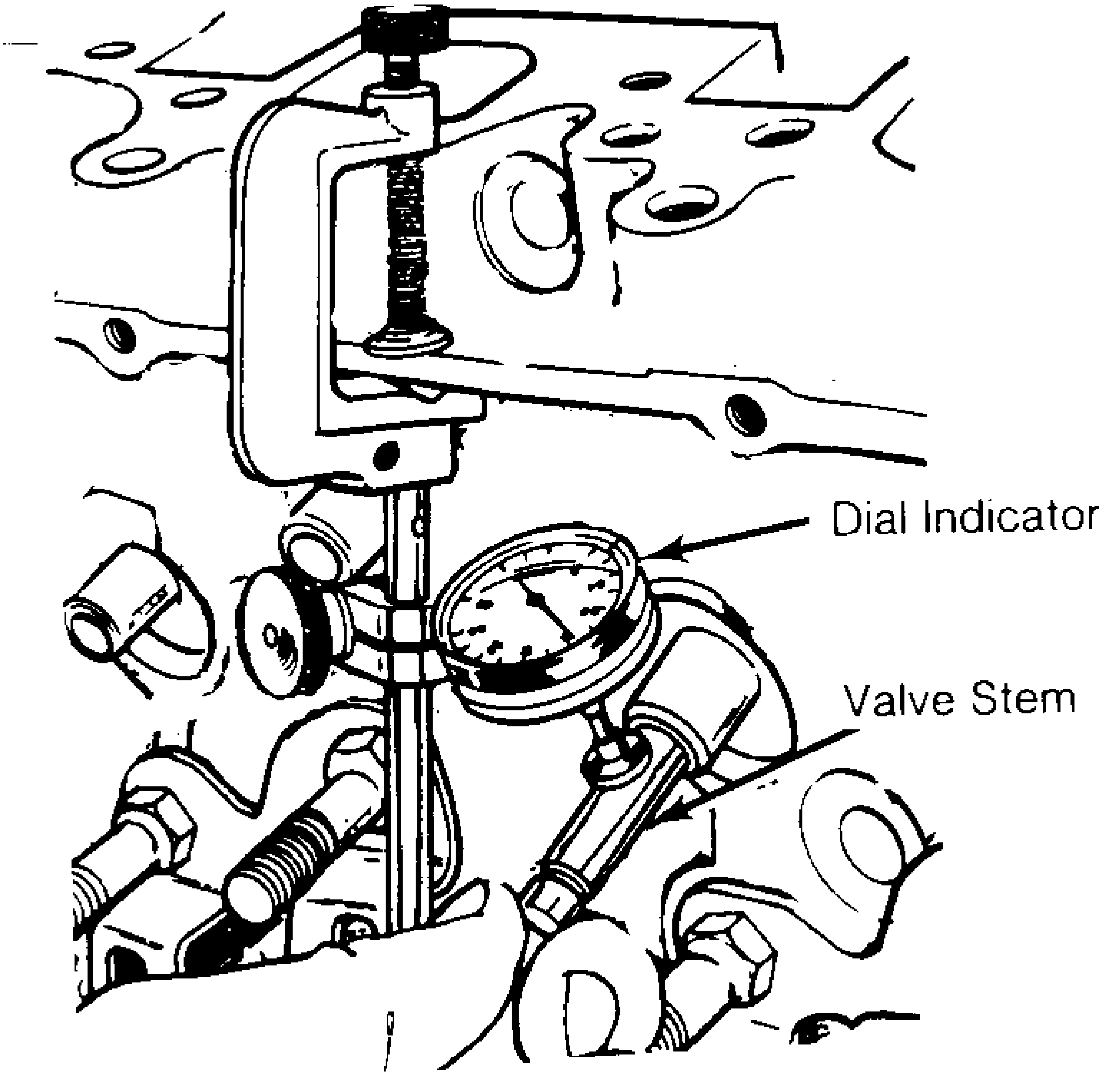

Fig. 6: Measuring Valve Stem-to-Guide Clearance

Lower valve approximately 1/16" below valve seat. Push valve stem against valve guide as far as possible. Adjust dial indicator to zero. Push valve stem in opposite direction and note reading. Clearance must be within specification.

If valve guide clearance exceeds specification, valves with oversize stems may be used and valve guides are reamed to larger size or valve guide must be replaced. On some applications, a false guide is installed, then reamed to proper specification. Valve guide reamer set is used to ream valve guide to obtain proper clearance for new valve.

Reaming Valve Guide

Select proper reamer for size of valve stem. Reamer must be of proper length to provide clean cut through entire length of valve guide. Install reamer in valve guide and rotate to cut valve guide. See Fig. 7.

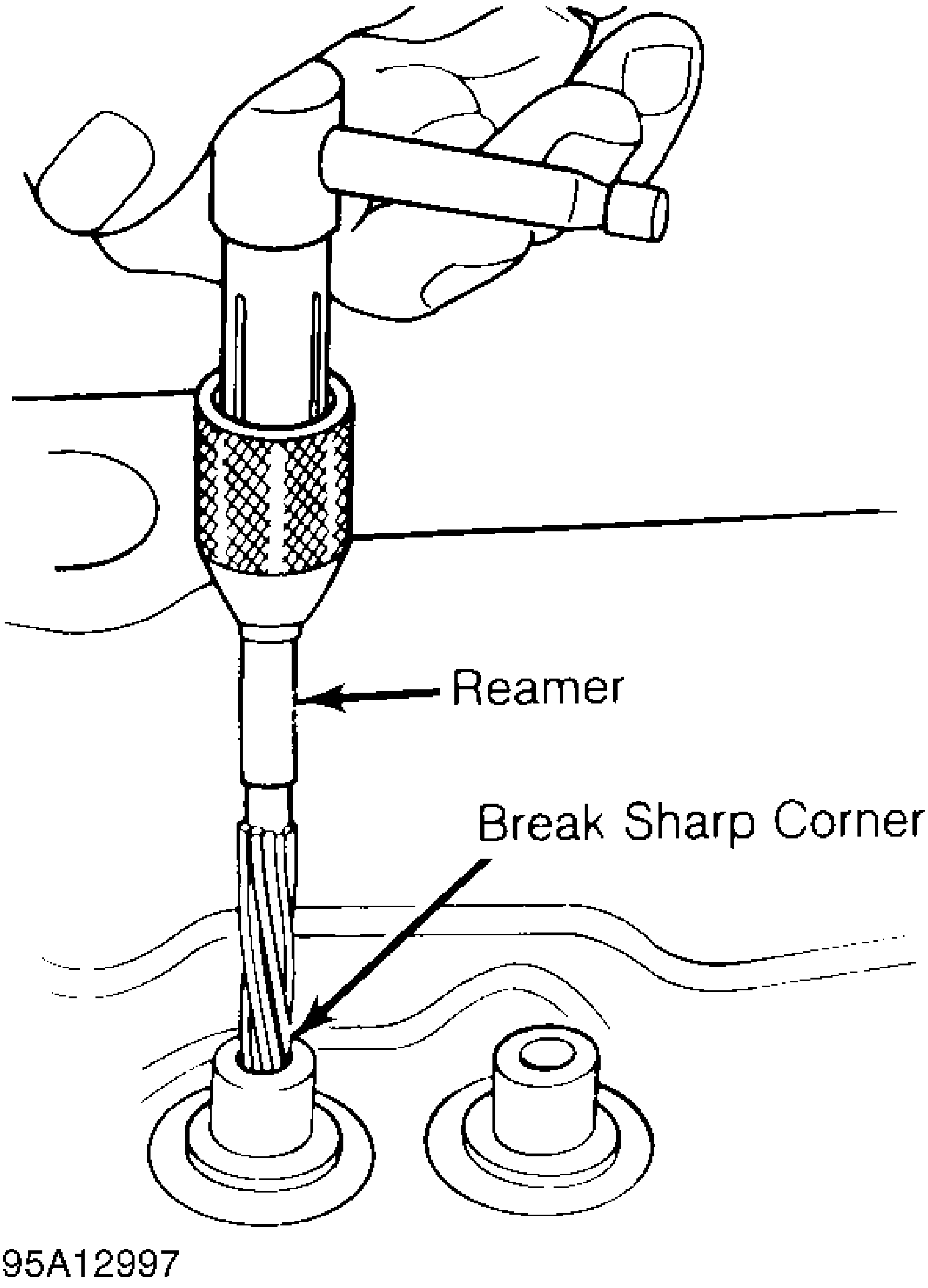

Fig. 7: Reaming Valve Guides

Replacing Valve Guide

Replace valve guide if clearance exceeds specification. Valve guides are either pressed, hammered or shrunk in place, depending upon cylinder head design and type of metal used.

Remove valve guide from cylinder head by pressing or tapping on a stepped drift. See **Fig. 8**. Once valve guide is installed, distance from cylinder head to top of valve guide must be checked. This distance must be within specification.

Aluminum heads are often heated before installing valve guide. Valve guide is sometimes cooled in dry ice prior to installation. Combination of a heated cylinder head and cooled valve guide ensures a tight guide fit upon assembly. The new guide must be reamed to specification.

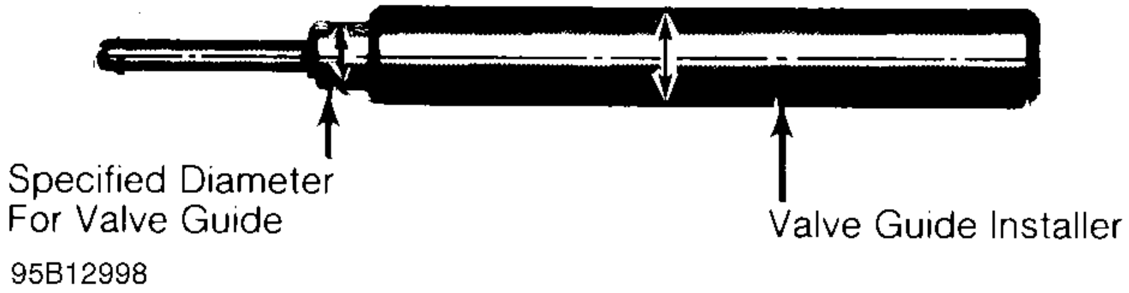

Fig. 8: Typical Valve Guide Remover & Installer

VALVES & VALVE SEATS

NOTE: **Examples used in this article are general in nature and do not necessarily relate to a specific engine or system. Illustrations and procedures have been chosen to guide mechanic through engine overhaul process. Descriptions of processes of cleaning, inspection, assembly and machine shop practice are included.**

Always refer to appropriate engine overhaul article, if available, in the ENGINES section for complete overhaul procedures and specifications for the vehicle being repaired.

Valve Grinding

Valve stem O.D. should be measured in several areas to indicate amount of wear. Replace valve if not within specification. Valve margin area should be measured to ensure that valve can be ground. See Fig. 9.

If valve margin is less than specification, the valves will be burned. Valve must be replaced. Due to minimum margin dimensions during manufacture, some new type valves cannot be reground. Some manufacturers use stellite coated valves that must NOT be machined. Valves can only be lapped into valve seat.

CAUTION: **Some valves are sodium filled. Extreme care must be used when disposing of damaged or worn sodium-filled valves.**

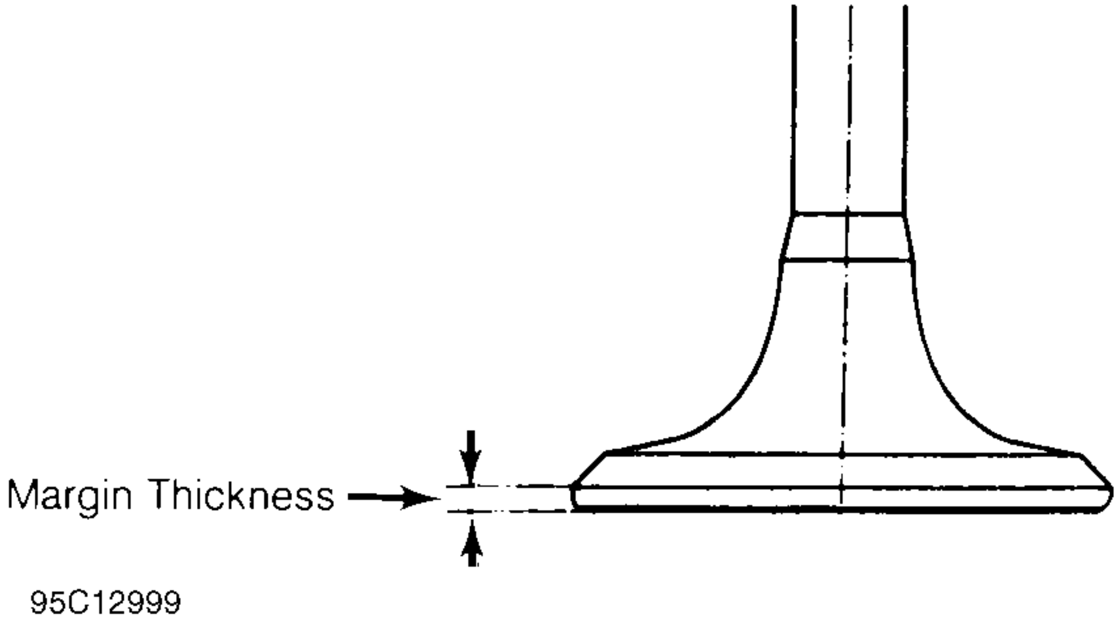

Fig. 9: Measuring Valve Head Margin

Resurface valve to proper angle specification using valve grinding machine. Follow manufacturer's instructions for valve grinding machine. Specifications may indicate a different valve face angle than seat angle. Measure valve margin after grinding. Replace valve if not within specification. Valve stem tip can be refinished using valve grinding machine.

Valve Lapping

During valve lapping of recently designed valves, be sure to follow manufacturer's recommendations. Surface hardening and materials used with some valves do not permit lapping. Lapping process will remove excessive amounts of the hardened surface.

Valve lapping is done to ensure adequate sealing between valve face and seat. Use either a hand drill or lapping stick with suction cup attached.

Moisten and attach suction cup to valve. Lubricate valve stem and guide. Apply a thin coat of fine valve grinding compound between valve and seat. Rotate lapping tool between the palms or with hand drill.

Lift valve upward off the seat and change position often. This is done to prevent grooving of valve seat. Lap valve until a smooth polished seat is obtained. Thoroughly clean grinding compound from components. Valve-to-valve seat concentricity should be checked. See VALVE SEAT CONCENTRICITY.

CAUTION: **Valve guides must be in good condition and free of carbon deposits prior to valve seat grinding. Some engines contain an induction hardened valve seat. Excessive material removal will damage valve seats.**

Valve Seat Grinding

Select coarse stone of correct size and angle for seat to be ground. Ensure stone is true and has a smooth surface. Select correct size pilot for valve guide dimension. Install pilot in valve guide. Lightly lubricate pilot shaft. Install stone on pilot. Move stone off and on the seat approximately 2 times per second during grinding operation.

Select a fine stone to finish grinding operation. Various angle grinding stones are used to center and narrow the valve seat as required. See Fig. 10.

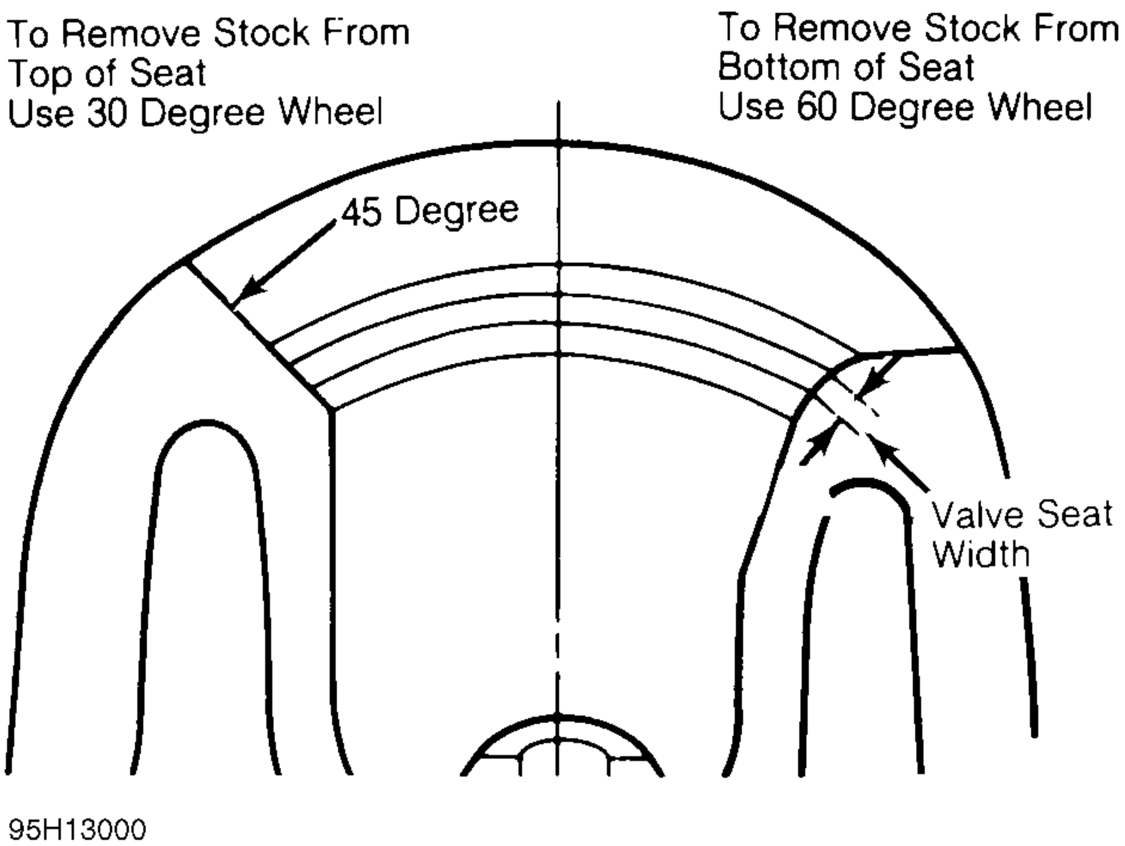

Fig. 10: Adjusting Valve Seat Width

Valve Seat Replacement

Replacement of valve seat inserts is done by cutting out the old insert and machining an oversize insert bore. Replacement oversize insert is usually cooled and the cylinder head is sometimes warmed. Valve seat is pressed into the head. This operation requires specialized machine shop equipment.

Valve Seat Concentricity

Using dial gauge, install gauge pilot in valve guide. Position gauge arm on the valve seat. Adjust dial indicator to zero. Rotate arm 360 degrees and note reading. Runout should not exceed specification.

To check valve-to-valve seat concentricity, coat valve face lightly with Prussian Blue dye. Install valve and rotate it on valve seat. If pattern is even and entire seat is coated at valve contact point, valve is concentric with the valve seat.

CYLINDER HEAD REASSEMBLY

NOTE: **Examples used in this article are general in nature and do not necessarily relate to a specific engine or system. Illustrations and procedures have been chosen to guide mechanic through engine overhaul process. Descriptions of processes of cleaning, inspection, assembly and machine shop practice are included.**

Always refer to appropriate engine overhaul article, if available, in the ENGINES section for complete overhaul procedures and specifications for the vehicle

being repaired.

Valve Stem Installed Height

Valve stem installed height must be checked when new valves are installed or when valves or valve seats have been ground. Install valve in valve guide. Measure distance from tip of valve stem to spring seat. See **Fig. 11**. Distance must be within specification to allow sufficient clearance for valve operation.

Remove valve and grind valve stem tip if height exceeds specification. Valve tips are surface hardened. DO NOT remove more than .010" (.25 mm) from tip. Chamfer sharp edge of reground valve tip. Recheck valve stem installed height.

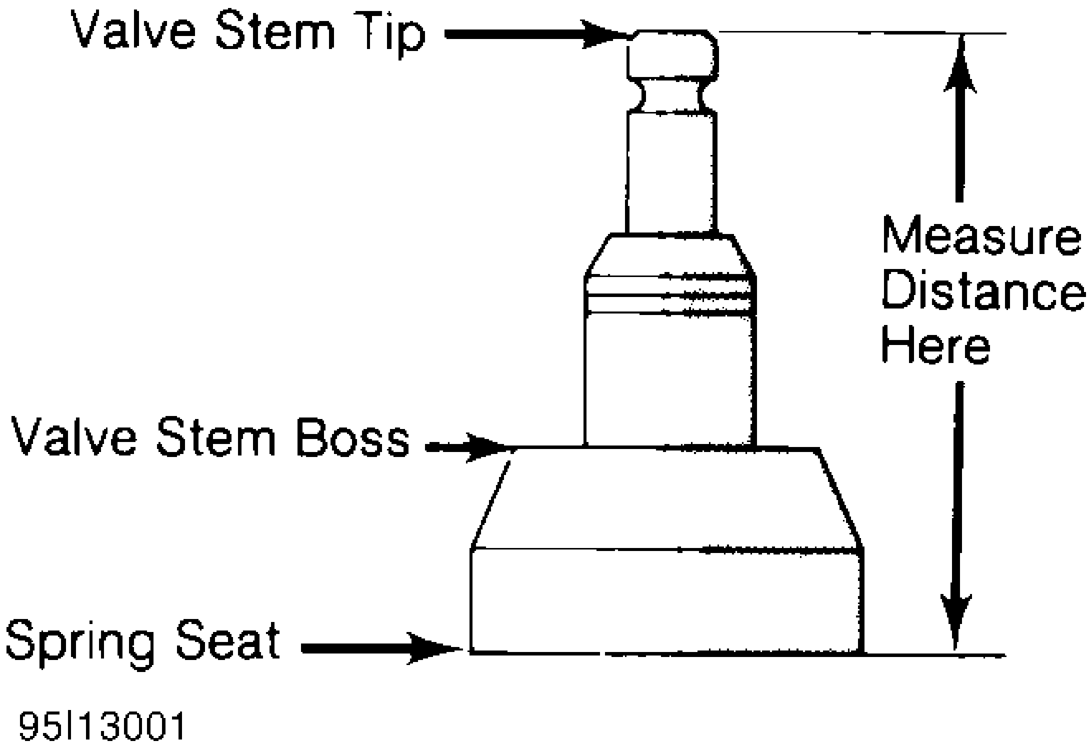

Fig. 11: Measuring Valve Stem Installed Height

VALVE STEM OIL SEALS

NOTE: **Examples used in this article are general in nature and do not necessarily relate to a specific engine or system. Illustrations and procedures have been chosen to guide mechanic through engine overhaul process. Descriptions of processes of cleaning, inspection, assembly and machine shop practice are included.**

Always refer to appropriate engine overhaul article, if available, in the ENGINES section for complete overhaul procedures and specifications for the vehicle being repaired.

Valve stem oil seals must be installed on valve stem. See **Fig. 2**. Seals are needed due to pressure differential at the ends of valve guides. Atmospheric pressure above intake guide, combined with manifold vacuum below guide, causes oil to be drawn into the cylinder.

Exhaust guides also have pressure differential created by exhaust gas flowing past the guide, creating a low pressure area. This low pressure area draws oil into the exhaust system.

Some manufacturers require that special color code or specified height valve stem oil seal be installed in designated area.

Replacement (On-Vehicle)

Mark rocker arm or overhead cam components for location. Remove rocker arm components or overhead cam components. Components must be installed in original location. Remove spark plugs. Valve stem oil seals may be replaced by holding valves against seats using air pressure.

Air pressure must be installed in cylinder using an adapter for spark plug hole. An adapter can be constructed by welding air hose connection to spark plug body with porcelain removed.

Rotate engine until piston is at top of stroke. Install adapter in spark plug hole. Apply a minimum of 140 psi (9.8 kg/cm^2) line pressure to adapter. Air pressure should hold valve closed. If air pressure does not hold valve closed, check for damaged or bent valve. Cylinder head must be removed for service.

Using valve spring compressor, compress valve springs. Remove valve locks. Carefully release spring compressor. Remove retainer or rotator and valve spring. Remove valve stem oil seal.

If oversize valves have been installed, oversize oil seals must be used. Coat valve stem with engine oil. Install protective sleeve over end of valve stem. Install new oil seal over valve stem and seat on valve guide. Remove protective sleeve. Install spring seat, valve spring and retainer or rotator. Compress spring and install valve locks. Remove spring compressor. Ensure valve locks are fully seated.

Install rocker arms or overhead cam components. Tighten all bolts to specification. Adjust valves if required. Remove adapter. Install spark plugs, valve cover and gasket.

VALVE SPRING INSTALLED HEIGHT

NOTE: **Examples used in this article are general in nature and do not necessarily relate to a specific engine or system. Illustrations and procedures have been chosen to guide mechanic through engine overhaul process. Descriptions of processes of cleaning, inspection, assembly and machine shop practice are included.**

Always refer to appropriate engine overhaul article, if available, in the ENGINES section for complete overhaul procedures and specifications for the vehicle being repaired.

Valve spring installed height should be checked during reassembly. Measure height from lower edge of valve spring to the upper edge. DO NOT include valve spring seat or retainer. Distance must be within specification. If valves and/or seats have been ground, a valve spring shim may be required to correct spring height. See **Fig. 12**.

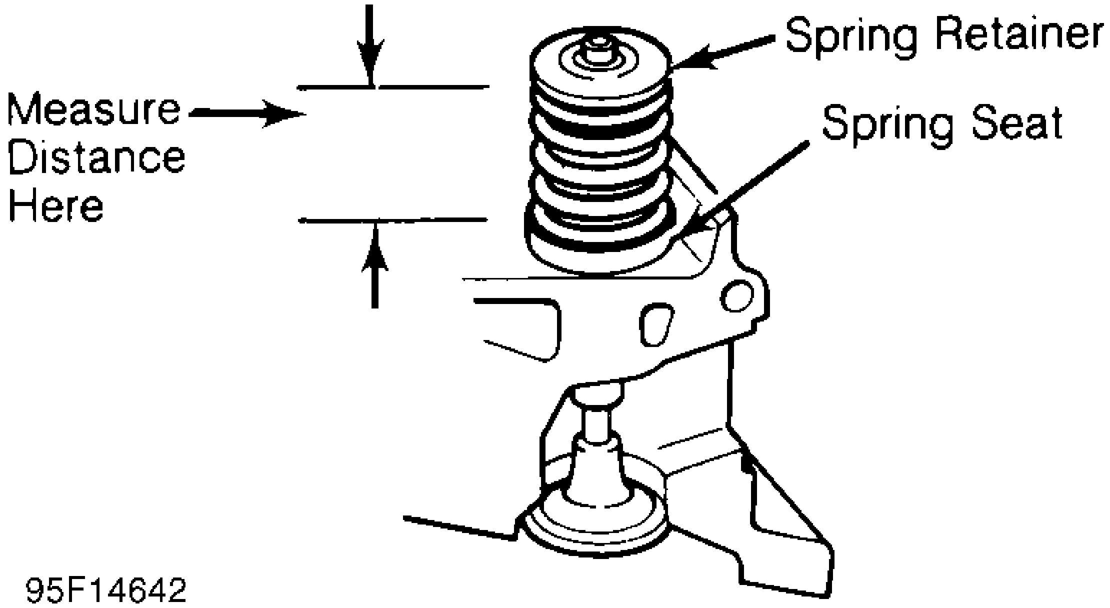

Fig. 12: Measuring Valve Spring Installed Height

ROCKER ARMS & ASSEMBLIES

NOTE: **Examples used in this article are general in nature and do not necessarily relate to a specific engine or system. Illustrations and procedures have been chosen to guide mechanic through engine overhaul process. Descriptions of processes of cleaning, inspection, assembly and machine shop practice are included.**

Always refer to appropriate engine overhaul article, if available, in the ENGINES section for complete overhaul procedures and specifications for the vehicle being repaired.

Rocker Studs

Rocker studs are either threaded or pressed in place. Threaded studs are removed by locking 2 nuts on the stud. Unscrew the stud by turning the jam nut. Coat new stud threads with Loctite and install. Tighten to specification.

Pressed-in stud can be removed using a stud puller. Ream stud bore to proper specification and press in a new oversize stud. Pressed-in studs are often replaced by cutting threads in the stud bore to accept a threaded stud.

Rocker Arms & Shafts

Mark rocker arms for location. Remove rocker arm retaining bolts. Remove rocker arms. Inspect rocker arms, shafts, bushings and pivot balls (if equipped) for excessive wear. Inspect rocker arms for wear in valve stem contact area. Measure rocker arm bushing I.D. Replace bushings if excessively worn.

The rocker arm valve stem contact point may be reground, using special fixture for valve grinding machine. Remove minimum amount of material as possible. Ensure all oil passages are clear. Install rocker arm components in original location. Ensure rocker arm is properly seated in push rod. Tighten bolts to specification. Adjust valves if required. See VALVE ADJUSTMENT.

PUSH RODS

NOTE: **Examples used in this article are general in nature and do not necessarily relate to a specific engine or system. Illustrations and procedures have been chosen to guide mechanic through engine overhaul process. Descriptions of processes of cleaning, inspection, assembly and machine shop practice are included.**

Always refer to appropriate engine overhaul article, if available, in the ENGINES section for complete overhaul procedures and specifications for the vehicle being repaired.

Remove rocker arms. Mark push rods for location. Remove push rods. Push rods can be steel or aluminum, solid or hollow. Hollow push rods must be internally cleaned to ensure oil passage to rocker arms is cleaned. Check push rods for damage, such as loose ends on steel tipped aluminum types.

Check push rod for straightness. Roll push rod on a flat surface. Using feeler gauge, check clearance at center. Replace push rod if bent. The push rod can also be supported at each end and rotated. A dial indicator is used to detect a bent area in the push rod.

Lubricate ends of push rod and install push rod in original location. Ensure push rod is properly seated in lifter. Install rocker arm. Tighten bolts to specification. Adjust valves if required. See **VALVE ADJUSTMENT**.

LIFTERS

NOTE: **Examples used in this article are general in nature and do not necessarily relate to a specific engine or system. Illustrations and procedures have been chosen to guide mechanic through engine overhaul process. Descriptions of processes of cleaning, inspection, assembly and machine shop practice are included.**

Always refer to appropriate engine overhaul article, if available, in the ENGINES section for complete overhaul procedures and specifications for the vehicle being repaired.

Hydraulic Lifters

Before replacing a hydraulic lifter for noisy operation, ensure noise is not caused by worn rocker arms or valve tips. Also ensure sufficient oil pressure exists. Hydraulic lifters must be installed in original location. Remove rocker arm assembly and push rod. Mark components for location. Some applications require intake manifold, cylinder head or lifter cover removal. Remove lifter retainer plate (if used). To remove lifters, use a hydraulic lifter remover or magnet. Different type lifters are used. See **Fig. 13**.

On sticking lifters, disassemble and clean lifter. DO NOT mix lifter components or positions. Parts are select-fitted and are not interchangeable. Inspect all components for wear. Note amount of wear in lifter body-to-camshaft contact area. Surface must have smooth and convex contact face. If wear is apparent, carefully inspect cam lobe.

Inspect push rod contact area and lifter body for scoring or signs of wear. If body is scored, inspect lifter bore for damage and lack of lubrication. On roller type lifters, inspect roller for flaking, pitting, loss of needle bearings and roughness during rotation.

Measure lifter body O.D. in several areas. Measure lifter bore I.D. Ensure components or oil clearance is within specification. Some models offer oversize lifters. Replace lifter if damaged.

If lifter check valve is not operating, obstructions may be preventing it from closing or valve spring may be broken. Clean or replace components as necessary.

Check plunger operation. Plunger should drop to bottom of the body by its own weight when assembled dry. If plunger is not free, soak lifter in solvent to dissolve deposits.

Lifter leak-down test can be performed on lifter. Lifter must be filled with special test oil. New lifters contain special test oil. Using lifter leak-down tester, perform leak-down test following manufacturer's instructions. If leak-down time is not within specifications, replace lifter assembly.

Lifters should be soaked in clean engine oil several hours prior to installation. Coat lifter base, roller (if equipped) and lifter body with ample amount of Molykote or camshaft lubricant. See Fig. 13. Install lifter in original location. Install remaining components. Valve lash adjustment is not required on most hydraulic lifters. Preload of hydraulic lifter is automatic. Some models may require adjustment.

NOTE: **Some manufacturers require that a crankcase conditioner be added to engine oil and engine operated for specified amount of time to aid in lifter break-in procedure if new lifters or camshaft are installed.**

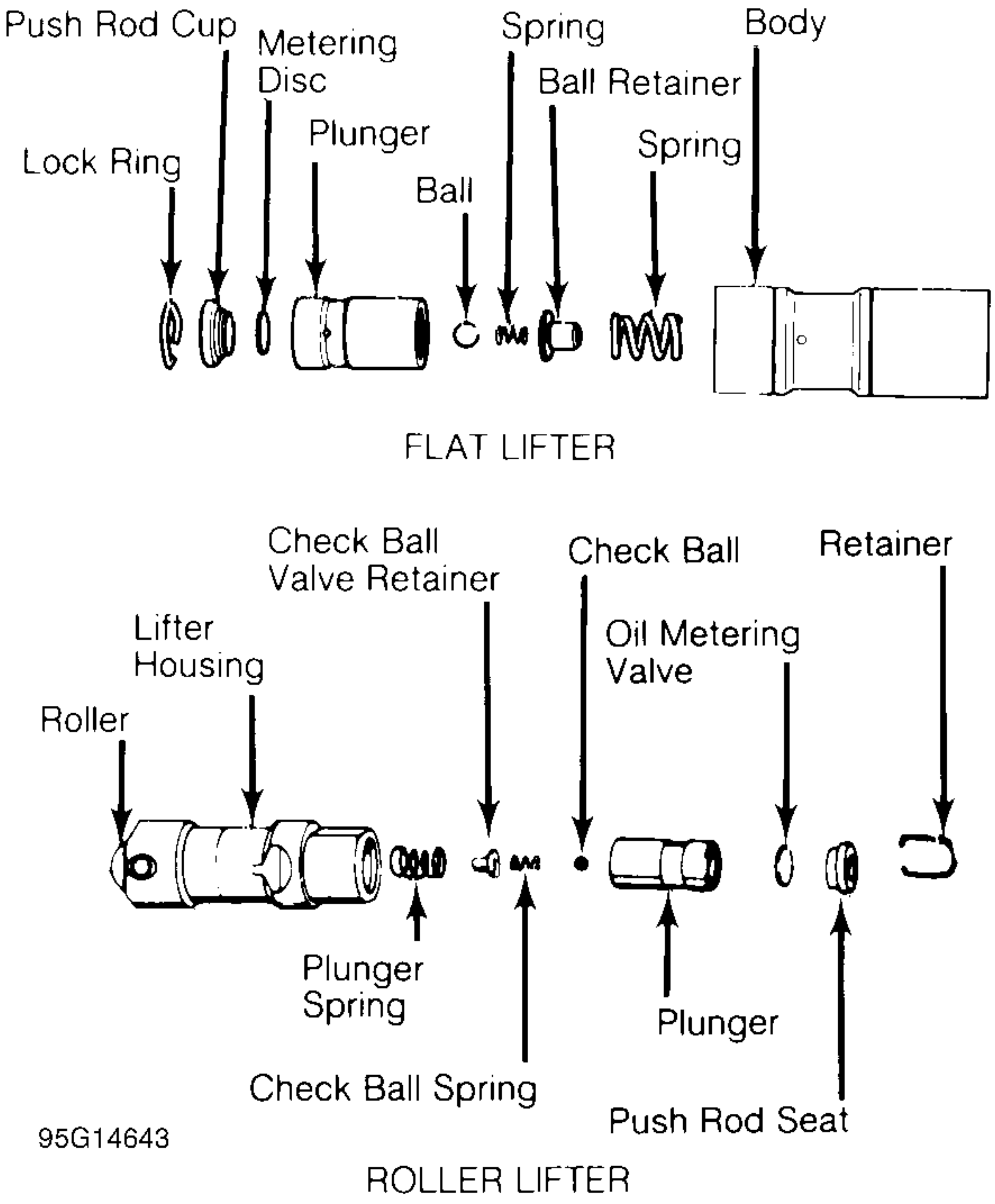

Push Rod Cup
Metering Disc
Spring
Body
Ball Retainer
Plunger
Lock Ring
Spring
Ball
FLAT LIFTER
Check Ball Valve Retainer
Check Ball
Retainer
Lifter Housing
Oil Metering Valve
Roller
Plunger Spring
Plunger
Check Ball Spring
Push Rod Seat
95G14643
ROLLER LIFTER

Fig. 13: Typical Hydraulic Valve Lifter Assemblies

Mechanical Lifters

Lifter assemblies must be installed in original locations. Remove rocker arm assembly and push rod. Mark components for location. Some applications require intake manifold or lifter cover removal. Remove lifter retainer plate (if used). To remove lifters, use lifter remover or magnet.

Inspect push rod contact area and lifter body for scoring or signs of wear. If body is scored, inspect lifter bore for damage and lack of lubrication. Note amount of wear in lifter body-to-camshaft contact area. Surface must have smooth and convex contact face. If wear is apparent, carefully inspect cam lobe.

Coat lifter base, roller (if equipped) and lifter body with ample amount of Molykote or camshaft lubricant. Install lifter in original location. Install remaining components. Tighten bolts to specification. Adjust valves. See VALVE ADJUSTMENT.

PISTONS, CONNECTING RODS & BEARINGS

* PLEASE READ THIS FIRST *

NOTE: **Examples used in this article are general in nature and do not necessarily relate to a specific engine or system. Illustrations and procedures have been chosen to guide mechanic through engine overhaul process. Descriptions of processes of cleaning, inspection, assembly and machine shop practice are included.**

Always refer to appropriate engine overhaul article, if available, in the ENGINES section for complete overhaul procedures and specifications for the vehicle being repaired.

RIDGE REMOVAL

NOTE: **Examples used in this article are general in nature and do not necessarily relate to a specific engine or system. Illustrations and procedures have been chosen to guide mechanic through engine overhaul process. Descriptions of processes of cleaning, inspection, assembly and machine shop practice are included.**

Always refer to appropriate engine overhaul article, if available, in the ENGINES section for complete overhaul procedures and specifications for the vehicle being repaired.

Ridge in cylinder wall must be removed prior to piston removal. Failure to remove ridge prior to removing pistons will cause piston damage in piston ring lands or grooves.

With piston at bottom dead center, place rag in bore to trap metal chips. Install ridge reamer in cylinder bore. Adjust ridge reamer using manufacturer's instructions. Remove ridge using ridge reamer. DO NOT remove an excessive amount of material. Ensure ridge is completely removed.

PISTON & CONNECTING ROD REMOVAL

NOTE: **Examples used in this article are general in nature and do not necessarily relate to a specific engine or system. Illustrations and procedures have been chosen to guide mechanic through engine overhaul process. Descriptions of processes of cleaning, inspection, assembly and machine shop practice are included.**

Always refer to appropriate engine overhaul article, if available, in the ENGINES section for complete overhaul procedures and specifications for the vehicle being repaired.

Note top of piston. Some pistons may contain a notch, arrow or be marked FRONT. Piston must be installed in proper direction to prevent damage with valve operation.

Check that connecting rod and cap are numbered for cylinder location and which side of cylinder block the number faces. Proper cap and connecting rod must be installed together. Connecting rod cap must be installed on connecting rod in proper direction to ensure bearing lock procedure. Mark connecting rod and cap if necessary. Pistons must be installed in original location.

Remove cap retaining nuts or bolts. Remove bearing cap. Install tubing protectors on connecting rod bolts. This protects cylinder walls from scoring during removal. Ensure proper removal of ridge. Push piston and connecting rod from cylinder. Connecting rod boss can be tapped with a wooden dowel or hammer handle to aid in removal.

PISTON & CONNECTING ROD

NOTE: **Examples used in this article are general in nature and do not necessarily relate to a specific engine or system. Illustrations and procedures have been chosen to guide mechanic through engine overhaul process. Descriptions of processes of cleaning, inspection, assembly and machine shop practice are included.**

Always refer to appropriate engine overhaul article, if available, in the ENGINES section for complete overhaul procedures and specifications for the vehicle being repaired.

Disassembly

Using ring expander, remove piston rings. Remove piston pin retaining rings (if equipped). Note direction of piston installation on connecting rod. On pressed type piston pins, special fixtures and procedures according to manufacturer must be used to remove piston pins. Follow manufacturer's recommendations to avoid piston distortion or breakage.

Cleaning

Remove all carbon and varnish from piston. Pistons and connecting rods may be cleaned in cold type chemical tank. Using ring groove cleaner, clean all deposits from ring grooves. Ensure all deposits are cleaned from ring grooves to prevent ring breakage or sticking. DO NOT attempt to clean pistons with wire brush.

Inspection

Inspect pistons for nicks, scoring, cracks or damage in ring areas. Connecting rod should be checked for cracks using Magnaflux procedure. Piston diameter must be measured in manufacturer's specified area.

Using telescopic gauge and micrometer, measure piston pin bore of piston in 2 areas, 90 degrees apart. This is done to check diameter and out-of-round.

Install proper bearing cap on connecting rod. Ensure bearing cap is installed in proper location. Tighten bolts or nuts to specification. Using inside micrometer, measure inside diameter in 2 areas, 90 degrees apart.

Connecting rod I.D. and out-of-round must be within specification. Measure piston pin bore I.D. and piston pin O.D. All components must be within specification. Subtract piston pin diameter from piston pin bore in piston and connecting rod to determine proper fit.

Connecting rod length must be measured from center of crankshaft journal inside diameter to center of piston pin bushing using proper caliper. Connecting rods must be the same length. Connecting rods should be checked on an alignment fixture for bent or twisted condition. Replace all components which are damaged or not within specification.

PISTON & CYLINDER BORE FIT

NOTE: **Examples used in this article are general in nature and do not necessarily relate to a specific engine or system. Illustrations and procedures have been chosen to guide mechanic through engine overhaul process. Descriptions of processes of cleaning, inspection, assembly and machine shop practice are included.**

Always refer to appropriate engine overhaul article, if available, in the ENGINES section for complete overhaul procedures and specifications for the vehicle being repaired.

Ensure cylinder is checked for taper, out-of-round and properly honed prior to checking piston and cylinder bore fit. See CYLINDER BLOCK. Using dial bore gauge, measure cylinder bore.

Measure piston skirt diameter at 90 degree angle to piston pin at specified area by manufacturer. Subtract piston diameter from cylinder bore diameter to determine piston-to-cylinder clearance. Clearance must be within specification. Mark piston for proper cylinder location.

ASSEMBLING PISTON & CONNECTING ROD

NOTE: **Examples used in this article are general in nature and do not necessarily relate to a specific engine or system. Illustrations and procedures have been chosen to guide mechanic through engine overhaul process. Descriptions of processes of cleaning, inspection, assembly and machine shop practice are included.**

Always refer to appropriate engine overhaul article, if available, in the ENGINES section for complete overhaul procedures and specifications for the vehicle being repaired.

Install piston on connecting rod for corresponding cylinder. Ensure reference marking on top of piston corresponds with connecting rod and cap number. See Fig. 14.

Lubricate piston pin and install in connecting rod. Ensure piston pin retainers are fully seated (if equipped). On pressed type piston pins, follow manufacturer's recommended procedure to avoid distortion or breakage.

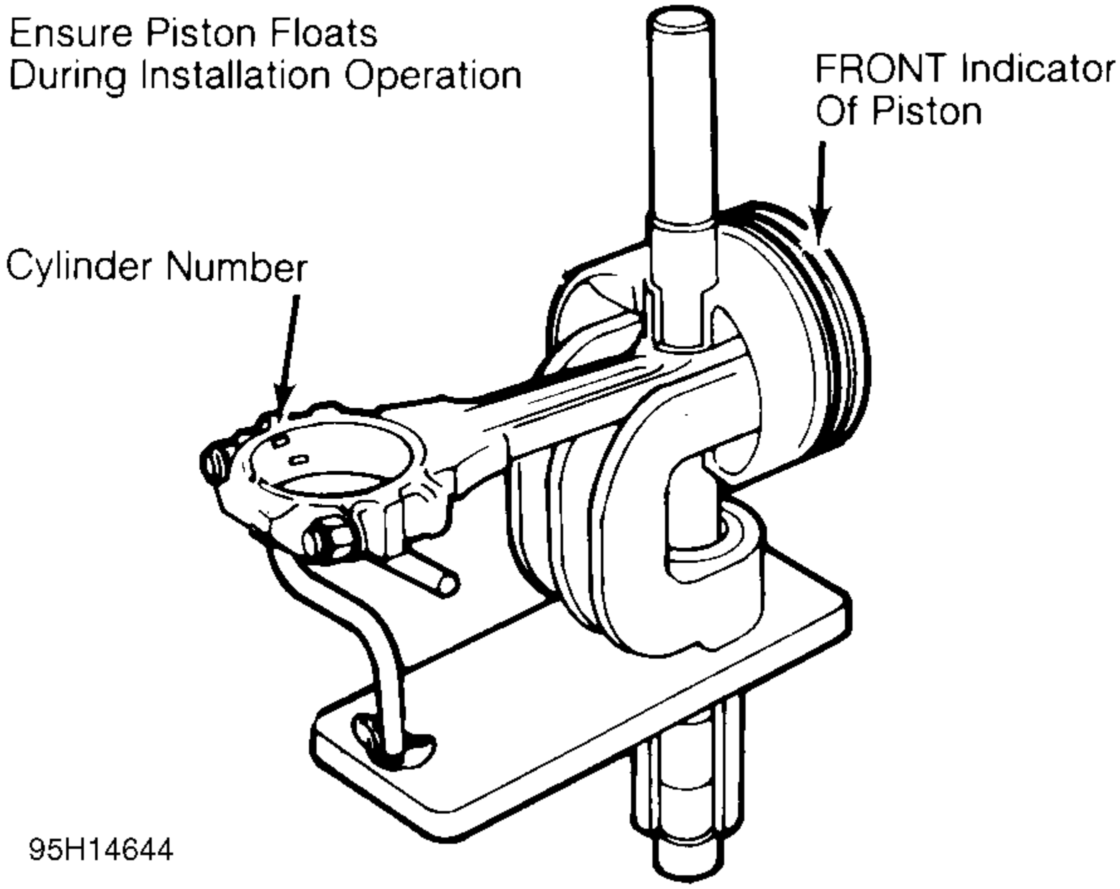
Ensure Piston Floats During Installation Operation
FRONT Indicator Of Piston
Cylinder Number
95H14644

Fig. 14: Installing Typical Piston Pin

CHECKING PISTON RING CLEARANCES

NOTE: **Examples used in this article are general in nature and do not necessarily relate to a specific engine or system. Illustrations and procedures have been chosen to guide mechanic through engine overhaul process. Descriptions of processes of cleaning, inspection, assembly and machine shop practice are included.**

Always refer to appropriate engine overhaul article, if available, in the ENGINES section for complete overhaul procedures and specifications for the vehicle being repaired.

Piston rings must be checked for side clearance and end gap. To check end gap, install piston ring in cylinder in which it is to be installed. Using an inverted piston, push ring to bottom of cylinder in smallest cylinder diameter.

Using feeler gauge, check ring end gap. See Fig. 15. Piston ring end gap must be within specification. Ring breakage will occur if insufficient ring end gap exists.

Some manufacturers permit correcting insufficient ring end gap by using a fine file while other manufacturers recommend using another ring set. Mark rings for proper cylinder installation after checking end gap.

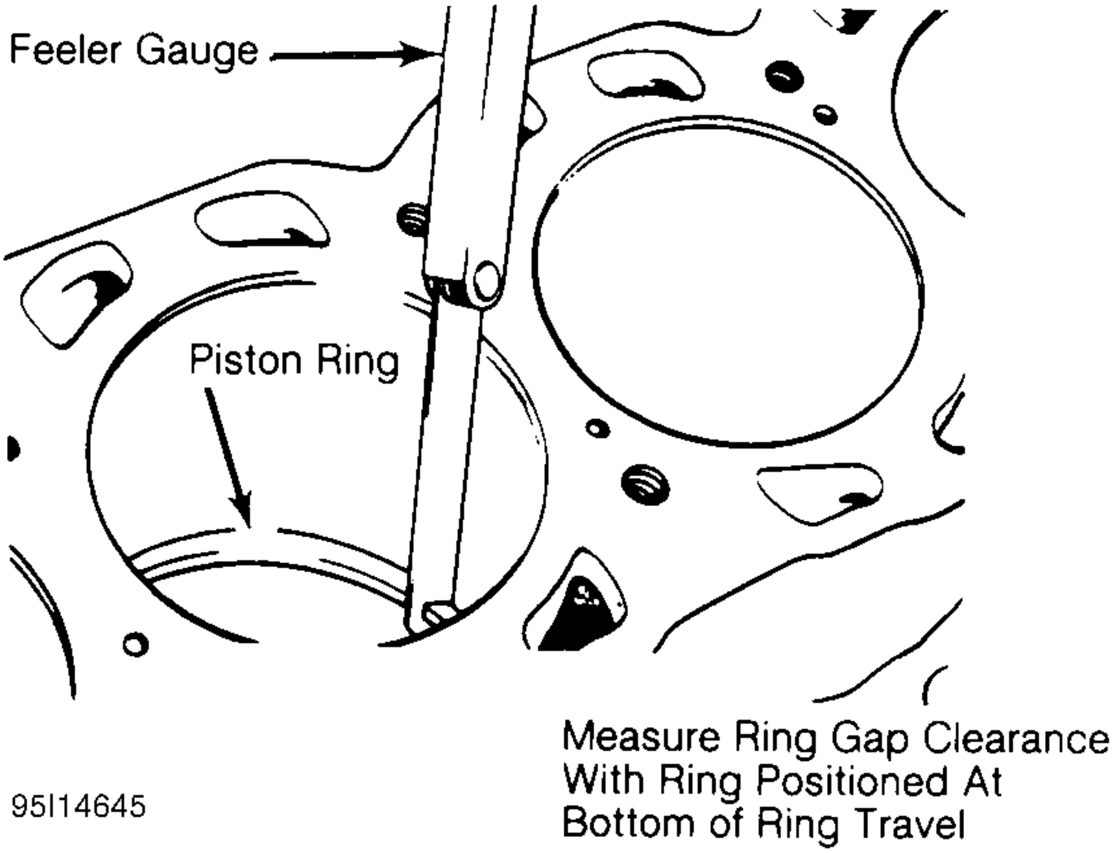
Feeler Gauge
Piston Ring
Measure Ring Gap Clearance With Ring Positioned At Bottom of Ring Travel
95I14645

Fig. 15: Checking Piston Ring End Gap

For checking side clearance, install rings on piston. Using feeler gauge, measure clearance between piston ring and piston ring land. Check side clearance in several areas around piston. Side clearance must be within specification.

If side clearance is excessive, piston ring grooves can be machined to accept oversize piston rings (if available). Normal practice is to replace piston.

PISTON & CONNECTING ROD INSTALLATION

NOTE: **Examples used in this article are general in nature and do not necessarily relate to a specific engine or system. Illustrations and procedures have been chosen to guide mechanic through engine overhaul process. Descriptions of processes of cleaning, inspection, assembly and machine shop practice are included.**

Always refer to appropriate engine overhaul article, if available, in the ENGINES section for complete overhaul procedures and specifications for the vehicle being repaired.

Cylinders must be honed prior to piston installation. See CYLINDER HONING under CYLINDER BLOCK.

Install upper connecting rod bearings. Lubricate upper bearings with engine oil. Install lower bearings in rod caps. Ensure bearing tabs are properly seated. Position piston ring gaps according to manufacturer's recommendations. See Fig. 16. Lubricate pistons, rings and cylinder walls.

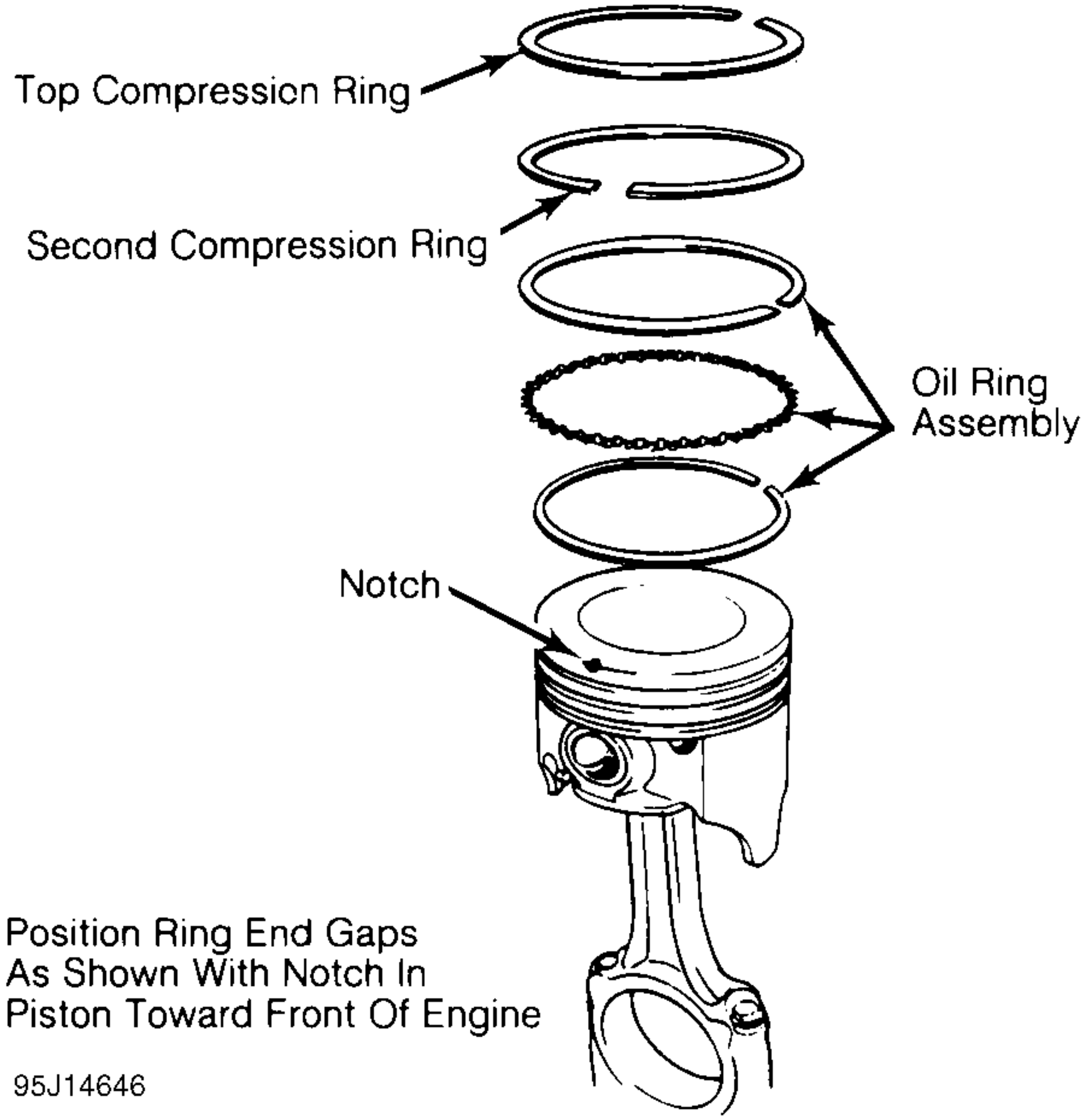
Top Compression Ring
Second Compression Ring
Oil Ring Assembly
Notch
Position Ring End Gaps As Shown With Notch In Piston Toward Front Of Engine
95J14646

Fig. 16: Positioning Typical Piston Ring End Gap

Install ring compressor. Use care not to rotate piston rings. Compress rings with ring compressor. Install plastic tubing protectors over connecting rod bolts. Install piston and connecting rod assembly. Ensure piston notch, arrow or FRONT mark is toward front of engine. See **Fig. 17**.

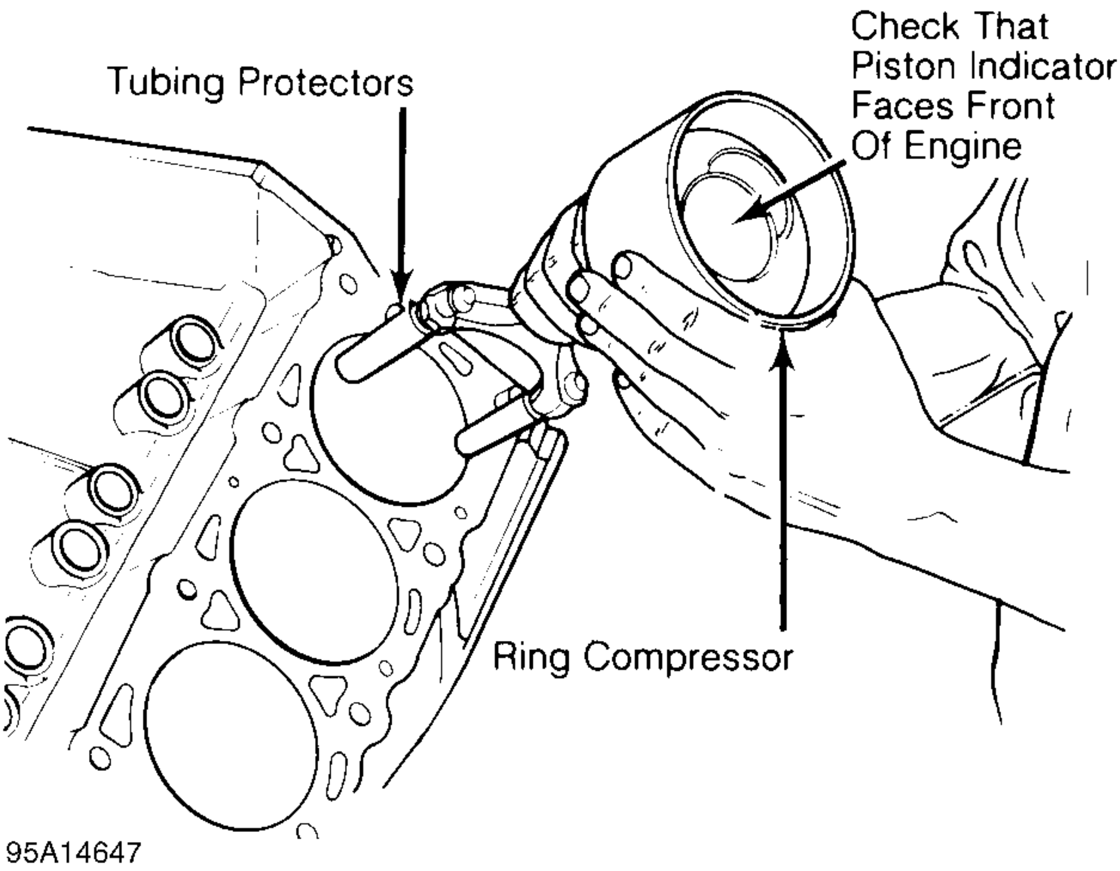

Fig. 17: Installing Piston & Connecting Rod Assembly

Carefully tap piston into cylinder until rod bearing is seated on crankshaft journal. Remove protectors. Install rod cap and bearing. Lightly tighten connecting rod bolts. Repeat procedure for remaining cylinders. Check bearing clearance. See MAIN & CONNECTING ROD BEARING CLEARANCE.

Once clearance is checked, lubricate journals and bearings. Install bearing caps. Ensure marks are aligned on connecting rod and cap. Tighten rod nuts or bolts to specification. Ensure rod moves freely on crankshaft. Check connecting rod side clearance. See CONNECTING ROD SIDE CLEARANCE.

CONNECTING ROD SIDE CLEARANCE

NOTE: **Examples used in this article are general in nature and do not necessarily relate to a specific engine or system. Illustrations and procedures have been chosen to guide mechanic through engine overhaul process. Descriptions of processes of cleaning, inspection, assembly and machine shop practice are included.**

Always refer to appropriate engine overhaul article, if available, in the ENGINES section for complete overhaul procedures and specifications for the vehicle being repaired.

Position connecting rod toward one side of crankshaft as far as possible. Using feeler gauge, measure clearance between side of connecting rod and crankshaft. See Fig. 18. Clearance must be within specification.

Check for improper bearing installation, wrong bearing cap or insufficient bearing clearance if side clearance is insufficient. Connecting rod may require machining to obtain proper clearance. Excessive clearance usually indicates excessive wear at crankshaft. Crankshaft must be repaired or replaced.

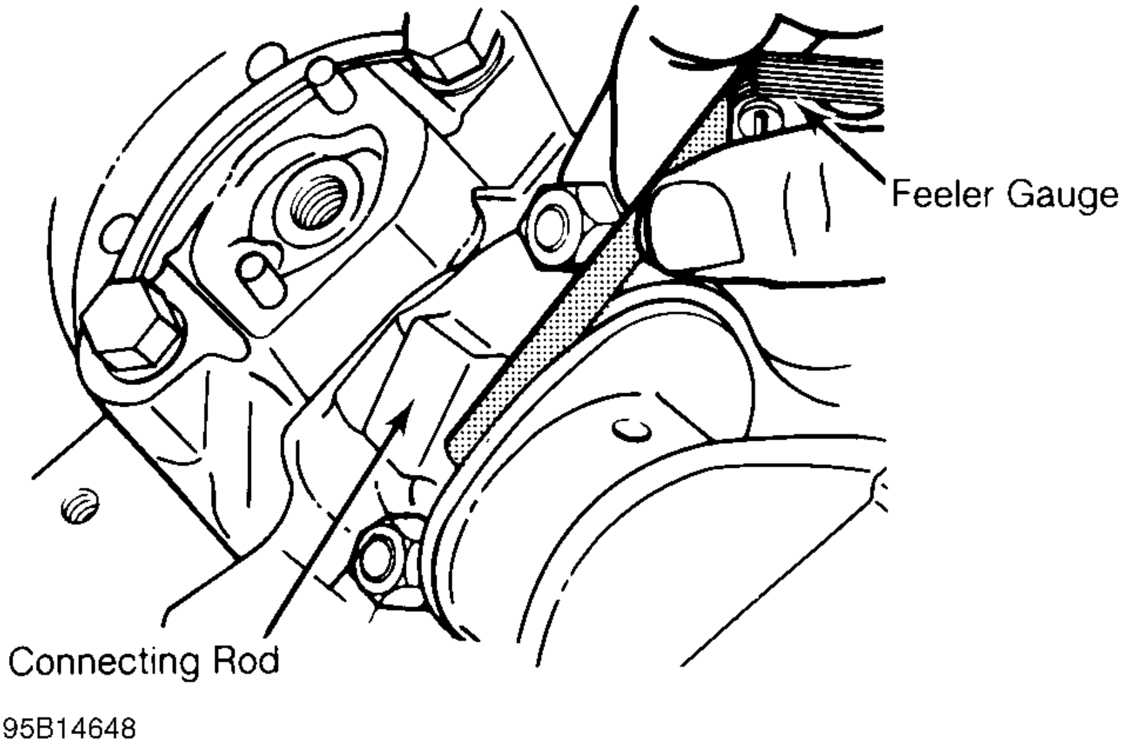

Fig. 18: Measuring Connecting Rod Side Clearance

MAIN & CONNECTING ROD BEARING CLEARANCE

NOTE: **Examples used in this article are general in nature and do not necessarily relate to a specific engine or system. Illustrations and procedures have been chosen to guide mechanic through engine overhaul process. Descriptions of processes of cleaning, inspection, assembly and machine shop practice are included.**

Always refer to appropriate engine overhaul article, if available, in the ENGINES section for complete overhaul procedures and specifications for the vehicle being repaired.

Plastigage Method

Plastigage method may be used to determine bearing clearance. Plastigage can be used with an engine in service or during reassembly. Plastigage material is oil soluble.

Ensure journals and bearings are free of oil or solvent. Oil or solvent will dissolve material and false reading will be obtained. Install small piece of Plastigage along full length of bearing journal. Install bearing cap in original location. Tighten bolts to specification.

CAUTION: **DO NOT rotate crankshaft while Plastigage is installed. Bearing clearance will not be obtained if crankshaft is rotated.**

Remove bearing cap. Compare Plastigage width with scale on Plastigage container to determine bearing clearance. See Fig. 19. Rotate crankshaft 90 degrees. Repeat procedure. This is done to check journal eccentricity. This procedure can be used to check oil clearance on both connecting rod and main bearings.

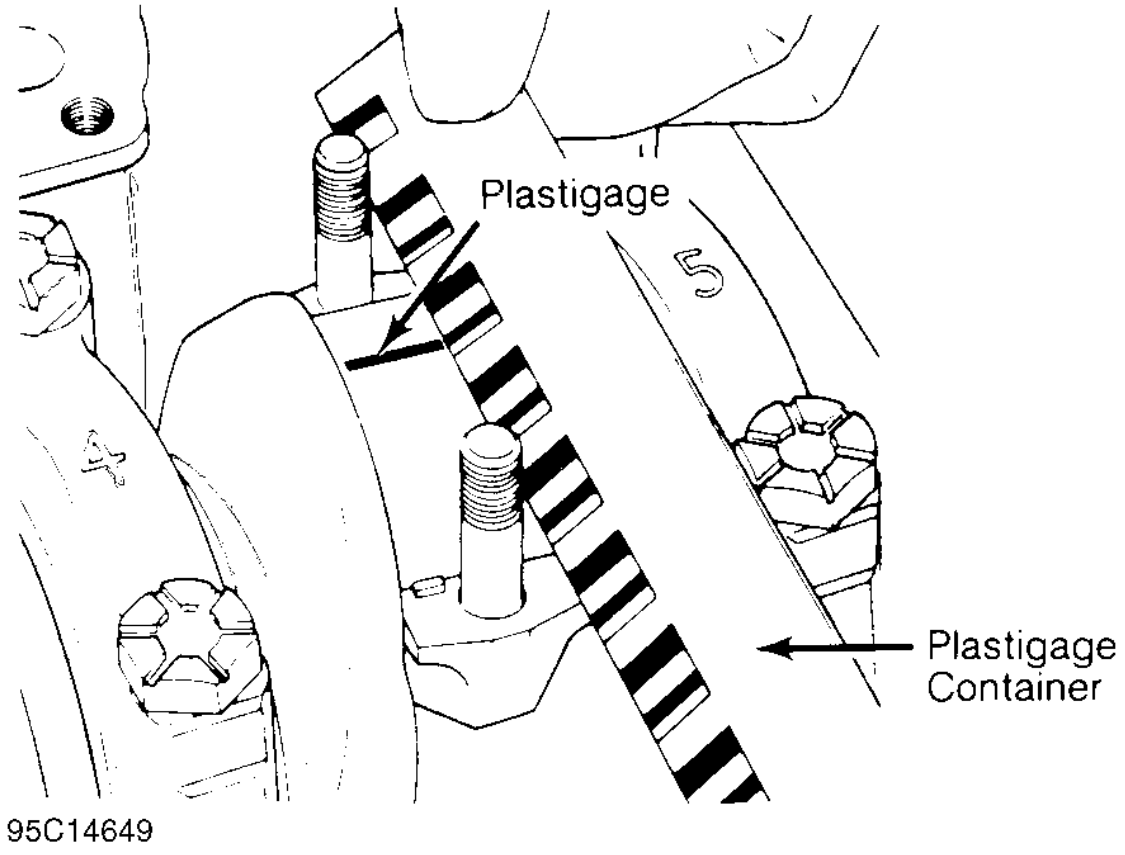

Fig. 19: Measuring Bearing Clearance

Micrometer & Telescopic Gauge Method

A micrometer is used to determine journal diameter, taper and out-of-round dimensions of the crankshaft. See CLEANING & INSPECTION under CRANKSHAFT & MAIN BEARINGS in this article.

With crankshaft removed, install bearings and caps in original location on cylinder block. Tighten bolts to specification. On connecting rods, install bearings and caps on connecting rods. Install proper connecting rod cap on corresponding rod. Ensure bearing cap is installed in original location. Tighten bolts to specification.

Using a telescopic gauge and micrometer or inside micrometer, measure inside diameter of connecting rod and main bearings bores. Subtract each crankshaft journal diameter from the corresponding inside bearing bore diameter. This is the bearing clearance.

CRANKSHAFT & MAIN BEARINGS

* PLEASE READ THIS FIRST *

NOTE: **Examples used in this article are general in nature and do not necessarily relate to a specific engine or system. Illustrations and procedures have been chosen to guide mechanic through engine overhaul process. Descriptions of processes of cleaning, inspection, assembly and machine shop practice are included.**

Always refer to appropriate engine overhaul article, if available, in the ENGINES section for complete overhaul procedures and specifications for the vehicle being repaired.

REMOVAL

NOTE: **Examples used in this article are general in nature and do not necessarily relate to a specific engine or system. Illustrations and procedures have been chosen to guide mechanic through engine overhaul process. Descriptions of processes of cleaning, inspection, assembly and machine shop practice are included.**

Always refer to appropriate engine overhaul article, if available, in the ENGINES section for complete overhaul procedures and specifications for the vehicle being repaired.

Ensure all main bearing caps are marked for location on cylinder block. Some main bearing caps have an arrow stamped on them. The arrow must face timing belt or timing chain end of engine. Remove main bearing cap bolts. Remove main bearing caps. Carefully remove crankshaft. Use care not to bind crankshaft in cylinder block during removal.

CLEANING & INSPECTION

NOTE: **Examples used in this article are general in nature and do not necessarily relate to a specific engine or system. Illustrations and procedures have been chosen to guide mechanic through engine overhaul process. Descriptions of processes of cleaning, inspection, assembly and machine shop practice are included.**

Always refer to appropriate engine overhaul article, if available, in the ENGINES section for complete overhaul procedures and specifications for the vehicle being repaired.

Thoroughly clean crankshaft using solvent. Dry with compressed air. Ensure all oil passages are clear and free of sludge, rust, dirt and metal chips.

Inspect crankshaft for scoring and nicks. Inspect crankshaft for cracks using Magnaflux procedure. Inspect rear seal area for grooving or damage. Inspect bolt hole threads for damage. If pilot bearing or bushing is used, check pilot bearing or bushing fit in crankshaft. Inspect crankshaft gear for damaged or cracked teeth. Replace gear if damaged. Ensure oil passage plugs are tight (if equipped).

Using micrometer, measure all journals in 4 areas to determine journal taper, out-of-round and undersize. See **Fig. 20**. Some crankshafts can be reground to the next largest undersize, depending on the amount of wear or damage. Crankshafts with rolled fillet cannot be reground and must be replaced.

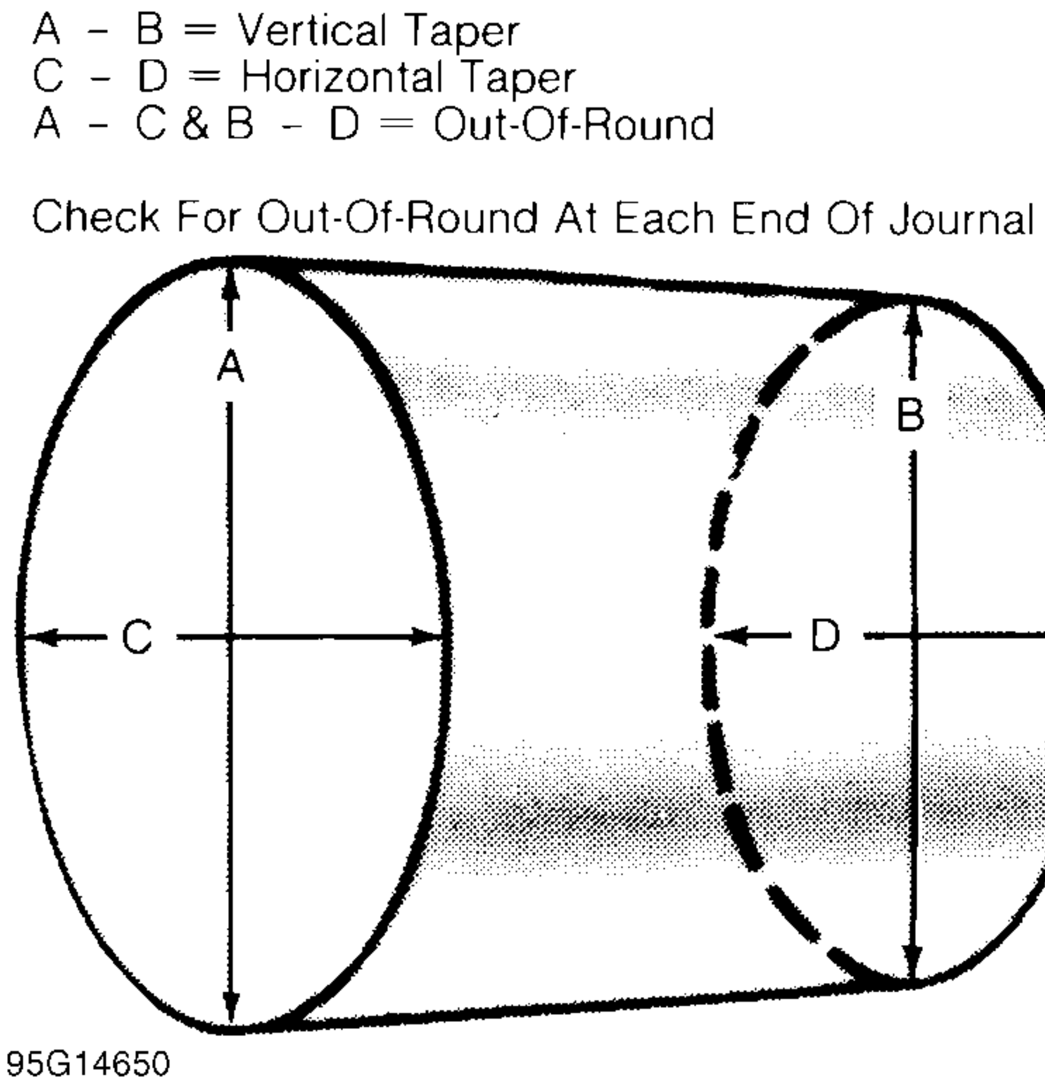
A - B = Vertical Taper
C - D = Horizontal Taper
A - C & B - D = Out-Of-Round
Check For Out-Of-Round At Each End Of Journal
A
B
C
D
95G14650

Fig. 20: Measuring Crankshaft Journals

Crankshaft journal runout should be checked. Install crankshaft in "V" blocks or bench center. Position dial indicator with tip resting on the main bearing journal area. See **Fig. 21**. Rotate crankshaft and note reading. Journal runout must not exceed specification. Repeat procedure on all main bearing journals. Crankshaft must be replaced if runout exceeds specification.

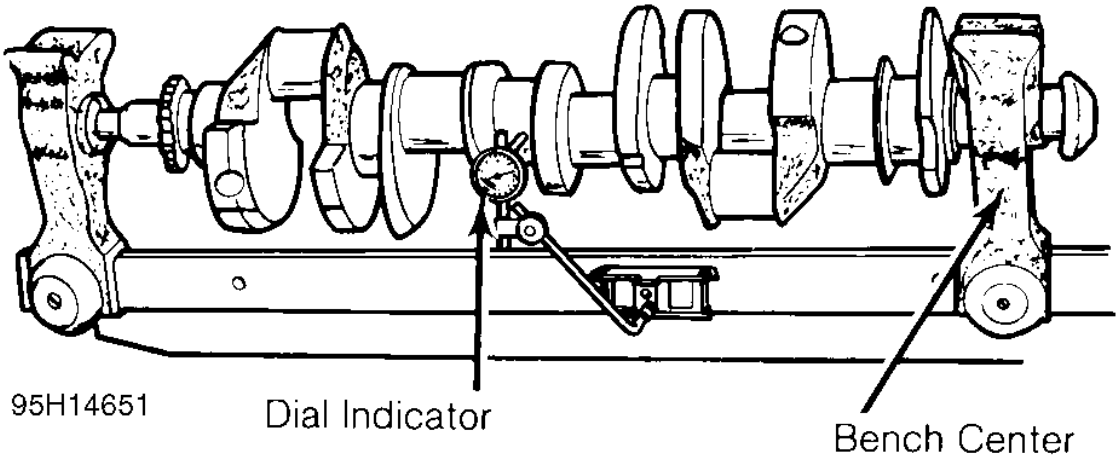

Fig. 21: Measuring Crankshaft Main Bearing Journal Runout

INSTALLATION

NOTE: **Examples used in this article are general in nature and do not necessarily relate to a specific engine or system. Illustrations and procedures have been chosen to guide mechanic through engine overhaul process. Descriptions of processes of cleaning, inspection, assembly and machine shop practice are included.**

Always refer to appropriate engine overhaul article, if available, in the ENGINES section for complete overhaul procedures and specifications for the vehicle being repaired.

Install upper main bearing in cylinder block. Ensure lock tab is properly located in cylinder block. Install bearings in main bearing caps. Ensure all oil passages are aligned. Install rear seal (if removed).

Ensure crankshaft journals are clean. Lubricate upper main bearings with clean engine oil. Carefully install crankshaft. Check each main bearing clearance using Plastigage method. See MAIN & CONNECTING ROD BEARING CLEARANCE.

Once clearance is checked, lubricate lower main bearing and journals. Install main bearing caps in original location. Install rear seal in rear main bearing cap (if removed). Some rear main bearing caps require sealant to be applied in corners to prevent oil leakage.

Install and tighten all bolts except thrust bearing cap to specification. Tighten thrust bearing cap bolts finger tight only. Some models require that thrust bearing be aligned. On most applications, crankshaft must be moved rearward then forward. Procedure may vary with manufacturer. Thrust bearing cap is then tightened to specification. Ensure crankshaft rotates freely. Crankshaft end play should be checked. See CRANKSHAFT END PLAY.

CRANKSHAFT END PLAY

NOTE: **Examples used in this article are general in nature and do not necessarily relate to a specific engine or system. Illustrations and procedures have been chosen to guide mechanic through engine overhaul process. Descriptions of processes of cleaning, inspection, assembly and machine shop practice are included.**

Always refer to appropriate engine overhaul article, if available, in the ENGINES section for complete overhaul procedures and specifications for the vehicle being repaired.

Dial Indicator Method

Crankshaft end play can be checked using dial indicator. Mount dial indicator on rear of cylinder block. Position dial indicator tip against rear of crankshaft. Ensure tip is resting against flat surface.

Pry crankshaft rearward. Adjust dial indicator to zero. Pry crankshaft forward and note reading. Crankshaft end play must be within specification. If end play is not within specification, check for faulty thrust bearing installation or worn crankshaft. Some applications offer oversize thrust bearings.

Feeler Gauge Method

Crankshaft end play can be checked using feeler gauge. Pry crankshaft rearward. Pry crankshaft forward. Using feeler gauge, measure clearance between crankshaft and thrust bearing surface. See Fig. 22.

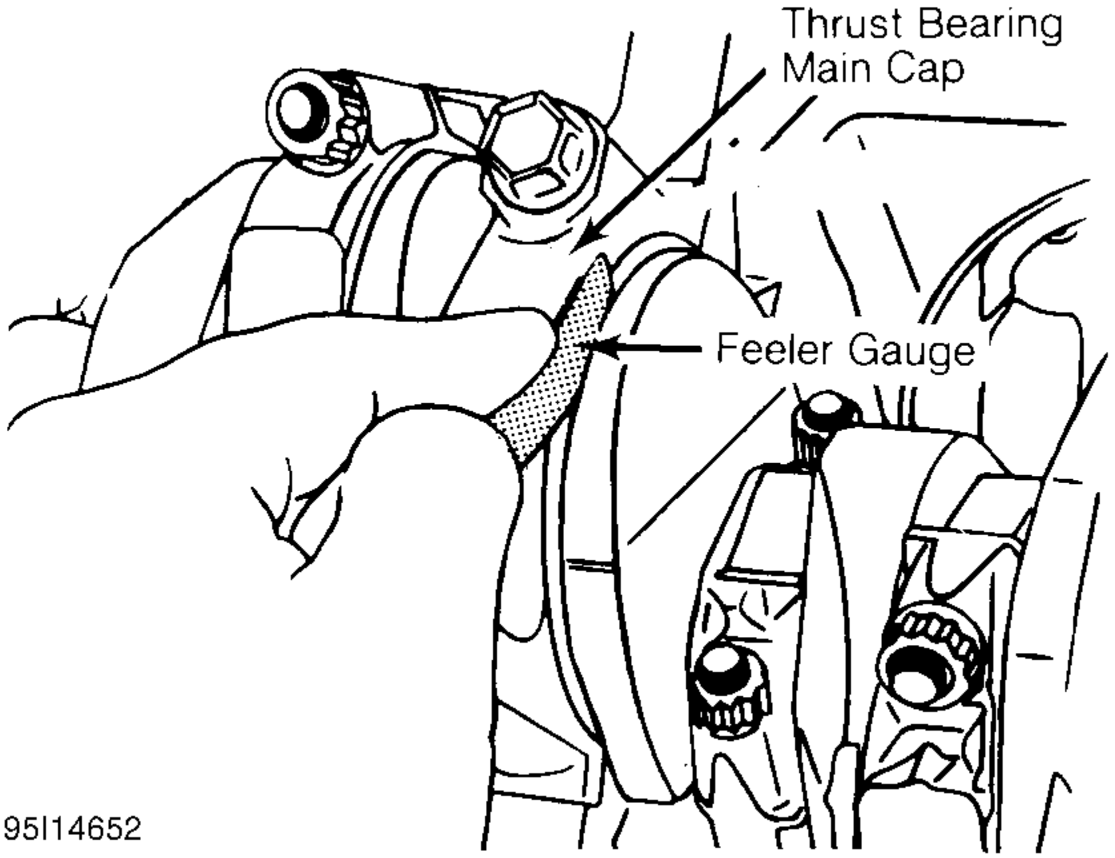

Fig. 22: Checking Crankshaft End Play

Crankshaft end play must be within specification. If end play is not within specification, check for faulty thrust bearing installation or worn crankshaft. Some applications offer oversize thrust bearings.

CYLINDER BLOCK

NOTE: **Examples used in this article are general in nature and do not necessarily relate to a specific engine or system. Illustrations and procedures have been chosen to guide mechanic through engine overhaul process. Descriptions of**

processes of cleaning, inspection, assembly and machine shop practice are included.

Always refer to appropriate engine overhaul article, if available, in the ENGINES section for complete overhaul procedures and specifications for the vehicle being repaired.

Block Cleaning

Only cast cylinder blocks should be hot tank cleaned. Aluminum cylinder blocks should be cleaned using cold tank method. Cylinder block is cleaned in order to remove carbon deposits, gasket residue and water jacket scale. Remove oil gallery plugs, freeze plugs and cam bearings before cleaning block.

Block Inspection

Visually inspect the block. Check suspected areas for cracks using the Dye Penetrant inspection method. Block may be checked for cracks using the Magnaflux method.

Cracks are most commonly found at the bottom of cylinders, main bearing saddles, near expansion plugs and between cylinders and water jackets. Inspect lifter bores for damage. Inspect all head bolt holes for damaged threads. Threads should be cleaned using tap to ensure proper head bolt torque. Consult machine shop concerning possible welding and machining (if required).

Cylinder Bore Inspection

Inspect bore for scoring or roughness. Cylinder bore is dimensionally checked for out-of-round and taper using dial bore gauge. For determining out-of-round, measure cylinder parallel and perpendicular to the block center line. Difference in the 2 readings is the bore out-of-round. Cylinder bore must be checked at top, middle and bottom of piston travel area.

Bore taper is obtained by measuring bore at the top and bottom. If wear has exceeded allowable limits, block must be honed or bored to next available oversize piston dimension.

Cylinder Honing

Cylinder must be properly honed to allow new piston rings to properly seat. Cross-hatching at correct angle and depth is critical to lubrication of cylinder walls and pistons.

A flexible drive hone and power drill are commonly used. Drive hone must be lubricated during operation. Mix equal parts of kerosene and SAE 20W engine oil for lubrication.

Apply lubrication to cylinder wall. Operate cylinder hone from top to bottom of cylinder using even strokes to produce 45 degree cross-hatch pattern on the cylinder wall. DO NOT allow cylinder hone to extend below cylinder during operation.

Recheck bore dimension after final honing. Wash cylinder wall with hot soapy water to remove abrasive particles. Blow dry with compressed air. Coat cleaned cylinder walls with lubricating oil.

Deck Warpage

Check deck for damage or warped gasket surface. Place a straightedge across gasket surface of the deck. Using feeler gauge, measure clearance at center of straightedge. Measure across width and length of cylinder block at several points.

If warpage exceeds specifications, deck must be resurfaced. If warpage exceeds manufacturer's maximum tolerance for material removal, replace block.

NOTE: **Some manufacturers recommend that a total amount of material (cylinder head and cylinder block) can only be removed before components must be replaced.**

Deck Height

Distance from crankshaft center line to block deck is called the deck height. Measure and record front and rear main journals of crankshaft. To compute this distance, install crankshaft and retain with center main bearing and cap only. Measure distance from crankshaft journal to block deck, parallel to cylinder center line.

Add one half of main bearing journal diameter to distance from crankshaft journal to block deck. This dimension should be checked at front and rear of cylinder block. Both readings should be the same.

If difference exceeds specification, cylinder block must be repaired or replaced. Deck height and warpage should be corrected at the same time.

Main Bearing Bore & Alignment

For checking main bearing bore, remove all bearings from cylinder block and main bearing caps. Install main bearing caps in original location. Tighten bolts to specification. Using inside micrometer, measure main bearing bore in 2 areas 90 degrees apart. Determine bore size and out-of-round. If diameter is not within specification, block must be align-bored.

For checking alignment, place a straightedge along center line of main bearing saddles. Check for clearance between straightedge and main bearing saddles. Block must be align-bored if clearance exists.

Expansion Plug Removal

Drill hole in center of expansion plug. Remove with screwdriver or punch. Use care not to damage sealing surface.

Expansion Plug Installation

Ensure sealing surface is free of burrs. Coat expansion plug with sealer. Using wooden dowel or pipe of slightly smaller diameter, install expansion plug. Ensure expansion plug is evenly located.

Oil Gallery Plug Removal

Remove threaded oil gallery plugs using appropriate wrench. Soft press-in plugs are removed by drilling into plug and installing a sheet metal screw. Remove plug with slide hammer or pliers.

Oil Gallery Plug Installation

Ensure threads or sealing surface is clean. Coat threaded oil gallery plugs with sealer and install. Replacement soft press-in plugs are installed with a hammer and drift.

CAMSHAFT

* PLEASE READ THIS FIRST *

NOTE: **Examples used in this article are general in nature and do not necessarily relate to a specific engine or system. Illustrations and procedures have been chosen to guide mechanic through engine overhaul process. Descriptions of processes of cleaning, inspection, assembly and machine shop practice are included.**

Always refer to appropriate engine overhaul article, if available, in the ENGINES section for complete overhaul procedures and specifications for the vehicle being repaired.

CLEANING & INSPECTION

NOTE: **Examples used in this article are general in nature and do not necessarily relate to a specific engine or system. Illustrations and procedures have been chosen**

to guide mechanic through engine overhaul process. Descriptions of processes of cleaning, inspection, assembly and machine shop practice are included.

Always refer to appropriate engine overhaul article, if available, in the ENGINES section for complete overhaul procedures and specifications for the vehicle being repaired.

Clean camshaft with solvent. Ensure all oil passages are clear. Inspect cam lobes and bearing journals for pitting, flaking or scoring. Using micrometer, measure bearing journal O.D.

Support camshaft at each end with "V" blocks. Position dial indicator with tip resting on center bearing journal. Rotate camshaft and note camshaft runout reading. If reading exceeds specification, replace camshaft.

Check cam lobe lift by measuring base circle of camshaft using micrometer. Measure again at 90-degree angle to tip of cam lobe. Cam lift can be determined by subtracting base circle diameter from tip of cam lobe measurement.

Different lift dimensions are given for intake and exhaust cam lobes. Reading must be within specification. Replace camshaft if cam lobes or bearing journals are not within specification.

Inspect camshaft gear for chipped, eroded or damaged teeth. Replace gear if damaged. On camshafts using thrust plate, measure distance between thrust plate and camshaft shoulder. Replace thrust plate if not within specification.

CAMSHAFT BEARINGS

NOTE: **Examples used in this article are general in nature and do not necessarily relate to a specific engine or system. Illustrations and procedures have been chosen to guide mechanic through engine overhaul process. Descriptions of processes of cleaning, inspection, assembly and machine shop practice are included.**

Always refer to appropriate engine overhaul article, if available, in the ENGINES section for complete overhaul procedures and specifications for the vehicle being repaired.

Removal & Installation

Remove camshaft rear plug. Camshaft bearing remover is assembled with shoulder resting against bearing to be removed according to manufacturer's instructions. Tighten puller nut until bearing is removed. Remove remaining bearings, leaving front and rear bearings until last. These bearings act as a guide for camshaft bearing remover.

To install new bearings, puller is rearranged to pull bearings toward the center of block. Ensure all lubrication passages of bearing are aligned with cylinder block. Coat new camshaft rear plug with sealant. Install camshaft rear plug. Ensure plug is even in cylinder block.

CAMSHAFT INSTALLATION

NOTE: **Examples used in this article are general in nature and do not necessarily relate to a specific engine or system. Illustrations and procedures have been chosen to guide mechanic through engine overhaul process. Descriptions of processes of cleaning, inspection, assembly and machine shop practice are included.**

Always refer to appropriate engine overhaul article, if available, in the ENGINES section for complete overhaul procedures and specifications for the vehicle being repaired.

Lubricate bearing surfaces and cam lobes with ample amount of Molykote or camshaft lubricant. Carefully install camshaft. Use care not to damage bearing journals during installation. Install thrust plate retaining bolts (if equipped). Tighten bolts to specification. On overhead camshafts, install bearing caps in original location. Tighten bolts to specification. On all applications, check camshaft end play.

CAMSHAFT END PLAY

NOTE: **Examples used in this article are general in nature and do not necessarily relate to a specific engine or system. Illustrations and procedures have been chosen to guide mechanic through engine overhaul process. Descriptions of processes of cleaning, inspection, assembly and machine shop practice are included.**

Always refer to appropriate engine overhaul article, if available, in the ENGINES section for complete overhaul procedures and specifications for the vehicle being repaired.

Using dial indicator, check camshaft end play. Position dial indicator on front of engine block or cylinder head. Position indicator tip against camshaft. Push camshaft toward rear of cylinder head or engine and adjust indicator to zero.

Move camshaft forward and note reading. Camshaft end play must be within specification. End play may be adjusted by relocating gear, shimming thrust plate or replacing thrust plate depending on each manufacturer.

TIMING CHAINS & BELTS

* PLEASE READ THIS FIRST *

NOTE: **Examples used in this article are general in nature and do not necessarily relate to a specific engine or system. Illustrations and procedures have been chosen to guide mechanic through engine overhaul process. Descriptions of processes of cleaning, inspection, assembly and machine shop practice are included.**

Always refer to appropriate engine overhaul article, if available, in the ENGINES section for complete overhaul procedures and specifications for the vehicle being repaired.

TIMING CHAINS

NOTE: **Examples used in this article are general in nature and do not necessarily relate to a specific engine or system. Illustrations and procedures have been chosen to guide mechanic through engine overhaul process. Descriptions of processes of cleaning, inspection, assembly and machine shop practice are included.**

Always refer to appropriate engine overhaul article, if available, in the ENGINES section for complete overhaul procedures and specifications for the vehicle being repaired.

Timing chains will stretch during operation. Limits are placed upon amount of stretch before replacement is required. Timing chain stretch will alter ignition timing and valve timing.

To check timing chain stretch, rotate crankshaft to eliminate slack from one side of timing chain. Mark reference point on cylinder block. Rotate crankshaft in opposite direction to eliminate slack from remaining side of timing chain. Force other side of chain outward and measure distance between reference point and timing chain. See **Fig. 23**. Replace timing chain and gears if not within specification.

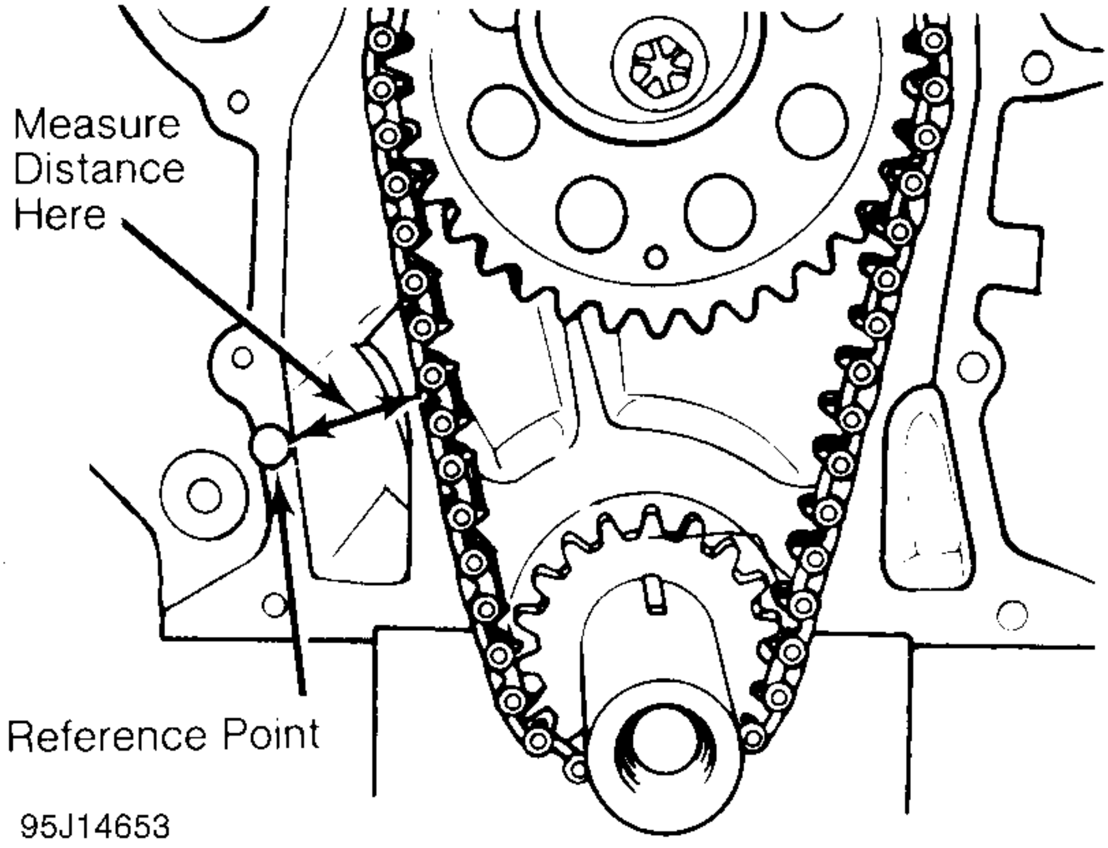
Measure Distance Here
Reference Point
95J14653

Fig. 23: Measuring Timing Chain Stretch

Timing chains must be installed so timing marks on camshaft gear and crankshaft gear are aligned according to manufacturer. See **Fig. 24**.

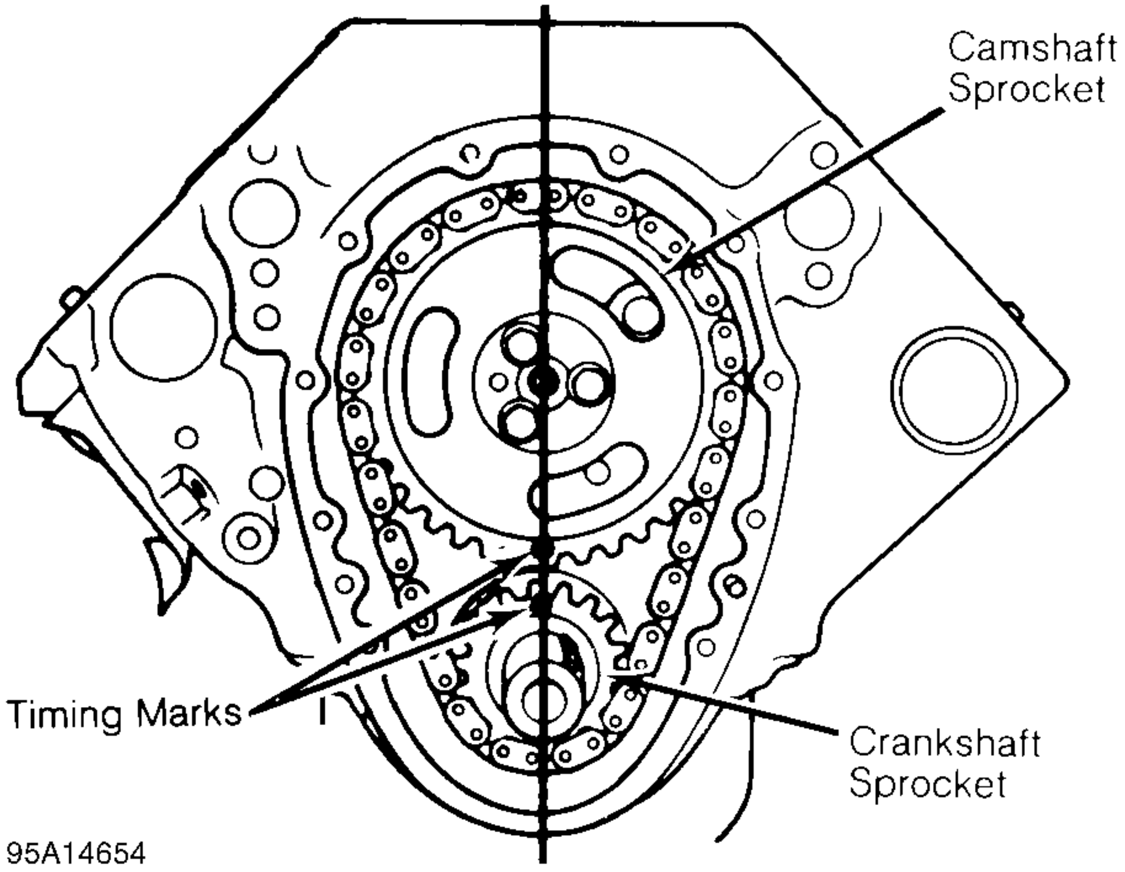

Fig. 24: Typical Gear Timing Mark Alignment

TIMING BELTS

NOTE: **Examples used in this article are general in nature and do not necessarily relate to a specific engine or system. Illustrations and procedures have been chosen to guide mechanic through engine overhaul process. Descriptions of processes of cleaning, inspection, assembly and machine shop practice are included.**

Always refer to appropriate engine overhaul article, if available, in the ENGINES section for complete overhaul procedures and specifications for the vehicle being repaired.

Cogged tooth belts are commonly used on overhead cam engines. Inspect belt teeth for rounded corners or cracking. Replace belt if it is cracked, damaged, missing teeth or oil soaked.

Used timing belt must be installed in original direction of rotation. Inspect all sprocket teeth for wear. Replace all worn sprockets. Sprockets are marked for timing purposes. Engine is positioned so that crankshaft sprocket mark will be upward. Camshaft sprocket is aligned with reference mark on cylinder head or timing belt cover and then timing belt can be installed. See Fig. 25.

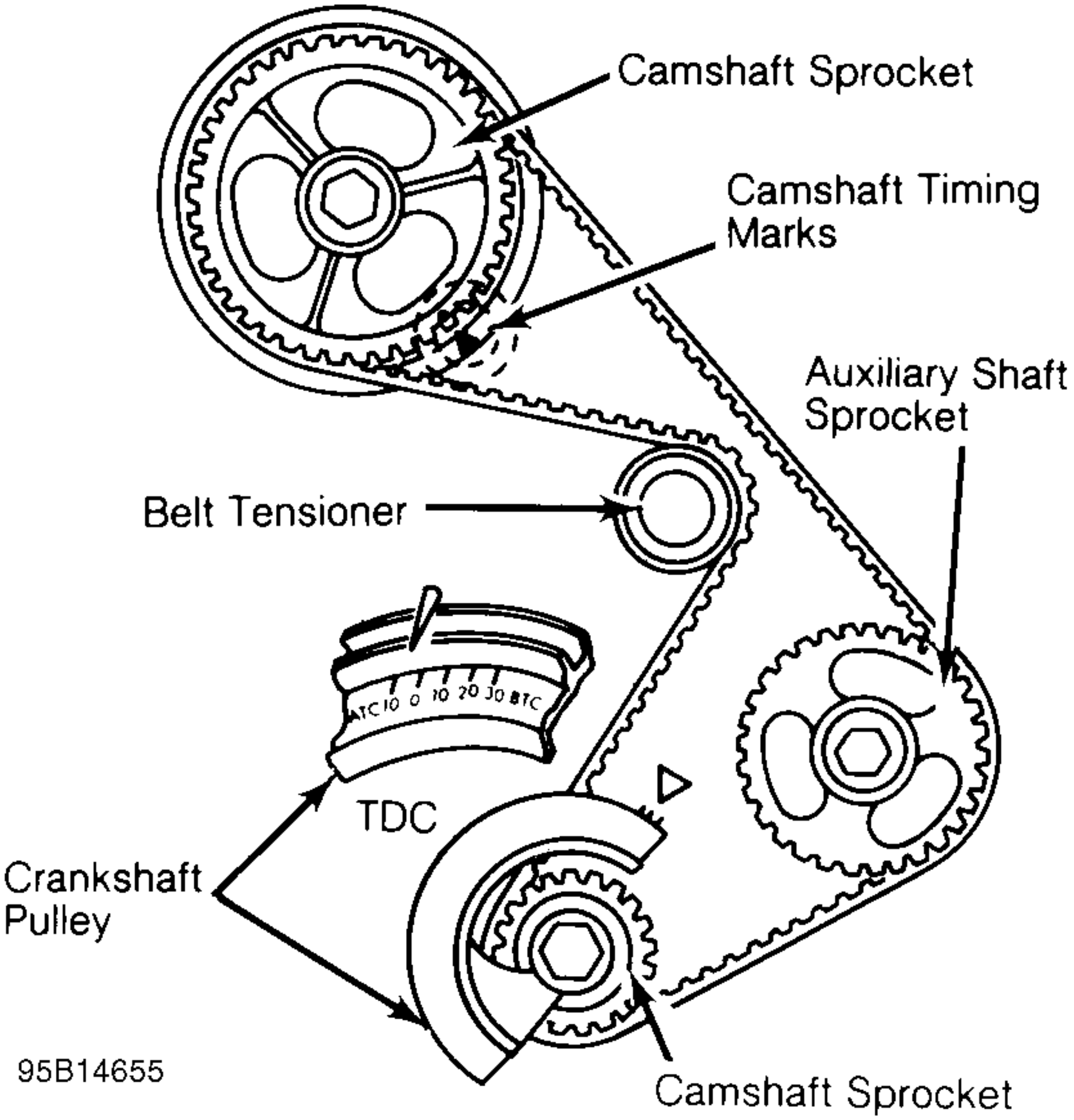
Camshaft Sprocket
Camshaft Timing Marks
Auxiliary Shaft Sprocket
Belt Tensioner
ATC 10 0 10 20 30 BTC
TDC
Crankshaft Pulley
95B14655
Camshaft Sprocket

Fig. 25: Typical Camshaft Belt Sprocket Alignment

TENSION ADJUSTMENT

NOTE: **Examples used in this article are general in nature and do not necessarily relate to a specific engine or system. Illustrations and procedures have been chosen to guide mechanic through engine overhaul process. Descriptions of processes of cleaning, inspection, assembly and machine shop practice are included.**

Always refer to appropriate engine overhaul article, if available, in the ENGINES section for complete overhaul procedures and specifications for the vehicle being repaired.

If guide rails are used with spring loaded tensioners, ensure at least half of original rail thickness remains. Spring loaded tensioner should be inspected for damage.

Ensure all timing marks are aligned. Adjust belt tension using manufacturer's recommendations. Belt tension may require checking using tension gauge. See Fig. 26.

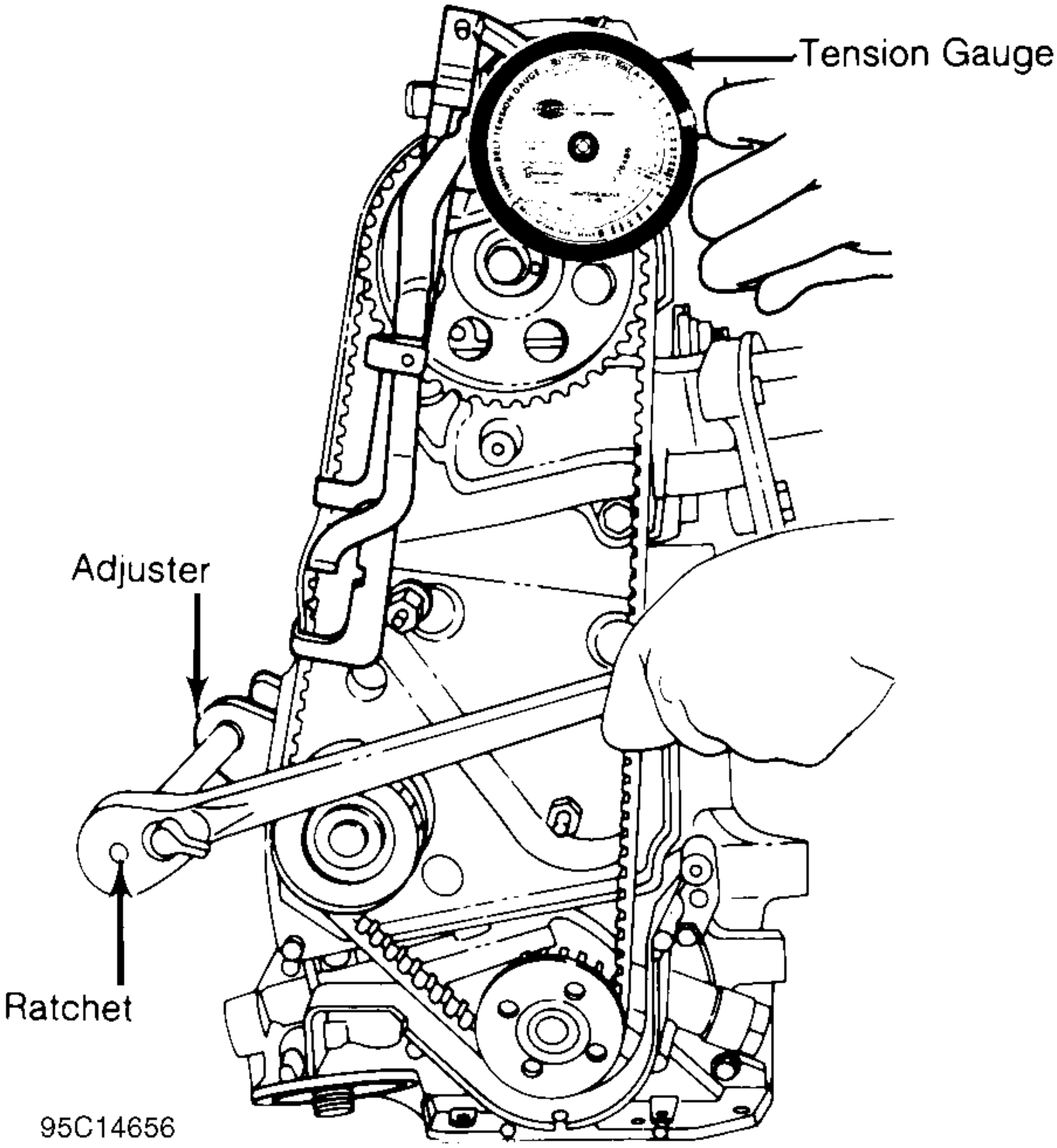

Fig. 26: Adjusting Typical Timing Belt Tension

TIMING GEARS

* PLEASE READ THIS FIRST *

NOTE: Examples used in this article are general in nature and do not necessarily relate to a specific engine or system. Illustrations and procedures have been chosen to guide mechanic through engine overhaul process. Descriptions of processes of cleaning, inspection, assembly and machine shop practice are included.

Always refer to appropriate engine overhaul article, if available, in the ENGINES section for complete overhaul procedures and specifications for the vehicle being repaired.

TIMING GEAR BACKLASH & RUNOUT

NOTE: **Examples used in this article are general in nature and do not necessarily relate to a specific engine or system. Illustrations and procedures have been chosen to guide mechanic through engine overhaul process. Descriptions of processes of cleaning, inspection, assembly and machine shop practice are included.**

Always refer to appropriate engine overhaul article, if available, in the ENGINES section for complete overhaul procedures and specifications for the vehicle being repaired.

On engines where camshaft gear operates directly on crankshaft gear, gear backlash and runout must be checked. To check backlash, install dial indicator with tip resting on tooth of camshaft gear. Rotate camshaft gear as far as possible. Adjust indicator to zero. Rotate camshaft gear in opposite direction as far as possible and note reading.

To determine timing gear runout, mount dial indicator with tip resting on face edge of camshaft gear. Adjust indicator to zero. Rotate camshaft gear 360 degrees and note reading. If backlash or runout exceeds specification, replace camshaft and/or crankshaft gear.

REAR MAIN OIL SEAL INSTALLATION

NOTE: **Examples used in this article are general in nature and do not necessarily relate to a specific engine or system. Illustrations and procedures have been chosen to guide mechanic through engine overhaul process. Descriptions of processes of cleaning, inspection, assembly and machine shop practice are included.**

Always refer to appropriate engine overhaul article, if available, in the ENGINES section for complete overhaul procedures and specifications for the vehicle being repaired.

One-Piece Type Seal

For one-piece type oil seal installation, coat block contact surface of seal with sealer if seal is not factory coated. Ensure seal surface is free of burrs. Lubricate seal lip with engine oil and press seal into place using proper oil seal installer. See **Fig. 27**.

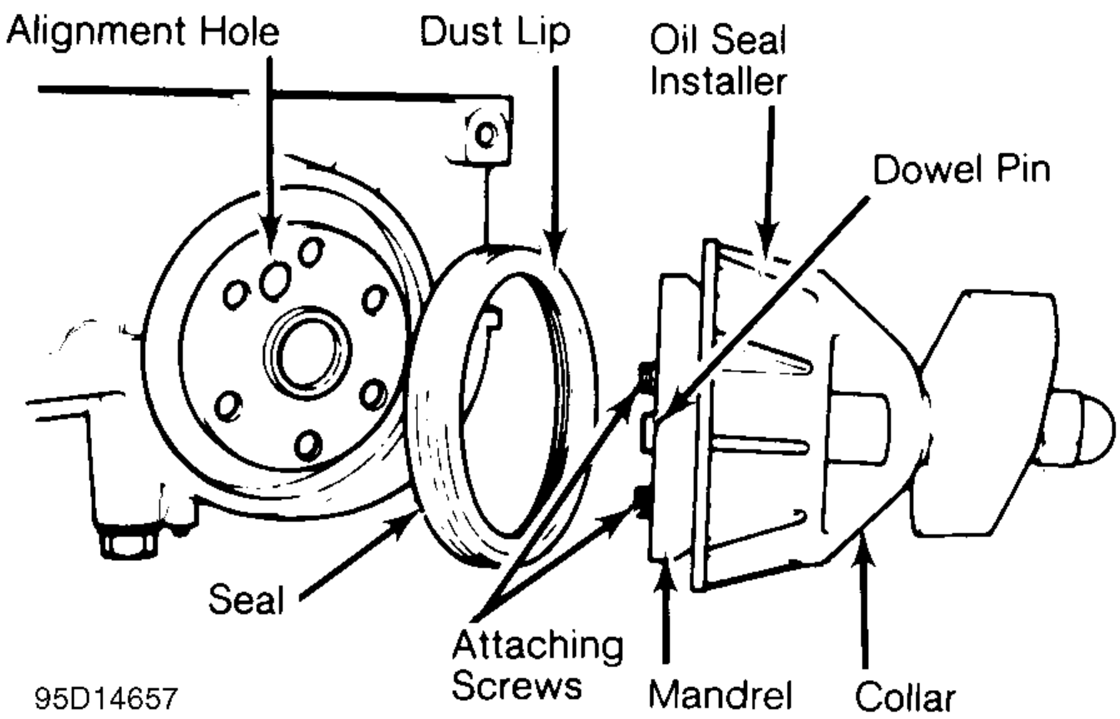
Alignment Hole
Dust Lip
Oil Seal Installer
Dowel Pin
Seal
Attaching Screws
Mandrel
Collar
95D14657

Fig. 27: Installing Typical One-Piece Oil Seal

Rope Type Seal

For rope type rear main oil seal installation, press seal lightly into seat area. Using seal installer, fully seat seal in bearing cap or cylinder block.

Trim seal ends even with cylinder block parting surface. Some applications require sealer to be applied on main bearing cap before installing. See Fig. 28.

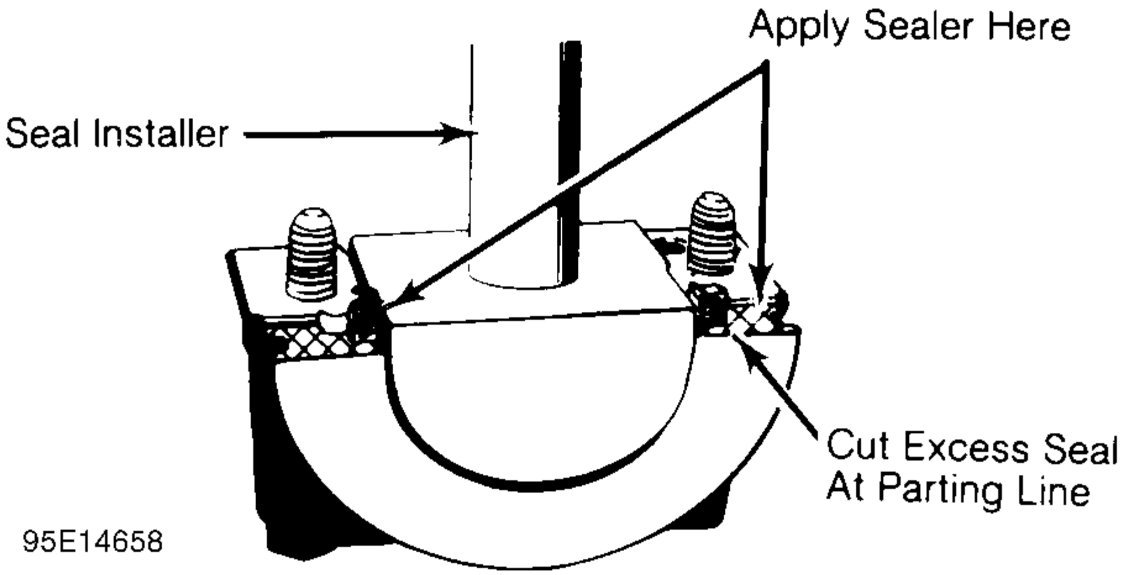
Apply Sealer Here
Seal Installer
Cut Excess Seal At Parting Line
95E14658

Fig. 28: Installing Typical Rope Seal

Split-Rubber Type Seal

Follow manufacturer's procedures when installing split-rubber type rear main oil seals. Installation procedures vary with manufacturer and engine type. See Fig. 29.

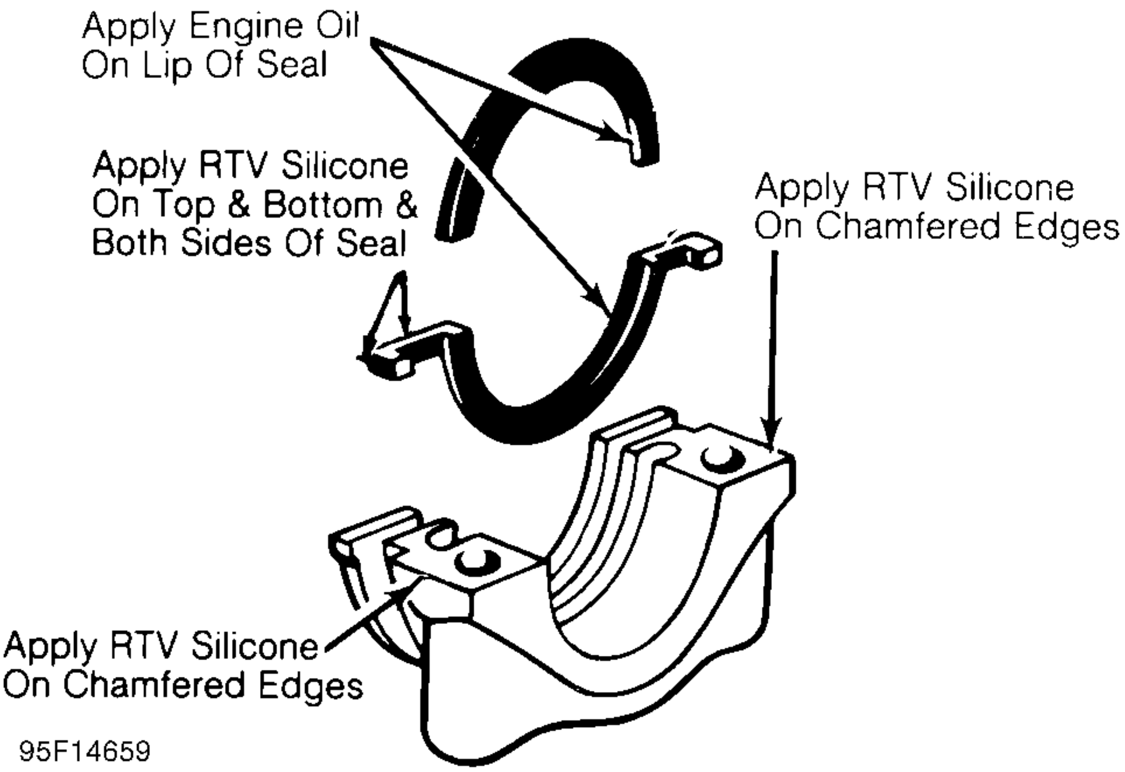
Apply Engine Oil On Lip Of Seal
Apply RTV Silicone On Top & Bottom & Both Sides Of Seal
Apply RTV Silicone On Chamfered Edges
Apply RTV Silicone On Chamfered Edges
95F14659

Fig. 29: Installing Typical Split-Rubber Seal

OIL PUMP

* PLEASE READ THIS FIRST *

NOTE: **Examples used in this article are general in nature and do not necessarily relate to a specific engine or system. Illustrations and procedures have been chosen to guide mechanic through engine overhaul process. Descriptions of processes of cleaning, inspection, assembly and machine shop practice are included.**

Always refer to appropriate engine overhaul article, if available, in the ENGINES section for complete overhaul procedures and specifications for the vehicle being repaired.

ROTOR TYPE

NOTE: **Examples used in this article are general in nature and do not necessarily relate to a specific engine or system. Illustrations and procedures have been chosen to guide mechanic through engine overhaul process. Descriptions of processes of cleaning, inspection, assembly and machine shop practice are included.**

Always refer to appropriate engine overhaul article, if available, in the ENGINES section for complete overhaul procedures and specifications for the vehicle

being repaired.

Mark oil pump rotor locations before removing. See Fig. 30. Remove outer rotor and measure thickness and diameter. Measure inner rotor thickness. Inspect shaft for scoring or wear. Inspect rotors for pitting or damage. Inspect cover for grooving or wear. Replace worn or damaged components.

Measure outer rotor-to-body clearance. Replace pump assembly if clearance exceeds specification. Measure clearance between rotors. See Fig. 31. Replace shaft and both rotors if clearance exceeds specification.

Install rotors in pump body. Position straightedge across pump body. Using feeler gauge, measure clearance between rotors and straightedge. Pump cover wear is measured using a straightedge and feeler gauge. Replace pump if clearance exceeds specification.

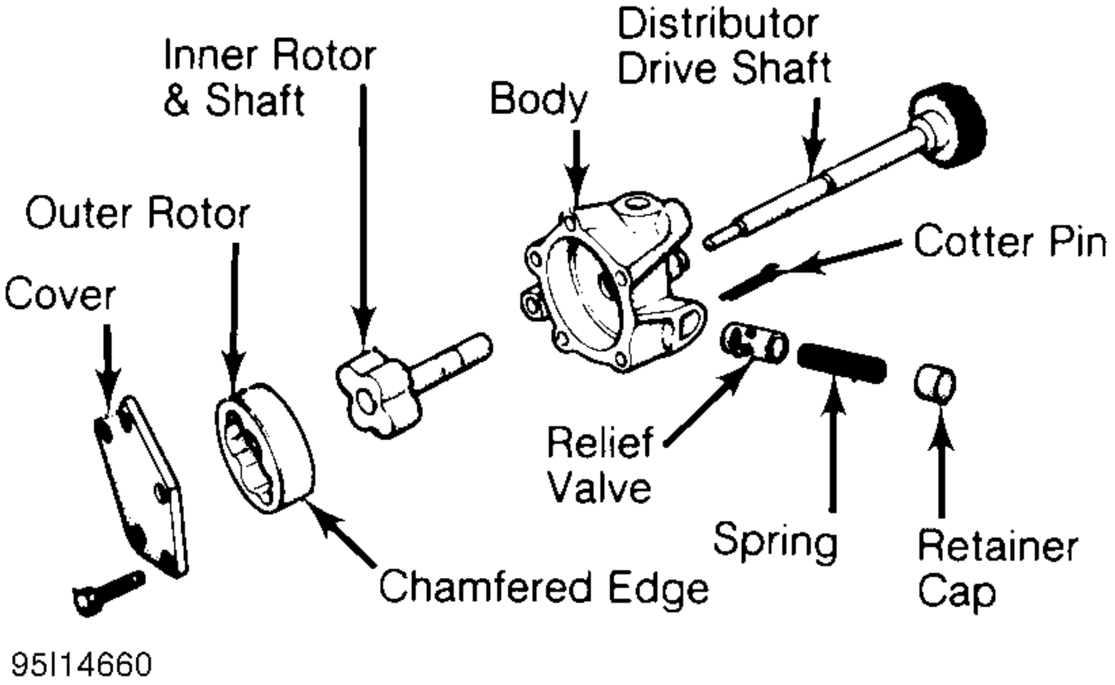
Distributor Drive Shaft
Inner Rotor & Shaft
Body
Outer Rotor
Cotter Pin
Cover
Relief Valve
Spring
Retainer Cap
Chamfered Edge
95I14660

Fig. 30: Typical Rotor Type Oil Pump

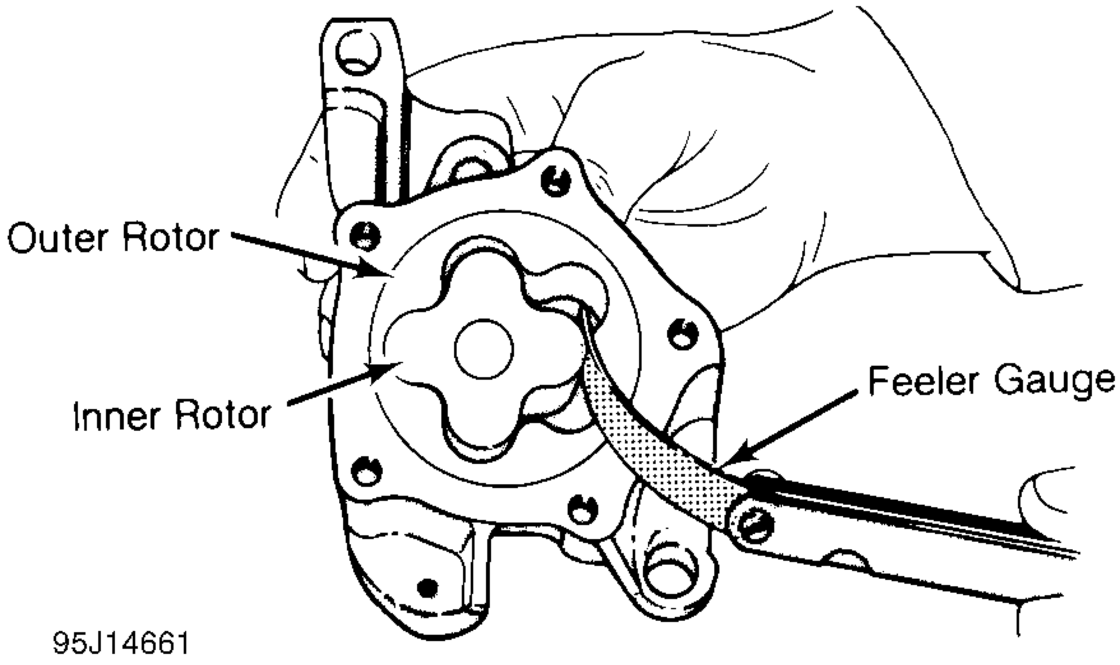

Fig. 31: Measuring Rotor Clearance

GEAR TYPE

NOTE: **Examples used in this article are general in nature and do not necessarily relate to a specific engine or system. Illustrations and procedures have been chosen to guide mechanic through engine overhaul process. Descriptions of processes of cleaning, inspection, assembly and machine shop practice are included.**

Always refer to appropriate engine overhaul article, if available, in the ENGINES section for complete overhaul procedures and specifications for the vehicle being repaired.

Mark oil pump gear location before removing. See Fig. 32. Remove gears from pump body. Inspect gears for pitting or damage. Inspect cover for grooving or wear. Measure gear diameter and length. Measure gear housing cavity depth and diameter. See Fig. 33. Replace worn or damaged components.

Pump cover wear is measured using a straightedge and feeler gauge. Replace pump or components if warpage or wear exceeds specification, or mating surface of pump cover is scratched or grooved.

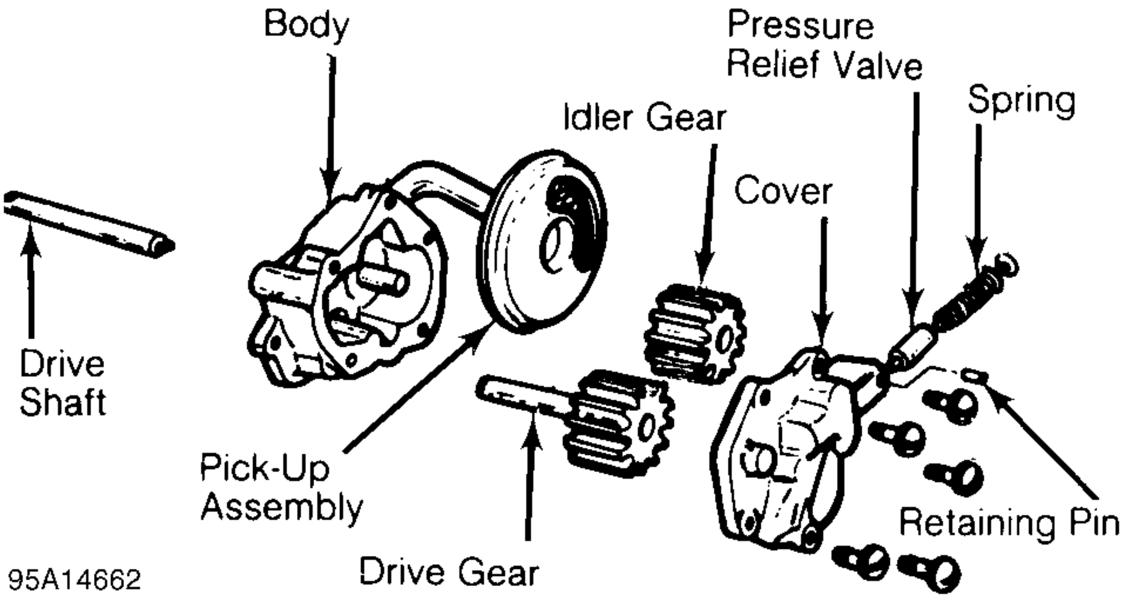
Body
Pressure Relief Valve
Spring
Idler Gear
Cover
Drive Shaft
Pick-Up Assembly
Retaining Pin
Drive Gear
95A14662

Fig. 32: Typical Gear Type Oil Pump

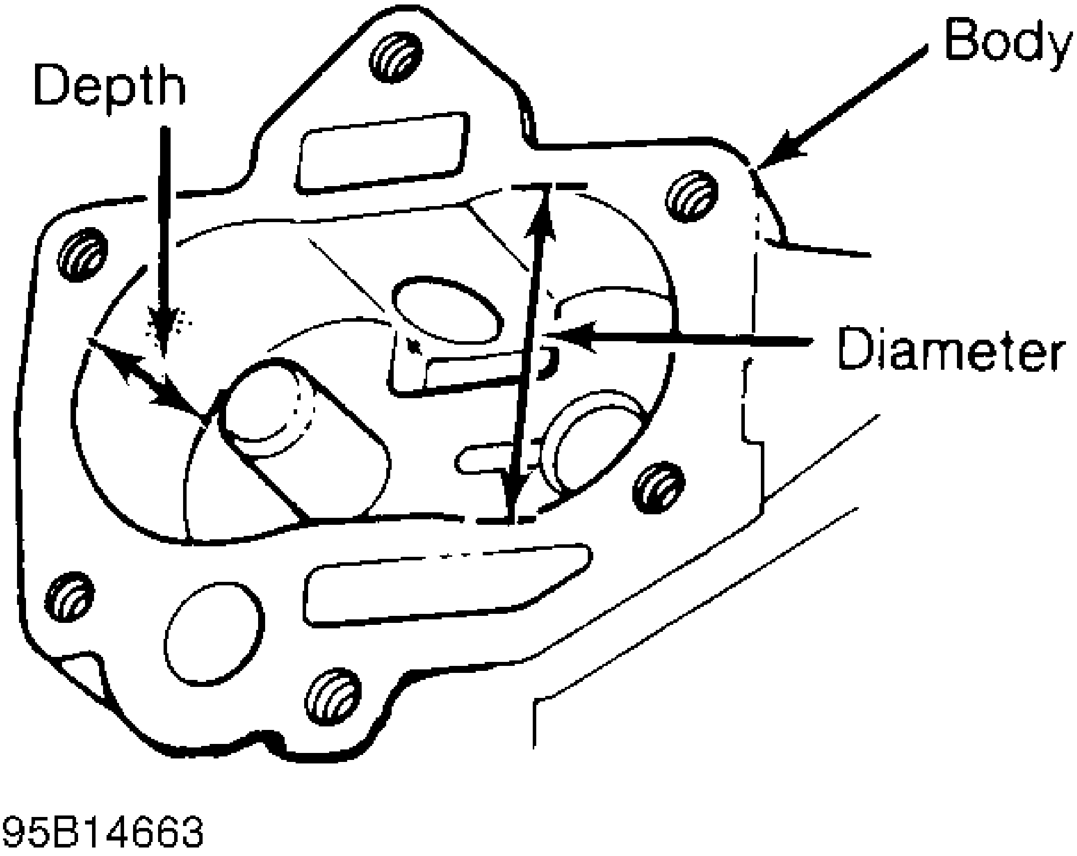
Depth
Body
Diameter
95B14663

Fig. 33: Measuring Oil Pump Gear Cavity

BREAK-IN PROCEDURE

* PLEASE READ THIS FIRST *

NOTE: **Examples used in this article are general in nature and do not necessarily relate to a specific engine or system. Illustrations and procedures have been chosen to guide mechanic through engine overhaul process. Descriptions of processes of cleaning, inspection, assembly and machine shop practice are included.**

Always refer to appropriate engine overhaul article, if available, in the ENGINES section for complete overhaul procedures and specifications for the vehicle being repaired.

ENGINE PRE-OILING

NOTE: **Examples used in this article are general in nature and do not necessarily relate to a specific engine or system. Illustrations and procedures have been chosen to guide mechanic through engine overhaul process. Descriptions of processes of cleaning, inspection, assembly and machine shop practice are included.**

Always refer to appropriate engine overhaul article, if available, in the ENGINES section for complete overhaul procedures and specifications for the vehicle being repaired.

Pre-oil engine prior to operation to prevent engine damage. Lightly oiled oil pump will cavitate unless oil pump cavities are filled with engine oil or petroleum jelly.

Engine pre-oiling can be done using pressure oiler (if available). Connect pressure oiler to cylinder block oil passage such as oil pressure sending unit. Operate pressure oiler long enough to ensure correct amount of oil has filled crankcase. Check oil level while pre-oiling.

If pressure oiler is not available, disconnect ignition system. Remove oil pressure sending unit and replace with oil pressure test gauge. Using starter motor, rotate engine starter until gauge shows normal oil pressure for several seconds. DO NOT crank engine for more than 30 seconds to avoid starter motor damage. Ensure oil pressure has reached the most distant point from the oil pump.

NOTE: **If new lifters or camshaft are installed, some manufacturers require that a crankcase conditioner be added to engine oil. The engine should be operated for specified amount of time to aid in lifter break-in procedure.**

INITIAL START-UP

NOTE: **Examples used in this article are general in nature and do not necessarily relate to a specific engine or system. Illustrations and procedures have been chosen to guide mechanic through engine overhaul process. Descriptions of processes of cleaning, inspection, assembly and machine shop practice are included.**

Always refer to appropriate engine overhaul article, if available, in the ENGINES section for complete overhaul procedures and specifications for the vehicle being repaired.

Start engine and operate engine at low speed while checking for coolant, fuel and oil leaks. Stop engine. Recheck coolant and oil level. Adjust if necessary.

CAMSHAFT

NOTE: **Examples used in this article are general in nature and do not necessarily relate to a specific engine or system. Illustrations and procedures have been chosen to guide mechanic through engine overhaul process. Descriptions of processes of cleaning, inspection, assembly and machine shop practice are included.**

Always refer to appropriate engine overhaul article, if available, in the ENGINES section for complete overhaul procedures and specifications for the vehicle being repaired.

Break-in procedure is required when new or reground camshaft has been installed. Operate and maintain engine speed between 1500-2500 RPM for approximately 30 minutes. Procedure may vary due to manufacturer's recommendations.

PISTON RINGS

NOTE: **Examples used in this article are general in nature and do not necessarily relate to a specific engine or system. Illustrations and procedures have been chosen to guide mechanic through engine overhaul process. Descriptions of processes of cleaning, inspection, assembly and machine shop practice are included.**

Always refer to appropriate engine overhaul article, if available, in the ENGINES section for complete overhaul procedures and specifications for the vehicle being repaired.

Piston rings require a break-in procedure to ensure seating of rings to cylinder walls. Serious damage may occur to rings if correct procedures are not followed.

Extremely high piston ring temperatures are obtained during break-in process. If rings are exposed to excessively high RPM or high cylinder pressures, ring damage can occur. Follow piston ring manufacturer's recommended break-in procedure.

FINAL ADJUSTMENTS

NOTE: **Examples used in this article are general in nature and do not necessarily relate to a specific engine or system. Illustrations and procedures have been chosen to guide mechanic through engine overhaul process. Descriptions of processes of cleaning, inspection, assembly and machine shop practice are included.**

Always refer to appropriate engine overhaul article, if available, in the ENGINES section for complete overhaul procedures and specifications for the vehicle being repaired.

Check or adjust ignition timing and dwell (if applicable). Adjust valves (if necessary). Adjust idle speed and mixture. Retighten cylinder heads (if required). If cylinder head or block is aluminum, retighten bolts when engine is cold. Follow the engine manufacturer's recommended break-in procedure and maintenance schedule for new engines.

NOTE: **Some manufacturers require that head bolts be retightened after specified amount of operation. This must be done to prevent head gasket failure.**

Engine Performance Diagnostic Routine Outline

* PLEASE READ THIS FIRST *

NOTE: **This article is generic in nature and all information does not apply to all vehicles. For vehicle specific information, see the appropriate articles in the ENGINE PERFORMANCE category.**

WHERE DOES DRIVEABILITY DIAGNOSIS START?

PERFORM BASIC INSPECTION

NOTE: **This article is generic in nature and all information does not apply to all vehicles. For vehicle specific information, see the appropriate articles in the ENGINE PERFORMANCE category.**

1. Verify Customer Complaint
2. Check for Relevant Technical Service Bulletins (TSBs)
3. Perform Visual Inspection **(See Basic Diagnostic Procedures)**
4. Test Engine Sub-Systems **(See Basic Diagnostic Procedures)**
    - Mechanical Condition (Compression)
    - Ignition Output
    - Fuel Delivery
5. Check Air Induction System For Leaks
6. Check & Adjust Basic Engine Settings**(See On-Vehicle Adjustments)**
    - Ignition Timing
    - Idle Speed

CHECK FOR TROUBLE CODES

NOTE: **This article is generic in nature and all information does not apply to all vehicles. For vehicle specific information, see the appropriate articles in the ENGINE PERFORMANCE category.**

1. Check for Diagnostic Trouble Codes (DTCs).**(See Self-Diagnostics)**
2. Repair cause of DTCs.
3. Clear PCM memory and repeat self-test.

DIAGNOSE SYMPTOM

NOTE: **This article is generic in nature and all information does not apply to all vehicles. For vehicle specific information, see the appropriate articles in the ENGINE PERFORMANCE category.**

1. If no self-diagnostics available, or no trouble codes present, identify symptom.
2. See trouble shooting procedure to identify problem. **(See Trouble Shooting - No Codes)**

TEST SYSTEM

NOTE: **This article is generic in nature and all information does not apply to all vehicles. For vehicle specific information, see the appropriate articles in the**

ENGINE PERFORMANCE category.

1. Perform required tests. **(See Systems & Component Testing)**
2. Verify complaint is repaired.

GENERAL INFORMATION

Engine Performance Safety Precautions

- Always refer to Emission Decal in engine compartment before servicing vehicle. If manual and decal differ, always use decal specifications.
- Do not allow or create a condition of misfire in more than one cylinder for an extended period of time. Damage to converter may occur due to loading converter with unburned air/fuel mixture.
- Always turn ignition off and disconnect negative battery cable BEFORE disconnecting or connecting computer or other electrical components.
- DO NOT drop or shock electrical components such as computer, airflow meter, etc.
- DO NOT use fuel system cleaning compounds that are not recommended by the manufacturer. Damage to gaskets, diaphragm materials and catalytic converter may result.
- Before performing a compression test or cranking engine using a remote starter switch, disconnect coil wire from distributor and secure it to a good engine ground, or disable ignition.
- Before disconnecting any fuel system component, ensure fuel system pressure is released.
- Use a shop towel to absorb any spilled fuel to prevent fire.
- DO NOT create sparks or have an open flame near battery.
- If any fuel system components such as hoses or clamps are replaced, ensure they are replaced with components designed for fuel system use.
- Always reassemble throttle body components with new gaskets, "O" rings and seals.
- If equipped with an inertia switch, DO NOT reset switch until fuel system has been inspected for leaks.
- Wear safety goggles when drilling or grinding.
- Wear proper clothing which protects against chemicals and other hazards.

English-Metric Conversion Chart

METRIC CONVERSIONS

Metric conversions are making life more difficult for the mechanic. In addition to increasing the number of tools required, metric-dimensioned nuts and bolts are used alongside English components in many new vehicles. The mechanic has to decide which tool to use, slowing down the job. The tool problem can be solved by trial and error, but some metric conversions aren't so simple.

Converting temperature, lengths or volumes requires a calculator and conversion charts, or else a very nimble mind. Conversion charts are only part of the answer though, because they don't help you "think" metric, or "visualize" what you are converting. The following examples are intended to help you "see" metric sizes:

LENGTH

Meters are the standard unit of length in the metric system. The smaller units are 10ths (decimeter), 100ths (centimeter), and 1000ths (millimeter) of a meter. These common examples might help you to visualize the metric units:

- A meter is slightly longer than a yard (about 40 inches).
- An aspirin tablet is about one centimeter across (.4 inches).
- A millimeter is about the thickness of a dime.

VOLUME

The metric weight system is based on the gram, with the most common unit being the kilogram (1000 grams). Our comparable units are ounces and pounds:

- A kilogram is about 2.2 pounds.
- A kilogram is about 2.2 pounds.

TORQUE

Torque is somewhat complicated. The term describes the amount of effort exerted to turn something. A chosen unit of weight or force is applied to a lever of standard length. The resulting leverage is called torque. In our standard system, we use the weight of one pound applied to a lever a foot long, resulting in the unit called a foot-pound. A smaller unit is the inch-pound (the lever is one inch long). Metric units include the meter kilogram (lever one meter long with a kilogram of weight applied) and the Newton-meter (lever one meter long with force of one Newton applied). Some conversions are:

- A meter kilogram is about 7.2 foot pounds.
- A foot pound is about 1.4 Newton-meters.
- A centimeter kilogram (cmkg) is equal to .9 inch pounds.

PRESSURE

Pressure is another complicated measurement. Pressure is described as a force or weight applied to a given area. Our common unit is pounds per square inch. Metric units can be expressed in several ways. One is the kilogram per square centimeter (kg/cm^2). Another unit of pressure is the Pascal (force of one Newton on an area of one square meter), which equals about 4 ounces on a square yard. Since this is a very small amount of pressure, we usually see the kiloPascal, or kPa (1000 Pascals). Another common automotive term for pressure is the bar (used by German manufacturers), which equals 10 Pascals. Thoroughly confused? Try the examples below:

- Atmospheric pressure at sea level is about 14.7 psi.

- Atmospheric pressure at sea level is about 1 bar.
- Atmospheric pressure at sea level is about 1 kg/cm^2 .
- One pound per square inch is about 7 kPa.

CONVERSION FACTORS

CONVERSION FORMULA

To Convert	To	Multiply By
LENGTH		
Millimeters (mm)	Inches	.03937
Inches	Millimeters	25.4
Meters (M)	Inches	39.37
Meters (M)	Feet	3.28084
Feet	Meters	.3048
Kilometers (Km)	Miles	.62137
AREA		
Square Centimeters (cm^2)	Square Inches	.155
Square Inches	Square Centimeters	6.45159
VOLUME		
Cubic Centimeters	Cubic Inches	.06103
Cubic Inches	Cubic Centimeters	16.38703
Liters	Cubic Inches	61.025
Cubic Inches	Liters	.01639
Liters	Quarts	1.05672
Quarts	Liters	.94633
Liters	Pints	2.11344
Pints	Liters	.47317
Liters	Ounces	33.81497
Ounces	Liters	.02957
WEIGHT		
Grams	Ounces	.03527
Ounces	Grams	28.34953
Kilograms	Pounds	2.20462
Pounds	Kilograms	.45359
WORK		
Centimeter Kilograms	Inch Pounds	.8676
Pounds/Sq. Inch	Kilograms/Sq. Centimeter	.07031
Bar	Pounds/Sq. Inch	14.504
Pounds/Sq. Inch	Bar	.06895
Atmosphere	Pounds/Sq. Inch	14.696
Pounds/Sq. Inch	Atmosphere	.06805
TEMPERATURE		
Centigrade Degrees	Fahrenheit Degrees	(CB°x^{9} /$_{5}$)+32
Fahrenheit Degrees	Centigrade Degrees	(FB°-32)x^{5} /$_{9}$

EQUIVALENCIES

Inches	Decimals	mm
1/64	.016	.397
1/32	.031	.794

Inches	Decimals	mm
3/64	.047	1.191
1/16	.063	1.588
5/64	.078	1.984
3/32	.094	2.381
7/64	.109	2.778
1/8	.125	3.175
9/64	.141	3.572
5/32	.156	3.969
11/64	.172	4.366
3/16	.188	4.763
13/64	.203	5.159
7/32	.219	5.556
15/64	.234	5.953
1/4	.250	6.350
17/64	.266	6.747
9/32	.281	7.144
19/64	.297	7.541
5/16	.313	7.938
21/64	.328	8.334
11/32	.344	8.731
23/64	.359	9.128
3/8	.375	9.525
25/64	.391	9.992
13/32	.406	10.319
27/64	.422	10.716
7/16	.438	11.113
29/64	.453	11.509
15/32	.469	11.906
31/64	.484	12.303
1/2	.500	12.700
33/64	.516	13.097
17/32	.531	13.494
35/64	.547	13.891
9/16	.563	14.288
37/64	.578	14.684
19/32	.594	15.081
39/64	.609	15.478
5/8	.625	15.875
41/64	.641	16.272
21/32	.656	16.669
43/64	.672	17.066
11/16	.687	17.463
45/64	.703	17.859
23/32	.719	18.256
47/64	.734	18.653
3/4	.750	19.050
49/64	.766	19.447
25/32	.781	19.844

Inches	**Decimals**	**mm**
51/64	.797	20.241
13/16	.813	20.638
53/64	.828	21.034
27/32	.844	21.431
55/64	.859	21.828
7/8	.875	22.225
57/64	.891	22.622
29/32	.906	23.019
59/64	.922	23.416
15/16	.938	23.813
61/64	.953	24.209
31/32	.969	24.606
63/64	.984	25.003
1	1.000	25.400

Release January 2023

GENERAL INFORMATION

Gear Tooth Contact Patterns

* PLEASE READ THIS FIRST *

NOTE: **This is GENERAL information. This article is not intended to be specific to any unique situation or individual vehicle configuration. For model-specific information see appropriate articles where available.**

INSPECTION

NOTE: **This is GENERAL information. This article is not intended to be specific to any unique situation or individual vehicle configuration. For model-specific information see appropriate articles where available.**

Wipe lubricant from internal parts. Rotate gears and inspect for wear or damage. Mount dial indicator to housing and check backlash at several points around ring gear. Backlash must be within specification at all points. If no defects are found, check gear tooth pattern contact.

NOTE: **Drive pattern should be well centered on ring gear teeth. Coast pattern should be centered, but may be slightly toward toe of ring gear teeth.**

GEAR TOOTH CONTACT PATTERN

NOTE: **This is GENERAL information. This article is not intended to be specific to any unique situation or individual vehicle configuration. For model-specific information see appropriate articles where available.**

1. Paint ring gear teeth with marking compound. Wrap cloth or rope around drive pinion flange to act as brake. Rotate gear until clear contact pattern is obtained.
2. Contact pattern will indicate whether correct pinion bearing mounting shim has been installed and if drive gear backlash has been set properly. Backlash between drive gear pinion must be maintained within specified limits until correct tooth pattern is obtained.

ADJUSTMENTS

NOTE: **This is GENERAL information. This article is not intended to be specific to any unique situation or individual vehicle configuration. For model-specific information see appropriate articles where available.**

GEAR BACKLASH & PINION SHIM CHANGES

NOTE: **This is GENERAL information. This article is not intended to be specific to any unique situation or individual vehicle configuration. For model-specific information see appropriate articles where available.**

1. With no change in backlash, moving pinion further from ring gear moves drive pattern toward heel and top of tooth, and moves coast pattern toward toe and top of tooth.
2. With no change in backlash, moving pinion closer to ring gear moves drive pattern toward toe and bottom of tooth, and moves coast pattern toward heel and bottom of tooth.
3. With no change in pinion shim thickness, an increase in backlash moves ring gear further from pinion. Both drive and coast patterns move toward heel and top of tooth.
4. With no change in pinion shim thickness, a decrease in backlash moves ring gear closer to pinion gear. Both drive and coast patterns move toward toe and bottom of tooth.

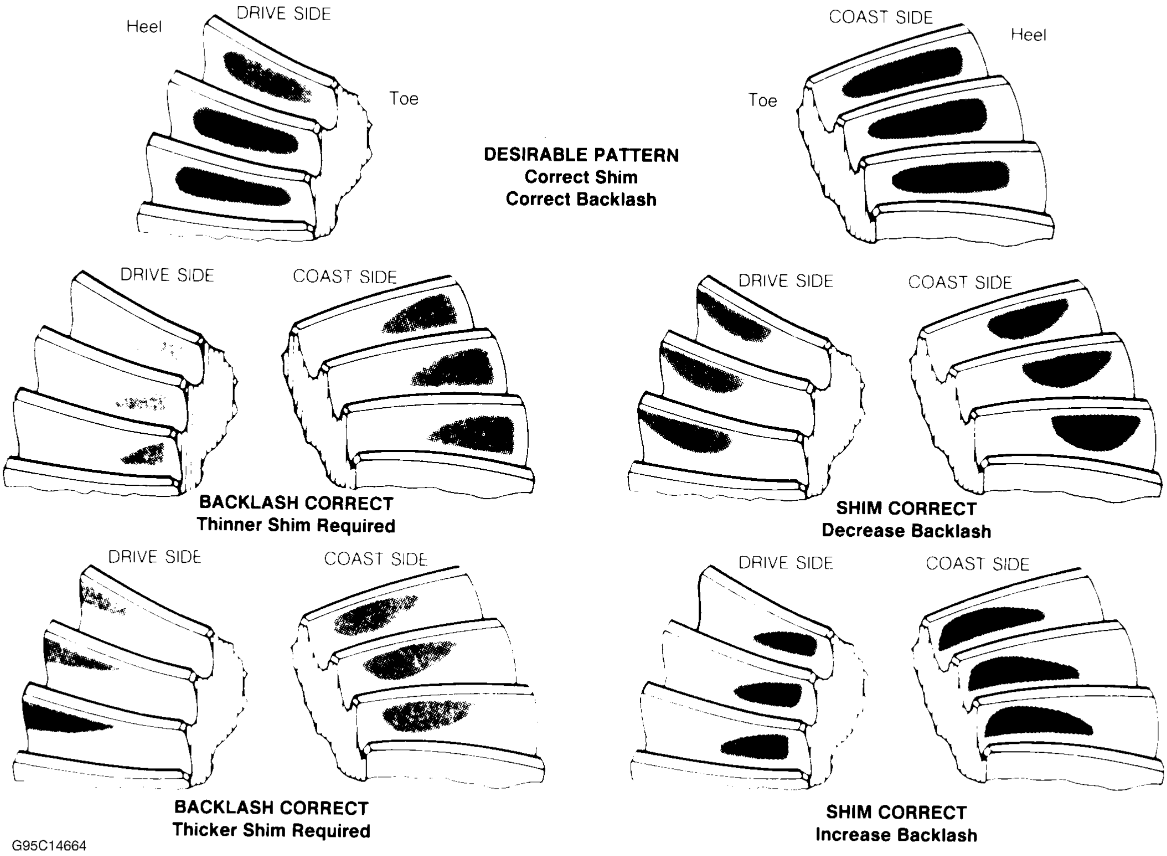
Heel
DRIVE SIDE
Toe
COAST SIDE
Heel
Toe
DESIRABLE PATTERN
Correct Shim
Correct Backlash
DRIVE SIDE
COAST SIDE
BACKLASH CORRECT
Thinner Shim Required
DRIVE SIDE
COAST SIDE
SHIM CORRECT
Decrease Backlash
DRIVE SIDE
COAST SIDE
BACKLASH CORRECT
Thicker Shim Required
DRIVE SIDE
COAST SIDE
SHIM CORRECT
Increase Backlash
G95C14664

Fig. 1: Drive Axle Gear Tooth Patterns

General Cooling System Service

* PLEASE READ THIS FIRST *

This article is generic in nature and all information does not apply to all vehicles including those without a liquid cooling system. For vehicle specific information, see the appropriate articles in the ENGINE category.

DESCRIPTION

The liquid cooling system consists of a radiator, water pump, thermostat, electric or belt-driven cooling fan, pressure cap, heater, and various connecting hoses and cooling passages in the engine block and cylinder head.

MAINTENANCE

DRAINING

Remove radiator cap and open heater control valve to maximum heat position. Open drain cocks or remove plugs in bottom of radiator and engine block. In-line engines usually have one plug or drain cock, while "V" type engines have 2, one in each bank of cylinders.

FLUSHING

CAUTION: **Some manufacturers use an aluminum and plastic radiator. Flushing solution must be compatible with aluminum.**

Radiator

Connect flushing gun to water outlet of radiator. Disconnect water inlet hose. To prevent flooding engine, use a hose connected to radiator inlet. Use air in short bursts to prevent damage to radiator. Continue flushing until water runs clear.

Engine Block

To flush engine, remove thermostat. Connect flushing gun to water outlet of radiator. Use air in short bursts to prevent damage to radiator. Continue flushing until water runs clear.

REFILLING

To prevent air from being trapped in engine block, engine should be running when refilling cooling system. After system is full, continue running engine until thermostat is open, then recheck fill level. Do not overfill system.

TESTING

THERMOSTAT

1. Remove and inspect thermostat for corrosion and proper seating of valve. If okay, suspend thermostat and thermometer in a 50/50 mixture of coolant and water. See **Fig. 1**. DO NOT allow thermostat or thermometer to touch bottom or container. Heat water until thermostat begins to open.
2. Read temperature on thermometer. This is the initial opening temperature and should be within specification. Continue heating water until thermostat is fully open and note temperature. This is the fully open temperature. If either reading is not to specification, replace thermostat.

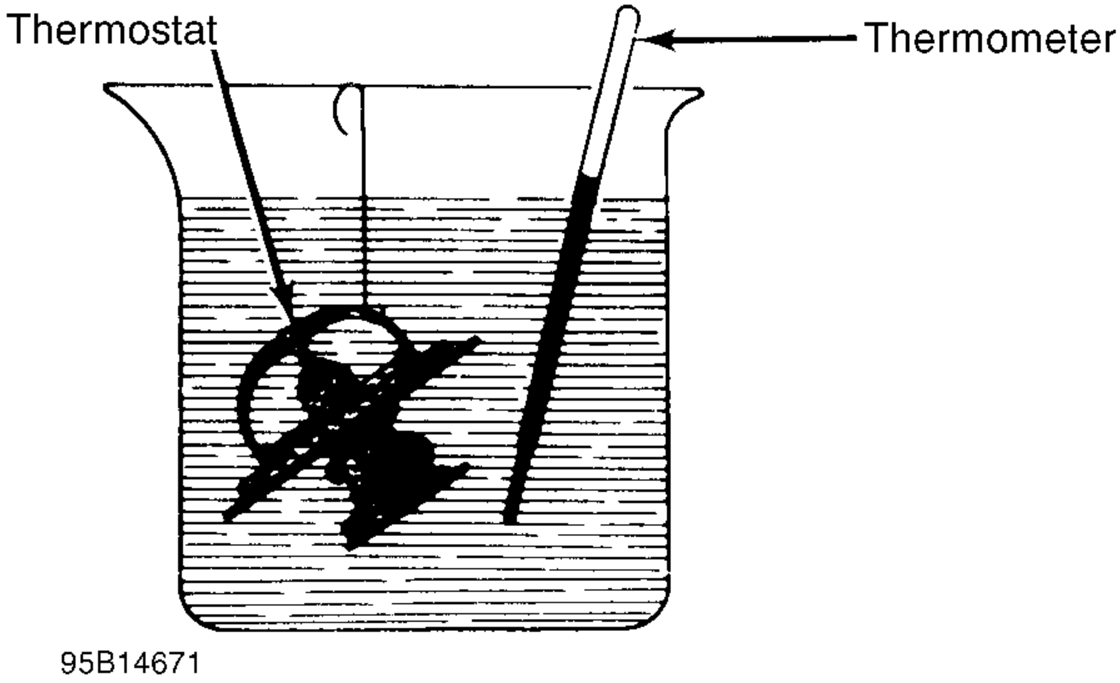

Fig. 1: Testing Thermostat in Coolant/Water Solution

PRESSURE TESTING

A pressure tester is used to check both radiator cap and complete cooling system. Follow pressure tester manufacturer instructions and test components as follows:

Radiator Cap

Visually inspect radiator cap. If cap looks okay, connect pressure tester to cap. See Fig. 2. Pressurize tester to full radiator cap specification. Replace cap if it fails to hold pressure.

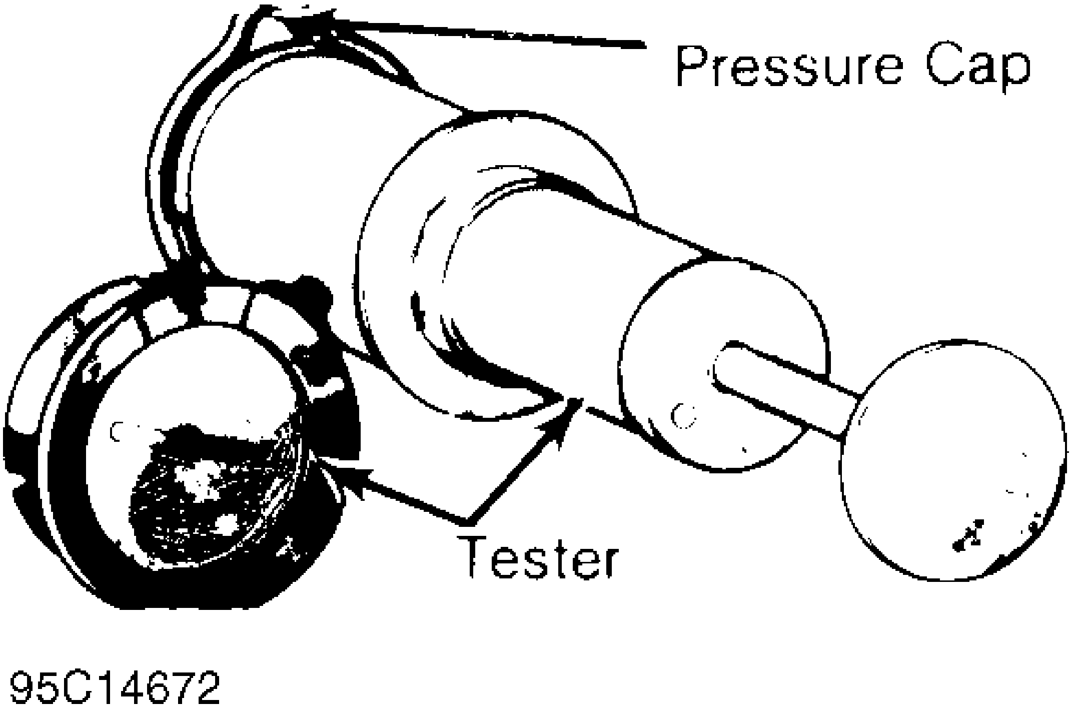

Fig. 2: Pressure Testing Radiator Cap

Cooling System

1. Turn ignition off and allow engine to cool. Ensure radiator if filled to correct level. Remove cap and attach pressure tester to radiator. Pressurize tester to full radiator rating specification.
2. If pressure drops, check for external leaks. If no leaks are found, start engine and allow to idle. If pressure builds up immediately, check cylinder head and block for cracks. If pressure does not build up immediately, go to next step.

CAUTION: **DO NOT allow excess pressure to build in cooling system or damage may result.**

3. Using pressure tester, pump cooling system up to pressure specified on radiator cap. If pump gauge pointer vibrates, compression or combustion leak into cooling system is indicated. Isolate leak by shorting each spark plug wire to cylinder block. Gauge pointer vibration will stop or decrease when leaking cylinder is shorted.

GENERAL INFORMATION

Manual Transmission Trouble Shooting

* PLEASE READ THIS FIRST *

NOTE: **This is GENERAL information. This article is not intended to be specific to any unique situation or individual vehicle configuration. For model-specific information see appropriate articles where available.**

INTRODUCTION

NOTE: **This is GENERAL information. This article is not intended to be specific to any unique situation or individual vehicle configuration. For model-specific information see appropriate articles where available.**

There are many times when the transmission is incorrectly blamed for shifting problems or noises that are actually caused by other reasons. Shift difficulties are frequently caused by conditions outside of the transmission or transaxle. Typical conditions include: shift linkage, shift cables, alignment of engine to transmission, worn engine mounts or clutch problems. Drive train noises may come from many sources such as tires, road surfaces, wheel bearings, differentials, engine or exhaust system. Repairing or overhauling transmission will not cure these problems.

No manufacturer makes a perfectly quiet transmission. Gear rollover noise is present in most constant mesh transmissions and will tend to disappear when the clutch is disengaged or transmission is placed in gear. If clutch is properly adjusted, clutch release bearing noise will disappear when release bearing is moved enough to slide release bearing away from pressure plate.

Trouble shooting can be helped by driving vehicle on a smooth level road to help eliminate tire and body noise. Note whether noise occurs on acceleration, coasting, deceleration or steady driving conditions. Some problems may only occur when transmission is either hot or cold. Gear lubricant that is too thick can cause hard shifting on cold mornings before engine is warm and vehicle has been driven.

MANUAL TRANSMISSION/TRANSAXLE TROUBLE SHOOTING

Condition	Possible Cause
Noisy In Forward Gears	Low Gear Oil Level, Loose Bellhousing Bolts, Worn Bearings Or Gears
Clunk On Deceleration (FWD Only)	Loose Engine Mounts, Worn Inboard CV Joints, Worn Differential Pinion Shaft, Oversized Side Gear Hub Counterbore in Case
Gear Clash When Shifting Forward Gears	Clutch Out Of Alignment, Shift Linkage Damaged Or Out Of Adjustment, Gears Or Synchronizers Damaged, Low Gear Oil Level
Transmission Noisy When Moving (RWD Only); Quiet In Neutral With Clutch Engaged	Worn Rear Output Shaft Bearing
Gear Rattle	Worn Bearings, Worn Gear Oil, Low Gear Oil, Worn Gears
Steady Ticking At Idle (Increases With RPM)	Broken Tooth On A Gear
Gear Clash When Shifting Forward Gears	Worn Or Broken Synchronizers, Faulty Clutch
Loud Whine In Reverse	Normal Condition (1)
Noise When Stepping On Clutch	Faulty Release Bearing, Worn Pilot Bearing
Ticking Or Screeching As Clutch Is Engaged	Faulty Release Bearing, Uneven Pressure Plate Fingers
Click Or Snap When Clutch Is Engaged	Worn Clutch Fork, Worn Pivot Ball, Worn Or Broken Front Bearing Retainer

Condition	Possible Cause
Transmission Shifts Hard	Clutch Not Releasing, Incorrect Gear Oil, Shift Mechanism Binding, Clutch Installed Backward
Will Not Shift Into One Gear, Shifts Into All Others	Bent Shift Fork, Worn Detent Balls
Locked Into Gear, Cannot Shift	Clutch Adjustment, Worn Detent Balls
Transmission Jumps Out Of Gear	Pilot Bearing Worn, Bent Shift Fork, Worn Gear Teeth Or Face, Excessive Gear Train End Play, Worn Synchronizers, Missing Detent Ball Spring, Shift Mechanism Worn Or Out Of Adjustment, Engine Or Transmission Mount Bolts Loose, Transmission Not Aligned
Shift Lever Rattle	Worn Detents Or Shift Lever, Worn Shift Fork, Worn Synchronizer Sleeves
Shift Lever Hops Under Acceleration	Worn Engine Or Transmission Mounts

(1) Most units use spur cut gears in Reverse and are naturally noisy.

GENERAL INFORMATION

Parasitic Load Explanation & Test Procedures

* PLEASE READ THIS FIRST *

NOTE: **This is GENERAL information. This article is not intended to be specific to any unique situation or individual vehicle configuration. For model-specific information see appropriate articles where available.**

GENERAL INFORMATION

NOTE: **This is GENERAL information. This article is not intended to be specific to any unique situation or individual vehicle configuration. For model-specific information see appropriate articles where available.**

The term Parasitic Load refers to electrical devices that continue to use or draw current after the ignition switch is turned to OFF position. This small amount of continuous battery draw is expressed in milliamps (mA). On Chrysler vehicles, a typical Parasitic Load should be no more than 30 milliamps (0.030 amps). On Ford Motor Co. and General Motors vehicles produced after 1980, a typical Parasitic Load should be no more than 50 milliamps (0.050 amps).

Vehicles produced since 1980 have memory devices that draw current with ignition off for as long as 20 minutes before shutting down the Parasitic Drain. When Parasitic Load exceeds normal specifications, the vehicle may exhibit dead battery and no-start condition.

Follow test procedure for checking Parasitic Loads to completion. A brief overview of a suggested test procedure is included along with some typical Parasitic Load specifications. Refer to GENERAL MOTORS PARASITIC LOAD TABLE chart.

TESTING FOR PARASITIC LOAD

NOTE: **This is GENERAL information. This article is not intended to be specific to any unique situation or individual vehicle configuration. For model-specific information see appropriate articles where available.**

CAUTION: **Always turn ignition off when connecting or disconnecting battery cables, battery chargers or jumper cables. DO NOT turn test switch to OFF position (which causes current to run through ammeter or vehicle electrical system).**

NOTE: **Memory functions of various accessories must be reset after the battery is reconnected.**

The battery circuit must be opened to connect test switch (shunt) and ammeter into the circuit. When a battery cable is removed, timer circuits within the vehicle computer are interrupted and immediately begin to discharge. If in doubt about the condition of the ammeter fuse, test it with an ohmmeter prior to beginning test. An open fuse will show the same reading (00.00) as no parasitic drain. Begin test sequence with the meter installed and on the 10-amp scale. Select lower scale to read parasitic draw.

CHRYSLER IGNITION OFF DRAW (IOD) TEST

To test for excessive IOD, verify that all electrical accessories are OFF. Turn off all lights, remove ignition key, and close all doors and decklid. If the vehicle is equipped with electronic accessories (illuminated entry, automatic load leveler, body computer, or high line radio), allow the system to automatically shut off (time out), up to 3 minutes.

1. Raise the hood and disconnect both battery cables, negative first.

CAUTION: **IOD greater than 3 amps may damage millampmeter.**

2. Reconnect the negative cable and connect a typical 12-volt test light (low wattage bulb) between the positive cable clamp and the positive battery post. Remove the engine compartment lamp bulb. If the test light does not light, proceed to step 3. If the test light does light, proceed to step, 4. The test light will indicate IOD greater than 3 amps. After higher amperage IOD has been corrected, proceed to step 3.
3. ith 12-volt test light still connected (not lit), connect an ammeter (milliampere scale) between the positive cable clamp and the positive battery post, disconnect test light, refer to instructions provided with ammeter being used. A reading of 30 milliamperes or less indicates normal electrical draw. If ammeter reads more than 30 milliamperes, excessive IOD must be corrected.
4. Locate the fuse panel and remove fuses or circuit breakers one at a time, and observe ammeter after each fuse or circuit breaker is removed. If test light goes out and the reading drops below 30 milliamperes when a certain fuse or circuit breaker is removed, that circuit may have a defect.
5. If IOD is detected after all fuses and circuit breakers have been removed, disconnect the 60-way connector at the Single Module Engine Control (SMEC), located outboard of the battery.
6. If excessive IOD is detected after all fused circuits and SMEC have been verified, disconnect the B+ terminal from the alternator. If reading drops below 30 milliamperes, reinstall all fuses and circuit breakers, reconnect B+ terminal at alternator, reconnect battery, and perform alternator diagnostics.
7. Install engine compartment lamp bulb.

TEST PROCEDURE USING TEST SWITCH

1. Turn ignition off. Remove negative battery terminal cable. Install Disconnect Tool (J-38758) test switch male end to negative battery cable. Turn test switch knob to OFF position (current through meter). Install negative battery cable to the female end of test switch.
2. Turn test switch knob to ON position (current through switch). Road test vehicle with vehicle accessories on (radio, air conditioner, etc). After road test, turn ignition switch to LOCKED position and remove key. Connect ammeter terminals to test switch terminals. See **Fig. 1**. Select 10-amp scale.
3. Turn off all electrical accessories. Turn off interior lights, underhood lamp, trunk light, illuminated entry, etc. To avoid damaging ammeter or obtaining a false meter reading, all accessories must be off before turning test switch knob to OFF position.
4. Turn test switch knob to OFF position to allow current to flow through ammeter. If meter reads wrong polarity, turn test switch to ON position and reverse leads. Turn test switch to OFF position. Observe current reading. If reading is less than 2 amps, turn test switch to ON position to keep electrical circuits powered-up.
5. Select low amp scale. Switch lead to the correct meter position. Turn test switch to OFF position and compare results to normal current draw. See **GENERAL MOTORS PARASITIC LOAD TABLE (MILLIAMPS)**. If current draw is unusually high for the vehicle's overall electrical system, remove system fuses one at a time until current draw returns to normal.
6. Turn test switch to ON position each time door is opened or fuse is removed. Turn switch to OFF position to read current draw value through meter. When the cause of excessive current drain has been located and repaired, remove test switch and reconnect negative battery cable to the negative battery terminal.

INTERMITTENT PARASITIC LOAD PROBLEMS

Intermittent parasitic load can occur because of a memory device that does not power down with ignition off. With an intermittent parasitic load, battery draw can be greater than 1.0 amp.

To find an intermittent problem requires that an ammeter and Disconnect Tool (J-38758) test switch be connected and left in the circuit. See **Fig. 1**. Road test vehicle. After road test, turn ignition off and remove key.

Monitor the milliamps scale for 15-20 minutes after ignition is turned off. This allows monitoring memory devices to determine if they time out and stop drawing memory current. The test switch is needed to protect ammeter when the vehicle is started.

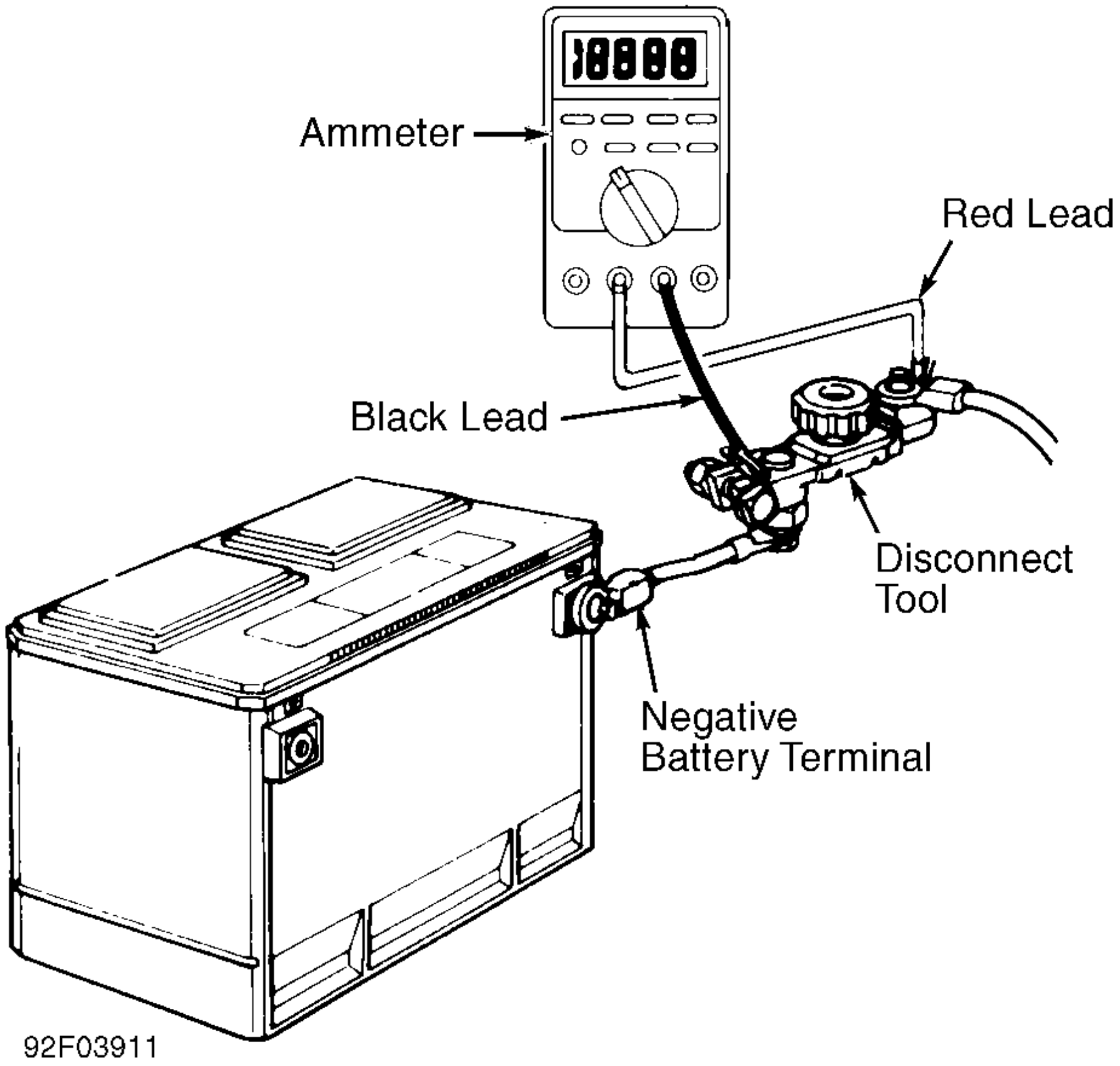
Ammeter
Red Lead
Black Lead
Disconnect Tool
Negative Battery Terminal
92F03911

Fig. 1: Connecting Kent-Moore Disconnect Tool (J-38758)
Courtesy of GENERAL MOTORS CORP.

GENERAL MOTORS PARASITIC LOAD

Component	Normal Draw	Maximum Draw	Time-Out (Minutes)
Anti-Theft System	0.4	1.0	.....
Auto Door Lock	1.0	1.0	.....
Body Control Module	3.6	12.4	20
Central Processing System	1.6	2.7	20
Electronic Control Module	5.6	10.0	.....
Electronic Level Control	2.0	3.3	20
Heated Windshield Module	0.3	0.4	.....
HVAC Power Module	1.0	1.0	.....
Illuminated Entry	1.0	1.0	1

Component	Normal Draw	Maximum Draw	Time-Out (Minutes)
Light Control Module	0.5	1.0	.....
Oil Level Module	0.1	0.1	.....
Multi-Function Chime	1.0	1.0	.....
Pass Key Decoder Module	0.75	1.0	.....
Power Control Module	5.0	7.0	.....
Retained Accessory Power	3.8	3.8	.....
Radio	7.0	8.0	15
Twilight Sentinel Module	1.0	1.0	.....
Voltage Regulator	1.4	2.0	.....

DIODE CHECK & SOLENOID TEST

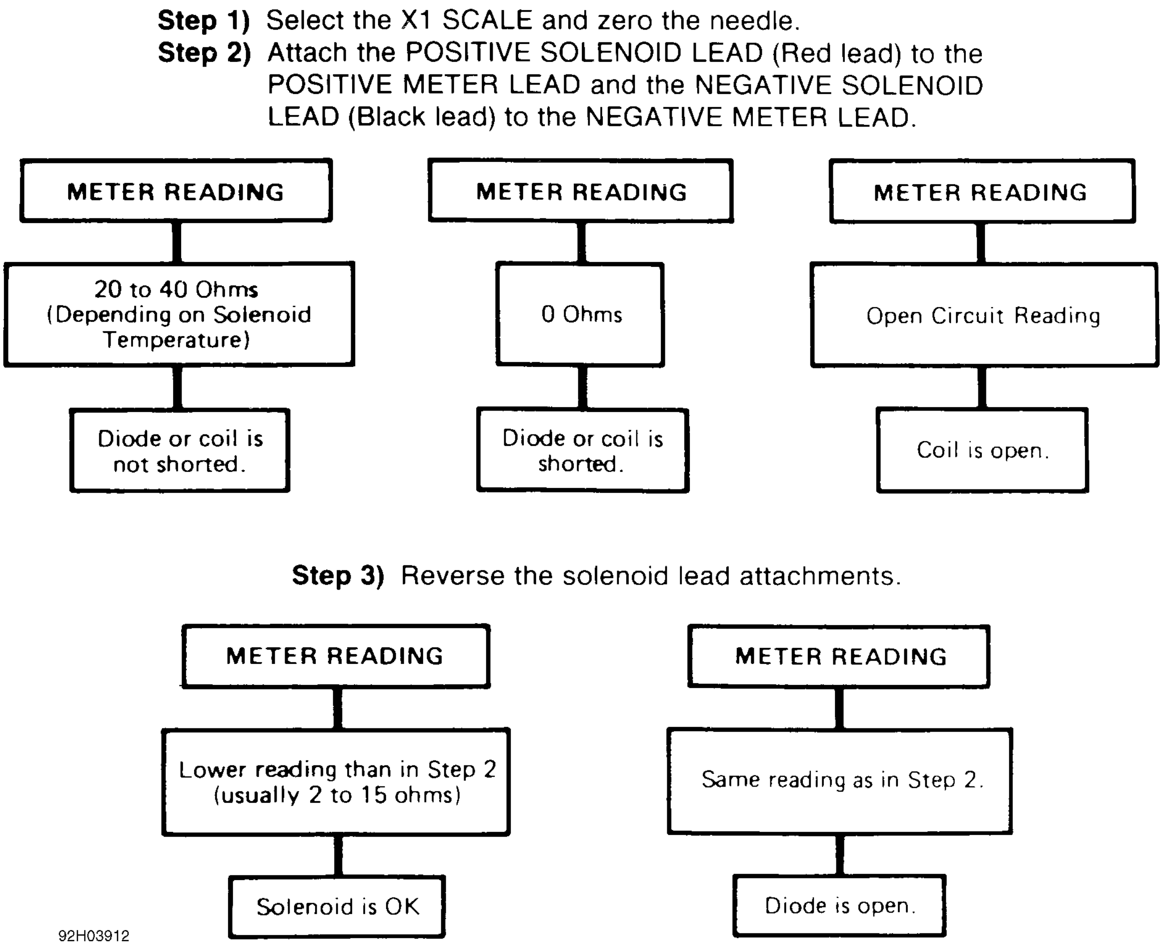

Step 1) Select the X1 SCALE and zero the needle.

Step 2) Attach the POSITIVE SOLENOID LEAD (Red lead) to the POSITIVE METER LEAD and the NEGATIVE SOLENOID LEAD (Black lead) to the NEGATIVE METER LEAD.

Step 3) Reverse the solenoid lead attachments.

METER READING
20 to 40 Ohms (Depending on Solenoid Temperature)
Diode or coil is not shorted.
METER READING
0 Ohms
Diode or coil is shorted.
METER READING
Open Circuit Reading
Coil is open.
METER READING
Lower reading than in Step 2 (usually 2 to 15 ohms)
Solenoid is OK
METER READING
Same reading as in Step 2.
Diode is open.
92H03912

Fig. 2: Diode Check & Solenoid Test

Courtesy of GENERAL MOTORS CORP.

QUAD DRIVER TEST

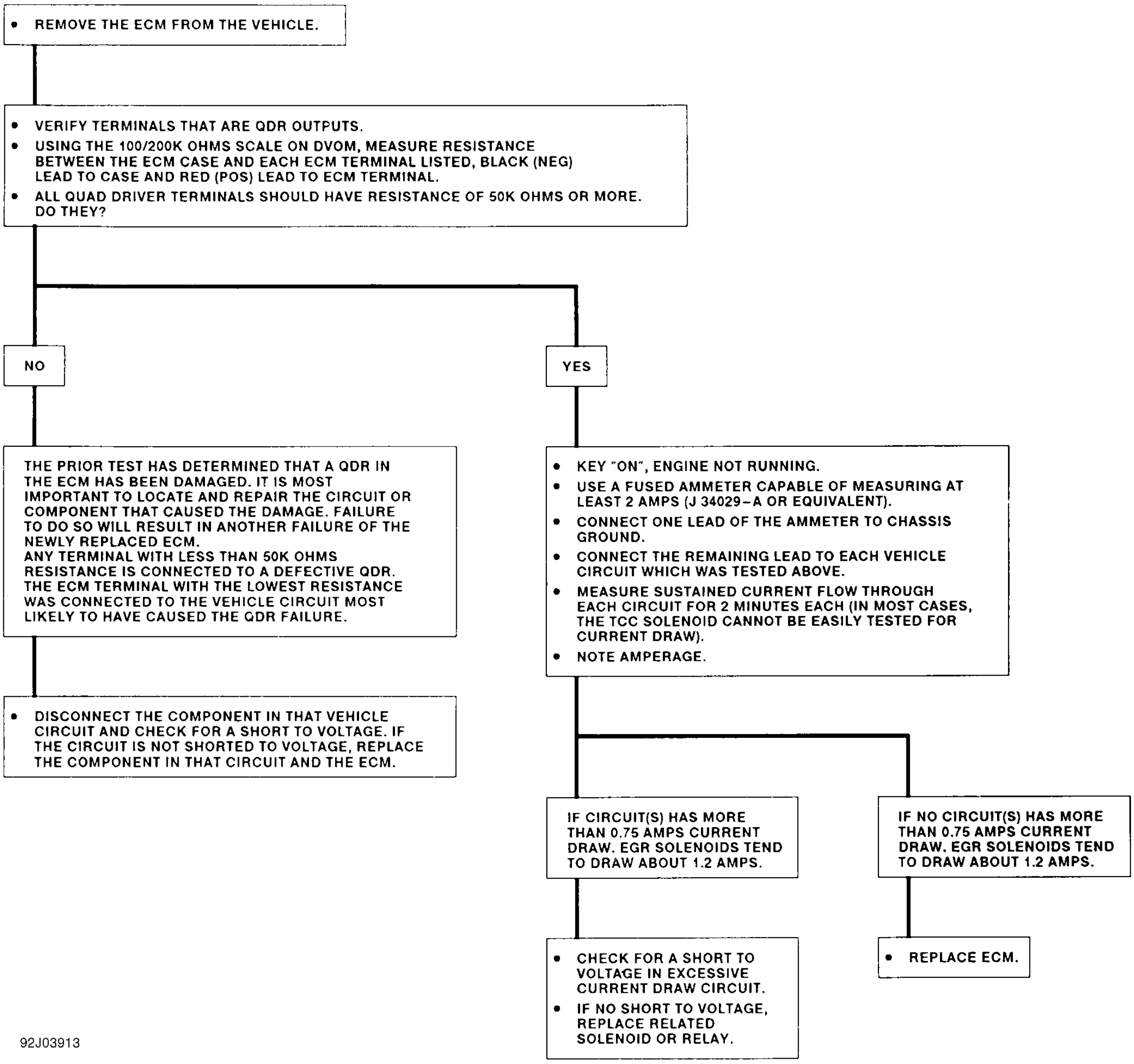

- REMOVE THE ECM FROM THE VEHICLE.

- VERIFY TERMINALS THAT ARE QDR OUTPUTS.
- USING THE 100/200K OHMS SCALE ON DVOM, MEASURE RESISTANCE BETWEEN THE ECM CASE AND EACH ECM TERMINAL LISTED, BLACK (NEG) LEAD TO CASE AND RED (POS) LEAD TO ECM TERMINAL.
- ALL QUAD DRIVER TERMINALS SHOULD HAVE RESISTANCE OF 50K OHMS OR MORE. DO THEY?

NO

THE PRIOR TEST HAS DETERMINED THAT A QDR IN THE ECM HAS BEEN DAMAGED. IT IS MOST IMPORTANT TO LOCATE AND REPAIR THE CIRCUIT OR COMPONENT THAT CAUSED THE DAMAGE. FAILURE TO DO SO WILL RESULT IN ANOTHER FAILURE OF THE NEWLY REPLACED ECM.
ANY TERMINAL WITH LESS THAN 50K OHMS RESISTANCE IS CONNECTED TO A DEFECTIVE QDR. THE ECM TERMINAL WITH THE LOWEST RESISTANCE WAS CONNECTED TO THE VEHICLE CIRCUIT MOST LIKELY TO HAVE CAUSED THE QDR FAILURE.

- DISCONNECT THE COMPONENT IN THAT VEHICLE CIRCUIT AND CHECK FOR A SHORT TO VOLTAGE. IF THE CIRCUIT IS NOT SHORTED TO VOLTAGE, REPLACE THE COMPONENT IN THAT CIRCUIT AND THE ECM.

YES

- KEY "ON", ENGINE NOT RUNNING.
- USE A FUSED AMMETER CAPABLE OF MEASURING AT LEAST 2 AMPS (J 34029-A OR EQUIVALENT).
- CONNECT ONE LEAD OF THE AMMETER TO CHASSIS GROUND.
- CONNECT THE REMAINING LEAD TO EACH VEHICLE CIRCUIT WHICH WAS TESTED ABOVE.
- MEASURE SUSTAINED CURRENT FLOW THROUGH EACH CIRCUIT FOR 2 MINUTES EACH (IN MOST CASES, THE TCC SOLENOID CANNOT BE EASILY TESTED FOR CURRENT DRAW).
- NOTE AMPERAGE.

IF CIRCUIT(S) HAS MORE THAN 0.75 AMPS CURRENT DRAW. EGR SOLENOIDS TEND TO DRAW ABOUT 1.2 AMPS.

- CHECK FOR A SHORT TO VOLTAGE IN EXCESSIVE CURRENT DRAW CIRCUIT.
- IF NO SHORT TO VOLTAGE, REPLACE RELATED SOLENOID OR RELAY.

IF NO CIRCUIT(S) HAS MORE THAN 0.75 AMPS CURRENT DRAW. EGR SOLENOIDS TEND TO DRAW ABOUT 1.2 AMPS.

- REPLACE ECM.

Fig. 3: Quad Driver Test
Courtesy of GENERAL MOTORS CORP.

State Emission Standards - Gasoline

ALASKA

NOTE: **Because of frequent revisions in state emission standards, the emission standards listed in this article should only be used as a guide.**

NOTE: **As of March 1, 2012, Alaska is not testing for tailpipe emissions.**

ALASKA EMISSION STANDARDS - ANCHORAGE & FAIRBANKS (2-SPEED IDLE TEST)

Application	Idle HC ppm (CO %)	2500 RPM HC ppm (CO %)
Passenger Cars (1)		
1968-71	1000 (5.0)	1000 (4.0)
1972-74	1000 (4.0)	1000 (3.0)
1975-80	1000 (2.0)	1000 (2.0)
1981-83	1000 (1.0)	1000 (1.0)
1984-93	750 (1.0)	750 (1.0)
1994-	200 (0.5)	200 (0.5)
Light & Medium Duty Trucks (1)		
1968-72	1000 (5.0)	1000 (4.0)
1973-78	1000 (4.0)	1000 (3.0)
1979-83	1000 (2.0)	1000 (2.0)
1984-93	750 (1.0)	750 (1.0)
1994-	220 (0.5)	220 (0.5)
Heavy Duty Vehicles (2)		
1968-73	1000 (5.0)	1000 (5.0)
1974-93	1000 (4.0)	1000 (4.0)
1994-	220 (1.0)	220 (1.0)
(1) 8500 GVWR or less.		
(2) 8500 GVWR or more.		

ARIZONA

NOTE: **Curb idle only test are for vehicles with full-time 4WD, non-defeatable traction control and motorcycles. Curb idle and loaded cruise tests are performed on 1967-80 light-duty gasoline powered vehicles and all heavy-duty gasoline powered vehicles.**

ARIZONA EMISSION STANDARDS - PHOENIX AREA (CURB IDLE & LOADED CRUISE TESTS)

Application (1)	Idle HC ppm (CO %)	(2) Loaded/Cruise HC ppm (CO %)
Light Duty Vehicles (6000 GVWR Or Less)		
1967-71 4-Cyl. Or Less	500 (5.50)	500 (4.20)
1967-71 More Than 4-Cyl.	450 (5.00)	450 (3.75)
1972-74 4-Cyl. Or Less	400 (5.50)	400 (4.20)
1972-74 More Than 4-Cyl.	400 (5.00)	400 (3.75)
1975-78 4-Cyl. Or Less	250 (2.20)	250 (1.65)

Application (1)	Idle HC ppm (CO %)	(2) Loaded/Cruise HC ppm (CO %)
1975-78 More Than 4-Cyl.	250 (2.00)	250 (1.50)
Light Duty Vehicles (8500 GVWR Or Less)		
1979 4-Cyl. Or Less	220 (2.20)	220 (1.65)
1979 More Than 4-Cyl.	220 (2.20)	220 (1.50)
1980	220 (1.20)	220 (1.20)
1981 & Newer	220 (1.20)	.....
Light Duty Trucks (6000 GVWR Or Less)		
1967-80	(3)	(3)
Light Duty Trucks (6001-8500 GVWR)		
1967-74	(3)	(3)
1975-78	350 (4.00)	350 (3.00)
1979 4-Cyl. Or Less	220 (2.20)	220 (1.65)
1979 More Than 4-Cyl.	220 (2.00)	220 (1.50)
1980	220 (1.20)	220 (1.20)
1981 & Newer	220 (1.20)	.....
Heavy Duty Trucks (Greater Than 8500 GVWR)		
1967-74	(3)	(3)
1975-78	350 (4.00)	350 (3.00)
1979 & Newer	300 (4.00)	300 (3.00)
Motorcycles		
1967 & Newer	1800 (5.50)	.....

(1) 4-stroke engines only.

(2) Except AWD, non-defeatable traction control and motorcycles.

(3) Same as light duty vehicles.

ARIZONA EMISSION STANDARDS - PHOENIX AREA (IM147 TEST)

Application	HC gpm (CO gpm)	NOx gpm
Light Duty Vehicles		
1981-82	3.0 (25.0)	3.5
1983-85	2.4 (20.0)	3.5
1986-89	1.6 (15.0)	2.5
1990-93	1.0 (12.0)	2.5
1994 & Newer	0.8 (12.0)	2.0
Light Trucks (6000 GVWR Or Less)		
1981-85	4.0 (40.0)	5.5
1986-89	3.0 (25.0)	4.5
1990-93	2.0 (20.0)	4.0
1994 & Newer	1.6 (20.0)	3.0
Light Duty Trucks (6000-8500 GVWR)		
1981-85	4.4 (48.0)	7.0
1986-87	4.0 (40.0)	5.5
1988-89	3.0 (25.0)	5.5
1990-93	3.0 (25.0)	5.0
1994 & Newer	2.4 (25.0)	4.0

NOTE: **Curb idle test only for 1967-80 light-duty gasoline vehicles, all vehicles with full-time 4WD and/or non-defeatable traction control and motorcycles. Curb idle**

and loaded cruise tests are performed on all 1981 and later vehicles except those with full-time 4WD and/or non-defeatable traction control.

ARIZONA EMISSION STANDARDS - TUCSON AREA (CURB IDLE & LOADED CRUISE TESTS)

Application (1)	Idle HC ppm (CO %)	(2) Loaded/Cruise HC ppm (CO %)
Light Duty Vehicles (6000 GVWR Or Less)		
1967-71 4-Cyl. Or Less	500 (5.50)	.....
1967-71 More Than 4-Cyl.	450 (5.00)	.....
1972-74 4-Cyl. Or Less	400 (5.50)	.....
1972-74 More Than 4-Cyl.	400 (5.00)	.....
1975-78 4-Cyl. Or Less	250 (2.20)	.....
1975-78 More Than 4-Cyl.	250 (2.00)	.....
Light Duty Vehicles (8500 GVWR Or Less)		
1979 4-Cyl. Or Less	220 (2.20)	.....
1979 More Than 4-Cyl.	220 (2.20)	.....
1980	220 (1.20)	.....
1981 & Newer	220 (1.20)	220 (1.20)
Light Duty Trucks (6000 GVWR Or Less)		
1967-80	(3)	(3)
Light Duty Trucks (6001-8500 GVWR)		
1967-74	(3)	(3)
1975-78	350 (4.00)	.....
1979 4-Cyl. Or Less	220 (2.20)	.....
1979 More Than 4-Cyl.	220 (2.00)	.....
1980	220 (1.20)	.....
1981 & Newer	220 (1.20)	220 (1.20)
Heavy Duty Trucks (Greater Than 8500 GVWR)		
1967-74	(3)	(3)
1975-78	350 (4.00)	.....
1979-80	300 (4.00)	.....
1981 & Newer	300 (4.00)	300 (3.00)
Motorcycles		
1967 & Newer	1800 (5.50)	.....
(1) 4-stroke engines only. (2) Except AWD, non-defeatable traction control and motorcycles. (3) Same as light duty vehicles.		

CALIFORNIA

CALIFORNIA EMISSION STANDARDS ASM TESTS

Specific vehicle cutpoints are available on the California BAR web site at www.bar.ca.gov under the Industry tab, then Cutpoints Application.

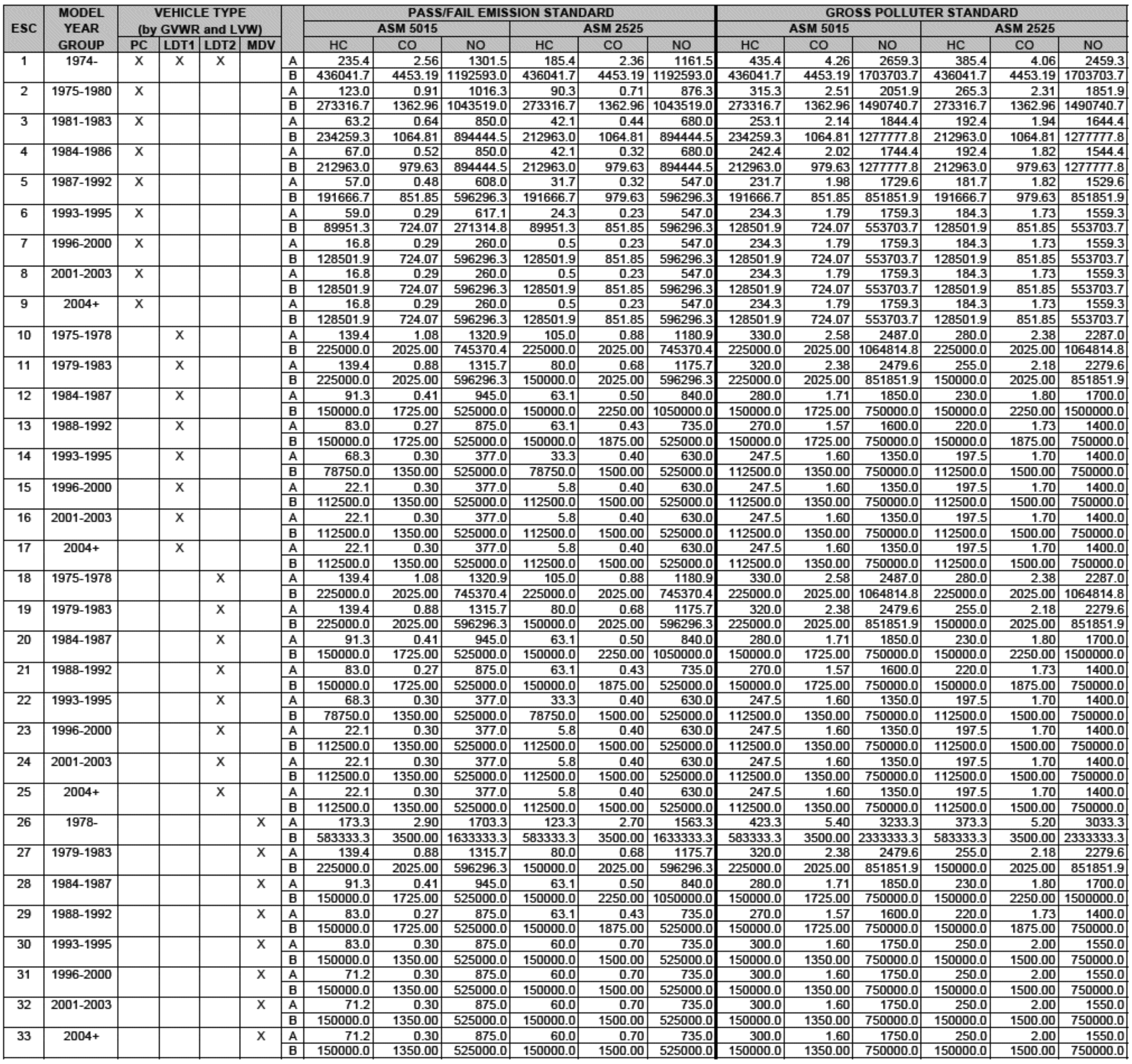

ESC	MODEL YEAR GROUP	VEHICLE TYPE (by GVWR and LVW)					PASS/FAIL EMISSION STANDARD						GROSS POLLUTER STANDARD					
							ASM 5015			ASM 2525			ASM 5015			ASM 2525		
		PC	LDT1	LDT2	MDV		HC	CO	NO	HC	CO	NO	HC	CO	NO	HC	CO	NO
1	1974-	X	X	X		A	235.4	2.56	1301.5	185.4	2.36	1161.5	435.4	4.26	2659.3	385.4	4.06	2459.3
						B	436041.7	4453.19	1192593.0	436041.7	4453.19	1192593.0	436041.7	4453.19	1703703.7	436041.7	4453.19	1703703.7
2	1975-1980	X				A	123.0	0.91	1016.3	90.3	0.71	876.3	315.3	2.51	2051.9	265.3	2.31	1851.9
						B	273316.7	1362.96	1043519.0	273316.7	1362.96	1043519.0	273316.7	1362.96	1490740.7	273316.7	1362.96	1490740.7
3	1981-1983	X				A	63.2	0.64	850.0	42.1	0.44	680.0	253.1	2.14	1844.4	192.4	1.94	1644.4
						B	234259.3	1064.81	894444.5	212963.0	1064.81	894444.5	234259.3	1064.81	1277777.8	212963.0	1064.81	1277777.8
4	1984-1986	X				A	67.0	0.52	850.0	42.1	0.32	680.0	242.4	2.02	1744.4	192.4	1.82	1544.4
						B	212963.0	979.63	894444.5	212963.0	979.63	894444.5	212963.0	979.63	1277777.8	212963.0	979.63	1277777.8
5	1987-1992	X				A	57.0	0.48	608.0	31.7	0.32	547.0	231.7	1.98	1729.6	181.7	1.82	1529.6
						B	191666.7	851.85	596296.3	191666.7	979.63	596296.3	191666.7	851.85	851851.9	191666.7	979.63	851851.9
6	1993-1995	X				A	59.0	0.29	617.1	24.3	0.23	547.0	234.3	1.79	1759.3	184.3	1.73	1559.3
						B	89951.3	724.07	271314.8	89951.3	851.85	596296.3	128501.9	724.07	553703.7	128501.9	851.85	553703.7
7	1996-2000	X				A	16.8	0.29	260.0	0.5	0.23	547.0	234.3	1.79	1759.3	184.3	1.73	1559.3
						B	128501.9	724.07	596296.3	128501.9	851.85	596296.3	128501.9	724.07	553703.7	128501.9	851.85	553703.7
8	2001-2003	X				A	16.8	0.29	260.0	0.5	0.23	547.0	234.3	1.79	1759.3	184.3	1.73	1559.3
						B	128501.9	724.07	596296.3	128501.9	851.85	596296.3	128501.9	724.07	553703.7	128501.9	851.85	553703.7
9	2004+	X				A	16.8	0.29	260.0	0.5	0.23	547.0	234.3	1.79	1759.3	184.3	1.73	1559.3
						B	128501.9	724.07	596296.3	128501.9	851.85	596296.3	128501.9	724.07	553703.7	128501.9	851.85	553703.7
10	1975-1978		X			A	139.4	1.08	1320.9	105.0	0.88	1180.9	330.0	2.58	2487.0	280.0	2.38	2287.0
						B	225000.0	2025.00	745370.4	225000.0	2025.00	745370.4	225000.0	2025.00	1064814.8	225000.0	2025.00	1064814.8
11	1979-1983		X			A	139.4	0.88	1315.7	80.0	0.68	1175.7	320.0	2.38	2479.6	255.0	2.18	2279.6
						B	225000.0	2025.00	596296.3	150000.0	2025.00	596296.3	225000.0	2025.00	851851.9	150000.0	2025.00	851851.9
12	1984-1987		X			A	91.3	0.41	945.0	63.1	0.50	840.0	280.0	1.71	1850.0	230.0	1.80	1700.0
						B	150000.0	1725.00	525000.0	150000.0	2250.00	1050000.0	150000.0	1725.00	750000.0	150000.0	2250.00	1500000.0
13	1988-1992		X			A	83.0	0.27	875.0	63.1	0.43	735.0	270.0	1.57	1600.0	220.0	1.73	1400.0
						B	150000.0	1725.00	525000.0	150000.0	1875.00	525000.0	150000.0	1725.00	750000.0	150000.0	1875.00	750000.0
14	1993-1995		X			A	68.3	0.30	377.0	33.3	0.40	630.0	247.5	1.60	1350.0	197.5	1.70	1400.0
						B	78750.0	1350.00	525000.0	78750.0	1500.00	525000.0	112500.0	1350.00	750000.0	112500.0	1500.00	750000.0
15	1996-2000		X			A	22.1	0.30	377.0	5.8	0.40	630.0	247.5	1.60	1350.0	197.5	1.70	1400.0
						B	112500.0	1350.00	525000.0	112500.0	1500.00	525000.0	112500.0	1350.00	750000.0	112500.0	1500.00	750000.0
16	2001-2003		X			A	22.1	0.30	377.0	5.8	0.40	630.0	247.5	1.60	1350.0	197.5	1.70	1400.0
						B	112500.0	1350.00	525000.0	112500.0	1500.00	525000.0	112500.0	1350.00	750000.0	112500.0	1500.00	750000.0
17	2004+		X			A	22.1	0.30	377.0	5.8	0.40	630.0	247.5	1.60	1350.0	197.5	1.70	1400.0
						B	112500.0	1350.00	525000.0	112500.0	1500.00	525000.0	112500.0	1350.00	750000.0	112500.0	1500.00	750000.0
18	1975-1978			X		A	139.4	1.08	1320.9	105.0	0.88	1180.9	330.0	2.58	2487.0	280.0	2.38	2287.0
						B	225000.0	2025.00	745370.4	225000.0	2025.00	745370.4	225000.0	2025.00	1064814.8	225000.0	2025.00	1064814.8
19	1979-1983			X		A	139.4	0.88	1315.7	80.0	0.68	1175.7	320.0	2.38	2479.6	255.0	2.18	2279.6
						B	225000.0	2025.00	596296.3	150000.0	2025.00	596296.3	225000.0	2025.00	851851.9	150000.0	2025.00	851851.9
20	1984-1987			X		A	91.3	0.41	945.0	63.1	0.50	840.0	280.0	1.71	1850.0	230.0	1.80	1700.0
						B	150000.0	1725.00	525000.0	150000.0	2250.00	1050000.0	150000.0	1725.00	750000.0	150000.0	2250.00	1500000.0
21	1988-1992			X		A	83.0	0.27	875.0	63.1	0.43	735.0	270.0	1.57	1600.0	220.0	1.73	1400.0
						B	150000.0	1725.00	525000.0	150000.0	1875.00	525000.0	150000.0	1725.00	750000.0	150000.0	1875.00	750000.0
22	1993-1995			X		A	68.3	0.30	377.0	33.3	0.40	630.0	247.5	1.60	1350.0	197.5	1.70	1400.0
						B	78750.0	1350.00	525000.0	78750.0	1500.00	525000.0	112500.0	1350.00	750000.0	112500.0	1500.00	750000.0
23	1996-2000			X		A	22.1	0.30	377.0	5.8	0.40	630.0	247.5	1.60	1350.0	197.5	1.70	1400.0
						B	112500.0	1350.00	525000.0	112500.0	1500.00	525000.0	112500.0	1350.00	750000.0	112500.0	1500.00	750000.0
24	2001-2003			X		A	22.1	0.30	377.0	5.8	0.40	630.0	247.5	1.60	1350.0	197.5	1.70	1400.0
						B	112500.0	1350.00	525000.0	112500.0	1500.00	525000.0	112500.0	1350.00	750000.0	112500.0	1500.00	750000.0
25	2004+			X		A	22.1	0.30	377.0	5.8	0.40	630.0	247.5	1.60	1350.0	197.5	1.70	1400.0
						B	112500.0	1350.00	525000.0	112500.0	1500.00	525000.0	112500.0	1350.00	750000.0	112500.0	1500.00	750000.0
26	1978-				X	A	173.3	2.90	1703.3	123.3	2.70	1563.3	423.3	5.40	3233.3	373.3	5.20	3033.3
						B	583333.3	3500.00	1633333.3	583333.3	3500.00	1633333.3	583333.3	3500.00	2333333.3	583333.3	3500.00	2333333.3
27	1979-1983				X	A	139.4	0.88	1315.7	80.0	0.68	1175.7	320.0	2.38	2479.6	255.0	2.18	2279.6
						B	225000.0	2025.00	596296.3	150000.0	2025.00	596296.3	225000.0	2025.00	851851.9	150000.0	2025.00	851851.9
28	1984-1987				X	A	91.3	0.41	945.0	63.1	0.50	840.0	280.0	1.71	1850.0	230.0	1.80	1700.0
						B	150000.0	1725.00	525000.0	150000.0	2250.00	1050000.0	150000.0	1725.00	750000.0	150000.0	2250.00	1500000.0
29	1988-1992				X	A	83.0	0.27	875.0	63.1	0.43	735.0	270.0	1.57	1600.0	220.0	1.73	1400.0
						B	150000.0	1725.00	525000.0	150000.0	1875.00	525000.0	150000.0	1725.00	750000.0	150000.0	1875.00	750000.0
30	1993-1995				X	A	83.0	0.30	875.0	60.0	0.70	735.0	300.0	1.60	1750.0	250.0	2.00	1550.0
						B	150000.0	1350.00	525000.0	150000.0	1500.00	525000.0	150000.0	1350.00	750000.0	150000.0	1500.00	750000.0
31	1996-2000				X	A	71.2	0.30	875.0	60.0	0.70	735.0	300.0	1.60	1750.0	250.0	2.00	1550.0
						B	150000.0	1350.00	525000.0	150000.0	1500.00	525000.0	150000.0	1350.00	750000.0	150000.0	1500.00	750000.0
32	2001-2003				X	A	71.2	0.30	875.0	60.0	0.70	735.0	300.0	1.60	1750.0	250.0	2.00	1550.0
						B	150000.0	1350.00	525000.0	150000.0	1500.00	525000.0	150000.0	1350.00	750000.0	150000.0	1500.00	750000.0
33	2004+				X	A	71.2	0.30	875.0	60.0	0.70	735.0	300.0	1.60	1750.0	250.0	2.00	1550.0
						B	150000.0	1350.00	525000.0	150000.0	1500.00	525000.0	150000.0	1350.00	750000.0	150000.0	1500.00	750000.0

Fig. 1: California Emission Standards - Enhanced & Partially Enhanced Program Areas - Light & Medium Duty Vehicles (ASM Test)

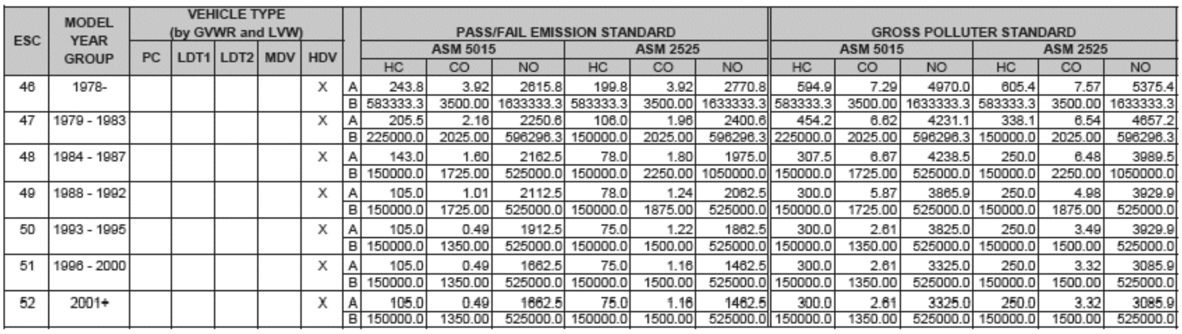

ESC	MODEL YEAR GROUP	VEHICLE TYPE (by GVWR and LVW)						PASS/FAIL EMISSION STANDARD						GROSS POLLUTER STANDARD					
								ASM 5015			ASM 2525			ASM 5015			ASM 2525		
		PC	LDT1	LDT2	MDV	HDV		HC	CO	NO	HC	CO	NO	HC	CO	NO	HC	CO	NO
46	1978-					X	A	243.8	3.92	2615.8	199.8	3.92	2770.8	594.9	7.29	4970.0	605.4	7.57	5375.4
							B	583333.3	3500.00	1633333.3	583333.3	3500.00	1633333.3	583333.3	3500.00	1633333.3	583333.3	3500.00	1633333.3
47	1979 - 1983					X	A	205.5	2.16	2250.6	106.0	1.96	2400.6	454.2	6.62	4231.1	338.1	6.54	4657.2
							B	225000.0	2025.00	596296.3	150000.0	2025.00	596296.3	225000.0	2025.00	596296.3	150000.0	2025.00	596296.3
48	1984 - 1987					X	A	143.0	1.60	2162.5	78.0	1.80	1975.0	307.5	6.67	4238.5	250.0	6.48	3989.5
							B	150000.0	1725.00	525000.0	150000.0	2250.00	1050000.0	150000.0	1725.00	525000.0	150000.0	2250.00	1050000.0
49	1988 - 1992					X	A	105.0	1.01	2112.5	78.0	1.24	2062.5	300.0	5.87	3865.9	250.0	4.98	3929.9
							B	150000.0	1725.00	525000.0	150000.0	1875.00	525000.0	150000.0	1725.00	525000.0	150000.0	1875.00	525000.0
50	1993 - 1995					X	A	105.0	0.49	1912.5	75.0	1.22	1862.5	300.0	2.61	3825.0	250.0	3.49	3929.9
							B	150000.0	1350.00	525000.0	150000.0	1500.00	525000.0	150000.0	1350.00	525000.0	150000.0	1500.00	525000.0
51	1996 - 2000					X	A	105.0	0.49	1662.5	75.0	1.16	1462.5	300.0	2.61	3325.0	250.0	3.32	3085.9
							B	150000.0	1350.00	525000.0	150000.0	1500.00	525000.0	150000.0	1350.00	525000.0	150000.0	1500.00	525000.0
52	2001+					X	A	105.0	0.49	1662.5	75.0	1.16	1462.5	300.0	2.61	3325.0	250.0	3.32	3085.9
							B	150000.0	1350.00	525000.0	150000.0	1500.00	525000.0	150000.0	1350.00	525000.0	150000.0	1500.00	525000.0

Fig. 2: California Emission Standards - Enhanced & Partially Enhanced Program Areas - Heavy Duty Vehicles (ASM Test)

LEGEND

ESC - Emission Standard Category
GVWR - Manufacture's Gross Vehicle Weight Rating
LVW - Loaded Vehicle Weight
PC - Passenger Car
LDT1 - Light-Duty Truck up through 3750 LVW and GVWR no greater than 6000 lbs.
LDT2 - Light-Duty Truck greater than 3750 LVW and GVWR no greater than 6000 lbs.

MDV - Medium-Duty Vehicle, GVWR from 6001 to 8500 lbs.
HC - Hydrocarbon, ppm
CO - Carbon Monoxide, %
NO - Nitric Oxide, ppm

PASS/FAIL EMISSION STANDARDS = A+B / VTW

PASS/FAIL STANDARDS - Emission standards used to determine if a vehicle passes the emission inspection. A vehicle passes if the emission levels are equal to or less than the standards for HC, CO and NO for ASM 5015 and ASM 2525.

GROSS POLLUTER STANDARDS - Emission standards used to designate a vehicle as a gross polluter. A vehicle is designated as a gross polluter if the emission levels at the time of the initial inspection, before repairs are greater than the gross polluter standards for HC, CO or NO for ASM 5015 or ASM 2525.

NOTE: **If test data on emission pass/fail rates or gross polluter identification rates indicate adjustments are required, the emission standards may be increased or decreased by the bureau by 30% or by the following tolerances, or standards may be set for any specific vehicle and engine configuration which the bureau determines has excessive errors of commission of omission, whichever is necessary to comply with Section 44001.5 of the Health and Safety Code.**

COLORADO

COLORADO EMISSION STANDARDS - ENHANCED PROGRAM (IM240)

Application	HC gpm	CO gpm	NOx gpm
Passenger Cars			
1982	3.5	45	5.0
1983	3.5	30	4.5
1984	3.0	30	4.5
1985	2.5	20	4.5
1986	2.5	20	4.5
1987	2.5	20	4.0
1988 & 1989	2.0	20	4.0
1990	2.0	20	3.5
1991	1.5	20	3.5
1992	1.5	15	3.5
1993	1.5	15	3.5
1994	1.2	15	3.0
1995	1.2	15	2.5
1996	1.2	15	2.0
1997	1.2	15	2.0
1998 & Newer	1.2	15	1.5
Light Duty Vehicles			
1982	6.0	65	6.0
1983	6.0	65	6.0
1984	5.0	55	6.0
1985	4.5	45	6.0
1986	4.0	40	6.0
1987	3.5	30	5.5
1988 & 1989	3.0	25	5.0
1990	3.0	25	5.0

Application	HC gpm	CO gpm	NOx gpm
1991	2.5	25	4.5
1992	2.5	25	4.5
1993	2.5	25	4.5
1994	2.0	20	4.0
1995	2.0	20	4.0
1996	1.2	15	3.5
1997	1.2	15	3.0
1998	1.2	15	2.0
1999 & Newer	1.2	15	2.0

COLORADO EMISSION STANDARDS - 2-SPEED IDLE TEST

Application	HC ppm	CO %
Passenger Cars & Light Duty Trucks		
1970 & Earlier	1000	3.5
1971	1000	3.0
1972	1000	3.0
1973	1000	3.0
1974	1000	3.0
1975	600	2.0
1976	600	2.0
1977	400	1.5
1978	400	1.5
1979	400	1.5
1980	400	1.5
1981 & Newer	220	1.2
Heavy Duty Trucks (6000 GVWR Or Greater)		
1967 Or Earlier	1500	7.0
1968-69	1200	6.5
1969	1200	6.5
1970	1000	5.5
1971	1000	5.5
1972	1000	5.5
1973	1000	5.5
1974	1000	5.5
1975	1000	5.5
1976	1000	5.5
1977	1000	5.5
1978	1000	5.5
Heavy Duty Trucks (8501 GVWR Or Greater)		
1979	800	4.0
1980	800	3.5
1981	600	3.0
1982	600	3.0
1983	600	3.0
1984	600	3.0
1985	600	3.0
1986 & Newer	300	2.0

CONNECTICUT

CONNECTICUT EMISSION STANDARDS - IDLE TEST

Application	HC ppm (CO)
10,000 GVWR Or Less	
1979	250 (2.1)
1980	225 (2.0)
1981-82	200 (1.2)
1983	175 (1.0)
1984-87	150 (1.0)
1988 & Newer	125 (1.0)

DELAWARE

DELAWARE EMISSION STANDARDS - KENT, NEW CASTLE & SUSSEX COUNTIES (IDLE TEST)

Application	HC ppm (CO %)
Light Duty Vehicles (6000 GVWR Or Less)	
1968-70	900 (9.0)
1971-74	600 (6.0)
1975-79	400 (4.0)
1980	220 (2.0)
1981 & Newer	220 (1.2)
Light Duty Trucks (6001-8500 GVWR)	
1970-72	900 (9.0)
1973-78	600 (6.0)
1979-83	400 (4.0)
1984 & Newer	220 (1.2)

DISTRICT OF COLUMBIA

DISTRICT OF COLUMBIA EMISSION STANDARDS - IDLE TEST

Application	HC ppm (CO %)
Light Duty Vehicles & Trucks (26000 GVWR Or Less)	
1968-70	1250 (11.0)
1971-74	1200 (9.0)
1975-79	600 (6.5)
1980	300 (1.5)
1981 & Newer	220 (1.2)

GEORGIA

NOTE: **The Georgia program incorporates original U.S. EPA recommended start-up ASM2525 and ASM5015 standards for 1995 and older model year vehicles. Refer to appropriate model year range in appropriate table. See U. S. EPA ASM2525 & ASM5015 START-UP EMISSION STANDARDS.**

GEORGIA EMISSION STANDARDS - 2-SPEED IDLE TEST

Application (1)	HC ppm (CO %)
1979	500 (5.0)
1980	350 (3.5)
1981-83	250 (1.5)
1984 & Newer	220 (1.2)

Application (1)	HC ppm (CO %)
(1) 8500 GVWR or less.	

IDAHO

IDAHO EMISSION STANDARDS - 2-SPEED IDLE TEST

Application	HC ppm (CO %)
Light Duty Vehicles	
8500 GVWR Or Less	
1965-74	900 (5.0)
1975-79	700 (3.0)
1980	400 (1.5)
1981 & Newer	220 (1.2)
Heavy Duty Trucks	
8501 GVWR Or More	
1965-74	900 (6.0)
1975-80	700 (5.0)
1981 & Newer	500 (3.0)

ILLINOIS

ILLINOIS EMISSION STANDARDS - IM240 TEST

Application	HC gpm	CO gpm
Light Duty Vehicles (6000 GVWR Or Less)		
1981-82	2.00	60.0
1983-87	2.00	30.0
1988-95	0.80	15.0
1996 & Newer	0.60	10.0
Light Duty Trucks (6000 GVWR Or Less)		
1981-83	7.50	100.0
1984-87	3.20	80.0
1988-95	1.60	40.0
1996 & Newer (3750 LVW Or More) (1)	0.80	13.0
1996 & Newer (3750 LVW Or Less) (1)	0.60	10.0
Light Duty Trucks (6001-6500 GVWR)		
1981-83	7.50	100.0
1984-87	3.20	80.0
1988-95	1.60	40.0
1996 & Newer (5750 ALVW Or More)	0.80	15.0
1996 & Newer (5750 ALVW Or Less)	0.80	13.0
(1) Loaded Vehicle Weight (LVW) is vehicle curb weight plus 300 lbs.		

ILLINOIS EMISSION STANDARDS - IDLE TEST

Application	HC ppm (CO %)
Passenger Vehicles (6000 GVWR Or Less)	
1968-71	900 (9.0)
1972-74	800 (8.0)
1975-77	700 (7.0)
1978-79	600 (6.0)

Application	HC ppm (CO %)
1980	300 (3.0)
1981 & Newer	220 (1.2)
Light Duty Vehicles (8000 GVWR Or Less)	
1968-71	900 (9.0)
1972-74	800 (8.0)
1975-78	700 (7.0)
1979-80	600 (6.0)
1981-83	300 (3.0)
1984 & Newer	220 (1.2)
Heavy Duty Vehicles (8001 GVWR Or More)	
1968-71	1500 (9.5)
1972-78	900 (9.0)
1979-84	700 (7.0)
1985 & Newer	300 (3.0)

INDIANA

INDIANA EMISSION STANDARDS - IM93 TEST

Application	HC gpm (CO gpm)	NOx (gpm)
Passenger Cars		
1981-82	2.0 (60)	3.0
1983-86	2.0 (30)	3.0
1987-90	1.4 (20)	3.0
1991-95	0.8 (15)	2.5
1996 & Newer	0.6 (10)	2.5
Light Duty Trucks (6000 GVWR Or Less)		
1981-83	5.0 (80)	7.0
1984-86	3.2 (70)	7.0
1987-90	2.2 (55)	3.5
1991-95	1.6 (40)	3.0
1996 & Newer	0.8 (20)	3.0
Light Duty Trucks (6001-8500 GVWR)		
1981-83	5.0 (80)	7.0
1984-86	3.2 (70)	7.0
1987-90	2.2 (55)	5.0
1991-96	1.6 (40)	4.5
1997 & Newer	0.8 (20)	4.5
Heavy Duty Trucks (8501-9000 GVWR)		
1981-82	7.5 (100)	8.0
1983-84	6.0 (100)	8.0
1985-86	5.0 (75)	8.0
1987-90	3.0 (60)	8.0
1991-97	2.4 (40)	8.0
1998 & Newer	2.0 (30)	6.0

INDIANA EMISSION STANDARDS - IDLE TEST

Application	HC ppm (CO %)
Passenger Cars	
1976-79	350 (3.5)

Application	**HC ppm (CO %)**
1980	250 (2.0)
1981 & Newer	220 (1.2)
Light Duty Trucks (6000 GVWR Or Less)	
1976-78	500 (5.0)
1979-83	350 (3.5)
1984 & Newer	220 (1.2)
Medium Duty Trucks (6001-8500 GVWR)	
1976-78	500 (5.0)
1979-83	350 (3.5)
1984 & Newer	220 (1.2)

KENTUCKY

NOTE: **Currently, there is no emission testing in Kentucky.**

KENTUCKY EMISSION STANDARDS - BOONE, CAMPBELL & KENTON COUNTIES (IDLE TEST)

Application	**HC ppm (CO)**
Passenger Cars (Automobiles)	
1968	950 (8.5)
1969	900 (8.5)
1970	850 (8.1)
1972	800 (8.0)
1973	800 (7.8)
1974	800 (7.6)
1975	700 (7.5)
1976	700 (6.5)
1977	650 (6.3)
1978	600 (5.5)
1979	600 (4.5)
1980	250 (2.5)
1981 & Newer	220 (1.2)
Light Duty Trucks (6000 GVWR Or Less)	
1968	1300 (8.0)
1969	1200 (8.0)
1970-71	1100 (8.0)
1972-73	1000 (7.8)
1974	950 (7.8)
1975	900 (7.0)
1976-77	700 (7.0)
1978	700 (6.3)
1979	450 (5.5)
1980	450 (4.0)
1981	350 (1.7)
1982 & Newer	220 (1.2)
Light Duty Trucks (6001-10,000 GVWR)	
1969	1500 (9.0)
1970	1100 (8.0)
1971	1000 (8.0)

Application	HC ppm (CO)
1972-75	950 (7.5)
1976	900 (7.5)
1977	850 (7.5)
1978	700 (6.0)
1979	650 (5.5)
1980	550 (5.0)
1981	450 (4.0)
1982	400 (2.5)
1983	350 (2.0)
1984	220 (1.5)
1985 & Newer	220 (1.2)
Heavy Duty Trucks (10,001-18,000 GVWR)	
1968	1500 (9.0)
1969-70	1300 (8.5)
1971	1200 (8.5)
1972-76	1000 (7.0)
1977-80	900 (6.5)
1982-83	400 (3.0)
1984 & Newer	250 (1.5)

MARYLAND

MARYLAND EMISSION STANDARDS - IM240 TEST

Application	HC gpm (CO gpm)	NOx gpm
Light Duty Vehicles (6000 GVWR Or Less)		
1984-87	1.80 (30.0)	2.8
1988-90	1.40 (30.0)	2.5
1991-93	1.00 (20.0)	2.2
1994-95	0.90 (20.0)	2.1
Light Duty Trucks (6000 GVWR Or Less)		
1984-87	2.80 (80.0)	5.8
1988-90	2.40 (80.0)	3.0
1991-93	2.00 (60.0)	2.7
1994-95	1.80 (60.0)	2.6
Light Duty Trucks (6001-8500 GVWR)		
1984-87	2.90 (80.0)	6.6
1988-90	2.40 (80.0)	4.2
1991-93	2.00 (60.0)	4.0
1994-95	1.80 (60.0)	3.7
Heavy Duty Trucks (8501-9999 GVWR)		
1984	5.80 (100.0)	7.7
1985-86	4.70 (80.0)	7.7
1987	3.00 (80.0)	7.7
1988-90	2.60 (80.0)	7.0
1991-97	2.50 (60.0)	5.5
1998 & Newer	2.20 (60.0)	4.0

MARYLAND EMISSION STANDARDS - IDLE TEST

Application	HC ppm (CO %)
Light Duty Vehicles (6000 GVWR Or Less)	
1977	500 (6.0)
1978	430 (5.5)
1979	400 (4.0)
1980	220 (1.7)
1981 & Newer	220 (1.2)
Light Duty Trucks (6001-9999 GVWR)	
1977	580 (7.0)
1978	550 (6.7)
1979	470 (5.0)
1980	350 (5.0)
1981	250 (3.0)
1982	220 (2.5)
1983	220 (1.5)
1984 & Newer	220 (1.2)
Heavy Duty Trucks (10,000-26,000 GVWR)	
1977-78	650 (7.0)
1979	650 (6.5)
1980-82	500 (6.0)
1983	500 (3.5)
1984-85	440 (3.0)
1986	280 (2.5)
1987 & Newer	220 (1.2)

MASSACHUSETTS

MASSACHUSETTS EMISSION STANDARDS - MA31 TEST

Application	HC gpm (CO gpm)	NOx gpm
Passenger Cars		
1984-90	2.0 (30)	3.0
1991-95	1.2 (20)	2.5
1996 & Newer	0.8 (13)	2.0
Light Duty Trucks (6000 GVWR Or Less)		
1984-87	3.2 (80)	7.0
1988-1990	3.2 (80)	3.5
1991-95	2.4 (60)	3.0
1996 & Newer (3750 LVW (1) Or Less)	0.8 (15)	2.0
1996 & Newer (3751 LVW (1) Or Greater)	1.0 (20)	2.5
Light Duty Trucks (6001-8500 GVWR)		
1984-87	3.2 (80)	7.0
1988-90	3.2 (80)	5.0
1991-95	2.4 (60)	4.5
1996 & Newer (5750 ALVW (2) Or Less)	1.0 (20)	2.5
1996 & Newer (5751 ALVW (2) Or Greater)	2.4 (60)	4.0
Heavy Duty Trucks (8501-10,000 Or Greater)		
1984-87	3.2 (80)	7.0
1988-90	3.2 (80)	5.0

Application	HC gpm (CO gpm)	NOx gpm
1991-95	2.4 (60)	4.5
1996 & Newer	2.4 (60)	4.0

(1) Loaded Vehicle Weight (LVW).

(2) Adjusted Loaded Vehicle Weight (ALVW).

MASSACHUSETTS EMISSION STANDARDS - 2-SPEED IDLE TEST

Application	HC ppm (CO %)
All Vehicles	
1984-86	220 (0.80)
1987 & Newer	100 (0.60)

MISSOURI

MISSOURI EMISSION STANDARDS - JEFFERSON, ST. CHARLES & ST. LOUIS COUNTIES - IM240 TEST

Application	HC gpm (CO gpm)	NOx gpm
Light Duty Vehicles (6000 GVWR Or Less)		
1981-82	0.80 (30.0)	2.0
1983-95	0.80 (15.0)	2.0
1996 & Newer	0.60 (10.0)	1.5
Light Duty Trucks (6000 GVWR Or Less)		
1981-83	3.40 (70.0)	4.5
1984-87	1.60 (40.0)	4.5
1988-95	1.60 (40.0)	2.5
1996 & Newer (Less Than 3750 LVW)	0.80 (13.0)	1.8
1996 & Newer (3750 LVW Or Less)	0.60 (10.0)	1.5
Light Duty Trucks (6001-8500 GVWR)		
1981-83	3.4 (70.0)	4.5
1984-87	1.6 (40.0)	4.5
1988-95	1.60 (40.0)	3.5
1996 & Newer (5750 ALVW Or Less)	0.80 (13.0)	1.8
1996 & Newer (5750 ALVW Or More)	0.80 (15.0)	2.0

MISSOURI EMISSION STANDARDS - FRANKLIN, JEFFERSON, ST. CHARLES & ST. LOUIS COUNTIES - IDLE TEST

Application (1)	HC ppm (CO %)
1971-74	700 (7.0)
1975-79	600 (6.0)
1980	300 (3.0)
1981 & Newer	220 (1.2)

(1) 8500 GVWR or less.

MISSOURI EMISSION STANDARDS - FRANKLIN, JEFFERSON, ST. CHARLES & ST. LOUIS COUNTIES - REMOTE SENSING CLEAN SCREEN TEST

Application (1)	HC ppm (CO %)	NOx ppm
All Vehicles (8500 GVWR Or Less)		
1971 & Newer	200 (0.5)	2000

(1) 8500 GVWR or less.

NEVADA

NEVADA EMISSION STANDARDS - 2-SPEED IDLE TEST

Application	HC ppm (CO %)
Light Duty Vehicles (8500 GVWR Or Less)	
1968-69	800 (4.0)
1970-74	700 (3.5)
1975-78	500 (2.5)
1979-80	500 (2.0)
1981 & Newer	220 (1.2)
Heavy Duty Vehicles (8501 GVWR Or More)	
1968-69	1400 (7.0)
1970-78	1400 (6.0)
1979	1000 (5.0)
1980	1000 (4.0)
1981 & Newer	1000 (3.5)

NEW JERSEY

NOTE: The New Jersey program incorporates original U.S. EPA recommended start-up ASM5015 standards for 1981 and newer model year vehicles. Refer to appropriate model year range in appropriate table. See U. S. EPA ASM2525 & ASM5015 START-UP EMISSION STANDARDS.

NEW JERSEY EMISSION STANDARDS - 2-SPEED IDLE TEST

Application	Idle HC ppm (CO %)	2500 RPM HC ppm (CO %)
Light Duty Vehicles (8500 GVWR Or Less)		
1967 & Earlier	1400 (8.5)	.....
1968-70	700 (7.0)	.....
1971-74	500 (5.0)	.....
1975-80	300 (3.0)	.....
1981 & Newer	220 (1.2)	100 (0.5)
Heavy Duty Vehicles (8501 GVWR Or Greater)		
1967 & Earlier	1400 (8.5)	.....
1968-70	1200 (8.5)	.....
1971-74	700 (6.0)	.....
1975-78	500 (4.0)	.....
1979 & Earlier	300 (3.0)	.....

NEW MEXICO

NEW MEXICO EMISSION STANDARDS - 2-SPEED IDLE TEST

Application	Idle HC ppm (CO %)	2500 RPM HC ppm (CO %)
Light Duty Vehicles (6000 GVWR Or Less)		
1975-78	500 (5.0)	500 (5.0)
1979-80	400 (4.0)	400 (4.0)
1981-85	220 (1.2)	220 (1.2)
1986-90	200 (1.2)	200 (1.2)
1991-95	180 (1.2)	180 (1.2)
Light Duty Trucks (6001-8000 GVWR)		
1975-78	600 (6.0)	600 (6.0)

Application	Idle HC ppm (CO %)	2500 RPM HC ppm (CO %)
1979-80	600 (4.5)	600 (4.5)
1981-82	400 (2.7)	400 (3.0)
1983-88	300 (1.2)	300 (3.0)
1989-95	220 (1.2)	220 (1.2)
Medium Duty Trucks (8001-10,000 GVWR)		
1975 & Newer	650 (6.5)	650 (6.5)

NEW YORK

NEW YORK EMISSION STANDARDS - IM240 TEST

Application	HC gpm Composite	HC gpm Phase 2	CO gpm Composite	CO gpm Phase 2	NOx gpm Both
Light Duty Vehicles					
1981-82	0.80	0.50	30.0	24.0	2.0
1983-95	0.80	0.50	15.0	12.0	2.0
1996 & Newer	0.60	0.40	10.0	8.0	1.5
Light Duty Trucks (6000 GVWR Or Less)					
1981-83	3.40	2.00	70.0	56.0	4.5
1984-87	1.60	1.00	40.0	32.0	4.5
1988-95	1.60	1.00	40.0	32.0	2.5
1996 & Newer (3750 LVW Or Less)	0.60	0.40	10.0	8.0	1.5
1996 & Newer (3751 LVW Or More)	0.80	0.50	13.0	10.0	1.8
Light Duty Trucks (6501-8500 GVWR)					
1981-83	3.40	2.00	70.0	56.0	4.5
1984-87	1.60	1.00	40.0	32.0	4.5
1988-95	1.60	1.00	40.0	32.0	3.5
1996 & Newer (5750 ALVW Or Less)	0.80	0.50	13.0	10.0	1.8
1996 & Newer (5751 ALVW Or More)	0.80	0.50	15.0	12.0	2.0

NEW YORK EMISSION STANDARDS - IDLE TEST

Application	HC ppm (CO %)
Light Duty Vehicles (8500 GVWR Or Less)	
1978	300 (3.0)
1979-80	300 (2.5)
1981 & Newer	220 (1.2)
Heavy Duty Vehicles (8501 GVWR Or More)	
1978	600 (4.5)
1979 & Newer	300 (3.0)

NORTH CAROLINA

NORTH CAROLINA EMISSION STANDARDS - IDLE TEST

Application	HC ppm (CO %)
Light Duty Vehicles (8500 GVWR Or Less)	
1977	450 (4.5)
1978-79	350 (3.5)

Application	HC ppm (CO %)
1980	250 (2.0)
1981 & Newer	250 (1.2)
Heavy Duty Trucks (8501 GVWR Or More)	
1977-78	500 (5.0)
1979 & Newer	400 (4.0)

OHIO

NOTE: **The Ohio program incorporates original U.S. EPA recommended start-up ASM2525 standards for all model year vehicles. Refer to appropriate model year range in appropriate table. See U. S. EPA ASM2525 & ASM5015 START-UP EMISSION STANDARDS.**

OHIO EMISSION STANDARDS - 2-SPEED IDLE TEST

Application	HC ppm (CO %)
1978	350 (4.0)
1979	275 (3.0)
1980	230 (2.0)
1981 & Newer	220 (1.2)

OREGON

OREGON EMISSION STANDARDS - METROPOLITAN PORTLAND ENHANCED AREA - BAR31

Application	HC gpm (CO gpm)	NOx gpm
Light Duty Passenger Cars		
1981-82	2.0 (64)	3.70
1983-89	2.0 (32)	3.70
1990-95	1.2 (30)	3.00
1996 & Newer	OBD-II Test	OBD-II Test
Light Duty Trucks (6000 GVWR Or Less)		
1981-83	8.5 (149)	8.32
1984-87	4.0 (85)	8.32
1988-89	4.0 (85)	4.62
1990-95	2.4 (80)	3.75
1996 & Newer	OBD-II Test	OBD-II Test
Light Duty Trucks (6001-8500 GVWR)		
1981-83	8.5 (149)	8.32
1984-87	4.0 (85)	8.32
1988-89	4.0 (85)	6.47
1990-95	2.4 (80)	5.25
1996 & Newer	OBD-II Test	OBD-II Test

OREGON EMISSION STANDARDS - METROPOLITAN PORTLAND & ROGUE VALLEY AREA BASIC TEST - 2-SPEED IDLE TEST

Application	Idle HC ppm (CO %)	2500 RPM HC ppm (CO %)
Light Duty Passenger Cars (6000 GVWR Or Less)		
1975-80 (No Catalyst)	300 (2.5)	-
1975-80 (Catalyst)	220 (1.0)	-
1981 & Newer (All)	220 (1.0)	220 (1.0)

Application	Idle HC ppm (CO %)	2500 RPM HC ppm (CO %)
1975 & Newer (2-Stroke)	n/a (7.0)	-
Light Duty Trucks (6001-8500 GVWR)		
1975-78 (All)	350 (2.5)	-
1979-80 (No Catalyst)	300 (2.5)	-
1979-80 (Catalyst)	220 (1.0)	-
1981 & Newer (All)	220 (1.0)	220 (1.0)
1996 & Newer (3750 LVW Or Less)	0.9 (20)	2.25
Heavy Duty Trucks (8501 GVWR Or More)		
1975-78 (Carbureted)	500 (4.0)	n/a (3.0)
1975-78 (Fuel Injection)	500 (4.0)	-
1979-84 (Carbureted)	350 (3.0)	n/a (3.0)
1979-84 (Fuel Injection)	350 (3.0)	-
1985 & Newer (No Catalyst)	350 (3.0)	n/a (3.0)
1985 & Newer (W/Catalyst)	220 (1.0)	220 (1.0)

OREGON EMISSION STANDARDS - METROPOLITAN PORTLAND & ROGUE VALLEY AREA BASIC TEST - EXHAUST OPACITY TEST

Application	Opacity % @ Idle	Opacity % @ High Idle
1975 & Newer		
2-Cycle Engines	20	.....
Gasoline Engines	0	0

PENNSYLVANIA

NOTE: **The Pennsylvania (in Philadelphia area) program incorporates original U.S. EPA recommended start-up ASM5015 standards for 1981 and newer model year vehicles. Refer to appropriate model year range in appropriate table. See U. S. EPA ASM2525 & ASM5015 START-UP EMISSION STANDARDS.**

PENNSYLVANIA EMISSION STANDARDS - PITTSBURGH & OLDER PHILADELPHIA VEHICLES - IDLE TEST

Application	HC ppm (CO %)
6000 GVWR Or Less	
1975-79	400 (4.0)
1980	300 (3.0)
1981-92	220 (1.2)
1993 & Newer	130 (1.0)
6001-9000 GVWR	
1975-78	650 (6.0)
1979	400 (4.0)
1980	300 (3.0)
1981-92	220 (1.2)
1993 & Newer	180 (1.0)

RHODE ISLAND

RHODE ISLAND EMISSION STANDARDS - RI2000 TEST

Application	HC gpm (CO gpm)	NOx gpm
Light Duty Vehicles		

Application	HC gpm (CO gpm)	NOx gpm
1974 & Earlier	15.92 (132.44)	14.92
1975-76	6.74 (96.21)	9.92
1977-79	6.74 (96.21)	6.59
1980	2.25 (45.48)	6.59
1981-82	2.25 (45.48)	3.25
1983-95	2.25 (23.74)	3.25
1996 & Newer	1.84 (16.50)	2.42
Light Duty Trucks (6000 GVWR Or Less)		
1975 & Earlier	16.94 (175.92)	14.92
1975-78	8.78 (117.95)	9.92
1979-83	7.55 (103.45)	7.42
1984-87	3.88 (59.97)	7.42
1988-90	3.88 (59.97)	4.09
1991-95	3.88 (59.97)	4.09
1996 & Newer (3750 LVW Or Less)	1.84 (16.50)	2.42
1996 & Newer (3751 LVW Or More)	2.25 (20.84)	2.92
Light Duty Trucks (6001-8500 GVWR)		
1974 & Earlier	16.94 (175.92)	14.92
1975-78	8.78 (117.95)	9.92
1979-83	7.55 (103.45)	7.42
1984-87	3.88 (59.97)	7.42
1989-90	3.88 (59.97)	5.75
1991-95	3.88 (59.97)	5.75
1996 & Newer (5750 LVW Or Less)	2.25 (20.84)	2.92
1996 & Newer (5751 LVW or More)	5.51 (23.74)	3.25

RHODE ISLAND EMISSION STANDARDS - 2-SPEED IDLE TEST

Application Idle (1)	HC ppm (CO %)
1967 & Earlier	800 (7.0)
1968-74	700 (6.0)
1975-78	300 (3.0)
1979-80	300 (2.5)
1981 & Newer	220 (1.2)

(1) 8500 GVWR or less.

TENNESSEE

TENNESSEE EMISSION STANDARDS - MEMPHIS - IDLE TEST

Application	HC ppm (CO %)
Light Duty Vehicles (9000 GVWR Or Less)	
1971 & Older	900 (8.9)
1972-74	700 (8.2)
1975-79	600 (7.5)
1980	400 (4.7)
1981 & Newer	220 (1.2)
Heavy Duty Trucks (9001-25,999 GVWR)	
1971 & Older	1000 (8.9)
1972-74	1000 (8.2)

Application	HC ppm (CO %)
1975-79	1000 (8.0)
1980	800 (6.0)
1981 & Newer	400 (4.0)

TENNESSEE EMISSION STANDARDS - DAVIDSON & NASHVILLE COUNTIES - IDLE TEST

Application	HC ppm (CO %)
Light Duty Vehicles (6000 GVWR Or Less)	
1975-77	500 (5.0)
1978-79	400 (4.0)
1980	300 (3.0)
1981 & Newer	220 (1.2)
Medium Duty Trucks (6001-8500 GVWR)	
1975-77	750 (6.5)
1978-79	600 (6.0)
1980	400 (4.5)
1981 & Newer	400 (4.0)

TENNESSEE EMISSION STANDARDS - FOUR COUNTY AREA SURROUNDING NASHVILLE - IDLE TEST

Application	HC ppm (CO %)
Light Duty Vehicles (6000 GVWR Or Less)	
1975-77	500 (5.0)
1978-79	400 (4.0)
1980	300 (3.0)
1981 & Newer	220 (1.2)
Medium Duty Trucks (6001-8500 GVWR)	
1975-77	750 (6.5)
1978-79	600 (6.0)
1980	400 (4.5)
1981 & Newer	400 (4.0)

TEXAS

NOTE: **The Texas program incorporates original U.S. EPA recommended start-up ASM2525 and ASM5015 standards for 1995 and newer model year vehicles. Refer to appropriate model year range in appropriate table. See U. S. EPA ASM2525 & ASM5015 START-UP EMISSION STANDARDS.**

TEXAS EMISSION STANDARDS - 2-SPEED IDLE TEST

Application	HC ppm (CO %)
Light Duty Vehicles (8500 GVWR Or Less)	
1979	600 (6.0)
1980	400 (4.0)
1981 & Newer	220 (1.2)
Heavy Duty Vehicles (8501 GVWR Or More)	
1979-81	700 (7.0)
1982-84	500 (5.0)
1985 & Newer	300 (3.0)

UTAH

UTAH EMISSION STANDARDS - DAVIS COUNTY - DC98 TEST

Application	HC gpm (CO gpm)	NOx gpm
Light Duty Vehicles (6000 GVWR Or Less)		
1989-90	2.00 (30)	3.0
1991-95	1.2 (20)	2.5
Light Duty Trucks (6000 GVWR Or Less)		
1989-90	3.2 (80)	3.5
1991-95	2.4 (60)	3.0
Light Duty Trucks (6001-8500 GVWR)		
1989-90	3.2 (80)	5.0
1991-95	2.4 (60)	4.5

UTAH EMISSION STANDARDS - DAVIS COUNTY - 2-SPEED IDLE TEST

Application	HC ppm (CO %)
Light Duty Vehicles (6000 GVWR Or Less)	
1968-69	800 (6.0)
1970-74	700 (5.0)
1975-76	600 (4.0)
1977-79	500 (3.0)
1980	300 (2.0)
1981-95	220 (1.2)
Light Duty Vehicles (6001-8500 GVWR)	
1968-69	1500 (7.0)
1970-78	1200 (5.0)
1979	500 (3.0)
1980	300 (2.0)
1981-95	220 (1.2)
Heavy Duty Vehicles (8501 GVWR Or More)	
1968-69	1500 (7.0)
1970-78	1200 (5.0)
1979-80	1000 (4.0)
1981 & Newer	800 (3.5)

NOTE: **The Salt Lake County program incorporates California style ASM2525 and ASM5015 standards for 1968 and newer model year vehicles; however, actual cutpoints are unique to this program and current information is not available at this time.**

UTAH EMISSION STANDARDS - SALT LAKE COUNTY - 2-SPEED IDLE TEST

Application	HC ppm (CO %)
Light Duty Vehicles (6000 GVWR Or Less)	
1968-69	800 (6.0)
1970-74	700 (5.0)
1975-76	600 (4.0)
1977-79	500 (3.0)
1980	300 (2.0)
1981 & Newer	220 (1.2)
Light Duty Trucks (6000 GVWR Or Less)	
1968-99	800 (6.0)
1970-74	700 (5.0)

Application	HC ppm (CO %)
1975-76	600 (4.0)
1977-79	500 (3.0)
1980	300 (2.0)
1981 & Newer	220 (1.2)
Light Duty Trucks (6001-8500 GVWR)	
1968-69	1500 (7.0)
1970-78	1200 (5.0)
1979	500 (3.0)
1980	300 (2.0)
1981 & Newer	220 (1.2)
Heavy Duty Trucks (8500 GVWR Or More)	
1968-69	1500 (7.0)
1970-78	1200 (5.0)
1979-80	1000 (4.0)
1981 & Newer	800 (3.5)

UTAH EMISSION STANDARDS - UTAH & WEBER COUNTIES - 2-SPEED IDLE TEST

Application	HC ppm (CO %)
Light Duty Vehicles (6000 GVWR Or Less)	
1968-69	800 (6.0)
1970-74	700 (5.0)
1975-76	600 (4.0)
1977-79	500 (3.0)
1980	300 (2.0)
1981-95	220 (1.2)
Light Duty Trucks (6000 GVWR Or Less)	
1968-99	800 (6.0)
1970-74	700 (5.0)
1975-76	600 (4.0)
1977-79	500 (3.0)
1980	300 (2.0)
1981 & Newer	220 (1.2)
Light Duty Trucks (6001-8500 GVWR)	
1968-69	1500 (7.0)
1970-78	1200 (5.0)
1979	500 (3.0)
1980	300 (2.0)
1981 & Newer	220 (1.2)
Heavy Duty Trucks (8500 GVWR Or More)	
1968-69	1500 (7.0)
1970-78	1200 (5.0)
1979-80	1000 (4.0)
1981 & Newer	800 (3.5)

VIRGINIA

NOTE: **The Virginia program incorporates original U.S. EPA recommended start-up ASM2525 and ASM5015 standards for 1981 and newer model year vehicles.**

Refer to appropriate model year range in appropriate table. See U. S. EPA ASM2525 & ASM5015 START-UP EMISSION STANDARDS.

VIRGINIA EMISSION STANDARDS - 2-SPEED IDLE TEST

Application	**HC ppm (CO %)**
8500 GVWR Or Less	
1975-90	400 (4.0)
1980	220 (2.0)
1981-89	220 (1.2)
1990-95	125 (1.0)
1996 & Newer	100 (0.75)
8501-10,000 GVWR	
1975-79	400 (4.0)
1980	220 (2.0)
1981-90	220 (1.2)
1991-96	150 (1.0)
1997 & Newer	125 (0.75)

WASHINGTON

WASHINGTON EMISSION STANDARDS - ASM2525 TEST

Application	**HC ppm (CO %)**
1980 & Earlier (Light-Duty Vehicles)	
1750 GVWR	400 (4.2)
1875 GVWR	380 (4.0)
2000 GVWR	350 (3.8)
2125 GVWR	340 (3.6)
2250 GVWR	320 (3.4)
2375 GVWR	300 (3.2)
2500 GVWR	290 (3.0)
2625 GVWR	270 (2.9)
2750 GVWR	260 (2.8)
2875 GVWR	250 (2.7)
3000 GVWR	240 (2.6)
3125 GVWR	230 (2.5)
3250 GVWR	220 (2.4)
3375 GVWR	220 (2.3)
3500 GVWR	210 (2.2)
3625 GVWR	200 (2.1)
3750 Or Greater GVWR (Passenger Cars Only)	200 (2.1)
3750 Or Greater GVWR (Light Duty Trucks)	300 (2.5)
1981 & Newer (Light-Duty Vehicles)	
1750 GVWR	250 (1.8)
1875 GVWR	240 (1.7)
2000 GVWR	220 (1.6)
2125 GVWR	210 (1.5)
2250 GVWR	200 (1.5)
2375 GVWR	190 (1.4)
2500 GVWR	180 (1.3)
2625 GVWR	180 (1.3)

Application	HC ppm (CO %)
2750 GVWR	171 (1.2)
2875 GVWR	160 (1.2)
3000 GVWR	160 (1.1)
3125 GVWR	150 (1.1)
3250 GVWR	150 (1.0)
3375 GVWR	150 (1.0)
3500 GVWR	150 (1.0)
3625 GVWR	150 (1.0)
3750 Or Greater GVWR (Passenger Cars Only)	150 (1.0)
3750 Or Greater GVWR (Light Duty Trucks)	300 (2.5)

WASHINGTON EMISSION STANDARDS - 2-SPEED IDLE TEST

Application	Idle/2500 RPM HC ppm (CO %)
Light Duty Vehicles (8500 GVWR Or Less)	
1980 & Earlier	600 (3.0)
1981 & Newer	220 (1.2)
Heavy Duty Trucks (8500 GVWR Or More)	
1981 & Newer	400 (3.0)

WISCONSIN

WISCONSIN EMISSION STANDARDS - IM240 TEST

Application	HC gpm (CO gpm)	NOx gpm
Light Duty Vehicles (6000 GVWR Or Less)		
1968-72	7.0 (120)	7.0
1973-74	7.0 (120)	6.0
1975-76	3.0 (65)	6.0
1977-79	3.0 (65)	4.0
1980	2.0 (60)	4.0
1981-82	2.0 (60)	3.0
1983-86	2.0 (30)	3.0
1987-93	0.8 (15)	2.0
1991-95	0.8 (15)	2.0
1996 & Newer	0.6 (10)	1.5
Light Duty Trucks (6000 GVWR Or Less)		
1968-72	7.0 (120)	7.0
1973-74	7.0 (120)	6.0
1975-78	4.0 (80)	6.0
1979-83	3.4 (70)	4.5
1984-86	3.2 (70)	4.5
1987	1.6 (40)	4.5
1988-95	1.6 (40)	2.5
1996 & Newer (3750 LVW Or Less)	0.6 (10)	1.5
1996 & Newer (3751 LVW Or More)	0.8 (13)	1.8
Light Duty Trucks (6001-8500 GVWR)		
1968-72	7.0 (120)	7.0
1973-74	7.0 (120)	6.0
1975-78	4.0 (80)	6.0
1979-83	3.4 (70)	4.5

Application	HC gpm (CO gpm)	NOx gpm
1984-86	3.2 (70)	4.5
1988-96	1.6 (40)	3.5
1997 & Newer (5750 ALVW Or Less)	0.8 (13)	1.8
1997 & Newer (5751 ALVW Or More)	0.8 (15)	2.0
Heavy Duty Trucks (8501-10,000 GVWR)		
1968-69	20.0 (200)	15.0
1970-73	10.0 (175)	10.0
1974-78	10.0 (150)	10.0
1979-84	7.5 (100)	8.0
1985-86	5.0 (80)	8.0
1987-90	2.0 (40)	6.0
1991-97	2.0 (40)	5.0
1998 & Newer	2.0 (30)	4.0
Heavy Duty Trucks (10,001 GVWR or More)		
1968-69	24.0 (250)	30.0
1970-73	13.0 (175)	20.0
1974-78	13.0 (150)	20.0
1979-84	11.5 (150)	16.0
1985-86	10.0 (150)	16.0
1987-90	3.5 (70)	11.0
1991-97	3.5 (70)	9.0
1998 & Newer	3.5 (60)	7.0

WISCONSIN EMISSION STANDARDS - 2-SPEED IDLE TEST

Application	HC ppm (CO %)
Passenger Cars	
1968-71	800 (8.0)
1972-74	550 (7.0)
1975-77	450 (5.5)
1978	350 (4.0)
1979	275 (3.0)
1980	230 (2.0)
1981 & Newer	220 (1.2)
Light Duty Trucks (6000 GVWR Or Less)	
1968-71	800 (8.0)
1972-74	700 (7.0)
1975-77	500 (6.0)
1978	450 (5.0)
1979	300 (3.0)
1980	275 (2.5)
1981-84	250 (2.0)
1985 & Newer	220 (1.2)
Light Duty Trucks (6001-8500 GVWR)	
1968-69	1450 (9.0)
1970-71	800 (8.0)
1972-74	700 (7.0)
1975-77	550 (6.5)
1978	450 (5.5)
1979	300 (3.0)

Application	HC ppm (CO %)
1980	275 (2.5)
1981-84	250 (2.0)
1985 & Newer	220 (1.2)
Heavy Duty Trucks (8501 GVWR Or More)	
1968-71	1500 (9.5)
1972-78	900 (9.0)
1979-84	700 (7.0)
1985 & Newer	300 (3.0)

U. S. EPA ASM2525 & ASM5015 START-UP EMISSION STANDARDS

U.S. EPA ASM EMISSION STANDARDS - 1968-72 LIGHT DUTY VEHICLES

Test Weight	ASM5015		ASM2525	
	HC ppm (CO %)	NOx ppm	HC ppm (CO %)	NOx ppm
1750	1118 (8.02)	4990	1098 (9.90)	4990
1875	1052 (7.56)	4990	1034 (9.90)	4990
2000	992 (7.14)	4990	975 (9.90)	4990
2125	938 (6.75)	4990	921 (9.66)	4990
2250	887 (6.40)	4990	872 (9.14)	4990
2375	841 (6.07)	4990	827 (8.67)	4990
2500	800 (5.78)	4990	786 (8.25)	4990
2625	761 (5.51)	4990	748 (7.85)	4990
2750	726 (5.26)	4990	714 (7.50)	4772
2875	695 (5.03)	4892	683 (7.17)	4556
3000	666 (4.83)	4680	654 (6.87)	4359
3125	639 (4.64)	4488	628 (6.60)	4180
3250	615 (4.47)	4311	604 (6.35)	4016
3375	593 (4.31)	4150	583 (6.13)	3866
3500	573 (4.17)	4002	563 (5.92)	3728
3625	554 (4.04)	3867	544 (5.73)	3602
3750	537 (3.91)	3741	527 (5.55)	3485
3875	521 (3.80)	3625	512 (5.39)	3377
4000	506 (3.70)	3517	497 (5.24)	3276
4125	492 (3.60)	3416	484 (5.09)	3182
4250	479 (3.51)	3321	471 (4.96)	3094
4375	467 (3.42)	3230	459 (4.83)	3010
4500	455 (3.34)	3145	447 (4.71)	2930
4625	444 (3.26)	3063	436 (4.60)	2854
4750	433 (3.18)	2983	425 (4.49)	2780
4875	423 (3.11)	2907	415 (4.38)	2709
5000	412 (3.03)	2833	405 (4.28)	2540
5125	402 (2.97)	2760	395 (4.18)	2573
5250	393 (2.90)	2690	386 (4.08)	2507
5375	383 (2.83)	2621	376 (3.98)	2443
5500	374 (2.77)	2554	367 (3.89)	2381
5625	365 (2.70)	2489	359 (3.80)	2321
5750	357 (2.64)	2426	350 (3.71)	2262
5875	348 (2.59)	2366	342 (3.62)	2206

Test Weight	ASM5015		ASM2525	
	HC ppm (CO %)	NOx ppm	HC ppm (CO %)	NOx ppm
6000	341 (2.53)	2308	334 (3.54)	2152
6125	333 (2.48)	2254	327 (3.47)	2102
6250	326 (2.43)	2204	320 (3.40)	2056
6375	320 (2.39)	2159	314 (3.34)	2014
6500	315 (2.35)	2119	309 (3.28)	1977
6625	310 (2.32)	2087	304 (3.23)	1947
6750	307 (2.29)	2062	301 (3.20)	1924
6875	305 (2.28)	2046	299 (3.17)	1909
7000	304 (2.27)	2040	298 (3.17)	1904
7125 Or More	304 (2.27)	2045	298 (3.17)	1904

U.S. EPA ASM EMISSION STANDARDS - 1973-74 LIGHT DUTY VEHICLES

Test Weight	ASM5015		ASM2525	
	HC ppm (CO %)	NOx ppm	HC ppm (CO %)	NOx ppm
1750	1118 (8.02)	4990	1098 (9.90)	4980
1875	1052 (7.56)	4990	1034 (9.90)	4906
2000	992 (7.14)	4919	975 (9.90)	4838
2125	938 (6.75)	4853	921 (9.66)	4776
2250	887 (6.40)	4792	872 (9.14)	4720
2375	841 (6.07)	4736	827 (8.67)	4668
2500	800 (5.78)	4685	786 (8.25)	4620
2625	761 (5.51)	4639	748 (7.85)	4577
2750	726 (5.26)	4596	714 (7.50)	4374
2875	695 (5.03)	4484	683 (7.17)	4176
3000	666 (4.83)	4290	654 (6.87)	3996
3125	639 (4.64)	4114	628 (6.60)	3832
3250	615 (4.47)	3952	604 (6.35)	3681
3375	593 (4.31)	3804	583 (6.13)	3544
3500	573 (4.17)	3669	563 (5.92)	3418
3625	554 (4.04)	3544	544 (5.73)	3302
3750	537 (3.91)	3429	527 (5.55)	3195
3875	521 (3.80)	3323	512 (5.39)	3096
4000	506 (3.70)	3224	497 (5.24)	3003
4125	492 (3.60)	3131	484 (5.09)	2917
4250	479 (3.51)	3044	471 (4.96)	2836
4375	467 (3.42)	2961	459 (4.83)	2759
4500	455 (3.34)	2883	447 (4.71)	2686
4625	444 (3.26)	2807	436 (4.60)	2616
4750	433 (3.18)	2735	425 (4.49)	2549
4875	423 (3.11)	2665	415 (4.38)	2483
5000	412 (3.03)	2597	405 (4.28)	2420
5125	402 (2.97)	2530	395 (4.18)	2359
5250	393 (2.90)	2466	386 (4.08)	2298
5375	383 (2.83)	2403	376 (3.98)	2240
5500	374 (2.77)	2341	367 (3.89)	2183
5625	365 (2.70)	2282	359 (3.80)	2127

Test Weight	ASM5015		ASM2525	
	HC ppm (CO %)	NOx ppm	HC ppm (CO %)	NOx ppm
5750	357 (2.64)	2224	350 (3.71)	2074
5875	348 (2.59)	2168	342 (3.62)	2022
6000	341 (2.53)	2116	334 (3.54)	1973
6125	333 (2.48)	2066	327 (3.47)	1927
6250	326 (2.43)	2020	320 (3.40)	1884
6375	320 (2.39)	1979	314 (3.34)	1846
6500	315 (2.35)	1943	309 (3.28)	1813
6625	310 (2.32)	1913	304 (3.23)	1785
6750	307 (2.29)	1890	301 (3.20)	1764
6875	305 (2.28)	1875	299 (3.17)	1750
7000	304 (2.27)	1870	298 (3.17)	1745
7125 Or More	304 (2.27)	1874	298 (3.17)	1745

U.S. EPA ASM EMISSION STANDARDS - 1975-76 LIGHT DUTY VEHICLES

Test Weight	ASM5015		ASM2525	
	HC ppm (CO %)	NOx ppm	HC ppm (CO %)	NOx ppm
1750	774 (3.92)	4990	761 (5.45)	4980
1875	729 (3.70)	4990	717 (5.14)	4906
2000	688 (3.49)	4919	676 (4.85)	4838
2125	650 (3.31)	4853	638 (4.58)	4776
2250	615 (3.13)	4792	604 (4.34)	4720
2375	583 (2.98)	4736	573 (4.12)	4668
2500	554 (2.83)	4685	544 (3.91)	4620
2625	528 (2.70)	4639	518 (3.73)	4577
2750	503 (2.58)	4596	495 (3.56)	4374
2875	481 (2.47)	4484	473 (3.41)	4176
3000	461 (2.37)	4290	453 (3.27)	3996
3125	443 (2.28)	4114	435 (3.14)	3832
3250	426 (2.20)	3952	419 (3.02)	3681
3375	411 (2.12)	3804	404 (2.91)	3544
3500	397 (2.05)	3669	390 (2.82)	3418
3625	384 (1.99)	3544	377 (2.73)	3302
3750	372 (1.93)	3429	365 (2.64)	3195
3875	361 (1.87)	3323	355 (2.57)	3096
4000	351 (1.82)	3224	345 (2.49)	3003
4125	341 (1.77)	3131	335 (2.43)	2917
4250	332 (1.73)	3044	326 (2.36)	2836
4375	323 (1.68)	2961	318 (2.31)	2759
4500	315 (1.64)	2883	310 (2.25)	2686
4625	308 (1.61)	2807	302 (2.19)	2616
4750	300 (1.57)	2735	295 (2.14)	2549
4875	293 (1.53)	2665	288 (2.09)	2483
5000	286 (1.50)	2597	281 (2.04)	2420
5125	279 (1.46)	2530	274 (2.00)	2359
5250	272 (1.43)	2466	267 (1.95)	2298
5375	266 (1.40)	2403	261 (1.90)	2240

Test Weight	ASM5015		ASM2525	
	HC ppm (CO %)	NOx ppm	HC ppm (CO %)	NOx ppm
5500	259 (1.37)	2341	255 (1.86)	2183
5625	253 (1.34)	2282	248 (1.82)	2127
5750	247 (1.31)	2224	243 (1.78)	2074
5875	241 (1.28)	2168	237 (1.74)	2022
6000	236 (1.25)	2116	232 (1.70)	1973
6125	231 (1.23)	2066	227 (1.66)	1927
6250	226 (1.20)	2020	222 (1.63)	1884
6375	222 (1.18)	1979	218 (1.60)	1846
6500	218 (1.16)	1943	214 (1.57)	1813
6625	215 (1.15)	1913	211 (1.55)	1785
6750	213 (1.14)	1890	209 (1.54)	1764
6875	211 (1.13)	1875	207 (1.52)	1750
7000	211 (1.12)	1870	207 (1.52)	1745
7125 Or More	211 (1.12)	1874	206 (1.52)	1745

U.S. EPA ASM EMISSION STANDARDS - 1977-79 LIGHT DUTY VEHICLES

Test Weight	ASM5015		ASM2525	
	HC ppm (CO %)	NOx ppm	HC ppm (CO %)	NOx ppm
1750	774 (3.92)	4990	761 (5.45)	4950
1875	729 (3.70)	4990	717 (5.14)	4655
2000	688 (3.49)	4707	676 (4.85)	4384
2125	650 (3.31)	4441	638 (4.58)	4136
2250	615 (3.13)	4197	604 (4.34)	3909
2375	583 (2.98)	3974	573 (4.12)	3701
2500	554 (2.83)	3771	544 (3.91)	3512
2625	528 (2.70)	3585	518 (3.73)	3339
2750	503 (2.58)	3416	495 (3.56)	3181
2875	481 (2.47)	3261	473 (3.41)	3037
3000	461 (2.37)	3120	453 (3.27)	2906
3125	443 (2.28)	2992	435 (3.14)	2787
3250	426 (2.20)	2874	419 (3.02)	2677
3375	411 (2.12)	2767	404 (2.91)	2577
3500	397 (2.05)	2668	390 (2.82)	2486
3625	384 (1.99)	2578	377 (2.73)	2401
3750	372 (1.93)	2494	365 (2.64)	2323
3875	361 (1.87)	2417	355 (2.57)	2251
4000	351 (1.82)	2345	345 (2.49)	2184
4125	341 (1.77)	2277	335 (2.43)	2122
4250	332 (1.73)	2214	326 (2.36)	2063
4375	323 (1.68)	2154	318 (2.31)	2007
4500	315 (1.64)	2096	310 (2.25)	1953
4625	308 (1.61)	2042	302 (2.19)	1903
4750	300 (1.57)	1989	295 (2.14)	1854
4875	293 (1.53)	1938	288 (2.09)	1806
5000	286 (1.50)	1889	281 (2.04)	1760
5125	279 (1.46)	1840	274 (2.00)	1715

Test Weight	ASM5015		ASM2525	
	HC ppm (CO %)	NOx ppm	HC ppm (CO %)	NOx ppm
5250	272 (1.43)	1793	267 (1.95)	1672
5375	266 (1.40)	1747	261 (1.90)	1629
5500	259 (1.37)	1703	255 (1.86)	1587
5625	253 (1.34)	1659	248 (1.82)	1547
5750	247 (1.31)	1617	243 (1.78)	1508
5875	241 (1.28)	1577	237 (1.74)	1471
6000	236 (1.25)	1539	232 (1.70)	1435
6125	231 (1.23)	1503	227 (1.66)	1401
6250	226 (1.20)	1469	222 (1.63)	1371
6375	222 (1.18)	1439	218 (1.60)	1343
6500	218 (1.16)	1413	214 (1.57)	1318
6625	215 (1.15)	1391	211 (1.55)	1298
6750	213 (1.14)	1374	209 (1.54)	1283
6875	211 (1.13)	1364	207 (1.52)	1273
7000 Or More	211 (1.12)	1360	207 (1.52)	1269

U.S. EPA ASM EMISSION STANDARDS - 1980 LIGHT DUTY VEHICLES

Test Weight	ASM5015		ASM2525	
	HC ppm (CO %)	NOx ppm	HC ppm (CO %)	NOx ppm
1750	291 (2.78)	4990	282 (3.64)	4950
1875	275 (2.63)	4990	266 (3.43)	4655
2000	260 (2.48)	4707	252 (3.24)	4384
2125	246 (2.35)	4441	239 (3.06)	4136
2250	234 (2.23)	4197	227 (2.90)	3909
2375	223 (2.12)	3974	216 (2.76)	3701
2500	212 (2.02)	3771	206 (2.62)	3512
2625	203 (1.92)	3585	197 (2.50)	3339
2750	194 (1.84)	3416	189 (2.39)	3181
2875	187 (1.76)	3261	181 (2.29)	3037
3000	180 (1.69)	3120	174 (2.19)	2906
3125	173 (1.63)	2992	168 (2.11)	2787
3250	167 (1.57)	2874	162 (2.03)	2677
3375	162 (1.52)	2767	157 (1.96)	2577
3500	157 (1.47)	2668	152 (1.89)	2486
3625	152 (1.42)	2578	148 (1.84)	2401
3750	148 (1.38)	2492	144 (1.78)	2323
3875	144 (1.34)	2417	140 (1.73)	2251
4000	140 (1.31)	2345	137 (1.68)	2184
4125	137 (1.27)	2277	133 (1.64)	2122
4250	134 (1.24)	2214	130 (1.60)	2063
4375	131 (1.21)	2154	127 (1.56)	2007
4500	128 (1.18)	2096	124 (1.52)	1953
4625	125 (1.15)	2042	122 (1.48)	1903
4750	122 (1.13)	1989	119 (1.45)	1854
4875	120 (1.10)	1938	117 (1.42)	1806
5000	117 (1.08)	1889	114 (1.38)	1760

Test Weight	ASM5015		ASM2525	
	HC ppm (CO %)	NOx ppm	HC ppm (CO %)	NOx ppm
5125	115 (1.05)	1840	112 (1.35)	1715
5250	112 (1.03)	1793	110 (1.32)	1672
5375	110 (1.01)	1747	107 (1.29)	1629
5500	108 (0.99)	1703	105 (1.26)	1587
5625	106 (0.97)	1659	103 (1.24)	1547
5750	104 (0.94)	1617	101 (1.21)	1508
5875	102 (0.92)	1577	99 (1.18)	1471
6000	100 (0.91)	1539	97 (1.16)	1435
6125	98 (0.89)	1503	95 (1.13)	1401
6250	96 (0.87)	1469	94 (1.11)	1371
6375	95 (0.86)	1439	92 (1.09)	1343
6500	93 (0.84)	1413	91 (1.08)	1318
6625	92 (0.83)	1391	90 (1.06)	1298
6750	91 (0.82)	1374	89 (1.05)	1283
6875	91 (0.82)	1364	89 (1.04)	1273
7000	91 (0.82)	1360	88 (1.04)	1269
7125 Or More	90 (0.81)	1360	88 (1.04)	1269

U.S. EPA ASM EMISSION STANDARDS - 1981-82 LIGHT DUTY VEHICLES

Test Weight	ASM5015		ASM2525	
	HC ppm (CO %)	NOx ppm	HC ppm (CO %)	NOx ppm
1750	291 (2.78)	2272	282 (3.64)	2114
1875	275 (2.63)	2181	266 (3.43)	1991
2000	260 (2.48)	2058	252 (3.24)	1877
2125	246 (2.35)	1944	239 (3.06)	1774
2250	234 (2.23)	1839	227 (2.90)	1678
2375	223 (2.12)	1744	216 (2.76)	1592
2500	212 (2.02)	1657	206 (2.62)	1512
2625	203 (1.92)	1577	197 (2.50)	1440
2750	194 (1.84)	1504	189 (2.39)	1374
2875	187 (1.76)	1438	181 (2.29)	1313
3000	180 (1.69)	1378	174 (2.19)	1258
3125	173 (1.63)	1323	168 (2.11)	1208
3250	167 (1.57)	1273	162 (2.03)	1163
3375	162 (1.52)	1227	157 (1.96)	1121
3500	157 (1.47)	1184	152 (1.89)	1082
3625	152 (1.42)	1146	148 (1.84)	1047
3750	148 (1.38)	1110	144 (1.78)	1014
3875	144 (1.34)	1077	140 (1.73)	984
4000	140 (1.31)	1046	137 (1.68)	956
4125	137 (1.27)	1017	133 (1.64)	930
4250	134 (1.24)	990	130 (1.60)	905
4375	131 (1.21)	964	127 (1.56)	882
4500	128 (1.18)	939	124 (1.52)	859
4625	125 (1.15)	916	122 (1.48)	838
4750	122 (1.13)	893	119 (1.45)	818

Test Weight	ASM5015		ASM2525	
	HC ppm (CO %)	NOx ppm	HC ppm (CO %)	NOx ppm
4875	120 (1.10)	872	117 (1.42)	798
5000	117 (1.08)	850	114 (1.38)	778
5125	115 (1.05)	830	112 (1.35)	760
5250	112 (1.03)	810	110 (1.32)	741
5375	110 (1.01)	790	107 (1.29)	723
5500	108 (0.99)	771	105 (1.26)	706
5625	106 (0.97)	752	103 (1.24)	689
5750	104 (0.94)	734	101 (1.21)	673
5875	102 (0.92)	717	99 (1.18)	657
6000	100 (0.91)	701	97 (1.16)	642
6125	98 (0.89)	685	95 (1.13)	628
6250	96 (0.87)	671	94 (1.11)	615
6375	95 (0.86)	658	92 (1.09)	604
6500	93 (0.84)	647	91 (1.08)	593
6625	92 (0.83)	638	90 (1.06)	585
6750	91 (0.82)	631	89 (1.05)	578
6875	91 (0.82)	626	89 (1.04)	574
7000	91 (0.82)	624	88 (1.04)	573
7125 Or More	90 (0.81)	625	88 (1.04)	573

U.S. EPA ASM EMISSION STANDARDS - 1983-90 LIGHT DUTY VEHICLES

Test Weight	ASM5015		ASM2525	
	HC ppm (CO %)	NOx ppm	HC ppm (CO %)	NOx ppm
1750	291 (1.64)	2272	282 (1.83)	2114
1875	275 (1.55)	2181	266 (1.72)	1991
2000	260 (1.47)	2058	252 (1.63)	1877
2125	246 (1.39)	1944	239 (1.54)	1774
2250	234 (1.31)	1839	227 (1.47)	1678
2375	223 (1.26)	1744	216 (1.39)	1592
2500	212 (1.20)	1657	206 (1.33)	1512
2625	203 (1.15)	1577	197 (1.27)	1440
2750	194 (1.10)	1504	189 (1.21)	1374
2875	187 (1.05)	1438	181 (1.16)	1313
3000	180 (1.01)	1378	174 (1.12)	1258
3125	173 (0.98)	1323	168 (1.08)	1208
3250	167 (0.94)	1273	162 (1.04)	1163
3375	162 (0.91)	1227	157 (1.00)	1121
3500	157 (0.88)	1184	152 (0.97)	1082
3625	152 (0.86)	1146	148 (0.94)	1047
3750	148 (0.83)	1110	144 (0.92)	1014
3875	144 (0.81)	1077	140 (0.89)	984
4000	140 (0.79)	1046	137 (0.87)	956
4125	137 (0.77)	1017	133 (0.85)	930
4250	134 (0.75)	990	130 (.83)	905
4375	131 (0.74)	964	127 (0.81)	882
4500	128 (0.72)	939	124 (0.79)	859

Test Weight	ASM5015		ASM2525	
	HC ppm (CO %)	NOx ppm	HC ppm (CO %)	NOx ppm
4625	125 (0.70)	916	122 (0.77)	838
4750	122 (0.69)	893	119 (0.76)	818
4875	120 (0.67)	872	117 (0.74)	798
5000	117 (0.66)	850	114 (0.73)	778
5125	115 (0.65)	830	112 (0.71)	760
5250	112 (0.63)	810	110 (0.70)	741
5375	110 (0.62)	790	107 (0.68)	723
5500	108 (0.61)	771	105 (0.67)	706
5625	106 (0.59)	752	103 (0.65)	689
5750	104 (0.58)	734	101 (0.64)	673
5875	102 (0.57)	717	99 (0.63)	657
6000	100 (0.56)	701	97 (0.62)	642
6125	98 (0.55)	685	95 (0.61)	628
6250	96 (0.54)	671	94 (0.60)	615
6375	95 (0.53)	658	92 (0.59)	604
6500	93 (0.52)	647	91 (0.58)	593
6625	92 (0.52)	638	90 (0.57)	585
6750	91 (0.51)	631	89 (0.57)	578
6875	91 (0.51)	626	89 (0.56)	574
7000	91 (0.51)	624	88 (0.56)	573
7125	90 (0.51)	625	88 (0.56)	573
7250 Or More	90 (0.50)	625	88 (0.56)	573

U.S. EPA ASM EMISSION STANDARDS - 1991-95 LIGHT DUTY VEHICLES

Test Weight	ASM5015		ASM2525	
	HC ppm (CO %)	NOx ppm	HC ppm (CO %)	NOx ppm
1750	224 (1.26)	1819	216 (1.22)	1642
1875	212 (1.19)	1713	205 (1.16)	1547
2000	201 (1.13)	1616	194 (1.09)	1460
2125	191 (1.07)	1527	184 (1.04)	1380
2250	182 (1.02)	1446	175 (0.99)	1307
2375	173 (0.97)	1372	167 (0.94)	1240
2500	166 (0.93)	1304	160 (0.90)	1179
2625	159 (0.89)	1242	153 (0.86)	1123
2750	152 (0.85)	1186	147 (0.82)	1072
2875	146 (0.82)	1134	141 (0.79)	1026
3000	141 (0.79)	1088	136 (0.76)	984
3125	136 (0.76)	1045	132 (0.73)	945
3250	132 (0.73)	1006	127 (0.71)	910
3375	128 (0.71)	970	123 (0.69)	878
3500	124 (0.69)	937	120 (0.67)	848
3625	120 (0.67)	907	117 (0.65)	821
3750	117 (0.65)	879	114 (0.63)	796
3875	114 (0.63)	853	111 (0.61)	773
4000	112 (0.62)	829	108 (0.60)	751
4125	109 (0.60)	807	106 (0.58)	731

Test Weight	ASM5015		ASM2525	
	HC ppm (CO %)	NOx ppm	HC ppm (CO %)	NOx ppm
4250	107 (0.59)	786	103 (0.57)	712
4375	104 (0.58)	766	101 (0.56)	694
4500	102 (0.57)	747	99 (0.55)	677
4625	100 (0.55)	728	97 (0.54)	661
4750	98 (0.54)	711	95 (0.53)	645
4875	96 (0.53)	694	93 (0.52)	630
5000	94 (0.52)	677	92 (0.51)	615
5125	93 (0.51)	661	90 (0.50)	600
5250	91 (0.50)	646	88 (0.49)	586
5375	89 (0.49)	631	86 (0.48)	573
5500	87 (0.48)	616	85 (0.47)	559
5625	86 (0.47)	601	83 (0.46)	546
5750	84 (0.46)	587	82 (0.45)	534
5875	83 (0.45)	574	80 (0.44)	522
6000	81 (0.44)	561	79 (0.44)	510
6125	80 (0.44)	549	78 (0.43)	499
6250	79 (0.43)	538	76 (0.42)	489
6375	77 (0.42)	528	75 (0.42)	480
6500	76 (0.42)	519	74 (0.41)	473
6625	76 (0.41)	512	74 (0.41)	466
6750	75 (0.41)	507	73 (0.41)	461
6875	75 (0.40)	503	73 (0.40)	458
7000 Or More	74 (0.40)	502	72 (0.40)	457

U.S. EPA ASM EMISSION STANDARDS - 1994 & NEWER + TIER 1 LIGHT DUTY VEHICLES

Test Weight	ASM5015		ASM2525	
	HC ppm (CO %)	NOx ppm	HC ppm (CO %)	NOx ppm
1750	142 (0.80)	1212	136 (0.77)	1095
1875	134 (0.75)	1142	129 (0.73)	1031
2000	127 (0.71)	1077	123 (0.69)	973
2125	121 (0.68)	1018	116 (0.66)	920
2250	115 (0.64)	964	111 (0.62)	871
2375	109 (0.61)	915	106 (0.59)	827
2500	105 (0.59)	869	101 (0.57)	786
2625	100 (0.56)	828	97 (0.54)	749
2750	96 (0.54)	791	93 (0.52)	715
2875	92 (0.52)	756	89 (0.50)	684
3000	89 (0.50)	725	86 (0.48)	656
3125	86 (0.48)	696	83 (0.46)	630
3250	83 (0.46)	670	80 (0.45)	607
3375	81 (0.45)	647	78 (0.43)	585
3500	78 (0.44)	625	76 (0.42)	566
3625	76 (0.42)	605	74 (0.41)	547
3750	74 (0.41)	586	72 (0.40)	531
3875	72 (0.40)	569	70 (0.39)	515
4000	71 (0.39)	553	68 (0.38)	501

Test Weight	ASM5015		ASM2525	
	HC ppm (CO %)	NOx ppm	HC ppm (CO %)	NOx ppm
4125	69 (0.38)	538	67 (0.37)	487
4250	67 (0.37)	524	65 (0.36)	475
4375	66 (0.36)	510	64 (0.35)	463
4500	65 (0.36)	498	63 (0.35)	440
4625	63 (0.35)	486	61 (0.34)	440
4750	62 (0.34)	474	60 (0.33)	430
4875	61 (0.34)	463	59 (0.33)	420
5000	60 (0.33)	452	58 (0.32)	410
5125	58 (0.32)	441	57 (0.31)	400
5250	57 (0.32)	431	56 (0.31)	391
5375	56 (0.31)	420	55 (0.30)	382
5500	55 (0.30)	410	54 (0.30)	373
5625	54 (0.30)	401	53 (0.29)	364
5750	53 (0.29)	391	52 (0.29)	356
5875	52 (0.29)	383	51 (0.28)	348
6000	51 (0.28)	374	50 (0.28)	340
6125	50 (0.28)	366	49 (0.27)	333
6250	50 (0.27)	359	48 (0.27)	326
6375	49 (0.27)	352	48 (0.26)	320
6500	48 (0.26)	346	47 (0.26)	315
6625	48 (0.26)	341	46 (0.26)	311
6750	47 (0.26)	338	46 (0.26)	307
6875	47 (0.26)	335	46 (0.25)	305
7000 Or More	47 (0.25)	335	46 (0.25)	305

U.S. EPA ASM EMISSION STANDARDS - 1968-72 LIGHT DUTY TRUCKS (6000 GVWR OR LESS)

Test Weight	ASM5015		ASM2525	
	HC ppm (CO %)	NOx ppm	HC ppm (CO %)	NOx ppm
1750	1118 (8.02)	4990	1098 (9.90)	4990
1875	1052 (7.56)	4990	1034 (9.90)	4990
2000	992 (7.14)	4990	975 (9.90)	4990
2125	938 (6.75)	4990	921 (9.66)	4990
2250	887 (6.40)	4990	872 (9.14)	4990
2375	841 (6.07)	4990	827 (8.67)	4990
2500	800 (5.78)	4990	786 (8.25)	4990
2625	761 (5.51)	4990	748 (7.85)	4990
2750	726 (5.26)	4990	714 (7.50)	4772
2875	695 (5.03)	4892	683 (7.17)	4556
3000	666 (4.83)	4680	654 (6.87)	4359
3125	639 (4.64)	4488	628 (6.60)	4180
3250	615 (4.47)	4311	604 (6.35)	4016
3375	593 (4.31)	4150	583 (6.13)	3866
3500	573 (4.17)	4002	563 (5.92)	3728
3625	554 (4.04)	3867	544 (5.73)	3602
3750	537 (3.91)	3741	527 (5.55)	3485
3875	521 (3.80)	3625	512 (5.39)	3377

Test Weight	ASM5015		ASM2525	
	HC ppm (CO %)	NOx ppm	HC ppm (CO %)	NOx ppm
4000	506 (3.70)	3517	497 (5.24)	3276
4125	492 (3.60)	3416	484 (5.09)	3182
4250	479 (3.51)	3321	471 (4.96)	3094
4375	467 (3.42)	3230	459 (4.83)	3010
4500	455 (3.34)	3145	447 (4.71)	2930
4625	444 (3.26)	3063	436 (4.60)	2854
4750	433 (3.18)	2983	425 (4.49)	2780
4875	423 (3.11)	2907	415 (4.38)	2709
5000	412 (3.03)	2833	405 (4.28)	2540
5125	402 (2.97)	2760	395 (4.18)	2573
5250	393 (2.90)	2690	386 (4.08)	2507
5375	383 (2.83)	2621	376 (3.98)	2443
5500	374 (2.77)	2554	367 (3.89)	2381
5625	365 (2.70)	2489	359 (3.80)	2321
5750	357 (2.64)	2426	350 (3.71)	2262
5875	348 (2.59)	2366	342 (3.62)	2206
6000	341 (2.53)	2308	334 (3.54)	2152
6125	333 (2.48)	2254	327 (3.47)	2102
6250	326 (2.43)	2204	320 (3.40)	2056
6375	320 (2.39)	2159	314 (3.34)	2014
6500	315 (2.35)	2119	309 (3.28)	1977
6625	310 (2.32)	2087	304 (3.23)	1947
6750	307 (2.29)	2062	301 (3.20)	1924
6875	305 (2.28)	2046	299 (3.17)	1909
7000	304 (2.27)	2040	298 (3.17)	1904
7125 Or More	304 (2.27)	2045	298 (3.17)	1904

U.S. EPA ASM EMISSION STANDARDS - 1973-74 LIGHT DUTY TRUCKS (6000 GVWR OR LESS)

Test Weight	ASM5015		ASM2525	
	HC ppm (CO %)	NOx ppm	HC ppm (CO %)	NOx ppm
1750	1118 (8.02)	4990	1098 (9.90)	4980
1875	1052 (7.56)	4990	1034 (9.90)	4906
2000	992 (7.14)	4919	975 (9.90)	4838
2125	938 (6.75)	4853	921 (9.66)	4776
2250	887 (6.40)	4792	872 (9.14)	4720
2375	841 (6.07)	4736	827 (8.67)	4668
2500	800 (5.78)	4685	786 (8.25)	4620
2625	761 (5.51)	4639	748 (7.85)	4577
2750	726 (5.26)	4596	714 (7.50)	4374
2875	695 (5.03)	4484	683 (7.17)	4176
3000	666 (4.83)	4290	654 (6.87)	3996
3125	639 (4.64)	4114	628 (6.60)	3832
3250	615 (4.47)	3952	604 (6.35)	3681
3375	593 (4.31)	3804	583 (6.13)	3544
3500	573 (4.17)	3669	563 (5.92)	3418
3625	554 (4.04)	3544	544 (5.73)	3302

Test Weight	ASM5015		ASM2525	
	HC ppm (CO %)	NOx ppm	HC ppm (CO %)	NOx ppm
3750	537 (3.91)	3429	527 (5.55)	3195
3875	521 (3.80)	3323	512 (5.39)	3096
4000	506 (3.70)	3224	497 (5.24)	3003
4125	492 (3.60)	3131	484 (5.09)	2917
4250	479 (3.51)	3044	471 (4.96)	2836
4375	467 (3.42)	2961	459 (4.83)	2759
4500	455 (3.34)	2883	447 (4.71)	2686
4625	444 (3.26)	2807	436 (4.60)	2616
4750	433 (3.18)	2735	425 (4.49)	2549
4875	423 (3.11)	2665	415 (4.38)	2483
5000	412 (3.03)	2597	405 (4.28)	2420
5125	402 (2.97)	2530	395 (4.18)	2359
5250	393 (2.90)	2466	386 (4.08)	2298
5375	383 (2.83)	2403	376 (3.98)	2240
5500	374 (2.77)	2341	367 (3.89)	2183
5625	365 (2.70)	2282	359 (3.80)	2127
5750	357 (2.64)	2224	350 (3.71)	2074
5875	348 (2.59)	2168	342 (3.62)	2022
6000	341 (2.53)	2116	334 (3.54)	1973
6125	333 (2.48)	2066	327 (3.47)	1927
6250	326 (2.43)	2020	320 (3.40)	1884
6375	320 (2.39)	1979	314 (3.34)	1846
6500	315 (2.35)	1943	309 (3.28)	1813
6625	310 (2.32)	1913	304 (3.23)	1785
6750	307 (2.29)	1890	301 (3.20)	1764
6875	305 (2.28)	1875	299 (3.17)	1750
7000	304 (2.27)	1870	298 (3.17)	1745
7125 Or More	304 (2.27)	1874	298 (3.17)	1745

U.S. EPA ASM EMISSION STANDARDS - 1975-78 LIGHT DUTY TRUCKS (6000 GVWR OR LESS)

Test Weight	ASM5015		ASM2525	
	HC ppm (CO %)	NOx ppm	HC ppm (CO %)	NOx ppm
1750	843 (5.07)	4990	828 (7.26)	4980
1875	794 (4.78)	4990	780 (6.84)	4906
2000	749 (4.51)	4919	736 (6.45)	4838
2125	707 (4.26)	4853	695 (6.10)	4776
2250	669 (4.04)	4792	658 (5.78)	4720
2375	635 (3.83)	4736	624 (5.48)	4668
2500	603 (3.65)	4685	593 (5.21)	4620
2625	574 (3.48)	4639	564 (4.96)	4577
2750	548 (3.32)	4596	539 (4.73)	4374
2875	524 (3.18)	4484	515 (4.53)	4176
3000	502 (3.05)	4290	493 (4.34)	3996
3125	482 (2.93)	4114	474 (4.17)	3832
3250	464 (2.82)	3952	456 (4.01)	3681
3375	447 (2.72)	3804	440 (3.87)	3544

Test Weight	ASM5015		ASM2525	
	HC ppm (CO %)	NOx ppm	HC ppm (CO %)	NOx ppm
3500	432 (2.63)	3669	424 (3.74)	3418
3625	418 (2.55)	3544	411 (3.62)	3302
3750	405 (2.47)	3429	398 (3.51)	3195
3875	393 (2.40)	3323	386 (3.40)	3096
4000	382 (2.33)	3224	375 (3.31)	3003
4125	371 (2.27)	3131	365 (3.22)	2917
4250	361 (2.21)	3044	355 (3.13)	2836
4375	352 (2.16)	2961	346 (3.05)	2759
4500	343 (2.11)	2883	337 (2.98)	2686
4625	335 (2.06)	2807	329 (2.90)	2616
4750	327 (2.01)	2735	321 (2.83)	2549
4875	319 (1.96)	2665	313 (2.77)	2483
5000	311 (1.92)	2597	305 (2.70)	2420
5125	304 (1.87)	2530	298 (2.64)	2359
5250	296 (1.83)	2466	291 (2.58)	2298
5375	289 (1.79)	2403	284 (2.51)	2240
5500	282 (1.75)	2341	277 (2.46)	2183
5625	276 (1.71)	2282	271 (2.40)	2127
5750	269 (1.67)	2224	264 (2.34)	2074
5875	263 (1.63)	2168	258 (2.29)	2022
6000	257 (1.60)	2116	252 (2.24)	1973
6125	251 (1.57)	2066	247 (2.19)	1927
6250	246 (1.54)	2020	242 (2.15)	1884
6375	242 (1.51)	1979	237 (2.11)	1846
6500	238 (1.48)	1943	233 (2.07)	1813
6625	234 (1.46)	1913	230 (2.04)	1785
6750	232 (1.45)	1890	227 (2.02)	1764
6875	230 (1.44)	1875	225 (2.00)	1750
7000	229 (1.43)	1870	225 (2.00)	1745
7125 Or More	229 (1.43)	1874	225 (2.00)	1745

U.S. EPA ASM EMISSION STANDARDS - 1979-83 LIGHT DUTY TRUCKS (6000 GVWR OR LESS)

Test Weight	ASM5015		ASM2525	
	HC ppm (CO %)	NOx ppm	HC ppm (CO %)	NOx ppm
1750	774 (4.31)	4990	761 (6.06)	4960
1875	729 (4.06)	4990	717 (5.70)	4738
2000	688 (3.83)	4778	676 (5.38)	4535
2125	650 (3.63)	4578	638 (5.09)	4349
2250	615 (3.44)	4395	604 (4.82)	4179
2375	583 (3.26)	4228	573 (4.57)	4024
2500	554 (3.10)	4076	544 (4.35)	3881
2625	528 (2.96)	3936	518 (4.14)	3752
2750	503 (2.83)	3809	495 (3.95)	3579
2875	481 (2.71)	3669	473 (3.78)	3417
3000	461 (2.60)	3510	453 (3.62)	3270
3125	443 (2.50)	3366	435 (3.48)	3135

Test Weight	ASM5015		ASM2525	
	HC ppm (CO %)	NOx ppm	HC ppm (CO %)	NOx ppm
3250	426 (2.40)	3234	419 (3.35)	3012
3375	411 (2.32)	3113	404 (3.23)	2899
3500	397 (2.24)	3002	390 (3.12)	2796
3625	384 (2.17)	2900	377 (3.02)	2701
3750	372 (2.11)	2806	365 (2.93)	2614
3875	361 (2.05)	2719	355 (2.58)	2533
4000	351 (1.99)	2638	345 (2.77)	2457
4125	341 (1.94)	2562	335 (2.69)	2387
4250	332 (1.89)	2490	326 (2.62)	2320
4375	323 (1.84)	2423	318 (2.55)	2258
4500	315 (1.80)	2359	310 (2.49)	2198
4625	308 (1.76)	2297	302 (2.43)	2140
4750	300 (1.72)	2238	295 (2.37)	2085
4875	293 (1.68)	2180	288 (2.32)	2032
5000	286 (1.64)	2125	281 (2.26)	1980
5125	279 (1.60)	2070	274 (2.21)	1930
5250	272 (1.56)	2017	267 (2.16)	1881
5375	26 (1.53)	1966	261 (2.11)	1833
5500	259 (1.49)	1916	255 (2.06)	1786
5625	253 (1.46)	1867	248 (2.01)	1740
5750	247 (1.43)	1820	243 (1.96)	1697
5875	241 (1.40)	1774	237 (1.92)	1654
6000	236 (1.37)	1731	232 (1.88)	1614
6125	231 (1.34)	1690	227 (1.84)	1577
6250	226 (1.31)	1653	222 (1.80)	1542
6375	222 (1.29)	1619	218 (1.77)	1510
6500	218 (1.27)	1590	214 (1.74)	1483
6625	215 (1.25)	1565	211 (1.72)	1460
6750	213 (1.24)	1546	209 (1.70)	1443
6875	211 (1.23)	1534	207 (1.68)	1432
7000	211 (1.23)	1530	207 (1.68)	1428
7125 Or More	211 (1.22)	1531	206 (1.68)	1428

U.S. EPA ASM EMISSION STANDARDS - 1984-87 LIGHT DUTY TRUCKS (6000 GVWR OR LESS)

Test Weight	ASM5015		ASM2525	
	HC ppm (CO %)	NOx ppm	HC ppm (CO %)	NOx ppm
1750	390 (3.54)	4990	381 (4.85)	4960
1875	368 (3.34)	4990	359 (4.57)	4738
2000	348 (3.16)	4778	339 (4.31)	4535
2125	329 (2.99)	4578	321 (4.08)	4349
2250	312 (2.83)	4395	305 (3.86)	4179
2375	297 (2.69)	4228	290 (3.66)	4024
2500	283 (2.56)	4076	276 (3.48)	3881
2625	270 (2.44)	3936	263 (3.32)	3752
2750	258 (2.33)	3809	252 (3.17)	3579
2875	247 (2.23)	3669	241 (3.03)	3417

Test Weight	ASM5015		ASM2525	
	HC ppm (CO %)	NOx ppm	HC ppm (CO %)	NOx ppm
3000	237 (2.14)	3510	232 (2.91)	3270
3125	228 (2.06)	3366	223 (2.79)	3135
3250	220 (1.99)	3234	215 (2.69)	3012
3375	213 (1.92)	3113	208 (2.60)	2899
3500	206 (1.86)	3002	201 (2.51)	2796
3625	200 (1.80)	2900	195 (2.43)	2701
3750	194 (1.74)	2806	189 (2.36)	2614
3875	188 (1.69)	2719	184 (2.29)	2533
4000	183 (1.65)	2638	179 (2.22)	2457
4125	179 (1.61)	2562	175 (2.16)	2387
4250	174 (1.56)	2490	170 (2.11)	2320
4375	170 (1.53)	2423	166 (2.06)	2258
4500	166 (1.49)	2359	162 (2.01)	2198
4625	162 (1.46)	2297	159 (1.96)	2140
4750	159 (1.42)	2238	155 (1.91)	2085
4875	155 (1.39)	2180	152 (1.87)	2032
5000	152 (1.36)	2125	148 (1.82)	1980
5125	148 (1.33)	2070	145 (1.78)	1930
5250	145 (1.30)	2017	142 (1.74)	1881
5375	142 (1.27)	1966	139 (1.70)	1833
5500	139 (1.24)	1916	136 (1.66)	1786
5625	136 (1.12)	1867	133 (1.62)	1740
5750	133 (1.19)	1820	130 (1.59)	1697
5875	130 (1.16)	1774	127 (1.55)	1654
6000	127 (1.14)	1731	124 (1.52)	1614
6125	125 (1.11)	1690	122 (1.49)	1577
6250	123 (1.09)	1653	120 (1.46)	1542
6375	120 (1.07)	1619	118 (1.43)	1510
6500	119 (1.06)	1590	116 (1.41)	1483
6625	117 (1.04)	1565	114 (1.39)	1460
6750	116 (1.03)	1546	113 (1.37)	1443
6875	115 (1.02)	1534	113 (1.36)	1432
7000	115 (1.02)	1530	112 (1.36)	1428
7125 Or More	115 (1.02)	1531	112 (1.36)	1428

U.S. EPA ASM EMISSION STANDARDS - 1988-90 LIGHT DUTY TRUCKS (6000 GVWR OR LESS)

Test Weight	ASM5015		ASM2525	
	HC ppm (CO %)	NOx ppm	HC ppm (CO %)	NOx ppm
1750	390 (3.54)	2725	381 (4.85)	2587
1875	368 (3.34)	2649	359 (4.57)	2435
2000	348 (3.16)	2499	339 (4.31)	2295
2125	329 (2.99)	2360	321 (4.08)	2167
2250	312 (2.83)	2232	305 (3.86)	2050
2375	297 (2.69)	2115	290 (3.66)	1943
2500	283 (2.56)	2009	276 (3.48)	1845
2625	270 (2.44)	1912	263 (3.32)	1756

Test Weight	ASM5015		ASM2525	
	HC ppm (CO %)	NOx ppm	HC ppm (CO %)	NOx ppm
2750	258 (2.33)	1823	252 (3.17)	1675
2875	247 (2.23)	1742	241 (3.03)	1601
3000	237 (2.14)	1668	232 (2.91)	1533
3125	228 (2.06)	1601	223 (2.79)	1471
3250	220 (1.99)	1539	215 (2.69)	1415
3375	213 (1.92)	1483	208 (2.60)	1363
3500	206 (1.86)	1432	201 (2.51)	1316
3625	200 (1.80)	1384	195 (2.43)	1273
3750	194 (1.74)	1340	189 (2.36)	1233
3875	188 (1.69)	1300	184 (2.29)	1195
4000	183 (1.65)	1262	179 (2.22)	1161
4125	179 (1.61)	1227	175 (2.16)	1126
4250	174 (1.56)	1194	170 (2.11)	1098
4375	170 (1.53)	1162	166 (2.06)	1069
4500	166 (1.49)	1132	162 (2.01)	1042
4625	162 (1.46)	1104	159 (1.96)	1015
4750	159 (1.42)	1076	155 (1.91)	990
4875	155 (1.39)	1049	152 (1.87)	966
5000	152 (1.36)	1023	148 (1.82)	942
5125	148 (1.33)	998	145 (1.78)	919
5250	145 (1.30)	974	142 (1.74)	896
5375	142 (1.27)	950	139 (1.70)	874
5500	139 (1.24)	926	136 (1.66)	853
5625	136 (1.12)	904	133 (1.62)	832
5750	133 (1.19)	882	130 (1.59)	812
5875	130 (1.16)	860	127 (1.55)	793
6000	127 (1.14)	840	124 (1.52)	774
6125	125 (1.11)	822	122 (1.49)	757
6250	123 (1.09)	804	120 (1.46)	741
6375	120 (1.07)	788	118 (1.43)	727
6500	119 (1.06)	775	116 (1.41)	714
6625	117 (1.04)	763	114 (1.39)	704
6750	116 (1.03)	755	113 (1.37)	696
6875	115 (1.02)	749	113 (1.36)	691
7000 Or More	115 (1.02)	747	112 (1.36)	689

U.S. EPA ASM EMISSION STANDARDS - 1991-95 LIGHT DUTY TRUCKS (6000 GVWR OR LESS)

Test Weight	ASM5015		ASM2525	
	HC ppm (CO %)	NOx ppm	HC ppm (CO %)	NOx ppm
1750	324 (2.78)	2272	315 (3.64)	2114
1875	306 (2.63)	2181	297 (3.43)	1991
2000	289 (2.48)	2058	281 (3.24)	1877
2125	274 (2.35)	1944	267 (3.06)	1774
2250	260 (2.23)	1839	253 (2.90)	1678
2375	247 (2.12)	1744	241 (2.76)	1592
2500	236 (2.02)	1657	230 (2.62)	1512

Test Weight	ASM5015		ASM2525	
	HC ppm (CO %)	NOx ppm	HC ppm (CO %)	NOx ppm
2625	225 (1.92)	1577	219 (2.50)	1440
2750	216 (1.84)	1504	210 (2.39)	1374
2875	207 (1.76)	1438	210 (2.29)	1313
3000	199 (1.69)	1378	194 (2.19)	1258
3125	191 (1.63)	1323	186 (2.11)	1208
3250	185 (1.57)	1273	180 (2.03)	1163
3375	179 (1.52)	1227	174 (1.96)	1121
3500	173 (1.47)	1184	169 (1.89)	1082
3625	168 (1.42)	1146	164 (1.84)	1047
3750	163 (1.38)	1110	159 (1.78)	1014
3875	159 (1.34)	1077	155 (1.73)	984
4000	155 (1.31)	1046	151 (1.68)	956
4125	151 (1.27)	1017	147 (1.64)	930
4250	147 (1.24)	990	143 (1.60)	905
4375	144 (1.21)	964	140 (1.56)	882
4500	141 (1.18)	939	137 (1.52)	859
4625	137 (1.15)	916	134 (1.48)	838
4750	134 (1.13)	893	131 (1.45)	818
4875	132 (1.10)	872	128 (1.42)	798
5000	129 (1.08)	850	126 (1.38)	778
5125	126 (1.05)	830	123 (1.35)	760
5250	123 (1.03)	810	120 (1.32)	741
5375	121 (1.01)	790	118 (1.29)	723
5500	118 (0.99)	771	115 (1.26)	706
5625	116 (0.97)	752	113 (1.24)	689
5750	113 (0.94)	734	111 (1.21)	673
5875	111 (0.92)	717	108 (1.18)	657
6000	109 (0.91)	701	106 (1.16)	642
6125	107 (0.89)	685	104 (1.13)	628
6250	105 (.087)	671	102 (1.11)	615
6375	103 (0.86)	658	101 (1.09)	604
6500	102 (0.84)	647	99 (1.08)	593
6625	101 (0.83)	638	98 (1.06)	585
6750	100 (0.82)	631	97 (1.05)	578
6875	99 (0.82)	626	97 (1.04)	574
7000	99 (0.82)	624	96 (1.04)	573
7125 Or More	98 (0.81)	625	96 (1.04)	573

U.S. EPA ASM EMISSION STANDARDS - 1994 + TIER 1 LIGHT DUTY TRUCKS (3750 LVW OR LESS)

Test Weight	ASM5015		ASM2525	
	HC ppm (CO %)	NOx ppm	HC ppm (CO %)	NOx ppm
1750	142 (0.80)	1212	136 (0.77)	1095
1875	134 (0.75)	1142	129 (0.73)	1031
2000	127 (0.71)	1077	123 (0.69)	973
2125	121 (0.68)	1018	116 (0.66)	920

Test Weight	**ASM5015**		**ASM2525**	
	HC ppm (CO %)	**NOx ppm**	**HC ppm (CO %)**	**NOx ppm**
2250	115 (0.64)	964	111 (0.62)	871
2375	109 (0.61)	915	106 (0.59)	827
2500	105 (0.59)	869	101 (0.57)	786
2625	100 (0.56)	828	97 (0.54)	749
2750	96 (0.54)	791	93 (0.52)	715
2875	92 (0.52)	756	89 (0.50)	684
3000	89 (0.50)	725	86 (0.48)	656
3125	86 (0.48)	696	83 (0.46)	630
3250	83 (0.46)	670	80 (0.45)	607
3375	81 (0.45)	647	78 (0.43)	585
3500	78 (0.44)	625	76 (0.42)	566
3625	76 (0.42)	605	74 (0.41)	547
3750	74 (0.41)	586	72 (0.40)	531
3875	72 (0.40)	569	70 (0.39)	515
4000	71 (0.39)	553	68 (0.38)	501
4125	69 (0.38)	538	67 (0.37)	487
4250	67 (0.37)	524	65 (0.36)	475
4375	66 (0.36)	510	64 (0.35)	463
4500	65 (0.36)	498	63 (0.35)	440
4625	63 (0.35)	486	61 (0.34)	440
4750	62 (0.34)	474	60 (0.33)	430
4875	61 (0.34)	463	59 (0.33)	420
5000	60 (0.33)	452	58 (0.32)	410
5125	58 (0.32)	441	57 (0.31)	400
5250	57 (0.32)	431	56 (0.31)	391
5375	56 (0.31)	420	55 (0.30)	382
5500	55 (0.30)	410	54 (0.30)	373
5625	54 (0.30)	401	53 (0.29)	364
5750	53 (0.29)	391	52 (0.29)	356
5875	52 (0.29)	383	51 (0.28)	348
6000	51 (0.28)	374	50 (0.28)	340
6125	50 (0.28)	366	49 (0.27)	333
6250	50 (0.27)	359	48 (0.27)	326
6375	49 (0.27)	352	48 (0.26)	320
6500	48 (0.26)	346	47 (0.26)	315
6625	48 (0.26)	341	46 (0.26)	311
6750	47 (0.26)	338	46 (0.26)	307
6875	47 (0.26)	335	46 (0.25)	305
7000 Or More	47 (0.25)	335	46 (0.25)	305

U.S. EPA ASM EMISSION STANDARDS - 1994 + TIER 1 LIGHT DUTY TRUCKS (3751 LVW OR MORE)

Test Weight	**ASM5015**		**ASM2525**	
	HC ppm (CO %)	**NOx ppm**	**HC ppm (CO %)**	**NOx ppm**
1750	224 (1.26)	1819	216 (1.22)	1642
1875	212 (1.19)	1713	205 (1.16)	1547

Test Weight	ASM5015		ASM2525	
	HC ppm (CO %)	NOx ppm	HC ppm (CO %)	NOx ppm
2000	201 (1.13)	1616	194 (1.09)	1460
2125	191 (1.07)	1527	184 (1.04)	1380
2250	182 (1.02)	1446	175 (0.99)	1307
2375	173 (0.97)	1372	167 (0.94)	1240
2500	166 (0.93)	1304	160 (0.90)	1179
2625	159 (0.89)	1242	153 (0.86)	1123
2750	152 (0.85)	1186	147 (0.82)	1072
2875	146 (0.82)	1134	141 (0.79)	1026
3000	141 (0.79)	1088	136 (0.76)	984
3125	136 (0.76)	1045	132 (0.73)	945
3250	132 (0.73)	1006	127 (0.71)	910
3375	128 (0.71)	970	123 (0.69)	878
3500	124 (0.69)	937	120 (0.67)	848
3625	120 (0.67)	907	117 (0.65)	821
3750	117 (0.65)	879	114 (0.63)	796
3875	114 (0.63)	853	111 (0.61)	773
4000	112 (0.62)	829	108 (0.60)	751
4125	109 (0.60)	807	106 (0.58)	731
4250	107 (0.59)	786	103 (0.57)	712
4375	104 (0.58)	766	101 (0.56)	694
4500	102 (0.57)	747	99 (0.55)	677
4625	100 (0.55)	728	97 (0.54)	661
4750	98 (0.54)	711	95 (0.53)	645
4875	96 (0.53)	694	93 (0.52)	630
5000	94 (0.52)	677	92 (0.51)	615
5125	93 (0.51)	661	90 (0.50)	600
5250	91 (0.50)	646	88 (0.49)	586
5375	89 (0.49)	631	86 (0.48)	573
5500	87 (0.48)	616	85 (0.47)	559
5625	86 (0.47)	601	83 (0.46)	546
5750	84 (0.46)	587	82 (0.45)	534
5875	83 (0.45)	574	80 (0.44)	522
6000	81 (0.44)	561	79 (0.44)	510
6125	80 (0.44)	549	78 (0.43)	499
6250	79 (0.43)	538	76 (0.42)	489
6375	77 (0.42)	528	75 (0.42)	480
6500	76 (0.42)	519	74 (0.41)	473
6625	76 (0.41)	512	74 (0.41)	466
6750	75 (0.41)	507	73 (0.41)	461
6875	75 (0.40)	503	73 (0.40)	458
7000 Or More	74 (0.40)	502	72 (0.40)	457

U.S. EPA ASM EMISSION STANDARDS - 1968-72 LIGHT DUTY TRUCKS (6001 GVWR OR MORE)

Test Weight	ASM5015		ASM2525	
	HC ppm (CO %)	NOx ppm	HC ppm (CO %)	NOx ppm
1750	1118 (8.02)	4990	1098 (9.90)	4990

Test Weight	**ASM5015**		**ASM2525**	
	HC ppm (CO %)	**NOx ppm**	**HC ppm (CO %)**	**NOx ppm**
1875	1052 (7.56)	4990	1034 (9.90)	4990
2000	992 (7.14)	4990	975 (9.90)	4990
2125	938 (6.75)	4990	921 (9.66)	4990
2250	887 (6.40)	4990	872 (9.14)	4990
2375	841 (6.07)	4990	827 (8.67)	4990
2500	800 (5.78)	4990	786 (8.25)	4990
2625	761 (5.51)	4990	748 (7.85)	4990
2750	726 (5.26)	4990	714 (7.50)	4772
2875	695 (5.03)	4892	683 (7.17)	4556
3000	666 (4.83)	4680	654 (6.87)	4359
3125	639 (4.64)	4488	628 (6.60)	4180
3250	615 (4.47)	4311	604 (6.35)	4016
3375	593 (4.31)	4150	583 (6.13)	3866
3500	573 (4.17)	4002	563 (5.92)	3728
3625	554 (4.04)	3867	544 (5.73)	3602
3750	537 (3.91)	3741	527 (5.55)	3485
3875	521 (3.80)	3625	512 (5.39)	3377
4000	506 (3.70)	3517	497 (5.24)	3276
4125	492 (3.60)	3416	484 (5.09)	3182
4250	479 (3.51)	3321	471 (4.96)	3094
4375	467 (3.42)	3230	459 (4.83)	3010
4500	455 (3.34)	3145	447 (4.71)	2930
4625	444 (3.26)	3063	436 (4.60)	2854
4750	433 (3.18)	2983	425 (4.49)	2780
4875	423 (3.11)	2907	415 (4.38)	2709
5000	412 (3.03)	2833	405 (4.28)	2640
5125	402 (2.97)	2760	395 (4.18)	2573
5250	393 (2.90)	2690	386 (4.08)	2507
5375	383 (2.83)	2621	376 (3.98)	2443
5500	374 (2.77)	2554	367 (3.89)	2381
5625	365 (2.70)	2489	359 (3.80)	2321
5750	357 (2.64)	2426	350 (3.71)	2262
5875	348 (2.59)	2366	342 (3.62)	2206
6000	341 (2.53)	2308	334 (3.54)	2152
6125	333 (2.48)	2254	327 (3.47)	2102
6250	326 (2.43)	2204	320 (3.40)	2056
6375	320 (2.39)	2159	314 (3.34)	2014
6500	315 (2.35)	2119	309 (3.28)	1977
6625	310 (2.32)	2087	304 (3.23)	1947
6750	307 (2.29)	2062	301 (3.20)	1924
6875	305 (2.28)	2046	299 (3.17)	1909
7000	304 (2.27)	2040	298 (3.17)	1904
7125 Or More	304 (2.27)	2045	298 (3.17)	1904

U.S. EPA ASM EMISSION STANDARDS - 1973-74 LIGHT DUTY TRUCKS (6001 GVWR OR MORE)

Test Weight	ASM5015		ASM2525	
	HC ppm (CO %)	NOx ppm	HC ppm (CO %)	NOx ppm
1750	1118 (8.02)	4990	1098 (9.90)	4980
1875	1052 (7.56)	4990	1034 (9.90)	4906
2000	992 (7.14)	4919	975 (9.90)	4838
2125	938 (6.75)	4853	921 (9.66)	4776
2250	887 (6.40)	4792	872 (9.14)	4720
2375	841 (6.07)	4736	827 (8.67)	4668
2500	800 (5.78)	4685	786 (8.25)	4620
2625	761 (5.51)	4639	748 (7.85)	4577
2750	726 (5.26)	4596	714 (7.50)	4374
2875	695 (5.03)	4484	683 (7.17)	4176
3000	666 (4.83)	4290	654 (6.87)	3996
3125	639 (4.64)	4114	628 (6.60)	3832
3250	615 (4.47)	3952	604 (6.35)	3681
3375	593 (4.31)	3804	583 (6.13)	3544
3500	573 (4.17)	3669	563 (5.92)	3418
3625	554 (4.04)	3544	544 (5.73)	3302
3750	537 (3.91)	3429	527 (5.55)	3195
3875	521 (3.80)	3323	512 (5.39)	3096
4000	506 (3.70)	3224	497 (5.24)	3003
4125	492 (3.60)	3131	484 (5.09)	2917
4250	479 (3.51)	3044	471 (4.96)	2836
4375	467 (3.42)	2961	459 (4.83)	2759
4500	455 (3.34)	2883	447 (4.71)	2686
4625	444 (3.26)	2807	436 (4.60)	2616
4750	433 (3.18)	2735	425 (4.49)	2549
4875	423 (3.11)	2665	415 (4.38)	2483
5000	412 (3.03)	2597	405 (4.28)	2420
5125	402 (2.97)	2530	395 (4.18)	2359
5250	393 (2.90)	2466	386 (4.08)	2298
5375	383 (2.83)	2403	376 (3.98)	2240
5500	374 (2.77)	2341	367 (3.89)	2183
5625	365 (2.70)	2282	359 (3.80)	2127
5750	357 (2.64)	2224	350 (3.71)	2074
5875	348 (2.59)	2168	342 (3.62)	2022
6000	341 (2.53)	2116	334 (3.54)	1973
6125	333 (2.48)	2066	327 (3.47)	1927
6250	326 (2.43)	2020	320 (3.40)	1884
6375	320 (2.39)	1979	314 (3.34)	1846
6500	315 (2.35)	1943	309 (3.28)	1813
6625	310 (2.32)	1913	304 (3.23)	1785
6750	307 (2.29)	1890	301 (3.20)	1764
6875	305 (2.28)	1875	299 (3.17)	1750
7000	304 (2.27)	1870	298 (3.17)	1745
7125 Or More	304 (2.27)	1874	298 (3.17)	1745

U.S. EPA ASM EMISSION STANDARDS - 1975-78 LIGHT DUTY TRUCKS (6001 GVWR OR MORE)

Test Weight	ASM5015		ASM2525	
	HC ppm (CO %)	NOx ppm	HC ppm (CO %)	NOx ppm
1750	843 (5.07)	4990	828 (7.26)	4980
1875	794 (4.78)	4990	780 (6.84)	4906
2000	749 (4.51)	4919	736 (6.45)	4838
2125	707 (4.26)	4853	695 (6.10)	4776
2250	669 (4.04)	4792	658 (5.78)	4720
2375	635 (3.83)	4736	624 (5.48)	4668
2500	603 (3.65)	4685	593 (5.21)	4620
2625	574 (3.48)	4639	564 (4.96)	4577
2750	548 (3.32)	4596	539 (4.73)	4374
2875	524 (3.18)	4484	515 (4.53)	4176
3000	502 (3.05)	4290	493 (4.34)	3996
3125	482 (2.93)	4114	474 (4.17)	3832
3250	464 (2.82)	3952	456 (4.01)	3681
3375	447 (2.72)	3804	440 (3.87)	3544
3500	432 (2.63)	3669	424 (3.74)	3418
3625	418 (2.55)	3544	411 (3.62)	3302
3750	405 (2.47)	3429	398 (3.51)	3195
3875	393 (2.40)	3323	386 (3.40)	3096
4000	382 (2.33)	3224	375 (3.31)	3003
4125	371 (2.27)	3131	365 (3.22)	2917
4250	361 (2.21)	3044	355 (3.13)	2836
4375	352 (2.16)	2961	346 (3.05)	2759
4500	343 (2.11)	2883	337 (2.98)	2686
4625	335 (2.06)	2807	329 (2.90)	2616
4750	327 (2.01)	2735	321 (2.83)	2549
4875	319 (1.96)	2665	313 (2.77)	2483
5000	311 (1.92)	2597	305 (2.70)	2420
5125	304 (1.87)	2530	298 (2.64)	2359
5250	296 (1.83)	2466	291 (2.58)	2298
5375	289 (1.79)	2403	284 (2.51)	2240
5500	282 (1.75)	2341	277 (2.46)	2183
5625	276 (1.71)	2282	271 (2.40)	2127
5750	269 (1.67)	2224	264 (2.34)	2074
5875	263 (1.63)	2168	258 (2.29)	2022
6000	257 (1.60)	2116	252 (2.24)	1973
6125	251 (1.57)	2066	247 (2.19)	1927
6250	246 (1.54)	2020	242 (2.15)	1884
6375	242 (1.51)	1979	237 (2.11)	1846
6500	238 (1.48)	1943	233 (2.07)	1813
6625	234 (1.46)	1913	230 (2.04)	1785
6750	232 (1.45)	1890	227 (2.02)	1764
6875	230 (1.44)	1875	225 (2.00)	1750
7000	229 (1.43)	1870	225 (2.00)	1745
7125 Or More	229 (1.43)	1874	225 (2.00)	1745

U.S. EPA ASM EMISSION STANDARDS - 1979-83 LIGHT DUTY TRUCKS (6001 GVWR OR MORE)

Test Weight	ASM5015		ASM2525	
	HC ppm (CO %)	NOx ppm	HC ppm (CO %)	NOx ppm
1750	774 (4.31)	4990	761 (6.06)	4960
1875	729 (4.06)	4990	717 (5.70)	4738
2000	688 (3.83)	4778	676 (5.38)	4535
2125	650 (3.63)	4578	638 (5.09)	4349
2250	615 (3.44)	4395	604 (4.82)	4179
2375	583 (3.26)	4228	573 (4.57)	4024
2500	554 (3.10)	4076	544 (4.35)	3881
2625	528 (2.96)	3936	518 (4.14)	3752
2750	503 (2.83)	3809	495 (3.95)	3579
2875	481 (2.71)	3669	473 (3.78)	3417
3000	461 (2.60)	3510	453 (3.62)	3270
3125	443 (2.50)	3366	435 (3.48)	3135
3250	426 (2.40)	3234	419 (3.35)	3012
3375	411 (2.32)	3113	404 (3.23)	2899
3500	397 (2.24)	3002	390 (3.12)	2796
3625	384 (2.17)	2900	377 (3.02)	2701
3750	372 (2.11)	2806	365 (2.93)	2614
3875	361 (2.05)	2719	355 (2.58)	2533
4000	351 (1.99)	2638	345 (2.77)	2457
4125	341 (1.94)	2562	335 (2.69)	2387
4250	332 (1.89)	2490	326 (2.62)	2320
4375	323 (1.84)	2423	318 (2.55)	2258
4500	315 (1.80)	2359	310 (2.49)	2198
4625	308 (1.76)	2297	302 (2.43)	2140
4750	300 (1.72)	2238	295 (2.37)	2085
4875	293 (1.68)	2180	288 (2.32)	2032
5000	286 (1.64)	2125	281 (2.26)	1980
5125	279 (1.60)	2070	274 (2.21)	1930
5250	272 (1.56)	2017	267 (2.16)	1881
5375	26 (1.53)	1966	261 (2.11)	1833
5500	259 (1.49)	1916	255 (2.06)	1786
5625	253 (1.46)	1867	248 (2.01)	1740
5750	247 (1.43)	1820	243 (1.96)	1697
5875	241 (1.40)	1774	237 (1.92)	1654
6000	236 (1.37)	1731	232 (1.88)	1614
6125	231 (1.34)	1690	227 (1.84)	1577
6250	226 (1.31)	1653	222 (1.80)	1542
6375	222 (1.29)	1619	218 (1.77)	1510
6500	218 (1.27)	1590	214 (1.74)	1483
6625	215 (1.25)	1565	211 (1.72)	1460
6750	213 (1.24)	1546	209 (1.70)	1443
6875	211 (1.23)	1534	207 (1.68)	1432
7000	211 (1.23)	1530	207 (1.68)	1428
7125 Or More	211 (1.22)	1531	206 (1.68)	1428

U.S. EPA ASM EMISSION STANDARDS - 1984-87 LIGHT DUTY TRUCKS (6001 GVWR OR MORE)

Test Weight	ASM5015		ASM2525	
	HC ppm (CO %)	NOx ppm	HC ppm (CO %)	NOx ppm
1750	390 (3.54)	4990	381 (4.85)	4960
1875	368 (3.34)	4990	359 (4.57)	4738
2000	348 (3.16)	4778	339 (4.31)	4535
2125	329 (2.99)	4578	321 (4.08)	4349
2250	312 (2.83)	4395	305 (3.86)	4179
2375	297 (2.69)	4228	290 (3.66)	4024
2500	283 (2.56)	4076	276 (3.48)	3881
2625	270 (2.44)	3936	263 (3.32)	3752
2750	258 (2.33)	3809	252 (3.17)	3579
2875	247 (2.23)	3669	241 (3.03)	3417
3000	237 (2.14)	3510	232 (2.91)	3270
3125	228 (2.06)	3366	223 (2.79)	3135
3250	220 (1.99)	3234	215 (2.69)	3012
3375	213 (1.92)	3113	208 (2.60)	2899
3500	206 (1.86)	3002	201 (2.51)	2796
3625	200 (1.80)	2900	195 (2.43)	2701
3750	194 (1.74)	2806	189 (2.36)	2614
3875	188 (1.69)	2719	184 (2.29)	2533
4000	183 (1.65)	2638	179 (2.22)	2457
4125	179 (1.61)	2562	175 (2.16)	2387
4250	174 (1.56)	2490	170 (2.11)	2320
4375	170 (1.53)	2423	166 (2.06)	2258
4500	166 (1.49)	2359	162 (2.01)	2198
4625	162 (1.46)	2297	159 (1.96)	2140
4750	159 (1.42)	2238	155 (1.91)	2085
4875	155 (1.39)	2180	152 (1.87)	2032
5000	152 (1.36)	2125	148 (1.82)	1980
5125	148 (1.33)	2070	145 (1.78)	1930
5250	145 (1.30)	2017	142 (1.74)	1881
5375	142 (1.27)	1966	139 (1.70)	1833
5500	139 (1.24)	1916	136 (1.66)	1786
5625	136 (1.12)	1867	133 (1.62)	1740
5750	133 (1.19)	1820	130 (1.59)	1697
5875	130 (1.16)	1774	127 (1.55)	1654
6000	127 (1.14)	1731	124 (1.52)	1614
6125	125 (1.11)	1690	122 (1.49)	1577
6250	123 (1.09)	1653	120 (1.46)	1542
6375	120 (1.07)	1619	118 (1.43)	1510
6500	119 (1.06)	1590	116 (1.41)	1483
6625	117 (1.04)	1565	114 (1.39)	1460
6750	116 (1.03)	1546	113 (1.37)	1443
6875	115 (1.02)	1534	113 (1.36)	1432
7000	115 (1.02)	1530	112 (1.36)	1428
7125 Or More	115 (1.02)	1531	112 (1.36)	1428

U.S. EPA ASM EMISSION STANDARDS - 1988-90 LIGHT DUTY TRUCKS (6001 GVWR OR MORE)

Test Weight	ASM5015		ASM2525	
	HC ppm (CO %)	NOx ppm	HC ppm (CO %)	NOx ppm
1750	390 (3.54)	4084	381 (4.85)	4005
1875	368 (3.34)	4054	359 (4.57)	3767
2000	348 (3.16)	3824	339 (4.31)	3548
2125	329 (2.99)	3609	321 (4.08)	3348
2250	312 (2.83)	3411	305 (3.86)	3165
2375	297 (2.69)	3231	290 (3.66)	2998
2500	283 (2.56)	3066	276 (3.48)	2845
2625	270 (2.44)	2916	263 (3.32)	2706
2750	258 (2.33)	2779	252 (3.17)	2579
2875	247 (2.23)	2654	241 (3.03)	2463
3000	237 (2.14)	2539	232 (2.91)	2357
3125	228 (2.06)	2435	223 (2.79)	2260
3250	220 (1.99)	2340	215 (2.69)	2172
3375	213 (1.92)	2253	208 (2.60)	2092
3500	206 (1.86)	2174	201 (2.51)	2018
3625	200 (1.80)	2100	195 (2.43)	1950
3750	194 (1.74)	2033	189 (2.36)	1887
3875	188 (1.69)	1970	184 (2.29)	1829
4000	183 (1.65)	1912	179 (2.22)	1775
4125	179 (1.61)	1857	175 (2.16)	1724
4250	174 (1.56)	1806	170 (2.11)	1677
4375	170 (1.53)	1757	166 (2.06)	1632
4500	166 (1.49)	1711	162 (2.01)	1589
4625	162 (1.46)	1666	159 (1.96)	1548
4750	159 (1.42)	1624	155 (1.91)	1508
4875	155 (1.39)	1583	152 (1.87)	1470
5000	152 (1.36)	1542	148 (1.82)	1433
5125	148 (1.33)	1503	145 (1.78)	1397
5250	145 (1.30)	1465	142 (1.74)	1362
5375	142 (1.27)	1428	139 (1.70)	1327
5500	139 (1.24)	1392	136 (1.66)	1294
5625	136 (1.12)	1357	133 (1.62)	1261
5750	133 (1.19)	1323	130 (1.59)	1230
5875	130 (1.16)	1290	127 (1.55)	1199
6000	127 (1.14)	1259	124 (1.52)	1171
6125	125 (1.11)	1230	122 (1.49)	1144
6250	123 (1.09)	1203	120 (1.46)	1119
6375	120 (1.07)	1179	118 (1.43)	1096
6500	119 (1.06)	1158	116 (1.41)	1077
6625	117 (1.04)	1140	114 (1.39)	1060
6750	116 (1.03)	1127	113 (1.37)	1048
6875	115 (1.02)	1118	113 (1.36)	1040
7000 Or More	115 (1.02)	1115	112 (1.36)	1037

U.S. EPA ASM EMISSION STANDARDS - 1991-95 LIGHT DUTY TRUCKS (6001 GVWR OR MORE)

Test Weight	**ASM5015**		**ASM2525**	
	HC ppm (CO %)	**NOx ppm**	**HC ppm (CO %)**	**NOx ppm**
1750	324 (2.78)	3631	315 (3.64)	3532
1875	306 (2.63)	3586	297 (3.43)	3323
2000	289 (2.48)	3383	281 (3.24)	3131
2125	274 (2.35)	3192	267 (3.06)	2955
2250	260 (2.23)	3018	253 (2.90)	2794
2375	247 (2.12)	2859	241 (2.76)	2646
2500	236 (2.02)	2714	230 (2.62)	2512
2625	225 (1.92)	2581	219 (2.50)	2389
2750	216 (1.84)	2460	210 (2.39)	2277
2875	207 (1.76)	2350	210 (2.29)	2175
3000	199 (1.69)	2249	194 (2.19)	2082
3125	191 (1.63)	2157	186 (2.11)	1997
3250	185 (1.57)	2073	180 (2.03)	1920
3375	179 (1.52)	1997	174 (1.96)	1849
3500	173 (1.47)	1926	169 (1.89)	1784
3625	168 (1.42)	1862	164 (1.84)	1724
3750	163 (1.38)	1802	159 (1.78)	1669
3875	159 (1.34)	1747	155 (1.73)	1618
4000	155 (1.31)	1695	151 (1.68)	1570
4125	151 (1.27)	1647	147 (1.64)	1526
4250	147 (1.24)	1602	143 (1.60)	1484
4375	144 (1.21)	1559	140 (1.56)	1444
4500	141 (1.18)	1518	137 (1.52)	1406
4625	137 (1.15)	1479	134 (1.48)	1370
4750	134 (1.13)	1441	131 (1.45)	1336
4875	132 (1.10)	1405	128 (1.42)	1302
5000	129 (1.08)	1369	126 (1.38)	1269
5125	126 (1.05)	1335	123 (1.35)	1237
5250	123 (1.03)	1031	120 (1.32)	1206
5375	121 (1.01)	1269	118 (1.29)	1176
5500	118 (0.99)	1237	115 (1.26)	1147
5625	116 (0.97)	1206	113 (1.24)	1118
5750	113 (0.94)	1176	111 (1.21)	1090
5875	111 (0.92)	1147	108 (1.18)	1064
6000	109 (0.91)	1120	106 (1.16)	1039
6125	107 (0.89)	1094	104 (1.13)	1015
6250	105 (.087)	1070	102 (1.11)	993
6375	103 (0.86)	1049	101 (1.09)	973
6500	102 (0.84)	1030	99 (1.08)	956
6625	101 (0.83)	1014	98 (1.06)	941
6750	100 (0.82)	1003	97 (1.05)	931
6875	99 (0.82)	995	97 (1.04)	924
7000	99 (0.82)	992	96 (1.04)	921
7125 Or More	98 (0.81)	992	96 (1.04)	921

U.S. EPA ASM EMISSION STANDARDS - 1994 + TIER 1 LIGHT DUTY TRUCKS (5750 LVW OR LESS)

Test Weight	ASM5015		ASM2525	
	HC ppm (CO %)	NOx ppm	HC ppm (CO %)	NOx ppm
1750	224 (1.26)	1819	216 (1.22)	1642
1875	212 (1.19)	1713	205 (1.16)	1547
2000	201 (1.13)	1616	194 (1.09)	1460
2125	191 (1.07)	1527	184 (1.04)	1380
2250	182 (1.02)	1446	175 (0.99)	1307
2375	173 (0.97)	1372	167 (0.94)	1240
2500	166 (0.93)	1304	160 (0.90)	1179
2625	159 (0.89)	1242	153 (0.86)	1123
2750	152 (0.85)	1186	147 (0.82)	1072
2875	146 (0.82)	1134	141 (0.79)	1026
3000	141 (0.79)	1088	136 (0.76)	984
3125	136 (0.76)	1045	132 (0.73)	945
3250	132 (0.73)	1006	127 (0.71)	910
3375	128 (0.71)	970	123 (0.69)	878
3500	124 (0.69)	937	120 (0.67)	848
3625	120 (0.67)	907	117 (0.65)	821
3750	117 (0.65)	879	114 (0.63)	796
3875	114 (0.63)	853	111 (0.61)	773
4000	112 (0.62)	829	108 (0.60)	751
4125	109 (0.60)	807	106 (0.58)	731
4250	107 (0.59)	786	103 (0.57)	712
4375	104 (0.58)	766	101 (0.56)	694
4500	102 (0.57)	747	99 (0.55)	677
4625	100 (0.55)	728	97 (0.54)	661
4750	98 (0.54)	711	95 (0.53)	645
4875	96 (0.53)	694	93 (0.52)	630
5000	94 (0.52)	677	92 (0.51)	615
5125	93 (0.51)	661	90 (0.50)	600
5250	91 (0.50)	646	88 (0.49)	586
5375	89 (0.49)	631	86 (0.48)	573
5500	87 (0.48)	616	85 (0.47)	559
5625	86 (0.47)	601	83 (0.46)	546
5750	84 (0.46)	587	82 (0.45)	534
5875	83 (0.45)	574	80 (0.44)	522
6000	81 (0.44)	561	79 (0.44)	510
6125	80 (0.44)	549	78 (0.43)	499
6250	79 (0.43)	538	76 (0.42)	489
6375	77 (0.42)	528	75 (0.42)	480
6500	76 (0.42)	519	74 (0.41)	473
6625	76 (0.41)	512	74 (0.41)	466
6750	75 (0.41)	507	73 (0.41)	461
6875	75 (0.40)	503	73 (0.40)	458
7000 Or More	74 (0.40)	502	72 (0.40)	457

U.S. EPA ASM EMISSION STANDARDS - 1994 + TIER 1 LIGHT DUTY TRUCKS (5751 LVW OR MORE)

Test Weight	ASM5015		ASM2525	
	HC ppm (CO %)	NOx ppm	HC ppm (CO %)	NOx ppm
1750	324 (2.78)	3178	315 (3.64)	3060
1875	306 (2.63)	3117	297 (3.43)	2879
2000	289 (2.48)	2941	281 (3.24)	2713
2125	274 (2.35)	2776	267 (3.06)	2561
2250	260 (2.23)	2625	253 (2.90)	2422
2375	247 (2.12)	2487	241 (2.76)	2295
2500	236 (2.02)	2361	230 (2.62)	2179
2625	225 (1.92)	2246	219 (2.50)	2073
2750	216 (1.84)	2142	210 (2.39)	1976
2875	207 (1.76)	2046	210 (2.29)	1888
3000	199 (1.69)	1959	194 (2.19)	1808
3125	191 (1.63)	1879	186 (2.11)	1734
3250	185 (1.57)	1806	180 (2.03)	1667
3375	179 (1.52)	1740	174 (1.96)	1606
3500	173 (1.47)	1679	169 (1.89)	1550
3625	168 (1.42)	1623	164 (1.84)	1498
3750	163 (1.38)	1571	159 (1.78)	1451
3875	159 (1.34)	1523	155 (1.73)	1407
4000	155 (1.31)	1479	151 (1.68)	1365
4125	151 (1.27)	1437	147 (1.64)	1327
4250	147 (1.24)	1398	143 (1.60)	1291
4375	144 (1.21)	1360	140 (1.56)	1257
4500	141 (1.18)	1325	137 (1.52)	1224
4625	137 (1.15)	1291	134 (1.48)	1193
4750	134 (1.13)	1259	131 (1.45)	1163
4875	132 (1.10)	1227	128 (1.42)	1134
5000	129 (1.08)	1196	126 (1.38)	1106
5125	126 (1.05)	1167	123 (1.35)	1078
5250	123 (1.03)	1138	120 (1.32)	1051
5375	121 (1.01)	1109	118 (1.29)	1025
5500	118 (0.99)	1082	115 (1.26)	1000
5625	116 (0.97)	1055	113 (1.24)	975
5750	113 (0.94)	1029	111 (1.21)	951
5875	111 (0.92)	1004	108 (1.18)	928
6000	109 (0.91)	980	106 (1.16)	906
6125	107 (0.89)	958	104 (1.13)	886
6250	105 (.087)	937	102 (1.11)	867
6375	103 (0.86)	919	101 (1.09)	850
6500	102 (0.84)	902	99 (1.08)	835
6625	101 (0.83)	889	98 (1.06)	823
6750	100 (0.82)	879	97 (1.05)	813
6875	99 (0.82)	872	97 (1.04)	807
7000	99 (0.82)	870	96 (1.04)	805
7125 Or More	98 (0.81)	870	96 (1.04)	805

U. S. EPA REVISED FINAL ASM EMISSION STANDARDS (ASM5015 & ASM2525)

NOTE: **EPA has not published a revised final standards for High Altitude, Light Duty Trucks 2 (6000-8500 GVWR), or vehicles older than 1980 model year. EPA guidance as of February 2003 states that a program may choose to use combinations of the Original and the Revised Final Standards.**

U.S. EPA REVISED FINAL ASM EMISSION STANDARDS

Application	ASM5015		ASM2525	
HC ppm (CO %)		NOx ppm	HC ppm (CO %)	NOx ppm
Passenger Cars				
1980	275 (1.3)	8500	500 (2.3)	4750
1981-82	275 (1.3)	3600	500 (2.3)	3500
1983-89	275 (1.1)	3600	500 (1.6)	3500
1990 & Newer	275 (1.1)	3600	300 (1.6)	3500
Light Duty Trucks (Less Than 6000 GVWR)				
1980-83	1140 (9.7)	14,145	340 (23.28)	32,200
1984-87	537 (5.4)	14,145	160 (12.96)	32,200
1988-95	537 (5.4)	7380	160 (12.96)	16,800
1996 & Newer	275 (1.1)	6150	82 (4.40)	14,000

U.S. EPA IM240 EMISSION STANDARDS

START-UP STANDARDS

Start-up standards should be used during the first 2 years of program operation. Tier 1 standards are recommended for all 1996 and newer vehicles and may be used for 1994 and newer vehicles certified to Tier 1 standards as well.

U.S. EPA IM240 HYDROCARBONS EMISSION START-UP STANDARDS

Application	Hydrocarbons (Grams/Mile)	
Composite		Phase 2
Light Duty Vehicles		
1996 & Newer	0.80	0.50
1991-95	1.20	0.75
1983-90	2.00	1.25
1980-82	2.00	1.25
1975-79	7.50	5.00
1968-74	10.0	6.00
High Altitude Light Duty Vehicles		
1983-84	2.00	1.25
1982	2.00	1.25
Light Duty Trucks (0-6000 Lbs. GVWR)		

Application	Hydrocarbons (Grams/Mile)	
	Composite	Phase 2
1996 & Newer (Less Than 3750 LVW)	0.80	0.50
1996 & Newer (More Than 3750 LVW)	1.00	0.63
1991-95	2.40	1.50
1984-90	3.20	2.00
1979-83	7.50	5.00
1975-78	8.00	5.00
1968-74	10.0	6.00
High Altitude Light Duty Trucks (0-6000 Lbs. GVWR)		
1991 & Newer	3.00	2.00
1984-90	4.00	2.50
1982-83	8.00	5.00
Light Duty Trucks (6001-8500 Lbs. GVWR)		
1996 & Newer (Less Than 5750 ALVW)	1.00	0.63
1996 & Newer (More Than 5750 ALVW)	2.40	1.50
1991-95	2.40	1.50
1984-90	3.20	2.00
1979-83	7.50	5.00
1975-78	8.00	5.00
1968-74	10.0	6.00
High Altitude Light Duty Trucks (6001-8500 Lbs. GVWR)		
1991 & Newer	3.00	2.00
1984-90	4.00	2.50
1982-83	8.00	5.00
Heavy Duty Trucks (Greater Than 8500 Lbs. GVWR)		
1998 & Newer	2.00	1.30
1987-97	3.00	1.90
1985-86	5.00	3.10
1979-84	6.00	3.80
1970-78	10.0	6.30
1969 & Earlier	20.0	12.50

U.S. EPA IM240 CARBON MONOXIDE EMISSION START-UP STANDARDS

Application	Carbon Monoxide (Grams/Mile)	
	Composite	Phase 2
Light Duty Vehicles		
1996 & Newer	15.0	12.0
1991-95	20.0	16.0
1983-90	30.0	24.0
1980-82	60.0	48.0
1975-79	90.0	72.0
1968-74	150.0	120.0
High Altitude Light Duty Vehicles		
1983-84	60.0	48.0
1982	75.0	60.0
Light Duty Trucks (0-6000 Lbs. GVWR)		
1996 & Newer (Less Than 3750 LVW)	15.0	12.0
1996 & Newer (More Than 3750 LVW)	20.0	16.0
1991-95	60.0	48.0

Application	Carbon Monoxide (Grams/Mile)	
Composite		Phase 2
1984-90	80.0	64.0
1979-83	100.0	80.0
1975-78	120.0	96.0
1968-74	150.0	120.0
High Altitude Light Duty Trucks (0-6000 Lbs. GVWR)		
1991 & Newer	70.0	56.0
1984-90	90.0	72.0
1982-83	130.0	104.0
Light Duty Trucks (6001-8500 Lbs. GVWR)		
1996 & Newer (Less Than 5750 ALVW)	20.0	16.0
1996 & Newer (More Than 5750 ALVW)	60.0	48.0
1991-95	60.0	48.0
1984-90	80.0	64.0
1979-83	100.0	80.0
1975-78	120.0	96.0
1968-74	150.0	120.0
High Altitude Light Duty Trucks (6001-8500 Lbs. GVWR)		
1991 & Newer	70.0	56.0
1984-90	90.0	72.0
1982-83	130.0	104.0
Heavy Duty Trucks (Greater Than 8500 Lbs. GVWR)		
1998 & Newer	30.0	24.0
1987-97	60.0	48.0
1985-86	75.0	60.0
1979-84	100.0	80.0
1974-78	150.00	120.0
1970-73	175.00	140.00
1969 & Earlier	200.0	160.0

U.S. EPA IM240 OXIDES OF NITROGEN EMISSION START-UP STANDARDS

Application	Oxides Of Nitrogen (Grams/Mile)	
Composite		Phase 2
Light Duty Vehicles		
1996 & Newer	2.0	2.0
1991-95	2.5	2.5
1981-90	3.0	3.0
1977-80	6.0	6.0
1973-76	9.0	9.0
1968-72	10.0	10.0
High Altitude Light Duty Vehicles		
1982-84	3.0	3.0
Light Duty Trucks (0-6000 Lbs. GVWR)		
1996 & Newer (Less Than 3750 LVW)	2.0	2.0
1996 & Newer (More Than 3750 LVW)	2.5	2.5
1991-95	3.0	3.0
1988-90	3.5	3.5
1979-87	7.0	7.0
1973-78	9.0	9.0

Application	Oxides Of Nitrogen (Grams/Mile)	
	Composite	Phase 2
1968-72	10.0	10.0
High Altitude Light Duty Trucks (0-6000 Lbs. GVWR)		
1991 & Newer	3.0	3.0
1988-90	3.5	3.5
1982-87	7.0	7.0
Light Duty Trucks (6001-8500 Lbs. GVWR)		
1996 & Newer (Less Than 5750 ALVW)	2.5	2.5
1996 & Newer (More Than 5750 ALVW)	4.0	4.0
1991-95	4.5	4.5
1988-90	5.0	5.0
1979-87	7.0	7.0
1973-78	9.0	9.0
1968-72	10.0	10.0
High Altitude Light Duty Trucks (6001-8500 Lbs. GVWR)		
1991 & Newer	4.5	4.5
1988-90	5.0	5.0
1982-87	7.0	7.0
Heavy Duty Trucks (Greater Than 8500 Lbs. GVWR)		
1998 & Newer	4.0	4.0
1991-97	6.0	6.0
1979-90	8.0	8.0
1970-78	10.0	10.0
1969 & Earlier	15.0	15.0

FINAL STANDARDS

Final standards are recommended for vehicles tested in calendar years 1997 and later. Tier 1 standards are recommended for all 1996 and newer vehicles and may be used for 1994 and newer vehicles.

U.S. EPA IM240 HYDROCARBONS EMISSION FINAL STANDARDS

Application	Hydrocarbons (Grams/Mile)	
	Composite	Phase 2
Light Duty Vehicles		
1996 & Newer	0.60	0.40
1980-95	0.80	0.50
1975-79	3.00	2.00
1968-74	7.00	4.50
High Altitude Light Duty Vehicles		
1982-84	1.20	0.75
Light Duty Trucks (0-6000 Lbs. GVWR)		
1996 & Newer (Less Than 3750 LVW)	0.60	0.40
1996 & Newer (More Than 3750 LVW)	0.80	0.50
1984-95	1.60	1.00
1979-83	3.40	2.00
1975-78	4.00	2.50
1968-74	7.00	4.50
High Altitude Light Duty Trucks (0-6000 Lbs. GVWR)		
1988 & Newer	2.00	1.25

Application	Hydrocarbons (Grams/Mile)	
Composite		Phase 2
1984-87	2.00	1.25
1982-83	4.00	2.50
Light Duty Trucks (6001-8500 Lbs. GVWR)		
1996 & Newer (Less Than 5750 ALVW)	0.80	0.50
1996 & Newer (More Than 5750 ALVW)	0.80	0.50
1984-95	1.60	1.00
1979-83	3.40	2.00
1975-78	4.00	2.50
1968-74	7.00	4.50
High Altitude Light Duty Trucks (6001-8500 Lbs. GVWR)		
1988 & Newer	2.00	1.25
1984-87	2.00	1.25
1982-83	4.00	2.50
Heavy Duty Trucks (Greater Than 8500 Lbs. GVWR)		
1998 & Newer	2.00	1.30
1987-97	2.00	1.30
1985-86	3.00	1.90
1979-84	5.00	3.10
1970-78	10.0	6.30
1969 & Earlier	20.0	12.50

U.S. EPA IM240 CARBON MONOXIDE EMISSION FINAL STANDARDS

Application	Carbon Monoxide (Grams/Mile)	
Composite		Phase 2
Light Duty Vehicles		
1996 & Newer	10.0	8.0
1983-95	15.0	12.0
1980-82	30.0	24.0
1975-79	65.0	52.0
1968-74	120.0	96.0
High Altitude Light Duty Vehicles		
1983-84	30.0	24.0
1982	45.0	36.0
Light Duty Trucks (0-6000 Lbs. GVWR)		
1996 & Newer (Less Than 3750 LVW)	10.0	8.0
1996 & Newer (More Than 3750 LVW)	13.0	10.0
1984-95	40.0	32.0
1979-83	70.0	56.0
1975-78	80.0	64.0
1968-74	120.0	96.0
High Altitude Light Duty Trucks (0-6000 Lbs. GVWR)		
1988 & Newer	60.0	48.0
1984-87	60.0	48.0
1982-83	90.0	72.0
Light Duty Trucks (6001-8500 Lbs. GVWR)		
1996 & Newer (Less Than 5750 ALVW)	13.0	10.0
1996 & Newer (More Than 5750 ALVW)	15.0	12.0
1984-95	40.0	32.0

Application	Carbon Monoxide (Grams/Mile)	
	Composite	Phase 2
1979-83	70.0	56.0
1975-78	80.0	64.0
1968-74	120.0	96.0
High Altitude Light Duty Trucks (6001-8500 Lbs. GVWR)		
1984 & Newer	60.0	48.0
1982-83	90.0	72.0
Heavy Duty Trucks (Greater Than 8500 Lbs. GVWR)		
1998 & Newer	30.0	24.0
1987-97	40.0	32.0
1985-86	50.0	40.0
1979-84	75.0	60.0
1974-78	150.0	120.0
1970-73	175.0	140.0
1969 & Earlier	200.0	160.0

U.S. EPA IM240 OXIDES OF NITROGEN EMISSION FINAL STANDARDS

Application	Oxides Of Nitrogen (Grams/Mile)	
	Composite	Phase 2
Light Duty Vehicles		
1996 & Newer	1.5	1.5
1981-95	2.0	2.0
1977-80	4.0	4.0
1973-76	6.0	6.0
1968-72	7.0	7.0
High Altitude Light Duty Vehicles		
1982-84	2.0	2.0
Light Duty Trucks (0-6000 Lbs. GVWR)		
1996 & Newer (Less Than 3750 LVW)	1.5	1.5
1996 & Newer (More Than 3750 LVW)	1.8	1.8
1988-95	2.5	2.5
1979-87	4.5	4.5
1973-78	6.0	6.0
1968-72	7.0	7.0
High Altitude Light Duty Trucks (0-6000 Lbs. GVWR)		
1988 & Newer	2.5	2.5
1982-87	4.5	4.5
Light Duty Trucks (6001-8500 Lbs. GVWR)		
1996 & Newer (Less Than 5750 ALVW)	1.8	1.8
1996 & Newer (More Than 5750 ALVW)	2.0	2.0
1988-95	3.5	3.5
1979-87	4.5	4.5
1973-78	6.0	6.0
1968-72	7.0	7.0
High Altitude Light Duty Trucks (6001-8500 Lbs. GVWR)		
1988 & Newer	3.5	3.5
1982-87	4.5	4.5
Heavy Duty Trucks (Greater Than 8500 Lbs. GVWR)		
1998 & Newer	4.0	4.0

Application	Oxides Of Nitrogen (Grams/Mile)	
Composite		Phase 2
1991-97	5.0	5.0
1979-90	6.0	6.0
1970-78	10.0	10.0
1969 & Earlier	15.0	15.0

ARIZONA

NOTE: Because of frequent revisions in state emission standards, the emission standards listed in this article should only be used as a guide.

ARIZONA EMISSION STANDARDS - PHOENIX & TUCSON AREA (DIESEL OPACITY LOADED CRUISE TEST)

Application		Altitude (Feet)	Opacity (% For 10 Seconds)
Light Duty Vehicles (8500 GVWR Or Less)			
	All Years	Less Than 2000	20 Or Less
B	B	2001-4000	30 Or Less
B	B	Greater Than 4000	40 Or Less

ARIZONA EMISSION STANDARDS - PHOENIX & TUCSON AREA (DIESEL J1667 SNAP IDLE TEST)

Application	Altitude (Feet)	Opacity (% For 10 Seconds)
Heavy Duty Vehicles (8500 GVWR Or Greater)		
1990 & Earlier	All	55
1991 & Newer	All	40

COLORADO

COLORADO EMISSION STANDARDS - DIESEL OPACITY

Application	Opacity %
14,000 GVWR Or Less	
Non-Turbo	40
Turbo	35
14,000 GVWR Or More	
Non-Turbo	35
Turbo	20

CONNECTICUT

CONNECTICUT EMISSION STANDARDS - DIESEL OPACITY

Application	Opacity %
10,000 GVWR Or Less	
1979 & Newer	20
26,000 GVWR Or More	
1974 & Earlier	70
1974-90	55
1991 & Newer	40

IDAHO

IDAHO EMISSION STANDARDS - DIESEL OPACITY

Application	**Opacity %**
All Weight Range	
1965-74	70
1975-91	55
1992 & Newer	40

KENTUCKY

KENTUCKY EMISSION STANDARDS - BOONE, CAMPBELL & KENTON COUNTIES (DIESEL OPACITY)

Application	**Opacity**
18,000 GVWR Or Less	
All Years	10% @ Idle

MASSACHUSETTS

MASSACHUSETTS EMISSION STANDARDS - DIESEL OPACITY

Application	**Opacity %**
Light Duty (8500 GVWR Or Less)	
1984 & Newer	20
Light Duty (8501-10,000 GVWR Or Less)	
1984 & Newer	40
Heavy Duty Buses (10,000 GVWR Or More)	
1984-93	40
1994 & Newer	30
Heavy Duty Trucks (10,000 Or Less GVWR)	
1984-90	55
1991 & Newer	40

NEW YORK

NEW YORK EMISSION STANDARDS - DIESEL OPACITY TEST

Application	**Opacity %**
Heavy Duty Vehicles (8500 GVWR Or More)	
1973 & Earlier	70
1974-90	55
1991 & Newer	40

OHIO

OHIO EMISSION STANDARDS - DIESEL OPACITY TEST

Application	**Opacity %**
Light Duty Diesel	20

RHODE ISLAND

RHODE ISLAND EMISSION STANDARDS - DIESEL OPACITY TEST

Application	**Opacity %**
All Model Years (8500 GVWR Or Less)	20

UTAH

UTAH EMISSION STANDARDS - DAVIS COUNTY - DIESEL OPACITY TEST

Application	Opacity %
Light Duty Diesel - Turbo (16,000 GVWR Or Less)	30
Light Duty Diesel - Non-Turbo (16,000 GVWR Or Less)	35
Heavy Duty Diesel (16,000 GVWR Or More)	70

UTAH EMISSION STANDARDS - SALT LAKE COUNTY - DIESEL OPACITY TEST

Application	Opacity %
All Model Years - Turbo (16,000 GVWR Or Less)	30
All Model Years - Non-Turbo (16,000 GVWR Or Less)	35
All Model Years (16,000 GVWR Or More)	70

UTAH EMISSION STANDARDS - UTAH COUNTY - DIESEL OPACITY TEST

Application	Opacity %
All Model Years - Turbo (16,000 GVWR Or Less)	30
All Model Years - Non-Turbo (16,000 GVWR Or Less)	35
All Model Years (16,000 GVWR Or More)	70

WASHINGTON

WASHINGTON EMISSION STANDARDS - DIESEL OPACITY TEST

Application	Opacity %
Light Duty Diesel (8500 GVWR Or Less)	
All Model Years	20
Heavy Duty Diesel (8500 GVWR Or More)	
1991 & Earlier	55
1992 & Newer	40

GENERAL INFORMATION

Symptom Check List Worksheets

* PLEASE READ THIS FIRST *

NOTE: **This article is intended for general information purposes only. It does not apply specifically to one make or model.**

PURPOSE

NOTE: **This article is intended for general information purposes only. It does not apply specifically to one make or model.**

WHY USE THE SYMPTOM CHECK LIST WORKSHEETS?

One of the most difficult and critical lines of communication is between the service customer and the technician. The clearer the technician understands the customer's concerns, the more likely the problem will be "fixed right the first time".

The Symptom Check List Worksheets in this article are designed to improve this communication. When used consistently, they can be helpful in reducing shop comebacks, increasing technician productivity, and producing satisfied customers. They also provide other benefits:

- Reduce "No Trouble Found" problems
- Increase customer involvement
- Customer perceive that "they really care and listen"
- Save time during peak write-up periods
- Reduce recontacting customers for additional information
- Improve night drop information
- Insure all the right questions are asked at write-up

MAKING THE WORKSHEETS A PART OF YOUR NORMAL ROUTINE

The following information contains ideas that may be helpful in forming habits that promote daily use of the Symptom Check Lists:

- HAVE THE SERVICE ADVISER FILL OUT THE FORM(S) WITH THE CUSTOMER WHENEVER POSSIBLE.
- Place them in your night drop for the customer to fill out, along with an instruction sheet to help them understand what to do.
- Hand out the worksheets to customers while they wait in line during the peak morning rush and ask them to fill it out. It will save time for all concerned and improve the quality of information received from the customer.
- Make sure it is attached to the hard copy when it goes to the technician.
- Place a copy with the final repair papers and review it with the customer at delivery.
- Put a new worksheet in the glovebox of all departing customers.
- Require that you personally see a copy of all worksheets filled out for shop comebacks.
- Hold a shop meeting to get employee buy-in and their ideas on how to make it effective in your shop.

There are many other ways to utilize the concept, but as with every other idea, successful implementation depends on employee involvement and buy-in.

SYMPTOM CHECK LIST WORKSHEETS

CONDENSED VERSION - ALL ON ONE PAGE

NOTE: Have the service adviser fill out this form with the customer whenever possible.

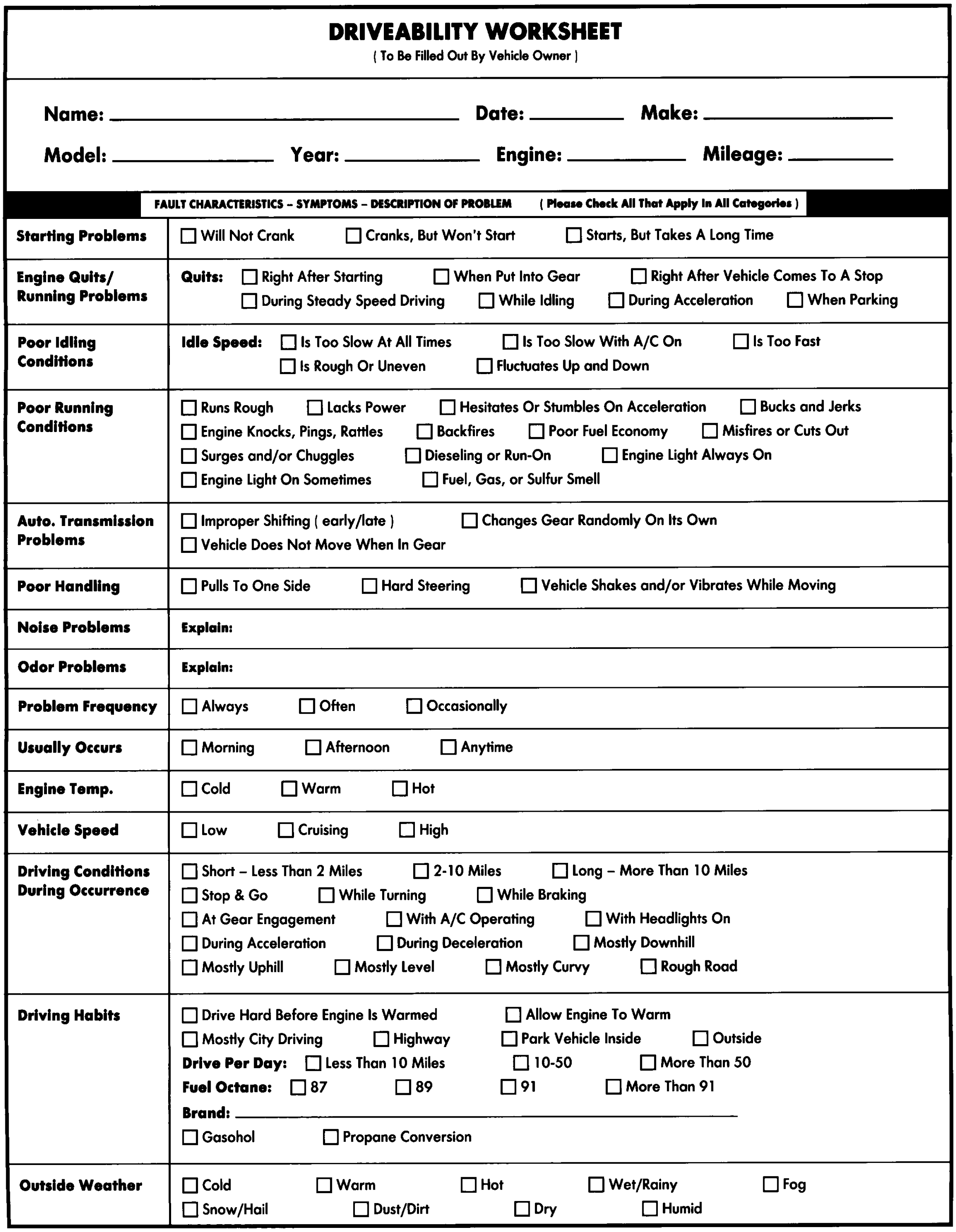

DRIVEABILITY WORKSHEET

(To Be Filled Out By Vehicle Owner)

Name: ____________________ **Date:** __________ **Make:** ____________

Model: ____________ **Year:** ____________ **Engine:** ____________ **Mileage:** __________

FAULT CHARACTERISTICS – SYMPTOMS – DESCRIPTION OF PROBLEM (**Please Check All That Apply In All Categories**)

Starting Problems	☐ Will Not Crank ☐ Cranks, But Won't Start ☐ Starts, But Takes A Long Time
Engine Quits/ Running Problems	**Quits:** ☐ Right After Starting ☐ When Put Into Gear ☐ Right After Vehicle Comes To A Stop ☐ During Steady Speed Driving ☐ While Idling ☐ During Acceleration ☐ When Parking
Poor Idling Conditions	**Idle Speed:** ☐ Is Too Slow At All Times ☐ Is Too Slow With A/C On ☐ Is Too Fast ☐ Is Rough Or Uneven ☐ Fluctuates Up and Down
Poor Running Conditions	☐ Runs Rough ☐ Lacks Power ☐ Hesitates Or Stumbles On Acceleration ☐ Bucks and Jerks ☐ Engine Knocks, Pings, Rattles ☐ Backfires ☐ Poor Fuel Economy ☐ Misfires or Cuts Out ☐ Surges and/or Chuggles ☐ Dieseling or Run-On ☐ Engine Light Always On ☐ Engine Light On Sometimes ☐ Fuel, Gas, or Sulfur Smell
Auto. Transmission Problems	☐ Improper Shifting (early/late) ☐ Changes Gear Randomly On Its Own ☐ Vehicle Does Not Move When In Gear
Poor Handling	☐ Pulls To One Side ☐ Hard Steering ☐ Vehicle Shakes and/or Vibrates While Moving
Noise Problems	**Explain:**
Odor Problems	**Explain:**
Problem Frequency	☐ Always ☐ Often ☐ Occasionally
Usually Occurs	☐ Morning ☐ Afternoon ☐ Anytime
Engine Temp.	☐ Cold ☐ Warm ☐ Hot
Vehicle Speed	☐ Low ☐ Cruising ☐ High
Driving Conditions During Occurrence	☐ Short – Less Than 2 Miles ☐ 2-10 Miles ☐ Long – More Than 10 Miles ☐ Stop & Go ☐ While Turning ☐ While Braking ☐ At Gear Engagement ☐ With A/C Operating ☐ With Headlights On ☐ During Acceleration ☐ During Deceleration ☐ Mostly Downhill ☐ Mostly Uphill ☐ Mostly Level ☐ Mostly Curvy ☐ Rough Road
Driving Habits	☐ Drive Hard Before Engine Is Warmed ☐ Allow Engine To Warm ☐ Mostly City Driving ☐ Highway ☐ Park Vehicle Inside ☐ Outside **Drive Per Day:** ☐ Less Than 10 Miles ☐ 10-50 ☐ More Than 50 **Fuel Octane:** ☐ 87 ☐ 89 ☐ 91 ☐ More Than 91 **Brand:** ____________________ ☐ Gasohol ☐ Propane Conversion
Outside Weather	☐ Cold ☐ Warm ☐ Hot ☐ Wet/Rainy ☐ Fog ☐ Snow/Hail ☐ Dust/Dirt ☐ Dry ☐ Humid

Fig. 1: Entire Vehicle - Symptom Check List For Customer

FULL VERSION - ALL ON FOUR PAGES

NOTE: Have the service adviser fill out these forms with the customer whenever possible.

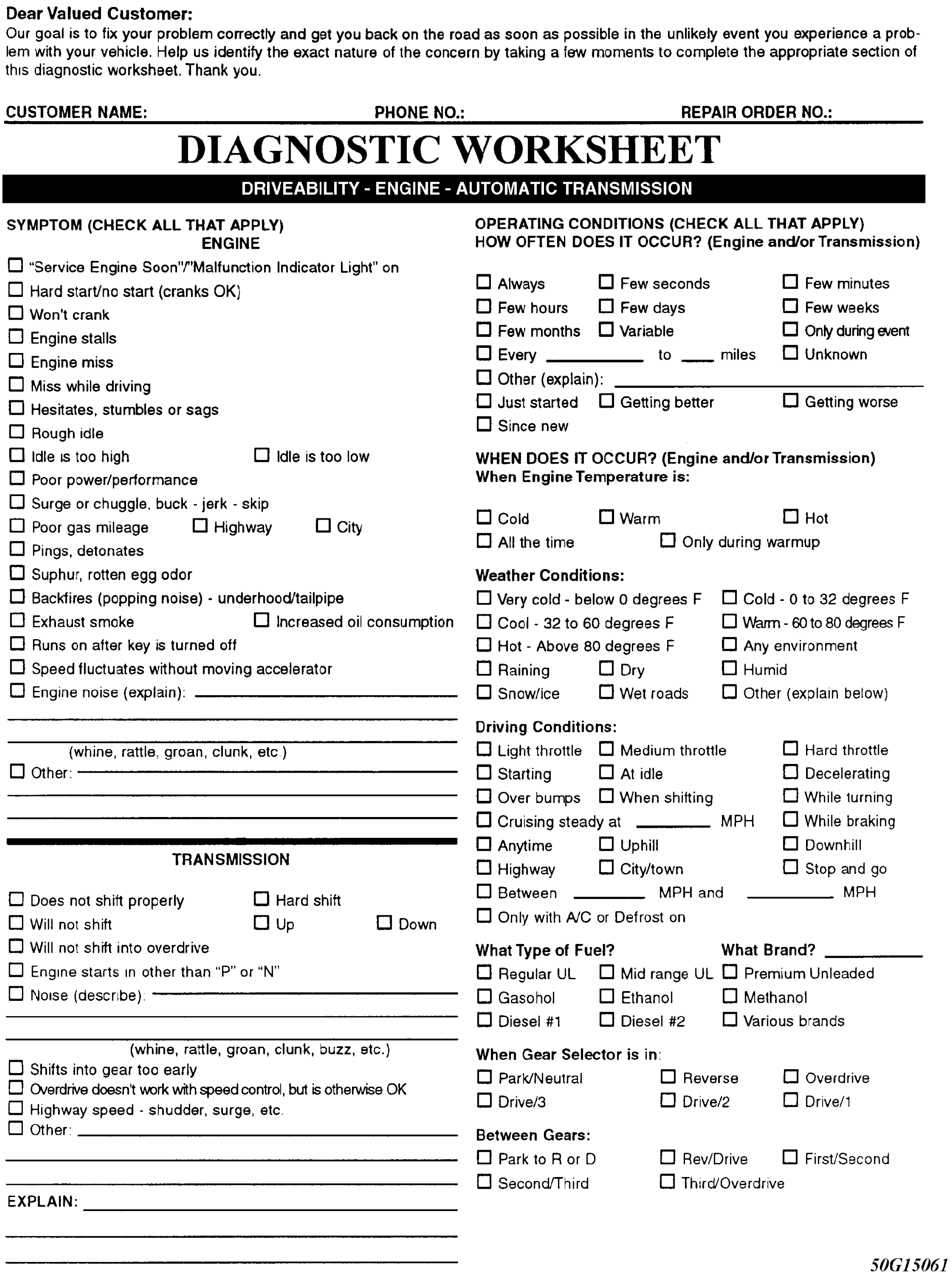

Dear Valued Customer:

Our goal is to fix your problem correctly and get you back on the road as soon as possible in the unlikely event you experience a problem with your vehicle. Help us identify the exact nature of the concern by taking a few moments to complete the appropriate section of this diagnostic worksheet. Thank you.

CUSTOMER NAME: **PHONE NO.:** **REPAIR ORDER NO.:**

DIAGNOSTIC WORKSHEET

DRIVEABILITY - ENGINE - AUTOMATIC TRANSMISSION

SYMPTOM (CHECK ALL THAT APPLY)

ENGINE

☐ "Service Engine Soon"/"Malfunction Indicator Light" on
☐ Hard start/no start (cranks OK)
☐ Won't crank
☐ Engine stalls
☐ Engine miss
☐ Miss while driving
☐ Hesitates, stumbles or sags
☐ Rough idle
☐ Idle is too high ☐ Idle is too low
☐ Poor power/performance
☐ Surge or chuggle, buck - jerk - skip
☐ Poor gas mileage ☐ Highway ☐ City
☐ Pings, detonates
☐ Suphur, rotten egg odor
☐ Backfires (popping noise) - underhood/tailpipe
☐ Exhaust smoke ☐ Increased oil consumption
☐ Runs on after key is turned off
☐ Speed fluctuates without moving accelerator
☐ Engine noise (explain): ____________

(whine, rattle, groan, clunk, etc.)

☐ Other: ____________

TRANSMISSION

☐ Does not shift properly ☐ Hard shift
☐ Will not shift ☐ Up ☐ Down
☐ Will not shift into overdrive
☐ Engine starts in other than "P" or "N"
☐ Noise (describe): ____________

(whine, rattle, groan, clunk, buzz, etc.)

☐ Shifts into gear too early
☐ Overdrive doesn't work with speed control, but is otherwise OK
☐ Highway speed - shudder, surge, etc.
☐ Other: ____________

EXPLAIN: ____________

OPERATING CONDITIONS (CHECK ALL THAT APPLY)

HOW OFTEN DOES IT OCCUR? (Engine and/or Transmission)

☐ Always ☐ Few seconds ☐ Few minutes
☐ Few hours ☐ Few days ☐ Few weeks
☐ Few months ☐ Variable ☐ Only during event
☐ Every ______ to ___ miles ☐ Unknown
☐ Other (explain): ____________
☐ Just started ☐ Getting better ☐ Getting worse
☐ Since new

WHEN DOES IT OCCUR? (Engine and/or Transmission)

When Engine Temperature is:

☐ Cold ☐ Warm ☐ Hot
☐ All the time ☐ Only during warmup

Weather Conditions:

☐ Very cold - below 0 degrees F ☐ Cold - 0 to 32 degrees F
☐ Cool - 32 to 60 degrees F ☐ Warm - 60 to 80 degrees F
☐ Hot - Above 80 degrees F ☐ Any environment
☐ Raining ☐ Dry ☐ Humid
☐ Snow/ice ☐ Wet roads ☐ Other (explain below)

Driving Conditions:

☐ Light throttle ☐ Medium throttle ☐ Hard throttle
☐ Starting ☐ At idle ☐ Decelerating
☐ Over bumps ☐ When shifting ☐ While turning
☐ Cruising steady at ______ MPH ☐ While braking
☐ Anytime ☐ Uphill ☐ Downhill
☐ Highway ☐ City/town ☐ Stop and go
☐ Between ______ MPH and ______ MPH
☐ Only with A/C or Defrost on

What Type of Fuel? **What Brand?** ______

☐ Regular UL ☐ Mid range UL ☐ Premium Unleaded
☐ Gasohol ☐ Ethanol ☐ Methanol
☐ Diesel #1 ☐ Diesel #2 ☐ Various brands

When Gear Selector is in:

☐ Park/Neutral ☐ Reverse ☐ Overdrive
☐ Drive/3 ☐ Drive/2 ☐ Drive/1

Between Gears:

☐ Park to R or D ☐ Rev/Drive ☐ First/Second
☐ Second/Third ☐ Third/Overdrive

50G15061

Fig. 2: Symptom Check List - Page 1

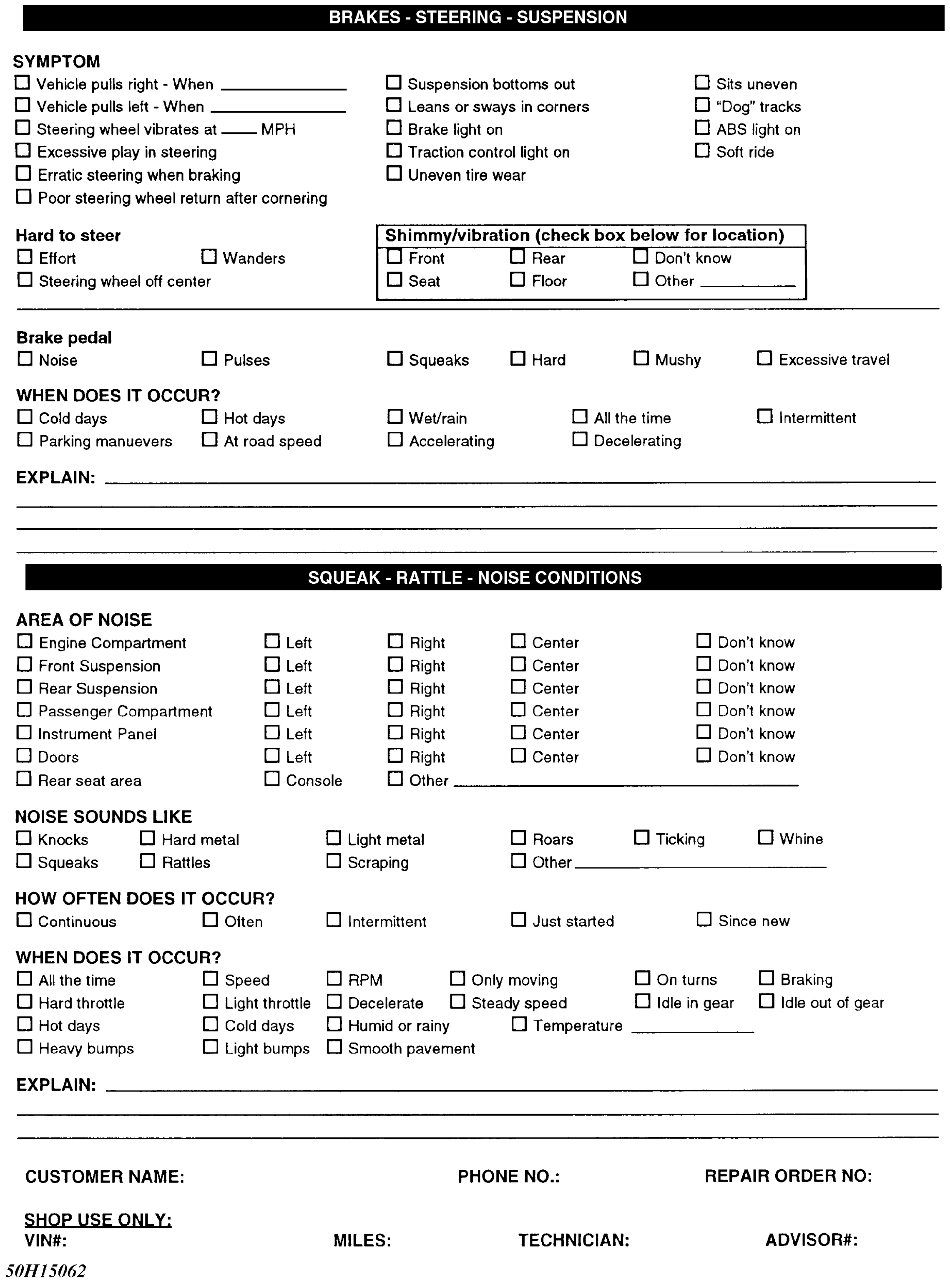

BRAKES - STEERING - SUSPENSION

SYMPTOM

☐ Vehicle pulls right - When ____________
☐ Vehicle pulls left - When ____________
☐ Steering wheel vibrates at ____ MPH
☐ Excessive play in steering
☐ Erratic steering when braking
☐ Poor steering wheel return after cornering
☐ Suspension bottoms out
☐ Leans or sways in corners
☐ Brake light on
☐ Traction control light on
☐ Uneven tire wear
☐ Sits uneven
☐ "Dog" tracks
☐ ABS light on
☐ Soft ride

Hard to steer

☐ Effort ☐ Wanders
☐ Steering wheel off center

Shimmy/vibration (check box below for location)

☐ Front ☐ Rear ☐ Don't know
☐ Seat ☐ Floor ☐ Other __________

Brake pedal

☐ Noise ☐ Pulses ☐ Squeaks ☐ Hard ☐ Mushy ☐ Excessive travel

WHEN DOES IT OCCUR?

☐ Cold days ☐ Hot days ☐ Wet/rain ☐ All the time ☐ Intermittent
☐ Parking manuevers ☐ At road speed ☐ Accelerating ☐ Decelerating

EXPLAIN: ____

____

____

____

SQUEAK - RATTLE - NOISE CONDITIONS

AREA OF NOISE

☐ Engine Compartment	☐ Left	☐ Right	☐ Center	☐ Don't know
☐ Front Suspension	☐ Left	☐ Right	☐ Center	☐ Don't know
☐ Rear Suspension	☐ Left	☐ Right	☐ Center	☐ Don't know
☐ Passenger Compartment	☐ Left	☐ Right	☐ Center	☐ Don't know
☐ Instrument Panel	☐ Left	☐ Right	☐ Center	☐ Don't know
☐ Doors	☐ Left	☐ Right	☐ Center	☐ Don't know
☐ Rear seat area	☐ Console	☐ Other ____________		

NOISE SOUNDS LIKE

☐ Knocks ☐ Hard metal ☐ Light metal ☐ Roars ☐ Ticking ☐ Whine
☐ Squeaks ☐ Rattles ☐ Scraping ☐ Other ____________

HOW OFTEN DOES IT OCCUR?

☐ Continuous ☐ Often ☐ Intermittent ☐ Just started ☐ Since new

WHEN DOES IT OCCUR?

☐ All the time ☐ Speed ☐ RPM ☐ Only moving ☐ On turns ☐ Braking
☐ Hard throttle ☐ Light throttle ☐ Decelerate ☐ Steady speed ☐ Idle in gear ☐ Idle out of gear
☐ Hot days ☐ Cold days ☐ Humid or rainy ☐ Temperature __________
☐ Heavy bumps ☐ Light bumps ☐ Smooth pavement

EXPLAIN: ____

____

____

CUSTOMER NAME: **PHONE NO.:** **REPAIR ORDER NO:**

SHOP USE ONLY:
VIN#: **MILES:** **TECHNICIAN:** **ADVISOR#:**

50H15062

Fig. 3: Symptom Check List - Page 2

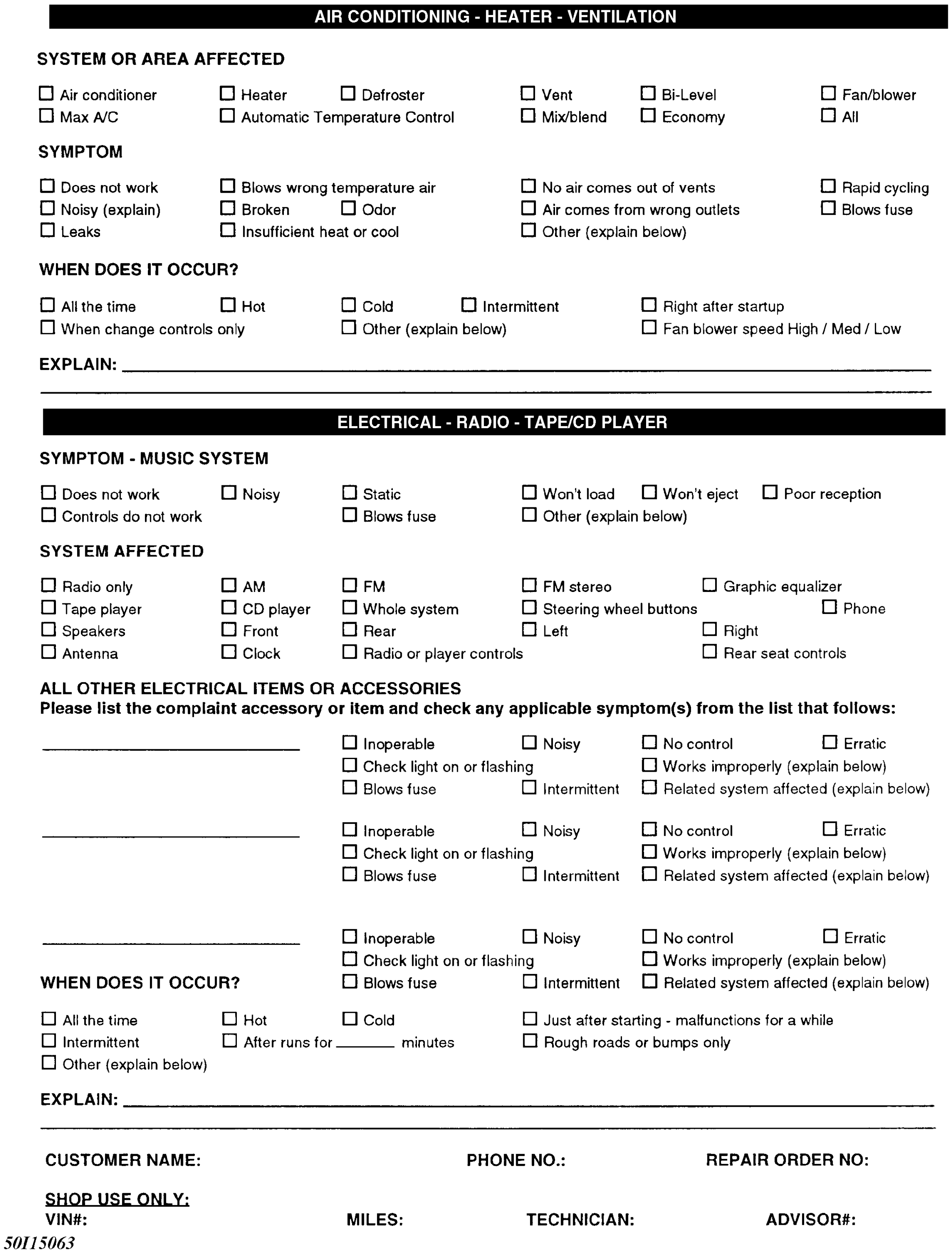

AIR CONDITIONING - HEATER - VENTILATION

SYSTEM OR AREA AFFECTED

☐ Air conditioner ☐ Heater ☐ Defroster ☐ Vent ☐ Bi-Level ☐ Fan/blower
☐ Max A/C ☐ Automatic Temperature Control ☐ Mix/blend ☐ Economy ☐ All

SYMPTOM

☐ Does not work ☐ Blows wrong temperature air ☐ No air comes out of vents ☐ Rapid cycling
☐ Noisy (explain) ☐ Broken ☐ Odor ☐ Air comes from wrong outlets ☐ Blows fuse
☐ Leaks ☐ Insufficient heat or cool ☐ Other (explain below)

WHEN DOES IT OCCUR?

☐ All the time ☐ Hot ☐ Cold ☐ Intermittent ☐ Right after startup
☐ When change controls only ☐ Other (explain below) ☐ Fan blower speed High / Med / Low

EXPLAIN: ______________________________

____

ELECTRICAL - RADIO - TAPE/CD PLAYER

SYMPTOM - MUSIC SYSTEM

☐ Does not work ☐ Noisy ☐ Static ☐ Won't load ☐ Won't eject ☐ Poor reception
☐ Controls do not work ☐ Blows fuse ☐ Other (explain below)

SYSTEM AFFECTED

☐ Radio only ☐ AM ☐ FM ☐ FM stereo ☐ Graphic equalizer
☐ Tape player ☐ CD player ☐ Whole system ☐ Steering wheel buttons ☐ Phone
☐ Speakers ☐ Front ☐ Rear ☐ Left ☐ Right
☐ Antenna ☐ Clock ☐ Radio or player controls ☐ Rear seat controls

ALL OTHER ELECTRICAL ITEMS OR ACCESSORIES
Please list the complaint accessory or item and check any applicable symptom(s) from the list that follows:

______________________ ☐ Inoperable ☐ Noisy ☐ No control ☐ Erratic
☐ Check light on or flashing ☐ Works improperly (explain below)
☐ Blows fuse ☐ Intermittent ☐ Related system affected (explain below)

______________________ ☐ Inoperable ☐ Noisy ☐ No control ☐ Erratic
☐ Check light on or flashing ☐ Works improperly (explain below)
☐ Blows fuse ☐ Intermittent ☐ Related system affected (explain below)

______________________ ☐ Inoperable ☐ Noisy ☐ No control ☐ Erratic
☐ Check light on or flashing ☐ Works improperly (explain below)
☐ Blows fuse ☐ Intermittent ☐ Related system affected (explain below)

WHEN DOES IT OCCUR?

☐ All the time ☐ Hot ☐ Cold ☐ Just after starting - malfunctions for a while
☐ Intermittent ☐ After runs for ______ minutes ☐ Rough roads or bumps only
☐ Other (explain below)

EXPLAIN: ______________________________

____

CUSTOMER NAME: **PHONE NO.:** **REPEAIR ORDER NO:**

SHOP USE ONLY:
VIN#: **MILES:** **TECHNICIAN:** **ADVISOR#:**

50I15063

Fig. 4: Symptom Check List - Page 3

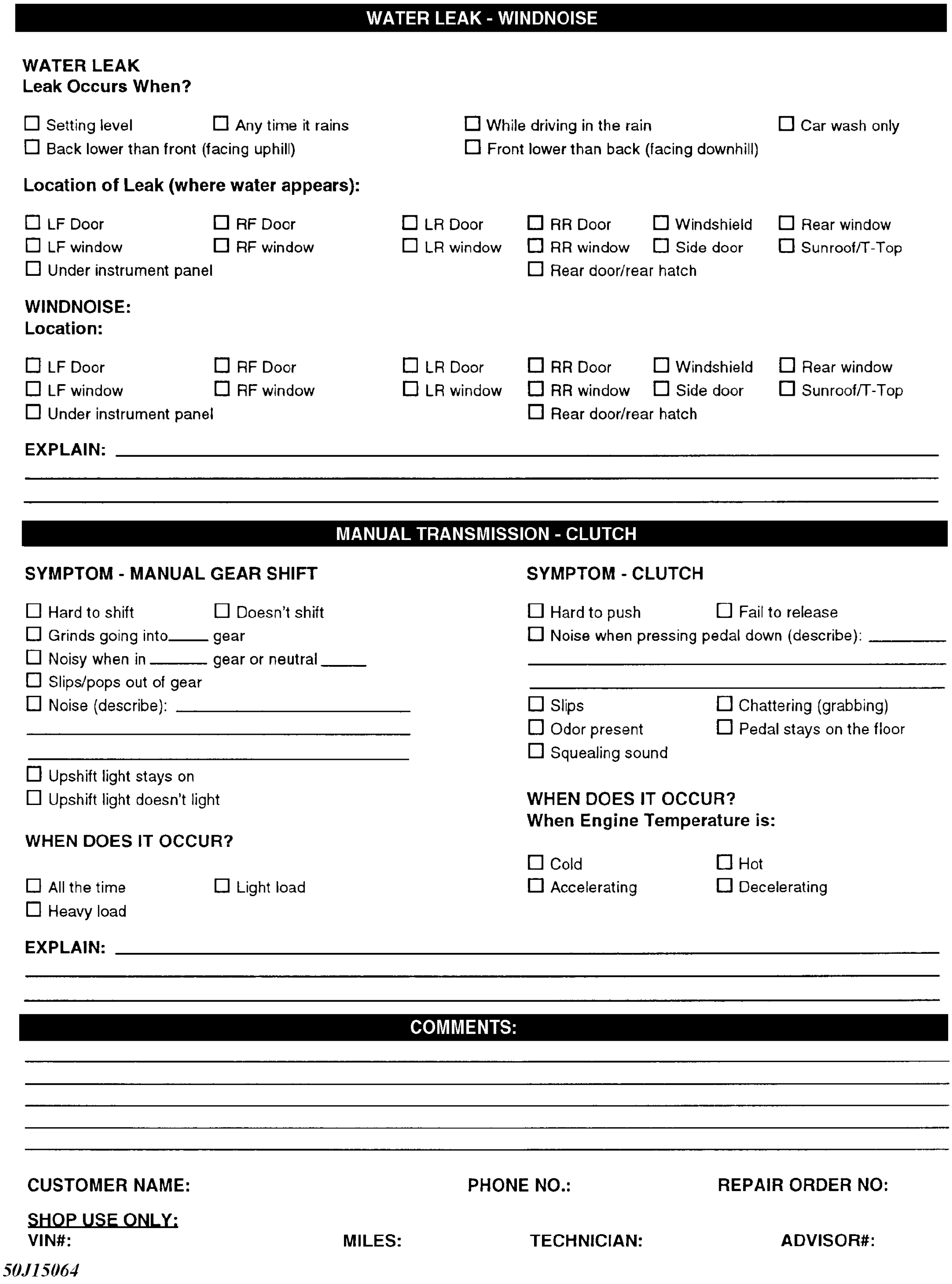

WATER LEAK - WINDNOISE

WATER LEAK
Leak Occurs When?

☐ Setting level ☐ Any time it rains ☐ While driving in the rain ☐ Car wash only
☐ Back lower than front (facing uphill) ☐ Front lower than back (facing downhill)

Location of Leak (where water appears):

☐ LF Door ☐ RF Door ☐ LR Door ☐ RR Door ☐ Windshield ☐ Rear window
☐ LF window ☐ RF window ☐ LR window ☐ RR window ☐ Side door ☐ Sunroof/T-Top
☐ Under instrument panel ☐ Rear door/rear hatch

WINDNOISE:
Location:

☐ LF Door ☐ RF Door ☐ LR Door ☐ RR Door ☐ Windshield ☐ Rear window
☐ LF window ☐ RF window ☐ LR window ☐ RR window ☐ Side door ☐ Sunroof/T-Top
☐ Under instrument panel ☐ Rear door/rear hatch

EXPLAIN: ______________________________
____
____

MANUAL TRANSMISSION - CLUTCH

SYMPTOM - MANUAL GEAR SHIFT

☐ Hard to shift ☐ Doesn't shift
☐ Grinds going into_____ gear
☐ Noisy when in _______ gear or neutral _____
☐ Slips/pops out of gear
☐ Noise (describe): ______________________
____
____
☐ Upshift light stays on
☐ Upshift light doesn't light

WHEN DOES IT OCCUR?

☐ All the time ☐ Light load
☐ Heavy load

SYMPTOM - CLUTCH

☐ Hard to push ☐ Fail to release
☐ Noise when pressing pedal down (describe): _________
____
____
☐ Slips ☐ Chattering (grabbing)
☐ Odor present ☐ Pedal stays on the floor
☐ Squealing sound

WHEN DOES IT OCCUR?
When Engine Temperature is:

☐ Cold ☐ Hot
☐ Accelerating ☐ Decelerating

EXPLAIN: ______________________________
____
____

COMMENTS:

____
____
____
____
____

CUSTOMER NAME: **PHONE NO.:** **REPAIR ORDER NO:**

SHOP USE ONLY:
VIN#: **MILES:** **TECHNICIAN:** **ADVISOR#:**

50J15064

Fig. 5: Symptom Check List - Page 4

INDIVIDUAL SYSTEM-BASED CHECK LISTS

NOTE: **Have the service adviser fill out these forms with the customer whenever possible.**

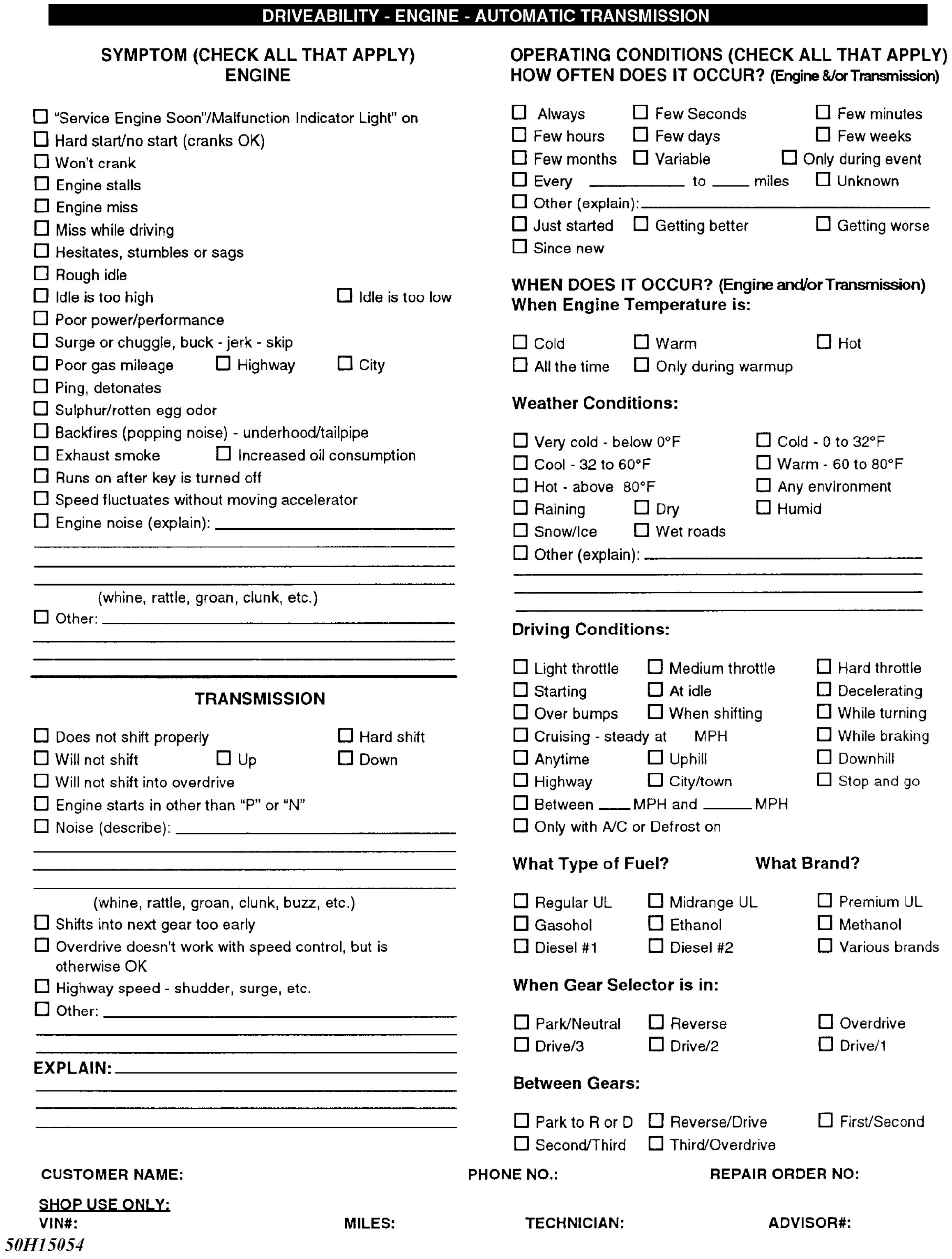

DRIVEABILITY - ENGINE - AUTOMATIC TRANSMISSION

SYMPTOM (CHECK ALL THAT APPLY)
ENGINE

☐ "Service Engine Soon"/Malfunction Indicator Light" on
☐ Hard start/no start (cranks OK)
☐ Won't crank
☐ Engine stalls
☐ Engine miss
☐ Miss while driving
☐ Hesitates, stumbles or sags
☐ Rough idle
☐ Idle is too high ☐ Idle is too low
☐ Poor power/performance
☐ Surge or chuggle, buck - jerk - skip
☐ Poor gas mileage ☐ Highway ☐ City
☐ Ping, detonates
☐ Sulphur/rotten egg odor
☐ Backfires (popping noise) - underhood/tailpipe
☐ Exhaust smoke ☐ Increased oil consumption
☐ Runs on after key is turned off
☐ Speed fluctuates without moving accelerator
☐ Engine noise (explain): ____
(whine, rattle, groan, clunk, etc.)
☐ Other: ____

TRANSMISSION

☐ Does not shift properly ☐ Hard shift
☐ Will not shift ☐ Up ☐ Down
☐ Will not shift into overdrive
☐ Engine starts in other than "P" or "N"
☐ Noise (describe): ____
(whine, rattle, groan, clunk, buzz, etc.)
☐ Shifts into next gear too early
☐ Overdrive doesn't work with speed control, but is otherwise OK
☐ Highway speed - shudder, surge, etc.
☐ Other: ____

EXPLAIN: ____

OPERATING CONDITIONS (CHECK ALL THAT APPLY)
HOW OFTEN DOES IT OCCUR? (Engine &/or Transmission)

☐ Always ☐ Few Seconds ☐ Few minutes
☐ Few hours ☐ Few days ☐ Few weeks
☐ Few months ☐ Variable ☐ Only during event
☐ Every ____ to ____ miles ☐ Unknown
☐ Other (explain): ____
☐ Just started ☐ Getting better ☐ Getting worse
☐ Since new

WHEN DOES IT OCCUR? (Engine and/or Transmission)
When Engine Temperature is:

☐ Cold ☐ Warm ☐ Hot
☐ All the time ☐ Only during warmup

Weather Conditions:

☐ Very cold - below 0°F ☐ Cold - 0 to 32°F
☐ Cool - 32 to 60°F ☐ Warm - 60 to 80°F
☐ Hot - above 80°F ☐ Any environment
☐ Raining ☐ Dry ☐ Humid
☐ Snow/Ice ☐ Wet roads
☐ Other (explain): ____

Driving Conditions:

☐ Light throttle ☐ Medium throttle ☐ Hard throttle
☐ Starting ☐ At idle ☐ Decelerating
☐ Over bumps ☐ When shifting ☐ While turning
☐ Cruising - steady at MPH ☐ While braking
☐ Anytime ☐ Uphill ☐ Downhill
☐ Highway ☐ City/town ☐ Stop and go
☐ Between ____ MPH and ____ MPH
☐ Only with A/C or Defrost on

What Type of Fuel? **What Brand?**

☐ Regular UL ☐ Midrange UL ☐ Premium UL
☐ Gasohol ☐ Ethanol ☐ Methanol
☐ Diesel #1 ☐ Diesel #2 ☐ Various brands

When Gear Selector is in:

☐ Park/Neutral ☐ Reverse ☐ Overdrive
☐ Drive/3 ☐ Drive/2 ☐ Drive/1

Between Gears:

☐ Park to R or D ☐ Reverse/Drive ☐ First/Second
☐ Second/Third ☐ Third/Overdrive

CUSTOMER NAME: **PHONE NO.:** **REPAIR ORDER NO:**

SHOP USE ONLY:
VIN#: **MILES:** **TECHNICIAN:** **ADVISOR#:**

50H15054

Fig. 6: Engine Driveability & Automatic Transmission

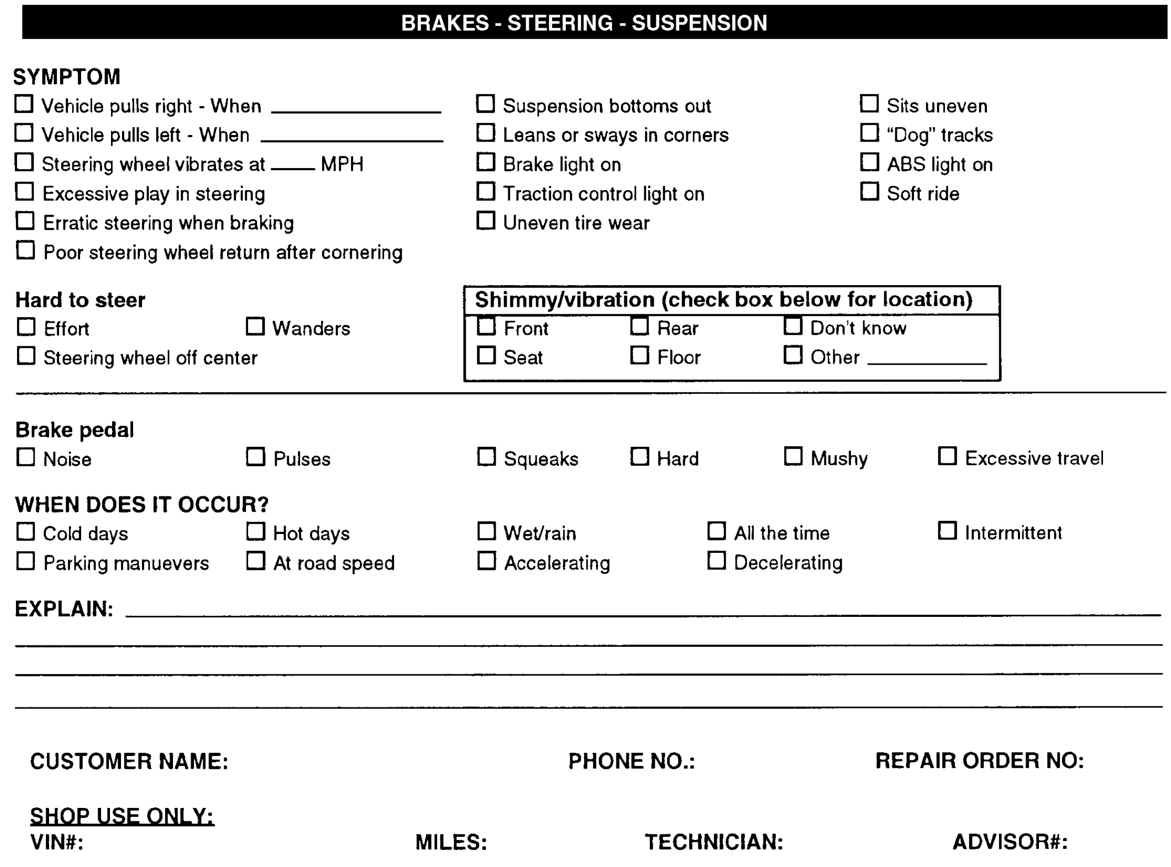

BRAKES - STEERING - SUSPENSION

SYMPTOM

☐ Vehicle pulls right - When ________________
☐ Vehicle pulls left - When ________________
☐ Steering wheel vibrates at ____ MPH
☐ Excessive play in steering
☐ Erratic steering when braking
☐ Poor steering wheel return after cornering
☐ Suspension bottoms out
☐ Leans or sways in corners
☐ Brake light on
☐ Traction control light on
☐ Uneven tire wear
☐ Sits uneven
☐ "Dog" tracks
☐ ABS light on
☐ Soft ride

Hard to steer

☐ Effort
☐ Steering wheel off center
☐ Wanders

Shimmy/vibration (check box below for location)

☐ Front
☐ Seat
☐ Rear
☐ Floor
☐ Don't know
☐ Other ____________

Brake pedal

☐ Noise
☐ Pulses
☐ Squeaks
☐ Hard
☐ Mushy
☐ Excessive travel

WHEN DOES IT OCCUR?

☐ Cold days
☐ Parking manuevers
☐ Hot days
☐ At road speed
☐ Wet/rain
☐ Accelerating
☐ All the time
☐ Decelerating
☐ Intermittent

EXPLAIN: ____

____

____

____

CUSTOMER NAME: **PHONE NO.:** **REPAIR ORDER NO:**

SHOP USE ONLY:
VIN#: **MILES:** **TECHNICIAN:** **ADVISOR#:**

50C15059

Fig. 7: Brakes, Steering, & Suspension

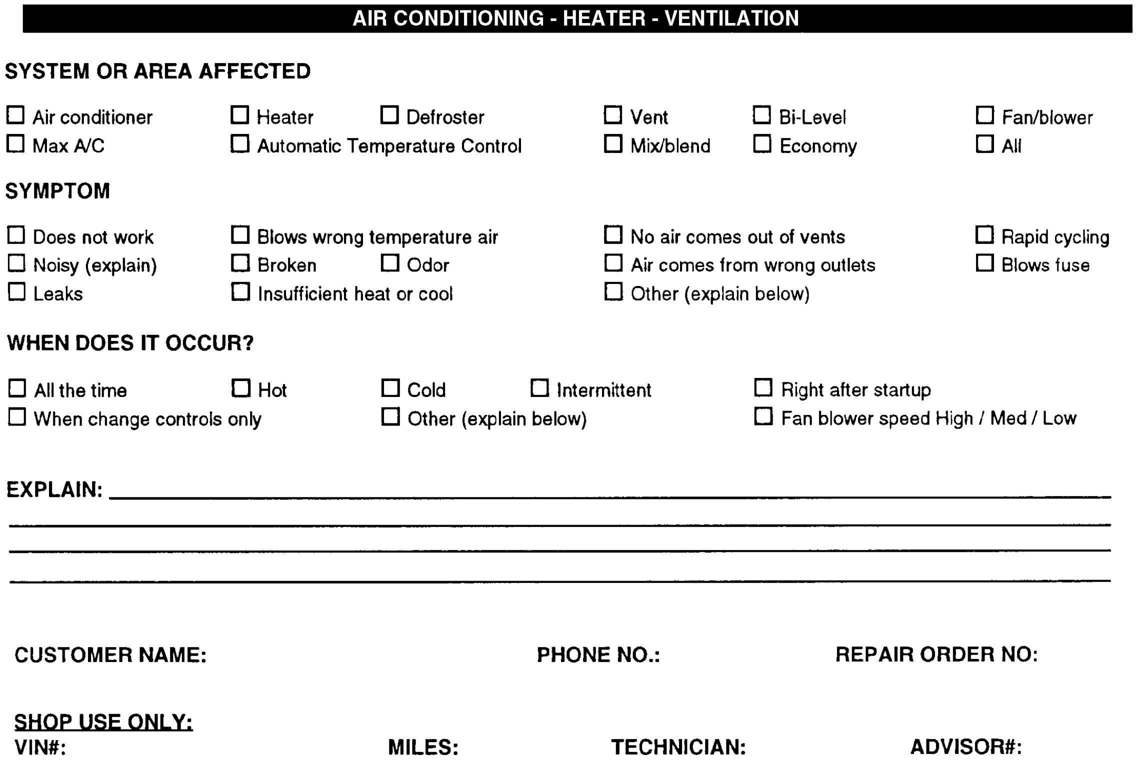

AIR CONDITIONING - HEATER - VENTILATION

SYSTEM OR AREA AFFECTED

☐ Air conditioner
☐ Max A/C
☐ Heater
☐ Automatic Temperature Control
☐ Defroster
☐ Vent
☐ Mix/blend
☐ Bi-Level
☐ Economy
☐ Fan/blower
☐ All

SYMPTOM

☐ Does not work
☐ Noisy (explain)
☐ Leaks
☐ Blows wrong temperature air
☐ Broken
☐ Insufficient heat or cool
☐ Odor
☐ No air comes out of vents
☐ Air comes from wrong outlets
☐ Other (explain below)
☐ Rapid cycling
☐ Blows fuse

WHEN DOES IT OCCUR?

☐ All the time
☐ When change controls only
☐ Hot
☐ Cold
☐ Other (explain below)
☐ Intermittent
☐ Right after startup
☐ Fan blower speed High / Med / Low

EXPLAIN: ____

____

____

____

CUSTOMER NAME: **PHONE NO.:** **REPAIR ORDER NO:**

SHOP USE ONLY:
VIN#: **MILES:** **TECHNICIAN:** **ADVISOR#:**

50A15057

Fig. 8: Air Conditioning, Heater & Ventilation

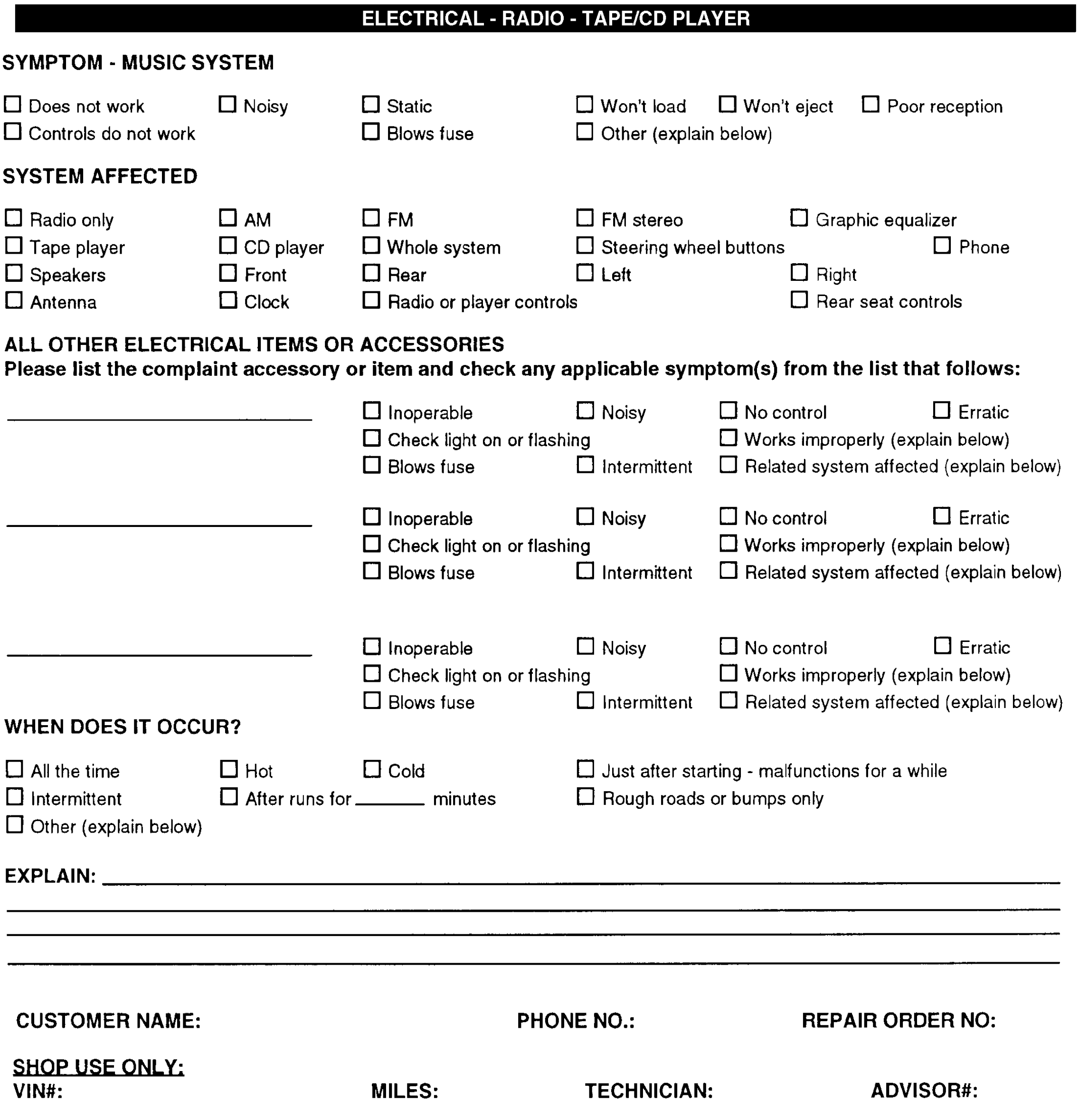

ELECTRICAL - RADIO - TAPE/CD PLAYER

SYMPTOM - MUSIC SYSTEM

☐ Does not work ☐ Noisy ☐ Static ☐ Won't load ☐ Won't eject ☐ Poor reception
☐ Controls do not work ☐ Blows fuse ☐ Other (explain below)

SYSTEM AFFECTED

☐ Radio only ☐ AM ☐ FM ☐ FM stereo ☐ Graphic equalizer
☐ Tape player ☐ CD player ☐ Whole system ☐ Steering wheel buttons ☐ Phone
☐ Speakers ☐ Front ☐ Rear ☐ Left ☐ Right
☐ Antenna ☐ Clock ☐ Radio or player controls ☐ Rear seat controls

ALL OTHER ELECTRICAL ITEMS OR ACCESSORIES
Please list the complaint accessory or item and check any applicable symptom(s) from the list that follows:

____________________ ☐ Inoperable ☐ Noisy ☐ No control ☐ Erratic
☐ Check light on or flashing ☐ Works improperly (explain below)
☐ Blows fuse ☐ Intermittent ☐ Related system affected (explain below)

____________________ ☐ Inoperable ☐ Noisy ☐ No control ☐ Erratic
☐ Check light on or flashing ☐ Works improperly (explain below)
☐ Blows fuse ☐ Intermittent ☐ Related system affected (explain below)

____________________ ☐ Inoperable ☐ Noisy ☐ No control ☐ Erratic
☐ Check light on or flashing ☐ Works improperly (explain below)
☐ Blows fuse ☐ Intermittent ☐ Related system affected (explain below)

WHEN DOES IT OCCUR?

☐ All the time ☐ Hot ☐ Cold ☐ Just after starting - malfunctions for a while
☐ Intermittent ☐ After runs for _____ minutes ☐ Rough roads or bumps only
☐ Other (explain below)

EXPLAIN: ____

CUSTOMER NAME: **PHONE NO.:** **REPAIR ORDER NO:**

SHOP USE ONLY:
VIN#: **MILES:** **TECHNICIAN:** **ADVISOR#:**

50B15058

Fig. 9: Electrical, Radio & Tape/CD Player

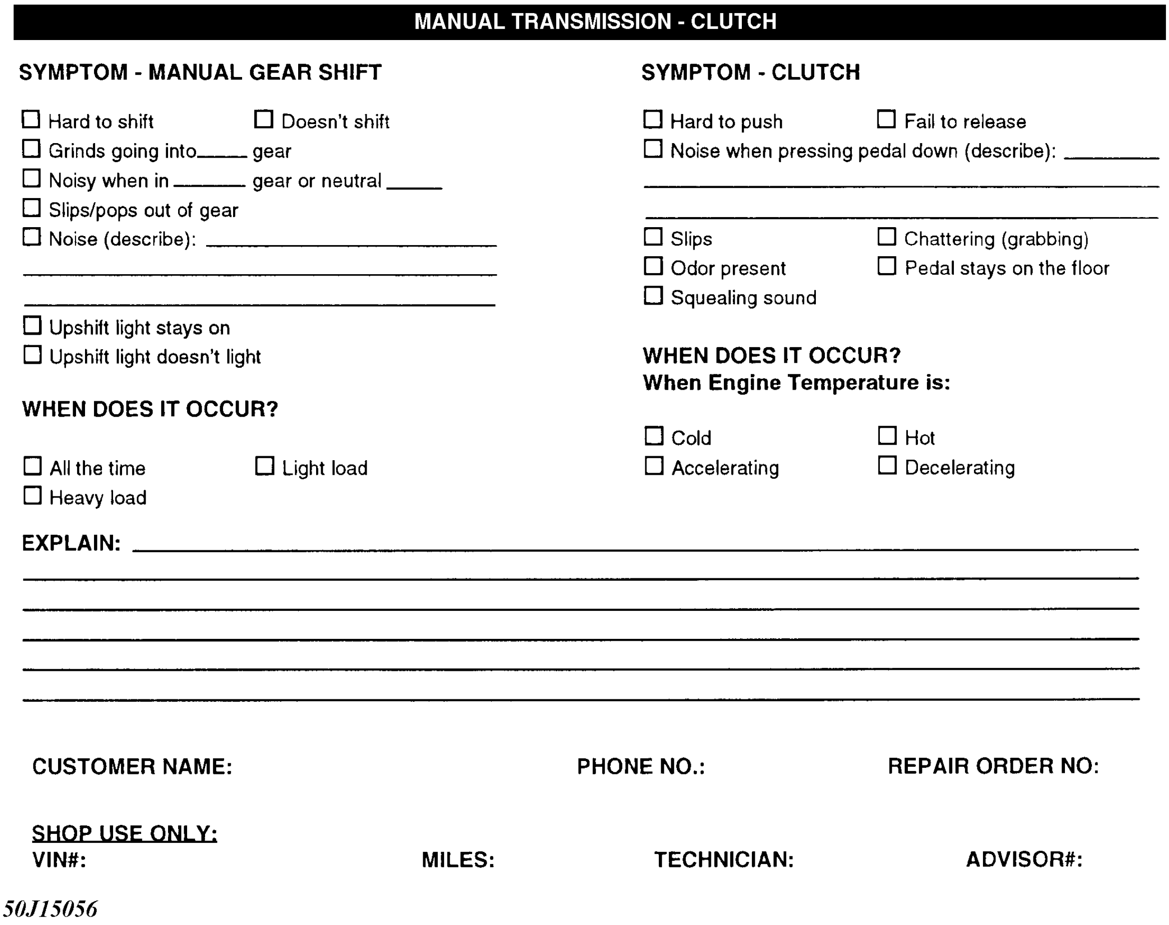

MANUAL TRANSMISSION - CLUTCH

SYMPTOM - MANUAL GEAR SHIFT

☐ Hard to shift ☐ Doesn't shift
☐ Grinds going into_____ gear
☐ Noisy when in _______ gear or neutral _____
☐ Slips/pops out of gear
☐ Noise (describe): ____________________________
____
____

☐ Upshift light stays on
☐ Upshift light doesn't light

WHEN DOES IT OCCUR?

☐ All the time ☐ Light load
☐ Heavy load

SYMPTOM - CLUTCH

☐ Hard to push ☐ Fail to release
☐ Noise when pressing pedal down (describe): _________
____
____

☐ Slips ☐ Chattering (grabbing)
☐ Odor present ☐ Pedal stays on the floor
☐ Squealing sound

WHEN DOES IT OCCUR?
When Engine Temperature is:

☐ Cold ☐ Hot
☐ Accelerating ☐ Decelerating

EXPLAIN: ____
____
____
____
____
____

CUSTOMER NAME: **PHONE NO.:** **REPAIR ORDER NO:**

SHOP USE ONLY:
VIN#: **MILES:** **TECHNICIAN:** **ADVISOR#:**

50J15056

Fig. 10: Manual Transmission & Clutch

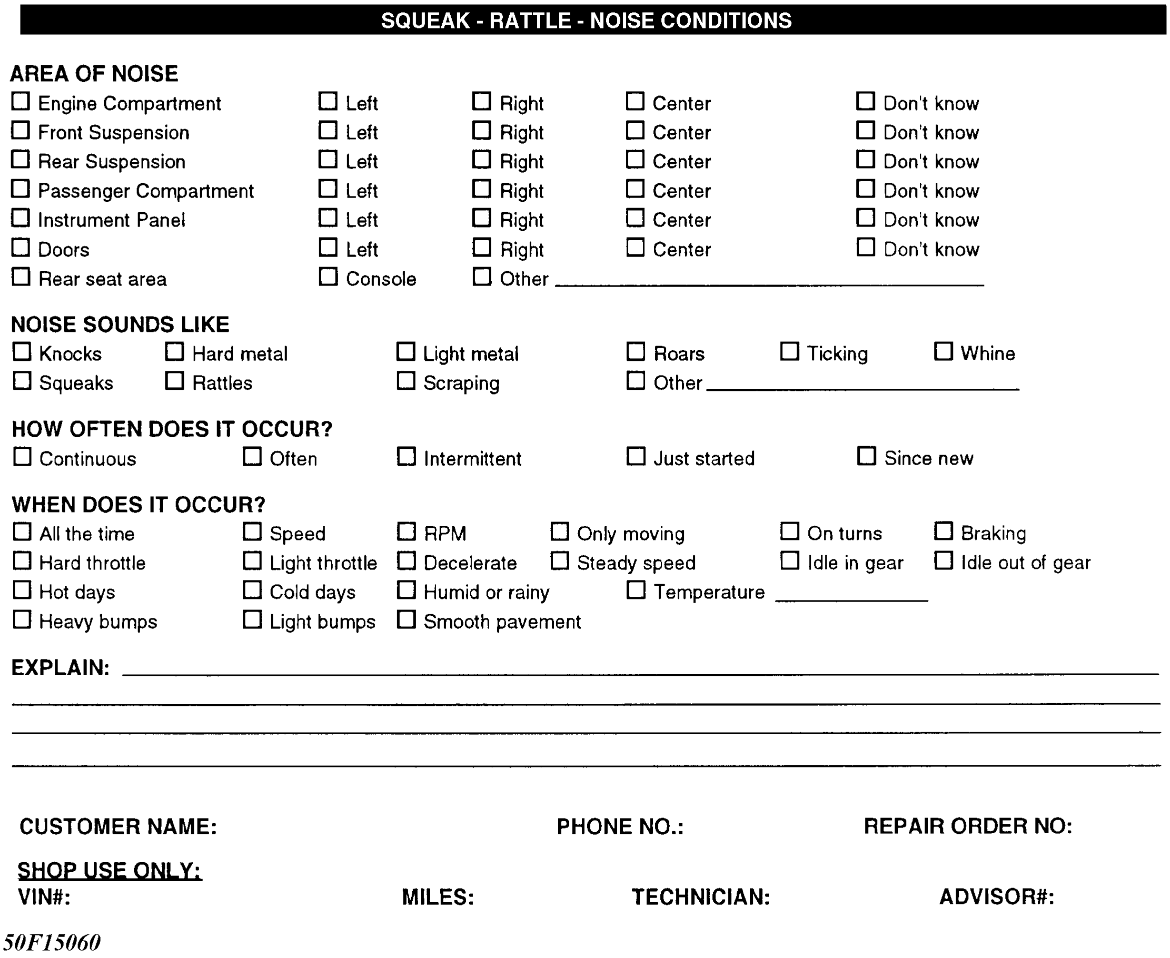

SQUEAK - RATTLE - NOISE CONDITIONS

AREA OF NOISE

☐ Engine Compartment ☐ Left ☐ Right ☐ Center ☐ Don't know
☐ Front Suspension ☐ Left ☐ Right ☐ Center ☐ Don't know
☐ Rear Suspension ☐ Left ☐ Right ☐ Center ☐ Don't know
☐ Passenger Compartment ☐ Left ☐ Right ☐ Center ☐ Don't know
☐ Instrument Panel ☐ Left ☐ Right ☐ Center ☐ Don't know
☐ Doors ☐ Left ☐ Right ☐ Center ☐ Don't know
☐ Rear seat area ☐ Console ☐ Other ______________________

NOISE SOUNDS LIKE

☐ Knocks ☐ Hard metal ☐ Light metal ☐ Roars ☐ Ticking ☐ Whine
☐ Squeaks ☐ Rattles ☐ Scraping ☐ Other ______________________

HOW OFTEN DOES IT OCCUR?

☐ Continuous ☐ Often ☐ Intermittent ☐ Just started ☐ Since new

WHEN DOES IT OCCUR?

☐ All the time ☐ Speed ☐ RPM ☐ Only moving ☐ On turns ☐ Braking
☐ Hard throttle ☐ Light throttle ☐ Decelerate ☐ Steady speed ☐ Idle in gear ☐ Idle out of gear
☐ Hot days ☐ Cold days ☐ Humid or rainy ☐ Temperature ______________
☐ Heavy bumps ☐ Light bumps ☐ Smooth pavement

EXPLAIN: ____

____

____

____

CUSTOMER NAME: **PHONE NO.:** **REPAIR ORDER NO:**

SHOP USE ONLY:
VIN#: **MILES:** **TECHNICIAN:** **ADVISOR#:**

50F15060

Fig. 11: Squeak, Rattle, & Noise Conditions

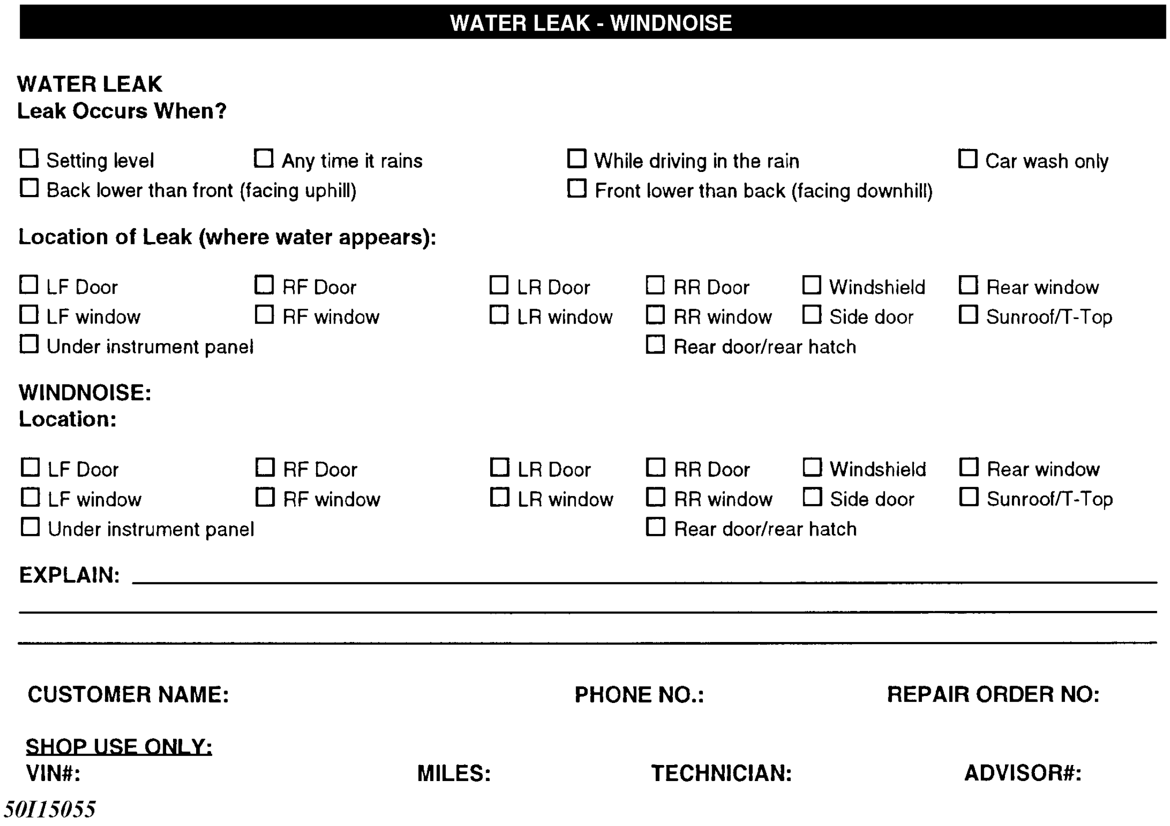

WATER LEAK - WINDNOISE

WATER LEAK
Leak Occurs When?

☐ Setting level ☐ Any time it rains ☐ While driving in the rain ☐ Car wash only
☐ Back lower than front (facing uphill) ☐ Front lower than back (facing downhill)

Location of Leak (where water appears):

☐ LF Door ☐ RF Door ☐ LR Door ☐ RR Door ☐ Windshield ☐ Rear window
☐ LF window ☐ RF window ☐ LR window ☐ RR window ☐ Side door ☐ Sunroof/T-Top
☐ Under instrument panel ☐ Rear door/rear hatch

WINDNOISE:
Location:

☐ LF Door ☐ RF Door ☐ LR Door ☐ RR Door ☐ Windshield ☐ Rear window
☐ LF window ☐ RF window ☐ LR window ☐ RR window ☐ Side door ☐ Sunroof/T-Top
☐ Under instrument panel ☐ Rear door/rear hatch

EXPLAIN: ____

____

____

CUSTOMER NAME: **PHONE NO.:** **REPAIR ORDER NO:**

SHOP USE ONLY:
VIN#: **MILES:** **TECHNICIAN:** **ADVISOR#:**

50I15055

Fig. 12: Water Leak & Wind Noise

* PLEASE READ THIS FIRST *

NOTE: **This is GENERAL information. This article is not intended to be specific to any unique situation or individual vehicle configuration. The purpose of this Trouble Shooting information is to provide a list of common causes to problem symptoms. For model-specific Trouble Shooting, refer to SUBJECT, DIAGNOSTIC, or TESTING articles available in the section(s) you are accessing.**

ACCESSORIES & ELECTRICAL

CHARGING SYSTEM TROUBLE SHOOTING

NOTE: **This is GENERAL information. This article is not intended to be specific to any unique situation or individual vehicle configuration. The purpose of this Trouble Shooting information is to provide a list of common causes to problem symptoms. For model-specific Trouble Shooting, refer to SUBJECT, DIAGNOSTIC, or TESTING articles available in the section(s) you are accessing.**

NOTE: **This is GENERAL information. This article is not intended to be specific to any unique situation or individual vehicle configuration. The purpose of this Trouble Shooting information is to provide a list of common causes to problem symptoms. For model-specific Trouble Shooting, refer to SUBJECT, DIAGNOSTIC, or TESTING articles available in the section(s) you are accessing.**

BASIC CHARGING SYSTEM TROUBLE SHOOTING CHART

CONDITION & POSSIBLE CAUSE	CORRECTION
Vehicle Will Not Start	
Dead battery	Check battery cells, alternator belt tension and alternator output
Loose or corroded battery connections	Check all charging system connections
Ignition circuit or switch malfunction	Check and replace as necessary
Alternator Light Stays On With Engine Running	
Loose or worn alternator drive belt	Check alternator drive tension and condition, See Belt Adjustment in TUNE-UP article in the TUNE-UP section
Loose alternator wiring connections	Check all charging system connections
Short in alternator light wiring	See Indicator Warning Lights in STANDARD INSTRUMENTS in the ACCESSORIES & EQUIPMENT section
Defective alternator stator or diodes	See Bench Tests in ALTERNATOR article
Defective regulator	See Regulator Check in ALTERNATOR article
Alternator Light Stays Off With Ignition Switch ON	
Blown fuse	See WIRING DIAGRAMS
Defective alternator	See Testing in ALTERNATOR article
Defective indicator light bulb or socket	See Indicator Warning Lights in STANDARD INSTRUMENTS in the ACCESSORIES & EQUIPMENT section
Alternator Light Stays OFF With Ignition Switch ON	
Short in alternator wiring	See On-Vehicle Tests in ALTERNATOR article

CONDITION & POSSIBLE CAUSE	CORRECTION
Defective rectifier bridge	See Bench Tests in ALTERNATOR article
Lights or Fuses Burn Out Frequently	
Defective alternator wiring	See On-Vehicle Tests in ALTERNATOR article
Defective regulator	See Regulator Check in ALTERNATOR article
Defective battery	Check and replace as necessary
Ammeter Gauge Shows Discharge	
Loose or worn drive belt	Check alternator drive belt tension and condition. See Belt Adjustment in TUNE-UP article in the TUNE-UP section
Defective wiring	Check all wires and wire connections
Defective alternator or regulator	See Bench Tests and On-Vehicle Tests in ALTERNATOR article
Defective ammeter, or improper ammeter wiring connection	See Testing in STANDARD INSTRUMENTS in the ACCESSORIES & EQUIPMENT section
Noisy Alternator	
Loose drive pulley	Tighten drive pulley attaching nut
Loose mounting bolts	Tighten all alternator mounting bolts
Worn or dirty bearings	See Bearing Replacement ALTERNATOR article
Defective diodes or stator	See Bench Test in ALTERNATOR article
Battery Does Stay Charged	
Loose or worn drive belt	Check alternator drive belt tension and condition. See Belt Adjustment in appropriate TUNE-UP article in the TUNE-UP section
Loose or corroded battery connections	Check all charging system connections
Loose alternator connections	Check all charging system connections
Defective alternator or battery	See On-Vehicle Tests and Bench Tests in ALTERNATOR article
Add-on electrical accessories exceeding alternator capacity	Install larger alternator
Battery Overcharged-Uses Too Much Water	
Defective battery	Check alternator output and repair as necessary
Defective alternator	See On-Vehicle Test and Bench Tests in ALTERNATOR article
Excessive alternator voltage	Check alternator output and repair as necessary

IGNITION SYSTEM TROUBLE SHOOTING

NOTE: **This is GENERAL information. This article is not intended to be specific to any unique situation or individual vehicle configuration. The purpose of this Trouble Shooting information is to provide a list of common causes to problem symptoms. For model-specific Trouble Shooting, refer to SUBJECT, DIAGNOSTIC, or TESTING articles available in the section(s) you are accessing.**

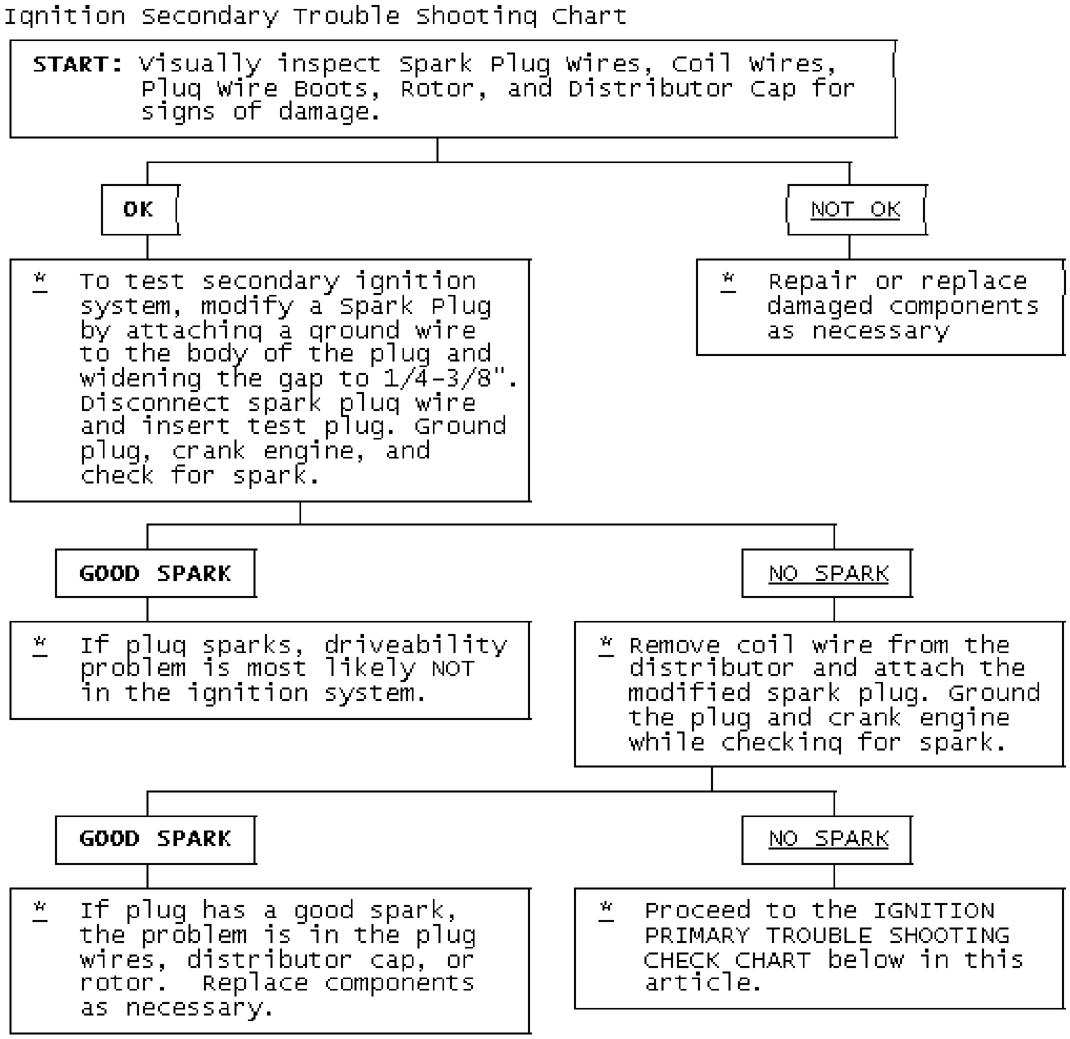

Ignition Secondary Trouble Shooting Chart

START: Visually inspect Spark Plug Wires, Coil Wires, Plug Wire Boots, Rotor, and Distributor Cap for signs of damage.

OK

* To test secondary ignition system, modify a Spark Plug by attaching a ground wire to the body of the plug and widening the gap to 1/4-3/8". Disconnect spark plug wire and insert test plug. Ground plug, crank engine, and check for spark.

GOOD SPARK

* If plug sparks, driveability problem is most likely NOT in the ignition system.

NO SPARK

* Remove coil wire from the distributor and attach the modified spark plug. Ground the plug and crank engine while checking for spark.

GOOD SPARK

* If plug has a good spark, the problem is in the plug wires, distributor cap, or rotor. Replace components as necessary.

NO SPARK

* Proceed to the IGNITION PRIMARY TROUBLE SHOOTING CHECK CHART below in this article.

NOT OK

* Repair or replace damaged components as necessary

Fig. 1: Ignition Secondary Trouble Shooting Chart

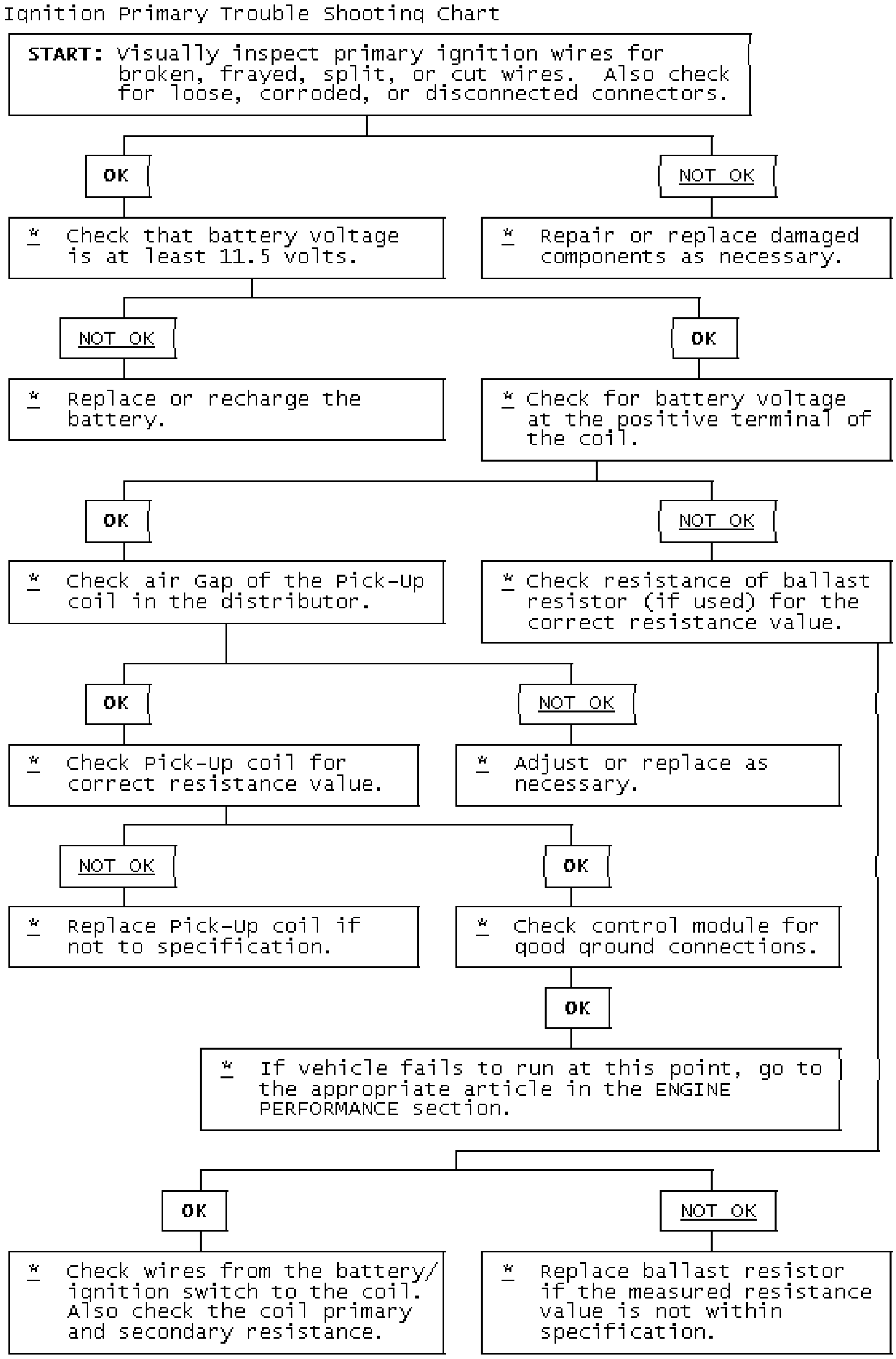
Ignition Primary Trouble Shooting Chart
START: Visually inspect primary ignition wires for broken, frayed, split, or cut wires. Also check for loose, corroded, or disconnected connectors.
OK
NOT OK
* Check that battery voltage is at least 11.5 volts.
* Repair or replace damaged components as necessary.
NOT OK
OK
* Replace or recharge the battery.
* Check for battery voltage at the positive terminal of the coil.
OK
NOT OK
* Check air Gap of the Pick-Up coil in the distributor.
* Check resistance of ballast resistor (if used) for the correct resistance value.
OK
NOT OK
* Check Pick-Up coil for correct resistance value.
* Adjust or replace as necessary.
NOT OK
OK
* Replace Pick-Up coil if not to specification.
* Check control module for good ground connections.
OK
* If vehicle fails to run at this point, go to the appropriate article in the ENGINE PERFORMANCE section.
OK
NOT OK
* Check wires from the battery/ ignition switch to the coil. Also check the coil primary and secondary resistance.
* Replace ballast resistor if the measured resistance value is not within specification.

Fig. 2: Ignition Primary Trouble Shooting Chart

STARTER TROUBLE SHOOTING

NOTE: **This is GENERAL information. This article is not intended to be specific to any unique situation or individual vehicle configuration. The purpose of this Trouble Shooting information is to provide a list of common causes to problem symptoms. For model-specific Trouble Shooting, refer to SUBJECT, DIAGNOSTIC, or TESTING articles available in the section(s) you are accessing.**

BASIC STARTER TROUBLE SHOOTING CHART

CONDITION & POSSIBLE CAUSE	CORRECTION
Starter Fails to Operate	
Dead battery or bad connections between starter and battery	Check battery charge and all wires and connections to starter
Ignition switch faulty or misadjusted	Adjust or replace ignition switch
Open circuit between starter switch ignition terminal on starter relay	Check and repair wires and connections as necessary
Starter relay or starter defective	See Testing in STARTER article
Open solenoid pull-in wire	Testing in STARTER article
Starter Does Not Operate and Headlights Dim	
Weak battery or dead cell	Charge or replace battery as necessary
Loose or corroded battery connections	Check that battery connections are clean and tight
Internal ground in starter windings	See Testing in STARTER article
Grounded starter fields	See Testing in STARTERS
Armature rubbing on pole	See STARTER article shoes
Starter Turns but Engine Does Not Rotate	
Starter clutch slipping	See STARTER article
Broken clutch housing	See STARTER article
Pinion shaft rusted or dry	See STARTER article
Engine basic timing incorrect	See Ignition Timing in TUNE-UP article
Broken teeth on engine flywheel	Replace flywheel and check for starter pinion gear damage
Starter Will Not Crank Engine	
Faulty overrunning clutch	See STARTER article
Broken clutch housing	See STARTER article
Broken flywheel teeth	Replace flywheel and check for starter pinion gear damage
Armature shaft sheared or reduction gear teeth stripped	See STARTER article
Weak battery	Charge or replace battery as necessary
Faulty solenoid	See On-Vehicle Tests in STARTER article
Poor grounds	Check all ground connections for tight and clean connections
Ignition switch faulty or misadjusted	Adjust or replace ignition switch as necessary
Starter Cranks Engine Slowly	
Battery weak or defective	Charge or replace battery as necessary
Engine overheated	See ENGINE COOLING SYSTEM article
Engine oil too heavy	Check that proper viscosity oil is used
Poor battery-to-starter connections	Check that all between battery and starter are clean and tight
Current draw too low or too high	See Bench Tests in STARTER article
Bent armature, loose pole shoes screws or worn bearing	See STARTER article
Burned solenoid contacts	Replace solenoid
Faulty starter	Replace starter
Starter Engages Engine Only Momentarily	
Engine timing too far advanced	See Ignition Timing in TUNE-UP article
Overrunning clutch not engaging properly	Replace overrunning clutch. See STARTER article
Broken starter clutch	See STARTER article

CONDITION & POSSIBLE CAUSE	CORRECTION
Broken teeth on engine flywheel	Replace flywheel and check starter pinion gear for damage
Weak drive assembly thrust spring	See STARTER article
Weak hold-in coil	See Bench Tests in STARTER article
Starter Drive Will Not Engage	
Defective point assembly	See Testing in STARTER article
Poor point assembly ground	See Testing in STARTER article
Defective pull-in coil	Replace starter solenoid
Starter Relay Does Not Close	
Dead battery	Charge or replace battery as necessary
Faulty wiring	Check all wiring and connections leading to relay
Neutral safety switch faulty	Replace neutral safety switch
Starter relay faulty	Replace starter relay
Starter Drive Will Not Disengage	
Starter motor loose on mountings	Tighten starter attach bolts
Worn drive end bushing	See STARTER article
Damaged engine flywheel teeth	Replace flywheel and starter pinion gear for damage
Drive yolk return spring broken or missing	Replace return spring
Faulty ignition switch	Replace ignition switch
Insufficient clearance between winding leads to solenoid terminal and main contact in solenoid	Replace starter solenoid
Starter clutch not disengaging	Replace starter clutch
Ignition starter switch	Replace ignition switch contacts sticking
Starter Relay Operates but Solenoid Does Not	
Faulty solenoid switch, switch connections or relay	Check all wiring between relay and solenoid or replace relay or solenoid as necessary
Broken lead or loose soldered connections	Repair wire or wire connections as necessary
Solenoid Plunger Vibrates When Switch is Engaged	
Weak battery	Charge or replace battery as necessary
Solenoid contacts corroded	Clean contacts or replace solenoid
Faulty wiring	Check all wiring leading to solenoid
Broken connections inside switch cover	Repair connections or replace solenoid
Open hold-in wire	solenoid
Low Current Draw	
Worn brushes or weak brush springs	Replace brushes or brush springs as necessary
High Pitched Whine During Cranking Before Engine Fires but Engine Fires and Cranks Normally	
Distance too great between starter pinion and flywheel	Align starter or check that correct starter and flywheel are being used
High Pitched Whine After Engine Fires With Key released. Engine Fires and Cranks Normally	
Distance too small between starter pinion and flywheel	Flywheel runout contributes to the intermittent nature

AIR CONDITIONING & HEAT

AIR CONDITIONING TROUBLE SHOOTING

WARNING: **This is GENERAL information. This article is not intended to be specific to any unique situation or individual vehicle configuration. The purpose of this Trouble Shooting information is to provide a list of common causes to problem**

symptoms. For model-specific Trouble Shooting, refer to SUBJECT, DIAGNOSTIC, or TESTING articles available in the section(s) you are accessing.

BASIC AIR CONDITIONING TROUBLE SHOOTING CHART

CONDITION	POSSIBLE CAUSE
Compressor Not Working	Compressor clutch circuit open.
.....	Compressor clutch coil inoperative.
.....	Poor clutch ground connection.
.....	Fan belts loose.
.....	Thermostatic switch inoperative.
.....	Thermostatic switch not adjusted.
.....	Ambient temperature switch open.
.....	Superheat fuse blown.
Excessive Noise or Vibration	Missing or loose mounting bolts.
.....	Bad idler pulley bearings.
.....	Fan belts not tightened correctly.
.....	Compressor clutch contacting body.
.....	Excessive system pressure.
.....	Compressor oil level low.
.....	Damaged clutch bearings.
.....	Damaged reed valves.
.....	Damaged compressor.
Insufficient or No Cooling; Compressor Working	Expansion valve inoperative.
.....	Heater control valve stuck open.
.....	Low system pressure.
.....	Blocked condenser fins.
.....	Blocked evaporator fins.
.....	Vacuum system leak.
.....	Vacuum motors inoperative.
.....	Control cables improperly adjusted.
.....	Restricted air inlet.
.....	Mode doors binding.
.....	Blower motor inoperative.
.....	Temperature above system capacity.

HEATER SYSTEM TROUBLE SHOOTING

NOTE: **This is GENERAL information. This article is not intended to be specific to any unique situation or individual vehicle configuration. The purpose of this Trouble Shooting information is to provide a list of common causes to problem symptoms. For model-specific Trouble Shooting, refer to DIAGNOSTIC, or TESTING articles available in the section(s) you are accessing.**

BASIC HEATER SYSTEM TROUBLE SHOOTING CHART

CONDITION	POSSIBLE CAUSE
Insufficient, Erratic, or No Heat	Low Coolant Level
.....	Incorrect thermostat.
.....	Restricted coolant flow through core.
.....	Heater hoses plugged.
.....	Misadjusted control cable.

CONDITION	POSSIBLE CAUSE
.....	Sticking heater control valve.
.....	Vacuum hose leaking.
.....	Vacuum hose blocked.
.....	Vacuum motors inoperative.
.....	Blocked air inlet.
.....	Inoperative heater blower motor.
.....	Oil residue on heater core fins.
.....	Dirt on heater core fins.
Too Much Heat	Improperly adjusted cables.
.....	Sticking heater control valve.
.....	No vacuum to heater control valve.
.....	Temperature door stuck open.
Air Flow Changes During Acceleration	Vacuum system leak.
.....	Bad check valve or reservoir.
Air From Defroster At All Times	Vacuum system leak.
.....	Improperly adjusted control cables.
.....	Inoperative vacuum motor.
Blower Does Not Operate Correctly	Blown fuse.
.....	Blower motor windings open.
.....	Resistors burned out.
.....	Motor ground connection loose.
.....	Wiring harness connections loose.
.....	Blower motor switch inoperative.
.....	Blower relay inoperative.
.....	Fan binding or foreign object in housing.
.....	Fan blades broken or bent.

BRAKES

BRAKE SYSTEM TROUBLE SHOOTING

NOTE: **This is GENERAL information. This article is not intended to be specific to any unique situation or individual vehicle configuration. The purpose of this Trouble Shooting information is to provide a list of common causes to problem symptoms. For model-specific Trouble Shooting, refer to SUBJECT, DIAGNOSTIC, or TESTING articles available in the section(s) you are accessing.**

BRAKE SYSTEM TROUBLE SHOOTING CHART

CONDITION & POSSIBLE CAUSE	CORRECTION
Brakes Pull Left or Right	
Incorrect tire pressure	Inflate tires to proper pressure
Front end out of alignment	See WHEEL ALIGNMENT
Mismatched tires	Check tires sizes
Restricted brake lines or hoses	Check hose routing
Loose or malfunctioning caliper	See DISC BRAKES or BRAKE SYSTEM
Bent shoe or oily linings	See DRUM BRAKES or BRAKE SYSTEM
Malfunctioning rear brakes	See DRUM, DISC BRAKES or BRAKE SYSTEM
Loose suspension parts	See SUSPENSION

CONDITION & POSSIBLE CAUSE	CORRECTION
Noises Without Brakes Applied	
Front linings worn out	Replace linings
Dust or oil on drums or rotors	See DRUM, DISC BRAKES or BRAKE SYSTEM
Noises With Brakes Applied	
Insulator on outboard shoe damaged	See DISC BRAKES or BRAKE SYSTEM
Incorrect pads or linings	Replace pads or linings
Brake Rough, Chatters or Pulsates	
Excessive lateral runout	Check rotor runout
Parallelism not to specifications	Reface or replace rotor
Wheel bearings not adjusted	See SUSPENSION
Rear drums out-of-round	Reface or replace drums
Disc pad reversed, steel against rotor	Remove and reinstall pad
Excessive Pedal Effort	
Malfunctioning power unit	See POWER BRAKES or BRAKE SYSTEM
Partial system failure	Check fluid and pipes
Worn disc pad or lining	Replace pad or lining
Caliper piston stuck or sluggish	See DISC BRAKES or BRAKE SYSTEM
Master cylinder piston stuck	See MASTER CYLINDERS or BRAKE SYSTEM
Brake fade due to incorrect pads for linings	Replace pads or linings
Linings or pads glazed	Replace pads or linings
Worn drums	Reface or replace drums
Excessive Pedal Travel	
Partial brake system failure	Check fluid and pipes
Insufficient fluid in master cylinder	See MASTER CYLINDERS or BRAKE SYSTEM
Air trapped in system	See BRAKE BLEEDING or BRAKE SYSTEM
Rear brakes not adjusted	See Adjustments in DRUM BRAKES or BRAKE SYSTEM
Bent shoe or lining	See DRUM BRAKES or BRAKE SYSTEM
Plugged master cylinder cap	See MASTER CYLINDERS or BRAKE SYSTEM
Improper brake fluid	Replace brake fluid
Pedal Travel Decreasing	
Compensating port plugged	See MASTER CYLINDERS or BRAKE SYSTEM
Swollen cup in master cylinder	See MASTER CYLINDERS or BRAKE SYSTEM
Master cylinder piston not returning	See MASTER CYLINDERS or BRAKE SYSTEM
Weak shoe retracting springs	See DRUM BRAKES BRAKE SYSTEM
Wheel cylinder piston sticking	See DRUM BRAKES or BRAKE SYSTEM
Dragging Brakes	
Master cylinder pistons not returning	See MASTER CYLINDERS BRAKE SYSTEM
Restricted brake lines or hoses	Check line routing
Incorrect parking brake adjustment	See DRUM BRAKES BRAKE SYSTEM
Parking Brake cables frozen	See DRUM BRAKES BRAKE SYSTEM
Incorrect installation of inboard disc pad	Remove and replace correctly

CONDITION & POSSIBLE CAUSE	CORRECTION
Power booster output rod too long	See POWER BRAKE UNITS BRAKE SYSTEM
Brake pedal not returning freely	See DISC, DRUM BRAKES BRAKE SYSTEM
Brakes Grab or Uneven Braking Action	
Malfunction of combination valve	See CONTROL VALVE or BRAKE SYSTEM
Malfunction of power brake unit	See POWER BRAKE UNITS or BRAKE SYSTEM
Binding brake pedal	See DISC, DRUM BRAKES or BRAKE SYSTEM
Pulsation or Roughness	
Uneven pad wear caused by caliper	See DISC BRAKES or BRAKE SYSTEM
Uneven rotor wear	See DISC BRAKES or BRAKE SYSTEM
Drums out-of-round	Reface or replace drums

ENGINE MECHANICAL

COOLING SYSTEM TROUBLE SHOOTING

NOTE: **This is GENERAL information. This article is not intended to be specific to any unique situation or individual vehicle configuration. The purpose of this Trouble Shooting information is to provide a list of common causes to problem symptoms. For model-specific Trouble Shooting, refer to SUBJECT, DIAGNOSTIC, or TESTING articles available in the section(s) you are accessing.**

COOLING SYSTEM TROUBLE SHOOTING

CONDITION & POSSIBLE CAUSE	CORRECTION
Overheating	
Coolant Leak	Fill/Pressure Test System
A/C Condenser Fins Clogged	Remove/Clean Condenser
Radiator Fins Clogged	Remove/Clean Radiator
Thermostat Stuck Closed	Replace Thermostat
Clogged Cooling System Passages	Clean/Flush Cooling System
Water Pump Malfunction	Replace Water Pump
Fan Clutch Malfunction	Replace Fan Clutch
Retarded Ignition Timing	Reset Ignition Timing
Cooling Fan Malfunction	Test Cooling Fan/Circuit
Cooling Fan Motor Malfunction	Test Fan Motor
Cooling Fan Relay Malfunction	Test Fan Relay
Faulty Radiator Cap	Replace Radiator Cap
Broken/Slipping Fan Belt	Replace Fan Belt
Restricted Exhaust	Repair Exhaust System
Corrosion	
Impurities In Coolant	Clean/Flush System
Coolant Leakage	
Damaged hose	Replace Hose
Leaky Water Pump	Replace Water Pump
Damaged Radiator Seam	Replace/Repair Radiator
Leaky Thermostat Cover	Replace Thermostat Cover
Cylinder Head Problem	Check Head/Head Gasket
Leaky Freeze Plugs	Replace Freeze Plugs

CONDITION & POSSIBLE CAUSE	CORRECTION
Recovery System Inoperative	
Loose and/or Defective Radiator Cap	Replace Radiator Cap
Overflow Tube Clogged and/or Leaking	Repair Tube
Recovery Bottle Vent Restricted	Clean Vent
No Heater Core Flow	
Collapsed Heater Hose	Replace Heater Hose
Plugged Heater Core	Clean/Replace Heater Core
Faulty Heater Valve	Replace Heater Valve

GASOLINE ENGINE - MECHANICAL TROUBLE SHOOTING

NOTE: **This is GENERAL information. This article is not intended to be specific to any unique situation or individual vehicle configuration. The purpose of this Trouble Shooting information is to provide a list of common causes to problem symptoms. For model-specific Trouble Shooting, refer to SUBJECT, DIAGNOSTIC, or TESTING articles available in the section(s) you are accessing.**

BASIC GASOLINE ENGINE - MECHANICAL TROUBLE SHOOTING CHART

CONDITION & POSSIBLE CAUSE	CORRECTION
Engine Lopes At Idle	
Intake manifold-to-head leaks	Replace manifold gasket, See ENGINES
Blown head gasket	Replace head gasket, See ENGINES
Worn timing gears, chain or sprocket	Replace gears, chain or sprocket
Worn camshaft lobes	Replace camshaft, See ENGINES
Overheated engine	Check cooling system, See COOLING
Blocked crankcase vent valve	Remove restriction
Leaking EGR valve	Repair leak and/or replace valve
Faulty fuel pump	Replace fuel pump
Engine Has Low Power	
Leaking fuel pump	Repair leak and/or replace fuel pump
Excessive piston-to-bore clearance	Install larger pistons, See ENGINES
Sticking valves or weak valve springs	Check valve train components, See ENGINES
Incorrect valve timing	Reset valve timing, See ENGINES
Worn camshaft lobes	Replace camshaft, See ENGINES
Blown head gasket	Replace head gasket. See ENGINES.
Clutch slipping	Adjust pedal and/or replace components, See ENGINES
Engine overheating	Check cooling system, See COOLING
Auto. Trans. pressure regulator valve faulty	Replace pressure regulator valve
Auto. Trans. fluid level too low	Add fluid as necessary
Improper vacuum diverter valve operation	Replace vacuum diverter valve
Vacuum leaks	Inspect vacuum system and repair as required
Leaking piston rings	Replace piston rings, See ENGINES
Faulty High Speed Operation	
Low fuel pump volume	Replace fuel pump
Leaking valves or worn	Replace valves and/or springs, See ENGINES
Incorrect valve timing	Reset valve timing,See ENGINES
Intake manifold restricted	Remove restriction
Worn distributor shaft	Replace distributor
Faulty Acceleration	

CONDITION & POSSIBLE CAUSE	**CORRECTION**
Improper fuel pump stroke	Remove pump and reset pump stroke
Incorrect ignition timing	Reset ignition timing, See TUNE-UP
Leaking valves	Replace valves, See ENGINES
Worn fuel pump diaphragm or piston	Replace diaphragm or piston
Intake Backfire	
Improper ignition timing	Reset ignition timing, See TUNE-UP
Faulty accelerator pump discharge	Replace accelerator pump
Improper choke operation	Check choke and adjust as required
Defective EGR valve	Replace EGR valve
Fuel mixture too lean	Reset air/fuel mixture, See TUNE-UP
Choke valve initial clearance too large	Reset choke valve initial clearance
Exhaust Backfire	
Vacuum leak	Inspect and repair vacuum system
Faulty vacuum diverter valve	Replace vacuum diverter valve
Faulty choke operation	Check choke and adjust as required
Exhaust system leak	repair exhaust system leak
Engine Detonation	
Ignition timing too far advanced	Reset ignition timing, See TUNE-UP
Faulty ignition system	Check ignition timing, See TUNE-UP
Spark plugs loose or faulty	Retighten or replace plugs
Fuel delivery system clogged	Inspect lines, pump and filter for clog
EGR valve inoperative	Replace EGR valve
PCV system inoperative	Inspect and/or replace hoses or valve
Vacuum leaks	Check vacuum system and repair leaks
Excessive combustion chamber deposits	Remove built-up deposits
Leaking, sticking or broken valves	Inspect and/or replace valves
External Oil Leakage	
Fuel pump improperly seated or worn gasket	Remove pump, replace gasket and seat properly
Oil pan gasket broken or pan bent	Straighten pan and replace gasket
Timing chain cover gasket broken	Replace timing chain cover gasket
Rear main oil seal worn	Replace rear main oil seal
Oil pan drain plug not seated properly	Remove and reinstall drain plug
Camshaft bearing drain hole blocked	Remove restriction
Oil pressure sending switch leaking	Remove and reinstall sending switch
Excessive Oil Consumption	
Worn valve stems or guides	Replace stems or guides, See ENGINES
Valve "O" ring seals damaged	Replace "O" ring seals, See ENGINES
Plugged oil drain back holes	Remove restrictions
Improper PCV valve operation	Replace PCV valve
Engine oil level too high	Remove excess oil
Engine oil too thin	Replace thicker oil
Valve stem oil deflectors damaged	Replace oil deflectors
Incorrect piston rings	Replace piston rings, See ENGINES
Piston ring gaps not staggered	Reinstall piston rings, See ENGINES
Insufficient piston ring tension	Replace rings, See ENGINES
Piston ring grooves or oil return	slots clogged Replace piston rings, See ENGINES
Piston rings sticking in grooves	Replace piston rings, See ENGINES

CONDITION & POSSIBLE CAUSE	**CORRECTION**
Piston ring grooves excessively worn	Replace piston and rings, See ENGINES
Compression rings installed upside down	Replace compression rings correctly, See ENGINES
Worn or scored cylinder walls	Rebore cylinders or replace block
Mismatched oil ring expander and rail	Replace oil ring expander and rail, See ENGINES
Intake gasket dowels too long	Replace intake gasket dowels
Excessive main or connecting rod bearing clearance	Replace main or connecting rod bearings, See ENGINES
No Oil Pressure	
Low oil level	Add oil to proper level
Oil pressure sender or gauge broken	Replace sender or gauge
Oil pump malfunction	Remove and overhaul oil pump, See ENGINES
Oil pressure relief valve sticking	Remove and reinstall valve
Oil pump passages blocked	Overhaul oil pump, See ENGINES
Oil pickup screen or tube blocked	Remove restriction
Loose oil inlet tube	Tighten oil inlet tube
Loose camshaft bearings	Replace camshaft bearings, See ENGINES
Internal leakage at oil passages	Replace block or cylinder head
Low Oil Pressure	
Low engine oil level	Add oil to proper level
Engine oil too thin	Remove and replace with thicker oil
Excessive oil pump clearance	Reduce oil pump clearance, See ENGINES
Oil pickup tube or screen blocked	Remove restrictions
Main, rod or cam bearing clearance excessive	Replace bearing to reduce clearance, See ENGINES
High Oil Pressure	
Improper grade of oil	Replace with proper oil
Oil pressure relief valve stuck closed	Eliminate binding
Oil pressure sender or gauge faulty	Replace sender or gauge
Noisy Main Bearings	
Inadequate oil supply	Check oil delivery to main bearings
Excessive main bearing clearance	Replace main bearings, See ENGINES
Excessive crankshaft end play	Replace crankshaft, See ENGINES
Loose flywheel or torque converter	Tighten attaching bolts
Loose or damaged vibration damper	Tighten or replace vibration damper
Crankshaft journals out-of-round	Re-grind crankshaft journals
Excessive belt tension	Loosen belt tension
Noisy Connecting Rods	
Excessive bearing clearance or missing bearing	Replace bearing, See ENGINES
Crankshaft rod journal out-of-round	Re-grind crankshaft journal
Misaligned connecting rod or cap	Remove rod or cap and realign
Incorrectly tightened rod bolts	Remove and re-tighten rod bolts
Noisy Pistons and Rings	
Excessive piston-to-bore clearance	Install larger pistons, See ENGINES
Bore tapered or out-of-round	Rebore block
Piston ring broken	Replace piston rings, See ENGINES
Piston pin loose or seized	Replace piston pin, See ENGINES
Connecting rods misaligned	Realign connecting rods

CONDITION & POSSIBLE CAUSE	**CORRECTION**
Ring side clearance too loose or tight	Replace with larger or smaller rings
Carbon build-up on piston	Remove carbon
Noisy Valve Train	
Worn or bent push rods	Replace push rods, See ENGINES
Worn rocker arms or bridged pivots	Replace push rods, See ENGINES
Dirt or chips in valve lifters	Remove lifters and remove dirt/chips
Excessive valve lifter leak-down	Replace valve lifters, See ENGINES
Valve lifter face worn	Replace valve lifters, See ENGINES
Broken or cocked valve springs	Replace or reposition springs
Too much valve stem-to-guide clearance	Replace valve guides, See ENGINES
Valve bent	Replace valve, See ENGINES
Loose rocker arms	Retighten rocker arms, See ENGINES
Excessive valve seat run-out	Reface valve seats, See ENGINES
Missing valve lock	Install new valve lock
Excessively worn camshaft lobes	Replace camshaft, See ENGINES
Plugged valve lifter oil holes	Eliminate restriction or replace lifter
Faulty valve lifter check ball	Replace lifter check ball, See ENGINES
Rocker arm nut installed upside down	Remove and reinstall correctly
Valve lifter incorrect for engine	Remove and replace valve lifters
Faulty push rod seat or lifter plunger	Replace plunger or push rod
Noisy Valves	
Improper valve lash	Re-adjust valve lash, See ENGINES
Worn or dirty valve lifters	Clean and/or replace lifters
Worn valve guides	Replace valve guides, See ENGINES
Excessive valve seat or face run-out	Reface seats or valve face
Worn camshaft lobes	Replace camshaft, See ENGINES
Loose rocker arm studs	Re-tighten rocker arm studs, See ENGINES
Bent push rods	Replace push rods, See ENGINES
Broken valve springs	Replace valve springs, See ENGINES
Burned,Sticking or Broken Valves	
Weak valve springs or warped valves	Replace valves and/or springs, See ENGINES
Improper lifter clearance	Re-adjust clearance or replace lifters
Worn guides or improper guide clearance	Replace valve guides, See ENGINES
Out-of-round valve seats or improper seat width	Re-grind valve seats
Gum deposits on valve stems, seats or guide	Remove deposits
Improper spark timing	Re-adjust spark timing
Broken Pistons/Rings	
Undersize pistons	Replace with larger pistons, See ENGINES
Wrong piston rings	Replace with correct rings, See ENGINES
Out-of-round cylinder bore	Re-bore cylinder bore
Improper connecting rod alignment	Remove and realign connecting rods
Excessively worn ring grooves	Replace pistons, See ENGINES
Improperly assembled piston pins	Re-assemble pin-to-piston, See ENGINES
Insufficient ring gap clearance	Install new rings, See ENGINES
Engine overheating	Check cooling system
Incorrect ignition timing	Re-adjust ignition timing, See TUNE-UP
Excessive Exhaust Noise	
Leaks at manifold to head, or to pipe	Replace manifold or pipe gasket

CONDITION & POSSIBLE CAUSE	CORRECTION
Exhaust manifold cracked or broken	Replace exhaust manifold, See ENGINES

ENGINE PERFORMANCE

CARBURETOR TROUBLE SHOOTING:

NOTE: **This is GENERAL information. This article is not intended to be specific to any unique situation or individual vehicle configuration. The purpose of this Trouble Shooting information is to provide a list of common causes to problem symptoms. For model-specific Trouble Shooting, refer to SUBJECT, DIAGNOSTIC, or TESTING articles available in the section(s) you are accessing.**

BASIC COLD START SYMPTOMS TROUBLE SHOOTING CHART

CONDITION & POSSIBLE CAUSE	CORRECTION
Engine Won't Start	
Choke not closing	Check choke operation, see FUEL SYSTEMS
Choke linkage bent	Check linkage, see FUEL SYSTEM
Engine Starts, Then Dies	
Choke vacuum kick setting too wide	Check setting and adjust see, FUEL SYSTEMS
Fast idle RPM too low	Reset RPM to specification, see TUNE-UP
Fast idle cam index incorrect	Reset fast idle cam index, see FUEL SYSTEMS
Vacuum leak	Inspect vacuum system for leaks
Low fuel pump outlet	Repair or replace pump, see FUEL SYSTEMS
Low carburetor fuel level	Check float setting see FUEL SYSTEM
Engine Quits Under Load	
Choke vacuum kick setting incorrect	Reset vacuum kick setting,see FUEL SYSTEMS
Fast idle cam index incorrect	Reset fast idle cam index, see FUEL SYSTEM
Incorrect hot fast idle speed RPM	Reset fast idle RPM, see TUNE-UP
Engine Starts, Runs Up, Then Idles, Slowly With Black Smoke	
Choke vacuum kick set too narrow	Reset vacuum kick, see FUEL SYSTEMS
Fast idle cam index incorrect	Reset fast idle cam index, see FUEL SYSTEMS
Hot fast idle RPM too low	Reset fast idle RPM, see TUNE-UP

BASIC HOT START SYMPTOMS TROUBLE SHOOTING CHART

CONDITION & POSSIBLE CAUSE	CORRECTION
Engine Won't Start	
Engine flooded	Allow fuel to evaporate

BASIC COLD ENGINE DRIVEABILITY SYMPTOMS TROUBLE SHOOTING CHART

CONDITION & POSSIBLE CAUSE	CORRECTION
Engine Stalls in Gear	
Choke vacuum kick setting incorrect	Reset choke vacuum kick, see FUEL SYSTEMS
Fast idle RPM incorrect	Reset fast idle RPM, see TUNE-UP
Fast idle cam index incorrect	Reset fast idle cam see FUEL SYSTEMS
Acceleration Sag or Stall	
Defective choke control switch	Replace choke control switch
Choke vacuum kick setting incorrect	Reset choke vacuum kick see, FUEL SYSTEMS
Float level incorrect (too low)	Adjust float level, FUEL SYSTEMS
Accelerator pump defective	Repair or replace pump see FUEL SYSTEMS

CONDITION & POSSIBLE CAUSE	CORRECTION
Secondary throttles not closed	Inspect lockout adjustment, see FUEL SYSTEMS
Sag or Stall After Warmup	
Defective choke control switch	Replace choke control switch, see FUEL SYSTEMS
Defective accelerator pump	Replace pump, see FUEL SYSTEMS
Float level incorrect (too low)	Adjust float level, see FUEL SYSTEMS
Backfiring & Black Smoke	
Plugged heat crossover system	Remove restriction

BASIC WARM ENGINE DRIVEABILITY SYMPTOMS TROUBLE SHOOTING CHART

CONDITION & POSSIBLE CAUSE	CORRECTION
Hesitation With Small Amount of Gas Pedal Movement	
Vacuum leak	Inspect vacuum lines
Accelerator pump weak or inoperable	Replace pump, see FUEL SYSTEMS
Float level setting too low	Reset float level, see,FUEL SYSTEMS
Metering rods sticking or binding	Inspect and/or replace rods, see FUEL SYSTEMS
Carburetor idle or transfer system plugged	Inspect system and remove restriction
Frozen or binding heated air inlet	Inspect heated air door for binding
Hesitation With Heavy Gas Pedal Movement	
Defective accelerator pump	Replace pump, see FUEL SYSTEMS
Metering rod carrier sticking or binding	Remove restriction
Large vacuum leak	Inspect vacuum system and repair leak
Float level setting too low	Reset float level, see FUEL SYSTEMS
Defective fuel pump, lines or filter	Inspect pump, lines and filter
Air door setting incorrect	Adjust air door setting, see FUEL

DIESEL ENGINE TROUBLE SHOOTING

NOTE: **This is GENERAL information. This article is not intended to be specific to any unique situation or individual vehicle configuration. The purpose of this Trouble Shooting information is to provide a list of common causes to problem symptoms. For model-specific Trouble Shooting, refer to SUBJECT, DIAGNOSTIC, or TESTING articles available in the section(s) you are accessing.**

NOTE: **Diesel engines mechanical diagnosis is the same as gasoline engines for items such as noisy valves, bearings, pistons, etc. The following trouble shooting covers only items pertaining to diesel engines.**

BASIC DIESEL ENGINE TROUBLE SHOOTING CHART

CONDITION & POSSIBLE CAUSE	CORRECTION
Engine Won't Crank	
Bad battery connections or dead batteries	Check connections and/or replace batteries
Bad starter connections or bad starter	Check connections and/or replace starter
Engine Cranks Slowly, Won't Start	
Bad battery connections or dead batteries	Check connections and/or replace batteries
Engine oil too heavy	Replace engine oil
Engine Cranks Normally, But Will Not Start	
Glow plugs not functioning	Check glow plug system, see FUEL SYSTEMS
Glow plug control not functioning	Check controller, see FUEL SYSTEMS

CONDITION & POSSIBLE CAUSE	**CORRECTION**
Fuel not injected into cylinders	Check fuel injectors, see FUEL SYSTEMS
No fuel to injection pump	Check fuel delivery system
Fuel filter blocked	Replace fuel filter
Fuel tank filter blocked	Replace fuel tank filter
Fuel pump not operating	Check pump operation and/or replace pump
Fuel return system blocked	Inspect system and remove restriction
No voltage to fuel solenoid	Check solenoid and connections
Incorrect or contaminated fuel	Replace fuel
Incorrect injection pump timing	Re-adjust pump timing, see FUEL SYSTEMS
Low compression	Check valves, pistons, rings, see ENGINES
Injection pump malfunction	Inspect and/or replace injection pump
Engine Starts, Won't Idle	
Incorrect slow idle adjustment	Reset idle adjustment, see TUNE-UP
Fast idle solenoid malfunctioning	Check solenoid and connections
Fuel return system blocked	Check system and remove restrictions
Glow plugs go off too soon	See glow plug diagnosis in FUEL SYSTEMS
Injection pump timing incorrect	Reset pump timing, see FUEL SYSTEMS
No fuel to injection pump	Check fuel delivery system
Incorrect or contaminated fuel	Replace fuel
Low compression	Check valves, piston, rings, see ENGINES
Injection pump malfunction	Replace injection pump, see FUEL SYSTEMS
Fuel solenoid closes in RUN position	Check solenoid and connections
Engines Starts/Idles Rough W/out Smoke or Noise	
Incorrect slow idle adjustment	Reset slow idle, see TUNE-UP
Injection line fuel leaks	Check lines and connections
Fuel return system blocked	Check lines and connections
Air in fuel system	Bleed air from system
Incorrect or contaminated fuel	Replace fuel
Injector nozzle malfunction	Check nozzles, see FUEL SYSTEMS
Engines Starts and Idles Rough W/out Smoke or Noise, But Clears After Warm-Up	
Injection pump timing incorrect	Reset pump timing, see FUEL SYSTEMS
Engine not fully broken in	Put more miles on engine
Air in system	Bleed air from system
Injector nozzle malfunction	Check nozzles, see FUEL SYSTEMS
Engine Idles Correctly, Misfires Above Idle	
Blocked fuel filter	Replace fuel filter
Injection pump timing incorrect	Reset pump timing, see FUEL SYSTEMS
Incorrect or contaminated fuel	Replace fuel
Engine Won't Return To Idle	
Fast idle adjustment incorrect	Reset fast idle, see TUNE-UP
Internal injection pump malfunction	Replace injection pump, see FUEL SYSTEMS
External linkage binding	Check linkage and remove binding
Fuel Leaks On Ground	
Loose or broken fuel line	Check lines and connections
Internal injection pump seal leak	Replace injection pump, see FUEL SYSTEMS
Cylinder Knocking Noise	
Injector nozzles sticking open	Test injectors, see FUEL SYSTEMS
Very low nozzle opening pressure	Test injectors and/or replace

CONDITION & POSSIBLE CAUSE	CORRECTION
Loss of Engine Power	
Restricted air intake	Remove restriction
EGR valve malfunction	Replace EGR valve
Blocked or damaged exhaust system	Remove restriction and/or replace components
Blocked fuel tank filter	Replace filter
Restricted fuel filter	Remove restriction and/or replace filter
Block vent in gas cap	Remove restriction and/or replace cap
Tank-to-injection pump fuel supply blocked	Check fuel lines and connections
Blocked fuel return system	Remove restriction
Incorrect or contaminated fuel	Replace fuel
Blocked injector nozzles	Check nozzle for blockage, see FUEL SYSTEMS
Low compression	Check valves, rings, pistons, see ENGINES
Loud Engine Noise With Black Smoke	
Basic timing incorrect	Reset timing, see FUEL SYSTEMS
EGR valve malfunction	Replace EGR valve
Internal injection pump malfunction	Replace injection pump, see FUEL SYSTEMS
Incorrect injector pump housing pressure	Check pressure, see FUEL SYSTEMS
Engine Overheating	
Cooling system leaks	Check cooling system and repair leaks
Belt slipping or damaged	Check tension and/or replace belt
Thermostat stuck closed	Remove and replace thermostat, see ENGINE COOLING
Head gasket leaking	Replace head gasket
Oil Light on at Idle	
Low oil pump pressure	Check oil pump operation, see ENGINES
Oil cooler or line restricted	Remove restriction and/or replace cooler
Engine Won't Shut Off	
Injector pump fuel solenoid does not return fuel valve to OFF position	Remove and check solenoid and replace if needed

VACUUM PUMP DIAGNOSIS

CONDITION & POSSIBLE CAUSE	CORRECTION
Excessive Noise	
Loose pump-to-drive assembly screws	Tighten screws
Loose tube on pump assembly	Tighten tube
Valves not functioning properly	Replace valves
Oil Leakage	
Loose end plug	Tighten end plug
Bad seal crimp	Remove and re-crimp seal

FUEL INJECTION TROUBLE SHOOTING

NOTE: **This is GENERAL information. This article is not intended to be specific to any unique situation or individual vehicle configuration. The purpose of this Trouble Shooting information is to provide a list of common causes to problem symptoms. For model-specific Trouble Shooting, refer to SUBJECT, DIAGNOSTIC, or TESTING articles available in the section(s) you are accessing.**

BASIC FUEL INJECTION TROUBLE SHOOTING CHART

CONDITION & POSSIBLE CAUSE	CORRECTION
Engine Won't Start (Cranks Normally)	
Cold start valve inoperative	Test valve and circuit
Poor connection;vacuum or wiring	Check vacuum and electrical connections
Contaminated fuel	Test fuel for water or alcohol
Defective fuel pump relay or circuit	Test relay and wiring
Battery too low	Charge and test battery
Low fuel pressure	Test pressure regulator and fuel pump, check for restricted lines and filters
No distributor reference pulses	Repair ignition system as necessary
Open coolant temperature sensor circuit	Test sensor and wiring
Shorted W.O.T. switch in T.P.S.	Disconnect W.O.T. switch, engine should start
Defective ECM	Replace ECM
Fuel tank residual pressure valve leaks	Test for fuel pressure drop after shut down
Hard Starting	
Disconnected hot air tube to air cleaner	Reconnect tube and test control valve
Defective Idle Air Control (IAC) valve	Test valve operation and circuit
Shorted, open or misadjusted T.P.S.	Test and adjust or replace T.P.S.
EGR valve open	Test EGR valve and control circuit
Poor Oxygen sensor signal	Test for shorted or circuit
Incorrect mixture from PCV system	Test PCV for flow, check sealing of oil filter cap
Poor High Speed Operation	
Low fuel pump volume	Faulty pump or restricted fuel lines or filters
Poor MAP sensor signal	Test MAP sensor, vacuum hose and wiring
Poor Oxygen sensor signal	Test for shorted or open sensor or circuit
Open coolant temperature sensor circuit	Test sensor and wiring
Faulty ignition operation	Check wires for cracks or poor con- nections, test secondary voltage with oscilloscope
Contaminated fuel	Test fuel for water or alcohol
Intermittent ECM ground	Test ECM ground connection for resistance
Restricted air cleaner	Replace air cleaner
Restricted exhaust system	Test for exhaust manifold back pressure
Poor MAF sensor signal	Check leakage between sensor and manifold
Poor VSS signal	If tester for ALCL hook-up is available check that VSS reading matches speedometer
Ping or Knock on Acceleration	
Poor Knock sensor signal	Test for shorted or open sensor or circuit
Poor Baro sensor signal	Test for shorted or open sensor or circuit
Improper ignition timing	See VEHICLE EMISSION CONTROL LABEL (where applicable)
Check for engine overheating problems	Low coolant, loose belts or electric cooling fan inoperative

NOTE: **For additional electronic fuel injection trouble shooting information, see the appropriate article in the ENGINE PERFORMANCE section (not all vehicles have Computer Engine Control articles). Information is provided there for diagnosing fuel system problems on vehicles with electronic fuel injection.**

IGNITION SYSTEM TROUBLE SHOOTING

NOTE: **This is GENERAL information. This article is not intended to be specific to any unique situation or individual vehicle configuration. The purpose of this Trouble Shooting information is to provide a list of common causes to problem symptoms. For model-specific Trouble Shooting, refer to SUBJECT, DIAGNOSTIC, or TESTING articles available in the section(s) you are accessing.**

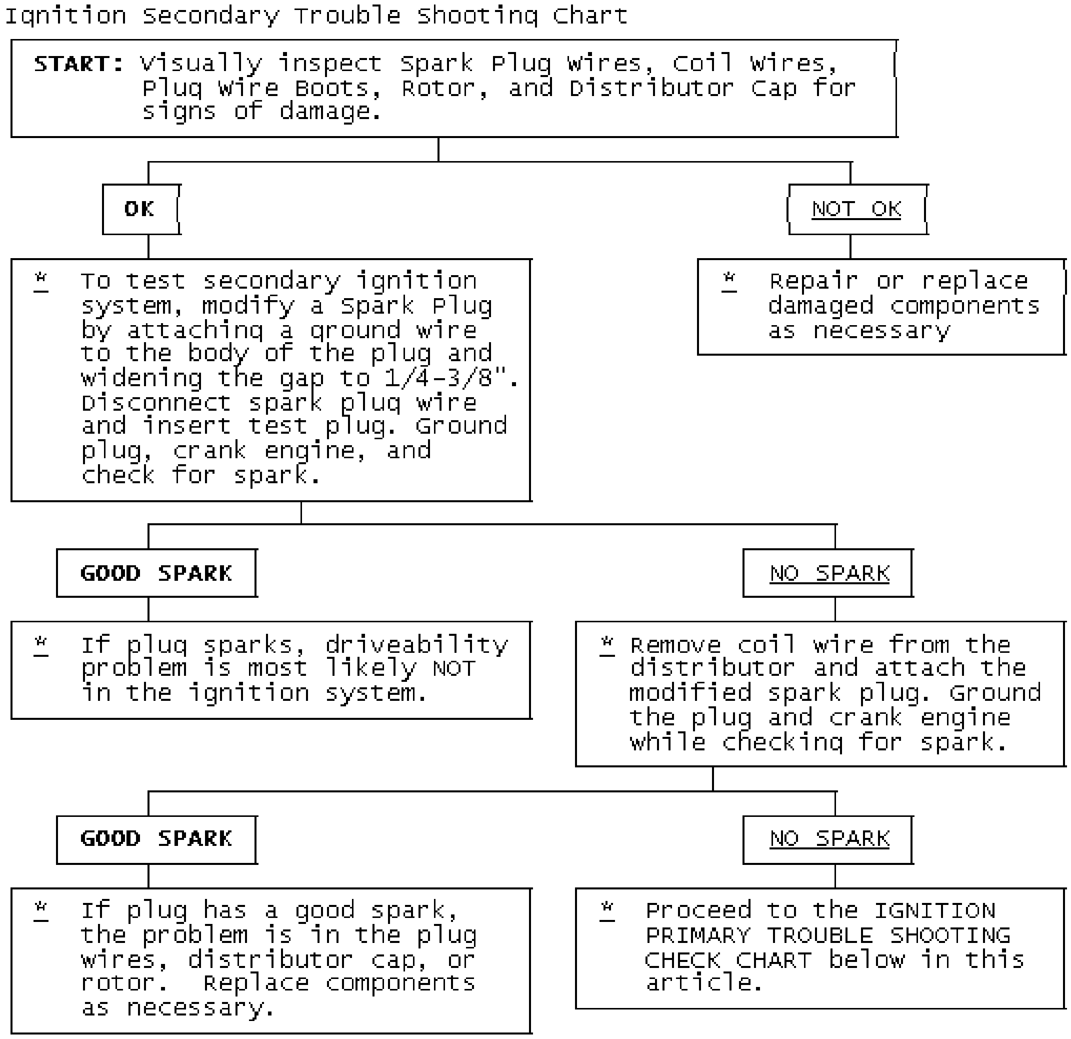

Ignition Secondary Trouble Shooting Chart

START: Visually inspect Spark Plug Wires, Coil Wires, Plug Wire Boots, Rotor, and Distributor Cap for signs of damage.

* To test secondary ignition system, modify a Spark Plug by attaching a ground wire to the body of the plug and widening the gap to 1/4-3/8". Disconnect spark plug wire and insert test plug. Ground plug, crank engine, and check for spark.

* Repair or replace damaged components as necessary

* If plug sparks, driveability problem is most likely NOT in the ignition system.

* Remove coil wire from the distributor and attach the modified spark plug. Ground the plug and crank engine while checking for spark.

* If plug has a good spark, the problem is in the plug wires, distributor cap, or rotor. Replace components as necessary.

* Proceed to the IGNITION PRIMARY TROUBLE SHOOTING CHECK CHART below in this article.

Fig. 3: Ignition Secondary Trouble Shooting Chart

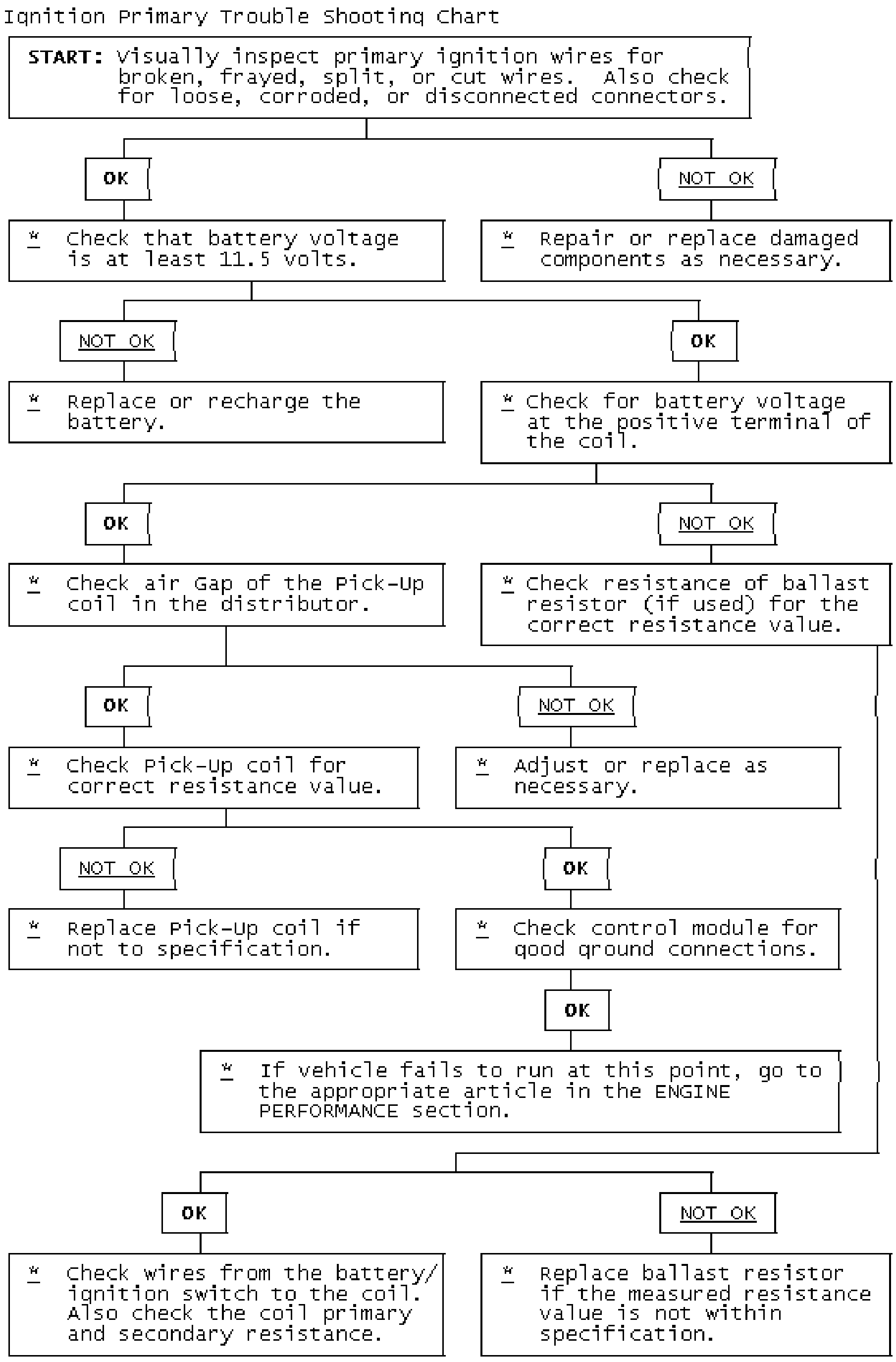
Ignition Primary Trouble Shooting Chart
START: Visually inspect primary ignition wires for broken, frayed, split, or cut wires. Also check for loose, corroded, or disconnected connectors.
OK
NOT OK
* Check that battery voltage is at least 11.5 volts.
* Repair or replace damaged components as necessary.
NOT OK
OK
* Replace or recharge the battery.
* Check for battery voltage at the positive terminal of the coil.
OK
NOT OK
* Check air Gap of the Pick-Up coil in the distributor.
* Check resistance of ballast resistor (if used) for the correct resistance value.
OK
NOT OK
* Check Pick-Up coil for correct resistance value.
* Adjust or replace as necessary.
NOT OK
OK
* Replace Pick-Up coil if not to specification.
* Check control module for good ground connections.
OK
* If vehicle fails to run at this point, go to the appropriate article in the ENGINE PERFORMANCE section.
OK
NOT OK
* Check wires from the battery/ ignition switch to the coil. Also check the coil primary and secondary resistance.
* Replace ballast resistor if the measured resistance value is not within specification.

Fig. 4: Ignition Primary Trouble Shooting Chart

STARTER TROUBLE SHOOTING

NOTE: **This is GENERAL information. This article is not intended to be specific to any unique situation or individual vehicle configuration. The purpose of this Trouble Shooting information is to provide a list of common causes to problem symptoms. For model-specific Trouble Shooting, refer to SUBJECT, DIAGNOSTIC, or TESTING articles available in the section(s) you are accessing.**

BASIC STARTER TROUBLE SHOOTING CHART

CONDITION & POSSIBLE CAUSE	CORRECTION
Starter Fails to Operate	
Dead battery or bad connections between starter and battery	Check battery charge and all wires and connections to starter
Ignition switch faulty or misadjusted	Adjust or replace ignition switch
Open circuit between starter switch ignition terminal on starter relay	Check and repair wires and connections as necessary
Starter relay or starter defective	See Testing in STARTER article
Open solenoid pull-in wire	See Testing in STARTER article
Starter Does Not Operate and Headlights Dim	
Weak battery or dead cell	Charge or replace battery as necessary
Loose or corroded battery connections	Check that battery connections are clean and tight
Internal ground in starter windings	See Testing in STARTER article
Grounded starter fields	See Testing in STARTERS
Armature rubbing on pole shoes	See STARTER article
Starter Turns but Engine Does Not Rotate	
Starter clutch slipping	See STARTER article
Broken clutch housing	See STARTER article
Pinion shaft rusted or dry	See STARTER article
Engine basic timing incorrect	See Ignition Timing in TUNE-UP article
Broken teeth on engine flywheel	Replace flywheel and check for starter pinion gear damage
Starter Will Not Crank Engine	
Faulty overrunning clutch	See STARTER article
Broken clutch housing	See STARTER article
Broken flywheel teeth	Replace flywheel and check for starter pinion gear damage
Armature shaft sheared or reduction gear teeth stripped	See STARTER article
Weak battery	Charge or replace battery as necessary
Faulty solenoid	See On-Vehicle Tests in STARTER article
Poor grounds	Check all ground connections for tight and clean connections
Ignition switch faulty or misadjusted	Adjust or replace ignition switch as necessary
Starter Cranks Engine Slowly	
Battery weak or defective	Charge or replace battery as necessary
Engine overheated	See ENGINE COOLING SYSTEM article
Engine oil too heavy	Check that proper viscosity oil is used
Poor battery-to-starter connections	Check that all between battery and starter are clean and tight
Current draw too low or too high	See Bench Tests in STARTER article
Bent armature, loose pole shoes screws or worn bearings	See STARTER article
Burned solenoid contacts	Replace solenoid
Faulty starter	Replace starter
Starter Engages Engine Only Momentarily	
Engine timing too far advanced	See Ignition Timing in TUNE-UP article
Overrunning clutch not engaging properly	Replace overrunning clutch. See STARTER article

CONDITION & POSSIBLE CAUSE	CORRECTION
Broken starter clutch	See STARTER article
Broken teeth on engine flywheel	Replace flywheel and check starter pinion gear for damage
Weak drive assembly thrust spring	See STARTER article
Weak hold-in coil	See Bench Tests in STARTER article
Starter Drive Will Not Engage	
Defective point assembly	See Testing in STARTER article
Poor point assembly ground	See Testing in STARTER article
Defective pull-in coil	Replace starter solenoid
Starter Relay Does Not Close	
Dead battery	Charge or replace battery as necessary
Faulty wiring	Check all wiring and connections leading to relay
Neutral safety switch faulty	Replace neutral safety switch
Starter relay faulty	Replace starter relay
Starter Drive Will Not Disengage	
Starter motor loose on mountings	Tighten starter attach bolts
Worn drive end bushing	See STARTER article
Damaged engine flywheel teeth	Replace flywheel and starter pinion gear for damage
Drive yolk return spring broken or missing	Replace return spring
Faulty ignition switch	Replace ignition switch
Insufficient clearance between winding leads to solenoid terminal and main contact in solenoid	Replace starter solenoid
Starter clutch not disengaging	Replace starter clutch
Ignition starter switch contacts sticking	Replace ignition switch
Starter Relay Operates but Solenoid Does Not	
Faulty solenoid switch, switch connections or relay	Check all wiring between relay and solenoid or replace relay or solenoid as necessary
Broken lead or loose soldered connections	Repair wire or wire connections as necessary
Solenoid Plunger Vibrates When Switch is Engaged	
Weak battery	Charge or replace battery as necessary
Solenoid contacts corroded	Clean contacts or replace solenoid
Faulty wiring	Check all wiring leading to solenoid
Broken connections inside switch cover	Repair connections or replace solenoid
Open hold-in wire	Replace solenoid
Low Current Draw	
Worn brushes or weak	Replace brushes or brush springs as necessary
High Pitched Whine During Cranking Before Engine Fires but Engine Fires and Cranks Normally	
Distance too great between starter pinion and flywheel	Align starter or check that correct starter and flywheel are being used
High Pitched Whine After Engine Fires With Key released. Engine Fires and Cranks Normally	
Distance too small between starter pinion and flywheel	Flywheel runout contributes to the intermittent nature

TUNE-UP TROUBLE SHOOTING - GAS ENGINE VEHICLES

NOTE: **This is GENERAL information. This article is not intended to be specific to any unique situation or individual vehicle configuration. The purpose of this Trouble Shooting information is to provide a list of common causes to problem**

symptoms. For model-specific Trouble Shooting, refer to SUBJECT, DIAGNOSTIC, or TESTING articles available in the section(s) you are accessing.

BASIC SPARK PLUG TROUBLE SHOOTING CHARTS

CONDITION & POSSIBLE CAUSE	CORRECTION
Normal Spark Plug Condition	
Light Tan or Gray deposits	No Action
Electrode not burned or fouled	No Action
Gap tolerance not changed	No Action
Cold Fouling or Carbon Deposits	
Overrich air/fuel mixture	Adjust air/fuel mixture, see ENGINE PERFORMANCE section
Faulty choke	Replace choke assembly, see ENGINE PERFORMANCE section
Clogged air filter	Clean and/or replace air filter
Incorrect idle speed or dirty carburetor	Reset idle speed and/ or clean carburetor
Faulty ignition wires	Replace ignition wiring
Prolonged operation at idle	Shut engine off during long idle
Sticking valves or worn valve guide seals	Check valve train
Wet Fouling or Oil Deposits	
Worn rings and pistons	Install new rings and pistons
Excessive cylinder wear	Rebore or replace block
Excessive valve guide clearance	Worn or loose bearing
Gap Bridged	
Deposits in combustion chamber becoming fused to electrode	Clean combustion chamber of deposits
Blistered Electrode	
Engine overheating	Check cooling system
Wrong type of fuel	Replace with correct fuel
Loose spark plugs	Retighten spark plugs
Over-advanced ignition timing	Reset ignition timing see ENGINE PERFORMANCE
Pre-Ignition or Melted Electrodes	
Incorrect type of fuel	Replace with correct fuel
Incorrect ignition timing	Reset ignition timing see ENGINE PERFORMANCE
Burned valves	Replace valves
Engine Overheating	Check cooling system
Wrong type of spark plug, too hot	Replace with correct spark plug, see ENGINE PERFORMANCE
Chipped Insulators	
Severe detonation	Check for over-advanced timing or combustion
Improper gapping procedure	Re-gap spark plugs
Rust Colored Deposits	
Additives in unleaded fuel	Try different fuel brand
Water In Combustion Chamber	
Blown head gasket or cracked head	Repair or replace head or head gasket

NOTE: **Before diagnosing an electronic ignition system, ensure that all wiring is connected properly between distributor, wiring connector and spark plugs.**

Ignition problem will show up either as: Engine Will Not Start or Engine Runs Rough.

BASIC ELECTRONIC IGNITION TROUBLE SHOOTING CHARTS

CONDITION & POSSIBLE CAUSE	CORRECTION
Engine Won't Start	
Open circuit between distributor and bulkhead connector	Repair circuit
Open circuit between bulkhead connector and ignition switch	Repair circuit
Open circuit between ignition switch and starter solenoid	Repair circuit
Engine Runs Rough	
Fuel lines leaking or clogged	Tighten fitting, remove restriction
Initial timing incorrect	Reset ignition timing see ENGINE PERFORMANCE
Centrifugal advance malfunction	Repair distributor advance
Defective spark plugs or wiring	Replace plugs or plug wiring
Component Failure	
Spark arc-over on cap, rotor or coil	Replace cap, rotor or or coil
Defective pick-up coil	Replace pick-up coil
Defective ignition coil	Replace ignition coil
Defective vacuum unit	Replace vacuum unit
Defective control module	Replace control module

BASIC ELECTRONIC IGNITION TROUBLE SHOOTING CHARTS - USING OSCILLOSCOPE PATTERNS

CONDITION & POSSIBLE CAUSE	CORRECTION
Firing Voltage Lines are the Same, but Abnormally High	
Retarded ignition timing	Reset ignition timing, see ENGINE PERFORMANCE section
Fuel mixture too lean	Readjust carburetor, see ENGINE PERFORMANCE
High resistance in coil wire	Replace coil wire
Corrosion in coil tower terminal	Clean and/or replace coil
Corrosion in distributor coil terminal	Clean and/or replace distributor cap
Firing Voltage Lines are the Same but Abnormally Low	
Fuel mixture too rich	Readjust carburetor, see ENGINE PERFORMANCE
Breaks in coil wire causing arcing	Replace coil wire
Cracked coil tower causing arcing	Replace coil
Low coil output	Replace coil
Low engine compression	Determine cause and repair
One or More, But Not All Firing Voltage Lines are Higher Than Others	
Carburetor idle mixture not balanced	Readjust carburetor, see ENGINE PERFORMANCE
EGR valve stuck open	Clean and/or replace valve
High resistance in spark plug wires	Replace spark plug wires
Cracked or broken spark plug insulator	Replace spark plugs
Intake vacuum leak	Repair leak
Defective spark plugs	Replace spark plugs

CONDITION & POSSIBLE CAUSE	**CORRECTION**
Corroded spark plug terminals	Replace spark plugs
One or More, But Not All Firing Voltage Lines Are Lower Than Others	
Curb idle mixture not balanced	Readjust carburetor, see ENGINE PERFORMANCE
Breaks in plug wires	Replace plug wires causing arcing
Cracked coil tower causing arcing	Replace coil
Low compression	Determine cause and repair
Defective spark plugs	Replace spark plugs
Corroded spark plugs	Replace spark plugs
Cylinders Not Firing	
Cracked distributor cap terminals	Replace distributor cap
Shorted spark plug wire	Determine cause and repair
Mechanical problem in engine	Determine cause and repair
Defective spark plugs	Replace spark plugs
Spark plugs fouled	Replace spark plugs

BASIC DRIVEABILITY PROBLEMS TROUBLE SHOOTING

CONDITION & POSSIBLE CAUSE	**CORRECTION**
Hard Starting	
Binding carburetor linkage	Eliminate binding
Binding choke linkage	Eliminate binding
Binding choke piston	Eliminate binding
Restricted choke vacuum	Check vacuum lines for blockage
Worn or dirty needle valve and seat	Clean carburetor, see ENGINE PERFORMANCE
Float sticking	Readjust or replace float see the ENGINE PERFORMANCE section
Incorrect choke adjustment	Reset choke adjustment see ENGINE PERFORMANCE
Defective coil	Replace coil
Improper spark plug gap	Regap spark plugs
Incorrect ignition timing	Reset ignition timing see ENGINE PERFORMANCE
Detonation	
Over-advanced ignition timing	Reset ignition timing see ENGINE PERFORMANCE
Defective spark plugs	Replace spark plugs
Fuel lines clogged	Clean fuel lines
EGR system malfunction	Check and repair EGR system
PCV system malfunction	Repair PCV system
Vacuum leaks	Check and repair vacuum system
Loose fan belts	Tighten or replace fan belts, see ENGINE PERFORMANCE
Restricted airflow	Remove restriction
Vacuum advance malfunction	Check distributor operation
Dieseling	
Binding carburetor linkage	Eliminate binding
Binding throttle linkage	Eliminate blinding
Binding choke linkage or fast idle cam	Eliminate binding

CONDITION & POSSIBLE CAUSE	**CORRECTION**
Defective idle solenoid	Replace idle solenoid see ENGINE PERFORMANCE
Improper base idle speed	Reset idle speed, see see ENGINE PERFORMANCE
Incorrect ignition timing	Reset ignition timing see ENGINE PERFORMANCE
Incorrect idle mixture setting	Reset idle mixture, see ENGINE PERFORMANCE
Faulty Acceleration	
Incorrect ignition timing	Reset ignition timing see ENGINE PERFORMANCE
Engine cold and choke too lean	Adjust choke and allow engine to warm-up
Defective spark plugs	Replace spark plugs
Defective coil	Replace coil
Faulty Low Speed Operation	
Clogged idle transfer slots	Clean idle transfer slots, see FUEL
Restricted idle air bleeds and passages	Disassemble and clean carburetor, see FUEL
Clogged air cleaner	Replace air filter
Defective spark plugs	Replace spark plugs
Defective ignition wires	Replace ignition wire see ENGINE PERFORMANCE
Defective distributor cap	Replace distributor cap
Faulty High Speed Operation	
Incorrect ignition timing	Reset ignition timing see ENGINE PERFORMANCE
Defective distributor centrifugal advance	Replace advance mechanism
Defective distributor vacuum advance	Replace advance unit
Incorrect spark plugs or plug gap	Check gap and/or replace spark plugs
Faulty choke operation	Check choke and repair as required
Clogged vacuum passages	Remove restrictions
Improper size or clogged main jet	Check jet size and clean, see FUEL
Restricted air cleaner	Check filter and replace as necessary
Defective distributor cap, rotor or coil	Replace cap, rotor or coil
Misfire at All Speeds	
Defective spark plugs	Replace spark plugs
Defective spark plug wires	Replace spark plug wires
Defective distributor cap, rotor, or coil	Replace cap, rotor, or coil
Cracked or broken vacuum hoses	Replace vacuum hoses
Vacuum leaks	Repair vacuum leaks
Fuel lines clogged	Remove restriction
Hesitation	
Cracked or broken vacuum	Replace vacuum hoses hoses
Vacuum leaks	Repair Vacuum leaks
Binding carburetor linkage	Eliminate binding
Binding throttle linkage	Eliminate binding
Binding choke linkage or fast idle cam	Eliminate binding
Improper float setting	Readjust float setting, see FUEL
Cracked or broken ignition wires	Replace ignition wires
Rough Idle, Missing or Stalling	

CONDITION & POSSIBLE CAUSE	CORRECTION
Incorrect curb idle or fast idle speed	Reset idle speed, see see ENGINE PERFORMANCE
Incorrect basic timing	Reset ignition timing see ENGINE PERFORMANCE
Improper idle mixture adjustment	Reset idle mixture, see ENGINE PERFORMANCE
Improper feedback system operation	Check feedback system see ENGINE PERFORMANCE
Incorrect spark plug gap	Reset spark plug gap, see ENGINE PERFORMANCE
Moisture in ignition components	Dry components
Loose or broken ignition wires	Replace ignition wires
Damaged distributor cap or or rotor	Replace distributor cap or rotor
Faulty ignition coil	Replace ignition coil
Fuel filter clogged or worn	Replace fuel filter
Damaged idle mixture screw	Replace idle mixture screw, see FUEL
Improper fast idle cam adjustment	Reset fast idle cam adjustment, see TUNE- see ENGINE PERFORMANCE
Improper EGR valve operation	Replace EGR valve
Faulty PCV valve air flow	Replace PCV valve
Choke binding or improper choke setting	Reset choke or eliminate binding
Vacuum leak	Repair vacuum leak
Improper float bowl fuel level	Reset float adjustment, see FUEL
Clogged air bleed or idle passages	Clean carburetor passages, see FUEL
Clogged or worn air cleaner filter	Replace air filter
Faulty choke vacuum diaphragm	Replace diaphragm, see ENGINE PERFORMANCE
Exhaust manifold heat valve inoperative	Replace heat valve
Improper distributor spark advance	Check distributor operation
Leaking valves or valve components	Check and repair valvetrain
Improper carburetor mounting	Remove and remount carburetor
Excessive play in distributor shaft	Replace distributor
Loose or corroded wiring connections	Repair or replace as required
Engine Surges	
Improper PCV valve airflow	Replace PCV valve
Vacuum leaks	Repair vacuum leaks
Clogged air bleeds	Remove restriction
EGR valve malfunction	Replace EGR valve
Restricted air cleaner filter	Replace air filter
Cracked or broken vacuum hoses	Replace vacuum hoses
Cracked or broken ignition wires	Replace ignition wires
Vacuum advance malfunction	Check unit and replace as necessary
Defective or fouled spark plugs	Replace spark plugs
Ping or Spark Knock	
Incorrect ignition timing	Reset ignition timing see ENGINE PERFORMANCE
Distributor centrifugal or vacuum advance malfunction	Check operation and replace as necessary
Carburetor setting too lean	Readjust mixture setting, see ENGINE PERFORMANCE

CONDITION & POSSIBLE CAUSE	CORRECTION
Vacuum leak	Eliminate vacuum leak
EGR valve malfunction	Replace EGR valve
Poor Gasoline Mileage	
Cracked or broken vacuum	Replace vacuum hoses hoses
Vacuum leaks	Repair vacuum leaks
Defective ignition wires	Replace wires
Incorrect choke setting	Readjust setting, see ENGINE PERFORMANCE
Defective vacuum advance	Replace vacuum advance
Defective spark plugs	Replace spark plugs
Binding carburetor power piston	Eliminate binding
Dirt in carburetor jets	Clean and/or replace jets
Incorrect float adjustment	Readjust float setting, see FUEL
Defective power valve	Replace power valve, see ENGINE PERFORMANCE
Incorrect idle speed	Readjust idle speed
Engine Stalls	
Improper float level	Readjust float level
Leaking needle valve and seat	Replace needle valve and seat
Vacuum leaks	Eliminate vacuum leaks

VACUUM PUMP - DIESEL TROUBLE SHOOTING

NOTE: **This is GENERAL information. This article is not intended to be specific to any unique situation or individual vehicle configuration. The purpose of this Trouble Shooting information is to provide a list of common causes to problem symptoms. For model-specific Trouble Shooting, refer to SUBJECT, DIAGNOSTIC, or TESTING articles available in the section(s) you are accessing.**

NOTE: **Diesel engines mechanical diagnosis is the same as gasoline engines for items such as noisy valves, bearings, pistons, etc. The following trouble shooting covers only items pertaining to diesel engines.**

VACUUM PUMP (DIESEL) TROUBLE SHOOTING CHART

CONDITION & POSSIBLE CAUSE	CORRECTION
Excessive Noise	
Loose pump-to-drive assembly screws	Tighten screws
Loose tube on pump assembly	Tighten tube
Valves not functioning properly	Replace valves
Oil Leakage	
Loose end plug	Tighten end plug
Bad seal crimp	Remove and re-crimp seal

MANUAL TRANSMISSION

MANUAL TRANSMISSION TROUBLE SHOOTING

NOTE: **This is GENERAL information. This article is not intended to be specific to any unique situation or individual vehicle configuration. The purpose of this Trouble Shooting information is to provide a list of common causes to problem**

symptoms. For model-specific Trouble Shooting, refer to SUBJECT, DIAGNOSTIC, or TESTING articles available in the section(s) you are accessing.**

MANUAL TRANSMISSION/TRANSAXLE TROUBLE SHOOTING

Condition	Possible Cause
Noisy In Forward Gears	Low gear oil level, Loose bell housing bolts, Worn bearings or gears
Clunk On Deceleration (FWD Only)	Loose engine mounts, Worn inboard CV joints, Worn differential pinion shaft, Side gear hub counterbore in case worn oversize
Gear Clash When Shifting Forward Gears	Clutch Out Of Adjustment, Shift linkage damaged or out of adjustment, Gears or synchronizers damaged, Low gear oil level
Transmission Noisy When Moving (RWD Only) Quiet In Neutral With Clutch Engaged	Worn rear outputshaft bearing
Gear Rattle	Worn bearings, Wrong gear oil, Low gear oil, Worn gears
Steady Ticking At Idle (Increases With RPM)	Broken tooth on gear
Gear Clash When Shifting Forward Gears	Worn or broken synchronizers
Loud Whine In Reverse	Normal condition (1)
Noise When Stepping On Clutch	Bad release bearing, Worn pilot bearing
Ticking Or Screeching As Clutch Is Engaged	Faulty release bearing, Uneven pressure plate fingers
Click Or Snap When Clutch Is Engaged	Worn clutch fork, Worn or broken front bearing retainer
Transmission Shifts Hard	Clutch not releasing, Shift mechanism binding, Clutch installed backwards
Will Not Shift Into One Gear, Shifts Into All Others	Bent shift fork, Worn detent balls
Locked Into Gear, Cannot Shift	Clutch adjustment, Worn detent balls
Transmission Jumps Out Of Gear	Pilot bearing worn, Bent shift fork, Worn gear teeth or face, Excessive gear train end play, Worn synchronizers, Missing detent ball spring, Shift mechanism worn or out of adjustment, Engine or transmission mount bolts loose or out of adjustment, Transmission not aligned
Shift Lever Rattle	Worn shift lever or detents, Worn shift forks, Worn synchronizers sleeve
Shift Lever Hops Under Acceleration	Worn engine or transmission mounts
(1) Most units use spur cut gears in reverse and are noisy	

POWERTRAIN

CLUTCH TROUBLE SHOOTING

NOTE: **This is GENERAL information. This article is not intended to be specific to any unique situation or individual vehicle configuration. The purpose of this Trouble Shooting information is to provide a list of common causes to problem symptoms. For model-specific Trouble Shooting, refer to SUBJECT, DIAGNOSTIC, or TESTING articles available in the section(s) you are accessing.**

BASIC CLUTCH TROUBLE SHOOTING CHART

CONDITION & POSSIBLE CAUSE	CORRECTION
Chattering or Grabbing	

CONDITION & POSSIBLE CAUSE	CORRECTION
Incorrect clutch adjustment	Adjust clutch
Oil, grease or glaze on facings	Disassemble and clean or replace
Loose "U" joint flange	See DRIVE AXLES article
Worn input shaft spline	Replace input shaft
Binding pressure plate	Replace pressure plate
Binding release lever	See CLUTCH article
Binding clutch disc hub	Replace clutch disc
Unequal pressure plate contact	Replace worn/misaligned components
Loose/bent clutch disc	Replace clutch disc
Incorrect transmission alignment	Realign transmission
Worn pressure plate, disc or flywheel	Replace damaged components
Broken or weak pressure springs	Replace pressure plate
Sticking clutch pedal	Lubricate clutch pedal & linkage
Incorrect clutch disc facing	Replace clutch disc
Engine loose in chassis	Tighten all mounting bolts
Failure to Release	
Oil or grease on clutch facings	Clean or replace clutch clutch disc
Incorrect release lever or pedal adjustment	See CLUTCH article
Worn or broken clutch facings	Replace clutch disc
Bent clutch disc or pressure plate	Replace damaged components
Clutch disc hub binding on input shaft	Clean or replace clutch disc and/or input shaft
Binding pilot bearing	Replace pilot bearing
Sticking release bearing sleeve	Replace release bearing and/or sleeve
Binding clutch cable	See CLUTCH article
Defective clutch master	Replace master cylinder
Defective clutch slave	Replace slave cylinder
Air in hydraulic system	Bleed hydraulic system
Rattling	
Weak or broken release lever spring	Replace spring and check alignment
Damaged pressure plate	Replace pressure plate
Broken clutch return spring	Replace return spring
Worn splines on clutch disc or input shaft	Replace clutch disc and/or input shaft
Worn clutch release bearing	Replace release bearing
Dry or worn pilot bearing	Lubricate or replace pilot bearing
Unequal release lever contact	Align or replace release lever
Incorrect pedal free play	Adjust free play
Warped or damaged clutch disc	Replace damaged components
Slipping	
Pressure springs worn or	Release pressure plate
Oily, greasy or worn facings	Clean or replace clutch disc
Incorrect clutch alignment	Realign clutch assembly
Warped clutch disc or pressure plate	Replace damaged components
Binding release levers or clutch pedal	Lubricate and/or replace release components
Squeaking	
Worn or damaged release	Replace release bearing
Dry or worn pilot or release bearing	Lubricate or replace assembly
Pilot bearing turning in crankshaft	Replace pilot bearing and/or crankshaft
Worn input shaft bearing	Replace bearing and seal

CONDITION & POSSIBLE CAUSE	CORRECTION
Incorrect transmission alignment	Realign transmission
Dry release fork between pivot	Lubricate release fork and pivot
Heavy and/or Stiff Pedal	
Sticking release bearing sleeve	Replace release bearing and/or sleeve
Dry or binding clutch pedal hub	Lubricate and align components
Floor mat interference with pedal	Lay mat flat in proper area
Dry or binding ball/fork pivots	Lubricate and align components
Faulty clutch cable	Replace clutch cable
Noisy Clutch Pedal	
Faulty interlock switch	Replace interlock switch
Self-adjuster ratchet noise	Lubricate or replace self-adjuster
Speed control interlock switch	Lubricate or replace interlock switch
Clutch Pedal Sticks Down	
Binding clutch cable	See CLUTCH article
Springs weak in pressure plate	Replace pressure plate
Binding in clutch linkage	Lubricate and free linkage
Noisy	
Dry release bearing	Lubricate or replace release bearing
Dry or worn pilot bearing	Lubricate or replace bearing
Worn input shaft bearing	Replace bearing
Transmission Click	
Weak springs in pressure	Replace pressure plate plate
Release fork loose on ball stud	Replace release fork and/or ball stud
Oil on clutch disc damper	Replace clutch disc
Broken spring in slave cylinder	Replace slave cylinder

DRIVE AXLE - NOISE DIAGNOSIS

Unrelated Noises

Some driveline trouble symptoms are also common to the engine, transmission, wheel bearings, tires, and other parts of the vehicle. Ensure cause of trouble actually is in the drive axle before adjusting, repairing, or replacing any of its parts.

Non-Drive Axle Noises

A few conditions can sound just like drive axle noise and have to be considered in pre-diagnosis. The 4 most common noises are exhaust, tires, CV/universal joints and wheel trim rings.

In certain conditions, the pitch of the exhaust gases may e gear whine. At other times, it may be mistaken for a wheel bearing rumble.

Tires, especially radial and snow, can have a high-pitched tread whine or roar, similar to gear noise. Also, some non-standard tires with an unusual tread construction may emit a roar or whine.

Defective CV/universal joints may cause clicking noises or excessive driveline play that can be improperly diagnosed as drive axle problems.

Trim and moldings also can cause a whistling or whining noise. Ensure none of these components are causing the noise before disassembling the drive axle.

Gear Noise

A "howling" or "whining" noise from the ring and pinion gear can be caused by an improper gear pattern, gear damage, or improper bearing preload. It can occur at various speeds and driving conditions, or it can be continuous.

Before disassembling axle to diagnose and correct gear ke sure that tires, exhaust, and vehicle trim have been checked as possible causes.

Chuckle

This is a particular rattling noise that sounds like a stick against the spokes of a spinning bicycle wheel. It occurs while decelerating from 40 MPH and usually can be heard until vehicle comes to a complete stop. The frequency varies with the speed of the vehicle.

A chuckle that occurs on the driving phase is usually caused ive clearance due to differential gear wear, or by a damaged tooth on the coast side of the pinion or ring gear. Even a very small tooth nick or a ridge on the edge of a gear tooth is enough the cause the noise.

This condition can be corrected simply by cleaning the gear tooth nick or ridge with a small grinding wheel. If either gear is damaged or scored badly, the gear set must be replaced. If metal has broken loose, the carrier and housing must be cleaned to remove particles that could cause damage.

Knock

This is very similar to a chuckle, though it may be louder, and occur on acceleration or deceleration. Knock can be caused by a gear tooth that is damaged on the drive side of the ring and pinion gears. Ring gear bolts that are hitting the carrier casting can cause knock. Knock can also be due to excessive end play in the axle shafts.

Clunk

Clunk is a metallic noise heard when an automatic transmission is engaged in Reverse or Drive, or when throttle is applied or released. It is caused by backlash somewhere in the driveline, but not necessarily in the axle. To determine whether driveline clunk is caused by the axle, check the total axle backlash as follows:

1. Raise vehicle on a frame or twinpost hoist so that drive wheels are free. Clamp a bar between axle companion flange and a part of the frame or body so that flange cannot move.
2. On conventional drive axles, lock the left wheel to keep it from turning. On all models, turn the right wheel slowly until it is felt to be in Drive condition. Hold a chalk marker on side of tire about 12" from center of wheel. Turn wheel in the opposite direction until it is again felt to be in Drive condition.
3. Measure the length of the chalk mark, which is the total axle backlash. If backlash is one inch or less, drive axle is not the source of clunk noise.

Bearing Whine

Bearing whine is a high-pitched sound similar to a whistle. It is usually caused by malfunctioning pinion bearings. Pinion bearings operate at drive shaft speed. Roller wheel bearings may whine in a similar manner if they run completely dry of lubricant. Bearing noise will occur at all driving speeds. This distinguishes it from gear whine, which usually comes and goes as speed changes.

Bearing Rumble

Bearing rumble sounds like marbles being tumbled. It is usually caused by a malfunctioning wheel bearing. The lower pitch is because the wheel bearing turns at only about 1/3 of drive shaft speed.

Chatter On Turns

This is a condition where the entire front or rear of vehicle vibrates when vehicle is moving. The vibration is plainly felt as well as heard. Extra differential thrust washers installed during axle repair can cause a condition of partial lock-up that creates this chatter.

Axle Shaft Noise

Axle shaft noise is similar to gear noise and pinion bearing whine. Axle shaft bearing noise will normally distinguish itself from gear noise by occurring in all driving modes (Drive, cruise, coast and float), and will persist with transmission in Neutral while vehicle is moving at problem speed.

If vehicle displays this noise condition, remove suspect parts, replace wheel seals and install a new set of bearings. Re-evaluate vehicle for noise before removing any internal components.

Vibration

Vibration is a high-frequency trembling, shaking or grinding condition (felt or heard) that may be constant or variable in level and can occur during the total operating speed range of the vehicle.

The types of vibrations that can be felt in the vehicle can d into 3 main groups:

- Vibrations of various unbalanced rotating parts of the vehicle.
- Resonance vibrations of the body and frame structures caused by rotating of unbalanced parts.
- Tip-in moans of resonance vibrations from stressed engine or exhaust system mounts or driveline flexing modes.

DRIVE AXLE - RWD TROUBLE SHOOTING

NOTE: **This is GENERAL information. This article is not intended to be specific to any unique situation or individual vehicle configuration. The purpose of this Trouble Shooting information is to provide a list of common causes to problem symptoms. For model-specific Trouble Shooting, refer to SUBJECT, DIAGNOSTIC, or TESTING articles available in the section(s) you are accessing. For definitions of listed noises or sounds, see DRIVE AXLE - NOISE DIAGNOSIS under POWERTRAIN.**

DRIVE AXLE (RWD) TROUBLE SHOOTING

CONDITION & POSSIBLE CAUSE	CORRECTION
Knocking or Clunking	
Differential Side Gear Clearance	Check Clearance
Worn Pinion Shaft	Replace Pinion Shaft
Axle Shaft End Play	Check End Play
Missing Gear Teeth	Check Differential/Replace Gear
Wrong Axle Backlash	Check Backlash
Misaligned Driveline	Realign Driveline
Clinking During Engagement	
Side Gear Clearance	Check Clearance
Ring and Pinion Backlash	Check Backlash
Worn/Loose Pinion Shaft	Replace Shaft/Bearing
Bad "U" Joint	Replace "U" Joint
Sticking Slip Yoke	Lube Slip Yoke
Broken Rear Axle Mount	Replace Mount
Loose Drive Shaft Flange	Check Flange
Click/Chatter On Turns	
Differential Side Gear Clearance	Check Clearance
Wrong Turn On Plates (1)	Replace Clutch Plates
Wrong Differential Lubricant (1)	Change Lubricant
Knock Or Click	
Flat Spot on Rear Wheel Bearing	Replace Wheel Bearing

CONDITION & POSSIBLE CAUSE	CORRECTION
Low Vibration At All Speeds	
Faulty Wheel Bearing	Replace Wheel Bearing
Faulty "U" Joint	Replace "U" Joint
Faulty Drive Shaft	Balance Drive Shaft
Faulty Companion Flange	Replace Flange
Faulty Slip Yoke Flange	Replace Flange
(1) Limited slip differential only.	

FWD AXLE SHAFTS & CV JOINTS TROUBLE SHOOTING

NOTE: **This is GENERAL information. This article is not intended to be specific to any unique situation or individual vehicle configuration. The purpose of this Trouble Shooting information is to provide a list of common causes to problem symptoms. For model-specific Trouble Shooting, refer to SUBJECT, DIAGNOSTIC, or TESTING articles available in the section(s) you are accessing.**

BASIC FWD AXLE SHAFTS & CV JOINTS TROUBLE SHOOTING CHART

CONDITION	POSSIBLE CAUSE
Grease Leaks	CV boot torn or cracked
Clicking Noise on Cornering	Damaged outer CV
Clunk Noise on Acceleration	Damaged inner CV
Vibration or Shudder on Acceleration	Sticking, damaged or worn CV Misalignment or spring height

STEERING & SUSPENSION

MANUAL STEERING GEAR TROUBLE SHOOTING

NOTE: **This is GENERAL information. This article is not intended to be specific to any unique situation or individual vehicle configuration. The purpose of this Trouble Shooting information is to provide a list of common causes to problem symptoms. For model-specific Trouble Shooting, refer to SUBJECT, DIAGNOSTIC, or TESTING articles available in the section(s) you are accessing.**

BASIC MANUAL STEERING GEAR TROUBLE SHOOTING CHART

CONDITION & POSSIBLE CAUSE	CORRECTION
Rattle or Chucking Noise in Rack and Pinion	
Rack and pinion mounting bracket loose	Tighten all mounting bolts
Lack of/or incorrect lubricant	Correct as necessary
Steering gear mounting bolts loose	Tighten all mounting bolts
Excessive Play	
Front wheel bearing improperly adjusted	See FRONT SUSPENSION article
Loose or worn steering linkage	See STEERING LINKAGE article
Loose or worn steering gear shift	See MANUAL STEERING GEAR article
Steering arm loose on gear shaft	See MANUAL STEERING GEAR article
Steering gear housing bolts loose	Tighten all mounting bolts
Steering gear adjustment too loose	See MANUAL STEERING GEAR article
Steering arms loose on knuckles	Tighten and check steering linkage
Rack and pinion mounting loose	Tighten all mounting bolts
Rack and pinion out of adjustment	See adjustment in STEERING article
Tie rod end loose	Tighten and check steering linkage

CONDITION & POSSIBLE CAUSE	CORRECTION
Excessive Pitman shaft-to-ball nut lash	Repair as necessary
Poor Returnability	
Lack of lubricant in ball joint or linkage	Lubricate and service systems
Binding in linkage or ball joints	See STEERING LINKAGE and SUSPENSION article
Improper front end alignment	See WHEEL ALIGNMENT article
Improper tire pressure	Inflate to proper pressure
Tie rod binding	Inflate to proper pressure
Shaft seal rubbing shaft	See STEERING COLUMN article
Excessive Vertical Motion	
Improper tire pressure	Inflate to proper pressure
Tires, wheels or rotors out of balance	Balance tires then check wheels and rotors
Worn or faulty shock absorbers	Check and replace if necessary
Loose tie rod ends or steering	Tighten or replace if necessary
Loose or worn wheel bearings	See SUSPENSION article
Steering Pulls to One Side	
Improper tire pressure	Inflate to proper pressure
Front tires are different sizes	Rotate or replace if necessary
Wheel bearings not adjusted properly	See FRONT SUSPENSION article
Bent or broken suspension components	See FRONT SUSPENSION article
Improper wheel alignment	See WHEEL ALIGNMENT article
Brakes dragging	See BRAKES article
Instability	
Low or uneven tire pressure	Inflate to proper pressure
Loose or worn wheel bearings	See FRONT SUSPENSION article
Loose or worn idler arm bushing	See FRONT SUSPENSION article
Loose or worn strut bushings	See FRONT SUSPENSION article
Incorrect front wheel alignment	See WHEEL ALIGNMENT article
Steering gear not centered	See MANUAL STEERING GEARS article
Springs or shock	Check and replace if necessary
Improper cross shaft	See MANUAL STEERING GEARS article

POWER STEERING TROUBLE SHOOTING

NOTE: **This is GENERAL information. This article is not intended to be specific to any unique situation or individual vehicle configuration. The purpose of this Trouble Shooting information is to provide a list of common causes to problem symptoms. For model-specific Trouble Shooting, refer to SUBJECT, DIAGNOSTIC, or TESTING articles available in the section(s) you are accessing.**

BASIC POWER STEERING TROUBLE SHOOTING CHART

CONDITION & POSSIBLE CAUSE	CORRECTION
Rattle or Chucking Noise	
Pressure hoses touching engine parts	Adjust to proper clearance
Loose Pitman shaft	Adjust or replace if necessary
Tie rods ends or Pitman arm loose	Tighten and check system
Rack and pinion mounts loose	Tighten all mounting bolts
Free play in worm gear	See POWER STEERING GEAR article
Loose sector shaft or thrust bearing adjustment	See POWER STEERING GEAR
Free play in pot coupling	See STEERING COLUMN article

CONDITION & POSSIBLE CAUSE	CORRECTION
Worn shaft serrations	See STEERING COLUMN article
Growl in Steering Pump	
Excessive pressure in hoses	Restricted hoses, see POWER STEERING GEAR article
Scored pressure plates	See POWER STEERING GEAR article
Scored thrust plates or rotor	See POWER STEERING GEAR article
Extreme wear of cam ring	See POWER STEERING GEAR article
Rattle in Steering Pump	
Vanes not installed	See POWER STEERING PUMP article
Vanes sticking in rotor	See POWER STEERING PUMP article
Swish noise in Pump	
Defective flow control valve	See POWER STEERING PUMP article
Groan in Steering Pump	
Air in fluid	See POWER STEERING PUMP article
Poor pressure hose connection	Tighten and check, replace if necessary
Squawk When Turning	
Damper "O" ring on valve spool cut	See POWER STEERING PUMP article
Moan or Whine in Pump	
Pump shaft bearing scored	Replace bearing and fluid
Air in fluid or fluid level low	See POWER STEERING PUMP article
Hose or column grounded	Check and replace if necessary
Cover "O" ring missing or damaged	See POWER STEERING PUMP article
Valve cover baffle missing or damaged	See POWER STEERING PUMP article
Interference of components in pump	See POWER STEERING PUMP article
Loose or poor bracket alignment	Correct or replace if necessary
Hissing When Parking	
Internal leakage in steering gear	Check valved assembly first
Chirp in Steering Pump	
Loose or worn power steering belt	Adjust or replace if necessary
Buzzing When Not Steering	
Noisy pump	See POWER STEERING PUMP article
Free play in steering shaft bearing	See STEERING COLUMN article
Bearing loose on shaft serrations	See STEERING COLUMN article
Clicking Noise in Pump	
Pump slippers too long	See POWER STEERING PUMP article
Broken slipper springs	See POWER STEERING PUMP article
Excessive wear or nicked rotors	See POWER STEERING PUMP article
Damaged cam contour	See POWER STEERING PUMP article
Poor Return of Wheel	
Wheel rubbing against turn signal	See STEERING COLUMN SWITCHES article
Flange rubbing steering gear adjuster	See STEERING COLUMN article
Tight or frozen steering shaft bearing	See STEERING COLUMN article
Steering gear out of adjustment	See POWER STEERING GEAR article
Sticking or plugged spool valve	See POWER STEERING PUMP article
Improper front end alignment	See WHEEL ALIGNMENT article
Wheel bearings worn or loose	See FRONT SUSPENSION article
Ties rods or ball joints binding	Check and replace if necessary
Intermediate shaft joints binding	See STEERING COLUMN article

CONDITION & POSSIBLE CAUSE	CORRECTION
Kinked pressure hoses	Correct or replace if necessary
Loose housing head spanner nut	See POWER STEERING GEAR article
Damaged valve lever	See POWER STEERING GEAR article
Sector shaft adjusted too tight	See ADJUSTMENTS in POWER STEERING GEAR article
Worm thrust bearing adjusted too tight	See ADJUSTMENTS in POWER STEERING GEAR article
Reaction ring sticking in cylinder	See POWER STEERING GEAR article
Reaction ring sticking in housing head	See POWER STEERING GEAR article
Steering pump internal leakage	See POWER STEERING PUMP article
Steering gear-to-column misalignment	See STEERING COLUMN article
Lack of lubrication in linkage	Service front suspension
Lack of lubrication in ball joints	Service front suspension
Increased Effort When Turning Wheel Fast Foaming, Milky Power Steering Fluid, Low Fluid Level or Low Pressure	
High internal pump leakage	See POWER STEERING PUMP article
Power steering pump belt slipping	Adjust or replace if necessary
Low fluid level	Check and fill to proper level
Engine idle speed to low	Adjust to correct setting
Air in pump fluid system	See POWER STEERING PUMP article
Pump output low	See POWER STEERING PUMP article
Steering gear malfunctioning	See POWER STEERING GEAR article
Wheel Surges or Jerks	
Low fluid level	Check and fill to proper level
Loose fan belt	Adjust or replace if necessary
Insufficient pump pressure	See POWER STEERING PUMP article
Sticky flow control valve	See POWER STEERING PUMP article
Linkage hitting oil pan at full turn	Replace bent components
Kick Back or Free Play	
Air in pump fluid system	See POWER STEERING PUMP article
Worn poppet valve in steering gear	See POWER STEERING PUMP article
Excessive over center lash	See POWER STEERING GEAR article
Thrust bearing out of adjustment	See POWER STEERING GEAR article
Free play in pot coupling	See POWER STEERING PUMP article
Steering gear coupling loose on shaft	See POWER STEERING PUMP article
Steering disc mounting bolts loose	Tighten or replace if necessary
Coupling loose on worm shaft	Tighten or replace if necessary
Improper sector shaft adjustment	See POWER STEERING GEAR article
Excessive worm piston side play	See POWER STEERING GEAR article
Damaged valve lever	See POWER STEERING GEAR article
Universal joint loose	Tighten or replace if necessary
Defective rotary valve	See POWER STEERING GEAR article
No Power When Parking	
Sticking flow control valve	See POWER STEERING PUMP article
Insufficient pump pressure output	See POWER STEERING PUMP article
Excessive internal pump leakage	See POWER STEERING PUMP article
Excessive internal gear leakage	See POWER STEERING PUMP article
Flange rubs against gear adjust plug	See STEERING COLUMN article
Loose pump belt	Adjust or replace if necessary

CONDITION & POSSIBLE CAUSE	CORRECTION
Low fluid level	Check and add proper amount of fluid
Engine idle too low	Adjust to correct setting
Steering gear-to-column misaligned	See STEERING COLUMN article
No Power, Left Turn	
Left turn reaction seal "O" ring worn	See POWER STEERING GEAR article
Left turn reaction seal damaged/missing	See POWER STEERING GEAR article
Cylinder head "O" ring damaged	See POWER STEERING PUMP article
No Power, Right Turns	
Column pot coupling bottomed	See STEERING COLUMN article
Right turn reaction seal "O" ring worn	See POWER STEERING GEAR article
Right turn reaction seal damaged	See POWER STEERING GEAR article
Internal leakage through piston end plug	See POWER STEERING GEAR article
Internal leakage through side plugs	See POWER STEERING GEAR article
Lack of Effort in Turning	
Left and/or right reaction seal sticking in cylinder head	Replace, see POWER STEERING GEAR article
Wanders to One Side	
Front end alignment incorrect	See WHEEL ALIGNMENT article
Unbalanced steering gear valve	See POWER STEERING GEAR article
Low Pressure Due to Steering Pump	
Flow control valve stuck or inoperative	See POWER STEERING PUMP article
Pressure plate not flat against cam ring	See POWER STEERING PUMP article
Extreme wear of cam ring	Replace and check adjustments
Scored plate, thrust plate or rotor	See POWER STEERING PUMP article
Vanes not installed properly	See POWER STEERING PUMP article
Vanes sticking in rotor slots	See POWER STEERING PUMP article
Cracked/broken thrust or pressure plate	See POWER STEERING PUMP article

STEERING COLUMN TROUBLE SHOOTING

NOTE: **This is GENERAL information. This article is not intended to be specific to any unique situation or individual vehicle configuration. The purpose of this Trouble Shooting information is to provide a list of common causes to problem symptoms. For model-specific Trouble Shooting, refer to SUBJECT, DIAGNOSTIC, or TESTING articles available in the section(s) you are accessing.**

BASIC STEERING COLUMN TROUBLE SHOOTING CHART

CONDITION & POSSIBLE CAUSE	CORRECTION
Noise in Steering	
Coupling pulled apart	See STEERING COLUMNS article
Column not correctly aligned	See STEERING COLUMNS article
Broken lower joint	Replace joint
Horn contact ring not	See STEERING COLUMN article
Bearing not lubricated	See STEERING COLUMN article
Shaft snap ring not properly seated	Reseat or replace snap ring
Plastic spherical joint not lubricated	See STEERING COLUMN article
Shroud or housing loose	Tighten holding screws
Lock plate retaining ring not seated	See STEERING COLUMN article
Loose sight shield	Tighten holding screws
High Steering Shaft Effort	

CONDITION & POSSIBLE CAUSE	CORRECTION
Column assembly misaligned	See STEERING COLUMN article
Improperly installed dust shield	Adjust or replace
Tight steering universal joint	See STEERING COLUMN article
High Shift Effort	
Column is out of alignment	See STEERING COLUMN article
Improperly installed dust shield	Adjust or replace
Seals or bearings not lubricated	See STEERING COLUMNS article
Mounting bracket screws too long	Replace with new shorter screws
Burrs on shift tube	Remove burrs or replace tube
Lower bowl bearing assembled wrong	See STEERING COLUMN article
Shift tube bent or broken	Replace as necessary
Improper adjustment of shift levers	See STEERING COLUMN article
Improper Trans. Shifting	
Sheared shift tube joint	Replace as necessary
Sheared lower shaft lever	Replace as necessary
Improper shift lever adjustment	See STEERING COLUMN article
Improper gate plate adjustment	See STEERING COLUMN article
Excess Play in Column	
Instrument panel bracket bolts loose	Tighten bolts and check bracket
Broken weld nut on jacket	See STEERING COLUMN article
Instrument bracket capsule sheared	See STEERING COLUMN article
Column bracket/jacket bolts loose	Tighten bolts and check bracket
Steering Locks in Gear	
Release lever mechanism	See STEERING COLUMN article

SUSPENSION TROUBLE SHOOTING

NOTE: **This is GENERAL information. This article is not intended to be specific to any unique situation or individual vehicle configuration. The purpose of this Trouble Shooting information is to provide a list of common causes to problem symptoms. For model-specific Trouble Shooting, refer to SUBJECT, DIAGNOSTIC, or TESTING articles available in the section(s) you are accessing.**

BASIC SUSPENSION TROUBLE SHOOTING CHART

CONDITION & POSSIBLE CAUSE	CORRECTION
Front End Noise	
Loose or worn wheel	See Wheel Bearing Adjustment in SUSPENSION
Worn shocks or shock mountings	Replace struts or strut mountings
Worn struts or strut mountings	Replace struts or strut mountings
Loose or worn lower control arm	See SUSPENSION
Loose steering gear-to-frame bolts	See STEERING
Worn control arm bushings	See SUSPENSION
Ball joints not lubricated	Lubricate ball joints & see Ball Joint Checking in SUSPENSION
Front Wheel Shake, Shimmy, or Vibration	
Tires or wheels out of balance	Check tire balance
Incorrect wheel alignment	See WHEEL ALIGNMENT
Drive shaft unbalanced	Check drive shaft balance
Loose or worn wheel bearings	See WHEEL ALIGNMENT

CONDITION & POSSIBLE CAUSE	CORRECTION
Loose or worn tie rod ends	See SUSPENSION
Worn upper ball joints	See Ball Joint Checking in SUSPENSION
Worn shock absorbers	Replace shock absorbers
Worn strut bushings	Replace strut bushings
Car Pulls to One Side	
Mismatched or uneven tires	Check tire condition
Broken or sagging springs	See SUSPENSION
Loose or worn strut bushings	See SUSPENSION
Improper wheel alignment	See WHEEL ALIGNMENT
Improper rear axle alignment	Check rear axle alignment
Power steering gear unbalanced	See STEERING
Front brakes dragging	See BRAKES
Abnormal Tire Wear	
Unbalanced tires	Check tire balance & rotation
Sagging or broken springs	See SUSPENSION
Incorrect front end alignment	See WHEEL ALIGNMENT
Faulty shock absorbers	Replace chock absorbers
Scuffed Tires	
Toe-In incorrect	See WHEEL ALIGNMENT
Suspension arm bent or twisted	See appropriate SUSPENSION article
Springs Bottom or Sag	
Bent or broken springs	See SUSPENSION
Leaking or worn shock absorbers	Replace shock absorbers
Frame misalignment	Check frame for damage
Spring Noises	
Loose "U" Bolts	See SUSPENSION
Loose or worn bushings	See SUSPENSION
Worn or missing interliners	See SUSPENSION
Shock Absorber Noise	
Loose shock mountings	Check & tighten mountings
Worn bushings	Replace bushings
Air in system	Bleed air from system
Undercoating on shocks	Remove undercoating
Car Leans or Sways on Corners	
Loose stabilizer bar	See SUSPENSION
Faulty shocks or mountings	Replace shocks or mountings
Broken or sagging springs	See SUSPENSION
Shock Absorbers Leaking	
Worn seals or reservoir tube crimped	See SUSPENSION
Broken Springs	
Loose "U" bolts	See SUSPENSION
Inoperative shock absorbers	Replace shock absorbers

WHEEL ALIGNMENT TROUBLE SHOOTING

NOTE: **This is GENERAL information. This article is not intended to be specific to any unique situation or individual vehicle configuration. The purpose of this Trouble Shooting information is to provide a list of common causes to problem**

symptoms. For model-specific Trouble Shooting, refer to SUBJECT, DIAGNOSTIC, or TESTING articles available in the section(s) you are accessing.

BASIC WHEEL ALIGNMENT TROUBLE SHOOTING CHART

CONDITION & POSSIBLE CAUSE	CORRECTION
Premature Tire Wear	
Improper tire inflation	Check tire pressure
Front alignment out of tolerance	See ALIGNMENT SPECS in WHEEL ALIGNMENT section
Suspension components worn	See SUSPENSION section
Steering system components worn	See STEERING section
Improper standing height	See WHEEL ALIGNMENT
Uneven or sagging springs	See SUSPENSION section
Bent wheel	See WHEEL ALIGNMENT
Improper torsion bar adjustment	See SUSPENSION section
Loose or worn wheel bearings	See WHEEL BEARING ADJ. in SUSPENSION section
Worn or defective shock	Replace shock absorbers
Tires out of balance	Check tire balance
Pulls to One Side	
Improper tire inflation	Check tire pressure
Brake dragging	See BRAKE section
Mismatched tires	See WHEEL ALIGNMENT
Broken or sagging spring	See SUSPENSION section
Broken torsion bar	See SUSPENSION section
Power steering valve not centered	See STEERING section
Front alignment out of tolerance	See WHEEL ALIGNMENT section
Defective wheel bearing	See WHEEL BEARINGS in SUSPENSION section
Uneven sway bar links	See SUSPENSION section
Frame bent	Check for frame damage
Steering system bushing worn	See STEERING section
Hard Steering	
Idler arm bushing too tight	See STEERING LINKAGE in STEERING section
Ball joint tight or seized	See SUSPENSION section
Steering linkage too tight	See STEERING LINKAGE in STEERING section
Power steering fluid low	Add proper amount of fluid
Power steering drive belt loose	See STEERING section
Power steering pump defective	See STEERING section
Steering gear out of adjustment	See STEERING section
Incorrect wheel alignment	See WHEEL ALIGNMENT
Damaged steering gear	See STEERING section
Damaged suspension	See SUSPENSION section
Bent steering knuckle or supports	See SUSPENSION section
Vehicle "Wanders"	
Strut rod or control arm bushing worn	See SUSPENSION section
Loose or worn wheel bearings	See WHEEL BEARINGS in SUSPENSION section
Improper tire inflation	Check tire pressure

CONDITION & POSSIBLE CAUSE	**CORRECTION**
Stabilizer bar missing or defective	See SUSPENSION section
Wheel alignment out of tolerance	See Adjustment in WHEEL ALIGNMENT section
Broken spring	See SUSPENSION section
Defective shock absorber	Replace shock absorbers
Worn steering & suspension components	See SUSPENSION section
Front End Shimmy	
Tire out of balance/round	Check tire balance
Excessive wheel runout	See WHEEL ALIGNMENT
Insufficient or improper caster	See WHEEL ALIGNMENT section
Worn suspension or steering components	See SUSPENSION section
Defective shock absorbers	Replace shock absorber
Wheel bearings worn or loose	See WHEEL BEARING ADJ. in SUSPENSION section
Power steering reaction Bracket loose	See STEERING section
Steering gear box (rack) mounting loose	See STEERING section
Steering gear adjustment loose	See STEERING section
Worn spherical joints	See SUSPENSION section
Toe-In Not Adjustable	
Lower control arm bent	See SUSPENSION section
Frame bent	Check frame for damage
Camber Not Adjustable	
Control arm bent	See SUSPENSION section
Frame bent	Check frame for damage
Hub & bearing not seated properly	See SUSPENSION section

* PLEASE READ THIS FIRST *

NOTE: **This article is generic in nature and all information does not apply to all vehicles. For vehicle specific information, see the appropriate articles in the ENGINE PERFORMANCE category.**

ENGINE PERFORMANCE

NOTE: **This article is generic in nature and all information does not apply to all vehicles. For vehicle specific information, see the appropriate articles in the ENGINE PERFORMANCE category.**

TUNE-UP TROUBLE SHOOTING

Problem & Possible Cause	Action
Carbon Fouled Plugs	
Clogged Air Filter	Replace Air Filter
Incorrect Idle Speed	Reset Idle Speed
Faulty Ignition Wiring	Replace Ignition Wiring
Sticky Valves/Worn Valve Seal	Check Valve Train
Fuel Injection Operation	Check Fuel Injection
Wet/Oil Fouled Plugs	
Worn Rings/Pistons	Overhaul/Replace Engine
Excessive Cylinder Wear	Overhaul/Replace Engine
Plug Gap Bridged	
Combustion Chamber Carbon Deposits	Clean Combustion Chamber
Blistered Electrode	
Engine Overheating	Check Cooling System
Loose Spark Plugs	Clean/Torque Plugs
Over-Advanced Timing	Reset Timing
Wrong Plug Heat Range	Install Correct Plug
Melted Electrodes	
Incorrect Timing	Reset Timing
Burned Valves	Replace Valves
Engine Overheating	Check Cooling System
Wrong Plug Heat Range	Install Correct Plug
Engine Won't Start	
Loose Connections	Check Connections
No Power	Check Fuses/Battery
Loose/Worn Timing Belt/Chain/Gears	Check Belt/Chain/Gears
Engine Runs Rough	
Leaky/Clogged Fuel Injectors	Repair Fuel Injectors
Leaky/Clogged Fuel Lines	Repair Fuel Lines
Clogged Fuel Filter	Replace Fuel Filter
Incorrect Timing	Reset Timing/Check Advance
Faulty Plugs/Wires	Replace Plugs/Wires
Uneven Compression	Overhaul/Replace Engine
Poor Acceleration	

Problem & Possible Cause	Action
Incorrect Ignition Timing	Reset Timing
Leaky Valves	Check Compression
Component Failure	
Spark Arcing	Replace Faulty Part
Defective Pick-Up Coil	Replace Pick-Up Coil
Defective Ignition Coil	Replace Ignition Coil
Defective Control Unit	Replace Control Unit
Ignition Diagnosis By Scope Pattern	
All Firing Lines Abnormally High	
Retarded Ignition Timing	Reset Ignition Timing
Lean Air/Fuel Mixture	Adjust Fuel Mixture
High Secondary Resistance	Repair Secondary Ignition
All Firing Lines Abnormally Low	
Rich Air/Fuel Mixture	Adjust Air/Fuel Mixture
Arcing Coil Wire	Replace Coil Wire
Cracked Coil	Replace Coil
Low Coil Output	Replace Coil
Low Compression	Check/Repair Engine
Several High Firing Lines	
Fuel Mixture Unbalanced	Check Fuel System
EGR Valve Stuck Open	Clean/Replace EGR Valve
High Plug Wire Resistance	Replace Plug Wire
Cracked/Broken Plugs	Replace Plugs
Intake Vacuum Leak	Repair Leak
Several Low Firing Lines	
Fuel Mixture Unbalanced	Adjust Fuel Mixture
Plug Wires Arcing	Replace Plug Wires
Cracked Coil Arcing	Replace Coil
Uneven Compression	Check/Repair Engine
Faulty Spark Plugs	Replace Plugs
Cylinders Not Firing	
Cracked Distributor Cap	Replace Cap
Shorted Plug Wires	Replace Plug Wires
Mechanical Engine Fault	Check/Repair Engine
Spark Plugs Fouled	Replace Plugs
Carbon Track in Distributor Cap	Replace Cap
Hard Starting	
Defective Ignition Coil(s)	Replace Coil(s)
Fouled Spark Plugs	Replace Plugs
Incorrect Timing	Reset Ignition Timing

NOTE: **This article is generic in nature and all information does not apply to all vehicles. For vehicle specific information, see the appropriate articles in the ENGINE PERFORMANCE category.**

FUEL INJECTION TROUBLE SHOOTING

Problem & Possible Cause	Action
Cold Start Valve Inoperative	Test Cold Start Valve
Poor Vacuum/Electrical Connection	Repair Connections

Problem & Possible Cause	**Action**
Contaminated Fuel	Test Fuel for Water/Alcohol
Bad Fuel Pump Relay/Circuit	Test Relay/Wiring
Battery Voltage Low	Charge/Test Battery
Low Fuel Pressure	Test Press. Regulator/Pump
No Distributor Reference Pulse	Repair Ignition System
Coolant Temp. Sensor Defective	Test Temp. Sensor/Circuit
No Power To Injectors	Check Injector Fuse/Relay
Hard Starting	
Defective Idle Air Control (IAC)	Test IAC and Circuit
EGR Valve Open	Test EGR Valve/Control Circuit
Restricted Fuel Lines	Inspect/Replace Fuel Lines
Poor MAP Sensor Signal	Test MAP Sensor/Circuit
Engine Stalls During Parking Maneuver	Check P.S. Press. Switch
Rough Idle	
Dirty Fuel Injectors	Clean/Replace Injectors
Poor MAP Sensor Signal	Test MAP Sensor/Circuit
Intermittent Fuel Injector Operation	Check Harness Connectors
Erratic Vehicle Speed Sensor Inputs	Harness Too Close to Plug Wires
Poor O_2 Sensor Signal	Test O_2 Sensor/Circuit
Faulty PCV System	Check PCV Valve and Hoses
Poor Acceleration	
Weak Fuel Pump	Replace Fuel Pump
Dirty Fuel Injectors	Clean/Replace Injectors
Excessive Intake Valve Deposits	Clean Intake System
Poor High Speed Operation	
Low Fuel Pump Volume	Faulty Fuel Pump/Filter
Poor MAP Sensor Signal	Test Speed Sensor/Circuit
Acceleration Ping/Knock	
Faulty EGR System	Check EGR Valve and Hoses
Poor Knock Sensor Signal	Test Knock Sensor/Circuit
Poor Baro Sensor Signal	Test Baro Sensor/Circuit
Improper Ignition Timing	Adjust Timing
Engine Overheating	Check Cooling System
Poor Quality Fuel	Use Different Fuel
Carbon Build-Up	Decarbon Engine

GENERAL INFORMATION

Waveforms - Injector Pattern Tutorial

* PLEASE READ THIS FIRST *

NOTE: **This is GENERAL information. This article is not intended to be specific to any unique situation or individual vehicle configuration. For model-specific information see appropriate articles where available.**

PURPOSE OF THIS ARTICLE

NOTE: **This is GENERAL information. This article is not intended to be specific to any unique situation or individual vehicle configuration. For model-specific information see appropriate articles where available.**

Learning how to interpret injector drive patterns from a Lab Scope can be like learning ignition patterns all over again. This article exists to ease you into becoming a skilled injector pattern interpreter.

You will learn:

- How a DVOM and noid light fall short of a lab scope.
- The two types of injector driver circuits, voltage controlled & current controlled.
- The two ways injector circuits can be wired, constant ground/switched power & constant power/switched ground.
- The two different pattern types you can use to diagnose with, voltage & current.
- All the valuable details injector patterns can reveal.

SCOPE OF THIS ARTICLE

This is NOT a manufacturer specific article. All different types of systems are covered here, regardless of the specific year/make/model/engine.

The reason for such broad coverage is because there are only a few basic ways to operate a solenoid-type injector. By understanding the fundamental principles, you will understand all the major points of injector patterns you encounter. Of course there are minor differences in each specific system, but that is where a waveform library helps out.

If this is confusing, consider a secondary ignition pattern. Even though there are many different implementations, each still has a primary voltage turn-on, firing line, spark line, etc.

If specific waveforms are available in On Demand for the engine and vehicle you are working on, you will find them in the Engine Performance section under the Engine Performance category.

IS A LAB SCOPE NECESSARY?

INTRODUCTION

You probably have several tools at your disposal to diagnose injector circuits. But you might have questioned "Is a lab scope necessary to do a thorough job, or will a set of noid lights and a multifunction DVOM do just as well?"

In the following text, we are going to look at what noid lights and DVOMs do best, do not do very well, and when they can mislead you. As you might suspect, the lab scope, with its ability to look inside an active circuit, comes to the rescue by answering for the deficiencies of these other tools.

OVERVIEW OF NOID LIGHT

The noid light is an excellent "quick and dirty" tool. It can usually be hooked to a fuel injector harness fast and the flashing light is easy to understand. It is a dependable way to identify a no-pulse situation.

However, a noid light can be very deceptive in two cases:

- If the wrong one is used for the circuit being tested. Beware: Just because a connector on a noid light fits the harness does not mean it is the right one.
- If an injector driver is weak or a minor voltage drop is present.

Use the Right Noid Light

In the following text we will look at what can happen if the wrong noid light is used, why there are different types of noid lights (besides differences with connectors), how to identify the types of noid lights, and how to know the right type to use.

First, let's discuss what can happen if the incorrect type of noid light is used. You might see:

- A dimly flashing light when it should be normal.
- A normal flashing light when it should be dim.

A noid light will flash dim if used on a lower voltage circuit than it was designed for. A normally operating circuit would appear underpowered, which could be misinterpreted as the cause of a fuel starvation problem.

Here are the two circuit types that could cause this problem:

- Circuits with external injector resistors. Used predominately on some Asian & European systems, they are used to reduce the available voltage to an injector in order to limit the current flow. This lower voltage can cause a dim flash on a noid light designed for full voltage.
- Circuits with current controlled injector drivers (e.g. "Peak and Hold"). Basically, this type of driver allows a quick burst of voltage/current to flow and then throttles it back significantly for the remainder of the pulse width duration. If a noid light was designed for the other type of driver (voltage controlled, e.g. "Saturated"), it will appear dim because it is expecting full voltage/current to flow for the entire duration of the pulse width.

Let's move to the other situation where a noid light flashes normally when it should be dim. This could occur if a more sensitive noid light is used on a higher voltage/amperage circuit that was weakened enough to cause problems (but not outright broken). A circuit with an actual problem would thus appear normal.

Let's look at why. A noid light does not come close to consuming as much amperage as an injector solenoid. If there is a partial driver failure or a minor voltage drop in the injector circuit, there can be adequate amperage to fully operate the noid light BUT NOT ENOUGH TO OPERATE THE INJECTOR.

If this is not clear, picture a battery with a lot of corrosion on the terminals. Say there is enough corrosion that the starter motor will not operate; it only clicks. Now imagine turning on the headlights (with the ignition in the RUN position). You find they light normally and are fully bright. This is the same idea as noid light: There is a problem, but enough amp flow exists to operate the headlights ("noid light"), but not the starter motor ("injector").

How do you identify and avoid all these situations? By using the correct type of noid light. This requires that you understanding the types of injector circuits that your noid lights are designed for. There are three. They are:

- Systems with a voltage controlled injector driver. Another way to say it: The noid light is designed for a circuit with a "high" resistance injector (generally 12 ohms or above).
- Systems with a current controlled injector driver. Another way to say it: The noid light is designed for a circuit with a low resistance injector (generally less than 12 ohms) without an external injector resistor.

- Systems with a voltage controlled injector driver and an external injector resistor. Another way of saying it: The noid light is designed for a circuit with a low resistance injector (generally less than 12 ohms) and an external injector resistor.

NOTE: **Some noid lights can meet both the second and third categories simultaneously.**

If you are not sure which type of circuit your noid light is designed for, plug it into a known good car and check out the results. If it flashes normally during cranking, determine the circuit type by finding out injector resistance and if an external injector resistor is used. You now know enough to identify the type of injector circuit. Label the noid light appropriately.

Next time you need to use a noid light for diagnosis, determine what type of injector circuit you are dealing with and select the appropriate noid light.

Of course, if you suspect a no-pulse condition you could plug in any one whose connector fit without fear of misdiagnosis. This is because it is unimportant if the flashing light is dim or bright. It is only important that it flashes.

In any cases of doubt regarding the use of a noid light, a lab scope will overcome all inherent weaknesses.

OVERVIEW OF DVOM

A DVOM is typically used to check injector resistance and available voltage at the injector. Some techs also use it check injector on-time either with a built-in feature or by using the dwell/duty function.

There are situations where the DVOM performs these checks dependably, and other situations where it can deceive you. It is important to be aware of these strengths and weaknesses. We will cover the topics above in the following text.

Checking Injector Resistance

If a short in an injector coil winding is constant, an ohmmeter will accurately identify the lower resistance. The same is true with an open winding. Unfortunately, an intermittent short is an exception. A faulty injector with an intermittent short will show "good" if the ohmmeter cannot force the short to occur during testing.

Alcohol in fuel typically causes an intermittent short, happening only when the injector coil is hot and loaded by a current high enough to jump the air gap between two bare windings or to break down any oxides that may have formed between them.

When you measure resistance with an ohmmeter, you are only applying a small current of a few milliamps. This is nowhere near enough to load the coil sufficiently to detect most problems. As a result, most resistance checks identify intermittently shorted injectors as being normal.

There are two methods to get around this limitation. The first is to purchase an tool that checks injector coil windings under full load. The Kent-Moore J-39021 is such a tool, though there are others. The Kent-Moore costs around $240 at the time of this writing and works on many different manufacturer's systems.

The second method is to use a lab scope. Remember, a lab scope allows you to see the regular operation of a circuit in real time. If an injector is having an short or intermittent short, the lab scope will show it.

Checking Available Voltage At the Injector

Verifying a fuel injector has the proper voltage to operate correctly is good diagnostic technique. Finding an open circuit on the feed circuit like a broken wire or connector is an accurate check with a DVOM. Unfortunately, finding an intermittent or excessive resistance problem with a DVOM is unreliable.

Let's explore this drawback. Remember that a voltage drop due to excessive resistance will only occur when a circuit is operating? Since the injector circuit is only operating for a few milliseconds at a time, a DVOM will only see a potential fault for a few milliseconds. The remaining 90+% of the time the unloaded injector circuit will show normal battery voltage.

Since DVOMs update their display roughly two to five times a second, all measurements in between are averaged. Because a potential voltage drop is visible for such a small amount of time, it gets "averaged out", causing you to miss it.

Only a DVOM that has a "min-max" function that checks EVERY MILLISECOND will catch this fault consistently (if used in that mode). The Fluke 87 among others has this capability.

A "min-max" DVOM with a lower frequency of checking (100 millisecond) can miss the fault because it will probably check when the injector is not on. This is especially true with current controlled driver circuits. The Fluke 88, among others fall into this category.

Outside of using a Fluke 87 (or equivalent) in the 1 mS "min-max" mode, the only way to catch a voltage drop fault is with a lab scope. You will be able to see a voltage drop as it happens.

One final note. It is important to be aware that an injector circuit with a solenoid resistor will always show a voltage drop when the circuit is energized. This is somewhat obvious and normal; it is a designed-in voltage drop. What can be unexpected is what we already covered--a voltage drop disappears when the circuit is unloaded. The unloaded injector circuit will show normal battery voltage at the injector. Remember this and do not get confused.

Checking Injector On-Time With Built-In Function

Several DVOMs have a feature that allows them to measure injector on-time (mS pulse width). While they are accurate and fast to hookup, they have three limitations you should be aware of:

- They only work on voltage controlled injector drivers (e.g "Saturated Switch"), NOT on current controlled injector drivers (e.g. "Peak & Hold").
- A few unusual conditions can cause inaccurate readings.
- Varying engine speeds can result in inaccurate readings.

Regarding the first limitation, DVOMs need a well-defined injector pulse in order to determine when the injector turns ON and OFF. Voltage controlled drivers provide this because of their simple switch-like operation. They completely close the circuit for the entire duration of the pulse. This is easy for the DVOM to interpret.

The other type of driver, the current controlled type, start off well by completely closing the circuit (until the injector pintle opens), but then they throttle back the voltage/current for the duration of the pulse. The DVOM understands the beginning of the pulse but it cannot figure out the throttling action. In other words, it cannot distinguish the throttling from an open circuit (de-energized) condition.

Yet current controlled injectors will still yield a millisecond on-time reading on these DVOMs. You will find it is also always the same, regardless of the operating conditions. This is because it is only measuring the initial completely-closed circuit on-time, which always takes the same amount of time (to lift the injector pintle off its seat). So even though you get a reading, it is useless.

The second limitation is that a few erratic conditions can cause inaccurate readings. This is because of a DVOM's slow display rate; roughly two to five times a second. As we covered earlier, measurements in between display updates get averaged. So conditions like skipped injector pulses or intermittent long/short injector pulses tend to get "averaged out", which will cause you to miss important details.

The last limitation is that varying engine speeds can result in inaccurate readings. This is caused by the quickly shifting injector on-time as the engine load varies, or the RPM moves from a state of acceleration to stabilization, or similar situations. It too is caused by the averaging of all measurements in between DVOM display periods. You can avoid this by checking on-time when there are no RPM or load changes.

A lab scope allows you to overcome each one of these limitations.

Checking Injector On-Time With Dwell Or Duty

If no tool is available to directly measure injector millisecond on-time measurement, some techs use a simple DVOM dwell or duty cycle functions as a replacement.

While this is an approach of last resort, it does provide benefits. We will discuss the strengths and weaknesses in a moment, but first we will look at how a duty cycle meter and dwell meter work.

How A Duty Cycle Meter and Dwell Meter Work

All readings are obtained by comparing how long something has been OFF to how long it has been ON in a fixed time period. A dwell meter and duty cycle meter actually come up with the same answers using different scales. You can convert freely between them. See **RELATIONSHIP BETWEEN DWELL & DUTY CYCLE READINGS TABLE**.

The DVOM display updates roughly one time a second, although some DVOMs can be a little faster or slower. All measurements during this update period are tallied inside the DVOM as ON time or OFF time, and then the total ratio is displayed as either a percentage (duty cycle) or degrees (dwell meter).

For example, let's say a DVOM had an update rate of exactly 1 second (1000 milliseconds). Let's also say that it has been measuring/tallying an injector circuit that had been ON a total of 250 mS out of the 1000 mS. That is a ratio of one-quarter, which would be displayed as 25% duty cycle or 15B° dwell (six-cylinder scale). Note that most duty cycle meters can reverse the readings by selecting the positive or negative slope to trigger on. If this reading were reversed, a duty cycle meter would display 75%.

Strengths of Dwell/Duty Meter

The obvious strength of a dwell/duty meter is that you can compare injector on-time against a known-good reading. This is the only practical way to use a dwell/duty meter, but requires you to have known-good values to compare against.

Another strength is that you can roughly convert injector mS on-time into dwell reading with some computations.

A final strength is that because the meter averages everything together it does not miss anything (though this is also a severe weakness that we will look at later). If an injector has a fault where it occasionally skips a pulse, the meter registers it and the reading changes accordingly.

Let's go back to figuring out dwell/duty readings by using injector on-time specification. This is not generally practical, but we will cover it for completeness. You NEED to know three things:

- Injector mS on-time specification.
- Engine RPM when specification is valid.
- How many times the injectors fire per crankshaft revolution.

The first two are self-explanatory. The last one may require some research into whether it is a bank-fire type that injects every 360B° of crankshaft rotation, a bank-fire that injects every 720B°, or an SFI that injects every 720B°. Many manufacturers do not release this data so you may have to figure it out yourself with a frequency meter.

Here are the four complete steps to convert millisecond on-time:

1. Determine the injector pulse width and RPM it was obtained at. Let's say the specification is for one millisecond of on-time at a hot idle of 600 RPM.
2. Determine injector firing method for the complete 4 stroke cycle. Let's say this is a 360B° bank-fired, meaning an injector fires each and every crankshaft revolution.
3. Determine how many times the injector will fire at the specified engine speed (600 RPM) in a fixed time period. We will use 100 milliseconds because it is easy to use. Six hundred crankshaft Revolutions Per Minute (RPM) divided by 60 seconds equals 10 revolutions per second. Multiplying 10 times .100 yields

one; the crankshaft turns one time in 100 milliseconds. With exactly one crankshaft rotation in 100 milliseconds, we know that the injector fires exactly one time.

4. Determine the ratio of injector on-time vs. off-time in the fixed time period, then figure duty cycle and/or dwell. The injector fires one time for a total of one millisecond in any given 100 millisecond period. One hundred minus one equals 99. We have a 99% duty cycle. If we wanted to know the dwell (on 6 cylinder scale), multiple 99% times .6; this equals 59.4B° dwell.

Weaknesses of Dwell/Duty Meter

The weaknesses are significant. First, there is no one-to-one correspondence to actual mS on-time. No manufacturer releases dwell/duty data, and it is time-consuming to convert the mS on-time readings. Besides, there can be a large degree of error because the conversion forces you to assume that the injector(s) are always firing at the same rate for the same period of time. This can be a dangerous assumption.

Second, all level of detail is lost in the averaging process. This is the primary weakness. You cannot see the details you need to make a confident diagnosis.

Here is one example. Imagine a vehicle that has a faulty injector driver that occasionally skips an injector pulse. Every skipped pulse means that that cylinder does not fire, thus unburned O2 gets pushed into the exhaust and passes the O2 sensor. The O2 sensor indicates lean, so the computer fattens up the mixture to compensate for the supposed "lean" condition.

A connected dwell/duty meter would see the fattened pulse width but would also see the skipped pulses. It would tally both and likely come back with a reading that indicated the "pulse width" was within specification because the rich mixture and missing pulses offset each other.

This situation is not a far-fetched scenario. Some early GM 3800 engines were suffering from exactly this. The point is that a lack of detail could cause misdiagnosis.

As you might have guessed, a lab scope would not miss this.

RELATIONSHIP BETWEEN DWELL & DUTY CYCLE READINGS

Dwell Meter (2)	Duty Cycle Meter
1B°	1%
15B°	25%
30B°	50%
45B°	75%
60B°	100%

(1) These are just some examples for your understanding. It is okay to fill in the gaps.

(2) Dwell meter on the six-cylinder scale.

THE TWO TYPES OF INJECTOR DRIVERS

NOTE: **This is GENERAL information. This article is not intended to be specific to any unique situation or individual vehicle configuration. For model-specific information see appropriate articles where available.**

OVERVIEW

There are two types of transistor driver circuits used to operate electric fuel injectors: voltage controlled and current controlled. The voltage controlled type is sometimes called a "saturated switch" driver, while the current controlled type is sometimes known as a "peak and hold" driver.

The basic difference between the two is the total resistance of the injector circuit. Roughly speaking, if a particular leg in an injector circuit has total resistance of 12 or more ohms, a voltage control driver is used. If less than 12 ohms, a current control driver is used.

It is a question of what is going to do the job of limiting the current flow in the injector circuit; the inherent "high" resistance in the injector circuit, or the transistor driver. Without some form of control, the current flow through the injector would cause the solenoid coil to overheat and result in a damaged injector.

VOLTAGE CONTROLLED CIRCUIT ("SATURATED SWITCH")

The voltage controlled driver inside the computer operates much like a simple switch because it does not need to worry about limiting current flow. Recall, this driver typically requires injector circuits with a total leg resistance of 12 or more ohms.

The driver is either ON, closing/completing the circuit (eliminating the voltage-drop), or OFF, opening the circuit (causing a total voltage drop).

Some manufacturers call it a "saturated switch" driver. This is because when switched ON, the driver allows the magnetic field in the injector to build to saturation. This is the same "saturation" property that you are familiar with for an ignition coil.

There are two ways "high" resistance can be built into an injector circuit to limit current flow. One method uses an external solenoid resistor and a low resistance injector, while the other uses a high resistance injector without the solenoid resistor. See the left side of Fig. Fig. 1.

In terms of injection opening time, the external resistor voltage controlled circuit is somewhat faster than the voltage controlled high resistance injector circuit. The trend, however, seems to be moving toward use of this latter type of circuit due to its lower cost and reliability. The ECU can compensate for slower opening times by increasing injector pulse width accordingly.

NOTE: **Never apply battery voltage directly across a low resistance injector. This will cause injector damage from solenoid coil overheating.**

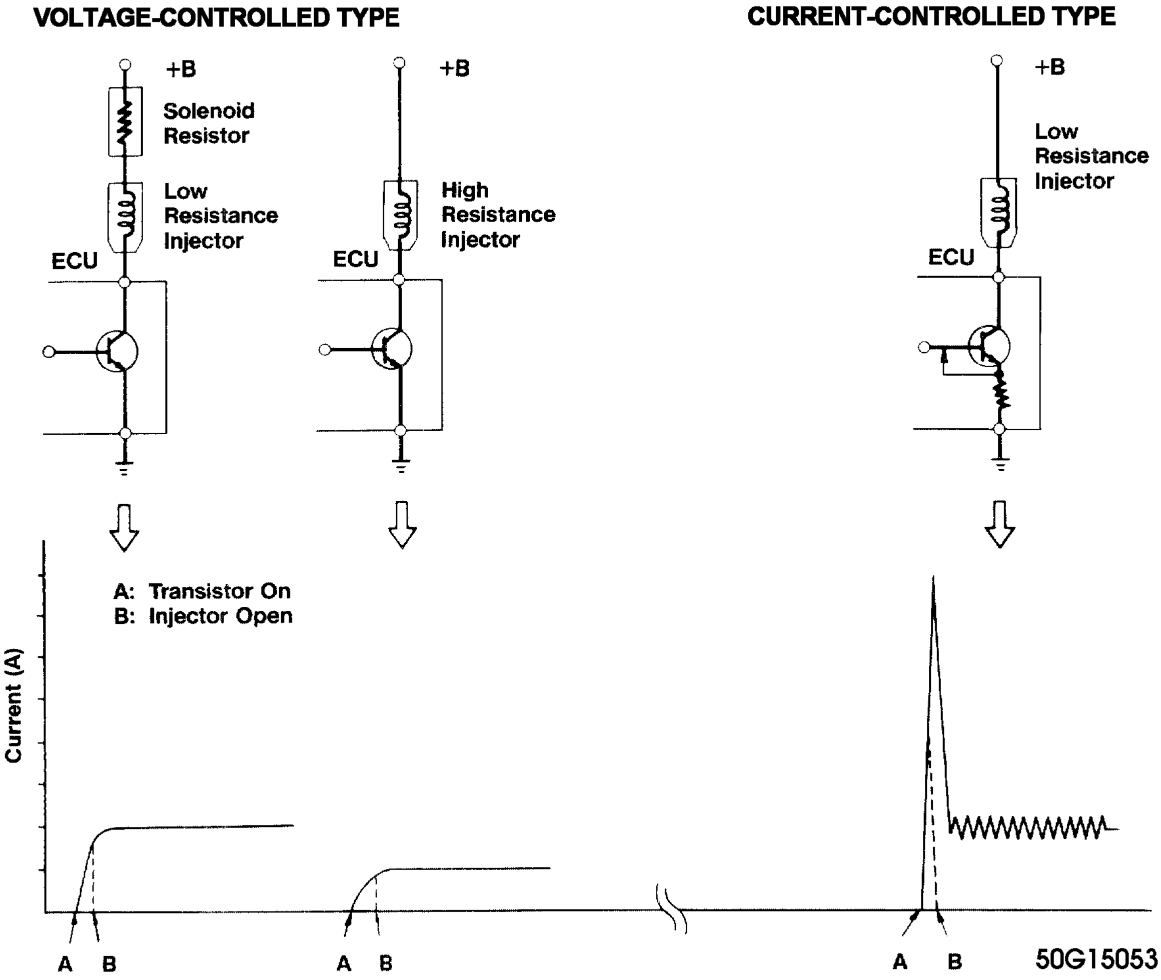
VOLTAGE-CONTROLLED TYPE
CURRENT-CONTROLLED TYPE
+B
Solenoid Resistor
Low Resistance Injector
ECU
+B
High Resistance Injector
ECU
+B
Low Resistance Injector
ECU
A: Transistor On
B: Injector Open
Current (A)
A
B
A
B
A
B
50G15053

Fig. 1: Injector Driver Types - Current and Voltage

CURRENT CONTROLLED CIRCUIT ("PEAK & HOLD")

The current controlled driver inside the computer is more complex than a voltage controlled driver because as the name implies, it has to limit current flow in addition to its ON-OFF switching function. Recall, this driver typically requires injector circuits with a total leg resistance of less than 12 ohms.

Once the driver is turned ON, it will not limit current flow until enough time has passed for the injector pintle to open. This period is preset by the particular manufacturer/system based on the amount of current flow needed to open their injector. This is typically between two and six amps. Some manufacturers refer to this as the "peak" time, referring to the fact that current flow is allowed to "peak" (to open the injector).

Once the injector pintle is open, the amp flow is considerably reduced for the rest of the pulse duration to protect the injector from overheating. This is okay because very little amperage is needed to hold the injector open, typically in the area of one amp or less. Some manufacturers refer to this as the "hold" time, meaning that just enough current is allowed through the circuit to "hold" the already-open injector open.

There are a couple methods of reducing the current. The most common trims back the available voltage for the circuit, similar to turning down a light at home with a dimmer.

The other method involves repeatedly cycling the circuit ON-OFF. It does this so fast that the magnetic field never collapses and the pintle stays open, but the current is still significantly reduced. See the right side of Fig. **Fig. 1** for an illustration.

The advantage to the current controlled driver circuit is the short time period from when the driver transistor goes ON to when the injector actually opens. This is a function of the speed with which current flow reaches its peak due to the low circuit resistance. Also, the injector closes faster when the driver turns OFF because of the lower holding current.

NOTE: **Never apply battery voltage directly across a low resistance injector. This will cause injector damage from solenoid coil overheating.**

THE TWO WAYS INJECTOR CIRCUITS ARE WIRED

NOTE: **This is GENERAL information. This article is not intended to be specific to any unique situation or individual vehicle configuration. For model-specific information see appropriate articles where available.**

Like other circuits, injector circuits can be wired in one of two fundamental directions. The first method is to steadily power the injectors and have the computer driver switch the ground side of the circuit. Conversely, the injectors can be steadily grounded while the driver switches the power side of the circuit.

There is no performance benefit to either method. Voltage controlled and current controlled drivers have been successfully implemented both ways.

However, 95% percent of the systems are wired so the driver controls the ground side of the circuit. Only a handful of systems use the drivers on the power side of the circuit. Some examples of the latter are the 1970's Cadillac EFI system, early Jeep 4.0 EFI (Renix system), and Chrysler 1984-87 TBI.

INTERPRETING INJECTOR WAVEFORMS

NOTE: **This is GENERAL information. This article is not intended to be specific to any unique situation or individual vehicle configuration. For model-specific information see appropriate articles where available.**

INTERPRETING A VOLTAGE CONTROLLED PATTERN

NOTE: **Voltage controlled drivers are also known as "Saturated Switch" drivers. They typically require injector circuits with a total leg resistance of 12 ohms or more.**

NOTE: **This example is based on a constant power/switched ground circuit.**

- See **Fig. 2** for pattern that the following text describes.

Point "A" is where system voltage is supplied to the injector. A good hot run voltage is usually 13.5 or more volts. This point, commonly known as open circuit voltage, is critical because the injector will not get sufficient current saturation if there is a voltage shortfall. To obtain a good look at this precise point, you will need to shift your Lab Scope to five volts per division.

You will find that some systems have slight voltage fluctuations here. This can occur if the injector feed wire is also used to power up other cycling components, like the ignition coil(s). Slight voltage fluctuations are normal and are no reason for concern. Major voltage fluctuations are a different story, however. Major voltage shifts on the injector feed line will create injector performance problems. Look for excessive resistance problems in the feed circuit if you see big shifts and repair as necessary.

Note that circuits with external injector resistors will not be any different because the resistor does not affect open circuit voltage.

Point "B" is where the driver completes the circuit to ground. This point of the waveform should be a clean square point straight down with no rounded edges. It is during this period that current saturation of the injector windings is taking place and the driver is heavily stressed. Weak drivers will distort this vertical line.

Point "C" represents the voltage drop across the injector windings. Point "C" should come very close to the ground reference point, but not quite touch. This is because the driver has a small amount of inherent resistance. Any significant offset from ground is an indication of a resistance problem on the ground circuit that needs repaired. You might miss this fault if you do not use the negative battery post for your Lab Scope hook-up, so it is HIGHLY recommended that you use the battery as your hook-up.

The points between "B" and "D" represent the time in milliseconds that the injector is being energized or held open. This line at Point "C" should remain flat. Any distortion or upward bend indicates a ground problem, short problem, or a weak driver. Alert readers will catch that this is exactly opposite of the current controlled type drivers (explained in the next section), because they bend upwards at this point.

How come the difference? Because of the total circuit resistance. Voltage controlled driver circuits have a high resistance of 12+ ohms that slows the building of the magnetic field in the injector. Hence, no counter voltage is built up and the line remains flat.

On the other hand, the current controlled driver circuit has low resistance which allows for a rapid magnetic field build-up. This causes a slight inductive rise (created by the effects of counter voltage) and hence, the upward bend. You should not see that here with voltage controlled circuits.

Point "D" represents the electrical condition of the injector windings. The height of this voltage spike (inductive kick) is proportional to the number of windings and the current flow through them. The more current flow and greater number of windings, the more potential for a greater inductive kick. The opposite is also true. The less current flow or fewer windings means less inductive kick. Typically you should see a minimum 35 volts at the top of Point "D".

If you do see approximately 35 volts, it is because a zener diode is used with the driver to clamp the voltage. Make sure the beginning top of the spike is squared off, indicating the zener dumped the remainder of the spike. If it is not squared, that indicates the spike is not strong enough to make the zener fully dump, meaning the injector has a weak winding.

If a zener diode is not used in the computer, the spike from a good injector will be 60 or more volts.

Point "E" brings us to a very interesting section. As you can see, the voltage dissipates back to supply value after the peak of the inductive kick. Notice the slight hump? This is actually the mechanical injector pintle closing. Recall that moving an iron core through a magnetic field will create a voltage surge. The pintle is the iron core here.

This pintle hump at Point "E" should occur near the end of the downward slope, and not afterwards. If it does occur after the slope has ended and the voltage has stabilized, it is because the pintle is slightly sticking because of a faulty injector

If you see more than one hump it is because of a distorted pintle or seat. This faulty condition is known as "pintle float".

It is important to realize that it takes a good digital storage oscilloscope or analog lab scope to see this pintle hump clearly. Unfortunately, it cannot always be seen.

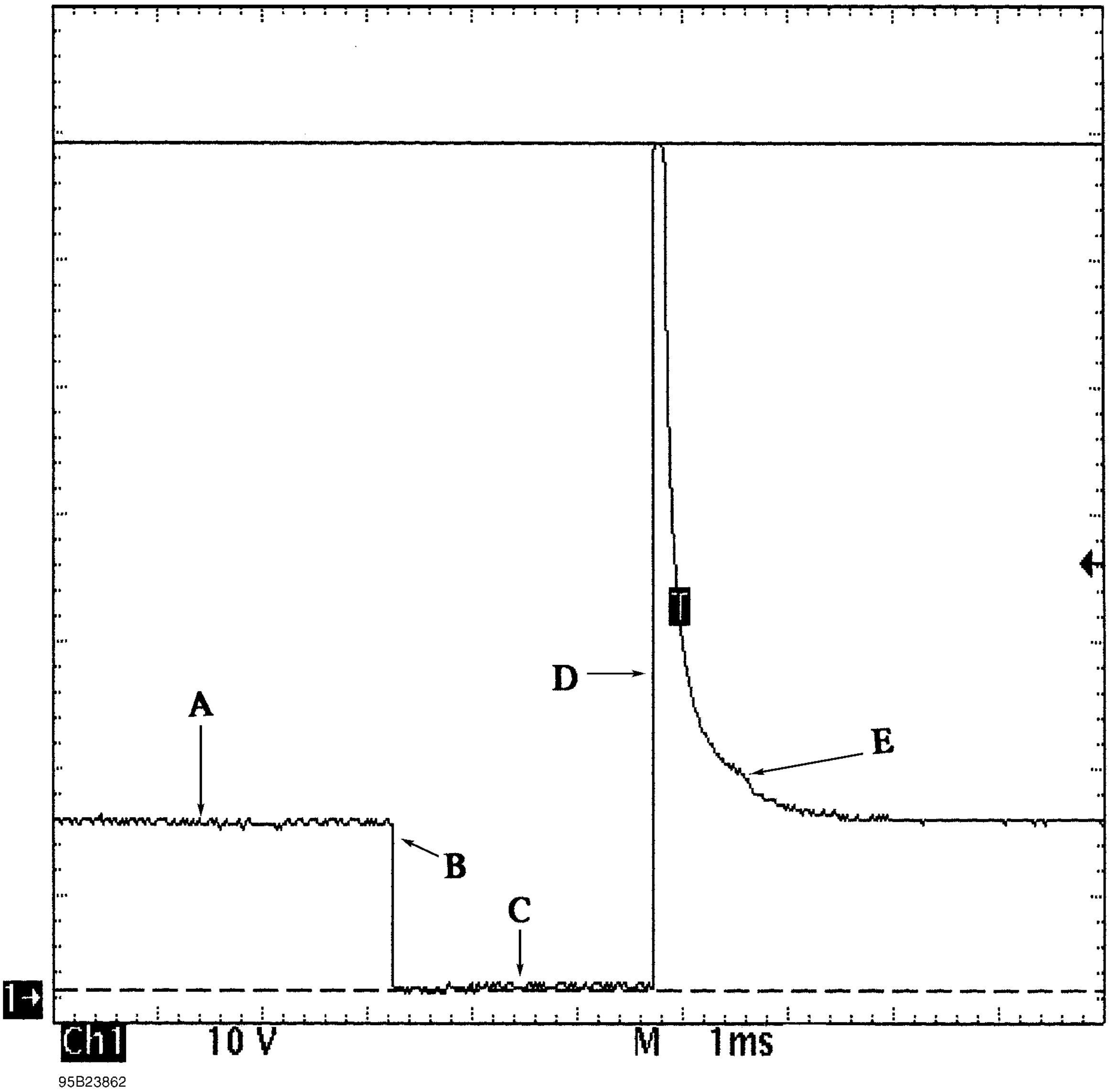

Fig. 2: Identifying Voltage Controlled Type Injector Pattern

INTERPRETING A CURRENT CONTROLLED PATTERN

NOTE: **Current controlled drivers are also known as "Peak and Hold" drivers. They typically require injector circuits with a total leg resistance with less than 12 ohm.**

NOTE: **This example is based on a constant power/switched ground circuit.**

- See **Fig. 3** for pattern that the following text describes.

Point "A" is where system voltage is supplied to the injector. A good hot run voltage is usually 13.5 or more volts. This point, commonly known as open circuit voltage, is critical because the injector will not get sufficient current saturation if there is a voltage shortfall. To obtain a good look at this precise point, you will need to shift your Lab Scope to five volts per division.

You will find that some systems have slight voltage fluctuations here. This could occur if the injector feed wire is also used to power up other cycling components, like the ignition coil(s). Slight voltage fluctuations are normal and are no reason for concern. Major voltage fluctuations are a different story, however. Major voltage shifts on the injector feed line will create injector performance problems. Look for excessive resistance problems in the feed circuit if you see big shifts and repair as necessary.

Point "B" is where the driver completes the circuit to ground. This point of the waveform should be a clean square point straight down with no rounded edges. It is during this period that current saturation of the injector windings is taking place and the driver is heavily stressed. Weak drivers will distort this vertical line.

Point "C" represents the voltage drop across the injector windings. Point "C" should come very close to the ground reference point, but not quite touch. This is because the driver has a small amount of inherent resistance. Any significant offset from ground is an indication of a resistance problem on the ground circuit that needs repaired. You might miss this fault if you do not use the negative battery post for your Lab Scope hook-up, so it is HIGHLY recommended that you use the battery as your hook-up.

Right after Point "C", something interesting happens. Notice the trace starts a normal upward bend. This slight inductive rise is created by the effects of counter voltage and is normal. This is because the low circuit resistance allowed a fast build-up of the magnetic field, which in turn created the counter voltage.

Point "D" is the start of the current limiting, also known as the "Hold" time. Before this point, the driver had allowed the current to free-flow ("Peak") just to get the injector pintle open. By the time point "D" occurs, the injector pintle has already opened and the computer has just significantly throttled the current back. It does this by only allowing a few volts through to maintain the minimum current required to keep the pintle open.

The height of the voltage spike seen at the top of Point "D" represents the electrical condition of the injector windings. The height of this voltage spike (inductive kick) is proportional to the number of windings and the current flow through them. The more current flow and greater number of windings, the more potential for a greater inductive kick. The opposite is also true. The less current flow or fewer windings means less inductive kick. Typically you should see a minimum 35 volts.

If you see approximately 35 volts, it is because a zener diode is used with the driver to clamp the voltage. Make sure the beginning top of the spike is squared off, indicating the zener dumped the remainder of the spike. If it is not squared, that indicates the spike is not strong enough to make the zener fully dump, meaning there is a problem with a weak injector winding.

If a zener diode is not used in the computer, the spike from a good injector will be 60 or more volts.

At Point "E", notice that the trace is now just a few volts below system voltage and the injector is in the current limiting, or the "Hold" part of the pattern. This line will either remain flat and stable as shown here, or will cycle up and down rapidly. Both are normal methods to limit current flow. Any distortion may indicate shorted windings.

Point "F" is the actual turn-off point of the driver (and injector). To measure the millisecond on-time of the injector, measure between points "C" and "F". Note that we used cursors to do it for us; they are measuring a 2.56 mS on-time.

The top of Point "F" (second inductive kick) is created by the collapsing magnetic field caused by the final turn-off of the driver. This spike should be like the spike on top of point "D".

Point "G" shows a slight hump. This is actually the mechanical injector pintle closing. Recall that moving an iron core through a magnetic field will create a voltage surge. The pintle is the iron core here.

This pintle hump at Point "E" should occur near the end of the downward slope, and not afterwards. If it does occur after the slope has ended and the voltage has stabilized, it is because the pintle is slightly sticking. Some older Nissan TBI systems suffered from this.

If you see more than one hump it is because of a distorted pintle or seat. This faulty condition is known as "pintle float".

It is important to realize that it takes a good digital storage oscilloscope or analog lab scope to see this pintle hump clearly. Unfortunately, it cannot always be seen.

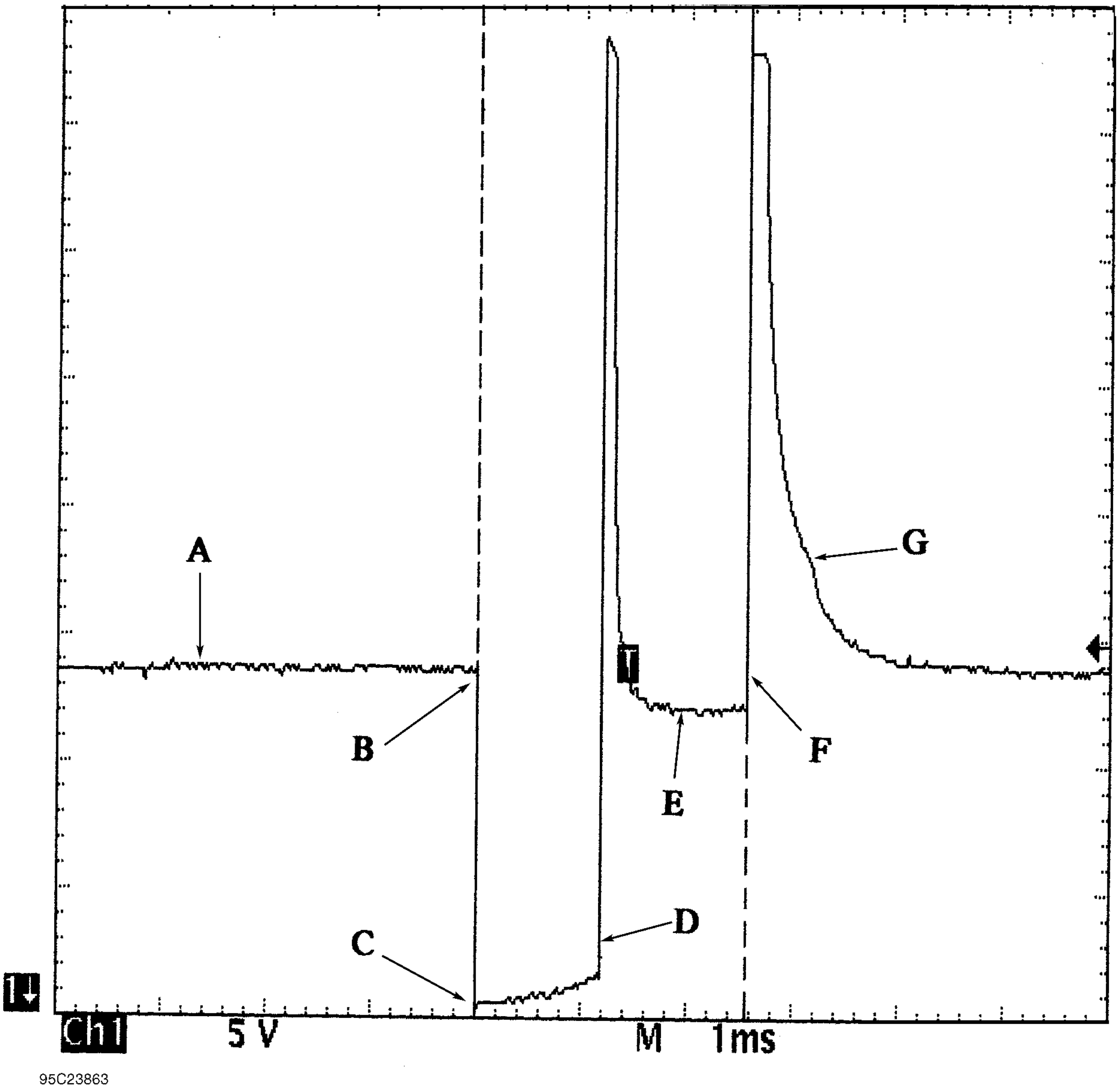

Fig. 3: Identifying Current Controlled Type Injector Pattern

CURRENT WAVEFORM SAMPLES

NOTE: **This is GENERAL information. This article is not intended to be specific to any unique situation or individual vehicle configuration. For model-specific information see appropriate articles where available.**

EXAMPLE #1 - VOLTAGE CONTROLLED DRIVER

The waveform pattern shown in Fig. Fig. 4 indicate a normal current waveform from a Ford 3.0L V6 VIN [U] engine. This voltage controlled type circuit pulses the injectors in groups of three injectors. Injectors No. 1, 3, and 5 are pulsed together and cylinders 2, 4, and 6 are pulsed together. The specification for an acceptable bank resistance is 4.4 ohms. Using Ohm's Law and assuming a hot run voltage of 14 volts, we determine that the bank would draw a current of 3.2 amps.

However this is not the case because as the injector windings become saturated, counter voltage is created which impedes the current flow. This, coupled with the inherent resistance of the driver's transistor, impedes the current flow even more. So, what is a known good value for a dynamic current draw on a voltage controlled bank of injectors? The waveform pattern shown below indicates a good parallel injector current flow of 2 amps. See **Fig. 4**.

Note that if just one injector has a resistance problem and partially shorts, the entire parallel bank that it belongs to will draw more current. This can damage the injector driver.

The waveform pattern in Fig. **Fig. 5** indicates this type of problem with too much current flow. This is on other bank of injectors of the same vehicle; the even side. Notice the Lab Scope is set on a one amp per division scale. As you can see, the current is at an unacceptable 2.5 amps.

It is easy to find out which individual injector is at fault. All you need to do is inductively clamp onto each individual injector and compare them. To obtain a known-good value to compare against, we used the good bank to capture the waveform in Fig. **Fig. 6**. Notice that it limits current flow to 750 milliamps.

The waveform shown in Fig. **Fig. 7** illustrates the problem injector we found. This waveform indicates an unacceptable current draw of just over one amp as compared to the 750 milliamp draw of the known-good injector. A subsequent check with a DVOM found 8.2 ohms, which is under the 12 ohm specification.

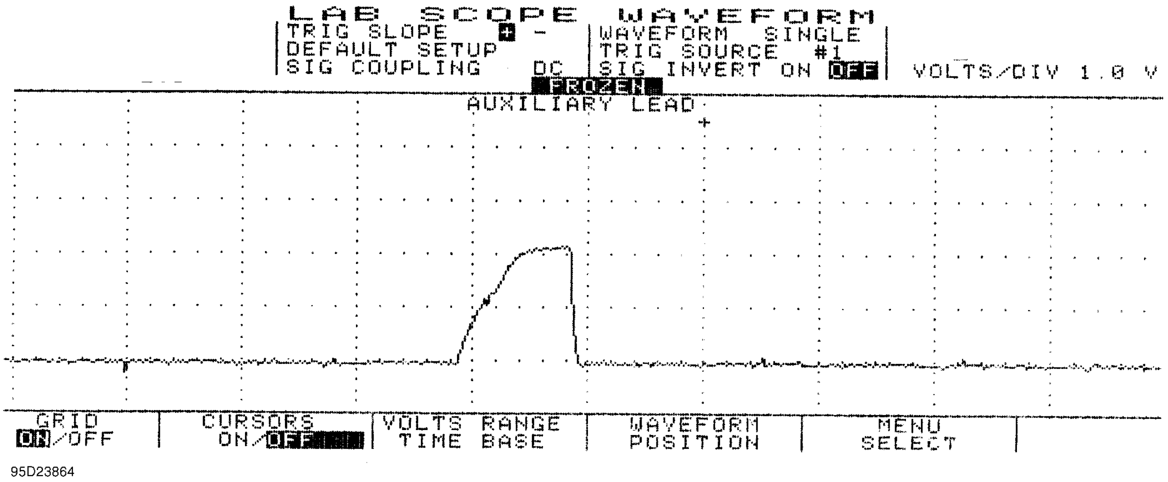
LAB SCOPE WAVEFORM
TRIG SLOPE + -
DEFAULT SETUP
SIG COUPLING DC
WAVEFORM SINGLE
TRIG SOURCE #1
SIG INVERT ON OFF
VOLTS/DIV 1.0 V
FROZEN
AUXILIARY LEAD
GRID ON/OFF
CURSORS ON/OFF
VOLTS RANGE TIME BASE
WAVEFORM POSITION
MENU SELECT
95D23864

Fig. 4: Injector Bank w/Normal Current Flow - Current Pattern

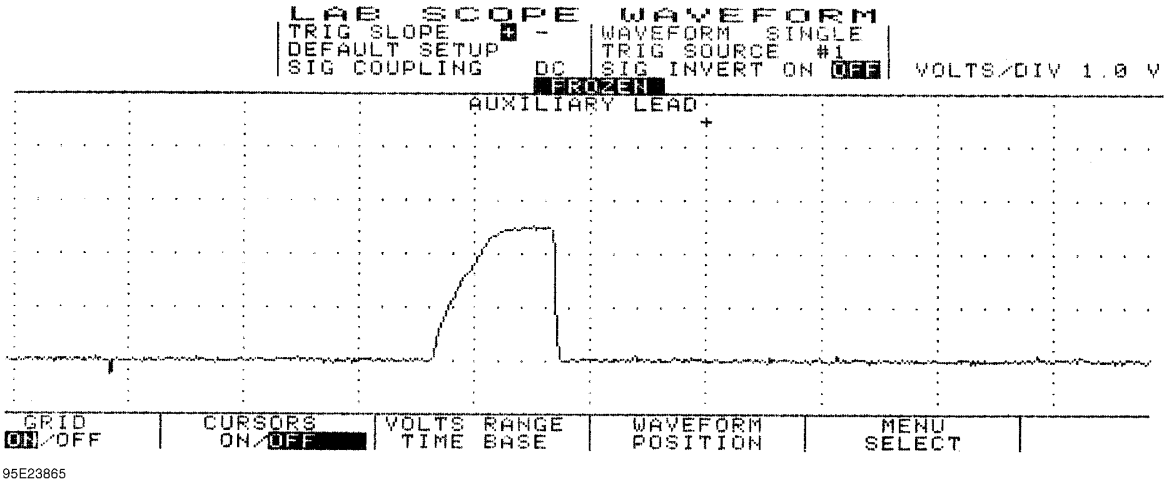
LAB SCOPE WAVEFORM
TRIG SLOPE + -
DEFAULT SETUP
SIG COUPLING DC
WAVEFORM SINGLE
TRIG SOURCE #1
SIG INVERT ON OFF
VOLTS/DIV 1.0 V
FROZEN
AUXILIARY LEAD
GRID ON/OFF
CURSORS ON/OFF
VOLTS RANGE TIME BASE
WAVEFORM POSITION
MENU SELECT
95E23865

Fig. 5: Injector Bank w/Excessive Current Flow - Current Pattern

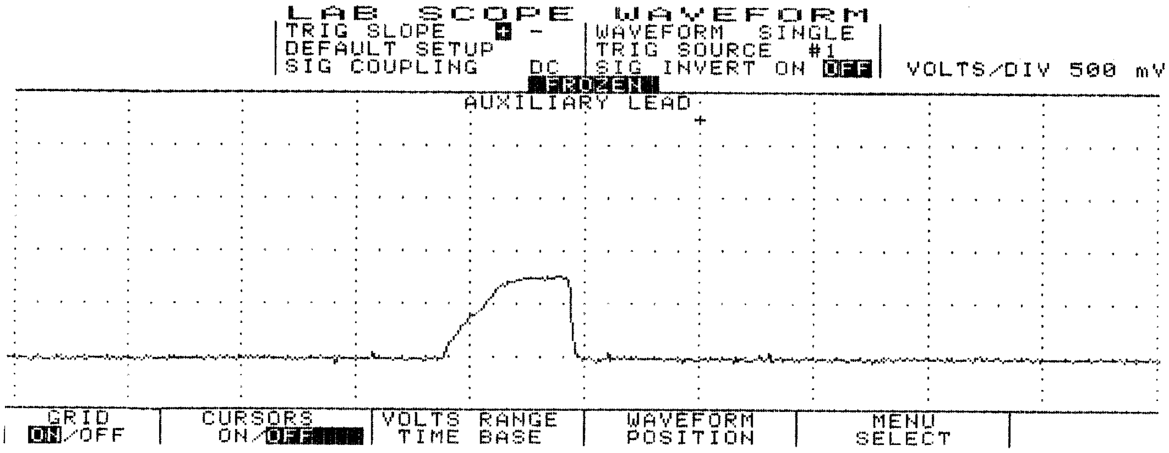
LAB SCOPE WAVEFORM
TRIG SLOPE + -
DEFAULT SETUP
SIG COUPLING DC
WAVEFORM SINGLE
TRIG SOURCE #1
SIG INVERT ON OFF
VOLTS/DIV 500 mV
FROZEN
AUXILIARY LEAD
GRID ON/OFF
CURSORS ON/OFF
VOLTS RANGE TIME BASE
WAVEFORM POSITION
MENU SELECT

95F23866

Fig. 6: Single Injector w/Normal Current Flow - Current Pattern

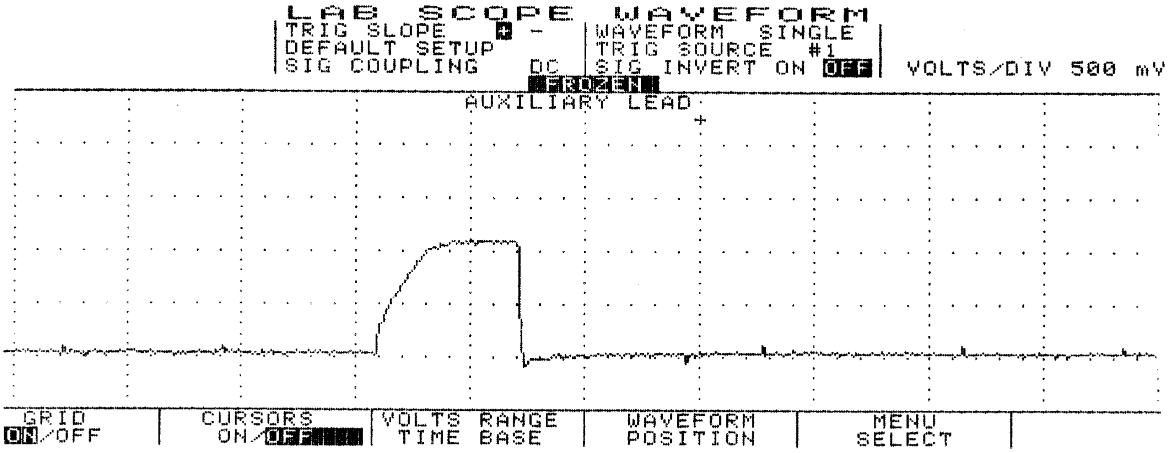
LAB SCOPE WAVEFORM
TRIG SLOPE + -
DEFAULT SETUP
SIG COUPLING DC
WAVEFORM SINGLE
TRIG SOURCE #1
SIG INVERT ON OFF
VOLTS/DIV 500 mV
FROZEN
AUXILIARY LEAD
GRID ON/OFF
CURSORS ON/OFF
VOLTS RANGE TIME BASE
WAVEFORM POSITION
MENU SELECT

95G23867

Fig. 7: Single Injector w/Excessive Current Flow - Current Pattern

EXAMPLE #2 - VOLTAGE CONTROLLED DRIVER

This time we will look at a GM 3.1L V6 VIN [T]. Fig. **Fig. 8** shows the 1, 3, 5 (odd) injector bank with the current waveform indicating about a 2.6 amp draw at idle. This pattern, taken from a known good vehicle, correctly stays at or below the maximum 2.6 amps current range. Ideally, the current for each bank should be very close in comparison.

Notice the small dimple on the current flow's rising edge. This is the actual injector opening or what engineers refer to as the "set point." For good idle quality, the set point should be uniform between the banks.

When discussing Ohm's Law as it pertains to this parallel circuit, consider that each injector has specified resistance of 12.2 ohms. Since all three injectors are in parallel the total resistance of this parallel circuit drops to 4.1 ohms. Fourteen volts divided by four ohms would pull a maximum of 3.4 amps on this bank of injectors. However, as we discussed in **EXAMPLE #1** above, other factors knock this value down to roughly the 2.6 amp neighborhood.

Now we are going to take a look at the even bank of injectors; injectors 2, 4, and 6. See **Fig. 9**. Notice this bank peaked at 1.7 amps at idle as compared to the 2.6 amps peak of the odd bank (Fig. **Fig. 8**). Current flow between even and odd injectors banks is not uniform, yet it is not causing a driveability problem. That is because it is still under the maximum amperage we figured out earlier. But be aware this vehicle could develop a problem if the amperage flow increases any more.

Checking the resistance of this even injector group with a DVOM yielded 6.2 ohms, while the odd injector group in the previous example read 4.1 ohms.

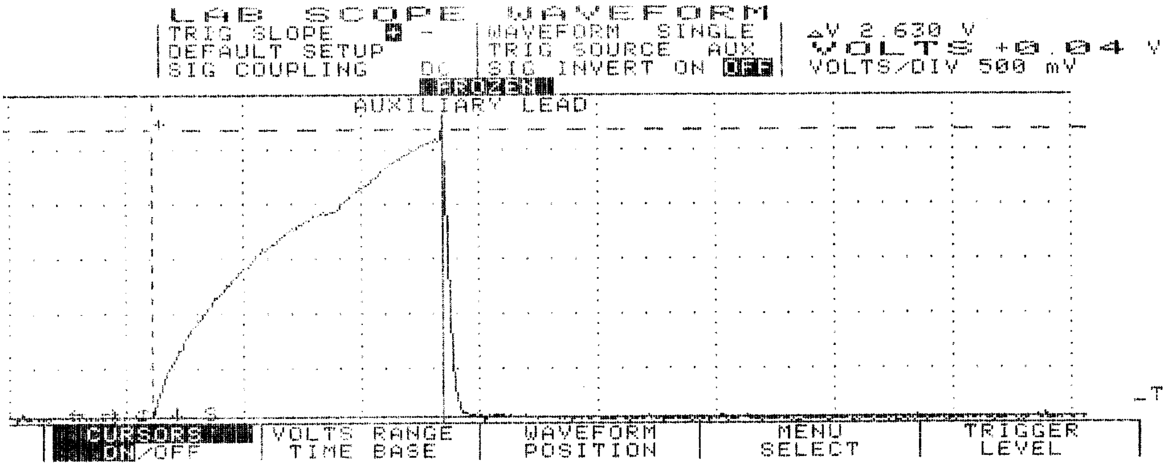

95E23873

Fig. 8: Injector Odd Bank w/Normal Current Flow - Current Pattern

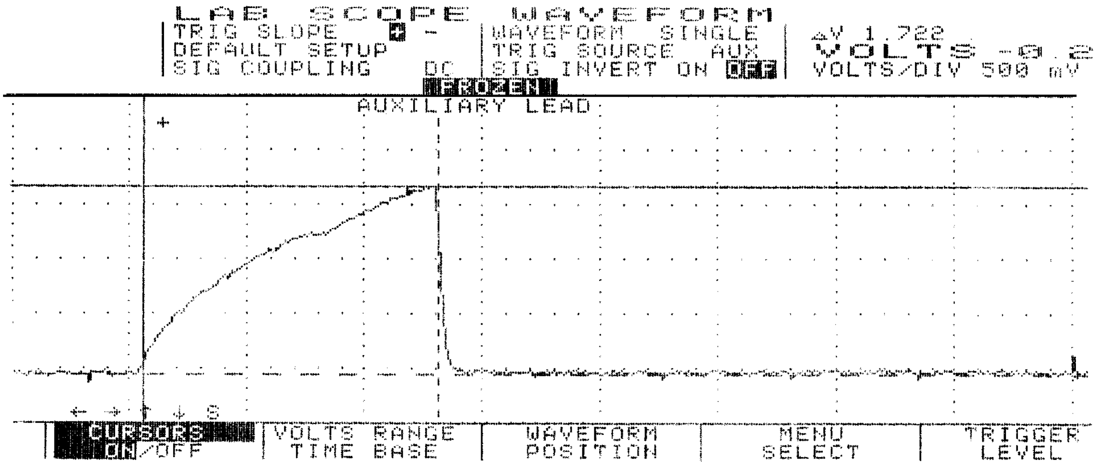

95F23874

Fig. 9: Injector Even Bank w/Normal Current Flow - Current Pattern

EXAMPLE #3 - VOLTAGE CONTROLLED DRIVER

Example #3 is of a Ford 5.0L V8 SEFI. Fig. Fig. 10 shows a waveform of an individual injector at idle with the Lab Scope set on 200 milliamps per division. Notice the dimple in the rising edge. This dimple indicates the actual opening of the injector (set point) occurred at 400 milliamps and current peaked at 750 milliamps. This is a good specification for this engine.

The next waveform pattern in Fig. Fig. 11 shows an abnormality with another injector. With the Lab Scope set on 500 milliamps per division, you can see that the current waveform indicates a 1200 milliamp draw. This is a faulty injector.

Abnormally low resistance injectors create excessive current draw, causing rough idle, and possible computer driver damage.

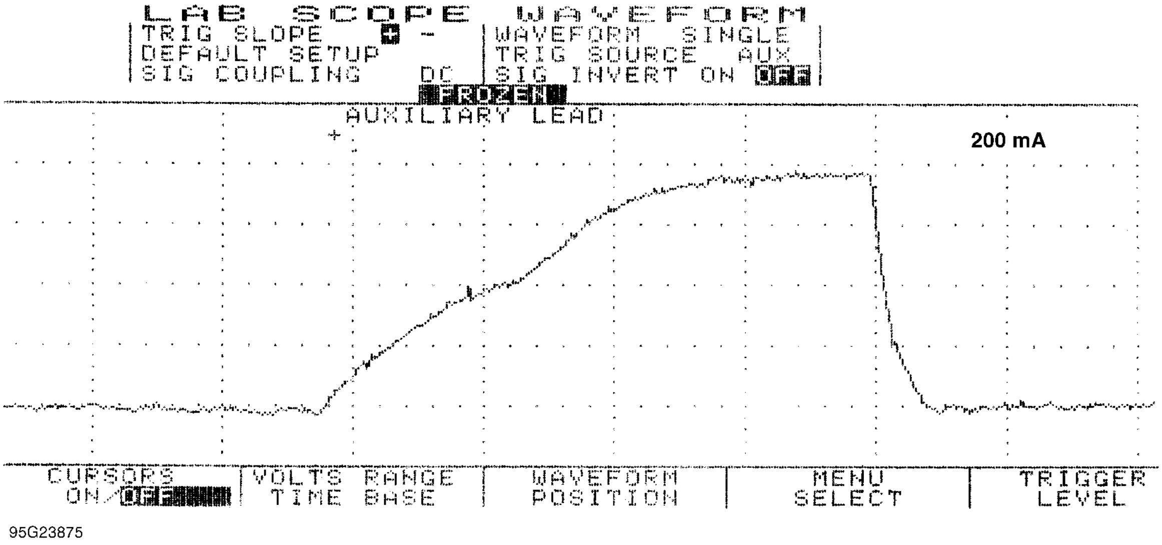

Fig. 10: Single Injector w/Normal Current Flow - Current Pattern

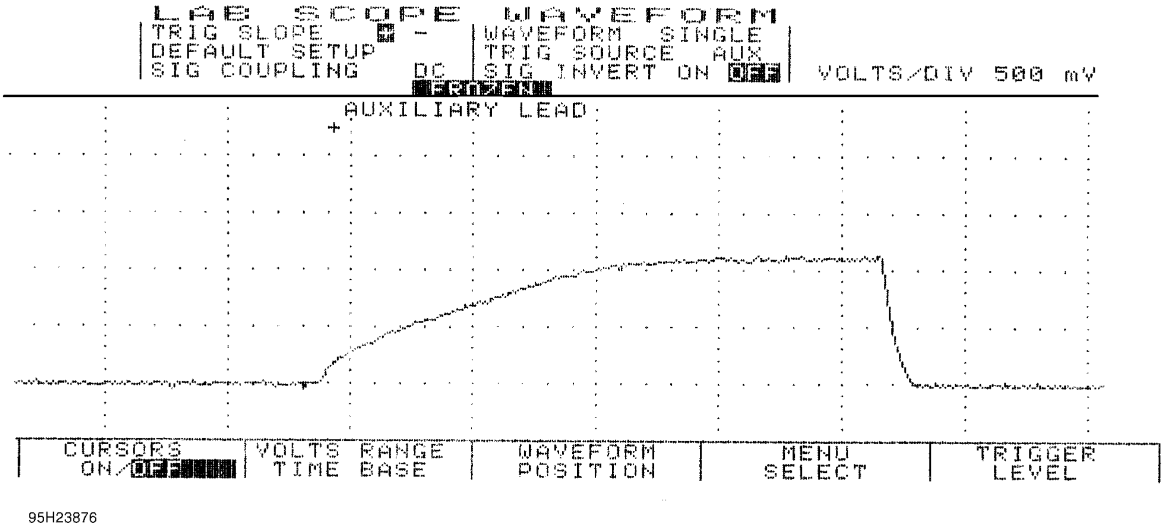

Fig. 11: Single Injector w/Excessive Current Flow - Current Pattern

EXAMPLE #4 - CURRENT CONTROLLED DRIVER

Example #4 is of a Ford 4.6L SEFI VIN [W]. See Fig. 12 for the known-good waveform pattern. This Ford system is different from the one above in EXAMPLE #3 as it peaks at 900 milliamps and the actual opening of the injector (set point) is just below 600 milliamps.

This is offered as a comparison against the Ford pattern listed above, as they are both Ford SEFI injectors but with different operating ranges. The point is that you should not make any broad assumptions for any manufacturer.

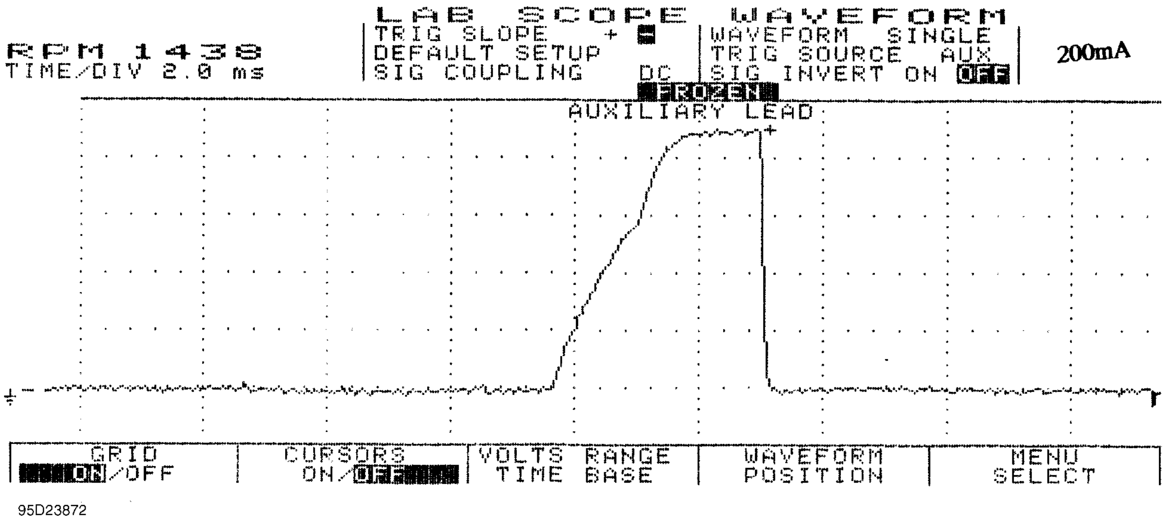
LAB SCOPE WAVEFORM
RPM 1438
TIME/DIV 2.0 ms
TRIG SLOPE + -
DEFAULT SETUP
SIG COUPLING DC
WAVEFORM SINGLE
TRIG SOURCE AUX
SIG INVERT ON OFF
200mA
FROZEN
AUXILIARY LEAD
GRID ON/OFF
CURSORS ON/OFF
VOLTS RANGE TIME BASE
WAVEFORM POSITION
MENU SELECT
95D23872

Fig. 12: Single Injector w/Normal Current Flow - Current Pattern

EXAMPLE #5 - CURRENT CONTROLLED DRIVER

The known-good waveform in Fig. Fig. 13 is from a Chrysler 3.0L V6 PFI VIN [3]. It is a perfect example of the peak and hold theory. The waveform shows a 1-amp per division current flow, ramping to 4 amps and then decreasing to 1-amp to hold the injector open.

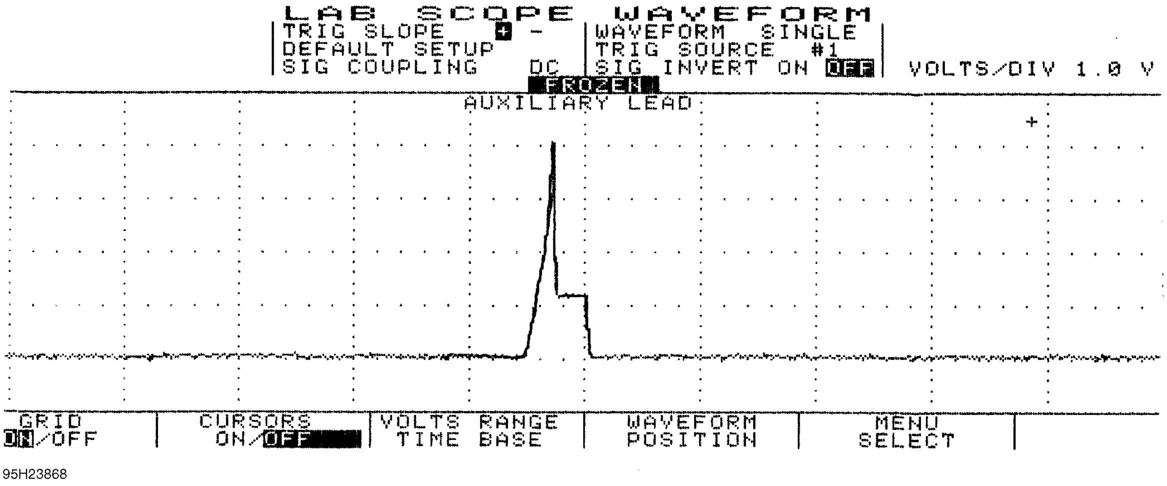
LAB SCOPE WAVEFORM
TRIG SLOPE + -
DEFAULT SETUP
SIG COUPLING DC
WAVEFORM SINGLE
TRIG SOURCE #1
SIG INVERT ON OFF
VOLTS/DIV 1.0 V
FROZEN
AUXILIARY LEAD
GRID ON/OFF
CURSORS ON/OFF
VOLTS RANGE TIME BASE
WAVEFORM POSITION
MENU SELECT
95H23868

Fig. 13: Injector Bank w/Normal Current Flow - Current Pattern

EXAMPLE #6 - CURRENT CONTROLLED DRIVER

This next known-good waveform is from a Ford 5.0L V8 CFI VIN [F]. See Fig. 14. The pattern, which is set on a 250 milliamps scale, indicates a 1.25 amp peak draw and a hold at 350 milliamps.

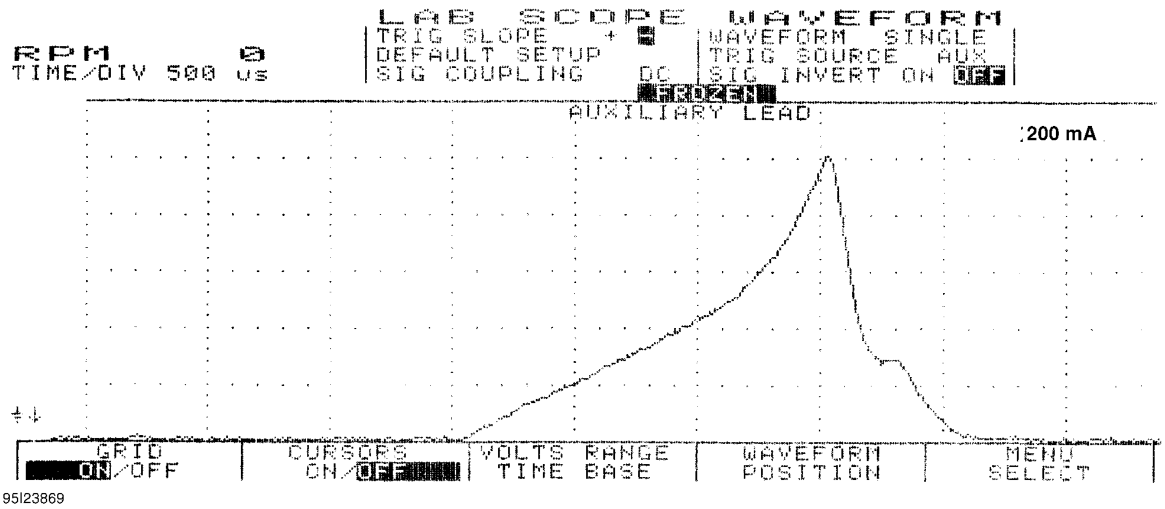

Fig. 14: Single Injector w/Normal Current Flow - Current Pattern

EXAMPLE #7 - CURRENT CONTROLLED DRIVER

The known-good current controlled type waveform in Fig. Fig. 15 is from a GM 2.0L TBI VIN [1]. With the lab scope set at 2 amps per division, notice that this system peaks at 4 amps and holds at 1 amp.

The next waveform is from the same type of engine, except that it shows a faulty injector. See Fig. 16. Notice that the current went to almost 5 amps and stayed at 1 amp during the hold pattern. Excessive amounts of current flow from bad injectors are a common source of intermittent computer shutdown. Using a current waveform pattern is the most accurate method of pinpointing this problem.

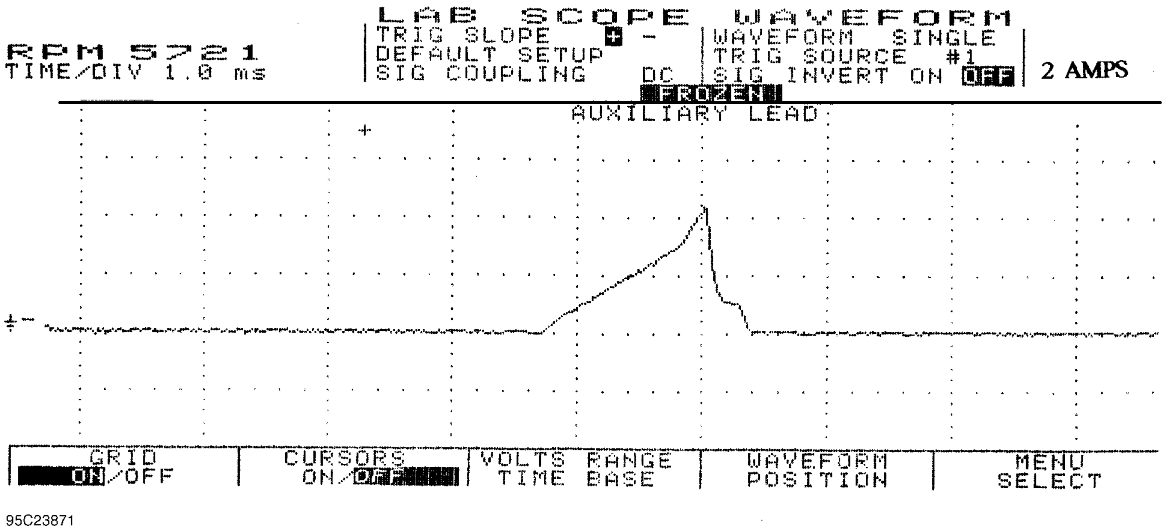

Fig. 15: Single Injector w/Normal Current Flow - Current Pattern

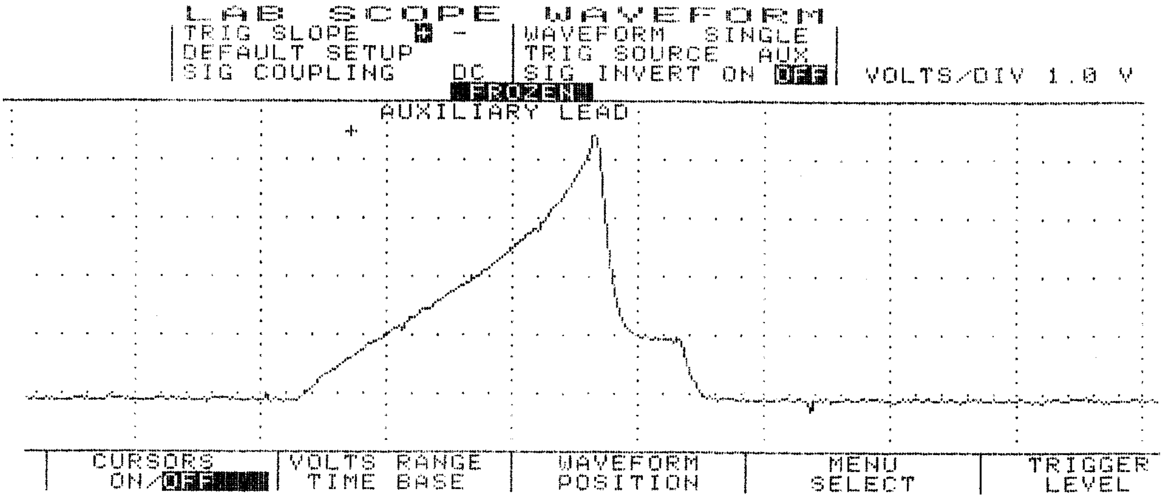

95I23877

Fig. 16: Single Injector w/Excessive Current Flow - Current Pattern

EXAMPLE #8 - CURRENT CONTROLLED DRIVER

This known-good CPI system waveform from a GM 4.3L V6 CPI VIN [W] peaks at 4 amps and holds at 1-amp. See Fig. 17 for waveform.

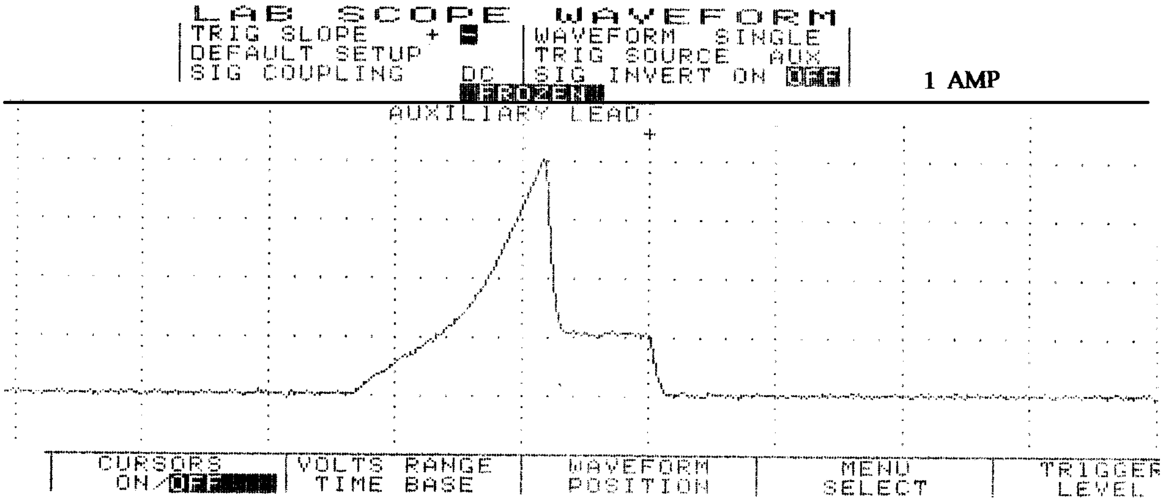

95B23870

Fig. 17: Single Injector w/Normal Current Flow - Current Pattern

VOLTAGE WAVEFORM SAMPLES

NOTE: **This is GENERAL information. This article is not intended to be specific to any unique situation or individual vehicle configuration. For model-specific information see appropriate articles where available.**

EXAMPLE #1 - VOLTAGE CONTROLLED DRIVER

These two known-good waveform patterns are from a Ford 4.6L V8 VIN [W]. Fig. Fig. 18 illustrates the 64 volt inductive kick on this engine, indicating no clamping is occurring. The second pattern, Fig. Fig. 19, was taken during hot idle, closed loop, and no load.

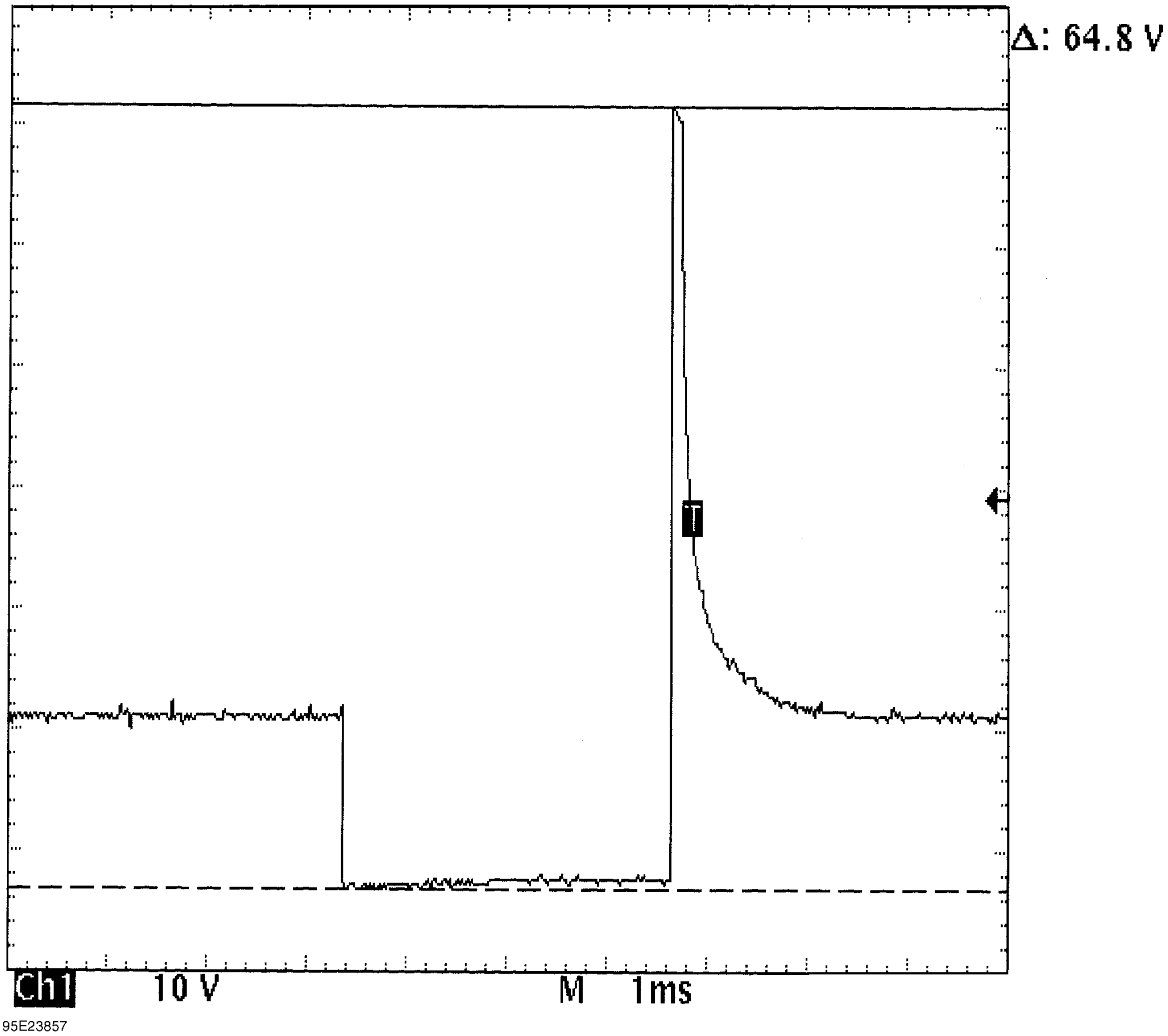

Fig. 18: Injector Bank - Known Good - Voltage Pattern

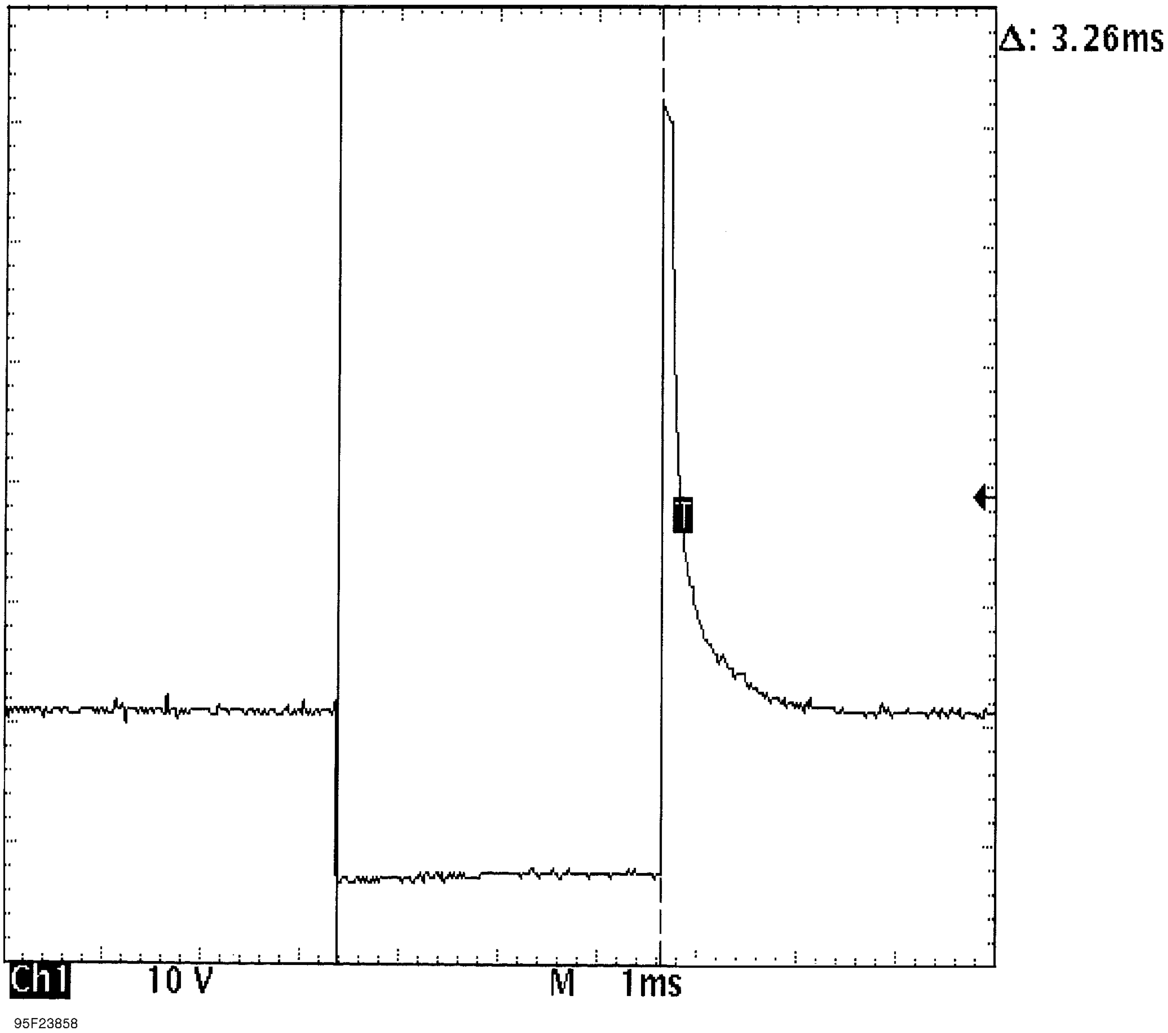

Fig. 19: Injector Bank - Known Good - Voltage Pattern

EXAMPLE #2 - VOLTAGE CONTROLLED DRIVER

The known-good waveform pattern in Fig. Fig. 20 is from a GM 3.8L V6 PFI VIN [3]. It was taken during hot idle, closed loop and no load.

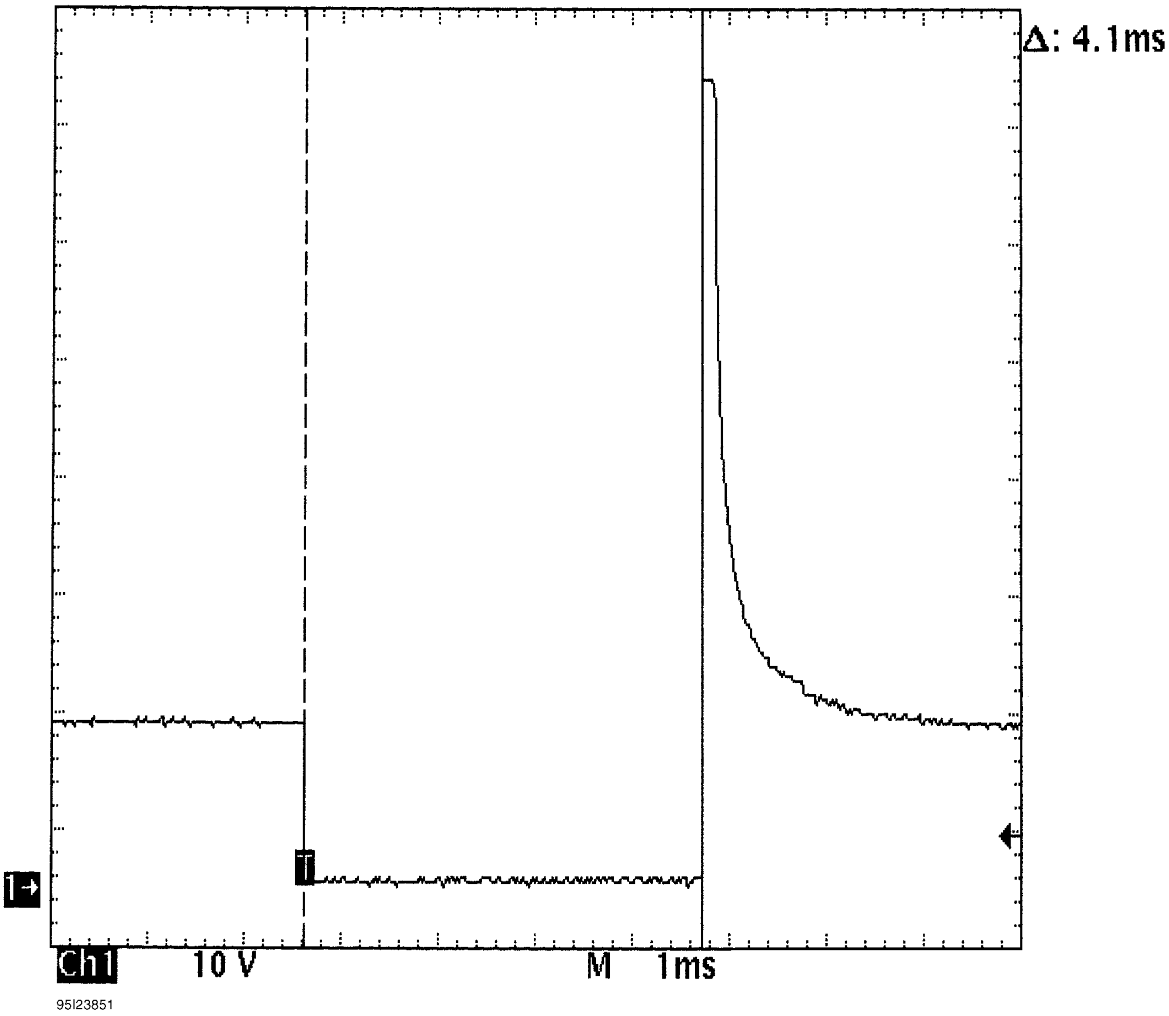

Fig. 20: Injector Bank - Known Good - Voltage Pattern

EXAMPLE #3 - VOLTAGE CONTROLLED DRIVER

This known-good waveform pattern, Fig. **Fig. 21**, is from a GM 5.0L V8 TPI VIN [F]. It was taken during hot idle, closed loop and no load.

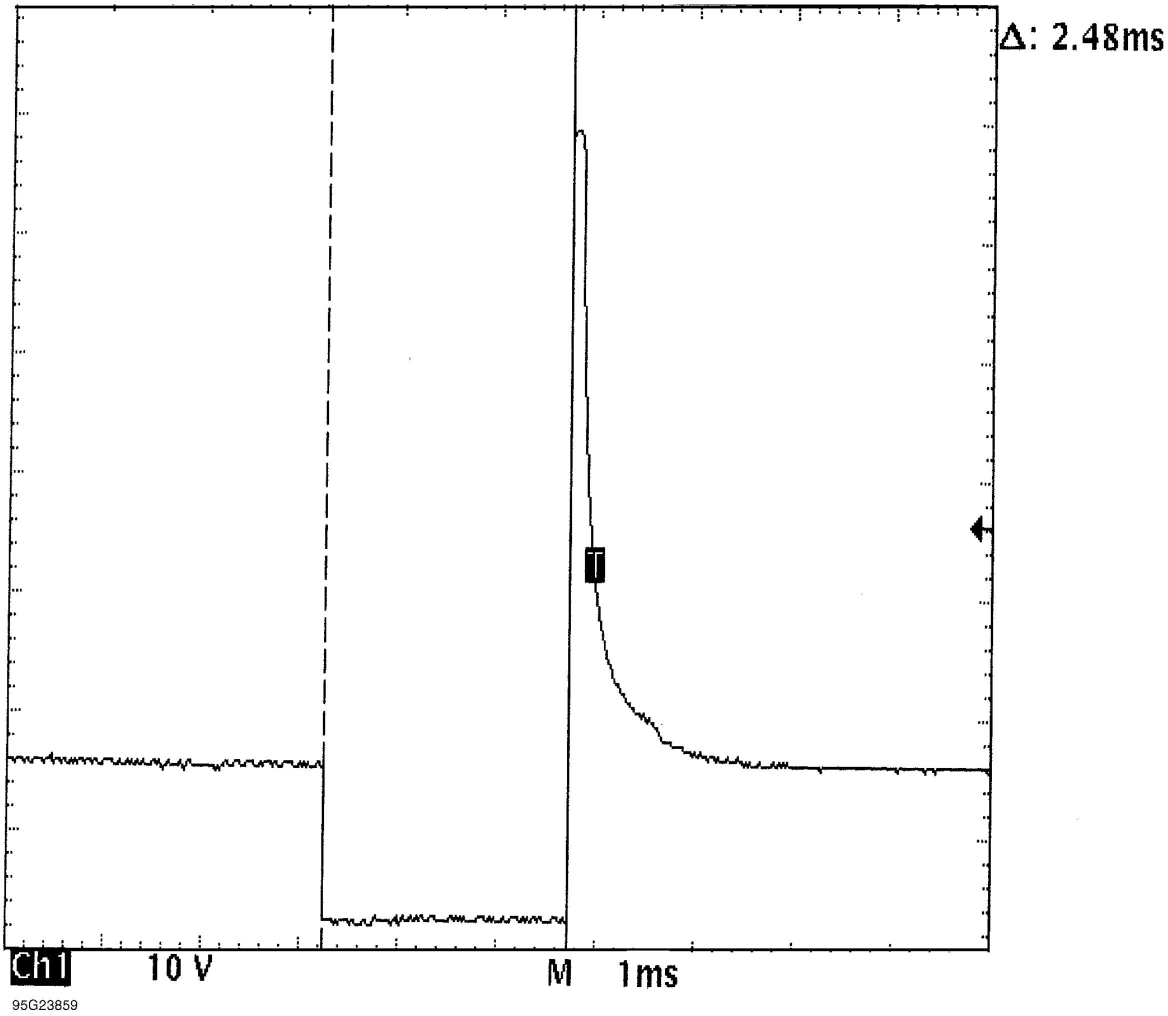

Fig. 21: Injector Bank - Known Good - Voltage Pattern

EXAMPLE #4 - CURRENT CONTROLLED DRIVER

From 1984 to 1987, Chrysler used this type injector drive on their TBI-equipped engines. See Fig. 22 for a known-good pattern. Instead of the ground side controlling the injector, Chrysler permanently grounds out the injector and switches the power feed side. Most systems do not work this way.

These injectors peak at 6 amps of current flow and hold at 1 amp.

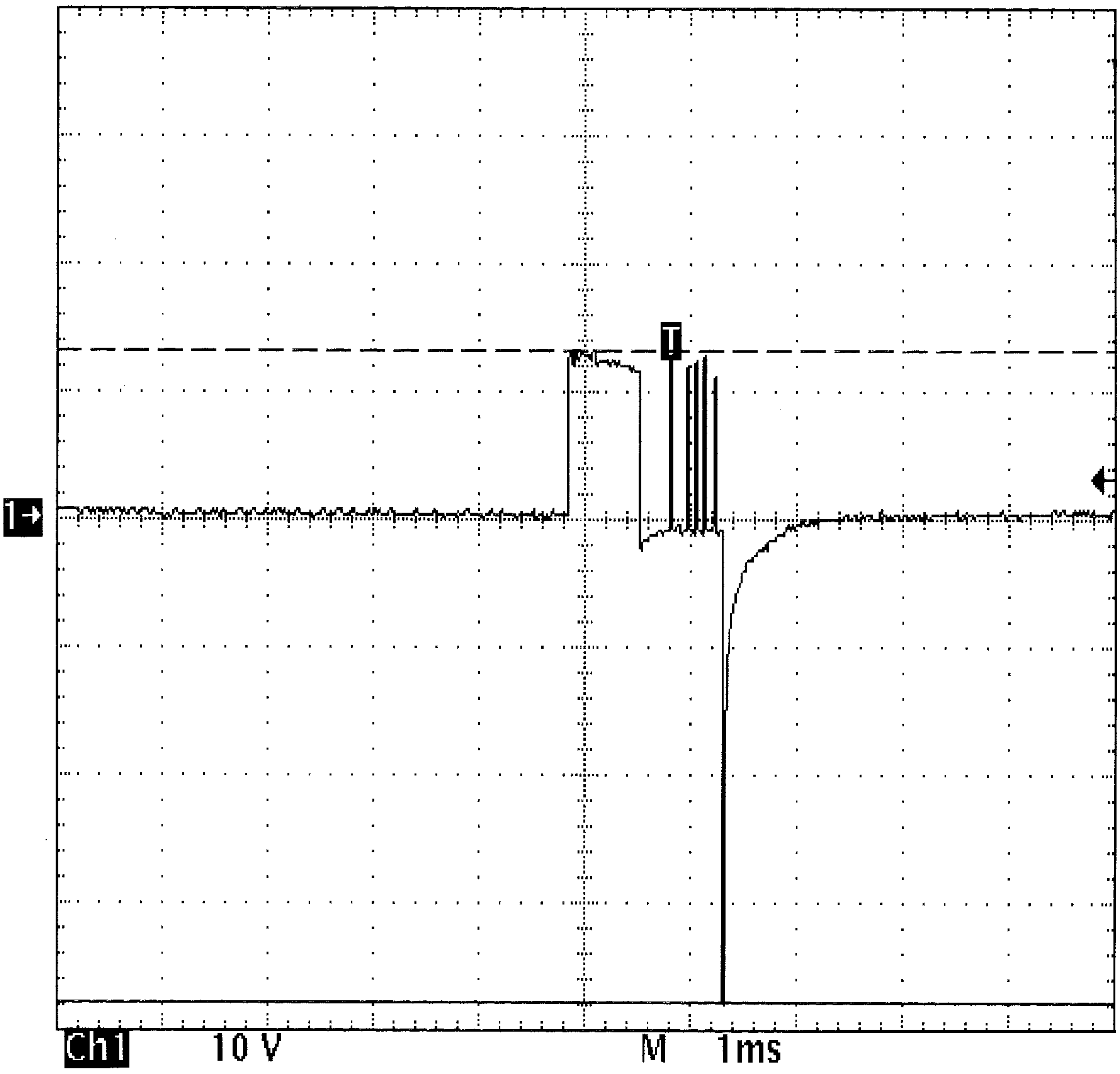

95J23860

Fig. 22: Single Injector - Known Good - Voltage Pattern

EXAMPLE #5 - CURRENT CONTROLLED DRIVER

These two known-good waveform patterns are from a Chrysler 3.0L V6 VIN [3]. The first waveform, Fig. Fig. 23, is a dual trace pattern that illustrates how Chrysler uses the rising edge of the engine speed signal to trigger the injectors. The second waveform, Fig. Fig. 24, was taken during hot idle, closed loop, and no load.

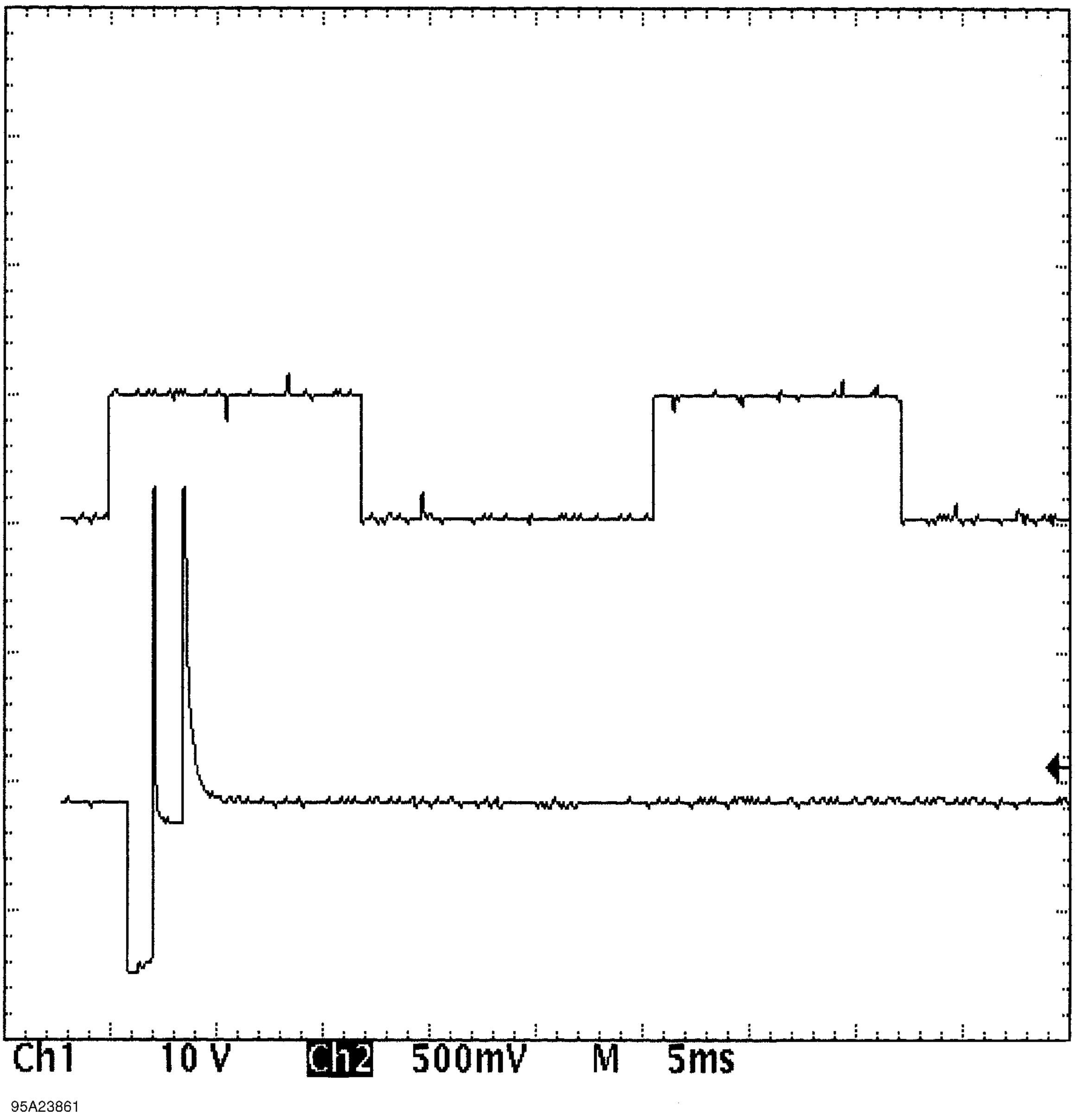

Fig. 23: Injector Bank - Known Good - Voltage Pattern

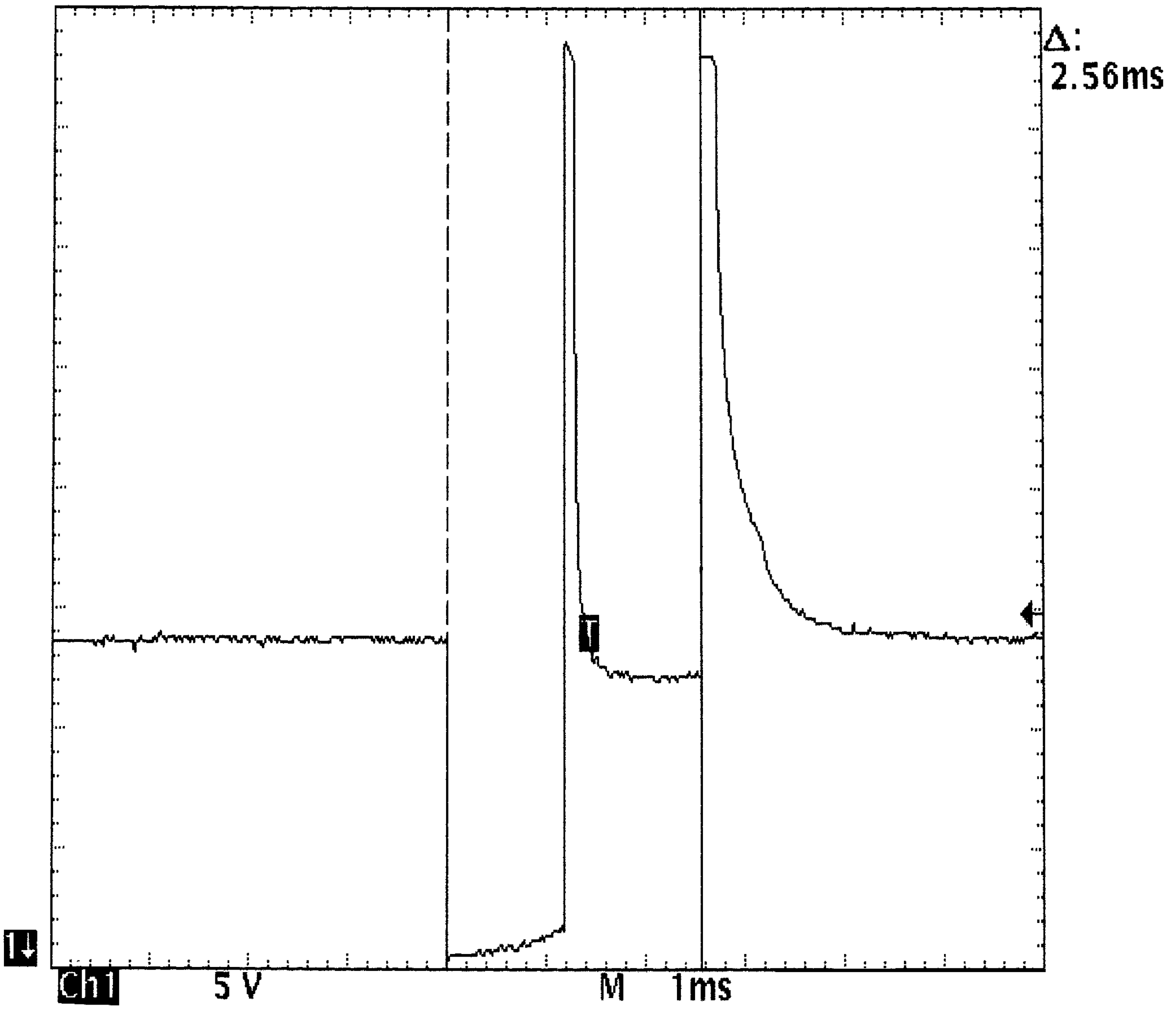

95B23854

Fig. 24: Injector Bank - Known Good - Voltage Pattern

EXAMPLE #6 - CURRENT CONTROLLED DRIVER

This known-good pattern from a Ford 3.0L V6 PFI VIN [U] illustrates that a zener diode inside the computer is used to clamp the injector's inductive kick to 35-volts on this system. See Fig. 25.

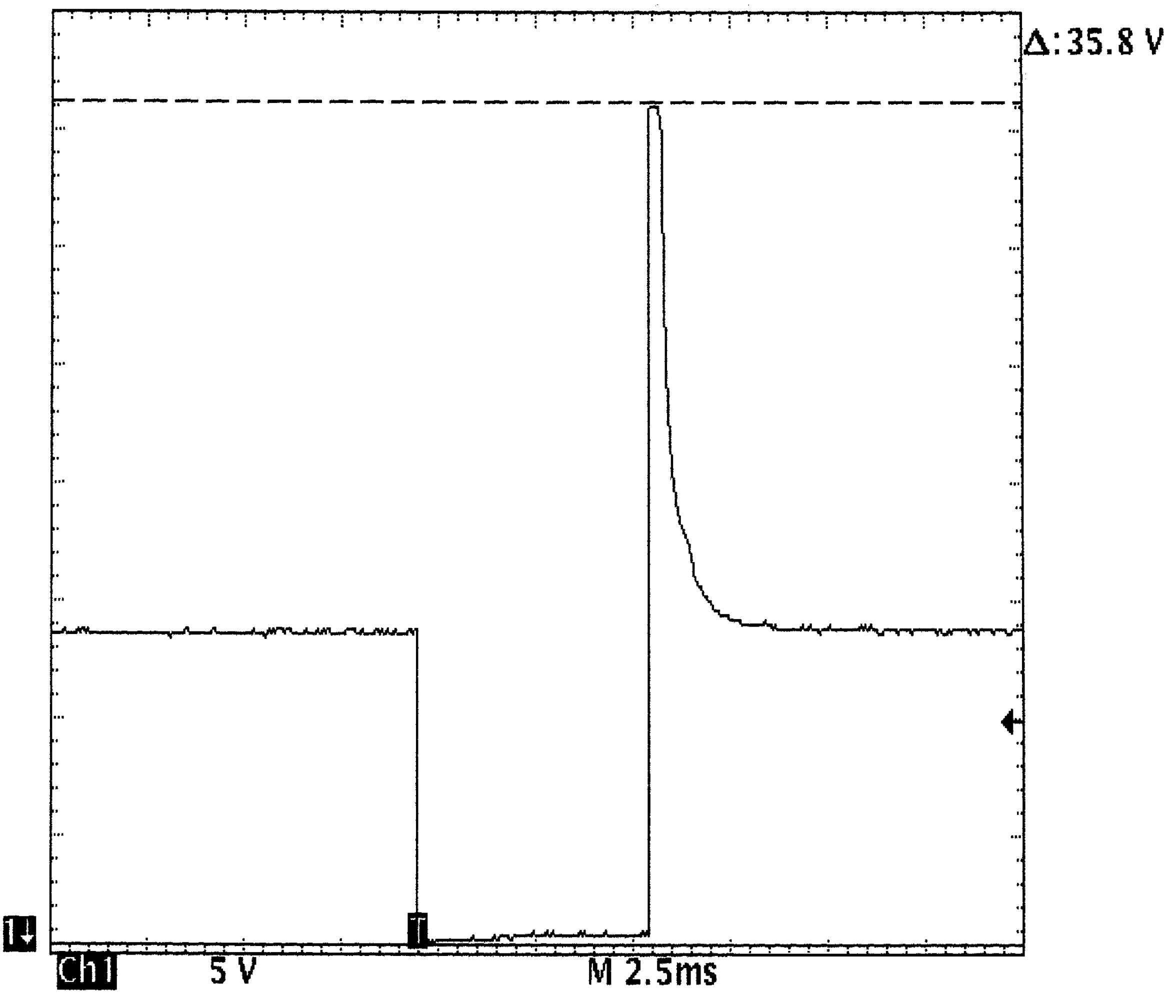

95J23852

Fig. 25: Injector Bank - Known Good - Voltage Pattern

EXAMPLE #7 - CURRENT CONTROLLED DRIVER

This known-good waveform from a Ford 5.0L V8 CFI VIN [F] was taken during hot idle, closed loop, and no load. See **Fig. 26**.

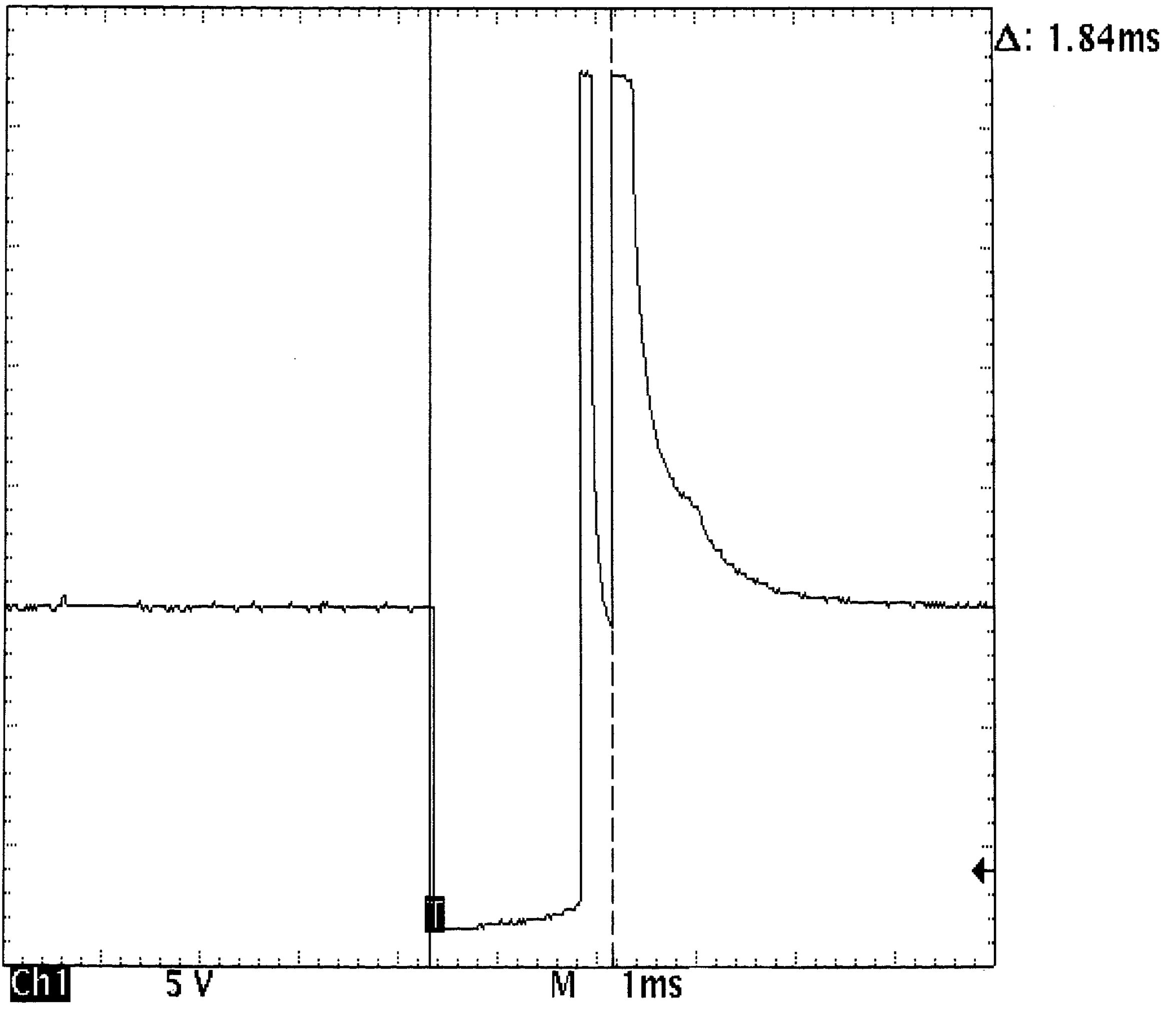

95D23856

Fig. 26: Single Injector - Known Good - Voltage Pattern

EXAMPLE #8 - CURRENT CONTROLLED DRIVER

These two known-good waveform patterns are from a GM 2.0L In-Line 4 VIN [1]. Fig. **Fig. 27** illustrates the 78 volt inductive spike that indicates a zener diode is not used. The second waveform, Fig. **Fig. 28**, was taken during hot idle, closed loop, and no load.

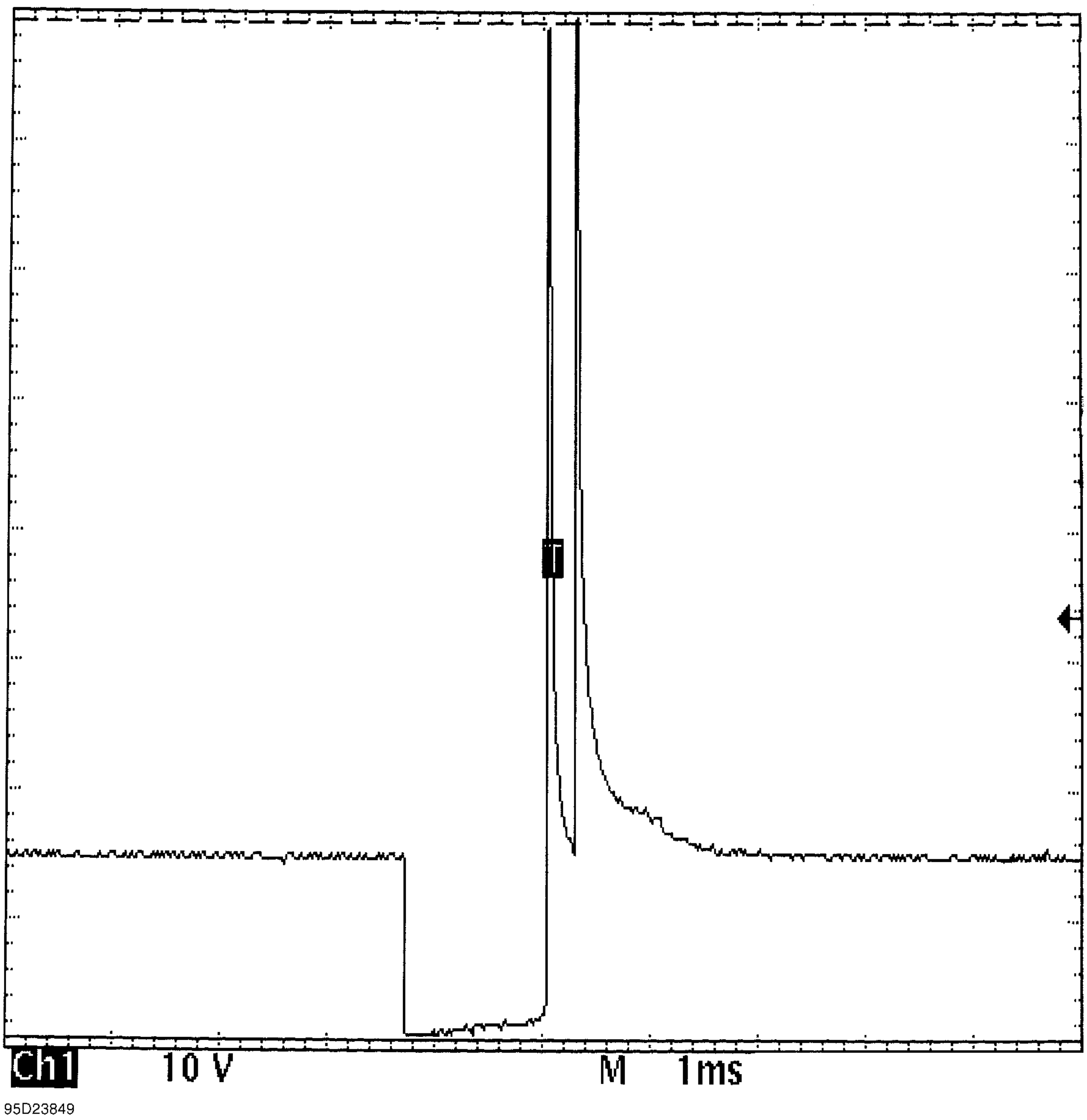

Fig. 27: Single Injector - Known Good - Voltage Pattern

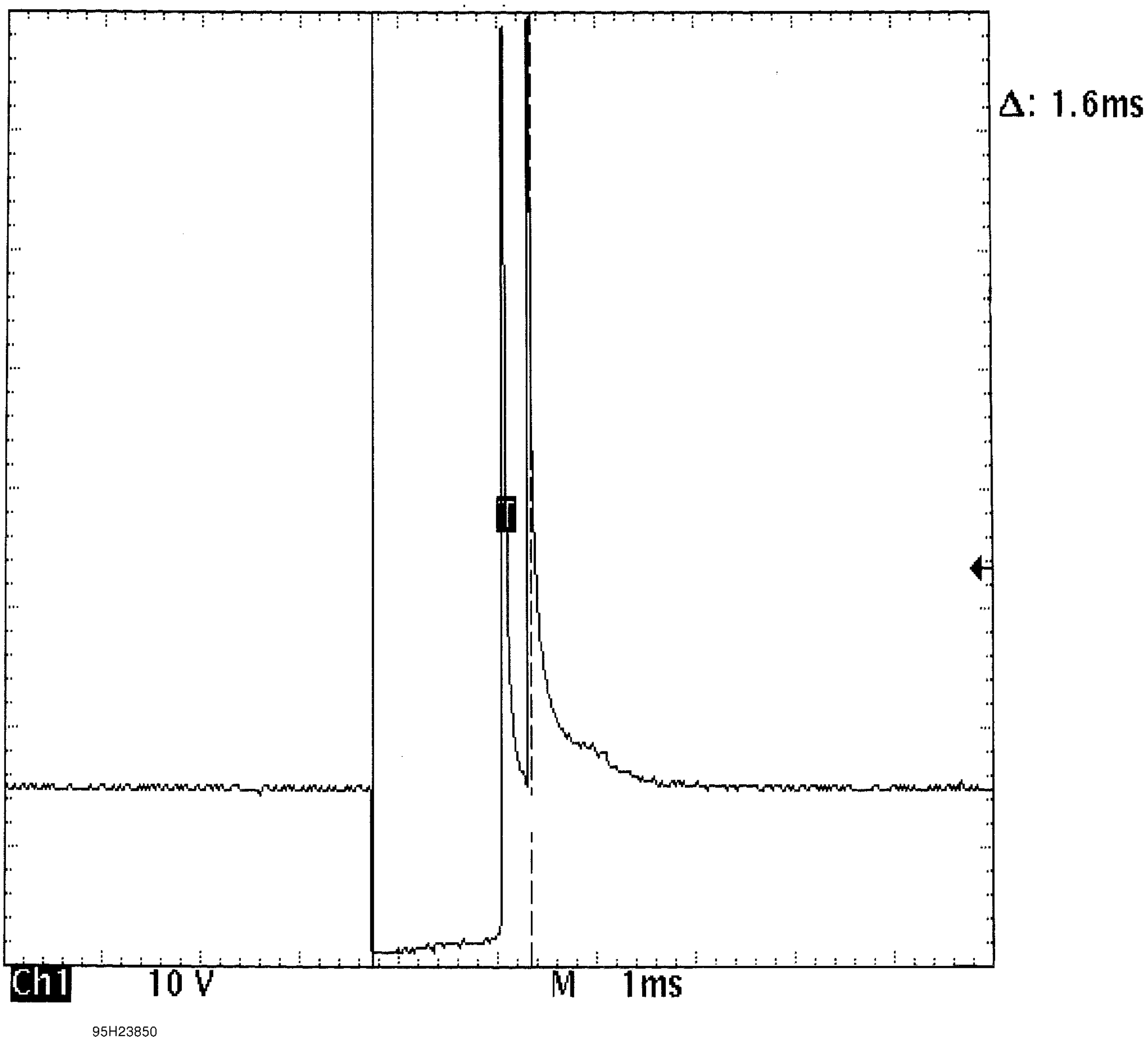

Fig. 28: Single Injector - Known Good - Voltage Pattern

Wheel Alignment Theory & Operation

* PLEASE READ THIS FIRST *

NOTE: **This is GENERAL information. This article is not intended to be specific to any unique situation or individual vehicle configuration. For model-specific information see appropriate articles where available.**

PRE-ALIGNMENT INSTRUCTIONS

NOTE: **This is GENERAL information. This article is not intended to be specific to any unique situation or individual vehicle configuration. For model-specific information see appropriate articles where available.**

GENERAL ALIGNMENT CHECKS

Before adjusting wheel alignment, check the following:

- Each axle uses tires of same construction and tread style, equal in tread wear and overall diameter. Verify that radial and axial runout is not excessive. Inflation should be at manufacturer's specifications.
- Steering linkage and suspension must not have excessive play. Check for wear in tie rod ends and ball joints. Springs must not be sagging. Control arm and strut rod bushings must not have excessive play. See **Fig. 1**.

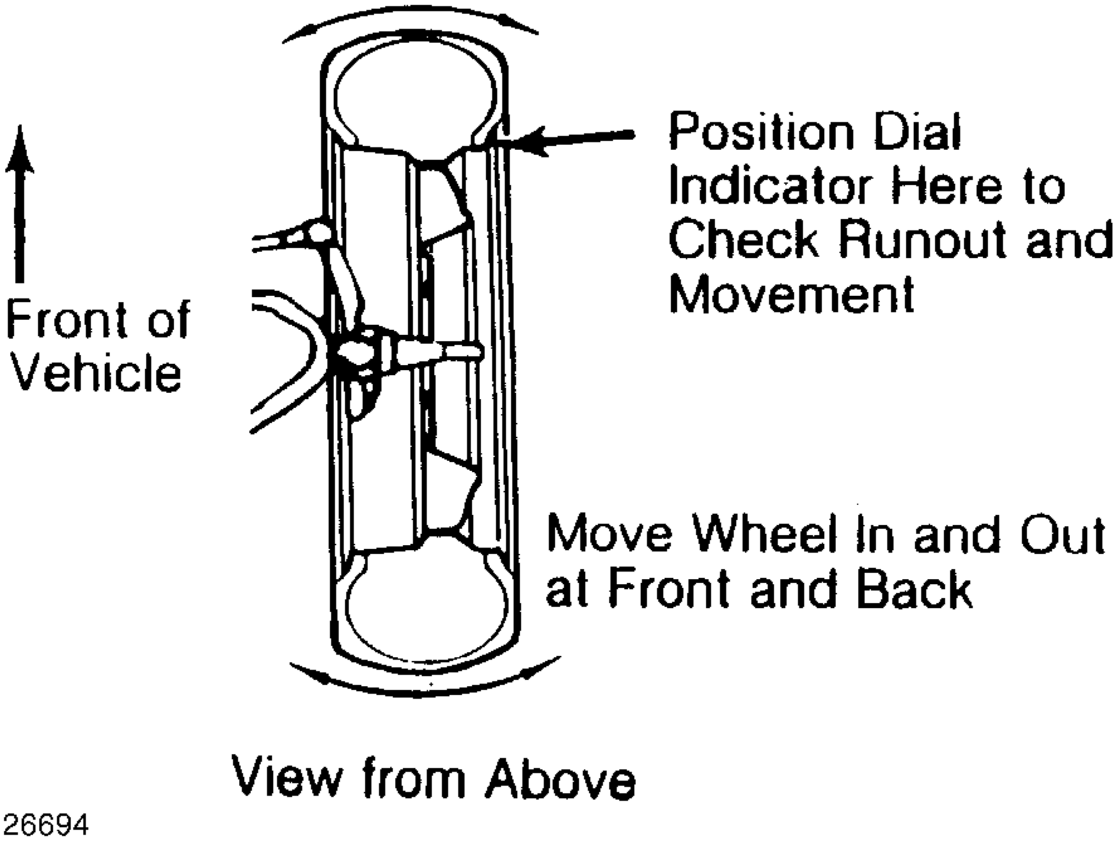
Position Dial Indicator Here to Check Runout and Movement
Front of Vehicle
Move Wheel In and Out at Front and Back
View from Above
26694

Fig. 1: Checking Steering Linkage

- Vehicle must be on level floor with full fuel tank, no passenger load, spare tire in place and no load in trunk. Bounce front and rear end of vehicle several times. Confirm vehicle is at normal riding height.
- Steering wheel must be centered with wheels in straight ahead position. If required, shorten one tie rod adjusting sleeve and lengthen opposite sleeve (equal amount of turns). See Fig. 2.
- Wheel bearings should have the correct preload and lug nuts must be tightened to manufacturer's specifications. Adjust camber, caster and toe-in using this sequence. Follow instructions of the alignment equipment manufacturer.

CAUTION: **DO NOT attempt to correct alignment by straightening parts. Damaged parts MUST be replaced.**

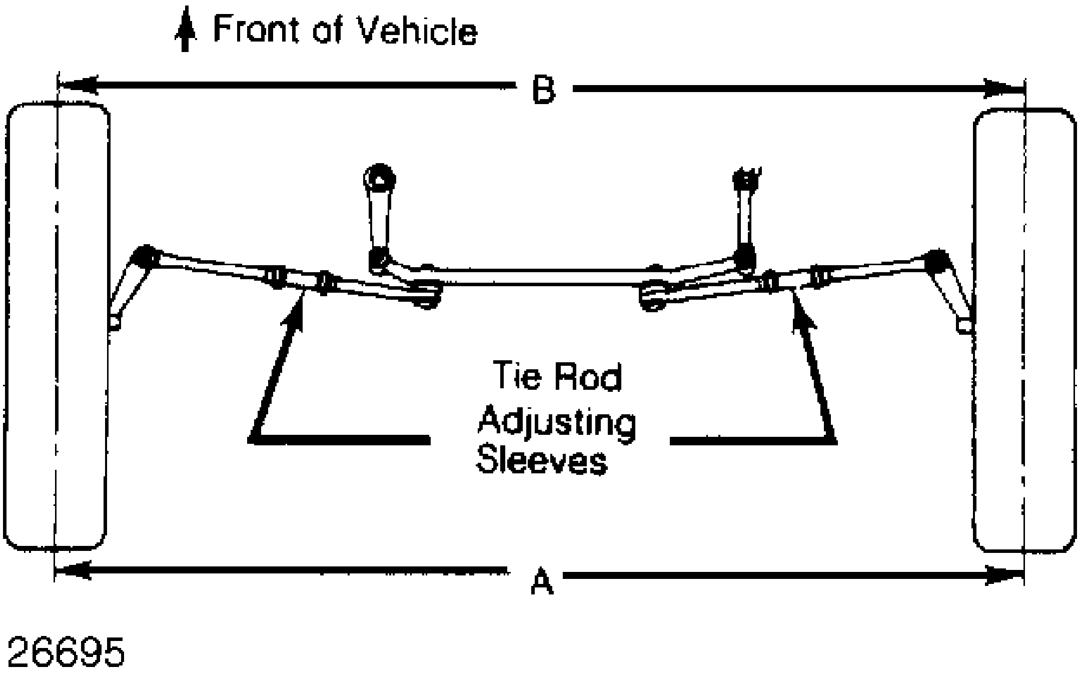

Fig. 2: Adjusting Tie Rod Sleeves (Top View)

ADJUSTMENTS

NOTE: **This is GENERAL information. This article is not intended to be specific to any unique situation or individual vehicle configuration. For model-specific information see appropriate articles where available.**

CAMBER

1. Camber is the tilting of the wheel, outward at either top or bottom, as viewed from front of vehicle. See Fig. 3.
2. When wheels tilts outward at the top (from centerline of vehicle), camber is positive. When wheels tilt inward at top, camber is negative. Amount of tilt is measured in degrees from vertical.

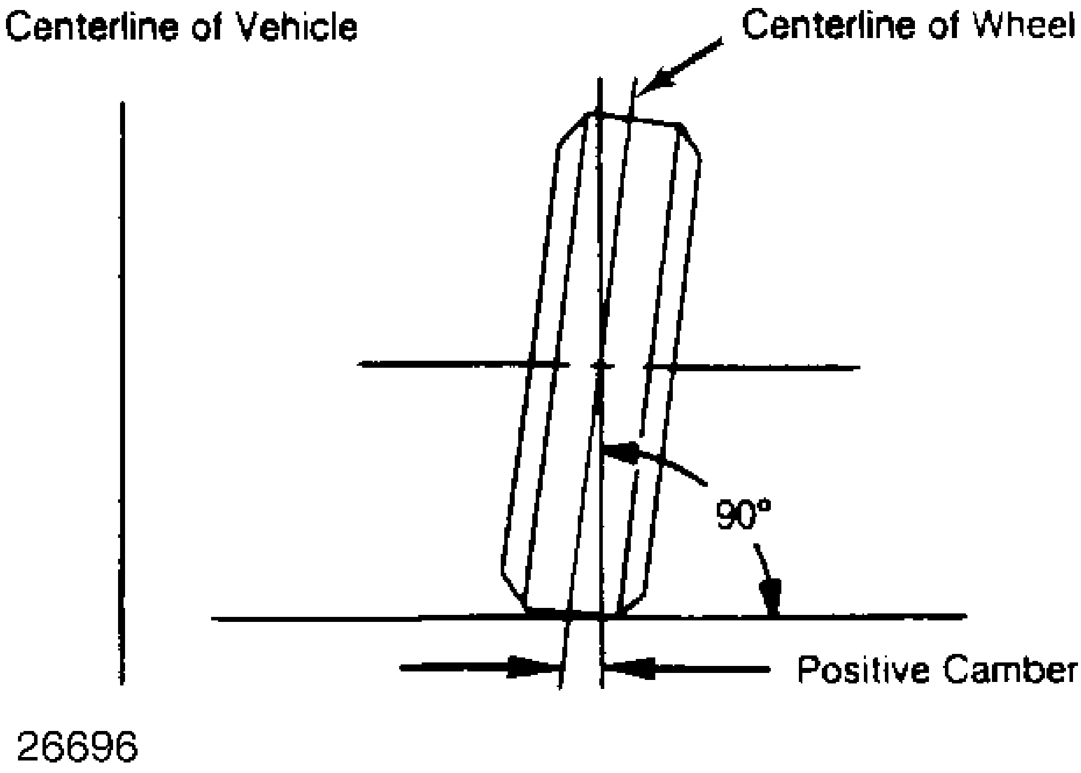
Centerline of Vehicle
Centerline of Wheel
90°
Positive Camber
26696

Fig. 3: Determining Camber Angle

CASTER

1. Caster is tilting of front steering axis either forward or backward from vertical, as viewed from side of vehicle. See Fig. 4.
2. When axis is tilted backward from vertical, caster is positive. This creates a trailing action on front wheels. When axis is tilted forward, caster is negative, causing a leading action on front wheels.

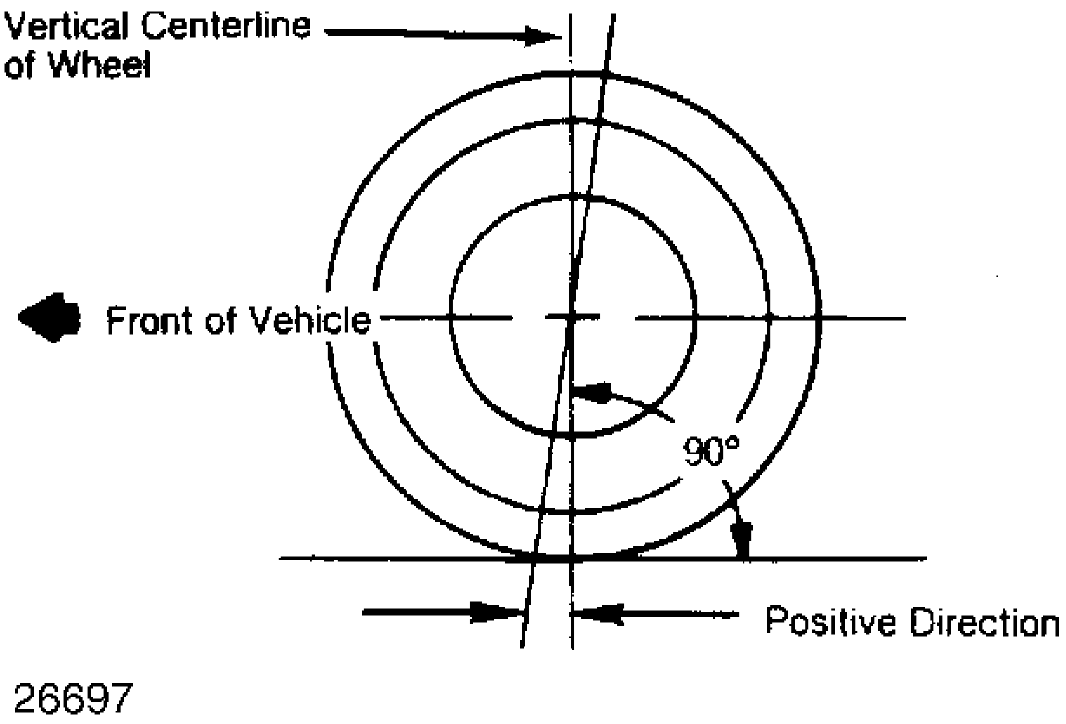

Fig. 4: Determining Caster Angle

TOE-IN ADJUSTMENT

Toe-in is the width measured at the rear of the tires subtracted by the width measured at the front of the tires at about spindle height. A positive figure would indicate toe-in and a negative figure would indicate toe-out. If the distance between the front and rear of the tires is the same, toe measurement would be zero. To adjust:

1) Measure toe-in with front wheels in straight ahead position and steering wheel centered. To adjust toe-in, loosen clamps and turn adjusting sleeve or adjustable end on right and left tie rods. See Fig. 2 and Fig. 5 .

2) Turn equally and in opposite directions to maintain steering wheel in centered position. Face of tie rod end must be parallel with machined surface of steering rod end to prevent binding.

3) When tightening clamps, make certain that clamp bolts are positioned so there will be no interference with other parts throughout the entire travel of linkage.

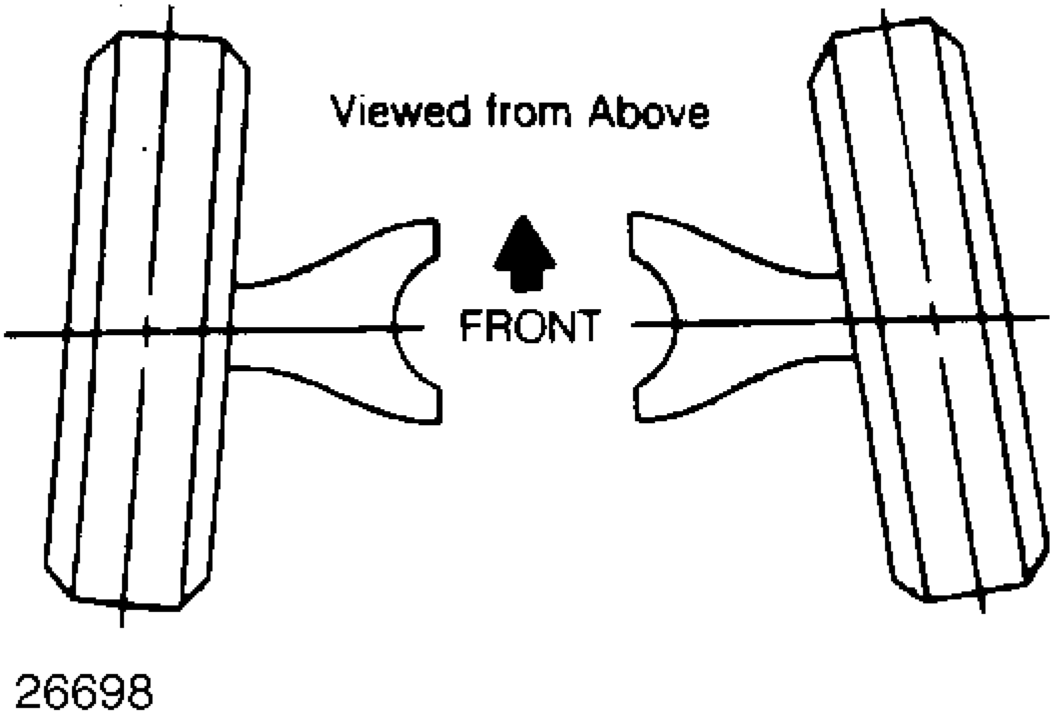

Fig. 5: Wheel Toe-In (Dimension A Less Dimension B)

TOE-OUT ON TURNS

1. Toe-out on turns (turning radius) is a check for bent or damaged parts, and not a service adjustment. With caster, camber, and toe-in properly adjusted, check toe-out with weight of vehicle on wheels.
2. Use a full floating turntable under each wheel, repeating test with each wheel positioned for right and left turns. Incorrect toe-out generally indicates a bent steering arm. Replace arm, if necessary, and recheck wheel alignment.

STEERING AXIS INCLINATION

1. Steering axis inclination is a check for bent or damaged parts, and not a service adjustment. Vehicle must be level and camber should be properly adjusted. See Fig. 6.
2. If camber cannot be brought within limits and steering axis inclination is correct, steering knuckle is bent. If camber and steering axis inclination are both incorrect by approximately the same amount, the upper and lower control arms are bent.

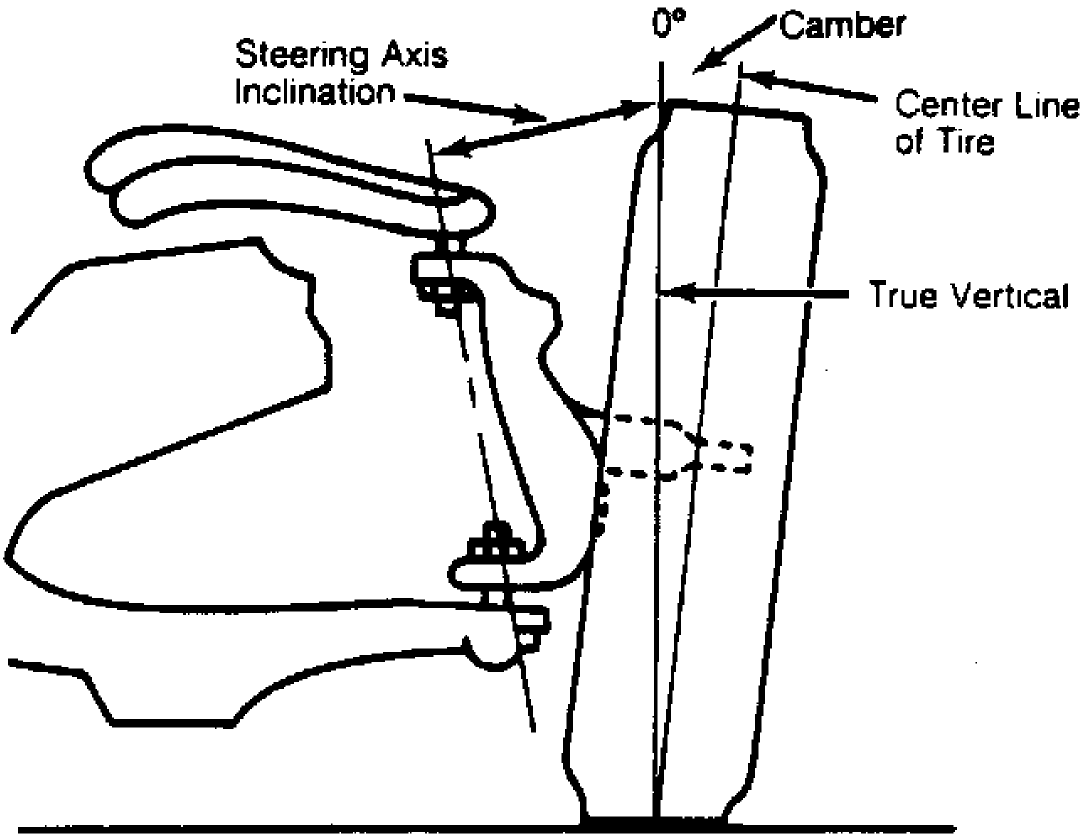
0°
Camber
Steering Axis Inclination
Center Line of Tire
True Vertical

Fig. 6: Checking Steering Axis Inclination

DTC TROUBLESHOOTING

DTC B296D (D-A2), B296D (68)

DTC B296D, DTC screen D-A2, or DTC screen 68 : Electric heater coolant Pump Communication Fail

DTC Description	DTC
B296D Electric heater coolant Pump Communication Fail	B

DTC (AC)

1. Problem verification

   -1. Clear the DTCs with the HDS.

   -2. Turn the vehicle to the OFF (LOCK) mode and then the ON mode.

   -3. Display audio type: Set the A/C icon and the fan control icon or the fan control button to ON.

   Color audio type: Set the A/C button and the fan control button to ON.

   -4. Wait for at least 30 seconds.

   -5. **Do the Self-Diagnostic Function with the HDS or the climate control unit** .

   -6. Check for the climate control unit DTCs.

DTC Description	DTC
B296D Electric heater coolant Pump Communication Fail	B

   Is DTC B296D, Error on the DTC screen D-A2 (climate control panel without display), or DTC screen 68 (climate control panel with display) indicated?

   YES

   The failure is duplicated. Go to step 2.

   NO

   Intermittent failure, the system is OK at this time.

2. Fuse check

   -1. Turn the vehicle to the OFF (LOCK) mode.

   -2. Check the following fuse.

Fuse	**No. A23**

   Is the fuse OK?

   YES

   Go to step 3.

NO

Replace the fuse, and recheck. If the fuse blows again, repair a short in the No. A23 fuse circuit.

3. Relay circuit board check

-1. Remove the relay circuit board from the under-hood fuse/relay box, and **test it** .

Is the relay circuit board OK?

YES

Go to step 4.

NO

Replace the relay circuit board .

4. Open wire check (+B A/C WATER PUMP line)

-1. Measure the voltage between test points 1 and 2.

Test condition	Vehicle OFF (LOCK) mode
	Relay circuit board connector C (18P): disconnected
Test point 1	Relay circuit board connector C (18P) (female terminals) No. 15: ①
Test point 2	Body ground

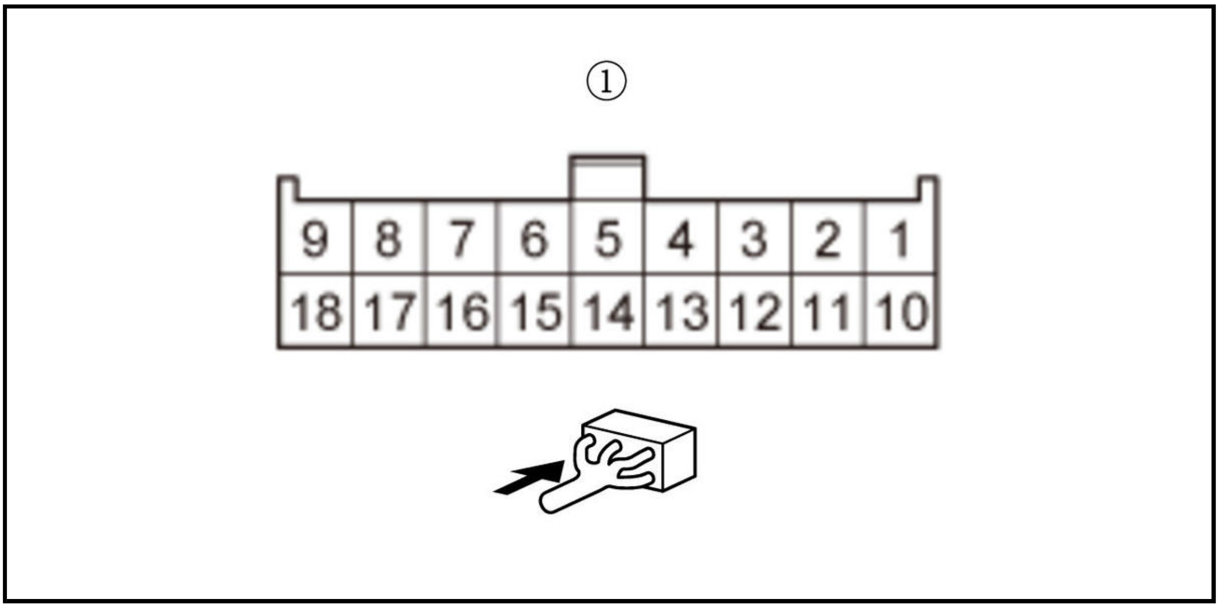

Is there battery voltage?

YES

The +B A/C WATER PUMP wire is OK. Go to step 5.

NO

Repair an open in the +B A/C WATER PUMP wire.

5. Open wire check (IG2_A/C line)

-1. Turn the vehicle to the ON mode.

-2. Measure the voltage between test points 1 and 2.

Test condition	Vehicle ON mode Relay circuit board connector C (18P): disconnected
Test point 1	Relay circuit board connector C (18P) (female terminals) No. 6: ①
Test point 2	Body ground

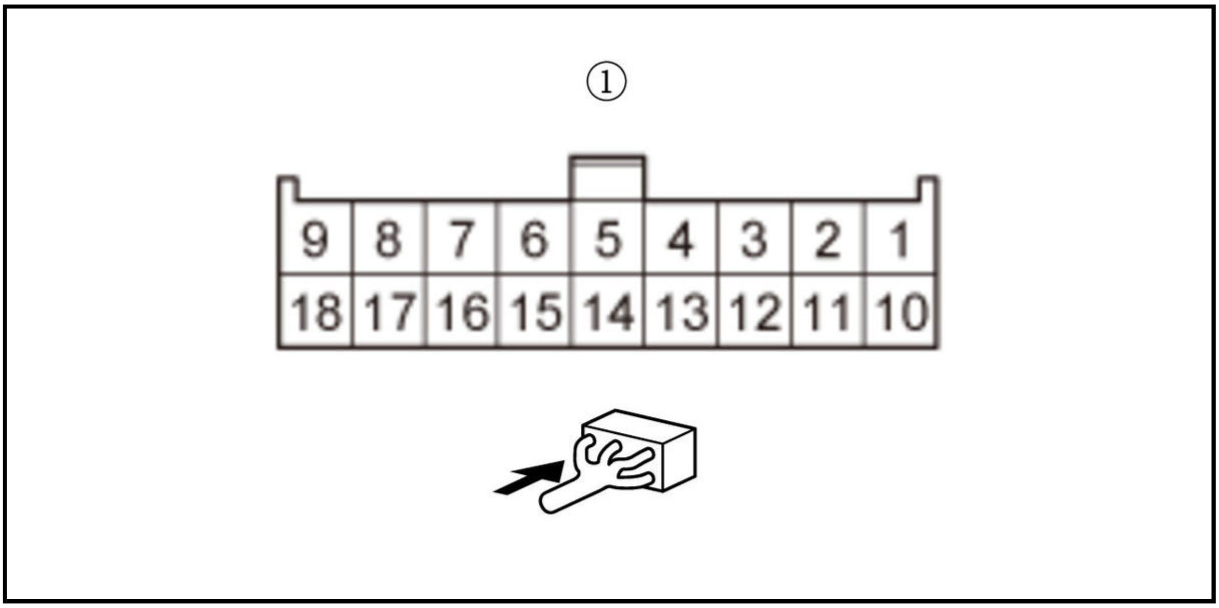

Is there battery voltage?

YES

The IG2_A/C wire is OK. Go to step 6.

NO

Repair an open in the IG2_A/C wire.

6. Open wire check (GND line)

-1. Turn the vehicle to the OFF (LOCK) mode.

-2. Measure the resistance between test points 1 and 2.

Test condition	Vehicle OFF (LOCK) mode Relay circuit board connector C (18P): disconnected
Test point 1	Relay circuit board connector C (18P) (female terminals) No. 8: ①
Test point 2	Body ground

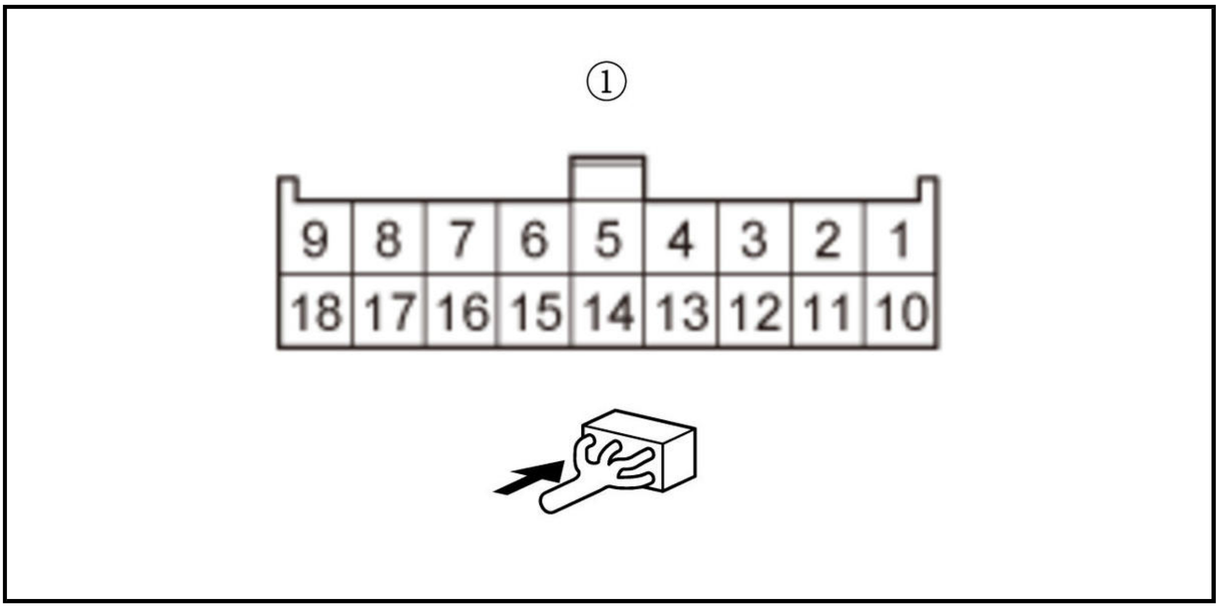

Is there 1.0 Ω or less?

YES

The GND wire is OK. Go to step 7.

NO

Check for an open in the GND wire. If the wire is OK, check for poor ground at G351.

7. Determine possible failure area (EWP_PWM line, A/C_WATER_PUMP line)

-1. Reinstall the relay circuit board

-2. Disconnect the following connector.

Electric heater coolant pump 3P connector

-3. Turn the vehicle to the ON mode.

-4. Measure the voltage between test points 1 and 2.

Test condition	Vehicle ON mode
	Electric heater coolant pump 3P connector: disconnected
Test point 1	Electric heater coolant pump 3P connector (female terminals) No. 1: ①
Test point 2	Electric heater coolant pump 3P connector (female terminals) No. 3: ①

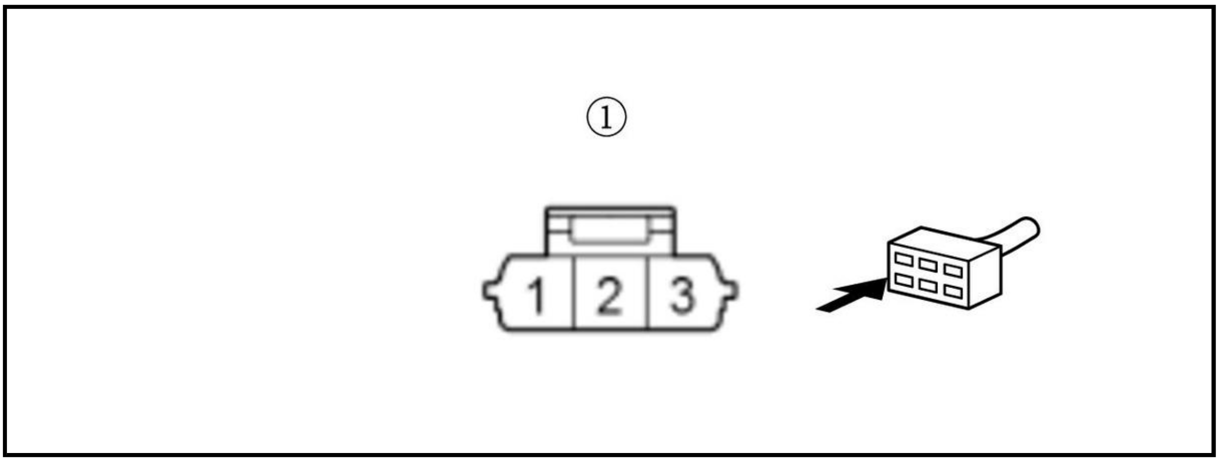

Is there battery voltage?

YES

The A/C_WATER_PUMP wire is OK. Go to step 8.

NO

Go to step 10.

8. Open wire check (EWP_PWM line)

-1. Turn the vehicle to the OFF (LOCK) mode.

-2. Disconnect the following connector.

Climate control unit connector A (32P)

-3. Measure the resistance between test points 1 and 2.

Test condition	Vehicle OFF (LOCK) mode Climate control unit connector A (32P): disconnected Electric heater coolant pump 3P connector: disconnected

Test point 1	**Climate control unit connector A (32P) No. 3**
Test point 2	Electric heater coolant pump 3P connector (female terminals) No. 2: ①

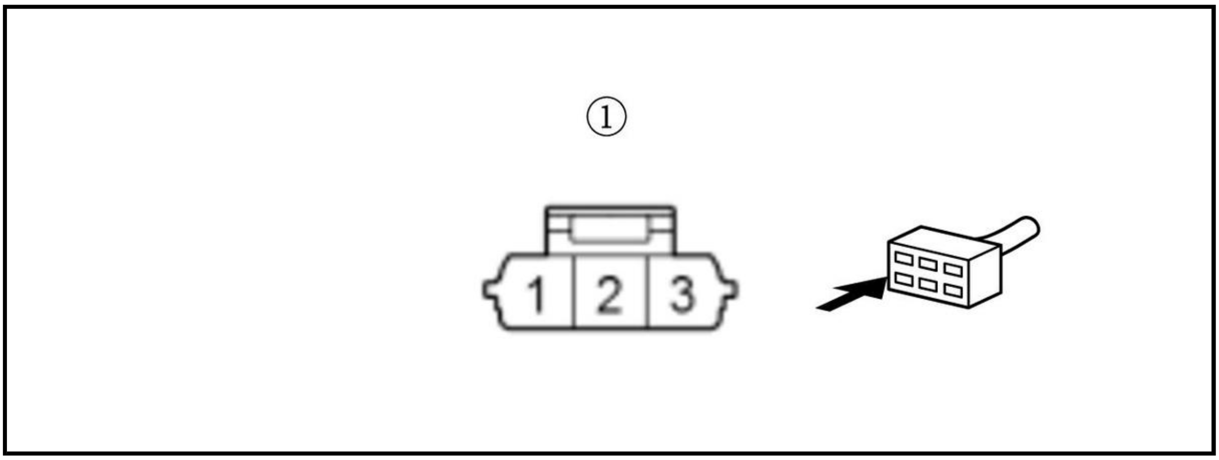

Is there 1.0 Ω or less?

YES

The EWP_PWM wire is not open. Go to step 9.

NO

Repair an open in the EWP_PWM wire.

9. Shorted wire check (EWP_PWM line)

-1. Measure the resistance between test points 1 and 2.

Test condition	Vehicle OFF (LOCK) mode
	Climate control unit connector A (32P): disconnected
	Electric heater coolant pump 3P connector: disconnected
Test point 1	**Climate control unit connector A (32P) No. 3**
Test point 2	Body ground

Is there 1 MΩ or more?

YES

Replace the electric heater coolant pump , and recheck. If the DTC detected, **replace the climate control unit** .

NO

Repair a short to body ground in the EWP_PWM wire.

10. Open wire check (A/C_WATER_PUMP line)

-1. Measure the voltage between test points 1 and 2.

Test condition	Vehicle ON mode
	Electric heater coolant pump 3P connector: disconnected
Test point 1	Electric heater coolant pump 3P connector (female terminals) No. 1: ①
Test point 2	Body ground

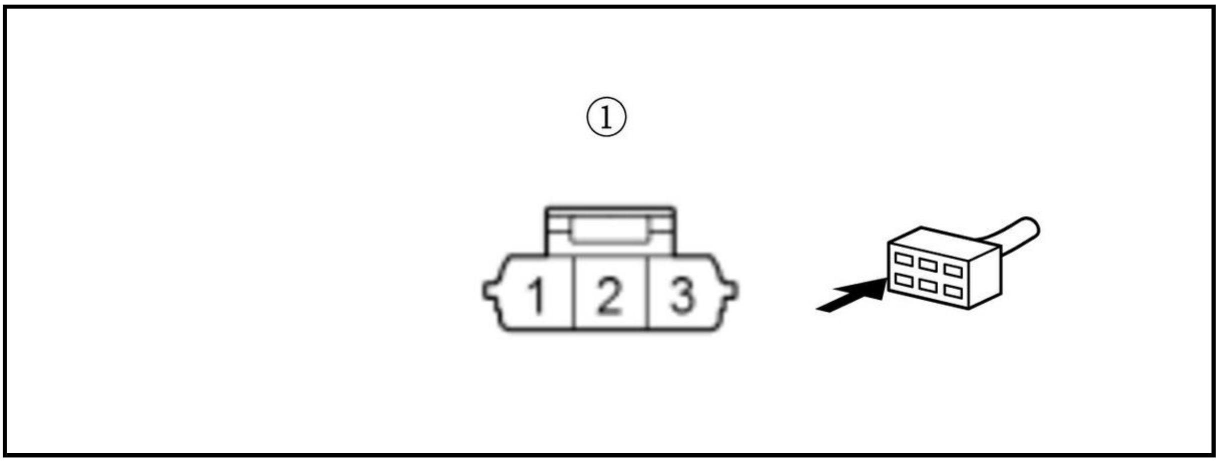

Is there battery voltage?

YES

Check for an open in the GND wire between the electric heater coolant pump and body ground. If the wire is OK, check for poor ground at G351

NO

Repair an open in the A/C_WATER_PUMP wire.

2020-22 HVAC

Air Conditioning Service Specifications - CR-V (Hybrid)

AIR CONDITIONING

Item	Measurement	Qualification	Standard or New	Service Limit
Refrigerant	Type	B	HFO-1234yf (R-1234yf)	
	Capacity of system	B	415-465 g (14.64-16.40 oz)	-
Refrigerant oil	Type	B	DENSO ND-OIL 11 (POE oil: P/N 38899-TX9-023)	
	Capacity of components	Condenser (including dryer desiccant)	25 mL (5/6 fl oz)	
		Evaporator	40 mL (1 1/3 fl oz)	
		Each line and hose	10 mL (1/3 fl oz)	
		Dryer desiccant	10 mL (1/3 fl oz)	
		Compressor	120-135 mL (4-4 1/2 fl oz)	

2020-21 HVAC

HVAC Service Specifications - CR-V

STANDARDS AND SERVICE LIMITS (2020-21)

AIR CONDITIONING

Item	Measurement	Qualification	Standard or New	Service Limit
Refrigerant	Type (KA/KC)	B	HFO-1234yf (R-1234yf)	
	Type (KX)	B	HFC-134a (R-134a)	
	Capacity of system	B	435-485 g (15.34-17.11 oz)	-
Refrigerant oil	Type (KA/KC)	B	RL85HM (P/N 38899-RLV-A01)	
	Type (KX)	B	DENSO ND-OIL 8 (P/N 38897-PR7-A01AH)	
	Capacity of components	Condenser (including dryer desiccant)	25 mL (5/6 fl oz)	
		Evaporator	40 mL (1 1/3 fl oz)	
		Each line and hose	10 mL (1/3 fl oz)	
		Dryer desiccant	10 mL (1/3 fl oz)	
		Compressor	77-103 mL (2 3/5-3 1/2 fl oz)	
Compressor	Field coil resistance	At 68 deg.F (20 deg.C)	3.35-3.61 '	
	Variable capacity control solenoid resistance	At 68 deg.F (20 deg.C)	9.6-11.6 '	
	Pulley-to-armature plate clearance	B	0.30-0.60 mm (0.012-0.023 in)	-

TROUBLESHOOTING

CLIMATE CONTROL SYSTEM DTC TROUBLESHOOTING: A-A4, CD

DTC screen A-A4 or DTC indicator Cd : Unknown sunlight sensor type

1. DTC check

    -1. Clear the DTC with the HDS.

    -2. Turn the vehicle to the OFF (LOCK) mode then the ON mode.

    -3. Do the Self-Diagnostic Function with the HDS or the climate control unit .

    -4. Check for DTCs.

DTC Description	DTC
B123F Automatic lighting control unit/sunlight sensor error	B

    Is DTC B123F or Error on the DTC screen A-A3 (climate control panel without display) or 17 (climate control panel with display) indicated?

    YES

    Go to climate control DTC B123F troubleshooting.

    NO

    Go to step 2.

2. Problem verification

    -1. Turn the vehicle to the OFF (LOCK) mode and then the ON mode.

    -2. Do the Self-Diagnostic Function with the climate control unit .

    -3. Check for DTCs.

    Is Error on the DTC screen A-A4 (climate control panel without display) or Cd (climate control panel with display) indicated?

    YES

    Go to step 3.

    NO

    Intermittent failure, the system is OK at this time.

3. Connector check

    -1. Turn the vehicle to the OFF (LOCK) mode.

    -2. Check connection of the following connectors.

Sunlight sensor 2P connector (with automatic wiper or without automatic lighting)
Automatic lighting control unit-sensor 5P connector (without automatic wiper and with automatic lighting)
Climate control unit connector A (32P)

Is the connection OK?

YES

Replace the climate control unit .

NO

Reconnect or repair the connector, then recheck the system.

CLIMATE CONTROL SYSTEM DTC TROUBLESHOOTING: I-A4

DTC screen I-A4 : Climate control unit lost communication with center display unit

NOTE: The DTC may be stored due to the grounding failure or the power source failure at the center display (the grounding inspection and the power source inspection on each control unit are required prior to this checking process).

1. Problem verification

   -1. Turn the vehicle to the OFF (LOCK) mode and then the ON mode.

   -2. Do the Self-Diagnostic Function with the climate control unit .

   -3. Check for DTCs.

   Is Error on the DTC screen I-A4 indicated?

   YES

   Go to step 2.

   NO

   Intermittent failure, the system is OK at this time. Check for loose wires or poor connections.

2. Open wire check (B-CAN_H line)

   -1. Turn the vehicle to the OFF (LOCK) mode.

   -2. Disconnect the following connectors.

Audio unit connector A (24P) (without navigation)
Audio-navigation unit connector A (24P) (with navigation)
Climate control unit connector A (32P)

   -3. Check for continuity between test points 1 and 2.

   Without navigation

Test condition	Vehicle OFF (LOCK) mode
	Audio unit connector A (24P): disconnected
	Climate control unit connector A (32P): disconnected

Test point 1	**Audio unit connector A (24P) No. 14**

Test point 2	**Climate control unit connector A (32P) No. 25**

With navigation

Test condition	Vehicle OFF (LOCK) mode Audio-navigation unit connector A (24P): disconnected Climate control unit connector A (32P): disconnected
Test point 1	**Audio-navigation unit connector A (24P) No. 14**
Test point 2	**Climate control unit connector A (32P) No. 25**

Is there continuity?

YES

The B-CAN_H wire is OK. Go to step 3.

NO

Repair an open in the B-CAN_H wire.

3. Open wire check (B-CAN_L line)

-1. Check for continuity between test points 1 and 2.

Without navigation

Test condition	Vehicle OFF (LOCK) mode Audio unit connector A (24P): disconnected Climate control unit connector A (32P): disconnected
Test point 1	**Audio unit connector A (24P) No. 24**
Test point 2	**Climate control unit connector A (32P) No. 8**

With navigation

Test condition	Vehicle OFF (LOCK) mode Audio-navigation unit connector A (24P): disconnected Climate control unit connector A (32P): disconnected
Test point 1	**Audio-navigation unit connector A (24P) No. 24**
Test point 2	**Climate control unit connector A (32P) No. 8**

Is there continuity?

YES

Replace the **audio unit (without navigation)** or the **audio-navigation unit (with navigation)** .

NO

Repair an open in the B-CAN_L wire.

CLIMATE CONTROL SYSTEM DTC TROUBLESHOOTING: I-B8, C0

DTC screen I-B8 or DTC indicator C0 : Climate control unit internal error

1. Problem verification

-1. Turn the vehicle to the OFF (LOCK) mode and then the ON mode.

-2. Do the Self-Diagnostic Function with the climate control unit .

-3. Check for DTCs.

Is Error on the DTC screen I-B8 (climate control panel without display) or C0 (climate control panel with display) indicated?

YES

Replace the climate control unit .

NO

Intermittent failure, the climate control unit is OK at this time.

DTC TROUBLESHOOTING: B120A (I-B4), B120A (8A)

DTC B120A or DTC screen I-B4 or DTC indicator 8A : Climate Control Unit LIN Communication Bus Line Error

DTC Description	DTC
B120A Climate Control Unit LIN Communication Bus Line Error	B

DTCs (AC)

1. Problem verification

-1. Clear the DTCs with the HDS.

-2. Turn the vehicle to the OFF (LOCK) mode and then the ON mode.

-3. Do the Self-Diagnostic Function with the HDS or the climate control unit .

-4. Check for DTCs.

DTC Description	DTC
B120A Climate Control Unit LIN Communication Bus Line Error	B

Is DTC B120A or Error on the DTC screen I-B4 (climate control panel without display) or 8A (climate control panel with display) indicated?

YES

Go to step 2.

NO

Intermittent failure. Check for loose wires or poor connections on the climate control panel circuit.

2. Fuse check

-1. Turn the vehicle to the OFF (LOCK) mode.

-2. Check the following fuse.

Fuse	No. D9 (10 A)
Location	Under-dash fuse/relay box

Is the fuse OK?

YES

Go to step 3.

NO

Replace the fuse, and recheck. If the fuse blows again, repair a short in the No. D9 (10 A) fuse circuit.

3. Determine possible failure area (BUS-DATA line, others)

-1. Disconnect the following connector.

Climate control panel 20P connector

-2. Turn the vehicle to the ON mode.

-3. Measure the voltage between test points 1 and 2.

Test condition	Vehicle ON mode
	Climate control panel 20P connector: disconnected
Test point 1	Climate control panel 20P connector (female terminals) No. 13: ①
Test point 2	Climate control panel 20P connector (female terminals) No. 19: ①

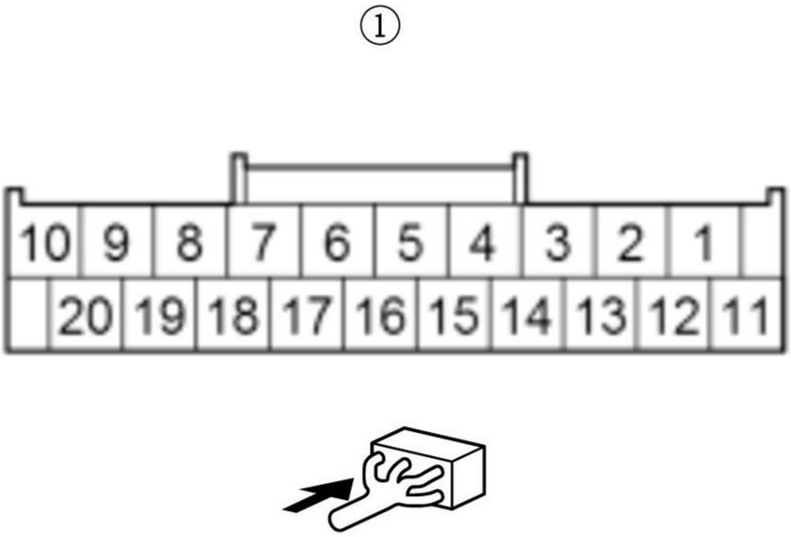

Is there battery voltage?

YES

Go to step 4.

NO

Go to step 7.

4. Shorted wire check (BUS-DATA line)

-1. Turn the vehicle to the OFF (LOCK) mode.

-2. Disconnect the following connector.

Climate control unit connector A (32P)

-3. Check for continuity between test points 1 and 2.

Test condition	Vehicle OFF (LOCK) mode
	Climate control unit connector A (32P): disconnected
	Climate control panel 20P connector: disconnected
Test point 1	**Climate control unit connector A (32P) No. 29**
Test point 2	Body ground

Is there continuity?

YES

Repair a short to ground in the BUS-DATA wire.

NO

The BUS-DATA wire is not shorted. Go to step 5.

5. Open wire check (BUS-DATA line)

-1. Check for continuity between test points 1 and 2.

Test condition	Vehicle OFF (LOCK) mode
	Climate control unit connector A (32P): disconnected
	Climate control panel 20P connector: disconnected
Test point 1	**Climate control unit connector A (32P) No. 29**
Test point 2	Climate control panel 20P connector (female terminals) No. 18: ①

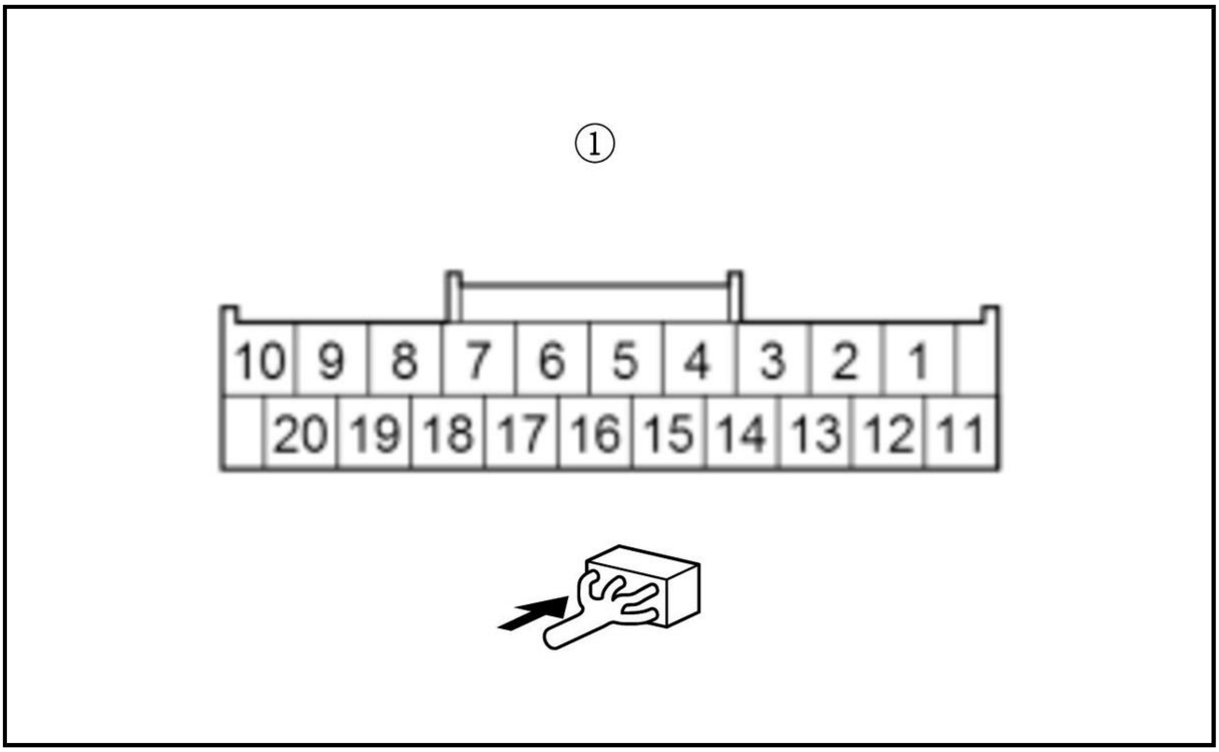

Is there continuity?

YES

The BUS-DATA wire is not open. Go to step 6.

NO

Repair an open in the BUS-DATA wire.

6. Climate control panel check (substitution)

-1. Reconnect the following connector.

Climate control unit connector A (32P)

-2. **Substitute a known-good climate control panel** .

-3. Clear the DTCs with the HDS.

-4. Turn the vehicle to the OFF (LOCK) mode and then the ON mode.

-5. **Do the Self-Diagnostic Function with the HDS or the climate control unit** .

-6. Check for DTCs.

DTC Description	DTC
B120A Climate Control Unit LIN Communication Bus Line Error	B

Is DTC B120A or Error on the DTC screen I-B4 (climate control panel without display) or 8A (climate control panel with display) indicated?

YES

Replace the climate control unit .

NO

Replace the original climate control panel .

7. Open wire check (IG2 A/C line)

-1. Measure the voltage between test points 1 and 2.

Test condition	Vehicle ON mode Climate control panel 20P connector: disconnected
Test point 1	Climate control panel 20P connector (female terminals) No. 19: ①
Test point 2	Body ground

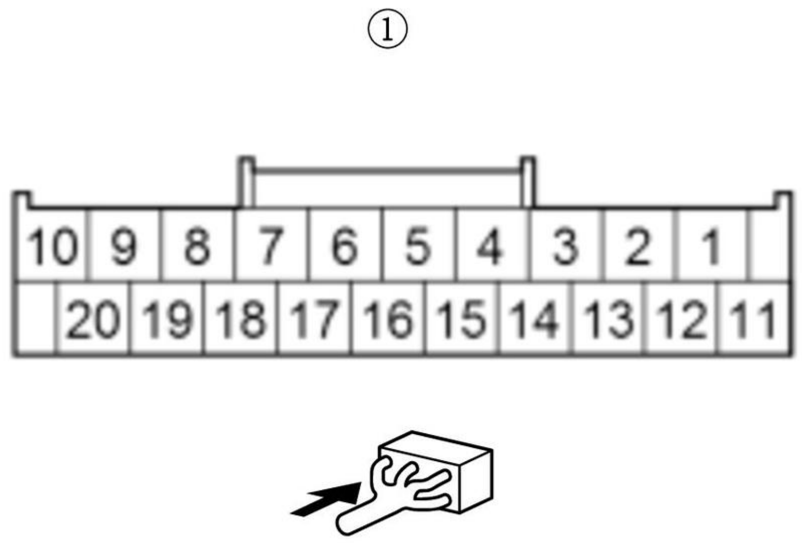

Is there battery voltage?

YES

Check for an open in the GND wire. If the wire is OK, check for poor ground at G402.

NO

Repair an open in the IG2 A/C wire.

DTC TROUBLESHOOTING: B121A (B-B1), B121A (49)

DTC B121A or DTC screen B-B1 or DTC indicator 49 : An open in the mode control motor circuit

DTC Description	DTC
B121A An open in the mode control motor circuit	B

DTCs (AC)

1. Problem verification

-1. Clear the DTCs with the HDS.

-2. Turn the vehicle to the OFF (LOCK) mode and then the ON mode.

-3. **Do the Self-Diagnostic Function with the HDS or the climate control unit** .

-4. Check for DTCs.

DTC Description	DTC
B121A An open in the mode control motor circuit	B

Is DTC B121A, Error on the DTC screen B-B1 (climate control panel without display) or 49 (climate control panel with display) indicated?

YES

Go to step 2.

NO

Intermittent failure. Check for loose wires or poor connections on the mode control motor circuit.

2. Determine possible failure area (MDD-P line, others)

-1. Turn the vehicle to the OFF (LOCK) mode.

-2. Disconnect the following connector.

Mode control motor 5P connector

-3. Turn the vehicle to the ON mode.

-4. Measure the voltage between test points 1 and 2.

Test condition	Vehicle ON mode
	Mode control motor 5P connector: disconnected
Test point 1	Mode control motor 5P connector (female terminals) No. 2: ①
Test point 2	Body ground

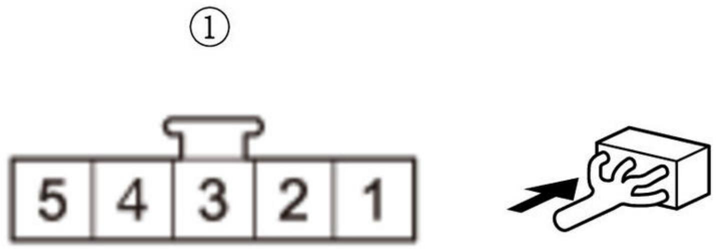

Is there about 5 V?

YES

The MDD-P wire is OK. Go to step 3.

NO

Go to step 4.

3. Open wire check (SENS-COM line)

-1. Measure the voltage between test points 1 and 2.

Test condition	Vehicle ON mode Mode control motor 5P connector: disconnected
Test point 1	Mode control motor 5P connector (female terminals) No. 2: ①
Test point 2	Mode control motor 5P connector (female terminals) No. 1: ①

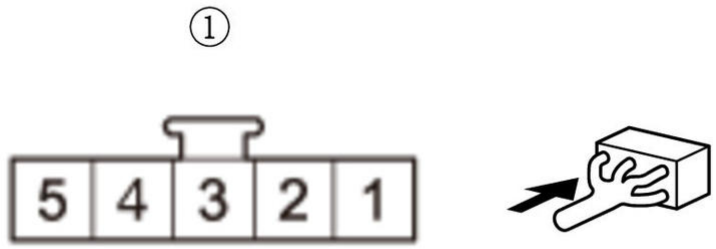

Is there about 5 V?

YES

Replace the mode control motor .

NO

Repair an open in the SENS-COM wire.

4. Open wire check (MDD-P line)

-1. Measure the voltage between test points 1 and 2.

Test condition	Vehicle ON mode Mode control motor 5P connector: disconnected
Test point 1	Climate control unit connector B (24P) No. 5
Test point 2	Body ground

Is there about 5 V?

YES

Repair an open in the MDD-P wire.

NO

Replace the climate control unit .

DTC TROUBLESHOOTING: B121B (B-B2), B121B (4A)

DTC B121B or DTC screen B-B2 or DTC indicator 4A : A short in the mode control motor circuit

NOTE: If other short circuit DTCs are indicated at the same time, there may be an open or short to body ground in the power (5 V) circuit.

DTC Description	DTC
B121B A short in the mode control motor circuit	B

DTCs (AC)

1. Problem verification

   -1. Clear the DTCs with the HDS.

   -2. Turn the vehicle to the OFF (LOCK) mode and then the ON mode.

   -3. **Do the Self-Diagnostic Function with the HDS or the climate control unit** .

   -4. Check for DTCs.

DTC Description	DTC
B121B A short in the mode control motor circuit	B

   Is DTC B121B or Error on the DTC screen B-B2 (climate control panel without display) or 4A (climate control panel with display) indicated?

   YES

   Go to step 2.

   NO

   Intermittent failure. Check for loose wires or poor connections on the mode control motor circuit.

2. Determine possible failure area (S5V line, others)

   -1. Turn the vehicle to the OFF (LOCK) mode.

   -2. Disconnect the following connector.

Mode control motor 5P connector

   -3. Turn the vehicle to the ON mode.

   -4. Measure the voltage between test points 1 and 2.

Test condition	Vehicle ON mode
	Mode control motor 5P connector: disconnected
Test point 1	Mode control motor 5P connector (female terminals) No. 3: ①
Test point 2	Body ground

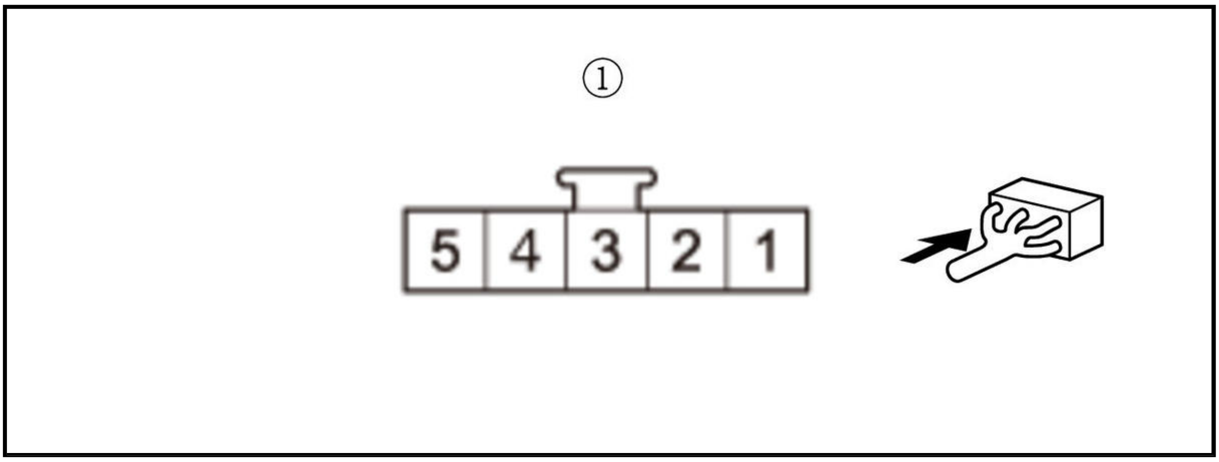

Is there about 5 V?

YES

The S5V wire is OK. Go to step 3.

NO

Go to step 4.

3. Determine possible failure area (mode control motor, others)

-1. Measure the voltage between test points 1 and 2.

Test condition	Vehicle ON mode Mode control motor 5P connector: disconnected
Test point 1	Mode control motor 5P connector (female terminals) No. 2: ①
Test point 2	Body ground

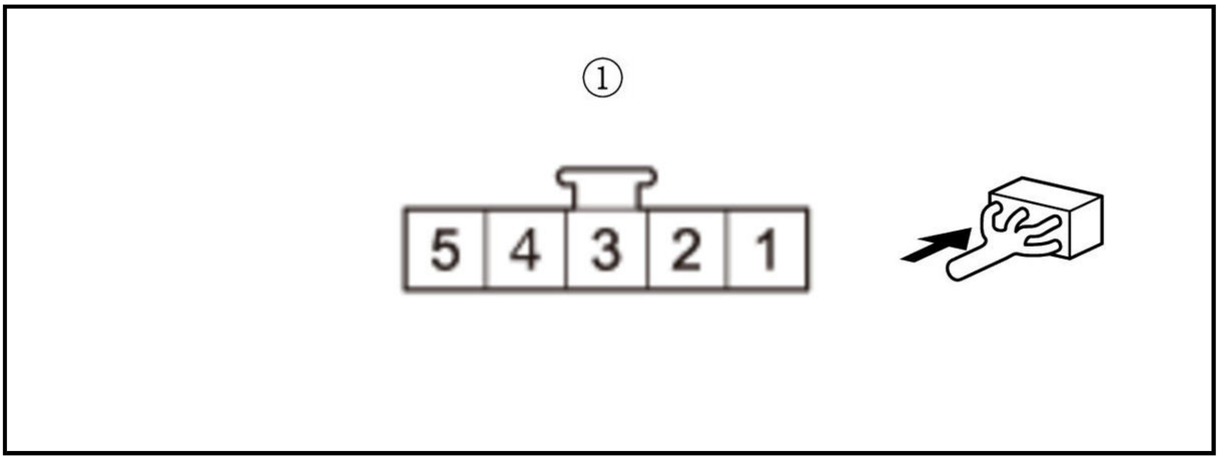

Is there about 5 V?

YES

Replace the mode control motor .

NO

Go to step 6.

4. Open wire check (S5V line)

-1. Measure the voltage between test points 1 and 2.

Test condition	Vehicle ON mode
	Mode control motor 5P connector: disconnected
Test point 1	**Climate control unit connector B (24P) No. 1**
Test point 2	Body ground

Is there about 5 V?

YES

Repair an open in the S5V wire.

NO

Go to step 5.

5. Shorted wire check (S5V line)

-1. Turn the vehicle to the OFF (LOCK) mode.

-2. Disconnect the following connector.

Climate control unit connector B (24P)

-3. Check for continuity between test points 1 and 2.

Test condition	Vehicle OFF (LOCK) mode
	Climate control unit connector B (24P): disconnected
	Mode control motor 5P connector: disconnected
Test point 1	**Climate control unit connector B (24P) No. 1**
Test point 2	Body ground

Is there continuity?

YES

Repair a short to ground in the S5V wire.

NO

Replace the climate control unit .

6. Shorted wire check (MDD-P line)

-1. Turn the vehicle to the OFF (LOCK) mode.

-2. Disconnect the following connector.

Climate control unit connector B (24P)

-3. Check for continuity between test points 1 and 2.

Test condition	Vehicle OFF (LOCK) mode
	Climate control unit connector B (24P): disconnected
	Mode control motor 5P connector: disconnected
Test point 1	**Climate control unit connector B (24P) No. 5**

Test point 2	Body ground

Is there continuity?

YES

Repair a short to ground in the MDD-P wire.

NO

Replace the climate control unit .

DTC TROUBLESHOOTING: B121D (A-B6), B121D (89) (2020 2021)

DTC B121D or DTC screen A-B6 or DTC indicator 89 : Humidity/In-Car Temperature Sensor Communication Error

DTC Description	DTC
B121D Humidity/in-car temperature sensor communication error	B

1. Problem verification

   -1. Clear the DTC with the HDS.

   -2. Turn the vehicle to the OFF (LOCK) mode and then the ON mode.

   -3. **Do the Self-Diagnostic Function with the HDS or the climate control unit** .

   -4. Check for DTCs.

DTC Description	DTC
B121D Humidity/in-car temperature sensor communication error	B

   Is DTC B121D, Error on the DTC screen A-B6 (climate control panel without display), or 89 (climate control panel with display) indicated?

   YES: Climate control panel without display

   Go to step 2.

   YES: Climate control panel with display

   Go to step 4.

   NO

   Intermittent failure. Check for loose wires or poor connections on the humidity/in-car temperature sensor circuit.

2. Climate control unit check 1

   -1. Turn the vehicle to the OFF (LOCK) mode.

   -2. Disconnect the following connector.

Humidity/in-car temperature sensor 4P connector

   -3. Turn the vehicle to the ON mode.

-4. While pressing the WINDSHIELD DEFROST button, press and hold the ON/OFF button for 10 seconds or more.

Is Normal on the DTC screen A-B7 indicated?

YES

Go to step 7.

NO

Go to step 3.

3. Climate control unit check 2

-1. Turn the vehicle to the OFF (LOCK) mode.

-2. Connect terminals A and B with a jumper wire.

Terminal A	Humidity/in-car temperature sensor 4P connector No. 2: ①
Terminal B	Humidity/in-car temperature sensor 4P connector No. 4: ①

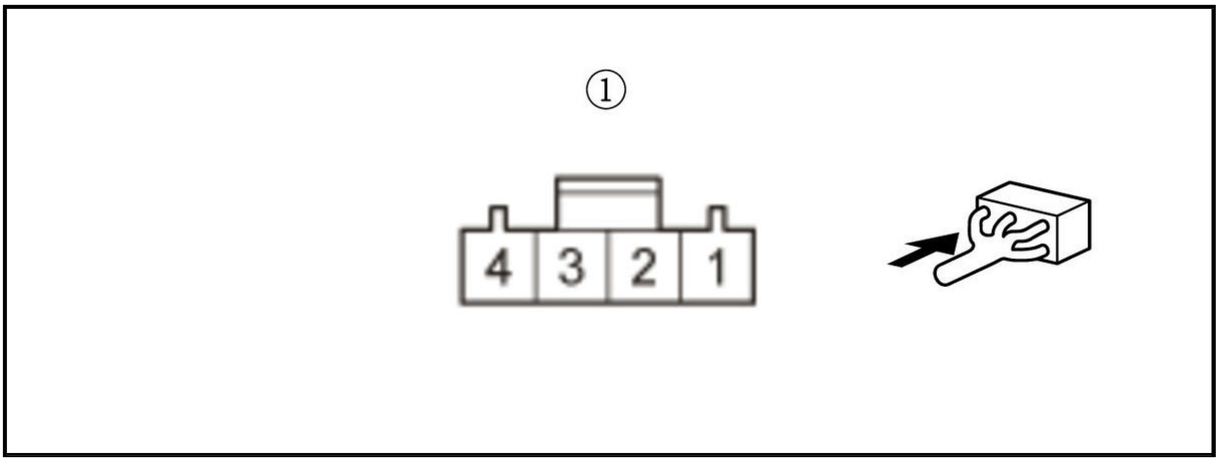

-3. Turn the vehicle to the ON mode.

-4. While pressing the WINDSHIELD DEFROST button, press and hold the ON/OFF button for 10 seconds or more.

Is Normal on the DTC screen A-B7 indicated?

YES

Go to step 6.

NO

Go to step 8.

4. Climate control unit check 1

-1. Turn the vehicle to the OFF (LOCK) mode.

-2. Disconnect the following connector.

Humidity/in-car temperature sensor 4P connector

-3. Turn the vehicle to the ON mode.

-4. While pressing the WINDSHIELD DEFROST button, press and hold the ON/OFF button for 10 seconds or more.

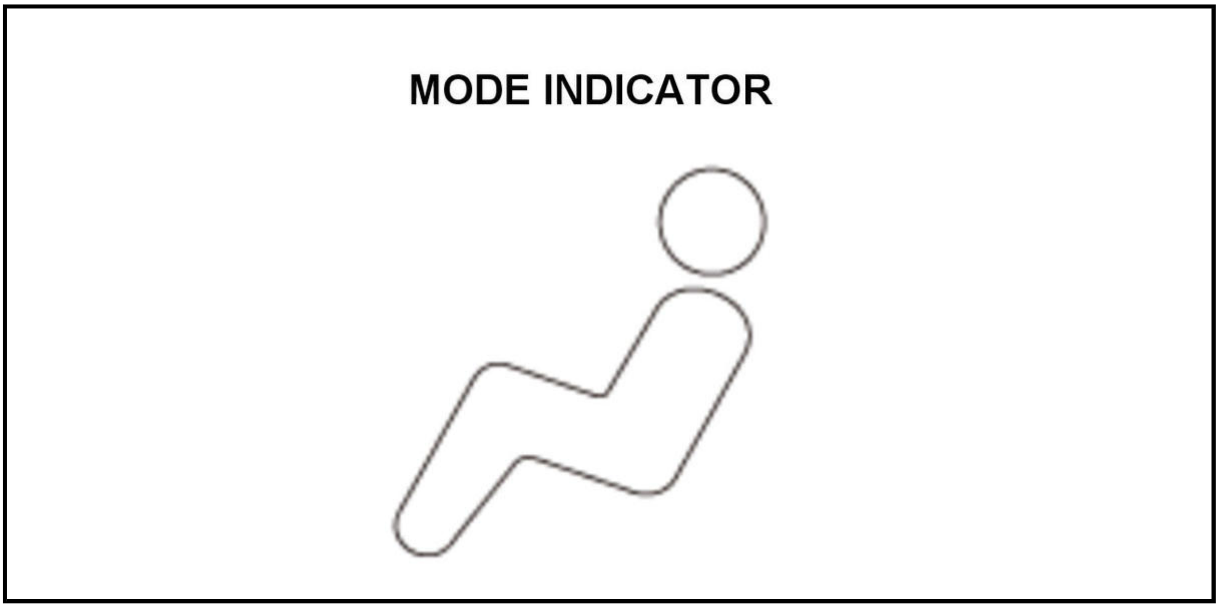

Does the MODE indicator turn on?

YES

Go to step 7.

NO

Go to step 5.

5. Climate control unit check 2

-1. Turn the vehicle to the OFF (LOCK) mode.

-2. Connect terminals A and B with a jumper wire.

Terminal A	Humidity/in-car temperature sensor 4P connector No. 2: ①
Terminal B	Humidity/in-car temperature sensor 4P connector No. 4: ①

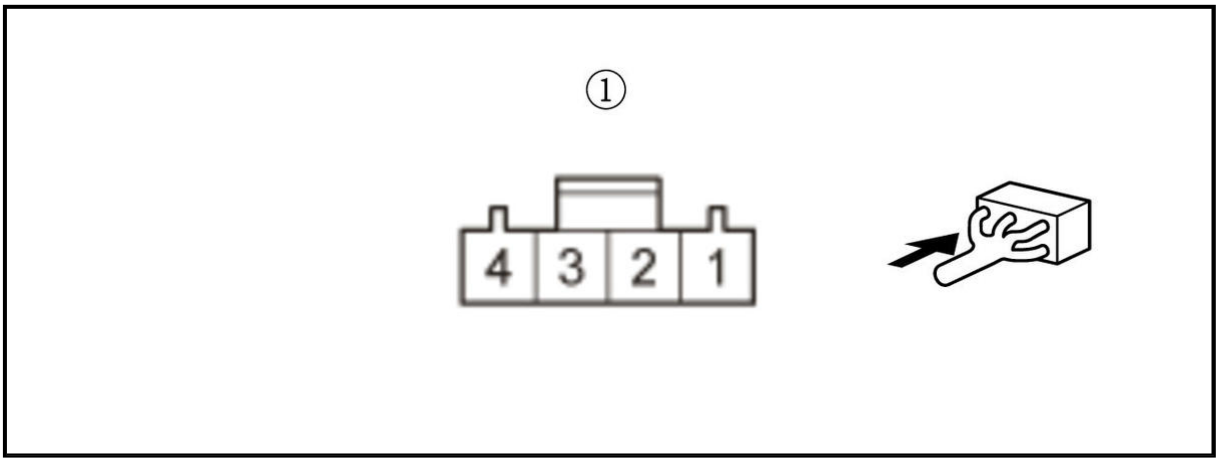

-3. Turn the vehicle to the ON mode.

-4. While pressing the WINDSHIELD DEFROST button, press and hold the ON/OFF button for 10 seconds or more.

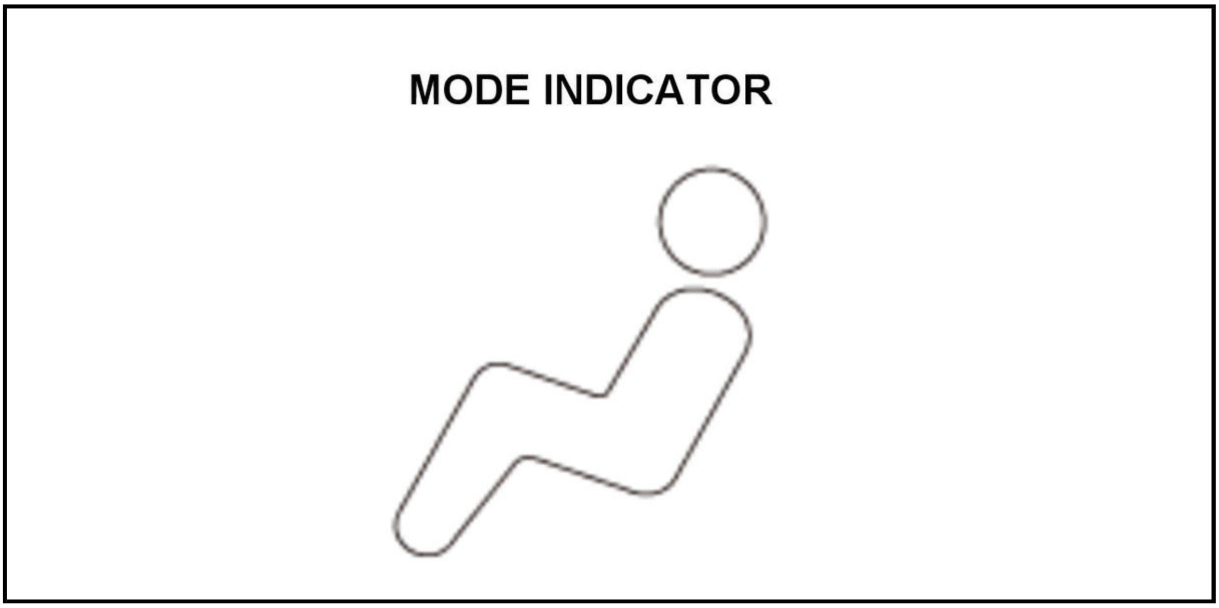

Does the MODE indicator turn on?

YES

Go to step 6.

NO

Go to step 8.

6. Determine possible failure area (humidity/in-car temperature sensor, others)

-1. Turn the vehicle to the OFF (LOCK) mode.

-2. Disconnect the jumper wire.

-3. Turn the vehicle to the ON mode.

-4. Measure the voltage between test points 1 and 2.

Test condition	Vehicle ON mode
	Humidity/in-car temperature sensor 4P connector: disconnected
Test point 1	Humidity/in-car temperature sensor 4P connector No. 1: ①
Test point 2	Body ground

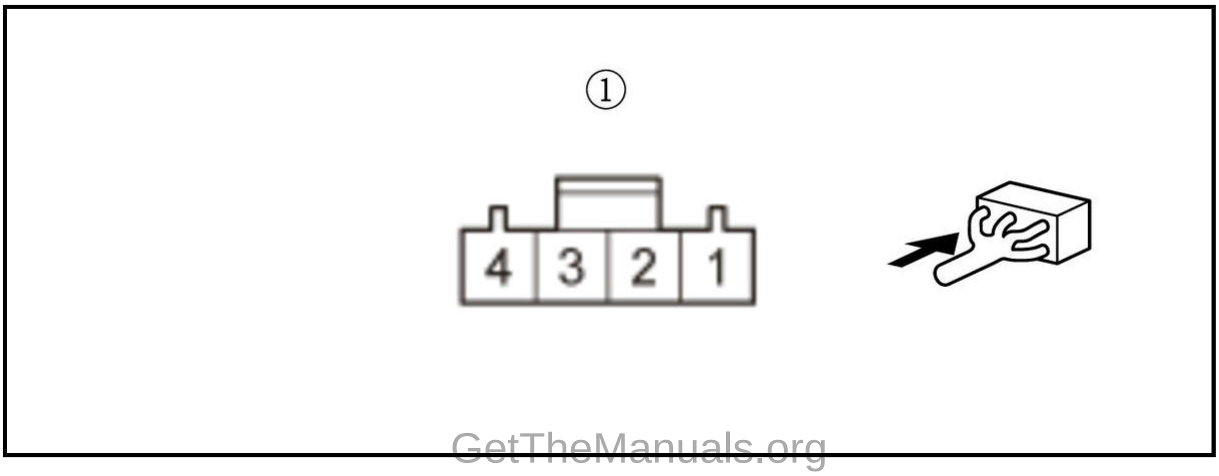

Is there about 5 V?

YES

Replace the humidity/in-car temperature sensor .

NO

Go to step 12.

7. Shorted wire check (HUM DATA line to HUM CLK line)

-1. Turn the vehicle to the OFF (LOCK) mode.

-2. Disconnect the following connector.

Climate control unit connector A (32P)

-3. Measure the resistance between test points 1 and 2.

Test condition	Vehicle OFF (LOCK) mode
	Climate control unit connector A (32P): disconnected
	Humidity/in-car temperature sensor 4P connector: disconnected
Test point 1	**Climate control unit connector A (32P) No. 7**
Test point 2	**Climate control unit connector A (32P) No. 24**

Is there 1 MΩ or more?

YES

Replace the climate control unit .

NO

Repair a short in the HUM DATA wire to HUM CLK wire.

8. Open wire check (HUM DATA line)

-1. Turn the vehicle to the OFF (LOCK) mode.

-2. Disconnect the jumper wire.

-3. Disconnect the following connector.

Climate control unit connector A (32P)

-4. Measure the resistance between test points 1 and 2.

Test condition	Vehicle OFF (LOCK) mode
	Climate control unit connector A (32P): disconnected
	Humidity/in-car temperature sensor 4P connector: disconnected
Test point 1	**Climate control unit connector A (32P) No. 7**
Test point 2	Humidity/in-car temperature sensor 4P connector No. 2: ①

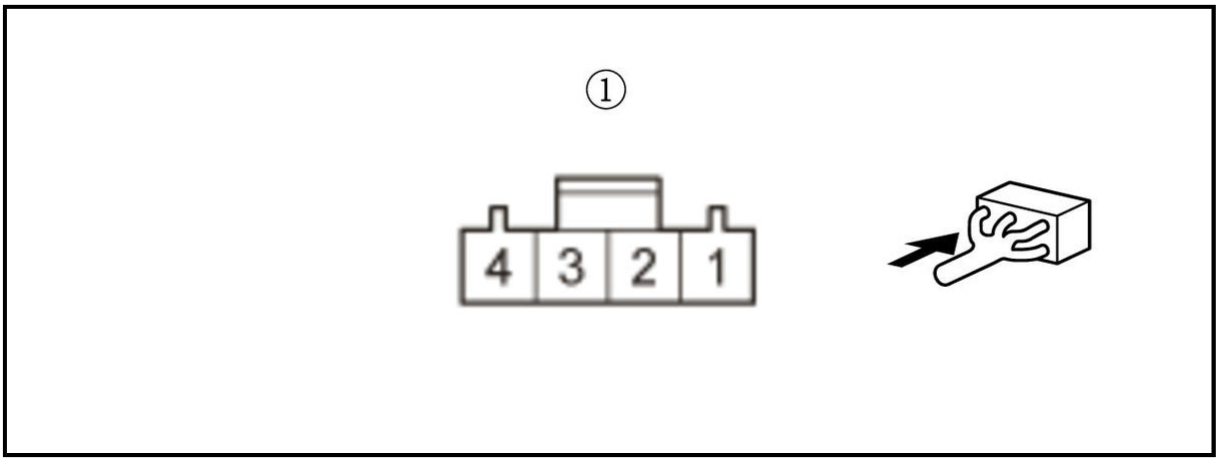

Is there 1.0 Ω or less?

YES

The HUM DATA wire is not open. Go to step 9.

NO

Repair an open in the HUM DATA wire.

9. Open wire check (HUM CLK line)

-1. Measure the resistance between test points 1 and 2.

Test condition	Vehicle OFF (LOCK) mode
	Climate control unit connector A (32P): disconnected
	Humidity/in-car temperature sensor 4P connector: disconnected
Test point 1	**Climate control unit connector A (32P) No. 24**
Test point 2	Humidity/in-car temperature sensor 4P connector No. 4: ①

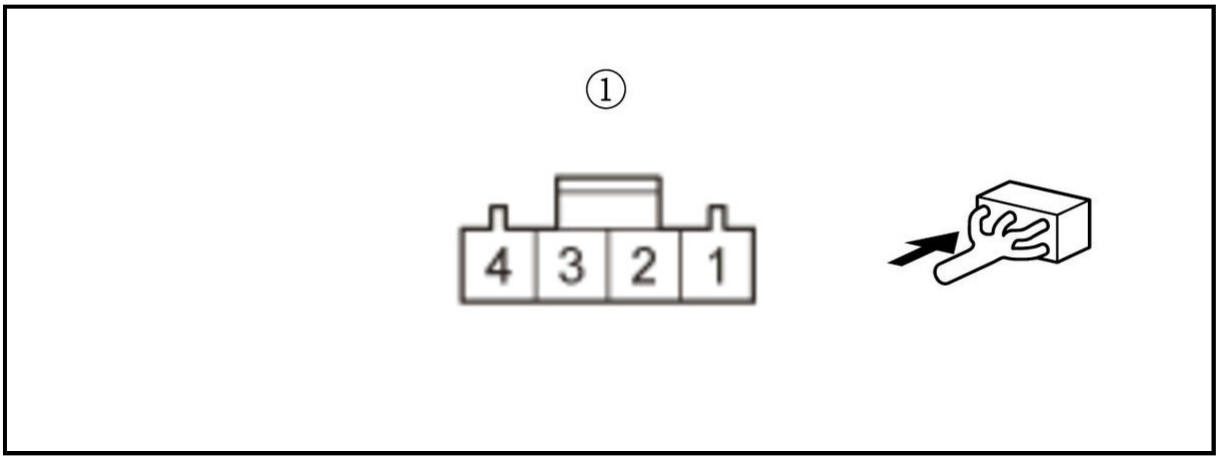

Is there 1.0 Ω or less?

YES

The HUM CLK wire is not open. Go to step 10.

NO

Repair an open in the HUM CLK wire.

10. Shorted wire check (HUM DATA line)

-1. Measure the resistance between test points 1 and 2.

Test condition	Vehicle OFF (LOCK) mode
	Climate control unit connector A (32P): disconnected
	Humidity/in-car temperature sensor 4P connector: disconnected
Test point 1	**Climate control unit connector A (32P) No. 7**
Test point 2	Body ground

Is there 1 MΩ or more?

YES

The HUM DATA wire is OK. Go to step 11.

NO

Repair a short to ground in the HUM DATA wire.

11. Shorted wire check (HUM CLK line)

-1. Measure the resistance between test points 1 and 2.

Test condition	Vehicle OFF (LOCK) mode
	Climate control unit connector A (32P): disconnected
	Humidity/in-car temperature sensor 4P connector: disconnected
Test point 1	**Climate control unit connector A (32P) No. 24**
Test point 2	Body ground

Is there 1 MΩ or more?

YES

Replace the climate control unit .

NO

Repair a short to ground in the HUM CLK wire.

12. Open wire check (S 5V line)

-1. Turn the vehicle to the OFF (LOCK) mode.

-2. Disconnect the following connector.

Climate control unit connector A (32P)

-3. Measure the resistance between test points 1 and 2.

Test condition	Vehicle OFF (LOCK) mode
	Climate control unit connector A (32P): disconnected
	Humidity/in-car temperature sensor 4P connector: disconnected
Test point 1	**Climate control unit connector A (32P) No. 26**
Test point 2	Humidity/in-car temperature sensor 4P connector No. 1: ①

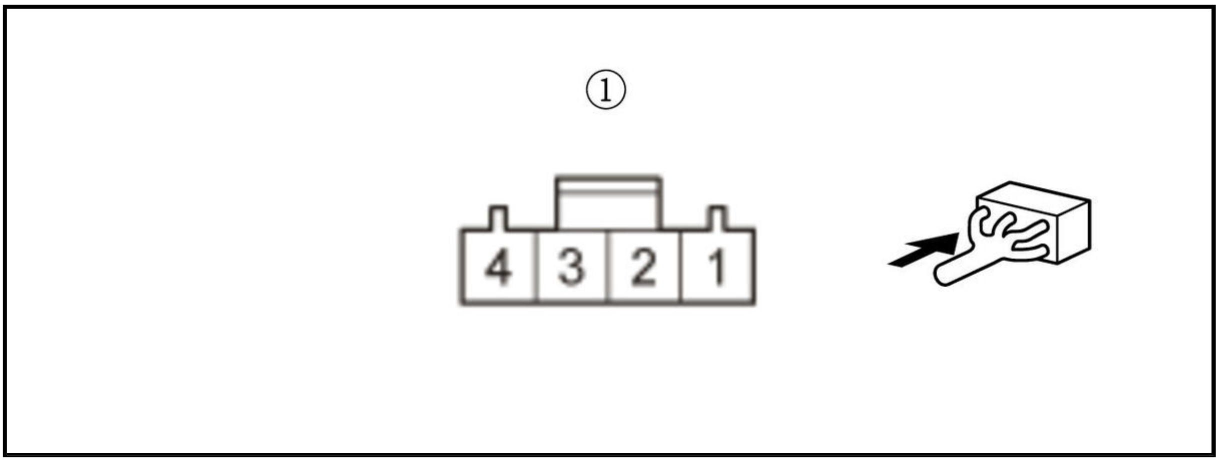

Is there 1.0 Ω or less?

YES

The S 5V line is not open. Go to step 13.

NO

Repair an open in the S 5V wire.

13. Open wire check (SENSOR COM line)

-1. Measure the resistance between test points 1 and 2.

Test condition	Vehicle OFF (LOCK) mode
	Climate control unit connector A (32P): disconnected
	Humidity/in-car temperature sensor 4P connector: disconnected
Test point 1	**Climate control unit connector A (32P) No. 12**
Test point 2	Humidity/in-car temperature sensor 4P connector No. 3: ①

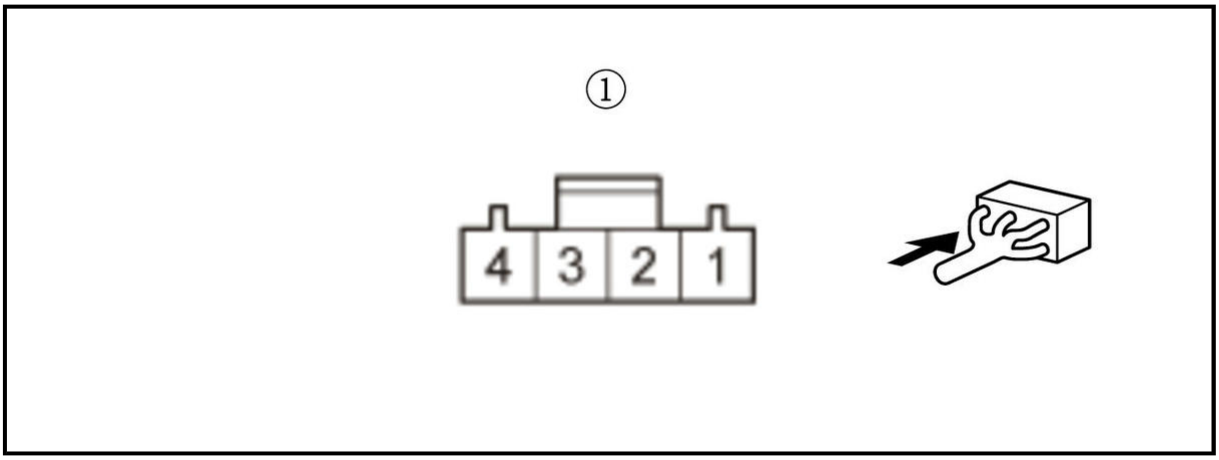

Is there 1.0 Ω or less?

YES

The SENSOR COM wire is OK. Go to step 14.

NO

Repair an open in the SENSOR COM wire.

14. Shorted wire check (S 5V line)

-1. Measure the resistance between test points 1 and 2.

Test condition	Vehicle OFF (LOCK) mode
	Climate control unit connector A (32P): disconnected
	Humidity/in-car temperature sensor 4P connector: disconnected
Test point 1	Climate control unit connector A (32P) No. 26
Test point 2	Body ground

Is there 1 MΩ or more?

YES

Replace the climate control unit .

NO

Repair a short to ground in the S 5V wire.

DTC TROUBLESHOOTING: B1220 (B-B5), B1220 (56)

DTC B1220 or DTC screen B-B5 or DTC indicator 56 : A Short in the recirculation control motor circuit

NOTE: If other short circuit DTCs are indicated at the same time, there may be an open or short to body ground in the power (5 V) circuit.

DTC Description	DTC
B1220 A Short in the recirculation control motor circuit	B

DTCs (AC)

1. Problem verification

-1. Clear the DTCs with the HDS.

-2. Turn the vehicle to the OFF (LOCK) mode and then the ON mode.

-3. Do the Self-Diagnostic Function with the HDS or the climate control unit .

-4. Check for DTCs.

DTC Description	DTC
B1220 A Short in the recirculation control motor circuit	B

Is DTC B1220 or Error on the DTC screen B-B5 (climate control panel without display) or 56 (climate control panel with display) indicated?

YES

Go to step 2.

NO

Intermittent failure. Check for loose wires or poor connections on the recirculation control motor circuit.

2. Determine possible failure area (S5V line, others)

-1. Turn the vehicle to the OFF (LOCK) mode.

-2. Disconnect the following connector.

Recirculation control motor 5P connector

-3. Turn the vehicle to the ON mode.

-4. Measure the voltage between test points 1 and 2.

Test condition	Vehicle ON mode
	Recirculation control motor 5P connector: disconnected
Test point 1	Recirculation control motor 5P connector (female terminals) No. 3: ①
Test point 2	Body ground

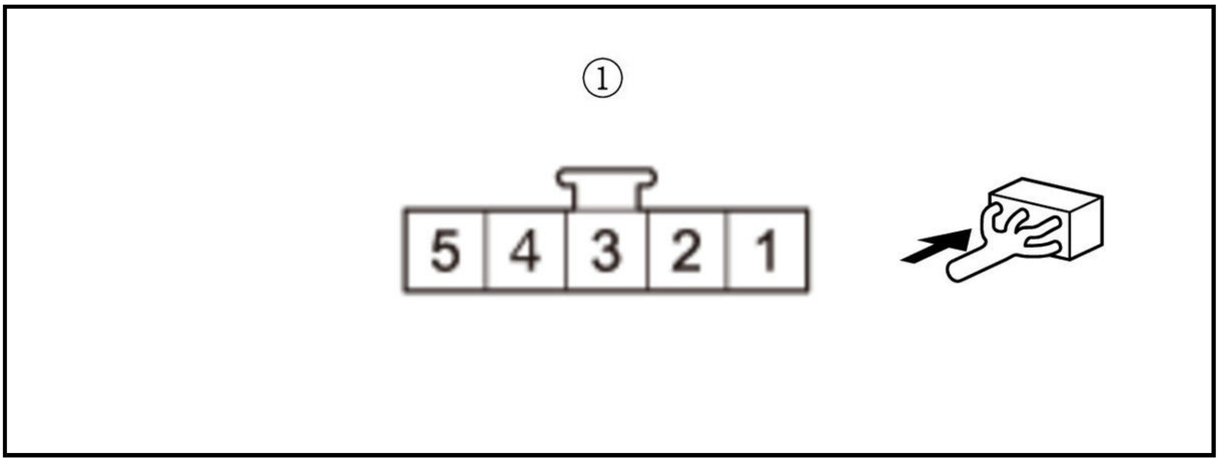

Is there about 5 V?

YES

The S5V wire is OK. Go to step 3.

NO

Go to step 4.

3. Determine possible failure area (recirculation control motor, others)

-1. Measure the voltage between test points 1 and 2.

Test condition	Vehicle ON mode
	Recirculation control motor 5P connector: disconnected
Test point 1	Recirculation control motor 5P connector (female terminals) No. 2: ①
Test point 2	Body ground

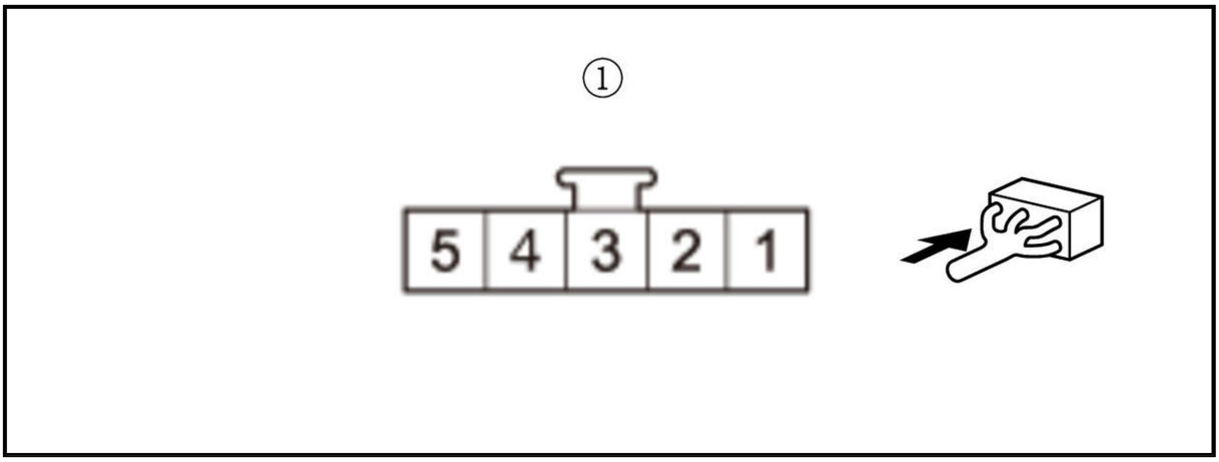

Is there about 5 V?

YES

Replace the recirculation control motor .

NO

Go to step 6.

4. Open wire check (S5V line)

-1. Measure the voltage between test points 1 and 2.

Test condition	Vehicle ON mode
	Recirculation control motor 5P connector: disconnected
Test point 1	**Climate control unit connector B (24P) No. 1**
Test point 2	Body ground

Is there about 5 V?

YES

Repair an open in the S5V wire.

NO

Go to step 5.

5. Shorted wire check (S5V line)

-1. Turn the vehicle to the OFF (LOCK) mode.

-2. Disconnect the following connector.

Climate control unit connector B (24P)

-3. Check for continuity between test points 1 and 2.

Test condition	Vehicle OFF (LOCK) mode
	Climate control unit connector B (24P): disconnected
	Recirculation control motor 5P connector: disconnected
Test point 1	**Climate control unit connector B (24P) No. 1**
Test point 2	Body ground

Is there continuity?

YES

Repair a short in the S5V wire.

NO

Replace the climate control unit .

6. Shorted wire check (RFD-P line)

   -1. Turn the vehicle to the OFF (LOCK) mode.

   -2. Disconnect the following connector.

Climate control unit connector B (24P)

   -3. Check for continuity between test points 1 and 2.

Test condition	Vehicle OFF (LOCK) mode
	Climate control unit connector B (24P): disconnected
	Recirculation control motor 5P connector: disconnected
Test point 1	**Climate control unit connector B (24P) No. 4**
Test point 2	Body ground

   Is there continuity?

   YES

   Repair a short in the RFD-P wire.

   NO

   Replace the climate control unit .

DTC TROUBLESHOOTING: B1225 (A-B1), B1225 (01)

DTC B1225 or DTC screen A-B1 or DTC indicator 01 : An open in the in-car temperature sensor circuit

DTC Description	DTC
B1225 An open in the in-car temperature sensor circuit	B

DTCs (AC)

1. Problem verification

   -1. Clear the DTC with the HDS.

   -2. Turn the vehicle to the OFF (LOCK) mode and then the ON mode.

   -3. **Do the Self-Diagnostic Function with the HDS or the climate control unit** .

   -4. Check for DTCs.

DTC Description	DTC
B1225 An open in the in-car temperature sensor circuit	B

Is DTC B1225 or Error on the DTC screen A-B1 (climate control panel without display) or 01 (climate control panel with display) indicated?

YES

Go to step 2.

NO

Intermittent failure. Check for loose wires or poor connections on the in-car temperature sensor circuit.

2. Open wire check (TR line)

-1. Turn the vehicle to the OFF (LOCK) mode.

-2. Disconnect the following connectors.

Climate control unit connector A (32P)
In-car temperature sensor 2P connector

-3. Check for continuity between test points 1 and 2.

Test condition	Vehicle OFF (LOCK) mode
	Climate control unit connector A (32P): disconected
	In-car temperature sensor 2P connector: disconnected
Test point 1	**Climate control unit connector A (32P) No. 27**
Test point 2	In-car temperature sensor 2P connector (female terminals) No. 2: ①

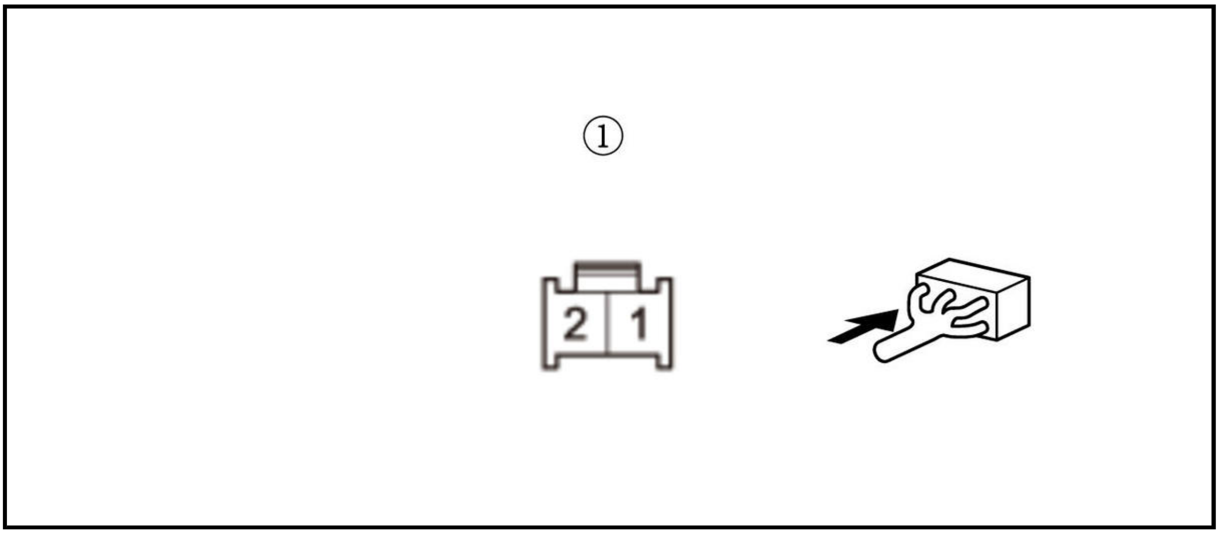

Is there continuity?

YES

The TR wire is not open. Go to step 3.

NO

Repair an open in the TR wire.

3. Open wire check (SENSOR COM line)

-1. Check for continuity between test points 1 and 2.

Test condition	Vehicle OFF (LOCK) mode
	Climate control unit connector A (32P): disconnected
	In-car temperature sensor 2P connector: disconnected
Test point 1	**Climate control unit connector A (32P) No. 12**
Test point 2	In-car temperature sensor 2P connector (female terminals) No. 1: ①

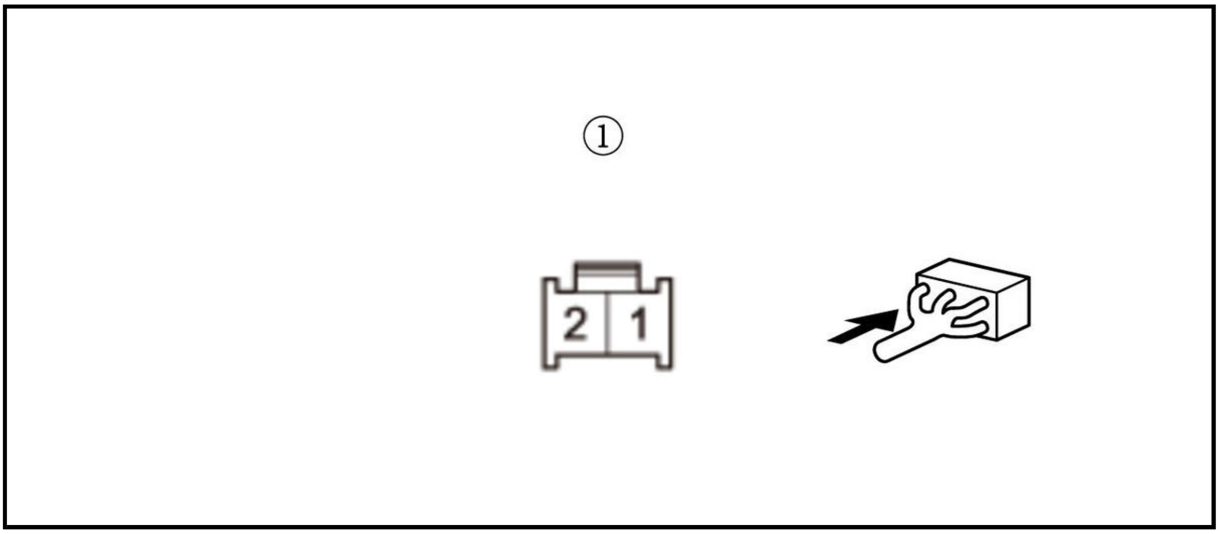

Is there continuity?

YES

The SENSER COM wire is OK. Go to step 4.

NO

Repair an open in the SENSOR COM wire.

4. Shorted wire check (TR line to power)

-1. Turn the vehicle to the ON mode.

-2. Measure the voltage between test points 1 and 2.

Test condition	Vehicle ON mode
	Climate control unit connector A (32P): disconnected
	In-car temperature sensor 2P connector: disconnected
Test point 1	**Climate control unit connector A (32P) No. 27**
Test point 2	Body ground

Is there any voltage?

YES

Repair a short to power in the TR wire.

NO

The TR wire is OK. Go to step 5.

5. In-car temperature sensor check

-1. Turn the vehicle to the OFF (LOCK) mode.

-2. Test the in-car temperature sensor .

Is the in-car temperature sensor OK?

YES

Replace the climate control unit .

NO

Replace the in-car temperature sensor .

DTC TROUBLESHOOTING: B1226 (A-B2), B1226 (02)

DTC B1226 or DTC screen A-B2 or DTC indicator 02 : A short in the in-car temperature sensor circuit

DTC Description	DTC
B1226 A short in the in-car temperature sensor circuit	B

DTCs (AC)

1. Problem verification

-1. Clear the DTC with the HDS.

-2. Turn the vehicle to the OFF (LOCK) mode and then the ON mode.

-3. Do the Self-Diagnostic Function with the HDS or the climate control unit .

-4. Check for DTCs.

DTC Description	DTC
B1226 A short in the in-car temperature sensor circuit	B

Is DTC B1226 or Error on the DTC screen A-B2 (climate control panel without display) or 02 (climate control panel with display) indicated?

YES

Go to step 2.

NO

Intermittent failure. Check for loose wires or poor connections on the in-car temperature sensor circuit.

2. Shorted wire check (TR line)

-1. Turn the vehicle to the OFF (LOCK) mode.

-2. Disconnect the following connectors.

Climate control unit connector A (32P)
In-car temperature sensor 2P connector

-3. Check for continuity between test points 1 and 2.

Test condition	Vehicle OFF (LOCK) mode
	Climate control unit connector A (32P): disconnected

	In-car temperature sensor 2P connector: disconnected
Test point 1	**Climate control unit connector A (32P) No. 27**
Test point 2	Body ground

Is there continuity?

YES

Repair a short to ground in the TR wire.

NO

The TR wire is not shorted. Go to step 3.

3. Shorted wire check (TR line to SENSOR COM line)

-1. Check for continuity between test points 1 and 2.

Test condition	Vehicle OFF (LOCK) mode
	Climate control unit connector A (32P): disconnected
	In-car temperature sensor 2P connector: disconnected
Test point 1	**Climate control unit connector A (32P) No. 12**
Test point 2	**Climate control unit connector A (32P) No. 27**

Is there continuity?

YES

Repair a short in the TR wire to SENSOR COM wire.

NO

The TR wire and SENSOR COM wire are OK. Go to step 4.

4. In-car temperature sensor check

-1. **Test the in-car temperature sensor** .

Is the in-car temperature sensor OK?

YES

Replace the climate control unit .

NO

Replace the in-car temperature sensor .

DTC TROUBLESHOOTING: B1227 (A-A1), B1227 (05)

DTC B1227 or DTC screen A-A1 or DTC indicator 05 : An open in the outside air temperature sensor circuit

DTC Description	DTC
B1227 An open in the outside air temperature sensor circuit	B

DTCs (AC)

1. Problem verification

-1. Clear the DTC with the HDS.

-2. Turn the vehicle to the OFF (LOCK) mode and then the ON mode.

-3. **Do the Self-Diagnostic Function with the HDS or the climate control unit** .

-4. Check for DTCs.

DTC Description	DTC
B1227 An open in the outside air temperature sensor circuit	B

Is DTC B1227 or Error on the DTC screen A-A1 (climate control panel without display) or 05 (climate control panel with display) indicated?

YES

Go to step 2.

NO

Intermittent failure. Check for loose wires or poor connections on the outside air temperature sensor circuit.

2. Open wire check (TAM line)

-1. Turn the vehicle to the OFF (LOCK) mode.

-2. Disconnect the following connectors.

Climate control unit connector A (32P)
Outside air temperature sensor 2P connector

-3. Check for continuity between test points 1 and 2.

Test condition	Vehicle OFF (LOCK) mode
	Climate control unit connector A (32P): disconnected
	Outside air temperature sensor 2P connector: disconnected
Test point 1	**Climate control unit connector A (32P) No. 11**
Test point 2	Outside air temperature sensor 2P connector (female terminals) No. 2: ①

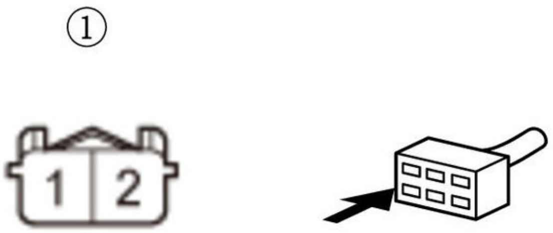

Is there continuity?

YES

The TAM wire is not open. Go to step 3.

NO

Repair an open in the TAM wire.

3. Open wire check (SENSOR COM line)

-1. Check for continuity between test points 1 and 2.

Test condition	Vehicle OFF (LOCK) mode
	Climate control unit connector A (32P): disconnected
	Outside air temperature sensor 2P connector: disconnected
Test point 1	**Climate control unit connector A (32P) No. 12**
Test point 2	Outside air temperature sensor 2P connector (female terminals) No. 1: ①

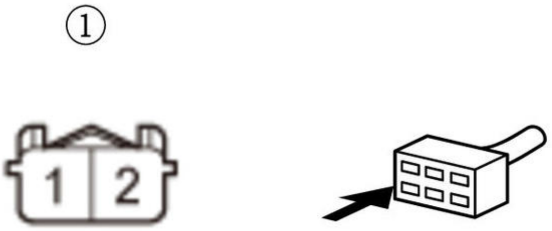

Is there continuity?

YES

The SENSOR COM wire is OK. Go to step 4.

NO

Repair an open in the SENSOR COM wire.

4. Shorted wire check (TAM line to power)

-1. Turn the vehicle to the ON mode.

-2. Measure the voltage between test points 1 and 2.

Test condition	Vehicle ON mode
	Climate control unit connector A (32P): disconnected
	Outside air temperature sensor 2P connector: disconnected
Test point 1	**Climate control unit connector A (32P) No. 11**
Test point 2	Body ground

Is there any voltage?

YES

Repair a short to power in the TAM wire.

NO

The TAM wire is OK. Go to step 5.

5. Outside air temperature sensor check

-1. Turn the vehicle to the OFF (LOCK) mode.

-2. Test the outside air temperature sensor .

Is the outside air temperature sensor OK?

YES

Replace the climate control unit .

NO

Replace the outside air temperature sensor .

DTC TROUBLESHOOTING: B1228 (A-A2), B1228 (06)

DTC B1228 or DTC screen A-A2 or DTC indicator 06 : A short in the outside air temperature sensor circuit

DTC Description	DTC
B1228 A short in the outside air temperature sensor circuit	B

DTCs (AC)

1. Problem verification

-1. Clear the DTC with the HDS.

-2. Turn the vehicle to the OFF (LOCK) mode and then the ON mode.

-3. Do the Self-Diagnostic Function with the HDS or the climate control unit .

-4. Check for DTCs.

DTC Description	DTC
B1228 A short in the outside air temperature sensor circuit	B

Is DTC B1228 or Error on the DTC screen A-A2 (climate control panel without display) or 06 (climate control panel with display) indicated?

YES

Go to step 2.

NO

Intermittent failure. Check for loose wires or poor connections on the outside air temperature sensor circuit.

2. Shorted wire check (TAM line)

-1. Turn the vehicle to the OFF (LOCK) mode.

-2. Disconnect the following connectors.

Climate control unit connector A (32P)
Outside air temperature sensor 2P connector

-3. Check for continuity between test points 1 and 2.

Test condition	Vehicle OFF (LOCK) mode
	Climate control unit connector A (32P): disconnected
	Outside air temperature sensor 2P connector: disconnected
Test point 1	**Climate control unit connector A (32P) No. 11**
Test point 2	Body ground

Is there continuity?

YES

Repair a short to ground in the TAM wire.

NO

The TAM wire is not shorted. Go to step 3.

3. Shorted wire check (TAM line to SENSOR COM line)

-1. Check for continuity between test points 1 and 2.

Test condition	Vehicle OFF (LOCK) mode
	Climate control unit connector A (32P): disconnected
	Outside air temperature sensor 2P connector: disconnected
Test point 1	**Climate control unit connector A (32P) No. 11**
Test point 2	**Climate control unit connector A (32P) No. 12**

Is there continuity?

YES

Repair a short in the TAM wire to SENSOR COM wire.

NO

The TAM wire and SENSOR COM wire are OK. Go to step 4.

4. Outside air temperature sensor check

-1. **Test the outside air temperature sensor** .

Is the outside air temperature sensor OK?

YES

Replace the climate control unit .

NO

Replace the outside air temperature sensor .

DTC TROUBLESHOOTING: B1231 (A-A5), B1231 (09)

DTC B1231 or DTC screen A-A5 or DTC indicator 09 : An open in the evaporator temperature sensor circuit

DTC Description	DTC
B1231 An open in the evaporator temperature sensor circuit	B

DTCs (AC)

1. Problem verification

   -1. Clear the DTC with the HDS.

   -2. Turn the vehicle to the OFF (LOCK) mode and then the ON mode.

   -3. **Do the Self-Diagnostic Function with the HDS or the climate control unit** .

   -4. Check for DTCs.

DTC Description	DTC
B1231 An open in the evaporator temperature sensor circuit	B

   Is DTC B1231 or Error on the DTC screen A-A5 (climate control panel without display) or 09 (climate control panel with display) indicated?

   YES

   Go to step 2.

   NO

   Intermittent failure. Check for loose wires or poor connections on the evaporator temperature sensor circuit.

2. Shorted wire check (TEVA line to power)

   -1. Turn the vehicle to the OFF (LOCK) mode.

   -2. Disconnect the following connector.

Climate control unit connector B (24P)

   -3. Turn the vehicle to the ON mode.

   -4. Measure the voltage between test points 1 and 2.

Test condition	Vehicle ON mode
	Climate control unit connector B (24P): disconnected
Test point 1	**Climate control unit connector B (24P) No. 8**
Test point 2	Body ground

   Is there any voltage?

   YES

   Repair a short to power in the TEVA wire.

   NO

   The TEVA wire is not shorted. Go to step 3.

3. Determine possible failure area (climate control unit, others)

-1. Turn the vehicle to the OFF (LOCK) mode.

-2. Measure the resistance between test points 1 and 2.

Test condition	Vehicle OFF (LOCK) mode Climate control unit connector B (24P): disconnected
Test point 1	**Climate control unit connector B (24P) No. 8**
Test point 2	**Climate control unit connector B (24P) No. 10**

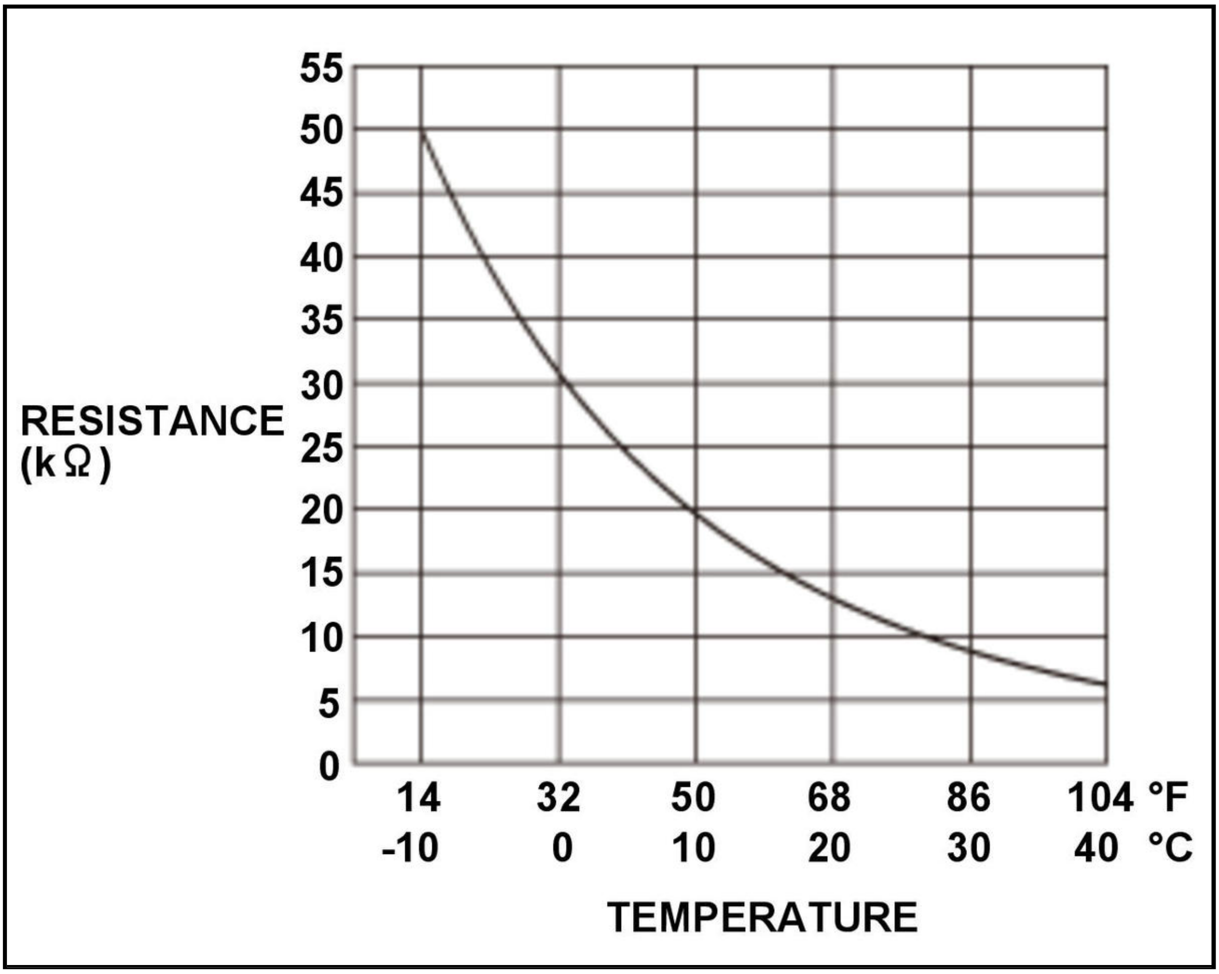

Is resistance value within the range?

YES

Replace the climate control unit .

NO

Go to step 4.

4. Open wire check (TEVA line)

-1. Disconnect the following connector.

Evaporator temperature sensor 2P connector

-2. Check for continuity between test points 1 and 2.

Test condition	Vehicle OFF (LOCK) mode Climate control unit connector B (24P): disconnected Evaporator temperature sensor 2P connector: disconnected

Test point 1	**Climate control unit connector B (24P) No. 8**
Test point 2	Evaporator temperature sensor 2P connector (female terminals) No. 1: ①

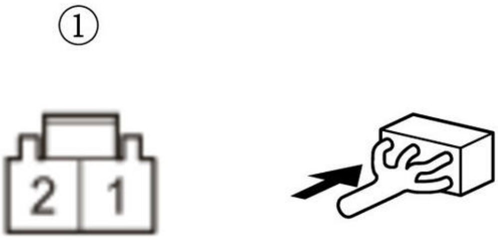

Is there continuity?

YES

The TEVA wire is OK. Go to step 5.

NO

Repair an open in the TEVA wire.

5. Open wire check (SENS-COM line)

-1. Check for continuity between test points 1 and 2.

Test condition	Vehicle OFF (LOCK) mode
	Climate control unit connector B (24P): disconnected
	Evaporator temperature sensor 2P connector: disconnected
Test point 1	**Climate control unit connector B (24P) No. 10**
Test point 2	Evaporator temperature sensor 2P connector (female terminals) No. 2: ①

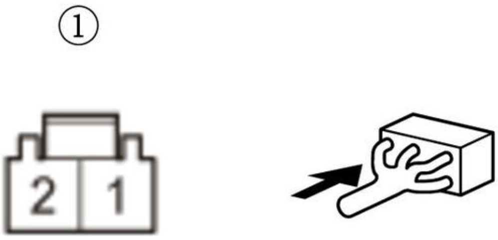

Is there continuity?

YES

Replace the evaporator temperature sensor .

NO

Repair an open in the SENS-COM wire.

DTC TROUBLESHOOTING: B1232 (A-A6), B1232 (0A)

DTC B1232 or DTC screen A-A6 or DTC indicator 0A : A short in the evaporator temperature sensor circuit

DTC Description	DTC
B1232 A short in the evaporator temperature sensor circuit	B

DTCs (AC)

1. Problem verification

   -1. Clear the DTC with the HDS.

   -2. Turn the vehicle to the OFF (LOCK) mode and then the ON mode.

   -3. Do the Self-Diagnostic Function with the HDS or the climate control unit .

   -4. Check for DTCs.

DTC Description	DTC
B1232 A short in the evaporator temperature sensor circuit	B

   Is DTC B1232 or Error on the DTC screen A-A6 (climate control panel without display) or 0A (climate control panel with display) indicated?

   YES

   Go to step 2.

   NO

   Intermittent failure. Check for loose wires or poor connections on the evaporator temperature sensor circuit.

2. Shorted wire check (TEVA line)

   -1. Turn the vehicle to the OFF (LOCK) mode.

   -2. Disconnect the following connector.

Climate control unit connector B (24P)

   -3. Check for continuity between test points 1 and 2.

Test condition	Vehicle OFF (LOCK) mode
	Climate control unit connector B (24P): disconnected
Test point 1	Climate control unit connector B (24P) No. 8
Test point 2	Body ground

   Is there continuity?

   YES

   Repair a short to ground in the TEVA wire.

NO

The TEVA wire is not shorted. Go to step 3.

3. Determine possible failure area (climate control unit, others)

-1. Measure the resistance between test points 1 and 2.

Test condition	Vehicle OFF (LOCK) mode Climate control unit connector B (24P): disconnected
Test point 1	**Climate control unit connector B (24P) No. 8**
Test point 2	**Climate control unit connector B (24P) No. 10**

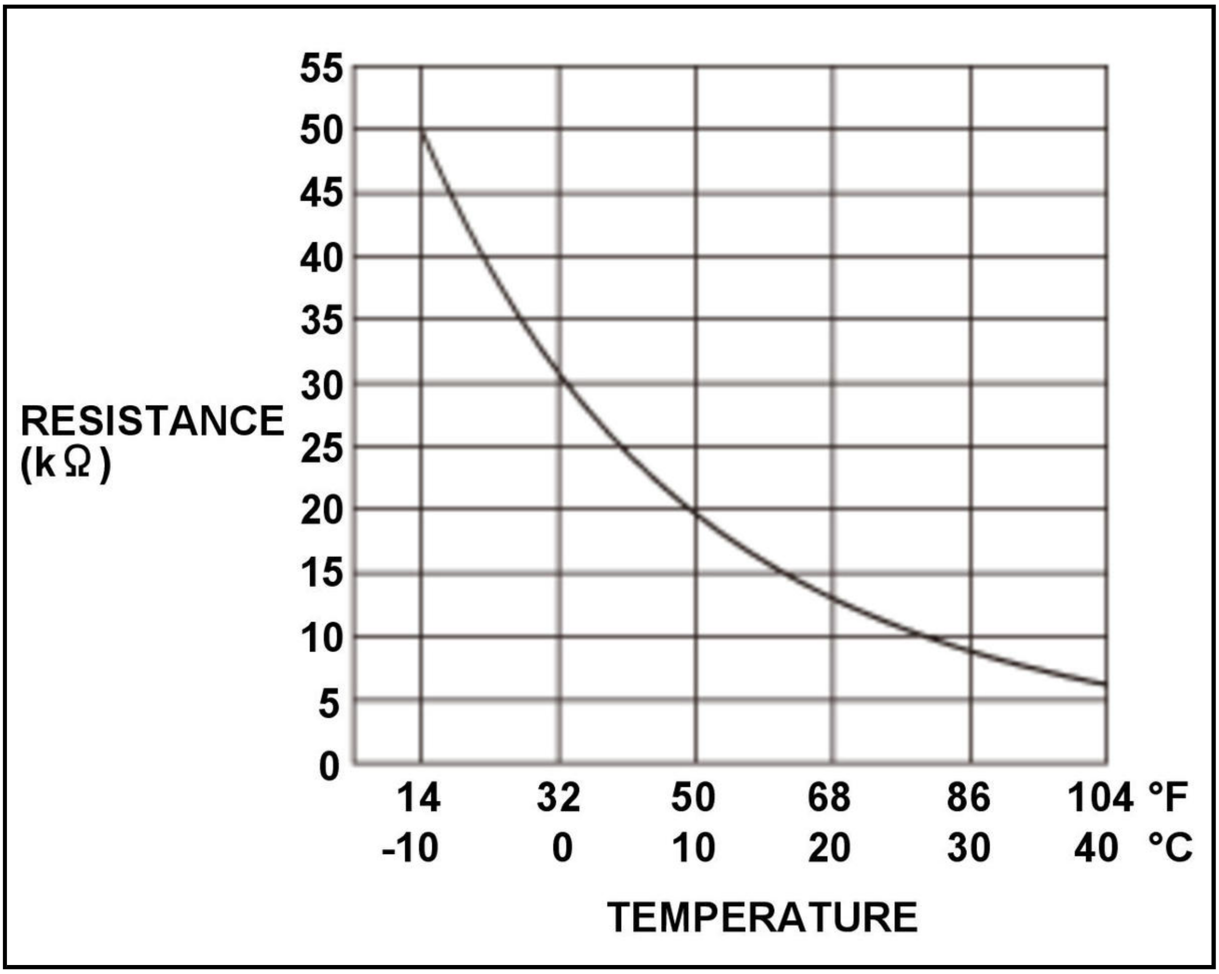

Is resistance value within the range?

YES

Replace the climate control unit .

NO

Go to step 4.

4. Shorted wire check (TEVA line to SENS-COM line)

-1. Disconnect the following connector.

Evaporator temperature sensor 2P connector

-2. Check for continuity between test points 1 and 2.

Test condition	Vehicle OFF (LOCK) mode
	Climate control unit connector B (24P): disconnected
	Evaporator temperature sensor 2P connector: disconnected
Test point 1	Climate control unit connector B (24P) No. 8

Test point 2	Climate control unit connector B (24P) No. 10

Is there continuity?

YES

Repair a short in the TEVA wire to SENS-COM wire.

NO

Replace the evaporator temperature sensor .

DTC TROUBLESHOOTING: B1233 (B-A1), B1233 (40)

DTC B1233 or DTC screen B-A1 or DTC indicator 40 : An open in the air mix control motor circuit (driver's)

DTC Description	DTC
B1233 An open in the air mix control motor circuit (driver's)	B

DTCs (AC)

1. Problem verification

   -1. Clear the DTCs with the HDS.

   -2. Turn the vehicle to the OFF (LOCK) mode and then the ON mode.

   -3. Do the Self-Diagnostic Function with the HDS or the climate control unit .

   -4. Check for DTCs.

DTC Description	DTC
B1233 An open in the air mix control motor circuit (driver's)	B

   Is DTC B1233 or Error on the DTC screen B-A1 (climate control panel without display) or 40 (climate control panel with display) indicated?

   YES

   Go to step 2.

   NO

   Intermittent failure. Check for loose wires or poor connections on the air mix control motor circuit.

   NO

   Intermittent failure. Check for loose wires or poor connections on the driver's air mix control motor circuit.

2. Determine possible failure area (AMD-P-DR line, others)

-1. Turn the vehicle to the OFF (LOCK) mode.

-2. Disconnect the following connector.

Without dual zone control: Air mix control motor 5P connector
With dual zone control: Driver's air mix control motor 5P connector

-3. Turn the vehicle to the ON mode.

-4. Measure the voltage between test points 1 and 2.

Without dual zone control

Test condition	Vehicle ON mode Air mix control motor 5P connector: disconnected
Test point 1	Air mix control motor 5P connector (female terminals) No. 2: ①
Test point 2	Body ground

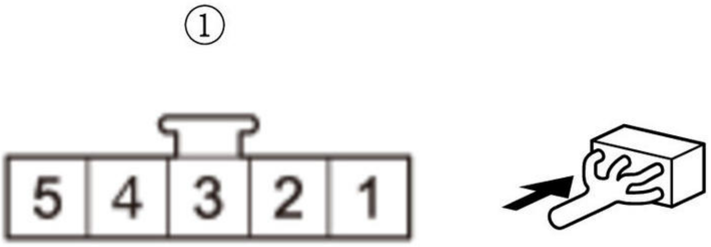

With dual zone control

Test condition	Vehicle ON mode Driver's air mix control motor 5P connector: disconnected
Test point 1	Driver's air mix control motor 5P connector (female terminals) No. 2: ①
Test point 2	Body ground

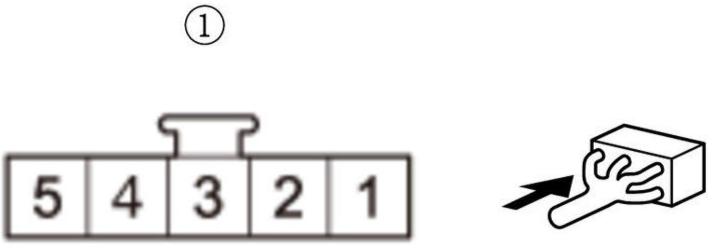

Is there about 5 V?

YES

The AMD-P-DR wire is OK. Go to step 3.

NO

Go to step 4.

3. Open wire check (SENS-COM line)

-1. Measure the voltage between test points 1 and 2.

Without dual zone control

Test condition	Vehicle ON mode Air mix control motor 5P connector: disconnected
Test point 1	Air mix control motor 5P connector (female terminals) No. 2: ①
Test point 2	Air mix control motor 5P connector (female terminals) No. 1: ①

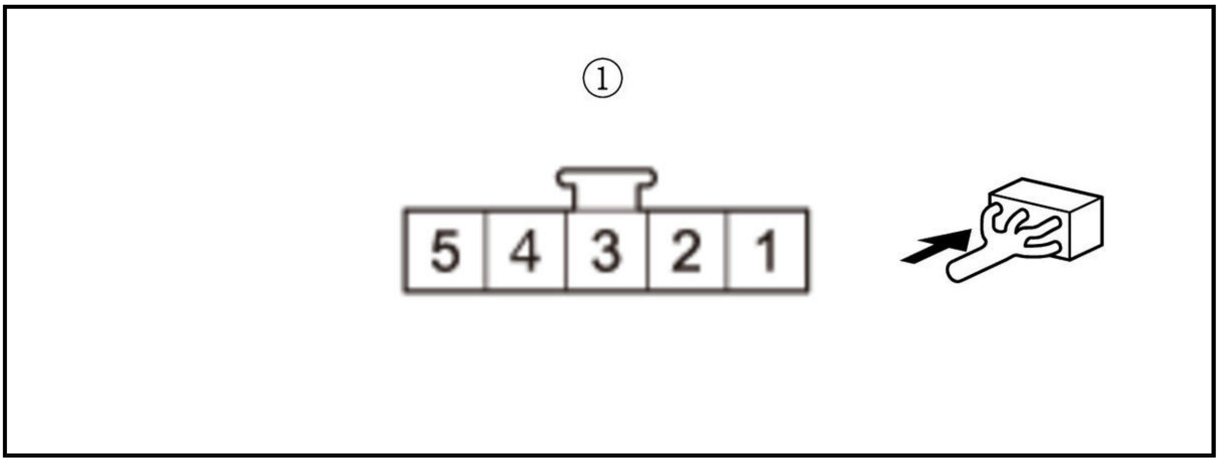

With dual zone control

Test condition	Vehicle ON mode Driver's air mix control motor 5P connector: disconnected
Test point 1	Driver's air mix control motor 5P connector (female terminals) No. 2: ①
Test point 2	Driver's air mix control motor 5P connector (female terminals) No. 3: ①

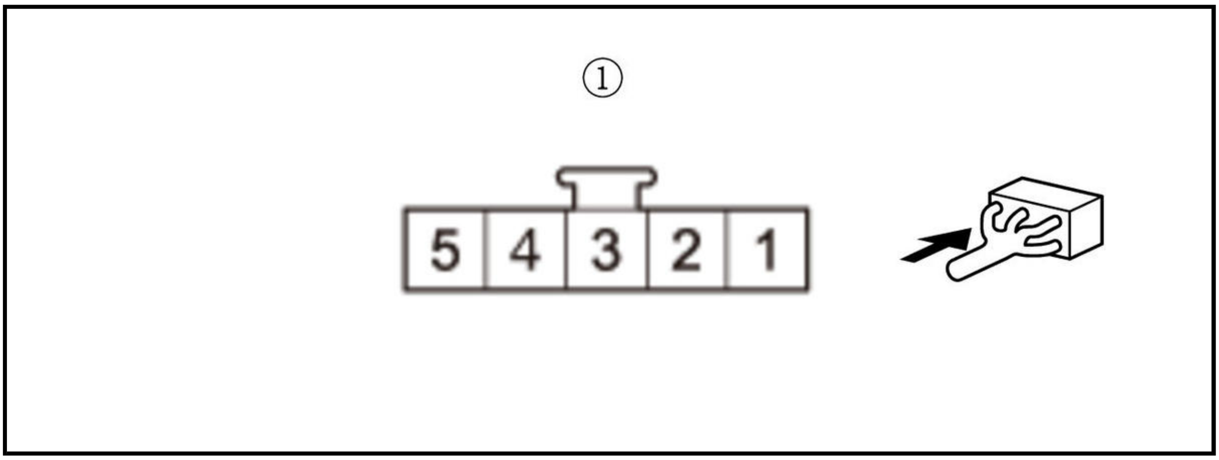

Is there about 5 V?

YES

Replace the air mix control motor (without dual zone control) or driver's air mix control motor (with dual zone control) .

NO

Repair an open in the SENS-COM wire.

4. Open wire check (AMD-P-DR line)

-1. Measure the voltage between test points 1 and 2.

Without dual zone control

Test condition	Vehicle ON mode
	Air mix control motor 5P connector: disconnected
Test point 1	Climate control unit connector B (24P) No. 2
Test point 2	Body ground

With dual zone control

Test condition	Vehicle ON mode
	Driver's air mix control motor 5P connector: disconnected
Test point 1	Climate control unit connector B (24P) No. 2
Test point 2	Body ground

Is there about 5 V?

YES

Repair an open in the AMD-P-DR wire.

NO

Replace the climate control unit .

DTC TROUBLESHOOTING: B1234 (B-A2), B1234 (41)

DTC B1234 or DTC screen B-A2 or DTC indicator 41 : A short in the air mix control motor circuit (driver's)

NOTE: If other short circuit DTCs are indicated at the same time, there may be an open or short to body ground in the power (5 V) circuit.

DTC Description	DTC
B1234 A short in the air mix control motor circuit (driver's)	B

DTCs (AC)

1. Problem verification

-1. Clear the DTCs with the HDS.

-2. Turn the vehicle to the OFF (LOCK) mode and then the ON mode.

-3. Do the Self-Diagnostic Function with the HDS or the climate control unit .

-4. Check for DTCs.

DTC Description	DTC
B1234 A short in the air mix control motor circuit (driver's)	B

Is DTC B1234 or Error on the DTC screen B-A2 (climate control panel without display) or 41 (climate control panel with display) indicated?

YES

Go to step 2.

NO

Intermittent failure. Check for loose wires or poor connections on the air mix control motor circuit.

NO

Intermittent failure. Check for loose wires or poor connections on the driver's air mix control motor circuit.

2. Determine possible failure area (S5V line, others)

-1. Turn the vehicle to the OFF (LOCK) mode.

-2. Disconnect the following connector.

Without dual zone control: Air mix control motor 5P connector
With dual zone control: Driver's air mix control motor 5P connector

-3. Turn the vehicle to the ON mode.

-4. Measure the voltage between test points 1 and 2.

Without dual zone control

Test condition	Vehicle ON mode
	Air mix control motor 5P connector: disconnected
Test point 1	Air mix control motor 5P connector (female terminals) No. 3: ①
Test point 2	Body ground

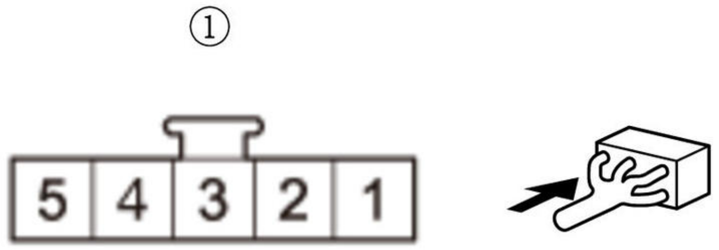

With dual zone control

Test condition	Vehicle ON mode
	Driver's air mix control motor 5P connector: disconnected

Test point 1	Driver's air mix control motor 5P connector (female terminals) No. 1: ①
Test point 2	Body ground

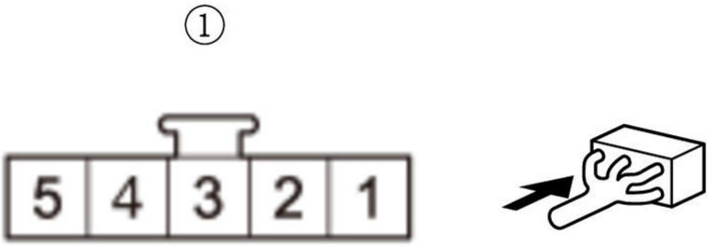

Is there about 5 V?

YES

The S5V wire is OK. Go to step 3.

NO

Go to step 4.

3. Determine possible failure area (air mix control motor (without dual zone control) or driver's air mix control motor (with dual zone control) check, others)

-1. Measure the voltage between test points 1 and 2.

Without dual zone control

Test condition	Vehicle ON mode
	Air mix control motor 5P connector: disconnected
Test point 1	Air mix control motor 5P connector (female terminals) No. 2: ①
Test point 2	Body ground

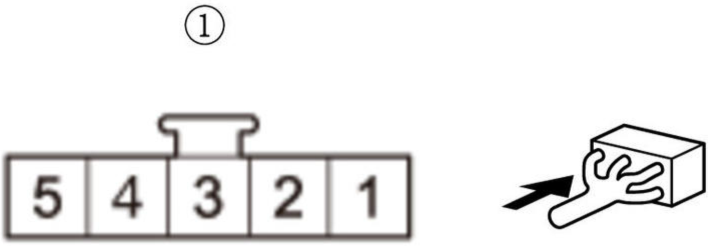

With dual zone control

Test condition	Vehicle ON mode
	Driver's air mix control motor 5P connector: disconnected

Test point 1	Driver's air mix control motor 5P connector (female terminals) No. 2: ①
Test point 2	Body ground

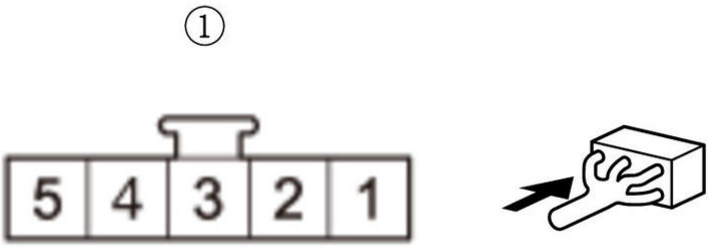

Is there about 5 V?

YES

Replace the air mix control motor (without dual zone control) or driver's air mix control motor (with dual zone control) .

NO

Go to step 6.

4. Open wire check (S5V line)

-1. Measure the voltage between test points 1 and 2.

Without dual zone control

Test condition	Vehicle ON mode
	Air mix control motor 5P connector: disconnected

Test point 1	**Climate control unit connector B (24P) No. 1**
Test point 2	Body ground

With dual zone control

Test condition	Vehicle ON mode
	Driver's air mix control motor 5P connector: disconnected
Test point 1	**Climate control unit connector B (24P) No. 1**
Test point 2	Body ground

Is there about 5 V?

YES

Repair an open in the S5V wire.

NO

The S5V wire is not open. Go to step 5.

5. Shorted wire check (S5V line)

-1. Turn the vehicle to the OFF (LOCK) mode.

-2. Disconnect the following connector.

Climate control unit connector B (24P)

-3. Check for continuity between test points 1 and 2.

Without dual zone control

Test condition	Vehicle OFF (LOCK) mode
	Climate control unit connector B (24P): disconnected
	Air mix control motor 5P connector: disconnected
Test point 1	**Climate control unit connector B (24P) No. 1**
Test point 2	Body ground

With dual zone control

Test condition	Vehicle OFF (LOCK) mode
	Climate control unit connector B (24P): disconnected
	Driver's air mix control motor 5P connector: disconnected
Test point 1	**Climate control unit connector B (24P) No. 1**
Test point 2	Body ground

Is there continuity?

YES

Repair a short to ground in the S5V wire.

NO

Replace the climate control unit .

6. Shorted wire check (AMD-P-DR line)

-1. Turn the vehicle to the OFF (LOCK) mode.

-2. Disconnect the following connector.

Climate control unit connector B (24P)

-3. Check for continuity between test points 1 and 2.

Without dual zone control

Test condition	Vehicle OFF (LOCK) mode
	Climate control unit connector B (24P): disconnected
	Air mix control motor 5P connector: disconnected
Test point 1	**Climate control unit connector B (24P) No. 2**
Test point 2	Body ground

With dual zone control

Test condition	Vehicle OFF (LOCK) mode
	Climate control unit connector B (24P): disconnected

	Driver's air mix control motor 5P connector: disconnected
Test point 1	**Climate control unit connector B (24P) No. 2**
Test point 2	Body ground

Is there continuity?

YES

Repair a short to ground in the AMD-P-DR wire.

NO

Replace the climate control unit .

DTC TROUBLESHOOTING: B1235 (B-A3), B1235 (42)

DTC B1235 or DTC screen B-A3 or DTC indicator 42 : A problem in the air mix control motor circuit, linkage, door, or motor (driver's)

DTC Description	DTC
B1235 A problem in the air mix control motor circuit, linkage, door, or motor (driver's)	B

DTCs (AC)

1. Problem verification

   -1. Clear the DTCs with the HDS.

   -2. Turn the vehicle to the OFF (LOCK) mode and then the ON mode.

   -3. **Do the Self-Diagnostic Function with the HDS or the climate control unit** .

   -4. Check for DTCs.

DTC Description	DTC
B1235 A problem in the air mix control motor circuit, linkage, door, or motor (driver's)	B

   Is DTC B1235 or Error on the DTC screen B-A3 (climate control panel without display) or 42 (climate control panel with display) indicated?

   YES

   Go to step 2.

   NO

   Intermittent failure. Check for loose wires or poor connections on the air mix control motor circuit.

2. Open wire check (M-HOT-DR line)

   -1. Turn the vehicle to the OFF (LOCK) mode.

   -2. Disconnect the following connectors.

Climate control unit connector B (24P)
Without dual zone control: Air mix control motor 5P connector

With dual zone control: Driver's air mix control motor 5P connector

-3. Check for continuity between test points 1 and 2.

Without dual zone control

Test condition	Vehicle OFF (LOCK) mode
	Climate control unit connector B (24P): disconnected
	Air mix control motor 5P connector: disconnected
Test point 1	**Climate control unit connector B (24P) No. 13**
Test point 2	Air mix control motor 5P connector (female terminals) No. 5: ①

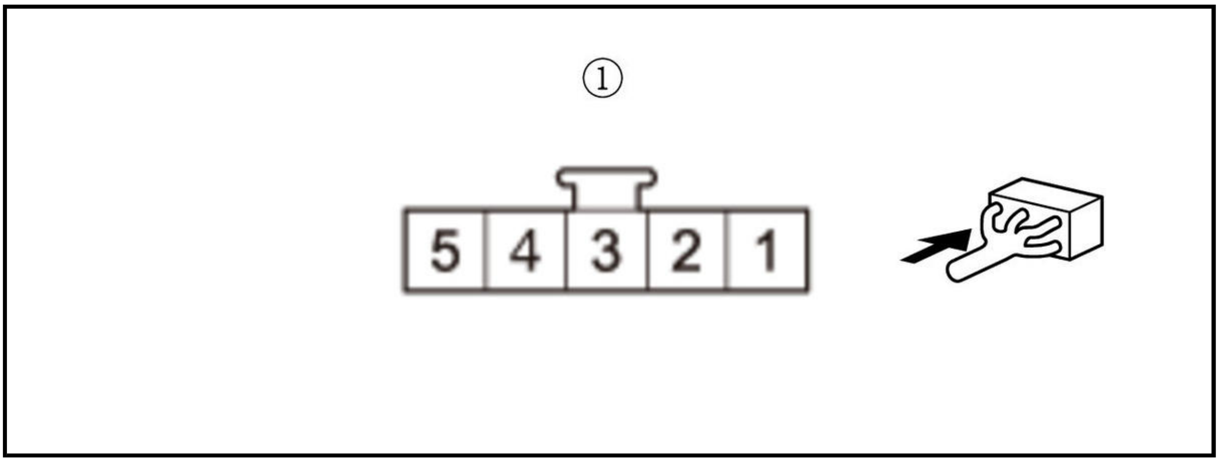

With dual zone control

Test condition	Vehicle OFF (LOCK) mode
	Climate control unit connector B (24P): disconnected
	Driver's air mix control motor 5P connector: disconnected
Test point 1	**Climate control unit connector B (24P) No. 13**
Test point 2	Driver's air mix control motor 5P connector (female terminals) No. 4: ①

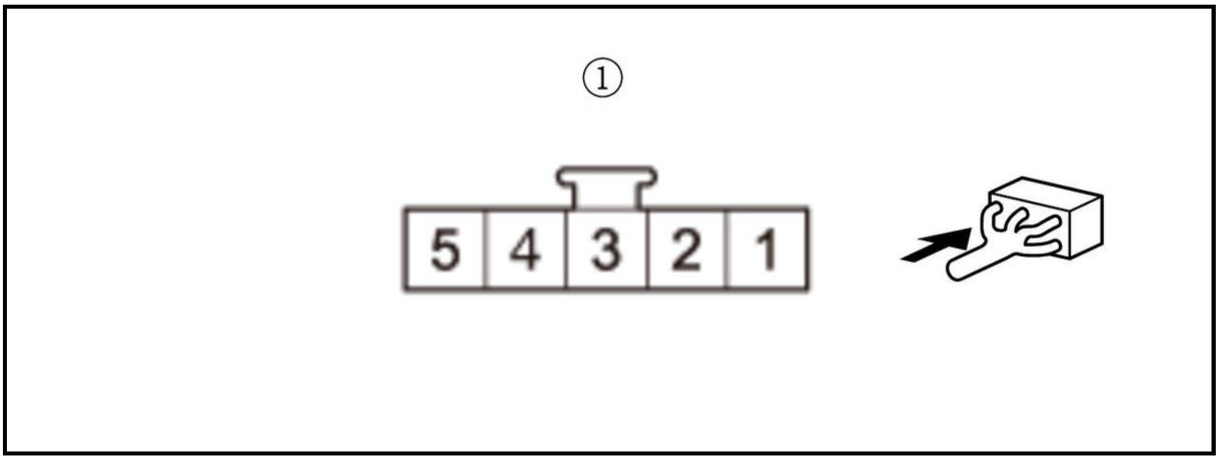

Is there continuity?

YES

The M-HOT-DR wire is not open. Go to step 3.

NO

Repair an open in the M-HOT-DR wire.

3. Open wire check (M-COOL-DR line)

-1. Check for continuity between test points 1 and 2.

Without dual zone control

Test condition	Vehicle OFF (LOCK) mode
	Climate control unit connector B (24P): disconnected
	Air mix control motor 5P connector: disconnected
Test point 1	**Climate control unit connector B (24P) No. 14**
Test point 2	Air mix control motor 5P connector (female terminals) No. 4: ①

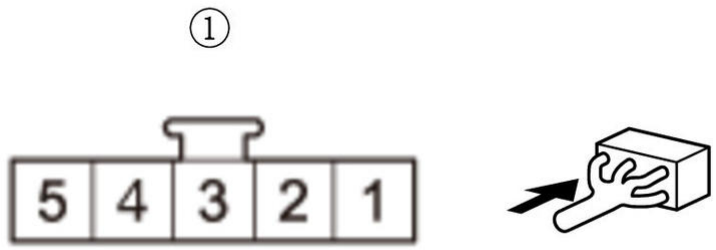

With dual zone control

Test condition	Vehicle OFF (LOCK) mode
	Climate control unit connector B (24P): disconnected
	Driver's air mix control motor 5P connector: disconnected
Test point 1	**Climate control unit connector B (24P) No. 14**
Test point 2	Driver's air mix control motor 5P connector (female terminals) No. 5: ①

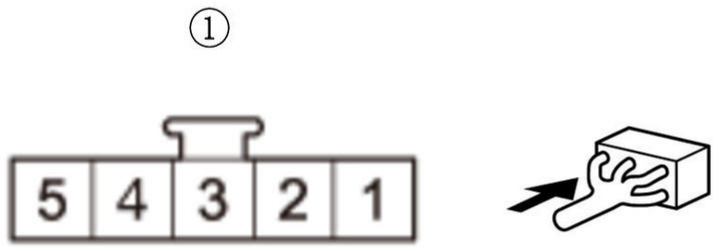

Is there continuity?

YES

The M-COOL-DR wire is not open. Go to step 4.

NO

Repair an open in the M-COOL-DR wire.

4. Shorted wire check (M-HOT-DR line)

-1. Check for continuity between test points 1 and 2.

Without dual zone control

Test condition	Vehicle OFF (LOCK) mode
	Climate control unit connector B (24P): disconnected
	Air mix control motor 5P connector: disconnected
Test point 1	**Climate control unit connector B (24P) No. 13**
Test point 2	Body ground

With dual zone control

Test condition	Vehicle OFF (LOCK) mode
	Climate control unit connector B (24P): disconnected
	Driver's air mix control motor 5P connector: disconnected
Test point 1	**Climate control unit connector B (24P) No. 13**
Test point 2	Body ground

Is there continuity?

YES

Repair a short to ground in the M-HOT-DR wire.

NO

The M-HOT-DR wire is OK. Go to step 5.

5. Shorted wire check (M-COOL-DR line)

-1. Check for continuity between test points 1 and 2.

Without dual zone control

Test condition	Vehicle OFF (LOCK) mode
	Climate control unit connector B (24P): disconnected
	Air mix control motor 5P connector: disconnected
Test point 1	**Climate control unit connector B (24P) No. 14**
Test point 2	Body ground

With dual zone control

Test condition	Vehicle OFF (LOCK) mode
	Climate control unit connector B (24P): disconnected
	Driver's air mix control motor 5P connector: disconnected
Test point 1	**Climate control unit connector B (24P) No. 14**
Test point 2	Body ground

Is there continuity?

YES

Repair a short to ground in the M-COOL-DR wire.

NO

The M-COOL-DR wire is OK. Go to step 6.

6. Air mix control motor (without dual zone control) or driver's air mix control motor (with dual zone control) check

-1. **Test the air mix control motor (without dual zone control) or driver's air mix control motor (with dual zone control)** .

Is the air mix control motor (without dual zone control) or driver's air mix control motor (with dual zone control) OK?

YES

Replace the climate control unit .

NO

Replace the air mix control motor , or repair the air mix control linkage or door.

NO

Replace the driver's air mix control motor , or repair the driver's air mix control linkage or door.

DTC TROUBLESHOOTING: B1236 (B-A4)

DTC B1236 or DTC screen B-A4 : An open in the passenger's air mix control motor circuit

DTC Description	DTC
B1236 An open in the passenger's air mix control motor circuit	B

DTCs (AC)

1. Problem verification

-1. Clear the DTCs with the HDS.

-2. Turn the vehicle to the OFF (LOCK) mode and then the ON mode.

-3. **Do the Self-Diagnostic Function with the HDS or the climate control unit** .

-4. Check for DTCs.

DTC Description	DTC
B1236 An open in the passenger's air mix control motor circuit	B

Is DTC B1236 or Error on the DTC screen B-A4 indicated?

YES

Go to step 2.

NO

Intermittent failure. Check for loose wires or poor connections on the passenger's air mix control motor circuit.

2. Determine possible failure area (AMD-P-AS line, others)

-1. Turn the vehicle to the OFF (LOCK) mode.

-2. Disconnect the following connector.

Passenger's air mix control motor 5P connector

-3. Turn the vehicle to the ON mode.

-4. Measure the voltage between test points 1 and 2.

Test condition	Vehicle ON mode
	Passenger's air mix control motor 5P connector: disconnected
Test point 1	Passenger's air mix control motor 5P connector (female terminals) No. 2: ①
Test point 2	Body ground

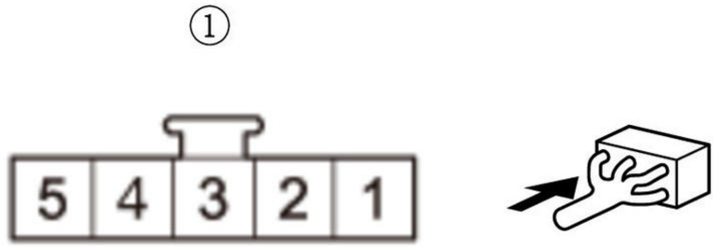

Is there about 5 V?

YES

The AMD-P-AS wire is OK. Go to step 3.

NO

Go to step 4.

3. Open wire check (SENS-COM line)

-1. Measure the voltage between test points 1 and 2.

Test condition	Vehicle ON mode
	Passenger's air mix control motor 5P connector: disconnected
Test point 1	Passenger's air mix control motor 5P connector (female terminals) No. 2: ①
Test point 2	Passenger's air mix control motor 5P connector (female terminals) No. 1: ①

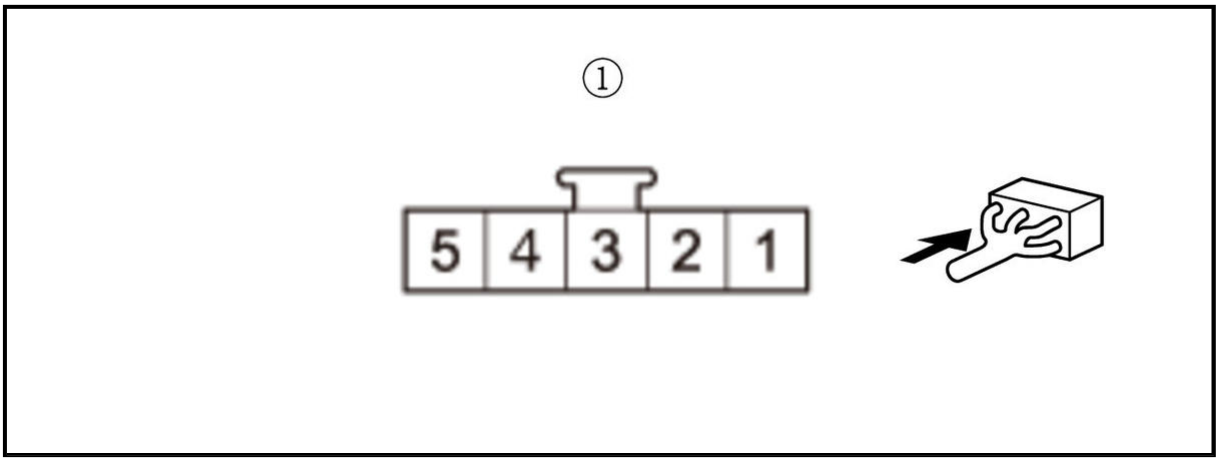

Is there about 5 V?

YES

Replace the passenger's air mix control motor .

NO

Repair an open in the SENS-COM wire.

4. Open wire check (AMD-P-AS line)

   -1. Measure the voltage between test points 1 and 2.

Test condition	Vehicle ON mode Passenger's air mix control motor 5P connector: disconnected
Test point 1	**Climate control unit connector B (24P) No. 3**
Test point 2	Body ground

Is there about 5 V?

YES

Repair an open in the AMD-P-AS wire.

NO

Replace the climate control unit .

DTC TROUBLESHOOTING: B1237 (B-A5)

DTC B1237 or DTC screen B-A5 : A short in the passenger's air mix control motor circuit

NOTE: If other short circuit DTCs are indicated at the same time, there may be an open or short to body ground in the power (5 V) circuit.

DTC Description	DTC
B1237 A short in the passenger's air mix control motor circuit	B

DTCs (AC)

1. Problem verification

   -1. Clear the DTCs with the HDS.

   -2. Turn the vehicle to the OFF (LOCK) mode and then the ON mode.

-3. Do the Self-Diagnostic Function with the HDS or the climate control unit .

-4. Check for DTCs.

DTC Description	DTC
B1237 A short in the passenger's air mix control motor circuit	B

Is DTC B1237 or Error on the DTC screen B-A5 indicated?

YES

Go to step 2.

NO

Intermittent failure. Check for loose wires or poor connections on the passenger's air mix control motor circuit.

2. Determine possible failure area (S5V line, others)

-1. Turn the vehicle to the OFF (LOCK) mode.

-2. Disconnect the following connector.

Passenger's air mix control motor 5P connector

-3. Turn the vehicle to the ON mode.

-4. Measure the voltage between test points 1 and 2.

Test condition	Vehicle ON mode Passenger's air mix control motor 5P connector: disconnected
Test point 1	Passenger's air mix control motor 5P connector (female terminals) No. 3: ①
Test point 2	Body ground

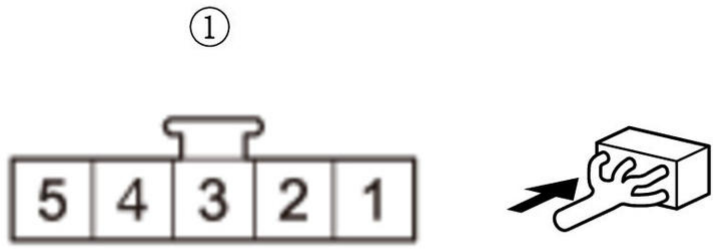

Is there about 5 V?

YES

The S5V wire is OK. Go to step 3.

NO

Go to step 4.

3. Determine possible failure area (passenger's air mix control motor, others)

-1. Measure the voltage between test points 1 and 2.

Test condition	Vehicle ON mode Passenger's air mix control motor 5P connector: disconnected
Test point 1	Passenger's air mix control motor 5P connector (female terminals) No. 2: ①
Test point 2	Body ground

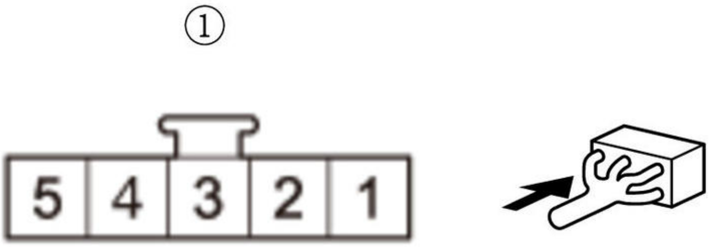

Is there about 5 V?

YES

Replace the passenger's air mix control motor .

NO

Go to step 6.

4. Open wire check (S5V line)

-1. Measure the voltage between test points 1 and 2.

Test condition	Vehicle ON mode Passenger's air mix control motor 5P connector: disconnected
Test point 1	**Climate control unit connector B (24P) No. 1**
Test point 2	Body ground

Is there about 5 V?

YES

Repair an open in the S5V wire.

NO

The S5V wire is not open. Go to step 5.

5. Shorted wire check (S5V line)

-1. Turn the vehicle to the OFF (LOCK) mode.

-2. Disconnect the following connector.

Climate control unit connector B (24P)

-3. Check for continuity between test points 1 and 2.

Test condition	Vehicle OFF (LOCK) mode
	Climate control unit connector B (24P): disconnected
	Passenger's air mix control motor 5P connector: disconnected
Test point 1	**Climate control unit connector B (24P) No. 1**
Test point 2	Body ground

Is there continuity?

YES

Repair a short to ground in the S5V wire.

NO

Replace the climate control unit .

6. Shorted wire check (AMD-P-AS line)

-1. Turn the vehicle to the OFF (LOCK) mode.

-2. Disconnect the following connector.

Climate control unit connector B (24P)

-3. Check for continuity between test points 1 and 2.

Test condition	Vehicle OFF (LOCK) mode
	Climate control unit connector B (24P): disconnected
	Passenger's air mix control motor 5P connector: disconnected
Test point 1	**Climate control unit connector B (24P) No. 3**
Test point 2	Body ground

Is there continuity?

YES

Repair a short to ground in the AMD-P-AS wire.

NO

Replace the climate control unit .

DTC TROUBLESHOOTING: B1238 (B-A6)

DTC B1238 or DTC screen B-A6 : A problem in the passenger's air mix control motor circuit, linkage, door, or motor

DTC Description	DTC
B1238 A problem in the passenger's air mix control motor circuit, linkage, door, or motor	B

DTCs (AC)

1. Problem verification

-1. Clear the DTCs with the HDS.

-2. Turn the vehicle to the OFF (LOCK) mode and then the ON mode.

-3. **Do the Self-Diagnostic Function with the HDS or the climate control unit** .

-4. Check for DTCs.

DTC Description	DTC
B1238 A problem in the passenger's air mix control motor circuit, linkage, door, or motor	B

Is DTC B1238 or Error on the DTC screen B-A6 indicated?

YES

Go to step 2.

NO

Intermittent failure. Check for loose wires or poor connections on the passenger's air mix control motor circuit.

2. Open wire check (M-HOT-AS line)

-1. Turn the vehicle to the OFF (LOCK) mode.

-2. Disconnect the following connectors.

Climate control unit connector B (24P)
Passenger's air mix control motor 5P connector

-3. Check for continuity between test points 1 and 2.

Test condition	Vehicle OFF (LOCK) mode
	Climate control unit connector B (24P): disconnected
	Passenger's air mix control motor 5P connector: disconnected
Test point 1	**Climate control unit connector B (24P) No. 15**
Test point 2	Passenger's air mix control motor 5P connector (female terminals) No. 5: ①

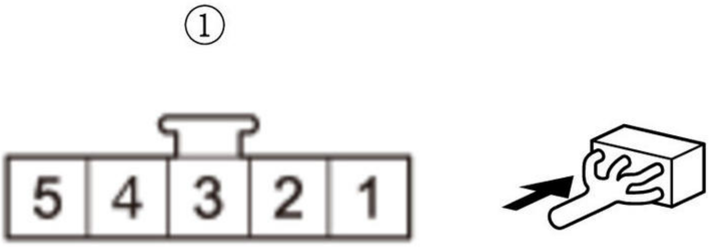

Is there continuity?

YES

The M-HOT-AS wire is not open. Go to step 3.

NO

Repair an open in the M-HOT-AS wire.

3. Open wire check (M-COOL-AS line)

-1. Check for continuity between test points 1 and 2.

Test condition	Vehicle OFF (LOCK) mode Climate control unit connector B (24P): disconnected Passenger's air mix control motor 5P connector: disconnected
Test point 1	**Climate control unit connector B (24P) No. 16**
Test point 2	Passenger's air mix control motor 5P connector (female terminals) No. 4: ①

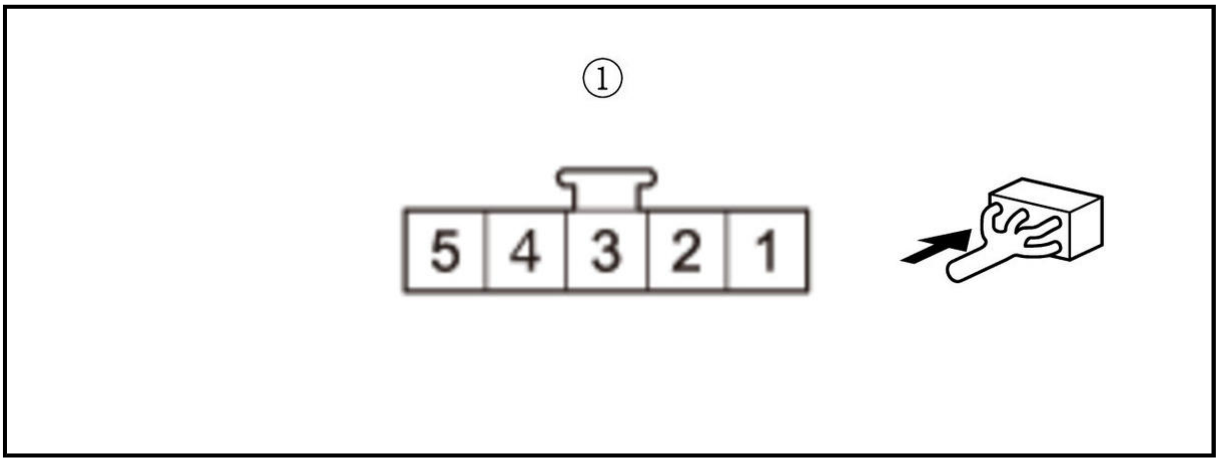

Is there continuity?

YES

The M-COOL-AS wire is not open. Go to step 4.

NO

Repair an open in the M-COOL-AS wire.

4. Shorted wire check (M-HOT-AS line)

-1. Check for continuity between test points 1 and 2.

Test condition	Vehicle OFF (LOCK) mode Climate control unit connector B (24P): disconnected Passenger's air mix control motor 5P connector: disconnected
Test point 1	**Climate control unit connector B (24P) No. 15**
Test point 2	Body ground

Is there continuity?

YES

Repair a short to ground in the M-HOT-AS wire.

NO

The M-HOT-AS wire is OK. Go to step 5.

5. Shorted wire check (M-COOL-AS line)

-1. Check for continuity between test points 1 and 2.

Test condition	Vehicle OFF (LOCK) mode
	Climate control unit connector B (24P): disconnected
	Passenger's air mix control motor 5P connector: disconnected
Test point 1	Climate control unit connector B (24P) No. 16
Test point 2	Body ground

Is there continuity?

YES

Repair a short to ground in the M-COOL-AS wire.

NO

The M-COOL-AS wire is OK. Go to step 6.

6. Passenger's air mix control motor check

-1. Test the passenger's air mix control motor check .

Is the passenger's air mix control motor OK?

YES

Replace the climate control unit .

NO

Replace the passenger's air mix control motor , or repair the passenger's air mix control linkage or door.

DTC TROUBLESHOOTING: B123F (A-A3), B123F (17) (2017 2018 2019)

DTC B123F or DTC screen A-A3 or DTC indicator 17 : Automatic lighting control unit/sunlight sensor error

DTC Description	DTC
B123F Automatic lighting control unit/sunlight sensor error	B

DTCs (AC)

1. Problem verification

-1. Clear the DTCs with the HDS.

-2. Turn the vehicle to the OFF (LOCK) mode and then the ON mode.

-3. Do the Self-Diagnostic Function with the HDS or the climate control unit .

-4. Check for DTCs.

DTC Description	DTC
B123F Automatic lighting control unit/sunlight sensor error	B

Is DTC B123F or Error on the DTC screen A-A3 (climate control panel without display) or 17 (climate control panel with display) indicated?

YES

Go to step 2.

NO

Intermittent failure, the system is OK at this time.

2. Equipment check 1

   -1. Turn the vehicle to the OFF (LOCK) mode.

   -2. Confirm the vehicle have an automatic lighting system.

   Does the combination light switch have an AUTO position?

   YES

   Go to step 3.

   NO

   Go to step 4.

3. Equipment check 2

   -1. Confirm the vehicle have an automatic wiper system.

   Does the wiper/washer switch have an AUTO position?

   YES

   Go to step 4.

   NO

   Go to step 9.

4. Open wire check (TSUN line)

   -1. Disconnect the following connectors.

Climate control unit connector A (32P)
Sunlight sensor 2P connector

-2. Check for continuity between test points 1 and 2.

Test condition	Vehicle OFF (LOCK) mode
	Climate control unit connector A (32P): disconnected
	Sunlight sensor 2P connector: disconnected
Test point 1	**Climate control unit connector A (32P) No. 10**
Test point 2	Sunlight sensor 2P connector (female terminals) No. 2: ①

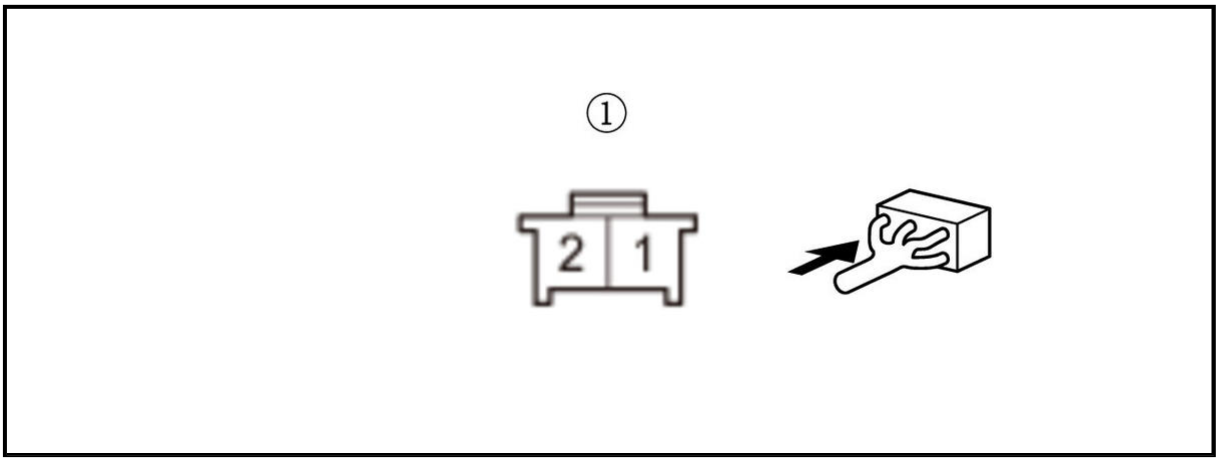

Is there continuity?

YES

The TSUN wire is not open. Go to step 5.

NO

Repair an open in the TSUN wire.

5. Open wire check (SENSOR COM line)

-1. Check for continuity between test points 1 and 2.

Test condition	Vehicle OFF (LOCK) mode
	Climate control unit connector A (32P): disconnected
	Sunlight sensor 2P connector: disconnected
Test point 1	**Climate control unit connector A (32P) No. 12**
Test point 2	Sunlight sensor 2P connector (female terminals) No. 1: ①

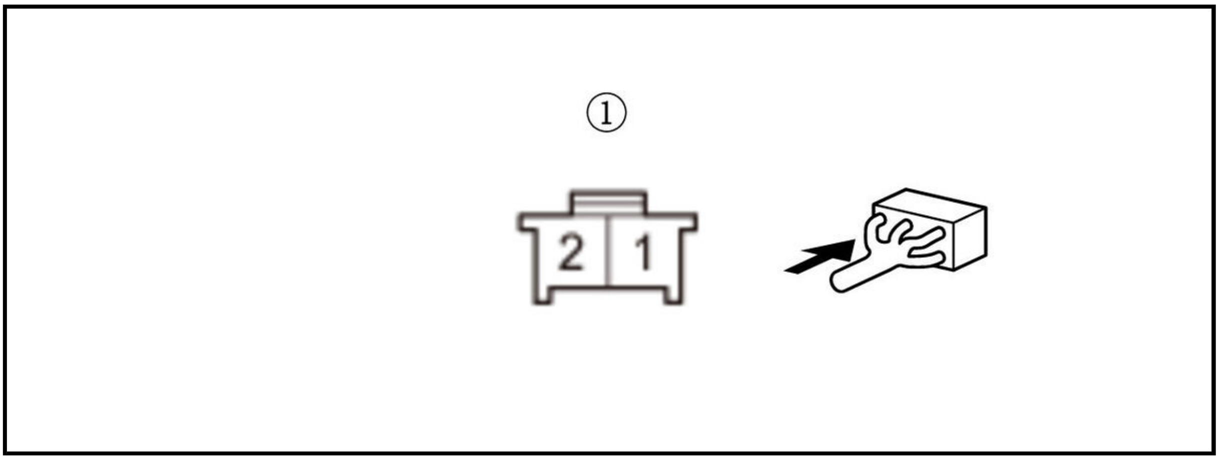

Is there continuity?

YES

The SENSOR COM wire is OK. Go to step 6.

NO

Repair an open in the SENSOR COM wire.

6. Shorted wire check (TSUN line)

-1. Check for continuity between test points 1 and 2.

Test condition	Vehicle OFF (LOCK) mode
	Climate control unit connector A (32P): disconnected
	Sunlight sensor 2P connector: disconnected
Test point 1	**Climate control unit connector A (32P) No. 10**
Test point 2	Body ground

Is there continuity?

YES

Repair a short to ground in the TSUN wire.

NO

The TSUN wire is not shorted. Go to step 7.

7. Shorted wire check (TSUN line to SENSOR COM line)

-1. Check for continuity between test points 1 and 2.

Test condition	Vehicle OFF (LOCK) mode
	Climate control unit connector A (32P): disconnected
	Sunlight sensor 2P connector: disconnected
Test point 1	**Climate control unit connector A (32P) No. 10**
Test point 2	**Climate control unit connector A (32P) No. 12**

Is there continuity?

YES

Repair a short in the TSUN wire to SENSOR COM wire.

NO

The TSUN wire and SENSOR COM wire are OK. Go to step 8.

8. Sunlight sensor check

-1. Reconnect the following connectors.

Climate control unit connector A (32P)
Sunlight sensor 2P connector

-2. **Test the sunlight sensor** .

Is the sunlight sensor OK?

YES

Replace the climate control unit .

NO

Replace the sunlight sensor .

9. Fuse check:

NOTE: **Check for DTCs. If a DTC U1280 or Error on the DTC screen I-A1 (climate control panel without display) or 80 (climate control panel with display) indicated, troubleshoot the DTC first.**

-1. Check the following fuse.

Fuse	No. A18 (10 A)
Location	Under-hood fuse/relay box

Is the fuse OK?

YES

Go to step 10.

NO

Replace the fuse, and recheck. If the fuse blows again, repair a short in the No. A18 (10 A) fuse circuit.

10. Determine possible failure area (B-CAN lines, others)

-1. Disconnect the following connector.

Automatic lighting control unit-sensor 5P connector

-2. Measure the voltage between test points 1 and 2.

Test condition	Vehicle OFF (LOCK) mode
	Automatic lighting control unit-sensor 5P connector: disconnected
Test point 1	Automatic lighting control unit-sensor 5P connector No. 3
Test point 2	Automatic lighting control unit-sensor 5P connector No. 4

Is there battery voltage?

YES

Go to step 11.

NO

Go to step 14.

11. Open wire check (B-CAN_H line)

-1. Disconnect the following connector.

Climate control unit connector A (32P)

-2. Check for continuity between test points 1 and 2.

Test condition	Vehicle OFF (LOCK) mode
	Automatic lighting control unit-sensor 5P connector: disconnected
	Climate control unit connector A (32P): disconnected
Test point 1	Automatic lighting control unit-sensor 5P connector No. 1
Test point 2	Climate control unit connector A (32P) No. 25

Is there continuity?

YES

The B-CAN_H wire is OK. Go to step 12.

NO

Repair an open in the B-CAN_H wire.

12. Open wire check (B-CAN_L line)

-1. Check for continuity between test points 1 and 2.

Test condition	Vehicle OFF (LOCK) mode
	Automatic lighting control unit-sensor 5P connector: disconnected
	Climate control unit connector A (32P): disconnected
Test point 1	**Automatic lighting control unit-sensor 5P connector No. 2**
Test point 2	**Climate control unit connector A (32P) No. 8**

Is there continuity?

YES

The B-CAN_L wire is OK. Go to step 13.

NO

Repair an open in the B-CAN_L wire.

13. DTC check

-1. Reconnect the following connectors.

Automatic lighting control unit-sensor 5P connector
Climate control unit connector A (32P)

-2. Clear the DTC with the HDS.

-3. Turn the vehicle to the OFF (LOCK) mode then the ON mode.

-4. Wait for at least 8 seconds.

-5. **Do the Self-Diagnostic Function with the climate control unit** .

-6. Check for DTCs.

DTC Description	DTC
B123F Automatic lighting control unit/sunlight sensor error	B
U128D Climate Control Unit Lost communication with gauge control module	B

Is DTC B123F or Error on the DTC screen A-A3 (climate control panel without display) or 17 (climate control panel with display) and DTC U128D or Error on the DTC screen I-A2 (climate control panel without display) or 83 (climate control panel with display) indicated?

YES

Replace the climate control unit .

NO

Replace the automatic lighting control unit-sensor .

14. Open wire check (+B BACK UP line)

-1. Measure the voltage between test points 1 and 2.

Test condition	Vehicle OFF (LOCK) mode
	Automatic lighting control unit-sensor 5P connector: disconnected
Test point 1	**Automatic lighting control unit-sensor 5P connector No. 4**
Test point 2	Body ground

Is there battery voltage?

YES

Check for an open in the GND wire. If the wire is OK, check for poor ground at G402.

NO

Repair an open in the +B BACK UP wire.

DTC TROUBLESHOOTING: B123F (A-A3), B123F (17) (2020 2021)

DTC B123F or DTC screen A-A3 or DTC indicator 17 : Automatic lighting control unit/sunlight sensor error

*1: Without auto idle stop system

*2: With auto idle stop system

DTC Description	DTC
B123F Automatic lighting control unit/sunlight sensor error	B

DTCs (AC)

1. Problem verification

-1. Clear the DTCs with the HDS.

-2. Turn the vehicle to the OFF (LOCK) mode and then the ON mode.

-3. **Do the Self-Diagnostic Function with the HDS or the climate control unit** .

-4. Check for DTCs.

DTC Description	DTC
B123F Automatic lighting control unit/sunlight sensor error	B

Is DTC B123F or Error on the DTC screen A-A3 (climate control panel without display) or 17 (climate control panel with display) indicated?

YES *1

Go to step 3

YES *2

Go to step 2

NO

Intermittent failure, the system is OK at this time.

2. Fuse check

-1. Check the following fuse.

Fuse	No. B27 (30 A)
Location	Fuse/relay holder A

Is the fuse OK?

YES

Go to step 3.

NO

Replace the fuse, and recheck. If the fuse blows again, repair a short in the No. B27 (30 A) fuse circuit.

3. Equipment check 1

-1. Turn the vehicle to the OFF (LOCK) mode.

-2. Confirm the vehicle have an automatic lighting system.

Does the combination light switch have an AUTO position?

YES

Go to step 4.

NO

Go to step 5.

4. Equipment check 2

-1. Confirm the vehicle have an automatic wiper system.

Does the wiper/washer switch have an AUTO position?

YES

Go to step 5.

NO

Go to step 10.

5. Open wire check (TSUN line)

-1. Disconnect the following connectors.

Climate control unit connector A (32P)
Sunlight sensor 2P connector

-2. Measure the resistance between test points 1 and 2.

Test condition	Vehicle OFF (LOCK) mode
	Climate control unit connector A (32P): disconnected
	Sunlight sensor 2P connector: disconnected
Test point 1	**Climate control unit connector A (32P) No. 10**
Test point 2	Sunlight sensor 2P connector (female terminals) No. 2: ①

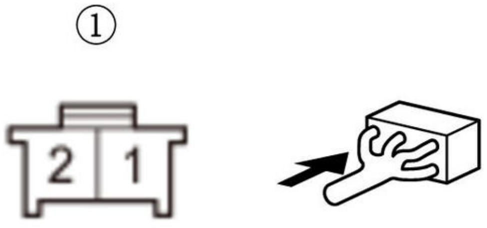

Is there 1.0 Ω or less?

YES

The TSUN wire is not open. Go to step 6.

NO

Repair an open in the TSUN wire.

6. Open wire check (SENSOR COM line)

-1. Measure the resistance between test points 1 and 2.

Test condition	Vehicle OFF (LOCK) mode
	Climate control unit connector A (32P): disconnected
	Sunlight sensor 2P connector: disconnected
Test point 1	**Climate control unit connector A (32P) No. 12**
Test point 2	Sunlight sensor 2P connector (female terminals) No. 1: ①

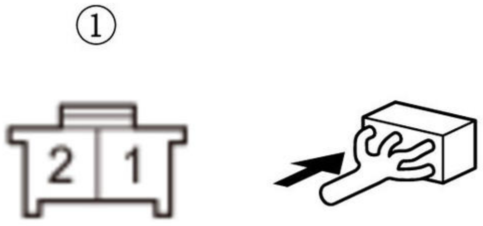

Is there 1.0 Ω or less?

YES

The SENSOR COM wire is OK. Go to step 7.

NO

Repair an open in the SENSOR COM wire.

7. Shorted wire check (TSUN line)

-1. Measure the resistance between test points 1 and 2.

Test condition	Vehicle OFF (LOCK) mode
	Climate control unit connector A (32P): disconnected
	Sunlight sensor 2P connector: disconnected
Test point 1	**Climate control unit connector A (32P) No. 10**
Test point 2	Body ground

Is there 1 MΩ or more?

YES

The TSUN wire is not shorted. Go to step 8.

NO

Repair a short to ground in the TSUN wire.

8. Shorted wire check (TSUN line to SENSOR COM line)

-1. Measure the resistance between test points 1 and 2.

Test condition	Vehicle OFF (LOCK) mode
	Climate control unit connector A (32P): disconnected
	Sunlight sensor 2P connector: disconnected
Test point 1	**Climate control unit connector A (32P) No. 10**
Test point 2	**Climate control unit connector A (32P) No. 12**

Is there 1 MΩ or more?

YES

The TSUN wire and SENSOR COM wire are OK. Go to step 9.

NO

Repair a short in the TSUN wire to SENSOR COM wire.

9. Sunlight sensor check

-1. Reconnect the following connectors.

Climate control unit connector A (32P)
Sunlight sensor 2P connector

-2. **Test the sunlight sensor** .

Is the sunlight sensor OK?

YES

Replace the climate control unit .

NO

Replace the sunlight sensor .

10. Fuse check:

NOTE: **Check for DTCs. If a DTC U1280 or Error on the DTC screen I-A1 (climate control panel without display) or 80 (climate control panel with display) indicated, troubleshoot the DTC first.**

-1. Check the following fuse.

Fuse	No. A18 (10 A)
Location	Under-hood fuse/relay box

Is the fuse OK?

YES

Go to step 11.

NO

Replace the fuse, and recheck. If the fuse blows again, repair a short in the No. A18 (10 A) fuse circuit.

11. Determine possible failure area (B-CAN lines, others)

-1. Disconnect the following connector.

Automatic lighting control unit-sensor 5P connector

-2. Measure the voltage between test points 1 and 2.

Test condition	Vehicle OFF (LOCK) mode
	Automatic lighting control unit-sensor 5P connector: disconnected
Test point 1	**Automatic lighting control unit-sensor 5P connector No. 3**
Test point 2	**Automatic lighting control unit-sensor 5P connector No. 4**

Is there battery voltage?

YES

Go to step 12.

NO

Go to step 15.

12. Open wire check (B-CAN_H line)

-1. Disconnect the following connector.

Climate control unit connector A (32P)

-2. Measure the resistance between test points 1 and 2.

Test condition	Vehicle OFF (LOCK) mode

	Automatic lighting control unit-sensor 5P connector: disconnected
	Climate control unit connector A (32P): disconnected
Test point 1	**Automatic lighting control unit-sensor 5P connector No. 1**
Test point 2	**Climate control unit connector A (32P) No. 25**

Is there 1.0 Ω or less?

YES

The B-CAN_H wire is OK. Go to step 13.

NO

Repair an open in the B-CAN_H wire.

13. Open wire check (B-CAN_L line)

-1. Measure the resistance between test points 1 and 2.

Test condition	Vehicle OFF (LOCK) mode
	Automatic lighting control unit-sensor 5P connector: disconnected
	Climate control unit connector A (32P): disconnected
Test point 1	**Automatic lighting control unit-sensor 5P connector No. 2**
Test point 2	**Climate control unit connector A (32P) No. 8**

Is there 1.0 Ω or less?

YES

The B-CAN_L wire is OK. Go to step 14.

NO

Repair an open in the B-CAN_L wire.

14. DTC check

-1. Reconnect the following connectors.

Automatic lighting control unit-sensor 5P connector

Climate control unit connector A (32P)

-2. Clear the DTC with the HDS.

-3. Turn the vehicle to the OFF (LOCK) mode then the ON mode.

-4. Wait for at least 8 seconds.

-5. **Do the Self-Diagnostic Function with the climate control unit** .

-6. Check for DTCs.

DTC Description	DTC
B123F Automatic lighting control unit/sunlight sensor error	B
U128D Climate Control Unit Lost communication with gauge control module	B

Is DTC B123F or Error on the DTC screen A-A3 (climate control panel without display) or 17 (climate control panel with display) and DTC U128D or Error on the DTC screen I-A2 (climate control panel without display) or 83 (climate control panel with display) indicated?

YES

Replace the climate control unit .

NO

Replace the automatic lighting control unit-sensor .

15. Open wire check (+B BACK UP *1, +B BACKUP2 SUB *2 line):-1.

    Measure the voltage between test points 1 and 2.

Test condition	Vehicle OFF (LOCK) mode Automatic lighting control unit-sensor 5P connector: disconnected
Test point 1	**Automatic lighting control unit-sensor 5P connector No. 4**
Test point 2	Body ground

    Is there battery voltage?

    YES

    Check for an open in the GND wire between the automatic lighting control unit-sensor and body ground. If the wire is OK, check for poor ground at G402.

    NO

    Repair an open in the +B BACK UP *1, +B BACKUP2 SUB *2 wire.

DTC TROUBLESHOOTING: B1240 (B-B3), B1240 (4B)

DTC B1240 or DTC screen B-B3 or DTC indicator 4b : A problem in the mode control motor circuit, linkage, door, or motor

DTC Description	DTC
B1240 A problem in the mode control motor circuit, linkage, door, or motor	B

DTCs (AC)

1. Problem verification

   -1. Clear the DTCs with the HDS.

   -2. Turn the vehicle to the OFF (LOCK) mode and then the ON mode.

   -3. **Do the Self-Diagnostic Function with the HDS or the climate control unit** .

   -4. Check for DTCs.

DTC Description	DTC
B1240 A problem in the mode control motor circuit, linkage, door, or motor	B

   Is DTC B1240 or Error on the DTC screen B-B3 (climate control panel without display) or 4b (climate control panel with display) indicated?

   YES

Go to step 2.

NO

Intermittent failure. Check for loose wires or poor connections on the mode control motor circuit.

2. Open wire check (M-DEF line)

-1. Turn the vehicle to the OFF (LOCK) mode.

-2. Disconnect the following connectors.

Climate control unit connector B (24P)
Mode control motor 5P connector

-3. Check for continuity between test points 1 and 2.

Test condition	Vehicle OFF (LOCK) mode
	Climate control unit connector B (24P): disconnected
	Mode control motor 5P connector: disconnected
Test point 1	**Climate control unit connector B (24P) No. 20**
Test point 2	Mode control motor 5P connector (female terminals) No. 5: ①

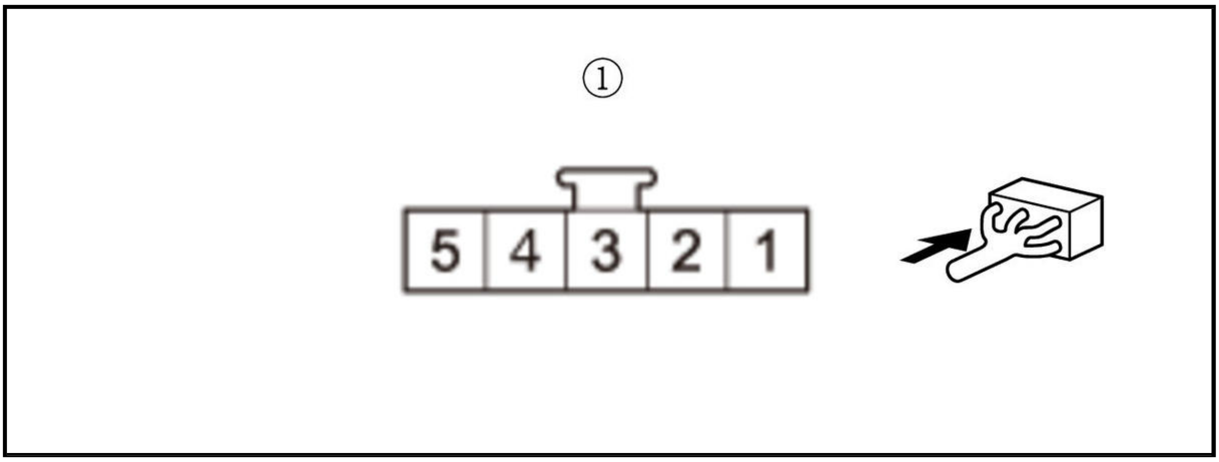

Is there continuity?

YES

The M-DEF wire is not open. Go to step 3.

NO

Repair an open in the M-DEF wire.

3. Open wire check (M-VENT line)

-1. Check for continuity between test points 1 and 2.

Test condition	Vehicle OFF (LOCK) mode
	Climate control unit connector B (24P): disconnected
	Mode control motor 5P connector: disconnected
Test point 1	**Climate control unit connector B (24P) No. 19**
Test point 2	Mode control motor 5P connector (female terminals) No. 4: ①

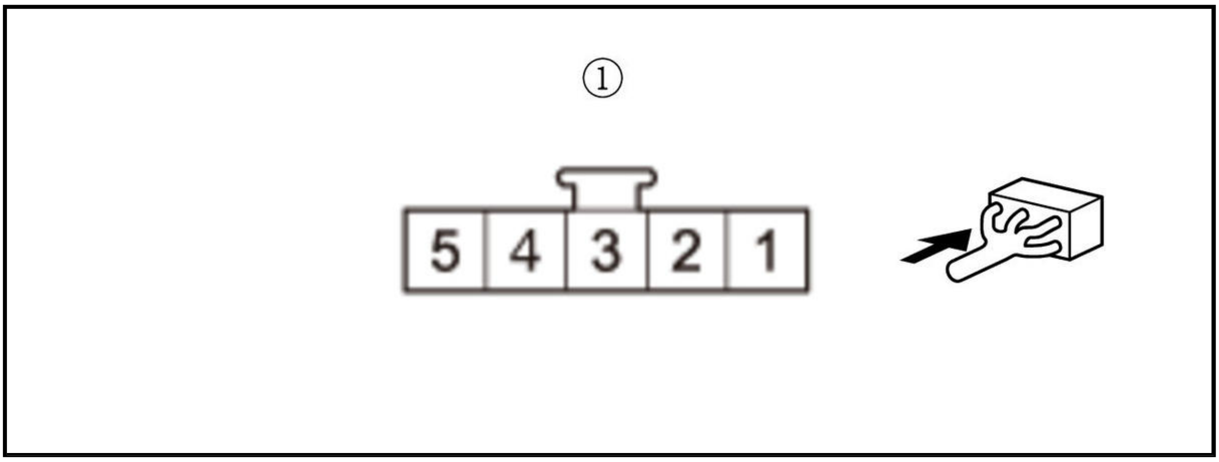

Is there continuity?

YES

The M-VENT wire is not open. Go to step 4.

NO

Repair an open in the M-VENT wire.

4. Shorted wire check (M-DEF line)

-1. Check for continuity between test points 1 and 2.

Test condition	Vehicle OFF (LOCK) mode
	Climate control unit connector B (24P): disconnected
	Mode control motor 5P connector: disconnected
Test point 1	**Climate control unit connector B (24P) No. 20**
Test point 2	Body ground

Is there continuity?

YES

Repair a short to ground in the M-DEF wire.

NO

The M-DEF wire is OK. Go to step 5.

5. Shorted wire check (M-VENT line)

-1. Check for continuity between test points 1 and 2.

Test condition	Vehicle OFF (LOCK) mode
	Climate control unit connector B (24P): disconnected
	Mode control motor 5P connector: disconnected
Test point 1	**Climate control unit connector B (24P) No. 19**
Test point 2	Body ground

Is there continuity?

YES

Repair a short to ground in the M-VENT wire.

NO

The M-VENT wire is OK. Go to step 6.

6. Mode control motor check

-1. Test the mode control motor .

Is the mode control motor OK?

YES

Replace the climate control unit .

NO

Replace the mode control motor , or repair the mode control linkage or door.

DTC TROUBLESHOOTING: B1241 (D-A1), B1241 (59)

DTC B1241 or DTC screen D-A1 or DTC indicator 59 : A problem in the blower motor circuit

DTC Description	DTC
B1241 A problem in the blower motor circuit	B

DTCs (AC)

1. Problem verification

-1. Clear the DTC with the HDS.

-2. Turn the vehicle to the OFF (LOCK) mode and then the ON mode.

-3. Do the Self-Diagnostic Function with the HDS or the climate control unit .

-4. Check for DTCs.

DTC Description	DTC
B1241 A problem in the blower motor circuit	B

Is DTC B1241 or Error on the DTC screen D-A1 (climate control panel without display) or 59 (climate control panel with display) indicated?

YES

Go to step 2.

NO

Intermittent failure. Check for loose wires or poor connections on the blower motor circuit.

2. Fuse check

-1. Turn the vehicle to the OFF (LOCK) mode.

-2. Check the following fuse.

Fuse	No. A3-1 (40 A)
Location	Under-hood fuse/relay box

Is the fuse OK?

YES

Go to step 3.

NO

Replace the fuse, and recheck. If fuse blows again, repair a short in the No. A3-1 (40 A) fuse circuit.

3. Blower motor power circuit check

-1. Disconnect the following connector.

Blower motor 2P connector

-2. Turn the vehicle to the ON mode.

-3. Measure the voltage between test points 1 and 2.

Test condition	Vehicle ON mode
	Blower motor 2P connector: disconnected
Test point 1	Blower motor 2P connector (female terminals) No. 2: ①
Test point 2	Body ground

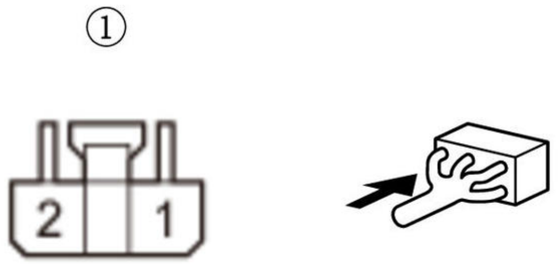

Is there battery voltage?

YES

Go to step 4.

NO

Go to step 12.

4. Blower motor operation check

-1. Turn the vehicle to the OFF (LOCK) mode.

-2. Reconnect the blower motor 2P connector.

-3. Connect terminals A and B with a jumper wire.

Terminal A	Blower motor 2P connector (female terminals) No. 1: ①

Terminal B	Body ground

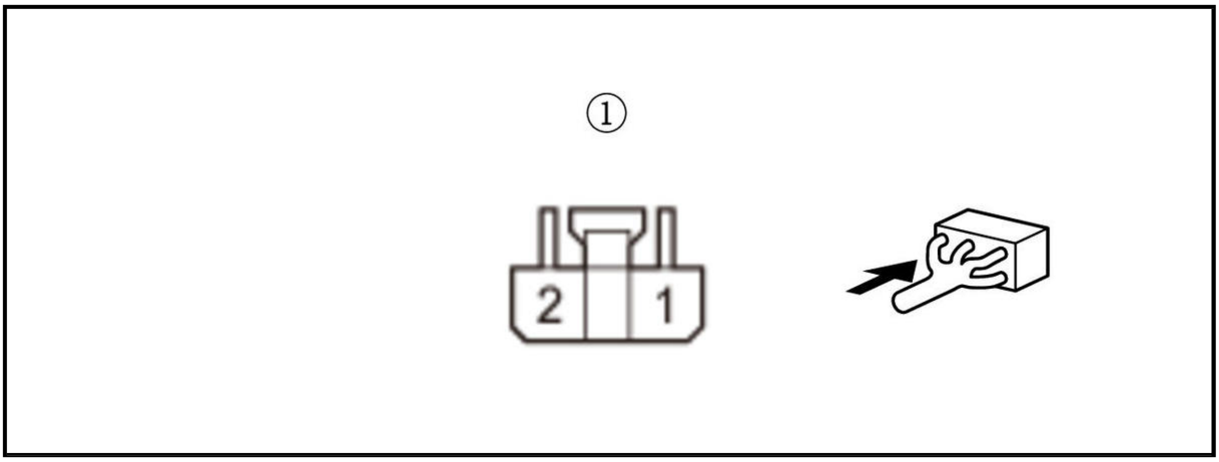

-4. Turn the vehicle to the ON mode.

Does the blower motor run at high speed?

YES

Go to step 5.

NO

Replace the blower motor .

5. Open wire check (GND line)

-1. Turn the vehicle to the OFF (LOCK) mode.

-2. Disconnect the jumper wire.

-3. Disconnect the following connector.

Power transistor 4P connector

-4. Check for continuity between test points 1 and 2.

Test condition	Vehicle OFF (LOCK) mode
	Power transistor 4P connector: disconnected
Test point 1	Power transistor 4P connector (female terminals) No. 2: ①
Test point 2	Body ground

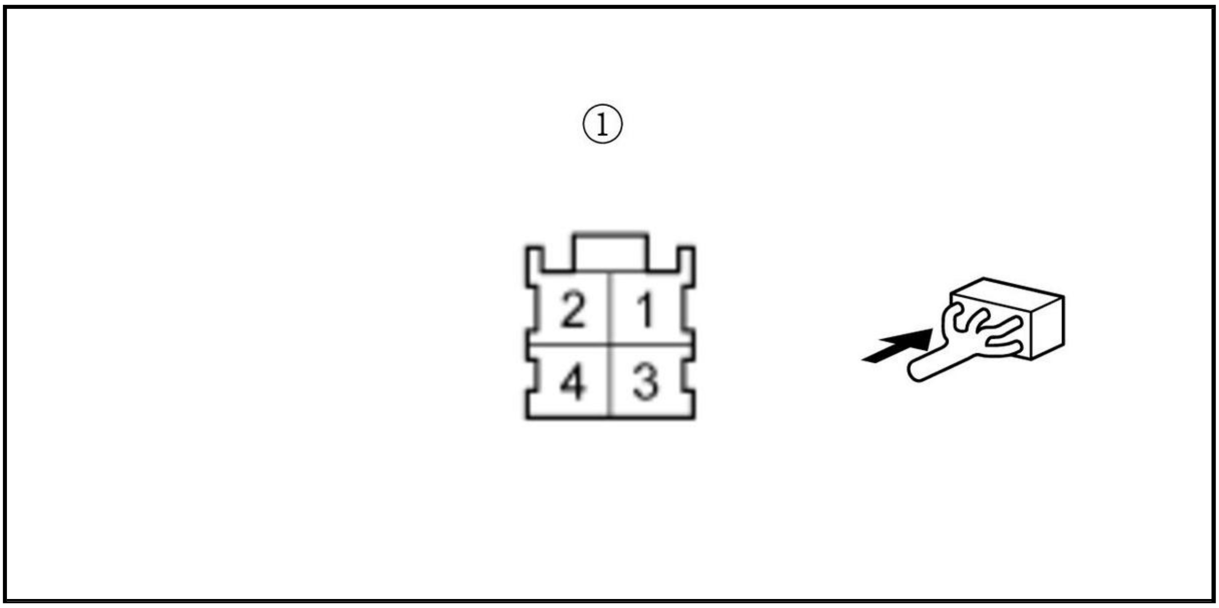

Is there continuity?

YES

The GND wire is OK. Go to step 6.

NO

Check for an open in the GND wire. If the wire is OK, check for poor ground at G251.

6. Open wire check (BLW-M line)

-1. Connect terminals A and B with a jumper wire.

Terminal A	Power transistor 4P connector (female terminals) No. 1: ①
Terminal B	Power transistor 4P connector (female terminals) No. 2: ①

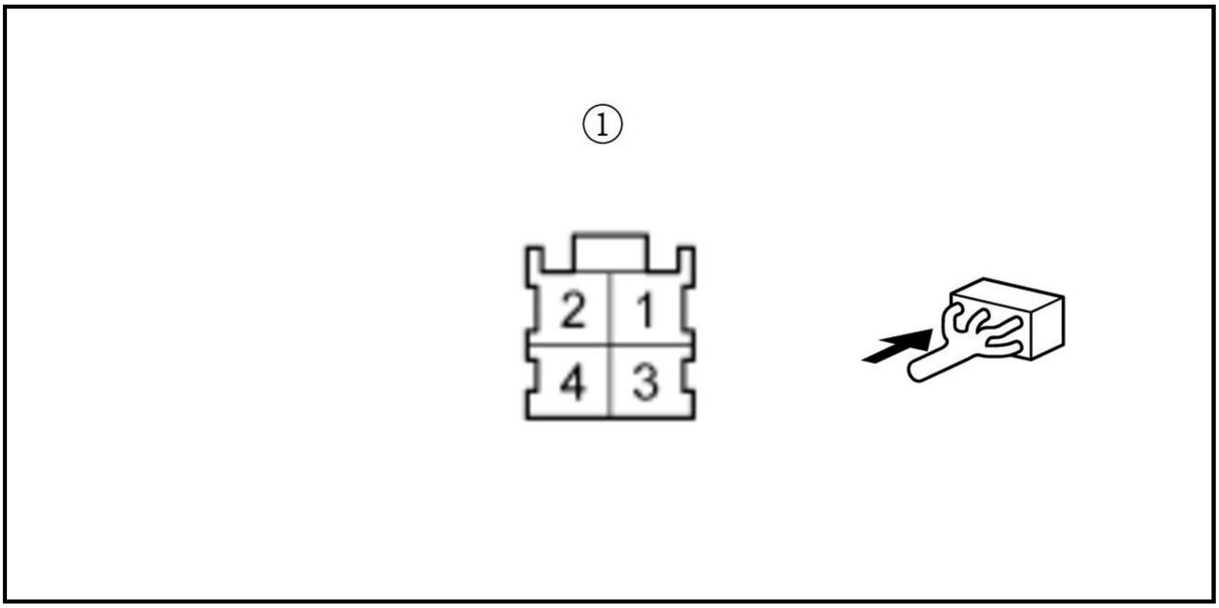

-2. Turn the vehicle to the ON mode.

Does the blower motor run at high speed?

YES

The BLW-M wire is OK. Go to step 7.

NO

Repair an open in the BLW-M wire.

7. Shorted wire check (BLW-V line)

-1. Turn the vehicle to the OFF (LOCK) mode.

-2. Disconnect the jumper wire.

-3. Disconnect the following connector.

Climate control unit connector B (24P)

-4. Check for continuity between test points 1 and 2.

Test condition	Vehicle OFF (LOCK) mode
	Climate control unit connector B (24P): disconnected
	Power transistor 4P connector: disconnected
Test point 1	**Climate control unit connector B (24P) No. 12**
Test point 2	Body ground

Is there continuity?

YES

Repair a short to ground in the BLW-V wire.

NO

The BLW-V wire is not shorted. Go to step 8.

8. Shorted wire check (BLW-G line)

-1. Check for continuity between test points 1 and 2.

Test condition	Vehicle OFF (LOCK) mode
	Climate control unit connector B (24P): disconnected
	Power transistor 4P connector: disconnected
Test point 1	**Climate control unit connector B (24P) No. 11**
Test point 2	Body ground

Is there continuity?

YES

Repair a short to ground in the BLW-G wire.

NO

The BLW-G wire is not shorted. Go to step 9.

9. Open wire check (BLW-V line)

-1. Check for continuity between test points 1 and 2.

Test condition	Vehicle OFF (LOCK) mode
	Climate control unit connector B (24P): disconnected
	Power transistor 4P connector: disconnected
Test point 1	**Climate control unit connector B (24P) No. 12**
Test point 2	Power transistor 4P connector (female terminals) No. 3: ①

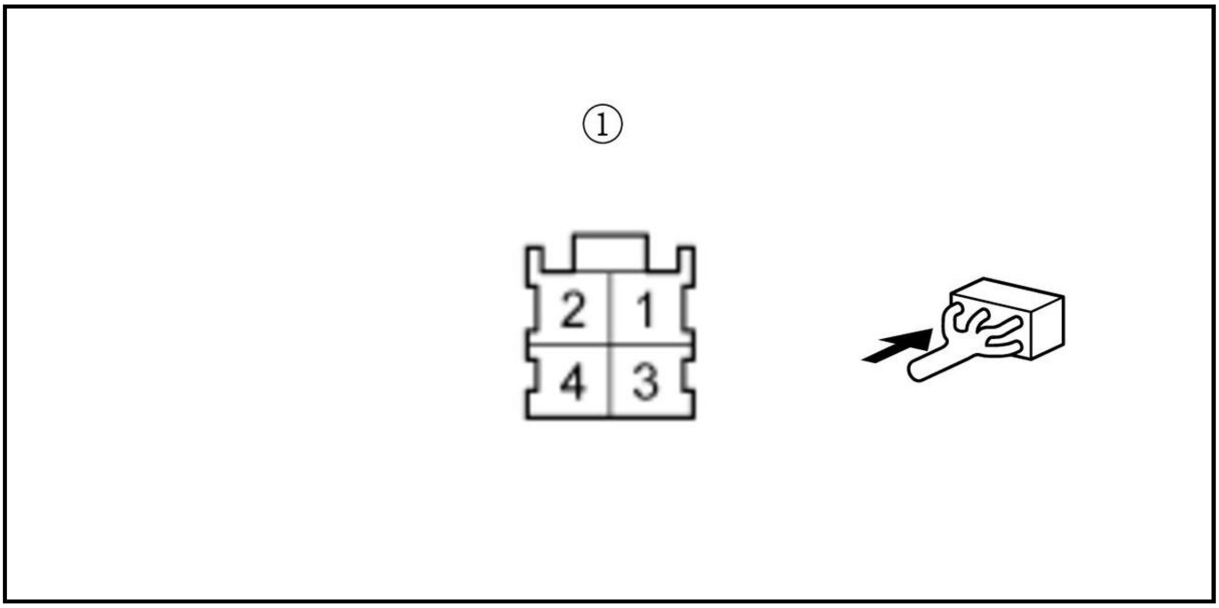

Is there continuity?

YES

The BLW-V wire is OK. Go to step 10.

NO

Repair an open in the BLW-V wire.

10. Open wire check (BLW-G line)

-1. Check for continuity between test points 1 and 2.

Test condition	Vehicle OFF (LOCK) mode
	Climate control unit connector B (24P): disconnected
	Power transistor 4P connector: disconnected
Test point 1	**Climate control unit connector B (24P) No. 11**
Test point 2	Power transistor 4P connector (female terminals) No. 4: ①

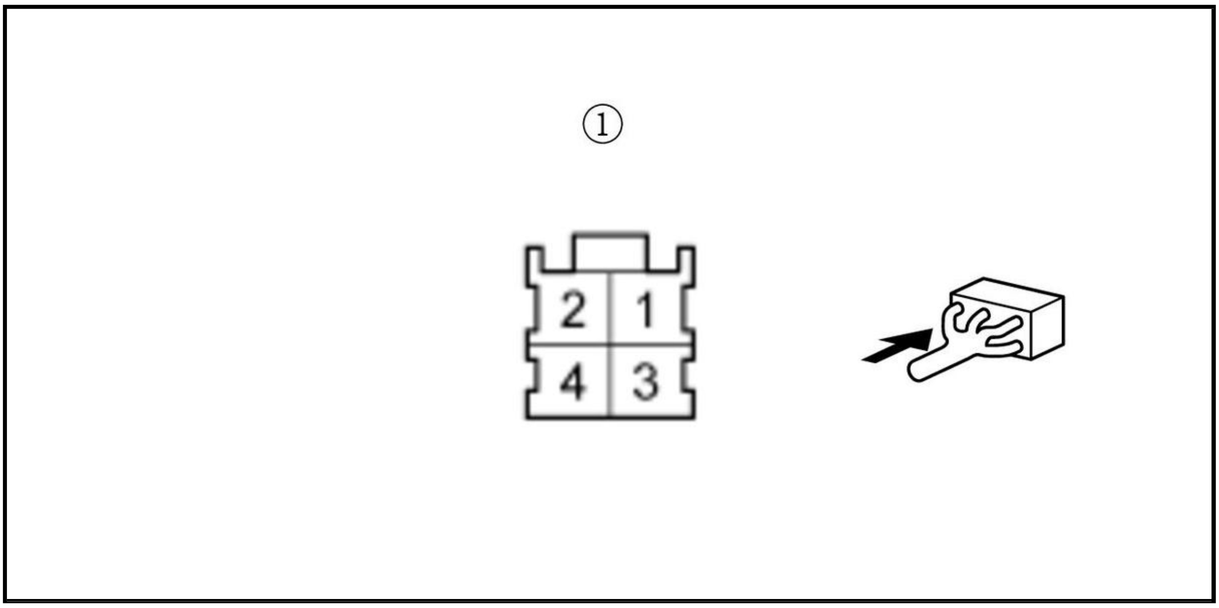

Is there continuity?

YES

The BLW-G wire is OK. Go to step 11.

NO

Repair an open in the BLW-G wire.

11. Power transistor check

-1. **Test the power transistor** .

Is the power transistor OK?

YES

Replace the climate control unit .

NO

Replace the power transistor .

NOTE: **If the power transistor is faulty, check the blower motor for damage. If necessary, replace the blower motor .**

12. Front blower motor relay check

-1. Turn the vehicle to the OFF (LOCK) mode.

-2. Remove the front blower motor relay from the under-hood fuse/relay box, and **test it** .

Is the relay OK?

YES

Go to step 13.

NO

Replace the front blower motor relay.

13. Open wire check (+B HTR MTR line)

-1. Measure the voltage between test points 1 and 2.

Test condition	Vehicle OFF (LOCK) mode Front blower motor relay: disconnected
Test point 1	Front blower motor relay 4P socket (female terminals) No. 1: ①
Test point 2	Body ground

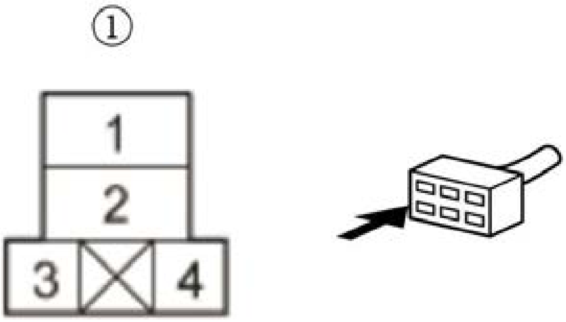

Is there battery voltage?

YES

The +B HTR MTR wire is OK. Go to step 14.

NO

Repair an open in the +B HTR MTR wire.

14. Open wire check (IG2 A/C line)

-1. Turn the vehicle to the ON mode.

-2. Measure the voltage between test points 1 and 2.

Test condition	Vehicle ON mode Front blower motor relay: disconnected
Test point 1	Front blower motor relay 4P socket (female terminals) No. 3: ①
Test point 2	Body ground

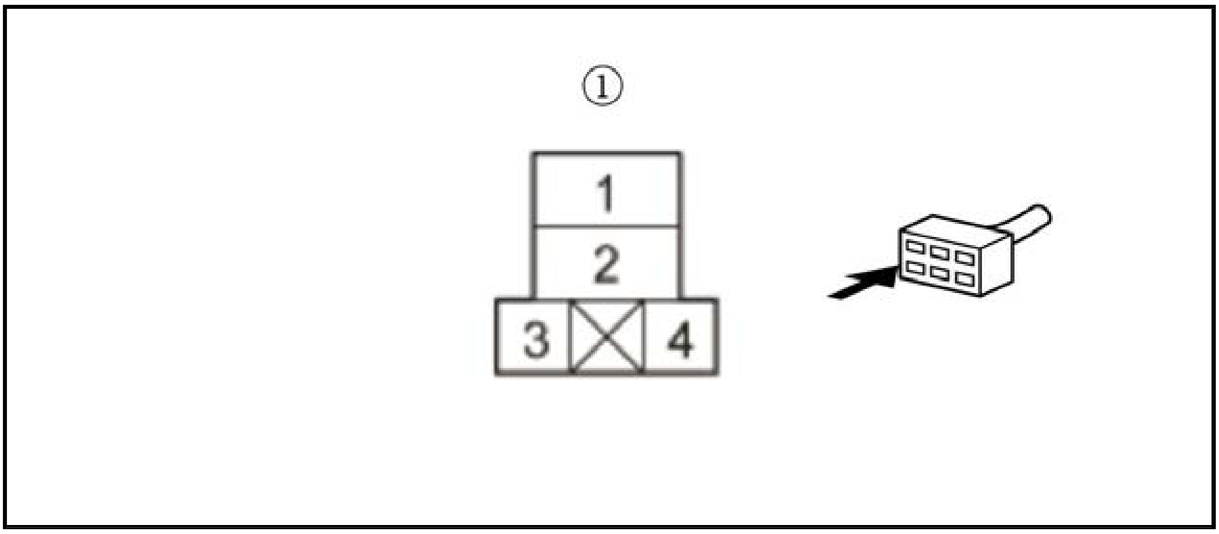

Is there battery voltage?

YES

The IG2 A/C wire is OK. Go to step 15.

NO

Repair an open in the IG2 A/C wire.

15. Open wire check (GND line)

-1. Turn the vehicle to the OFF (LOCK) mode.

-2. Check for continuity between test points 1 and 2.

Test condition	Vehicle OFF (LOCK) mode Front blower motor relay: disconnected
Test point 1	Front blower motor relay 4P socket (female terminals) No. 4: ①
Test point 2	Body ground

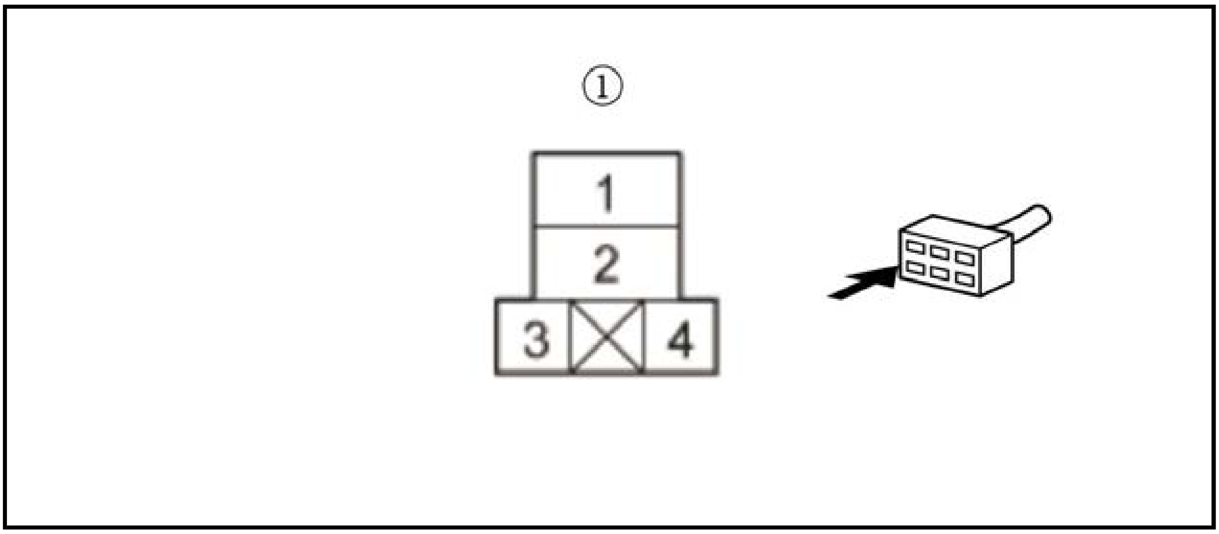

Is there continuity?

YES

Repair an open in the BLOWER MTR wire.

NO

Check for an open in the GND wire. If the wire is OK, check for poor ground at G351.

DTC TROUBLESHOOTING: B2964 (I-B5), B2964 (93)

DTC B2964 or DTC screen I-B5 or DTC indicator 93 : Climate control unit lost communication with Front PANEL (climate control panel)

DTC Description	DTC
B2964 Climate control unit lost communication with Front PANEL (climate control panel)	B

DTCs (AC)

1. Problem verification

   -1. Clear the DTCs with the HDS.

   -2. Turn the vehicle to the OFF (LOCK) mode and then the ON mode.

   -3. **Do the Self-Diagnostic Function with the HDS or the climate control unit** .

   -4. Check for DTCs.

DTC Description	DTC
B2964 Climate control unit lost communication with Front PANEL (climate control panel)	B

   Is DTC B2964 or Error on the DTC screen I-B5 (climate control panel without display) or 93 (climate control panel with display) indicated?

   YES

   Go to step 2.

   NO

   Intermittent failure. Check for loose wires or poor connections on the climate control panel circuit.

2. Fuse check

   -1. Turn the vehicle to the OFF (LOCK) mode.

   -2. Check the following fuse.

Fuse	No. D9 (10 A)
Location	Under-dash fuse/relay box

   Is the fuse OK?

   YES

   Go to step 3.

   NO

   Replace the fuse, and recheck. If the fuse blows again, repair a short in the No. D9 (10 A) fuse circuit.

3. Determine possible failure area (BUS-DATA line, others)

-1. Disconnect the following connector.

Climate control panel 20P connector

-2. Turn the vehicle to the ON mode.

-3. Measure the voltage between test points 1 and 2.

Test condition	Vehicle ON mode
	Climate control panel 20P connector: disconnected
Test point 1	Climate control panel 20P connector (female terminals) No. 13: ①
Test point 2	Climate control panel 20P connector (female terminals) No. 19: ①

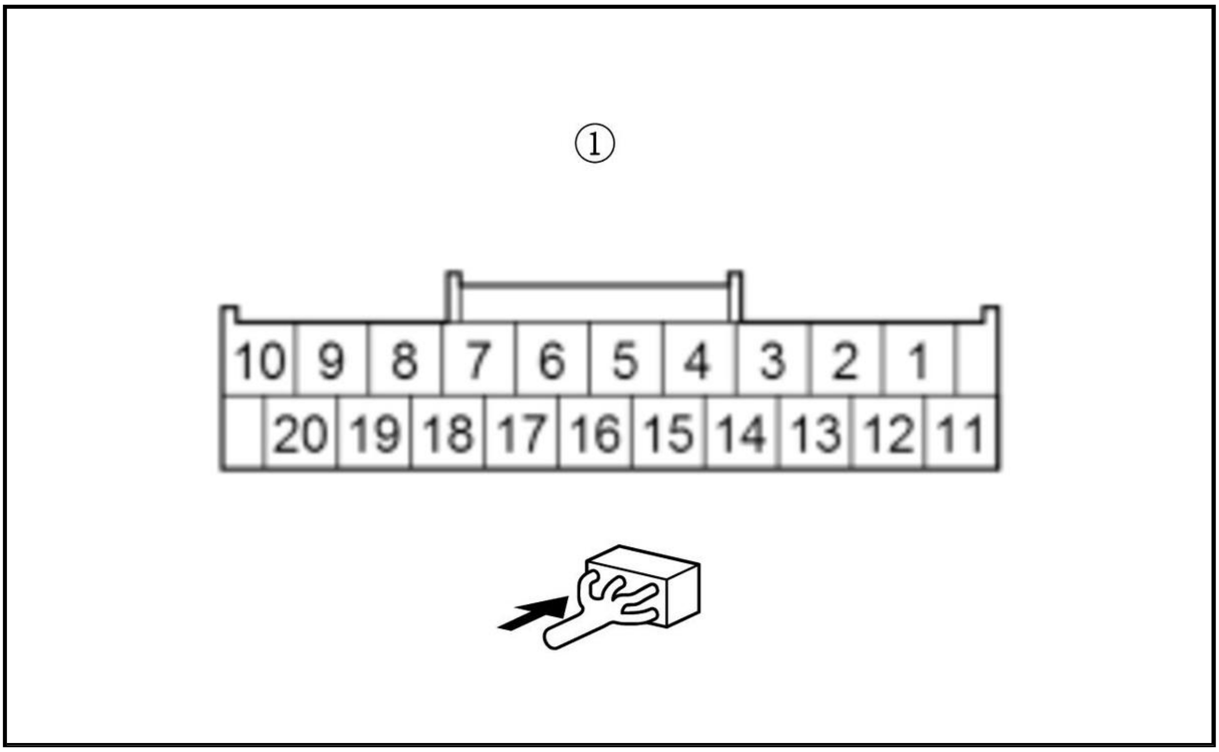

Is there battery voltage?

YES

Go to step 4.

NO

Go to step 7.

4. Shorted wire check (BUS-DATA line)

-1. Turn the vehicle to the OFF (LOCK) mode.

-2. Disconnect the following connector.

Climate control unit connector A (32P)

-3. Check for continuity between test points 1 and 2.

Test condition	Vehicle OFF (LOCK) mode Climate control unit connector A (32P): disconnected Climate control panel 20P connector: disconnected
Test point 1	**Climate control unit connector A (32P) No. 29**
Test point 2	Body ground

Is there continuity?

YES

Repair a short to ground in the BUS-DATA wire.

NO

The BUS-DATA wire is OK. Go to step 5.

5. Open wire check (BUS-DATA line)

-1. Check for continuity between test points 1 and 2.

Test condition	Vehicle OFF (LOCK) mode Climate control unit connector A (32P): disconnected Climate control panel 20P connector: disconnected
Test point 1	**Climate control unit connector A (32P) No. 29**
Test point 2	Climate control panel 20P connector (female terminals) No. 18: ①

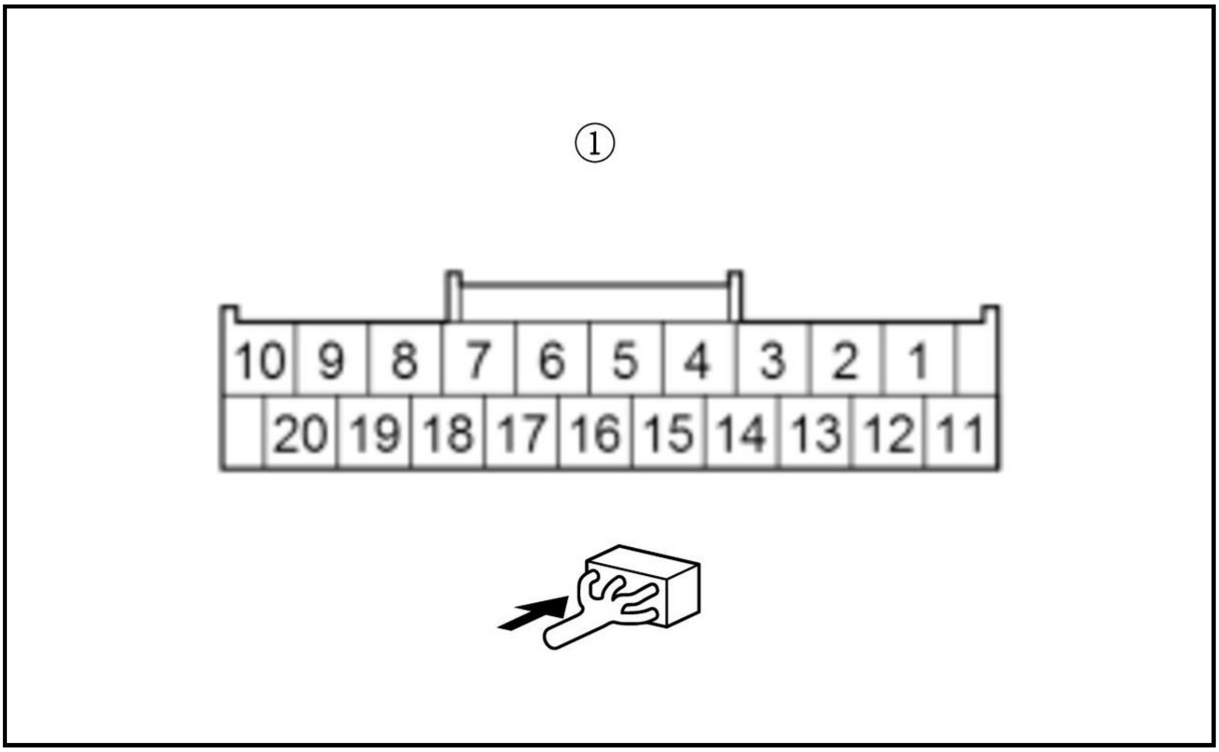

Is there continuity?

YES

The BUS-DATA wire is not open. Go to step 6.

NO

Repair an open in the BUS-DATA wire.

6. Climate control panel check (substitution)

-1. Reconnect the following connector.

Climate control unit connector A (32P)

-2. **Substitute a known-good climate control panel** .

-3. Clear the DTCs with the HDS.

-4. Turn the vehicle to the OFF (LOCK) mode and then the ON mode.

-5. **Do the Self-Diagnostic Function with the HDS or the climate control unit** .

-6. Check for DTCs.

DTC Description	DTC
B2964 Climate control unit lost communication with Front PANEL (climate control panel)	B

Is DTC B2964 or Error on the DTC screen D-B5 (climate control panel without display) or 93 (climate control panel with display) indicated?

YES

Replace the climate control unit .

NO

Replace the original climate control panel .

7. Open wire check (IG2 A/C line)

-1. Measure the voltage between test points 1 and 2.

Test condition	Vehicle ON mode
	Climate control panel 20P connector: disconnected
Test point 1	Climate control panel 20P connector (female terminals) No. 19: ①
Test point 2	Body ground

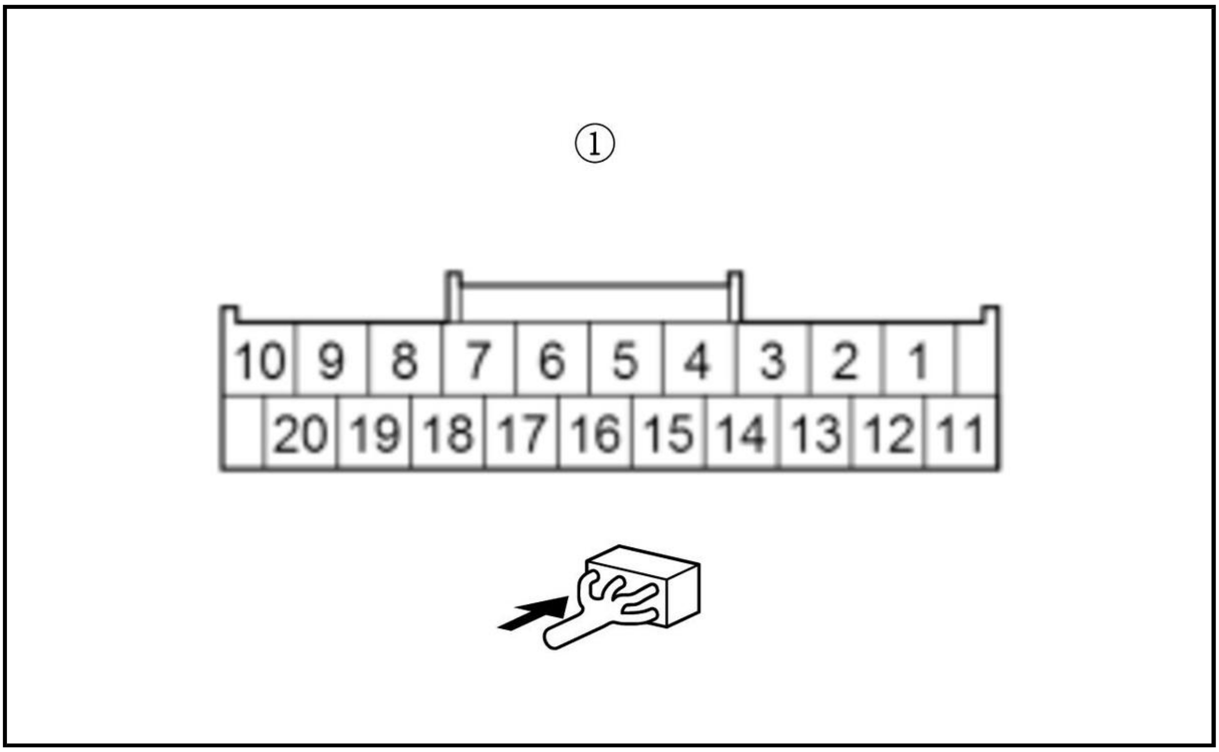

Is there battery voltage?

YES

Check for an open in the GND wire. If the wire is OK, check for poor ground at G402.

NO

Repair an open in the IG2 A/C wire.

DTC TROUBLESHOOTING: B2983 (B-B6), B2983 (57)

DTC B2983 or DTC screen B-B6 or DTC indicator 57 : A problem in the recirculation control motor circuit, linkage, door, or motor

DTC Description	DTC
B2983 A problem in the recirculation control motor circuit, linkage, door, or motor	B

DTCs (AC)

1. Problem verification

-1. Clear the DTCs with the HDS.

-2. Turn the vehicle to the OFF (LOCK) mode and then the ON mode.

-3. **Do the Self-Diagnostic Function with the HDS or the climate control unit** .

-4. Check for DTCs.

DTC Description	DTC
B2983 A problem in the recirculation control motor circuit, linkage, door, or motor	B

Is DTC B2983 or Error on the DTC screen B-B6 (climate control panel without display) or 57 (climate control panel with display) indicated?

YES

Go to step 2.

NO

Intermittent failure. Check for loose wires or poor connections on the recirculation control motor circuit.

2. Open wire check (M-REC line)

-1. Turn the vehicle to the OFF (LOCK) mode.

-2. Disconnect the following connectors.

Climate control unit connector B (24P)
Recirculation control motor 5P connector

-3. Check for continuity between test points 1 and 2.

Test condition	Vehicle OFF (LOCK) mode
	Climate control unit connector B (24P): disconnected
	Recirculation control motor 5P connector: disconnected
Test point 1	**Climate control unit connector B (24P) No. 17**
Test point 2	Recirculation control motor 5P connector (female terminals) No. 5: ①

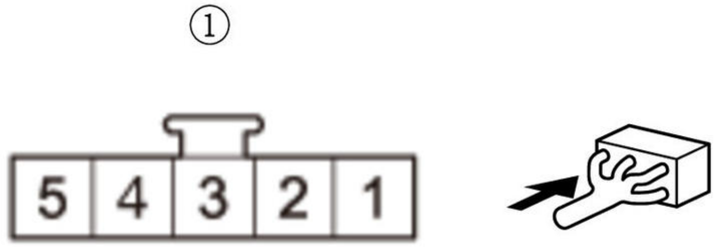

Is there continuity?

YES

The M-REC wire is not open. Go to step 3.

NO

Repair an open in the M-REC wire.

3. Open wire check (M-FRS line)

-1. Check for continuity between test points 1 and 2.

Test condition	Vehicle OFF (LOCK) mode
	Climate control unit connector B (24P): disconnected
	Recirculation control motor 5P connector: disconnected
Test point 1	**Climate control unit connector B (24P) No. 18**

Test point 2	Recirculation control motor 5P connector (female terminals) No. 4: ①

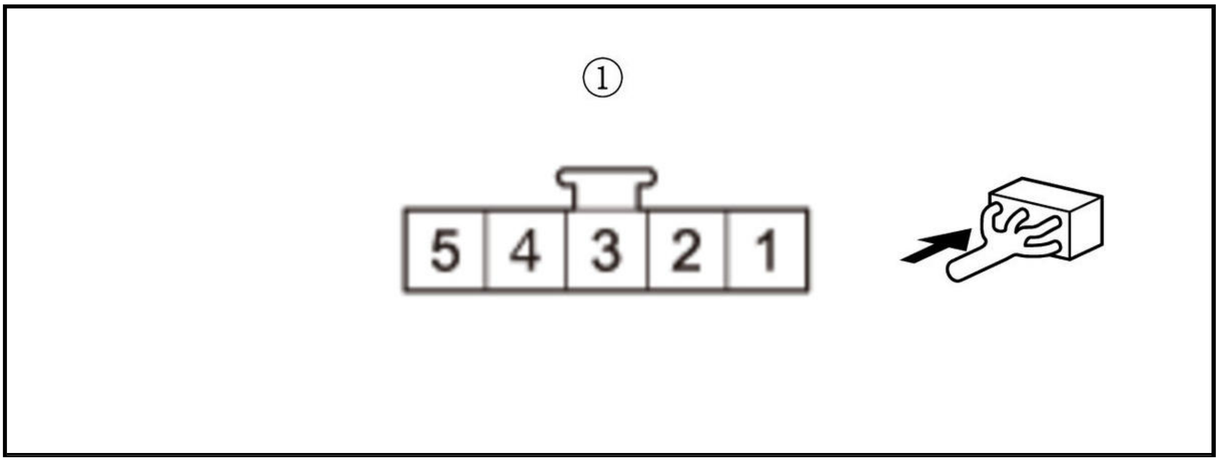

Is there continuity?

YES

The M-FRS wire is not open. Go to step 4.

NO

Repair an open in the M-FRS wire.

4. Shorted wire check (M-REC line)

-1. Check for continuity between test points 1 and 2.

Test condition	Vehicle OFF (LOCK) mode
	Climate control unit connector B (24P): disconnected
	Recirculation control motor 5P connector: disconnected
Test point 1	**Climate control unit connector B (24P) No. 17**
Test point 2	Body ground

Is there continuity?

YES

Repair a short to ground in the M-REC wire.

NO

The M-REC wire is OK. Go to step 5.

5. Shorted wire check (M-FRS line)

-1. Check for continuity between test points 1 and 2.

Test condition	Vehicle OFF (LOCK) mode
	Climate control unit connector B (24P): disconnected
	Recirculation control motor 5P connector: disconnected
Test point 1	**Climate control unit connector B (24P) No. 18**
Test point 2	Body ground

Is there continuity?

YES

Repair a short to ground in the M-FRS wire.

NO

The M-FRS wire is OK. Go to step 6.

6. Recirculation control motor check

-1. **Test the recirculation control motor** .

Is the recirculation control motor OK?

YES

Replace the climate control unit .

NO

Replace the recirculation control motor , or repair the recirculation control linkage or door.

DTC TROUBLESHOOTING: B2986 (B-B4), B2986 (55)

DTC B2986 or DTC screen B-B4 or DTC indicator 55 : An open in the recirculation control motor circuit

DTC Description	DTC
B2986 An open in the recirculation control motor circuit	B

DTCs (AC)

1. Problem verification

-1. Clear the DTCs with the HDS.

-2. Turn the vehicle to the OFF (LOCK) mode and then the ON mode.

-3. **Do the Self-Diagnostic Function with the HDS or the climate control unit** .

-4. Check for DTCs.

DTC Description	DTC
B2986 An open in the recirculation control motor circuit	B

Is DTC B2986 or Error on the DTC screen B-B4 (climate control panel without display) or 55 (climate control panel with display) indicated?

YES

Go to step 2.

NO

Intermittent failure. Check for loose wires or poor connections on the recirculation control motor circuit.

2. Determine possible failure area (RFD-P line, others)

-1. Turn the vehicle to the OFF (LOCK) mode.

-2. Disconnect the following connector.

Recirculation control motor 5P connector

-3. Turn the vehicle to the ON mode.

-4. Measure the voltage between test points 1 and 2.

Test condition	Vehicle ON mode Recirculation control motor 5P connector: disconnected
Test point 1	Recirculation control motor 5P connector (female terminals) No. 2: ①
Test point 2	Body ground

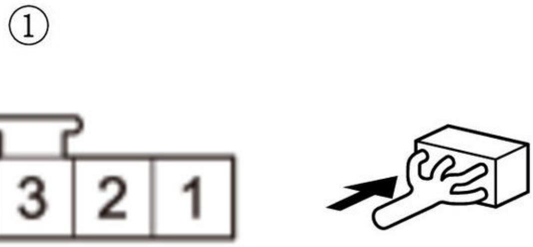

Is there about 5 V?

YES

The RFD-P wire is OK. Go to step 3.

NO

Go to step 4.

3. Open wire check (SENS-COM line)

-1. Measure the voltage between test points 1 and 2.

Test condition	Vehicle ON mode Recirculation control motor 5P connector: disconnected
Test point 1	Recirculation control motor 5P connector (female terminals) No. 2: ①
Test point 2	Recirculation control motor 5P connector (female terminals) No. 1: ①

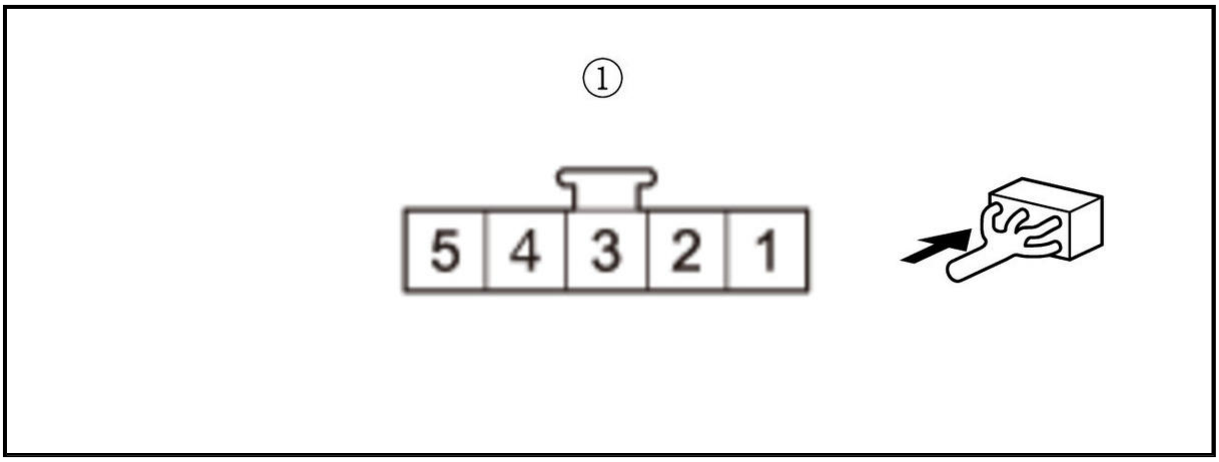

Is there about 5 V?

YES

Replace the recirculation control motor .

NO

Repair an open in the SENS-COM wire.

4. Open wire check (RFD-P line)

-1. Measure the voltage between test points 1 and 2.

Test condition	Vehicle ON mode
	Recirculation control motor 5P connector: disconnected
Test point 1	Climate control unit connector B (12P) No. 4
Test point 2	Body ground

Is there about 5 V?

YES

Repair an open in the RFD-P wire.

NO

Replace the climate control unit .

DTC TROUBLESHOOTING: B2988 (D-B1), B2988 (D-B2), B2988 (61)

DTC B2988 or DTC screen D-B1 : An open in the A/C compressor variable capacity control solenoid circuit
DTC B2988 or DTC screen D-B2 : A short in the A/C Compressor variable capacity control solenoid circuit
DTC B2988 or DTC indicator 61 : A problem in the A/C compressor variable capacity control solenoid circuit

DTC Description	DTC
B2988 A problem in the A/C compressor variable capacity control solenoid circuit	B

DTCs (AC)

1. Problem verification

-1. Clear the DTCs with the HDS.

-2. Turn the vehicle to the OFF (LOCK) mode and then the ON mode.

-3. Do the Self-Diagnostic Function with the HDS or the climate control unit .

-4. Wait for at least 1 minute.

-5. Check for DTCs.

DTC Description	DTC
B2988 A problem in the A/C compressor variable capacity control solenoid circuit	B

Is DTC B2988 or Error on the DTC screen D-B1 (climate control panel without display) or D-B2 (climate control panel without display) or 61 (climate control panel with display) indicated?

YES

Go to step 2.

NO

Intermittent failure. Check for loose wires or poor connections on the A/C compressor variable capacity control solenoid circuit.

2. Open wire check (SOL OUT line)

-1. Turn the vehicle to the OFF (LOCK) mode.

-2. Disconnect the following connectors.

Climate control unit connector A (32P)
A/C compressor clutch 3P connector

-3. Check for continuity between test points 1 and 2.

Test condition	Vehicle OFF (LOCK) mode
	Climate control unit connector A (32P): disconnected
	A/C compressor clutch 3P connector: disconnected
Test point 1	Climate control unit connector A (32P) No. 30
Test point 2	A/C compressor clutch 3P connector (female terminals) No. 2: ①

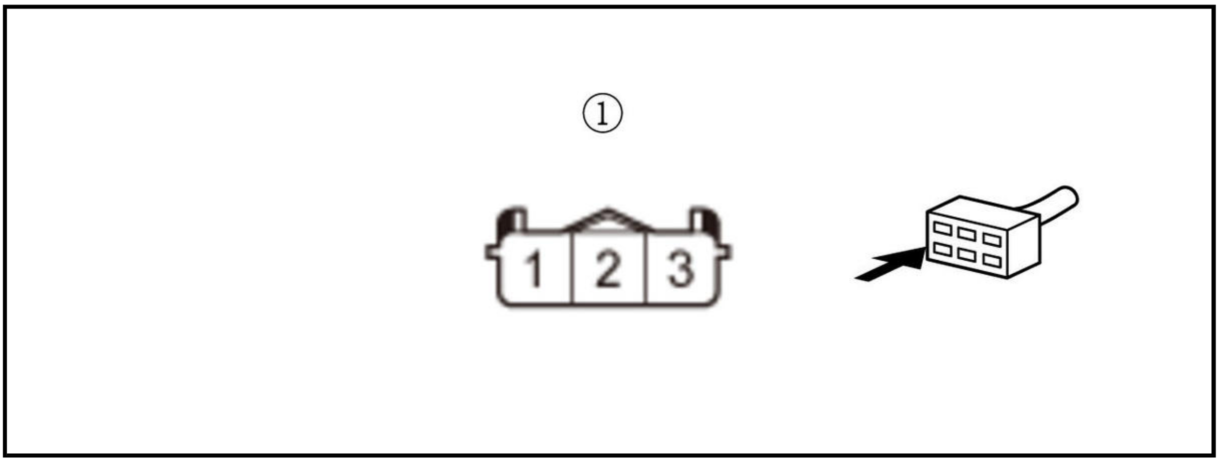

Is there continuity?

YES

The SOL OUT wire is not open. Go to step 3.

NO

Repair an open in the SOL OUT wire.

3. Open wire check (SOL IN line)

-1. Check for continuity between test points 1 and 2.

Test condition	Vehicle OFF (LOCK) mode
	Climate control unit connector A (32P): disconnected
	A/C compressor clutch 3P connector: disconnected
Test point 1	**Climate control unit connector A (32P) No. 14**
Test point 2	A/C compressor clutch 3P connector (female terminals) No. 3: ①

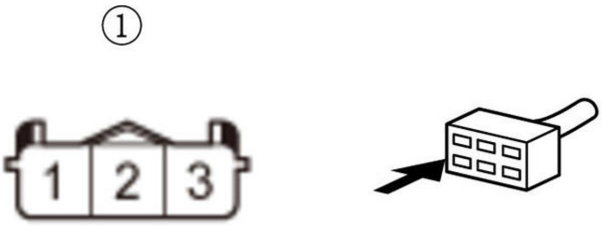

Is there continuity?

YES

The SOL IN wire is not open. Go to step 4.

NO

Repair an open in the SOL IN wire.

4. Shorted wire check (SOL OUT line)

-1. Check for continuity between test points 1 and 2.

Test condition	Vehicle OFF (LOCK) mode
	Climate control unit connector A (32P): disconnected
	A/C compressor clutch 3P connector: disconnected
Test point 1	**Climate control unit connector A (32P) No. 30**
Test point 2	Body ground

Is there continuity?

YES

Repair a short to ground in the SOL OUT wire.

NO

The SOL OUT wire is OK. Go to step 5.

5. Shorted wire check (SOL IN line)

-1. Check for continuity between test points 1 and 2.

Test condition	Vehicle OFF (LOCK) mode
	Climate control unit connector A (32P): disconnected
	A/C compressor clutch 3P connector: disconnected
Test point 1	**Climate control unit connector A (32P) No. 14**
Test point 2	Body ground

Is there continuity?

YES

Repair a short to ground in the SOL IN wire.

NO

The SOL IN wire is OK. Go to step 6.

6. A/C compressor variable capacity control solenoid check

-1. **Test the A/C compressor variable capacity control solenoid** .

Is the variable capacity control solenoid OK?

YES

Replace the climate control unit .

NO

Replace the A/C compressor .

DTC TROUBLESHOOTING: U1280 (I-A1), U1280 (80) (CLIMATE CONTROL UNIT)

DTC U1280 or DTC screen I-A1 or DTC indicator 80 : Communication bus line error (BUS-OFF)

DTC Description	DTC
U1280 Communication bus line error (BUS-OFF)	B

1. Problem verification

-1. Clear the DTCs with the HDS.

-2. Turn the vehicle to the OFF (LOCK) mode and then the ON mode.

-3. **Do the Self-Diagnostic Function with the climate control unit** .

-4. Wait for at least 6 seconds.

-5. Check for DTCs.

DTC Description	DTC
U1280 Communication bus line error (BUS-OFF)	B

Is DTC U1280 or Error on the DTC screen I-A1 (climate control panel without display) or 80 (climate control panel with display) indicated?

YES

Go to body control module DTC U1280 troubleshooting .

NO

Intermittent failure, the system is OK at this time.

DTC TROUBLESHOOTING: U1281 (I-A3), U1281 (91), U128D (I-A2), U128D (83), U1290 (I-A6), U1290 (8F) (CLIMATE CONTROL UNIT)

DTC U1281 or DTC screen I-A3 or DTC indicator 91 : Climate Control Unit Lost Communication with MICU (body control module)**DTC U128D or DTC screen I-A2** : Climate Control Unit Lost communication with gauge control module **DTC U128D or DTC indicator 83** : Climate Control Unit Lost communication with gauge control module (VSP message)**DTC U1290 or DTC screen I-A6 or DTC indicator 8F** : Climate Control Unit Lost Communication With Seat Heater Control Unit (front)

NOTE:

- According to the detected DTC(s), check for the power circuit and the ground circuit of the control unit which cannot communicate with the climate control unit.
- Refer to the DTC shown on the display, then inspect the connectors and terminals based on the instructions.

DTC Description	DTC
U1281 Climate Control Unit Lost Communication with MICU (body control module)	B
U128D Climate Control Unit Lost communication with gauge control module	B
U1290 Climate Control Unit Lost Communication With Seat Heater Control Unit (front)	B

1. Problem verification

-1. Clear the DTC with the HDS.

-2. Turn the vehicle to the OFF (LOCK) mode and then the ON mode.

-3. Wait for at least 6 seconds.

-4. Do the Self-Diagnostic Function with the climate control unit .

-5. Check for DTCs.

DTC Description	DTC
U1281 Climate Control Unit Lost Communication with MICU (body control module)	B
U128D Climate Control Unit Lost communication with gauge control module	B
U1290 Climate Control Unit Lost Communication With Seat Heater Control Unit	B

Are any DTCs indicated?

YES

Go to step 2.

NO

Intermittent failure, the system is OK at this time. Check for poor connections or loose terminals at the transmitting control units and the climate control unit.

2. Open wire check (B-CAN_H line, B-CAN_L line)

-1. Turn the vehicle to the OFF (LOCK) mode.

-2. Disconnect the receiving control unit connector.

Climate control unit connector A (32P)

-3. Disconnect the transmitting control unit connector(s).

Refer to the DTC shown on the display, then disconnect the connector(s) based on the instructions (see table).

DTC	Connector
U1281	Body control module connector B (36P)
U128D	Gauge control module connector A (32P)
U1290	Front seat heater control unit 24P connector

-4. Check for continuity between the receiving control unit and the transmitting control unit on the B-CAN_H circuit and the B-CAN_L circuit.

Test condition	Vehicle OFF (LOCK) mode
	Climate control unit connector A (32P): disconnected
	Transmitting control unit connector(s) for indicated DTCs: disconnected

DTC	Circuit name	Receiving control unit		Transmitting control unit	
		Connector	Terminal	Connector	Terminal
U1281	B-CAN_H	**Climate control unit connector A (32P)**	No. 25	**Body control module connector B (36P)**	No. 20
	B-CAN_L		No. 8		No. 21
U128D	B-CAN_H	**Climate control unit connector A (32P)**	No. 25	**Gauge control module connector A (32P)**	No. 30
	B-CAN_L		No. 8		No. 31
U1290	B-CAN_H	**Climate control unit connector A (32P)**	No. 25	**Front seat heater control unit 24P connector**	No. 10
	B-CAN_L		No. 8		No. 9

Is there continuity?

YES

The B-CAN_H wire and B-CAN_L wire is OK.Refer to the DTC shown on the display, then substitute or replace the control unit based on the instructions (see table).

DTC	Operation for transmitting control unit
U1281	**Substitute a known-good body control module** , then recheck. If DTC U1281 goes away after substitution, **replace the original body control module** .
U128D	**Substitute a known-good gauge control module** , then recheck. If DTC U128D goes away after substitution, **replace the original gauge control module** .
U1290	**Substitute a known-good front seat heater control unit** , then recheck. If DTC U1290 goes away after substitution, **replace the original front seat heater control unit** .

NO

Repair an open in the B-CAN_H wire and/or the B-CAN_L wire between the climate control unit and the transmitting control unit.

DTC TROUBLESHOOTING INDEX

CLIMATE CONTROL SYSTEM DTC TROUBLESHOOTING INDEX (2020 2021)

DTC	Detection Item or Symptom	ECU	DTC Type
B120A	Climate Control Unit LIN Communication Bus Line Error	Climate control unit	Loss of communication
B121A	An open in the mode control motor circuit	Climate control unit	Signal error
B121B	A short in the mode control motor circuit	Climate control unit	Signal error
B121D*1	Humidity/In-Car Temperature Sensor Communication Error	Climate control unit	Signal error
B1220	A short in the recirculation control motor circuit	Climate control unit	Signal error
B1225*2	An open in the in-car temperature sensor circuit	Climate control unit	Signal error
B1226*2	A short in the in-car temperature sensor circuit	Climate control unit	Signal error
B1227	An open in the outside air temperature sensor circuit	Climate control unit	Signal error
B1228	A short in the outside air temperature sensor circuit	Climate control unit	Signal error
B1231	An open in the evaporator temperature sensor circuit	Climate control unit	Signal error
B1232	A short in the evaporator temperature sensor circuit	Climate control unit	Signal error
B1233	An open in the air mix control motor circuit (driver's)	Climate control unit	Signal error
B1234	A short in the air mix control motor circuit (driver's)	Climate control unit	Signal error
B1235	A problem in the air mix control motor circuit, linkage, door, or motor (driver's)	Climate control unit	Signal error
B1236	An open in the passenger's air mix control motor circuit	Climate control unit	Signal error
B1237	A short in the passenger's air mix control motor circuit	Climate control unit	Signal error
B1238	A problem in the passenger's air mix control motor circuit, linkage, door, or motor	Climate control unit	Signal error
B123F	Automatic lighting control unit/sunlight sensor error	Climate control unit	Signal error
B1240	A problem in the mode control motor circuit, linkage, door, or motor	Climate control unit	Signal error
B1241	A problem in the blower motor circuit	Climate control unit	Signal error
B2964	Climate control unit lost communication with front panel (climate control panel)	Climate control unit	Loss of communication
B2983	A problem in the recirculation control motor circuit, linkage, door, or motor	Climate control unit	Signal error
B2986	An open in the recirculation control motor circuit	Climate control	Signal error

DTC	Detection Item or Symptom	ECU	DTC Type
		unit	
B2988	A problem in the A/C compressor variable capacity control solenoid circuit	Climate control unit	Signal error
U1280	Communication bus line error (BUS-OFF)	Climate control unit	Loss of communication
U1281	Climate control unit lost communication with MICU (body control module)	Climate control unit	Loss of communication

*1: With auto idle stop system

*2: Without auto idle stop system

DTC	Detection Item or Symptom	ECU	DTC Type
U128D	Climate control unit lost communication with gauge control module	Climate control unit	Loss of communication
U1290	Climate control unit lost communication with seat heater control unit (front)	Climate control unit	Loss of communication

*1: With auto idle stop system

*2: Without auto idle stop system

HOW TO INFORMATION

HOW TO TROUBLESHOOT THE CLIMATE CONTROL SYSTEM(CLIMATE CONTROL PANEL WITH DISPLAY)

How to Check for DTCs with the HDS

NOTE:

- There are three methods used to check for DTCs. The recommended method is to use the Honda Diagnostic System (HDS) with the appropriate software, plugged into the data link connector (DLC).
- The second method is to run the self-diagnostic function built into the climate control unit.
- The third method is to use B-CAN system diagnosis test mode A .

1. Turn the vehicle to the OFF (LOCK) mode.

2. Connect the HDS to the DLC

3. Select BODY ELECTRICAL in the System Selection Menu.

4. Select HVAC/Climate control in the Body Electrical System Select.

5. Select DTCs in the HVAC/Climate Control Mode Menu.Check for DTCs. If any DTCs are indicated, write down the DTCs, then go to the indicated DTC troubleshooting. If no DTCs are indicated, do all system scan, then refer to symptom troubleshooting.**NOTE:**

- After troubleshooting, clear the DTCs with the HDS.
- For specific operations, refer to the user's manual that came with the HDS.

How to Use the Self-Diagnostic Function with the HDS

NOTE: This method is only available if the HDS can communicate with the climate control unit.

1. Turn the vehicle to the OFF (LOCK) mode.

2. Connect the HDS to the DLC.

3. Select BODY ELECTRICAL in the System Selection Menu.

4. Select HVAC/Climate Control in the Body Electrical System Select.

5. Select Inspection in the HVAC/Climate Control Mode Menu.

6. Select Climate Control Unit Self Test in the Inspection Menu.Check for DTCs. If any DTCs are indicated, write down the DTCs, then go to the indicated DTC troubleshooting.

NOTE:

- **After troubleshooting, clear the DTCs with the HDS.**
- **For specific operations, refer to the user's manual that came with the HDS.**

How to Use the Self-Diagnostic Function without the HDS

Button

Button	Button Name
AUTO	AUTO button

Button	Button Name
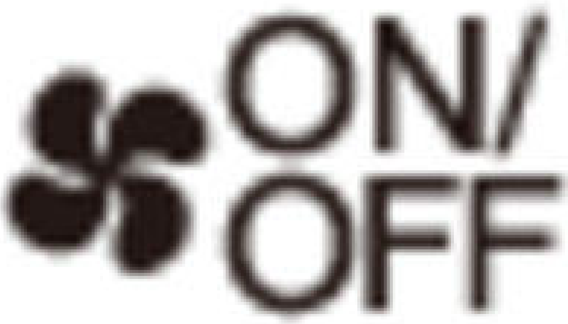	ON/OFF button
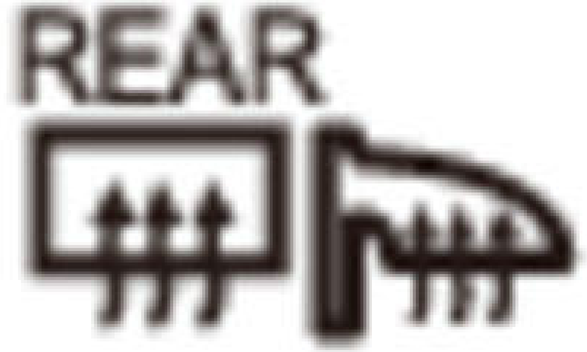	REAR WINDOW DEFOGGER/MIRROR DEFOGGER * button

Button	Button Name
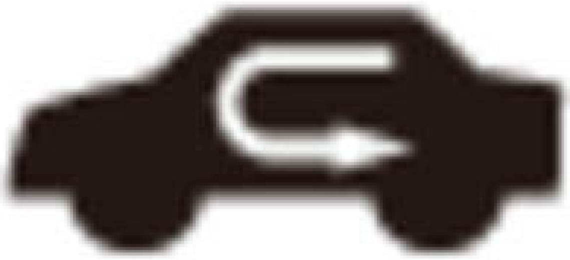	RECIRCULATION button
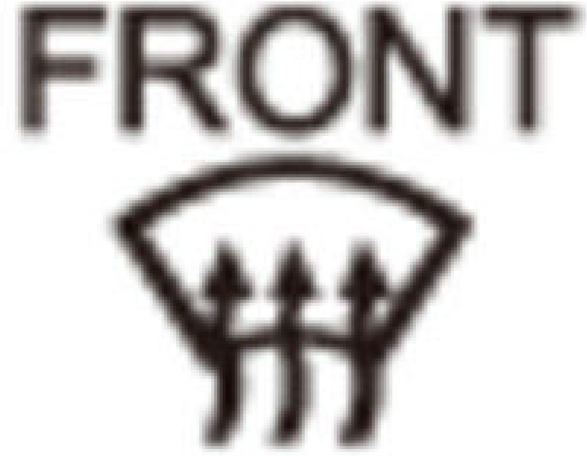	WINDSHIELD DEFROST button

*: With mirror defogger

The climate control unit has a self-diagnostic function. To run the self-diagnostic function, do the following:

1. Turn the vehicle to the OFF (LOCK) mode and then the ON mode.

2. Press and hold the ON/OFF button, then within 10 seconds press and release the REAR WINDOW DEFOGGER/MIRROR DEFOGGER * button five times. Release the ON/OFF button.*: With mirror defoggerALL LCD segments come on for 2 seconds, then the self-diagnostic function begins.

NOTE:

- **The blower motor will run at various speeds regardless of what the panel is displaying.**
- **If there is any problem in the system, the temperature indicator flashes 88. Refer to checking for DTCs.**

- **If there is more than one DTC, they are displayed one at a time in sequence followed by a pause (all the display indicator segments illuminate) between the DTCs.**
- **If no DTCs are present, the temperature indicator will flash "no".**

Canceling the Self-Diagnostic Function

4. Turn the vehicle to the OFF (LOCK) mode to cancel the self-diagnostic function. After completing repair work, run the self-diagnostic function again to make sure that there are no other DTCs.

Checking for DTCs

The temperature indicator display indicates single or multiple DTCs. If no DTCs are present, the temperature indicator will flash "no".

DTC (Temperature Indicator Segments)	DTC	Detection Item
01	**B1225**	An open in the in-car temperature sensor circuit
02	**B1226**	A short in the in-car temperature sensor circuit
05	**B1227**	An open in the outside air temperature sensor circuit

*1: 1.5 L engine

*2: With front seat heater

DTC (Temperature Indicator Segments)	DTC	Detection Item
06	**B1228**	A short in the outside air temperature sensor circuit
09	**B1231**	An open in the evaporator temperature sensor circuit
0A	**B1232**	A short in the evaporator temperature sensor circuit
17	**B123F**	Automatic lighting control unit/sunlight sensor error
40	**B1233**	An open in the air mix control motor circuit
41	**B1234**	A short in the air mix control motor circuit
42	**B1235**	A problem in the air mix control motor circuit, linkage, door, or motor
49	**B121A**	An open in the mode control motor circuit
4A	**B121B**	A short in the mode control motor circuit
4b	**B1240**	A problem in the mode control motor circuit, linkage, door, or motor
55	**B2986**	An open in the recirculation control motor circuit
56	**B1220**	A short in the recirculation control motor circuit
57	**B2983**	A problem in the recirculation control motor circuit, linkage, door, or motor
59	**B1241**	A problem in the blower motor circuit
61 *1	**B2988**	A problem in the A/C compressor variable capacity control solenoid circuit
80	**U1280**	Communication bus line error (BUS-OFF)
83	**U128D**	Climate control unit lost communication with gauge control module (VSP message)
8A	**B120A**	Climate control unit LIN communication bus line error
8F *2	**U1290**	Climate control unit lost communication with seat heater control unit (front)
91	**U1281**	Climate control unit lost communication with MICU (body control module)

DTC (Temperature Indicator Segments)	DTC	Detection Item
93	B2964	Climate control unit lost communication with front panel (climate control panel)
C0	---	Climate control unit internal error
Cd	---	Unknown sunlight sensor type

*1: 1.5 L engine

*2: With front seat heater

How to Check for History DTCs

The climate control unit can record history DTCs. To read the history DTCs, do the following:

1. Turn the vehicle to the OFF (LOCK) mode and then the ON mode.

2. While pressing the WINDSHIELD DEFROST button, press and hold the ON/OFF button for 10 seconds or more.While pressing and holding both the WINDSHIELD DEFROST and ON/OFF buttons, the display screen goes directly to the A/C Error Display shown.

NOTE:

- **If there is any problem in the system, the temperature indicator flashes 88. Refer to checking for DTCs.**
- **If there is more than one DTC, they are displayed one at a time in sequence followed by a pause (all the display indicator segments illuminate) between the DTCs.**
- **If no DTCs are present, the temperature indicator will flash "no".**

Canceling the Read History DTCs

4. Turn the vehicle to the OFF (LOCK) mode to cancel the history DTCs. After completing the repair work, clear the DTCs.

How to Clear the History DTCs

1. Turn the vehicle to the OFF (LOCK) mode.

2. Press and hold both the AUTO and WINDSHIELD DEFROST buttons, then turn the vehicle to the ON mode.

3. After about 5 seconds the windshield defrost indicator starts to blink, release the buttons.

4. Do the How to Check for History DTCs to verify DTCs have been cleared.

Displaying Sensor Inputs at the Climate Control Unit

The climate control unit has a mode that displays the sensor inputs it receives. This mode shows you what the climate control unit is receiving from each of the sensors, one at a time, and it can help you determine if a sensor is faulty.

Checks Before Using the Sensor Input Display Mode

1. Turn the vehicle to the ON mode, and check the recirculation door function; press the RECIRCULATION button to switch from FRESH to RECIRCULATE. The air volume and sound should change slightly.Set the TEMPERATURE CONTROL dial to the desired test temperature:

- "Lo" temperature setting will default to MAX COOL, VENT, and RECIRCULATE (A/C on) or FRESH (A/C off).
- "Hi" temperature setting will default to MAX HOT, HEAT, HEAT/DEF and FRESH.

3. Turn the vehicle to the OFF (LOCK) mode.

Run the Sensor Input Display Mode

1. Press and hold both the AUTO and RECIRCULATION buttons, then start the engine.

2. Release both buttons. The temperature indicator will flash the sensor number and then the value for that sensor. Record the value displayed.To advance to the next sensor, press the REAR WINDOW DEFOGGER/MIRROR DEFOGGER * button.*: With mirror defogger

NOTE:

- **The sensor values will be displayed in degrees Celsius (deg.C) or an alphanumeric code. Use the chart to convert the value to degrees Fahrenheit (deg.F).**
- **If the sensor value displays "Er", this indicates there is an open or short in the circuit or sensor. Check for DTCs using the HDS, or use the climate control self-diagnostic function.**
- **If necessary, compare the sensor input display to a known-good vehicle under the same test conditions.**
- **If the sensor displayed value is out of the normal range, refer to the sensor test or substitute a known-good sensor, and recheck.**
- **Unsupported items shall be skipped.**

Sensor	Item	Displayed Value
0	In-car temperature sensor	deg.C
1	Outside air temperature sensor	deg.C
2	Sunlight sensor	10 W/m 2
3	Engine coolant temperature	deg.C
4	Evaporator temperature sensor	deg.C
8	Air mix opening (low value indicates cooler air distribution, higher value indicates warmer air distribution)	% of opening
b	Mode positioning	0.1 V
d	Recirculation control opening	% of opening
F	Vehicle speed (vehicle must be driven to display speed)	10 km/h

Sensor	Item	Displayed Value
H	Not used	---
L	Sunlight sensor type	Hard Wire: 0BCAN: 153Unknown: - -

Celsius to Fahrenheit Conversion Table

deg.C	deg.F	deg.C	deg.F	deg.C	deg.F	deg.C	deg.F	deg.C	deg.F
0	32	10	50	20	68	30	86	40	104
1	34	11	52	21	70	31	88	41	106
2	36	12	54	22	72	32	90	42	108
3	37	13	55	23	73	33	91	43	109
4	39	14	57	24	75	34	93	44	111

deg.C	deg.F	deg.C	deg.F	deg.C	deg.F	deg.C	deg.F	deg.C	deg.F
5	41	15	59	25	77	35	95	45	113
6	43	16	61	26	79	36	97	46	115
7	45	17	63	27	81	37	99	47	117
8	46	18	64	28	82	38	100	48	118
9	48	19	66	29	84	39	102	49	120

deg.C	deg.F	deg.C	deg.F	deg.C	deg.F	deg.C	deg.F	deg.C	deg.F
50	122	60	140	70	158	80	176	90	194
51	124	61	142	71	160	81	178	91	196
52	126	62	144	72	162	82	180	92	198
53	127	63	145	73	163	83	181	93	199
54	129	64	147	74	165	84	183	94	201
55	131	65	149	75	167	85	185	95	203
56	133	66	151	76	169	86	187	96	205
57	135	67	153	77	171	87	189	97	207
58	136	68	154	78	172	88	190	98	208
59	138	69	156	79	174	89	192	99	210

Alphanumeric Conversion Table

Display Reading (Alphanumeric)	deg.C	deg.F	%	Value
0 thru 99	0 thru 99	32 thru 210	0 thru 99	---
A1 thru A9	-1 thru -9	30 thru 16	-1 thru -10	---
B0 thru B9	-10 thru -19	14 thru -2	-10 thru -19	---
C0 thru C9	-20 thru -29	-4 thru -20	-20 thru -29	---
D0 thru D9	-30 thru -39	-22 thru -38	-30 thru -39	---
E0 thru E9	-40 thru -49	-40 thru -56	-40 thru -49	---
F0 thru F8	100 thru 108	212 thru 226	100 thru 108	---
F9	109 thru 200	228 thru 392	109 thru 200	---
--	---	---	---	254
Er	---	---	---	255

Alphanumeric Conversion Table (Mode Positioning)

Display Reading (%)	Indication	Mode Position
-01-01	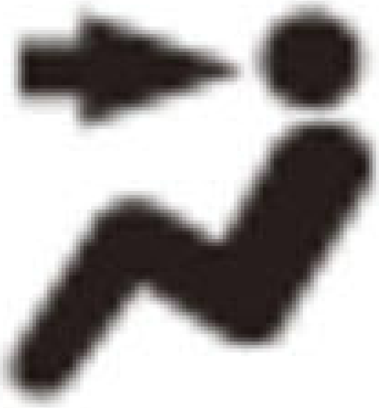	VENT
16-18	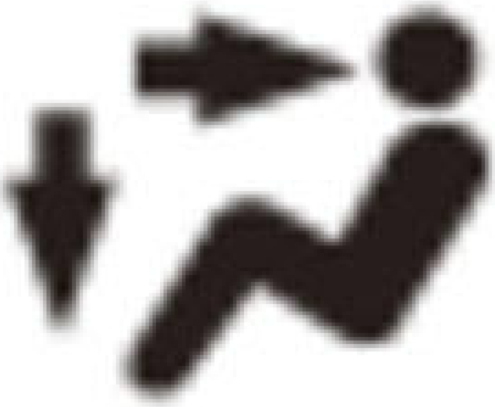	HEAT/VENT-1
22-25		HEAT/VENT-2
32-34		HEAT/VENT-3

Display Reading (%)	Indication	Mode Position
46-48	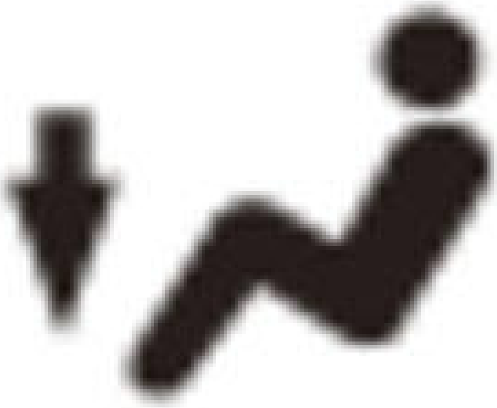	HEAT-1
58-61		HEAT-2
68-71	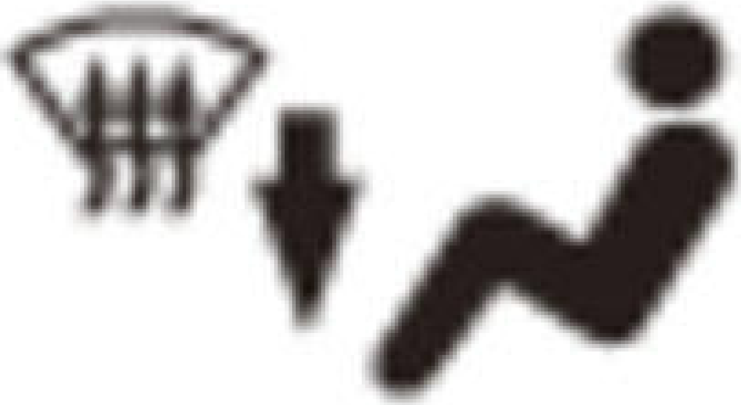	HEAT/DEF-1
88-90		HEAT/DEF-2

Display Reading (%)	Indication	Mode Position
99-101	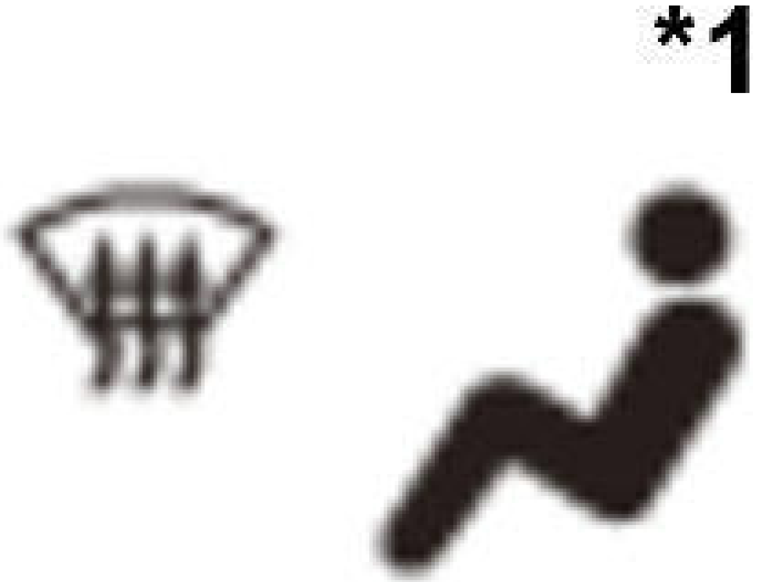	DEF
	Not indication *2	

*1: Auto mode

*2: Manual mode

4. To cancel the sensor input display mode, press the AUTO button or turn the vehicle to the OFF (LOCK) mode.

DTC TROUBLESHOOTING INDEX

CLIMATE CONTROL SYSTEM DTC TROUBLESHOOTING INDEX

DTC	Detection Item or Symptom	ECU	DTC Type
B120A	Climate Control Unit LIN Communication Bus Line Error	Climate control unit	Loss of communication
B121A	An open in the mode control motor circuit	Climate control unit	Signal error
B121B	A short in the mode control motor circuit	Climate control unit	Signal error
B121D	Humidity/in-car temperature sensor communication error	Climate control unit	Loss of communication
B1220	A Short in the recirculation control motor circuit	Climate control unit	Signal error
B1227	An open in the outside air temperature sensor circuit	Climate control unit	Signal error
B1228	A short in the outside air temperature sensor circuit	Climate control unit	Signal error
B1231	An open in the evaporator temperature sensor circuit	Climate control unit	Signal error
B1232	A short in the evaporator temperature sensor circuit	Climate control unit	Signal error
B1233	An open in the air mix control motor circuit (driver's)	Climate control unit	Signal error
B1234	A short in the air mix control motor circuit (driver's)	Climate control unit	Signal error
B1235	A problem in the air mix control motor circuit, linkage, door, or motor (driver's)	Climate control unit	Signal error
B1236*1	An open in the passenger's air mix control motor circuit	Climate control unit	Signal error
B1237*1	A short in the passenger's air mix control motor circuit	Climate control unit	Signal error
B1238*1	A problem in the passenger's air mix control motor circuit, linkage, door, or motor	Climate control unit	Signal error
B123F	Automatic lighting control unit/sunlight sensor error	Climate control unit	Signal error
B1240	A problem in the mode control motor circuit, linkage, door, or motor	Climate control unit	Signal error
B1241	A problem in the blower motor circuit	Climate control unit	Signal error
B2964	Climate control unit lost communication with Front PANEL (Climate Control Panel)	Climate control unit	Loss of communication
B296D	Electric heater coolant Pump Communication Fail	Climate control unit	Loss of communication
B296E	Electric heater coolant Pump Fail	Climate control unit	Signal error
B2983	A problem in the recirculation control motor circuit, linkage, door, or motor	Climate control unit	Signal error

DTC	Detection Item or Symptom	ECU	DTC Type
B2986	An open in the recirculation control motor circuit	Climate control unit	Signal error
B2990	A problem in the A/C compressor driving circuit (A Problem in the Electric A/C Compressor Driving Circuit)	Climate control unit	Signal error
B2998	A problem in the A/C compressor driver (A Problem in the Electric A/C Compressor Driver)	Climate control unit	Signal error
U1280	Communication bus line error (BUS-OFF)	Climate control unit	Loss of communication
U1281	Climate Control Unit Lost Communication with MICU (body control module)	Climate control unit	Loss of communication
U128D	Climate Control Unit Lost communication with gauge control module	Climate control unit	Loss of communication
U1290*2	Climate Control Unit Lost Communication With Seat Heater Control Unit (Front)	Climate control unit	Loss of communication

*1: With dual zone climate control

*2: With seat heater

HOW TO INFORMATION

HOW TO TROUBLESHOOT THE CLIMATE CONTROL SYSTEM (CLIMATE CONTROL PANEL WITHOUT DISPLAY)

How to Check for DTCs with the HDS

1. Turn the vehicle to the OFF (LOCK) mode.

2. Connect the HDS to the DLC

3. Turn the vehicle to the ON mode.

4. Make sure the HDS communicates with the vehicle and the climate control unit. If it does not, go to the DLC circuit troubleshooting

5. Select Body Electrical in the System Selection Menu.

6. Select HVAC in the Body Electrical.

7. Select DTCs in the Test Mode Menu. Check for DTCs. If any DTCs are indicated, write down the DTCs, then go to the indicated DTC troubleshooting. If no DTCs are indicated, do all system scan, then refer to symptom troubleshooting.

NOTE:

- **After troubleshooting, clear the DTCs with the HDS.**
- **For specific operations, refer to the user's manual that came with the HDS.**

How to Use the Self-Diagnostic Function with the HDS

NOTE: This method is only available if the HDS can communicate with the climate control unit.

1. Turn the vehicle to the OFF (LOCK) mode.

2. Connect the HDS to the DLC

3. Turn the vehicle to the ON mode.

4. Make sure the HDS communicates with the vehicle and the climate control unit. If it does not, go to the **DLC circuit troubleshooting**

5. Select Body Electrical in the System Selection Menu.

6. Select HVAC in the Body Electrical.

7. Select Function Test in the Test Mode Menu.

8. Select Climate Control Unit Self Test in the Function Test. Check for DTCs. If any DTCs are indicated, write down the DTCs, then go to the indicated DTC troubleshooting.

NOTE:

- **After troubleshooting, clear the DTCs with the HDS.**
- **For specific operations, refer to the user's manual that came with the HDS.**

How to Use the Self-Diagnostic Function without the HDS

Button	Button Name
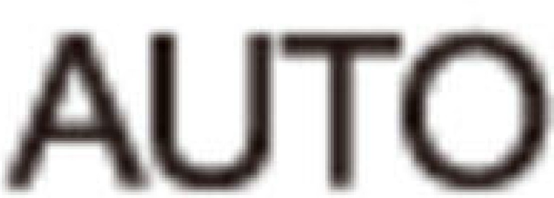	AUTO button
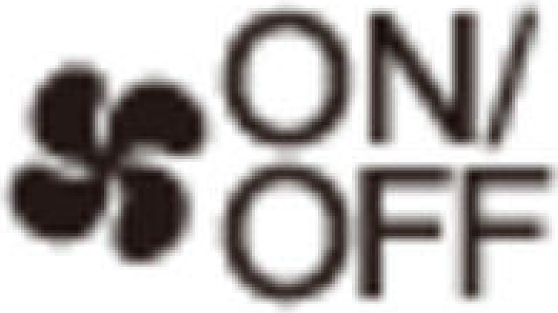	ON/OFF button

Button	Button Name
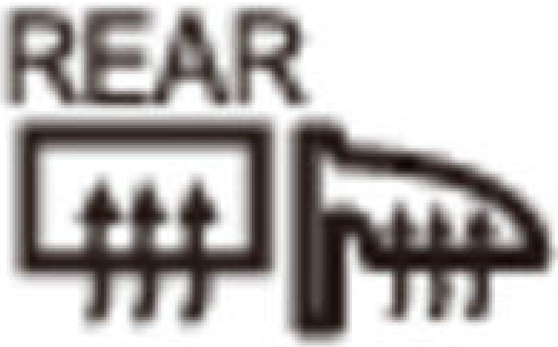	REAR WINDOW DEFOGGER/MIRROR DEFOGGER button
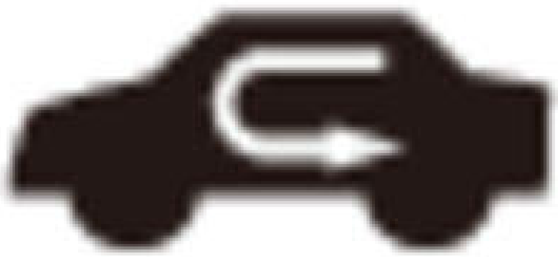	RECIRCULATION button

Button	Button Name
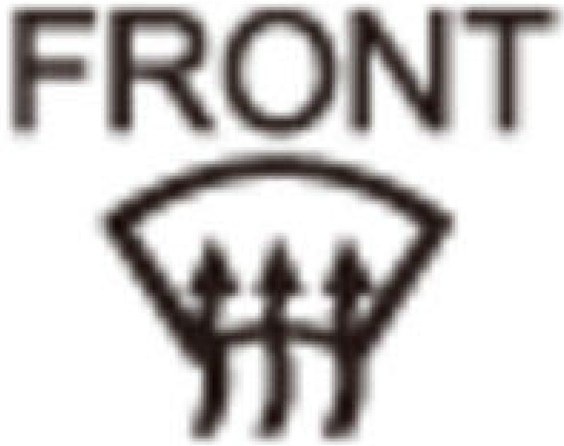	WINDSHIELD DEFROST button

The climate control unit has a self-diagnostic function. To run the self-diagnostic function, do the following:

1. Turn the vehicle to the OFF (LOCK) mode and then the ON mode. Press and hold the ON/OFF button, then within 10 seconds press and release the REAR WINDOW DEFOGGER/MIRROR DEFOGGER button five times. Release the ON/OFF button, then the self-diagnostic function begins.

NOTE:

- **The blower motor should run at various speeds when in the self-diagnostic mode.**
- **If there are any problems in the system, the A/C Error Display screen will indicate them. Select the previous/next icon to confirm the DTCs. To determine the meaning of the indication, refer to the table that follows.**
- **If there are no problems detected, The error status shows Normal, and The number of Errors indicates "0".**

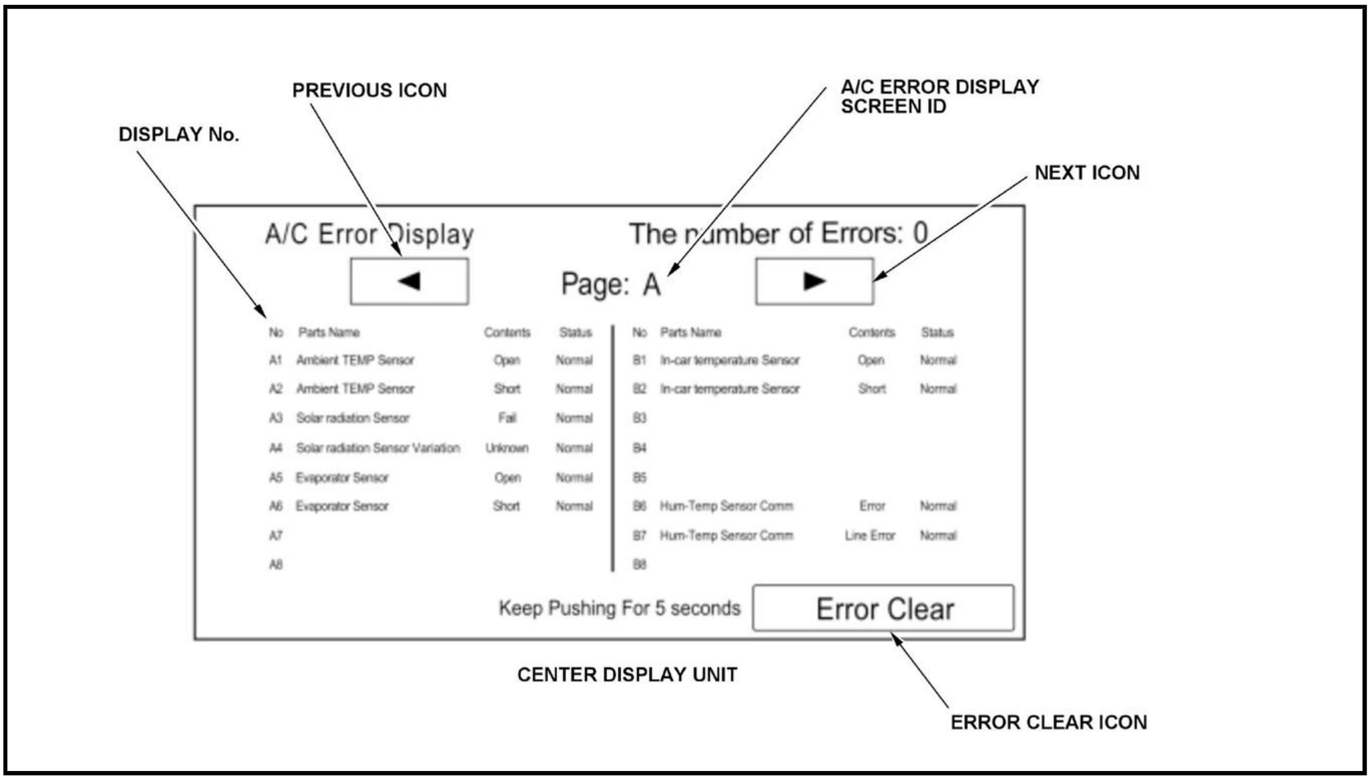
PREVIOUS ICON
A/C ERROR DISPLAY SCREEN ID
DISPLAY No.
NEXT ICON
A/C Error Display
The number of Errors: 0
◄
Page: A
►
Keep Pushing For 5 seconds
Error Clear
CENTER DISPLAY UNIT
ERROR CLEAR ICON

No	Parts Name	Contents	Status
A1	Ambient TEMP Sensor	Open	Normal
A2	Ambient TEMP Sensor	Short	Normal
A3	Solar radiation Sensor	Fail	Normal
A4	Solar radiation Sensor Variation	Unknown	Normal
A5	Evaporator Sensor	Open	Normal
A6	Evaporator Sensor	Short	Normal
A7			
A8			

No	Parts Name	Contents	Status
B1	In-car temperature Sensor	Open	Normal
B2	In-car temperature Sensor	Short	Normal
B3			
B4			
B5			
B6	Hum-Temp Sensor Comm	Error	Normal
B7	Hum-Temp Sensor Comm	Line Error	Normal
B8			

Canceling the Self-Diagnostic Function

3. Turn the vehicle to the OFF (LOCK) mode to cancel the self-diagnostic function. After completing repair work, run the self-diagnostic function again to make sure that there are no other DTCs.

Checking for DTCs

A/C Error Display Screen ID	Display No.	Parts Name	Contents	DTC	Detection Item
A	A1	Ambient TEMP Sensor	Open	B1227	An open in the outside air temperature sensor circuit
	A2	Ambient TEMP Sensor	Short	B1228	A short in the outside air temperature sensor circuit
	A3	Solar radiation Sensor	Fail	B123F	Automatic lighting control unit/sunlight sensor error
	A4	Solar radiation Sensor Variation	Unknown	---	Unknown sunlight sensor type
	A5	Evaporator Sensor	Open	B1231	An open in the evaporator temperature sensor circuit
	A6	Evaporator Sensor	Short	B1232	A short in the evaporator temperature sensor circuit
	B6	Hum-Temp Sensor Comm	Error	B121D	Humidity/in-car temperature sensor communication error
	B7	Hum-Temp Sensor Comm	Line Error	---	Display "Normal" when humidity/in-car temperature sensor 4P connector disconnected, and connect HUM CLK line and HUM DATA line with a jumper wire.

*: With seat heater

A/C Error Display Screen ID	Display No.	Parts Name	Contents	DTC	Detection Item
B	A1	A/M motor (Dr)	Open	B1233	An open in the air mix control motor circuit (driver's)
	A2	A/M motor (Dr)	Short	B1234	A short in the air mix control motor circuit (driver's)
	A3	A/M motor (Dr)	Lock	B1235	A problem in the air mix control motor circuit, linkage, door, or motor (driver's)
	A4	A/M motor (As)	Open	B1236	An open in the passenger's air mix control motor circuit
	A5	A/M motor (As)	Short	B1237	A short in the passenger's air mix control motor circuit
	A6	A/M motor (As)	Lock	B1238	A problem in the passenger's air mix control motor circuit, linkage, door, or motor
	B1	MODE motor	Open	B121A	An open in the mode control motor circuit
	B2	MODE motor	Short	B121B	A short in the mode control motor circuit
	B3	MODE motor	Lock	B1240	A problem in the mode control motor circuit, linkage, door, or motor
	B4	R/F motor	Open	B2986	An open in the recirculation control motor circuit
	B5	R/F motor	Short	B1220	A short in the recirculation control motor circuit
	B6	R/F motor	Lock	B2983	A problem in the recirculation control motor circuit, linkage, door, or motor
D	A1	Blower motor	Lock	B1241	A problem in the blower motor circuit
	A2	EWP	COMM Error	B296D	Electric water pump communication fail
	A3	EWP	FAIL	B296E	Electric water pump fail
	B6	ECOMP	SLEEP	B2990	A problem in the A/C compressor driving circuit (A problem in the electric A/C compressor driving circuit)
	B7	ECOMP	INV FAIL	B2998	A problem in the A/C compressor driver (A problem in the electric A/C compressor driver)
	B8	Lost Communication with	ECOMP (FCAN)	---	Electric A/C compressor lost communication
I	A1	B-CAN	BUS OFF	U1280	Communication bus line error (BUS-OFF)
	A2	Lost Communication with	Meter (BCAN)	U128D	Climate control unit lost communication with gauge

A/C Error Display Screen ID	Display No.	Parts Name	Contents	DTC	Detection Item
					control module
	A3	Lost Communication with	MICU (BCAN)	U1281	Climate control unit lost communication with MICU (body control module)
	A4	Lost Communication with	AHU (BCAN)	---	Climate control unit lost communication with center display unit
	A6 *	Lost Communication with	HCS (BCAN)	U1290	Climate control unit lost communication with seat heater control unit (front)
	B4	LIN Communication	BUS OFF	B120A	Climate control unit LIN communication bus line error
	B5	Lost Communication with	Fr PANEL (LIN)	B2964	Climate control unit lost communication with front panel (climate control panel)
	B8	EEPROM	Data Error	---	Climate control unit internal error

*: With seat heater

How to Check for History DTCs

The climate control unit can record history DTCs. To read the history DTCs, do the following:

1. Turn the vehicle to the ON mode, then turn the vehicle to the OFF (LOCK) mode after confirming the A/C system is OFF.

2. Turn the vehicle to the ON mode.

3. While pressing the WINDSHIELD DEFROST button, press and hold the ON/OFF button for 10 seconds or more. While pressing and holding both the WINDSHIELD DEFROST and ON/OFF buttons, the display screen goes directly to the A/C Error Display shown.

NOTE:

- **If there are any problems in the system, the A/C Error Display screen will indicate them. Select the previous/next icon to confirm the DTCs. To determine the meaning of the indication, refer to the table that follows.**
- **If there are no problems detected, The error status shows Normal, and The number of Errors indicates "0".**

Canceling the Read History DTCs

5. Turn the vehicle to the OFF (LOCK) mode to cancel reading the history DTCs. After completing the repair work, clear the DTCs.

How to Clear the History DTCs

1. Turn the vehicle to the ON mode, then turn the vehicle to the OFF (LOCK) mode after confirming the A/C system is OFF.

2. Turn the vehicle to the ON mode.

3. While pressing the WINDSHIELD DEFROST button, press and hold the ON/OFF button for 10 seconds or more.

4. While pressing and holding both the WINDSHIELD DEFROST and ON/OFF buttons, the display screen goes directly to the A/C Error Display shown, touch and hold the Error Clear icon for 5 seconds.

5. Do the How to Check for History DTCs to verify DTCs have been cleared.

Displaying Sensor Inputs at the Climate Control Unit

The climate control unit has a mode that displays the sensor inputs it receives. This mode shows you what the climate control unit is receiving from each of the sensors, one at a time, and it can help you determine if a sensor is faulty.

Checks Before Using the Sensor Input Display Mode

1. Turn the vehicle to the ON mode, and check the recirculation door function; press the RECIRCULATION button to switch from FRESH to RECIRCULATE. The air volume and sound should change slightly. Set the TEMPERATURE CONTROL button to the desired test temperature:

- "Lo" temperature setting will default to MAX COOL, VENT and RECIRCULATE (A/C on) or FRESH (A/C off).
- "Hi" temperature setting will default to MAX HOT, HEAT, HEAT/DEF, and FRESH.

3. Turn the vehicle to the OFF (LOCK) mode.

Run the Sensor Input Display Mode

1. Turn the vehicle to the OFF (LOCK) mode.

2. Press and hold both the AUTO and RECIRCULATION buttons, then turn the vehicle to the READY TO DRIVE mode.

3. Release both buttons. The display screen goes directly to the A/C sensor display mode shown. The display screen indicates the sensor ID and then the value for that sensor.

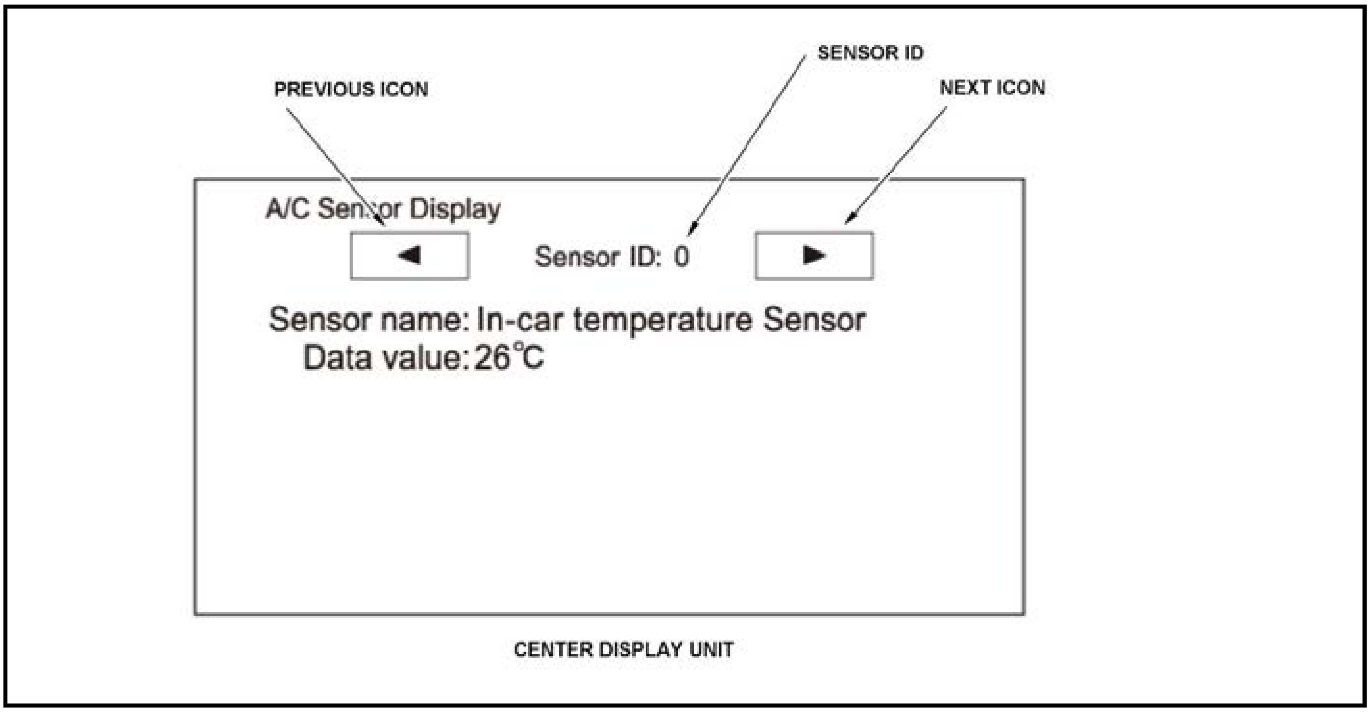

Sensor ID: 0

Sensor name: In-car temperature Sensor
Data value: 26℃

4. To advance to the next sensor, touch the sensor ID previous/next icon or press the REAR WINDOW DEFOGGER/MIRROR DEFOGGER * button.*: With mirror defogger To cancel the sensor input display mode, press the AUTO button or turn the vehicle to the OFF (LOCK) mode.

NOTE:

- **The sensor values will be displayed in degrees Celsius (deg.C) or an alphanumeric code. Use the chart to convert the value to degrees Fahrenheit (deg.F).**
- **If the sensor value displays "Error", this indicates there is an open or short in the circuit or sensor. Check for DTCs using the HDS, or use the climate control self-diagnostic function.**
- **If necessary, compare the sensor input display to a known-good vehicle under the same test conditions.**
- **If the sensor displayed value is out of the normal range, refer to the sensor test or substitute a known-good sensor, and recheck.**
- **Unsupported items shall be skipped.**

Sensor ID	Sensor Name	Data Value Unit
0	In-car temperature Sensor	deg.C
1	Ambient temperature Sensor	deg.C
2	Solar radiation Sensor	10 W/m 2
3	Water temperature Sensor	deg.C
4	Evaporator Sensor	deg.C
5	Humidity Sensor	%
8	A/M motor potentiometer (Dr)	% of opening
9	A/M motor potentiometer (As)	% of opening

Sensor ID	Sensor Name	Data Value Unit
10	Mode motor potentiometer	0.1 V
11	R/F motor potentiometer	% of opening
16	ECOMP Real RPM	100 rpm
26	COMP Oil circulation	• Unfinished • Finished
27	Solar radiation Sensor Variation	• Hard Wire • BCAN • Unknown

Celsius to Fahrenheit Conversion Table

deg.C	deg.F	deg.C	deg.F	deg.C	deg.F	deg.C	deg.F	deg.C	deg.F
0	32	10	50	20	68	30	86	40	104
1	34	11	52	21	70	31	88	41	106
2	36	12	54	22	72	32	90	42	108
3	37	13	55	23	73	33	91	43	109
4	39	14	57	24	75	34	93	44	111
5	41	15	59	25	77	35	95	45	113
6	43	16	61	26	79	36	97	46	115
7	45	17	63	27	81	37	99	47	117
8	46	18	64	28	82	38	100	48	118
9	48	19	66	29	84	39	102	49	120

deg.C	deg.F	deg.C	deg.F	deg.C	deg.F	deg.C	deg.F	deg.C	deg.F
50	122	60	140	70	158	80	176	90	194
51	124	61	142	71	160	81	178	91	196
52	126	62	144	72	162	82	180	92	198
53	127	63	145	73	163	83	181	93	199
54	129	64	147	74	165	84	183	94	201
55	131	65	149	75	167	85	185	95	203
56	133	66	151	76	169	86	187	96	205
57	135	67	153	77	171	87	189	97	207
58	136	68	154	78	172	88	190	98	208
59	138	69	156	79	174	89	192	99	210

Alphanumeric Conversion Table

Display Reading (Alphanumeric)	deg.C	deg.F	%
F9	109 thru 200	228 thru 392	109 thru 200
F0 thru F8	100 thru 108	212 thru 226	100 thru 108
0 thru 99	0 thru 99	32 thru 210	0 thru 99
A1 thru A9	-1 thru -9	30 thru 16	-1 thru -10
B0 thru B9	-10 thru -19	14 thru -2	-10 thru -19
C0 thru C9	-20 thru -29	-4 thru -20	-20 thru -29
D0 thru D9	-30 thru -39	-22 thru -38	-30 thru -39
E0 thru E9	-40 thru -49	-40 thru -56	-40 thru -49

Alphanumeric Conversion Table (Mode Positioning)

Display Reading (Volt)	Indication	Mode Position
0.5-0.6	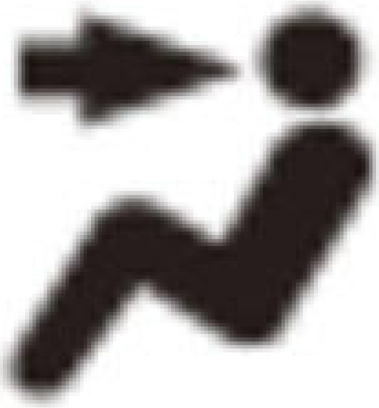	VENT

Display Reading (Volt)	Indication	Mode Position
1.1-1.2	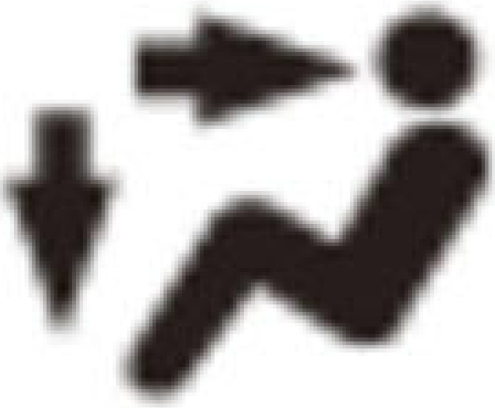	HEAT/VENT-1
1.4-1.5		HEAT/VENT-2
1.8-1.9		HEAT/VENT-3
2.3-2.4	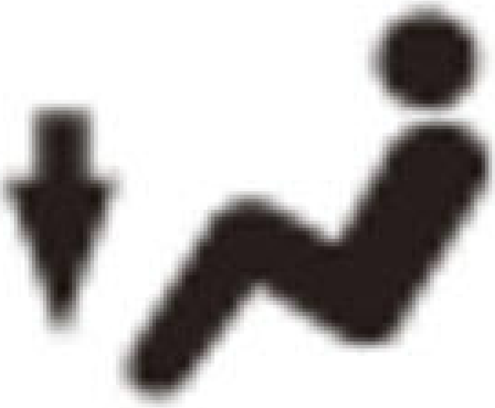	HEAT-1
2.8-2.9		HEAT-2

Display Reading (Volt)	Indication	Mode Position
3.2-3.3	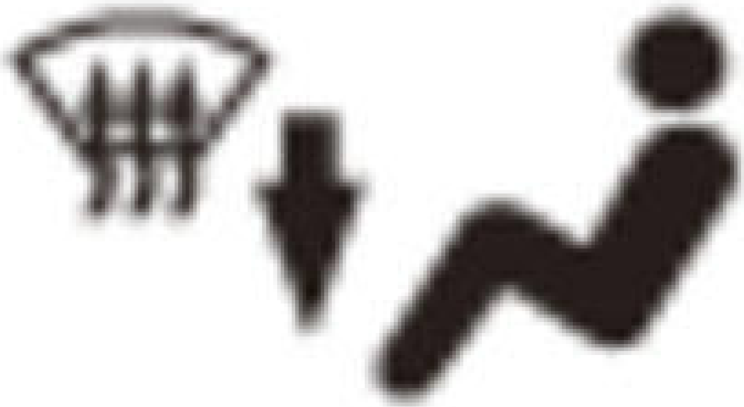	HEAT/DEF-1
4.0-4.1		HEAT/DEF-2
4.4-4.5	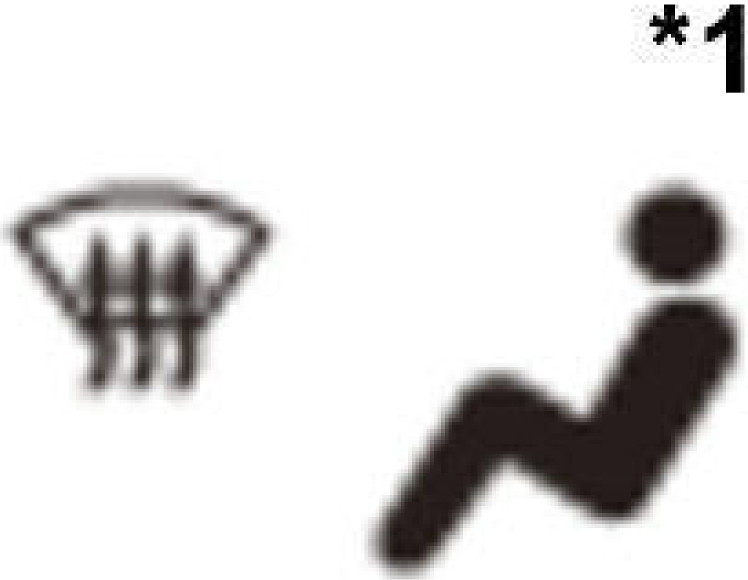	DEF
	Not indication *2	

*1: Auto mode

*2: Manual mode

HOW TO TROUBLESHOOT THE CLIMATE CONTROL SYSTEM (CLIMATE CONTROL PANEL WITH DISPLAY)

How to Check for DTCs with the HDS

1. Make sure the vehicle is in the OFF (LOCK) mode.

2. Connect the HDS to the DLC

3. Turn the vehicle to the ON mode.

4. Make sure the HDS communicates with the vehicle and the climate control unit. If it does not, go to the DLC circuit troubleshooting

5. Select Body Electrical in the System Selection Menu.

6. Select HVAC in the Body Electrical.

7. Select DTCs in the Test Mode Menu. Check for DTCs. If any DTCs are indicated, write down the DTCs, then go to the indicated DTC troubleshooting. If no DTCs are indicated, do all system scan, then refer to symptom troubleshooting.

NOTE:

- **After troubleshooting, clear the DTCs with the HDS.**
- **For specific operations, refer to the user's manual that came with the HDS.**

How to Use the Self-Diagnostic Function with the HDS

NOTE: This method is only available if the HDS can communicate with the climate control unit.

1. Make sure the vehicle is in the OFF (LOCK) mode.

2. Connect the HDS to the DLC

3. Turn the vehicle to the ON mode.

4. Make sure the HDS communicates with the vehicle and the climate control unit. If it does not, go to the DLC circuit troubleshooting

5. Select Body Electrical in the System Selection Menu.

6. Select HVAC in the Body Electrical.

7. Select Function Test in the Test Mode Menu.

8. Select Climate Control Unit Self Test in the Function Test. Check for DTCs. If any DTCs are indicated, write down the DTCs, then go to the indicated DTC troubleshooting.

NOTE:

- **After troubleshooting, clear the DTCs with the HDS.**
- **For specific operations, refer to the user's manual that came with the HDS.**

How to Use the Self-Diagnostic Function without the HDS

Button	Button Name
AUTO	AUTO button
ON/ OFF	ON/OFF button

Button	Button Name
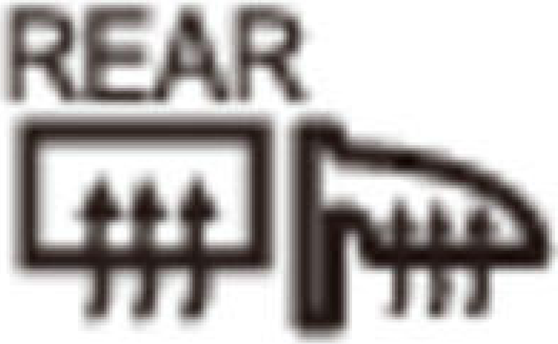	REAR WINDOW DEFOGGER/MIRROR DEFOGGER button
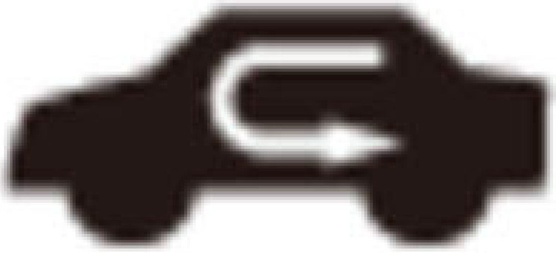	RECIRCULATION button

Button	Button Name
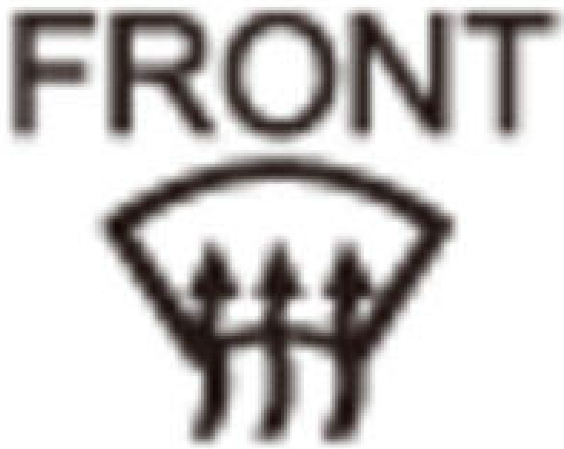	WINDSHIELD DEFROST button

The climate control unit has a self-diagnostic function. To run the self-diagnostic function, do the following:

1. Turn the vehicle to the OFF (LOCK) mode and then the ON mode.

2. Press and hold the ON/OFF button, then within 10 seconds press and release the REAR WINDOW DEFOGGER/MIRROR DEFOGGER button five times. Release the ON/OFF button. ALL LCD segments come on for 2 seconds, then the self-diagnostic function begins.

NOTE:

- **The blower motor will run at various speeds regardless of what the panel is displaying.**
- **If there is any problem in the system, the temperature indicator flashes "88". Refer to checking for DTCs.**
- **If there is more than one DTC, they are displayed one at a time in sequence followed by a pause (all the display indicator segments illuminate) between the DTCs.**
- **If no DTCs are present, the temperature indicator will flash "no".**

Canceling the Self-Diagnostic Function

4. Turn the vehicle to the OFF (LOCK) mode to cancel the self-diagnostic function. After completing repair work, run the self-diagnostic function again to make sure that there are no other DTCs.

Checking for DTCs

The temperature indicator display indicates single or multiple DTCs. If no DTCs are present, the temperature indicator will flash "no".

DTC (Temperature Indicator Segments)	DTC	Detection Item
05	B1227	An open in the outside air temperature sensor circuit
06	B1228	A short in the outside air temperature sensor circuit
09	B1231	An open in the evaporator temperature sensor circuit
0A	B1232	A short in the evaporator temperature sensor circuit

DTC (Temperature Indicator Segments)	DTC	Detection Item
17	**B123F**	Automatic lighting control unit/sunlight sensor error
40	**B1233**	An open in the air mix control motor circuit
41	**B1234**	A short in the air mix control motor circuit
42	**B1235**	A problem in the air mix control motor circuit, linkage, door, or motor
49	**B121A**	An open in the mode control motor circuit
4A	**B121B**	A short in the mode control motor circuit
4b	**B1240**	A problem in the mode control motor circuit, linkage, door, or motor
55	**B2986**	An open in the recirculation control motor circuit
56	**B1220**	A short in the recirculation control motor circuit
57	**B2983**	A problem in the recirculation control motor circuit, linkage, door, or motor
59	**B1241**	A problem in the blower motor circuit
68	**B296D**	Electric water pump communication fail
69	**B296E**	Electric water pump fail
80	**U1280**	Communication bus line error (BUS-OFF)
83	**U128D**	Climate control unit lost communication with gauge control module (VSP message)
89	**B121D**	Humidity/in-car temperature sensor communication error
8A	**B120A**	Climate control unit LIN communication bus line error
91	**U1281**	Climate control unit lost communication with MICU (body control module)
93	**B2964**	Climate control unit lost communication with front panel (climate control panel)
C0	---	Climate control unit internal error
C3	**B2990**	A problem in the A/C compressor driving circuit (A problem in the electric A/C compressor driving circuit)
C5	**B2998**	A problem in the A/C compressor driver (A problem in the electric A/C compressor driver)
C7	---	Electric A/C compressor lost communication
Cd	---	Unknown sunlight sensor type

How to Check for History DTCs

The climate control unit can record history DTCs. To read the history DTCs, do the following:

1. Turn the vehicle to the ON mode, then turn the vehicle to the OFF (LOCK) mode after confirming the A/C system is OFF.

2. Turn the vehicle to the ON mode.

3. While pressing the WINDSHIELD DEFROST button, press and hold the ON/OFF button for 10 seconds or more. While pressing and holding both the WINDSHIELD DEFROST and ON/OFF buttons, the history DTCs will be indicated.

NOTE:

- **If there is any problem in the system, the temperature indicator flashes "88". Refer to checking for DTCs.**
- **If there is more than one DTC, they are displayed one at a time in sequence followed by a pause (all the display indicator segments illuminate) between the DTCs.**
- **If no DTCs are present, the temperature indicator will flash "no".**

Canceling the Read History DTCs

5. Turn the vehicle to the OFF (LOCK) mode to cancel the history DTCs. After completing the repair work, clear the DTCs.

How to Clear the History DTCs

1. Turn the vehicle to the OFF (LOCK) mode.

2. Press and hold both the AUTO and WINDSHIELD DEFROST buttons, then turn the vehicle to the ON mode.

3. After about 5 seconds the windshield defrost indicator starts to blink, release the buttons.

4. Do the How to Check for History DTCs to verify DTCs have been cleared.

Displaying Sensor Inputs at the Climate Control Unit

The climate control unit has a mode that displays the sensor inputs it receives. This mode shows you what the climate control unit is receiving from each of the sensors, one at a time, and it can help you determine if a sensor is faulty.

Checks Before Using the Sensor Input Display Mode

1. Turn the vehicle to the ON mode, and check the recirculation door function; press the RECIRCULATION button to switch from FRESH to RECIRCULATE. The air volume and sound should change slightly. Set the TEMPERATURE CONTROL dial to the desired test temperature:

- "Lo" temperature setting will default to MAX COOL, VENT, and RECIRCULATE (A/C on) or FRESH (A/C off).
- "Hi" temperature setting will default to MAX HOT, HEAT, HEAT/DEF and FRESH.

3. Turn the vehicle to the OFF (LOCK) mode.

Run the Sensor Input Display Mode

1. Turn the vehicle to the OFF (LOCK) mode.

2. Press and hold both the AUTO and RECIRCULATION buttons, then turn the vehicle to the READY TO DRIVE mode.

3. Release both buttons. The temperature indicator will flash the sensor number and then the value for that sensor. Record the value displayed.

4. To advance to the next sensor, press the REAR WINDOW DEFOGGER/MIRROR DEFOGGER button. To cancel the sensor input display mode, press the AUTO button or turn the vehicle to the OFF (LOCK) mode.

NOTE:

- **The sensor values will be displayed in degrees Celsius (deg.C) or an alphanumeric code. Use the chart to convert the value to degrees Fahrenheit (deg.F).**
- **If the sensor value displays "Er", this indicates there is an open or short in the circuit or sensor. Check for DTCs using the HDS, or use the climate control self-diagnostic function.**
- **If necessary, compare the sensor input display to a known-good vehicle under the same test conditions.**
- **If the sensor displayed value is out of the normal range, refer to the sensor test or substitute a known-good sensor, and recheck.**
- **Unsupported items shall be skipped.**

Sensor Number	Item	Displayed Value Unit
0	In-car temperature sensor	deg.C
1	Outside air temperature sensor	deg.C

Sensor Number	Item	Displayed Value Unit
2	Sunlight sensor	10 W/m 2
3	Engine coolant temperature	deg.C
4	Evaporator temperature sensor	deg.C
5	Humidity sensor	%
8	Air mix opening (low value indicates cooler air distribution, higher value indicates warmer air distribution)	% of opening
b	Mode control positioning	0.1 V
d	Recirculation control opening	% of opening
F	Vehicle speed (vehicle must be driven to display speed)	10 km/h
H	A/C compressor oil circulation	• Unfinished: 00 • Finished: 01
L	Sunlight sensor type	• Hard Wire: 00 • BCAN: 99 • Unknown: --
r	Electric compressor speed	100 rpm

Celsius to Fahrenheit Conversion Table

deg.C	deg.F	deg.C	deg.F	deg.C	deg.F	deg.C	deg.F	deg.C	deg.F
0	32	10	50	20	68	30	86	40	104
1	34	11	52	21	70	31	88	41	106
2	36	12	54	22	72	32	90	42	108
3	37	13	55	23	73	33	91	43	109
4	39	14	57	24	75	34	93	44	111
5	41	15	59	25	77	35	95	45	113
6	43	16	61	26	79	36	97	46	115
7	45	17	63	27	81	37	99	47	117
8	46	18	64	28	82	38	100	48	118
9	48	19	66	29	84	39	102	49	120

deg.C	deg.F	deg.C	deg.F	deg.C	deg.F	deg.C	deg.F	deg.C	deg.F
50	122	60	140	70	158	80	176	90	194
51	124	61	142	71	160	81	178	91	196
52	126	62	144	72	162	82	180	92	198
53	127	63	145	73	163	83	181	93	199
54	129	64	147	74	165	84	183	94	201
55	131	65	149	75	167	85	185	95	203
56	133	66	151	76	169	86	187	96	205
57	135	67	153	77	171	87	189	97	207
58	136	68	154	78	172	88	190	98	208

deg.C	deg.F	deg.C	deg.F	deg.C	deg.F	deg.C	deg.F	deg.C	deg.F
59	138	69	156	79	174	89	192	99	210

Alphanumeric Conversion Table

Display Reading (Alphanumeric)	deg.C	deg.F	%
F9	109 thru 200	228 thru 392	109 thru 200
F0 thru F8	100 thru 108	212 thru 226	100 thru 108
0 thru 99	0 thru 99	32 thru 210	0 thru 99

Display Reading (Alphanumeric)	deg.C	deg.F	%
A1 thru A9	-1 thru -9	30 thru 16	-1 thru -10
B0 thru B9	-10 thru -19	14 thru -2	-10 thru -19
C0 thru C9	-20 thru -29	-4 thru -20	-20 thru -29
D0 thru D9	-30 thru -39	-22 thru -38	-30 thru -39
E0 thru E9	-40 thru -49	-40 thru -56	-40 thru -49

Alphanumeric Conversion Table (Mode Positioning)

Display Reading (Volt)	Indication	Mode Position
0.5-0.6	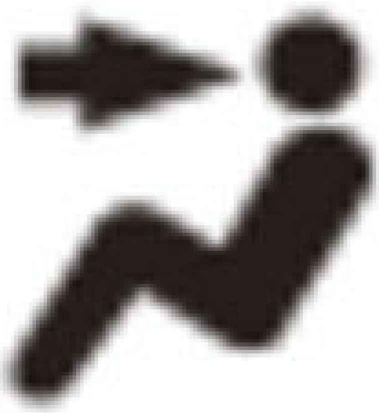	VENT

Display Reading (Volt)	Indication	Mode Position
1.1-1.2	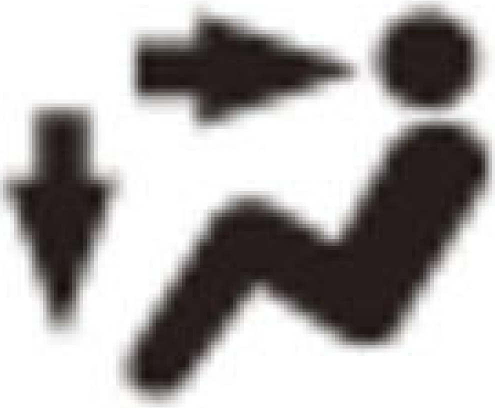	HEAT/VENT-1
1.4-1.5		HEAT/VENT-2
1.8-1.9		HEAT/VENT-3
2.3-2.4	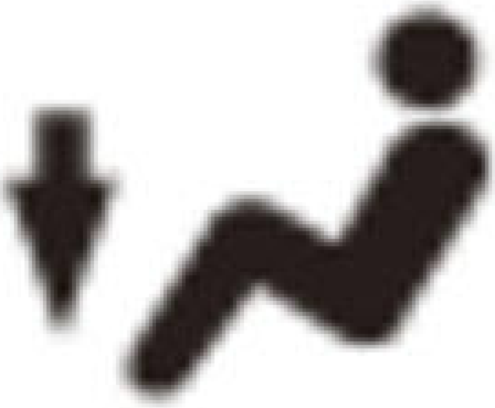	HEAT-1
2.8-2.9		HEAT-2

Display Reading (Volt)	**Indication**	**Mode Position**
3.2-3.3	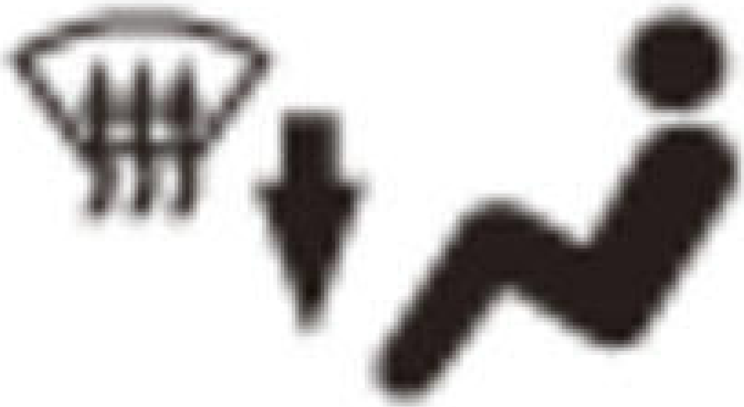	HEAT/DEF-1
4.0-4.1		HEAT/DEF-2
4.4-4.5	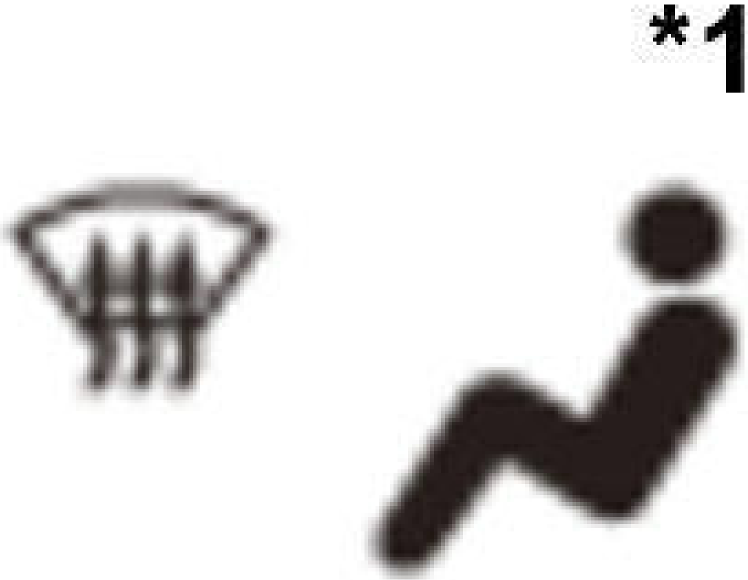	DEF
	Not indication *2	

*1: Auto mode

*2: Manual mode

DTC TROUBLESHOOTING

CLIMATE CONTROL SYSTEM DTC A-A4, CD

DTC screen A-A4 or DTC screen Cd : Unknown sunlight sensor type

*1: Climate control panel without display*2: Climate control panel with display

1. DTC check

   -1. Clear the DTC with the HDS.

   -2. Turn the vehicle to the OFF (LOCK) mode and then the ON mode.

   -3. Do the Self-Diagnostic Function with the HDS or the climate control unit.

   -4. Check for DTCs.

DTC Description	DTC
B123F Automatic lighting control unit/sunlight sensor error	Â

   Is DTC B123F, Error on the DTC screen A-A3 (climate control panel without display), or DTC screen 17 (climate control panel with display) indicated?

   YES

   Go to climate control DTC B123F troubleshooting.

   NO

   Go to step 2.

2. Problem verification

   -1. Turn the vehicle to the OFF (LOCK) mode and then the ON mode.

   -2. Do the Self-Diagnostic Function with the climate control unit.

   -3. Check for DTCs.

   Is Error on the DTC screen A-A4 *1 or DTC screen Cd *2 indicated?

   YES

   The failure is duplicated. Go to step 3.

   NO

   Intermittent failure, the system is OK at this time.

3. Connector check

   -1. Turn the vehicle to the OFF (LOCK) mode.

   -2. Check connection of the following connectors.

Sunlight sensor 2P connector (with automatic wiper)
Automatic lighting control unit-sensor 5P connector (without automatic wiper)
Climate control unit connector A (32P)

   Are the connection and terminals OK?

YES

Replace the climate control unit .

NO

Repair the connections or terminals, then recheck.

CLIMATE CONTROL SYSTEM DTC D-B8, C7

DTC screen D-B8 or DTC screen C7 : Electric A/C Compressor Lost Communication

1. Problem verification

   -1. Turn the vehicle to the OFF (LOCK) mode and then the ON mode.

   -2. Do the Self-Diagnostic Function with the climate control unit.

   -3. Check for DTCs.

   Is Error on the DTC screen D-B8 or DTC screen C7 indicated?

   YES

   The failure is duplicated. Go to step 2.

   NO

   Intermittent failure, the system is OK at this time.

2. CAN gateway system DTC check

   -1. Turn the vehicle to the OFF (LOCK) mode.

   -2. Connect the HDS to the DLC .

   -3. Turn the vehicle to the ON mode.

   -4. Check for CAN gateway system DTCs with the HDS.

DTC Description	DTC
Â	Â

   Are any DTCs indicated?

   YES

   Go to the troubleshooting for CAN gateway system DTC(s) .

   NO

   Go to step 3.

3. Open wire check (F-CAN D_H line, F-CAN D_L line)

   -1. Turn the vehicle to the OFF (LOCK) mode.

   -2. Disconnect the following connectors.

Electric A/C compressor 4P connector

CAN gateway 16P connector

-3. Measure the resistance between test points 1 and 2.

Test condition	Vehicle OFF (LOCK) mode Electric A/C compressor 4P connector: disconnected CAN gateway 16P connector: disconnected
Test point 1	Electric A/C compressor 4P connector (female terminals) No. 4: ①
Test point 2	CAN gateway 16P connector (female terminals) No. 7: ②

Test point 1	Electric A/C compressor 4P connector (female terminals) No. 3: ①
Test point 2	CAN gateway 16P connector (female terminals) No. 15: ②

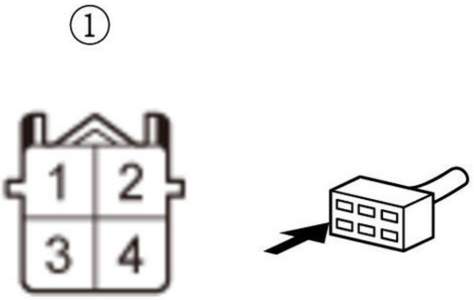

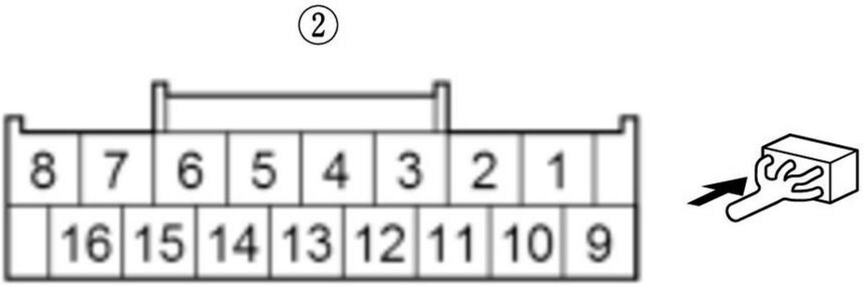

Is there 1.0 Ω or less?

YES

Replace the electric A/C compressor .

NO

Repair an open in the F-CAN D_H wire or the F-CAN D_L wire between the electric A/C compressor and the CAN gateway.

CLIMATE CONTROL SYSTEM DTC I-A4

DTC screen I-A4 : Climate control unit lost communication with center display unit

NOTE: The DTC may be stored due to the grounding failure or the power source failure at the center display (the grounding inspection and the power source inspection on each control unit are required prior to this checking process).

1. Problem verification

   -1. Turn the vehicle to the OFF (LOCK) mode and then the ON mode.

   -2. Do the Self-Diagnostic Function with the climate control unit.

   -3. Check for DTCs.

   Is Error on the DTC screen I-A4 indicated?

   YES

   The failure is duplicated. Go to step 2.

   NO

   Intermittent failure, the system is OK at this time. Check for loose wires or poor connections.

2. Open wire check (B-CAN_H line)

   -1. Turn the vehicle to the OFF (LOCK) mode.

   -2. Disconnect the following connectors.

Audio unit connector A (24P) (without navigation)
Audio-navigation unit connector A (24P) (with navigation)
Climate control unit connector A (32P)

   -3. Measure the resistance between test points 1 and 2.

Test condition	Vehicle OFF (LOCK) mode
	Audio unit connector A (24P) (without navigation): disconnected
	Audio-navigation unit connector A (24P) (with navigation): disconnected
	Climate control unit connector A (32P): disconnected

Test point 1	Audio unit connector A (24P) No. 14 (without navigation)
	Audio-navigation unit connector A (24P) No. 14 (with navigation)
Test point 2	Climate control unit connector A (32P) No. 25

   Is there 1.0 Ω or less?

   YES

   The B-CAN_H wire is OK. Go to step 3.

   NO

   Repair an open in the B-CAN_H wire.

3. Open wire check (B-CAN_L line)

   -1. Measure the resistance between test points 1 and 2.

Test condition	Vehicle OFF (LOCK) mode
	Audio unit connector A (24P) (without navigation): disconnected
	Audio-navigation unit connector A (24P) (with navigation): disconnected
	Climate control unit connector A (32P): disconnected
Test point 1	**Audio unit connector A (24P) No. 24 (without navigation)**
	Audio-navigation unit connector A (24P) No. 24 (with navigation)
Test point 2	**Climate control unit connector A (32P) No. 8**

Is there 1.0 Ω or less?

YES: Without navigation

Replace the audio unit .

YES: With navigation

Replace the audio-navigation unit .

NO

Repair an open in the B-CAN_L wire.

CLIMATE CONTROL SYSTEM DTC I-B8, C0

DTC screen I-B8 or DTC screen C0 : Climate control unit internal error

1. Problem verification

-1. Turn the vehicle to the OFF (LOCK) mode and then the ON mode.

-2. **Do the Self-Diagnostic Function with the climate control unit**.

-3. Check for DTCs.

Is Error on the DTC screen I-B8 or DTC screen C0 indicated?

YES

Replace the climate control unit .

NO

Intermittent failure, the climate control unit is OK at this time.

DTC B120A (I-B4), B120A (8A)

DTC B120A, DTC screen I-B4, or DTC screen 8A : Climate Control Unit LIN Communication Bus Line Error

DTC Description	DTC
B120A Climate Control Unit LIN Communication Bus Line Error	Â

DTC (AC)

1. Problem verification

-1. Clear the DTCs with the HDS.

-2. Turn the vehicle to the OFF (LOCK) mode and then the ON mode.

-3. Do the Self-Diagnostic Function with the HDS or the climate control unit.

-4. Check for DTCs.

DTC Description	DTC
B120A Climate Control Unit LIN Communication Bus Line Error	Â

Is DTC B120A, Error on the DTC screen I-B4 (climate control panel without display), or DTC screen 8A (climate control panel with display) indicated?

YES

The failure is duplicated. Go to step 2.

NO

Intermittent failure. Check for loose wires or poor connections on the climate control panel circuit.

2. Fuse check

-1. Turn the vehicle to the OFF (LOCK) mode.

-2. Check the following fuse.

Fuse	No. D9

Is the fuse OK?

YES

Go to step 3.

NO

Replace the fuse, and recheck. If the fuse blows again, repair a short in the No. D9 fuse circuit.

3. Determine possible failure area (BUS-DATA line, IG2_A/C line)

-1. Disconnect the following connector.

Climate control panel 20P connector

-2. Turn the vehicle to the ON mode.

-3. Measure the voltage between test points 1 and 2.

Test condition	Vehicle ON mode
	Climate control panel 20P connector: disconnected
Test point 1	Climate control panel 20P connector (female terminals) No. 13: ①
Test point 2	Climate control panel 20P connector (female terminals) No. 19: ①

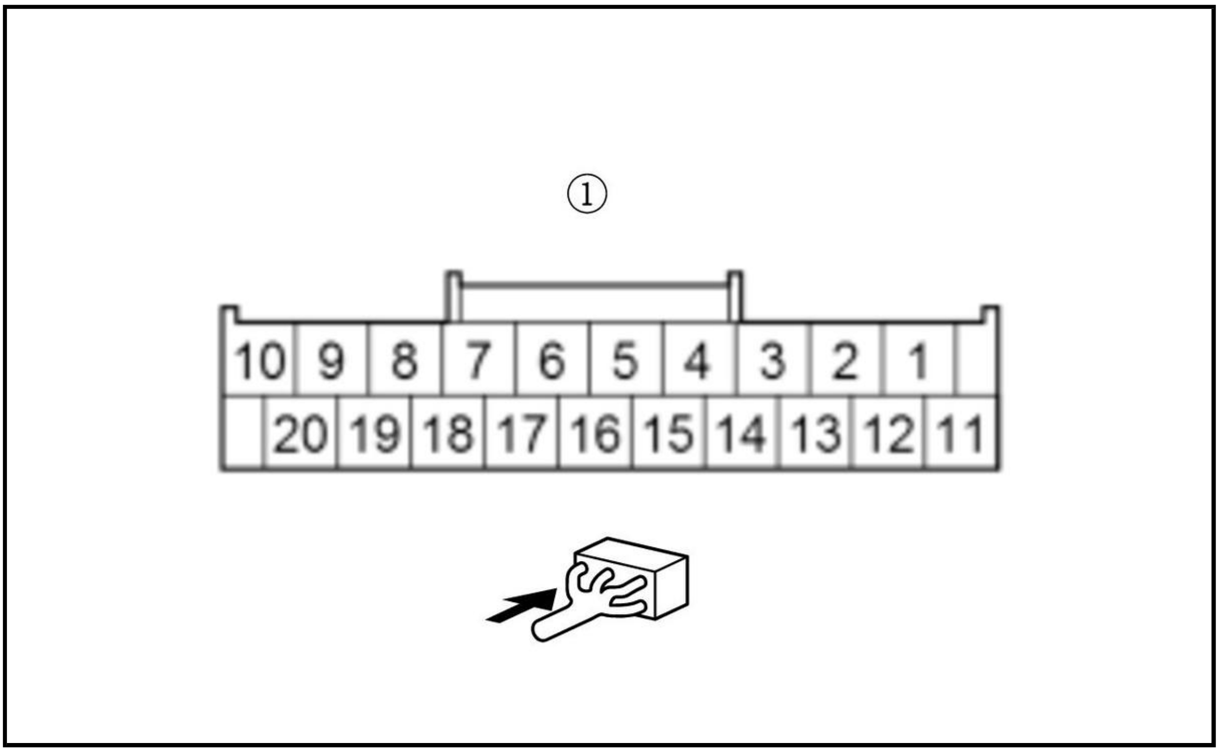

Is there battery voltage?

YES

Go to step 4.

NO

Go to step 7.

4. Shorted wire check (BUS-DATA line)

-1. Turn the vehicle to the OFF (LOCK) mode.

-2. Disconnect the following connector.

Climate control unit connector A (32P)

-3. Measure the resistance between test points 1 and 2.

Test condition	Vehicle OFF (LOCK) mode
	Climate control unit connector A (32P): disconnected
	Climate control panel 20P connector: disconnected
Test point 1	Climate control unit connector A (32P) No. 29
Test point 2	Body ground

Is there 1 MΩ or more?

YES

The BUS-DATA wire is not shorted. Go to step 5.

NO

Repair a short to ground in the BUS-DATA wire.

5. Open wire check (BUS-DATA line)

-1. Measure the resistance between test points 1 and 2.

Test condition	Vehicle OFF (LOCK) mode
	Climate control unit connector A (32P): disconnected
	Climate control panel 20P connector: disconnected
Test point 1	**Climate control unit connector A (32P) No. 29**
Test point 2	Climate control panel 20P connector (female terminals) No. 18: ①

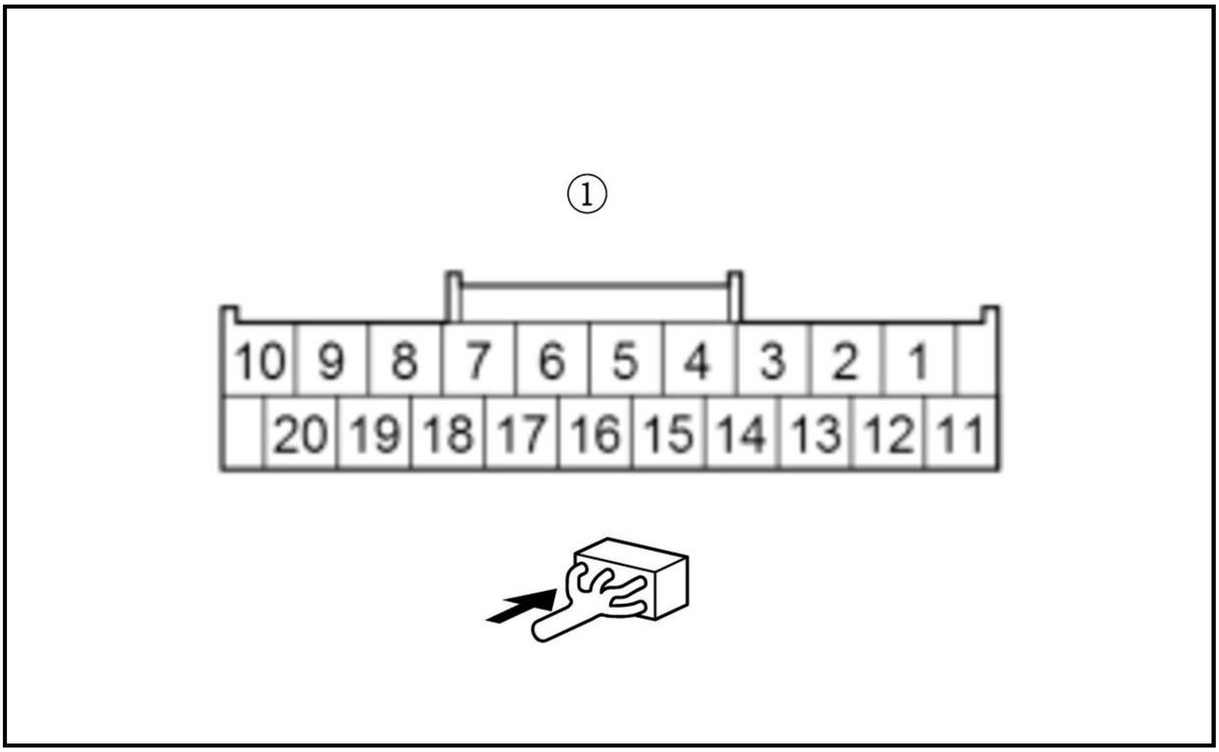

Is there 1.0 Ω or less?

YES

The BUS-DATA wire is OK. Go to step 6.

NO

Repair an open in the BUS-DATA wire.

6. Climate control panel check

-1. Reconnect the following connector.

Climate control unit connector A (32P)

-2. **Substitute a known-good climate control panel** .

-3. Clear the DTCs with the HDS.

-4. Turn the vehicle to the OFF (LOCK) mode and then the ON mode.

-5. **Do the Self-Diagnostic Function with the HDS or the climate control unit**.

-6. Check for DTCs.

DTC Description	DTC
B120A Climate Control Unit LIN Communication Bus Line Error	Â

Is DTC B120A, Error on the DTC screen I-B4 (climate control panel without display), or DTC screen 8A (climate control panel with display) indicated?

YES

Replace the climate control unit .

NO

Replace the original climate control panel .

7. Open wire check (IG2_A/C line)

-1. Measure the voltage between test points 1 and 2.

Test condition	Vehicle ON mode Climate control panel 20P connector: disconnected
Test point 1	Climate control panel 20P connector (female terminals) No. 19: ①
Test point 2	Body ground

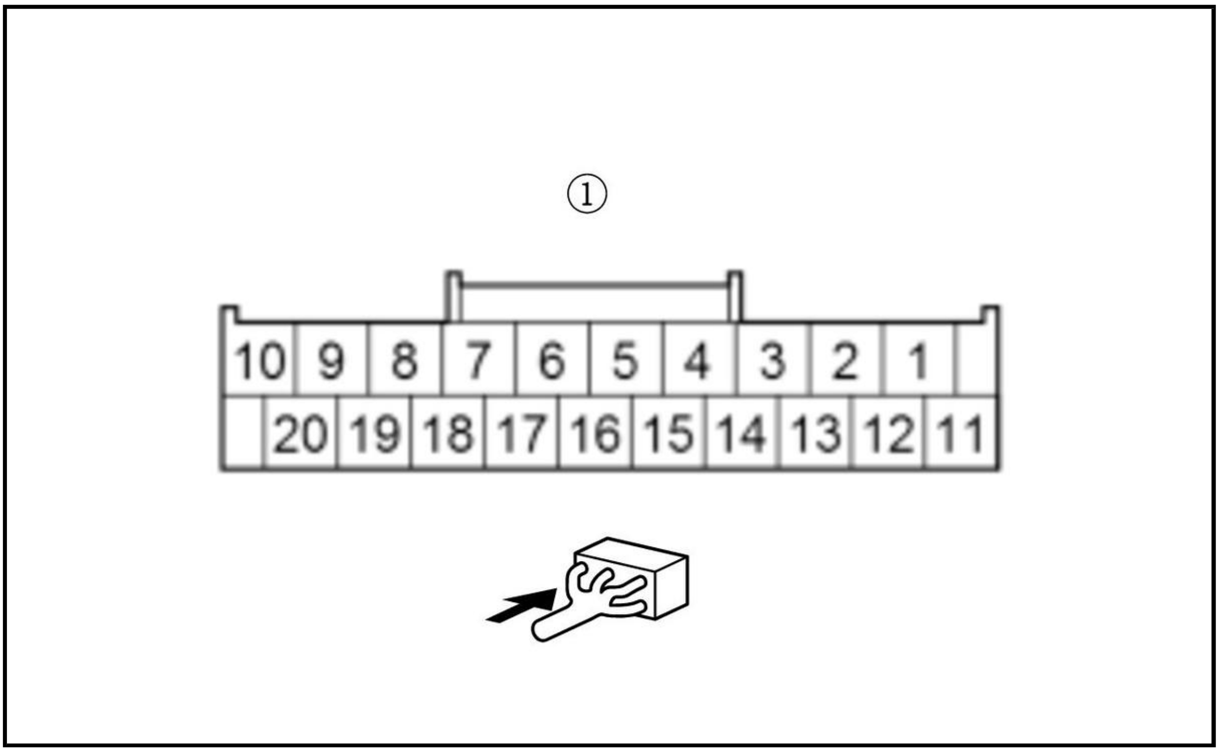

Is there battery voltage?

YES

Check for an open in the GND wire between the climate control panel and body ground. If the wire is OK, check for poor ground at G402.

NO

Repair an open in the IG2_A/C wire.

DTC B121A (B-B1), B121A (49)

DTC B121A, DTC screen B-B1, or DTC screen 49 : An Open in the Mode Control Motor Circuit

DTC Description	DTC
B121A An open in the mode control motor circuit	Â

DTC (AC)

1. Problem verification

   -1. Clear the DTCs with the HDS.

   -2. Turn the vehicle to the OFF (LOCK) mode and then the ON mode.

   -3. **Do the Self-Diagnostic Function with the HDS or the climate control unit**.

   -4. Check for DTCs.

DTC Description	DTC
B121A An open in the mode control motor circuit	Â

   Is DTC B121A, Error on the DTC screen B-B1 (climate control panel without display), or DTC screen 49 (climate control panel with display) indicated?

   YES

   The failure is duplicated. Go to step 2.

   NO

   Intermittent failure. Check for loose wires or poor connections on the mode control motor circuit.

2. Determine possible failure area (MDD-P line, others)

   -1. Turn the vehicle to the OFF (LOCK) mode.

   -2. Disconnect the following connector.

Mode control motor 5P connector

   -3. Turn the vehicle to the ON mode.

   -4. Measure the voltage between test points 1 and 2.

Test condition	Vehicle ON mode
	Mode control motor 5P connector: disconnected
Test point 1	Mode control motor 5P connector (female terminals) No. 2: ①
Test point 2	Body ground

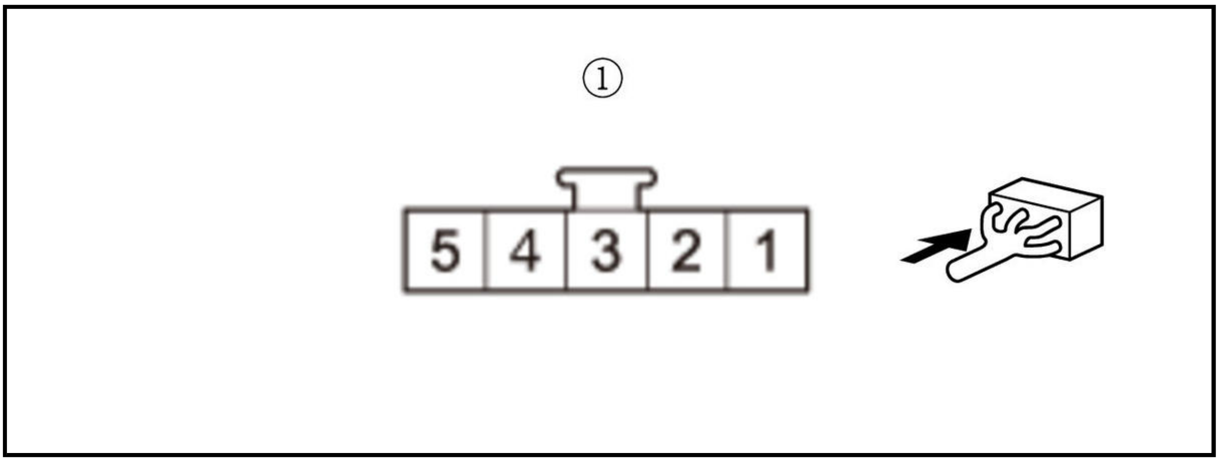

Is there about 5 V?

YES

The MDD-P wire is OK. Go to step 3.

NO

Go to step 5.

3. Determine possible failure area (mode control motor, SENS-COM line)

-1. Measure the voltage between test points 1 and 2.

Test condition	Vehicle ON mode
	Mode control motor 5P connector: disconnected
Test point 1	Mode control motor 5P connector (female terminals) No. 1: ①
Test point 2	Mode control motor 5P connector (female terminals) No. 2: ①

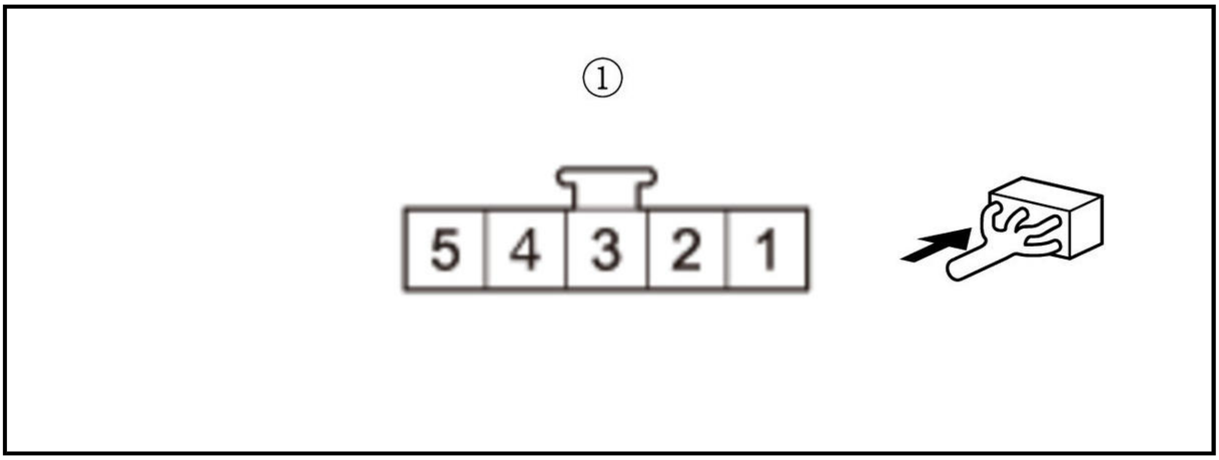

Is there about 5 V?

YES

Replace the mode control motor .

NO

Go to step 4.

4. Open wire check (SENS-COM line)

-1. Turn the vehicle to the OFF (LOCK) mode.

-2. Disconnect the following connector.

Climate control unit connector B (24P)

-3. Measure the resistance between test points 1 and 2.

Test condition	Vehicle OFF (LOCK) mode
	Mode control motor 5P connector: disconnected
Â	Climate control unit connector B (24P): disconnected
Test point 1	Mode control motor 5P connector (female terminals) No. 1: ①
Test point 2	**Climate control unit connector B (24P) No. 10**

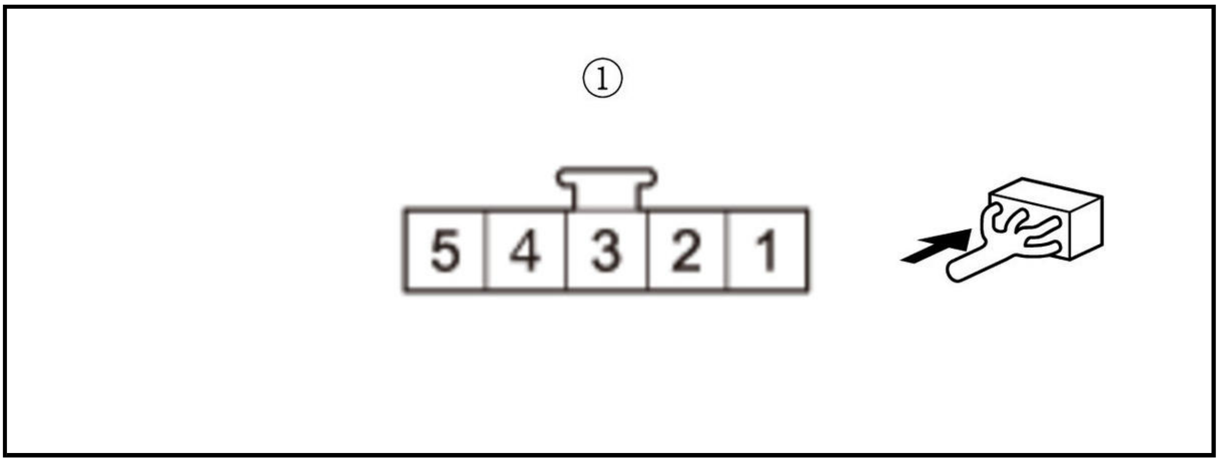

Is there 1.0 Ω or less?

YES

Replace the climate control unit .

NO

Repair an open in the SENS-COM wire.

5. Open wire check (MDD-P line)

-1. Measure the voltage between test points 1 and 2.

Test condition	Vehicle ON mode
	Mode control motor 5P connector: disconnected
Test point 1	**Climate control unit connector B (24P) No. 5**
Test point 2	Body ground

Is there about 5 V?

YES

Repair an open in the MDD-P wire.

NO

Replace the climate control unit .

DTC B121B (B-B2), B121B (4A)

DTC B121B, DTC screen B-B2, or DTC screen 4A : A short in the mode control motor circuit

NOTE: If other short circuit DTCs are indicated at the same time, there may be an open or short to body ground in the power S5V circuit.

DTC Description	DTC
B121B A short in the mode control motor circuit	Â

DTC (AC)

1. Problem verification

   -1. Clear the DTCs with the HDS.

   -2. Turn the vehicle to the OFF (LOCK) mode and then the ON mode.

   -3. Do the Self-Diagnostic Function with the HDS or the climate control unit.

   -4. Check for DTCs.

DTC Description	DTC
B121B A short in the mode control motor circuit	Â

   Is DTC B121B, Error on the DTC screen B-B2 (climate control panel without display), or DTC screen 4A (climate control panel with display) indicated?

   YES

   The failure is duplicated. Go to step 2.

   NO

   Intermittent failure. Check for loose wires or poor connections on the mode control motor circuit.

2. Determine possible failure area (S5V line, others)

   -1. Turn the vehicle to the OFF (LOCK) mode.

   -2. Disconnect the following connector.

Mode control motor 5P connector

   -3. Turn the vehicle to the ON mode.

   -4. Measure the voltage between test points 1 and 2.

Test condition	Vehicle ON mode
	Mode control motor 5P connector: disconnected
Test point 1	Mode control motor 5P connector (female terminals) No. 3: ①
Test point 2	Body ground

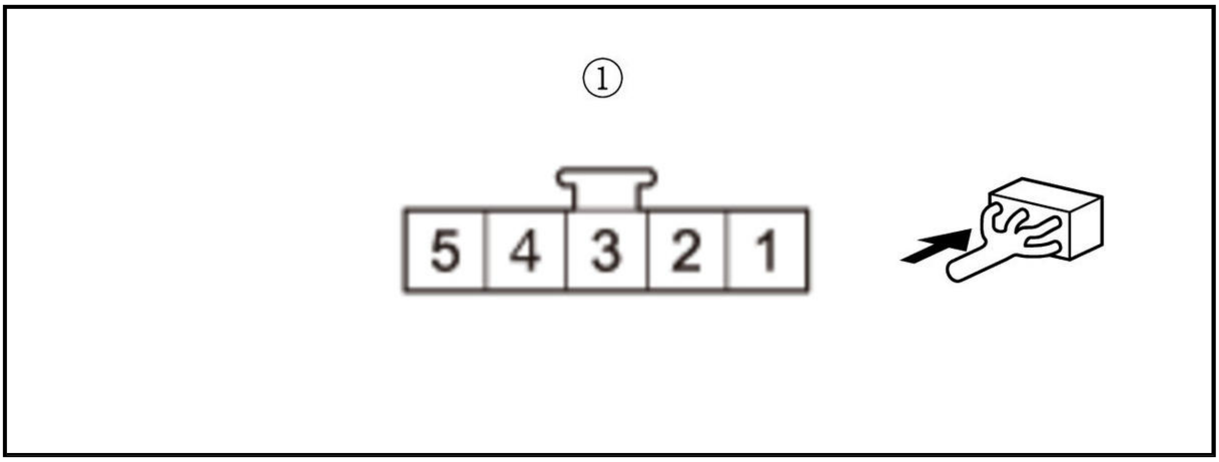

Is there about 5 V?

YES

The S5V wire is OK. Go to step 3.

NO

Go to step 6.

3. Determine possible failure area (mode control motor, MDD-P line)

-1. Measure the voltage between test points 1 and 2.

Test condition	Vehicle ON mode
	Mode control motor 5P connector: disconnected
Test point 1	Mode control motor 5P connector (female terminals) No. 2: ①
Test point 2	Body ground

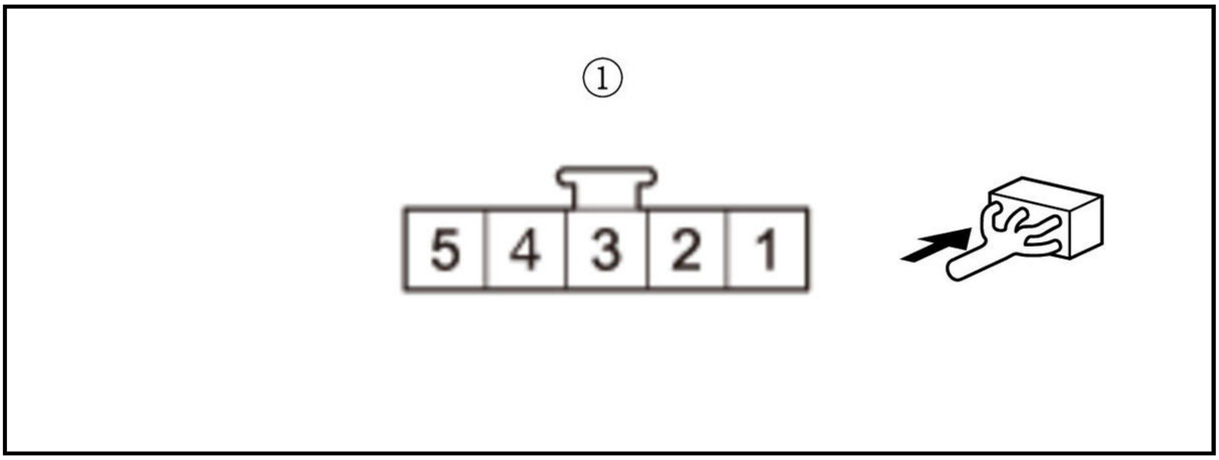

Is there about 5 V?

YES

Replace the mode control motor .

NO

Go to step 4.

4. Shorted wire check (MDD-P line)

-1. Turn the vehicle to the OFF (LOCK) mode.

-2. Disconnect the following connector.

Climate control unit connector B (24P)

-3. Measure the resistance between test points 1 and 2.

Test condition	Vehicle OFF (LOCK) mode
	Climate control unit connector B (24P): disconnected
	Mode control motor 5P connector: disconnected
Test point 1	**Climate control unit connector B (24P) No. 5**
Test point 2	Body ground

Is there 1 MΩ or more?

YES

The MDD-P wire is not shorted to body ground. Go to step 5.

NO

Repair a short to body ground in the MDD-P wire.

5. Shorted wire check (MDD-P line to SENS-COM line)

-1. Check for continuity between test points 1 and 2.

Test condition	Vehicle OFF (LOCK) mode
	Climate control unit connector B (24P): disconnected
	Mode control motor 5P connector: disconnected
Test point 1	Mode control motor 5P connector (female terminals) No. 1: ①
Test point 2	Mode control motor 5P connector (female terminals) No. 2: ①

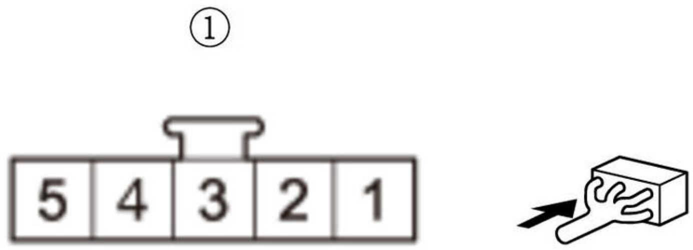

Is there 1 MΩ or more?

YES

Replace the climate control unit .

NO

Repair a short in the MDD-P wire to SENS-COM wire.

6. Open wire check (S5V line)

-1. Measure the voltage between test points 1 and 2.

Test condition	Vehicle ON mode
	Mode control motor 5P connector: disconnected
Test point 1	**Climate control unit connector B (24P) No. 1**
Test point 2	Body ground

Is there about 5 V?

YES

Repair an open in the S5V wire.

NO

The S5V wire is not open. Go to step 7.

7. Shorted wire check (S5V line)

-1. Turn the vehicle to the OFF (LOCK) mode.

-2. Disconnect the following connector.

Climate control unit connector B (24P)

-3. Measure the resistance between test points 1 and 2.

Test condition	Vehicle OFF (LOCK) mode
	Climate control unit connector B (24P): disconnected
	Mode control motor 5P connector: disconnected
Test point 1	**Climate control unit connector B (24P) No. 1**
Test point 2	Body ground

Is there 1 MΩ or more?

YES

Replace the climate control unit .

NO

Repair a short to body ground in the S5V wire.

DTC B121D (A-B6), B121D (89)

DTC B121D, DTC screen A-B6, or DTC indicator 89 : Humidity/In-Car Temperature Sensor Communication Error

DTC Description	DTC
B121D Humidity/in-car temperature sensor communication error	Â

DTC (AC)

1. Problem verification

-1. Clear the DTC with the HDS.

-2. Turn the vehicle to the OFF (LOCK) mode and then the ON mode.

-3. Do the Self-Diagnostic Function with the HDS or the climate control unit.

-4. Check for DTCs.

DTC Description	DTC
B121D Humidity/in-car temperature sensor communication error	Â

Is DTC B121D, Error on the DTC screen A-B6 (climate control panel without display), or DTC indicator 89 (climate control panel with display) indicated?

YES: Climate control panel without display

The failure is duplicated. Go to step 2.

YES: Climate control panel with display

The failure is duplicated. Go to step 4.

NO

Intermittent failure. Check for loose wires or poor connections on the humidity/in-car temperature sensor circuit.

2. Climate control unit check 1

-1. Turn the vehicle to the OFF (LOCK) mode after confirming the A/C system is OFF.

-2. Disconnect the following connector.

Humidity/in-car temperature sensor 4P connector

-3. Turn the vehicle to the ON mode.

-4. While pressing the WINDSHIELD DEFROST button, press and hold the ON/OFF button for 10 seconds or more.

Is Normal on the DTC screen A-B7 indicated?

YES

Go to step 7.

NO

Go to step 3.

3. Climate control unit check 2

-1. Turn the vehicle to the OFF (LOCK) mode after confirming the A/C system is OFF.

-2. Connect terminals A and B with a jumper wire.

Terminal A	Humidity/in-car temperature sensor 4P connector (female terminals) No. 2: ①
Terminal B	Humidity/in-car temperature sensor 4P connector (female terminals) No. 4: ①

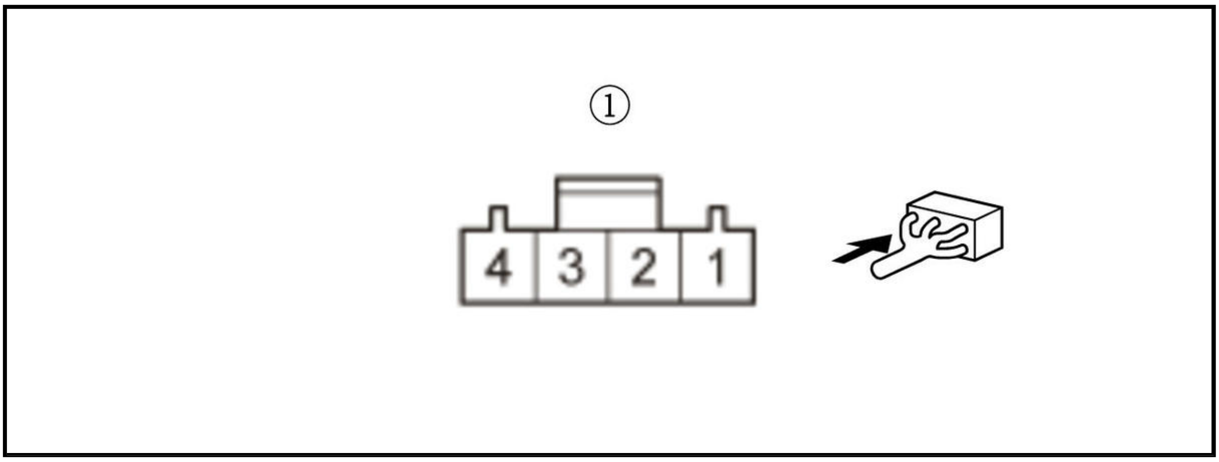

-3. Turn the vehicle to the ON mode.

-4. While pressing the WINDSHIELD DEFROST button, press and hold the ON/OFF button for 10 seconds or more.

Is Normal on the DTC screen A-B7 indicated?

YES

Go to step 6.

NO

Go to step 8.

4. Climate control unit check 1

-1. Turn the vehicle to the OFF (LOCK) mode after confirming the A/C system is OFF.

-2. Disconnect the following connector.

Humidity/in-car temperature sensor 4P connector

-3. Turn the vehicle to the ON mode.

-4. While pressing the WINDSHIELD DEFROST button, press and hold the ON/OFF button for 10 seconds or more.

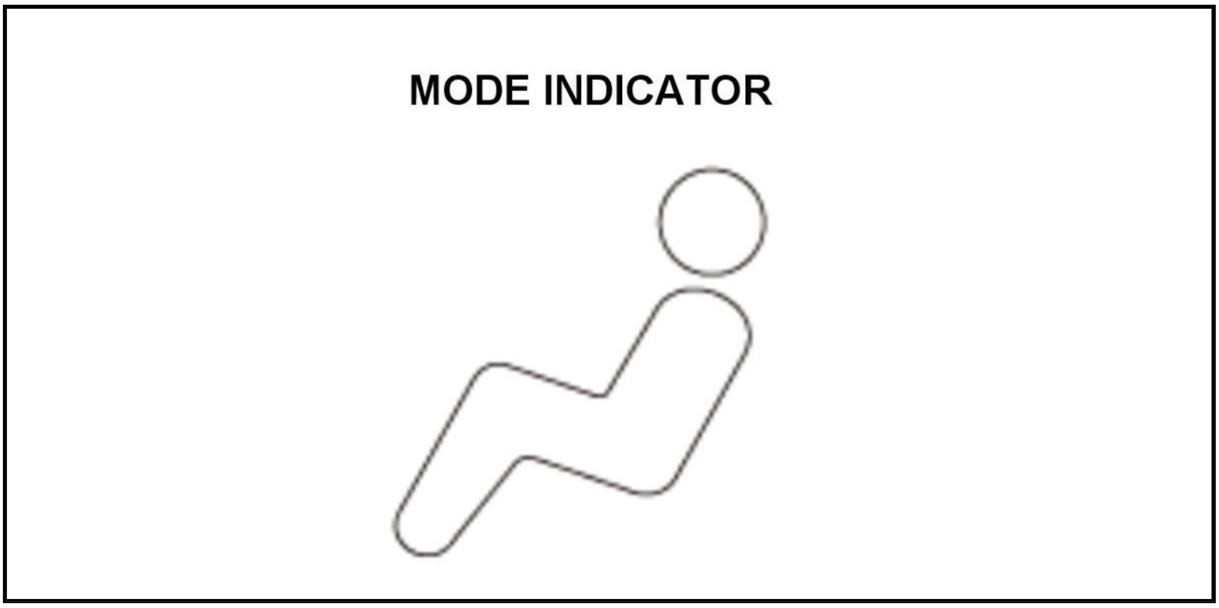

Does the MODE indicator turn on?

YES

Go to step 7.

NO

Go to step 5.

5. Climate control unit check 2

-1. Turn the vehicle to the OFF (LOCK) mode after confirming the A/C system is OFF.

-2. Connect terminals A and B with a jumper wire.

Terminal A	Humidity/in-car temperature sensor 4P connector (female terminals) No. 2: ①
Terminal B	Humidity/in-car temperature sensor 4P connector (female terminals) No. 4: ①

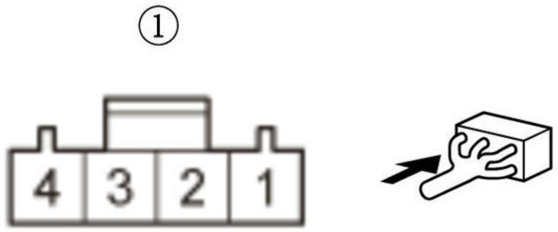

-3. Turn the vehicle to the ON mode.

-4. While pressing the WINDSHIELD DEFROST button, press and hold the ON/OFF button for 10 seconds or more.

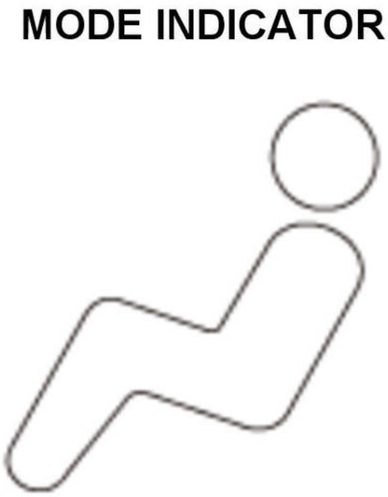

Does the MODE indicator turn on?

YES

Go to step 6.

NO

Go to step 8.

6. Determine possible failure area (humidity/in-car temperature sensor, others)

-1. Turn the vehicle to the OFF (LOCK) mode.

-2. Disconnect the jumper wire.

-3. Turn the vehicle to the ON mode.

-4. Measure the voltage between test points 1 and 2.

Test condition	Vehicle ON mode Humidity/in-car temperature sensor 4P connector: disconnected
Test point 1	Humidity/in-car temperature sensor 4P connector (female terminals) No. 1: ①
Test point 2	Body ground

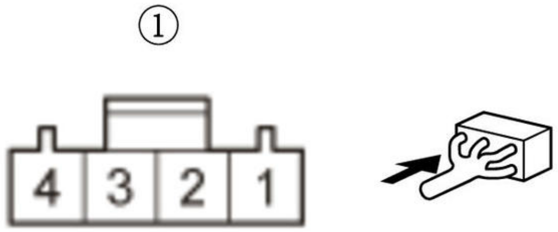

Is there about 5 V?

YES

Replace the humidity/in-car temperature sensor .

NO

Go to step 12.

7. Shorted wire check (HUM_DATA line to HUM_CLK line)

-1. Turn the vehicle to the OFF (LOCK) mode.

-2. Disconnect the following connector.

Climate control unit connector A (32P)

-3. Measure the resistance between test points 1 and 2.

Test condition	Vehicle OFF (LOCK) mode

	Climate control unit connector A (32P): disconnected
	Humidity/in-car temperature sensor 4P connector: disconnected
Test point 1	**Climate control unit connector A (32P) No. 7**
Test point 2	**Climate control unit connector A (32P) No. 24**

Is there 1 MΩ or more?

YES

Replace the climate control unit .

NO

Repair a short in the HUM_DATA wire to the HUM_CLK wire.

8. Open wire check (HUM_DATA line)

-1. Turn the vehicle to the OFF (LOCK) mode.

-2. Disconnect the jumper wire from the humidity/in-car temperature sensor.

-3. Disconnect the following connector.

Climate control unit connector A (32P)

-4. Measure the resistance between test points 1 and 2.

Test condition	Vehicle OFF (LOCK) mode
	Climate control unit connector A (32P): disconnected
	Humidity/in-car temperature sensor 4P connector: disconnected
Test point 1	**Climate control unit connector A (32P) No. 7**
Test point 2	Humidity/in-car temperature sensor 4P connector (female terminals) No. 2: ①

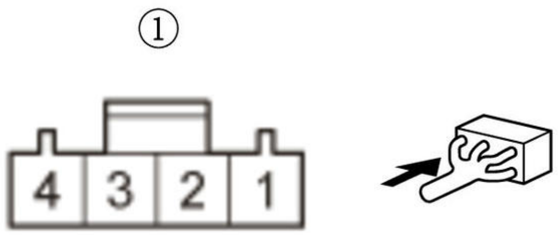

Is there 1.0 Ω or less?

YES

The HUM_DATA wire is not open. Go to step 9.

NO

Repair an open in the HUM_DATA wire.

9. Open wire check (HUM_CLK line)

-1. Measure the resistance between test points 1 and 2.

Test condition	Vehicle OFF (LOCK) mode
	Climate control unit connector A (32P): disconnected
	Humidity/in-car temperature sensor 4P connector: disconnected
Test point 1	**Climate control unit connector A (32P) No. 24**
Test point 2	Humidity/in-car temperature sensor 4P connector (female terminals) No. 4: ①

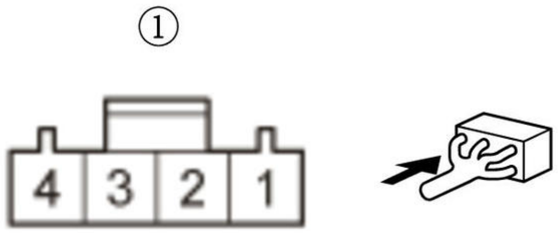

Is there 1.0 Ω or less?

YES

The HUM_CLK wire is not open. Go to step 10.

NO

Repair an open in the HUM_CLK wire.

10. Shorted wire check (HUM_DATA line)

-1. Measure the resistance between test points 1 and 2.

Test condition	Vehicle OFF (LOCK) mode
	Climate control unit connector A (32P): disconnected
	Humidity/in-car temperature sensor 4P connector: disconnected
Test point 1	**Climate control unit connector A (32P) No. 7**
Test point 2	Body ground

Is there 1 MΩ or more?

YES

The HUM_DATA wire is OK. Go to step 11.

NO

Repair a short to body ground in the HUM_DATA wire.

11. Shorted wire check (HUM_CLK line)

-1. Measure the resistance between test points 1 and 2.

Test condition	Vehicle OFF (LOCK) mode

	Climate control unit connector A (32P): disconnected
	Humidity/in-car temperature sensor 4P connector: disconnected
Test point 1	**Climate control unit connector A (32P) No. 24**
Test point 2	Body ground

Is there 1 MΩ or more?

YES

Replace the climate control unit .

NO

Repair a short to body ground in the HUM_CLK wire.

12. Open wire check (S 5V line)

-1. Turn the vehicle to the OFF (LOCK) mode.

-2. Disconnect the following connector.

Climate control unit connector A (32P)

-3. Measure the resistance between test points 1 and 2.

Test condition	Vehicle OFF (LOCK) mode
	Climate control unit connector A (32P): disconnected
	Humidity/in-car temperature sensor 4P connector: disconnected
Test point 1	**Climate control unit connector A (32P) No. 26**
Test point 2	Humidity/in-car temperature sensor 4P connector (female terminals) No. 1: ①

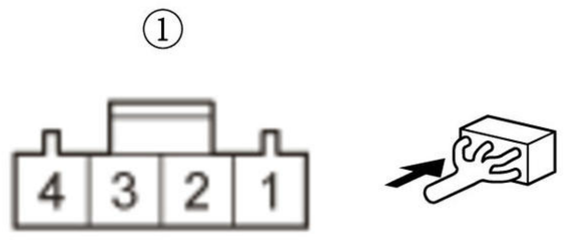

Is there 1.0 Ω or less?

YES

The S 5V line is not open. Go to step 13.

NO

Repair an open in the S 5V wire.

13. Open wire check (SENSOR_COM line)

-1. Measure the resistance between test points 1 and 2.

Test condition	Vehicle OFF (LOCK) mode
	Climate control unit connector A (32P): disconnected
	Humidity/in-car temperature sensor 4P connector: disconnected
Test point 1	Climate control unit connector A (32P) No. 12
Test point 2	Humidity/in-car temperature sensor 4P connector (female terminals) No. 3: ①

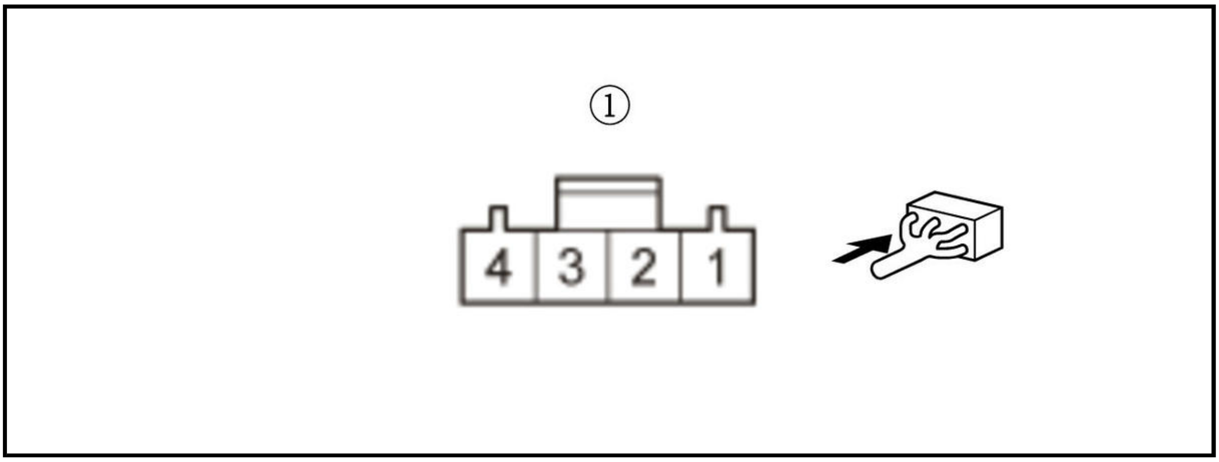

Is there 1.0 Ω or less?

YES

The SENSOR_COM wire is OK. Go to step 14.

NO

Repair an open in the SENSOR_COM wire.

14. Shorted wire check (S 5V line)

-1. Measure the resistance between test points 1 and 2.

Test condition	Vehicle OFF (LOCK) mode
	Climate control unit connector A (32P): disconnected
	Humidity/in-car temperature sensor 4P connector: disconnected
Test point 1	Climate control unit connector A (32P) No. 26
Test point 2	Body ground

Is there 1 MΩ or more?

YES

Replace the climate control unit .

NO

Repair a short to body ground in the S 5V wire.

DTC B1220 (B-B5), B1220 (56)

DTC B1220, DTC screen B-B5, or DTC screen 56 : A Short in the recirculation control motor circuit

NOTE: If other short circuit DTCs are indicated at the same time, there may be an open or short to body ground in the power S5V circuit.

DTC Description	DTC
B1220 A Short in the recirculation control motor circuit	Â

DTC (AC)

1. Problem verification

   -1. Clear the DTCs with the HDS.

   -2. Turn the vehicle to the OFF (LOCK) mode and then the ON mode.

   -3. Do the Self-Diagnostic Function with the HDS or the climate control unit.

   -4. Check for DTCs.

DTC Description	DTC
B1220 A Short in the recirculation control motor circuit	Â

   Is DTC B1220, Error on the DTC screen B-B5 (climate control panel without display), or DTC screen 56 (climate control panel with display) indicated?

   YES

   The failure is duplicated. Go to step 2.

   NO

   Intermittent failure. Check for loose wires or poor connections on the recirculation control motor circuit.

2. Determine possible failure area (S5V line, others)

   -1. Turn the vehicle to the OFF (LOCK) mode.

   -2. Disconnect the following connector.

Recirculation control motor 5P connector

   -3. Turn the vehicle to the ON mode.

   -4. Measure the voltage between test points 1 and 2.

Test condition	Vehicle ON mode
	Recirculation control motor 5P connector: disconnected
Test point 1	Recirculation control motor 5P connector (female terminals) No. 3: ①
Test point 2	Body ground

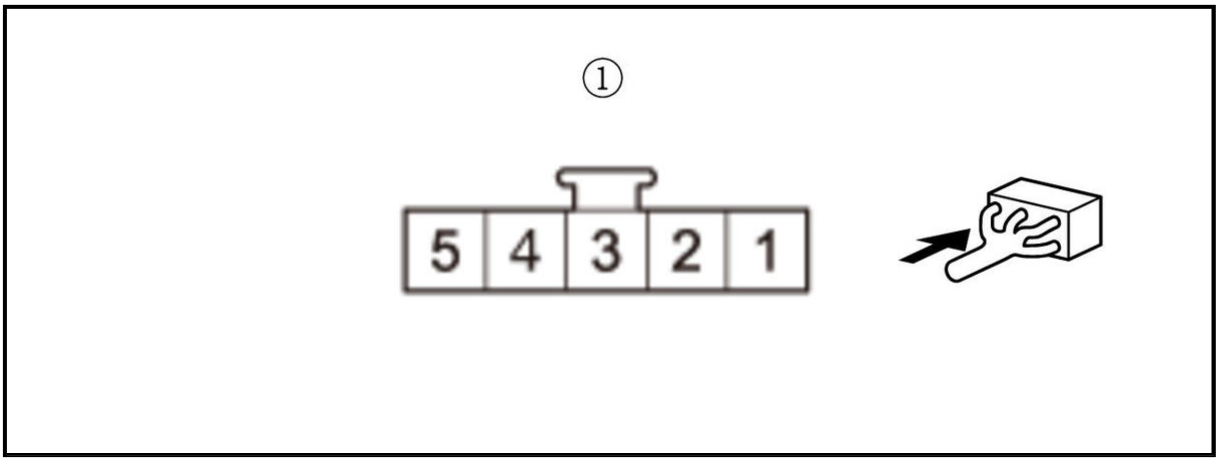

Is there about 5 V?

YES

The S5V wire is OK. Go to step 3.

NO

Go to step 6.

3. Determine possible failure area (recirculation control motor, RFD-P line)

-1. Measure the voltage between test points 1 and 2.

Test condition	Vehicle ON mode
	Recirculation control motor 5P connector: disconnected
Test point 1	Recirculation control motor 5P connector (female terminals) No. 2: ①
Test point 2	Body ground

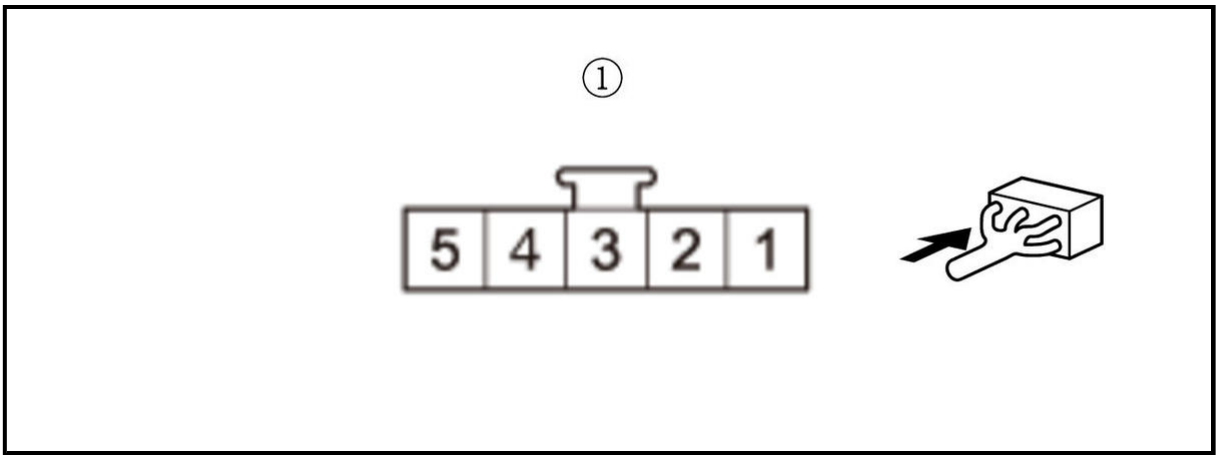

Is there about 5 V?

YES

Replace the recirculation control motor .

NO

Go to step 4.

4. Shorted wire check (RFD-P line)

-1. Turn the vehicle to the OFF (LOCK) mode.

-2. Disconnect the following connector.

Climate control unit connector B (24P)

-3. Measure the resistance between test points 1 and 2.

Test condition	Vehicle OFF (LOCK) mode
	Climate control unit connector B (24P): disconnected
	Recirculation control motor 5P connector: disconnected
Test point 1	**Climate control unit connector B (24P) No. 4**
Test point 2	Body ground

Is there 1 MΩ or more?

YES

The RFD-P wire is not shorted to body ground. Go to step 5.

NO

Repair a short to body ground in the RFD-P wire.

5. Shorted wire check (RFD-P line to SENS-COM line)

-1. Check for continuity between test points 1 and 2.

Test condition	Vehicle OFF (LOCK) mode
	Climate control unit connector B (24P): disconnected
	Recirculation control motor 5P connector: disconnected
Test point 1	Recirculation control motor 5P connector (female terminals) No. 1: ①
Test point 2	Recirculation control motor 5P connector (female terminals) No. 2: ①

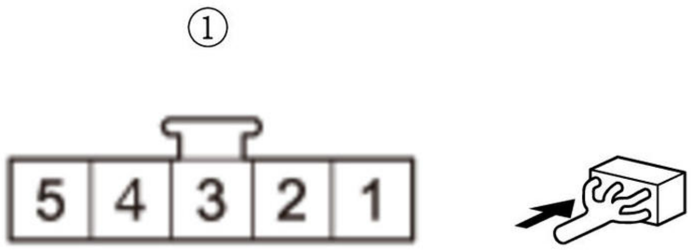

Is there 1 MΩ or more?

YES

Replace the climate control unit .

NO

Repair a short in the RFD-P wire to SENS-COM wire.

6. Open wire check (S5V line)

-1. Measure the voltage between test points 1 and 2.

Test condition	Vehicle ON mode
	Recirculation control motor 5P connector: disconnected
Test point 1	**Climate control unit connector B (24P) No. 1**
Test point 2	Body ground

Is there about 5 V?

YES

Repair an open in the S5V wire.

NO

The S5V wire is not open. Go to step 7.

7. Shorted wire check (S5V line)

-1. Turn the vehicle to the OFF (LOCK) mode.

-2. Disconnect the following connector.

Climate control unit connector B (24P)

-3. Measure the resistance between test points 1 and 2.

Test condition	Vehicle OFF (LOCK) mode
	Climate control unit connector B (24P): disconnected
	Recirculation control motor 5P connector: disconnected
Test point 1	**Climate control unit connector B (24P) No. 1**
Test point 2	Body ground

Is there 1 MΩ or more?

YES

Replace the climate control unit .

NO

Repair a short to body ground in the S5V wire.

DTC B1227 (A-A1), B1227 (05)

DTC B1227, DTC screen A-A1, or DTC screen 05 : An open in the outside air temperature sensor circuit

DTC Description	DTC
B1227 An open in the outside air temperature sensor circuit	Â

DTC (AC)

1. Problem verification

-1. Clear the DTC with the HDS.

-2. Turn the vehicle to the OFF (LOCK) mode and then the ON mode.

-3. **Do the Self-Diagnostic Function with the HDS or the climate control unit**.

-4. Check for DTCs.

DTC Description	DTC
B1227 An open in the outside air temperature sensor circuit	Â

Is DTC B1227, Error on the DTC screen A-A1 (climate control panel without display), or DTC screen 05 (climate control panel with display) indicated?

YES

The failure is duplicated. Go to step 2.

NO

Intermittent failure. Check for loose wires or poor connections on the outside air temperature sensor circuit.

2. Open wire check (TAM line)

-1. Turn the vehicle to the OFF (LOCK) mode.

-2. Disconnect the following connectors.

Climate control unit connector A (32P)
Outside air temperature sensor 2P connector

-3. Measure the resistance between test points 1 and 2.

Test condition	Vehicle OFF (LOCK) mode
	Climate control unit connector A (32P): disconnected
	Outside air temperature sensor 2P connector: disconnected
Test point 1	**Climate control unit connector A (32P) No. 11**
Test point 2	Outside air temperature sensor 2P connector (female terminals) No. 2: ①

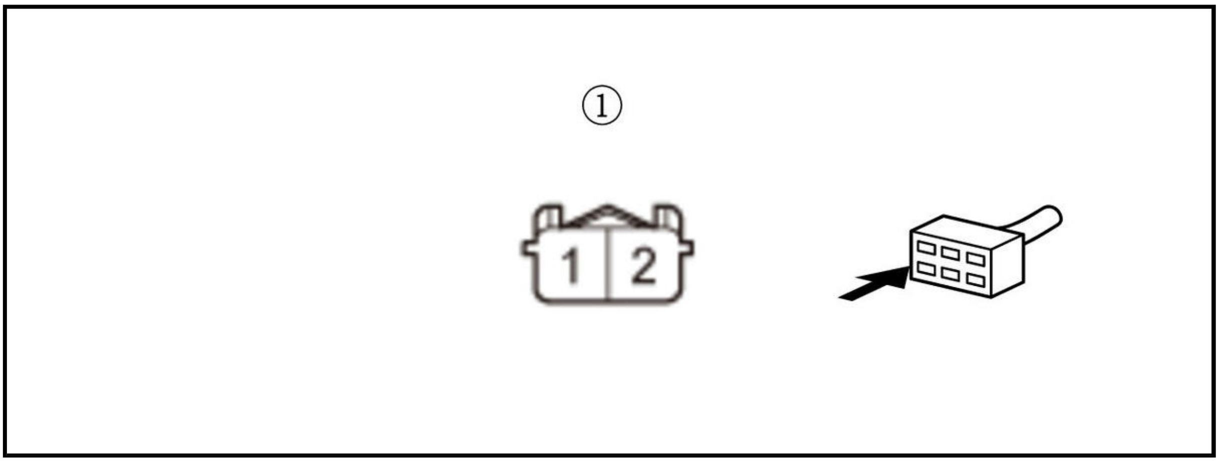

Is there 1.0 Ω or less?

YES

The TAM wire is not open. Go to step 3.

NO

Repair an open in the TAM wire.

3. Open wire check (SENSOR_COM line)

-1. Measure the resistance between test points 1 and 2.

Test condition	Vehicle OFF (LOCK) mode
	Climate control unit connector A (32P): disconnected
	Outside air temperature sensor 2P connector: disconnected
Test point 1	**Climate control unit connector A (32P) No. 12**
Test point 2	Outside air temperature sensor 2P connector (female terminals) No. 1: ①

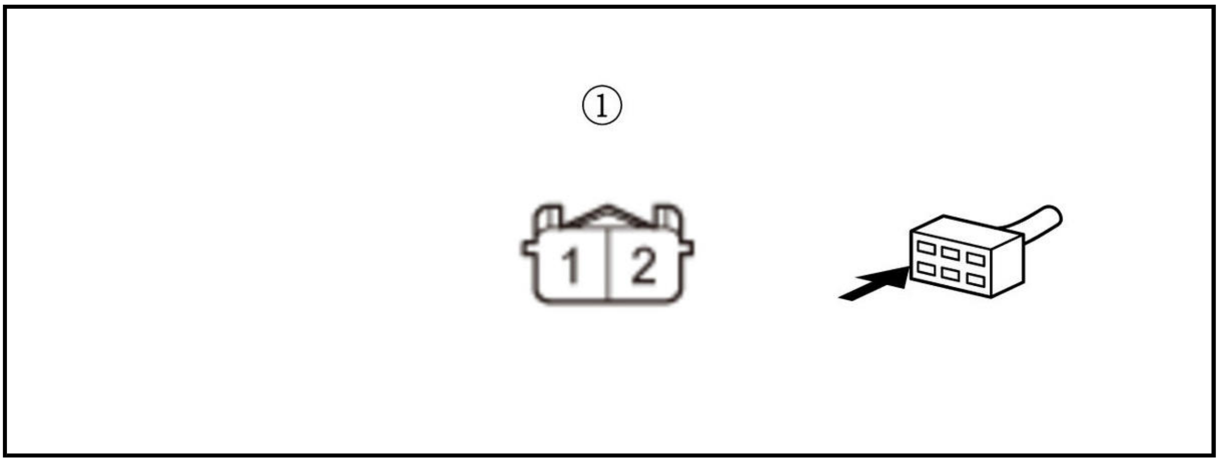

Is there 1.0 Ω or less?

YES

The SENSOR_COM wire is OK. Go to step 4.

NO

Repair an open in the SENSOR_COM wire.

4. Shorted wire check (TAM line to power)

-1. Turn the vehicle to the ON mode.

-2. Measure the voltage between test points 1 and 2.

Test condition	Vehicle ON mode
	Climate control unit connector A (32P): disconnected
	Outside air temperature sensor 2P connector: disconnected
Test point 1	**Climate control unit connector A (32P) No. 11**
Test point 2	Body ground

Is there any voltage?

YES

Repair a short to power in the TAM wire.

NO

The TAM wire is OK. Go to step 5.

5. Outside air temperature sensor check

   -1. Turn the vehicle to the OFF (LOCK) mode.

   -2. Test the outside air temperature sensor .

   Is the outside air temperature sensor OK?

   YES

   Replace the climate control unit .

   NO

   Replace the outside air temperature sensor .

DTC B1228 (A-A2), B1228 (06)

DTC B1228, or DTC screen A-A2, or DTC screen 06 : A short in the outside air temperature sensor circuit

DTC Description	DTC
B1228 A short in the outside air temperature sensor circuit	Â

DTC (AC)

1. Problem verification

   -1. Clear the DTC with the HDS.

   -2. Turn the vehicle to the OFF (LOCK) mode and then the ON mode.

   -3. Do the Self-Diagnostic Function with the HDS or the climate control unit.

   -4. Check for DTCs.

DTC Description	DTC
B1228 A short in the outside air temperature sensor circuit	Â

   Is DTC B1228, Error on the DTC screen A-A2 (climate control panel without display), or DTC screen 06 (climate control panel with display) indicated?

   YES

   The failure is duplicated. Go to step 2.

   NO

   Intermittent failure. Check for loose wires or poor connections on the outside air temperature sensor circuit.

2. Shorted wire check (TAM line)

   -1. Turn the vehicle to the OFF (LOCK) mode.

   -2. Disconnect the following connectors.

Climate control unit connector A (32P)
Outside air temperature sensor 2P connector

-3. Measure the resistance between test points 1 and 2.

Test condition	Vehicle OFF (LOCK) mode
	Climate control unit connector A (32P): disconnected
	Outside air temperature sensor 2P connector: disconnected
Test point 1	**Climate control unit connector A (32P) No. 11**
Test point 2	Body ground

Is there 1 MΩ or more?

YES

The TAM wire is not shorted. Go to step 3.

NO

Repair a short to body ground in the TAM wire.

3. Shorted wire check (TAM line to SENSOR_COM line)

-1. Measure the resistance between test points 1 and 2.

Test condition	Vehicle OFF (LOCK) mode
	Climate control unit connector A (32P): disconnected
	Outside air temperature sensor 2P connector: disconnected
Test point 1	**Climate control unit connector A (32P) No. 11**
Test point 2	**Climate control unit connector A (32P) No. 12**

Is there 1 MΩ or more?

YES

The TAM wire and the SENSOR_COM wire are OK. Go to step 4.

NO

Repair a short in the TAM wire to the SENSOR_COM wire.

4. Outside air temperature sensor check

-1. **Test the outside air temperature sensor** .

Is the outside air temperature sensor OK?

YES

Replace the climate control unit .

NO

Replace the outside air temperature sensor .

DTC B1231 (A-A5), B1231 (09)

DTC B1231, DTC screen A-A5, or DTC screen 09 : An open in the evaporator temperature sensor circuit

DTC Description	DTC
B1231 An open in the evaporator temperature sensor circuit	Â

DTC (AC)

1. Problem verification

-1. Clear the DTC with the HDS.

-2. Turn the vehicle to the OFF (LOCK) mode and then the ON mode.

-3. Do the Self-Diagnostic Function with the HDS or the climate control unit.

-4. Check for DTCs.

DTC Description	DTC
B1231 An open in the evaporator temperature sensor circuit	Â

Is DTC B1231, Error on the DTC screen A-A5 (climate control panel without display), or DTC screen 09 (climate control panel with display) indicated?

YES

The failure is duplicated. Go to step 2.

NO

Intermittent failure. Check for loose wires or poor connections on the evaporator temperature sensor circuit.

2. Open wire check (TEVA line)

-1. Turn the vehicle to the OFF (LOCK) mode.

-2. Disconnect the following connectors.

Climate control unit connector B (24P)
Evaporator temperature sensor 2P connector

-3. Measure the resistance between test points 1 and 2.

Test condition	Vehicle OFF (LOCK) mode
	Climate control unit connector B (24P): disconnected
	Evaporator temperature sensor 2P connector: disconnected
Test point 1	Climate control unit connector B (24P) No. 8
Test point 2	Evaporator temperature sensor 2P connector (female terminals) No. 1: ①

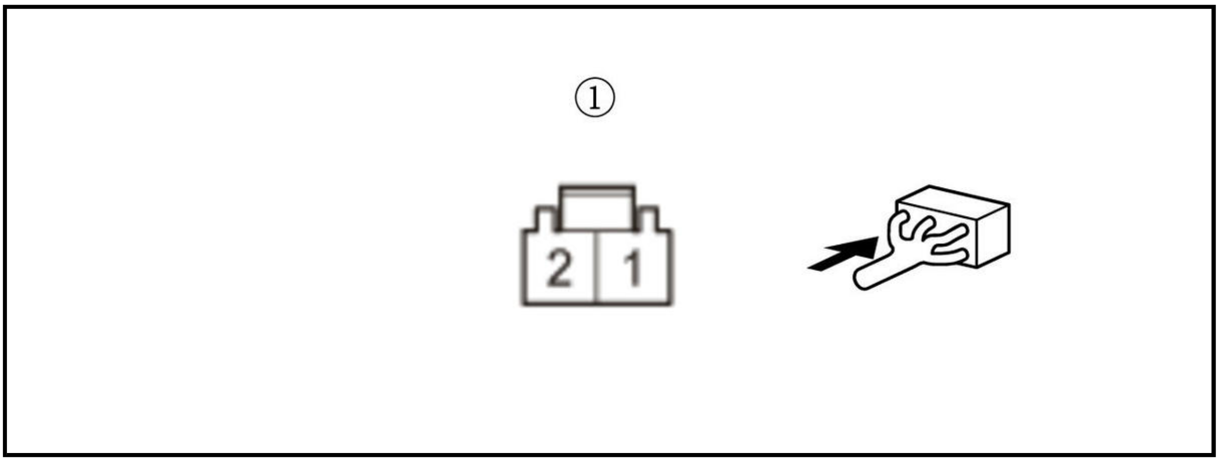

Is there 1.0 Ω or less?

YES

The TEVA wire is not open. Go to step 3.

NO

Repair an open in the TEVA wire.

3. Open wire check (SENS-COM line)

-1. Measure the resistance between test points 1 and 2.

Test condition	Vehicle OFF (LOCK) mode
	Climate control unit connector B (24P): disconnected
	Evaporator temperature sensor 2P connector: disconnected
Test point 1	**Climate control unit connector B (24P) No. 10**
Test point 2	Evaporator temperature sensor 2P connector (female terminals) No. 2: ①

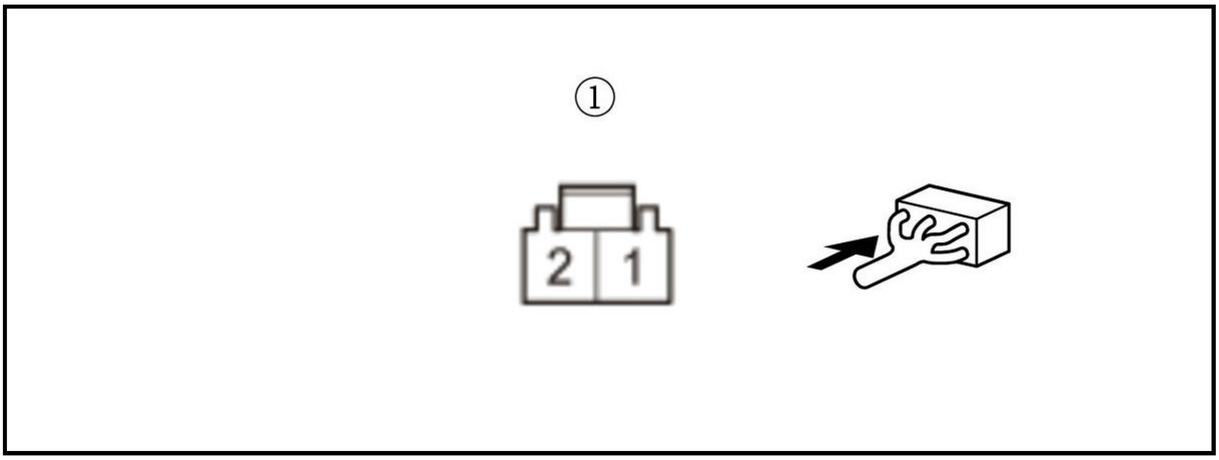

Is there 1.0 Ω or less?

YES

The SENS-COM wire is OK. Go to step 4.

NO

Repair an open in the SENS-COM wire.

4. Shorted wire check (TEVA line to power)

-1. Turn the vehicle to the ON mode.

-2. Measure the voltage between test points 1 and 2.

Test condition	Vehicle ON mode
	Climate control unit connector B (24P): disconnected
	Evaporator temperature sensor 2P connector: disconnected
Test point 1	**Climate control unit connector B (24P) No. 8**
Test point 2	Body ground

Is there any voltage?

YES

Repair a short to power in the TEVA wire.

NO

The TEVA wire is OK. Go to step 5.

5. Evaporator temperature sensor check

-1. Turn the vehicle to the OFF (LOCK) mode.

-2. **Test the evaporator temperature sensor** .

Is the evaporator temperature sensor OK?

YES

Replace the climate control unit .

NO

Replace the evaporator temperature sensor .

DTC B1232 (A-A6), B1232 (0A)

DTC B1232, DTC screen A-A6, or DTC screen 0A : A short in the evaporator temperature sensor circuit

DTC Description	DTC
B1232 A short in the evaporator temperature sensor circuit	Â

DTC (AC)

1. Problem verification

-1. Clear the DTC with the HDS.

-2. Turn the vehicle to the OFF (LOCK) mode and then the ON mode.

-3. **Do the Self-Diagnostic Function with the HDS or the climate control unit**.

-4. Check for DTCs.

DTC Description	DTC
B1232 A short in the evaporator temperature sensor circuit	Â

Is DTC B1232, Error on the DTC screen A-A6 (climate control panel without display), or DTC screen 0A (climate control panel with display) indicated?

YES

The failure is duplicated. Go to step 2.

NO

Intermittent failure. Check for loose wires or poor connections on the evaporator temperature sensor circuit.

2. Shorted wire check (TEVA line)

-1. Turn the vehicle to the OFF (LOCK) mode.

-2. Disconnect the following connectors.

Climate control unit connector B (24P)
Evaporator temperature sensor 2P connector

-3. Measure the resistance between test points 1 and 2.

Test condition	Vehicle OFF (LOCK) mode
	Climate control unit connector B (24P): disconnected
	Evaporator temperature sensor 2P connector: disconnected
Test point 1	**Climate control unit connector B (24P) No. 8**
Test point 2	Body ground

Is there 1 MΩ or more?

YES

The TEVA wire is not shorted. Go to step 3.

NO

Repair a short to body ground in the TEVA wire.

3. Shorted wire check (TEVA line to SENS-COM line)

-1. Measure the resistance between test points 1 and 2.

Test condition	Vehicle OFF (LOCK) mode
	Climate control unit connector B (24P): disconnected
	Evaporator temperature sensor 2P connector: disconnected
Test point 1	**Climate control unit connector B (24P) No. 8**
Test point 2	**Climate control unit connector B (24P) No. 10**

Is there 1 MΩ or more?

YES

The TEVA wire and the SENS-COM wire are OK. Go to step 4.

NO

Repair a short in the TEVA wire to the SENS-COM wire.

4. Evaporator temperature sensor check

-1. Test the evaporator temperature sensor .

Is the evaporator temperature sensor OK?

YES

Replace the climate control unit .

NO

Replace the evaporator temperature sensor .

DTC B1233 (B-A1), B1233 (40)

DTC B1233, DTC screen B-A1, or DTC screen 40 : An open in the air mix control motor circuit (driver's)

DTC Description	DTC
B1233 An open in the air mix control motor circuit (driver's)	Â

DTC (AC)

1. Problem verification

-1. Clear the DTCs with the HDS.

-2. Turn the vehicle to the OFF (LOCK) mode and then the ON mode.

-3. Do the Self-Diagnostic Function with the HDS or the climate control unit.

-4. Check for DTCs.

DTC Description	DTC
B1233 An open in the air mix control motor circuit (driver's)	Â

Is DTC B1233, Error on the DTC screen B-A1 (climate control panel without display), or DTC screen 40 (climate control panel with display) indicated?

YES

The failure is duplicated. Go to step 2.

NO: Without dual zone climate control

Intermittent failure. Check for loose wires or poor connections on the air mix control motor circuit.

NO: With dual zone climate control

Intermittent failure. Check for loose wires or poor connections on the driver's air mix control motor circuit.

2. Determine possible failure area (AMD-P-DR line, others)

-1. Turn the vehicle to the OFF (LOCK) mode.

-2. Disconnect the following connector.

Air mix control motor 5P connector (without dual zone climate control)

Driver's air mix control motor 5P connector (with dual zone climate control)

-3. Turn the vehicle to the ON mode.

-4. Measure the voltage between test points 1 and 2.

Without dual zone climate control

Test condition	Vehicle ON mode Air mix control motor 5P connector: disconnected
Test point 1	Air mix control motor 5P connector (female terminals) No. 2: ①
Test point 2	Body ground

With dual zone climate control

Test condition	Vehicle ON mode Driver's air mix control motor 5P connector: disconnected
Test point 1	Driver's air mix control motor 5P connector (female terminals) No. 2: ①
Test point 2	Body ground

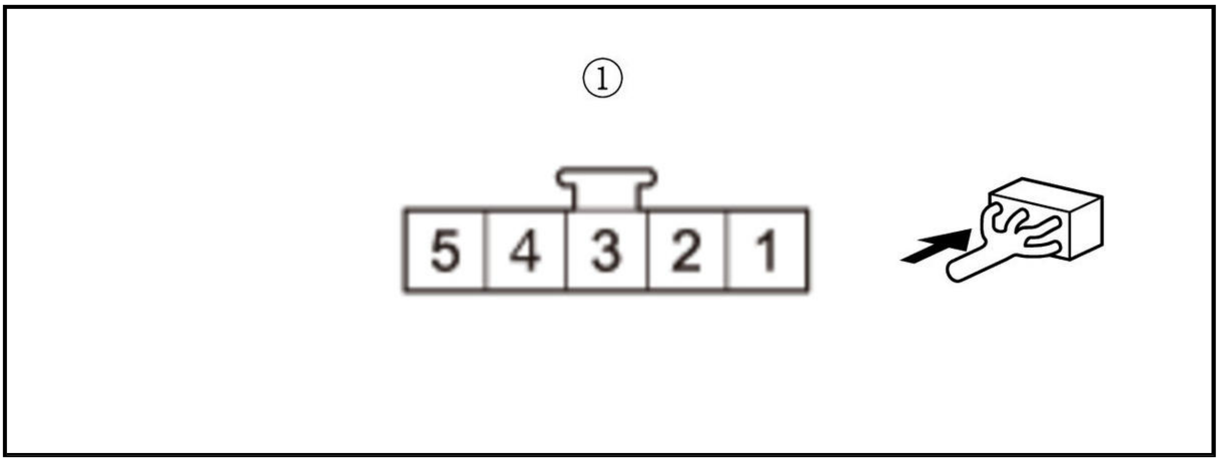

Is there about 5 V?

YES

The AMD-P-DR wire is OK. Go to step 3.

NO

Go to step 5.

3. Determine possible failure area (air mix control motor (Without dual zone climate control), driver's air mix control motor (With dual zone climate control), SENS-COM line)

-1. Measure the voltage between test points 1 and 2.

Without dual zone climate control

Test condition	Vehicle ON mode Air mix control motor 5P connector: disconnected
Test point 1	Air mix control motor 5P connector (female terminals) No. 1: ①

Test point 2	Air mix control motor 5P connector (female terminals) No. 2: ①

With dual zone climate control

Test condition	Vehicle ON mode Driver's air mix control motor 5P connector: disconnected
Test point 1	Driver's air mix control motor 5P connector (female terminals) No. 2: ①
Test point 2	Driver's air mix control motor 5P connector (female terminals) No. 3: ①

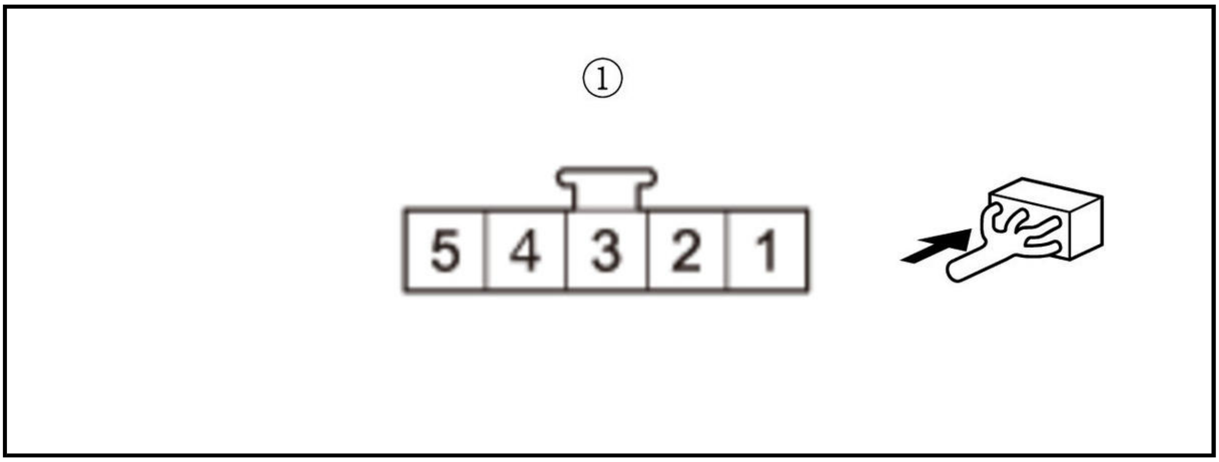

Is there about 5 V?

YES: Without dual zone climate control

Replace the air mix control motor .

YES: With dual zone climate control

Replace the driver's air mix control motor .

NO

Go to step 4.

4. Open wire check (SENS-COM line)

-1. Turn the vehicle to the OFF (LOCK) mode.

-2. Disconnect the following connector.

Climate control unit connector B (24P)

-3. Measure the resistance between test points 1 and 2.

Without dual zone climate control

Test condition	Vehicle OFF (LOCK) mode Air mix control motor 5P connector: disconnected
Â	Climate control unit connector B (24P): disconnected
Test point 1	Air mix control motor 5P connector (female terminals) No. 1: ①
Test point 2	**Climate control unit connector B (24P) No. 10**

With dual zone climate control

Test condition	Vehicle OFF (LOCK) mode
	Driver's air mix control motor 5P connector: disconnected
Â	Climate control unit connector B (24P): disconnected
Test point 1	Driver's air mix control motor 5P connector (female terminals) No. 3: ①
Test point 2	Climate control unit connector B (24P) No. 10

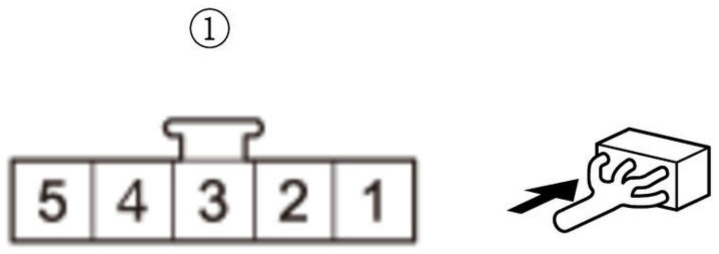

Is there 1.0 Ω or less?

YES

Replace the climate control unit .

NO

Repair an open in the SENS-COM wire.

5. Open wire check (AMD-P-DR line)

-1. Measure the voltage between test points 1 and 2.

Test condition	Vehicle ON mode
	Air mix control motor 5P connector (without dual zone climate control): disconnected
	Driver's air mix control motor 5P connector (with dual zone climate control): disconnected
Test point 1	Climate control unit connector B (24P) No. 2
Test point 2	Body ground

Is there about 5 V?

YES

Repair an open in the AMD-P-DR wire.

NO

Replace the climate control unit .

DTC B1234 (B-A2), B1234 (41)

DTC B1234, DTC screen B-A2, or DTC screen 41 : A short in the air mix control motor circuit (driver's)

NOTE: If other short circuit DTCs are indicated at the same time, there may be an open or short to body ground in the S5V circuit.

DTC Description	DTC
B1234 A short in the air mix control motor circuit (driver's)	Â

DTC (AC)

1. Problem verification

   -1. Clear the DTCs with the HDS.

   -2. Turn the vehicle to the OFF (LOCK) mode and then the ON mode.

   -3. **Do the Self-Diagnostic Function with the HDS or the climate control unit**.

   -4. Check for DTCs.

DTC Description	DTC
B1234 A short in the air mix control motor circuit (driver's)	Â

   Is DTC B1234, Error on the DTC screen B-A2 (climate control panel without display), or DTC screen 41 (climate control panel with display) indicated?

   YES

   The failure is duplicated. Go to step 2.

   NO: Without dual zone climate control

   Intermittent failure. Check for loose wires or poor connections on the air mix control motor circuit.

   NO: With dual zone climate control

   Intermittent failure. Check for loose wires or poor connections on the driver's air mix control motor circuit.

2. Determine possible failure area (S5V line, others)

   -1. Turn the vehicle to the OFF (LOCK) mode.

   -2. Disconnect the following connector.

Air mix control motor 5P connector (without dual zone climate control)
Driver's air mix control motor 5P connector (with dual zone climate control)

   -3. Turn the vehicle to the ON mode.

   -4. Measure the voltage between test points 1 and 2.

   Without dual zone climate control

Test condition	Vehicle ON mode
	Air mix control motor 5P connector: disconnected
Test point 1	Air mix control motor 5P connector (female terminals) No. 3: ①
Test point 2	Body ground

With dual zone climate control

Test condition	Vehicle ON mode
	Driver's air mix control motor 5P connector: disconnected
Test point 1	Driver's air mix control motor 5P connector (female terminals) No. 1: ①

Test point 2	Body ground

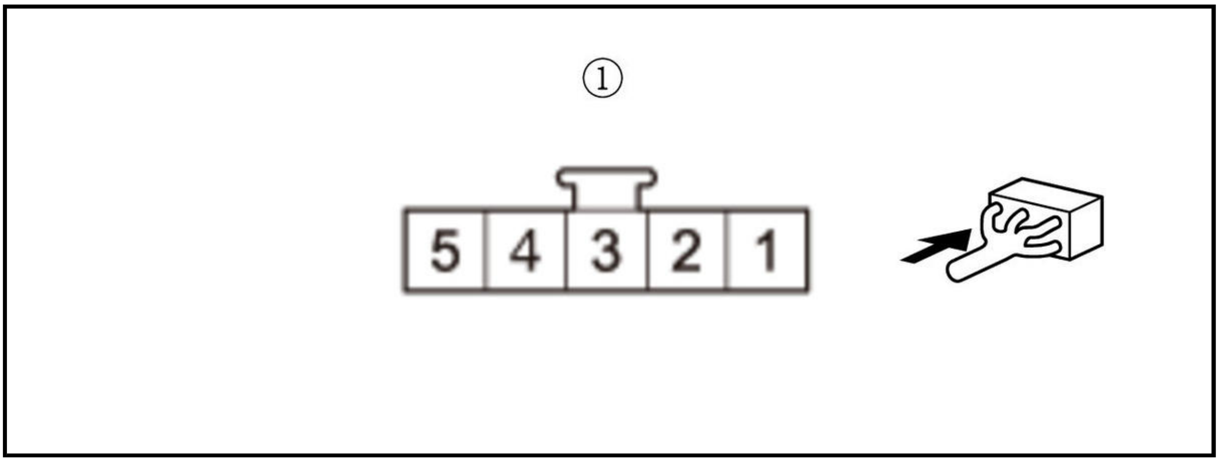

Is there about 5 V?

YES: Without dual zone climate control

The S5V wire is OK. Go to step 3.

YES: With dual zone climate control

The S5V wire is OK. Go to step 4.

NO

Go to step 8.

3. Determine possible failure area (air mix control motor, AMD-P-DR line)

-1. Measure the voltage between test points 1 and 2.

Test condition	Vehicle ON mode
	Air mix control motor 5P connector: disconnected
Test point 1	Air mix control motor 5P connector (female terminals) No. 2: ①
Test point 2	Body ground

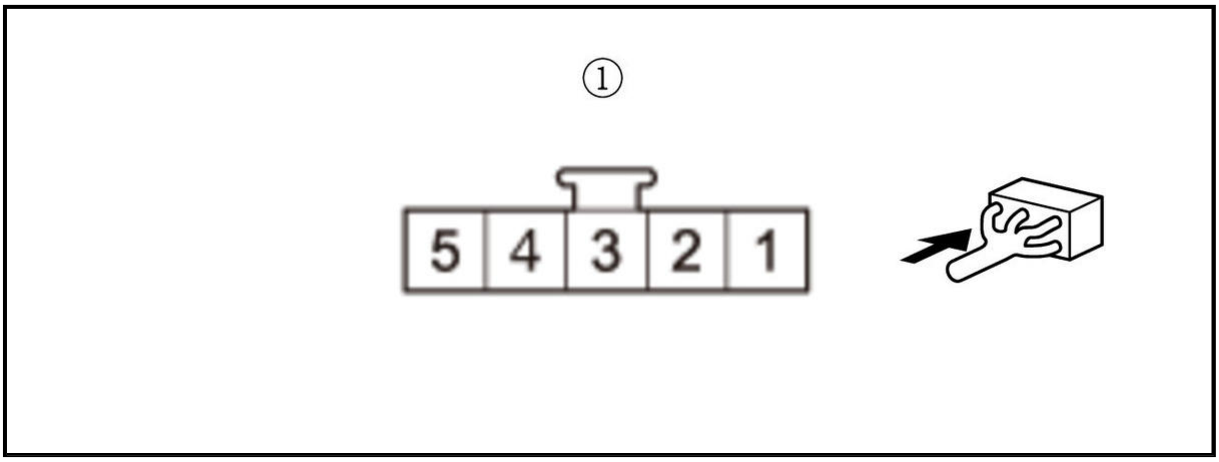

Is there about 5 V?

YES

Replace the air mix control motor .

NO

Go to step 5.

4. Determine possible failure area (driver's air mix control motor, AMD-P-DR line)

-1. Measure the voltage between test points 1 and 2.

Test condition	Vehicle ON mode Driver's air mix control motor 5P connector: disconnected
Test point 1	Driver's air mix control motor 5P connector (female terminals) No. 2: ①
Test point 2	Body ground

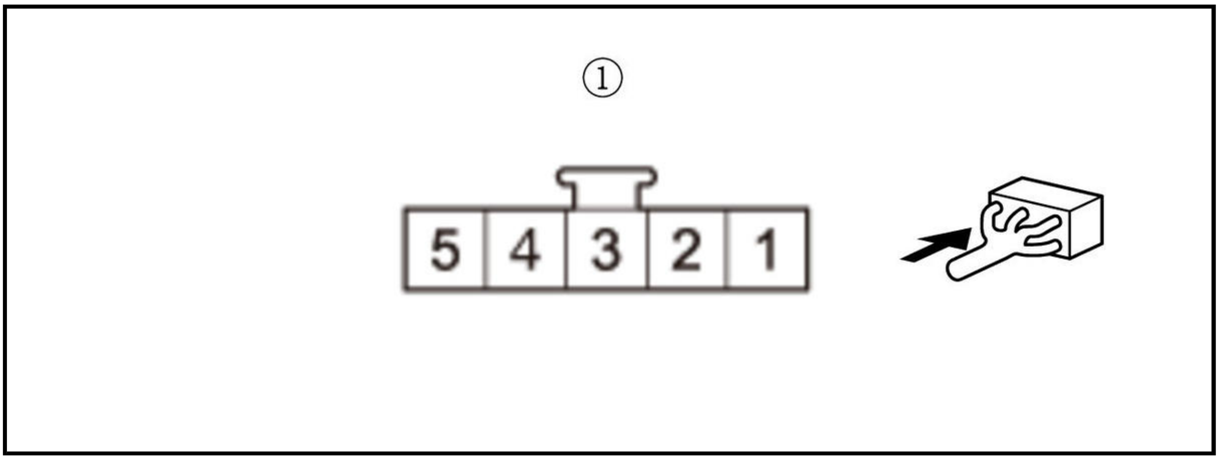

Is there about 5 V?

YES

Replace the driver's air mix control motor .

NO

Go to step 5.

5. Shorted wire check (AMD-P-DR line)

-1. Turn the vehicle to the OFF (LOCK) mode.

-2. Disconnect the following connector.

Climate control unit connector B (24P)

-3. Measure the resistance between test points 1 and 2.

Test condition	Vehicle OFF (LOCK) mode
	Climate control unit connector B (24P): disconnected
	Air mix control motor 5P connector (without dual zone climate control): disconnected
	Driver's air mix control motor 5P connector (with dual zone climate control): disconnected
Test point 1	**Climate control unit connector B (24P) No. 2**
Test point 2	Body ground

Is there 1 MΩ or more?

YES: Without dual zone climate control

The AMD-P-DR wire is not shorted to body ground. Go to step 6.

YES: With dual zone climate control

The AMD-P-DR wire is not shorted to body ground. Go to step 7.

NO

Repair a short to ground in the AMD-P-DR wire.

6. Shorted wire check (AMD-P-DR line to SENS-COM line)

-1. Check for continuity between test points 1 and 2.

Test condition	Vehicle OFF (LOCK) mode
	Climate control unit connector B (24P): disconnected
	Air mix control motor 5P connector (without dual zone climate control): disconnected
	Driver's air mix control motor 5P connector (with dual zone climate control): disconnected
Test point 1	Air mix control motor 5P connector (female terminals) No. 1: ①
Test point 2	Air mix control motor 5P connector (female terminals) No. 2: ①

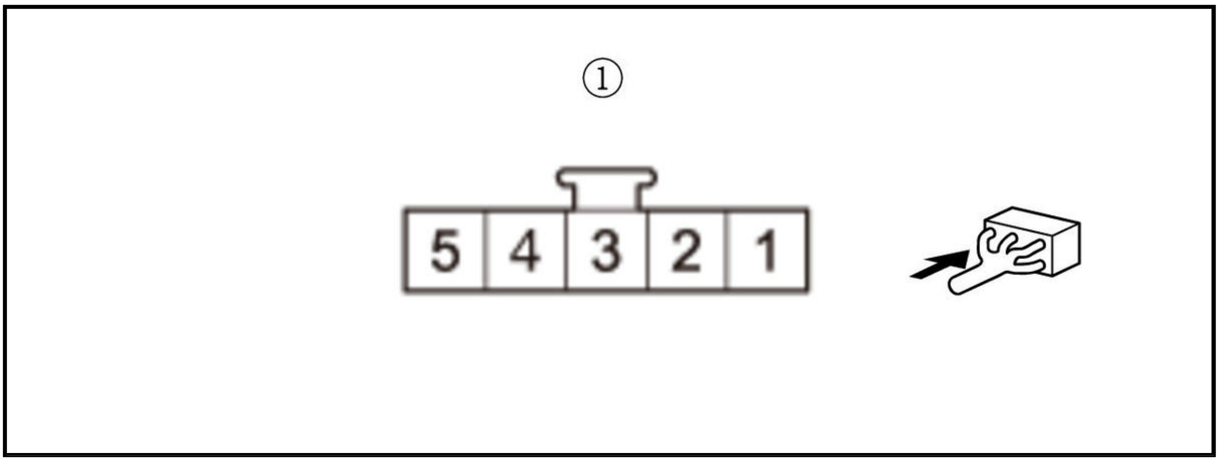

Is there 1 MΩ or more?

YES

Replace the climate control unit .

NO

Repair a short in the AMD-P-DR wire to SENS-COM wire.

7. Shorted wire check (AMD-P-DR line to SENS-COM line)

-1. Check for continuity between test points 1 and 2.

Test condition	Vehicle OFF (LOCK) mode
	Climate control unit connector B (24P): disconnected
	Air mix control motor 5P connector (without dual zone climate control): disconnected
	Driver's air mix control motor 5P connector (with dual zone climate control): disconnected

Test point 1	Driver's air mix control motor 5P connector (female terminals) No. 1: ①
Test point 2	Driver's air mix control motor 5P connector (female terminals) No. 2: ①

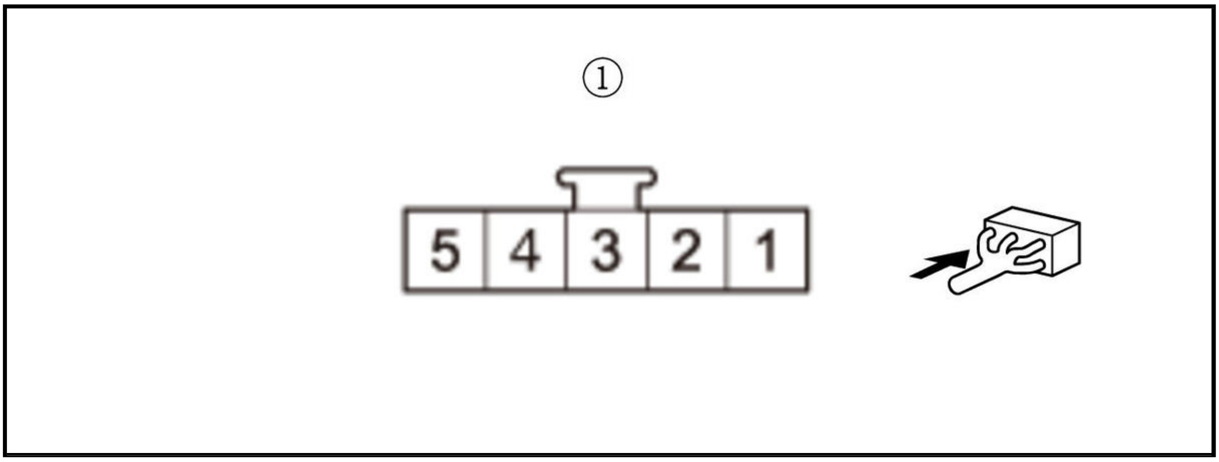

Is there 1 MΩ or more?

YES

Replace the climate control unit .

NO

Repair a short in the AMD-P-DR wire to SENS-COM wire.

8. Open wire check (S5V line)

-1. Measure the voltage between test points 1 and 2.

Test condition	Vehicle ON mode
	Air mix control motor 5P connector (without dual zone climate control): disconnected
	Driver's air mix control motor 5P connector (with dual zone climate control): disconnected
Test point 1	**Climate control unit connector B (24P) No. 1**

Test point 2	Body ground

Is there about 5 V?

YES

Repair an open in the S5V wire.

NO

Go to step 9.

9. Shorted wire check (S5V line)

-1. Turn the vehicle to the OFF (LOCK) mode.

-2. Disconnect the following connector.

Climate control unit connector B (24P)

-3. Measure the resistance between test points 1 and 2.

Test condition	Vehicle OFF (LOCK) mode Climate control unit connector B (24P): disconnected Air mix control motor 5P connector (without dual zone climate control): disconnected Driver's air mix control motor 5P connector (with dual zone climate control): disconnected
Test point 1	**Climate control unit connector B (24P) No. 1**
Test point 2	Body ground

Is there 1 MΩ or more?

YES

Replace the climate control unit .

NO

Repair a short to ground in the S5V wire.

DTC B1235 (B-A3), B1235 (42)

DTC B1235, DTC screen B-A3, or DTC screen 42 : A problem in the air mix control motor circuit, linkage, door, or motor (driver's)

DTC Description	DTC
B1235 A problem in the air mix control motor circuit, linkage, door, or motor (driver's)	Â

DTC (AC)

1. Problem verification

-1. Clear the DTCs with the HDS.

-2. Turn the vehicle to the OFF (LOCK) mode and then the ON mode.

-3. **Do the Self-Diagnostic Function with the HDS or the climate control unit**.

-4. Check for DTCs.

DTC Description	DTC
B1235 A problem in the air mix control motor circuit, linkage, door, or motor (driver's)	Â

Is DTC B1235, Error on the DTC screen B-A3 (climate control panel without display), or DTC screen 42 (climate control panel with display) indicated?

YES

The failure is duplicated. Go to step 2.

NO: Without dual zone climate control

Intermittent failure. Check for loose wires or poor connections on the air mix control motor circuit.

NO: With dual zone climate control

Intermittent failure. Check for loose wires or poor connections on the driver's air mix control motor circuit.

2. Open wire check (M-HOT-DR line)

-1. Turn the vehicle to the OFF (LOCK) mode.

-2. Disconnect the following connectors.

Climate control unit connector B (24P)
Air mix control motor 5P connector (without dual zone climate control)
Driver's air mix control motor 5P connector (with dual zone climate control)

-3. Measure the resistance between test points 1 and 2.

Without dual zone climate control

Test condition	Vehicle OFF (LOCK) mode
	Climate control unit connector B (24P): disconnected
	Air mix control motor 5P connector: disconnected
Test point 1	**Climate control unit connector B (24P) No. 13**
Test point 2	Air mix control motor 5P connector (female terminals) No. 5: ①

With dual zone climate control

Test condition	Vehicle OFF (LOCK) mode
	Climate control unit connector B (24P): disconnected
	Driver's air mix control motor 5P connector: disconnected
Test point 1	**Climate control unit connector B (24P) No. 13**
Test point 2	Driver's air mix control motor 5P connector (female terminals) No. 4: ①

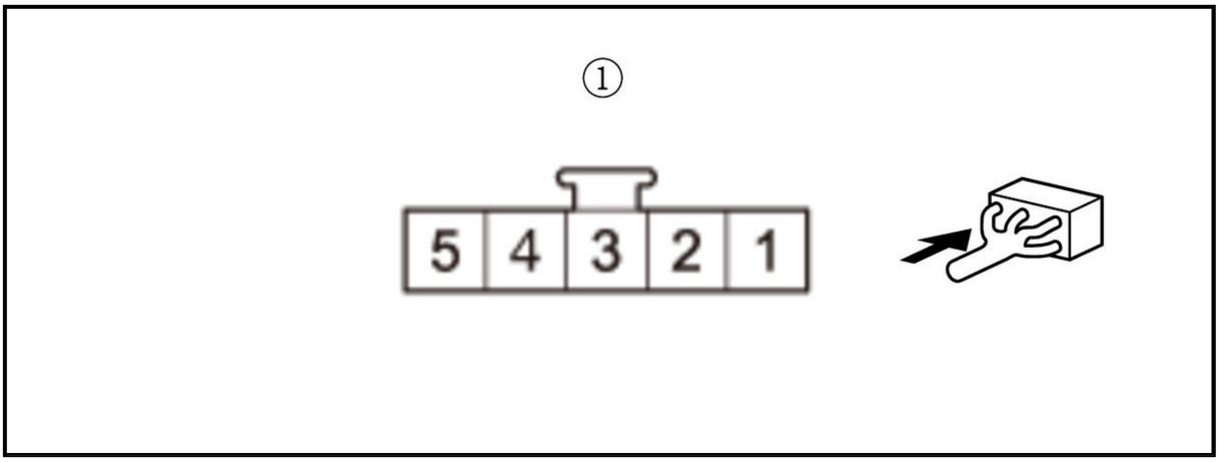

Is there 1.0 Ω or less?

YES

The M-HOT-DR wire is not open. Go to step 3.

NO

Repair an open in the M-HOT-DR wire.

3. Open wire check (M-COOL-DR line)

-1. Measure the resistance between test points 1 and 2.

Without dual zone climate control

Test condition	Vehicle OFF (LOCK) mode
	Climate control unit connector B (24P): disconnected
	Air mix control motor 5P connector: disconnected
Test point 1	**Climate control unit connector B (24P) No. 14**
Test point 2	Air mix control motor 5P connector (female terminals) No. 4: ①

With dual zone climate control

Test condition	Vehicle OFF (LOCK) mode
	Climate control unit connector B (24P): disconnected
	Driver's air mix control motor 5P connector: disconnected
Test point 1	**Climate control unit connector B (24P) No. 14**
Test point 2	Driver's air mix control motor 5P connector (female terminals) No. 5: ①

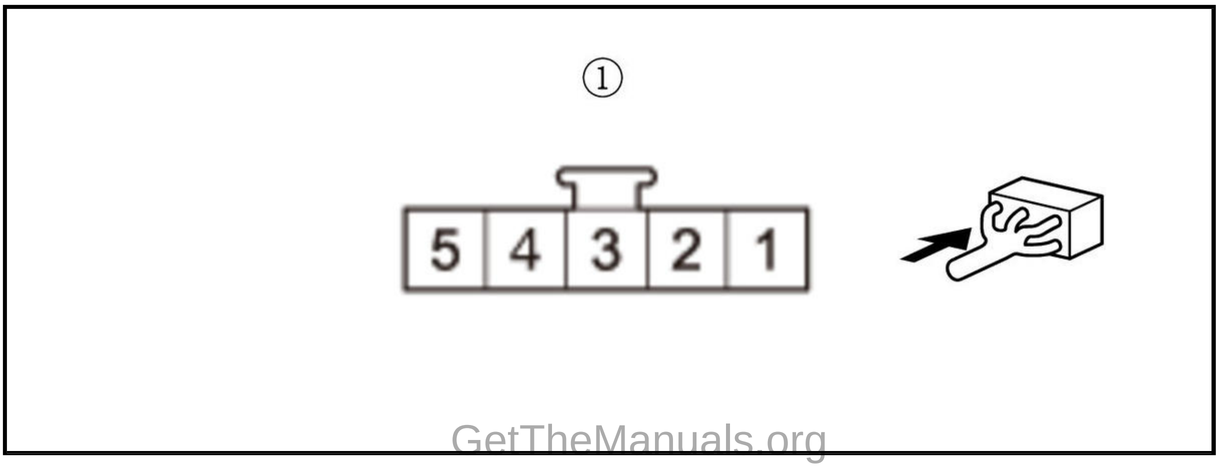

Is there 1.0 Ω or less?

YES

The M-COOL-DR wire is not open. Go to step 4.

NO

Repair an open in the M-COOL-DR wire.

4. Shorted wire check (M-HOT-DR line)

-1. Measure the resistance between test points 1 and 2.

Test condition	Vehicle OFF (LOCK) mode Climate control unit connector B (24P): disconnected Air mix control motor 5P connector (without dual zone climate control): disconnected Driver's air mix control motor 5P connector (with dual zone climate control): disconnected
Test point 1	**Climate control unit connector B (24P) No. 13**
Test point 2	Body ground

Is there 1 MΩ or more?

YES

The M-HOT-DR wire is OK. Go to step 5.

NO

Repair a short to ground in the M-HOT-DR wire.

5. Shorted wire check (M-COOL-DR line)

-1. Measure the resistance between test points 1 and 2.

Test condition	Vehicle OFF (LOCK) mode Climate control unit connector B (24P): disconnected Air mix control motor 5P connector (without dual zone climate control): disconnected Driver's air mix control motor 5P connector (with dual zone climate control) : disconnected
Test point 1	**Climate control unit connector B (24P) No. 14**
Test point 2	Body ground

Is there 1 MΩ or more?

YES: Without dual zone climate control

The M-COOL-DR wire is OK. Go to step 6.

YES: With dual zone climate control

The M-COOL-DR wire is OK. Go to step 7.

NO

Repair a short to ground in the M-COOL-DR wire.

6. Air mix control motor check

-1. **Test the air mix control motor** .

Is the air mix control motor OK?

YES

Replace the climate control unit .

NO

Replace the air mix control motor , or repair the air mix control linkage or door.

7. Driver's air mix control motor check

-1. **Test the driver's air mix control motor** .

Is the driver's air mix control motor OK?

YES

Replace the climate control unit .

NO

Replace the driver's air mix control motor , or repair the driver's air mix control linkage or door.

DTC B1236 (B-A4)

DTC B1236 or DTC screen B-A4 : An open in the passenger's air mix control motor circuit

DTC Description	DTC
B1236 An open in the passenger's air mix control motor circuit	Â

DTC (AC)

1. Problem verification

-1. Clear the DTCs with the HDS.

-2. Turn the vehicle to the OFF (LOCK) mode and then the ON mode.

-3. **Do the Self-Diagnostic Function with the HDS or the climate control unit**.

-4. Check for DTCs.

DTC Description	DTC
B1236 An open in the passenger's air mix control motor circuit	Â

Is DTC B1236 or Error on the DTC screen B-A4 indicated?

YES

The failure is duplicated. Go to step 2.

NO

Intermittent failure. Check for loose wires or poor connections on the passenger's air mix control motor circuit.

2. Determine possible failure area (AMD-P-AS line, others)

-1. Turn the vehicle to the OFF (LOCK) mode.

-2. Disconnect the following connector.

Passenger's air mix control motor 5P connector

-3. Turn the vehicle to the ON mode.

-4. Measure the voltage between test points 1 and 2.

Test condition	Vehicle ON mode Passenger's air mix control motor 5P connector: disconnected
Test point 1	Passenger's air mix control motor 5P connector (female terminals) No. 2: ①
Test point 2	Body ground

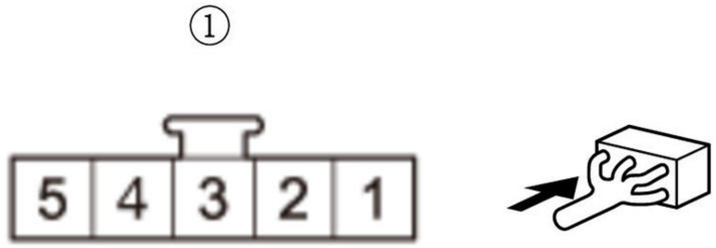

Is there about 5 V?

YES

The AMD-P-AS wire is OK. Go to step 3.

NO

Go to step 5.

3. Determine possible failure area (passenger's air mix control motor, SENS-COM line)

-1. Measure the voltage between test points 1 and 2.

Test condition	Vehicle ON mode Passenger's air mix control motor 5P connector: disconnected
Test point 1	Passenger's air mix control motor 5P connector (female terminals) No. 1: ①
Test point 2	Passenger's air mix control motor 5P connector (female terminals) No. 2: ①

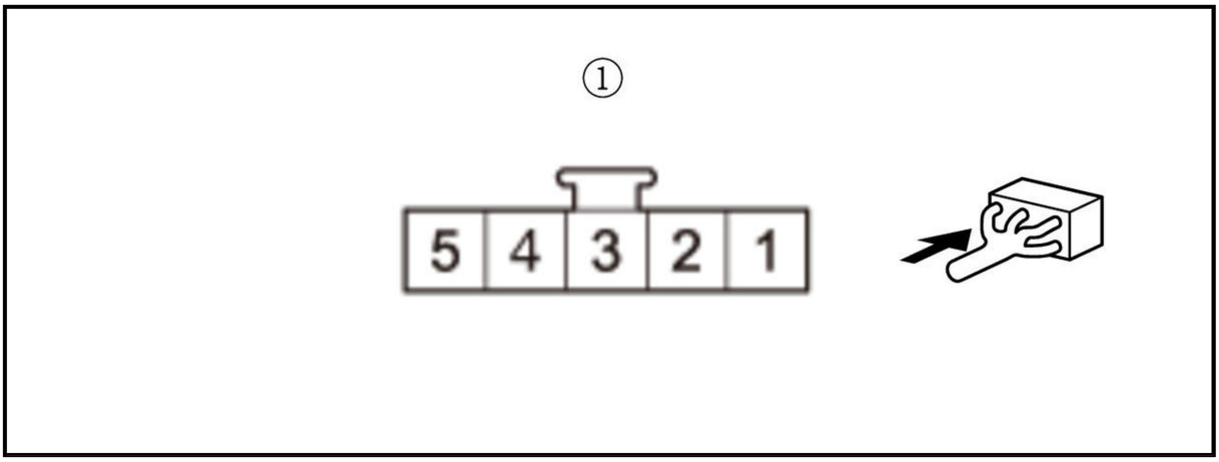

Is there about 5 V?

YES

Replace the passenger's air mix control motor .

NO

Go to step 4.

4. Open wire check (SENS-COM line)

-1. Turn the vehicle to the OFF (LOCK) mode.

-2. Disconnect the following connector.

Climate control unit connector B (24P)

-3. Measure the resistance between test points 1 and 2.

Test condition	Vehicle OFF (LOCK) mode Passenger's air mix control motor 5P connector: disconnected
Â	Climate control unit connector B (24P): disconnected
Test point 1	Passenger's air mix control motor 5P connector (female terminals) No. 1: ①
Test point 2	**Climate control unit connector B (24P) No. 10**

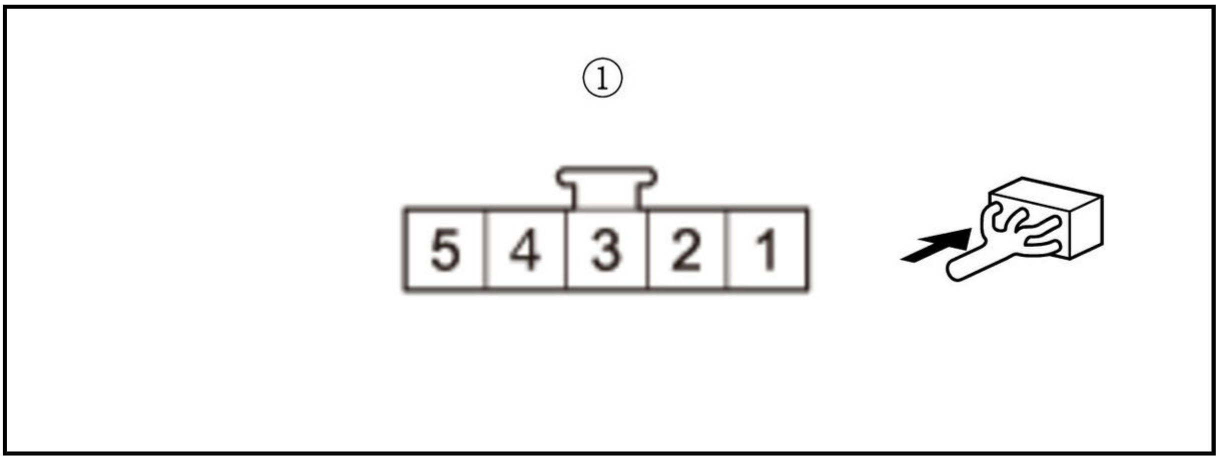

Is there 1.0 Ω or less?

YES

Replace the climate control unit .

NO

Repair an open in the SENS-COM wire.

5. Open wire check (AMD-P-AS line)

   -1. Measure the voltage between test points 1 and 2.

Test condition	Vehicle ON mode
	Passenger's air mix control motor 5P connector: disconnected
Test point 1	**Climate control unit connector B (24P) No. 3**
Test point 2	Body ground

   Is there about 5 V?

   YES

   Repair an open in the AMD-P-AS wire.

   NO

   Replace the climate control unit .

DTC B1237 (B-A5)

DTC B1237 or DTC screen B-A5 : A Short in the Passenger's Air Mix Control Motor Circuit

NOTE: If other short circuit DTCs are indicated at the same time, there may be an open or short to body ground in the power S5V circuit.

DTC Description	DTC
B1237 A short in the passenger's air mix control motor circuit	Â

DTC (AC)

1. Problem verification

   -1. Clear the DTCs with the HDS.

   -2. Turn the vehicle to the OFF (LOCK) mode and then the ON mode.

   -3. **Do the Self-Diagnostic Function with the HDS or the climate control unit**.

   -4. Check for DTCs.

DTC Description	DTC
B1237 A short in the passenger's air mix control motor circuit	Â

   Is DTC B1237 or Error on the DTC screen B-A5 indicated?

   YES

   The failure is duplicated. Go to step 2.

   NO

   Intermittent failure. Check for loose wires or poor connections on the passenger's air mix control motor circuit.

2. Determine possible failure area (S5V line, others)

-1. Turn the vehicle to the OFF (LOCK) mode.

-2. Disconnect the following connector.

Passenger's air mix control motor 5P connector

-3. Turn the vehicle to the ON mode.

-4. Measure the voltage between test points 1 and 2.

Test condition	Vehicle ON mode Passenger's air mix control motor 5P connector: disconnected
Test point 1	Passenger's air mix control motor 5P connector (female terminals) No. 3: ①
Test point 2	Body ground

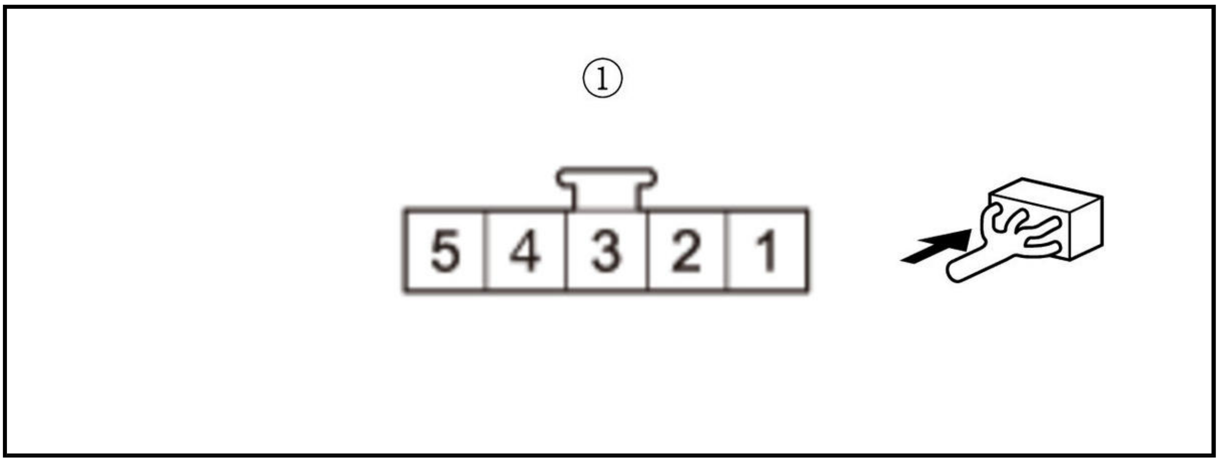

Is there about 5 V?

YES

The S5V wire is OK. Go to step 3.

NO

Go to step 6.

3. Determine possible failure area (passenger's air mix control motor, AMD-P-AS line)

-1. Measure the voltage between test points 1 and 2.

Test condition	Vehicle ON mode Passenger's air mix control motor 5P connector: disconnected
Test point 1	Passenger's air mix control motor 5P connector (female terminals) No. 2: ①
Test point 2	Body ground

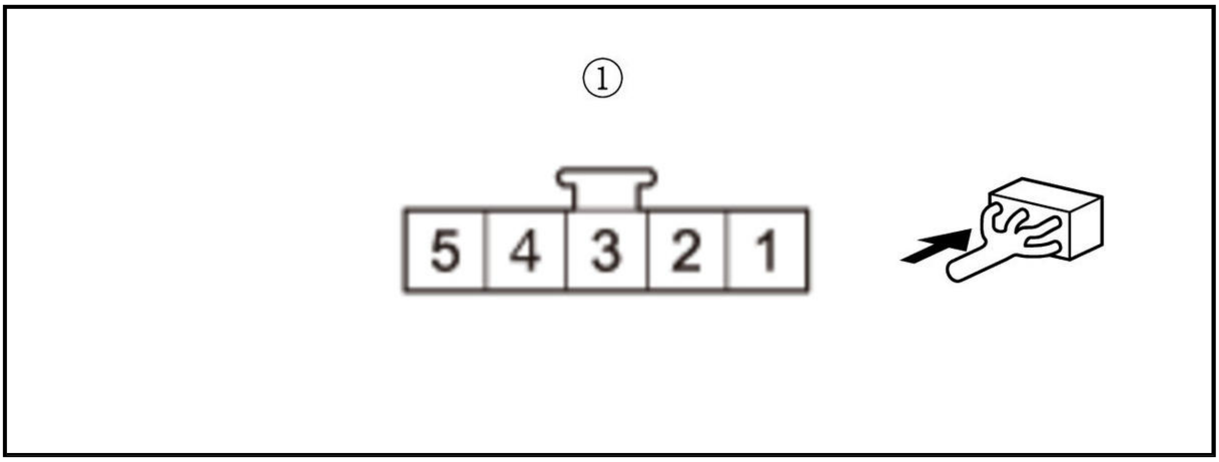

Is there about 5 V?

YES

Replace the passenger's air mix control motor .

NO

Go to step 4.

4. Shorted wire check (AMD-P-AS line)

-1. Turn the vehicle to the OFF (LOCK) mode.

-2. Disconnect the following connector.

Climate control unit connector B (24P)

-3. Measure the resistance between test points 1 and 2.

Test condition	Vehicle OFF (LOCK) mode
	Climate control unit connector B (24P): disconnected
	Passenger's air mix control motor 5P connector: disconnected
Test point 1	**Climate control unit connector B (24P) No. 3**
Test point 2	Body ground

Is there 1 MΩ or more?

YES

The AMD-P-AS wire is not shorted to body ground. Go to step 5.

NO

Repair a short to body ground in the AMD-P-AS wire.

5. Shorted wire check (AMD-P-AS line to SENS-COM line)

-1. Check for continuity between test points 1 and 2.

Test condition	Vehicle OFF (LOCK) mode
	Climate control unit connector B (24P): disconnected
	Passenger's air mix control motor 5P connector: disconnected
Test point 1	Passenger's air mix control motor 5P connector (female terminals) No. 1: ①

Test point 2	Passenger's air mix control motor 5P connector (female terminals) No. 2: ①

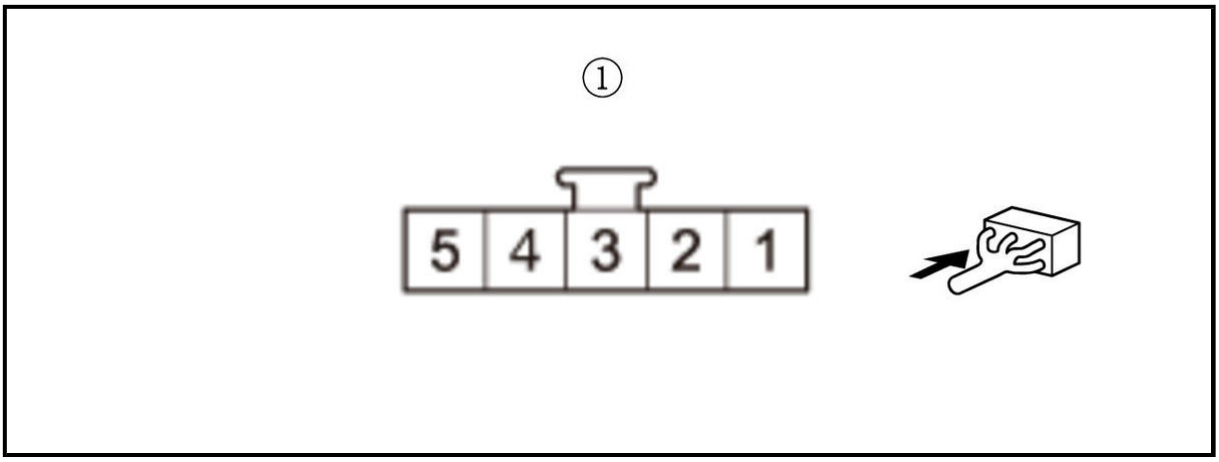

Is there 1 MΩ or more?

YES

Replace the climate control unit .

NO

Repair a short in the AMD-P-AS wire to SENS-COM wire.

6. Open wire check (S5V line)

-1. Measure the voltage between test points 1 and 2.

Test condition	Vehicle ON mode Passenger's air mix control motor 5P connector: disconnected
Test point 1	Climate control unit connector B (24P) No. 1
Test point 2	Body ground

Is there about 5 V?

YES

Repair an open in the S5V wire.

NO

The S5V wire is not open. Go to step 7.

7. Shorted wire check (S5V line)

-1. Turn the vehicle to the OFF (LOCK) mode.

-2. Disconnect the following connector.

Climate control unit connector B (24P)

-3. Measure the resistance between test points 1 and 2.

Test condition	Vehicle OFF (LOCK) mode Climate control unit connector B (24P): disconnected Passenger's air mix control motor 5P connector: disconnected

Test point 1	Climate control unit connector B (24P) No. 1
Test point 2	Body ground

Is there 1 MΩ or more?

YES

Replace the climate control unit .

NO

Repair a short to body ground in the S5V wire.

DTC B1238 (B-A6)

DTC B1238 or DTC screen B-A6 : A problem in the passenger's air mix control motor circuit, linkage, door, or motor

DTC Description	DTC
B1238 A problem in the passenger's air mix control motor circuit, linkage, door, or motor	Â

DTC (AC)

1. Problem verification

-1. Clear the DTCs with the HDS.

-2. Turn the vehicle to the OFF (LOCK) mode and then the ON mode.

-3. Do the Self-Diagnostic Function with the HDS or the climate control unit.

-4. Check for DTCs.

DTC Description	DTC
B1238 A problem in the passenger's air mix control motor circuit, linkage, door, or motor	Â

Is DTC B1238 or Error on the DTC screen B-A6 indicated?

YES

The failure is duplicated. Go to step 2.

NO

Intermittent failure. Check for loose wires or poor connections on the passenger's air mix control motor circuit.

2. Open wire check (M-HOT-AS line)

-1. Turn the vehicle to the OFF (LOCK) mode.

-2. Disconnect the following connectors.

Climate control unit connector B (24P)
Passenger's air mix control motor 5P connector

-3. Measure the resistance between test points 1 and 2.

Test condition	Vehicle OFF (LOCK) mode Climate control unit connector B (24P): disconnected Passenger's air mix control motor 5P connector: disconnected
Test point 1	**Climate control unit connector B (24P) No. 15**
Test point 2	Passenger's air mix control motor 5P connector (female terminals) No. 5: ①

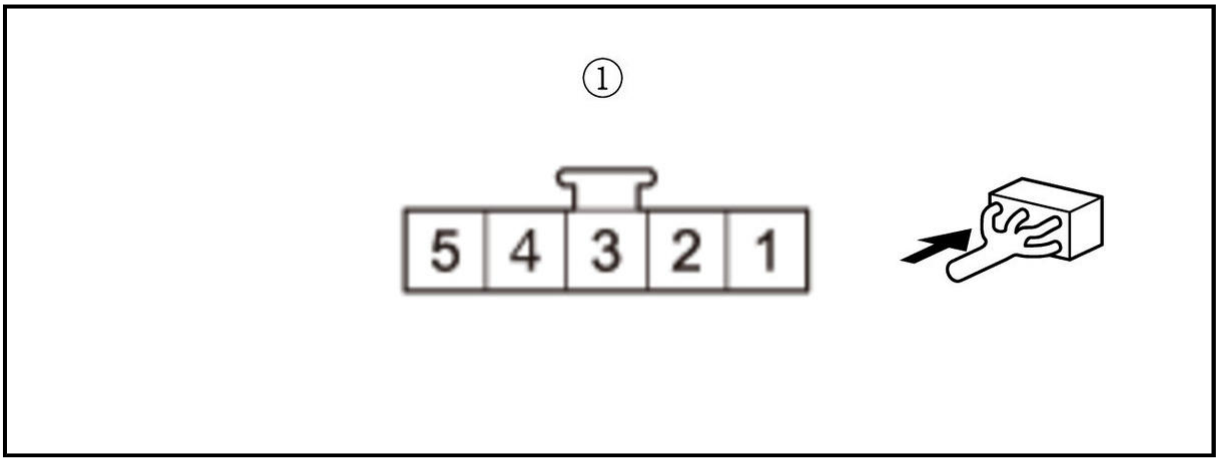

Is there 1.0 Ω or less?

YES

The M-HOT-AS wire is not open. Go to step 3.

NO

Repair an open in the M-HOT-AS wire.

3. Open wire check (M-COOL-AS line)

-1. Measure the resistance between test points 1 and 2.

Test condition	Vehicle OFF (LOCK) mode Climate control unit connector B (24P): disconnected Passenger's air mix control motor 5P connector: disconnected
Test point 1	**Climate control unit connector B (24P) No. 16**
Test point 2	Passenger's air mix control motor 5P connector (female terminals) No. 4: ①

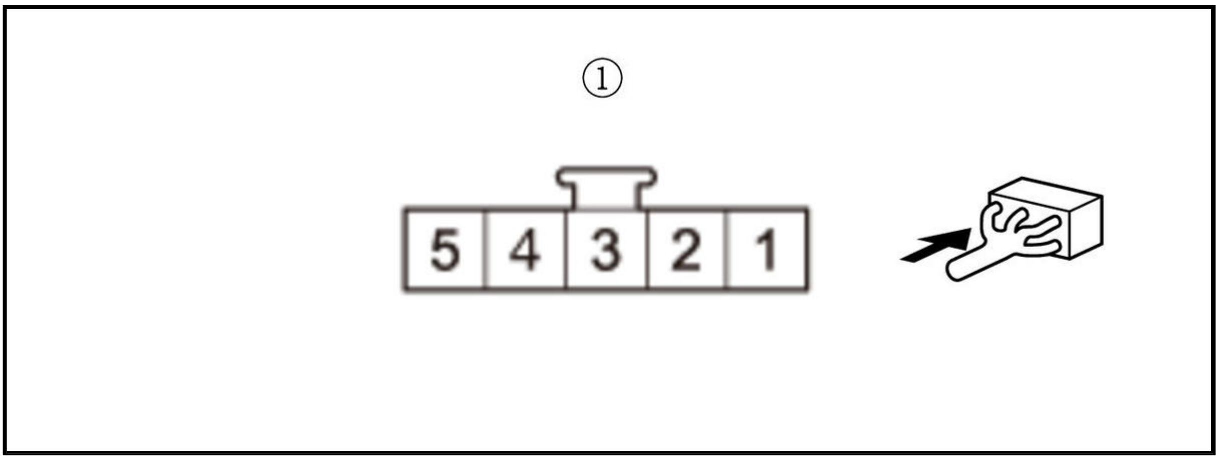

Is there 1.0 Ω or less?

YES

The M-COOL-AS wire is not open. Go to step 4.

NO

Repair an open in the M-COOL-AS wire.

4. Shorted wire check (M-HOT-AS line)

-1. Measure the resistance between test points 1 and 2.

Test condition	Vehicle OFF (LOCK) mode
	Climate control unit connector B (24P): disconnected
	Passenger's air mix control motor 5P connector: disconnected
Test point 1	**Climate control unit connector B (24P) No. 15**
Test point 2	Body ground

Is there 1 MΩ or more?

YES

The M-HOT-AS wire is OK. Go to step 5.

NO

Repair a short to body ground in the M-HOT-AS wire.

5. Shorted wire check (M-COOL-AS line)

-1. Measure the resistance between test points 1 and 2.

Test condition	Vehicle OFF (LOCK) mode
	Climate control unit connector B (24P): disconnected
	Passenger's air mix control motor 5P connector: disconnected
Test point 1	**Climate control unit connector B (24P) No. 16**
Test point 2	Body ground

Is there 1 MΩ or more?

YES

The M-COOL-AS wire is OK. Go to step 6.

NO

Repair a short to body ground in the M-COOL-AS wire.

6. Passenger's air mix control motor check

-1. **Test the passenger's air mix control motor check** .

Is the passenger's air mix control motor OK?

YES

Replace the climate control unit .

NO

Replace the passenger's air mix control motor , or repair the passenger's air mix control linkage or door.

DTC B123F (A-A3), B123F (17)

DTC B123F, DTC screen A-A3, or DTC screen 17 : Automatic lighting control unit/sunlight sensor error

NOTE: Check for DTCs. If a DTC U1280, Error on the DTC screen I-A1 *1, or DTC screen 80 *2 indicated, troubleshoot this DTC first.

*1: Climate control panel without display

*2: Climate control panel with display

DTC Description	DTC
B123F Automatic lighting control unit/sunlight sensor error	Â

DTC (AC)

1. Problem verification

   -1. Clear the DTCs with the HDS.

   -2. Turn the vehicle to the OFF (LOCK) mode and then the ON mode.

   -3. Do the Self-Diagnostic Function with the HDS or the climate control unit.

   -4. Check for DTCs.

DTC Description	DTC
B123F Automatic lighting control unit/sunlight sensor error	Â

   Is DTC B123F, Error on the DTC screen A-A3 (climate control panel without display), or DTC screen 17 (climate control panel with display) indicated?

   YES

   The failure is duplicated. Go to step 2.

   NO

   Intermittent failure, the system is OK at this time.

2. Equipment check

   -1. Turn the vehicle to the OFF (LOCK) mode.

   -2. Confirm the vehicle have an automatic wiper system.

   Does the wiper/washer switch have an AUTO position?

   YES

   Go to step 3.

   NO

   Go to step 8.

3. Open wire check (TSUN line)

-1. Disconnect the following connectors.

Climate control unit connector A (32P)
Sunlight sensor 2P connector

-2. Measure the resistance between test points 1 and 2.

Test condition	Vehicle OFF (LOCK) mode
	Climate control unit connector A (32P): disconnected
	Sunlight sensor 2P connector: disconnected
Test point 1	**Climate control unit connector A (32P) No. 10**
Test point 2	Sunlight sensor 2P connector (female terminals) No. 2: ①

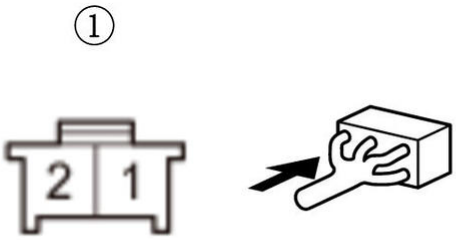

Is there 1.0 Ω or less?

YES

The TSUN wire is not open. Go to step 4.

NO

Repair an open in the TSUN wire.

4. Open wire check (SENSOR_COM line)

-1. Measure the resistance between test points 1 and 2.

Test condition	Vehicle OFF (LOCK) mode
	Climate control unit connector A (32P): disconnected
	Sunlight sensor 2P connector: disconnected
Test point 1	**Climate control unit connector A (32P) No. 12**
Test point 2	Sunlight sensor 2P connector (female terminals) No. 1: ①

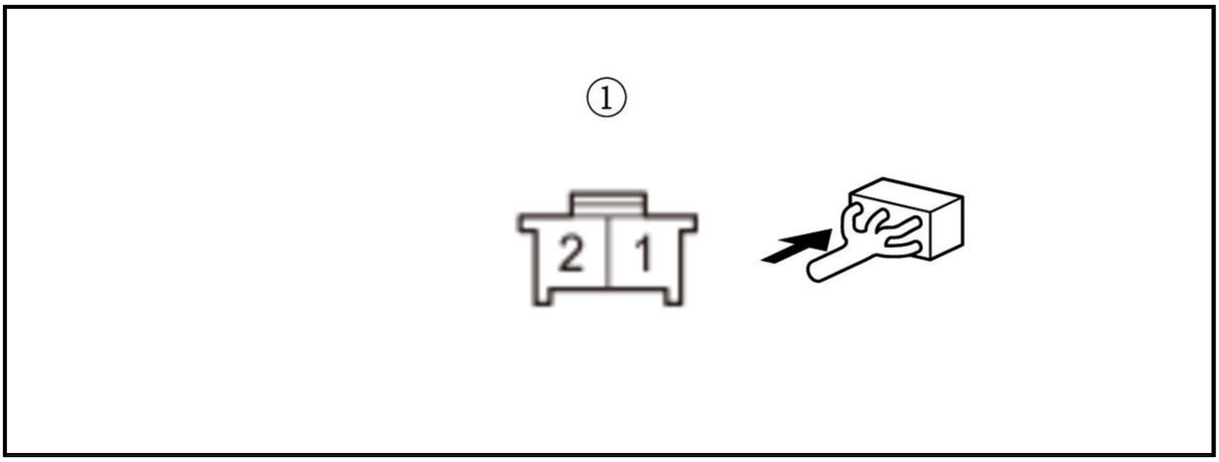

Is there 1.0 Ω or less?

YES

The SENSOR_COM wire is OK. Go to step 5.

NO

Repair an open in the SENSOR_COM wire.

5. Shorted wire check (TSUN line)

-1. Measure the resistance between test points 1 and 2.

Test condition	Vehicle OFF (LOCK) mode
	Climate control unit connector A (32P): disconnected
	Sunlight sensor 2P connector: disconnected
Test point 1	Climate control unit connector A (32P) No. 10
Test point 2	Body ground

Is there 1 MΩ or more?

YES

The TSUN wire is not shorted. Go to step 6.

NO

Repair a short to body ground in the TSUN wire.

6. Shorted wire check (TSUN line to SENSOR_COM line)

-1. Measure the resistance between test points 1 and 2.

Test condition	Vehicle OFF (LOCK) mode
	Climate control unit connector A (32P): disconnected
	Sunlight sensor 2P connector: disconnected
Test point 1	Climate control unit connector A (32P) No. 10
Test point 2	Climate control unit connector A (32P) No. 12

Is there 1 MΩ or more?

YES

The TSUN wire and the SENSOR_COM wire are OK. Go to step 7.

NO

Repair a short in the TSUN wire to the SENSOR_COM wire.

7. Sunlight sensor check

-1. Reconnect the following connectors.

Climate control unit connector A (32P)
Sunlight sensor 2P connector

-2. **Test the sunlight sensor** .

Is the sunlight sensor OK?

YES

Replace the climate control unit .

NO

Replace the sunlight sensor .

8. Fuse check:**NOTE:** Check for DTCs. If a DTC U1280, Error on the DTC screen I-A1 *1, or DTC indicator 80 *2 indicated, troubleshoot the DTC first.-1.

Check the following fuse.

Fuse	**No. A18**

Is the fuse OK?

YES

Go to step 9.

NO

Replace the fuse, and recheck. If the fuse blows again, repair a short in the No. A18 fuse circuit.

9. Determine possible failure area (B-CAN lines, others)

-1. Disconnect the following connector.

Automatic lighting control unit-sensor 5P connector

-2. Measure the voltage between test points 1 and 2.

Test condition	Vehicle OFF (LOCK) mode
	Automatic lighting control unit-sensor 5P connector: disconnected
Test point 1	**Automatic lighting control unit-sensor 5P connector No. 3**
Test point 2	**Automatic lighting control unit-sensor 5P connector No. 4**

Is there battery voltage?

YES

Go to step 10.

NO

Go to step 13.

10. Open wire check (B-CAN_H line)

-1. Disconnect the following connector.

Climate control unit connector A (32P)

-2. Measure the resistance between test points 1 and 2.

Test condition	Vehicle OFF (LOCK) mode
	Automatic lighting control unit-sensor 5P connector: disconnected
	Climate control unit connector A (32P): disconnected
Test point 1	**Automatic lighting control unit-sensor 5P connector No. 1**
Test point 2	**Climate control unit connector A (32P) No. 25**

Is there 1.0 Ω or less?

YES

The B-CAN_H wire is OK. Go to step 11.

NO

Repair an open in the B-CAN_H wire.

11. Open wire check (B-CAN_L line)

-1. Measure the resistance between test points 1 and 2.

Test condition	Vehicle OFF (LOCK) mode
	Automatic lighting control unit-sensor 5P connector: disconnected
	Climate control unit connector A (32P): disconnected
Test point 1	**Automatic lighting control unit-sensor 5P connector No. 2**
Test point 2	**Climate control unit connector A (32P) No. 8**

Is there 1.0 Ω or less?

YES

The B-CAN_L wire is OK. Go to step 12.

NO

Repair an open in the B-CAN_L wire.

12. DTC check

-1. Reconnect the following connectors.

Automatic lighting control unit-sensor 5P connector
Climate control unit connector A (32P)

-2. Clear the DTC with the HDS.

-3. Turn the vehicle to the OFF (LOCK) mode and then the ON mode.

-4. Wait for at least 8 seconds.

-5. Do the Self-Diagnostic Function with the climate control unit.

-6. Check for DTCs.

DTC Description	DTC
B123F Automatic lighting control unit/sunlight sensor error	Â
U128D Climate Control Unit Lost communication with gauge control module	Â

Are DTC B123F, Error on the DTC screen A-A3 *1, or DTC screen 17 *2 and DTC U128D, Error on the DTC screen I-A2 *1, or DTC screen 83 *2 indicated?

YES

Replace the climate control unit .

NO

Replace the automatic lighting control unit-sensor .

13. Open wire check (+B_BACK_UP line)

-1. Measure the voltage between test points 1 and 2.

Test condition	Vehicle OFF (LOCK) mode
	Automatic lighting control unit-sensor 5P connector: disconnected
Test point 1	**Automatic lighting control unit-sensor 5P connector No. 4**
Test point 2	Body ground

Is there battery voltage?

YES

Check for an open in the GND wire between the automatic lighting control unit-sensor and body ground. If the wire is OK, check for poor ground at G402.

NO

Repair an open in the +B_BACK_UP wire.

DTC B1240 (B-B3), B1240 (4B)

DTC B1240, DTC screen B-B3, or DTC screen 4b : A problem in the mode control motor circuit, linkage, door, or motor

DTC Description	DTC
B1240 A problem in the mode control motor circuit, linkage, door, or motor	Â

DTC (AC)

1. Problem verification

-1. Clear the DTCs with the HDS.

-2. Turn the vehicle to the OFF (LOCK) mode and then the ON mode.

-3. Do the Self-Diagnostic Function with the HDS or the climate control unit.

-4. Check for DTCs.

DTC Description	DTC
B1240 A problem in the mode control motor circuit, linkage, door, or motor	Â

Is DTC B1240, Error on the DTC screen B-B3 (climate control panel without display), or DTC screen 4b (climate control panel with display) indicated?

YES

The failure is duplicated. Go to step 2.

NO

Intermittent failure. Check for loose wires or poor connections on the mode control motor circuit.

2. Open wire check (M-DEF line)

-1. Turn the vehicle to the OFF (LOCK) mode.

-2. Disconnect the following connectors.

Climate control unit connector B (24P)
Mode control motor 5P connector

-3. Measure the resistance between test points 1 and 2.

Test condition	Vehicle OFF (LOCK) mode
	Climate control unit connector B (24P): disconnected
	Mode control motor 5P connector: disconnected
Test point 1	**Climate control unit connector B (24P) No. 20**
Test point 2	Mode control motor 5P connector (female terminals) No. 5: ①

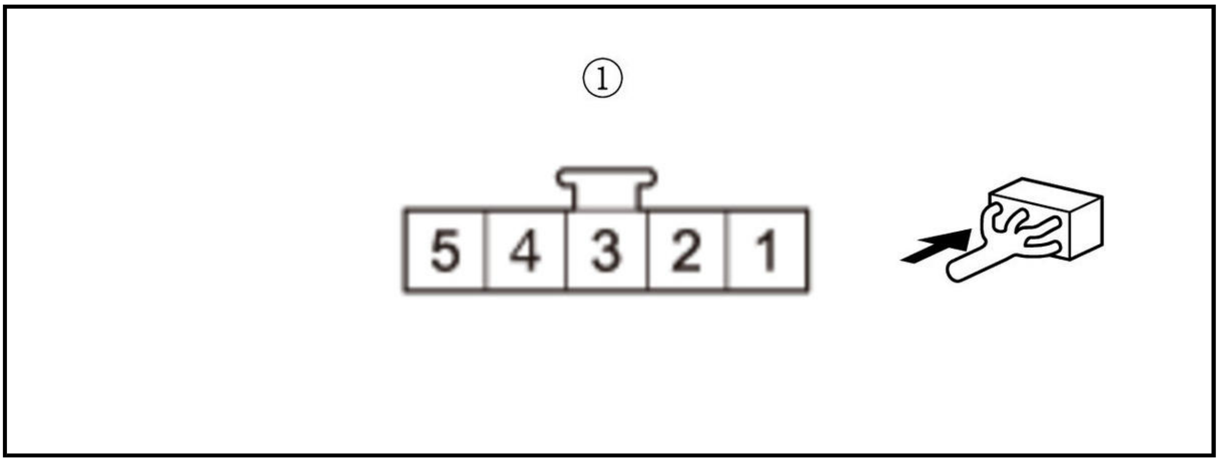

Is there 1.0 Ω or less?

YES

The M-DEF wire is not open. Go to step 3.

NO

Repair an open in the M-DEF wire.

3. Open wire check (M-VENT line)

-1. Measure the resistance between test points 1 and 2.

Test condition	Vehicle OFF (LOCK) mode
	Climate control unit connector B (24P): disconnected
	Mode control motor 5P connector: disconnected
Test point 1	**Climate control unit connector B (24P) No. 19**
Test point 2	Mode control motor 5P connector (female terminals) No. 4: ①

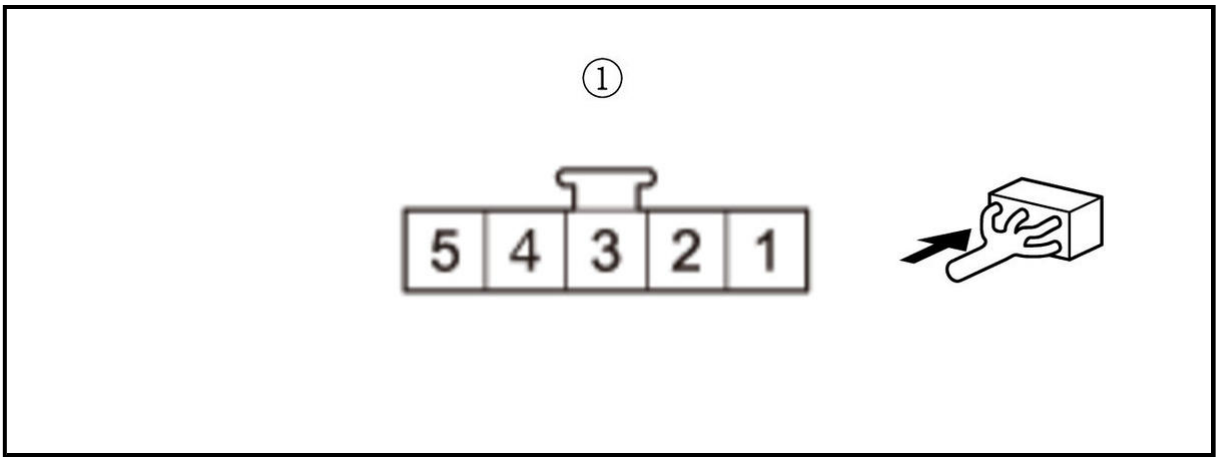

Is there 1.0 Ω or less?

YES

The M-VENT wire is not open. Go to step 4.

NO

Repair an open in the M-VENT wire.

4. Shorted wire check (M-DEF line)

-1. Measure the resistance between test points 1 and 2.

Test condition	Vehicle OFF (LOCK) mode
	Climate control unit connector B (24P): disconnected
	Mode control motor 5P connector: disconnected
Test point 1	**Climate control unit connector B (24P) No. 20**
Test point 2	Body ground

Is there 1 MΩ or more?

YES

The M-DEF wire is OK. Go to step 5.

NO

Repair a short to body ground in the M-DEF wire.

5. Shorted wire check (M-VENT line)

-1. Measure the resistance between test points 1 and 2.

Test condition	Vehicle OFF (LOCK) mode

	Climate control unit connector B (24P): disconnected
	Mode control motor 5P connector: disconnected
Test point 1	**Climate control unit connector B (24P) No. 19**
Test point 2	Body ground

Is there 1 MΩ or more?

YES

The M-VENT wire is OK. Go to step 6.

NO

Repair a short to body ground in the M-VENT wire.

6. Mode control motor check

-1. **Test the mode control motor** .

Is the mode control motor OK?

YES

Replace the climate control unit .

NO

Replace the mode control motor , or repair the mode control linkage or door.

DTC B1241 (D-A1), B1241 (59)

DTC B1241, DTC screen D-A1, or DTC screen 59 : A problem in the blower motor circuit

DTC Description	DTC
B1241 A problem in the blower motor circuit	Â

DTC (AC)

1. Problem verification

-1. Clear the DTC with the HDS.

-2. Turn the vehicle to the OFF (LOCK) mode and then the ON mode.

-3. **Do the Self-Diagnostic Function with the HDS or the climate control unit**.

-4. Check for DTCs.

DTC Description	DTC
B1241 A problem in the blower motor circuit	Â

Is DTC B1241, Error on the DTC screen D-A1 (climate control panel without display), or DTC screen 59 (climate control panel with display) indicated?

YES

The failure is duplicated. Go to step 2.

NO

Intermittent failure. Check for loose wires or poor connections on the blower motor circuit.

2. Fuse check

-1. Turn the vehicle to the OFF (LOCK) mode.

-2. Check the following fuse.

Fuse	**No. A3-1**

Is the fuse OK?

YES

Go to step 3.

NO

Replace the fuse, and recheck. If fuse blows again, repair a short in the No. A3-1 fuse circuit.

3. Blower motor power circuit check

-1. Disconnect the following connector.

Blower motor 2P connector

-2. Turn the vehicle to the ON mode.

-3. Measure the voltage between test points 1 and 2.

Test condition	Vehicle ON mode
	Blower motor 2P connector: disconnected
Test point 1	Blower motor 2P connector (female terminals) No. 2: ①
Test point 2	Body ground

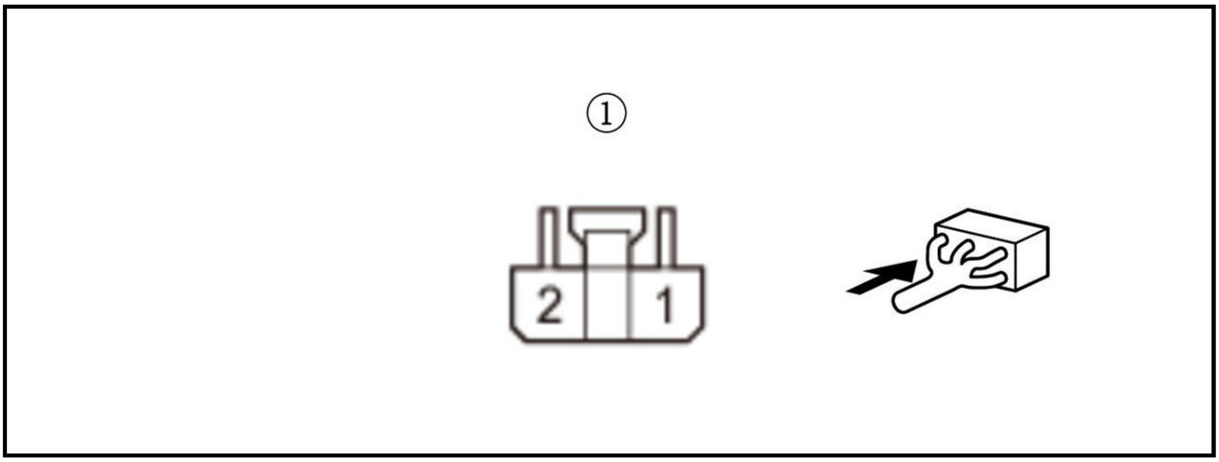

Is there battery voltage?

YES

Go to step 4.

NO

Go to step 12.

4. Blower motor operation check

-1. Turn the vehicle to the OFF (LOCK) mode.

-2. Reconnect the blower motor 2P connector.

-3. Connect terminals A and B with a jumper wire.

Terminal A	Blower motor 2P connector (female terminals) No. 1: ①
Terminal B	Body ground

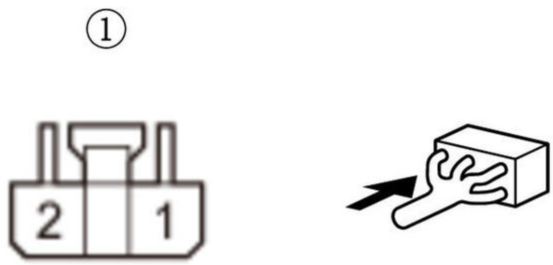

-4. Turn the vehicle to the ON mode.

Does the blower motor run at high speed?

YES

Go to step 5.

NO

Replace the blower motor .

5. Open wire check (GND line)

-1. Turn the vehicle to the OFF (LOCK) mode.

-2. Remove the jumper wire from the blower motor 2P connector.

-3. Disconnect the following connector.

Power transistor 4P connector

-4. Measure the resistance between test points 1 and 2.

Test condition	Vehicle OFF (LOCK) mode Power transistor 4P connector: disconnected
Test point 1	Power transistor 4P connector (female terminals) No. 2: ①
Test point 2	Body ground

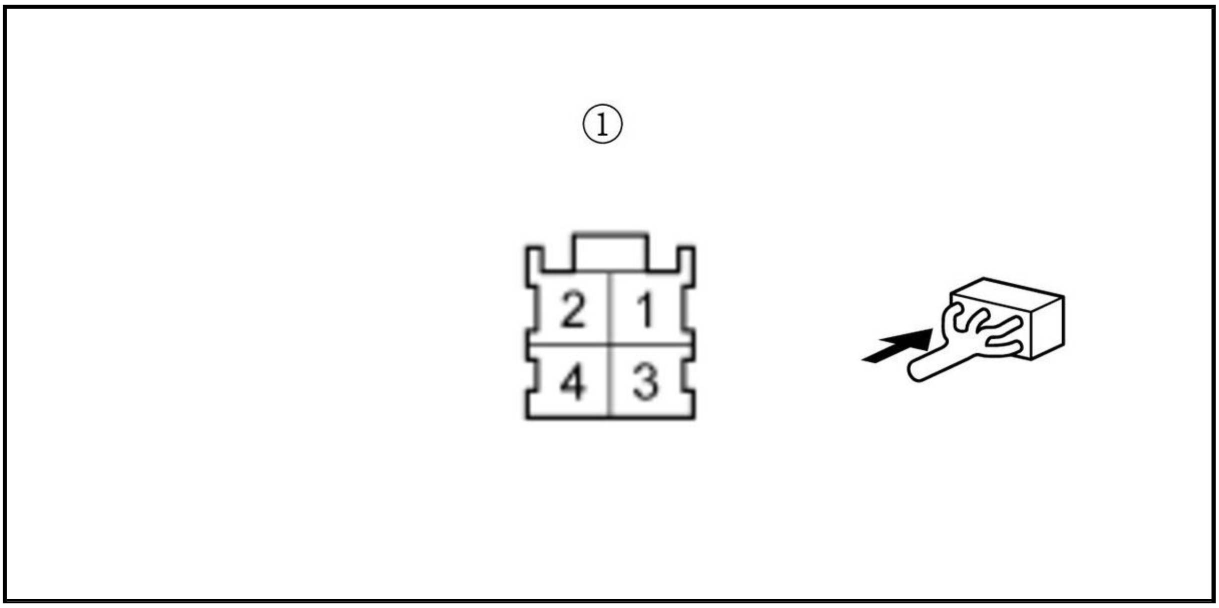

Is there 1.0 Ω or less?

YES

The GND wire is OK. Go to step 6.

NO

Check for an open in the GND wire. If the wire is OK, check for poor ground at G251.

6. Open wire check (BLW-M line)

-1. Connect terminals A and B with a jumper wire.

Terminal A	Power transistor 4P connector (female terminals) No. 1: ①
Terminal B	Power transistor 4P connector (female terminals) No. 2: ①

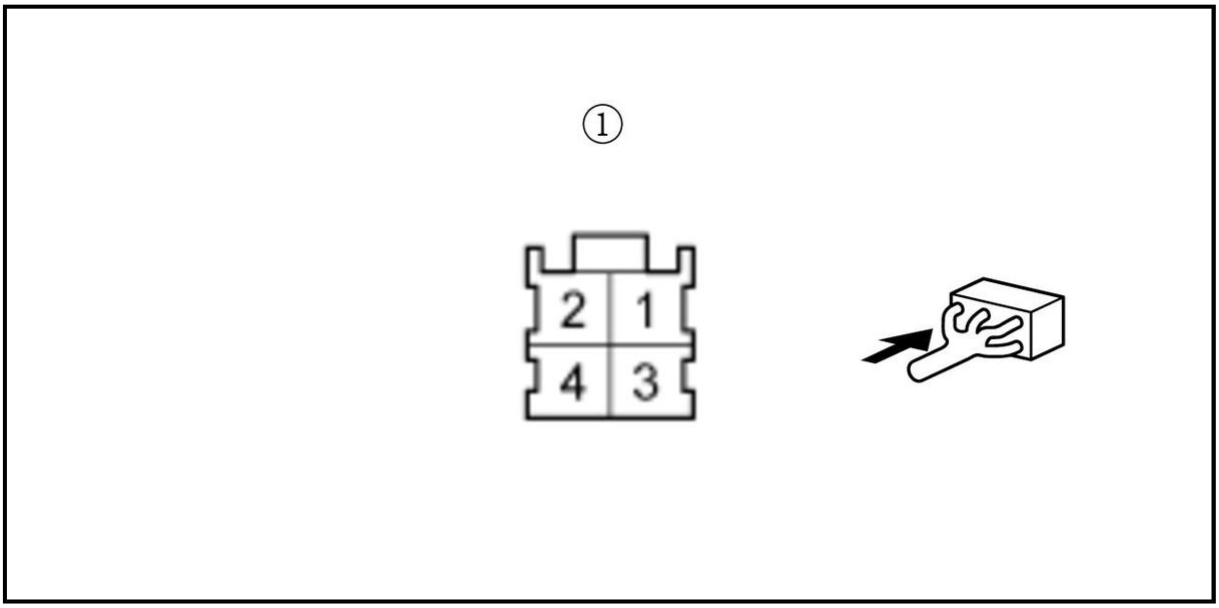

-2. Turn the vehicle to the ON mode.

Does the blower motor run at high speed?

YES

The BLW-M wire is OK. Go to step 7.

NO

Repair an open in the BLW-M wire.

7. Shorted wire check (BLW-V line)

-1. Turn the vehicle to the OFF (LOCK) mode.

-2. Remove the jumper wire from the power transistor 4P connector.

-3. Disconnect the following connector.

Climate control unit connector B (24P)

-4. Measure the resistance between test points 1 and 2.

Test condition	Vehicle OFF (LOCK) mode
	Climate control unit connector B (24P): disconnected
	Power transistor 4P connector: disconnected
Test point 1	**Climate control unit connector B (24P) No. 12**
Test point 2	Body ground

Is there 1 MΩ or more?

YES

The BLW-V wire is not shorted. Go to step 8.

NO

Repair a short to body ground in the BLW-V wire.

8. Shorted wire check (BLW-G line)

-1. Measure the resistance between test points 1 and 2.

Test condition	Vehicle OFF (LOCK) mode
	Climate control unit connector B (24P): disconnected
	Power transistor 4P connector: disconnected
Test point 1	**Climate control unit connector B (24P) No. 11**
Test point 2	Body ground

Is there 1 MΩ or more?

YES

The BLW-G wire is not shorted. Go to step 9.

NO

Repair a short to body ground in the BLW-G wire.

9. Open wire check (BLW-V line)

-1. Measure the resistance between test points 1 and 2.

Test condition	Vehicle OFF (LOCK) mode
	Climate control unit connector B (24P): disconnected
	Power transistor 4P connector: disconnected
Test point 1	**Climate control unit connector B (24P) No. 12**
Test point 2	Power transistor 4P connector (female terminals) No. 3: ①

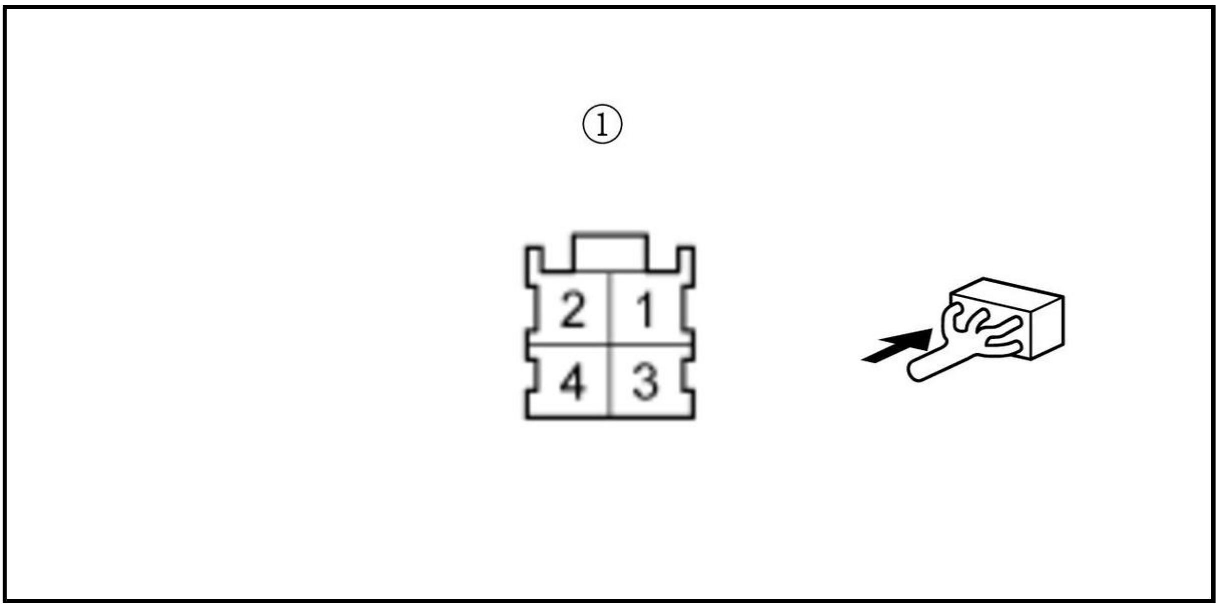

Is there 1.0 Ω or less?

YES

The BLW-V wire is OK. Go to step 10.

NO

Repair an open in the BLW-V wire.

10. Open wire check (BLW-G line)

-1. Measure the resistance between test points 1 and 2.

Test condition	Vehicle OFF (LOCK) mode
	Climate control unit connector B (24P): disconnected
	Power transistor 4P connector: disconnected
Test point 1	**Climate control unit connector B (24P) No. 11**
Test point 2	Power transistor 4P connector (female terminals) No. 4: ①

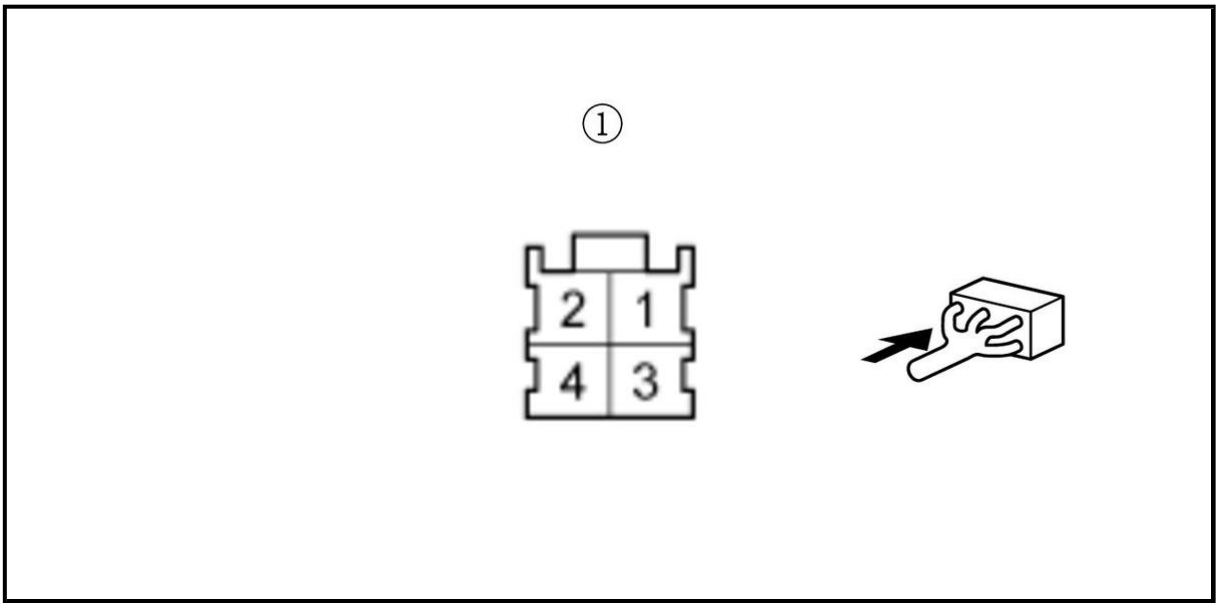

Is there 1.0 Ω or less?

YES

The BLW-G wire is OK. Go to step 11.

NO

Repair an open in the BLW-G wire.

11. Power transistor check

    -1. **Test the power transistor** .

    Is the power transistor OK?

    YES

    Replace the climate control unit .

    NO

    Replace the power transistor .

    NOTE: If the power transistor is faulty, check the blower motor for damage. If necessary, **replace the blower motor** .

12. Front blower motor relay check

    -1. Turn the vehicle to the OFF (LOCK) mode.

    -2. Remove the front blower motor relay from the under-hood fuse/relay box, and **test it** .

    Is the relay OK?

    YES

    Go to step 13.

    NO

    Replace the front blower motor relay.

13. Open wire check (+B_HTR_MTR line)

-1. Measure the voltage between test points 1 and 2.

Test condition	Vehicle OFF (LOCK) mode
	Front blower motor relay: disconnected
Test point 1	Front blower motor relay 4P socket (female terminals) No. 1: ①
Test point 2	Body ground

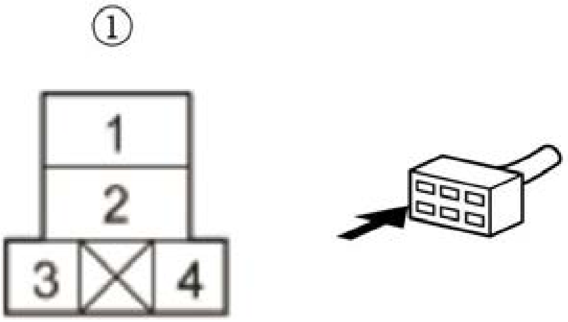

Is there battery voltage?

YES

The +B_HTR_MTR wire is OK. Go to step 14.

NO

Replace the under-hood fuse/relay box .

14. Open wire check (IG2_A/C line)

-1. Turn the vehicle to the ON mode.

-2. Measure the voltage between test points 1 and 2.

Test condition	Vehicle ON mode
	Front blower motor relay: disconnected
Test point 1	Front blower motor relay 4P socket (female terminals) No. 3: ①
Test point 2	Body ground

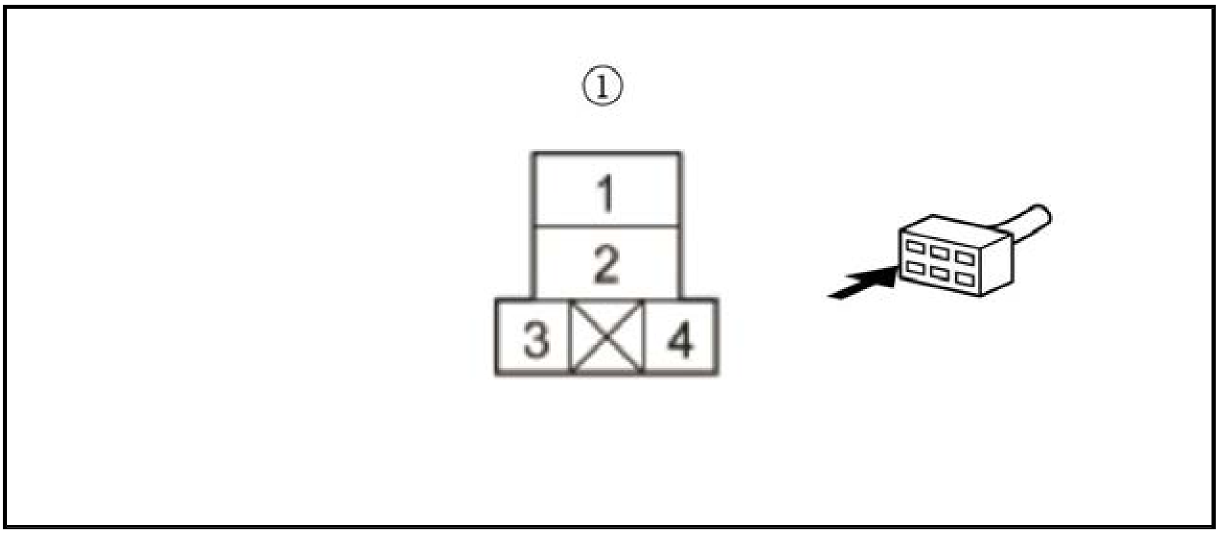

Is there battery voltage?

YES

The IG2_A/C wire is OK. Go to step 15.

NO

Repair an open in the IG2_A/C wire.

15. Open wire check (GND line)

-1. Turn the vehicle to the OFF (LOCK) mode.

-2. Measure the resistance between test points 1 and 2.

Test condition	Vehicle OFF (LOCK) mode Front blower motor relay: disconnected
Test point 1	Front blower motor relay 4P socket (female terminals) No. 4: ①
Test point 2	Body ground

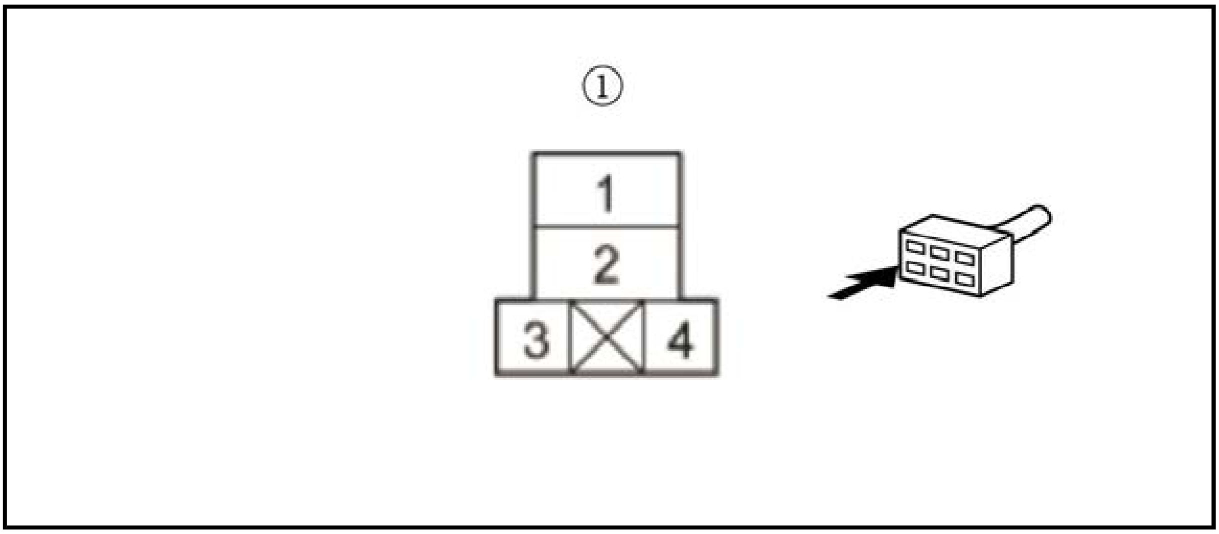

Is there 1.0 Ω or less?

YES

Repair an open in the BLOWER MTR/BLW-RLY(OUT) wire between the front blower motor relay and the blower motor.

NO

Check for an open in the GND wire. If the wire is OK, check for poor ground at G351.

DTC B2964 (I-B5), B2964 (93)

DTC B2964, DTC screen I-B5, or DTC screen 93 : Climate control unit lost communication with Front PANEL (Climate Control Panel)

DTC Description	DTC
B2964 Climate control unit lost communication with Front PANEL	Â

DTC (AC)

1. Problem verification

   -1. Clear the DTCs with the HDS.

   -2. Turn the vehicle to the OFF (LOCK) mode and then the ON mode.

   -3. Do the Self-Diagnostic Function with the HDS or the climate control unit.

   -4. Check for DTCs.

DTC Description	DTC
B2964 Climate control unit lost communication with Front PANEL	Â

   Is DTC B2964, Error on the DTC screen I-B5 (climate control panel without display), or DTC screen 93 (climate control panel with display) indicated?

   YES

   The failure is duplicated. Go to step 2.

   NO

   Intermittent failure. Check for loose wires or poor connections on the climate control panel circuit.

2. Fuse check

   -1. Turn the vehicle to the OFF (LOCK) mode.

   -2. Check the following fuse.

Fuse	No. D9

   Is the fuse OK?

   YES

   Go to step 3.

   NO

   Replace the fuse, and recheck. If the fuse blows again, repair a short in the No. D9 fuse circuit.

3. Determine possible failure area (BUS-DATA line, IG2_A/C line)

   -1. Disconnect the following connector.

Climate control panel 20P connector

-2. Turn the vehicle to the ON mode.

-3. Measure the voltage between test points 1 and 2.

Test condition	Vehicle ON mode
	Climate control panel 20P connector: disconnected
Test point 1	Climate control panel 20P connector (female terminals) No. 13: ①
Test point 2	Climate control panel 20P connector (female terminals) No. 19: ①

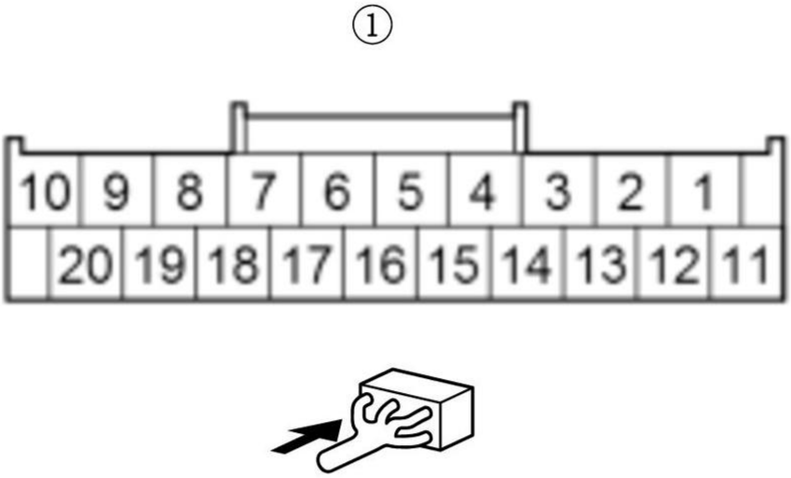

Is there battery voltage?

YES

Go to step 4.

NO

Go to step 7.

4. Shorted wire check (BUS-DATA line)

-1. Turn the vehicle to the OFF (LOCK) mode.

-2. Disconnect the following connector.

Climate control unit connector A (32P)

-3. Measure the resistance between test points 1 and 2.

Test condition	Vehicle OFF (LOCK) mode
	Climate control unit connector A (32P): disconnected
	Climate control panel 20P connector: disconnected

Test point 1	**Climate control unit connector A (32P) No. 29**
Test point 2	Body ground

Is there 1 MΩ or more?

YES

The BUS-DATA wire is not shorted. Go to step 5.

NO

Repair a short to body ground in the BUS-DATA wire.

5. Open wire check (BUS-DATA line)

-1. Measure the resistance between test points 1 and 2.

Test condition	Vehicle OFF (LOCK) mode
	Climate control unit connector A (32P): disconnected
	Climate control panel 20P connector: disconnected
Test point 1	**Climate control unit connector A (32P) No. 29**
Test point 2	Climate control panel 20P connector (female terminals) No. 18: ①

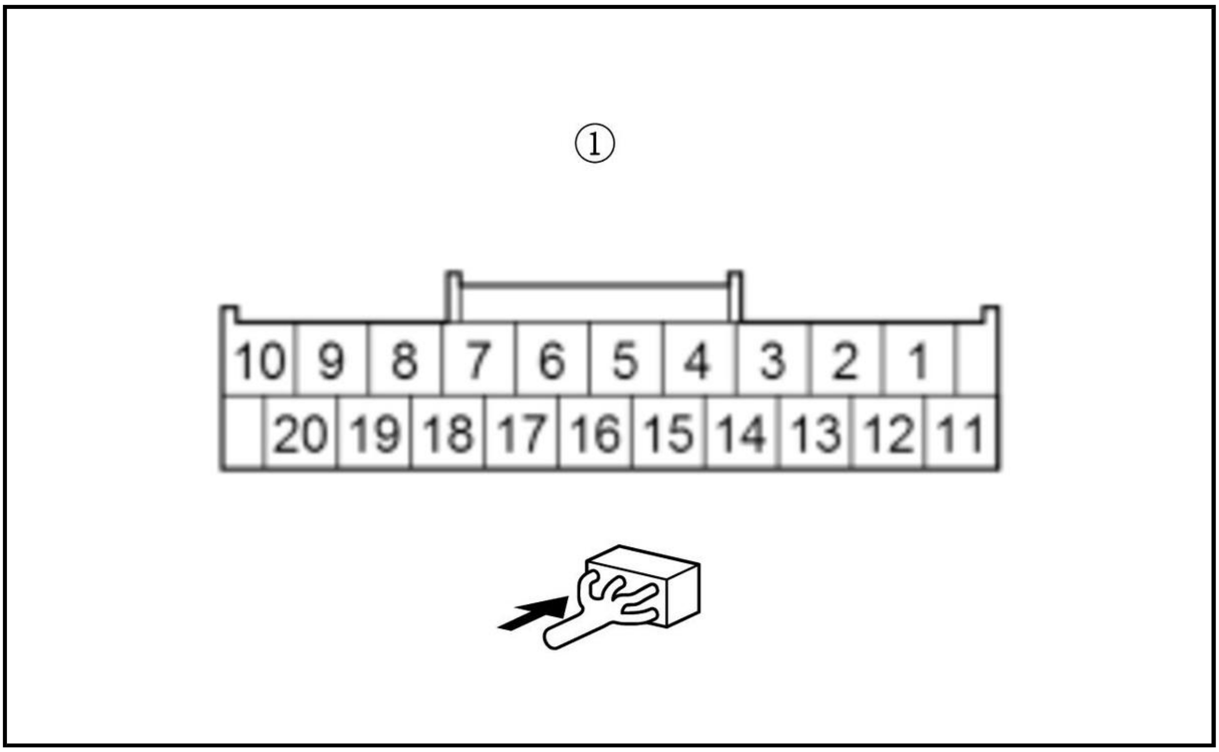

Is there 1.0 Ω or less?

YES

The BUS-DATA wire is OK. Go to step 6.

NO

Repair an open in the BUS-DATA wire.

6. Climate control panel check (substitution)

-1. Reconnect the following connector.

Climate control unit connector A (32P)

-2. **Substitute a known-good climate control panel** .

-3. Clear the DTCs with the HDS.

-4. Turn the vehicle to the OFF (LOCK) mode and then the ON mode.

-5. **Do the Self-Diagnostic Function with the HDS or the climate control unit**.

-6. Check for DTCs.

DTC Description	DTC
B2964 Climate control unit lost communication with Front PANEL	Â

Is DTC B2964 or Error on the DTC screen I-B5 indicated?

YES

Replace the climate control unit .

NO

Replace the original climate control panel .

7. Open wire check (IG2_A/C line)

-1. Measure the voltage between test points 1 and 2.

Test condition	Vehicle ON mode Climate control panel 20P connector: disconnected
Test point 1	Climate control panel 20P connector (female terminals) No. 19: ①
Test point 2	Body ground

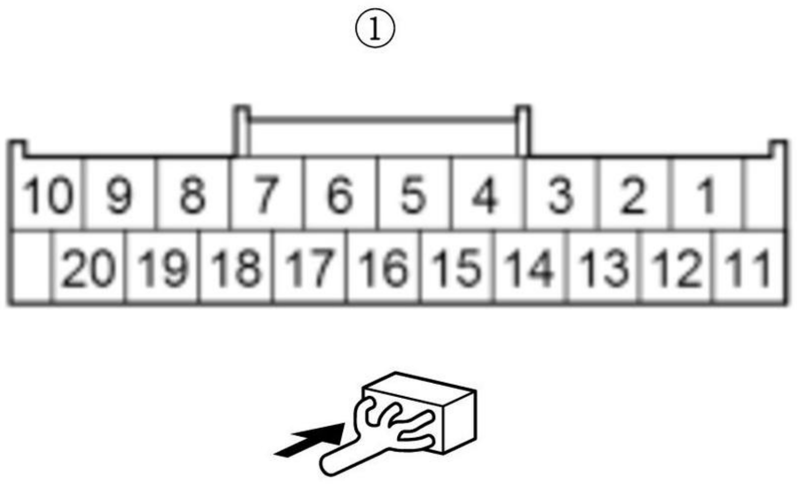

Is there battery voltage?

YES

Check for an open in the GND wire. If the wire is OK, check for poor ground at G402.

NO

Repair an open in the IG2_A/C wire.

DTC B296E (D-A3), B296E (69)

DTC B296E, DTC screen D-A3, or DTC screen 69 : Electric heater coolant Pump Fail

DTC Description	DTC
B296E Electric heater coolant Pump Fail	Â

DTC (AC)

1. Problem verification 1

   -1. Clear the DTCs with the HDS.

   -2. Turn the vehicle to the OFF (LOCK) mode and then the ON mode.

   -3. Display audio type: Set the A/C icon and the fan control icon or the fan control button to ON.

   Color audio type: Set the A/C button and the fan control button to ON.

   -4. Wait for at least 30 seconds.

   -5. Do the Self-Diagnostic Function with the HDS or the climate control unit.

   -6. Check for the climate control unit DTCs.

DTC Description	DTC
B296E Electric heater coolant Pump Fail	Â

   Is DTC B296E, Error on the DTC screen D-A3 (climate control panel without display), or DTC screen 69 (climate control panel with display) indicated?

   YES

   The failure is duplicated. Go to step 2.

   NO

   Intermittent failure, the system is OK at this time.

2. Problem verification 2

   -1. Turn the vehicle to the OFF (LOCK) mode.

   -2. Bleed air from engine coolant .

   -3. Clear the DTCs with the HDS.

   -4. Turn the vehicle to the OFF (LOCK) mode and then the ON mode.

   -5. Display audio type: Set the A/C icon and the fan control icon or the fan control button to ON.

   Color audio type: Set the A/C button and the fan control button to ON.

-6. Wait for at least 30 seconds.

-7. Do the Self-Diagnostic Function with the HDS or the climate control unit.

-8. Check for the climate control unit DTCs.

DTC Description	DTC
B296E Electric heater coolant Pump Fail	Â

Is DTC B296E, Error on the DTC screen D-A3 (climate control panel without display), or DTC screen 69 (climate control panel with display) indicated?

YES

Replace the electric heater coolant pump , and recheck. If the DTC detected, replace the climate control unit .

NO

A DTC is stored due to air trapping, the system is OK at this time.

DTC B2983 (B-B6), B2983 (57)

DTC B2983, DTC screen B-B6, or DTC screen 57 : A problem in the recirculation control motor circuit, linkage, door, or motor

DTC Description	DTC
B2983 A problem in the recirculation control motor circuit, linkage, door, or motor	Â

DTC (AC)

1. Problem verification

-1. Clear the DTCs with the HDS.

-2. Turn the vehicle to the OFF (LOCK) mode and then the ON mode.

-3. Do the Self-Diagnostic Function with the HDS or the climate control unit.

-4. Check for DTCs.

DTC Description	DTC
B2983 A problem in the recirculation control motor circuit, linkage, door, or motor	Â

Is DTC B2983, Error on the DTC screen B-B6 (climate control panel without display), or DTC screen 57 (climate control panel with display) indicated?

YES

The failure is duplicated. Go to step 2.

NO

Intermittent failure. Check for loose wires or poor connections on the recirculation control motor circuit.

2. Open wire check (M-REC line)

-1. Turn the vehicle to the OFF (LOCK) mode.

-2. Disconnect the following connectors.

Climate control unit connector B (24P)
Recirculation control motor 5P connector

-3. Measure the resistance between test points 1 and 2.

Test condition	Vehicle OFF (LOCK) mode
	Climate control unit connector B (24P): disconnected
	Recirculation control motor 5P connector: disconnected
Test point 1	**Climate control unit connector B (24P) No. 17**
Test point 2	Recirculation control motor 5P connector (female terminals) No. 5: ①

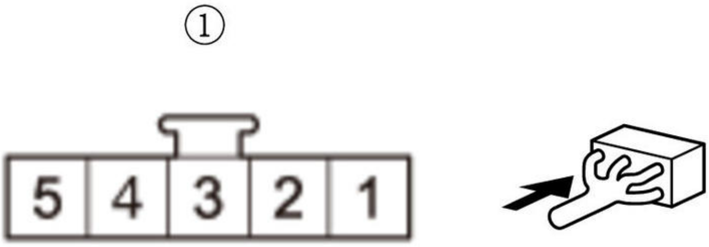

Is there 1.0 Ω or less?

YES

The M-REC wire is not open. Go to step 3.

NO

Repair an open in the M-REC wire.

3. Open wire check (M-FRS line)

-1. Measure the resistance between test points 1 and 2.

Test condition	Vehicle OFF (LOCK) mode
	Climate control unit connector B (24P): disconnected
	Recirculation control motor 5P connector: disconnected
Test point 1	**Climate control unit connector B (24P) No. 18**
Test point 2	Recirculation control motor 5P connector (female terminals) No. 4: ①

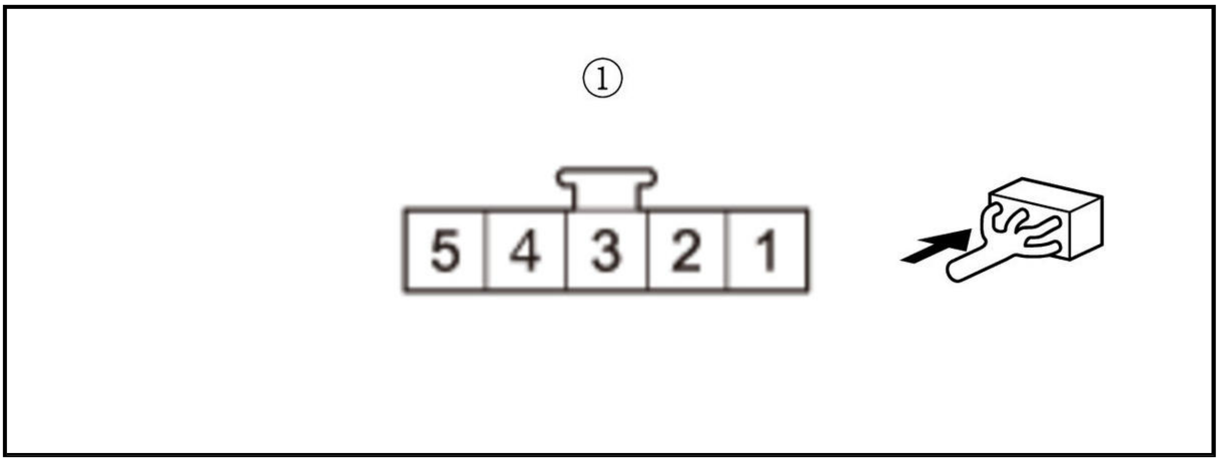

Is there 1.0 Ω or less?

YES

The M-FRS wire is not open. Go to step 4.

NO

Repair an open in the M-FRS wire.

4. Shorted wire check (M-REC line)

-1. Measure the resistance between test points 1 and 2.

Test condition	Vehicle OFF (LOCK) mode
	Climate control unit connector B (24P): disconnected
	Recirculation control motor 5P connector: disconnected
Test point 1	**Climate control unit connector B (24P) No. 17**
Test point 2	Body ground

Is there 1 MΩ or more?

YES

The M-REC wire is OK. Go to step 5.

NO

Repair a short to body ground in the M-REC wire.

5. Shorted wire check (M-FRS line)

-1. Measure the resistance between test points 1 and 2.

Test condition	Vehicle OFF (LOCK) mode
	Climate control unit connector B (24P): disconnected
	Recirculation control motor 5P connector: disconnected
Test point 1	**Climate control unit connector B (24P) No. 18**
Test point 2	Body ground

Is there 1 MΩ or more?

YES

The M-FRS wire is OK. Go to step 6.

NO

Repair a short to body ground in the M-FRS wire.

6. Recirculation control motor check

-1. **Test the recirculation control motor** .

Is the recirculation control motor OK?

YES

Replace the climate control unit .

NO

Replace the recirculation control motor , or repair the recirculation control linkage or door.

DTC B2986 (B-B4), B2986 (55)

DTC B2986, DTC screen B-B4, or DTC screen 55 : An open in the recirculation control motor circuit

DTC Description	DTC
B2986 An open in the recirculation control motor circuit	Â

DTC (AC)

1. Problem verification

-1. Clear the DTCs with the HDS.

-2. Turn the vehicle to the OFF (LOCK) mode and then the ON mode.

-3. **Do the Self-Diagnostic Function with the HDS or the climate control unit**.

-4. Check for DTCs.

DTC Description	DTC
B2986 An open in the recirculation control motor circuit	Â

Is DTC B2986, Error on the DTC screen B-B4 (climate control panel without display), or DTC screen 55 (climate control panel with display) indicated?

YES

The failure is duplicated. Go to step 2.

NO

Intermittent failure. Check for loose wires or poor connections on the recirculation control motor circuit.

2. Determine possible failure area (RFD-P line, others)

-1. Turn the vehicle to the OFF (LOCK) mode.

-2. Disconnect the following connector.

Recirculation control motor 5P connector

-3. Turn the vehicle to the ON mode.

-4. Measure the voltage between test points 1 and 2.

Test condition	Vehicle ON mode
	Recirculation control motor 5P connector: disconnected
Test point 1	Recirculation control motor 5P connector (female terminals) No. 2: ①
Test point 2	Body ground

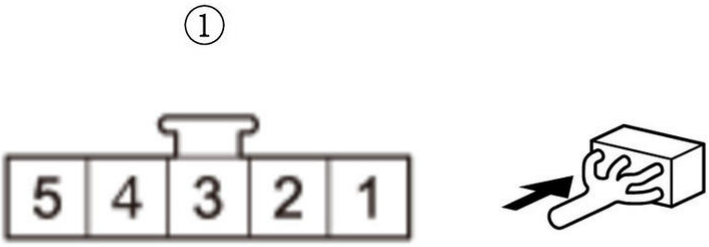

Is there about 5 V?

YES

The RFD-P wire is OK. Go to step 3.

NO

Go to step 5.

3. Determine possible failure area (recirculation control motor, SENS-COM line)

-1. Measure the voltage between test points 1 and 2.

Test condition	Vehicle ON mode
	Recirculation control motor 5P connector: disconnected
Test point 1	Recirculation control motor 5P connector (female terminals) No. 1: ①
Test point 2	Recirculation control motor 5P connector (female terminals) No. 2: ①

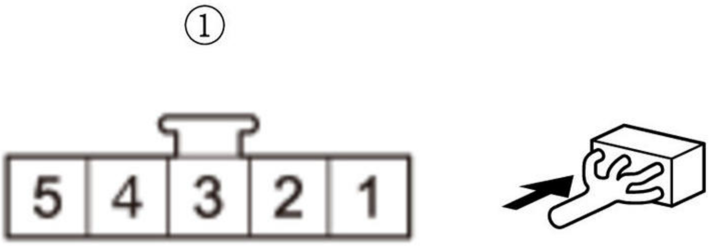

Is there about 5 V?

YES

Replace the recirculation control motor .

NO

Go to step 4.

4. Open wire check (SENS-COM line)

-1. Turn the vehicle to the OFF (LOCK) mode.

-2. Disconnect the following connector.

Climate control unit connector B (24P)

-3. Measure the resistance between test points 1 and 2.

Test condition	Vehicle OFF (LOCK) mode
	Recirculation control motor 5P connector: disconnected
Â	Climate control unit connector B (24P): disconnected
Test point 1	Recirculation control motor 5P connector (female terminals) No. 1: ①
Test point 2	**Climate control unit connector B (24P) No. 10**

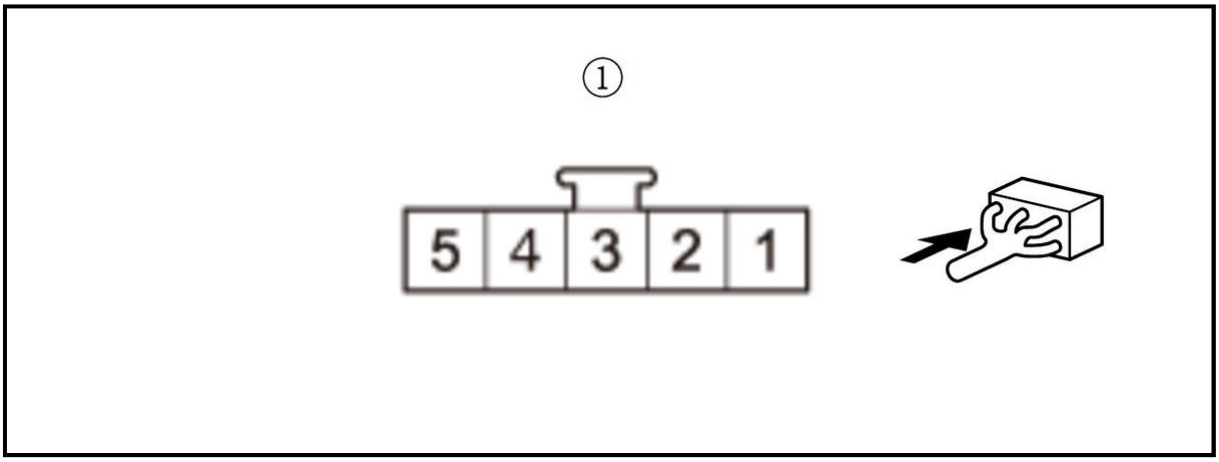

Is there 1.0 Ω or less?

YES

Replace the climate control unit .

NO

Repair an open in the SENS-COM wire.

5. Open wire check (RFD-P line)

-1. Measure the voltage between test points 1 and 2.

Test condition	Vehicle ON mode
	Recirculation control motor 5P connector: disconnected
Test point 1	**Climate control unit connector B (12P) No. 4**
Test point 2	Body ground

Is there about 5 V?

YES

Repair an open in the RFD-P wire.

NO

Replace the climate control unit .

DTC B2990 (D-B6), B2990 (C3)

DTC B2990, DTC screen D-B6, or DTC screen C3 : A problem in the A/C compressor driving circuit (A Problem in the Electric A/C Compressor Driving Circuit)

DTC Description	DTC
B2990 A problem in the A/C compressor driving circuit	Â

DTC (AC)

1. Problem verification

   -1. Clear the DTC with the HDS.

   -2. Turn the vehicle to the OFF (LOCK) mode and then the READY TO DRIVE mode.

   -3. Without dual zone climate control: Set the A/C button and the temperature control dial to MAX COOL.

   With dual zone climate control: Set the A/C icon and the driver's and the passenger's temperature control dial to MAX COOL.

   -4. **Do the Self-Diagnostic Function with the HDS or the climate control unit**.

   -5. Check for DTCs.

DTC Description	DTC
B2990 A problem in the A/C compressor driving circuit	Â

   Is DTC B2990, Error on the DTC screen D-B6 (climate control panel without display), or DTC screen C3 (climate control panel with display) indicated?

   YES

   The failure is duplicated. Go to step 2.

   NO

   Intermittent failure. Check for loose wires or poor connections on the electric A/C compressor circuit.

2. Determine possible failure area (electric A/C compressor driver, others)

   -1. Check for DTCs.

DTC Description	DTC
B2998 A problem in the A/C compressor driver	Â

   Is DTC B2998, Error on the DTC screen D-B7 (climate control panel without display), or DTC screen C5 (climate control panel with display) indicated?

   YES

Go to climate control DTC B2998 troubleshooting.

NO

Go to step 3.

3. Electric powertrain system DTC check

-1. Check for Pending or Confirmed DTCs with the HDS.

DTC Description	Confirmed DTC	Pending DTC	Freeze Frame
P0AE1 HV Battery Precharge Contactor Circuit	Â	Â	Â

Is DTC P0AE1 indicated?

YES

Go to battery condition monitor module DTC P0AE1 troubleshooting .

NO

Go to step 4.

4. Electric A/C compressor fuse (30 A) check

-1. Turn the vehicle to the OFF (LOCK) mode.

-2. Do the 12 volt battery terminal disconnection procedure .

-3. Remove the service plug and the IPU cover .

-4. Check for continuity between test points 1 and 2.

Test condition	Vehicle OFF (LOCK) mode
Test point 1	Electric A/C compressor fuse (30 A) terminal (A)
Test point 2	Electric A/C compressor fuse (30 A) terminal (B)

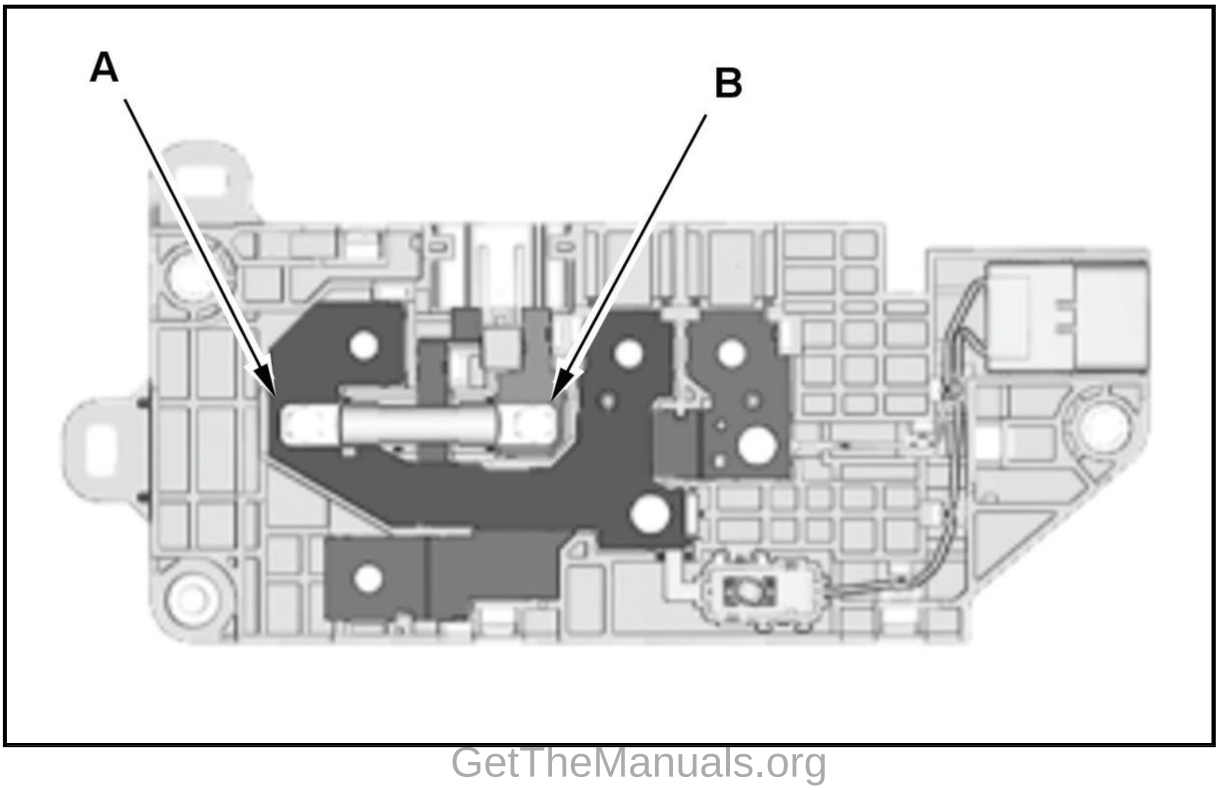

Is there continuity?

YES

Replace the subjunction board .

NO

Replace the electric A/C compressor fuse (30 A) .

DTC B2998 (D-B7), B2998 (C5)

DTC B2998, DTC screen D-B7, or DTC screen C5 : A problem in the A/C compressor driver (A Problem in the Electric A/C Compressor Driver)

DTC Description	DTC
B2998 A problem in the A/C compressor driver	Â

DTC (AC)

1. Problem verification

-1. Clear the DTCs with the HDS.

-2. Turn the vehicle to the OFF (LOCK) mode and then the ON mode.

-3. **Do the Self-Diagnostic Function with the HDS or the climate control unit**.

-4. Check for DTCs.

DTC Description	DTC
B2998 A problem in the A/C compressor driver	Â

Is DTC B2998, Error on the DTC screen D-B7 (climate control panel without display), or DTC screen C5 (climate control panel with display) indicated?

YES

Replace the electric A/C compressor .

NO

Intermittent failure. Check for loose wires or poor connections on the electric A/C compressor circuit.

DTC U1280 (I-A1), U1280 (80) (CLIMATE CONTROL UNIT)

DTC U1280, DTC screen I-A1, or DTC screen 80 : Communication bus line error (BUS-OFF)

DTC Description	DTC
U1280 Communication bus line error (BUS-OFF)	Â

DTC (AC)

1. Problem verification

-1. Clear the DTCs with the HDS.

-2. Turn the vehicle to the OFF (LOCK) mode and then the ON mode.

-3. Do the Self-Diagnostic Function with the climate control unit.

-4. Wait for at least 6 seconds.

-5. Check for DTCs.

DTC Description	DTC
U1280 Communication bus line error (BUS-OFF)	Â

Is DTC U1280, Error on the DTC screen I-A1 (climate control panel without display), or DTC screen 80 (climate control panel with display) indicated?

YES

The failure is duplicated. **Go to body control module DTC U1280 troubleshooting** .

NO

Intermittent failure, the system is OK at this time.

DTC U1281 (I-A3), U1281 (91), U128D (I-A2), U128D (83), U1290 (I-A6), U1290 (8F) (CLIMATE CONTROL UNIT)

DTC U1281, DTC screen I-A3, or DTC screen 91 : Climate Control Unit Lost Communication with MICU (body control module)

DTC U128D or DTC screen I-A2 : Climate Control Unit Lost communication with gauge control module

DTC U128D or DTC indicator 83 : Climate Control Unit Lost Communication with Gauge Control Module (VSP Message)

DTC U1290 or DTC screen I-A6 : Climate Control Unit Lost Communication With Seat Heater Control Unit (Front)

NOTE:

- According to the detected DTC(s), check for the power circuit and the ground circuit of the control unit which cannot communicate with the climate control unit.
- Refer to the DTC shown on the display, then inspect the connectors and terminals based on the instructions.

DTC Description	DTC
U1281 Climate Control Unit Lost Communication with MICU (body control module)	Â
U128D Climate Control Unit Lost communication with gauge control module	Â
U1290 Climate Control Unit Lost Communication With Seat Heater Control Unit	Â

DTC (AC)

1. Problem verification

-1. Clear the DTC with the HDS.

-2. Turn the vehicle to the OFF (LOCK) mode and then the ON mode.

-3. Wait for at least 6 seconds.

-4. Do the Self-Diagnostic Function with the climate control unit.

-5. Check for DTCs.

DTC Description	DTC
U1281 Climate Control Unit Lost Communication with MICU (body control module)	Â
U128D Climate Control Unit Lost communication with gauge control module	Â
U1290 Climate Control Unit Lost Communication With Seat Heater Control Unit	Â

Are any DTCs indicated?

YES

The failure is duplicated. Go to step 2.

NO

Intermittent failure, the system is OK at this time. Check for poor connections or loose terminals at the transmitting control units and the climate control unit.

2. Open wire check (B-CAN_H line, B-CAN_L line)

-1. Turn the vehicle to the OFF (LOCK) mode.

-2. Disconnect the receiving control unit connector.

Climate control unit connector A (32P)

-3. Disconnect the transmitting control unit connector(s).

Refer to the DTC shown on the display, then disconnect the connector(s) based on the instructions (see table).

DTC	Connector
U1281	Body control module connector B (36P)
U128D	Gauge control module connector A (32P)
U1290	Front seat heater control unit 24P connector

-4. Measure the resistance between the receiving control unit and the transmitting control unit on the B-CAN_H circuit and the B-CAN_L circuit.

Test condition	Vehicle OFF (LOCK) mode
	Climate control unit connector A (32P): disconnected
	Transmitting control unit connector(s) for indicated DTCs: disconnected

DTC	Circuit name	Test point 1 (Receiving control unit)		Test point 2 (Transmitting control unit)	
		Connector	Terminal	Connector	Terminal
U1281	B-CAN_H	Climate control unit connector A (32P)	No. 25	Body control module connector B (36P)	No. 20
	B-CAN_L		No. 8		No. 21
U128D	B-CAN_H	Climate control unit connector A (32P)	No. 25	Gauge control module connector A (32P)	No. 30
	B-CAN_L		No. 8		No. 31

DTC	Circuit name	Test point 1 (Receiving control unit)		Test point 2 (Transmitting control unit)	
		Connector	Terminal	Connector	Terminal
U1290	B-CAN_H	Climate control unit connector A (32P)	No. 25	Front seat heater control unit 24P connector	No. 10
	B-CAN_L		No. 8		No. 9

Is there 1.0 Ω or less?

YES

The B-CAN_H wire and B-CAN_L wire is OK.Refer to the DTC shown on the display, then substitute or replace the control unit based on the instructions (see table).

DTC	Operation for transmitting control unit
U1281	**Substitute a known-good body control module** , then recheck. If DTC U1281 goes away after substitution, **replace the original body control module** .
U128D	**Substitute a known-good gauge control module** , then recheck. If DTC U128D goes away after substitution, **replace the original gauge control module** .
U1290	**Substitute a known-good front seat heater control unit** , then recheck. If DTC U1290 goes away after substitution, **replace the original front seat heater control unit** .

NO

Repair an open in the B-CAN_H wire and/or the B-CAN_L wire between the climate control unit and the transmitting control unit.

REMOVAL & INSTALLATION TEST

AIR MIX CONTROL MOTOR/MODE CONTROL MOTOR/RECIRCULATION CONTROL MOTOR REMOVAL, INSTALLATION, AND TEST

Special Tools Required

Image	Description/Tool Number
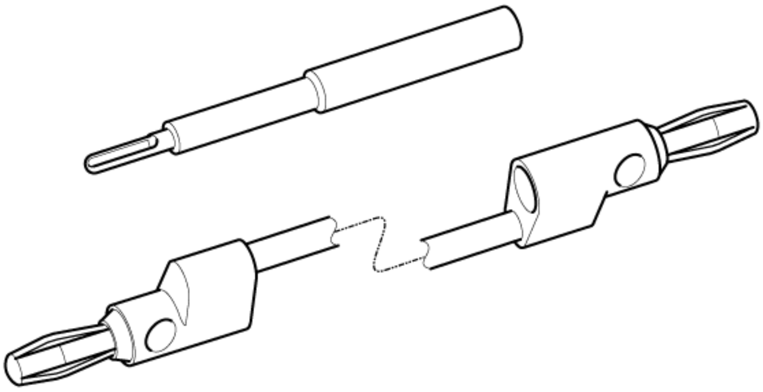	Backprobe Set 07SAZ-001000A

Removal and Installation

SRS components are located near the mode control motor and the recirculation control motor. Review the SRS component locations and the precautions and procedures before doing repairs or service.

NOTE:

- Set the VENT position before removing the mode control motor.
- Set the FRESH position before removing the recirculation control motor.
- Set the MAX COOL position before removing the air mix control motor.
- Unless otherwise indicated, illustrations used in the procedure are for LHD model.

1. Part Removal For Motor Access

Remove Parts	Remove Control Motor				
	Air mix control motor *1	Driver's Air Mix Control Motor *2	Passenger's Air Mix Control Motor *2	Mode Control Motor	Recirculation Control Motor
Passenger's Dashboard Undercover - Remove	[1]	---	[1]	[1]	[1]
Glove Box	[2]	---	[2]	[2]	[2]
Driver's Dashboard Undercover - Remove (For some models)	---	[1]	---	---	---

*1: Without dual zone control*2: With dual zone control

2. Motors Location

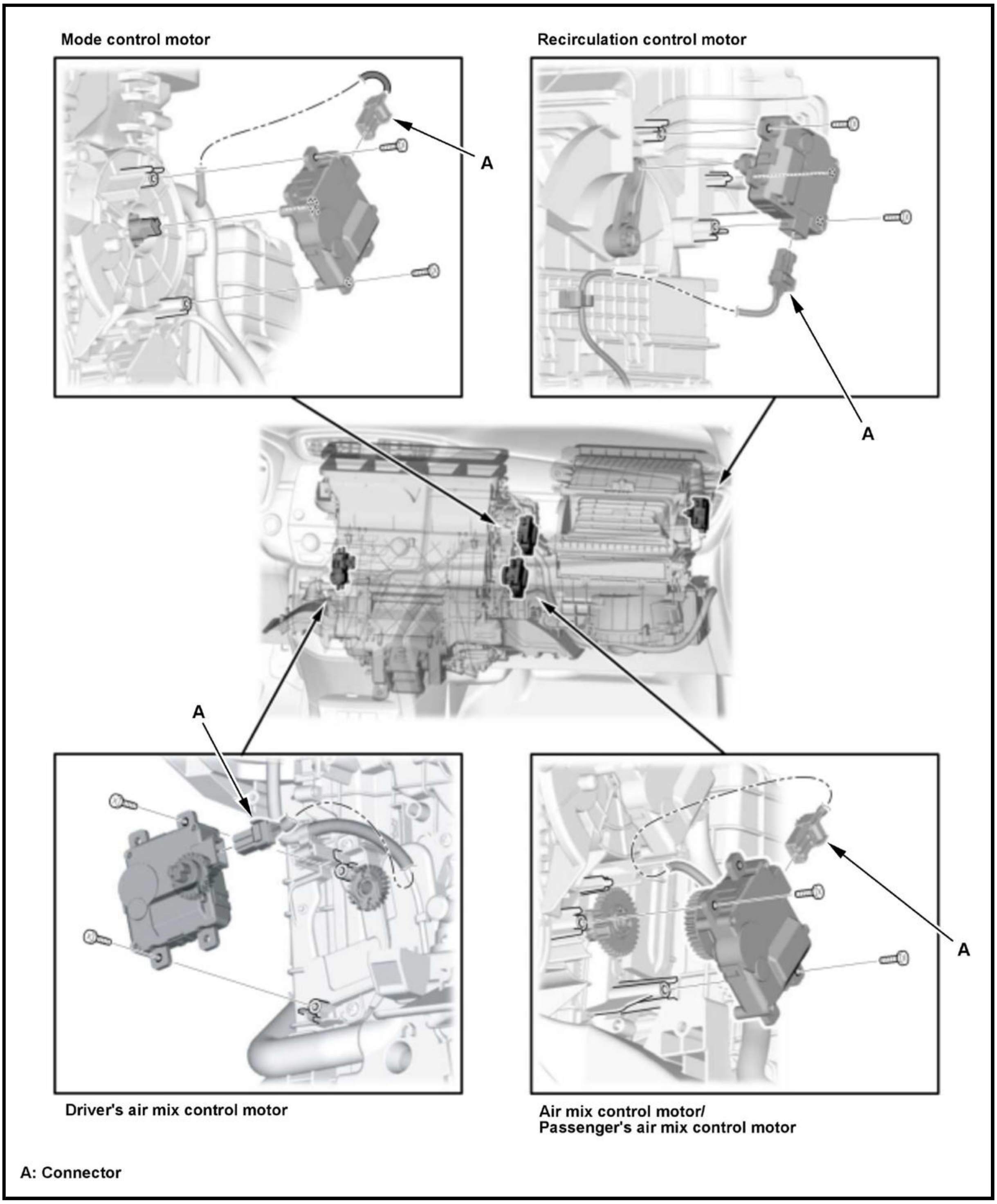
Mode control motor
Recirculation control motor
A
A
A
A
Driver's air mix control motor
Air mix control motor/
Passenger's air mix control motor
A: Connector

3. All Removed Parts - Install

Air mix control motor/Passenger's air mix control motor 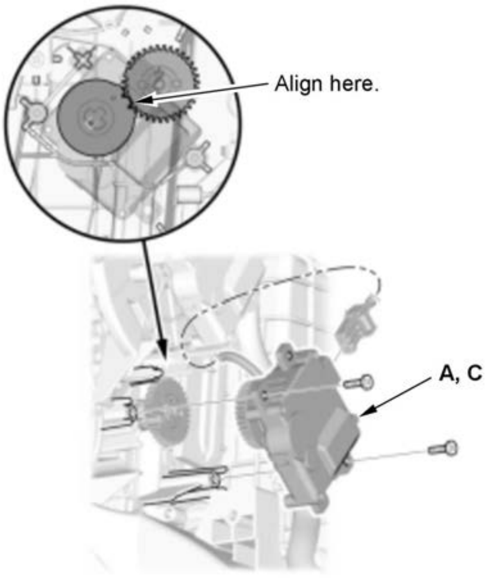 **Driver's air mix control motor** 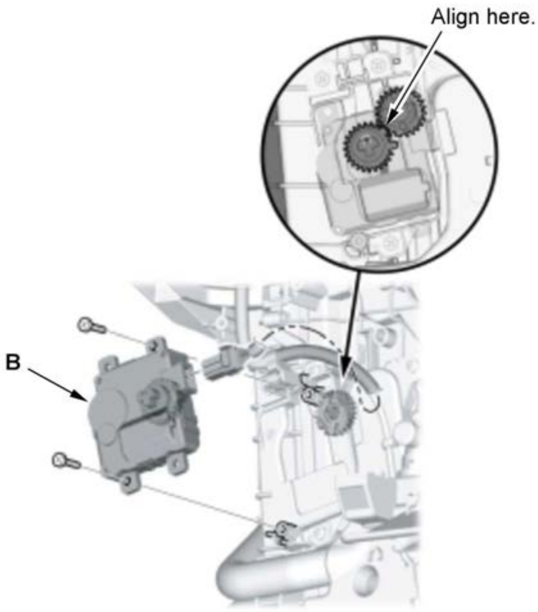	1. Install the parts in the reverse order of removal, and note these items: • Before installation, make sure the door and linkage move smoothly. • When you install the air mix control motor (A), align the air mix control motor with the gear, then install the motor. • When you install the driver's air mix control motor (B), align the driver's air mix control motor with the gear, then install the motor. • When you install the passenger's air mix control motor (C), align the passenger's air mix control motor with the gear, then install the motor.

Test

SRS components are located near the mode control motor and the recirculation control motor. Review the **SRS component locations** and the **precautions and procedures** before doing repairs or service.

NOTE: Before testing the motor, check for **climate control DTCs** .

1. Part Removal For Motor Access

   NOTE: Numbers in table indicate parts removal order.

Remove Parts	Test Control Motor				
	Air mix control motor *1	Driver's Air Mix Control Motor *2	Passenger's Air Mix Control Motor *2	Mode Control Motor	Recirculation Control Motor
Passenger's Dashboard Undercover - Remove	[1]	---	[1]	[1]	[1]
Glove Box	[2]	---	[2]	[2]	[2]
Driver's Dashboard Undercover - Remove (For some models)	---	[1]	---	---	---

*1: Without dual zone control*2: With dual zone control

2. Connector Type

The diagram below details the motor connector design used on this vehicle.

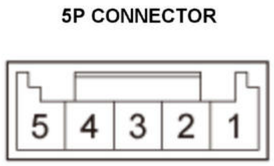

Appearance and structure of the actual connectors may vary depending on the model.

3. Air Mix Control Motor, Driver's Air Mix Control Motor, Passenger's Air Mix Control Motor, Mode Control Motor and Recirculation Control Motor - Test

1. Disconnect the connector for necessary inspections.

NOTE: **Incorrectly applying power and ground to the HVAC control motors will damage it. Follow the instructions carefully.**

2. Test the motor in each direction by connecting a 12 volt battery power and ground at the connector according to the table. The motor should run smoothly, then stop. As soon as the motor stops, disconnect the 12 volt battery power immediately.

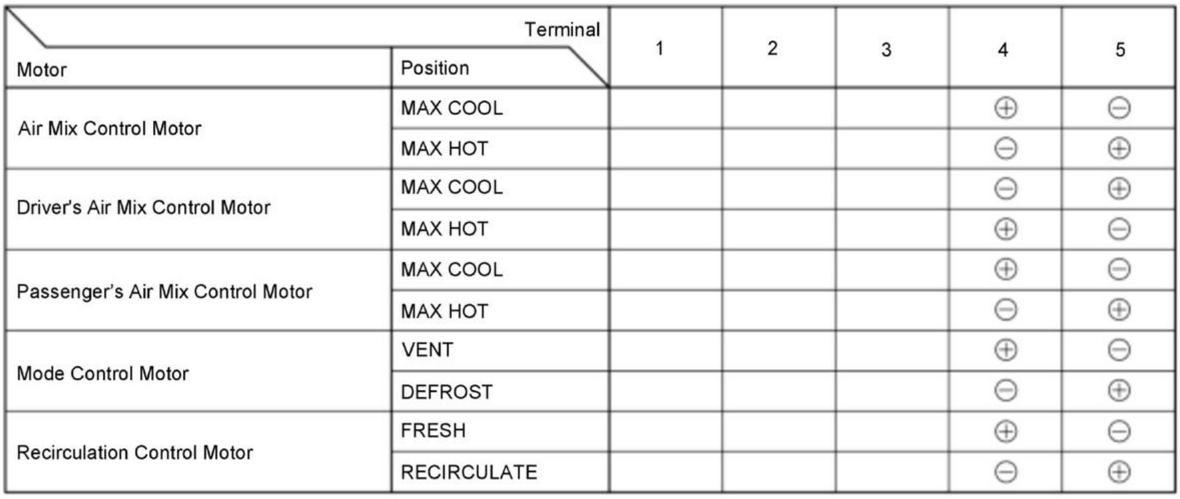

Motor	Position \ Terminal	1	2	3	4	5
Air Mix Control Motor	MAX COOL				⊕	⊖
	MAX HOT				⊖	⊕
Driver's Air Mix Control Motor	MAX COOL				⊖	⊕
	MAX HOT				⊕	⊖
Passenger's Air Mix Control Motor	MAX COOL				⊕	⊖
	MAX HOT				⊖	⊕
Mode Control Motor	VENT				⊕	⊖
	DEFROST				⊖	⊕
Recirculation Control Motor	FRESH				⊕	⊖
	RECIRCULATE				⊖	⊕

3. If any of the HVAC control motors did not run in step 2, remove it, then check the control linkage and door for smooth movement.

- If the linkage and doors move smoothly, go to step 4.
- If the linkage or door sticks or binds, repair them as needed.

4. Measure the resistance between terminals according to the table.

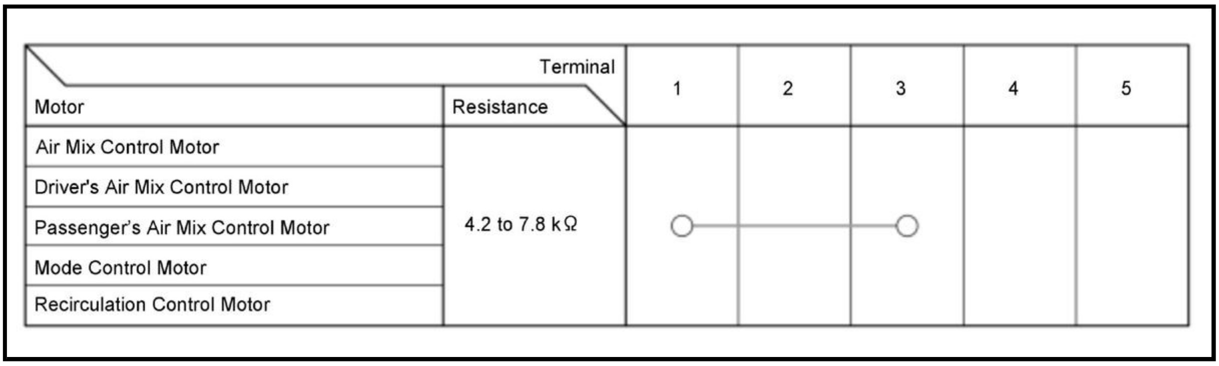

Motor	Resistance \ Terminal	1	2	3	4	5
Air Mix Control Motor	4.2 to 7.8 kΩ	○	—	○		
Driver's Air Mix Control Motor						
Passenger's Air Mix Control Motor						
Mode Control Motor						
Recirculation Control Motor						

5. Reconnect the connector, which was removed in the step 1.

6. Turn the vehicle to the ON mode.

7. Using the backprobe set, measure the voltage between terminals according to the table.

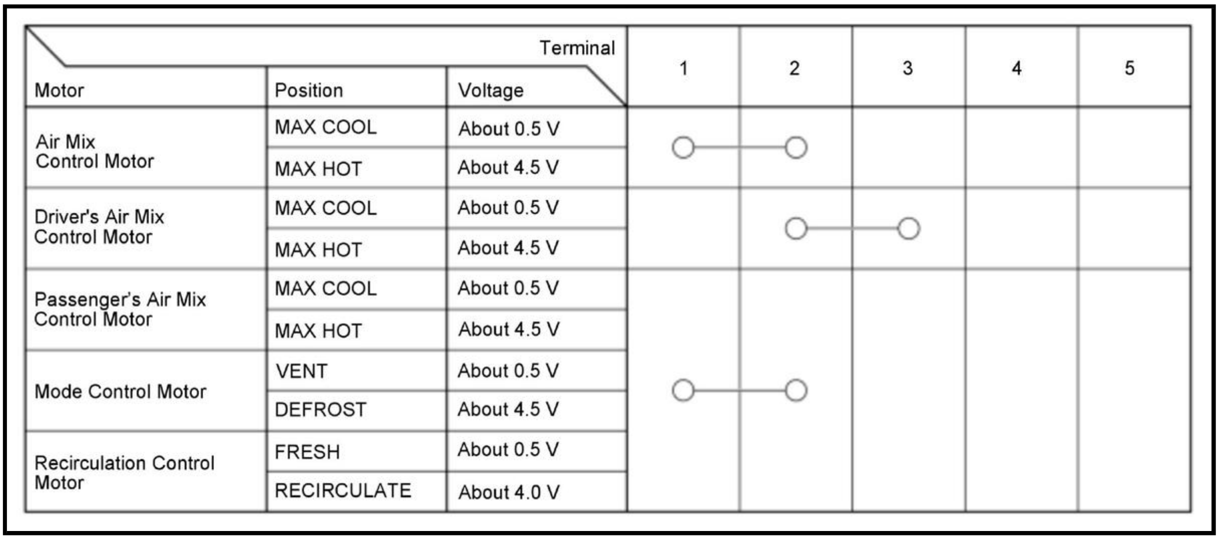

Motor	Position	Voltage \ Terminal	1	2	3	4	5
Air Mix Control Motor	MAX COOL	About 0.5 V	○	○			
	MAX HOT	About 4.5 V					
Driver's Air Mix Control Motor	MAX COOL	About 0.5 V		○	○		
	MAX HOT	About 4.5 V					
Passenger's Air Mix Control Motor	MAX COOL	About 0.5 V	○	○			
	MAX HOT	About 4.5 V					
Mode Control Motor	VENT	About 0.5 V					
	DEFROST	About 4.5 V					
Recirculation Control Motor	FRESH	About 0.5 V					
	RECIRCULATE	About 4.0 V					

8. If either the resistance or the voltage readings are not as specified, replace the faulty motor.

4. All Removed Parts - Install

1. Install the parts in the reverse order of removal.

B

BLOWER POWER TRANSISTOR REMOVAL, INSTALLATION, AND TEST

Removal and Installation

SRS components are located in this area. Review the SRS component locations and the precautions and procedures before doing repairs or service.

1

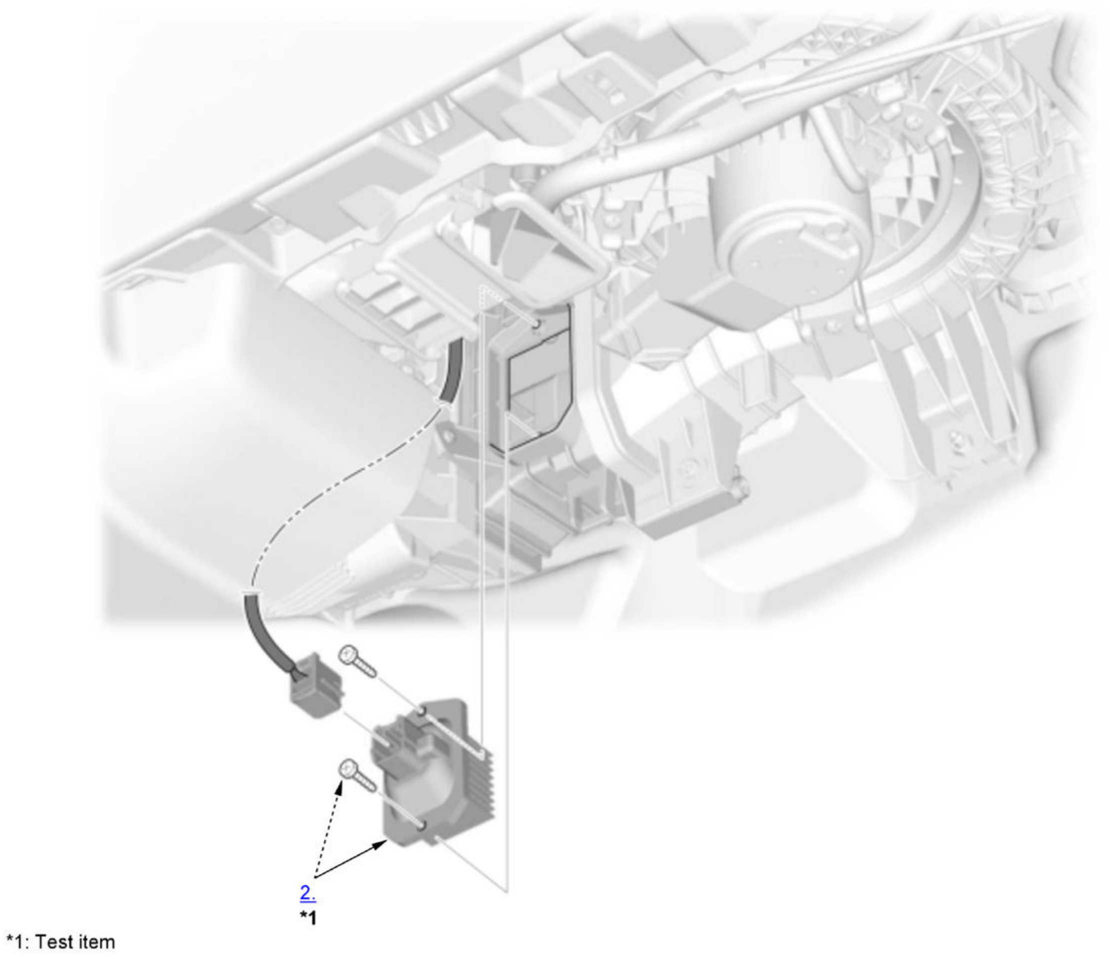

1. **Passenger's Dashboard Undercover - Remove**
2. Power Transistor - Remove
3. All Removed Parts - Install
    1. Install the parts in the reverse order of removal.

B

Test

NOTE: Before testing the power transistor, check for **climate control DTCs** .

1. Power Transistor - Test

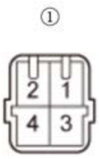	1. Disconnect the power transistor connector. 2. Measure the resistance between terminals (male terminals) No. 1 and No. 3 of the power transistor. It should be about 1.5 kΩ.:

- If the resistance is within the specifications, go to step 3.
- If the resistance is not within the specifications, replace the power transistor.

NOTE:

Also check the blower motor for binding. Power transistor failure can be caused by a defective blower motor.

3. Reconnect the power transistor connector.

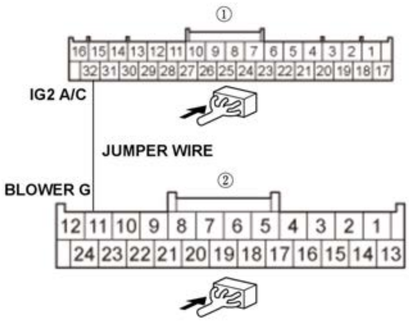
①
16 15 14 13 12 11 10 9 8 7 6 5 4 3 2 1
32 31 30 29 28 27 26 25 24 23 22 21 20 19 18 17
IG2 A/C
JUMPER WIRE
②
BLOWER G
12 11 10 9 8 7 6 5 4 3 2 1
24 23 22 21 20 19 18 17 16 15 14 13

4. Disconnect the following connectors.

- Climate control unit connector A (32P)
- Climate control unit connector B (24P)

5. Connect climate control unit connector A (32P) terminal (female terminals) No. 32:

①

and climate control unit connector B (24P) terminal (female terminals) No. 11:

②

with a jumper wire.

6. Turn the vehicle to the ON mode.

7. Check that the blower motor runs.

- If the blower motor does not run, replace the power transistor.

  NOTE: A faulty blower motor can cause the power transistor to fail. Before replacing the power transistor, check the blower motor for binding, and **replace the blower motor if necessary**.

	- If the blower motor runs, the power transistor is OK.

EVAPORATOR TEMPERATURE SENSOR REMOVAL, INSTALLATION, AND TEST(WITH COLD STORAGE EVAPORATOR) (2020 2021)

Removal and Installation

1

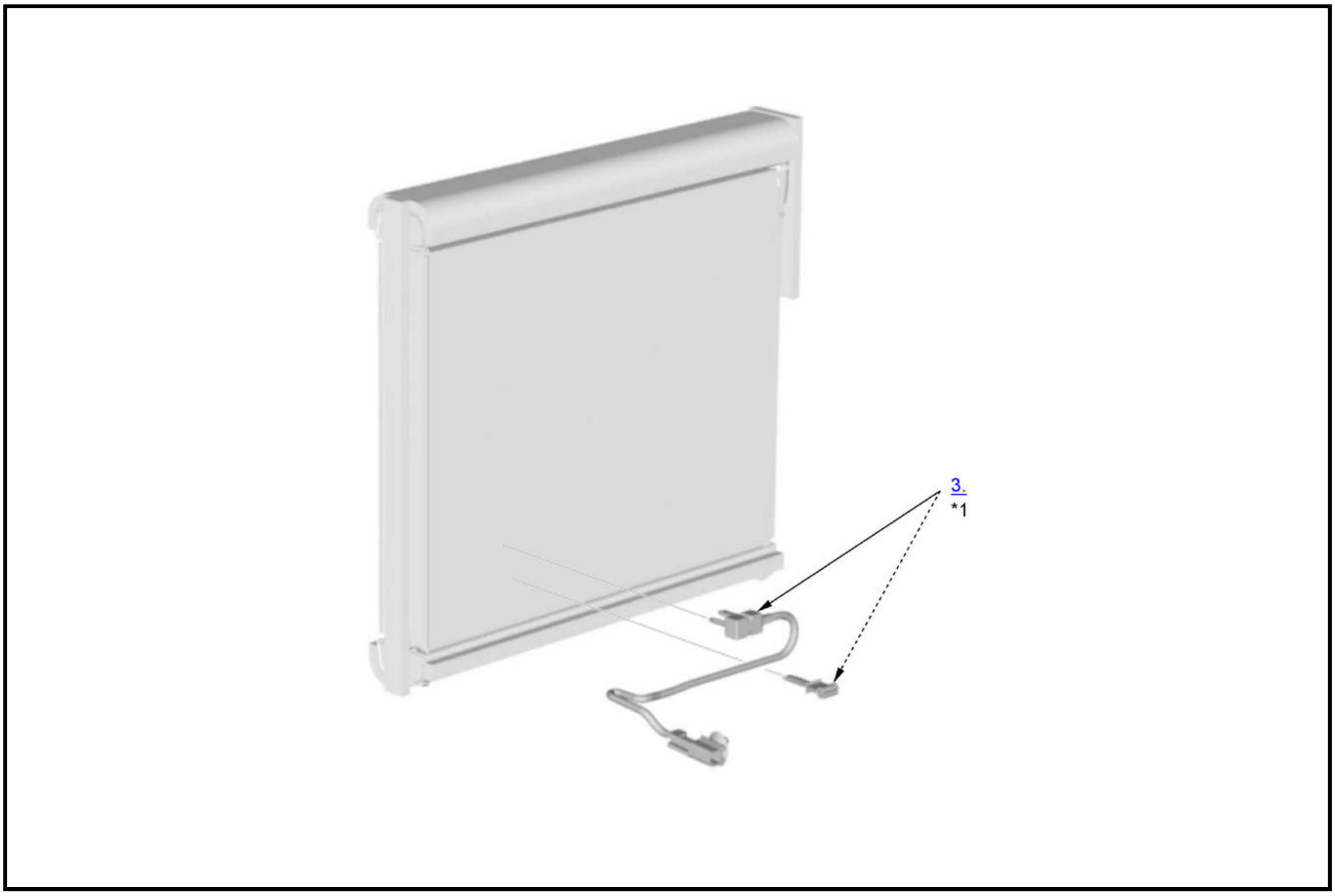

*1	Test item

1. **HVAC Unit - Remove**
2. **Evaporator Core - Remove**
3. Evaporator Temperature Sensor - Remove
4. All Removed Parts - Install

1. Install the evaporator temperature sensor (A) in the evaporator core (B). Refer to the following position list.

B	C	D *
	Row	**mm (in)**
Factory-Preset Position	9th	25 (0.98)
New Position	9th	15 (0.59)

*: Measure from end of aluminum evaporator tank.

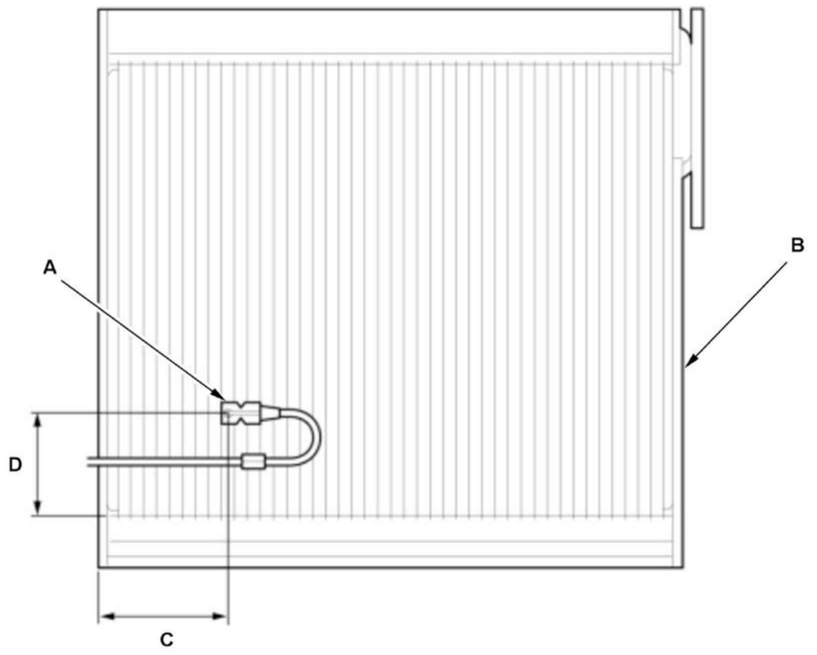

Test

1. Evaporator Temperature Sensor - Test

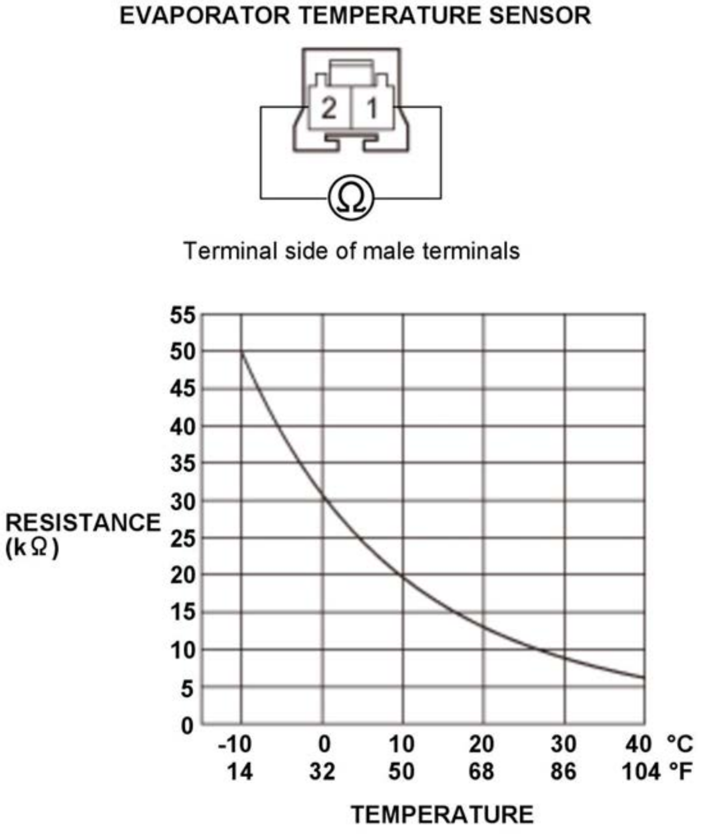 	1. Dip the sensor in ice water, and measure the resistance between terminals No. 1 and No. 2. 2. Then pour warm water on the sensor, and check for a change in resistance. 3. Compare the resistance readings with the specifications shown in the graph; the resistance should be within the specifications. 4. If the resistance is not as specified, replace the evaporator temperature sensor.

EVAPORATOR TEMPERATURE SENSOR REMOVAL, INSTALLATION, AND TEST(WITHOUT COLD STORAGE EVAPORATOR)

Removal and Installation

1

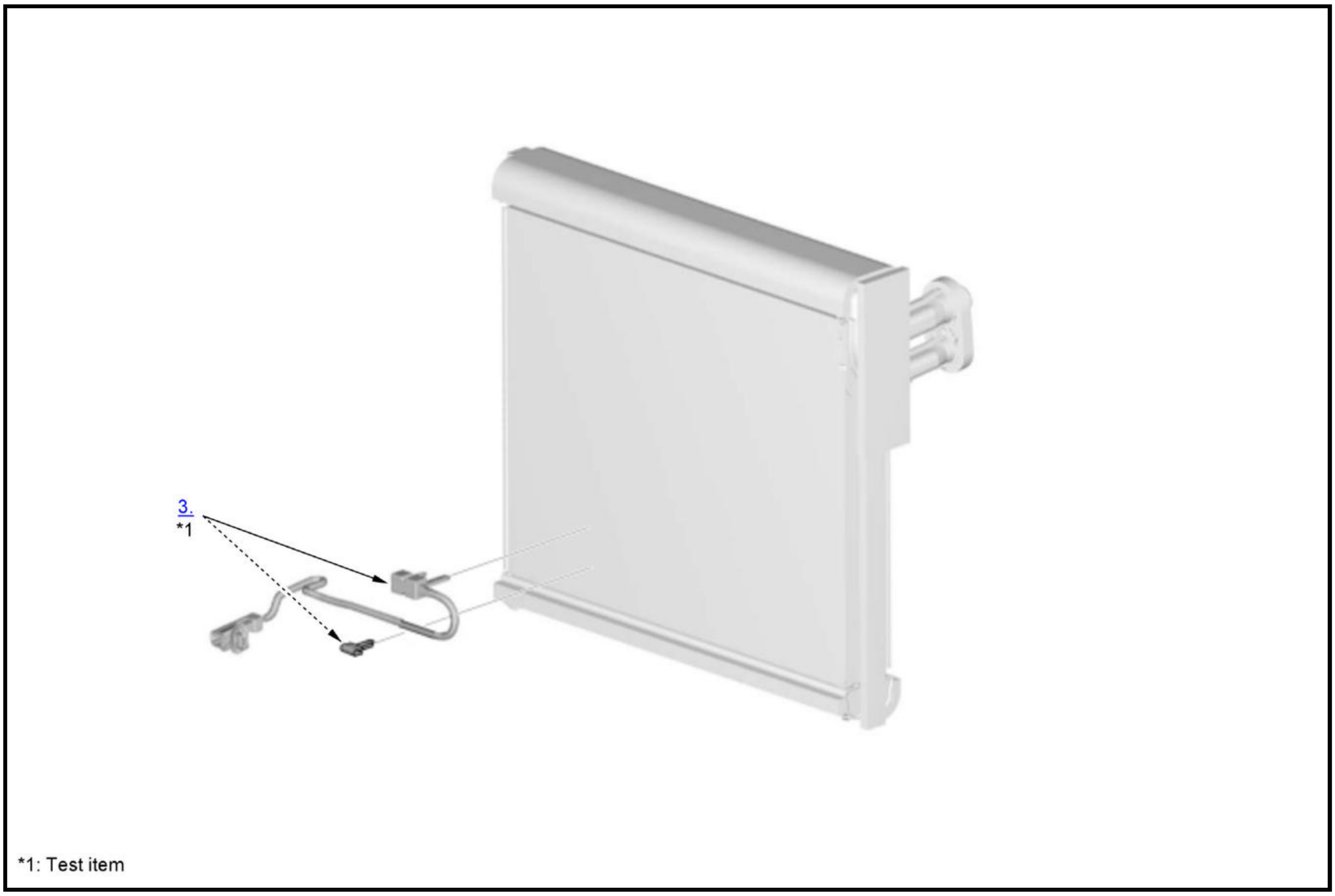

1. HVAC Unit - Remove
2. Evaporator Core - Remove
3. Evaporator Temperature Sensor - Remove
4. All Removed Parts - Install

   1. Install the evaporator temperature sensor (A) in the evaporator core (B). Refer to the following position list.

B	C	D *
	Row	mm (in)
Factory-Preset Position	9rd	50 (1.97)
New Position	10nd	50 (1.97)

*: Measure from end of aluminum evaporator tank.

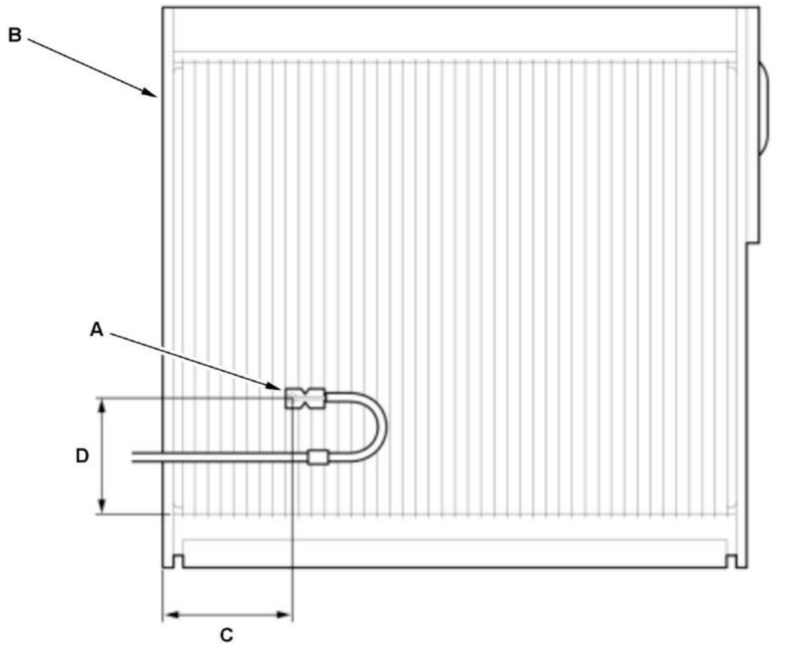

Test

1. Evaporator Temperature Sensor - Test

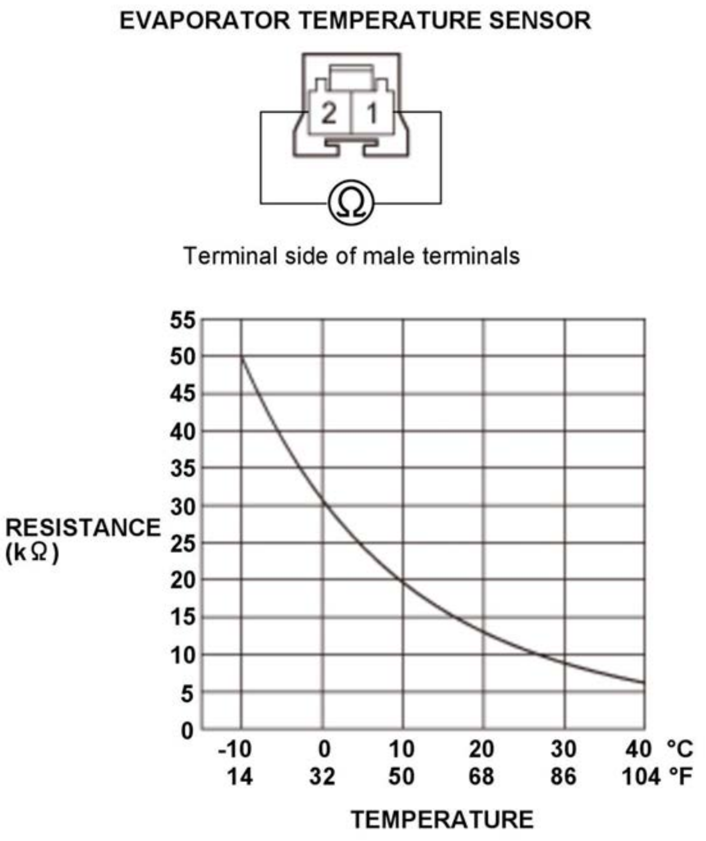 	1. Dip the sensor in ice water, and measure the resistance between terminals No. 1 and No. 2. 2. Then pour warm water on the sensor, and check for a change in resistance. 3. Compare the resistance readings with the specifications shown in the graph; the resistance should be within the specifications. 4. If the resistance is not as specified, replace the evaporator temperature sensor.

HUMIDITY/IN-CAR TEMPERATURE SENSOR REMOVAL, INSTALLATION, AND TEST (2020 2021)

Removal and Installation

1

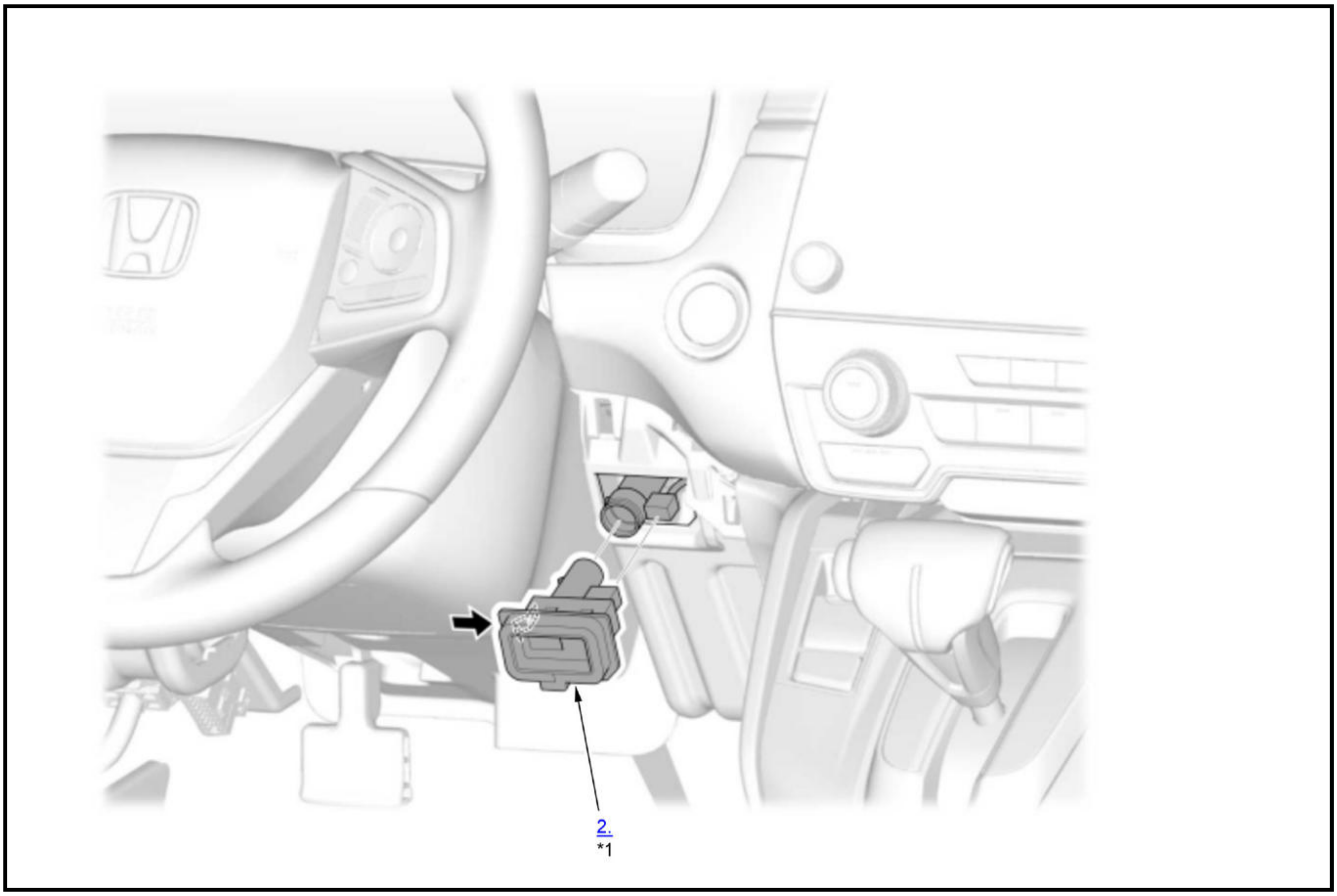

*1	Test item

1. **Driver's Dashboard Lower Cover - Remove**
2. Humidity/In-Car Temperature Sensor - Remove
3. All Removed Parts - Install

   1. Install the parts in the reverse order of removal.

B

Test

NOTE:

- Before testing the sensor, **check for climate control DTCs** .
- The climate control unit receives humidity (%) data via digital signal.
- The climate control unit receives in-car temperature (deg.C) data via digital signal.

1. Humidity/In-Car Temperature Sensor - Test

   1. **Refer to "Run the Sensor Input Display Mode" in General Troubleshooting Information under How to Troubleshoot the Climate Control System** .

B

IN-CAR TEMPERATURE SENSOR REMOVAL, INSTALLATION, AND TEST

Removal and Installation

1

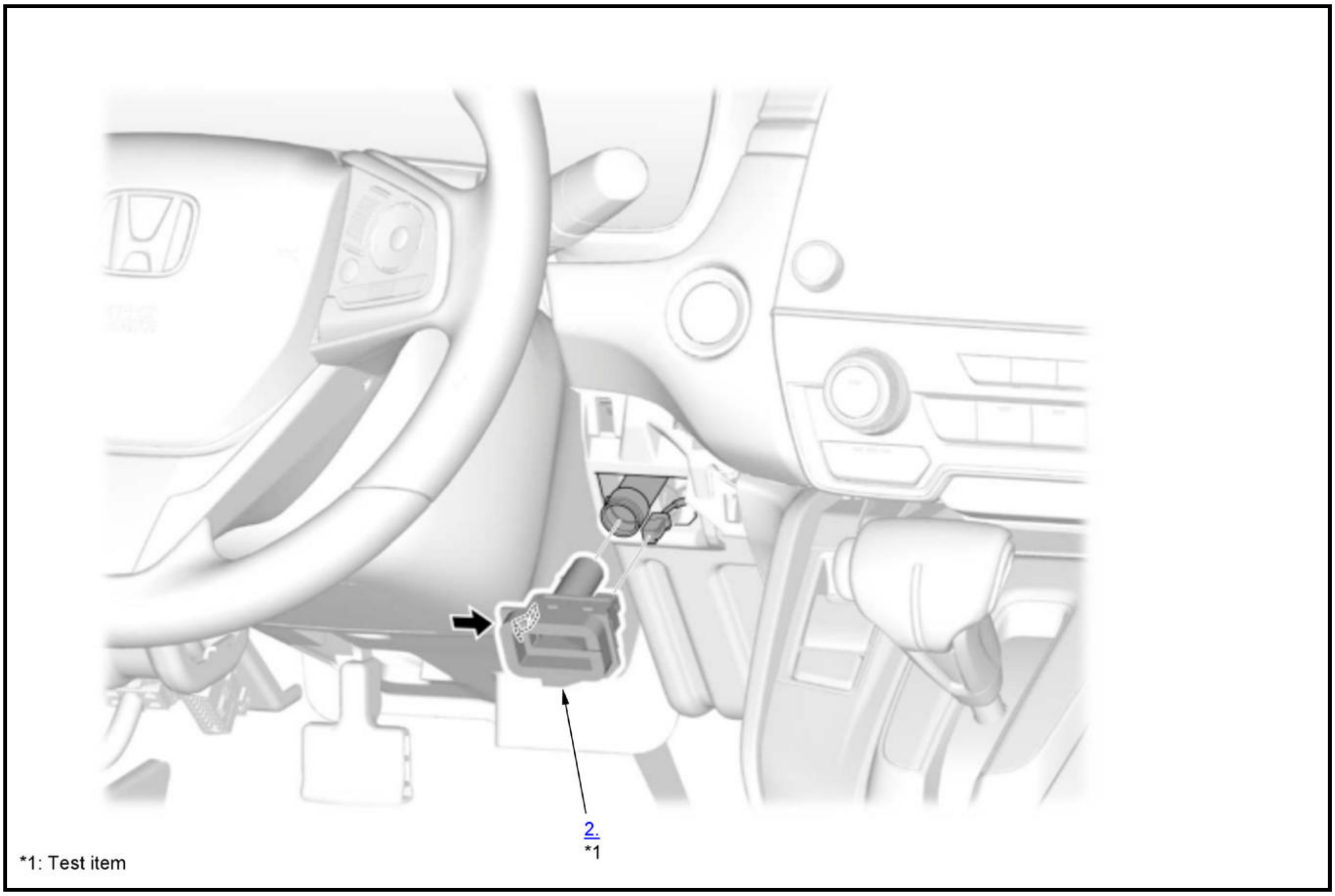

1. **Driver's Dashboard Lower Cover - Remove**
2. In-Car Temperature Sensor - Remove
3. All Removed Parts - Install
    1. Install the parts in the reverse order of removal.

B

Test

NOTE: Before testing the sensor, check for **climate control DTCs** .

1. In-Car Temperature Sensor - Test

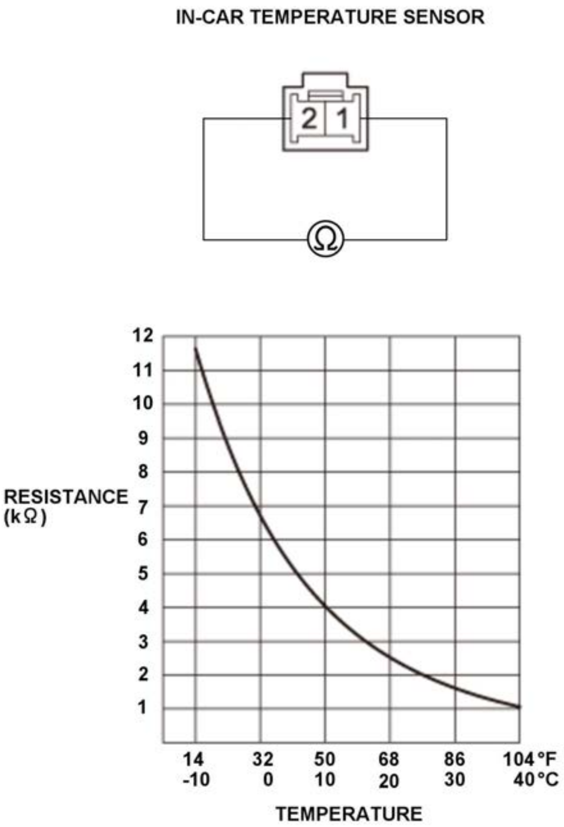	1. Test the in-car temperature sensor while holding it in front of the dashboard center vent. - Measure the resistance with the system set to MAX COOL. - Measure the resistance with the system set to MAX HOT. 2. Compare the resistance readings with the specifications shown in the graph, the resistance should be within the specifications. 3. If the resistance is not as specified, replace the in-car temperature sensor.

OUTSIDE AIR TEMPERATURE SENSOR REMOVAL, INSTALLATION, AND TEST

Removal and Installation

1

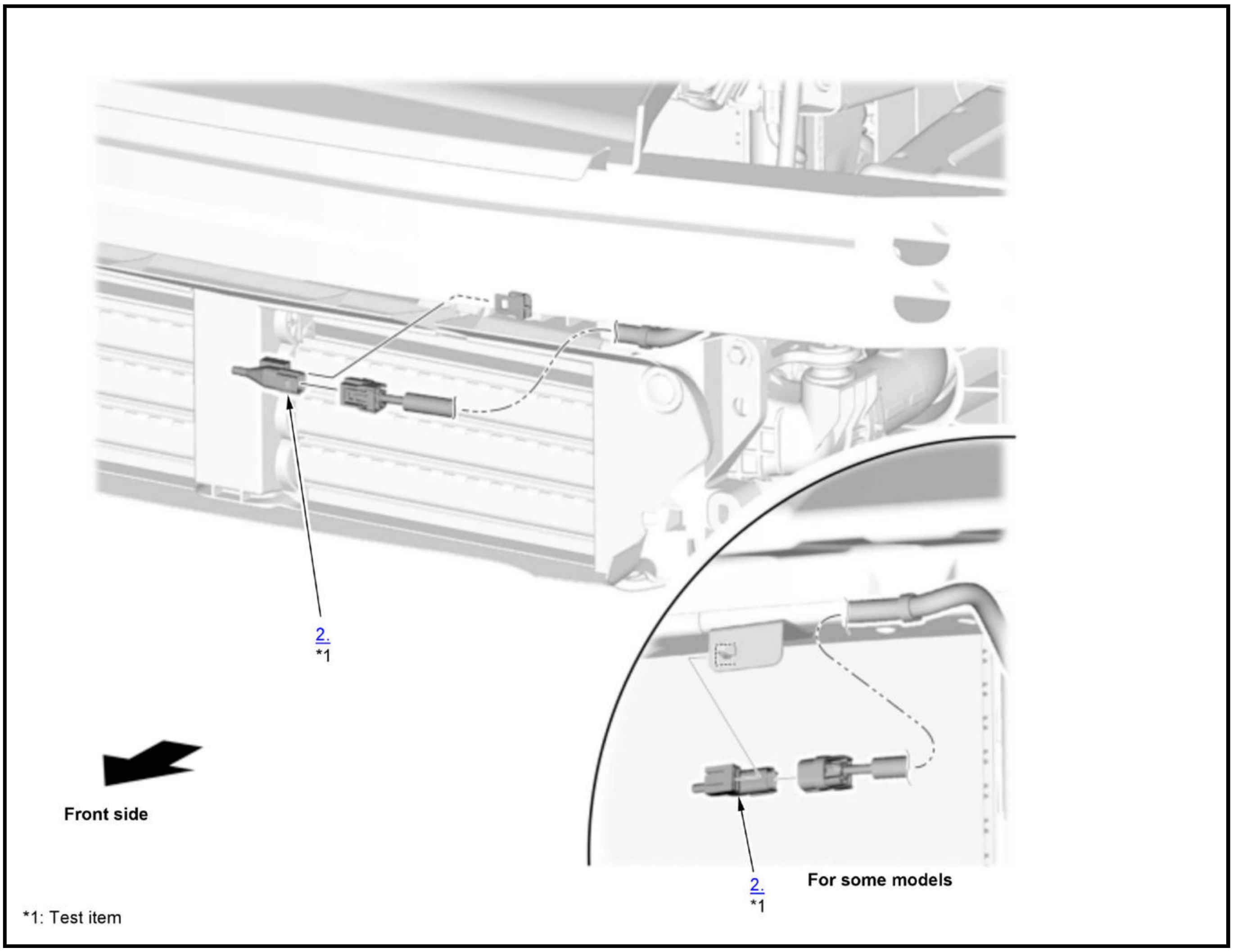
2.
*1
Front side
2.
*1
For some models
*1: Test item

1. **Front Bumper - Remove**
2. Outside Air Temperature Sensor - Remove
3. All Removed Parts - Install

   1. Install the parts in the reverse order of removal.

B

Test

NOTE: Before testing the sensor, check for **climate control DTCs** .

1. Outside Air Temperature Sensor - Test

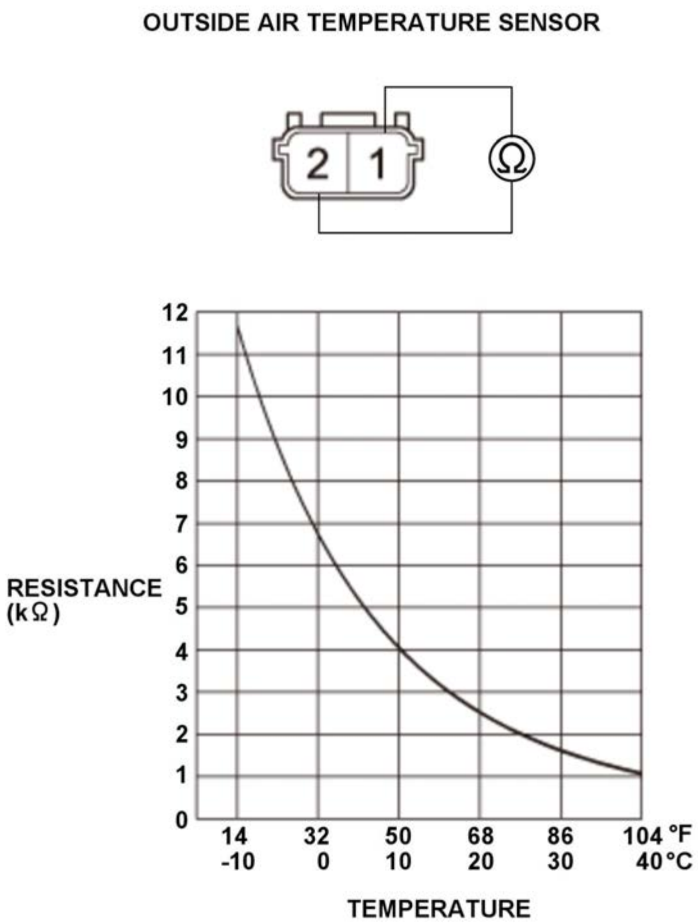

1. Dip the sensor in ice water, and measure the resistance between terminals No. 1 and No. 2.

2. Then pour warm water on the sensor, and check for a change in resistance.

3. Compare the resistance readings with the specifications shown in the graph, the resistance should be within the specifications.

4. If the resistance is not as specified, replace the outside air temperature sensor.

SUNLIGHT SENSOR REMOVAL, INSTALLATION, AND TEST

Removal and Installation

NOTE: Be careful not to damage the sunlight sensor and the dashboard.

1

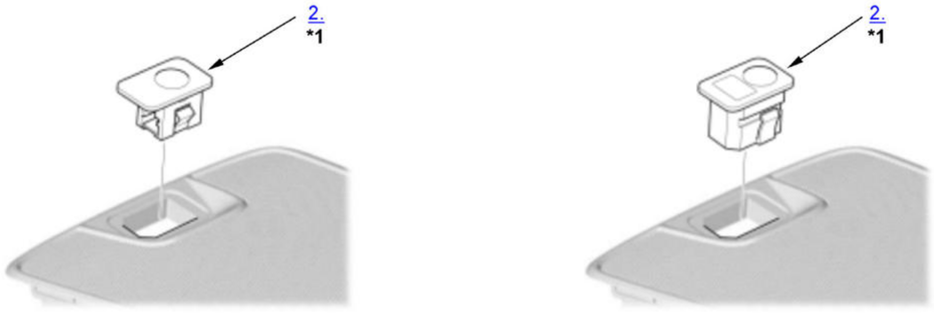

Without automatic lighting

With automatic lighting

*1: Test item

1. Dashboard Center Panel - Remove
2. Sunlight Sensor - Remove
3. All Removed Parts - Install

1. Install the parts in the reverse order of removal.

B

Test

NOTE:

- Before testing the sensor, check for climate control DTCs .
- The sunlight sensor with automatic lighting cannot be test. If no DTC indicated, the sunlight sensor is OK.

1. Sunlight Sensor - Test

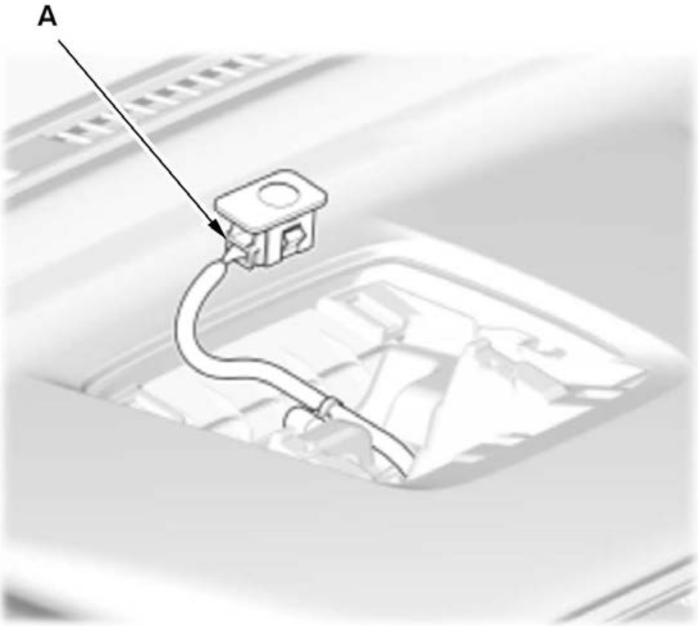

1. Connect the sunlight sensor connector (A).

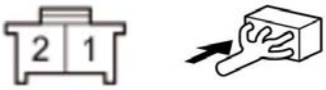

Sensor	Voltage	1	2
	Terminal		
Sunlight Sensor	About 3.56V or less*	○	○

*: 3.56V condition is no sunlight or the sensor coverd up. If sunlight, voltage is less than 3.56V.

2. Turn the vehicle to the ON mode.

3. Measure the voltage between terminals according to the table.

NOTE:

The voltage readings will not change under the light of a flashlight or a fluorescent lamp.

4. If the voltage is not as specified, replace the sunlight sensor.

DISASSEMBLY AND REASSEMBLY

CLIMATE CONTROL PANEL DISASSEMBLY AND REASSEMBLY

Exploded View

1. Climate Control Panel

Without Display

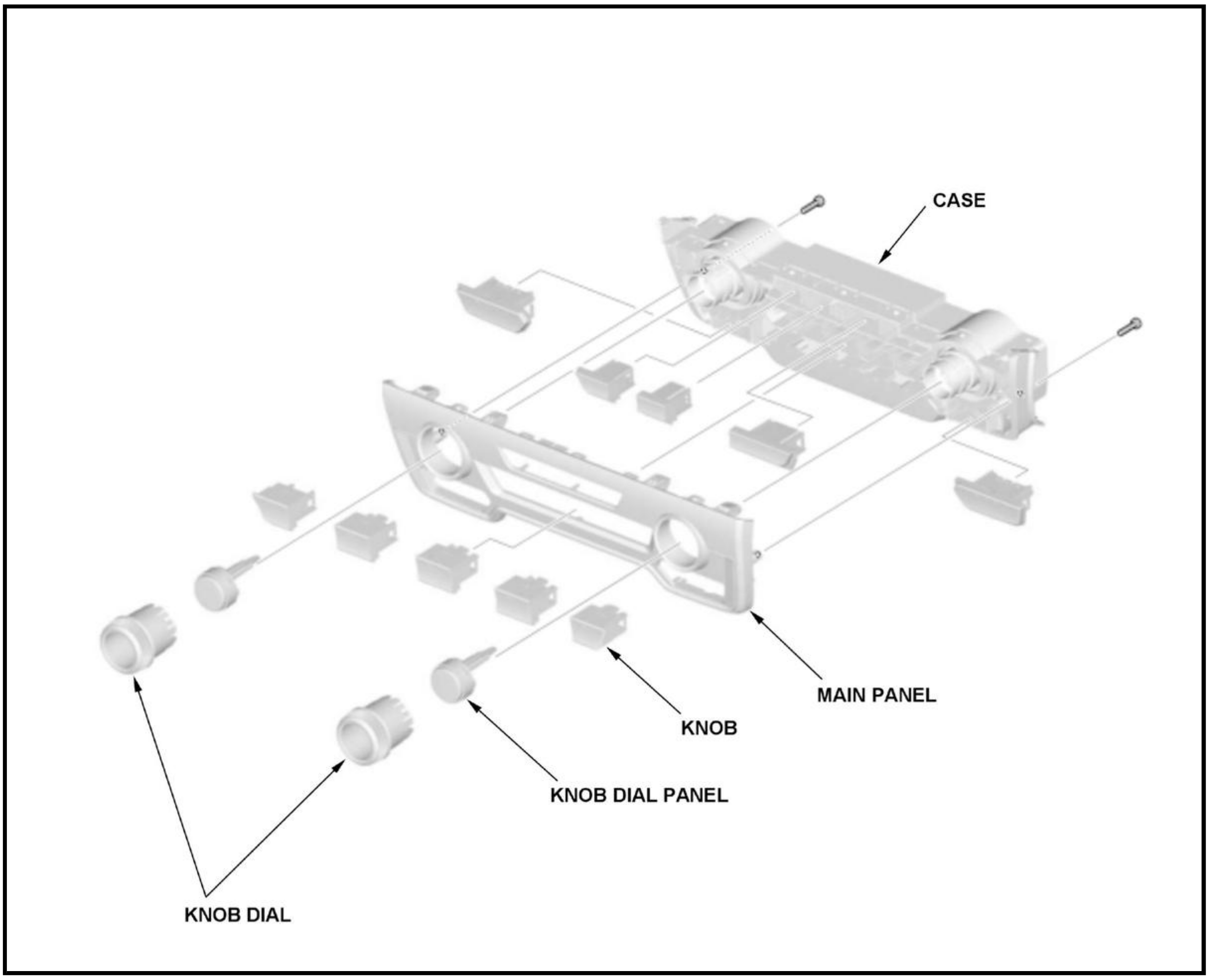
CASE
MAIN PANEL
KNOB
KNOB DIAL PANEL
KNOB DIAL

With Display

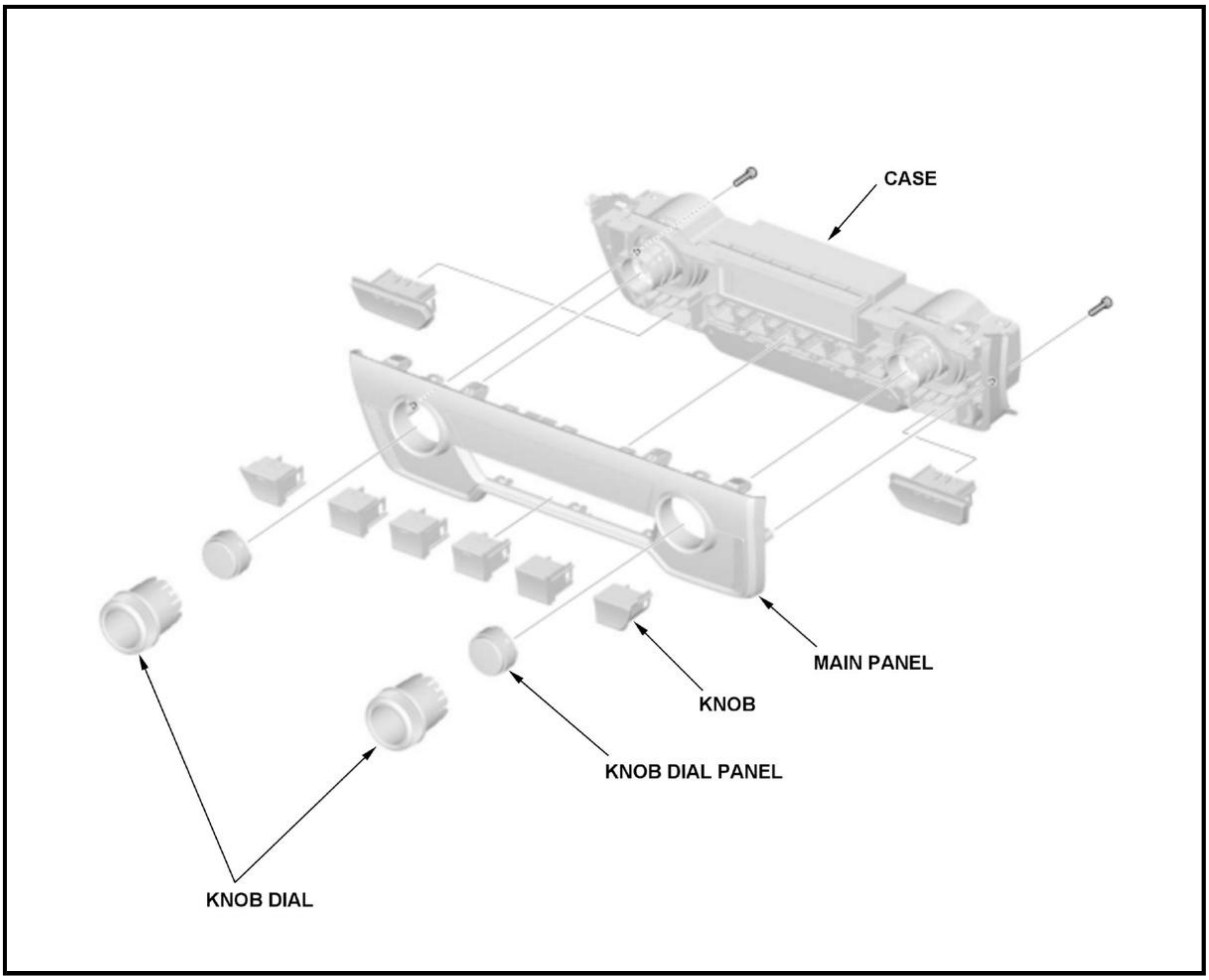
CASE
MAIN PANEL
KNOB
KNOB DIAL PANEL
KNOB DIAL

HVAC UNIT DISASSEMBLY AND REASSEMBLY

Exploded View

NOTE: If any seal, insulator, or other part is damaged, replace it with a new one.

1. HVAC Unit

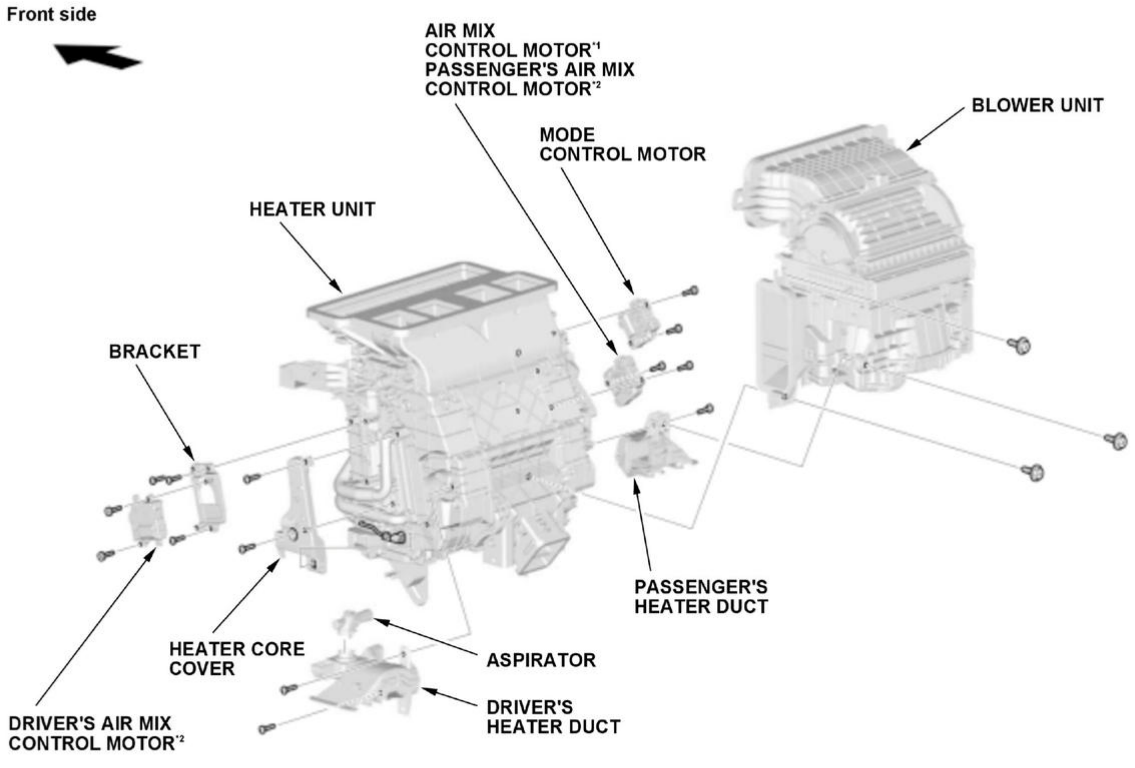
Front side
AIR MIX
CONTROL MOTOR*1
PASSENGER'S AIR MIX
CONTROL MOTOR*2
BLOWER UNIT
MODE
CONTROL MOTOR
HEATER UNIT
BRACKET
PASSENGER'S
HEATER DUCT
ASPIRATOR
HEATER CORE
COVER
DRIVER'S
HEATER DUCT
DRIVER'S AIR MIX
CONTROL MOTOR*2

*1: Without dual zone control
*2: With dual zone control

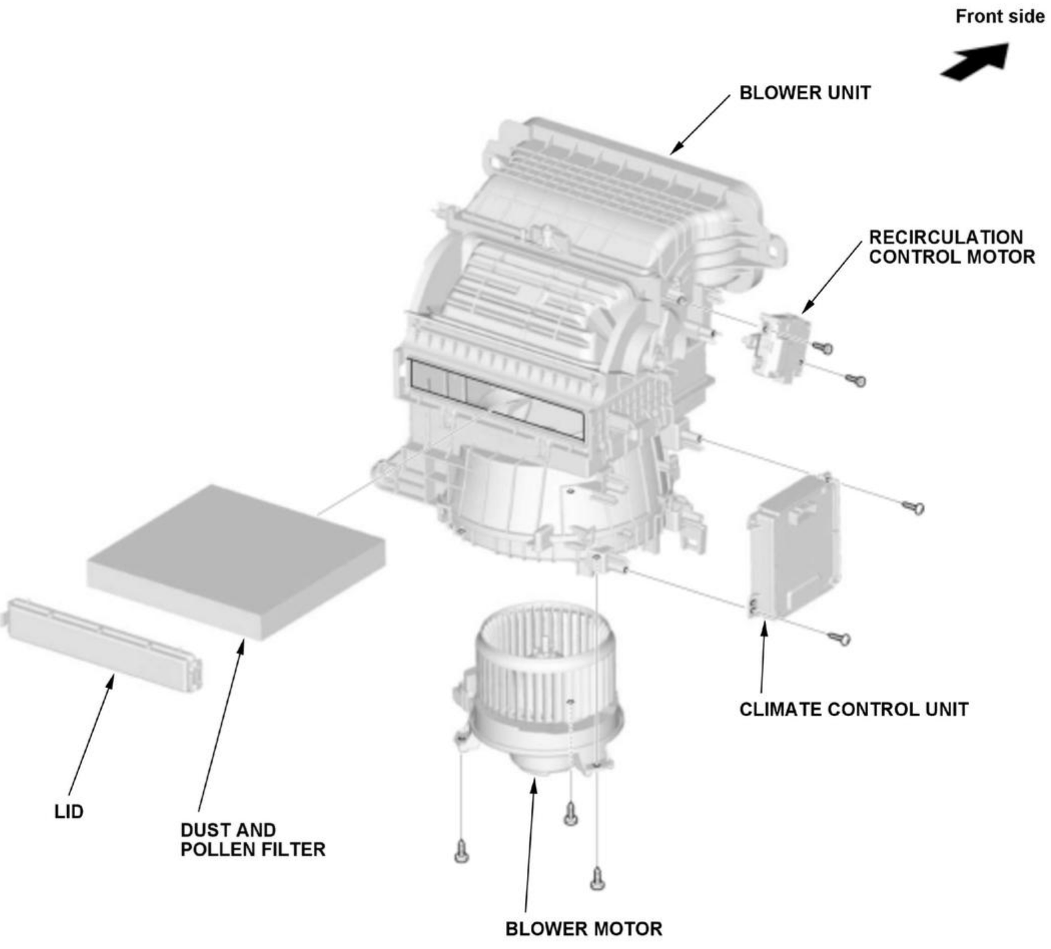
Front side
BLOWER UNIT
RECIRCULATION
CONTROL MOTOR
CLIMATE CONTROL UNIT
LID
DUST AND
POLLEN FILTER
BLOWER MOTOR

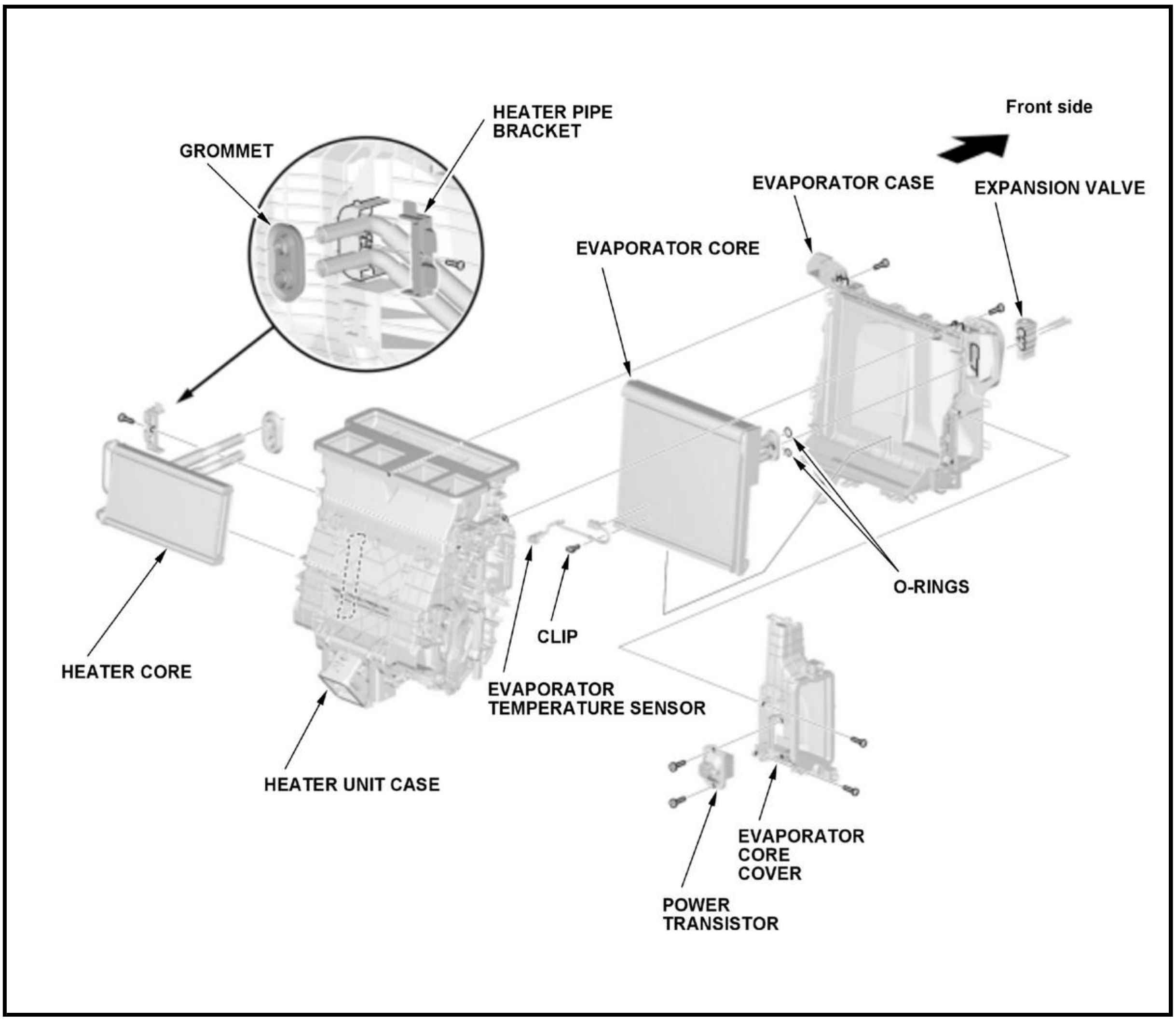
HEATER PIPE BRACKET
Front side
GROMMET
EVAPORATOR CASE
EXPANSION VALVE
EVAPORATOR CORE
O-RINGS
CLIP
HEATER CORE
EVAPORATOR TEMPERATURE SENSOR
HEATER UNIT CASE
EVAPORATOR CORE COVER
POWER TRANSISTOR

REMOVAL AND INSTALLATION

A/C COMPRESSOR RELIEF VALVE REMOVAL AND INSTALLATION

Removal and Installation

NOTE:

- If the A/C compressor relief valve released refrigerant to the atmosphere, determine and correct the cause of the excessive system pressure, then replace the relief valve.
- Plug the opening to keep moisture and foreign material from entering the system, and the A/C compressor oil from running out.

1

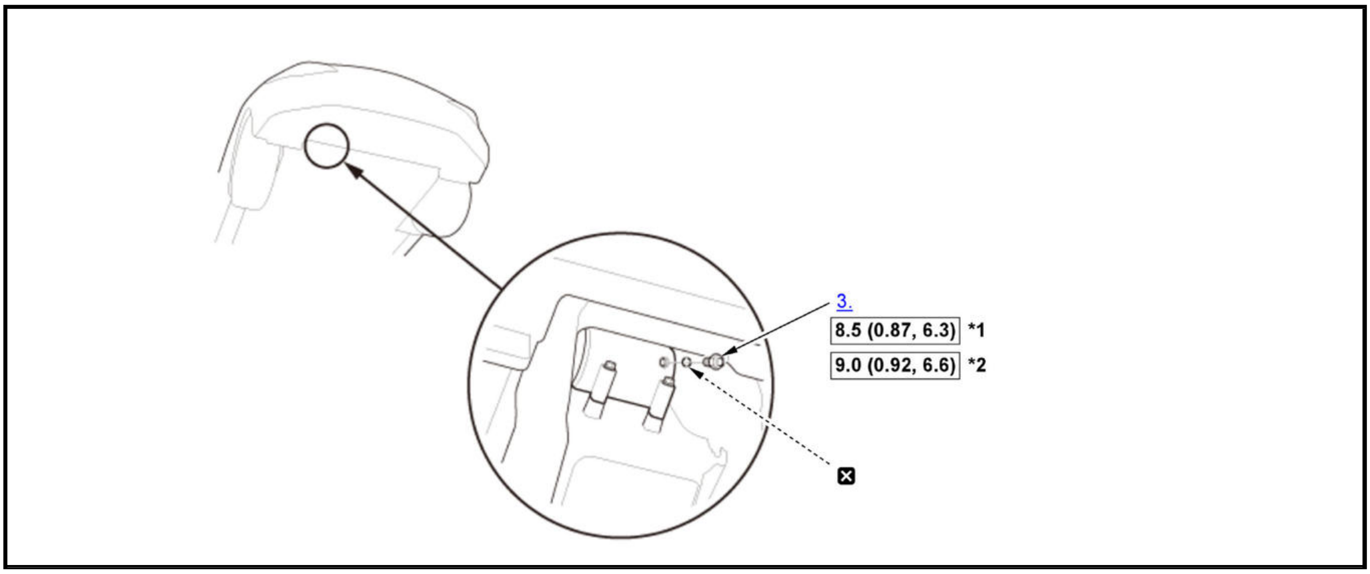

☐	Torque: N.m (kgf.m, lbf.ft)
☒	Replace
*1	1.5 L engine
*2	2.4 L engine

1. **A/C Refrigerant - Recover**
2. **Front Engine Undercover Lid - Remove**
3. A/C Compressor Relief Valve - Remove
4. All Removed Parts - Install

    1. Install the parts in the reverse order of removal, and note these items:

        - If the A/C compressor relief valve released refrigerant to the atmosphere, determine and correct the cause of the excessive system pressure, then replace the relief valve.
        - Clean the mating surfaces.
        - A new O-ring should be used at each fitting. Prior to installation, apply a thin coat of the same **refrigerant oil** used in the A/C compressor. Be sure to use the correct O-ring for refrigerant types to avoid leakage.
        - **Charge the system with the specified amount of refrigerant** .

B

A/C COMPRESSOR REMOVAL AND INSTALLATION

Removal and Installation

NOTE:

- Do not install the A/C compressor into a system unless you are completely sure that the system is free of contamination. Installing the A/C compressor into a contaminated system can result in premature A/C compressor failure. **Refer to the A/C System Contamination Inspection** .
- If the A/C compressor is marginally operable, run the engine at idle speed, and let the air conditioning work for a few minutes, then shut the engine off.

1

1.5 L engine

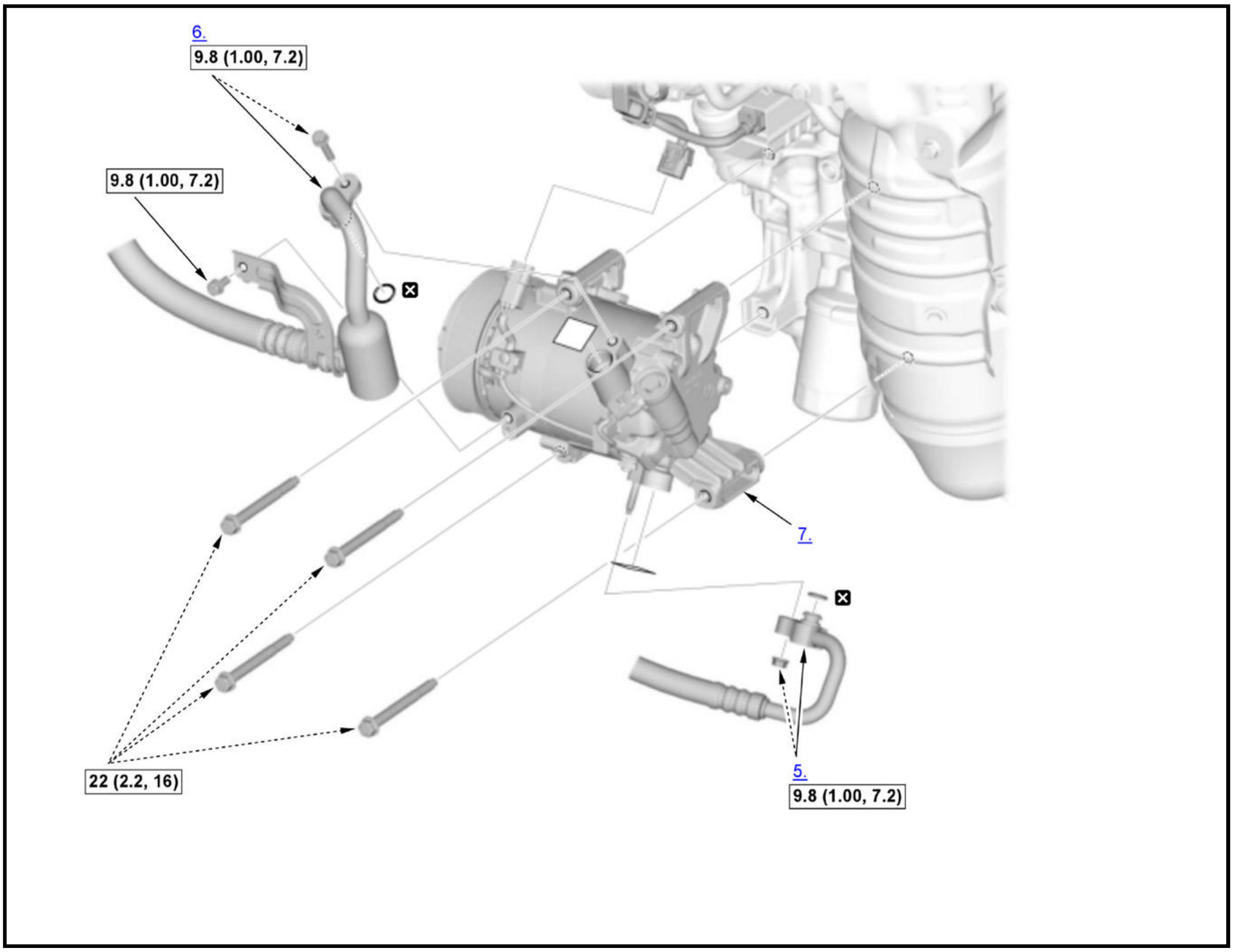
6.
9.8 (1.00, 7.2)
9.8 (1.00, 7.2)
☒
7.
☒
22 (2.2, 16)
5.
9.8 (1.00, 7.2)

▭	Torque: N.m (kgf.m, lbf.ft)
☒	Replace

2.4 L engine

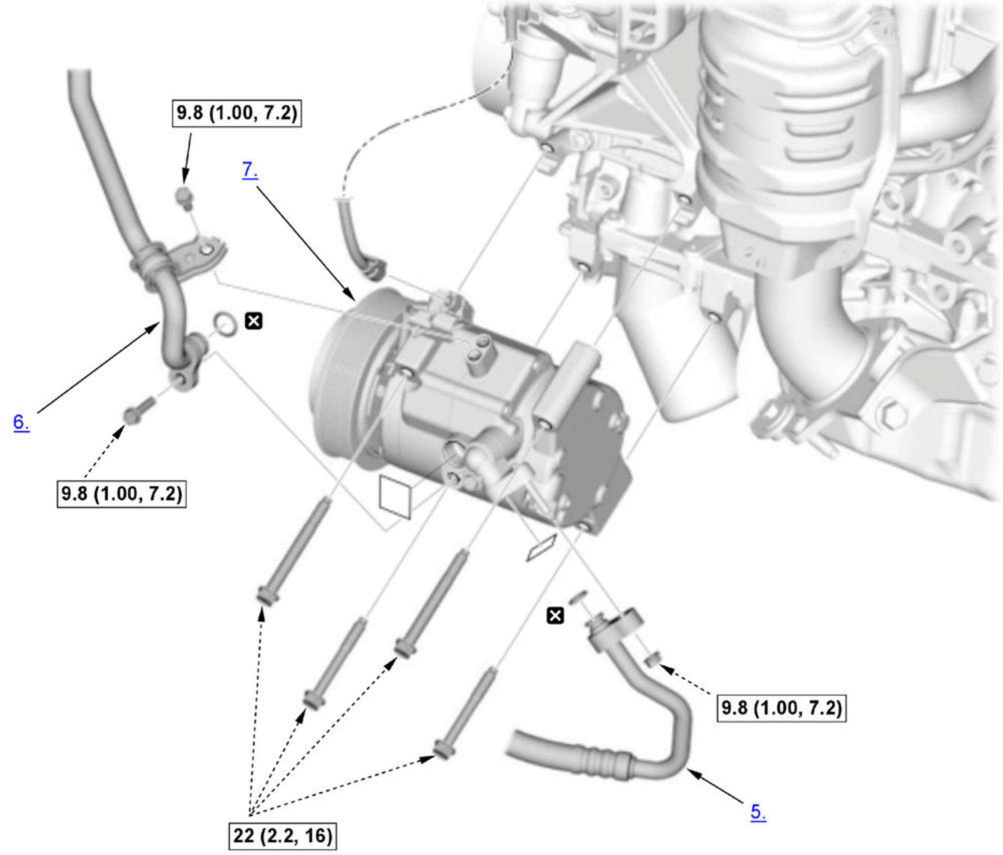

☐	Torque: N.m (kgf.m, lbf.ft)
☒	Replace

1. **A/C Refrigerant - Recover**
2. **Engine Undercover Assembly - Remove**
3. **Front Subframe Brace - Remove**
4. **Drive Belt - Remove**
5. Discharge Hose - Disconnect
6. Suction Hose - Disconnect
7. A/C Compressor - Remove
8. All Removed Parts - Install
    1. Install the parts in the reverse order of removal, and note these items:
        - Inspect the A/C lines for any signs of contamination.
        - If you are installing a new A/C compressor, you must **calculate the amount of refrigerant oil** to be removed from it. A new A/C compressor comes with a full charge of oil.
        - A new O-ring should be used at each fitting. Prior to installation, apply a thin coat of the same **refrigerant oil** used in the A/C compressor. Be sure to use the correct O-ring for refrigerant types to avoid leakage.
        - To avoid contamination, do not return the oil to the container once dispensed, and never mix it with other kinds of **refrigerant oils** .

- Immediately after using the oil, reinstall the cap on the container, and seal it to avoid moisture absorption.
- Do not spill the refrigerant oil on the vehicle, because it may damage painted surfaces. If refrigerant oil contacts the paint, wash it off with water immediately.
- Be careful not to damage the radiator fins when installing the A/C compressor and the fan shroud.
- To avoid damage to the radiator, cover it with cardboard after removing the fan shroud.
- **Charge the system with the specified amount of refrigerant** .

B

A/C CONDENSER REMOVAL AND INSTALLATION

Removal and Installation

NOTE: Be careful not to damage the radiator and A/C condenser fins, and receiver line when removing the A/C condenser.

1

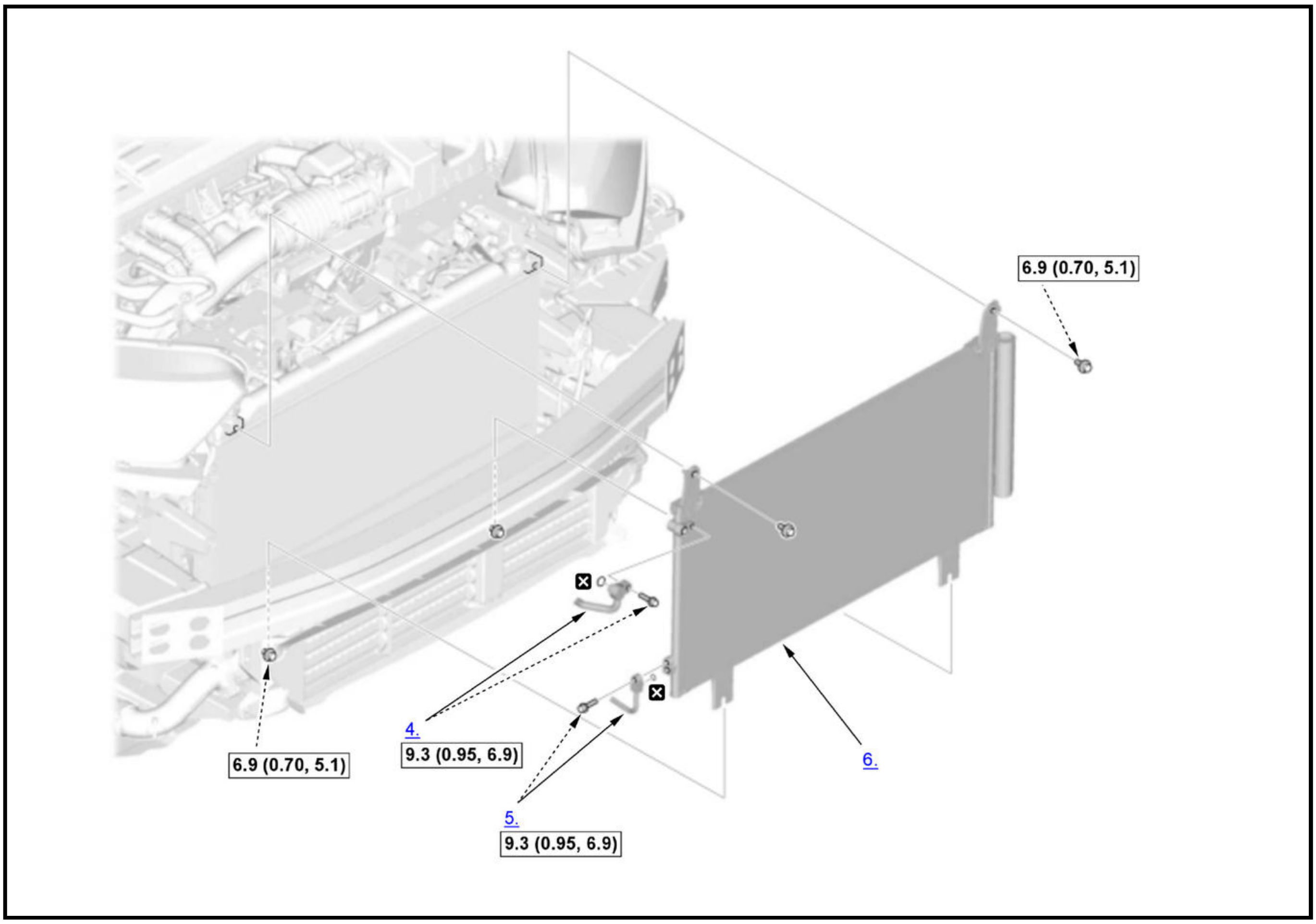

☐	Torque: N.m (kgf.m, lbf.ft)
☒	Replace

1. **A/C Refrigerant - Recover**
2. **Front Bumper - Remove**
3. **Upper Shutter Grille - Remove**
4. Discharge Hose - Disconnect
5. Receiver Pipe - Disconnect

6. A/C Condenser - Remove
7. All Removed Parts - Install

1. Install the parts in the reverse order of removal, and note these items:

    - If you are installing a new A/C condenser, **add the appropriate refrigerant oil for the A/C compressor which installed to the vehicle** .
    - A new O-ring should be used at each fitting. Prior to installation, apply a thin coat of the same **refrigerant oil** used in the A/C compressor. Be sure to use the correct O-rings for refrigerant types to avoid leakage.
    - Immediately after using the oil, reinstall the cap on the container, and seal it to avoid moisture absorption.
    - Do not spill the refrigerant oil on the vehicle, because it may damage painted surfaces. If refrigerant oil contacts the paint, wash it off with water immediately.
    - Be careful not to damage the radiator and A/C condenser fins when removing the A/C condenser.
    - **Charge the system with the specified amount** .

B

A/C LINE REMOVAL AND INSTALLATION

Exploded View

A/C Line - Remove and Install

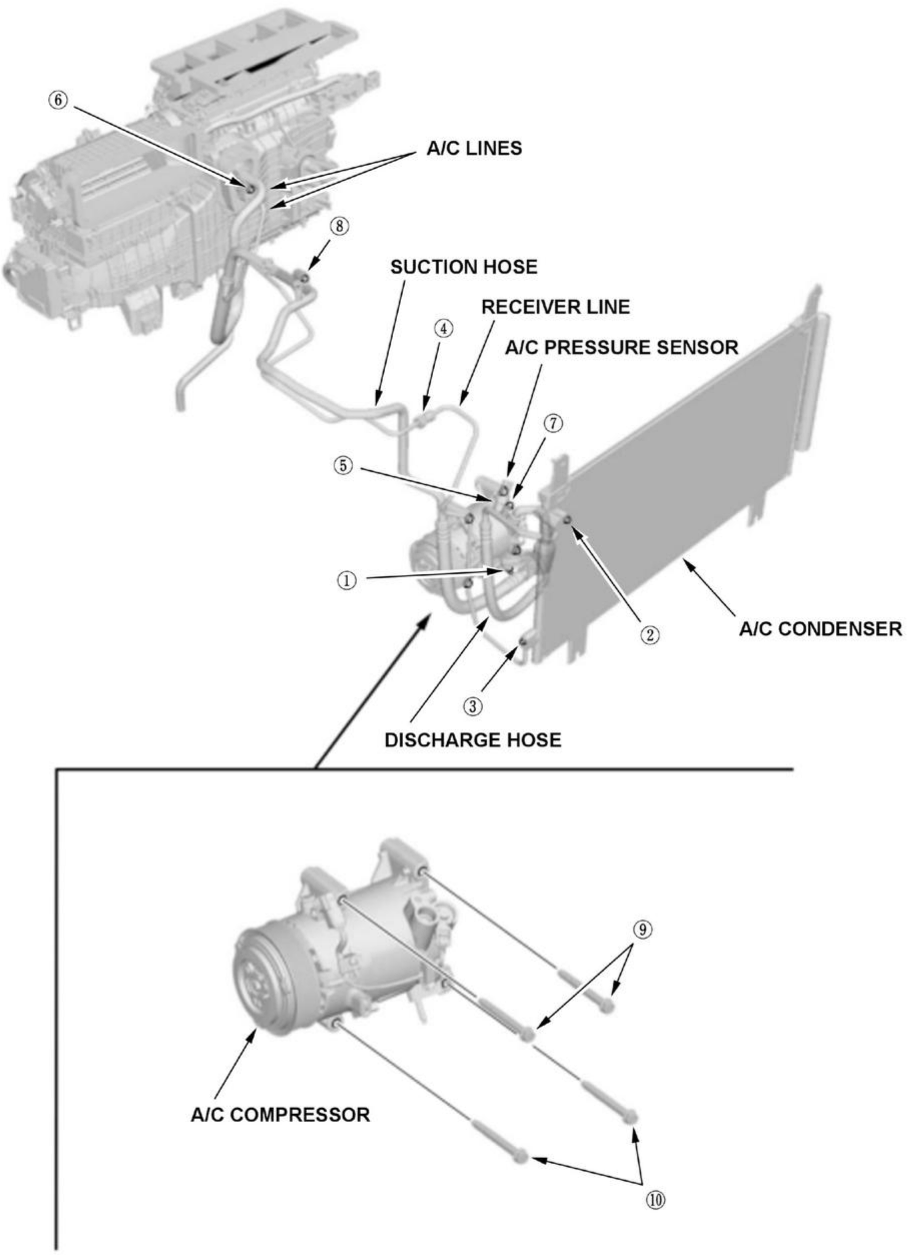
⑥
A/C LINES
⑧
SUCTION HOSE
RECEIVER LINE
④
A/C PRESSURE SENSOR
⑦
⑤
①
②
A/C CONDENSER
③
DISCHARGE HOSE
⑨
A/C COMPRESSOR
⑩

No.	Related Parts		Torque: N.m (kgf.m, lbf.ft)
①	Discharge hose	A/C compressor	9.8 (1.00, 7.2)

*: For some models

No.	Related Parts		Torque: N.m (kgf.m, lbf.ft)
②	Discharge hose	A/C condenser	9.3 (0.95, 6.9)
③	Receiver line	A/C condenser	9.3 (0.95, 6.9)
④	A/C lines	Receiver line	13 (1.3, 10)
⑤	A/C pressure sensor	Discharge hose	11 (1.1, 8)

No.	Related Parts		Torque: N.m (kgf.m, lbf.ft)
⑥	A/C lines	Expansion valve	9.8 (1.00, 7.2)
⑦	Suction hose	A/C compressor	9.8 (1.00, 7.2)
⑧	Suction hose	A/C lines	9.8 (1.00, 7.2)
⑨	A/C compressor	Engine block	22 (2.2, 16)
⑨ *	A/C compressor	Water passage	22 (2.2, 16)
⑩	A/C compressor	Oil pan	22 (2.2, 16)

*: For some models

A/C PRESSURE SENSOR REMOVAL AND INSTALLATION

Removal and Installation

NOTE: ℹ Where icon is shown, further information shown below.

1

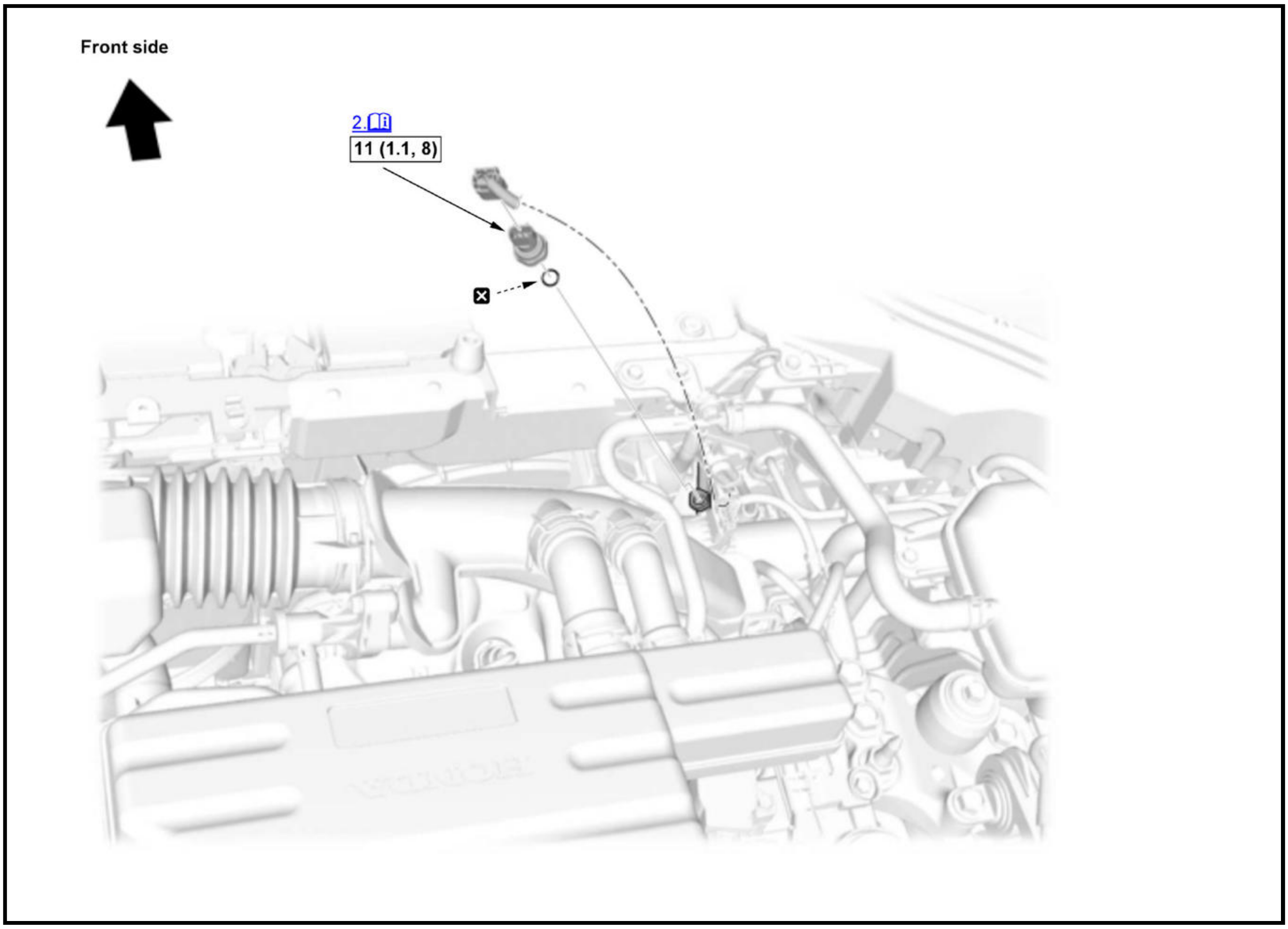

ℹ	Detailed information, notes, and precautions
☐	Torque: N.m (kgf.m, lbf.ft)

☒	Replace

1. **A/C Refrigerant - Recover**
2. A/C Pressure Sensor - Remove

   1. Hold the A/C pressure sensor block with a wrench to prevent damaging the discharge hose, then remove the A/C pressure sensor.

B

3. All Removed Parts - Install

   1. Install the parts in the reverse order of removal, and note these items:

      - A new O-ring should be used at each fitting. Prior to installation, apply a thin coat of the same **refrigerant oil** used in the A/C compressor. Be sure to use the correct O-ring for refrigerant types to avoid leakage.
      - **Charge the system with the specified amount of refrigerant** .

B

BLOWER MOTOR REMOVAL AND INSTALLATION

Removal and Installation

SRS components are located in this area. Review the **SRS component locations** and the **precautions and procedures** before doing repairs or service.

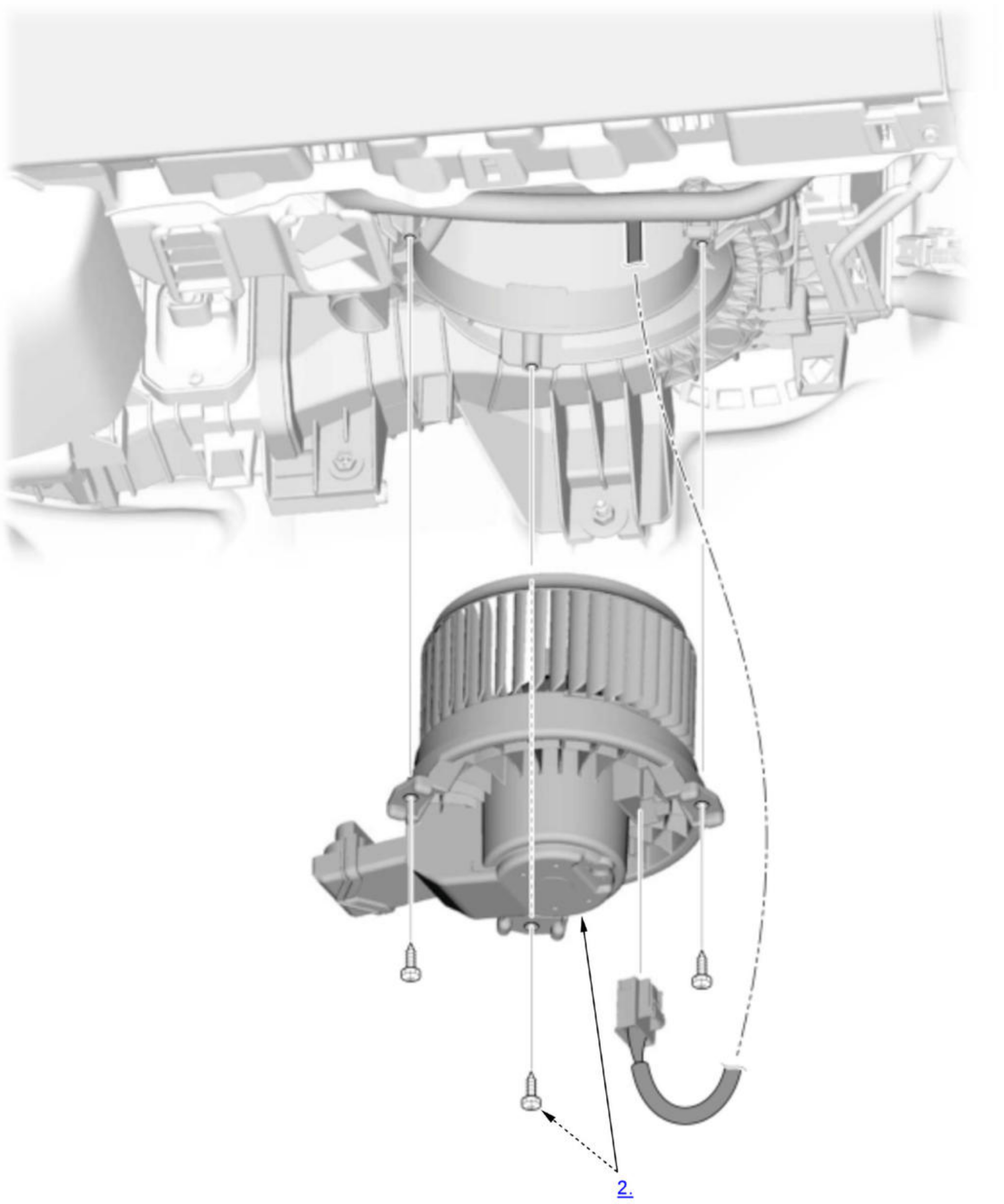

1. **Passenger's Dashboard Undercover - Remove**
2. Blower Motor - Remove
3. All Removed Parts - Install

    1. Install the parts in the reverse order of removal.

B

BLOWER UNIT REMOVAL AND INSTALLATION

Removal and Installation

SRS components are located in this area. Review the **SRS component locations** and the **precautions and procedures** before doing repairs or service.

1

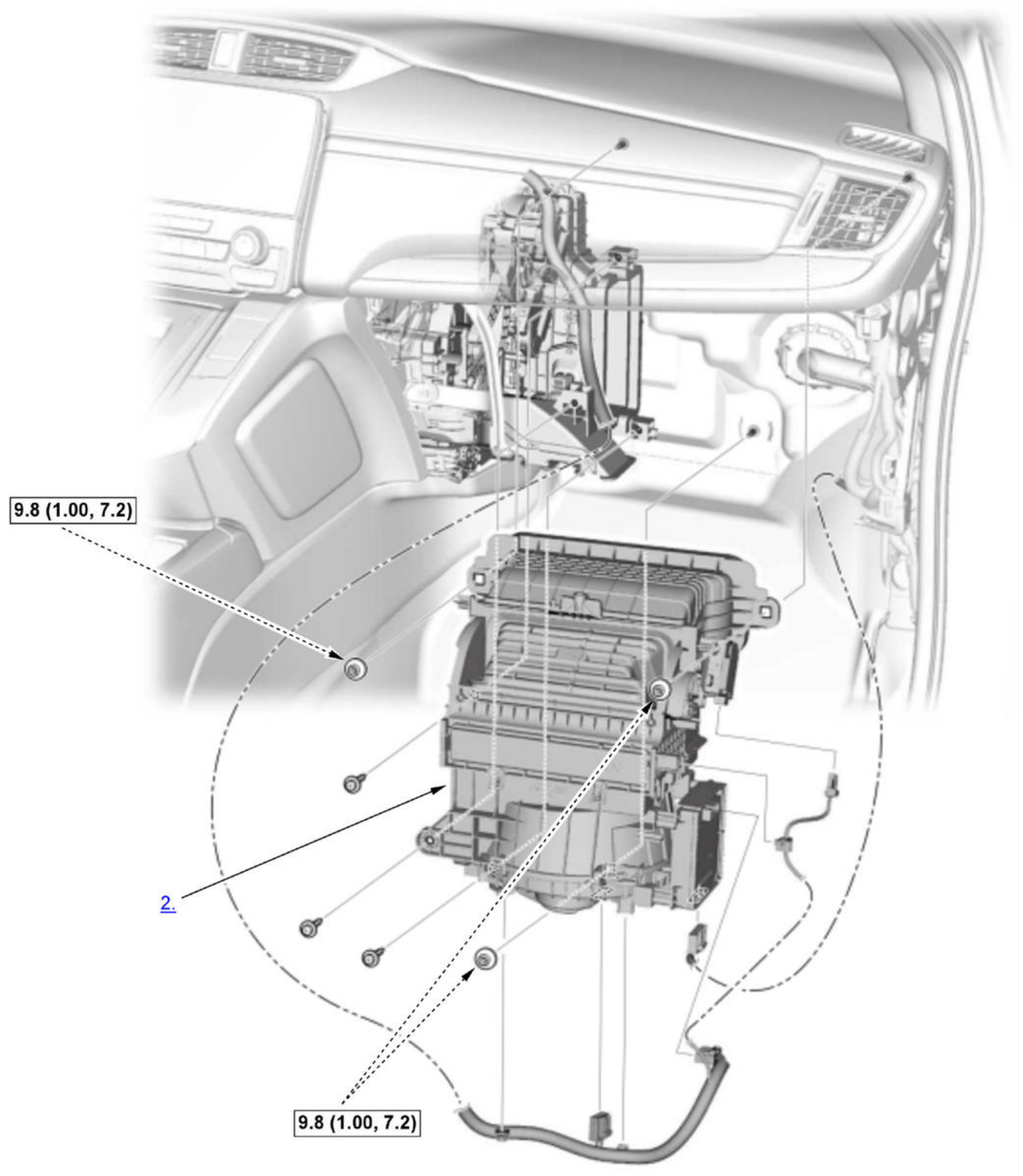

▭	Torque: N.m (kgf.m, lbf.ft)

1. **Glove Box - Remove**
2. Blower Unit - Remove
3. All Removed Parts - Install
    1. Install the parts in the reverse order of removal.

B

CLIMATE CONTROL PANEL REMOVAL AND INSTALLATION

Removal and Installation

NOTE: Unless otherwise indicated, illustrations used in the procedure are for LHD model.

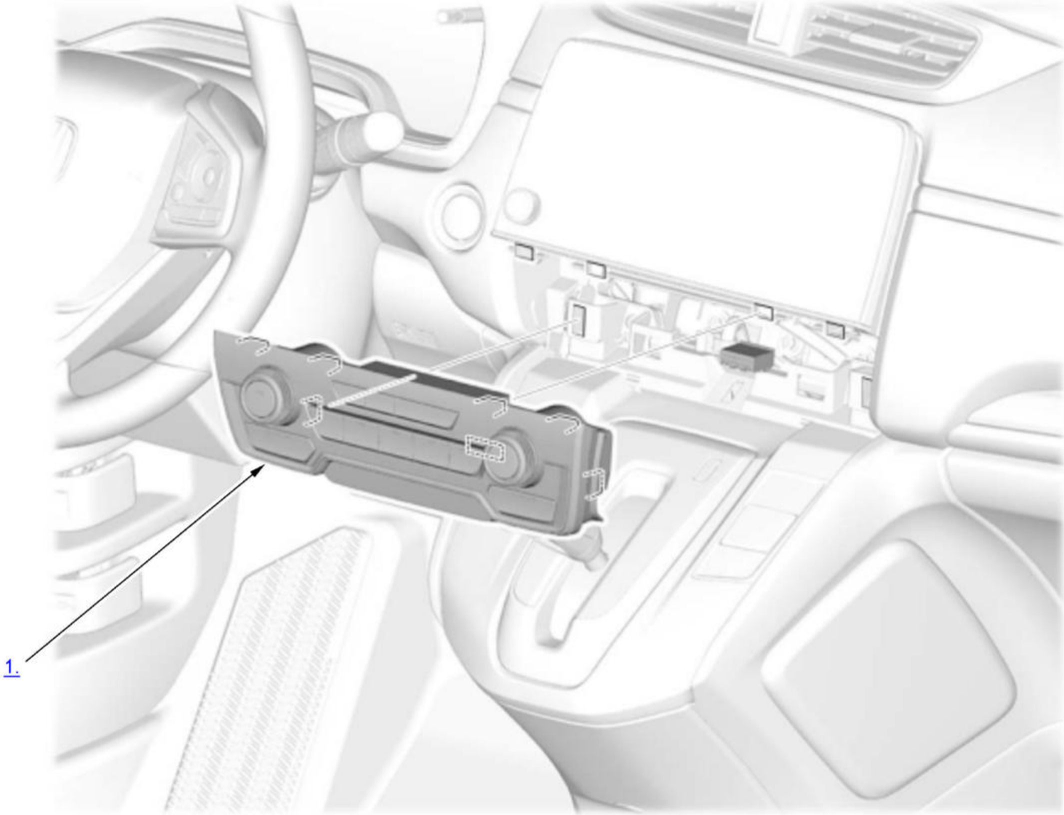

1. Climate Control Panel - Remove
2. All Removed Parts - Install

   1. Install the parts in the reverse order of removal.

   2. **Run the self-diagnostic function to confirm that there are no problems in the system**

   .

B

CLIMATE CONTROL UNIT REMOVAL AND INSTALLATION

Removal and Installation

SRS components are located in this area. Review the **SRS component locations** and the **precautions and procedures** before doing repairs or service.

1

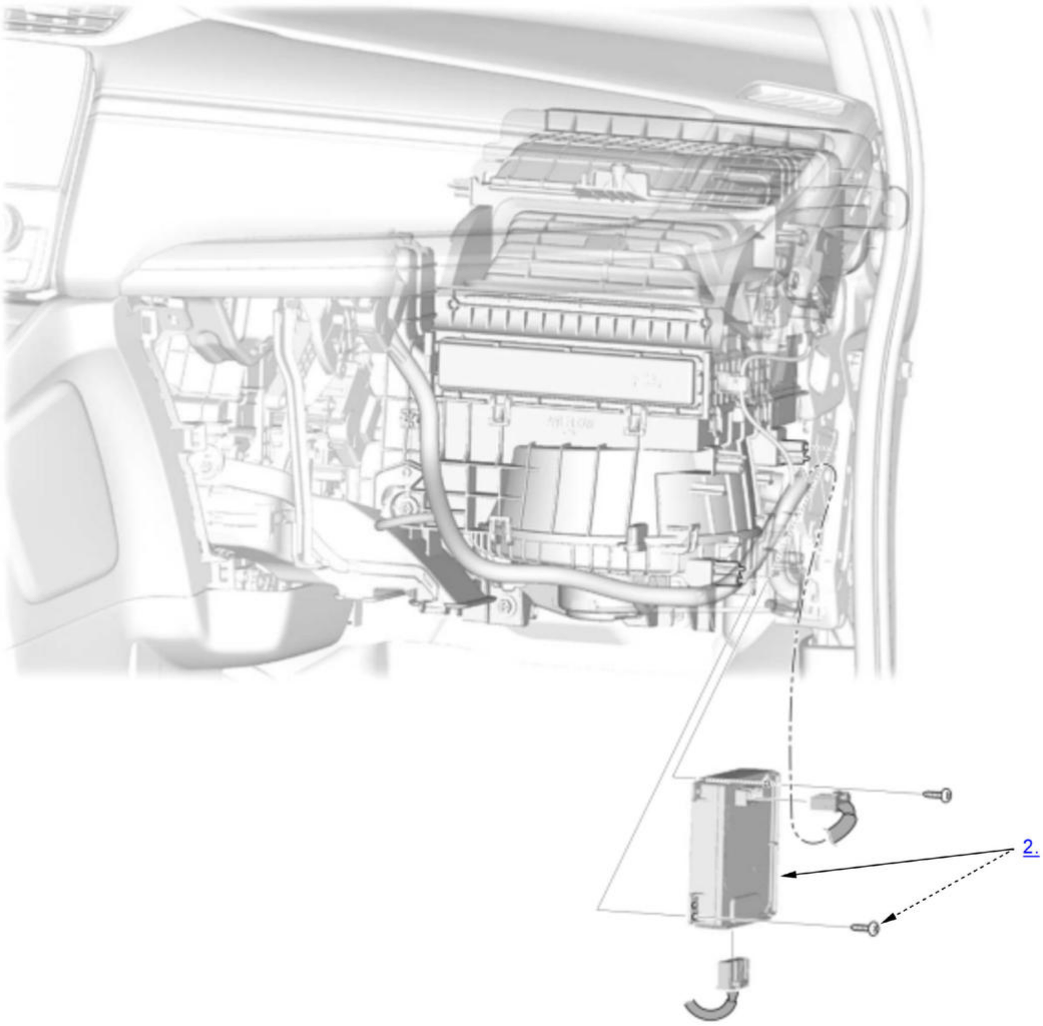

1. Glove Box - Remove
2. Climate Control Unit - Remove
3. All Removed Parts - Install

   1. Install the parts in the reverse order of removal.

NOTE: **After installing all the parts, run the self-diagnostic function to confirm that there are no problems in the system .**

B

DUST AND POLLEN FILTER REMOVAL AND INSTALLATION

Removal and Installation

1

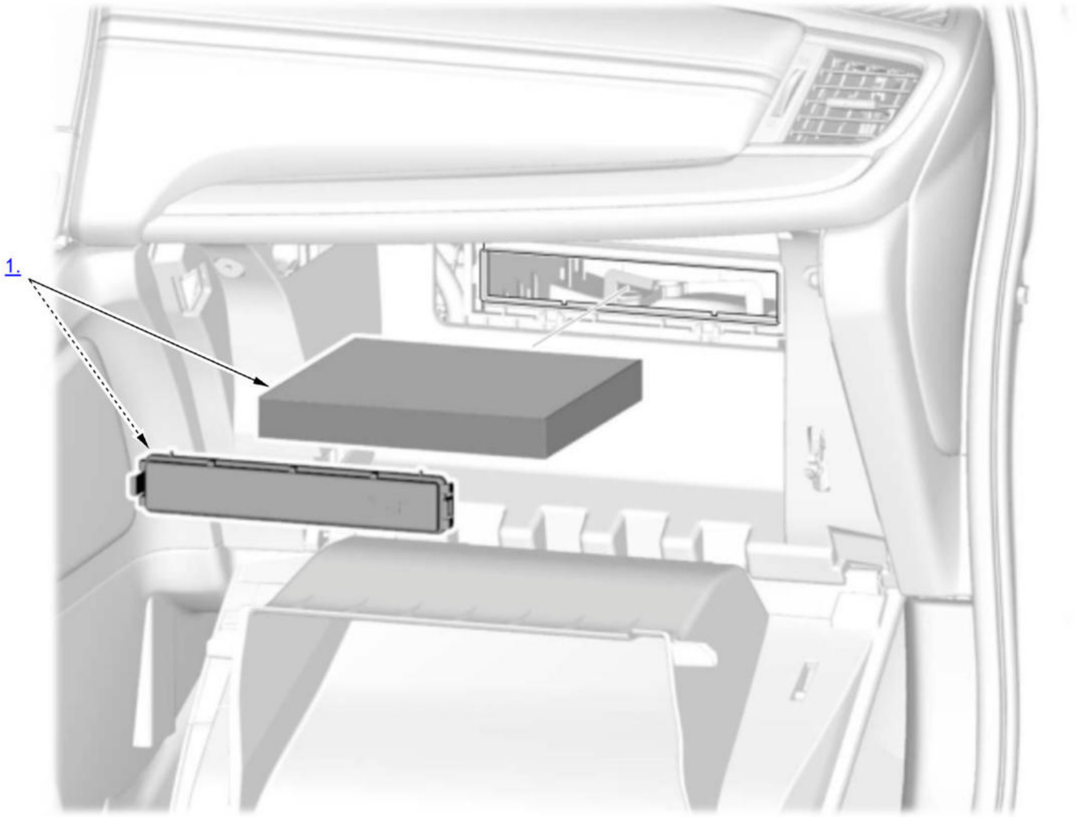

1. Dust and Pollen Filter - Remove
2. All Removed Parts - Install
    1. Install the parts in the reverse order of removal.

NOTE: **Make sure that there is no air leaking out of the blower unit.**

B

EVAPORATOR CORE REMOVAL AND INSTALLATION

Removal and Installation

NOTE: Be careful not to damage the evaporator core.

1

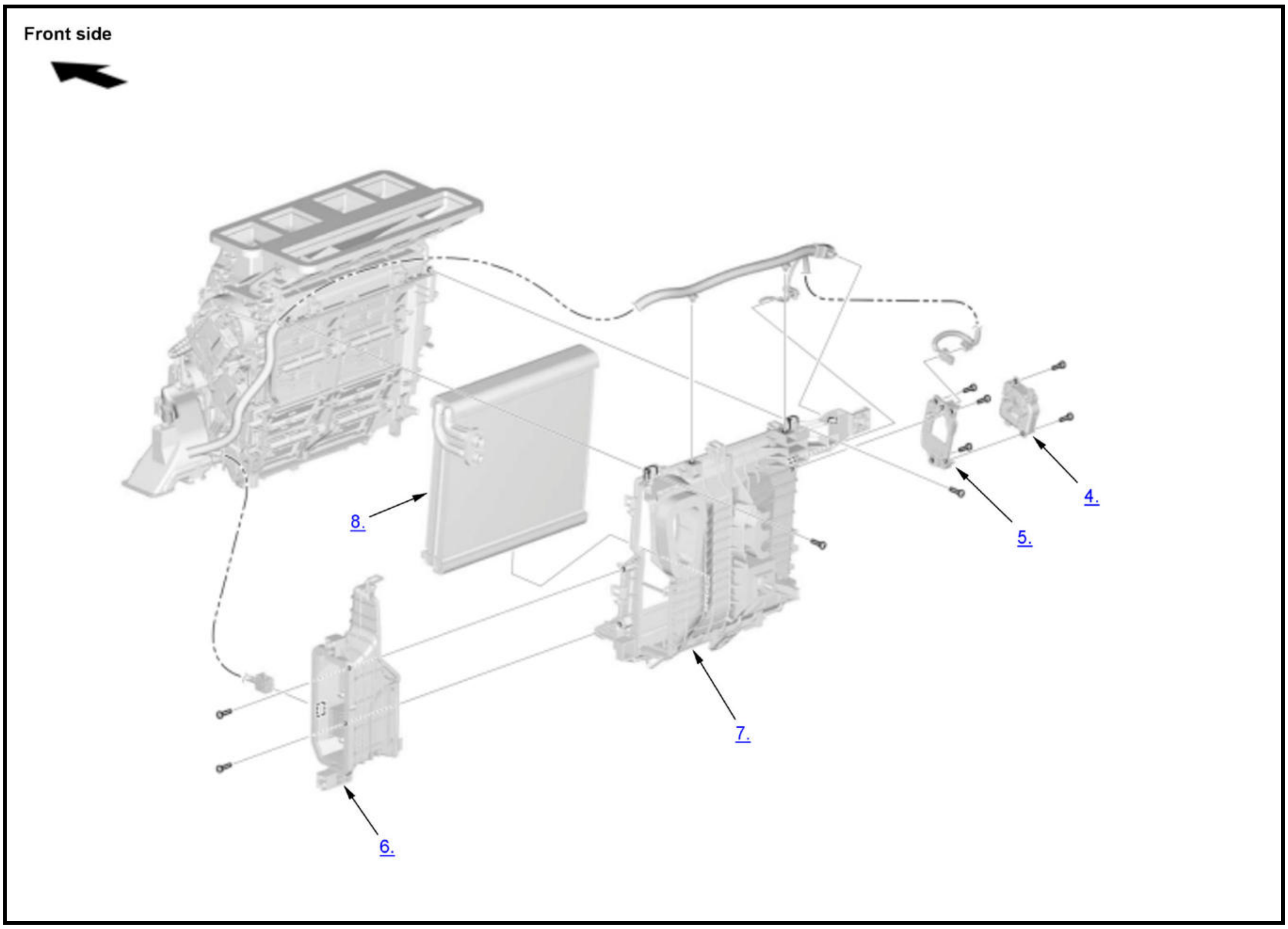

1. **HVAC Unit - Remove**
2. **Blower Unit - Remove**
3. **Heater Core - Remove**
4. Driver's Air Mix Control Motor - Remove (With dual zone control)
5. Bracket - Remove
6. Evaporator Core Cover - Remove
7. Evaporator Case - Remove
8. Evaporator Core - Remove
9. **Evaporator Temperature Sensor - Remove**
10. All Removed Parts - Install

    1. Install the parts in the reverse order of removal, and note these items:

        - Replace the seal washer with new ones at each fitting, and apply a thin coat of **refrigerant oil** before installing them. Be sure to use the correct seal washer to avoid leakage.
        - **Charge the system with the specified amount of refrigerant** .
        - Make sure that there is no refrigerant leakage.
        - Make sure that there is no air leakage.

B

EVAPORATOR EXPANSION VALVE REMOVAL AND INSTALLATION

Removal and Installation

1

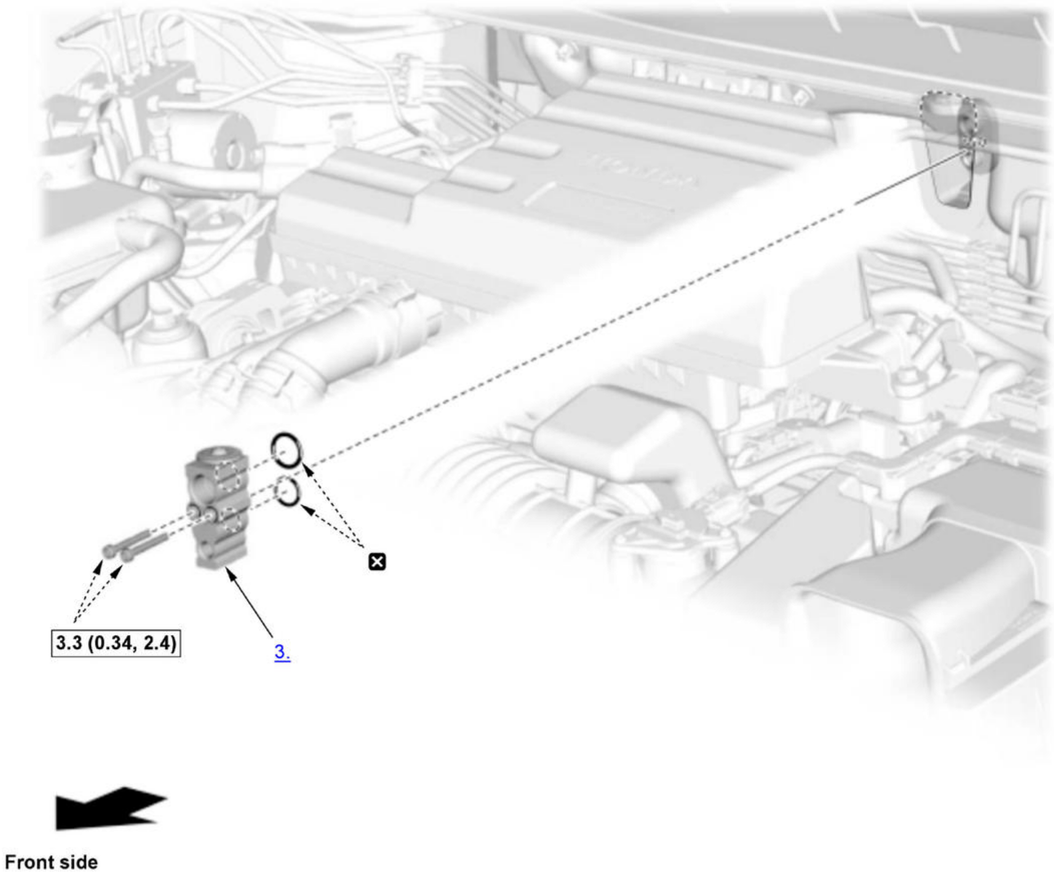

▭	Torque: N.m (kgf.m, lbf.ft)
☒	Replace

1. A/C Refrigerant - Recover
2. A/C Lines - Remove
3. Expansion Valve - Remove
4. All Removed Parts - Install

   1. Install the parts in the reverse order of removal, and note these items:

      - Replace the seal washer with new ones at each fitting, and apply a thin coat of **refrigerant oil** before installing them. Be sure to use the correct seal washer to avoid leakage.
      - **Charge the system with the specified amount of refrigerant** .

B

HVAC UNIT REMOVAL AND INSTALLATION

Removal and Installation

SRS components are located in this area. Review the **SRS component locations** and the **precautions and procedures** before doing repairs or service.

NOTE: ℹ Where icon is shown, further information shown below.

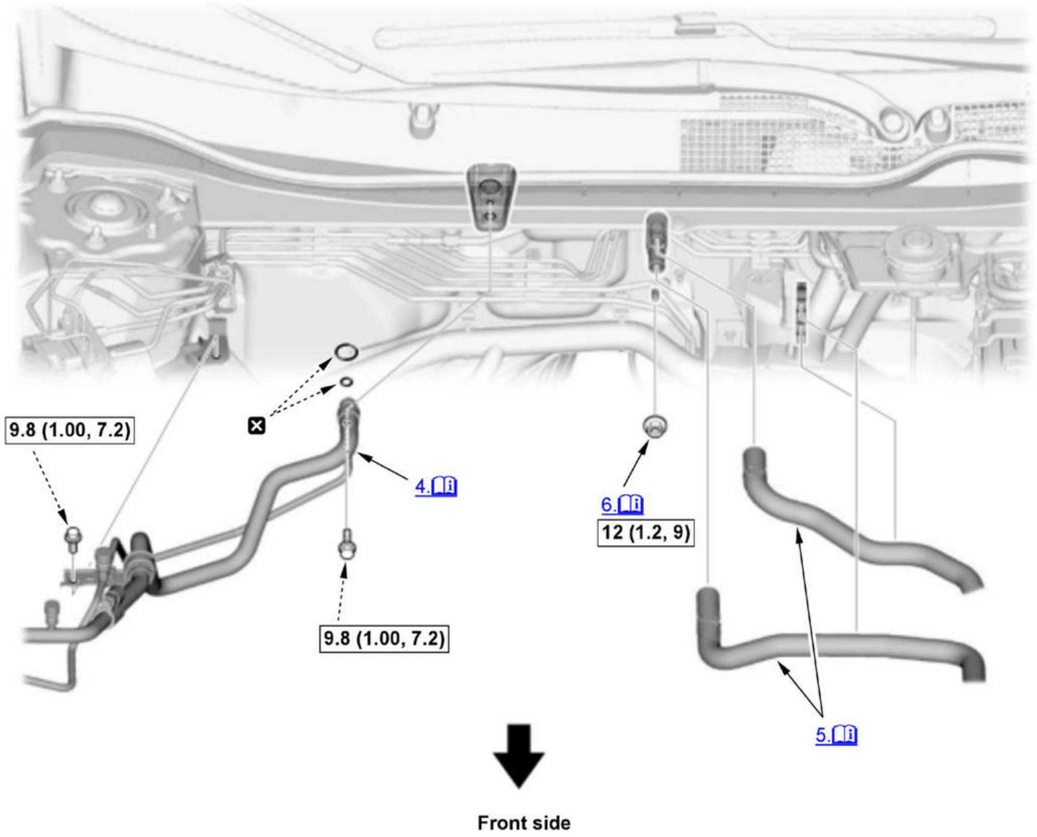
9.8 (1.00, 7.2)
☒
4.
6.
12 (1.2, 9)
9.8 (1.00, 7.2)
5.
Front side

📖	Detailed information, notes, and precautions
☐	Torque: N.m (kgf.m, lbf.ft)
☒	Replace

2

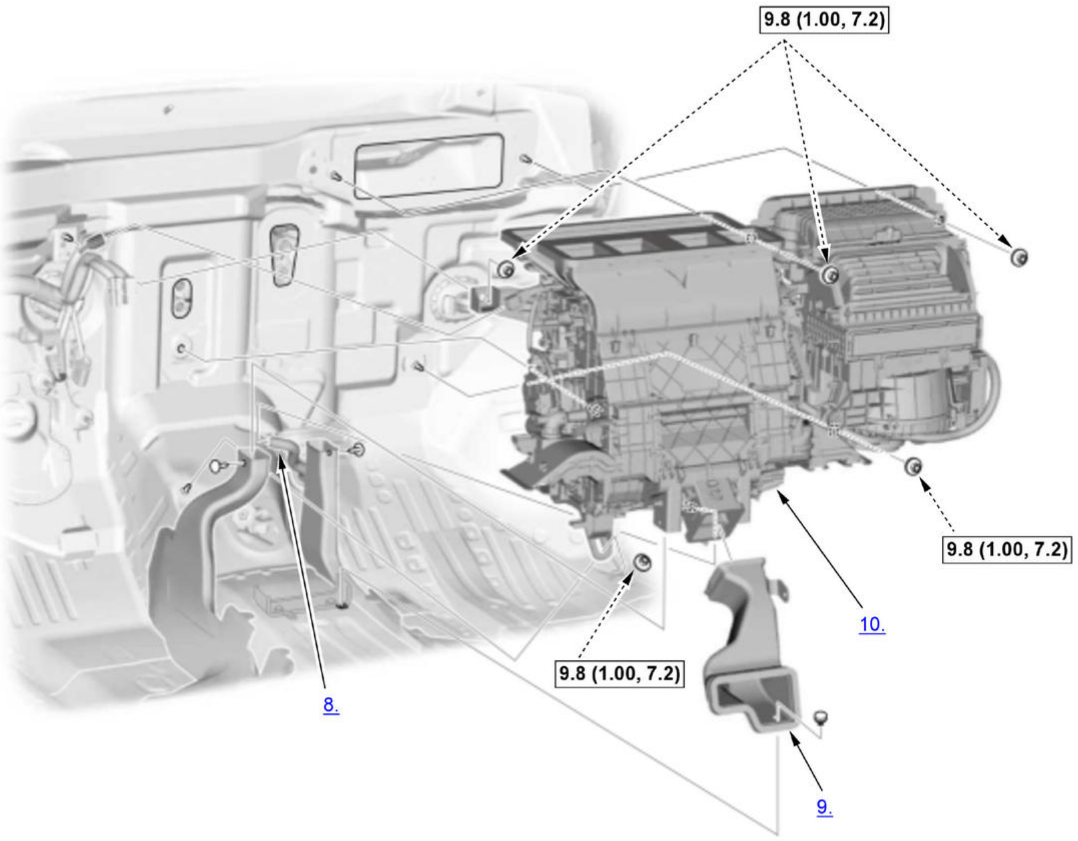

☐	Torque: N.m (kgf.m, lbf.ft)

1. 12 Volt Battery Terminal - Disconnect
2. A/C Refrigerant - Recover
3. Engine Coolant - Drain
4. A/C Lines - Remove

   NOTE: Take care not to damage or bend the fuel lines or the brake lines.

   B

5. Heater Hoses - Remove

   NOTE:

   - Engine coolant will run out when the hoses are disconnected; drain it into a clean drip pan. Be sure not to let coolant spill on the electrical parts or the painted surfaces. If any coolant spills, rinse it off immediately.
   - Note the layout of the hoses.

   B

6. Heater Unit Mounting Nut - Remove

   NOTE: Take care not to damage or bend the fuel lines or the brake lines.

   B

7. Dashboard/Steering Hanger Beam - Remove

8. Drain Hose - Disconnect
9. Rear Vent Duct - Remove
10. HVAC Unit - Remove
11. All Removed Parts - Install

    1. Install the parts in the reverse order of removal, and note these items:

        - Do not interchange the inlet and outlet heater hoses, and install the hose clamps securely.
        - Make sure that there is no coolant leakage.
        - Make sure that there is no air leakage.
        - Make sure that there is no refrigerant leakage.
        - **Do the 12 volt battery terminal reconnection procedure** .
        - **Refill the radiator with engine coolant, and bleed the air from the cooling system** .
        - A new O-ring should be used at each fitting. Prior to installation, apply a thin coat of the same **refrigerant oil** used in the A/C compressor. Be sure to use the correct O-ring for refrigerant types to avoid leakage.
        - **Charge the system with the specified amount of refrigerant** .

B

HEATER UNIT/CORE REMOVAL AND INSTALLATION

Removal and Installation

NOTE: Be careful not to damage the heater core.

1

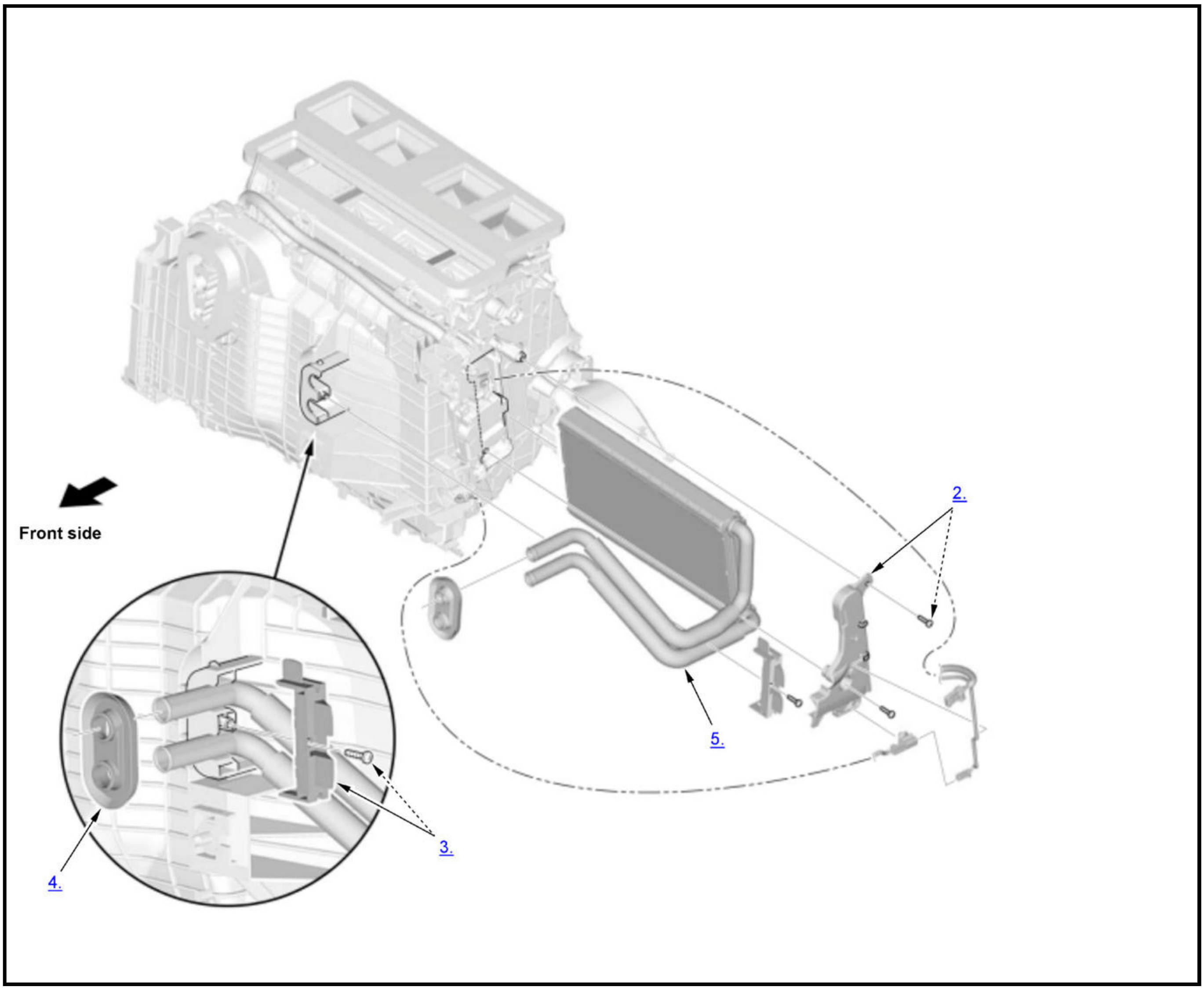

1. HVAC Unit - Remove
2. Heater Core Cover - Remove
3. Heater Pipe Bracket - Remove
4. Grommet - Remove
5. Heater Core - Remove
6. All Removed Parts - Install
    1. Install the parts in the reverse order of removal.

NOTE: **Make sure that there is no air leakage.**

B

RECEIVER/DRYER DESICCANT REMOVAL AND INSTALLATION

Removal and Installation

1

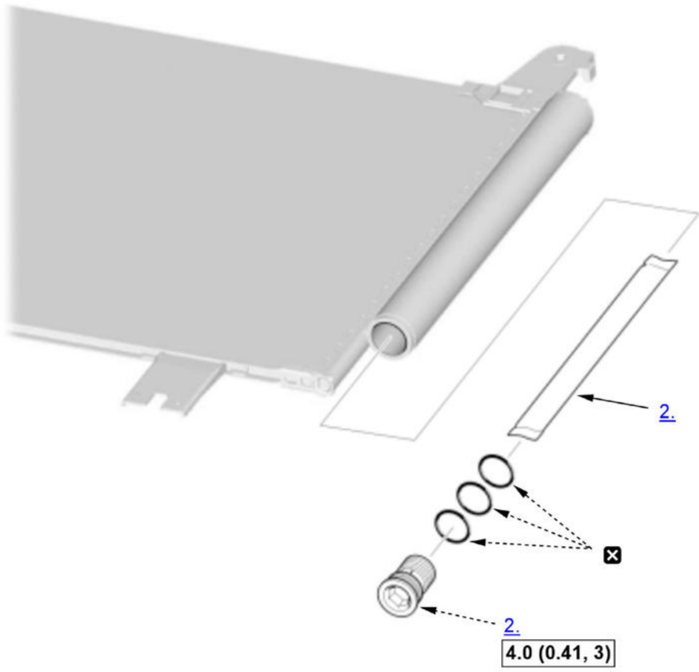

☐	Torque: N.m (kgf.m, lbf.ft)
☒	Replace

1. **A/C Condenser - Remove**
2. Desiccant - Remove
3. All Removed Parts - Install

   1. Install the parts in the reverse order of removal, and note these items:

      - Install the desiccant as quickly as possible to prevent the system from absorbing moisture from the air.
      - If you are installing a new desiccant, add **refrigerant oil** .
      - Replace the O-rings with new ones, and apply a thin coat of **refrigerant oil** before installing them.
      - Install the cap to the specified torque. It is made of resin and can be easily stripped.

B

OVERHAUL

A/C COMPRESSOR CLUTCH OVERHAUL

*These tools are available through the Honda Tool and Equipment Program; call 888-424-6857.

Special Tools Required

Image	Description/Tool Number
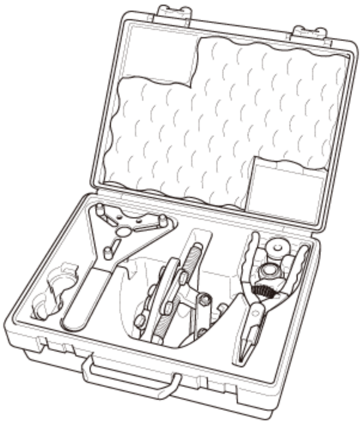	A/C Compressor Kit 07AAF-000A150*
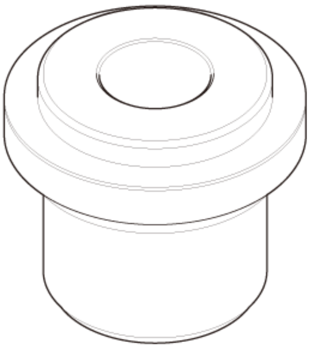	Delphi A/C Clutch Adapter 07AAC-TBAA100*

*These tools are available through the Honda Tool and Equipment Program; call 888-424-6857.

Disassembly and Reassembly

NOTE: ⓘ Where icon is shown, further information shown below.

1

1.5 L engine

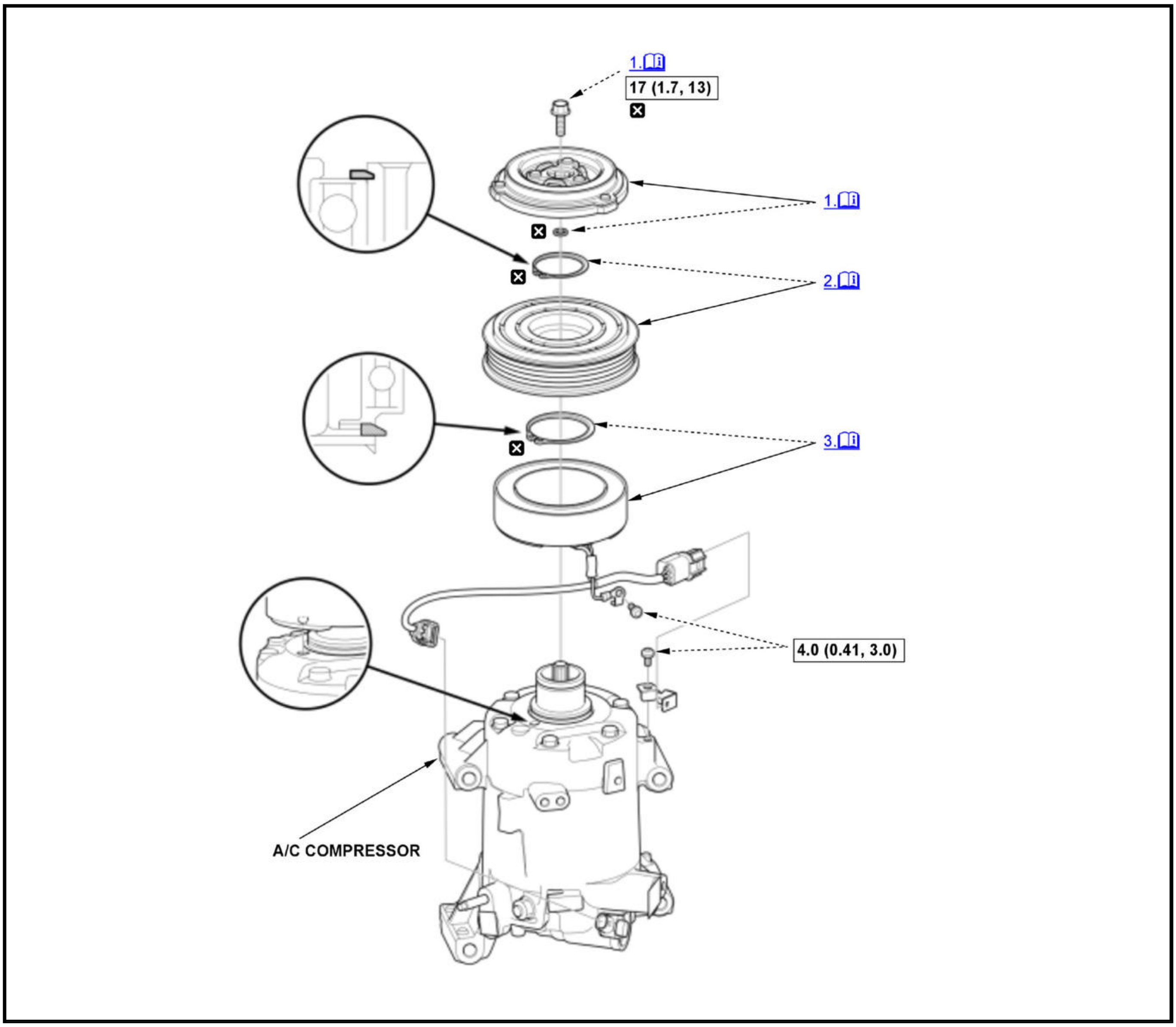
1.
17 (1.7, 13)
1.
2.
3.
4.0 (0.41, 3.0)
A/C COMPRESSOR

ℹ	Detailed information, notes, and precautions
▭	Torque: N.m (kgf.m, lbf.ft)
☒	Replace

2

2.4 L engine

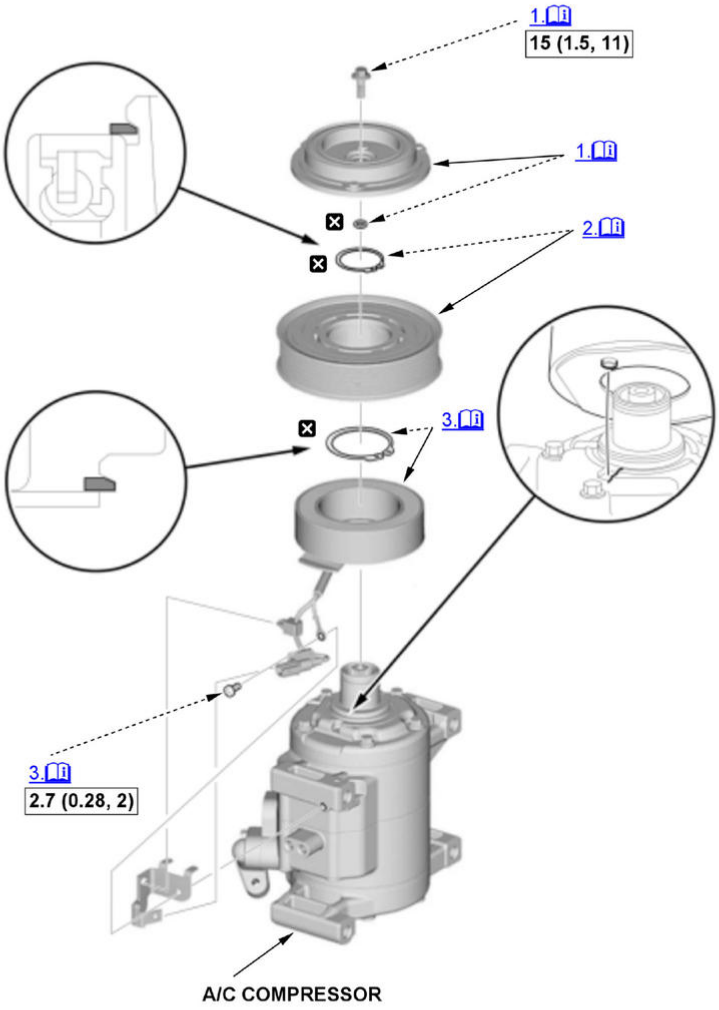
1.
15 (1.5, 11)
1.
2.
3.
3.
2.7 (0.28, 2)
A/C COMPRESSOR

ⓘ	Detailed information, notes, and precautions
☐	Torque: N.m (kgf.m, lbf.ft)
☒	Replace

1. A/C Compressor Armature Plate - Remove
    1. Remove the center bolt (A) while holding the armature plate (B) with the A/C clutch holder (C).

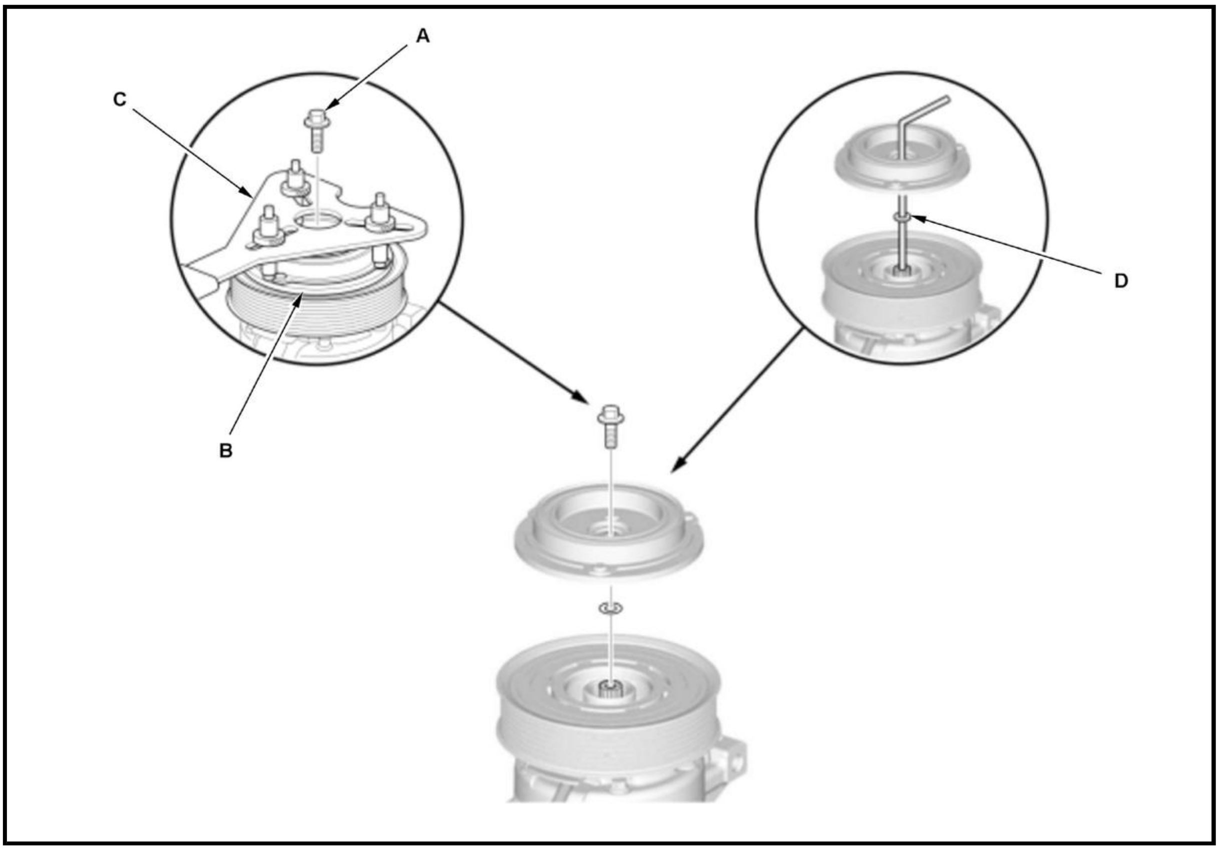

2. Remove the armature plate and the shim(s) (D).

NOTE:

- **1.5 L engine: The shims are available in three thicknesses: 0.3 mm, 0.4 mm, and 0.5 mm.**
- **2.4 L engine: The shims are available in seven thicknesses: 0.7 mm, 0.8 mm, 0.9 mm, 1.0 mm, 1.1 mm, 1.2 mm, and 1.3 mm.**
- **Do not pry on the armature plate with screwdrivers or similar tools. Prying damages the armature plate and the pulley.**
- **Inspect the armature plate and pulley friction surfaces for wear. If there is excessive wear, roughness, or scoring, replace the clutch set.**
- **If traces of refrigerant oil is found around the compressor, replace the A/C compressor.**

2. A/C Compressor Pulley - Remove

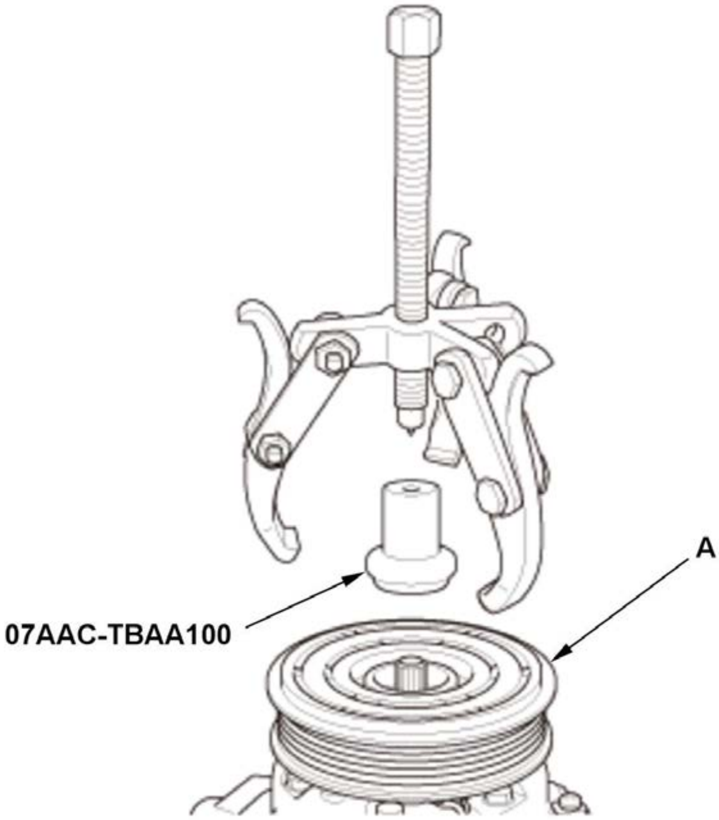 **1.5 L engine** **2.4 L engine** 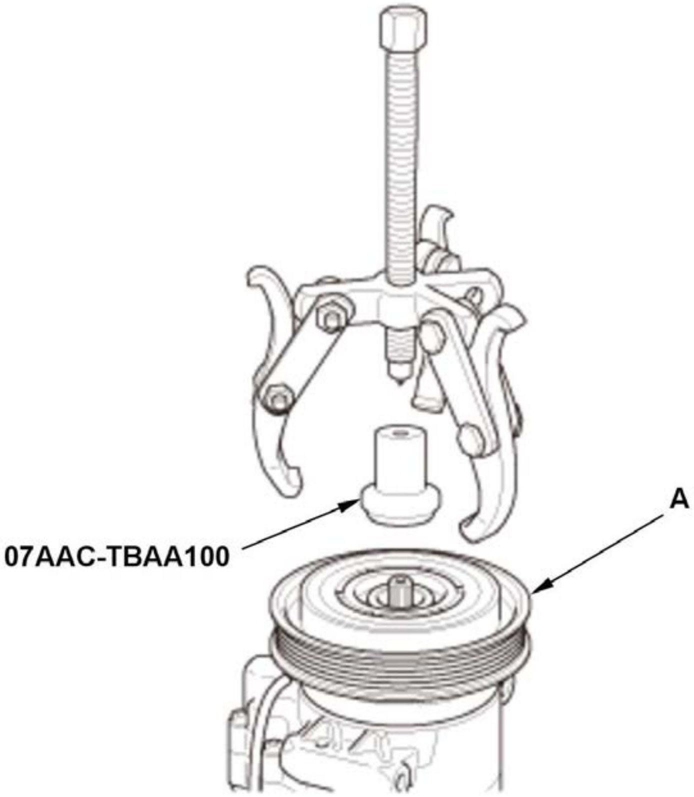	1. Remove the pulley (A). **NOTE:** - **Do not hammer or pry on the pulley to remove it. Using a hammer damages the A/C compressor. If the pulley is difficult to remove, use a commercially available pulley removing tool. Make sure the jaws of the pulling tool engage the back face of the pulley, not the pulley grooves.** - **Be careful not to damage the pulley or the A/C compressor.**

3. A/C Compressor Field Coil - Remove

NOTE: Inspect the friction surfaces and the compressor shaft hub for excess oil. If excess oil is present, and it is not from the engine, then the compressor shaft seal is leaking. Replace the A/C compressor.

B

4. All Removed Parts - Install

1. Install the parts in the reverse order of removal, and note these items:

- When replacing the field coil, **check that the new coil has the correct resistance** .
- Measure the clearance between the pulley and the armature plate all the way around. If the clearance is not within specified limits, remove the armature plate and add or remove shims as needed to increase or decrease clearance.
- Install the field coil with the wire side facing down, and align the boss on the field coil with the hole in the A/C compressor.
- If the clutch surface is oil soaked, check the compressor front seal for leakage. Installing a new clutch assembly on a leaking compressor will damage the new clutch assembly friction surfaces.
- Clean the pulley and the A/C compressor friction surfaces with contact cleaner or other non-petroleum solvent.
- Install new snap rings, note the installation direction, and make sure they are fully seated in the grooves.
- Make sure that the pulley turns smoothly after it's reassembled.
- Route and clamp the wires properly to prevent damage by the pulley.
- After reinstallation, cycle the A/C compressor clutch approximately 20 times by running the engine at 1, 500-2, 000 rpm and setting the A/C system to MAX COOL. This procedure seats the clutch sliding surfaces, and increases clutch torque capacity.

B

REMOVAL AND INSTALLATION

HEATED STEERING WHEEL CONTROL UNIT REMOVAL AND INSTALLATION

Removal And Installation

SRS Components Are Located In This Area. Review The SRS Component Locations And The Precautions And Procedures Before Doing Repairs Or Service.

1. Driver's Airbag - Remove
2. Heated Steering Wheel Control Unit - Remove
3. All Remove Parts - Install

1. Install The Parts In The Reverse Order Of Removal.

REMOVAL, INSTALLATION & TEST

CLIMATE CONTROL SYSTEM (INTERIOR) REMOVAL, INSTALLATION, AND TEST

Removal and Installation

WARNING: **Do not apply current when core is removed.**

- **To prevent electrocution because current will flow through the whole PTC heater core.**
- **If any foreign material is stuck, an odor/smell, smoke or fire could occur.**

SRS components are located near the mode control motor and the recirculation control motor. Review the SRS component locations and the precautions and procedures before doing repairs or service.

NOTE:

- Make sure you review the A/C service tips and precautions before doing repairs or servicing.
- Although a numbered sequence is shown, the parts can be removed independently of each other.
- Review the A/C refrigerant oil replacement before doing repairs or service.
- Plug or cap the lines immediately after disconnecting them to avoid moisture and dust contamination.
- Apply compressor oil when installing O-rings.
- If the packings and seals are damaged or torn, replace it with a new one.
- Install the parts in the reverse order of removal method if there is no special instruction.

Note for Sunlight Sensor (Automatic Lighting Control Unit-Sensor)

- Be careful not to damage the sunlight sensor (automatic lighting control unit-sensor) and the dashboard.

Note for Air Mix Control Motor

- Set the MAX COOL (Lo) position before removing the air mix control motor.

Note for Driver's Air Mix Control Motor

- Set to the MAX COOL (Lo) position before removing the driver's air mix control motor.

Note for Passenger's Air Mix Control Motor

- Set to the MAX COOL (Lo) position before removing the passenger's air mix control motor.

Note for Mode Control Motor

- Set the VENT ( ) position before removing the mode control motor.

Note for Recirculation Control Motor

- Set the FRESH position before removing the recirculation control motor.

Note for HVAC Unit

- Engine coolant will run out when the hoses are disconnected; drain it into a clean drip pan. Be sure not to let coolant spill on the auxiliary electrical parts or the painted surfaces. If any coolant spills, rinse it off immediately.
- Note the layout of the hoses.

Note for Heater Core

- The pipe portion of the heater core can be easily bend. When removing the heater core, grab the core side of the pipe.
- Make sure the heater core fins do not have any deformation, damage, or rust.

Note for Evaporator Core

- Be careful not to damage the evaporator core.

Procedure

NOTE: **Numbered call-outs in figure pertain to list numbers in following procedure.**

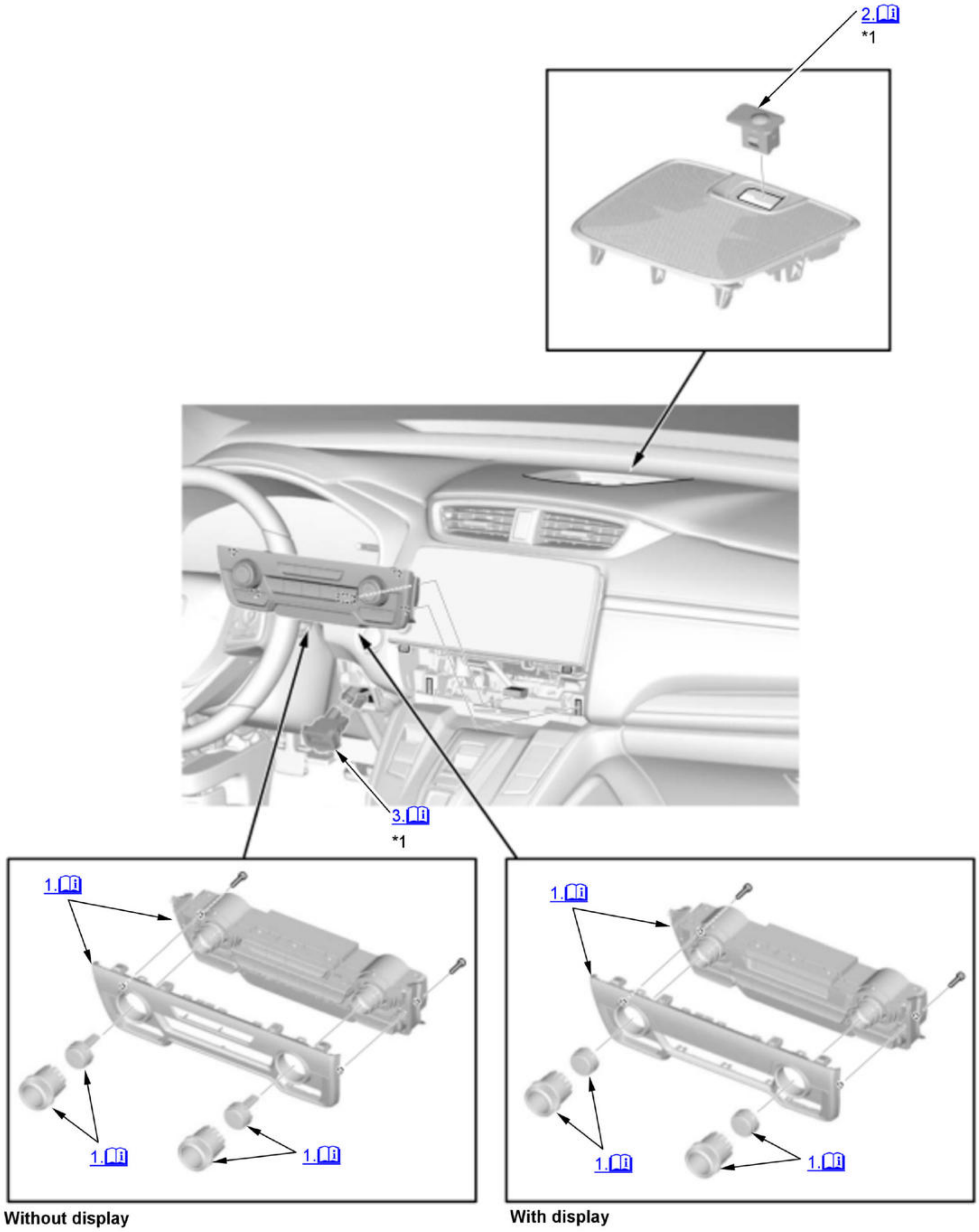
2.
*1
3.
*1
1.
1.
1.
1.
1.
1.
Without display
With display

Fig. 1: Exploded View Of Climate Control System (Interior) Components (1 Of 7)
Courtesy of HONDA, U.S.A., INC.

*1	Test item

Parts that can be removed without removing the HVAC unit and the blower unit.

NOTE: **Numbered call-outs in figure pertain to list numbers in following procedure.**

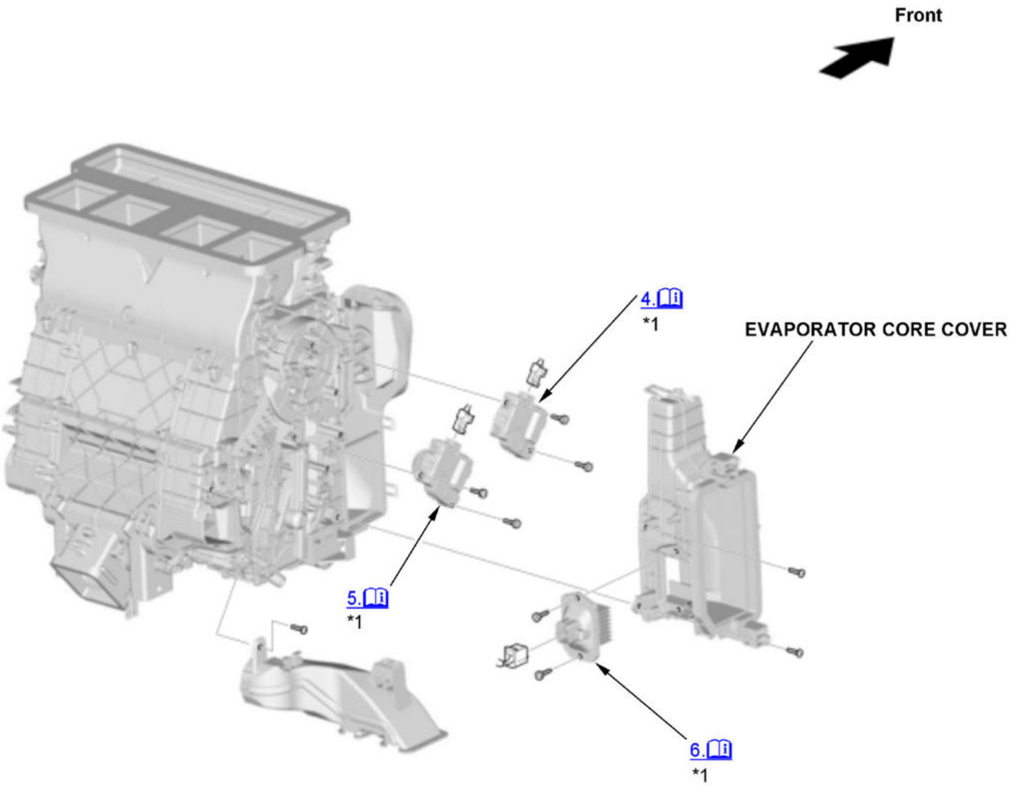
Front
4.
*1
EVAPORATOR CORE COVER
5.
*1
6.
*1

Fig. 2: Exploded View Of Climate Control System (Interior) Components (2 Of 7)
Courtesy of HONDA, U.S.A., INC.

*1	Test item

Parts that can be removed without removing the HVAC unit and the blower unit.

NOTE: **Numbered call-outs in figure pertain to list numbers in following procedure.**

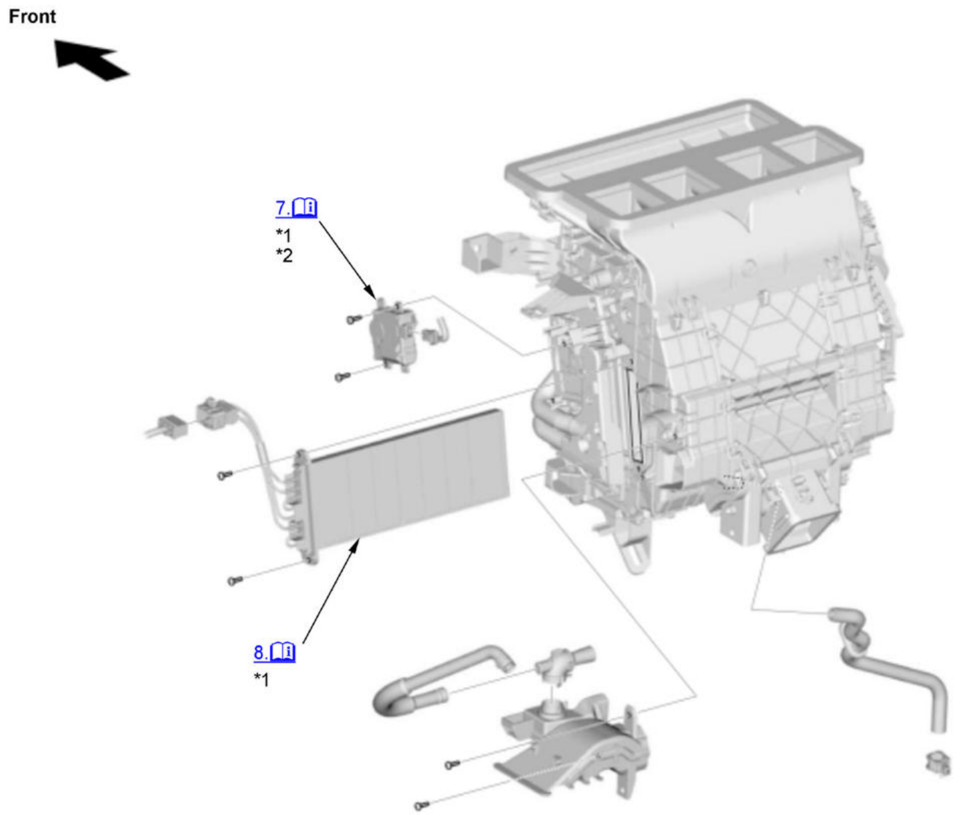

[Fig. 3: Exploded View Of Climate Control System (Interior) Components (3 Of 7)]

Courtesy of HONDA, U.S.A., INC.

*1	Test item
*2	With dual zone climate control

Parts that can be removed without removing the HVAC unit and the blower unit.

NOTE: **Numbered call-outs in figure pertain to list numbers in following procedure.**

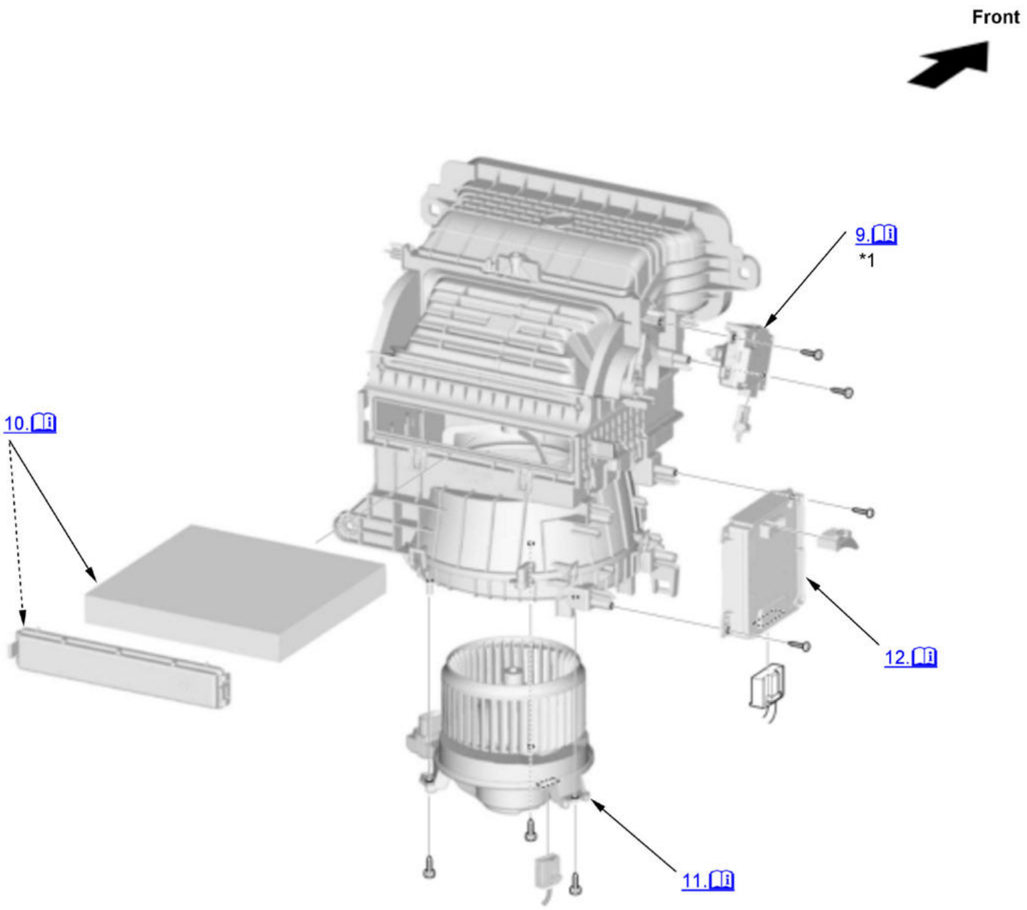

[Fig. 4: Exploded View Of Climate Control System (Interior) Components (4 Of 7)]
Courtesy of HONDA, U.S.A., INC.

*1	Test item

This illustration shows how to remove the blower unit.

NOTE: **Numbered call-outs in figure pertain to list numbers in following procedure.**

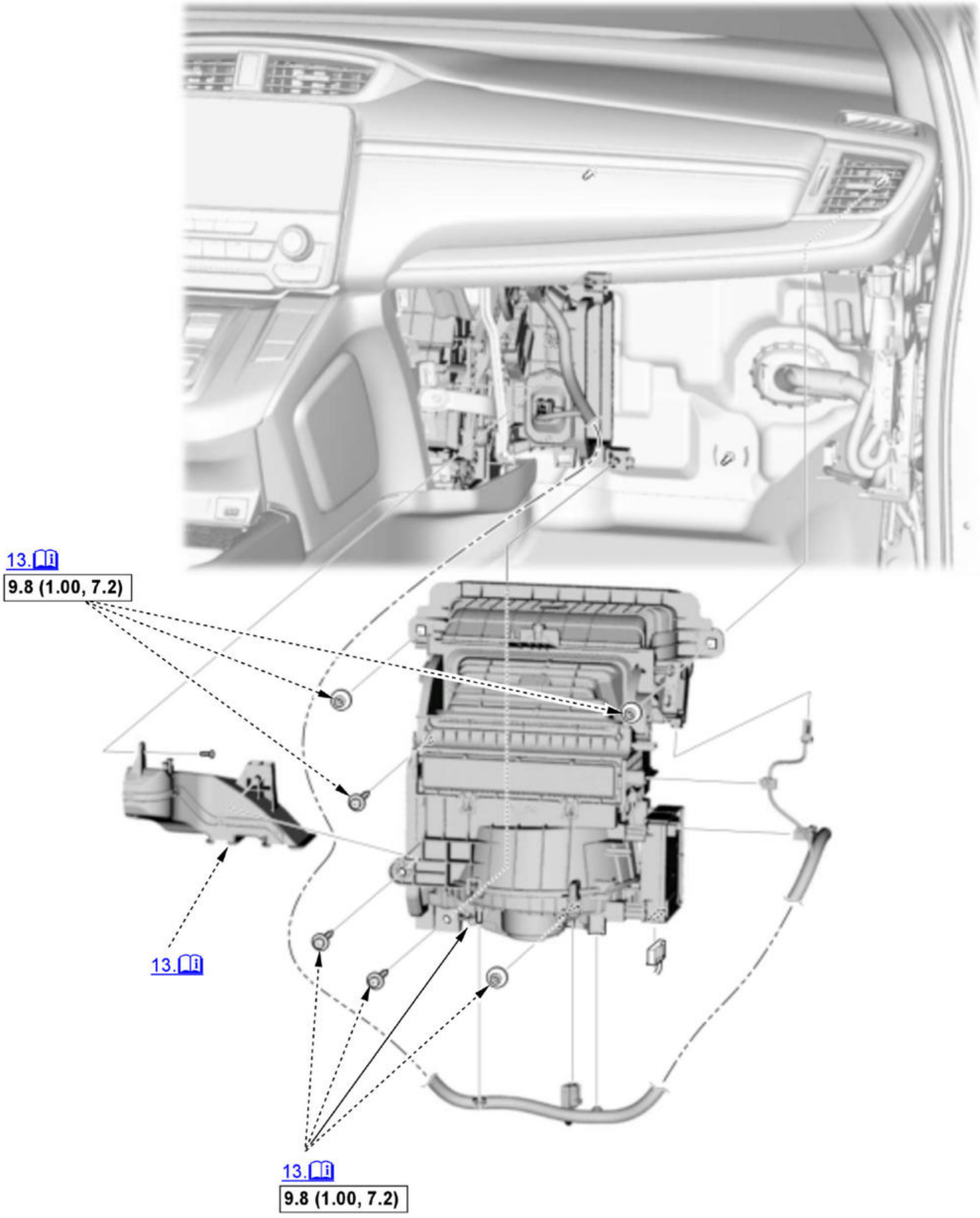

Fig. 5: Exploded View Of Climate Control System (Interior) Components With Torque Specifications (5 Of 7)

Courtesy of HONDA, U.S.A., INC.

▭	Torque: N.m (kgf.m, lbf.ft)

This illustration shows how to remove the HVAC unit

NOTE: **Numbered call-outs in figure pertain to list numbers in following procedure.**

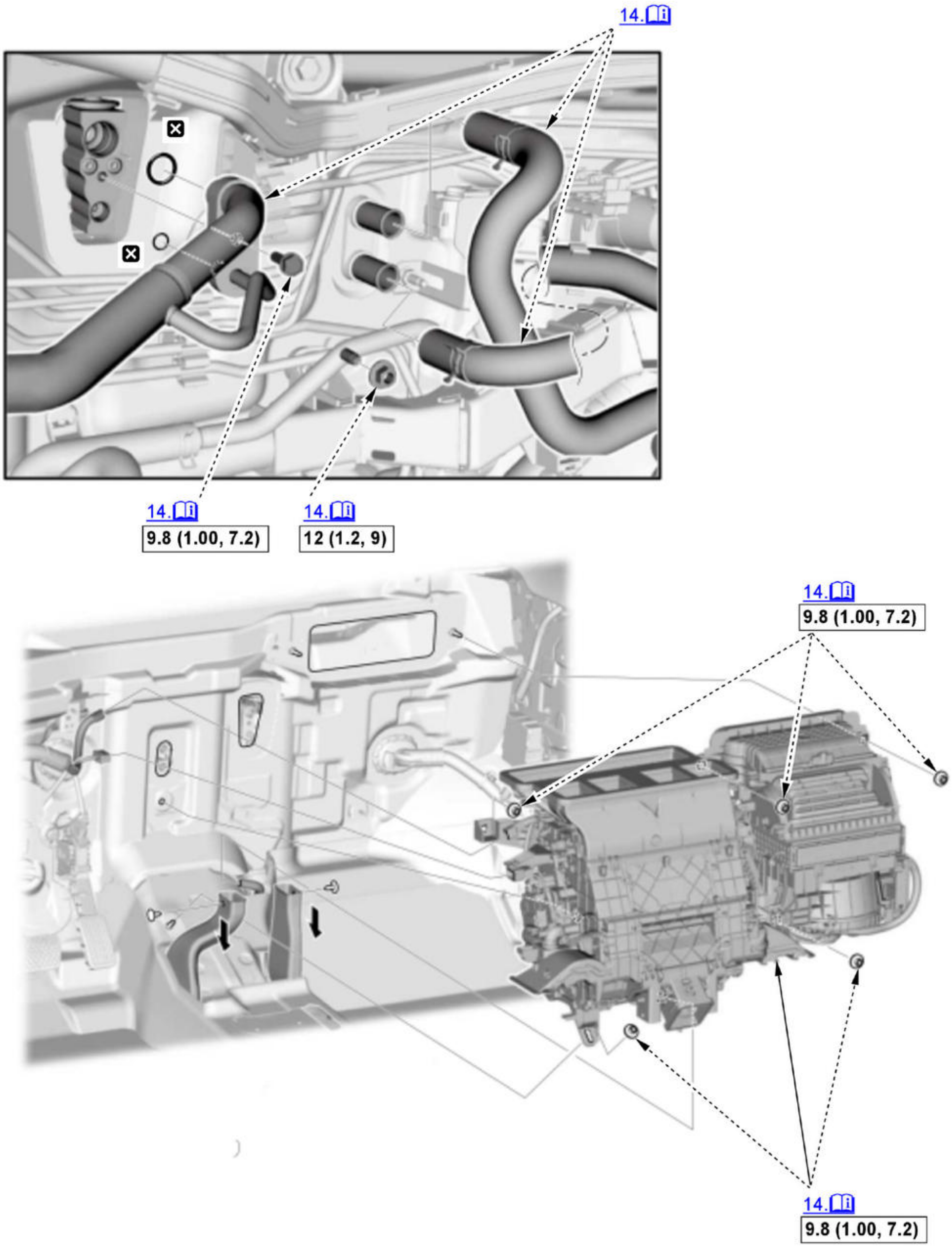
14.
14.
9.8 (1.00, 7.2)
14.
12 (1.2, 9)
14.
9.8 (1.00, 7.2)
14.
9.8 (1.00, 7.2)

Fig. 6: Exploded View Of Climate Control System (Interior) Components With Torque Specifications (6 Of 7)

Courtesy of HONDA, U.S.A., INC.

☐	Torque: N.m (kgf.m, lbf.ft)
☒	Replace

Parts that can only be removed after removing the HVAC unit.

NOTE: **Numbered call-outs in figure pertain to list numbers in following procedure.**

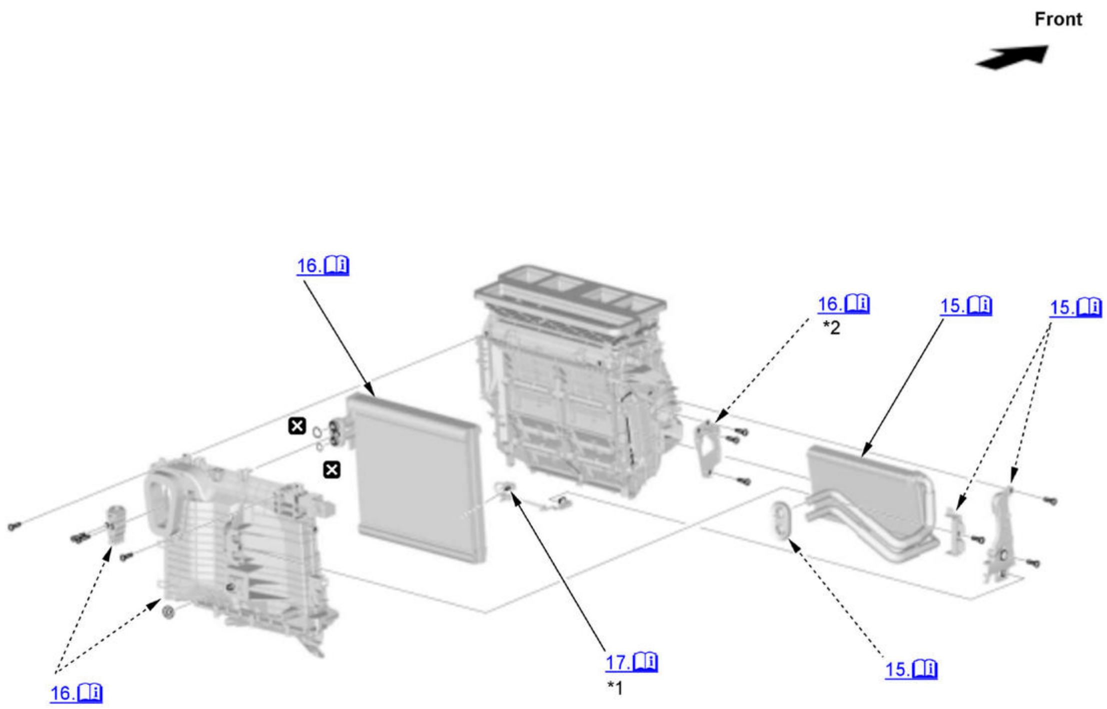

Fig. 7: Exploded View Of Climate Control System (Interior) Components (7 Of 7)
Courtesy of HONDA, U.S.A., INC.

☒	Replace
*1	Test item
*2	With dual zone climate control

1. Climate Control Panel - Remove

   Note for installation

   Run the self-diagnostic function to confirm that there are no problems in the system .

2. Sunlight Sensor - Remove
   1. Remove the dashboard center panel .
   2. Remove the sunlight sensor.
3. Humidity/In-Car Temperature Sensor (with climate control) - Remove
   1. Remove the driver's dashboard lower cover .
   2. Remove the humidity/in-car temperature sensor.
4. Mode Control Motor - Remove
   1. Remove the following items:
      - Passenger's dashboard undercover

- **Glove box**

2. Remove the mode control motor.

Note for installation

- Before installation, make sure the door and linkage move smoothly.
- After installation, **do the Self-Diagnostic Function with the HDS or the climate control unit** .

5. Air Mix Control Motor, Passenger's Air Mix Control Motor - Remove

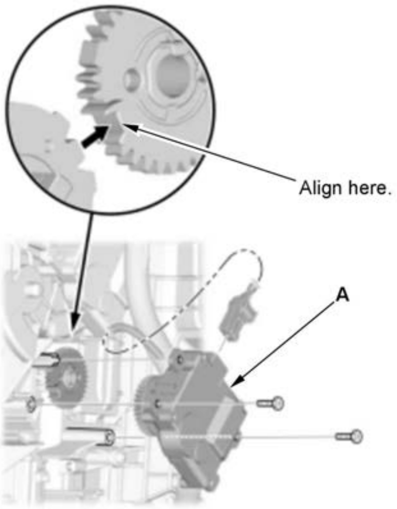

1. Remove the following items:
   - **Passenger's dashboard undercover**
   - **Glove box**

2. Without dual zone climate control: Remove the air mix control motor.

With dual zone climate control: Remove the passenger's air mix control motor.

Note for installation

- Make sure the door lever moves smoothly before installation.
- When you install the air mix control motor (A), align the air mix control motor with the gear, then install the motor.
- After installation, **do the Self-Diagnostic Function with the HDS or the climate control unit** .

6. Power Transistor - Remove

1. **Remove the passenger's dashboard undercover** .

2. Remove the power transistor.

7. Driver's Air Mix Control Motor - Remove

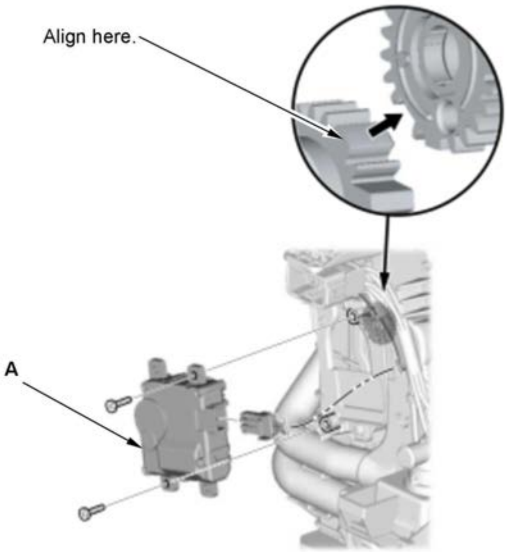

1. **Remove the driver's dashboard undercover** .
2. Remove the driver's air mix control motor.

Note for installation

- Make sure the door lever moves smoothly before installation.
- When you install the air mix control motor (A), align the air mix control motor with the gear, then install the motor.
- After installation, **do the Self-Diagnostic Function with the HDS or the climate control unit** .

8. PTC Heater Core - Remove

    1. Remove the following items:

        - **Driver's dashboard lower cover**
        - **Driver's front console cover**
        - Aspirator hose
        - Aspirator
        - Driver's heater duct
        - **CAN gateway**

    2. Remove the PTC heater core.

9. Recirculation Control Motor - Remove

    1. Remove the following items:

        - **Passenger's dashboard undercover**
        - **Glove box**

    2. Remove the recirculation control motor.

    Note for installation

    - Before installation, make sure the door and linkage move smoothly.
    - After installation, **do the Self-Diagnostic Function with the HDS or the climate control unit** .

10. Dust and Pollen Filter - Remove

    1. Open and hang the glove box down.

    2. Remove the lid.

    3. Remove the dust and pollen filter.

    NOTE: Do not clean the dust and pollen filter.

    Note for installation Install the dust and pollen filter with the AIR FLOW arrow mark pointed down.

11. Blower Motor - Remove

    1. **Remove the passenger's dashboard undercover** .

    2. Remove the blower motor.

12. Climate Control Unit - Remove

    1. **Remove the glove box** .

    2. Remove the climate control unit.

    Note for installation

    - Before installation, make sure the door and linkage move smoothly.
    - After installation, **run the self-diagnostic function to confirm that there are no problems in the system** .

13. Blower Unit - Remove

1. **Remove the glove box** .

2. Remove the blower unit.

14. HVAC Unit - Remove

1. Before removing the HVAC unit, do the following procedures:

- **Recover the refrigerant** .
- **Disconnect the 12 volt battery negative terminal** .
- **Drain the engine coolant** .

2. **Remove the dashboard/steering hanger beam** .

3. Remove the HVAC unit.

Note for installation

- **Refer to Under-Hood side for A/C lines installation torque**.
- Make sure the hose clamps are positioned as shown.
- Make sure the hose clamps is in the position of its range shown.

Heater hose

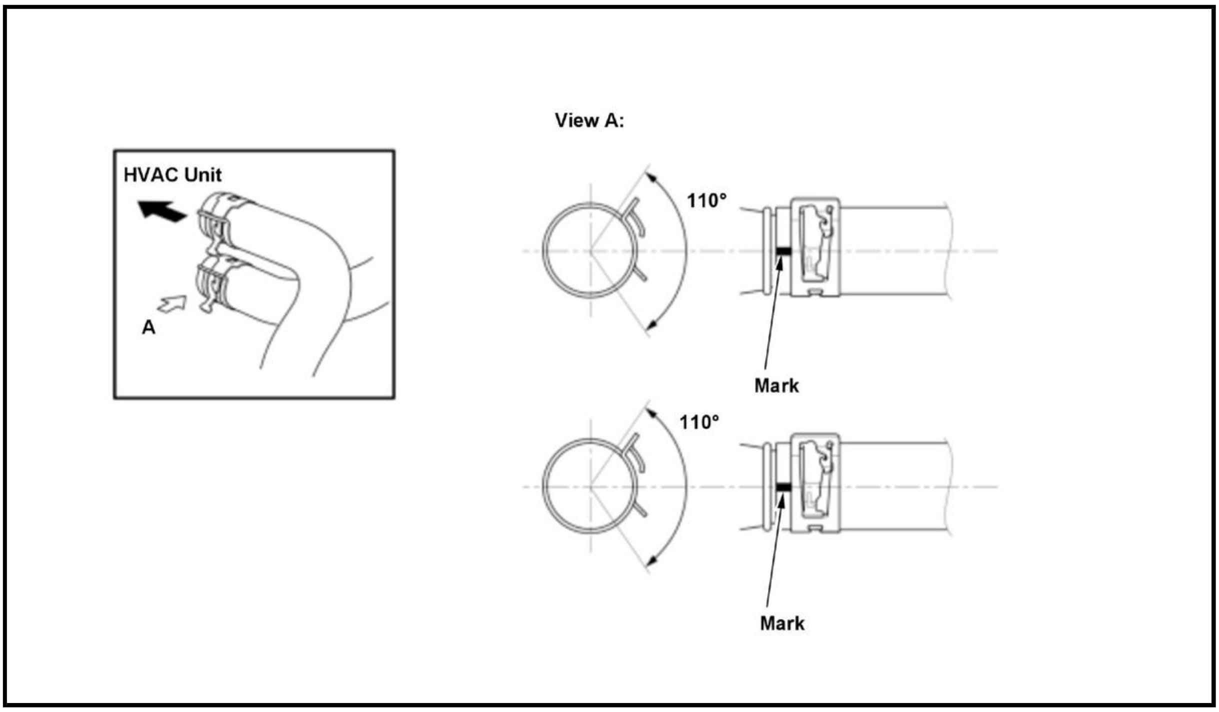

15. Heater Core - Remove

1. Remove the following items:

-1. HVAC unit

-2. Grommet

-3. Heater core cover

-4. Heater pipe bracket

2. Remove the heater core.

16. Evaporator Core - Remove

1. Remove the following items:

-1. HVAC unit

-2. Blower unit

-3. Heater core

-4. Driver's air mix control motor and bracket (with dual zone climate control)

-5. Expansion valve

-6. Evaporator case

2. Remove the evaporator core.

Note for installation

- If you are installing a new evaporator core, add the **appropriate refrigerant oil for the A/C compressor which installed to the vehicle** .
- **Refer to Under-Hood side for expansion valve installation torque**.

17. Evaporator Temperature Sensor - Remove

1. Remove the evaporator core.

2. Remove the evaporator temperature sensor.

Note for installation

Install the evaporator temperature sensor (A) in the evaporator core (B). Refer to the following position list.

B	C	D *
	Row	mm (in)
Factory-Preset Position	9th	50 (1.97)
New Position	10th	50 (1.97)

*: Measure from end of aluminum evaporator tank.

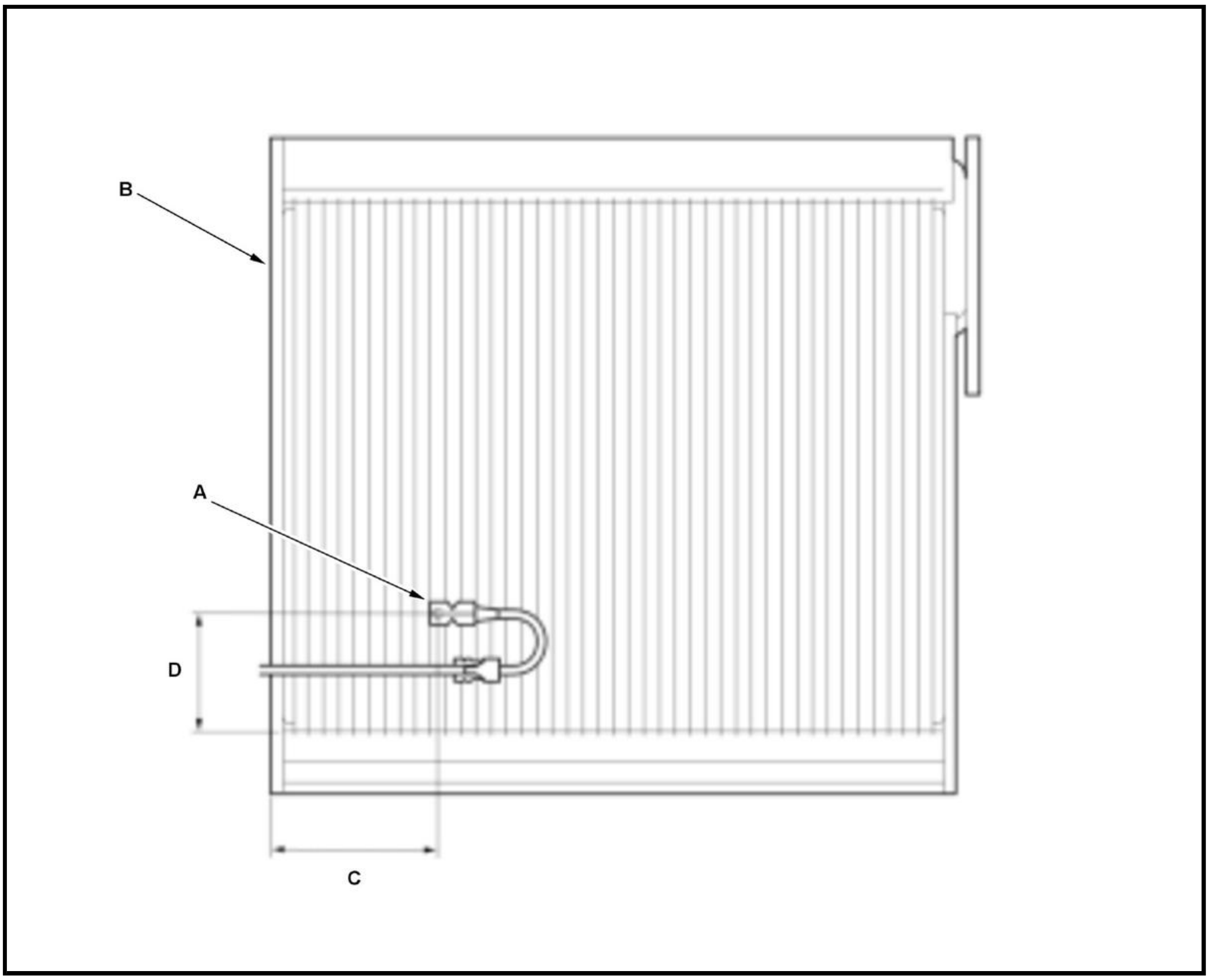

Test

SRS components are located near the mode control motor and the recirculation control motor. Review the **SRS component locations** and the **precautions and procedures** before doing repairs or service.

NOTE: Before testing the each item, check for **climate control DTCs** .

Note for Sunlight Sensor

- The sunlight sensor (automatic lighting control unit-sensor) 5P connector type cannot be tested. Therefore, if no DTC is indicated, the sensor is normal.

Note for Humidity/In-Car Temperature Sensor

- The climate control unit receives humidity (%) data via digital signal.
- The climate control unit receives in-car temperature (B°C) data via digital signal.

1. Sunlight Sensor - Test

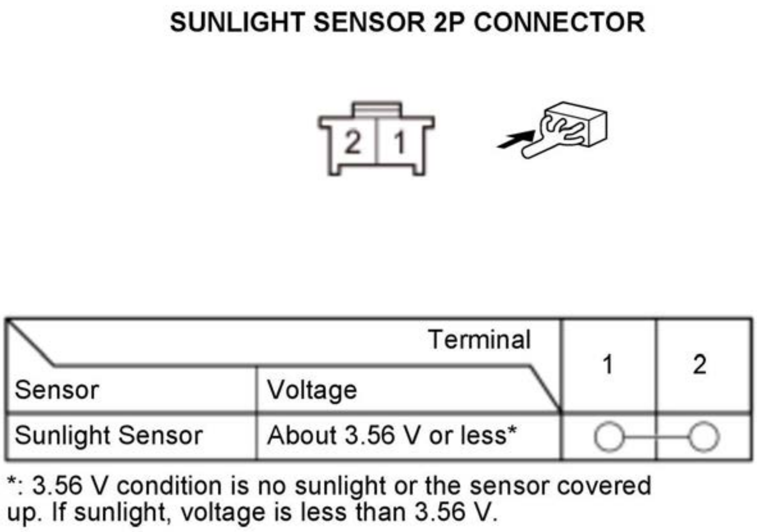

Sensor	Voltage	Terminal 1	2
Sunlight Sensor	About 3.56 V or less*	○	○

*: 3.56 V condition is no sunlight or the sensor covered up. If sunlight, voltage is less than 3.56 V.

1. Remove the sunlight sensor.

NOTE: Do not disconnect the connector.

2. Turn the vehicle to the ON mode.

3. Measure the voltage between terminals according to the table.

NOTE: The voltage readings will not change under the light of a flashlight or a fluorescent lamp.

4. If the voltage is not as specified, replace the sunlight sensor.

2. Humidity/In-Car Temperature Sensor - Test

1. Refer to "Run the Sensor Input Display Mode" in General Troubleshooting Information under How to Troubleshoot the Climate Control System .

3. Air Mix Control Motor, Driver's Air Mix Control Motor, Passenger's Air Mix Control Motor, Mode Control Motor, Recirculation Control Motor and Water Valve Control Motor - Test

NOTE: For locations or names of each motor, refer to Component Location Index .

1. Remove the following items:

Motor	Glove Box Removal	Driver's Dashboard Undercover Removal	Passenger's Dashboard Undercover Removal
Air Mix Control Motor (Without dual zone climate control)	○	---	○
Driver's Air Mix Control Motor (With dual zone climate control)	---	○	---
Passenger's Air Mix Control Motor (With dual zone climate control)	○	---	○
Mode Control Motor	○	---	○
Recirculation Control Motor	○	---	○

2. Disconnect the connector for necessary inspections.

The diagram below details the motor connector design used on this vehicle.

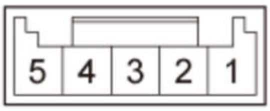

CAUTION: **Incorrectly applying power and ground to the HVAC control motors will damage it. Follow the instructions carefully.**

3. Test the motor in each direction by connecting a 12 volt battery power and ground at the connector according to the table. The motor should run smoothly, then stop. As soon as the motor stops, disconnect the 12 volt battery power immediately.

Motor	Position \ Terminal	1	2	3	4	5
Air Mix Control Motor	MAX COOL (Lo)				⊕	⊖
	MAX HOT (Hi)				⊖	⊕
Driver's Air Mix Control Motor	MAX COOL (Lo)				⊖	⊕
	MAX HOT (Hi)				⊕	⊖
Passenger's Air Mix Control Motor	MAX COOL (Lo)				⊕	⊖
	MAX HOT (Hi)				⊖	⊕
Mode Control Motor	VENT ( )				⊕	⊖
	DEFROST ( )				⊖	⊕
Recirculation Control Motor	FRESH ( )				⊕	⊖
	RECIRCULATE ( )				⊖	⊕

4. If any of the HVAC control motors did not run in step 2, remove it, then check the control linkage and door for smooth movement.

- If the linkage and doors move smoothly, go to step 4.
- If the linkage or door sticks or binds, repair them as needed.

5. Measure the resistance between terminals according to the table.

Motor	Resistance \ Terminal	1	2	3	4	5
Air Mix Control Motor	4.2 to 7.8 kΩ	○	—	○		
Driver's Air Mix Control Motor						
Passenger's Air Mix Control Motor						
Mode Control Motor						
Recirculation Control Motor	3.5 to 6.5 kΩ	○	—	○		

6. Reconnect the connector which was removed in the step 1.

7. Turn the vehicle to the ON mode.

8. Measure the voltage between terminals according to the table.

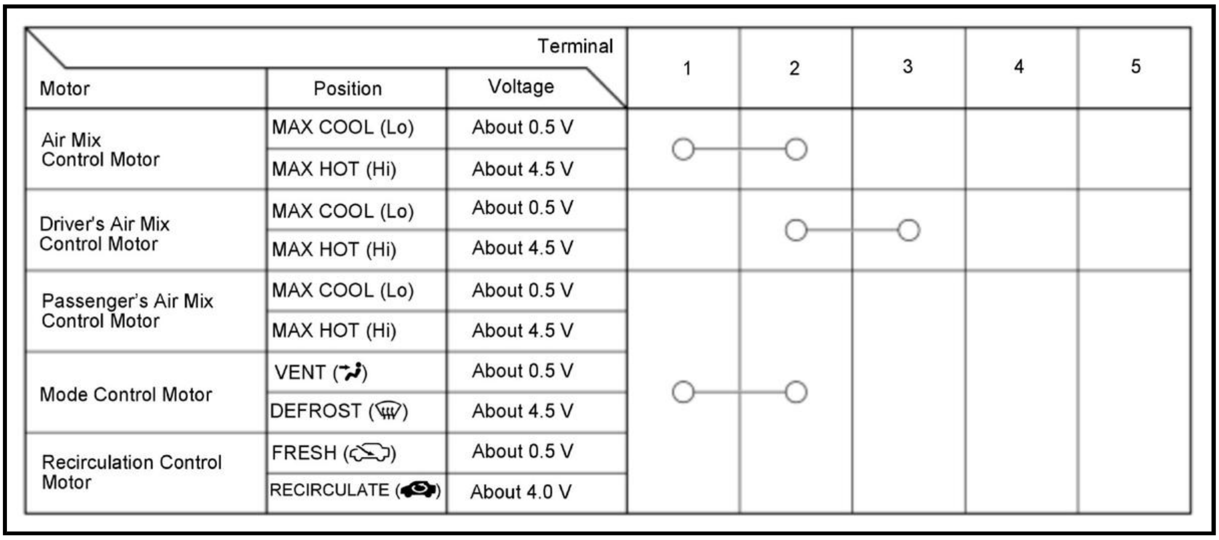

Motor	Position	Terminal / Voltage	1	2	3	4	5
Air Mix Control Motor	MAX COOL (Lo)	About 0.5 V	○	○			
	MAX HOT (Hi)	About 4.5 V					
Driver's Air Mix Control Motor	MAX COOL (Lo)	About 0.5 V		○	○		
	MAX HOT (Hi)	About 4.5 V					
Passenger's Air Mix Control Motor	MAX COOL (Lo)	About 0.5 V	○	○			
	MAX HOT (Hi)	About 4.5 V					
Mode Control Motor	VENT	About 0.5 V					
	DEFROST	About 4.5 V					
Recirculation Control Motor	FRESH	About 0.5 V					
	RECIRCULATE	About 4.0 V					

9. If either the resistance or the voltage readings are not as specified, replace the faulty motor.

4. Power Transistor - Test

POWER TRANSISTOR 4P CONNECTOR

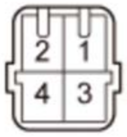

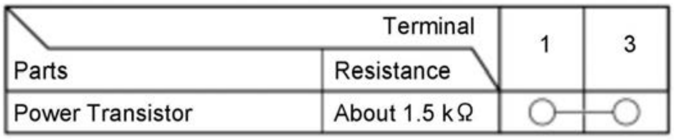

Parts	Terminal / Resistance	1	3
Power Transistor	About 1.5 kΩ	○	○

1. **Remove the passenger's dashboard undercover**

2. Disconnect the power transistor connector.

3. Measure the resistance between terminals according to the table.

- If the resistance is within the specifications, go to step 4.
- If the resistance is not within the specifications, replace the power transistor.

  NOTE: Also check the blower motor. Power transistor failure can be caused by a defective blower motor.

4. Reconnect the power transistor connector.

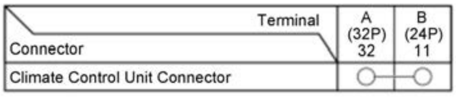

Connector	Terminal	A (32P) 32	B (24P) 11
Climate Control Unit Connector		○	○

5. Disconnect the following connectors:

- Climate control unit connector A (32P)
- Climate control unit connector B (24P)

6. Refer to **Climate Control Unit Connector for Inputs and Outputs** and connect terminals with a jumper wire according to the table.

7. Turn the vehicle to the ON mode.

8. Check that the blower motor runs.

- If the blower motor does not run, replace the power transistor.

  NOTE: A faulty blower motor can cause the power transistor to fail. Before replacing the power transistor, check the blower motor for binding, and replace the blower motor if necessary.

- If the blower motor runs, the power transistor is OK.

5. PTC Heater Core - Test

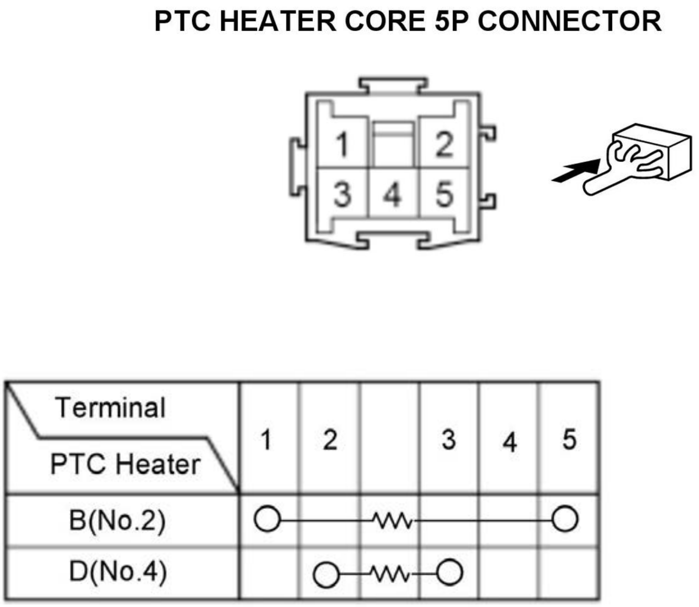

Terminal / PTC Heater	1	2		3	4	5
B(No.2)	○		∿			○
D(No.4)		○	∿	○		

1. **Remove the driver's dashboard lower cover**

2. Disconnect the PTC heater 5P connector.

3. Check for continuity between terminals according to the table.

4. If the continuity is not as specified, replace the PTC heater core.

6. Evaporator Temperature Sensor - Test

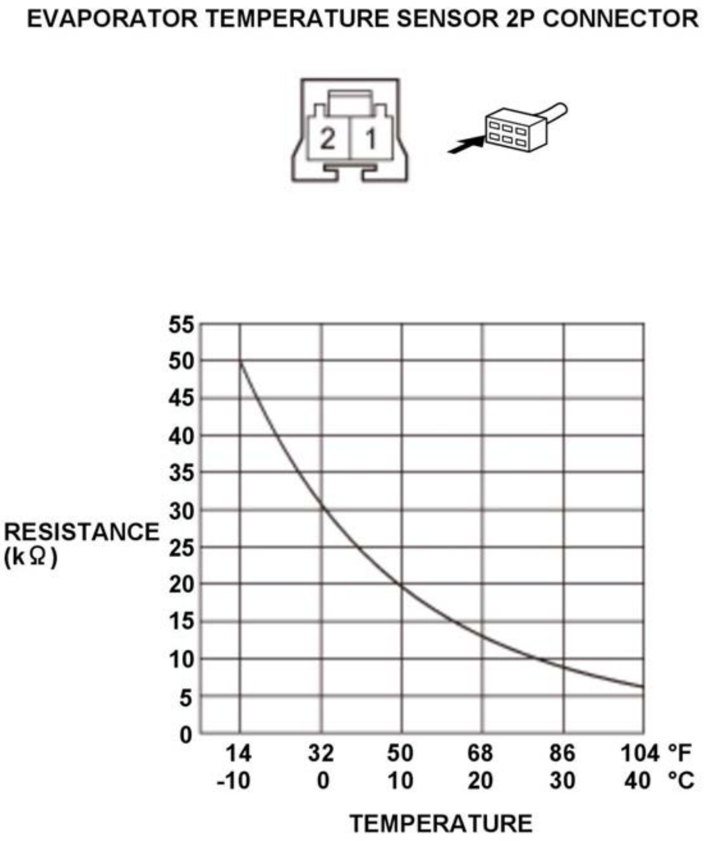	1. Remove the evaporator temperature sensor. 2. Dip the sensor in ice water, and measure the resistance between terminals No. 1 and No. 2. 3. Then pour warm water on the sensor, and check for a change in resistance. 4. Compare the resistance readings with the specifications shown in the graph; the resistance should be within the specifications. 5. If the resistance is not as specified, replace the evaporator temperature sensor.

CLIMATE CONTROL SYSTEM (UNDER-HOOD) REMOVAL, INSTALLATION, AND TEST

Removal and Installation

WARNING:

- **The power cables carry high voltage when the electric powertrain system is energized. To avoid serious injury from electrical shock, do not turn on the system with the power cables disconnected.**
- **Wear insulated gloves and use insulated tools to protect you from electrical shock. When removing or installing high voltage items, always use them. Wrap the high voltage items with insulating tape after removing.**

  Please be careful when you see ⚠ on the illustration.

The electric powertrain components are located in this area. The electric powertrain is a high-voltage system. You must be familiar with the electric powertrain system before working on or around it. Make sure you have read the electric powertrain service precautions before doing repairs or service.

NOTE:

- Make sure you review the A/C service tips and precautions before doing repairs or servicing.
- Although a numbered sequence is shown, the parts can be removed independently of each other.
- Review the A/C refrigerant oil replacement before doing repairs or service.
- Plug or cap the lines immediately after disconnecting them to avoid moisture and dust contamination.
- Apply compressor oil when installing O-rings.
- Install the parts in the reverse order of removal unless otherwise specified.

Note for Electric Heater Coolant Pump

- Engine coolant will run out when the hoses are disconnected; drain it into a clean drip pan. Be sure not to let coolant spill on the auxiliary electrical parts or the painted surfaces. If any coolant spills, rinse it off immediately.
- Note the layout of the hoses.

Note for Electric A/C Compressor

- The electric A/C compressor is a high-voltage system. The high voltage cables and their covers are identified by orange coloring. The safety labels are attached to high voltage and other related parts. You must be familiar with the electrical powertrain before working around it. Make sure you have read the Service Precautions in the electrical powertrain section before doing repairs or service.
- Wear insulated gloves and use insulated tools to protect you from electrical shock.

Note for Electric A/C Compressor Relief Valve

- If the electric A/C compressor relief valve released refrigerant to the atmosphere, determine and correct the cause of the excessive system pressure, then replace the relief valve.
- Plug the opening to keep moisture and foreign material from entering the system, and the electric A/C compressor oil from running out.

Note for A/C Condenser

- Be careful not to damage the radiator fins, the A/C condenser fins, and the receiver line when removing the A/C condenser.

Procedure

NOTE: **Numbered call-outs in figure pertain to list numbers in following procedure.**

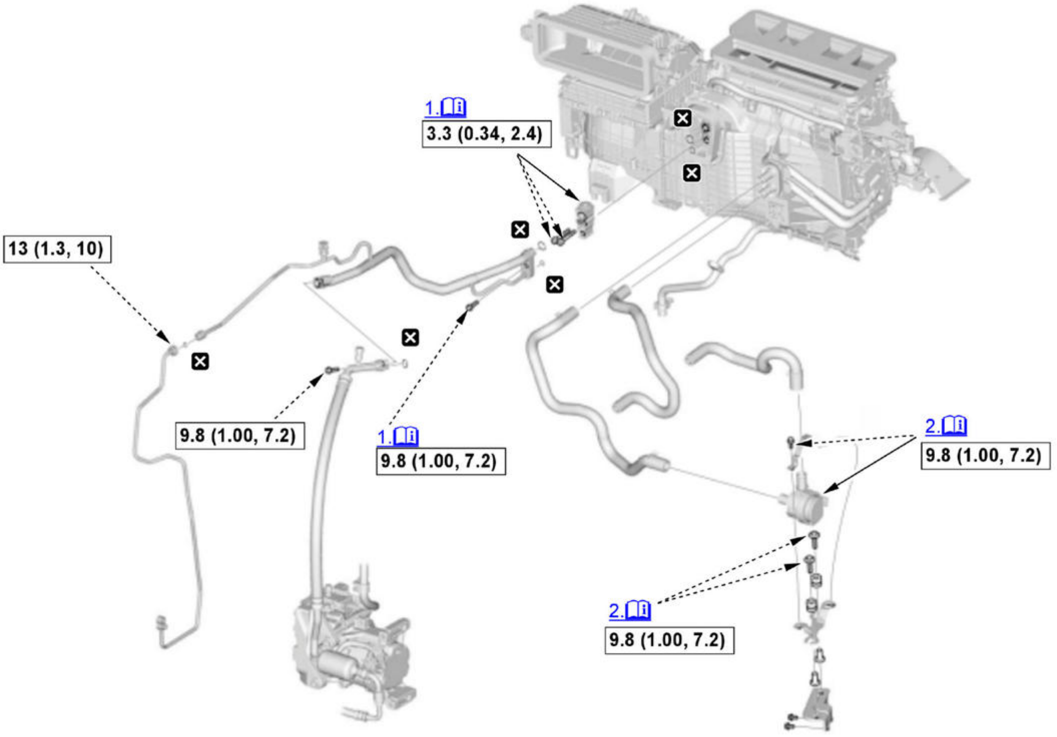

Fig. 8: Exploded View Of Climate Control System (Under-Hood) Components With Torque

Specifications (1 Of 3)
Courtesy of HONDA, U.S.A., INC.

▭	Torque: N.m (kgf.m, lbf.ft)
☒	Replace

NOTE: **Numbered call-outs in figure pertain to list numbers in following procedure.**

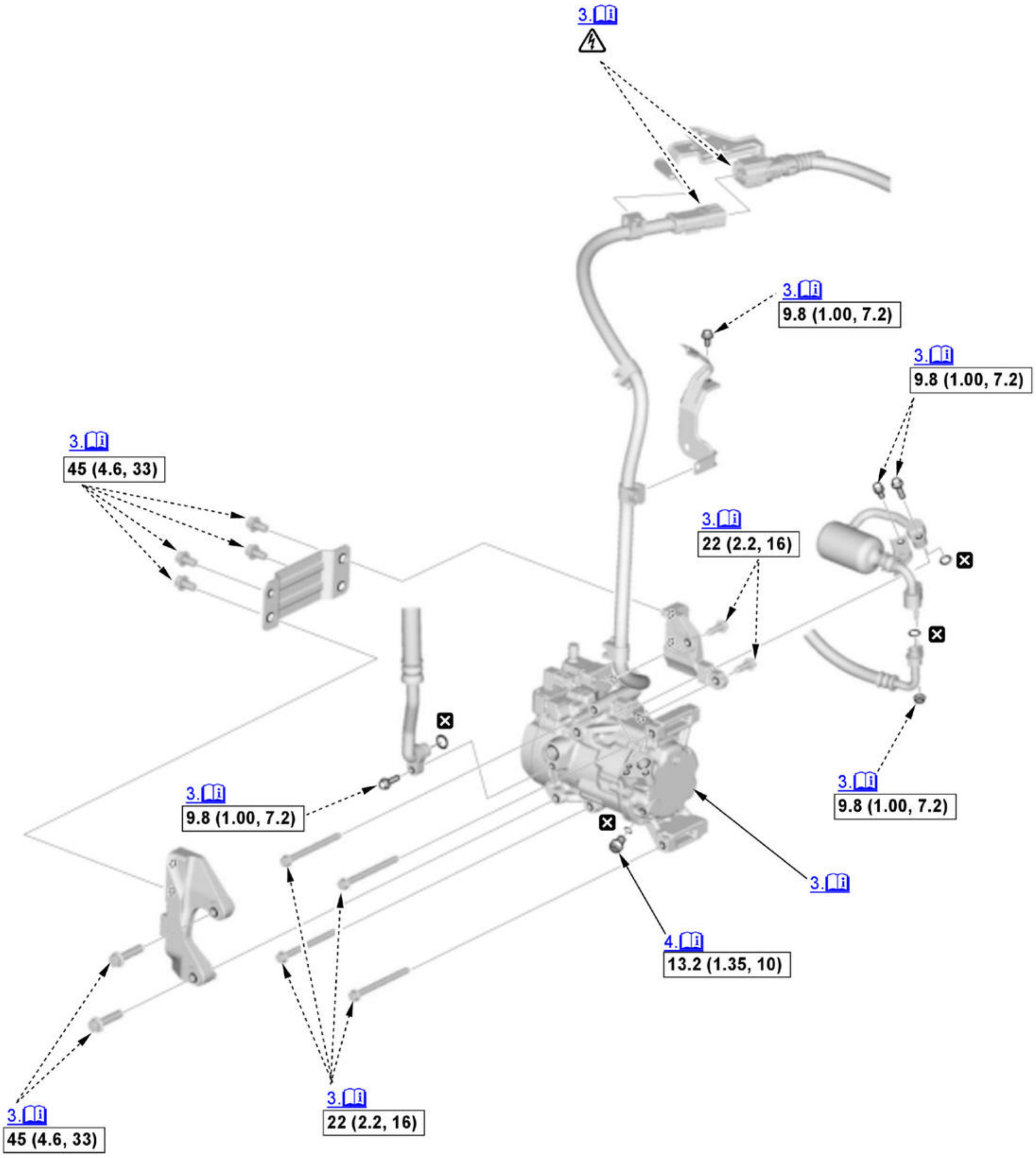
3.
⚠
3.
9.8 (1.00, 7.2)
3.
9.8 (1.00, 7.2)
3.
45 (4.6, 33)
3.
22 (2.2, 16)
☒
☒
☒
3.
9.8 (1.00, 7.2)
☒
3.
9.8 (1.00, 7.2)
3.
4.
13.2 (1.35, 10)
3.
45 (4.6, 33)
3.
22 (2.2, 16)

Fig. 9: Exploded View Of Climate Control System (Under-Hood) Components With Torque Specifications (2 Of 3)
Courtesy of HONDA, U.S.A., INC.

▭	Torque: N.m (kgf.m, lbf.ft)
☒	Replace

NOTE: **Numbered call-outs in figure pertain to list numbers in following procedure.**

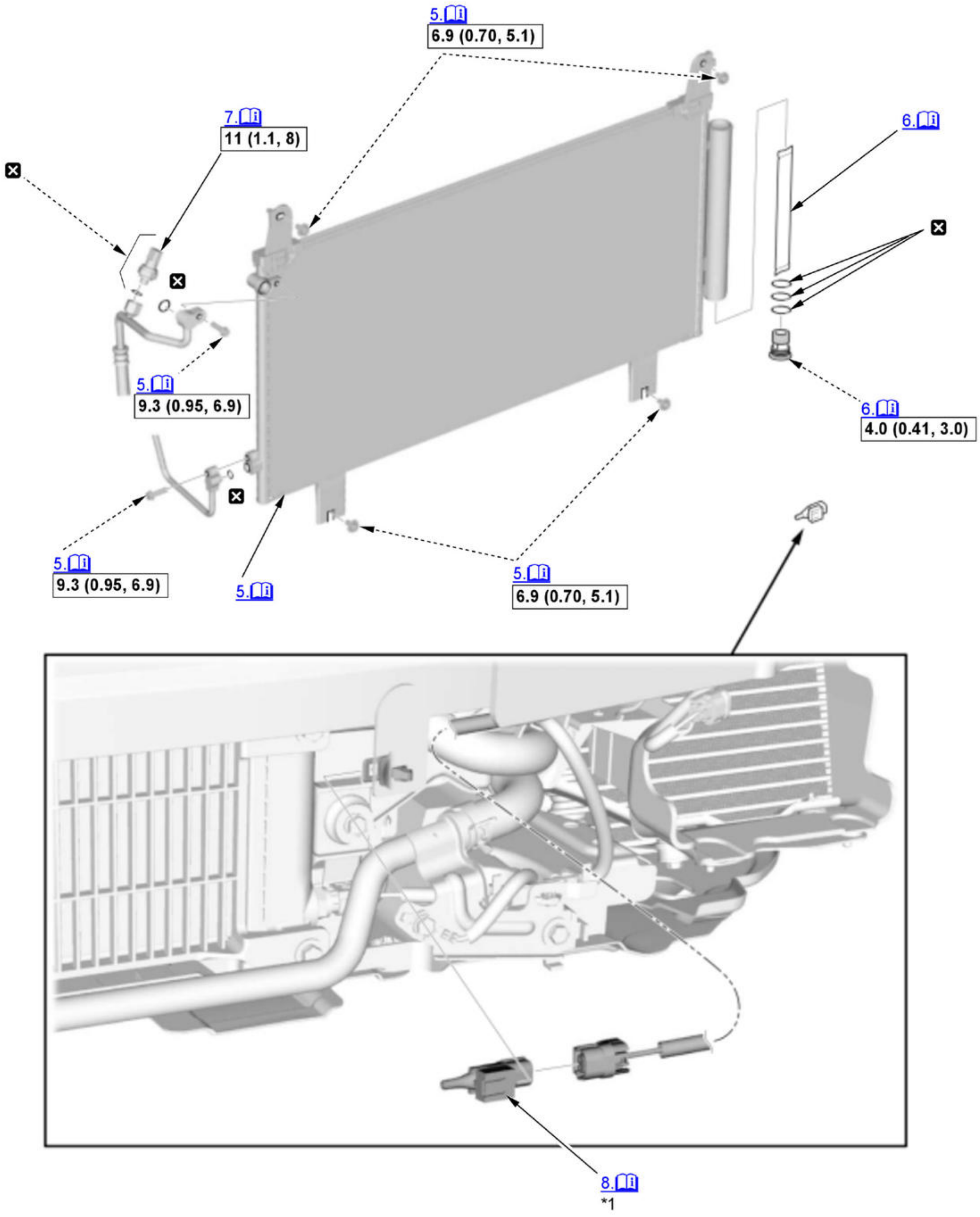
5.
6.9 (0.70, 5.1)
7.
11 (1.1, 8)
6.
5.
9.3 (0.95, 6.9)
6.
4.0 (0.41, 3.0)
5.
9.3 (0.95, 6.9)
5.
5.
6.9 (0.70, 5.1)
8.
*1

[Fig. 10: Exploded View Of Climate Control System (Under-Hood) Components With Torque Specifications (3 Of 3)]()
Courtesy of HONDA, U.S.A., INC.

☐	Torque: N.m (kgf.m, lbf.ft)
☒	Replace
*1	Test item

1. Expansion Valve - Remove
    1. [Recover the refrigerant from the A/C system]() .

    2. Remove the expansion valve.
2. Electric Heater Coolant Pump - Remove

    1. **Drain the engine coolant** .

    2. **Remove the engine undercover** .

    3. Remove the electric heater coolant pump.

    Note for installation

    - Make sure the hose clamp is positioned as shown.
    - Make sure the hose clamp is in the position of its range shown.
    - Make sure that there is no engine coolant leakage.

    Heater hose

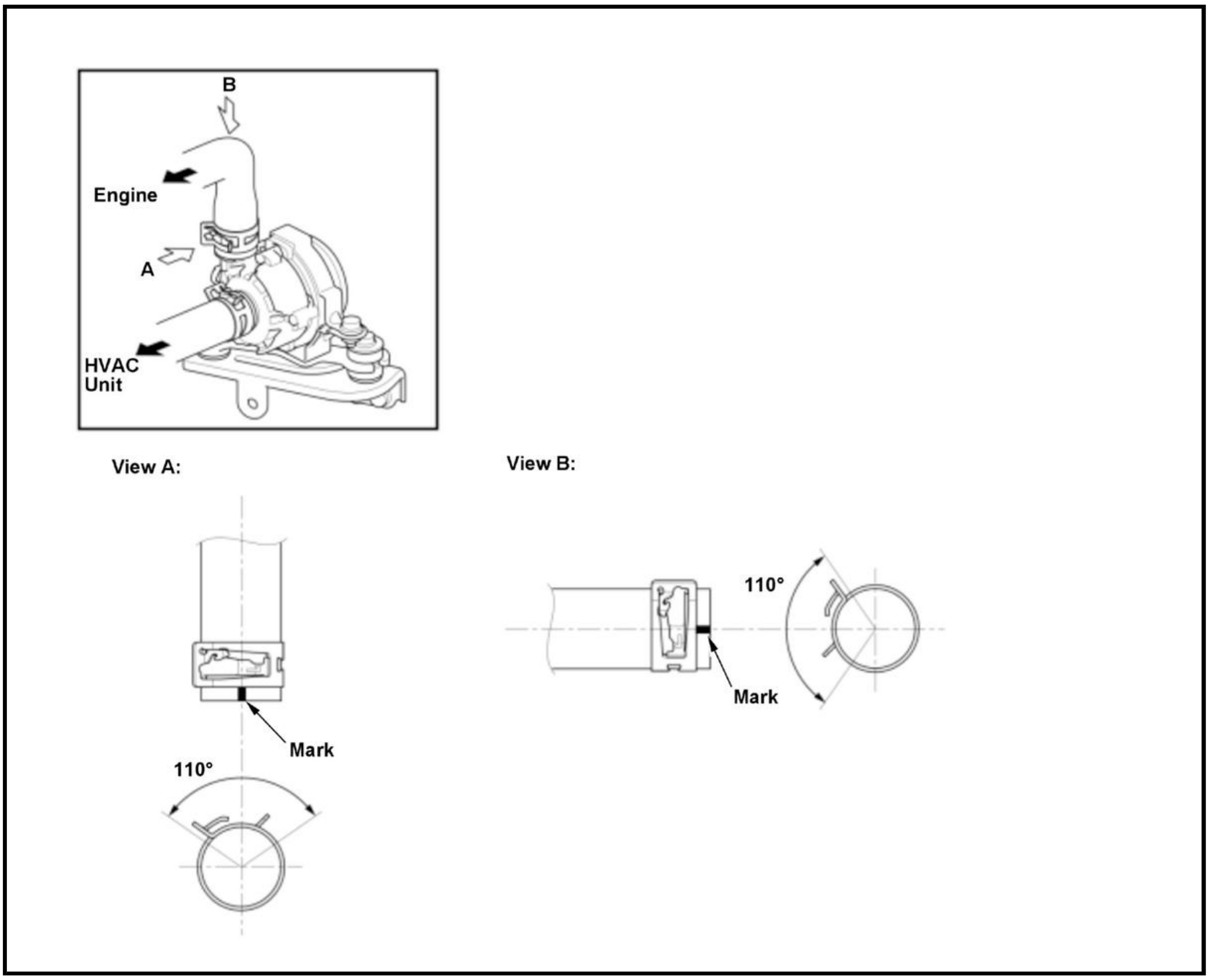

3. Electric A/C Compressor - Remove

    1. Before removing the electric A/C compressor, do the following procedures:

        - **Turning off the service plug** .
        - **Recover the refrigerant** .

    2. **Remove the front engine undercover** .

    3. Remove the electric A/C compressor.

    Note for installation

- Do not install the electric A/C compressor into a system unless you are completely sure that the system is free of contamination. Installing the electric A/C compressor into a contaminated system can result in premature electric A/C compressor failure. **Refer to A/C System Contamination Inspection** .
- To avoid contamination, do not return the oil to the container once dispensed, and never mix it with other refrigerant oils.
- If you are installing a new electric A/C compressor, **you must calculate the amount of refrigerant oil to be removed from it** . A new electric A/C compressor comes with a full charge of oil.

4. Electric A/C Compressor Relief Valve - Remove

    1. **Recover the refrigerant from the A/C system** .

    2. **Remove the front engine undercover lid** .

    3. Remove the electric A/C compressor relief valve.

5. A/C Condenser - Remove

    1. **Recover the refrigerant from the A/C system** .

    2. **Remove the shutter grille** .

    3. Remove the A/C condenser.

    Note for installation If you are installing a new A/C condenser, **add the appropriate refrigerant oil for the electric A/C compressor which installed to the vehicle** .

6. Desiccant - Remove

    1. **Recover the refrigerant from the A/C system**

    2. Remove the A/C condenser.

    3. Remove the desiccant.

    Note for installation

    - Install the desiccant as quickly as possible to prevent the system from absorbing moisture from the air.
    - If you are installing a new desiccant, **add the appropriate refrigerant oil for the electric A/C compressor which installed to the vehicle** .
    - Install the cap to the specified torque. It is made of resin and can be easily stripped.

7. A/C Pressure Sensor - Remove

    1. **Recover the refrigerant from the A/C system** .

    2. Remove the A/C pressure sensor.

    NOTE: Hold the A/C pressure sensor block with a wrench to prevent damaging the discharge hose, then remove and install the A/C pressure sensor.

8. Outside Air Temperature Sensor - Remove

    1. **Remove the front bumper** .

    2. Remove the outside air temperature sensor.

Test

NOTE: Before testing the each item, **check for climate control DTCs** .

1. Outside Air Temperature Sensor - Test

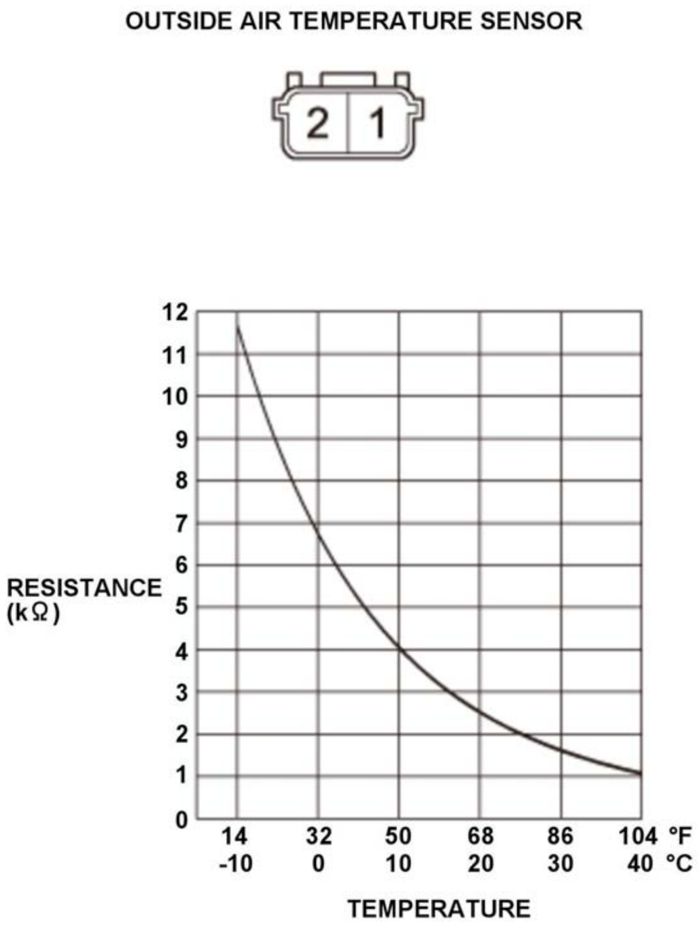	1. **Remove the front bumper** 2. Remove the outside air temperature sensor. 3. Dip the sensor in ice water, and measure the resistance between terminals No. 1 and No. 2. 4. Then pour warm water on the sensor, and check for a change in resistance. 5. Compare the resistance readings with the specifications shown in the graph, the resistance should be within the specifications. 6. If the resistance is not as specified, replace the outside air temperature sensor.

HEATED STEERING WHEEL SWITCH REMOVAL, INSTALLATION, AND TEST

Removal and Installation

SRS components are located in this area. Review the **SRS component locations** and the **precautions and procedures** before doing repairs or service.

NOTE: The heated steering wheel switch is a part of the ACC combination switch, and it cannot be replaced by itself.

1. **ACC Combination Switch - Remove**
2. All Remove Parts - Install

1. Install the parts in the reverse order of removal.

Test

1. Heated Steering Wheel Switch - Test

   1. Check for continuity between the terminals in each switch position according to the table.

   NOTE:

   - When an LED is located between terminals, check if the LED illuminates by connecting power and ground to the LED.

- Note this important operating characteristic; diode bias causes a diode to fully conduct electricity in one direction (forward), while not at all in the opposite direction (reverse).

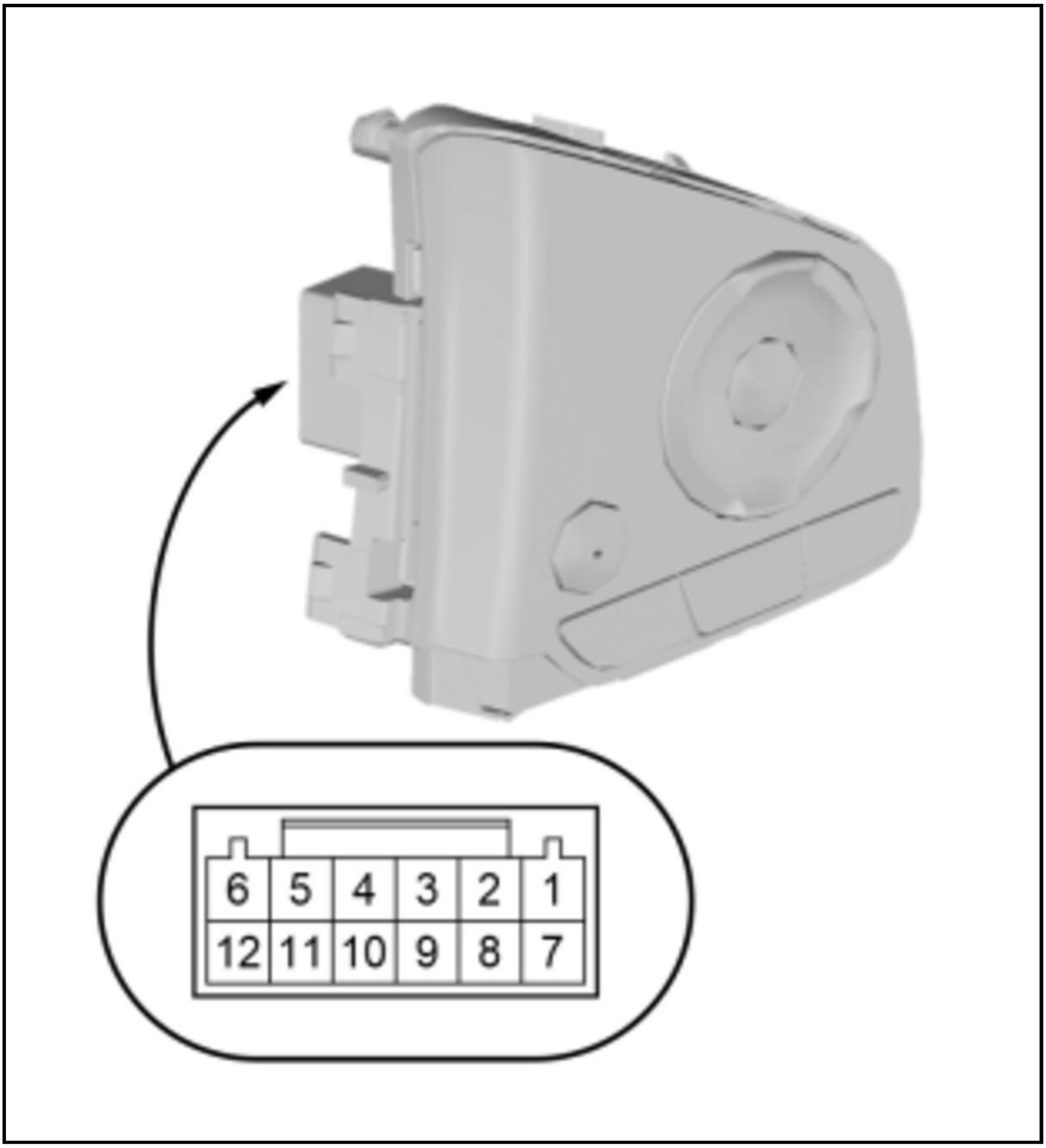

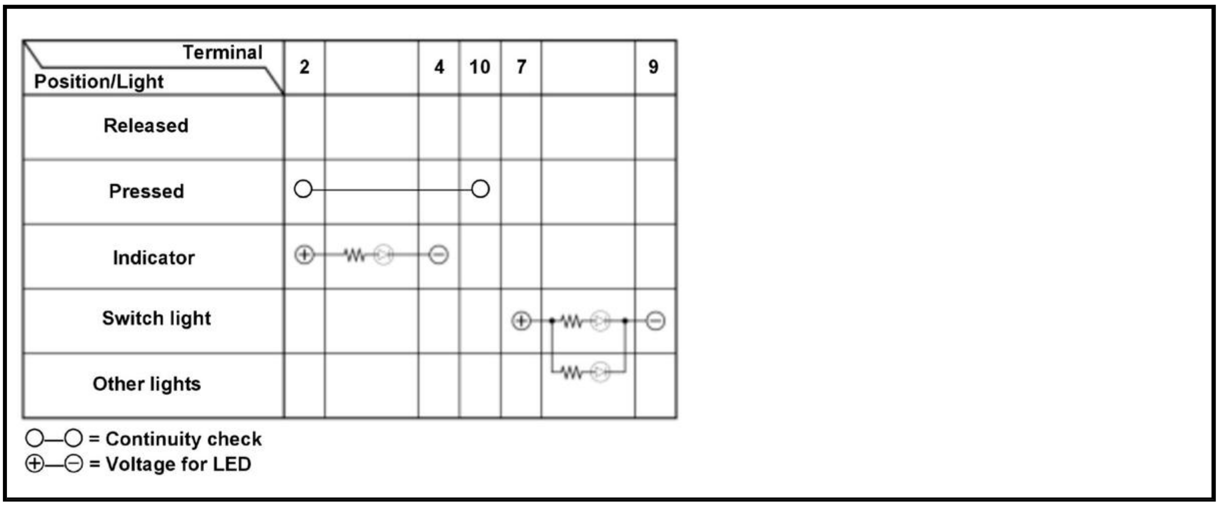

Terminal Position/Light	2		4	10	7		9
Released							
Pressed	○	—	—	○			
Indicator	⊕	—W—⊳—	⊖				
Switch light					⊕	—W—⊳—	⊖
Other lights						—W—⊳—	

○—○ = Continuity check

⊕—⊖ = Voltage for LED

2. If the result is not as specified, replace the heated steering wheel switch.

REPLACEMENT

A/C REFRIGERANT OIL REPLACEMENT (1234YF)

*Available through the Honda Tool and Equipment Program; call 888-424-6857.

Special Tools Required

Image	D
	R-1234yf POE Oil In

Replacement

NOTE: How to read the torque specifications .

1. A/C Refrigerant Oil - Replace

1.5 L engine

Recommended POE oil: RL85HM
P/N 38899-RLV-A01: 40 m L(1 1/3 fl oz)

2.4 L engine

Recommended POE oil: DENSO ND-OIL 14
NOTE: Although the refrigerant oil information is listed on the under-hood air conditioning information label, always use the recommended refrigerant oil listed in this service manual.
P/N 38899-50Z-G01: 40 m L(1 1/3 fl oz)

It is important to have the correct amount of refrigerant oil in the A/C system to ensure proper lubrication of the A/C compressor. Too little oil damages the A/C c
the system, and can produce high vent temperatures.

- To avoid contamination, do not return the oil to the container once dispensed, and never mix it with other refrigerant oils.
- Use the refrigerant oil immediately after opening the container, and dispose of any unused oil. The oil rapidly absorbs moisture, which damages its electrica
- Do not spill the refrigerant oil on the vehicle, because it may damage painted surfaces. If refrigerant oil contacts the paint, wash it off with water immediate

Add the recommended refrigerant oil in the amount listed if you replace any of the following parts:

Parts	Oil Amount
A/C condenser	**25 mL (5/6 fl oz)**
Evaporator	**40 mL (1 1/3 fl oz)**
Line or hose	**10 mL (1/3 fl oz)**
Desiccant	**10 mL (1/3 fl oz)**
Leakage repair	**25 mL (5/6 fl oz)**
A/C compressor	**77-103 mL (2 3/5-3 1/2 fl oz) *1**
	95-107 mL (3 1/5-3 3/5 fl oz) *2

*1: 1.5 L engine*2: 2.4 L engine

1.5 L engine

2. A/C Compressor Oil - Adjustment

1. Cover the pulley and clutch with plastic bag to prevent from spilling the oil.

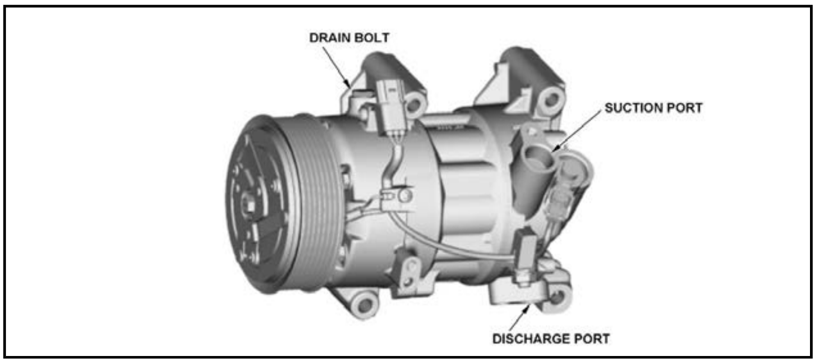
DRAIN BOLT
SUCTION PORT
DISCHARGE PORT

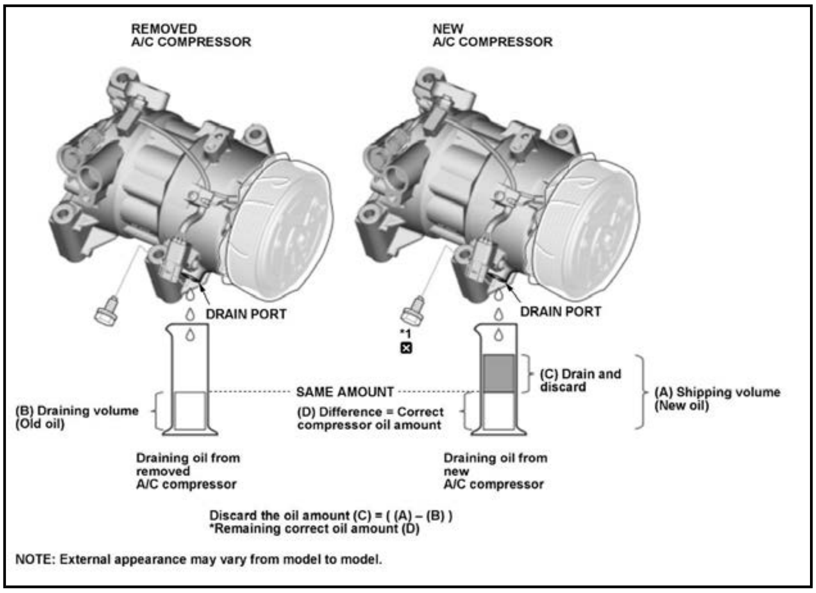
REMOVED
A/C COMPRESSOR
NEW
A/C COMPRESSOR
DRAIN PORT
DRAIN PORT
*1
(C) Drain and discard
(A) Shipping volume (New oil)
(B) Draining volume (Old oil)
SAME AMOUNT
(D) Difference = Correct compressor oil amount
Draining oil from removed A/C compressor
Draining oil from new A/C compressor
Discard the oil amount (C) = ((A) – (B))
*Remaining correct oil amount (D)
NOTE: External appearance may vary from model to model.

***1**

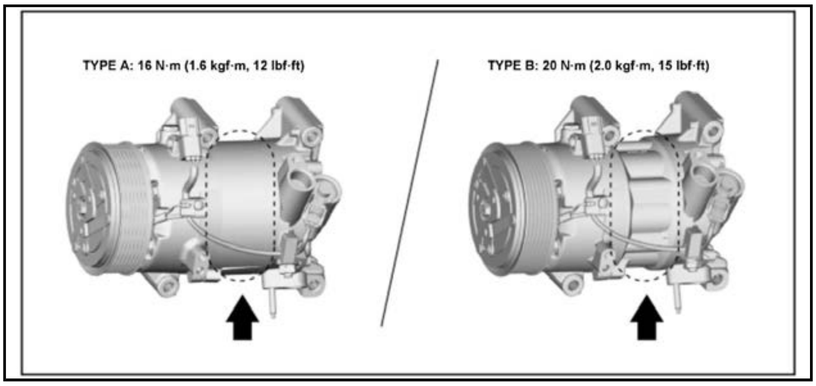
TYPE A: 16 N·m (1.6 kgf·m, 12 lbf·ft)
TYPE B: 20 N·m (2.0 kgf·m, 15 lbf·ft)

2. Remove the drain bolt, and drain the oil from the drain port.

3. Tighten new drain bolt and washer to the specified torque.

4. Refill the oil from suction port.

NOTE: **If no oil was drained from the removed A/C compressor, do not drain more than 50 mL (1 2/3 fl oz) from the new A/C compr**

2.4 L engine

3. A/C Compressor Oil - Adjustment

NOTE: If no oil was drained from the removed A/C compressor, do not drain more than 50 mL (1 2/3 fl oz) from the new A/C compressor.

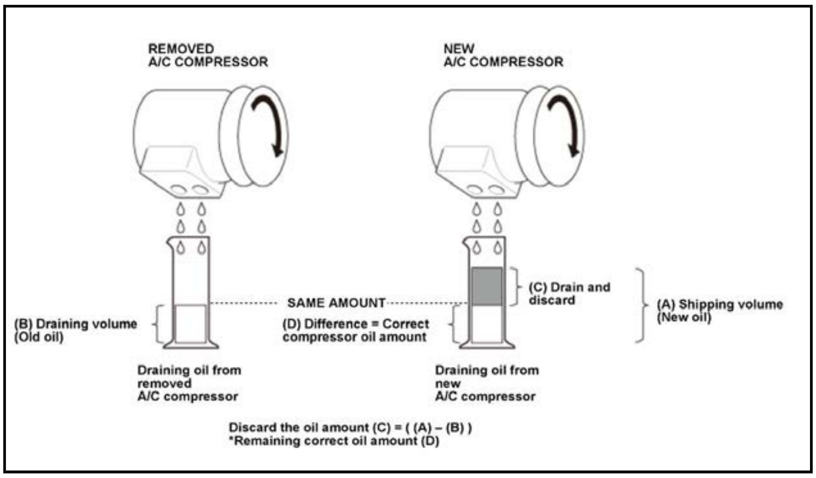
REMOVED
A/C COMPRESSOR
NEW
A/C COMPRESSOR
(C) Drain and discard
(A) Shipping volume (New oil)
SAME AMOUNT
(B) Draining volume (Old oil)
(D) Difference = Correct compressor oil amount
Draining oil from removed A/C compressor
Draining oil from new A/C compressor
Discard the oil amount (C) = ((A) – (B))
*Remaining correct oil amount (D)

A/C REFRIGERANT OIL REPLACEMENT(134A)

*Available through the Honda Tool and Equipment Program; call 888-424-6857.

Special Tools Required

Image	I
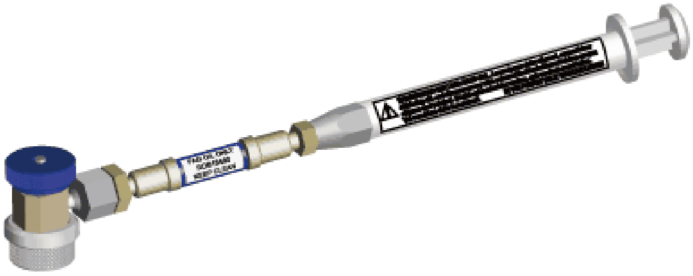	PAG Oil Injector R

Replacement

NOTE: How to read the torque specifications .

1. A/C Refrigerant Oil - Replace

   Recommended PAG oil: DENSO ND-OIL 8

   P/N 38897-PR7-A01AH: 120 mL (4 fl oz)

   It is important to have the correct amount of refrigerant oil in the A/C system to ensure proper lubrication of the A/C compressor. Too little oil damages the A/C c
   the system, and can produce high vent temperatures.

   - To avoid contamination, do not return the oil to the container once dispensed, and never mix it with other refrigerant oils.
   - Immediately after using the oil, reinstall the cap on the container, and seal it to avoid moisture absorption.
   - Do not spill the refrigerant oil on the vehicle, because it may damage painted surfaces. If refrigerant oil contacts the paint, wash it off with water immediate

   Add the recommended refrigerant oil in the amount listed if you replace any of the following parts:

Parts	Oil Amount
A/C condenser	**25 mL (5/6 fl oz)**
Evaporator	**40 mL (1 1/3 fl oz)**
Line or hose	**10 mL (1/3 fl oz)**
Desiccant	**10 mL (1/3 fl oz)**
Leakage repair	**25 mL (5/6 fl oz)**

   *1: 1.5 L engine*2: 2.4 L engine

Parts	Oil Amount
A/C compressor	**77-103 mL (2 3/5-3 1/2 fl oz) *1**
	95-107 mL (3 1/5-3 3/5 fl oz) *2

*1: 1.5 L engine*2: 2.4 L engine

1.5 L engine

2. A/C Compressor Oil - Adjustment

   1. Cover the pulley and clutch with plastic bag to prevent from spilling the oil.

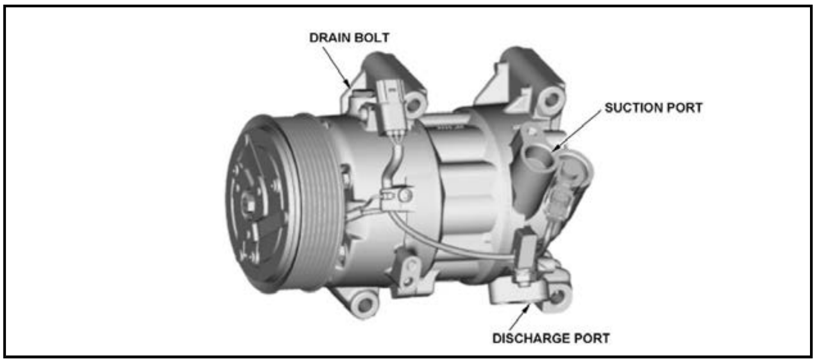
DRAIN BOLT
SUCTION PORT
DISCHARGE PORT

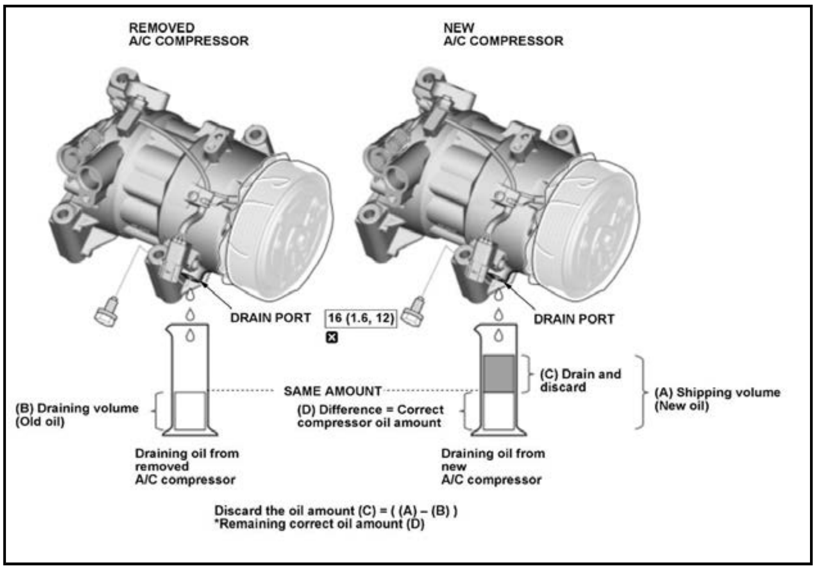
REMOVED
A/C COMPRESSOR
NEW
A/C COMPRESSOR
DRAIN PORT
16 (1.6, 12)
☒
DRAIN PORT
(C) Drain and discard
SAME AMOUNT
(A) Shipping volume (New oil)
(B) Draining volume (Old oil)
(D) Difference = Correct compressor oil amount
Draining oil from removed A/C compressor
Draining oil from new A/C compressor
Discard the oil amount (C) = ((A) – (B))
*Remaining correct oil amount (D)

   2. Remove the drain bolt, and drain the oil from the drain port.

   3. Tighten new drain bolt and washer to the specified torque.

   4. Refill the oil from suction port.

NOTE: **If no oil was drained from the removed A/C compressor, do not drain more than 50 mL (1 2/3 fl oz) from the new A/C compr**

2.4 L engine

3. A/C Compressor Oil - Adjustment

NOTE: If no oil was drained from the removed A/C compressor, do not drain more than 50 mL (1 2/3 fl oz) from the new A/C compressor.

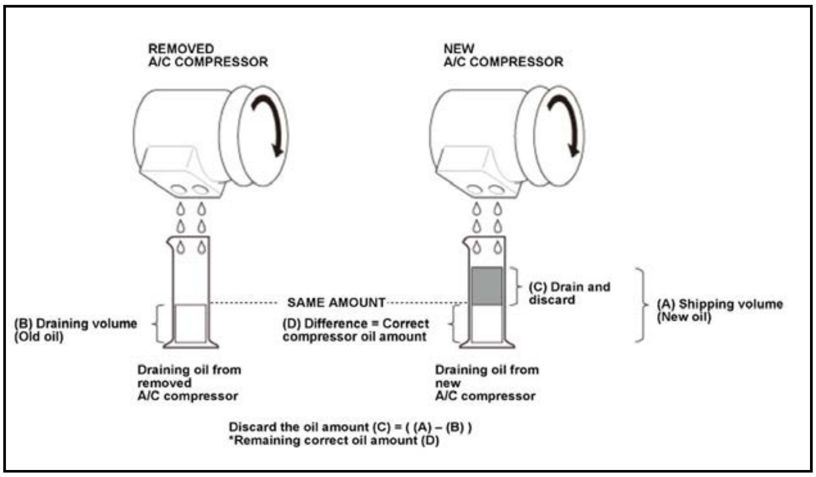
REMOVED
A/C COMPRESSOR
NEW
A/C COMPRESSOR
(C) Drain and discard
SAME AMOUNT
(A) Shipping volume (New oil)
(B) Draining volume (Old oil)
(D) Difference = Correct compressor oil amount
Draining oil from removed A/C compressor
Draining oil from new A/C compressor
Discard the oil amount (C) = ((A) – (B))
*Remaining correct oil amount (D)

A/C REFRIGERANT RECOVERY/EVACUATION/CHARGING (1234YF)

*These tools are available through the Honda Tool and Equipment Program; call 888-424-6857.

Special Tools Required

Image	Description/
	R-1234yf A/C Recover/Recycle/Recharge Ma
	R-1234yf POE Oil Injector ROB18470*

Procedure

WARNING:

- Compressed air mixed with the HFO-1234yf (R-1234yf) forms a combustible vapor.
- The vapor can burn or explode causing serious injury.
- Never use compressed air to pressure test HFO-1234yf (R-1234yf) service equipment or vehicle air conditioning systems.

WARNING:

- Air conditioning refrigerant or lubricant vapor can irritate your eyes, nose, or throat.
- Be careful when connecting service equipment.
- Do not breathe refrigerant or vapor.

NOTE:

- If accidental system discharge occurs, ventilate the work area before resuming service.
- Additional health and safety information may be obtained from the refrigerant and lubricant manufacturers.
- Do not allow moisture to contaminate the A/C system oil. Moisture in the oil is difficult to remove, and it can damage the A/C compressor.
- Using an electronic vacuum gauge may decrease the required evacuation time because you can measure actual moisture level with this tool.
- Air conditioning refrigerant is poisonous. If ingested, get medical attention immediately.

When an A/C System has been opened to the atmosphere, such as during installation or repair, it must be evacuated using an A/C recover/recycle/recharge machine. If tl receiver/dryer or the desiccant, drain the **refrigerant oil**, and add fresh oil. Then evacuate the system for several hours before charging it.

1. A/C Recover/Recycle/Recharge Machine - Connect

   1. Connect an A/C recover/recycle/recharge machine to the high-pressure service port (A) and the low-pressure service port (B), as shown, following the equipme

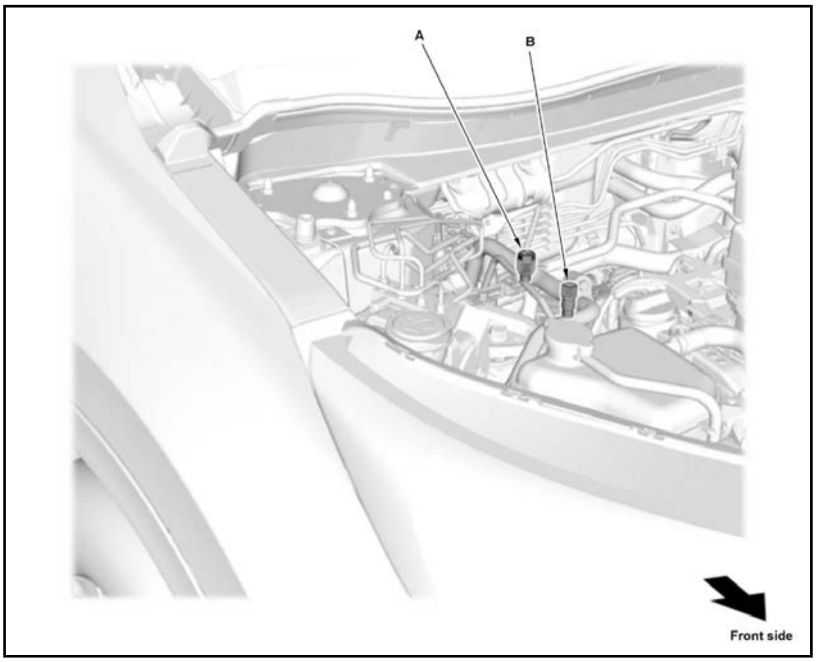

2. A/C Refrigerant - Recover

   1. Recover the refrigerant from the A/C system.

   2. Measure the amount of **refrigerant oil**

   removed from the A/C system after the recovery process is completed. Be sure to put the same amount of new **refrigerant oil** back into the A/C system before ch

   B

3. A/C System - Evacuate

   1. Evacuate the system. The vacuum pump should run for a minimum of 30 minutes or until the moisture vacuum test passes, to eliminate all moisture from the sy mmHg, -27.55 inHg) for at least 30 minutes, or the moisture vacuum test passes, close all valves, and turn off the vacuum pump.

   2. If the suction gauge does not reach approximately -93.3 kPa (-700 mmHg, -27.55 inHg) in 15 minutes or the moisture vacuum test fails, there is probably a lea leaks.

   B

4. **A/C Refrigerant Leak Check**
5. A/C Refrigerant - Charge

   1. Charge the system with the specified amount of R-1234yf refrigerant. Do not overcharge the system; the A/C compressor will be damaged.Select the appropriat recover/recycle/recharge machine.

   1.5 L engine

Refrigerant Capacity:
435 to 485 g
15.34 to 17.11 oz
0.435 to 0.485 kg
0.959 to 1.069 lbs

   2.4 L engine

Refrigerant Capacity:
415 to 465 g
14.64 to 16.40 oz
0.415 to 0.465 kg
0.915 to 1.025 lbs

   B

6. **A/C Refrigerant Leak Check**
7. **A/C System - Test**

A/C REFRIGERANT RECOVERY/EVACUATION/CHARGING (134A)

*Available through the Honda Tool and Equipment Program; call 888-424-6857.The tool ROB14777 is only required if you are not using the ROB48920T A/C recover/ (compact electronic) vacuum gauge.

Special Tools Required

Image	Description/Tool
	Compact Electronic Vacuum Gauge Robinair ROB1477
	R134a A/C Automatic Recover/Recycle/Recharge Machi
	PAG Oil Injector Robinair ROB18480*

Procedure

WARNING:

- Compressed air mixed with the R-134a forms a combustible vapor.
- The vapor can burn or explode causing serious injury.
- Never use compressed air to pressure test R-134a service equipment or vehicle air conditioning systems.

WARNING:

- Air conditioning refrigerant or lubricant vapor can irritate your eyes, nose, or throat.
- Be careful when connecting service equipment.
- Do not breathe refrigerant or vapor.

NOTE:

- If accidental system discharge occurs, ventilate the work area before resuming service.
- Additional health and safety information may be obtained from the refrigerant and lubricant manufacturers.
- Do not allow moisture to contaminate the A/C system oil. Moisture in the oil is difficult to remove, and it can damage the A/C compressor.

- Using a thermistor (compact electronic) vacuum gauge may decrease the required evacuation time because you can measure actual moisture level with this tool.
- Air conditioning refrigerant is poisonous. If ingested, get medical attention immediately.

A more efficient way to measure moisture removal is with a special tool called a thermistor (compact electronic) vacuum gauge, measuring vacuum levels in microns. T recover/recycle/recharge machine has a built-in thermistor (compact electronic) vacuum gauge. If you are using a different A/C recover/recycle/recharge machine, a sep

Connect the tool according to the manufacturers instructions and allow the vacuum pump to run until the gauge reads 750 microns.

Shut off and isolate the vacuum pump, then observe the gauge reading:

- If the vacuum level remains stable at 750 microns for at least three minutes, all moisture in the system has been removed.
- A slow increase in the micron reading means there is still moisture boiling out of the system. Restart the vacuum pump and continue evacuating.
- A quick increase of micron levels indicates a leak is present in the system or your service equipment. Determine the cause and correct the leak before continuing.

When an A/C System has been opened to the atmosphere, such as during installation or repair, it must be evacuated using an A/C recover/recycle/recharge machine. If tl receiver/dryer or the desiccant, drain the **refrigerant oil**, and add fresh oil. Then evacuate the system for several hours before charging it.

1. A/C Recover/Recycle/Recharge Machine - Connect

   1. Connect an A/C recover/recycle/recharge machine to the high-pressure service port (A) and the low-pressure service port (B), as shown, following the equipme

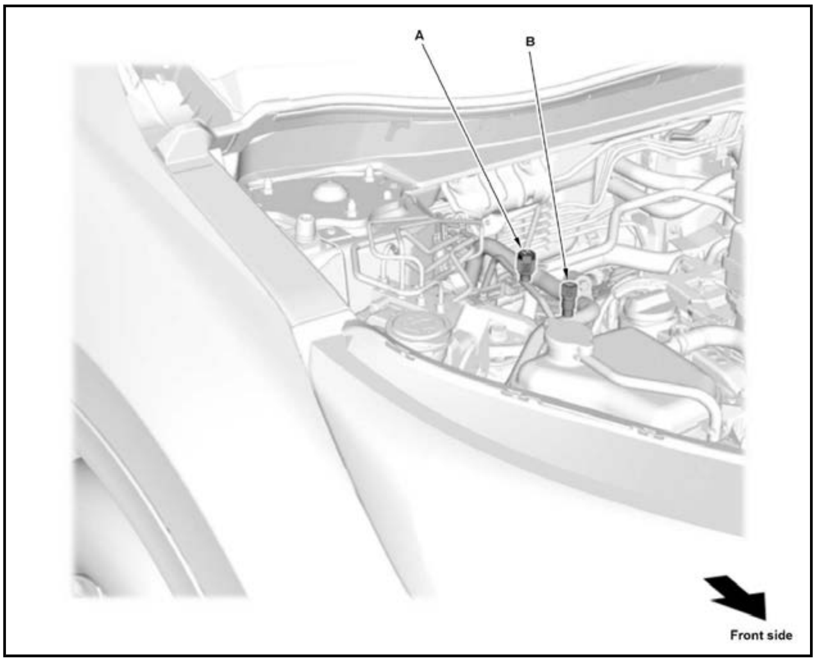

2. A/C Refrigerant - Recover

   1. Recover the refrigerant from the A/C system.

   2. Measure the amount of **refrigerant oil**

   removed from the A/C system after the recovery process is completed. Be sure to put the same amount of new **refrigerant oil** back into the A/C system before ch:

B

3. A/C System - Evacuate

   1. Evacuate the system. The vacuum pump should run for a minimum of 30 minutes or until the moisture vacuum test passes, to eliminate all moisture from the sy mmHg, -27.55 inHg) for at least 30 minutes, or the moisture vacuum test passes, close all valves, and turn off the vacuum pump.

   2. If the suction gauge does not reach approximately -93.3 kPa (-700 mmHg, -27.55 inHg) in 15 minutes or the moisture vacuum test fails, there is probably a leal leaks.

B

4. **A/C Refrigerant - Leak Check**
5. A/C Refrigerant - Charge

   1. Charge the system with the specified amount of R-134a refrigerant. Do not overcharge the system; the A/C compressor will be damaged. Select the appropriate recover/recycle/recharge machine.

1.5 L engine

Refrigerant Capacity:
435 to 485 g
15.34 to 17.11 oz
0.435 to 0.485 kg
0.959 to 1.069 lbs

2.4 L engine

Refrigerant Capacity:

415 to 465 g
14.64 to 16.40 oz
0.415 to 0.465 kg
0.915 to 1.025 lbs

B

6. A/C Refrigerant - Leak Check
7. A/C System - Test

REPAIR REGENERATION

REAR WINDOW DEFOGGER WIRE REPAIR

Reconditioning

1. Defogger Wire - Repair

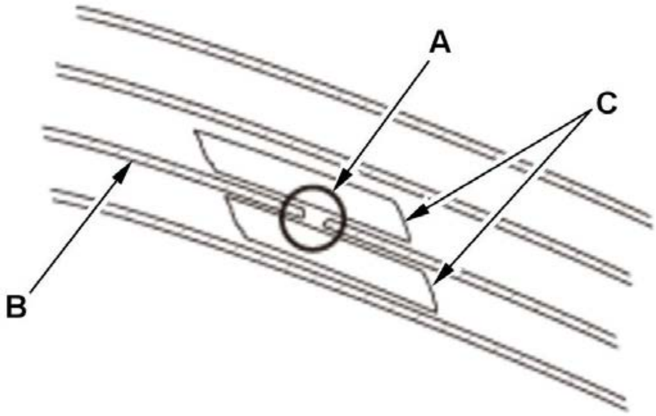	**NOTE:** To make an effectiv 25 mm (1.0 in). 1. Lightly rub the area arour with isopropyl alcohol. 2. Carefully mask above anc (B) with cellophane tapes (C

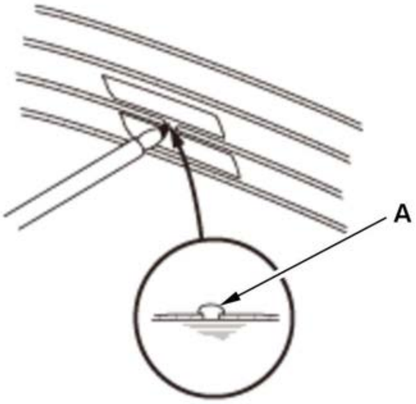	3. Using a small brush, apply a heavy coat of silver cc about 3.0 mm (0.1 in) on both sides of the break. Allo 4. Do the function test to confirm that the wire is repa 5. Apply a second coat of paint in the same way. Let i

DESCRIPTION & OPERATION

A/C SYSTEM DESCRIPTION

The air conditioning system regulates temperature air outlet by mixing cold and warm air in an appropriate ratio. The heater core and evaporator core are installed in the mode control damper. The blower unit is composed of a blower motor, the recirculation control damper and the dust and pollen filter. The blower unit is connected to th

System Diagram

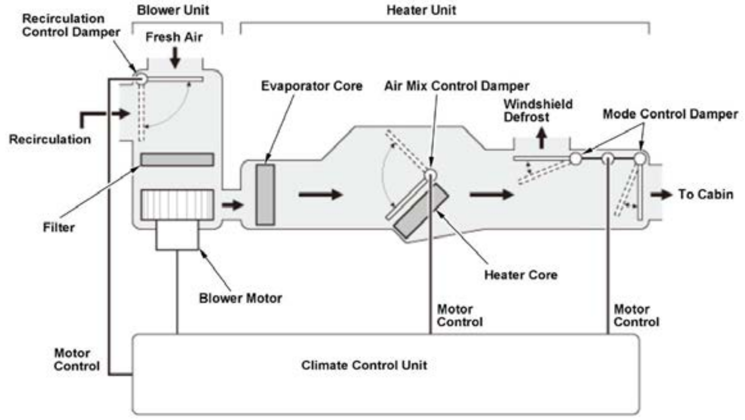
Recirculation Control Damper
Blower Unit
Heater Unit
Fresh Air
Evaporator Core
Air Mix Control Damper
Windshield Defrost
Mode Control Damper
Recirculation
To Cabin
Filter
Heater Core
Blower Motor
Motor Control
Motor Control
Motor Control
Climate Control Unit

Air Flow Diagram

NOTE: This illustration is an example only. Appearance and structure of the actual parts may vary depending on the model.

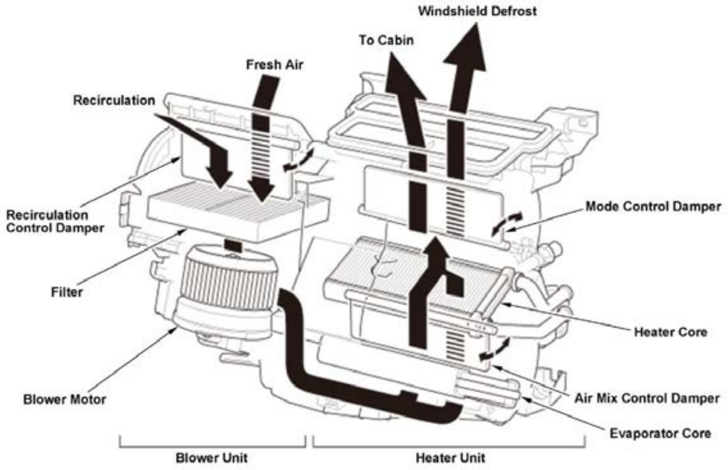
Windshield Defrost
To Cabin
Fresh Air
Recirculation
Recirculation Control Damper
Mode Control Damper
Filter
Heater Core
Blower Motor
Air Mix Control Damper
Evaporator Core
Blower Unit
Heater Unit

Refrigerant Cycle

NOTE: This illustration is an example only. Appearance and structure of the actual parts may vary depending on the model.

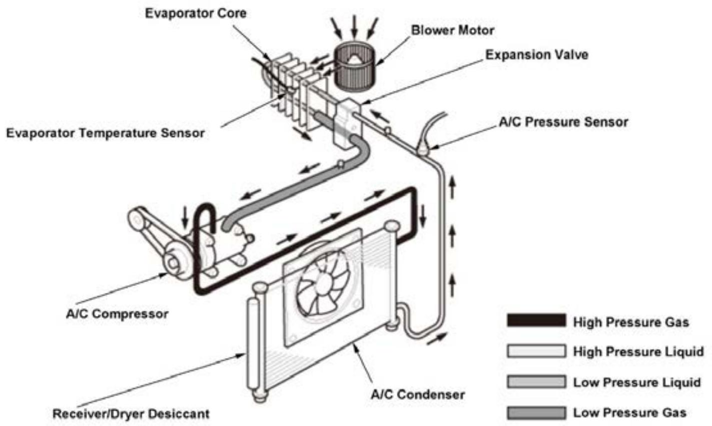
Evaporator Core
Blower Motor
Expansion Valve
Evaporator Temperature Sensor
A/C Pressure Sensor
A/C Compressor
High Pressure Gas
High Pressure Liquid
Low Pressure Liquid
Low Pressure Gas
Receiver/Dryer Desiccant
A/C Condenser

Climate Control

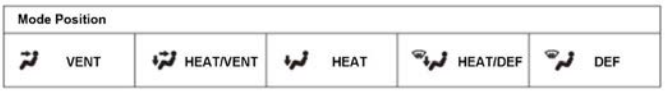

Mode Position				
VENT	HEAT/VENT	HEAT	HEAT/DEF	DEF

The climate control system transmits appropriate signals to each motor based on the information (sunlight, humidity, in-car temperature, outside air temperature) receiv

- Air Mix Control Motor: The system controls the temperature of air coming into the cabin by the air mix control motor adjusting the air mix control damper positi air.
- Mode Control Motor: The system directs the airflow to the specified area by the mode control motor switching the mode control damper position to the "VENT",
- Recirculation Control Motor: The recirculation control motor switches the recirculation control damper position to the "FRESH" or "RECIRCULATION".

- BLOWER MOTOR: The blower motor changes the air volume based on the voltage adjusted by the blower power transistor.

The climate control unit optimizes these controls in order to maintain passenger comfort.

Relationship Between Vent (Air Outlet) Temperature and Actual In-Car Temperature

The climate control unit can automatically control vent temperature (air mix position), blower motor speed, blower intake, and A/C compressor operation to raise or low customer's setting temperature. The actual vent outlet temperature largely depends upon the difference between the in-car temperature sensor reading and the customer's

Warm-Up Control

If heating is desired, and there is no available heat due to low engine coolant temperature, the climate control unit will slow the fan speed to avoid ventilating cold air. T speed as the engine coolant temperature rises.

The conditions that this control becomes effective are as follows:

- Fan speed "AUTO"
- Air outlet position "AUTO", "HEAT", or "HEAT/DEF"
- Outside air temperature is less than 68B°F (20B°C)
- Engine coolant temperature sensor is normal.
- Engine coolant temperature is less than 131B°F (55B°C)

Low Engine Coolant Temperature Control

When the engine coolant temperature is low, the climate control system changes an air outlet position to the "DEF". When the engine coolant temperature increases, the outlet air temperature automatically.

Relationship Between Vehicle Speed and Blower Intake Mode

Because the air resistance is different between fresh air and recirculated air, the volume of air coming through the vents would be different if the fan speed was constant "FRESH", the fresh air flow increases as the vehicle speed increases. The climate control unit regulates the fan speed so that the air volume is the same when "FRESH"

A/C Control

To prevent the evaporator from freezing, the climate control unit switches the A/C compressor ON and OFF based on the evaporator temperature sensor value. While in automatically varies the A/C compressor operation time based on the evaporator temperature sensor value, as well as the outside air temperature.

MAX Control

When the temperature setting is adjusted to "MAX COOL (Lo)" or "MAX HOT (Hi)", the climate control unit overrides automatic control and defaults to the following

- MAX COOL

  "RECIRC", "VENT", blower fan maximum speed, and A/C system ON.

- MAX HOT

  "FRESH", "HEAT*", blower fan maximum speed, and A/C system ON.*: If the sensor information indicates that the windshield may fog, the air outlet switches t

Customize Function

How to Change the Set Temperature (Climate Control Panel with Display)

The climate control unit has a function to change the set temperature +2.7B°F (+1.5B°C) or -2.7B°F (-1.5B°C) in case customers feel the temperature is too warm or too

NOTE: Verify that the climate control and A/C system is working properly before enabling the customize function to offset the set temperature.

- Turn the vehicle to the ON mode, then based on the desired temperature change, set the temperature condition on the temperature control dial according to the tab
- Turn the climate control system OFF then turn the vehicle to the OFF (LOCK) mode.
- Depending on desired setting change, press and hold the pair of buttons according to the table.
- While holding the buttons, turn the vehicle to the ON mode.
- Keep the buttons pressed for 10 seconds.

Setting	Temperature Condition	Buttons		
+2.7B°F (+1.5B°C) Change	Hi	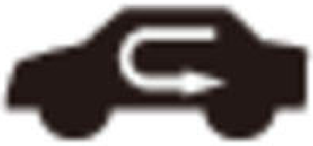	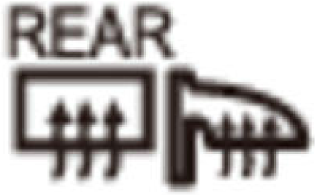	or

Setting	Temperature Condition	Buttons		
-2.7B°F (-1.5B°C) Change	Lo	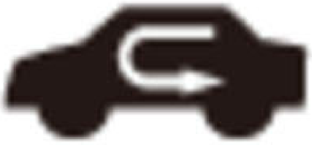	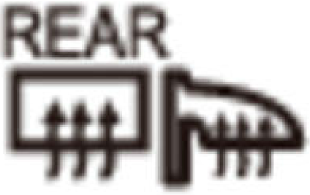	or
Changing back to 0B°F (0B°C)	Except Hi or Lo	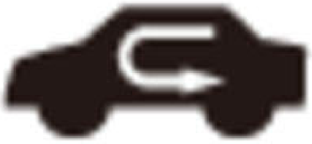	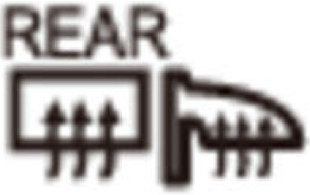	or

- Indication of the change

  The climate control unit displays the following during each change.

-
  - -

    Displays nothing from the vehicle ON mode for 5 seconds.
  - -

    Blinks the current setting for the next 5 seconds.
  - -

    The display will indicate a Hi, Lo or two dashes depending on the set temperature change.

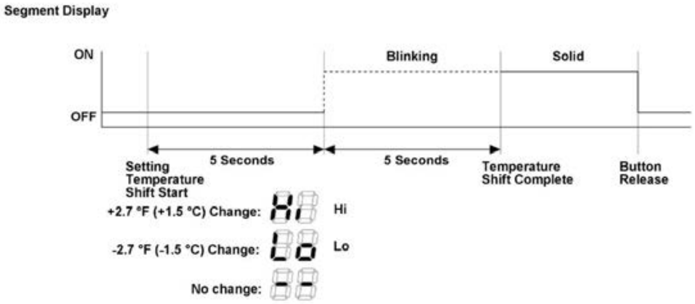
Segment Display
ON
OFF
Blinking
Solid
5 Seconds
5 Seconds
Setting Temperature Shift Start
Temperature Shift Complete
Button Release
+2.7 °F (+1.5 °C) Change:
Hi
-2.7 °F (-1.5 °C) Change:
Lo
No change:

How to Change the Set Temperature (Climate Control Panel without Display)

The climate control unit has a function to change the set temperature +2.7B°F (+1.5B°C) or -2.7B°F (-1.5B°C) in case customers feel the temperature is too warm or to

NOTE: Verify that the climate control and A/C system is working properly before enabling the customize function to offset the set temperature.

The setting temperature is only displayed in degrees centigrade (deg.C).

- Turn the vehicle to the ON mode, then turn the vehicle to the OFF (LOCK) mode after confirming the climate control system is OFF.
- Press and hold the pair of buttons according to the table.
- While holding the buttons, turn the vehicle to the ON mode.
- Release the buttons, then select the desired temperature shift icon on the display.

Buttons			
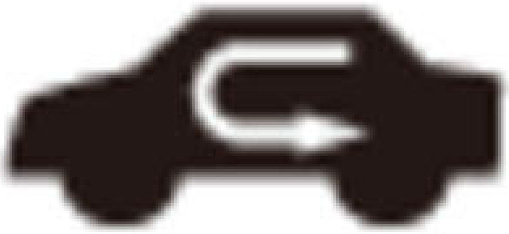	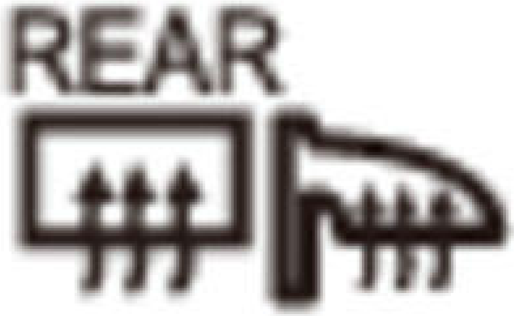	or	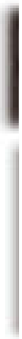

NOTE: This illustration is an example only. Appearance and structure of the actual parts may vary depending on the model.

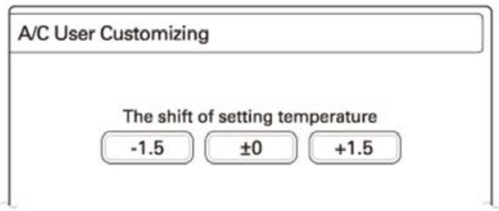

A/C User Customizing

The shift of setting temperature

-1.5 ±0 +1.5

- How to cancel A/C User Customizing
-
    - -

      Turn the vehicle to the OFF (LOCK) mode.

A/C SYSTEM DESCRIPTION - COMPONENTS (2017 2018 2019)

Outside Air Temperature Sensor

The outside air temperature sensor is installed on the front side of the vehicle, behind the front bumper. The outside air temperature sensor uses a sensor that decreases r unit calculates the outside air temperature based on the information received from the outside air temperature sensor.

NOTE: This illustration is an example only. Appearance and structure of the actual parts may vary depending on the model.

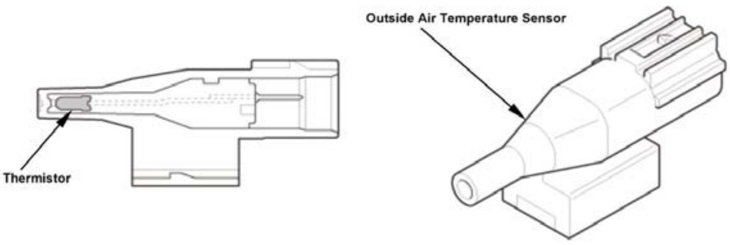

A/C Condenser

The condenser and receiver/dryer are integrated. The main A/C condenser changes the high pressure and temperature refrigerant vapor from the electric A/C compresso the refrigerant to release heat to the outside air. The receiver/dryer acts as a reservoir of liquid refrigerant for the expansion valve. It also removes debris and moisture fr pressure and temperature liquid refrigerant even further to improve A/C performance.

NOTE: This illustration is an example only. Appearance and structure of the actual parts may vary depending on the model.

Sub Cool Cycle Condenser System

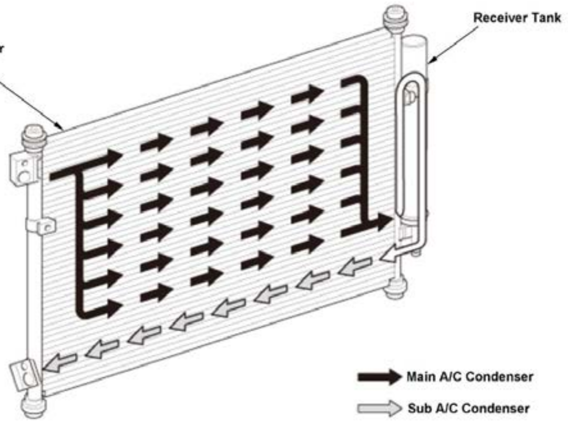

A/C Pressure Sensor

The A/C pressure sensor is attached to the receiver line on the outlet side of the A/C condenser. The sensor's output voltage changes in response to changes in A/C disch
used to drive the A/C compressor. The PCM also controls the radiator fan and A/C condenser fan. When the A/C system pressure rises to the upper limit, or decreases to
protect the system.

- Upper limit: 2, 950 kPa (30.08 kgf/cm 2, 427.9 psi)
- Lower limit: 196 kPa (2.00 kgf/cm 2, 28.4 psi)
- High speed fans switch point: 1, 600 kPa (16.32 kgf/cm 2, 232.1 psi)

NOTE: This illustration is an example only. Appearance and structure of the actual parts may vary depending on the model.

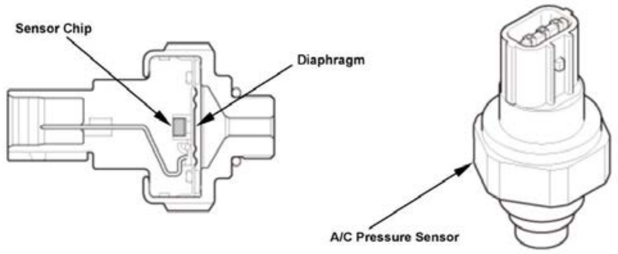

A/C Compressor

The A/C compressor is a pump that compresses refrigerant. It is driven by the engine accessory drive belt. When the compressor clutch is OFF, the pulley and armature
operate. When the compressor clutch is ON, the field coil is energized, creating a strong magnetic field. This magnetic field locks the pulley and armature plate together
becomes a high pressure and temperature vapor that is sent to the A/C condenser.

The A/C compressor has a mechanical relief valve, and the valve opens when refrigerant pressure exceeds the rated value. It cannot be reused, and should be replaced.

Variable Capacity Control (1.5 L Engine)

The climate control unit operates the variable capacity control solenoid on the A/C compressor. The solenoid controls the cooling capacity by adjusting the flow of refri
control unit determines the solenoid circuit's current flow based on the outside air temperature sensor, the in-car temperature sensor, and solar radiation values.

NOTE: This illustration is an example only. Appearance and structure of the actual parts may vary depending on the model.

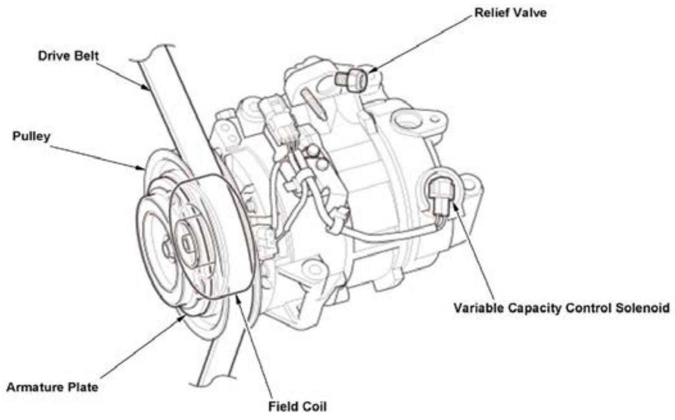

Sunlight Sensor

The sunlight sensor is attached to the upper face of the dashboard. The sunlight sensor uses a photodiode-type optical sensor which changes current in proportion to the
information of the sunlight sensor.

NOTE: This illustration is an example only. Appearance and structure of the actual parts may vary depending on the model.

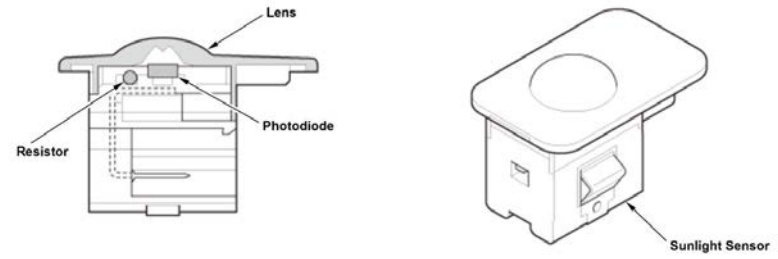
Lens
Photodiode
Resistor
Sunlight Sensor

Evaporator Temperature Sensor

The evaporator temperature sensor is a clip-type thermistor, with a sensing element that is directly mounted to the evaporator core fins. The sensor is connected to the cl temperature. The A/C compressor and fans are cycled off briefly if the temperature approaches the freezing point of water. If the evaporator temperature goes too low, th causing restricted evaporator airflow and poor A/C performance.

NOTE: This illustration is an example only. Appearance and structure of the actual parts may vary depending on the model.

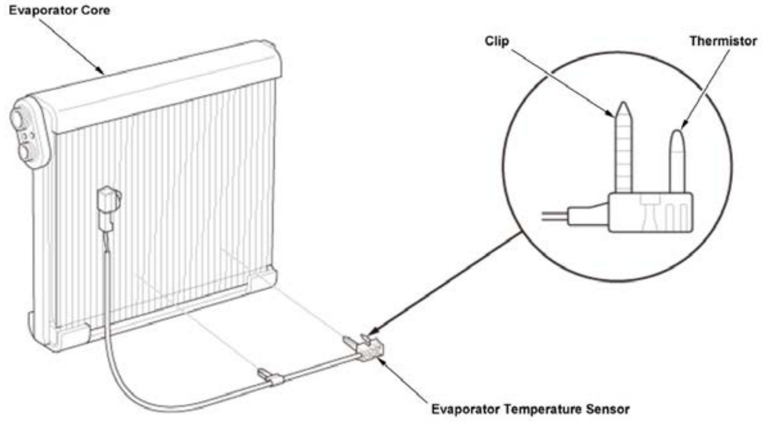
Evaporator Core
Clip
Thermistor
Evaporator Temperature Sensor

In-Car Temperature Sensor

The in-car temperature sensor is attached to the center face of the dashboard and reads in-car temperature. The sensor uses a chip type thermistor-type temperature senso increases resistance when temperature is drops. The climate control unit reads the resistance fluctuation in response to changes in in-car temperature and control the A/C

NOTE: This illustration is an example only. Appearance and structure of the actual parts may vary depending on the model.

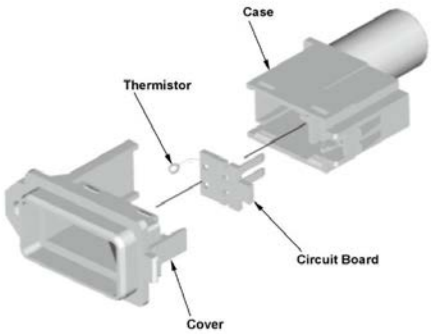
Case
Thermistor
Circuit Board
Cover

A/C SYSTEM DESCRIPTION - COMPONENTS (2020 2021)

Outside Air Temperature Sensor

The outside air temperature sensor is installed on the front side of the vehicle, behind the front bumper. The outside air temperature sensor uses a sensor that decreases r unit calculates the outside air temperature based on the information received from the outside air temperature sensor.

NOTE: This illustration is an example only. Appearance and structure of the actual parts may vary depending on the model.

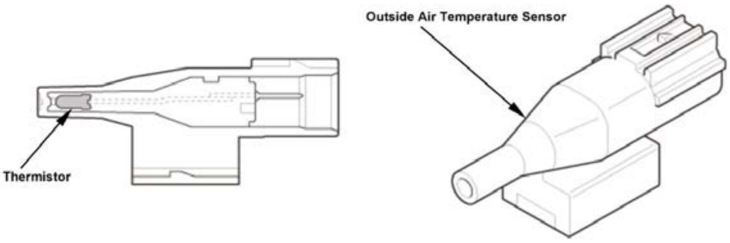
Outside Air Temperature Sensor
Thermistor

A/C Condenser

The condenser and receiver/dryer are integrated. The main A/C condenser changes the high pressure and temperature refrigerant vapor from the A/C compressor into a h refrigerant to release heat to the outside air. The receiver/dryer acts as a reservoir of liquid refrigerant for the expansion valve. It also removes debris and moisture from pressure and temperature liquid refrigerant even further to improve A/C performance.

NOTE: This illustration is an example only. Appearance and structure of the actual parts may vary depending on the model.

Sub Cool Cycle Condenser System

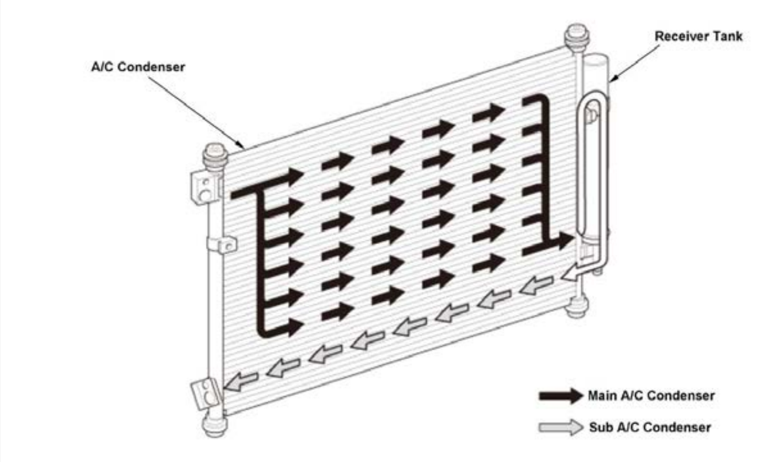

A/C Pressure Sensor

The A/C pressure sensor is attached to the receiver line on the outlet side of the A/C condenser. The sensor's output voltage changes in response to changes in A/C disch used to drive the A/C compressor. The PCM also controls the radiator fan and A/C condenser fan. When the A/C system pressure rises to the upper limit, or decreases to protect the system.

- Upper limit: 2, 950 kPa (30.08 kgf/cm 2, 427.9 psi)
- Lower limit: 196 kPa (2.00 kgf/cm 2, 28.4 psi)
- Low to high fans switch point: 1, 600 kPa (16.32 kgf/cm 2, 232.1 psi)

NOTE: This illustration is an example only. Appearance and structure of the actual parts may vary depending on the model.

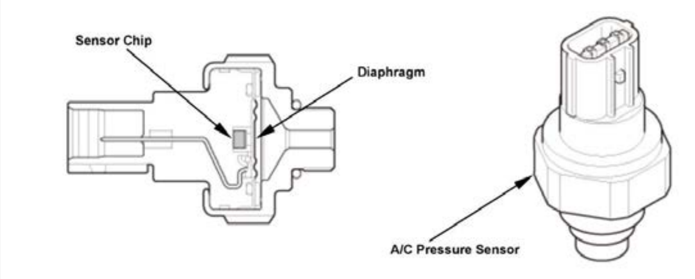

A/C Compressor

The A/C compressor is a pump that compresses refrigerant. It is driven by the engine accessory drive belt. When the compressor clutch is OFF, the pulley and armature operate. When the compressor clutch is ON, the field coil is energized, creating a strong magnetic field. This magnetic field locks the pulley and armature plate together becomes a high pressure and temperature vapor that is sent to the A/C condenser.

The A/C compressor has a mechanical relief valve, and the valve opens when refrigerant pressure exceeds the rated value. It cannot be reused, and should be replaced.

Variable Capacity Control (1.5 L Engine)

The climate control unit operates the variable capacity control solenoid on the A/C compressor. The solenoid controls the cooling capacity by adjusting the flow of refri control unit determines the solenoid circuit's current flow based on the outside air temperature sensor, the in-car temperature sensor, and solar radiation values.

NOTE: This illustration is an example only. Appearance and structure of the actual parts may vary depending on the model.

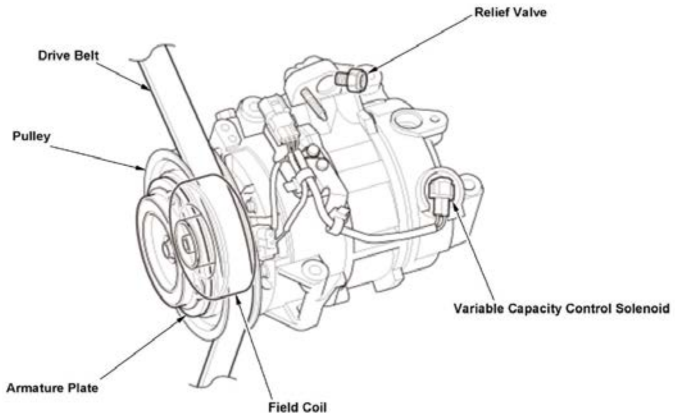
Relief Valve
Drive Belt
Pulley
Variable Capacity Control Solenoid
Armature Plate
Field Coil

Sunlight Sensor

The sunlight sensor is attached to the upper face of the dashboard. The sunlight sensor uses a photodiode-type optical sensor which changes current in proportion to the
information of the sunlight sensor.

NOTE: This illustration is an example only. Appearance and structure of the actual parts may vary depending on the model.

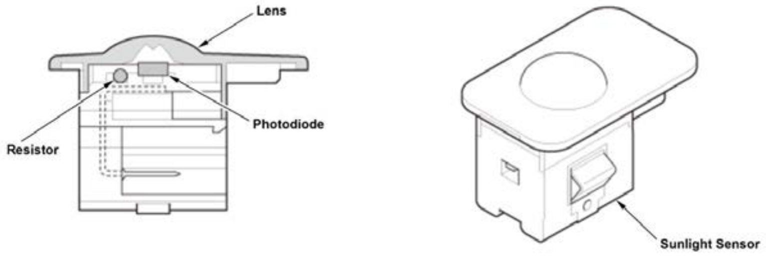
Lens
Resistor
Photodiode
Sunlight Sensor

Cold Storage Evaporator

To improve the comfort level in the passenger compartment, and improve fuel consumption, the A/C system is equipped with a cold storage evaporator. The evaporator
which stores cold energy to be used to cool the passenger compartment while the engine and air-conditioning cycle is off during the idle-stop. Once the engine restarts, t
enhance the cold insulator, the storage case uses paraffin and is integrated with inner fins to enhance heat conductivity.

NOTE: This illustration is an example only. Appearance and structure of the actual parts may vary depending on the model.

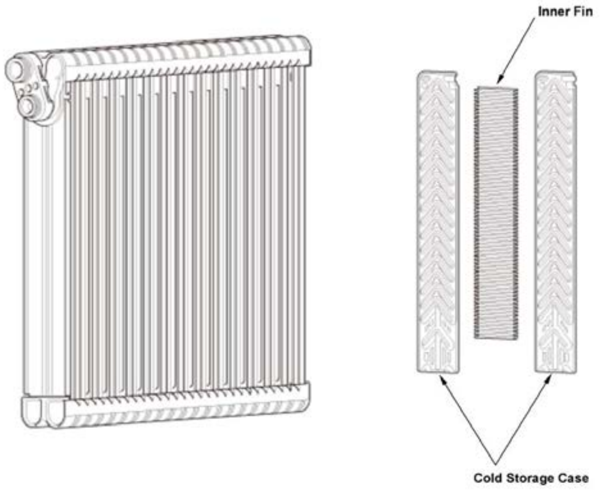
Inner Fin
Cold Storage Case

Evaporator Temperature Sensor

The evaporator temperature sensor is a clip-type thermistor, with a sensing element that is directly mounted to the evaporator core fins. The sensor is connected to the cl
temperature. The A/C compressor and fans are cycled off briefly if the temperature approaches the freezing point of water. If the evaporator temperature goes too low, th
causing restricted evaporator airflow and poor A/C performance.

NOTE: This illustration is an example only. Appearance and structure of the actual parts may vary depending on the model.

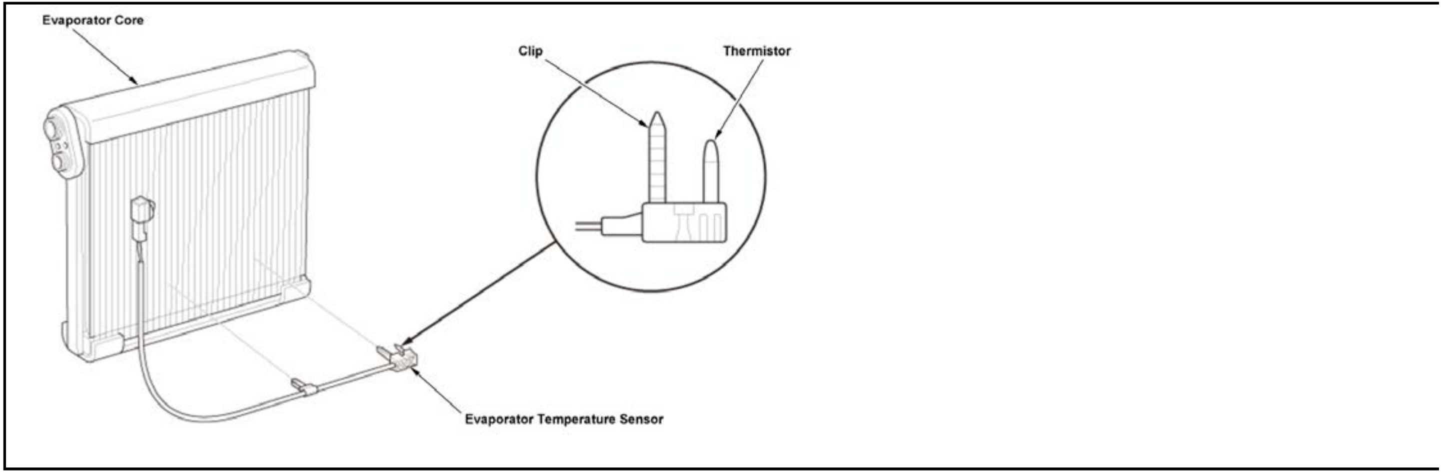

In-Car Temperature Sensor

The in-car temperature sensor is attached to the center face of the dashboard and reads in-car temperature. The sensor uses a chip type thermistor-type temperature sens
increases resistance when temperature is drops. The climate control unit reads the resistance fluctuation in response to changes in in-car temperature and control the A/C

NOTE: This illustration is an example only. Appearance and structure of the actual parts may vary depending on the model.

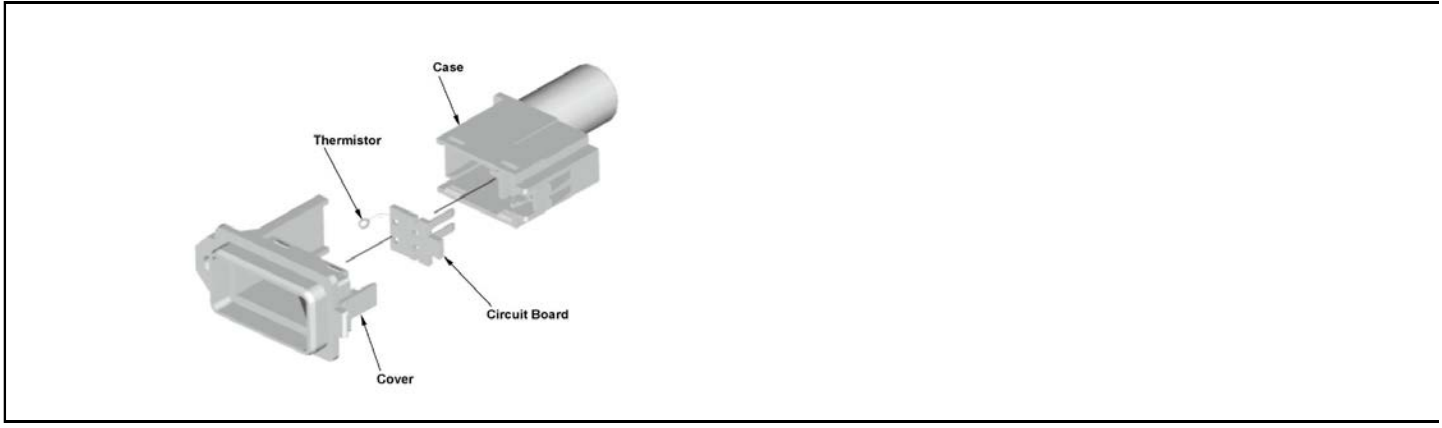

Humidity/In-Car Temperature Sensor

The humidity/in-car temperature sensor has a humidity sensor and an in-car temperature sensor. The climate control unit receives humidity information from the sensor
humid, the climate control unit operates the A/C compressor to prevent a windshield from being fogged. When the humidity is low enough, the climate control unit redu
hose connects the sensor case to an aspirator on the HVAC unit to improve the accuracy of temperature and humidity measurements.

NOTE: This illustration is an example only. Appearance and structure of the actual parts may vary depending on the model.

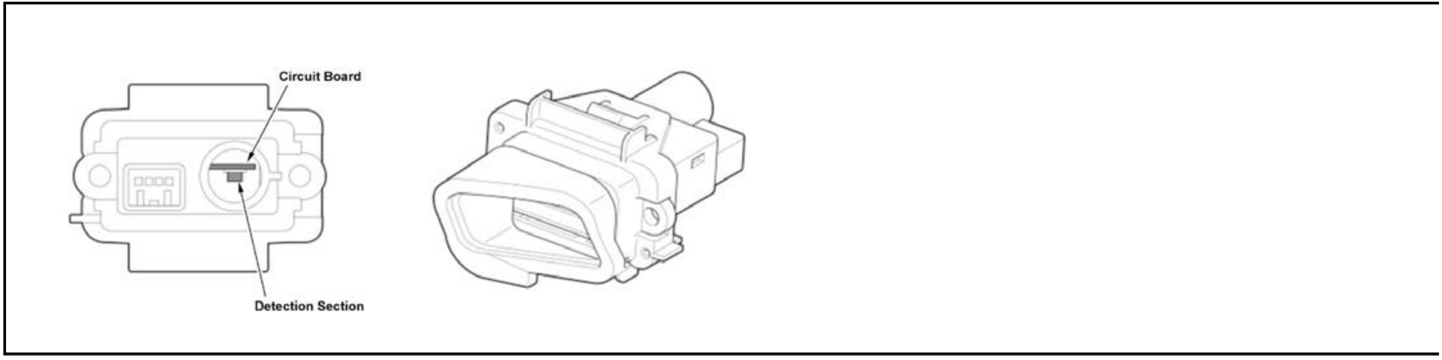

A/C SYSTEM DESCRIPTION - SYSTEM DIAGRAM (2017 2018 2019)

For locations of each component on vehicle, refer to Component Location Index.

System Diagram

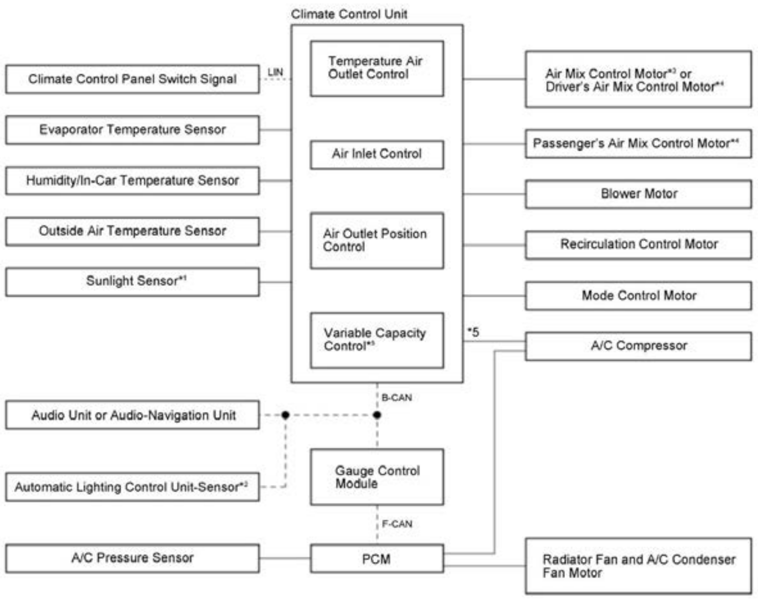
Climate Control Unit
Climate Control Panel Switch Signal
LIN
Temperature Air Outlet Control
Air Mix Control Motor*3 or Driver's Air Mix Control Motor*4
Evaporator Temperature Sensor
Air Inlet Control
Passenger's Air Mix Control Motor*4
Humidity/In-Car Temperature Sensor
Blower Motor
Outside Air Temperature Sensor
Air Outlet Position Control
Recirculation Control Motor
Sunlight Sensor*1
Mode Control Motor
Variable Capacity Control*5
*5
A/C Compressor
B-CAN
Audio Unit or Audio-Navigation Unit
Automatic Lighting Control Unit-Sensor*2
Gauge Control Module
F-CAN
A/C Pressure Sensor
PCM
Radiator Fan and A/C Condenser Fan Motor

*1 : Without automatic lighting
*2 : With automatic lighting
*3 : Without dual zone control
*4 : With dual zone control
*5 : With variable capacity compressor

A/C SYSTEM DESCRIPTION - SYSTEM DIAGRAM (2020 2021)

For locations of each component on vehicle, refer to Component Location Index.

System Diagram

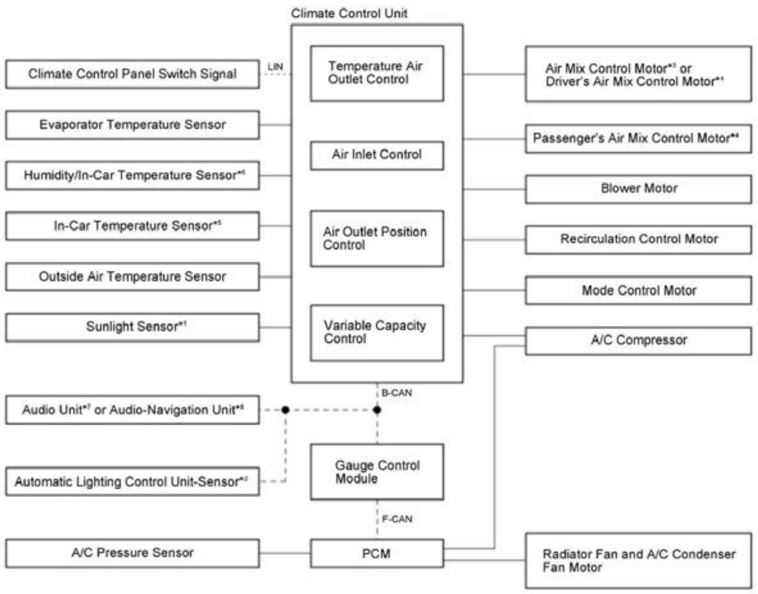
Climate Control Unit
Climate Control Panel Switch Signal
LIN
Temperature Air Outlet Control
Air Mix Control Motor*3 or Driver's Air Mix Control Motor*4
Evaporator Temperature Sensor
Air Inlet Control
Passenger's Air Mix Control Motor*4
Humidity/In-Car Temperature Sensor*6
Blower Motor
In-Car Temperature Sensor*5
Air Outlet Position Control
Recirculation Control Motor
Outside Air Temperature Sensor
Mode Control Motor
Sunlight Sensor*1
Variable Capacity Control
A/C Compressor
B-CAN
Audio Unit*7 or Audio-Navigation Unit*8
Automatic Lighting Control Unit-Sensor*2
Gauge Control Module
F-CAN
A/C Pressure Sensor
PCM
Radiator Fan and A/C Condenser Fan Motor

*1 : With automatic wiper
*2 : With automatic lighting
*3 : Without dual zone control
*4 : With dual zone control
*5 : Without auto idle stop system
*6 : With auto idle stop system
*7 : Climate control panel with display
*8 : Climate control panel without display

HEATED STEERING WHEEL SYSTEM DESCRIPTION - SYSTEM DIAGRAM

For locations of each component on vehicle, refer to Component Location Index

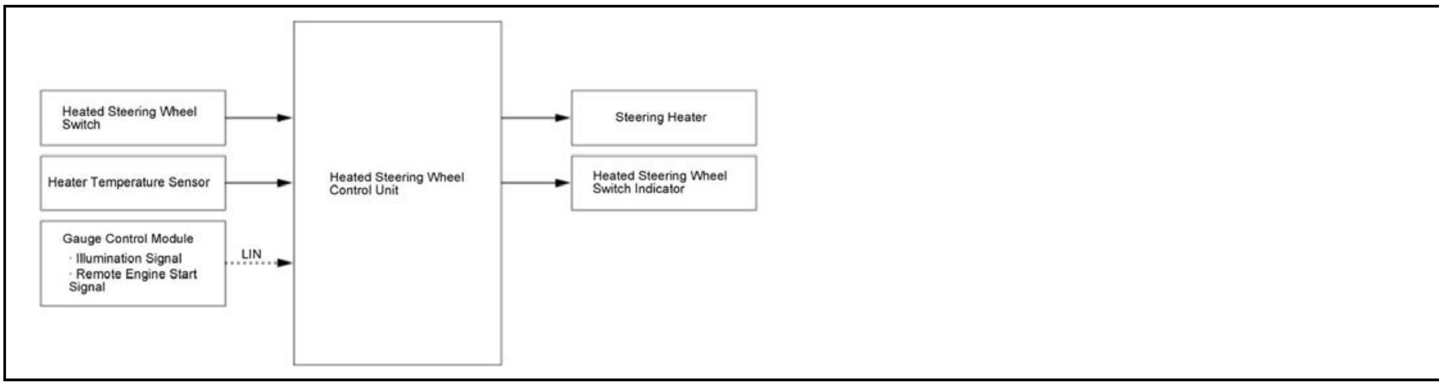
Heated Steering Wheel Switch
Heater Temperature Sensor
Gauge Control Module
· Illumination Signal
· Remote Engine Start Signal
LIN
Heated Steering Wheel Control Unit
Steering Heater
Heated Steering Wheel Switch Indicator

REAR WINDOW DEFOGGER SYSTEM DESCRIPTION

The Timer Function

The rear window defogger provides the timer control function that is controlled by the climate control unit. The timer control is operated by turning the vehicle to the O defogger switch*. The timer operating time varies according to ambient temperature. If the rear window defogger/mirror defogger* switch is turned on when the timer i switch is pressed.

*: With mirror defogger

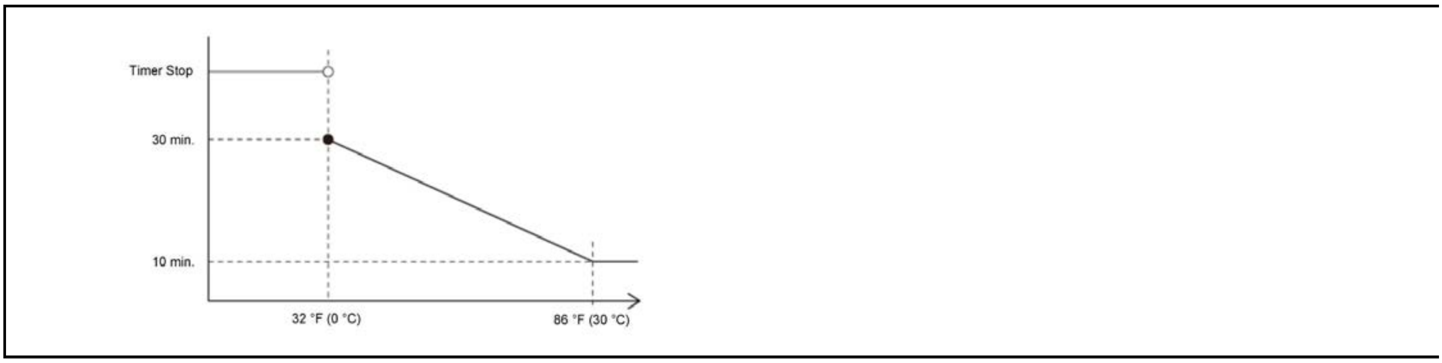

REAR WINDOW DEFOGGER SYSTEM DESCRIPTION - SYSTEM DIAGRAM

For locations of each component on the vehicle, refer to Component Location Index

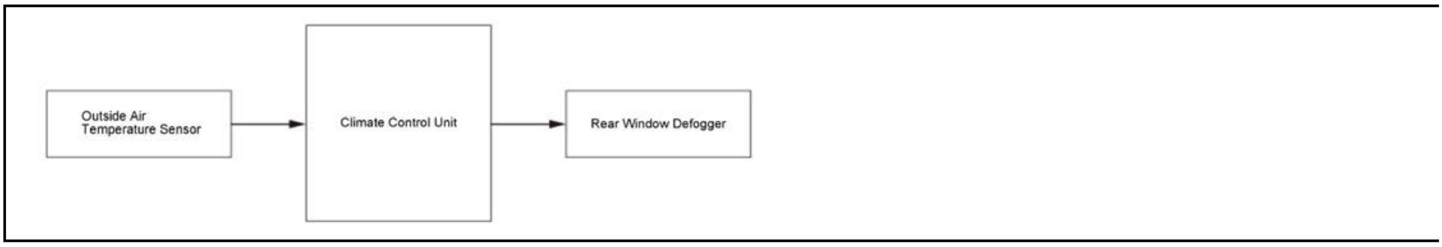
Outside Air Temperature Sensor
Climate Control Unit
Rear Window Defogger

CONNECTOR VIEW

CLIMATE CONTROL UNIT CONNECTOR FOR INPUTS AND OUTPUTS (2017 2018 2019)

Connector Index
Climate Control Unit Connector A (32P)
Climate Control Unit Connector B (24P)

CLIMATE CONTROL UNIT CONNECTOR A (32P)

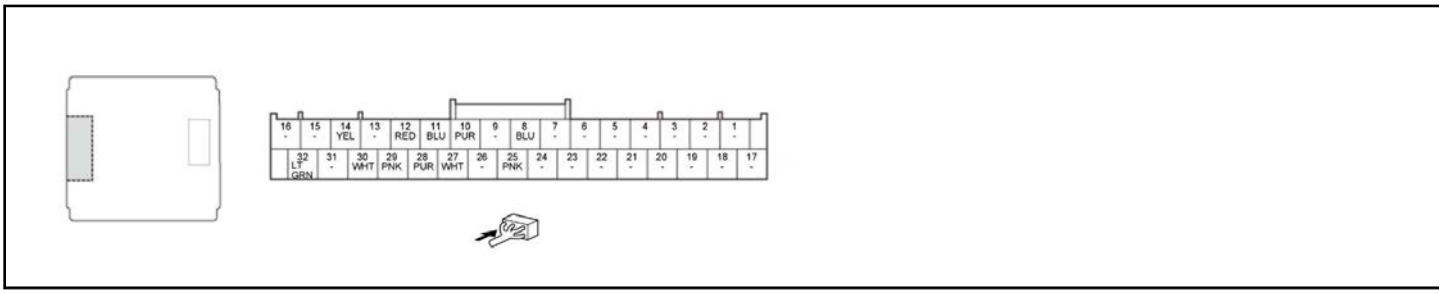
16 -
15 -
14 YEL
13 -
12 RED
11 BLU
10 PUR
9 -
8 BLU
7 -
6 -
5 -
4 -
3 -
2 -
1 -
32 LT GRN
31 -
30 WHT
29 PNK
28 PUR
27 WHT
26 -
25 PNK
24 -
23 -
22 -
21 -
20 -
19 -
18 -
17 -

Cavity	Terminal name	Description	Sig
1	Not used	----	----
2	Not used	----	----
3	Not used	----	----
4	Not used	----	----
5	Not used	----	----

Cavity	Terminal name	Description	Sig
6	Not used	----	----
7	Not used	----	----
8	B-CAN_L	B-CAN communication signal	With vehicle in ON mode: pulses
9	Not used	----	----
10 *1	TSUN	Detects sunlight sensor signal	With vehicle in ON mode, and no sunlight or t With vehicle in ON mode, and sunlight on the
11	TAM	Detects outside air temperature sensor signal	With vehicle in ON mode: about 0.2-4.8 V (de
12	SENSOR COM	Sensor ground	With vehicle in ON mode: less than 0.2 V
13	Not used	----	----
14	SOL IN	Outputs 12 V to A/C compressor variable capacity control solenoid	Variable voltage based on cooling load. With
15	Not used	----	----
16	Not used	----	----
17	Not used	----	----
18	Not used	----	----
19	Not used	----	----
20	Not used	----	----
21	Not used	----	----
22	Not used	----	----
23	Not used	----	----
24	Not used	----	----
25	B-CAN_H	B-CAN communication signal	With vehicle in ON mode: pulses
26	Not used	----	----

*1: With automatic wiper or without automatic lighting

Cavity	Terminal name	Description	Sig
27	TR	Detects in-car temperature sensor signal	With vehicle in ON mode: about 0.2-4.8 V (de
28	GND	Ground for climate control unit (G402)	With vehicle in ON mode: less than 0.2 V
29	BUS-DATA	BUS-DATA communication signal	----
30	SOL OUT	Ground for A/C compressor variable capacity control solenoid	With vehicle in ON mode: less than 0.2 V
31	Not used	----	----
32	IG2 A/C	IG2 power source	With vehicle in ON mode: battery voltage

*1: With automatic wiper or without automatic lighting

CLIMATE CONTROL UNIT CONNECTOR B (24P)

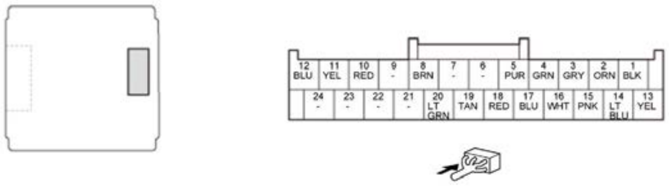

Cavity	Terminal name	Description	Sig
1	S5V	Outputs sensor 5 V	With vehicle in ON mode: about 5.0 V
2	AMD-P-DR	Detects potentiometer signal of air mix control motor (door position) *1Detects potentiometer signal of driver's air mix control motor (door position) *2	With vehicle in ON mode: about 0.5-4.5 V (de *1With vehicle in ON mode: about 0.5-4.5 V (position) *2
3 *2	AMD-P-AS	Detects potentiometer signal of passenger's air mix control motor (door position)	With vehicle in ON mode: about 0.5-4.5 V (de position)
4	RFD-P	Detects potentiometer signal of recirculation control motor (door position)	With vehicle in ON mode: about 0.5-4 V (depe
5	MDD-P	Detects potentiometer signal of mode control motor (door position)	With vehicle in ON mode: about 0.5-4.5 V (de
6	Not used	----	----
7	Not used	----	----
8	TEVA	Detects evaporator temperature sensor signal	With vehicle in ON mode: about 0.2-4.8 V (de
9	Not used	----	----
10	SENS-COM	Sensor ground	With vehicle in ON mode: less than 0.2 V
11	BLW-G	Outputs power transistor gate voltage	With vehicle in ON mode and fan control icon With vehicle in ON mode and fan control icon voltage (depending on blower motor control)
12	BLW-V	Feedback signal of power transistor drain voltage	With vehicle in ON mode: about 0 V-battery v

*1: Without dual zone control

*2: With dual zone control

Cavity	Terminal name	Description	Sig
13	M-HOT-DR	Output to drive air mix control motor to HOT side *1Output to drive driver's air mix control motor to HOT side *2	With vehicle in ON mode and air mix control vehicle in ON mode and driver's air mix contro

Cavity	Terminal name	Description	Sig
14	M-COOL-DR	Output to drive air mix control motor to COOL side *1Output to drive driver's air mix control motor to COOL side *2	With vehicle in ON mode and air mix control r *1With vehicle in ON mode and driver's air mi voltage *2
15 *2	M-HOT-AS	Output to drive passenger's air mix control motor to HOT side	With vehicle in ON mode and passenger's air n voltage
16 *2	M-COOL-AS	Output to drive passenger's air mix control motor to COOL side	With vehicle in ON mode and passenger's air n voltage
17	M-REC	Output to drive recirculation control motor to RECIRCULATE side	With vehicle in ON mode and recirculation co battery voltage
18	M-FRS	Output to drive recirculation control motor to FRESH side	With vehicle in ON mode and recirculation co voltage
19	M-VENT	Outputs to drive mode control motor to VENT side	With vehicle in ON mode and mode control m
20	M-DEF	Outputs to drive mode control motor to DEF side	With vehicle in ON mode and mode control m
21	Not used	----	----
22	Not used	----	----
23	Not used	----	----
24	Not used	----	----

*1: Without dual zone control*2: With dual zone control

CLIMATE CONTROL UNIT CONNECTOR FOR INPUTS AND OUTPUTS (2020 2021)

Connector Index
Climate Control Unit Connector A (32P)
Climate Control Unit Connector B (24P)

CLIMATE CONTROL UNIT CONNECTOR A (32P)

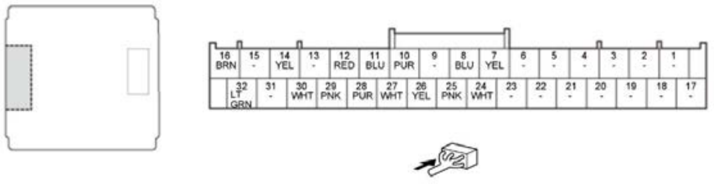

Cavity	Terminal name	Description	Sig
1	Not used	----	----
2	Not used	----	----
3	Not used	----	----
4	Not used	----	----
5	Not used	----	----
6	Not used	----	----
7 *2	HUM DATA	Humidity/in-car temperature sensor communication signal	With vehicle in ON mode: pulses
8	B-CAN_L	B-CAN communication signal	With vehicle in ON mode: pulses
9	Not used	----	----
10 *1	TSUN	Detects sunlight sensor signal	With vehicle in ON mode, and no sunlight or t With vehicle in ON mode, and sunlight on the
11	TAM	Detects outside air temperature sensor signal	With vehicle in ON mode: about 0.2-4.8 V (de
12	SENSOR COM	Sensor ground	With vehicle in ON mode: less than 0.2 V
13	Not used	----	----
14	SOL IN	Outputs 12 V to A/C compressor variable capacity control solenoid	Variable voltage based on cooling load. With A
15	Not used	----	----
16 *2	+B BACKUP2 SUB	+B power source	With vehicle in ON mode: battery voltage
17	Not used	----	----
18	Not used	----	----
19	Not used	----	----
20	Not used	----	----
21	Not used	----	----
22	Not used	----	----
23	Not used	----	----
24 *2	HUM CLK	Humidity/in-car temperature sensor communication signal	With vehicle in ON mode: pulses
25	B-CAN_H	B-CAN communication signal	With vehicle in ON mode: pulses
26 *2	S 5V	Outputs sensor 5 V	With vehicle in ON mode: about 5.0 V

*1: With automatic wiper

*2: With auto idle stop system

*3: Without auto idle stop system

Cavity	Terminal name	Description	Sig
27 *3	TR	Detects in-car temperature sensor signal	With vehicle in ON mode: about 0.2-4.8 V (de

Cavity	Terminal name	Description	Sig
28	GND	Ground for climate control unit (G402)	With vehicle in ON mode: less than 0.2 V
29	BUS-DATA	BUS-DATA communication signal	----
30	SOL OUT	Ground for A/C compressor variable capacity control solenoid	With vehicle in ON mode: less than 0.2 V
31	Not used	----	----
32	IG2 A/C	IG2 power source	With vehicle in ON mode: battery voltage

*1: With automatic wiper*2: With auto idle stop system*3: Without auto idle stop system

CLIMATE CONTROL UNIT CONNECTOR B (24P)

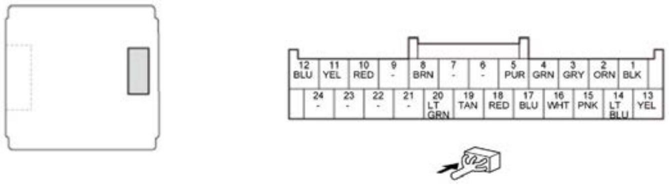

Cavity	Terminal name	Description	Sig
1	S5V	Outputs sensor 5 V	With vehicle in ON mode: about 5.0 V
2	AMD-P-DR	Detects potentiometer signal of air mix control motor (door position) *1Detects potentiometer signal of driver's air mix control motor (door position) *2	With vehicle in ON mode: about 0.5-4.5 V (de *1With vehicle in ON mode: about 0.5-4.5 V (position) *2
3 *2	AMD-P-AS	Detects potentiometer signal of passenger's air mix control motor (door position)	With vehicle in ON mode: about 0.5-4.5 V (de position)
4	RFD-P	Detects potentiometer signal of recirculation control motor (door position)	With vehicle in ON mode: about 0.5-4 V (depe
5	MDD-P	Detects potentiometer signal of mode control motor (door position)	With vehicle in ON mode: about 0.5-4.5 V (de
6	Not used	----	----
7	Not used	----	----
8	TEVA	Detects evaporator temperature sensor signal	With vehicle in ON mode: about 0.2-4.8 V (de
9	Not used	----	----
10	SENS-COM	Sensor ground	With vehicle in ON mode: less than 0.2 V
11	BLW-G	Outputs power transistor gate voltage	With vehicle in ON mode and fan control icon With vehicle in ON mode and fan control icon voltage (depending on blower motor control)
12	BLW-V	Feedback signal of power transistor drain voltage	With vehicle in ON mode: about 0 V-battery v

*1: Without dual zone control*2: With dual zone control

Cavity	Terminal name	Description	Sig
13	M-HOT-DR	Output to drive air mix control motor to HOT side *1Output to drive driver's air mix control motor to HOT side *2	With vehicle in ON mode and air mix control vehicle in ON mode and driver's air mix contr
14	M-COOL-DR	Output to drive air mix control motor to COOL side *1Output to drive driver's air mix control motor to COOL side *2	With vehicle in ON mode and air mix control *1With vehicle in ON mode and driver's air mi voltage *2
15 *2	M-HOT-AS	Output to drive passenger's air mix control motor to HOT side	With vehicle in ON mode and passenger's air voltage
16 *2	M-COOL-AS	Output to drive passenger's air mix control motor to COOL side	With vehicle in ON mode and passenger's air voltage
17	M-REC	Output to drive recirculation control motor to RECIRCULATE side	With vehicle in ON mode and recirculation co battery voltage
18	M-FRS	Output to drive recirculation control motor to FRESH side	With vehicle in ON mode and recirculation co voltage
19	M-VENT	Outputs to drive mode control motor to VENT side	With vehicle in ON mode and mode control m
20	M-DEF	Outputs to drive mode control motor to DEF side	With vehicle in ON mode and mode control m
21	Not used	----	----
22	Not used	----	----
23	Not used	----	----
24	Not used	----	----

*1: Without dual zone control

*2: With dual zone control

CHECK

A/C COMPRESSOR CLUTCH CHECK

Check

1. A/C Compressor Clutch Clearance - Check

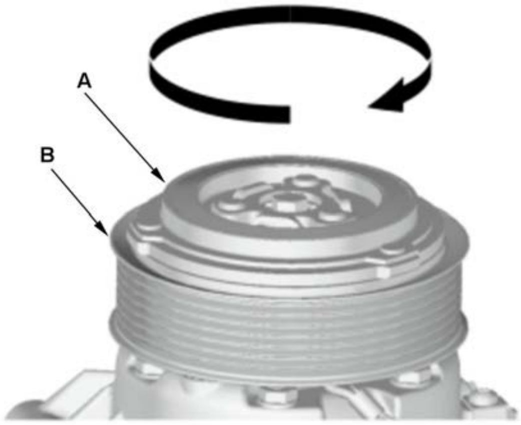 	1. Check the armature plate (A) for discoloration, peeling, or other dama 2. Check the pulley (B) bearing play and drag by rotating the pulley by l Replace the clutch set with a new one if it is noisy, has excessive play/dr faces. **NOTE:** **The pulley and the armature plate were mated at the factory by a burnishing operation. Always replace the pulley and the plate as a set. Replacing only one part of the clutch set will cause clutch slippage.**
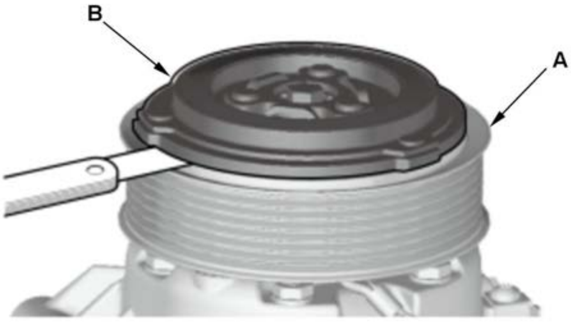 	3. Measure the clearance between the pulley (A) and the armature pla specified limits, **remove the armature plate** and add or remove shim NOTE: - 1.5 L engine: The shims are available in three thicknesses: 0.3 - 2.4 L engine: The shims are available in seven thicknesses: 0.7 mm.

Clearance
1.5 L engine: 0.30-0.60 mm (0.012-0.023 in)
2.4 L engine: 0.35-0.65 mm (0.014-0.025 in)

2. A/C Compressor Clutch Field Coil - Check

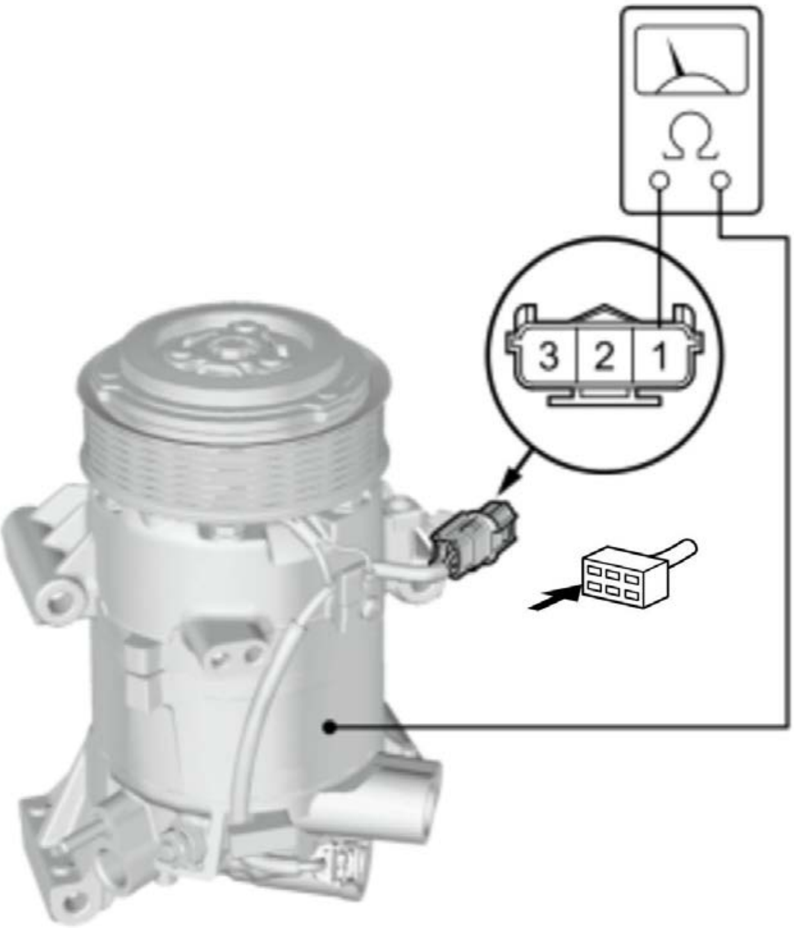 **1.5 L engine** **2.4 L engine**	1. Measure the resistance o specifications, **replace the**

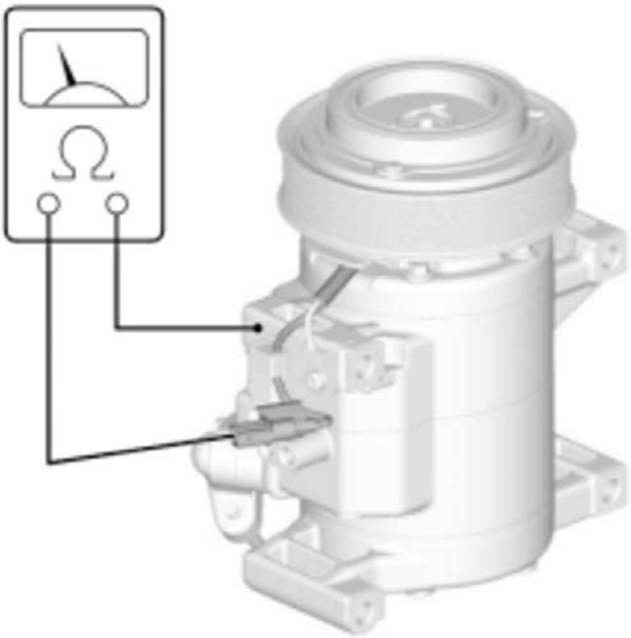

Field Coil Resistance
1.5 L engine: 3.35-3.61 Ω at 68B°F (20B°C)
2.4 L engine: 4.926-5.446 Ω at 68B°F (20B°C)

3. A/C Compressor Clutch Oil Leak Check

1. **Remove the armature plate** , and inspect the armature plate and pulley friction surface for wear. If there is excessive wear, roughness, or scoring, **replace the**
2. Inspect the friction surfaces and the A/C compressor shaft hub for excess oil. If excess oil is present and it is not from the engine or other system, the A/C comp
compressor .

A/C REFRIGERANT LEAK CHECK (134A)

*These tools are available through the Honda Tool and Equipment Program; call 888-424-6857.

Special Tools Required

Image	Description/Too
	R134a A/C Automatic Recover/Recycle/Recharge M

Image	Description/To
	Dual Mode Refrigerant Gas Leak Detector ROBLD
	Infrared Refrigerant Leak Detector ROB22791*
OPTIMAX Jr™ A/C Leak Detection Kit for Honda and Acura Vehicles	OPTIMAX Jr. A/C Leak Detection Kit TRP124893

Check

WARNING:

- Compressed air mixed with the R-134a forms a combustible vapor.
- The vapor can burn or explode causing serious injury.
- Never use compressed air to pressure test R-134a service equipment or vehicle air conditioning systems.

WARNING:

- Air conditioning refrigerant or lubricant vapor can irritate your eyes, nose, or throat.
- Be careful when connecting service equipment.
- Do not breathe refrigerant or vapor.
- Do not operate the leak detector near flammable vapors. Its sensor operates at high temperatures, and could ignite the vapors, resulting in personal injury and/or d

NOTE:

- If accidental system discharge occurs, ventilate the work area before resuming service.
- Additional health and safety information may be obtained from the refrigerant and lubricant manufacturers.
- Check the system for leaks using an R-134a refrigerant leak detector with an accuracy of 14 g (0.49 oz) per year or better.

Leak Detector Usage Tips (Refer to the Operator's Manual for complete operating instructions)

- Position the vehicle in a wind-free work area. This will aid in detecting small leaks.
- When using the leak detector for the first time, allow it to warm up for 2 minutes with the probe in a clean atmosphere. This lets the temperature sensor in the dete
- The calibration check should be done in the "Search 2" mode. Once that is done, the other check modes do not need calibrating.
- When leak checking through the HVAC module drain hose, avoid drawing water into the probe. Water can damage the internal pump and sensor.
- Avoid creasing the flexible probe extension. Creases can restrict air flow and give false readings.
- Because the detector recalibrates itself for ambient gases, it may be necessary to move the detector away from the leak to clear the sensor. Once the sensor has cle
- When removing the clear probe tip, be careful not to lose the flow ball.
- R-134a is heavier than air; always check below and to the sides of all potential leak sources.
- Halogen leak detectors are sensitive to chemicals: windshield washing solutions, solvents/cleaners, and some vehicle adhesives. Keep these chemicals out of the a

Fluorescent Dye Usage Tips

- Use only Tracer-Stick single dose fluorescent dye capsules from TracerlineB®. Other dyes contain solvents that may contaminate the refrigerant oil, leading to co
- Adding excessive amounts of dye can damage the A/C compressor.
- PAG oil is water soluble, so condensation on the evaporator core or the refrigerant lines may wash the PAG oil and fluorescent dye away from the actual leak. Co module drain.
- After checking and repairing leaks, thoroughly clean any residual dye from the areas where leaks were found. Use GLO-AWAY dye cleaner, from Tracerline ® instructions on the bottle). Residual dye stains can cause misdiagnosis of any future A/C system leaks.
- If any refrigerant dye contacts an exterior paint surface, remove it by doing this:
-
  - -

    Carefully wash the affected surfaces to remove any dirt, and to prevent paint scratching.

  - -

    Mix water and isopropyl alcohol in a 50/50 mixture. Soak a soft 100 % cotton towel with the water/alcohol mixture, and place the cloth on the affected area

  - -

    After removing the dye with the water/alcohol-soaked cloth, carefully wash the affected areas, and check that there is no remaining dye.

1. **A/C Recover/Recycle/Recharge Machine - Connect**
2. **A/C Refrigerant - Recover**
3. **A/C System - Evacuate**
4. **A/C Refrigerant - Charge**
5. A/C Refrigerant - Leak Check

   1. With the engine OFF, use a leak detector first to detect the leak source. Follow a continuous path in order to ensure that you will not miss any possible leaks. Te

Possible Leak Area	Diagnostic Procedure with the Leak Detector	Notes
Service ports	• Check the service ports with caps installed • If the detector "sniffs" a leak, use fluorescent dye to confirm it	When capping the service ports, ensure that the seals on the port caps the caps are tight. The caps are used as the final seals in the system
A/C condenser	If the detector "sniffs" a leak, use fluorescent dye to confirm it	• Check for joints or connections coated with oily dust • Check for damaged and corroded areas • Check all fittings, couplings, brazed/welded areas and areas aro • Move the probe slowly (1 in./second or less), and keep it withir component being checked. This maximizes the chance of detec • If you detect a leak, blow compressed air over the area, then rec large leaks, cleaning the area with compressed air may help you source
Evaporator	• Check at the evaporator drain hose • Check at the passenger's side vent and turn the blower on at low speed	B
A/C lines	• Wiggle the rubber hoses when checking crimped metal ends • If the detector "sniffs" a leak, use fluorescent dye to confirm it	• Check all fittings, couplings, pressure switches, brazed/welded attachment points on A/C lines and components • Check for damaged and corroded areas • Move the probe slowly (1 in./second or less), and keep it withir component being checked. This maximizes the chance of detec

   2. If a leak could not be found with the detector, do the following: close the quick coupler valves, then disconnect the quick couplers from the vehicle service port

   3. Attach the universal connect set from the Optimax Jr. Leak Detection Kit to the service valve fitting. Close the control valve (the black knob on the connect set)

   4. Attach the A/C recover/recycle/recharge machine low pressure hose quick coupler to the service valve fitting, and open the quick coupler valve. Evacuate the co machine vacuum pump, then close the quick coupler valve.

   5. Detach the universal connect set, and install a Tracer-StickB® dye capsule between the connect set and the service valve fitting (see the manufacturer's instruct

6. Attach the quick coupler on the universal connect set to the low pressure service port on the vehicle. Attach the A/C recover/recycle/recharge machine low side recover/recycle/recharge machine low pressure hose quick coupler valve, but do not open the control valve.

7. Start the engine, and set the A/C system to maximum cooling. Open the control valve to let refrigerant and the dye enter the A/C system through the low pressu StickB® dye capsule is empty.

8. Run the engine and A/C system for 15 minutes to thoroughly circulate the dye. Then shut the engine off, and inspect the following areas of the system for leaks

NOTE:

- **Check for leaks in a dark work area, and use the UV light and the special glasses from the leak check kit. Other UV lig dye.**
- **Small leaks may take up to 1 week of vehicle operation (with normal A/C use) to become visible.**

Possible Leak Area	Diagnostic Procedure with Infrared Leak Detector or Fluorescent Dye
Service ports	If a leak is found, replace the cap/O-ring seal or A/C line as needed
A/C lines	• Use a permanent marker pen to circle the leak area • If a leak is found, **remove and replace the A/C line**
A/C condenser	• If a leak is found, **remove the A/C condenser** • Determine whether leak is in the A/C condenser or the dryer desiccant • Use a permanent marker pen to circle the leak area • **Replace either the dryer desiccant** or **the A/C condenser** , depending upon which is leaking
A/C compressor	• Check for leaks at all of the A/C compressor joints, the clutch center, the A/C compressor front housing bolts, and the scroll bolts on the back of the A/C compressor • If a leak is found, use a permanent marker pen to circle the leak area • If the A/C compressor relief valve appears to be leaking, determine whether the leak is coming from the relief valve, or the joint between the A/C compressor casing and the valve. If the leak is from the relief valve, check the A/C system pressures, and refer to the **pressure test table in the A/C system test**. If the leak is from the casing/valve joint, **replace the A/C compressor relief valve** • If the leak is coming from the suction hose and/or discharge hose fittings on the A/C compressor, clean the A/C fittings and replace the suction/discharge fitting O-rings • For all other A/C compressor leaks, **remove and replace the A/C compressor**
Evaporator	• Start checking for evaporator leaks by illuminating the evaporator drain tube area • If a leak is found, **remove the evaporator core** • Determine whether leak is from evaporator or expansion valve • Use a permanent marker pen to circle leak area • **Replace the expansion valve** or **the evaporator core** , depending upon which is leaking

INPUT TEST

HEATED STEERING WHEEL CONTROL UNIT INPUT TEST

SRS components are located in this area. Review the **SRS component locations** and the **precautions and procedures** before doing repairs or service.

NOTE:

- Make sure the fuses associated with the system is OK.
- After testing, clear the SRS control unit DTCs.

1. Turn the vehicle to the OFF (LOCK) mode.

2. Disconnect the heated steering wheel control unit 14P connector.

Heated Steering Wheel Control Unit 14P Connector (female terminals)

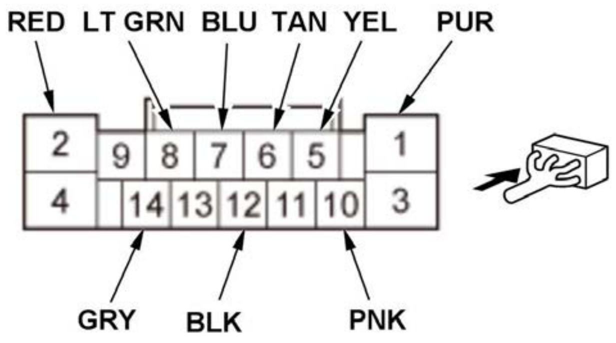

Inspect the connector and socket terminals to be sure they are all making good contact:

- If the terminals are bent, loose, or corroded, repair them as necessary, and recheck the system.

- If the terminals are OK, go to step 4.

With the connector still disconnected, do the following input tests:

- If any test indicates a problem, find and correct the cause, then recheck the system.
- If all the input tests prove OK, go to step 5.

Cavity	Wire	Test condition	Test: Desired result	Possibl
8	LT GRN	Disconnect the audio remote-HFL switch 12P connector	Check for continuity between terminal No. 8, and audio remote-HFL switch 12P connector terminal No. 11: There should be continuity.	An open in th
			Check for continuity to ground:There should be no continuity.	A short to gro
7	BLU	Disconnect the steering heater 4P connector	Check for continuity between terminal No. 7 and steering wheel heater 4P connector terminal No. 4: There should be continuity.	An open or h

Reconnect the connector, and do the following input tests:

- If any test indicates a problem, find and correct the cause, then recheck the system.
- If all the input tests prove OK, **replace the heated steering wheel control unit** .

Cavity	Wire	Test condition	Test: Desired result	Possible
2	RED	Vehicle ON mode	Measure the voltage to ground: There should be battery voltage.	• Faulty h • Faulty c • An open
12	BLK	In all power modes	Measure the voltage to ground:There should be less than 0.2 V.	• Faulty a • Faulty c • An open
1	PUR	Disconnect the steering wheel heater 4P connector, vehicle ON mode, and heated steering wheel switch ON	Measure the voltage to ground: There should be battery voltage.	A short to grou
6	TAN	Disconnect the steering wheel heater 4P connector, vehicle ON mode, and heated steering wheel switch ON	Measure the voltage to ground: There should be 5 V.	A short to grou
514	YELGRY	Vehicle ON mode, and heated steering wheel switch pressed	Measure the voltage between terminals No. 5 and No. 14:There should be less than 0.2 V.	• Faulty h • An open
		Vehicle ON mode, and heated steering wheel switch released	Measure the voltage between terminals No. 5 and No. 14:There should be battery voltage.	• Faulty h • A short t
10	PNK	Vehicle ON mode	Connect to ground with a jumper wire:The heated steering wheel switch indicator should come on.	• Faulty h • An open

TROUBLESHOOTING

A/C SIGNAL CIRCUIT TROUBLESHOOTING(1.5 L ENGINE)

A/C Signal Circuit Troubleshooting

1. DTC check

   -1. Turn the vehicle to the ON mode.

   -2. Check for Pending or Confirmed DTCs with the HDS.

DTC Description	Confirmed DTC	Pending DTC
B	B	B

   DTC (PGM-FI)

   Are any Pending or Confirmed DTCs indicated?

   YES

   Go to the indicated DTCs troubleshooting.

   NO

   Go to step 2.

2. A/C compressor clutch condition check

   -1. Start the engine, and let it idle.

   -2. Turn the blower switch on.

   -3. Turn the A/C switch on.

   -4. Check the parameter(s) below with the HDS.

Signal	Threshold		
	Values	Unit	
A/C CLUTCH	ON	B	B

Do the current condition(s) match the threshold?

YES

Go to step 3.

NO

Do the A/C system test.

3. A/C system check

   -1. **Check the A/C system**.

   Does the A/C system operate?

   YES

   The A/C system circuit is OK.

   NO

   Go to step 4.

4. A/C compressor clutch circuit check

   -1. Turn the vehicle to the OFF (LOCK) mode.

   -2. Turn the vehicle to the ON mode.

   -3. Activate the A/C CLUTCH in the INSPECTION MENU with the HDS.

   A/C CLUTCH

   Is there a clicking noise from the A/C compressor clutch?

   YES

   The A/C compressor clutch circuit is OK. **Do the A/C system test**.

   NO

   Go to step 5.

5. Open wire check (ACC/A/C MG CLUTCH RLY CL- line)

   -1. Turn the vehicle to the OFF (LOCK) mode.

   -2. Jump the SCS line with the HDS, and wait more than 1 minute.

   -3. Disconnect the following connector.

PCM connector E (80P)

   -4. Exit the SCS mode with the HDS.

   -5. Turn the vehicle to the ON mode.

   -6. Connect terminals A and B with a jumper wire.

Terminal A	**PCM connector E (80P) No. 31**
Terminal B	Body ground

   Is there a clicking noise from the A/C compressor clutch?

   YES

   The ACC/A/C MG CLUTCH RLY CL- wire is OK. Check for any authorized service information related to the DTCs or symptoms you are troubleshooting, or
   symptom/indication goes away and the PCM was substituted, **replace the original PCM** .

   NO

   Check for poor connections or loose terminals at the A/C compressor clutch relay and the PCM. If the connections and terminals are OK, check the A/C compress
   MG CLUTCH RLY CL- wire between the PCM (E31) and the A/C compressor clutch relay, or other parts in the A/C systems.

A/C SIGNAL CIRCUIT TROUBLESHOOTING(2.4 L ENGINE) (2017 2018 2019)

A/C Signal Circuit Troubleshooting

1. DTC check

   -1. Turn the vehicle to the ON mode.

   -2. Check for Pending or Confirmed DTCs with the HDS.

DTC Description	Confirmed DTC	Pending DTC
B	B	B

DTC (PGM-FI)

Are any Pending or Confirmed DTCs indicated?

YES

Go to the indicated DTCs troubleshooting.

NO

Go to step 2.

2. A/C compressor clutch condition check

-1. Start the engine, and let it idle.

-2. Turn the blower switch on.

-3. Turn the A/C switch on.

-4. Check the parameter(s) below with the HDS.

Signal	Threshold		
	Values	Unit	
A/C CLUTCH	ON	B	B

Do the current condition(s) match the threshold?

YES

Go to step 3.

NO

Do the A/C system test.

3. A/C system check

-1. **Check the A/C system**.

Does the A/C system operate?

YES

The A/C system circuit is OK.

NO

Go to step 4.

4. A/C compressor clutch circuit check

-1. Turn the vehicle to the OFF (LOCK) mode.

-2. Turn the vehicle to the ON mode.

-3. Activate the A/C CLUTCH in the INSPECTION MENU with the HDS.

A/C CLUTCH

Is there a clicking noise from the A/C compressor clutch?

YES

The A/C compressor clutch circuit is OK. **Do the A/C system test**.

NO

Go to step 5.

5. Open wire check (A/C MG CLUTCH RLY CL- line)

-1. Turn the vehicle to the OFF (LOCK) mode.

-2. Jump the SCS line with the HDS, and wait more than 1 minute.

-3. Disconnect the following connector.

PCM connector A (51P)

-4. Exit the SCS mode with the HDS.

-5. Turn the vehicle to the ON mode.

-6. Connect terminals A and B with a jumper wire.

Terminal A	**PCM connector A (51P) No. 13**

Terminal B	Body ground

Is there a clicking noise from the A/C compressor clutch?

YES

The A/C MG CLUTCH RLY CL- wire is OK. Check for any authorized service information related to the DTCs or symptoms you are troubleshooting, or **substit** symptom/indication goes away and the PCM was substituted, **replace the original PCM** .

NO

Check for poor connections or loose terminals at the A/C compressor clutch relay and the PCM. If the connections and terminals are OK, check the A/C compress CLUTCH RLY CL- wire between the PCM (A13) and the A/C compressor clutch relay, or other parts in the A/C systems.

DIAGNOSIS

A/C DIAGNOSTIC PROCESS

When a customer presents an A/C concern, do the following procedure to identify the cause of the problem.

Confirm the type of concern.

- If a customer complains about an A/C performance problem, go to step 2.
- If a customer complains about an A/C noise problem, **do the A/C system noise check** .

2. **Do the A/C system inspection** and repair any problems. If no problems are found, go to step 3.**Recover the refrigerant from the A/C system** and measure the refrig recovery/recycling/charging station.

- If the refrigerant charge is within specifications, go to step 5.
- If the refrigerant charge is significantly under specifications, go to step 4.
- If the refrigerant charge is significantly over specifications, go to step 5.

4. **Do the Refrigerant Leak Check** and repair any leaks. If no leaks are found, go to step 5.**Evacuate and recharge the system** and **do the A/C system test**.

- If vent temperature or suction/discharge pressures are within specifications, the repair is confirmed and the A/C diagnostic process is complete.
- If vent temperature or suction/discharge pressures are not within specifications, a problem may still exist. Return to step 2, and recheck your test procedures.

BLEEDING

DRIVE BELT AUTO-TENSIONER AIR BLEEDING (1.5 L ENGINE)

Bleeding

1. **Drive Belt - Remove**

   NOTE: After the drive belt is removed, remove the pin from the drive belt auto-tensioner.

2. Drive Belt Auto-Tensioner - Air Bleed

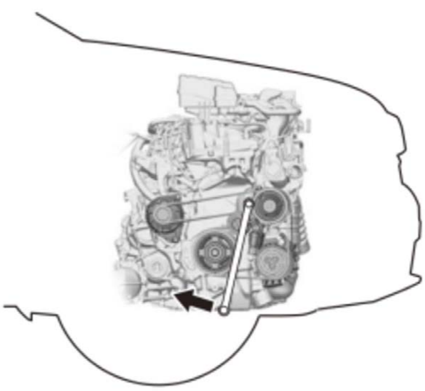	1. Attach a socket wrench to the drive belt auto-tensioner from above the engine. Sl the direction shown, the full length of its stroke, then slowly (at least 3 seconds) mo length of its stroke. Repeat this operation three times.

3. All Removed Parts - Install

1. Install the parts in the reverse order of removal.

TEST

A/C COMPRESSOR VARIABLE CAPACITY CONTROL SOLENOID TEST

Test

1. A/C Compressor Variable Capacity Control Solenoid - Test

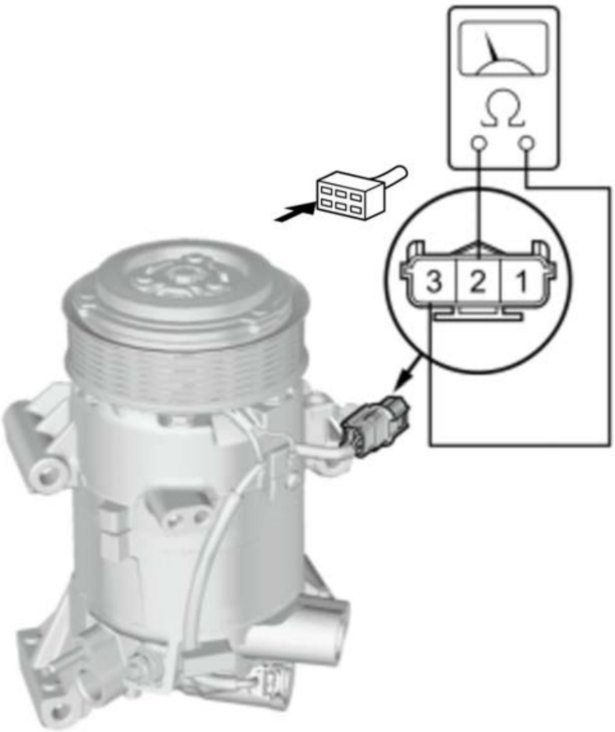	1. Measure the resistance between A/C compressor clut 3. If the resistance is not within specifications, **replace t**

Variable Capacity Control Solenoid Resistance:	**9.6-11.6 Ω at 68B°F (20B°C)**

A/C SYSTEM TEST (1234YF)

*Available through the Honda Tool and Equipment Program; call 888-424-6857.

Special Tools Required

Image	Description/
	R-1234yf A/C Recover/Recycle/Recharge Ma

Image	Description/
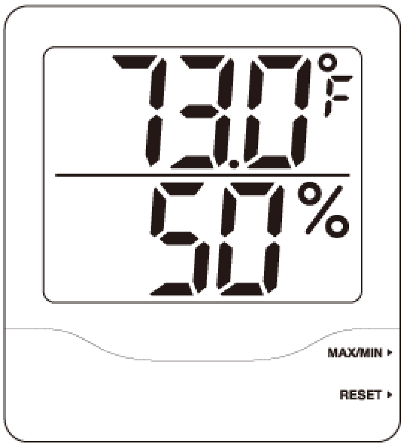	Big Digit Hygro-Thermometer PYR445703*
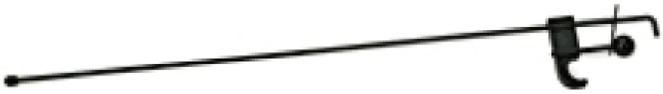	Throttle Pedal Depressor Tool B240B*

Test

WARNING:

- Air conditioning refrigerant or lubricant vapor can irritate your eyes, nose, or throat.
- Be careful when connecting service equipment.
- Do not breathe refrigerant or vapor.

SRS components are located in this area. Review the **SRS component locations** and the **precautions and procedures** before doing repairs or service.

The performance test will help determine if the A/C system is operating within specifications.

NOTE:

- If accidental system discharge occurs, ventilate the work area before resuming service.
- Additional health and safety information may be obtained from the refrigerant and lubricant manufacturers.

Performance Test

1. A/C System - Inspect
    1. **Do the A/C system inspection**, and correct any problems found.

    B

2. **Refrigerant Recovery/Recycling/Charging Station - Connect**
3. **Glove Box - Remove**
4. A/C System - Test

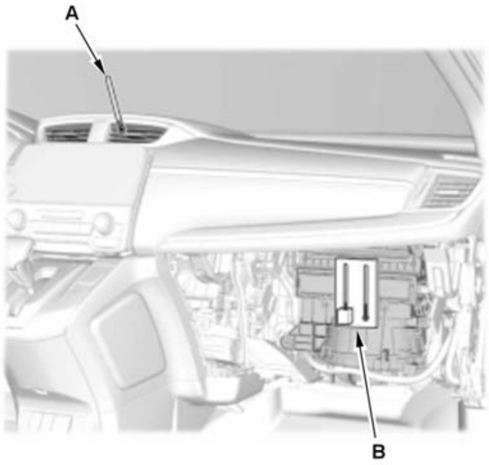

1. Determine the relative humidity and air temperature.

2. Insert a thermometer (A) in the dashboard center vent.

3. Place a hygro-thermometer (B) near the blower unit's recirculation inlet duct

4. Test conditions:

- The blower intake temperature must be at least 68B°F (20B°C).
- Move the vehicle out of direct sunlight and let it cool down to the surrou vehicle to cool it down more quickly.
- Open the hood.
- Open the front doors.
- Apply the parking brake.
- Shift the vehicle to P, N position/mode, or Neutral.
- Start the engine.
- Set the A/C system to the following conditions.
-
    - -

      A/C: ON
    - -

      Temperature control: MAX COOL
    - -

      Mode control: VENT
    - -

      Recirculation control: RECIRCULATE
    - -

      Fan control: Max
- Using the throttle pedal depressor tool to run the engine at a steady 1, 50
- No driver or passengers in the vehicle.

5. Inspect the A/C components for the following conditions:

- A/C compressor clutch not engaged.
- Abnormal frost areas.
- Unusual noises.

If you observe any of these conditions, **refer to the Symptom Troubleshootin**

6. After running the air conditioning for 10 minutes under the test conditions, r center vent, the blower intake temperature near the blower unit, and the discha

7. To complete the vent (delivery)/blower intake temperature chart:

- Mark the vent (delivery) temperature on the vertical line.
- Mark the blower intake temperature on the bottom line.
- Draw a vertical line from the blower intake temperature mark.
- Draw a horizontal line from the vent (delivery) temperature mark until it intersects the vertical line.

NOTE: The vent (delivery) temperature and blower intake temperature should intersect in the shaded area. Any measurements outside the line may indicate the n

1.5 L engine

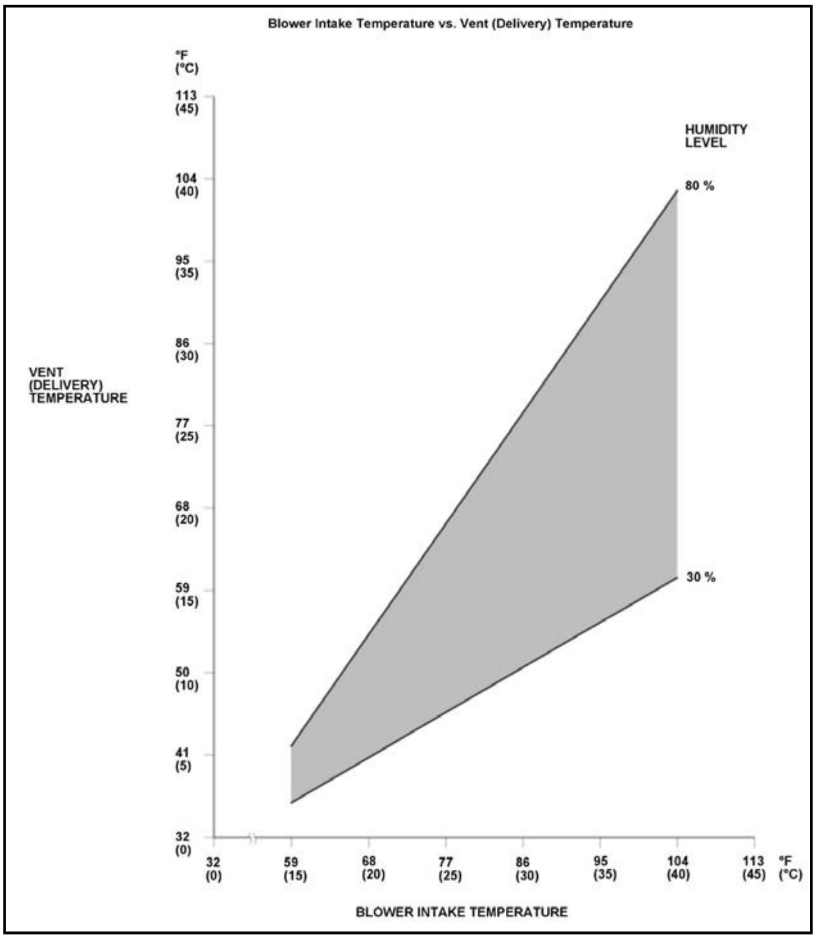

2.4 L engine

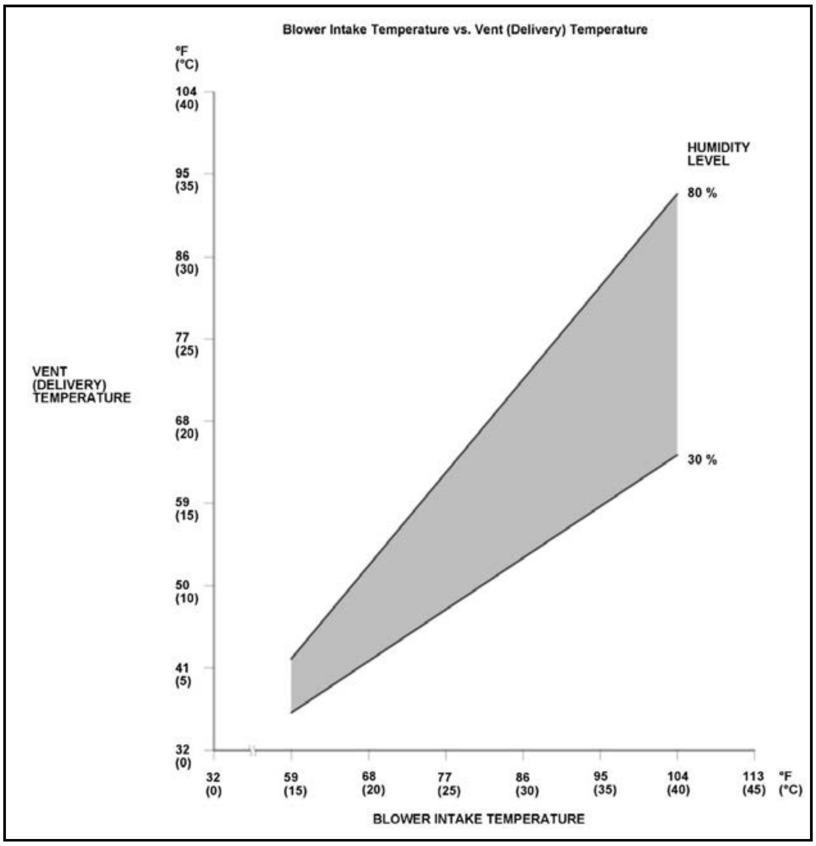

8. To complete the high side (discharge) pressure/blower intake temperature chart:

- Mark the high side (discharge) pressure on the vertical line.
- Mark the blower intake temperature on the bottom line.
- Draw a vertical line from the blower intake temperature mark.
- Draw a horizontal line from the high side (discharge) pressure mark until it intersects the vertical line.

NOTE: The high side (discharge) pressure and blower intake temperature should intersect in the shaded area. Any measurements outside the line may indicate the

1.5 L engine

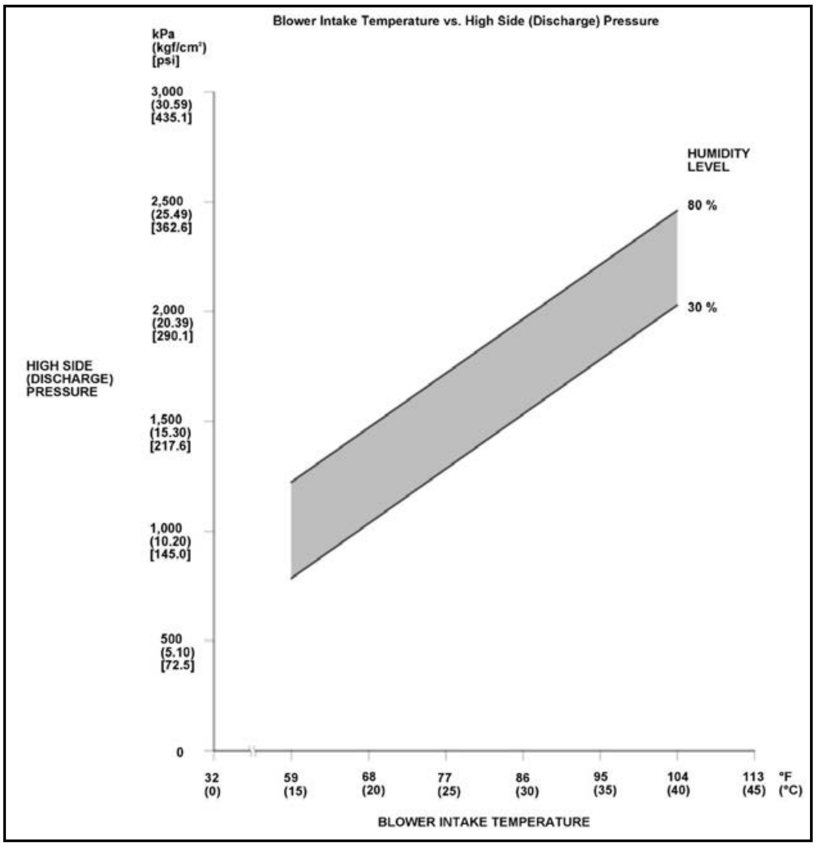

2.4 L engine

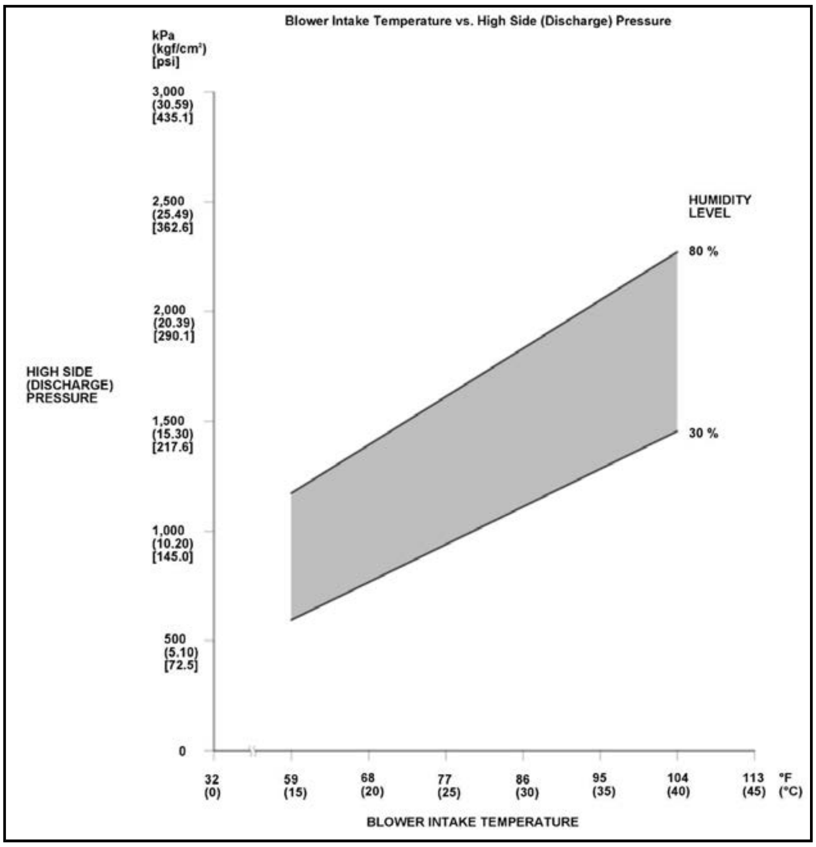

9. To complete the low side (suction) pressure/blower intake temperature chart:

- Mark the low side (suction) pressure along the vertical line.
- Mark the blower intake temperature along the bottom line.
- Draw a vertical line from the blower intake temperature mark.
- Draw a horizontal line from the low side (suction) pressure mark until it intersects the vertical line.

NOTE: The low side (suction) pressure and blower intake temperature should intersect in the shaded area. Any measurements outside the line may indicate the ne

1.5 L engine

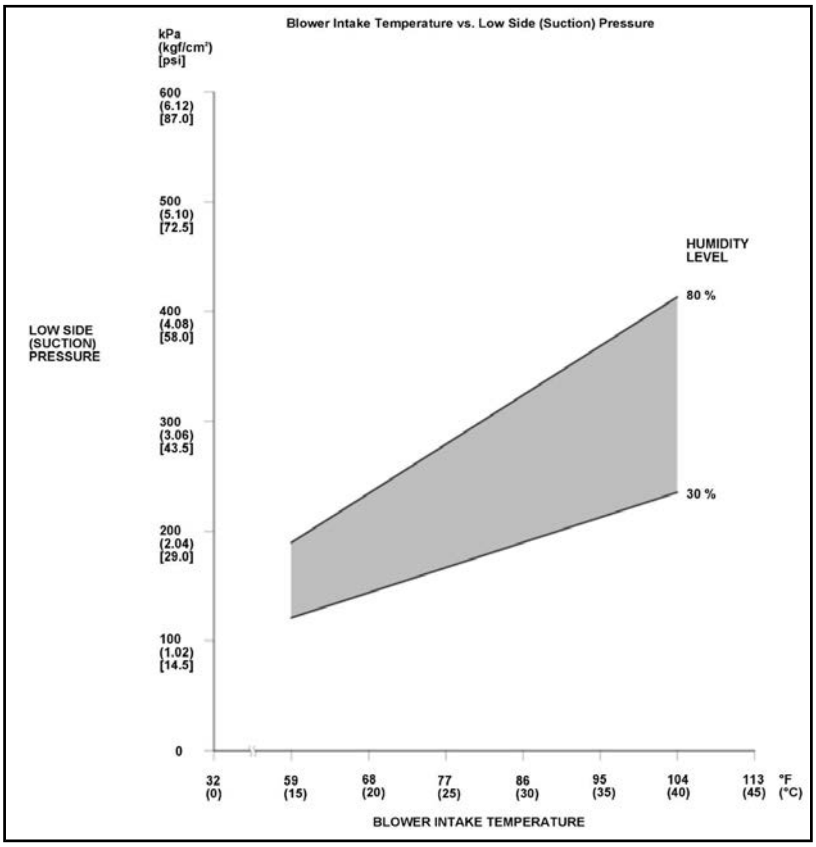

2.4 L engine

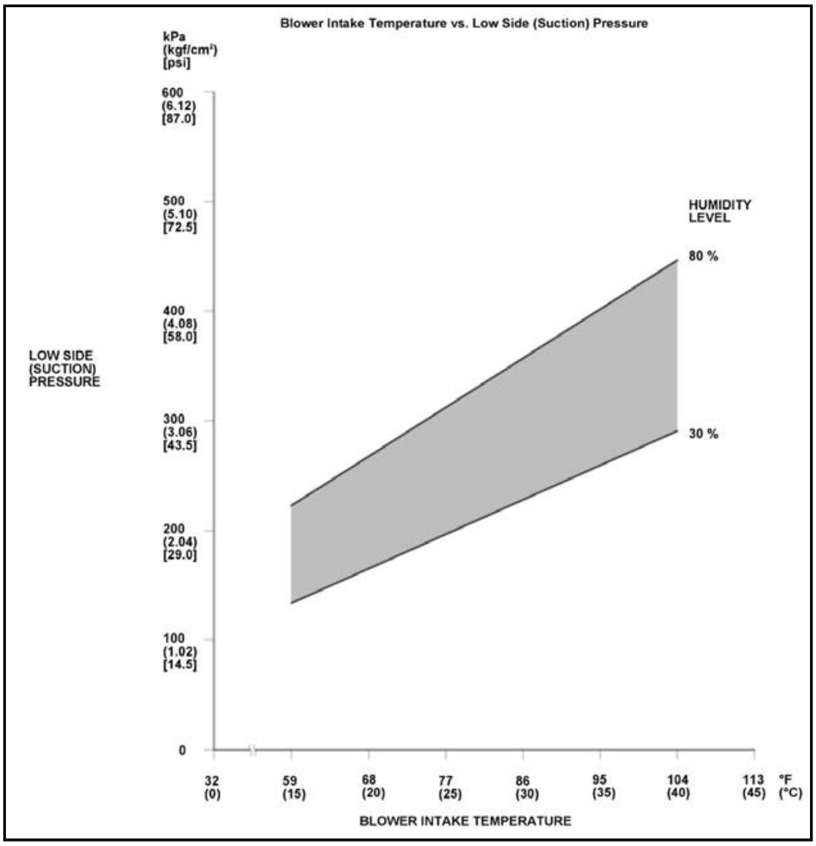

Pressure Test

5. A/C System Pressure - Test

Test results	Related symptoms	
Driver and passenger's side A/C vent temperatures may vary by approximately 20B°F (11B°C) or more	Suction pressure may be low	• Low refri • Expansion
	Driver's or passenger's air mix door DTCs present	One air mix doo

Test results	Related symptoms	
Discharge pressure abnormally High	Discharge pressure reduced when A/C condenser cooled with water spray	Significant refri
	• Restricted/weak airflow through A/C condenser	• Dirty A/C

Test results	Related symptoms	
	With doors open, fresh air selected and cooling fan run on high speed, temperature drop across A/C condenser inlet to outlet is less than about 9B°F (5B°C)	Debris be Radiator a
Discharge pressure abnormally Low	Suction and discharge pressures equalize rapidly after stopping A/C compressor Suction pressure higher than normal	Faulty A/C com
Suction pressure abnormally Low	Weak or insufficient airflow across evaporator	Restricted blow
	Suction pressure varies from near normal to a vacuum, as moisture freezes in expansion valve orifice	Moisture Faulty ex
	Reduced airflow from vents Vent temperature is very low	Evaporato Faulty eva Faulty ex on positio
Suction pressure abnormally High	Lack of slight suction pressure variation at 1, 500 rpm when "Recirculated" airflow is switched to "Fresh Air" Discharge pressure near normal	Expansion valv
Suction and Discharge pressures abnormally High	Sheet of paper does not stick to front of A/C condenser surface with cooling fans on With doors open, fresh air selected and cooling fan run on high speed, temperature drop across A/C condenser inlet to outlet is less than about 9B°F (5B°C)	Radiator and/or reversed
	A/C compressor clutch remains engaged during off cycle Pressure relief valve may open	Insufficie A/C comp problem Excessive
Suction and Discharge pressures abnormally Low	Suction line from expansion valve to A/C compressor is not cold	Excessively low
	Lack of slight suction pressure variation at 1, 500 rpm when "Recirculated" airflow is switched to "Fresh Air"	Expansion valv opening sufficie
	More than 18-29B°F (10-16B°C) temperature drop across A/C condenser inlet to outlet pipes	Blocked or restr lines/componen
	Significant temperature difference along high or low side A/C lines or components **NOTE:** Some restrictions may not show up until 3, 000 rpm	Restriction in A temperatures to

Test results	Related symptoms	
Suction pressure High and Discharge pressure Low	Excessive A/C compressor noise Pressures equalize quickly and noise after A/C compressor turns off	A/C compressor contamination)
Suction and Discharge pressures slightly Low	Vent temperature too high	Slightly lc Excessive
	Static pressures high with A/C system equalized. (After engine is off 4-12 hours)	Air/Non-c Contamin

A/C SYSTEM TEST (134A)

*Available through the Honda Tool and Equipment Program; call 888-424-6857.

Special Tools Required

Image	Description/Too
	R134a A/C Automatic Recover/Recycle/Recharge M

Image	Description/To
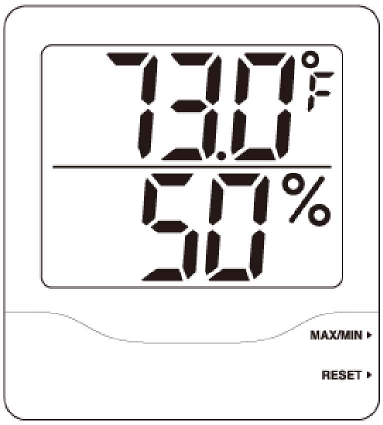	Big Digit Hygro-Thermometer PYR445703*
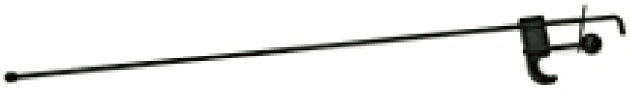	Throttle Pedal Depressor Tool B240B*

Test

WARNING:

- Air conditioning refrigerant or lubricant vapor can irritate your eyes, nose, or throat.
- Be careful when connecting service equipment.
- Do not breathe refrigerant or vapor.

SRS components are located in this area. Review the **SRS component locations** and the **precautions and procedures** before doing repairs or service.

The performance test will help determine if the A/C system is operating within specifications.

NOTE:

- If accidental system discharge occurs, ventilate the work area before resuming service.
- Additional health and safety information may be obtained from the refrigerant and lubricant manufacturers.

Performance Test

1. A/C System - Inspect
    1. **Do the A/C system inspection**, and correct any problems found.

    B

2. **Refrigerant Recovery/Recycling/Charging Station - Connect**
3. **Glove Box - Remove**
4. A/C System - Test

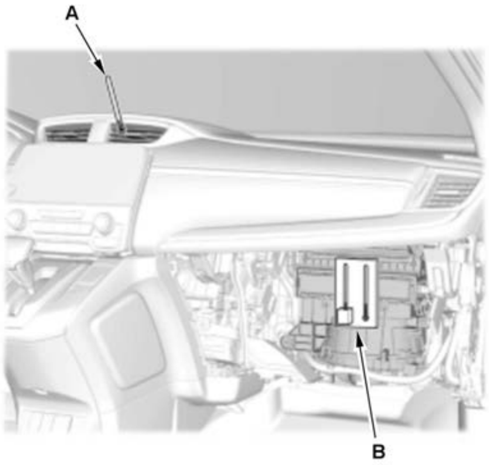

1. Determine the relative humidity and air temperature.

2. Insert a thermometer (A) in the dashboard center vent.

3. Place a hygro-thermometer (B) near the blower unit's recirculation inlet duc

4. Test conditions:

- The blower intake temperature must be at least 68B°F (20B°C).
- Move the vehicle out of direct sunlight and let it cool down to the surrou vehicle to cool it down more quickly.
- Open the hood.
- Open the front doors.
- Apply the parking brake.
- Shift the vehicle to P, N position/mode, or Neutral.
- Start the engine.
- Set the A/C system to the following conditions.
-
  - -

    A/C: ON

  - -

    Temperature control: MAX COOL

  - -

    Mode control: VENT

  - -

    Recirculation control: RECIRCULATE

  - -

    Fan control: Max

- Using the throttle pedal depressor tool to run the engine at a steady 1, 50
- No driver or passengers in the vehicle.

5. Inspect the A/C components for the following conditions:

- A/C compressor clutch not engaged.
- Abnormal frost areas.
- Unusual noises.

If you observe any of these conditions, **refer to the Symptom Troubleshootin**

6. After running the air conditioning for 10 minutes under the test conditions, r center vent, the blower intake temperature near the blower unit, and the discha

7. To complete the vent (delivery)/blower intake temperature chart:

- Mark the vent (delivery) temperature on the vertical line.
- Mark the blower intake temperature on the bottom line.
- Draw a vertical line from the blower intake temperature mark.
- Draw a horizontal line from the vent (delivery) temperature mark until it intersects the vertical line.

NOTE: The vent (delivery) temperature and blower intake temperature should intersect in the shaded area. Any measurements outside the line may indicate the n

1.5 L engine

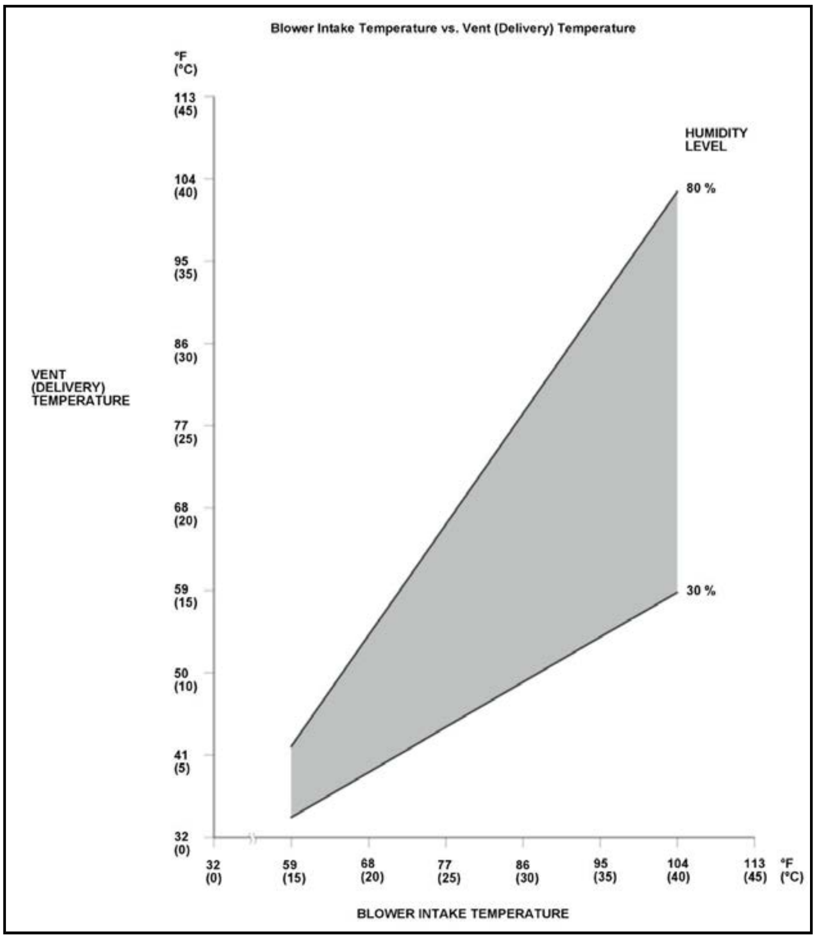

2.4 L engine

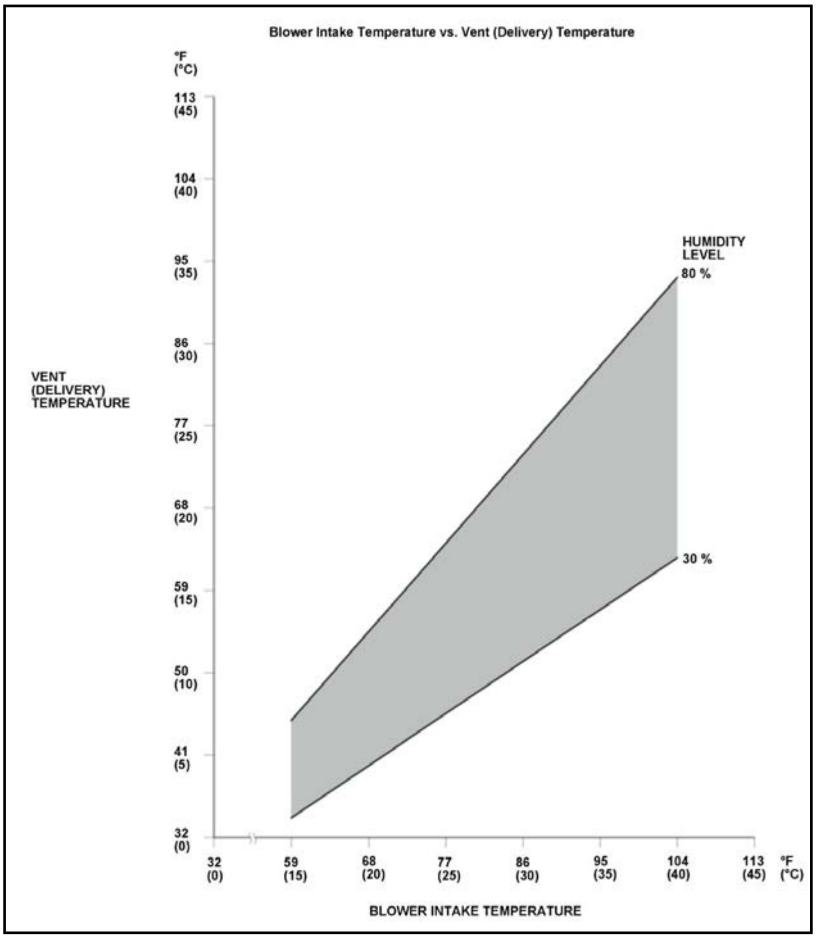

8. To complete the high side (discharge) pressure/blower intake temperature chart:

- Mark the high side (discharge) pressure on the vertical line.
- Mark the blower intake temperature on the bottom line.
- Draw a vertical line from the blower intake temperature mark.

- Draw a horizontal line from the high side (discharge) pressure mark until it intersects the vertical line.

NOTE: The high side (discharge) pressure and blower intake temperature should intersect in the shaded area. Any measurements outside the line may indicate the

1.5 L engine

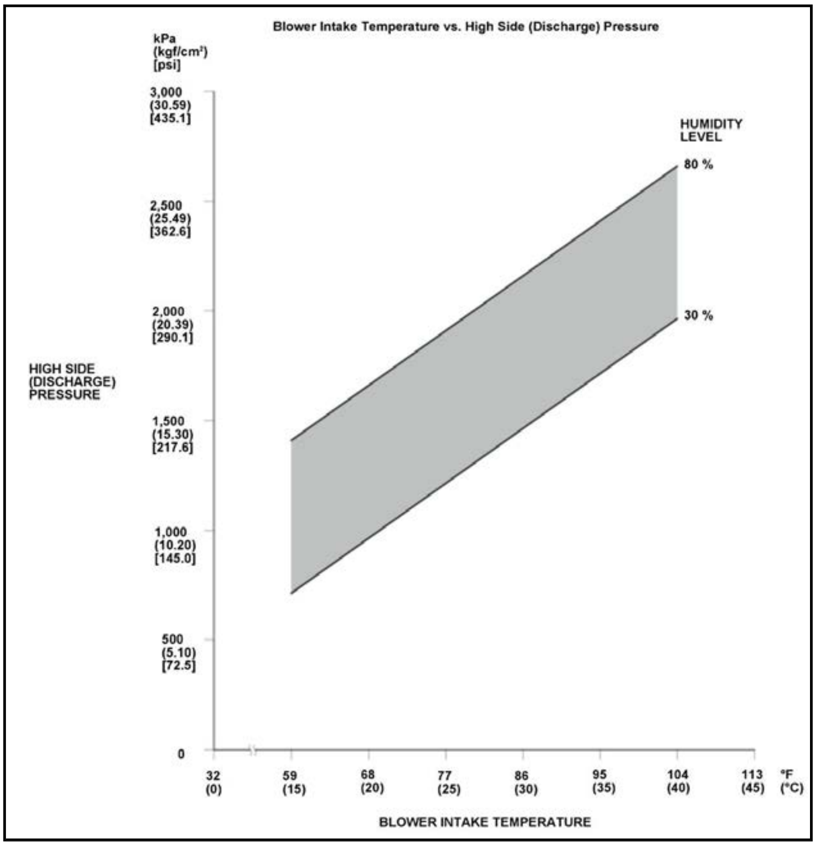

2.4 L engine

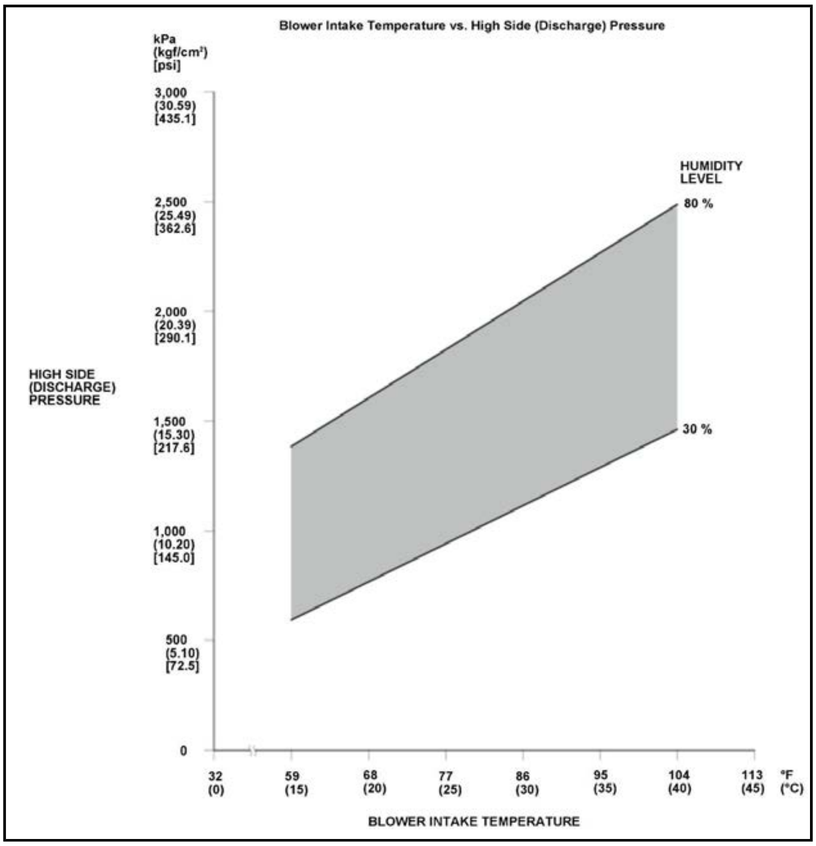

9. To complete the low side (suction) pressure/blower intake temperature chart:

- Mark the low side (suction) pressure along the vertical line.
- Mark the blower intake temperature along the bottom line.
- Draw a vertical line from the blower intake temperature mark.
- Draw a horizontal line from the low side (suction) pressure mark until it intersects the vertical line.

NOTE: The low side (suction) pressure and blower intake temperature should intersect in the shaded area. Any measurements outside the line may indicate the ne

1.5 L engine

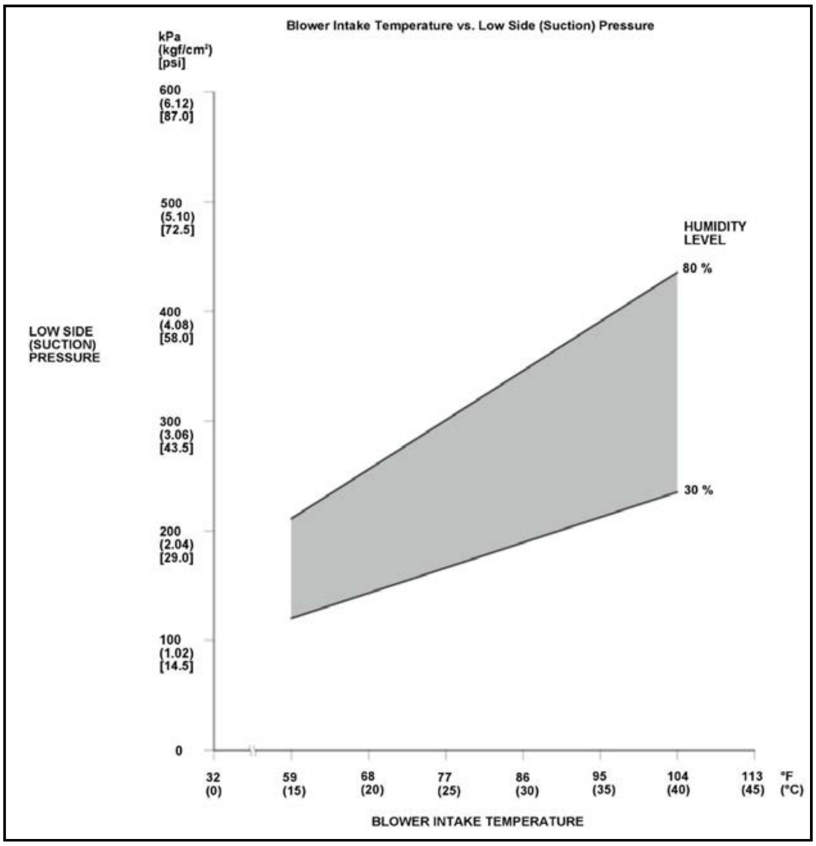

2.4 L engine

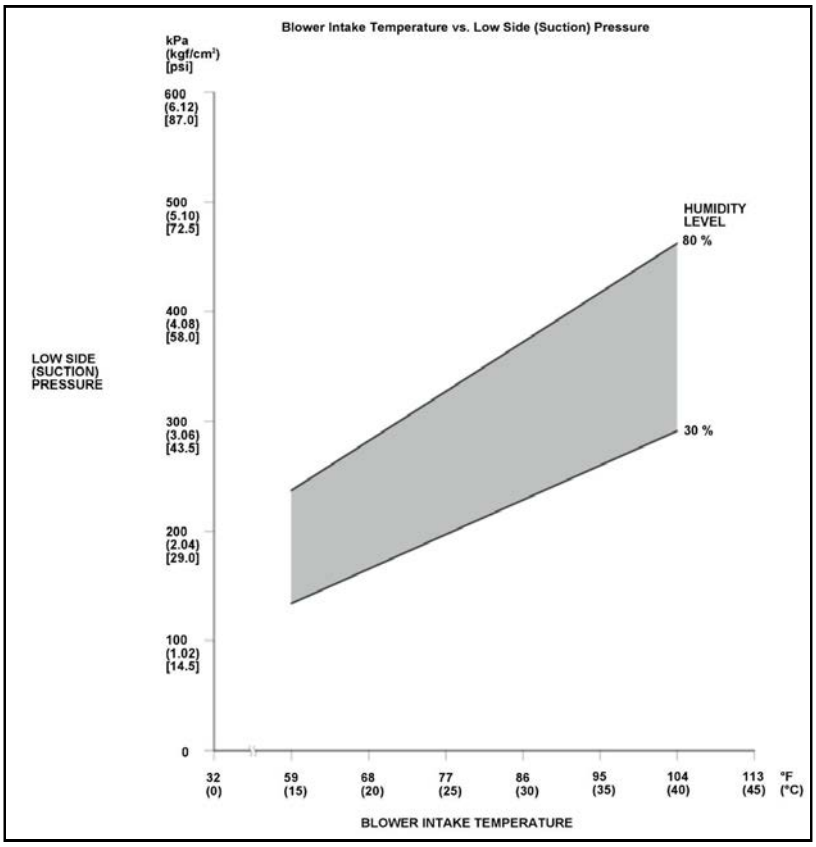

Pressure Test

5. A/C System Pressure - Test

Test results	Related symptoms	
Driver and passenger's side A/C vent temperatures may vary by approximately 20B°F (11B°C) or more	Suction pressure may be low	- Low refri - Expansio
	Driver's or passenger's air mix door DTCs present	One air mix doo

Test results	Related symptoms	
Discharge pressure abnormally High	Discharge pressure reduced when A/C condenser cooled with water spray	Significant refri
	• Restricted/weak airflow through A/C condenser • With doors open, fresh air selected and cooling fan run on high speed, temperature drop across A/C condenser inlet to outlet is less than about 9B°F (5B°C)	• Dirty A/C • Debris be • Radiator
Discharge pressure abnormally Low	• Suction and discharge pressures equalize rapidly after stopping A/C compressor • Suction pressure higher than normal	Faulty A/C com
Suction pressure abnormally Low	Weak or insufficient airflow across evaporator	Restricted blow
	Suction pressure varies from near normal to a vacuum, as moisture freezes in expansion valve orifice	• Moisture • Faulty ex
	• Reduced airflow from vents • Vent temperature is very low	• Evaporat • Faulty ev • Faulty ex on positio
Suction pressure abnormally High	• Lack of slight suction pressure variation at 1, 500 rpm when "Recirculated" airflow is switched to "Fresh Air" • Discharge pressure near normal	Expansion valv
Suction and Discharge pressures abnormally High	• Sheet of paper does not stick to front of A/C condenser surface with cooling fans on • With doors open, fresh air selected and cooling fan run on high speed, temperature drop across A/C condenser inlet to outlet is less than about 9B°F (5B°C)	Radiator and/or reversed
	• A/C compressor clutch remains engaged during off cycle • Pressure relief valve may open	• Insufficie • A/C com problem • Excessive
Suction and Discharge pressures abnormally Low	Suction line from expansion valve to A/C compressor is not cold	Excessively low
	Lack of slight suction pressure variation at 1, 500 rpm when "Recirculated" airflow is switched to "Fresh Air"	Expansion valv opening sufficie
	More than 18-29B°F (10-16B°C) temperature drop across A/C condenser inlet to outlet pipes	Blocked or restr lines/componen
	Significant temperature difference along high or low side A/C lines or components **NOTE:** Some restrictions may not show up until 3, 000 rpm	Restriction in A temperatures to

Test results	Related symptoms	
Suction pressure High and Discharge pressure Low	• Excessive A/C compressor noise • Pressures equalize quickly and noise after A/C compressor turns off	A/C compressor contamination)
Suction and Discharge pressures slightly Low	Vent temperature too high	• Slightly l • Excessive
	Static pressures high with A/C system equalized. (After engine is off 4-12 hours)	• Air/Non- • Contamin

RADIATOR AND A/C CONDENSER FAN MOTOR TEST

Test

1. Fan Motor - Test

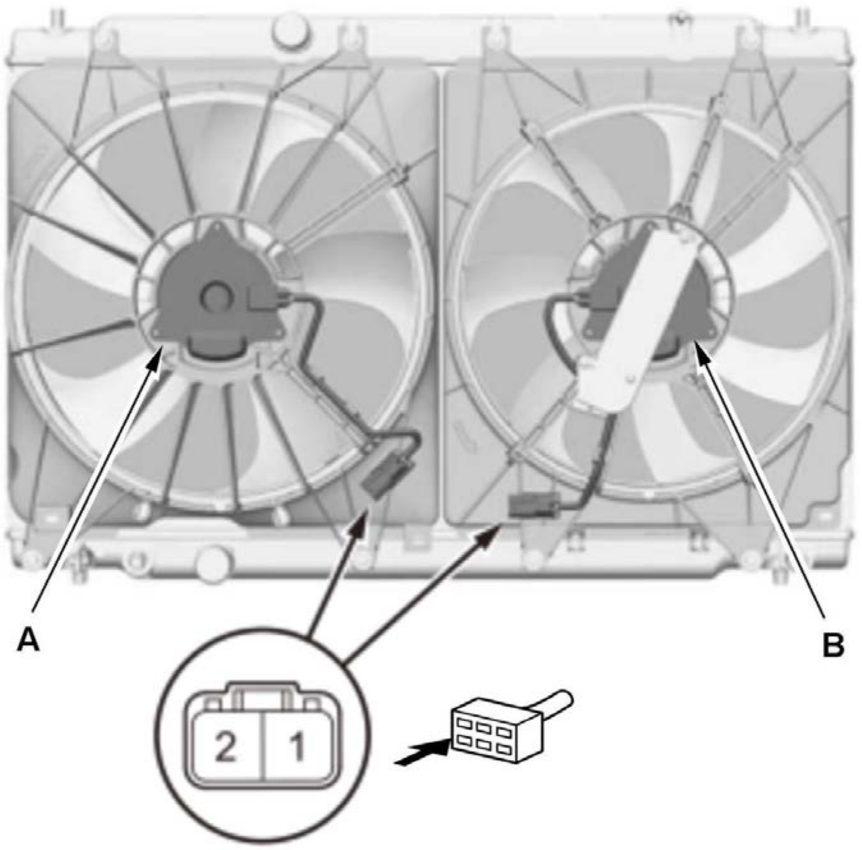	1. Disconnect the cc condenser fan moto 2. Test each motor b to terminal No. 2. 3. If a motor fails to .

INSPECTION

A/C SYSTEM CONTAMINATION INSPECTION

Inspection

NOTE:

- If the A/C compressor failure is diagnosed, always use this inspection to check the extent of contamination in the A/C system.
- The parts illustrations are sample. External appearance may vary from model to model.

1. A/C System Contamination - Inspect

   Remove a part from the related parts as described in the table. Then, swab inside the part with a cotton swab to see if there is metal, dark grey or black residue.

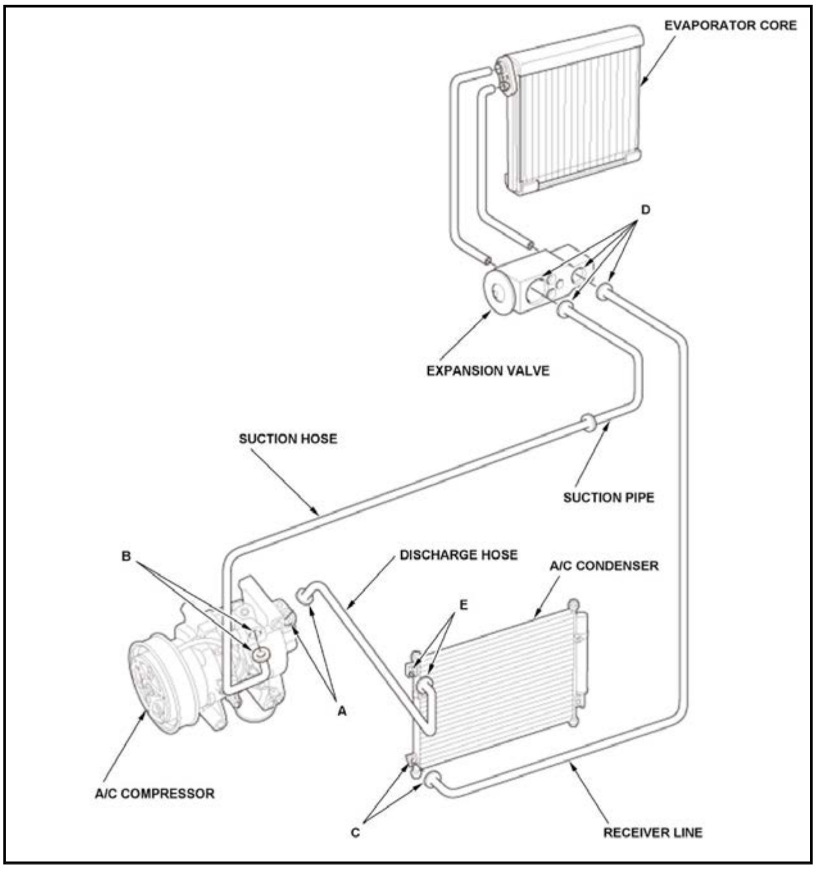
EVAPORATOR CORE
D
EXPANSION VALVE
SUCTION HOSE
SUCTION PIPE
B
DISCHARGE HOSE
A/C CONDENSER
E
A
A/C COMPRESSOR
C
RECEIVER LINE

Step	Part to Remove	Inspection Area	Metal, Dark Grey or	
			Contamination	
1	Discharge hose (A/C compressor side)	Discharge port (A)	Go to step 2.	No **Re**
2	Suction hose (A/C compressor side)	Suction port (B)	Replace the components in Repair Procedure D.	Go
3	Receiver line (A/C condenser outlet)	A/C condenser outlet port (C)	Go to step 4.	Go
4	Receiver line and suction pipe (Both are expansion valve side)	Expansion valve port (D)	Replace the components in Repair Procedure D.	Re
5	Discharge hose (A/C condenser inlet)	A/C condenser inlet port (E)	Replace the components in Repair Procedure B.	Re

Replacement

NOTE: The parts illustrations are sample. External appearance may vary from model to model.

1. A/C Components - Replace

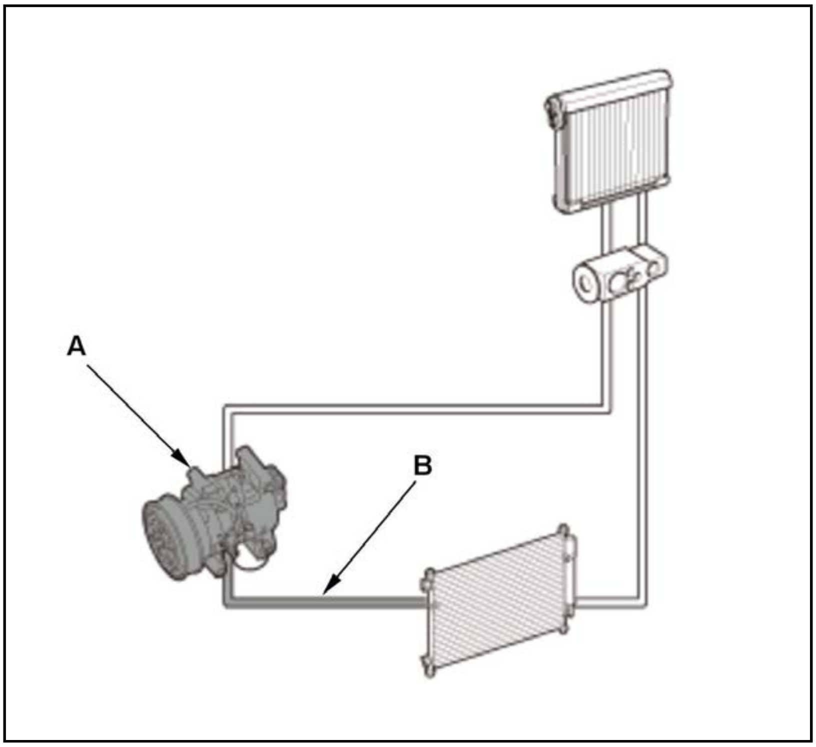

Repair Procedure A

Replace the following parts:

- A/C compressor (A)
- Discharge hose (B)

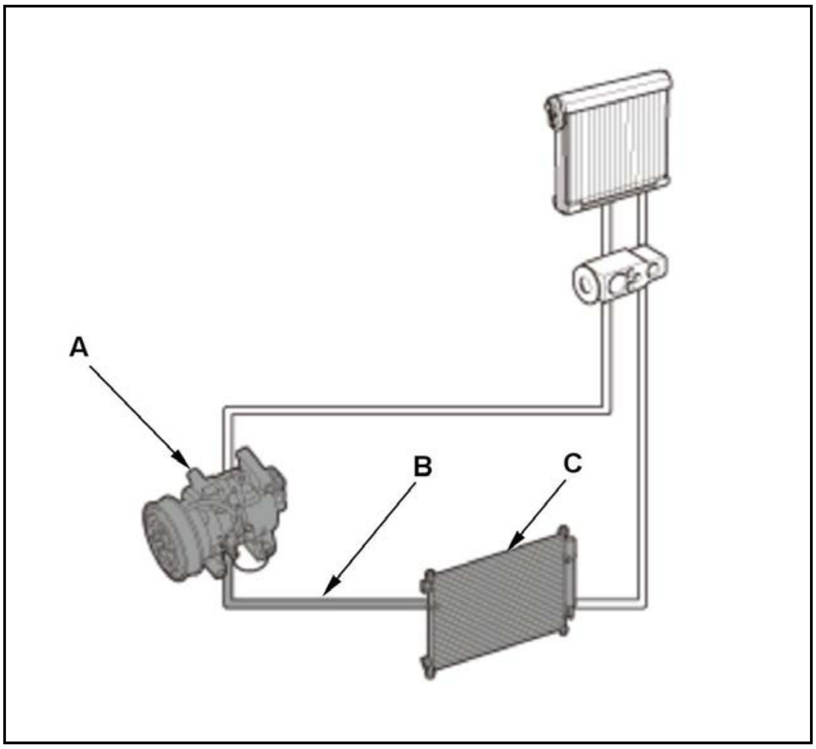

Repair Procedure B

Replace the following parts:

- A/C compressor (A)
- Discharge hose (B)
- A/C condenser (C)

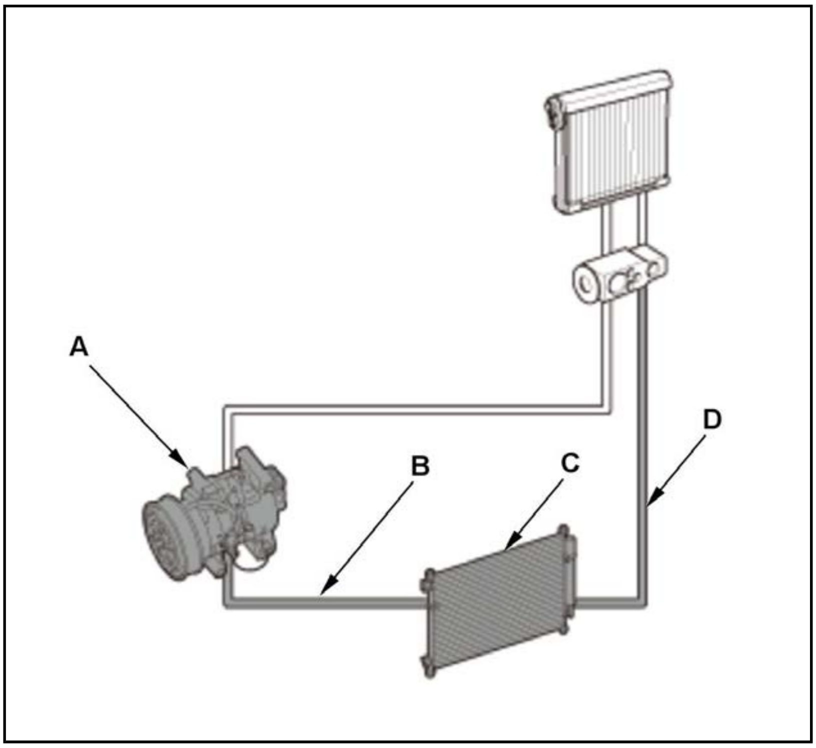

Repair Procedure C

Replace the following parts:

- A/C compressor (A)
- Discharge hose (B)
- A/C condenser (C)
- Receiver line (D)

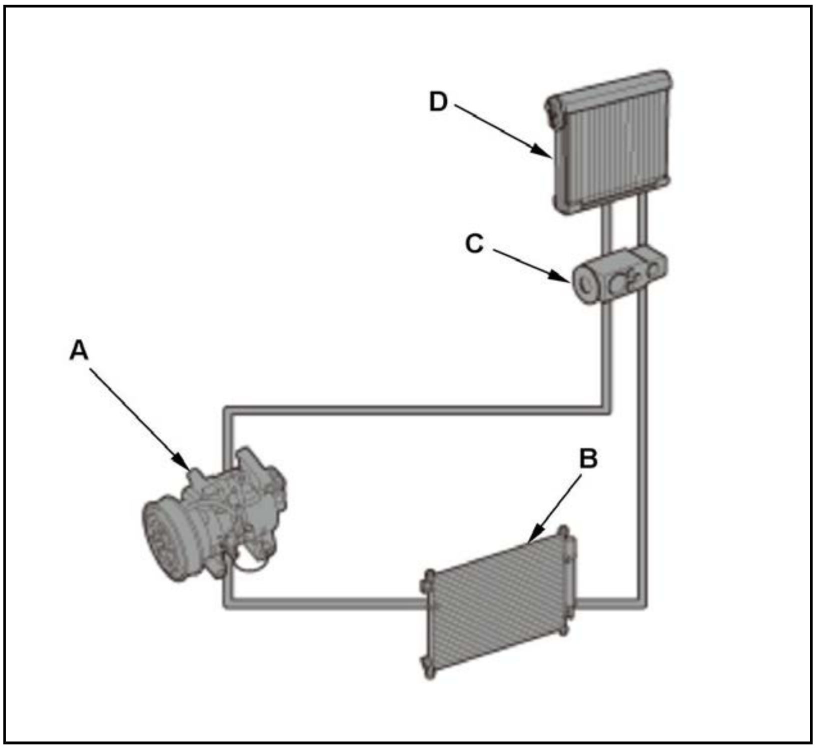

Repair Procedure D

Replace the following parts:

- **A/C compressor (A)**
- **A/C condenser (B)**
- **Expansion valve (C)**
- **Evaporator core (D)**
- **All A/C hoses and lines**

A/C SYSTEM INSPECTION

Inspection

NOTE:

- For A/C system noise, **do the A/C system noise check** .
- Check for climate control DTCs using the Self-Diagnostic Function. If there are any DTCs, **go to the appropriate troubleshooting**.

1. A/C System - Inspect

Before troubleshooting any problem with the A/C system, do the following to check if there is anything wrong with the A/C system. If any malfunctions are founc "Actions to take" in the table given below.

Inspection Area	Check for	
Fresh air intake for the HVAC unit (at the base of the windshield)	Leaves or debris blocking the air intake	Remove any blo
A/C lines and hoses	Kinks or sharp bends	Replace the A/C
• A/C components • A/C lines and hoses	Stains at the components or joints that may indicate a refrigerant or an A/C compressor oil leak	**Do the Refriger**
Drive belt	• Signs of slippage • Damage	**Inspect the driv**
A/C condenser	Dirt in the fins, or material clogging the fins (dirt, insects, etc.)	Clean the fins **NOTE:** • Carefully water and • Do not pe
	Fin damage, bent fins	Try to comb ther **NOTE:** If the fi
	Visible damage to the A/C condenser	**Do the Refriger** is leaking, **repla**
A/C compressor clutch armature plate engagement	Check that the A/C compressor clutch armature plate engages and is rotating at the same speed as the clutch pulley.	• **Do the A/** • **Do the A/**
A/C condenser fan and radiator fan	Check that the A/C condenser fan and the radiator fan operate when the A/C compressor clutch is engaged and blow air toward the engine compartment.	• **Refer to t** • **Do the fa**
Dust and pollen filter	The dust and pollen filter is clogged or restricted.	**Replace the dus**

Inspection Area	Check for	
Blower fan	Check that the A/C operates at each position of the fan control dial or icon (except OFF). If the A/C does not operate at all fan control icon positions, refer to the symptom troubleshooting. **NOTE:** Start the engine, turn the A/C system on, and allow it to run for a few minutes and reach stable operation.	**Refer to the sy**

DTC TROUBLESHOOTING INDEX

CLIMATE CONTROL SYSTEM DTC TROUBLESHOOTING INDEX (2017 2018 2019)

DTC	Detection Item or Symptom	ECU
B120A	Climate Control Unit LIN Communication Bus Line Error	Climate control unit
B121A	An open in the mode control motor circuit	Climate control unit
B121B	A short in the mode control motor circuit	Climate control unit
B1220	A short in the recirculation control motor circuit	Climate control unit
B1225	An open in the in-car temperature sensor circuit	Climate control unit
B1226	A short in the in-car temperature sensor circuit	Climate control unit
B1227	An open in the outside air temperature sensor circuit	Climate control unit
B1228	A short in the outside air temperature sensor circuit	Climate control unit
B1231	An open in the evaporator temperature sensor circuit	Climate control unit
B1232	A short in the evaporator temperature sensor circuit	Climate control unit
B1233	An open in the air mix control motor circuit (driver's)	Climate control unit
B1234	A short in the air mix control motor circuit (driver's)	Climate control unit
B1235	A problem in the air mix control motor circuit, linkage, door, or motor (driver's)	Climate control unit
B1236	An open in the passenger's air mix control motor circuit	Climate control unit
B1237	A short in the passenger's air mix control motor circuit	Climate control unit
B1238	A problem in the passenger's air mix control motor circuit, linkage, door, or motor	Climate control unit
B123F	Automatic lighting control unit/sunlight sensor error	Climate control unit
B1240	A problem in the mode control motor circuit, linkage, door, or motor	Climate control unit
B1241	A problem in the blower motor circuit	Climate control unit
B2964	Climate control unit lost communication with front panel (climate control panel)	Climate control unit
B2983	A problem in the recirculation control motor circuit, linkage, door, or motor	Climate control unit
B2986	An open in the recirculation control motor circuit	Climate control unit
B2988	A problem in the A/C compressor variable capacity control solenoid circuit	Climate control unit
U1280	Communication bus line error (BUS-OFF)	Climate control unit
U1281	Climate control unit lost communication with MICU (body control module)	Climate control unit
U128D	Climate control unit lost communication with gauge control module	Climate control unit
U1290	Climate control unit lost communication with seat heater control unit (front)	Climate control unit

CIRCUIT DIAGRAM

CLIMATE CONTROL SYSTEM CIRCUIT DIAGRAM (2017 2018 2019)

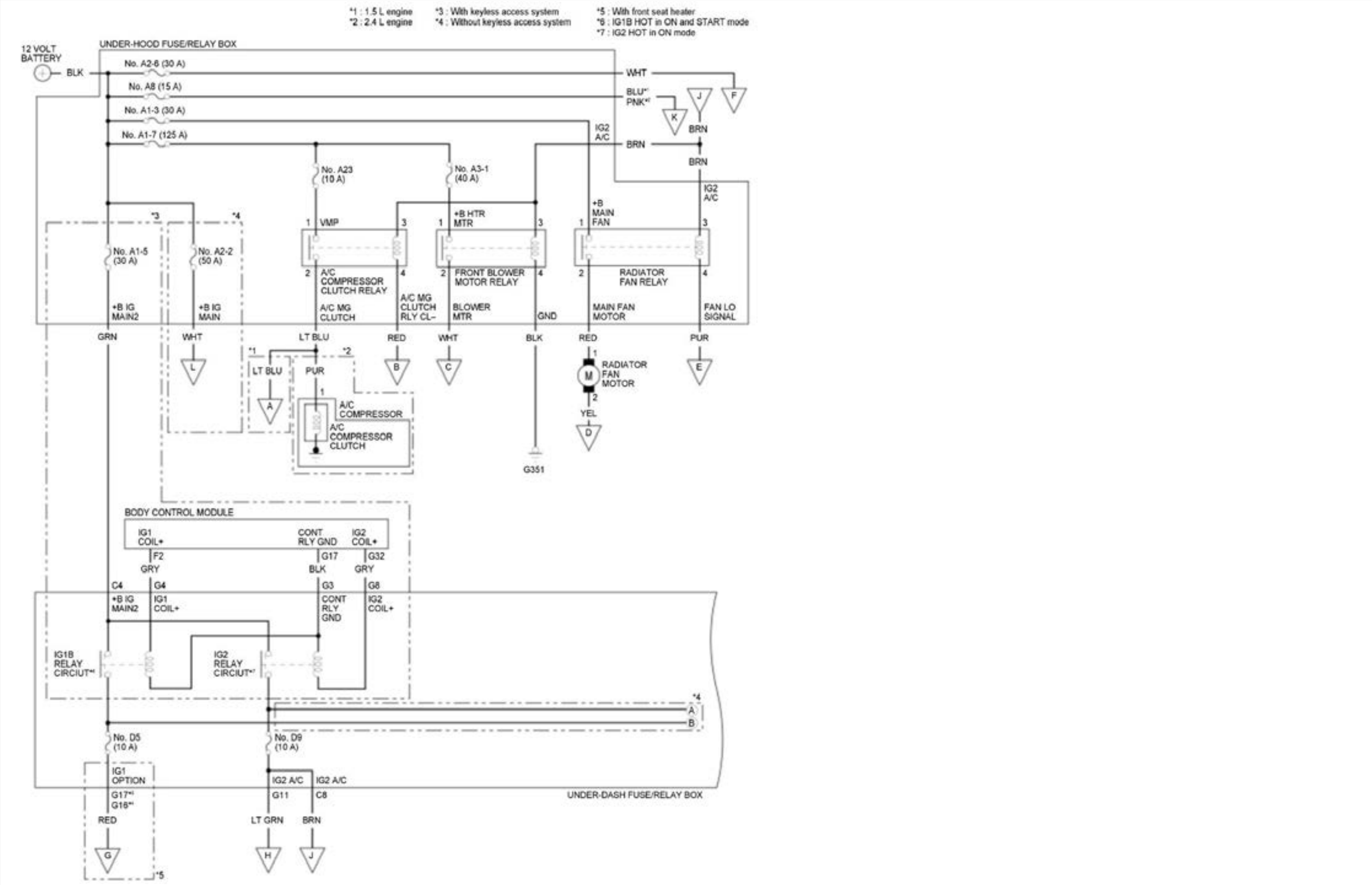
*1 : 1.5 L engine
*2 : 2.4 L engine
*3 : With keyless access system
*4 : Without keyless access system
*5 : With front seat heater
*6 : IG1B HOT in ON and START mode
*7 : IG2 HOT in ON mode
12 VOLT BATTERY
BLK
UNDER-HOOD FUSE/RELAY BOX
No. A2-6 (30 A)
No. A8 (15 A)
No. A1-3 (30 A)
No. A1-7 (125 A)
WHT
BLU*1
PNK*2
F
J
K
BRN
IG2 A/C
BRN
BRN
IG2 A/C
No. A23 (10 A)
No. A3-1 (40 A)
*3
*4
No. A1-5 (30 A)
No. A2-2 (50 A)
1 VMP
3
2
4
A/C COMPRESSOR CLUTCH RELAY
1 +B HTR MTR
3
2
4
FRONT BLOWER MOTOR RELAY
1 +B MAIN FAN
3
2
4
RADIATOR FAN RELAY
+B IG MAIN2
+B IG MAIN
A/C MG CLUTCH
A/C MG CLUTCH RLY CL−
BLOWER MTR
GND
MAIN FAN MOTOR
FAN LO SIGNAL
GRN
WHT
LT BLU
RED
WHT
BLK
RED
PUR
L
*1
*2
LT BLU
PUR
A
B
C
E
1
A/C COMPRESSOR
A/C COMPRESSOR CLUTCH
RADIATOR FAN MOTOR
M
1
2
YEL
D
G351
BODY CONTROL MODULE
IG1 COIL+
CONT RLY GND
IG2 COIL+
F2
GRY
G17
BLK
G32
GRY
C4
G4
G3
G8
+B IG MAIN2
IG1 COIL+
CONT RLY GND
IG2 COIL+
IG1B RELAY CIRCIUT*6
IG2 RELAY CIRCIUT*7
*4
A
B
No. D5 (10 A)
No. D9 (10 A)
IG1 OPTION
G17*3
G18*4
IG2 A/C
G11
IG2 A/C
C8
RED
LT GRN
BRN
G
H
J
*5
UNDER-DASH FUSE/RELAY BOX

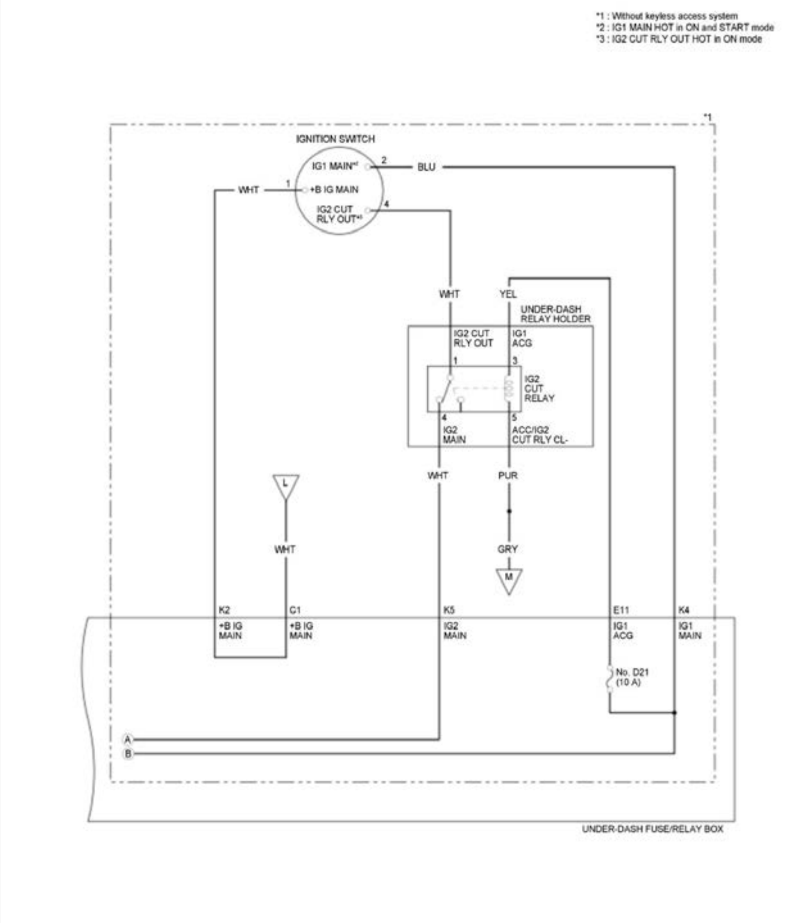
*1 : Without keyless access system
*2 : IG1 MAIN HOT in ON and START mode
*3 : IG2 CUT RLY OUT HOT in ON mode
*1
IGNITION SWITCH
IG1 MAIN*2
2
BLU
WHT
1
+B IG MAIN
IG2 CUT RLY OUT*3
4
WHT
YEL
UNDER-DASH RELAY HOLDER
IG2 CUT RLY OUT
IG1 ACG
1
3
IG2 CUT RELAY
4
5
IG2 MAIN
ACC/IG2 CUT RLY CL-
WHT
PUR
L
WHT
GRY
M
K2
+B IG MAIN
C1
+B IG MAIN
K5
IG2 MAIN
E11
IG1 ACG
K4
IG1 MAIN
No. D21 (10 A)
A
B
UNDER-DASH FUSE/RELAY BOX

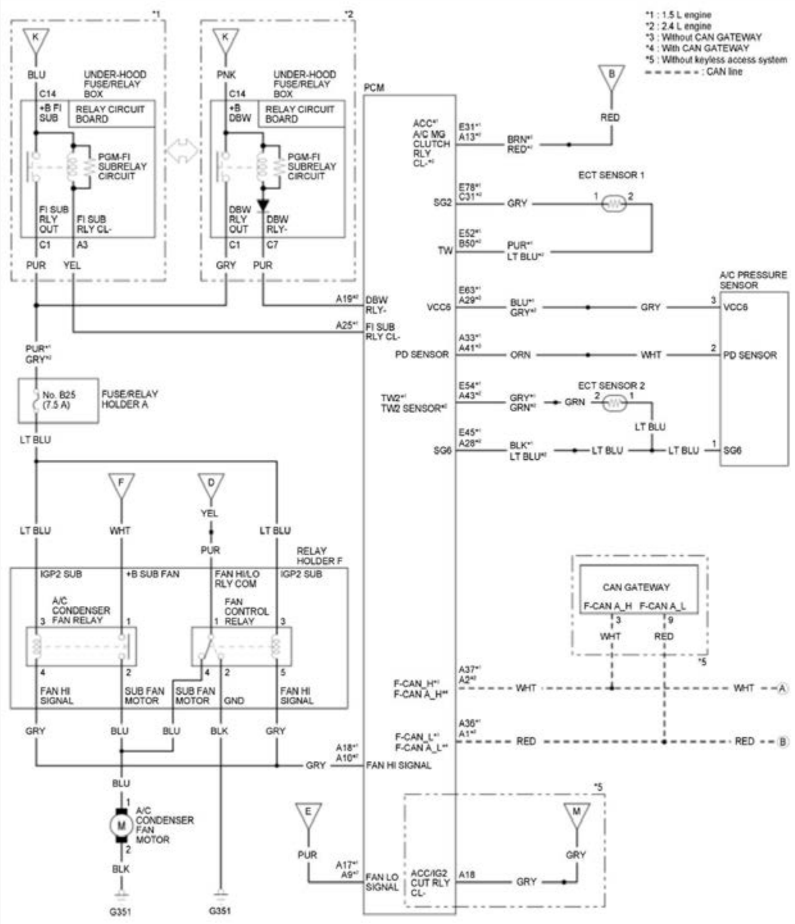
*1 : 1.5 L engine
*2 : 2.4 L engine
*3 : Without CAN GATEWAY
*4 : With CAN GATEWAY
*5 : Without keyless access system
- - - - - - : CAN line
*1
*2
K
BLU
UNDER-HOOD FUSE/RELAY BOX
C14
+B FI SUB
RELAY CIRCUIT BOARD
PGM-FI SUBRELAY CIRCUIT
FI SUB RLY OUT
FI SUB RLY CL-
C1
A3
PUR
YEL
K
PNK
UNDER-HOOD FUSE/RELAY BOX
C14
+B DBW
RELAY CIRCUIT BOARD
PGM-FI SUBRELAY CIRCUIT
DBW RLY OUT
DBW RLY-
C1
C7
GRY
PUR
PCM
A19*2 DBW RLY-
A25*1 FI SUB RLY CL-
PUR*1
GRY*2
No. B25 (7.5 A)
FUSE/RELAY HOLDER A
LT BLU
F
D
YEL
LT BLU
WHT
PUR
LT BLU
RELAY HOLDER F
IGP2 SUB
+B SUB FAN
FAN HI/LO RLY COM
IGP2 SUB
A/C CONDENSER FAN RELAY
FAN CONTROL RELAY
3
1
1
3
4
2
4
2
5
FAN HI SIGNAL
SUB FAN MOTOR
SUB FAN MOTOR
GND
FAN HI SIGNAL
GRY
BLU
BLU
BLK
GRY
GRY
A18*1
A10*2
FAN HI SIGNAL
BLU
1
A/C CONDENSER FAN MOTOR
M
2
BLK
G351
G351
E
PUR
A17*1
A9*2
FAN LO SIGNAL
ACC*1
A/C MG CLUTCH RLY CL-*2
E31*1
A13*2
BRN*1
RED*2
B
RED
ECT SENSOR 1
SG2
E78*1
C31*2
GRY
1
2
TW
E52*1
B50*2
PUR*1
LT BLU*2
A/C PRESSURE SENSOR
VCC6
E63*1
A29*2
BLU*1
GRY*2
GRY
3
VCC6
PD SENSOR
A33*1
A41*2
ORN
WHT
2
PD SENSOR
ECT SENSOR 2
TW2*1
TW2 SENSOR*2
E54*1
A43*2
GRY*1
GRN*2
GRN
2
1
LT BLU
SG6
E45*1
A28*2
BLK*1
LT BLU*2
LT BLU
LT BLU
1
SG6
CAN GATEWAY
F-CAN A_H
F-CAN A_L
3
9
WHT
RED
*5
F-CAN_H*1
F-CAN A_H*4
A37*1
A2*2
WHT
WHT
A
F-CAN_L*1
F-CAN A_L*4
A36*1
A1*2
RED
RED
B
*5
M
GRY
ACC/IG2 CUT RLY CL-
A18
GRY

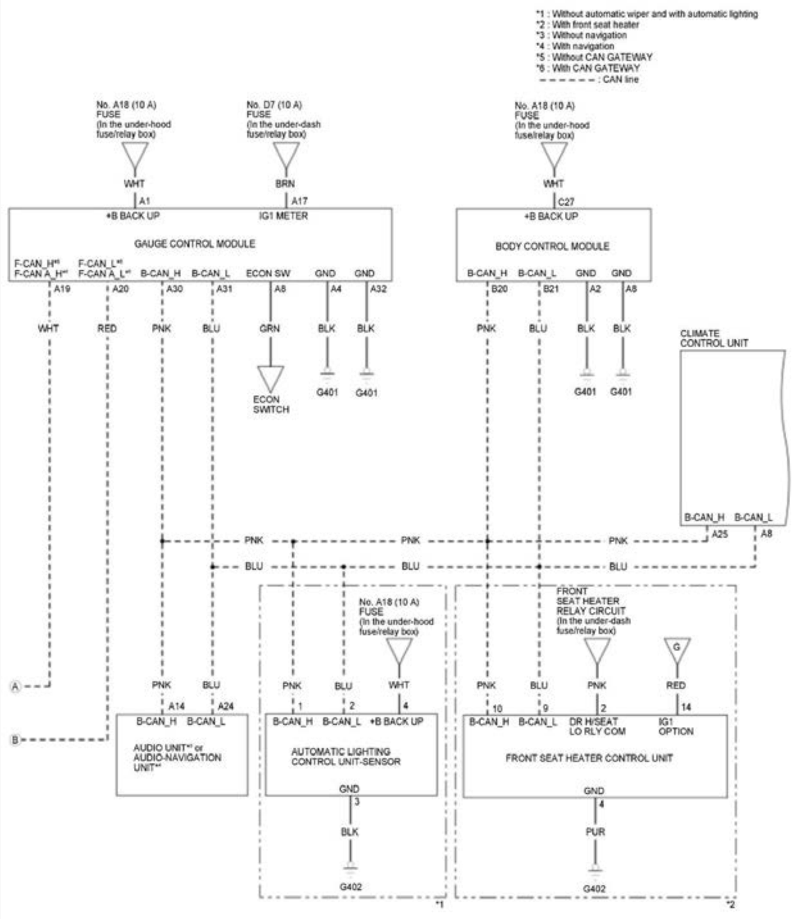
*1 : Without automatic wiper and with automatic lighting
*2 : With front seat heater
*3 : Without navigation
*4 : With navigation
*5 : Without CAN GATEWAY
*6 : With CAN GATEWAY
- - - - - - : CAN line
No. A18 (10 A) FUSE (In the under-hood fuse/relay box)
No. D7 (10 A) FUSE (In the under-dash fuse/relay box)
No. A18 (10 A) FUSE (In the under-hood fuse/relay box)
WHT
BRN
WHT
A1
A17
C27
+B BACK UP
IG1 METER
+B BACK UP
GAUGE CONTROL MODULE
BODY CONTROL MODULE
F-CAN_H*5
F-CAN A_H*6
F-CAN_L*5
F-CAN A_L*6
B-CAN_H
B-CAN_L
ECON SW
GND
GND
B-CAN_H
B-CAN_L
GND
GND
A19
A20
A30
A31
A8
A4
A32
B20
B21
A2
A8
WHT
RED
PNK
BLU
GRN
BLK
BLK
PNK
BLU
BLK
BLK
ECON SWITCH
G401
G401
G401
G401
CLIMATE CONTROL UNIT
B-CAN_H
B-CAN_L
A25
A8
PNK
PNK
PNK
BLU
BLU
BLU
No. A18 (10 A) FUSE (In the under-hood fuse/relay box)
FRONT SEAT HEATER RELAY CIRCUIT (In the under-dash fuse/relay box)
G
A
B
PNK
BLU
PNK
BLU
WHT
PNK
BLU
PNK
RED
A14
A24
1
2
4
10
9
2
14
B-CAN_H
B-CAN_L
AUDIO UNIT*3 or AUDIO-NAVIGATION UNIT*4
B-CAN_H
B-CAN_L
+B BACK UP
AUTOMATIC LIGHTING CONTROL UNIT-SENSOR
GND
3
BLK
G402
B-CAN_H
B-CAN_L
DR H/SEAT LO RLY COM
IG1 OPTION
FRONT SEAT HEATER CONTROL UNIT
GND
4
PUR
G402
*1
*2

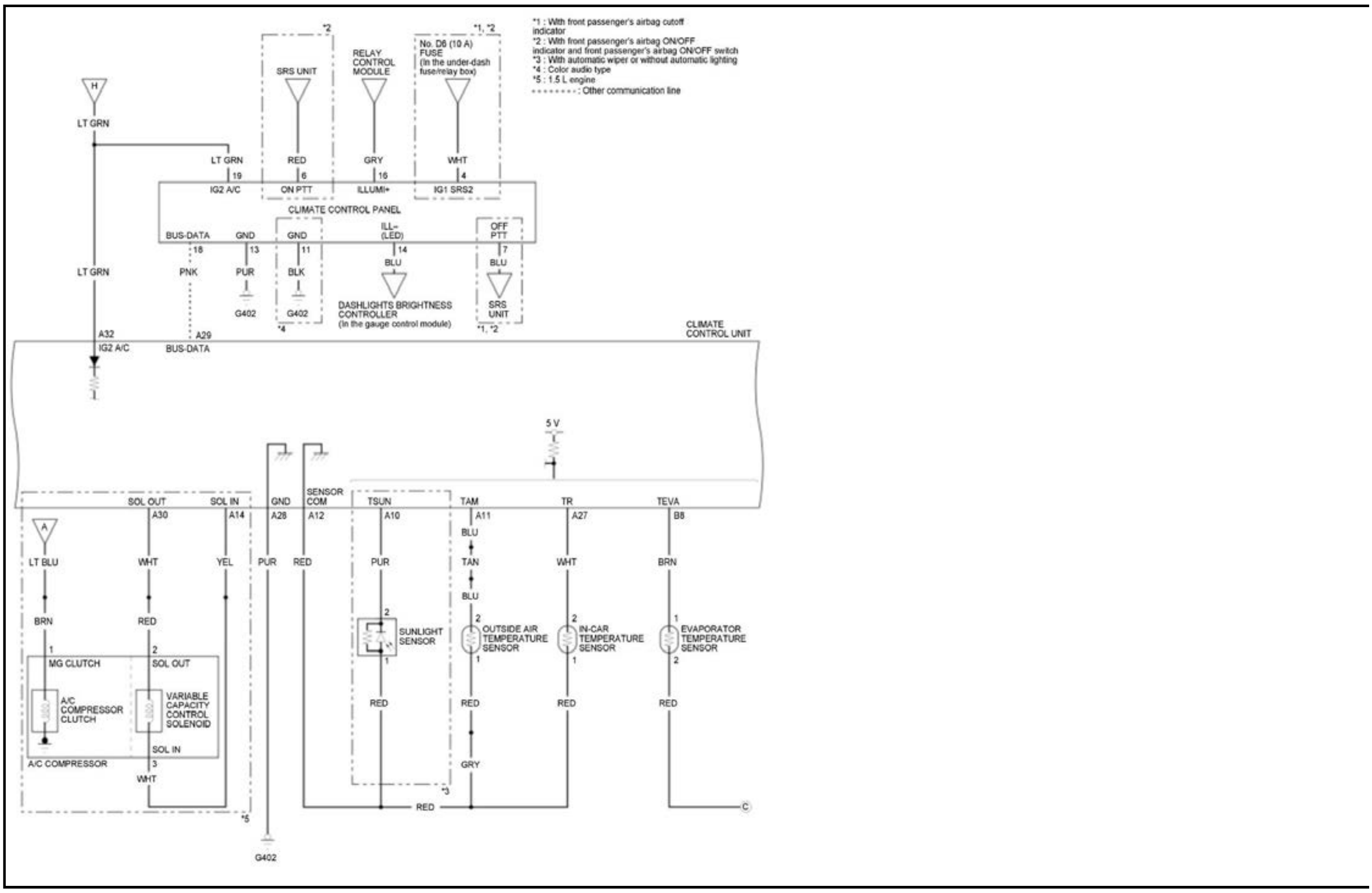
*1 : With front passenger's airbag cutoff indicator
*2 : With front passenger's airbag ON/OFF indicator and front passenger's airbag ON/OFF switch
*3 : With automatic wiper or without automatic lighting
*4 : Color audio type
*5 : 1.5 L engine
: Other communication line
H
LT GRN
SRS UNIT
RELAY CONTROL MODULE
No. D6 (10 A) FUSE (In the under-dash fuse/relay box)
*2
*1, *2
LT GRN
RED
GRY
WHT
19
6
16
4
IG2 A/C
ON PTT
ILLUMI+
IG1 SRS2
CLIMATE CONTROL PANEL
BUS-DATA
GND
GND
ILL- (LED)
OFF PTT
18
13
11
14
7
LT GRN
PNK
PUR
BLK
BLU
BLU
G402
G402
*4
DASHLIGHTS BRIGHTNESS CONTROLLER (In the gauge control module)
SRS UNIT
*1, *2
CLIMATE CONTROL UNIT
A32
IG2 A/C
A29
BUS-DATA
5 V
SOL OUT
SOL IN
GND
SENSOR COM
TSUN
TAM
TR
TEVA
A30
A14
A28
A12
A10
A11
A27
B8
A
LT BLU
WHT
YEL
PUR
RED
PUR
BLU
TAN
BLU
WHT
BRN
BRN
RED
1
2
MG CLUTCH
SOL OUT
A/C COMPRESSOR CLUTCH
VARIABLE CAPACITY CONTROL SOLENOID
SOL IN
3
A/C COMPRESSOR
WHT
*5
G402
2
SUNLIGHT SENSOR
1
2
OUTSIDE AIR TEMPERATURE SENSOR
1
2
IN-CAR TEMPERATURE SENSOR
1
1
EVAPORATOR TEMPERATURE SENSOR
2
RED
RED
RED
RED
GRY
*3
RED
C

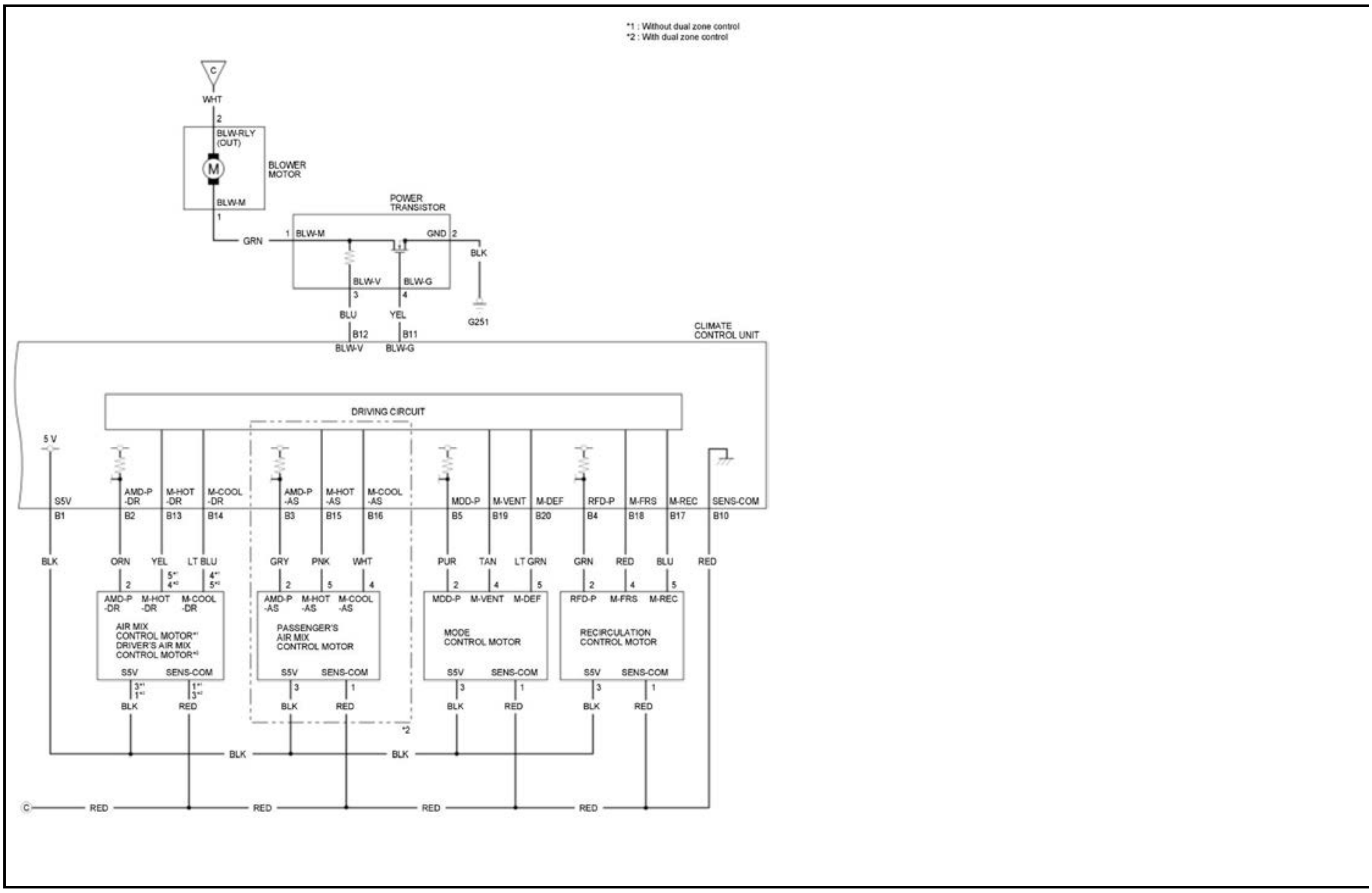
*1 : Without dual zone control
*2 : With dual zone control
C
WHT
2
BLW-RLY (OUT)
M
BLOWER MOTOR
BLW-M
1
POWER TRANSISTOR
GRN
1
BLW-M
GND
2
BLK
BLW-V
BLW-G
3
4
G251
BLU
YEL
B12
B11
BLW-V
BLW-G
CLIMATE CONTROL UNIT
DRIVING CIRCUIT
5 V
S5V
AMD-P -DR
M-HOT -DR
M-COOL -DR
AMD-P -AS
M-HOT -AS
M-COOL -AS
MDD-P
M-VENT
M-DEF
RFD-P
M-FRS
M-REC
SENS-COM
B1
B2
B13
B14
B3
B15
B16
B5
B19
B20
B4
B18
B17
B10
BLK
ORN
YEL
LT BLU
GRY
PNK
WHT
PUR
TAN
LT GRN
GRN
RED
BLU
RED
2
5*1 4*2
4*1 5*2
2
5
4
2
4
5
2
4
5
AMD-P -DR
M-HOT -DR
M-COOL -DR
AIR MIX CONTROL MOTOR*1
DRIVER'S AIR MIX CONTROL MOTOR*2
S5V
SENS-COM
3*1 1*2
1*1 3*2
AMD-P -AS
M-HOT -AS
M-COOL -AS
PASSENGER'S AIR MIX CONTROL MOTOR
S5V
SENS-COM
3
1
MDD-P
M-VENT
M-DEF
MODE CONTROL MOTOR
S5V
SENS-COM
3
1
RFD-P
M-FRS
M-REC
RECIRCULATION CONTROL MOTOR
S5V
SENS-COM
3
1
BLK
RED
BLK
RED
BLK
RED
BLK
RED
*2
BLK
BLK
C
RED
RED
RED
RED

CLIMATE CONTROL SYSTEM CIRCUIT DIAGRAM (2020 2021)

*1 : With keyless access system
*2 : Without keyless access system
*3 : With front seat heater
*4 : IG1B HOT in ON and START mode
*5 : IG2 HOT in ON mode
*6 : With wireless chager
*7 : Without wireless chager

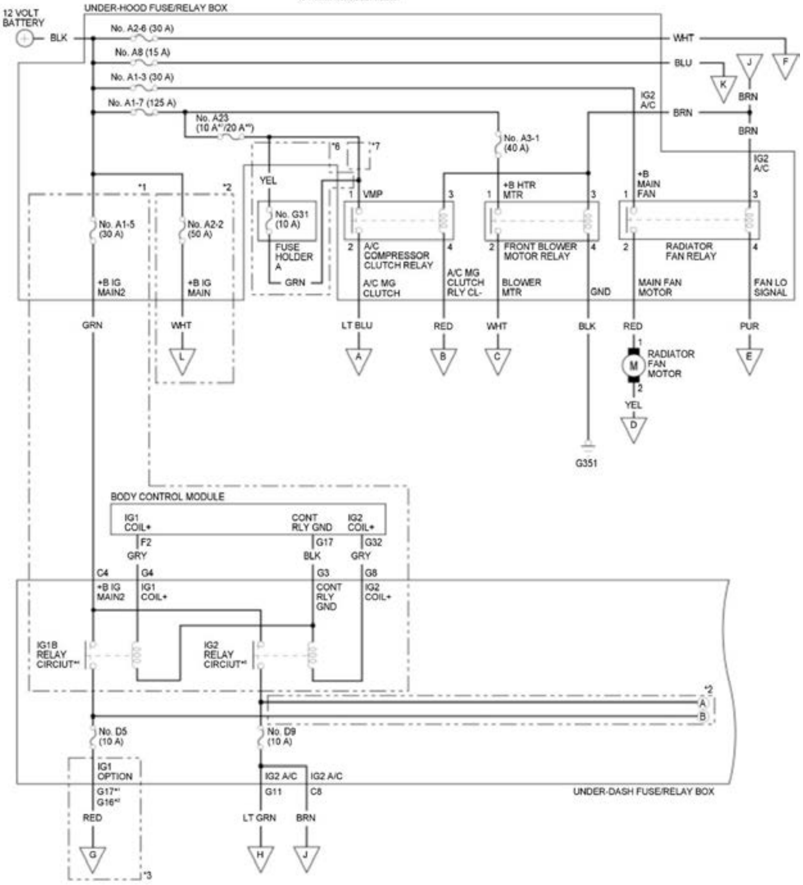
12 VOLT BATTERY
BLK
UNDER-HOOD FUSE/RELAY BOX
No. A2-6 (30 A)
No. A8 (15 A)
No. A1-3 (30 A)
No. A1-7 (125 A)
No. A23 (10 A*6/20 A*7)
No. A3-1 (40 A)
WHT
BLU
BRN
IG2 A/C
F
J
K
*6
*7
YEL
No. G31 (10 A)
FUSE HOLDER A
GRN
*1
*2
No. A1-5 (30 A)
No. A2-2 (50 A)
+B IG MAIN2
+B IG MAIN
1
VMP
3
2
4
A/C COMPRESSOR CLUTCH RELAY
A/C MG CLUTCH
A/C MG CLUTCH RLY CL-
+B HTR MTR
FRONT BLOWER MOTOR RELAY
BLOWER MTR
GND
+B MAIN FAN
RADIATOR FAN RELAY
MAIN FAN MOTOR
FAN LO SIGNAL
GRN
WHT
LT BLU
RED
WHT
BLK
RED
PUR
L
A
B
C
E
RADIATOR FAN MOTOR
M
YEL
D
G351
BODY CONTROL MODULE
IG1 COIL+
CONT RLY GND
IG2 COIL+
F2
G17
G32
GRY
BLK
GRY
C4
G4
G3
G8
+B IG MAIN2
IG1 COIL+
CONT RLY GND
IG2 COIL+
IG1B RELAY CIRCUIT*4
IG2 RELAY CIRCUIT*5
*2
A
B
No. D5 (10 A)
No. D9 (10 A)
IG1 OPTION
G17*1
G16*2
IG2 A/C
IG2 A/C
G11
C8
RED
LT GRN
BRN
G
H
J
*3
UNDER-DASH FUSE/RELAY BOX

*1 : Without keyless access system
*2 : IG1 MAIN HOT in ON and START mode
*3 : IG2 CUT RLY OUT HOT in ON mode

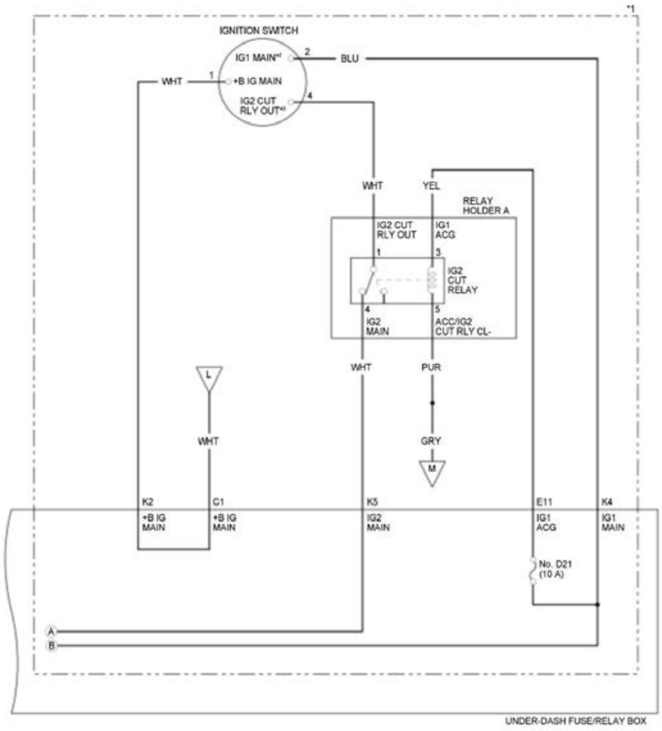
*1
IGNITION SWITCH
IG1 MAIN*2
2
BLU
WHT
1
+B IG MAIN
IG2 CUT RLY OUT*3
4
WHT
YEL
RELAY HOLDER A
IG2 CUT RLY OUT
IG1 ACG
1
3
IG2 CUT RELAY
4
5
IG2 MAIN
ACC/IG2 CUT RLY CL-
WHT
PUR
L
WHT
GRY
M
K2
C1
K5
E11
K4
+B IG MAIN
+B IG MAIN
IG2 MAIN
IG1 ACG
IG1 MAIN
No. D21 (10 A)
A
B
UNDER-DASH FUSE/RELAY BOX

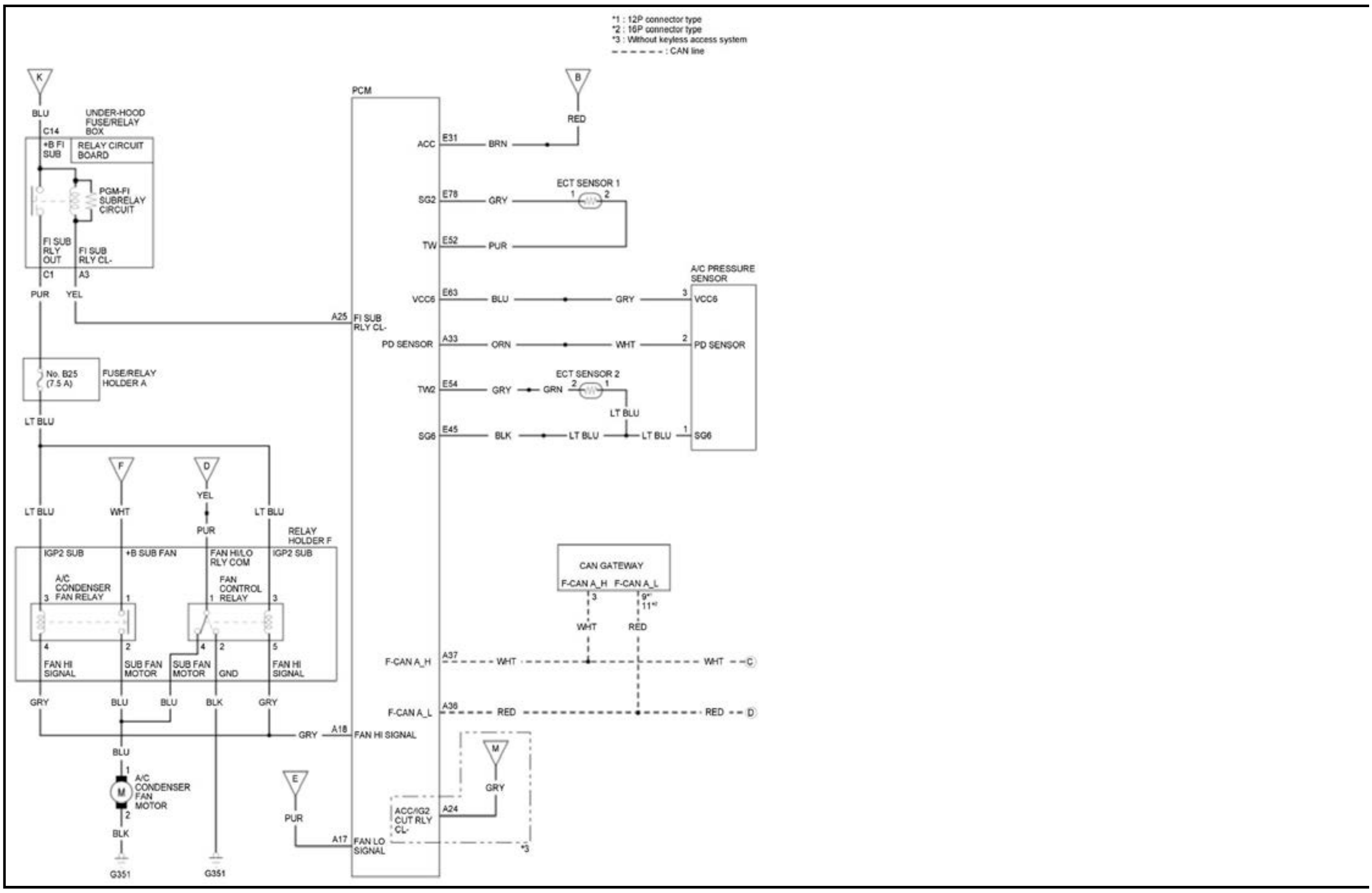
*1 : 12P connector type
*2 : 16P connector type
*3 : Without keyless access system
- - - - - - : CAN line

K
BLU
C14
UNDER-HOOD FUSE/RELAY BOX
+B FI SUB
RELAY CIRCUIT BOARD
PGM-FI SUBRELAY CIRCUIT
FI SUB RLY OUT
FI SUB RLY CL-
C1
A3
PUR
YEL
No. B25 (7.5 A)
FUSE/RELAY HOLDER A
LT BLU
F
D
WHT
YEL
PUR
LT BLU
RELAY HOLDER F
IGP2 SUB
+B SUB FAN
FAN HI/LO RLY COM
IGP2 SUB
A/C CONDENSER FAN RELAY
FAN CONTROL RELAY
3
1
1
3
4
2
4
2
5
FAN HI SIGNAL
SUB FAN MOTOR
SUB FAN MOTOR
GND
FAN HI SIGNAL
GRY
BLU
BLU
BLK
GRY
A/C CONDENSER FAN MOTOR
M
1
2
BLK
G351
G351
PCM
ACC
E31
BRN
B
RED
SG2
E78
GRY
ECT SENSOR 1
1
2
TW
E52
PUR
VCC6
E63
BLU
GRY
A/C PRESSURE SENSOR
3
VCC6
A25
FI SUB RLY CL-
PD SENSOR
A33
ORN
WHT
2
PD SENSOR
TW2
E54
GRY
GRN
ECT SENSOR 2
2
1
LT BLU
SG6
E45
BLK
LT BLU
LT BLU
1
SG6
CAN GATEWAY
F-CAN A_H
F-CAN A_L
3
9*1
11*2
WHT
RED
F-CAN A_H
A37
WHT
WHT
C
F-CAN A_L
A36
RED
RED
D
GRY
A18
FAN HI SIGNAL
M
GRY
E
PUR
ACC/IG2 CUT RLY CL-
A24
A17
FAN LO SIGNAL
*3

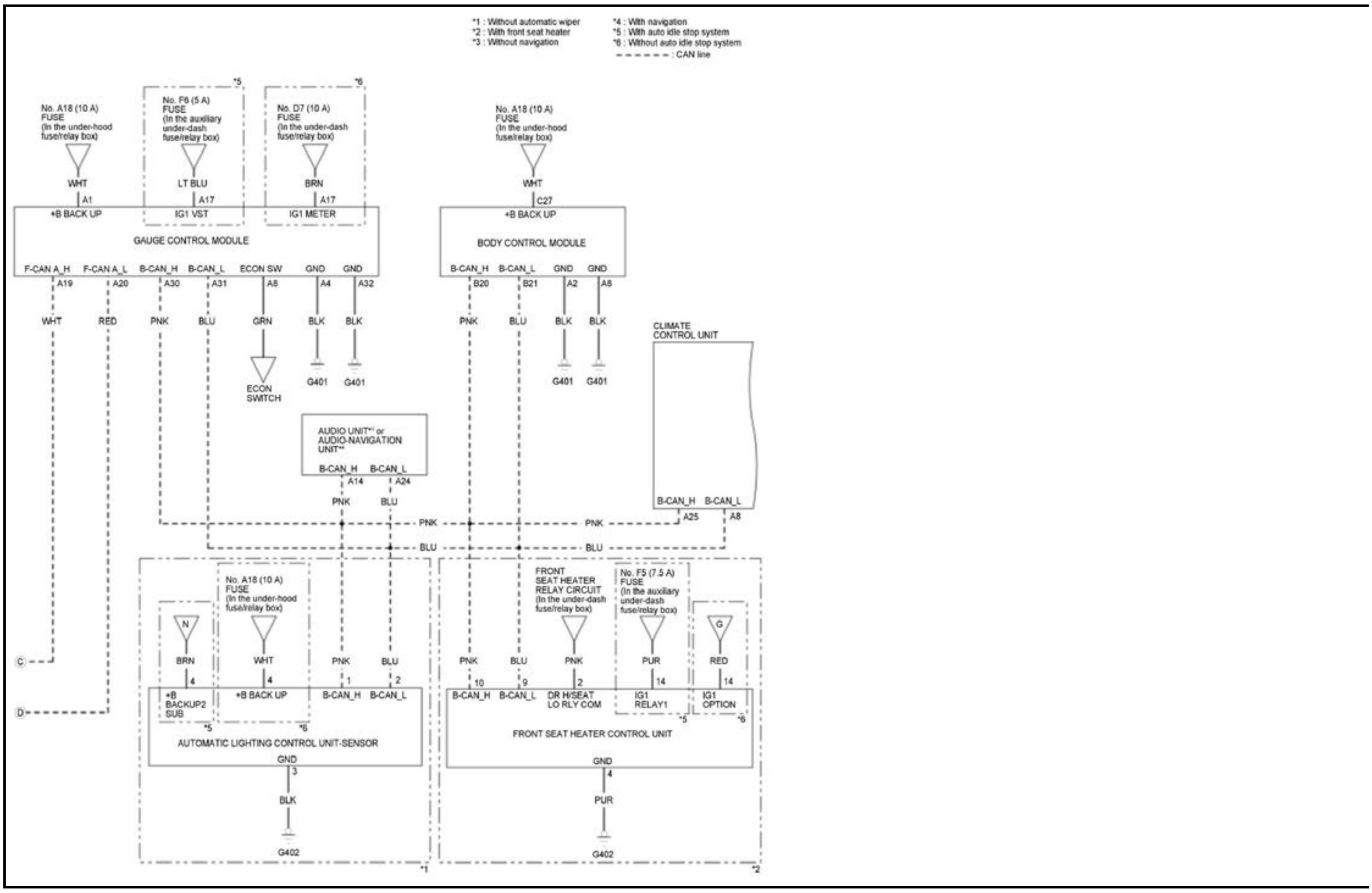
*1 : Without automatic wiper
*2 : With front seat heater
*3 : Without navigation
*4 : With navigation
*5 : With auto idle stop system
*6 : Without auto idle stop system
- - - - - - : CAN line

No. A18 (10 A) FUSE (In the under-hood fuse/relay box)
No. F6 (5 A) FUSE (In the auxiliary under-dash fuse/relay box)
*5
No. D7 (10 A) FUSE (In the under-dash fuse/relay box)
*6
No. A18 (10 A) FUSE (In the under-hood fuse/relay box)
WHT
A1
LT BLU
A17
BRN
A17
WHT
C27
+B BACK UP
IG1 VST
IG1 METER
GAUGE CONTROL MODULE
+B BACK UP
BODY CONTROL MODULE
F-CAN A_H
F-CAN A_L
B-CAN_H
B-CAN_L
ECON SW
GND
GND
A19
A20
A30
A31
A8
A4
A32
WHT
RED
PNK
BLU
GRN
BLK
BLK
ECON SWITCH
G401
G401
B-CAN_H
B-CAN_L
GND
GND
B20
B21
A2
A8
PNK
BLU
BLK
BLK
G401
G401
CLIMATE CONTROL UNIT
AUDIO UNIT*3 or AUDIO-NAVIGATION UNIT*4
B-CAN_H
B-CAN_L
A14
A24
PNK
BLU
B-CAN_H
B-CAN_L
A25
A8
PNK
PNK
BLU
BLU
No. A18 (10 A) FUSE (In the under-hood fuse/relay box)
N
BRN
WHT
PNK
BLU
4
4
1
2
+B BACKUP2 SUB
+B BACK UP
B-CAN_H
B-CAN_L
*5
*6
AUTOMATIC LIGHTING CONTROL UNIT-SENSOR
GND
3
BLK
G402
*1
C
D
FRONT SEAT HEATER RELAY CIRCUIT (In the under-dash fuse/relay box)
No. F5 (7.5 A) FUSE (In the auxiliary under-dash fuse/relay box)
G
PNK
BLU
PNK
PUR
RED
10
9
2
14
14
B-CAN_H
B-CAN_L
DR H/SEAT LO RLY COM
IG1 RELAY1
IG1 OPTION
*5
*6
FRONT SEAT HEATER CONTROL UNIT
GND
4
PUR
G402
*2

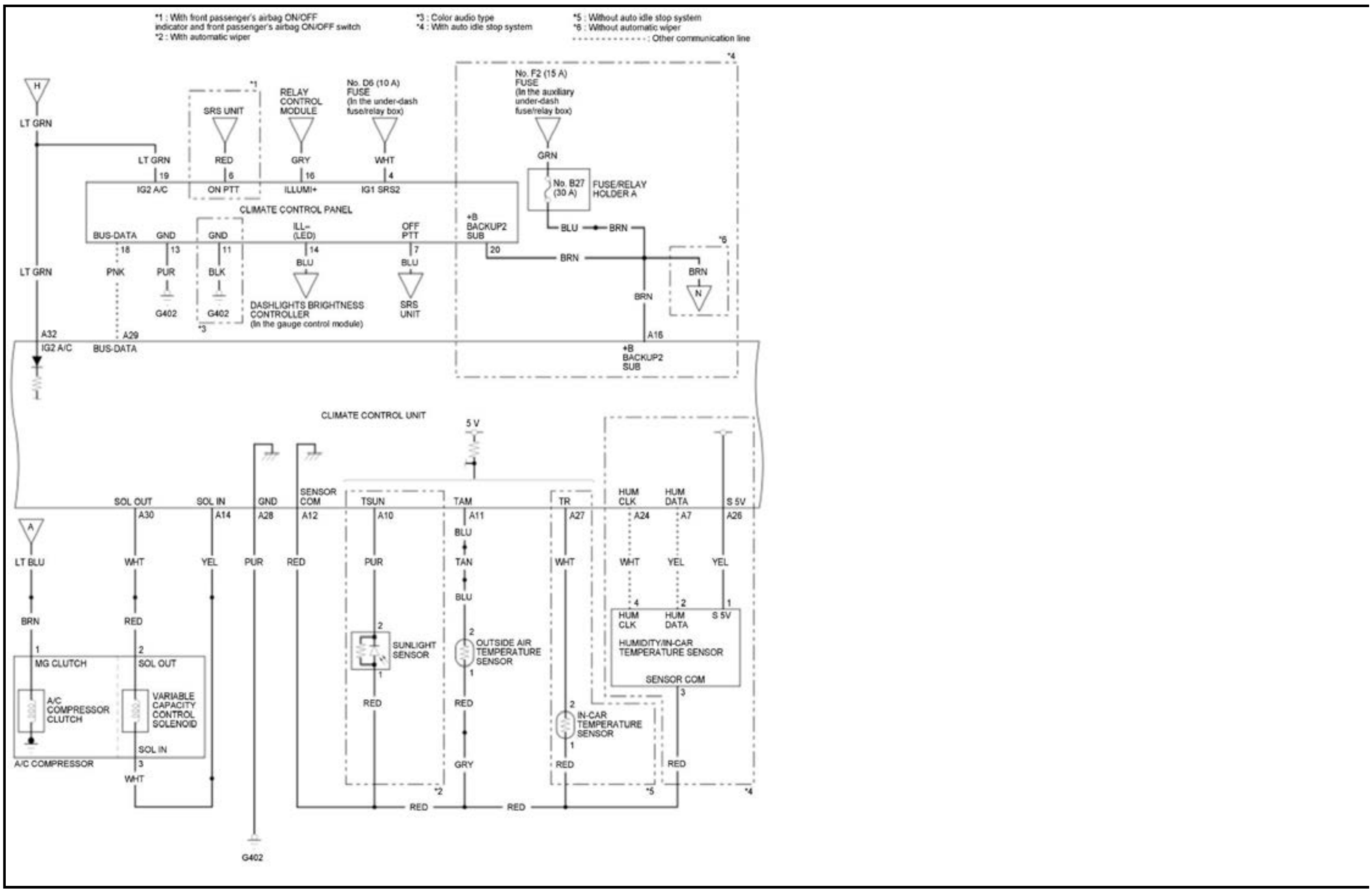
*1 : With front passenger's airbag ON/OFF indicator and front passenger's airbag ON/OFF switch
*2 : With automatic wiper
*3 : Color audio type
*4 : With auto idle stop system
*5 : Without auto idle stop system
*6 : Without automatic wiper
: Other communication line
H
LT GRN
SRS UNIT
RELAY CONTROL MODULE
No. D6 (10 A) FUSE (In the under-dash fuse/relay box)
No. F2 (15 A) FUSE (In the auxiliary under-dash fuse/relay box)
GRN
LT GRN
RED
GRY
WHT
19
6
16
4
IG2 A/C
ON PTT
ILLUMI+
IG1 SRS2
No. B27 (30 A)
FUSE/RELAY HOLDER A
CLIMATE CONTROL PANEL
BUS-DATA
GND
GND
ILL– (LED)
OFF PTT
+B BACKUP2 SUB
BLU
BRN
18
13
11
14
7
20
BRN
BRN
BRN
N
PNK
PUR
BLK
BLU
BLU
G402
G402
DASHLIGHTS BRIGHTNESS CONTROLLER (In the gauge control module)
SRS UNIT
A32
A29
A16
IG2 A/C
BUS-DATA
+B BACKUP2 SUB
CLIMATE CONTROL UNIT
5 V
SOL OUT
SOL IN
GND
SENSOR COM
TSUN
TAM
TR
HUM CLK
HUM DATA
S 5V
A30
A14
A28
A12
A10
A11
A27
A24
A7
A26
A
LT BLU
WHT
YEL
PUR
RED
PUR
BLU
TAN
BLU
WHT
WHT
YEL
YEL
BRN
RED
1
2
MG CLUTCH
SOL OUT
A/C COMPRESSOR CLUTCH
VARIABLE CAPACITY CONTROL SOLENOID
SOL IN
3
A/C COMPRESSOR
WHT
SUNLIGHT SENSOR
OUTSIDE AIR TEMPERATURE SENSOR
IN-CAR TEMPERATURE SENSOR
4
2
1
HUM CLK
HUM DATA
S 5V
HUMIDITY/IN-CAR TEMPERATURE SENSOR
SENSOR COM
3
RED
RED
GRY
RED
RED
RED
RED
G402

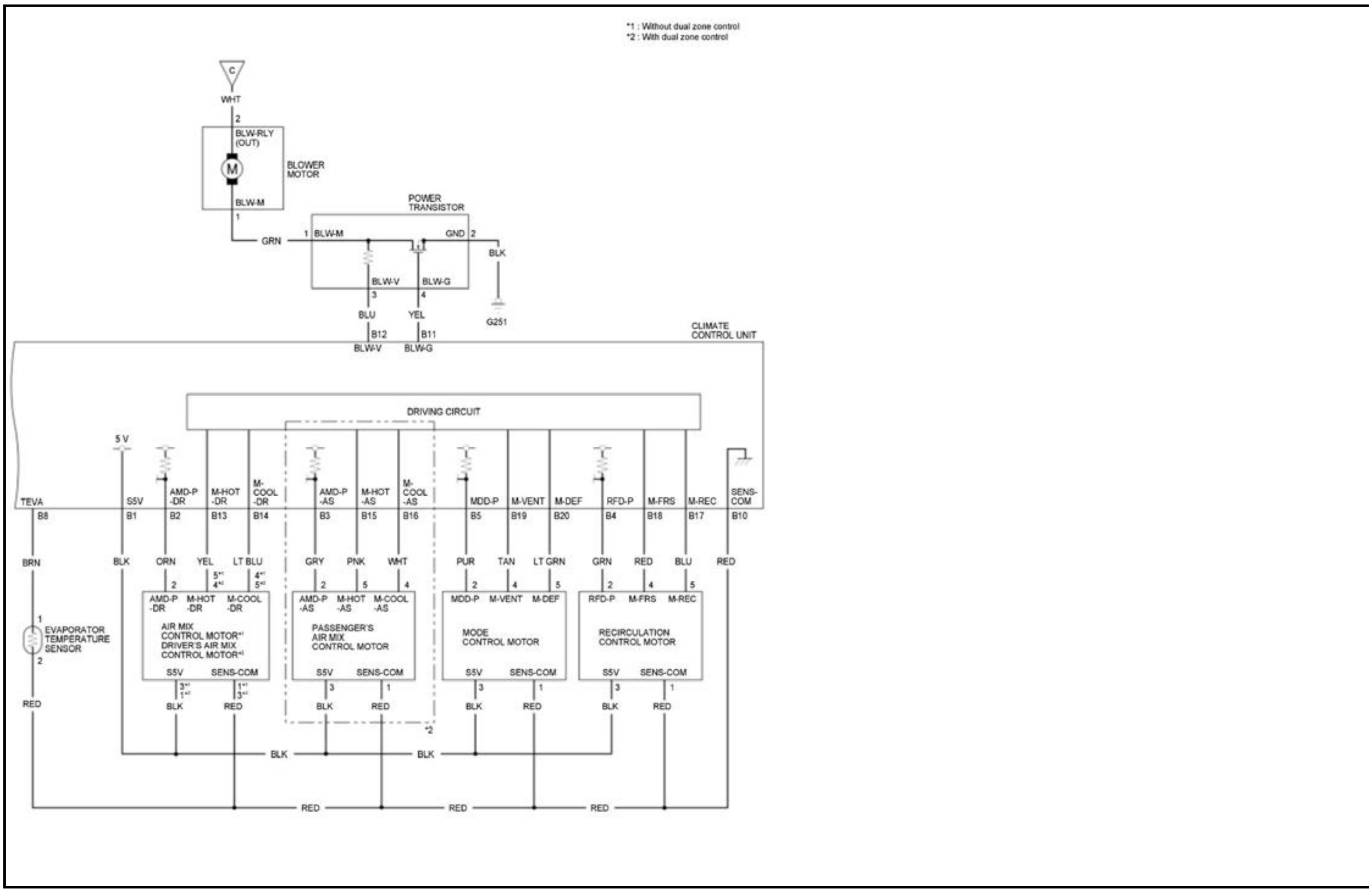
*1 : Without dual zone control
*2 : With dual zone control
C
WHT
2
BLW-RLY (OUT)
M
BLOWER MOTOR
BLW-M
1
GRN
POWER TRANSISTOR
1
BLW-M
GND
2
BLK
BLW-V
BLW-G
3
4
G251
BLU
YEL
B12
B11
BLW-V
BLW-G
CLIMATE CONTROL UNIT
DRIVING CIRCUIT
5 V
TEVA
S5V
AMD-P -DR
M-HOT -DR
M-COOL -DR
AMD-P -AS
M-HOT -AS
M-COOL -AS
MDD-P
M-VENT
M-DEF
RFD-P
M-FRS
M-REC
SENS-COM
B8
B1
B2
B13
B14
B3
B15
B16
B5
B19
B20
B4
B18
B17
B10
BRN
BLK
ORN
YEL
LT BLU
GRY
PNK
WHT
PUR
TAN
LT GRN
GRN
RED
BLU
RED
EVAPORATOR TEMPERATURE SENSOR
AMD-P -DR
M-HOT -DR
M-COOL -DR
AIR MIX CONTROL MOTOR*1
DRIVER'S AIR MIX CONTROL MOTOR*2
S5V
SENS-COM
AMD-P -AS
M-HOT -AS
M-COOL -AS
PASSENGER'S AIR MIX CONTROL MOTOR
MDD-P
M-VENT
M-DEF
MODE CONTROL MOTOR
RFD-P
M-FRS
M-REC
RECIRCULATION CONTROL MOTOR
BLK
RED
BLK
RED
BLK
RED
BLK
RED
BLK
BLK
RED
RED
RED
RED

HEATED STEERING WHEEL CIRCUIT DIAGRAM

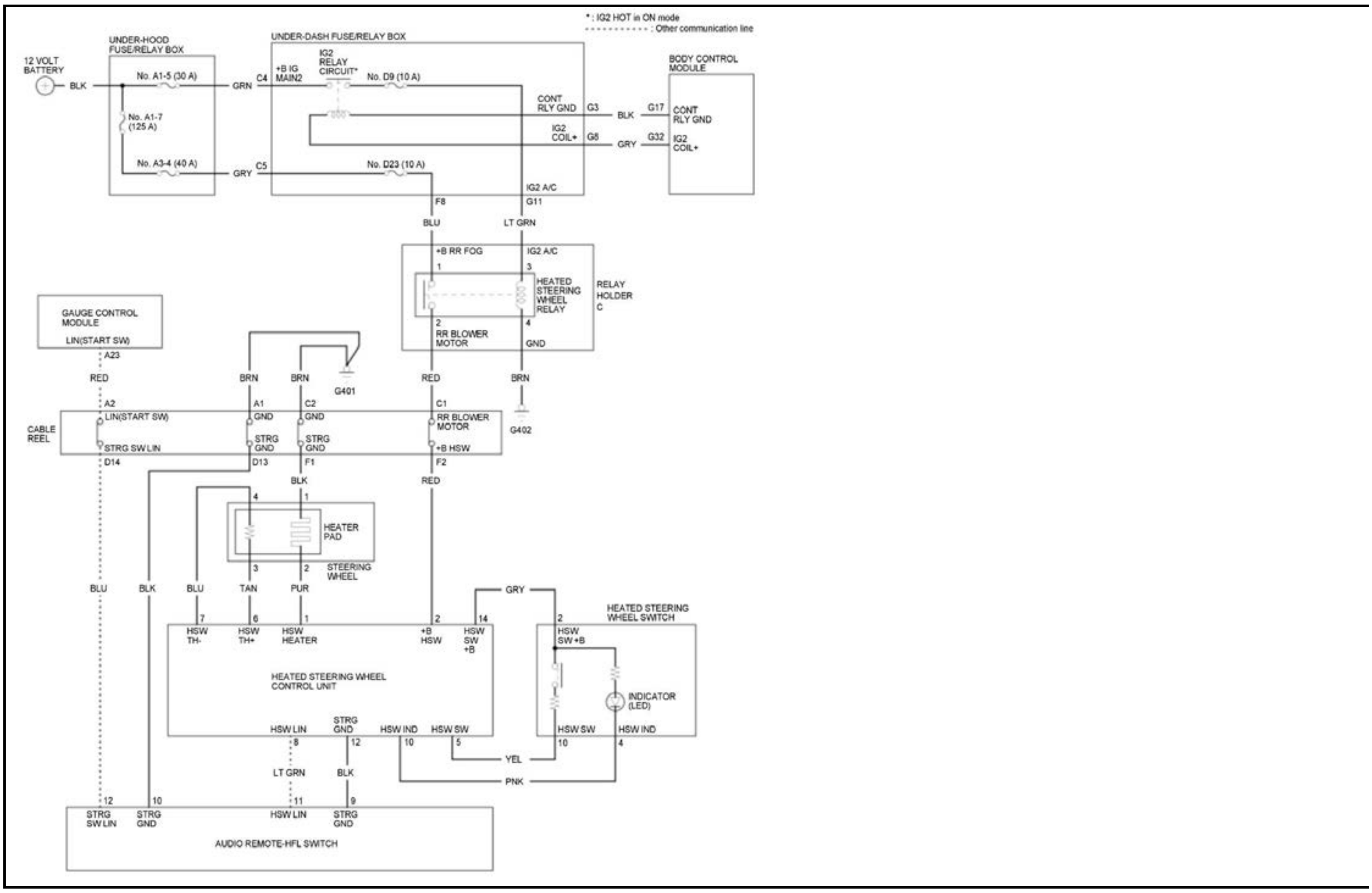
*: IG2 HOT in ON mode
: Other communication line
12 VOLT BATTERY
BLK
UNDER-HOOD FUSE/RELAY BOX
No. A1-5 (30 A)
No. A1-7 (125 A)
No. A3-4 (40 A)
GRN
GRY
C4
C5
UNDER-DASH FUSE/RELAY BOX
+B IG MAIN2
IG2 RELAY CIRCUIT*
No. D9 (10 A)
No. D23 (10 A)
CONT RLY GND
IG2 COIL+
G3
G8
BLK
GRY
G17
G32
BODY CONTROL MODULE
CONT RLY GND
IG2 COIL+
IG2 A/C
F8
G11
BLU
LT GRN
+B RR FOG
IG2 A/C
1
3
HEATED STEERING WHEEL RELAY
RELAY HOLDER C
2
4
RR BLOWER MOTOR
GND
GAUGE CONTROL MODULE
LIN(START SW)
A23
RED
BRN
BRN
G401
RED
BRN
G402
A2
A1
C2
C1
CABLE REEL
LIN(START SW)
GND
GND
RR BLOWER MOTOR
STRG SW LIN
STRG GND
STRG GND
+B HSW
D14
D13
F1
F2
BLK
RED
4
1
HEATER PAD
3
2
STEERING WHEEL
BLU
BLK
BLU
TAN
PUR
GRY
7
6
1
2
14
HSW TH-
HSW TH+
HSW HEATER
+B HSW
HSW SW +B
HEATED STEERING WHEEL CONTROL UNIT
HSW LIN
STRG GND
HSW IND
HSW SW
8
12
10
5
HEATED STEERING WHEEL SWITCH
2
HSW SW +B
INDICATOR (LED)
HSW SW
HSW IND
10
4
YEL
PNK
LT GRN
BLK
12
10
11
9
STRG SW LIN
STRG GND
HSW LIN
STRG GND
AUDIO REMOTE-HFL SWITCH

REAR WINDOW DEFOGGER CIRCUIT DIAGRAM

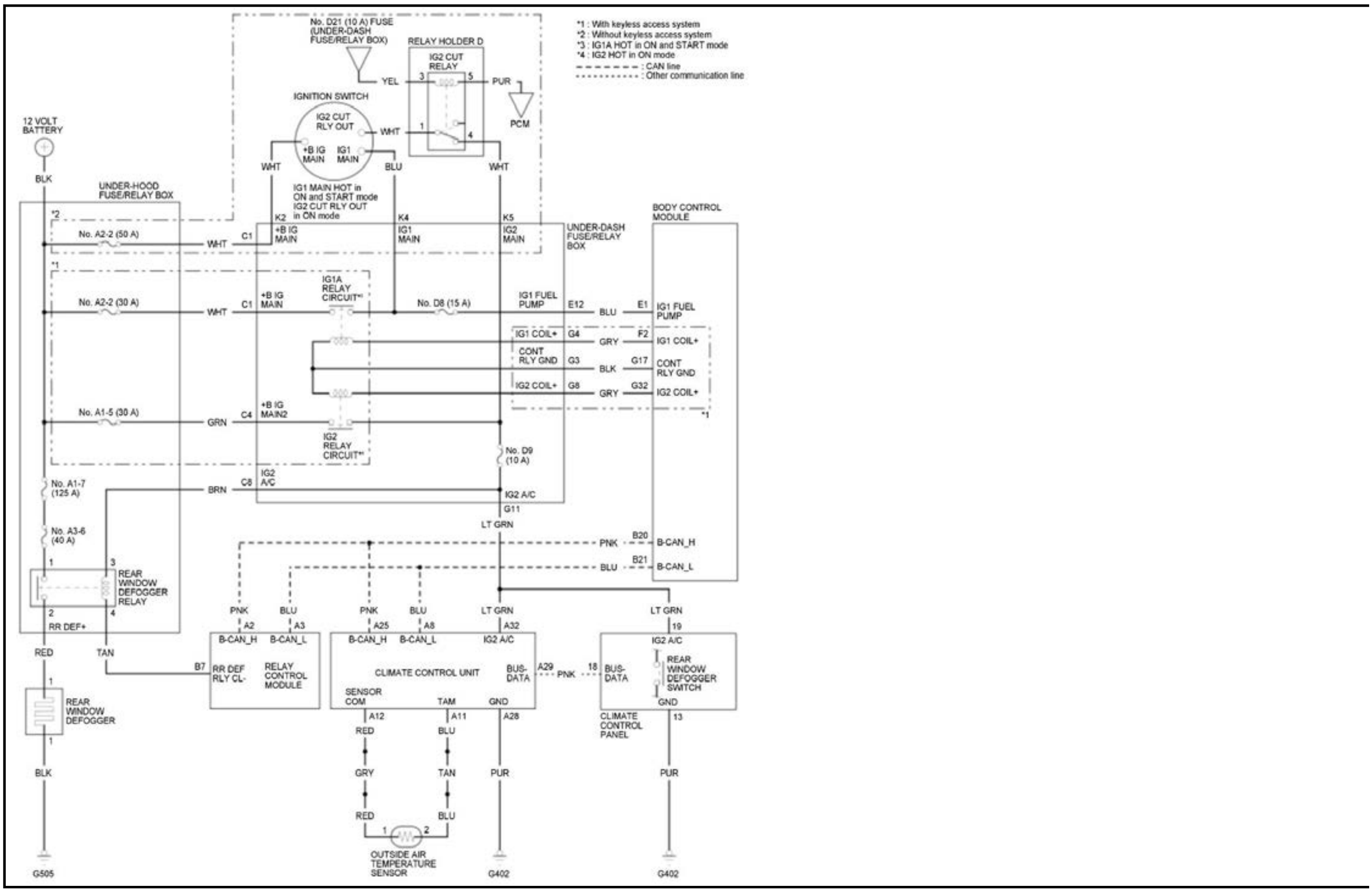
*1 : With keyless access system
*2 : Without keyless access system
*3 : IG1A HOT in ON and START mode
*4 : IG2 HOT in ON mode
: CAN line
: Other communication line
No. D21 (10 A) FUSE (UNDER-DASH FUSE/RELAY BOX)
RELAY HOLDER D
IG2 CUT RELAY
YEL
3
5
PUR
PCM
1
4
IGNITION SWITCH
IG2 CUT RLY OUT
WHT
+B IG MAIN
IG1 MAIN
WHT
BLU
WHT
IG1 MAIN HOT in ON and START mode
IG2 CUT RLY OUT in ON mode
12 VOLT BATTERY
BLK
UNDER-HOOD FUSE/RELAY BOX
*2
No. A2-2 (50 A)
WHT
C1
K2
+B IG MAIN
K4
IG1 MAIN
K5
IG2 MAIN
UNDER-DASH FUSE/RELAY BOX
BODY CONTROL MODULE
*1
No. A2-2 (30 A)
WHT
C1
+B IG MAIN
IG1A RELAY CIRCUIT*3
No. D8 (15 A)
IG1 FUEL PUMP
E12
BLU
E1
IG1 FUEL PUMP
IG1 COIL+
G4
GRY
F2
IG1 COIL+
CONT RLY GND
G3
BLK
G17
CONT RLY GND
IG2 COIL+
G8
GRY
G32
IG2 COIL+
*1
No. A1-5 (30 A)
GRN
C4
+B IG MAIN2
IG2 RELAY CIRCUIT*4
No. D9 (10 A)
No. A1-7 (125 A)
BRN
C8
IG2 A/C
IG2 A/C
G11
LT GRN
No. A3-6 (40 A)
PNK
B20
B-CAN_H
BLU
B21
B-CAN_L
1
3
REAR WINDOW DEFOGGER RELAY
2
4
RR DEF+
RED
TAN
PNK
BLU
PNK
BLU
LT GRN
LT GRN
A2
A3
A25
A8
A32
19
B-CAN_H
B-CAN_L
B-CAN_H
B-CAN_L
IG2 A/C
IG2 A/C
B7
RR DEF RLY CL-
RELAY CONTROL MODULE
CLIMATE CONTROL UNIT
BUS-DATA
A29
PNK
18
BUS-DATA
REAR WINDOW DEFOGGER SWITCH
1
REAR WINDOW DEFOGGER
1
SENSOR COM
TAM
GND
GND
A12
A11
A28
13
CLIMATE CONTROL PANEL
RED
BLU
BLK
GRY
TAN
PUR
PUR
RED
BLU
1
2
OUTSIDE AIR TEMPERATURE SENSOR
G505
G402
G402

GENERAL INFORMATION

A/C SERVICE TIPS AND PRECAUTIONS (1234YF)

WARNING:

- Compressed air mixed with the HFO-1234yf (R-1234yf) forms a combustible vapor.
- The vapor can burn or explode causing serious injury.
- Never use compressed air to pressure test HFO-1234yf (R-1234yf) service equipment or vehicle air conditioning systems.

WARNING:

- Air conditioning refrigerant or lubricant vapor can irritate your eyes, nose, or throat.
- Be careful when connecting service equipment.
- Do not breathe refrigerant or vapor.

The air conditioning system uses HFO-1234yf (R-1234yf) refrigerant and polyolester (POE) **refrigerant oil**.

Use only service equipment that is U.L.-listed and is certified to meet the requirements of SAE J639 to remove R-1234yf from the air conditioning system.

If accidental system discharge occurs, ventilate the work area before resuming service.

R-1234yf service equipment or vehicle air conditioning systems should not be pressure tested or leak tested with compressed air.

Additional health and safety information may be obtained from the refrigerant and lubricant manufacturers.

NOTE:

- The following label is found under the hood.
- The following illustration is an example. The value and the oil type of the actual vehicle may vary depending on the model.

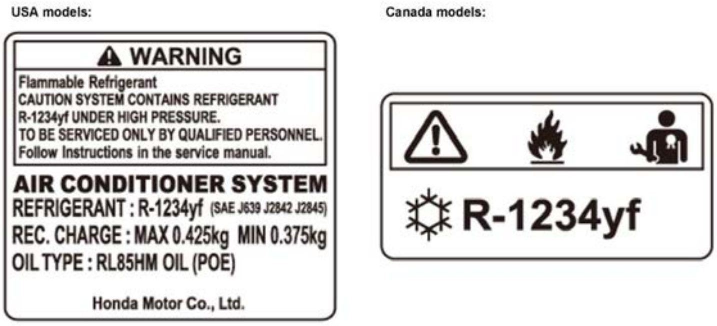

USA models:

⚠ WARNING

Flammable Refrigerant
CAUTION SYSTEM CONTAINS REFRIGERANT
R-1234yf UNDER HIGH PRESSURE.
TO BE SERVICED ONLY BY QUALIFIED PERSONNEL.
Follow Instructions in the service manual.

AIR CONDITIONER SYSTEM
REFRIGERANT : R-1234yf (SAE J639 J2842 J2845)
REC. CHARGE : MAX 0.425kg MIN 0.375kg
OIL TYPE : RL85HM OIL (POE)

Honda Motor Co., Ltd.

Canada models:

R-1234yf

Symbol	Symbol name
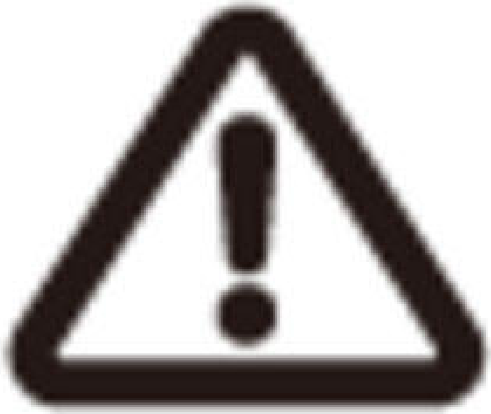	Caution

Symbol	Symbol name
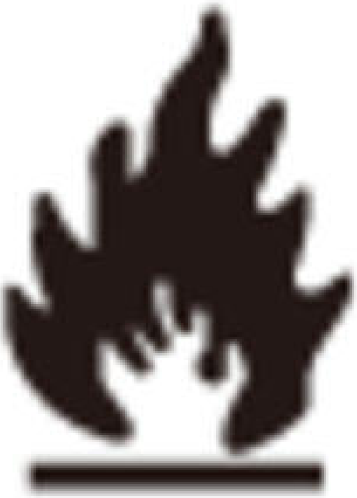	Inflammable refrigerant

Symbol	Symbol name
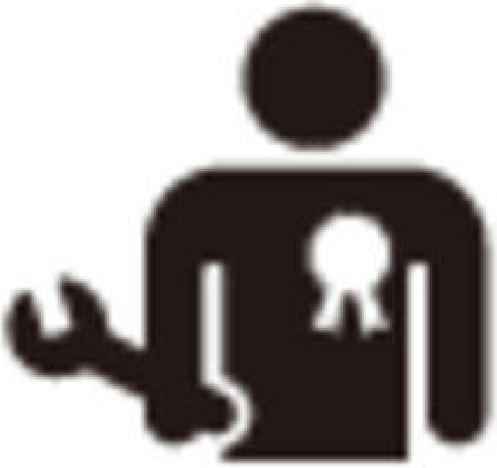	Requires properly trained technician to service mobile A/C systems
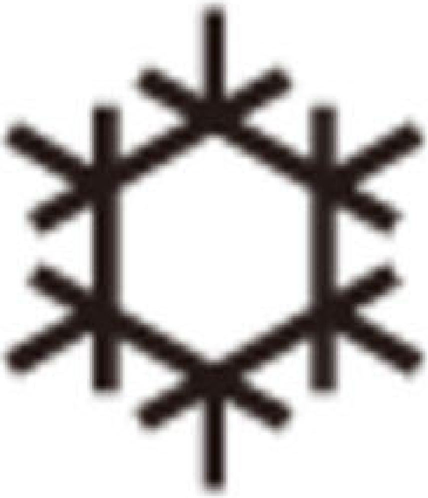	A/C system

- Always disconnect the negative cable from the 12 volt battery whenever replacing air conditioning parts.
- Keep moisture and dirt out of the system. When disconnecting any lines, plug or cap the fittings immediately; do not remove the caps or plugs until just before yo
- Before connecting any hose or line, apply a few drops of **refrigerant oil** to the O-ring.
- When tightening or loosening a fitting, use a second wrench to support the matching fitting.
- When discharging the system, use an R-1234yf refrigerant A/C recover/recycle/recharge machine; do not release refrigerant into the atmosphere.
- Servicing of an R-1234yf system should be done in well-ventilated work area.
- To ensure proper and safe operation, the Society of Automotive Engineers (SAE J2845) recommends that the refrigerant system only be serviced by trained and c
- Never repair or replace the air conditioning evaporator (cooling coil) with one removed from a used or salvaged vehicle.
- New replacement mobile air conditioning evaporator must be certified (and labeled) as meeting SAE Standard J2842.
- Vented refrigerant is harmful to the environment.
- To avoid refrigerant from venting, never replace the evaporator with one removed from a used or salvaged vehicle.

- Refrigerant in your vehicle's air conditioning system is flammable and can be ignited during servicing if proper procedures are not followed.
- Requires a qualified technician to service.
- For safety system components should be replaced shall not be repaired or salvaged for reuse.

A/C SERVICE TIPS AND PRECAUTIONS (134A)

WARNING:

- Compressed air mixed with the R-134a forms a combustible vapor.
- The vapor can burn or explode causing serious injury.
- Never use compressed air to pressure test R-134a service equipment or vehicle air conditioning systems.

WARNING:

- Air conditioning refrigerant or lubricant vapor can irritate your eyes, nose, or throat.
- Be careful when connecting service equipment.
- Do not breathe refrigerant or vapor.

The air conditioning system uses HFC-134a (R-134a) refrigerant and polyalkylene glycol (PAG) **refrigerant oil**.

Use only service equipment that is U.L.-listed and is certified to meet the requirements of SAE J2788 to remove R-134a from the air conditioning system.

If accidental system discharge occurs, ventilate the work area before resuming service.

R-134a service equipment or vehicle air conditioning systems should not be pressure tested or leak tested with compressed air.

Additional health and safety information may be obtained from the refrigerant and lubricant manufacturers.

- Always disconnect the negative cable from the 12 volt battery whenever replacing air conditioning parts.
- Keep moisture and dirt out of the system. When disconnecting any lines, plug or cap the fittings immediately; do not remove the caps or plugs until just before yo
- Before connecting any hose or line, apply a few drops of **refrigerant oil** to the O-ring.
- When tightening or loosening a fitting, use a second wrench to support the matching fitting.
- When discharging the system, use an R-134a refrigerant A/C recover/recycle/recharge machine; do not release refrigerant into the atmosphere.

COMPONENT LOCATION INDEX

CLIMATE CONTROL SYSTEM COMPONENT LOCATION INDEX

For relationships between signals in a system, refer to System Diagram.

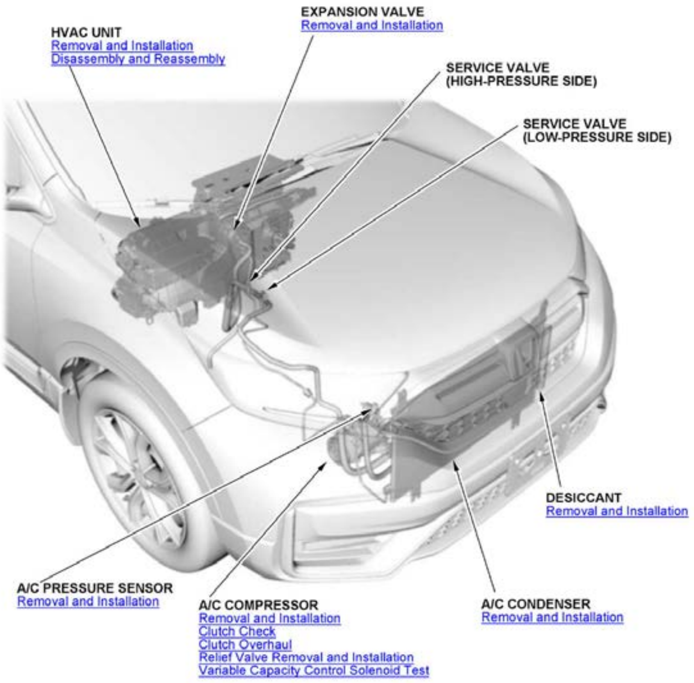
EXPANSION VALVE
Removal and Installation
HVAC UNIT
Removal and Installation
Disassembly and Reassembly
SERVICE VALVE
(HIGH-PRESSURE SIDE)
SERVICE VALVE
(LOW-PRESSURE SIDE)
DESICCANT
Removal and Installation
A/C PRESSURE SENSOR
Removal and Installation
A/C COMPRESSOR
Removal and Installation
Clutch Check
Clutch Overhaul
Relief Valve Removal and Installation
Variable Capacity Control Solenoid Test
A/C CONDENSER
Removal and Installation

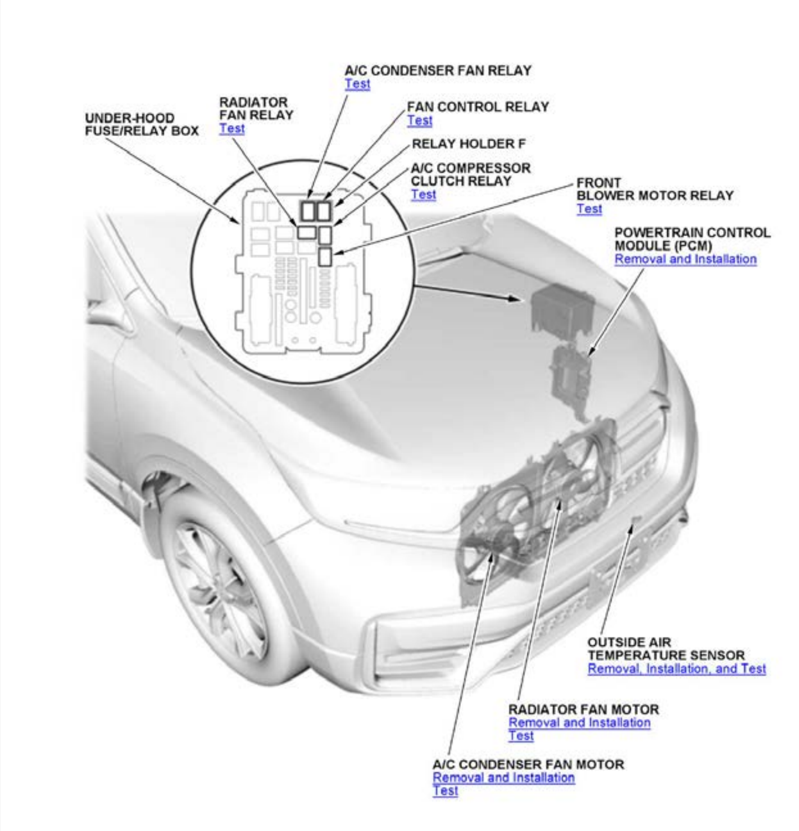
A/C CONDENSER FAN RELAY
Test
RADIATOR FAN RELAY
Test
FAN CONTROL RELAY
Test
UNDER-HOOD FUSE/RELAY BOX
RELAY HOLDER F
A/C COMPRESSOR CLUTCH RELAY
Test
FRONT BLOWER MOTOR RELAY
Test
POWERTRAIN CONTROL MODULE (PCM)
Removal and Installation
OUTSIDE AIR TEMPERATURE SENSOR
Removal, Installation, and Test
RADIATOR FAN MOTOR
Removal and Installation
Test
A/C CONDENSER FAN MOTOR
Removal and Installation
Test

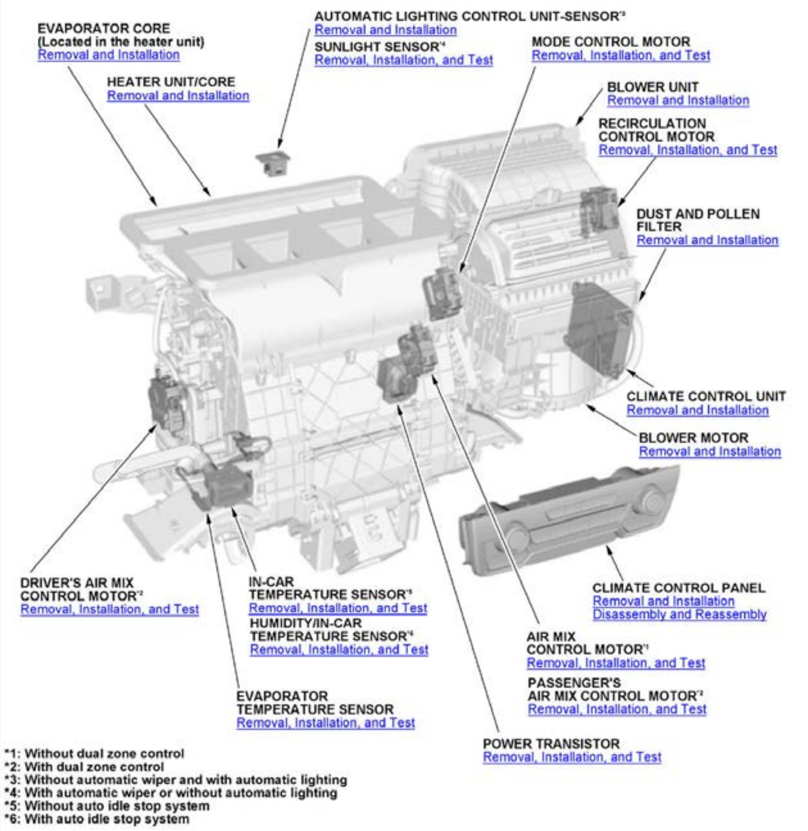
EVAPORATOR CORE
(Located in the heater unit)
Removal and Installation
AUTOMATIC LIGHTING CONTROL UNIT-SENSOR*3
Removal and Installation
SUNLIGHT SENSOR*4
Removal, Installation, and Test
MODE CONTROL MOTOR
Removal, Installation, and Test
HEATER UNIT/CORE
Removal and Installation
BLOWER UNIT
Removal and Installation
RECIRCULATION CONTROL MOTOR
Removal, Installation, and Test
DUST AND POLLEN FILTER
Removal and Installation
CLIMATE CONTROL UNIT
Removal and Installation
BLOWER MOTOR
Removal and Installation
CLIMATE CONTROL PANEL
Removal and Installation
Disassembly and Reassembly
DRIVER'S AIR MIX CONTROL MOTOR*2
Removal, Installation, and Test
IN-CAR TEMPERATURE SENSOR*5
Removal, Installation, and Test
HUMIDITY/IN-CAR TEMPERATURE SENSOR*6
Removal, Installation, and Test
AIR MIX CONTROL MOTOR*1
Removal, Installation, and Test
PASSENGER'S AIR MIX CONTROL MOTOR*2
Removal, Installation, and Test
EVAPORATOR TEMPERATURE SENSOR
Removal, Installation, and Test
POWER TRANSISTOR
Removal, Installation, and Test

*1: Without dual zone control
*2: With dual zone control
*3: Without automatic wiper and with automatic lighting
*4: With automatic wiper or without automatic lighting
*5: Without auto idle stop system
*6: With auto idle stop system

CLIMATE CONTROL SYSTEM COMPONENT LOCATION INDEX (1.5 L ENGINE)

For relationships between signals in a system, refer to System Diagram.

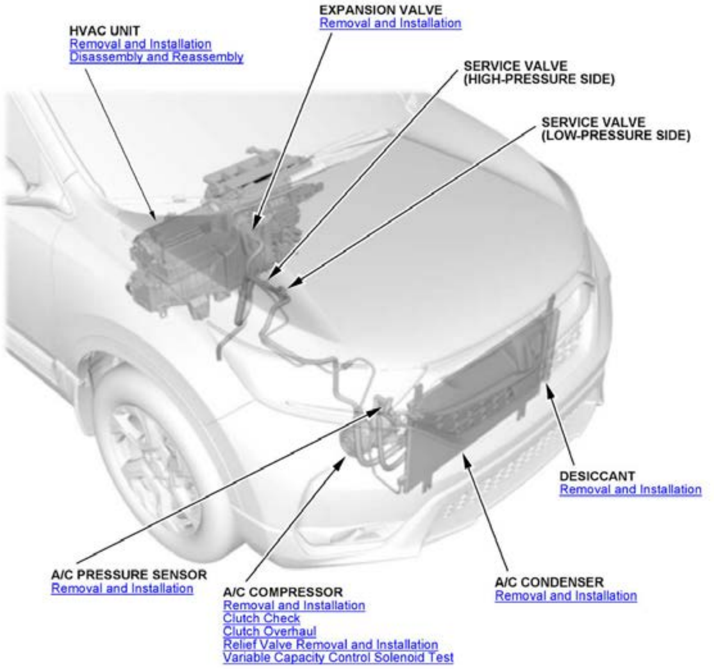
HVAC UNIT
Removal and Installation
Disassembly and Reassembly
EXPANSION VALVE
Removal and Installation
SERVICE VALVE (HIGH-PRESSURE SIDE)
SERVICE VALVE (LOW-PRESSURE SIDE)
DESICCANT
Removal and Installation
A/C PRESSURE SENSOR
Removal and Installation
A/C COMPRESSOR
Removal and Installation
Clutch Check
Clutch Overhaul
Relief Valve Removal and Installation
Variable Capacity Control Solenoid Test
A/C CONDENSER
Removal and Installation

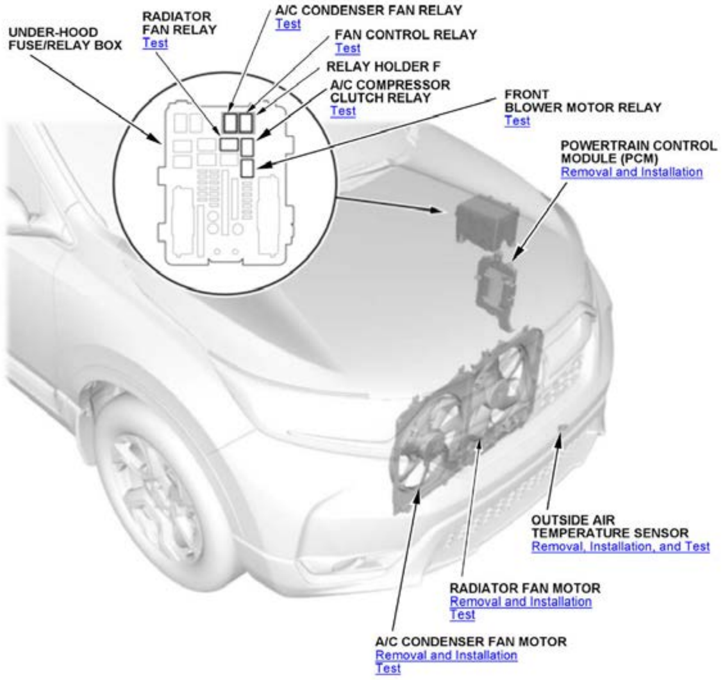
UNDER-HOOD FUSE/RELAY BOX
RADIATOR FAN RELAY
Test
A/C CONDENSER FAN RELAY
Test
FAN CONTROL RELAY
Test
RELAY HOLDER F
A/C COMPRESSOR CLUTCH RELAY
Test
FRONT BLOWER MOTOR RELAY
Test
POWERTRAIN CONTROL MODULE (PCM)
Removal and Installation
OUTSIDE AIR TEMPERATURE SENSOR
Removal, Installation, and Test
RADIATOR FAN MOTOR
Removal and Installation
Test
A/C CONDENSER FAN MOTOR
Removal and Installation
Test

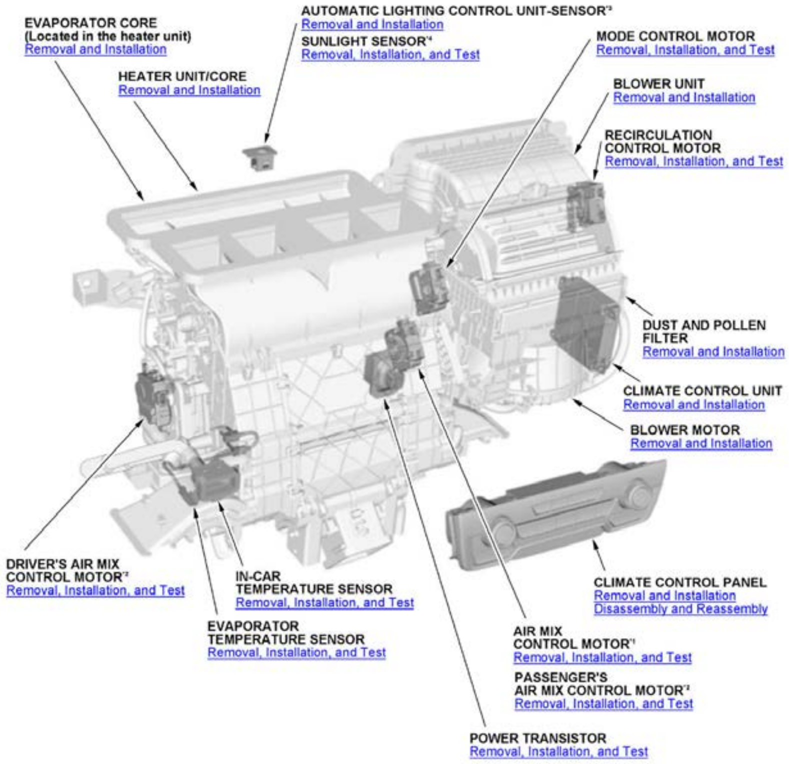
EVAPORATOR CORE
(Located in the heater unit)
Removal and Installation
HEATER UNIT/CORE
Removal and Installation
AUTOMATIC LIGHTING CONTROL UNIT-SENSOR*3
Removal and Installation
SUNLIGHT SENSOR*4
Removal, Installation, and Test
MODE CONTROL MOTOR
Removal, Installation, and Test
BLOWER UNIT
Removal and Installation
RECIRCULATION
CONTROL MOTOR
Removal, Installation, and Test
DUST AND POLLEN
FILTER
Removal and Installation
CLIMATE CONTROL UNIT
Removal and Installation
BLOWER MOTOR
Removal and Installation
CLIMATE CONTROL PANEL
Removal and Installation
Disassembly and Reassembly
DRIVER'S AIR MIX
CONTROL MOTOR*2
Removal, Installation, and Test
IN-CAR
TEMPERATURE SENSOR
Removal, Installation, and Test
EVAPORATOR
TEMPERATURE SENSOR
Removal, Installation, and Test
AIR MIX
CONTROL MOTOR*1
Removal, Installation, and Test
PASSENGER'S
AIR MIX CONTROL MOTOR*2
Removal, Installation, and Test
POWER TRANSISTOR
Removal, Installation, and Test

*1: Without dual zone control
*2: With dual zone control
*3: Without automatic wiper and with automatic lighting
*4: With automatic wiper or without automatic lighting

HEATED STEERING WHEEL COMPONENT LOCATION INDEX

For relationships between signals in a system, refer to System Diagram.

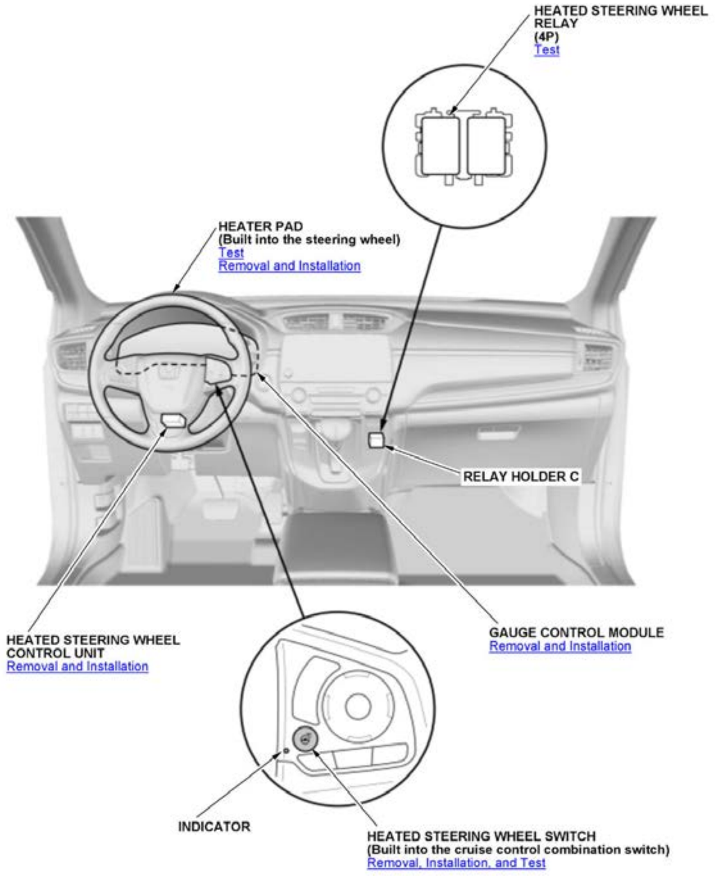
HEATED STEERING WHEEL
RELAY
(4P)
Test
HEATER PAD
(Built into the steering wheel)
Test
Removal and Installation
RELAY HOLDER C
HEATED STEERING WHEEL
CONTROL UNIT
Removal and Installation
GAUGE CONTROL MODULE
Removal and Installation
INDICATOR
HEATED STEERING WHEEL SWITCH
(Built into the cruise control combination switch)
Removal, Installation, and Test

REAR WINDOW DEFOGGER COMPONENT LOCATION INDEX

For relationships between signals in a system, refer to System Diagram.

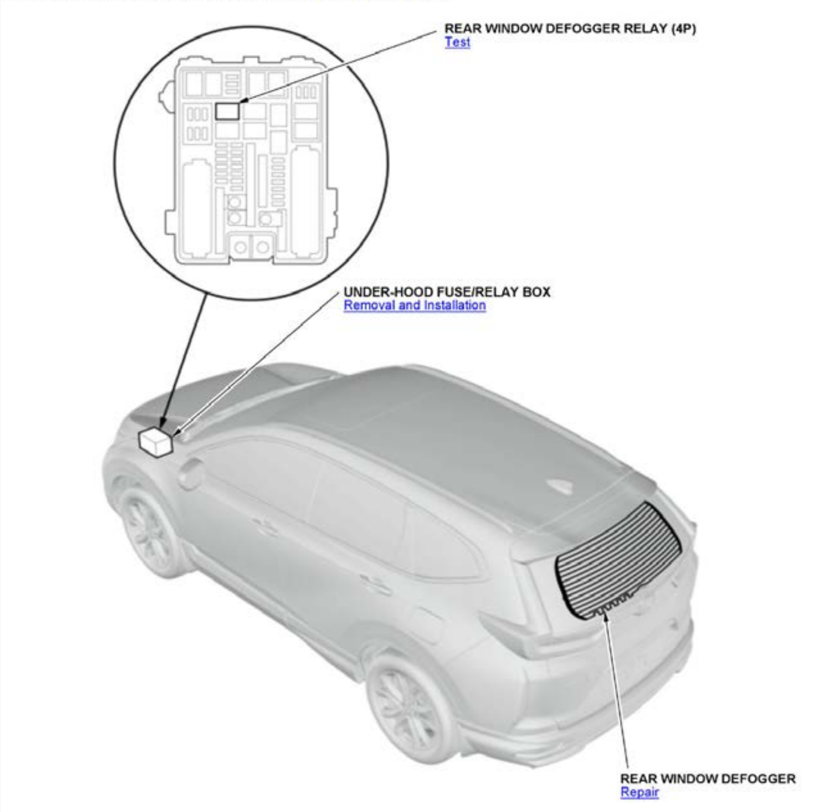
REAR WINDOW DEFOGGER RELAY (4P)
Test
UNDER-HOOD FUSE/RELAY BOX
Removal and Installation
REAR WINDOW DEFOGGER
Repair

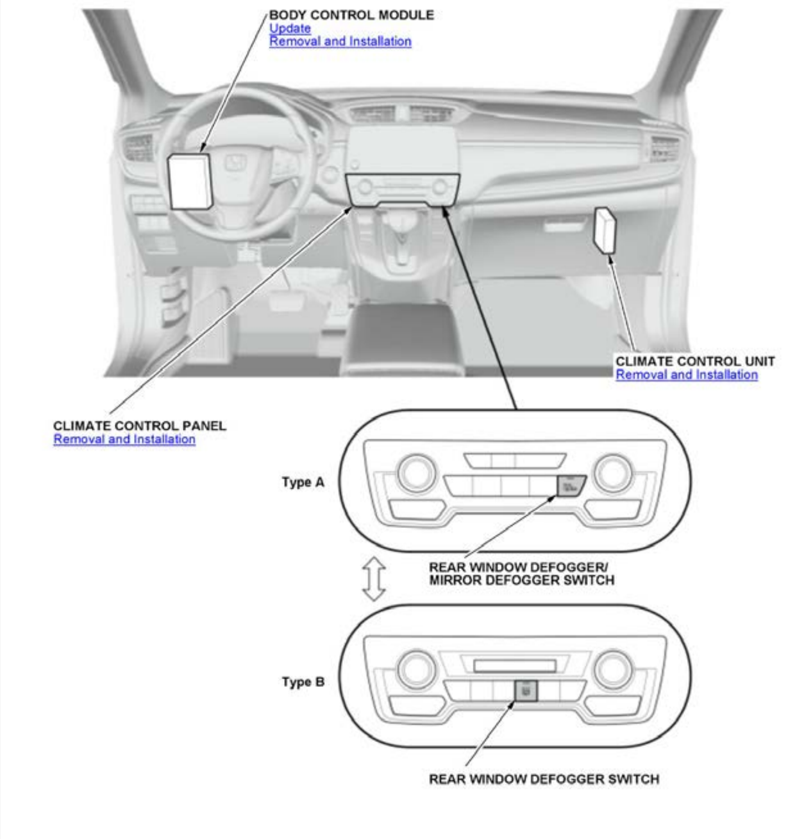
BODY CONTROL MODULE
Update
Removal and Installation
CLIMATE CONTROL UNIT
Removal and Installation
CLIMATE CONTROL PANEL
Removal and Installation
Type A
REAR WINDOW DEFOGGER/
MIRROR DEFOGGER SWITCH
Type B
REAR WINDOW DEFOGGER SWITCH

SYMPTOM TROUBLESHOOTING

CLIMATE CONTROL SYSTEM SYMPTOM TROUBLESHOOTING - THE A/C COMPRESSOR CLUTCH DOES NOT ENGAGE, BUT THE A/C CONDI BLOWER AND HEATER CONTROLS WORK (2017 2018 2019)

The A/C compressor clutch does not engage, but the A/C condenser/radiator fans operate, and the blower and heater controls work

NOTE:

- It is normal for the A/C compressor to turn off under certain conditions, such as low idle, high engine coolant temperature, or hard acceleration.
- Do not use this troubleshooting procedure if the cooling fan is also inoperative with the A/C on. Refer to the symptom troubleshooting index.

- Before doing symptom troubleshooting, check for **PGM-FI DTCs** .

1. Fuse check

   -1. Check the following fuse.

Fuse	No. A23 (10 A)
Location	Under-hood fuse/relay box

   Is the fuse OK?

   YES

   Go to step 2.

   NO

   Replace the fuse, and recheck. If the fuse blows again, repair a short in the No. A23 (10 A) fuse circuit.

2. A/C pressure sensor parameter check

   -1. **Connect the HDS to the DLC** .

   -2. Start the engine.

   Set the A/C system to the following conditions:

   - A/C: ON
   - Fan control: ON

   -4. Check the parameter(s) below with the HDS.

Signal	Threshold		
	Values	Unit	
ENGINE SPEED	670-770	rpm	B
ECT SENSOR 1	80-100	deg.C	B
	176-212	deg.F	

   -5. Check the parameter(s) below with the HDS.

Signal	Threshold		
	Values	Unit	
A/C PRESSURE SENSOR	196-2, 950	kPa	B
	2.00-30.08	kgf/cm 2	
	28.4-427.9	psi	

   Do the current condition(s) match the threshold?

   YES

   Go to step 3.

   NO

   Go to the **A/C system test**.

3. PGM-FI system parameter check

   -1. Check the parameter(s) below with the HDS.

Signal	Threshold		
	Values	Unit	
A/C SWITCH	ON	B	B
A/C CLUTCH	ON	B	B

   Do the current condition(s) match the threshold?

   YES

   Go to step 4.

   NO: A/C SWITCH is OFF

   A/C SWITCH is OFF, **replace the climate control unit** .

   NO: A/C SWITCH is ON and A/C CLUTCH is OFF

   A/C SWITCH is ON and A/C CLUTCH is OFF, check for any authorized service information related to the DTCs or symptoms you are troubleshooting, or **subst** symptom/indication goes away and the PCM was substituted, **replace the original PCM** .

4. A/C compressor clutch relay check

   -1. Turn the vehicle to the OFF (LOCK) mode.

   -2. Remove the A/C compressor clutch relay from the under-hood fuse/relay box, and **test it** .

   Is the relay OK?

YES

Go to step 5.

NO

Replace the A/C compressor clutch relay.

5. Open wire check (VMP line)

-1. Measure the voltage between test points 1 and 2.

Test condition	Vehicle OFF (LOCK) mode A/C compressor clutch relay: disconnected
Test point 1	A/C compressor clutch relay 4P socket (female terminals) No. 1: ①
Test point 2	Body ground

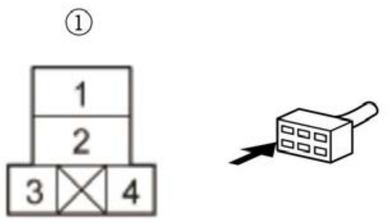

Is there battery voltage?

YES

The VMP wire is OK. Go to step 6.

NO

Repair an open in the VMP wire.

6. Determine possible failure area (A/C compressor clutch relay switch side circuit, A/C compressor clutch relay coil side circuit)

-1. Connect terminals A and B with a jumper wire.

Terminal A	A/C compressor clutch relay 4P socket (female terminals) No. 1: ①
Terminal B	A/C compressor clutch relay 4P socket (female terminals) No. 2: ①

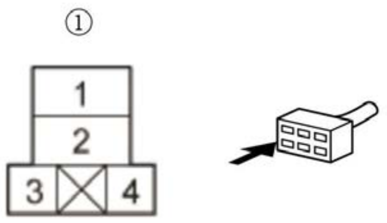

Does the A/C compressor clutch clickΩ

YES

Go to step 7.

NO

Go to step 9.

7. Open wire check (IG2 A/C line)

-1. Disconnect the jumper wire.

-2. Turn the vehicle to the ON mode.

-3. Measure the voltage between test points 1 and 2.

Test condition	Vehicle ON mode A/C compressor clutch relay: disconnected

Test point 1	A/C compressor clutch relay 4P socket (female terminals) No. 3: ①
Test point 2	Body ground

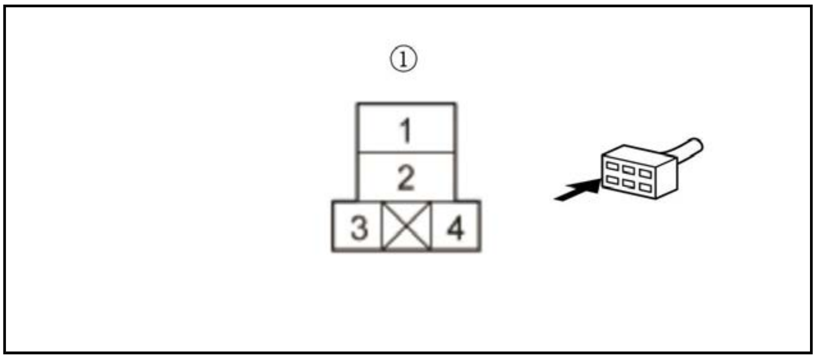

Is there battery voltage?

YES

The IG2 A/C wire is OK. Go to step 8.

NO

Repair an open in the IG2 A/C wire.

8. Open wire check (A/C MG CLUTCH RLY CL-/ACC (1.5 L engine) or A/C MG CLUTCH RLY CL- (2.4 L engine) line)

-1. Turn the vehicle to the OFF (LOCK) mode.

-2. Reinstall the A/C compressor clutch relay.

-3. Jump the SCS line with the HDS, and wait more than 1 minute.

NOTE: This step must be done to protect the PCM from damage.

-4. Disconnect the following connector.

1.5 L engine: PCM connector E (80P)
2.4 L engine: PCM connector A (51P)

-5. Connect terminals A and B with a jumper wire.

1.5 L engine

Terminal A	PCM connector E (80P) No. 31
Terminal B	Body ground

2.4 L engine

Terminal A	PCM connector A (51P) No. 13
Terminal B	Body ground

-6. Turn the vehicle to the ON mode.

Does the A/C compressor clutch clickΩ

YES

Check for any authorized service information related to the DTCs or symptoms you are troubleshooting, or substitute a known-good PCM , then recheck. If the substituted, replace the original PCM .

NO

Repair an open in the A/C MG CLUTCH RLY CL-/ACC (1.5 L engine) or A/C MG CLUTCH RLY CL- (2.4 L engine) wire.

9. Open wire check (A/C MG CLUTCH/MG CLUTCH (1.5 L engine) or A/C MG CLUTCH (2.4 L engine) line)

-1. Disconnect the jumper wire.

-2. Disconnect the following connector.

1.5 L engine: A/C compressor clutch 3P connector 2.4 L engine: A/C compressor clutch 1P connector

-3. Check for continuity between test points 1 and 2.

1.5 L engine

Test condition	Vehicle OFF (LOCK) mode
	A/C compressor clutch relay: disconnected
	A/C compressor clutch 3P connector: disconnected

Test point 1	A/C compressor clutch relay 4P socket (female terminals) No. 2: ①
Test point 2	A/C compressor clutch 3P connector (female terminals) No. 1: ②

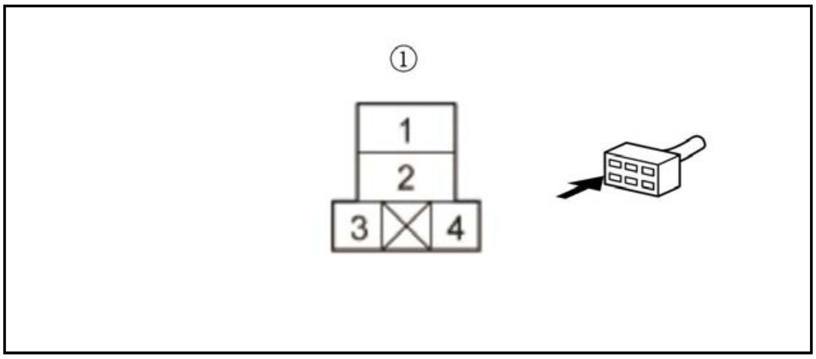

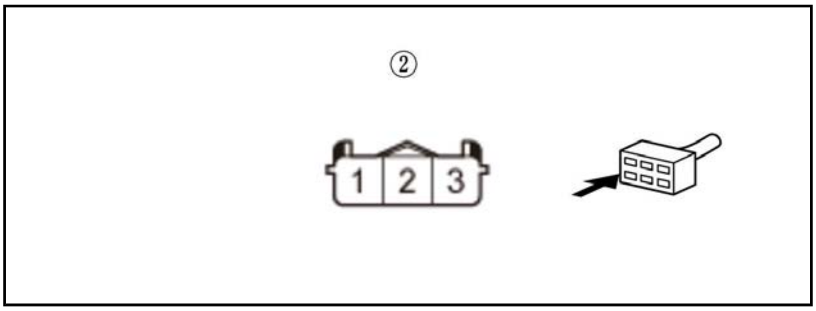

2.4 L engine

Test condition	Vehicle OFF (LOCK) mode
	A/C compressor clutch relay: disconnected
	A/C compressor clutch 1P connector: disconnected
Test point 1	A/C compressor clutch relay 4P socket (female terminals) No. 2: ①
Test point 2	A/C compressor clutch 1P connector (female terminals) No. 1: ②

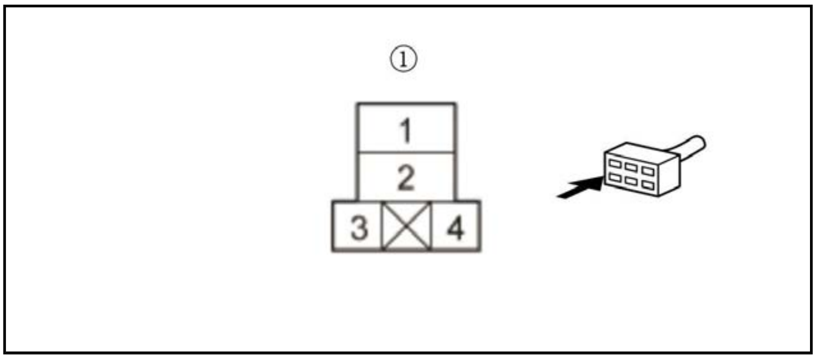

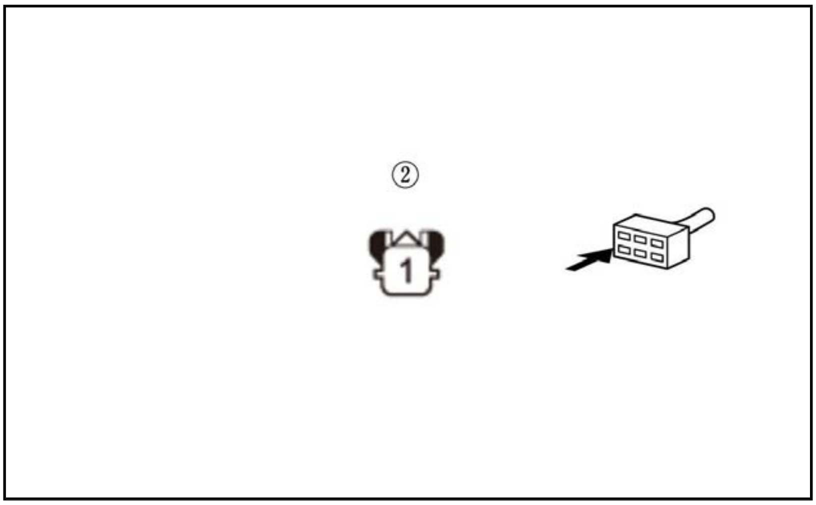

Is there continuity?

YES

The A/C MG CLUTCH/MG CLUTCH (1.5 L engine) or A/C MG CLUTCH (2.4 L engine) wire is OK. **Check the A/C compressor clutch clearance and the A/**

NO

Repair an open in the A/C MG CLUTCH/MG CLUTCH (1.5 L engine) or A/C MG CLUTCH (2.4 L engine) wire.

CLIMATE CONTROL SYSTEM SYMPTOM TROUBLESHOOTING - THE A/C COMPRESSOR CLUTCH DOES NOT ENGAGE, BUT THE A/C CONDI BLOWER AND HEATER CONTROLS WORK (2020 2021)

The A/C compressor clutch does not engage, but the A/C condenser/radiator fans operate, and the blower and heater controls work

NOTE:

- It is normal for the A/C compressor to turn off under certain conditions, such as low idle, high engine coolant temperature, or hard acceleration.
- Do not use this troubleshooting procedure if the cooling fan is also inoperative with the A/C on. **Refer to the symptom troubleshooting index**.
- Before doing symptom troubleshooting, check for **PGM-FI DTCs** .

1. Fuse check

   -1. Check the following fuse.

   Without wireless charger

Fuse	No. A23 (10 A)
Location	Under-hood fuse/relay box

   With wireless charger

Fuse	No. G31 (10 A)
Location	Fuse holder A

   Is the fuse OK.

   YES

   Go to step 2.

   NO

   - Without wireless charger: replace the fuse, and recheck. If the fuse blows again, repair a short in the No. A23 (10 A) fuse circuit.
   - With wireless charger: replace the fuse, and recheck. If the fuse blows again, repair a short in the No. G31 (10 A) fuse circuit.

2. A/C pressure sensor parameter check

   -1. **Connect the HDS to the DLC** .

   -2. Start the engine.

   Set the A/C system to the following conditions:

   - A/C: ON
   - Fan control: ON

   -4. Check the parameter(s) below with the HDS.

Signal	Threshold		
	Values	Unit	
ENGINE SPEED	670-770	rpm	B
ECT SENSOR 1	80-100	deg.C	B
	176-212	deg.F	

   -5. Check the parameter(s) below with the HDS.

Signal	Threshold		
	Values	Unit	
A/C PRESSURE SENSOR	196-2, 950	kPa	B
	2.00-30.08	kgf/cm 2	
	28.4-427.9	psi	

   Do the current condition(s) match the threshold?

   YES

   Go to step 3.

   NO

   Go to the **A/C system test**.

3. PGM-FI system parameter check

   -1. Check the parameter(s) below with the HDS.

Signal	Threshold		
	Values	Unit	
A/C SWITCH	ON	B	B
A/C CLUTCH	ON	B	B

Do the current condition(s) match the threshold?

YES

Go to step 4.

NO: A/C SWITCH is OFF

A/C SWITCH is OFF, replace the climate control unit .

NO: A/C SWITCH is ON and A/C CLUTCH is OFF

A/C SWITCH is ON and A/C CLUTCH is OFF, check for any authorized service information related to the DTCs or symptoms you are troubleshooting, or subst symptom/indication goes away and the PCM was substituted, replace the original PCM .

4. A/C compressor clutch relay check

   -1. Turn the vehicle to the OFF (LOCK) mode.

   -2. Remove the A/C compressor clutch relay from the under-hood fuse/relay box, and test it .

   Is the relay OK?

   YES

   Go to step 5.

   NO

   Replace the A/C compressor clutch relay.

5. Open wire check (VMP line)

   -1. Measure the voltage between test points 1 and 2.

Test condition	Vehicle OFF (LOCK) mode A/C compressor clutch relay: disconnected
Test point 1	A/C compressor clutch relay 4P socket (female terminals) No. 1: ①
Test point 2	Body ground

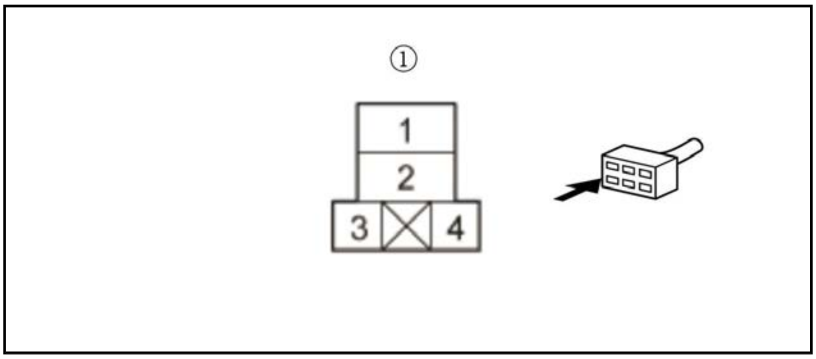

Is there battery voltage?

YES

The VMP wire is OK. Go to step 6.

NO

Repair an open in the VMP wire.

6. Determine possible failure area (A/C compressor clutch relay switch side circuit, A/C compressor clutch relay coil side circuit)

   -1. Connect terminals A and B with a jumper wire.

Terminal A	A/C compressor clutch relay 4P socket (female terminals) No. 1: ①
Terminal B	A/C compressor clutch relay 4P socket (female terminals) No. 2: ①

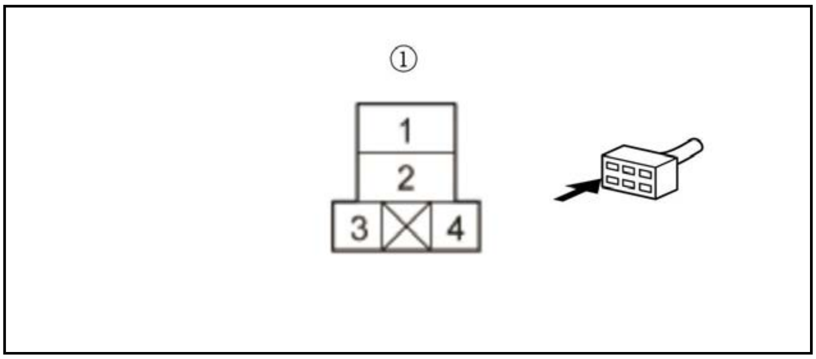

Does the A/C compressor clutch clickΩ

YES

Go to step 7.

NO

Go to step 9.

7. Open wire check (IG2 A/C line)

   -1. Disconnect the jumper wire.

   -2. Turn the vehicle to the ON mode.

   -3. Measure the voltage between test points 1 and 2.

Test condition	Vehicle ON mode A/C compressor clutch relay: disconnected
Test point 1	A/C compressor clutch relay 4P socket (female terminals) No. 3: ①
Test point 2	Body ground

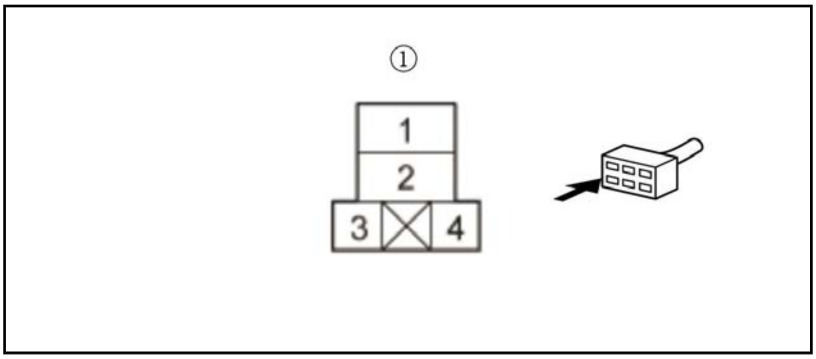

Is there battery voltage?

YES

The IG2 A/C wire is OK. Go to step 8.

NO

Repair an open in the IG2 A/C wire.

8. Open wire check (A/C MG CLUTCH RLY CL-/ACC line)

   -1. Turn the vehicle to the OFF (LOCK) mode.

   -2. Reinstall the A/C compressor clutch relay.

   -3. Jump the SCS line with the HDS, and wait more than 1 minute.

   -4. Disconnect the following connector.

PCM connector E (80P)

   -5. Connect terminals A and B with a jumper wire.

Terminal A	**PCM connector E (80P) No. 31**
Terminal B	Body ground

   -6. Turn the vehicle to the ON mode.

Does the A/C compressor clutch clickΩ

YES

Check for any authorized service information related to the DTCs or symptoms you are troubleshooting, or **substitute a known-good PCM** , then recheck. If the substituted, **replace the original PCM** .

NO

Repair an open in the A/C MG CLUTCH RLY CL-/ACC wire.

9. Open wire check (A/C MG CLUTCH/MG CLUTCH line)

-1. Disconnect the jumper wire.

-2. Disconnect the following connector.

A/C compressor clutch 3P connector

-3. Measure the resistance between test points 1 and 2.

Test condition	Vehicle OFF (LOCK) mode
	A/C compressor clutch relay: disconnected
	A/C compressor clutch 3P connector: disconnected
Test point 1	A/C compressor clutch relay 4P socket (female terminals) No. 2: ①
Test point 2	A/C compressor clutch 3P connector (female terminals) No. 1: ②

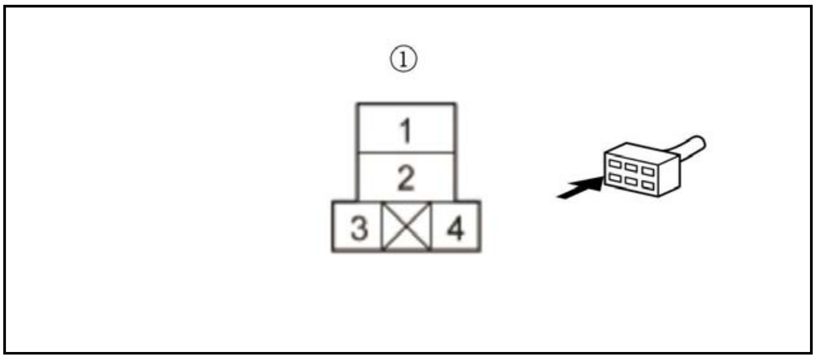

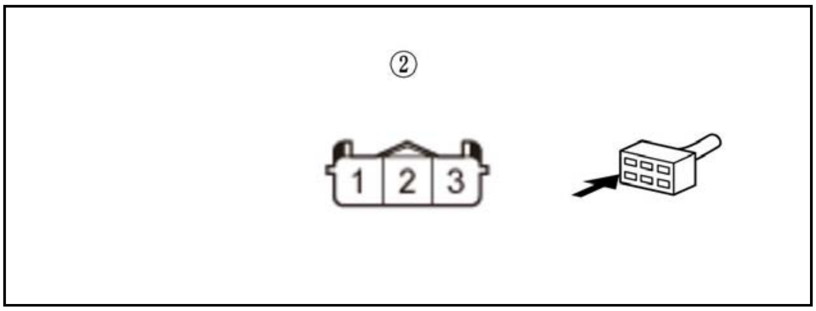

Is there 1.0 Ω or less?

YES

The A/C MG CLUTCH/MG CLUTCH wire is OK. **Check the A/C compressor clutch clearance and the A/C compressor clutch field coil**. Repair as needed.

NO

Repair an open in the A/C MG CLUTCH/MG CLUTCH wire.

CLIMATE CONTROL SYSTEM SYMPTOM TROUBLESHOOTING - THE A/C CONDENSER/RADIATOR FANS DO NOT RUN AT HIGH SPEED, BUT

The A/C condenser/radiator fans do not run at high speed, but do run at low speed

NOTE:

- Do not use this troubleshooting procedure if the A/C compressor is inoperative. **Refer to the symptom troubleshooting index**.
- If the A/C system is inoperable, the radiator and A/C condenser fans are controlled based only on engine coolant temperature.
- Before doing symptom troubleshooting, check for **PGM-FI DTCs** .

1. Fuse check

-1. Check the following fuses.

Fuse	No. A2-6 (30 A)
Location	Under-hood fuse/relay box

Fuse	No. B25 (7.5 A)

Location	Fuse/relay holder A

Is each fuse OK?

YES

Go to step 2.

NO

Replace the fuse(s), and recheck. If the fuse(s) blows again, repair a short in the No. A2-6 (30 A) and/or the No. B25 (7.5 A) fuse circuit(s).

2. A/C condenser fan low speed operation check

   -1. Jump the SCS line with the HDS, and wait more than 1 minute.

   NOTE: This step must be done to protect the PCM from damage.

   -2. Disconnect the following connector.

1.5 L engine: PCM connector A (50P)
2.4 L engine: PCM connector A (51P)

   -3. Connect terminals A and B with a jumper wire.

   1.5 L engine

Terminal A	**PCM connector A (50P) No. 17**
Terminal B	Body ground

   2.4 L engine

Terminal A	**PCM connector A (51P) No. 9**
Terminal B	Body ground

   -4. Turn the vehicle to the ON mode.

   Do the A/C condenser and radiator fans run on low?

   YES

   Go to step 3.

   NO

   Go to **radiator and A/C condenser fan low speed circuit troubleshooting**.

3. A/C condenser fan high speed operation check

   -1. Turn the vehicle to the OFF (LOCK) mode.

   -2. Connect terminals A and B with jumper wires.

   1.5 L engine

Terminal A	**PCM connector A (50P) No. 18**
Terminal B	Body ground

   2.4 L engine

Terminal A	**PCM connector A (51P) No. 10**
Terminal B	Body ground

   -3. Turn the vehicle to the ON mode.

   Do the A/C condenser and radiator fans run on high?

   YES

   Check for any authorized service information related to the DTCs or symptoms you are troubleshooting, or **substitute a known-good PCM** , then recheck. If the substituted, **replace the original PCM** .

   NO

   Go to step 4.

4. A/C condenser fan relay check

   -1. Turn the vehicle to the OFF (LOCK) mode.

   -2. Disconnect the jumper wires.

   -3. Remove the A/C condenser fan relay from the relay holder F, and **test it** .

   Is the relay OK?

   YES

   Go to step 5.

   NO

   Replace the A/C condenser fan relay.

5. Open wire check (+B SUB FAN line)

-1. Measure the voltage between test points 1 and 2.

Test condition	Vehicle OFF (LOCK) mode
	PCM connector A (50P): disconnected
	A/C condenser fan relay: disconnected
Test point 1	A/C condenser fan relay 4P socket (female terminals) No. 1: ①
Test point 2	Body ground

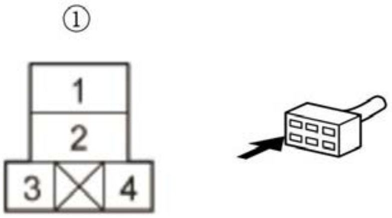

Is there battery voltage?

YES

The +B SUB FAN wire is OK. Go to step 6.

NO

An open in the +B SUB FAN wire.

6. Open wire check (SUB FAN MOTOR line)

-1. Connect terminals A and B with a jumper wire.

Terminal A	A/C condenser fan relay 4P socket (female terminals) No. 1: ①
Terminal B	A/C condenser fan relay 4P socket (female terminals) No. 2: ①

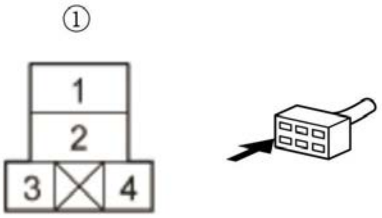

Does the A/C condenser fan run on high?

YES

The SUB FAN MOTOR wire is not open. Go to step 7.

NO

Repair an open in the SUB FAN MOTOR wire.

7. A/C condenser fan relay coil side power circuit check

-1. Disconnect the jumper wire.

-2. Measure the voltage between test points 1 and 2.

1.5 L engine

Test condition	Vehicle OFF (LOCK) mode
	PCM connector A (50P): disconnected
	A/C condenser fan relay: disconnected
Test point 1	A/C condenser fan relay 4P socket (female terminals) No. 3: ①
Test point 2	Body ground

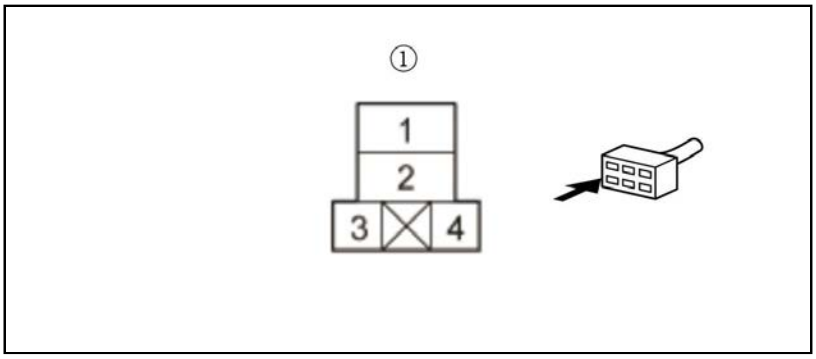

2.4 L engine

Test condition	Vehicle OFF (LOCK) mode PCM connector A (51P): disconnected A/C condenser fan relay: disconnected
Test point 1	A/C condenser fan relay 4P socket (female terminals) No. 3: ①
Test point 2	Body ground

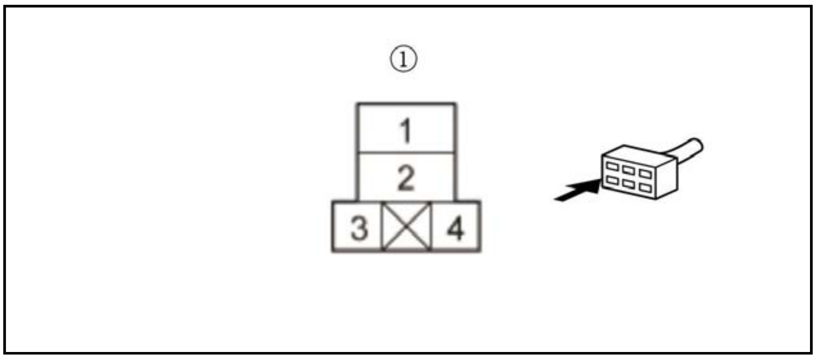

-3. Turn the vehicle to the ON mode.

Is there battery voltage?

YES

Repair an open in the FAN HI SIGNAL wire.

NO

Repair an open in the IGP2 SUB wire.

CLIMATE CONTROL SYSTEM SYMPTOM TROUBLESHOOTING - THE A/C CONDENSER/RADIATOR FANS DO NOT RUN AT LOW SPEED WITH CONTROLS WORK NORMALLY

The A/C condenser/radiator fans do not run at low speed with the A/C on, but the blower and heater controls work normally

NOTE:

- Do not use this troubleshooting procedure if the A/C compressor is inoperative. **Refer to the symptom troubleshooting index**.
- If the A/C system is inoperable, the radiator and A/C condenser fans are controlled based only on engine coolant temperature.
- Before doing symptom troubleshooting, check for **PGM-FI DTCs** .

1. Fuse check

-1. Check the following fuse.

Fuse	No. A1-3 (30 A)
Location	Under-hood fuse/relay box

Is the fuse OK?

YES

Go to step 2.

NO

Replace the fuse, and recheck. If the fuse blows again, repair a short in the No. A1-3 (30 A) fuse circuit.

2. PGM-FI system parameter check

-1. Connect the HDS to the DLC.

-2. Turn the vehicle to the ON mode. Make sure the A/C system is OFF, then start the engine.

-3. Touch the fan control button ON, then momentarily turn ON the A/C with the A/C button.

NOTE: Do not run the A/C for more than a few seconds with the engine running or damage to the A/C system will result.

-4. Check the parameter(s) below with the HDS.

Signal	Threshold		
	Values	Unit	
FAN LOW CTRL	ON	B	B

Is the FAN LOW CTRL on with the A/C on?

YES

Go to step 3.

NO

Check for any authorized service information related to the DTCs or symptoms you are troubleshooting, or **substitute a known-good PCM** , then recheck. If the substituted, **replace the original PCM** .

3. Radiator fan relay check

-1. Turn the vehicle to the OFF (LOCK) mode.

-2. Remove the radiator fan relay from the under-hood fuse/relay box, and **test it** .

Is the relay OK?

YES

Go to step 4.

NO

Replace the radiator fan relay.

4. Open wire check (+B MAIN FAN line)

-1. Measure the voltage between test points 1 and 2.

Test condition	Vehicle OFF (LOCK) mode Radiator fan relay: disconnected
Test point 1	Radiator fan relay 4P socket (female terminals) No. 1: ①
Test point 2	Body ground

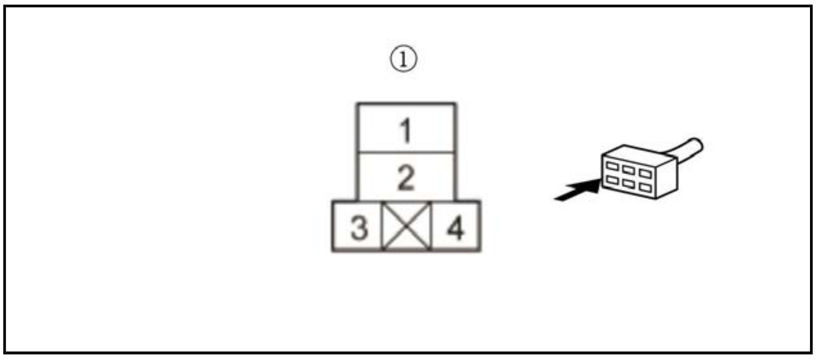

Is there battery voltage?

YES

The +B MAIN FAN wire is OK. Go to step 5.

NO

An open in the +B MAIN FAN wire.

5. Determine possible failure area (radiator fan relay switch side circuit, radiator fan relay coil side circuit)

-1. Connect terminals A and B with a jumper wire.

Terminal A	Radiator fan relay 4P socket (female terminals) No. 1: ①
Terminal B	Radiator fan relay 4P socket (female terminals) No. 2: ①

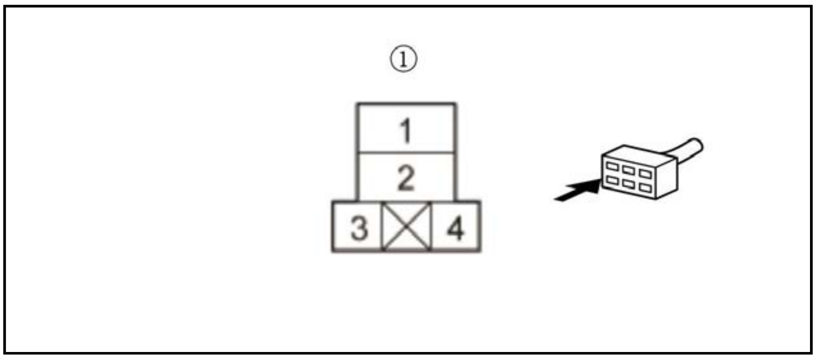

Do the A/C condenser and radiator fans run on low?

YES

Go to step 6.

NO

Go to step 8.

6. Open wire check (IG2 A/C line)

   -1. Disconnect the jumper wire.

   -2. Turn the vehicle to the ON mode.

   -3. Measure the voltage between test points 1 and 2.

Test condition	Vehicle ON mode Radiator fan relay: disconnected
Test point 1	Radiator fan relay 4P socket (female terminals) No. 3: ①
Test point 2	Body ground

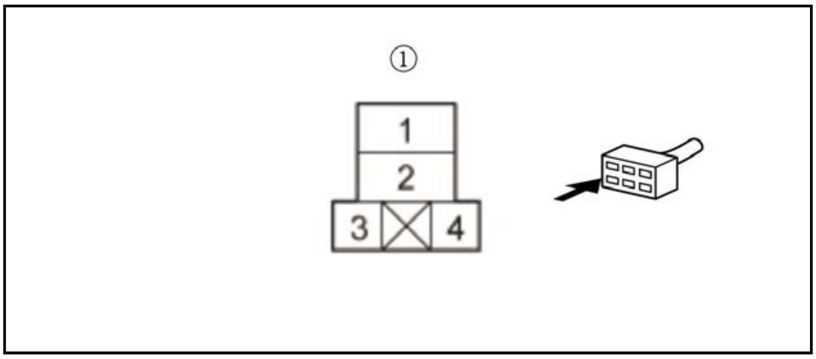

Is there battery voltage?

YES

The IG2 A/C wire is OK. Go to step 7.

NO

Repair an open in the wire between the No. D9 (10 A) fuse in the under-dash fuse/relay box and the radiator fan relay.

7. Open wire check (FAN LO SIGNAL line)

   -1. Turn the vehicle to the OFF (LOCK) mode.

   -2. Reinstall the radiator fan relay.

   -3. Jump the SCS line with the HDS, and wait more than 1 minute.

   NOTE: This step must be done to protect the PCM from damage.

   -4. Disconnect the following connector.

1.5 L engine: PCM connector A (50P)
2.4 L engine: PCM connector A (51P)

   -5. Connect terminals A and B with a jumper wire.

1.5 L engine

Terminal A	**PCM connector A (50P) No. 17**
Terminal B	Body ground

2.4 L engine

Terminal A	PCM connector A (51P) No. 9
Terminal B	Body ground

-6. Turn the vehicle to the ON mode.

Do the A/C condenser and radiator fans run on low?

YES

Check for any authorized service information related to the DTCs or symptoms you are troubleshooting, or substitute a known-good PCM , then recheck. If the substituted, replace the original PCM .

NO

Repair an open in the FAN LO SIGNAL wire.

8. Open wire check (MAIN FAN MOTOR line)

-1. Disconnect the following connector.

Radiator fan motor 2P connector

-2. Measure the voltage between test points 1 and 2.

Test condition	Vehicle OFF (LOCK) mode
	Radiator fan relay: disconnected
	Radiator fan motor 2P connector: disconnected
	Radiator fan relay 4P socket No. 1 and No. 2: jumped

Test point 1	Radiator fan motor 2P connector (female terminals) No. 1: ①
Test point 2	Body ground

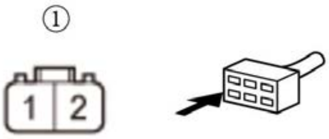

Is there battery voltage?

YES

The MAIN FAN MOTOR wire is OK. Go to step 9.

NO

Repair an open in the MAIN FAN MOTOR wire.

9. Radiator and A/C condenser fan motors test

-1. Test the radiator and the A/C condenser fan motors.

Are the radiator and A/C condenser fan motors OK?

YES

Go to step 10.

NO

Replace the radiator fan motor and/or the A/C condenser fan motor .

10. Fan control relay check

-1. Remove the fan control relay from the under-hood fuse/relay box, and test it .

Is the relay OK?

YES

Go to step 11.

NO

Replace the fan control relay.

11. Open wire check (FAN HI/LO RLY COM line)

-1. Reconnect the radiator fan motor 2P connector.

-2. Measure the voltage between test points 1 and 2.

Test condition	Vehicle OFF (LOCK) mode Radiator fan relay: disconnected Fan control relay: disconnected A/C condenser fan motor 2P connector: disconnected Radiator fan relay 4P socket No. 1 and No. 2: jumped
Test point 1	Fan control relay 5P socket (female terminals) No. 1
Test point 2	Body ground

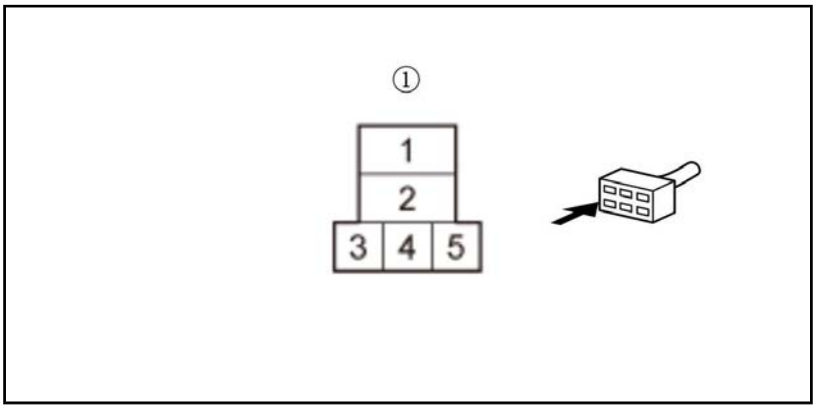

Is there battery voltage?

YES

The FAN HI/LO RLY COM wire is OK. Go to step 12.

NO

Repair an open in the FAN HI/LO RLY COM wire.

12. Open wire check (SUB FAN MOTOR line)

-1. Reinstall the fan control relay.

-2. Measure the voltage between test points 1 and 2.

Test condition	Vehicle OFF (LOCK) mode
B	Radiator fan relay: disconnected
B	A/C condenser fan motor 2P connector: disconnected
B	Radiator fan relay 4P socket No. 1 and No. 2: jumped
Test point 1	A/C condenser fan motor 2P connector (female terminals) No. 1
Test point 2	Body ground

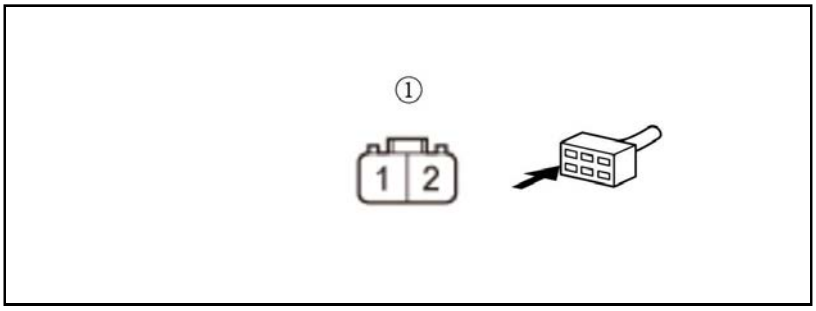

Is there battery voltage?

YES

Check for an open in the GND wire. If the wire is OK, check for poor ground at G351.

NO

Repair an open in the SUB FAN MOTOR wire.

CLIMATE CONTROL SYSTEM SYMPTOM TROUBLESHOOTING - THE BLOWER AND THE HEATER CONTROLS AND THE A/C SYSTEM DO NC

The blower and the heater controls and the A/C system do not work

NOTE: Do this troubleshooting procedure only if sent here by symptom troubleshooting index.

1. Fuse check

-1. Check the following fuse.

Fuse	No. D9 (10 A)
Location	Under-dash fuse/relay box

Is the fuse OK?

YES

Go to step 2.

NO

Replace the fuse, and recheck. If the fuse blows again, repair a short in the No. D9 (10 A) fuse circuit.

2. Open wire check (IG2 A/C line)

-1. Disconnect the following connector.

Climate control unit connector A (32P)

-2. Turn the vehicle to the ON mode.

-3. Measure the voltage between test points 1 and 2.

Test condition	Vehicle ON mode
	Climate control unit connector A (32P): disconnected
Test point 1	**Climate control unit connector A (32P) No. 32**
Test point 2	Body ground

Is there battery voltage?

YES

The IG2 A/C wire is OK. Go to step 3.

NO

Repair an open in the IG2 A/C wire.

3. Open wire check (GND line)

-1. Turn the vehicle to the OFF (LOCK) mode.

-2. Check for continuity between test points 1 and 2.

Test condition	Vehicle OFF (LOCK) mode
	Climate control unit connector A (32P): disconnected
Test point 1	**Climate control unit connector A (32P) No. 28**
Test point 2	Body ground

Is there continuity?

YES

Replace the climate control unit .

NO

Check for an open in the GND wire. If the wire is OK, check for poor ground at G402.

CLIMATE CONTROL SYSTEM SYMPTOM TROUBLESHOOTING - THE BLOWER AND THE HEATER CONTROLS AND THE A/C SYSTEM DO NC

The blower and the heater controls and the A/C system do not work

NOTE: Do this troubleshooting procedure only if sent here by **symptom troubleshooting index**.

1. Fuse check

-1. Check the following fuse.

Fuse	No. D9 (10 A)
Location	Under-dash fuse/relay box

Is the fuse OK?

YES

Go to step 2.

NO

Replace the fuse, and recheck. If the fuse blows again, repair a short in the No. D9 (10 A) fuse circuit.

2. Open wire check (IG2 A/C line)

-1. Disconnect the following connector.

Climate control unit connector A (32P)

-2. Turn the vehicle to the ON mode.

-3. Measure the voltage between test points 1 and 2.

Test condition	Vehicle ON mode
	Climate control unit connector A (32P): disconnected
Test point 1	**Climate control unit connector A (32P) No. 32**

Test point 2	Body ground

Is there battery voltage?

YES

The IG2 A/C wire is OK. Go to step 3.

NO

Repair an open in the IG2 A/C wire.

3. Fuse check

-1. Turn the vehicle to the OFF (LOCK) mode.

-2. Check the following fuse.

Fuse	No. B27 (30 A)
Location	Fuse/relay holder A

Is the fuse OK?

YES

Go to step 4.

NO

Replace the fuse, and recheck. If the fuse blows again, repair a short in the No. B27 fuse circuit.

4. Open wire check (+B_BACKUP2_SUB line)

-1. Measure the voltage between test points 1 and 2.

Test condition	Vehicle OFF (LOCK) mode
	Climate control unit connector A (32P): disconnected
Test point 1	**Climate control unit connector A (32P) No. 16**
Test point 2	Body ground

Is there battery voltage?

YES

The +B_BACKUP2_SUB wire is OK. Go to step 5.

NO

Repair an open in the +B_BACKUP2_SUB wire.

5. Open wire check (GND line)

-1. Measure the resistance between test points 1 and 2.

Test condition	Vehicle OFF (LOCK) mode
	Climate control unit connector A (32P): disconnected
Test point 1	**Climate control unit connector A (32P) No. 28**
Test point 2	Body ground

Is there 1.0 Ω or less?

YES

Replace the climate control unit .

NO

Check for an open in the GND wire. If the wire is OK, check for poor ground at G402.

SYMPTOM TROUBLESHOOTING INDEX

CLIMATE CONTROL SYSTEM SYMPTOM TROUBLESHOOTING INDEX (2017 2018 2019)

Symptom	Diagnostic Procedure	
The blower and the heater controls and the A/C system do not work	**Symptom Troubleshooting**	- **Climate contro** - Blown fuse No. - Poor ground at - Poor or loose c
The A/C compressor clutch and the cooling fan are inoperative, but the blower and heater controls work	Probable cause: A/C pressure sensor circuit malfunction or evaporator temperature sensor circuit malfunction	- **Climate contro** - **PGM-FI DTCs**

Symptom	Diagnostic Procedure	
	Troubleshoot the A/C pressure sensor circuit: - **A/C pressure sensor circuit low voltage** - **A/C pressure sensor circuit high voltage** **NOTE:** The A/C pressure sensor circuit can malfunction without setting a DTC	- **Abnormal A/C** - Faulty evaporat - Poor or loose cc
The A/C compressor clutch does not engage, but the cooling fan operate, and the blower and heater controls work	**Symptom Troubleshooting**	- **Climate contro** - Blown fuse No. - **Abnormal A/C** - Poor or loose cc
Blower fan runs slower than expected in cold weather (when in AUTO mode) **NOTE:** It is normal for the blower fan to run slowly until the coolant temperature rises when in AUTO mode	Probable cause: Engine coolant temperature (ECT) circuit malfunction Troubleshoot the ECT sensor circuit: - **ECT sensor 2 circuit low voltage** - **ECT sensor 2 circuit high voltage**	- **Climate contro** - **PGM-FI DTCs** - Blower motor o
The A/C compressor clutch cycles rapidly on and off *6	Probable cause: - A/C system is overcharged (Excessive pressure on high side of system causing pressure sensor to turn A/C compressor off) - Cooling fan inoperative - Low idle speed - Evaporator temperature sensor malfunction **Do the evaporator temperature sensor test**	- **Climate contro** - If there is no lea **A/C compresso** for an intermitte - Faulty A/C pres
The A/C compressor clutch does not disengage when the A/C switch is off	Probable cause: The A/C compressor clutch circuit is on (energized) continuously, shorted to ground, stuck A/C compressor clutch relay, or the A/C compressor clutch is mechanically jammed **Do the A/C compressor clutch check**, and repair any problems with the A/C compressor clutch	The A/C compressor r atmosphere, correct th the A/C compressor cl **compressor relief val**

*1: Without navigation *2: With navigation*3: Without dual zone control*4: With dual zone control*5: 1.5 L engine*6: 2.4 L engine

Symptom	Diagnostic Procedure	
The A/C compressor relief valve has vented refrigerant **NOTE:** This indicates the A/C system high side pressure was high	Probable cause: A high-side restriction, the cooling fan is inoperative, or the A/C compressor clutch is not disengaging - If the fans and A/C compressor clutch operate normally, feel the lines for restrictions **Do the A/C system contamination inspection** - If the A/C compressor clutch will not disengage, **troubleshoot the A/C compressor clutch circuit**, and **check for mechanical problems** - If the A/C condenser/radiator fans are inoperative, troubleshoot the fan circuits	**PGM-FI DTCs**
Driver's and passenger's side vent temperatures vary by more than 11B°C (20B°F)	Probable cause: - The air mix doors are malfunctioning Do the following troubleshooting: - - - **Air mix control motor test*3** - - **Driver's air mix control motor test** *4 - - **Passenger's air mix control motor test*4** - Low refrigerant charge - **Variable capacity control solenoid malfunction**	- **Climate contr** - Poor or loose c
HDS does not communicate with the climate control unit or the vehicle	**Troubleshoot the DLC circuit**	B
A/C information does not display on the center display unit, but the blower, heater and A/C system controls work (climate control panel without display)	Probable cause: Communication malfunction between the audio unit *1 or the audio-navigation unit *2 and the climate control unit Check the B-CAN line between the audio unit *1 or the audio-navigation unit *2 and the climate control unit	**Climate control DT**
Insufficient heating	- **Check the coolant level** - Check **the expansion tank cap*5** or **the radiator cap*6**	**Climate control DT**

Symptom	Diagnostic Procedure	

	• Check the engine coolant temperature (ECT) during normal operation with the HDS
	• Check the heater core inlet hose temperature:
	•
	    • If it is COLD, check for restrictions in the hose, a damaged or leaking thermostat, or a damaged or leaking water pump
	    • If it is HOT, check for restrictions in the heater core. Back flush or **replace the heater core**
	• Check the operation of the air mix doors:
	•
	    • **Air mix control motor test*3**
	    • Driver's air mix control motor test *4
	    • **Passenger's air mix control motor test*4**
	• Check the blower motor unit for obstructions
	• Check for air leaks around the ducts and vents	

*1: Without navigation *2: With navigation*3: Without dual zone control*4: With dual zone control*5: 1.5 L engine*6: 2.4 L engine

CLIMATE CONTROL SYSTEM SYMPTOM TROUBLESHOOTING INDEX (2020 2021)

Symptom	Diagnostic Procedure	
The blower and the heater controls and the A/C system do not work	**Symptom Troubleshooting**	• **Climate contr** • Blown fuse Nc • Blown fuse Nc • Poor ground at • Poor or loose c
The A/C compressor clutch and the cooling fan are inoperative, but the blower and heater controls work	Probable cause: A/C pressure sensor circuit malfunction or evaporator temperature sensor circuit malfunction Troubleshoot the A/C pressure sensor circuit: • **A/C pressure sensor circuit low voltage** • **A/C pressure sensor circuit high voltage** **NOTE:** The A/C pressure sensor circuit can malfunction without setting a DTC	• **Climate contr** • **PGM-FI DTC** • **Abnormal A/(** • Faulty evapora • Poor or loose c
The A/C compressor clutch does not engage, but the cooling fan operate, and the blower and heater controls work	**Symptom Troubleshooting**	• **Climate contr** • Blown fuse Nc *6 • Blown fuse Nc • **Abnormal A/(** • Poor or loose c
Blower fan runs slower than expected in cold weather (when in AUTO mode) **NOTE:** It is normal for the blower fan to run slowly until the coolant temperature rises when in AUTO mode	Probable cause: Engine coolant temperature (ECT) circuit malfunction Troubleshoot the ECT sensor circuit: • **ECT Sensor 2 Out of Range** • **ECT Sensor 2 Circuit Range/Performance Problem** • **ECT sensor 2 circuit low voltage** • **ECT sensor 2 circuit high voltage**	• **Climate contr** • **PGM-FI DTC** • Blower motor
The A/C compressor clutch does not disengage when the A/C switch is off	Probable cause: The A/C compressor clutch circuit is on (energized) continuously, shorted to ground, stuck A/C compressor clutch relay, or the A/C compressor clutch is mechanically jammed **Do the A/C compressor clutch check**, and repair any problems with the A/C compressor clutch	The A/C compressor atmosphere, correct t or the A/C compresso **compressor relief va**

*1: Without navigation *2: With navigation*3: Without dual zone control*4: With dual zone control*5: With auto idle stop system*6: Without wireless charger*7: With

Symptom	Diagnostic Procedure	
The A/C compressor relief valve has vented refrigerant **NOTE:** This indicates the A/C system high side pressure was high	Probable cause: A high-side restriction, the cooling fan is inoperative, or the A/C compressor clutch is not disengaging • If the fans and A/C compressor clutch operate normally, feel the lines for restrictions **Do the A/C system contamination inspection** • If the A/C compressor clutch will not disengage, **troubleshoot the A/C compressor clutch circuit**, and **check for mechanical problems** • If the A/C condenser/radiator fans are inoperative, troubleshoot the fan circuits	**PGM-FI DTCs**
Driver's and passenger's side vent temperatures vary by more than 11B°C (20B°F)	Probable cause: • The air mix doors are malfunctioning Do the following troubleshooting: • • - **Air mix control motor test*3** • - **Driver's air mix control motor test*4** • - **Passenger's air mix control motor test*4** • Low refrigerant charge • **Variable capacity control solenoid malfunction**	• **Climate contr** • Poor or loose c
HDS does not communicate with the climate control unit or the vehicle	**Troubleshoot the DLC circuit**	B
A/C information does not display on the center display unit, but the blower, heater and A/C system controls work (climate control panel without display)	Probable cause: Communication malfunction between the audio unit *1 or the audio-navigation unit *2 and the climate control unit Check the B-CAN line between the audio unit *1 or the audio-navigation unit *2 and the climate control unit	**Climate control DT**
Insufficient heating	• **Check the coolant level** • Check **the expansion tank cap** • Check the engine coolant temperature (ECT) during normal operation with the HDS • Check the heater core inlet hose temperature: • • If it is COLD, check for restrictions in the hose, a damaged or leaking thermostat, or a damaged or leaking water pump • If it is HOT, check for restrictions in the heater core. Back flush or **replace the heater core** • Check the operation of the air mix doors: • • **Air mix control motor test*3** • **Driver's air mix control motor test*4** • **Passenger's air mix control motor test*4** • Check the blower motor unit for obstructions • Check for air leaks around the ducts and vents	**Climate control DT**

*1: Without navigation *2: With navigation*3: Without dual zone control*4: With dual zone control*5: With auto idle stop system*6: Without wireless charger*7: With

HOW TO INFORMATION

HOW TO TROUBLESHOOT THE CLIMATE CONTROL SYSTEM (CLIMATE CONTROL PANEL WITH DISPLAY)

How to Check for DTCs with the HDS

NOTE:

- There are three methods used to check for DTCs. The recommended method is to use the Honda Diagnostic System (HDS) with the appropriate software, plugged
- The second method is to run the self-diagnostic function built into the climate control unit.
- The third method is to use **B-CAN system diagnosis test mode A** .

1. Turn the vehicle to the OFF (LOCK) mode.

2. **Connect the HDS to the DLC**

3. Select BODY ELECTRICAL in the System Selection Menu.

4. Select HVAC/Climate control in the Body Electrical System Select.

5. Select DTCs in the HVAC/Climate Control Mode Menu.Check for DTCs. If any DTCs are indicated, write down the DTCs, then go to the indicated DTC troubleshoo
refer to symptom troubleshooting.

NOTE:

- **After troubleshooting, clear the DTCs with the HDS.**
- **For specific operations, refer to the user's manual that came with the HDS.**

How to Use the Self-Diagnostic Function with the HDS

NOTE: This method is only available if the HDS can communicate with the climate control unit.

1. Turn the vehicle to the OFF (LOCK) mode.

2. Connect the HDS to the DLC.

3. Select BODY ELECTRICAL in the System Selection Menu.

4. Select HVAC/Climate Control in the Body Electrical System Select.

5. Select Inspection in the HVAC/Climate Control Mode Menu.

6. Select Climate Control Unit Self Test in the Inspection Menu.Check for DTCs. If any DTCs are indicated, write down the DTCs, then go to the indicated DTC troubl

- After troubleshooting, clear the DTCs with the HDS.
- For specific operations, refer to the user's manual that came with the HDS.

How to Use the Self-Diagnostic Function without the HDS

Button

Button	Button Name
AUTO	AUTO button
ON/ OFF	ON/OFF button

Button	Button Name
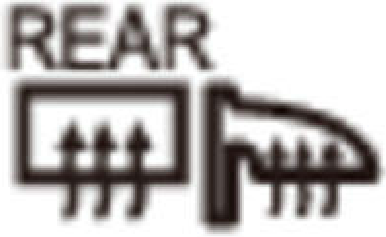	REAR WINDOW DEFOGGER/MIRROR DEFOGGER * button
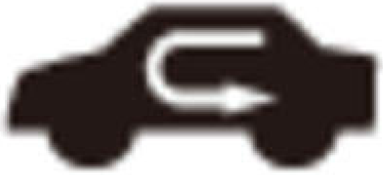	RECIRCULATION button
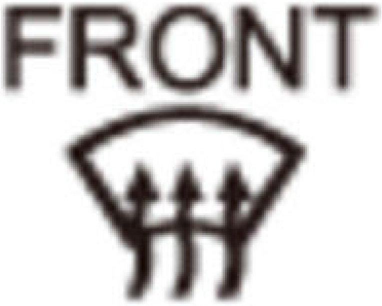	WINDSHIELD DEFROST button

*: With mirror defogger

The climate control unit has a self-diagnostic function. To run the self-diagnostic function, do the following:

1. Turn the vehicle to the OFF (LOCK) mode and then the ON mode.

2. Press and hold the ON/OFF button, then within 10 seconds press and release the REAR WINDOW DEFOGGER/MIRROR DEFOGGER * button five times. Release segments come on for 2 seconds, then the self-diagnostic function begins.**NOTE:**

- The blower motor will run at various speeds regardless of what the panel is displaying.
- If there is any problem in the system, the temperature indicator flashes 88. Refer to checking for DTCs.
- If there is more than one DTC, they are displayed one at a time in sequence followed by a pause (all the display indicator segments illuminate) between the DTCs
- If no DTCs are present, the temperature indicator will flash "no".

Canceling the Self-Diagnostic Function

4. Turn the vehicle to the OFF (LOCK) mode to cancel the self-diagnostic function. After completing repair work, run the self-diagnostic function again to make sure th

Checking for DTCs

The temperature indicator display indicates single or multiple DTCs. If no DTCs are present, the temperature indicator will flash "no".

DTC (Temperature Indicator Segments)	DTC	Detection Item
01 *1	B1225	An open in the in-car temperature sensor circuit

DTC (Temperature Indicator Segments)	DTC	Detection Item
02 *1	B1226	A short in the in-car temperature sensor circuit

*1: Without auto idle stop system*2: 1.5 L engine*3: With auto idle stop system*4: With front seat heater

DTC (Temperature Indicator Segments)	DTC	Detection Item
05	B1227	An open in the outside air temperature sensor circuit
06	B1228	A short in the outside air temperature sensor circuit
09	B1231	An open in the evaporator temperature sensor circuit
0A	B1232	A short in the evaporator temperature sensor circuit
17	B123F	Automatic lighting control unit/sunlight sensor error
40	B1233	An open in the air mix control motor circuit
41	B1234	A short in the air mix control motor circuit
42	B1235	A problem in the air mix control motor circuit, linkage, door, or motor
49	B121A	An open in the mode control motor circuit
4A	B121B	A short in the mode control motor circuit
4b	B1240	A problem in the mode control motor circuit, linkage, door, or motor
55	B2986	An open in the recirculation control motor circuit
56	B1220	A short in the recirculation control motor circuit
57	B2983	A problem in the recirculation control motor circuit, linkage, door, or motor
59	B1241	A problem in the blower motor circuit
61 *2	B2988	A problem in the A/C compressor variable capacity control solenoid circuit
80	U1280	Communication bus line error (BUS-OFF)
83	U128D	Climate control unit lost communication with gauge control module (VSP message)
89 *3	B121D	Humidity/In-Car Temperature Sensor Communication Error
8A	B120A	Climate control unit LIN communication bus line error
8F *4	U1290	Climate control unit lost communication with seat heater control unit (front)
91	U1281	Climate control unit lost communication with MICU (body control module)
93	B2964	Climate control unit lost communication with front panel (climate control panel)
C0	---	Climate control unit internal error
Cd	---	Unknown sunlight sensor type

*1: Without auto idle stop system*2: 1.5 L engine*3: With auto idle stop system*4: With front seat heater

How to Check for History DTCs

The climate control unit can record history DTCs. To read the history DTCs, do the following:

1. Turn the vehicle to the OFF (LOCK) mode and then the ON mode.

2. While pressing the WINDSHIELD DEFROST button, press and hold the ON/OFF button for 10 seconds or more.While pressing and holding both the WINDSHIEL goes directly to the A/C Error Display shown.

NOTE:

- **If there is any problem in the system, the temperature indicator flashes 88. Refer to checking for DTCs.**
- **If there is more than one DTC, they are displayed one at a time in sequence followed by a pause (all the display indicator s**
- **If no DTCs are present, the temperature indicator will flash "no".**

Canceling the Read History DTCs

4. Turn the vehicle to the OFF (LOCK) mode to cancel the history DTCs. After completing the repair work, clear the DTCs.

How to Clear the History DTCs

1. Turn the vehicle to the OFF (LOCK) mode.

2. Press and hold both the AUTO and WINDSHIELD DEFROST buttons, then turn the vehicle to the ON mode.

3. After about 5 seconds the windshield defrost indicator starts to blink, release the buttons.

4. Do the How to Check for History DTCs to verify DTCs have been cleared.

Displaying Sensor Inputs at the Climate Control Unit

The climate control unit has a mode that displays the sensor inputs it receives. This mode shows you what the climate control unit is receiving from each of the sensors, faulty.

Checks Before Using the Sensor Input Display Mode

1. Turn the vehicle to the ON mode, and check the recirculation door function; press the RECIRCULATION button to switch from FRESH to RECIRCULATE. The air TEMPERATURE CONTROL dial to the desired test temperature:

- "Lo" temperature setting will default to MAX COOL, VENT, and RECIRCULATE (A/C on) or FRESH (A/C off).
- "Hi" temperature setting will default to MAX HOT, HEAT, HEAT/DEF and FRESH.

3. Turn the vehicle to the OFF (LOCK) mode.

Run the Sensor Input Display Mode

1. Press and hold both the AUTO and RECIRCULATION buttons, then start the engine.

2. Release both buttons. The temperature indicator will flash the sensor number and then the value for that sensor. Record the value displayed.To advance to the next ser DEFOGGER * button.

*: With mirror defogger

NOTE:

- **The sensor values will be displayed in degrees Celsius (deg.C) or an alphanumeric code. Use the chart to convert the valu**
- **If the sensor value displays "Er", this indicates there is an open or short in the circuit or sensor. Check for DTCs using the function.**
- **If necessary, compare the sensor input display to a known-good vehicle under the same test conditions.**
- **If the sensor displayed value is out of the normal range, refer to the sensor test or substitute a known-good sensor, and re**
- **Unsupported items shall be skipped.**

Sensor	Item
0	In-car temperature sensor
1	Outside air temperature sensor
2	Sunlight sensor
3	Engine coolant temperature
4	Evaporator temperature sensor
5	Humidity sensor
8	Air mix opening (low value indicates cooler air distribution, higher value indicates warmer air distribution)
b	Mode positioning

Sensor	Item
d	Recirculation control opening
F	Vehicle speed (vehicle must be driven to display speed)
H	Not used
L	Sunlight sensor type

Celsius to Fahrenheit Conversion Table

deg.C	deg.F	deg.C	deg.F	deg.C	deg.F	deg.C	deg.F
0	32	10	50	20	68	30	86
1	34	11	52	21	70	31	88
2	36	12	54	22	72	32	90
3	37	13	55	23	73	33	91
4	39	14	57	24	75	34	93
5	41	15	59	25	77	35	95
6	43	16	61	26	79	36	97
7	45	17	63	27	81	37	99
8	46	18	64	28	82	38	100
9	48	19	66	29	84	39	102

deg.C	deg.F	deg.C	deg.F	deg.C	deg.F	deg.C	deg.F
50	122	60	140	70	158	80	176
51	124	61	142	71	160	81	178
52	126	62	144	72	162	82	180
53	127	63	145	73	163	83	181
54	129	64	147	74	165	84	183
55	131	65	149	75	167	85	185
56	133	66	151	76	169	86	187
57	135	67	153	77	171	87	189
58	136	68	154	78	172	88	190
59	138	69	156	79	174	89	192

Alphanumeric Conversion Table

Display Reading (Alphanumeric)	deg.C	deg.F	%
0 thru 99	0 thru 99	32 thru 210	0 thru 99
A1 thru A9	-1 thru -9	30 thru 16	-1 thru -10
B0 thru B9	-10 thru -19	14 thru -2	-10 thru -19
C0 thru C9	-20 thru -29	-4 thru -20	-20 thru -29
D0 thru D9	-30 thru -39	-22 thru -38	-30 thru -39
E0 thru E9	-40 thru -49	-40 thru -56	-40 thru -49
F0 thru F8	100 thru 108	212 thru 226	100 thru 108
F9	109 thru 200	228 thru 392	109 thru 200
--	---	---	---
Er	---	---	---

Alphanumeric Conversion Table (Mode Positioning)

Display Reading (%)	Indication	Mod
-01-01		VENT
16-18		HEAT/VENT-1
22-25		HEAT/VENT-2
32-34		HEAT/VENT-3
46-48		HEAT-1
58-61		HEAT-2

Display Reading (%)	Indication	Mod
68-71	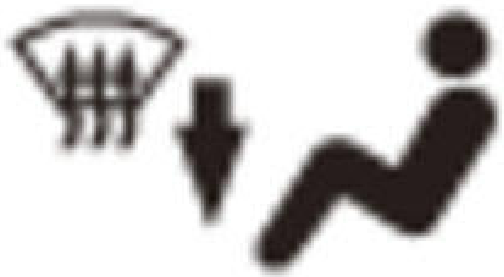	HEAT/DEF-1
88-90		HEAT/DEF-2
99-101	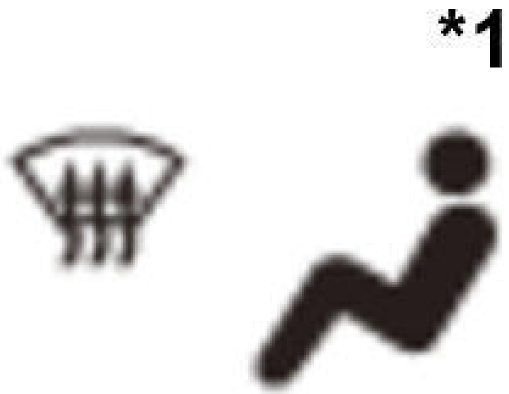 Not indication *2	DEF

*1: Auto mode

*2: Manual mode

4. To cancel the sensor input display mode, press the AUTO button or turn the vehicle to the OFF (LOCK) mode.

HOW TO TROUBLESHOOT THE CLIMATE CONTROL SYSTEM(CLIMATE CONTROL PANEL WITHOUT DISPLAY)

How to Check for DTCs with the HDS

NOTE:

- There are three methods used to check for DTCs. The recommended method is to use the Honda Diagnostic System (HDS) with the appropriate software, plugge
- The second method is to run the self-diagnostic function built into the climate control unit.
- The third method is to use B-CAN system diagnosis test mode A .

1. Turn the vehicle to the OFF (LOCK) mode.

2. Connect the HDS to the DLC

3. Select BODY ELECTRICAL in the System Selection Menu.

4. Select HVAC/Climate control in the Body Electrical System Select.

5. Select DTCs in the HVAC/Climate Control Mode Menu.Check for DTCs. If any DTCs are indicated, write down the DTCs, then go to the indicated DTC troublesho refer to symptom troubleshooting.

NOTE:

- **After troubleshooting, clear the DTCs with the HDS.**
- **For specific operations, refer to the user's manual that came with the HDS.**

How to Use the Self-Diagnostic Function with the HDS

NOTE: This method is only available if the HDS can communicate with the climate control unit.

1. Turn the vehicle to the OFF (LOCK) mode.

2. Connect the HDS to the DLC

3. Select BODY ELECTRICAL in the System Selection Menu.

4. Select HVAC/Climate Control in the Body Electrical System Select.

5. Select Inspection in the HVAC/Climate Control Mode Menu.

6. Select Climate Control Unit Self Test in the Inspection Menu.Check for DTCs. If any DTCs are indicated, write down the DTCs, then go to the indicated DTC troubl

NOTE:

- **After troubleshooting, clear the DTCs with the HDS.**
- **For specific operations, refer to the user's manual that came with the HDS.**

How to Use the Self-Diagnostic Function without the HDS

Button

Button	Button Name
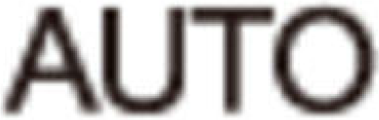	AUTO button
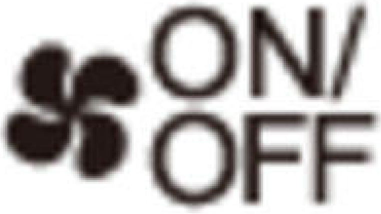	ON/OFF button
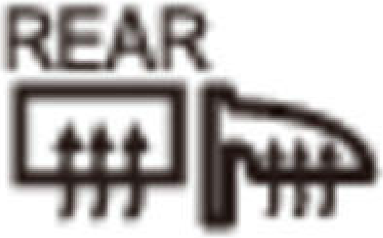	REAR WINDOW DEFOGGER/MIRROR DEFOGGER * button

Button	Button Name
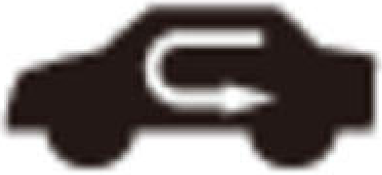	RECIRCULATION button
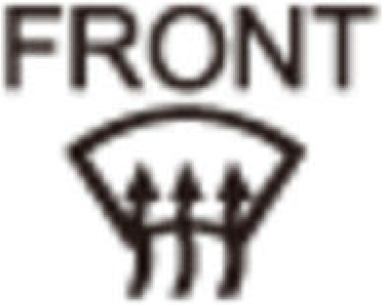	WINDSHIELD DEFROST button

*: With mirror defogger

The climate control unit has a self-diagnostic function. To run the self-diagnostic function, do the following:

1. Turn the vehicle to the OFF (LOCK) mode and then the ON mode.Press and hold the ON/OFF button, then within 10 seconds press and release the REAR WINDOW times. Release the ON/OFF button, then the self-diagnostic function begins.

*: With mirror defogger

NOTE:

- **The blower motor should run at various speeds when in the self-diagnostic mode.**
- **If there are any problems in the system, the A/C Error Display screen will indicate them. Select the previous/next icon to cc the indication, refer to the table that follows.**
- **If there are no problems detected, The error status shows Normal, and The number of Errors indicates "0".**

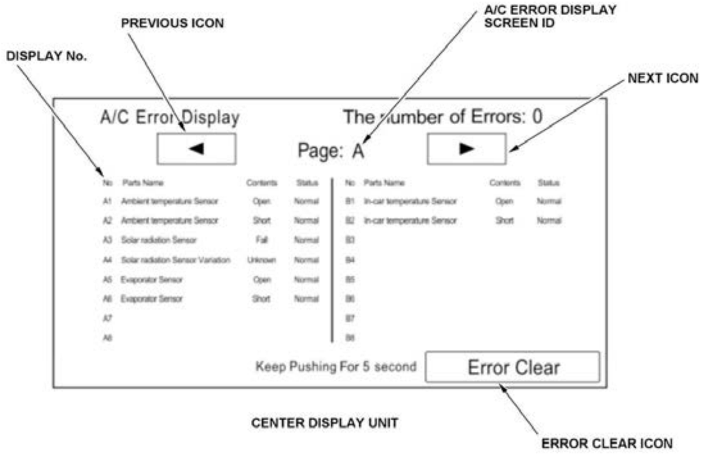

A/C Error Display

The number of Errors: 0

Page: A

No	Parts Name	Contents	Status	No	Parts Name	Contents	Status
A1	Ambient temperature Sensor	Open	Normal	B1	In-car temperature Sensor	Open	Normal
A2	Ambient temperature Sensor	Short	Normal	B2	In-car temperature Sensor	Short	Normal
A3	Solar radiation Sensor	Fail	Normal	B3			
A4	Solar radiation Sensor Variation	Unknown	Normal	B4			
A5	Evaporator Sensor	Open	Normal	B5			
A6	Evaporator Sensor	Short	Normal	B6			
A7				B7			
A8				B8			

Keep Pushing For 5 second

Canceling the Self-Diagnostic Function

3. Turn the vehicle to the OFF (LOCK) mode to cancel the self-diagnostic function. After completing repair work, run the self-diagnostic function again to make sure th

Checking for DTCs

A/C Error Display Screen ID	Display No.	Parts Name	Contents	DTC	
A	A1	Ambient temperature Sensor	Open	**B1227**	An open in the outside
	A2	Ambient temperature Sensor	Short	**B1228**	A short in the outside a
	A3	Solar radiation Sensor	Fail	**B123F**	Automatic lighting con
	A4	Solar radiation Sensor Variation	Unknown	---	Unknown sunlight sens
	A5	Evaporator Sensor	Open	**B1231**	An open in the evapora
	A6	Evaporator Sensor	Short	**B1232**	A short in the evaporat
	B1	In-car temperature Sensor	Open	**B1225**	An open in the in-car te
	B2	In-car temperature Sensor	Short	**B1226**	A short in the in-car ter

*1: With dual zone control *2: With front seat heater

A/C Error Display Screen ID	Display No.	Parts Name	Contents	DTC	
B	A1	A/M motor(Dr)	Open	**B1233**	An open in the air mix
	A2	A/M motor(Dr)	Short	**B1234**	A short in the air mix c
	A3	A/M motor(Dr)	Lock	**B1235**	A problem in the air m motor (driver's)
	A4 *1	A/M motor(As)	Open	**B1236**	An open in the passeng
	A5 *1	A/M motor(As)	Short	**B1237**	A short in the passenge
	A6 *1	A/M motor(As)	Lock	**B1238**	A problem in the passe door, or motor
	B1	Mode motor	Open	**B121A**	An open in the mode c
	B2	Mode motor	Short	**B121B**	A short in the mode co
	B3	Mode motor	Lock	**B1240**	A problem in the mode
	B4	R/F motor	Open	**B2986**	An open in the recircul
	B5	R/F motor	Short	**B1220**	A short in the recircula
	B6	R/F motor	Lock	**B2983**	A problem in the recirc or motor
D	A1	Blower motor	Lock	**B1241**	A problem in the blowe
	B1	Compressor solenoid	Open	**B2988**	An open in the A/C co circuit
	B2	Compressor solenoid	Short		A short in the A/C com circuit
I	A1	B-CAN	BUS OFF	**U1280**	Communication bus li
	A2	Lost Communication with	Meter(BCAN)	**U128D**	Climate control unit lo
	A3	Lost Communication with	MICU(BCAN)	**U1281**	Climate control unit lo module)
	A4	Lost Communication with	AHU(BCAN)	---	Climate control unit lo
	A6 *2	Lost Communication with	HCS(BCAN)	**U1290**	Climate control unit lo unit (front)
	B4	LIN Communication	BUS OFF	**B120A**	Climate control unit L
	B5	Lost Communication with	Fr PANEL(LIN)	**B2964**	Climate control unit lo control panel)
	B8	EEPROM	Data Error	---	Climate control unit in

*1: With dual zone control *2: With front seat heater

How to Check for History DTCs

The climate control unit can record history DTCs. To read the history DTCs, do the following:

1. Turn the vehicle to the OFF (LOCK) mode and then the ON mode.

2. While pressing the WINDSHIELD DEFROST button, press and hold the ON/OFF button for 10 seconds or more.While pressing and holding both the WINDSHIEL goes directly to the A/C Error Display shown.

NOTE:

- **If there are any problems in the system, the A/C Error Display screen will indicate them. Select the previous/next icon to c the indication, refer to the table that follows.**
- **If there are no problems detected, The error status shows Normal, and The number of Errors indicates "0".**

Canceling the Read History DTCs

4. Turn the vehicle to the OFF (LOCK) mode to cancel reading the history DTCs. After completing the repair work, clear the DTCs.

How to Clear the History DTCs

1. Turn the vehicle to the OFF (LOCK) mode and then the vehicle ON mode.

2. While pressing the WINDSHIELD DEFROST button, press and hold the ON/OFF button for 10 seconds or more.

3. While pressing and holding both the WINDSHIELD DEFROST and ON/OFF buttons, the display screen goes directly to the A/C Error Display shown, touch and hol

4. Do the How to Check for History DTCs to verify DTCs have been cleared.

Displaying Sensor Inputs at the Climate Control Unit

The climate control unit has a mode that displays the sensor inputs it receives. This mode shows you what the climate control unit is receiving from each of the sensors, faulty.

Checks Before Using the Sensor Input Display Mode

1. Turn the vehicle to the ON mode, and check the recirculation door function; press the RECIRCULATION button to switch from FRESH to RECIRCLATE. The air v TEMPERATURE CONTROL dial to the desired test temperature:

- "Lo" temperature setting will default to MAX COOL, VENT and RECIRCULATE (A/C on) or FRESH (A/C off).
- "Hi" temperature setting will default to MAX HOT, HEAT, HEAT/DEF, and FRESH.

3. Turn the vehicle to the OFF (LOCK) mode.

Run the Sensor Input Display Mode

1. Press and hold both the AUTO and RECIRCULATION buttons, then start the engine.

2. Release both buttons. The display screen goes directly to the A/C sensor display mode shown. The display screen indicates the sensor ID and then the value for that s

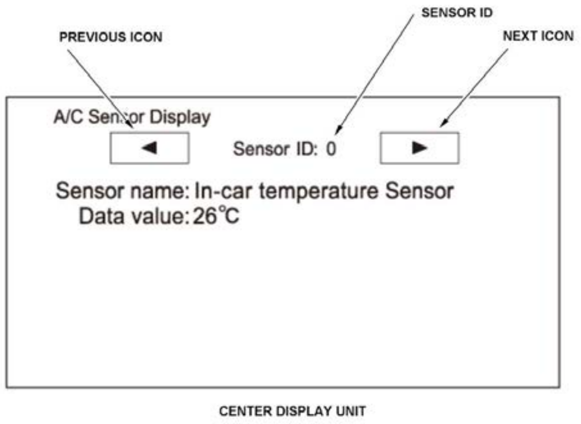

Sensor name: In-car temperature Sensor
Data value: 26℃

To advance to the next sensor, touch the sensor ID previous/next icon or press the REAR WINDOW DEFOGGER/MIRROR DEFOGGER * button.

*: With mirror defogger

NOTE:

- **The sensor values will be displayed in degrees Celsius (deg.C) or an alphanumeric code. Use the chart to convert the valu**
- **If the sensor value displays "255", this indicates there is an open or short in the circuit or sensor. Check for DTCs using th diagnostic function.**
- **If necessary, compare the sensor input display to a known-good vehicle under the same test conditions.**
- **If the sensor displayed value is out of the normal range, refer to the sensor test or substitute a known-good sensor, and re**
- **Unsupported items shall be skipped.**

Sensor ID	Sensor Name
0	In-car temperature sensor
1	Outside air temperature sensor
2	Sunlight sensor
3	Engine coolant temperature
4	Evaporator temperature sensor
8	Air mix opening (low value indicates cooler air distribution, higher value indicates warmer air distribution) *1Driver's air mix opening (low v indicates cooler air distribution, higher value indicates warmer air distribution) *2
9 *2	Passenger's air mix opening (low value indicates cooler air distribution, higher value indicates warmer air distribution)
10	Mode positioning
11	Recirculation control opening
26	Not used
27	Sunlight sensor type

*1: Without dual zone control*2: With dual zone control

Celsius to Fahrenheit Conversion Table

deg.C	deg.F	deg.C	deg.F	deg.C	deg.F	deg.C	deg.F
0	32	10	50	20	68	30	86
1	34	11	52	21	70	31	88
2	36	12	54	22	72	32	90
3	37	13	55	23	73	33	91
4	39	14	57	24	75	34	93
5	41	15	59	25	77	35	95
6	43	16	61	26	79	36	97
7	45	17	63	27	81	37	99

deg.C	deg.F	deg.C	deg.F	deg.C	deg.F	deg.C	deg.F
8	46	18	64	28	82	38	100
9	48	19	66	29	84	39	102

deg.C	deg.F	deg.C	deg.F	deg.C	deg.F	deg.C	deg.F
50	122	60	140	70	158	80	176
51	124	61	142	71	160	81	178
52	126	62	144	72	162	82	180
53	127	63	145	73	163	83	181
54	129	64	147	74	165	84	183
55	131	65	149	75	167	85	185
56	133	66	151	76	169	86	187
57	135	67	153	77	171	87	189
58	136	68	154	78	172	88	190
59	138	69	156	79	174	89	192

Alphanumeric Conversion Table

Display Reading (Alphanumeric)	Value
0 thru 200	0 thru 200
201 thru 209	-1 thru -9
210 thru 219	-10 thru -19
220 thru 229	-20 thru -29
230 thru 239	-30 thru -39
240 thru 249	-40 thru -49
250 thru 253	Not used
254	---
255	Er

Alphanumeric Conversion Table (Mode Positioning)

Display Reading (%)	Indication	Mod
-01-01	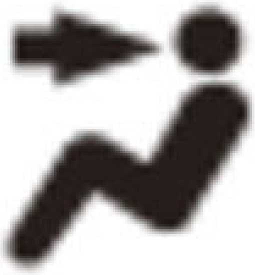	VENT
16-18	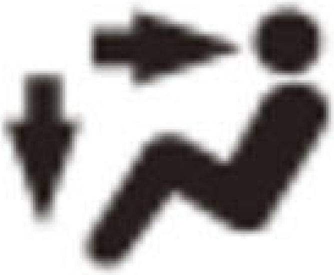	HEAT/VENT-1
22-25		HEAT/VENT-2
32-34		HEAT/VENT-3

*1: Auto mode

*2: Manual mode

Display Reading (%)	Indication	Mod
46-48	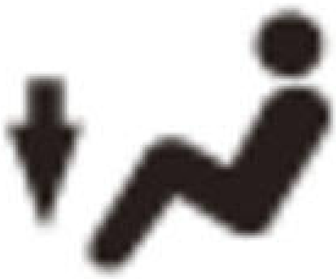	HEAT-1
58-61		HEAT-2
68-71	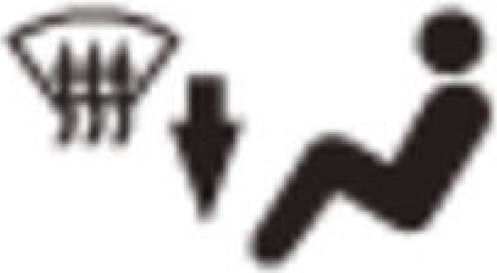	HEAT/DEF-1
88-90		HEAT/DEF-2
99-101	*1 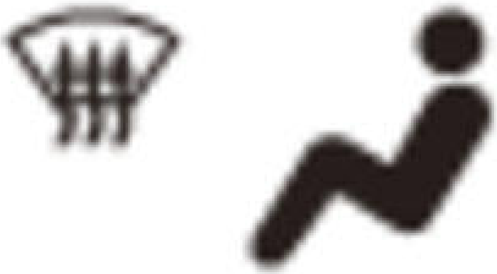 Not indication *2	DEF

*1: Auto mode

*2: Manual mode

4. To cancel the sensor input display mode, press the AUTO button or turn the vehicle to the OFF (LOCK) mode.

HOW TO TROUBLESHOOT THE CLIMATE CONTROL SYSTEM(CLIMATE CONTROL PANEL WITHOUT DISPLAY)

How to Check for DTCs with the HDS

NOTE:

- There are three methods used to check for DTCs. The recommended method is to use the Honda Diagnostic System (HDS) with the appropriate software, plugge
- The second method is to run the self-diagnostic function built into the climate control unit.
- The third method is to use **B-CAN system diagnosis test mode A** .

1. Turn the vehicle to the OFF (LOCK) mode.

2. **Connect the HDS to the DLC**

3. Select BODY ELECTRICAL in the System Selection Menu.

4. Select HVAC/Climate control in the Body Electrical System Select.

5. Select DTCs in the HVAC/Climate Control Mode Menu.Check for DTCs. If any DTCs are indicated, write down the DTCs, then go to the indicated DTC troublesho refer to symptom troubleshooting.

NOTE:

- **After troubleshooting, clear the DTCs with the HDS.**
- **For specific operations, refer to the user's manual that came with the HDS.**

How to Use the Self-Diagnostic Function with the HDS

NOTE: This method is only available if the HDS can communicate with the climate control unit.

1. Turn the vehicle to the OFF (LOCK) mode.

2. **Connect the HDS to the DLC**

3. Select BODY ELECTRICAL in the System Selection Menu.

4. Select HVAC/Climate Control in the Body Electrical System Select.

5. Select Inspection in the HVAC/Climate Control Mode Menu.

6. Select Climate Control Unit Self Test in the Inspection Menu.Check for DTCs. If any DTCs are indicated, write down the DTCs, then go to the indicated DTC troubl

- After troubleshooting, clear the DTCs with the HDS.
- For specific operations, refer to the user's manual that came with the HDS.

How to Use the Self-Diagnostic Function without the HDS

Button

Button	Button Name
AUTO	AUTO button
ON/ OFF	ON/OFF button

Button	Button Name
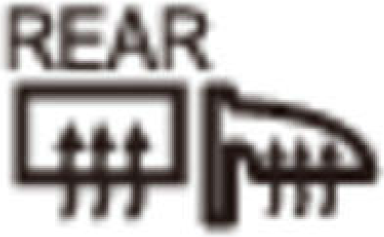	REAR WINDOW DEFOGGER/MIRROR DEFOGGER * button
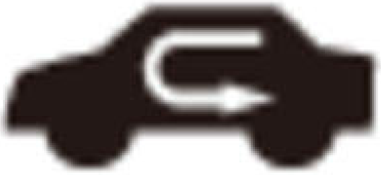	RECIRCULATION button
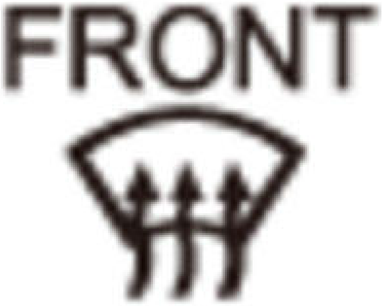	WINDSHIELD DEFROST button

*: With mirror defogger

The climate control unit has a self-diagnostic function. To run the self-diagnostic function, do the following:

1. Turn the vehicle to the OFF (LOCK) mode and then the ON mode.Press and hold the ON/OFF button, then within 10 seconds press and release the REAR WINDOW
times. Release the ON/OFF button, then the self-diagnostic function begins.

*: With mirror defogger

NOTE:

- **The blower motor should run at various speeds when in the self-diagnostic mode.**
- **If there are any problems in the system, the A/C Error Display screen will indicate them. Select the previous/next icon to co the indication, refer to the table that follows.**
- **If there are no problems detected, The error status shows Normal, and The number of Errors indicates "0".**

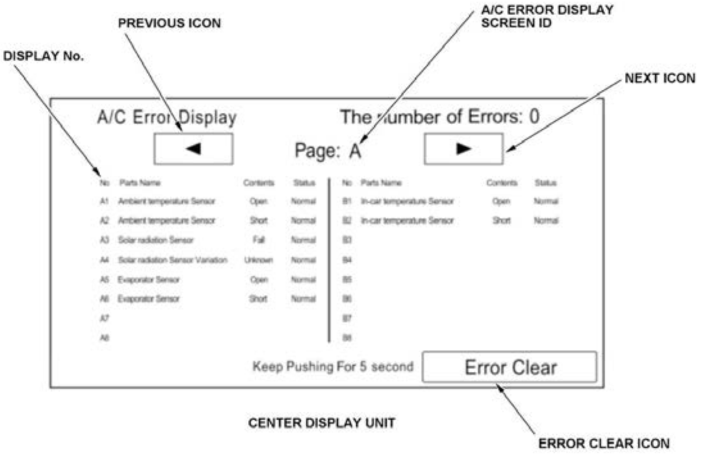

A/C Error Display The number of Errors: 0

◄ Page: A ►

No	Parts Name	Contents	Status	No	Parts Name	Contents	Status
A1	Ambient temperature Sensor	Open	Normal	B1	In-car temperature Sensor	Open	Normal
A2	Ambient temperature Sensor	Short	Normal	B2	In-car temperature Sensor	Short	Normal
A3	Solar radiation Sensor	Fail	Normal	B3			
A4	Solar radiation Sensor Variation	Unknown	Normal	B4			
A5	Evaporator Sensor	Open	Normal	B5			
A6	Evaporator Sensor	Short	Normal	B6			
A7				B7			
A8				B8			

Keep Pushing For 5 second Error Clear

Canceling the Self-Diagnostic Function

3. Turn the vehicle to the OFF (LOCK) mode to cancel the self-diagnostic function. After completing repair work, run the self-diagnostic function again to make sure th

Checking for DTCs

A/C Error Display Screen ID	Display No.	Parts Name	Contents	DTC	
A	A1	Ambient temperature Sensor	Open	B1227	An open in the outside
	A2	Ambient temperature Sensor	Short	B1228	A short in the outside ai
	A3	Solar radiation Sensor	Fail	B123F	Automatic lighting cont
	A4	Solar radiation Sensor Variation	Unknown	---	Unknown sunlight sens
	A5	Evaporator Sensor	Open	B1231	An open in the evaporat
	A6	Evaporator Sensor	Short	B1232	A short in the evaporat
	B1 *1	In-car temperature Sensor	Open	B1225	An open in the in-car te
	B2 *1	In-car temperature Sensor	Short	B1226	A short in the in-car te
	B6 *2	Hum-Temp Sensor Comm	Error	B121D	Humidity/in-car temper
	B7 *2	Hum-Temp Sensor Comm	Line Error	---	Display "Normal" wher connector disconnected DATA line with a jump
B	A1	A/M motor(Dr)	Open	B1233	An open in the air mix
	A2	A/M motor(Dr)	Short	B1234	A short in the air mix c
	A3	A/M motor(Dr)	Lock	B1235	A problem in the air mi motor (driver's)
	A4 *3	A/M motor(As)	Open	B1236	An open in the passeng
	A5 *3	A/M motor(As)	Short	B1237	A short in the passenger
	A6 *3	A/M motor(As)	Lock	B1238	A problem in the passen door, or motor
	B1	Mode motor	Open	B121A	An open in the mode c
	B2	Mode motor	Short	B121B	A short in the mode con
	B3	Mode motor	Lock	B1240	A problem in the mode
	B4	R/F motor	Open	B2986	An open in the recircula
	B5	R/F motor	Short	B1220	A short in the recirculat
	B6	R/F motor	Lock	B2983	A problem in the recircu motor
D	A1	Blower motor	Lock	B1241	A problem in the blowe
	B1	Compressor solenoid	Open	B2988	An open in the A/C con circuit
	B2	Compressor solenoid	Short		A short in the A/C comp circuit

*1: With auto idle stop system *2: Without auto idle stop system*3: With dual zone control *4: With front seat heater

A/C Error Display Screen ID	Display No.	Parts Name	Contents	DTC	
I	A1	B-CAN	BUS OFF	U1280	Communication bus li
	A2	Lost Communication with	Meter(BCAN)	U128D	Climate control unit lo
	A3	Lost Communication with	MICU(BCAN)	U1281	Climate control unit lo module)
	A4	Lost Communication with	AHU(BCAN)	---	Climate control unit lo
	A6 *4	Lost Communication with	HCS(BCAN)	U1290	Climate control unit lo unit (front)
	B4	LIN Communication	BUS OFF	B120A	Climate control unit L
	B5	Lost Communication with	Fr PANEL(LIN)	B2964	Climate control unit lo control panel)
	B8	EEPROM	Data Error	---	Climate control unit in

*1: With auto idle stop system *2: Without auto idle stop system*3: With dual zone control *4: With front seat heater

How to Check for History DTCs

The climate control unit can record history DTCs. To read the history DTCs, do the following:

1. Turn the vehicle to the OFF (LOCK) mode and then the ON mode.

2. While pressing the WINDSHIELD DEFROST button, press and hold the ON/OFF button for 10 seconds or more.While pressing and holding both the WINDSHIELI
goes directly to the A/C Error Display shown.

NOTE:

- **If there are any problems in the system, the A/C Error Display screen will indicate them. Select the previous/next icon to cc the indication, refer to the table that follows.**
- **If there are no problems detected, The error status shows Normal, and The number of Errors indicates "0".**

Canceling the Read History DTCs

4. Turn the vehicle to the OFF (LOCK) mode to cancel reading the history DTCs. After completing the repair work, clear the DTCs.

How to Clear the History DTCs

1. Turn the vehicle to the OFF (LOCK) mode and then the vehicle ON mode.

2. While pressing the WINDSHIELD DEFROST button, press and hold the ON/OFF button for 10 seconds or more.

3. While pressing and holding both the WINDSHIELD DEFROST and ON/OFF buttons, the display screen goes directly to the A/C Error Display shown, touch and hol

4. Do the How to Check for History DTCs to verify DTCs have been cleared.

Displaying Sensor Inputs at the Climate Control Unit

The climate control unit has a mode that displays the sensor inputs it receives. This mode shows you what the climate control unit is receiving from each of the sensors,
faulty.

Checks Before Using the Sensor Input Display Mode

1. Turn the vehicle to the ON mode, and check the recirculation door function; press the RECIRCULATION button to switch from FRESH to RECIRCLATE. The air vo
TEMPERATURE CONTROL dial to the desired test temperature:

- "Lo" temperature setting will default to MAX COOL, VENT and RECIRCULATE (A/C on) or FRESH (A/C off).
- "Hi" temperature setting will default to MAX HOT, HEAT, HEAT/DEF, and FRESH.

3. Turn the vehicle to the OFF (LOCK) mode.

Run the Sensor Input Display Mode

1. Press and hold both the AUTO and RECIRCULATION buttons, then start the engine.

2. Release both buttons. The display screen goes directly to the A/C sensor display mode shown. The display screen indicates the sensor ID and then the value for that se

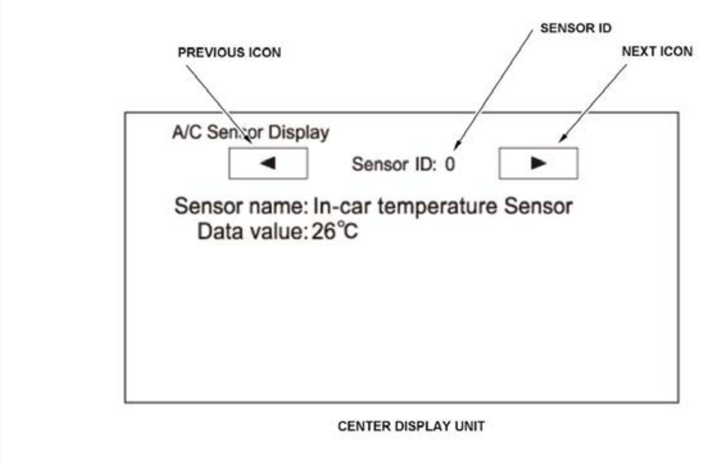

A/C Sensor Display

Sensor ID: 0

Sensor name: In-car temperature Sensor
Data value: 26℃

To advance to the next sensor, touch the sensor ID previous/next icon or press the REAR WINDOW DEFOGGER/MIRROR DEFOGGER * button.

*: With mirror defogger

NOTE:

- **The sensor values will be displayed in degrees Celsius (deg.C) or an alphanumeric code. Use the chart to convert the valu**
- **If the sensor value displays "255", this indicates there is an open or short in the circuit or sensor. Check for DTCs using th diagnostic function.**
- **If necessary, compare the sensor input display to a known-good vehicle under the same test conditions.**
- **If the sensor displayed value is out of the normal range, refer to the sensor test or substitute a known-good sensor, and re**
- **Unsupported items shall be skipped.**

Sensor ID	Sensor Name
0	In-car temperature sensor
1	Outside air temperature sensor

Sensor ID	Sensor Name
2	Sunlight sensor
3	Engine coolant temperature
4	Evaporator temperature sensor
5	Humidity sensor
8	Air mix opening (low value indicates cooler air distribution, higher value indicates warmer air distribution) *1Driver's air mix opening (low va indicates cooler air distribution, higher value indicates warmer air distribution) *2
9 *2	Passenger's air mix opening (low value indicates cooler air distribution, higher value indicates warmer air distribution)
10	Mode positioning
11	Recirculation control opening
26	Not used
27	Sunlight sensor type

*1: Without dual zone control*2: With dual zone control

Celsius to Fahrenheit Conversion Table

deg.C	deg.F	deg.C	deg.F	deg.C	deg.F	deg.C	deg.F
0	32	10	50	20	68	30	86
1	34	11	52	21	70	31	88
2	36	12	54	22	72	32	90
3	37	13	55	23	73	33	91
4	39	14	57	24	75	34	93
5	41	15	59	25	77	35	95
6	43	16	61	26	79	36	97
7	45	17	63	27	81	37	99
8	46	18	64	28	82	38	100
9	48	19	66	29	84	39	102

deg.C	deg.F	deg.C	deg.F	deg.C	deg.F	deg.C	deg.F
50	122	60	140	70	158	80	176
51	124	61	142	71	160	81	178
52	126	62	144	72	162	82	180
53	127	63	145	73	163	83	181
54	129	64	147	74	165	84	183
55	131	65	149	75	167	85	185
56	133	66	151	76	169	86	187
57	135	67	153	77	171	87	189
58	136	68	154	78	172	88	190
59	138	69	156	79	174	89	192

Alphanumeric Conversion Table

Display Reading (Alphanumeric)	Value
0 thru 200	0 thru 200
201 thru 209	-1 thru -9

Display Reading (Alphanumeric)	Value
210 thru 219	-10 thru -19
220 thru 229	-20 thru -29
230 thru 239	-30 thru -39
240 thru 249	-40 thru -49
250 thru 253	Not used
254	---
255	Er

Alphanumeric Conversion Table (Mode Positioning)

Display Reading (%)	Indication	Mod
-01-01	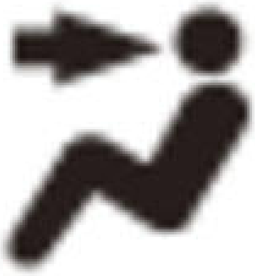	VENT
16-18	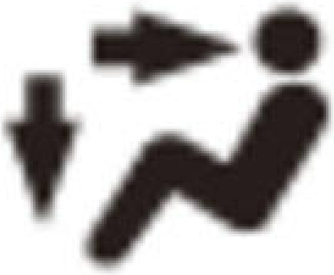	HEAT/VENT-1
22-25		HEAT/VENT-2
32-34		HEAT/VENT-3
46-48	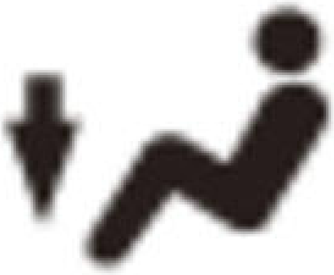	HEAT-1
58-61		HEAT-2

Display Reading (%)	Indication	Mod
68-71	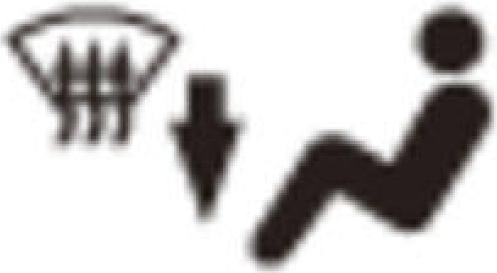	HEAT/DEF-1
88-90		HEAT/DEF-2
99-101	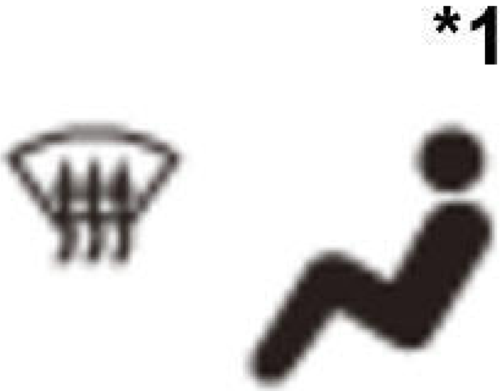 Not indication *2	DEF

*1: Auto mode

*2: Manual mode

4. To cancel the sensor input display mode, press the AUTO button or turn the vehicle to the OFF (LOCK) mode.

REMOVAL & INSTALLATION INSPECTION

DRIVE BELT AUTO-TENSIONER REMOVAL, INSTALLATION, AND INSPECTION (1.5 L ENGINE)

Removal and Installation

1

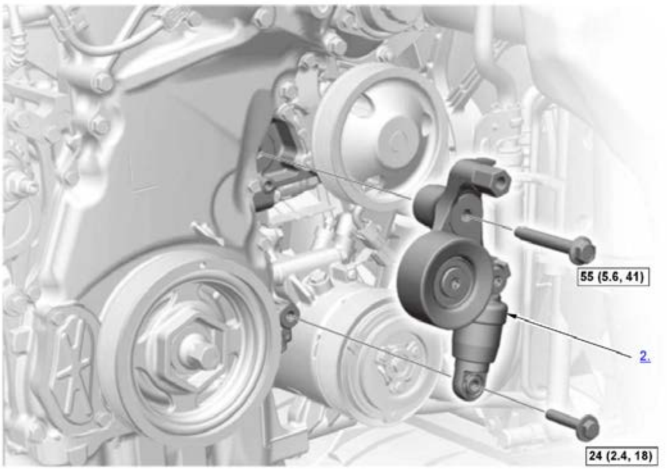
55 (5.6, 41)
2.
24 (2.4, 18)

	Torque: N.m (kgf.m, lbf.ft)

2

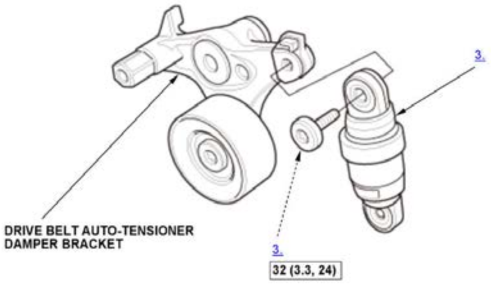
3.
DRIVE BELT AUTO-TENSIONER DAMPER BRACKET
3.
32 (3.3, 24)

	Torque: N.m (kgf.m, lbf.ft)

1. **Drive Belt - Remove**
2. Drive Belt Auto-Tensioner - Remove
3. Drive Belt Auto-Tensioner Damper - Remove
4. All Removed Parts - Install

> 1. Install the parts in the reverse order of removal..
>
> **NOTE:**
>
> **Do the drive belt auto-tensioner air bleeding**

Inspection

1. Drive Belt Auto-Tensioner - Position Check

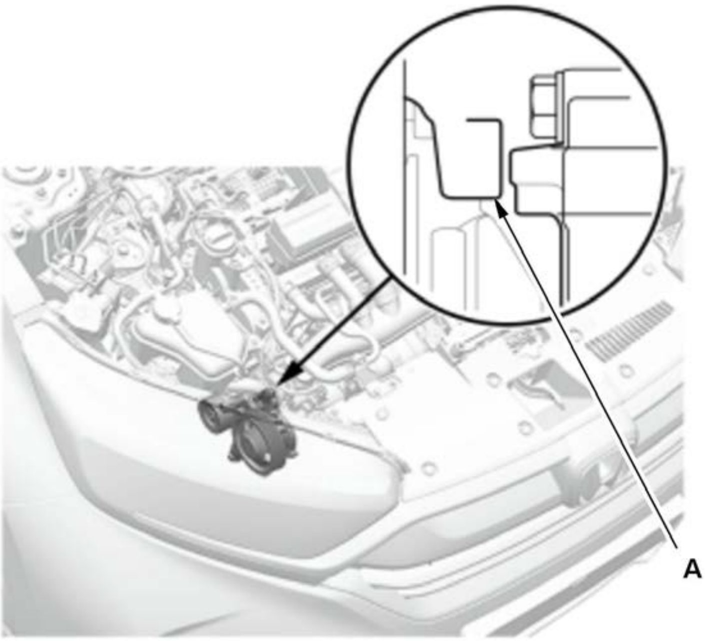	1. Turn the vehicle to the ON mode, and make the OFF (LOCK) mode. 2. Check the position of the drive belt auto-ten 3. Start the engine, then check the position aga moves or fluctuates a lot, replace the drive belt 4. Check for abnormal noise from the tensione drive belt auto-tensioner.

2. **Drive Belt - Remove**

NOTE: After the drive belt is removed, remove the pin from the drive belt auto-tensioner.

3. Drive Belt Auto-Tensioner - Inspect

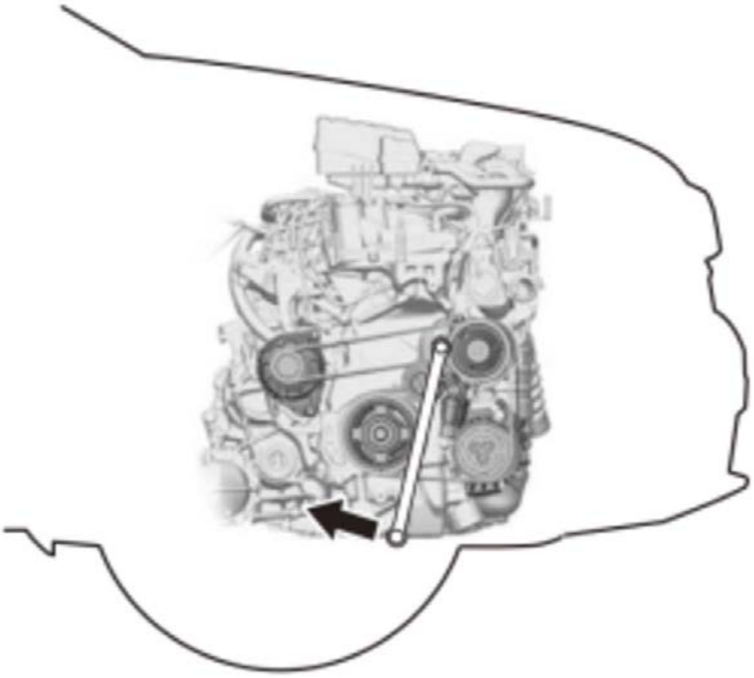	1. Set a wrench on the d the direction of the arro **NOTE:** - **This is a hydraulic type auto-tensioner, so you must turn the wrench slowly for at least 3 seconds.** - **Check the belt for cracks or damage.** - **Check for oil leakage from the damper rubber bellows.** - **If the tensioner does not move smoothly, or you hear abnormal noise, replace the drive belt auto-tensioner.**

4. All Removed Parts - Install

1. Install the parts in the reverse order of removal.

SYMPTOM TROUBLESHOOTING INDEX FOR VIEWER

A/C INFORMATION DOES NOT DISPLAY ON THE CENTER DISPLAY UNIT, BUT THE BLOWER, HEATER AND A/C SYSTEM CONTROLS WORK DISPLAY) (2017 2018 2019)

Diagnostic Procedure

Probable cause: Communication malfunction between the audio unit *1 or the audio-navigation unit *2 and the climate control unit

Check the B-CAN line between the audio unit *1 or the audio-navigation unit *2 and the climate control unit

Also Check for

Climate control DTCs

A/C INFORMATION DOES NOT DISPLAY ON THE CENTER DISPLAY UNIT, BUT THE BLOWER, HEATER AND A/C SYSTEM CONTROLS WORK DISPLAY) (2020 2021)

Diagnostic Procedure

Probable cause: Communication malfunction between the audio unit *1 or the audio-navigation unit *2 and the climate control unit

Check the B-CAN line between the audio unit *1 or the audio-navigation unit *2 and the climate control unit

Also Check for

Climate control DTCs

BLOWER FAN RUNS SLOWER THAN EXPECTED IN COLD WEATHER (WHEN IN AUTO MODE) NOTE: IT IS NORMAL FOR THE BLOWER FAN TEMPERATURE RISES WHEN IN AUTO MODE (2017 2018 2019)

Diagnostic Procedure

Probable cause: Engine coolant temperature (ECT) circuit malfunction

Troubleshoot the ECT sensor circuit:

- ECT sensor 2 circuit low voltage
- ECT sensor 2 circuit high voltage

Also Check for

- Climate control DTCs
- PGM-FI DTCs
- Blower motor operation

BLOWER FAN RUNS SLOWER THAN EXPECTED IN COLD WEATHER (WHEN IN AUTO MODE) NOTE: IT IS NORMAL FOR THE BLOWER FAN TEMPERATURE RISES WHEN IN AUTO MODE (2020 2021)

Diagnostic Procedure

Probable cause: Engine coolant temperature (ECT) circuit malfunction

Troubleshoot the ECT sensor circuit:

- ECT Sensor 2 Out of Range
- ECT Sensor 2 Circuit Range/Performance Problem
- ECT sensor 2 circuit low voltage
- ECT sensor 2 circuit high voltage

Also Check for

- Climate control DTCs
- PGM-FI DTCs
- Blower motor operation

DRIVER'S AND PASSENGER'S SIDE VENT TEMPERATURES VARY BY MORE THAN 11B°C (20B°F) (2017 2018 2019)

Diagnostic Procedure

Probable cause:

- The air mix doors are malfunctioning

  Do the following troubleshooting:

-
    - -

      Air mix control motor test*3

    - -

      Driver's air mix control motor test *4

    - -

      Passenger's air mix control motor test*4

- Low refrigerant charge
- Variable capacity control solenoid malfunction

Also Check for

- Climate control DTCs
- Poor or loose connections at the terminals

DRIVER'S AND PASSENGER'S SIDE VENT TEMPERATURES VARY BY MORE THAN 11B°C (20B°F) (2020 2021)

Diagnostic Procedure

Probable cause:

- The air mix doors are malfunctioning

  Do the following troubleshooting:

-
    - -

      Air mix control motor test*3

    - -

      Driver's air mix control motor test*4

    - -

      Passenger's air mix control motor test*4

- Low refrigerant charge
- Variable capacity control solenoid malfunction

Also Check for

- Climate control DTCs
- Poor or loose connections at the terminals

HDS DOES NOT COMMUNICATE WITH THE CLIMATE CONTROL UNIT OR THE VEHICLE (2017 2018 2019)

Diagnostic Procedure

- Troubleshoot the DLC circuit

HDS DOES NOT COMMUNICATE WITH THE CLIMATE CONTROL UNIT OR THE VEHICLE (2020 2021)

Diagnostic Procedure

- Troubleshoot the DLC circuit

INSUFFICIENT HEATING (2017 2018 2019)

Diagnostic Procedure

- Check the coolant level
- Check the expansion tank cap*5 or the radiator cap*6
- Check the engine coolant temperature (ECT) during normal operation with the HDS
- Check the heater core inlet hose temperature:
-
    - If it is COLD, check for restrictions in the hose, a damaged or leaking thermostat, or a damaged or leaking water pump
    - If it is HOT, check for restrictions in the heater core. Back flush or replace the heater core
- Check the operation of the air mix doors:
-
    - Air mix control motor test*3
    - Driver's air mix control motor test *4
    - Passenger's air mix control motor test*4
- Check the blower motor unit for obstructions
- Check for air leaks around the ducts and vents

Also Check for

Climate control DTCs

INSUFFICIENT HEATING (2020 2021)

Diagnostic Procedure

- Check the coolant level
- Check the expansion tank cap
- Check the engine coolant temperature (ECT) during normal operation with the HDS
- Check the heater core inlet hose temperature:
-
    - If it is COLD, check for restrictions in the hose, a damaged or leaking thermostat, or a damaged or leaking water pump

    - If it is HOT, check for restrictions in the heater core. Back flush or **replace the heater core**
- Check the operation of the air mix doors:
-
    - **Air mix control motor test*3**
    - **Driver's air mix control motor test*4**
    - **Passenger's air mix control motor test*4**
- Check the blower motor unit for obstructions
- Check for air leaks around the ducts and vents

Also Check for

Climate control DTCs

THE A/C COMPRESSOR CLUTCH AND THE COOLING FAN ARE INOPERATIVE, BUT THE BLOWER AND HEATER CONTROLS WORK (2017 201

Diagnostic Procedure

Probable cause: A/C pressure sensor circuit malfunction or evaporator temperature sensor circuit malfunction

Troubleshoot the A/C pressure sensor circuit:

- **A/C pressure sensor circuit low voltage**
- **A/C pressure sensor circuit high voltage**

NOTE: The A/C pressure sensor circuit can malfunction without setting a DTC

Also Check for

- **Climate control DTCs**
- **PGM-FI DTCs**
- **Abnormal A/C system pressures**
- Faulty evaporator temperature sensor
- Poor or loose connections at the terminals

THE A/C COMPRESSOR CLUTCH AND THE COOLING FAN ARE INOPERATIVE, BUT THE BLOWER AND HEATER CONTROLS WORK (2020 202

Diagnostic Procedure

Probable cause: A/C pressure sensor circuit malfunction or evaporator temperature sensor circuit malfunction

Troubleshoot the A/C pressure sensor circuit:

- **A/C pressure sensor circuit low voltage**
- **A/C pressure sensor circuit high voltage**

NOTE: The A/C pressure sensor circuit can malfunction without setting a DTC

Also Check for

- **Climate control DTCs**
- **PGM-FI DTCs**
- **Abnormal A/C system pressures**
- Faulty evaporator temperature sensor
- Poor or loose connections at the terminals

THE A/C COMPRESSOR CLUTCH CYCLES RAPIDLY ON AND OFF*6 (2017 2018 2019)

Diagnostic Procedure

Probable cause:

- A/C system is overcharged (Excessive pressure on high side of system causing pressure sensor to turn A/C compressor off)
- Cooling fan inoperative
- Low idle speed
- Evaporator temperature sensor malfunction

  Do the evaporator temperature sensor test

Also Check for

- **Climate control DTCs**
- If there is no leak and the refrigerant level is normal, **do the A/C compressor clutch circuit troubleshooting**, and look for an intermittent problem
- Faulty A/C pressure sensor

THE A/C COMPRESSOR CLUTCH DOES NOT DISENGAGE WHEN THE A/C SWITCH IS OFF (2017 2018 2019)

Diagnostic Procedure

Probable cause: The A/C compressor clutch circuit is on (energized) continuously, shorted to ground, stuck A/C compressor clutch relay, or the A/C compressor clutch i

Do the A/C compressor clutch check, and repair any problems with the A/C compressor clutch

Also Check for

The A/C compressor relief valve. If it has vented refrigerant to the atmosphere, correct the problem with the A/C compressor clutch or the A/C compressor clutch circuit

THE A/C COMPRESSOR CLUTCH DOES NOT DISENGAGE WHEN THE A/C SWITCH IS OFF (2020 2021)

Diagnostic Procedure

Probable cause: The A/C compressor clutch circuit is on (energized) continuously, shorted to ground, stuck A/C compressor clutch relay, or the A/C compressor clutch i

Do the A/C compressor clutch check, and repair any problems with the A/C compressor clutch

Also Check for

The A/C compressor relief valve. If it has vented refrigerant to the atmosphere, correct the problem with the A/C compressor clutch or the A/C compressor clutch circuit

THE A/C COMPRESSOR CLUTCH DOES NOT ENGAGE, BUT THE COOLING FAN OPERATE, AND THE BLOWER AND HEATER CONTROLS WO

Diagnostic Procedure

- Symptom Troubleshooting

Also Check for

- Climate control DTCs
- Blown fuse No. A23 (10 A) in the under-hood fuse/relay box
- Abnormal A/C system pressures
- Poor or loose connections at the terminals

THE A/C COMPRESSOR CLUTCH DOES NOT ENGAGE, BUT THE COOLING FAN OPERATE, AND THE BLOWER AND HEATER CONTROLS WO

Diagnostic Procedure

- Symptom Troubleshooting

Also Check for

- Climate control DTCs
- Blown fuse No. A23 (10 A) in the under-hood fuse/relay box *6
- Blown fuse No. G31 (10 A) in the fuse holder A *7
- Abnormal A/C system pressures
- Poor or loose connections at the terminals

THE A/C COMPRESSOR RELIEF VALVE HAS VENTED REFRIGERANT NOTE: THIS INDICATES THE A/C SYSTEM HIGH SIDE PRESSURE WAS

Diagnostic Procedure

Probable cause: A high-side restriction, the cooling fan is inoperative, or the A/C compressor clutch is not disengaging

- If the fans and A/C compressor clutch operate normally, feel the lines for restrictions

  Do the A/C system contamination inspection

- If the A/C compressor clutch will not disengage, troubleshoot the A/C compressor clutch circuit, and check for mechanical problems
- If the A/C condenser/radiator fans are inoperative, troubleshoot the fan circuits

Also Check for

PGM-FI DTCs

THE A/C COMPRESSOR RELIEF VALVE HAS VENTED REFRIGERANTNOTE: THIS INDICATES THE A/C SYSTEM HIGH SIDE PRESSURE WAS I

Diagnostic Procedure

Probable cause: A high-side restriction, the cooling fan is inoperative, or the A/C compressor clutch is not disengaging

- If the fans and A/C compressor clutch operate normally, feel the lines for restrictions

  Do the A/C system contamination inspection

- If the A/C compressor clutch will not disengage, troubleshoot the A/C compressor clutch circuit, and check for mechanical problems
- If the A/C condenser/radiator fans are inoperative, troubleshoot the fan circuits

Also Check for

PGM-FI DTCs

THE BLOWER AND THE HEATER CONTROLS AND THE A/C SYSTEM DO NOT WORK (2017 2018 2019)

Diagnostic Procedure

- Symptom Troubleshooting

Also Check for

- Climate control DTCs
- Blown fuse No. D9 (10 A) in the under-dash fuse/relay box
- Poor ground at G402
- Poor or loose connections at the terminals

THE BLOWER AND THE HEATER CONTROLS AND THE A/C SYSTEM DO NOT WORK (2020 2021)

Diagnostic Procedure

- Symptom Troubleshooting

Also Check for

- Climate control DTCs
- Blown fuse No. D9 (10 A) in the under-dash fuse/relay box
- Blown fuse No. B27 (30 A) in the fuse/relay holder A *5
- Poor ground at G402
- Poor or loose connections at the terminals

SYMPTOM TROUBLESHOOTING INDEX FOR VIEWER

A/C INFORMATION DOES NOT DISPLAY ON THE CENTER DISPLAY UNIT, BUT THE BLOWER, THE HEATER, AND THE A/C SYSTEM CONTRO WITHOUT DISPLAY)

Diagnostic Procedure

Probable cause: Communication malfunction between the audio unit and the climate control unit

Check the B-CAN line between the audio unit and the climate control unit

Also Check for

Climate control DTCs

BLOWER FAN RUNS SLOWER THAN EXPECTED IN COLD WEATHER (WHEN IN AUTO MODE)

NOTE: **It is normal for the blower fan to run slowly until the engine coolant temperature rises when in AUTO mode**

Diagnostic Procedure

Probable cause: Engine coolant temperature (ECT) circuit malfunction

Troubleshoot the ECT sensor circuit:

- ECT sensor 1 out of range
- ECT sensor 1 circuit range/performance problem
- ECT sensor 1 circuit low voltage
- ECT sensor 1 circuit high voltage

Also Check for

- Climate control DTCs
- PGM-FI DTCs
- Manual blower motor operation

DRIVER'S AND PASSENGER'S SIDE VENT TEMPERATURES VARY BY MORE THAN 20 B°F (11 B°C)

Diagnostic Procedure

Probable cause:

- The air mix doors are malfunctioning

  Do the following troubleshooting:

-
    - -

      Air mix control motor test*1
    - -

      Driver's air mix control motor test*2
    - -

      Passenger's air mix control motor test*2
- Low refrigerant charge

Also Check for

- Climate control DTCs
- Harness/connections

HDS DOES NOT COMMUNICATE WITH THE CLIMATE CONTROL UNIT OR THE VEHICLE

Diagnostic Procedure

- Troubleshoot the DLC circuit

INSUFFICIENT HEATING

Diagnostic Procedure

- Check the engine coolant level
- Check the radiator cap
- Check the engine coolant temperature (ECT) during normal operation with the HDS
- Check the heater core inlet hose temperature:
-
    - If it is COLD, check for restrictions in the hose, a damaged or leaking thermostat, or a damaged or leaking water pump

  - If it is HOT, check for restrictions in the heater core. Back flush or **replace the heater core**
- Check the operation of the air mix doors:
-
  - **Air mix control motor test*1**
  - **Driver's air mix control motor test*2**
  - **Passenger's air mix control motor test*2**
- Check the blower motor unit for obstructions
- Check for air leaks around the ducts and vents

Also Check for

Climate control DTCs

THE BLOWER, THE HEATER CONTROLS, AND THE A/C SYSTEM DO NOT WORK

Diagnostic Procedure

- **Symptom Troubleshooting**

Also Check for

- **Blown fuse No. D9**
- Poor ground at G251
- Climate control unit
- Harness/connections

THE ELECTRIC A/C COMPRESSOR AND THE COOLING FAN ARE INOPERATIVE, BUT THE BLOWER AND HEATER CONTROLS WORK

Diagnostic Procedure

Probable cause: A/C pressure sensor circuit malfunction or evaporator temperature sensor circuit malfunction

Troubleshoot the A/C pressure sensor circuit:

- **A/C pressure sensor circuit low voltage**
- **A/C pressure sensor circuit high voltage**

NOTE: The A/C pressure sensor circuit can malfunction without setting a DTC

Also Check for

- **Climate control DTCs**
- **PGM-FI DTCs**
- **Abnormal A/C system pressures**
- Evaporator temperature sensor
- Harness/connections

WHEN AN ENGINE STOPS, THE HEATER DOES NOT WARM (THE PTC HEATER DOES NOT HEAT UP)

Diagnostic Procedure

- **Do the PTC heater circuit troubleshooting**

Also Check for

- **Blown fuse No. C1-1**
- **Blown fuse No. C1-3**
- Poor ground at G352
- PTC heater B relay
- PTC heater D relay
- PTC heater core
- Climate control unit
- Harness/connections

DESCRIPTION & OPERATION

A/C SYSTEM DESCRIPTION

The Air Conditioning is a system that controls the interior space to a comfortable environment.

Air Flow Diagram

NOTE: This illustration is an example only. Appearance and structure of the actual parts may vary depending on the model.

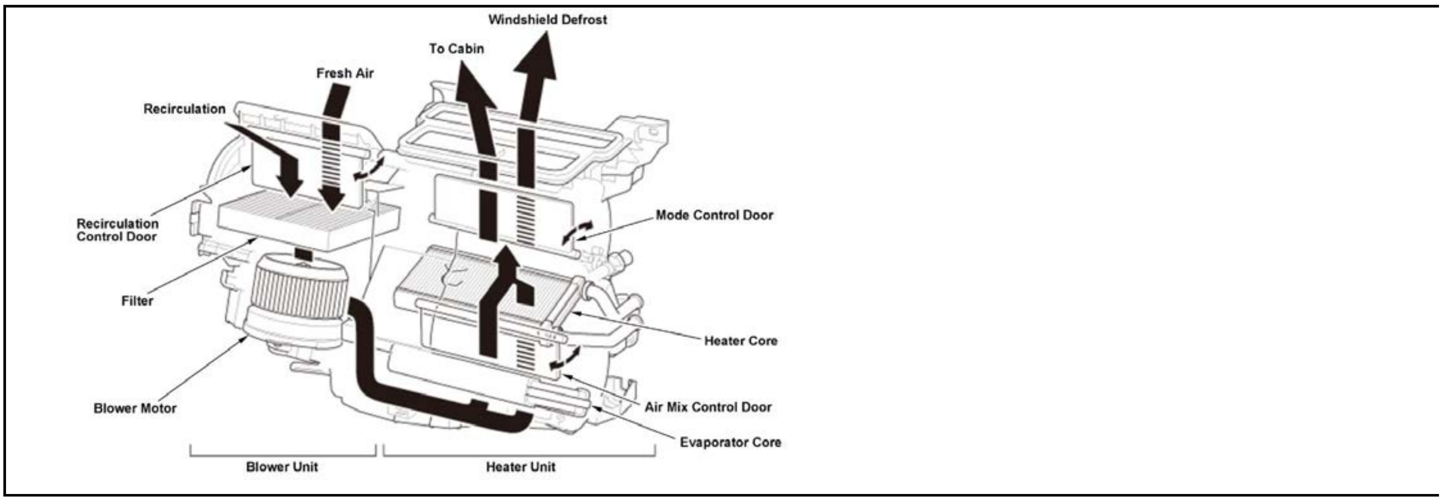
Windshield Defrost
To Cabin
Fresh Air
Recirculation
Recirculation Control Door
Filter
Blower Motor
Mode Control Door
Heater Core
Air Mix Control Door
Evaporator Core
Blower Unit
Heater Unit

Refrigerant Cycle

NOTE: This illustration is an example only. Appearance and structure of the actual parts may vary depending on the model.

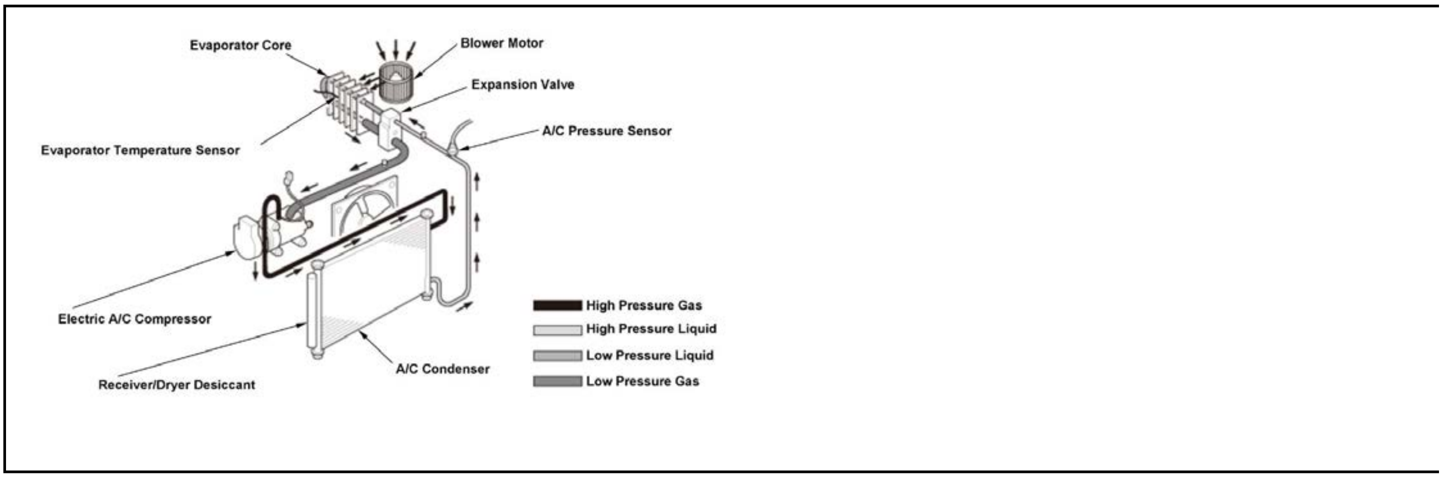
Evaporator Core
Blower Motor
Expansion Valve
A/C Pressure Sensor
Evaporator Temperature Sensor
Electric A/C Compressor
Receiver/Dryer Desiccant
A/C Condenser
High Pressure Gas
High Pressure Liquid
Low Pressure Liquid
Low Pressure Gas

Climate Control

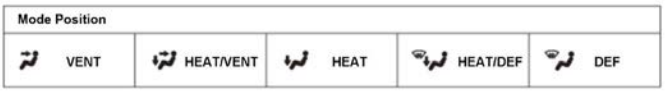

Mode Position				
VENT	HEAT/VENT	HEAT	HEAT/DEF	DEF

The climate control system transmits signals appropriate signals to each motor based on the information (sunlight, humidity, in-car temperature, outside air temperature)

- Air Mix Control Motor: The system controls the air temperature coming into the cabin by mixing the ratio of warm and cold air. The air mix control motor adjusts
- Mode Control Motor: The system directs the airflow to the specified area (VENT, HEAT/VENT, HEAT, HEAT/DEF, or DEF). The mode control motor switches t
- Recirculation Control Motor: The recirculation control motor switches the recirculation control door position to the "FRESH" or "RECIRCULATION".
- Blower Motor: The blower motor changes the air volume based on the voltage adjusted by the power transistor.

The climate control unit optimizes these controls in order to maintain passenger comfort.

Relationship between Vent (Air Outlet) Temperature and Actual In-Car Temperature

The climate control unit can automatically control vent temperature (air mix position), blower motor speed, blower intake, and the electric A/C compressor operation to the customer's temperature setting. The actual vent outlet temperature largely depends upon the difference between the in-car temperature sensor reading and the custom

Warm-Up Control

If the customer wants to warm-up the interior when no heat is available because the engine coolant temperature is low, the climate control unit will slow the fan speed to gradually increase the fan speed as the engine coolant temperature rises.

The climate control system will control this process when the following characteristics are present:

- Fan speed is set to "AUTO".
- Air outlet position is set to "AUTO", "HEAT", or "HEAT/DEF".
- Outside air temperature is less than 68 deg.F (20 deg.C).
- Engine coolant temperature sensor and outside air temperature sensor are normal.
- Engine coolant temperature is less than 131 deg.F (55 deg.C).

Low Engine Coolant Temperature Control

When the engine coolant temperature is low, the climate control system changes an air outlet position to the "DEF". When the engine coolant temperature increases, the outlet air temperature automatically.

Revision because of Sunlight

When the air conditioner is operating, if fan speed is set to "AUTO" and air outlet position is "VENT" or "HEAT/VENT", the climate control unit raises the fan speed d

Relationship between Vehicle Speed and Blower Intake Mode

Because the air resistance is different between fresh air and recirculated air, the volume of air coming through the vents would be different if the fan speed was constant the fresh air flow increases as the vehicle speed increases. The climate control unit regulates the fan speed so that the air volume is the same when "FRESH" or "RECIR

A/C Control

To prevent the evaporator from freezing, the climate control unit switches the electric A/C compressor ON and OFF based on the evaporator temperature sensor value. V control unit automatically varies the electric A/C compressor operation time based on the evaporator temperature sensor value, as well as the outside air temperature, ins

MAX Control

When the temperature setting is adjusted to "MAX COOL (Lo)" or "MAX HOT (Hi)", the climate control unit overrides automatic control and defaults to the following

- MAX COOL

  "RECIRCULATION", "VENT", blower fan maximum speed, and A/C system ON.

- MAX HOT

  "FRESH", "HEAT*", blower fan maximum speed, and A/C system ON.*: If the sensor information indicates that the windshield may fog, the air outlet switches t

ECON Control

- Electric A/C compressor load control

  Reduces load on electric A/C compressor by slightly raising the target temperature of the evaporator.

- Blower fan speed control

  Control the blower fan speed low compared to normal operation for an energy-saving operation with low air volume.

Customize Function

How to Change the Set Temperature (Climate Control Panel with Display)

The climate control unit has a function to change the set temperature +2.7 deg.F (+1.5 deg.C) or -2.7 deg.F (-1.5 deg.C) in case the customer feels the temperature is too

NOTE: Verify that the climate control and A/C system is working properly before using the customize function to offset the set temperature.

- Turn the vehicle to the ON mode, then based on the desired temperature change, set the temperature condition on the temperature control dial according to the tab
- Turn the climate control system OFF then turn the vehicle to the OFF (LOCK) mode.
- Depending on desired setting change, press and hold the pair of buttons according to the table.
- While holding the buttons, turn the vehicle to the ON mode.
- Keep the buttons pressed for 10 seconds.

Setting	Temperature Condition	Buttons		
+2.7 deg.F (+1.5 deg.C) Change	Hi	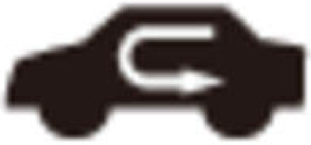	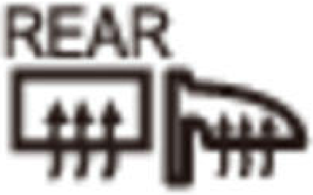	or
-2.7 deg.F (-1.5 deg.C) Change	Lo	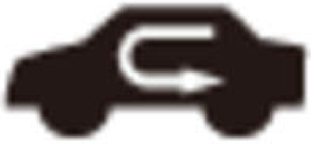	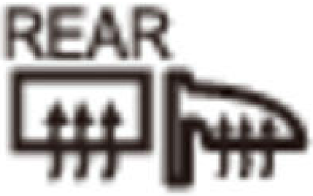	or

Setting	Temperature Condition	Buttons		
Changing back to 0 deg.F (0 deg.C)	Except Hi or Lo	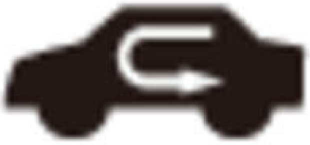	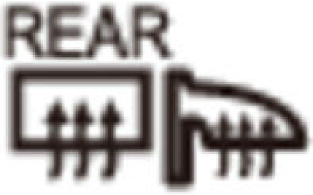	or

- Indication of the change

  The climate control unit displays the following during each change.

-
  - -

    Displays nothing from the vehicle ON mode for 5 seconds.

  - -

    Blinks the current setting for the next 5 seconds.

  - -

    The display will indicate a Hi, Lo or two dashes depending on the set temperature change.

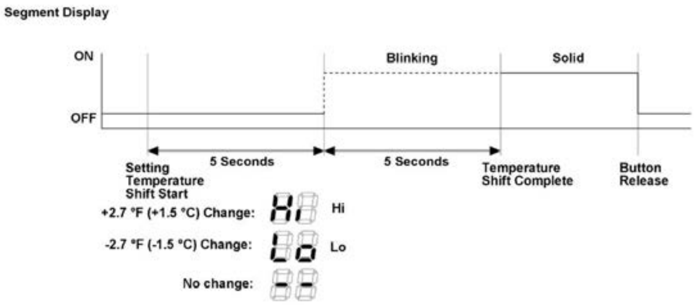
Segment Display
ON
OFF
Blinking
Solid
5 Seconds
5 Seconds
Setting Temperature Shift Start
Temperature Shift Complete
Button Release
+2.7 °F (+1.5 °C) Change:
Hi
-2.7 °F (-1.5 °C) Change:
Lo
No change:

- How to exit the A/C User Customizing
-
  - -

    Turn the vehicle to the OFF (LOCK) mode, or press a button other than the RECIRCULATION and the REAR WINDOW DEFOGGER/MIRROR DEFOG

How to Change the Set Temperature (Climate Control Panel without Display)

The climate control unit has a function to change the set temperature +2.7 deg.F (+1.5 deg.C) or -2.7 deg.F (-1.5 deg.C) in case the customer feels the temperature is too

The setting temperature is only displayed in degrees centigrade (deg.C).

NOTE: Verify that the climate control and A/C system is working properly before enabling the customize function to offset the set temperature.

- Turn the climate control system OFF then turn the vehicle to the OFF (LOCK) mode.
- Press and hold the pair of buttons according to the table.
- While holding the buttons, turn the vehicle to the ON mode.
- Release the buttons, then select the desired temperature shift icon on the display.

Buttons			
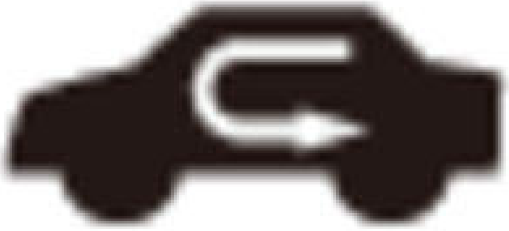	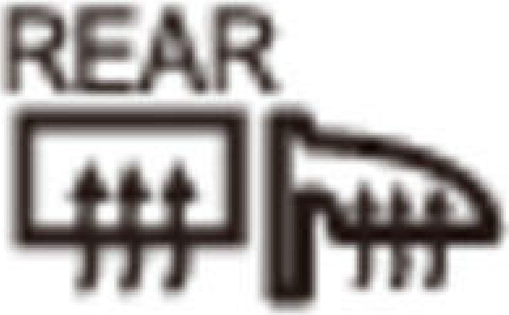	or	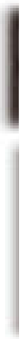

NOTE: This illustration is an example only. Appearance and structure of the actual parts may vary depending on the model.

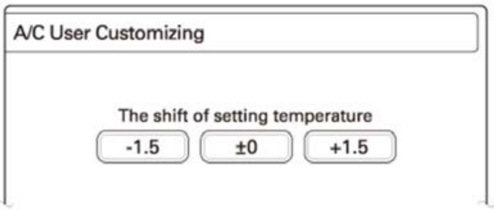

A/C User Customizing

The shift of setting temperature

- How to exit the A/C User Customizing
-
    - -

      Turn the vehicle to the OFF (LOCK) mode, or press a button other than the RECIRCULATION and the REAR WINDOW DEFOGGER/MIRROR DEFOG

A/C SYSTEM DESCRIPTION - COMPONENTS

Outside Air Temperature Sensor

The outside air temperature sensor uses a sensor that decreases resistance when temperature rises. The climate control unit calculates the outside air temperature based c temperature sensor.

NOTE: This illustration is an example only. Appearance and structure of the actual parts may vary depending on the model.

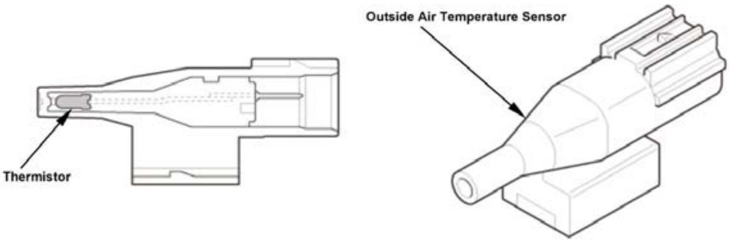

A/C Condenser

Sub Cool Cycle Condenser System

The condenser and receiver/dryer are integrated. The main A/C condenser changes the high pressure and temperature refrigerant vapor from the electric A/C compresso allows the refrigerant to release heat to the outside air. The receiver/dryer acts as a reservoir of liquid refrigerant for the expansion valve. It also removes debris and moi the high pressure and high temperature liquid refrigerant even further to improve A/C performance.

NOTE: This illustration is an example only. Appearance and structure of the actual parts may vary depending on the model.

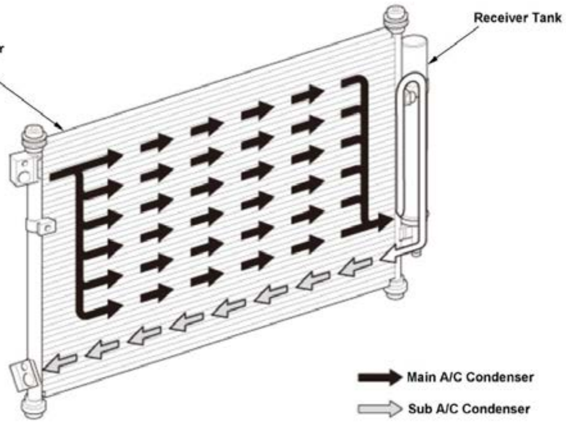
A/C Condenser
Receiver Tank
Main A/C Condenser
Sub A/C Condenser

Electric A/C Compressor

The electric A/C compressor is pump driven by a built-in motor to compress the A/C refrigerant. The compressed refrigerant from the electric A/C compressor turns into condenser. The electric A/C compressor has a mechanical relief valve, and the valve opens when pressure exceeds the rated value. It cannot be reused, and should be rep significantly low (below level "L" as shown on state of charge (SOC) analog meter at the gauge control module), operation of the electric A/C compressor will be limite to vehicle propulsion.

NOTE: This illustration is an example only. The appearance and structure of the actual parts may vary depending on the model.

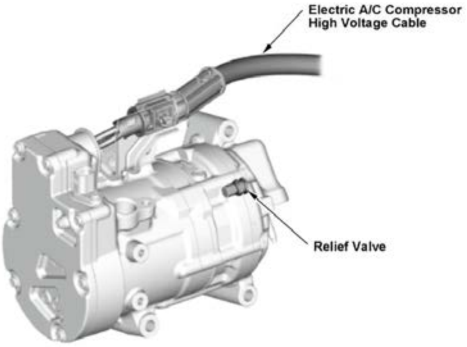
Electric A/C Compressor
High Voltage Cable
Relief Valve

A/C Pressure Sensor

The A/C pressure sensor's output voltage changes in response to changes in A/C discharge pressure. The PCM receives the voltage signal and is used to drive the electric the upper limit, or decreases to the lower limit, the PCM stops the electric A/C compressor to protect the system.

- Upper limit: 2, 950 kPa (30.08 kgf/cm 2, 427.9 psi)
- Lower limit: 196 kPa (2.00 kgf/cm 2, 28.4 psi)

NOTE: This illustration is an example only. Appearance and structure of the actual parts may vary depending on the model.

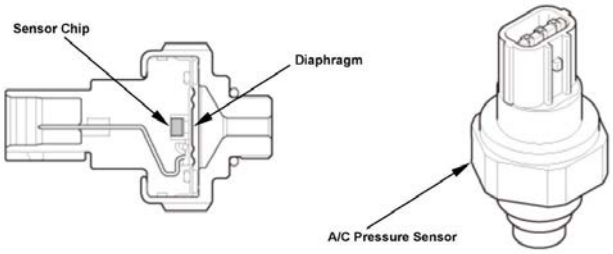
Sensor Chip
Diaphragm
A/C Pressure Sensor

Electric Heater Coolant Pump

The electric heater coolant pump circulates the engine coolant through the heater core. The climate control unit drives the electric heater coolant pump based on the setti each sensor.

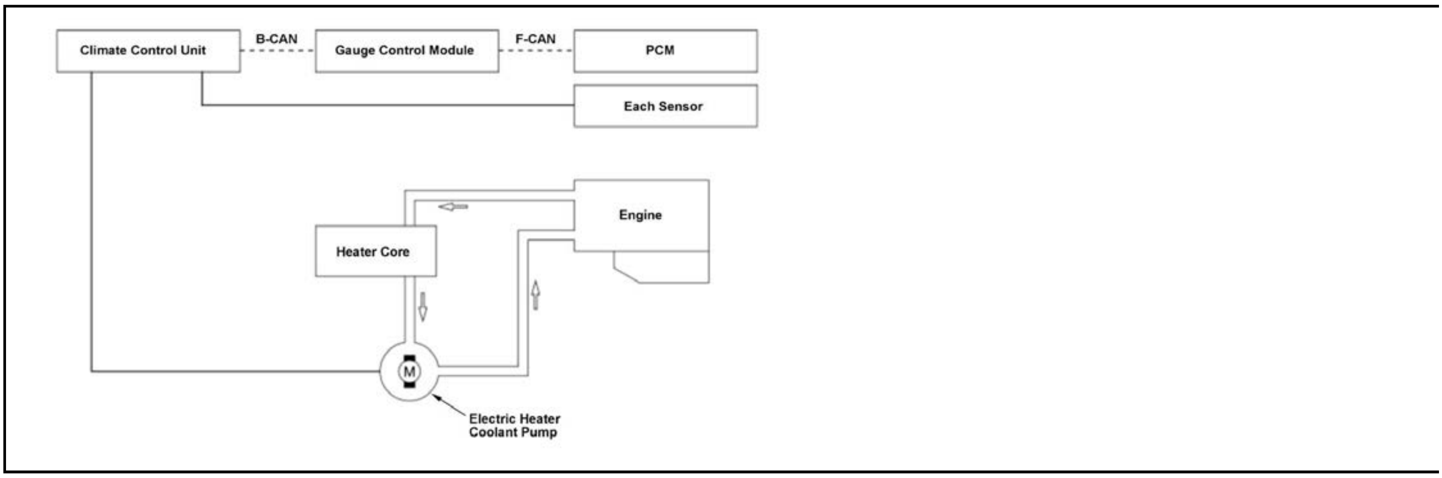
Climate Control Unit
B-CAN
Gauge Control Module
F-CAN
PCM
Each Sensor
Engine
Heater Core
M
Electric Heater
Coolant Pump

Sunlight Sensor

The sunlight sensor uses a photodiode-type optical sensor which changes current in proportion to the sunlight intensity. The climate control unit reads the information o

NOTE: This illustration is an example only. Appearance and structure of the actual parts may vary depending on the model.

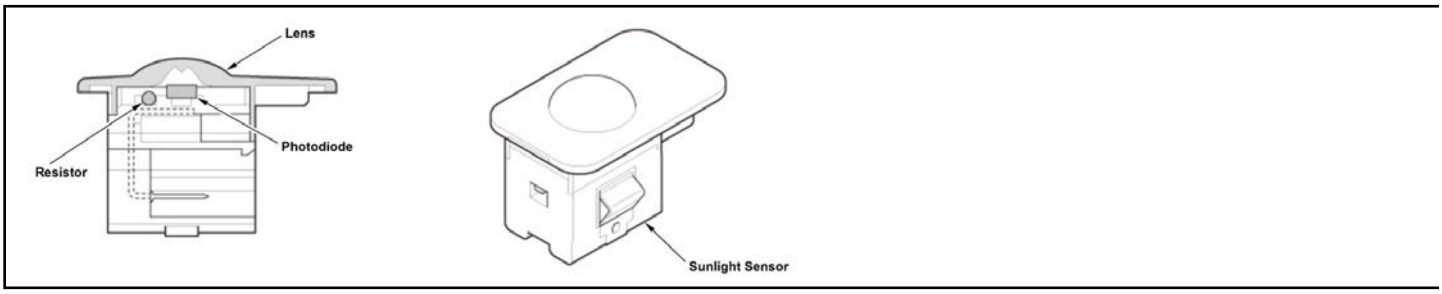
Lens
Photodiode
Resistor
Sunlight Sensor

Evaporator Temperature Sensor

The evaporator temperature sensor is a clip-type thermistor, with a sensing element that is directly mounted to the evaporator core fins. The sensor is connected to the cl temperature. The electric A/C compressor and fans are cycled off briefly if the temperature approaches the freezing point of water. If the evaporator temperature gets too freeze, causing restricted evaporator airflow and poor A/C performance.

NOTE: This illustration is an example only. Appearance and structure of the actual parts may vary depending on the model.

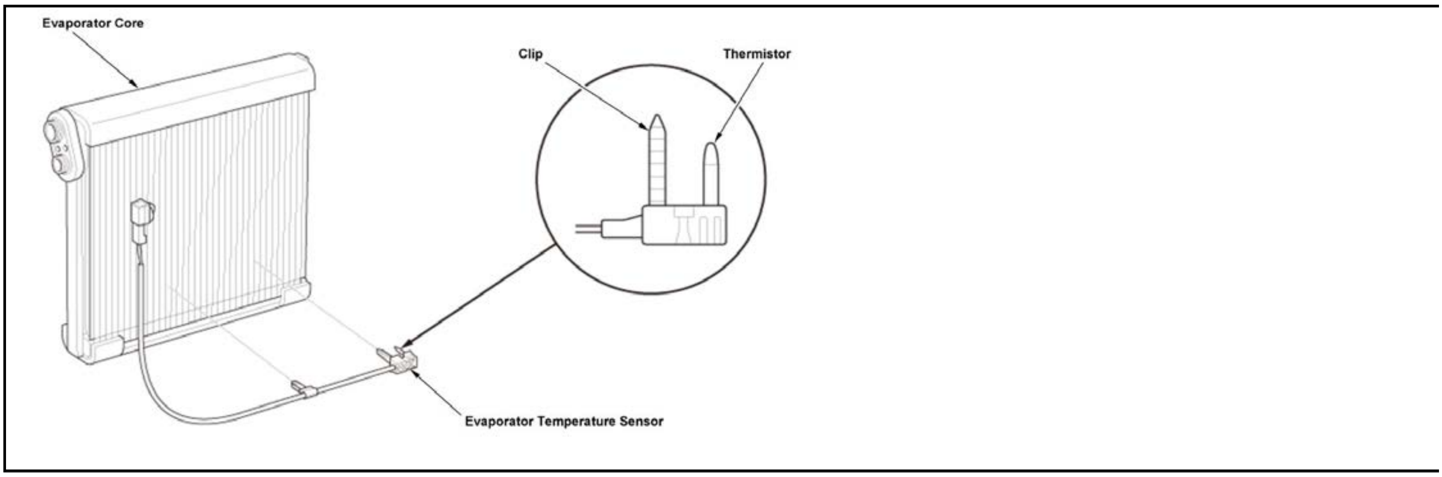
Evaporator Core
Clip
Thermistor
Evaporator Temperature Sensor

Humidity/In-Car Temperature Sensor

The humidity/in-car temperature sensor has a humidity sensor and an in-car temperature sensor. The climate control unit receives humidity information from the sensor When it is humid, the climate control unit operates the electric A/C compressor to prevent a windshield from being fogged. When the humidity is low enough, the clima A/C compressor. A flexible hose connects the sensor case to an aspirator on the HVAC unit to detect the accuracy of temperature and humidity.

NOTE: This illustration is an example only. Appearance and structure of the actual parts may vary depending on the model.

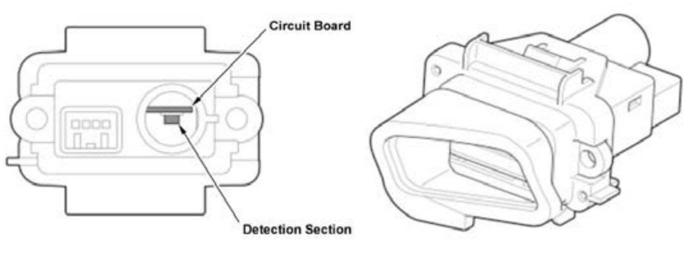
Circuit Board
Detection Section

PTC Heater

When the engine coolant temperature is low, the heating performance is not available due to low engine coolant temperature. The climate control unit turns on the electr performance. The climate control unit drives PTC heater relays and turns on the electric heater and secures heater performance. If heater core temperature rises enough, and the power supply to the PTC heater.

PTC: Positive Temperature Coefficient

NOTE: This illustration is an example only. Appearance, structure of the actual parts and a portion of usable PTC heater circuit may vary depending on the model.

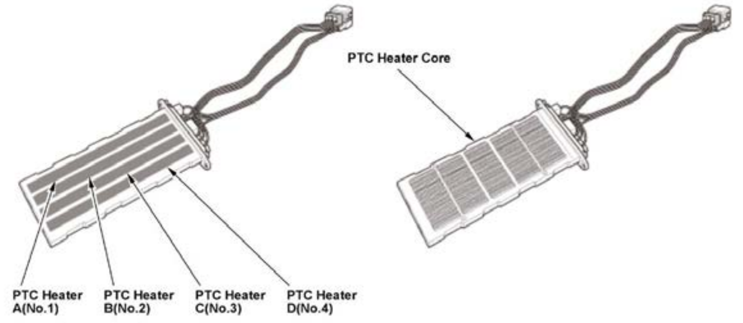
PTC Heater Core
PTC Heater A(No.1)
PTC Heater B(No.2)
PTC Heater C(No.3)
PTC Heater D(No.4)

A/C SYSTEM DESCRIPTION - SYSTEM DIAGRAM

For locations of each component on vehicle, refer to Component Location Index.

System Diagram

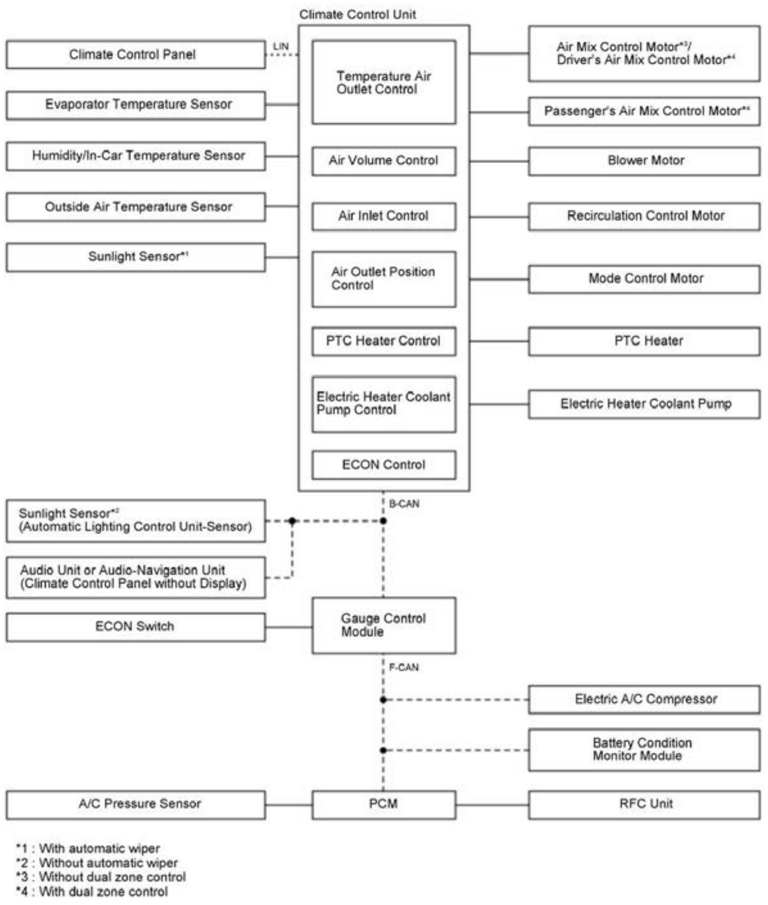
Climate Control Unit
Climate Control Panel
LIN
Evaporator Temperature Sensor
Humidity/In-Car Temperature Sensor
Outside Air Temperature Sensor
Sunlight Sensor*1
Temperature Air Outlet Control
Air Volume Control
Air Inlet Control
Air Outlet Position Control
PTC Heater Control
Electric Heater Coolant Pump Control
ECON Control
Air Mix Control Motor*3/ Driver's Air Mix Control Motor*4
Passenger's Air Mix Control Motor*4
Blower Motor
Recirculation Control Motor
Mode Control Motor
PTC Heater
Electric Heater Coolant Pump
B-CAN
Sunlight Sensor*2 (Automatic Lighting Control Unit-Sensor)
Audio Unit or Audio-Navigation Unit (Climate Control Panel without Display)
ECON Switch
Gauge Control Module
F-CAN
Electric A/C Compressor
Battery Condition Monitor Module
A/C Pressure Sensor
PCM
RFC Unit
*1 : With automatic wiper
*2 : Without automatic wiper
*3 : Without dual zone control
*4 : With dual zone control

HEATED STEERING WHEEL SYSTEM DESCRIPTION

Basic Control/Function

The heated steering wheel switch turns on or off the heated steering wheel system. When the heated steering wheel switch is pressed, the switch sends on signals to the l steering wheel indicator. The heated steering wheel control unit controls outputs to the steering heater based on the heater temperature sensor values. While the heater is the illumination signal via LIN, and adjusts the brightness of the indicator.

Automatic Control

When the remote engine start control system is activated, the climate control system turns on the seat heater system based on the vehicle temperature. When the seat hea the gauge control module sends ON commands to the heated steering wheel control unit, and provides power to the heater pad. When the seat heater is turned on in this on.

Transition to Off State

The heater output shall transition to the off state under any of the following conditions

- +B_HTR power is off.
- The current operation state is off.
- Thermistor open/short failure is detected.
- Heater current abnormal failure is detected.
- Steering wheel not heating failure is detected.
- Main heater switch failure is detected.
- Heated steering wheel switch failure is detected.

HEATED STEERING WHEEL SYSTEM DESCRIPTION - COMPONENTS

Steering Heater

Heating is done by the current from the heated steering wheel control unit.

Heated Steering Wheel Switch

The heated steering wheel switch is a momentary switch and performs input to the heated steering wheel control unit. The heated steering wheel indicator is driven by t

Heater Temperature Sensor

The temperature of the steering heater is fedback to the heated steering wheel control unit.

HEATED STEERING WHEEL SYSTEM DESCRIPTION - SYSTEM DIAGRAM

For locations of each component on vehicle, refer to Component Location Index

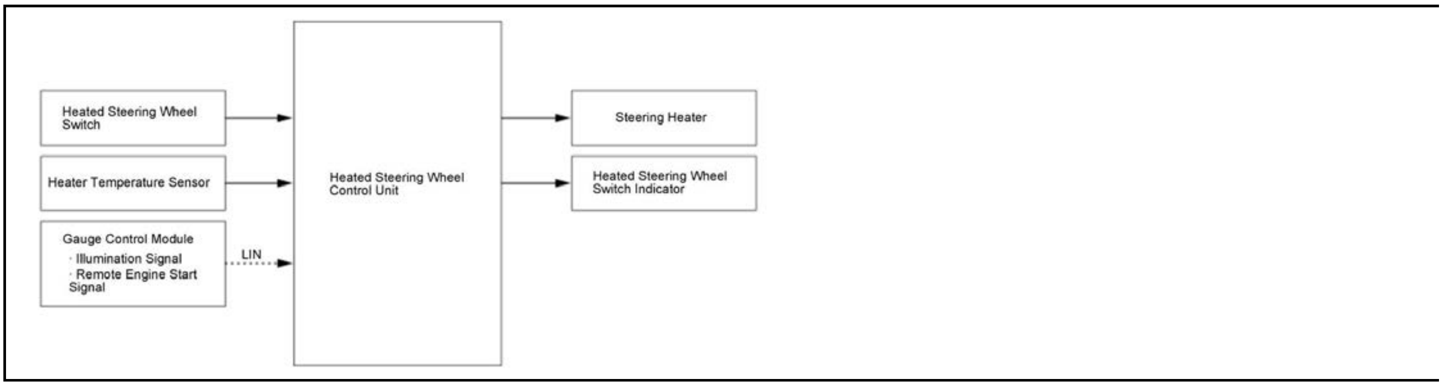
Heated Steering Wheel Switch
Heater Temperature Sensor
Gauge Control Module
· Illumination Signal
· Remote Engine Start Signal
LIN
Heated Steering Wheel Control Unit
Steering Heater
Heated Steering Wheel Switch Indicator

REAR WINDOW DEFOGGER SYSTEM DESCRIPTION

The Timer Function

The rear window defogger provides the timer control function that is controlled by the climate control unit. The timer control is operated by turning the vehicle to the O defogger switch*. The timer operating time varies according to ambient temperature. If the rear window defogger/mirror defogger* switch is turned on when the timer i switch is pressed.*: With mirror defogger

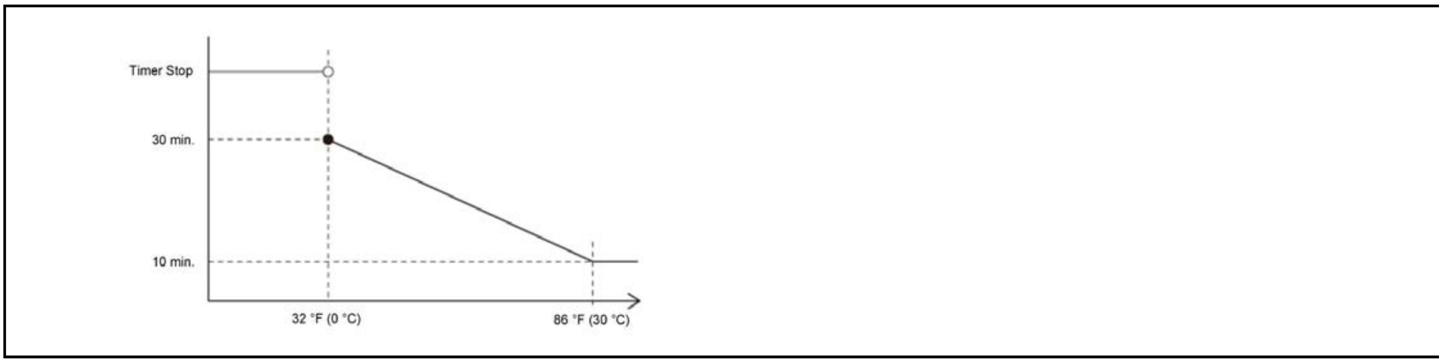

REAR WINDOW DEFOGGER SYSTEM DESCRIPTION - SYSTEM DIAGRAM

For locations of each component on the vehicle, refer to Component Location Index

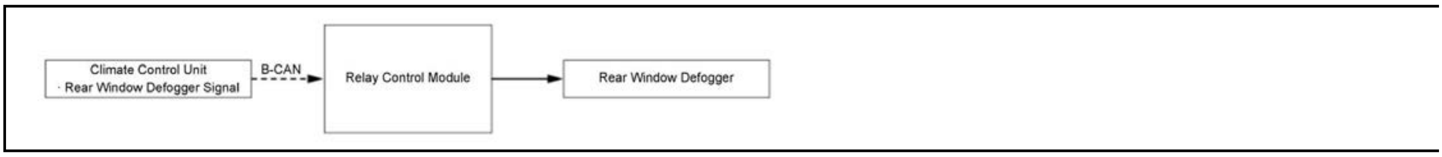

DIAGNOSIS

A/C DIAGNOSTIC PROCESS

When a customer presents an A/C concern, do the following procedure to identify the cause of the problem.

1. Confirm the type of concern.

- If a customer complains about an A/C performance problem, go to step 2.
- If a customer complains about an A/C noise problem, **do the A/C system noise check**.

2. **Do the A/C system inspection** and repair any problems. If no problems are found, go to step 3.

- If the refrigerant charge is within specifications, go to step 5.
- If the refrigerant charge is significantly under specifications, go to step 4.
- If the refrigerant charge is significantly over specifications, go to step 5.

3. **Recover the refrigerant from the A/C system** and measure the refrigerant charge from the A/C system using an A/C recover/recycle/recharge station.

4. **Do the refrigerant leak check** and repair any leaks. If no leaks are found, go to step 5.

5. **Evacuate and recharge the system** and **do the A/C system test**.

- If vent temperature or suction/discharge pressures are within specifications, the repair is confirmed and the A/C diagnostic process is complete.
- If vent temperature or suction/discharge pressures are not within specifications, a problem may still exist. Return to step 2, and recheck your test procedures.

GENERAL INFORMATION

A/C SERVICE TIPS AND PRECAUTIONS

WARNING:

- Compressed air mixed with the HFO-1234yf (R-1234yf) forms a combustible vapor.
- The vapor can burn or explode causing serious injury.
- Never use compressed air to pressure test HFO-1234yf (R-1234yf) service equipment or vehicle air conditioning systems.

WARNING:

- Air conditioning refrigerant or lubricant vapor can irritate your eyes, nose, or throat.
- Be careful when connecting service equipment.
- Do not breathe refrigerant or vapor.

The air conditioning system uses HFO-1234yf (R-1234yf) refrigerant and polyolester (POE) **refrigerant oil**.

Use only service equipment that is U.L.-listed and is certified to meet the requirements of SAE J639 to remove R-1234yf from the air conditioning system.

If accidental system discharge occurs, ventilate the work area before resuming service.

R-1234yf service equipment or vehicle air conditioning systems should not be pressure tested or leak tested with compressed air.

Additional health and safety information may be obtained from the refrigerant and lubricant manufacturers.

- Always disconnect the negative cable from the 12 volt battery whenever replacing air conditioning parts.
- Keep moisture and dirt out of the system. When disconnecting any lines, plug or cap the fittings immediately; do not remove the caps or plugs until just before yo
- Before connecting any hose or line, apply a few drops of **refrigerant oil** to the O-ring.
- When tightening or loosening a fitting, use a second wrench to support the matching fitting.
- When discharging the system, use an R-1234yf refrigerant A/C recover/recycle/recharge machine; do not release refrigerant into the atmosphere.
- Servicing of an R-1234yf system should be done in well-ventilated work area.
- To ensure proper and safe operation, the Society of Automotive Engineers (SAE J2845) recommends that the refrigerant system only be serviced by trained and c
- Never repair or replace the air conditioning evaporator (cooling coil) with one removed from a used or salvaged vehicle.
- New replacement mobile air conditioning evaporator must be certified (and labeled) as meeting SAE Standard J2842.
- Vented refrigerant is harmful to the environment.
- To avoid refrigerant from venting, never replace the evaporator with one removed from a used or salvaged vehicle.
- Refrigerant in your vehicle's air conditioning system is flammable and can be ignited during servicing if proper procedures are not followed.
- Requires a qualified technician to service.
- For safety system components should be replaced shall not be repaired or salvaged for reuse.

A/C Label Description

NOTE:

- The following label is on the label found under the hood.
- The following symbol is an example. The value and the oil type of the actual vehicle may vary depending on the model.

Symbol	Symbol name
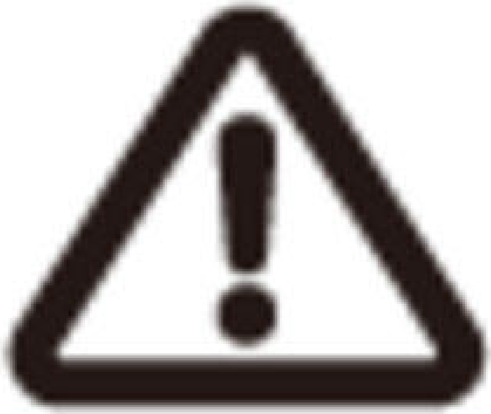	Caution

Symbol	Symbol name
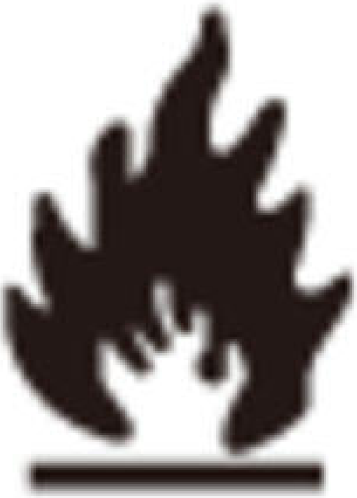	Inflammable refrigerant
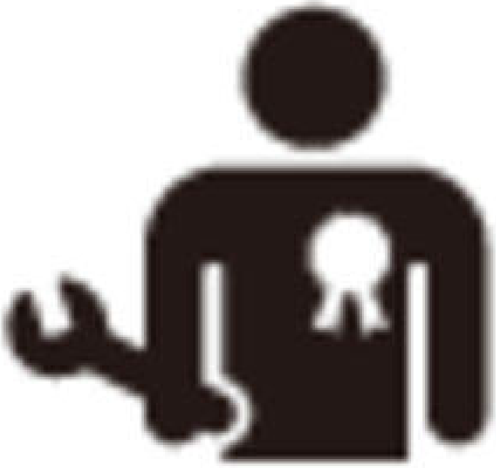	Requires properly trained technician to service mobile A/C systems

Symbol	Symbol name
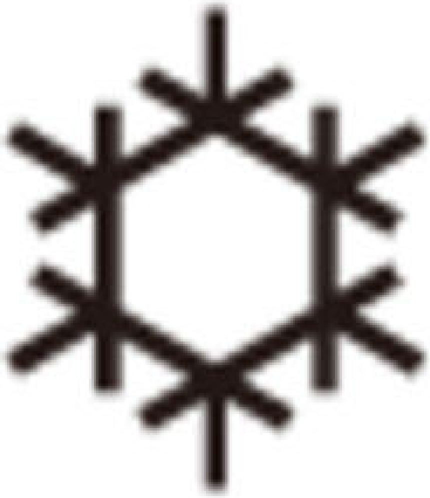	A/C system

SYMPTOM TROUBLESHOOTING INDEX

CLIMATE CONTROL SYSTEM SYMPTOM TROUBLESHOOTING INDEX

Symptom	Diagnostic Procedure	
The blower, the heater controls, and the A/C system do not work	Symptom Troubleshooting	- Blown fuse No. - Poor ground at - Climate control - Harness/connec
The electric A/C compressor and the cooling fan are inoperative, but the blower and heater controls work	Probable cause: A/C pressure sensor circuit malfunction or evaporator temperature sensor circuit malfunction Troubleshoot the A/C pressure sensor circuit: - A/C pressure sensor circuit low voltage - A/C pressure sensor circuit high voltage **NOTE:** The A/C pressure sensor circuit can malfunction without setting a DTC	- Climate contro - PGM-FI DTCs - Abnormal A/C - Evaporator tem - Harness/connec
Blower fan runs slower than expected in cold weather (when in AUTO mode) **NOTE:** It is normal for the blower fan to run slowly until the engine coolant temperature rises when in AUTO mode	Probable cause: Engine coolant temperature (ECT) circuit malfunction Troubleshoot the ECT sensor circuit: - ECT sensor 1 out of range - ECT sensor 1 circuit range/performance problem - ECT sensor 1 circuit low voltage - ECT sensor 1 circuit high voltage	- Climate contro - PGM-FI DTCs - Manual blower
Driver's and passenger's side vent temperatures vary by more than 20 deg.F (11 deg.C)	Probable cause: - The air mix doors are malfunctioning Do the following troubleshooting: - - - Air mix control motor test*1 - - Driver's air mix control motor test*2 - - Passenger's air mix control motor test*2 - Low refrigerant charge	- Climate contro - Harness/connec
HDS does not communicate with the climate control unit or the vehicle	Troubleshoot the DLC circuit	B
A/C information does not display on the center display unit, but the blower, the heater, and the A/C system controls work (climate control panel without display)	Probable cause: Communication malfunction between the audio unit and the climate control unit Check the B-CAN line between the audio unit and the climate control unit	Climate control DTC
When an engine stops, the heater does not warm (The PTC heater does not heat up)	Do the PTC heater circuit troubleshooting	- Blown fuse No. - Blown fuse No. - Poor ground at

Symptom	Diagnostic Procedure	
		• PTC heater B re • PTC heater D re • PTC heater core • Climate control • Harness/connec

Insufficient heating	• **Check the engine coolant level**
	• **Check the radiator cap**
	• Check the engine coolant temperature (ECT) during normal operation with the HDS
	• Check the heater core inlet hose temperature:
	•
	    • If it is COLD, check for restrictions in the hose, a damaged or leaking thermostat, or a damaged or leaking water pump
	    • If it is HOT, check for restrictions in the heater core. Back flush or **replace the heater core**
	• Check the operation of the air mix doors:
	•
	    • **Air mix control motor test*1**
	    • **Driver's air mix control motor test*2**
	    • **Passenger's air mix control motor test*2**
	• Check the blower motor unit for obstructions
	• Check for air leaks around the ducts and vents
		Climate control DTC

*1: Without dual zone climate control

*2: With dual zone climate control

INSPECTION

A/C SYSTEM CONTAMINATION INSPECTION

Inspection

NOTE:

- If an electric A/C compressor failure is determined, always check for contamination in the A/C system.
- The parts illustrations are samples. External appearance may vary from model to model.

1. A/C System Contamination - Inspect

   Remove the listed parts, step by step as shown in the table. Then swab inside the component using a cotton swab to see if there are any metal, dark grey or black r

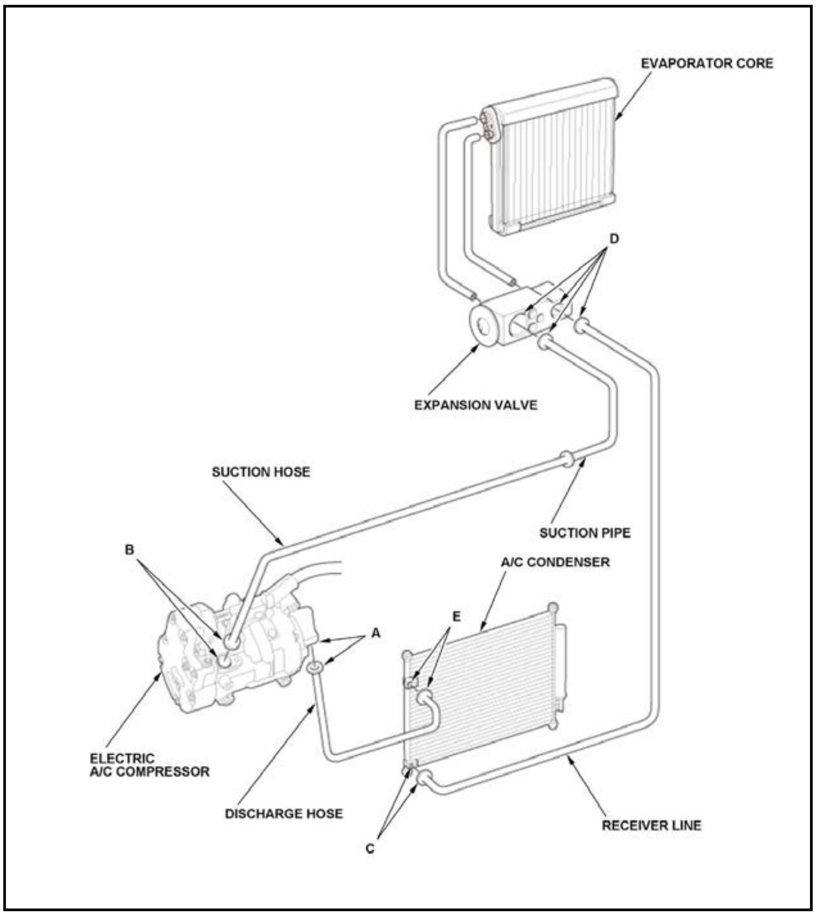
EVAPORATOR CORE
D
EXPANSION VALVE
SUCTION HOSE
SUCTION PIPE
B
A/C CONDENSER
E
A
ELECTRIC
A/C COMPRESSOR
DISCHARGE HOSE
RECEIVER LINE
C

Step	Part to remove	Inspection area	Metal, dark
			Found
1	Discharge hose (electric A/C compressor side)	Discharge port (A)	Go to step 2
2	Suction hose (electric A/C compressor side)	Suction port (B)	Replace the components in Repair Procedure
3	Receiver line (A/C condenser outlet)	A/C condenser outlet port (C)	Go to step 4
4	Receiver line and suction pipe (Both are expansion valve side)	Expansion valve port (D)	Replace the components in Repair Procedure

Step	Part to remove	Inspection area	Metal, dark
			Found
5	Discharge hose (A/C condenser inlet)	A/C condenser inlet port (E)	Replace the components in Repair Procedure

Replacement

NOTE: The parts illustrations are samples. External appearance may vary from model to model.

1. A/C Components - Replace

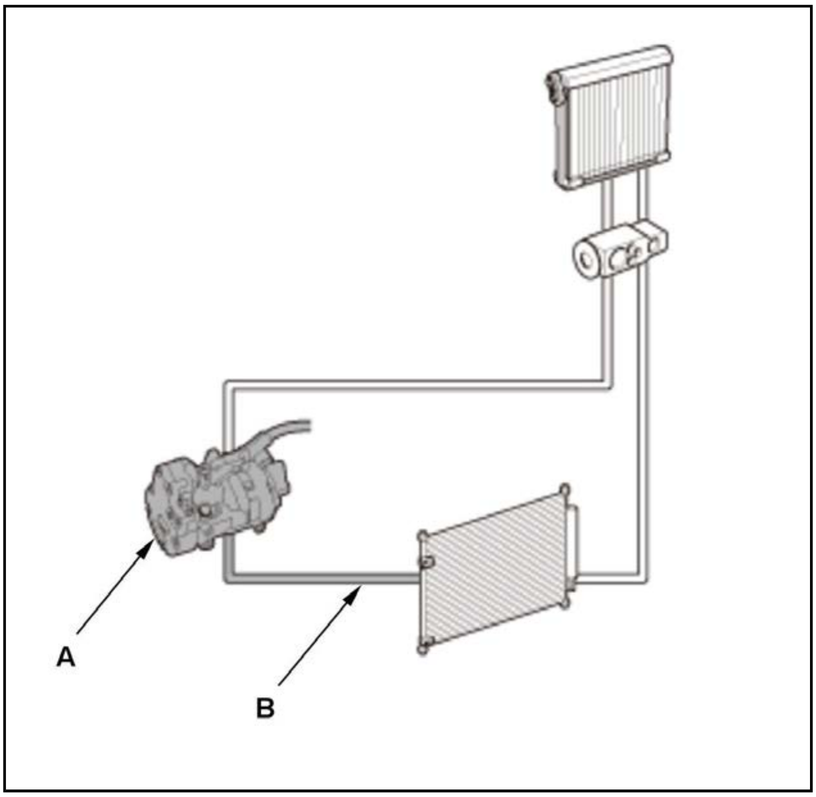

Repair Procedure A

Replace the following parts:

- Electric A/C compressor (A)
- Discharge hose (B)

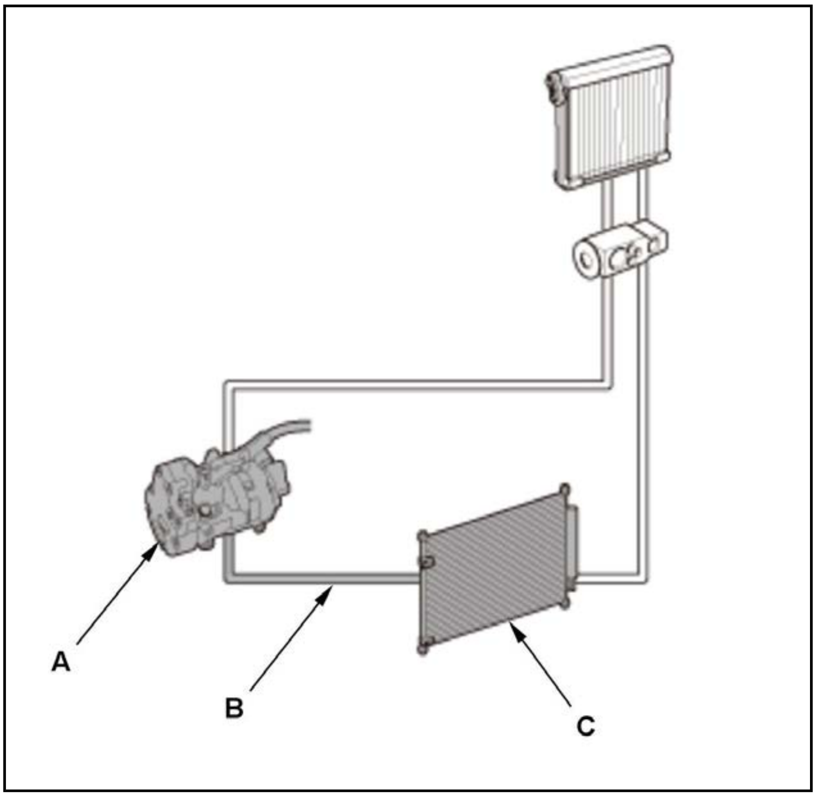

Repair Procedure B

Replace the following parts:

- Electric A/C compressor (A)
- Discharge hose (B)
- A/C condenser (C)

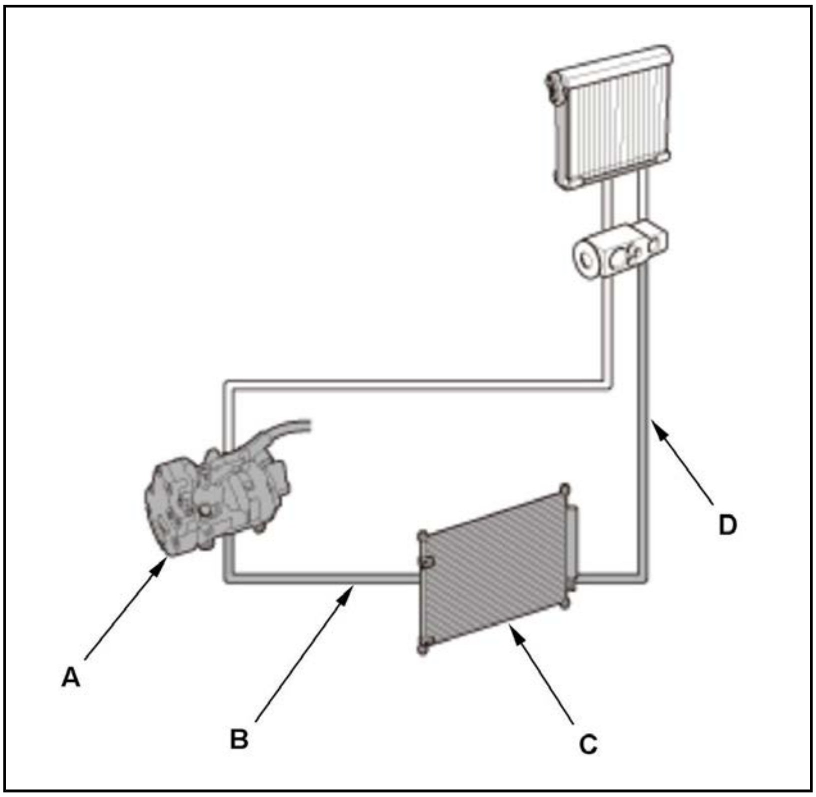

Repair Procedure C

Replace the following parts:

- Electric A/C compressor (A)
- Discharge hose (B)
- A/C condenser (C)
- Receiver line (D)

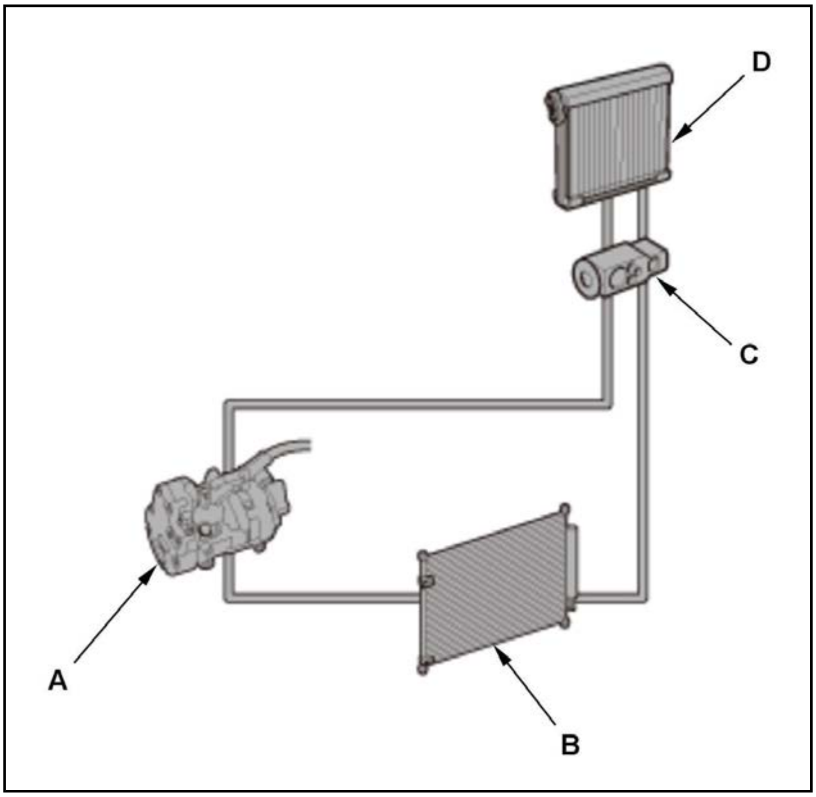

Repair Procedure D

Replace the following parts:

- Electric A/C compressor (A)
- A/C condenser (B)
- Expansion valve (C)
- Evaporator core (D)
- All A/C hoses and lines

A/C SYSTEM INSPECTION

Inspection

NOTE:

- For A/C system noises, **go to the A/C System Noise Check**.
- **Check for climate control DTCs using the Self-Diagnostic Function** . If there are any DTCs, **go to the appropriate troubleshooting** .

1. A/C System - Inspect

   Before troubleshooting any problem with the A/C system, do the following to check if there is anything wrong with the A/C system.

Inspection Area	Check for	
Fresh air intake for the HVAC unit (at the base of the windshield)	Leaves or debris blocking the air intake	Remove any bl
A/C lines and hoses	Kinks or sharp bends	Replace the A/C
• A/C components • A/C lines and hoses	Stains at the components or joints that may indicate a refrigerant or an electric A/C compressor oil leak	**Do the Refrige**
A/C condenser	Dirt in the fins, or material clogging the fins (dirt, insects, etc.)	Clean the fins. **NOTE:** • **Carefull clean ar material from the A/C conden fins witl water ar deterge** • **Do not perform system test unt the conden is complet dry.**
	Fin damage, bent fins	Try to comb the **NOTE:** If the fi
	Visible damage to the A/C condenser	**Do the Refrige** condenser is lea
Cooling fan	Check that the cooling fan operates when the electric A/C compressor is operated and that airs flows toward the under-hood compartment	**RFC system m**
Electric A/C compressor	Electric A/C compressor does not operate (A/C is switched on)	• **Troubles** • **Troubles** • **F-CAN n**
Dust and pollen filter	The dust and pollen filter is clogged or restricted	**Replace the du**

Inspection Area	Check for	
Blower fan	Check that the A/C operates at each position of the fan control (except OFF). If the A/C does not operate at all fan control positions, refer to the symptom troubleshooting **NOTE:** Turn the vehicle to the READY TO DRIVE mode, turn the A/C system on, and allow it to run for a few minutes	**Refer to the sy**

REPLACEMENT

A/C REFRIGERANT OIL REPLACEMENT

Special Tools Required

Image	D
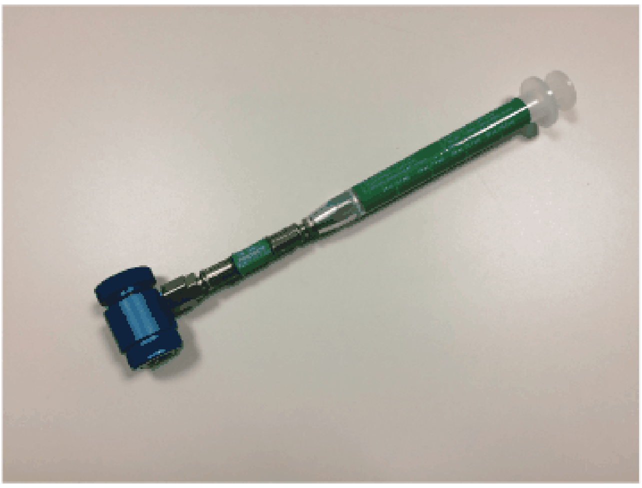	R-1234yf POE Oil In

*Available through the Honda Tool and Equipment Program; call 888-424-6857.

Replacement

WARNING:

Using the wrong refrigerant oil increases the chance of electric shock or death. You must use the specified refrigerant oil when servicing the A/C system.

1. A/C Refrigerant Oil - Replace

   Recommended POE oil: DENSO ND-OIL 11

   NOTE: Although the refrigerant oil information is listed on the under-hood air conditioning information label, always use the recommended refrigerant oil listed

Parts Number	Oil Amount
38899-TX9-023	40 mL (1 1/3 fl oz)

   The electric A/C compressor in this vehicle is powered by the electric powertrain high voltage battery module, and this oil is required because it has unique electri

   It is important to have the correct amount of refrigerant oil in the A/C system to ensure proper lubrication of the electric A/C compressor. Too little oil damages th cooling capacity of the system, and can produce high vent temperatures.

   - To avoid contamination, do not return the oil to the container once dispensed, and never mix it with other refrigerant oils.
   - Use the refrigerant oil immediately after opening the container, and dispose of any unused oil. The oil rapidly absorbs moisture, which damages its electrica
   - Do not spill the refrigerant oil on the vehicle, because it may damage painted surfaces. If refrigerant oil contacts the paint, wash it off with water immediate

   Add the recommended refrigerant oil in the amount listed if you replace any of the following parts:

Parts	Oil Amount
A/C condenser	**25 mL (5/6 fl oz)**
Evaporator	**40 mL (1 1/3 fl oz)**
Line or hose	**10 mL (1/3 fl oz)**
Desiccant	**10 mL (1/3 fl oz)**
Leakage repair	**25 mL (5/6 fl oz)**
Electric A/C compressor	**120-135 mL (4-4 1/2 fl oz)**

A/C REFRIGERANT RECOVERY/EVACUATION/CHARGING

Special Tools Required

Image	Description/
	R-1234yf A/C Recover/Recycle/Recharge Ma
	R-1234yf POE Oil Injector ROB18470*

*These tools are available through the Honda Tool and Equipment Program; call 888-424-6857.

Procedure

WARNING:

- Compressed air mixed with the HFO-1234yf (R-1234yf) forms a combustible vapor.
- The vapor can burn or explode causing serious injury.
- Never use compressed air to pressure test HFO-1234yf (R-1234yf) service equipment or vehicle air conditioning systems.

WARNING:

- Air conditioning refrigerant or lubricant vapor can irritate your eyes, nose, or throat.
- Be careful when connecting service equipment.
- Do not breathe refrigerant or vapor.

NOTE:

- If accidental system discharge occurs, ventilate the work area before resuming service.
- Additional health and safety information may be obtained from the refrigerant and lubricant manufacturers.
- Do not allow moisture to contaminate the A/C system oil. Moisture in the oil is difficult to remove, and it can damage the electric A/C compressor.
- Air conditioning refrigerant is poisonous. If ingested, get medical attention immediately.
- Connect an A/C recover/recycle/recharge machine, following the equipment manufacturer's instructions.

When an A/C system has been opened to the atmosphere, such as during installation or repair, it must be evacuated using an A/C recover/recycle/recharge machine. If th receiver/dryer or the desiccant, drain the **refrigerant oil**, and add fresh oil. Then evacuate the system for several hours before charging it.

1. A/C Refrigerant - Recover
   1. Recover the refrigerant from the A/C system.
   2. Measure the amount of **refrigerant oil**

   removed from the A/C system after the recovery process is completed. Be sure to put the same amount of new **refrigerant oil** back into the A/C system before ch
2. A/C System - Evacuate

1. Evacuate the system. The vacuum pump should run for a minimum of 30 minutes or until the moisture vacuum test passes, to eliminate all moisture from the sy mmHg, -27.55 inHg) for at least 30 minutes, or the moisture vacuum test passes, close all valves, and turn off the vacuum pump.

2. If the suction gauge does not reach approximately -93.3 kPa (-700 mmHg, -27.55 inHg) in 15 minutes or the moisture vacuum test fails, there is probably a leal leaks.

3. A/C Refrigerant - Leak Check
4. A/C Refrigerant - Charge

1. Charge the system with the specified amount of R-1234yf refrigerant. Do not overcharge the system; the electric A/C compressor will be damaged.Select the ap recover/recycle/recharge machine.

Refrigerant Capacity:
415 to 465 g
14.64 to 16.40 oz
0.415 to 0.465 kg
0.915 to 1.025 lbs

5. A/C Refrigerant - Leak Check
6. A/C System - Test

SYMPTOM TROUBLESHOOTING

CLIMATE CONTROL SYSTEM SYMPTOM TROUBLESHOOTING - THE BLOWER, THE HEATER CONTROLS, AND THE A/C SYSTEM DO NOT W

NOTE: Do this troubleshooting procedure only if sent here by symptom troubleshooting index.

1. Fuse check

-1. Check the following fuse.

Fuse	No. D9

Is the fuse OK?

YES

Go to step 2.

NO

Replace the fuse, and recheck. If the fuse blows again, repair a short in the No. D9 fuse circuit.

2. Open wire check (IG2_A/C line)

-1. Disconnect the following connector.

Climate control unit connector A (32P)

-2. Turn the vehicle to the ON mode.

-3. Measure the voltage between test points 1 and 2.

Test condition	Vehicle ON mode
	Climate control unit connector A (32P): disconnected
Test point 1	Climate control unit connector A (32P) No. 32
Test point 2	Body ground

Is there battery voltage?

YES

The IG2_A/C wire is OK. Go to step 3.

NO

Repair an open in the IG2_A/C wire.

3. Open wire check (GND line)

-1. Turn the vehicle to the OFF (LOCK) mode.

-2. Measure the resistance between test points 1 and 2.

Test condition	Vehicle OFF (LOCK) mode
	Climate control unit connector A (32P): disconnected
Test point 1	Climate control unit connector A (32P) No. 28
Test point 2	Body ground

Is there 1.0 Ω or less?

YES

Replace the climate control unit .

NO

Check for an open in the GND wire. If the wire is OK, check for poor ground at G402.

TEST

A/C SYSTEM TEST

Test

WARNING:

- Air conditioning refrigerant or lubricant vapor can irritate your eyes, nose, or throat.
- Be careful when connecting service equipment.
- Do not breathe refrigerant or vapor.

SRS components are located in this area. Review the **SRS component locations** and the **precautions and procedures** before doing repairs or service.

The performance test will help determine if the A/C system is operating within specifications.

NOTE:

- If accidental system discharge occurs, ventilate the work area before resuming service.
- Additional health and safety information may be obtained from the refrigerant and lubricant manufacturers.
- Connect an A/C recover/recycle/recharge station, following equipment manufacturer's instructions.

Performance Test

1. A/C System - Inspect
    1. **Do the A/C system inspection**, and correct any problems found.
2. **Glove Box - Remove**
3. A/C System - Test

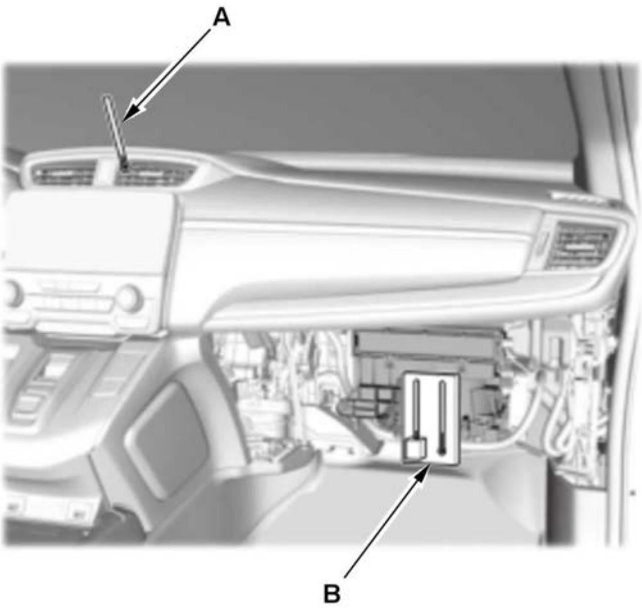
 	
	1. Determine the relative humidity and air temperatu
	2. Insert a thermometer (A) in the dashboard center
	3. To measure the intake temperature, place a hygro-
	4. Test conditions:
	- The blower intake temperature must be at leas
	- Move the vehicle out of direct sunlight and let If necessary, wash the vehicle to cool it down
	- Open the hood.
	- Open the front doors.
	- Apply the parking brake.
	- Shift the vehicle to P position/mode.
	- Turn the vehicle to the READY TO DRIVE m
	- Set the A/C system to the following condition
	-
	  - - A/C: ON
	  - - Temperature control: MAX COOL (Lo)
	  - - Mode control: VENT ( )
	  - - Recirculation control: RECIRCULATE
	  - - Fan control: Max
	  - - All vents: Open
	- No driver or passengers in the vehicle.
	5. Inspect the A/C components for the following con
	- Abnormal frost areas.
	- Unusual noises.
	If you observe any of these conditions, **refer to the**

6. After running the air conditioning for 10 minutes under the test conditions, read the delivery temperature from the thermometer in the center vent, the blower in
(high) and suction (low) pressures on the A/C gauges

7. To complete the vent (delivery)/blower intake temperature chart:

- Mark the vent (delivery) temperature on the vertical line.
- Mark the blower intake temperature on the bottom line.
- Draw a vertical line from the blower intake temperature mark.
- Draw a horizontal line from the vent (delivery) temperature mark until it intersects the vertical line.

NOTE: The vent (delivery) temperature and blower intake temperature should intersect in the shaded area. Any measurements outside the line may indicate the n

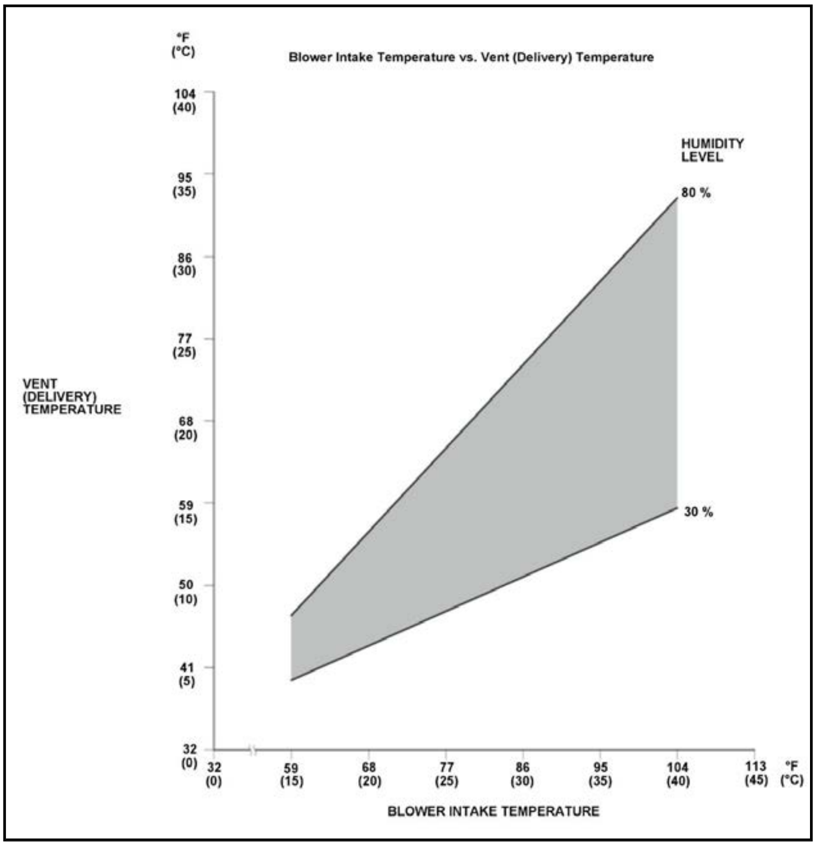

8. To complete the high side (discharge) pressure/blower intake temperature chart:

- Mark the high side (discharge) pressure on the vertical line.
- Mark the blower intake temperature on the bottom line.
- Draw a vertical line from the blower intake temperature mark.
- Draw a horizontal line from the high side (discharge) pressure mark until it intersects the vertical line.

NOTE: The high side (discharge) pressure and blower intake temperature should intersect in the shaded area. Any measurements outside the line may indicate the

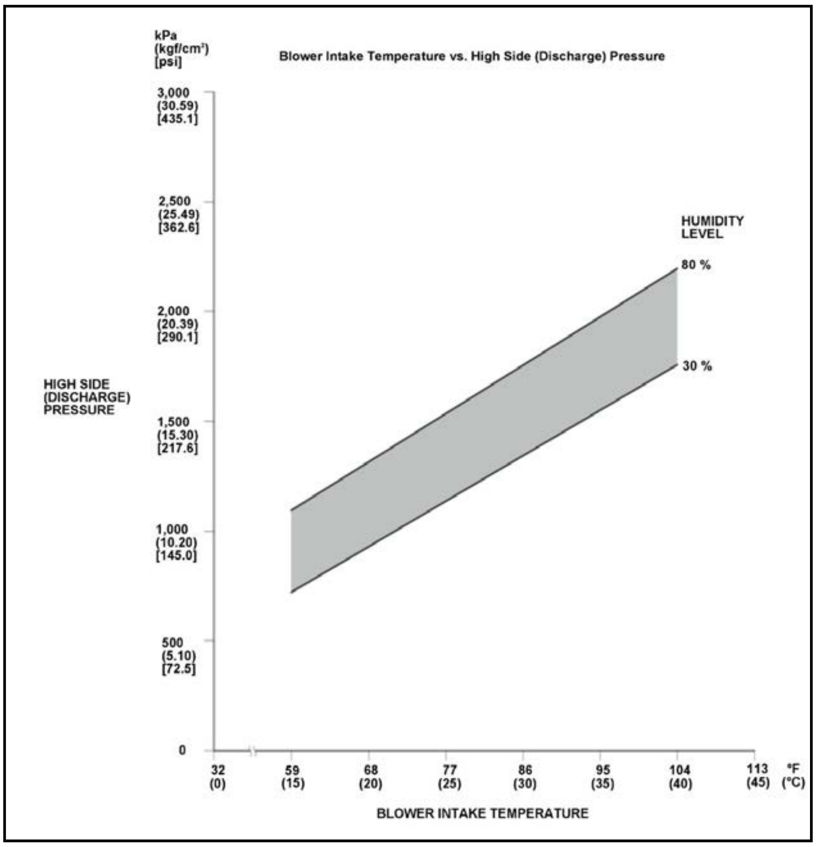

9. To complete the low side (suction) pressure/blower intake temperature chart:

- Mark the low side (suction) pressure along the vertical line.
- Mark the blower intake temperature along the bottom line.
- Draw a vertical line from the blower intake temperature mark.
- Draw a horizontal line from the low side (suction) pressure mark until it intersects the vertical line.

NOTE: The low side (suction) pressure and blower intake temperature should intersect in the shaded area. Any measurements outside the line may indicate the ne

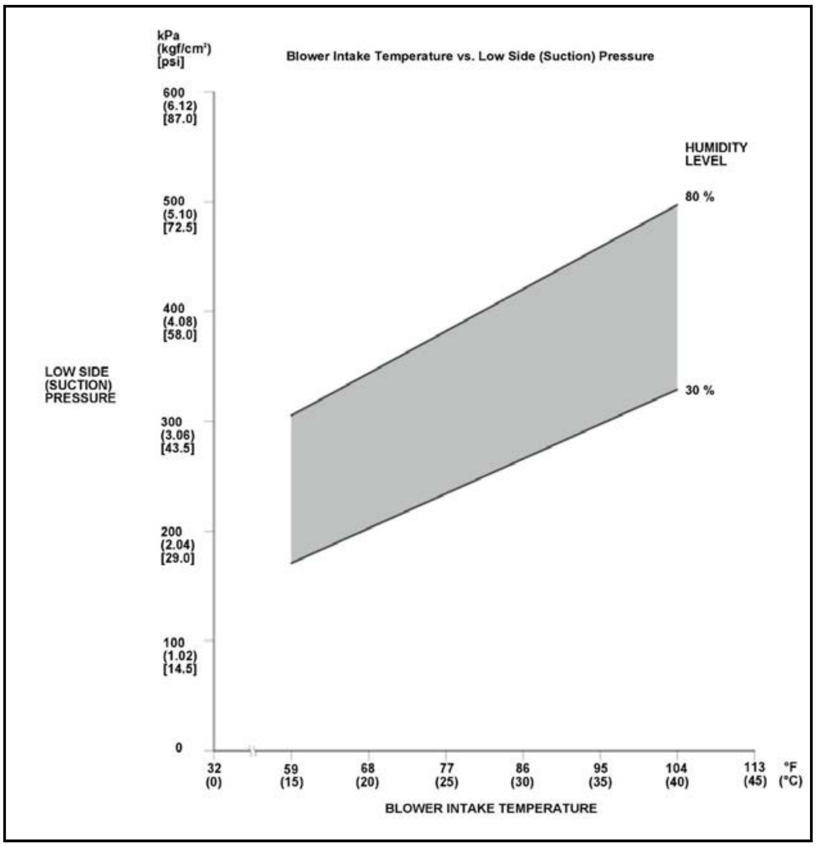

Pressure Test

4. Refrigerant Pressure Check Procedure

1. Connect a manifold gauge and start operating the A/C system.

2. Check the value shown on the manifold gauge. If the value is out of the normal range, do proper troubleshooting and check it again.

5. How to Read Gauge

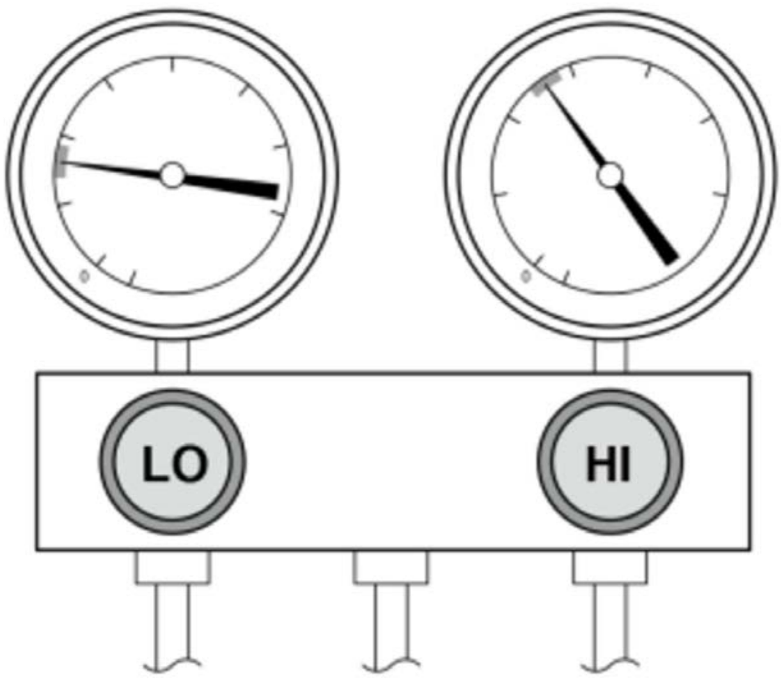	1. Check that the A/C system works pr at outside temperature 68 deg.F (20 de

6. A/C System Pressure - Test

Gauge Level	Related Symptoms	
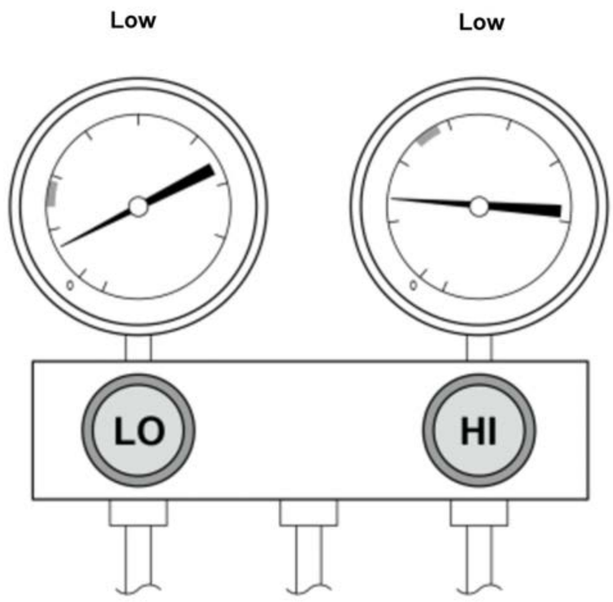	Suction pressure is low	• •
	Suction line from expansion valve to A/C compressor is not cold	Low r
	More than 18-29 deg.F (10-16 deg.C) temperature difference between A/C compressor inlet pipe and outlet pipe	Refrig passag
	Vent temperature is too high	Low r
	Large temperature difference between high/low pressure sides of A/C line or among components	Refrig discha
	Pressure in A/C system is equalized with static pressure high after electric A/C compressor is stopped (4-12 hours after engine is off)	• •
	A/C compressor or receiver pipe is not hot	Debris

Gauge Level	Related Symptoms	
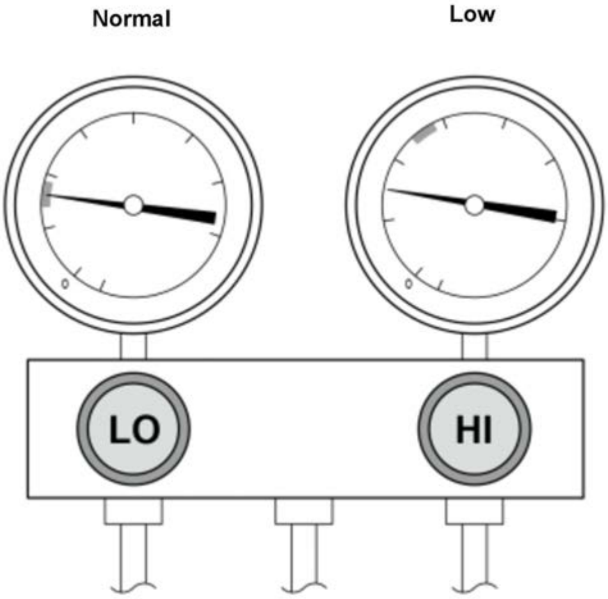 Normal Low LO HI	Air coming from outlet is not cold enough	Sligh
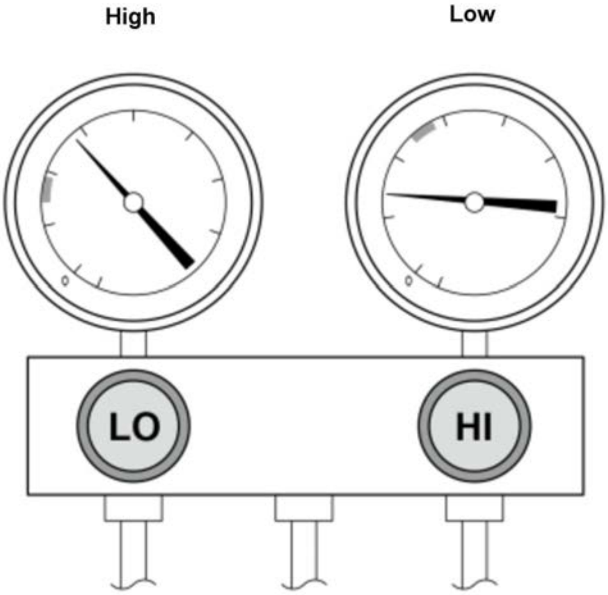 High Low LO HI	• Pressures at suction and discharge lines are equalized quickly after A/C compressor is stopped • Suction pressure is higher than normal	Fault
	• Excessive A/C compressor noise • Pressure is equalized quickly and there is excessive noise after A/C compressor is stopped	A/C c debri
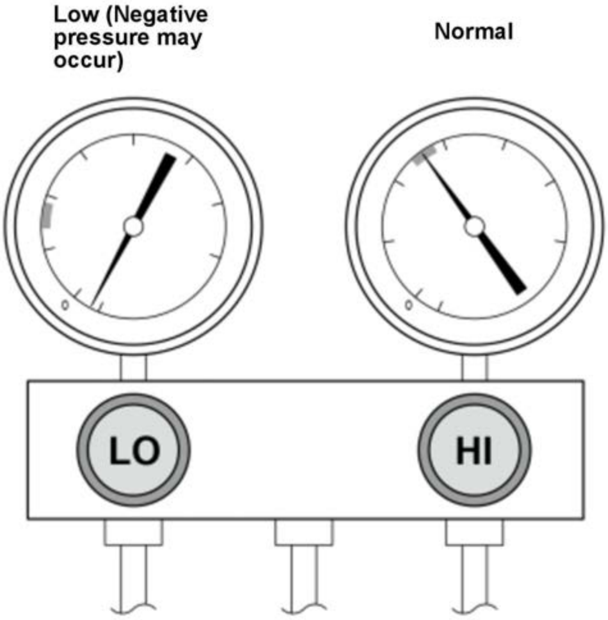 Low (Negative pressure may occur) Normal LO HI	Air coming from outlet is not cold at all	• • •
	After refrigerant is added properly	• •

Gauge Level	Related Symptoms	
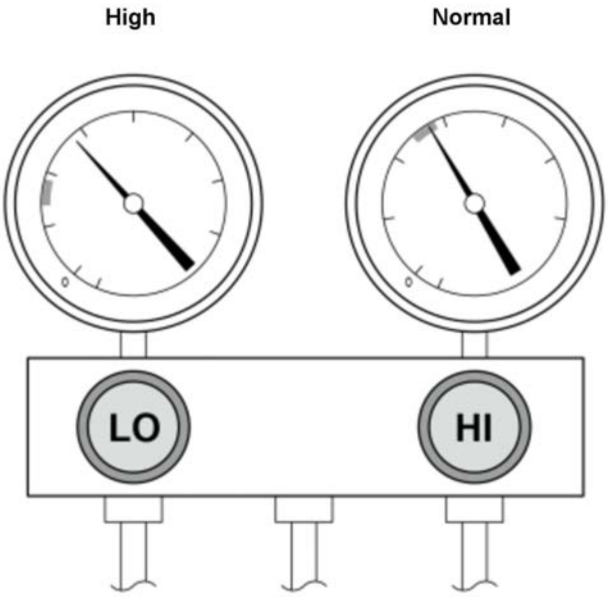	Air coming from outlet is not cold enough	Expar
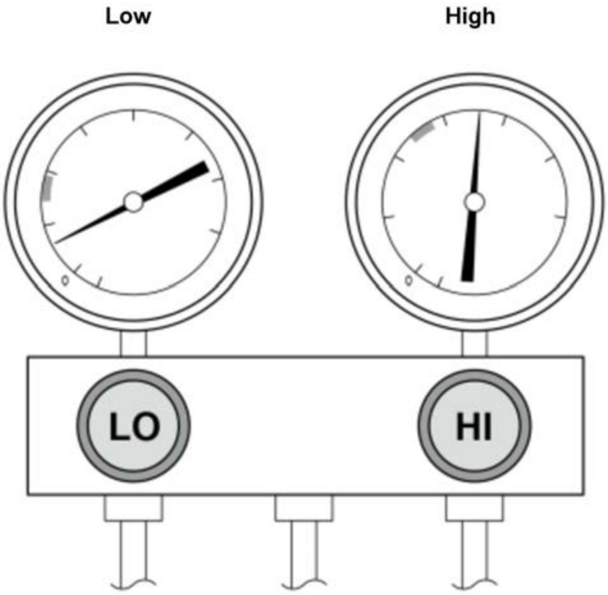	Suction pressure is turned to negative pressure because openings at expansion valve are freezing	• •
	Suction pressure drops slightly when "Recirculated" airflow is switched to "Fresh Air"	Expar suffic
	Temperature of suction hose at A/C compressor is lower than outlet of expansion valve or evaporator	Suctic
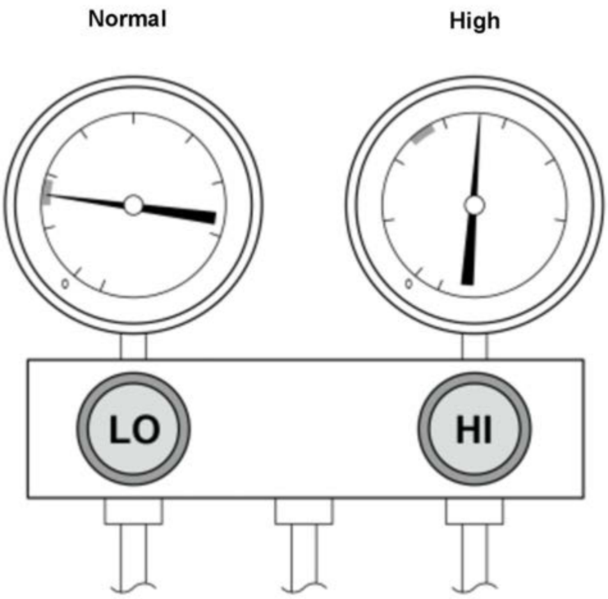	Airflow through A/C condenser is weak or restricted	
	Temperature between A/C condenser inlet and outlet is less than about 9 deg.F (5 deg.C) when radiator and A/C condenser fan run at high speed, with doors opened and fresh air selected	• • •

Gauge Level	Related Symptoms	
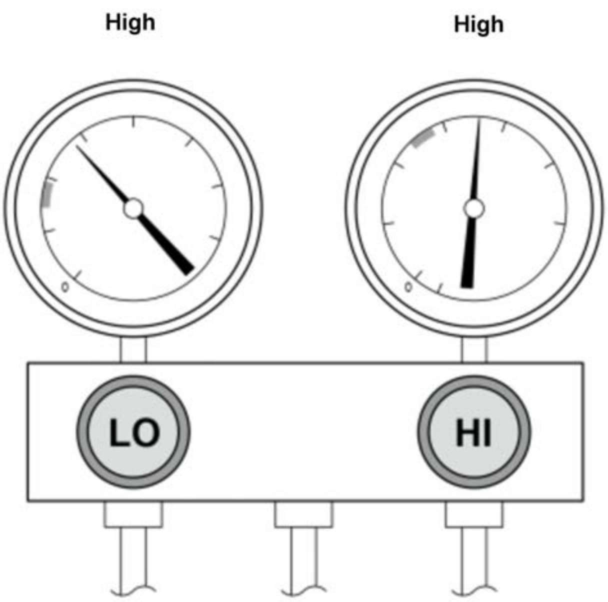	Discharge pressure is reduced when A/C condenser is cooled	Refrig
	• Airflow in VENT ( ) is reduced • Air temperature in VENT ( ) is very low	Faulty
	• Suction pressure drops slightly when "Recirculated" airflow is switched to "Fresh Air" • Discharge pressure is almost normal value	Expan
	• A sheet of paper does not stick on to A/C condenser surface with the cooling fans on • Temperature between A/C condenser inlet and outlet is less than about 9 deg.F (5 deg.C) when radiator and A/C condenser fan run at high speed, with doors opened and fresh air selected	Radia
	Belt type A/C compressor: A/C compressor clutch remains engaged when A/C system is stopped	• • • •

HEATED STEERING WHEEL TEMPERATURE SENSOR TEST

Test

SRS components are located in this area. Review the **SRS component locations** and the **precautions and procedures** before doing repairs or service.

NOTE: The heated steering wheel temperature sensor is built into the steering wheel.

1. **Driver's Airbag - Remove**
2. Steering Wheel Temperature Sensor - Test

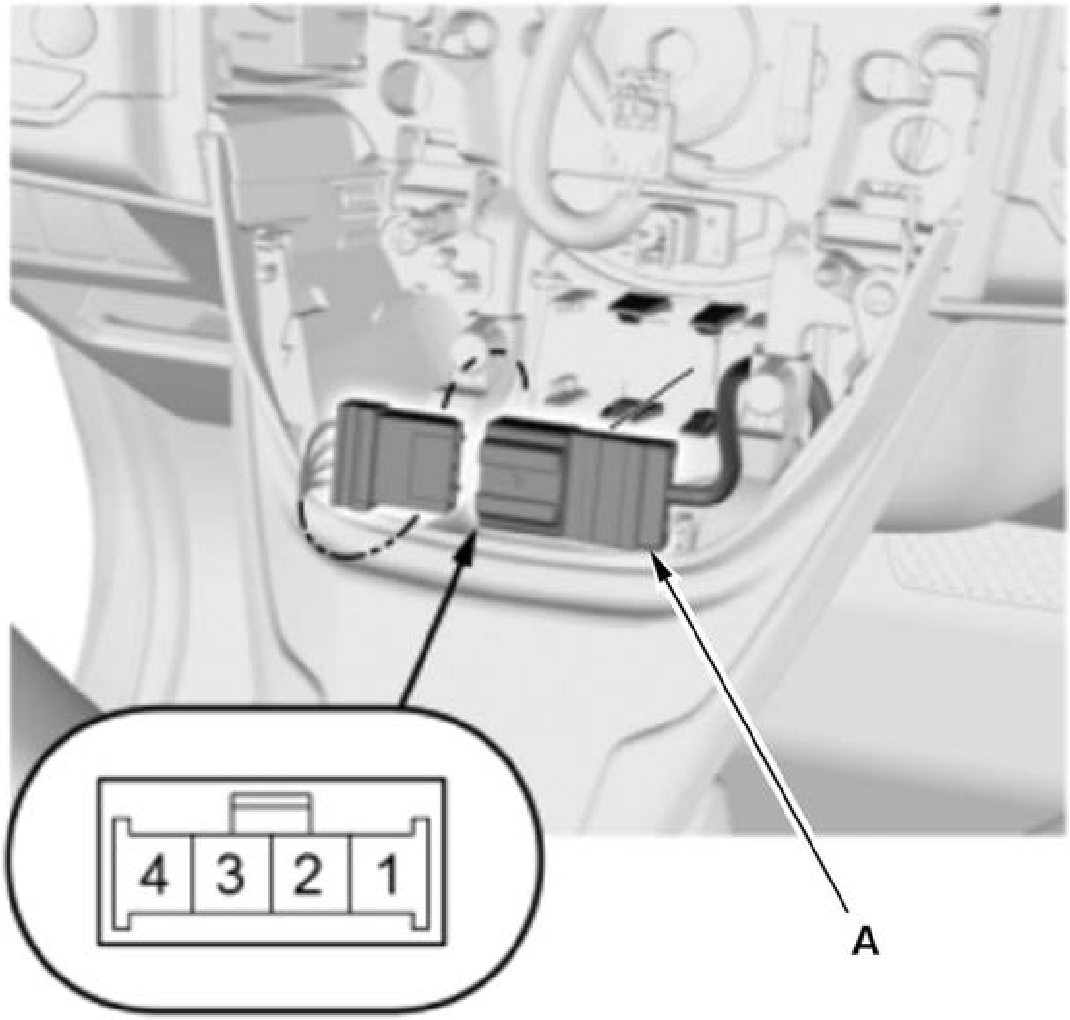

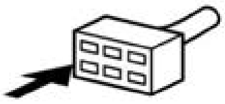

Terminal	3		4
	○	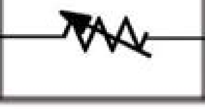	○

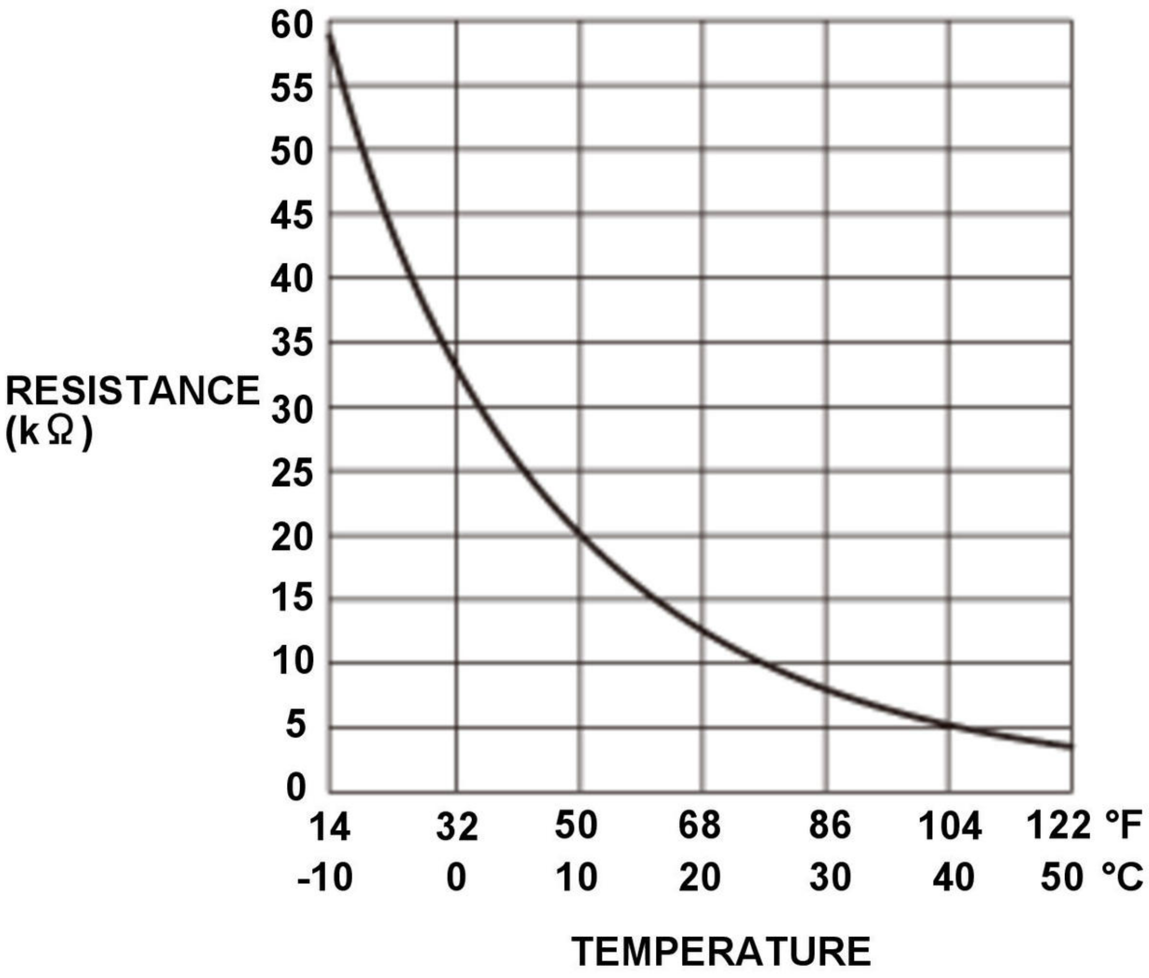

3. All Remove Parts - Install

   1. Install the parts in the reverse order of removal.

STEERING HEATER TEST

Test

SRS components are located in this area. Review the **SRS component locations** and the **precautions and procedures** before doing repairs or service.

1. **Driver's Airbag - Remove**
2. Steering Heater - Test

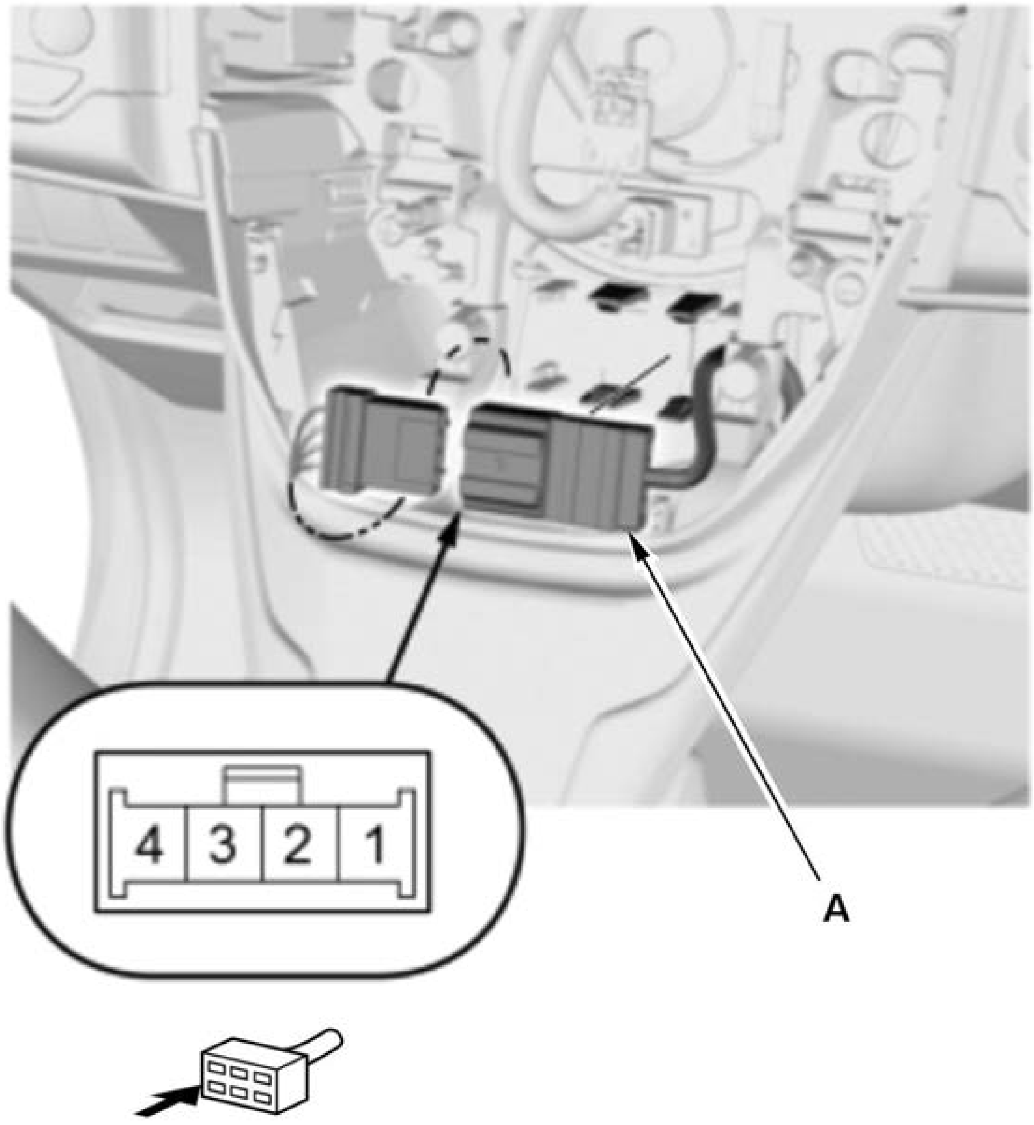

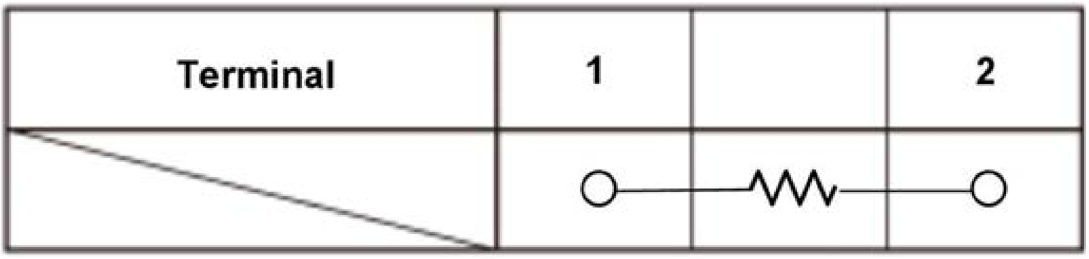

Terminal	1		2
	○		○

3. All Remove Parts - Install

1. Install the parts in the reverse order of removal.

CONNECTOR VIEW

CLIMATE CONTROL UNIT CONNECTOR FOR INPUTS AND OUTPUTS

Connector Index
Climate Control Unit Connector A (32P)
Climate Control Unit Connector B (24P)

Climate Control Unit Connector A (32P) (female terminals)

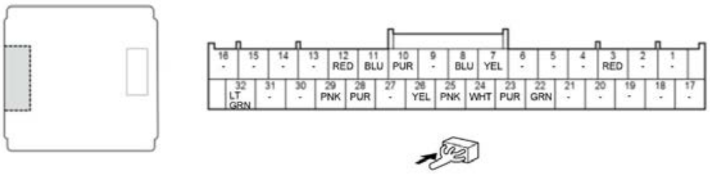
16
-
15
-
14
-
13
-
12
RED
11
BLU
10
PUR
9
-
8
BLU
7
YEL
6
-
5
-
4
-
3
RED
2
-
1
-
32
LT GRN
31
-
30
-
29
PNK
28
PUR
27
-
26
YEL
25
PNK
24
WHT
23
PUR
22
GRN
21
-
20
-
19
-
18
-
17
-

Cavity	Terminal name	Description	Sig
1	Not used	----	----
2	Not used	----	----
3	EWP_PWM	Electric heater coolant pump communication signal	With vehicle in ON mode: pulses
4	Not used	----	----
5	Not used	----	----
6	Not used	----	----
7	HUM_DATA	Humidity/in-car temperature sensor communication signal	With vehicle in ON mode: pulses
8	B-CAN_L	B-CAN communication signal	With vehicle in ON mode: pulses
9	Not used	----	----
10 *1	TSUN	Detects sunlight sensor signal	With vehicle in ON mode, and no sunlight or t With vehicle in ON mode, and sunlight on the
11	TAM	Detects outside air temperature sensor signal	With vehicle in ON mode: about 1.0-4.0 V (de
12	SENSOR_ COM	Sensor ground	With vehicle in ON mode: less than 0.2 V
13	Not used	----	----
14	Not used	----	----
15	Not used	----	----
16	Not used	----	----
17	Not used	----	----
18	Not used	----	----
19	Not used	----	----
20	Not used	----	----
21	Not used	----	----
22	A/C_PTC2_RLY_CL-	Signal for PTC heater B relay	With vehicle in ON mode and PTC heater D re With vehicle in ON mode and PTC heater B re
23	A/C_PTC4_RLY_CL-	Signal for PTC heater D relay	With vehicle in ON mode and PTC heater D re With vehicle in ON mode and PTC heater D re
24	HUM_CLK	Humidity/in-car temperature sensor communication signal	With vehicle in ON mode: pulses

*1: With automatic wiper

Cavity	Terminal name	Description	Sig
25	B-CAN_H	B-CAN communication signal	With vehicle in ON mode: pulses
26	S 5V	Outputs sensor 5 V	With vehicle in ON mode: about 5.0 V
27	Not used	----	----
28	GND	Ground for climate control unit (G403)	With vehicle in ON mode: less than 0.2 V
29	BUS-DATA	BUS-DATA communication signal	----
30	Not used	----	----
31	Not used	----	----
32	IG2_A/C	IG2 power source	With vehicle in ON mode: battery voltage

*1: With automatic wiper

Climate Control Unit Connector B (24P) (female terminals)

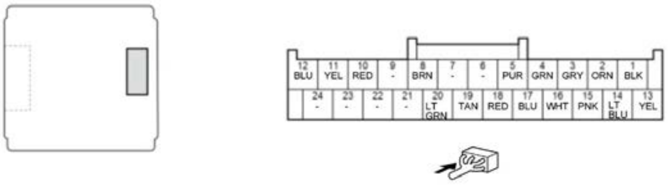
12
BLU
11
YEL
10
RED
9
-
8
BRN
7
-
6
-
5
PUR
4
GRN
3
GRY
2
ORN
1
BLK
24
-
23
-
22
-
21
-
20
LT GRN
19
TAN
18
RED
17
BLU
16
WHT
15
PNK
14
LT BLU
13
YEL

Cavity	Terminal name	Description	Sig
1	S5V	Outputs sensor 5 V	With vehicle in ON mode: about 5.0 V
2	AMD-P-DR	Detects potentiometer signal of air mix control motor (door position) *1	With vehicle in ON mode: about 0.5-4.5 V (de
		Detects potentiometer signal of driver's air mix control motor (door position) *2	With vehicle in ON mode: about 0.5-4.5 V (de position) *2
3 *2	AMD-P-AS	Detects potentiometer signal of passenger's air mix control motor (door position)	With vehicle in ON mode: about 0.5-4.5 V (de position)
4	RFD-P	Detects potentiometer signal of recirculation control motor (door position)	With vehicle in ON mode: about 1.0-4.0 V (de position
5	MDD-P	Detects potentiometer signal of mode control motor (door position)	With vehicle in ON mode: about 0.5-4.5 V (de
6	Not used	----	----
7	Not used	----	----
8	TEVA	Detects evaporator temperature sensor signal	With vehicle in ON mode: about 1.0-4.0 V (de
9	Not used	----	----
10	SENS-COM	Sensor ground	With vehicle in ON mode: less than 0.2 V
11	BLW-G	Outputs power transistor gate voltage	With vehicle in ON mode and fan control dial *3 OFF: less than 0.2 V With vehicle in ON mode and fan control dial *3 ON: about 4.0 V-battery voltage (depending

*1: Without dual zone climate control

*2: With dual zone climate control

*3: Climate control panel without display

*4: Climate control panel with display

Cavity	Terminal name	Description	Sig
12	BLW-V	Feedback signal of power transistor drain voltage	With vehicle in ON mode: about 0 V-battery vo
13	M-HOT-DR	Outputs to drive air mix control motor to HOT side *1	With vehicle in ON mode and air mix control m
		Outputs to drive driver's air mix control motor to HOT side *2	With vehicle in ON mode and driver's air mix *2
14	M-COOL-DR	Outputs to drive air mix control motor to COOL side *1	With vehicle in ON mode and air mix control m
		Outputs to drive driver's air mix control motor to COOL side *2	With vehicle in ON mode and driver's air mix voltage *2
15 *2	M-HOT-AS	Outputs to drive passenger's air mix control motor to HOT side	With vehicle in ON mode and passenger's air m voltage
16 *2	M-COOL-AS	Outputs to drive passenger's air mix control motor to COOL side	With vehicle in ON mode and passenger's air m voltage
17	M-REC	Outputs to drive recirculation control motor to RECIRCULATE side	With vehicle in ON mode and recirculation co battery voltage
18	M-FRS	Outputs to drive recirculation control motor to FRESH side	With vehicle in ON mode and recirculation co voltage
19	M-VENT	Outputs to drive mode control motor to VENT side	With vehicle in ON mode and mode control m
20	M-DEF	Outputs to drive mode control motor to DEF side	With vehicle in ON mode and mode control m
21	Not used	----	----
22	Not used	----	----
23	Not used	----	----
24	Not used	----	----

*1: Without dual zone climate control

*2: With dual zone climate control

*3: Climate control panel without display

*4: Climate control panel with display

HEATED STEERING WHEEL CONTROL UNIT CONNECTOR FOR INPUTS AND OUTPUTS

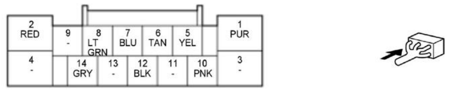

Terminal number	Terminal name	Description	
1	HSW_HEATER	Outputs heated steering wheel signal	With heated steering operation: pulse (heated steering wheel operation: less th
2	+B_HSW	Detects heated steering wheel relay signal	With vehicle in ON mode: about batter
3	---	Not used	---
4	---	Not used	---

Terminal number	Terminal name	Description	
5	HSW_SW	Detects heated steering wheel switch signal	With vehicle in ON mode and heated s voltage. If none of above conditions ar
6	NTC_TH+	Detects heater temperature signal	---
7	NTC_TH-	Detects heater temperature signal	---
8	HSW_LIN	Communication line	---
9	---	Not used	---
10	HSW_IND	Detects heated steering wheel switch indicator signal	---
11	---	Not used	---
12	STRG_GND	Heated steering wheel control unit ground	Less than 0.2 V at all times
13	---	Not used	---
14	HSW_SW_+B	Drives heated steering wheel switch	With vehicle in ON mode: about batter

CHECK

A/C REFRIGERANT LEAK CHECK

Check

WARNING:

- Compressed air mixed with the HFO-1234yf (R-1234yf) forms a combustible vapor.
- The vapor can burn or explode causing serious injury.
- Never use compressed air to pressure test HFO-1234yf (R-1234yf) service equipment or vehicle air conditioning systems.

WARNING:

- Air conditioning refrigerant or lubricant vapor can irritate your eyes, nose, or throat.
- Be careful when connecting service equipment.
- Do not breathe refrigerant or vapor.
- Do not operate the leak detector near flammable vapors. Its sensor operates at high temperatures, and could ignite the vapors, resulting in personal injury and/or d
- Electric powertrain components are located near A/C system components. Make sure you have read the electric powertrain service precautions before doing repai

NOTE:

- If accidental system discharge occurs, ventilate the work area before resuming service.
- Additional health and safety information may be obtained from the refrigerant and lubricant manufacturers.
- Check the system for leaks using an R-1234yf refrigerant leak detector with an accuracy of 14 g (0.49 oz) per year or better.
- Always use the most current approved A/C service equipment and tools. Refer to the Acura / Honda Tools and Equipment catalog and available service informatic

1. A/C Refrigerant - Recover

   1. Connect an Acura/Honda approved A/C recover/recycle/recharge machine to the high-pressure service port and the low-pressure service port following the equ

   2. Check the amount of refrigerant recovered. Is the amount of refrigerant recovered according to specifications?**YES**

   - Charge refrigerant and go to A/C system Test for further diagnosis.**NO** - Go to the next step.

2. A/C System - Evacuate

   NOTE: You must use the moisture (thermistor) vacuum option when you evacuate.

3. A/C Refrigerant - Charge

   Did the A/C recover/recycle/recharge machine prohibit a charge?

   YES - There is a leak large enough that the vehicle cannot retain a charge. Evacuate the system again under the timed vacuum option and use a ultrasonic leak det information for details.

   NO - Go to the next step.

4. A/C Refrigerant - Leak Check

   NOTE:

   - **There are a variety of approved leak detectors available that can be used to detect a leak depending on the model. Re information.**
   - **Use of leak dyes are prohibited depending on the model. Refer to available service information to see which models c**
   - **If a leak cannot be found by any method, do the following:**
   -
     - **-**

       Let the vehicle idle for 30 minutes with the hood down and the climate control set to the max cool position.
   -
     - **-**

       After 30 minutes, drive the vehicle for couple miles and check for leaks again.

   1. With the power system off, use a leak detector to detect the leak source. Follow a continuous path in order to ensure that you will not miss any possible leaks. T Move the probe slowly (1 in/second or less), and keep it within 1/4 in of the component being checked. This maximizes the chance of detecting a leak.

Possible Leak Area	Diagnostic Procedure	Notes
Service ports	Check the service ports with the service caps installed	Ensure that the seals on the service caps are in place, and that the caps used as the final seals in the system

Possible Leak Area	Diagnostic Procedure	Notes
Electric A/C compressor	Wave the leak detector around the entire electric A/C compressor	Check for leaks at all of the electric A/C compressor joints, hose fittin relief valve and the scroll bolts on the back of the electric A/C compre
A/C condenser	Wave the leak detector around the entire A/C condenser	• Check for joints or connections coated with oily dust • Check for damaged and corroded areas • Check all fittings, couplings, brazed/welded areas and areas aro • If you detect a leak, determine if the leak is coming from the A/ receiver/dryer • When using a refrigerant gas leak detector - If you detect a leak over the area, then recheck for leaks. For large leaks, cleaning tl compressed air may help you pinpoint the leak source
Evaporator	• Check at the evaporator drain hose • Turn the blower on at low speed and check at the passenger's side vent	Remove **the blower unit** and **the evaporator core cover** (as necessar
A/C lines	Wiggle the rubber hoses when checking crimped metal ends	• Check all fittings, couplings, pressure switches, brazed/welded attachment points on A/C lines and components • Check for damaged and corroded areas

Detected Leak Area	Repair Action
Service ports	If a leak is found, replace the cap/O-ring seal or A/C line as needed
Electric A/C compressor	• If the electric A/C compressor relief valve appears to be leaking, determine whether the leak is coming from the relief valve, or the joint between the electric A/C compressor casing and the valve. If the leak is from the relief valve, check the A/C system pressures, and refer to the **pressure test table in the A/C system test**. If the leak is from the casing/valve joint, **replace the electric A/C compressor relief valve** • If the leak is coming from the suction hose and/or discharge hose fittings on the electric A/C compressor, clean the A/C fittings and replace the suction/discharge fitting O-rings • For all other electric A/C compressor leaks, **remove and replace the electric A/C compressor**
A/C condenser	**Replace either the receiver/dryer** or **the A/C condenser** , depending on the location of the leak
Evaporator	• If the source of the leak was determined, replace the component causing the leak • If the source of the leak was not determined, remove the evaporator core and visually check for damage and oily dust, then **replace the evaporator core, O-rings** , or **the expansion valve** as necessary
A/C lines	**Remove and replace the A/C line causing the leak**

A/C SYSTEM NOISE CHECK

Check

WARNING:

- Air conditioning refrigerant or lubricant vapor can irritate your eyes, nose, or throat.
- Be careful when connecting service equipment.
- Do not breathe refrigerant or vapor.

The A/C system noise check will help you determine the source of abnormal A/C system noise.

NOTE:

- If an accidental system discharge occurs, ventilate the work area before resuming service.
- Additional health and safety information may be obtained from the refrigerant and lubricant manufacturers.
- Identify the conditions when the noise occurs. The weather, vehicle speed, vehicle being in gear or in neutral, engine temperature, or other conditions may be fact
- **Do the A/C system inspection**, and correct any problems found prior to diagnosing abnormal noises.
- Abnormal A/C noises can be misleading. For example, a sound similar to a failed bearing may be caused by loose fasteners or loose mounting brackets.

1. A/C System (Cabin) - Noise Check

   1. Cycle the HVAC system through all blower speeds and all air distribution modes, and check for unusual noises and excessive vibration. If noise and/or vibratio this inspection, close the doors and windows, and do not start the engine.

Check for	Result	Also
Conditions when the noise occurs	The noise or vibration occurs only in a specific mode or setting	• Check the operation of the air mix cor • Check the operation of the mode cont • Check the operation of the recirculatic
	There is a squeaking or chirping noise, but no unusual vibration	**Replace the blower motor** .
Foreign material in the blower motor and fan	Foreign material (leaves or twigs, for example) is present	Remove it, and recheck for noise.
	No foreign material (leaves or twigs, for example) is present	**Remove the blower motor** , and check thes problems are present.

Check for	Result	Also
		- Damage on the fan blades - Tightness of the fan retainer - Fan alignment on the blower motor sh

2. A/C System (Under-Hood) - Noise Check

1. Set up the vehicle:

- Select a quiet area for testing.
- Apply the parking brake.
- Shift the transmission to P position/mode
- Turn the vehicle to the READY TO DRIVE mode
- Set the A/C system to the following conditions:
-
    - -

      Temperature control: MAX COOL (Lo)
    - -

      Mode control: VENT ( )
    - -

      Fan control: minimum (but not OFF)
    - -

      A/C: ON

2. Switch the electric A/C compressor on and off several times to clearly identify the sound during electric A/C compressor operation. Listen to the noise while th Probe the motor area with a stethoscope to pinpoint the noise

NOTE: If the noise does not change when the electric A/C compressor operated or non-operated, the noise may be caused by an electric powertrain-related comp pinpoint the noise.

3. Listen for noises coming from the A/C lines, the A/C hoses, the A/C condenser, the evaporator, the receiver/dryer, or the expansion valve, and check these item

Check for	Result	
Noises caused by A/C components touching other components or the body	The noise is present	Reroute or insu noise.
Loose, damaged or excessively worn A/C components or mounting hardware	Loose, damaged or excessively worn item is present	Repair or replac noise.
A moaning noise coming from the suction pipe and suction hose	A moaning noise is present	Check the syste **replace the rec**

Check for	Result	
A whistling or hissing noise from the expansion valve	A whistling or hissing noise is present	Evacuate the sy present, **replac**

4. Listen with a stethoscope for noises coming from the electric A/C compressor, and check these items:

Check for	Result	
The noise changes when the electric A/C compressor non-operated	Does not change	Check for the n component.
The A/C system operating pressures are normal	Abnormal	Troubleshoot th **system test**. Co noise.
The electric A/C compressor hose connections and fasteners are in good condition	Loose, damaged, or excessively worn	Repair or replac noise.
	In good condition	**Replace the ele**

TROUBLESHOOTING

PTC HEATER CIRCUIT TROUBLESHOOTING

NOTE: Do this troubleshooting procedure only if sent here by **symptom troubleshooting index**.

1. Determine possible failure area (PTC heater, fuse)

-1. Check the following fuses.

Fuse	**No. C1-1**
	No. C1-3

Are the fuses OK?

YES: PTC heater B

Go to step 2.

YES: PTC heater D

Go to step 10.

NO

Replace the fuse(s), and recheck. If the fuse blows again, repair a short in the No. C1-1 or No. C1-3 fuse circuit.

2. PTC heater B relay check

-1. Remove the PTC heater B relay from the under-hood fuse/relay box, and **test it** .

Is the relay OK?

YES

Go to step 3.

NO

Replace the PTC heater B relay.

3. Open wire check (GND line)

-1. Disconnect the following connector.

PTC heater core 5P connector

-2. Measure the resistance between test points 1 and 2.

Test condition	Vehicle OFF (LOCK) mode
	PTC heater B relay: disconnected
	PTC heater core 5P connector: disconnected
Test point 1	PTC heater core 5P connector (female terminals) No. 1: ①
Test point 2	Body ground

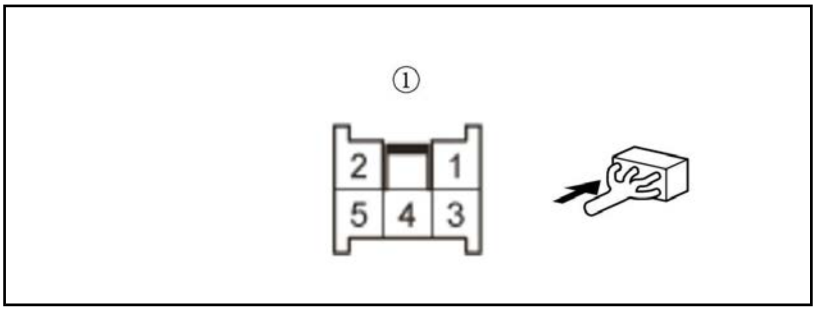

Is there 1.0 Ω or less?

YES

The GND wire is OK. Go to step 4.

NO

Check for an open in the GND wire. If the wires are OK, check for poor ground at G352.

4. PTC heater B circuit check

-1. Disconnect the following connectors.

Climate control unit connector A (32P)

-2. Connect terminals A and B with jumper wires.

Terminal A	**Climate control unit connector A (32P) No. 22**
Terminal B	Body ground

Terminal A	PTC heater B relay 4P socket (female terminals) No. 1: ①
Terminal B	PTC heater B relay 4P socket (female terminals) No. 2: ①

Terminal A	PTC heater B relay 4P socket (female terminals) No. 3: ①
Terminal B	PTC heater B relay 4P socket (female terminals) No. 4: ①

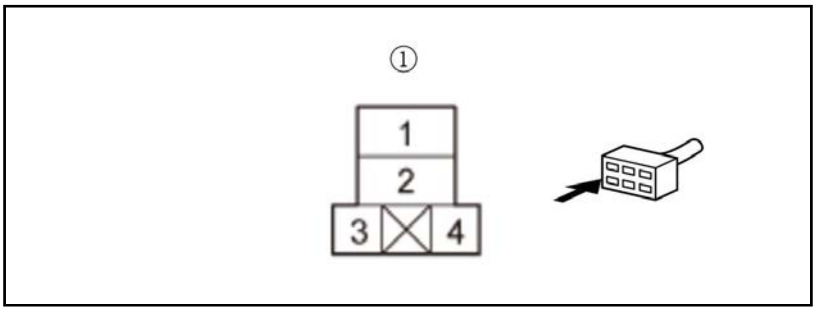

-3. Turn the vehicle to the ON mode.

-4. Measure the voltage between test points 1 and 2.

Test condition	Vehicle ON mode
	PTC heater B relay: disconnected
	Climate control unit connector A (32P): disconnected
	PTC heater core 5P connector: disconnected
	Climate control unit connector A (32P) No. 22: jumped to body ground
	PTC heater B relay 4P socket No. 1 and No. 2: jumped
	PTC heater B relay 4P socket No. 3 and No. 4: jumped
Test point 1	PTC heater core 5P connector (female terminals) No. 5: ①
Test point 2	Body ground

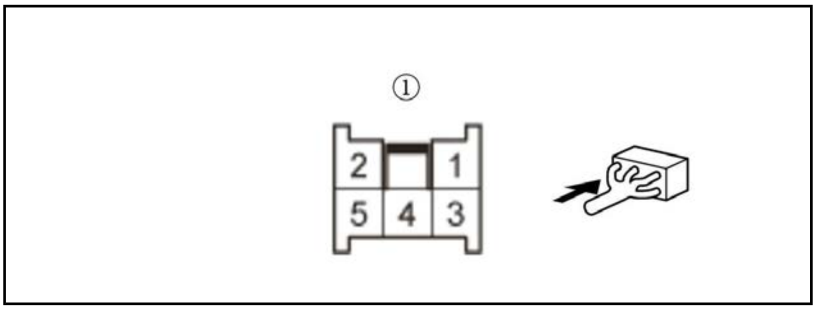

Is there battery voltage?

YES

Go to step 5.

NO

Go to step 6.

5. PTC heater B check

-1. Turn the vehicle to the OFF (LOCK) mode.

-2. Remove the jumper wires.

-3. **Test the PTC heater core** .

Is the PTC heater B OK?

YES

Replace the climate control unit .

NO

Replace the PTC heater core .

6. Open wire check (A/C_PTC2 line)

-1. Turn the vehicle to the OFF (LOCK) mode.

-2. Remove the jumper wires.

-3. Measure the resistance between test points 1 and 2.

Test condition	Vehicle OFF (LOCK) mode
	PTC heater B relay: disconnected
	Climate control unit connector A (32P): disconnected
	PTC heater core 5P connector: disconnected
Test point 1	PTC heater B relay 4P socket (female terminals) No. 2: ①
Test point 2	PTC heater core 5P connector (female terminals) No. 5: ②

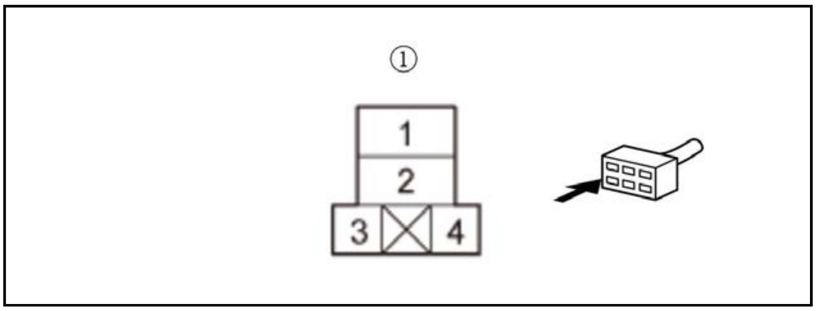

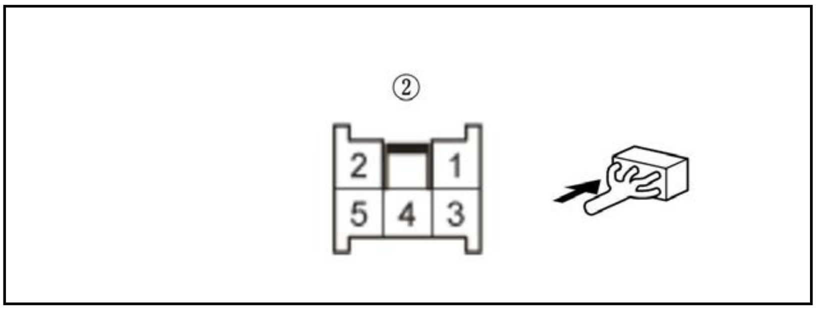

Is there 1.0 Ω or less?

YES

The A/C PTC2 wire is OK. Go to step 7.

NO

Repair an open in the A/C_PTC2 wire.

7. Open wire check (+B_A/C_PTC1 line)

-1. Measure the voltage between these test points 1 and 2.

Test condition	Vehicle OFF (LOCK) mode
	PTC heater B relay: disconnected
	Climate control unit connector A (32P): disconnected
	PTC heater core 5P connector: disconnected
Test point 1	PTC heater B relay 4P socket (female terminals) No. 1: ①
Test point 2	Body ground

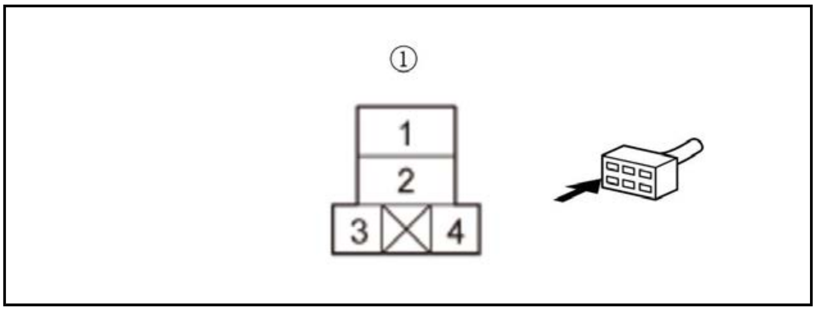

Is there battery voltage?

YES

The +B_A/C_PTC1 wire is OK. Go to step 8.

NO

Repair an open in the +B_A/C_PTC1 wire.

8. Open wire check (IG2_A/C line)

-1. Turn the vehicle to the ON mode.

-2. Measure the voltage between these test points 1 and 2.

Test condition	Vehicle ON mode
	PTC heater B relay: disconnected
	Climate control unit connector A (32P): disconnected
	PTC heater core 5P connector: disconnected
Test point 1	PTC heater B relay 4P socket (female terminals) No. 3: ①
Test point 2	Body ground

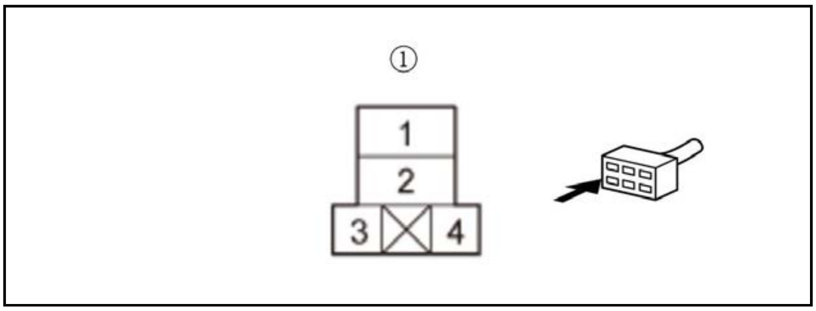

Is there battery voltage?

YES

The IIG2_A/C wires are OK. Go to step 9.

NO

Repair an open in the IG2_A/C wire.

9. Open wire check (A/C_PTC2_RLY_CL- line)

   -1. Turn the vehicle to the OFF (LOCK) mode.

   -2. Measure the resistance between test points 1 and 2.

Test condition	Vehicle OFF (LOCK) mode
	PTC heater B relay: disconnected
	Climate control unit connector A (32P): disconnected
	PTC heater core 5P connector: disconnected
Test point 1	**Climate control unit connector A (32P) No. 22**
Test point 2	PTC heater B relay 4P socket (female terminals) No. 4: ①

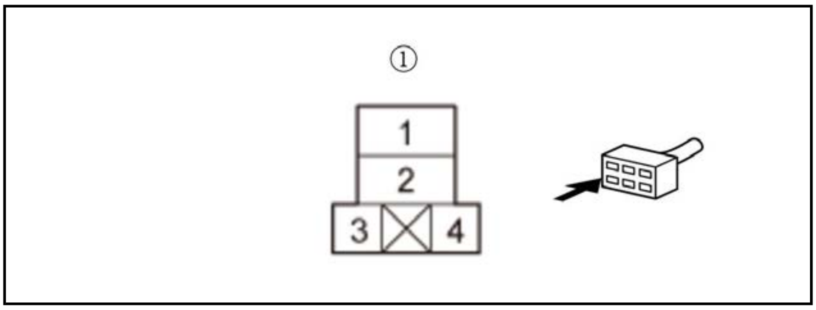

   Is there 1.0 Ω or less?

   YES

   Replace the climate control unit .

   NO

   Repair an open in the A/C_PTC2_RLY_CL- wire.

10. PTC heater D relay check

    -1. Remove the PTC heater D relay from the under-hood fuse/relay box, and **test it** .

    Is the relay OK?

    YES

    Go to step 11.

    NO

    Replace the PTC heater D relay.

11. Open wire check (GND line)

    -1. Disconnect the following connector.

PTC heater core 5P connector

    -2. Measure the resistance between test points 1 and 2.

Test condition	Vehicle OFF (LOCK) mode
	PTC heater D relay: disconnected
	PTC heater core 5P connector: disconnected
Test point 1	PTC heater core 5P connector (female terminals) No. 2: ①

Test point 2	Body ground

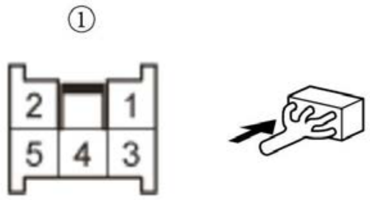

Is there 1.0 Ω or less?

YES

The GND wire is OK. Go to step 12.

NO

Check for an open in the GND wire. If the wires are OK, check for poor ground at G352.

12. PTC heater D circuit check

-1. Disconnect the following connectors.

Climate control unit connector A (32P)

-2. Connect terminals A and B with a jumper wires.

Terminal A	**Climate control unit connector A (32P) No. 23**
Terminal B	Body ground

Terminal A	PTC heater D relay 4P socket (female terminals) No. 1: ①
Terminal B	PTC heater D relay 4P socket (female terminals) No. 2: ①

Terminal A	PTC heater D relay 4P socket (female terminals) No. 3: ①
Terminal B	PTC heater D relay 4P socket (female terminals) No. 4: ①

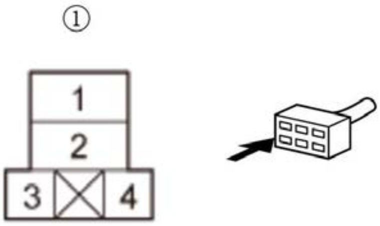

-3. Turn the vehicle to the ON mode.

-4. Measure the voltage between test points 1 and 2.

Test condition	Vehicle ON mode
	PTC heater B relay: disconnected
	Climate control unit connector A (32P): disconnected
	PTC heater core 5P connector: disconnected
	Climate control unit connector A (32P) No. 23: jumped to body ground
	PTC heater D relay 4P socket No. 1 and No. 2: jumped
	PTC heater D relay 4P socket No. 3 and No. 4: jumped
Test point 1	PTC heater core 5P connector (female terminals) No. 3: ①
Test point 2	Body ground

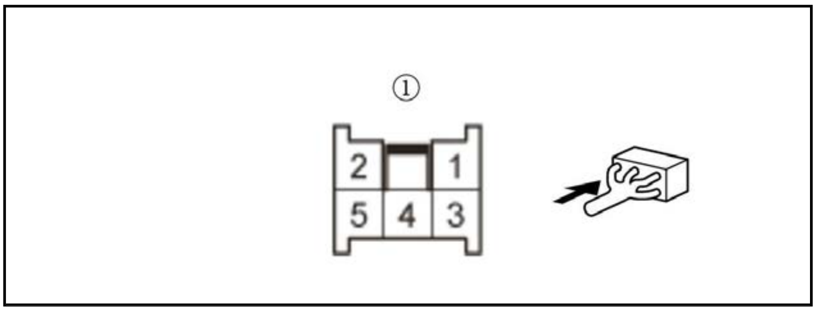

Is there battery voltage?

YES

Go to step 13.

NO

Go to step 14.

13. PTC heater D check

-1. Turn the vehicle to the OFF (LOCK) mode.

-2. Remove the jumper wires.

-3. **Test the PTC heater core** .

Is the PTC heater D OK?

YES

Replace the climate control unit .

NO

Replace the PTC heater core .

14. Open wire check (A/C_PTC4 line)

-1. Turn the vehicle to the OFF (LOCK) mode.

-2. Remove the jumper wires.

-3. Measure the resistance between test points 1 and 2.

Test condition	Vehicle OFF (LOCK) mode PTC heater D relay: disconnected Climate control unit connector A (32P): disconnected PTC heater core 5P connector: disconnected
Test point 1	PTC heater D relay 4P socket (female terminals) No. 2: ①
Test point 2	PTC heater core 5P connector (female terminals) No. 3: ②

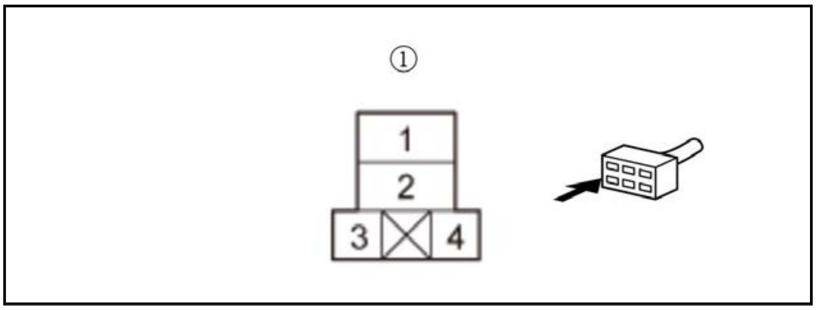

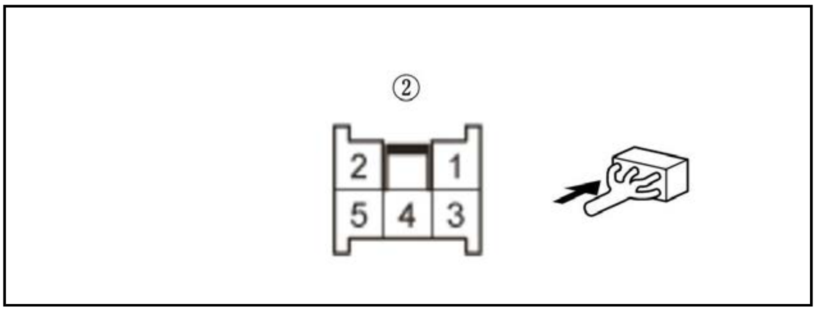

Is there 1.0 Ω or less?

YES

The A/C_PTC4 wire is OK. Go to step 15.

NO

Repair an open in the A/C_PTC4 wire.

15. Open wire check (+B_A/C_PTC3 line)

-1. Measure the voltage between these test points 1 and 2.

Test condition	Vehicle OFF (LOCK) mode
	PTC heater D relay: disconnected
	Climate control unit connector A (32P): disconnected
	PTC heater core 5P connector: disconnected
Test point 1	PTC heater D relay 4P socket (female terminals) No. 1: ①
Test point 2	Body ground

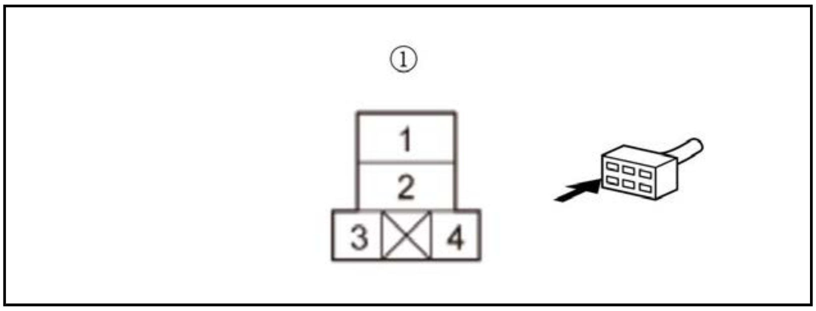

Is there battery voltage?

YES

The +B_A/C_PTC3 wire is OK. Go to step 16.

NO

Repair an open in the +B_A/C_PTC3 wire.

16. Open wire check (IG2_A/C line)

-1. Turn the vehicle to the ON mode.

-2. Measure the voltage between these test points 1 and 2.

Test condition	Vehicle ON mode
	PTC heater D relay: disconnected
	Climate control unit connector A (32P): disconnected
	PTC heater core 5P connector: disconnected
Test point 1	PTC heater D relay 4P socket (female terminals) No. 3: ①
Test point 2	Body ground

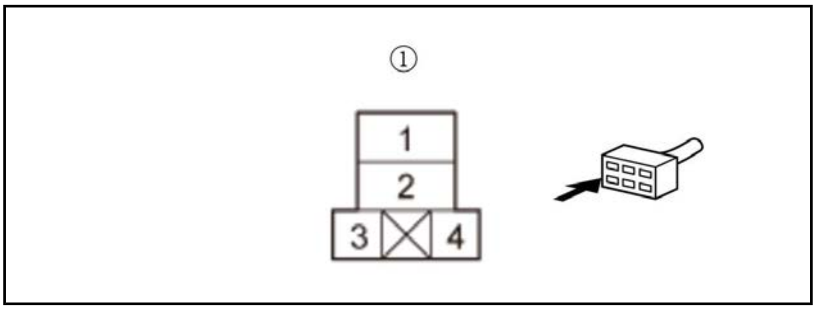

Is there battery voltage?

YES

The IG2_A/C wires are OK. Go to step 17.

NO

Repair an open in the IG2_A/C wire.

17. Open wire check (A/C_PTC4_RLY_CL- line)

-1. Turn the vehicle to the OFF (LOCK) mode.

-2. Measure the resistance between test points 1 and 2.

Test condition	Vehicle OFF (LOCK) mode
	PTC heater D relay: disconnected

	Climate control unit connector A (32P): disconnected PTC heater core 5P connector: disconnected
Test point 1	Climate control unit connector A (32P) No. 23
Test point 2	PTC heater D relay 4P socket (female terminals) No. 4: ①

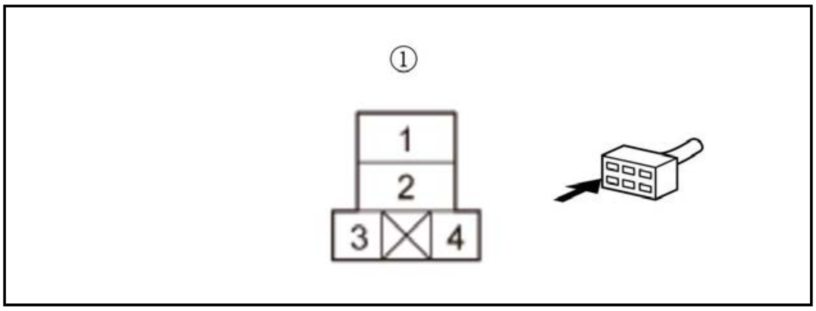

Is there continuity?

YES

Replace the climate control unit .

NO

Repair an open in the A/C_PTC4_RLY_CL- wire.

REPAIR REGENERATION

REAR WINDOW DEFOGGER WIRE REPAIR

Reconditioning

1. Defogger Wire - Repair

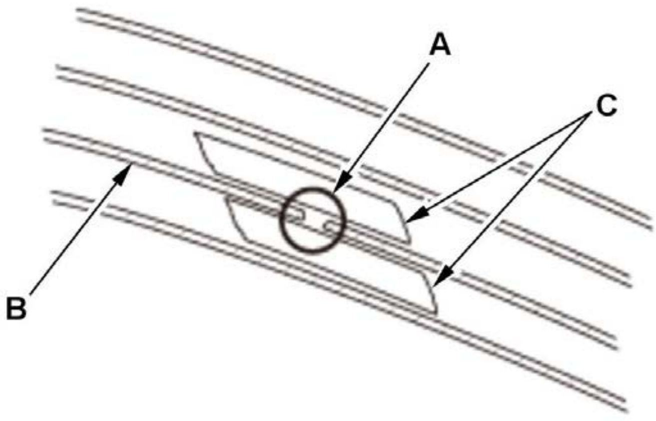	**NOTE:** To make an effectiv 25 mm (1.0 in). 1. Lightly rub the area arour with isopropyl alcohol. 2. Carefully mask above and (B) with cellophane tapes (C

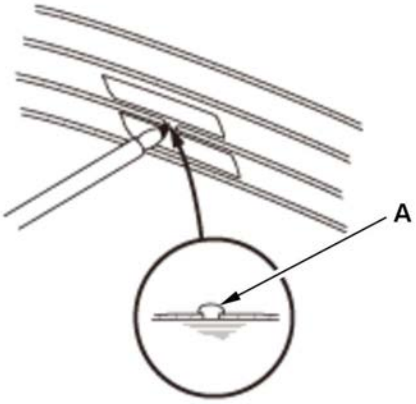	3. Using a small brush, apply a heavy coat of silver cc about 3.0 mm (0.1 in) on both sides of the break. Allo 4. Do the function test to confirm that the wire is repa 5. Apply a second coat of paint in the same way. Let i

CIRCUIT DIAGRAM

CLIMATE CONTROL SYSTEM CIRCUIT DIAGRAM

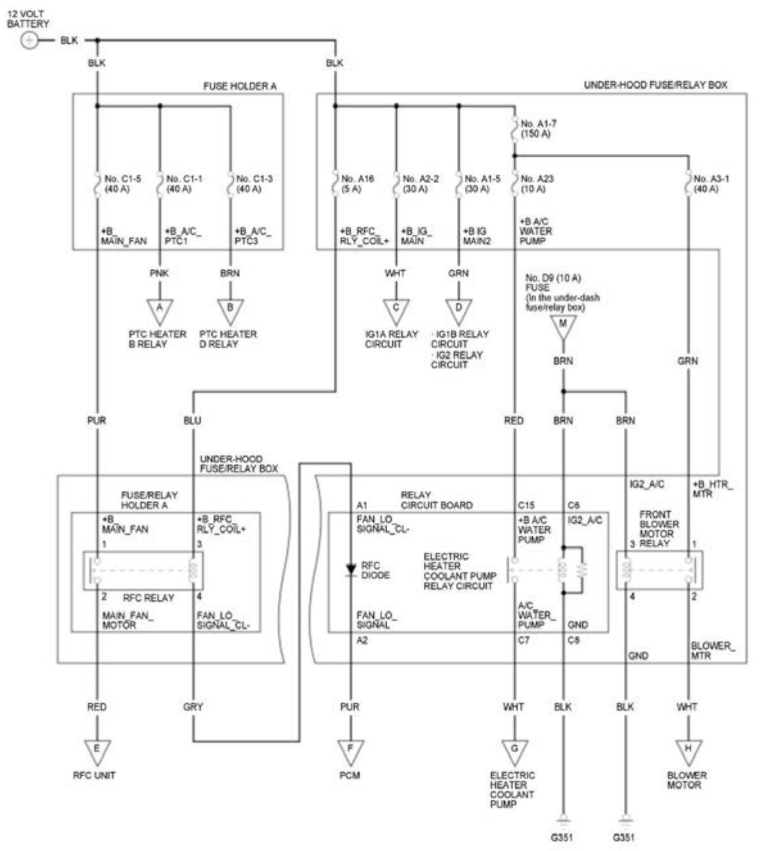
12 VOLT BATTERY
BLK
BLK
BLK
FUSE HOLDER A
UNDER-HOOD FUSE/RELAY BOX
No. A1-7 (150 A)
No. C1-5 (40 A)
No. C1-1 (40 A)
No. C1-3 (40 A)
No. A16 (5 A)
No. A2-2 (30 A)
No. A1-5 (30 A)
No. A23 (10 A)
No. A3-1 (40 A)
+B_ MAIN_FAN
+B_A/C_ PTC1
+B_A/C_ PTC3
+B_RFC_ RLY_COIL+
+B_IG_ MAIN
+B IG MAIN2
+B A/C WATER PUMP
PNK
BRN
WHT
GRN
A
B
C
D
PTC HEATER B RELAY
PTC HEATER D RELAY
IG1A RELAY CIRCUIT
· IG1B RELAY CIRCUIT
· IG2 RELAY CIRCUIT
No. D9 (10 A) FUSE (In the under-dash fuse/relay box)
M
BRN
GRN
PUR
BLU
RED
BRN
BRN
UNDER-HOOD FUSE/RELAY BOX
FUSE/RELAY HOLDER A
+B_ MAIN_FAN
+B_RFC_ RLY_COIL+
1
3
2
4
RFC RELAY
MAIN_FAN_ MOTOR
FAN_LO_ SIGNAL_CL-
A1
RELAY CIRCUIT BOARD
FAN_LO_ SIGNAL_CL-
RFC DIODE
ELECTRIC HEATER COOLANT PUMP RELAY CIRCUIT
FAN_LO_ SIGNAL
A2
C15
C6
+B A/C WATER PUMP
IG2_A/C
A/C WATER_ PUMP
GND
C7
C8
IG2_A/C
+B_HTR_ MTR
FRONT BLOWER MOTOR RELAY
3
1
4
2
GND
BLOWER_ MTR
RED
GRY
PUR
WHT
BLK
BLK
WHT
E
F
G
H
RFC UNIT
PCM
ELECTRIC HEATER COOLANT PUMP
G351
G351
BLOWER MOTOR

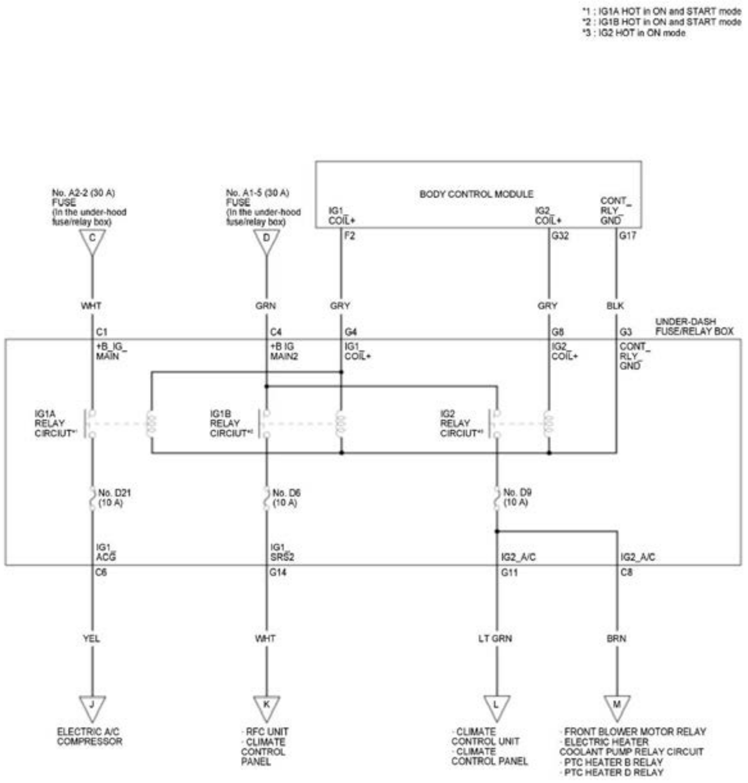
*1 : IG1A HOT in ON and START mode
*2 : IG1B HOT in ON and START mode
*3 : IG2 HOT in ON mode
BODY CONTROL MODULE
IG1_ COIL+
IG2_ COIL+
CONT_ RLY_ GND
F2
G32
G17
No. A2-2 (30 A) FUSE (In the under-hood fuse/relay box)
No. A1-5 (30 A) FUSE (In the under-hood fuse/relay box)
C
D
WHT
GRN
GRY
GRY
BLK
UNDER-DASH FUSE/RELAY BOX
C1
C4
G4
G8
G3
+B_IG_ MAIN
+B IG MAIN2
IG1_ COIL+
IG2_ COIL+
CONT_ RLY_ GND
IG1A RELAY CIRCIUT*1
IG1B RELAY CIRCIUT*2
IG2 RELAY CIRCIUT*3
No. D21 (10 A)
No. D6 (10 A)
No. D9 (10 A)
IG1_ ACG
IG1_ SRS2
IG2_A/C
IG2_A/C
C6
G14
G11
C8
YEL
WHT
LT GRN
BRN
J
K
L
M
ELECTRIC A/C COMPRESSOR
· RFC UNIT
· CLIMATE CONTROL PANEL
· CLIMATE CONTROL UNIT
· CLIMATE CONTROL PANEL
· FRONT BLOWER MOTOR RELAY
· ELECTRIC HEATER COOLANT PUMP RELAY CIRCUIT
· PTC HEATER B RELAY
· PTC HEATER D RELAY

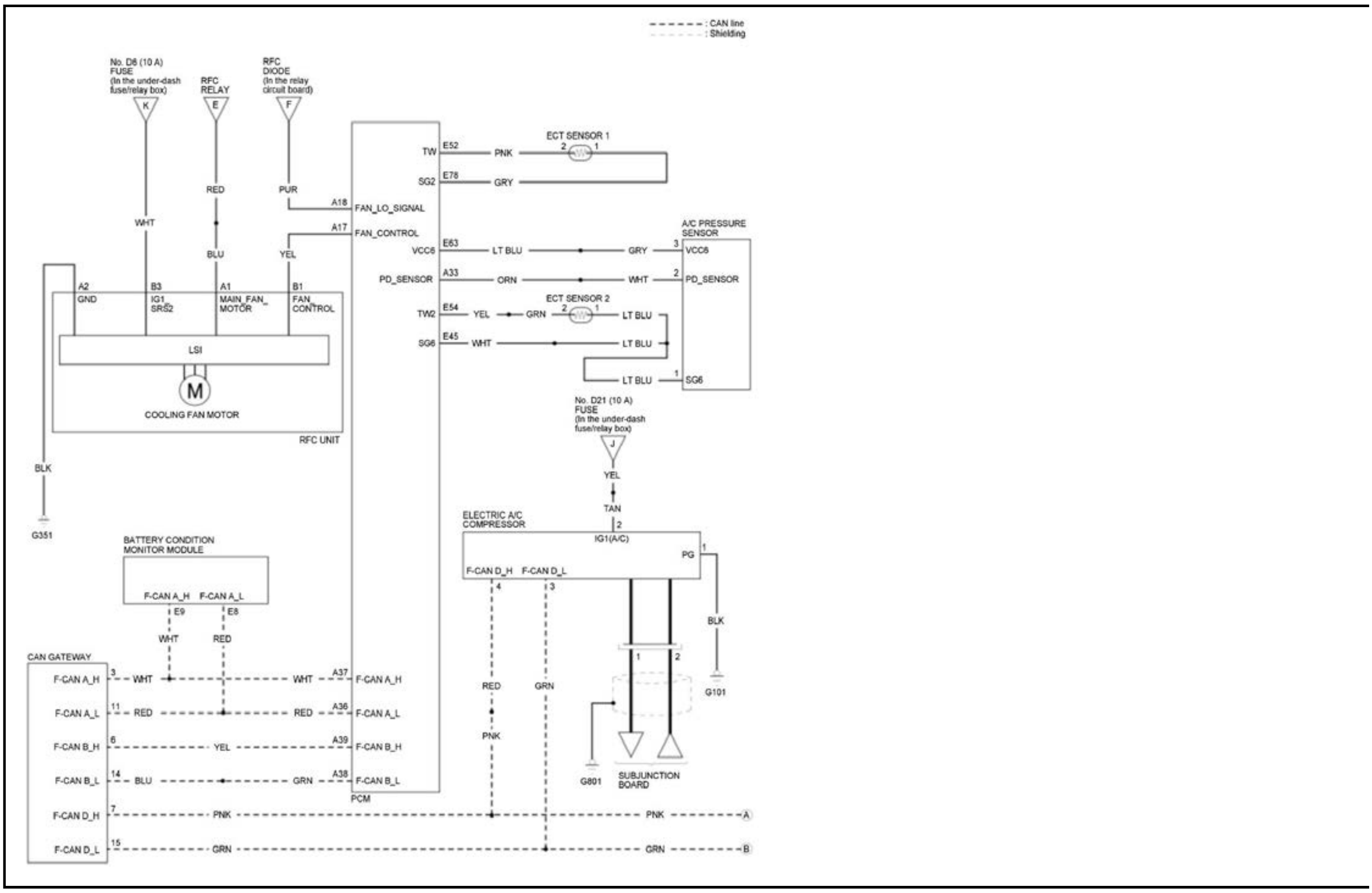
CAN line
Shielding
No. D6 (10 A) FUSE (In the under-dash fuse/relay box)
K
RFC RELAY
E
RFC DIODE (In the relay circuit board)
F
WHT
RED
BLU
PUR
YEL
A18 FAN_LO_SIGNAL
A17 FAN_CONTROL
A2 GND
B3 IG1 SRS2
A1 MAIN_FAN_ MOTOR
B1 FAN CONTROL
LSI
M
COOLING FAN MOTOR
RFC UNIT
BLK
G351
TW E52 PNK
SG2 E78 GRY
ECT SENSOR 1
2 1
A/C PRESSURE SENSOR
VCC6 E63 LT BLU GRY 3 VCC6
PD_SENSOR A33 ORN WHT 2 PD_SENSOR
ECT SENSOR 2
TW2 E54 YEL GRN LT BLU
SG6 E45 WHT LT BLU
LT BLU 1 SG6
No. D21 (10 A) FUSE (In the under-dash fuse/relay box)
J
YEL
TAN
ELECTRIC A/C COMPRESSOR
2 IG1(A/C)
PG 1
F-CAN D_H 4
F-CAN D_L 3
BLK
G101
1 2
RED
GRN
PNK
G801
SUBJUNCTION BOARD
BATTERY CONDITION MONITOR MODULE
F-CAN A_H E9 WHT
F-CAN A_L E8 RED
CAN GATEWAY
F-CAN A_H 3 WHT WHT A37 F-CAN A_H
F-CAN A_L 11 RED RED A36 F-CAN A_L
F-CAN B_H 6 YEL A39 F-CAN B_H
F-CAN B_L 14 BLU GRN A38 F-CAN B_L
PCM
F-CAN D_H 7 PNK PNK A
F-CAN D_L 15 GRN GRN B

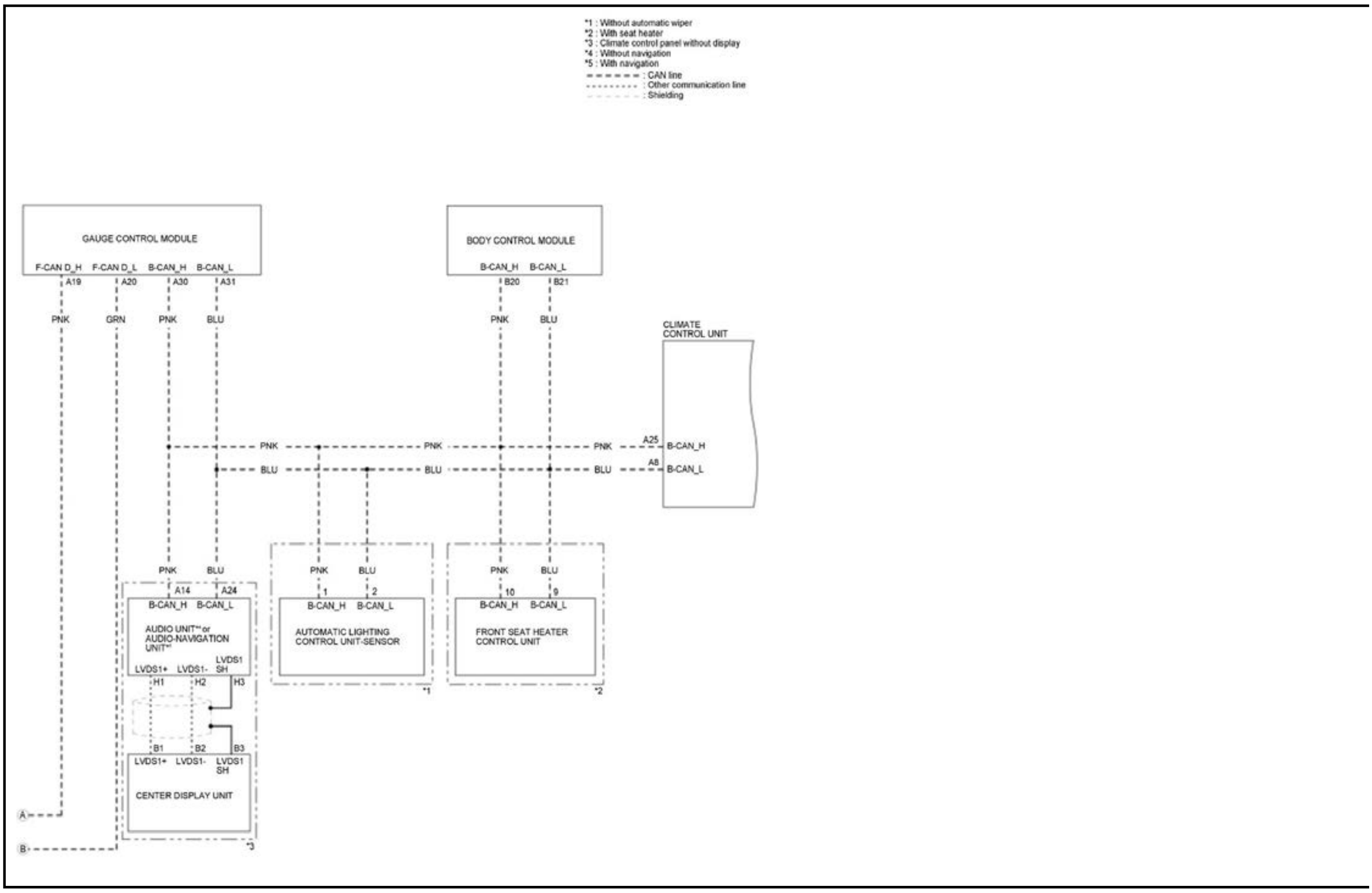
*1 : Without automatic wiper
*2 : With seat heater
*3 : Climate control panel without display
*4 : Without navigation
*5 : With navigation
CAN line
Other communication line
Shielding
GAUGE CONTROL MODULE
F-CAN D_H A19 PNK
F-CAN D_L A20 GRN
B-CAN_H A30 PNK
B-CAN_L A31 BLU
BODY CONTROL MODULE
B-CAN_H B20 PNK
B-CAN_L B21 BLU
CLIMATE CONTROL UNIT
PNK A25 B-CAN_H
BLU A8 B-CAN_L
PNK BLU
A14 B-CAN_H
A24 B-CAN_L
AUDIO UNIT*4 or AUDIO-NAVIGATION UNIT*5
LVDS1+ H1
LVDS1- H2
LVDS1 SH H3
B1 LVDS1+
B2 LVDS1-
B3 LVDS1 SH
CENTER DISPLAY UNIT
*3
1 B-CAN_H
2 B-CAN_L
AUTOMATIC LIGHTING CONTROL UNIT-SENSOR
*1
10 B-CAN_H
9 B-CAN_L
FRONT SEAT HEATER CONTROL UNIT
*2
A
B

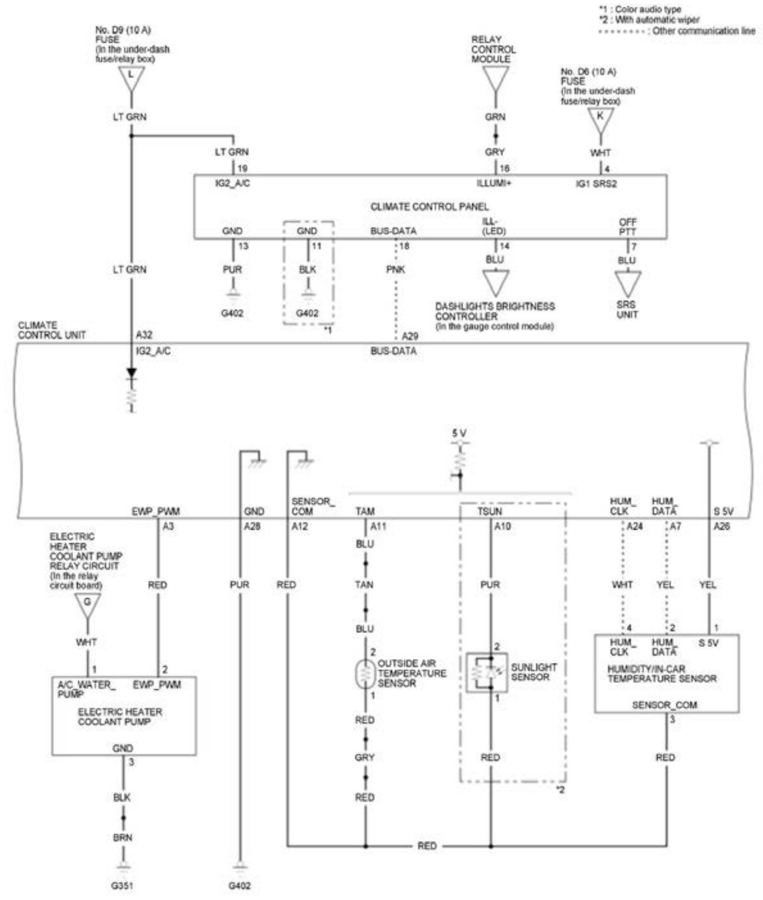
*1 : Color audio type
*2 : With automatic wiper
: Other communication line
No. D9 (10 A) FUSE (In the under-dash fuse/relay box)
L
LT GRN
RELAY CONTROL MODULE
GRN
GRY
No. D6 (10 A) FUSE (In the under-dash fuse/relay box)
K
WHT
19
16
4
IG2_A/C
ILLUMI+
IG1 SRS2
CLIMATE CONTROL PANEL
GND
GND
BUS-DATA
ILL- (LED)
OFF PTT
13
11
18
14
7
PUR
BLK
PNK
BLU
BLU
G402
G402
*1
DASHLIGHTS BRIGHTNESS CONTROLLER (In the gauge control module)
SRS UNIT
CLIMATE CONTROL UNIT
A32
IG2_A/C
A29
BUS-DATA
5 V
EWP_PWM
GND
SENSOR_ COM
TAM
TSUN
HUM_ CLK
HUM_ DATA
S 5V
A3
A28
A12
A11
A10
A24
A7
A26
ELECTRIC HEATER COOLANT PUMP RELAY CIRCUIT (In the relay circuit board)
G
WHT
RED
PUR
RED
BLU
TAN
BLU
PUR
WHT
YEL
YEL
1
2
A/C_WATER_ PUMP
EWP_PWM
ELECTRIC HEATER COOLANT PUMP
GND
3
OUTSIDE AIR TEMPERATURE SENSOR
SUNLIGHT SENSOR
HUM_ CLK
HUM_ DATA
S 5V
HUMIDITY/IN-CAR TEMPERATURE SENSOR
SENSOR_COM
RED
GRY
RED
RED
RED
*2
BLK
BRN
G351
G402

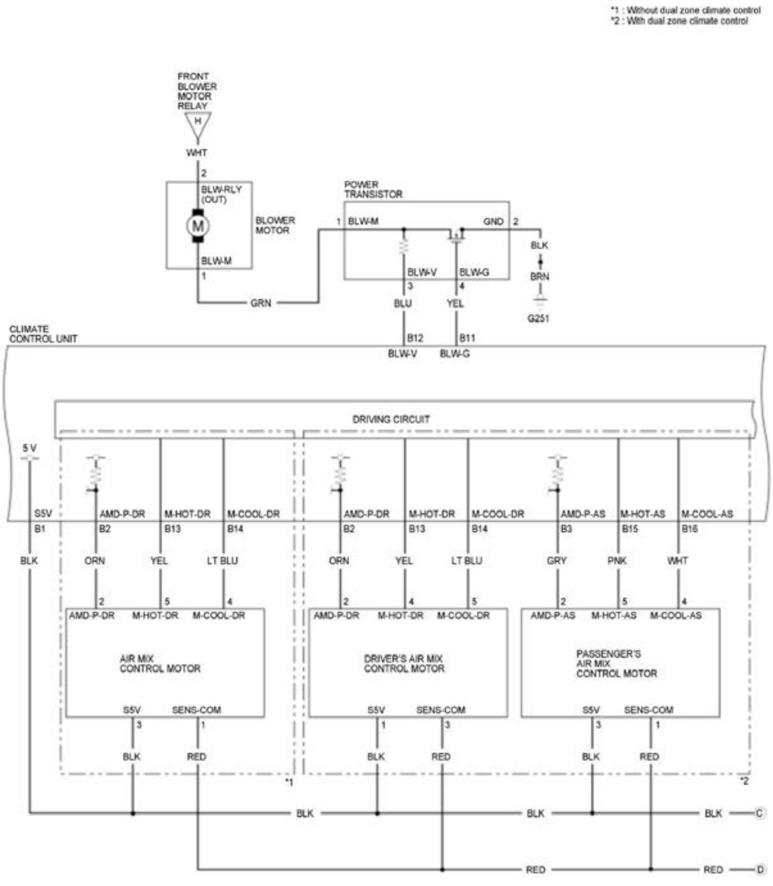
*1 : Without dual zone climate control
*2 : With dual zone climate control
FRONT BLOWER MOTOR RELAY
H
WHT
2
BLW-RLY (OUT)
M
BLOWER MOTOR
BLW-M
1
GRN
POWER TRANSISTOR
1
BLW-M
GND
2
BLW-V
BLW-G
3
4
BLK
BRN
G251
BLU
YEL
CLIMATE CONTROL UNIT
B12
B11
BLW-V
BLW-G
DRIVING CIRCUIT
5 V
S5V
AMD-P-DR
M-HOT-DR
M-COOL-DR
AMD-P-DR
M-HOT-DR
M-COOL-DR
AMD-P-AS
M-HOT-AS
M-COOL-AS
B1
B2
B13
B14
B2
B13
B14
B3
B15
B16
BLK
ORN
YEL
LT BLU
ORN
YEL
LT BLU
GRY
PNK
WHT
AIR MIX CONTROL MOTOR
DRIVER'S AIR MIX CONTROL MOTOR
PASSENGER'S AIR MIX CONTROL MOTOR
S5V
SENS-COM
BLK
RED
*1
*2
BLK
BLK
BLK
C
RED
RED
D

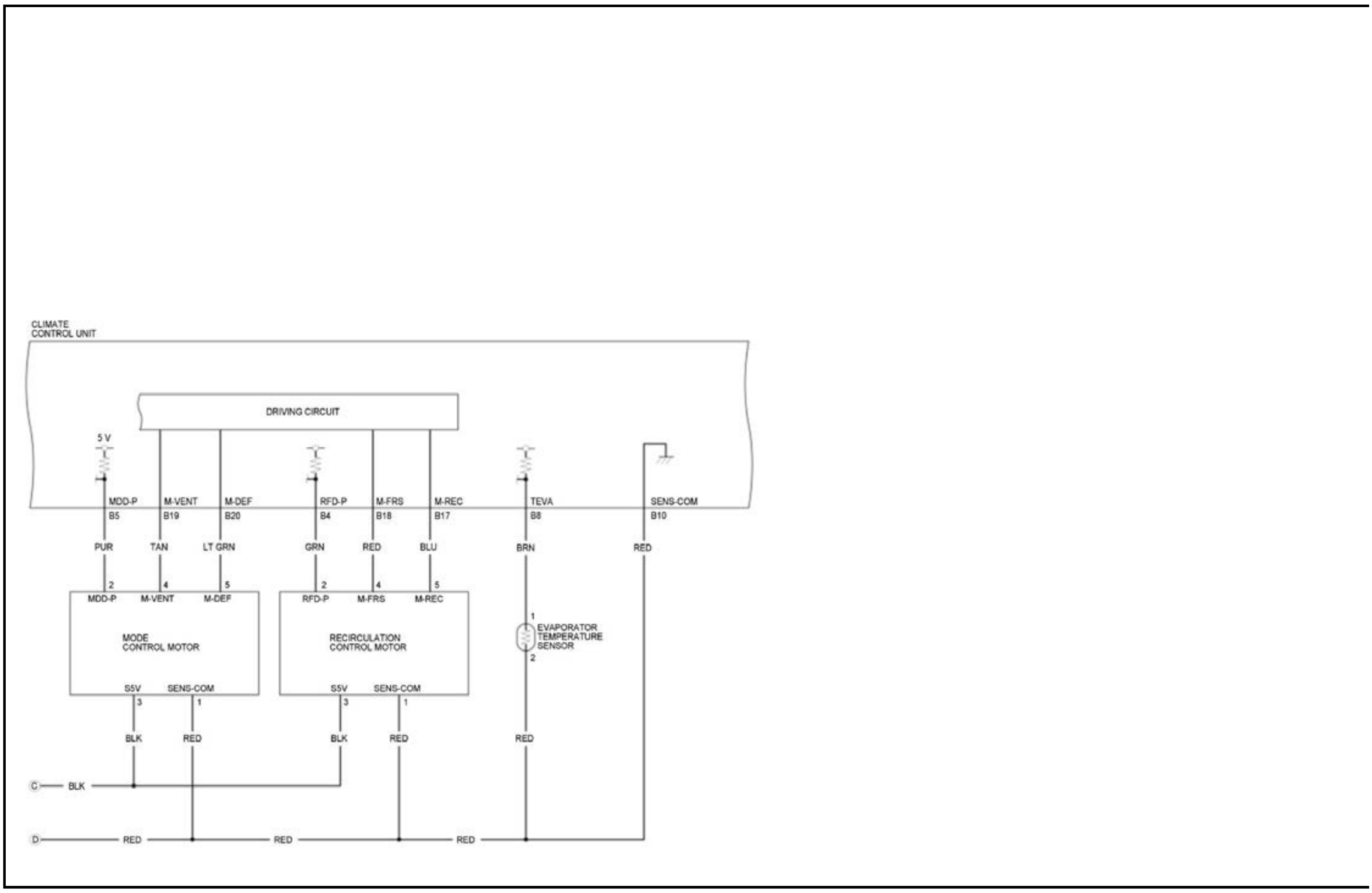
CLIMATE CONTROL UNIT
DRIVING CIRCUIT
5 V
MDD-P
B5
M-VENT
B19
M-DEF
B20
RFD-P
B4
M-FRS
B18
M-REC
B17
TEVA
B8
SENS-COM
B10
PUR
TAN
LT GRN
GRN
RED
BLU
BRN
RED
MODE CONTROL MOTOR
RECIRCULATION CONTROL MOTOR
EVAPORATOR TEMPERATURE SENSOR
S5V
SENS-COM
BLK
RED
C
D

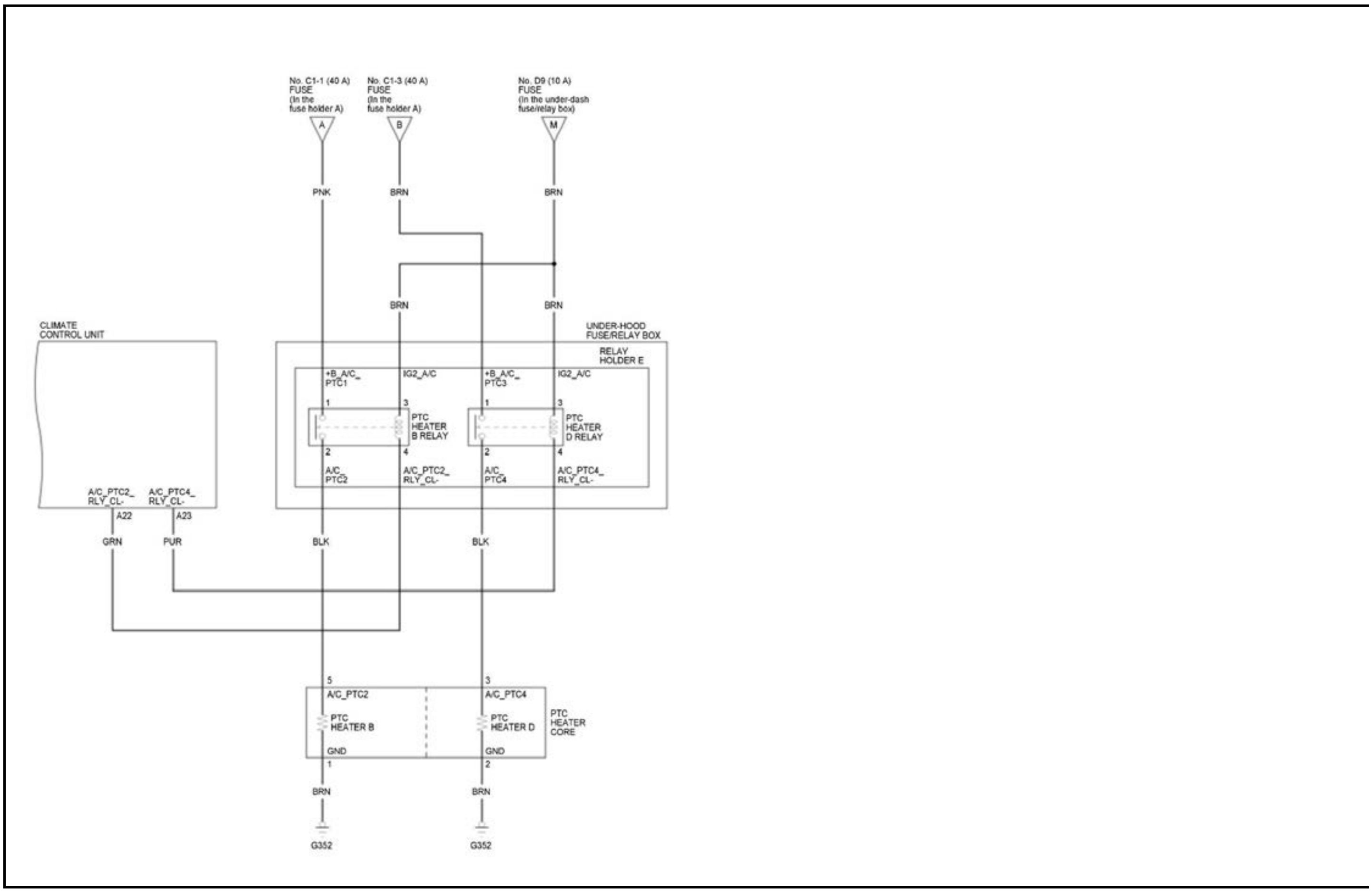
No. C1-1 (40 A) FUSE (In the fuse holder A)
No. C1-3 (40 A) FUSE (In the fuse holder A)
No. D9 (10 A) FUSE (In the under-dash fuse/relay box)
A
B
M
PNK
BRN
CLIMATE CONTROL UNIT
UNDER-HOOD FUSE/RELAY BOX
RELAY HOLDER E
+B_A/C_PTC1
IG2_A/C
+B_A/C_PTC3
PTC HEATER B RELAY
PTC HEATER D RELAY
A/C_PTC2
A/C_PTC2_RLY_CL-
A/C_PTC4
A/C_PTC4_RLY_CL-
A22
A23
GRN
PUR
BLK
PTC HEATER B
PTC HEATER D
PTC HEATER CORE
GND
BRN
G352

HEATED STEERING WHEEL CIRCUIT DIAGRAM

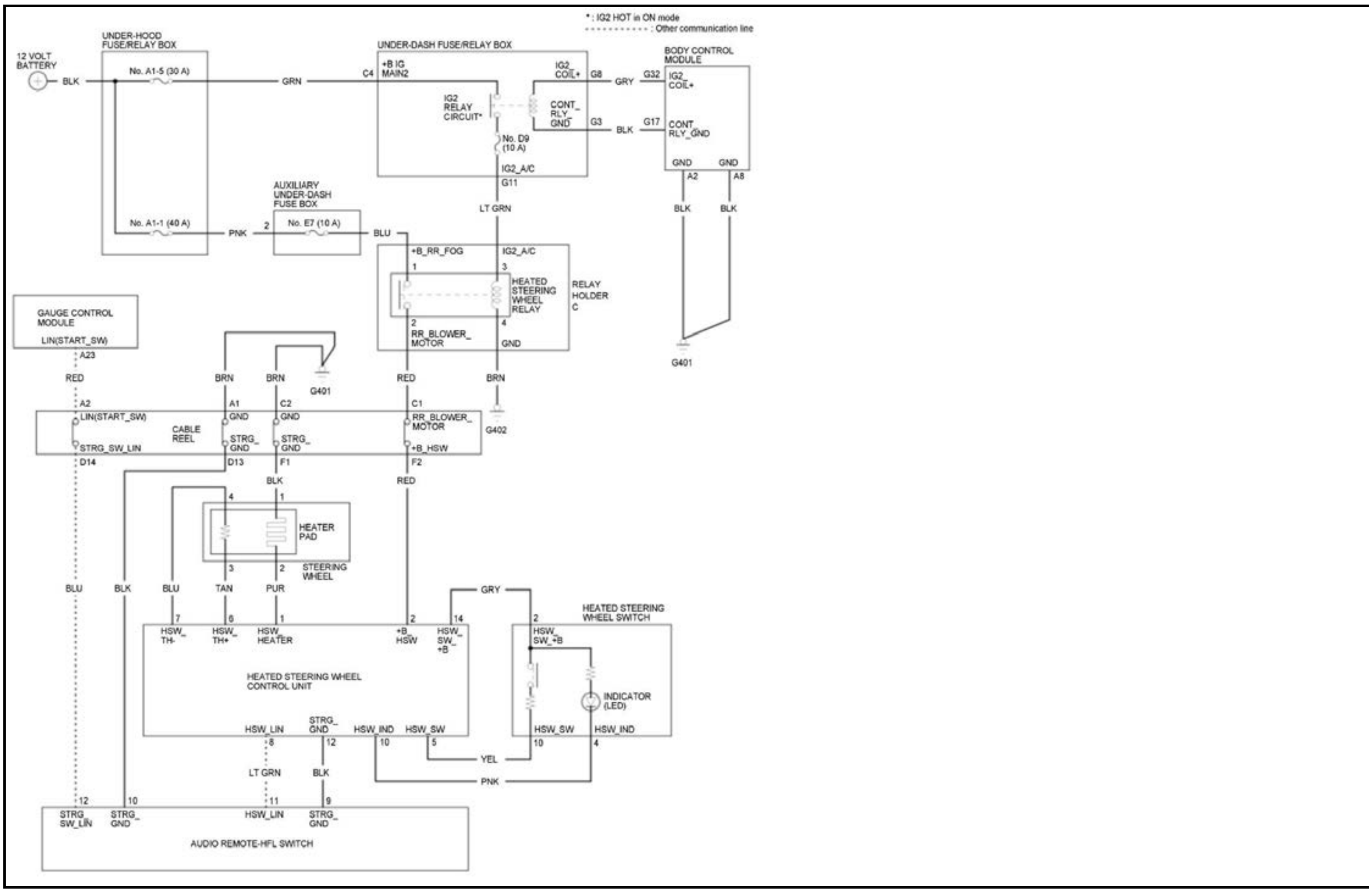
*: IG2 HOT in ON mode
: Other communication line
12 VOLT BATTERY
BLK
UNDER-HOOD FUSE/RELAY BOX
No. A1-5 (30 A)
GRN
No. A1-1 (40 A)
PNK
AUXILIARY UNDER-DASH FUSE BOX
No. E7 (10 A)
BLU
UNDER-DASH FUSE/RELAY BOX
C4
+B IG MAIN2
IG2 RELAY CIRCUIT*
IG2_COIL+
CONT_RLY_GND
G8
G3
No. D9 (10 A)
IG2_A/C
G11
GRY
BLK
BODY CONTROL MODULE
G32
G17
IG2_COIL+
CONT_RLY_GND
GND
A2
A8
BLK
G401
LT GRN
+B_RR_FOG
HEATED STEERING WHEEL RELAY
RELAY HOLDER C
RR_BLOWER_MOTOR
GND
GAUGE CONTROL MODULE
LIN(START_SW)
A23
RED
BRN
A2
LIN(START_SW)
CABLE REEL
STRG_SW_LIN
D14
A1
GND
STRG_GND
D13
C2
F1
C1
RR_BLOWER_MOTOR
+B_HSW
F2
G402
HEATER PAD
STEERING WHEEL
BLU
BLK
TAN
PUR
HSW_TH-
HSW_TH+
HSW_HEATER
+B_HSW
HSW_SW_+B
HEATED STEERING WHEEL CONTROL UNIT
HSW_LIN
STRG_GND
HSW_IND
HSW_SW
HEATED STEERING WHEEL SWITCH
HSW_SW_+B
INDICATOR (LED)
HSW_SW
HSW_IND
YEL
PNK
LT GRN
STRG_SW_LIN
STRG_GND
HSW_LIN
AUDIO REMOTE-HFL SWITCH

REAR WINDOW DEFOGGER CIRCUIT DIAGRAM

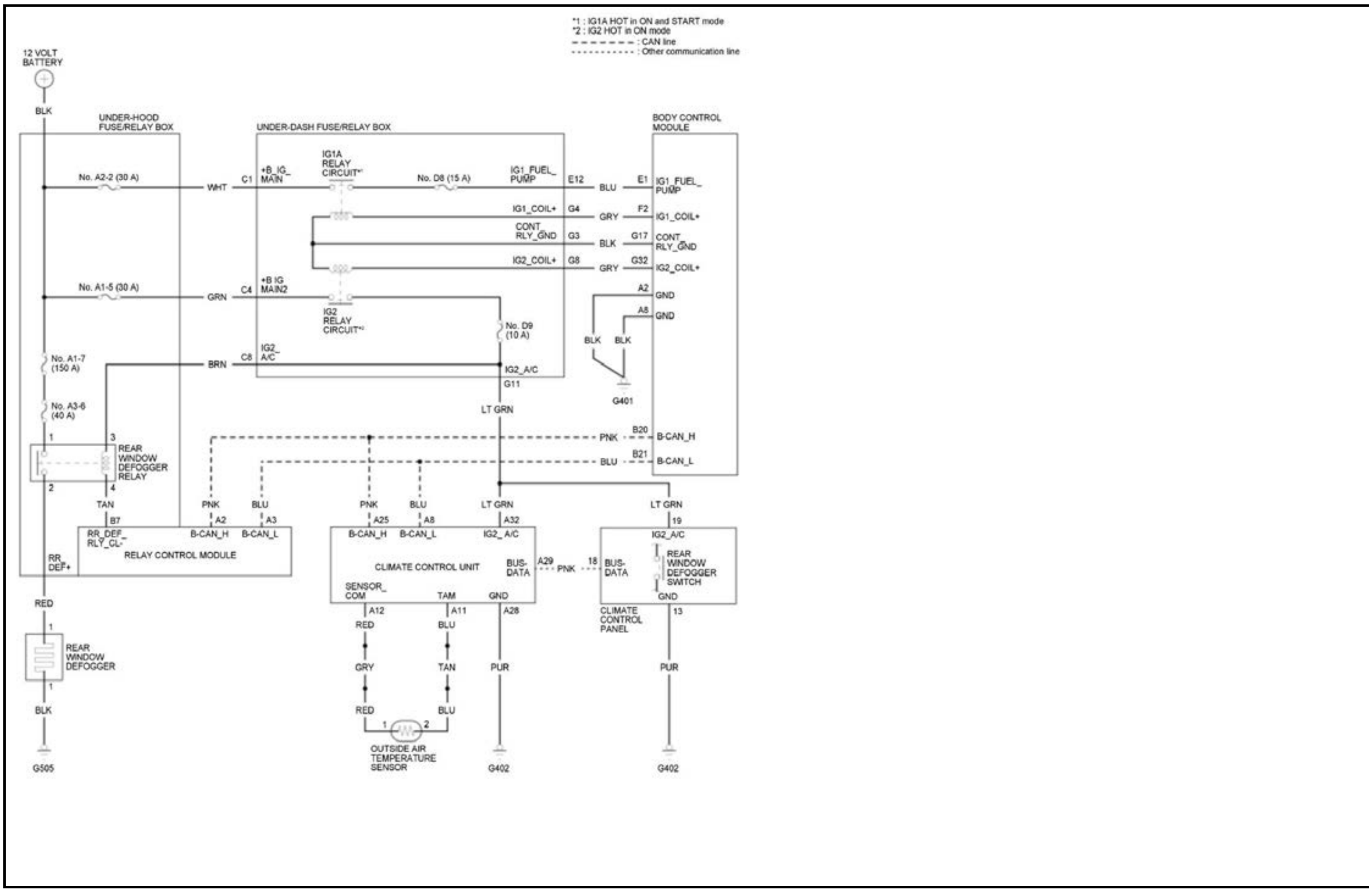
*1: IG1A HOT in ON and START mode
*2: IG2 HOT in ON mode
: CAN line
: Other communication line
12 VOLT BATTERY
BLK
UNDER-HOOD FUSE/RELAY BOX
No. A2-2 (30 A)
WHT
No. A1-5 (30 A)
GRN
No. A1-7 (150 A)
No. A3-6 (40 A)
BRN
REAR WINDOW DEFOGGER RELAY
TAN
UNDER-DASH FUSE/RELAY BOX
C1
+B_IG_MAIN
IG1A RELAY CIRCUIT*1
No. D8 (15 A)
IG1_FUEL_PUMP
IG1_COIL+
CONT_RLY_GND
IG2_COIL+
E12
G4
G3
G8
C4
+B IG MAIN2
IG2 RELAY CIRCUIT*2
No. D9 (10 A)
C8
IG2_A/C
G11
BLU
GRY
BLK
GRY
BODY CONTROL MODULE
E1
F2
G17
G32
IG1_FUEL_PUMP
IG1_COIL+
CONT_RLY_GND
IG2_COIL+
A2
A8
GND
G401
PNK
B20
B-CAN_H
B21
B-CAN_L
LT GRN
B7
RR_DEF_RLY_CL-
B-CAN_H
B-CAN_L
RELAY CONTROL MODULE
RR DEF+
A25
A8
A32
CLIMATE CONTROL UNIT
BUS-DATA
A29
SENSOR_COM
TAM
GND
A12
A11
A28
19
IG2_A/C
REAR WINDOW DEFOGGER SWITCH
BUS-DATA
18
GND
13
CLIMATE CONTROL PANEL
RED
REAR WINDOW DEFOGGER
GRY
TAN
PUR
OUTSIDE AIR TEMPERATURE SENSOR
G505
G402

ADJUSTMENT

A/C REFRIGERANT OIL ADJUSTMENT

Adjustment

NOTE:

- When the A/C compressor is replaced, check the work procedures from the table below and adjusts the A/C refrigerant oil amount.
- Cover the pulley and clutch with plastic bag to prevent the A/C refrigerant oil contact.
- Drain the A/C refrigerant oil sufficiently until the drip disappears.

Procedure

NOTE: **[ ] indicates the work process order and () indicates the number describing the work contents in following procedure.**

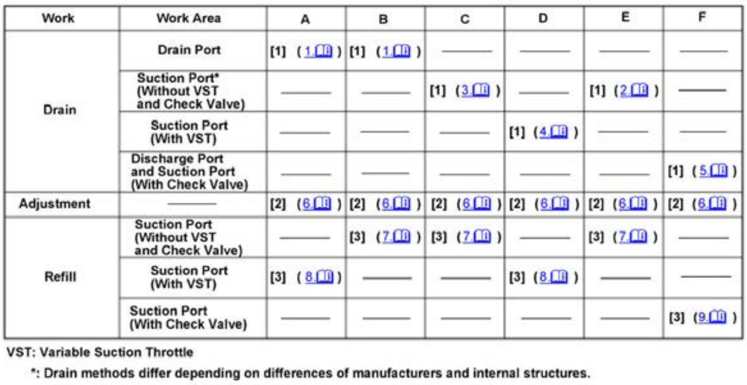

Work	Work Area	A	B	C	D	E	F
Drain	Drain Port	[1] (1)	[1] (1)	—	—	—	—
	Suction Port* (Without VST and Check Valve)	—	—	[1] (3)	—	[1] (2)	—
	Suction Port (With VST)	—	—	—	[1] (4)	—	—
	Discharge Port and Suction Port (With Check Valve)	—	—	—	—	—	[1] (5)
Adjustment	—	[2] (6)	[2] (6)	[2] (6)	[2] (6)	[2] (6)	[2] (6)
Refill	Suction Port (Without VST and Check Valve)	—	[3] (7)	[3] (7)	—	[3] (7)	—
	Suction Port (With VST)	[3] (8)	—	—	[3] (8)	—	—
	Suction Port (With Check Valve)	—	—	—	—	—	[3] (9)

VST: Variable Suction Throttle

*: Drain methods differ depending on differences of manufacturers and internal structures.

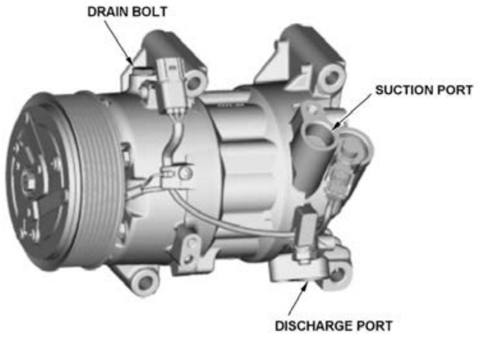

This illustration is an example only. Appearance and structure of the actual parts may vary depending on the model.

1. A/C Refrigerant Oil - Drain (Drain Port)

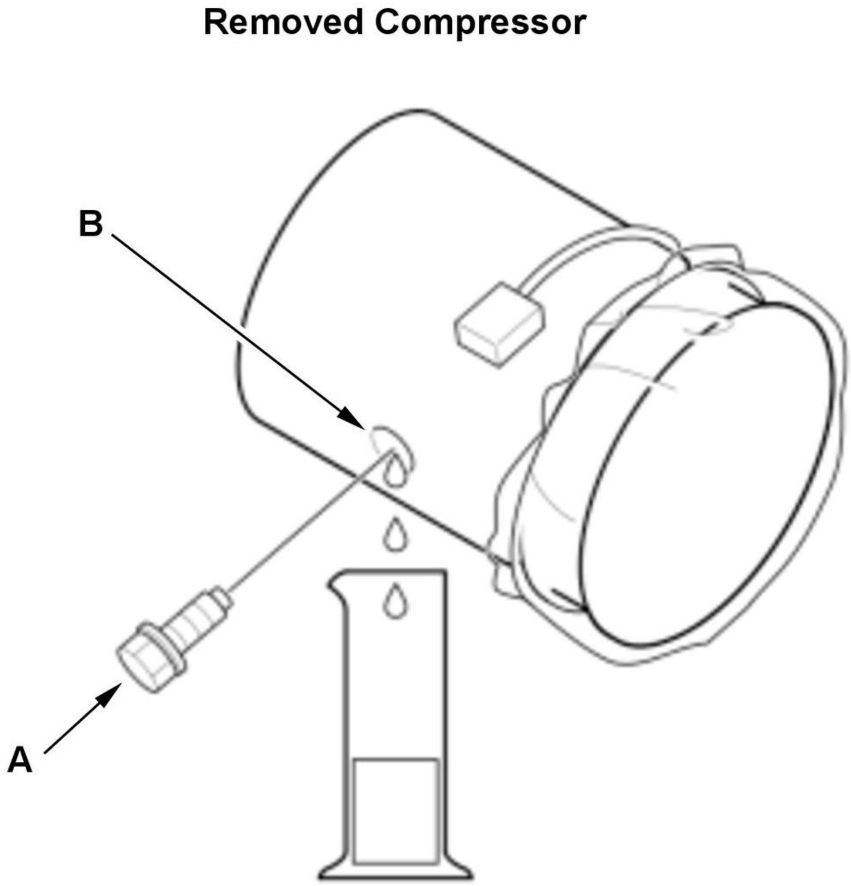 Removed Compressor B A	1. Remo 2. Drain measuri
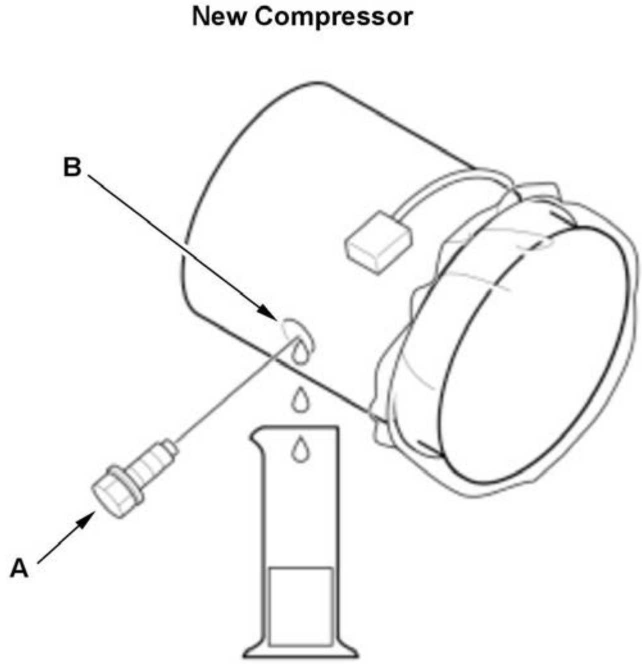 New Compressor B A	3. Remove the drain bolt (A) from the new A/ 4. Drain the A/C refrigerant oil from the drain 5. Use a new drain bolt and install it with the s Control System (Under-Hood) Removal, Insta

2. A/C Refrigerant Oil - Drain (Suction Port (Without VST and Check Valve))

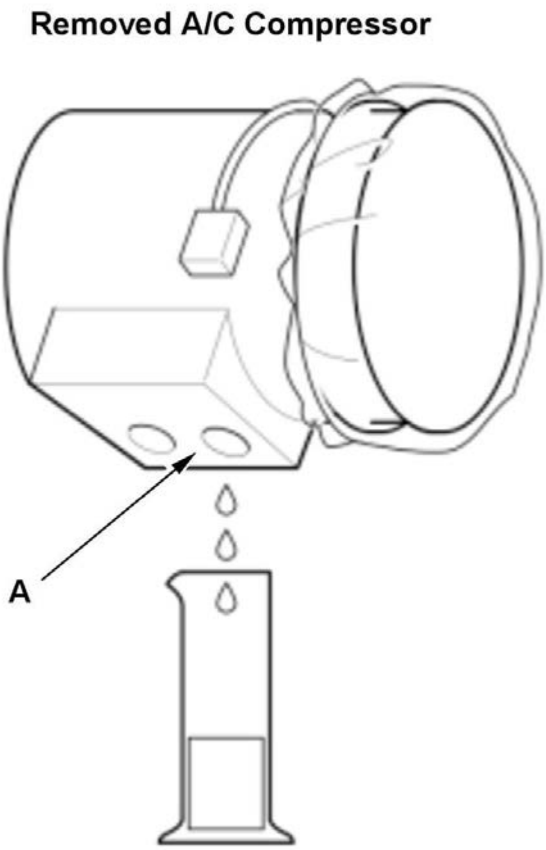 Removed A/C Compressor A	1. Drain the A/C refrigera compressor in a measurin
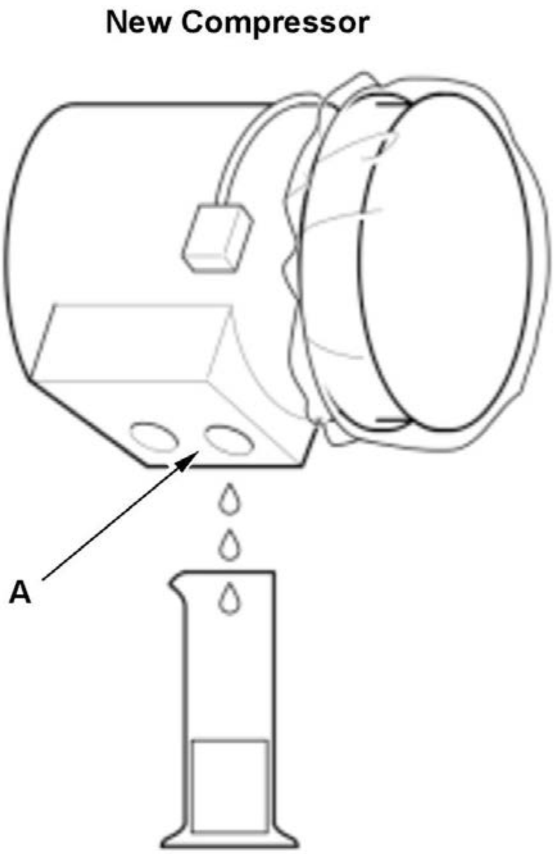 New Compressor A	2. Drain the A/C refrige compressor in a measuri

3. A/C Refrigerant Oil - Drain (Suction Port (Without VST and Check Valve))

1. Drain the A/C refrigerant oil from the suction port (A) of the removed A/C compressor in a measuring device.

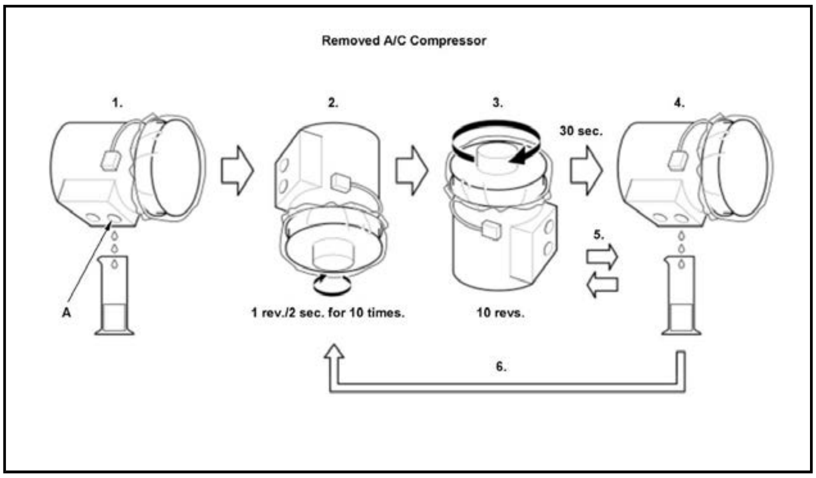

2. With the A/C compressor clutch faced downward, rotating the armature plate 10 times at a speed of 1 revolution per 2 seconds.

NOTE: When the armature plate is rotated, the refrigerant or refrigerant oil may squirt. Direct the suction port and discharge port in a safe direction.

3. With the A/C compressor clutch faced upward, rotating the armature plate 10 times at wait 30 seconds.

4. Drain the A/C refrigerant oil from the suction port.

5. Repeat steps 3 and 4 several more times until the refrigerant and refrigerant oil does not discharge.

6. When draining of the A/C refrigerant oil from the A/C compressor has ended, perform step 2, and repeat step 3 and step 4.

7. Drain the A/C refrigerant oil from the suction port (A) of the new A/C compressor in a measuring device.

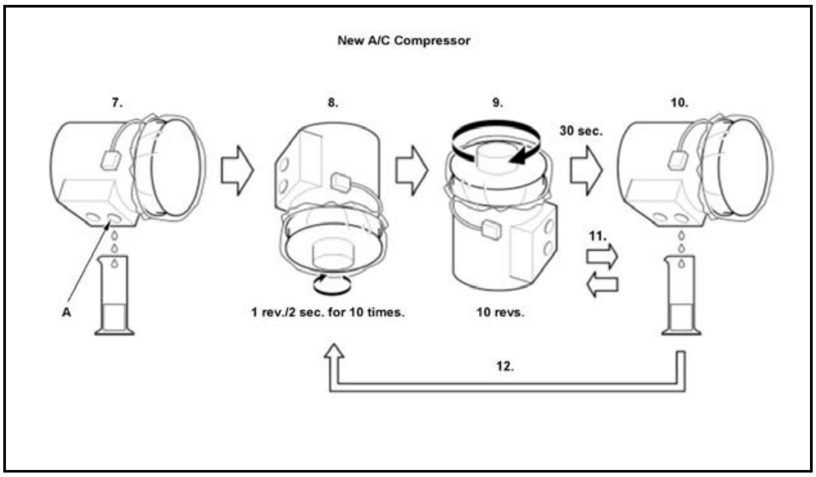

8. With the A/C compressor clutch faced downward, rotating the armature plate 10 times at a speed of 1 revolution per 2 seconds.

NOTE: When the armature plate is rotated, the refrigerant or refrigerant oil may squirt. Direct the suction port and discharge port in a safe direction.

9. With the A/C compressor clutch faced upward, rotating the armature plate 10 times at wait 30 seconds.

10. Drain the A/C refrigerant oil from the suction port.

11. Repeat steps 9 and 10 several more times until the refrigerant and refrigerant oil does not discharge.

12. When draining of the A/C refrigerant oil from the A/C compressor has ended, perform step 8, and repeat step 9 and step 10.

4. A/C Refrigerant Oil - Drain (Suction Port (With VST))

1. Push the VST with a flat-tip screwdriver, and drain the A/C refrigerant oil from the suction port (A) of the removed A/C compressor in a measuring device. The

NOTE:

- **Use a screwdriver that is not painted or rusted.**
- **Wrap the screwdriver it with protective tape (B) to prevent damage.**
- **Be careful not to damage the suction port.**
- **The VST is opened and closed using a light amount of force. Be careful not to press down it too hard.**

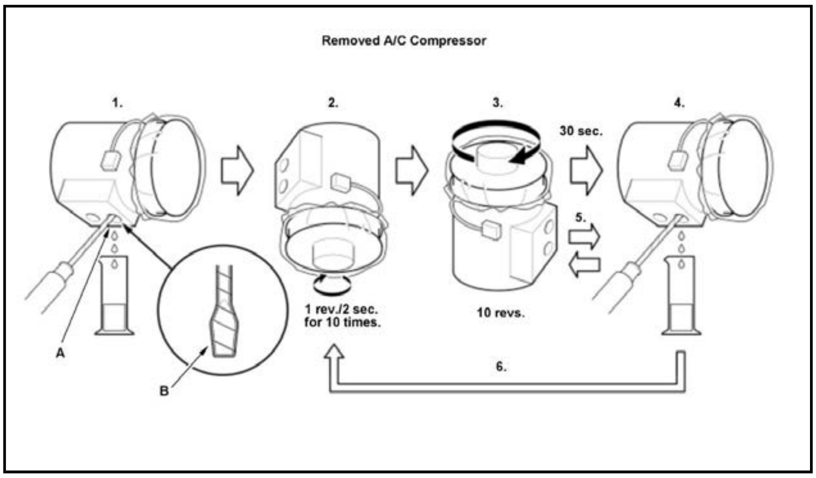

2. With the A/C compressor clutch faced downward, rotating the armature plate 10 times at a speed of 1 revolution per 2 seconds.

When the armature plate is rotated, the refrigerant or refrigerant oil may squirt. Direct the suction port and discharge port in a safe direction.

3. With the A/C compressor clutch faced upward, rotating the armature plate 10 times at wait 30 seconds.

4. Push the VST with a flat-tip screwdriver, and drain the A/C refrigerant oil from the suction port.

5. Repeat steps 3 and 4 several more times until the refrigerant and refrigerant oil does not discharge.

6. When draining of the A/C refrigerant oil from the A/C compressor has ended, perform step 2, and repeat step 3 and step 4.

7. Push the VST with a flat-tip screwdriver, and drain the A/C refrigerant oil from the suction port (A) of the new A/C compressor in a measuring device. The VS

- Use a screwdriver that is not painted or rusted.
- Wrap the screwdriver it with protective tape (B) to prevent damage.
- Be careful not to damage the suction port.
- The VST is opened and closed using a light amount of force. Be careful not to press it down too hard.

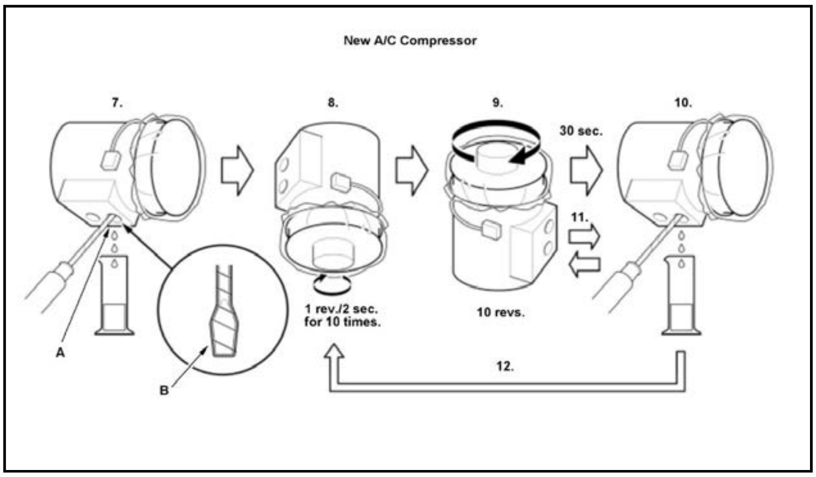

8. With the A/C compressor clutch faced downward, rotating the armature plate 10 times at a speed of 1 revolution per 2 seconds.

NOTE: When the armature plate is rotated, the refrigerant or refrigerant oil may squirt. Direct the suction port and discharge port in a safe direction.

9. With the A/C compressor clutch faced upward, rotating the armature plate 10 times at wait 30 seconds.

10. Push the VST with a flat-tip screwdriver, and drain the A/C refrigerant oil from the suction port.

11. Repeat steps 9 and 10 several more times until the refrigerant and refrigerant oil does not discharge.

12. When draining of the A/C refrigerant oil from the A/C compressor has ended, perform step 8, and repeat step 9 and step 10.

5. A/C Refrigerant Oil - Drain (Discharge Port and Suction Port (With Check Valve))

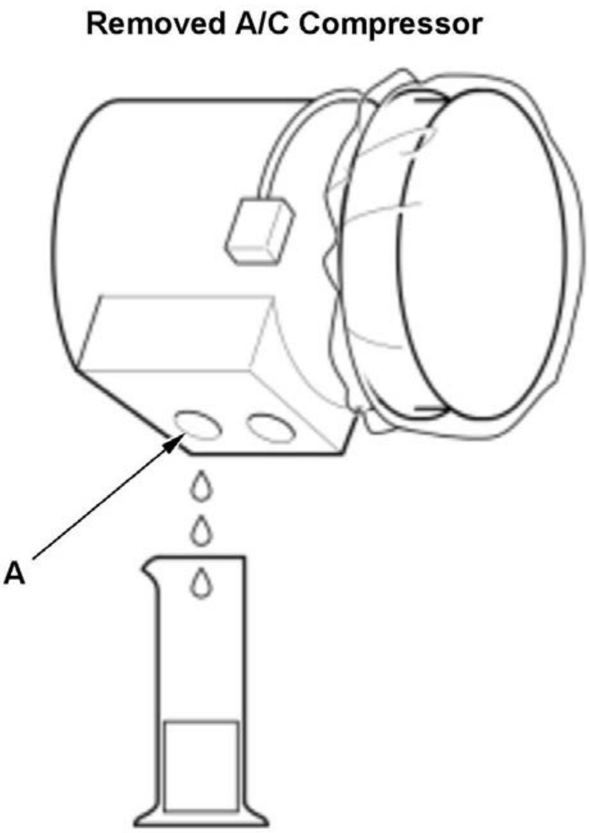 Removed A/C Compressor A	1. Drain the A/C refrigerant compressor in a measuring
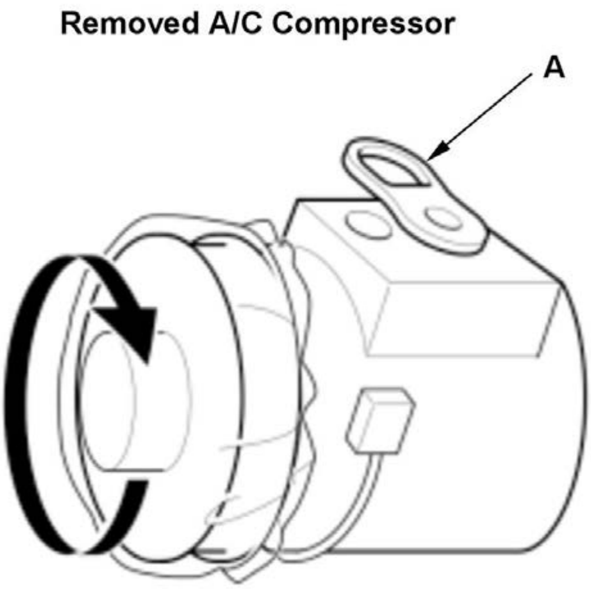 Removed A/C Compressor A	2. Install the lid (A) to the d the armature 5 times or so. **NOTE:** - **Use the lid that comes with a new A/C compressor.** - **Drain the A/C refrigerant oil in the cylinder by compressing air.**

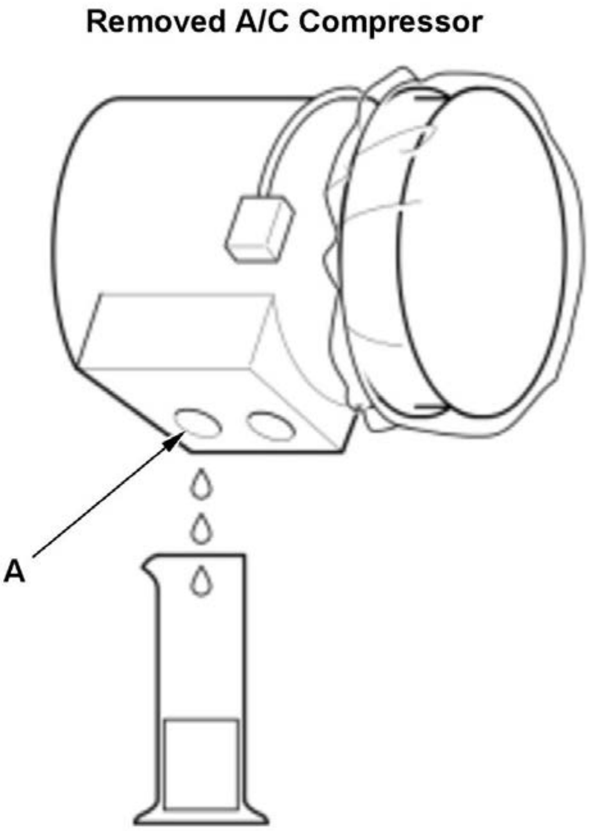 Removed A/C Compressor A	3. Drain the A/C refrigerant compressor in a measuring

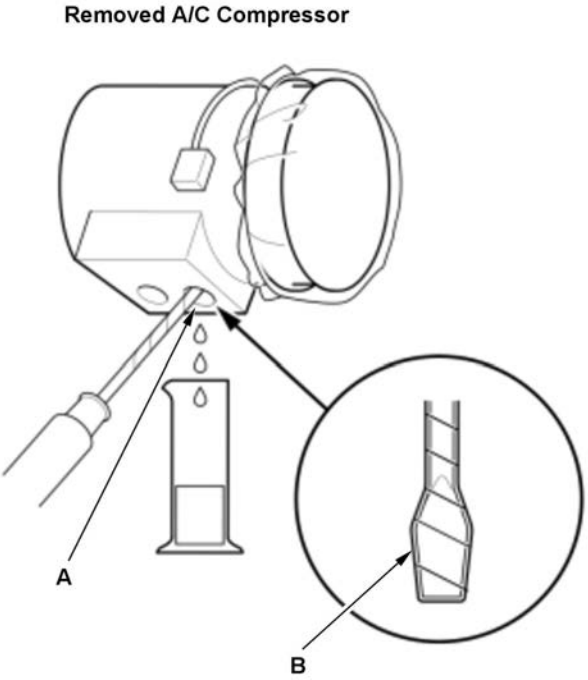 Removed A/C Compressor A B	4. Push the check valve with a flat-tip screwdriver, and drain the removed A/C compressor in a measuring device. The check valve **NOTE:** - **Use a screwdriver that is not painted and rusted.** - **Wrap the screwdriver with protective tape (B) to prevent damage.** - **Be careful not to damage the suction port.** - **The check valve is opened and closed using a light amount of force. Be careful not to press it down too hard.**

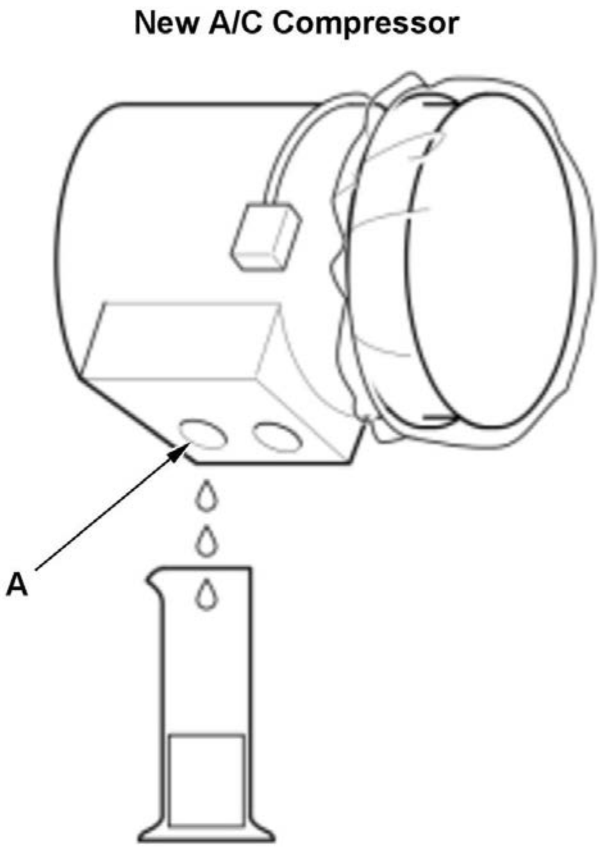 New A/C Compressor A	5. Drain the A/C refrigera compressor in a measurin
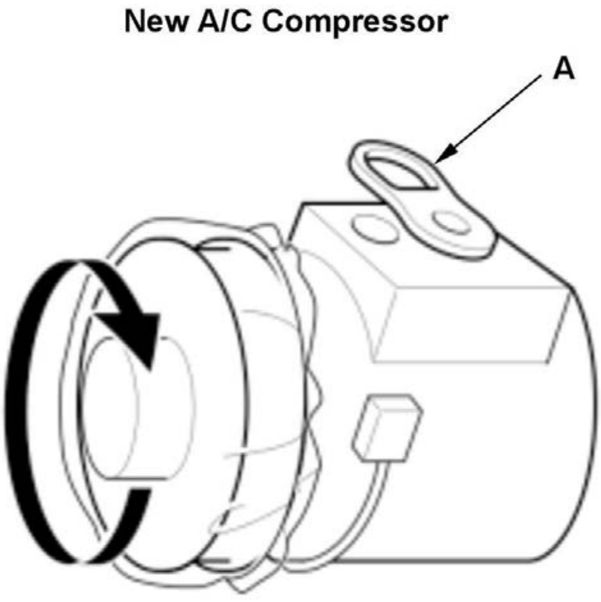 New A/C Compressor A	6. Install the lid (A) to the armature 5 times or so. **NOTE:** - **Use the lid that comes with a new A/C compressor.** - **Drain the A/C refrigerant oil in the cylinder by compressing air.**

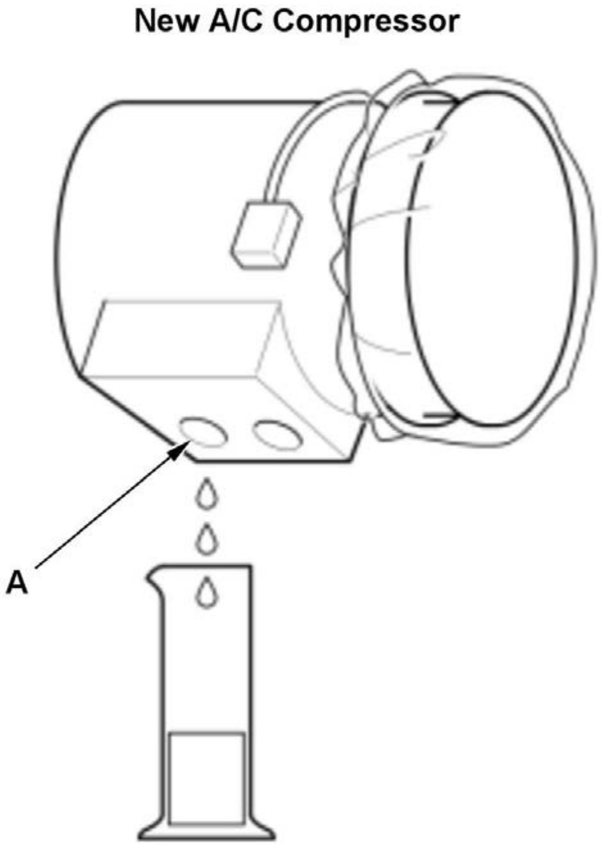	7. Drain the A/C refrigera compressor in a measurin

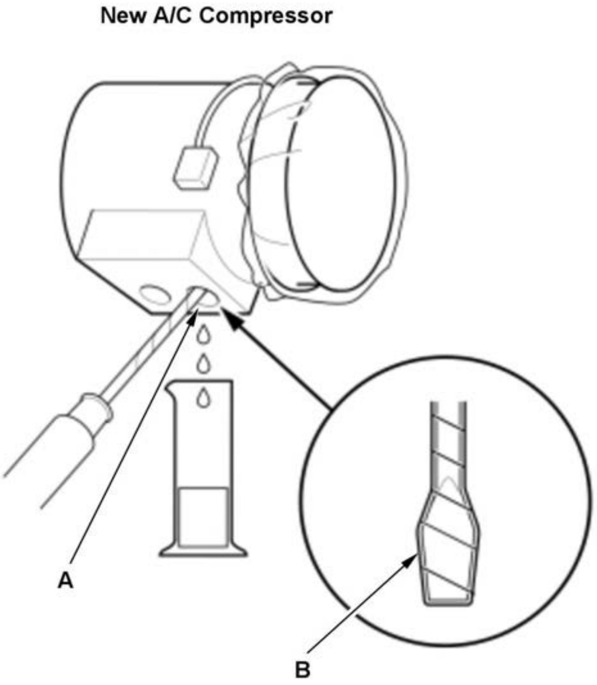	8. Push the check valve with a flat-tip screwdriver, and drain the A/C compressor in a measuring device. The check valve stroke **NOTE:** - **Use a screwdriver that is not painted and rusted.** - **Wrap the screwdriver it with protective tape (B) to prevent damage.** - **Be careful not to damage the suction port.** - **The check valve is opened and closed using a light amount of force. Be careful not to press down it too hard.**

6. A/C Compressor Oil - Adjustment

1. Adjust the A/C refrigerant oil drained from the new A/C compressor to the same amount as the A/C refrigerant oil drained from the removed A/C compressor.

NOTE: If no A/C refrigerant oil was drained from the removed A/C compressor, do not drain more than 50 mL (1 2/3 fl oz, 1.76 Imp oz) from the new A/C comp

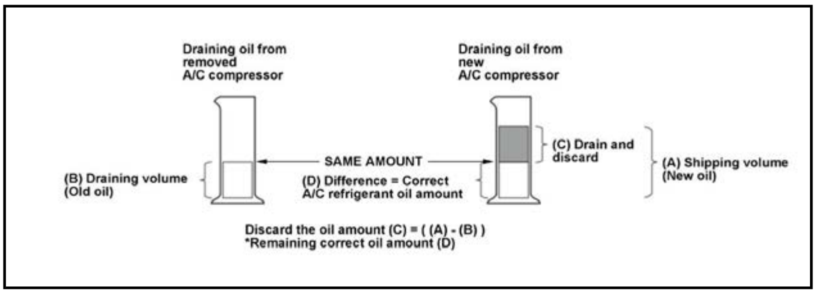
Draining oil from removed A/C compressor
Draining oil from new A/C compressor
(C) Drain and discard
SAME AMOUNT
(A) Shipping volume (New oil)
(B) Draining volume (Old oil)
(D) Difference = Correct A/C refrigerant oil amount
Discard the oil amount (C) = ((A) - (B))
*Remaining correct oil amount (D)

7. A/C Refrigerant Oil - Refill (Without VST and Check Valve)

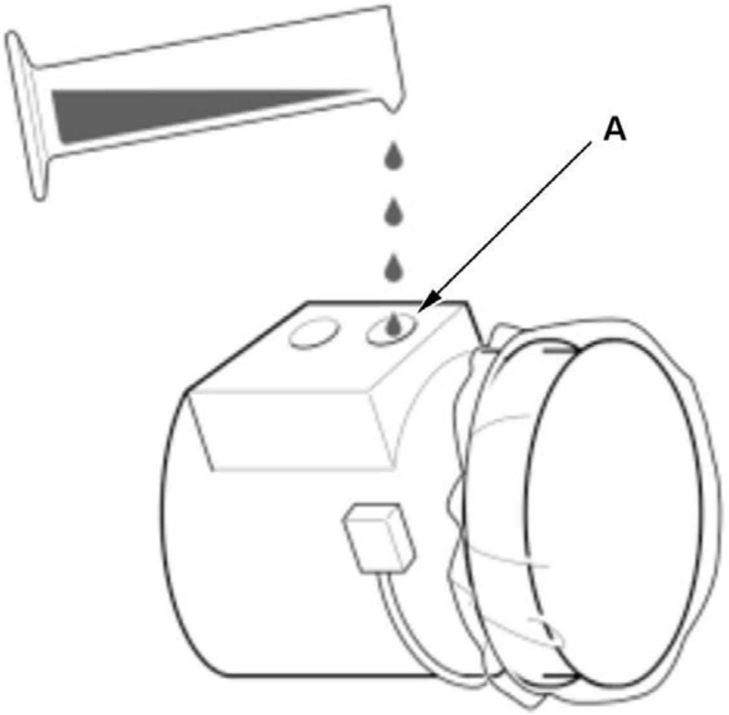	1. Refill the adjuste through the suction

8. A/C Refrigerant Oil - Refill (With VST)

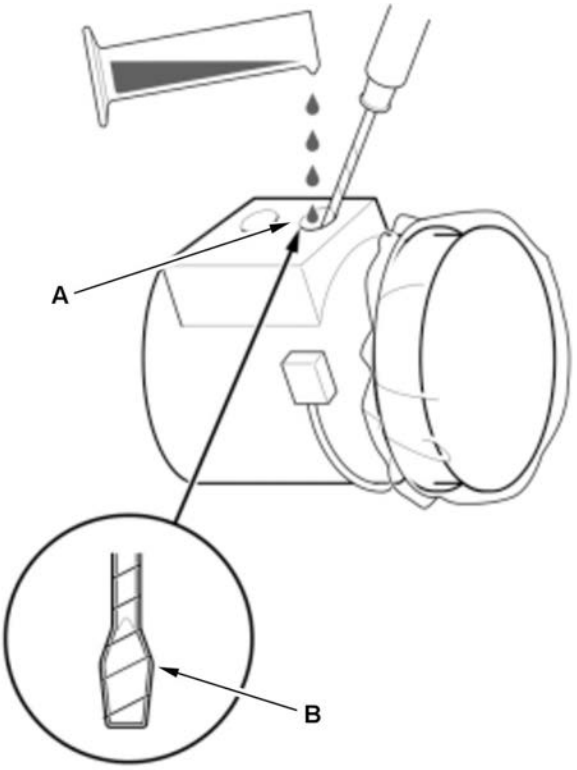	1. Push the VST with a flat-tip screwdriver, and refill the through the suction port (A). The VST stroke depth is ab **NOTE:** - **Use a screwdriver that is not painted or rusted.** - **Wrap the screwdriver it with protective tape (B) to prevent damage.** - **Be careful not to damage the suction port.** - **The VST is opened and closed using a light amount of force. Be careful not to press down it too hard.**

9. A/C Refrigerant Oil - Refill (With Check Valve)

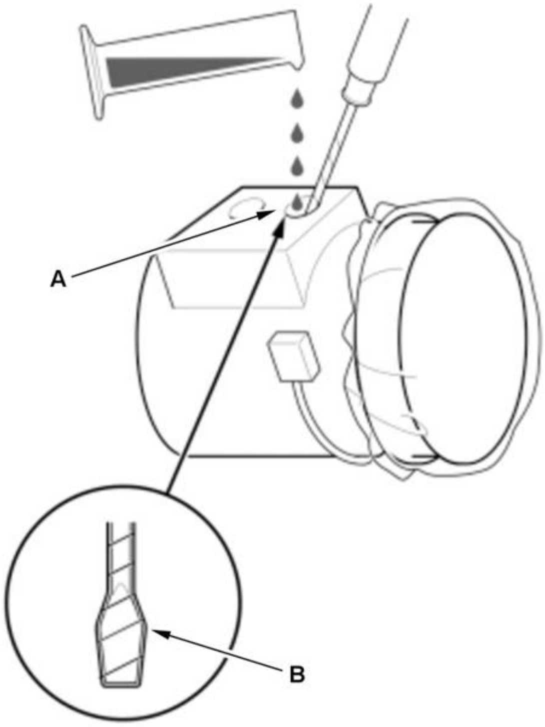	1. Push the check valve with a flat-tip screwdriver, and refill th compressor through the suction port (A). The check valve strok - Use a screwdriver that is not painted and rusted. - Wrap the screwdriver it with protective tape (B) to preve - Be careful not to damage the suction port. - The check valve is opened and closed using a light amou

COMPONENT LOCATION INDEX

CLIMATE CONTROL SYSTEM COMPONENT LOCATION INDEX

For relationships between signals in a system, refer to System Diagram.

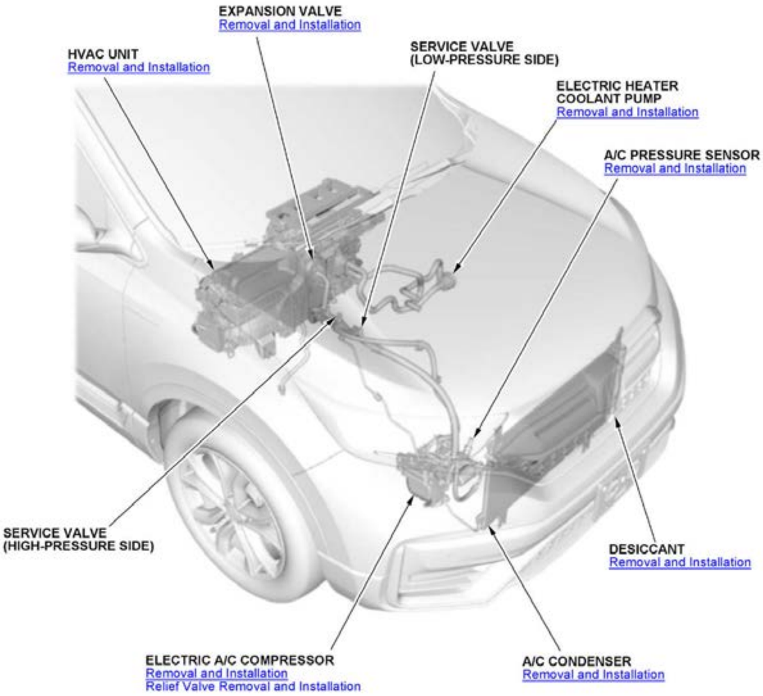
EXPANSION VALVE
Removal and Installation
HVAC UNIT
Removal and Installation
SERVICE VALVE
(LOW-PRESSURE SIDE)
ELECTRIC HEATER
COOLANT PUMP
Removal and Installation
A/C PRESSURE SENSOR
Removal and Installation
SERVICE VALVE
(HIGH-PRESSURE SIDE)
DESICCANT
Removal and Installation
ELECTRIC A/C COMPRESSOR
Removal and Installation
Relief Valve Removal and Installation
A/C CONDENSER
Removal and Installation

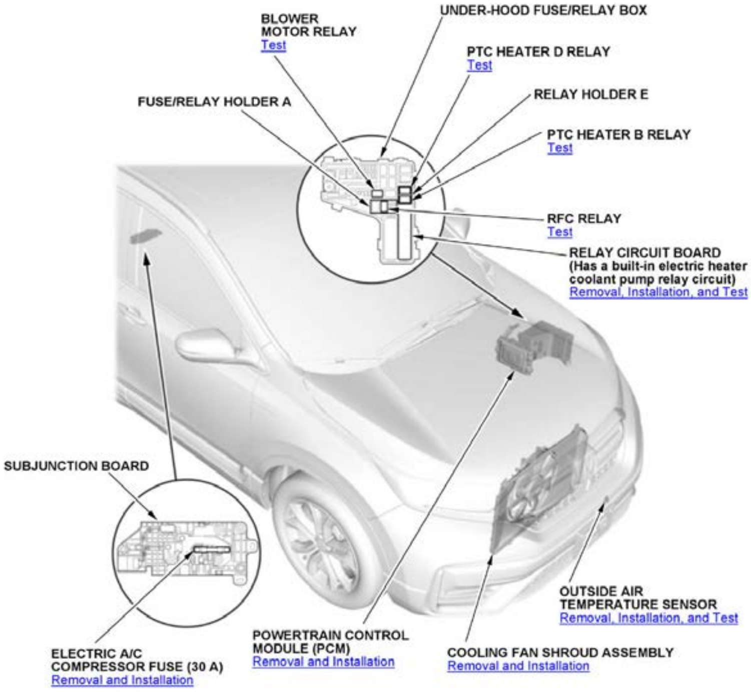
BLOWER
MOTOR RELAY
Test
UNDER-HOOD FUSE/RELAY BOX
PTC HEATER D RELAY
Test
FUSE/RELAY HOLDER A
RELAY HOLDER E
PTC HEATER B RELAY
Test
RFC RELAY
Test
RELAY CIRCUIT BOARD
(Has a built-in electric heater
coolant pump relay circuit)
Removal, Installation, and Test
SUBJUNCTION BOARD
OUTSIDE AIR
TEMPERATURE SENSOR
Removal, Installation, and Test
ELECTRIC A/C
COMPRESSOR FUSE (30 A)
Removal and Installation
POWERTRAIN CONTROL
MODULE (PCM)
Removal and Installation
COOLING FAN SHROUD ASSEMBLY
Removal and Installation

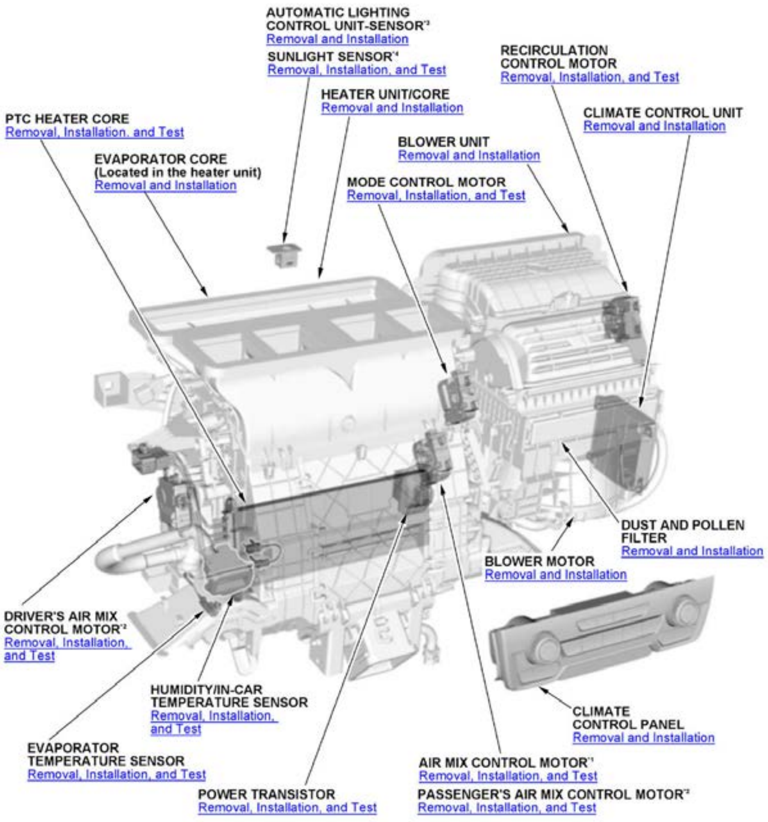
AUTOMATIC LIGHTING CONTROL UNIT-SENSOR*3
Removal and Installation
SUNLIGHT SENSOR*4
Removal, Installation, and Test
RECIRCULATION CONTROL MOTOR
Removal, Installation, and Test
HEATER UNIT/CORE
Removal and Installation
CLIMATE CONTROL UNIT
Removal and Installation
PTC HEATER CORE
Removal, Installation, and Test
BLOWER UNIT
Removal and Installation
EVAPORATOR CORE
(Located in the heater unit)
Removal and Installation
MODE CONTROL MOTOR
Removal, Installation, and Test
DUST AND POLLEN FILTER
Removal and Installation
BLOWER MOTOR
Removal and Installation
DRIVER'S AIR MIX CONTROL MOTOR*2
Removal, Installation, and Test
HUMIDITY/IN-CAR TEMPERATURE SENSOR
Removal, Installation, and Test
CLIMATE CONTROL PANEL
Removal and Installation
EVAPORATOR TEMPERATURE SENSOR
Removal, Installation, and Test
AIR MIX CONTROL MOTOR*1
Removal, Installation, and Test
POWER TRANSISTOR
Removal, Installation, and Test
PASSENGER'S AIR MIX CONTROL MOTOR*2
Removal, Installation, and Test

*1: Without dual zone climate control
*2: With dual zone climate control
*3: Without automatic wiper
*4: With automatic wiper

HEATED STEERING WHEEL COMPONENT LOCATION INDEX

For relationships between signals in a system, refer to System Diagram.

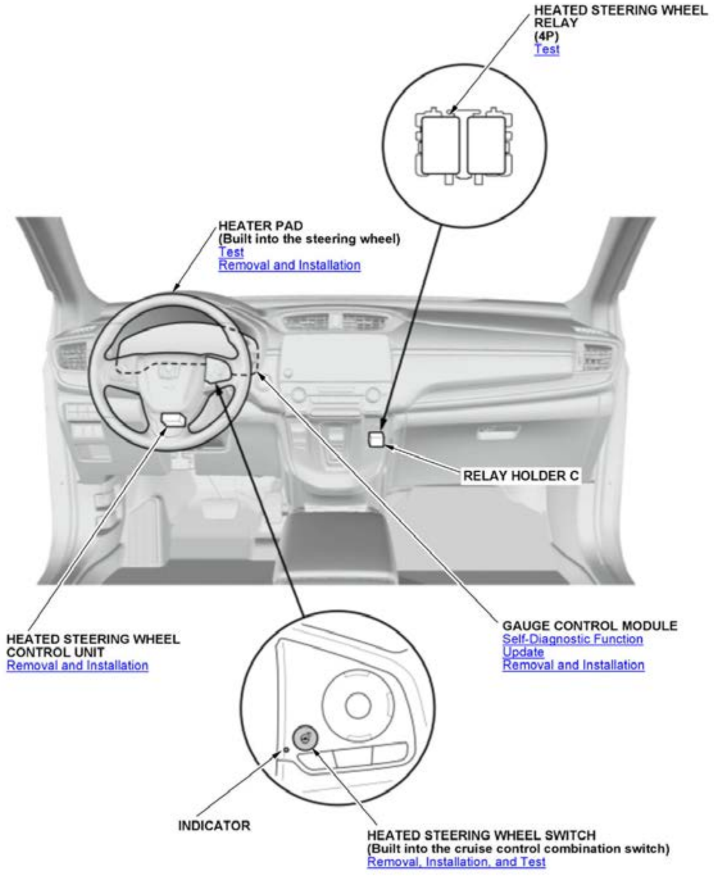
HEATED STEERING WHEEL RELAY
(4P)
Test
HEATER PAD
(Built into the steering wheel)
Test
Removal and Installation
RELAY HOLDER C
HEATED STEERING WHEEL CONTROL UNIT
Removal and Installation
GAUGE CONTROL MODULE
Self-Diagnostic Function
Update
Removal and Installation
INDICATOR
HEATED STEERING WHEEL SWITCH
(Built into the cruise control combination switch)
Removal, Installation, and Test

REAR WINDOW DEFOGGER COMPONENT LOCATION INDEX

For relationships between signals in a system, refer to System Diagram.

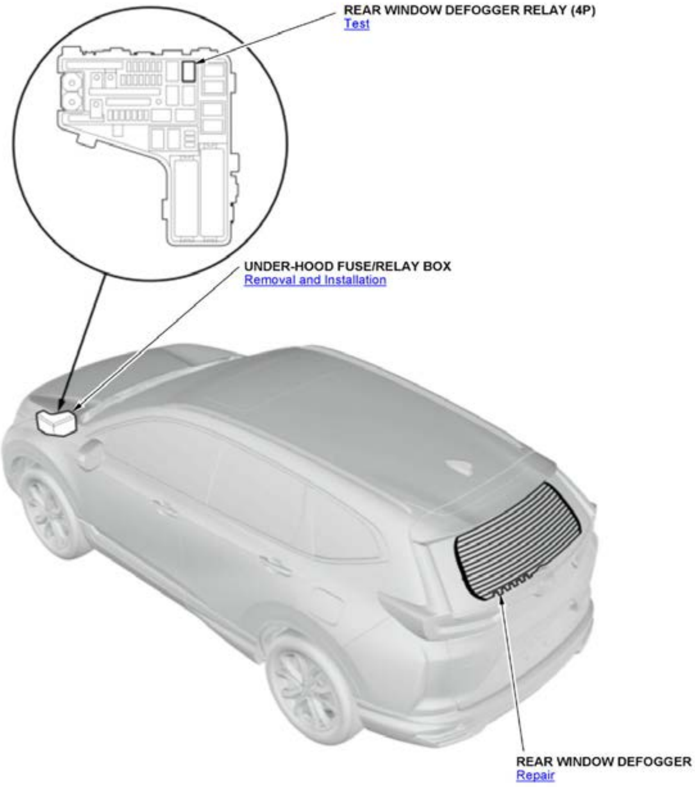
REAR WINDOW DEFOGGER RELAY (4P)
Test
UNDER-HOOD FUSE/RELAY BOX
Removal and Installation
REAR WINDOW DEFOGGER
Repair

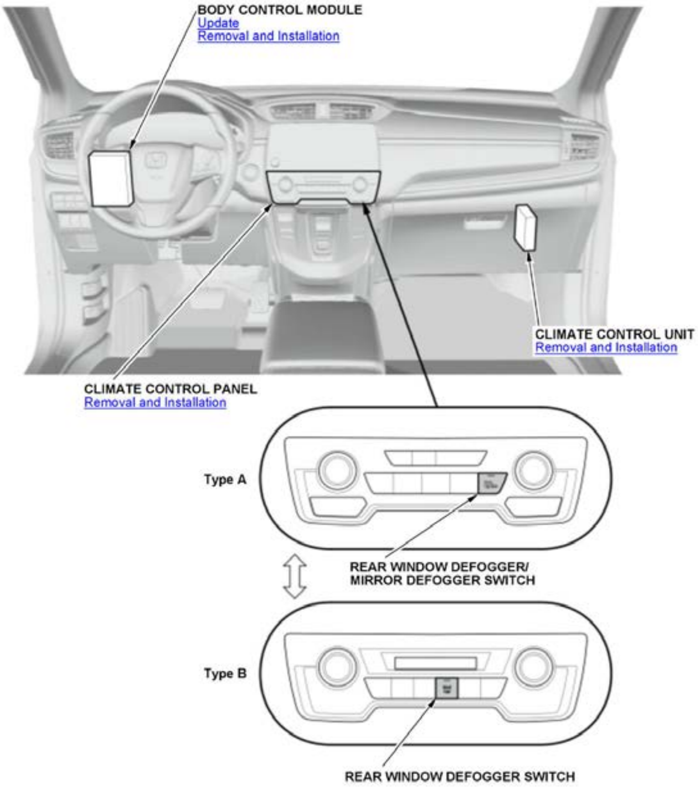
BODY CONTROL MODULE
Update
Removal and Installation
CLIMATE CONTROL UNIT
Removal and Installation
CLIMATE CONTROL PANEL
Removal and Installation
Type A
REAR WINDOW DEFOGGER/
MIRROR DEFOGGER SWITCH
Type B
REAR WINDOW DEFOGGER SWITCH

MAINTENANCE

MAINTENANCE MAIN ITEMS

If a Maintenance Minder indicator does not appear more than 12 months after the display is reset, change the engine oil every year.
NOTE: Adjust the valves during services A, B, 1, 2, or 3 if they are noisy.

Symbol	Maintenance Main Items
A	**Replace engine oil**
B	**Replace engine oil** and **oil filter**
B	**Inspect front and rear brakes**
B	• Check pads and discs for wear (thickness), damage, and cracks. • Check calipers for damage, leaks, and tightness of mounting bolts.
B	Check parking brake adjustment (Except EPB)
B	Check expiration date of the tire repair kit bottle (if equipped)
B	**Inspect tie-rod ends, steering gearbox, and gearbox boots**
B	• Check steering linkage. • Check boots for damage and leaking grease.
B	**Inspect suspension components**
B	• Check bolts for tightness. • Check condition of ball joint boots for deterioration and damage.
B	**Inspect driveshaft boots**
B	• Check boots for cracks and boot bands for tightness.
B	**Inspect brake hoses and lines including VSA lines**
B	• Check master cylinder and VSA modulator-control unit for damage and leakage.
B	Inspect all fluid levels and condition of fluids
B	• **Engine coolant** • **Transmission fluid** • **Rear Differential** • **Brake fluid** • Windshield washer fluid
B	**Inspect exhaust system**
B	• Check catalytic converter heat shields, exhaust pipes, and muffler for damage, leaks, and tightness.
B	**Inspect fuel lines** and **connections**
B	• Check for loose connections, cracks, and deterioration; retighten loose connections and replace damaged parts.

NOTE: According to state and federal regulations, failure to do the maintenance items marked with an asterisk (*) will not void the customer's emissions warranties. However, Honda recommends that all maintenance services be done at the recommended interval, to ensure long-term reliability.

MAINTENANCE SUB ITEMS

If a Maintenance Minder indicator does not appear more than 36 months after the item 7 is reset, change the brake fluid every 3 years.
NOTE: Adjust the valves during services A, B, 1, 2, or 3 if they are noisy.

Number	**Maintenance Sub Items**
1	Rotate tires, and check tire inflation and condition
B	• Follow the pattern shown in the Owner's Manual.
2	**Replace air cleaner element**
B	• If the vehicle is driven primarily in dusty conditions, replace every 15000 miles (24000 km).
B	**Replace dust and pollen filter**
B	• Replace filter whenever airflow from the heating and air conditioning system is less than normal. • If the vehicle is driven mostly in urban areas that have high concentrations of soot in the air from industry and from diesel-powered vehicles, replace every 15000 miles (24000 km).
3	**Replace transmission fluid**
B	• Driving in mountainous areas at very low vehicle speeds or trailer towing results in higher transmission temperatures. This requires transmission fluid changes more frequently than recommended by the Maintenance Minder. If the vehicle is regularly driven under these conditions, have the transmission fluid changed every 47500 miles (75000 km) or 3 years.
4	**Replace spark plugs**
B	**Inspect valve clearance**
5	**Replace engine coolant**
6	**Replace rear differential fluid**
7	**Replace brake fluid**

GENERAL INFORMATION FOR MAINTENANCE

LUBRICANTS AND FLUIDS

Application	**Lubricant or Fluid**
Engine	Honda Motor Oil: 0W-20 Look for the API certification seal on the oil container. Make sure it says "For Gasoline Engines." SAE Viscosity: See chart.
Transmission (e-CVT)	Honda Automatic Transmission Fluid (ATF DW-1): Always use Honda ATF DW-1. **NOTE:** Using the wrong type of fluid will damage the transmission.

Application	Lubricant or Fluid
Rear differential (with AWD)	Honda DPSF-II
Brake system (including VSA lines)	Honda DOT 3 Brake Fluid: Always use Honda DOT 3 Brake Fluid. Using a non-Honda brake fluid can cause corrosion and decrease the life of the system.
Cooling system	Always use Honda Long Life Antifreeze/Coolant Type 2. **NOTE:** For prolonged cold temperatures below -22B°F (-30B°C), add Honda Extreme Cold Weather Antifreeze/Coolant Type 2 **(concentrate)** .

Recommended Engine Oil

<table>
<tr><th>Recommended Engine Oil</th><th colspan="3">Engine Oil Standard</th></tr>
<tr><td>• Honda Genuine Motor Oil (0W-20)</td><td colspan="3">• If "Honda Genuine Motor Oil" is not available, use 0W-20.</td></tr>
<tr><td>B</td><td>B</td><td>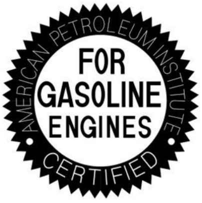API
Certification
Mark
"Starburst"</td><td>B</td></tr>
<tr><td>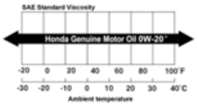</td><td colspan="3">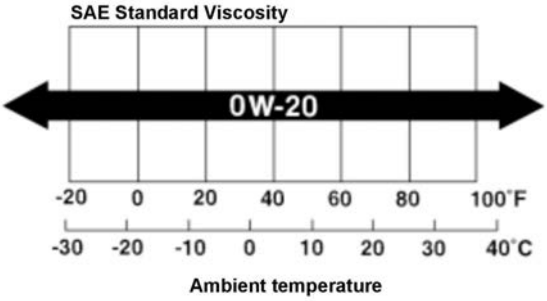 </td></tr>
</table>

For the details of the lubrication points and the type of lubricants to be applied, refer to the illustrated index and the various work procedures (such as Assembly/Reassembly, Replacement, Overhaul, Installation, etc.) contained in the service information.

Application		Lubricant or Fluid
A	Brake pedal yoke pin	Multipurpose grease
B	12 volt battery terminals	
C	Fuel fill door	
D	Hood hinges and hood latch	
E	Tailgate hinges	
F	Front brake caliper pins and pin boots	Honda silicone grease (P/N 08C30-B0234M) or Caliper set grease (NIGLUBE RM)
	Front brake caliper piston seals	Honda silicone grease (P/N 08C30-B0234M) or Caliper set grease (Shin-Etsu Chemical KS62M)
	Front brake caliper piston boots	Honda silicone grease (P/N 08C30-B0234M) or Caliper set grease (Cosmo Rubber Grease)
	Front brake caliper piston	Brake Fluid DOT 3

Application		Lubricant or Fluid
G	Rear brake caliper pins and pin boots	Honda silicone grease (P/N 08C30-B0234M) or Caliper set grease (NIGLUBE RM)
	Rear brake caliper piston seals	Brake Fluid DOT 3
	Rear brake caliper piston boots	Caliper set grease (GB3G)
H	Air conditioning compressor	Compressor Oil: DENSO ND-OIL 11 (POE oil: P/N 38899-TX9-023) for refrigerant HFO-1234yf (R-1234yf)

NOTE:

- Lubricate the following areas using the recommended lubricants and fluids.
- In corrosive areas, more frequent lubrication is necessary.

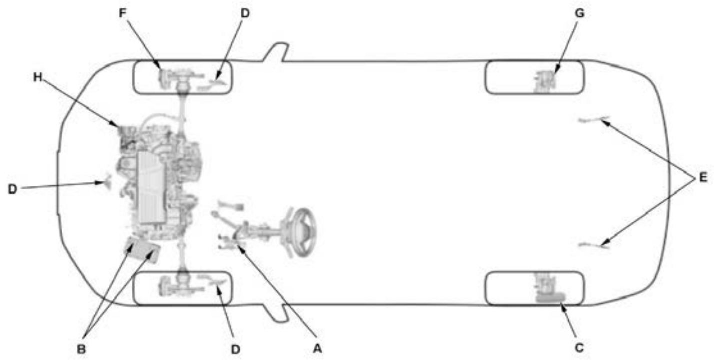

MAINTENANCE MINDER™ GENERAL INFORMATION

Maintenance Minder™ General Information

Maintenance Minder

The Maintenance Minder is an important feature of the multi-information display. Based on engine and transmission operating conditions, and accumulated engine revolutions, the onboard computer (PCM) calculates the remaining engine oil and the transmission fluid life. The system also displays the remaining engine oil life along with the code(s) for other scheduled maintenance items needing service.

Gauges:

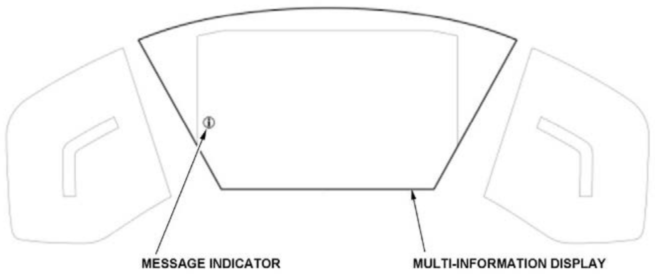

Steering Wheel:

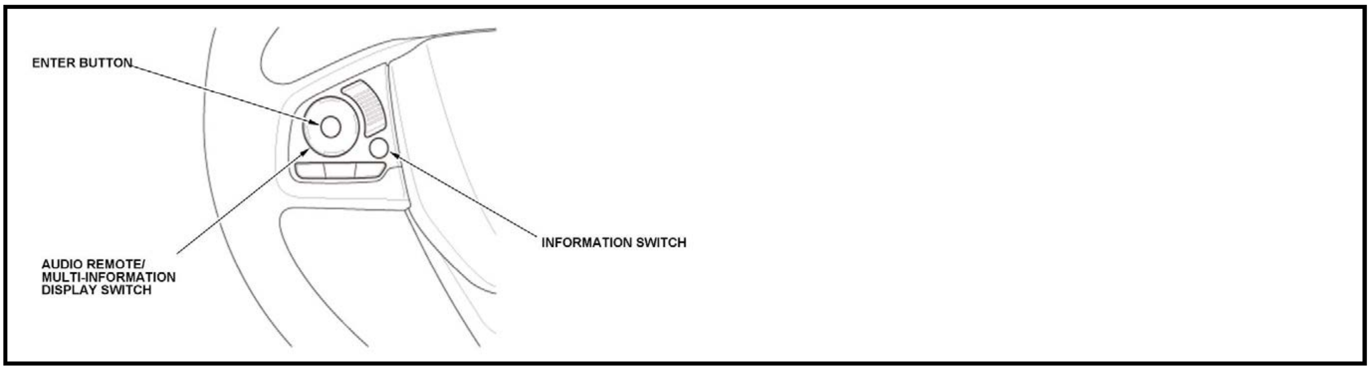
ENTER BUTTON
INFORMATION SWITCH
AUDIO REMOTE/
MULTI-INFORMATION
DISPLAY SWITCH

Service Information

1. The remaining engine oil life is shown as a percentage on the multi-information display. To see the current engine oil life, turn the vehicle to the ON mode, then press the information switch repeatedly until "Maintenance Minder (A)" appears on the multi-information display. Press the ENTER button to show the current engine oil life (B) on the display.

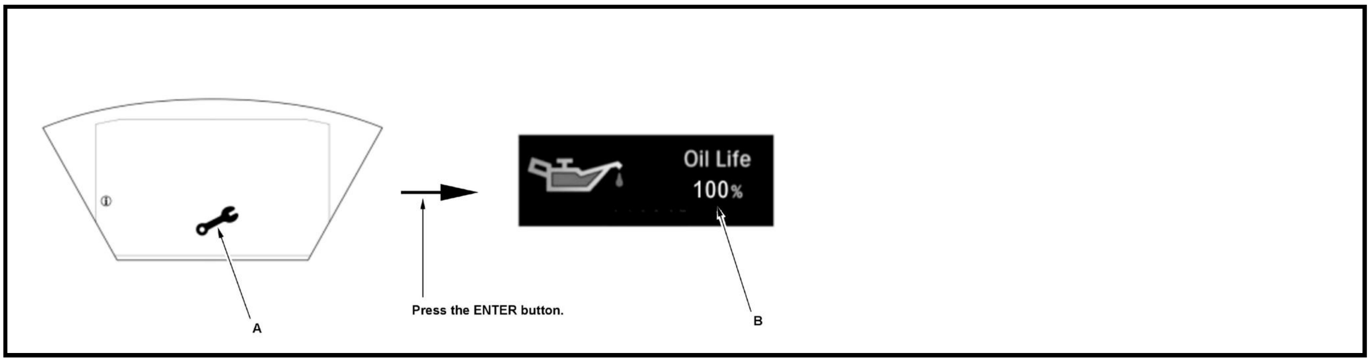
Oil Life
100%
A
Press the ENTER button.
B

2. When the vehicle is in the ON mode, and the remaining engine oil life is 15% to 6%, the remaining engine oil life and other scheduled maintenance item(s) needing service are displayed.

The Maintenance Minder message "Maintenance Due Soon" (A) also comes on. To cancel the message, press the information switch or audio remote/multi-information display switch. The display continues to show the remaining engine oil life (B) and the message indicator (C) until it is reset.

- Complete list of maintenance main items (D).
- Complete list of maintenance sub items (E).

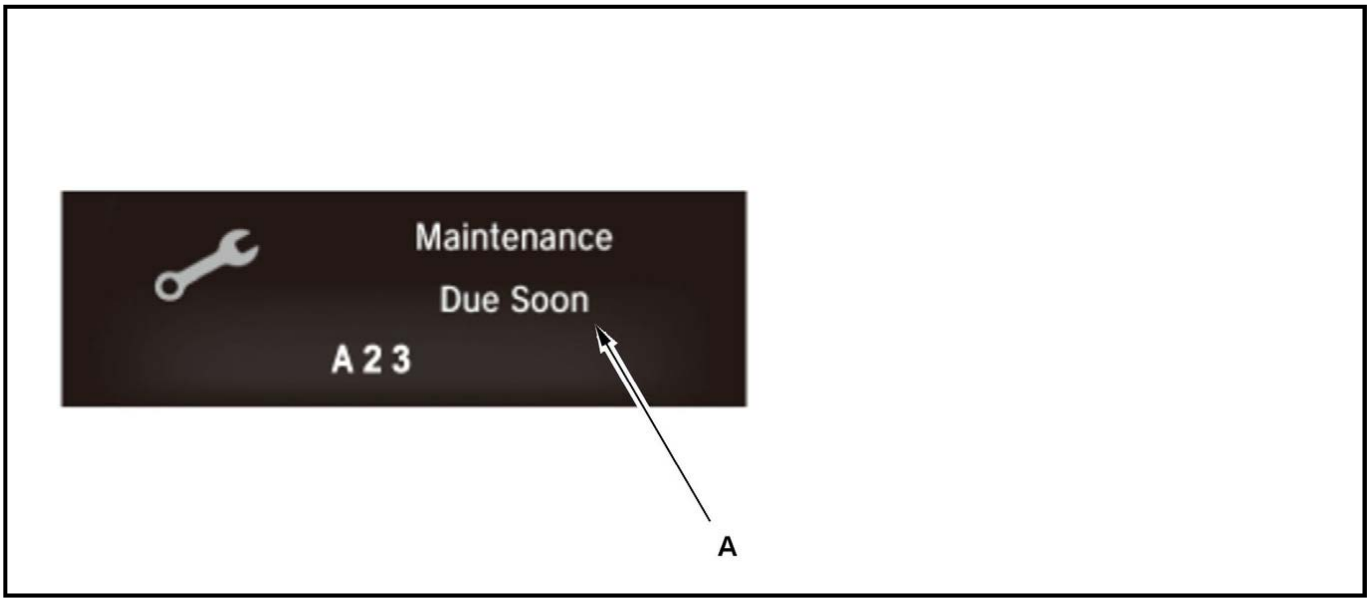
Maintenance
Due Soon
A 2 3
A

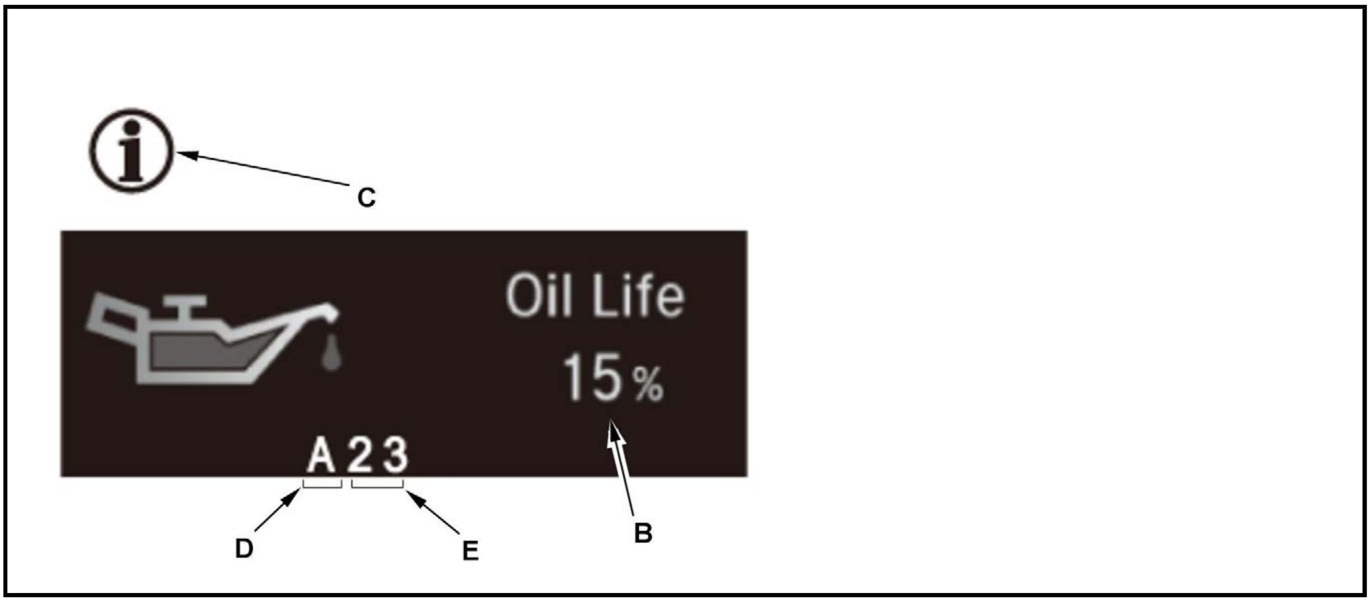
C
Oil Life
15%
A23
D
E
B

3. When the vehicle is in the ON mode, and the remaining engine oil life is 5% to 1%, the Maintenance Minder message "Maintenance Due Now" (A) is displayed along with the maintenance item code(s).

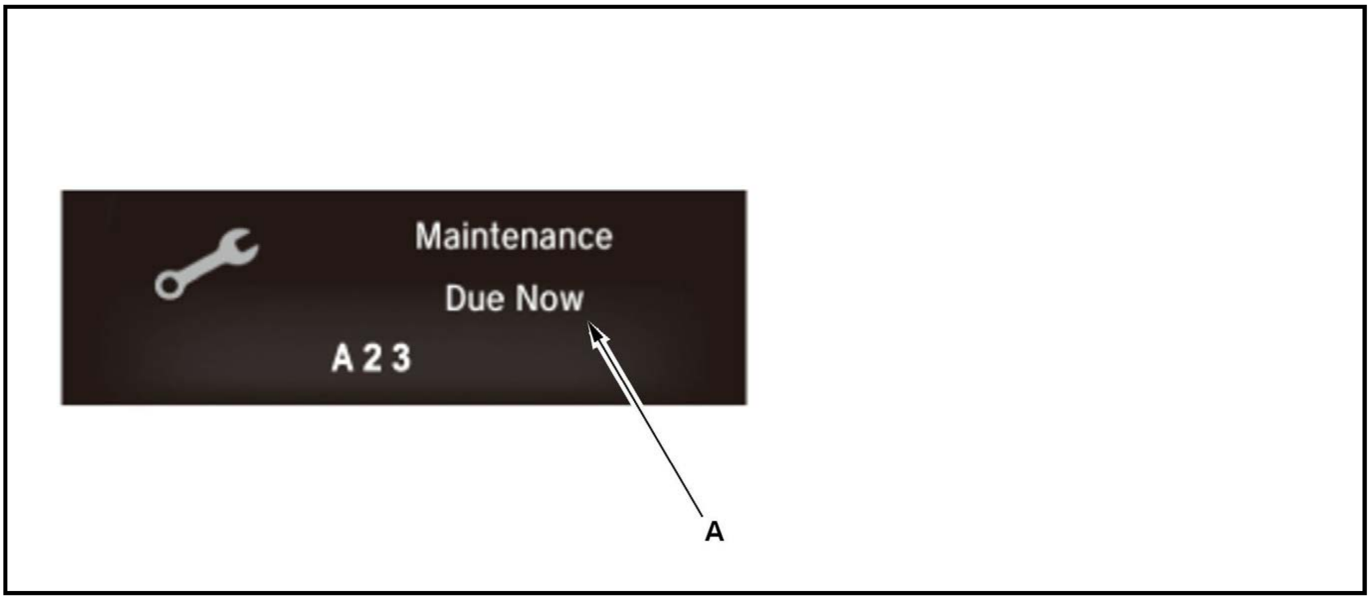
Maintenance
Due Now
A23
A

4. When the vehicle is in the ON mode, and the remaining engine oil life is 0%, the Maintenance Minder message "Maintenance Past Due" (A) is displayed along with the maintenance item code(s).

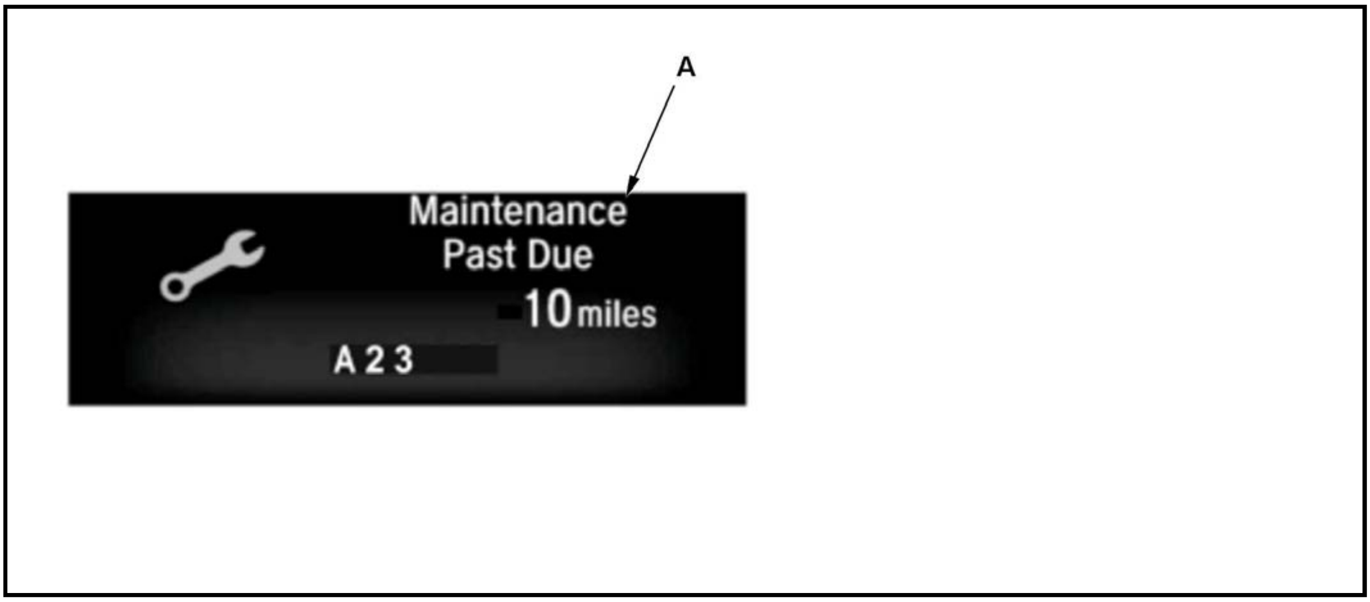
A
Maintenance
Past Due
10 miles
A23

5. If the indicated maintenance is not done, the Maintenance Minder shows a negative distance traveled (A), for example "-10 miles," on the display. If the negative distance traveled is between 0 and 9, the message is displayed for only a few seconds when turning the vehicle to the ON mode. The negative distance traveled remains displayed after the vehicle is driven more than 10 miles (for USA models) or 10 km (for Canada models) after 0% oil life is reached, and the display cannot be canceled. This means the indicated maintenance item(s) should have been done more than 10 miles (or 10 km) ago.

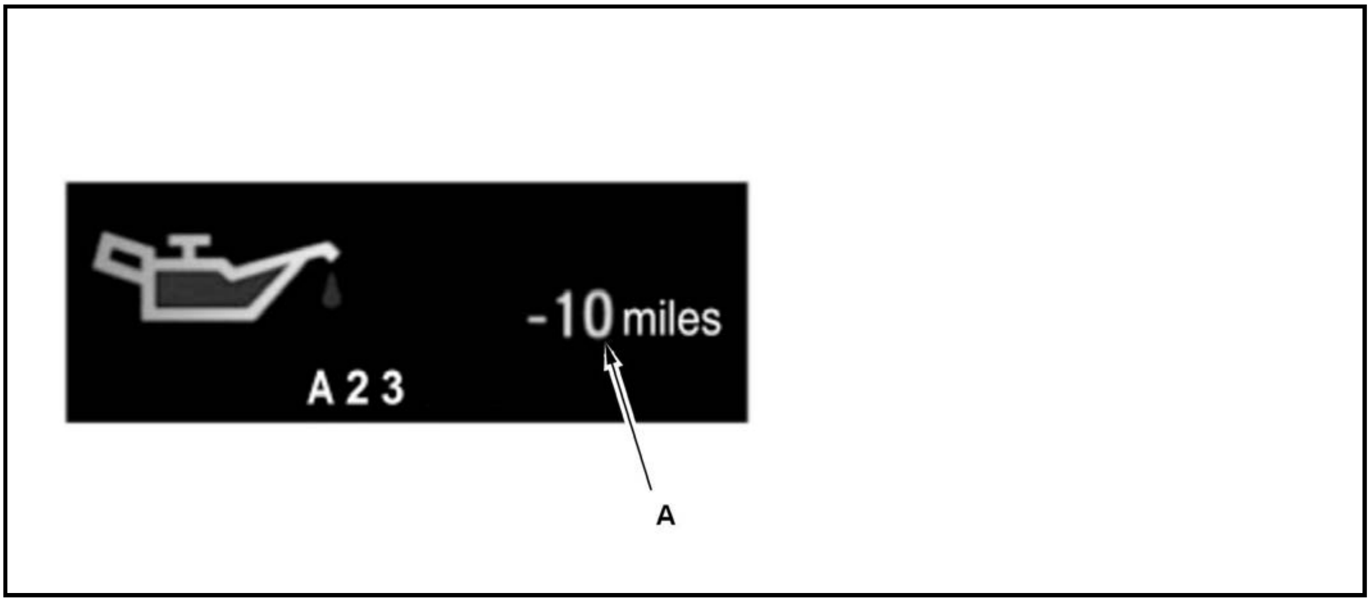

Resetting the Maintenance Minder

NOTE:

- The vehicle must be stopped to reset the Maintenance Minder.
- If a required service is done and the Maintenance Minder is not reset, or if the Maintenance Minder is reset without doing the service, the system will not show the proper maintenance timing. This can lead to serious mechanical problems because there will be no accurate record of when the required maintenance is needed.
- You can reset all maintenance items together, or you can select and reset each maintenance item individually on the display.
- The engine oil life and maintenance item(s) can also be independently reset with the HDS.

1. Turn the vehicle to the ON mode.

2. If system message(s) are displayed, press the information switch or audio remote/multi-information display switch to cancel the display until the "Maintenance Minder" icon is displayed, then press the ENTER button.

3. When the display shows the remaining engine oil life, press and hold the ENTER button for 10 seconds or more. The "Maintenance Reset" mode appears on the multi-information display.

NOTE:

- If you are resetting the Maintenance Minder when the engine oil life is more than 15 %, make sure any maintenance item(s) requiring service are done before resetting the display.
- To cancel the "Maintenance Reset" mode, press the audio remote/multi-information display switch to select the "Cancel," then press the ENTER button.

4. If you reset all the maintenance items shown on the display "A23 (for example)", select "All Due Items" by pressing the audio remote/multi-information display switch and press the ENTER button. If you want to reset each maintenance item individually, select an item (complete list of maintenance **main item(s)** and **sub item(s)**) you wish to reset by pressing the audio remote/multi-information display switch and press the ENTER button.

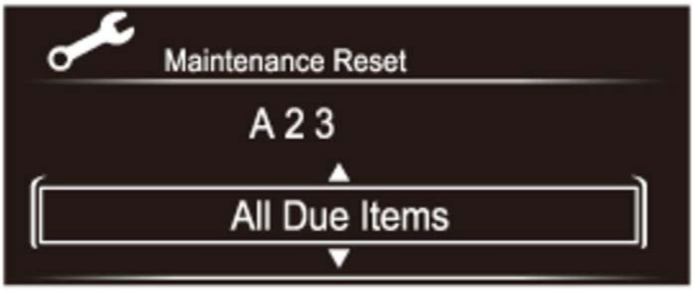

5. The maintenance item code(s) will disappear, and the engine oil life will reset to "100%."

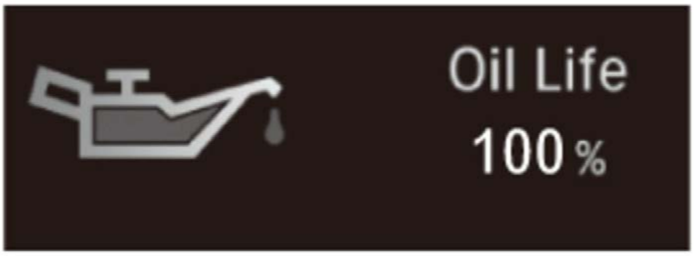

Resetting Individual Maintenance Items by HDS

1. **Connect the HDS**

2. Select GAUGES in the BODY ELECTRICAL with the HDS.

3. Select ADJUSTMENT in the GAUGES with the HDS.

4. Select MAINTENANCE INFORMATION in the ADJUSTMENT with the HDS.

5. Select MAINTENANCE MINDER in the MAINTENANCE INFORMATION with the HDS.

6. Select the individual maintenance item you wish to reset with the HDS.

GENERAL INFORMATION FOR MAINTENANCE

LUBRICANTS AND FLUIDS (ECUADOR) (2019 2020 2021)

Application	Lubricant or Fluid
Engine	Recommended Engine Oil: See chart.
CVT	Always use genuine Honda HCF-2. **NOTE:** Using the wrong type of fluid will damage the transmission.
Rear differential (with AWD)	Honda DPSF-II
Brake system (including VSA lines)	Brake Fluid DOT 3 or DOT 4:We recommend genuine Honda Brake Fluid. Using a non-Honda brake fluid can cause corrosion and decrease the life of the system.
Cooling system	We recommend Honda All Season Antifreeze/Coolant Type 2.

Recommended Engine Oil

- Engine oil viscosity for ambient temperature ranges.
- Using oils other than preferred viscosity may adversely affect consumption.

<table>
<tr><th>Recommended Engine Oil</th><th colspan="3">Engine Oil Standard</th></tr>
<tr><td rowspan="2">• Honda Genuine Motor Oil 0W-20*
• Honda Genuine Motor Oil, refer below(0W-20, 0W-30, 5W-30, 10W-30)
*: "Honda Genuine Motor Oil" is formulated to improve fuel economy. Consult your dealer for detail.</td><td colspan="3">• API SM or higher grade
• ACEA A5/B5
• If "Honda Genuine Motor Oil" is not available, use 0W-20, 0W-30, 5W-30, 10W-30.</td></tr>
<tr><td>B</td><td>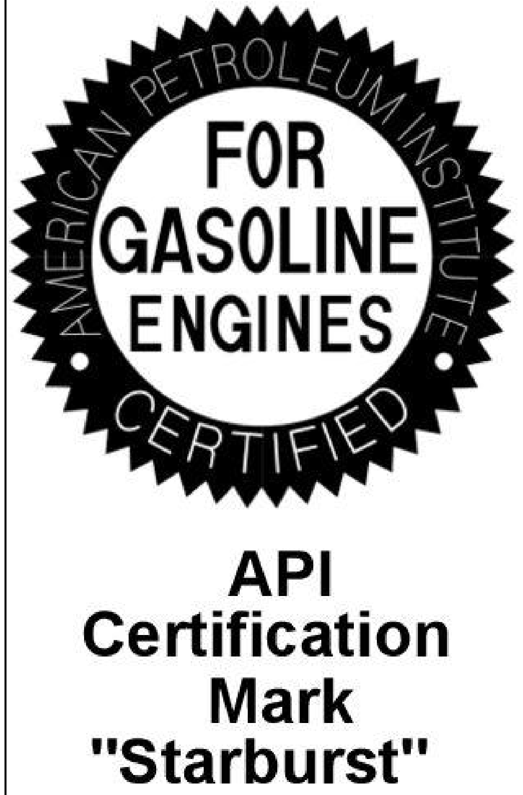
AMERICAN PETROLEUM INSTITUTE
FOR GASOLINE ENGINES
CERTIFIED
API Certification Mark "Starburst"

</td><td>B</td></tr>
<tr><td>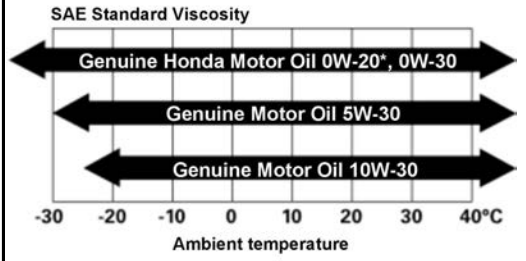
</td><td colspan="3">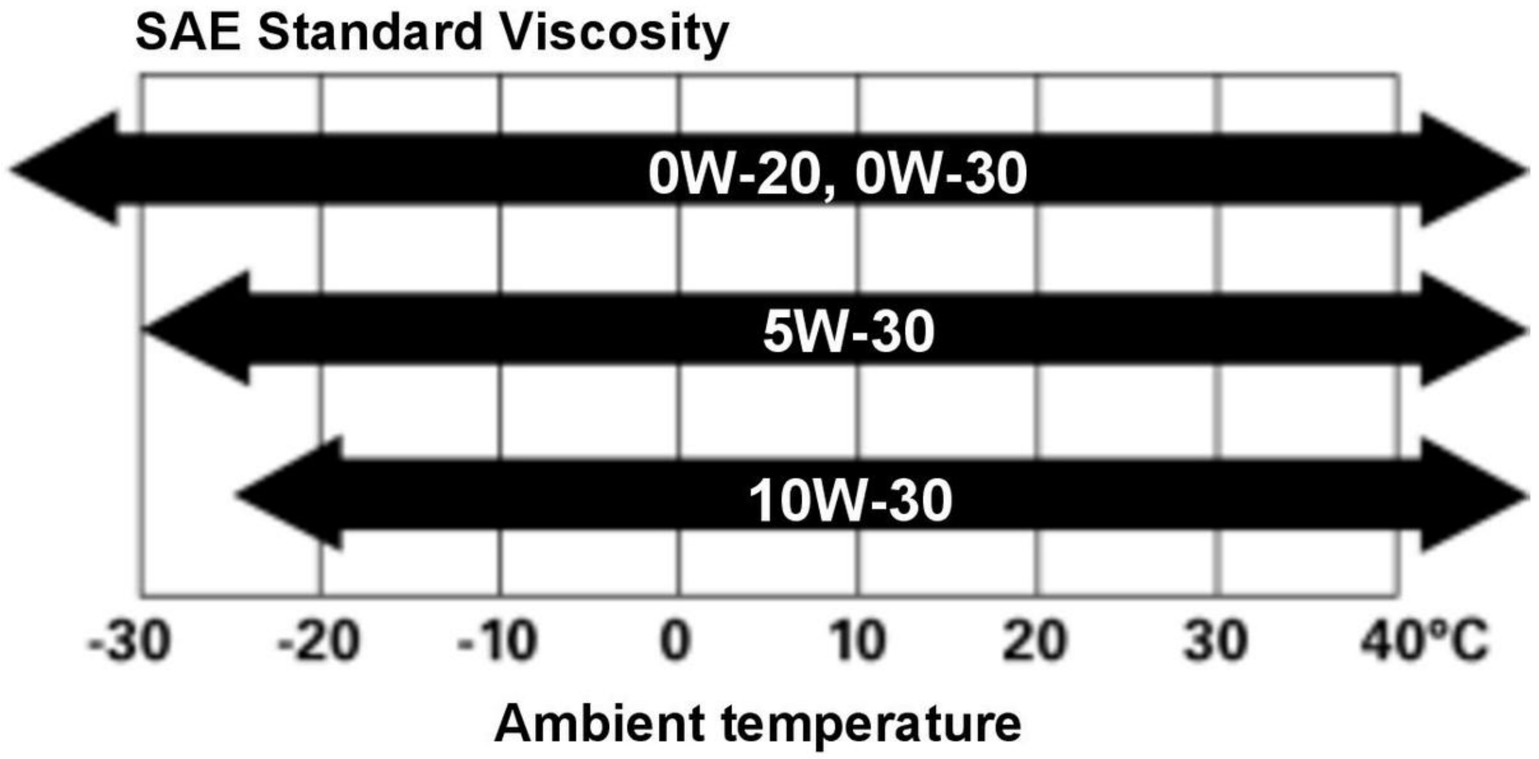
</td></tr>
</table>

For the details of the lubrication points and the type of lubricants to be applied, refer to the illustrated index and the various work procedures (such as Assembly/Reassembly, Replacement, Overhaul, Installation, etc.) contained in each section.

Application		Lubricant or Fluid
A	Brake pedal yoke pin	Multipurpose grease
B	12 volt battery terminals	
C	Fuel fill door	
D	Hood hinges and hood latch	
E	Tailgate hinges	
F	Caliper pins, caliper pin boots, front caliper piston seals, front caliper piston boots	Service set grease
G	Front caliper piston	Honda DOT 3 or DOT 4 brake fluid

GetManuals.org

Application		Lubricant or Fluid
H	Shift cable end	Molybdenum grease
I	Air conditioning compressor	Compressor Oil: DENSO ND-OIL 14 (P/N 38899-50Z-G01) for refrigerant HFO-1234yf (R-1234yf)

NOTE:

- Lubricate the following areas using the recommended lubricants and fluids.
- In corrosive areas, more frequent lubrication is necessary.

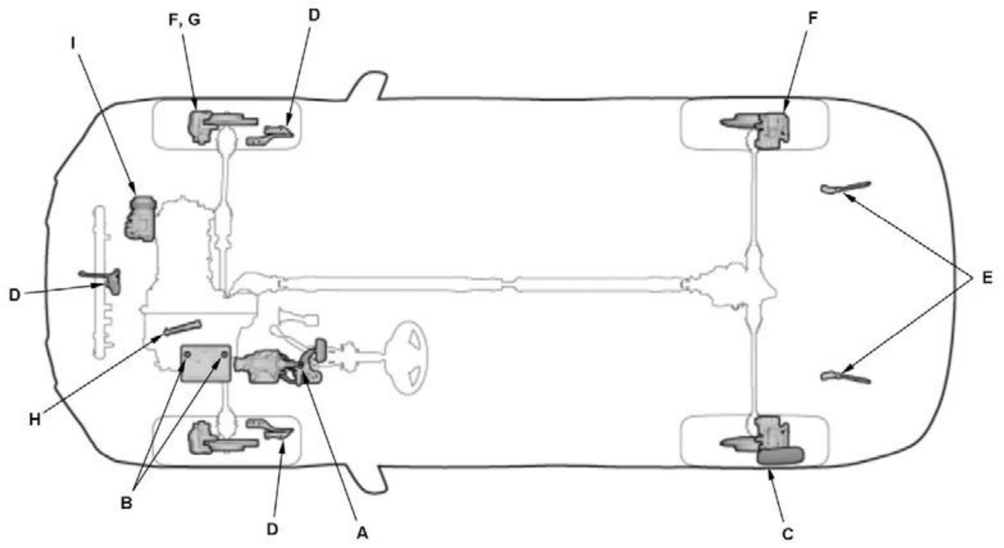

LUBRICANTS AND FLUIDS (KA/KC)

Application	Lubricant or Fluid
Engine	Honda Motor Oil: 0W-20Look for the API certification seal on the oil container. Make sure it says "For Gasoline Engines."SAE Viscosity: See chart.
CVT	Always use Honda HCF-2. **NOTE:** Using the wrong type of fluid will damage the transmission.
Rear differential (with AWD)	Honda DPSF-II
Brake system (including VSA lines)	Honda DOT 3 Brake Fluid:Always use Honda DOT 3 Brake Fluid.Using a non-Honda brake fluid can cause corrosion and decrease the life of the system.
Cooling system	Always use Honda Long Life Antifreeze/Coolant Type 2. **NOTE:** For prolonged cold temperatures below -22 deg.F (-30 deg.C), add Honda Extreme Cold Weather Antifreeze/Coolant Type 2 (concentrate) .

API CERTIFICATION SEAL

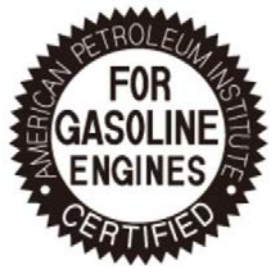

Recommended Engine Oil
Engine oil viscosity for ambient temperature ranges

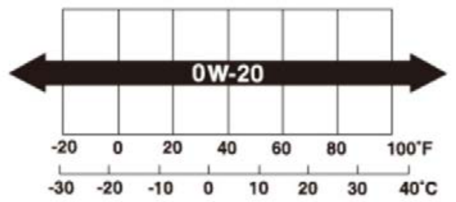

For the details of the lubrication points and the type of lubricants to be applied, refer to the illustrated index and the various work procedures (such as Assembly/Reassembly, Replacement, Overhaul, Installation, etc.) contained in each section.

Application			Lubricant or Fluid
A	Brake pedal yoke pin		Multipurpose grease
B	12 volt battery terminals		
C	Fuel fill door		
D	Hood hinges and hood latch		
E	Tailgate hinges		
F	Caliper pins, caliper pin boots, front caliper piston seals, front caliper piston boots		Service set grease
G	Front caliper piston		Honda DOT 3 brake fluid
H	Shift cable end		Molybdenum grease
I	Air conditioning compressor	1.5 L engine	Compressor Oil: RL85HM (P/N 38899-RLV-A01) for refrigerant HFO-1234yf (R-1234yf)
		2.4 L engine	Compressor Oil: DENSO ND-OIL 14 (P/N 38899-50Z-G01) for refrigerant HFO-1234yf (R-1234yf)

NOTE:

- Lubricate the following areas using the recommended lubricants and fluids.
- In corrosive areas, more frequent lubrication is necessary.

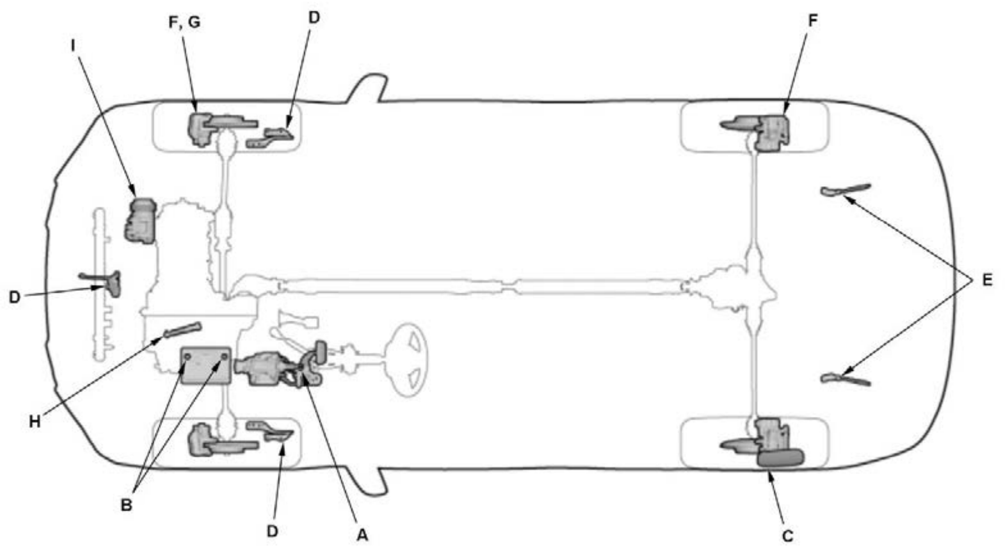
I
F, G
D
F
E
D
H
B
D
A
C

MAINTENANCE MINDER™ GENERAL INFORMATION (KA/KC (WITH MULTI-INFORMATION DISPLAY))

Maintenance Minder

The Maintenance Minder is an important feature of the multi-information display. Based on engine and transmission operating conditions, and accumulated engine revolutions, the onboard computer (PCM) calculates the remaining engine oil and the transmission fluid life. The system also displays the remaining engine oil life along with the code(s) for other scheduled maintenance items needing service.

Gauges:

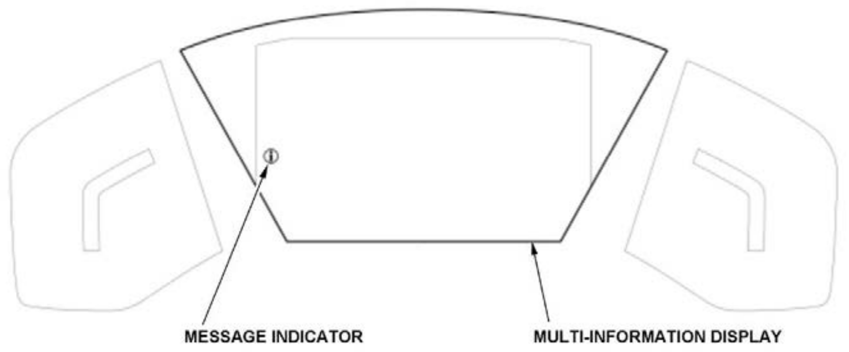
MESSAGE INDICATOR
MULTI-INFORMATION DISPLAY

Steering Wheel:

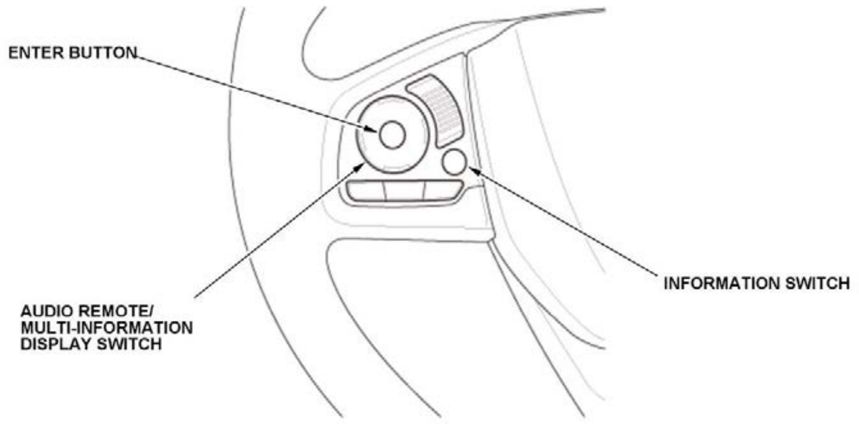
ENTER BUTTON
AUDIO REMOTE/
MULTI-INFORMATION
DISPLAY SWITCH
INFORMATION SWITCH

Service Information

1. The remaining engine oil life is shown as a percentage on the multi-information display. To see the current engine oil life, turn the vehicle to the ON mode, then press the information switch repeatedly until "Maintenance Minder (A)" appears on the multi-information display. Press the ENTER button to show the current engine oil life (B) on the display.

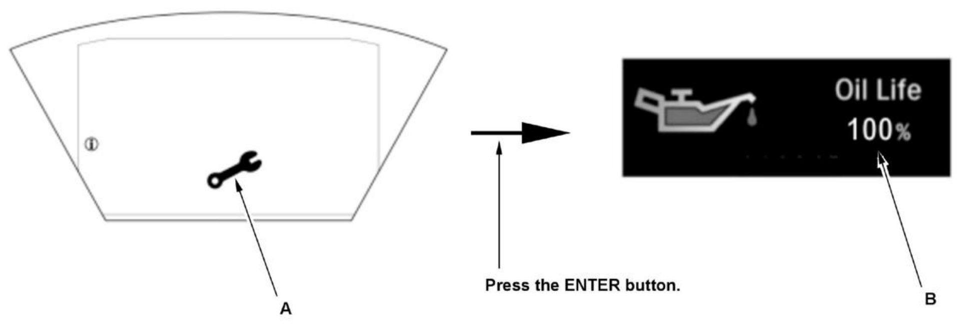
Oil Life
100%
A
Press the ENTER button.
B

When the vehicle is in the ON mode, and the remaining engine oil life is 15 % to 6 %, the remaining engine oil life and other scheduled maintenance item(s) needing service are displayed. The Maintenance Minder message "Maintenance Due Soon" (A) also comes on. To cancel the message, press the information switch or audio remote/multi-information display switch. The display continues to show the remaining engine oil life (B) and the message indicator (C) until it is reset.

- Complete list of maintenance main items (D).
- Complete list of maintenance sub items (E).

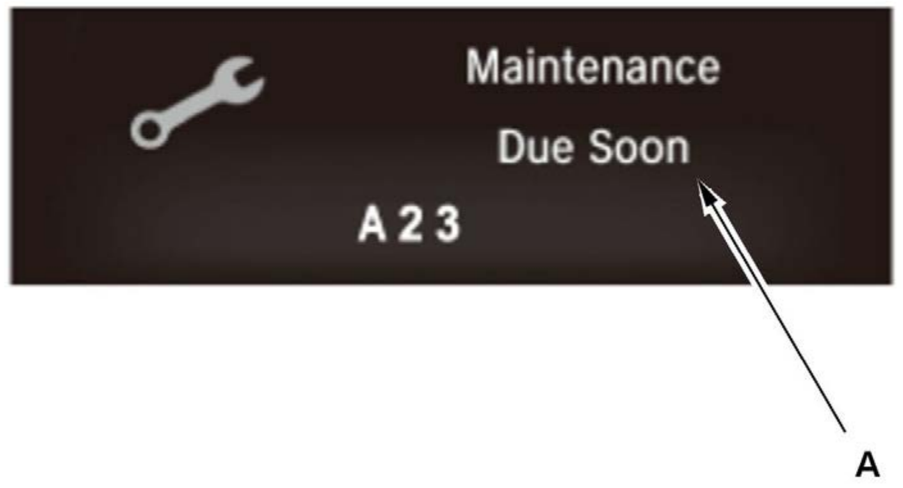
Maintenance
Due Soon
A 2 3
A

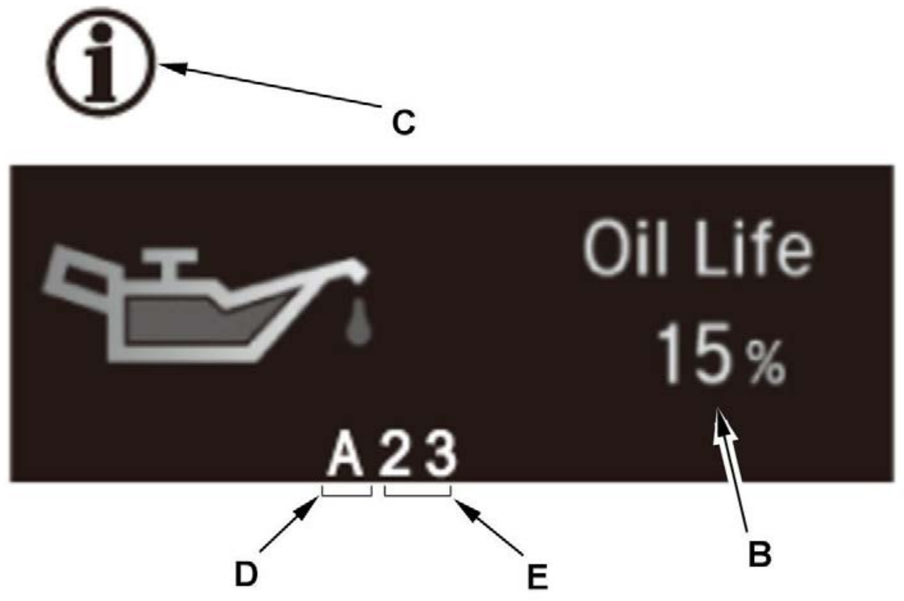
C
Oil Life
15 %
A 2 3
D
E
B

3. When the vehicle is in the ON mode, and the remaining engine oil life is 5 % to 1 %, the Maintenance Minder message "Maintenance Due Now" (A) is displayed along with the maintenance item code(s).

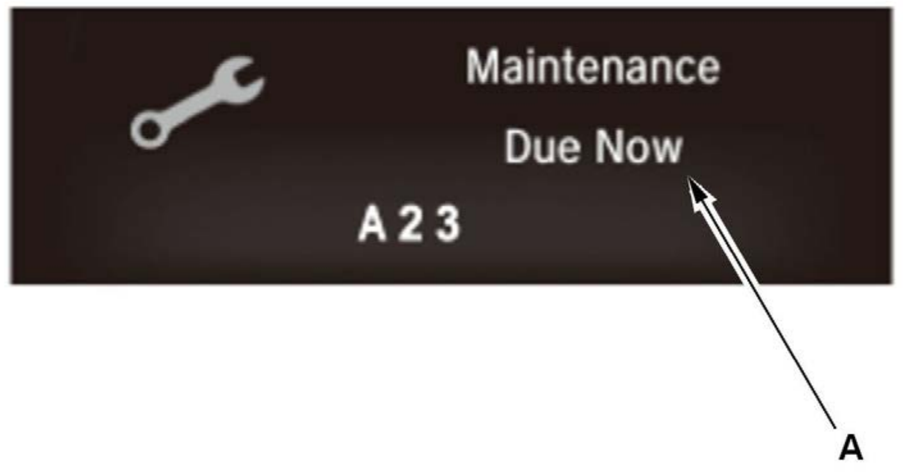
Maintenance
Due Now
A 2 3
A

4. When the vehicle is in the ON mode, and the remaining engine oil life is 0 %, the Maintenance Minder message "Maintenance Past Due" is displayed along with the maintenance item code(s).

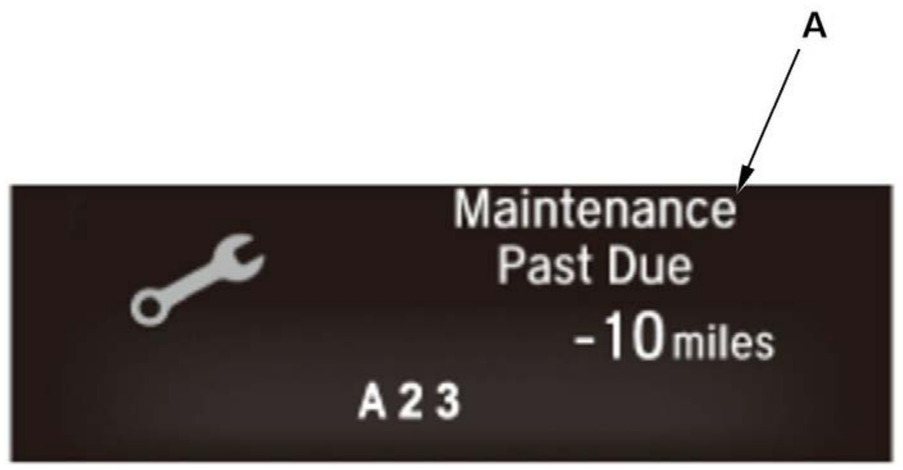

5. If the indicated maintenance is not done, the Maintenance Minder shows a negative distance traveled (A), for example "-10 miles," on the display. If the negative distance traveled is between 0 and 9, the message is displayed for only a few seconds when turning the vehicle to the ON mode. The negative distance traveled remains displayed after the vehicle is driven more than 10 miles (for USA models) or 10 km (for Canada models) after 0 % oil life is reached, and the display cannot be canceled. This means the indicated maintenance item(s) should have been done more than 10 miles (or 10 km) ago.

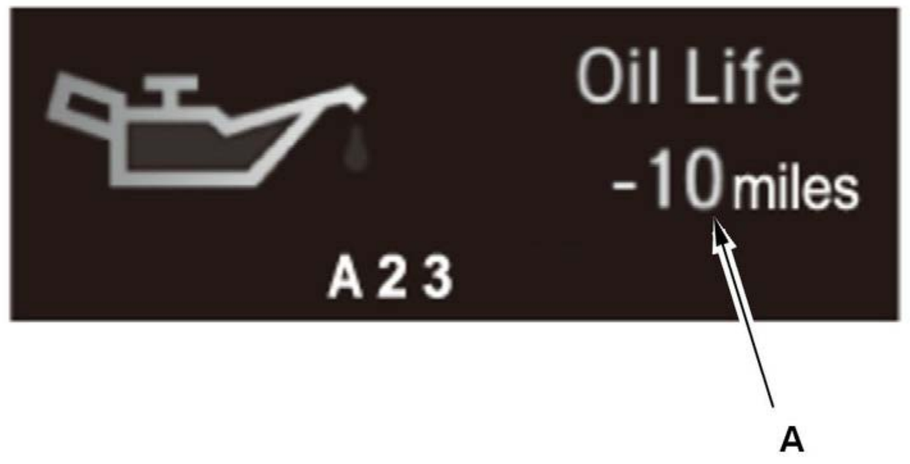

Resetting the Maintenance Minder

NOTE:

- The vehicle must be stopped to reset the Maintenance Minder.
- If a required service is done and the Maintenance Minder is not reset, or if the Maintenance Minder is reset without doing the service, the system will not show the proper maintenance timing. This can lead to serious mechanical problems because there will be no accurate record of when the required maintenance is needed.
- You can reset all maintenance items together, or you can select and reset each maintenance item individually on the display.
- The engine oil life and maintenance item(s) can also be independently reset with the HDS.

1. Turn the vehicle to the ON mode.

2. If system message(s) are displayed, press the information switch or audio remote/multi-information display switch to cancel the display until the "Maintenance Minder" icon is displayed, then press the ENTER button. When the display shows the remaining engine oil life, press and hold the ENTER button for 10 seconds or more. The "Maintenance Reset" mode appears on the multi-information display.

NOTE:

- If you are resetting the Maintenance Minder when the engine oil life is more than 15 %, make sure any maintenance item(s) requiring service are done before resetting the display.
- To cancel the "Maintenance Reset" mode, press the audio remote/multi-information display switch to select the "Cancel," then press the ENTER button.

4. If you reset all the maintenance items shown on the display "A23 (for example)", select "All Due Items" by pressing the audio remote/multi-information display switch and press the ENTER button. If you want to reset each maintenance item individually, select an item (complete list of maintenance **main item(s)** and **sub item(s)**) you wish to reset by pressing the audio remote/multi-information display switch and press the ENTER button.

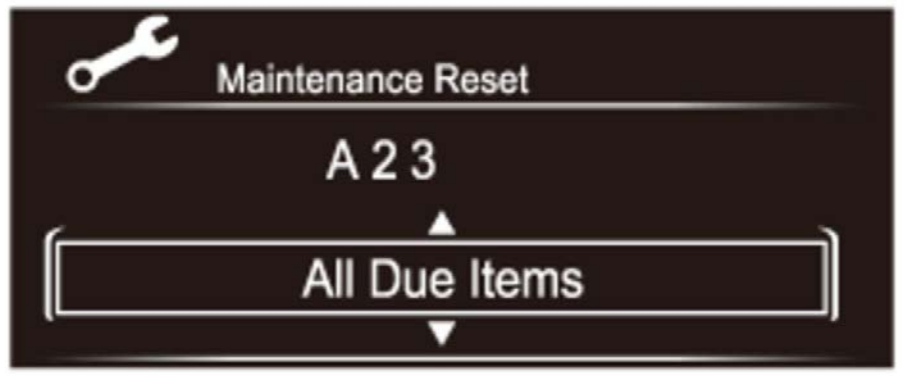

5. The maintenance item code(s) will disappear, and the engine oil life will reset to "100 %."

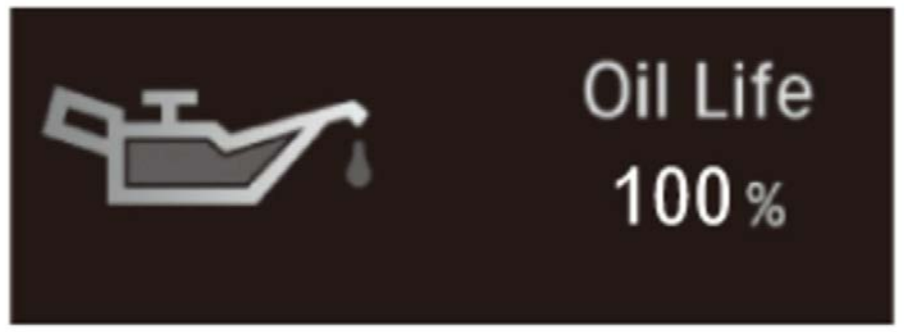

Resetting Individual Maintenance Items by HDS

1. Connect the HDS

2. Select GAUGES in the BODY ELECTRICAL with the HDS.

3. Select ADJUSTMENT in the GAUGES with the HDS.

4. Select MAINTENANCE INFORMATION in the ADJUSTMENT with the HDS.

5. Select MAINTENANCE MINDER in the MAINTENANCE INFORMATION with the HDS.

6. Select the individual maintenance item you wish to reset with the HDS.

MAINTENANCE MINDER™ GENERAL INFORMATION (KA/KC (WITHOUT MULTI-INFORMATION DISPLAY))

Maintenance Minder

The Maintenance Minder is an important feature of the information display. Based on engine and transmission operating conditions, and accumulated engine revolutions, the onboard computer (PCM) calculates the remaining engine oil and the transmission fluid life. The system also displays the remaining engine oil life along with the code(s) for other scheduled maintenance items needing service.

Gauges:

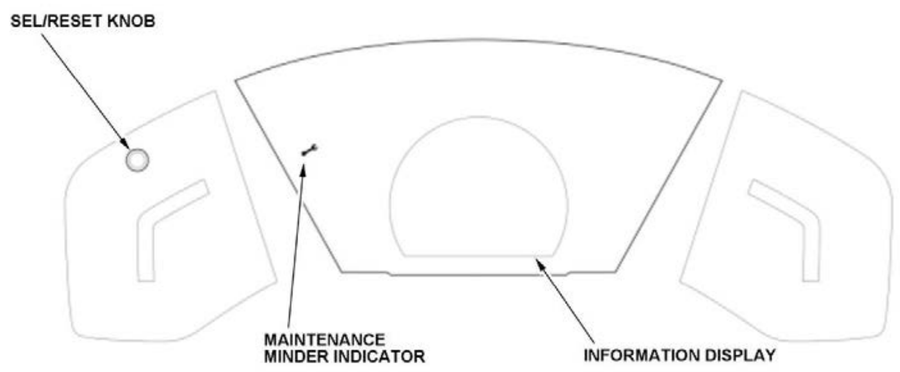

Service Information

1. The remaining engine oil life (A) is shown as a percentage on the information display. To see the current engine oil life, turn the vehicle to the ON mode, then push and release the SEL/RESET knob repeatedly until the engine oil life appears on the information display.

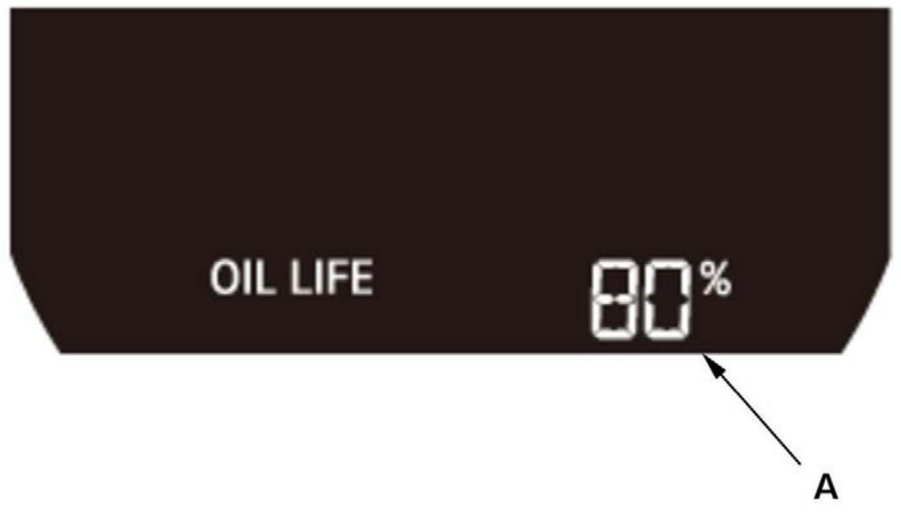

When the vehicle is in the ON mode, and the remaining engine oil life is 15 % or less, the remaining engine oil life (A) and other scheduled maintenance item(s) needing service are displayed. The maintenance minder indicator (B) also comes on. To cancel the display and the indicator, press the SEL/RESET knob.

- **Complete list of maintenance main items (C)**.
- **Complete list of maintenance sub items (D)**.

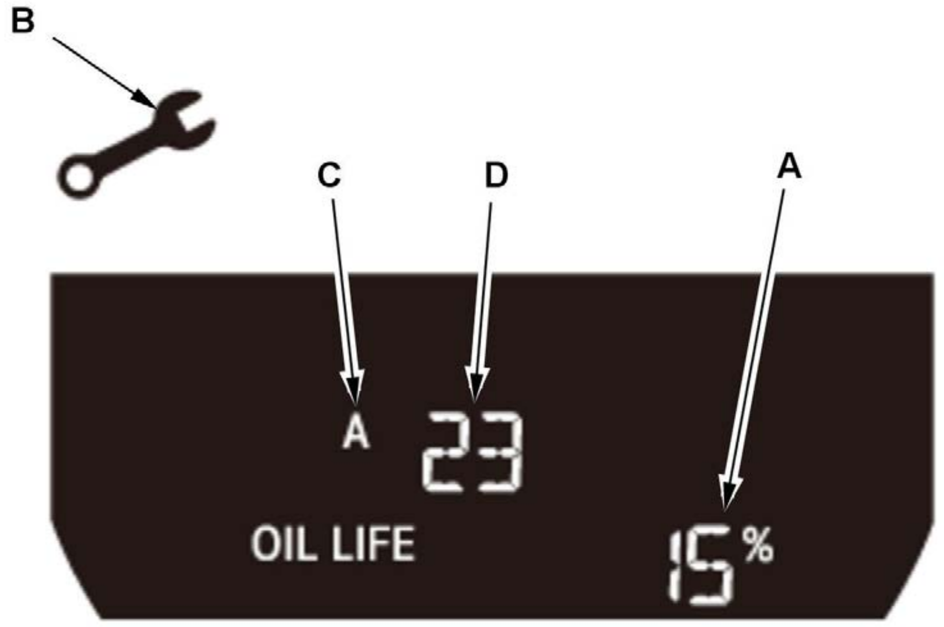

3. When the vehicle is in the ON mode, and the remaining engine oil life is 0 %, the engine oil life indicator (A) blinks. Pressing the SEL/RESET knob cancels the display, but the Maintenance Minder indicator stays on.

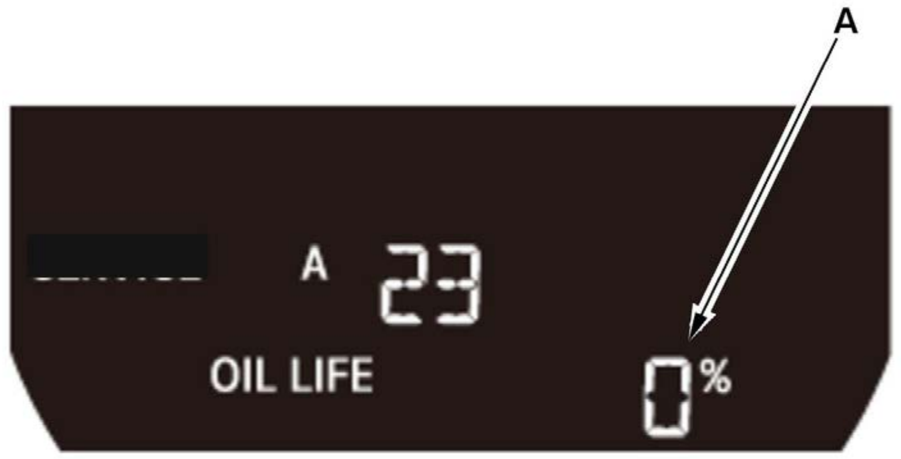

4. If the indicated maintenance is not done, the engine oil life indicator shows a negative distance traveled (A), for example "-10" on the display. If the negative distance traveled is between 0 and -9, the indicator is displayed for only a few seconds when turning the vehicle to the ON mode. The negative distance traveled remains displayed after the vehicle is driven more than 10 miles (for USA models) or 10 km (for Canada models) after 0 % oil life is reached, and the display cannot be canceled.This means the indicated maintenance item(s) should have been done more than 10 miles (or 10 km) ago.

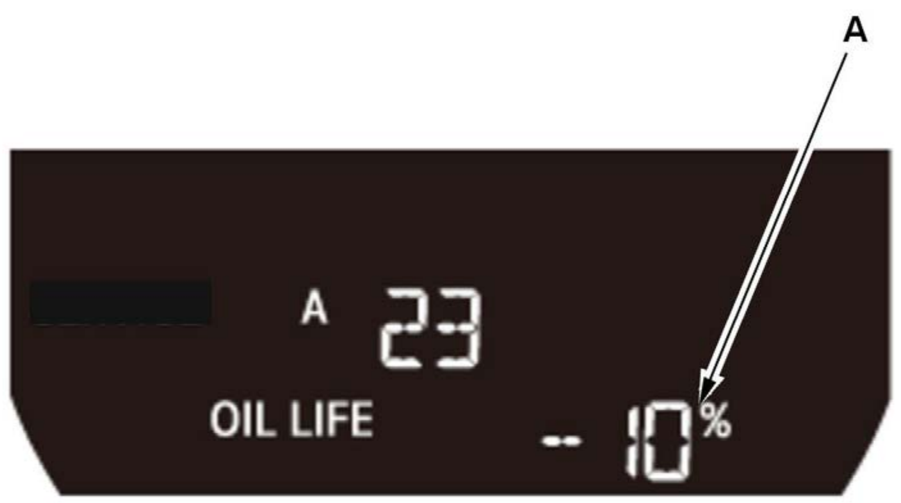

Resetting the Maintenance Minder

NOTE:

- The vehicle must be stopped to reset the Maintenance Minder.
- If a required service is done and the Maintenance Minder is not reset, or if the Maintenance Minder is reset without doing the service, the system will not show the proper maintenance timing. This can lead to serious mechanical problems because there will be no accurate record of when the required maintenance is needed.
- You can reset all maintenance items together, or you can select and reset each maintenance item individually on the display.
- The engine oil life and maintenance item(s) can also be independently reset with the HDS.

1. Turn the vehicle to the ON mode.

2. Push the SEL/RESET knob repeatedly until the engine oil life is displayed.

3. Press and hold the SEL/RESET knob for 10 seconds or more. The engine oil life and the maintenance item code(s) will blink to show it is in reset mode.

NOTE: If you are resetting the Maintenance Minder when the engine oil life is more than 15 %, make sure any maintenance item(s) requiring service are done before resetting the display.

4. If you reset all the maintenance items shown on the display "A23 (for example)", press and hold the SEL/RESET knob for 5 seconds or more. If you want to reset each maintenance item individually, select an item (complete list of maintenance **main item(s)** and **sub item(s)**) you wish to reset by rotating the SEL/RESET knob, and press and hold the knob for 5 seconds or more.

5. The maintenance item code(s) will disappear, and the engine oil life returns to "100 %."

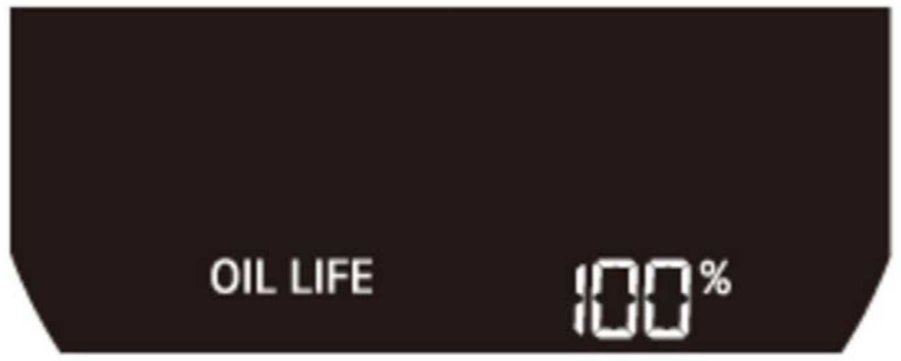

Resetting Individual Maintenance Items by HDS

1. **Connect the HDS**

2. Select GAUGES in the BODY ELECTRICAL with the HDS.

3. Select ADJUSTMENT in the GAUGES with the HDS.

4. Select MAINTENANCE INFORMATION in the ADJUSTMENT with the HDS.

5. Select MAINTENANCE MINDER in the MAINTENANCE INFORMATION with the HDS.

6. Select the individual maintenance item you wish to reset with the HDS.

MAINTENANCE

MAINTENANCE MAIN ITEMS (KA)

If a Maintenance Minder indicator does not appear more than 12 months after the display is reset, change the engine oil every year.

NOTE:

- Inspect idle speed every 160, 000 miles (256, 000 km).
- Adjust the valves during services A, B, 1, 2, or 3 if they are noisy.

Symbol	Maintenance Main Items
A	Replace engine oil

B	• Engine oil capacity without oil filter
	•
	  ◦ 1.5 L engine models: 3.2 L (3.4 US qt)
	  ◦ 2.4 L engine models: 4.2 L (4.4 US qt)

B	Replace engine oil and oil filter

B	• Engine oil capacity with oil filter
	•
	  ◦ 1.5 L engine models: 3.5 L (3.7 US qt)
	  ◦ 2.4 L engine models: 4.4 L (4.6 US qt)

B	Inspect front and rear brakes
B	• Check pads and discs for wear (thickness), damage, and cracks. • Check calipers for damage, leaks, and tightness of mounting bolts.
B	Inspect tie-rod ends, steering gearbox, and gearbox boots
B	• Check steering linkage. • Check boots for damage and leaking grease.
B	Inspect suspension components
B	• Check bolts for tightness. • Check condition of ball joint boots for deterioration and damage.
B	Inspect driveshaft boots
B	• Check boots for cracks and boot bands for tightness.
B	Inspect brake hoses and lines including VSA lines
B	• Check master cylinder and VSA modulator-control unit for damage and leakage.
B	Inspect all fluid levels and condition of fluids
B	• Engine coolant • CVT fluid • Rear differential fluid (with AWD) • Brake fluid • Windshield washer fluid
B	Inspect exhaust system
B	• Check catalytic converter heat shields, exhaust pipes, and muffler for damage, leaks, and tightness.
B	Inspect fuel lines and connections
B	• Check for loose connections, cracks, and deterioration; retighten loose connections and replace damaged parts.

NOTE: According to state and federal regulations, failure to do the maintenance items marked with an asterisk (*) will not void the customer's emissions warranties. However, Honda recommends that all maintenance services be done at the recommended interval, to ensure long-term reliability.

MAINTENANCE SUB ITEMS (KA)

If a Maintenance Minder indicator does not appear more than 36 months after the item 7 is reset, change the brake fluid every 3 years.

NOTE:

- Inspect idle speed every 160, 000 miles (256, 000 km).
- Adjust the valves during services A, B, 0, 1, 2, 3, or 9 if they are noisy.

Number	Maintenance Sub Items
1	Rotate tires, and check tire inflation and condition
B	• Follow the pattern shown in the Owner's Manual.
2	Replace air cleaner element
B	• If the vehicle is driven primarily in dusty conditions, replace every 15, 000 miles (24, 000 km).
B	Replace dust and pollen filter
B	• Replace filter whenever airflow from the heating and air conditioning system is less than normal. • If the vehicle is driven mostly in urban areas that have high concentrations of soot in the air from industry and from diesel-powered vehicles, replace every 15, 000 miles (24, 000 km).
B	Inspect drive belt
B	• Look for cracks and damage, then check the position of drive belt auto-tensioner indicator.
3	Replace CVT fluid
B	• Driving in mountainous areas at very low vehicle speeds or trailer towing results in higher transmission temperatures. This requires transmission fluid changes more frequently than recommended by the Maintenance Minder. If the vehicle is regularly driven under these conditions, have the transmission fluid changed every 25, 000 miles (40, 000 km). • Use Honda HCF-2. **NOTE:** Using the wrong type of fluid will damage the transmission. • Capacity

Number	Maintenance Sub Items
	• • AWD models: 4.3 L (4.5 US qt) • 2WD models: 3.7 L (3.9 US qt)
4	**Replace spark plugs**
B	**Inspect valve clearance (cold)**
B	• 1.5 L engine models: • • Intake: 0.21-0.25 mm (0.009 in) • Exhaust: 0.25-0.29 mm (0.010-0.011 in) • 2.4 L engine models: • • Intake: 0.21-0.25 mm (0.009 in) • Exhaust: 0.25-0.29 mm (0.010-0.011 in)
5	**Replace engine coolant**
B	• Use Honda Long Life Antifreeze/Coolant Type 2, and if necessary add Honda Extreme Cold Weather Antifreeze/Coolant Type 2 (concentrate) as needed for prolonged cold temperatures below -22 deg.F (-30 deg.C). • 1.5 L engine models: • • Coolant capacities (including engine, heater, hoses, and expansion tank): 6.2 L (1.64 US gal) • 2.4 L engine models: • • Coolant capacities (including engine, heater, hoses, and reservoir): 6.3 L (1.66 US gal)
6	**Replace rear differential fluid** (with AWD)
B	• Honda DPSF-II • Capacity: 1.2 L (1.3 US qt)
7	**Replace brake fluid**

Number	Maintenance Sub Items
B	• Honda DOT 3 Brake Fluid: We recommend genuine Honda Brake Fluid. • Make sure the brake fluid level is between upper and lower marks on the reservoir.

REMINDER INDICATOR (RESET PROCEDURES)

Honda - 1982-22

EMISSIONS MAINTENANCE REMINDER

NOTE: **To determine the appropriate reset procedure, refer to EMISSIONS MAINTENANCE REMINDER RESET INDEX.**

EMISSIONS MAINTENANCE REMINDER RESET INDEX

Model & Year	Reset Procedure
Passport DX	
1994-95	Emissions Maintenance Reminder Reset Procedure

EMISSIONS MAINTENANCE REMINDER RESET PROCEDURE

1. Heated Oxygen Sensor (HO2S) must be replaced every 90, 000 miles. When odometer reaches 90, 000 miles, O2S indicator light on dash will illuminate, and then every subsequent 90, 000 miles. After servicing, turn off or reset warning light.

   NOTE: **Reset procedure is for first 90, 000 mile reset. At every subsequent 90, 000 mile reset, move screw back to previous hole.**

2. To reset warning light, remove instrument cluster. Remove masking tape from hole "B". See Fig. 1 or Fig. 2 . Remove screw from hole "A" and insert into hole "B". Apply new masking tape to hole "A".

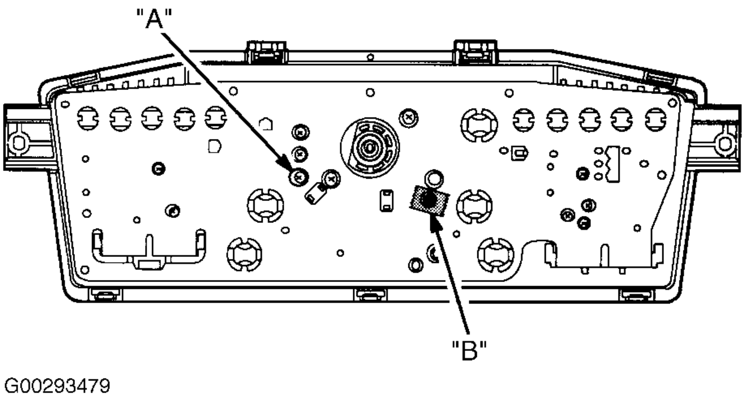

Fig. 1: Identifying Oxygen Sensor Warning Light Reset Holes (2.6L)
Courtesy of AMERICAN HONDA MOTOR CO., INC.

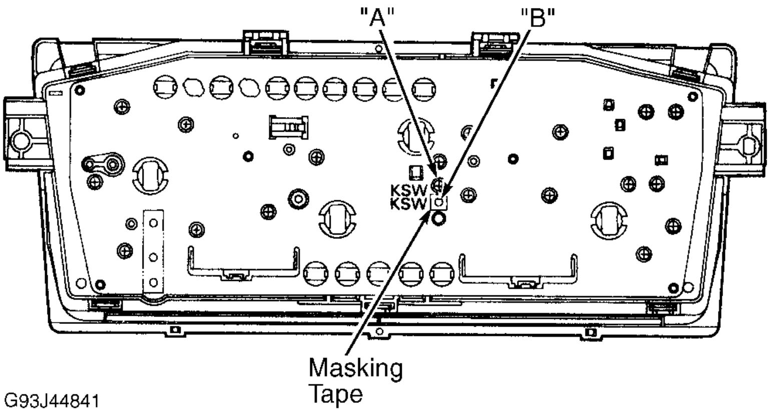

Fig. 2: Identifying Oxygen Sensor Warning Light Reset Holes (3.2L)
Courtesy of ISUZU MOTOR CO.

ENGINE OIL REPLACEMENT REMINDER

NOTE: **To determine the appropriate reset procedure, refer to ENGINE OIL REPLACEMENT REMINDER RESET INDEX.**

ENGINE OIL REPLACEMENT REMINDER RESET INDEX

Model & Year	Reset Procedure
Accord	
2006-16	Engine Oil Replacement Reminder Reset - Procedure 01

Model & Year	Reset Procedure
2017	Engine Oil Replacement Reminder Reset - Procedure 17
2019-22	Engine Oil Replacement Reminder Reset - Procedure 19
Accord Hybrid	
2014-22	Engine Oil Replacement Reminder Reset - Procedure 19
Civic	
2006-12	Engine Oil Replacement Reminder Reset - Procedure 01
2013-15	With Information Display: Engine Oil Replacement Reminder Reset - Procedure 01 With i-MID: Engine Oil Replacement Reminder Reset - Procedure 11
2016	Engine Oil Replacement Reminder Reset - Procedure 13
2017-22	Engine Oil Replacement Reminder Reset - Procedure 23
Civic Hybrid	
2012-15	Engine Oil Replacement Reminder Reset - Procedure 23
Clarity	
2017-21	Engine Oil Replacement Reminder Reset - Procedure 23
CR-V	
2007-11	Engine Oil Replacement Reminder Reset - Procedure 02
2012-16	Engine Oil Replacement Reminder Reset - Procedure 23
2017-22	Engine Oil Replacement Reminder Reset - Procedure 18
CR-Z	
2011-16	Engine Oil Replacement Reminder Reset - Procedure 06
Crosstour	
2012-15	Engine Oil Replacement Reminder Reset - Procedure 06
Element	
2007-11	Engine Oil Replacement Reminder Reset - Procedure 06
Fit	
2007-20	Engine Oil Replacement Reminder Reset - Procedure 06
HR-V	
2016-22	Engine Oil Replacement Reminder Reset - Procedure 06
Insight	
2010-14	Engine Oil Replacement Reminder Reset - Procedure 06
2019-22	Engine Oil Replacement Reminder Reset - Procedure 24
Odyssey (1)	
2005-10	Engine Oil Replacement Reminder Reset - Procedure 06
2012-15	Engine Oil Replacement Reminder Reset - Procedure 10
2018-22	Engine Oil Replacement Reminder Reset - Procedure 24
Pilot (1)	
2006-13	Engine Oil Replacement Reminder Reset - Procedure 06
2014-22	Engine Oil Replacement Reminder Reset - Procedure 06
2016-18	Engine Oil Replacement Reminder Reset - Procedure 06
2019-22	Engine Oil Replacement Reminder Reset - Procedure 19
Ridgeline	
2007-08	Engine Oil Replacement Reminder Reset - Procedure 04
2009-14	Engine Oil Replacement Reminder Reset - Procedure 06
2017-22	Engine Oil Replacement Reminder Reset - Procedure 03
S2000	
2006-09	Engine Oil Replacement Reminder Reset - Procedure 05

(1) Beginning with 2012 models, Honda no longers indicates whether the higher-end Multi-Information Display, that was previously only installed in the Touring models, continues to be available only in Touring. If you find a non-Touring model with a Multi-Information Display (identified by the steering wheel controls), use the Touring reset procedure.

ENGINE OIL REPLACEMENT REMINDER RESET - PROCEDURE 01

NOTE: **For Civic and CR-V, this procedure is for models with the Information Display. For 2013-15 Civic and CR-V models with i-MID, see PROCEDURE 11. For 2014-16 CR-V with i-MID, see PROCEDURE 12.**

1. Turn ignition switch to ON (II).
2. Press SELECT/RESET knob repeatedly until engine oil life indicator is displayed. See Fig. 3 or Fig. 4 .
3. Press SELECT/RESET knob for 10 seconds, until the Engine oil life indicator and the Maintenance item codes blink, then release the button.
4. Press SELECT/RESET knob again for 5 seconds. Maintenance items codes will disappear and engine oil life indicator will reset to 100%.

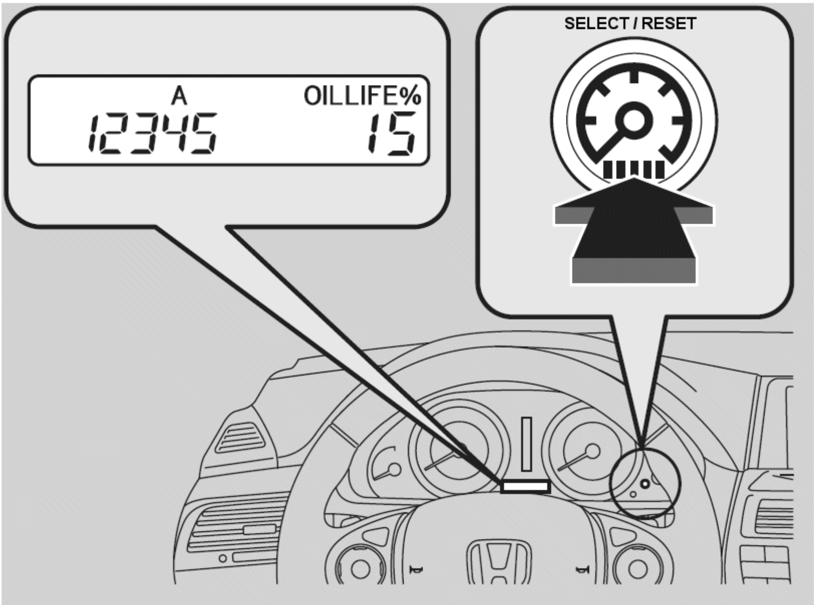

Fig. 3: Oil Life Display Controls (Maintenance Minder) - Typical Early Model Instrument Panel
Courtesy of AMERICAN HONDA MOTOR CO., INC.

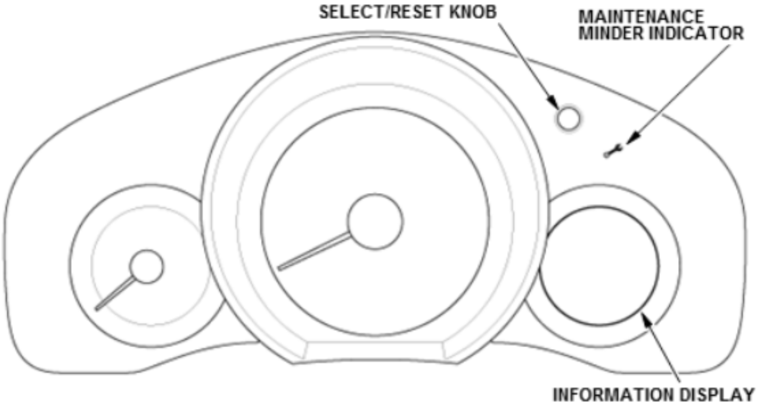

Fig. 4: Oil Life Display Controls (Maintenance Minder) - Typical Late Model Instrument Panel
Courtesy of AMERICAN HONDA MOTOR CO., INC.

ENGINE OIL REPLACEMENT REMINDER RESET - PROCEDURE 02

NOTE:

- **The vehicle must be stopped to reset the display. If a required service is done and the display is not reset, or if the maintenance display is reset without doing the service, the system will not show the proper maintenance timing. This can lead to serious mechanical problems because there will be no accurate record of when the required maintenance is needed.**
- **The engine oil life and the maintenance items can be reset independently only with the HDS.**

1. Turn the ignition switch to ON (II).
2. Push and release the Select/Reset knob repeatedly until the engine oil life indicator is displayed.
3. Press and hold the Select/Reset knob for about 10 seconds. The information display shows the reset mode display.

NOTE: **If you are resetting the display when the engine oil life is more than 15%, make sure any maintenance items requiring service are done before resetting the display.**

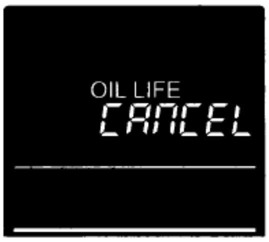

Fig. 5: Screen Display - Reset Knob Cancels
Courtesy of AMERICAN HONDA MOTOR CO., INC.

4. Twist the Select/Reset knob to select OIL LIFE, the display will begin to blink.
5. Push in on the Select/Reset knob to enter this selection, the OIL LIFE and the maintenance item codes will begin to blink.
6. Press and hold the Select/Reset knob again for about 5 seconds. The maintenance item codes will disappear, and the engine oil life will reset to 100%.

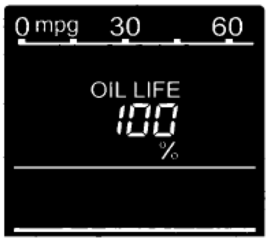

Fig. 6: Screen Display - Select/Reset Knob
Courtesy of AMERICAN HONDA MOTOR CO., INC.

ENGINE OIL REPLACEMENT REMINDER RESET - PROCEDURE 03

NOTE:

- **The vehicle must be stopped to reset the Maintenance Minder.**
- **If a required service is done and the Maintenance Minder is not reset, or if the Maintenance Minder is reset without doing the service, the system will not show the proper maintenance timing. This can lead to serious mechanical problems because there will be no accurate record of when the next required maintenance is needed.**
- **The engine oil life and maintenance item(s) can be independently reset with the HDS.**

1. Turn the vehicle to the ON mode.
2. Push the INFO button repeatedly until the engine oil life indicator is displayed.
3. Press and hold the SEL/RESET button for about 10 seconds. The Maintenance Reset screen appears on the multi-information display.

NOTE:

- **If you are resetting the Maintenance Minder when the engine oil life is more than 15 %, make sure any maintenance item(s) requiring service are done before resetting the display.**
- **To cancel the Maintenance Reset mode, press the INFO button to select the Cancel, then press the SEL/RESET button.**

4. Press the INFO button to select Reset, then press the SEL/RESET button. The "Reset Completed" message appears. The maintenance item code(s) will disappear and the engine oil life will be reset to 100%.

Resetting Individual Maintenance Items

1. Connect the HDS.
2. Select GAUGES in the BODY ELECTRICAL with the HDS.
3. Select ADJUSTMENT in the GAUGES with the HDS.
4. Select MAINTENANCE INFORMATION in the ADJUSTMENT with the HDS.
5. Select MAINTENANCE MINDER in the MAINTENANCE INFORMATION with the HDS.
6. Select the individual maintenance item you wish to reset with the HDS.

ENGINE OIL REPLACEMENT REMINDER RESET - PROCEDURE 04

1. Turn ignition switch to ON (II) position.
2. Press SELECT button repeatedly until engine oil life display or service message is displayed.
3. Press the RESET button for about 10 seconds. A "MAINT RESET" message will appear.
4. Select appropriate answer - "MAINT RESET >N" (NO) or "MAINT RESET >Y" (YES) by pressing the select button. ">N" or ">Y" is displayed on the outside temperature display.
5. Select the "MAINT RESET >Y" (YES), and press and hold RESET button again to reset engine oil life to 100%.

ENGINE OIL REPLACEMENT REMINDER RESET - PROCEDURE 05

NOTE:

- **The vehicle must be stopped to reset the display.**
- **If a required service is done and the display is not reset, or if the maintenance display is reset without doing the service, the system will not show the proper maintenance timing. This can lead to serious mechanical problems because there will be no accurate record of when the required maintenance is needed.**
- **The engine oil life and maintenance item(s) can be reset independently only with the HDS.**

1. Turn the ignition switch to ON (II).
2. Press release the trip button repeatedly until the engine oil life indicator is displayed.
3. Press and hold the trip button for about 10 seconds.

   The engine oil life indicator and the maintenance item code(s) will blink.

NOTE: **If you are resetting the display when the engine oil life is more than 15 %, make sure any maintenance item(s) requiring service are done before resetting the display.**

4. Press and hold the trip button for another 5 seconds. The maintenance item cods(s) will disappear, and the engine oil life will reset to "100".

ENGINE OIL REPLACEMENT REMINDER RESET - PROCEDURE 06

NOTE:

- **The vehicle must be stopped to reset the Maintenance Minder.**
- **If a required service is done and the Maintenance Minder is not reset, or if the Maintenance Minder is reset without doing the service, the system will not show the proper maintenance timing. This can lead to serious mechanical problems because there will be no accurate record of when the required maintenance is needed.**

- **The engine oil life and maintenance item(s) can be independently reset with the HDS.**

1. Turn the ignition switch to ON (II).
2. If system message(s) are displayed, press the INFO button to cancel the display.
3. Push the SEL/RESET button repeatedly until the engine oil life indicator is displayed.
4. Press and hold the SEL/RESET button for about 10 seconds, the OIL LIFE RESET" mode display appears.

NOTE:

- **If you are resetting the Maintenance Minder when the engine oil life is more than 15 %, make sure any maintenance item(s) requiring service are done before resetting the display.**
- **To cancel the OIL LIFE RESET" mode, press the INFO button repeatedly until the CANCEL" indicator is displayed, then press the SEL/RESET button.**

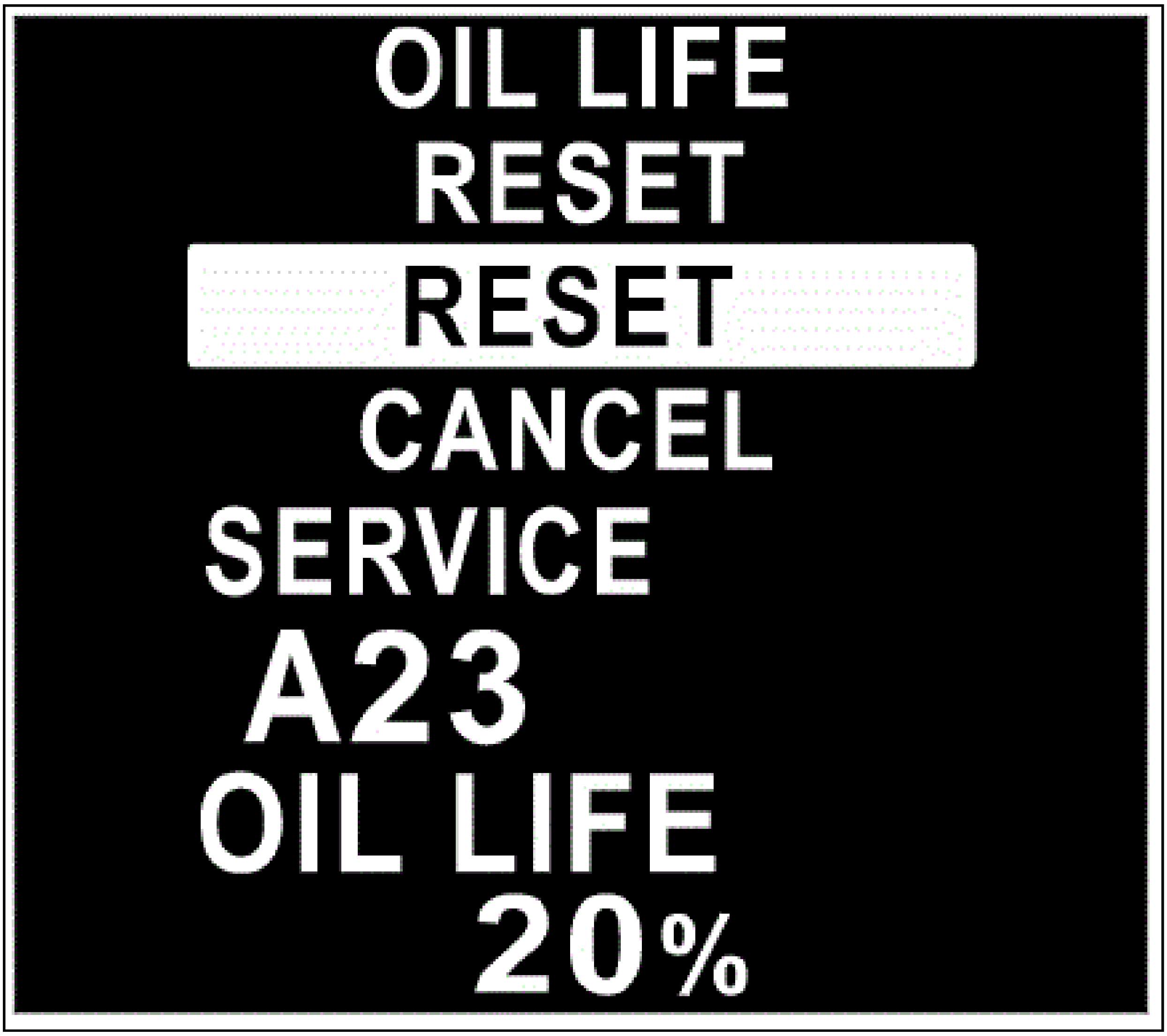

5. Press the INFO button repeatedly until the RESET" indicator is displayed, then press the SEL/RESET button. The maintenance item code(s) will disappear, and the engine oil life will reset to 100 %."

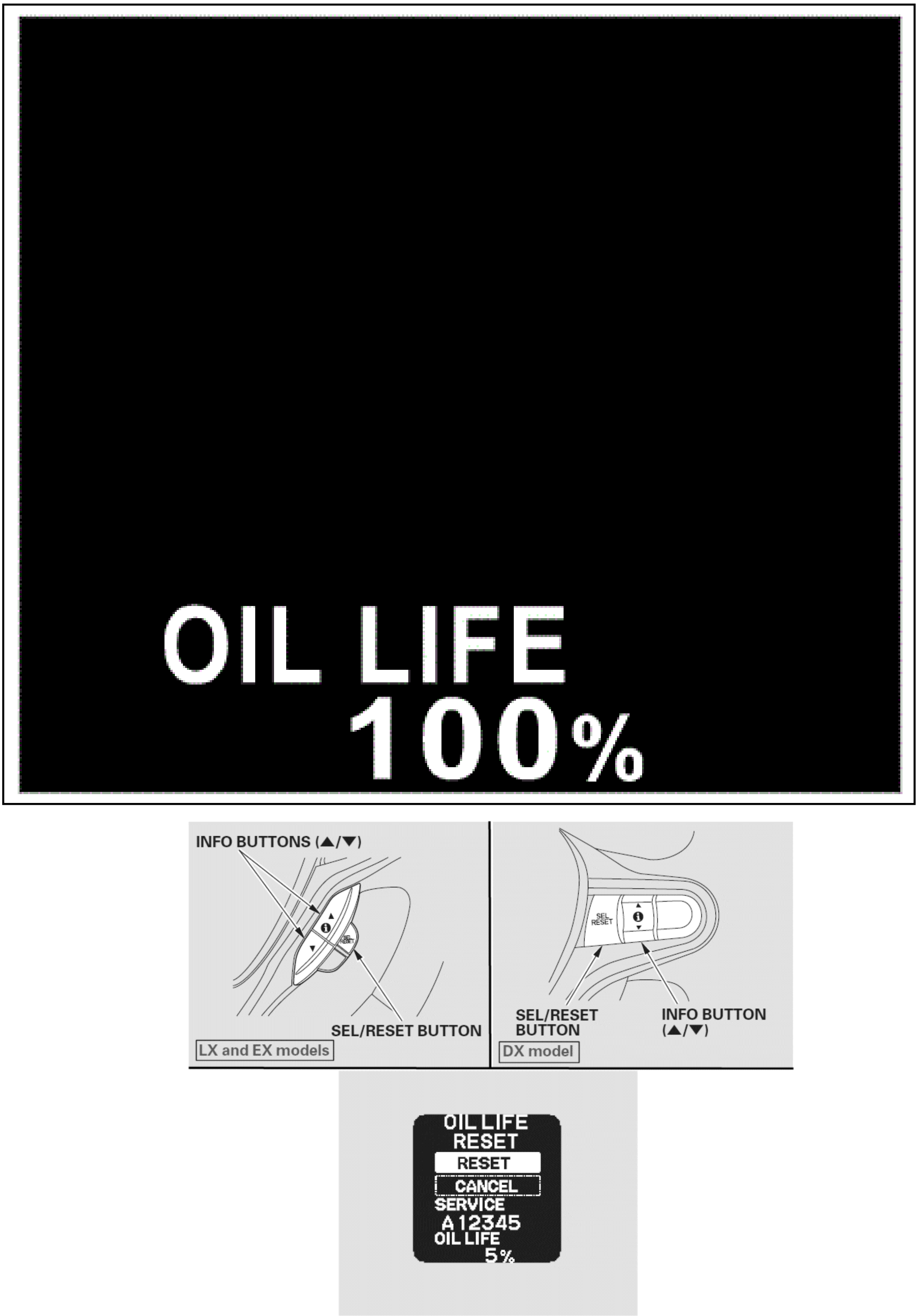
OIL LIFE
100%
INFO BUTTONS (▲/▼)
SEL/RESET BUTTON
LX and EX models
SEL/RESET BUTTON
INFO BUTTON (▲/▼)
DX model
OIL LIFE RESET
RESET
CANCEL
SERVICE
A 12345
OIL LIFE
5%

Fig. 7: Oil Life Display Controls (Maintenance Minder)
Courtesy of AMERICAN HONDA MOTOR CO., INC.

ENGINE OIL REPLACEMENT REMINDER RESET - PROCEDURE 07

NOTE: **Use this procedure if the vehicle IS NOT equipped with Navigation System.**

1. Turn ignition switch to ON (II) position.
2. Press the SELECT button repeatedly until the engine oil life is displayed.
3. Press the TRIP/RESET button for about 10 seconds. The engine oil life and the maintenance item codes will blink.
4. Press the TRIP/RESET button again for 5 seconds. The maintenance item codes will disappear, and the engine oil life will reset to 100%.

ENGINE OIL REPLACEMENT REMINDER RESET - PROCEDURE 08

NOTE: **Use this procedure if the vehicle IS equipped with Navigation System.**

1. Turn ignition switch to ON (II) position.
2. Press the SEL/RESET button on the dashboard until you see the engine oil life display.
3. Press and hold the SEL/RESET button for 10 seconds. The multi-information display will ask for a confirmation.
    - If you are sure you want to reset the display, press SEL/RESET button to select OK.
    - If you do not want to reset the display, press the INFO (ARROW) button to select CANCEL.

ENGINE OIL REPLACEMENT REMINDER RESET - PROCEDURE 09

1. Turn the ignition switch to ON (II).

    NOTE: **If system messages are displayed, press the INFO button to cancel the display.**

2. Push the ARROW buttons repeatedly until the engine oil life indicator is displayed. See Fig. 8.
3. Select RESET with the ARROW buttons
4. Press the SEL/RESET button for 10 seconds. The service code will disappear and the engine oil life display will return to 100%.
5. To cancel the oil life reset mode, select CANCEL, then press the SEL/RESET button.

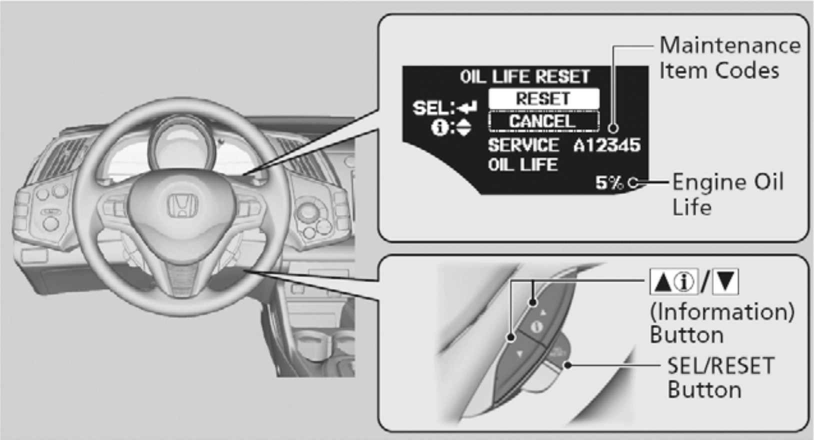

Fig. 8: Resetting Oil Life Display (Maintenance Minder) - Typical
Courtesy of AMERICAN HONDA MOTOR CO., INC.

ENGINE OIL REPLACEMENT REMINDER RESET - PROCEDURE 10

NOTE:

- **The vehicle must be stopped to reset the Maintenance Minder.**
- **If a required service is done and the Maintenance Minder is not reset, or if the Maintenance Minder is reset without doing the service, the system will not show the proper maintenance timing. This can lead to serious mechanical problems because there will be no accurate record of when the required maintenance is needed.**
- **The engine oil life and the maintenance item(s) can be independently reset with the HDS.**

1. Turn the ignition switch to ON (II).
2. Push the SEL/RESET knob repeatedly until the engine oil life indicator is displayed.
3. Press and hold the SEL/RESET knob for about 10 seconds. The engine oil life indicator and the maintenance item code(s) will be blink, then release the knob.

    NOTE: **If you are resetting the Maintenance Minder when the engine oil life is more than 15 %, make sure any maintenance item(s) requiring service are done before resetting the display.**

4. Push the SEL/RESET knob to select OIL LIFE, the display will begin to blink.
5. Push in on the SEL/RESET knob to enter this selection, the OIL LIFE and the maintenance item code(s) will begin to blink.
6. Press and hold the SEL/RESET knob for another 5 seconds. The maintenance item code(s) will disappear, and the engine oil life will reset to 100."

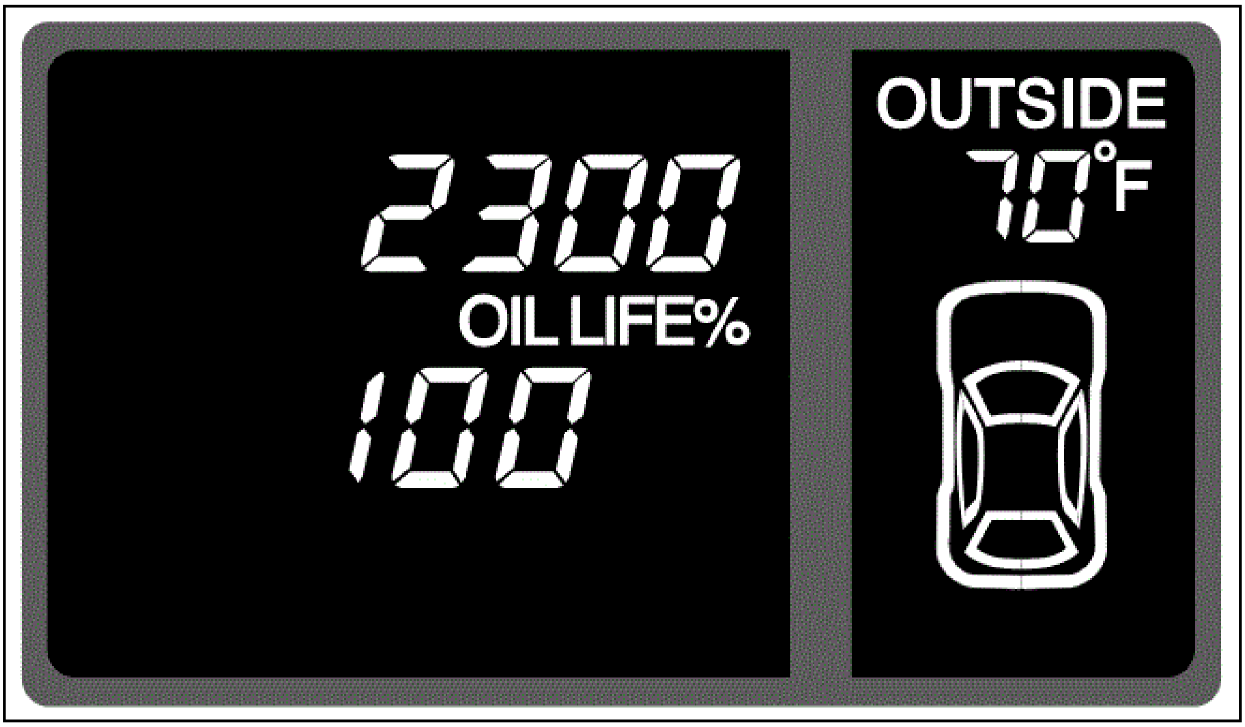

ENGINE OIL REPLACEMENT REMINDER RESET - PROCEDURE 11

Maintenance Minder messages begin appearing on the i-MID when engine oil life is less than 15%. The system message indicator comes on along with the Maintenance Minder message.

1. Turn the ignition switch to ON (II).
2. Press the MENU button to go to VEHICLE INFORMATION. See Fig. 9.
3. Select VEHICLE INFORMATION with the PLUS (+) button, then press the SOURCE button.
4. Press the SOURCE button again to go to the MAINTENANCE INFO screen. The engine oil life appears on the i-MID.
5. Select YES with the MINUS (-) button, then press the SOURCE button. The displayed maintenance items disappear, and the engine oil life display returns to 100%. Any maintenance items that are necessary for this vehicle at the next maintenance service will appear.
6. To cancel the oil life reset mode, select No, then press the SOURCE button.

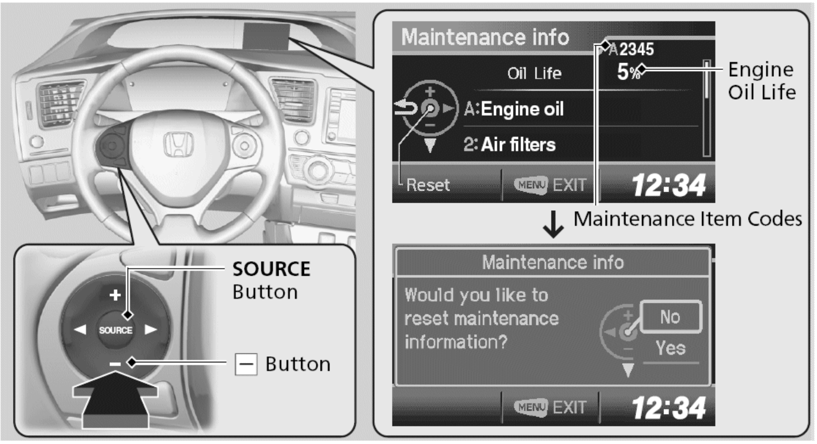

Would you like to reset maintenance information?

Fig. 9: Resetting Oil Life Display (Maintenance Minder)
Courtesy of AMERICAN HONDA MOTOR CO., INC.

ENGINE OIL REPLACEMENT REMINDER RESET - PROCEDURE 12

1. Set the power mode to ON.
2. Press ARROWS button (right side of steering wheel) to select VEHICLE SETTINGS, then press the SEL/RESET button.
3. Press ARROWS button until MAINTENANCE MINDER RESET appears on the display.
4. Press the SEL/RESET button. The MAINTENANCE MINDER reset mode is displayed on the multi-information display.
5.
    - **To Reset All Due Items At Once** : Select ALL DUE ITEMS with the ARROWS button, then press the SEL/RESET button. The displayed maintenance items disappear.
    - **To Reset Each Item Separately** : Select ITEM # ONLY with the ARROWS button, then press the SEL/RESET button. The displayed maintenance item (i.e. #) disappears.

NOTE: **To cancel the Maintenance Minder reset mode, select CANCEL, then press the SEL/ RESET button.**

You can also reset the Maintenance Minder display using the audio/information screen. With the power mode in ON, press the SETTINGS button. Rotate to select: Vehicle Settings > Maintenance Info. > Maintenance Minder Reset.

ENGINE OIL REPLACEMENT REMINDER RESET - PROCEDURE 13

1. Turn the ignition switch to ON (II).

   NOTE: **Models with the smart entry system have an ENGINE START/STOP button instead of an ignition switch.**

2. Press the DISPLAY/INFORMATION button repeatedly until the Wrench Icon appears. See Fig. 10.
3. Press the ENTER button.
4. Press and hold the ENTER button for about 10 seconds to enter the reset mode.
5. Press the UP/DOWN ARROW buttons to select a maintenance item to reset, or to select ALL DUE ITEMS (You can also select CANCEL to end the process).
6. Press the ENTER button to reset the selected item.

NOTE: **Repeat from step 4 for any other items needing to be reset.**

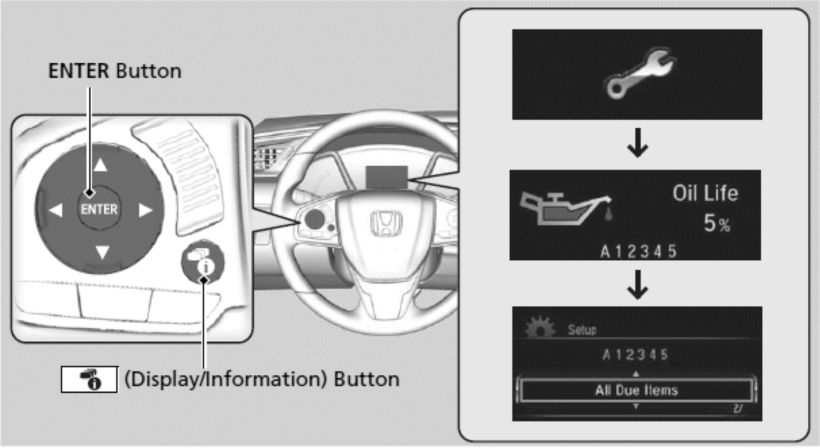
ENTER Button
ENTER
(Display/Information) Button
Oil Life
5%
A 1 2 3 4 5
Setup
A 1 2 3 4 5
All Due Items

Fig. 10: Resetting Oil Life Display (Maintenance Minder)
Courtesy of AMERICAN HONDA MOTOR CO., INC.

ENGINE OIL REPLACEMENT REMINDER RESET - PROCEDURE 14

NOTE: **This procedure is for vehicles with the Information Display.**

NOTE: **The engine oil life and maintenance item(s) can also be independently reset with an appropriate scan tool. See ENGINE OIL REPLACEMENT REMINDER RESET - PROCEDURE 20.**

1. Turn ignition switch to ON (II).

   NOTE: **Models with the smart entry system have an ENGINE START/STOP button instead of an ignition switch.**

2. Press and hold the SELECT/RESET knob for 10 seconds or more The information display shows the reset mode initial display. See Fig. 11.
3. Select oil life with the SELECT/RESET knob.
4. Press and hold the SELECT/RESET knob for a few seconds to enter the oil life reset mode.
5. Press and hold the SELECT/RESET knob for five seconds or more. The displayed maintenance items disappear and the engine oil life display will return to 100%.

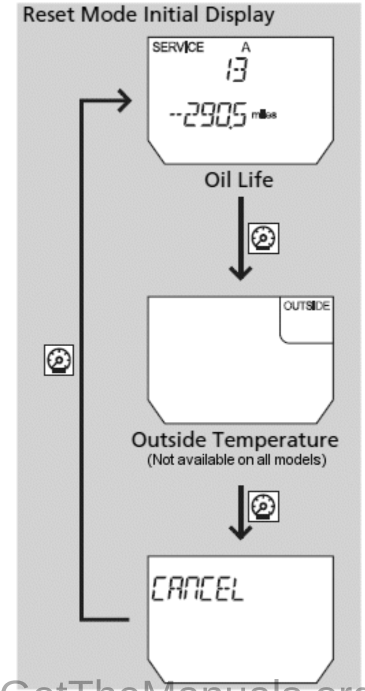
Reset Mode Initial Display
SERVICE
A
13
--2905 miles
Oil Life
OUTSIDE
Outside Temperature
(Not available on all models)
CANCEL

Fig. 11: Reset Mode Initial Display (Maintenance Minder)
Courtesy of AMERICAN HONDA MOTOR CO., INC.

ENGINE OIL REPLACEMENT REMINDER RESET - PROCEDURE 15

NOTE: **This procedure is for vehicles with the Multi-Information Display.**

NOTE: **The engine oil life and maintenance item(s) can also be independently reset with an appropriate scan tool. See ENGINE OIL REPLACEMENT REMINDER RESET - PROCEDURE 20.**

1. Turn ignition switch to ON (II).

   NOTE: **Models with the smart entry system have an ENGINE START/STOP button instead of an ignition switch.**

2. If system messages are displayed, press the INFO button to cancel the display.
3. Display the engine oil life by repeatedly pressing the SEL/RESET button. See Fig. 12.
4. Press and hold the SEL/RESET button for 10 seconds or more. The oil life reset mode is displayed on the multi-information display.
5. Select RESET with the INFORMATION button, then press the SEL/RESET button. The service code will disappear and the engine oil life display will return to 100%.
6. To cancel the oil life reset mode, select CANCEL, then press the SEL/RESET button.

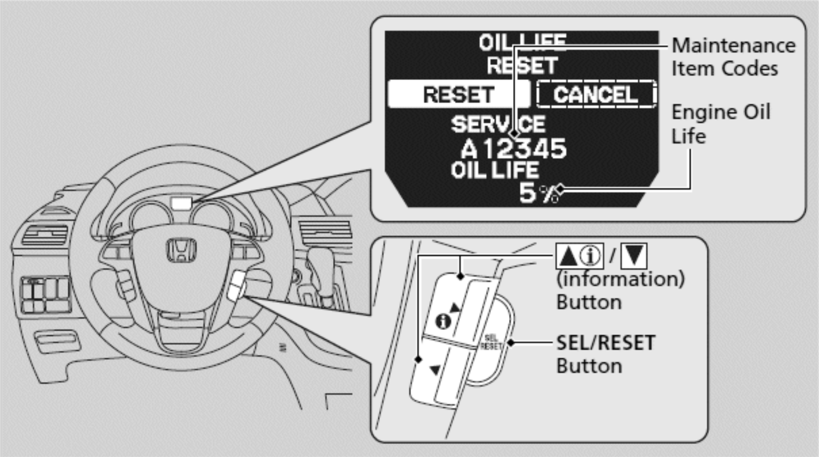

Fig. 12: Reset Mode Initial Display (Maintenance Minder)
Courtesy of AMERICAN HONDA MOTOR CO., INC.

ENGINE OIL REPLACEMENT REMINDER RESET - PROCEDURE 16

NOTE:

- **The vehicle must be stopped to reset the Maintenance Minder.**
- **If a required service is done and the Maintenance Minder is not reset, or if the Maintenance Minder is reset without doing the service, the system will not show the proper maintenance timing. This can lead to serious mechanical problems because there will be no accurate record of when the next required maintenance is needed.**

1. Turn ignition switch to ON (II).

   NOTE: **Models with the smart entry system have an ENGINE START/STOP button instead of an ignition switch.**

2. In the Multi-Information Display (MID), go to the Maintenance Info. group. > Customized Features.
3. Press and hold the RESET button. The oil life reset mode is displayed on the MID. See Fig. 13.
4. Select Reset with the INFORMATION button, then push the RESET button. The displayed maintenance items disappear, and the engine oil life display returns to 100%.
5. To cancel the oil life reset mode, select CANCEL, then press the RESET button.

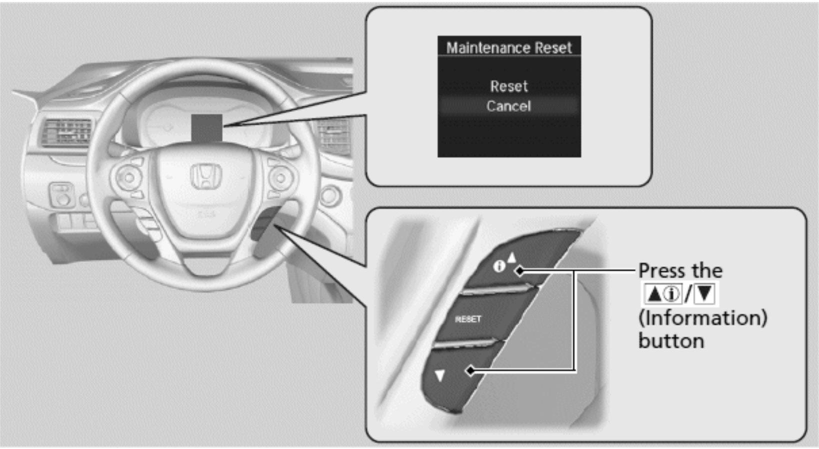

Fig. 13: Resetting Oil Life Display (Maintenance Minder)
Courtesy of AMERICAN HONDA MOTOR CO., INC.

ENGINE OIL REPLACEMENT REMINDER RESET - PROCEDURE 17

NOTE: **The engine oil life and maintenance item(s) can also be independently reset with an appropriate scan tool. See ENGINE OIL REPLACEMENT REMINDER RESET - PROCEDURE 20.**

NOTE: **There are three ways to reset the engine oil life, by using the infromation display select/reset knob, with the audio/information screen, or with the multi-information display screen.**

NOTE: **The engine oil life and maintenance items can be independently reset with an OEM scan tool.**

Information Display Select/Reset Knob Method

1. Turn ignition switch to ON (II).
2. Press SELECT/RESET knob (right side of instrument cluster) repeatedly until engine oil life indicator is displayed.
3. Press SELECT/RESET knob for 10 seconds. Engine oil life indicator and the maintenance item codes will blink.
4. Press SELECT/RESET knob again for 5 seconds. Maintenance items codes will disappear and engine oil life indicator will reset to "100%"

Multi-Information Display Screen Method

1. Press the engine start/stop button to select the ON mode.
2. Press INFO button (right-side steering wheel controls) to select VEHICLE SETTINGS, then press the SEL/RESET button.
3. Press the INFO button until MAINTENANCE RESET appears on the display, then press the SEL/RESET button. The oil life reset mode is displayed on the multi-information display.

   NOTE: **To cancel the oil life mode, press the INFO button to select CANCEL, then press the SEL/RESET button.**

4. Press the INFO button to select RESET, then press the SEL/RESET button. The maintenance item codes will disappear, and the engine oil life will reset to 100%.

Audio/Infomation Screen Method

1. Turn the ignition switch to ON (II), or press the engine start/stop button to select the ON mode
2. Press the SETTINGS button, then rotate the Selector Knob to select vehicle settings, then select maintence items.
3. Follow the screen prompts to reset the engine oil life.

ENGINE OIL REPLACEMENT REMINDER RESET - PROCEDURE 18

NOTE: **The engine oil life and maintenance item(s) can also be independently reset with an appropriate scan tool. See ENGINE OIL REPLACEMENT REMINDER RESET - PROCEDURE 20.**

NOTE: **You can reset all maintenance items by batch, or you can select and reset each maintenance item individually on the display.**

NOTE: **The engine oil life and maintenance items can be independently reset with the HDS.**

With Information Display

1. Turn the ignition switch to the ON (II) position.
2. Press the SELECT/RESET knob (on instrument cluster - right side) repeatedly until the engine oil life is displayed
3. Press and hold the SELECT/RESET knob for about 10 seconds. The engine oil life and the maintenance item codes will blink to show it is in reset mode.
4. If you wish to reset all the maintenance items shown on the display, press and hold the SEL/RESET knob for 5 seconds or more. If you reset each maintenance item individually, select an item (complete list of maintenance main items and sub items) you wish to reset by rotating the SEL/RESET knob, and press and hold the knob for 5 seconds or more.
5. The maintenance item codes will disappear and the engine oil life will reset to 100%.

With Multi-Information Display

1. Turn the vehicle to the ON mode.
2. If system messages are displayed, press the INFOMATION switch (see Fig. 14) or Audio Remote/Multi-Information Display Switch to cancel the display until the MAINTENANCE MINDER icon is displayed, then press the SOURCE/ENTER button.
3. Display shows the remaining engine oil life, and then press and hold the SOURCE/ENTER button for 10 seconds or more. The MAINTENANCE RESET mode appears on the multi-information display.

   NOTE: **To cancel the MAINTENANCE RESET mode, press the Audio Remote/Multi-Information Display Switch to select CANCEL, then press the SOURCE/ENTER button.**

4. If you wish to reset all the maintenance items shown on the display, select "All Due Items" by pressing the Audio Remote/Multi-Information Display Switch and press the SOURCE/ENTER button. If you reset each maintenance item individually, select an item (complete list of maintenance main items and sub items) you wish to reset by pressing the Audio Remote/Multi-Information Display Switch and press the SOURCE/ENTER button.
5. The maintenance item codes will disappear, and the engine oil life will reset to 100%.

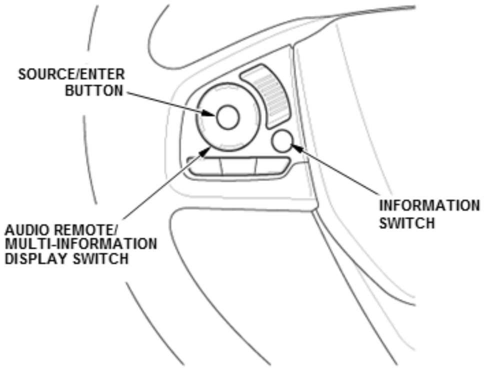

Fig. 14: Resetting Oil Life Display (Steering Wheel Controls)
Courtesy of AMERICAN HONDA MOTOR CO., INC.

ENGINE OIL REPLACEMENT REMINDER RESET - PROCEDURE 19

NOTE: **The engine oil life and maintenance item(s) can also be independently reset with an appropriate scan tool. See ENGINE OIL REPLACEMENT REMINDER RESET - PROCEDURE 20.**

NOTE:

- **The vehicle must be stopped to reset the Maintenance Minder.**
- **If a required service is done and the Maintenance Minder is not reset, or if the Maintenance Minder is reset without doing the service, the system will not show the proper maintenance timing. This can lead to serious mechanical problems because there will be no accurate record of when the required maintenance is needed.**
- **You can reset all maintenance items by batch, or you can select and reset each maintenance item individually on the display.**
- **The engine oil life and maintenance item(s) can be independently reset with the HDS.**

1. Turn the vehicle to the ON mode.
2. Press the HOME button and select "Maintenance" application by pushing repeatedly the Audio Remote/Multi-Information Display switch. Press and hold the ENTER button more than 10 seconds, and then display will change to Maintenance mode. Select "Oil Life" by pushing the Audio Remote/Multi-Information Display switch and press and hold the ENTER button more than 10 seconds to show the reset mode.
3. If you reset all the maintenance items shown on the display, select "All Due Items" by pressing the Audio Remote/Multi-Information Display switch and press the ENTER button. If you reset each maintenance item individually, select an item (complete list of maintenance main item(s) and sub item(s)) you wish to reset by pressing the Audio Remote/Multi-Information Display switch and press the ENTER button.

   NOTE:

   - **If you are resetting the Maintenance Minder when the engine oil life is more than 15 %, make sure any maintenance item(s) requiring service are done before resetting the display.**
   - **To cancel the reset mode, select "Cancel," then push the ENTER button.**

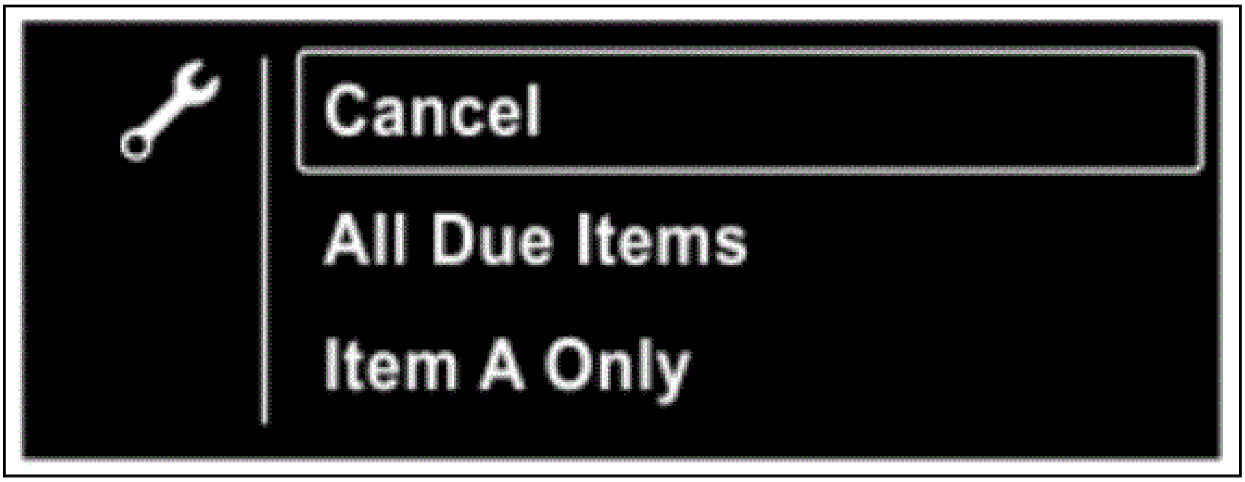

4. "Reset Completed" appears on the display and maintenance item code(s) will disappear. The engine oil life will reset to "100 %."

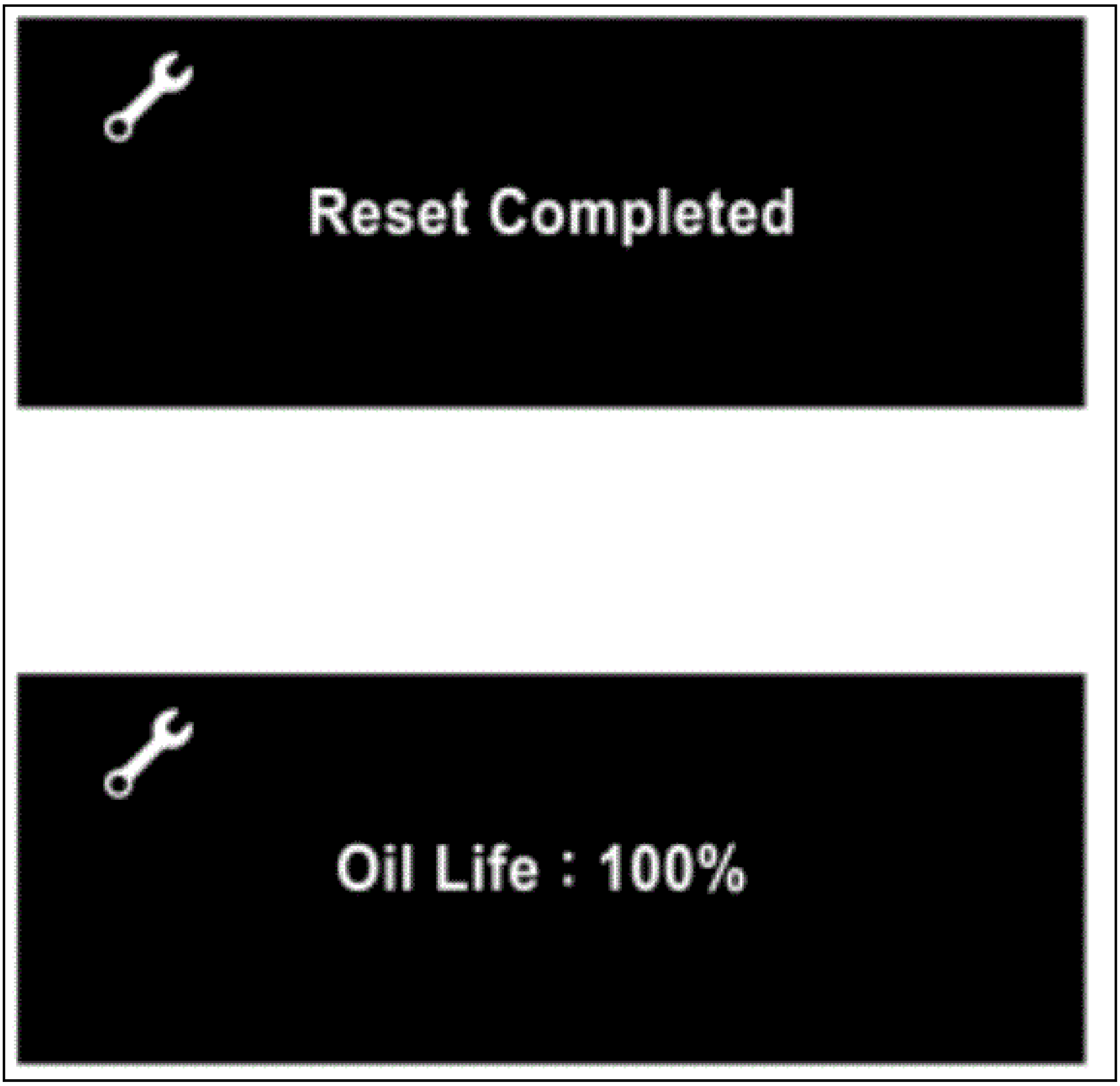
Reset Completed

Oil Life : 100%

ENGINE OIL REPLACEMENT REMINDER RESET - PROCEDURE 20

NOTE: **The engine oil life and maintenance item(s) can be independently reset with an appropriate scan tool. Follow procedure below.**

1. Connect the Honda Diagnostic System (HDS) to the data link connector (DLC).
2. Turn the vehicle to the ON mode.
3. Make sure the HDS communicates with the vehicle and the powertrain control module (PCM). If it doesn't communicate, troubleshoot the DLC circuit.
4. Select GAUGES in BODY ELECTRICAL with the HDS.
5. Select ADJUSTMENT in GAUGES.
6. Select MAINTENANCE INFORMATION in ADJUSTMENT.
7. Select MAINTENANCE MINDER in MAINTENANCE INFORMATION.
8. Select the individual maintenance item you wish to reset.

ENGINE OIL REPLACEMENT REMINDER RESET - PROCEDURE 21

NOTE: **The engine oil life and maintenance item(s) can also be independently reset with an appropriate scan tool. See Engine Oil Replacement Reminder Reset - Procedure 20.**

NOTE:

- **The vehicle must be stopped to reset the Maintenance Minder.**
- **If a required service is done and the Maintenance Minder is not reset, or if the Maintenance Minder is reset without doing the service, the system will not show the proper maintenance timing. This can lead to serious mechanical problems because there will be no accurate record of when the required maintenance is needed.**

1. With the vehicle stationary and the power mode ON, press the INFO button and then select the smart maintenance icon (wrench icon) using the right/left buttons. See Fig. 15.
2. After the smart maintenance screen is shown, press and hold the ENTER button for 10 seconds. The reset mode screen will appear.
3. Select the item you want to reset by pressing the up/down buttons, and then press the ENTER button. There are "All Due Items", "Item 1 only", "Item 2 only", and so on.

NOTE:

- **If you are resetting the Maintenance Minder, make sure that any maintenance items to service are done.**
- **To cancel the "Maintenance Reset" mode, press the up/down buttons to select the "Cancel," and then press the ENTER button.**

4. The "Reset Completed" message will appear. The maintenance items are reset and the maintenance item code(s) will disappear.

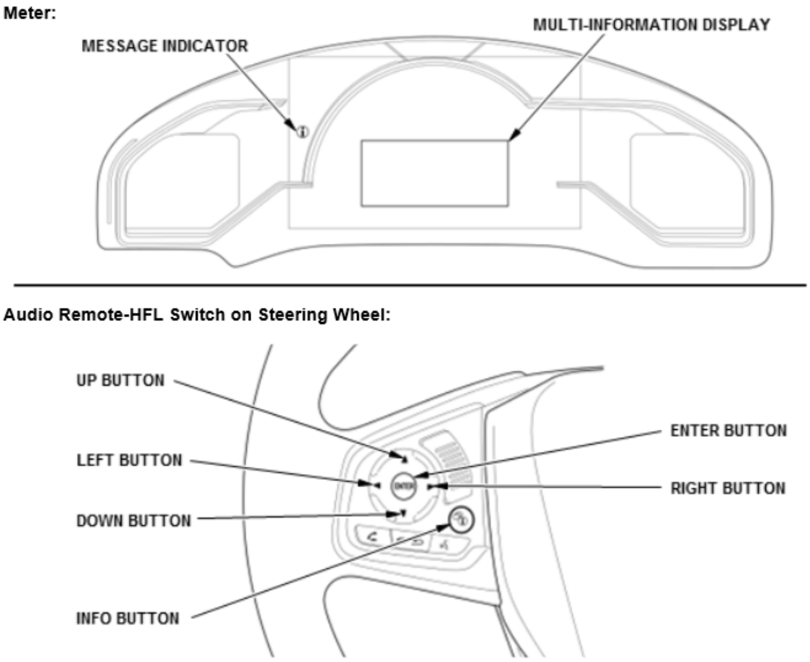

Fig. 15: Identifying Information Display And Steering Wheel Controls
Courtesy of AMERICAN HONDA MOTOR CO., INC.

ENGINE OIL REPLACEMENT REMINDER RESET - PROCEDURE 22

NOTE: **The engine oil life and maintenance item(s) can also be independently reset with an appropriate scan tool. See ENGINE OIL REPLACEMENT REMINDER RESET - PROCEDURE 20.**

NOTE:

- **The vehicle must be stopped to reset the Maintenance Minder.**
- **If a required service is done and the Maintenance Minder is not reset, or if the Maintenance Minder is reset without doing the service, the system will not show the proper maintenance timing. This can lead to serious mechanical problems because there will be no accurate record of when the required maintenance is needed.**
- **You can reset all maintenance items by batch, or you can select and reset each maintenance item individually on the display.**
- **The engine oil life and maintenance item(s) can be independently reset with the HDS.**

1. Turn the vehicle to the ON mode.
2. Press the HOME button and select "Maintenance" application by pushing repeatedly the Audio Remote/Multi-Information Display switch. See Fig. 16. Press and hold the ENTER button more than 10 seconds, and then display will change to Maintenance mode. Select "Oil Life" by pushing the Audio Remote/Multi-Information Display switch and press and hold the ENTER button more than 10 seconds to show the reset mode.
3. If you wish to reset all the maintenance items shown on the display, select "All Due Items" by pressing the Audio Remote/Multi-Information Display switch and press the ENTER button. If you reset each maintenance item individually, select an item (complete list of maintenance main item(s) and sub item(s)) you wish to reset by pressing the Audio Remote/Multi-Information Display switch and press the ENTER button.

NOTE:

- **If you are resetting the Maintenance Minder when the engine oil life is more than 15 %, make sure any maintenance item(s) requiring service are done before resetting the display.**
- **To cancel the reset mode, select "Cancel," then push the ENTER button.**

4. "Reset Completed" appears on the display and maintenance item code(s) will disappear. The engine oil life will reset to "100 %."

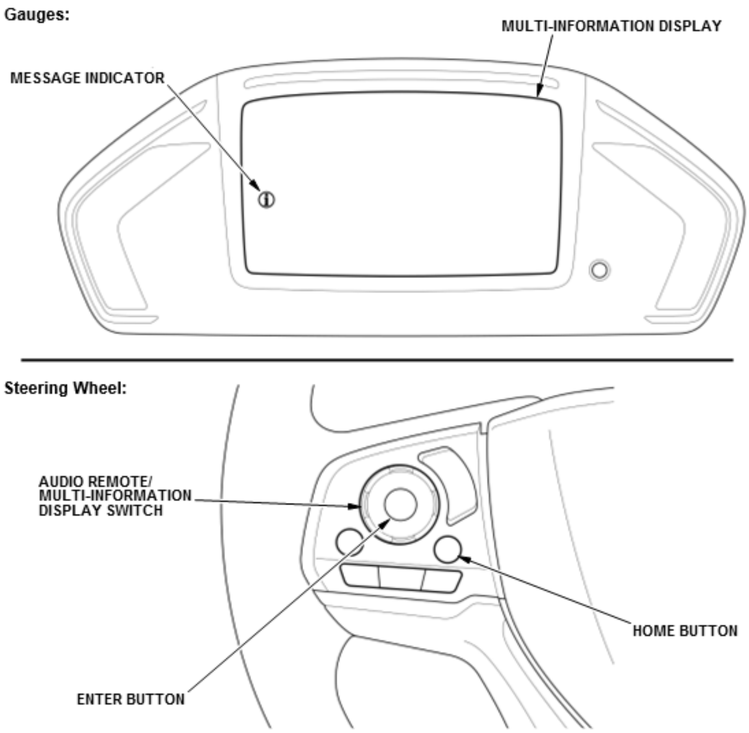
Gauges:
MULTI-INFORMATION DISPLAY
MESSAGE INDICATOR
Steering Wheel:
AUDIO REMOTE/ MULTI-INFORMATION DISPLAY SWITCH
HOME BUTTON
ENTER BUTTON

Fig. 16: Identifying Information Display And Steering Wheel Controls (Odyssey)
Courtesy of AMERICAN HONDA MOTOR CO., INC.

ENGINE OIL REPLACEMENT REMINDER RESET - PROCEDURE 23

NOTE:

- **The vehicle must be stopped to reset the Maintenance Minder.**
- **If a required service is done and the Maintenance Minder is not reset, or if the Maintenance Minder is reset without doing the service, the system will not show the proper maintenance timing. This can lead to serious mechanical problems because there will be no accurate record of when the required maintenance is needed.**
- **You can reset all maintenance items by batch, or you can select and reset each maintenance item individually on the display.**

1. Turn the vehicle to the ON mode.
2. Refer to the "How to access the current engine oil life," display the engine oil life on the multi-information display.
3. Press and hold the multi-function steering wheel controller for 10 seconds or more to show the reset mode.
4. If you reset all the maintenance items shown on the display "A23 (for example)", select "All due items" by rolling the multi-function steering wheel controller and press it. If you reset each maintenance item individually, select an item (complete list of maintenance main item(s) and sub item(s)) you wish to reset by rolling the multi-function steering wheel controller and press it.

   NOTE:

   - **If you are resetting the Maintenance Minder when the engine oil life is more than 15 %, make sure any maintenance item(s) requiring service are done before resetting the display.**
   - **To cancel the reset mode, toggle the multi-function steering wheel controller to the left.**

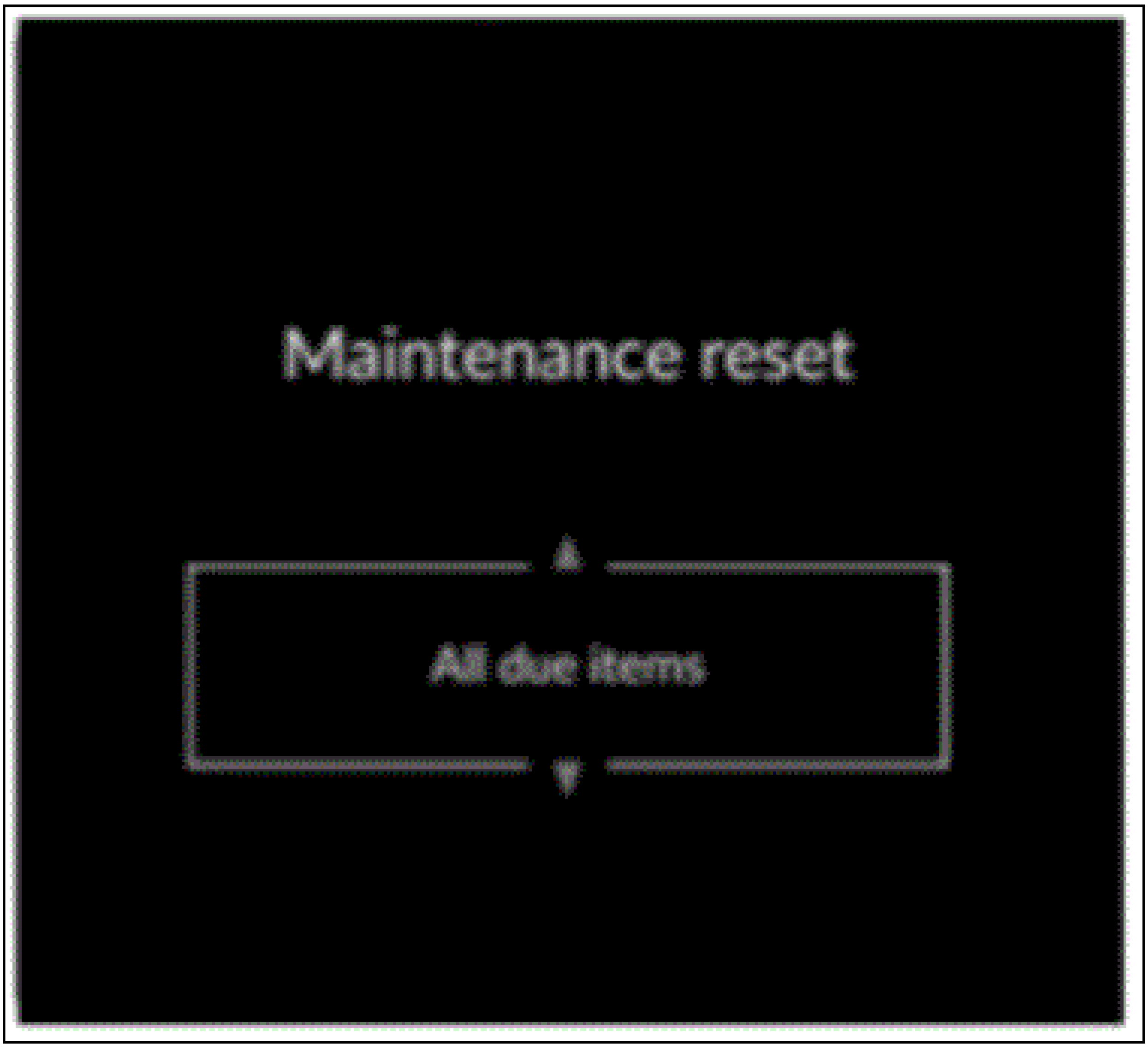

5. "Reset completed" appears on the display and maintenance item code(s) will disappear. The engine oil life will reset to "100 %."

ENGINE OIL REPLACEMENT REMINDER RESET - PROCEDURE 24

NOTE:

- **The vehicle must be stopped to reset the Maintenance Minder.**
- **If a required service is done and the Maintenance Minder is not reset, or if the Maintenance Minder is reset without doing the service, the system will not show the proper maintenance timing. This can lead to serious mechanical problems because there will be no accurate record of when the required maintenance is needed.**
- **You can reset all maintenance items by batch, or you can select and reset each maintenance item individually on the display.**
- **The engine oil life and maintenance item(s) can be independently reset with the HDS.**

1. Turn the vehicle to the ON mode.
2. If system message(s) are displayed to the multi-Information display, press the Left Selector Wheel to cancel the display. Press the HOME button, then select the "Maintenance" by rolling the Left Selector Wheel, and press that wheel.
3. Display shows the remaining engine oil life, and then press the Left Selector Wheel for 10 seconds or more. The "Maintenance Reset" mode appears on the multi-information display.

   NOTE:

   - **If you are resetting the Maintenance Minder when the engine oil life is more than 15 %, make sure any maintenance item(s) requiring service are done before resetting the display.**
   - **To cancel the "Maintenance Reset" mode, rolling the Left Selector Wheel to select the "Cancel", and press that wheel.**

4. If you reset all the maintenance items shown on the display "A23 (for example)", select "All Due Items" by rolling the Left Selector Wheel, and press that wheel. If you reset each maintenance item individually, select an item (complete list of maintenance main item(s) and sub item(s)) you wish to reset by rolling the Left Selector Wheel, and press that wheel.

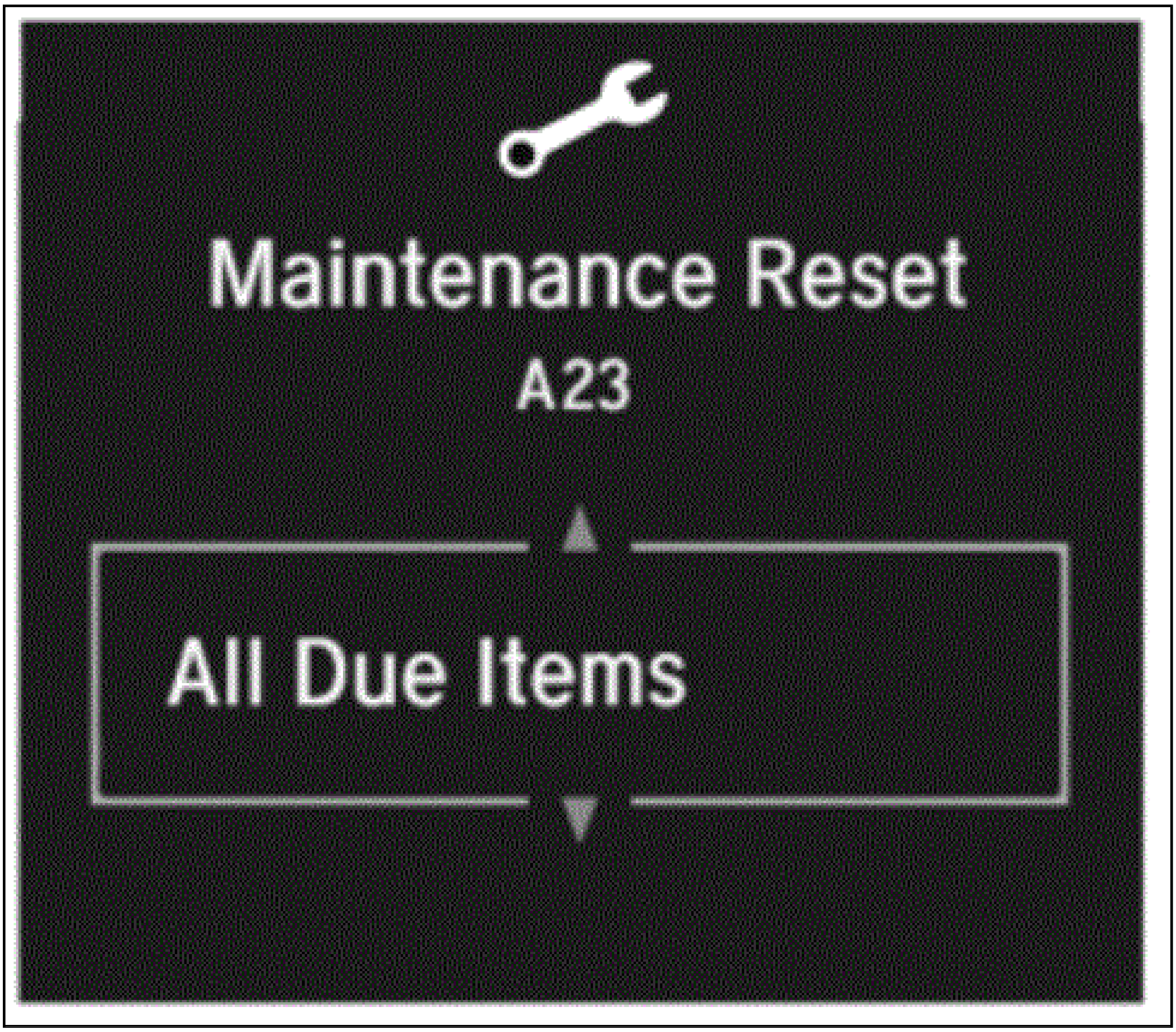
Maintenance Reset
A23
All Due Items

5. "Reset Completed" appears on the display and maintenance item code(s) will disappear. The engine oil life will reset to "100 %."

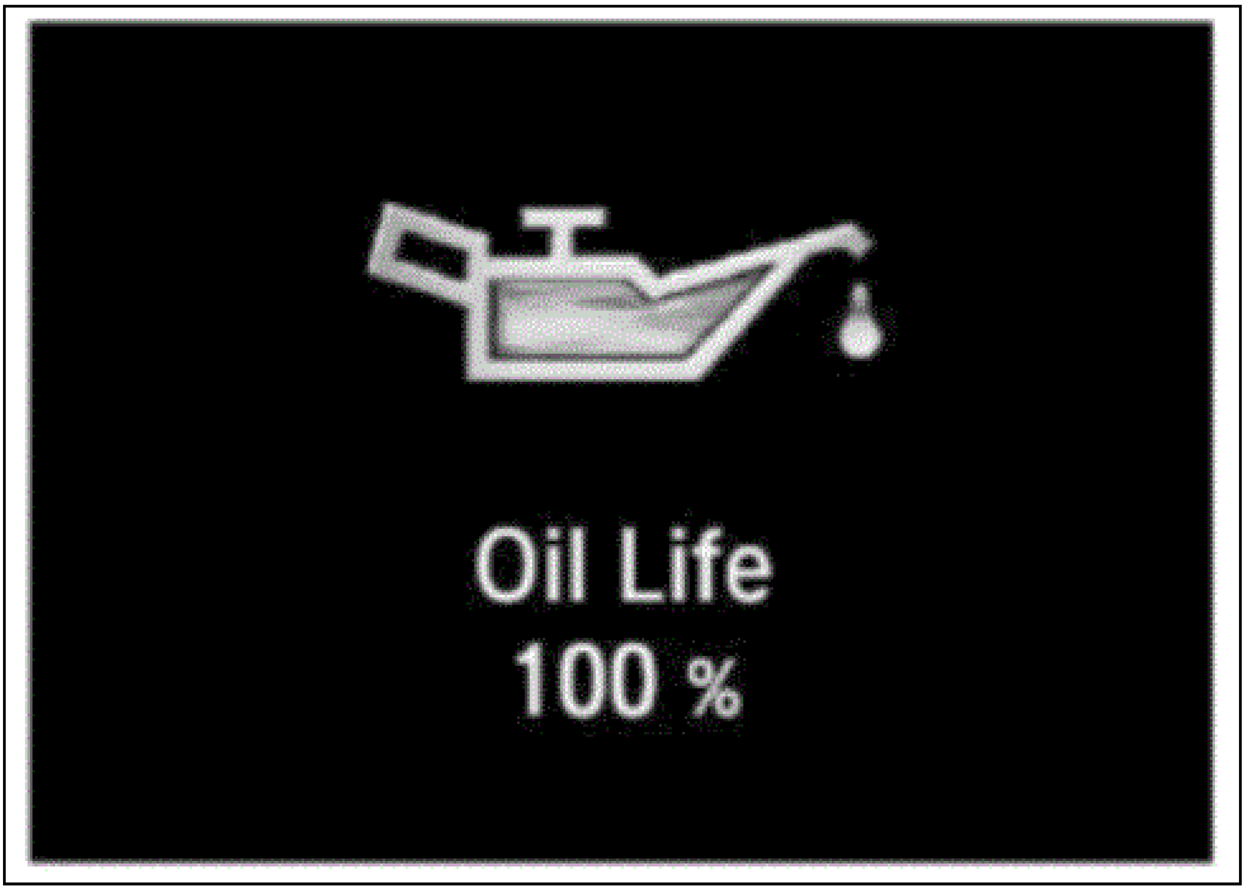
Oil Life
100 %

NOTE: **To determine the appropriate reset procedure, refer to MAINTENANCE SERVICE REMINDER RESET INDEX.**

MAINTENANCE REQUIRED REMINDER LIGHT RESET INDEX

Model & Year	Reset Procedure
Accord	
1982-85	Maintenance Service Reminder Reset - Procedure 05
1991-97	Maintenance Service Reminder Reset - Procedure 01
1998-05	Maintenance Service Reminder Reset - Procedure 02
Civic	
1996-00	Maintenance Service Reminder Reset - Procedure 02
2001-05	Maintenance Service Reminder Reset - Procedure 03
CR-V	
1998-01	Maintenance Service Reminder Reset - Procedure 01
2002-05	Maintenance Service Reminder Reset - Procedure 02
Element	
2003-05	Maintenance Service Reminder Reset - Procedure 03
Insight	
2000-05	Maintenance Service Reminder Reset - Procedure 04
Odyssey	
1996-97	Maintenance Service Reminder Reset - Procedure 01
1998-04	Maintenance Service Reminder Reset - Procedure 02
Pilot	
2003-06	Maintenance Service Reminder Reset - Procedure 02
Prelude	
1998-01	Maintenance Service Reminder Reset - Procedure 01
S2000	
2000-05	Maintenance Service Reminder Reset - Procedure 02

MAINTENANCE SERVICE REMINDER RESET - PROCEDURE 01

1. At each 7500 mile service interval, the MAINTENANCE REQUIRED light will change from Green to Yellow. If service is not performed (and light is not reset), the MAINTENANCE REQUIRED light will change from Yellow to Red.
2. When service has been completed, reset MAINTENANCE REQUIRED reminder light. To reset reminder light, turn ignition off. Insert ignition key in slot provided to the right of tachometer (or beside the indicator). See Fig. 17.

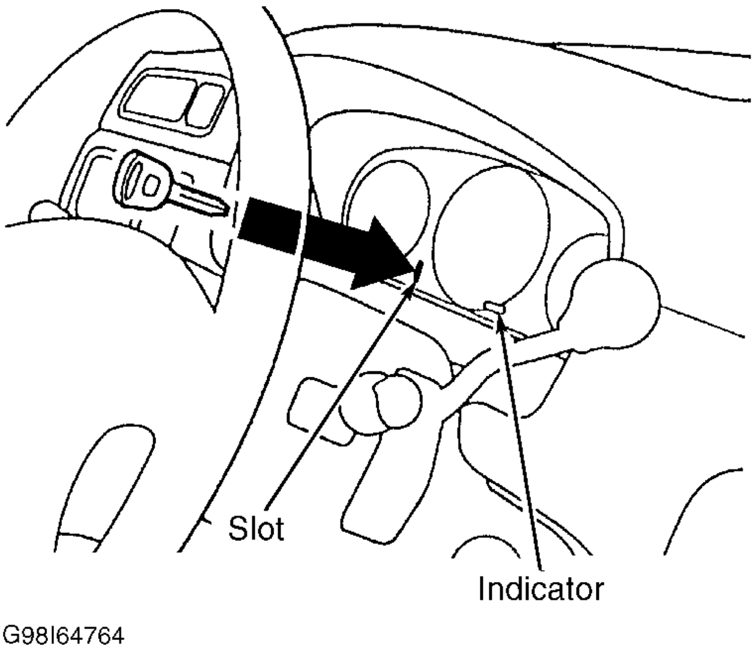

Fig. 17: Maintenance Reminder Light Reset
Courtesy of AMERICAN HONDA MOTOR CO., INC.

MAINTENANCE SERVICE REMINDER RESET - PROCEDURE 02

To reset MAINT REQ'D indicator light, turn ignition switch to OFF position. Push and hold the SELECT/RESET button and turn ignition switch to ON (II) position. Continue to hold button for more than 10 seconds or until MAINT REQ'D light goes out.

MAINTENANCE SERVICE REMINDER RESET - PROCEDURE 03

1. For the first 8000 miles after maintenance required indicator is reset, the MAINT REQ'D indicator light illuminates when the ignition is turned on, then will go out after 2 seconds. When mileage is 8000-10, 000 miles, the MAINT REQ'D reminder light will illuminate for 2 seconds, then blink for 10 seconds, and

then go out. When mileage exceeds 10, 000 miles, MAINT REQ'D indicator light illuminates and stays on while ignition switch is in ON (II) position.

2. To reset the MAINT REQ'D indicator light, turn ignition switch to OFF position. Press and hold the SELECT/RESET button. While still holding button, turn ignition switch to ON position, with engine off. Hold SELECT/RESET button for about 10 seconds until indicator resets.
3. If MAINT REQ'D reminder light does not reset, ensure headlights, parking lights, or both are turned off when resetting reminder light. The MAINT REQ'D indicator cannot be reset if any of these lights are on. If vehicle is equipped with daytime running lights and lights come on when ignition switch is turned to ON (II) position, daytime running lights must be disabled before indicator light can be reset.

MAINTENANCE SERVICE REMINDER RESET - PROCEDURE 04

1. When distance driven since maintenance required indicator was reset is 6000 miles, the MAINT REQ'D reminder light will start to blink. After exceeding 7500 miles without having scheduled maintenance performed and MAINT REQ'D reminder light reset, light will remain on until it is reset.
2. To reset the light, turn ignition switch to OFF position. Press and hold TRIP button, located on lower right side of instrument cluster. While still holding TRIP button, turn ignition switch to ON position with engine off. Hold button for about 10 seconds until indicator resets.

MAINTENANCE SERVICE REMINDER RESET - PROCEDURE 05

Oil, filter and service interval indicator flags/lights activate every 7500 miles. To reset indicators, insert ignition key into appropriate slot below glowing indicator flags/lights at lower right corner of instrument cluster. Push key in until reminder window changes from Red to Green.

TIRE PRESSURE MONITOR SYSTEM REMINDER

NOTE: **To determine the appropriate reset procedure, refer to TPMS REMINDER RESET INDEX.**

TPMS REMINDER RESET INDEX

Model & Year	Reset Procedure
Accord	
2008-12	(1)TPMS Reminder Reset - Procedure 01
2013-16	(2)TPMS Reminder Reset - Procedure 03
2017-22	(2)TPMS Reminder Reset - Procedure 07
Civic	
2006-13	(1)TPMS Reminder Reset - Procedure 01
2014-16	TPMS Reminder Reset - Procedure 04
2017-22	(2)TPMS Reminder Reset - Procedure 08
Clarity	
2017-22	(2)TPMS Reminder Reset - Procedure 09
Crosstour	
2010-15	(1)TPMS Reminder Reset - Procedure 01
CR-V	
2007-13	(1)TPMS Reminder Reset - Procedure 01
2014	(2)TPMS Reminder Reset - Procedure 03
2015-16	TPMS Reminder Reset - Procedure 05
2017-22	(2)TPMS Reminder Reset - Procedure 09
CR-Z	
2011-15	(1)TPMS Reminder Reset - Procedure 01
2016	TPMS Reminder Reset - Procedure 06
Element	
2007-11	(1)TPMS Reminder Reset - Procedure 01
Fit	
2007-13	(1)TPMS Reminder Reset - Procedure 01
2015-22	(2)TPMS Reminder Reset - Procedure 03
Fit EV	
2013-14	(1)TPMS Reminder Reset - Procedure 01
HR-V	
2016	TPMS Reminder Reset - Procedure 02
2017-22	(2)TPMS Reminder Reset - Procedure 03
Insight	
2010-14	(1)TPMS Reminder Reset - Procedure 01
Odyssey (Except Touring)	
2005-06	TPMS Reminder Reset - Procedure 02
2007-10	(1)TPMS Reminder Reset - Procedure 01
Odyssey (Touring)	
2007-10	TPMS Reminder Reset - Procedure 02
Odyssey (All Models)	
2011-22	(1)TPMS Reminder Reset - Procedure 01
Pilot	
2005-21	TPMS Reminder Reset - Procedure 02
Ridgeline	
2006-22	TPMS Reminder Reset - Procedure 02
S2000	
2007-09	(1)TPMS Reminder Reset - Procedure 01

Model & Year	Reset Procedure
(1) There are no TPMS reset procedures required for these models. Ensure tires are inflated to recommend pressure. Tire pressure sensor IDs need to be memorized if new sensor or TPMS control unit is installed.	
(2) This vehicle is equipped with an Indirect TPMS that does not use tire-mounted pressure sensors.	

TPMS REMINDER RESET - PROCEDURE 01

NOTE: **There is no TPMS reset procedure when re-inflating tires to the correct specification. Ensure tires are inflated to recommend pressure, and the TPMS indicator will go out shortly.**

NOTE: **If a flat tire is replaced with the spare tire, and the flat tire is stored in the cargo area, the low pressure indicator will stay on but the appropriate tire indicator will go off. This prevents the customer from thinking there is a problem with the spare tire. When the flat tire is taken out of the vehicle for repair, the TPMS indicator will come on because the system is no longer receiving the signal from the tire's transmitter.**

All four tire pressure sensor IDs must be memorized to the TPMS control unit whenever you do any of these actions:

- Replace the TPMS control unit.
- Replace the tire pressure sensor
- Substitute a known-good wheel with tire pressure sensor

When doing a tire rotation, memorizing the sensors in not needed.

Memorizing The Tire Pressure Sensor IDs

NOTE: **For vehicles that use this procedure, a tire pressure sensor activation tool is needed. As early as 2007 Honda started requiring the use, on some models, of the TPMS Sensor Activation Tool ATEQ VT55 instead of the standard Sensor Initializer Tool AKS0620006 or Sensor Activation Tool Bartec Wheelrite Tech 300-J-48714. Honda is not entirely clear on which models the VT55 only can be used. The models listed below have ID memorizing procedures that name the VT55 only. The procedures for all other models name the VT55 and one of the older type activation tools, or just an older activation tool. The VT55 can be used on all models with initiator-less TPM Systems.**

- **Crosstour, CR-V (2007-12), CR-Z, Fit (2009 & later): Only use the TPMS Sensor Activation Tool ATEQ VT55**
- **All Other Models: Can use either TPMS Sensor Initializer Tool AKS0620006 or TPMS Sensor Activation Tool Bartec Wheelrite Tech 300-J-48714**

NOTE: **To ensure the control unit memorizes the correct ID, the vehicle with the new sensor must be at least 10 ft (3 m) away from other vehicles that have tire pressure sensors.**

1. With the ignition switch in LOCK (0), connect the HDS to the data link connector (DLC) located under the driver's side of the dashboard.
2. Turn the ignition switch to ON (II)
3. Make sure the HDS communicates with the vehicle and the TPMS control unit. If it doesn't, troubleshoot the DLC circuit.
4. Select Sensor ID Learning from the mode menu on the HDS.
5. Follow HDS screen prompts to turn on the TPMS sensor initializer tool.

   NOTE: **On the TPMS Sensor Initializer Tool (AKS0620006), verify that the power switch (B) is in the "Low" position. See Fig. 18. If the power switch is in the "High" position, more than one sensor or sensors on other vehicles may be activated. Make sure the power switch is in the "Low" position.**

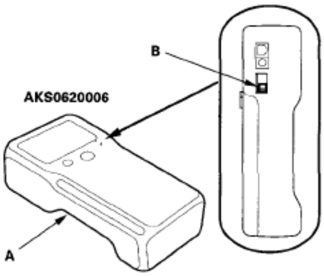

Fig. 18: Identifying TPMS Sensor Initializer Tool (AKS0620006) & Power Switch
Courtesy of AMERICAN HONDA MOTOR CO., INC.

6. Hold the TPMS sensor initializer tool near one wheel, memorize the pressure sensor ID by following the screen prompts on the HDS. See Fig. 19.

   NOTE:
   - **If you turn the ignition switch to LOCK (0) before memorizing all four sensor IDs, the memorizing ID is cancelled.**
   - **If more than one sensor ID is displayed on the HDS, verify that the power switch is in the "LOW" position, the vehicle has not been driven for 5 minutes, and there are no other vehicles within 10 ft (3 m).**
   - **See the HDS Help menu for specific instructions.**

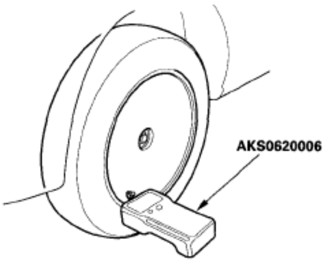

Fig. 19: Identifying TPMS Sensor Initializer Tool (AKS0620006) On Wheel (ATEQ VT55 & Tech 300-J-48714 Are Similar)
Courtesy of AMERICAN HONDA MOTOR CO., INC.

7. Repeat step 6 for each wheel until all four sensor IDs are memorized. When all four IDs are memorized, the low tire pressure indicator blinks
8. Turn the ignition switch to LOCK (0).
9. Disconnect the HDS from the DLC.
10. Test-drive the vehicle at 28 mph (45 km/h) or more for at least 1 minute.
11. Make sure the low tire pressure indicator does not blink.
12. Make sure the tires are inflated to the specified tire pressure listed on the doorjamb sticker.

TPMS REMINDER RESET - PROCEDURE 02

NOTE: **When a tire pressure sensor is replaced, the sensor ID must be memorized by the TPMS control unit.**

NOTE: **If a flat tire is replaced with the spare tire, and the flat tire is stored in the cargo area, the low pressure indicator will stay on but the appropriate tire indicator will go off. This prevents the customer from thinking there is a problem with the spare tire. When the flat tire is taken out of the vehicle for repair, the TPMS indicator will come on because the system is no longer receiving the signal from the tire's transmitter.**

Memorizing a Sensor ID Automatically

After rotating the tires or replacing a tire pressure sensor, drive the vehicle for at least 40 seconds at a speed of 15 mph (24 km/h) or more, and all the sensor IDs will be memorized automatically.

NOTE: **When replacing the TPMS control unit, use the HDS to memorize IDs. After the IDs are memorized, reduce the pressure in all four tires to less than the appropriate specification, and check to see that the four tire indicators come on.**

Memorizing a Sensor ID with the HDS

NOTE: **To ensure the control unit memorizes the correct ID, the vehicle with the new sensor must be at least 3 m (10 ft) from any other TPMS pressure sensor not installed on that vehicle.**

The HDS can memorize the ID of a new tire pressure sensor or a previously memorized ID.

1. With the ignition switch OFF, connect the HDS to the data link connector (DLC) located under the left side of the dashboard.
2. Turn the ignition switch ON (II), and memorize the ID of the tire pressure sensor by following the screen prompts on the HDS.

   NOTE:
   - **See the HDS Help menu for specific instructions.**
   - **When replacing the TPMS control unit, use the HDS to memorize IDs.**
   - **After the IDs are memorized, reduce the pressure in all four tires to less than the appropriate specification, and check to see that the four tire indicators come on.an indirect TPMS that doesnt use tire pressure sensors mounted inside the tires. It uses the existing VSA wheel speed sensors to monitor and compare tire characteristics while driving.**

3. Turn the vehicle to the OFF (LOCK) mode.

TPMS REMINDER RESET - PROCEDURE 03

This vehicle is equipped with an indirect TPMS that doesn't use tire pressure sensors mounted inside the tires. It uses the existing VSA wheel speed sensors to monitor and compare tire characteristics while driving.

TPMS calibration is required after performing any of the following actions:

- Adjusting tire pressures
- Rotating the tires
- Replacing the tires
- Updating/replacing the VSA modulator-control unit

Calibration begins when TPMS switch is pressed or Calibration is selected through the Multi-information display (MID). The process finishes automatically as the customer drives the vehicle. This takes about 30 minutes of cumulative driving at 30 to 60 mph.

Calibration - Models With TPMS Switch

1. Make sure the tires are inflated to the specified tire pressure listed on the doorjamb label. Vehicle must be stopped with the transmission in neutral (M/T) or P or N (A/T, CVT).
2. Turn the ignition switch to ON (II), or press the engine start/stop button to select the ON mode.
3. Press the TPMS switch (lower dash, left of steering wheel) for 3 seconds.
4. When the calibration successfully begins, the TPMS indicator (instrument cluster, center left) blinks twice.
5. Calibration is completed after driving 31 to 62 mph (50 to 100 km/h), steadily without much acceleration or deceleration for about 30 minutes.

Calibration - Models Without TPMS Switch

1. Make sure the tires are inflated to the specified tire pressure listed on the doorjamb label. Vehicle must be stopped with the transmission in neutral (M/T) or P or N (A/T, CVT).
2. Turn the ignition switch to ON (II), or press the engine start/stop button to select the ON mode.
3. Use ARROW buttons (right side of steering wheel) to select VEHICLE SETTINGS, then press the SEL/RESET button. TPMS CALIBRATION appears on the display.
4. Press the SEL/RESET button. The display switches to the customization setup screen, where you can select CANCEL or CALIBRATE.
5. Use ARROW buttons to select CALIBRATE, then press the SEL/RESET button. CALIBRATION STARTED screen appears, then the display returns to the customization menu screen

   NOTE: **If the CALIBRATION FAILED TO START message appears, repeat steps 4 and 5.**

6. Calibration is completed after driving 31 to 62 mph (50 to 100 km/h), steadily without much acceleration or deceleration for about 30 minutes.

TPMS REMINDER RESET - PROCEDURE 04

NOTE: **Make sure the tire pressure is properly adjusted to the specified tire pressure listed on the doorjamb label before doing the TPMS calibration.**

Do the TPMS calibration after doing the following items:

- Adjust the tire pressure
- Rotating the tires
- Replacing the tires
- Update/replace the VSA modulator-control unit

The calibration begins when the calibration is selected through the MID (multi-information display). The calibration is completed after driving in an ideal driving condition (28 to 65 mph (45 to 105 km/h), driving steadily without much acceleration or deceleration) for about 19 minutes. Full functionality of the system cannot be performed properly if the calibration is not completed.

1. Turn the ignition switch to ON (II), or the engine start/stop button is pressed to select the ON mode.

   NOTE: **Vehicle must be stopped with the transmission in neutral (M/T) or P or N (A/T and CVT).**

2. Press the MENU button (left side of steering wheel) to enter the customizing mode.
3. Press the AUDIO REMOTE + or - button to select CUSTOMIZE SETTINGS > TPMS CALIBRATION > INITIALISE.
4. Press the AUDIO REMOTE + or - button to select YES.
5. When the calibration successfully begins, "TPMS CALIBRATION HAS BEEN INITIALIZED" gets displayed on MID when the system received the calibration.

NOTE: **If the calibration does not begin successfully, "UNABLE TO INITIALIZE TPMS CALIBRATION" gets displayed on MID. Troubleshoot the TPMS.**

TPMS REMINDER RESET - PROCEDURE 05

NOTE: **Make sure the tire pressure is properly adjusted to the specified tire pressure listed on the doorjamb label before doing the TPMS calibration**

The calibration begins when the calibration is selected through the Multi-Information display. The calibration is completed after driving in an ideal driving condition 28 to 65 mph (45 to 105 km/h), driving steadily without much acceleration or deceleration for about 19 minutes. Full functionality of the system cannot be performed properly if the calibration is not completed.

Do the TPMS calibration after doing the following items.

- Adjust the tire pressure.
- Rotating the tires.
- Replacing the tires.
- Update/replace the VSA modulator-control unit.

Calibrate TPMS (Without TPMS Switch)

1. Make sure the tires are inflated to the specified tire pressure listed on the doorjamb label.
2. Turn the vehicle to the ON mode.

   NOTE: **Vehicle must be stopped with the shift lever in P or N position.**

3. Press and hold the INFORMATION button for at least 3 seconds to enter the customizing mode. See Fig. 20.
4. Press the SEL/RESET button to select TPMS CALIBRATION.
5. Press the SEL/RESET button to select CALIBRATE.
6. When the calibration successfully begins, "CALIBRATION STARTED" is shown on the Multi-Information display.

NOTE: **If the calibration does not begin successfully, "CALIBRATION FAILED TO START" gets displayed on multi-information display and do the troubleshooting the TPMS symptom troubleshooting.**

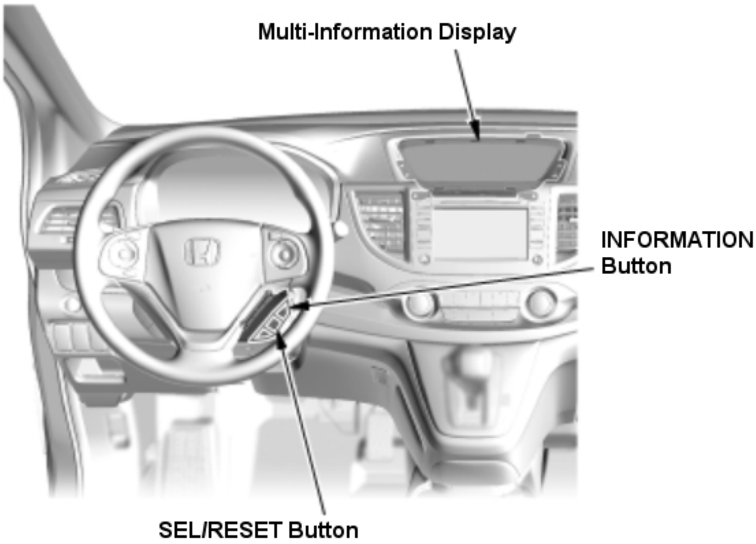

Fig. 20: Identifying TPMS Reset Controls
Courtesy of AMERICAN HONDA MOTOR CO., INC.

Calibrate TPMS (With TPMS Switch)

1. Make sure the tires are inflated to the specified tire pressure listed on the doorjamb label.
2. Turn the vehicle to the ON mode.

NOTE: **Vehicle must be stopped with the transmission in P or N position.**

3. Press the TPMS switch for 3 seconds. See Fig. 21.
4. When the calibration successfully begins, the indicator blinks twice.

NOTE: **If the indicator does not blink, check the TPMS switch.**

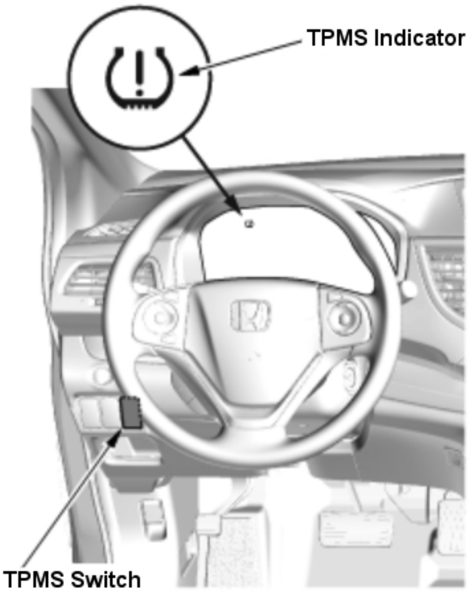

Fig. 21: Identifying TPMS Switch & Indicator
Courtesy of AMERICAN HONDA MOTOR CO., INC.

Calibration Check Method

The calibration check process gets interrupted if the vehicle moves. Do the troubleshooting if the indicator does not go off after 2 seconds, keeps blinking or stays on when the vehicle is in the ON mode.

Check if calibration is completed by following these procedures:

1. Stop the vehicle and shift into P or N position.
2. Turn the vehicle to the OFF (LOCK) mode.
3. Turn the vehicle to the ON mode and wait to see the low pressure indicator come on for 2 seconds and then off.
4. Do not drive the vehicle and wait for 45 seconds as is.
5. If the calibration is completed, the indicator does not come on. If the calibration is not yet completed, then the indicator comes on for 2 seconds and then goes off.

TPMS REMINDER RESET - PROCEDURE 06

Set the tire pressure of all wheels to pressure specified on the tire and loading information label. Make sure the vehicle is at a complete stop.

- For Manual transmission models: The shift lever is in "N".
- For CVT models: The shift lever is in "P".
- The power mode is ON.

Calibrate the system from the CUSTOMIZE SETTINGS menu on the multi-information display:

1. Press the UP/DOWN ARROW buttons on the right side of steering wheel to select CUSTOMIZE SETTINGS, then press the SEL/RESET button to see TPMS CALIBRATION appears on the display. See Fig. 22.
2. Press the SEL/RESET button. The display switches to the customization setup screen to select CALIBRATE.
3. Press the ARROW buttons and select CALIBRATE, then press the SEL/RESET button to see CALIBRATION STARTED screen appears, then the display returns to the customization menu screen.
4. The calibration process finishes automatically.

NOTE: If the CALIBRATION FAILED TO START message appears, repeat steps 2 and 3.

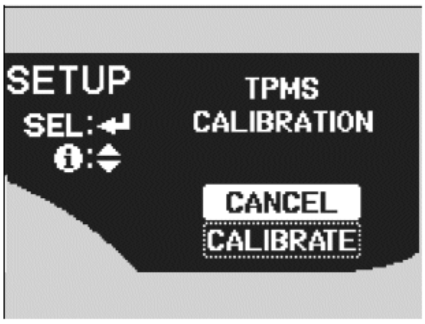

Fig. 22: Identifying Multi-Information Display (CR-Z)
Courtesy of AMERICAN HONDA MOTOR CO., INC.

TPMS REMINDER RESET - PROCEDURE 07

This vehicle is equipped with an indirect TPMS that doesn't use tire pressure sensors mounted inside the tires. It uses the existing VSA wheel speed sensors to monitor and compare tire characteristics while driving.

The calibration begins when the TPMS switch is pressed or the calibration is selected through the Multi-information display. The calibration is completed after driving 31 to 62 mph (50 to 100 km/h), steadily without much acceleration or deceleration for about 19 minutes.

TPMS calibration is required after performing any of the following actions:

- Adjusting tire pressures
- Rotating the tires
- Replacing the tires
- Updating/replacing the VSA modulator-control unit

Calibration begins when TPMS switch is pressed (Models Without ACC) or Calibration is selected through the Multi-information display (Models With ACC). The process finishes automatically as the vehicle is driven. This takes about 30 minutes of cumulative driving at 30 to 60 mph.

Calibration - Models Without ACC

1. Make sure the tires are inflated to the specified tire pressure listed on the doorjamb label. Vehicle must be stopped with the transmission in neutral (M/T) or P or N (A/T, CVT).
2. Turn the ignition switch to ON (II), or press the engine start/stop button to select the ON mode.
3. Press the TPMS switch (lower dash, left of steering wheel) for 3 seconds.
4. When the calibration successfully begins, the TPMS indicator (instrument cluster, center left) blinks twice.
5. Calibration is completed after driving 31 to 62 mph (50 to 100 km/h), steadily without much acceleration or deceleration for about 30 minutes.

Calibration - Models With ACC

1. Make sure the tires are inflated to the specified tire pressure listed on the doorjamb label. Vehicle must be stopped with the transmission in neutral (M/T) or P or N (A/T, CVT).
2. Turn the ignition switch to ON (II), or press the engine start/stop button to select the ON mode.
3. Press and hold the INFORMATION button (right side of steering wheel) to enter the VEHICLE SETTINGS mode.
4. Press the SEL/RESET button to select TPMS CALIBRATION.
5. When the calibration successfully begins, "Calibration Started" gets displayed on Multi-information display when the system received the calibration.

   NOTE: If the CALIBRATION FAILED TO START message appears, repeat steps 3 and 4.

6. Calibration is completed after driving 31 to 62 mph (50 to 100 km/h), steadily without much acceleration or deceleration for about 30 minutes.

TPMS REMINDER RESET - PROCEDURE 08

This vehicle is equipped with an indirect TPMS that doesn't use tire pressure sensors mounted inside the tires. It uses the existing VSA wheel speed sensors to monitor and compare tire characteristics while driving.

Calibration begins when it is selected through the Multi-information display (7-inch screen) or the TPMS switch is pressed (5-inch screen). Calibration is completed after driving 28 to 65 mph (50 to 100 km/h), steadily without much acceleration or deceleration for about 20 minutes.

TPMS calibration is required after performing any of the following actions:

- Adjusting tire pressures
- Rotating the tires
- Replacing the tires
- Updating/replacing the VSA modulator-control unit

With Display Audio Type (7-Inch Screen)

NOTE: Vehicle must be stopped with the transmission in neutral (M/T) or P or N (CVT).

1. Make sure the tires are inflated to the specified tire pressure listed on the doorjamb label.
2. Turn the vehicle to the ON mode.
3. Press the INFORMATION button (left side of steering wheel - See Fig. 23), then press the AUDIO REMOTE button to select the VEHICLE SETTINGS.
4. Press the AUDIO REMOTE button to select TPMS CALIBRATION.
5. Press the AUDIO REMOTE button to select CALIBRATE.
6. When the calibration successfully begins, CALIBRATION STARTED is displayed on Multi-information display when the system receives the calibration.

NOTE: If the calibration does not begin successfully, CALIBRATION FAILED TO START is displayed on Multi-information display.

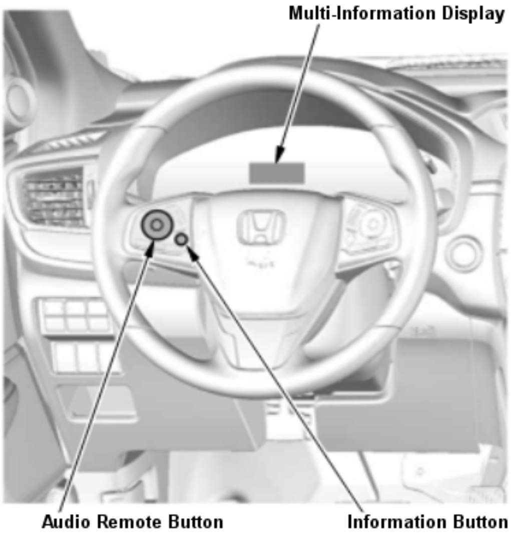

Fig. 23: TPMS Reset Controls (Steering Wheel Controls)
Courtesy of AMERICAN HONDA MOTOR CO., INC.

With Display Audio Type (5-Inch Screen)

NOTE: Vehicle must be stopped with the transmission in neutral (M/T) or P or N (CVT).

1. Make sure the tires are inflated to the specified tire pressure listed on the doorjamb label.
2. Turn the vehicle to the ON mode.
3. Press and hold the TPMS switch (lower left dash) for 3 seconds.
4. When the calibration successfully begins, the indicator blinks twice.

TPMS REMINDER RESET - PROCEDURE 09

This vehicle is equipped with an indirect TPMS that doesn't use tire pressure sensors mounted inside the tires. It uses the existing VSA wheel speed sensors to monitor and compare tire characteristics while driving.

Calibration begins when it is selected through the Multi-information display (7-inch screen) or the TPMS switch is pressed (5-inch screen). Calibration is completed after driving 28 to 65 mph (50 to 100 km/h), steadily without much acceleration or deceleration for about 20 minutes.

TPMS calibration is required after performing any of the following actions:

- Adjusting tire pressures
- Rotating the tires
- Replacing the tires
- Updating/replacing the VSA modulator-control unit

With Display Audio Type (7-Inch Screen)

NOTE: Vehicle must be stopped with the transmission in neutral (M/T) or P or N (CVT).

1. Make sure the tires are inflated to the specified tire pressure listed on the doorjamb label.
2. Turn the vehicle to the ON mode.
3. Select the HOME button on the screen.
4. Select SETTINGS.
5. Select VEHICLE.
6. Select TPMS CALIBRATION.
7. Select CALIBRATION.

8. When the calibration successfully begins, CALIBRATION STARTED is displayed on Multi-information display when the system receives the calibration.

NOTE: **If the calibration does not begin successfully, UNABLE TO INITIALIZE TPMS is displayed on Multi-information display.**

With Display Audio Type (5-Inch Screen)

NOTE: **Vehicle must be stopped with the transmission in neutral (M/T) or P or N (CVT).**

1. Make sure the tires are inflated to the specified tire pressure listed on the doorjamb label.
2. Turn the vehicle to the ON mode.
3. Press the INFORMATION button (left side of steering wheel - See Fig. 24), then press the AUDIO REMOTE button to select the VEHICLE SETTINGS.
4. Press the AUDIO REMOTE button to select TPMS CALIBRATION.
5. Press the AUDIO REMOTE button to select CALIBRATE.
6. When calibration successfully begins, CALIBRATION STARTED is displayed on Multi-information display when the system receives the calibration.

NOTE: **If calibration does not begin successfully, CALIBRATION FAILED TO START is displayed on Multi-information display.**

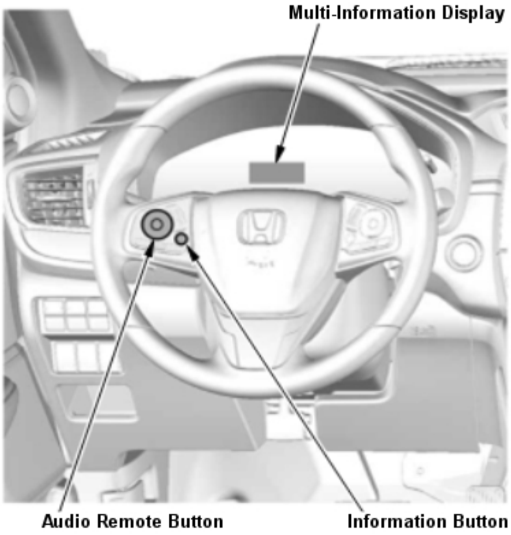

Fig. 24: TPMS Reset Controls (Steering Wheel Controls)
Courtesy of AMERICAN HONDA MOTOR CO., INC.

With TPMS Switch

NOTE: **Vehicle must be stopped with the transmission in neutral (M/T) or P or N (CVT).**

1. Make sure the tires are inflated to the specified tire pressure listed on the doorjamb label.
2. Turn the vehicle to the ON mode.
3. Press and hold the TPMS switch (lower left dash) for 3 seconds.
4. When the calibration successfully begins, the indicator blinks twice.

INSPECTION

SEAT BELT INSPECTION

Inspection

1. Seat Belt - Inspection (In Vehicle)

    In-Vehicle

    1. Check that the seat belt is not twisted or caught on anything.

    2. After installing the anchors, check for free movement on the anchor bolts. If necessary, remove the anchor bolts, and check that the washers and other parts are not damaged or improperly installed.

    3. Check the seat belts for damage or discoloration. Clean with a shop towel if necessary. Use only soap and water to clean the seat belts.

    NOTE: Dirt build-up in the loops of the upper anchors can cause the seat belts to retract slowly. Wipe the inside of the loops with a shop towel dampened with isopropyl alcohol.

    4. Check that the seat belt does not lock when pulled out slowly. The seat belt is designed to lock only during a sudden stop or impact.

    5. Make sure that the seat belt will retract automatically when released.

    6. For each rear seat belt, check the seat belt retractor locking mechanism automatic locking retractor (ALR). This function is for securing child seats.

    Pull out the seat belt all the way to engage the ALR. The seat belt should retract with a ratcheting sound, but not extend. This is normal.

    -2. To disengage the ALR, release the seat belt and allow it to fully retract, then pull out the seat belt part-way. The seat belt should retract and extend normally.

    7. Replace the seat belt with a new assembly if there is any abnormality. Do not disassemble any part of the seat belt for any reason.

2. **Headliner - Removal**
3. Seat Belt - Inspection (Out of Vehicle)

    Out of Vehicle

    For front seat belt retractors with seat belt tensioners, review the **SRS component locations** and the **precautions and procedures** before doing repairs or service.

    Front

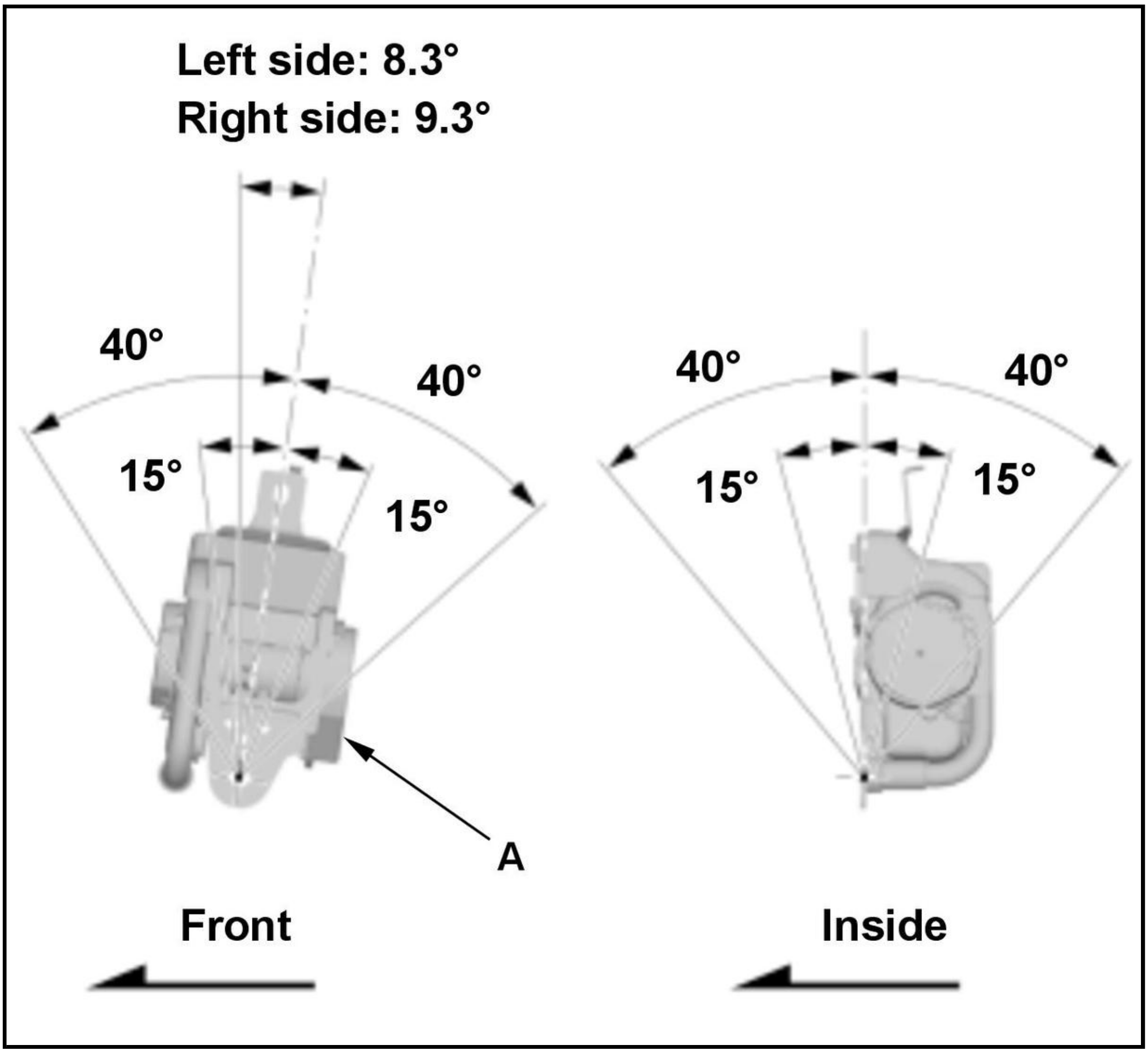
Left side: 8.3°
Right side: 9.3°
40°
40°
15°
15°
A
Front
40°
40°
15°
15°
Inside

Rear

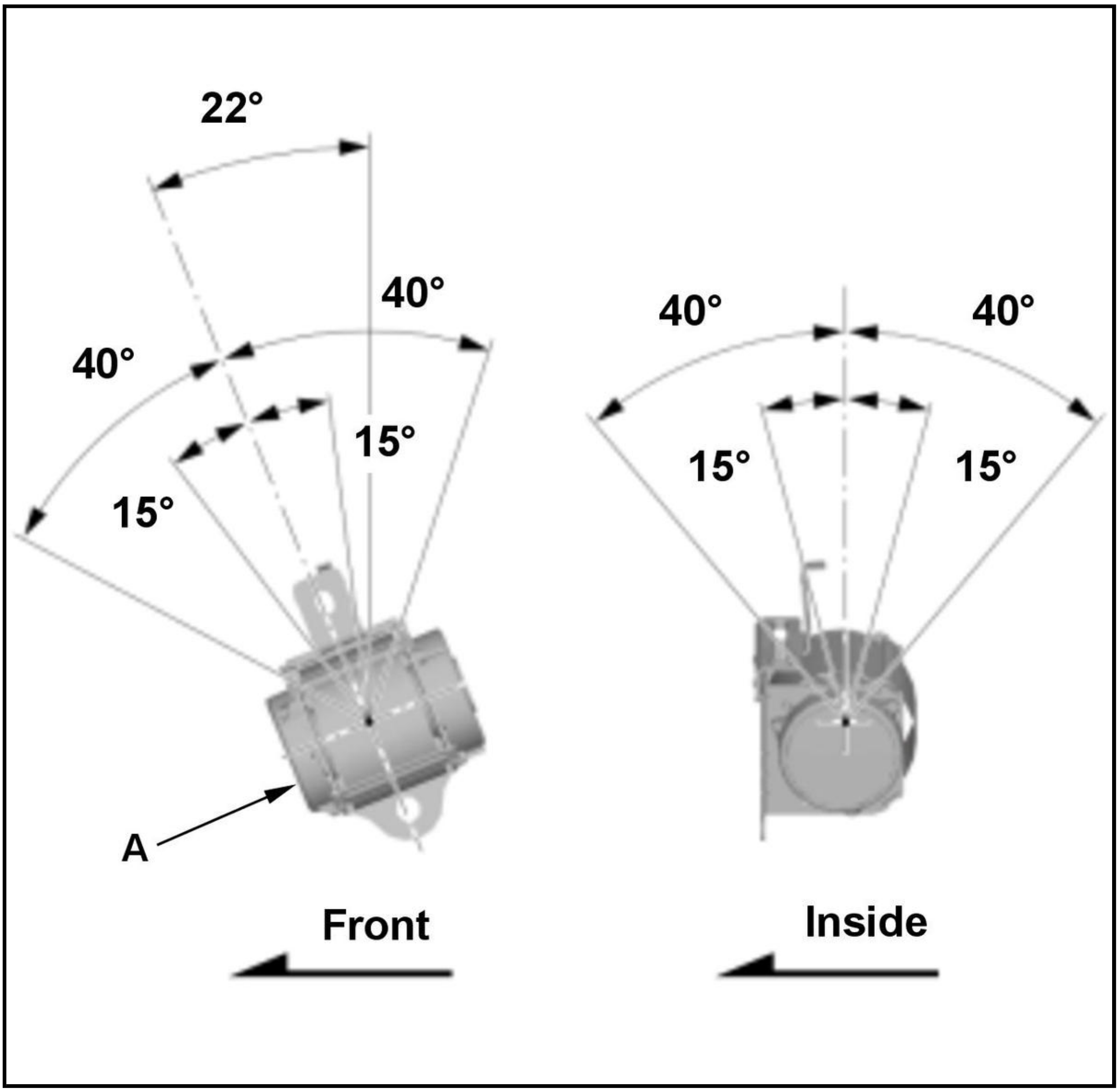
22°
40°
40°
15°
15°
A
Front
40°
40°
15°
15°
Inside

Rear Center

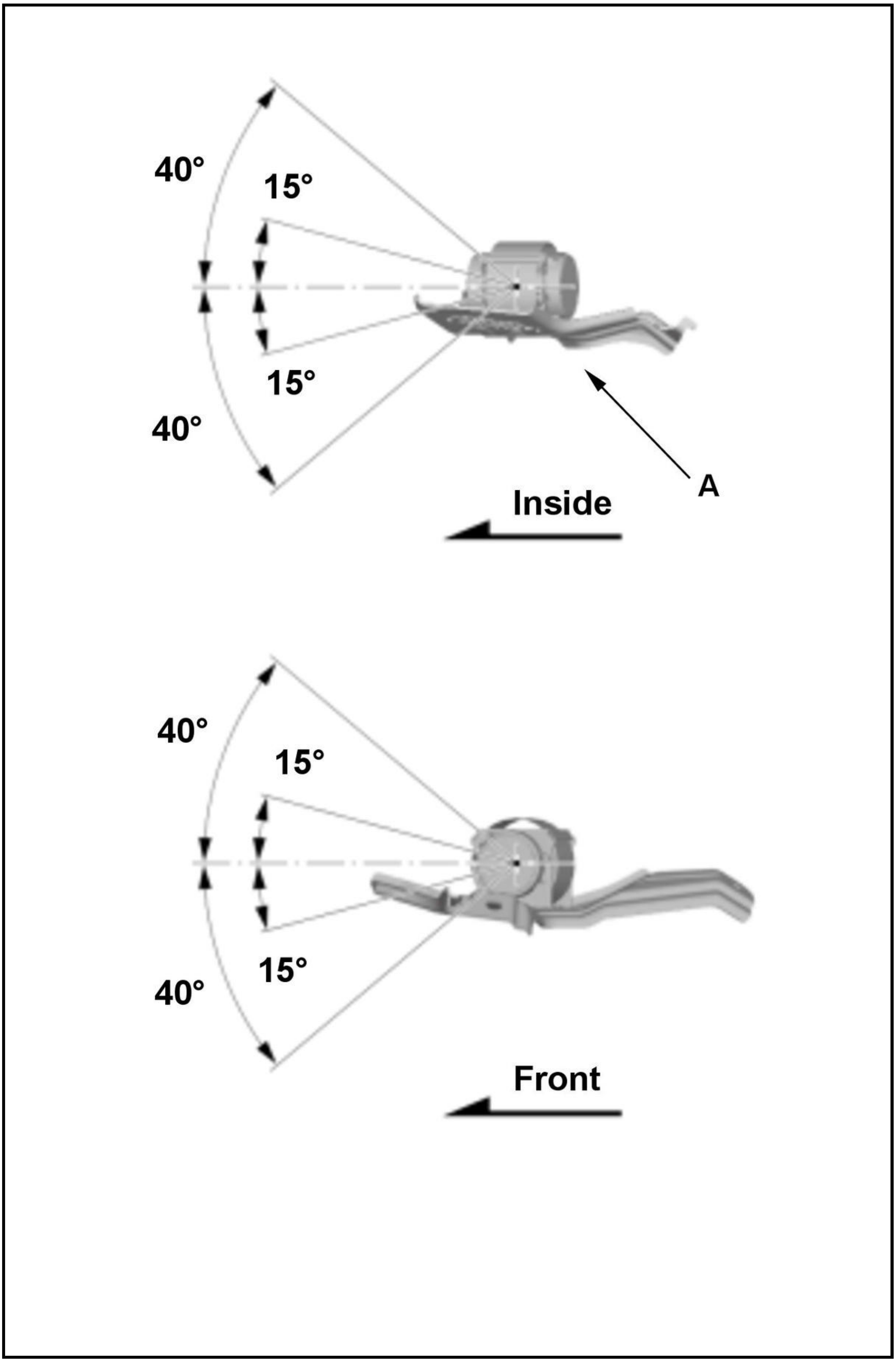
40°
15°
15°
40°
A
Inside
40°
15°
15°
40°
Front

Retractor

1. Before installing the retractor, check that the seat belt can be pulled out freely.

2. Make sure that the seat belt does not lock when the retractor (A) is leaned slowly up to 15 deg. from the mounted position. The seat belt should lock when the retractor is leaned over 40 deg.. Do not attempt

to disassemble the retractor.

3. Replace the seat belt with a new assembly if there is any abnormality. Do not disassemble any part of the seat belt for any reason.

4. **Headliner - Installation**

COMPONENT LOCATION INDEX

SEAT BELTS COMPONENT LOCATION INDEX

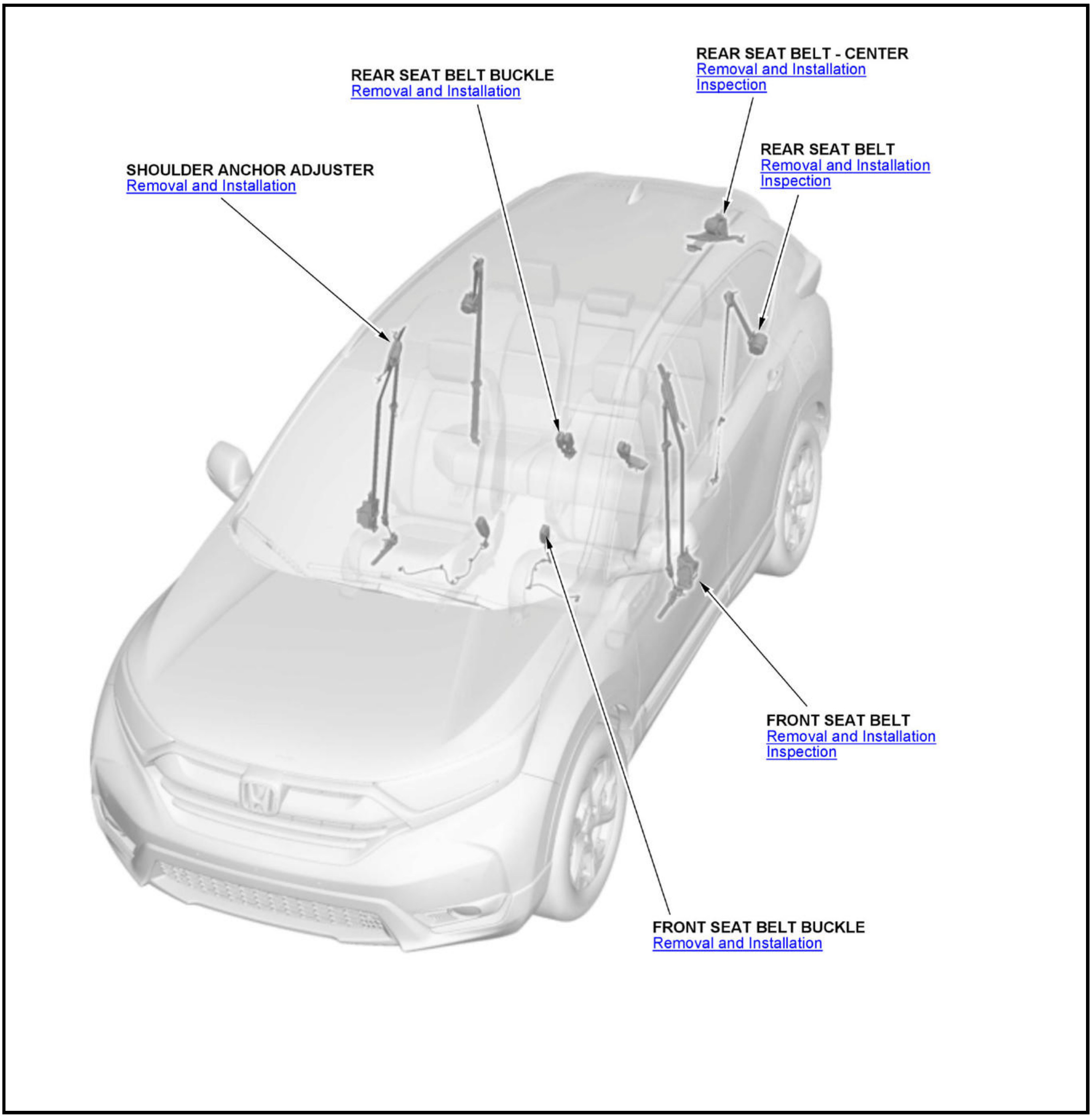
REAR SEAT BELT - CENTER
Removal and Installation
Inspection
REAR SEAT BELT BUCKLE
Removal and Installation
REAR SEAT BELT
Removal and Installation
Inspection
SHOULDER ANCHOR ADJUSTER
Removal and Installation
FRONT SEAT BELT
Removal and Installation
Inspection
FRONT SEAT BELT BUCKLE
Removal and Installation

INSPECTION

SEAT BELT INSPECTION

Inspection

1. Seat Belt - Inspection (In Vehicle)

   In-Vehicle

   1. Check that the seat belt is not twisted or caught on anything.

   2. After installing the anchors, check for free movement on the anchor bolts. If necessary, remove the anchor bolts, and check that the washers and other parts are not damaged or improperly installed.

   3. Check the seat belts for damage or discoloration. Clean with a shop towel if necessary. Use only soap and water to clean the seat belts.

   NOTE: Dirt build-up in the loops of the upper anchors can cause the seat belts to retract slowly. Wipe the inside of the loops with a shop towel dampened with isopropyl alcohol.

   4. Check that the seat belt does not lock when pulled out slowly. The seat belt is designed to lock only during a sudden stop or impact.

   5. Make sure that the seat belt will retract automatically when released.

   6. For each rear seat belt, check the seat belt retractor locking mechanism automatic locking retractor (ALR). This function is for securing child seats.

   -1. Pull out the seat belt all the way to engage the ALR. The seat belt should retract with a ratcheting sound, but not extend. This is normal.

   -2. To disengage the ALR, release the seat belt and allow it to fully retract, then pull out the seat belt part-way. The seat belt should retract and extend normally.

   7. Replace the seat belt with a new assembly if there is any abnormality. Do not disassemble any part of the seat belt for any reason.

2. **Headliner - Removal**
3. Seat Belt - Inspection (Out of Vehicle)

   Out of Vehicle

   For front seat belt retractors with seat belt tensioners, review the **SRS component locations** and the **precautions and procedures** before doing repairs or service.

   Front

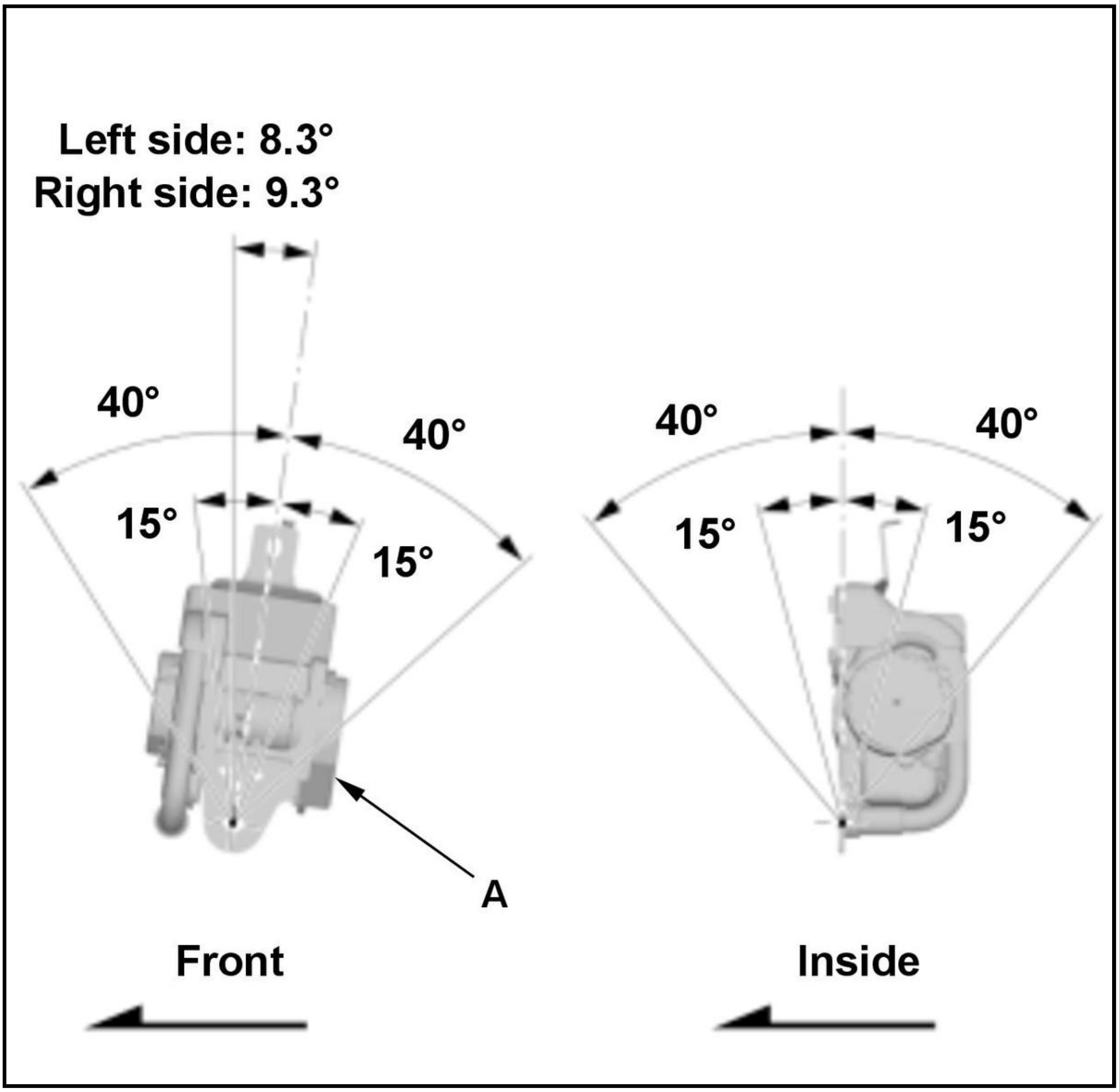
Left side: 8.3°
Right side: 9.3°
40°
40°
15°
15°
A
Front
40°
40°
15°
15°
Inside

Rear

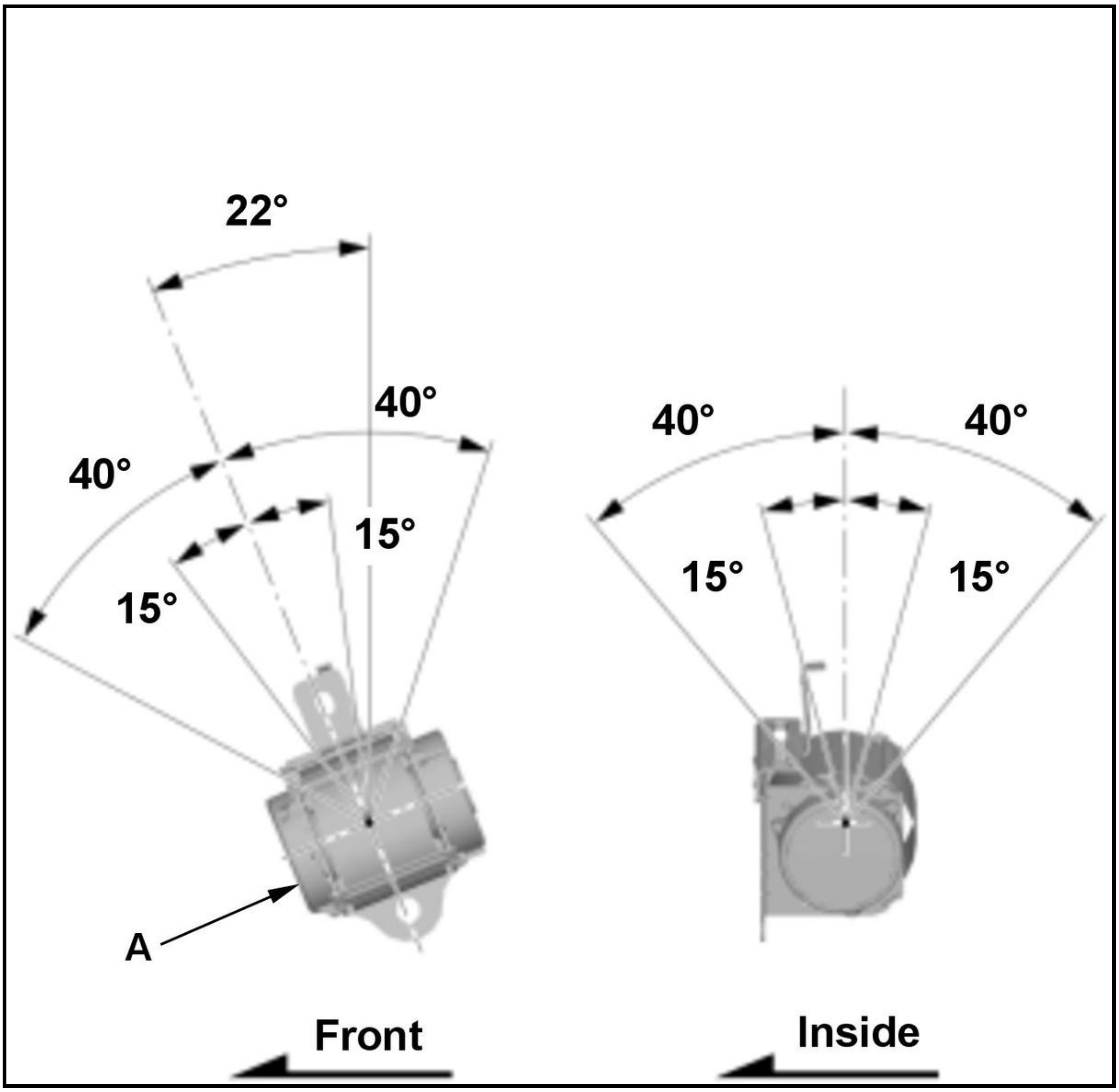
22°
40°
40°
15°
15°
A
Front
40°
40°
15°
15°
Inside

Rear Center

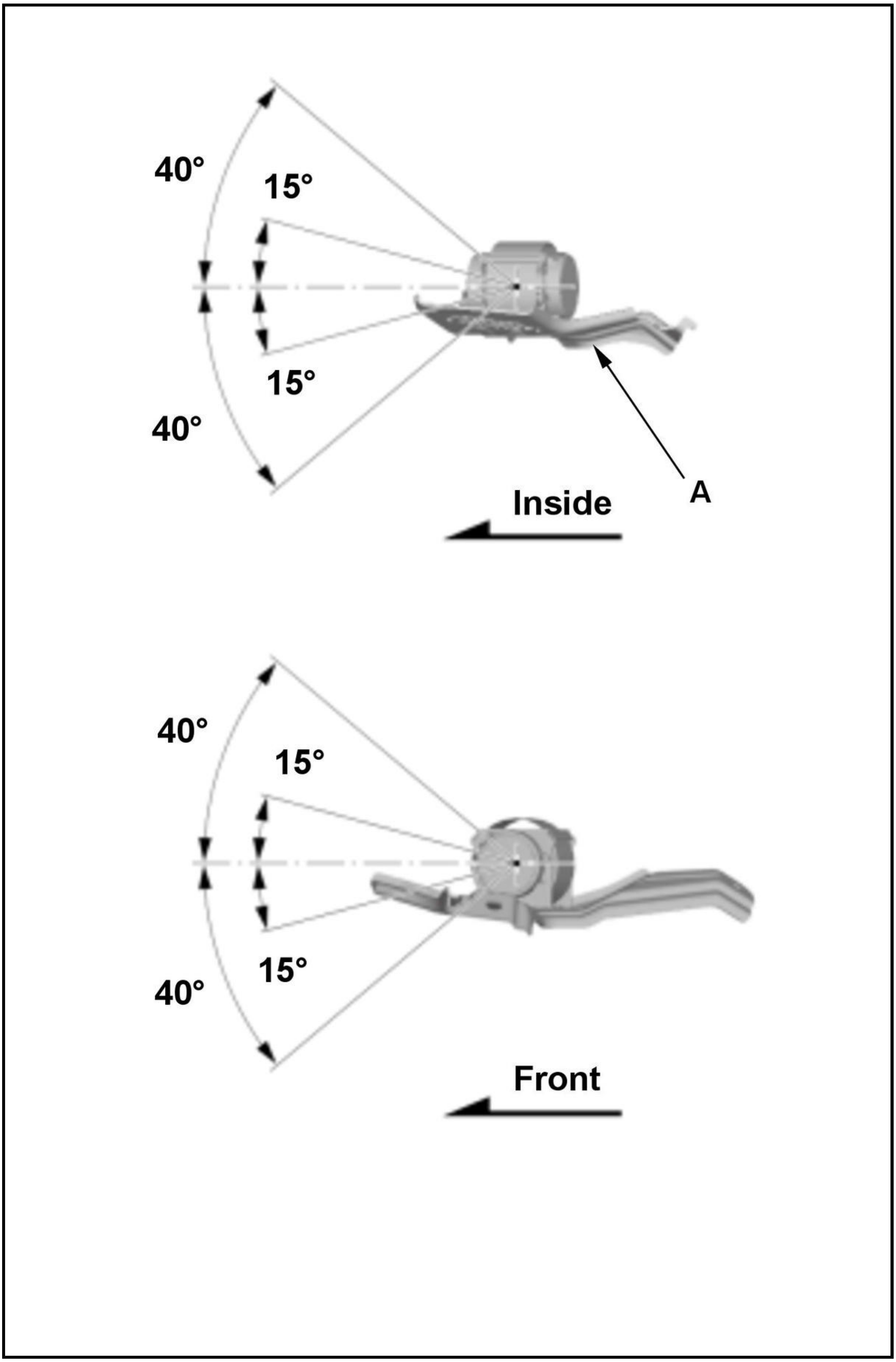
40°
15°
15°
40°
Inside
A
40°
15°
15°
40°
Front

Retractor

1. Before installing the retractor, check that the seat belt can be pulled out freely.

2. Make sure that the seat belt does not lock when the retractor (A) is leaned slowly up to 15B° from the mounted position. The seat belt should lock when the retractor is leaned over 40B°. Do not attempt to

disassemble the retractor.

3. Replace the seat belt with a new assembly if there is any abnormality. Do not disassemble any part of the seat belt for any reason.

4. **Headliner - Installation**

COMPONENT LOCATION INDEX

SEAT BELTS COMPONENT LOCATION INDEX

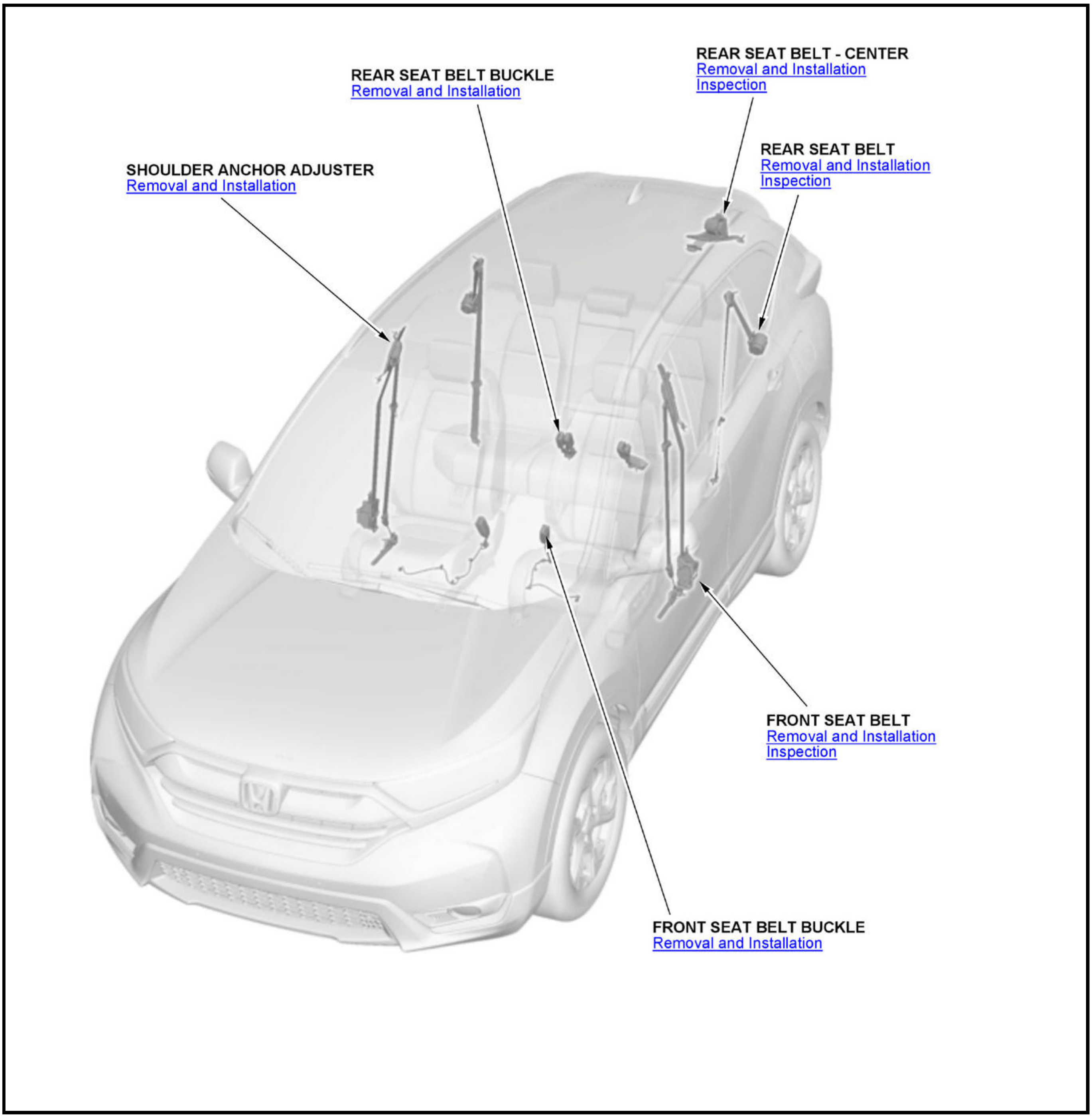
REAR SEAT BELT - CENTER
Removal and Installation
Inspection
REAR SEAT BELT BUCKLE
Removal and Installation
REAR SEAT BELT
Removal and Installation
Inspection
SHOULDER ANCHOR ADJUSTER
Removal and Installation
FRONT SEAT BELT
Removal and Installation
Inspection
FRONT SEAT BELT BUCKLE
Removal and Installation

REMOVAL AND INSTALLATION

FRONT SEAT BELT BUCKLE REMOVAL AND INSTALLATION

Removal and Installation

SRS components are located in this area. Review the SRS component locations and the precautions and procedures before doing repairs or service.

NOTE: How to read the torque specifications .

1. Front Seat - Remove
2. Front Seat Front Cushion Cover - Remove (Driver's Power Seat)
3. Front Seat Belt Buckle - Remove

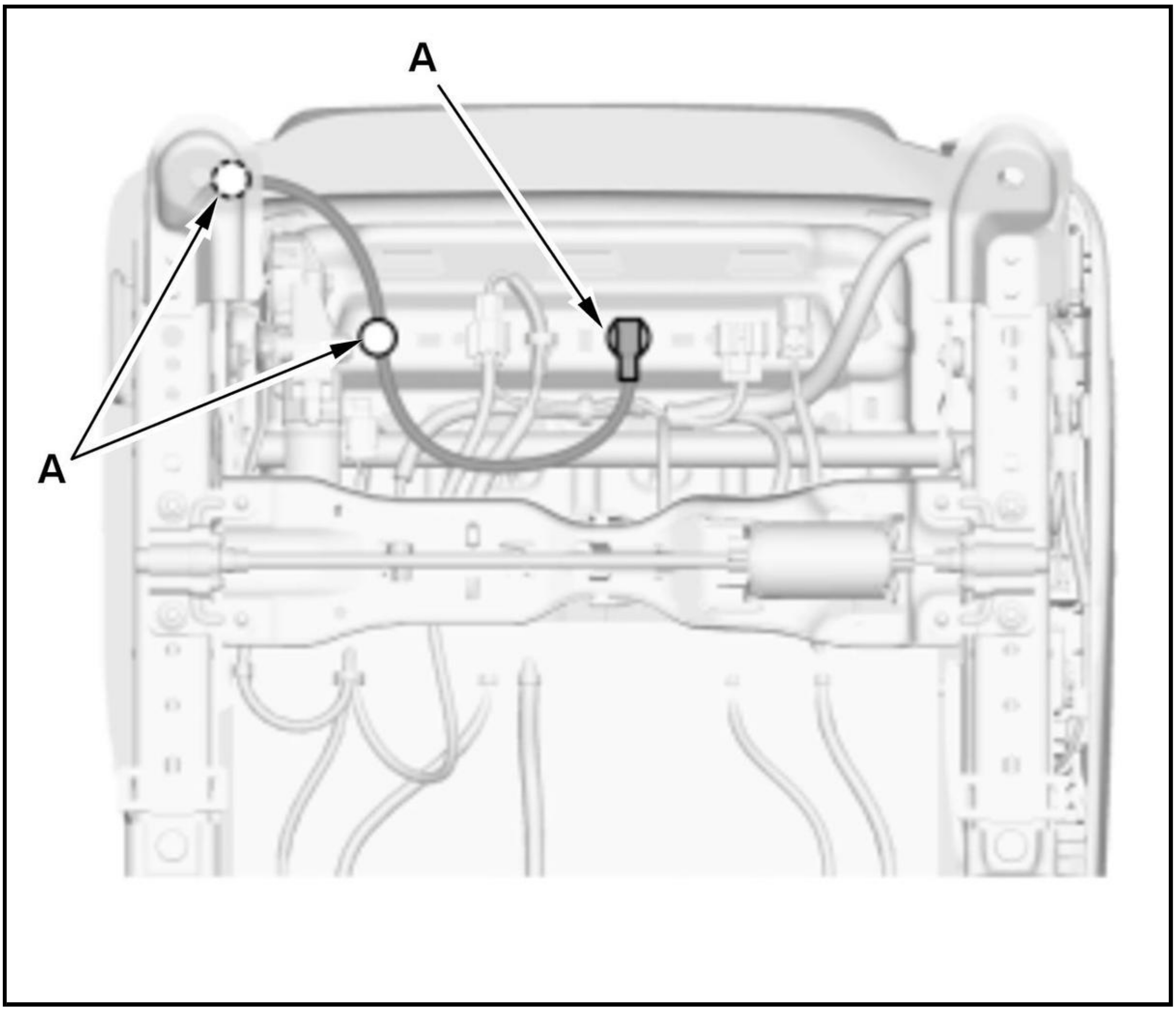

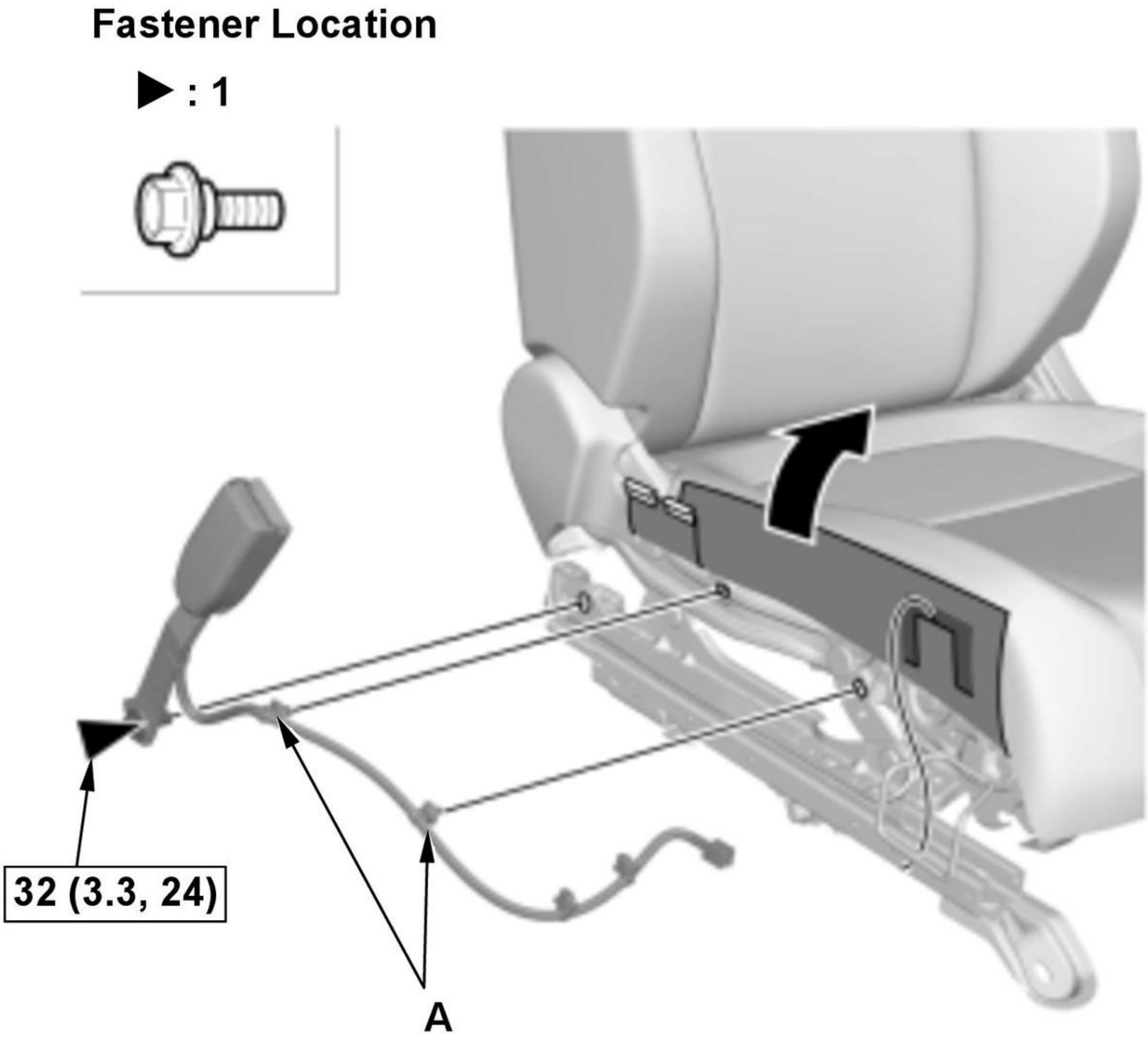
Fastener Location
▶ : 1
32 (3.3, 24)
A

Fig. 1: Front Seat Belt Buckle Components With Torque Specifications (Driver's Power Seat)
Courtesy of HONDA, U.S.A., INC.

Driver's Power Seat

1. Release the clips (A) and the remove the bolt.

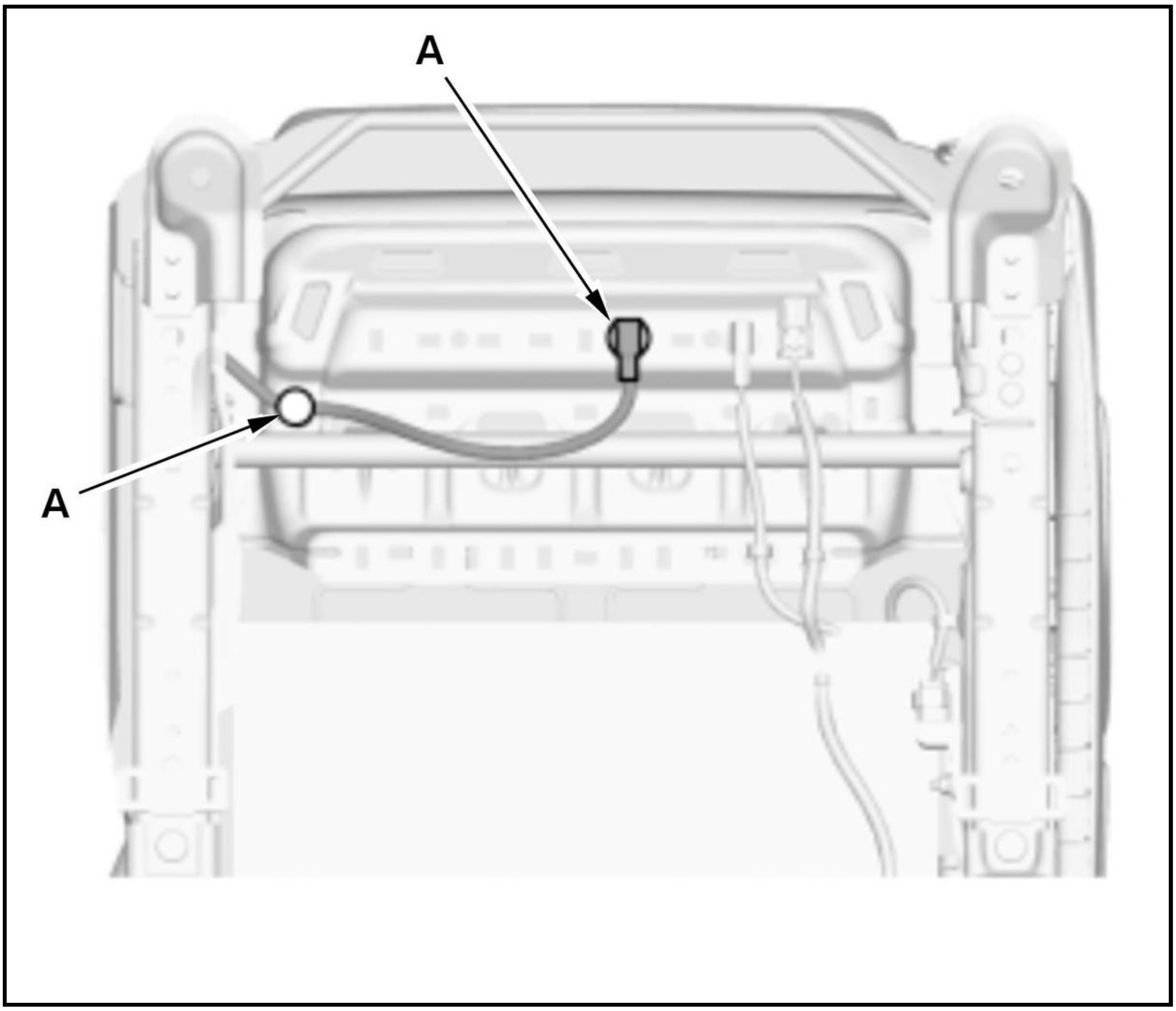
A
A

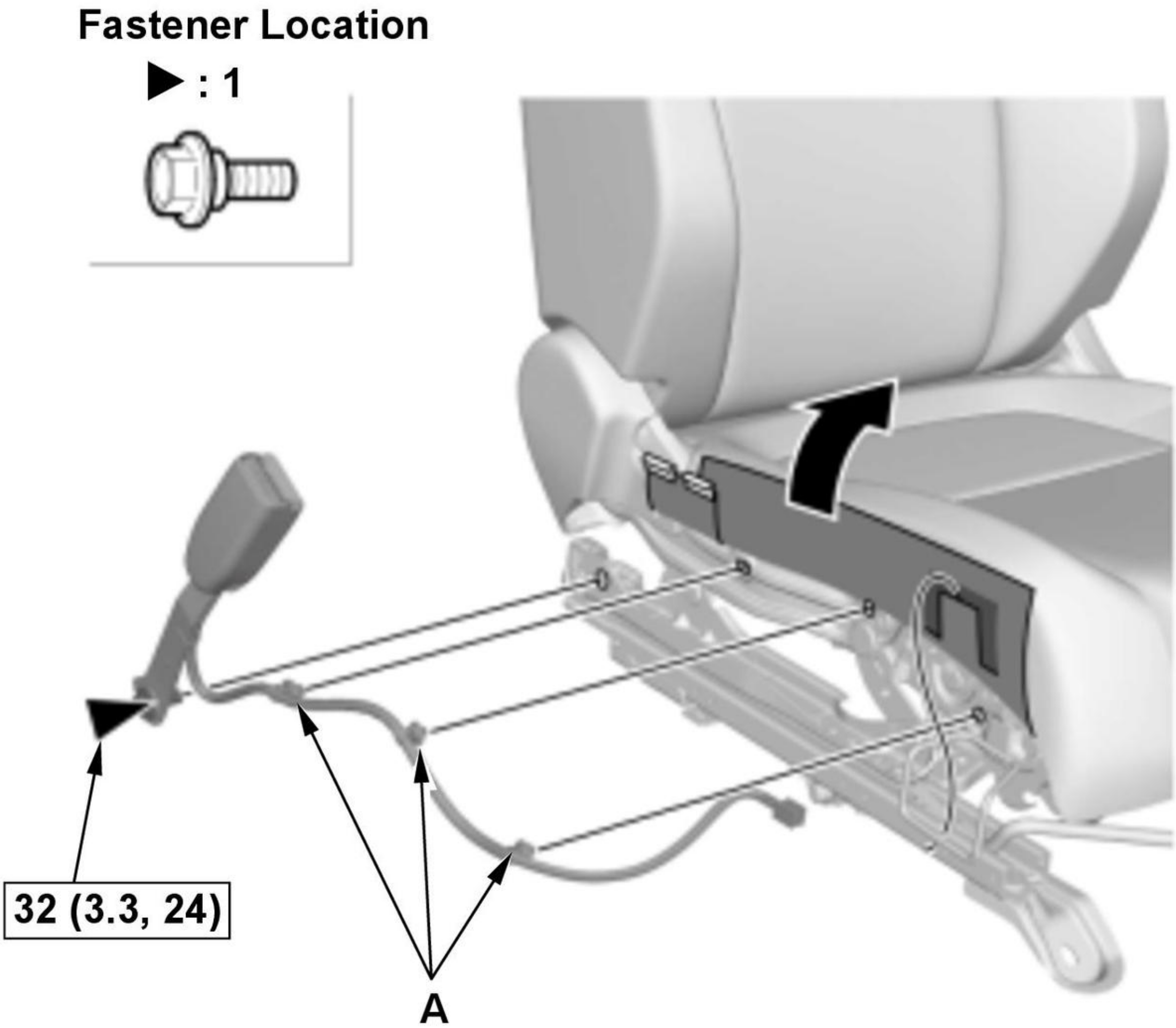
Fastener Location
▶ : 1
32 (3.3, 24)
A

Fig. 2: Front Seat Belt Buckle Components With Torque Specifications (Driver's Manual Seat)
Courtesy of HONDA, U.S.A., INC.

Driver's Manual Seat

1. Release the clips (A) and the remove the bolt.

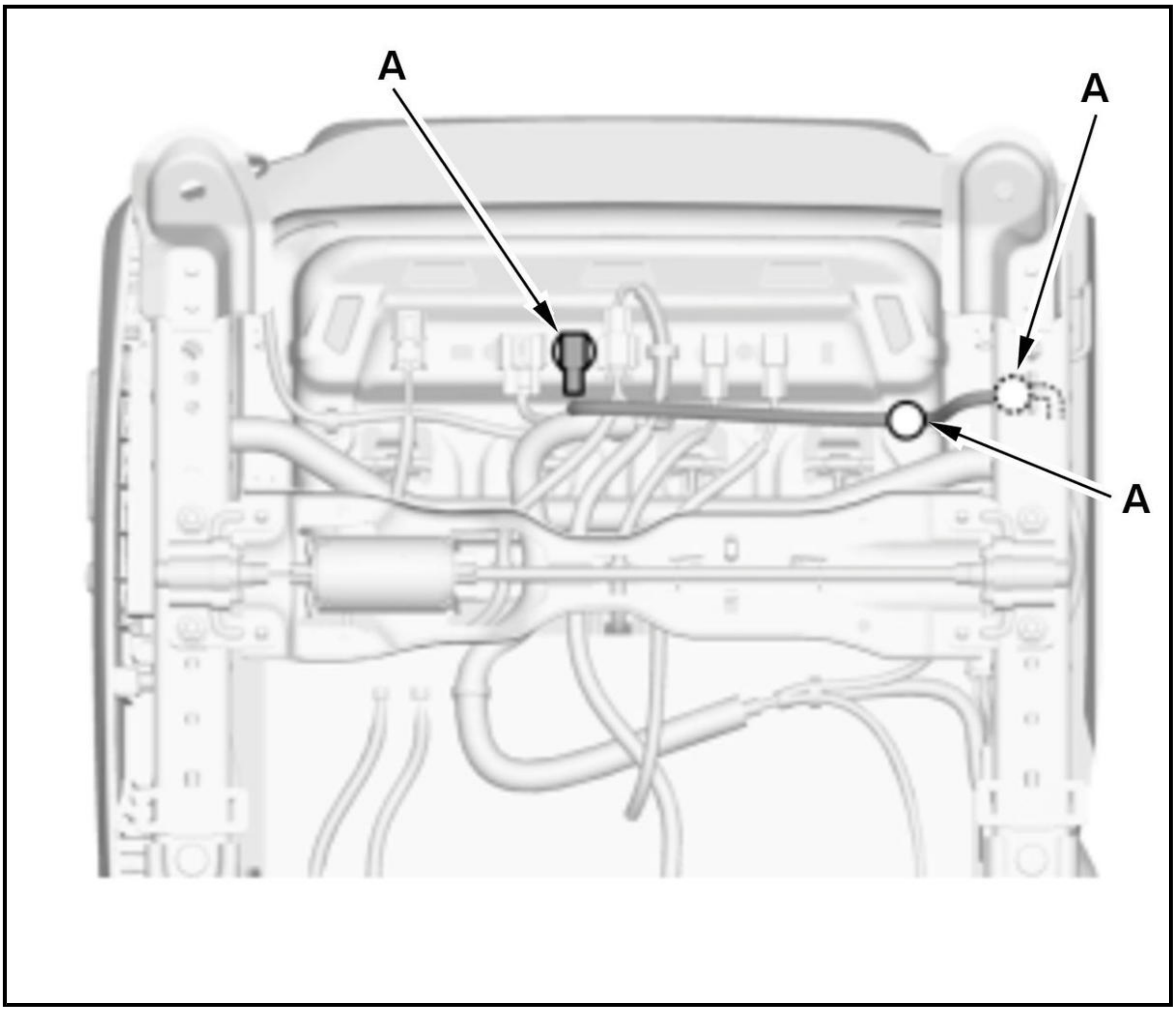
A
A
A

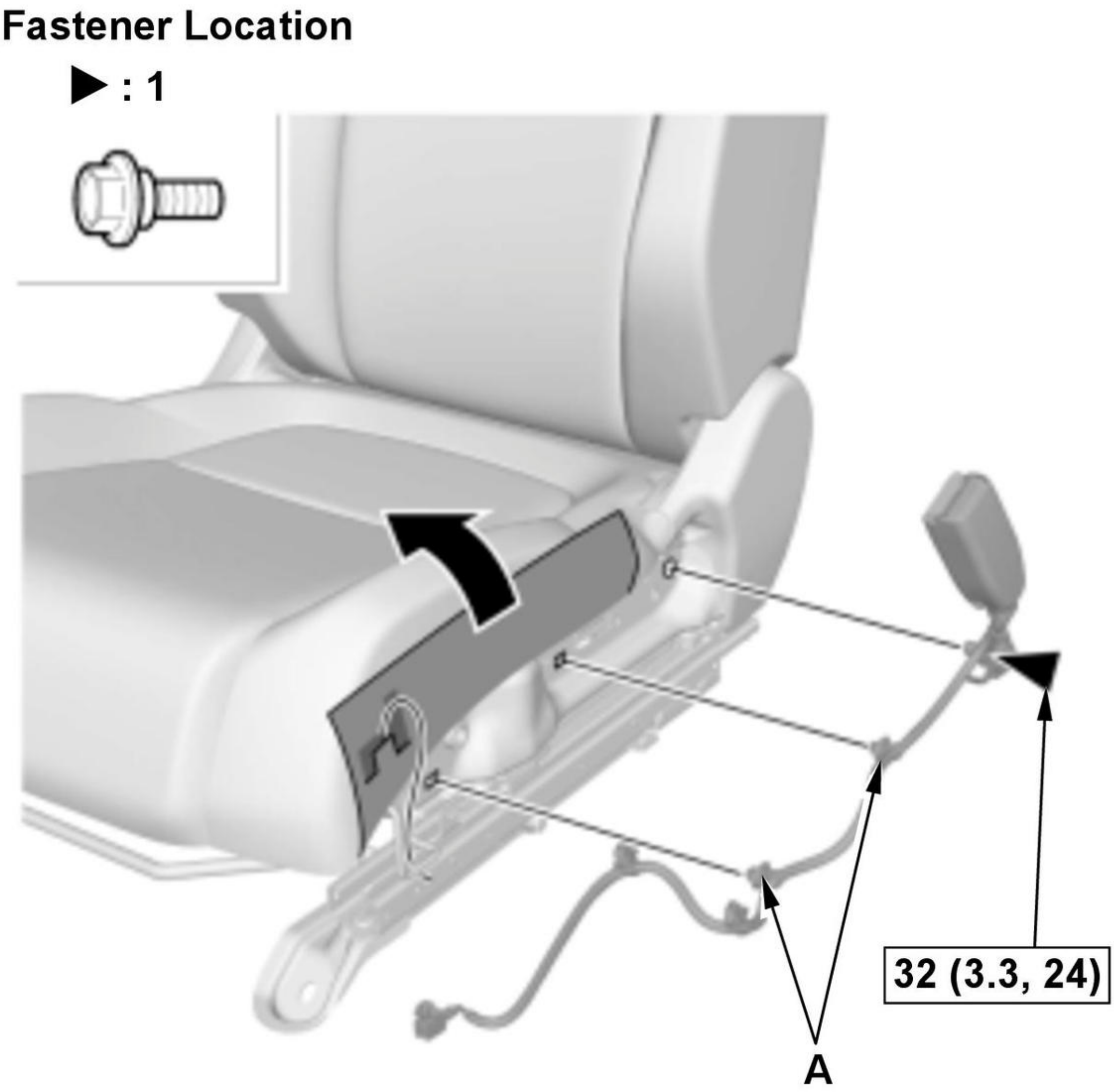
Fastener Location
▶ : 1
32 (3.3, 24)
A

Fig. 3: Front Seat Belt Buckle Components With Torque Specifications (Passenger's Seat)
Courtesy of HONDA, U.S.A., INC.

Passenger's Seat

1. Release the clips (A) and the remove the bolt.

4. All Removed Parts - Install

Driver's Seat 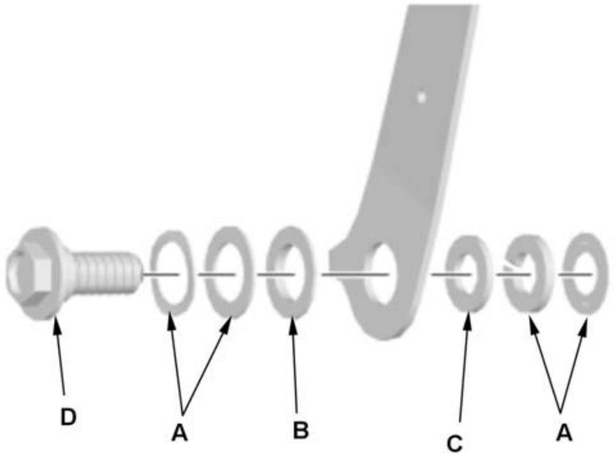 **Passenger's Seat** 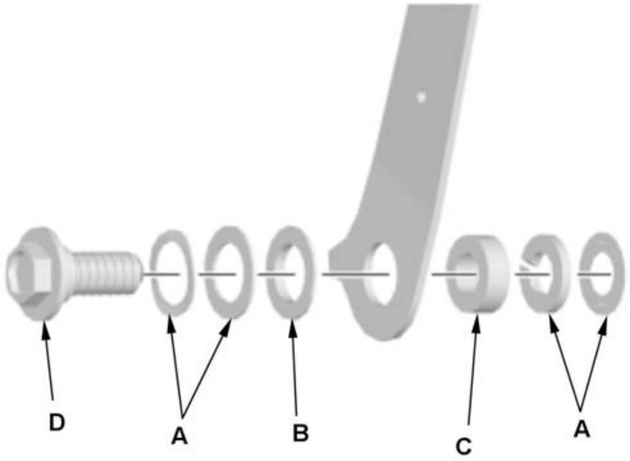	1. Install the parts in the reverse order of removal. **NOTE:** Assemble the washers (A), the bearing (B) and the collar (C) on the anchor bolt (D) as shown.

FRONT SEAT BELT REMOVAL AND INSTALLATION

Removal and Installation

SRS components are located in this area. Review the **SRS component locations** and the **precautions and procedures** before doing repairs or service.

NOTE: **How to read the torque specifications** .

1. **12 Volt Battery Terminal - Disconnect**

   NOTE: Wait at least 3 minutes before starting work.

2. Front Seat Belt Upper Anchor Bolt - Remove

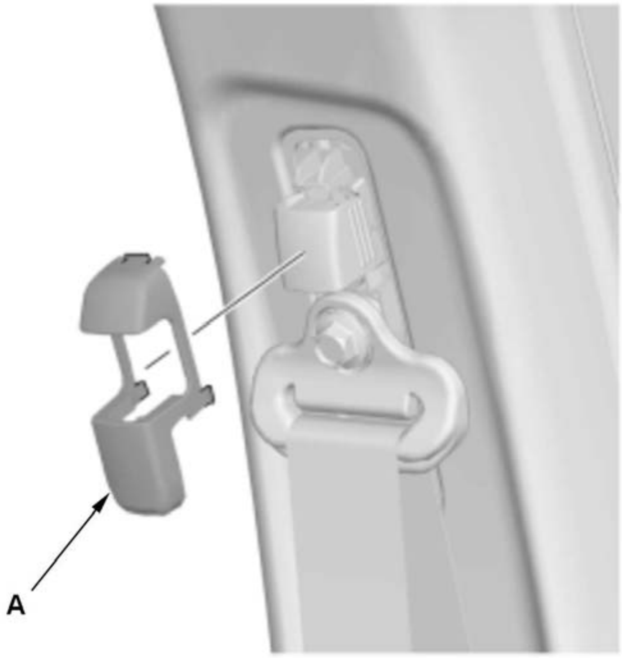	1. Remove the front seat belt upper anchor bolt cover (A).

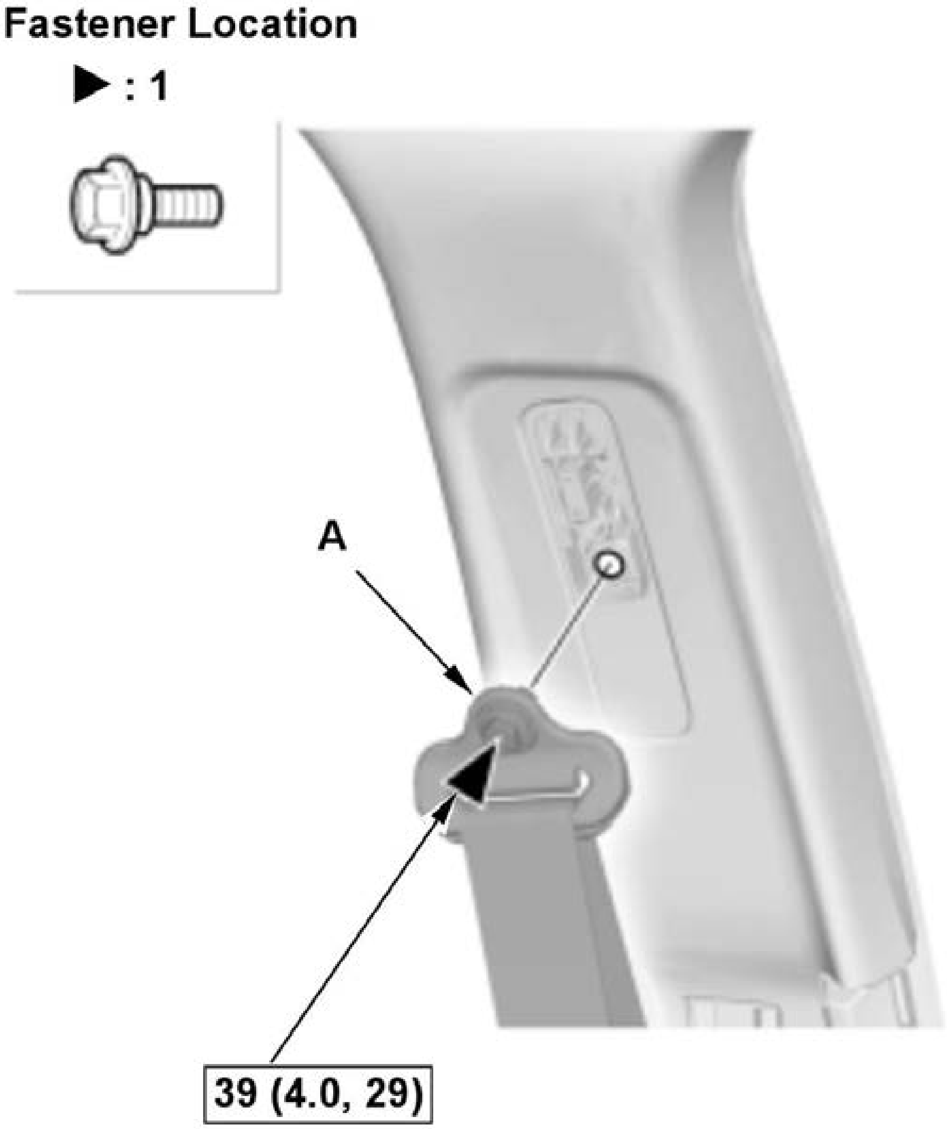
Fastener Location
▶ : 1
A
39 (4.0, 29)

Fig. 4: Front Seat Belt Upper Anchor And Bolt With Torque Specifications
Courtesy of HONDA, U.S.A., INC.

2. Remove the front seat belt upper anchor (A).

3. B-pillar Lower Trim - Remove
4. Outer Lap Tensioner Bolt - Remove

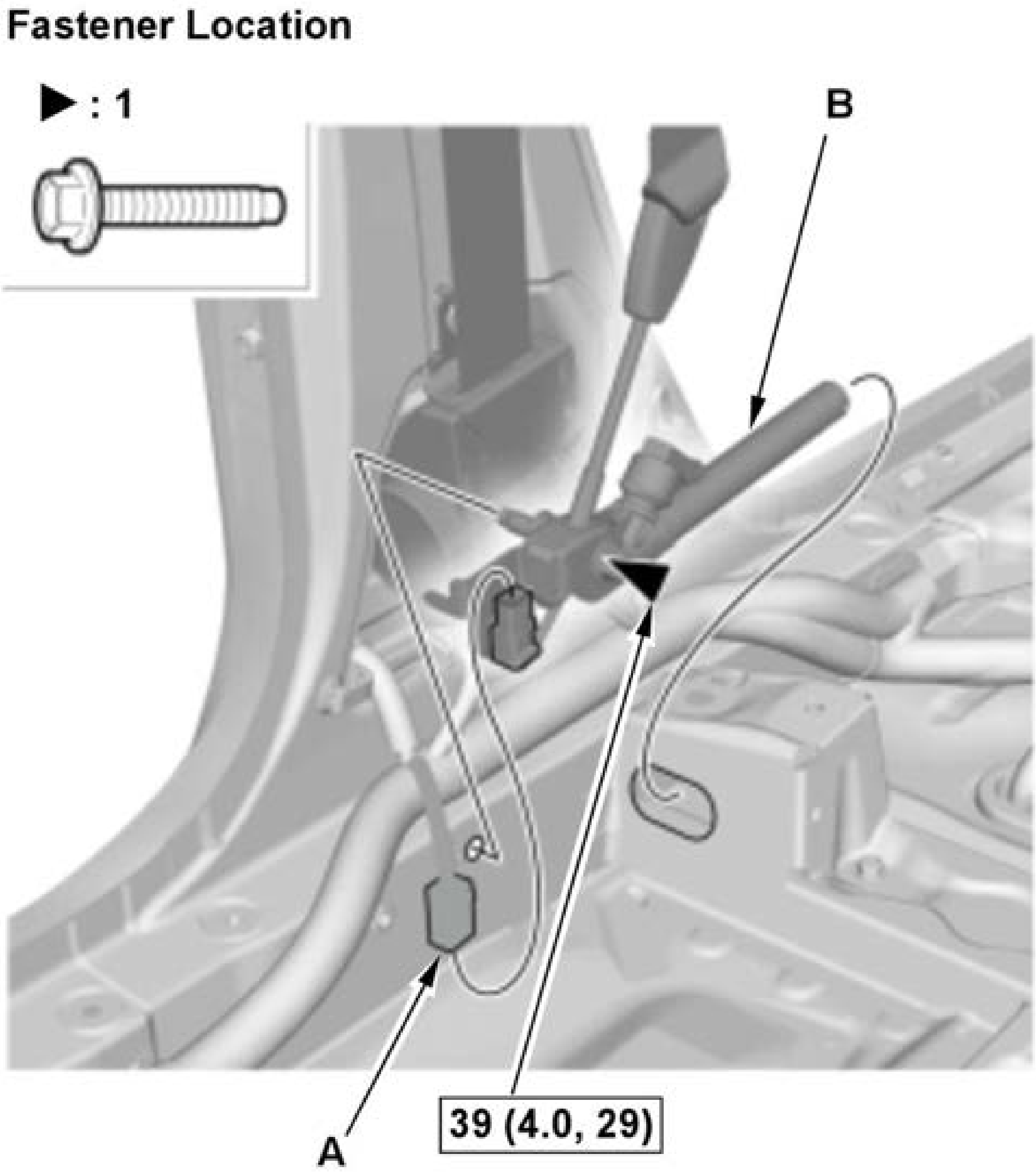

Fig. 5: Outer Lap Tensioner Components With Torque Specifications
Courtesy of HONDA, U.S.A., INC.

1. Disconnect the connector (A), and then remove the outer lap pretensioner (B).

5. Front Seat Belt Assembly - Remove

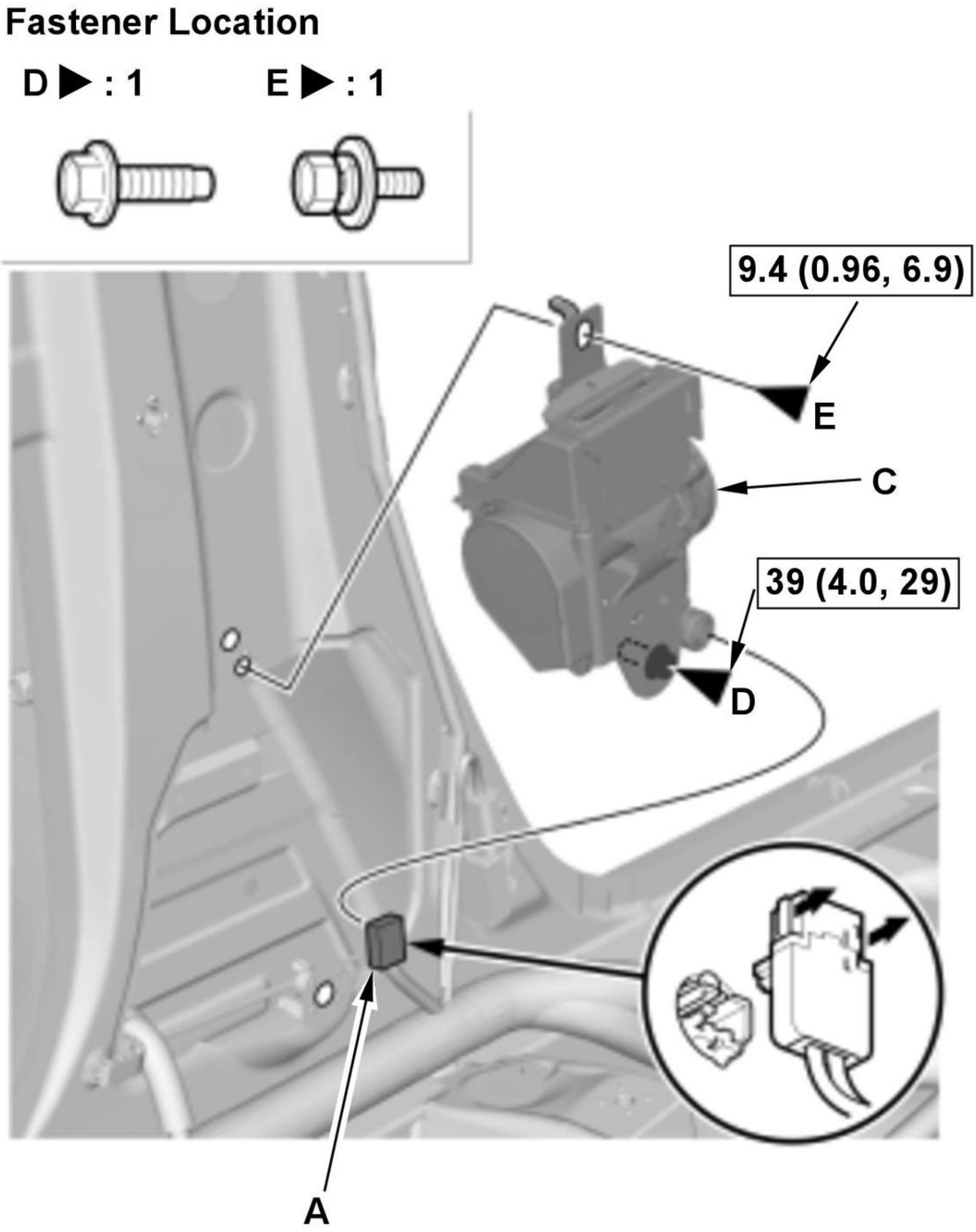
Fastener Location
D ▶ : 1
E ▶ : 1
9.4 (0.96, 6.9)
E
C
39 (4.0, 29)
D
A

Fig. 6: Front Seat Belt Assembly (Driver's) Components With Torque Specifications
Courtesy of HONDA, U.S.A., INC.

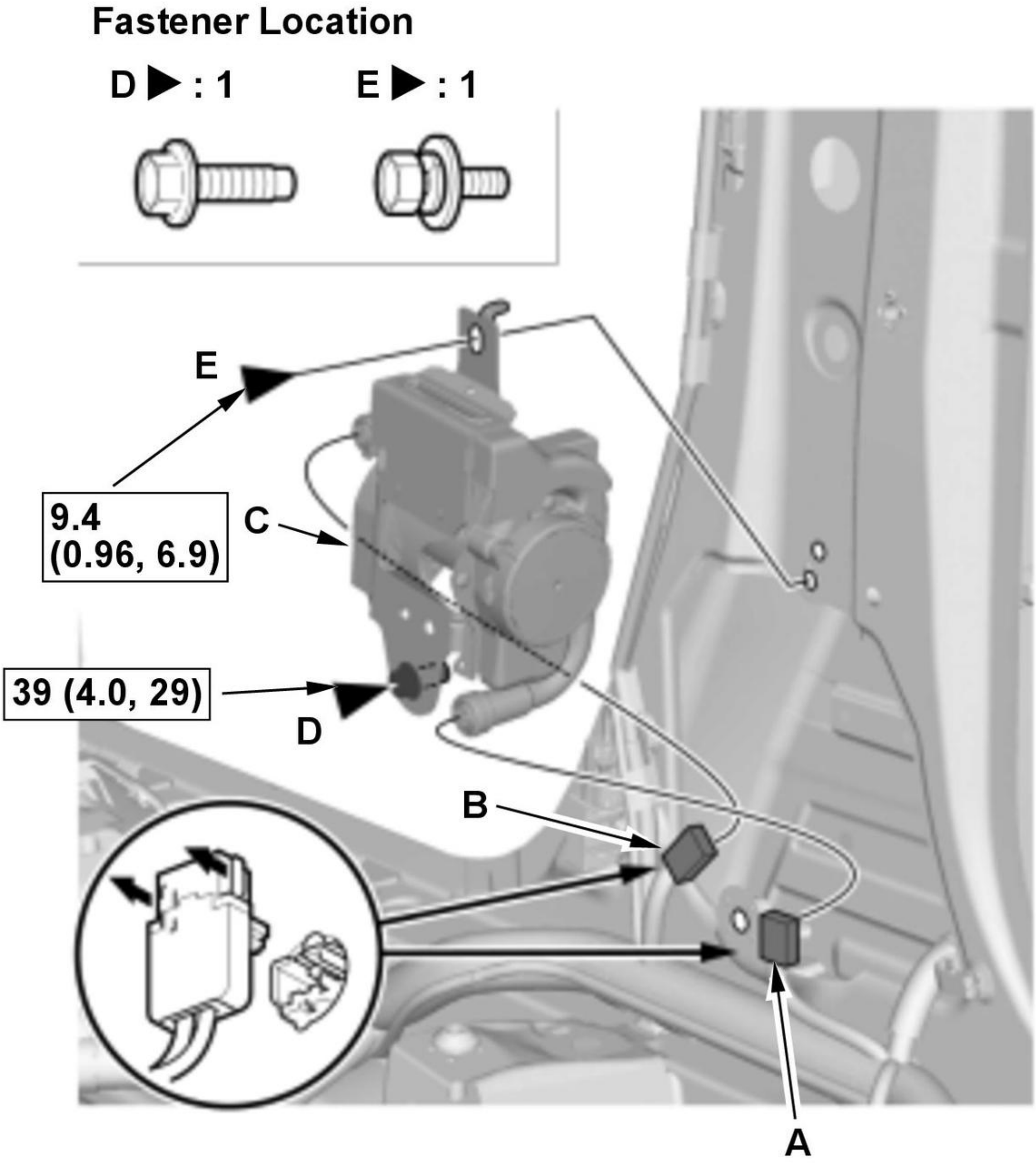
Fastener Location
D ▶ : 1
E ▶ : 1
E
9.4
(0.96, 6.9)
C
39 (4.0, 29)
D
B
A

Fig. 7: Front Seat Belt Assembly (Passenger's) Components With Torque Specifications
Courtesy of HONDA, U.S.A., INC.

1. Disconnect the connector (A).
2. Front Passenger's: Disconnect the connector (B).
3. Remove the lower anchor bolt, and then remove the front seat belt assembly (C).

6. All Removed Parts - Install

Upper Anchor Bolt Installation 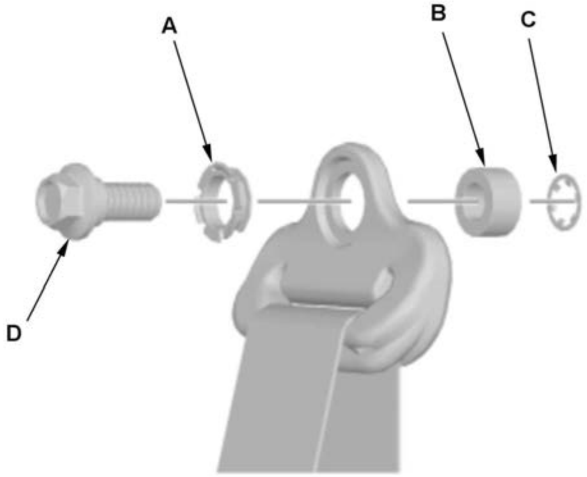 **Seat Belt Outer Lap Pretensioner Bolt Installation** 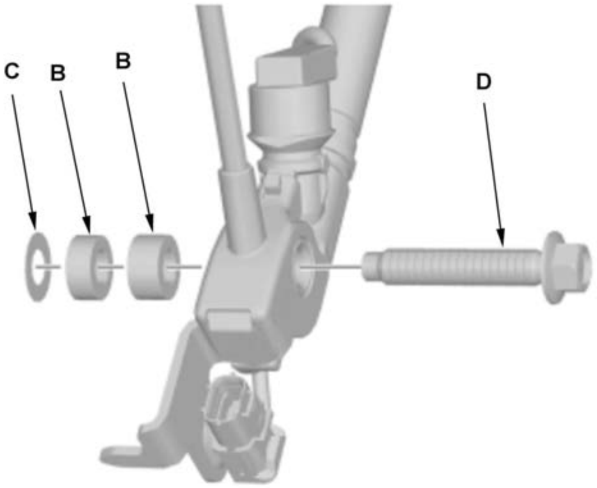 	1. Install the parts reverse order of removal. **NOTE:** • Assemble the bushing (A), the collars (B), and the toothed lock washer (C) on the bolt (D) as shown. • Apply medium strength type liquid thread lock to the upper anchor bolt before reinstallation.

REAR SEAT BELT BUCKLE REMOVAL AND INSTALLATION

Removal and Installation

Procedure

NOTE: **Numbered call-outs in figure pertain to list numbers in following procedure.**

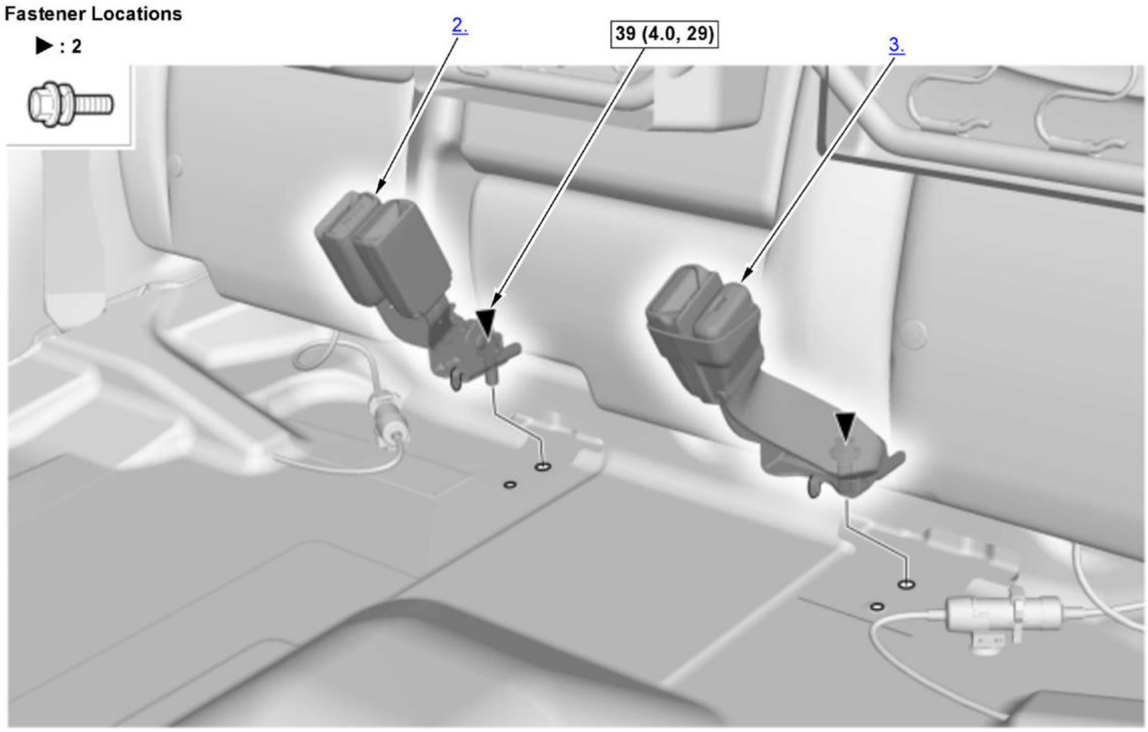

Fig. 8: Rear Seat Belt Buckle Components With Torque Specifications
Courtesy of HONDA, U.S.A., INC.

☐	Torque: N.m (kgf.m, lbf.ft)

1. Rear Seat Cushion - Lift
2. Right Rear Seat Belt Buckle - Remove
3. Left Rear Seat Belt Buckle - Remove
4. All Removed Parts - Install
    1. Install the parts in the reverse order of removal.

REAR SEAT BELT REMOVAL AND INSTALLATION

Removal and Installation

SRS components are located in this area. Review the SRS component locations and the precautions and procedures before doing repairs or service.

NOTE: How to read the torque specifications .

1. Rear Seat Belt Lower Anchor Bolt - Remove

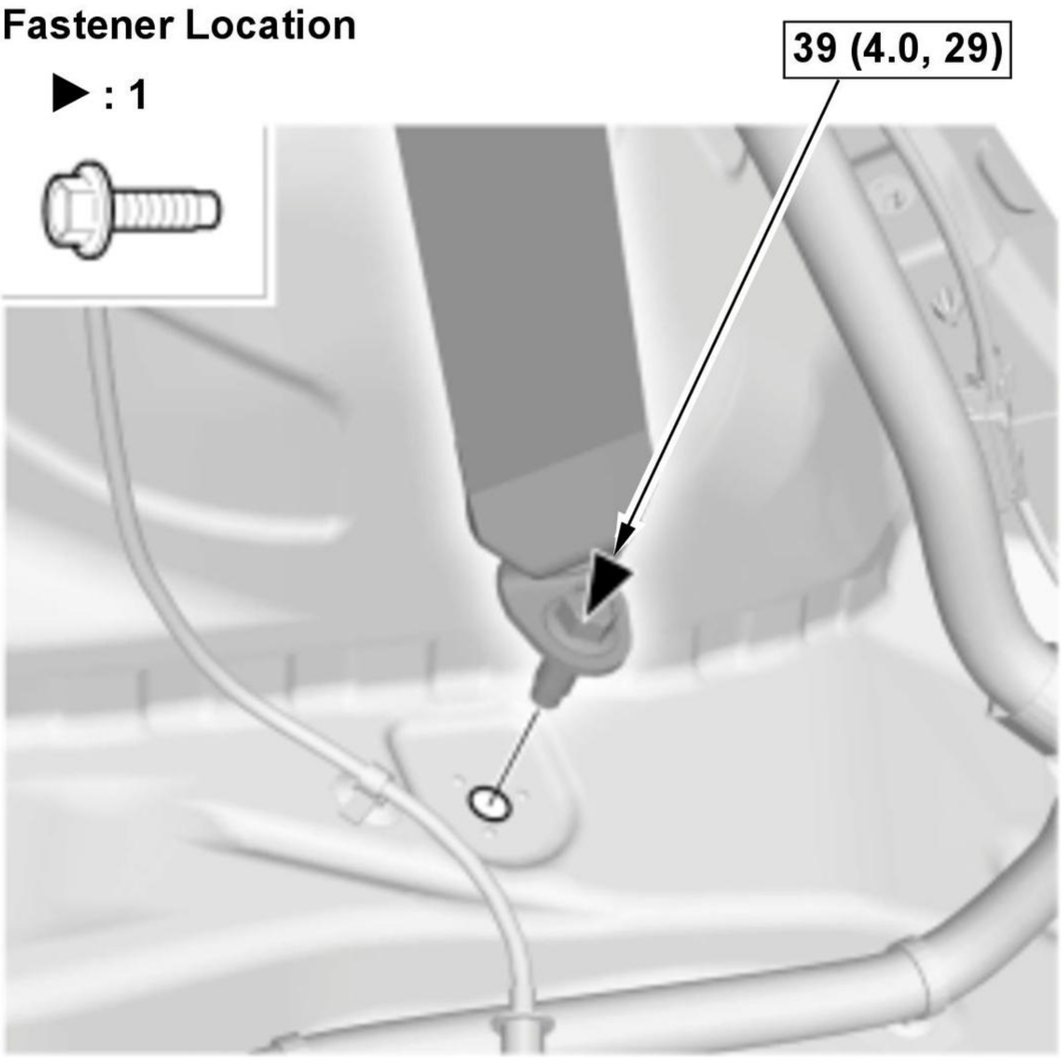
Fastener Location
▶ : 1
39 (4.0, 29)

Fig. 9: Rear Seat Belt Lower Anchor Bolt With Torque Specifications
Courtesy of HONDA, U.S.A., INC.

2. Quarter Pillar Trim - Remove
3. Rear Seat Belt Upper Anchor Bolt - Remove

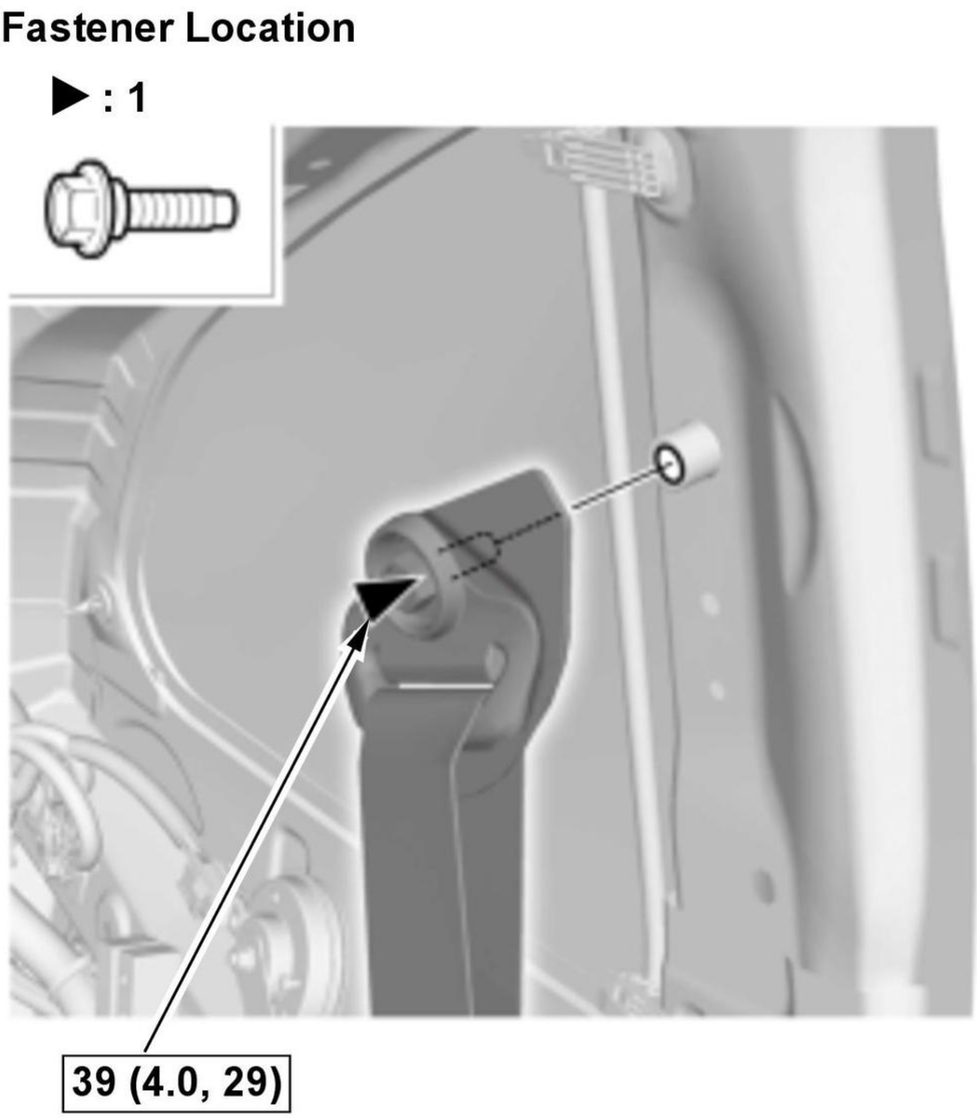
Fastener Location
▶ : 1
39 (4.0, 29)

Fig. 10: Rear Seat Belt Upper Anchor Bolt With Torque Specifications
Courtesy of HONDA, U.S.A., INC.

4. Rear Side Trim Panel - Remove
5. Rear Seat Belt Assembly - Remove

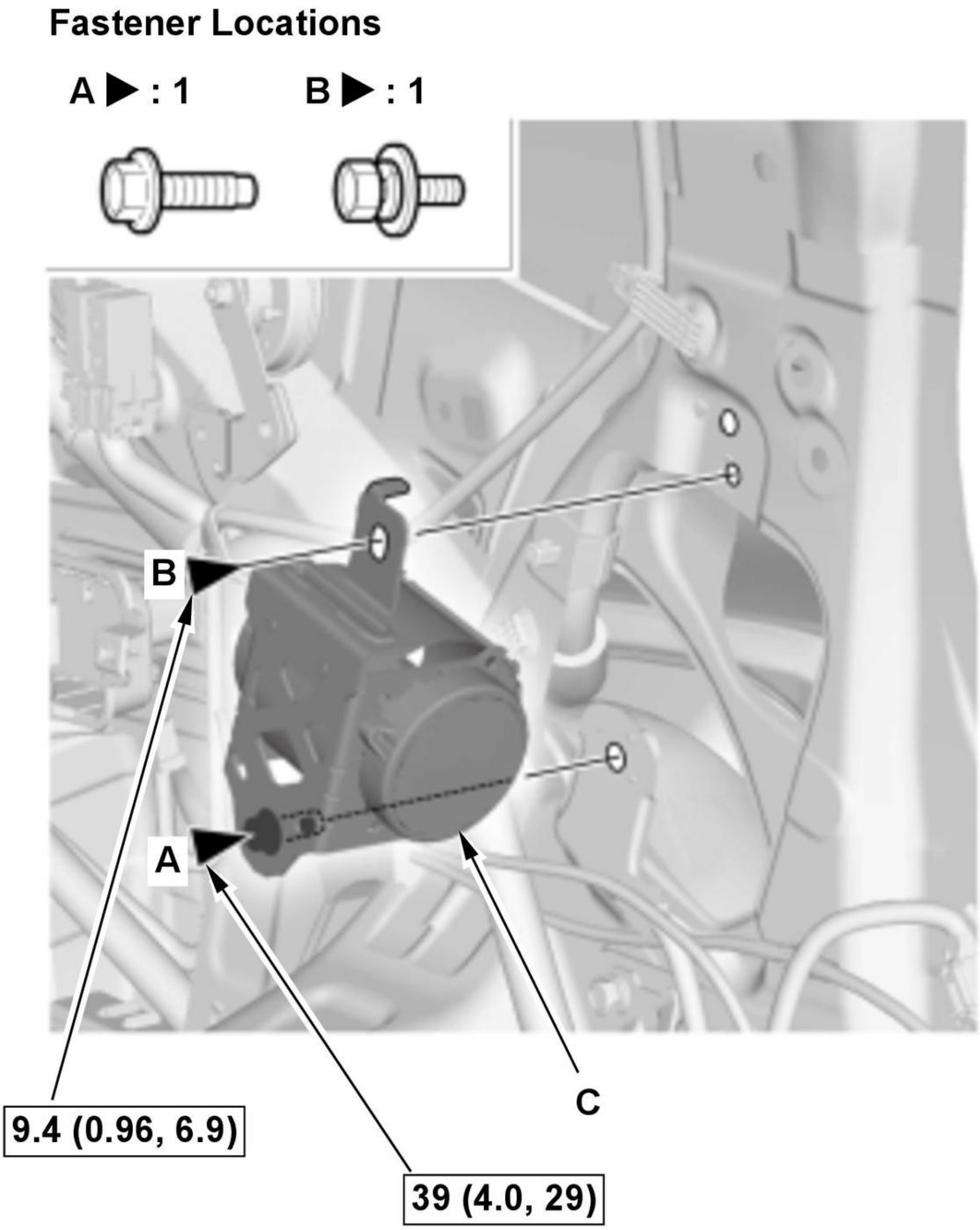
Fastener Locations
A ▶ : 1
B ▶ : 1
B
A
C
9.4 (0.96, 6.9)
39 (4.0, 29)

Fig. 11: Rear Seat Belt Assembly Components With Torque Specifications
Courtesy of HONDA, U.S.A., INC.

1. Remove the bolts (A, B).

2. Remove the rear seat belt assembly (C).

6. All Removed Parts - Install

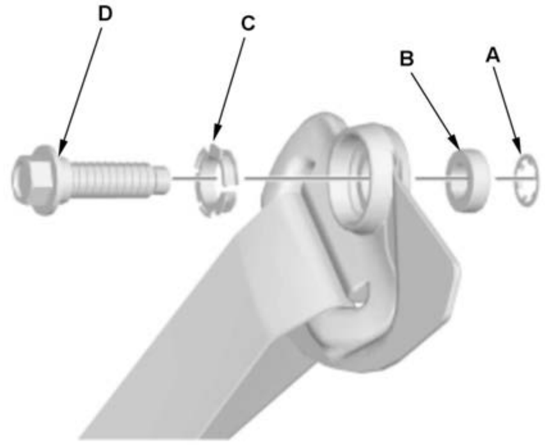	1. Install the parts in the reverse order of removal. **NOTE:** Assemble the toothed lock washer (A), the collar (B), and the bushing (C) on the upper anchor bolt (D) as shown.

REAR SEAT BELT REMOVAL AND INSTALLATION - CENTER

Removal and Installation

SRS components are located in this area. Review the **SRS component locations** and the **precautions and procedures** before doing repairs or service.

Procedure

NOTE: Numbered call-outs in figure pertain to list numbers in following procedure.

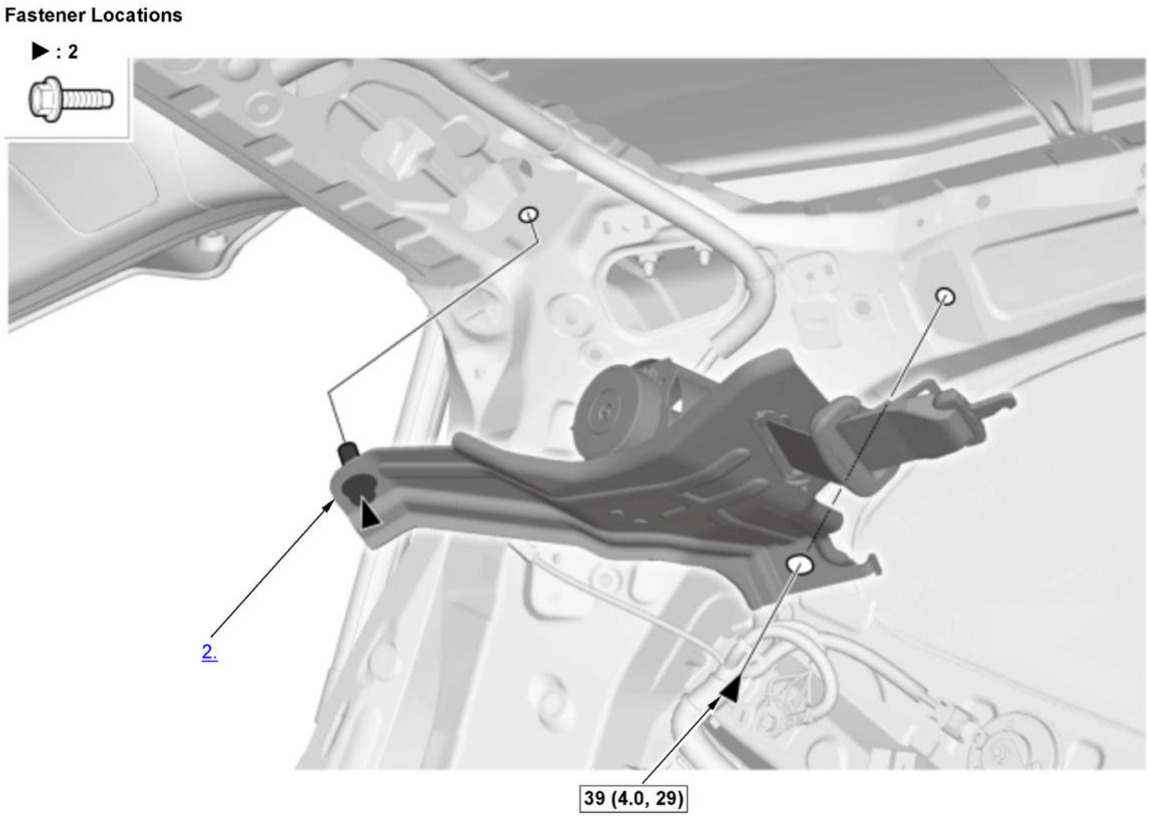

Fig. 12: Rear Seat Belt (Center) Components With Torque Specifications
Courtesy of HONDA, U.S.A., INC.

☐	Torque: N.m (kgf.m, lbf.ft)

1. **Headliner - Remove**
2. Rear Center Seat Belt - Remove

3. All Removed Parts - Install

    1. Install the parts in the reverse order of removal.

SEAT BELT SHOULDER ANCHOR ADJUSTER REMOVAL AND INSTALLATION

Removal and Installation

Procedure

NOTE: **Numbered call-outs in figure pertain to list numbers in following procedure.**

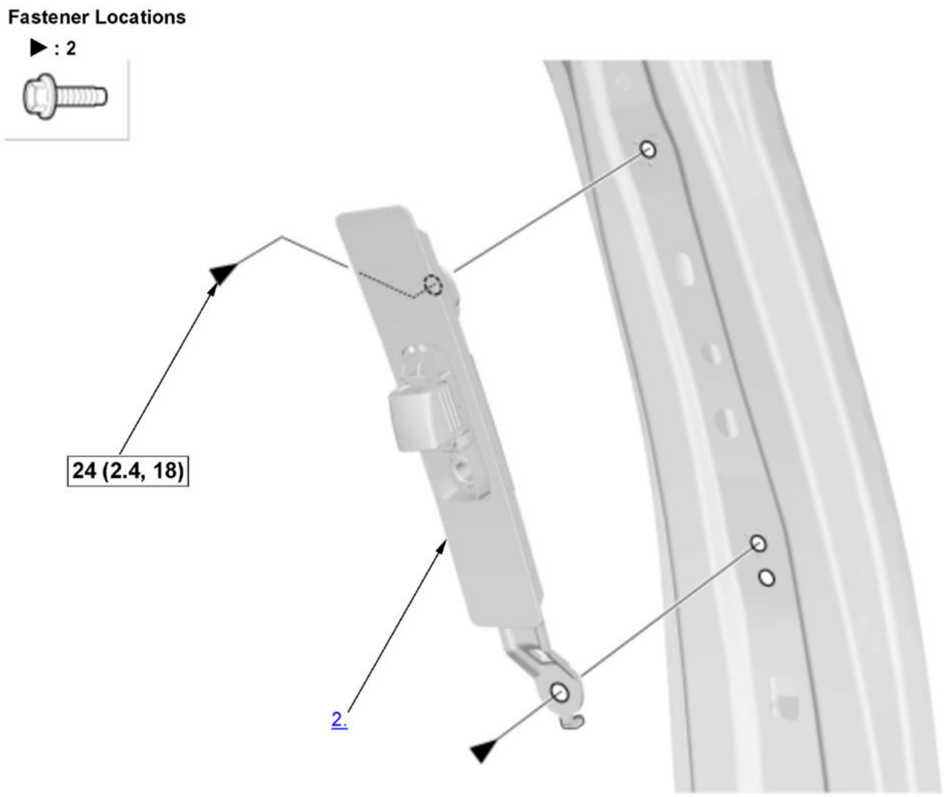

Fig. 13: Seat Belt Shoulder Anchor Adjuster Components With Torque Specifications
Courtesy of HONDA, U.S.A., INC.

☐	Torque: N.m (kgf.m, lbf.ft)

1. B-pillar Upper Trim - Remove
2. Front Seat Belt Shoulder Anchor Adjuster - Remove
3. All Removed Parts - Install

    1. Install the parts in the reverse order of removal.

REMOVAL AND INSTALLATION

FRONT SEAT BELT BUCKLE REMOVAL AND INSTALLATION

Removal and Installation

NOTE:

- **How to read the torque specifications** .
- SRS components are located in this area. Review the **SRS component locations** and the **precautions and procedures** before doing repairs or service.

1. **Front Seat - Remove**
2. **Front Seat Front Cushion Cover - Remove (Driver's Power Seat)**
3. Front Seat Belt Buckle - Remove

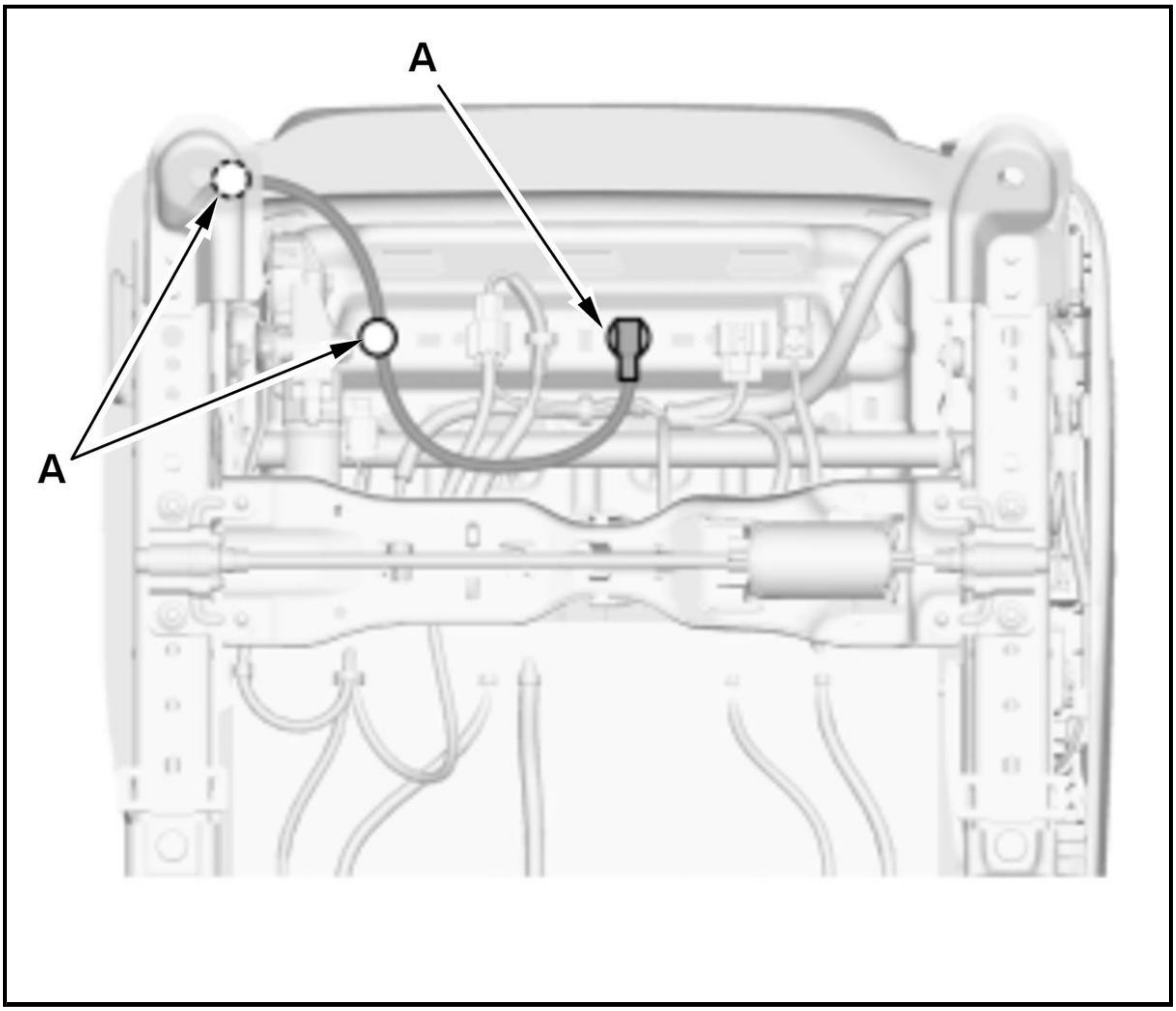

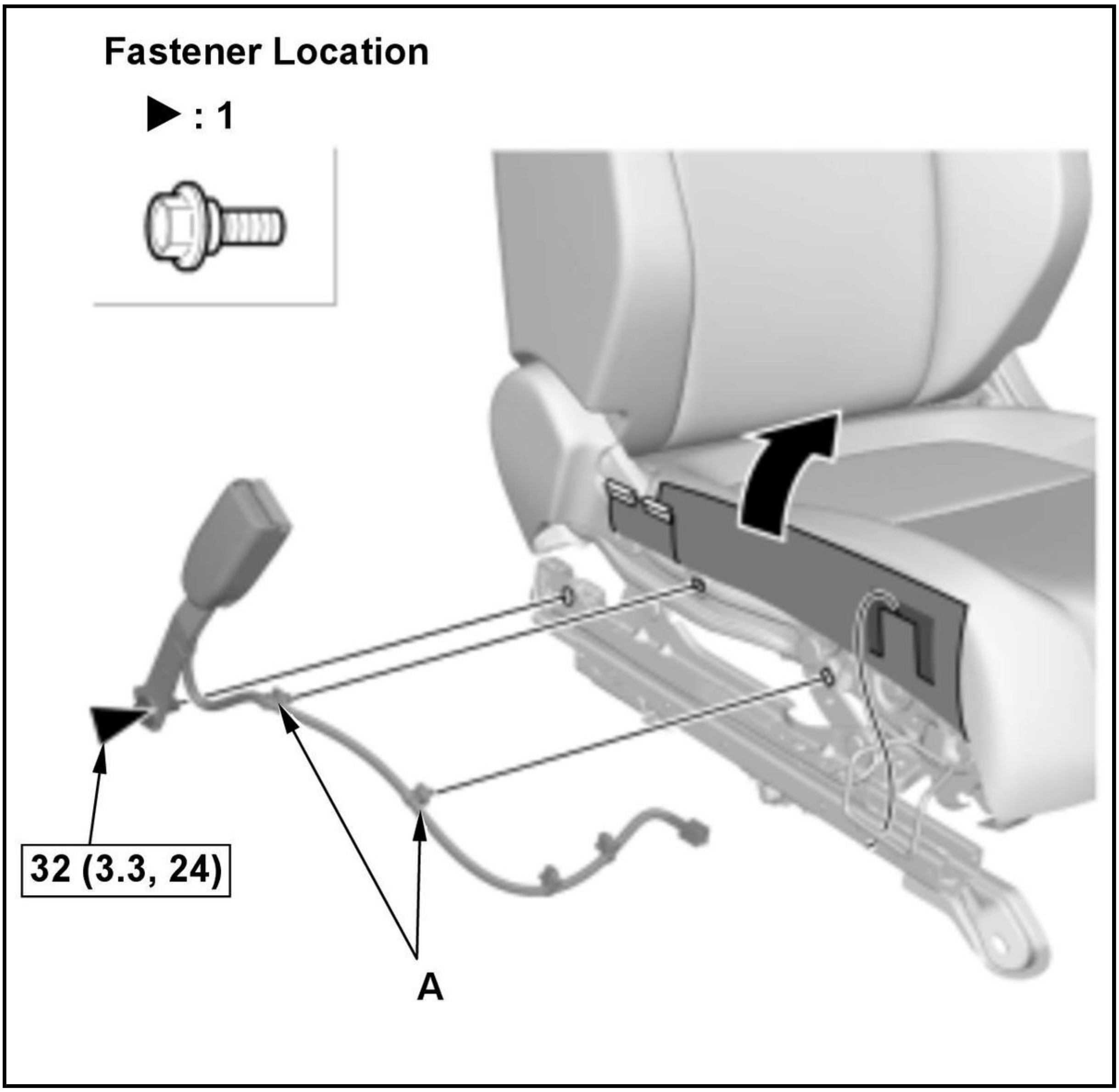
Fastener Location
: 1
32 (3.3, 24)
A

Driver's Power Seat

1. Release the clips (A) and the remove the bolt.

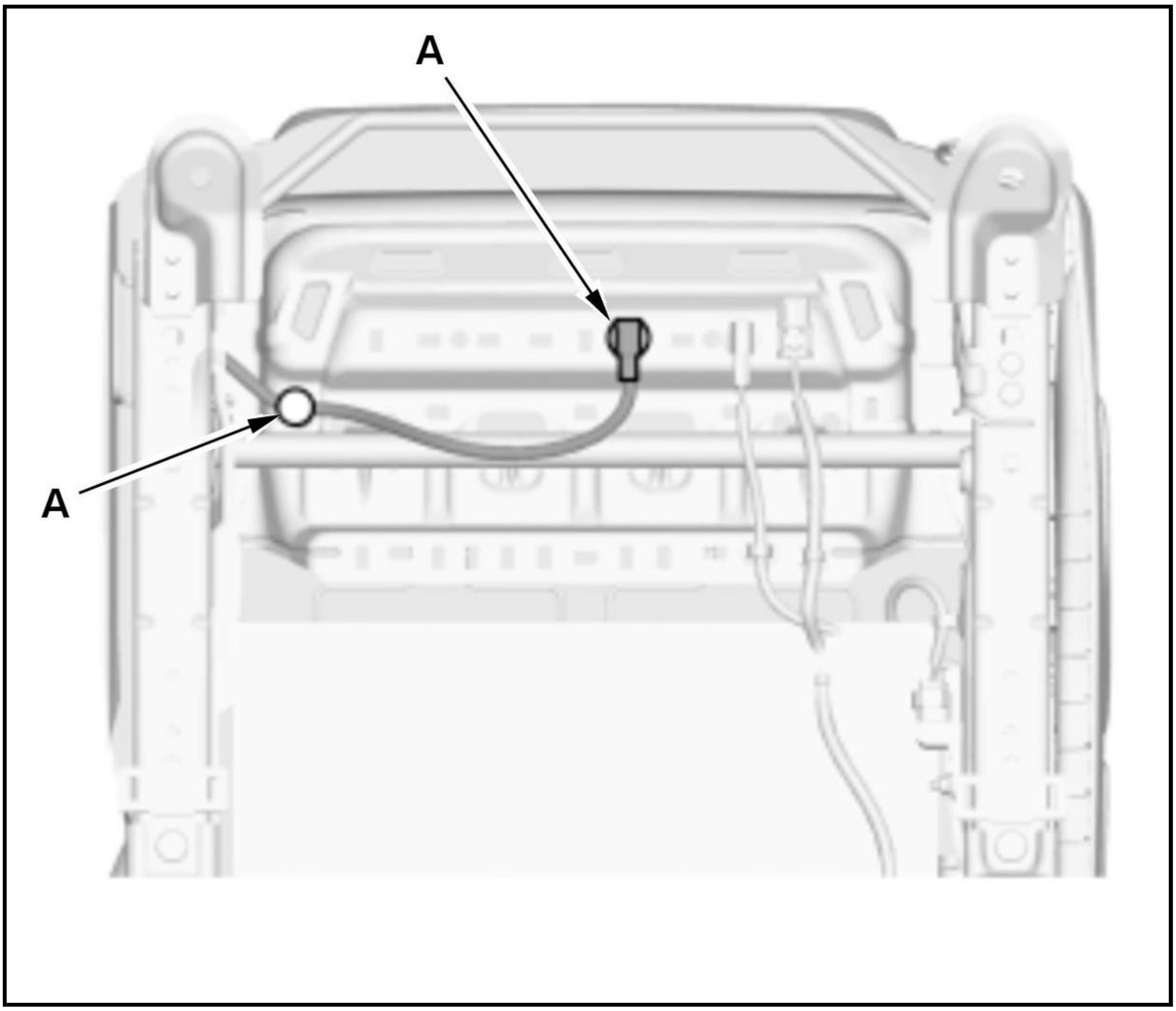
A
A

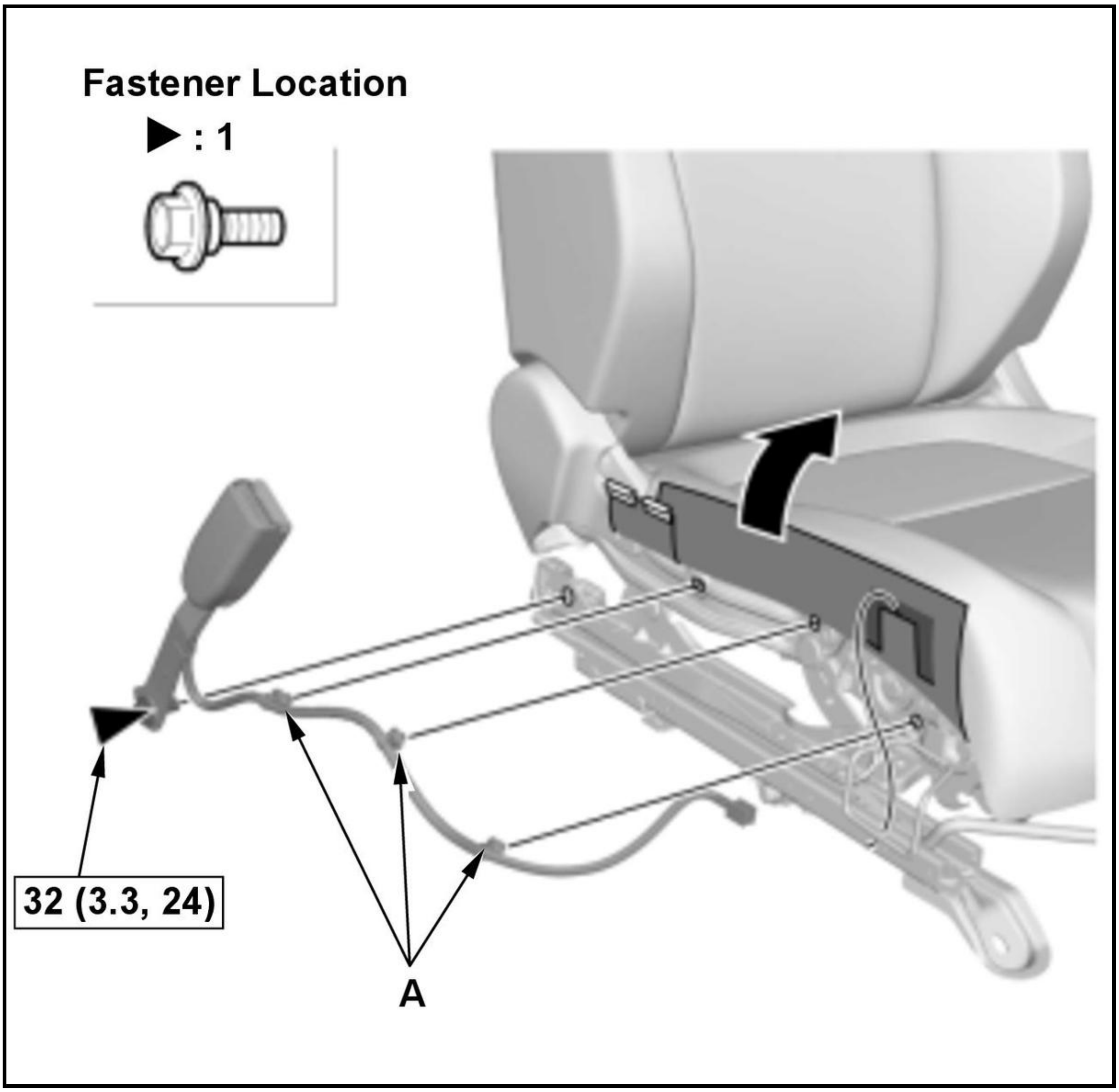
Fastener Location
▶ : 1
32 (3.3, 24)
A

Driver's Manual Seat

1. Release the clips (A) and the remove the bolt.

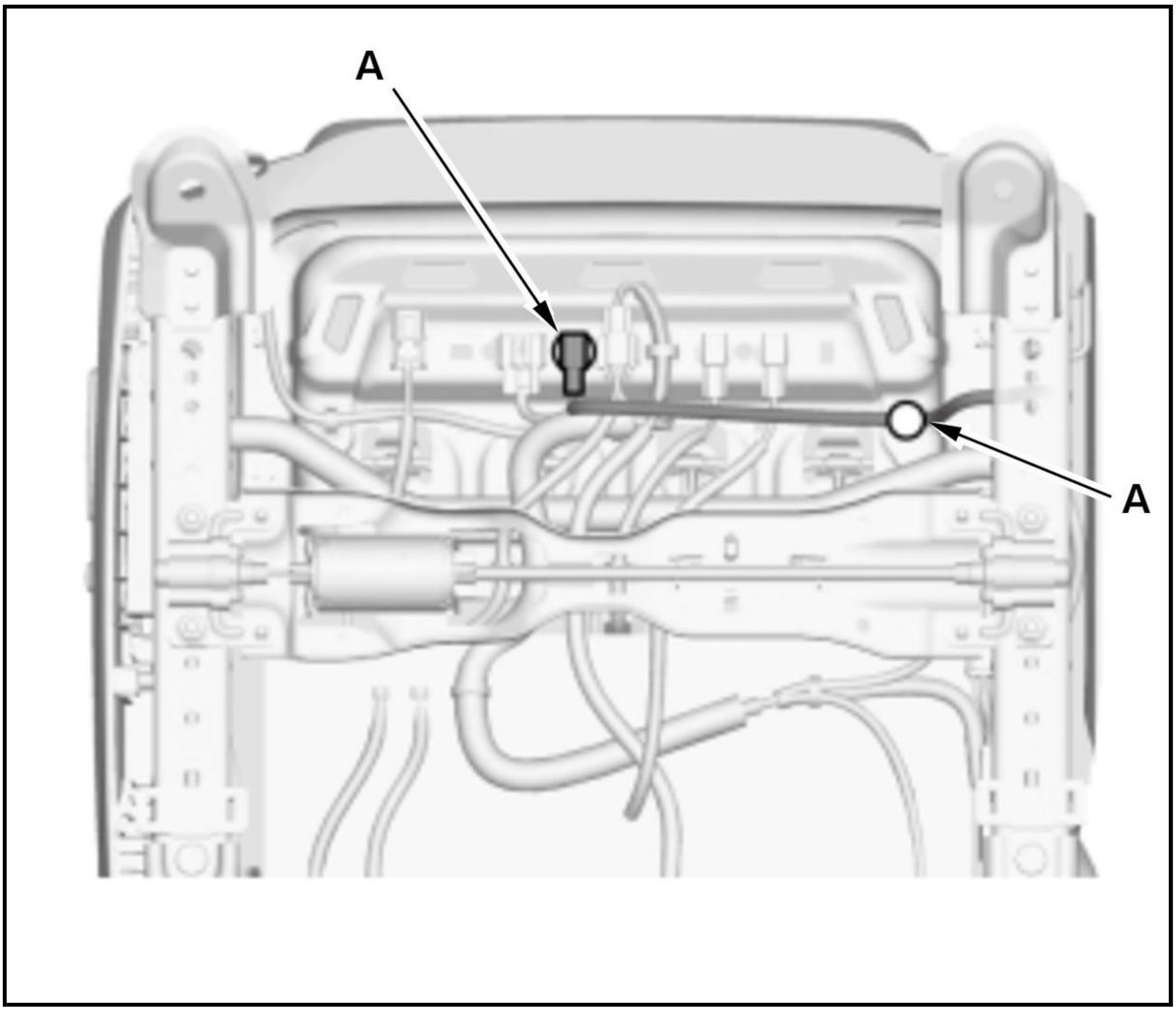
A
A

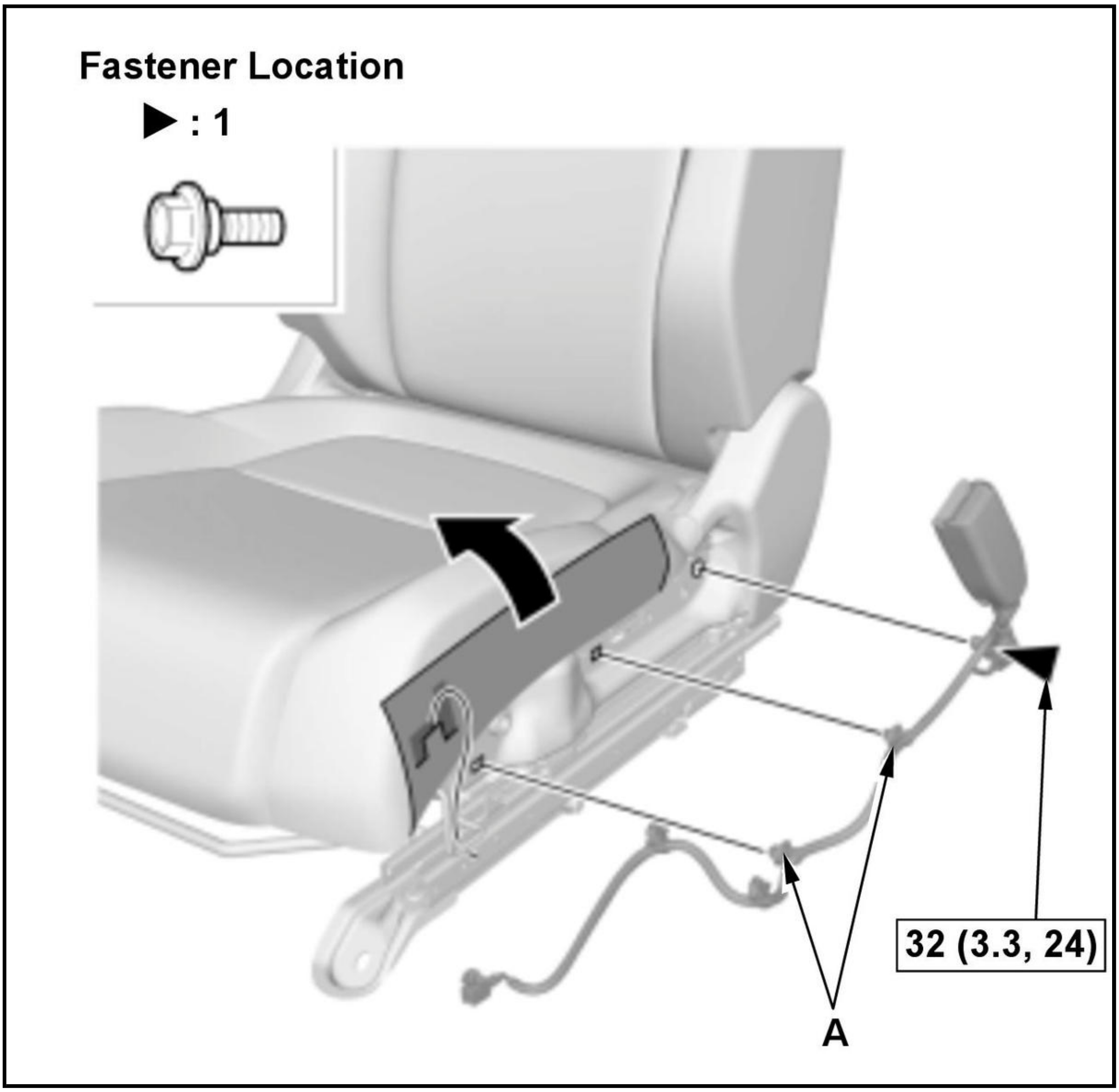
Fastener Location
▶ : 1
32 (3.3, 24)
A

Passenger's Power Seat

1. Release the clips (A) and the remove the bolt.

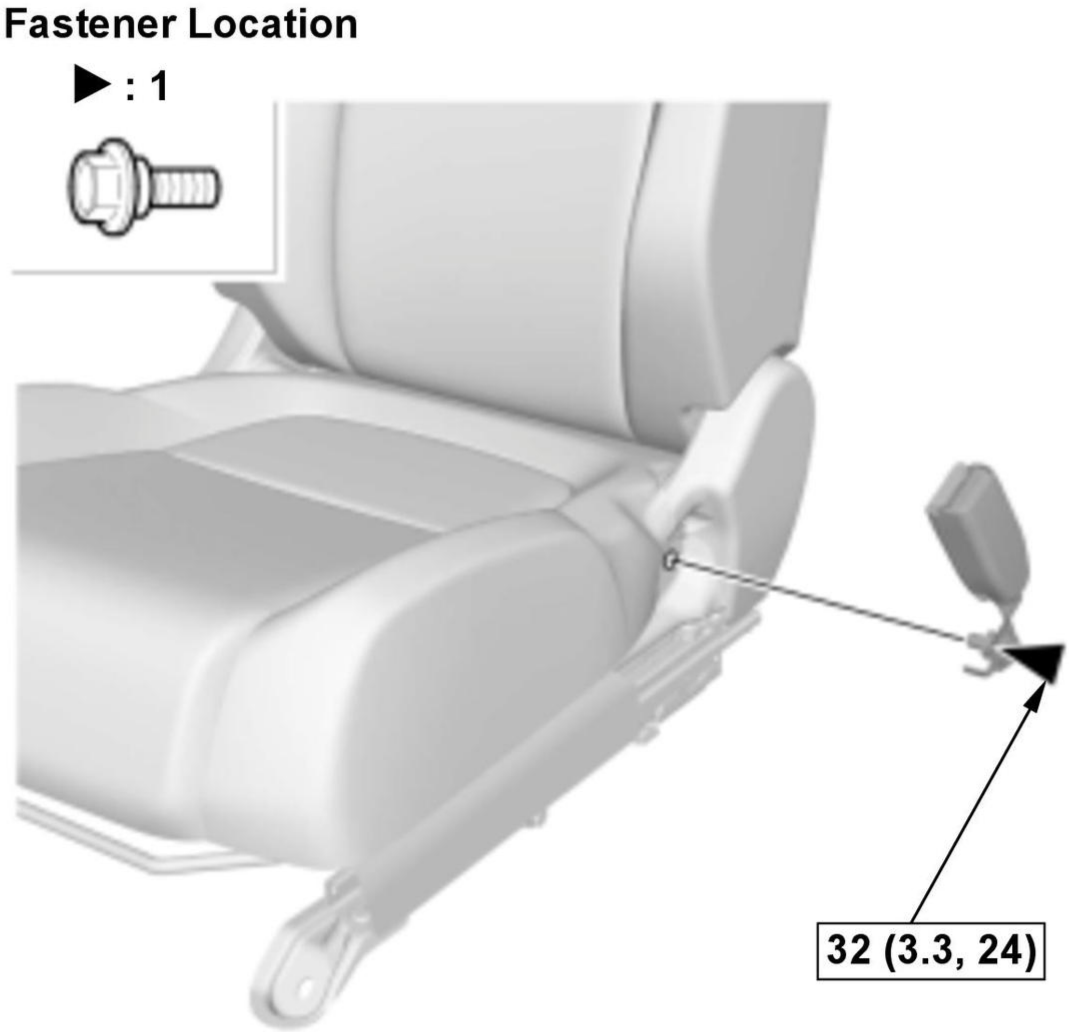
Fastener Location
▶ : 1
32 (3.3, 24)

Passenger's Seat Without Seat Belt Reminder

4. All Removed Parts - Install

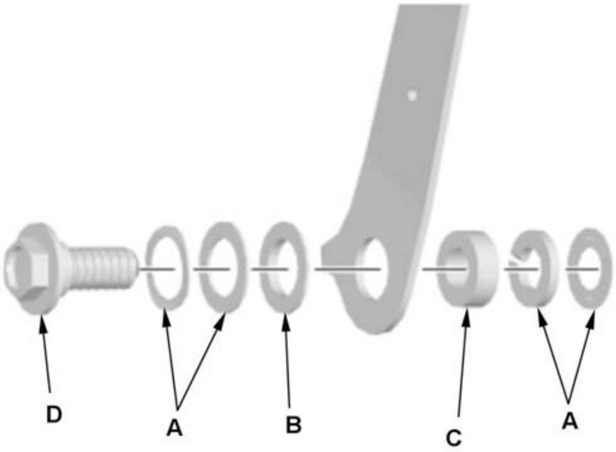 **Power Seat** **Manual Seat**	1. Install the parts in the reverse order of removal. **NOTE:** Assemble the washers (A), the bearing (B) and the collar (C) on the anchor bolt (D) as shown.

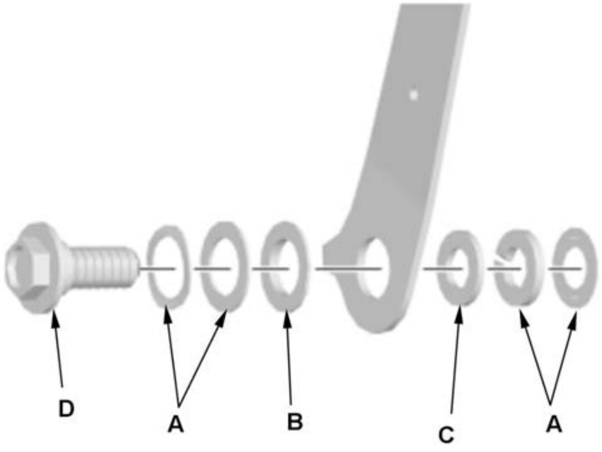 	

FRONT SEAT BELT REMOVAL AND INSTALLATION

Removal and Installation

NOTE:

- **How to read the torque specifications** .
- SRS components are located in this area. Review the **SRS component locations** and the **precautions and procedures** before doing repairs or service.

1. **12 Volt Battery Terminal - Disconnect**

   NOTE: Wait at least 3 minutes before starting work.

2. Front Seat Belt Upper Anchor Bolt - Remove

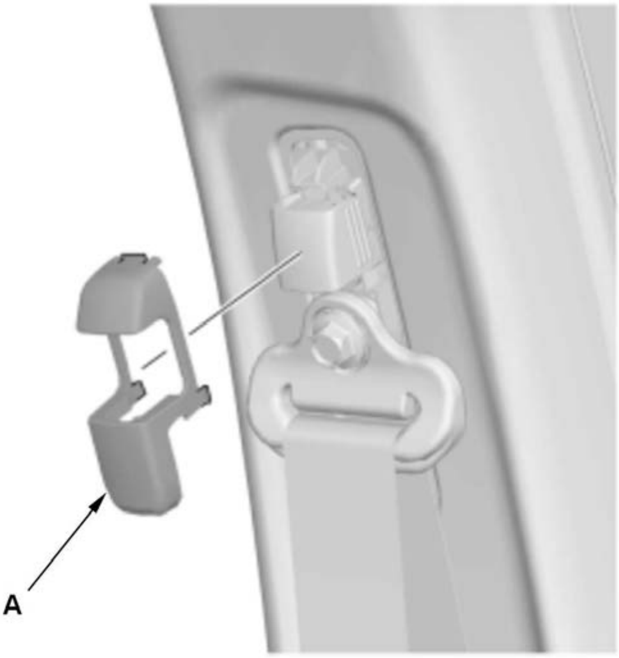 	1. Remove the front seat belt upper anchor bolt cover (A).

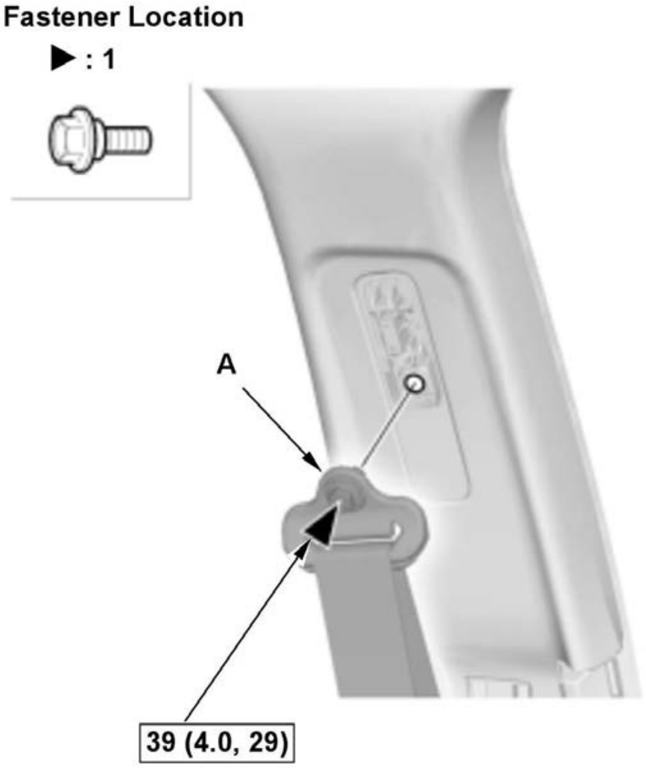 Fastener Location ▶ : 1 A 39 (4.0, 29)	2. Remove the front seat belt upper anchor (A).

3. **B-pillar Lower Trim - Remove**

4. Outer Lap Tensioner Bolt - Remove

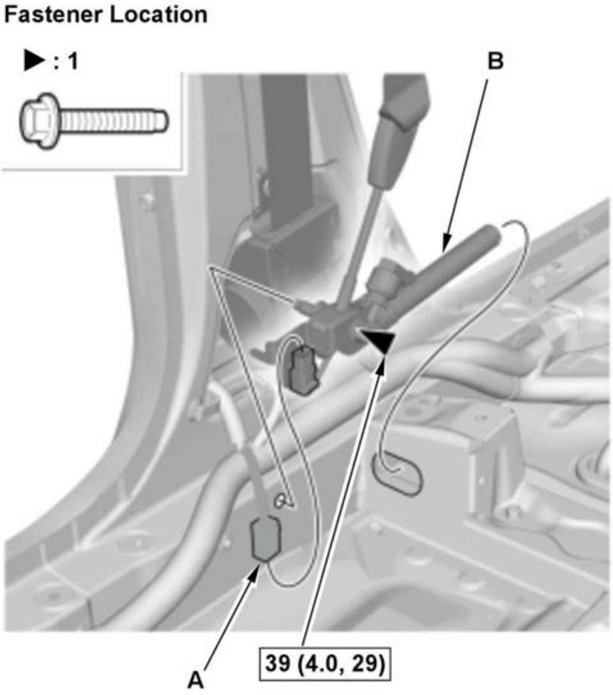 Fastener Location ▶ : 1 B A 39 (4.0, 29)	1. Disconnect the connector (A), and then remove the outer lap pretensioner (B).

5. Front Seat Belt Assembly- Remove

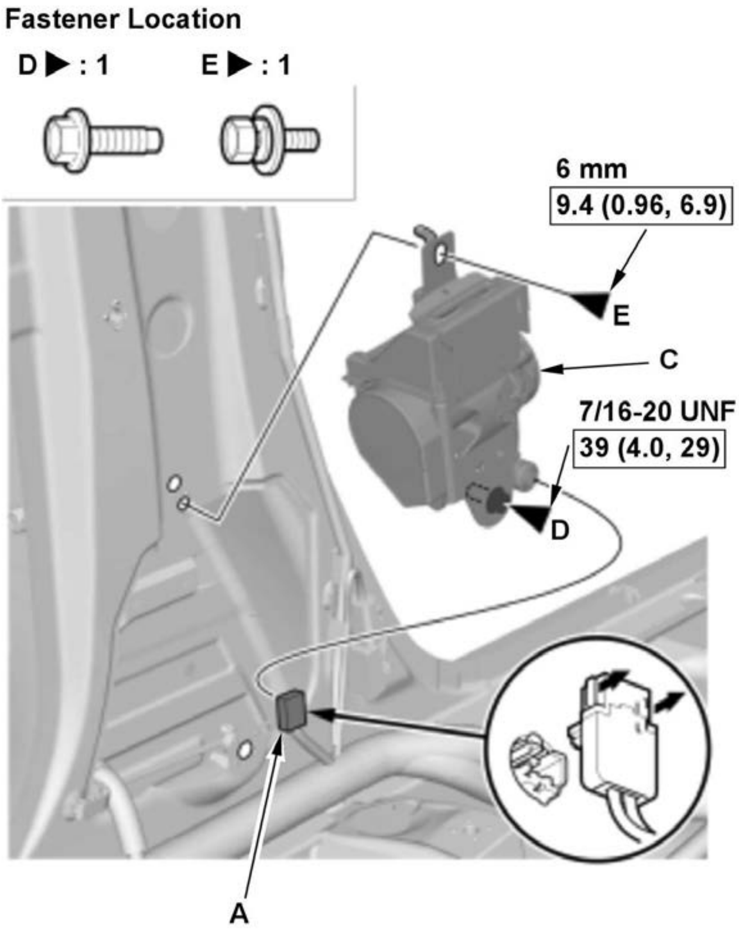
Fastener Location
D ▶ : 1
E ▶ : 1
6 mm
9.4 (0.96, 6.9)
E
C
7/16-20 UNF
39 (4.0, 29)
D
A

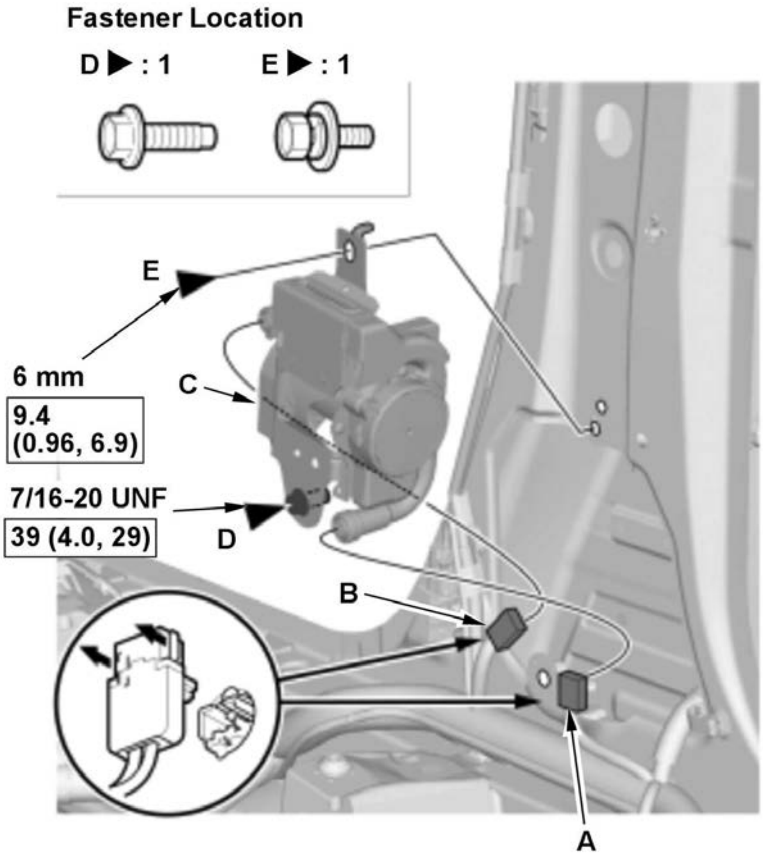
Fastener Location
D ▶ : 1
E ▶ : 1
E
6 mm
9.4
(0.96, 6.9)
C
7/16-20 UNF
39 (4.0, 29)
D
B
A

1. Disconnect the connector (A).

2. For some models: Disconnect the connector (B).

3. Remove the lower anchor bolt, and then remove the front seat belt assembly (C).

6. All Removed Parts - Install

Upper Anchor Bolt Installation

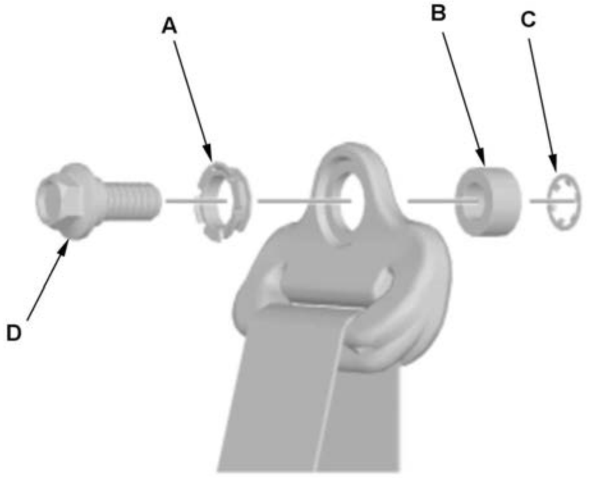

Seat Belt Outer Lap Pretensioner Bolt Installation

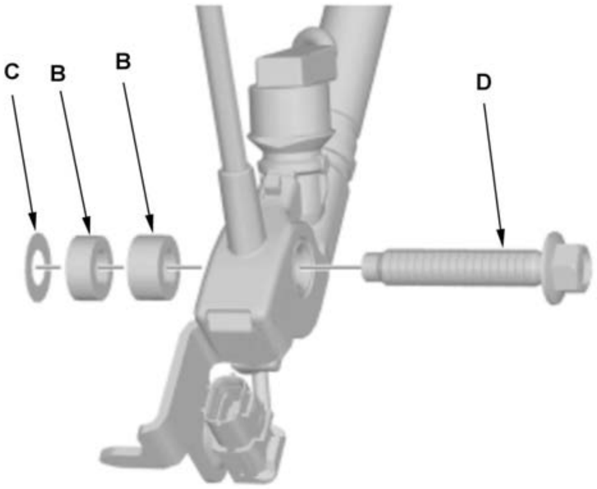

1. Install the parts reverse order of removal.

NOTE:

- Assemble the bushing (A), the collars (B), and the toothed lock washer (C) on the bolt (D) as shown.
- Apply medium strength type liquid thread lock to the upper anchor bolt before reinstallation.

REAR SEAT BELT BUCKLE REMOVAL AND INSTALLATION

Removal and Installation

1

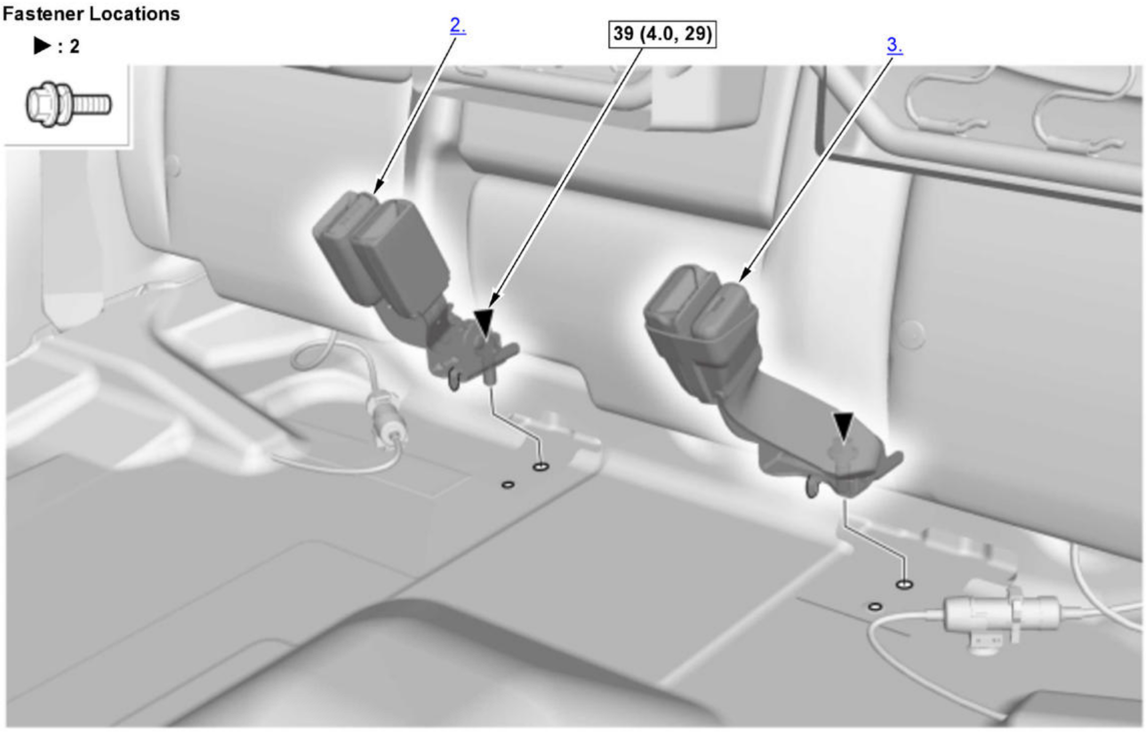

Fig. 1: Rear Seat Belt Buckle Replacement Components With Torque Specifications
Courtesy of HONDA, U.S.A., INC.

▭	Torque: N.m (kgf.m, lbf.ft)

1. Rear Seat Cushion - Lift
2. Right Rear Seat Belt Buckle - Remove
3. Left Rear Seat Belt Buckle - Remove
4. All Removed Parts - Install
    1. Install the parts in the reverse order of removal.

REAR SEAT BELT REMOVAL AND INSTALLATION

Removal and Installation

NOTE:

- How to read the torque specifications .
- SRS components are located in this area. Review the SRS component locations and the precautions and procedures before doing repairs or service.

1. Rear Seat Belt Lower Anchor Bolt - Remove

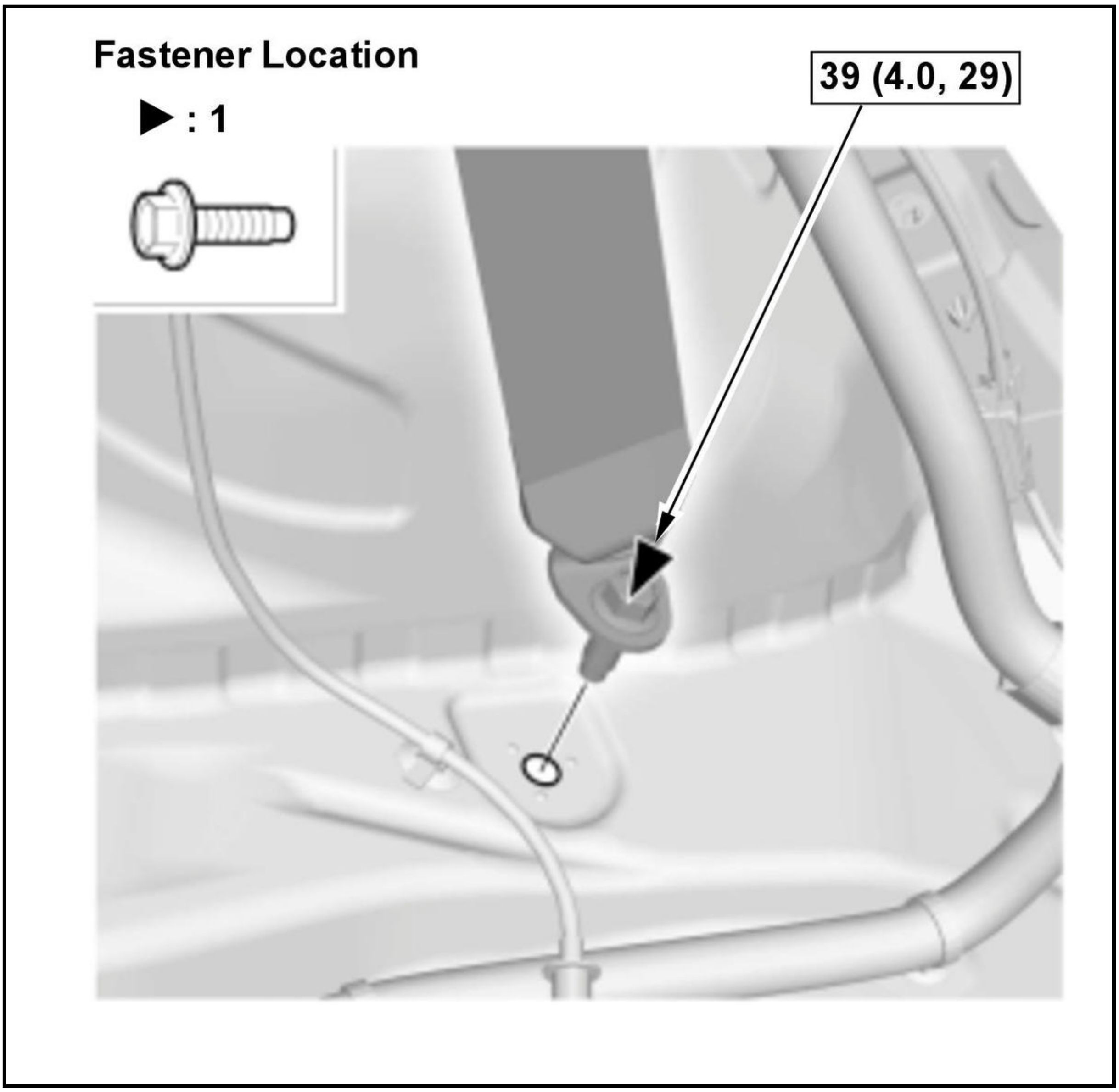
Fastener Location
▶ : 1
39 (4.0, 29)

2. Quarter Pillar Trim - Remove
3. Rear Seat Belt Upper Anchor Bolt - Remove

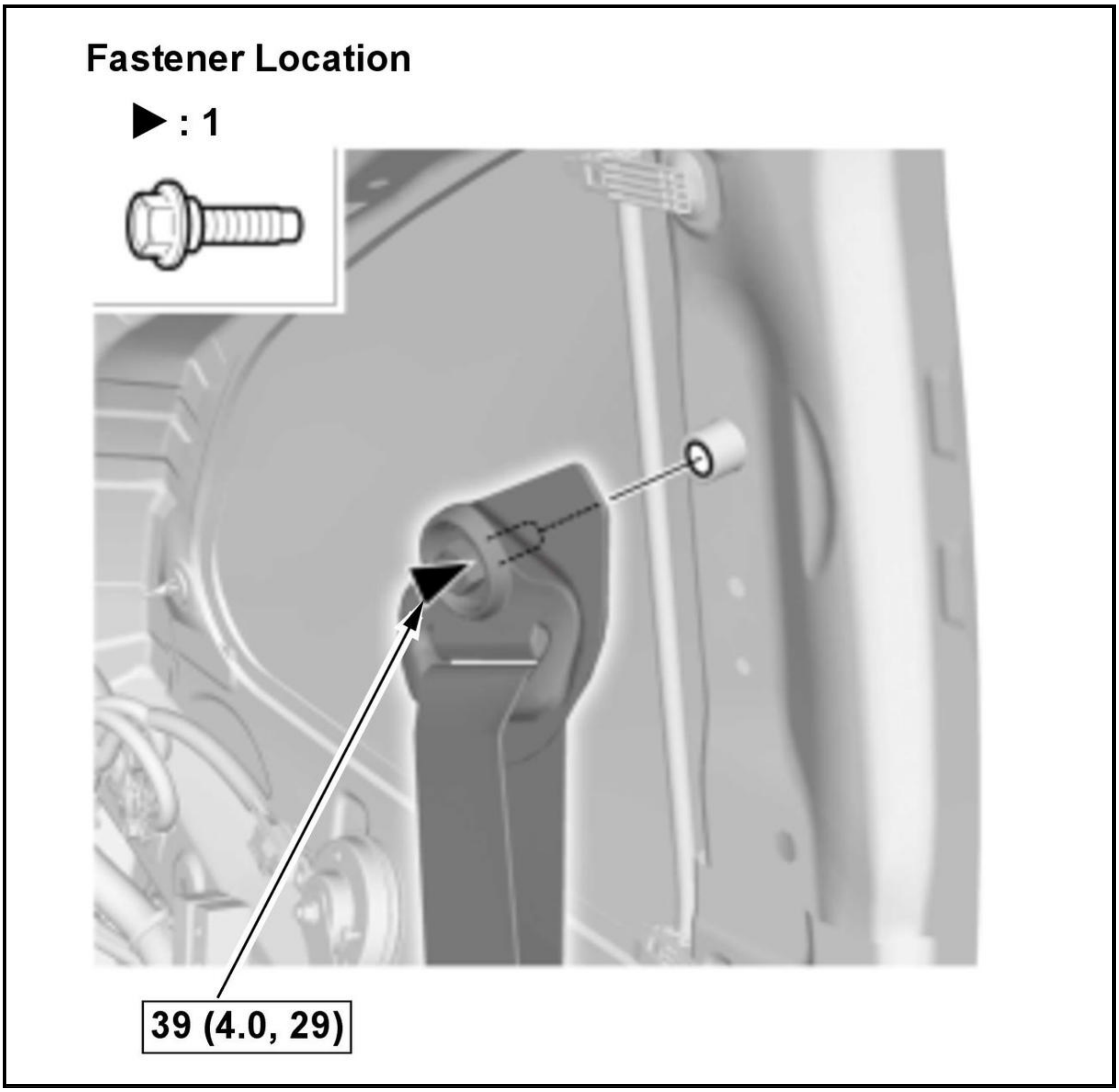
Fastener Location
▶ : 1
39 (4.0, 29)

4. **Rear Side Trim Panel - Remove**
5. Rear Seat Belt Assembly - Remove

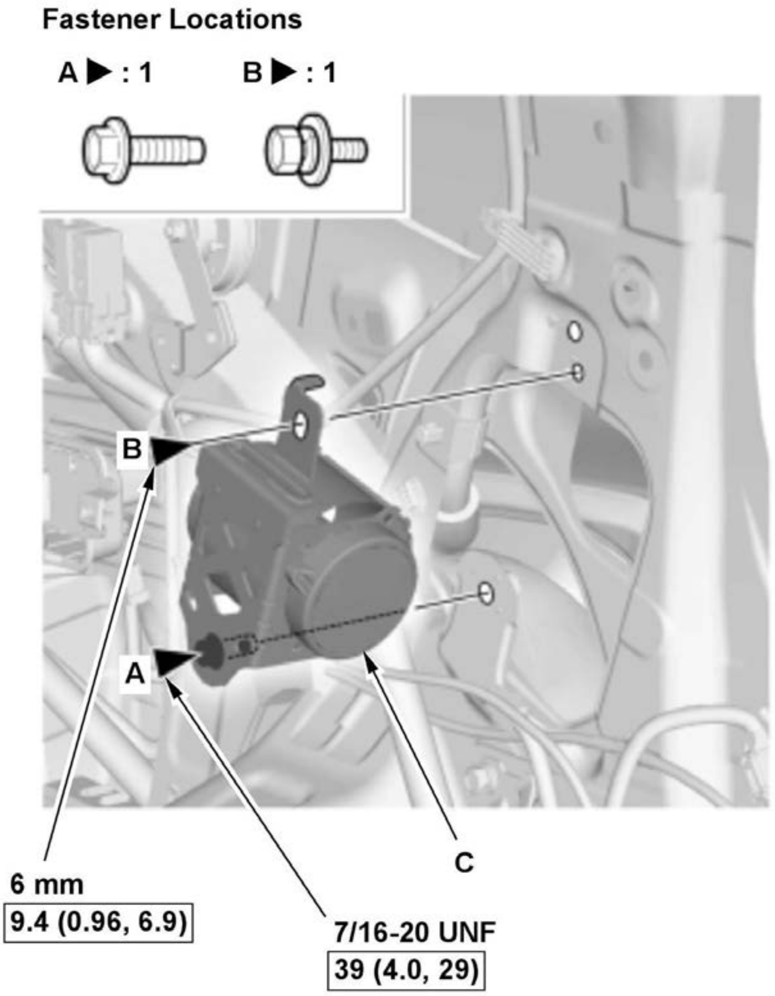 Fastener Locations A ▶ : 1 B ▶ : 1 B A C 6 mm 9.4 (0.96, 6.9) 7/16-20 UNF 39 (4.0, 29)	1. Remove the bolts (A, B). 2. Remove the rear seat belt assembly (C).

6. All Removed Parts - Install

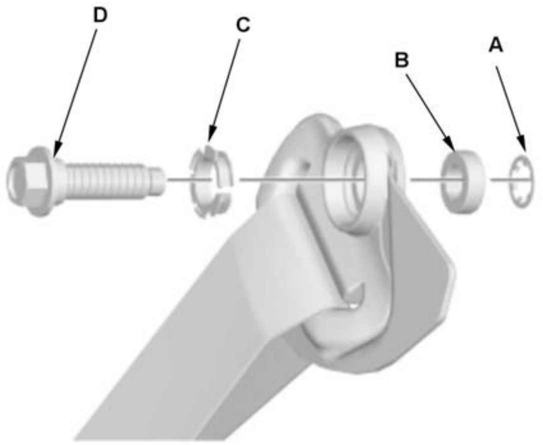	1. Install the parts in the reverse order of removal. **NOTE:** Assemble the toothed lock washer (A), the collar (B), and the bushing (C) on the upper anchor bolt (D) as shown.

REAR SEAT BELT REMOVAL AND INSTALLATION - CENTER

Removal and Installation

NOTE: SRS components are located in this area. Review the **SRS component locations** and the **precautions and procedures** before doing repairs or service.

1

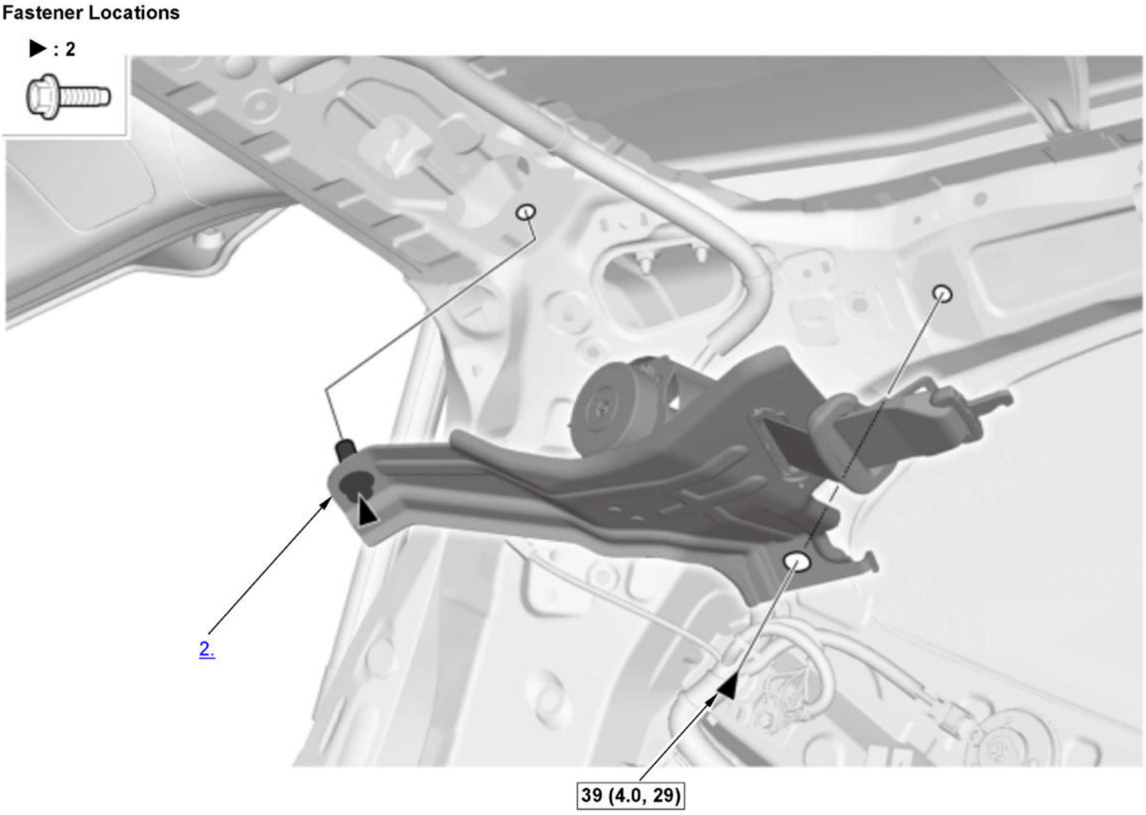

Fig. 2: Rear Seat Belt Center Replacement Components With Torque Specifications
Courtesy of HONDA, U.S.A., INC.

☐	Torque: N.m (kgf.m, lbf.ft)

1. **Headliner - Remove**
2. Rear Center Seat Belt - Remove
3. All Removed Parts - Install

1. Install the parts in the reverse order of removal.

SEAT BELT SHOULDER ANCHOR ADJUSTER REMOVAL AND INSTALLATION

Removal and Installation

1

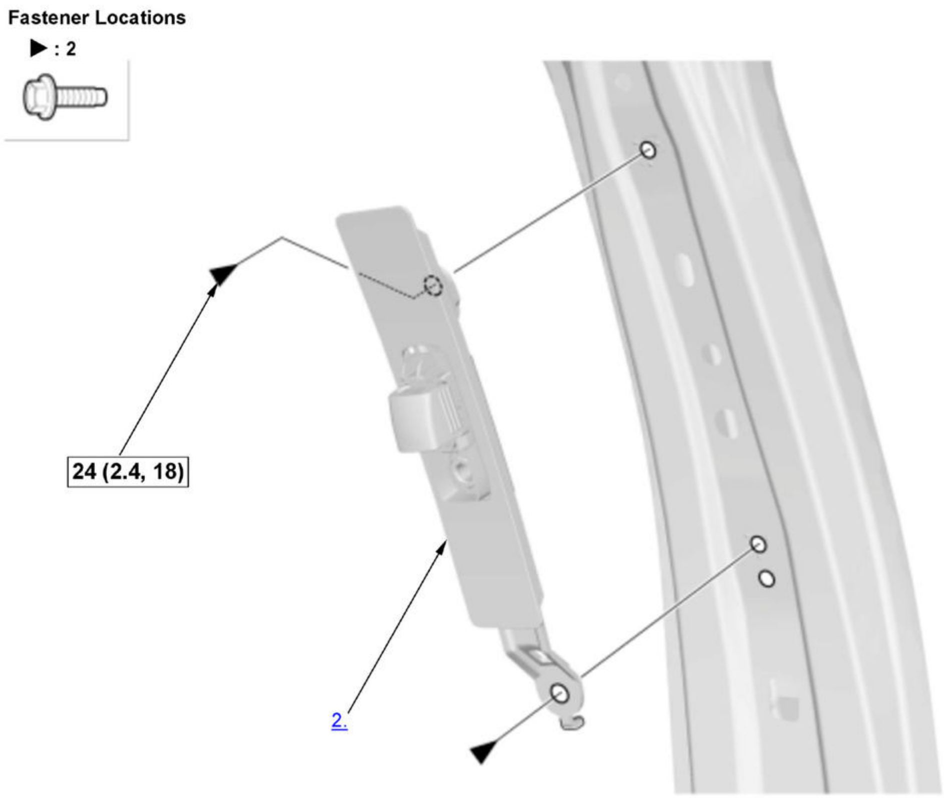

Fig. 3: Seat Belt Shoulder Anchor Adjuster Replacement Components With Torque Specifications
Courtesy of HONDA, U.S.A., INC.

☐	Torque: N.m (kgf.m, lbf.ft)

1. B-pillar Upper Trim - Remove
2. Front Seat Belt Shoulder Anchor Adjuster - Remove
3. All Removed Parts - Install

    1. Install the parts in the reverse order of removal.

REMOVAL AND INSTALLATION

CABLE REEL REMOVAL AND INSTALLATION

Removal

SRS components are located in this area. Review the **SRS component locations** and the **precautions and procedures** before doing repairs or service.

NOTE: Before doing this procedure, set the front wheels in the straight ahead position.

1. **12 Volt Battery Terminal - Disconnect**

   NOTE: Wait at least 3 minutes before starting work.

2. **Steering Wheel - Remove**
3. **Column Cover - Remove**
4. Cable Reel - Remove

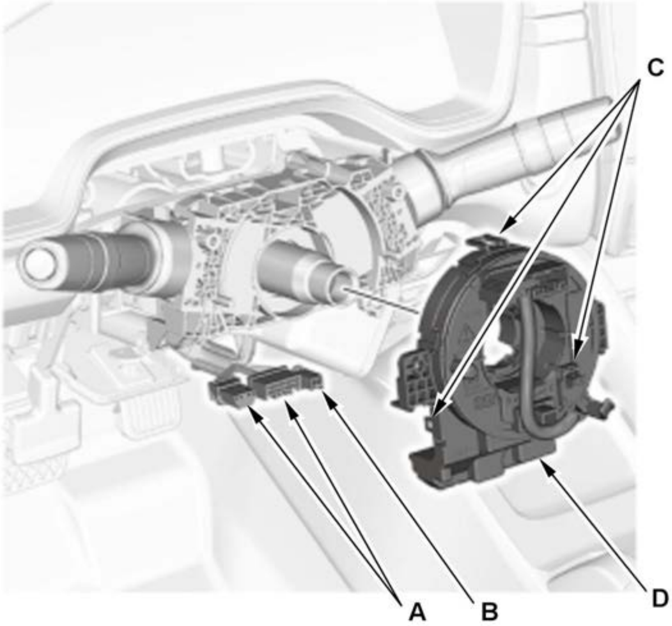	1. Disconnect the connectors (A) from the cable reel. 2. For some models: Disconnect the connector (B) from the cable reel. 3. Release the lock tabs (C), then remove the cable reel (D).

Installation

SRS components are located in this area. Review the **SRS component locations** and the **precautions and procedures** before doing repairs or service.

NOTE:

- Before installing the steering wheel, make sure the front wheels are aligned straight ahead.
- The new cable reel is locked by a yellow tab for center adjustment. When installing a new cable reel there is no need to rotate the cable reel. After installation of the cable reel, remove the tab and discard it.
- If the driver's airbag deployed, the cable reel cannot be reused because of thermal damage.

1. Cable Reel - Install

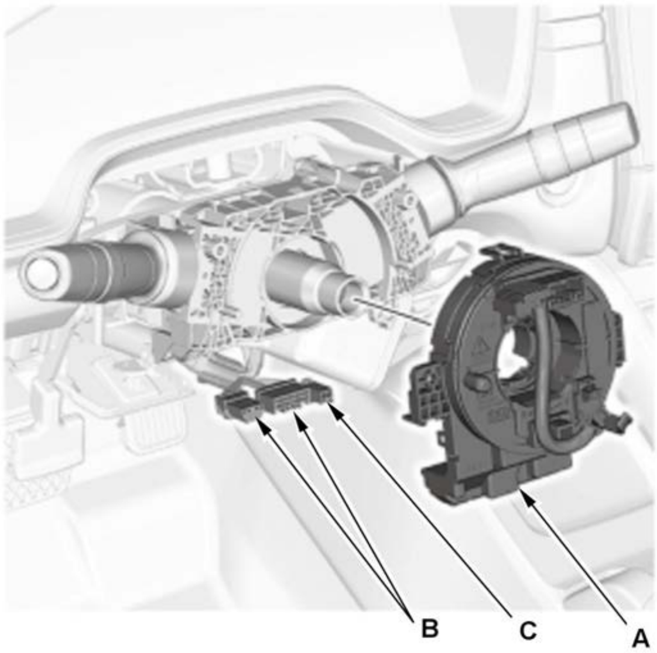	1. Install the cable reel (A). 2. Connect the connectors (B) to the cable reel. 3. For some models: Connect the connector (C) to the cable reel.

2. Column Cover - Install
3. Cable Reel - Align

For some models 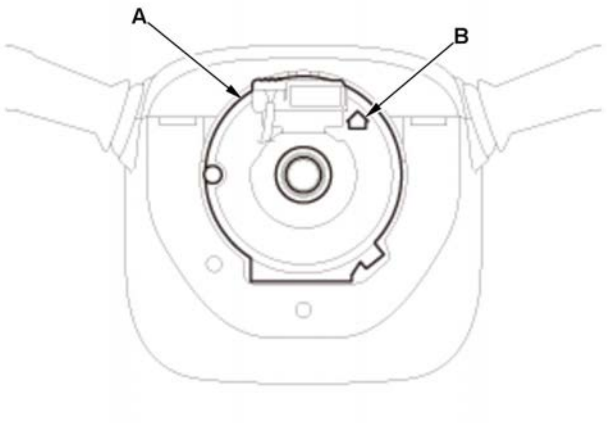 **For some models** 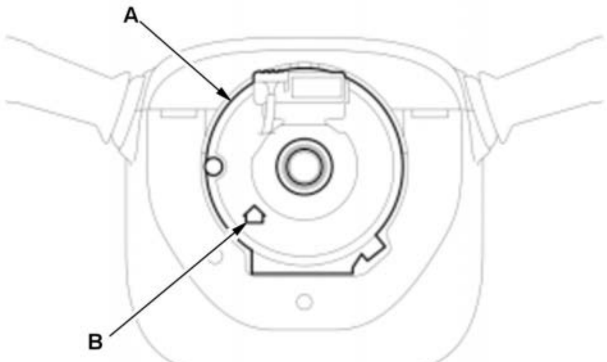	1. Make sure the front wheels are pointing straight ahead. 2. Rotate the cable reel (A) clockwise until it stops. 3. Rotate the cable reel counterclockwise until the arrow mark (B) on the cable reel points straight up. 4. Rotate the cable reel counterclockwise two full turns. The arrow mark on the cable reel should point straight up.

4. Steering Wheel - Install
5. SRS Operation - Confirm

1. Do the 12 volt battery terminal reconnection procedure, turn the vehicle to the ON mode, and check that the SRS indicator comes on for about 6 seconds and then goes off.

DRIVER'S AIRBAG REMOVAL AND INSTALLATION

Removal

SRS components are located in this area. Review the **SRS component locations** and the **precautions and procedures** before doing repairs or service.

NOTE: If replacing the driver's airbag after deployment, **refer to Component Replacement/Inspection After Deployment** for a complete list of other parts that must also be replaced.

1. **12 Volt Battery Terminal - Disconnect**

   NOTE: Wait at least 3 minutes before starting work.

2. Driver's Airbag - Remove

   1. Insert a punch (A) (diameter of 5.5 mm) through the left hole of the steering wheel cover and push the spring (B) to release the front airbag pin (C) while pulling out the airbag. Repeat for the right side.

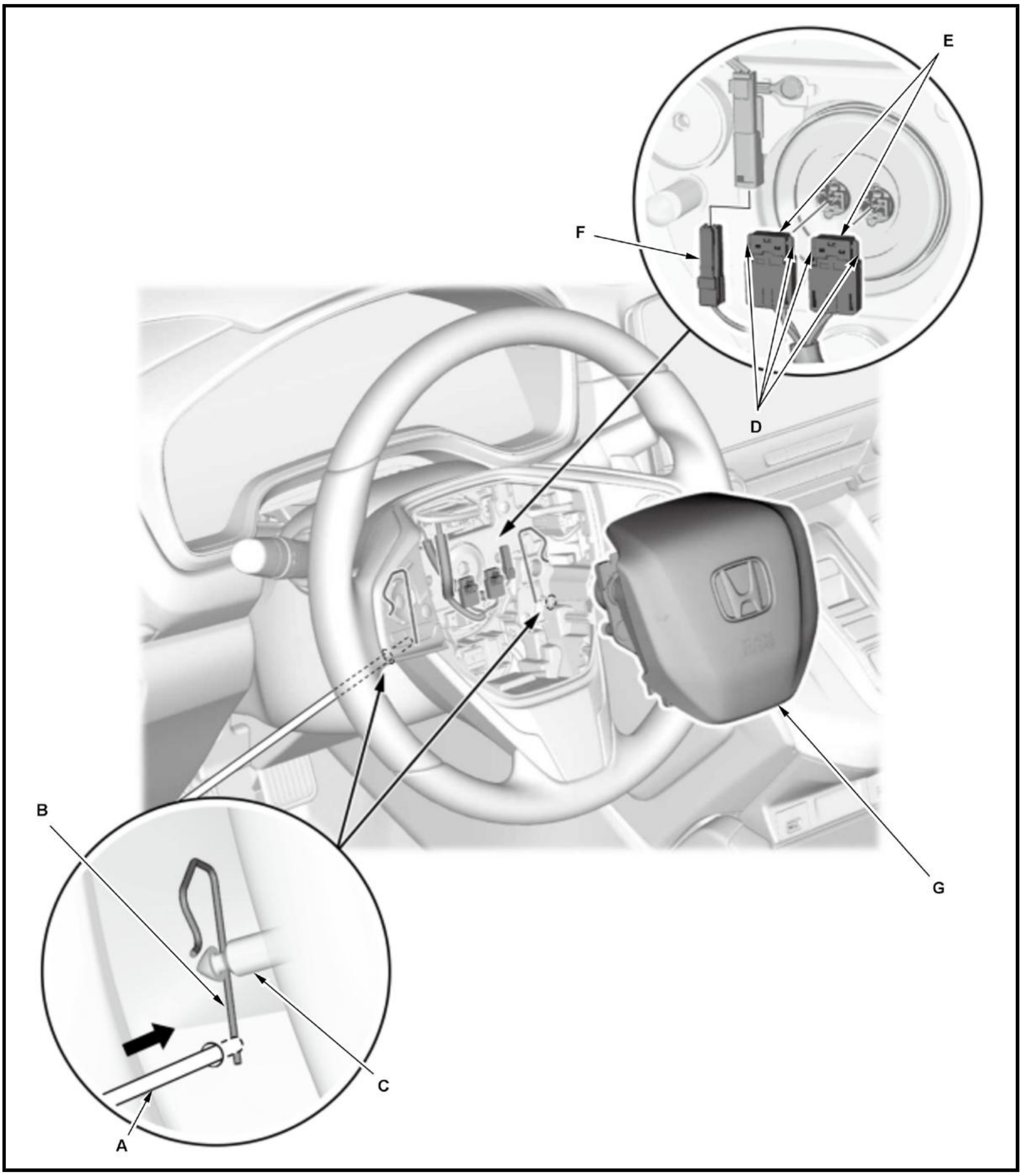

2. Pull up on both locking tabs (D) to disconnect the connector (E).

NOTE: Be careful not to damage the connectors.

3. Disconnect the connector (F).

4. Remove the driver's airbag (G).

3. Spring - Remove (If necessary)

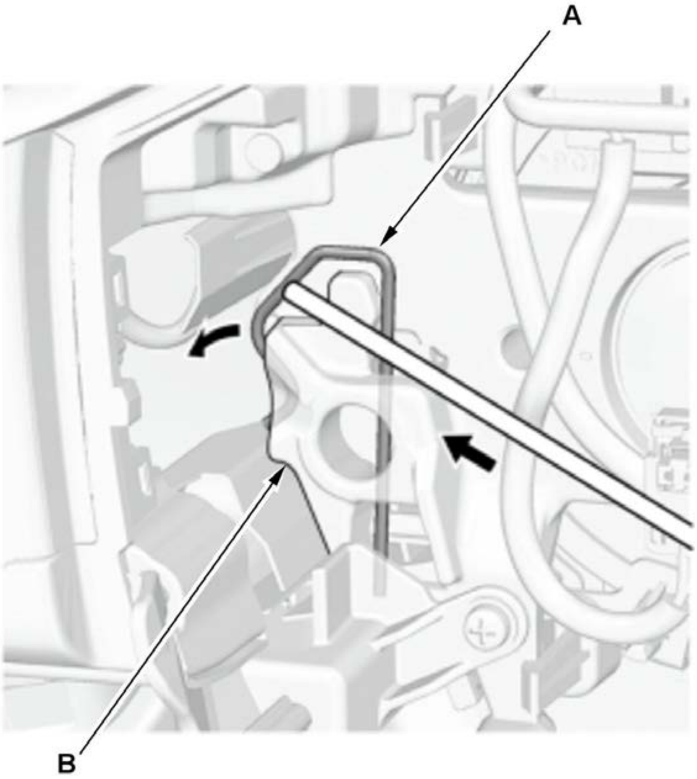	1. Remove the springs (A) from the steering wheel (B). **NOTE:** Be careful not to damage the steering wheel.

Installation

1. Spring - Install (If necessary)

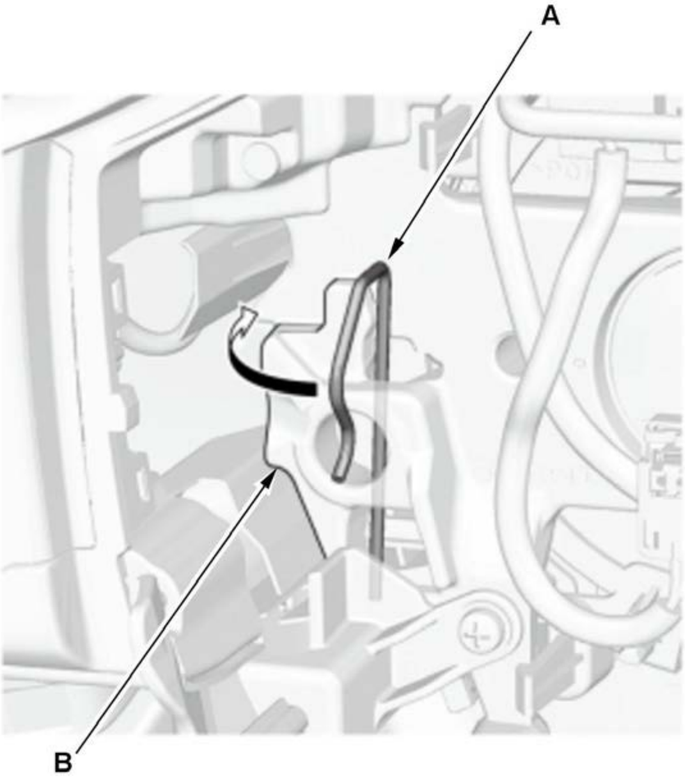	1. Install the springs (A) to the steering wheel (B). **NOTE:** Make sure that the springs are installed properly.

2. Driver's Airbag - Install

   1. Connect the connectors (A).

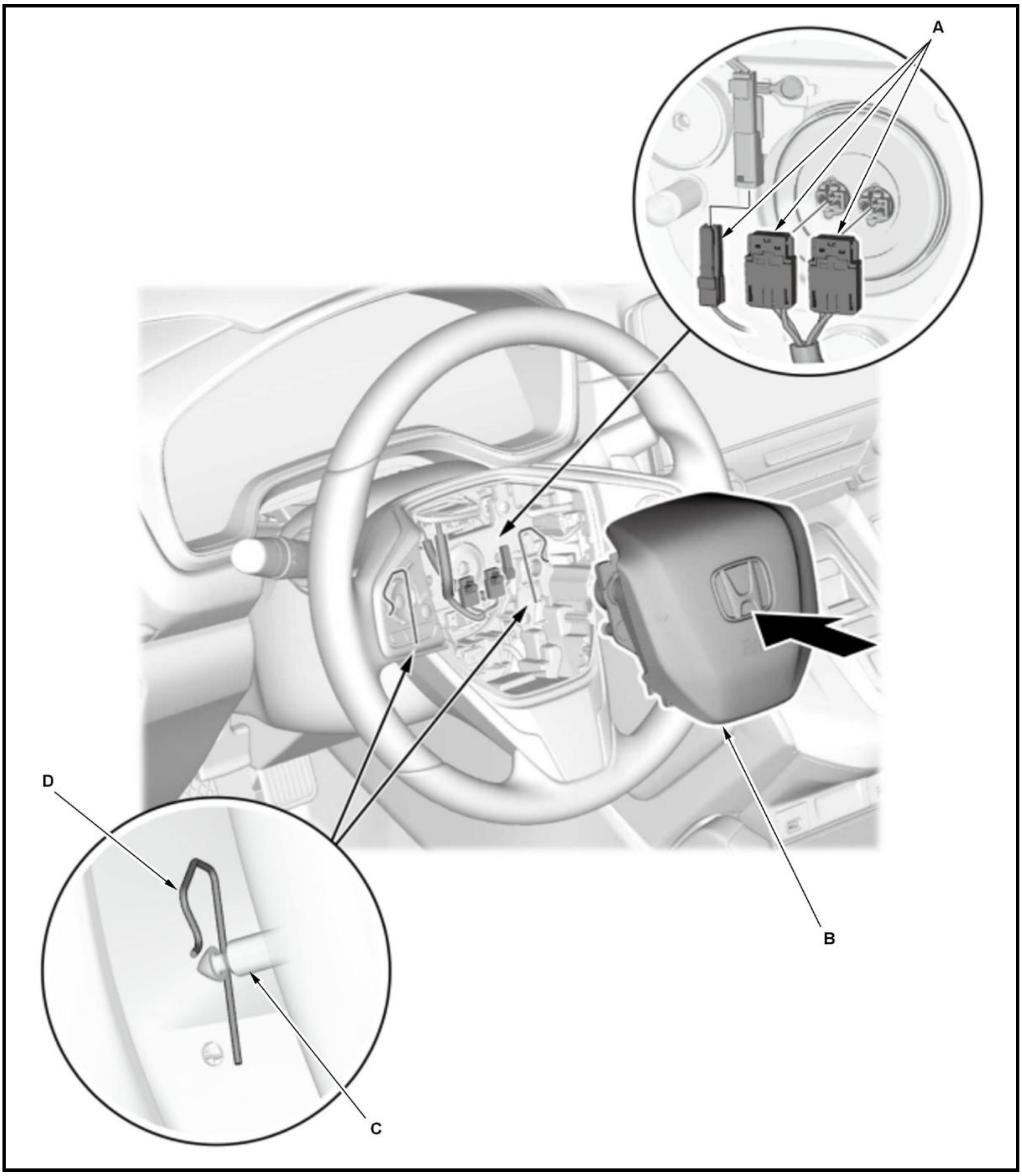

2. Install the driver's airbag (B) by pushing it in until you hear a click.

NOTE: Confirm that the front airbag pins (C) are securely mounted to the springs (D).

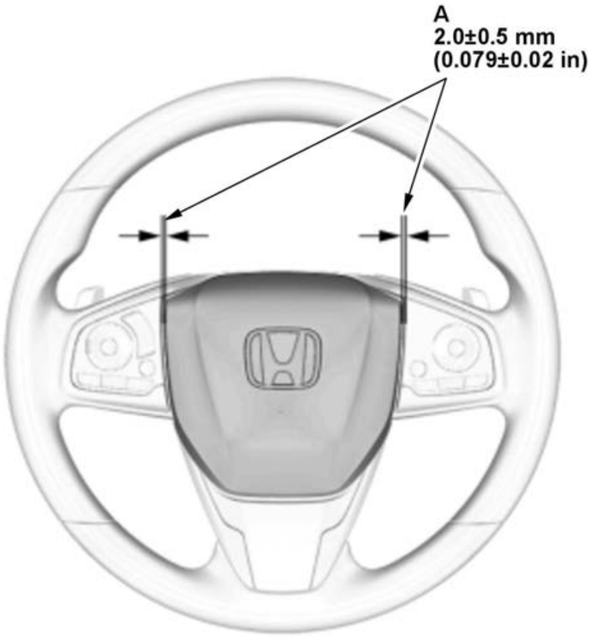	3. Make sure the clearance (A) between the steering wheel and horn pad is the specified value. 4. After connecting the negative cable to the 12 volt battery, make sure the horn works properly.

3. SRS Operation - Confirm

1. Do the 12 volt battery terminal reconnection procedure, turn the vehicle to the ON mode, and check that the SRS indicator comes on for about 6 seconds and then goes off.

DRIVER'S SEAT POSITION SENSOR REMOVAL AND INSTALLATION

Removal and Installation

SRS components are located in this area. Review the **SRS component locations** and the **precautions and procedures** before doing repairs or service.

NOTE:

- **How to read the torque specifications** .
- Do not turn the vehicle to the ON mode, while removing or installing the driver's seat position sensor.

1. **Front Seat - Remove**

   NOTE: Raise the driver's seat all the way up.

2. Driver's Seat Position Sensor - Remove

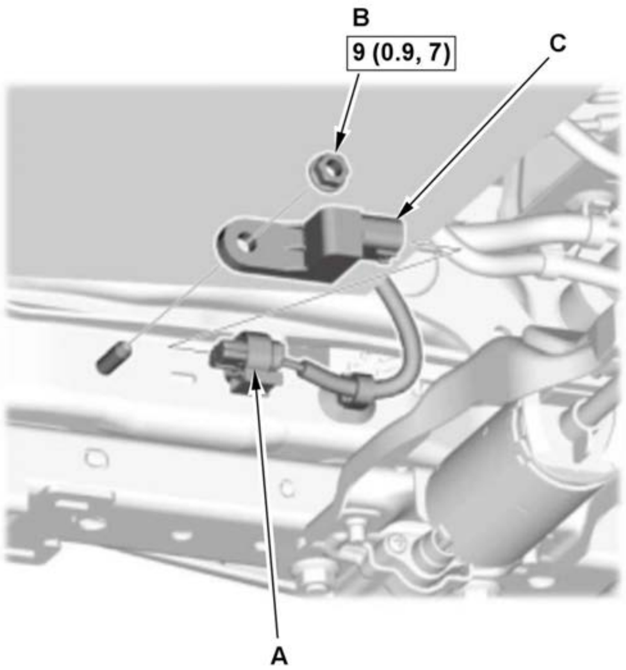	1. Disconnect the connector (A). 2. Remove the nut (B), then remove the driver's seat position sensor (C).

3. All Removed Parts - Install

1. Install the all removed parts in the reverse order of removal.

NOTE:

- Be sure to install the harness so it is not pinched or interferes with other parts.
- After replacing the driver's seat position sensor with a new one, check the driver's seat position sensor operation .

4. Driver's Seat Position Sensor - Operation Check
5. SRS Operation - Confirm

1. Turn the vehicle to the ON mode, and check that the SRS indicator comes on for about 6 seconds and then goes off.

FRONT PASSENGER'S AIRBAG CUTOFF INDICATOR REMOVAL AND INSTALLATION

Removal and Installation

SRS components are located in this area. Review the SRS component locations and the precautions and procedures before doing repairs or service.

1. 12 Volt Battery Terminal - Disconnect

   NOTE: Wait at least 3 minutes before starting work.

2. Climate Control panel / Front Passenger's Airbag Cutoff Indicator - Remove
3. All Removed Parts - Install

1. Install the all removed parts in the reverse order of removal.

4. SRS Operation - Confirm

1. Do the 12 volt battery terminal reconnection procedure, turn the vehicle to the ON mode, and check that the SRS indicator comes on for about 6 seconds and then goes off.

FRONT PASSENGER'S AIRBAG REMOVAL AND INSTALLATION

Removal

SRS components are located in this area. Review the **SRS component locations** and the **precautions and procedures** before doing repairs or service.

NOTE:

- **How to read the torque specifications** .
- If replacing the front passenger's airbag after deployment, **refer to Component Replacement/Inspection After Deployment** for a complete list of other parts that must also be replaced.

Removal Before the Front Passenger's Airbag Deployment

1. **12 Volt Battery Terminal - Disconnect**

   NOTE: Wait at least 3 minutes before starting work.

2. **Blower Unit - Remove**
3. Front Passenger's Airbag - Remove

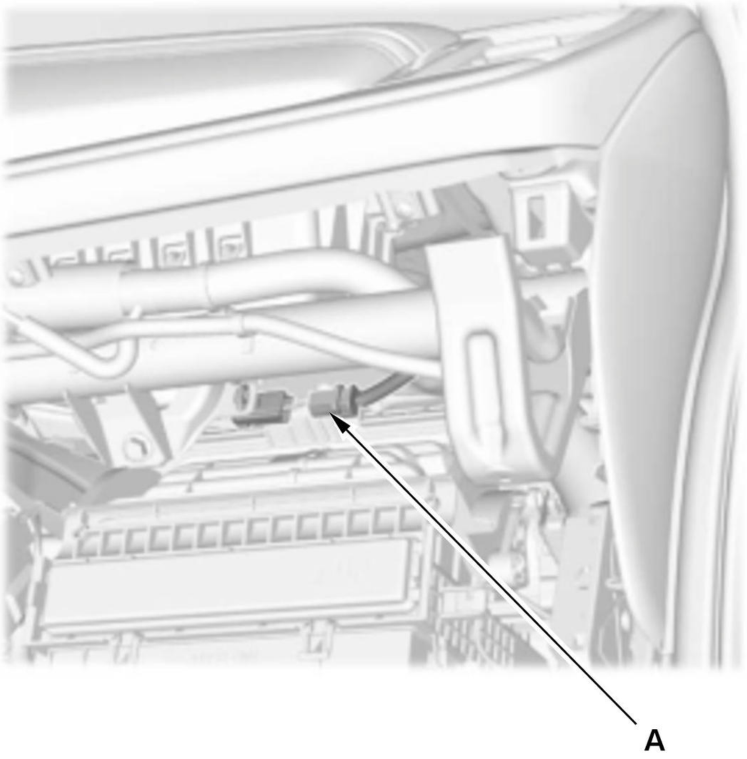	1. Disconnect the connector (A).

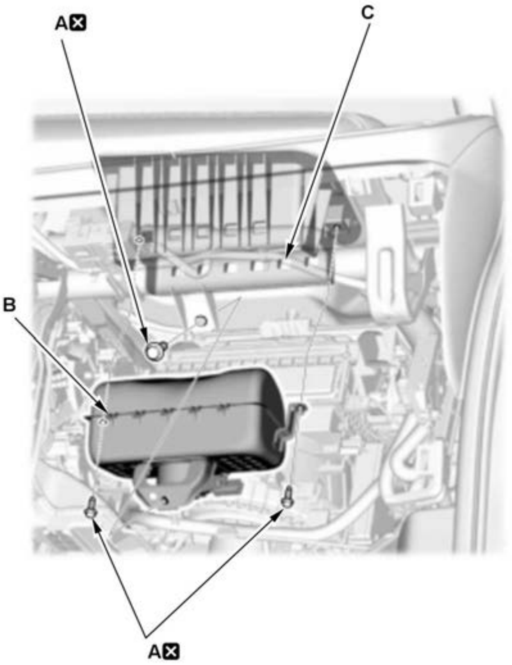	2. Remove the mounting bolts (A). 3. Release the hooks (B) from the front passenger's airbag housing holes (C) of the dashboard. **NOTE:** • When prying with a flat-tip screwdriver, wrap it with protective tape to prevent damage. • Take care not to damage the front passenger's airbag housing holes of the dashboard. • Take care not to damage the front passenger's airbag. 4. Lower the front passenger's airbag and release the hooks of the engine room side, then remove the airbag from the dashboard.

Removal After the Front Passenger's Airbag Deployment

1. 12 Volt Battery Terminal - Disconnect

   NOTE: Wait at least 3 minutes before starting work.

2. Glove Box - Remove
3. Front Passenger's Airbag Inflator Connector - Disconnect

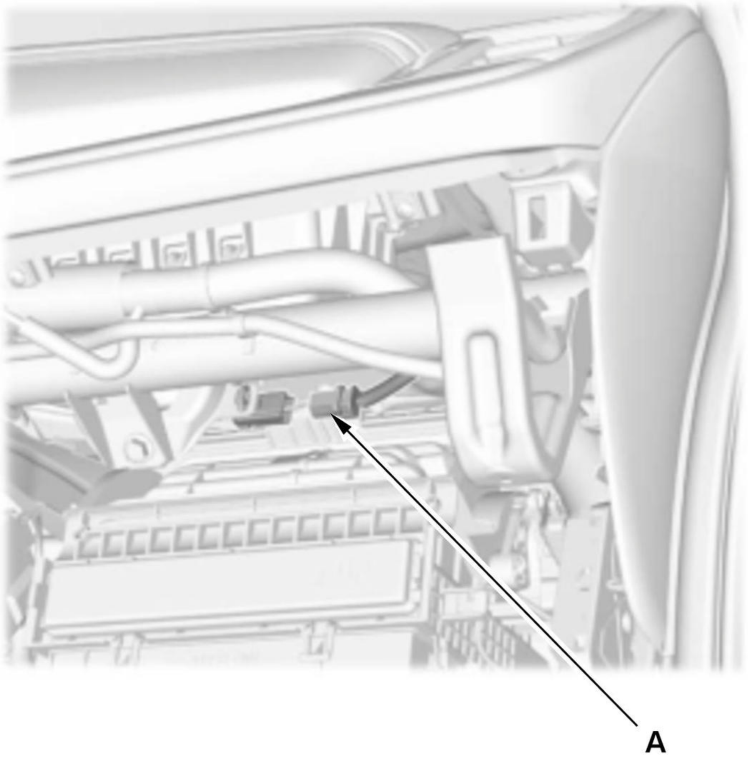	1. Disconnect the connector (A).

4. **Front Passenger's Airbag/Dashboard - Remove**

Installation

SRS components are located in this area. Review the **SRS component locations** and the **precautions and procedures** before doing repairs or service.

NOTE: **How to read the torque specifications** .

Installation Before the Front Passenger's Airbag Deployment

1. Front Passenger's Airbag - Install

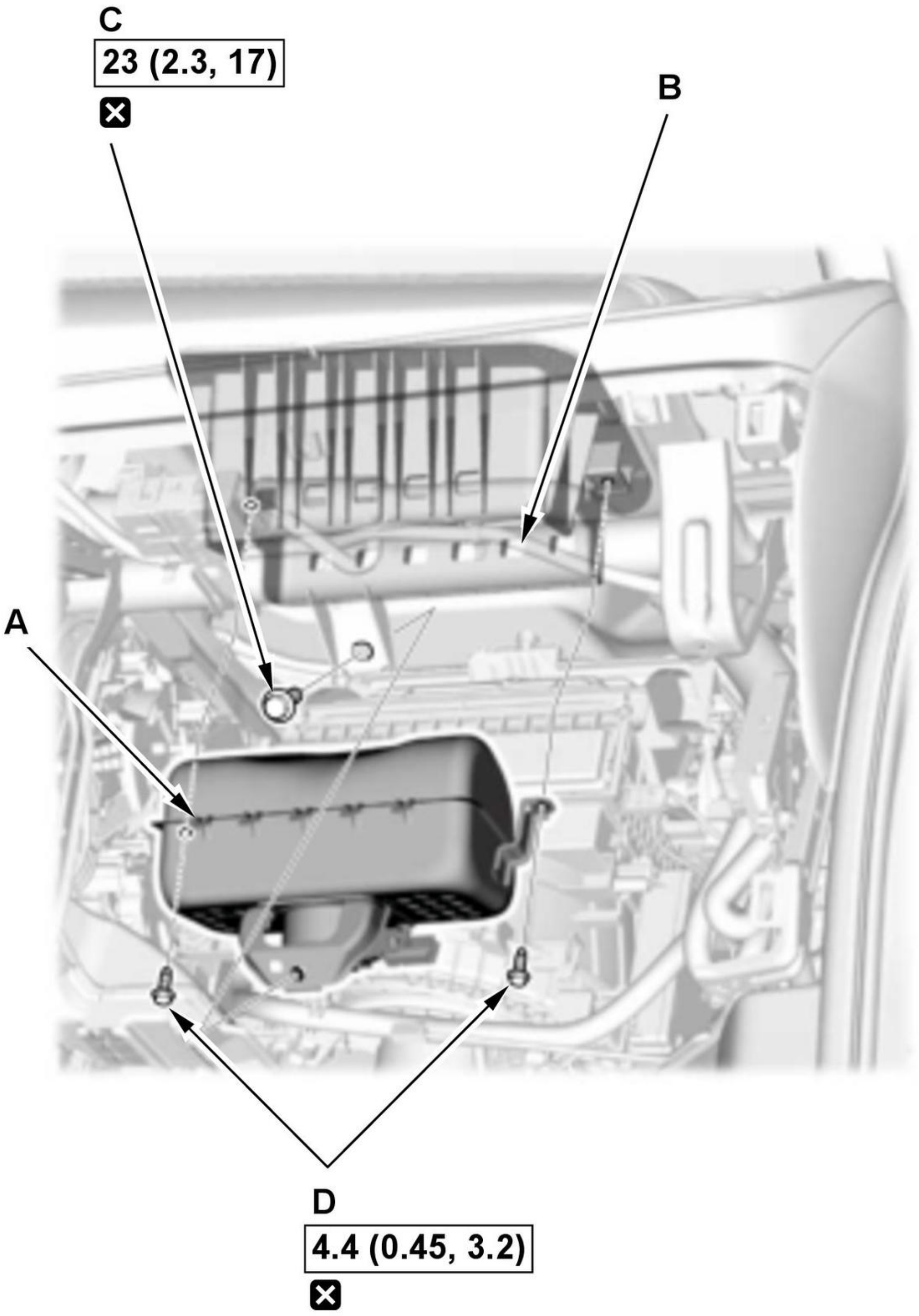

Fig. 1: Front Passenger's Airbag Components With Torque Specifications
Courtesy of HONDA, U.S.A., INC.

1. Insert the hooks (A) into the front passenger's airbag housing holes (B).

NOTE:

- Make sure there are no objects between the airbag and the dashboard.
- Make sure the airbag is fully seated, and make sure the dashboard is not deformed or damaged after the airbag is in place.
- Make sure the hooks are set properly.

2. Tighten the new mounting bolts (C, D).

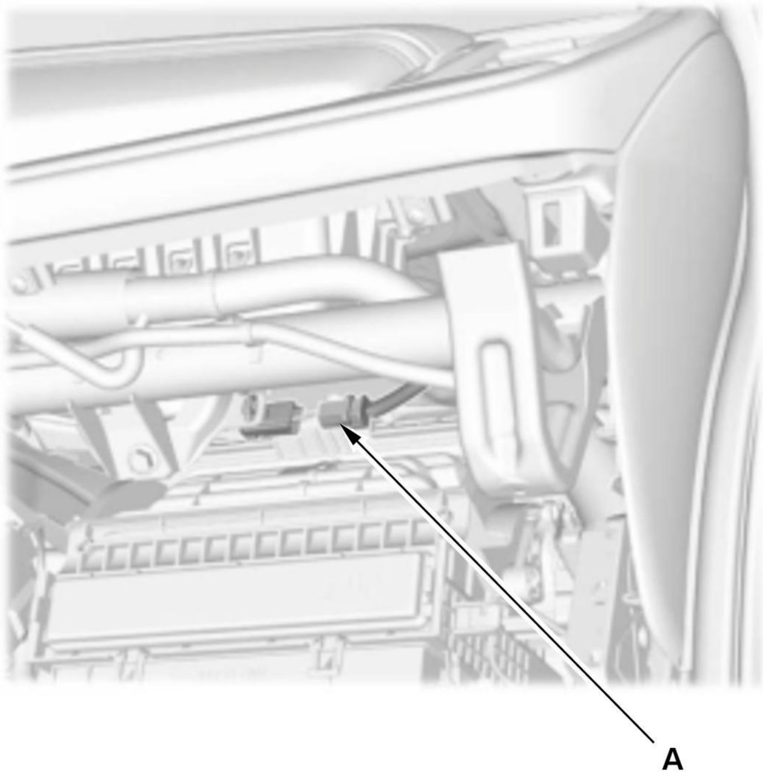	3. Connect the connector (A).

2. SRS Operation - Confirm

1. Do the 12 volt battery terminal reconnection procedure, turn the vehicle to the ON mode, and check that the SRS indicator comes on for about 6 seconds and then goes off.

3. Blower Unit - Install

Installation After the Front Passenger's Airbag Deployment

1. Front Passenger's Airbag - Install

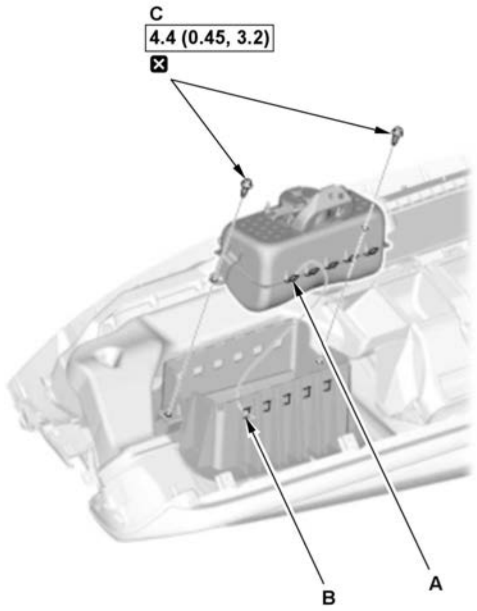	1. Insert the hooks (A) of the front passenger's airbag into the housing holes (B). **NOTE:** • Make sure there are no objects between the airbag and the dashboard. • Make sure the airbag is fully seated, and make sure the dashboard is not deformed or damaged after the airbag is in place. • Make sure the hooks are set properly. 2. Tighten the new bolts (C).

2. **Front Passenger's Airbag/Dashboard - Install**
3. Front Passenger's Airbag Inflator Connector - Connect

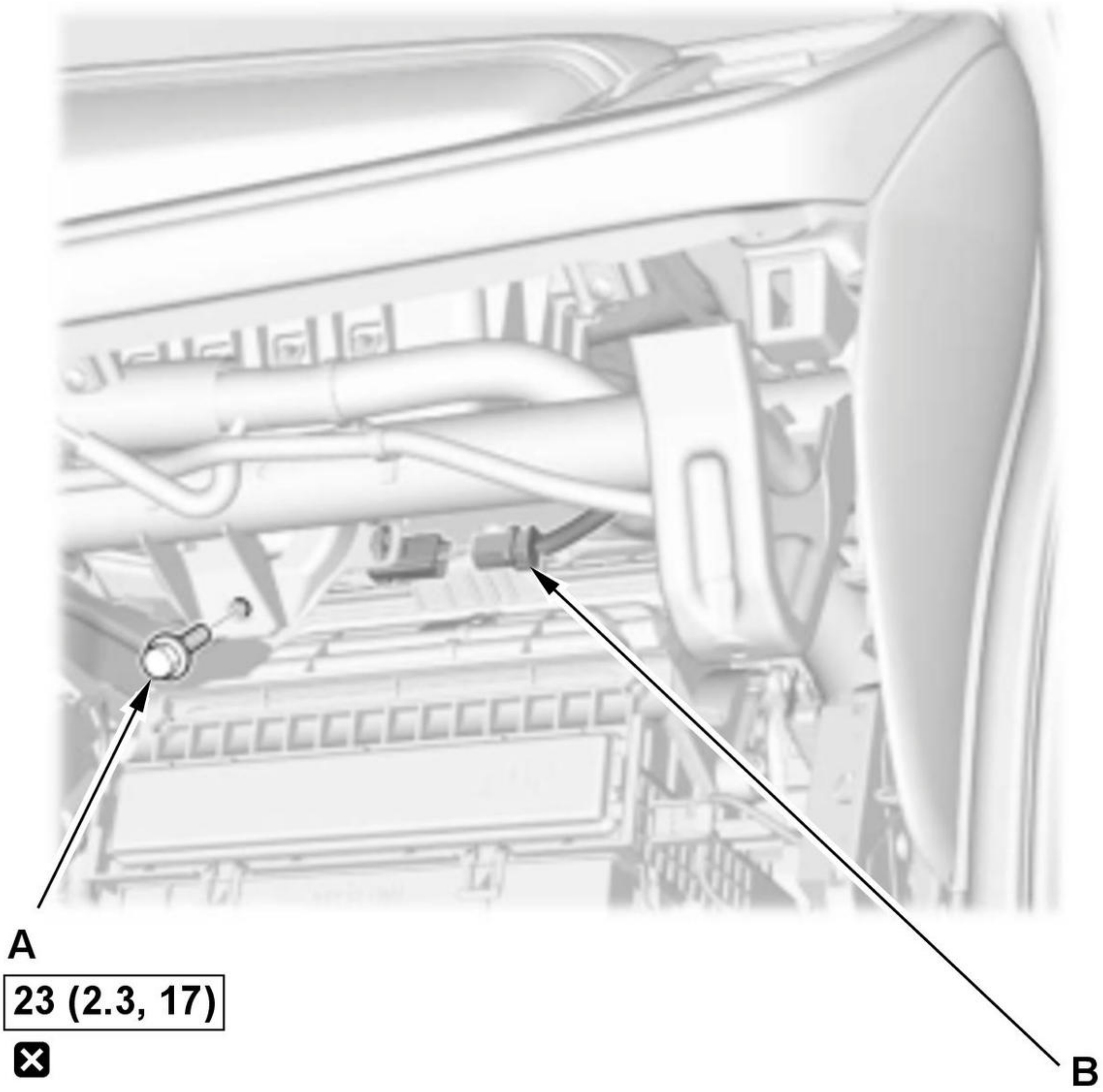

Fig. 2: Front Passenger's Airbag Inflator With Torque Specifications
Courtesy of HONDA, U.S.A., INC.

1. Tighten the new mounting bolt (A).

2. Connect the connector (B).

4. SRS Operation - Confirm

1. Do the 12 volt battery terminal reconnection procedure, turn the vehicle to the ON mode, and check that the SRS indicator comes on for about 6 seconds and then goes off.

5. **Glove Box - Install**

FRONT PASSENGER'S WEIGHT SENSOR REMOVAL AND INSTALLATION

Removal

SRS components are located in this area. Review the **SRS component locations** and the **precautions and procedures** before doing repairs or service.

NOTE:

- **Removal of the front passenger's weight sensors must be done according to Precautions and Procedures** .
- Manual seat: The front passenger's weight sensor is part of the seat frame and must be replaced as an assembly.
- Power seat: The front passenger's weight sensor is part of the seat rail and must be replaced as an assembly.

Manual Seat

1. **12 Volt Battery Terminal - Disconnect**

   NOTE: Wait at least 3 minutes before starting work.

2. **Front Seat Frame (Passenger's side) - Remove**
3. **Front Passenger's Seat Frame/Front Passenger's Weight Sensors - Remove**

Power Seat

1. **12 Volt Battery Terminal - Disconnect**

   NOTE: Wait at least 3 minutes before starting work.

2. **Front Seat Frame (Passenger's side) - Remove**
3. **Front Passenger's Seat Rail/Front Passenger's Weight Sensors - Remove**

Installation

SRS components are located in this area. Review the **SRS component locations** and the **precautions and procedures** before doing repairs or service.

NOTE:

- Be sure to install the harness wires so they are not pinched or interfering with other parts.
- Manual seat: The front passenger's weight sensor is part of the seat frame and must be replaced as an assembly.
- Power Seat: The front passenger's weight sensor is part of the seat rail and must be replaced as an assembly.

Manual Seat

1. **Front Passenger's Seat Frame/Front Passenger's Weight Sensors - Install**
2. **Front Seat Frame (Passenger's side) - Install**
3. **12 Volt Battery Terminal - Connect**
4. Seat Operation - Confirm

   1. Move the front seat and the seat-back through their full ranges of movement, making sure the harness is not pinched or interfering with other parts.

5. **Front Passenger's Weight Sensor - Initialize**
6. **Front Passenger's Weight Sensor - Operation Check**
7. SRS Operation - Confirm

   1. Turn the vehicle to the ON mode, and check that the SRS indicator comes on for about 6 seconds and then goes off.

Power Seat

1. **Front Passenger's Seat Rail/Front Passenger's Weight Sensors - Install**
2. **Front Seat Frame (Passenger's side) - Install**
3. **12 Volt Battery Terminal - Connect**
4. Seat Operation - Confirm

1. Move the front seat and the seat-back through their full ranges of movement, making sure the harness is not pinched or interfering with other parts.

5. **Front Passenger's Weight Sensor - Initialize**
6. **Front Passenger's Weight Sensor - Operation Check**
7. SRS Operation - Confirm

1. Turn the vehicle to the ON mode, and check that the SRS indicator comes on for about 6 seconds and then goes off.

IMPACT SENSOR REMOVAL AND INSTALLATION

Removal and Installation

SRS components are located in this area. Review the **SRS component locations** and the **precautions and procedures** before doing repairs or service.

NOTE: **How to read the torque specifications** .

Front Impact Sensor

1. **12 Volt Battery Terminal - Disconnect**

   NOTE: Wait at least 3 minutes before starting work.

2. **Front Bumper - Remove**
3. Front Impact Sensor - Remove

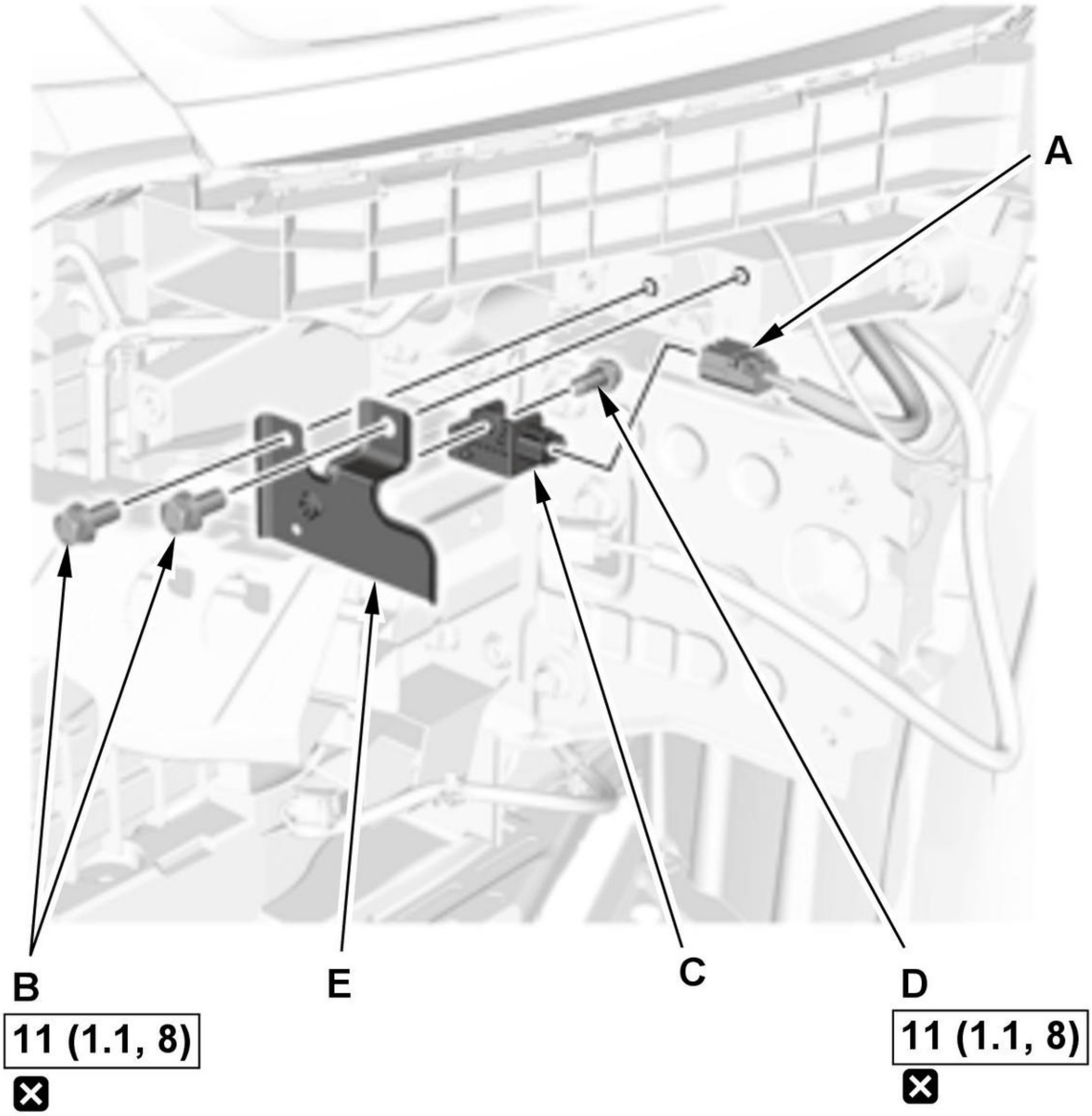

Fig. 3: Front Impact Sensor Components With Torque Specifications
Courtesy of HONDA, U.S.A., INC.

1. Disconnect the connector (A).

2. Remove the bolts (B), then remove the front impact sensor (C).

3. Remove the bolt (D), then remove the bracket (E).

4. All Removed Parts - Install

1. Install the parts in the reverse order of removal.

NOTE:

- During installation, install the new bolt to the specified torque.
- Before installing the front inner fender, make sure the SRS indicator works normally.

5. SRS Operation - Confirm

1. Do the 12 volt battery terminal reconnection procedure, turn the vehicle to the ON mode, and check that the SRS indicator comes on for about 6 seconds and then goes off.

Side Impact Sensor (First)

1. 12 Volt Battery Terminal - Disconnect

   NOTE: Wait at least 3 minutes before starting work.

2. B-pillar Lower Trim Cover - Remove
3. Side Impact Sensor (First) - Remove

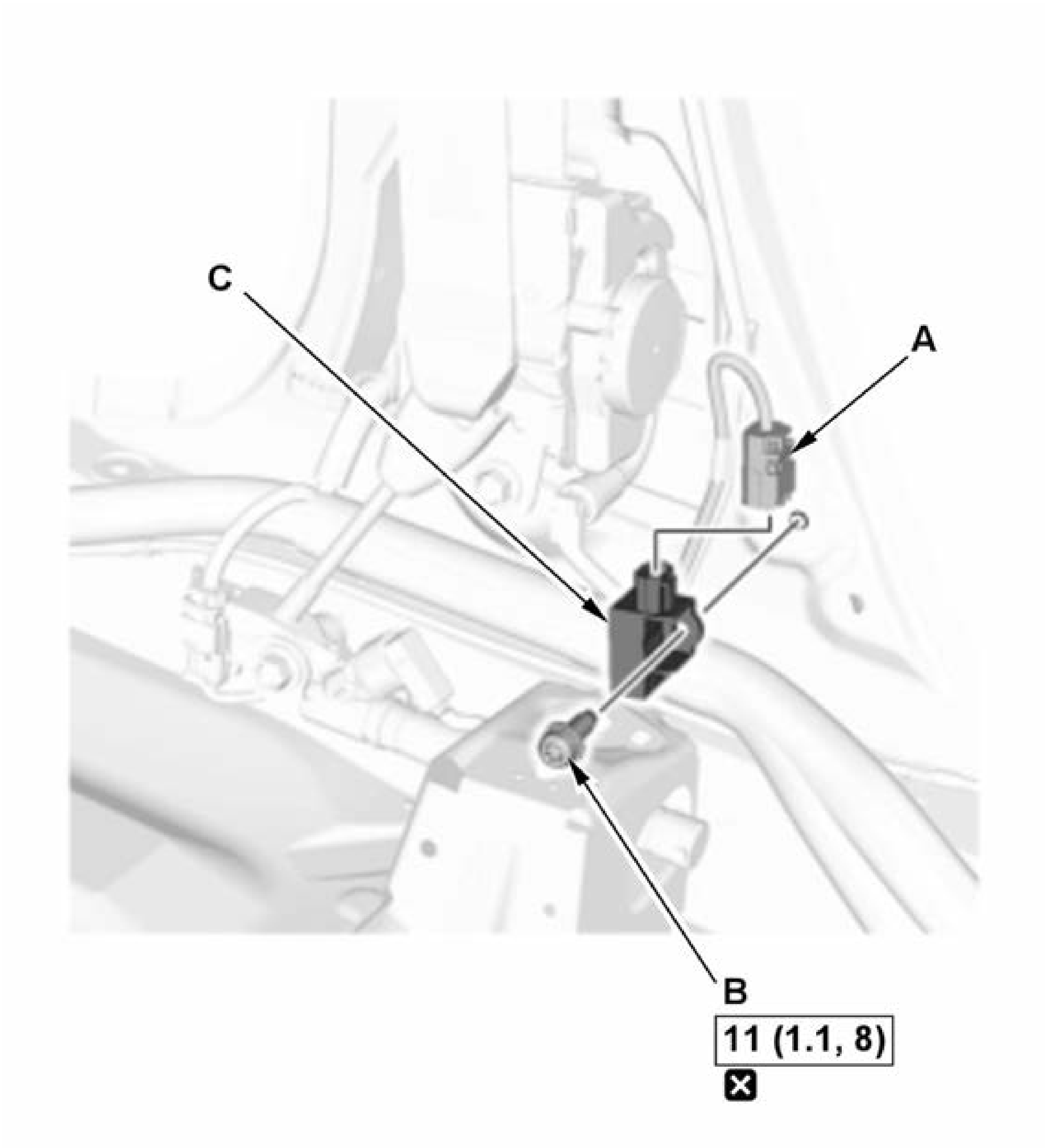

Fig. 4: Side Impact Sensor (First) Components With Torque Specifications
Courtesy of HONDA, U.S.A., INC.

1. Disconnect the connector (A).

2. Remove the bolt (B), then remove the side impact sensor (first) (C).

4. All Removed Parts - Install

1. Install the parts in the reverse order of removal.

NOTE:

- During installation, install the new bolt to the specified torque.
- Before installing the B-pillar lower trim, make sure the SRS indicator works normally.

5. SRS Operation - Confirm

1. Do the 12 volt battery terminal reconnection procedure, turn the vehicle to the ON mode, and check that the SRS indicator comes on for about 6 seconds and then goes off.

Side Impact Sensor (Second)

1. **12 Volt Battery Terminal - Disconnect**

   NOTE: Wait at least 3 minutes before starting work.

2. **Rear Side Trim Panel - Remove**
3. Side Impact Sensor (Second) - Remove

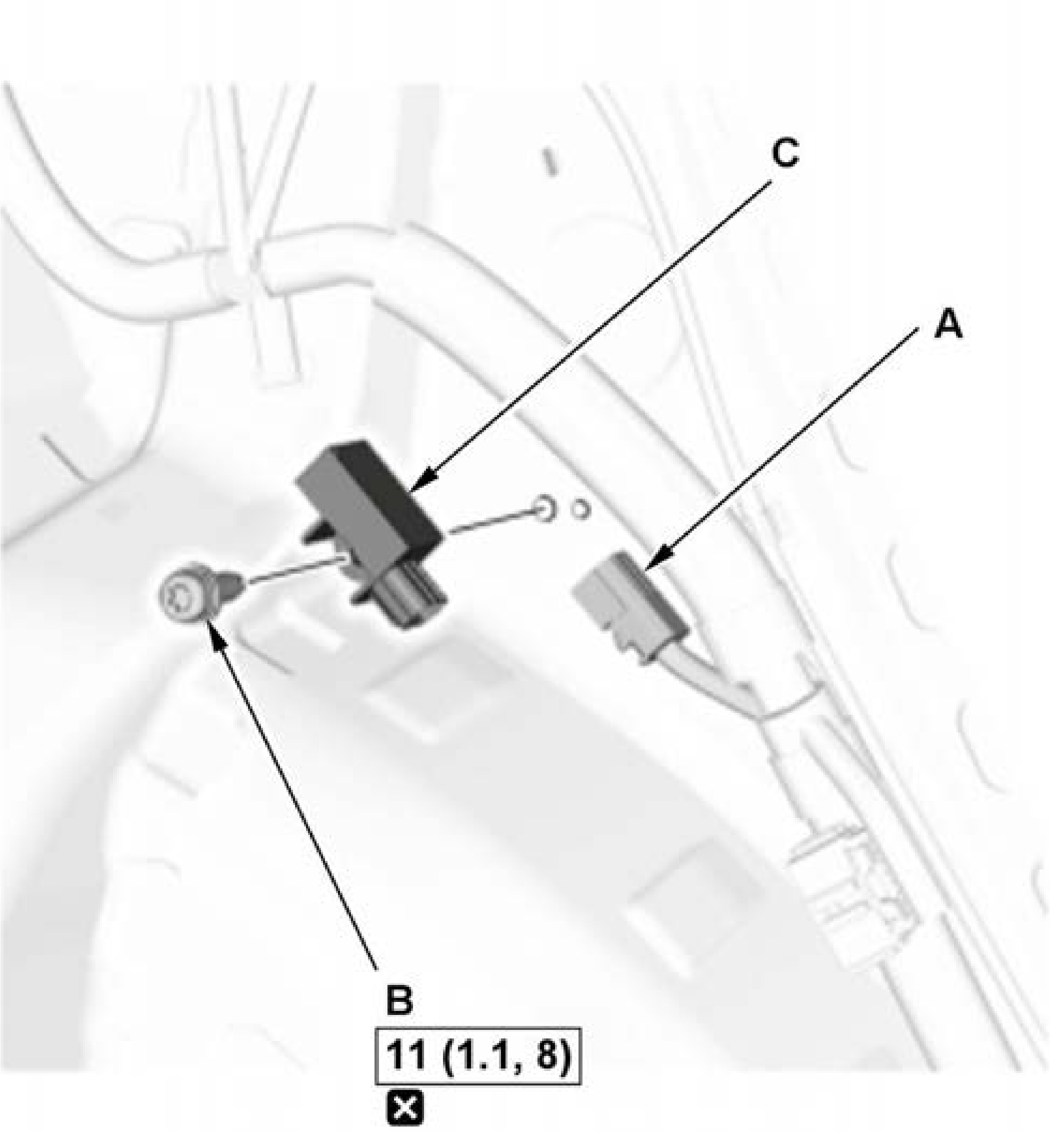

Fig. 5: Side Impact Senor (Second) Components With Torque Specifications
Courtesy of HONDA, U.S.A., INC.

1. Disconnect the connector (A).

2. Remove the bolt (B), then remove the side impact sensor (second) (C).

4. All Removed Parts - Install

1. Install the parts in the reverse order of removal.
NOTE:

- During installation, install the new bolt to the specified torque.
- Before installing the rear side trim panel, make sure the SRS indicator works normally.

5. SRS Operation - Confirm

1. Do the 12 volt battery terminal reconnection procedure, turn the vehicle to the ON mode, and check that the SRS indicator comes on for about 6 seconds and then goes off.

SRS UNIT REMOVAL AND INSTALLATION

Removal and Installation

SRS components are located in this area. Review the **SRS component locations** and the **precautions and procedures** before doing repairs or service.

NOTE: **How to read the torque specifications** .

1. **12 Volt Battery Terminal - Disconnect**

   NOTE: Wait at least 3 minutes before starting work.

2. **Center Console - Remove**
3. SRS Unit - Remove

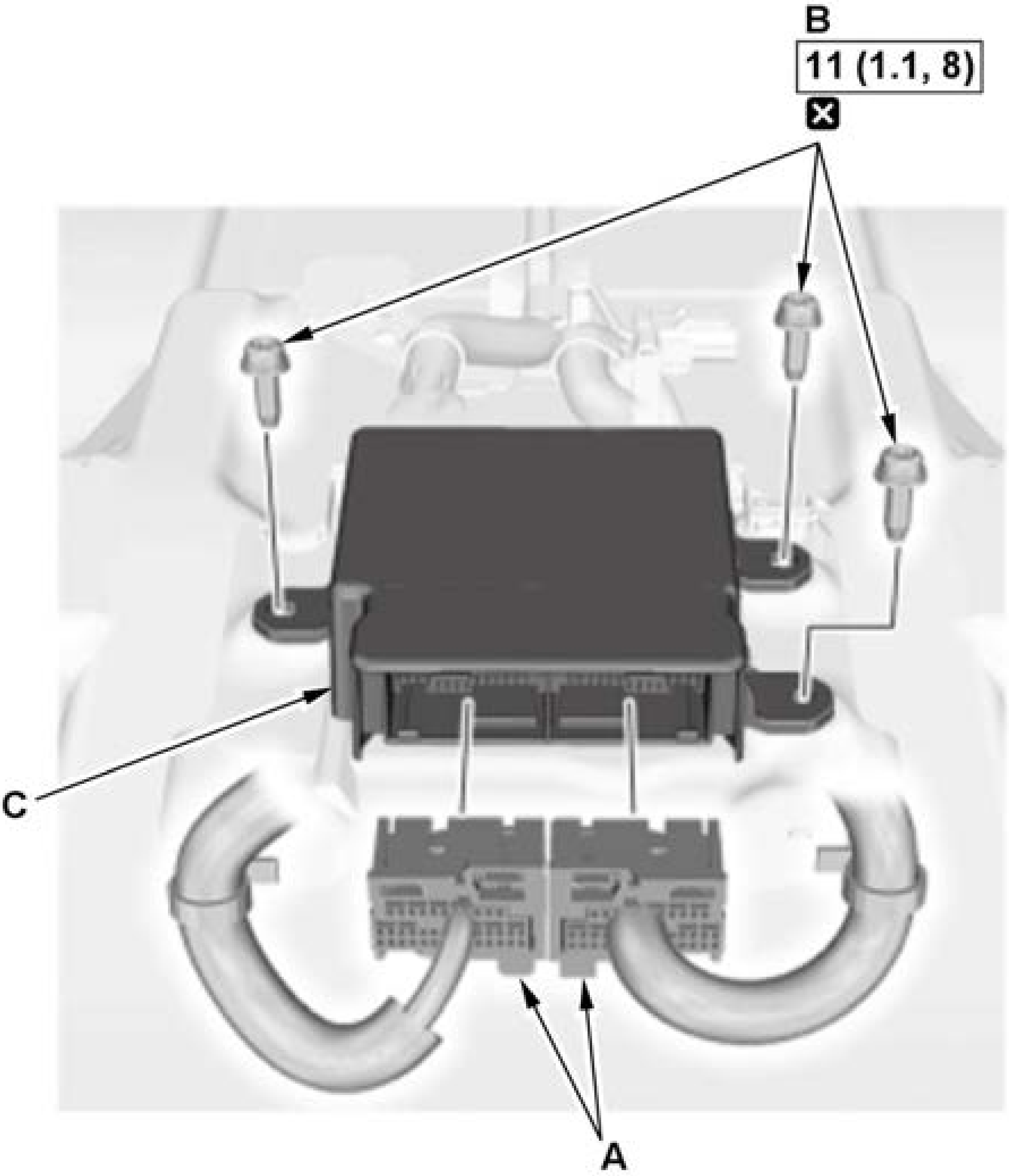

[Fig. 6: SRS Unit Components With Torque Specifications]

Courtesy of HONDA, U.S.A., INC.

1. Disconnect the connectors (A). **NOTE:** The SRS unit connectors have lever locks. Release the locks before disconnecting the connectors 2. Remove the bolts (B). 3. Remove the SRS unit (C).

4. All Removed Parts - Install

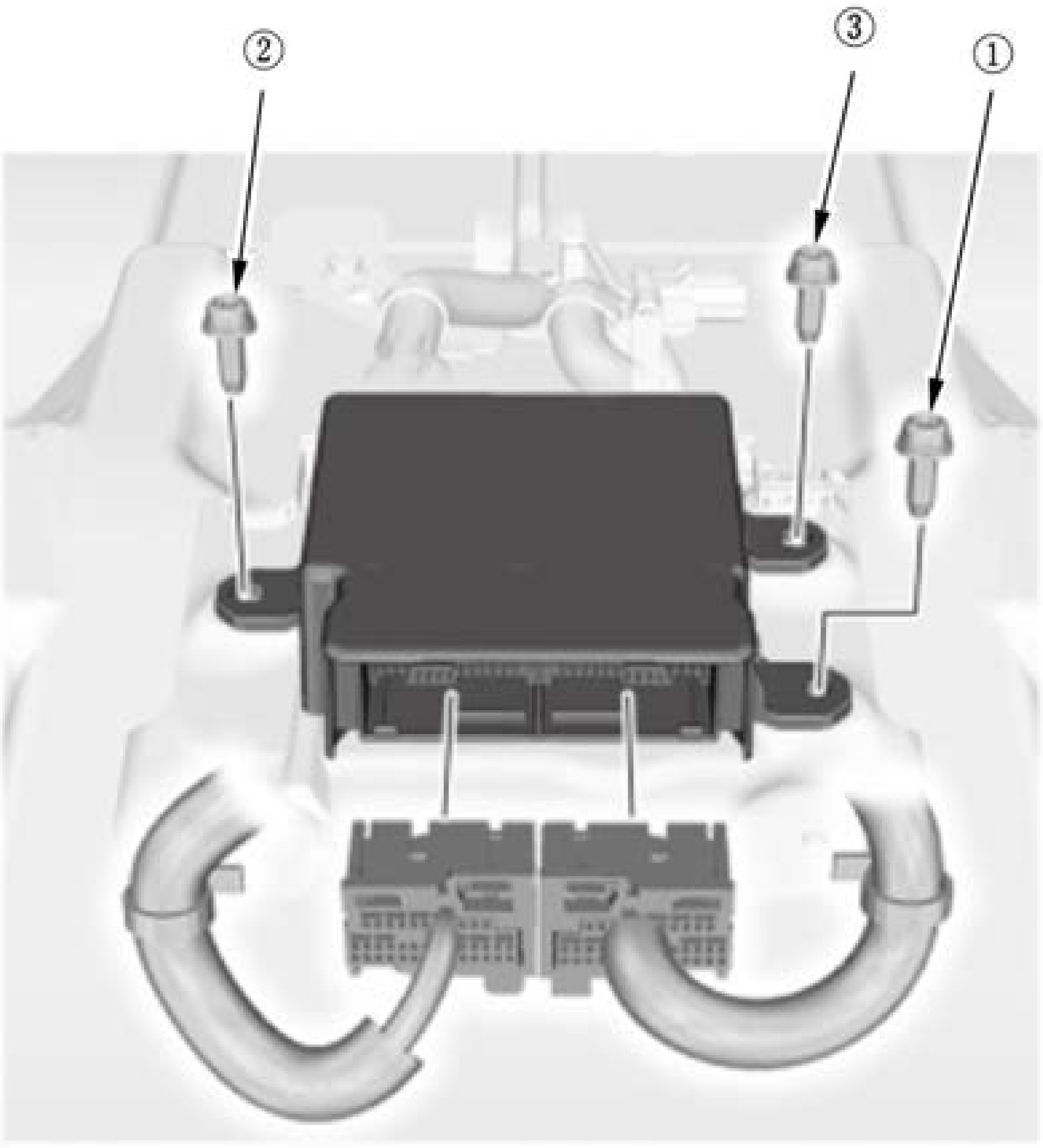

Fig. 7: SRS Unit Bolts With Tightening Sequence
Courtesy of HONDA, U.S.A., INC.

1. Install the parts in the reverse order of removal.

NOTE:

- During installation, install the new bolts to the specified torque.
- Before installing the center console, make sure the SRS indicator works normally.
- Make sure the SRS unit has the latest software. If it does not have the latest, update the software in the SRS unit .
- Tighten the bolts to specified torque in the numbered sequence shown.

5. Yaw Rate-Acceleration Neutral Position - Memorize

NOTE: After replacing the SRS unit with a new one, memorize the yaw rate-acceleration neutral position.

6. **Front Passenger's Weight Sensor - Initialize**

   NOTE: After replacing the SRS unit with a new one, initialize the front passenger's weight sensors.

7. SRS Operation - Confirm

   1. Do the 12 volt battery terminal reconnection procedure, turn the vehicle to the ON mode, and check that the SRS indicator comes on for about 6 seconds and then goes off.

SIDE AIRBAG REMOVAL AND INSTALLATION

Removal and Installation

SRS components are located in this area. Review the **SRS component locations** and the **precautions and procedures** before doing repairs or service.

NOTE:

- **How to read the torque specifications** .
- If replacing the side airbag after deployment, **refer to Component Replacement/Inspection After Deployment** for a complete list of other parts that must also be replaced.
- Before the front power seat is removed, slide the front power seat to the half-way position, then raise the seat to the highest position.
- When troubleshooting, do not remove the front seat. Disconnect only the side airbag inflator connector from under the front seat.

1. **12 Volt Battery Terminal - Disconnect**

   NOTE: Wait at least 3 minutes before starting work.

2. **Front Seat - Remove**
3. Front Seat-Back Cover/Pad - Remove

   1. **Remove the front seat-back cover/pad and harness clips as needed** .

4. Side Airbag - Remove

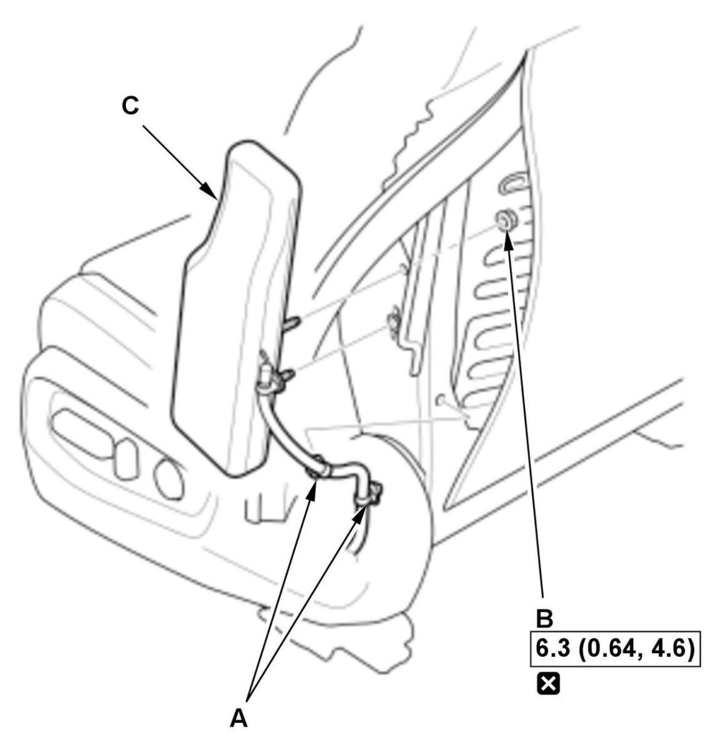	1. Release the harness clips (A). 2. Remove the mounting nut (B), then remove the side airbag (C).

5. All Removed Parts - Install

1. Install the all removed parts in the reverse order of removal.

NOTE:

- During installation, install the new mounting nut to the specified torque.
- If the side airbag cover is secured with tape, remove the tape.
- Do not open the lid on the side airbag cover.
- Make sure that the seat-back cover/pad is installed properly. Improper installation may prevent proper deployment.
- Be sure to install the harness so that they are not pinched or interfering with other parts.

6. Seat Operation - Confirm

1. Move the front seat and the seat-back through their full ranges of movement, making sure the harness are not pinched or interfering with other parts.

7. SRS Operation - Confirm

1. Turn the vehicle to the ON mode, and check that the SRS indicator comes on for about 6 seconds and then goes off.

SIDE CURTAIN AIRBAG REMOVAL AND INSTALLATION

Removal and Installation

SRS components are located in this area. Review the SRS component locations and the precautions and procedures before doing repairs or service.

NOTE:

- How to read the torque specifications .
- If replacing the side curtain airbag after deployment, refer to Component Replacement/Inspection After Deployment for a complete list of other parts that must also be replaced.

- **Review the interior trim replacement procedure before doing repair or service** .

1. **12 Volt Battery Terminal - Disconnect**

   NOTE: Wait at least 3 minutes before starting work.

2. **Headliner - Remove**
3. Side Curtain Airbag - Remove

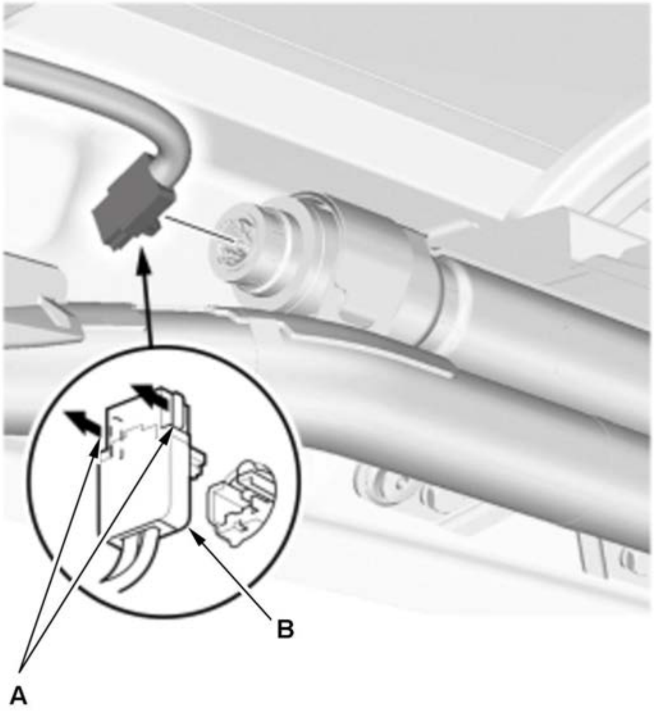	1. Pull up on both locking tabs (A) to disconnect the connector (B). **NOTE:** Be careful not to damage the connector.

2. Remove the side curtain airbag mounting bolts (A), then remove the side curtain airbag (B).

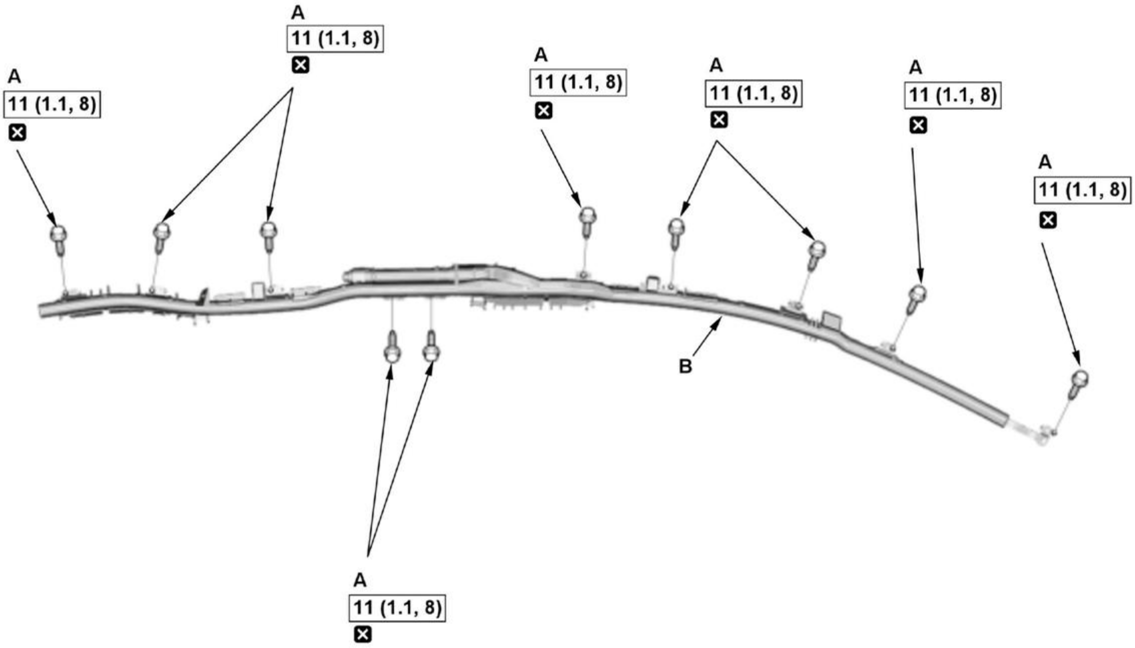

Fig. 8: Side Curtain Airbag And Mounting Bolts With Torque Specifications
Courtesy of HONDA, U.S.A., INC.

4. All Removed Parts - Install

1. Install all of the removed parts in reverse order.

NOTE:

- During installation, install the new side curtain airbag mounting bolts to the specified torque.
- If the side curtain airbag is frayed, or has any other visible damage, replace it. Do not attempt to repair an airbag.
- When you install the side curtain airbag, make sure it is not twisted, and that it is not caught between the inflator bracket by the bracket bolts.
- Make sure that the side curtain airbag inflator retainer is installed properly. Otherwise the side curtain airbag could incorrectly deploy and cause damage or injuries.
- If there is any damage to the side curtain airbag, do not try to repair it. Replace any damaged side curtain airbag.
- Before installing the headliner, make sure the SRS indicator works normally.

5. SRS Operation - Confirm

1. Do the 12 volt battery terminal reconnection procedure, turn the vehicle to the ON mode, and check that the SRS indicator comes on for about 6 seconds and then goes off.

6. **Headliner/Pillar Trim Overlap - Confirm**

REMOVAL AND INSTALLATION

CABLE REEL REMOVAL AND INSTALLATION

Removal

SRS components are located in this area. Review the **SRS component locations** and the **precautions and procedures** before doing repairs or service.

NOTE: Before doing this procedure, set the front wheels in the straight ahead position.

1. **12 Volt Battery Terminal - Disconnect**

   NOTE: Wait at least 3 minutes before starting work.

2. **Steering Wheel - Remove**
3. **Column Cover - Remove**
4. Cable Reel - Remove

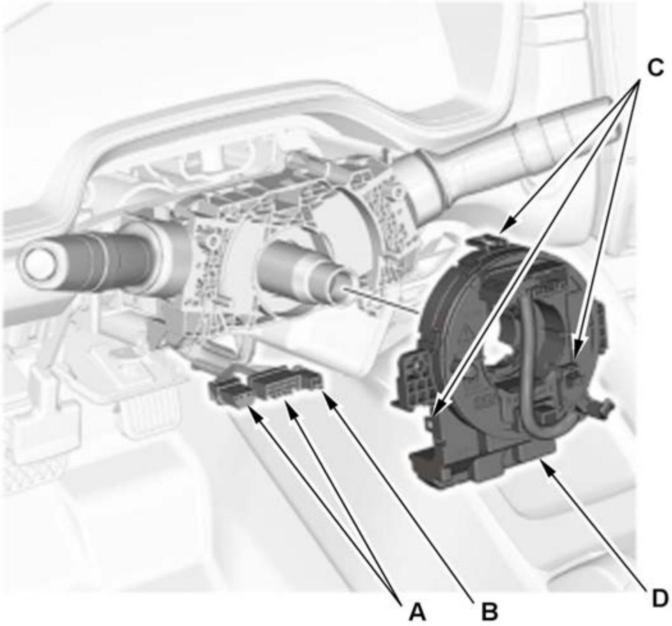	1. Disconnect the connectors (A) from the cable reel. 2. For some models: Disconnect the connector (B) from the cable reel. 3. Release the lock tabs (C), then remove the cable reel (D).

Installation

SRS components are located in this area. Review the **SRS component locations** and the **precautions and procedures** before doing repairs or service.

NOTE:

- Before installing the steering wheel, make sure the front wheels are aligned straight ahead.
- The new cable reel is locked by a yellow tab for center adjustment. When installing a new cable reel there is no need to rotate the cable reel. After installation of the cable reel, remove the tab and discard it.
- If the driver's airbag deployed, the cable reel cannot be reused because of thermal damage.

1. Cable Reel - Install

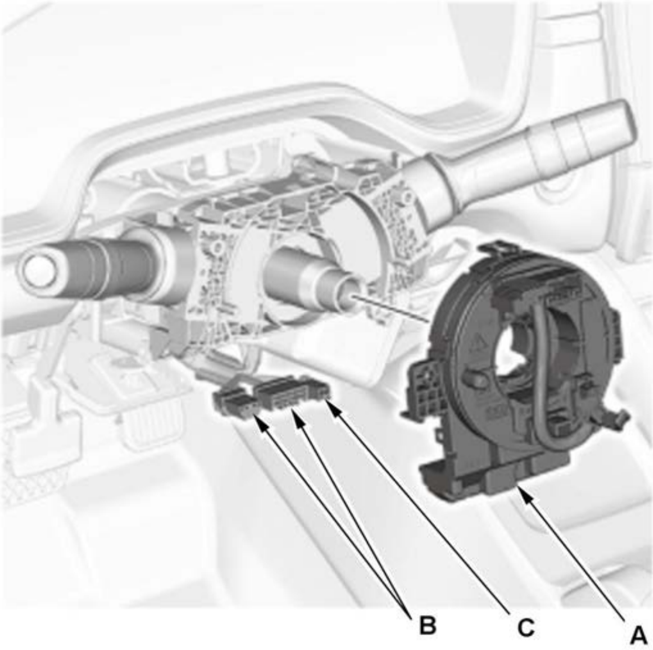	1. Install the cable reel (A). 2. Connect the connectors (B) to the cable reel. 3. For some models: Connect the connector (C) to the cable reel.

2. Column Cover - Install
3. Cable Reel - Align

For some models 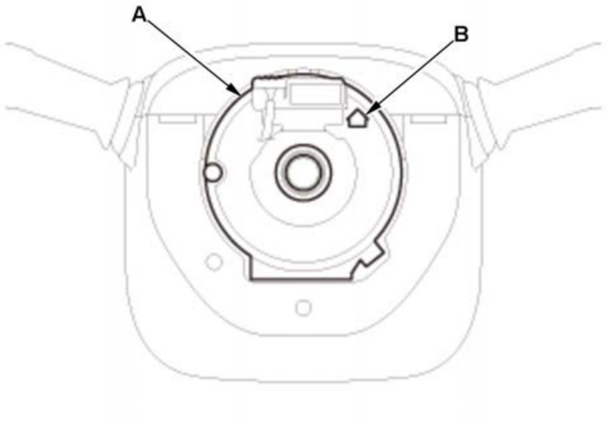 **For some models** 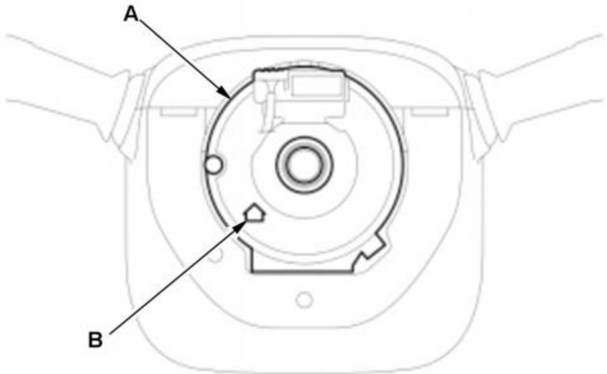	1. Make sure the front wheels are pointing straight ahead. 2. Rotate the cable reel (A) clockwise until it stops. 3. Rotate the cable reel counterclockwise until the arrow mark (B) on the cable reel points straight up. 4. Rotate the cable reel counterclockwise two full turns. The arrow mark on the cable reel should point straight up.

4. Steering Wheel - Install
5. SRS Operation - Confirm

1. Do the 12 volt battery terminal reconnection procedure, turn the vehicle to the ON mode, and check that the SRS indicator comes on for about 6 seconds and then goes off.

DRIVER'S AIRBAG REMOVAL AND INSTALLATION

Removal

SRS components are located in this area. Review the **SRS component locations** and the **precautions and procedures** before doing repairs or service.

NOTE: If replacing the driver's airbag after deployment, **refer to Component Replacement/Inspection After Deployment** for a complete list of other parts that must also be replaced.

1. **12 Volt Battery Terminal - Disconnect**

   NOTE: Wait at least 3 minutes before starting work.

2. Driver's Airbag - Remove

   1. Insert a punch (A) (diameter of 5.5 mm) through the left hole of the steering wheel cover and push the spring (B) to release the front airbag pin (C) while pulling out the airbag. Repeat for the right side.

   Single Inflator Type

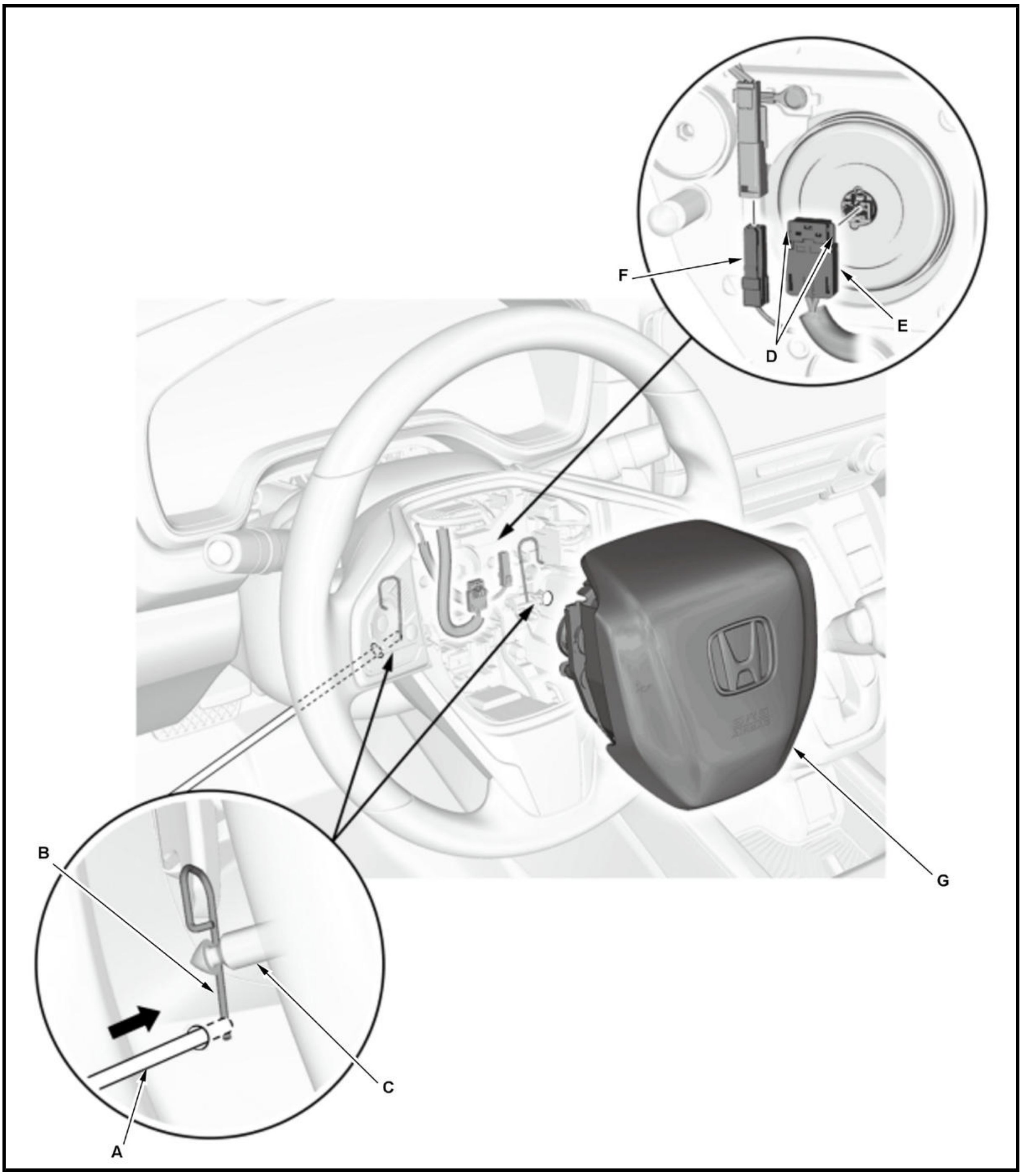

Dual Inflators Type

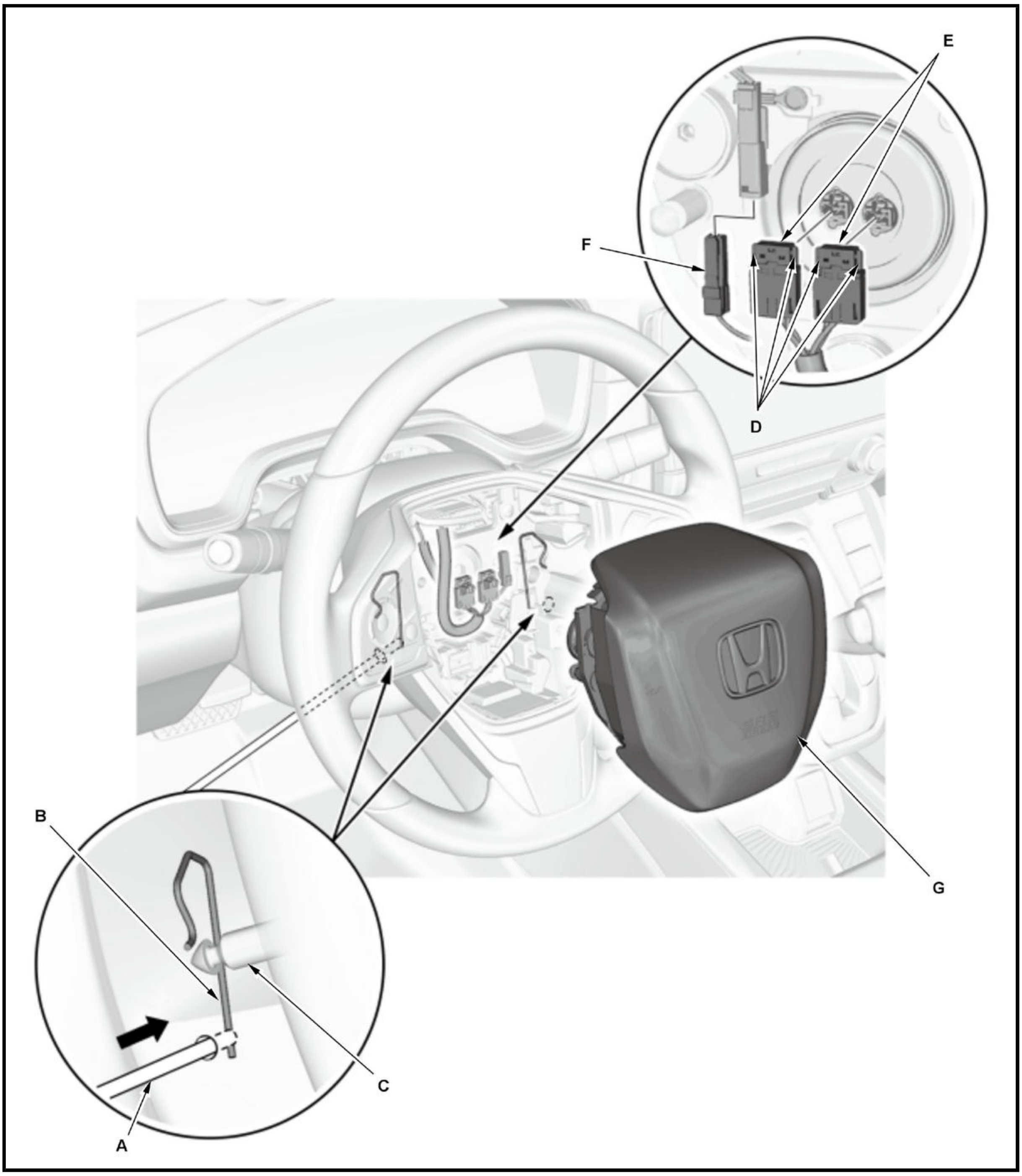

2. Pull up on both locking tabs (D) to disconnect the connector (E).

NOTE: Be careful not to damage the connectors.

3. Disconnect the connector (F).

4. Remove the driver's airbag (G).

3. Spring - Removal (If necessary)

<table>
<tr>
<td>

Single Inflator Type

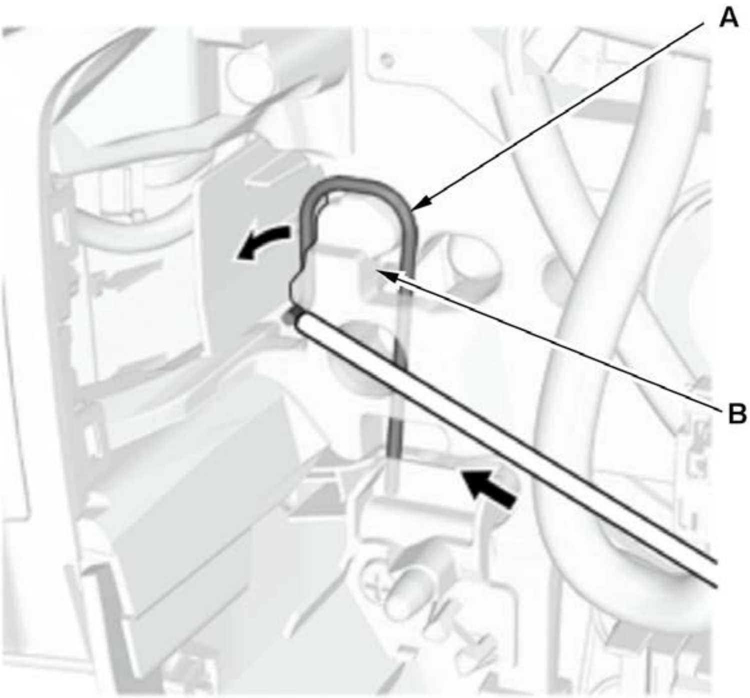

Dual Inflators Type

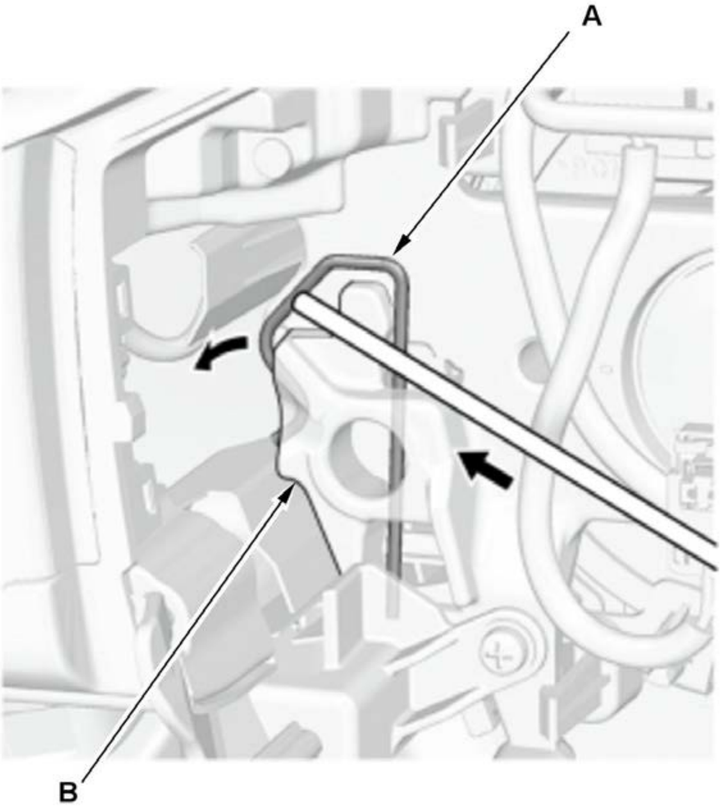

</td>
<td>1. Remove the springs (A) from the steering wheel (B).
NOTE: Be careful not to damage the steering wheel.</td>
</tr>
</table>

Installation

1. Spring - Install (If necessary)

Single Inflator Type 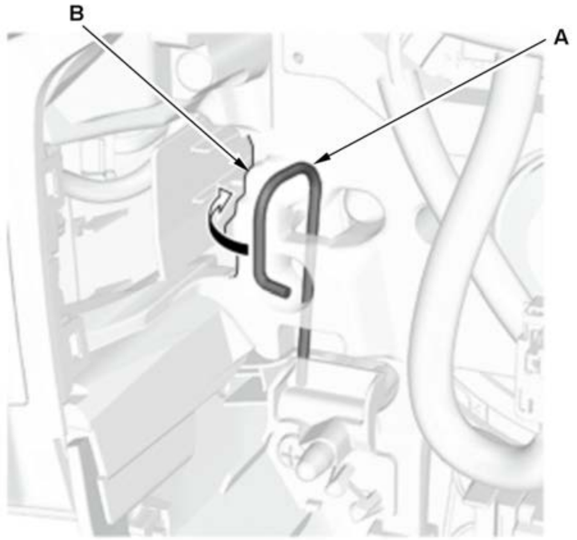 **Dual Inflators Type** 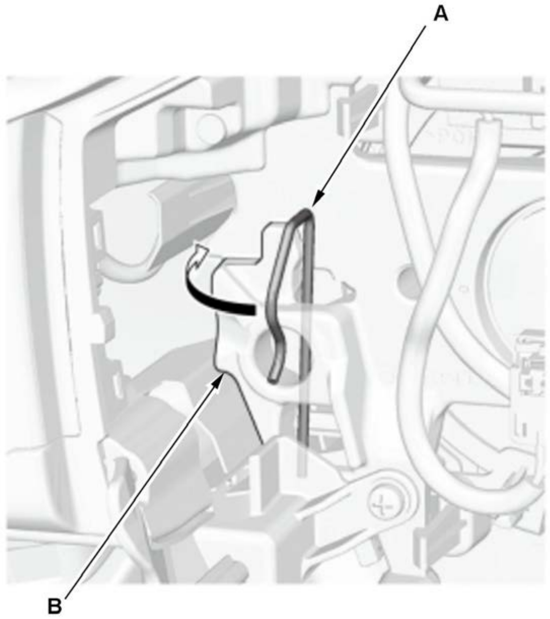	1. Install the springs (A) to the steering wheel (B). **NOTE:** • The springs are different between the left and right side. Note the orientation during installation (single inflator type). • Make sure that the springs are installed properly.

2. Driver's Airbag - Install

   1. Connect the connectors (A).

   Single Inflator Type

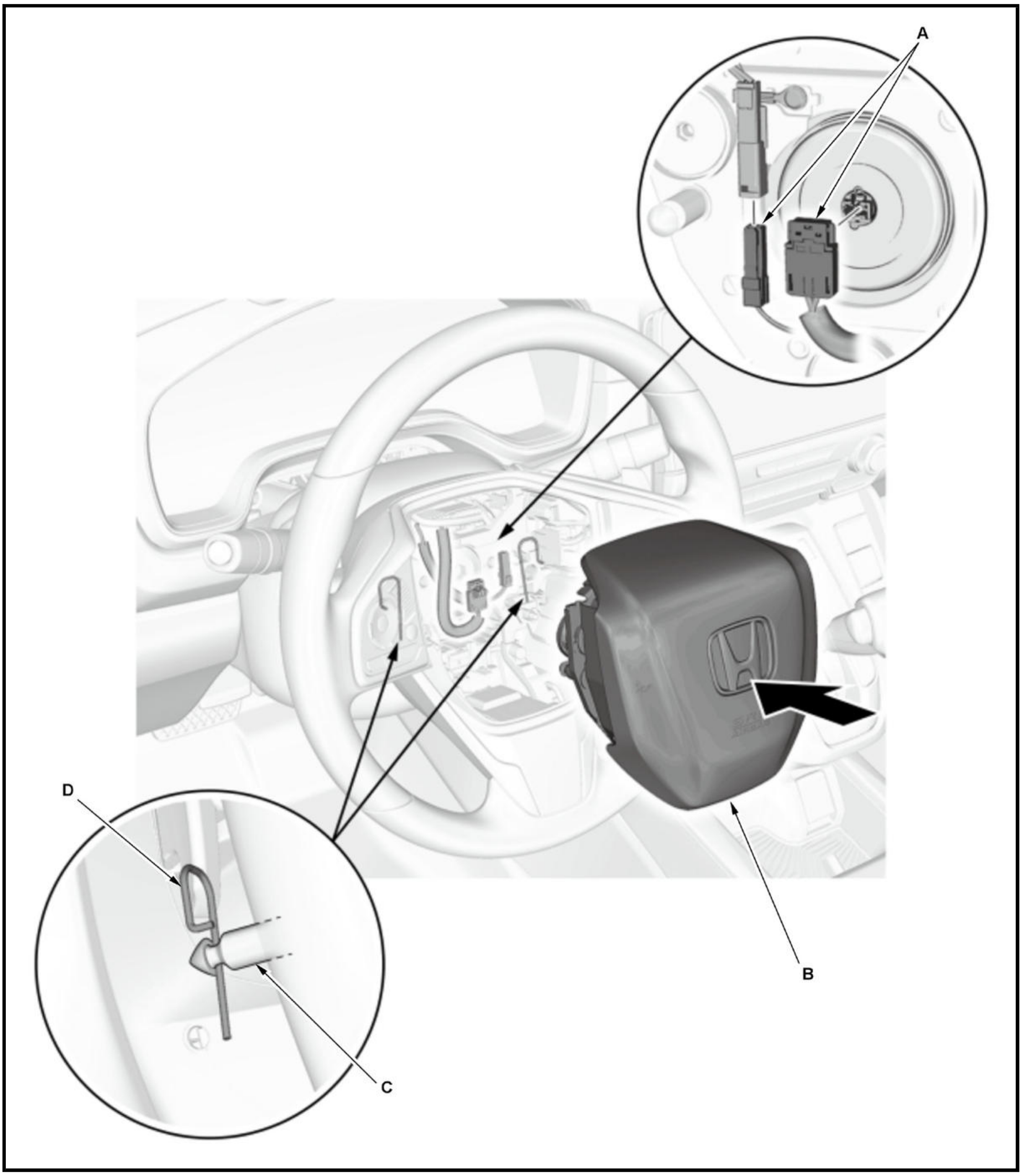

Dual Inflators Type

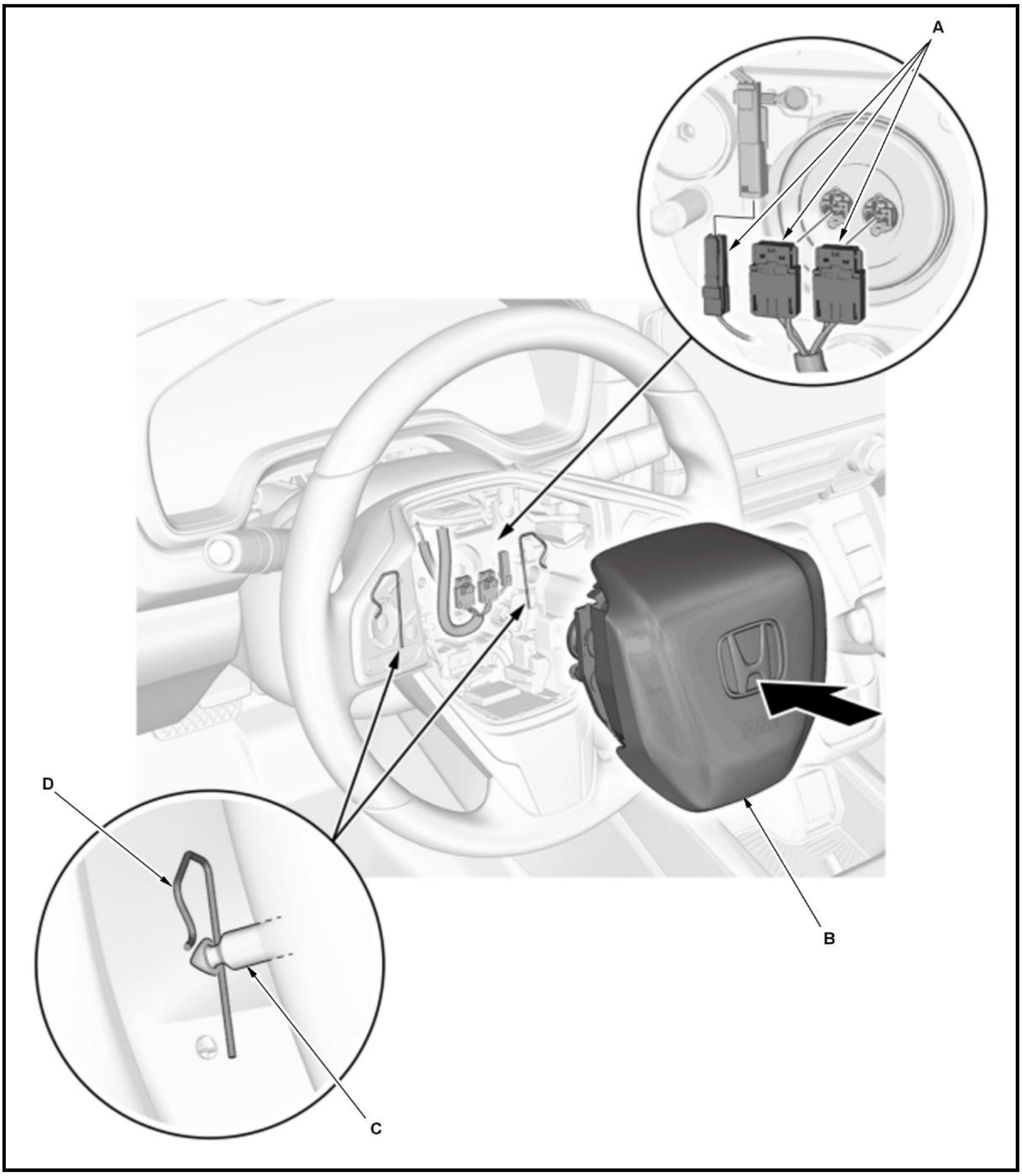

2. Install the driver's airbag (B) by pushing it in until you hear a click.

NOTE: Confirm that the front airbag pins (C) are securely mounted to the springs (D).

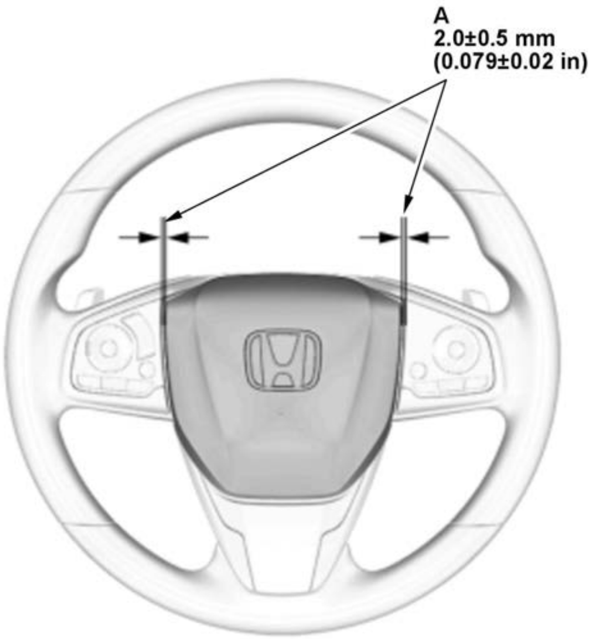	3. Make sure the clearance (A) between the steering wheel and horn pad is the specified value. 4. After connecting the negative cable to the 12 volt battery, make sure the horn works properly.

3. SRS Operation - Confirm

1. Do the 12 volt battery terminal reconnection procedure, turn the vehicle to the ON mode, and check that the SRS indicator comes on for about 6 seconds and then goes off.

DRIVER'S SEAT POSITION SENSOR REMOVAL AND INSTALLATION (KA/KC)

Removal and Installation

SRS components are located in this area. Review the **SRS component locations** and the **precautions and procedures** before doing repairs or service.

NOTE:

- **How to read the torque specifications** .
- Do not turn the vehicle to the ON mode, while removing or installing the driver's seat position sensor.

1. **Front Seat - Remove**

   NOTE: Raise the driver's seat all the way up.

2. Driver's Seat Position Sensor - Remove

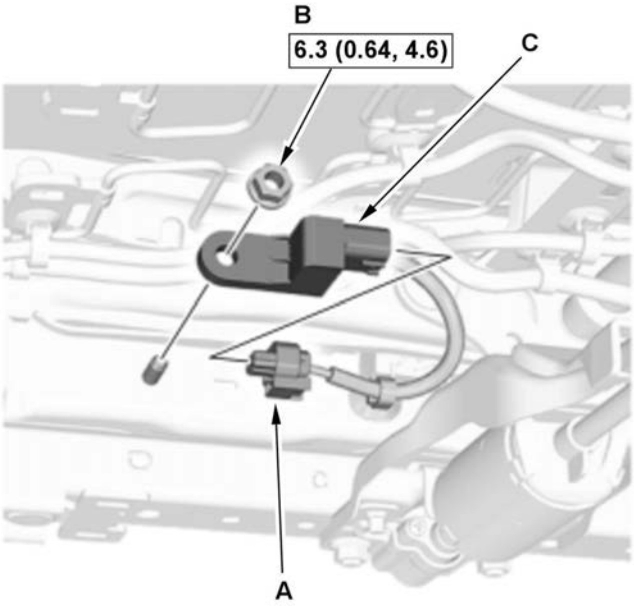	1. Disconnect the connector (A). 2. Remove the nut (B), then remove the driver's seat position sensor (C).

3. All Removed Parts - Install

> 1. Install the all removed parts in the reverse order of removal.
> **NOTE:**
> - Be sure to install the harness so it is not pinched or interferes with other parts.
> - After replacing the driver's seat position sensor with a new one, **check the driver's seat position sensor operation** .

4. **Driver's Seat Position Sensor - Operation Check**
5. SRS Operation - Confirm

> 1. Turn the vehicle to the ON mode, and check that the SRS indicator comes on for about 6 seconds and then goes off.

FRONT PASSENGER'S AIRBAG CUTOFF INDICATOR REMOVAL AND INSTALLATION(KA/KC)

Removal and Installation

SRS components are located in this area. Review the **SRS component locations** and the **precautions and procedures** before doing repairs or service.

1. **12 Volt Battery Terminal - Disconnect**

   NOTE: Wait at least 3 minutes before starting work.

2. **Climate Control panel / Front Passenger's Airbag Cutoff Indicator - Remove**
3. All Removed Parts - Install

> 1. Install the all removed parts in the reverse order of removal.

4. SRS Operation - Confirm

> 1. Do the 12 volt battery terminal reconnection procedure, turn the vehicle to the ON mode, and check that the SRS indicator comes on for about 6 seconds and then goes off.

FRONT PASSENGER'S AIRBAG REMOVAL AND INSTALLATION

Removal

SRS components are located in this area. Review the **SRS component locations** and the **precautions and procedures** before doing repairs or service.

NOTE:

- **How to read the torque specifications** .
- If replacing the front passenger's airbag after deployment, **refer to Component Replacement/Inspection After Deployment** for a complete list of other parts that must also be replaced.

Removal Before the Front Passenger's Airbag Deployment

1. **12 Volt Battery Terminal - Disconnect**

   NOTE: Wait at least 3 minutes before starting work.

2. **Blower Unit - Remove**
3. Front Passenger's Airbag - Remove

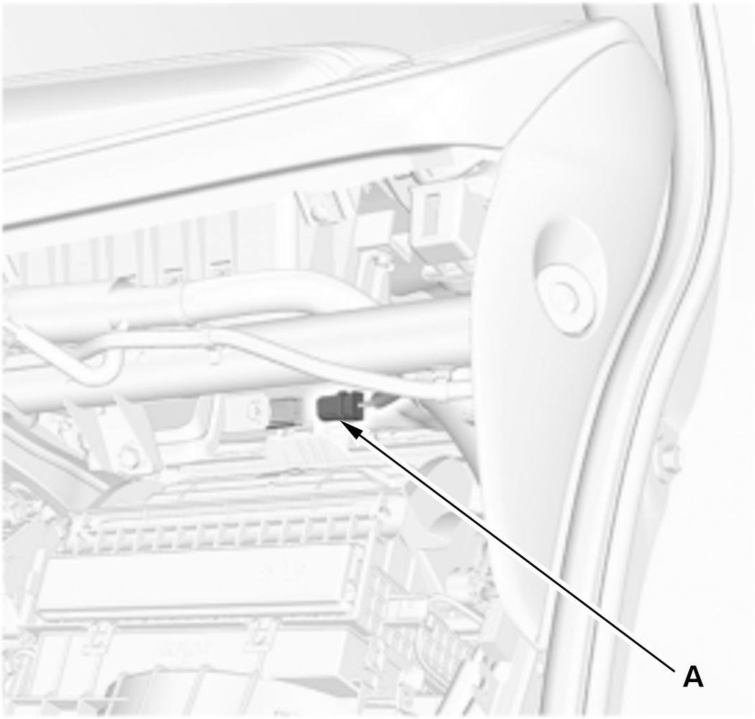	1. Disconnect the connector (A).

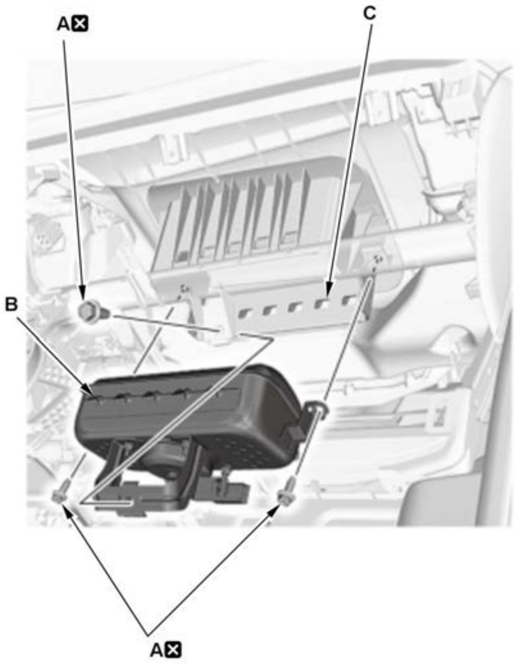	2. Remove the mounting bolts (A). 3. Release the hooks (B) from the front passenger's airbag housing holes (C) of the dashboard. **NOTE:** • When prying with a flat-tip screwdriver, wrap it with protective tape to prevent damage. • Take care not to damage the front passenger's airbag housing holes of the dashboard. • Take care not to damage the front passenger's airbag. 4. Lower the front passenger's airbag and release the hooks of the engine room side, then remove the airbag from the dashboard.

Removal After the Front Passenger's Airbag Deployment

4. 12 Volt Battery Terminal - Disconnect

NOTE: Wait at least 3 minutes before starting work.

5. Glove Box - Remove
6. Front Passenger's Airbag Inflator Connector - Disconnect

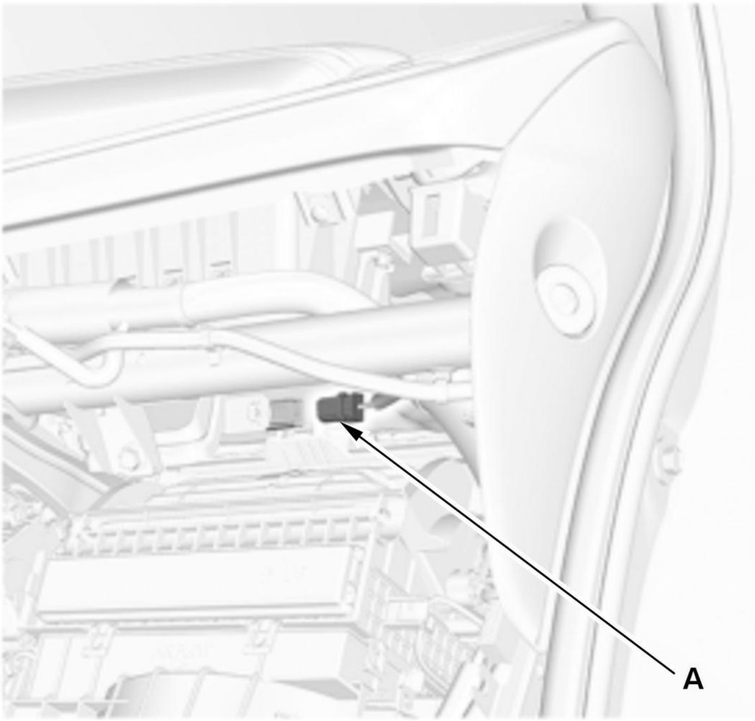	1. Disconnect the connector (A).

7. **Front Passenger's Airbag/Dashboard - Remove**

Installation

SRS components are located in this area. Review the **SRS component locations** and the **precautions and procedures** before doing repairs or service.

NOTE: **How to read the torque specifications** .

Installation Before the Front Passenger's Airbag Deployment

1. Front Passenger's Airbag - Install

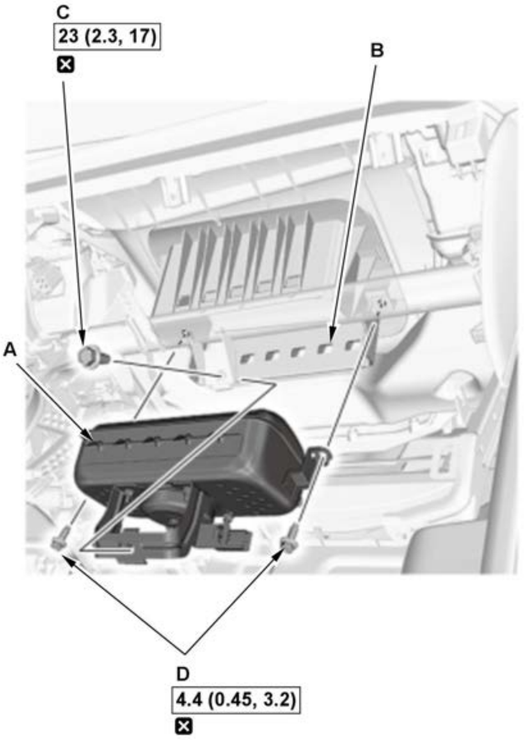 C 23 (2.3, 17) ☒ B A D 4.4 (0.45, 3.2) ☒	1. Insert the hooks (A) into the front passenger's airbag housing holes (B). **NOTE:** - Make sure there are no objects between the airbag and the dashboard. - Make sure the airbag is fully seated, and make sure the dashboard is not deformed or damaged after the airbag is in place. - Make sure the hooks are set properly. 2. Tighten the new mounting bolts (C, D).

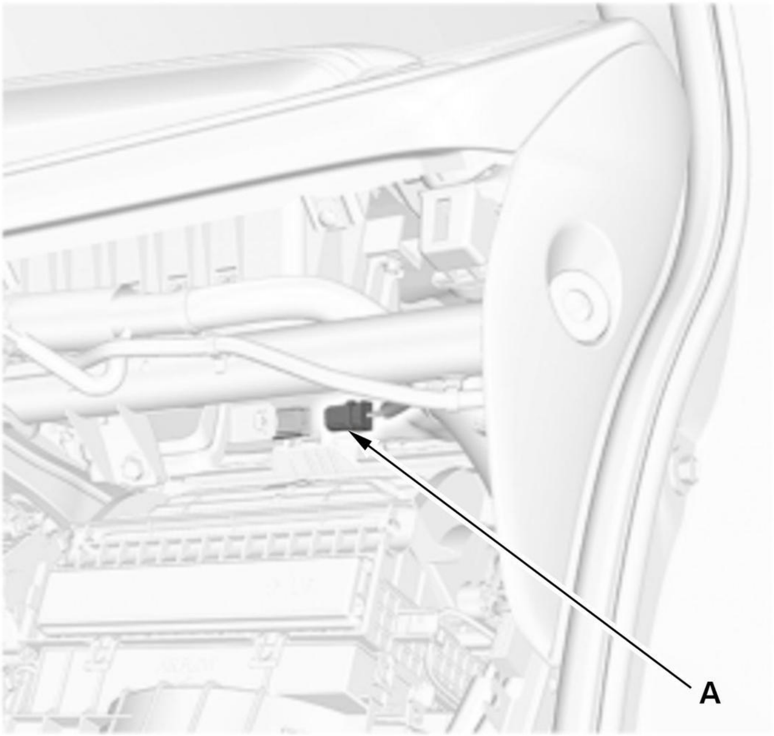	3. Connect the connector (A).

2. SRS Operation - Confirm

1. Do the 12 volt battery terminal reconnection procedure, turn the vehicle to the ON mode, and check that the SRS indicator comes on for about 6 seconds and then goes off.

3. Blower Unit - Install

Installation After the Front Passenger's Airbag Deployment

4. Front Passenger's Airbag - Install

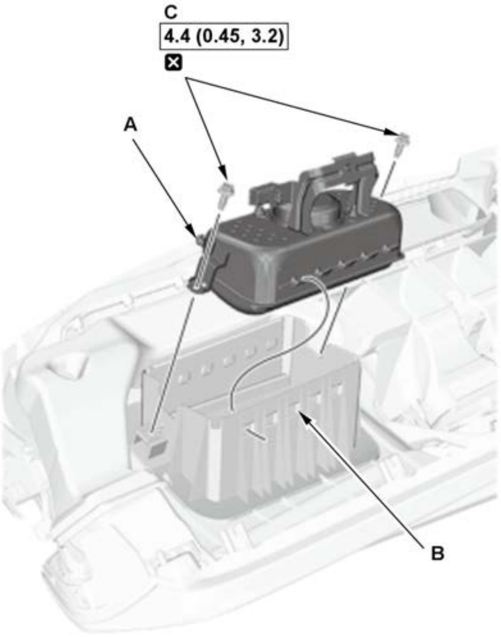	1. Insert the hooks (A) of the front passenger's airbag into the housing holes (B). **NOTE:** - Make sure there are no objects between the airbag and the dashboard. - Make sure the airbag is fully seated, and make sure the dashboard is not deformed or damaged after the airbag is in place. - Make sure the hooks are set properly. 2. Tighten the new bolts (C).

5. **Front Passenger's Airbag/Dashboard - Install**
6. Front Passenger's Airbag Inflator Connector - Connect

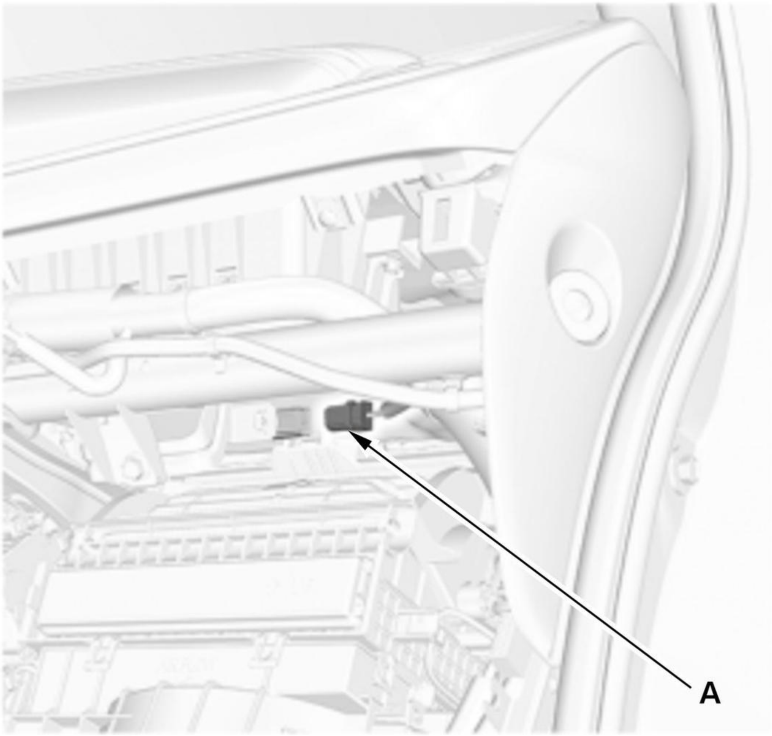	1. Connect the connector (A).

7. SRS Operation - Confirm

1. Do the 12 volt battery terminal reconnection procedure, turn the vehicle to the ON mode, and check that the SRS indicator comes on for about 6 seconds and then goes off.

8. **Glove Box - Install**

FRONT PASSENGER'S WEIGHT SENSOR REMOVAL AND INSTALLATION(KA/KC)

Removal

SRS components are located in this area. Review the **SRS component locations** and the **precautions and procedures** before doing repairs or service.

NOTE:

- **Removal of the front passenger's weight sensors must be done according to Precautions and Procedures** .
- Manual seat: The front passenger's weight sensor is part of the seat frame and must be replaced as an assembly.
- Power seat: The front passenger's weight sensor is part of the seat rail and must be replaced as an assembly.

Manual Seat

1. **12 Volt Battery Terminal - Disconnect**

NOTE: Wait at least 3 minutes before starting work.

2. **Front Seat Frame (Passenger's side) - Remove**
3. **Front Passenger's Seat Frame/Front Passenger's Weight Sensors - Remove**

Power Seat

4. **12 Volt Battery Terminal - Disconnect**

NOTE: Wait at least 3 minutes before starting work.

5. **Front Seat Frame (Passenger's side) - Remove**
6. **Front Passenger's Seat Rail/Front Passenger's Weight Sensors - Remove**

Installation

SRS components are located in this area. Review the **SRS component locations** and the **precautions and procedures** before doing repairs or service.

NOTE:

- Be sure to install the harness wires so they are not pinched or interfering with other parts.
- Manual seat: The front passenger's weight sensor is part of the seat frame and must be replaced as an assembly.
- Power Seat: The front passenger's weight sensor is part of the seat rail and must be replaced as an assembly.

Manual Seat

1. **Front Passenger's Seat Frame/Front Passenger's Weight Sensors - Install**
2. **Front Seat Frame (Passenger's side) - Install**
3. **12 Volt Battery Terminal - Connect**
4. Seat Operation - Confirm

1. Move the front seat and the seat-back through their full ranges of movement, making sure the harness is not pinched or interfering with other parts.

5. **Front Passenger's Weight Sensor - Initialize**
6. **Front Passenger's Weight Sensor - Operation Check**
7. SRS Operation - Confirm

1. Turn the vehicle to the ON mode, and check that the SRS indicator comes on for about 6 seconds and then goes off.

Power Seat

8. **Front Passenger's Seat Rail/Front Passenger's Weight Sensors - Install**
9. **Front Seat Frame (Passenger's side) - Install**
10. **12 Volt Battery Terminal - Connect**
11. Seat Operation - Confirm

1. Move the front seat and the seat-back through their full ranges of movement, making sure the harness is not pinched or interfering with other parts.

12. **Front Passenger's Weight Sensor - Initialize**
13. **Front Passenger's Weight Sensor - Operation Check**

14. SRS Operation - Confirm

1. Turn the vehicle to the ON mode, and check that the SRS indicator comes on for about 6 seconds and then goes off.

IMPACT SENSOR REMOVAL AND INSTALLATION

Removal and Installation

SRS components are located in this area. Review the **SRS component locations** and the **precautions and procedures** before doing repairs or service.

NOTE: **How to read the torque specifications** .

Front Impact Sensor

1. **12 Volt Battery Terminal - Disconnect**

   NOTE: Wait at least 3 minutes before starting work.

2. **Front Bumper - Remove**
3. Front Impact Sensor - Remove

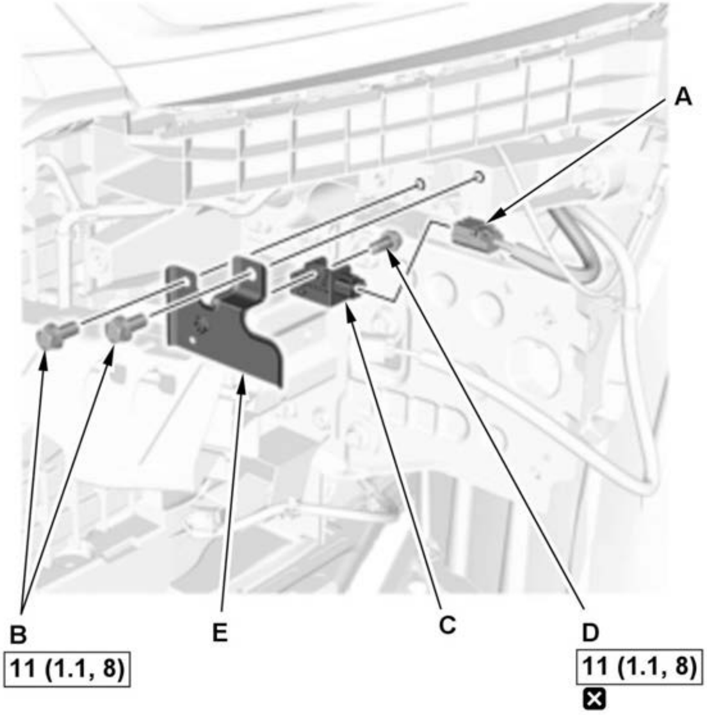	1. Disconnect the connector (A). 2. Remove the bolts (B), then remove the front impact sensor (C). 3. Remove the bolt (D), then remove the bracket (E).

4. All Removed Parts - Install

1. Install the parts in the reverse order of removal.
NOTE:

- During installation, install the new bolt to the specified torque.
- Before installing the front inner fender, make sure the SRS indicator works normally.

5. SRS Operation - Confirm

1. Do the 12 volt battery terminal reconnection procedure, turn the vehicle to the ON mode, and check that the SRS indicator comes on for about 6 seconds and then goes off.

Side Impact Sensor (First)

6. **12 Volt Battery Terminal - Disconnect**

   NOTE: Wait at least 3 minutes before starting work.

7. **B-pillar Lower Trim Cover - Remove**
8. Side Impact Sensor (First) - Remove

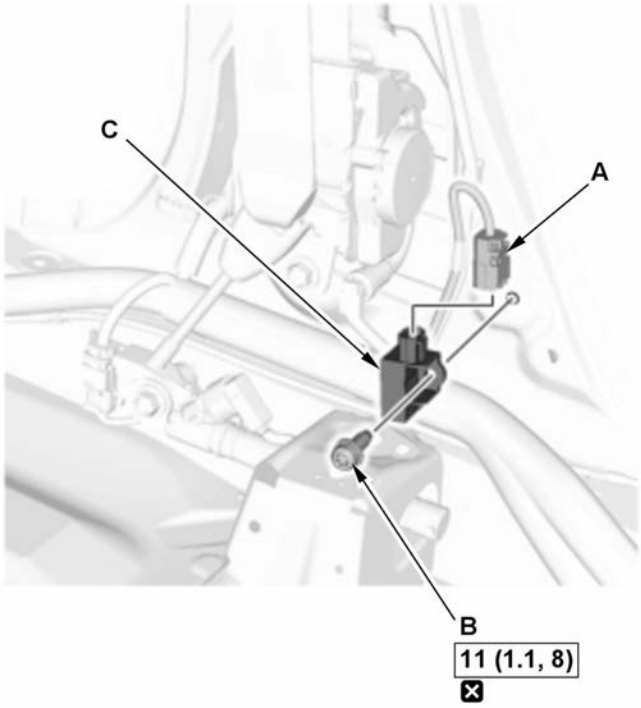	1. Disconnect the connector (A). 2. Remove the bolt (B), then remove the side impact sensor (first) (C).

9. All Removed Parts - Install

1. Install the parts in the reverse order of removal.

NOTE:

- During installation, install the new bolt to the specified torque.
- Before installing the B-pillar lower trim, make sure the SRS indicator works normally.

10. SRS Operation - Confirm

1. Do the 12 volt battery terminal reconnection procedure, turn the vehicle to the ON mode, and check that the SRS indicator comes on for about 6 seconds and then goes off.

Side Impact Sensor (Second)

11. **12 Volt Battery Terminal - Disconnect**

    NOTE: Wait at least 3 minutes before starting work.

12. **Rear Side Trim Panel - Remove**
13. Side Impact Sensor (Second) - Remove

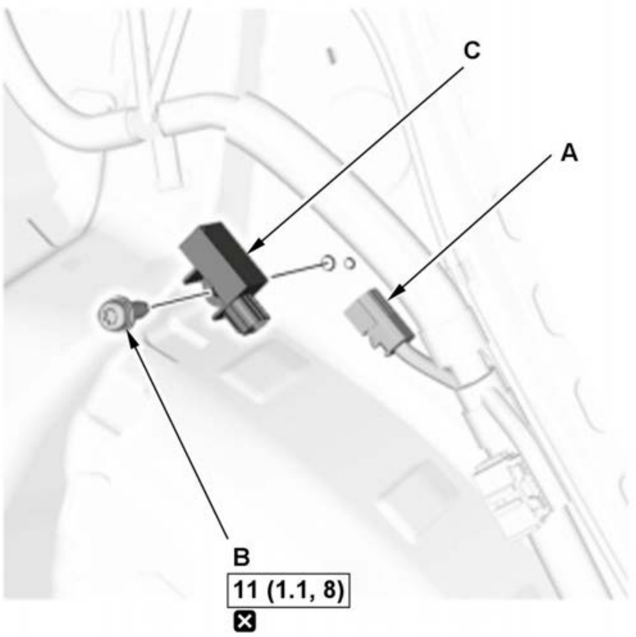	1. Disconnect the connector (A). 2. Remove the bolt (B), then remove the side impact sensor (second) (C).

14. All Removed Parts - Install

1. Install the parts in the reverse order of removal.

NOTE:

- During installation, install the new bolt to the specified torque.
- Before installing the rear side trim panel, make sure the SRS indicator works normally.

15. SRS Operation - Confirm

1. Do the 12 volt battery terminal reconnection procedure, turn the vehicle to the ON mode, and check that the SRS indicator comes on for about 6 seconds and then goes off.

SRS UNIT REMOVAL AND INSTALLATION

Removal and Installation

SRS components are located in this area. Review the **SRS component locations** and the **precautions and procedures** before doing repairs or service.

NOTE: **How to read the torque specifications** .

1. **12 Volt Battery Terminal - Disconnect**

   NOTE: Wait at least 3 minutes before starting work.

2. **Center Console - Remove**
3. SRS Unit - Remove

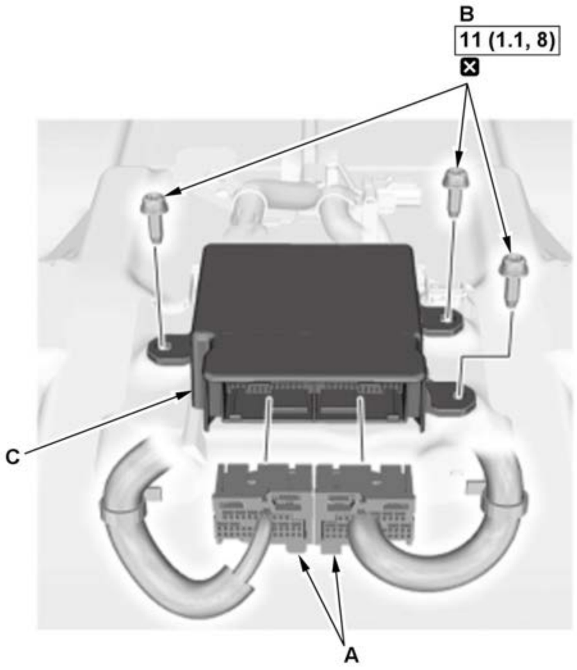

1. Disconnect the connectors (A).
NOTE: The SRS unit connectors have lever locks. **Release the locks before disconnecting the connectors**

2. Remove the bolts (B).

3. Remove the SRS unit (C).

4. All Removed Parts - Install

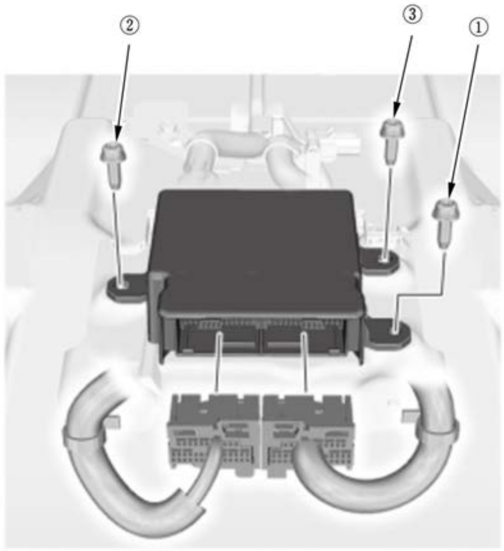

1. Install the parts in the reverse order of removal.
NOTE:

- During installation, install the new bolts to the specified torque.
- Before installing the center console, make sure the SRS indicator works normally.
- Make sure the SRS unit has the latest software. If it does not have the latest, **update the software in the SRS unit** .
- Tighten the bolts to specified torque in the numbered sequence shown.

5. **Yaw Rate-Acceleration Neutral Position - Memorize**

NOTE: After replacing the SRS unit with a new one, memorize the yaw rate-acceleration neutral position.

6. **Front Passenger's Weight Sensor - Initialize**

NOTE: After replacing the SRS unit with a new one, initialize the front passenger's weight sensors.

7. SRS Operation - Confirm

1. Do the 12 volt battery terminal reconnection procedure, turn the vehicle to the ON mode, and check that the SRS indicator comes on for about 6 seconds and then goes off.

SIDE AIRBAG REMOVAL AND INSTALLATION

Removal and Installation

SRS components are located in this area. Review the **SRS component locations** and the **precautions and procedures** before doing repairs or service.

NOTE:

- **How to read the torque specifications** .
- If replacing the side airbag after deployment, **refer to Component Replacement/Inspection After Deployment** for a complete list of other parts that must also be replaced.
- Before the front power seat is removed, slide the front power seat to the half-way position, then raise the seat to the highest position.
- When troubleshooting, do not remove the front seat. Disconnect only the side airbag inflator connector from under the front seat.

1. **12 Volt Battery Terminal - Disconnect**

   NOTE: Wait at least 3 minutes before starting work.

2. **Front Seat - Remove**
3. Front Seat-Back Cover/Pad - Remove

   1. **Remove the front seat-back cover/pad and harness clips as needed** .

4. Side Airbag - Remove

One Mounting Nut Type 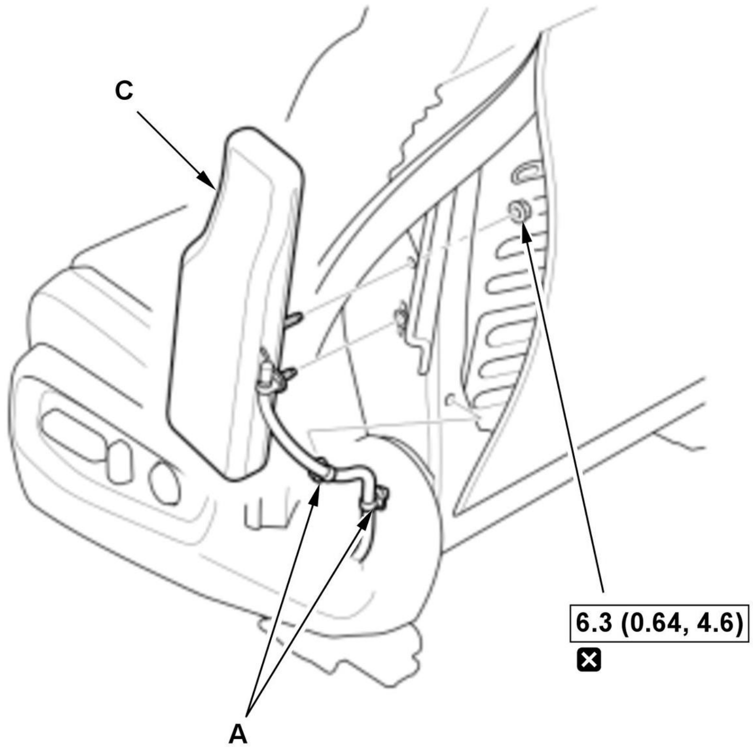 **Two Mounting Nuts Type**	1. Release the harness clips (A). 2. Remove the mounting nut (B), then remove the side airbag (C).

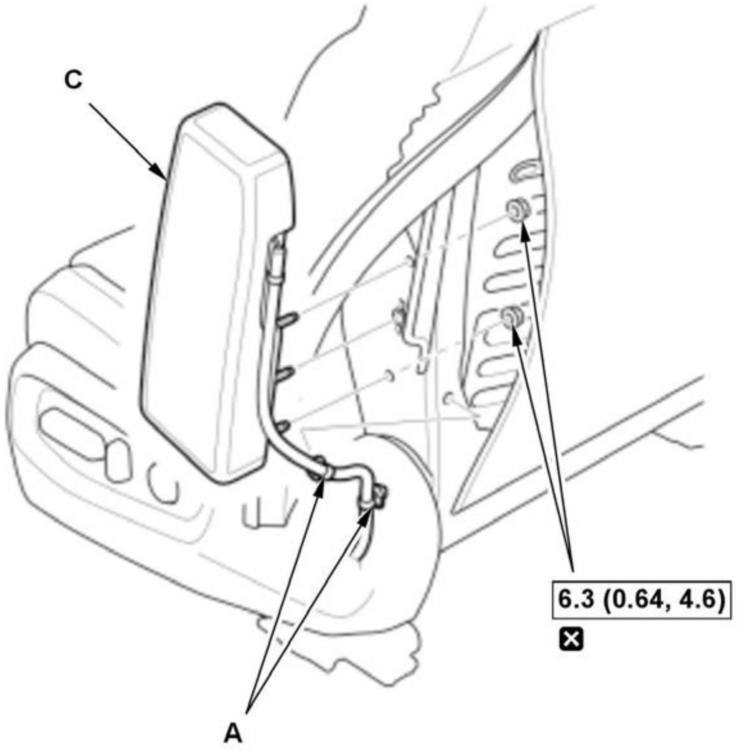	

5. All Removed Parts - Install

1. Install the all removed parts in the reverse order of removal.

NOTE:

- During installation, install the new mounting nut to the specified torque.
- If the side airbag cover is secured with tape, remove the tape.
- Do not open the lid on the side airbag cover.
- Make sure that the seat-back cover/pad is installed properly. Improper installation may prevent proper deployment.
- Be sure to install the harness so that they are not pinched or interfering with other parts.

6. Seat Operation - Confirm

1. Move the front seat and the seat-back through their full ranges of movement, making sure the harness are not pinched or interfering with other parts.

7. SRS Operation - Confirm

1. Turn the vehicle to the ON mode, and check that the SRS indicator comes on for about 6 seconds and then goes off.

SIDE CURTAIN AIRBAG REMOVAL AND INSTALLATION

Removal and Installation

SRS components are located in this area. Review the SRS component locations and the precautions and procedures before doing repairs or service.

NOTE:

- How to read the torque specifications .

- If replacing the side curtain airbag after deployment, **refer to Component Replacement/Inspection After Deployment** for a complete list of other parts that must also be replaced.
- **Review the interior trim replacement procedure before doing repair or service** .

1. **12 Volt Battery Terminal - Disconnect**

   NOTE: Wait at least 3 minutes before starting work.

2. **Headliner - Remove**
3. Side Curtain Airbag - Remove

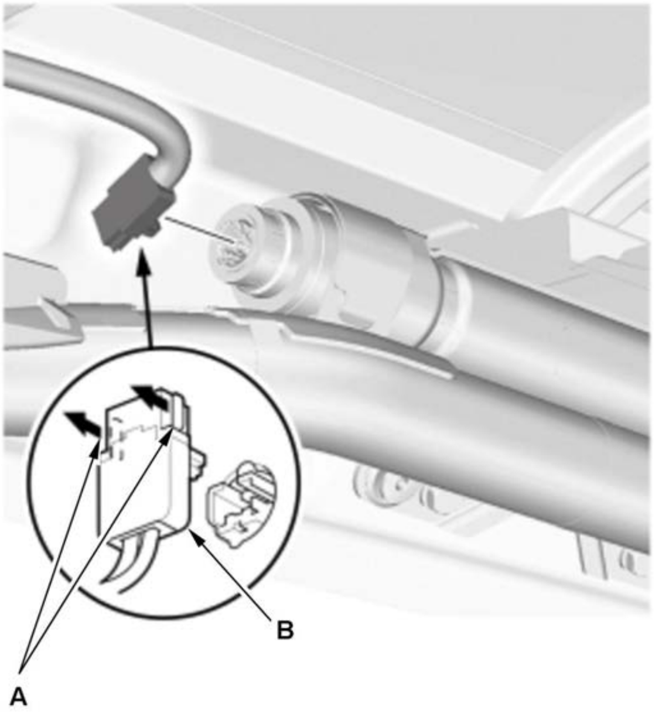

1. Pull up on both locking tabs (A) to disconnect the connector (B).
NOTE: Be careful not to damage the connector.

2. Remove the bolts (A, B).

NOTE: Depending on the model, the side curtain airbag mounting bolts are either a 5mm or 6mm bolt.

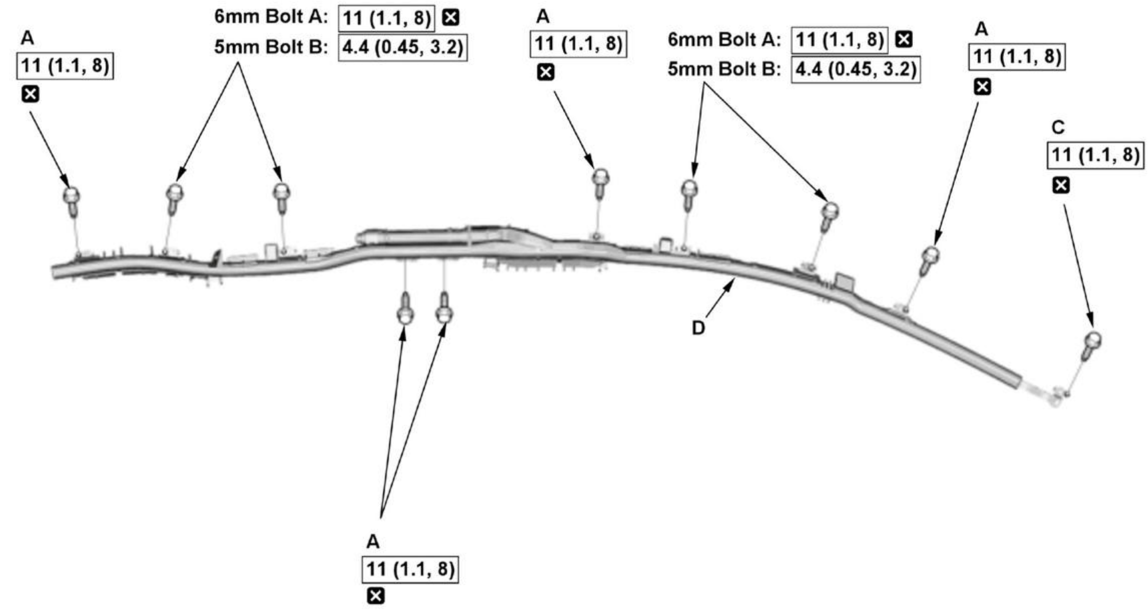
A
11 (1.1, 8)
☒
6mm Bolt A: 11 (1.1, 8) ☒
5mm Bolt B: 4.4 (0.45, 3.2)
A
11 (1.1, 8)
☒
6mm Bolt A: 11 (1.1, 8) ☒
5mm Bolt B: 4.4 (0.45, 3.2)
A
11 (1.1, 8)
☒
C
11 (1.1, 8)
☒
D
A
11 (1.1, 8)
☒

3. For some models: Remove the bolt (C).

4. Remove the side curtain airbag (D).

4. All Removed Parts - Install

1. Install all of the removed parts in reverse order.
NOTE:

- During installation, install the new side curtain airbag mounting bolts to the specified torque.
- If the side curtain airbag is frayed, or has any other visible damage, replace it. Do not attempt to repair an airbag.
- When you install the side curtain airbag, make sure it is not twisted, and that it is not caught between the inflator bracket by the bracket bolts.
- Make sure that the side curtain airbag inflator retainer is installed properly. Otherwise the side curtain airbag could incorrectly deploy and cause damage or injuries.
- If there is any damage to the side curtain airbag, do not try to repair it. Replace any damaged side curtain airbag.
- Before installing the headliner, make sure the SRS indicator works normally.

5. SRS Operation - Confirm

1. Do the 12 volt battery terminal reconnection procedure, turn the vehicle to the ON mode, and check that the SRS indicator comes on for about 6 seconds and then goes off.

6. **Headliner/Pillar Trim Overlap - Confirm**

SYMPTOM TROUBLESHOOTING INDEX FOR VIEWER

FRONT PASSENGER'S AIRBAG CUTOFF INDICATOR DOES NOT COME ON

Diagnostic procedure

- Check for DTCs. If any DTC is indicated, go to the DTC troubleshooting

Also check for

DTC B00D5-14 troubleshooting

FRONT PASSENGER'S AIRBAG CUTOFF INDICATOR FLASHES

Diagnostic procedure

- Check for DTCs. If any DTC is indicated, go to the DTC troubleshooting

Also check for

Front passenger's weight sensor initialization

FRONT SEAT BELT REMINDER INDICATOR DOES NOT COME ON, TURN OFF, OR FLASH

Diagnostic procedure

- Symptom Troubleshooting

Also check for

-

SRS INDICATOR DOES NOT COME ON

Diagnostic procedure

- Symptom Troubleshooting

Also check for

-

SRS INDICATOR STAYS ON, BUT NO DTCS ARE STORED, OR CANNOT BE READ

Diagnostic procedure

NOTE: If any of the CAN communication failure DTC is indicated in other system, troubleshoot the DTC first.

- Check for open wire or shorted wire in the F-CAN circuit;
-
    - -

      Between the SRS unit and the CAN gateway (F-CAN C_H, F-CAN C_L)
    - -

Between the CAN gateway and the gauge control module (F-CAN D_H, F-CAN D_L)

- Check the SRS unit power circuit (IG1_SRS).
- Check the SRS unit ground circuit (GND).
- Do the gauge control module self-diagnostic function .

Also check for

- Check the deployed history.

Refer to the followings about the circuit troubleshooting;

- Gauge control module connector for inputs and outputs
- SRS unit connector for inputs and outputs
- SRS system circuit diagram
- Fuse to components index
- Ground to component index

DESCRIPTION & OPERATION

SRS SYSTEM DESCRIPTION

This vehicle is equipped with SRS components that includes driver's and front passenger's airbags, side airbags, side curtain airbags, seat belt outer lap tensioners, and seat belt tensioners.

Trouble Diagnosis Function

For troubleshooting information, refer to the General Troubleshooting Information .

Driver's and Front Passenger's Airbag

In case of a frontal collision, the vehicle has a function to mitigate the impact forces acting on the head and chest of the front seat occupant that is used in combination with a seat belt tensioner as a body restraint device in addition to the impact-absorbing construction of the body shell.

Seat Belt Tensioner and Seat Belt Outer Lap Tensioner

The seat belt tensioner and the seat belt outer lap tensioner instantaneously retracts the seat belt at the time of a collision, and the effect of the seat belt is increased further by securely restraining the occupant in the seat. In the case of a low-speed collision, since the seat belt can adequately secure the occupant, only the seat belt tensioner and the seat belt outer lap tensioner are activated to retract the seat belt without deploying the airbags. In the case of a medium to high speed collision, the airbags, seat belt tensioners, and seat belt outer lap tensioners are activated to improve the restraining effect of the occupant and safety performance.

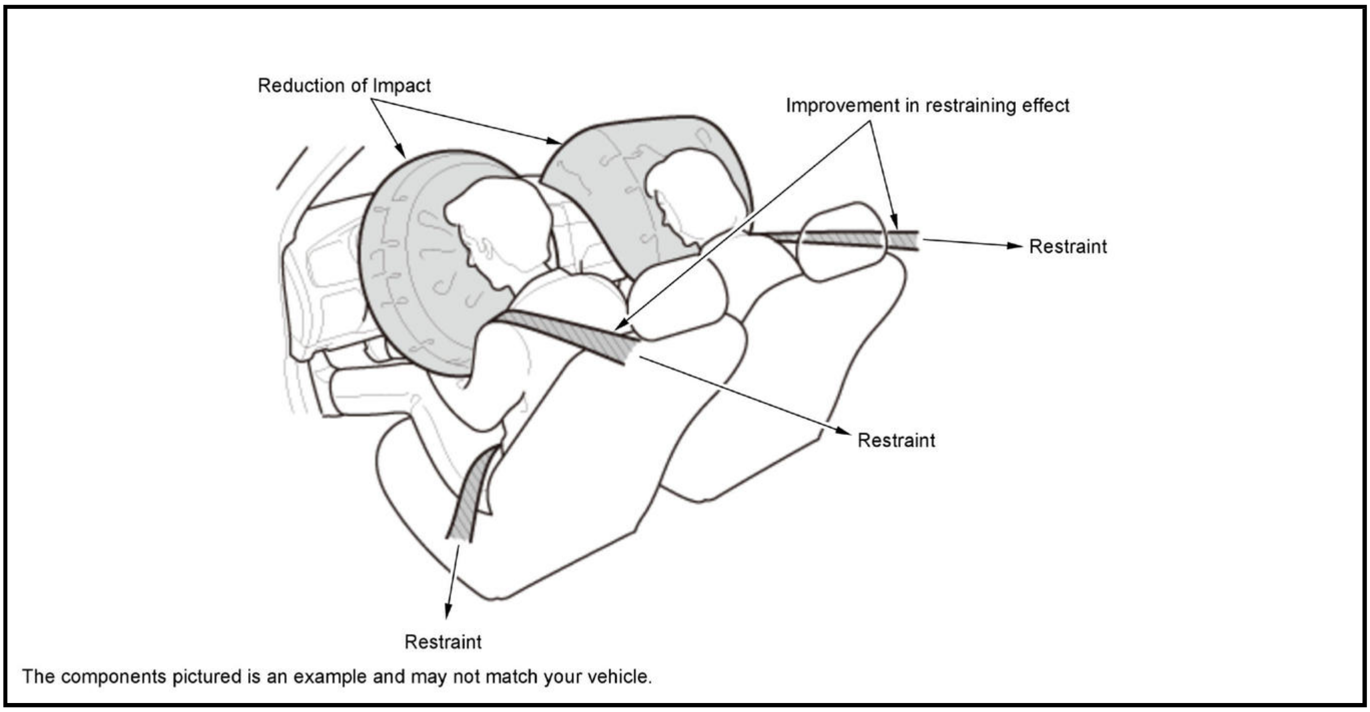
Reduction of Impact
Improvement in restraining effect
Restraint
Restraint
Restraint

The components pictured is an example and may not match your vehicle.

Operating process of driver's/front passenger's airbag/tensioner deployment:

1. The impact force generated by a frontal collision is transmitted through the vehicle's structural components and input from each of the front impact sensors, front impact G sensors, and the safing drive circuit inside the SRS unit.

2. The front impact sensor converts the collision force into electrical signals, which are sent to the microprocessor and the safing drive circuit inside the SRS unit. At the same time, the front impact G sensors inside the SRS unit converts the collision force input into waveform electrical signals and sends them to the microprocessor and the safing drive circuit.

3. The microprocessor outputs actuation signals if the outputs from the front impact sensors and front impact G sensor exceed the preset threshold value. At this time, if the output from the safing drive circuit inside the SRS unit exceeds the preset threshold value, current flows through a trigger circuit, which deploys the SRS airbag and/or operates the seat belt tensioners and the seat belt outer lap tensioners.

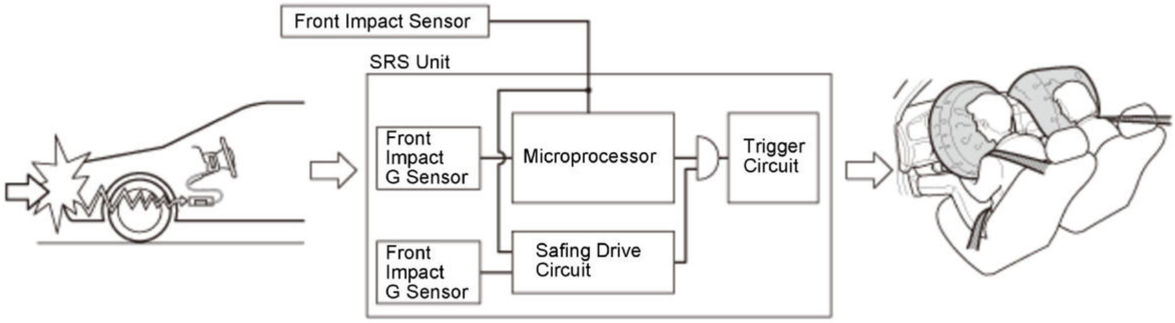
Front Impact Sensor
SRS Unit
Front Impact G Sensor
Microprocessor
Trigger Circuit
Front Impact G Sensor
Safing Drive Circuit

The components pictured is an example and may not match your vehicle.

SRS airbags do not deploy in the following cases:

The SRS airbags deploy when a strong impact comes from the left-front or right-front direction, within 30 degrees from the front face when the vehicle is in the ON mode. Therefore, in the following cases, the SRS airbags does not deploy because there is no effect on occupant protection but it may deploy depending on the state of the collision.

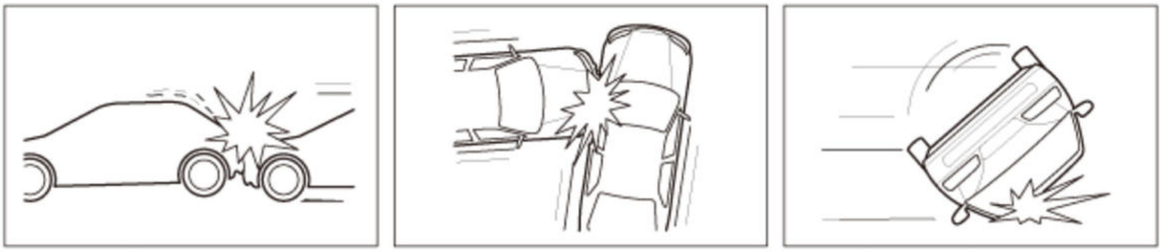

Rear impacts

Side impacts

Rollover or Overturn

The components pictured is an example and may not match your vehicle.

SRS airbags may not deploy in the following cases:

The deployment of the SRS airbags are designed based on the scale of the impact felt by the occupant(s). Therefore, the deployment of the SRS airbags are not always related to the amount of damage to the vehicle.

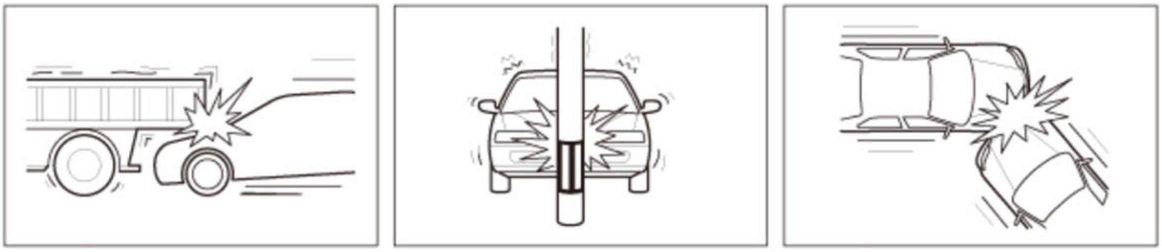

Creeping under a truck

Colliding into a pole or tree

Partial collision or
oblique direction collision

The components pictured is an example and may not match your vehicle.

Side Airbag System and Side Curtain Airbag System

In case of a side impact, the side airbag, the side curtain airbag, and the seat belt tensioner on the side impacted operate in addition to the impact-absorbing body shell of the vehicle, which mitigates the impact forces acting on the head and chest of the occupant. Moreover, the side impact sensors detect the various states of collision so that the airbag deploys accordingly. The side airbag uses a variable volume type which it's construction and deployment process of the airbag pressure chamber have been improved and enable a safe deployment regardless of the position of the occupant. Due to this design, conventional parts related to OPDS* are not equipped.*: Occupant Position Detection System

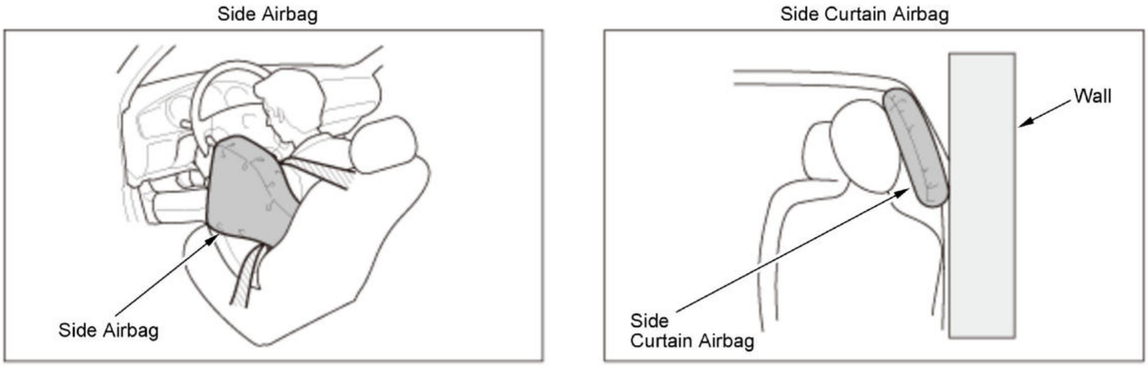

The components pictured is an example and may not match your vehicle.

Side airbag and side curtain airbag deployment process:

1. The collision force generated from the side impact is inputted to each of the side impact sensors and the side impact G sensor inside the SRS unit.

2. If the microprocessor inside the SRS unit determines that the side impact sensor(s) output exceeds a preset threshold value, and if the output from the side impact G sensor inside the SRS unit exceeds a preset threshold

value, the circuit creates an actuation signal.

3. The actuation signal is sent from the microprocessor to the trigger circuit, which deploys the side airbag, the side curtain airbag, and the seat belt tensioner.

NOTE: In cases of a strong frontal collision, the threshold value for a side impact is exceeded in the SRS unit, the side curtain airbag may deploy.

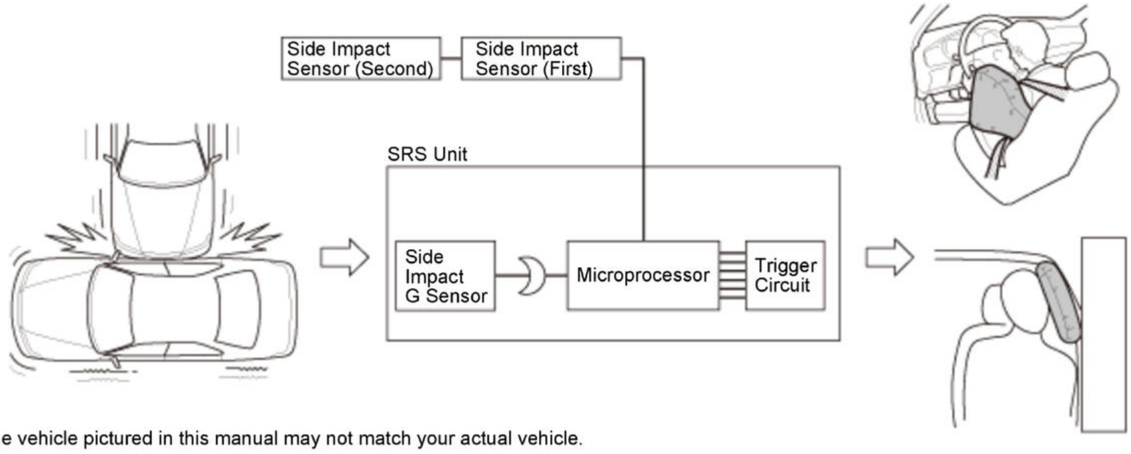

The vehicle pictured in this manual may not match your actual vehicle.

Side airbag and side curtain airbag deployment conditions:

When the vehicle is subject to a strong side impact and the side impact G sensor detects an impact that exceeds the preset threshold value, the side airbags and side curtain airbags on the side receiving the impact will deploy.

NOTE: The side curtain airbags may deploy along with the front airbags during a front-end collision in order to protect the heads of occupants if the collision force to the side of the vehicle exceeds a certain value.

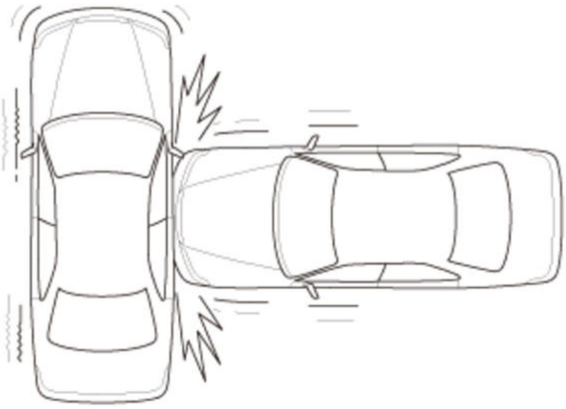

The components pictured is an example and may not match your vehicle.

Conditions in which side airbag and side curtain airbag may not deploy:

Since the side airbags and the side curtain airbags are designed to deploy when an impact force to the vehicle side exceeds a preset value, they may not deploy when impact forces are reduced by the vehicle's crush zone, or when a side impact is applied in the front or behind the passenger compartment. Also, these airbags may deploy in the case of side slip collision or when the vehicle roll overs, but in such cases, will not provide full occupant protection.

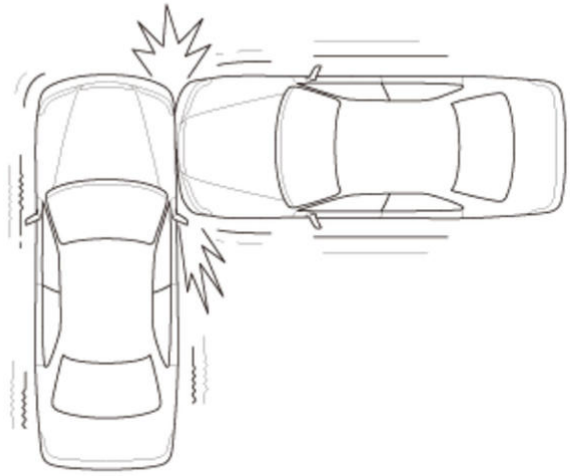

The components pictured is an example and may not match your vehicle.

SRS SYSTEM DESCRIPTION - COMPONENTS

Driver's and Front Passenger's Airbag

Airbag

The driver's airbag is located in the center of the steering wheel. The front passenger's airbag is located in the dashboard on the front passenger's side.

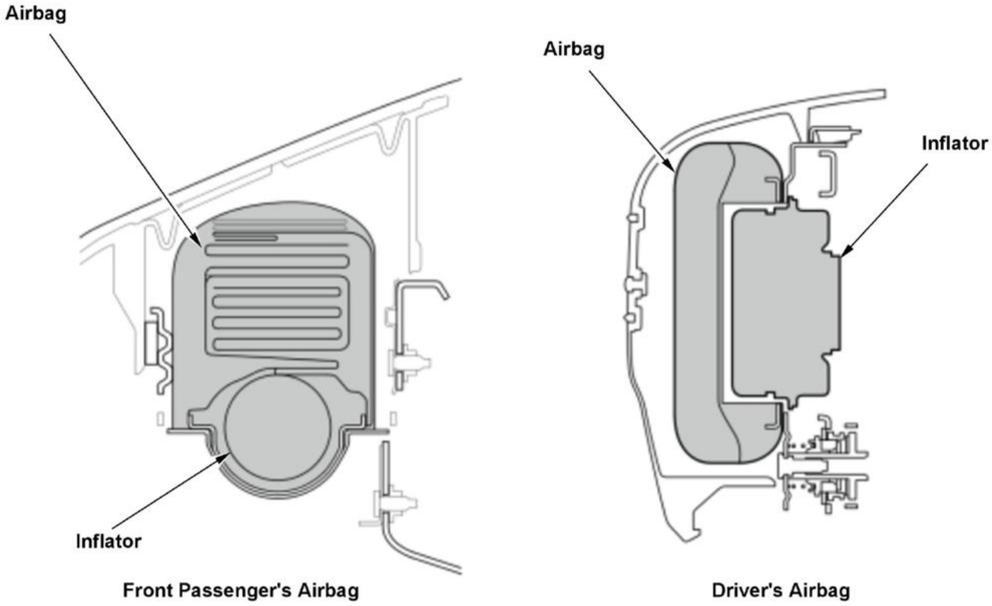
Airbag
Airbag
Inflator
Inflator
Front Passenger's Airbag
Driver's Airbag

The components pictured is an example and may not match your vehicle.

Dual Inflators

The airbag modules adopt dual inflators for the driver's and the front passenger's airbags. The dual inflators increase airbag effectiveness by properly adjusting the timing when the two inflators are to be ignited (together or sequentially) based on speed or impact.

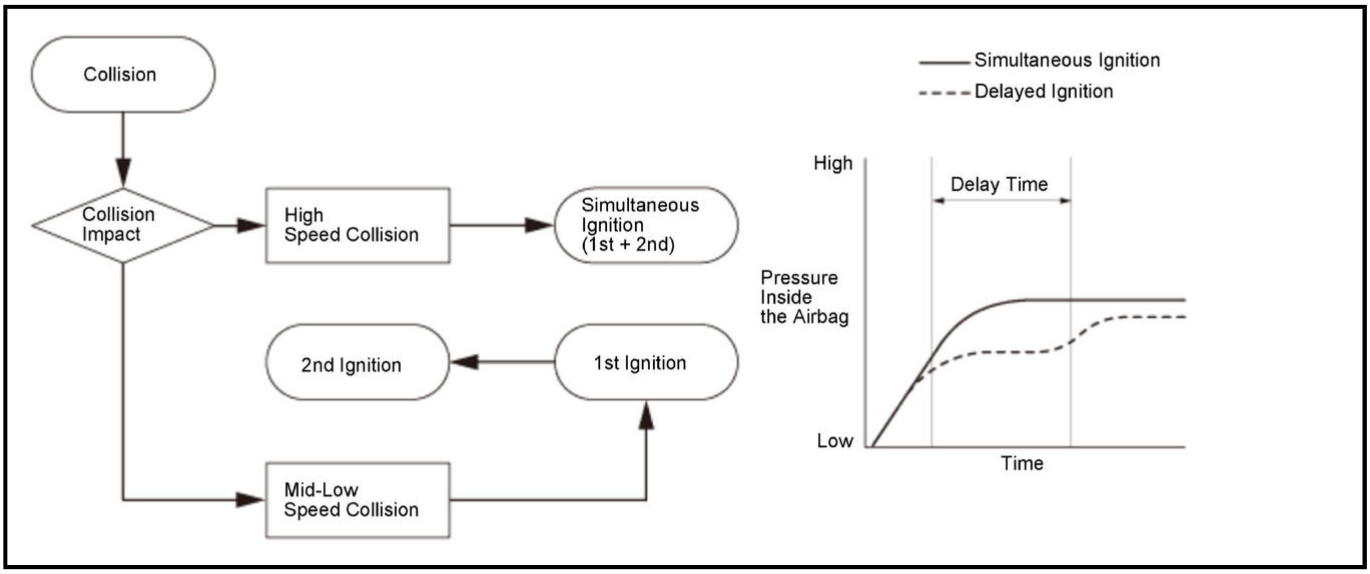
Collision
Collision Impact
High Speed Collision
Simultaneous Ignition (1st + 2nd)
2nd Ignition
1st Ignition
Mid-Low Speed Collision
Simultaneous Ignition
Delayed Ignition
High
Delay Time
Pressure Inside the Airbag
Low
Time

Driver's Airbag (Continuous Capacity Change Type)

The driver's airbag is a spiral stitched, continuous capacity changing airbag with an exhaust air control valve to help lower the impact of the airbag while helping to protect the occupant effectively. The spiral stitched airbag inflates in a shorter time at the correct pressure with a small amount of air inside However, it does not compromise the ability to help protect the occupant.

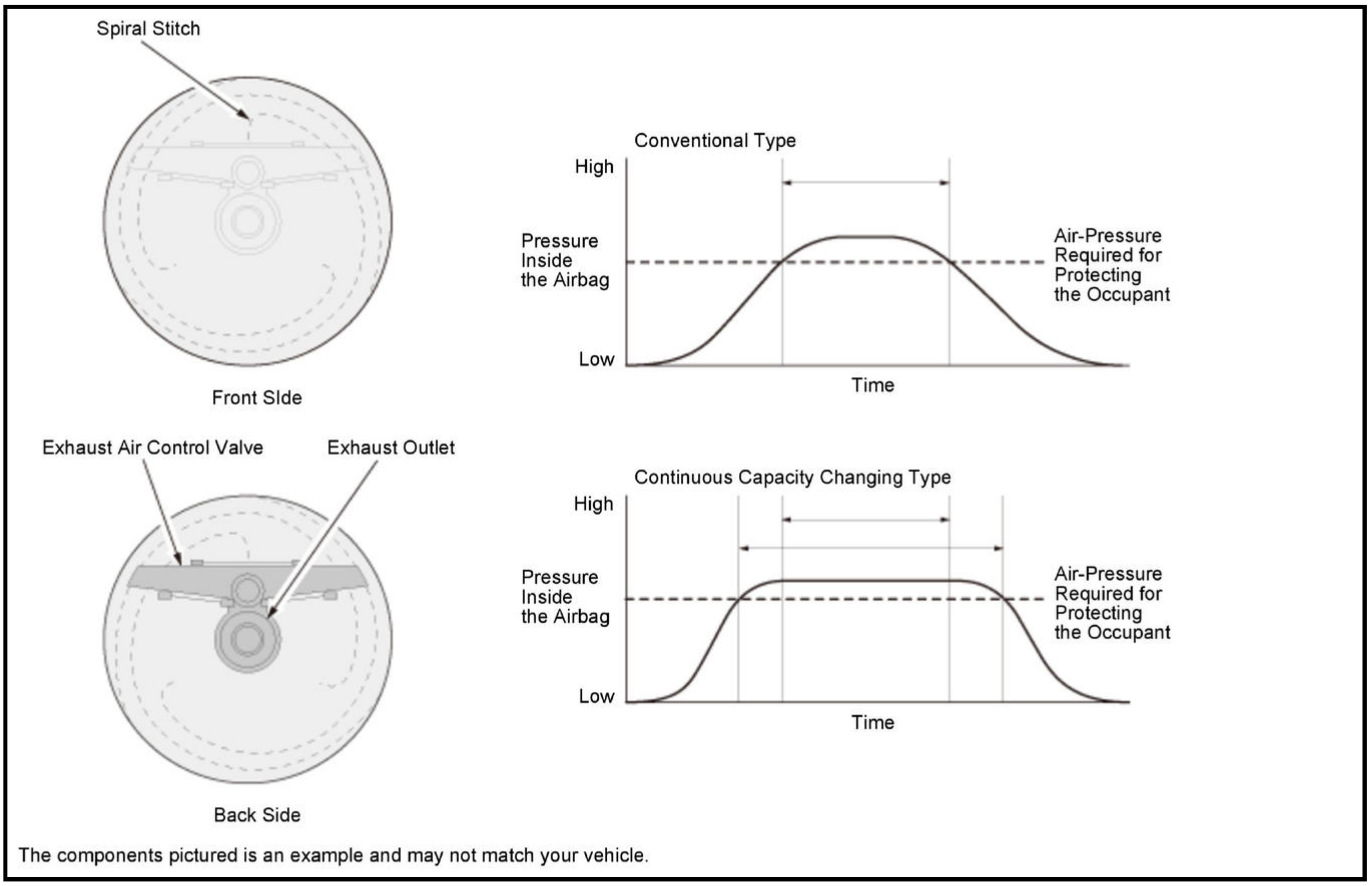
Spiral Stitch
Front SIde
Exhaust Air Control Valve
Exhaust Outlet
Back Side
Conventional Type
High
Pressure Inside the Airbag
Low
Time
Air-Pressure Required for Protecting the Occupant
Continuous Capacity Changing Type
High
Pressure Inside the Airbag
Low
Time
Air-Pressure Required for Protecting the Occupant

The components pictured is an example and may not match your vehicle.

Safety Vent

The front passenger's airbag (A) is equipped with safety vents (B). When airbag deployment occurs near the occupant, releasing gas from the safety vents reduces the possibility of injury to the occupant. When the airbag is fully deployed, the safety vents close and holds the internal pressure to ensure occupant restraint and protection performance.

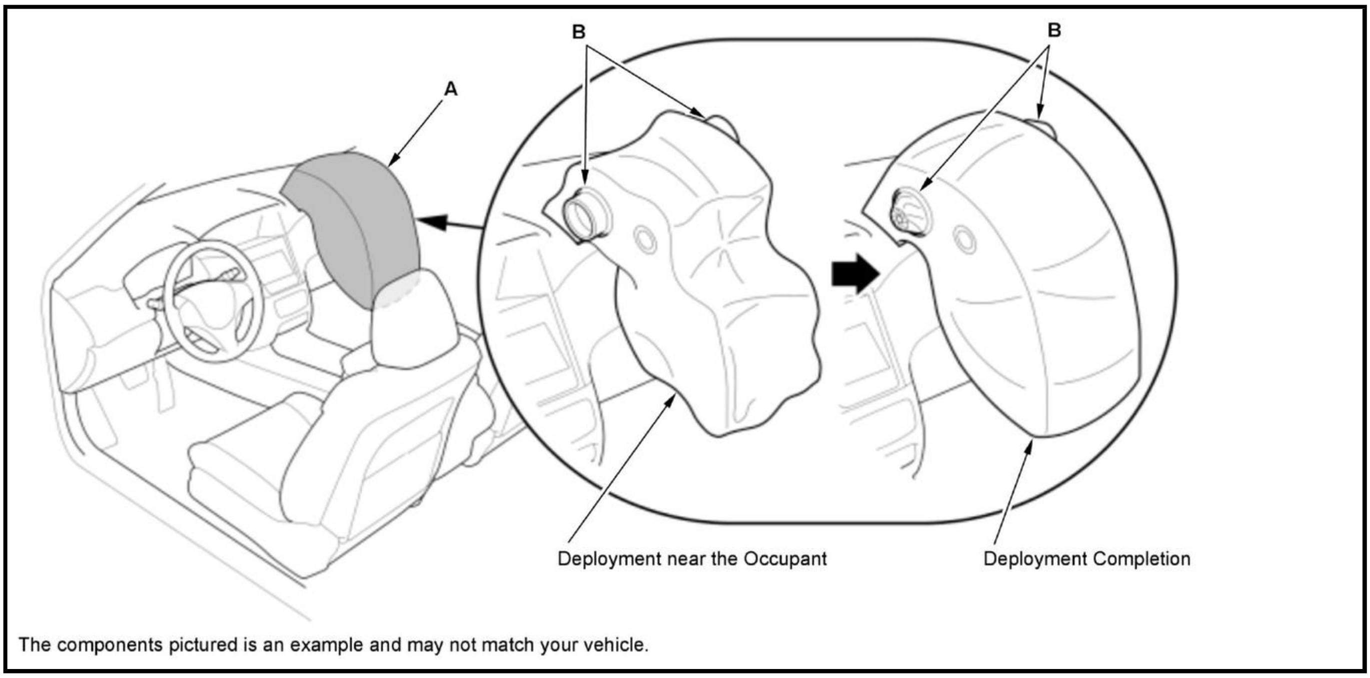
A
B
B
Deployment near the Occupant
Deployment Completion
The components pictured is an example and may not match your vehicle.

Side Airbag and Side Curtain Airbag

Side Airbag

The side airbags are located at the outside position of the seat-back of the driver's seat and the front passenger's seat. Being installed at the seat-back enables operation in optimal condition for the occupants regardless of the seat slide and recline position.

The side airbag assembly is configured with an inflator and an airbag. It is designed in a way that the airbag tears open the seam of the seat-back to enable efficient deployment. Objects adjacent to deployment or using a seat cover other than the one dedicated for the side airbag may prevent proper operation of the side airbag.

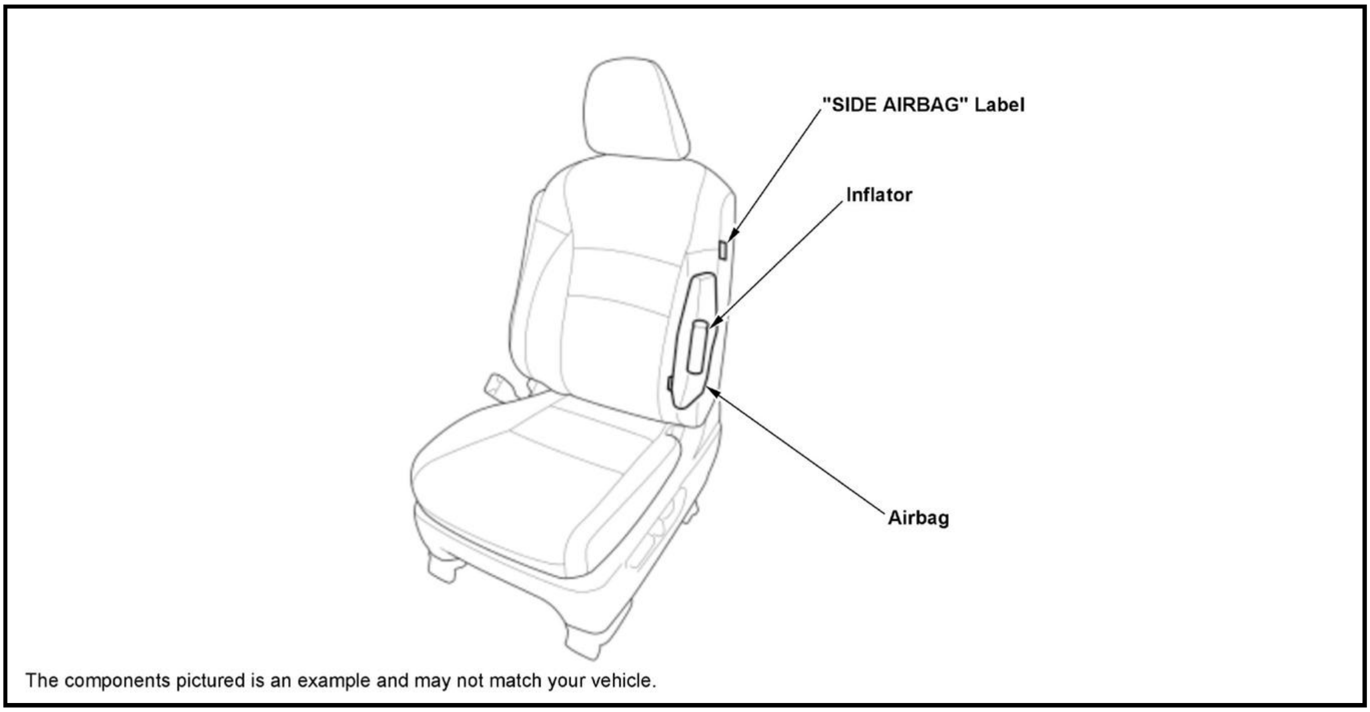
"SIDE AIRBAG" Label
Inflator
Airbag
The components pictured is an example and may not match your vehicle.

Side Curtain Airbag

A side curtain airbag inflates the full area of the window to protect the occupant's head from hitting the window or frame pillar in a side-impact collision. The side curtain airbags are located under the roof side panels. The side curtain airbags are deployed by triggering a gas inflator located near the B-pillar. Objects adjacent to deployment or attaching parts other than the ones dedicated for side curtain airbags may prevent proper operation of the side curtain airbags.

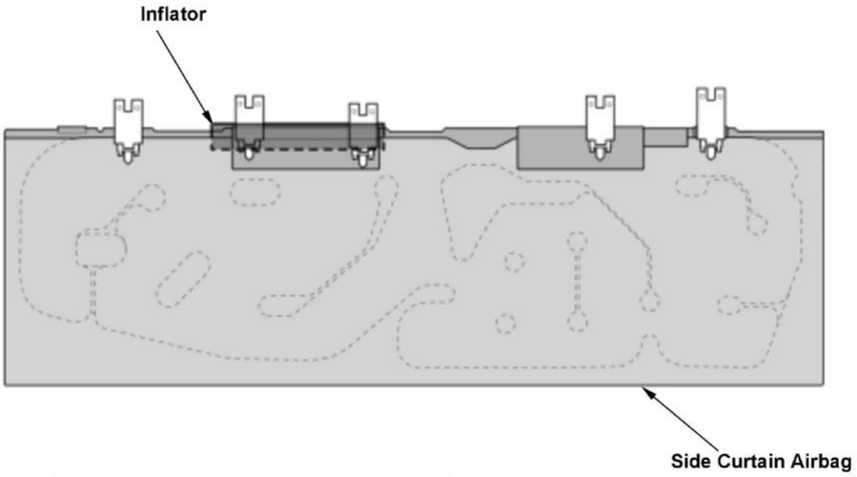

The components pictured is an example and may not match your vehicle.

Impact Sensor

The G-force sensor within the impact sensor detects the force upon a collision. If the impact exceeds a preset threshold value, it is converted into an electrical signal that is sent to the SRS unit.

- Front impact sensor: The front impact sensors are installed at the right and left front side frame. They detect the frontal vehicle impacts.
- Side impact sensor: The first and second side impact sensors are installed at the right and left floor near the center pilllars. They detect the lateral vehicle impacts.

SRS Unit

The SRS unit is located on the rear side of the center console. When airbags or tensioners are about to be deployed, a large amount of current passes through the SRS unit. After the airbags and tensioners are deployed, the internal components of the SRS unit are damaged and must be replaced.

Automatic Short-Circuit Mechanism of SRS Unit Connectors

When the SRS unit connectors are disconnected from the SRS unit, the automatic short-circuit mechanism in the connectors creates short-circuits to prevent accidental deployment of an airbag. This automatic short-circuit mechanism is configured in such a way that the respective deployment circuits (adjacent terminal) are short-circuited when the connector is disconnected.

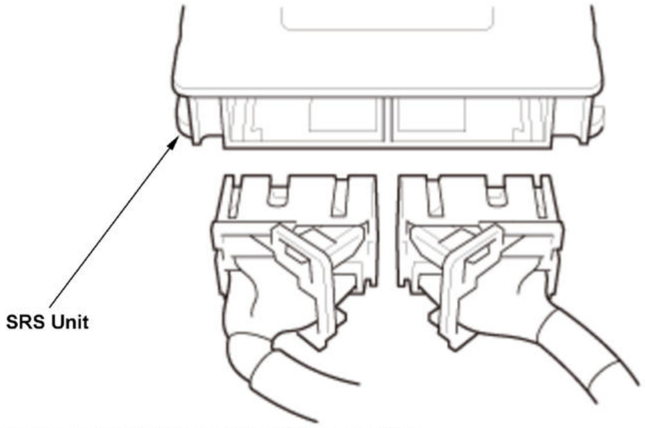

The components pictured is an example and may not match your vehicle.

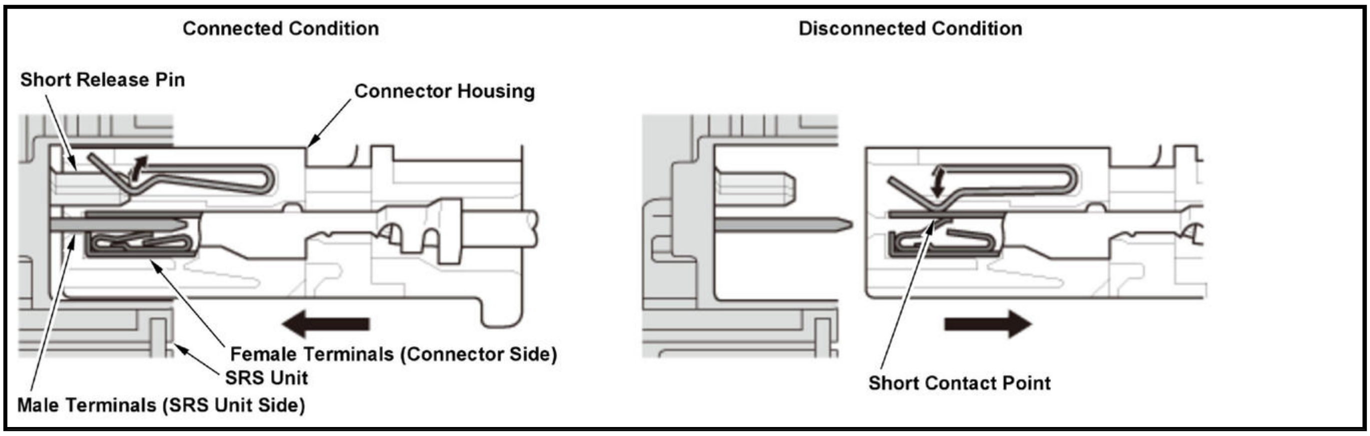
Connected Condition
Disconnected Condition
Short Release Pin
Connector Housing
Female Terminals (Connector Side)
SRS Unit
Male Terminals (SRS Unit Side)
Short Contact Point

Electrical Terminal Fit Detection System

The connectors connected to the SRS unit are equipped with a terminal that short-circuits the fit detection terminals with each other. If the connectors are properly connected, the fit detection terminals are short-circuited to each other and the SRS unit detects the fitting of the various connectors. When the vehicle is turned to the ON mode while a fitting is not detected, poor terminal fitting is judged and a DTC is stored.

Rollover Detection

A sensor integrated into the SRS unit performs rollover detection. The sensor detects the degree of vehicle roll and converts it to an electrical signal. If the SRS unit determines that a vehicle rollover is occurring, one or both side curtain airbags and seat belt tensioners will be deployed depending on the direction and number of rollover events.

Driver's Seat Position Sensor

The driver's seat position sensor is mounted to the driver's seat rail. When the driver's seat is moved to the full-forward position, a metal part of the seat track interrupts the sensor signal. This change in signal is then sent to the SRS unit for processing. If a frontal airbag deployment becomes necessary, the driver's airbag will deploy at the slowest rate, regardless of impact severity. With the seat moved further back, the SRS unit commands the appropriate deployment force based on impact severity.

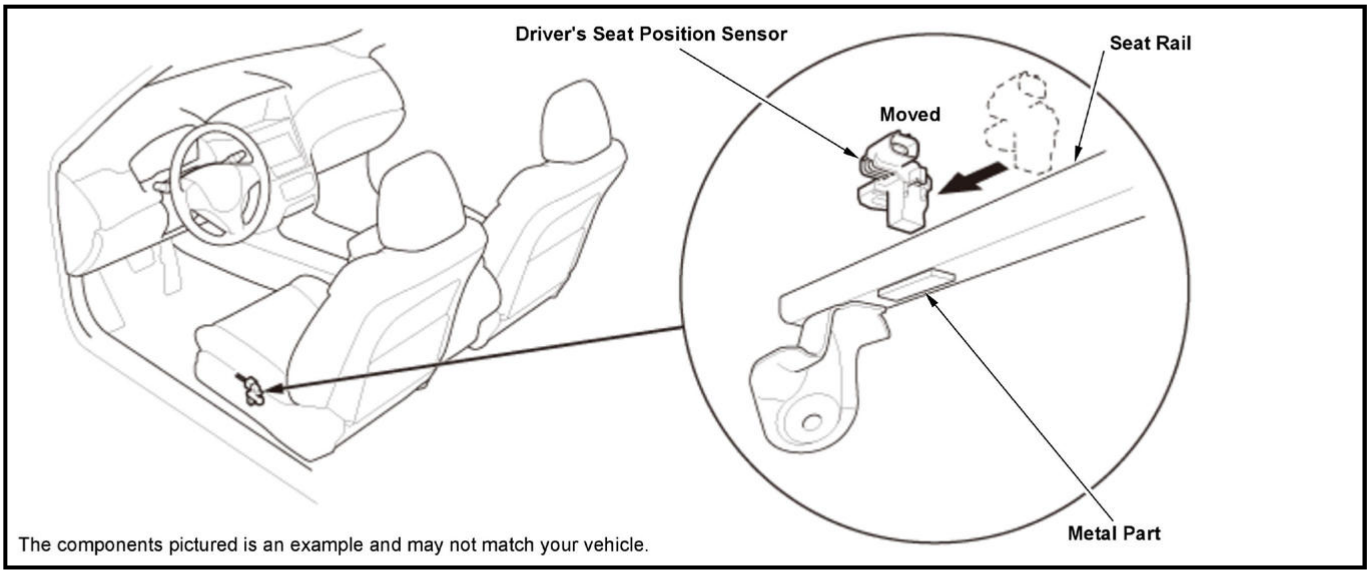
Driver's Seat Position Sensor
Seat Rail
Moved
Metal Part

The components pictured is an example and may not match your vehicle.

Front Passenger's Weight Sensor

Overview

The front passenger's weight sensors for load detection are equipped inside the front passenger's seat. The SRS unit receives the load information from the weight sensors via LIN communication and performs an occupant judgment of the front passenger's seat, and adjusts the front passenger's airbag deployment and performance. In addition, there are two types of weight sensors, a two sensor type and a four sensor type. The HDS can determine which type is used.

Operation

The weight of the front passenger's seat is detected by the weight sensors and sent to the SRS unit via LIN communication. If the weight is above a threshold level, front passenger's airbag operation is allowed, and if the weight is below a threshold level, the system will automatically turn the front passenger's airbag off. Also, the front passenger's airbag cutoff indicator turns on to inform the occupant that the front passenger's airbag will not deploy.

NOTE: The front passenger's weight sensors measure only the weight that's actually on the seat cushion. They do not measure the weight of the front passenger's legs extending to the floor or arms resting on the armrests. A front seat passenger who weighs near the airbag's cutoff threshold may cause the airbag and indicator to turn on and off just by moving around in the seat and shifting the occupant weight. This may cause some occupants to believe there's something wrong with the airbag system when it is operating normally. Also, although the measured weight of the two sensor type differs by the seating state of the occupant, load detection by the weight sensors is performed accurately.

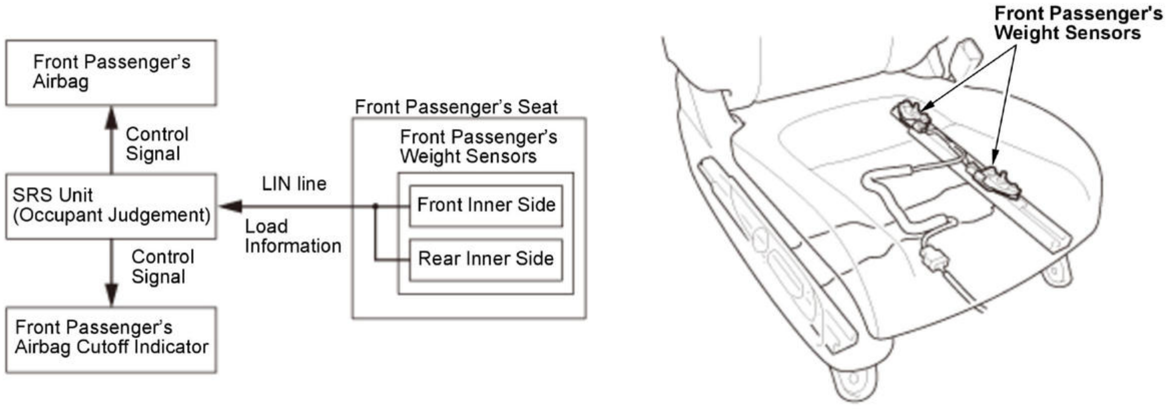
Front Passenger's Airbag
Control Signal
SRS Unit (Occupant Judgement)
Control Signal
Front Passenger's Airbag Cutoff Indicator
LIN line
Load Information
Front Passenger's Seat
Front Passenger's Weight Sensors
Front Inner Side
Rear Inner Side
Front Passenger's Weight Sensors

The components pictured is an example and may not match your vehicle.

Seat Belt Tensioner

Overview

When the seat belt tensioner operates, it quickly tightens the seat belt, and improves the occupant's initial restraining effect (preventing the occupant's body from being moved forward). When the load exceeds the preset value, the load limiter keeps the restraining effect while sending out the seat belt to protect the chest of the passenger.

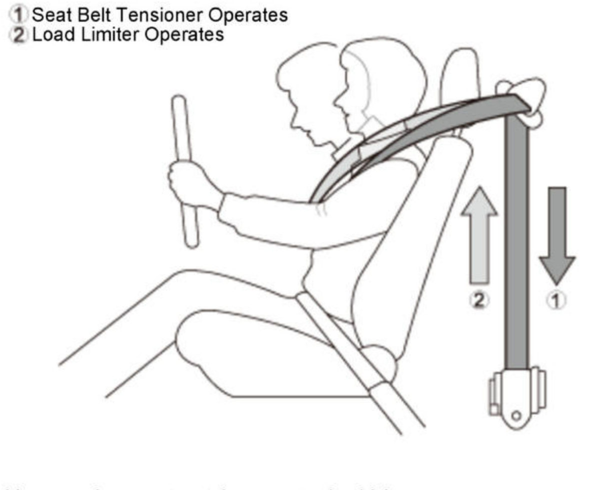
① Seat Belt Tensioner Operates
② Load Limiter Operates
②
①

The component pictured in this manual may not match your actual vehicle.

Operation of Seat Belt Tensioner

1. When the SRS unit detects a collision signal at the time of an impact acting upon the vehicle, it sends the actuation signal to the seat belt tensioner and the internal gas generator to generate gas.

2. The winding mechanism is rotated by the generated gas pressure and winds the seat belt.

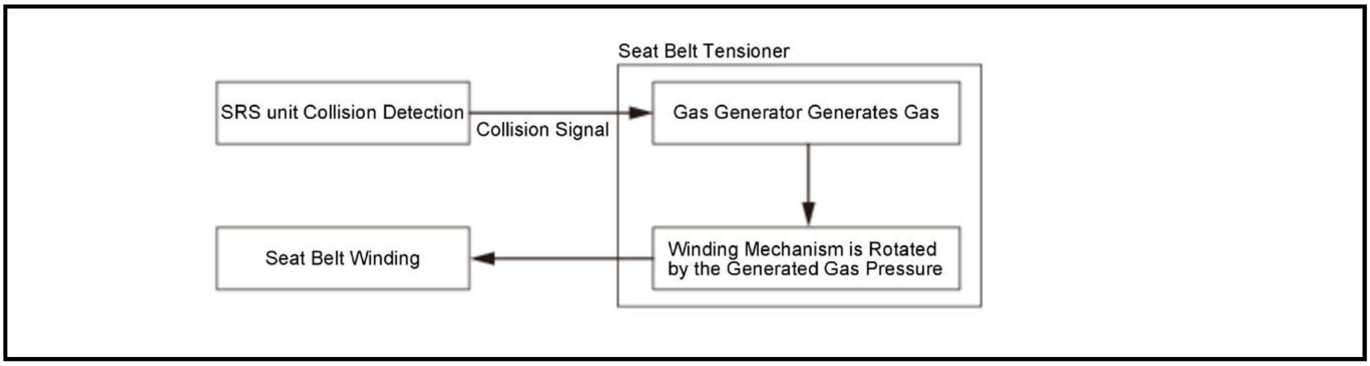
Seat Belt Tensioner
SRS unit Collision Detection
Collision Signal
Gas Generator Generates Gas
Seat Belt Winding
Winding Mechanism is Rotated by the Generated Gas Pressure

Operation of Load Limiter

3. After the seat belt tensioner actuation, or if the seat belt is rapidly pulled out, the ELR lock mechanism of the seat belt retractor is activated and locks the seat belt.

4. When the load applied to the seat belt exceeds the specified load, the load limiter is actuated and releases a certain amount of the seat belt to reduce the extra load.

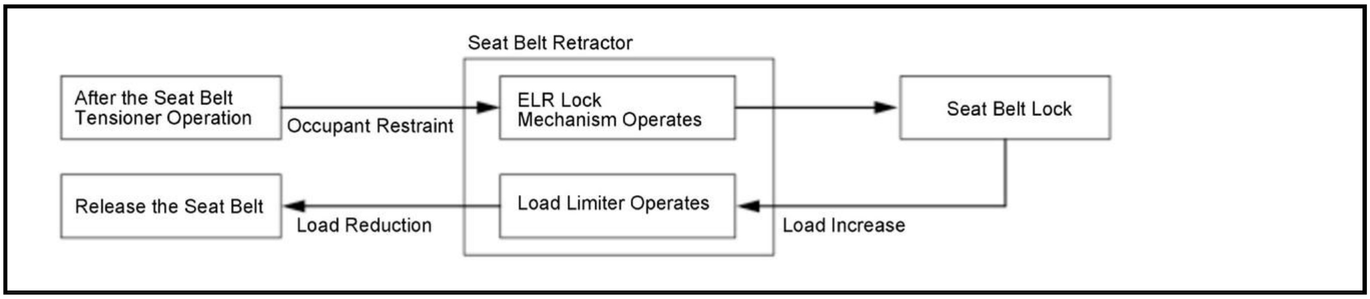
Seat Belt Retractor
After the Seat Belt Tensioner Operation
Occupant Restraint
ELR Lock Mechanism Operates
Seat Belt Lock
Release the Seat Belt
Load Reduction
Load Limiter Operates
Load Increase

ELR (Emergency Locking Retractor) Lock Mechanism

If the seat belt is rapidly pulled out (occupant sliding forward during a collision), the ELR lock mechanism of the seat belt retractor is actuated and locks the seat belt to secure the occupant's body.

Seat Belt Outer Lap Tensioner

Overview

In the event of a collision, the seat belt outer lap tensioner coordinates with the seat belt tensioner and instantaneously retracts the seat belt. This ensures the seat belt's ability to restrain and protect the occupant at the chest and waist by firmly securing the occupant to the seat.

Operation

1. When the SRS unit detects a collision signal at the time of an impact, it sends an actuation signal to the seat belt outer lap tensioner, and the internal gas generator generates gas.

2. A piston in the cylinder moves by the generated gas pressure and pulls the wire and seat belt.

3. After the retraction is complete, the seat belt outer lap tensioner locks the wire to prevent growth of the seat belt by the forward movement of the occupant.

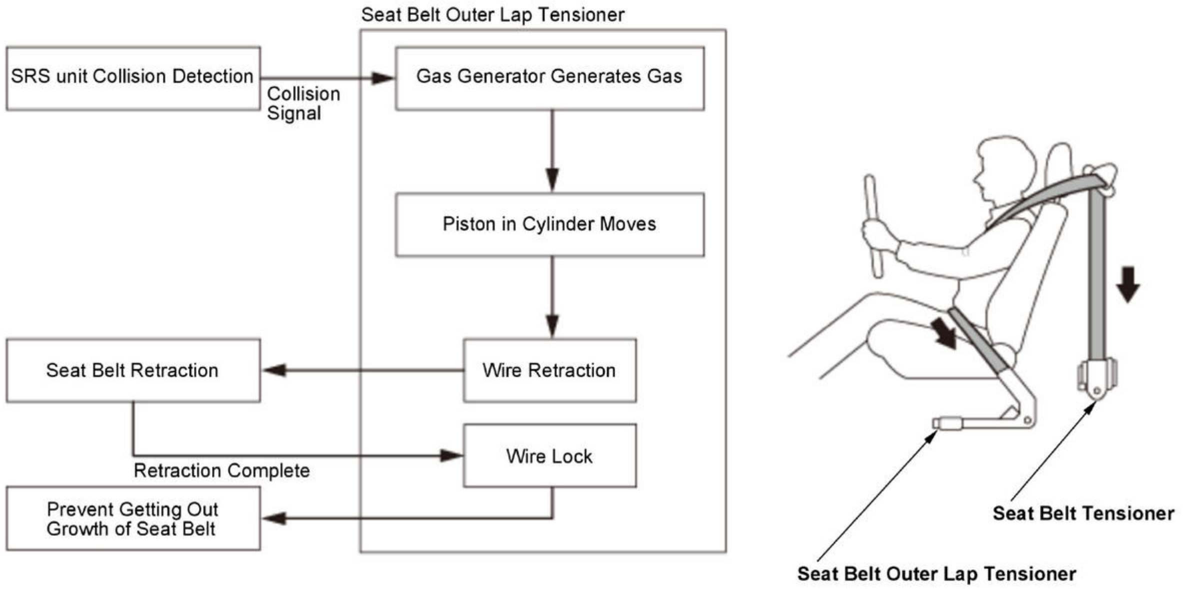
Seat Belt Outer Lap Tensioner
SRS unit Collision Detection
Collision Signal
Gas Generator Generates Gas
Piston in Cylinder Moves
Seat Belt Retraction
Wire Retraction
Wire Lock
Retraction Complete
Prevent Getting Out Growth of Seat Belt
Seat Belt Tensioner
Seat Belt Outer Lap Tensioner

The components pictured is an example and may not match your vehicle.

Selectable Energy Absorption Device

When the seat belt tensioner operates, it instantly retracts the seat belt, enhancing its ability to immediately restrain the occupant. Also, a selectable energy absorption device is fitted within the front passenger's seat belt tensioner that reduces the burden on the occupant's chest while properly maintaining the restraining force of the seat belt. To ensure the seat belt's ability to protect the occupant, the seat belt adjusts to its optimum energy absorption characteristic for the occupant by using the occupant weight information which is detected by the front passenger's weight sensor.

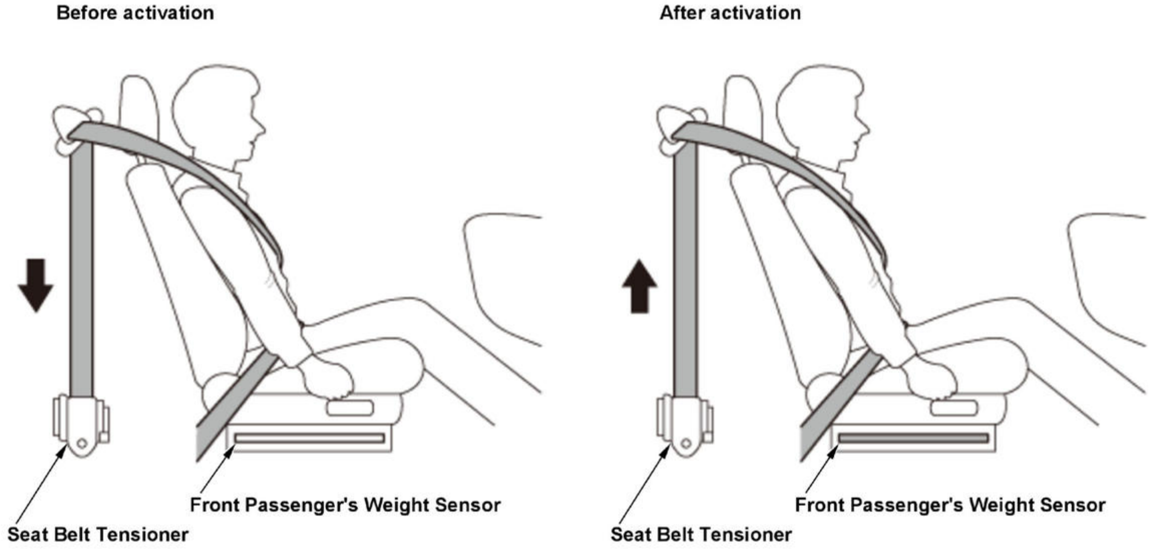
Before activation
After activation
Front Passenger's Weight Sensor
Seat Belt Tensioner
Front Passenger's Weight Sensor
Seat Belt Tensioner

The components pictured is an example and may not match your vehicle.

Seat Belt Reminder

Driver's Seat Belt Reminder Function

The SRS unit turns on the seat belt reminder indicator in order to urge the driver to wear their seat belt if the system detects that the seat belt is not buckled.

Passenger's Seat Belt Reminder Function

The SRS unit turns on the seat belt reminder indicator in order to urge the passenger to wear their seat belt if the system detects that there is a passenger and their seat belt is not buckled.

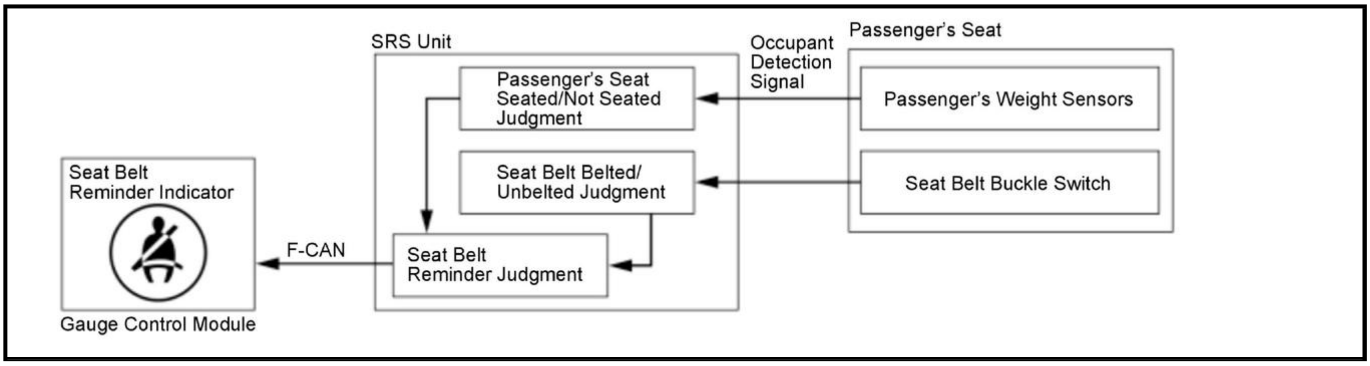
SRS Unit
Passenger's Seat Seated/Not Seated Judgment
Seat Belt Belted/ Unbelted Judgment
Seat Belt Reminder Judgment
Occupant Detection Signal
Passenger's Seat
Passenger's Weight Sensors
Seat Belt Buckle Switch
Seat Belt Reminder Indicator
F-CAN
Gauge Control Module

SRS SYSTEM DESCRIPTION - SYSTEM DIAGRAM

System Diagram

- Power supply circuit (booster circuit, backup power supply): Provides and maintains power when battery voltage is low or in case of power supply damage due to a collision.
- Front impact G sensors and side impact G sensor: Detect impact to the SRS unit as acceleration and converts it to an electrical signal.
- Rollover judgment circuit: Predicts an impending rollover using signals such as the one from the G sensor located inside of the SRS unit. Based on the rollover judgment and the seat belt buckle switch status, the circuit determines whether the seat belt tensioners and the side curtain airbags should deploy or not.
- Microprocessor: An impact decision algorithm decides whether or not the collision signal warrants deployment of the airbags or the tensioners.
- Diagnostic circuit: Performs self-diagnosis to determine whether system abnormalities are present. If an abnormality is detected, the SRS indicator in the gauge control module turns on.
- Non-volatile memory: Records fault conditions. The SRS memories are not erased even if the 12 volt battery terminal is disconnected.
- Communication circuit: Circuit for outputting or deleting memory contents.
- The SRS unit receives the load information from the weight sensors, performs an occupant judgment of the front passenger's seat, and adjusts the front passenger's airbag deployment and performance.

For locations of each component on vehicle, **refer to Component Location Index**.

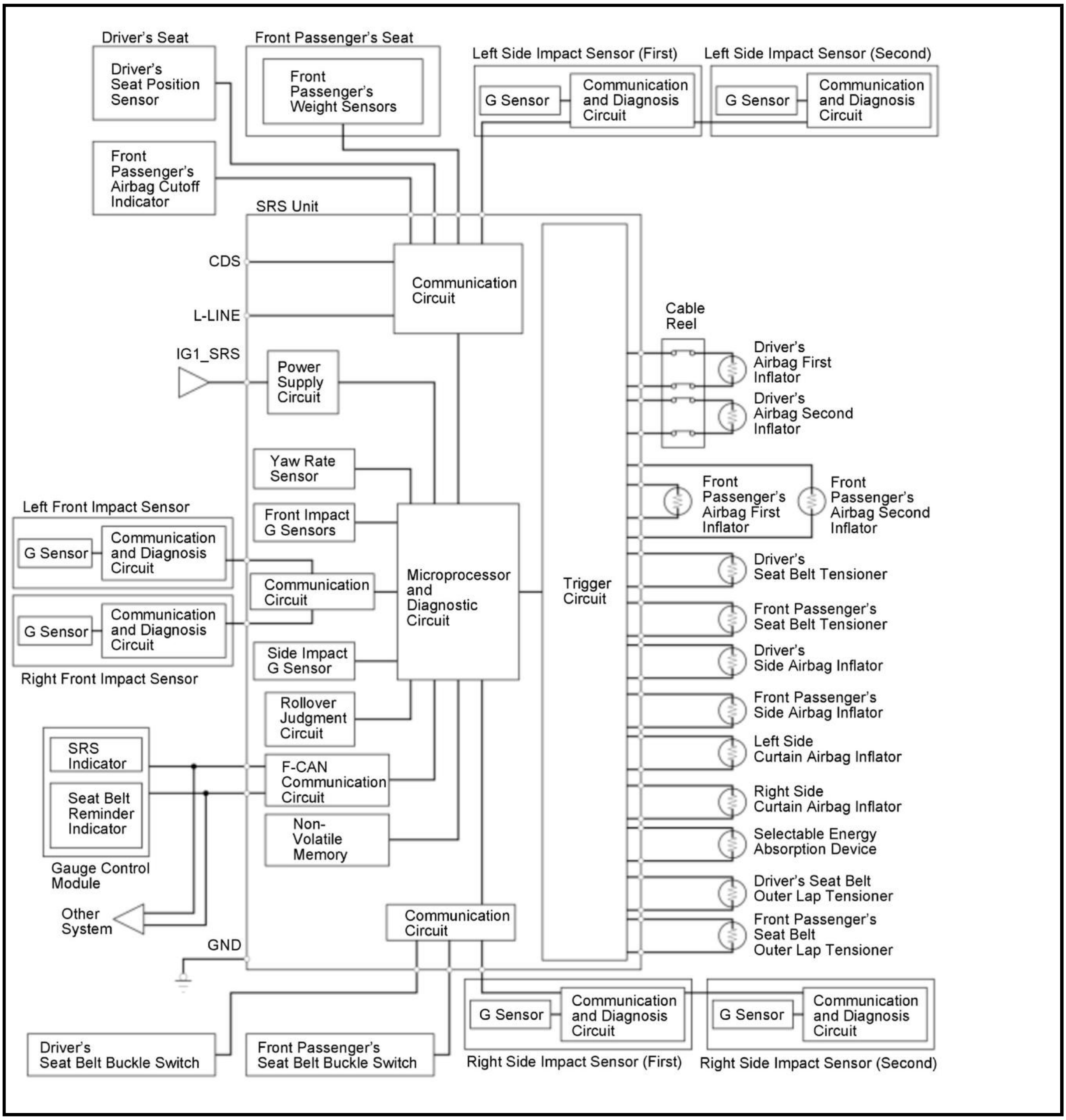
Driver's Seat
Driver's Seat Position Sensor
Front Passenger's Seat
Front Passenger's Weight Sensors
Left Side Impact Sensor (First)
G Sensor
Communication and Diagnosis Circuit
Left Side Impact Sensor (Second)
G Sensor
Communication and Diagnosis Circuit
Front Passenger's Airbag Cutoff Indicator
SRS Unit
CDS
L-LINE
IG1_SRS
Communication Circuit
Power Supply Circuit
Cable Reel
Driver's Airbag First Inflator
Driver's Airbag Second Inflator
Yaw Rate Sensor
Front Impact G Sensors
Left Front Impact Sensor
G Sensor
Communication and Diagnosis Circuit
Communication Circuit
Microprocessor and Diagnostic Circuit
Trigger Circuit
Front Passenger's Airbag First Inflator
Front Passenger's Airbag Second Inflator
Driver's Seat Belt Tensioner
Front Passenger's Seat Belt Tensioner
G Sensor
Communication and Diagnosis Circuit
Right Front Impact Sensor
Side Impact G Sensor
Driver's Side Airbag Inflator
Front Passenger's Side Airbag Inflator
Rollover Judgment Circuit
Left Side Curtain Airbag Inflator
SRS Indicator
Seat Belt Reminder Indicator
Gauge Control Module
F-CAN Communication Circuit
Non-Volatile Memory
Right Side Curtain Airbag Inflator
Selectable Energy Absorption Device
Driver's Seat Belt Outer Lap Tensioner
Other System
GND
Communication Circuit
Front Passenger's Seat Belt Outer Lap Tensioner
G Sensor
Communication and Diagnosis Circuit
G Sensor
Communication and Diagnosis Circuit
Driver's Seat Belt Buckle Switch
Front Passenger's Seat Belt Buckle Switch
Right Side Impact Sensor (First)
Right Side Impact Sensor (Second)

When airbags or tensioners are about to be deployed, a large amount of current passes through the SRS unit. After the airbags and tensioners are deployed, the internal components of the SRS unit are damaged and must be replaced.

GENERAL INFORMATION

HOW TO READ DEPLOYED HISTORY

How to Read Deployed History

NOTE: Due to the amount of electrical current that flows within the SRS unit to deploy airbags and tensioners, the SRS unit will be severely damaged and will require replacement. Therefore, the SRS unit retains a history that indicate which airbags and tensioners that deployed in a collision. Airbags and tensioners that deployed cannot be reused and must be replaced.

1. Turn the vehicle to the OFF (LOCK) mode, then wait for 10 seconds.

2. Connect the HDS to the data link connector (DLC).

In the SRS MENU of the HDS, select SRS, then select Data List.

NOTE:

- **A value of ON with a unit of RED indicates that the airbag(s) and or tensioner has deployed.**
- **A value of OFF with a unit of GREEN indicates that the airbag(s) or tensioner did not deploy.**
- **When any airbags or tensioners have deployed, go to Component Replacement/Inspection After Deployment.**

Signal	Value	Unit
Left Front Airbag, Left Front/Rear Seat Belt Tensioner and/or Left Knee Airbag Deployed	OFF	•
Right Front Airbag, Right Front/Rear Seat Belt Tensioner and/or Right Knee Airbag Deployed	OFF	•
Left Side Airbag, Left Side Curtain Airbag, and/or Left Front/Rear Seat Belt Tensioner Deployed	ON	o
Right Side Airbag, Right Side Curtain Airbag, and/or Right Front/Rear Seat Belt Tensioner Deployed	OFF	•

• : Green

o : Red

4. Turn the vehicle to the OFF (LOCK) mode, then wait for 10 seconds.

5. Disconnect the HDS.

SYMPTOM TROUBLESHOOTING INDEX

SRS SYMPTOM TROUBLESHOOTING INDEX

Symptom	Diagnostic procedure	Also check for
SRS indicator does not come on	Symptom Troubleshooting	-
SRS indicator stays on, but no DTCs are stored, or cannot be read	**NOTE:** If any of the CAN communication failure DTC is indicated in other system, troubleshoot the DTC first. • Check for open wire or shorted wire in the F-CAN circuit; • • - Between the SRS unit and the CAN gateway (F-CAN C_H, F-CAN C_L) • - Between the CAN gateway and the gauge control module (F-CAN D_H, F-CAN D_L) • Check the SRS unit power circuit (IG1_SRS).	• Check the deployed history. Refer to the followings about the circuit troubleshooting; • Gauge control module connector for inputs and outputs • SRS unit connector for inputs and outputs • SRS system circuit diagram • Fuse to components index • Ground to component index

Symptom	Diagnostic procedure	Also check for
	- Check the SRS unit ground circuit (GND). - Do the gauge control module self-diagnostic function .	
Front passenger's airbag cutoff indicator flashes	Check for DTCs. If any DTC is indicated, go to the DTC troubleshooting	Front passenger's weight sensor initialization
Front passenger's airbag cutoff indicator does not come on	Check for DTCs. If any DTC is indicated, go to the DTC troubleshooting	DTC B00D5-14 troubleshooting
Front seat belt reminder indicator does not come on, turn off, or flash	Symptom Troubleshooting	-

REWRITE

SRS UNIT UPDATE

Procedure

1. SRS Unit - Update
2. Yaw Rate-Acceleration Neutral Position - Memorize
3. Front Passenger's Weight Sensor - Initialize

INSPECTION REPLACEMENT

SRS COMPONENT REPLACEMENT/INSPECTION AFTER DEPLOYMENT

Inspection

1. Component Replacement/Inspection After Deployment - Inspect

NOTE:

- **Before doing any SRS repairs after a collision, check the deployed history and check for DTCs with the HDS to determine the components that need replacement.**
- **Do not repair damaged SRS wiring, connectors or terminals. Replace the affected wiring harness(es).**
- **When replacing the front seat belt tensioner, check the seat belt mounting portion for deformation. If any deformation is found, repair it as needed.**

After a collision where the seat belt outer lap tensioner deployed, replace these items:

- SRS unit
- Front seat belt(s)
- Seat belt outer lap tensioner(s)
- Front impact sensor(s)

After a collision where the front airbag(s) deployed, replace these items:

- SRS unit
- Deployed front airbag(s)
- Front seat belt(s)
- Front impact sensor(s)

- Cable reel (deployed driver's airbag)
- Dashboard (deployed front passenger's airbag)
- **Springs**

After a collision where the side airbag deployed, replace the items for the side(s) that deployed:

- SRS unit
- Deployed side airbag(s)
- Front seat belt(s)
- Side impact sensor(s) (first)
- Side impact sensor(s) (second)
- B-pillar lower trim
- Seat frame and related parts

After a collision where the side curtain airbag deployed, replace the items for the side(s) that deployed:

- SRS unit
- Deployed side curtain airbag(s)
- Front seat belt(s)
- Side impact sensor(s) (first)
- Side impact sensor(s) (second)
- A-pillar trim
- B-pillar upper trim
- Quarter pillar trim
- Front grab handle
- Rear grab handle
- All related trim clips
- Sunvisor
- Headliner

After a moderate to severe side or rear collision, inspect for any damage on the side curtain airbag or other related components. **Replace the pillar trims and related clips as needed** .

During the repair process, inspect these areas:

- Inspect all the SRS wire harnesses. Replace, do not repair, any damaged harnesses, connectors or terminals.
- Inspect the cable reel for heat damage. If there is any damage, **replace the cable reel** .

After the vehicle is completely repaired, turn the vehicle to the ON mode. If the SRS indicator comes on for about 6 seconds and then goes off, the SRS is OK. If the indicator does not function properly, use the HDS to **check for the DTCs** . If you cannot retrieve a code, do the SRS Symptom Troubleshooting.

2. Headliner/Pillar Trim Overlap - Check

Checking and Adjusting the Headliner/Pillar Trim Overlap

To prevent the side curtain airbag from deploying and damaging the pillar trim (A-pillar trim, B-pillar upper trim, and quarter pillar trim), the overlap between the headliner and pillar trim must be 8.0 +0/-2.0 mm (0.315 +0/-0.08 in). To check the overlap, do this:

1. Install the headliner (A) and the pillar trim (B).

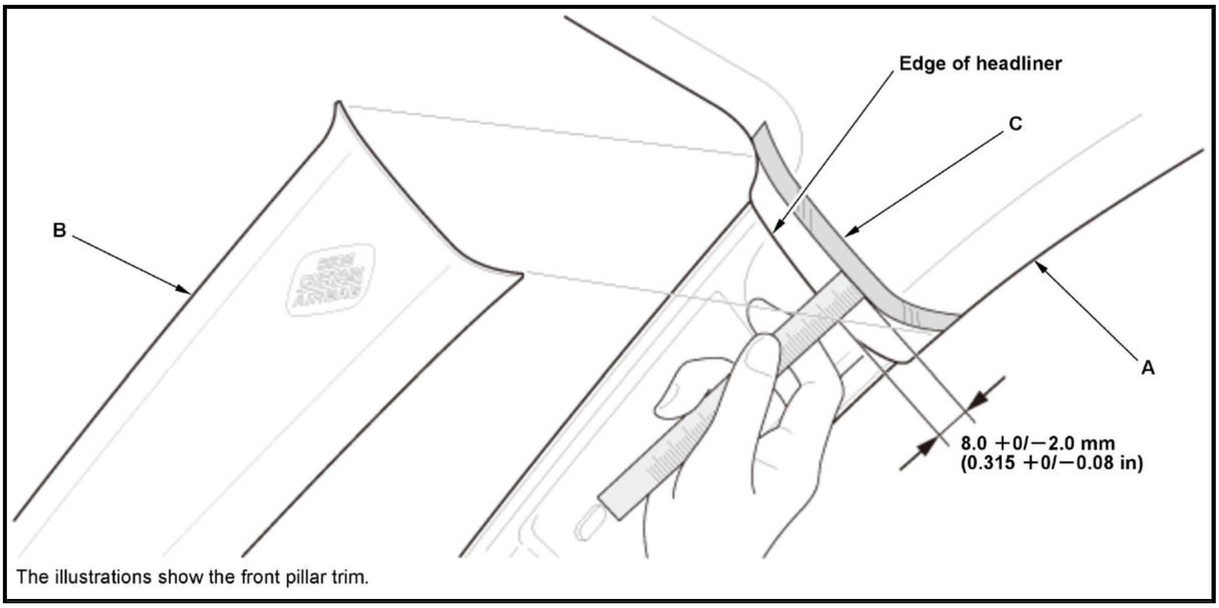

The illustrations show the front pillar trim.

2. Apply masking tape (C) to the headliner to mark the upper edge of the pillar trim.

3. Remove the pillar trim, and measure the headliner overlap.

   - If the overlap is 8.0 +0/-2.0 mm (0.315 +0/-0.08 in), remove the tape, and install the pillar trim.
   - If the overlap is more than 8.0 mm (0.315 in), go to step 4.

4. Carefully trim the headliner with a utility knife, reducing the overlap to 8.0 +0/-2.0 mm (0.315 +0/-0.08 in).

5. Remove the tape, and install the pillar trim.

INITIALIZATION

FRONT PASSENGER'S WEIGHT SENSOR INITIALIZATION

Procedure

NOTE:

- When you replace or update the SRS unit, initialize the front passenger's weight sensor with the HDS.
- When you replace or remove the front passenger's weight sensor, the front passenger's seat frame, or the front passenger's seat rail, initialize the front passenger's weight sensor with the HDS.

1. HDS - Connect
2. Front Passenger's Weight Sensor - Initialize

   NOTE:

   - Before doing this procedure, clear the DTCs.
   - Before doing this procedure, make sure the 12 volt battery is fully charged.
   - Make sure the front passenger's seat and all components of the seat are correctly installed.
   - Make sure nothing is on the front passenger's seat, including aftermarket seat covers or mats.
   - Make sure there is nothing in the front passenger's seat-back pocket.
   - Make sure the vehicle is on level ground.
   - When you perform this procedure, the vehicle temperature must be between 41- 113 deg.F (5 - 45 deg.C).
   - When the vehicle is exposed to intense cold or intense heat, move the vehicle inside, open the windows and moonroof (if equipped) and perform this procedure after one hour or more.

- Do not expose the front passenger's seat to sudden temperature changes.
- Do not use the A/C and the heater.
- Do not touch the front passenger's seat and keep the vehicle stationary during this procedure.
- Do not attach the seat belt tongue into the buckle.
- If possible, do all of the above procedures inside.

1. Position the front passenger's seat all the way rearward and lowermost (if equipped with the height adjuster), then adjust the seat-back to the forward most position.

NOTE: Do not move the seat from this position until the initialization is completed.

2. From SRS of the System Selection Menu, select SRS/SWS, then Adjustment. In the Adjustment, select SWS Initialization. Follow the prompts until the front passenger's weight sensor initialization has been completed.

3. From SRS of the System Selection Menu, select SRS/SWS, then Data List. In the Data List, select FRONT PASSENGER'S WEIGHT. The weight (T0) of the front passenger's seat is displayed by the HDS. Write this measurement down as "T0" on a piece of paper.

- If the reading on the HDS (T0) is within +/-0.35 kg (+/-0.77 lbs), go to step 4.
- If the reading on the HDS (T0) is at or not within +/-0.35 kg (+/-0.77 lbs), do the following and repeat the procedure from step 1.
-
    - -

      Confirm that the seat has no interference with surrounding components.
    - -

      Remove the front passenger's weight sensors (If they were not reinstalled), reinstall them, then repeat this procedure from the step 1.
- If after reinstalling the front passenger's weight sensors, the HDS (T0) is still at or not within +/-0.35 kg (+/-0.77 lbs), replace the front passenger's weight sensors, then repeat this procedure from the beginning.

4. Prepare a weight between 10 kg (22 lbs) - 20 kg (44 lbs) then measure and note its actual weight (M) with a weight scale.

NOTE:

- **The accuracy of the weight scale must be within 1 kg (2 lbs).**
- **The weight must be uniform in shape and size to allow precise placement on the seat.**

5. Place the prepared weight precisely on the center of the front passenger's seat as shown.

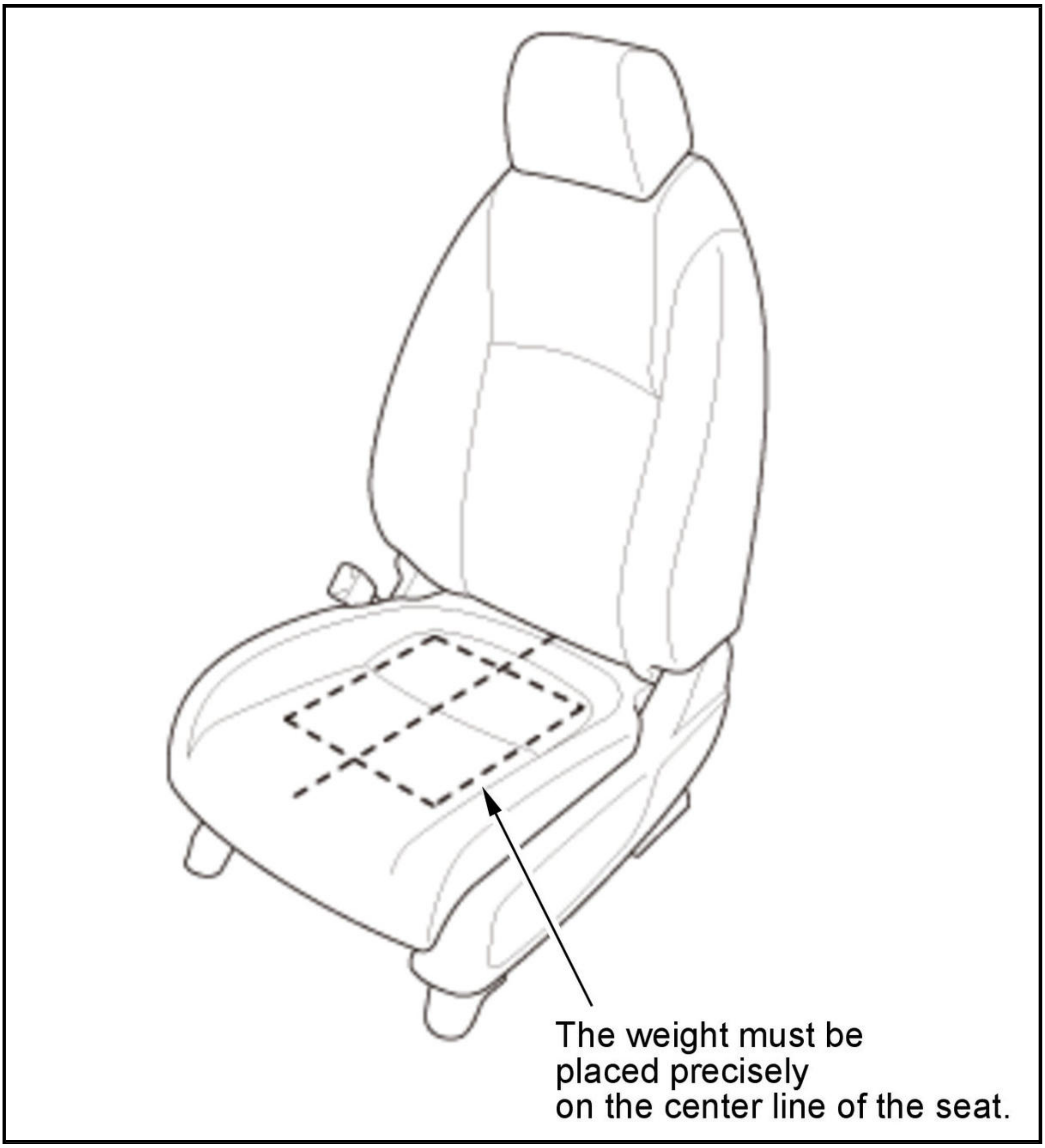
The weight must be placed precisely on the center line of the seat.

6. From the Data List, select FRONT PASSENGER'S WEIGHT. The weight (T) of the front passenger's seat is displayed by the HDS. Write this measurement down as "T" on a piece of paper.

7. Divide (M) by 2. Write this calculation as "M1" on a piece of paper.

8. Calculate the variance between (M1) and the HDS (T) with the following formula.

Variance = (T)-(M1)	
Â	
T:	**Weight measured by the HDS with the weight on the seat.**
M1:	**Half of the weight measured by the weight scale.**

- If the variance is within +/-2.2 kg (+/-4.9 lbs), initialization is complete. Go to step 9.
- If the variance is at or not within +/-2.2 kg (+/-4.9 lbs), do the following and repeat the procedure from step 1.
-
    - -

  Confirm that the seat has no interference with surrounding components.

- -

  Confirm that the weight was placed precisely in the center of the seat.

- -

  Remove the front passenger's weight sensors , reinstall them, then repeat this procedure from the step 1. If the variance is still at or not within +/-2.2 kg (+/-4.9 lbs), replace the front passenger's weight sensors (if they were not replaced), then repeat this procedure from step 1.

9. Turn the vehicle to the OFF (LOCK) mode.

SYMPTOM TROUBLESHOOTING

SRS SYMPTOM TROUBLESHOOTING - FRONT SEAT BELT REMINDER INDICATOR DOES NOT COME ON, TURN OFF, OR FLASH

NOTE:

- **Before doing this troubleshooting procedure, find out if the vehicle was in a collision. If so, verify that all the required components were replaced with new components of the correct part number and were properly installed**.
- Before doing this troubleshooting procedure, review **SRS Precautions and Procedures** and **General Troubleshooting Information** .

1. DTC check

   -1. Check for DTCs with the HDS.

DTC Description	DTC
Â	Â

   Are any SRS DTCs indicated?

   YES

   Go to SRS DTC troubleshooting.

   NO

   Go to step 2.

2. Body electrical system DTC check

   -1. Check for body electrical DTCs with the HDS.

DTC Description	DTC
U0151-00 Gauge control module lost communication with SRS unit	Â

   Is DTC U0151 indicated?

   YES

   Go to DTC U0151 troubleshooting .

   NO

   Go to step 3.

3. Gauge control module check

   -1. **Do the gauge control module self-diagnostic function** .

   Self diagnostic function - CAN METER

   Does the front seat belt reminder indicator blinkΩ

   YES

   Check for any authorized service information related to the DTCs or symptoms you are troubleshooting or **replace the SRS unit** .

   NO

   Replace the gauge control module .

SRS SYMPTOM TROUBLESHOOTING - SRS INDICATOR DOES NOT COME ON

NOTE:

- **Before doing this troubleshooting procedure, find out if the vehicle was in a collision. If so, verify that all the required components were replaced with new components of the correct part number and were properly installed**.
- Before doing this troubleshooting procedure, review **SRS Precautions and Procedures** and **General Troubleshooting Information** .

1. Problem verification

   -1. Turn the vehicle to the OFF (LOCK) mode, then wait for 10 seconds.

   -2. Turn the vehicle to the ON mode, and check that the SRS indicator comes on for about 6 seconds and then go off.

   Does the SRS indicator come on for about 6 seconds and then go off?

   YES

   Intermittent failure, the vehicle is OK at this time.

   NO

   The failure is duplicated. Go to step 2.

2. Gauge control module check

   -1. Turn the vehicle to the OFF (LOCK) mode.

   -2. **Connect the HDS to the data link connector (DLC)** .

   -3. Turn the vehicle to the ON mode.

   -4. **Do the gauge control module self-diagnostic function** .

   Does the SRS indicator blinkΩ

   YES

   Check for any authorized service information related to the DTCs or symptoms you are troubleshooting or **replace the SRS unit** .

NO

Replace the gauge control module .

SERVICE PROCEDURE

AIRBAG AND TENSIONER DISPOSAL

Special Tools Required

Image	Description/Tool Number
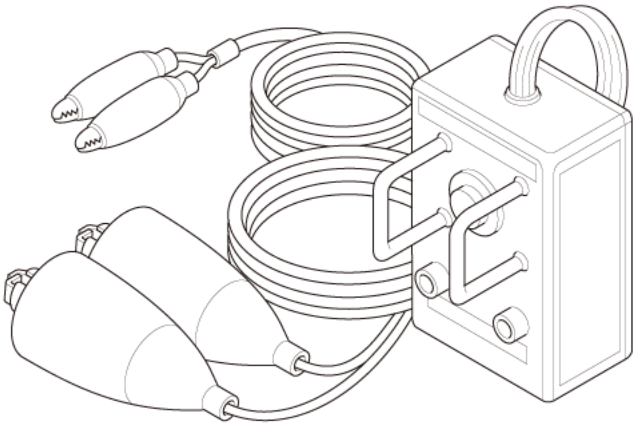	Deployment Tool 07AAZ-000A100

Inspection

NOTE:

- Before scrapping any front airbags, side airbags, side curtain airbags, seat belt outer lap tensioners, or front seat belt tensioners (including those in a whole vehicle to be scrapped), the part(s) must be deployed. If the vehicle is still within the warranty period, the Honda District Parts and Service Manager must give approval and/or special instruction before deploying the part(s). Only after the part(s) have been deployed (as the result of vehicle collision, for example), can they be scrapped. If the parts appear intact (not deployed), treat them with extreme caution. Follow this procedure.
- Please read the tool manual precautions and procedures for more details of the deployment tool.
- Airbag deployment is prohibited by law in some regions. Always check local laws and requirements before deploying airbags.

1. Airbag and Tensioner - Dispose

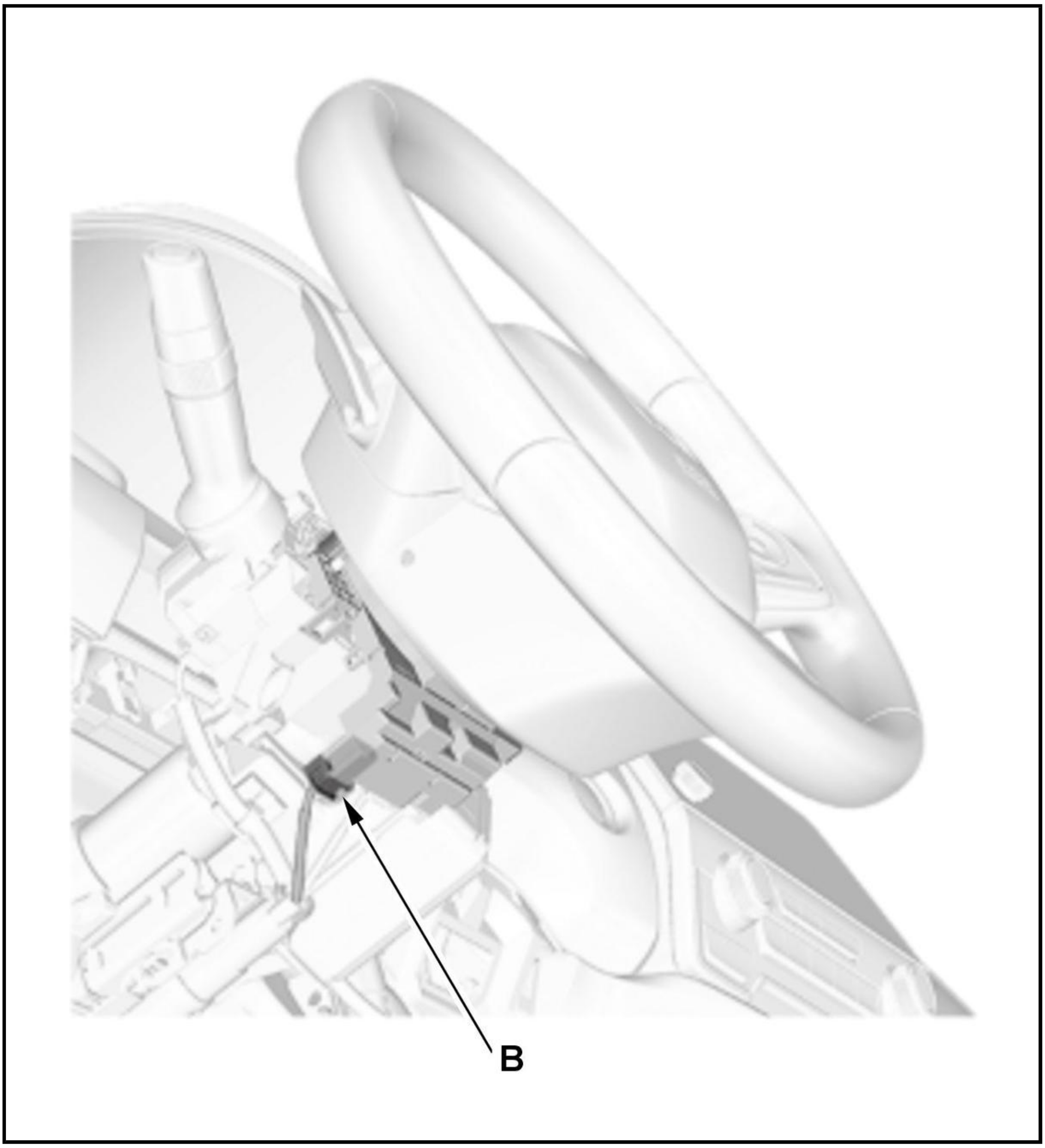

Deploying Airbags in the Vehicle

If an SRS equipped vehicle is to be entirely scrapped, its front airbags, side airbags, side curtain airbags, seat belt outer lap tensioners, and front seat belt tensioners should be deployed while still in the vehicle. These parts should not be considered as salvageable parts and should never be installed in another vehicle.

1. Turn the vehicle to the OFF (LOCK) mode. **Do the 12 volt battery terminal disconnection procedure**

, then wait at least 3 minutes before starting work.

2. Confirm that each front airbag, side airbag, side curtain airbag, seat belt outer lap tensioner, or front seat belt tensioner is securely mounted.

3. Confirm that the deployment tool is functioning properly by following the check procedure on the tool label.

Driver's Airbag

4. **Remove the column covers** .

5. Locate the cable reel connector B on the dashboard wire harness. Do not disconnect the cable reel connector B.

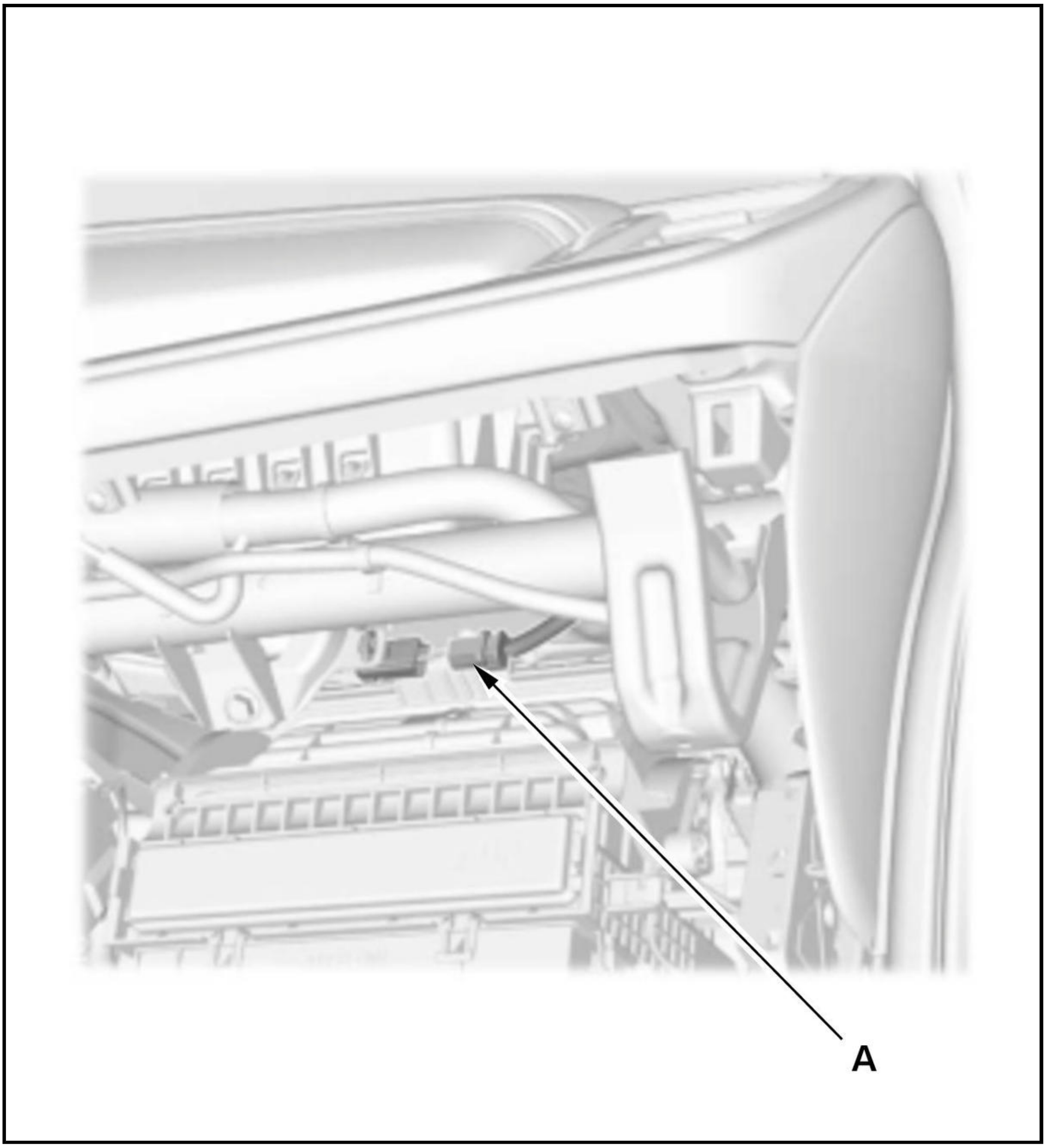

Front Passenger's Airbag

6. Remove the glove box .

7. Disconnect the connector (A).

Side Airbag

8. Disconnect the connector (A) .

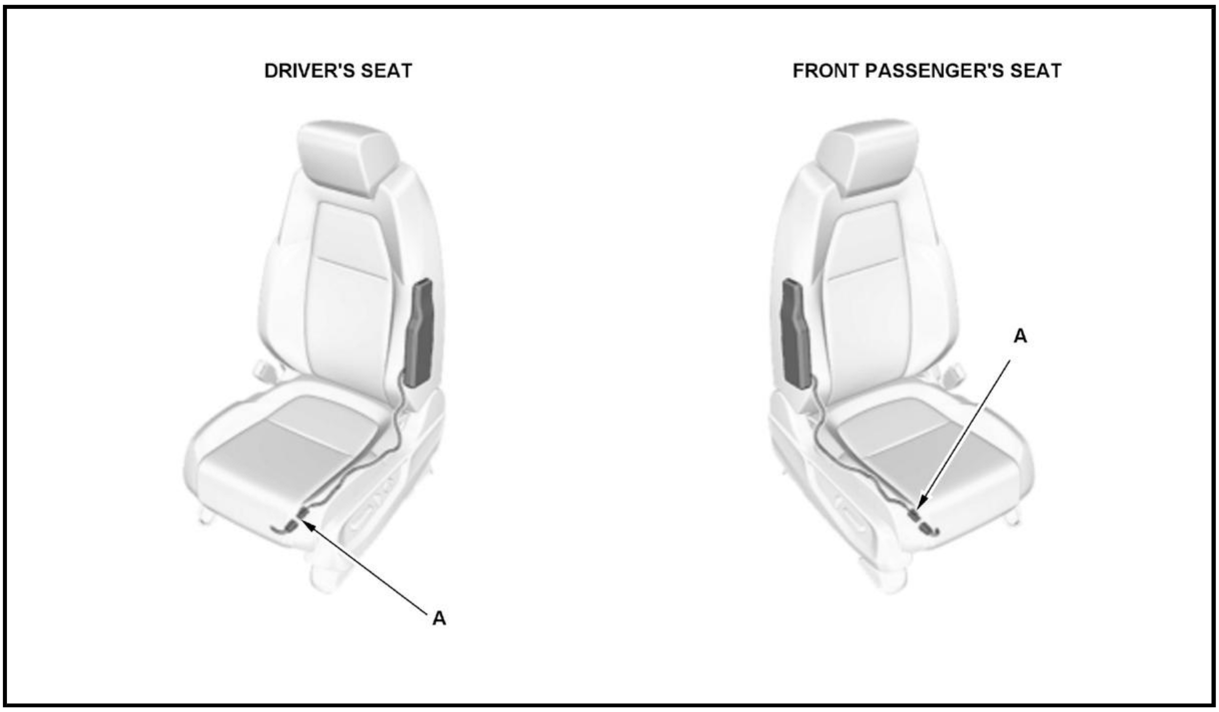
DRIVER'S SEAT
FRONT PASSENGER'S SEAT
A
A

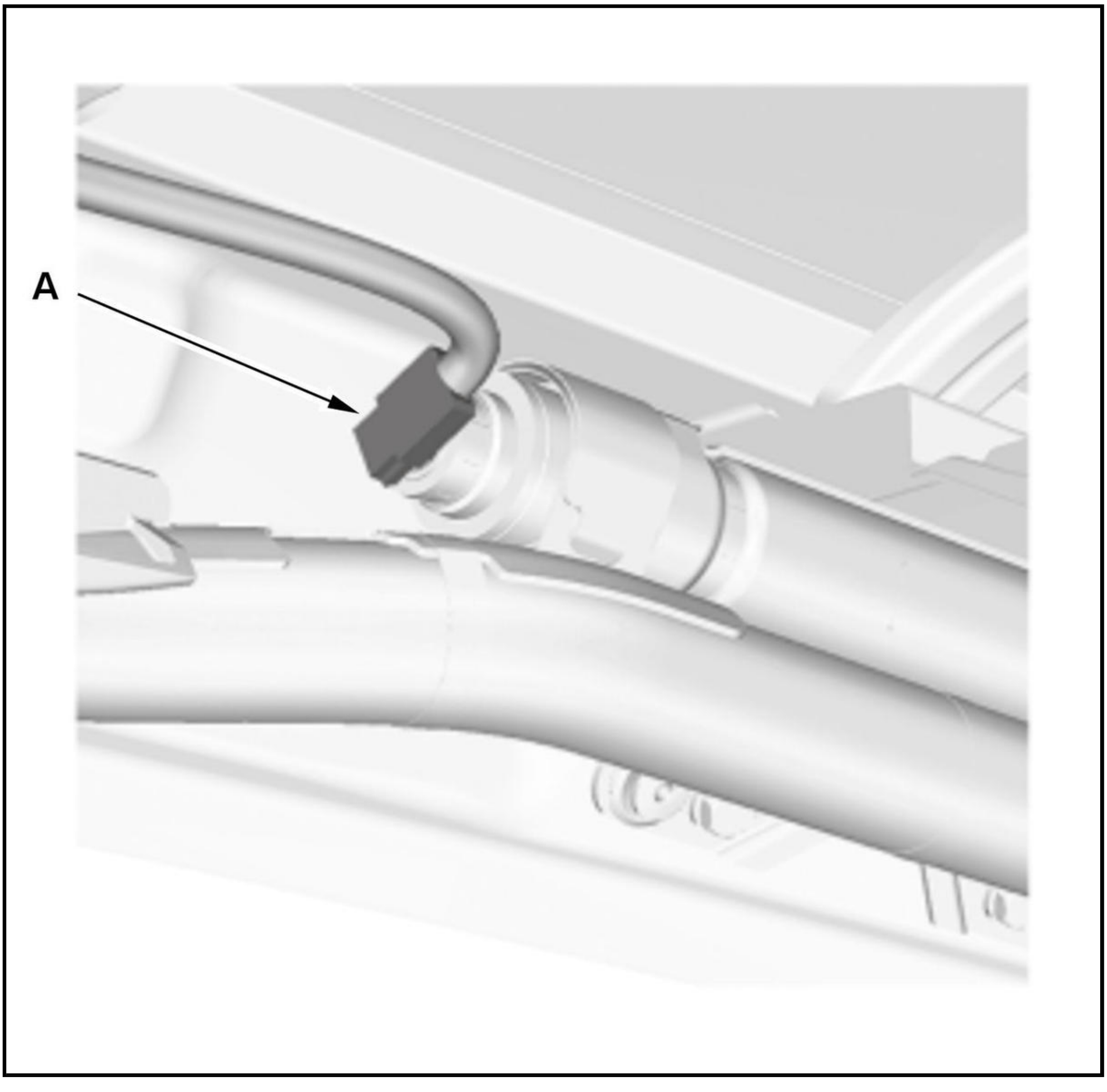

Side Curtain Airbag

9. Remove the headliner .

10. Locate the right and left side curtain airbag inflator connectors (A) on the floor wire harness. Do not disconnect the side curtain airbag inflator connectors.

Driver's Side

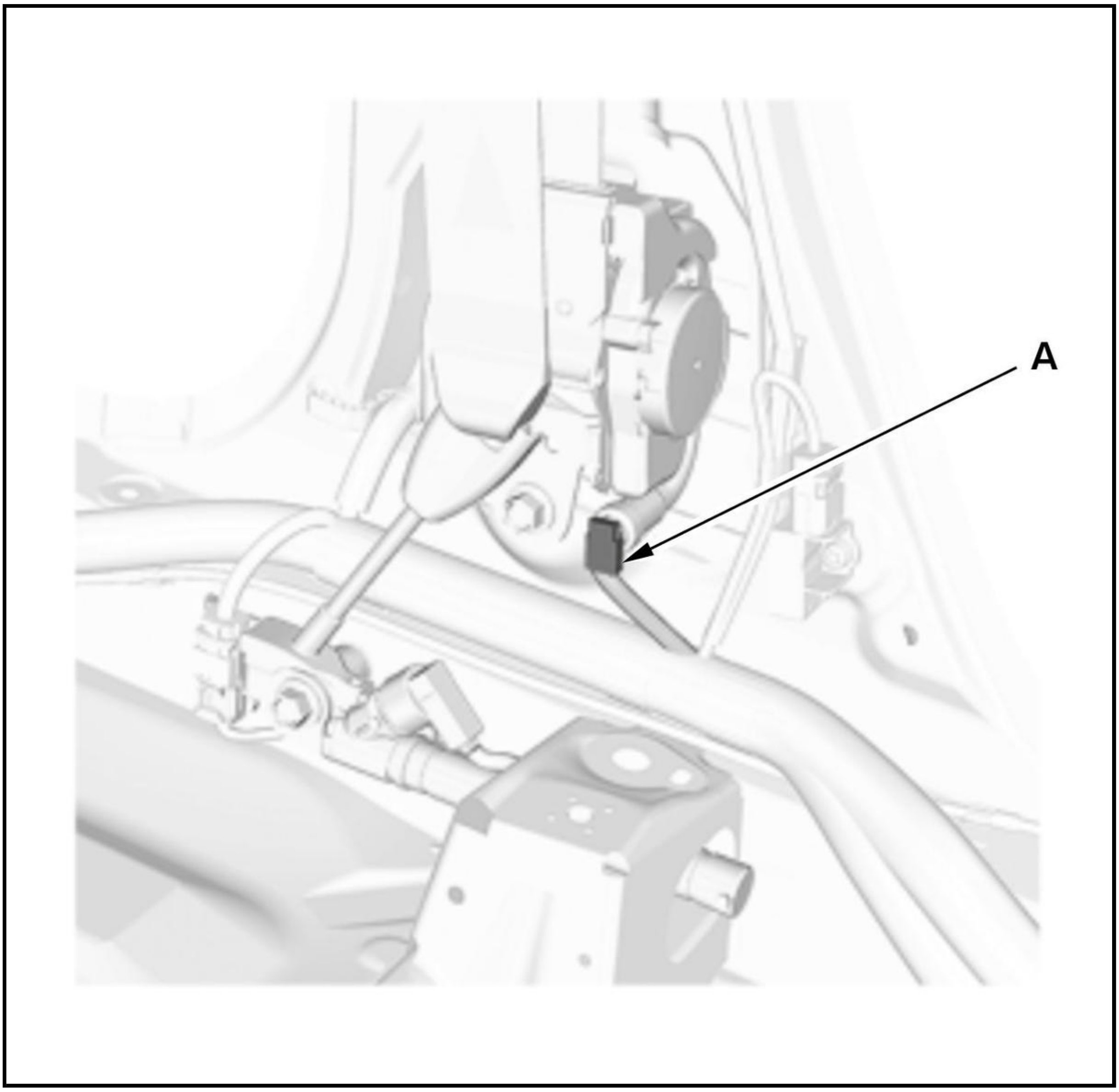

Passenger's Side

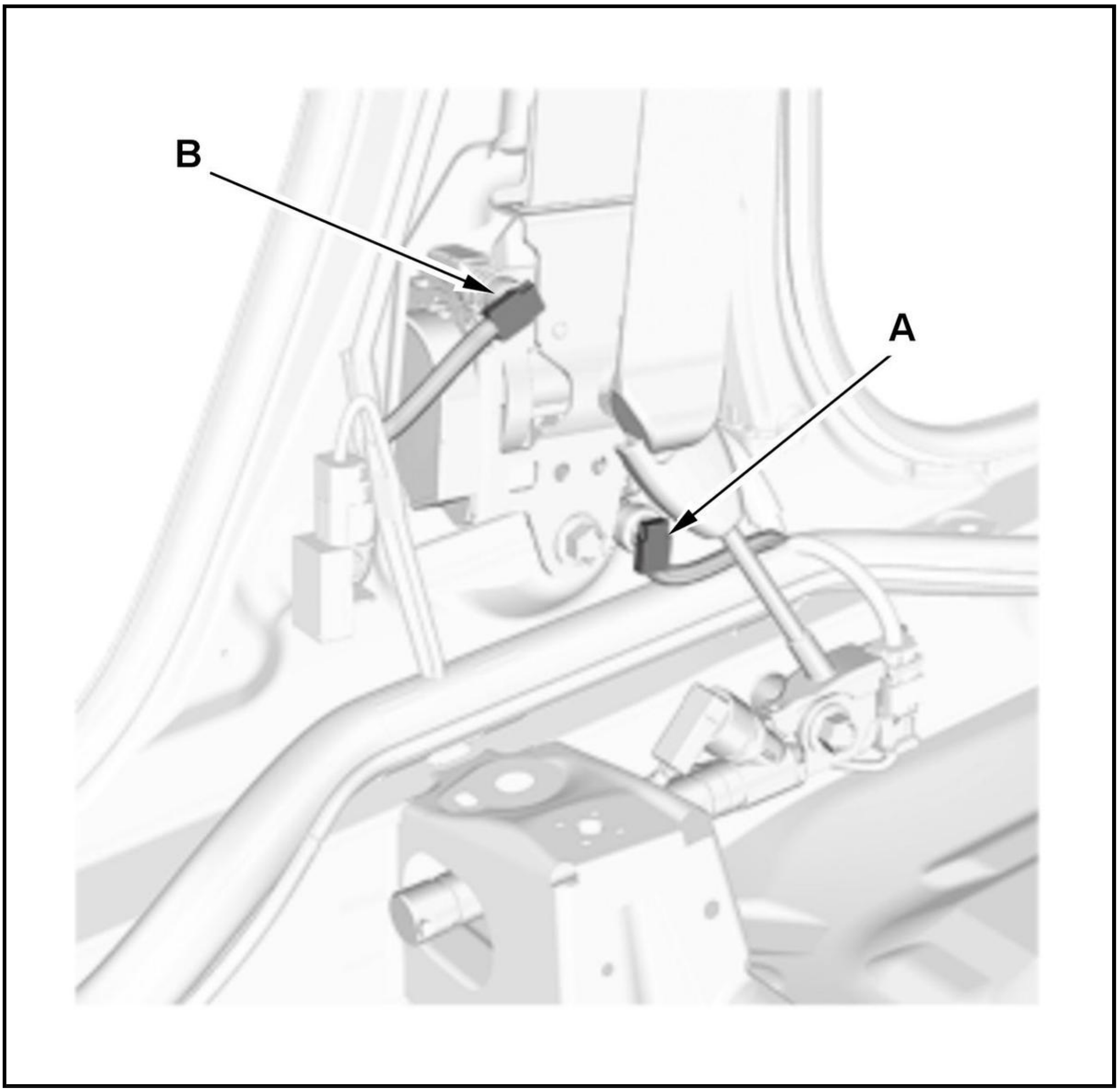

Front Seat Belt Tensioner

11. Remove the B-pillar lower trim cover

12. Locate the driver's and front passenger's seat belt tensioner connectors (A) on the floor wire harness. Do not disconnect the front seat belt tensioner connectors.

13. Front passenger's side: Locate the selectable energy absorption device connector (B) on the floor wire harness. Do not disconnect the selectable energy absorption device connector.

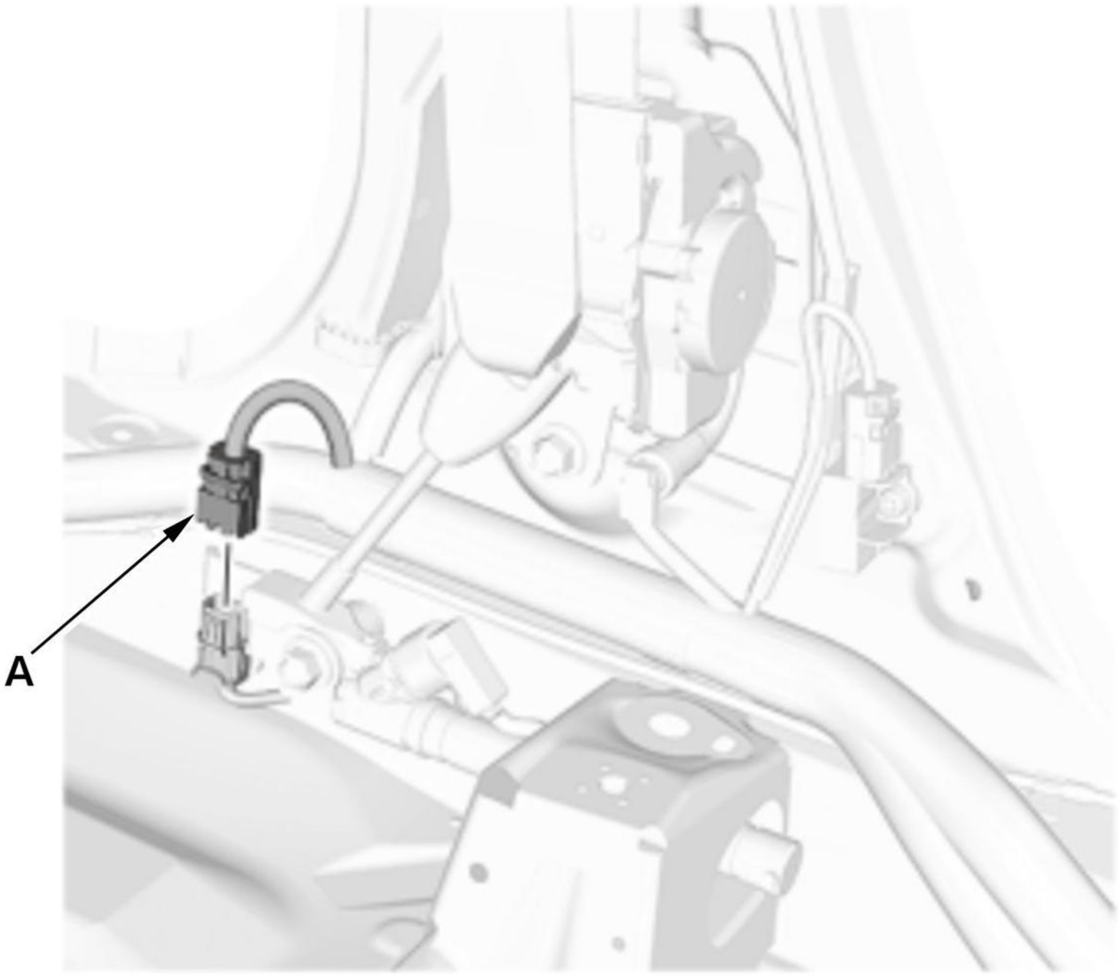

Seat Belt Outer Lap Tensioner

14. **Remove the B-pillar lower trim cover** .

15. Disconnect the connector (A).

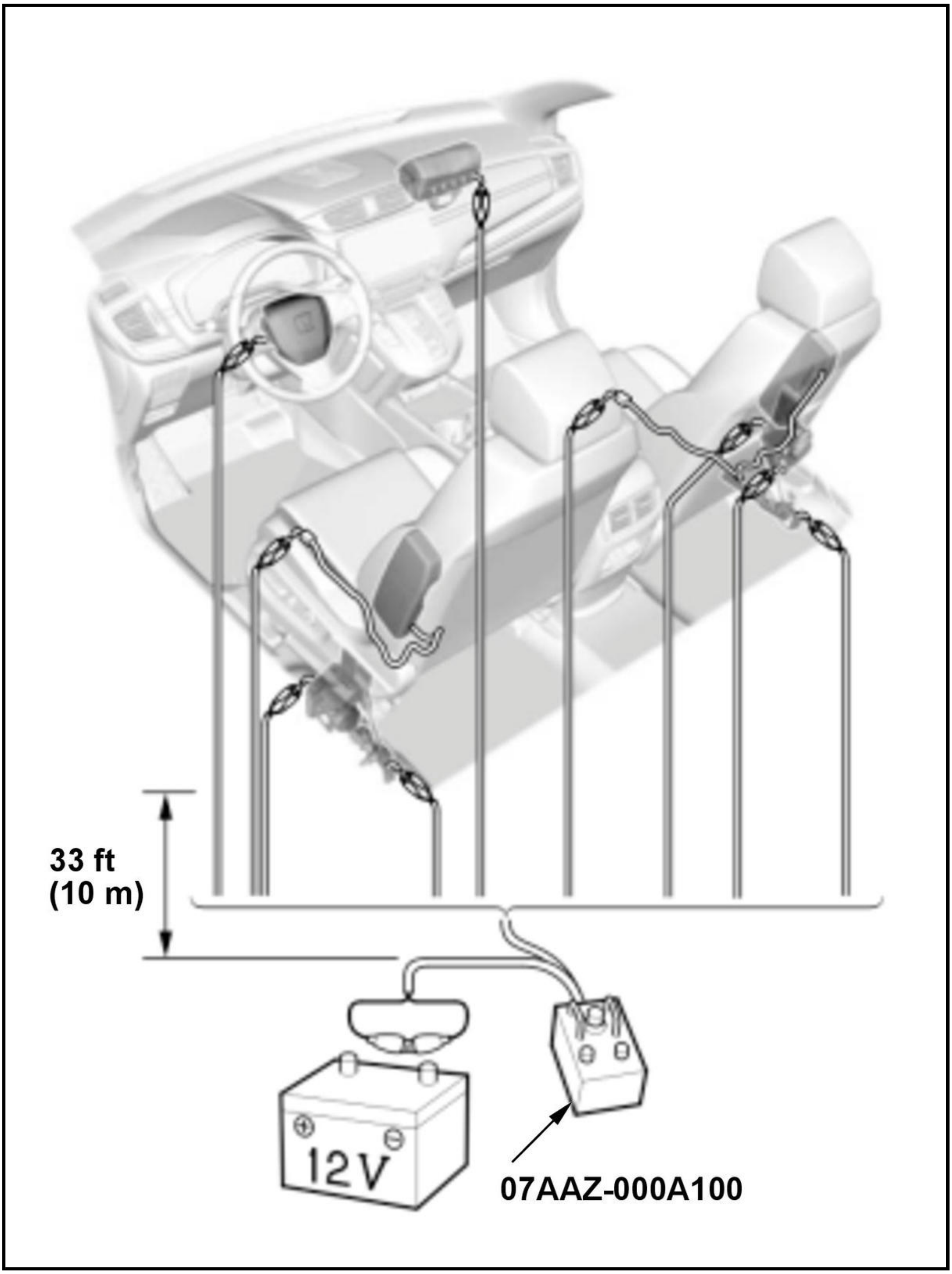
33 ft
(10 m)
12V
07AAZ-000A100

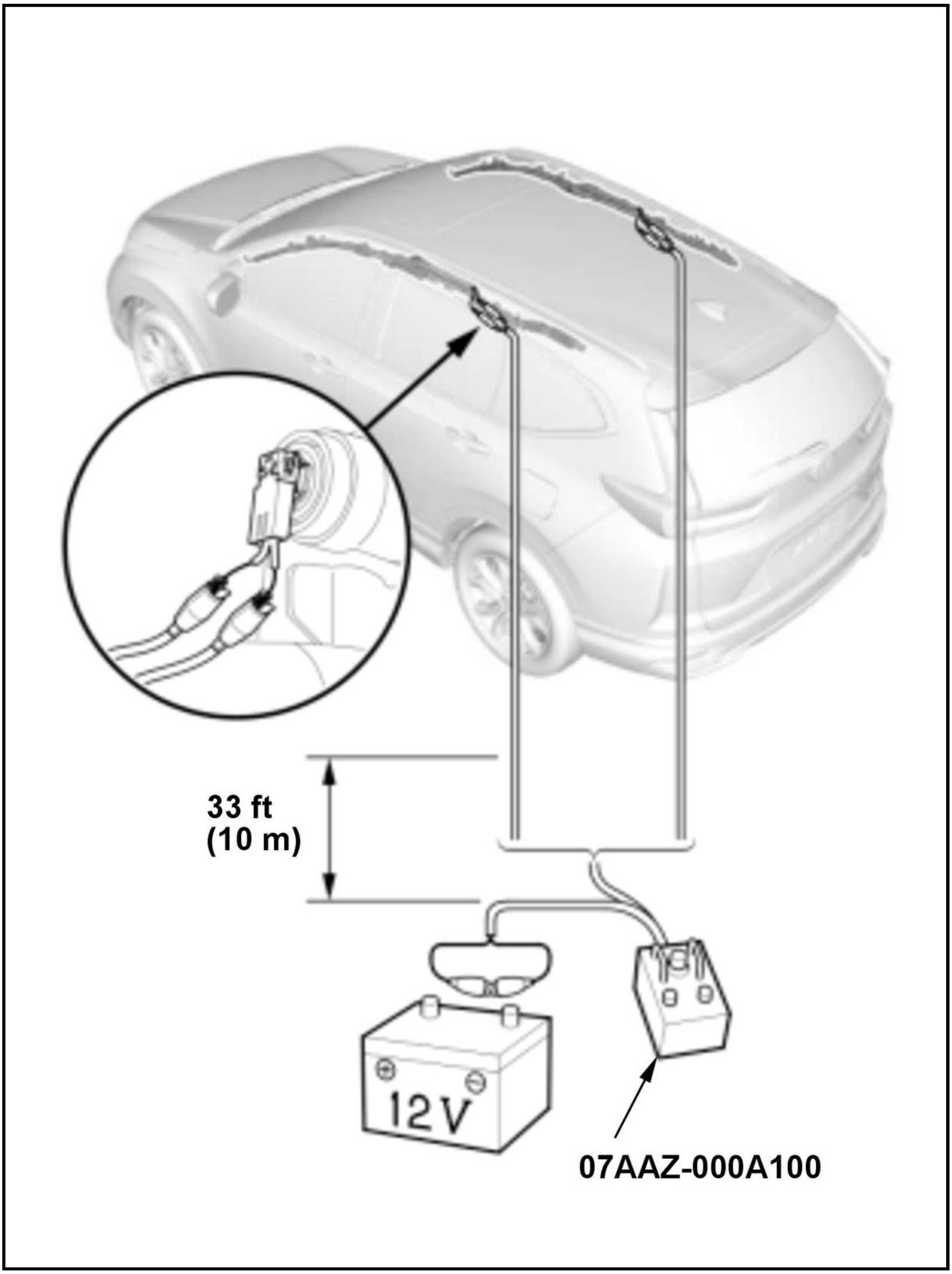

16. Cut off each connector and strip the ends of the wires. To prevent inflators from being deployed unexpectedly, twist each pair of wires coming from each inflator to have each inflator short-circuited.

17. Select one pair of wires and untwist the wires. Clip an alligator clip (A) to each end of the wires, so that the inflator is ready to be deployed.

NOTE:

- **Place the deployment tool at least 33 ft (10 m) away from the vehicle.**
- **Since the Front passenger's airbag has dual inflators, make sure to twist the correct pair of wires to have each inflator short-circuited.**

18. Connect a 12 volt battery to the tool.

- If the green light on the tool comes on, the igniter circuit is defective and cannot deploy the component. Go to Disposal of Damaged Components.
- If the red light on the tool comes on, the component is ready to be deployed.

19. Push the tool's deployment switch. The airbags and tensioners should deploy (deployment is both highly audible and visible: A loud noise and rapid inflation of the bag, followed by slow deflation).

- If the components deploy and the green light on the tool comes on, continue with this procedure.
- If a component does not deploy, and the green light comes on, its igniter is defective. Go to Disposal of Damaged Components.
- During deployment, the airbags can become hot enough to burn you. Wait for 30 minutes after deployment before touching the airbags.

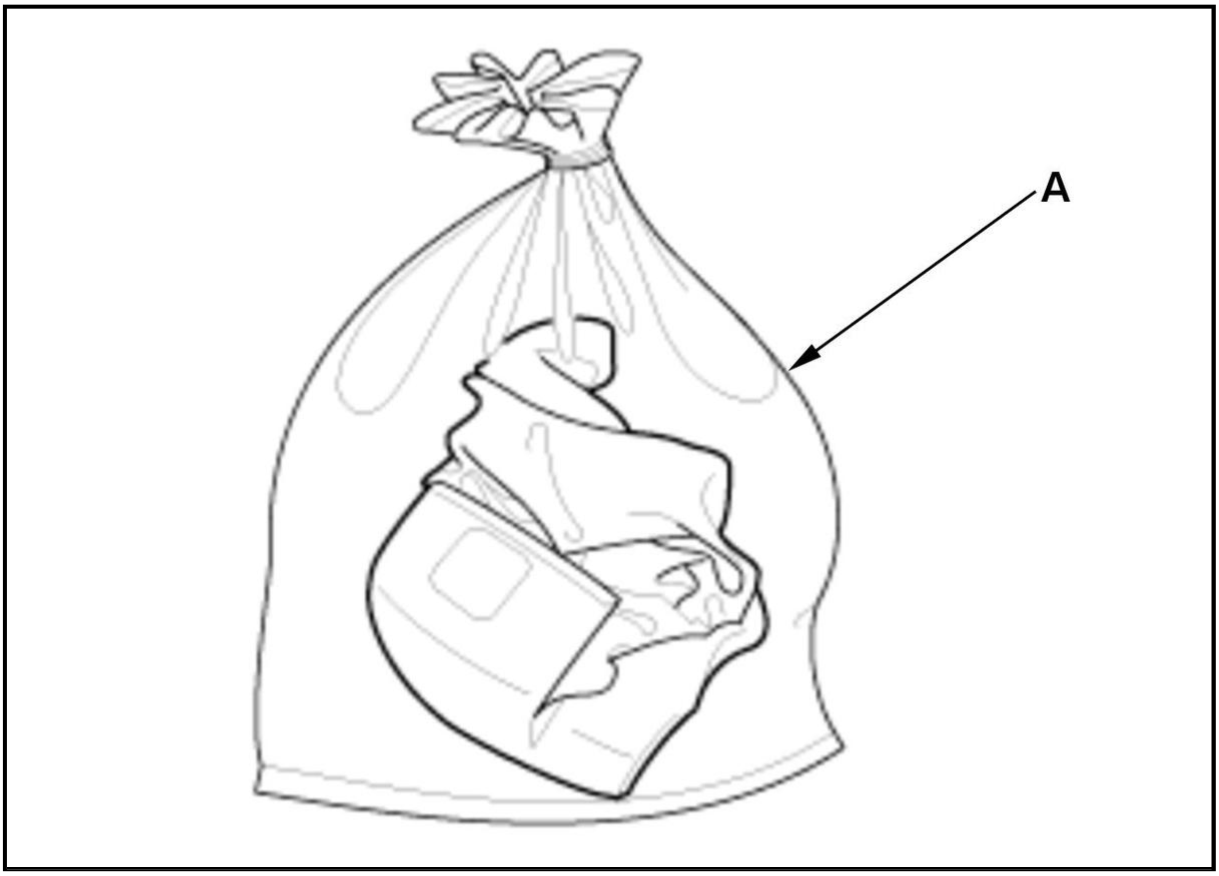

20. Dispose of the complete airbag or tensioner. No part of it can be reused. Place it in a sturdy plastic bag (A), and seal it securely. Dispose of the deployed airbag according to your local regulations.

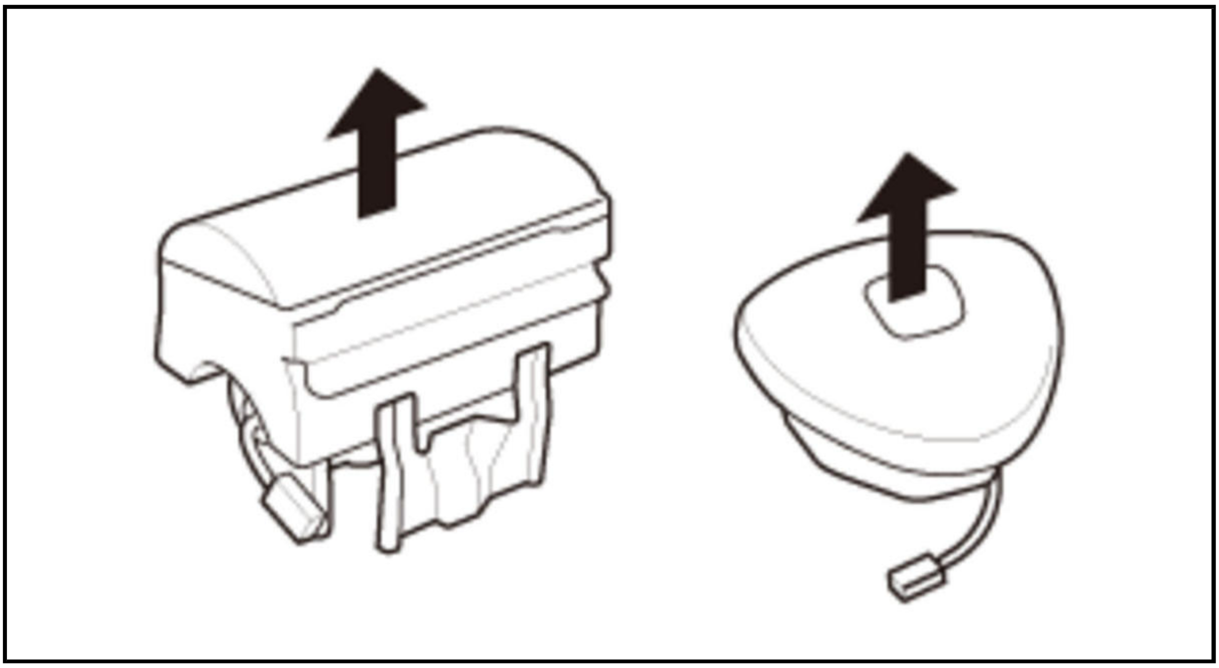

Deploying Components Out of the Vehicle

If an intact airbag or tensioner has been removed from a scrapped vehicle, or has been found defective or damaged during transit, storage, or service, it should be deployed as follows:

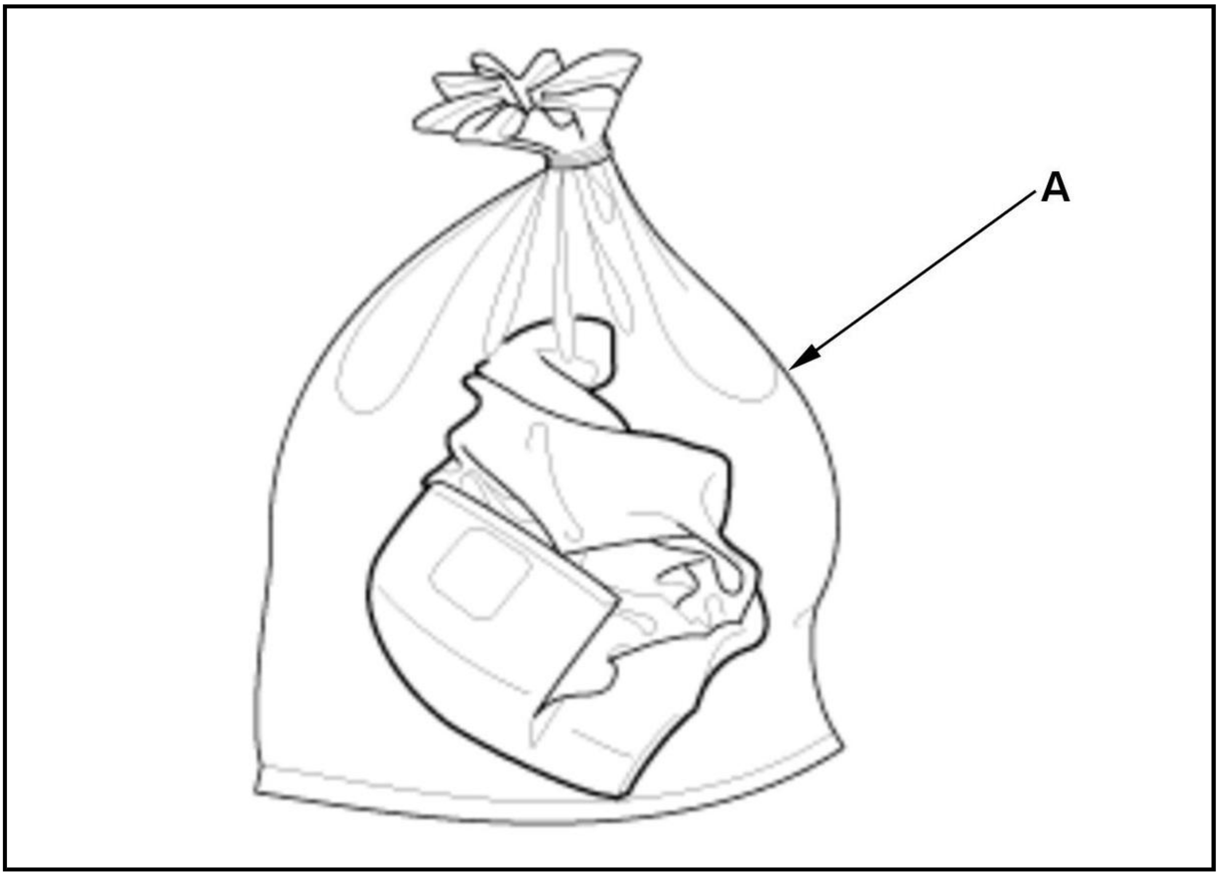

1. Confirm that the deployment tool is functioning properly by following the check procedure Deploying Airbags in the Vehicle on the tool label.

2. Position the airbag face up, outdoors, on flat ground, at least 10 m (33 ft) from any obstacles or people.

3. Cut off each connector and strip the ends of the wires. To prevent inflators from being deployed unexpectedly, twist each pair of wires coming from each inflator to have each inflator short-circuited.

4. Select one pair of wires and untwist the wires. Clip an alligator clip to each end of the wires, so that the inflator is ready to be deployed.

NOTE: Since the front passenger's airbag has dual inflators, make sure to twist the correct pair of wires to have each inflator short-circuited.

5. Connect a 12 volt battery to the tool.

- If the green light on the tool comes on, the igniter circuit is defective and cannot deploy the component. Go to Disposal of Damaged Components.
- If the red light on the tool comes on, the component is ready to be deployed.

6. Push the tool's deployment switch. The airbags and tensioners should deploy (deployment is both highly audible and visible: A loud noise and rapid inflation of the bag, followed by slow deflation).

- If the components deploy and the green light on the tool comes on, continue with this procedure.
- If a component does not deploy, and the green light comes on, its igniter is defective. Go to Disposal of Damaged Components.
- During deployment, the airbags can become hot enough to burn you. Wait for 30 minutes after deployment before touching the airbags.

7. Dispose of the complete airbag or tensioner. No part of it can be reused. Place it in a sturdy plastic bag (A), and seal it securely. Dispose of the deployed airbag according to your local regulations.

Disposal of Damaged Components

1. If installed in a vehicle, follow the removal procedure for **the driver's airbag** , **the front passenger's airbag** , **the side airbag** , **the side curtain airbag** , **seat belt outer lap tensioner** , and **the front seat belt tensioner** .

2. In all cases, make a short circuit by cutting, stripping, and twisting together the two inflator wires.

NOTE: Since the front passenger's airbags have dual inflators, make sure to twist the correct pair of wires to have each inflator short-circuited.

3. Package the component in exactly the same packaging that the new replacement part came in.

4. Mark the outside of the box DAMAGED AIRBAG NOT DEPLOYED, DAMAGED SIDE AIRBAG NOT DEPLOYED, DAMAGED SIDE CURTAIN AIRBAG NOT DEPLOYED, DAMAGED DRIVER'S SEAT BELT OUTER LAP TENSIONER NOT DEPLOYED, or DAMAGED SEAT BELT TENSIONER NOT DEPLOYED so it does not get confused with your parts stock.

5. Contact your Honda District Parts and Service Manager for instructions on how and where to return it for disposal.

SRS PRECAUTIONS AND PROCEDURES

General Precautions

NOTE:

- Some systems store data in memory that is lost when the 12 volt battery is disconnected. Before disconnecting the 12 volt battery, **refer to 12 volt battery Terminal Disconnection and Reconnection** .

Please read the following precautions carefully before servicing the SRS, or the airbags could accidentally deploy and cause damage or injuries.

- Except when doing electrical inspections that require 12 volt battery power, always turn the vehicle to the OFF (LOCK) mode, disconnect the negative cable from the 12 volt battery, then wait at least 3 minutes before starting work.

NOTE: The SRS memory is not erased even if the vehicle is turned to the OFF (LOCK) mode, or if the 12 volt battery cables are disconnected from the 12 volt battery.

- Use replacement parts which are manufactured to the same standards and quality as the original parts. Do not install used SRS parts. Use only new parts when making SRS repairs.
- Carefully inspect any SRS part before you install it. Do not install any part that shows signs of being dropped or improperly handled, such as dents, cracks or deformation.

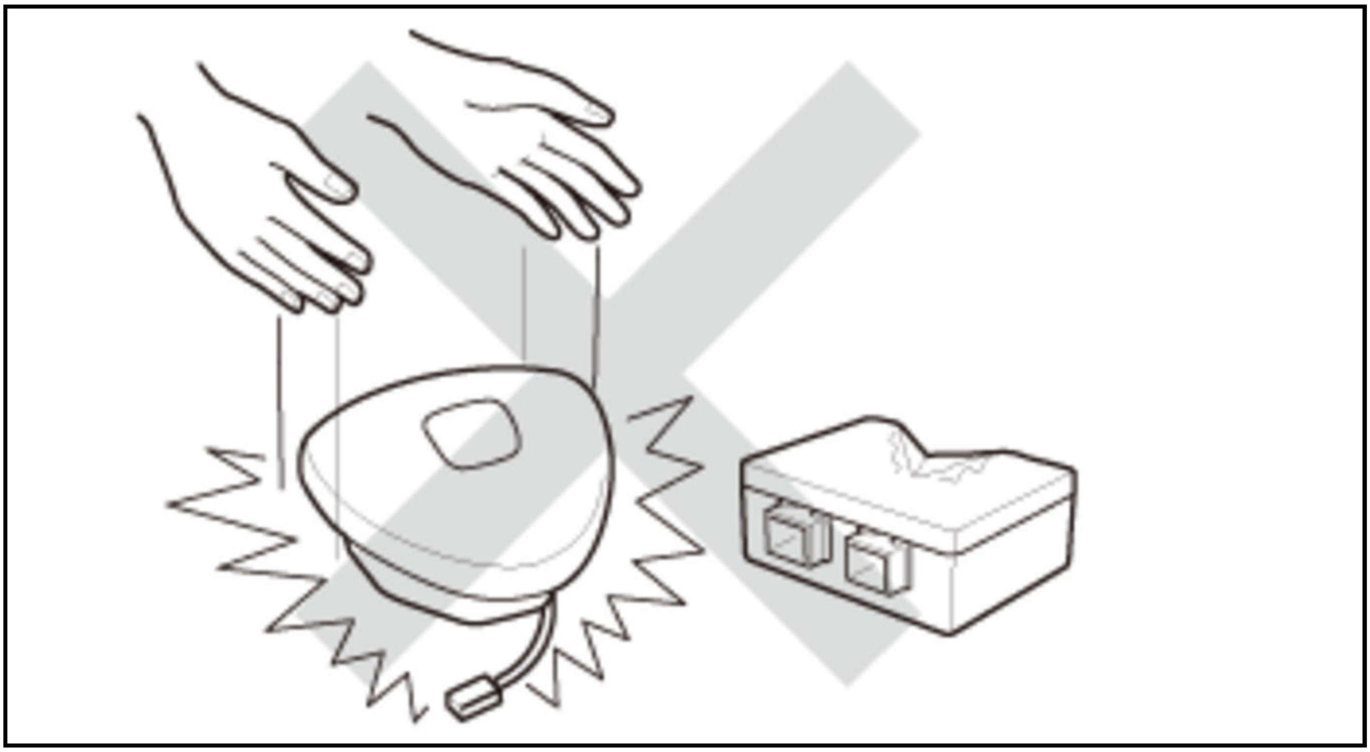

- Before disconnecting the SRS unit connectors, always disconnect the appropriate SRS parts connectors.
- Use only a digital multimeter to check the system. If it is not a Honda multimeter, make sure its output is 10 mA (0.01 A) or less when switched to the lowest value in the ohmmeter range. A tester with a higher output could cause accidental deployment and possible injury.
- Do not put objects on the front passenger's airbag.

Steering-Related Precautions

Cable Reel Alignment

- Misalignment of the cable reel could cause an open in the wiring, making the SRS, remote steering wheel controls, or the horn inoperative. **Center the cable reel whenever you do the following** .
-
    - -

      Installation of the steering wheel.
    - -

      Installation of the cable reel.
    - -

      Installation of the steering column.
    - -

Other steering-related adjustment or installation.

- Do not disassemble the cable reel.
- Do not apply grease to the cable reel.
- If the cable reel shows any signs of damage, replace it with a new one. For example, if the cable reel does not rotate smoothly, replace it.

Airbag Handling and Storage

Do not disassemble an airbag. It has no serviceable parts. Once an airbag has been deployed, it cannot be repaired or reused.

For temporary storage of an airbag during service, observe the following precautions.

- Store the removed airbag with the pad surface up. Never put anything on the airbag.

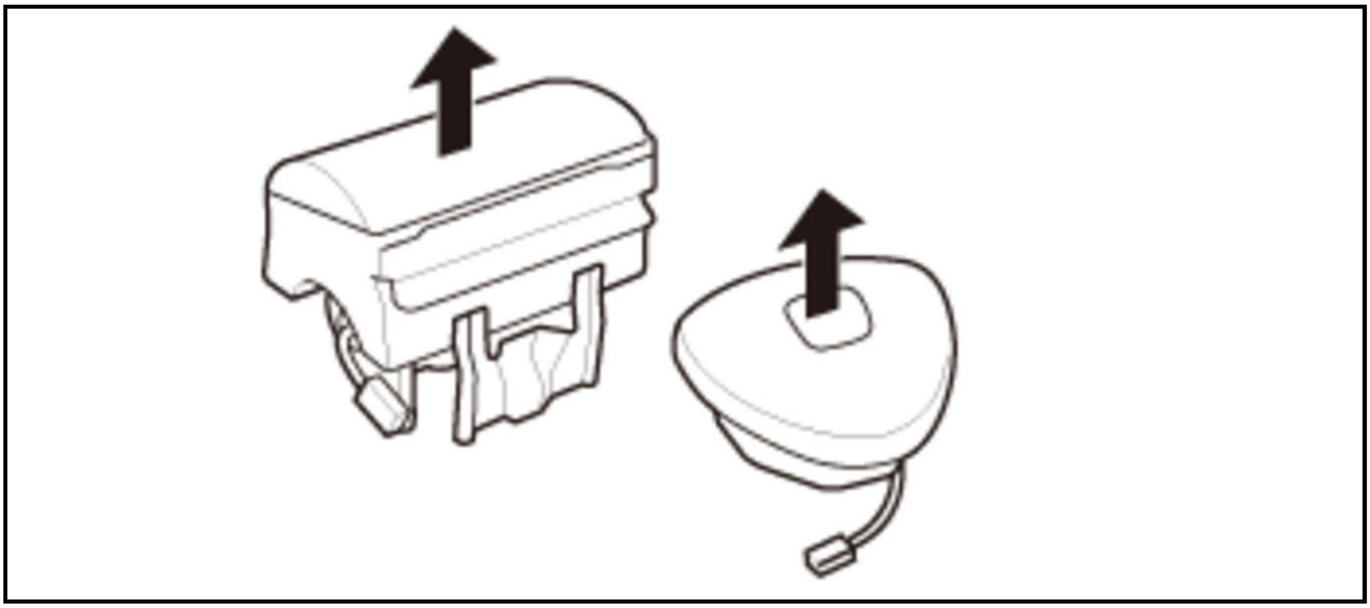

- To prevent damage to the airbag, keep it away from any oil, grease, detergent, or water.

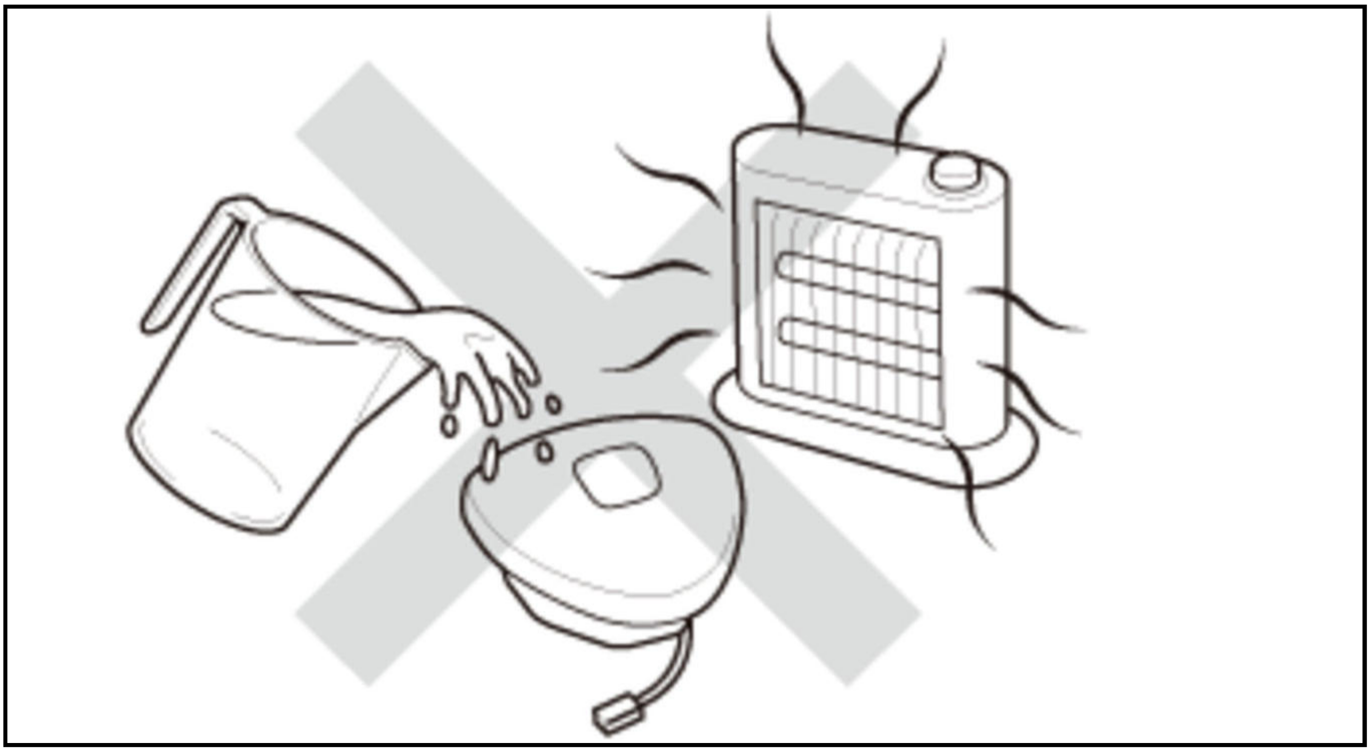

- Store the removed airbag on a secure, flat surface away from any high heat source (exceeding 200 deg.F (93 deg.C)).

- Never do electrical tests on the airbags, such as measuring resistance.
- Do not position yourself in front of the airbag during removal, inspection, or replacement.

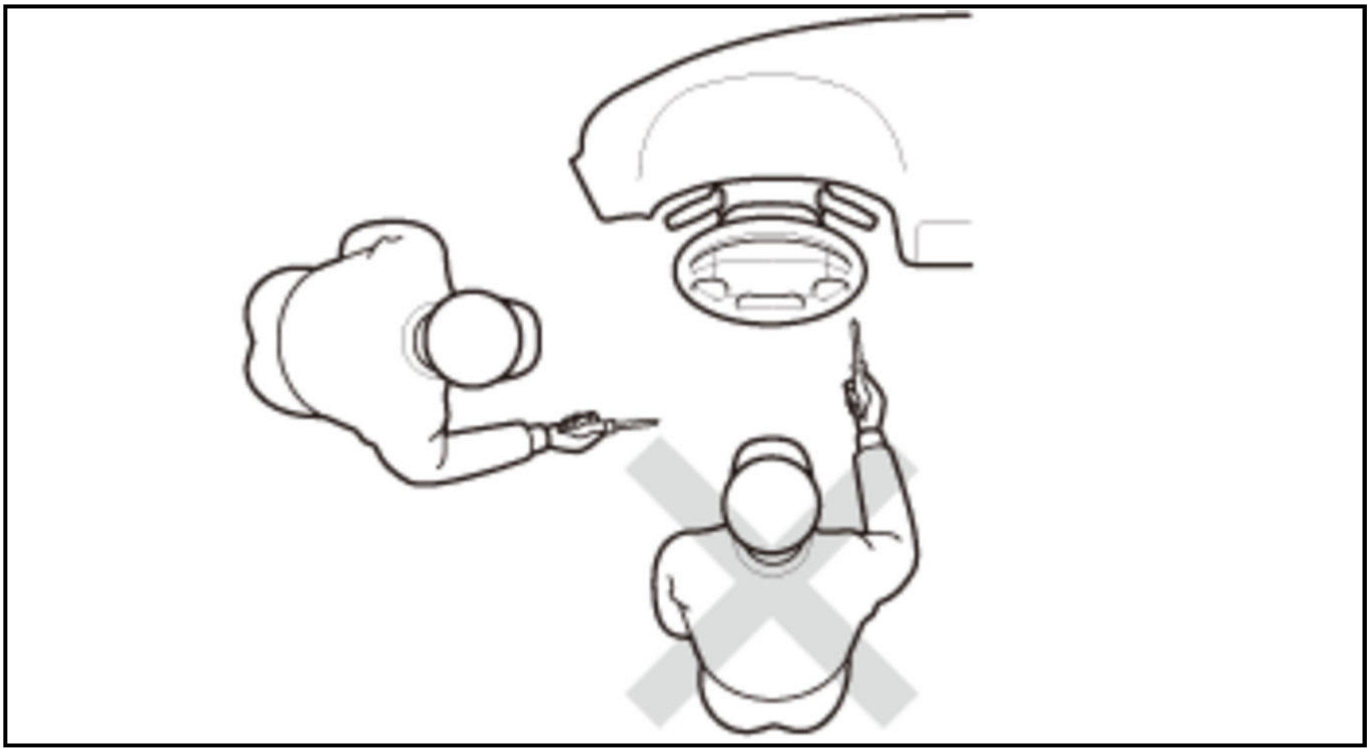

- For proper disposal of a damaged airbag or tensioner, **refer to Airbag and Tensioner Disposal**.

SRS Unit, Front and Side Impact Sensors, Driver's Seat Position Sensor, and Front Passenger's Weight Sensors

NOTE: Some systems store data in memory that is lost when the 12 volt battery is disconnected. Before disconnecting the 12 volt battery, **refer to 12 volt battery Terminal Disconnection and Reconnection** .

- Turn the vehicle to the OFF (LOCK) mode. Disconnect the negative cable from the 12 volt battery, then wait at least 3 minutes before starting installation or replacement of the SRS unit, or disconnecting the connectors from the SRS unit.
- Be careful not to bump or impact the SRS unit, the front impact sensors, or the side impact sensors when the vehicle is in the ON mode, or for at least 3 minutes after the vehicle is turned to the OFF (LOCK) mode.
- Do not reconnect any connectors to the SRS unit until it is fully installed, including torquing the bolts.
- During installation or replacement, be careful not to bump (by impact wrench, hammer, etc.) the area around the SRS unit, the front impact sensors, or the side impact sensors. The airbags could accidentally deploy and cause damage or injury.

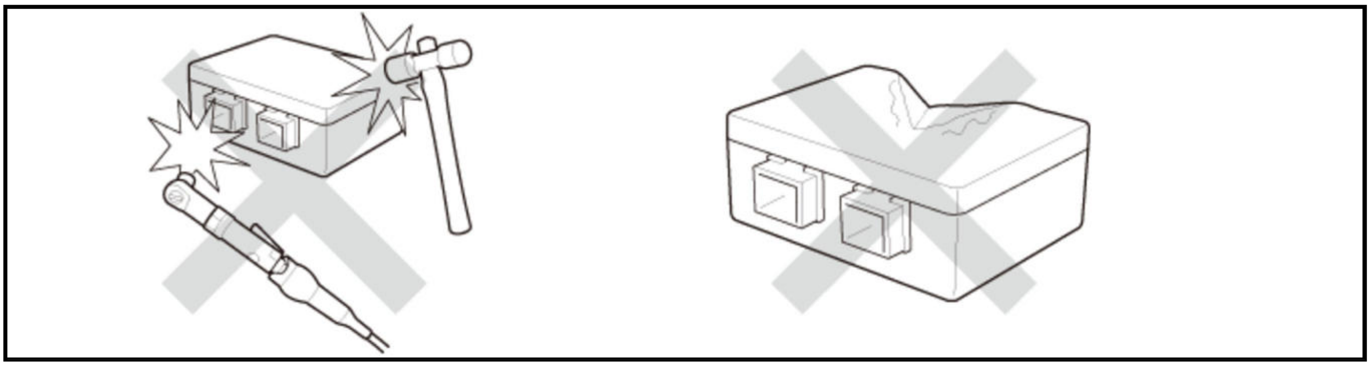

- After a collision where the front airbags, the side airbags, the side curtain airbags, the front seat belt tensioners, or the seat belt outer lap tensioner deploy, **go to Component Replacement/Inspection After Deployment**. After a collision where the airbags do not deploy, inspect for any damage or any deformation on the SRS unit, the front impact sensors, and the side impact sensors. If there is any damage, replace the SRS unit and/or the sensors. Replace all damaged parts.

- Do not disassemble the SRS unit, the front impact sensors, the side impact sensors, the driver's seat position sensor, or the front passenger's weight sensors.
- Always install the SRS unit, driver's seat position sensor, and the all impact sensors with the new bolts to the specified torque.
- Do not spill water or oil on the SRS unit or any of the sensors.

Wiring Precautions

Some of the SRS wiring can be identified by a special yellow outer covering, and the SRS connectors can be identified by their yellow color. Observe the following instructions.

- Never attempt to modify, splice, or repair SRS wiring. If there is an open or damage to the SRS wiring, replace the harness.

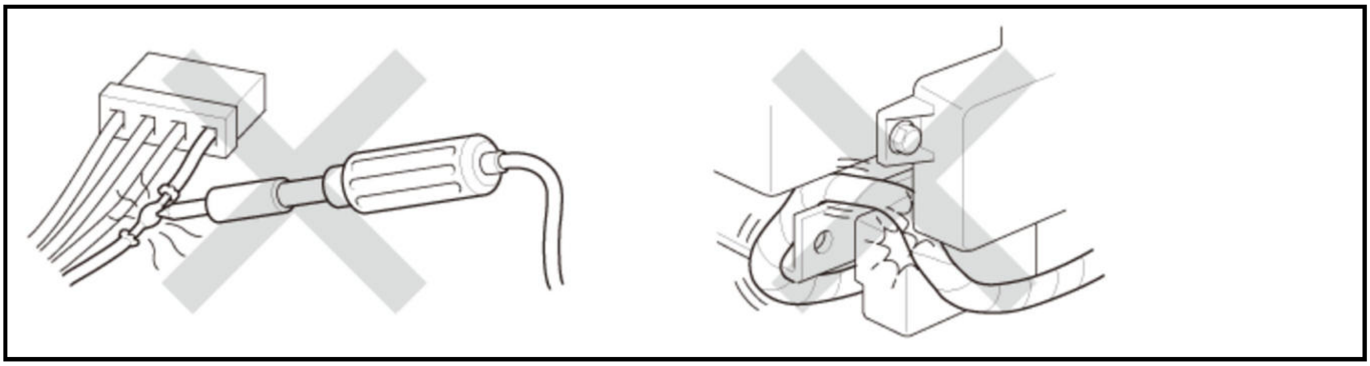

- Be sure to install the harness wires so they do not get pinched or interfere with other parts.
- Make sure all SRS ground locations are clean, and the grounds are securely fastened for optimum metal-to-metal contact. Poor grounds can cause intermittent problems that are difficult to diagnose.
- Do not use any silicone based cleaners or lubricants on any SRS connectors or terminals.

Lever-Locked Connector

The SRS unit connectors have a lever lock.

SRS Unit Connectors

Disconnecting/Connecting

- To release the lock (A), pull the lever (B) while pushing the lock on the outside of the connector, then pull out the connector (C).
- To reconnect the connector (D), push in on the connector. As the connector is pressed in, the lever (E) moves to the locked position.

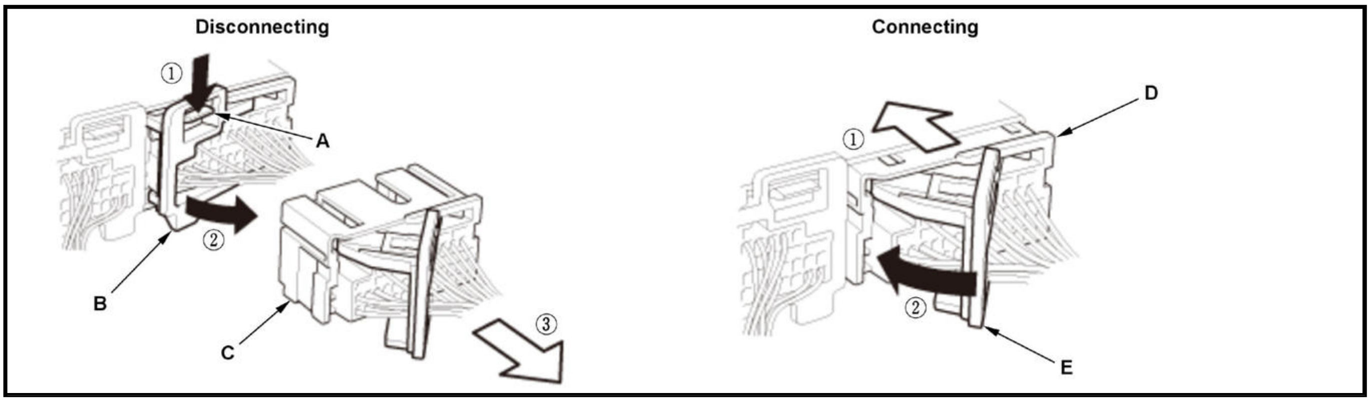

Spring-Loaded Lock Connector

Some SRS connectors have a spring-loaded lock.

Driver's Airbag Connector/Side Curtain Airbag Connector/Front Seat Belt Tensioner Connector

Disconnecting/Connecting

- Pull out on the locking tabs (A) to disconnect the connector (B). Be careful not to damage the connector.
- Align the guide tab (C) of the connector (D) with the ditch of the other side, and then connect the connector. Be careful not to damage the connector.

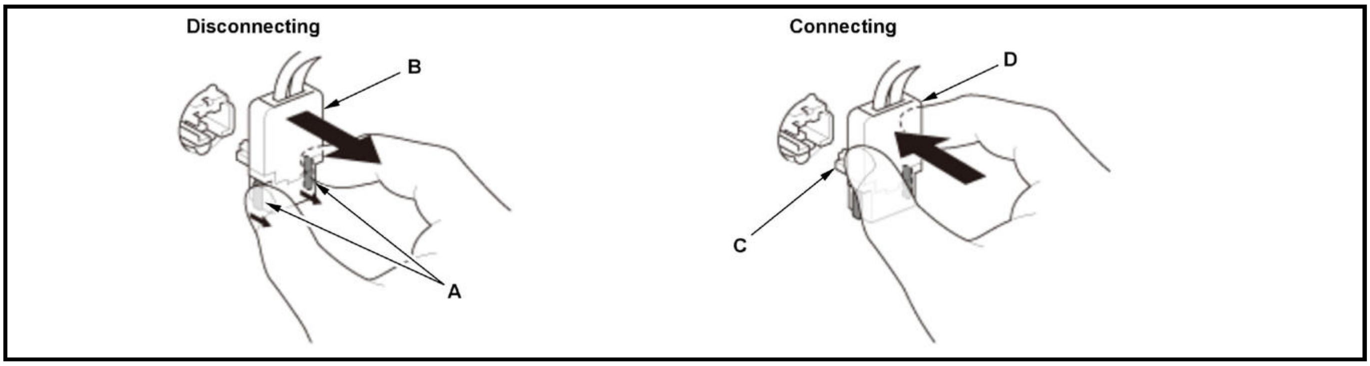

Front Passenger's Airbag Connector

Disconnecting/Connecting

- To release the lock, pull the spring-loaded sleeve (A) toward the stop (B) while holding the opposite half of the connector, then pull the connector halves apart. Be sure to pull on the sleeve and not on the connector.
- To reconnect, hold the pawl-side connector, and press on the back of the sleeve-side connector in the direction shown. As the two connector halves are pressed together, the sleeve (C) is pushed back by the pawl (D). Do not touch the sleeve.

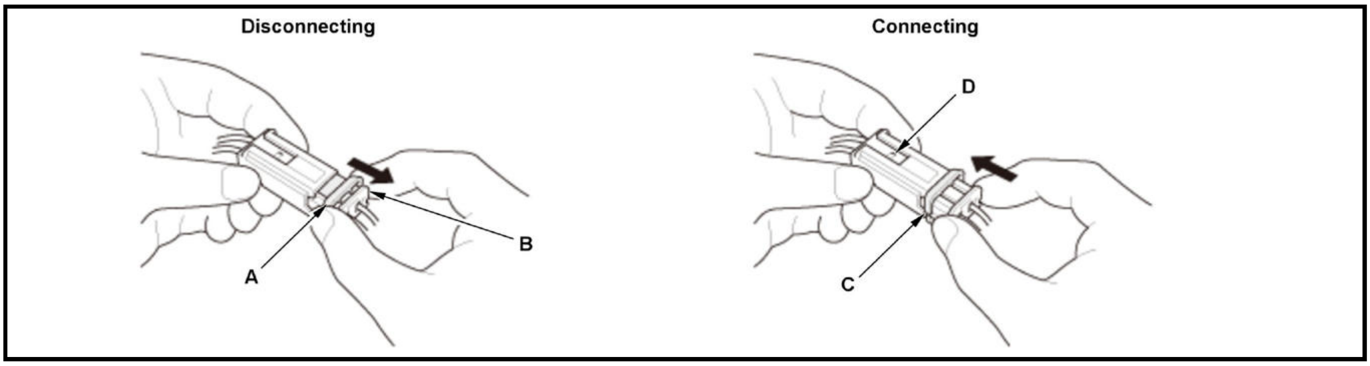

Side Airbag Connector/Front Seat Belt Outer Lap Tensioner Connector/Front Impact Sensor Connector/Side Impact Sensor Connector

Disconnecting/Connecting

- To release the lock, pull the spring-loaded sleeve (A) toward the stop (B) while holding the opposite half of the connector, then pull the connector halves apart. Be sure to pull on the sleeve and not on the connector half.
- To reconnect, hold both connector halves and press them firmly together until the projection (C) of the sleeve-side connector clicks.

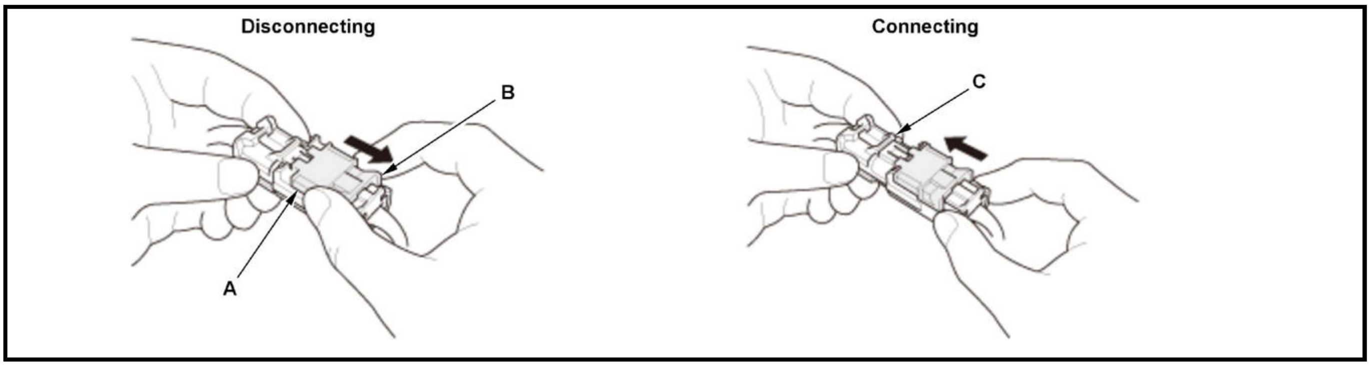
Disconnecting
B
A
Connecting
C

Side Curtain Airbags

The A-pillar trim and the quarter pillar trim with side curtain airbags have a "SIDE CURTAIN AIRBAG" mark.

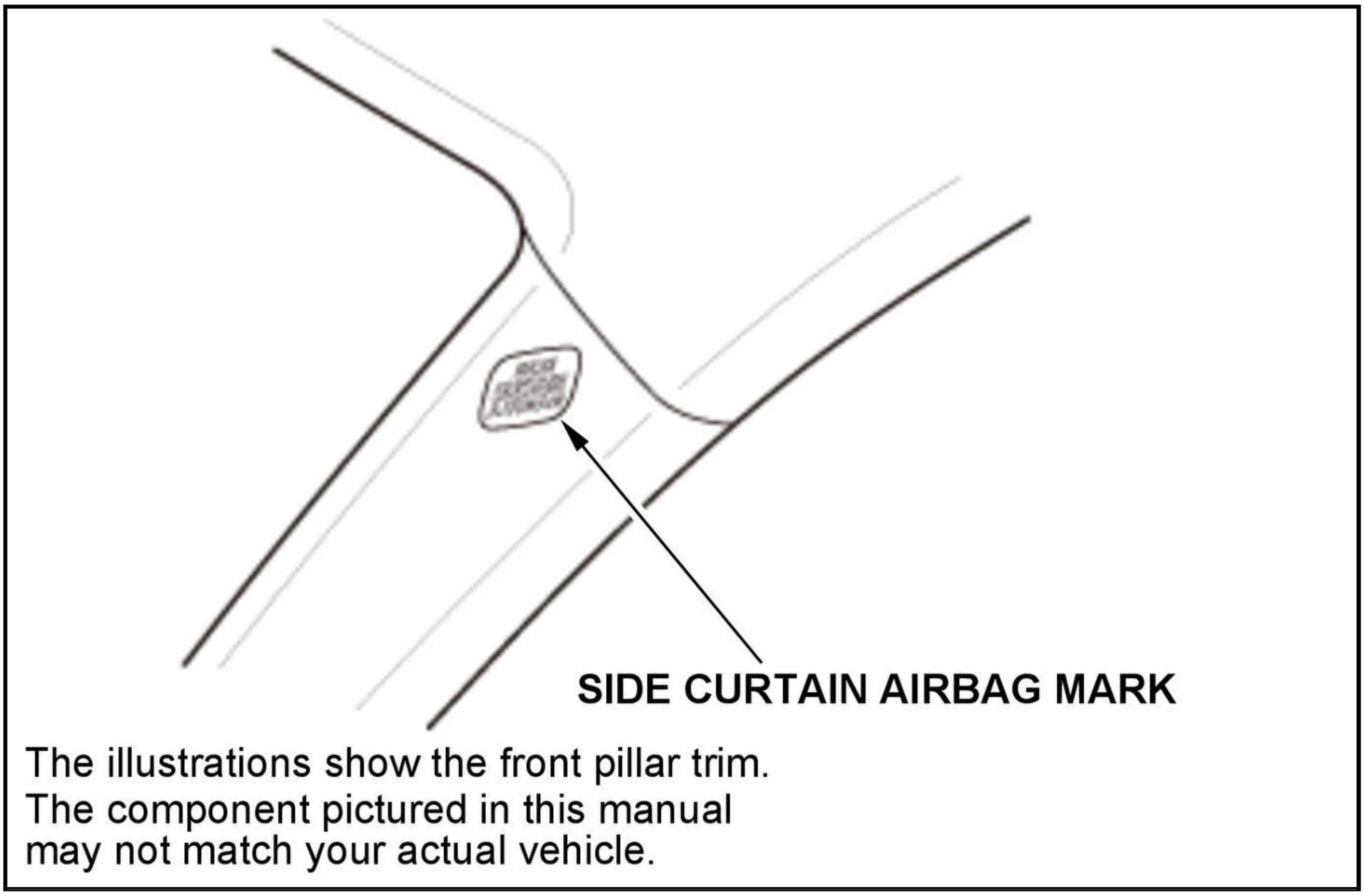
SIDE CURTAIN AIRBAG MARK
The illustrations show the front pillar trim.
The component pictured in this manual
may not match your actual vehicle.

The side curtain airbag module assembly is a long, jointed part containing an inflator, a flexible bag, and brackets. When removing or installing the side curtain airbag assembly, never:

- Handle the flexible bag.
- Drop the airbag assembly.
- Cut, tear, or unwrap the tape strips.

Front Seats With Side Airbags

Front seats with side airbags have a "SIDE AIRBAG" label on the seat-back.

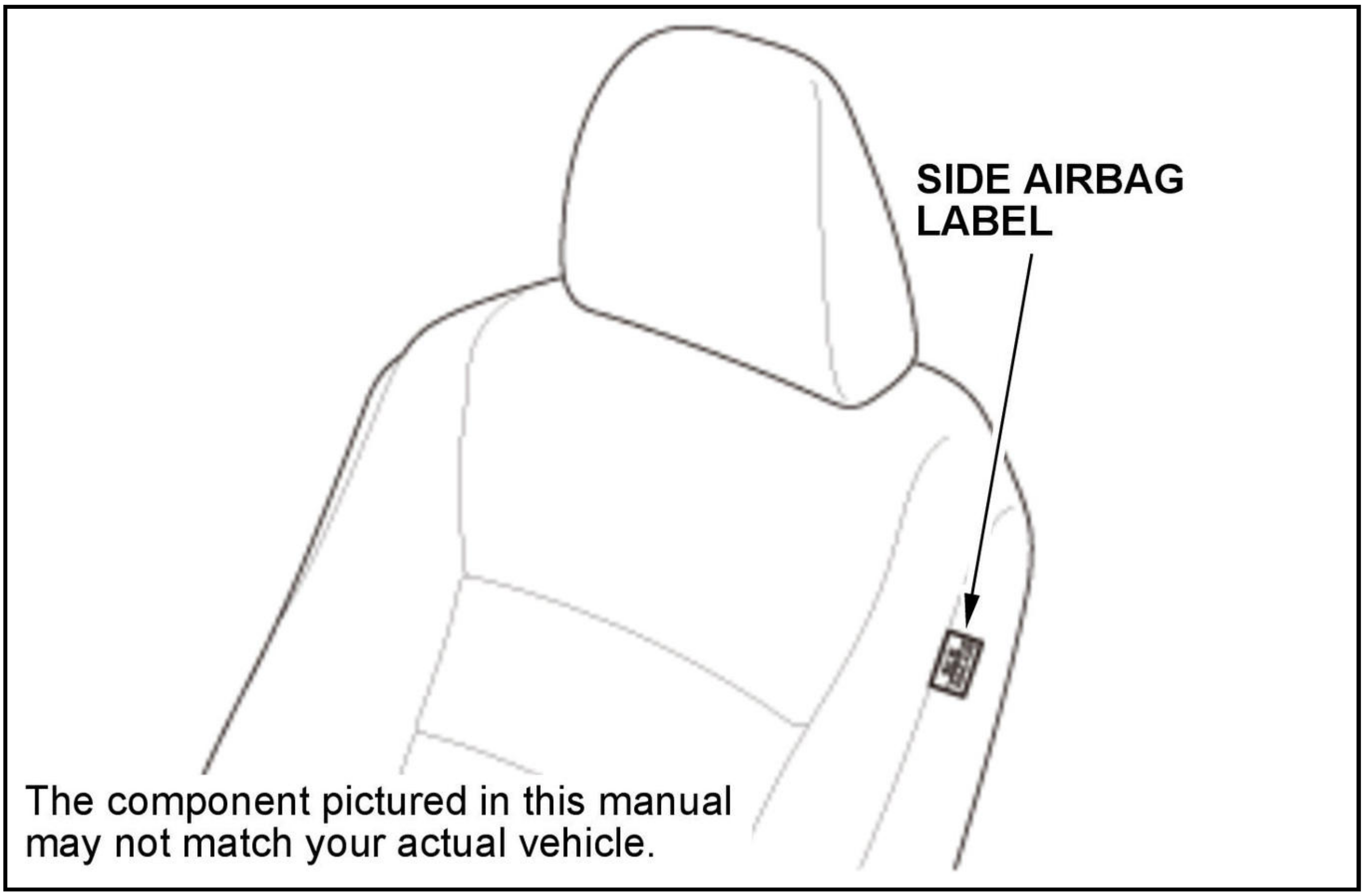
SIDE AIRBAG LABEL
The component pictured in this manual may not match your actual vehicle.

- Clean the seats with a damp cloth. Do not soak the seats with liquid. Do not spray steam on the seats.
- Do not repair a torn or frayed seat-back cover/pad. Replace the seat-back cover/pad if it is damaged.
- After a collision where the side airbag was deployed, replace the side airbag and the seat frame with the new parts. If the seat-back cover is split, it must be replaced. **Refer to Component Replacement/Inspection After Deployment**.
- Never put aftermarket accessories on the seats (covers, pads, seat heaters, lights, etc.).

YAW RATE-ACCELERATION NEUTRAL POSITION MEMORIZATION

Procedure

NOTE:

- The VSA modulator-control unit receives the yaw rate and the acceleration information from the SRS unit. This information is corrected by the neutral position learning of VSA modulator-control unit, performs the VSA control. Follow the procedures of the VSA system for more details.
- When you replace or update the SRS unit, memorize the yaw rate-acceleration neutral position.

1. **VSA Sensor Neutral Position - Memorize**

CONNECTOR VIEW

SRS UNIT CONNECTOR FOR INPUTS AND OUTPUTS

Connector Index
SRS unit connector A (39P)
SRS unit connector B (39P)

SRS Unit Inputs and Outputs at Connector A (39P) (female terminals)

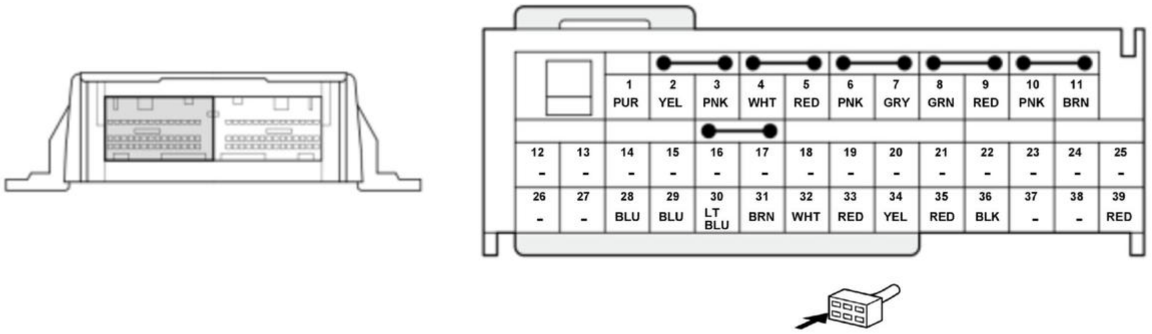
1 PUR
2 YEL
3 PNK
4 WHT
5 RED
6 PNK
7 GRY
8 GRN
9 RED
10 PNK
11 BRN
12 -
13 -
14 -
15 -
16 -
17 -
18 -
19 -
20 -
21 -
22 -
23 -
24 -
25 -
26 -
27 -
28 BLU
29 BLU
30 LT BLU
31 BRN
32 WHT
33 RED
34 YEL
35 RED
36 BLK
37 -
38 -
39 RED

NOTE: The wire colors of the SRS unit may be substituted in this illustration.

Terminal Number	Terminal Name	Description
1	CDS	Collision detection signal output line
2	RVEA+	Power source for the selectable energy absorption device of the front passenger's seat belt tensioner
3	RVEA-	Ground for the selectable energy absorption device of the front passenger's seat belt tensioner
4	RA1-	Ground for the front passenger's airbag first inflator
5	RA1+	Power source for the front passenger's airbag first inflator
6	RA2+	Power source for the front passenger's airbag second inflator
7	RA2-	Ground for the front passenger's airbag second inflator
8	LA1-	Ground for the driver's airbag first inflator
9	LA1+	Power source for the driver's airbag first inflator
10	LA2+	Power source for the driver's airbag second inflator
11	LA2-	Ground for the driver's airbag second inflator
12	Not Used	-
13	Not Used	-
14	Not Used	-
15	Not Used	-
16	Not Used	-
17	Not Used	-
18	Not Used	-
19	Not Used	-
20	Not Used	-
21	Not Used	-
22	Not Used	-
23	Not Used	-
24	Not Used	-
25	Not Used	-
26	Not Used	-
27	Not Used	-
28	OFF_PTT	Front passenger's airbag cutoff indicator output line
29	RFS+	Power source for the right front impact sensor
30	RFS-	Ground for the right front impact sensor

Terminal Number	Terminal Name	Description
31	LFS+	Power source for the left front impact sensor
32	LFS-	Ground for the left front impact sensor
33	L-LINE	Sends and receives scan tool signal (serial data)
34	F-CAN C_H	Sends and receives communication signal
35	F-CAN C_L	Sends and receives communication signal
36	GND	Ground circuit for the SRS unit
37	Not Used	-
38	Not Used	-
39	IG1_SRS	SRS dedicated power (dedicated booster circuit)

SRS Unit Inputs and Outputs at Connector B (39P) (female terminals)

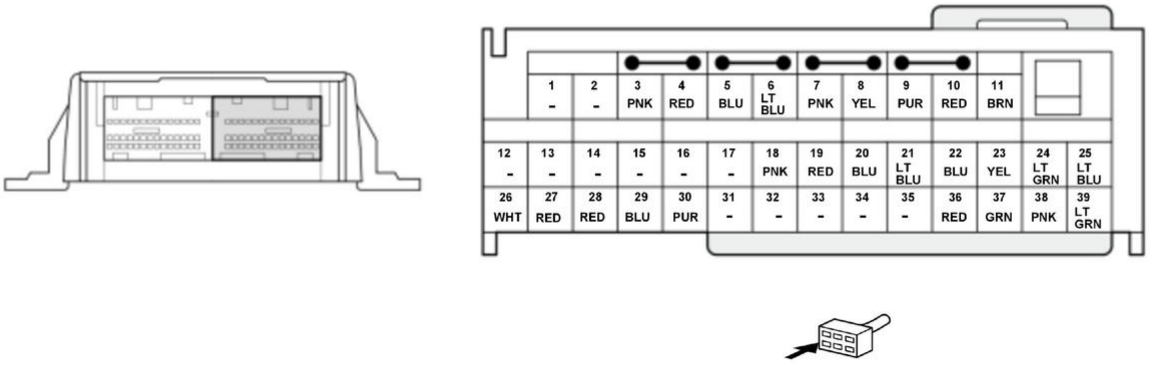
1 -
2 -
3 PNK
4 RED
5 BLU
6 LT BLU
7 PNK
8 YEL
9 PUR
10 RED
11 BRN
12 -
13 -
14 -
15 -
16 -
17 -
18 PNK
19 RED
20 BLU
21 LT BLU
22 BLU
23 YEL
24 LT GRN
25 LT BLU
26 WHT
27 RED
28 RED
29 BLU
30 PUR
31 -
32 -
33 -
34 -
35 -
36 RED
37 GRN
38 PNK
39 LT GRN

NOTE: The wire colors of the SRS unit may be substituted in this illustration.

Terminal Number	Terminal Name	Description
1	Not Used	-
2	Not Used	-
3	RSA-	Ground for the front passenger's side airbag inflator
4	RSA+	Power source for the front passenger's side airbag inflator
5	LSA+	Power source for the driver's side airbag inflator
6	LSA-	Ground for the driver's side airbag inflator
7	RCA-	Ground for the right side curtain airbag inflator
8	RCA+	Power source for the right side curtain airbag inflator
9	LCA+	Power source for the left side curtain airbag inflator
10	LCA-	Ground for the left side curtain airbag inflator
11	SS+	Driver's seat position sensor input line
12	Not Used	-
13	Not Used	-
14	Not Used	-
15	Not Used	-
16	Not Used	-
17	Not Used	-
18	RRP-	Ground for the front passenger's seat belt tensioner

Terminal Number	Terminal Name	Description
19	RRP+	Power source for the front passenger's seat belt tensioner
20	LRP+	Power source for the driver's seat belt tensioner
21	LRP-	Ground for the driver's seat belt tensioner
22	RLP-	Ground for the front passenger's seat belt outer lap tensioner
23	RLP+	Power source for the front passenger's seat belt outer lap tensioner
24	LLP+	Power source for the driver's seat belt outer lap tensioner
25	LLP-	Ground for the driver's seat belt outer lap tensioner
26	SWS+	Power source for the front passenger's weight sensors
27	FRBC	Front passenger's seat belt buckle switch input line
28	SWS-	Ground for the front passenger's weight sensors
29	FLBC	Driver's seat belt buckle switch input line
30	SWSS	Sends and receives communication signal with the front passenger's weight sensors
31	Not Used	-
32	Not Used	-
33	Not Used	-
34	Not Used	-
35	Not Used	-
36	RS1+	Power source for the right side impact sensor (first) and (second)
37	RS1-	Ground for the right side impact sensor (first) and (second)
38	LS1+	Power source for the left side impact sensor (first) and (second)
39	LS1-	Ground for the left side impact sensor (first) and (second)

CHECK

DRIVER'S SEAT POSITION SENSOR OPERATION CHECK

Procedure

NOTE: Check the driver's seat position sensor operation after the driver's seat position sensor replacement.

1. HDS - Connect
2. Driver's Seat Position Sensor - Operation Check

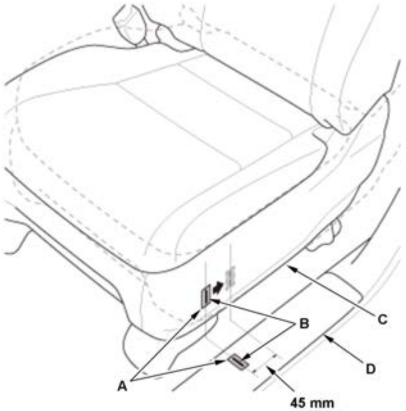 The component pictured in this manual may not match your actual vehicle.	1. Make sure the driver's seat is in the full forward position. 2. From SRS in the HDS Main Menu, select SRS, then Data List. 3. Using two pieces of tape (A), make alignment marks (B) on the recline cover (C) and the front door sill trim (D) as shown. The driver's seat position sensor should read NEAR on the HDS. 4. Move the seat back in small increments (about 5 mm, (0.20 in)) until the driver's seat position sensor reads NOT-NEAR on the HDS. The seat should be about 45 mm (1.77in) from the front. **NOTE:** It takes a few seconds for the HDS to change display, so wait for about 5 seconds between each movement. If the driver's seat position sensor data does not work as described above,

	check the driver's seat position sensor for damage, and replace parts as needed. 5. Turn the vehicle to the OFF (LOCK) mode.

FRONT PASSENGER'S WEIGHT SENSOR OPERATION CHECK AFTER REPLACING FRONT PASSENGER'S SEAT COMPONENT(S)

Procedure

NOTE:

- Check the front passenger's weight sensor operation after replacing or removing front passenger's seat component(s) (except front passenger's weight sensor, the front passenger's seat frame, or the front passenger's seat rail).
- Check the front passenger's weight sensor operation after front passenger's seat replacement or removal.
- When any of the following procedures are performed, **go to Front Passenger's Weight Sensor Initialization**.
-
    - -

      The SRS unit was replaced/updated.
    - -

      The front passenger's weight sensor, the front passenger's seat frame, and/or the front passenger's seat rail was replaced/removed.

1. **HDS - Connect**
2. Front Passenger's Weight Sensor - Operation Check

   NOTE:

   - Before doing this procedure, clear the DTCs.
   - Before doing this procedure, make sure the 12 volt battery is fully charged.
   - Make sure the front passenger's seat and all components of the seat are correctly installed.
   - Make sure nothing is on the front passenger's seat, including aftermarket seat covers or mats.
   - Make sure there is nothing in the front passenger's seat-back pocket.
   - Make sure the vehicle is on level ground.
   - When you perform this procedure, the vehicle temperature must be between 41- 113 deg.F (5 - 45 deg.C).
   - When the vehicle is exposed to intense cold or intense heat, move the vehicle inside, open the windows and moonroof (if equipped) and perform this procedure after one hour or more.
   - Do not expose the front passenger's seat to sudden temperature changes.
   - Do not use the A/C and the heater.
   - Do not touch the front passenger's seat and keep the vehicle stationary during this procedure.
   - Do not attach the seat belt tongue into the buckle.
   - If possible, do all of the above procedures inside.

   1. Position the front passenger's seat all the way rearward and lowermost (if equipped with the height adjuster), then adjust the seat-back to the forward most position.

   NOTE: Do not move the seat from this position until the operation check is completed.

2. From SRS of the System Selection Menu, select SRS/SWS, then Data List. In the Data List, select FRONT PASSENGER'S WEIGHT. The weight (T0) of the front passenger's seat is displayed by the HDS. Write this measurement down as "T0" on a piece of paper.

- If the reading on the HDS (T0) is within +/-2.1 kg (+/-4.6 lbs), go to step 3.
- If the reading on the HDS (T0) is at or not within +/-2.1 kg (+/-4.6 lbs), turn the vehicle to the OFF (LOCK) mode, and **go to the Front Passenger's Weight Sensor Initialization**.

3. Prepare a weight between 10 kg (22 lbs) - 20 kg (44 lbs) then measure and note its actual weight (M) with a weight scale.

NOTE:

- **The accuracy of the weight scale must be within 1 kg (2 lbs).**
- **The weight must be uniform in shape and size to allow precise placement on the seat.**

4. Place the prepared weight precisely on the center of the front passenger's seat as shown.

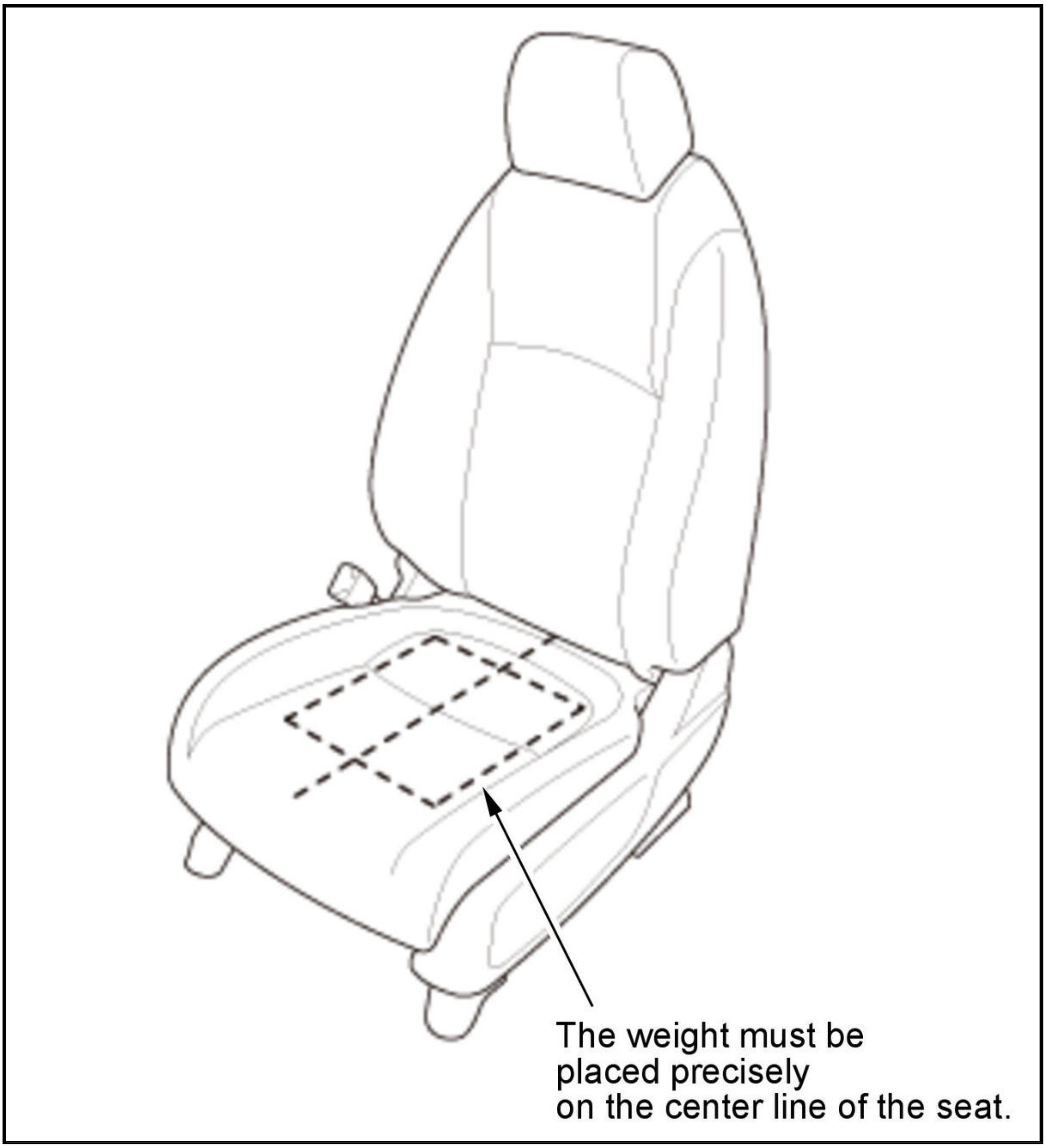

5. From the Data List, select FRONT PASSENGER'S WEIGHT. The weight (T1) of the front passenger's seat is displayed by the HDS. Write this measurement down as "T1".

6. Divide (M) by 2. Write this calculation as "M1" on a piece of paper.

7. Calculate the variance between the weight measured by the weight scale and the HDS with the formula.

Variance = ((T1)-(T0)-(M1))	
Â	
T1:	**Weight measured by the HDS with the weight on the seat.**
T0:	**Weight measured by the HDS with no load on the seat.**
M1:	**Half of the weight measured by the weight scale.**

- If the variance is within +/-2.2 kg (+/-4.9 lbs), initialization is complete. Go to step 8.
- If the variance is at or not within +/-2.2 kg (+/-4.9 lbs), do the following and then **go to the Front Passenger's Weight Sensor Initialization**.
-
    - -

      Confirm that the seat has no interference with surrounding components.
    - -

      Confirm that the weight was placed precisely in the center of the seat.
    - -

      Remove the front passenger's weight sensors and reinstall them .

8. Turn the vehicle to the OFF (LOCK) mode.

FRONT PASSENGER'S WEIGHT SENSOR OUTPUT CHECK AFTER A VEHICLE COLLISION

Procedure

NOTE:

- Check the front passenger's weight sensor output after a vehicle collision, regardless if the airbags and seatbelt tensioners deployed or not.
- When any of the following procedures are performed, **go to Front Passenger's Weight Sensor Initialization**.
-
    - -

      The SRS unit was replaced/updated.
    - -

      The front passenger's weight sensor, the front passenger's seat frame, and/or the front passenger's seat rail was replaced/removed.

1. **HDS - Connect**
2. Front Passenger's Weight Sensor - Output Check After a Vehicle Collision

   NOTE:

   - Before doing this procedure, clear the DTCs.
   - Before doing this procedure, make sure the 12 volt battery is fully charged.

- Make sure the front passenger's seat and all components of the seat are correctly installed.
- Make sure nothing is on the front passenger's seat, including aftermarket seat covers or mats.
- Make sure there is nothing in the front passenger's seat-back pocket.
- Make sure the vehicle is on level ground.
- When you perform this procedure, the vehicle temperature must be between 41- 113 deg.F (5 - 45 deg.C).
- When the vehicle is exposed to intense cold or intense heat, move the vehicle inside, open the windows and moonroof (if equipped) and perform this procedure after one hour or more.
- Do not expose the front passenger's seat to sudden temperature changes.
- Do not use the A/C and the heater.
- Do not touch the front passenger's seat and keep the vehicle stationary during this procedure.
- Do not attach the seat belt tongue into the buckle.
- If possible, do all of the above procedures inside.

1. Position the front passenger's seat all the way rearward and lowermost (if equipped with the height adjuster), then adjust the seat-back to the forward most position.

NOTE: Do not move the seat from this position until the output check is completed.

2. From SRS of the System Selection Menu, select SRS/SWS, then Data List. In the Data List, select FRONT PASSENGER'S WEIGHT. The weight (T0) of the front passenger's seat is displayed by the HDS. Write this measurement down as "T0" on a piece of paper.

- If the reading on the HDS (T0) is within +/-2.1 kg (+/-4.6 lbs), go to step 3.
- If the reading on the HDS (T0) is at or not within +/-2.1 kg (+/-4.6 lbs), do the following and then **go to the Front Passenger's Weight Sensor Initialization**.
-
    - -

      Confirm that the seat has no interference with surrounding components.
    - -

      Remove the front passenger's weight sensors and inspect them for damage. If damage is found, replace the sensors. If no damage is found, reinstall the sensors.

3. Prepare a weight between 10 kg (22 lbs) - 20 kg (44 lbs) then measure and note its actual weight (M) with a weight scale.

NOTE:

- **The accuracy of the weight scale must be within 1 kg (2 lbs).**
- **The weight must be uniform in shape and size to allow precise placement on the seat.**

4. Place the prepared weight precisely on the center of the front passenger's seat as shown.

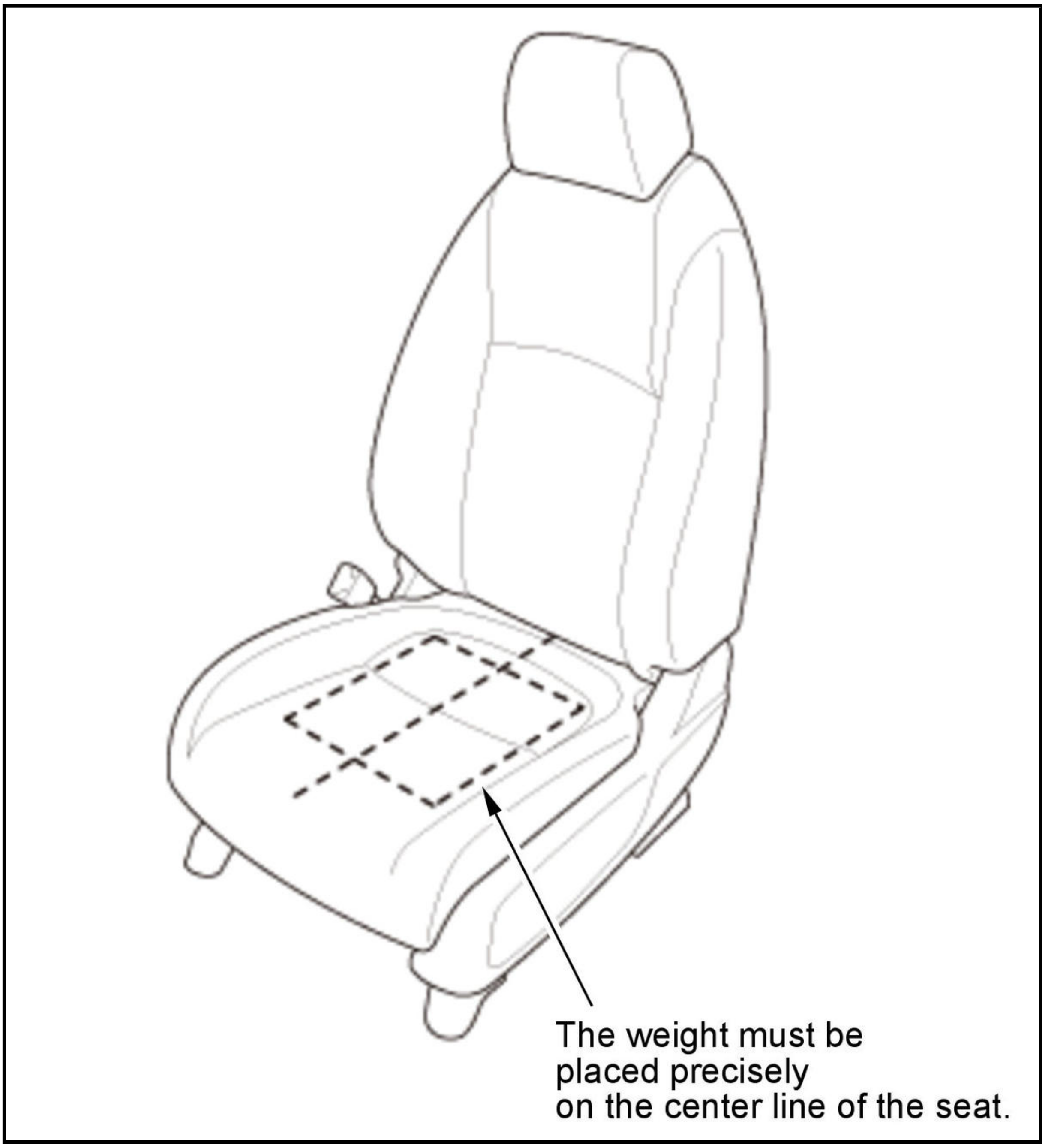

5. From the Data List, select FRONT PASSENGER'S WEIGHT. The weight (T1) of the front passenger's seat is displayed by the HDS. Write this measurement down as "T1".

6. Divide (M) by 2. Write this calculation as "M1" on a piece of paper.

7. Calculate the variance between the weight measured by the weight scale and the HDS with the formula.

Variance = ((T1)-(T0)-(M1))	
Â	
T1:	**Weight measured by the HDS with the weight on the seat.**
T0:	**Weight measured by the HDS with no load on the seat.**
M1:	**Half of the weight measured by the weight scale.**

- If the variance is within +/-2.2 kg (+/-4.9 lbs), initialization is complete. Go to step 8.
- If the variance is at or not within +/-2.2 kg (+/-4.9 lbs), do the following and then go to the Front Passenger's Weight Sensor Initialization.
-

- -

  Confirm that the seat has no interference with surrounding components.

- -

  Confirm that the weight was placed precisely in the center of the seat.

- -

  Remove the front passenger's weight sensors and reinstall them .

8. Turn the vehicle to the OFF (LOCK) mode.

CIRCUIT DIAGRAM

SRS CIRCUIT DIAGRAM

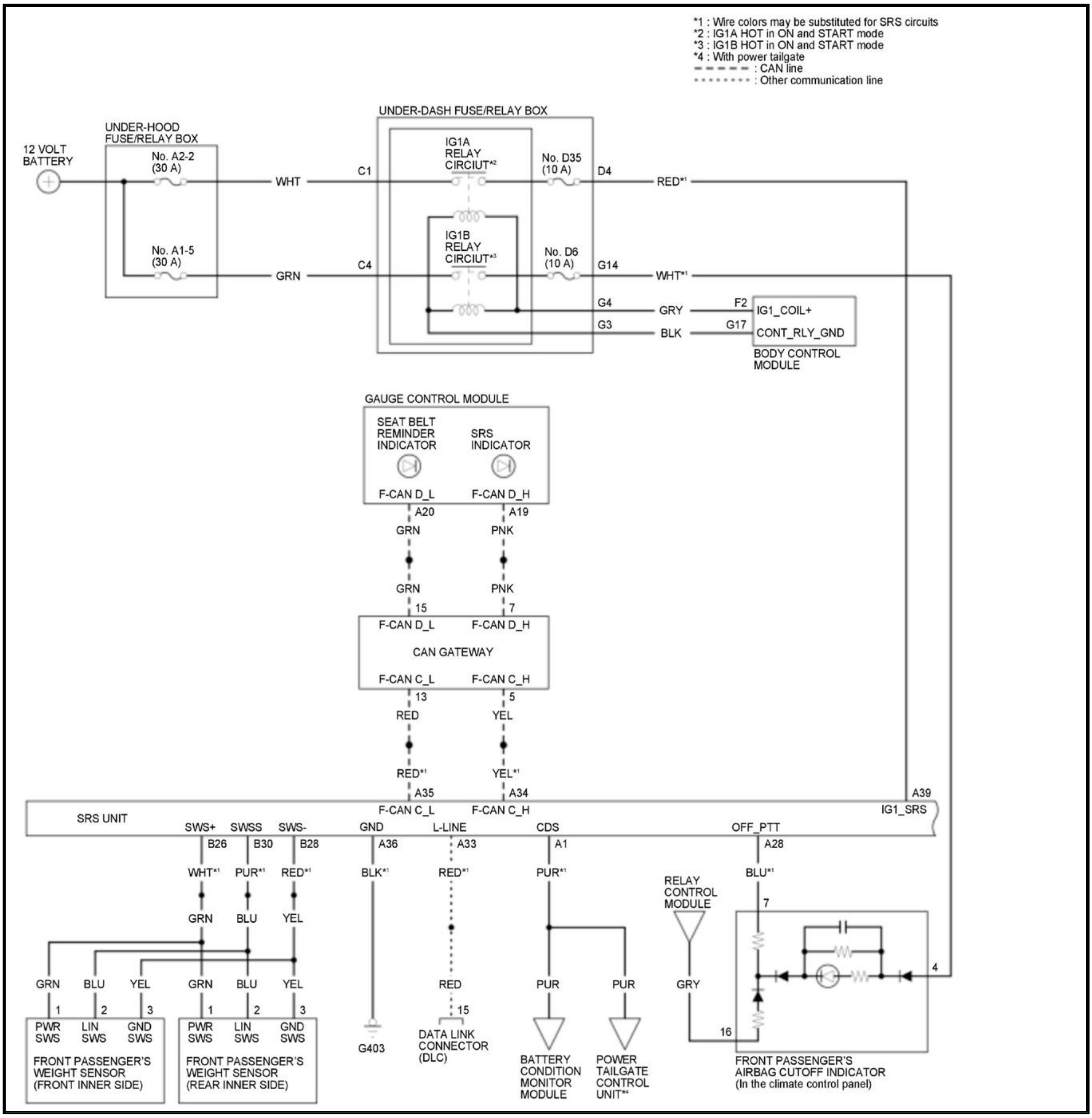
*1 : Wire colors may be substituted for SRS circuits
*2 : IG1A HOT in ON and START mode
*3 : IG1B HOT in ON and START mode
*4 : With power tailgate
: CAN line
: Other communication line
12 VOLT BATTERY
UNDER-HOOD FUSE/RELAY BOX
No. A2-2 (30 A)
No. A1-5 (30 A)
WHT
GRN
UNDER-DASH FUSE/RELAY BOX
C1
C4
IG1A RELAY CIRCUIT*2
IG1B RELAY CIRCUIT*3
No. D35 (10 A)
No. D6 (10 A)
D4
G14
G4
G3
RED*1
WHT*1
GRY
BLK
F2
G17
IG1_COIL+
CONT_RLY_GND
BODY CONTROL MODULE
GAUGE CONTROL MODULE
SEAT BELT REMINDER INDICATOR
SRS INDICATOR
F-CAN D_L
F-CAN D_H
A20
A19
GRN
PNK
GRN
PNK
15
7
F-CAN D_L
F-CAN D_H
CAN GATEWAY
F-CAN C_L
F-CAN C_H
13
5
RED
YEL
RED*1
YEL*1
A35
A34
A39
SRS UNIT
F-CAN C_L
F-CAN C_H
IG1_SRS
SWS+
SWSS
SWS-
GND
L-LINE
CDS
OFF_PTT
B26
B30
B28
A36
A33
A1
A28
WHT*1
PUR*1
RED*1
BLK*1
RED*1
PUR*1
BLU*1
GRN
BLU
YEL
RELAY CONTROL MODULE
7
4
GRN
BLU
YEL
GRN
BLU
YEL
RED
PUR
PUR
GRY
1
2
3
1
2
3
15
16
PWR SWS
LIN SWS
GND SWS
PWR SWS
LIN SWS
GND SWS
FRONT PASSENGER'S WEIGHT SENSOR (FRONT INNER SIDE)
FRONT PASSENGER'S WEIGHT SENSOR (REAR INNER SIDE)
G403
DATA LINK CONNECTOR (DLC)
BATTERY CONDITION MONITOR MODULE
POWER TAILGATE CONTROL UNIT*4
FRONT PASSENGER'S AIRBAG CUTOFF INDICATOR (In the climate control panel)

* : Wire colors may be substituted for SRS circuits

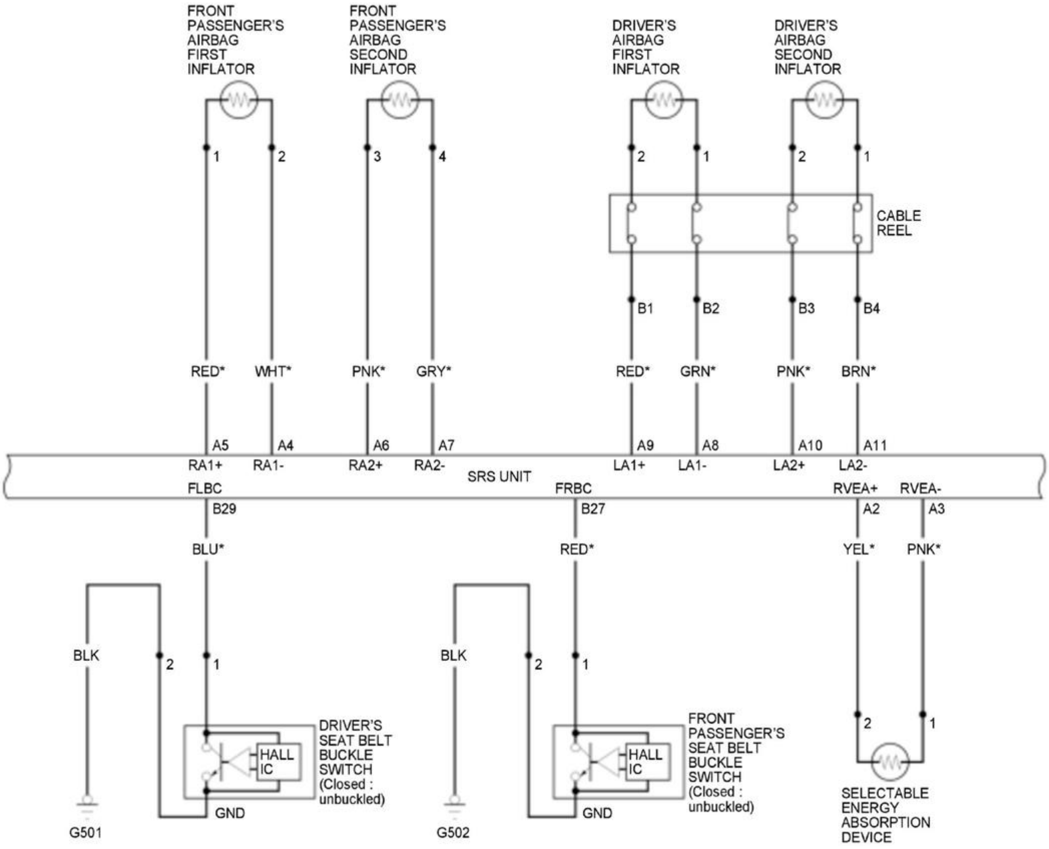
FRONT PASSENGER'S AIRBAG FIRST INFLATOR
FRONT PASSENGER'S AIRBAG SECOND INFLATOR
DRIVER'S AIRBAG FIRST INFLATOR
DRIVER'S AIRBAG SECOND INFLATOR
1
2
3
4
2
1
2
1
CABLE REEL
B1
B2
B3
B4
RED*
WHT*
PNK*
GRY*
RED*
GRN*
PNK*
BRN*
A5
A4
A6
A7
A9
A8
A10
A11
RA1+
RA1-
RA2+
RA2-
SRS UNIT
LA1+
LA1-
LA2+
LA2-
FLBC
FRBC
RVEA+
RVEA-
B29
B27
A2
A3
BLU*
RED*
YEL*
PNK*
BLK
2
1
BLK
2
1
DRIVER'S SEAT BELT BUCKLE SWITCH (Closed : unbuckled)
HALL IC
GND
G501
FRONT PASSENGER'S SEAT BELT BUCKLE SWITCH (Closed : unbuckled)
HALL IC
GND
G502
2
1
SELECTABLE ENERGY ABSORPTION DEVICE

* : Wire colors may be substituted for SRS circuits

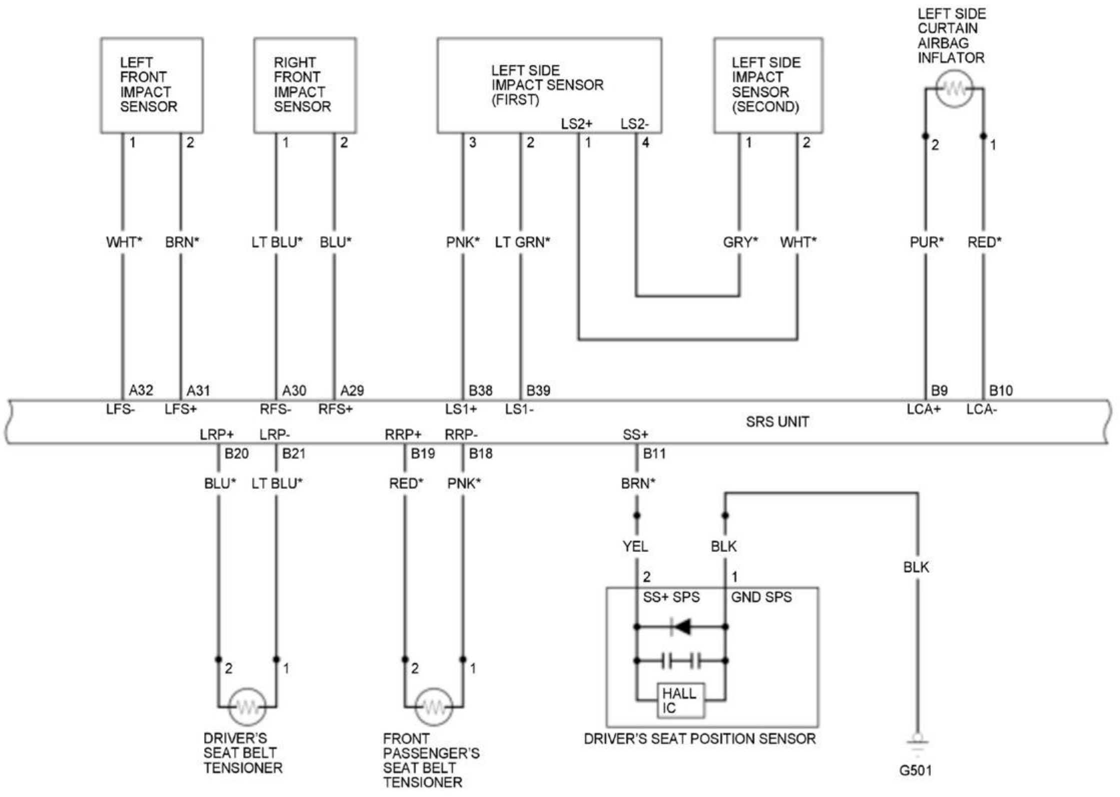
LEFT FRONT IMPACT SENSOR
RIGHT FRONT IMPACT SENSOR
LEFT SIDE IMPACT SENSOR (FIRST)
LEFT SIDE IMPACT SENSOR (SECOND)
LEFT SIDE CURTAIN AIRBAG INFLATOR
LS2+
LS2-
1
2
1
2
3
2
1
4
1
2
2
1
WHT*
BRN*
LT BLU*
BLU*
PNK*
LT GRN*
GRY*
WHT*
PUR*
RED*
A32
A31
A30
A29
B38
B39
B9
B10
LFS-
LFS+
RFS-
RFS+
LS1+
LS1-
LCA+
LCA-
SRS UNIT
LRP+
LRP-
RRP+
RRP-
SS+
B20
B21
B19
B18
B11
BLU*
LT BLU*
RED*
PNK*
BRN*
YEL
BLK
BLK
2
1
SS+ SPS
GND SPS
HALL IC
2
1
2
1
DRIVER'S SEAT BELT TENSIONER
FRONT PASSENGER'S SEAT BELT TENSIONER
DRIVER'S SEAT POSITION SENSOR
G501

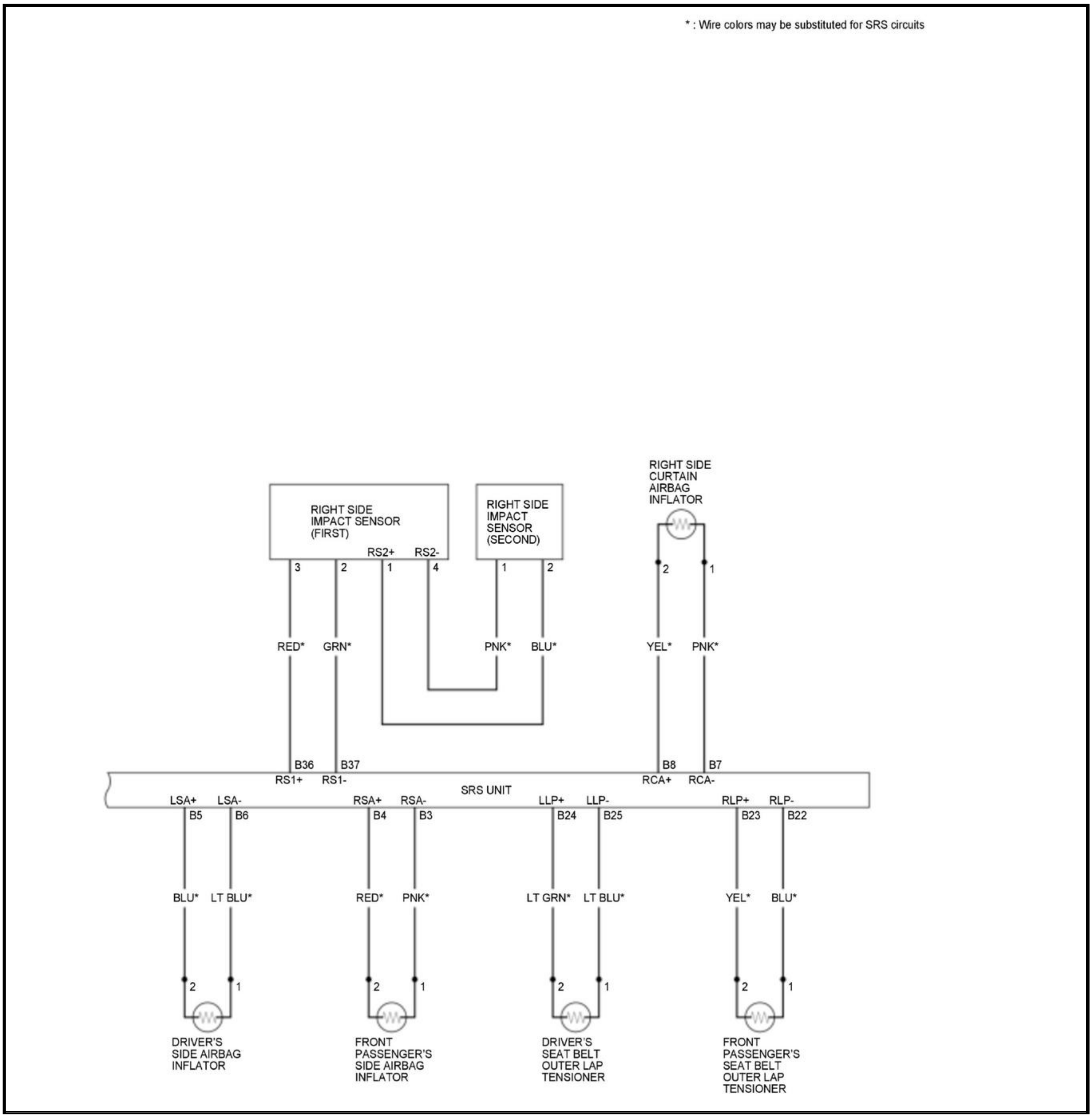
* : Wire colors may be substituted for SRS circuits
RIGHT SIDE IMPACT SENSOR (FIRST)
RS2+
RS2-
3
2
1
4
RIGHT SIDE IMPACT SENSOR (SECOND)
1
2
RIGHT SIDE CURTAIN AIRBAG INFLATOR
2
1
RED*
GRN*
PNK*
BLU*
YEL*
PNK*
B36
B37
B8
B7
RS1+
RS1-
RCA+
RCA-
SRS UNIT
LSA+
LSA-
B5
B6
RSA+
RSA-
B4
B3
LLP+
LLP-
B24
B25
RLP+
RLP-
B23
B22
BLU*
LT BLU*
RED*
PNK*
LT GRN*
LT BLU*
YEL*
BLU*
2
1
DRIVER'S SIDE AIRBAG INFLATOR
FRONT PASSENGER'S SIDE AIRBAG INFLATOR
DRIVER'S SEAT BELT OUTER LAP TENSIONER
FRONT PASSENGER'S SEAT BELT OUTER LAP TENSIONER

COMPONENT LOCATION INDEX

SRS COMPONENT LOCATION INDEX

For relationships between signals in a system, refer to System Diagram.

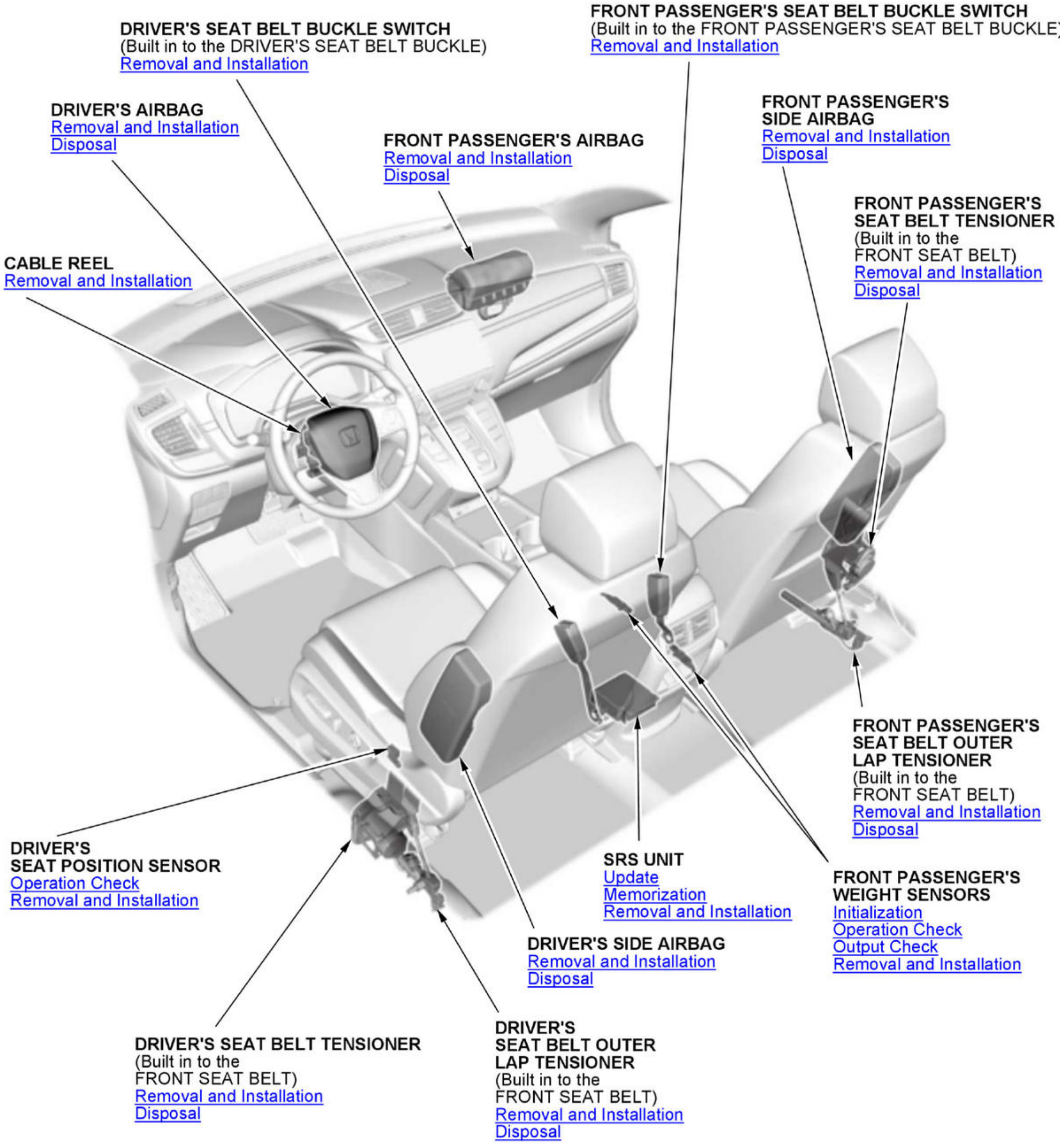
DRIVER'S SEAT BELT BUCKLE SWITCH
(Built in to the DRIVER'S SEAT BELT BUCKLE)
Removal and Installation
FRONT PASSENGER'S SEAT BELT BUCKLE SWITCH
(Built in to the FRONT PASSENGER'S SEAT BELT BUCKLE)
Removal and Installation
DRIVER'S AIRBAG
Removal and Installation
Disposal
FRONT PASSENGER'S AIRBAG
Removal and Installation
Disposal
FRONT PASSENGER'S SIDE AIRBAG
Removal and Installation
Disposal
FRONT PASSENGER'S SEAT BELT TENSIONER
(Built in to the FRONT SEAT BELT)
Removal and Installation
Disposal
CABLE REEL
Removal and Installation
FRONT PASSENGER'S SEAT BELT OUTER LAP TENSIONER
(Built in to the FRONT SEAT BELT)
Removal and Installation
Disposal
DRIVER'S SEAT POSITION SENSOR
Operation Check
Removal and Installation
SRS UNIT
Update
Memorization
Removal and Installation
FRONT PASSENGER'S WEIGHT SENSORS
Initialization
Operation Check
Output Check
Removal and Installation
DRIVER'S SIDE AIRBAG
Removal and Installation
Disposal
DRIVER'S SEAT BELT TENSIONER
(Built in to the FRONT SEAT BELT)
Removal and Installation
Disposal
DRIVER'S SEAT BELT OUTER LAP TENSIONER
(Built in to the FRONT SEAT BELT)
Removal and Installation
Disposal

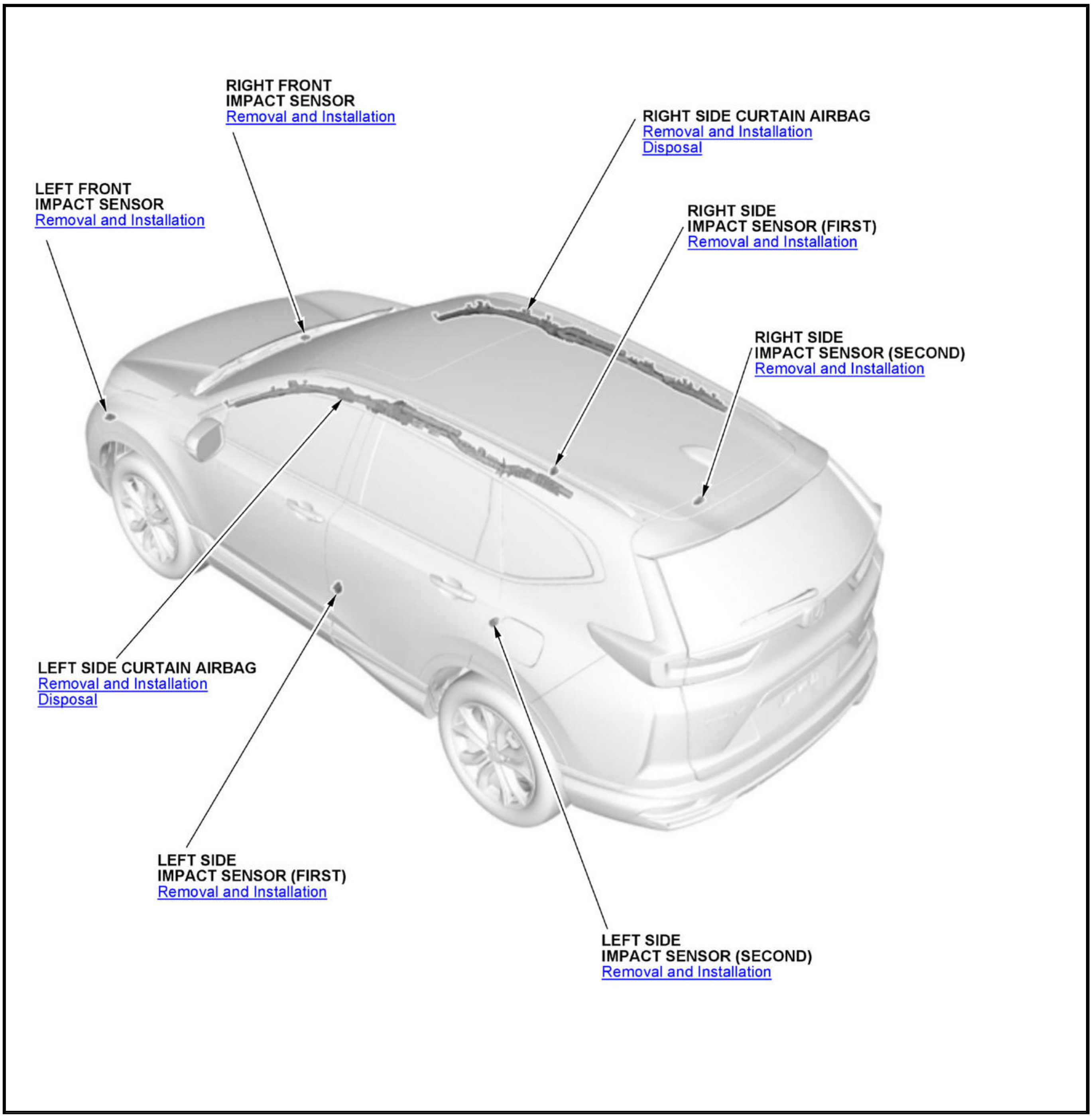
RIGHT FRONT
IMPACT SENSOR
Removal and Installation
RIGHT SIDE CURTAIN AIRBAG
Removal and Installation
Disposal
LEFT FRONT
IMPACT SENSOR
Removal and Installation
RIGHT SIDE
IMPACT SENSOR (FIRST)
Removal and Installation
RIGHT SIDE
IMPACT SENSOR (SECOND)
Removal and Installation
LEFT SIDE CURTAIN AIRBAG
Removal and Installation
Disposal
LEFT SIDE
IMPACT SENSOR (FIRST)
Removal and Installation
LEFT SIDE
IMPACT SENSOR (SECOND)
Removal and Installation

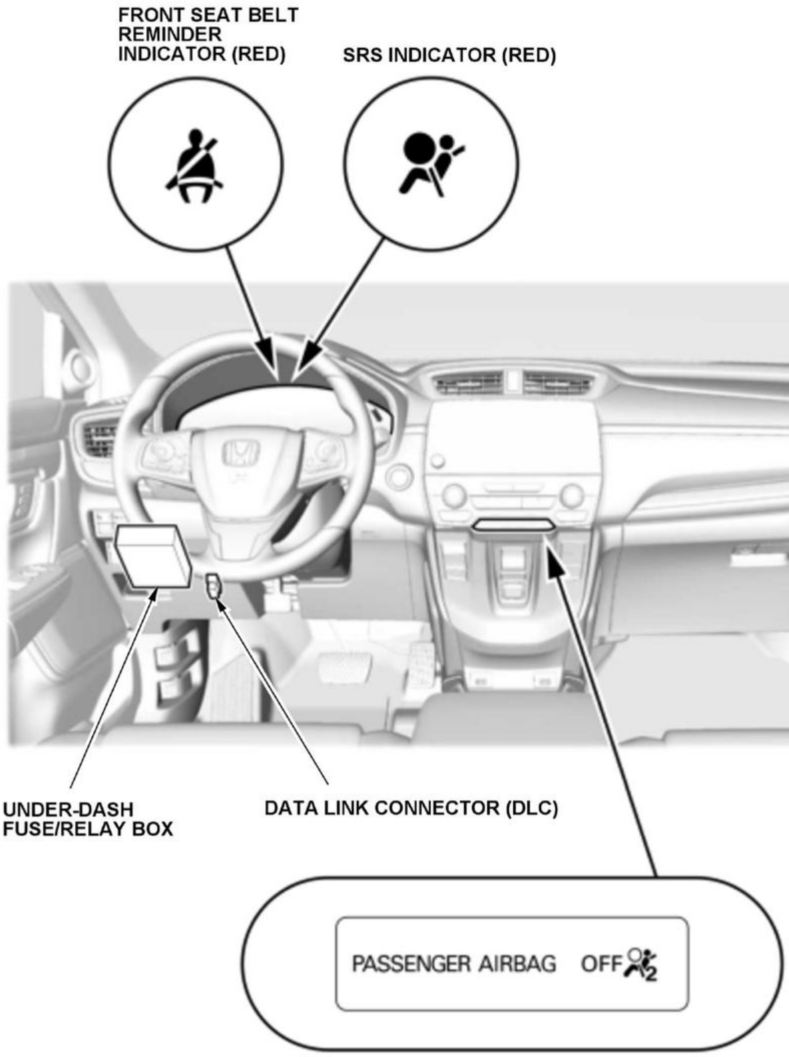
FRONT SEAT BELT REMINDER INDICATOR (RED)
SRS INDICATOR (RED)
UNDER-DASH FUSE/RELAY BOX
DATA LINK CONNECTOR (DLC)
PASSENGER AIRBAG OFF
FRONT PASSENGER'S AIRBAG CUTOFF INDICATOR (AMBER)

Removal and Installation

Supplemental Restraint System - Testing & Troubleshooting (Except Hybrid) - CR-V

DESCRIPTION AND OPERATION

SRS SYSTEM

SRS System Description

This vehicle is equipped with SRS components including driver's and front passenger's airbags, side airbags, side curtain airbags, seat belt outer lap tensioners, and seat belt tensioners.

SRS Airbag System (Driver's and Front Passenger's Airbag)

In case of a frontal collision, the SRS airbag system uses a seat belt tensioner as a body restraint device in addition to the impact-absorbing construction of the body shell as a function to mitigate the impact forces acting on the head and chest of the front seat occupant. The driver's airbag and the front passenger's airbag uses two inflators for a dual-stage output control system. In case of a collision at low or medium speed, the airbag is deployed while reducing the inflator output by means of a dual-stage ignition of each inflator, which helps to reduce the possibility of injury to the occupant. In case of a sudden collision at high speed, both inflators are ignited at the same time to restrain and protect the occupants. The system registers when a seated occupant is wearing the seat belt, and in some cases, like a low-speed collision, the occupant may be restrained by the seat belt only. This vehicle adopts a continuous capacity changing airbag for the driver's airbag that is designed to satisfy both protection of occupants and gentle deployment of the airbag.

Operating process of the SRS airbag:

1. The impact force generated by a frontal collision is transmitted via the vehicle's structural components and input from each of the front impact sensors, front impact G sensors and the safing drive circuit inside the SRS unit.

2. The front impact sensor converts the collision force into electrical signals which are sent to the microprocessor and the safing drive circuit inside the SRS unit. At the same time, the front impact G sensors inside the SRS unit converts the collision force input into waveform electrical signals and sends them to the microprocessor and the safing drive circuit.

3. The microprocessor outputs actuation signals if the outputs from the front impact sensors and front impact G sensor exceed the preset threshold value. At this time, if the output from the safing drive circuit inside the SRS unit exceeds the preset threshold value, current flows through a trigger circuit, which deploys the SRS airbag and operates the seat belt tensioner and the seat belt outer lap tensioner.

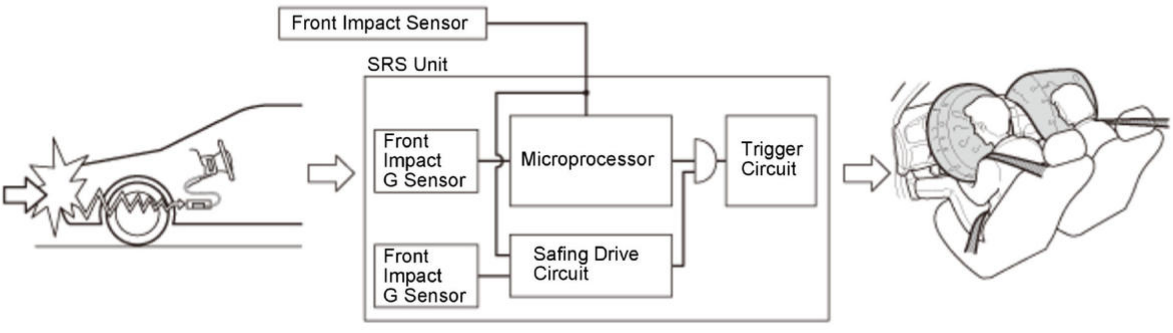

The vehicle pictured in this manual may not match your actual vehicle.

SRS airbags do not deploy in the following cases:

The SRS airbag deploys when a strong impact comes from the front right or left direction within 30 degrees from the front face when the vehicle is in the ON mode. Therefore, in the following cases, the SRS airbag does not deploy because there is no effect on the occupant protection. Note that it may deploy depending on the state of collision.

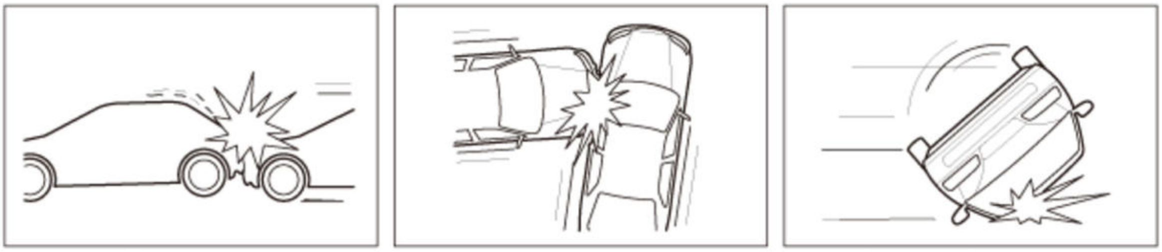

Rear impacts

Side impacts

Rollover or Overthrown

The vehicle pictured in this manual may not match your actual vehicle.

SRS airbags may not deploy in the following cases:

The deployment of the SRS airbag is designed based on the scale of the impact felt by the occupant. Therefore, the deployment of the SRS airbag is not always related to the amount of damage to the vehicle.

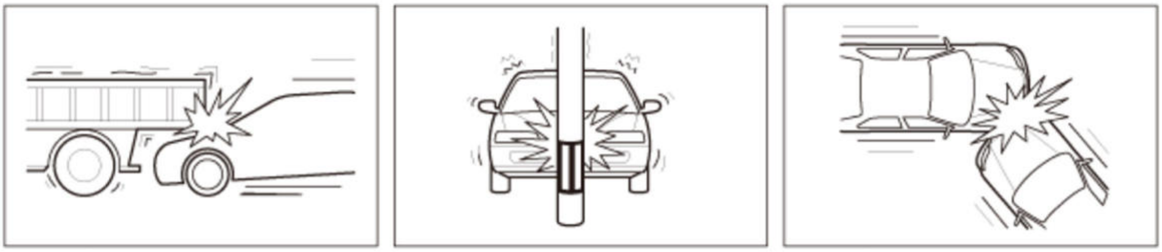

Creeping under the truck

Colliding into a pole or tree

Partial collision or
oblique direction collision

The vehicle pictured in this manual may not match your actual vehicle.

Side Airbag System and Side Curtain Airbag System

In case of a side impact, the side airbag, the side curtain airbag, and the seat belt tensioner on the impact side operate in addition to the impact-absorbing body shell of the vehicle, which mitigates the impact forces acting on the head and chest of the occupant. Moreover, the left and the right side impact sensors detect the various states of collision so that the airbag deploys accordingly. The side airbag uses a variable volume type; the construction and the deployment process of the airbag pressure chamber have been improved, and enable a safe deployment regardless of the position of the occupant. Therefore, conventional OPDS related parts are not equipped.*OPDS: Occupant Position Detection System

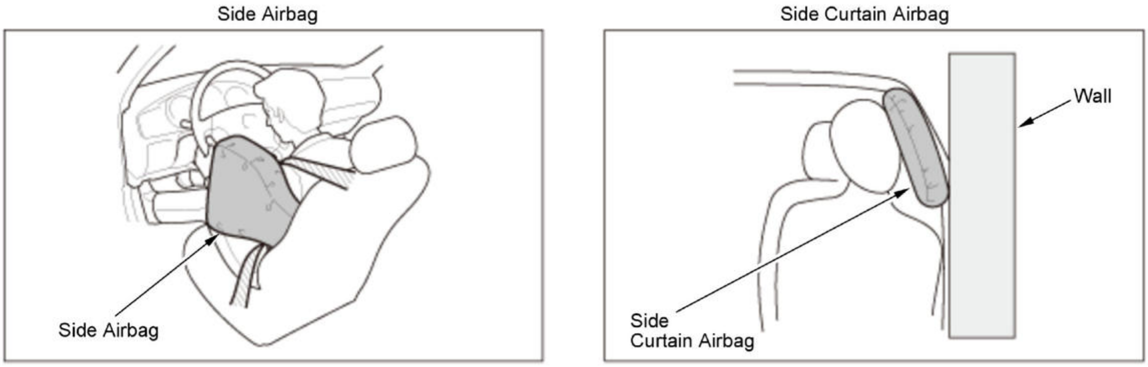

Side Airbag

Side Curtain Airbag

The vehicle pictured in this manual may not match your actual vehicle.

Side airbag and side curtain airbag deployment process:

1. The collision force generated from the side impact is input to each of the side impact sensors and the side impact G sensor inside the SRS unit.

2. If the microprocessor inside the SRS unit determines that the side impact sensor output exceeds a preset threshold value, and if the output from the side impact G sensor inside the SRS unit exceeds a preset threshold value, the circuit creates an actuation signal.

3. The actuation signal is sent from the microprocessor to the trigger circuit, which deploys the side airbag, the side curtain airbag, and the seat belt tensioner.

NOTE: In cases of a strong frontal collision, the threshold value for a side impact is exceeded in the SRS unit, the side curtain airbag may deploy.

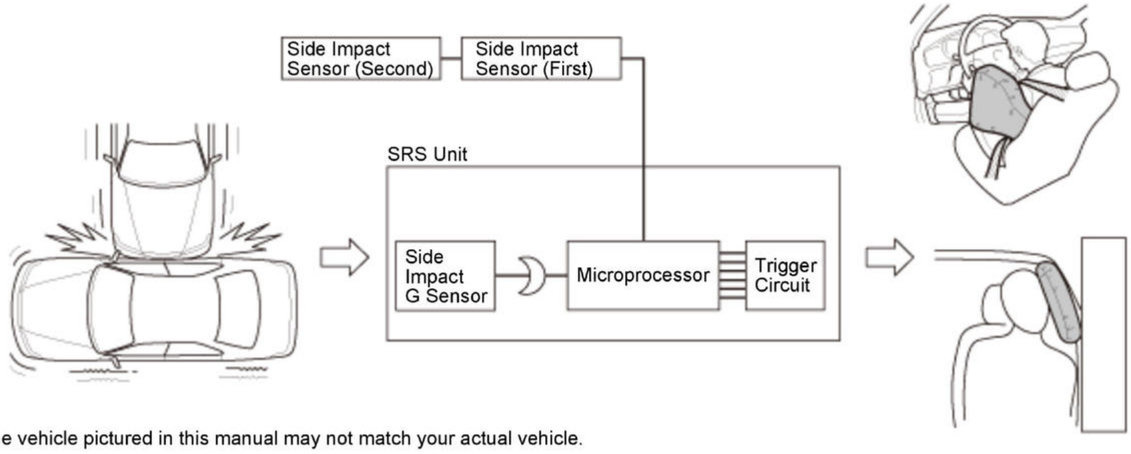

The vehicle pictured in this manual may not match your actual vehicle.

Side airbag and side curtain airbag deployment conditions:

When the vehicle is subject to strong side impact and the side impact G sensor detects an impact that exceeds the preset threshold value, the side airbags and side curtain airbags on the side receiving the impact will deploy.

NOTE: The side curtain airbags may deploy along with the front airbags during a front-end collision in order to protect the heads of occupants if the collision force to the side of the vehicle exceeds a certain value.

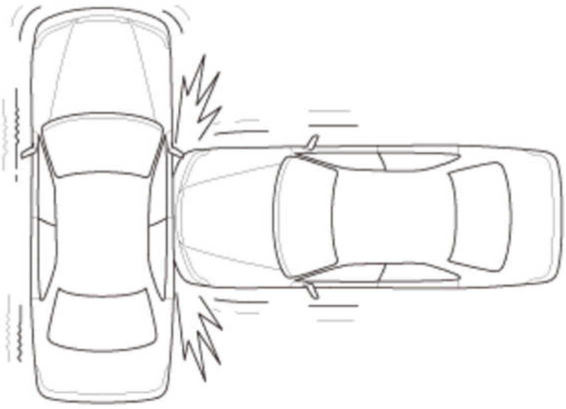

The vehicle pictured in this manual may not match your actual vehicle.

Conditions in which side airbag and side curtain airbag may not deploy:

Since the side airbags and the side curtain airbags are designed to deploy when an impact force to the vehicle side exceeds a preset value, they may not deploy when impact forces are reduced by the vehicle's crush zone, or when a side impact is applied in the front or behind the passenger compartment. Also, these airbags may deploy in the case of side slip collision or when the vehicle roll overs, but in such cases, will not provide full occupant protection.

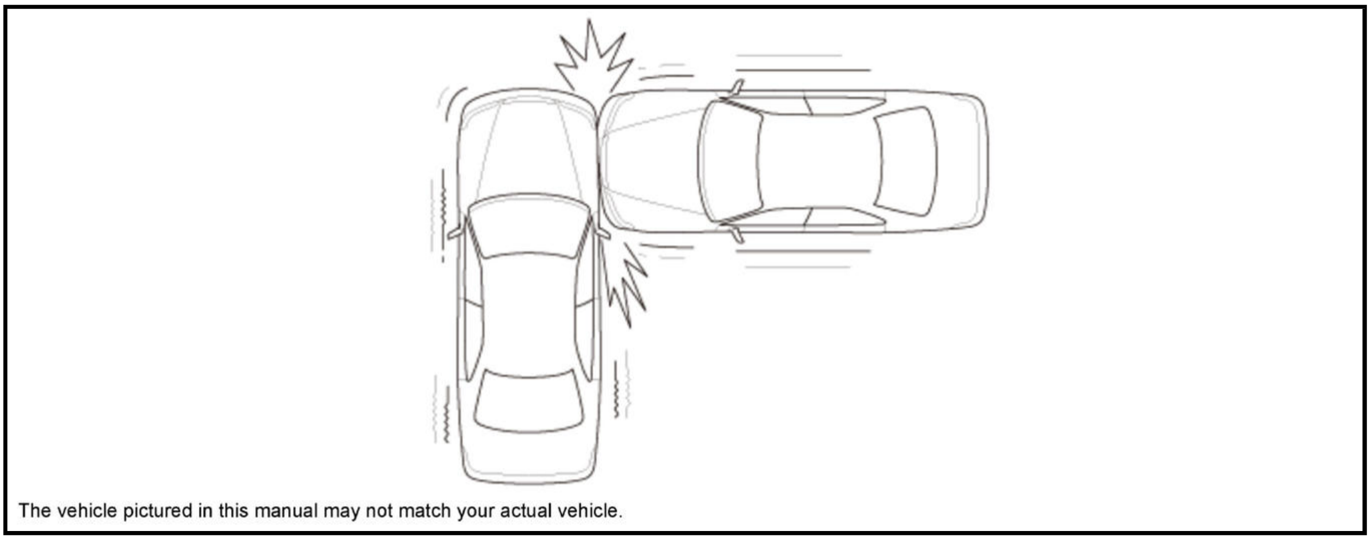
The vehicle pictured in this manual may not match your actual vehicle.

Seat Belt Tensioner and Seat Belt Outer Lap Tensioner

The seat belt tensioner and the seat belt outer lap tensioner instantaneously retract the seat belt at the time of a collision, and the effect of the seat belt is increased further by securely restraining the occupant in the seat. In the case of a low to medium speed or high speed collision, the airbags, seat belt tensioner, and seat belt outer lap tensioner are activated to improve the restraining effect of the occupant and safety performance. The seat belt tensioner and the seat belt outer lap tensioner instantaneously retract the seat belt at the time of a collision, and the effect of the seat belt is increased further by securely restraining the occupant in the seat. In the case of a low-speed collision, since the seat belt can adequately secure the occupant, only the seat belt tensioner and the seat belt outer lap tensioner are activated to retract the seat belt without deploying the airbags. In the case of a medium speed to high speed collision, the airbags, seat belt tensioner, and seat belt outer lap tensioner are activated to improve the restraining effect of the occupant and the safety performance.

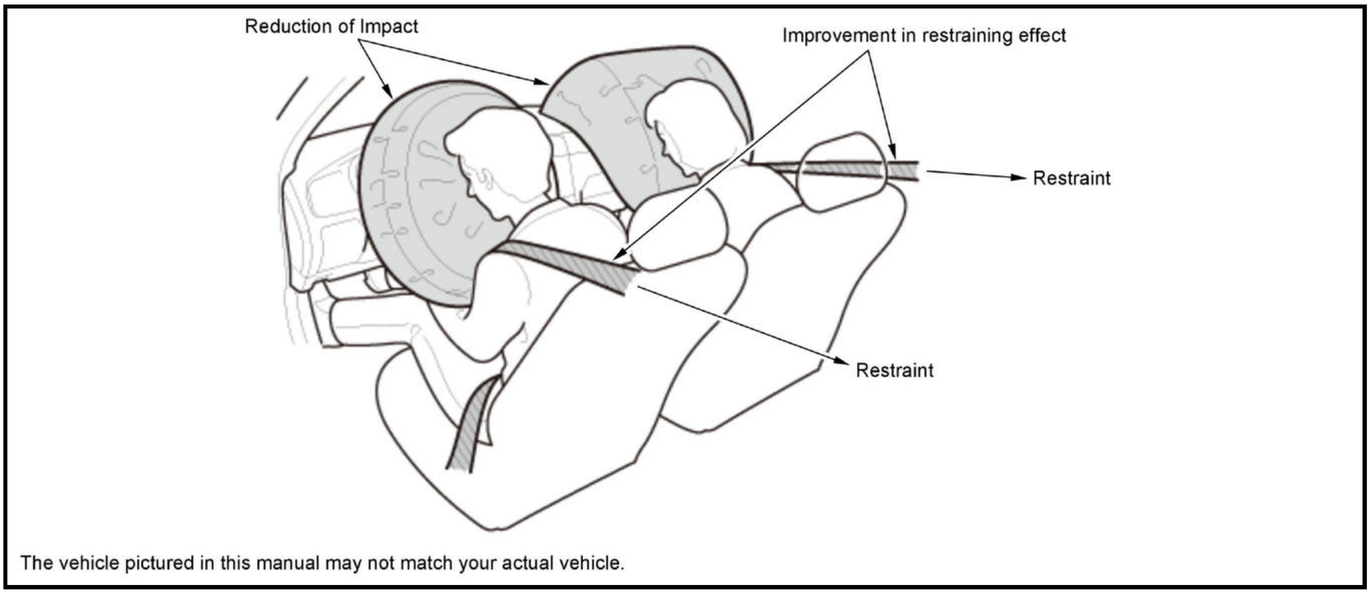
Reduction of Impact
Improvement in restraining effect
Restraint
Restraint
The vehicle pictured in this manual may not match your actual vehicle.

Components (2017 2018)

SRS Unit (Automatic Short-Circuit Mechanism of SRS Unit Connectors)

When the SRS unit connectors are disconnected from the SRS unit, the automatic short-circuit mechanism in the connectors creates short-circuits to prevent accidental deployment of airbags or tensioners. This automatic short-circuit mechanism is configured in such a way that the respective deployment side circuits (adjacent terminal) are short-circuited when the connector is disconnected.

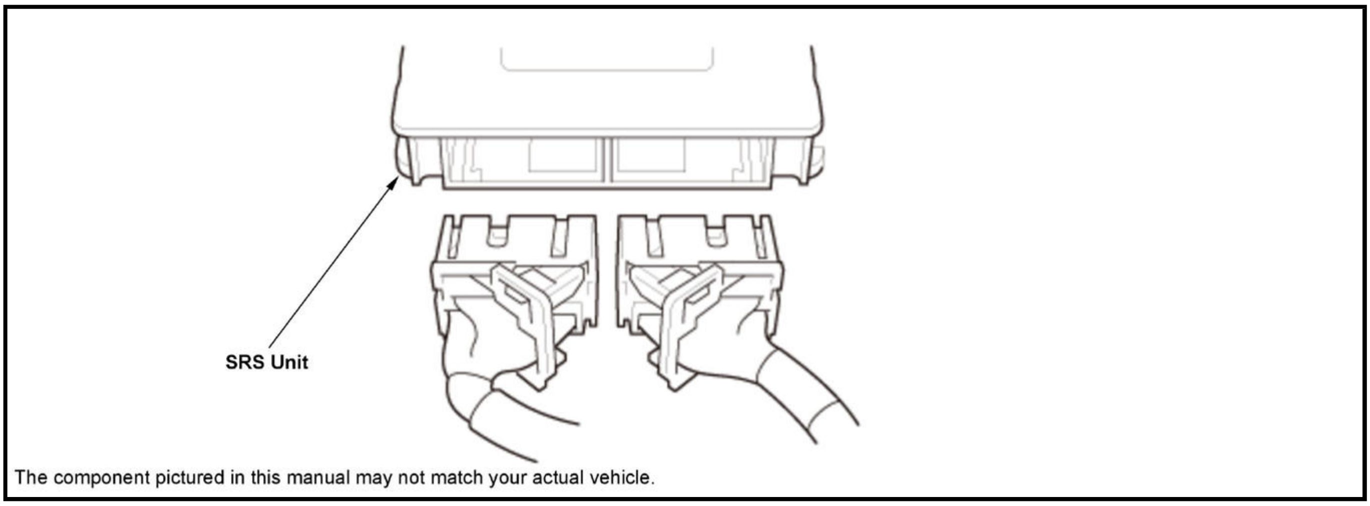

The component pictured in this manual may not match your actual vehicle.

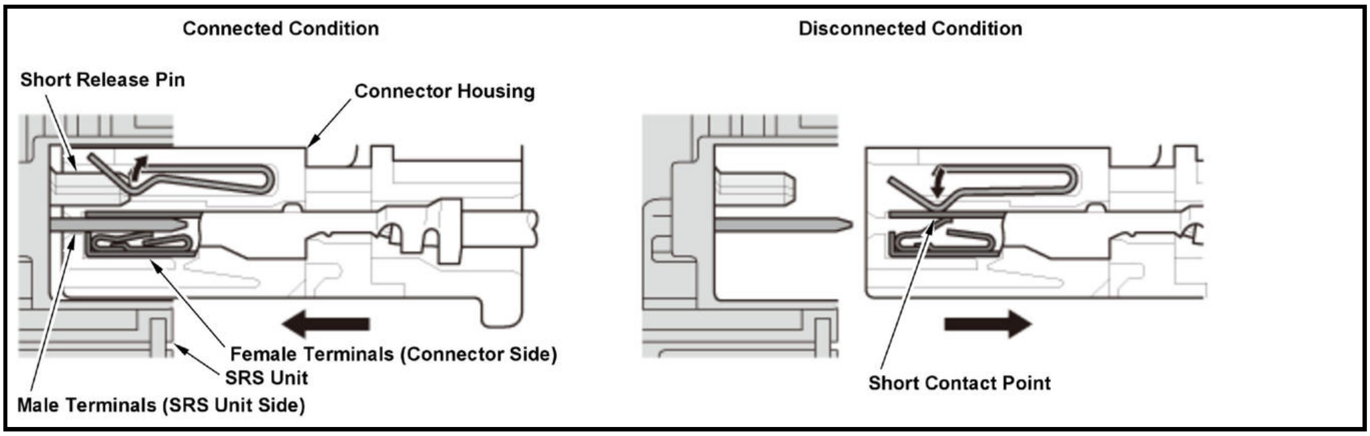
Connected Condition
Disconnected Condition
Short Release Pin
Connector Housing
Female Terminals (Connector Side)
SRS Unit
Male Terminals (SRS Unit Side)
Short Contact Point

SRS Unit (Electrical Terminal Fit Detection System)

The connectors connected to the SRS unit are equipped with a terminal that short-circuits the fit detection terminals with each other. If the connectors are properly connected, the fit detection terminals are short-circuited to each other and the SRS unit detects the fitting of the various connectors. When the vehicle is turned to the ON mode while a fitting is not detected, poor terminal fitting is judged and a DTC is stored.

SRS Unit (Rollover Detection)

A sensor integrated into the SRS unit performs rollover detection. The sensor detects the degree of vehicle roll and converts it to an electrical signal. If the SRS unit determines that a vehicle rollover is occurring, one or both side curtain airbags and seat belt tensioners will be deployed depending on the direction and number of rollover events.

Driver's and Front Passenger's Airbag

Airbag

The driver's airbag is located in the center of the steering wheel. The front passenger's airbag is located in the dashboard on the front passenger's side.

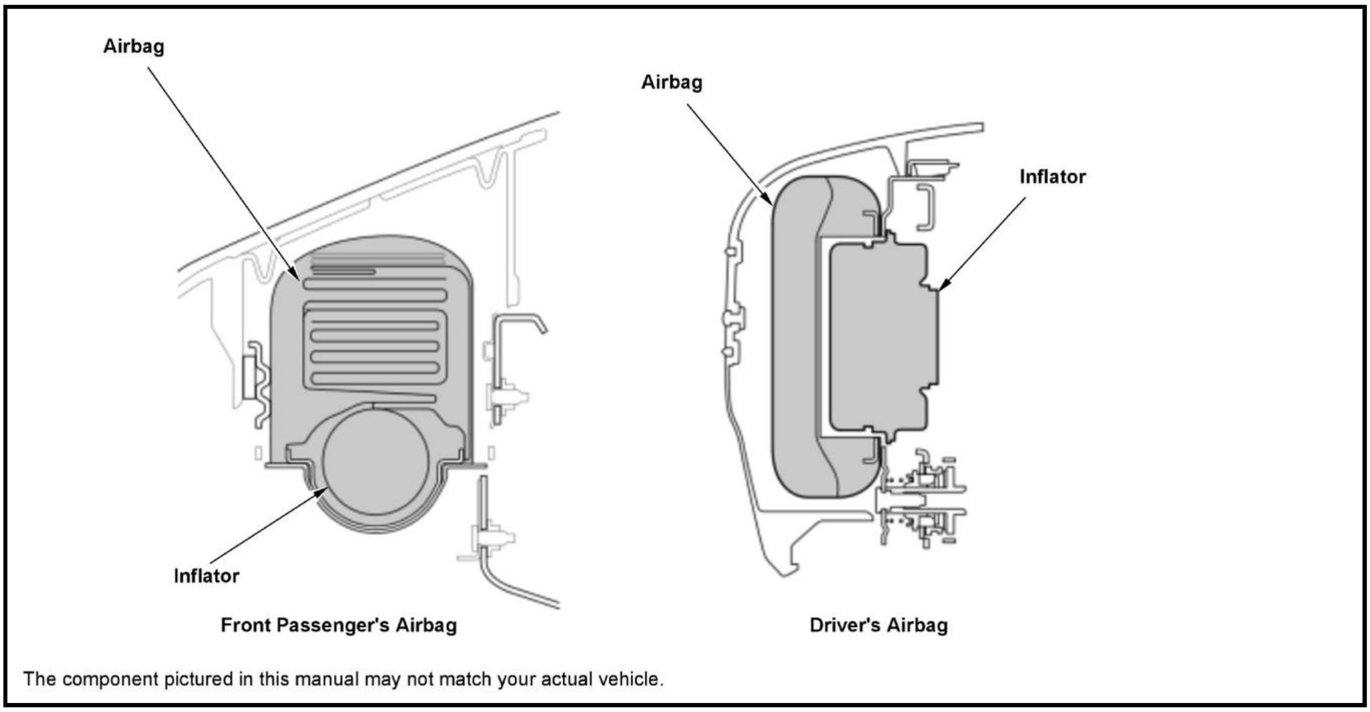
Airbag
Inflator
Front Passenger's Airbag
Airbag
Inflator
Driver's Airbag

The component pictured in this manual may not match your actual vehicle.

Driver's Airbag (Continuous Capacity Change Type)

For the driver's airbag, the continuous capacity changing airbag that is spiral stitched coming with the exhaust air control valve helps lower the impact of airbag while protecting the occupants effectively. The spiral stitched airbag can get inflated in a shorter time at the suitable air-pressure with a small amount of inside-air; however it does not compromise the ability of protecting the occupants. The exhaust air control valve on the airbag adjusts the air-pressure properly, and tearing the spiral stitches on the airbag will increase its air-capacity inside the airbag so that the system can keep its proper air-pressure.

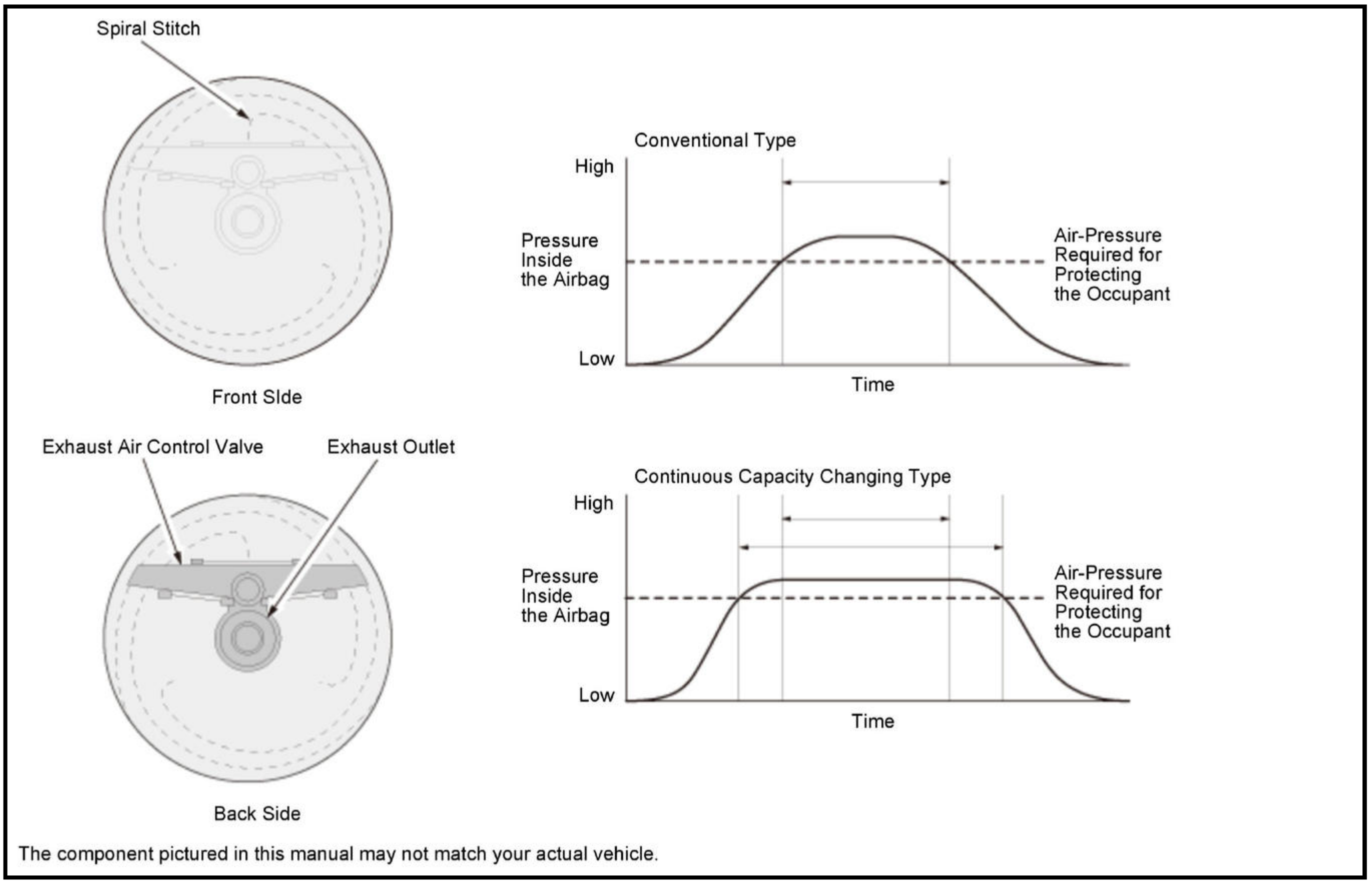
Spiral Stitch
Front SIde
Exhaust Air Control Valve
Exhaust Outlet
Back Side
Conventional Type
High
Pressure Inside the Airbag
Low
Time
Air-Pressure Required for Protecting the Occupant
Continuous Capacity Changing Type
High
Pressure Inside the Airbag
Low
Time
Air-Pressure Required for Protecting the Occupant

The component pictured in this manual may not match your actual vehicle.

Side Airbag and Side Curtain Airbag

Side Airbag

The side airbags are located at the outside position of the seat-back of the driver's seat and the front passenger's seat. Being installed at the seat-back enables operation in optimal condition for the occupants regardless of the seat slide and recline position.

The side airbag assembly is configured with an inflator and an airbag. It is designed in a way that the airbag tears open the seam of the seat-back to enable efficient deployment. Objects adjacent to deployment or using a seat cover other than the one dedicated for the side airbag may prevent proper operation of the side airbag.

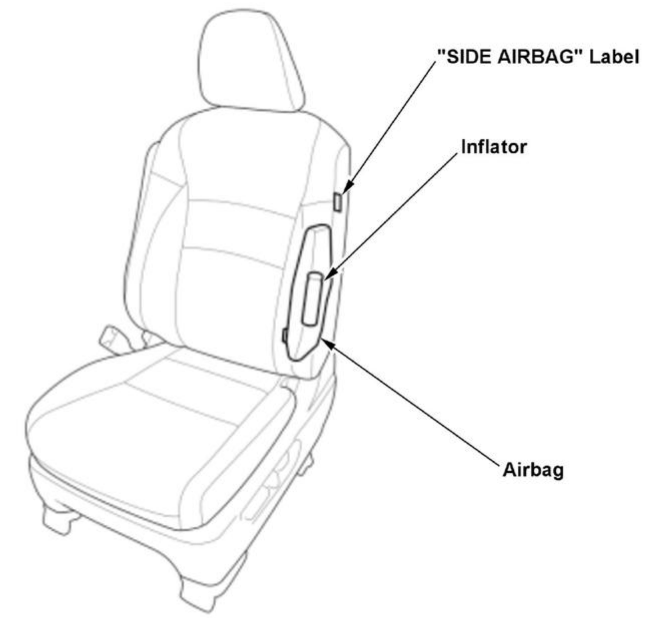

The component pictured in this manual may not match your actual vehicle.

Side Curtain Airbag

A side curtain airbag inflates the full area of the window to protect your head from hitting the window or frame pillar in a side-impact collision. The side curtain airbags are located under the roof side panels. The side curtain airbags are deployed by triggering a gas inflator located near the B-pillar. Objects adjacent to deployment or attaching parts other than the ones dedicated for side curtain airbags is subject to prevent proper operation of the side curtain airbags.

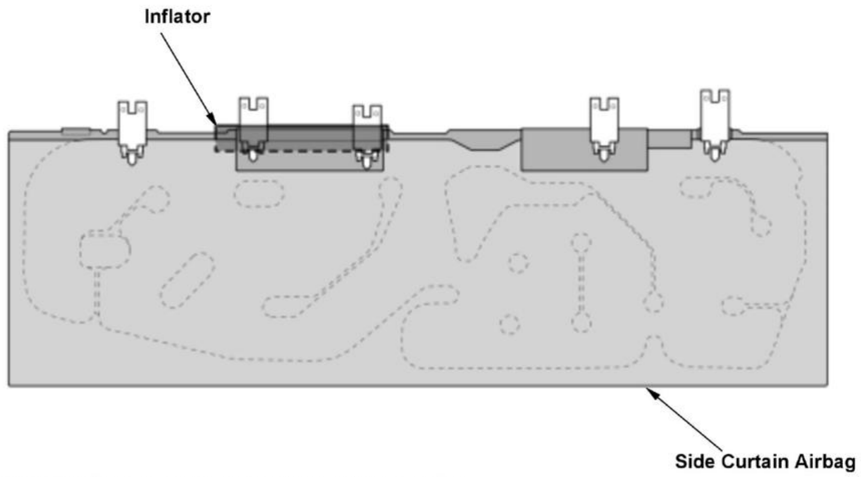

The component pictured in this manual may not match your actual vehicle.

Impact Sensor

The G-force sensor within the impact sensor detects the force upon a collision. If the impact exceeds a preset threshold value, it is converted into an electrical signal that is sent to the SRS unit.

- Front impact sensor: The front impact sensors are installed at the right and left front side frame. They detect the frontal vehicle impacts.
- Side impact sensor: The first and second side impact sensors are installed at the right and left floor near the center pillars. They detect the lateral vehicle impacts.

Driver's Seat Position Sensor

The driver's seat position sensor is mounted to the driver's seat rail. When the driver's seat is moved to the full-forward position, a metal part of the seat track interrupts the sensor signal. This change in signal is then sent to the SRS unit for processing. If a frontal airbag deployment becomes necessary, the driver's airbag will deploy at the slowest rate, regardless of impact severity. With the seat moved further back, the SRS unit commands the appropriate deployment force based on impact severity.

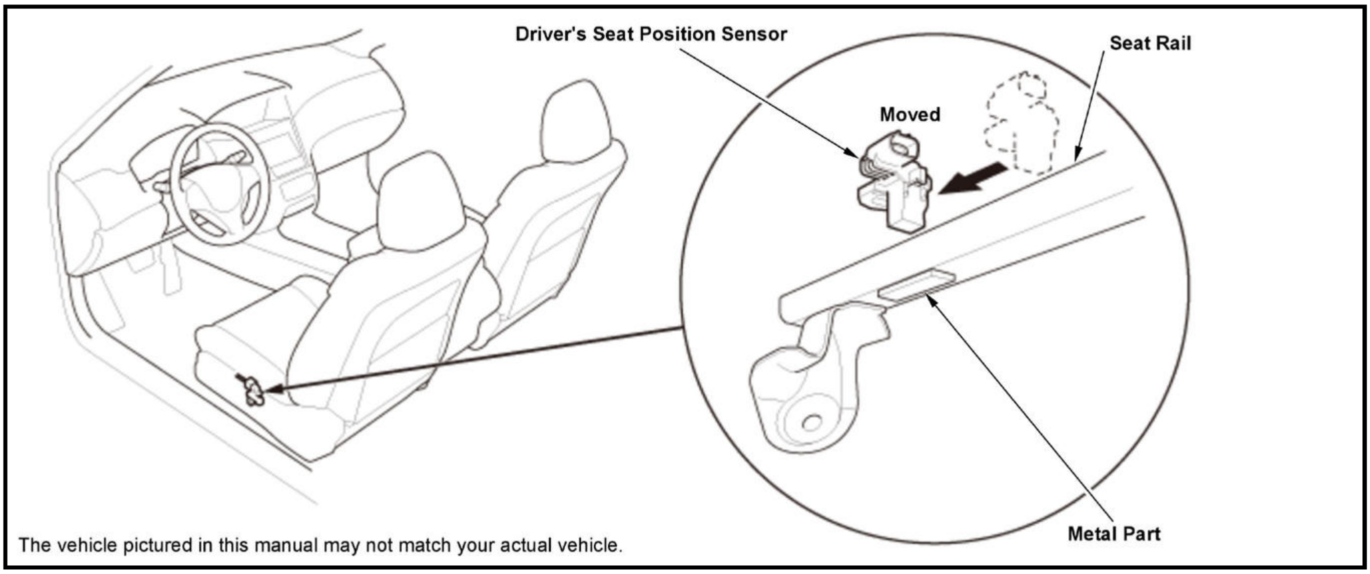
Driver's Seat Position Sensor
Seat Rail
Moved
Metal Part
The vehicle pictured in this manual may not match your actual vehicle.

Front Passenger's Weight Sensor

Overview

The front passenger's weight sensors for load detection are equipped inside the front passenger's seat. The SRS unit receives the load information from the weight sensors, performs an occupant judgment of the front passenger's seat, and adjusts the front passenger's airbag deployment and performance. In addition, there are two types of weight sensors, a two sensor type and a four sensor type. The HDS can determine which type is used.

Operation

The weight of the front passenger's seat is detected by the weight sensors and sent to the SRS unit. If the weight is above a threshold level, front passenger's airbag operation is allowed, and if the weight is below a threshold level, the system will automatically turn the front passenger's airbag off. Also, the front passenger's airbag cutoff indicator turns on to inform the occupant that the front passenger's airbag will not deploy.

NOTE: The front passenger's weight sensors measure only the weight that's actually on the seat cushion. They do not measure the weight of the front passenger's legs extending to the floor or arms resting on the armrests. A front seat passenger who weighs near the airbag's cutoff threshold may cause the airbag and indicator to turn on and off just by moving around in the seat and shifting the occupant weight. This may cause some occupants to believe there's something wrong with the airbag system when it is operating normally. Also, although the measured weight of the two sensor type differs by the seating state of the occupant, load detection by the weight sensors is performed accurately.

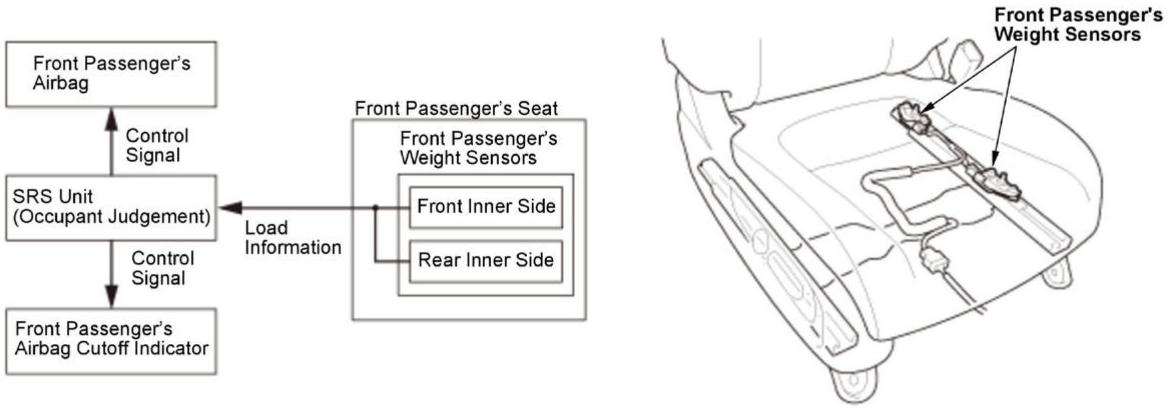
Front Passenger's Airbag
Control Signal
SRS Unit (Occupant Judgement)
Control Signal
Front Passenger's Airbag Cutoff Indicator
Load Information
Front Passenger's Seat
Front Passenger's Weight Sensors
Front Inner Side
Rear Inner Side
Front Passenger's Weight Sensors

The component pictured in this manual may not match your actual vehicle.

Seat Belt Tensioner

Overview

When the seat belt tensioner operates, it quickly tightens the seat belt, and improves the occupant's initial restraining effect (preventing the occupant's body from being moved forward). When the load exceeds the preset value, the load limiter keeps the restraining effect while sending out the seat belt to protect the chest of the passenger.

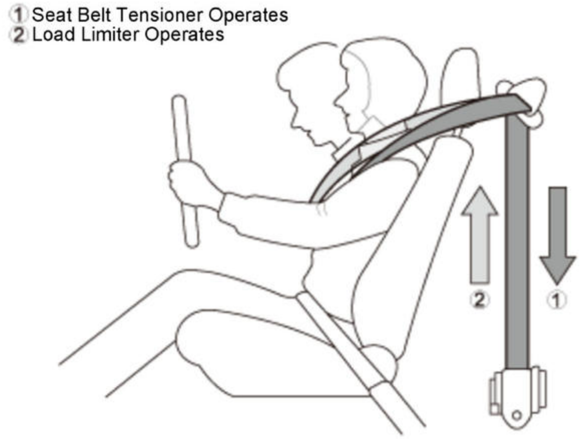
① Seat Belt Tensioner Operates
② Load Limiter Operates
②
①

The component pictured in this manual may not match your actual vehicle.

Operation of Seat Belt Tensioner

1. When the SRS unit detects a collision signal at the time of an impact acting upon the vehicle, it sends the actuation signal to the seat belt tensioner and the internal gas generator to generate gas.

2. The winding mechanism is rotated by the generated gas pressure and winds the seat belt.

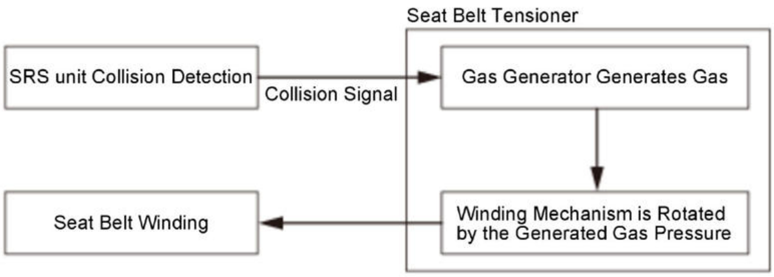
Seat Belt Tensioner
SRS unit Collision Detection
Collision Signal
Gas Generator Generates Gas
Winding Mechanism is Rotated by the Generated Gas Pressure
Seat Belt Winding

Operation of Load Limiter

3. After the seat belt tensioner actuation, or if the seat belt is rapidly pulled out, the ELR lock mechanism of the seat belt retractor is activated and locks the seat belt.

4. When the load applied to the seat belt exceeds the specified load, the load limiter is actuated and releases a certain amount of the seat belt to reduce the extra load.

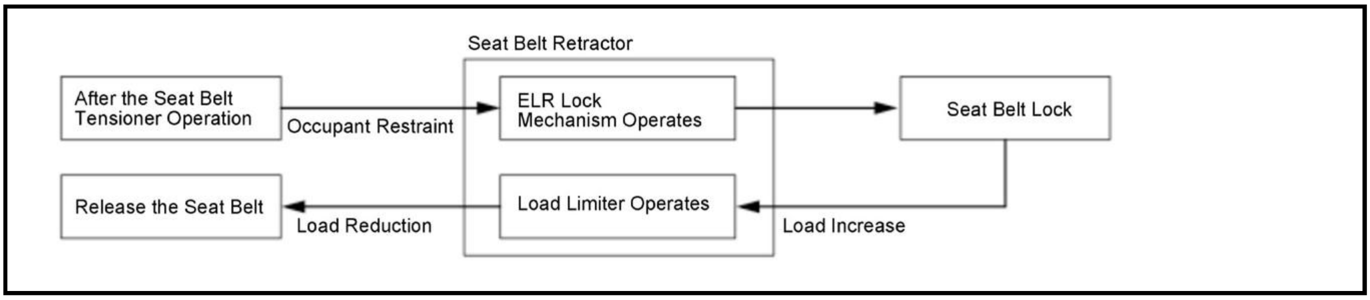
Seat Belt Retractor
After the Seat Belt Tensioner Operation
Occupant Restraint
ELR Lock Mechanism Operates
Seat Belt Lock
Release the Seat Belt
Load Reduction
Load Limiter Operates
Load Increase

ELR (Emergency Locking Retractor) Lock Mechanism

If the seat belt is rapidly pulled out (occupant sliding forward during a collision), the ELR lock mechanism of the seat belt retractor is actuated and locks the seat belt to secure the occupant's body.

Seat Belt Outer Lap Tensioner

Overview

In the event of a collision, the seat belt outer lap tensioner coordinates with the seat belt tensioner and instantaneously retracts the seat belt. This ensures the seat belt's ability to restrain and protect the occupant at the chest and waist by firmly securing the occupant to the seat.

Operation

1. When the SRS unit detects a collision signal at the time of an impact, it sends an actuation signal to the seat belt outer lap tensioner, and the internal gas generator generates gas.

2. A piston in the cylinder moves by the generated gas pressure and pulls the wire and seat belt.

3. After the retraction is complete, the seat belt outer lap tensioner locks the wire to prevent growth of the seat belt by the forward movement of the occupant.

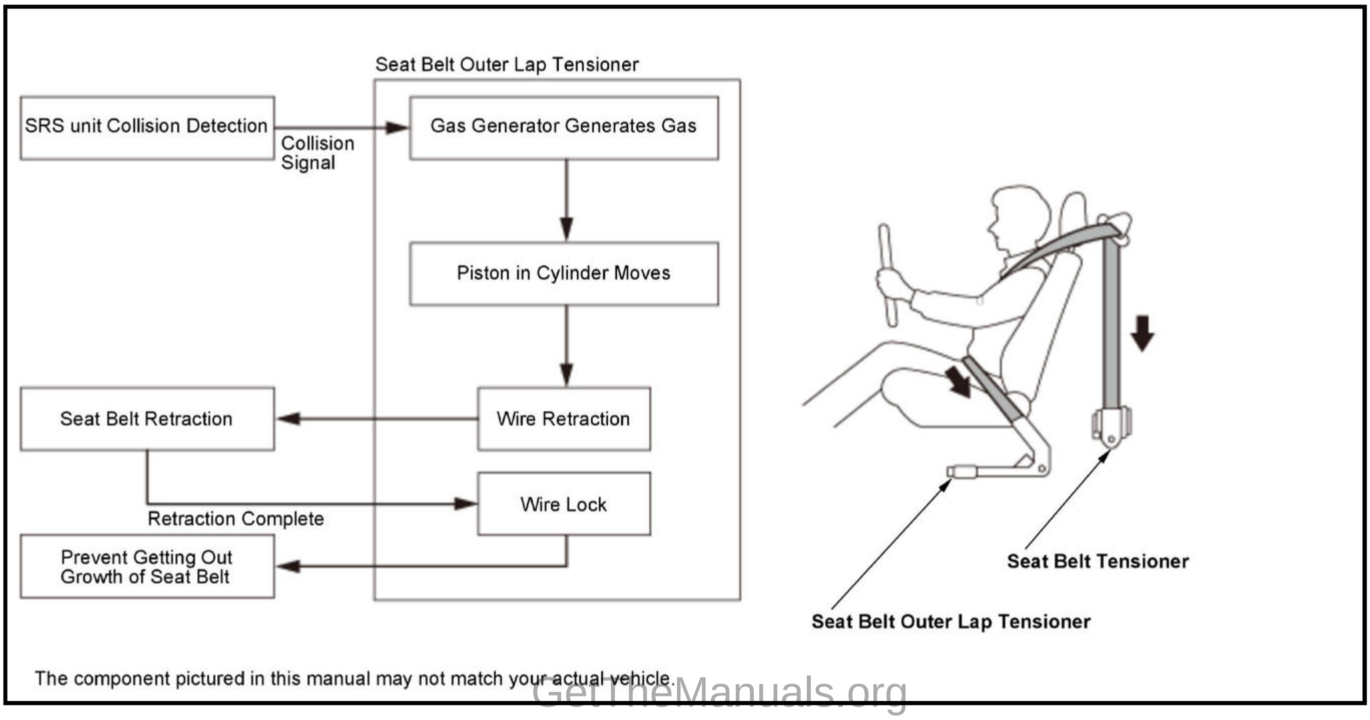
Seat Belt Outer Lap Tensioner
SRS unit Collision Detection
Collision Signal
Gas Generator Generates Gas
Piston in Cylinder Moves
Seat Belt Retraction
Wire Retraction
Retraction Complete
Wire Lock
Prevent Getting Out Growth of Seat Belt
Seat Belt Tensioner
Seat Belt Outer Lap Tensioner

The component pictured in this manual may not match your actual vehicle.

Selectable Energy Absorption Device

When the seat belt tensioner operates, it instantly retracts the seat belt, enhancing its ability to immediately restrain the occupant. Also, a selectable energy absorption device is fitted within the front passenger's seat belt tensioner that reduces the burden on the occupant's chest while properly maintaining the restraining force of the seat belt. To ensure the seat belt's ability to protect the occupant, the seat belt adjusts to its optimum energy absorption characteristic for the occupant by using the occupant weight information which is detected by the front passenger's weight sensor.

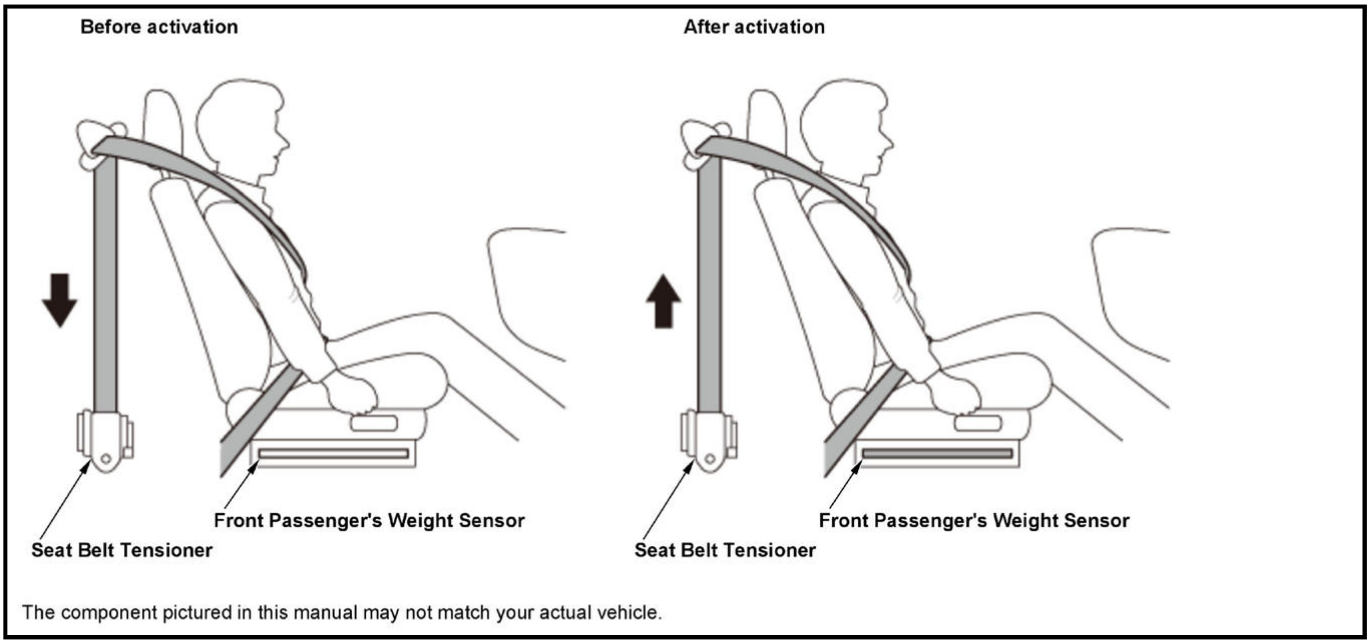
Before activation
After activation
Front Passenger's Weight Sensor
Seat Belt Tensioner
Front Passenger's Weight Sensor
Seat Belt Tensioner
The component pictured in this manual may not match your actual vehicle.

Seat Belt Reminder

Driver's Seat Belt Reminder Function

The SRS unit turns on the seat belt reminder indicator in order to urge the driver to wear their seat belt if the system detects that the seat belt is not buckled.

Passenger's Seat Belt Reminder Function

The SRS unit turns on the seat belt reminder indicator in order to urge the passenger to wear their seat belt if the system detects that there is a passenger and their seat belt is not buckled.

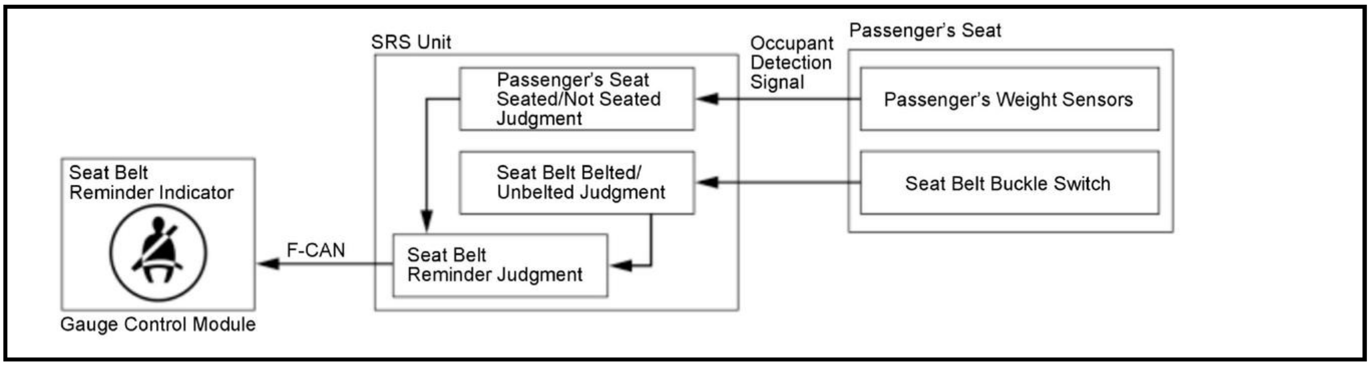
SRS Unit
Occupant Detection Signal
Passenger's Seat
Passenger's Seat Seated/Not Seated Judgment
Passenger's Weight Sensors
Seat Belt Belted/ Unbelted Judgment
Seat Belt Buckle Switch
Seat Belt Reminder Indicator
F-CAN
Seat Belt Reminder Judgment
Gauge Control Module

Components(KA/KC) (2019 2020 2021)

SRS Unit (Automatic Short-Circuit Mechanism of SRS Unit Connectors)

When the SRS unit connectors are disconnected from the SRS unit, the automatic short-circuit mechanism in the connectors creates short-circuits to prevent accidental deployment of airbags or tensioners. This automatic short-circuit mechanism is configured in such a way that the respective deployment side circuits (adjacent terminal) are short-circuited when the connector is disconnected.

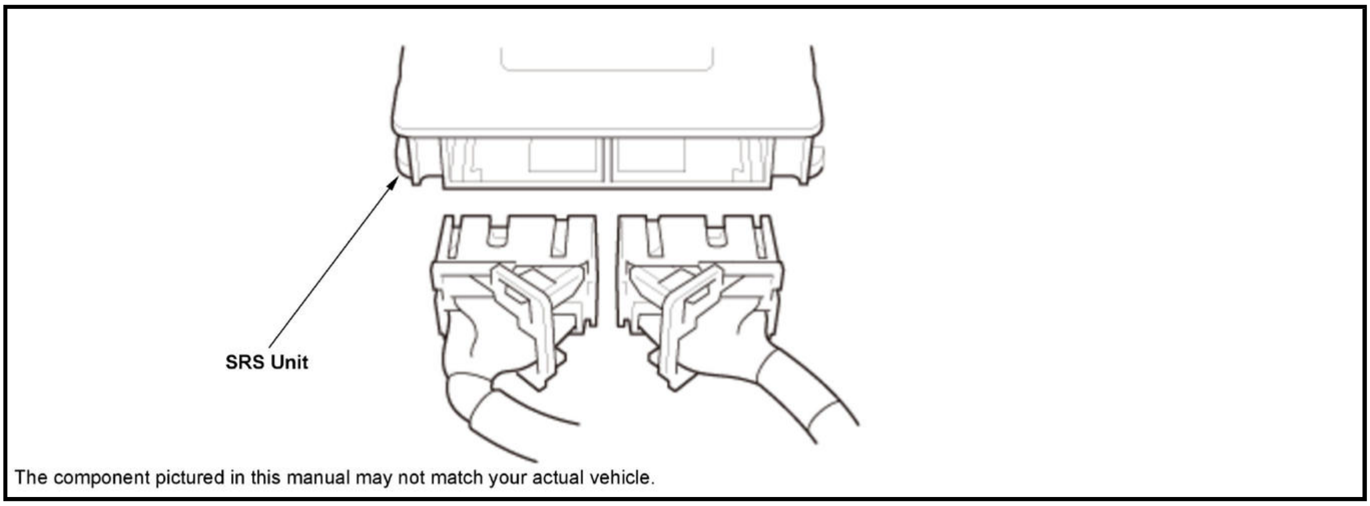

The component pictured in this manual may not match your actual vehicle.

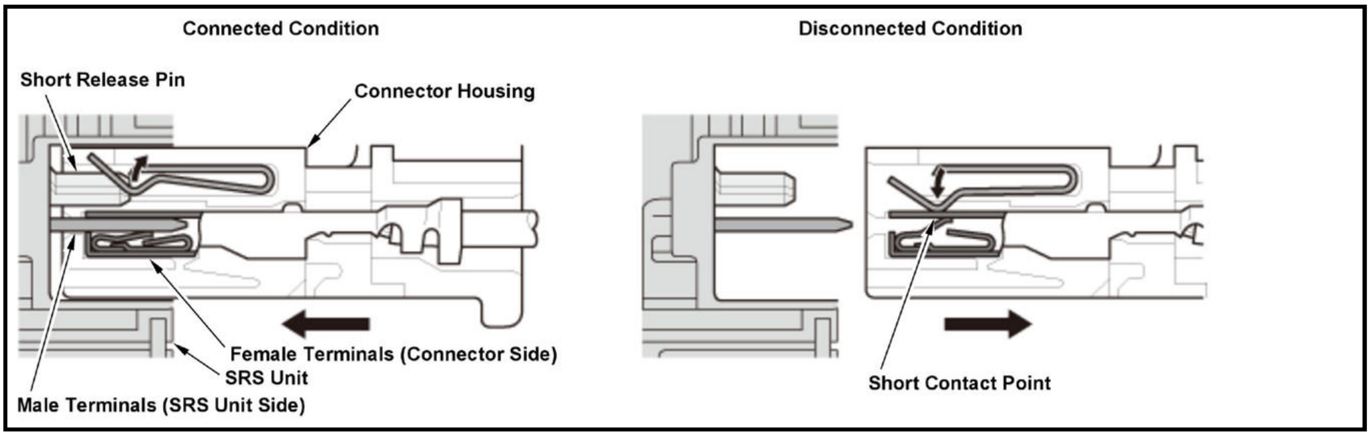
Connected Condition
Disconnected Condition
Short Release Pin
Connector Housing
Female Terminals (Connector Side)
SRS Unit
Male Terminals (SRS Unit Side)
Short Contact Point

SRS Unit (Electrical Terminal Fit Detection System)

The connectors connected to the SRS unit are equipped with a terminal that short-circuits the fit detection terminals with each other. If the connectors are properly connected, the fit detection terminals are short-circuited to each other and the SRS unit detects the fitting of the various connectors. When the vehicle is turned to the ON mode while a fitting is not detected, poor terminal fitting is judged and a DTC is stored.

SRS Unit (Rollover Detection)

A sensor integrated into the SRS unit performs rollover detection. The sensor detects the degree of vehicle roll and converts it to an electrical signal. If the SRS unit determines that a vehicle rollover is occurring, one or both side curtain airbags and seat belt tensioners will be deployed depending on the direction and number of rollover events.

Driver's and Front Passenger's Airbag

Airbag

The driver's airbag is located in the center of the steering wheel. The front passenger's airbag is located in the dashboard on the front passenger's side.

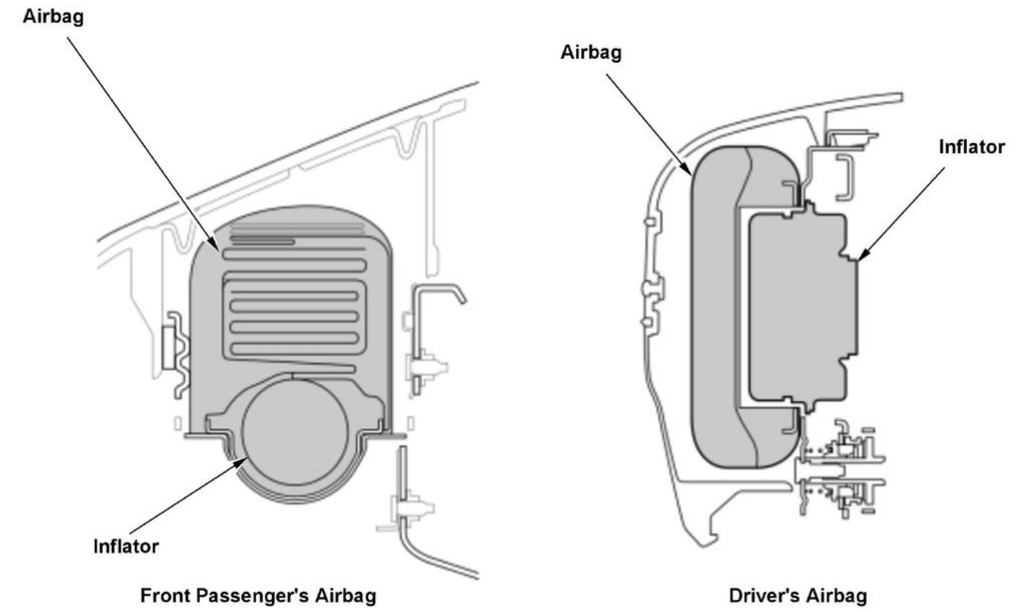
Airbag
Airbag
Inflator
Inflator
Front Passenger's Airbag
Driver's Airbag

The component pictured in this manual may not match your actual vehicle.

Dual Inflators

The airbag modules adopt dual inflators for the driver's and the front passenger's airbags. The dual inflators increase airbag effectiveness by properly adjusting the timing when the two inflators are to be ignited (together or sequentially) based on speed or impact.

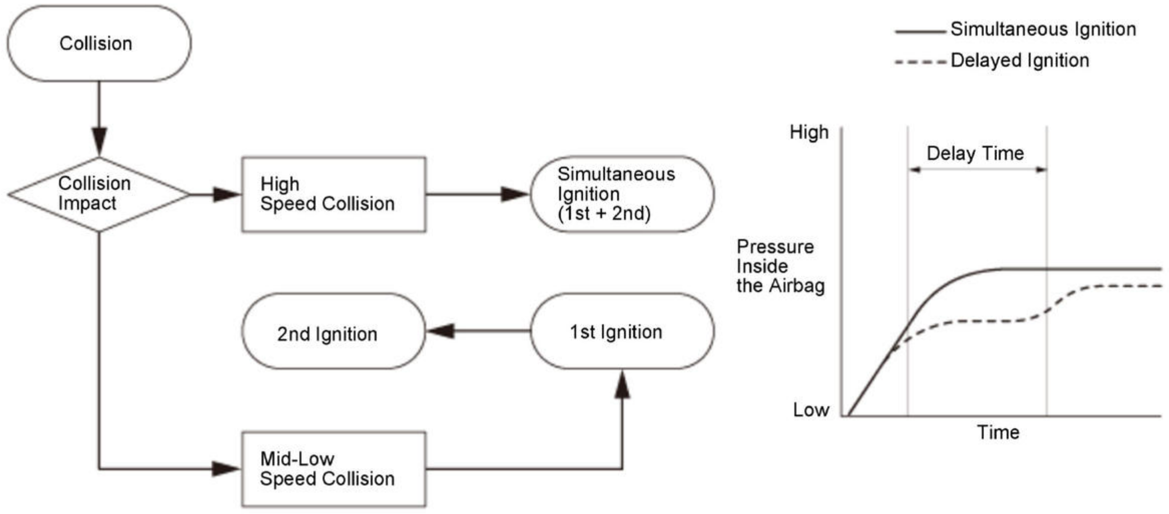
Collision
Collision Impact
High Speed Collision
Simultaneous Ignition (1st + 2nd)
2nd Ignition
1st Ignition
Mid-Low Speed Collision
Simultaneous Ignition
Delayed Ignition
High
Delay Time
Pressure Inside the Airbag
Low
Time

Driver's Airbag (Continuous Capacity Change Type)

For the driver's airbag, the continuous capacity changing airbag that is spiral stitched coming with the exhaust air control valve helps lower the impact of airbag while protecting the occupants effectively. The spiral stitched airbag can get inflated in a shorter time at the suitable air-pressure with a small amount of inside-air; however it does not compromise the ability of protecting the occupants. The exhaust air control valve on the airbag adjusts the air-pressure properly, and tearing the spiral stitches on the airbag will increase its air-capacity inside the airbag so that the system can keep its proper air-pressure.

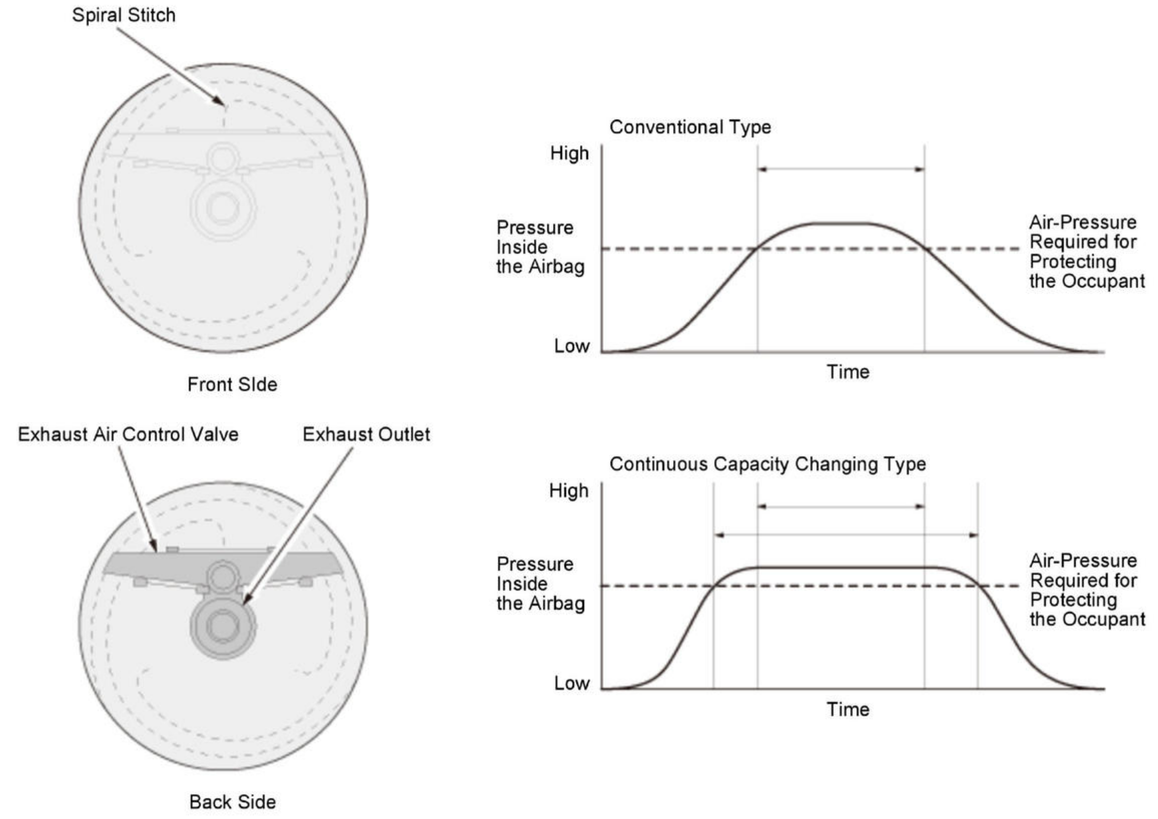
Spiral Stitch
Front Side
Exhaust Air Control Valve
Exhaust Outlet
Back Side
Conventional Type
High
Pressure Inside the Airbag
Low
Time
Air-Pressure Required for Protecting the Occupant
Continuous Capacity Changing Type
High
Pressure Inside the Airbag
Low
Time
Air-Pressure Required for Protecting the Occupant

The component pictured in this manual may not match your actual vehicle.

Safety Vent

The front passenger's airbag (A) is equipped with safety vents (B). When the airbag deployment occurs near the occupant, releasing gas from the safety vents reduces the possibility of injury to the occupant. When the airbag is fully deployed, the safety vents close and hold the internal pressure to ensure the occupant restraint and protection performance.

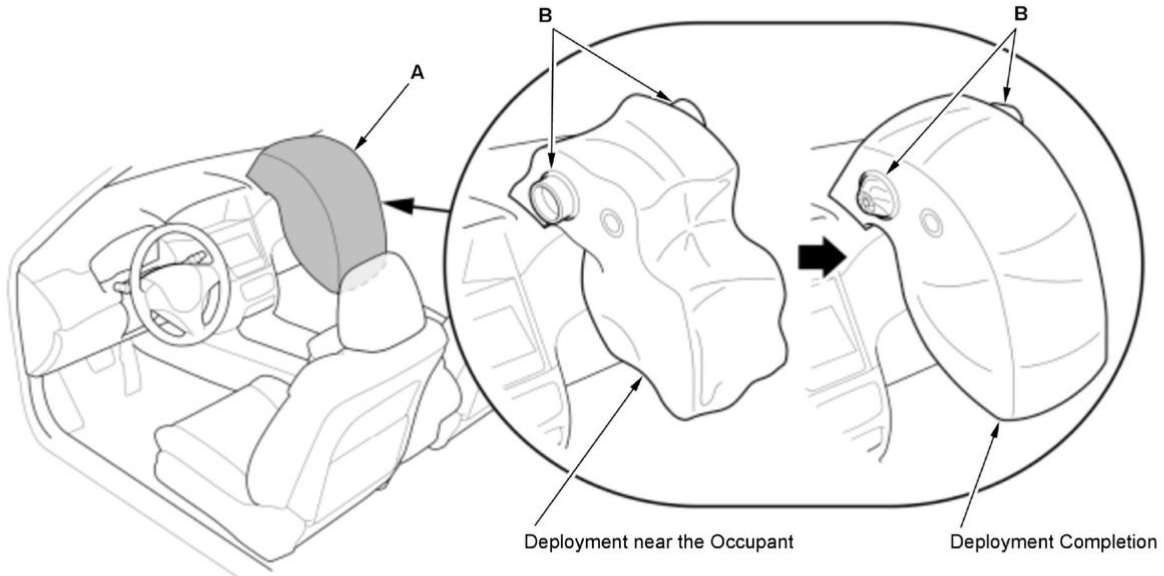
B
B
A
Deployment near the Occupant
Deployment Completion

The components pictured is an example and may not match your vehicle.

Side Airbag and Side Curtain Airbag

Side Airbag

The side airbags are located at the outside position of the seat-back of the driver's seat and the front passenger's seat. Being installed at the seat-back enables operation in optimal condition for the occupants regardless of the seat slide and recline position.

The side airbag assembly is configured with an inflator and an airbag. It is designed in a way that the airbag tears open the seam of the seat-back to enable efficient deployment. Objects adjacent to deployment or using a seat cover other than the one dedicated for the side airbag may prevent proper operation of the side airbag.

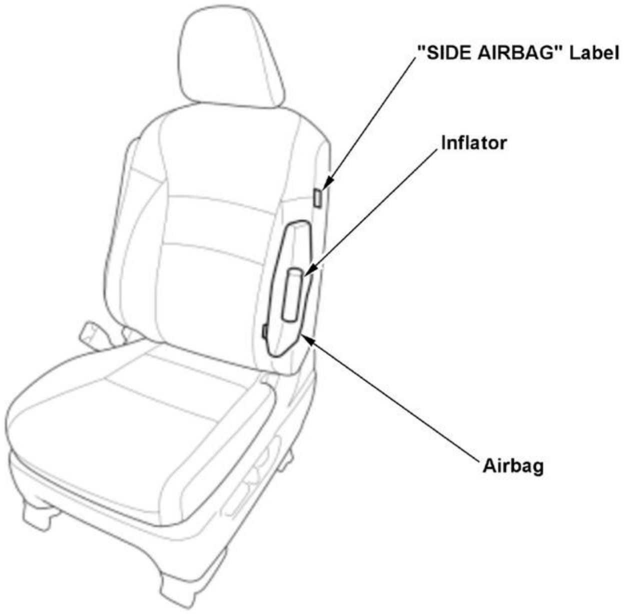

The component pictured in this manual may not match your actual vehicle.

Side Curtain Airbag

A side curtain airbag inflates the full area of the window to protect your head from hitting the window or frame pillar in a side-impact collision. The side curtain airbags are located under the roof side panels. The side curtain airbags are deployed by triggering a gas inflator located near the B-pillar. Objects adjacent to deployment or attaching parts other than the ones dedicated for side curtain airbags is subject to prevent proper operation of the side curtain airbags.

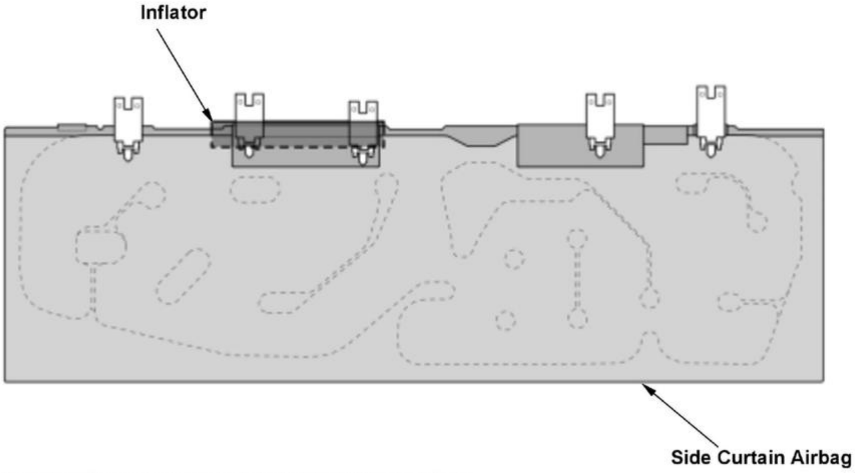

The component pictured in this manual may not match your actual vehicle.

Impact Sensor

The G-force sensor within the impact sensor detects the force upon a collision. If the impact exceeds a preset threshold value, it is converted into an electrical signal that is sent to the SRS unit.

- Front impact sensor: The front impact sensors are installed at the right and left front side frame. They detect the frontal vehicle impacts.

- Side impact sensor: The first and second side impact sensors are installed at the right and left floor near the center pillars. They detect the lateral vehicle impacts.

Driver's Seat Position Sensor

The driver's seat position sensor is mounted to the driver's seat rail. When the driver's seat is moved to the full-forward position, a metal part of the seat track interrupts the sensor signal. This change in signal is then sent to the SRS unit for processing. If a frontal airbag deployment becomes necessary, the driver's airbag will deploy at the slowest rate, regardless of impact severity. With the seat moved further back, the SRS unit commands the appropriate deployment force based on impact severity.

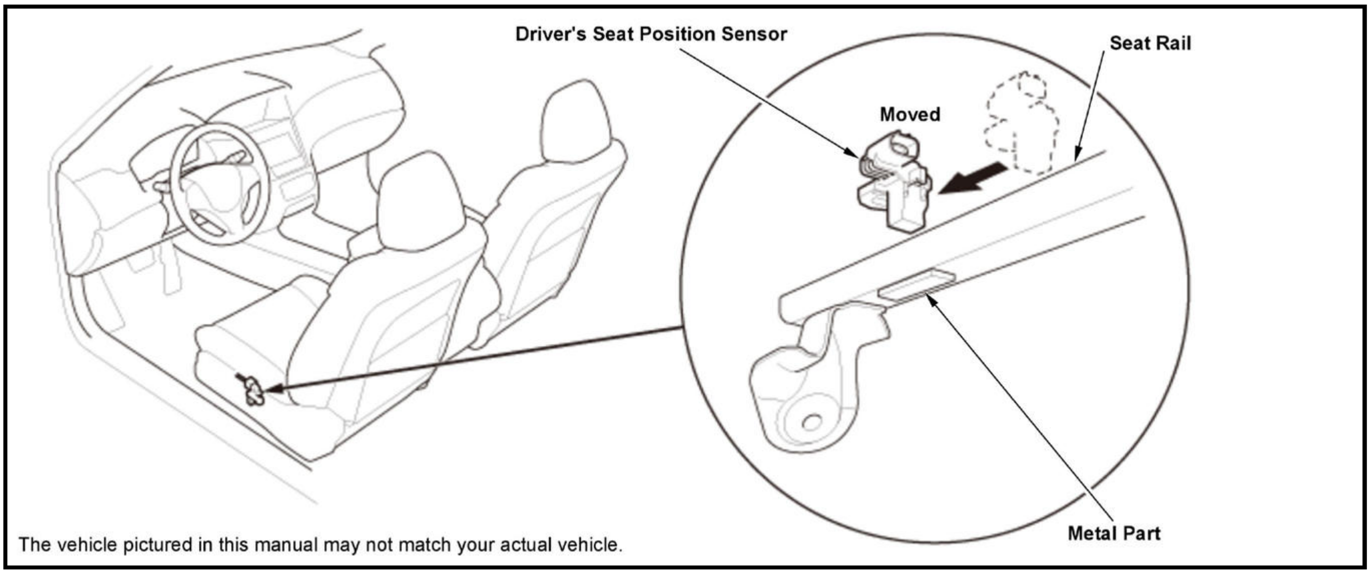
Driver's Seat Position Sensor
Seat Rail
Moved
Metal Part
The vehicle pictured in this manual may not match your actual vehicle.

Front Passenger's Weight Sensor

Overview

The front passenger's weight sensors for load detection are equipped inside the front passenger's seat. The SRS unit receives the load information from the weight sensors, performs an occupant judgment of the front passenger's seat, and adjusts the front passenger's airbag deployment and performance. In addition, there are two types of weight sensors, a two sensor type and a four sensor type. The HDS can determine which type is used.

Operation

The weight of the front passenger's seat is detected by the weight sensors and sent to the SRS unit. If the weight is above a threshold level, front passenger's airbag operation is allowed, and if the weight is below a threshold level, the system will automatically turn the front passenger's airbag off. Also, the front passenger's airbag cutoff indicator turns on to inform the occupant that the front passenger's airbag will not deploy.

NOTE: The front passenger's weight sensors measure only the weight that's actually on the seat cushion. They do not measure the weight of the front passenger's legs extending to the floor or arms resting on the armrests. A front seat passenger who weighs near the airbag's cutoff threshold may cause the airbag and indicator to turn on and off just by moving around in the seat and shifting the occupant weight. This may cause some occupants to believe there's something wrong with the airbag system when it is operating normally. Also, although the measured weight of the two sensor type differs by the seating state of the occupant, load detection by the weight sensors is performed accurately.

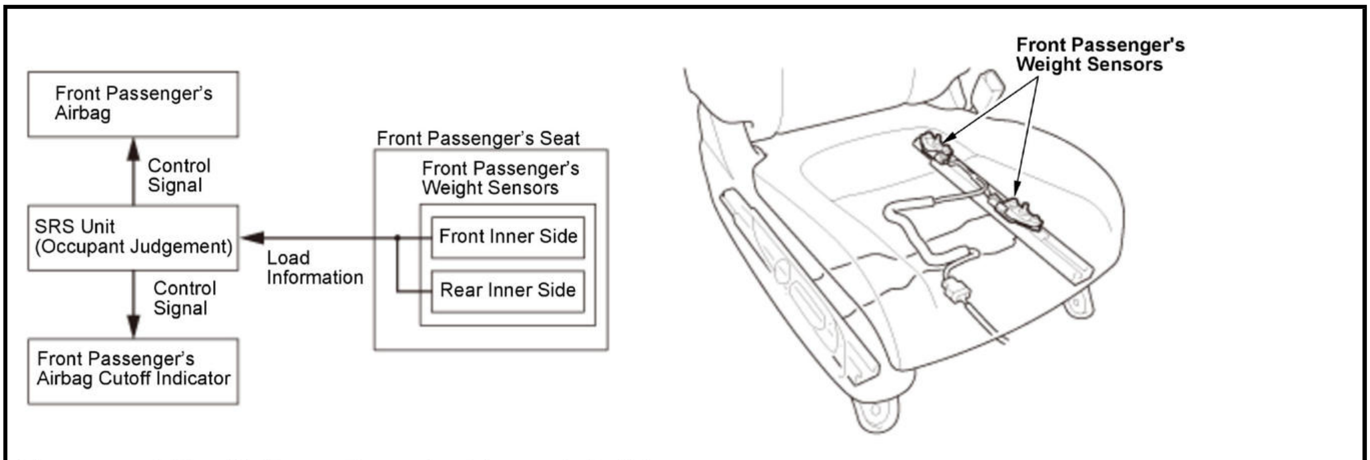
Front Passenger's Airbag
Control Signal
SRS Unit (Occupant Judgement)
Control Signal
Front Passenger's Airbag Cutoff Indicator
Load Information
Front Passenger's Seat
Front Passenger's Weight Sensors
Front Inner Side
Rear Inner Side
Front Passenger's Weight Sensors

The component pictured in this manual may not match your actual vehicle.

Seat Belt Tensioner

Overview

When the seat belt tensioner operates, it quickly tightens the seat belt, and improves the occupant's initial restraining effect (preventing the occupant's body from being moved forward). When the load exceeds the preset value, the load limiter keeps the restraining effect while sending out the seat belt to protect the chest of the passenger.

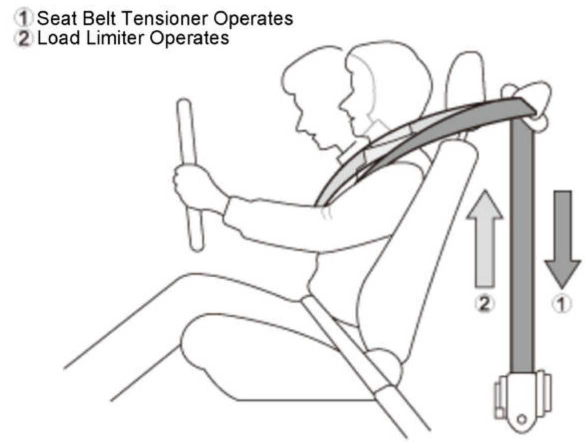
① Seat Belt Tensioner Operates
② Load Limiter Operates
②
①

The component pictured in this manual may not match your actual vehicle.

Operation of Seat Belt Tensioner

1. When the SRS unit detects a collision signal at the time of an impact acting upon the vehicle, it sends the actuation signal to the seat belt tensioner and the internal gas generator to generate gas.

2. The winding mechanism is rotated by the generated gas pressure and winds the seat belt.

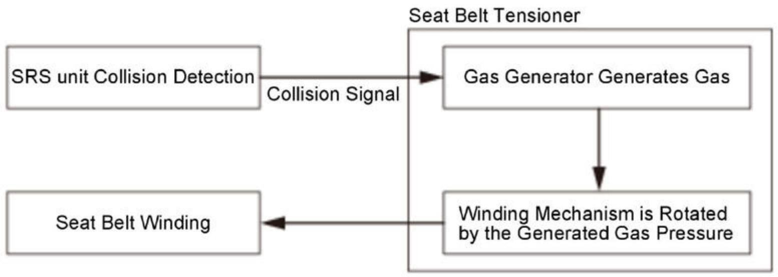
Seat Belt Tensioner
SRS unit Collision Detection
Collision Signal
Gas Generator Generates Gas
Winding Mechanism is Rotated by the Generated Gas Pressure
Seat Belt Winding

Operation of Load Limiter

3. After the seat belt tensioner actuation, or if the seat belt is rapidly pulled out, the ELR lock mechanism of the seat belt retractor is activated and locks the seat belt.

4. When the load applied to the seat belt exceeds the specified load, the load limiter is actuated and releases a certain amount of the seat belt to reduce the extra load.

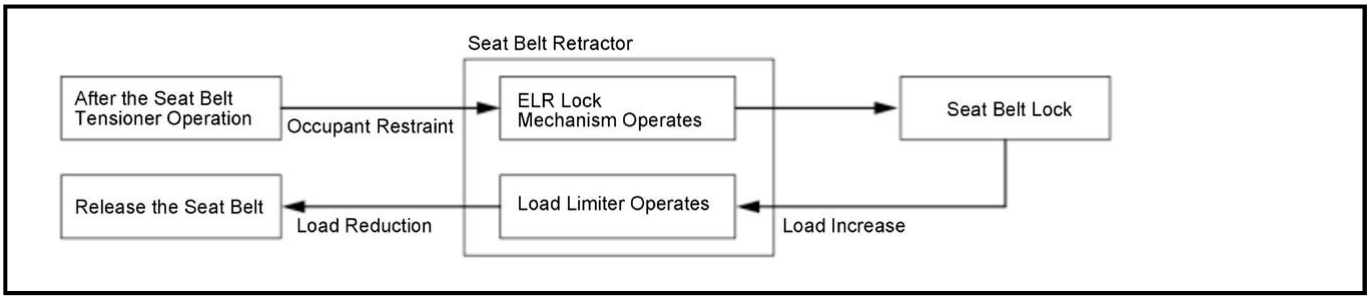
Seat Belt Retractor
After the Seat Belt Tensioner Operation
Occupant Restraint
ELR Lock Mechanism Operates
Seat Belt Lock
Release the Seat Belt
Load Reduction
Load Limiter Operates
Load Increase

ELR (Emergency Locking Retractor) Lock Mechanism

If the seat belt is rapidly pulled out (occupant sliding forward during a collision), the ELR lock mechanism of the seat belt retractor is actuated and locks the seat belt to secure the occupant's body.

Seat Belt Outer Lap Tensioner

Overview

In the event of a collision, the seat belt outer lap tensioner coordinates with the seat belt tensioner and instantaneously retracts the seat belt. This ensures the seat belt's ability to restrain and protect the occupant at the chest and waist by firmly securing the occupant to the seat.

Operation

1. When the SRS unit detects a collision signal at the time of an impact, it sends an actuation signal to the seat belt outer lap tensioner, and the internal gas generator generates gas.

2. A piston in the cylinder moves by the generated gas pressure and pulls the wire and seat belt.

3. After the retraction is complete, the seat belt outer lap tensioner locks the wire to prevent growth of the seat belt by the forward movement of the occupant.

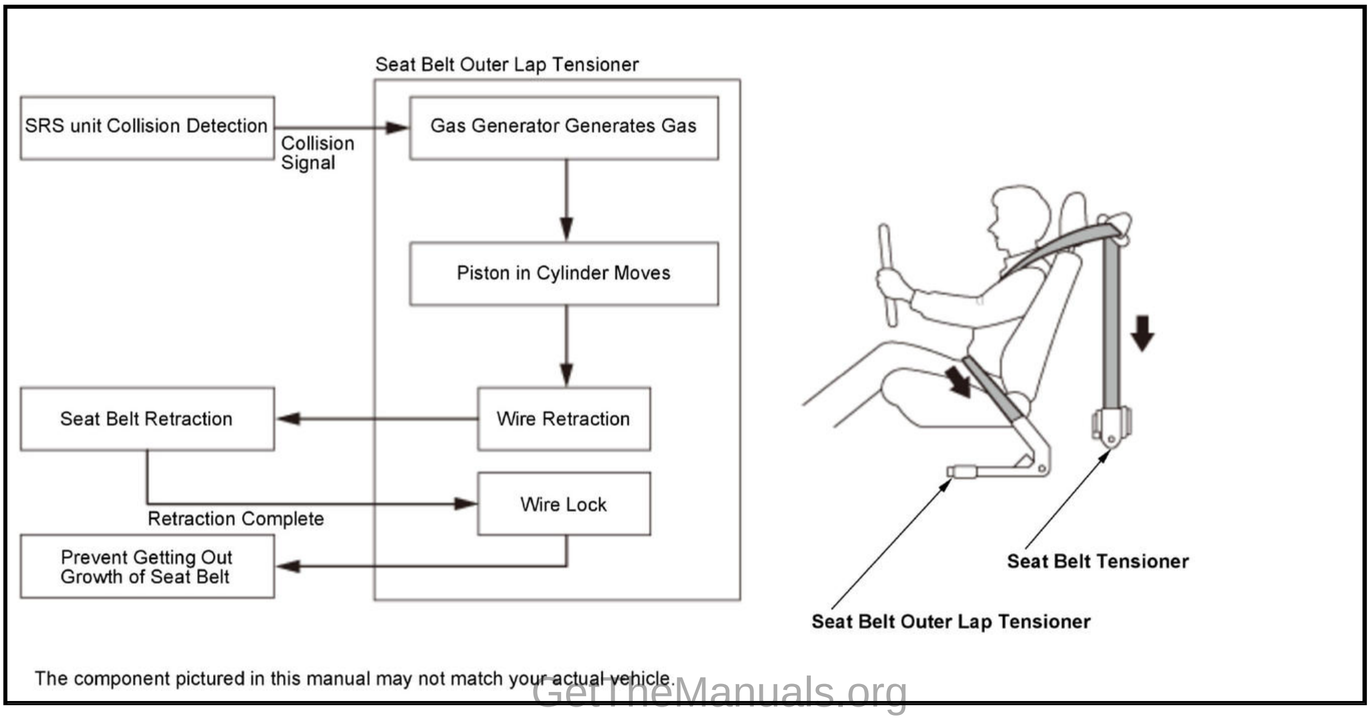
Seat Belt Outer Lap Tensioner
SRS unit Collision Detection
Collision Signal
Gas Generator Generates Gas
Piston in Cylinder Moves
Seat Belt Retraction
Wire Retraction
Retraction Complete
Wire Lock
Prevent Getting Out Growth of Seat Belt
Seat Belt Tensioner
Seat Belt Outer Lap Tensioner

The component pictured in this manual may not match your actual vehicle.

Selectable Energy Absorption Device

When the seat belt tensioner operates, it instantly retracts the seat belt, enhancing its ability to immediately restrain the occupant. Also, a selectable energy absorption device is fitted within the front passenger's seat belt tensioner that reduces the burden on the occupant's chest while properly maintaining the restraining force of the seat belt. To ensure the seat belt's ability to protect the occupant, the seat belt adjusts to its optimum energy absorption characteristic for the occupant by using the occupant weight information which is detected by the front passenger's weight sensor.

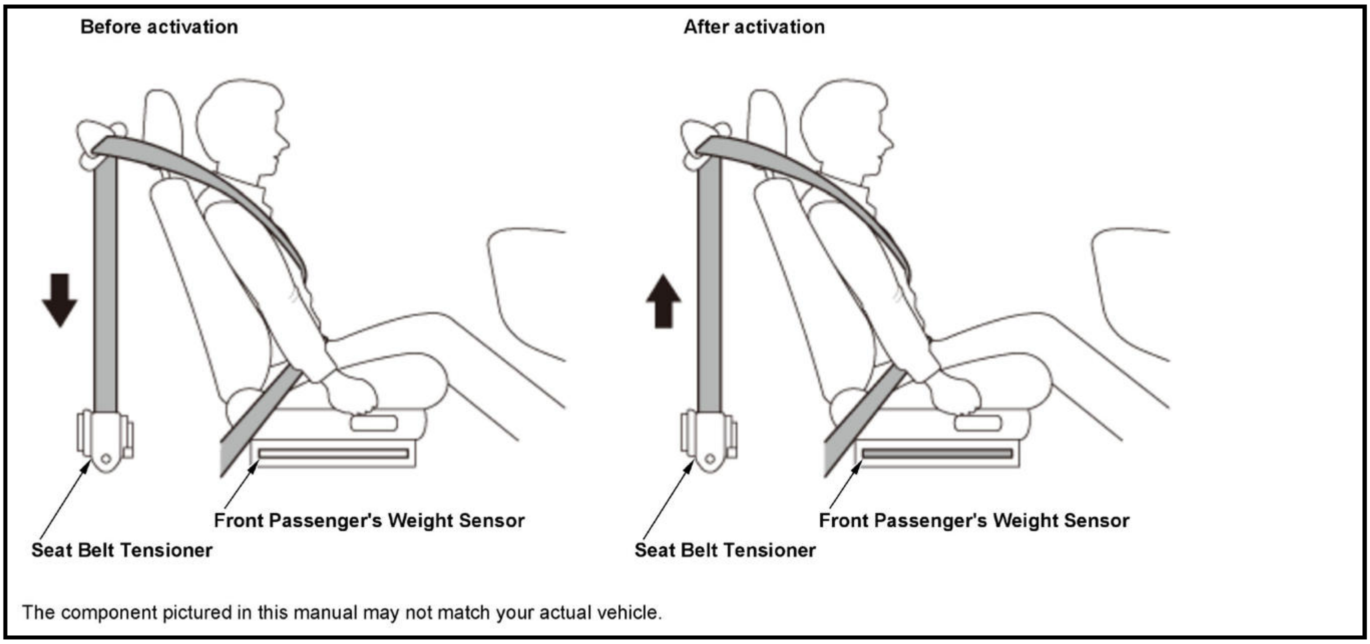
Before activation
After activation
Front Passenger's Weight Sensor
Seat Belt Tensioner
Front Passenger's Weight Sensor
Seat Belt Tensioner

The component pictured in this manual may not match your actual vehicle.

Seat Belt Reminder

Driver's Seat Belt Reminder Function

The SRS unit turns on the seat belt reminder indicator in order to urge the driver to wear their seat belt if the system detects that the seat belt is not buckled.

Passenger's Seat Belt Reminder Function

The SRS unit turns on the seat belt reminder indicator in order to urge the passenger to wear their seat belt if the system detects that there is a passenger and their seat belt is not buckled.

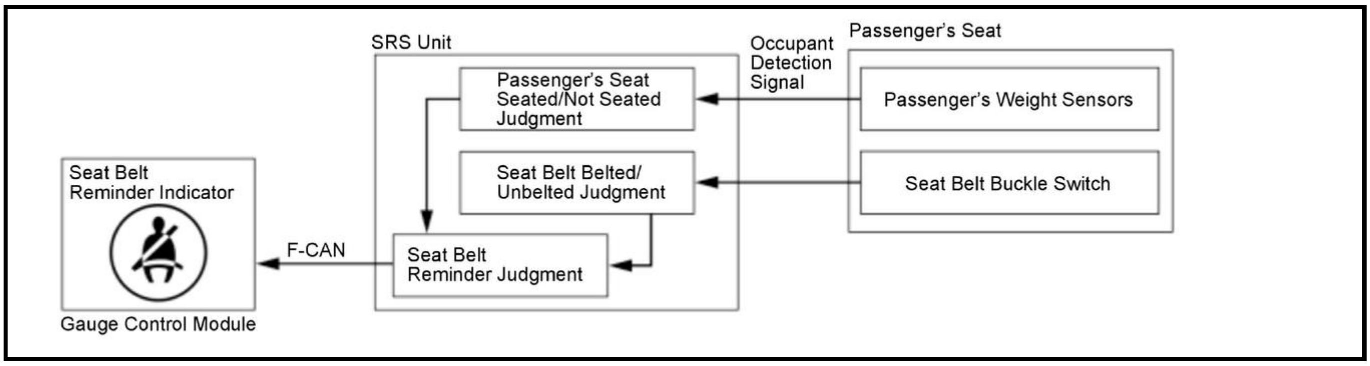
SRS Unit
Passenger's Seat Seated/Not Seated Judgment
Seat Belt Belted/ Unbelted Judgment
Seat Belt Reminder Judgment
Occupant Detection Signal
Passenger's Seat
Passenger's Weight Sensors
Seat Belt Buckle Switch
Seat Belt Reminder Indicator
F-CAN
Gauge Control Module

System Diagram

System Diagram

- Power supply circuit (booster circuit, backup power supply): Provides and maintains power when battery voltage is low or in case of power supply damage due to a collision.
- Front impact G sensors and side impact G sensor: Detect impact to the SRS unit as acceleration and converts it to an electrical signal.

- Rollover judgment circuit: Predicts an impending rollover using signals such as the one from the G sensor located inside of the SRS unit. Based on the rollover judgment and the seat belt buckle switch status, the circuit determines whether the seat belt tensioners and the side curtain airbags should deploy or not.
- Microprocessor: An impact decision algorithm decides whether or not the collision signal warrants deployment of the airbags or the tensioners.
- Diagnostic circuit: Performs self-diagnosis to determine whether system abnormalities are present. If an abnormality is detected, the SRS indicator in the gauge control module turns on.
- Non-volatile memory: Records fault conditions. The SRS memories are not erased even if the 12 volt battery terminal is disconnected.
- Communication circuit: Circuit for outputting or deleting memory contents.
- The SRS unit receives the load information from the weight sensors, performs an occupant judgment of the front passenger's seat, and adjusts the front passenger's airbag deployment and performance.

For locations of each component on vehicle, **refer to Component Location Index**.

KA/KC

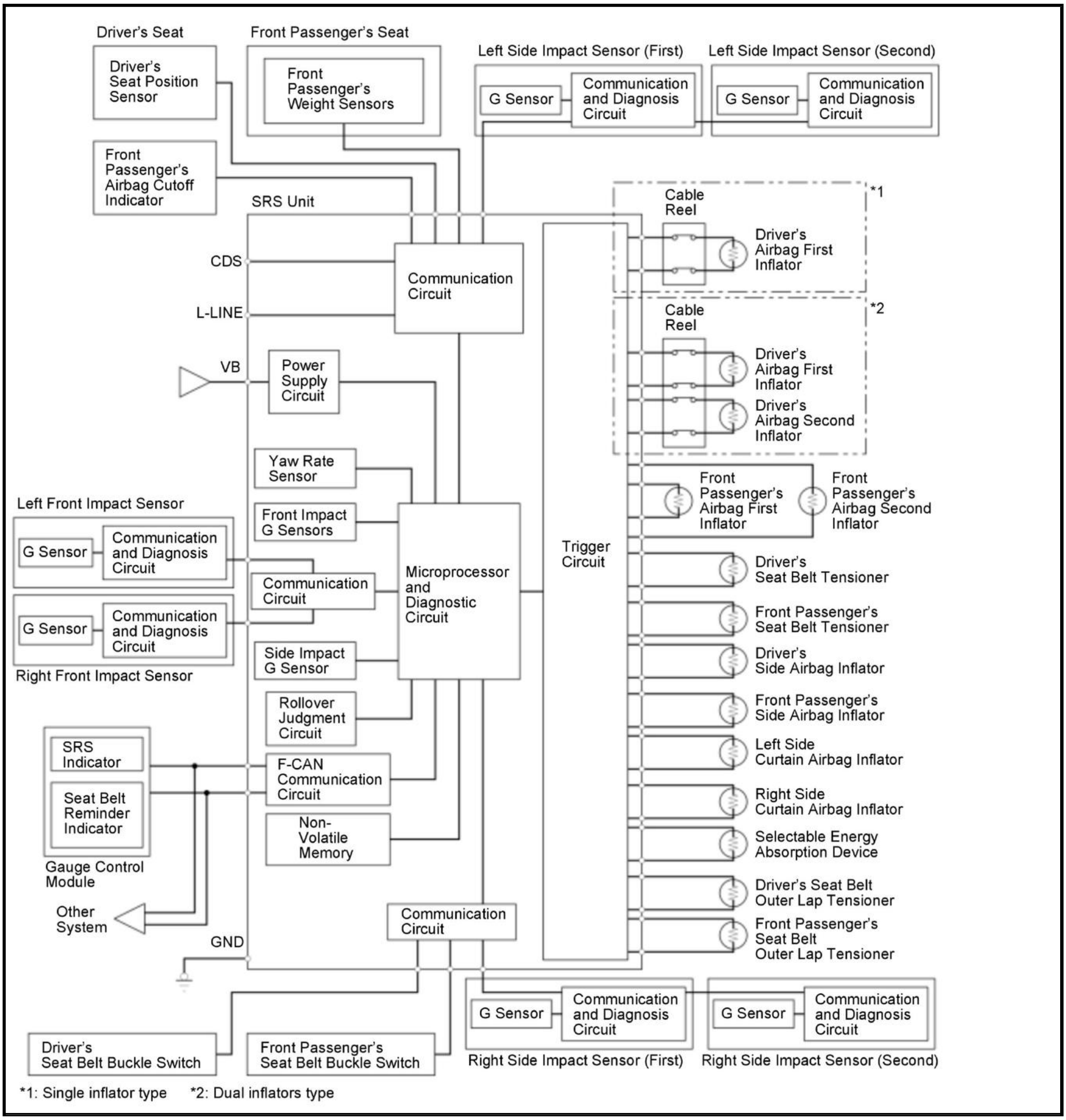
Driver's Seat
Driver's Seat Position Sensor
Front Passenger's Seat
Front Passenger's Weight Sensors
Left Side Impact Sensor (First)
G Sensor
Communication and Diagnosis Circuit
Left Side Impact Sensor (Second)
G Sensor
Communication and Diagnosis Circuit
Front Passenger's Airbag Cutoff Indicator
SRS Unit
*1
Cable Reel
Driver's Airbag First Inflator
CDS
Communication Circuit
L-LINE
*2
Cable Reel
Driver's Airbag First Inflator
Driver's Airbag Second Inflator
VB
Power Supply Circuit
Yaw Rate Sensor
Front Passenger's Airbag First Inflator
Front Passenger's Airbag Second Inflator
Left Front Impact Sensor
G Sensor
Communication and Diagnosis Circuit
Front Impact G Sensors
Trigger Circuit
Driver's Seat Belt Tensioner
Communication Circuit
Microprocessor and Diagnostic Circuit
Front Passenger's Seat Belt Tensioner
G Sensor
Communication and Diagnosis Circuit
Right Front Impact Sensor
Side Impact G Sensor
Driver's Side Airbag Inflator
Rollover Judgment Circuit
Front Passenger's Side Airbag Inflator
SRS Indicator
Left Side Curtain Airbag Inflator
F-CAN Communication Circuit
Seat Belt Reminder Indicator
Right Side Curtain Airbag Inflator
Non-Volatile Memory
Selectable Energy Absorption Device
Gauge Control Module
Driver's Seat Belt Outer Lap Tensioner
Other System
Communication Circuit
Front Passenger's Seat Belt Outer Lap Tensioner
GND
G Sensor
Communication and Diagnosis Circuit
G Sensor
Communication and Diagnosis Circuit
Driver's Seat Belt Buckle Switch
Front Passenger's Seat Belt Buckle Switch
Right Side Impact Sensor (First)
Right Side Impact Sensor (Second)
*1: Single inflator type
*2: Dual inflators type

KX

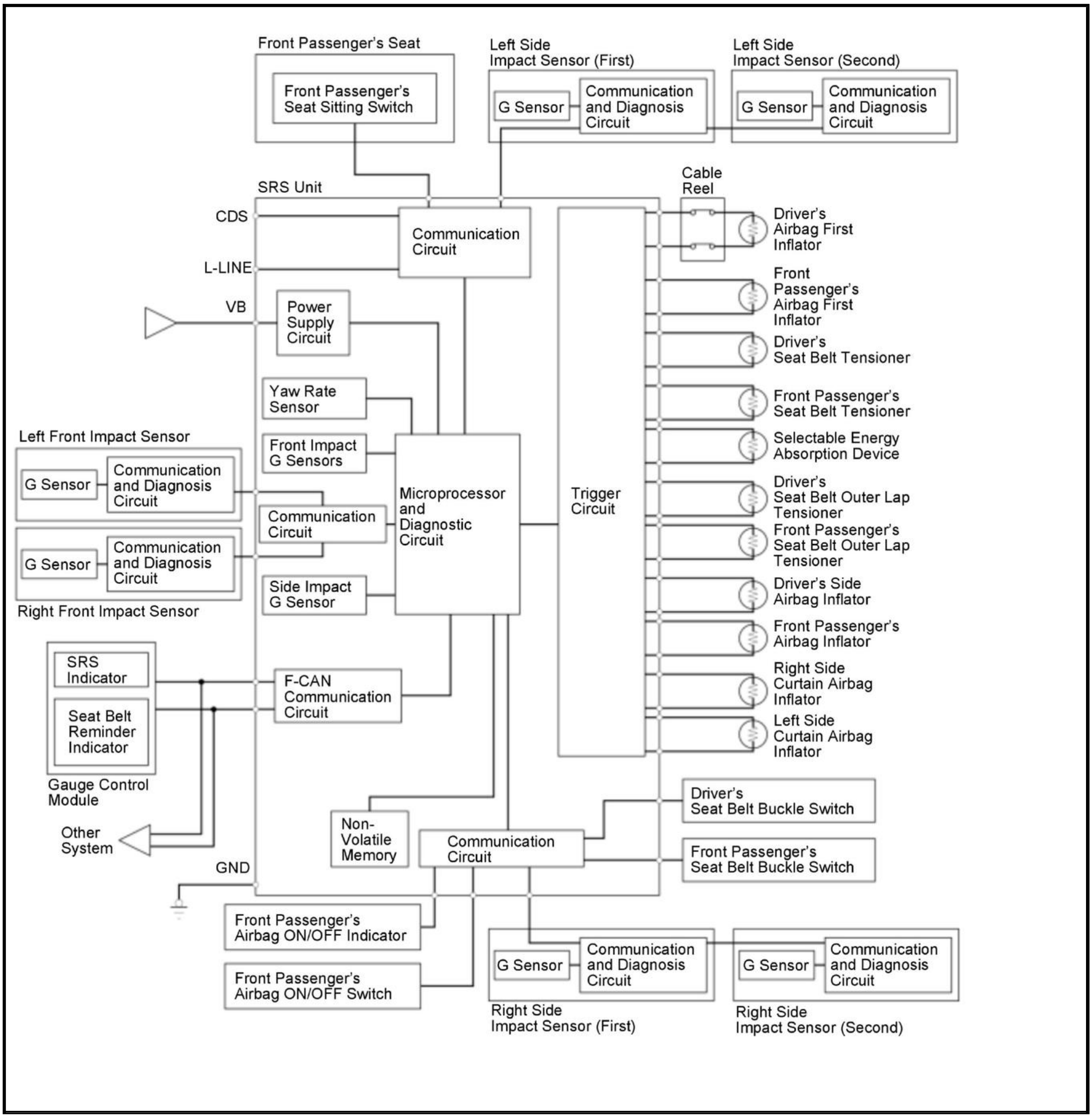
Front Passenger's Seat
Front Passenger's Seat Sitting Switch
Left Side Impact Sensor (First)
G Sensor
Communication and Diagnosis Circuit
Left Side Impact Sensor (Second)
G Sensor
Communication and Diagnosis Circuit
SRS Unit
Cable Reel
CDS
L-LINE
VB
Communication Circuit
Power Supply Circuit
Yaw Rate Sensor
Front Impact G Sensors
Communication Circuit
Side Impact G Sensor
Microprocessor and Diagnostic Circuit
Trigger Circuit
Left Front Impact Sensor
G Sensor
Communication and Diagnosis Circuit
G Sensor
Communication and Diagnosis Circuit
Right Front Impact Sensor
Driver's Airbag First Inflator
Front Passenger's Airbag First Inflator
Driver's Seat Belt Tensioner
Front Passenger's Seat Belt Tensioner
Selectable Energy Absorption Device
Driver's Seat Belt Outer Lap Tensioner
Front Passenger's Seat Belt Outer Lap Tensioner
Driver's Side Airbag Inflator
Front Passenger's Airbag Inflator
Right Side Curtain Airbag Inflator
Left Side Curtain Airbag Inflator
SRS Indicator
Seat Belt Reminder Indicator
Gauge Control Module
F-CAN Communication Circuit
Other System
GND
Non-Volatile Memory
Communication Circuit
Driver's Seat Belt Buckle Switch
Front Passenger's Seat Belt Buckle Switch
Front Passenger's Airbag ON/OFF Indicator
Front Passenger's Airbag ON/OFF Switch
G Sensor
Communication and Diagnosis Circuit
Right Side Impact Sensor (First)
G Sensor
Communication and Diagnosis Circuit
Right Side Impact Sensor (Second)

When airbags or tensioners are about to be deployed, a large amount of current passes through the SRS unit. After the airbags and tensioners are deployed, the internal components of the SRS unit are damaged and must be replaced.

CONNECTOR VIEW

SRS UNIT CONNECTOR FOR INPUTS AND OUTPUTS(KA/KC)

Connector Index
SRS unit connector A (39P)
SRS unit connector B (39P)

SRS Unit Inputs and Outputs at Connector A (39P) (female terminals)

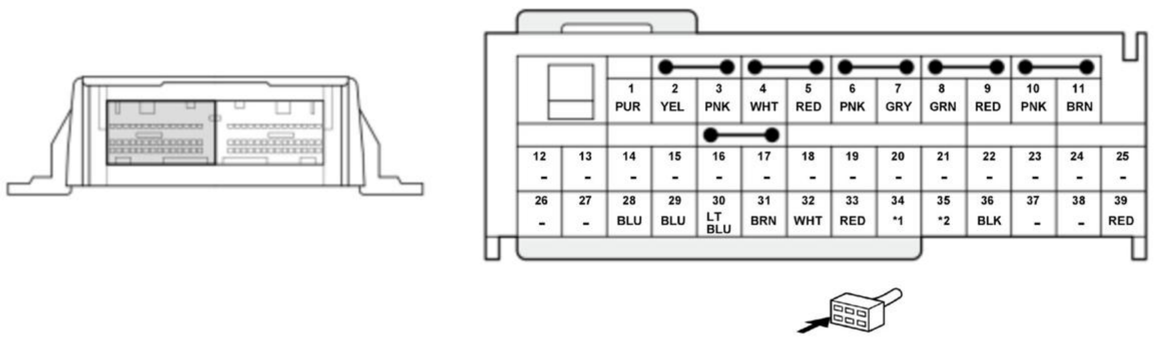
1 PUR
2 YEL
3 PNK
4 WHT
5 RED
6 PNK
7 GRY
8 GRN
9 RED
10 PNK
11 BRN
12 -
13 -
14 -
15 -
16 -
17 -
18 -
19 -
20 -
21 -
22 -
23 -
24 -
25 -
26 -
27 -
28 BLU
29 BLU
30 LT BLU
31 BRN
32 WHT
33 RED
34 *1
35 *2
36 BLK
37 -
38 -
39 RED

NOTE: The wire colors of the SRS unit may be substituted in this illustration.
*1: WHT (Without CAN gateway), YEL (With CAN gate way)
*2: RED (Without CAN gateway), BLU (With CAN gate way)

Terminal Number	Terminal Name	Description
1	CDS	Sends and receives communication signal with the front passenger's weight sensor unit
2	RVEA+	Power source for the selectable energy absorption device of the front passenger's seat belt tensioner
3	RVEA-	Ground for the selectable energy absorption device of the front passenger's seat belt tensioner
4	RA1-	Ground for the front passenger's airbag first inflator
5	RA1+	Power source for the front passenger's airbag first inflator
6	RA2+	Power source for the front passenger's airbag second inflator
7	RA2-	Ground for the front passenger's airbag second inflator
8	LA1-	Ground for the driver's airbag first inflator
9	LA1+	Power source for the driver's airbag first inflator
10	LA2+	Power source for the driver's airbag second inflator
11	LA2-	Ground for the driver's airbag second inflator
12	Not Used	-
13	Not Used	-
14	Not Used	-
15	Not Used	-
16	Not Used	-
17	Not Used	-
18	Not Used	-
19	Not Used	-
20	Not Used	-
21	Not Used	-
22	Not Used	-

*1: Without CAN gateway

*2: With CAN gateway

Terminal Number	Terminal Name	Description
23	Not Used	-
24	Not Used	-
25	Not Used	-

Terminal Number	Terminal Name	Description
26	Not Used	-
27	Not Used	-
28	OFF PTT	Front passenger's airbag cutoff indicator output line
29	RFS+	Power source for the right front impact sensor
30	RFS-	Ground for the right front impact sensor
31	LFS+	Power source for the left front impact sensor
32	LFS-	Ground for the left front impact sensor
33	L-LINE	Sends and receives scan tool signal (serial data)
34	F-CAN_H* 1F-CAN B_H* 2	Sends and receives communication signal
35	F-CAN_L* 1F-CAN B_L* 2	Sends and receives communication signal
36	GND	Ground circuit for the SRS unit
37	Not Used	-
38	Not Used	-
39	VB	SRS dedicated power (dedicated booster circuit)

*1: Without CAN gateway

*2: With CAN gateway

SRS Unit Inputs and Outputs at Connector B (39P) (female terminals)

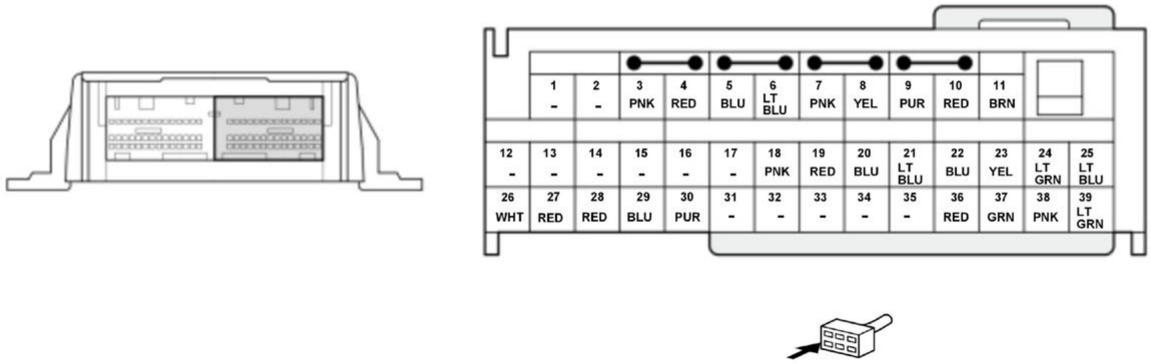
1
-
2
-
3
PNK
4
RED
5
BLU
6
LT BLU
7
PNK
8
YEL
9
PUR
10
RED
11
BRN
12
-
13
-
14
-
15
-
16
-
17
-
18
PNK
19
RED
20
BLU
21
LT BLU
22
BLU
23
YEL
24
LT GRN
25
LT BLU
26
WHT
27
RED
28
RED
29
BLU
30
PUR
31
-
32
-
33
-
34
-
35
-
36
RED
37
GRN
38
PNK
39
LT GRN

NOTE: The wire colors of the SRS unit may be substituted in this illustration.

Terminal Number	Terminal Name	Description
1	Not Used	-
2	Not Used	-
3	RSA-	Ground for the front passenger's side airbag inflator
4	RSA+	Power source for the front passenger's side airbag inflator
5	LSA+	Power source for the driver's side airbag inflator
6	LSA-	Ground for the driver's side airbag inflator
7	RCA-	Ground for the right side curtain airbag inflator
8	RCA+	Power source for the right side curtain airbag inflator

Terminal Number	Terminal Name	Description
9	LCA+	Power source for the left side curtain airbag inflator
10	LCA-	Ground for the left side curtain airbag inflator
11	SS+	Driver's seat position sensor input line
12	Not Used	-
13	Not Used	-
14	Not Used	-
15	Not Used	-
16	Not Used	-
17	Not Used	-
18	RRP-	Ground for the front passenger's seat belt tensioner
19	RRP+	Power source for the front passenger's seat belt tensioner
20	LRP+	Power source for the driver's seat belt tensioner
21	LRP-	Ground for the driver's seat belt tensioner
22	RLP-	Ground for the front passenger's seat belt outer lap tensioner
23	RLP+	Power source for the front passenger's seat belt outer lap tensioner
24	LLP+	Power source for the driver's seat belt outer lap tensioner
25	LLP-	Ground for the driver's seat belt outer lap tensioner
26	SWS+	Power source for the front passenger's weight sensors
27	FRBC	Front passenger's seat belt buckle switch input line
28	SWS-	Ground for the front passenger's weight sensors
29	FLBC	Driver's seat belt buckle switch input line
30	SWSS	Sends and receives communication signal with the front passenger's weight sensors
31	Not Used	-
32	Not Used	-
33	Not Used	-
34	Not Used	-
35	Not Used	-
36	RS1+	Power source for the right side impact sensor (first) and (second)
37	RS1-	Ground for the right side impact sensor (first) and (second)
38	LS1+	Power source for the left side impact sensor (first) and (second)
39	LS1-	Ground for the left side impact sensor (first) and (second)

CHECK

DRIVER'S SEAT POSITION SENSOR OPERATION CHECK (KA/KC)

Procedure

NOTE: Check the driver's seat position sensor operation after the driver's seat position sensor replacement.

1. HDS - Connect
2. Driver's Seat Position Sensor - Operation Check

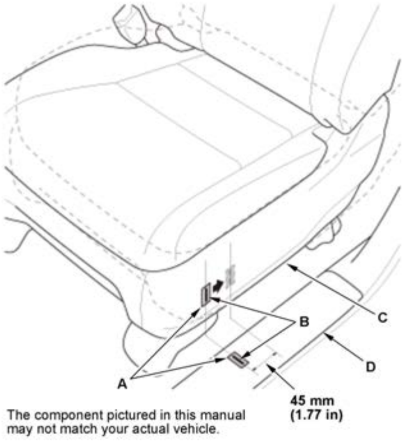 The component pictured in this manual may not match your actual vehicle.	1. Make sure the driver's seat is in the full forward position. 2. From SRS in the HDS Main Menu, select SRS, then Data List. 3. Using two pieces of tape (A), make alignment marks (B) on the recline cover (C) and the front door sill trim (D) as shown. The driver's seat position sensor should read NEAR on the HDS. 4. Move the seat back in small increments (about 5 mm, (0.20 in)) until the driver's seat position sensor reads NOT-NEAR on the HDS. The seat should be about 45 mm (1.77in) from the front. **NOTE:** It takes a few seconds for the HDS to change display, so wait for about 5 seconds between each movement. If the driver's seat position sensor data does not work as described above, check the driver's seat position sensor for damage, and replace parts as needed. 5. Turn the vehicle to the OFF (LOCK) mode.

FRONT PASSENGER'S WEIGHT SENSOR OPERATION CHECK AFTER REPLACING FRONT PASSENGER'S SEAT COMPONENT(S) (KA/KC)

Procedure

NOTE:

- Check the front passenger's weight sensor operation after replacing or removing front passenger's seat component(s) (except front passenger's weight sensor, the front passenger's seat frame, or the front passenger's seat rail).
- Check the front passenger's weight sensor operation after front passenger's seat replacement or removal.
- When any of the following procedures are performed, **go to Front Passenger's Weight Sensor Initialization**.
-
    - The SRS unit was replaced/updated.
    - The front passenger's weight sensor, the front passenger's seat frame, and/or the front passenger's seat rail was replaced/removed.

1. **HDS - Connect**
2. Front Passenger's Weight Sensor - Operation Check

   NOTE:

    - Before doing this procedure, clear the DTCs.
    - Before doing this procedure, make sure the 12 volt battery is fully charged.
    - Make sure the front passenger's seat and all components of the seat are correctly installed.
    - Make sure nothing is on the front passenger's seat, including aftermarket seat covers or mats.
    - Make sure there is nothing in the front passenger's seat-back pocket.
    - Make sure the vehicle is on level ground.
    - When you perform this procedure, the vehicle temperature must be between 41- 113 deg.F (5 - 45 deg.C).
    - When the vehicle is exposed to intense cold or intense heat, move the vehicle inside, open the windows and moonroof (if equipped) and perform this procedure after one hour or more.

- Do not expose the front passenger's seat to sudden temperature changes.
- Do not use the A/C and the heater.
- Do not touch the front passenger's seat and keep the vehicle stationary during this procedure.
- Do not attach the seat belt tongue into the buckle.
- If possible, do all of the above procedures inside.

1. Position the front passenger's seat all the way rearward and lowermost (if equipped with the height adjuster), then adjust the seat-back to the forward most position.

NOTE: Do not move the seat from this position until the operation check is completed.

2. From SRS of the System Selection Menu, select SRS/SWS, then Data List. In the Data List, select FRONT PASSENGER'S WEIGHT. The weight (T0) of the front passenger's seat is displayed by the HDS. Write this measurement down as "T0" on a piece of paper.

- If the reading on the HDS (T0) is within +/-2.1 kg (+/-4.6 lbs), go to step 3.
- If the reading on the HDS (T0) is at or not within +/-2.1 kg (+/-4.6 lbs), turn the vehicle to the OFF (LOCK) mode, and **go to the Front Passenger's Weight Sensor Initialization**.

3. Prepare a weight between 10 kg (22 lbs) - 20 kg (44 lbs) then measure and note its actual weight (M) with a weight scale.

NOTE:

- The accuracy of the weight scale must be within 1 kg (2 lbs).
- The weight must be uniform in shape and size to allow precise placement on the seat.

4. Place the prepared weight precisely on the center of the front passenger's seat as shown.

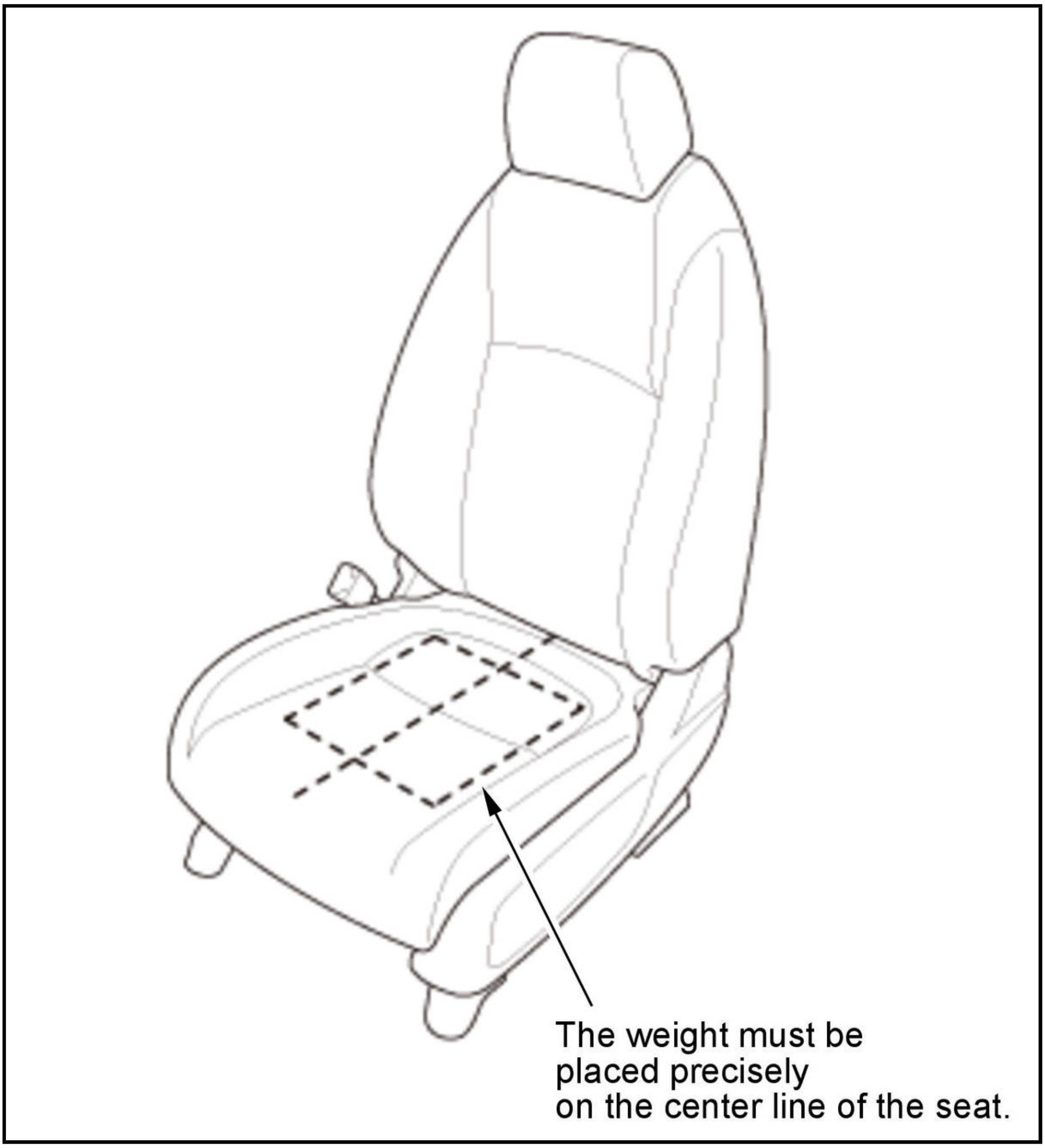

5. From the Data List, select FRONT PASSENGER'S WEIGHT. The weight (T1) of the front passenger's seat is displayed by the HDS. Write this measurement down as "T1".

6. Divide (M) by 2. Write this calculation as "M1" on a piece of paper.

7. Calculate the variance between the weight measured by the weight scale and the HDS with the formula.

Variance = ((T1)-(T0)-(M1))	
Â	
T1:	**Weight measured by the HDS with the weight on the seat.**
T0:	**Weight measured by the HDS with no load on the seat.**
M1:	**Half of the weight measured by the weight scale.**

- If the variance is within +/-2.2 kg (+/-4.9 lbs), initialization is complete. Go to step 8.
- If the variance is at or not within +/-2.2 kg (+/-4.9 lbs), do the following and then **go to the Front Passenger's Weight Sensor Initialization**.
-

    - Confirm that the seat has no interference with surrounding components.
    - Confirm that the weight was placed precisely in the center of the seat.
    - **Remove the front passenger's weight sensors and reinstall them** .

8. Turn the vehicle to the OFF (LOCK) mode.

FRONT PASSENGER'S WEIGHT SENSOR OUTPUT CHECK AFTER A VEHICLE COLLISION(KA/KC)

Procedure

NOTE:

- Check the front passenger's weight sensor output after a vehicle collision, regardless if the airbags and seatbelt tensioners deployed or not.
- When any of the following procedures are performed, **go to Front Passenger's Weight Sensor Initialization**.
-
    - The SRS unit was replaced/updated.
    - The front passenger's weight sensor, the front passenger's seat frame, and/or the front passenger's seat rail was replaced/removed.

1. **HDS - Connect**
2. Front Passenger's Weight Sensor - Output Check After a Vehicle Collision

NOTE:

- Before doing this procedure, clear the DTCs.
- Before doing this procedure, make sure the 12 volt battery is fully charged.
- Make sure the front passenger's seat and all components of the seat are correctly installed.
- Make sure nothing is on the front passenger's seat, including aftermarket seat covers or mats.
- Make sure there is nothing in the front passenger's seat-back pocket.
- Make sure the vehicle is on level ground.
- When you perform this procedure, the vehicle temperature must be between 41- 113 deg.F (5 - 45 deg.C).
- When the vehicle is exposed to intense cold or intense heat, move the vehicle inside, open the windows and moonroof (if equipped) and perform this procedure after one hour or more.
- Do not expose the front passenger's seat to sudden temperature changes.
- Do not use the A/C and the heater.
- Do not touch the front passenger's seat and keep the vehicle stationary during this procedure.
- Do not attach the seat belt tongue into the buckle.
- If possible, do all of the above procedures inside.

1. Position the front passenger's seat all the way rearward and lowermost (if equipped with the height adjuster), then adjust the seat-back to the forward most position.

NOTE:

Do not move the seat from this position until the output check is completed.

2. From SRS of the System Selection Menu, select SRS/SWS, then Data List. In the Data List, select FRONT PASSENGER'S WEIGHT. The weight (T0) of the front passenger's seat is displayed by the HDS. Write this measurement down as "T0" on a piece of paper.

- If the reading on the HDS (T0) is within +/-2.1 kg (+/-4.6 lbs), go to step 3.
- If the reading on the HDS (T0) is at or not within +/-2.1 kg (+/-4.6 lbs), do the following and then **go to the Front Passenger's Weight Sensor Initialization**.
-
    - Confirm that the seat has no interference with surrounding components.
    - **Remove the front passenger's weight sensors** and inspect them for damage. If damage is found, replace the sensors. If no damage is found, reinstall the sensors.

3. Prepare a weight between 10 kg (22 lbs) - 20 kg (44 lbs) then measure and note its actual weight (M) with a weight scale.

NOTE:

- The accuracy of the weight scale must be within 1 kg (2 lbs).
- The weight must be uniform in shape and size to allow precise placement on the seat.

4. Place the prepared weight precisely on the center of the front passenger's seat as shown.

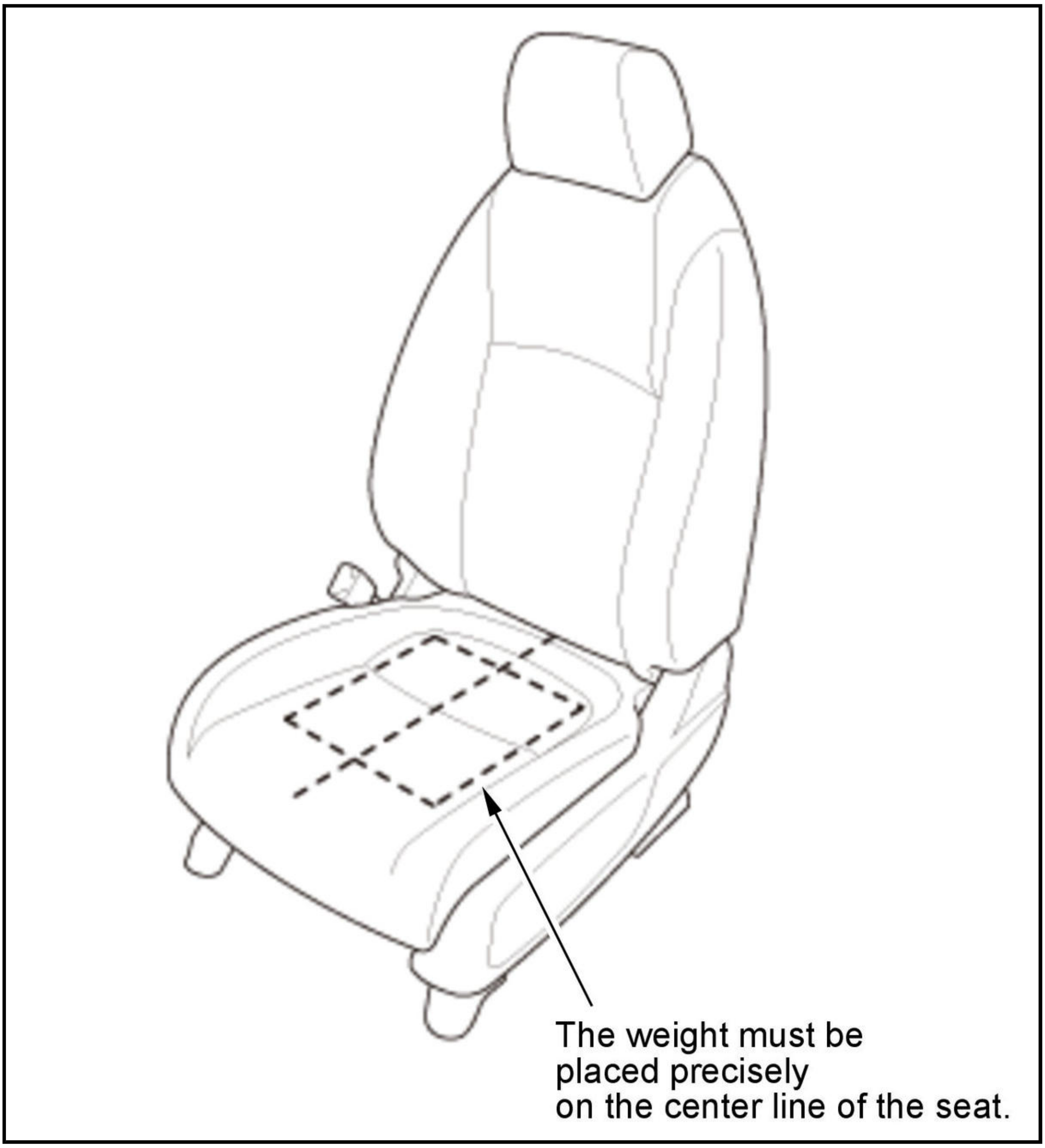
The weight must be placed precisely on the center line of the seat.

5. From the Data List, select FRONT PASSENGER'S WEIGHT. The weight (T1) of the front passenger's seat is displayed by the HDS. Write this measurement down as "T1".

6. Divide (M) by 2. Write this calculation as "M1" on a piece of paper.

7. Calculate the variance between the weight measured by the weight scale and the HDS with the formula.

Variance = ((T1)-(T0)-(M1))	
Â	
T1:	**Weight measured by the HDS with the weight on the seat.**
T0:	**Weight measured by the HDS with no load on the seat.**
M1:	**Half of the weight measured by the weight scale.**

- If the variance is within +/-2.2 kg (+/-4.9 lbs), initialization is complete. Go to step 8.
- If the variance is at or not within +/-2.2 kg (+/-4.9 lbs), do the following and then **go to the Front Passenger's Weight Sensor Initialization**.
-
    - Confirm that the seat has no interference with surrounding components.
    - Confirm that the weight was placed precisely in the center of the seat.
    - **Remove the front passenger's weight sensors and reinstall them** .

8. Turn the vehicle to the OFF (LOCK) mode.

INSPECTION REPLACEMENT

SRS COMPONENT REPLACEMENT/INSPECTION AFTER DEPLOYMENT

Inspection

1. Component Replacement/Inspection After Deployment - Inspect

NOTE:

- Before doing any SRS repairs after a collision, **check the deployed history** and **check for DTCs with the HDS** to determine the components that need replacement.
- Do not repair damaged SRS wiring, connectors or terminals. Replace the affected wiring harness(es).
- When replacing the front seat belt tensioner, check the seat belt mounting portion for deformation. If any deformation is found, repair it as needed.

After a collision where the seat belt outer lap tensioner deployed, replace these items:

- SRS unit
- Front seat belt(s)
- Seat belt outer lap tensioner(s)
- Front impact sensor(s)

After a collision where the front airbag(s) deployed, replace these items:

- SRS unit
- Deployed front airbag(s)
- Front seat belt(s)
- Front impact sensor(s)

- Cable reel (deployed driver's airbag)
- Springs (deployed driver's airbag)
- Dashboard (deployed front passenger's airbag)

After a collision where the side airbag deployed, replace the items for the side(s) that deployed:

- SRS unit
- Deployed side airbag(s)
- Front seat belt(s)
- Side impact sensor(s) (first)
- Side impact sensor(s) (second)
- B-pillar lower trim
- Seat frame and related parts

After a collision where the side curtain airbag deployed, replace the items for the side(s) that deployed:

- SRS unit
- Deployed side curtain airbag(s)
- Front seat belt(s)
- Side impact sensor(s) (first)
- Side impact sensor(s) (second)
- A-pillar trim
- B-pillar upper trim
- Quarter pillar trim
- Front grab handle
- Rear grab handle
- All related trim clips
- Sunvisor
- Headliner

After a moderate to severe side or rear collision, inspect for any damage on the side curtain airbag or other related components. Replace the pillar trims and related clips as needed .

During the repair process, inspect these areas:

- Inspect all the SRS wire harnesses. Replace, do not repair, any damaged harnesses, connectors or terminals.
- Inspect the cable reel for heat damage. If there is any damage, replace the cable reel .

After the vehicle is completely repaired, turn the vehicle to the ON mode. If the SRS indicator comes on for about 6 seconds and then goes off, the SRS is OK. If the indicator does not function properly, use the HDS to check for the DTCs. If you cannot retrieve a code, do the SRS Symptom Troubleshooting.

Â

2. Headliner/Pillar Trim Overlap - Check

Checking and Adjusting the Headliner/Pillar Trim Overlap

To prevent the side curtain airbag from deploying and damaging the pillar trim (A-pillar trim, B-pillar upper trim, and quarter pillar trim), the overlap between the headliner and pillar trim must be 8.0 +0/-2.0 mm (0.315 +0/-0.08 in). To check the overlap, do this:

1. Install the headliner (A) and the pillar trim (B).

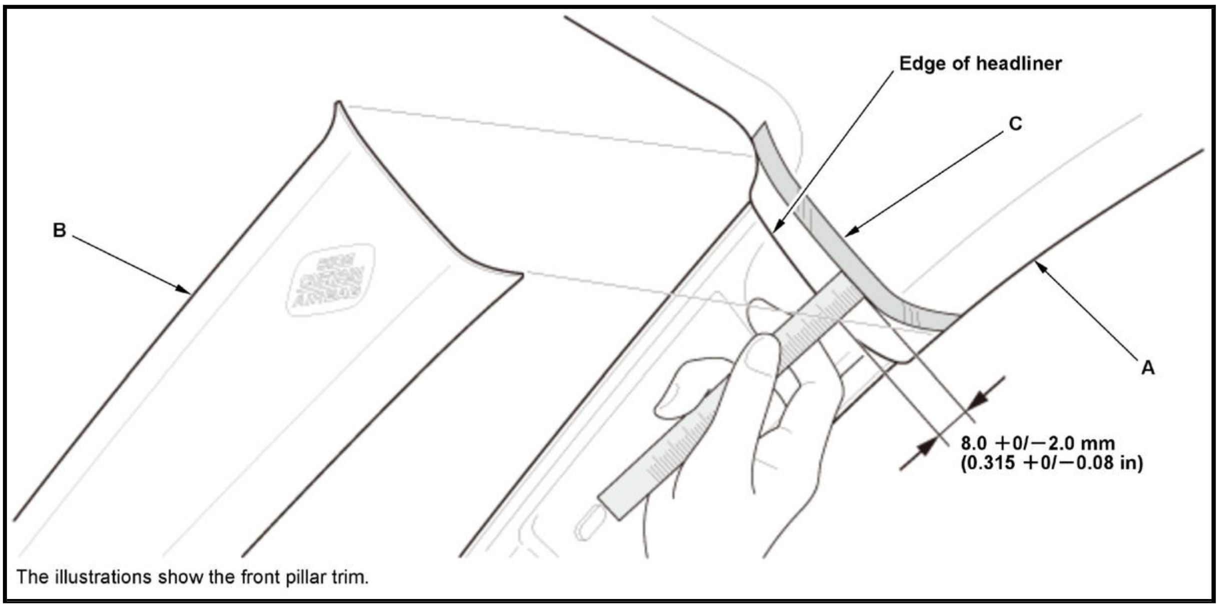
Edge of headliner
C
B
A
8.0 +0/−2.0 mm
(0.315 +0/−0.08 in)
The illustrations show the front pillar trim.

2. Apply masking tape (C) to the headliner to mark the upper edge of the pillar trim.

3. Remove the pillar trim, and measure the headliner overlap.

- If the overlap is 8.0 +0/-2.0 mm (0.315 +0/-0.08 in), remove the tape, and install the pillar trim.
- If the overlap is more than 8.0 mm (0.315 in), go to step 4.

4. Carefully trim the headliner with a utility knife, reducing the overlap to 8.0 +0/-2.0 mm (0.315 +0/-0.08 in).

5. Remove the tape, and install the pillar trim.

REPAIR PROCEDURES, TESTS

AIRBAG AND TENSIONER DISPOSAL

Special Tools Required

Image	Description/Tool Number
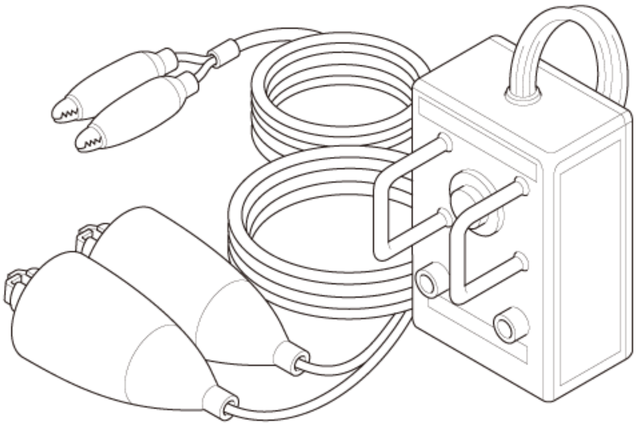	Deployment Tool 07AAZ-000A100

Inspection

NOTE:

- Before scrapping any front airbags, side airbags, side curtain airbags, seat belt outer lap tensioners, or front seat belt tensioners (including those in a whole vehicle to be scrapped), the part(s) must be deployed. If the vehicle is still within the warranty period, the Honda District Parts and Service Manager must give approval and/or special instruction before deploying the part(s). Only after the part(s) have been deployed (as the result of vehicle collision, for example), can they be scrapped. If the parts appear intact (not deployed), treat them with extreme caution. Follow this procedure.

- Please read the tool manual precautions and procedures for more details of the deployment tool.
- Airbag deployment is prohibited by law in some regions. Always check local laws and requirements before deploying airbags.

1. Airbag and Tensioner - Dispose

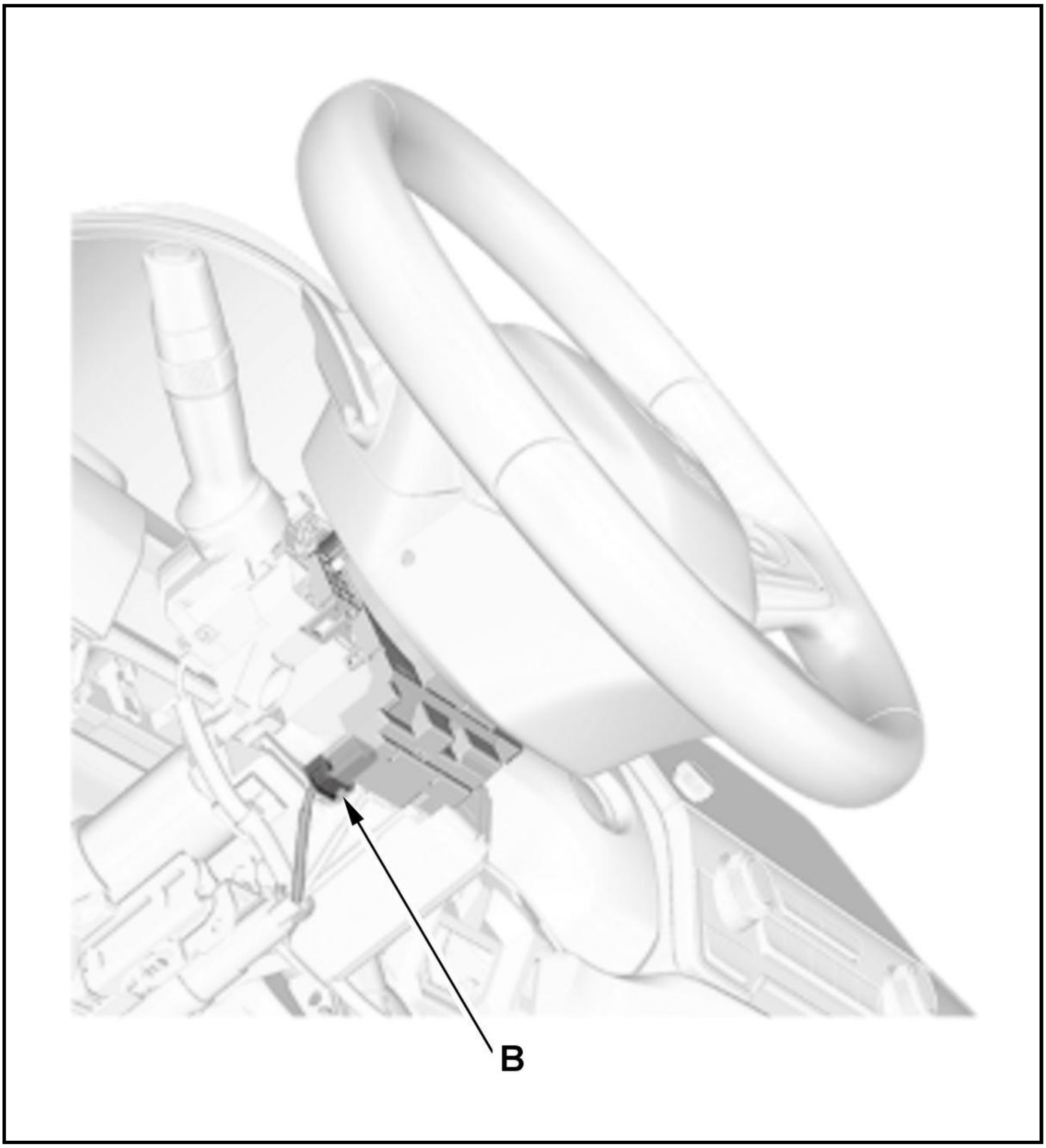

Deploying Airbags in the Vehicle

If an SRS equipped vehicle is to be entirely scrapped, its front airbags, side airbags, side curtain airbags, seat belt outer lap tensioners, and front seat belt tensioners should be deployed while still in the vehicle. These parts should not be considered as salvageable parts and should never be installed in another vehicle.

1. Turn the vehicle to the OFF (LOCK) mode. **Do the 12 volt battery terminal disconnection procedure** , then wait at least 3 minutes before starting work.

2. Confirm that each front airbag, side airbag, side curtain airbag, seat belt outer lap tensioner, or front seat belt tensioner is securely mounted.

3. Confirm that the deployment tool is functioning properly by following the check procedure on the tool label.

Driver's Airbag

4. **Remove the column covers** .

5. Locate the cable reel connector B on the dashboard wire harness. Do not disconnect the cable reel connector B.

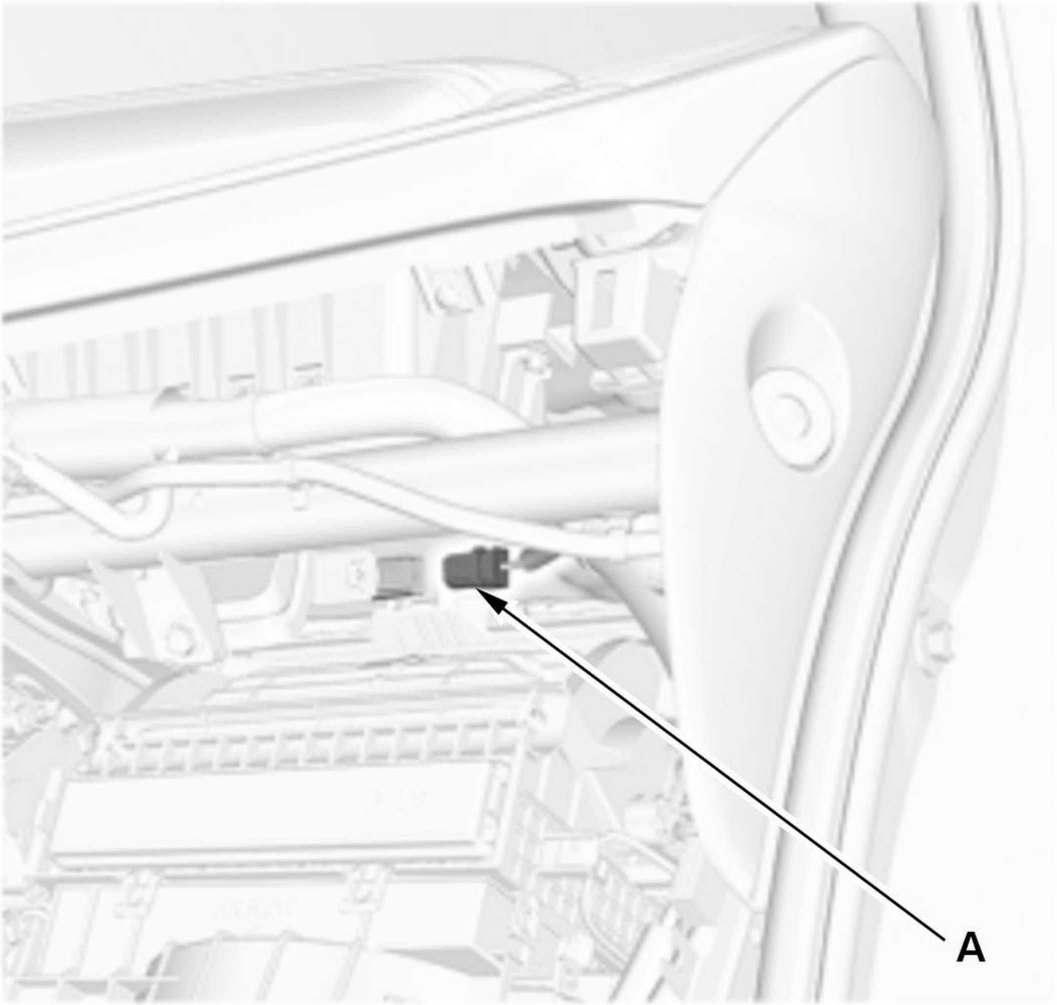

Front Passenger's Airbag

6. **Remove the glove box** .

7. Disconnect the connector (A).

Side Airbag

8. **Disconnect the connector (A)** .

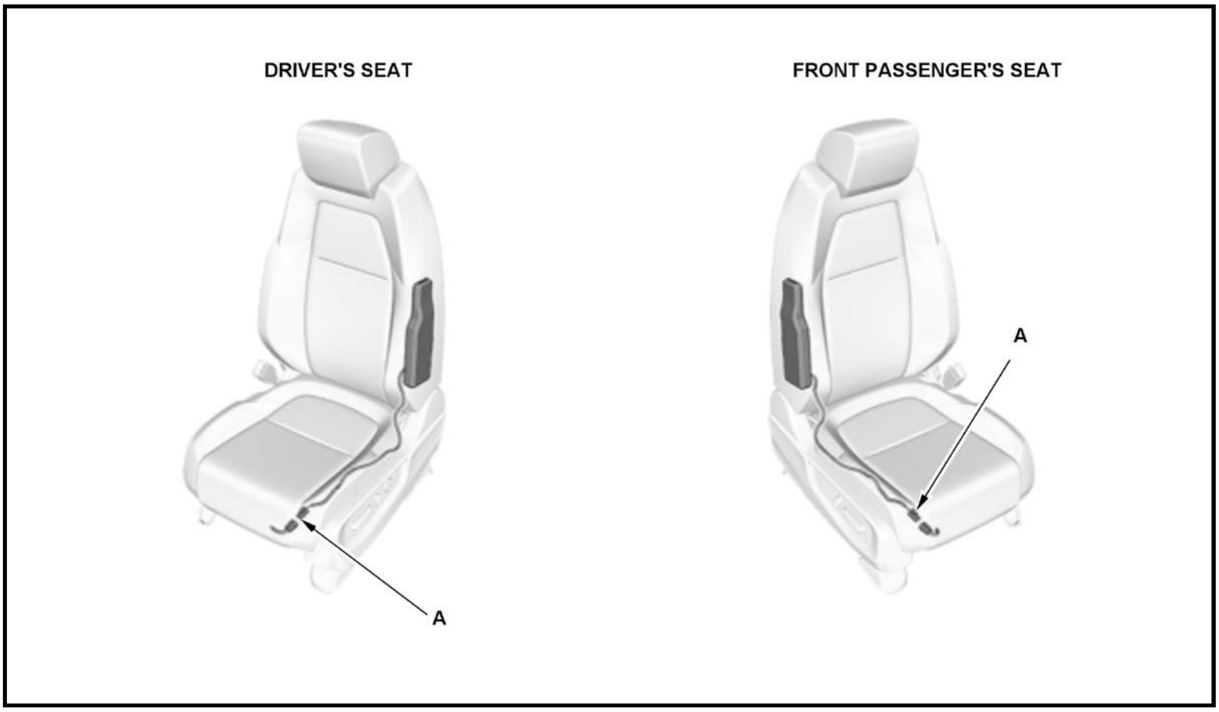
DRIVER'S SEAT
FRONT PASSENGER'S SEAT
A
A

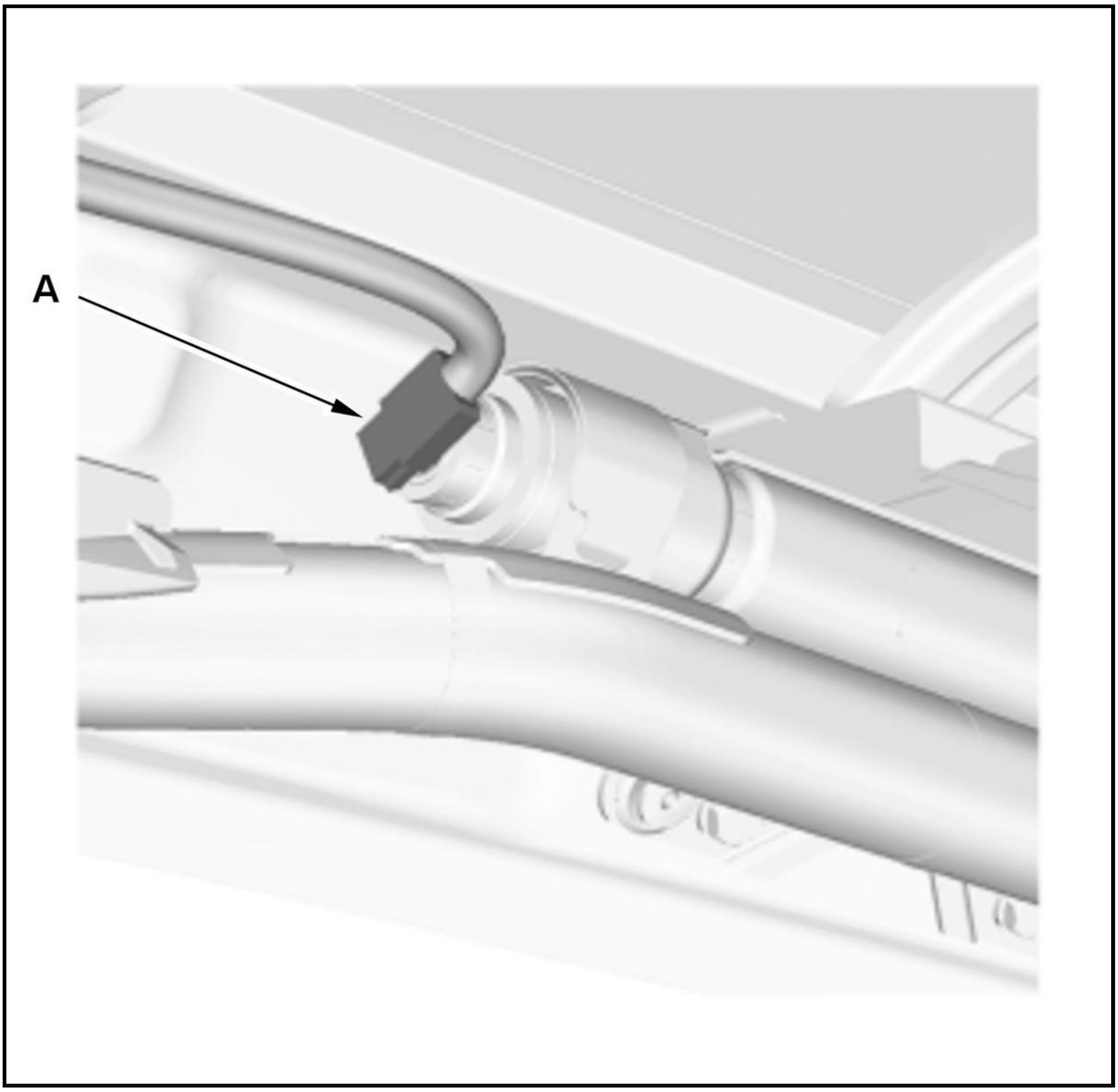

Side Curtain Airbag

9. **Remove the headliner** .

10. Locate the right and left side curtain airbag inflator connectors (A) on the floor wire harness. Do not disconnect the side curtain airbag inflator connectors.

Driver's Side

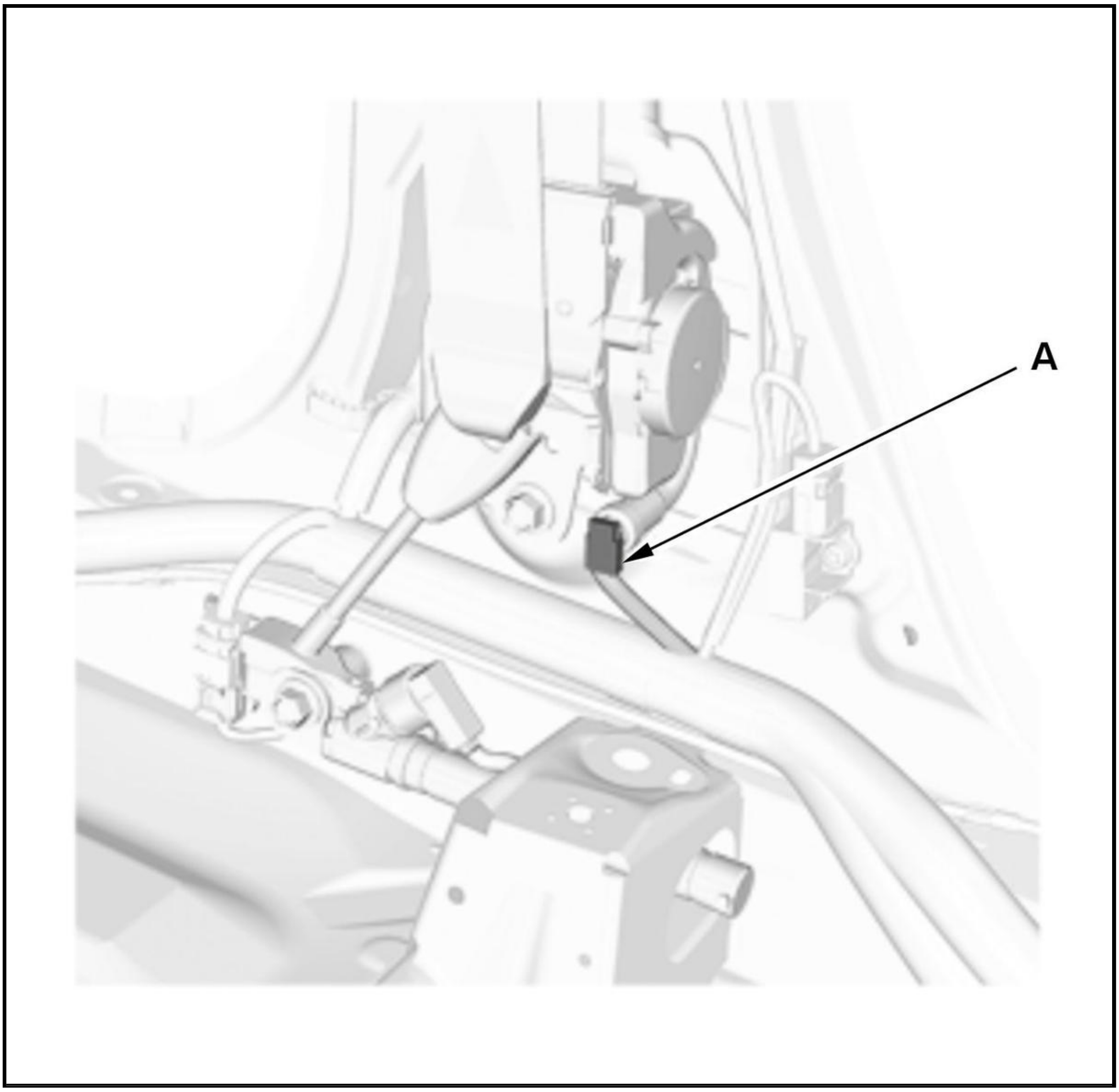

Passenger's Side

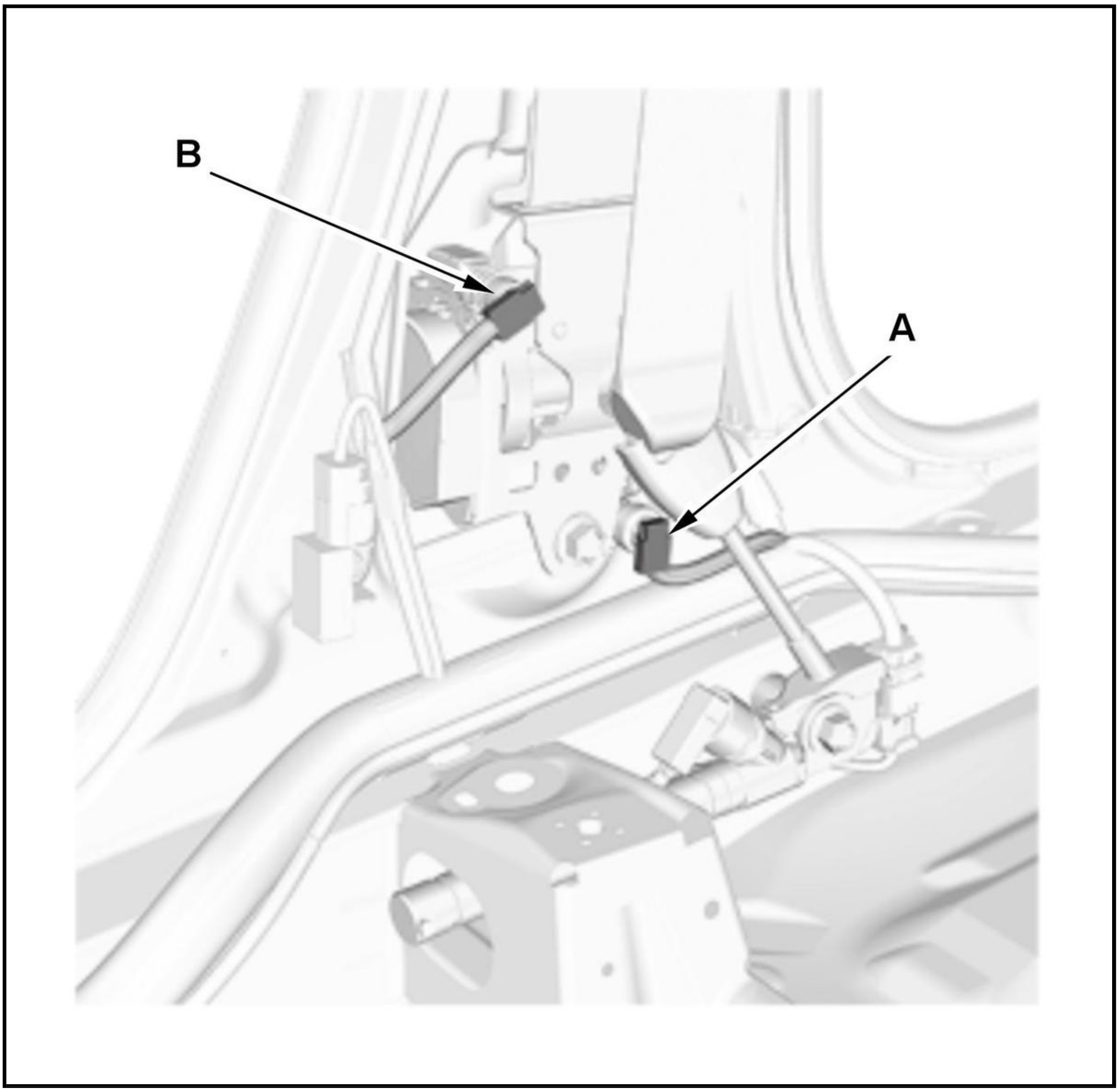

Front Seat Belt Tensioner

11. Remove the B-pillar lower trim cover

12. Locate the driver's and front passenger's seat belt tensioner connectors (A) on the floor wire harness. Do not disconnect the front seat belt tensioner connectors.

13. Front passenger's side: Locate the selectable energy absorption device connector (B) on the floor wire harness. Do not disconnect the selectable energy absorption device connector.

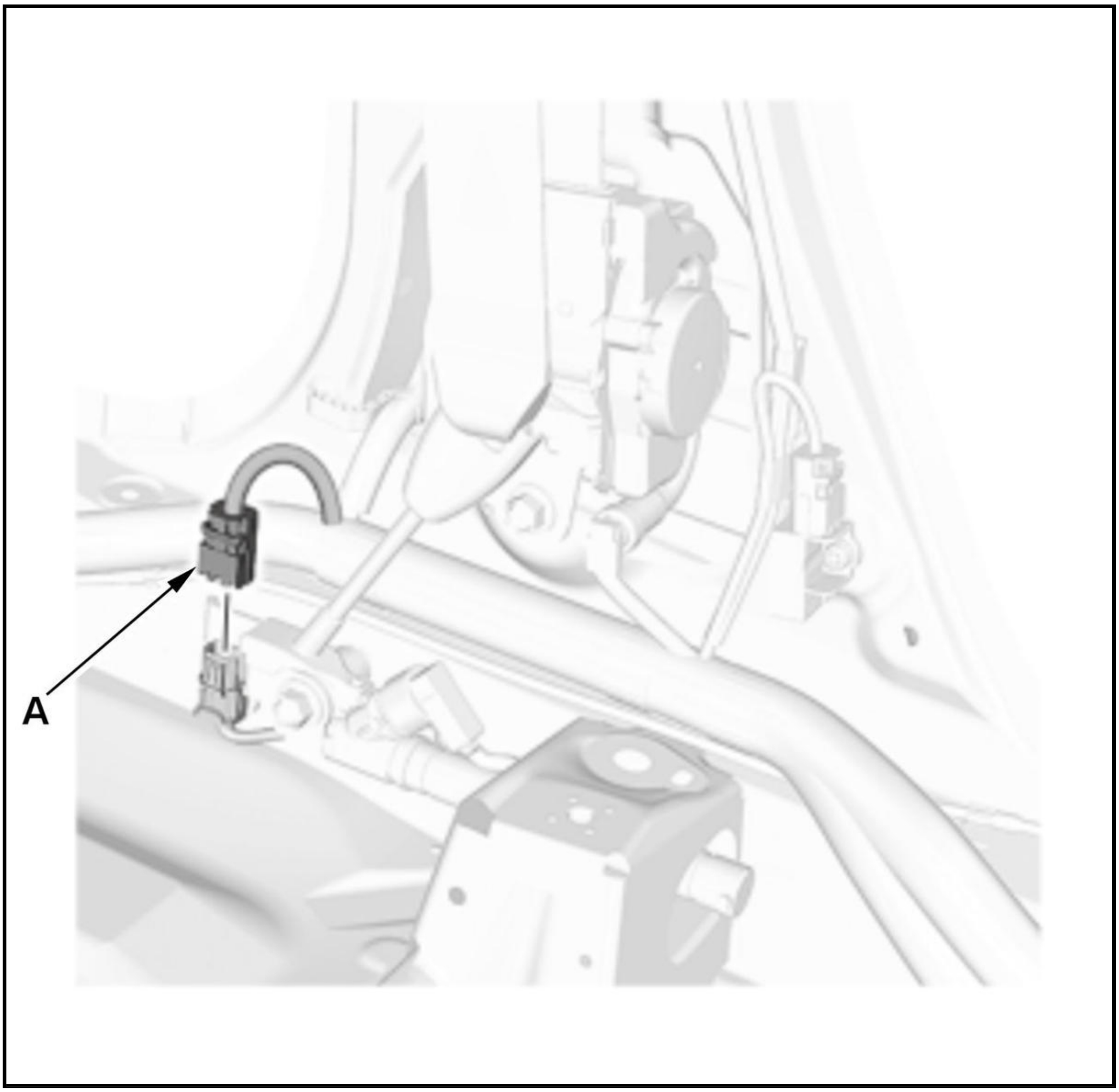

Seat Belt Outer Lap Tensioner

14. Remove the B-pillar lower trim cover .

15. Disconnect the connector (A).

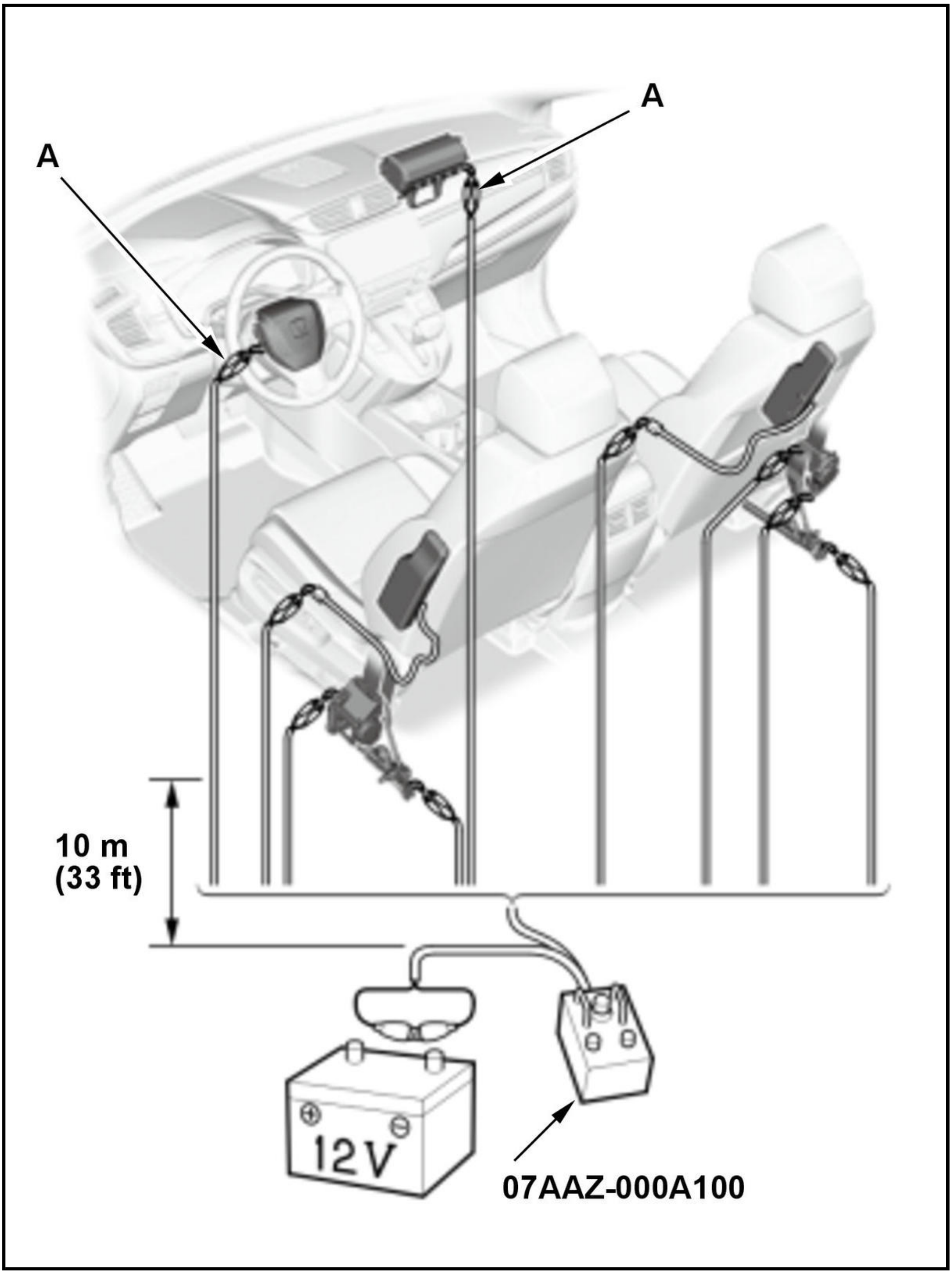
A
A
10 m
(33 ft)
12V
07AAZ-000A100

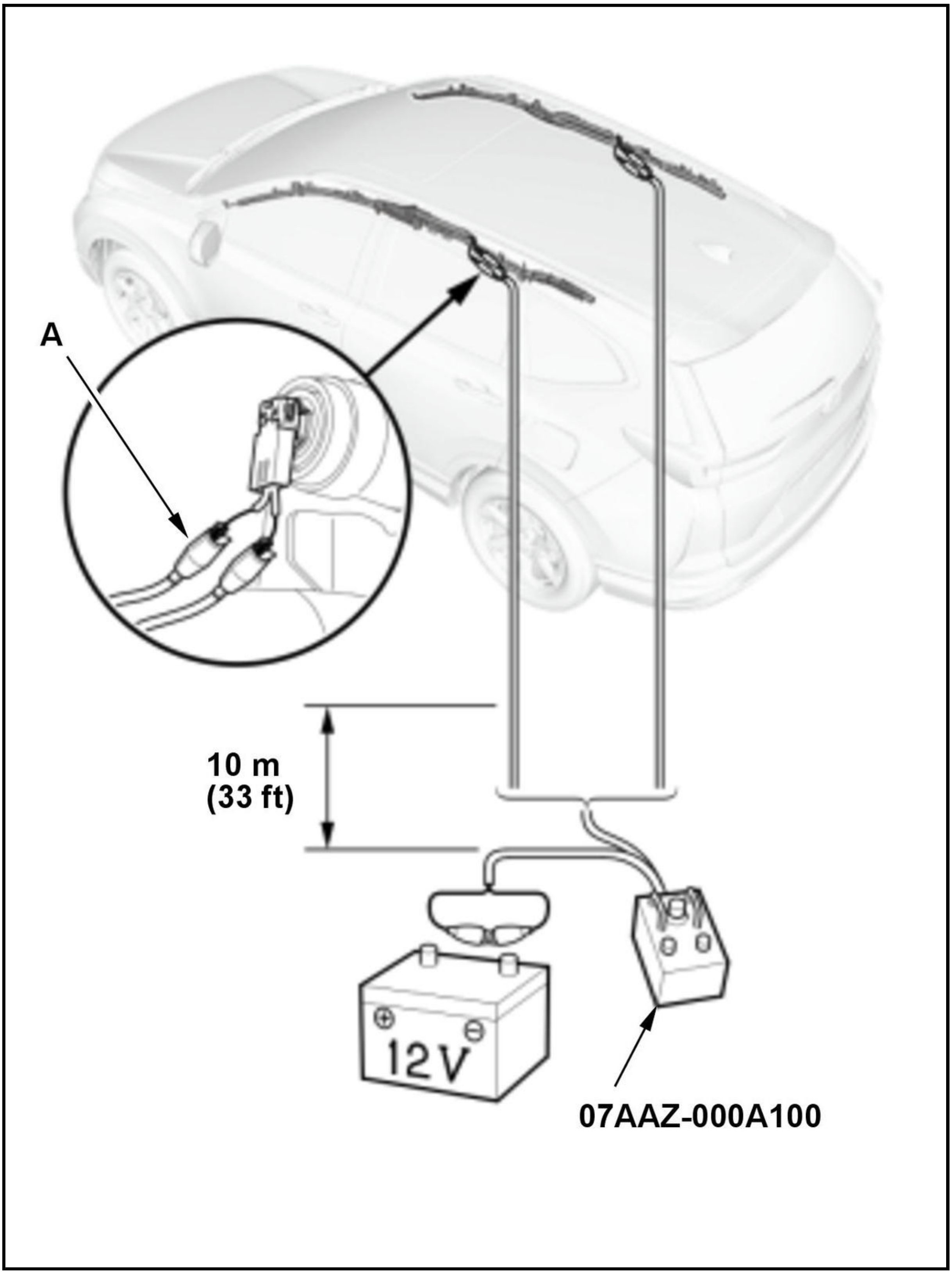

16. Cut off each connector and strip the ends of the wires. To prevent inflators from being deployed unexpectedly, twist each pair of wires coming from each inflator to have each inflator short-circuited.

17. Select one pair of wires and untwist the wires. Clip an alligator clip (A) to each end of the wires, so that the inflator is ready to be deployed.

NOTE:

- Place the deployment tool at least 10 m (33 ft) away from the vehicle.
- Since the driver's and front passenger's airbags have dual inflators, make sure to twist the correct pair of wires to have each inflator short-circuited (with dual inflators).

18. Connect a 12 volt battery to the tool.

- If the green light on the tool comes on, the igniter circuit is defective and cannot deploy the component. Go to Disposal of Damaged Components.
- If the red light on the tool comes on, the component is ready to be deployed.

19. Push the tool's deployment switch. The airbags and tensioners should deploy (deployment is both highly audible and visible: A loud noise and rapid inflation of the bag, followed by slow deflation).

- If the components deploy and the green light on the tool comes on, continue with this procedure.
- If a component does not deploy, and the green light comes on, its igniter is defective. Go to Disposal of Damaged Components.
- During deployment, the airbags can become hot enough to burn you. Wait for 30 minutes after deployment before touching the airbags.

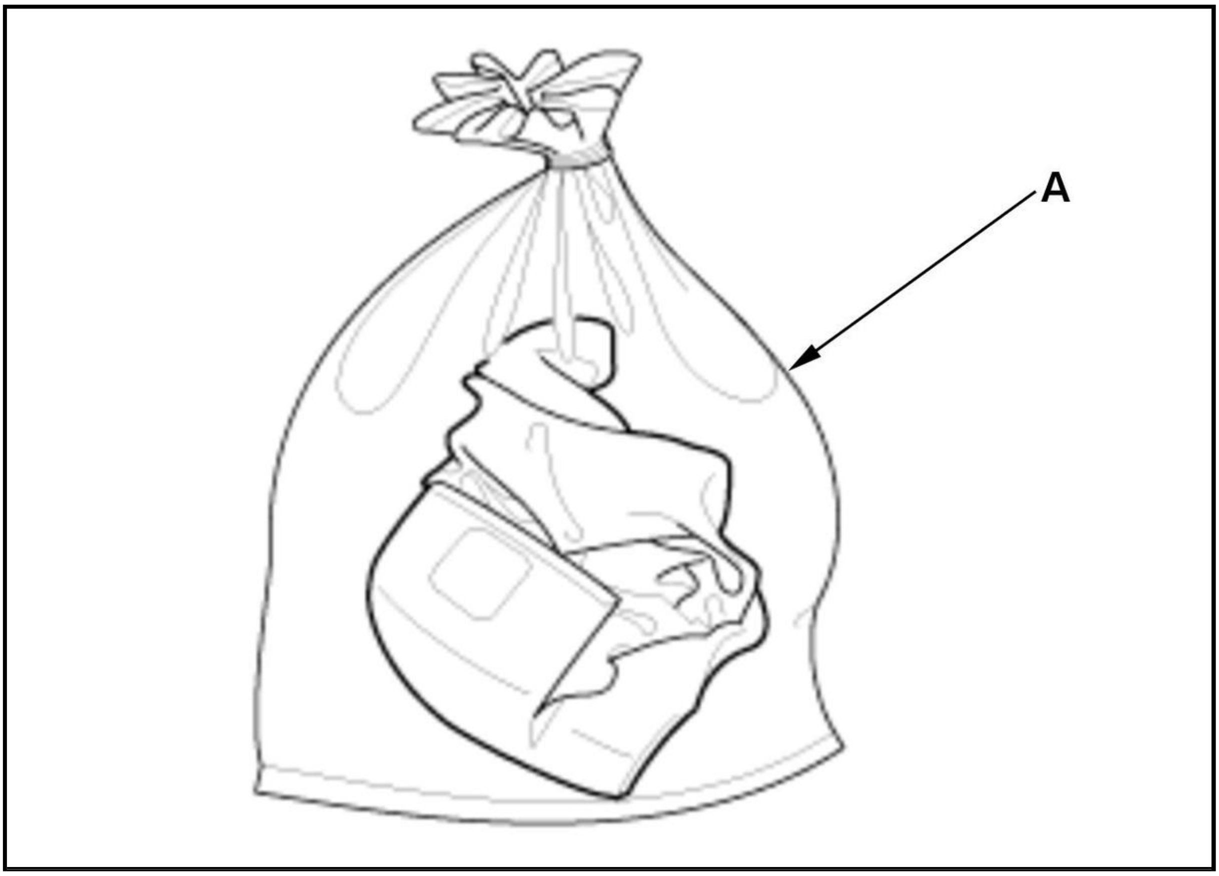

20. Dispose of the complete airbag or tensioner. No part of it can be reused. Place it in a sturdy plastic bag (A), and seal it securely. Dispose of the deployed airbag according to your local regulations.

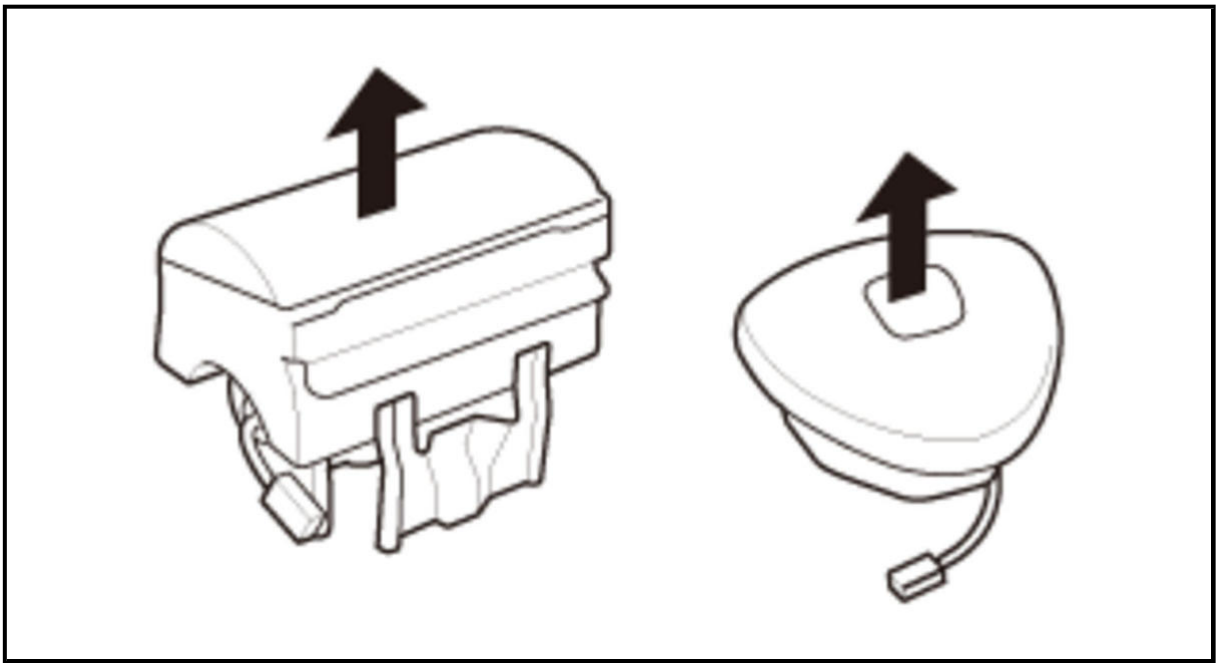

Deploying Components Out of the Vehicle

If an intact airbag or tensioner has been removed from a scrapped vehicle, or has been found defective or damaged during transit, storage, or service, it should be deployed as follows:

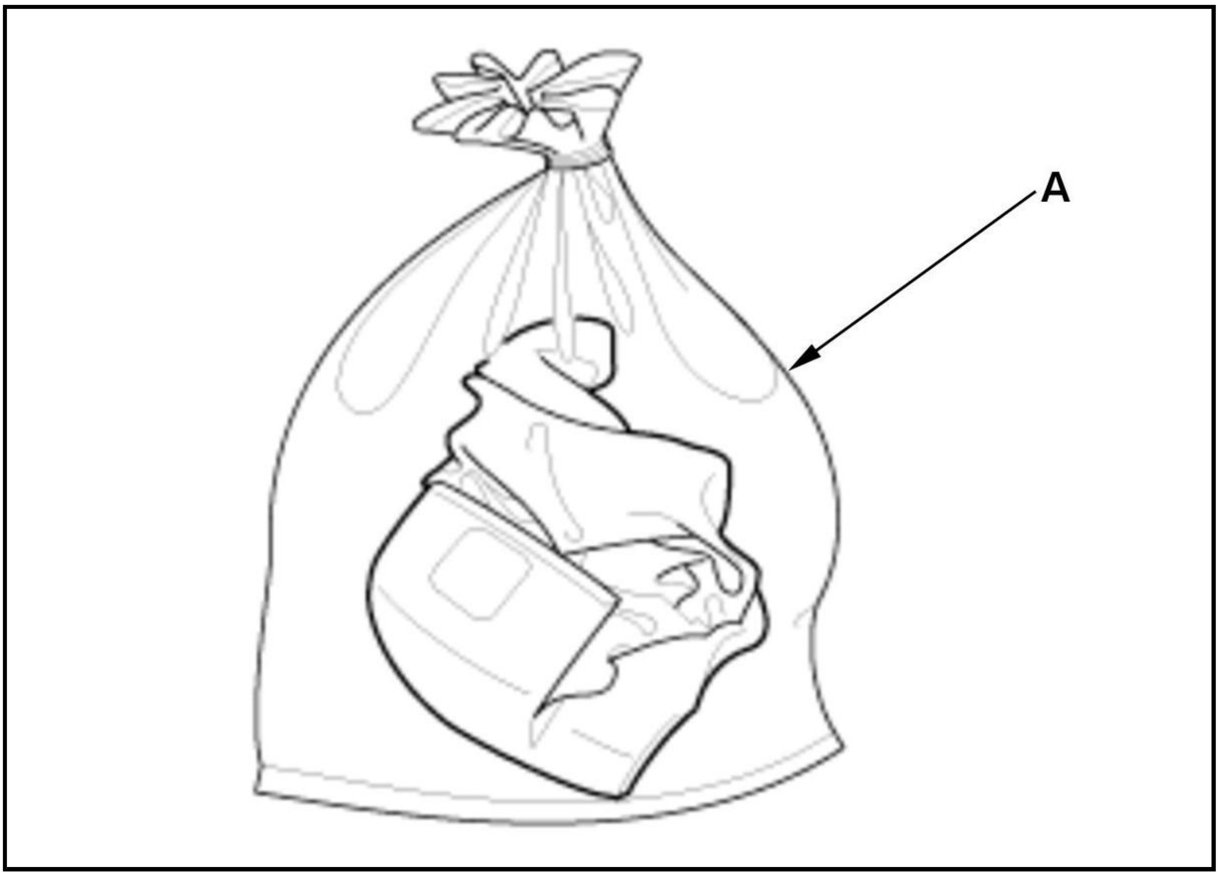

1. Confirm that the deployment tool is functioning properly by following the check procedure Deploying Airbags in the Vehicle on the tool label.

2. Position the airbag face up, outdoors, on flat ground, at least 10 m (33 ft) from any obstacles or people.

3. Cut off each connector and strip the ends of the wires. To prevent inflators from being deployed unexpectedly, twist each pair of wires coming from each inflator to have each inflator short-circuited.

4. Select one pair of wires and untwist the wires. Clip an alligator clip to each end of the wires, so that the inflator is ready to be deployed.

NOTE: Since the driver's and front passenger's airbags have dual inflators, make sure to twist the correct pair of wires to have each inflator short-circuited (with dual inflators).

5. Connect a 12 volt battery to the tool.

- If the green light on the tool comes on, the igniter circuit is defective and cannot deploy the component. Go to Disposal of Damaged Components.
- If the red light on the tool comes on, the component is ready to be deployed.

6. Push the tool's deployment switch. The airbags and tensioners should deploy (deployment is both highly audible and visible: A loud noise and rapid inflation of the bag, followed by slow deflation).

- If the components deploy and the green light on the tool comes on, continue with this procedure.
- If a component does not deploy, and the green light comes on, its igniter is defective. Go to Disposal of Damaged Components.
- During deployment, the airbags can become hot enough to burn you. Wait for 30 minutes after deployment before touching the airbags.

7. Dispose of the complete airbag or tensioner. No part of it can be reused. Place it in a sturdy plastic bag (A), and seal it securely. Dispose of the deployed airbag according to your local regulations.

Disposal of Damaged Components

1. If installed in a vehicle, follow the removal procedure for **the driver's airbag** , **the front passenger's airbag** , **the side airbag** , **the side curtain airbag** , **seat belt outer lap tensioner** , and **the front seat belt tensioner** .

2. In all cases, make a short circuit by cutting, stripping, and twisting together the two inflator wires.

NOTE: Since the driver's and front passenger's airbags have dual inflators, make sure to twist the correct pair of wires to have each inflator short-circuited (with dual inflators).

3. Package the component in exactly the same packaging that the new replacement part came in.

4. Mark the outside of the box DAMAGED AIRBAG NOT DEPLOYED, DAMAGED SIDE AIRBAG NOT DEPLOYED, DAMAGED SIDE CURTAIN AIRBAG NOT DEPLOYED, DAMAGED DRIVER'S SEAT BELT OUTER LAP TENSIONER NOT DEPLOYED, or DAMAGED SEAT BELT TENSIONER NOT DEPLOYED so it does not get confused with your parts stock.

5. Contact your Honda District Parts and Service Manager for instructions on how and where to return it for disposal.

SRS PRECAUTIONS AND PROCEDURES

General Precautions

NOTE:

- Some systems store data in memory that is lost when the 12 volt battery is disconnected. Before disconnecting the 12 volt battery, **refer to 12 volt battery Terminal Disconnection and Reconnection** .

Please read the following precautions carefully before servicing the SRS, or the airbags could accidentally deploy and cause damage or injuries.

- Except when doing electrical inspections that require 12 volt battery power, always turn the vehicle to the OFF (LOCK) mode, disconnect the negative cable from the 12 volt battery, then wait at least 3 minutes before starting work.

NOTE: The SRS memory is not erased even if the vehicle is turned to the OFF (LOCK) mode, or if the 12 volt battery cables are disconnected from the 12 volt battery.

- Use replacement parts which are manufactured to the same standards and quality as the original parts. Do not install used SRS parts. Use only new parts when making SRS repairs.
- Carefully inspect any SRS part before you install it. Do not install any part that shows signs of being dropped or improperly handled, such as dents, cracks or deformation.

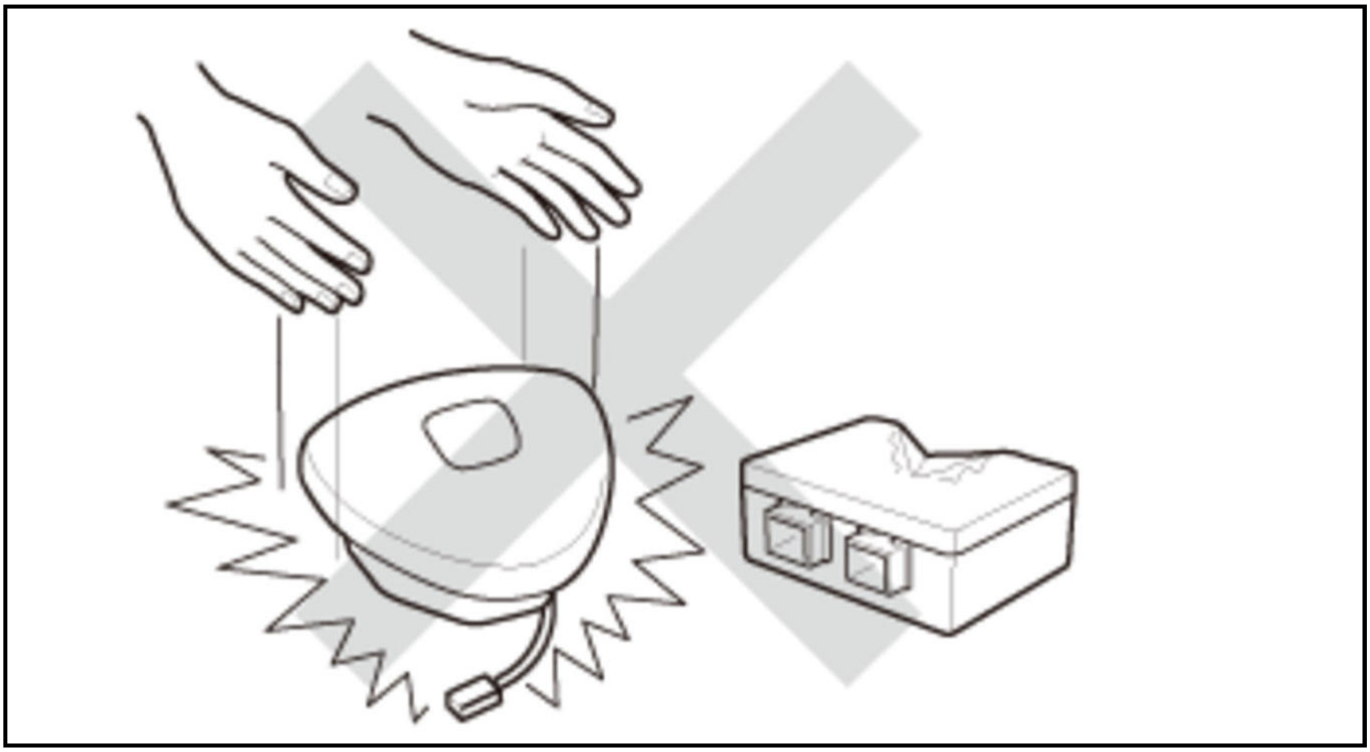

- Before disconnecting the SRS unit connectors, always disconnect the appropriate SRS parts connectors.
- Use only a digital multimeter to check the system. If it is not a Honda multimeter, make sure its output is 10 mA (0.01 A) or less when switched to the lowest value in the ohmmeter range. A tester with a higher output could cause accidental deployment and possible injury.
- Do not put objects on the front passenger's airbag.

Steering-Related Precautions

Cable Reel Alignment

- Misalignment of the cable reel could cause an open in the wiring, making the SRS, remote steering wheel controls, or the horn inoperative. Center the cable reel whenever you do the following .
-
    - -

      Installation of the steering wheel.

    - -

      Installation of the cable reel.

    - -

      Installation of the steering column.

    - -

Other steering-related adjustment or installation.

- Do not disassemble the cable reel.
- Do not apply grease to the cable reel.
- If the cable reel shows any signs of damage, replace it with a new one. For example, if the cable reel does not rotate smoothly, replace it.

Airbag Handling and Storage

Do not disassemble an airbag. It has no serviceable parts. Once an airbag has been deployed, it cannot be repaired or reused.

For temporary storage of an airbag during service, observe the following precautions.

- Store the removed airbag with the pad surface up. Never put anything on the airbag.

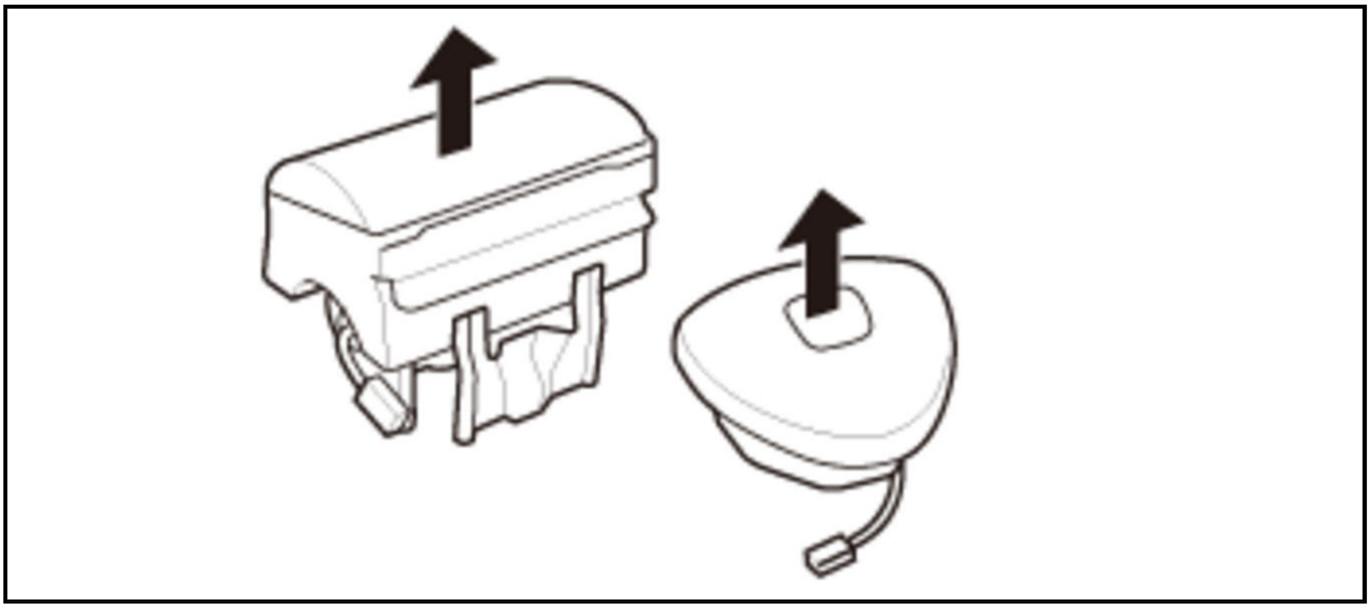

- To prevent damage to the airbag, keep it away from any oil, grease, detergent, or water.

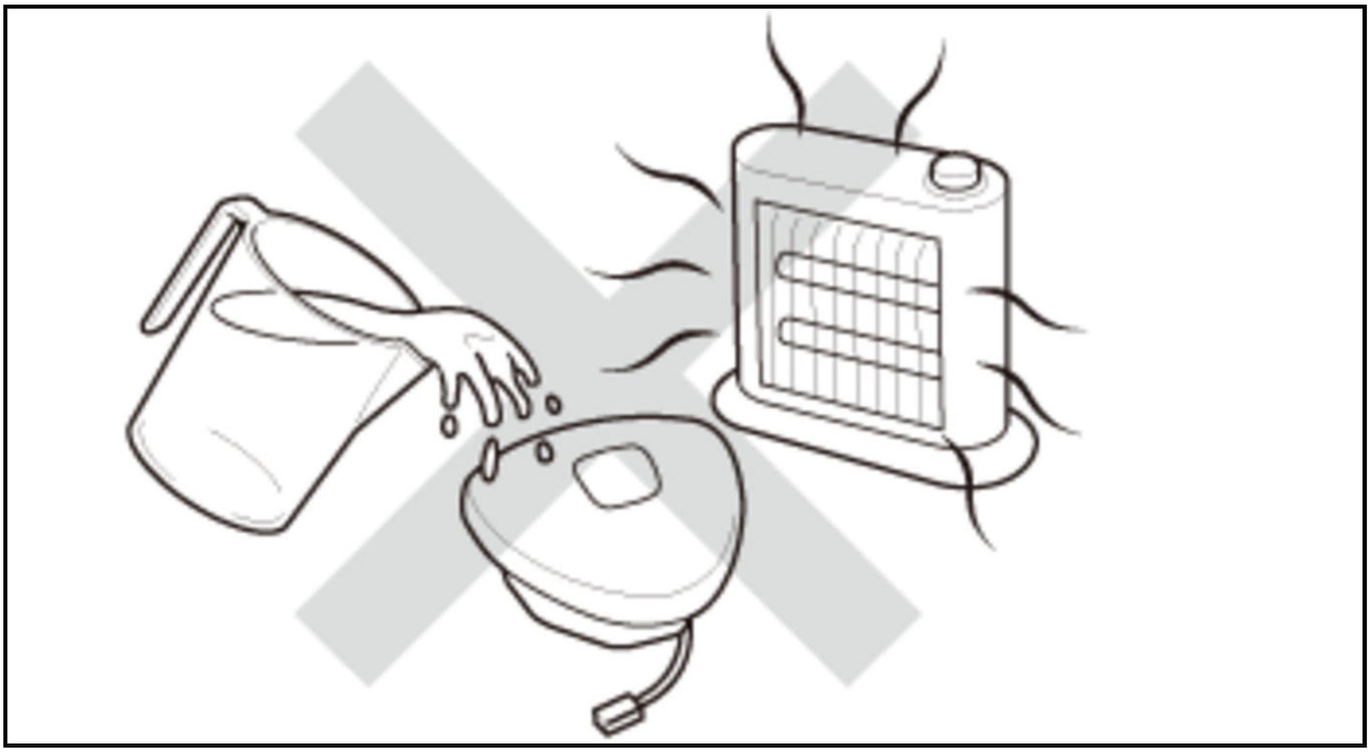

- Store the removed airbag on a secure, flat surface away from any high heat source (exceeding 200 deg.F (93 deg.C)).

- Never do electrical tests on the airbags, such as measuring resistance.
- Do not position yourself in front of the airbag during removal, inspection, or replacement.

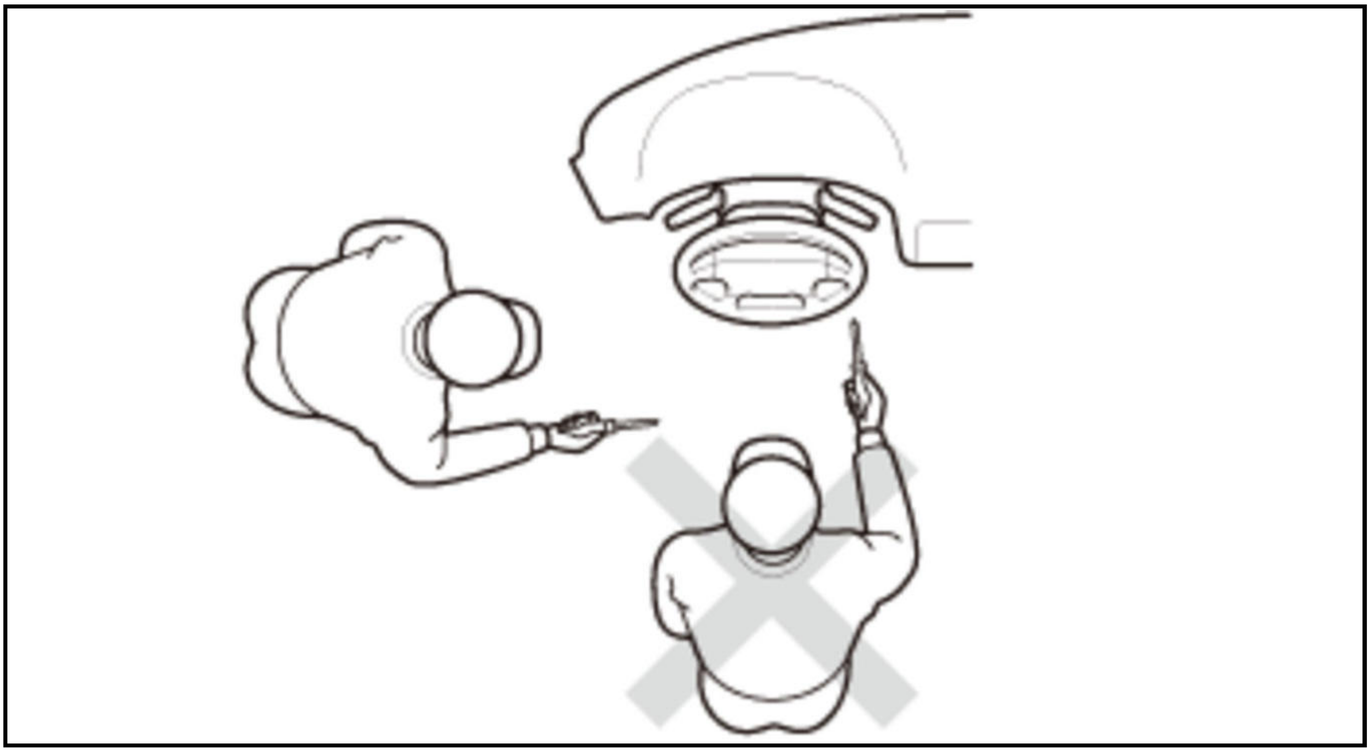

- For proper disposal of a damaged airbag or tensioner, **refer to Airbag and Tensioner Disposal**.

SRS Unit, Front and Side Impact Sensors, Driver's Seat Position Sensor, and Front Passenger's Weight Sensors

NOTE: Some systems store data in memory that is lost when the 12 volt battery is disconnected. Before disconnecting the 12 volt battery, **refer to 12 volt battery Terminal Disconnection and Reconnection** .

- Turn the vehicle to the OFF (LOCK) mode. Disconnect the negative cable from the 12 volt battery, then wait at least 3 minutes before starting installation or replacement of the SRS unit, or disconnecting the connectors from the SRS unit.
- Be careful not to bump or impact the SRS unit, the front impact sensors, or the side impact sensors when the vehicle is in the ON mode, or for at least 3 minutes after the vehicle is turned to the OFF (LOCK) mode.
- Do not reconnect any connectors to the SRS unit until it is fully installed, including torquing the bolts.
- During installation or replacement, be careful not to bump (by impact wrench, hammer, etc.) the area around the SRS unit, the front impact sensors, or the side impact sensors. The airbags could accidentally deploy and cause damage or injury.

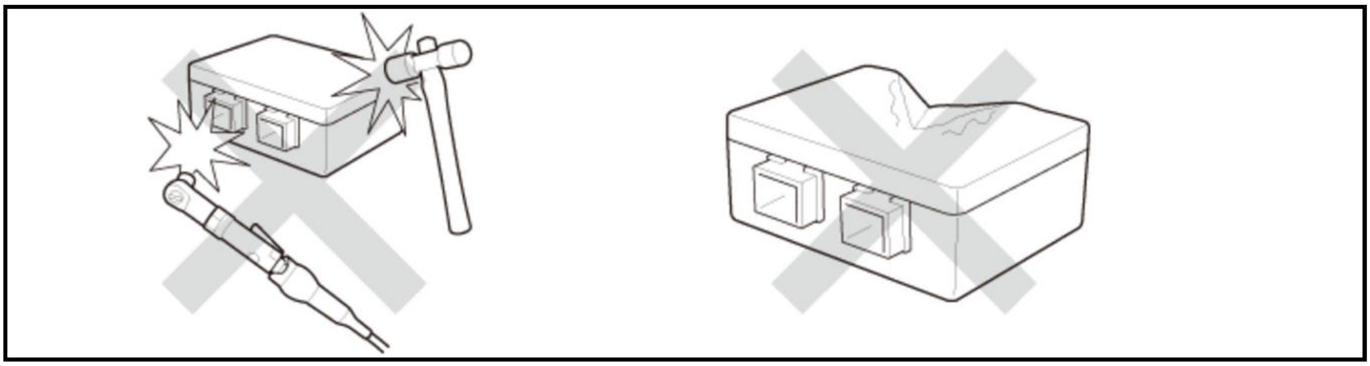

- After a collision where the front airbags, the side airbags, the side curtain airbags, the front seat belt tensioners, or the seat belt outer lap tensioner deploy, **go to Component Replacement/Inspection After Deployment**. After a collision where the airbags do not deploy, inspect for any damage or any deformation on the SRS unit, the front impact sensors, and the side impact sensors. If there is any damage, replace the SRS unit and/or the sensors. Replace all damaged parts.

- Do not disassemble the SRS unit, the front impact sensors, the side impact sensors, the driver's seat position sensor, or the front passenger's weight sensors.
- Always install the SRS unit, driver's seat position sensor, and the all impact sensors with the new bolts to the specified torque.
- Do not spill water or oil on the SRS unit or any of the sensors.

Wiring Precautions

Some of the SRS wiring can be identified by a special yellow outer covering, and the SRS connectors can be identified by their yellow color. Observe the following instructions.

- Never attempt to modify, splice, or repair SRS wiring. If there is an open or damage to the SRS wiring, replace the harness.

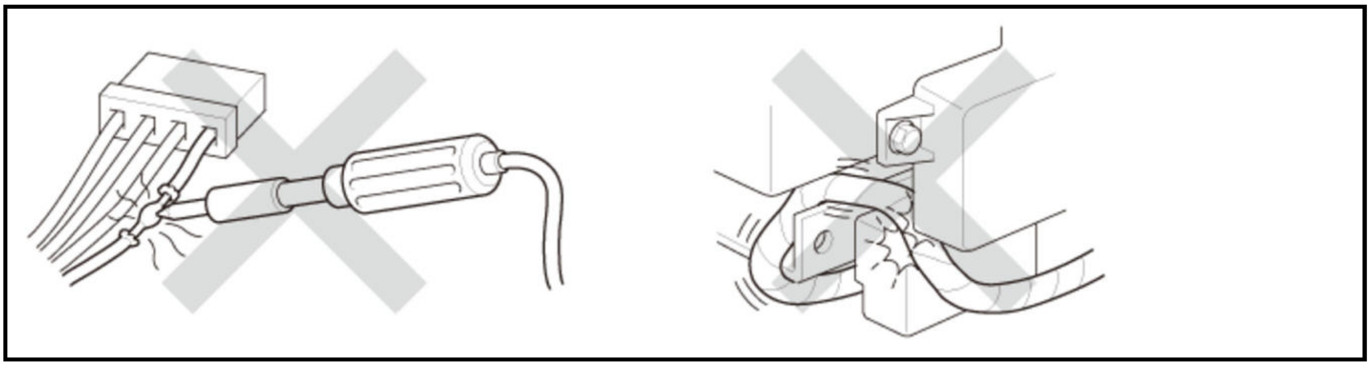

- Be sure to install the harness wires so they do not get pinched or interfere with other parts.
- Make sure all SRS ground locations are clean, and the grounds are securely fastened for optimum metal-to-metal contact. Poor grounds can cause intermittent problems that are difficult to diagnose.
- Do not use any silicone based cleaners or lubricants on any SRS connectors or terminals.

Lever-Locked Connector

The SRS unit connectors have a lever lock.

SRS Unit Connectors

Disconnecting/Connecting

- To release the lock (A), pull the lever (B) while pushing the lock on the outside of the connector, then pull out the connector (C).
- To reconnect the connector (D), push in on the connector. As the connector is pressed in, the lever (E) moves to the locked position.

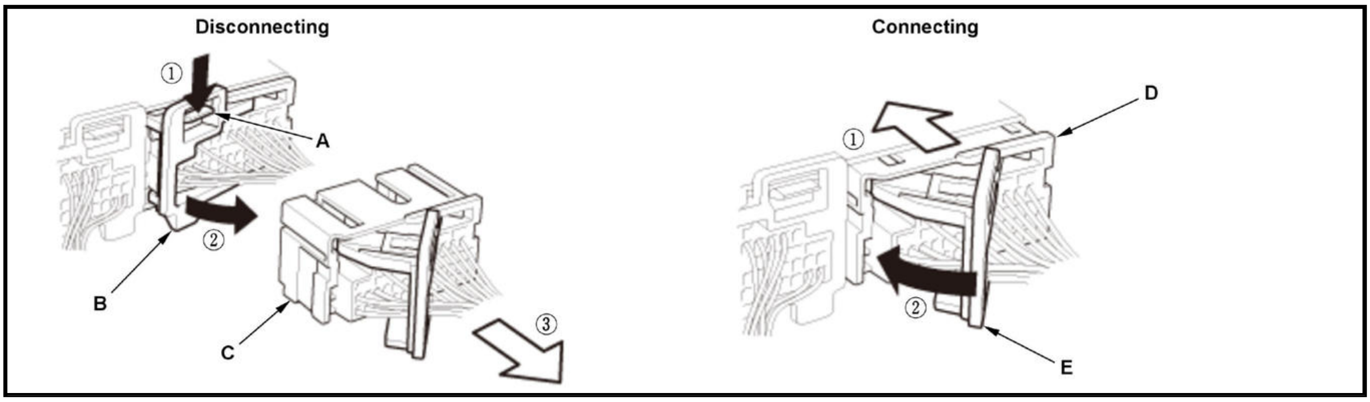

Spring-Loaded Lock Connector

Some SRS connectors have a spring-loaded lock.

Driver's Airbag Connector/Side Curtain Airbag Connector/Front Seat Belt Tensioner Connector

Disconnecting/Connecting

- Pull out on the locking tabs (A) to disconnect the connector (B). Be careful not to damage the connector.
- Align the guide tab (C) of the connector (D) with the ditch of the other side, and then connect the connector. Be careful not to damage the connector.

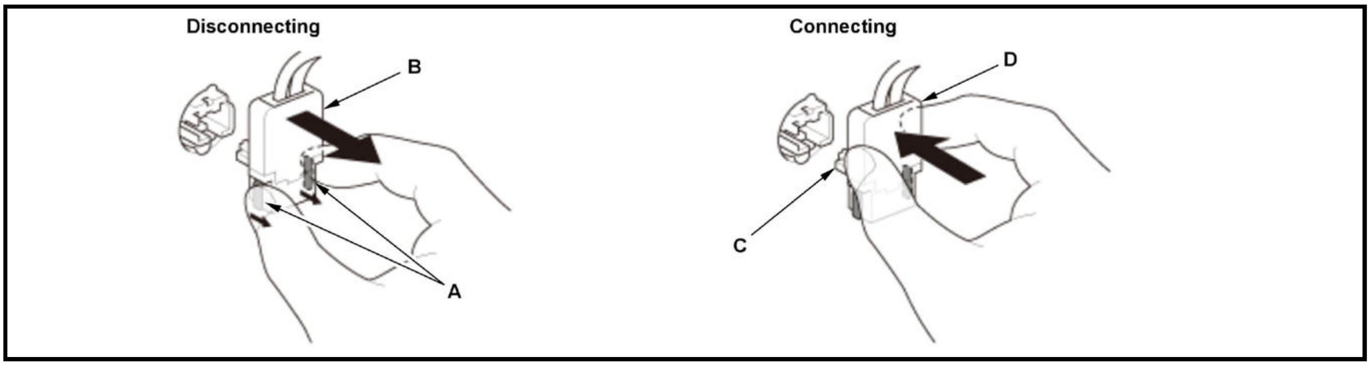

Front Passenger's Airbag Connector/Front Passenger's Side Airbag Connector

Disconnecting/Connecting

- To release the lock, pull the spring-loaded sleeve (A) toward the stop (B) while holding the opposite half of the connector, then pull the connector halves apart. Be sure to pull on the sleeve and not on the connector.
- To reconnect, hold the pawl-side connector, and press on the back of the sleeve-side connector in the direction shown. As the two connector halves are pressed together, the sleeve (C) is pushed back by the pawl (D). Do not touch the sleeve.

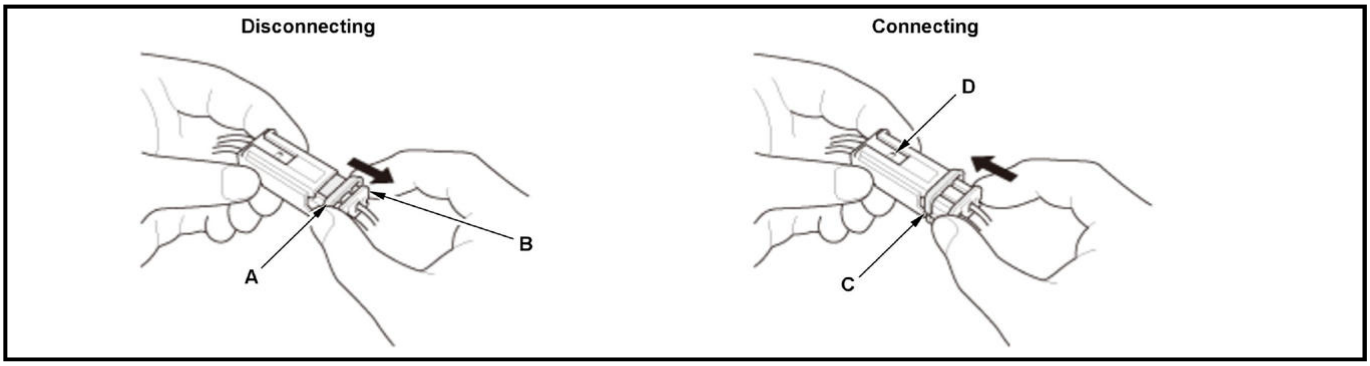

Driver's Side Airbag Connector/Seat Belt Outer Lap Tensioner Connector

Disconnecting/Connecting

- To release the lock, pull the spring-loaded sleeve (A) toward the stop (B) while holding the opposite half of the connector, then pull the connector halves apart. Be sure to pull on the sleeve and not on the connector half.
- Hold both connector halves, and press them firmly together until the projection (C) of the sleeve-side connector clicks.

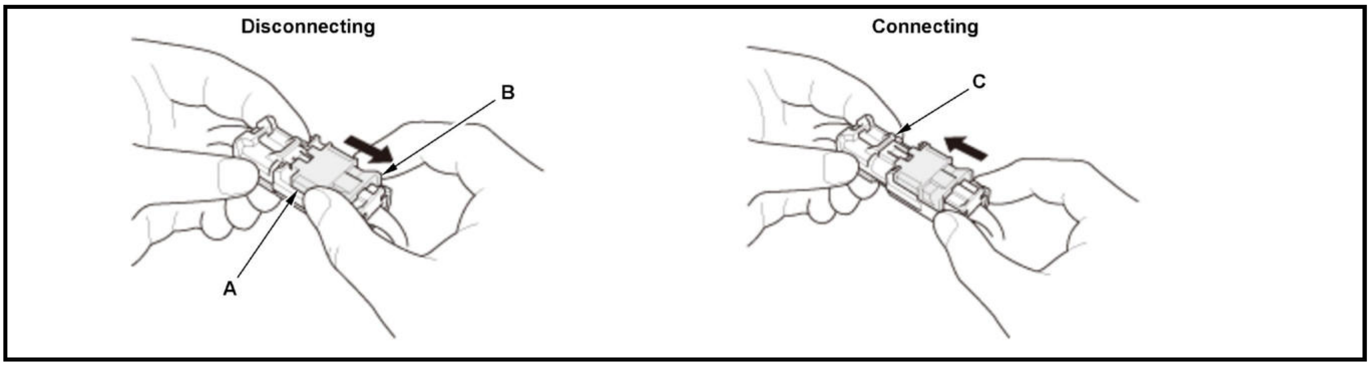
Disconnecting
B
A
Connecting
C

Side Curtain Airbags

The A-pillar trim and the quarter pillar trim with side curtain airbags have a "SIDE CURTAIN AIRBAG" mark.

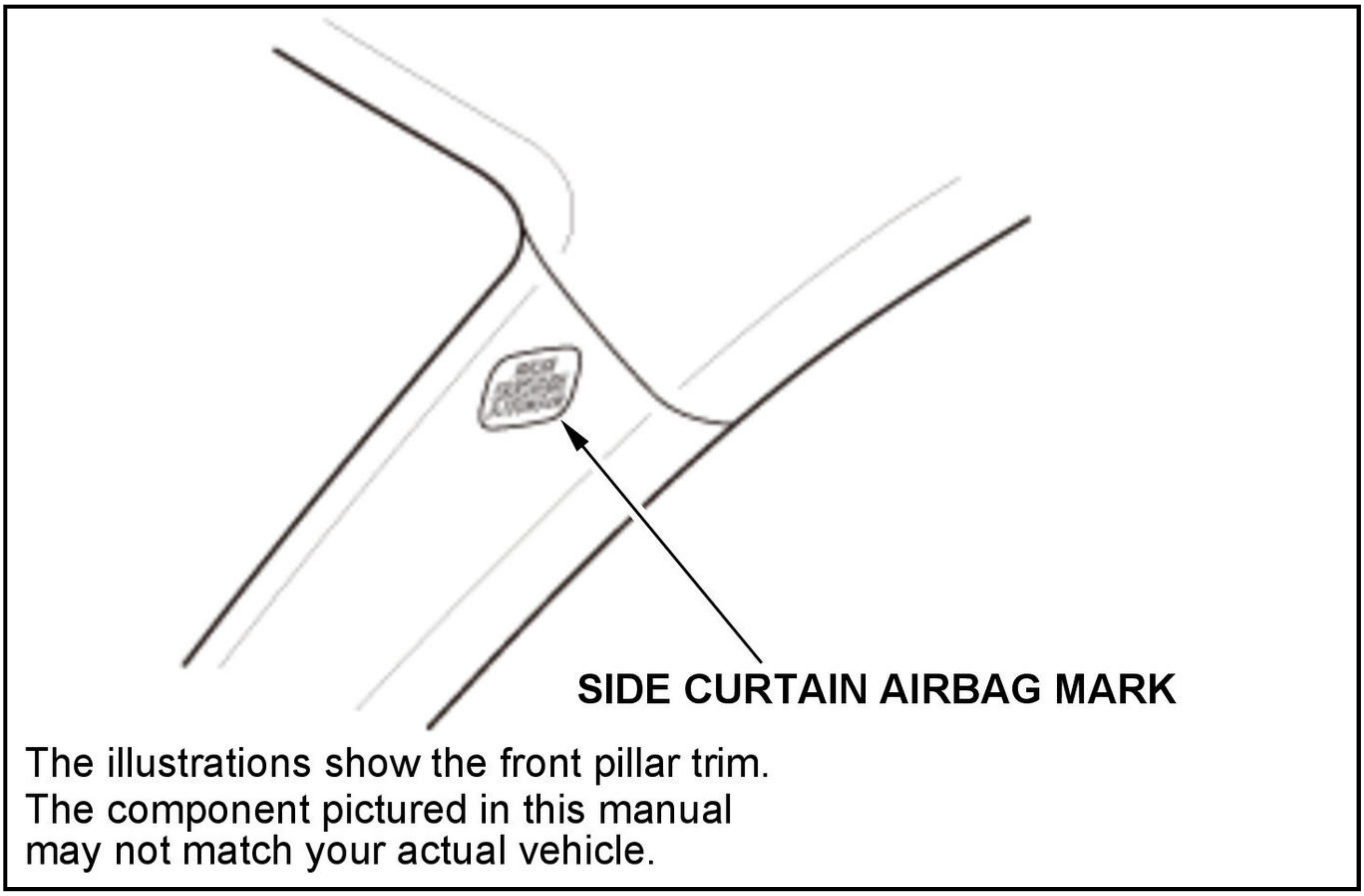
SIDE CURTAIN AIRBAG MARK
The illustrations show the front pillar trim.
The component pictured in this manual
may not match your actual vehicle.

The side curtain airbag module assembly is a long, jointed part containing an inflator, a flexible bag, and brackets. When removing or installing the side curtain airbag assembly, never:

- Handle the flexible bag.
- Drop the airbag assembly.
- Cut, tear, or unwrap the tape strips.

Front Seats With Side Airbags

Front seats with side airbags have a "SIDE AIRBAG" label on the seat-back.

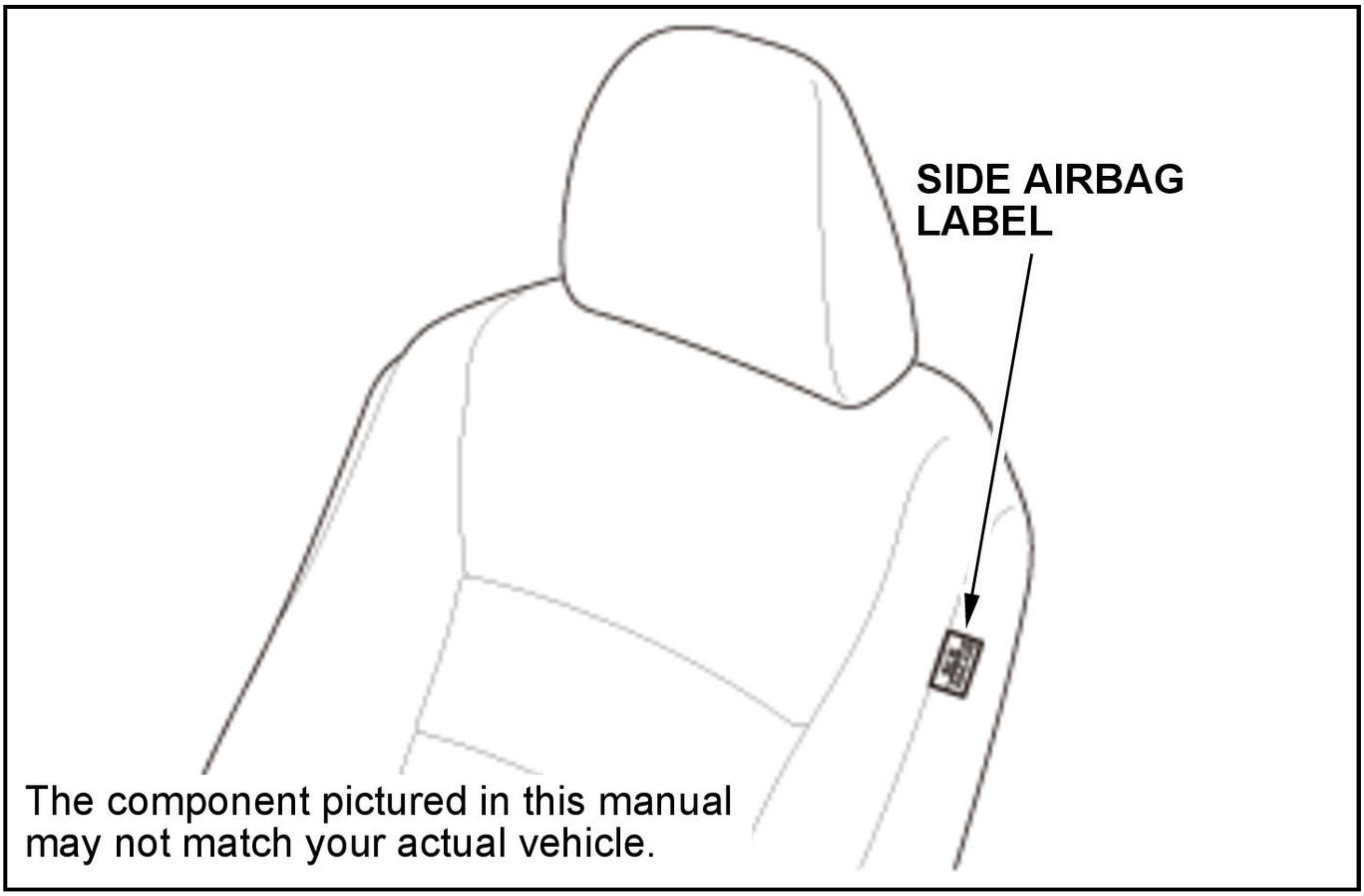
SIDE AIRBAG LABEL
The component pictured in this manual may not match your actual vehicle.

- Clean the seats with a damp cloth. Do not soak the seats with liquid. Do not spray steam on the seats.
- Do not repair a torn or frayed seat-back cover/pad. Replace the seat-back cover/pad if it is damaged.
- After a collision where the side airbag was deployed, replace the side airbag and the seat frame with the new parts. If the seat-back cover is split, it must be replaced. **Refer to Component Replacement/Inspection After Deployment**.
- Never put aftermarket accessories on the seats (covers, pads, seat heaters, lights, etc.).

YAW RATE-ACCELERATION NEUTRAL POSITION MEMORIZATION

Procedure

NOTE:

- The VSA modulator-control unit receives the yaw rate and the acceleration information from the SRS unit. This information is corrected by the neutral position learning of VSA modulator-control unit, performs the VSA control. Follow the procedures of the VSA system for more details.
- When you replace or update the SRS unit, memorize the yaw rate-acceleration neutral position.

1. **VSA Sensor Neutral Position - Memorize**

DTC TROUBLESHOOTING INDEX

SRS DTC TROUBLESHOOTING INDEX(KA/KC)

DTC	Detection Item
B0001-11	Short to ground in the driver's airbag first inflator
B0001-12	Short to power in the driver's airbag first inflator
B0001-13	Open or increased resistance in the driver's airbag first inflator
B0001-1A	Decreased resistance in the driver's airbag first inflator
B0001-2B	Short to another wire harness in the driver's airbag first inflator

DTC	Detection Item
B0002-11	Short to ground in the driver's airbag second inflator
B0002-12	Short to power in the driver's airbag second inflator
B0002-13	Open or increased resistance in the driver's airbag second inflator
B0002-1A	Decreased resistance in the driver's airbag second inflator
B0002-2B	Short to another wire harness in the driver's airbag second inflator
B0010-11	Short to ground in the front passenger's airbag first inflator
B0010-12	Short to power in the front passenger's airbag first inflator
B0010-13	Open or increased resistance in the front passenger's airbag first inflator
B0010-1A	Decreased resistance in the front passenger's airbag first inflator
B0010-2B	Short to another wire harness in the front passenger's airbag first inflator
B0011-11	Short to ground in the front passenger's airbag second inflator
B0011-12	Short to power in the front passenger's airbag second inflator
B0011-13	Open or increased resistance in the front passenger's airbag second inflator
B0011-1A	Decreased resistance in the front passenger's airbag second inflator
B0011-2B	Short to another wire harness in the front passenger's airbag second inflator
B0020-11	Short to ground in the driver's side airbag inflator
B0020-12	Short to power in the driver's side airbag inflator
B0020-13	Open or increased resistance in the driver's side airbag inflator
B0020-1A	Decreased resistance in the driver's side airbag inflator
B0020-2B	Short to another wire harness in the driver's side airbag first inflator
B0021-11	Short to ground in the left side curtain airbag first inflator
B0021-12	Short to power in the left side curtain airbag first inflator
B0021-13	Open or increased resistance in the left side curtain airbag first inflator
B0021-1A	Decreased resistance in the left side curtain airbag first inflator
B0021-2B	Short to another wire harness in the left side curtain airbag first inflator
B0028-11	Short to ground in the front passenger's side airbag inflator
B0028-12	Short to power in the front passenger's side airbag inflator
B0028-13	Open or increased resistance in the front passenger's side airbag inflator
B0028-1A	Decreased resistance in the front passenger's side airbag inflator
B0028-2B	Short to another wire harness in the front passenger's side airbag inflator
B0029-11	Short to ground in the right side curtain airbag first inflator
B0029-12	Short to power in the right side curtain airbag first inflator
B0029-13	Open or increased resistance in the right side curtain airbag first inflator
B0029-1A	Decreased resistance in the right side curtain airbag first inflator
B0029-2B	Short to another wire harness in the right side curtain airbag first inflator
B0050-11	Short or decreased resistance in the driver's seat belt buckle switch
B0050-13	Open or increased resistance in the driver's seat belt buckle switch
B0050-2B	Short to another wire harness in the driver's seat belt buckle switch
B0052-11	Short or decreased resistance in the front passenger's seat belt buckle switch
B0052-13	Open or increased resistance in the front passenger's seat belt buckle switch
B0052-2B	Short to another wire harness in the front passenger's seat belt buckle switch
B0070-11	Short to ground in the driver's seat belt tensioner
B0070-12	Short to power in the driver's seat belt tensioner
B0070-13	Open or increased resistance in the driver's seat belt tensioner
B0070-1A	Decreased resistance in the driver's seat belt tensioner
B0070-2B	Short to another wire harness in the driver's seat belt tensioner

DTC	Detection Item
B0072-11	Short to ground in the front passenger's seat belt tensioner
B0072-12	Short to power in the front passenger's seat belt tensioner
B0072-13	Open or increased resistance in the front passenger's seat belt tensioner
B0072-1A	Decreased resistance in the front passenger's seat belt tensioner
B0072-2B	Short to another wire harness in the front passenger's seat belt tensioner
B0079-11	Short to ground in the driver's seat belt outer lap tensioner
B0079-12	Short to power in the driver's seat belt outer lap tensioner
B0079-13	Open or increased resistance in the driver's seat belt outer lap tensioner
B0079-1A	Decreased resistance in the driver's seat belt outer lap tensioner
B0079-2B	Short to another wire harness in the driver's seat belt outer lap tensioner
B007A-11	Short to ground in the front passenger's seat belt outer lap tensioner
B007A-12	Short to power in the front passenger's seat belt outer lap tensioner
B007A-13	Open or increased resistance in the front passenger's seat belt outer lap tensioner
B007A-1A	Decreased resistance in the front passenger's seat belt outer lap tensioner
B007A-2B	Short to another wire harness in the front passenger's seat belt outer lap tensioner
B0082-11	Short to Ground in the Selectable Energy Absorption Device of the Front Passenger's Seat Belt Tensioner
B0082-12	Short to Power in the Selectable Energy Absorption Device of the Front Passenger's Seat Belt Tensioner
B0082-13	Open or Increased Resistance in the Selectable Energy Absorption Device of the Front Passenger's Seat Belt Tensioner
B0082-1A	Decreased Resistance in the Selectable Energy Absorption Device of the Front Passenger's Seat Belt Tensioner
B0082-2B	Short to Another Wire Harness in the Selectable Energy Absorption Device of the Front Passenger's Seat Belt Tensioner
B0090-4A	Internal failure of the left front impact sensor
B0090-87	No signal from the left front impact sensor
B0090-92	Internal failure of the left front impact sensor
B0091-4A	Internal failure of the left side impact sensor (first)
B0091-87	No signal from the left side impact sensor (first)
B0091-92	Internal failure of the left side impact sensor (first)
B0092-4A	Internal failure of the left side impact sensor (second)
B0092-87	No signal from the left side impact sensor (second)
B0092-92	Internal failure of the left side impact sensor (second)
B0095-4A	Internal failure of the right front impact sensor
B0095-87	No signal from the right front impact sensor
B0095-92	Internal failure of the right front impact sensor
B0096-4A	Internal failure of the right side impact sensor (first)
B0096-87	No signal from the right side impact sensor (first)
B0096-92	Internal failure of the right side impact sensor (first)
B0097-4A	Internal failure of the right side impact sensor (second)
B0097-87	No signal from the right side impact sensor (second)
B0097-92	Internal failure of the right side impact sensor (second)
B00A0-54	Front passenger's weight sensor not calibrated
B00B5-11	Short or decreased resistance in the driver's seat position sensor
B00B5-13	Open or increased resistance in the driver's seat position sensor
B00B5-2B	Short to another wire harness in the driver's seat position sensor

DTC	Detection Item
B00C0-16	Internal failure of the front passenger's weight sensor (front inner side)
B00C0-4A	Different supplier ID/function ID of the front passenger's weight sensor (front inner side)
B00C0-54	Different serial ID of the front passenger's weight sensor (front inner side)
B00C0-87	No signal from the front passenger's weight sensor (front inner side)
B00C0-96	Internal failure of the front passenger's weight sensor (front inner side)
B00C2-16	Internal failure of the front passenger's weight sensor (rear inner side)
B00C2-4A	Different supplier ID/function ID of the front passenger's weight sensor (rear inner side)
B00C2-54	Different Serial ID of the front passenger's weight sensor (rear inner side)
B00C2-87	No signal from the front passenger's weight sensor (rear inner side)
B00C2-96	Internal failure of the front passenger's weight sensor (rear inner side)
B00D5-14	Open or short to ground in the front passenger's airbag cutoff indicator
B00D5-17	Short to power in the front passenger's airbag cutoff indicator
B2800-49	Internal failure of the SRS unit
B2801-49	Internal failure of the SRS unit
B2802-49	Internal failure of the SRS unit
B2840-13	SRS unit connector A not properly installed
B2841-13	SRS unit connector B not properly installed
C0061-96	Internal failure of the SRS unit
C0063-96	Internal failure of the SRS unit
U0122-00	Lost communication with the VSA modulator-control unit (wheel speed sensor signal error)
U3000-49	Internal failure of the SRS unit
U3000-51	SRS unit programming error

REWRITE

SRS UNIT UPDATE

Procedure

1. SRS Unit - Update
2. **Yaw Rate-Acceleration Neutral Position - Memorize**
3. **Front Passenger's Weight Sensor - Initialize**

CIRCUIT DIAGRAM

SRS CIRCUIT DIAGRAM (KA/KC)

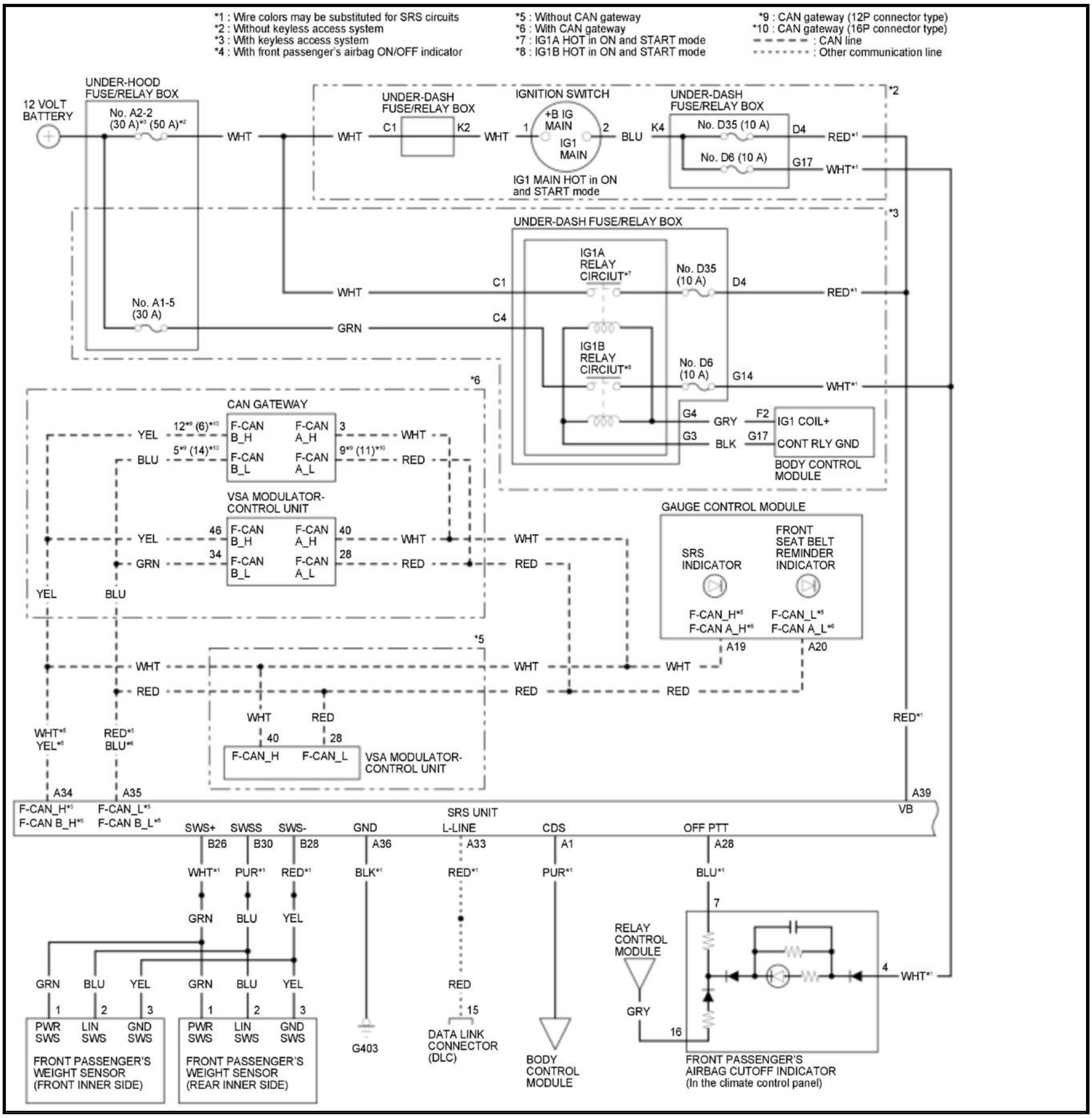
*1 : Wire colors may be substituted for SRS circuits
*2 : Without keyless access system
*3 : With keyless access system
*4 : With front passenger's airbag ON/OFF indicator
*5 : Without CAN gateway
*6 : With CAN gateway
*7 : IG1A HOT in ON and START mode
*8 : IG1B HOT in ON and START mode
*9 : CAN gateway (12P connector type)
*10 : CAN gateway (16P connector type)
: CAN line
: Other communication line
12 VOLT BATTERY
UNDER-HOOD FUSE/RELAY BOX
No. A2-2 (30 A)*3 (50 A)*2
WHT
UNDER-DASH FUSE/RELAY BOX
C1
K2
IGNITION SWITCH
+B IG MAIN
IG1 MAIN
1
2
BLU
K4
No. D35 (10 A)
D4
RED*1
No. D6 (10 A)
G17
WHT*1
IG1 MAIN HOT in ON and START mode
*2
*3
UNDER-DASH FUSE/RELAY BOX
IG1A RELAY CIRCUIT*7
No. D35 (10 A)
No. A1-5 (30 A)
GRN
C4
IG1B RELAY CIRCUIT*8
No. D6 (10 A)
G14
G4
GRY
F2
IG1 COIL+
G3
BLK
G17
CONT RLY GND
BODY CONTROL MODULE
*6
CAN GATEWAY
YEL
12*9 (6)*10
F-CAN B_H
F-CAN A_H
3
BLU
5*9 (14)*10
F-CAN B_L
F-CAN A_L
9*9 (11)*10
RED
VSA MODULATOR-CONTROL UNIT
46
F-CAN B_H
F-CAN A_H
40
34
F-CAN B_L
F-CAN A_L
28
GAUGE CONTROL MODULE
SRS INDICATOR
FRONT SEAT BELT REMINDER INDICATOR
F-CAN_H*5
F-CAN A_H*6
F-CAN_L*5
F-CAN A_L*6
A19
A20
*5
WHT
RED
40
28
F-CAN_H
F-CAN_L
VSA MODULATOR-CONTROL UNIT
WHT*5
YEL*6
RED*5
BLU*6
RED*1
A34
A35
A39
F-CAN_H*5
F-CAN B_H*6
F-CAN_L*5
F-CAN B_L*6
SRS UNIT
VB
SWS+
SWSS
SWS-
GND
L-LINE
CDS
OFF PTT
B26
B30
B28
A36
A33
A1
A28
WHT*1
PUR*1
RED*1
BLK*1
RED*1
PUR*1
BLU*1
GRN
BLU
YEL
RELAY CONTROL MODULE
GRY
7
4
WHT*1
16
RED
15
1
2
3
PWR SWS
LIN SWS
GND SWS
FRONT PASSENGER'S WEIGHT SENSOR (FRONT INNER SIDE)
FRONT PASSENGER'S WEIGHT SENSOR (REAR INNER SIDE)
G403
DATA LINK CONNECTOR (DLC)
BODY CONTROL MODULE
FRONT PASSENGER'S AIRBAG CUTOFF INDICATOR (In the climate control panel)

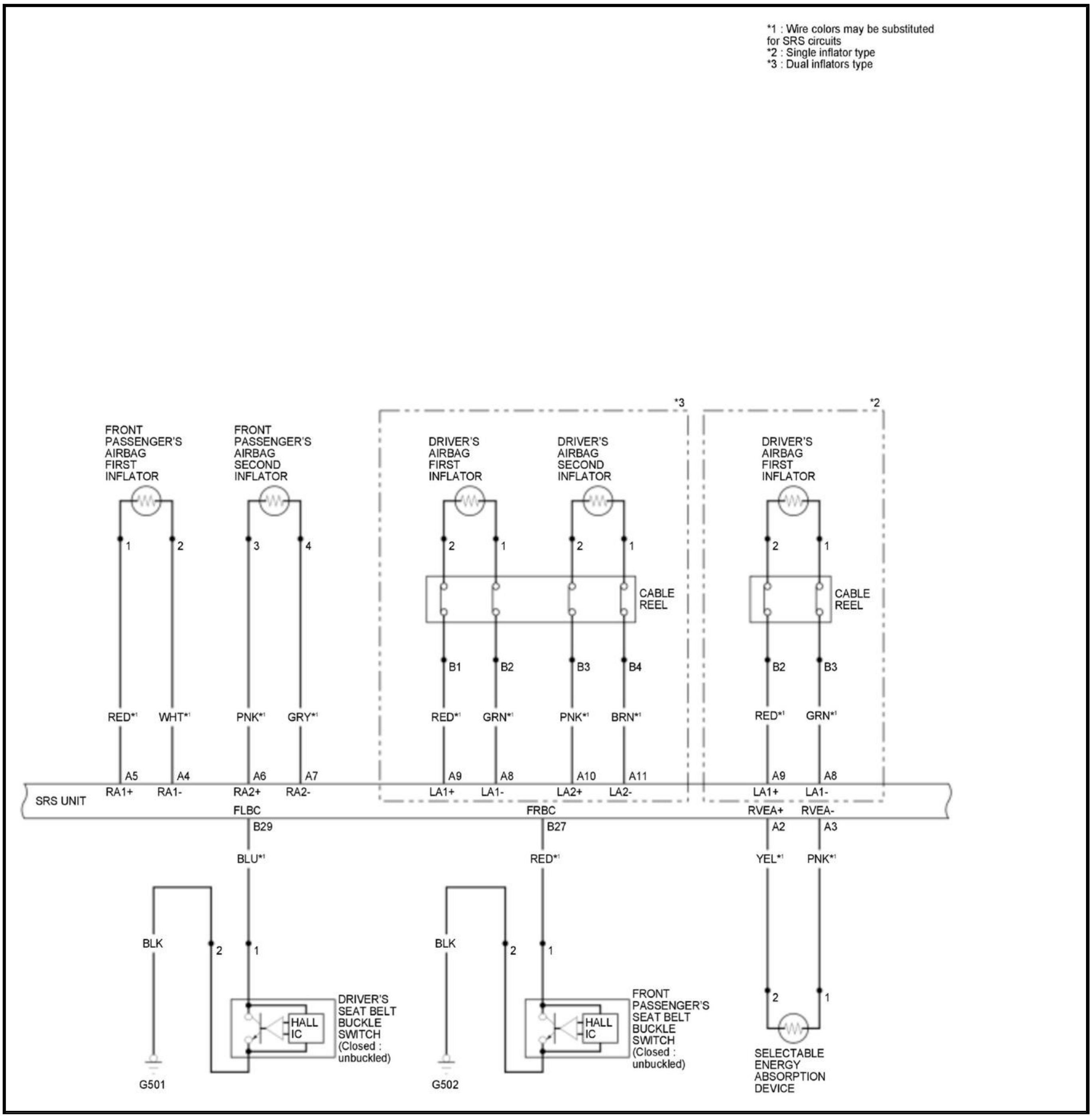

*1 : Wire colors may be substituted for SRS circuits

*2 : Single inflator type

*3 : Dual inflators type

FRONT PASSENGER'S AIRBAG FIRST INFLATOR
FRONT PASSENGER'S AIRBAG SECOND INFLATOR
DRIVER'S AIRBAG FIRST INFLATOR
DRIVER'S AIRBAG SECOND INFLATOR
DRIVER'S AIRBAG FIRST INFLATOR
*3
*2
1
2
3
4
2
1
2
1
2
1
CABLE REEL
CABLE REEL
B1
B2
B3
B4
B2
B3
RED*1
WHT*1
PNK*1
GRY*1
RED*1
GRN*1
PNK*1
BRN*1
RED*1
GRN*1
A5
A4
A6
A7
A9
A8
A10
A11
A9
A8
SRS UNIT
RA1+
RA1-
RA2+
RA2-
LA1+
LA1-
LA2+
LA2-
LA1+
LA1-
FLBC
FRBC
RVEA+
RVEA-
B29
B27
A2
A3
BLU*1
RED*1
YEL*1
PNK*1
BLK
2
1
BLK
2
1
2
1
DRIVER'S SEAT BELT BUCKLE SWITCH (Closed : unbuckled)
HALL IC
FRONT PASSENGER'S SEAT BELT BUCKLE SWITCH (Closed : unbuckled)
HALL IC
SELECTABLE ENERGY ABSORPTION DEVICE
G501
G502

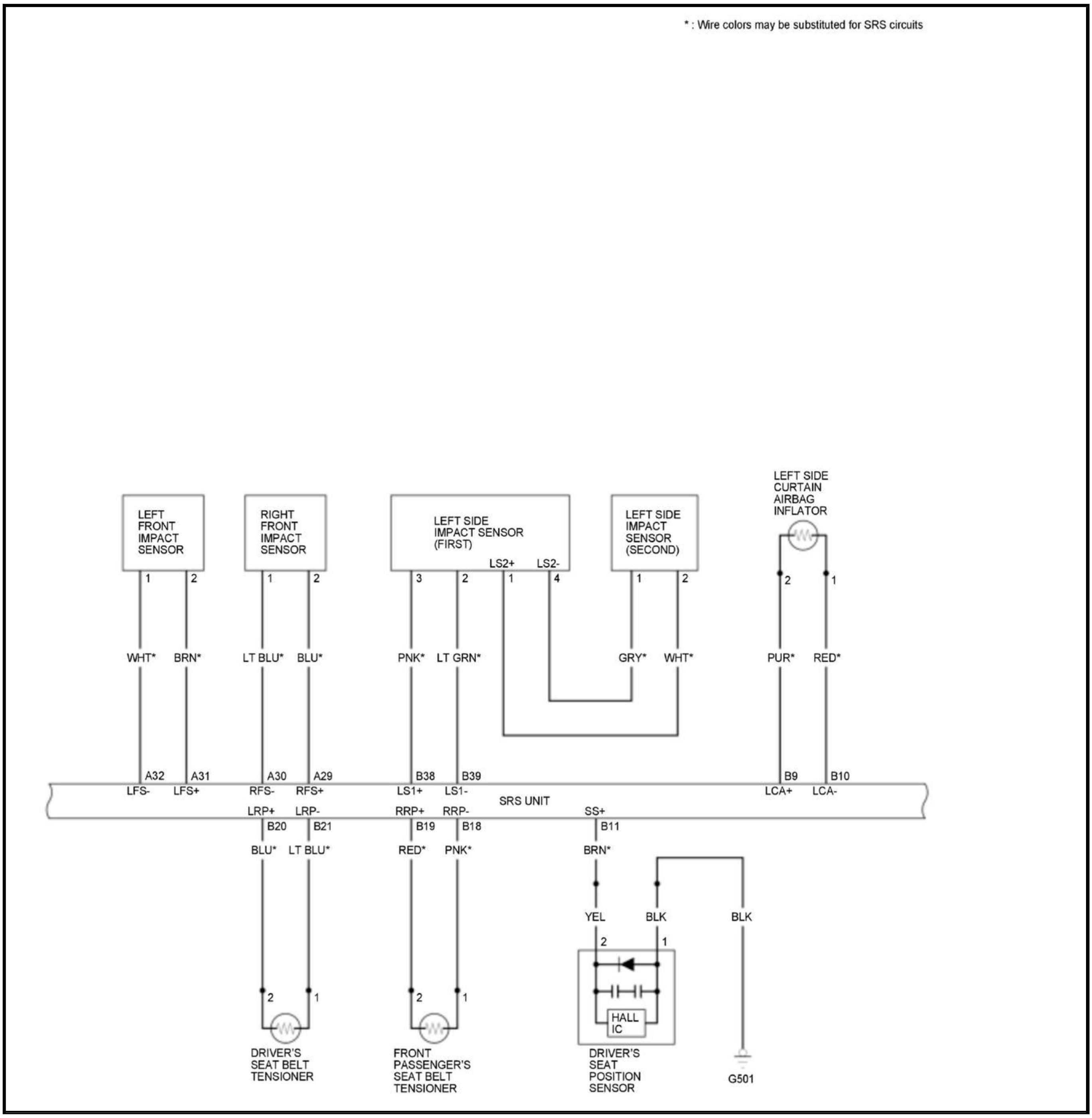
* : Wire colors may be substituted for SRS circuits

LEFT FRONT IMPACT SENSOR
RIGHT FRONT IMPACT SENSOR
LEFT SIDE IMPACT SENSOR (FIRST)
LEFT SIDE IMPACT SENSOR (SECOND)
LEFT SIDE CURTAIN AIRBAG INFLATOR
LS2+
LS2-
1
2
1
2
3
2
1
4
1
2
2
1
WHT*
BRN*
LT BLU*
BLU*
PNK*
LT GRN*
GRY*
WHT*
PUR*
RED*
A32
A31
A30
A29
B38
B39
B9
B10
LFS-
LFS+
RFS-
RFS+
LS1+
LS1-
LCA+
LCA-
SRS UNIT
LRP+
LRP-
RRP+
RRP-
SS+
B20
B21
B19
B18
B11
BLU*
LT BLU*
RED*
PNK*
BRN*
YEL
BLK
BLK
2
1
HALL IC
2
1
2
1
DRIVER'S SEAT BELT TENSIONER
FRONT PASSENGER'S SEAT BELT TENSIONER
DRIVER'S SEAT POSITION SENSOR
G501

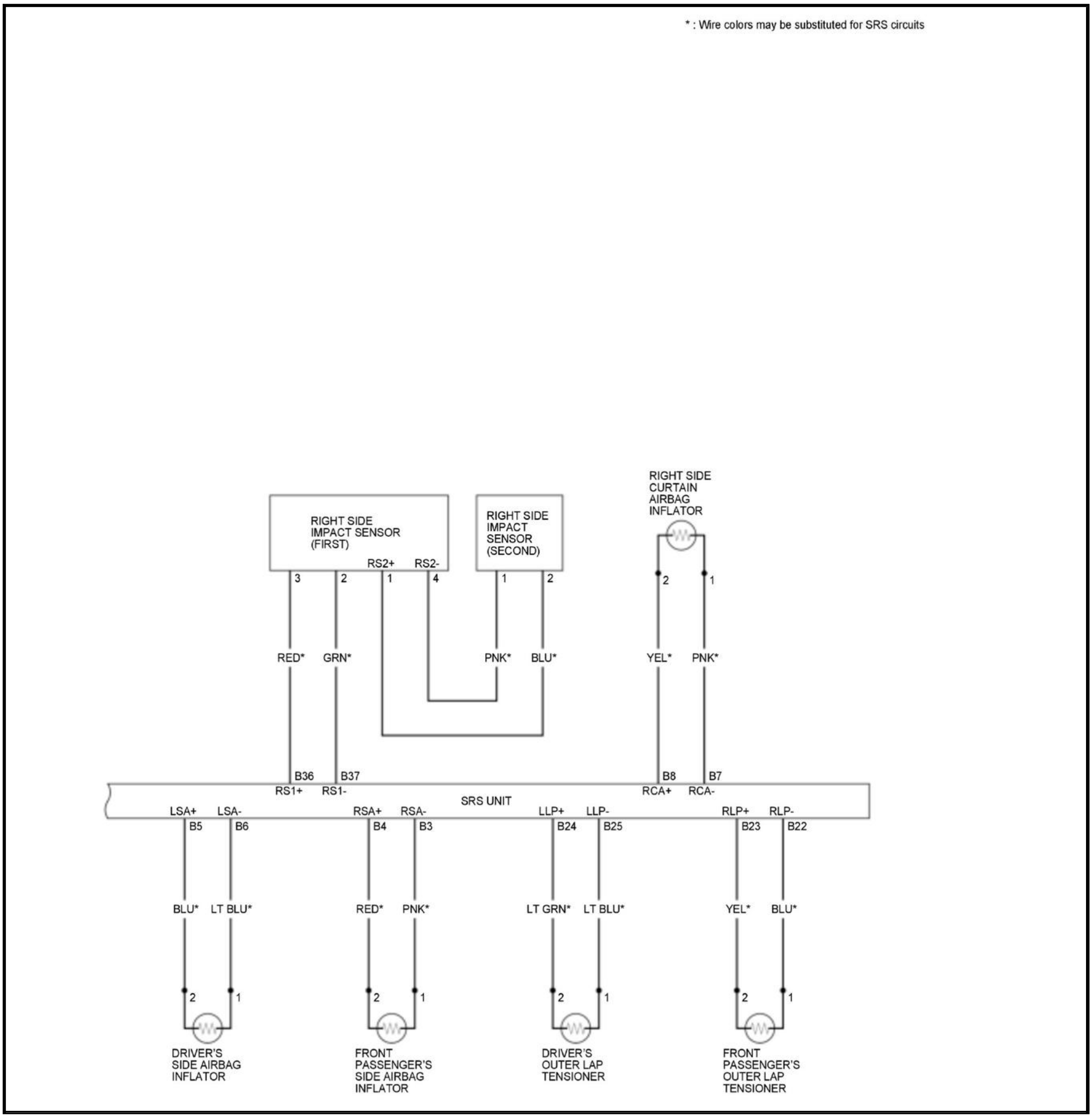
* : Wire colors may be substituted for SRS circuits
RIGHT SIDE IMPACT SENSOR (FIRST)
RS2+
RS2-
3
2
1
4
RIGHT SIDE IMPACT SENSOR (SECOND)
1
2
RIGHT SIDE CURTAIN AIRBAG INFLATOR
2
1
RED*
GRN*
PNK*
BLU*
YEL*
PNK*
B36
B37
B8
B7
RS1+
RS1-
RCA+
RCA-
SRS UNIT
LSA+
LSA-
RSA+
RSA-
LLP+
LLP-
RLP+
RLP-
B5
B6
B4
B3
B24
B25
B23
B22
BLU*
LT BLU*
RED*
PNK*
LT GRN*
LT BLU*
YEL*
BLU*
2
1
2
1
2
1
2
1
DRIVER'S SIDE AIRBAG INFLATOR
FRONT PASSENGER'S SIDE AIRBAG INFLATOR
DRIVER'S OUTER LAP TENSIONER
FRONT PASSENGER'S OUTER LAP TENSIONER

GENERAL INFORMATION

HOW TO READ DEPLOYED HISTORY

How to Read Deployed History

NOTE: Due to the amount of electrical current that flows within the SRS unit to deploy airbags and tensioners, the SRS unit will be severely damaged and will require replacement. Therefore, the SRS unit retains a history that indicate which airbags and tensioners that deployed in a collision. Airbags and tensioners that deployed cannot be reused and must be replaced.

1. Turn the vehicle to the OFF (LOCK) mode, then wait for 10 seconds.

2. Connect the HDS to the data link connector (DLC)

3. In the SRS MENU of the HDS, select SRS, then select Data List.

NOTE:

- A value of ON with a unit of RED indicates that the airbag(s) and or tensioner has deployed.
- A value of OFF with a unit of GREEN indicates that the airbag(s) or tensioner did not deploy.
- When any airbags or tensioners have deployed, **go to Component Replacement/Inspection After Deployment**.

Signal	**Value**	**Unit**
Left Front Airbag, Left Front/Rear Seat Belt Tensioner and/or Left Knee Airbag Deployed	OFF	•
Right Front Airbag, Right Front/Rear Seat Belt Tensioner and/or Right Knee Airbag Deployed	OFF	•
Left Side Airbag, Left Side Curtain Airbag, and/or Left Front/Rear Seat Belt Tensioner Deployed	ON	o
Right Side Airbag, Right Side Curtain Airbag, and/or Right Front/Rear Seat Belt Tensioner Deployed	OFF	•

•: Green

o: Red

4. Turn the vehicle to the OFF (LOCK) mode, then wait for 10 seconds.

5. Disconnect the HDS.

COMPONENT LOCATION INDEX

SRS COMPONENT LOCATION INDEX(POWER SEAT)

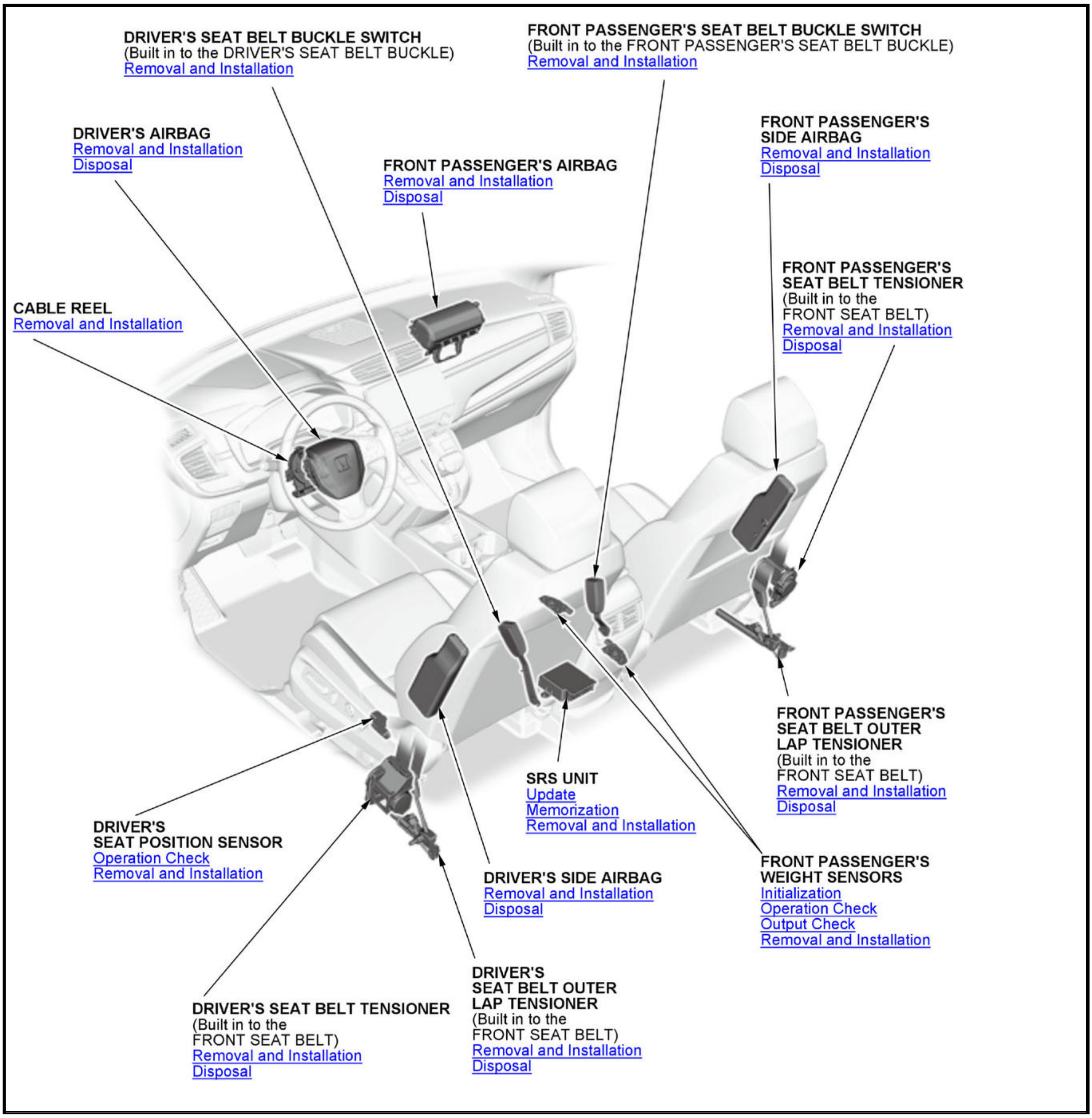
DRIVER'S SEAT BELT BUCKLE SWITCH
(Built in to the DRIVER'S SEAT BELT BUCKLE)
Removal and Installation
FRONT PASSENGER'S SEAT BELT BUCKLE SWITCH
(Built in to the FRONT PASSENGER'S SEAT BELT BUCKLE)
Removal and Installation
DRIVER'S AIRBAG
Removal and Installation
Disposal
FRONT PASSENGER'S AIRBAG
Removal and Installation
Disposal
FRONT PASSENGER'S SIDE AIRBAG
Removal and Installation
Disposal
CABLE REEL
Removal and Installation
FRONT PASSENGER'S SEAT BELT TENSIONER
(Built in to the FRONT SEAT BELT)
Removal and Installation
Disposal
FRONT PASSENGER'S SEAT BELT OUTER LAP TENSIONER
(Built in to the FRONT SEAT BELT)
Removal and Installation
Disposal
SRS UNIT
Update
Memorization
Removal and Installation
DRIVER'S SEAT POSITION SENSOR
Operation Check
Removal and Installation
DRIVER'S SIDE AIRBAG
Removal and Installation
Disposal
FRONT PASSENGER'S WEIGHT SENSORS
Initialization
Operation Check
Output Check
Removal and Installation
DRIVER'S SEAT BELT TENSIONER
(Built in to the FRONT SEAT BELT)
Removal and Installation
Disposal
DRIVER'S SEAT BELT OUTER LAP TENSIONER
(Built in to the FRONT SEAT BELT)
Removal and Installation
Disposal

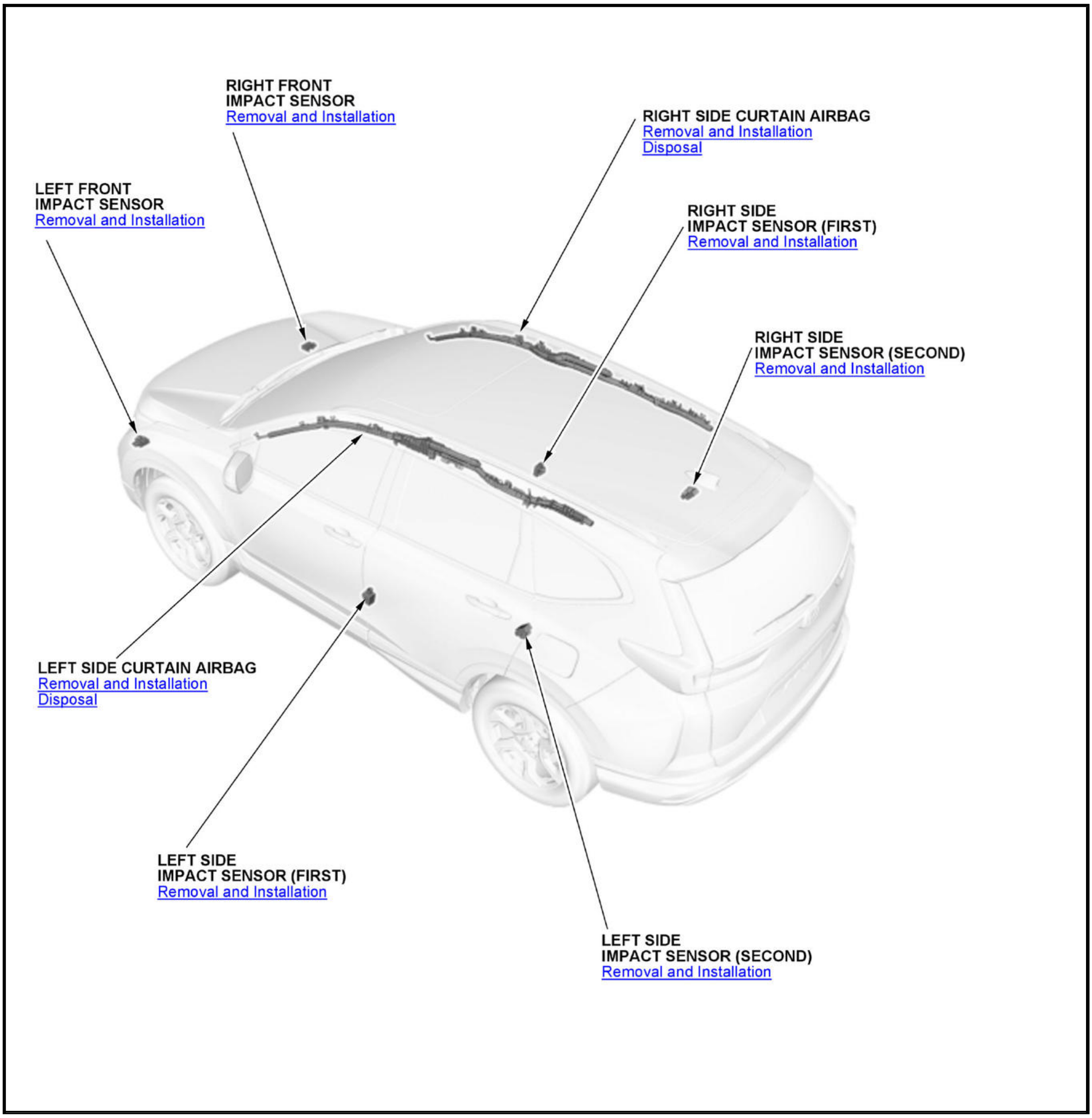
RIGHT FRONT
IMPACT SENSOR
Removal and Installation
RIGHT SIDE CURTAIN AIRBAG
Removal and Installation
Disposal
LEFT FRONT
IMPACT SENSOR
Removal and Installation
RIGHT SIDE
IMPACT SENSOR (FIRST)
Removal and Installation
RIGHT SIDE
IMPACT SENSOR (SECOND)
Removal and Installation
LEFT SIDE CURTAIN AIRBAG
Removal and Installation
Disposal
LEFT SIDE
IMPACT SENSOR (FIRST)
Removal and Installation
LEFT SIDE
IMPACT SENSOR (SECOND)
Removal and Installation

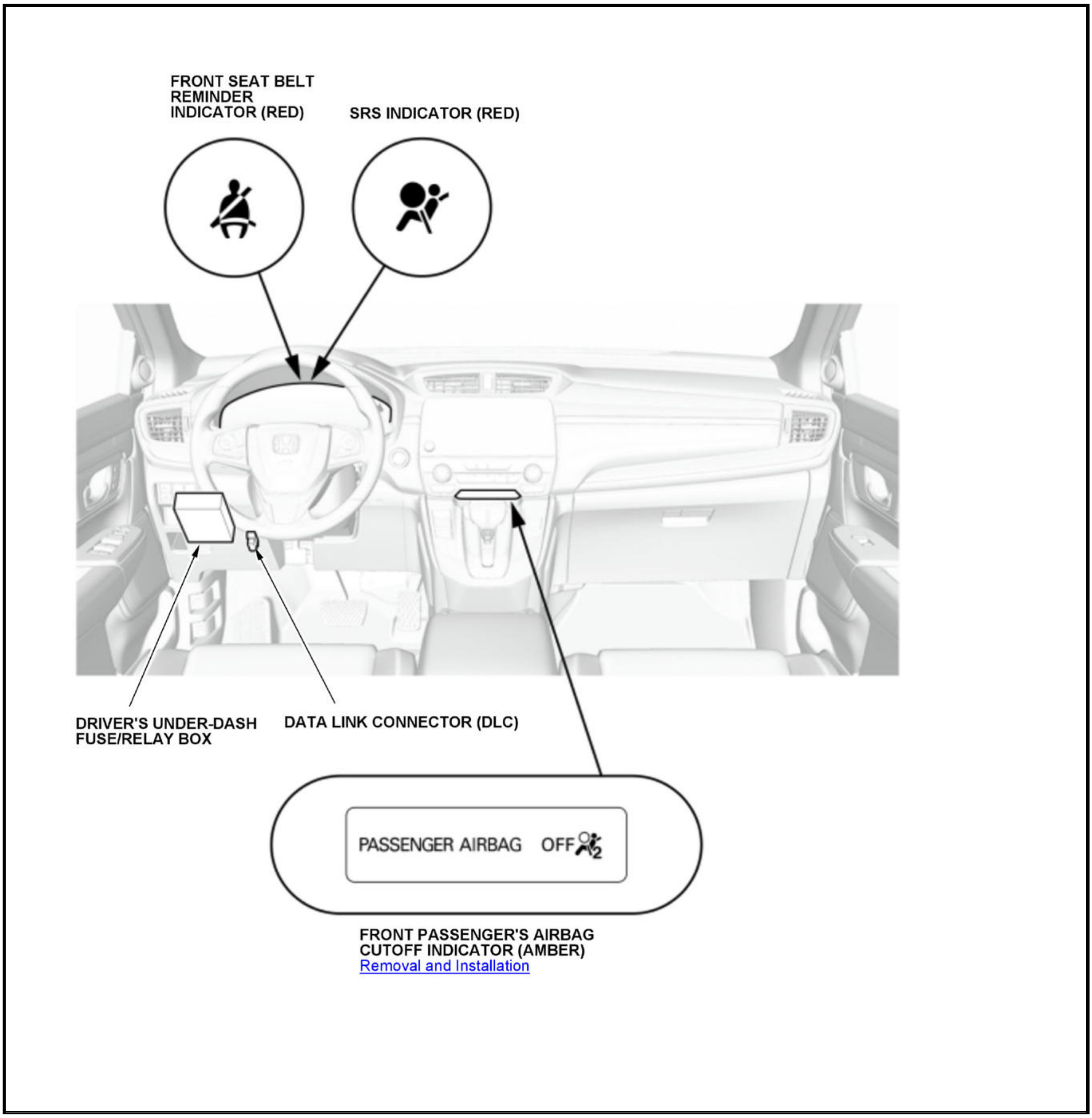
FRONT SEAT BELT REMINDER INDICATOR (RED)
SRS INDICATOR (RED)
DRIVER'S UNDER-DASH FUSE/RELAY BOX
DATA LINK CONNECTOR (DLC)
PASSENGER AIRBAG OFF
FRONT PASSENGER'S AIRBAG CUTOFF INDICATOR (AMBER)
Removal and Installation

SYMPTOM TROUBLESHOOTING

SRS SYMPTOM TROUBLESHOOTING

Front seat belt reminder indicator does not come on, turn off, or flash(KA/KC)

Front seat belt reminder indicator does not come on, turn off, or flash

NOTE:

- Before doing this troubleshooting procedure, find out if the vehicle was in a collision. If so, verify that all the required components were replaced with new components of the correct part number and were properly installed.
- Before doing this troubleshooting procedure, review SRS Precautions and Procedures and General Troubleshooting Information.

1. DTC check

-1. Check for DTCs with the HDS.

DTC Description	DTC
Â	Â

Are any SRS DTCs indicated?

YES

Go to SRS DTC troubleshooting.

NO

Go to step 2.

2. Body electrical system DTC check

   -1. Check for body electrical DTCs with the HDS.

DTC Description	DTC
U0151-00 Gauge control module lost communication with SRS unit	Â

Is DTC U0151 indicated?

YES

Go to DTC U0151 troubleshooting .

NO

Go to step 3.

3. Gauge control module check

   -1. **Do the gauge control module self-diagnostic function** .

Self diagnostic function - CAN METER

Does the front seat belt reminder indicator blinkΩ

YES

Check for any authorized service information related to the DTCs or symptoms you are troubleshooting or **replace the SRS unit** .

NO

Replace the gauge control module .

SRS indicator does not come on

NOTE:

- **Before doing this troubleshooting procedure, find out if the vehicle was in a collision. If so, verify that all the required components were replaced with new components of the correct part number and were properly installed**.
- Before doing this troubleshooting procedure, review **SRS Precautions and Procedures** and **General Troubleshooting Information**.

1. Problem verification

-1. Turn the vehicle to the OFF (LOCK) mode, then wait for 10 seconds.

-2. Turn the vehicle to the ON mode, and check that the SRS indicator comes on for about 6 seconds and then go off.

Does the SRS indicator come on for about 6 seconds and then go off?

YES

Intermittent failure, the vehicle is OK at this time.

NO

The failure is duplicated. Go to step 2.

2. Gauge control module check

   -1. Turn the vehicle to the OFF (LOCK) mode.

   -2. **Connect the HDS to the data link connector (DLC)** .

   -3. Turn the vehicle to the ON mode.

   -4. **Do the gauge control module self-diagnostic function** .

   Does the SRS indicator blinkΩ

   YES

   Check for any authorized service information related to the DTCs or symptoms you are troubleshooting or **replace the SRS unit** .

   NO

   Replace the gauge control module .

SRS indicator stays on, but no DTCs are stored, or cannot be read

NOTE:

- **Before doing this troubleshooting procedure, find out if the vehicle was in a collision. If so, verify that all the required components were replaced with new components of the correct part number and were properly installed**.
- Before doing this troubleshooting procedure, **make sure the 12 volt battery is fully charged** . If the 12 volt battery voltage is low, SRS indicator may stay on.
- Before doing this troubleshooting procedure, review **SRS Precautions and Procedures**, **General Troubleshooting Information**, and **12 Volt Battery Terminal Disconnection and Reconnection** .
- SRS unit with a history that has detected the collision, turns on the SRS indicator. The internal components of the SRS unit are damaged and must be replaced.

1. HDS communication check 1

   -1. Turn the vehicle to the OFF (LOCK) mode.

   -2. **Connect the HDS to the data link connector (DLC)** .

   -3. Turn the vehicle to the ON mode, then wait for 10 seconds.

   -4. Check the HDS communication with the vehicle.

Does the HDS communication with the vehicle?

YES

Go to step 2.

NO

Go to DLC circuit troubleshooting .

2. HDS communication check 2

   -1. Check select the SRS system, in the HDS system selection menu.

   Can the SRS be selected in the System Selection Menu?

   YES

   Go to step 3.

   NO

   Go to step 5.

3. DTC check

   -1. Check for DTCs with the HDS.

DTC Description	DTC
Â	Â

   Are any SRS DTCs indicated?

   YES

   Go to SRS DTC troubleshooting.

   NO

   Go to step 4.

4. Body electrical system DTC check

   -1. Check for body electrical DTCs with the HDS.

DTC Description	DTC
U0151-00 Gauge control module lost communication with SRS unit	Â

   Is DTC U0151 indicated?

   YES

   Go to DTC U0151 troubleshooting .

   NO

   Check the SRS indicator drive circuit by **performing self-diagnostic function of the gauge control module** . If the SRS indicator does not brink properly, **replace the gauge control module** .

5. Fuse check

-1. Turn the vehicle to the OFF (LOCK) mode.

-2. Check the following fuse.

Fuse	No. D35 (10 A)
Location	Under-dash fuse/relay box

Is the fuse OK?

YES

Go to step 6.

NO

Replace the fuse, then turn the vehicle to the ON mode. If the fuse blows again, check for a short to ground in the under-dash fuse/relay box No. C35 (10 A) fuse circuit (dashboard wire harness); replace the dashboard wire harness, and retest. If the problem is still present, replace the under-dash fuse/relay box.

6. SRS unit power supply circuit check 1(VB Line)

-1. Disconnect the negative cable from the 12 volt battery, then wait at least 3 minutes.

-2. Disconnect the following connector.

SRS unit connector A (39P)

-3. Reconnect the negative cable to the 12 volt battery.

-4. Turn the vehicle to the ON mode.

-5. Measure the voltage between test points 1 and 2.

Test condition	Vehicle ON mode
	SRS unit connector A (39P): disconnected
Test point 1	**SRS unit connector A (39P) No. 39**
Test point 2	Body ground

Is there battery voltage?

YES

The VB wire is OK. Go to step 7.

NO

Open in the dashboard wire harness or faulty under-dash fuse/relay box; replace the dashboard wire harness or **the under-dash fuse/relay box** .

7. SRS unit power supply circuit check 2(GND Line)

-1. Turn the vehicle to the OFF (LOCK) mode.

-2. Measure the resistance between test points 1 and 2.

Test condition	Vehicle OFF (LOCK) mode
	SRS unit connector A (39P): disconnected
Test point 1	**SRS unit connector A (39P) No. 36**

Test point 2	Body ground

Is there 1.0 Ω or less?

YES

The GND wire is OK. Check for any authorized service information related to the DTCs or symptoms you are troubleshooting or **replace the SRS unit** .

NO

Open in the dashboard wire harness; check for a poor ground at G305. If the ground is OK, replace the dashboard wire harness.

SYMPTOM TROUBLESHOOTING INDEX

SRS SYMPTOM TROUBLESHOOTING INDEX (KA/KC)

Symptom	Diagnostic procedure	Also check for
SRS indicator does not come on	**Symptom Troubleshooting**	-
SRS indicator stays on, but no DTCs are stored, or cannot be read	**Symptom Troubleshooting**	• **Check the deployed history**. • Charging system for under or overcharging • Communication with the HDS
Front passenger's airbag cutoff indicator flashes	Check for DTCs. If any DTC is indicated, go to the DTC troubleshooting	Front passenger's weight sensor initialization
Front passenger's airbag cutoff indicator does not come on	Check for DTCs. If any DTC is indicated, go to the DTC troubleshooting	DTC B00D5-14 troubleshooting
Front seat belt reminder indicator does not come on, turn off, or flash	**Symptom Troubleshooting**	-
HDS does not communicate with the vehicle	**DLC Circuit Troubleshooting**	• Correct HDS software • Communication with the HDS

INITIALIZATION

FRONT PASSENGER'S WEIGHT SENSOR INITIALIZATION (KA/KC)

Procedure

NOTE:

- When you replace or update the SRS unit, initialize the front passenger's weight sensor with the HDS.
- When you replace or remove the front passenger's weight sensor, the front passenger's seat frame, or the front passenger's seat rail, initialize the front passenger's weight sensor with the HDS.

1. **HDS - Connect**

2. Front Passenger's Weight Sensor - Initialize

NOTE:

- Before doing this procedure, clear the DTCs.
- Before doing this procedure, make sure the 12 volt battery is fully charged.
- Make sure the front passenger's seat and all components of the seat are correctly installed.
- Make sure nothing is on the front passenger's seat, including aftermarket seat covers or mats.
- Make sure there is nothing in the front passenger's seat-back pocket.
- Make sure the vehicle is on level ground.
- When you perform this procedure, the vehicle temperature must be between 41- 113 deg.F (5 - 45 deg.C).
- When the vehicle is exposed to intense cold or intense heat, move the vehicle inside, open the windows and moonroof (if equipped) and perform this procedure after one hour or more.
- Do not expose the front passenger's seat to sudden temperature changes.
- Do not use the A/C and the heater.
- Do not touch the front passenger's seat and keep the vehicle stationary during this procedure.
- Do not attach the seat belt tongue into the buckle.
- If possible, do all of the above procedures inside.

1. Position the front passenger's seat all the way rearward and lowermost (if equipped with the height adjuster), then adjust the seat-back to the forward most position.

NOTE: Do not move the seat from this position until the initialization is completed.

2. From SRS of the System Selection Menu, select SRS/SWS, then Adjustment. In the Adjustment, select SWS Initialization. Follow the prompts until the front passenger's weight sensor initialization has been completed.

3. From SRS of the System Selection Menu, select SRS/SWS, then Data List. In the Data List, select FRONT PASSENGER'S WEIGHT. The weight (T0) of the front passenger's seat is displayed by the HDS. Write this measurement down as "T0" on a piece of paper.

- If the reading on the HDS (T0) is within +/-0.35 kg (+/-0.77 lbs), go to step 4.
- If the reading on the HDS (T0) is at or not within +/-0.35 kg (+/-0.77 lbs), do the following and repeat the procedure from step 1.
-
    - Confirm that the seat has no interference with surrounding components.
    - **Remove the front passenger's weight sensors** (If they were not reinstalled), reinstall them, then repeat this procedure from the step 1.-
- If after reinstalling the front passenger's weight sensors, the HDS (T0) is still at or not within +/-0.35 kg (+/-0.77 lbs), replace the front passenger's weight sensors, then repeat this procedure from the beginning.

4. Prepare a weight between 10 kg (22 lbs) - 20 kg (44 lbs) then measure and note its actual weight (M) with a weight scale.

NOTE:

- The accuracy of the weight scale must be within 1 kg (2 lbs).
- The weight must be uniform in shape and size to allow precise placement on the seat.

5. Place the prepared weight precisely on the center of the front passenger's seat as shown.

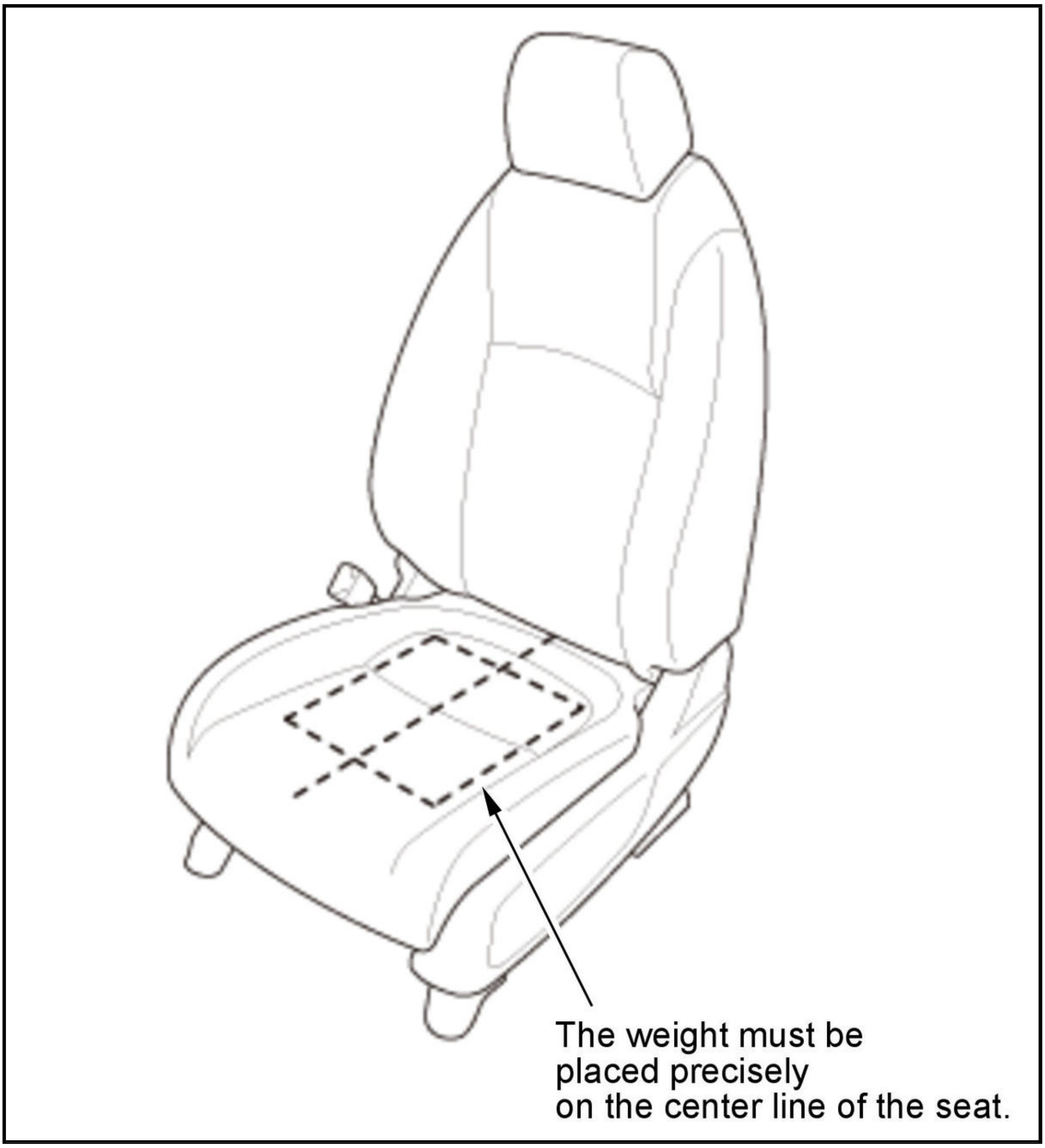

6. From the Data List, select FRONT PASSENGER'S WEIGHT. The weight (T) of the front passenger's seat is displayed by the HDS. Write this measurement down as "T" on a piece of paper.

7. Divide (M) by 2. Write this calculation as "M1" on a piece of paper.

8. Calculate the variance between (M1) and the HDS (T) with the following formula.

Variance = (T)-(M1)	
Â	
T:	**Weight measured by the HDS with the weight on the seat.**
M1:	**Half of the weight measured by the weight scale.**

- If the variance is within +/-2.2 kg (+/-4.9 lbs), initialization is complete. Go to step 9.
- If the variance is at or not within +/-2.2 kg (+/-4.9 lbs), do the following and repeat the procedure from step 1.
-
    - Confirm that the seat has no interference with surrounding components.
    - Confirm that the weight was placed precisely in the center of the seat.

    - Remove the front passenger's weight sensors , reinstall them, then repeat this procedure from the step 1. If the variance is still at or not within +/-2.2 kg (+/-4.9 lbs), replace the front passenger's weight sensors (if they were not replaced), then repeat this procedure from step 1.

9. Turn the vehicle to the OFF (LOCK) mode.

HOW TO INFORMATION

HOW TO TROUBLESHOOT THE SRS

SRS Indicator

The SRS indicator (A) on the gauge control module indicates problems related with SRS function.

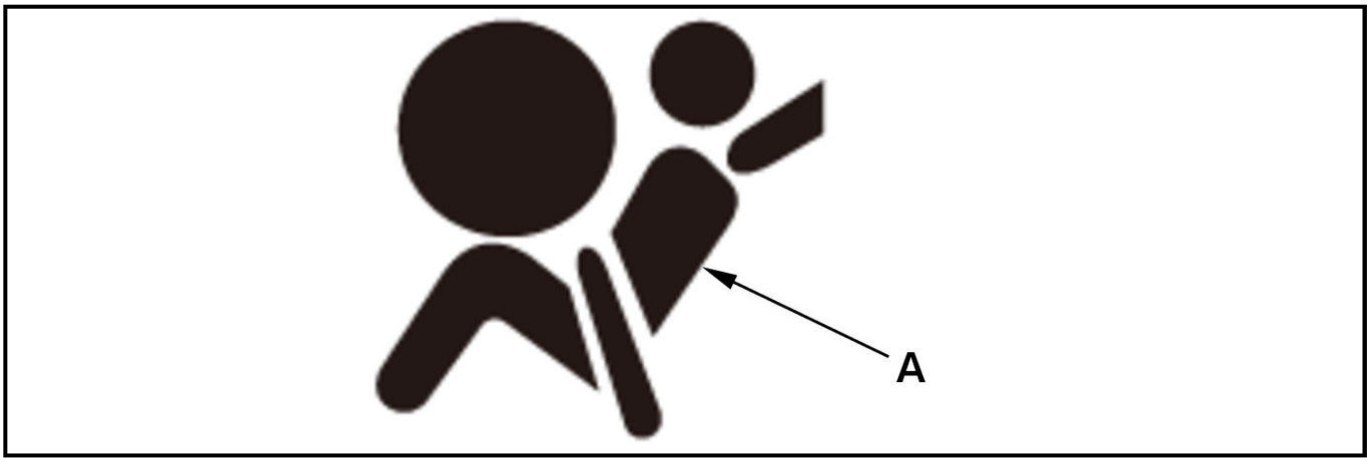

If the system is OK, the SRS indicator should come on when you turn the vehicle to the ON mode, and then go off 6 seconds later. If it does not, there is a problem with the system.

NOTE: If the SRS indicator comes on, and SRS DTCs are not indicated, do the SRS symptom troubleshooting.

How to Troubleshoot Circuits at the Connectors Especially for Connectors with Terminal Test Ports

Special Tools Required

Male Pin Probe 07ZAJ-RDJA110

NOTE:

- Make sure the 12 volt battery is fully charged when doing an electrical test. If the 12 volt battery is not fully charged, the results of the tests may not be accurate.
- To prevent damage to the connector terminals, do not insert test equipment probes, paper clips, or other substitutes. Damaged terminals cause a poor connection and an incorrect measurement.

1. When diagnosing or troubleshooting the circuits at the connectors (A), use the appropriate terminal test port as shown. Gently insert the pin probe of the tester or jumper wire at the terminal test port from the terminal side.

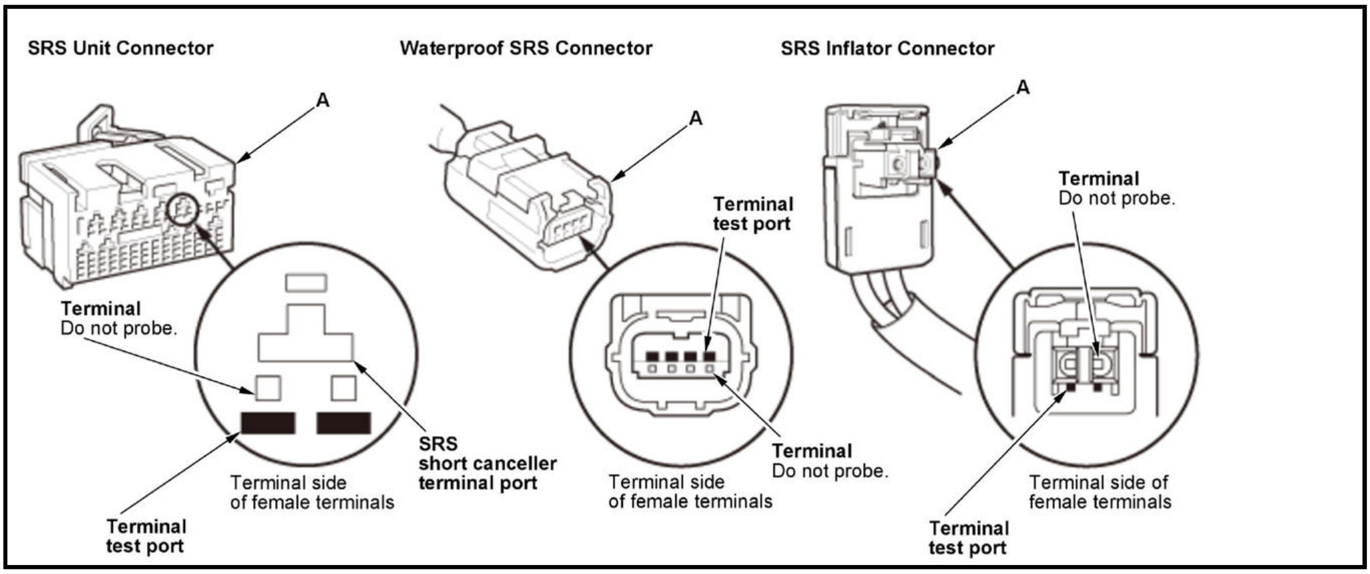
SRS Unit Connector
Waterproof SRS Connector
SRS Inflator Connector
A
A
A
Terminal
Do not probe.
Terminal side
of female terminals
SRS
short canceller
terminal port
Terminal
test port
Terminal
test port
Terminal
Do not probe.
Terminal side
of female terminals
Terminal
Do not probe.
Terminal side of
female terminals
Terminal
test port

NOTE:

- Do not insert the pin probes of the tester or a jumper wire at the terminal or the SRS short canceller terminal port.
- To prevent damage to the connector terminals, do not insert the test equipment probes, paper clips, or other substitutes as they can damage the terminals. Damaged terminals cause a poor connection and an incorrect measurement.

2. Connect one side of the patch cord terminals (A) to a commercially available digital multimeter (B), and connect the other side of the terminals (C) to the male pin probe.

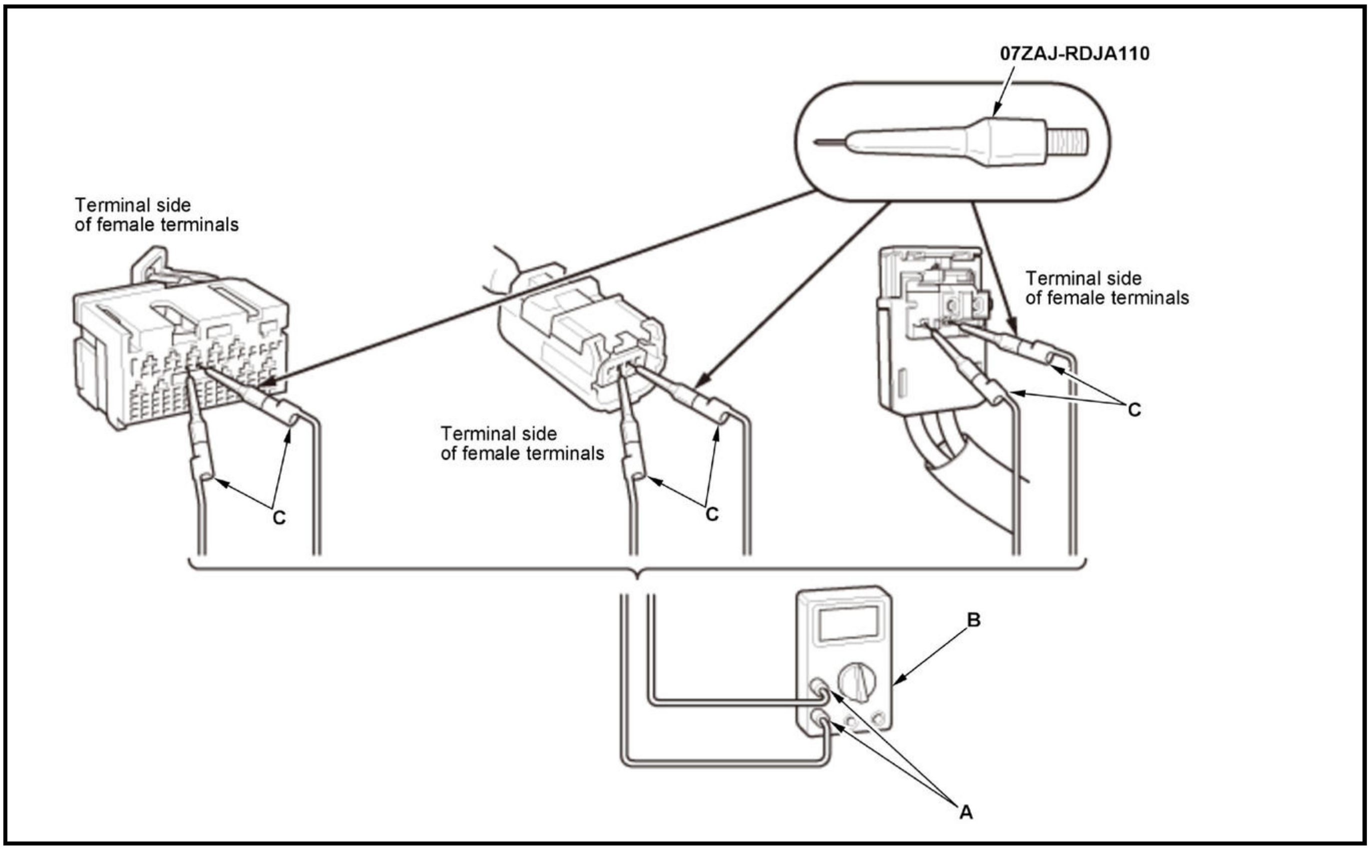
07ZAJ-RDJA110
Terminal side
of female terminals
Terminal side
of female terminals
Terminal side
of female terminals
C
C
C
B
A

Gently contact the male pin probe at the terminal test port from the terminal side. Do not force the tips into the terminals.

NOTE:

- For accurate results, always use the male pin probe.

- To prevent damage to the connector terminals, do not insert test equipment probes, paper clips, or other substitutes. Damaged terminals cause a poor connection and an incorrect measurement.
- Do not puncture the insulation on a wire. Punctures can cause poor or intermittent electrical connections.

How to Troubleshoot Circuits at the Connectors Except for Connectors with Terminal Test Ports

Special Tools Required

Back Probe Adapter, 17 mm 07TAZ-001020A

When using electrical test equipment, insert the back probe adapter, 17 mm of the tester into the wire side of the connector (except for connectors with terminal test ports).

NOTE:

- Make sure the 12 volt battery is fully charged when doing an electrical test. If the 12 volt battery is not fully charged, the results of the tests may not be accurate.
- Do not insert the probe of the tester into the terminal side of the connector, and do not tamper with the connector.
- To prevent damage to the connector, do not insert test equipment probes, paper clips, or other substitutes. Damaged terminals cause a poor connection and an incorrect measurement.
- Do not puncture the insulation on a wire. Punctures can cause poor or intermittent electrical connections.
- Do not insert the probe forcibly.
- Use specified service connectors in troubleshooting. Using improper tools could cause a diagnostic error due to poor metal-to-metal contact.

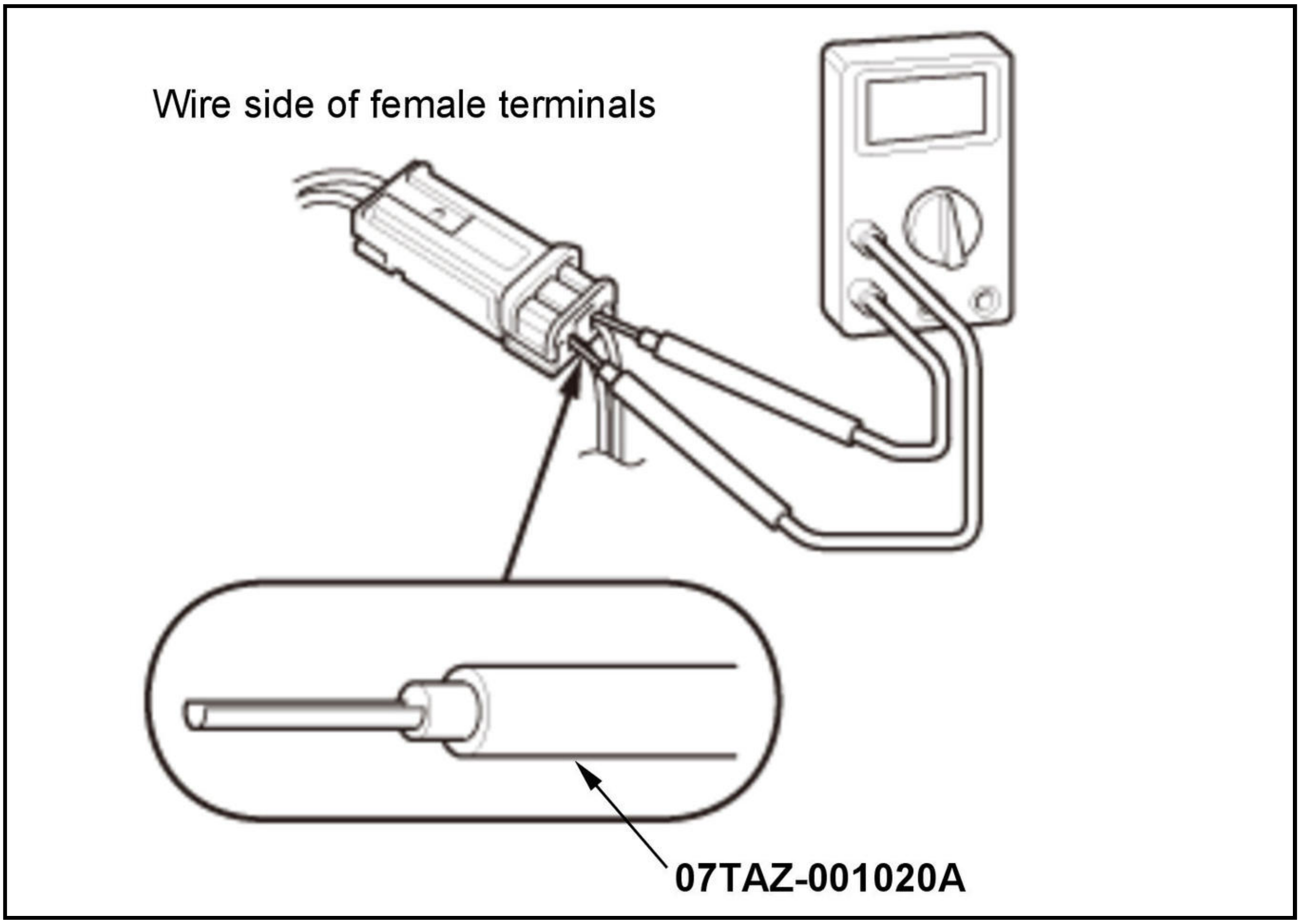

Opening the SRS Unit Shorting Connectors for Diagnosis

Special Tools Required

SRS Short Canceller 070AZ-SAA0100

NOTE:

- To prevent damage to the connector cavity, insert an SRS short canceller straight into the cavity from the terminal side.
- Before installing an SRS short canceller, wash it with electrical contact cleaner, then dry it with compressed air.
- Do not use an SRS short canceller if it is damaged.
- Make sure to remove an SRS short canceller before reconnecting the SRS unit connector.
- Some systems store data in memory that is lost when the 12 volt battery is disconnected. Before disconnecting the 12 volt battery, **refer to 12 Volt Battery Terminal Disconnection and Reconnection** .

When SRS unit connectors A (39P) and B (39P) are disconnected, short circuits are automatically created in the connector to prevent accidental deployment of an airbag. The circuit may need to be opened sometimes when diagnosing the system. Insert an SRS short canceller in the specified cavities when necessary to keep the circuit open for diagnosis.

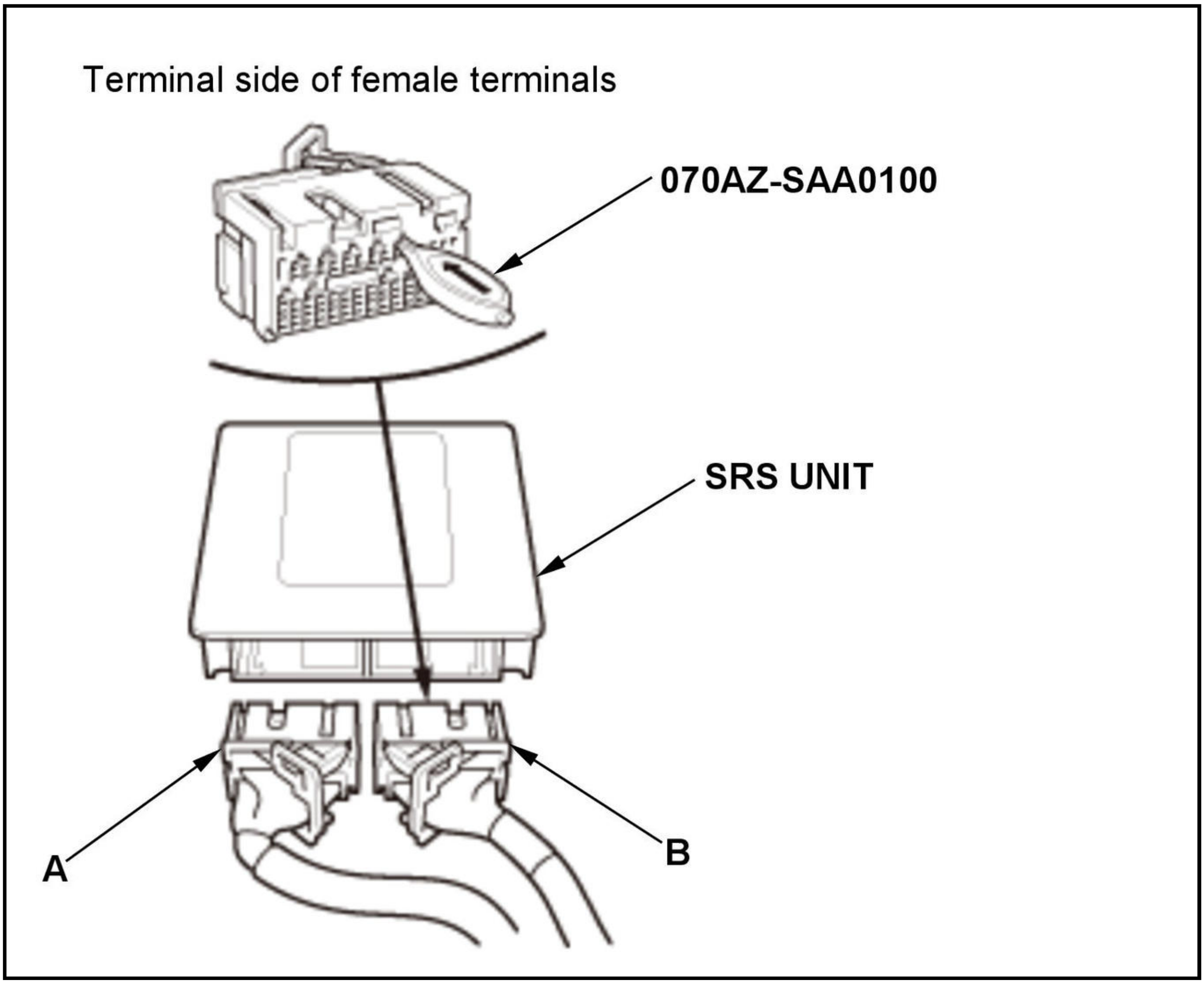

Terminal numbers are shown on the terminal side of the female terminals. Insert the SRS short canceller(s) into the cavities on the terminal side of the connector.

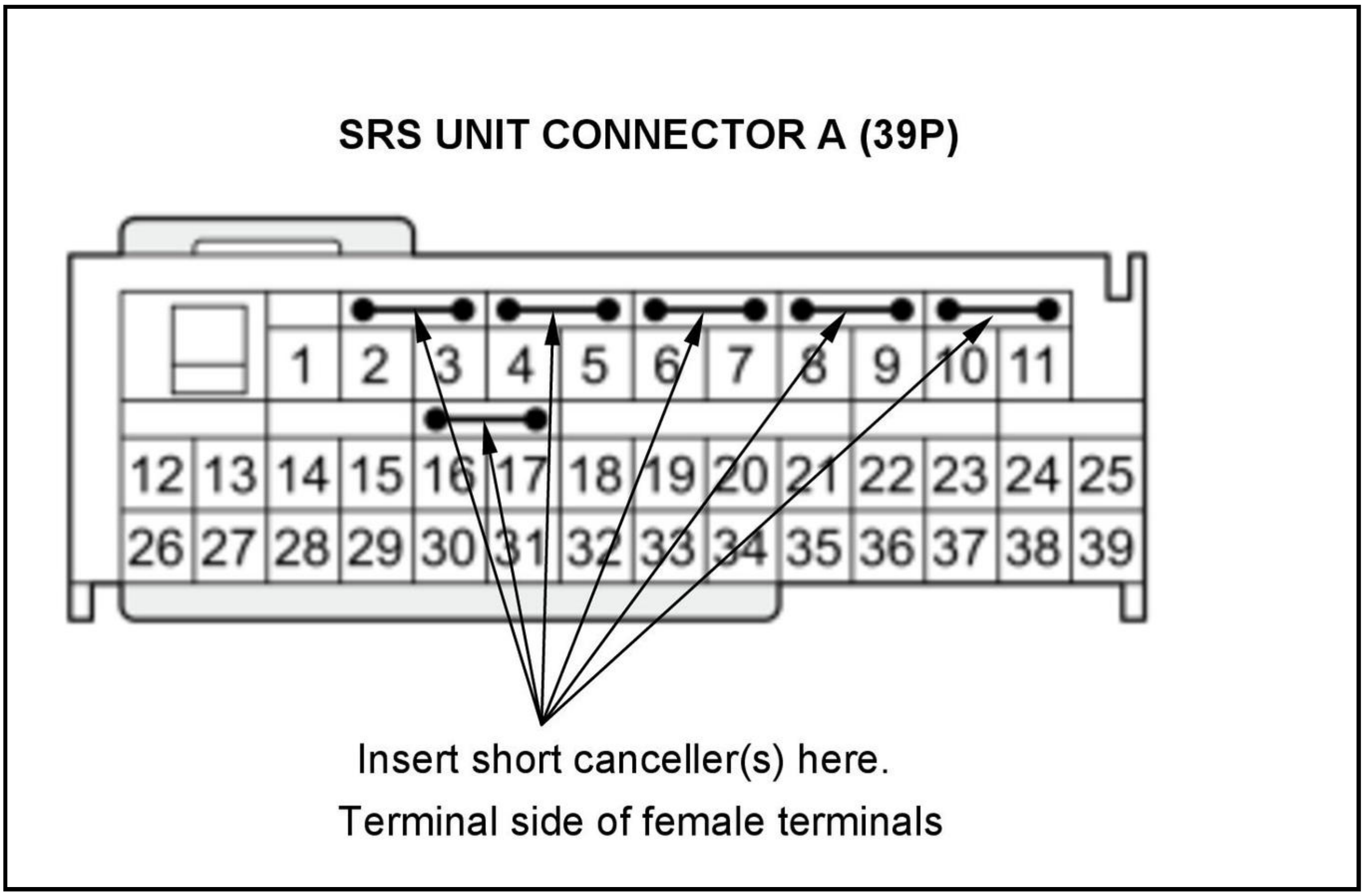
SRS UNIT CONNECTOR A (39P)

1 2 3 4 5 6 7 8 9 10 11
12 13 14 15 16 17 18 19 20 21 22 23 24 25
26 27 28 29 30 31 32 33 34 35 36 37 38 39

Insert short canceller(s) here.

Terminal side of female terminals

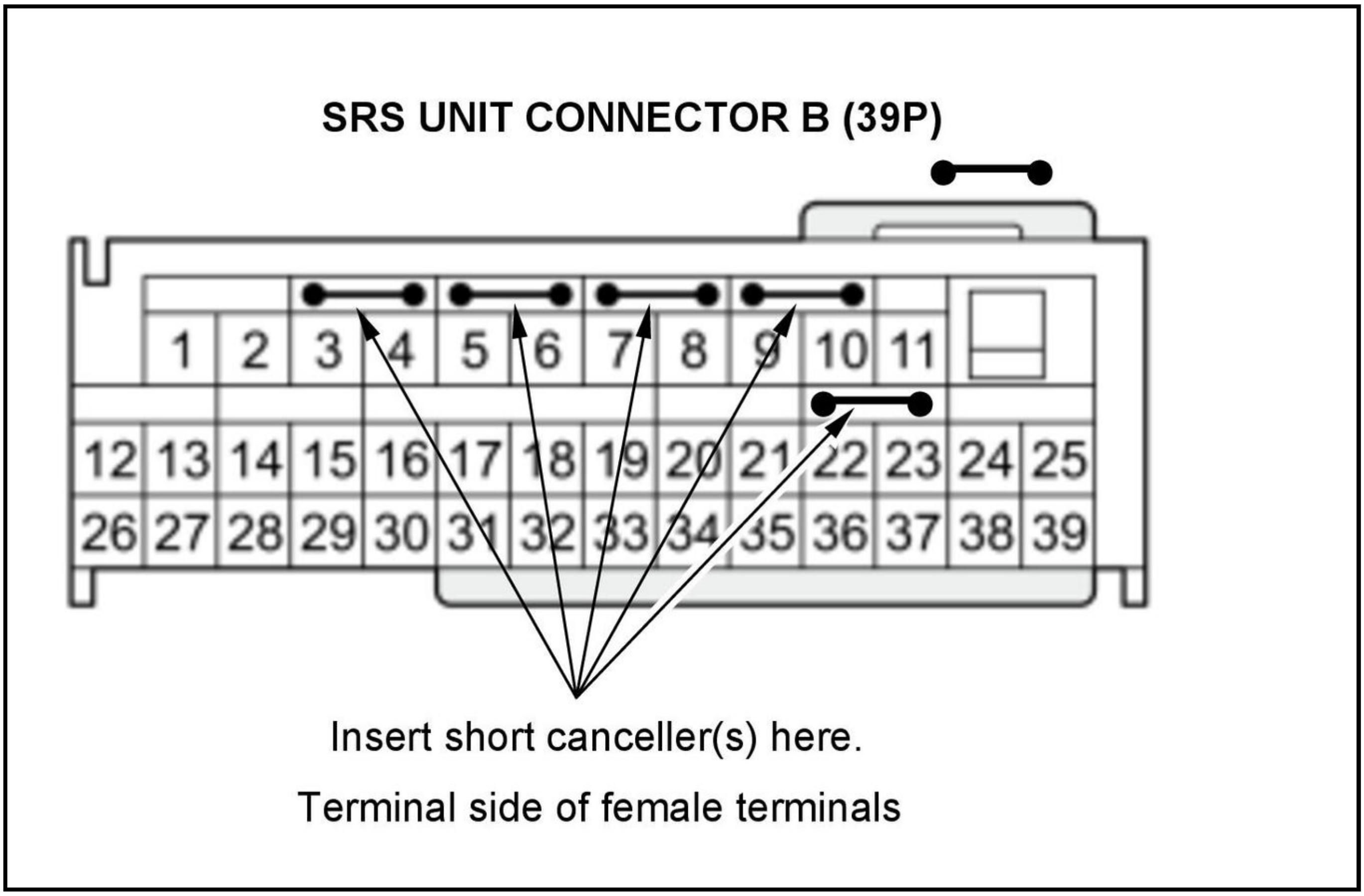
SRS UNIT CONNECTOR B (39P)

1 2 3 4 5 6 7 8 9 10 11
12 13 14 15 16 17 18 19 20 21 22 23 24 25
26 27 28 29 30 31 32 33 34 35 36 37 38 39

Insert short canceller(s) here.

Terminal side of female terminals

DTC (Diagnostic Trouble Codes)

The self-diagnostic function of the SRS unit allows it to locate the causes of system problems and store this information in memory. For easier troubleshooting, this data can be retrieved with the HDS via the data link circuit.

- When you turn the vehicle to the ON mode, the SRS indicator should come on. If it goes off after 6 seconds, the system is normal and is not currently detecting any problems.
- If there is a problem, the system locates and defines the problem, stores this information in the memory, and turns on the SRS indicator. The data remains in the memory even if the vehicle is turned to the OFF (LOCK) mode or the 12 volt battery is disconnected.
- The data is stored in memory as a diagnostic trouble code (DTC).
- DTCs are either latching or resetting depending on the malfunction. With resetting DTCs, the SRS indicator goes off the next time the vehicle is turned to the ON mode, and the system is normal, but the DTC is still stored. With latching DTCs, the SRS indicator does not turn off until the malfunction is repaired and the DTC is cleared.
- When you connect the HDS to the data link connector (DLC), you can retrieve a more detailed DTC in the HDS "SRS" menu.
- After reading and recording the DTC, go to the troubleshooting procedure for that code.

Precautions

- Make sure the 12 volt battery is fully charged. If the 12 volt battery is dead or low, electrical measurement values may not be correct.
- Use only a digital multimeter to check the system. Make sure its output is 10 mA (0.01 A) or less when switched to the smallest value in the ohmmeter range. A tester with a higher output could damage the airbag circuit or cause accidental airbag deployment and possible injury.
- Whenever the vehicle is turned to the ON mode, or the vehicle is in the OFF (LOCK) mode for less than 3 minutes, be careful not to bump the SRS unit; the system could falsely interpret an impact or rollover, deploying airbags in response and cause damage or injuries.
- Before removing the dashboard wire harness or floor wire harness, disconnect the driver's airbag inflator connector, the front passenger's airbag inflator connector, both side airbag inflator connectors, both side curtain airbag inflator connectors, and both front seat belt tensioner connectors.

How to Read DTCs

NOTE: Make sure the 12 volt battery is fully charged before you begin.

1. Turn the vehicle to the OFF (LOCK) mode, then wait for 10 seconds.

2. Connect the HDS to the data link connector (DLC)

3. Use the HDS to check for SRS DTCs.

4. Read and record the DTC.

NOTE: Do not clear the DTC until instructed by the troubleshooting procedure.

5. Turn the vehicle to the OFF (LOCK) mode, then wait for 10 seconds.

6. Do the troubleshooting procedure for the DTC.

How to Clear DTCs

NOTE: Make sure the 12 volt battery is fully charged before you begin.

1. Turn the vehicle to the OFF (LOCK) mode, then wait for 10 seconds.

2. Connect the HDS to the data link connector (DLC)

3. Clear the DTC(s) by following the screen prompts on the HDS.

4. Turn the vehicle to the OFF (LOCK) mode, then wait for 10 seconds.

Troubleshooting Intermittent Failures

If there was a malfunction that sets a DTC, but it does not recur, a DTC will be stored in the memory, and the SRS indicator may come on depending on the malfunction detected.

NOTE:

- Check the condition of the 12 volt battery . Low battery voltage may cause some intermittent failures.
- A faulty or damaged cable reel can cause intermittent problems related to the driver's airbag inflator DTCs.

After checking the DTC, troubleshoot as follows:

1. Check for DTCs with the HDS.

2. Clear the DTCs with the HDS.

3. Set the parking brake, then start the engine, and let it idle.

4. The SRS indicator comes on for about 6 seconds and then goes off.

5. Shake the related wire harnesses and the connectors, and look for loose connections, poor pin fits, and poor grounds.

6. Take a test-drive (quick acceleration, quick braking, and cornering), turn the steering wheel fully left and right, and hold it there for 5 to 10 seconds. If the problem recurs, the SRS indicator will come on.

7. If you cannot duplicate the concern, ask the customer about the conditions when it occurred, or ask the customer to demonstrate the concern.

8. If you cannot duplicate the intermittent failure, the system is OK at this time.

SYMPTOM TROUBLESHOOTING INDEX FOR VIEWER

FRONT PASSENGER'S AIRBAG CUTOFF INDICATOR DOES NOT COME ON (KA/KC)

Diagnostic procedure

- Check for DTCs. If any DTC is indicated, go to the DTC troubleshooting

Also check for

DTC B00D5-14 troubleshooting

FRONT PASSENGER'S AIRBAG CUTOFF INDICATOR FLASHES (KA/KC)

Diagnostic procedure

- Check for DTCs. If any DTC is indicated, go to the DTC troubleshooting

Also check for

Front passenger's weight sensor initialization

FRONT SEAT BELT REMINDER INDICATOR DOES NOT COME ON, TURN OFF, OR FLASH (KA/KC)

Diagnostic procedure

- Symptom Troubleshooting

Also check for

-

HDS DOES NOT COMMUNICATE WITH THE VEHICLE (KA/KC)

Diagnostic procedure

- DLC Circuit Troubleshooting

Also check for

- Correct HDS software
- Communication with the HDS

SRS INDICATOR DOES NOT COME ON (KA/KC)

Diagnostic procedure

- Symptom Troubleshooting

Also check for

-

SRS INDICATOR STAYS ON, BUT NO DTCS ARE STORED, OR CANNOT BE READ (KA/KC)

Diagnostic procedure

- Symptom Troubleshooting

Also check for

- Check the deployed history.
- Charging system for under or overcharging
- Communication with the HDS

ADVANCED DIAGNOSTICS

DTC B0001-11

DTC B0001-11 : Short to Ground in the Driver's Airbag First Inflator

NOTE

- Always check "How to troubleshoot the SRS system" and proceed along each "DTC Troubleshooting" procedure.
- Make sure the 12 volt battery is fully charged. If not, the results of tests may not be accurate.
- The SRS indicator will turn on when the 12 volt battery voltage becomes below 10 volts.
- The possible causes shown may not be a complete list of all potential problems, and it is possible that there may be other causes.

Confirmation Procedure	Basic Condition: • 12 volt battery voltage 10 - 16 V Operating Condition: • Turn the vehicle to the ON mode, and wait 6 seconds.
Duration	About 6 seconds
DTC Type	• 1 drive cycle • SRS indicator on
Fail Safe Action	• None
Possible Cause	• Short to ground between the SRS unit and the driver's airbag first inflator (LA1+, LA1- lines) • Driver's airbag internal failure (Driver's airbag first inflator) • Cable reel • SRS unit internal failure

DTC B0001-12

DTC B0001-12 : Short to Power in the Driver's Airbag First Inflator

NOTE

- Always check "How to troubleshoot the SRS system" and proceed along each "DTC Troubleshooting" procedure.
- Make sure the 12 volt battery is fully charged. If not, the results of tests may not be accurate.
- The SRS indicator will turn on when the 12 volt battery voltage becomes below 10 volts.
- The possible causes shown may not be a complete list of all potential problems, and it is possible that there may be other causes.

Confirmation Procedure	Basic Condition: • 12 volt battery voltage 10 - 16 V Operating Condition: • Turn the vehicle to the ON mode, and wait 6 seconds.
Duration	About 6 seconds
DTC Type	• 1 drive cycle • SRS indicator on
Fail Safe Action	• None
Possible Cause	• Short to power between the SRS unit and the driver's airbag first inflator (LA1+, LA1- lines) • Driver's airbag internal failure (Driver's airbag first inflator) • Cable reel • SRS unit internal failure

DTC B0001-13

DTC B0001-13 : Open or Increased Resistance in the Driver's Airbag First Inflator

NOTE

- Always check "How to troubleshoot the SRS system" and proceed along each "DTC Troubleshooting" procedure.
- Make sure the 12 volt battery is fully charged. If not, the results of tests may not be accurate.
- The SRS indicator will turn on when the 12 volt battery voltage becomes below 10 volts.
- The possible causes shown may not be a complete list of all potential problems, and it is possible that there may be other causes.

Confirmation Procedure	Basic Condition: • 12 volt battery voltage 10 - 16 V Operating Condition: • Turn the vehicle to the ON mode, and wait 6 seconds.
Duration	About 6 seconds
DTC Type	• 1 drive cycle • SRS indicator on
Fail Safe Action	• None
Possible Cause	• Open or Poor connection between the SRS unit and the driver's airbag first inflator (LA1+, LA1- lines) • Driver's airbag internal failure (Driver's airbag first inflator) • Cable reel • SRS unit internal failure

DTC B0001-1A

DTC B0001-1A : Decreased Resistance in the Driver's Airbag First Inflator

NOTE

- Always check "How to troubleshoot the SRS system" and proceed along each "DTC Troubleshooting" procedure.
- Make sure the 12 volt battery is fully charged. If not, the results of tests may not be accurate.
- The SRS indicator will turn on when the 12 volt battery voltage becomes below 10 volts.
- The possible causes shown may not be a complete list of all potential problems, and it is possible that there may be other causes.

Confirmation Procedure	Basic Condition: • 12 volt battery voltage 10 - 16 V Operating Condition: • Turn the vehicle to the ON mode, and wait 6 seconds.
Duration	About 6 seconds
DTC Type	• 1 drive cycle • SRS indicator on
Fail Safe Action	• None
Possible Cause	• Short to another line or Poor connection between the SRS unit and the driver's airbag first inflator (LA1+, LA1- lines) • Driver's airbag internal failure (Driver's airbag first inflator) • Cable reel • SRS unit internal failure

DTC B0001-2B

DTC B0001-2B : Short to Another Wire Harness in the Driver's Airbag First Inflator

NOTE

- Always check "How to troubleshoot the SRS system" and proceed along each "DTC Troubleshooting" procedure.
- Make sure the 12 volt battery is fully charged. If not, the results of tests may not be accurate.
- The SRS indicator will turn on when the 12 volt battery voltage becomes below 10 volts.
- The possible causes shown may not be a complete list of all potential problems, and it is possible that there may be other causes.

Confirmation Procedure	Basic Condition: • 12 volt battery voltage 10 - 16 V Operating Condition: • Turn the vehicle to the ON mode, and wait 6 seconds.
Duration	About 6 seconds
DTC Type	• 1 drive cycle • SRS indicator on
Fail Safe Action	• None
Possible Cause	• Short to another line between the SRS unit and the driver's airbag first inflator (LA1+, LA1- lines) • Driver's airbag internal failure (Driver's airbag first inflator) • Cable reel • SRS unit internal failure

DTC B0002-11

DTC B0002-11 : Short to Ground in the Driver's Airbag Second Inflator

NOTE

- Always check "How to troubleshoot the SRS system" and proceed along each "DTC Troubleshooting" procedure.
- Make sure the 12 volt battery is fully charged. If not, the results of tests may not be accurate.
- The SRS indicator will turn on when the 12 volt battery voltage becomes below 10 volts.
- The possible causes shown may not be a complete list of all potential problems, and it is possible that there may be other causes.

Confirmation Procedure	Basic Condition: - 12 volt battery voltage 10 - 16 V Operating Condition: - Turn the vehicle to the ON mode, and wait 6 seconds.
Duration	About 6 seconds
DTC Type	- 1 drive cycle - SRS indicator on
Fail Safe Action	- None
Possible Cause	- Short to ground between the SRS unit and the driver's airbag second inflator (LA2+, LA2- lines) - Driver's airbag internal failure (Driver's airbag second inflator) - Cable reel - SRS unit internal failure

DTC B0002-12

DTC B0002-12 : Short to Power in the Driver's Airbag Second Inflator

NOTE

- Always check "How to troubleshoot the SRS system" and proceed along each "DTC Troubleshooting" procedure.
- Make sure the 12 volt battery is fully charged. If not, the results of tests may not be accurate.
- The SRS indicator will turn on when the 12 volt battery voltage becomes below 10 volts.
- The possible causes shown may not be a complete list of all potential problems, and it is possible that there may be other causes.

Confirmation Procedure	Basic Condition: • 12 volt battery voltage 10 - 16 V Operating Condition: • Turn the vehicle to the ON mode, and wait 6 seconds.
Duration	About 6 seconds
DTC Type	• 1 drive cycle • SRS indicator on
Fail Safe Action	• None
Possible Cause	• Short to power between the SRS unit and the driver's airbag second inflator (LA2+, LA2- lines) • Driver's airbag internal failure (Driver's airbag second inflator) • Cable reel • SRS unit internal failure

DTC B0002-13

DTC B0002-13 : Open or Increased Resistance in the Driver's Airbag Second Inflator

NOTE

- Always check "How to troubleshoot the SRS system" and proceed along each "DTC Troubleshooting" procedure.
- Make sure the 12 volt battery is fully charged. If not, the results of tests may not be accurate.
- The SRS indicator will turn on when the 12 volt battery voltage becomes below 10 volts.
- The possible causes shown may not be a complete list of all potential problems, and it is possible that there may be other causes.

Confirmation Procedure	Basic Condition: • 12 volt battery voltage 10 - 16 V Operating Condition: • Turn the vehicle to the ON mode, and wait 6 seconds.
Duration	About 6 seconds
DTC Type	• 1 drive cycle • SRS indicator on
Fail Safe Action	• None
Possible Cause	• Open or Poor connection between the SRS unit and the driver's airbag second inflator (LA2+, LA2- lines) • Driver's airbag internal failure (Driver's airbag second inflator) • Cable reel • SRS unit internal failure

DTC B0002-1A

DTC B0002-1A : Decreased Resistance in the Driver's Airbag Second Inflator

NOTE

- Always check "How to troubleshoot the SRS system" and proceed along each "DTC Troubleshooting" procedure.
- Make sure the 12 volt battery is fully charged. If not, the results of tests may not be accurate.
- The SRS indicator will turn on when the 12 volt battery voltage becomes below 10 volts.
- The possible causes shown may not be a complete list of all potential problems, and it is possible that there may be other causes.

Confirmation Procedure	Basic Condition: • 12 volt battery voltage 10 - 16 V Operating Condition: • Turn the vehicle to the ON mode, and wait 6 seconds.
Duration	About 6 seconds
DTC Type	• 1 drive cycle • SRS indicator on
Fail Safe Action	• None
Possible Cause	• Short to another line or Poor connection between the SRS unit and the driver's airbag second inflator (LA2+, LA2- lines) • Driver's airbag internal failure (Driver's airbag second inflator) • Cable reel • SRS unit internal failure

DTC B0002-2B

DTC B0002-2B : Short to Another Wire Harness in the Driver's Airbag Second Inflator

NOTE

- Always check "How to troubleshoot the SRS system" and proceed along each "DTC Troubleshooting" procedure.
- Make sure the 12 volt battery is fully charged. If not, the results of tests may not be accurate.
- The SRS indicator will turn on when the 12 volt battery voltage becomes below 10 volts.
- The possible causes shown may not be a complete list of all potential problems, and it is possible that there may be other causes.

Confirmation Procedure	Basic Condition: - 12 volt battery voltage 10 - 16 V Operating Condition: - Turn the vehicle to the ON mode, and wait 6 seconds.
Duration	About 6 seconds
DTC Type	- 1 drive cycle - SRS indicator on
Fail Safe Action	- None
Possible Cause	- Short to another line between the SRS unit and the driver's airbag second inflator (LA2+, LA2- lines) - Driver's airbag internal failure (Driver's airbag first inflator) - Cable reel - SRS unit internal failure

DTC B0010-11

DTC B0010-11 : Short to Ground in the Front Passenger's Airbag First Inflator

NOTE

- Always check "How to troubleshoot the SRS system" and proceed along each "DTC Troubleshooting" procedure.
- Make sure the 12 volt battery is fully charged. If not, the results of tests may not be accurate.
- The SRS indicator will turn on when the 12 volt battery voltage becomes below 10 volts.
- The possible causes shown may not be a complete list of all potential problems, and it is possible that there may be other causes.

Confirmation Procedure	Basic Condition: - 12 volt battery voltage 10 - 16 V Operating Condition: - Turn the vehicle to the ON mode, and wait 6 seconds.
Duration	About 6 seconds
DTC Type	- 1 drive cycle - SRS indicator on
Fail Safe Action	- None
Possible Cause	- Short to ground between the SRS unit and the front passenger's airbag first inflator (RA1+, RA1- lines) - Front passenger's airbag internal failure (Front passenger's airbag first inflator) - SRS unit internal failure

DTC B0010-12

DTC B0010-12 : Short to Power in the Front Passenger's Airbag First Inflator

NOTE

- Always check "How to troubleshoot the SRS system" and proceed along each "DTC Troubleshooting" procedure.
- Make sure the 12 volt battery is fully charged. If not, the results of tests may not be accurate.
- The SRS indicator will turn on when the 12 volt battery voltage becomes below 10 volts.
- The possible causes shown may not be a complete list of all potential problems, and it is possible that there may be other causes.

Confirmation Procedure	Basic Condition: • 12 volt battery voltage 10 - 16 V Operating Condition: • Turn the vehicle to the ON mode, and wait 6 seconds.
Duration	About 6 seconds
DTC Type	• 1 drive cycle • SRS indicator on
Fail Safe Action	• None
Possible Cause	• Short to power between the SRS unit and the front passenger's airbag first inflator (RA1+, RA1- lines) • Front passenger's airbag internal failure (Front passenger's airbag first inflator) • SRS unit internal failure

DTC B0010-13

DTC B0010-13 : Open or Increased Resistance in the Front Passenger's Airbag First Inflator

NOTE

- Always check "How to troubleshoot the SRS system" and proceed along each "DTC Troubleshooting" procedure.
- Make sure the 12 volt battery is fully charged. If not, the results of tests may not be accurate.
- The SRS indicator will turn on when the 12 volt battery voltage becomes below 10 volts.
- The possible causes shown may not be a complete list of all potential problems, and it is possible that there may be other causes.

Confirmation Procedure	Basic Condition: • 12 volt battery voltage 10 - 16 V Operating Condition: • Turn the vehicle to the ON mode, and wait 6 seconds.
Duration	About 6 seconds

DTC Type	- 1 drive cycle - SRS indicator on
Fail Safe Action	- None
Possible Cause	- Open or Poor connection between the SRS unit and the front passenger's airbag first inflator (RA1+, RA1- lines) - Front passenger's airbag internal failure (Front passenger's airbag first inflator) - SRS unit internal failure

DTC B0010-1A

DTC B0010-1A : Decreased Resistance in the Front Passenger's Airbag First Inflator

NOTE

- Always check "How to troubleshoot the SRS system" and proceed along each "DTC Troubleshooting" procedure.
- Make sure the 12 volt battery is fully charged. If not, the results of tests may not be accurate.
- The SRS indicator will turn on when the 12 volt battery voltage becomes below 10 volts.
- The possible causes shown may not be a complete list of all potential problems, and it is possible that there may be other causes.

Confirmation Procedure	Basic Condition: - 12 volt battery voltage 10 - 16 V Operating Condition: - Turn the vehicle to the ON mode, and wait 6 seconds.
Duration	About 6 seconds
DTC Type	- 1 drive cycle - SRS indicator on
Fail Safe Action	- None
Possible Cause	- Short to another line or Poor connection between the SRS unit and the front passenger's airbag first inflator (RA1+, RA1- lines) - Front passenger's airbag internal failure (Front passenger's airbag first inflator) - SRS unit internal failure

DTC B0010-2B

DTC B0010-2B : Short to Another Wire Harness in the Front Passenger's Airbag First Inflator

NOTE

- Always check "How to troubleshoot the SRS system" and proceed along each "DTC Troubleshooting" procedure.
- Make sure the 12 volt battery is fully charged. If not, the results of tests may not be accurate.

- The SRS indicator will turn on when the 12 volt battery voltage becomes below 10 volts.
- The possible causes shown may not be a complete list of all potential problems, and it is possible that there may be other causes.

Confirmation Procedure	Basic Condition: • 12 volt battery voltage 10 - 16 V Operating Condition: • Turn the vehicle to the ON mode, and wait 6 seconds.
Duration	About 6 seconds
DTC Type	• 1 drive cycle • SRS indicator on
Fail Safe Action	• None
Possible Cause	• Short to another line between the SRS unit and the front passenger's airbag first inflator (RA1+, RA1- lines) • Front passenger's airbag internal failure (Front passenger's airbag first inflator) • SRS unit internal failure

DTC B0011-11

DTC B0011-11 : Short to Ground in the Front Passenger's Airbag Second Inflator

NOTE

- Always check "How to troubleshoot the SRS system" and proceed along each "DTC Troubleshooting" procedure.
- Make sure the 12 volt battery is fully charged. If not, the results of tests may not be accurate.
- The SRS indicator will turn on when the 12 volt battery voltage becomes below 10 volts.
- The possible causes shown may not be a complete list of all potential problems, and it is possible that there may be other causes.

Confirmation Procedure	Basic Condition: • 12 volt battery voltage 10 - 16 V Operating Condition: • Turn the vehicle to the ON mode, and wait 6 seconds.
Duration	About 6 seconds
DTC Type	• 1 drive cycle • SRS indicator on
Fail Safe Action	• None
Possible Cause	• Short to ground between the SRS unit and the front passenger's airbag second inflator (RA2+, RA2- lines) • Front passenger's airbag internal failure (Front passenger's airbag second inflator)

	- SRS unit internal failure

DTC B0011-12

DTC B0011-12 : Short to Power in the Front Passenger's Airbag Second Inflator

NOTE

- Always check "How to troubleshoot the SRS system" and proceed along each "DTC Troubleshooting" procedure.
- Make sure the 12 volt battery is fully charged. If not, the results of tests may not be accurate.
- The SRS indicator will turn on when the 12 volt battery voltage becomes below 10 volts.
- The possible causes shown may not be a complete list of all potential problems, and it is possible that there may be other causes.

Confirmation Procedure	Basic Condition: - 12 volt battery voltage 10 - 16 V Operating Condition: - Turn the vehicle to the ON mode, and wait 6 seconds.
Duration	About 6 seconds
DTC Type	- 1 drive cycle - SRS indicator on
Fail Safe Action	- None
Possible Cause	- Short to power between the SRS unit and the front passenger's airbag second inflator (RA2+, RA2- lines) - Front passenger's airbag internal failure (Front passenger's airbag second inflator) - SRS unit internal failure

DTC B0011-13

DTC B0011-13 : Open or Increased Resistance in the Front Passenger's Airbag Second Inflator

NOTE

- Always check "How to troubleshoot the SRS system" and proceed along each "DTC Troubleshooting" procedure.
- Make sure the 12 volt battery is fully charged. If not, the results of tests may not be accurate.
- The SRS indicator will turn on when the 12 volt battery voltage becomes below 10 volts.
- The possible causes shown may not be a complete list of all potential problems, and it is possible that there may be other causes.

Confirmation Procedure	Basic Condition: - 12 volt battery voltage 10 - 16 V Operating Condition:

	• Turn the vehicle to the ON mode, and wait 6 seconds.
Duration	About 6 seconds
DTC Type	• 1 drive cycle • SRS indicator on
Fail Safe Action	• None
Possible Cause	• Open or Poor connection between the SRS unit and the front passenger's airbag second inflator (RA2+, RA2- lines) • Front passenger's airbag internal failure (Front passenger's airbag second inflator) • SRS unit internal failure

DTC B0011-1A

DTC B0011-1A : Decreased Resistance in the Front Passenger's Airbag Second Inflator

NOTE

- Always check "How to troubleshoot the SRS system" and proceed along each "DTC Troubleshooting" procedure.
- Make sure the 12 volt battery is fully charged. If not, the results of tests may not be accurate.
- The SRS indicator will turn on when the 12 volt battery voltage becomes below 10 volts.
- The possible causes shown may not be a complete list of all potential problems, and it is possible that there may be other causes.

Confirmation Procedure	Basic Condition: • 12 volt battery voltage 10 - 16 V Operating Condition: • Turn the vehicle to the ON mode, and wait 6 seconds.
Duration	About 6 seconds
DTC Type	• 1 drive cycle • SRS indicator on
Fail Safe Action	• None
Possible Cause	• Short to another line or Poor connection between the SRS unit and the front passenger's airbag second inflator (RA2+, RA2- lines) • Front passenger's airbag internal failure (Front passenger's airbag second inflator) • SRS unit internal failure

DTC B0011-2B

DTC B0011-2B : Short to Another Wire Harness in the Front Passenger's Airbag Second Inflator

NOTE

- Always check "How to troubleshoot the SRS system" and proceed along each "DTC Troubleshooting" procedure.
- Make sure the 12 volt battery is fully charged. If not, the results of tests may not be accurate.
- The SRS indicator will turn on when the 12 volt battery voltage becomes below 10 volts.
- The possible causes shown may not be a complete list of all potential problems, and it is possible that there may be other causes.

Confirmation Procedure	Basic Condition: • 12 volt battery voltage 10 - 16 V Operating Condition: • Turn the vehicle to the ON mode, and wait 6 seconds.
Duration	About 6 seconds
DTC Type	• 1 drive cycle • SRS indicator on
Fail Safe Action	• None
Possible Cause	• Short to another line between the SRS unit and the front passenger's airbag second inflator (RA2+, RA2- lines) • Front passenger's airbag internal failure (Front passenger's airbag second inflator) • SRS unit internal failure

DTC B0020-11

DTC B0020-11 : Short to Ground in the Driver's Side Airbag Inflator

NOTE

- Always check "How to troubleshoot the SRS system" and proceed along each "DTC Troubleshooting" procedure.
- Make sure the 12 volt battery is fully charged. If not, the results of tests may not be accurate.
- The SRS indicator will turn on when the 12 volt battery voltage becomes below 10 volts.
- The possible causes shown may not be a complete list of all potential problems, and it is possible that there may be other causes.

Confirmation Procedure	Basic Condition: • 12 volt battery voltage 10 - 16 V Operating Condition: • Turn the vehicle to the ON mode, and wait 6 seconds.
Duration	About 6 seconds
DTC Type	• 1 drive cycle • SRS indicator on
Fail Safe Action	• None

Possible Cause	- Short to ground between the SRS unit and the driver's side airbag inflator (LSA+, LSA- lines) - Driver's side airbag internal failure (Driver's side airbag inflator) - SRS unit internal failure

DTC B0020-12

DTC B0020-12 : Short to Power in the Driver's Side Airbag Inflator

NOTE

- Always check "How to troubleshoot the SRS system" and proceed along each "DTC Troubleshooting" procedure.
- Make sure the 12 volt battery is fully charged. If not, the results of tests may not be accurate.
- The SRS indicator will turn on when the 12 volt battery voltage becomes below 10 volts.
- The possible causes shown may not be a complete list of all potential problems, and it is possible that there may be other causes.

Confirmation Procedure	Basic Condition: - 12 volt battery voltage 10 - 16 V Operating Condition: - Turn the vehicle to the ON mode, and wait 6 seconds.
Duration	About 6 seconds
DTC Type	- 1 drive cycle - SRS indicator on
Fail Safe Action	- None
Possible Cause	- Short to power between the SRS unit and the driver's side airbag inflator (LSA+, LSA- lines) - Driver's side airbag internal failure (Driver's side airbag inflator) - SRS unit internal failure

DTC B0020-13

DTC B0020-13 : Open or Increased Resistance in the Driver's Side Airbag Inflator

NOTE

- Always check "How to troubleshoot the SRS system" and proceed along each "DTC Troubleshooting" procedure.
- Make sure the 12 volt battery is fully charged. If not, the results of tests may not be accurate.
- The SRS indicator will turn on when the 12 volt battery voltage becomes below 10 volts.
- The possible causes shown may not be a complete list of all potential problems, and it is possible that there may be other causes.

Confirmation Procedure	Basic Condition:

	- 12 volt battery voltage 10 - 16 V Operating Condition: - Turn the vehicle to the ON mode, and wait 6 seconds.
Duration	About 6 seconds
DTC Type	- 1 drive cycle - SRS indicator on
Fail Safe Action	- None
Possible Cause	- Open or Poor connection between the SRS unit and the driver's side airbag inflator (LSA+, LSA- lines) - Driver's side airbag internal failure (Driver's side airbag inflator) - SRS unit internal failure

DTC B0020-1A

DTC B0020-1A : Decreased Resistance in the Driver's Side Airbag Inflator

NOTE

- Always check "How to troubleshoot the SRS system" and proceed along each "DTC Troubleshooting" procedure.
- Make sure the 12 volt battery is fully charged. If not, the results of tests may not be accurate.
- The SRS indicator will turn on when the 12 volt battery voltage becomes below 10 volts.
- The possible causes shown may not be a complete list of all potential problems, and it is possible that there may be other causes.

Confirmation Procedure	Basic Condition: - 12 volt battery voltage 10 - 16 V Operating Condition: - Turn the vehicle to the ON mode, and wait 6 seconds.
Duration	About 6 seconds
DTC Type	- 1 drive cycle - SRS indicator on
Fail Safe Action	- None
Possible Cause	- Short to another line or Poor connection between the SRS unit and the driver's side airbag inflator (LSA+, LSA- lines) - Driver's side airbag internal failure (Driver's side airbag inflator) - SRS unit internal failure

DTC B0020-2B

DTC B0020-2B : Short to Another Wire Harness in the Driver's Side Airbag Inflator

NOTE

- Always check "How to troubleshoot the SRS system" and proceed along each "DTC Troubleshooting" procedure.
- Make sure the 12 volt battery is fully charged. If not, the results of tests may not be accurate.
- The SRS indicator will turn on when the 12 volt battery voltage becomes below 10 volts.
- The possible causes shown may not be a complete list of all potential problems, and it is possible that there may be other causes.

Confirmation Procedure	Basic Condition: • 12 volt battery voltage 10 - 16 V Operating Condition: • Turn the vehicle to the ON mode, and wait 6 seconds.
Duration	About 6 seconds
DTC Type	• 1 drive cycle • SRS indicator on
Fail Safe Action	• None
Possible Cause	• Short to another line between the SRS unit and the driver's side airbag inflator (LSA+, LSA- lines) • Driver's side airbag internal failure (Driver's side airbag inflator) • SRS unit internal failure

DTC B0021-11

DTC B0021-11 : Short to Ground in the Left Side Curtain Airbag First Inflator

NOTE

- Always check "How to troubleshoot the SRS system" and proceed along each "DTC Troubleshooting" procedure.
- Make sure the 12 volt battery is fully charged. If not, the results of tests may not be accurate.
- The SRS indicator will turn on when the 12 volt battery voltage becomes below 10 volts.
- The possible causes shown may not be a complete list of all potential problems, and it is possible that there may be other causes.

Confirmation Procedure	Basic Condition: • 12 volt battery voltage 10 - 16 V Operating Condition: • Turn the vehicle to the ON mode, and wait 6 seconds.
Duration	About 6 seconds
DTC Type	• 1 drive cycle • SRS indicator on

Fail Safe Action	- None
Possible Cause	- Short to ground between the SRS unit and the left side curtain airbag inflator (LCA+, LCA- lines) - Left side curtain airbag internal failure (Left side curtain airbag inflator) - SRS unit internal failure

DTC B0021-12

DTC B0021-12 : Short to Power in the Left Side Curtain Airbag First Inflator

NOTE

- Always check "How to troubleshoot the SRS system" and proceed along each "DTC Troubleshooting" procedure.
- Make sure the 12 volt battery is fully charged. If not, the results of tests may not be accurate.
- The SRS indicator will turn on when the 12 volt battery voltage becomes below 10 volts.
- The possible causes shown may not be a complete list of all potential problems, and it is possible that there may be other causes.

Confirmation Procedure	Basic Condition: - 12 volt battery voltage 10 - 16 V Operating Condition: - Turn the vehicle to the ON mode, and wait 6 seconds.
Duration	About 6 seconds
DTC Type	- 1 drive cycle - SRS indicator on
Fail Safe Action	- None
Possible Cause	- Short to power between the SRS unit and the left side curtain airbag inflator (LCA+, LCA- lines) - Left side curtain airbag internal failure (Left side curtain airbag inflator) - SRS unit internal failure

DTC B0021-13

DTC B0021-13 : Open or Increased Resistance in the Left Side Curtain Airbag First Inflator

NOTE

- Always check "How to troubleshoot the SRS system" and proceed along each "DTC Troubleshooting" procedure.
- Make sure the 12 volt battery is fully charged. If not, the results of tests may not be accurate.
- The SRS indicator will turn on when the 12 volt battery voltage becomes below 10 volts.
- The possible causes shown may not be a complete list of all potential problems, and it is possible that there may be other causes.

Confirmation Procedure	Basic Condition: - 12 volt battery voltage 10 - 16 V Operating Condition: - Turn the vehicle to the ON mode, and wait 6 seconds.
Duration	About 6 seconds
DTC Type	- 1 drive cycle - SRS indicator on
Fail Safe Action	- None
Possible Cause	- Open or Poor connection between the SRS unit and the left side curtain airbag inflator (LCA+, LCA- lines) - Left side curtain airbag internal failure (Left side curtain airbag inflator) - SRS unit internal failure

DTC B0021-1A

DTC B0021-1A : Decreased Resistance in the Left Side Curtain Airbag First Inflator

NOTE

- Always check "How to troubleshoot the SRS system" and proceed along each "DTC Troubleshooting" procedure.
- Make sure the 12 volt battery is fully charged. If not, the results of tests may not be accurate.
- The SRS indicator will turn on when the 12 volt battery voltage becomes below 10 volts.
- The possible causes shown may not be a complete list of all potential problems, and it is possible that there may be other causes.

Confirmation Procedure	Basic Condition: - 12 volt battery voltage 10 - 16 V Operating Condition: - Turn the vehicle to the ON mode, and wait 6 seconds.
Duration	About 6 seconds
DTC Type	- 1 drive cycle - SRS indicator on
Fail Safe Action	- None
Possible Cause	- Short to another line or Poor connection between the SRS unit and the left side curtain airbag inflator (LCA+, LCA- lines) - Left side curtain airbag internal failure (Left side curtain airbag inflator) - SRS unit internal failure

DTC B0021-2B

DTC B0021-2B : Short to Another Wire Harness in the Left Side Curtain Airbag First Inflator

NOTE

- Always check "How to troubleshoot the SRS system" and proceed along each "DTC Troubleshooting" procedure.
- Make sure the 12 volt battery is fully charged. If not, the results of tests may not be accurate.
- The SRS indicator will turn on when the 12 volt battery voltage becomes below 10 volts.
- The possible causes shown may not be a complete list of all potential problems, and it is possible that there may be other causes.

Confirmation Procedure	Basic Condition: • 12 volt battery voltage 10 - 16 V Operating Condition: • Turn the vehicle to the ON mode, and wait 6 seconds.
Duration	About 6 seconds
DTC Type	• 1 drive cycle • SRS indicator on
Fail Safe Action	• None
Possible Cause	• Short to another line between the SRS unit and the left side curtain airbag inflator (LCA+, LCA- lines) • SRS unit internal failure

DTC B0028-11

DTC B0028-11 : Short to Ground in the Front Passenger's Side Airbag Inflator

NOTE

- Always check "How to troubleshoot the SRS system" and proceed along each "DTC Troubleshooting" procedure.
- Make sure the 12 volt battery is fully charged. If not, the results of tests may not be accurate.
- The SRS indicator will turn on when the 12 volt battery voltage becomes below 10 volts.
- The possible causes shown may not be a complete list of all potential problems, and it is possible that there may be other causes.

Confirmation Procedure	Basic Condition: • 12 volt battery voltage 10 - 16 V Operating Condition: • Turn the vehicle to the ON mode, and wait 6 seconds.
Duration	About 6 seconds
DTC Type	• 1 drive cycle • SRS indicator on
Fail Safe Action	• None
Possible Cause	• Short to ground between the SRS unit and the front passenger's side airbag (RSA+, RSA- lines) • Front passenger's side airbag internal failure (Front passenger's side airbag inflator) • SRS unit internal failure

DTC B0028-12

DTC B0028-12 : Short to Power in the Front Passenger's Side Airbag Inflator

NOTE

- Always check "How to troubleshoot the SRS system" and proceed along each "DTC Troubleshooting" procedure.
- Make sure the 12 volt battery is fully charged. If not, the results of tests may not be accurate.
- The SRS indicator will turn on when the 12 volt battery voltage becomes below 10 volts.
- The possible causes shown may not be a complete list of all potential problems, and it is possible that there may be other causes.

Confirmation Procedure	Basic Condition: • 12 volt battery voltage 10 - 16 V Operating Condition: • Turn the vehicle to the ON mode, and wait 6 seconds.
Duration	About 6 seconds
DTC Type	• 1 drive cycle • SRS indicator on
Fail Safe Action	• None
Possible Cause	• Short to power between the SRS unit and the front passenger's side airbag inflator (RSA+, RSA- lines) • Front passenger's side airbag internal failure (Front passenger's side airbag inflator) • SRS unit internal failure

DTC B0028-13

DTC B0028-13 : Open or Increased Resistance in the Front Passenger's Side Airbag Inflator

NOTE

- Always check "How to troubleshoot the SRS system" and proceed along each "DTC Troubleshooting" procedure.
- Make sure the 12 volt battery is fully charged. If not, the results of tests may not be accurate.
- The SRS indicator will turn on when the 12 volt battery voltage becomes below 10 volts.
- The possible causes shown may not be a complete list of all potential problems, and it is possible that there may be other causes.

Confirmation Procedure	Basic Condition: • 12 volt battery voltage 10 - 16 V Operating Condition: • Turn the vehicle to the ON mode, and wait 6 seconds.
Duration	About 6 seconds
DTC Type	• 1 drive cycle • SRS indicator on
Fail Safe Action	• None
Possible Cause	• Open or Poor connection between the SRS unit and the front passenger's side airbag inflator (RSA+, RSA- lines) • Front passenger's side airbag internal failure (Front passenger's side airbag inflator) • SRS unit internal failure

DTC B0028-1A

DTC B0028-1A : Decreased Resistance in the Front Passenger's Side Airbag Inflator

NOTE

- Always check "How to troubleshoot the SRS system" and proceed along each "DTC Troubleshooting" procedure.
- Make sure the 12 volt battery is fully charged. If not, the results of tests may not be accurate.
- The SRS indicator will turn on when the 12 volt battery voltage becomes below 10 volts.
- The possible causes shown may not be a complete list of all potential problems, and it is possible that there may be other causes.

Confirmation Procedure	Basic Condition: • 12 volt battery voltage 10 - 16 V Operating Condition: • Turn the vehicle to the ON mode, and wait 6 seconds.

Duration	About 6 seconds
DTC Type	- 1 drive cycle - SRS indicator on
Fail Safe Action	- None
Possible Cause	- Short to another line or Poor connection between the SRS unit and the front passenger's side airbag inflator (RSA+, RSA- lines) - Front passenger's side airbag internal failure (Front passenger's side airbag inflator) - SRS unit internal failure

DTC B0028-2B

DTC B0028-2B : Short to Another Wire Harness in the Front Passenger's Side Airbag Inflator

NOTE

- Always check "How to troubleshoot the SRS system" and proceed along each "DTC Troubleshooting" procedure.
- Make sure the 12 volt battery is fully charged. If not, the results of tests may not be accurate.
- The SRS indicator will turn on when the 12 volt battery voltage becomes below 10 volts.
- The possible causes shown may not be a complete list of all potential problems, and it is possible that there may be other causes.

Confirmation Procedure	Basic Condition: - 12 volt battery voltage 10 - 16 V Operating Condition: - Turn the vehicle to the ON mode, and wait 6 seconds.
Duration	About 6 seconds
DTC Type	- 1 drive cycle - SRS indicator on
Fail Safe Action	- None
Possible Cause	- Short to another line between the SRS unit and the front passenger's side airbag inflator (RSA+, RSA- lines) - Front passenger's side airbag internal failure (Front passenger's side airbag inflator) - SRS unit internal failure

DTC B0029-11

DTC B0029-11 : Short to Ground in the Right Side Curtain Airbag First Inflator

NOTE

- Always check "How to troubleshoot the SRS system" and proceed along each "DTC Troubleshooting" procedure.
- Make sure the 12 volt battery is fully charged. If not, the results of tests may not be accurate.
- The SRS indicator will turn on when the 12 volt battery voltage becomes below 10 volts.
- The possible causes shown may not be a complete list of all potential problems, and it is possible that there may be other causes.

Confirmation Procedure	Basic Condition: • 12 volt battery voltage 10 - 16 V Operating Condition: • Turn the vehicle to the ON mode, and wait 6 seconds.
Duration	About 6 seconds
DTC Type	• 1 drive cycle • SRS indicator on
Fail Safe Action	• None
Possible Cause	• Short to ground between the SRS unit and the right side curtain airbag inflator (RCA+, RCA- lines) • Right side curtain airbag internal failure (Right side curtain airbag inflator) • SRS unit internal failure

DTC B0029-12

DTC B0029-12 : Short to Power in the Right Side Curtain Airbag First Inflator

NOTE

- Always check "How to troubleshoot the SRS system" and proceed along each "DTC Troubleshooting" procedure.
- Make sure the 12 volt battery is fully charged. If not, the results of tests may not be accurate.
- The SRS indicator will turn on when the 12 volt battery voltage becomes below 10 volts.
- The possible causes shown may not be a complete list of all potential problems, and it is possible that there may be other causes.

Confirmation Procedure	Basic Condition: • 12 volt battery voltage 10 - 16 V Operating Condition: • Turn the vehicle to the ON mode, and wait 6 seconds.
Duration	About 6 seconds
DTC Type	• 1 drive cycle • SRS indicator on
Fail Safe Action	• None

Possible Cause	- Short to power between the SRS unit and the right side curtain airbag inflator (RCA+, RCA- lines) - Right side curtain airbag internal failure (Right side curtain airbag inflator) - SRS unit internal failure

DTC B0029-13

DTC B0029-13 : Open or Increased Resistance in the Right Side Curtain Airbag First Inflator

NOTE

- Always check "How to troubleshoot the SRS system" and proceed along each "DTC Troubleshooting" procedure.
- Make sure the 12 volt battery is fully charged. If not, the results of tests may not be accurate.
- The SRS indicator will turn on when the 12 volt battery voltage becomes below 10 volts.
- The possible causes shown may not be a complete list of all potential problems, and it is possible that there may be other causes.

Confirmation Procedure	Basic Condition: - 12 volt battery voltage 10 - 16 V Operating Condition: - Turn the vehicle to the ON mode, and wait 6 seconds.
Duration	About 6 seconds
DTC Type	- 1 drive cycle - SRS indicator on
Fail Safe Action	- None
Possible Cause	- Open or Poor connection between the SRS unit and the right side curtain airbag inflator (RCA+, RCA- lines) - Right side curtain airbag internal failure (Right side curtain airbag inflator) - SRS unit internal failure

DTC B0029-1A

DTC B0029-1A : Decreased Resistance in the Right Side Curtain Airbag First Inflator

NOTE

- Always check "How to troubleshoot the SRS system" and proceed along each "DTC Troubleshooting" procedure.
- Make sure the 12 volt battery is fully charged. If not, the results of tests may not be accurate.
- The SRS indicator will turn on when the 12 volt battery voltage becomes below 10 volts.
- The possible causes shown may not be a complete list of all potential problems, and it is possible that there may be other causes.

Confirmation Procedure	Basic Condition:

	- 12 volt battery voltage 10 - 16 V Operating Condition: - Turn the vehicle to the ON mode, and wait 6 seconds.
Duration	About 6 seconds
DTC Type	- 1 drive cycle - SRS indicator on
Fail Safe Action	- None
Possible Cause	- Short to another line or Poor connection between the SRS unit and the right side curtain airbag first inflator (RCA+, RCA- lines) - Right side curtain airbag internal failure (Right side curtain airbag inflator) - SRS unit internal failure

DTC B0029-2B

DTC B0029-2B : Short to Another Wire Harness in the Right Side Curtain Airbag First Inflator

NOTE

- Always check "How to troubleshoot the SRS system" and proceed along each "DTC Troubleshooting" procedure.
- Make sure the 12 volt battery is fully charged. If not, the results of tests may not be accurate.
- The SRS indicator will turn on when the 12 volt battery voltage becomes below 10 volts.
- The possible causes shown may not be a complete list of all potential problems, and it is possible that there may be other causes.

Confirmation Procedure	Basic Condition: - 12 volt battery voltage 10 - 16 V Operating Condition: - Turn the vehicle to the ON mode, and wait 6 seconds.
Duration	About 6 seconds
DTC Type	- 1 drive cycle - SRS indicator on
Fail Safe Action	- None
Possible Cause	- Short to another line between the SRS unit and the right side curtain airbag inflator (RCA+, RCA- lines) - SRS unit internal failure

DTC B0050-11

DTC B0050-11 : Short or Decreased Resistance in the Driver's Seat Belt Buckle Switch

NOTE

- Always check "How to troubleshoot the SRS system" and proceed along each "DTC Troubleshooting" procedure.
- Make sure the 12 volt battery is fully charged. If not, the results of tests may not be accurate.
- The SRS indicator will turn on when the 12 volt battery voltage becomes below 10 volts.
- The possible causes shown may not be a complete list of all potential problems, and it is possible that there may be other causes.

Confirmation Procedure	Basic Condition: • 12 volt battery voltage 10 - 16 V Operating Condition: • Turn the vehicle to the ON mode, and wait 6 seconds.
Duration	About 6 seconds
DTC Type	• 1 drive cycle • SRS indicator on
Fail Safe Action	• None
Possible Cause	• Short to ground or Short to power between the SRS unit and the driver's seat belt buckle switch (FLBC line) • Driver's seat belt buckle assembly internal failure (Driver's seat belt buckle switch)

DTC B0050-13

DTC B0050-13 : Open or Increased Resistance in the Driver's Seat Belt Buckle Switch

NOTE

- Always check "How to troubleshoot the SRS system" and proceed along each "DTC Troubleshooting" procedure.
- Make sure the 12 volt battery is fully charged. If not, the results of tests may not be accurate.
- The SRS indicator will turn on when the 12 volt battery voltage becomes below 10 volts.
- The possible causes shown may not be a complete list of all potential problems, and it is possible that there may be other causes.

Confirmation Procedure	Basic Condition: • 12 volt battery voltage 10 - 16 V Operating Condition: • Turn the vehicle to the ON mode, and wait 6 seconds.
Duration	About 6 seconds
DTC Type	• 1 drive cycle • SRS indicator on

Fail Safe Action	- None
Possible Cause	- Open or Poor connection between the SRS unit and the driver's seat belt buckle switch (FLBC line) - Open or Poor connection between the driver's seat belt buckle switch and the body ground (GND line) - Driver's seat belt buckle assembly internal failure (Driver's seat belt buckle switch) - SRS unit internal failure

DTC B0050-2B

DTC B0050-2B : Short to Another Wire Harness in the Driver's Seat Belt Buckle Switch

NOTE

- Always check "How to troubleshoot the SRS system" and proceed along each "DTC Troubleshooting" procedure.
- Make sure the 12 volt battery is fully charged. If not, the results of tests may not be accurate.
- The SRS indicator will turn on when the 12 volt battery voltage becomes below 10 volts.
- The possible causes shown may not be a complete list of all potential problems, and it is possible that there may be other causes.

Confirmation Procedure	Basic Condition: - 12 volt battery voltage 10 - 16 V Operating Condition: - Turn the vehicle to the ON mode, and wait 6 seconds.
Duration	About 6 seconds
DTC Type	- 1 drive cycle - SRS indicator on
Fail Safe Action	- None
Possible Cause	- Short to another line between the SRS unit and the driver's seat belt buckle switch (FLBC line) - Driver's seat belt buckle assembly internal failure (Driver's seat belt buckle switch)

DTC B0052-11

DTC B0052-11 : Short or Decreased Resistance in the Front Passenger's Seat Belt Buckle Switch

NOTE

- Always check "How to troubleshoot the SRS system" and proceed along each "DTC Troubleshooting" procedure.
- Make sure the 12 volt battery is fully charged. If not, the results of tests may not be accurate.
- The SRS indicator will turn on when the 12 volt battery voltage becomes below 10 volts.

- The possible causes shown may not be a complete list of all potential problems, and it is possible that there may be other causes.

Confirmation Procedure	Basic Condition: • 12 volt battery voltage 10 - 16 V Operating Condition: • Turn the vehicle to the ON mode, and wait 6 seconds.
Duration	About 6 seconds
DTC Type	• 1 drive cycle • SRS indicator on
Fail Safe Action	• None
Possible Cause	• Short to ground or Short to power between the SRS unit and the front passenger's seat belt buckle switch (FRBC line) • Front passenger's seat belt buckle assembly internal failure (Front passenger's seat belt buckle switch)

DTC B0052-13

DTC B0052-13 : Open or Increased Resistance in the Front Passenger's Seat Belt Buckle Switch

NOTE

- Always check "How to troubleshoot the SRS system" and proceed along each "DTC Troubleshooting" procedure.
- Make sure the 12 volt battery is fully charged. If not, the results of tests may not be accurate.
- The SRS indicator will turn on when the 12 volt battery voltage becomes below 10 volts.
- The possible causes shown may not be a complete list of all potential problems, and it is possible that there may be other causes.

Confirmation Procedure	Basic Condition: • 12 volt battery voltage 10 - 16 V Operating Condition: • Turn the vehicle to the ON mode, and wait 6 seconds.
Duration	About 6 seconds
DTC Type	• 1 drive cycle • SRS indicator on
Fail Safe Action	• None
Possible Cause	• Open or Poor connection between the SRS unit and the front passenger's seat belt buckle switch (FRBC line) • Open or Poor connection between the front passenger's seat belt buckle switch and the body ground (GND line)

	- Front passenger's seat belt buckle assembly internal failure (Front passenger's seat belt buckle switch) - SRS unit internal failure

DTC B0052-2B

DTC B0052-2B : Short to Another Wire Harness in the Front Passenger's Seat Belt Buckle Switch

NOTE

- Always check "How to troubleshoot the SRS system" and proceed along each "DTC Troubleshooting" procedure.
- Make sure the 12 volt battery is fully charged. If not, the results of tests may not be accurate.
- The SRS indicator will turn on when the 12 volt battery voltage becomes below 10 volts.
- The possible causes shown may not be a complete list of all potential problems, and it is possible that there may be other causes.

Confirmation Procedure	Basic Condition: - 12 volt battery voltage 10 - 16 V Operating Condition: - Turn the vehicle to the ON mode, and wait 6 seconds.
Duration	About 6 seconds
DTC Type	- 1 drive cycle - SRS indicator on
Fail Safe Action	- None
Possible Cause	- Short to another line between the SRS unit and the front passenger's seat belt buckle switch (FRBC line) - Front passenger's seat belt buckle assembly internal failure (Front passenger's seat belt buckle switch)

DTC B0070-11

DTC B0070-11 : Short to Ground in the Driver's Seat Belt Tensioner

NOTE

- Always check "How to troubleshoot the SRS system" and proceed along each "DTC Troubleshooting" procedure.
- Make sure the 12 volt battery is fully charged. If not, the results of tests may not be accurate.
- The SRS indicator will turn on when the 12 volt battery voltage becomes below 10 volts.
- The possible causes shown may not be a complete list of all potential problems, and it is possible that there may be other causes.

Confirmation Procedure	Basic Condition: - 12 volt battery voltage 10 - 16 V

	Operating Condition: • Turn the vehicle to the ON mode, and wait 6 seconds.
Duration	About 6 seconds
DTC Type	• 1 drive cycle • SRS indicator on
Fail Safe Action	• None
Possible Cause	• Short to ground between the SRS unit and the driver's seat belt tensioner (LRP+, LRP- lines) • Driver's seat belt internal failure (Driver's seat belt tensioner) • SRS unit internal failure

DTC B0070-12

DTC B0070-12 : Short to Power in the Driver's Seat Belt Tensioner

NOTE

- Always check "How to troubleshoot the SRS system" and proceed along each "DTC Troubleshooting" procedure.
- Make sure the 12 volt battery is fully charged. If not, the results of tests may not be accurate.
- The SRS indicator will turn on when the 12 volt battery voltage becomes below 10 volts.
- The possible causes shown may not be a complete list of all potential problems, and it is possible that there may be other causes.

Confirmation Procedure	Basic Condition: • 12 volt battery voltage 10 - 16 V Operating Condition: • Turn the vehicle to the ON mode, and wait 6 seconds.
Duration	About 6 seconds
DTC Type	• 1 drive cycle • SRS indicator on
Fail Safe Action	• None
Possible Cause	• Short to power between the SRS unit and the driver's seat belt tensioner (LRP+, LRP- lines) • Driver's seat belt internal failure (Driver's seat belt tensioner) • SRS unit internal failure

DTC B0070-13

DTC B0070-13 : Open or Increased Resistance in the Driver's Seat Belt Tensioner

NOTE

- Always check "How to troubleshoot the SRS system" and proceed along each "DTC Troubleshooting" procedure.
- Make sure the 12 volt battery is fully charged. If not, the results of tests may not be accurate.
- The SRS indicator will turn on when the 12 volt battery voltage becomes below 10 volts.
- The possible causes shown may not be a complete list of all potential problems, and it is possible that there may be other causes.

Confirmation Procedure	Basic Condition: • 12 volt battery voltage 10 - 16 V Operating Condition: • Turn the vehicle to the ON mode, and wait 6 seconds.
Duration	About 6 seconds
DTC Type	• 1 drive cycle • SRS indicator on
Fail Safe Action	• None
Possible Cause	• Open or Poor connection between the SRS unit and the driver's seat belt tensioner (LRP+, LRP- lines) • Driver's seat belt internal failure (Driver's seat belt tensioner) • SRS unit internal failure

DTC B0070-1A

DTC B0070-1A : Decreased Resistance in the Driver's Seat Belt Tensioner

NOTE

- Always check "How to troubleshoot the SRS system" and proceed along each "DTC Troubleshooting" procedure.
- Make sure the 12 volt battery is fully charged. If not, the results of tests may not be accurate.
- The SRS indicator will turn on when the 12 volt battery voltage becomes below 10 volts.
- The possible causes shown may not be a complete list of all potential problems, and it is possible that there may be other causes.

Confirmation Procedure	Basic Condition: • 12 volt battery voltage 10 - 16 V Operating Condition: • Turn the vehicle to the ON mode, and wait 6 seconds.
Duration	About 6 seconds
DTC Type	• 1 drive cycle • SRS indicator on
Fail Safe Action	• None

Possible Cause	- Short to another line or Poor connection between the SRS unit and the driver's seat belt tensioner (LRP+, LRP- lines) - Driver's seat belt internal failure (Driver's seat belt tensioner) - SRS unit internal failure

DTC B0070-2B

DTC B0070-2B : Short to Another Wire Harness in the Driver's Seat Belt Tensioner

NOTE

- Always check "How to troubleshoot the SRS system" and proceed along each "DTC Troubleshooting" procedure.
- Make sure the 12 volt battery is fully charged. If not, the results of tests may not be accurate.
- The SRS indicator will turn on when the 12 volt battery voltage becomes below 10 volts.
- The possible causes shown may not be a complete list of all potential problems, and it is possible that there may be other causes.

Confirmation Procedure	Basic Condition: - 12 volt battery voltage 10 - 16 V Operating Condition: - Turn the vehicle to the ON mode, and wait 6 seconds.
Duration	About 6 seconds
DTC Type	- 1 drive cycle - SRS indicator on
Fail Safe Action	- None
Possible Cause	- Short to another line between the SRS unit and the driver's seat belt tensioner (LRP+, LRP- lines) - SRS unit internal failure

DTC B0072-11

DTC B0072-11 : Short to Ground in the Front Passenger's Seat Belt Tensioner

NOTE

- Always check "How to troubleshoot the SRS system" and proceed along each "DTC Troubleshooting" procedure.
- Make sure the 12 volt battery is fully charged. If not, the results of tests may not be accurate.
- The SRS indicator will turn on when the 12 volt battery voltage becomes below 10 volts.
- The possible causes shown may not be a complete list of all potential problems, and it is possible that there may be other causes.

Confirmation Procedure	Basic Condition: - 12 volt battery voltage 10 - 16 V

	Operating Condition: • Turn the vehicle to the ON mode, and wait 6 seconds.
Duration	About 6 seconds
DTC Type	• 1 drive cycle • SRS indicator on
Fail Safe Action	• None
Possible Cause	• Short to ground between the SRS unit and the front passenger's seat belt tensioner (RRP+, RRP- lines) • Front passenger's seat belt internal failure (Front passenger's seat belt tensioner) • SRS unit internal failure

DTC B0072-12

DTC B0072-12 : Short to Power in the Front Passenger's Seat Belt Tensioner

NOTE

- Always check "How to troubleshoot the SRS system" and proceed along each "DTC Troubleshooting" procedure.
- Make sure the 12 volt battery is fully charged. If not, the results of tests may not be accurate.
- The SRS indicator will turn on when the 12 volt battery voltage becomes below 10 volts.
- The possible causes shown may not be a complete list of all potential problems, and it is possible that there may be other causes.

Confirmation Procedure	Basic Condition: • 12 volt battery voltage 10 - 16 V Operating Condition: • Turn the vehicle to the ON mode, and wait 6 seconds.
Duration	About 6 seconds
DTC Type	• 1 drive cycle • SRS indicator on
Fail Safe Action	• None
Possible Cause	• Short to power between the SRS unit and the front passenger's seat belt tensioner (RRP+, RRP- lines) • Front passenger's seat belt internal failure (Front passenger's seat belt tensioner) • SRS unit internal failure

DTC B0072-13

DTC B0072-13 : Open or Increased Resistance in the Front Passenger's Seat Belt Tensioner

NOTE

- Always check "How to troubleshoot the SRS system" and proceed along each "DTC Troubleshooting" procedure.
- Make sure the 12 volt battery is fully charged. If not, the results of tests may not be accurate.
- The SRS indicator will turn on when the 12 volt battery voltage becomes below 10 volts.
- The possible causes shown may not be a complete list of all potential problems, and it is possible that there may be other causes.

Confirmation Procedure	Basic Condition: • 12 volt battery voltage 10 - 16 V Operating Condition: • Turn the vehicle to the ON mode, and wait 6 seconds.
Duration	About 6 seconds
DTC Type	• 1 drive cycle • SRS indicator on
Fail Safe Action	• None
Possible Cause	• Open or Poor connection between the SRS unit and the front passenger's seat belt tensioner (RRP+, RRP- lines) • Front passenger's seat belt internal failure (Front passenger's seat belt tensioner) • SRS unit internal failure

DTC B0072-1A

DTC B0072-1A : Decreased Resistance in the Front Passenger's Seat Belt Tensioner

NOTE

- Always check "How to troubleshoot the SRS system" and proceed along each "DTC Troubleshooting" procedure.
- Make sure the 12 volt battery is fully charged. If not, the results of tests may not be accurate.
- The SRS indicator will turn on when the 12 volt battery voltage becomes below 10 volts.
- The possible causes shown may not be a complete list of all potential problems, and it is possible that there may be other causes.

Confirmation Procedure	Basic Condition: • 12 volt battery voltage 10 - 16 V Operating Condition: • Turn the vehicle to the ON mode, and wait 6 seconds.
Duration	About 6 seconds
DTC Type	• 1 drive cycle • SRS indicator on
Fail Safe Action	• None

Possible Cause	- Short to another line or Poor connection between the SRS unit and the front passenger's seat belt tensioner (RRP+, RRP- lines) - Front passenger's seat belt internal failure (Front passenger's seat belt tensioner) - SRS unit internal failure

DTC B0072-2B

DTC B0072-2B : Short to Another Wire Harness in the Front Passenger's Seat Belt Tensioner

NOTE

- Always check "How to troubleshoot the SRS system" and proceed along each "DTC Troubleshooting" procedure.
- Make sure the 12 volt battery is fully charged. If not, the results of tests may not be accurate.
- The SRS indicator will turn on when the 12 volt battery voltage becomes below 10 volts.
- The possible causes shown may not be a complete list of all potential problems, and it is possible that there may be other causes.

Confirmation Procedure	Basic Condition: - 12 volt battery voltage 10 - 16 V Operating Condition: - Turn the vehicle to the ON mode, and wait 6 seconds.
Duration	About 6 seconds
DTC Type	- 1 drive cycle - SRS indicator on
Fail Safe Action	- None
Possible Cause	- Short to another line between the SRS unit and the front passenger's seat belt tensioner (RRP+, RRP- lines) - SRS unit internal failure

DTC B0079-11

DTC B0079-11 : Short to Ground in the Driver's Seat Belt Outer Lap Tensioner

NOTE

- Always check "How to troubleshoot the SRS system" and proceed along each "DTC Troubleshooting" procedure.
- Make sure the 12 volt battery is fully charged. If not, the results of tests may not be accurate.
- The SRS indicator will turn on when the 12 volt battery voltage becomes below 10 volts.
- The possible causes shown may not be a complete list of all potential problems, and it is possible that there may be other causes.

Confirmation Procedure	Basic Condition: - 12 volt battery voltage 10 - 16 V

	Operating Condition: - Turn the vehicle to the ON mode, and wait 6 seconds.
Duration	About 6 seconds
DTC Type	- 1 drive cycle - SRS indicator on
Fail Safe Action	- None
Possible Cause	- Short to ground between the SRS unit and the driver's seat belt outer lap tensioner (LLP+, LLP- lines) - Driver's seat belt internal failure (Driver's seat belt outer lap tensioner) - SRS unit internal failure

DTC B0079-12

DTC B0079-12 : Short to Power in the Driver's Seat Belt Outer Lap Tensioner

NOTE

- Always check "How to troubleshoot the SRS system" and proceed along each "DTC Troubleshooting" procedure.
- Make sure the 12 volt battery is fully charged. If not, the results of tests may not be accurate.
- The SRS indicator will turn on when the 12 volt battery voltage becomes below 10 volts.
- The possible causes shown may not be a complete list of all potential problems, and it is possible that there may be other causes.

Confirmation Procedure	Basic Condition: - 12 volt battery voltage 10 - 16 V Operating Condition: - Turn the vehicle to the ON mode, and wait 6 seconds.
Duration	About 6 seconds
DTC Type	- 1 drive cycle - SRS indicator on
Fail Safe Action	- None
Possible Cause	- Short to power between the SRS unit and the driver's seat belt outer lap tensioner (LLP+, LLP- lines) - Driver's seat belt internal failure (Driver's seat belt outer lap tensioner) - SRS unit internal failure

DTC B0079-13

DTC B0079-13 : Open or Increased Resistance in the Driver's Seat Belt Outer Lap Tensioner

NOTE

- Always check "How to troubleshoot the SRS system" and proceed along each "DTC Troubleshooting" procedure.
- Make sure the 12 volt battery is fully charged. If not, the results of tests may not be accurate.
- The SRS indicator will turn on when the 12 volt battery voltage becomes below 10 volts.
- The possible causes shown may not be a complete list of all potential problems, and it is possible that there may be other causes.

Confirmation Procedure	Basic Condition: • 12 volt battery voltage 10 - 16 V Operating Condition: • Turn the vehicle to the ON mode, and wait 6 seconds.
Duration	About 6 seconds
DTC Type	• 1 drive cycle • SRS indicator on
Fail Safe Action	• None
Possible Cause	• Open or Poor connection between the SRS unit and the driver's seat belt outer lap tensioner (LLP+, LLP- lines) • Driver's seat belt internal failure (Driver's seat belt outer lap tensioner) • SRS unit internal failure

DTC B0079-1A

DTC B0079-1A : Decreased Resistance in the Driver's Seat Belt Outer Lap Tensioner

NOTE

- Always check "How to troubleshoot the SRS system" and proceed along each "DTC Troubleshooting" procedure.
- Make sure the 12 volt battery is fully charged. If not, the results of tests may not be accurate.
- The SRS indicator will turn on when the 12 volt battery voltage becomes below 10 volts.
- The possible causes shown may not be a complete list of all potential problems, and it is possible that there may be other causes.

Confirmation Procedure	Basic Condition: • 12 volt battery voltage 10 - 16 V Operating Condition: • Turn the vehicle to the ON mode, and wait 6 seconds.
Duration	About 6 seconds
DTC Type	• 1 drive cycle • SRS indicator on
Fail Safe Action	• None

Possible Cause	• Short to another line or Poor connection between the SRS unit and the driver's seat belt outer lap tensioner (LLP+, LLP- lines) • Driver's seat belt internal failure (Driver's seat belt outer lap tensioner) • SRS unit internal failure

DTC B0079-2B

DTC B0079-2B : Short to Another Wire Harness in the Driver's Seat Belt Outer Lap Tensioner

NOTE

- Always check "How to troubleshoot the SRS system" and proceed along each "DTC Troubleshooting" procedure.
- Make sure the 12 volt battery is fully charged. If not, the results of tests may not be accurate.
- The SRS indicator will turn on when the 12 volt battery voltage becomes below 10 volts.
- The possible causes shown may not be a complete list of all potential problems, and it is possible that there may be other causes.

Confirmation Procedure	Basic Condition: • Battery voltage 10 - 16 V Operating Condition: • Turn the vehicle to the ON mode, and wait 6 seconds.
Duration	About 6 seconds
DTC Type	• 1 drive cycle • SRS indicator on
Fail Safe Action	• None
Possible Cause	• Short to another line between the SRS unit and the driver's seat belt outer lap tensioner (LLP+, LLP- lines) • Driver's seat belt internal failure (Driver's seat belt outer lap tensioner) • SRS unit internal failure

DTC B007A-11

DTC B007A-11 : Short to Ground in the Front Passenger's Seat Belt Outer Lap Tensioner

NOTE

- Always check "How to troubleshoot the SRS system" and proceed along each "DTC Troubleshooting" procedure.
- Make sure the 12 volt battery is fully charged. If not, the results of tests may not be accurate.
- The SRS indicator will turn on when the 12 volt battery voltage becomes below 10 volts.
- The possible causes shown may not be a complete list of all potential problems, and it is possible that there may be other causes.

Confirmation Procedure	Basic Condition:

	• 12 volt battery voltage 10 - 16 V Operating Condition: • Turn the vehicle to the ON mode, and wait 6 seconds.
Duration	About 6 seconds
DTC Type	• 1 drive cycle • SRS indicator on
Fail Safe Action	• None
Possible Cause	• Short to ground between the SRS unit and the front passenger's seat belt outer lap tensioner (RLP+, RLP- lines) • Front passenger's seat belt internal failure (Front passenger's seat belt outer lap tensioner) • SRS unit internal failure

DTC B007A-12

DTC B007A-12 : Short to Power in the Front Passenger's Seat Belt Outer Lap Tensioner

NOTE

- Always check "How to troubleshoot the SRS system" and proceed along each "DTC Troubleshooting" procedure.
- Make sure the 12 volt battery is fully charged. If not, the results of tests may not be accurate.
- The SRS indicator will turn on when the 12 volt battery voltage becomes below 10 volts.
- The possible causes shown may not be a complete list of all potential problems, and it is possible that there may be other causes.

Confirmation Procedure	Basic Condition: • 12 volt battery voltage 10 - 16 V Operating Condition: • Turn the vehicle to the ON mode, and wait 6 seconds.
Duration	About 6 seconds
DTC Type	• 1 drive cycle • SRS indicator on
Fail Safe Action	• None
Possible Cause	• Short to power between the SRS unit and the front passenger's seat belt outer lap tensioner (RLP+, RLP- lines) • Front passenger's seat belt internal failure (Front passenger's seat belt outer lap tensioner) • SRS unit internal failure

DTC B007A-13

DTC B007A-13 : Open or Increased Resistance in the Front Passenger's Seat Belt Outer Lap Tensioner

NOTE

- Always check "How to troubleshoot the SRS system" and proceed along each "DTC Troubleshooting" procedure.
- Make sure the 12 volt battery is fully charged. If not, the results of tests may not be accurate.
- The SRS indicator will turn on when the 12 volt battery voltage becomes below 10 volts.
- The possible causes shown may not be a complete list of all potential problems, and it is possible that there may be other causes.

Confirmation Procedure	Basic Condition: • 12 volt battery voltage 10 - 16 V Operating Condition: • Turn the vehicle to the ON mode, and wait 6 seconds.
Duration	About 6 seconds
DTC Type	• 1 drive cycle • SRS indicator on
Fail Safe Action	• None
Possible Cause	• Open or Poor connection between the SRS unit and the front passenger's seat belt outer lap tensioner (RLP+, RLP- lines) • Front passenger's seat belt internal failure (Front passenger's seat belt outer lap tensioner) • SRS unit internal failure

DTC B007A-1A

DTC B007A-1A : Decreased Resistance in the Front Passenger's Seat Belt Outer Lap Tensioner

NOTE

- Always check "How to troubleshoot the SRS system" and proceed along each "DTC Troubleshooting" procedure.
- Make sure the 12 volt battery is fully charged. If not, the results of tests may not be accurate.
- The SRS indicator will turn on when the 12 volt battery voltage becomes below 10 volts.
- The possible causes shown may not be a complete list of all potential problems, and it is possible that there may be other causes.

Confirmation Procedure	Basic Condition: • 12 volt battery voltage 10 - 16 V Operating Condition: • Turn the vehicle to the ON mode, and wait 6 seconds.

Duration	About 6 seconds
DTC Type	• 1 drive cycle • SRS indicator on
Fail Safe Action	• None
Possible Cause	• Short to another line or Poor connection between the SRS unit and the front passenger's seat belt outer lap tensioner (RLP+, RLP- lines) • Front passenger's seat belt internal failure (Front passenger's seat belt outer lap tensioner) • SRS unit internal failure

DTC B007A-2B

DTC B007A-2B : Short to Another Wire Harness in the Front Passenger's Seat Belt Outer Lap Tensioner

NOTE

- Always check "How to troubleshoot the SRS system" and proceed along each "DTC Troubleshooting" procedure.
- Make sure the 12 volt battery is fully charged. If not, the results of tests may not be accurate.
- The SRS indicator will turn on when the 12 volt battery voltage becomes below 10 volts.
- The possible causes shown may not be a complete list of all potential problems, and it is possible that there may be other causes.

Confirmation Procedure	Basic Condition: • Battery voltage 10 - 16 V Operating Condition: • Turn the vehicle to the ON mode, and wait 6 seconds.
Duration	About 6 seconds
DTC Type	• 1 drive cycle • SRS indicator on
Fail Safe Action	• None
Possible Cause	• Short to another line between the SRS unit and the front passenger's seat belt outer lap tensioner (RLP+, RLP- lines) • Front passenger's seat belt internal failure (Front passenger's seat belt outer lap tensioner) • SRS unit internal failure

DTC B0082-11

DTC B0082-11 : Short to Ground in the Selectable Energy Absorption Device of the Front Passenger's Seat Belt Tensioner

NOTE

- Always check "How to troubleshoot the SRS system" and proceed along each "DTC Troubleshooting" procedure.
- Make sure the 12 volt battery is fully charged. If not, the results of tests may not be accurate.
- The SRS indicator will turn on when the 12 volt battery voltage becomes below 10 volts.
- The possible causes shown may not be a complete list of all potential problems, and it is possible that there may be other causes.

Confirmation Procedure	Basic Condition: • 12 volt battery voltage 10 - 16 V Operating Condition: • Turn the vehicle to the ON mode, and wait 6 seconds.
Duration	About 6 seconds
DTC Type	• 1 drive cycle • SRS indicator on
Fail Safe Action	• None
Possible Cause	• Short to ground between the SRS unit and the selectable energy absorption device (RVEA+, RVEA- lines) • Front passenger's seat belt internal failure (Selectable energy absorption device) • SRS unit internal failure

DTC B0082-12

DTC B0082-12 : Short to Power in the Selectable Energy Absorption Device of the Front Passenger's Seat Belt Tensioner

NOTE

- Always check "How to troubleshoot the SRS system" and proceed along each "DTC Troubleshooting" procedure.
- Make sure the 12 volt battery is fully charged. If not, the results of tests may not be accurate.
- The SRS indicator will turn on when the 12 volt battery voltage becomes below 10 volts.
- The possible causes shown may not be a complete list of all potential problems, and it is possible that there may be other causes.

Confirmation Procedure	Basic Condition: • 12 volt battery voltage 10 - 16 V Operating Condition: • Turn the vehicle to the ON mode, and wait 6 seconds.
Duration	About 6 seconds
DTC Type	• 1 drive cycle • SRS indicator on
Fail Safe Action	• None
Possible Cause	• Short to power between the SRS unit and the selectable energy absorption device (RVEA+, RVEA- lines) • Front passenger's seat belt internal failure (Selectable energy absorption device) • SRS unit internal failure

DTC B0082-13

DTC B0082-13 : Open or Increased Resistance in the Selectable Energy Absorption Device of the Front Passenger's Seat Belt Tensioner

NOTE

- Always check "How to troubleshoot the SRS system" and proceed along each "DTC Troubleshooting" procedure.
- Make sure the 12 volt battery is fully charged. If not, the results of tests may not be accurate.
- The SRS indicator will turn on when the 12 volt battery voltage becomes below 10 volts.
- The possible causes shown may not be a complete list of all potential problems, and it is possible that there may be other causes.

Confirmation Procedure	Basic Condition: • 12 volt battery voltage 10 - 16 V Operating Condition: • Turn the vehicle to the ON mode, and wait 6 seconds.
Duration	About 6 seconds
DTC Type	• 1 drive cycle • SRS indicator on
Fail Safe Action	• None
Possible Cause	• Open or Poor connection between the SRS unit and the selectable energy absorption device (RVEA+, RVEA- lines) • Front passenger's seat belt internal failure (Selectable energy absorption device) • SRS unit internal failure

DTC B0082-1A

DTC B0082-1A : Decreased Resistance in the Selectable Energy Absorption Device of the Front Passenger's Seat Belt Tensioner

NOTE

- Always check "How to troubleshoot the SRS system" and proceed along each "DTC Troubleshooting" procedure.
- Make sure the 12 volt battery is fully charged. If not, the results of tests may not be accurate.
- The SRS indicator will turn on when the 12 volt battery voltage becomes below 10 volts.
- The possible causes shown may not be a complete list of all potential problems, and it is possible that there may be other causes.

Confirmation Procedure	Basic Condition: • 12 volt battery voltage 10 - 16 V Operating Condition: • Turn the vehicle to the ON mode, and wait 6 seconds.
Duration	About 6 seconds
DTC Type	• 1 drive cycle • SRS indicator on
Fail Safe Action	• None
Possible Cause	• Short to another line or Poor connection between the SRS unit and the selectable energy absorption device (RVEA+, RVEA- lines) • Front passenger's seat belt internal failure (Selectable energy absorption device) • SRS unit internal failure

DTC B0082-2B

DTC B0082-2B : Short to Another Wire Harness in the Selectable Energy Absorption Device of the Front Passenger's Seat Belt Tensioner

NOTE

- Always check "How to troubleshoot the SRS system" and proceed along each "DTC Troubleshooting" procedure.
- Make sure the 12 volt battery is fully charged. If not, the results of tests may not be accurate.
- The SRS indicator will turn on when the 12 volt battery voltage becomes below 10 volts.
- The possible causes shown may not be a complete list of all potential problems, and it is possible that there may be other causes.

Confirmation Procedure	Basic Condition: • 12 volt battery voltage 10 - 16 V Operating Condition: • Turn the vehicle to the ON mode, and wait 6 seconds.
Duration	About 6 seconds
DTC Type	• 1 drive cycle • SRS indicator on
Fail Safe Action	• None
Possible Cause	• Short to another line or Poor connection between the SRS unit and the selectable energy absorption device (RVEA+, RVEA- lines) • SRS unit internal failure

DTC B0090-4A

DTC B0090-4A : Internal Failure of the Left Front Impact Sensor

NOTE

- Always check "How to troubleshoot the SRS system" and proceed along each "DTC Troubleshooting" procedure.
- Make sure the 12 volt battery is fully charged. If not, the results of tests may not be accurate.
- The SRS indicator will turn on when the 12 volt battery voltage becomes below 10 volts.
- The possible causes shown may not be a complete list of all potential problems, and it is possible that there may be other causes.

Confirmation Procedure	Basic Condition: • 12 volt battery voltage 10 - 16 V Operating Condition: • Turn the vehicle to the ON mode, and wait 6 seconds.
Duration	About 6 seconds
DTC Type	• 1 drive cycle • SRS indicator on
Fail Safe Action	• None
Possible Cause	• Incorrect left front impact sensor installed • Incorrect SRS unit installed • Left front impact sensor internal failure • SRS unit internal failure

DTC B0090-87

DTC B0090-87 : No Signal From the Left Front Impact Sensor

NOTE

- Always check "How to troubleshoot the SRS system" and proceed along each "DTC Troubleshooting" procedure.
- Make sure the 12 volt battery is fully charged. If not, the results of tests may not be accurate.
- The SRS indicator will turn on when the 12 volt battery voltage becomes below 10 volts.
- The possible causes shown may not be a complete list of all potential problems, and it is possible that there may be other causes.

Confirmation Procedure	Basic Condition: • 12 volt battery voltage 10 - 16 V Operating Condition: • Turn the vehicle to the ON mode, and wait 6 seconds.
Duration	About 6 seconds
DTC Type	• 1 drive cycle • SRS indicator on
Fail Safe Action	• None
Possible Cause	• Open, Short to another line, Short to ground, Short to power, or Poor connection between the SRS unit and the left front impact sensor (LFS+, LFS- lines) • Left front impact sensor internal failure • SRS unit internal failure

DTC B0090-92

DTC B0090-92 : Internal Failure of the Left Front Impact Sensor

NOTE

- Always check "How to troubleshoot the SRS system" and proceed along each "DTC Troubleshooting" procedure.
- Make sure the 12 volt battery is fully charged. If not, the results of tests may not be accurate.
- The SRS indicator will turn on when the 12 volt battery voltage becomes below 10 volts.
- The possible causes shown may not be a complete list of all potential problems, and it is possible that there may be other causes.

Confirmation Procedure	Basic Condition: • 12 volt battery voltage 10 - 16 V Operating Condition: • Turn the vehicle to the ON mode, and wait 6 seconds.
Duration	About 6 seconds
DTC Type	• 1 drive cycle

	- SRS indicator on
Fail Safe Action	- None
Possible Cause	- Left front impact sensor internal failure - SRS unit internal failure

DTC B0091-4A

DTC B0091-4A : Internal Failure of the Left Side Impact Sensor (first)

NOTE

- Always check "How to troubleshoot the SRS system" and proceed along each "DTC Troubleshooting" procedure.
- Make sure the 12 volt battery is fully charged. If not, the results of tests may not be accurate.
- The SRS indicator will turn on when the 12 volt battery voltage becomes below 10 volts.
- The possible causes shown may not be a complete list of all potential problems, and it is possible that there may be other causes.

Confirmation Procedure	Basic Condition: - 12 volt battery voltage 10 - 16 V Operating Condition: - Turn the vehicle to the ON mode, and wait 6 seconds.
Duration	About 6 seconds
DTC Type	- 1 drive cycle - SRS indicator on
Fail Safe Action	- None
Possible Cause	- Incorrect left side impact sensor (first) installed - Incorrect SRS unit installed - Left side impact sensor (first) internal failure - SRS unit internal failure

DTC B0091-87

DTC B0091-87 : No Signal From the Left Side Impact Sensor (first)

NOTE

- Always check "How to troubleshoot the SRS system" and proceed along each "DTC Troubleshooting" procedure.
- Make sure the 12 volt battery is fully charged. If not, the results of tests may not be accurate.
- The SRS indicator will turn on when the 12 volt battery voltage becomes below 10 volts.
- The possible causes shown may not be a complete list of all potential problems, and it is possible that there may be other causes.

Confirmation Procedure	Basic Condition: • 12 volt battery voltage 10 - 16 V Operating Condition: • Turn the vehicle to the ON mode, and wait 6 seconds.
Duration	About 6 seconds
DTC Type	• 1 drive cycle • SRS indicator on
Fail Safe Action	• None
Possible Cause	• Open, Short to another line, Short to ground, Short to power, or Poor connection between the SRS unit and the left side impact sensor (first) (LS1+, LS1- lines) • Left side impact sensor (first) internal failure • SRS unit internal failure

DTC B0091-92

DTC B0091-92 : Internal Failure of the Left Side Impact Sensor (first)

NOTE

- Always check "How to troubleshoot the SRS system" and proceed along each "DTC Troubleshooting" procedure.
- Make sure the 12 volt battery is fully charged. If not, the results of tests may not be accurate.
- The SRS indicator will turn on when the 12 volt battery voltage becomes below 10 volts.
- The possible causes shown may not be a complete list of all potential problems, and it is possible that there may be other causes.

Confirmation Procedure	Basic Condition: • 12 volt battery voltage 10 - 16 V Operating Condition: • Turn the vehicle to the ON mode, and wait 6 seconds.
Duration	About 6 seconds
DTC Type	• 1 drive cycle • SRS indicator on
Fail Safe Action	• None
Possible Cause	• Left side impact sensor (first) internal failure • SRS unit internal failure

DTC B0092-4A

DTC B0092-4A : Internal Failure of the Left Side Impact Sensor (second)

NOTE

- Always check "How to troubleshoot the SRS system" and proceed along each "DTC Troubleshooting" procedure.
- Make sure the 12 volt battery is fully charged. If not, the results of tests may not be accurate.
- The SRS indicator will turn on when the 12 volt battery voltage becomes below 10 volts.
- The possible causes shown may not be a complete list of all potential problems, and it is possible that there may be other causes.

Confirmation Procedure	Basic Condition: • 12 volt battery voltage 10 - 16 V Operating Condition: • Turn the vehicle to the ON mode, and wait 6 seconds.
Duration	About 6 seconds
DTC Type	• 1 drive cycle • SRS indicator on
Fail Safe Action	• None
Possible Cause	• Incorrect left side impact sensor (second) installed • Incorrect SRS unit installed • Left side impact sensor (second) internal failure • SRS unit internal failure

DTC B0092-87

DTC B0092-87 : No Signal From the Left Side Impact Sensor (second)

NOTE

- Always check "How to troubleshoot the SRS system" and proceed along each "DTC Troubleshooting" procedure.
- Make sure the 12 volt battery is fully charged. If not, the results of tests may not be accurate.
- The SRS indicator will turn on when the 12 volt battery voltage becomes below 10 volts.
- The possible causes shown may not be a complete list of all potential problems, and it is possible that there may be other causes.

Confirmation Procedure	Basic Condition: • 12 volt battery voltage 10 - 16 V Operating Condition: • Turn the vehicle to the ON mode, and wait 6 seconds.
Duration	About 6 seconds
DTC Type	• 1 drive cycle • SRS indicator on

Fail Safe Action	- None
Possible Cause	- Open, Short to another line, Short to ground, Short to power, or Poor connection between the SRS unit and the left side impact sensor (second) (LS2+, LS2- lines) - Left side impact sensor (second) internal failure - SRS unit internal failure

DTC B0092-92

DTC B0092-92 : Internal Failure of the Left Side Impact Sensor (second)

NOTE

- Always check "How to troubleshoot the SRS system" and proceed along each "DTC Troubleshooting" procedure.
- Make sure the 12 volt battery is fully charged. If not, the results of tests may not be accurate.
- The SRS indicator will turn on when the 12 volt battery voltage becomes below 10 volts.
- The possible causes shown may not be a complete list of all potential problems, and it is possible that there may be other causes.

Confirmation Procedure	Basic Condition: - 12 volt battery voltage 10 - 16 V Operating Condition: - Turn the vehicle to the ON mode, and wait 6 seconds.
Duration	About 6 seconds
DTC Type	- 1 drive cycle - SRS indicator on
Fail Safe Action	- None
Possible Cause	- Left side impact sensor (second) internal failure - SRS unit internal failure

DTC B0095-4A

DTC B0095-4A : Internal Failure of the Right Front Impact Sensor

NOTE

- Always check "How to troubleshoot the SRS system" and proceed along each "DTC Troubleshooting" procedure.
- Make sure the 12 volt battery is fully charged. If not, the results of tests may not be accurate.
- The SRS indicator will turn on when the 12 volt battery voltage becomes below 10 volts.
- The possible causes shown may not be a complete list of all potential problems, and it is possible that there may be other causes.

Confirmation Procedure	Basic Condition:

	- 12 volt battery voltage 10 - 16 V Operating Condition: - Turn the vehicle to the ON mode, and wait 6 seconds.
Duration	About 6 seconds
DTC Type	- 1 drive cycle - SRS indicator on
Fail Safe Action	- None
Possible Cause	- Incorrect right front impact sensor installed - Incorrect SRS unit installed - Right front impact sensor internal failure - SRS unit internal failure

DTC B0095-87

DTC B0095-87 : No Signal From the Right Front Impact Sensor

NOTE

- Always check "How to troubleshoot the SRS system" and proceed along each "DTC Troubleshooting" procedure.
- Make sure the 12 volt battery is fully charged. If not, the results of tests may not be accurate.
- The SRS indicator will turn on when the 12 volt battery voltage becomes below 10 volts.
- The possible causes shown may not be a complete list of all potential problems, and it is possible that there may be other causes.

Confirmation Procedure	Basic Condition: - 12 volt battery voltage 10 - 16 V Operating Condition: - Turn the vehicle to the ON mode, and wait 6 seconds.
Duration	About 6 seconds
DTC Type	- 1 drive cycle - SRS indicator on
Fail Safe Action	- None
Possible Cause	- Open, Short to another line, Short to ground, Short to power, or Poor connection between the SRS unit and the right front impact sensor (RFS+, RFS- lines) - Right front impact sensor internal failure - SRS unit internal failure

DTC B0095-92

DTC B0095-92 : Internal Failure of the Right Front Impact Sensor

NOTE

- Always check "How to troubleshoot the SRS system" and proceed along each "DTC Troubleshooting" procedure.
- Make sure the 12 volt battery is fully charged. If not, the results of tests may not be accurate.
- The SRS indicator will turn on when the 12 volt battery voltage becomes below 10 volts.
- The possible causes shown may not be a complete list of all potential problems, and it is possible that there may be other causes.

Confirmation Procedure	Basic Condition: • 12 volt battery voltage 10 - 16 V Operating Condition: • Turn the vehicle to the ON mode, and wait 6 seconds.
Duration	About 6 seconds
DTC Type	• 1 drive cycle • SRS indicator on
Fail Safe Action	• None
Possible Cause	• Right front impact sensor internal failure • SRS unit internal failure

DTC B0096-4A

DTC B0096-4A : Internal Failure of the Right Side Impact Sensor (first)

NOTE

- Always check "How to troubleshoot the SRS system" and proceed along each "DTC Troubleshooting" procedure.
- Make sure the 12 volt battery is fully charged. If not, the results of tests may not be accurate.
- The SRS indicator will turn on when the 12 volt battery voltage becomes below 10 volts.
- The possible causes shown may not be a complete list of all potential problems, and it is possible that there may be other causes.

Confirmation Procedure	Basic Condition: • 12 volt battery voltage 10 - 16 V Operating Condition: • Turn the vehicle to the ON mode, and wait 6 seconds.
Duration	About 6 seconds
DTC Type	• 1 drive cycle • SRS indicator on

Fail Safe Action	- None
Possible Cause	- Incorrect right side impact sensor (first) installed - Incorrect SRS unit installed - Right side impact sensor (first) internal failure - SRS unit internal failure

DTC B0096-87

DTC B0096-87 : No Signal From the Right Side Impact Sensor (first)

NOTE

- Always check "How to troubleshoot the SRS system" and proceed along each "DTC Troubleshooting" procedure.
- Make sure the 12 volt battery is fully charged. If not, the results of tests may not be accurate.
- The SRS indicator will turn on when the 12 volt battery voltage becomes below 10 volts.
- The possible causes shown may not be a complete list of all potential problems, and it is possible that there may be other causes.

Confirmation Procedure	Basic Condition: - 12 volt battery voltage 10 - 16 V Operating Condition: - Turn the vehicle to the ON mode, and wait 6 seconds.
Duration	About 6 seconds
DTC Type	- 1 drive cycle - SRS indicator on
Fail Safe Action	- None
Possible Cause	- Open, Short to another line, Short to ground, Short to power, or Poor connection between the SRS unit and the right side impact sensor (first) (RS1+, RS1- lines) - Right side impact sensor (first) internal failure - SRS unit internal failure

DTC B0096-92

DTC B0096-92 : Internal Failure of the Right Side Impact Sensor (first)

NOTE

- Always check "How to troubleshoot the SRS system" and proceed along each "DTC Troubleshooting" procedure.
- Make sure the 12 volt battery is fully charged. If not, the results of tests may not be accurate.
- The SRS indicator will turn on when the 12 volt battery voltage becomes below 10 volts.
- The possible causes shown may not be a complete list of all potential problems, and it is possible that there may be other causes.

Confirmation Procedure	Basic Condition: - 12 volt battery voltage 10 - 16 V Operating Condition: - Turn the vehicle to the ON mode, and wait 6 seconds.
Duration	About 6 seconds
DTC Type	- 1 drive cycle - SRS indicator on
Fail Safe Action	- None
Possible Cause	- Right side impact sensor (first) internal failure - SRS unit internal failure

DTC B0097-4A

DTC B0097-4A : Internal Failure of the Right Side Impact Sensor (second)

NOTE

- Always check "How to troubleshoot the SRS system" and proceed along each "DTC Troubleshooting" procedure.
- Make sure the 12 volt battery is fully charged. If not, the results of tests may not be accurate.
- The SRS indicator will turn on when the 12 volt battery voltage becomes below 10 volts.
- The possible causes shown may not be a complete list of all potential problems, and it is possible that there may be other causes.

Confirmation Procedure	Basic Condition: - 12 volt battery voltage 10 - 16 V Operating Condition: - Turn the vehicle to the ON mode, and wait 6 seconds.
Duration	About 6 seconds
DTC Type	- 1 drive cycle - SRS indicator on
Fail Safe Action	- None
Possible Cause	- Incorrect right side impact sensor (second) installed - Incorrect SRS unit installed - Right side impact sensor (second) internal failure - SRS unit internal failure

DTC B0097-87

DTC B0097-87 : No Signal From the Right Side Impact Sensor (second)

NOTE

- Always check "How to troubleshoot the SRS system" and proceed along each "DTC Troubleshooting" procedure.
- Make sure the 12 volt battery is fully charged. If not, the results of tests may not be accurate.
- The SRS indicator will turn on when the 12 volt battery voltage becomes below 10 volts.
- The possible causes shown may not be a complete list of all potential problems, and it is possible that there may be other causes.

Confirmation Procedure	Basic Condition: • 12 volt battery voltage 10 - 16 V Operating Condition: • Turn the vehicle to the ON mode, and wait 6 seconds.
Duration	About 6 seconds
DTC Type	• 1 drive cycle • SRS indicator on
Fail Safe Action	• None
Possible Cause	• Open, Short to another line, Short to ground, Short to power, or Poor connection between the SRS unit and the right side impact sensor (second) (RS2+, RS2- lines) • Right side impact sensor (second) internal failure • SRS unit internal failure

DTC B0097-92

DTC B0097-92 : Internal Failure of the Right Side Impact Sensor (second)

NOTE

- Always check "How to troubleshoot the SRS system" and proceed along each "DTC Troubleshooting" procedure.
- Make sure the 12 volt battery is fully charged. If not, the results of tests may not be accurate.
- The SRS indicator will turn on when the 12 volt battery voltage becomes below 10 volts.
- The possible causes shown may not be a complete list of all potential problems, and it is possible that there may be other causes.

Confirmation Procedure	Basic Condition: • 12 volt battery voltage 10 - 16 V Operating Condition: • Turn the vehicle to the ON mode, and wait 6 seconds.
Duration	About 6 seconds
DTC Type	• 1 drive cycle • SRS indicator on
Fail Safe Action	• None
Possible Cause	• Right side impact sensor (second) internal failure • SRS unit internal failure

DTC B00A0-54

DTC B00A0-54 : Front Passenger's Weight Sensor not Calibrated

NOTE

- Always check "How to troubleshoot the SRS system" and proceed along each "DTC Troubleshooting" procedure.
- Make sure the 12 volt battery is fully charged. If not, the results of tests may not be accurate.
- The SRS indicator will turn on when the 12 volt battery voltage becomes below 10 volts.
- The possible causes shown may not be a complete list of all potential problems, and it is possible that there may be other causes.

Confirmation Procedure	Basic Condition: • 12 volt battery voltage 10 - 16 V Operating Condition: • Turn the vehicle to the ON mode, and wait 6 seconds.
Duration	About 6 seconds
DTC Type	• 1 drive cycle • SRS indicator on
Fail Safe Action	• None
Possible Cause	• Front passenger's weight sensor not initialized

DTC B00B5-11

DTC B00B5-11 : Short or Decreased Resistance in the Driver's Seat Position Sensor

NOTE

- Always check "How to troubleshoot the SRS system" and proceed along each "DTC Troubleshooting" procedure.
- Make sure the 12 volt battery is fully charged. If not, the results of tests may not be accurate.
- The SRS indicator will turn on when the 12 volt battery voltage becomes below 10 volts.
- The possible causes shown may not be a complete list of all potential problems, and it is possible that there may be other causes.

Confirmation Procedure	Basic Condition: • 12 volt battery voltage 10 - 16 V Operating Condition: • Turn the vehicle to the ON mode, and wait 6 seconds.
Duration	About 6 seconds
DTC Type	• 1 drive cycle • SRS indicator on
Fail Safe Action	• None
Possible Cause	• Short to ground between the SRS unit and the driver's seat position sensor (SS+ line) • Driver's seat position sensor internal failure • SRS unit internal failure

DTC B00B5-13

DTC B00B5-13 : Open or Increased Resistance in the Driver's Seat Position Sensor

NOTE

- Always check "How to troubleshoot the SRS system" and proceed along each "DTC Troubleshooting" procedure.
- Make sure the 12 volt battery is fully charged. If not, the results of tests may not be accurate.
- The SRS indicator will turn on when the 12 volt battery voltage becomes below 10 volts.
- The possible causes shown may not be a complete list of all potential problems, and it is possible that there may be other causes.

Confirmation Procedure	Basic Condition: • 12 volt battery voltage 10 - 16 V Operating Condition: • Turn the vehicle to the ON mode, and wait 6 seconds.
Duration	About 6 seconds
DTC Type	• 1 drive cycle • SRS indicator on
Fail Safe Action	• None

Possible Cause	- Open or Poor connection between the SRS unit and the driver's seat position sensor (SS+ line) - Open or Poor connection between the driver's seat position sensor and the body ground (GND line) - Driver's seat position sensor internal failure - SRS unit internal failure

DTC B00B5-2B

DTC B00B5-2B : Short to Another Wire Harness in the Driver's Seat Position Sensor

NOTE

- Always check "How to troubleshoot the SRS system" and proceed along each "DTC Troubleshooting" procedure.
- Make sure the 12 volt battery is fully charged. If not, the results of tests may not be accurate.
- The SRS indicator will turn on when the 12 volt battery voltage becomes below 10 volts.
- The possible causes shown may not be a complete list of all potential problems, and it is possible that there may be other causes.

Confirmation Procedure	Basic Condition: - Battery voltage 10 - 16 V Operating Condition: - Turn the vehicle to the ON mode, and wait 6 seconds.
Duration	About 6 seconds
DTC Type	- 1 drive cycle - SRS indicator on
Fail Safe Action	- None
Possible Cause	- Short to another line between the SRS unit and the driver's seat position sensor (SS+ line) - Driver's seat position sensor internal failure - SRS unit internal failure

DTC B00C0-16

DTC B00C0-16 : Internal Failure of the Front Passenger's Weight Sensor (front inner side)

NOTE

- Always check "How to troubleshoot the SRS system" and proceed along each "DTC Troubleshooting" procedure.
- Make sure the 12 volt battery is fully charged. If not, the results of tests may not be accurate.
- The SRS indicator will turn on when the 12 volt battery voltage becomes below 10 volts.
- The possible causes shown may not be a complete list of all potential problems, and it is possible that there may be other causes.

Confirmation Procedure	Basic Condition: • Battery voltage 10 - 16 V Operating Condition: • Turn the vehicle to the ON mode, and wait 6 seconds.
Duration	About 6 seconds
DTC Type	• 1 drive cycle • SRS indicator on
Fail Safe Action	• None
Possible Cause	Front passenger's weight sensor internal failure (front inner side)

DTC B00C0-4A

DTC B00C0-4A : Different Supplier ID/Function ID of the Front Passenger's Weight Sensor (front inner side)

NOTE

- Always check "How to troubleshoot the SRS system" and proceed along each "DTC Troubleshooting" procedure.
- Make sure the 12 volt battery is fully charged. If not, the results of tests may not be accurate.
- The SRS indicator will turn on when the 12 volt battery voltage becomes below 10 volts.
- The possible causes shown may not be a complete list of all potential problems, and it is possible that there may be other causes.

Confirmation Procedure	Basic Condition: • Battery voltage 10 - 16 V Operating Condition: • Turn the vehicle to the ON mode, and wait 6 seconds.
Duration	About 6 seconds
DTC Type	• 1 drive cycle • SRS indicator on
Fail Safe Action	• None
Possible Cause	• Front passenger's weight sensor internal failure (front inner side) • SRS unit internal failure

DTC B00C0-54

DTC B00C0-54 : Different Serial ID of the Front Passenger's Weight Sensor (front inner side)

NOTE

- Always check "How to troubleshoot the SRS system" and proceed along each "DTC Troubleshooting" procedure.

- Make sure the 12 volt battery is fully charged. If not, the results of tests may not be accurate.
- The SRS indicator will turn on when the 12 volt battery voltage becomes below 10 volts.
- The possible causes shown may not be a complete list of all potential problems, and it is possible that there may be other causes.

Confirmation Procedure	Basic Condition: • Battery voltage 10 - 16 V Operating Condition: • Turn the vehicle to the ON mode, and wait 6 seconds.
Duration	About 6 seconds
DTC Type	• 1 drive cycle • SRS indicator on
Fail Safe Action	• None
Possible Cause	SRS unit internal failure

DTC B00C0-87

DTC B00C0-87 : No Signal From the Front Passenger's Weight Sensor (front inner side)

NOTE

- Always check "How to troubleshoot the SRS system" and proceed along each "DTC Troubleshooting" procedure.
- Make sure the 12 volt battery is fully charged. If not, the results of tests may not be accurate.
- The SRS indicator will turn on when the 12 volt battery voltage becomes below 10 volts.
- The possible causes shown may not be a complete list of all potential problems, and it is possible that there may be other causes.

Confirmation Procedure	Basic Condition: • Battery voltage 10 - 16 V Operating Condition: • Turn the vehicle to the ON mode, and wait 6 seconds.
Duration	About 6 seconds
DTC Type	• 1 drive cycle • SRS indicator on
Fail Safe Action	• None
Possible Cause	• Open or poor connection between the SRS unit and the front passenger's weight sensor (front inner side) (SWS+, SWSS, SWS- lines) • Short to power or short to ground between the SRS unit and the front passenger's weight sensor (front inner side) (SWSS line) • Short to another line or poor connection between the SRS unit and the front passenger's weight sensor (front inner side) (SWSS to SWS+ lines, SWSS to

	SWS- lines) - SRS unit internal failure - Front passenger's weight sensor internal failure (front inner side)

DTC B00C0-96

DTC B00C0-96 : Internal Failure of the Front Passenger's Weight Sensor (front inner side)

NOTE

- Always check "How to troubleshoot the SRS system" and proceed along each "DTC Troubleshooting" procedure.
- Make sure the 12 volt battery is fully charged. If not, the results of tests may not be accurate.
- The SRS indicator will turn on when the 12 volt battery voltage becomes below 10 volts.
- The possible causes shown may not be a complete list of all potential problems, and it is possible that there may be other causes.

Confirmation Procedure	Basic Condition: - Battery voltage 10 - 16 V Operating Condition: - Turn the vehicle to the ON mode, and wait 6 seconds.
Duration	About 6 seconds
DTC Type	- 1 drive cycle - SRS indicator on
Fail Safe Action	- None
Possible Cause	Front passenger's weight sensor internal failure (front inner side)

DTC B00C2-16

DTC B00C2-16 : Internal Failure of the Front Passenger's Weight Sensor (rear inner side)

NOTE

- Always check "How to troubleshoot the SRS system" and proceed along each "DTC Troubleshooting" procedure.
- Make sure the 12 volt battery is fully charged. If not, the results of tests may not be accurate.
- The SRS indicator will turn on when the 12 volt battery voltage becomes below 10 volts.
- The possible causes shown may not be a complete list of all potential problems, and it is possible that there may be other causes.

Confirmation Procedure	Basic Condition: - Battery voltage 10 - 16 V Operating Condition: - Turn the vehicle to the ON mode, and wait 6 seconds.

Duration	About 6 seconds
DTC Type	- 1 drive cycle - SRS indicator on
Fail Safe Action	- None
Possible Cause	Front passenger's weight sensor internal failure (rear inner side)

DTC B00C2-4A

DTC B00C2-4A : Different Supplier ID/Function ID of the Front Passenger's Weight Sensor (rear inner side)

NOTE

- Always check "How to troubleshoot the SRS system" and proceed along each "DTC Troubleshooting" procedure.
- Make sure the 12 volt battery is fully charged. If not, the results of tests may not be accurate.
- The SRS indicator will turn on when the 12 volt battery voltage becomes below 10 volts.
- The possible causes shown may not be a complete list of all potential problems, and it is possible that there may be other causes.

Confirmation Procedure	Basic Condition: - Battery voltage 10 - 16 V Operating Condition: - Turn the vehicle to the ON mode, and wait 6 seconds.
Duration	About 6 seconds
DTC Type	- 1 drive cycle - SRS indicator on
Fail Safe Action	- None
Possible Cause	- Front passenger's weight sensor internal failure (rear inner side) - SRS unit internal failure

DTC B00C2-54

DTC B00C2-54 : Different Serial ID of the Front Passenger's Weight Sensor (rear inner side)

NOTE

- Always check "How to troubleshoot the SRS system" and proceed along each "DTC Troubleshooting" procedure.
- Make sure the 12 volt battery is fully charged. If not, the results of tests may not be accurate.
- The SRS indicator will turn on when the 12 volt battery voltage becomes below 10 volts.
- The possible causes shown may not be a complete list of all potential problems, and it is possible that there may be other causes.

Confirmation Procedure	Basic Condition:

	• Battery voltage 10 - 16 V Operating Condition: • Turn the vehicle to the ON mode, and wait 6 seconds.
Duration	About 6 seconds
DTC Type	• 1 drive cycle • SRS indicator on
Fail Safe Action	• None
Possible Cause	SRS unit internal failure

DTC B00C2-87

DTC B00C2-87 : No Signal From the Front Passenger's Weight Sensor (rear inner side)

NOTE

- Always check "How to troubleshoot the SRS system" and proceed along each "DTC Troubleshooting" procedure.
- Make sure the 12 volt battery is fully charged. If not, the results of tests may not be accurate.
- The SRS indicator will turn on when the 12 volt battery voltage becomes below 10 volts.
- The possible causes shown may not be a complete list of all potential problems, and it is possible that there may be other causes.

Confirmation Procedure	Basic Condition: • Battery voltage 10 - 16 V Operating Condition: • Turn the vehicle to the ON mode, and wait 6 seconds.
Duration	About 6 seconds
DTC Type	• 1 drive cycle • SRS indicator on
Fail Safe Action	• None
Possible Cause	• Open or poor connection between the SRS unit and the front passenger's weight sensor (rear inner side) (SWS+, SWS-, SWSS lines) • SRS unit internal failure • Front passenger's weight sensor internal failure (rear inner side)

DTC B00C2-96

DTC B00C2-96 : Internal Failure of the Front Passenger's Weight Sensor (rear inner side)

NOTE

- Always check "How to troubleshoot the SRS system" and proceed along each "DTC Troubleshooting" procedure.

- Make sure the 12 volt battery is fully charged. If not, the results of tests may not be accurate.
- The SRS indicator will turn on when the 12 volt battery voltage becomes below 10 volts.
- The possible causes shown may not be a complete list of all potential problems, and it is possible that there may be other causes.

Confirmation Procedure	Basic Condition: • Battery voltage 10 - 16 V Operating Condition: • Turn the vehicle to the ON mode, and wait 6 seconds.
Duration	About 6 seconds
DTC Type	• 1 drive cycle • SRS indicator on
Fail Safe Action	• None
Possible Cause	Front passenger's seat rail internal failure (Front passenger's weight sensor (rear inner side))

DTC B00D5-14

DTC B00D5-14 : Open or Short to Ground in the Front Passenger's Airbag Cutoff Indicator

NOTE

- Always check "How to troubleshoot the SRS system" and proceed along each "DTC Troubleshooting" procedure.
- Make sure the 12 volt battery is fully charged. If not, the results of tests may not be accurate.
- The SRS indicator will turn on when the 12 volt battery voltage becomes below 10 volts.
- The possible causes shown may not be a complete list of all potential problems, and it is possible that there may be other causes.

Confirmation Procedure	Basic Condition: • 12 volt battery voltage 10 - 16 V Operating Condition: • Turn the vehicle to the ON mode, and wait 9 seconds.
Duration	About 9 seconds
DTC Type	• 1 drive cycle • SRS indicator on
Fail Safe Action	• None
Possible Cause	• Open or Short to ground between the SRS unit and the front passenger's airbag cutoff indicator (OFF_PTT line) • Open or Short to ground between the 12 volt battery and the front passenger's airbag cutoff indicator • Front passenger's airbag cutoff indicator internal failure

	- SRS unit internal failure

DTC B00D5-17

DTC B00D5-17 : Short to Power in the Front Passenger's Airbag Cutoff Indicator

NOTE

- Always check "How to troubleshoot the SRS system" and proceed along each "DTC Troubleshooting" procedure.
- Make sure the 12 volt battery is fully charged. If not, the results of tests may not be accurate.
- The SRS indicator will turn on when the 12 volt battery voltage becomes below 10 volts.
- The possible causes shown may not be a complete list of all potential problems, and it is possible that there may be other causes.

Confirmation Procedure	Basic Condition: • 12 volt battery voltage 10 - 16 V Operating Condition: • Turn the vehicle to the ON mode, and wait 9 seconds.
Duration	About 9 seconds
DTC Type	• 1 drive cycle • SRS indicator on
Fail Safe Action	• None
Possible Cause	• Short to power between the SRS unit and the front passenger's airbag cutoff indicator (OFF_PTT line) • Front passenger's airbag cutoff indicator internal failure • SRS unit internal failure

DTC B2800-49

DTC B2800-49 : Internal Failure of the SRS Unit

NOTE

- Always check "How to troubleshoot the SRS system" and proceed along each "DTC Troubleshooting" procedure.
- Make sure the 12 volt battery is fully charged. If not, the results of tests may not be accurate.
- The SRS indicator will turn on when the 12 volt battery voltage becomes below 10 volts.
- The possible causes shown may not be a complete list of all potential problems, and it is possible that there may be other causes.

Confirmation Procedure	Basic Condition: • 12 volt battery voltage 10 - 16 V Operating Condition:

	• Turn the vehicle to the ON mode, and wait 6 seconds.
Duration	About 6 seconds
DTC Type	• 1 drive cycle • SRS indicator on
Fail Safe Action	• None
Possible Cause	• SRS unit internal failure

DTC B2801-49

DTC B2801-49 : Internal Failure of the SRS Unit

NOTE

- Always check "How to troubleshoot the SRS system" and proceed along each "DTC Troubleshooting" procedure.
- Make sure the 12 volt battery is fully charged. If not, the results of tests may not be accurate.
- The SRS indicator will turn on when the 12 volt battery voltage becomes below 10 volts.
- The possible causes shown may not be a complete list of all potential problems, and it is possible that there may be other causes.

Confirmation Procedure	Basic Condition: • 12 volt battery voltage 10 - 16 V Operating Condition: • Turn the vehicle to the ON mode, and wait 6 seconds.
Duration	About 6 seconds
DTC Type	• 1 drive cycle • SRS indicator on
Fail Safe Action	• None
Possible Cause	• SRS unit internal failure

DTC B2802-49

DTC B2802-49 : Internal Failure of the SRS Unit

NOTE

- Always check "How to troubleshoot the SRS system" and proceed along each "DTC Troubleshooting" procedure.
- Make sure the 12 volt battery is fully charged. If not, the results of tests may not be accurate.
- The SRS indicator will turn on when the 12 volt battery voltage becomes below 10 volts.
- The possible causes shown may not be a complete list of all potential problems, and it is possible that there may be other causes.

Confirmation Procedure	Basic Condition: • 12 volt battery voltage 10 - 16 V Operating Condition: • Turn the vehicle to the ON mode, and wait 6 seconds.
Duration	About 6 seconds
DTC Type	• 1 drive cycle • SRS indicator on
Fail Safe Action	• None
Possible Cause	• SRS unit internal failure

DTC B2840-13

DTC B2840-13 : SRS Unit Connector A Not Properly Installed

NOTE

- Always check "How to troubleshoot the SRS system" and proceed along each "DTC Troubleshooting" procedure.
- Make sure the 12 volt battery is fully charged. If not, the results of tests may not be accurate.
- The SRS indicator will turn on when the 12 volt battery voltage becomes below 10 volts.
- The possible causes shown may not be a complete list of all potential problems, and it is possible that there may be other causes.

Confirmation Procedure	Basic Condition: • 12 volt battery voltage 10 - 16 V Operating Condition: • Turn the vehicle to the ON mode, and wait 6 seconds.
Duration	About 6 seconds
DTC Type	• 1 drive cycle • SRS indicator on
Fail Safe Action	• None
Possible Cause	• Poor connection between the SRS unit and connector A • SRS unit internal failure

DTC B2841-13

DTC B2841-13 : SRS Unit Connector B Not Properly Installed

NOTE

- Always check "How to troubleshoot the SRS system" and proceed along each "DTC Troubleshooting" procedure.
- Make sure the 12 volt battery is fully charged. If not, the results of tests may not be accurate.
- The SRS indicator will turn on when the 12 volt battery voltage becomes below 10 volts.
- The possible causes shown may not be a complete list of all potential problems, and it is possible that there may be other causes.

Confirmation Procedure	Basic Condition: • 12 volt battery voltage 10 - 16 V Operating Condition: • Turn the vehicle to the ON mode, and wait 6 seconds.
Duration	About 6 seconds
DTC Type	• 1 drive cycle • SRS indicator on
Fail Safe Action	• None
Possible Cause	• Poor connection between the SRS unit and connector B • SRS unit internal failure

DTC C0061-96 (SRS UNIT)

DTC C0061-96 : Internal Failure of the SRS Unit

NOTE

- Always check "How to troubleshoot the SRS system" and proceed along each "DTC Troubleshooting" procedure.
- Make sure the 12 volt battery is fully charged. If not, the results of tests may not be accurate.
- The SRS indicator will turn on when the 12 volt battery voltage becomes below 10 volts.
- The possible causes shown may not be a complete list of all potential problems, and it is possible that there may be other causes.

Confirmation Procedure	Basic Condition: - 12 volt battery voltage 10 - 16 V Operating Condition: - Turn the vehicle to the ON mode, and wait 6 seconds.
Duration	About 6 seconds
DTC Type	- 1 drive cycle - SRS indicator on
Fail Safe Action	- None
Possible Cause	- SRS unit internal failure

DTC C0063-96 (SRS UNIT)

DTC C0063-96 : Internal Failure of the SRS Unit

NOTE

- Always check "How to troubleshoot the SRS system" and proceed along each "DTC Troubleshooting" procedure.
- Make sure the 12 volt battery is fully charged. If not, the results of tests may not be accurate.
- The SRS indicator will turn on when the 12 volt battery voltage becomes below 10 volts.
- The possible causes shown may not be a complete list of all potential problems, and it is possible that there may be other causes.

Confirmation Procedure	Basic Condition: - 12 volt battery voltage 10 - 16 V Operating Condition: - Turn the vehicle to the ON mode, and wait 6 seconds.
Duration	About 6 seconds
DTC Type	- 1 drive cycle - SRS indicator on
Fail Safe Action	- None
Possible Cause	- SRS unit internal failure

DTC U0122-00 (SRS UNIT)

DTC U0122-00 : Lost Communication With the VSA Modulator-Control Unit (wheel speed sensor signal error)

NOTE

- Always check "How to troubleshoot the SRS system" and proceed along each "DTC Troubleshooting" procedure.
- Make sure the 12 volt battery is fully charged. If not, the results of tests may not be accurate.
- The SRS indicator will turn on when the 12 volt battery voltage becomes below 10 volts.
- The possible causes shown may not be a complete list of all potential problems, and it is possible that there may be other causes.

Confirmation Procedure	Basic Condition: • 12 volt battery voltage 10 - 16 V Operating Condition: • Turn the vehicle to the ON mode, and wait 6 seconds.
Duration	About 6 seconds
DTC Type	• 1 drive cycle • SRS indicator on
Fail Safe Action	• None
Possible Cause	• Open or Poor connection between the CAN gateway and the SRS unit (F-CAN C_H, F-CAN C_L lines) • Open or Poor connection between the CAN gateway and the VSA modulator-control unit (F-CAN B_H, F-CAN B_L, F-CAN C_H, F-CAN C_L lines) • VSA modulator-control unit internal failure • SRS unit internal failure

DTC U3000-49 (SRS UNIT)

DTC U3000-49 : Internal Failure of the SRS Unit

NOTE

- Always check "How to troubleshoot the SRS system" and proceed along each "DTC Troubleshooting" procedure.
- Make sure the 12 volt battery is fully charged. If not, the results of tests may not be accurate.
- The SRS indicator will turn on when the 12 volt battery voltage becomes below 10 volts.
- The possible causes shown may not be a complete list of all potential problems, and it is possible that there may be other causes.

Confirmation Procedure	Basic Condition: • 12 volt battery voltage 10 - 16 V Operating Condition: • Turn the vehicle to the ON mode, and wait 6 seconds.
Duration	About 6 seconds
DTC Type	• 1 drive cycle • SRS indicator on

Fail Safe Action	- None
Possible Cause	- Short to ground or short to power between the SRS unit and the front passenger's weight sensor (front inner side) (SWS+ line) - Short to another line between the SRS unit and the front passenger's weight sensor (front inner side) (SWS+ line to SWS- line) - Short to ground or short to power between the SRS unit and the front passenger's weight sensor (rear inner side) (SWS+ line) - Short to another line between the SRS unit and the front passenger's weight sensor (rear inner side) (SWS+ line to SWS- line) - SRS unit internal failure - Front passenger's weight sensor internal failure

DTC U3000-51 (SRS UNIT)

DTC U3000-51 : SRS Unit Programming Error

NOTE

- Always check "How to troubleshoot the SRS system" and proceed along each "DTC Troubleshooting" procedure.
- Make sure the 12 volt battery is fully charged. If not, the results of tests may not be accurate.
- The SRS indicator will turn on when the 12 volt battery voltage becomes below 10 volts.
- The possible causes shown may not be a complete list of all potential problems, and it is possible that there may be other causes.

Confirmation Procedure	Basic Condition: - 12 volt battery voltage 10 - 16 V Operating Condition: - Turn the vehicle to the ON mode, and wait 6 seconds.
Duration	About 6 seconds
DTC Type	- 1 drive cycle - SRS indicator on
Fail Safe Action	- None
Possible Cause	- SRS unit update is not completed properly - SRS unit internal failure

DTC ADVANCED DIAGNOSTICS

DTC B0001-11

DTC B0001-11 : Short to Ground in the Driver's Airbag First Inflator

NOTE

- Always check "How to troubleshoot the SRS system" and proceed along each "DTC Troubleshooting" procedure.
- Make sure the 12 volt battery is fully charged. If not, the results of tests may not be accurate.
- The SRS indicator will turn on when the 12 volt battery voltage becomes below 10 volts.
- The possible causes shown may not be a complete list of all potential problems, and it is possible that there may be other causes.

Confirmation Procedure	Basic Condition: • 12 volt battery voltage 10 - 16 V Operating Condition: • Turn the vehicle to the ON mode, and wait 6 seconds.
Duration	About 6 seconds
DTC Type	• 1 drive cycle • SRS indicator on
Fail Safe Action	• None
Possible Cause	• Short to ground between the SRS unit and the driver's airbag first inflator (LA1+, LA1- lines) • Driver's airbag internal failure (Driver's airbag first inflator) • SRS unit internal failure

DTC B0001-12

DTC B0001-12 : Short to Power in the Driver's Airbag First Inflator

NOTE

- Always check "How to troubleshoot the SRS system" and proceed along each "DTC Troubleshooting" procedure.
- Make sure the 12 volt battery is fully charged. If not, the results of tests may not be accurate.
- The SRS indicator will turn on when the 12 volt battery voltage becomes below 10 volts.
- The possible causes shown may not be a complete list of all potential problems, and it is possible that there may be other causes.

Confirmation Procedure	Basic Condition: • 12 volt battery voltage 10 - 16 V

	Operating Condition: • Turn the vehicle to the ON mode, and wait 6 seconds.
Duration	About 6 seconds
DTC Type	• 1 drive cycle • SRS indicator on
Fail Safe Action	• None
Possible Cause	• Short to power between the SRS unit and the driver's airbag first inflator (LA1+, LA1- lines) • Driver's airbag internal failure (Driver's airbag first inflator) • SRS unit internal failure

DTC B0001-13

DTC B0001-13 : Open or Increased Resistance in the Driver's Airbag First Inflator

NOTE

- Always check "How to troubleshoot the SRS system" and proceed along each "DTC Troubleshooting" procedure.
- Make sure the 12 volt battery is fully charged. If not, the results of tests may not be accurate.
- The SRS indicator will turn on when the 12 volt battery voltage becomes below 10 volts.
- The possible causes shown may not be a complete list of all potential problems, and it is possible that there may be other causes.

DTC B0001-13: Open or Increased Resistance in the Driver's Airbag First Inflator

Confirmation Procedure	Basic Condition: • 12 volt battery voltage 10 - 16 V Operating Condition: • Turn the vehicle to the ON mode, and wait 6 seconds.
Duration	About 6 seconds
DTC Type	• 1 drive cycle • SRS indicator on
Fail Safe Action	• None
Possible Cause	• Open or Poor connection between the SRS unit and the driver's airbag first inflator (LA1+, LA1- lines) • Driver's airbag internal failure (Driver's airbag first inflator) • SRS unit internal failure

DTC B0001-1A

DTC B0001-1A : Decreased Resistance in the Driver's Airbag First Inflator

NOTE

- Always check "How to troubleshoot the SRS system" and proceed along each "DTC Troubleshooting" procedure.
- Make sure the 12 volt battery is fully charged. If not, the results of tests may not be accurate.
- The SRS indicator will turn on when the 12 volt battery voltage becomes below 10 volts.
- The possible causes shown may not be a complete list of all potential problems, and it is possible that there may be other causes.

Confirmation Procedure	Basic Condition: • 12 volt battery voltage 10 - 16 V Operating Condition: • Turn the vehicle to the ON mode, and wait 6 seconds.
Duration	About 6 seconds
DTC Type	• 1 drive cycle • SRS indicator on
Fail Safe Action	• None
Possible Cause	• Short to another line or Poor connection between the SRS unit and the driver's airbag first inflator (LA1+, LA1-) • Driver's airbag internal failure (Driver's airbag first inflator) • SRS unit internal failure

DTC B0001-2B

DTC B0001-2B : Short to Another Wire Harness in the Driver's Airbag First Inflator

NOTE

- Always check "How to troubleshoot the SRS system" and proceed along each "DTC Troubleshooting" procedure.
- Make sure the 12 volt battery is fully charged. If not, the results of tests may not be accurate.
- The SRS indicator will turn on when the 12 volt battery voltage becomes below 10 volts.
- The possible causes shown may not be a complete list of all potential problems, and it is possible that there may be other causes.

Confirmation Procedure	Basic Condition: • 12 volt battery voltage 10 - 16 V Operating Condition: • Turn the vehicle to the ON mode, and wait 6 seconds.
Duration	About 6 seconds
DTC Type	• 1 drive cycle

	- SRS indicator on
Fail Safe Action	- None
Possible Cause	- Short to another line between the SRS unit and the driver's airbag first inflator (LA1+, LA1- line) - Driver's airbag internal failure (Driver's airbag first inflator) - SRS unit internal failure

DTC B0002-11 (KA/KC) (2019 2020 2021)

DTC B0002-11 : Short to Ground in the Driver's Airbag Second Inflator

NOTE

- Always check "How to troubleshoot the SRS system" and proceed along each "DTC Troubleshooting" procedure.
- Make sure the 12 volt battery is fully charged. If not, the results of tests may not be accurate.
- The SRS indicator will turn on when the 12 volt battery voltage becomes below 10 volts.
- The possible causes shown may not be a complete list of all potential problems, and it is possible that there may be other causes.

Confirmation Procedure	Basic Condition: - 12 volt battery voltage 10 - 16 V Operating Condition: - Turn the vehicle to the ON mode, and wait 6 seconds.
Duration	About 6 seconds
DTC Type	- 1 drive cycle - SRS indicator on
Fail Safe Action	- None
Possible Cause	- Short to ground between the SRS unit and the driver's airbag second inflator (LA2+, LA2- lines) - Driver's airbag internal failure (Driver's airbag second inflator) - Cable reel - SRS unit internal failure

DTC B0002-12 (KA/KC) (2019 2020 2021)

DTC B0002-12 : Short to Power in the Driver's Airbag Second Inflator

NOTE

- Always check "How to troubleshoot the SRS system" and proceed along each "DTC Troubleshooting" procedure.
- Make sure the 12 volt battery is fully charged. If not, the results of tests may not be accurate.
- The SRS indicator will turn on when the 12 volt battery voltage becomes below 10 volts.

- The possible causes shown may not be a complete list of all potential problems, and it is possible that there may be other causes.

Confirmation Procedure	Basic Condition: • 12 volt battery voltage 10 - 16 V Operating Condition: • Turn the vehicle to the ON mode, and wait 6 seconds.
Duration	About 6 seconds
DTC Type	• 1 drive cycle • SRS indicator on
Fail Safe Action	• None
Possible Cause	• Short to power between the SRS unit and the driver's airbag second inflator (LA2+, LA2- lines) • Driver's airbag internal failure (Driver's airbag second inflator) • Cable reel • SRS unit internal failure

DTC B0002-13 (KA/KC) (2019 2020 2021)

DTC B0002-13 : Open or Increased Resistance in the Driver's Airbag Second Inflator

NOTE

- Always check "How to troubleshoot the SRS system" and proceed along each "DTC Troubleshooting" procedure.
- Make sure the 12 volt battery is fully charged. If not, the results of tests may not be accurate.
- The SRS indicator will turn on when the 12 volt battery voltage becomes below 10 volts.
- The possible causes shown may not be a complete list of all potential problems, and it is possible that there may be other causes.

Confirmation Procedure	Basic Condition: • 12 volt battery voltage 10 - 16 V Operating Condition: • Turn the vehicle to the ON mode, and wait 6 seconds.
Duration	About 6 seconds
DTC Type	• 1 drive cycle • SRS indicator on
Fail Safe Action	• None
Possible Cause	• Open or Poor connection between the SRS unit and the driver's airbag second inflator (LA2+, LA2- lines) • Driver's airbag internal failure (Driver's airbag second inflator)

	• Cable reel • SRS unit internal failure

DTC B0002-1A (KA/KC) (2019 2020 2021)

DTC B0002-1A : Decreased Resistance in the Driver's Airbag Second Inflator

NOTE

- Always check "How to troubleshoot the SRS system" and proceed along each "DTC Troubleshooting" procedure.
- Make sure the 12 volt battery is fully charged. If not, the results of tests may not be accurate.
- The SRS indicator will turn on when the 12 volt battery voltage becomes below 10 volts.
- The possible causes shown may not be a complete list of all potential problems, and it is possible that there may be other causes.

Confirmation Procedure	Basic Condition: • 12 volt battery voltage 10 - 16 V Operating Condition: • Turn the vehicle to the ON mode, and wait 6 seconds.
Duration	About 6 seconds
DTC Type	• 1 drive cycle • SRS indicator on
Fail Safe Action	• None
Possible Cause	• Short to another line or Poor connection between the SRS unit and the driver's airbag second inflator (LA2+, LA2 - lines) • Driver's airbag internal failure (Driver's airbag second inflator) • Cable reel • SRS unit internal failure

DTC B0002-2B (KA/KC) (2019 2020 2021)

DTC B0002-2B : Short to Another Wire Harness in the Driver's Airbag Second Inflator

NOTE

- Always check "How to troubleshoot the SRS system" and proceed along each "DTC Troubleshooting" procedure.
- Make sure the 12 volt battery is fully charged. If not, the results of tests may not be accurate.
- The SRS indicator will turn on when the 12 volt battery voltage becomes below 10 volts.
- The possible causes shown may not be a complete list of all potential problems, and it is possible that there may be other causes.

Confirmation Procedure	Basic Condition: • 12 volt battery voltage 10 - 16 V

	Operating Condition: • Turn the vehicle to the ON mode, and wait 6 seconds.
Duration	About 6 seconds
DTC Type	• 1 drive cycle • SRS indicator on
Fail Safe Action	• None
Possible Cause	• Short to another line between the SRS unit and the driver's airbag second inflator (LA2 line) • Cable reel • SRS unit internal failure

DTC B0010-11

DTC B0010-11 : Short to Ground in the Front Passenger's Airbag First Inflator

NOTE

- Always check "How to troubleshoot the SRS system" and proceed along each "DTC Troubleshooting" procedure.
- Make sure the 12 volt battery is fully charged. If not, the results of tests may not be accurate.
- The SRS indicator will turn on when the 12 volt battery voltage becomes below 10 volts.
- The possible causes shown may not be a complete list of all potential problems, and it is possible that there may be other causes.

Confirmation Procedure	Basic Condition: • 12 volt battery voltage 10 - 16 V Operating Condition: • Turn the vehicle to the ON mode, and wait 6 seconds.
Duration	About 6 seconds
DTC Type	• 1 drive cycle • SRS indicator on
Fail Safe Action	• None
Possible Cause	• Short to ground between the SRS unit and the front passenger's airbag first inflator (RA1+, RA1- lines) • Front passenger's airbag internal failure (Front passenger's airbag first inflator) • SRS unit internal failure

DTC B0010-12

DTC B0010-12 : Short to Power in the Front Passenger's Airbag First Inflator

NOTE

- Always check "How to troubleshoot the SRS system" and proceed along each "DTC Troubleshooting" procedure.
- Make sure the 12 volt battery is fully charged. If not, the results of tests may not be accurate.
- The SRS indicator will turn on when the 12 volt battery voltage becomes below 10 volts.
- The possible causes shown may not be a complete list of all potential problems, and it is possible that there may be other causes.

Confirmation Procedure	Basic Condition: • 12 volt battery voltage 10 - 16 V Operating Condition: • Turn the vehicle to the ON mode, and wait 6 seconds.
Duration	About 6 seconds
DTC Type	• 1 drive cycle • SRS indicator on
Fail Safe Action	• None
Possible Cause	• Short to power between the SRS unit and the front passenger's airbag first inflator (RA1+, RA1- lines) • SRS unit internal failure

DTC B0010-13

DTC B0010-13 : Open or Increased Resistance in the Front Passenger's Airbag First Inflator

NOTE

- Always check "How to troubleshoot the SRS system" and proceed along each "DTC Troubleshooting" procedure.
- Make sure the 12 volt battery is fully charged. If not, the results of tests may not be accurate.
- The SRS indicator will turn on when the 12 volt battery voltage becomes below 10 volts.
- The possible causes shown may not be a complete list of all potential problems, and it is possible that there may be other causes.

Confirmation Procedure	Basic Condition: • 12 volt battery voltage 10 - 16 V Operating Condition: • Turn the vehicle to the ON mode, and wait 6 seconds.
Duration	About 6 seconds
DTC Type	• 1 drive cycle • SRS indicator on
Fail Safe Action	• None

Possible Cause	- Open or Poor connection between the SRS unit and the front passenger's airbag first inflator (RA1+, RA1- lines) - Front passenger's airbag internal failure (Front passenger's airbag first inflator) - SRS unit internal failure

DTC B0010-1A

DTC B0010-1A : Decreased Resistance in the Front Passenger's Airbag First Inflator

NOTE

- Always check "How to troubleshoot the SRS system" and proceed along each "DTC Troubleshooting" procedure.
- Make sure the 12 volt battery is fully charged. If not, the results of tests may not be accurate.
- The SRS indicator will turn on when the 12 volt battery voltage becomes below 10 volts.
- The possible causes shown may not be a complete list of all potential problems, and it is possible that there may be other causes.

Confirmation Procedure	Basic Condition: - 12 volt battery voltage 10 - 16 V Operating Condition: - Turn the vehicle to the ON mode, and wait 6 seconds.
Duration	About 6 seconds
DTC Type	- 1 drive cycle - SRS indicator on
Fail Safe Action	- None
Possible Cause	- Short to another line or Poor connection between the SRS unit and the front passenger's airbag first inflator (RA1+, RA1- lines) - Front passenger's airbag internal failure (Front passenger's airbag first inflator) - SRS unit internal failure

DTC B0010-2B

DTC B0010-2B : Short to Another Wire Harness in the Front Passenger's Airbag First Inflator

NOTE

- Always check "How to troubleshoot the SRS system" and proceed along each "DTC Troubleshooting" procedure.
- Make sure the 12 volt battery is fully charged. If not, the results of tests may not be accurate.
- The SRS indicator will turn on when the 12 volt battery voltage becomes below 10 volts.
- The possible causes shown may not be a complete list of all potential problems, and it is possible that there may be other causes.

Confirmation Procedure	Basic Condition:

	• 12 volt battery voltage 10 - 16 V Operating Condition: • Turn the vehicle to the ON mode, and wait 6 seconds.
Duration	About 6 seconds
DTC Type	• 1 drive cycle • SRS indicator on
Fail Safe Action	• None
Possible Cause	• Short to another line between the SRS unit and the front passenger's airbag first inflator (RA1+, RA1- lines) • SRS unit internal failure

DTC B0011-11

DTC B0011-11 : Short to Ground in the Front Passenger's Airbag Second Inflator

NOTE

- Always check "How to troubleshoot the SRS system" and proceed along each "DTC Troubleshooting" procedure.
- Make sure the 12 volt battery is fully charged. If not, the results of tests may not be accurate.
- The SRS indicator will turn on when the 12 volt battery voltage becomes below 10 volts.
- The possible causes shown may not be a complete list of all potential problems, and it is possible that there may be other causes.

Confirmation Procedure	Basic Condition: • 12 volt battery voltage 10 - 16 V Operating Condition: • Turn the vehicle to the ON mode, and wait 6 seconds.
Duration	About 6 seconds
DTC Type	• 1 drive cycle • SRS indicator on
Fail Safe Action	• None
Possible Cause	• Short to ground between the SRS unit and the front passenger's airbag second inflator (RA2+, RA2- lines) • Front passenger's airbag internal failure (Front passenger's airbag second inflator) • SRS unit internal failure

DTC B0011-12

DTC B0011-12 : Short to Power in the Front Passenger's Airbag Second Inflator

NOTE

- Always check "How to troubleshoot the SRS system" and proceed along each "DTC Troubleshooting" procedure.
- Make sure the 12 volt battery is fully charged. If not, the results of tests may not be accurate.
- The SRS indicator will turn on when the 12 volt battery voltage becomes below 10 volts.
- The possible causes shown may not be a complete list of all potential problems, and it is possible that there may be other causes.

Confirmation Procedure	Basic Condition: • 12 volt battery voltage 10 - 16 V Operating Condition: • Turn the vehicle to the ON mode, and wait 6 seconds.
Duration	About 6 seconds
DTC Type	• 1 drive cycle • SRS indicator on
Fail Safe Action	• None
Possible Cause	• Short to power between the SRS unit and the front passenger's airbag second inflator (RA2+, RA2- lines) • SRS unit internal failure

DTC B0011-13

DTC B0011-13 : Open or Increased Resistance in the Front Passenger's Airbag Second Inflator

NOTE

- Always check "How to troubleshoot the SRS system" and proceed along each "DTC Troubleshooting" procedure.
- Make sure the 12 volt battery is fully charged. If not, the results of tests may not be accurate.
- The SRS indicator will turn on when the 12 volt battery voltage becomes below 10 volts.
- The possible causes shown may not be a complete list of all potential problems, and it is possible that there may be other causes.

Confirmation Procedure	Basic Condition: • 12 volt battery voltage 10 - 16 V Operating Condition: • Turn the vehicle to the ON mode, and wait 6 seconds.
Duration	About 6 seconds
DTC Type	• 1 drive cycle • SRS indicator on

Fail Safe Action	- None
Possible Cause	- Open or Poor connection between the SRS unit and the front passenger's airbag second inflator (RA2+, RA2- lines) - Front passenger's airbag internal failure (Front passenger's airbag second inflator) - SRS unit internal failure

DTC B0011-1A

DTC B0011-1A : Decreased Resistance in the Front Passenger's Airbag Second Inflator

NOTE

- Always check "How to troubleshoot the SRS system" and proceed along each "DTC Troubleshooting" procedure.
- Make sure the 12 volt battery is fully charged. If not, the results of tests may not be accurate.
- The SRS indicator will turn on when the 12 volt battery voltage becomes below 10 volts.
- The possible causes shown may not be a complete list of all potential problems, and it is possible that there may be other causes.

Confirmation Procedure	Basic Condition: - 12 volt battery voltage 10 - 16 V Operating Condition: - Turn the vehicle to the ON mode, and wait 6 seconds.
Duration	About 6 seconds
DTC Type	- 1 drive cycle - SRS indicator on
Fail Safe Action	- None
Possible Cause	- Short to another line or Poor connection between the SRS unit and the front passenger's airbag second inflator (RA2+, RA2- lines) - Front passenger's airbag internal failure (Front passenger's airbag second inflator) - SRS unit internal failure

DTC B0011-2B

DTC B0011-2B : Short to Another Wire Harness in the Front Passenger's Airbag Second Inflator

NOTE

- Always check "How to troubleshoot the SRS system" and proceed along each "DTC Troubleshooting" procedure.
- Make sure the 12 volt battery is fully charged. If not, the results of tests may not be accurate.
- The SRS indicator will turn on when the 12 volt battery voltage becomes below 10 volts.
- The possible causes shown may not be a complete list of all potential problems, and it is possible that there may be other causes.

Confirmation Procedure	Basic Condition: • 12 volt battery voltage 10 - 16 V Operating Condition: • Turn the vehicle to the ON mode, and wait 6 seconds.
Duration	About 6 seconds
DTC Type	• 1 drive cycle • SRS indicator on
Fail Safe Action	• None
Possible Cause	• Short to another line between the SRS unit and the front passenger's airbag second inflator (RA2+, RA2- lines) • SRS unit internal failure

DTC B0020-11

DTC B0020-11 : Short to Ground in the Driver's Side Airbag Inflator

NOTE

- Always check "How to troubleshoot the SRS system" and proceed along each "DTC Troubleshooting" procedure.
- Make sure the 12 volt battery is fully charged. If not, the results of tests may not be accurate.
- The SRS indicator will turn on when the 12 volt battery voltage becomes below 10 volts.
- The possible causes shown may not be a complete list of all potential problems, and it is possible that there may be other causes.

Confirmation Procedure	Basic Condition: • 12 volt battery voltage 10 - 16 V Operating Condition: • Turn the vehicle to the ON mode, and wait 6 seconds.
Duration	About 6 seconds
DTC Type	• 1 drive cycle • SRS indicator on
Fail Safe Action	• None
Possible Cause	• Short to ground between the SRS unit and the driver's side airbag inflator (LSA+, LSA- lines) • Driver's side airbag internal failure (Driver's side airbag inflator) • SRS unit internal failure

DTC B0020-12

DTC B0020-12 : Short to Power in the Driver's Side Airbag Inflator

NOTE

- Always check "How to troubleshoot the SRS system" and proceed along each "DTC Troubleshooting" procedure.
- Make sure the 12 volt battery is fully charged. If not, the results of tests may not be accurate.
- The SRS indicator will turn on when the 12 volt battery voltage becomes below 10 volts.
- The possible causes shown may not be a complete list of all potential problems, and it is possible that there may be other causes.

Confirmation Procedure	Basic Condition: • 12 volt battery voltage 10 - 16 V Operating Condition: • Turn the vehicle to the ON mode, and wait 6 seconds.
Duration	About 6 seconds
DTC Type	• 1 drive cycle • SRS indicator on
Fail Safe Action	• None
Possible Cause	• Short to power between the SRS unit and the driver's side airbag inflator (LSA+, LSA- lines) • SRS unit internal failure

DTC B0020-13

DTC B0020-13 : Open or Increased Resistance in the Driver's Side Airbag Inflator

NOTE

- Always check "How to troubleshoot the SRS system" and proceed along each "DTC Troubleshooting" procedure.
- Make sure the 12 volt battery is fully charged. If not, the results of tests may not be accurate.
- The SRS indicator will turn on when the 12 volt battery voltage becomes below 10 volts.
- The possible causes shown may not be a complete list of all potential problems, and it is possible that there may be other causes.

Confirmation Procedure	Basic Condition: • 12 volt battery voltage 10 - 16 V Operating Condition: • Turn the vehicle to the ON mode, and wait 6 seconds.
Duration	About 6 seconds
DTC Type	• 1 drive cycle • SRS indicator on

Fail Safe Action	- None
Possible Cause	- Open or Poor connection between the SRS unit and the driver's side airbag inflator (LSA+, LSA- lines) - Driver's side airbag internal failure (Driver's side airbag inflator) - SRS unit internal failure

DTC B0020-1A

DTC B0020-1A : Decreased Resistance in the Driver's Side Airbag Inflator

NOTE

- Always check "How to troubleshoot the SRS system" and proceed along each "DTC Troubleshooting" procedure.
- Make sure the 12 volt battery is fully charged. If not, the results of tests may not be accurate.
- The SRS indicator will turn on when the 12 volt battery voltage becomes below 10 volts.
- The possible causes shown may not be a complete list of all potential problems, and it is possible that there may be other causes.

Confirmation Procedure	Basic Condition: - 12 volt battery voltage 10 - 16 V Operating Condition: - Turn the vehicle to the ON mode, and wait 6 seconds.
Duration	About 6 seconds
DTC Type	- 1 drive cycle - SRS indicator on
Fail Safe Action	- None
Possible Cause	- Short to another line or Poor connection between the SRS unit and the driver's side airbag inflator (LSA+, LSA- lines) - Driver's side airbag internal failure (Driver's side airbag inflator) - SRS unit internal failure

DTC B0020-2B

DTC B0020-2B : Short to Another Wire Harness in the Driver's Side Airbag Inflator

NOTE

- Always check "How to troubleshoot the SRS system" and proceed along each "DTC Troubleshooting" procedure.
- Make sure the 12 volt battery is fully charged. If not, the results of tests may not be accurate.
- The SRS indicator will turn on when the 12 volt battery voltage becomes below 10 volts.
- The possible causes shown may not be a complete list of all potential problems, and it is possible that there may be other causes.

Confirmation Procedure	Basic Condition: • 12 volt battery voltage 10 - 16 V Operating Condition: • Turn the vehicle to the ON mode, and wait 6 seconds.
Duration	About 6 seconds
DTC Type	• 1 drive cycle • SRS indicator on
Fail Safe Action	• None
Possible Cause	• Short to another line between the SRS unit and the driver's side airbag inflator (LSA+, LSA- lines) • SRS unit internal failure

DTC B0021-11

DTC B0021-11 : Short to Ground in the Left Side Curtain Airbag First Inflator

NOTE

- Always check "How to troubleshoot the SRS system" and proceed along each "DTC Troubleshooting" procedure.
- Make sure the 12 volt battery is fully charged. If not, the results of tests may not be accurate.
- The SRS indicator will turn on when the 12 volt battery voltage becomes below 10 volts.
- The possible causes shown may not be a complete list of all potential problems, and it is possible that there may be other causes.

Confirmation Procedure	Basic Condition: • 12 volt battery voltage 10 - 16 V Operating Condition: • Turn the vehicle to the ON mode, and wait 6 seconds.
Duration	About 6 seconds
DTC Type	• 1 drive cycle • SRS indicator on
Fail Safe Action	• None
Possible Cause	• Short to ground between the SRS unit and the left side curtain airbag inflator (LCA+, LCA- lines) • Left side curtain airbag internal failure (Left side curtain airbag inflator) • SRS unit internal failure

DTC B0021-12

DTC B0021-12 : Short to Power in the Left Side Curtain Airbag First Inflator

NOTE

- Always check "How to troubleshoot the SRS system" and proceed along each "DTC Troubleshooting" procedure.
- Make sure the 12 volt battery is fully charged. If not, the results of tests may not be accurate.
- The SRS indicator will turn on when the 12 volt battery voltage becomes below 10 volts.
- The possible causes shown may not be a complete list of all potential problems, and it is possible that there may be other causes.

Confirmation Procedure	Basic Condition: • 12 volt battery voltage 10 - 16 V Operating Condition: • Turn the vehicle to the ON mode, and wait 6 seconds.
Duration	About 6 seconds
DTC Type	• 1 drive cycle • SRS indicator on
Fail Safe Action	• None
Possible Cause	• Short to power between the SRS unit and the left side curtain airbag inflator (LCA+, LCA- lines) • SRS unit internal failure

DTC B0021-13

DTC B0021-13 : Open or Increased Resistance in the Left Side Curtain Airbag First Inflator

NOTE

- Always check "How to troubleshoot the SRS system" and proceed along each "DTC Troubleshooting" procedure.
- Make sure the 12 volt battery is fully charged. If not, the results of tests may not be accurate.
- The SRS indicator will turn on when the 12 volt battery voltage becomes below 10 volts.
- The possible causes shown may not be a complete list of all potential problems, and it is possible that there may be other causes.

Confirmation Procedure	Basic Condition: • 12 volt battery voltage 10 - 16 V Operating Condition: • Turn the vehicle to the ON mode, and wait 6 seconds.
Duration	About 6 seconds
DTC Type	• 1 drive cycle • SRS indicator on

Fail Safe Action	- None
Possible Cause	- Open or Poor connection between the SRS unit and the left side curtain airbag inflator (LCA+, LCA- lines) - Left side curtain airbag internal failure (Left side curtain airbag inflator) - SRS unit internal failure

DTC B0021-1A

DTC B0021-1A : Decreased Resistance in the Left Side Curtain Airbag First Inflator

NOTE

- Always check "How to troubleshoot the SRS system" and proceed along each "DTC Troubleshooting" procedure.
- Make sure the 12 volt battery is fully charged. If not, the results of tests may not be accurate.
- The SRS indicator will turn on when the 12 volt battery voltage becomes below 10 volts.
- The possible causes shown may not be a complete list of all potential problems, and it is possible that there may be other causes.

Confirmation Procedure	Basic Condition: - 12 volt battery voltage 10 - 16 V Operating Condition: - Turn the vehicle to the ON mode, and wait 6 seconds.
Duration	About 6 seconds
DTC Type	- 1 drive cycle - SRS indicator on
Fail Safe Action	- None
Possible Cause	- Short to another line or Poor connection between the SRS unit and the left side curtain airbag inflator (LCA+, LCA- lines) - Left side curtain airbag internal failure (Left side curtain airbag inflator) - SRS unit internal failure

DTC B0021-2B

DTC B0021-2B : Short to Another Wire Harness in the Left Side Curtain Airbag First Inflator

NOTE

- Always check "How to troubleshoot the SRS system" and proceed along each "DTC Troubleshooting" procedure.
- Make sure the 12 volt battery is fully charged. If not, the results of tests may not be accurate.
- The SRS indicator will turn on when the 12 volt battery voltage becomes below 10 volts.
- The possible causes shown may not be a complete list of all potential problems, and it is possible that there may be other causes.

Confirmation Procedure	Basic Condition: • 12 volt battery voltage 10 - 16 V Operating Condition: • Turn the vehicle to the ON mode, and wait 6 seconds.
Duration	About 6 seconds
DTC Type	• 1 drive cycle • SRS indicator on
Fail Safe Action	• None
Possible Cause	• Short to another line between the SRS unit and the left side curtain airbag inflator (LCA+, LCA- lines) • SRS unit internal failure

DTC B0028-11

DTC B0028-11 : Short to Ground in the Front Passenger's Side Airbag Inflator

NOTE

- Always check "How to troubleshoot the SRS system" and proceed along each "DTC Troubleshooting" procedure.
- Make sure the 12 volt battery is fully charged. If not, the results of tests may not be accurate.
- The SRS indicator will turn on when the 12 volt battery voltage becomes below 10 volts.
- The possible causes shown may not be a complete list of all potential problems, and it is possible that there may be other causes.

Confirmation Procedure	Basic Condition: • 12 volt battery voltage 10 - 16 V Operating Condition: • Turn the vehicle to the ON mode, and wait 6 seconds.
Duration	About 6 seconds
DTC Type	• 1 drive cycle • SRS indicator on
Fail Safe Action	• None
Possible Cause	• Short to ground between the SRS unit and the front passenger's side airbag (RSA+, RSA- lines) • Front passenger's side airbag internal failure (Front passenger's side airbag inflator) • SRS unit internal failure

DTC B0028-12

DTC B0028-12 : Short to Power in the Front Passenger's Side Airbag Inflator

NOTE

- Always check "How to troubleshoot the SRS system" and proceed along each "DTC Troubleshooting" procedure.
- Make sure the 12 volt battery is fully charged. If not, the results of tests may not be accurate.
- The SRS indicator will turn on when the 12 volt battery voltage becomes below 10 volts.
- The possible causes shown may not be a complete list of all potential problems, and it is possible that there may be other causes.

Confirmation Procedure	Basic Condition: • 12 volt battery voltage 10 - 16 V Operating Condition: • Turn the vehicle to the ON mode, and wait 6 seconds.
Duration	About 6 seconds
DTC Type	• 1 drive cycle • SRS indicator on
Fail Safe Action	• None
Possible Cause	• Short to power between the SRS unit and the front passenger's side airbag inflator (RSA+, RSA- lines) • SRS unit internal failure

DTC B0028-13

DTC B0028-13 : Open or Increased Resistance in the Front Passenger's Side Airbag Inflator

NOTE

- Always check "How to troubleshoot the SRS system" and proceed along each "DTC Troubleshooting" procedure.
- Make sure the 12 volt battery is fully charged. If not, the results of tests may not be accurate.
- The SRS indicator will turn on when the 12 volt battery voltage becomes below 10 volts.
- The possible causes shown may not be a complete list of all potential problems, and it is possible that there may be other causes.

Confirmation Procedure	Basic Condition: • 12 volt battery voltage 10 - 16 V Operating Condition: • Turn the vehicle to the ON mode, and wait 6 seconds.
Duration	About 6 seconds
DTC Type	• 1 drive cycle • SRS indicator on
Fail Safe Action	• None
Possible Cause	• Open or Poor connection between the SRS unit and the front passenger's side airbag inflator (RSA+, RSA- lines) • Front passenger's side airbag internal failure (Front passenger's side airbag inflator) • SRS unit internal failure

DTC B0028-1A

DTC B0028-1A : Decreased Resistance in the Front Passenger's Side Airbag Inflator

NOTE

- Always check "How to troubleshoot the SRS system" and proceed along each "DTC Troubleshooting" procedure.
- Make sure the 12 volt battery is fully charged. If not, the results of tests may not be accurate.
- The SRS indicator will turn on when the 12 volt battery voltage becomes below 10 volts.
- The possible causes shown may not be a complete list of all potential problems, and it is possible that there may be other causes.

Confirmation Procedure	Basic Condition: • 12 volt battery voltage 10 - 16 V Operating Condition: • Turn the vehicle to the ON mode, and wait 6 seconds.
Duration	About 6 seconds
DTC Type	• 1 drive cycle • SRS indicator on
Fail Safe Action	• None
Possible Cause	• Short to another line or Poor connection between the SRS unit and the front passenger's side airbag inflator (RSA+, RSA- lines) • Front passenger's side airbag internal failure (Front passenger's side airbag inflator) • SRS unit internal failure

DTC B0028-2B

DTC B0028-2B : Short to Another Wire Harness in the Front Passenger's Side Airbag Inflator

NOTE

- Always check "How to troubleshoot the SRS system" and proceed along each "DTC Troubleshooting" procedure.
- Make sure the 12 volt battery is fully charged. If not, the results of tests may not be accurate.
- The SRS indicator will turn on when the 12 volt battery voltage becomes below 10 volts.
- The possible causes shown may not be a complete list of all potential problems, and it is possible that there may be other causes.

Confirmation Procedure	Basic Condition: • 12 volt battery voltage 10 - 16 V Operating Condition: • Turn the vehicle to the ON mode, and wait 6 seconds.
Duration	About 6 seconds
DTC Type	• 1 drive cycle • SRS indicator on
Fail Safe Action	• None
Possible Cause	• Short to another line between the SRS unit and the front passenger's side airbag inflator (RSA+, RSA- lines) • SRS unit internal failure

DTC B0029-11

DTC B0029-11 : Short to Ground in the Right Side Curtain Airbag First Inflator

NOTE

- Always check "How to troubleshoot the SRS system" and proceed along each "DTC Troubleshooting" procedure.
- Make sure the 12 volt battery is fully charged. If not, the results of tests may not be accurate.
- The SRS indicator will turn on when the 12 volt battery voltage becomes below 10 volts.
- The possible causes shown may not be a complete list of all potential problems, and it is possible that there may be other causes.

Confirmation Procedure	Basic Condition: • 12 volt battery voltage 10 - 16 V Operating Condition: • Turn the vehicle to the ON mode, and wait 6 seconds.
Duration	About 6 seconds
DTC Type	• 1 drive cycle

	- SRS indicator on
Fail Safe Action	- None
Possible Cause	- Short to ground between the SRS unit and the right side curtain airbag inflator (RCA+, RCA- lines) - Right side curtain airbag internal failure (Right side curtain airbag inflator) - SRS unit internal failure

DTC B0029-12

DTC B0029-12 : Short to Power in the Right Side Curtain Airbag First Inflator

NOTE

- Always check "How to troubleshoot the SRS system" and proceed along each "DTC Troubleshooting" procedure.
- Make sure the 12 volt battery is fully charged. If not, the results of tests may not be accurate.
- The SRS indicator will turn on when the 12 volt battery voltage becomes below 10 volts.
- The possible causes shown may not be a complete list of all potential problems, and it is possible that there may be other causes.

Confirmation Procedure	Basic Condition: - 12 volt battery voltage 10 - 16 V Operating Condition: - Turn the vehicle to the ON mode, and wait 6 seconds.
Duration	About 6 seconds
DTC Type	- 1 drive cycle - SRS indicator on
Fail Safe Action	- None
Possible Cause	- Short to power between the SRS unit and the right side curtain airbag inflator (RCA+, RCA- lines) - SRS unit internal failure

DTC B0029-13

DTC B0029-13 : Open or Increased Resistance in the Right Side Curtain Airbag First Inflator

NOTE

- Always check "How to troubleshoot the SRS system" and proceed along each "DTC Troubleshooting" procedure.
- Make sure the 12 volt battery is fully charged. If not, the results of tests may not be accurate.
- The SRS indicator will turn on when the 12 volt battery voltage becomes below 10 volts.
- The possible causes shown may not be a complete list of all potential problems, and it is possible that there may be other causes.

Confirmation Procedure	Basic Condition: • 12 volt battery voltage 10 - 16 V Operating Condition: • Turn the vehicle to the ON mode, and wait 6 seconds.
Duration	About 6 seconds
DTC Type	• 1 drive cycle • SRS indicator on
Fail Safe Action	• None
Possible Cause	• Open or Poor connection between the SRS unit and the right side curtain airbag inflator (RCA+, RCA- lines) • Right side curtain airbag internal failure (Right side curtain airbag inflator) • SRS unit internal failure

DTC B0029-1A

DTC B0029-1A : Decreased Resistance in the Right Side Curtain Airbag First Inflator

NOTE

- Always check "How to troubleshoot the SRS system" and proceed along each "DTC Troubleshooting" procedure.
- Make sure the 12 volt battery is fully charged. If not, the results of tests may not be accurate.
- The SRS indicator will turn on when the 12 volt battery voltage becomes below 10 volts.
- The possible causes shown may not be a complete list of all potential problems, and it is possible that there may be other causes.

Confirmation Procedure	Basic Condition: • 12 volt battery voltage 10 - 16 V Operating Condition: • Turn the vehicle to the ON mode, and wait 6 seconds.
Duration	About 6 seconds
DTC Type	• 1 drive cycle • SRS indicator on
Fail Safe Action	• None
Possible Cause	• Short to another line or Poor connection between the SRS unit and the right side curtain airbag first inflator (RCA+, RCA- lines) • Right side curtain airbag internal failure (Right side curtain airbag first inflator) • SRS unit internal failure

DTC B0029-2B

DTC B0029-2B : Short to Another Wire Harness in the Right Side Curtain Airbag First Inflator

NOTE

- Always check "How to troubleshoot the SRS system" and proceed along each "DTC Troubleshooting" procedure.
- Make sure the 12 volt battery is fully charged. If not, the results of tests may not be accurate.
- The SRS indicator will turn on when the 12 volt battery voltage becomes below 10 volts.
- The possible causes shown may not be a complete list of all potential problems, and it is possible that there may be other causes.

Confirmation Procedure	Basic Condition: • 12 volt battery voltage 10 - 16 V Operating Condition: • Turn the vehicle to the ON mode, and wait 6 seconds.
Duration	About 6 seconds
DTC Type	• 1 drive cycle • SRS indicator on
Fail Safe Action	• None
Possible Cause	• Short to another line between the SRS unit and the right side curtain airbag first inflator (RCA+, RCA- lines) • SRS unit internal failure

DTC B0050-11

DTC B0050-11 : Short or Decreased Resistance in the Driver's Seat Belt Buckle Switch

NOTE

- Always check "How to troubleshoot the SRS system" and proceed along each "DTC Troubleshooting" procedure.
- Make sure the 12 volt battery is fully charged. If not, the results of tests may not be accurate.
- The SRS indicator will turn on when the 12 volt battery voltage becomes below 10 volts.
- The possible causes shown may not be a complete list of all potential problems, and it is possible that there may be other causes.

Confirmation Procedure	Basic Condition: • 12 volt battery voltage 10 - 16 V Operating Condition: • Turn the vehicle to the ON mode, and wait 6 seconds.
Duration	About 6 seconds
DTC Type	• 1 drive cycle • SRS indicator on
Fail Safe Action	• None
Possible Cause	• Short to ground or Short to power between the SRS unit and the driver's seat belt buckle switch (FLBC line) • Driver's seat belt buckle assembly internal failure (Driver's seat belt buckle switch) • SRS unit internal failure

DTC B0050-13

DTC B0050-13 : Open or Increased Resistance in the Driver's Seat Belt Buckle Switch

NOTE

- Always check "How to troubleshoot the SRS system" and proceed along each "DTC Troubleshooting" procedure.
- Make sure the 12 volt battery is fully charged. If not, the results of tests may not be accurate.
- The SRS indicator will turn on when the 12 volt battery voltage becomes below 10 volts.
- The possible causes shown may not be a complete list of all potential problems, and it is possible that there may be other causes.

Confirmation Procedure	Basic Condition: • 12 volt battery voltage 10 - 16 V Operating Condition: • Turn the vehicle to the ON mode, and wait 6 seconds.
Duration	About 6 seconds
DTC Type	• 1 drive cycle • SRS indicator on
Fail Safe Action	• None
Possible Cause	• Open or Poor connection between the SRS unit and the driver's seat belt buckle switch (FLBC line) • Open or Poor connection between the driver's seat belt buckle switch and the body ground (GND line) • Driver's seat belt buckle assembly internal failure (Driver's seat belt buckle switch)

	- SRS unit internal failure

DTC B0050-2B

DTC B0050-2B : Short to Another Wire Harness in the Driver's Seat Belt Buckle Switch

NOTE

- Always check "How to troubleshoot the SRS system" and proceed along each "DTC Troubleshooting" procedure.
- Make sure the 12 volt battery is fully charged. If not, the results of tests may not be accurate.
- The SRS indicator will turn on when the 12 volt battery voltage becomes below 10 volts.
- The possible causes shown may not be a complete list of all potential problems, and it is possible that there may be other causes.

Confirmation Procedure	Basic Condition: • 12 volt battery voltage 10 - 16 V Operating Condition: • Turn the vehicle to the ON mode, and wait 6 seconds.
Duration	About 6 seconds
DTC Type	• 1 drive cycle • SRS indicator on
Fail Safe Action	• None
Possible Cause	• Short to another line between the SRS unit and the driver's seat belt buckle switch (FLBC line) • Driver's seat belt buckle assembly internal failure (Driver's seat belt buckle switch)

DTC B0052-11

DTC B0052-11 : Short or Decreased Resistance in the Front Passenger's Seat Belt Buckle Switch

NOTE

- Always check "How to troubleshoot the SRS system" and proceed along each "DTC Troubleshooting" procedure.
- Make sure the 12 volt battery is fully charged. If not, the results of tests may not be accurate.
- The SRS indicator will turn on when the 12 volt battery voltage becomes below 10 volts.
- The possible causes shown may not be a complete list of all potential problems, and it is possible that there may be other causes.

Confirmation Procedure	Basic Condition: • 12 volt battery voltage 10 - 16 V Operating Condition:

	- Turn the vehicle to the ON mode, and wait 6 seconds.
Duration	About 6 seconds
DTC Type	- 1 drive cycle - SRS indicator on
Fail Safe Action	- None
Possible Cause	- Short to ground or Short to power between the SRS unit and the front passenger's seat belt buckle switch (FRBC line) - Front passenger's seat belt buckle assembly internal failure (Front passenger's seat belt buckle switch) - SRS unit internal failure

DTC B0052-13

DTC B0052-13 : Open or Increased Resistance in the Front Passenger's Seat Belt Buckle Switch

NOTE

- Always check "How to troubleshoot the SRS system" and proceed along each "DTC Troubleshooting" procedure.
- Make sure the 12 volt battery is fully charged. If not, the results of tests may not be accurate.
- The SRS indicator will turn on when the 12 volt battery voltage becomes below 10 volts.
- The possible causes shown may not be a complete list of all potential problems, and it is possible that there may be other causes.

Confirmation Procedure	Basic Condition: - 12 volt battery voltage 10 - 16 V Operating Condition: - Turn the vehicle to the ON mode, and wait 6 seconds.
Duration	About 6 seconds
DTC Type	- 1 drive cycle - SRS indicator on
Fail Safe Action	- None
Possible Cause	- Open or Poor connection between the SRS unit and the front passenger's seat belt buckle switch (FRBC line) - Open or Poor connection between the front passenger's seat belt buckle switch and the body ground (GND line) - Front passenger's seat belt buckle assembly internal failure (Front passenger's seat belt buckle switch) - SRS unit internal failure

DTC B0052-2B

DTC B0052-2B : Short to Another Wire Harness in the Front Passenger's Seat Belt Buckle Switch

NOTE

- Always check "How to troubleshoot the SRS system" and proceed along each "DTC Troubleshooting" procedure.
- Make sure the 12 volt battery is fully charged. If not, the results of tests may not be accurate.
- The SRS indicator will turn on when the 12 volt battery voltage becomes below 10 volts.
- The possible causes shown may not be a complete list of all potential problems, and it is possible that there may be other causes.

Confirmation Procedure	Basic Condition: • 12 volt battery voltage 10 - 16 V Operating Condition: • Turn the vehicle to the ON mode, and wait 6 seconds.
Duration	About 6 seconds
DTC Type	• 1 drive cycle • SRS indicator on
Fail Safe Action	• None
Possible Cause	• Short to another line between the SRS unit and the front passenger's seat belt buckle switch (FRBC line) • Front passenger's seat belt buckle assembly internal failure (Front passenger's seat belt buckle switch)

DTC B0070-11

DTC B0070-11 : Short to Ground in the Driver's Seat Belt Tensioner

NOTE

- Always check "How to troubleshoot the SRS system" and proceed along each "DTC Troubleshooting" procedure.
- Make sure the 12 volt battery is fully charged. If not, the results of tests may not be accurate.
- The SRS indicator will turn on when the 12 volt battery voltage becomes below 10 volts.
- The possible causes shown may not be a complete list of all potential problems, and it is possible that there may be other causes.

Confirmation Procedure	Basic Condition: • 12 volt battery voltage 10 - 16 V Operating Condition: • Turn the vehicle to the ON mode, and wait 6 seconds.
Duration	About 6 seconds
DTC Type	• 1 drive cycle • SRS indicator on
Fail Safe Action	• None
Possible Cause	• Short to ground between the SRS unit and the driver's seat belt tensioner (LRP+, LRP- lines) • Driver's seat belt internal failure (Driver's seat belt tensioner) • SRS unit internal failure

DTC B0070-12

DTC B0070-12 : Short to Power in the Driver's Seat Belt Tensioner

NOTE

- Always check "How to troubleshoot the SRS system" and proceed along each "DTC Troubleshooting" procedure.
- Make sure the 12 volt battery is fully charged. If not, the results of tests may not be accurate.
- The SRS indicator will turn on when the 12 volt battery voltage becomes below 10 volts.
- The possible causes shown may not be a complete list of all potential problems, and it is possible that there may be other causes.

Confirmation Procedure	Basic Condition: • 12 volt battery voltage 10 - 16 V Operating Condition: • Turn the vehicle to the ON mode, and wait 6 seconds.
Duration	About 6 seconds
DTC Type	• 1 drive cycle • SRS indicator on
Fail Safe Action	• None
Possible Cause	• Short to power between the SRS unit and the driver's seat belt tensioner (LRP+, LRP- lines) • SRS unit internal failure

DTC B0070-13

DTC B0070-13 : Open or Increased Resistance in the Driver's Seat Belt Tensioner

NOTE

- Always check "How to troubleshoot the SRS system" and proceed along each "DTC Troubleshooting" procedure.
- Make sure the 12 volt battery is fully charged. If not, the results of tests may not be accurate.
- The SRS indicator will turn on when the 12 volt battery voltage becomes below 10 volts.
- The possible causes shown may not be a complete list of all potential problems, and it is possible that there may be other causes.

Confirmation Procedure	Basic Condition: • 12 volt battery voltage 10 - 16 V Operating Condition: • Turn the vehicle to the ON mode, and wait 6 seconds.
Duration	About 6 seconds
DTC Type	• 1 drive cycle • SRS indicator on
Fail Safe Action	• None
Possible Cause	• Open or Poor connection between the SRS unit and the driver's seat belt tensioner (LRP+, LRP- lines) • Driver's seat belt internal failure (Driver's seat belt tensioner) • SRS unit internal failure

DTC B0070-1A

DTC B0070-1A : Decreased Resistance in the Driver's Seat Belt Tensioner

NOTE

- Always check "How to troubleshoot the SRS system" and proceed along each "DTC Troubleshooting" procedure.
- Make sure the 12 volt battery is fully charged. If not, the results of tests may not be accurate.
- The SRS indicator will turn on when the 12 volt battery voltage becomes below 10 volts.
- The possible causes shown may not be a complete list of all potential problems, and it is possible that there may be other causes.

Confirmation Procedure	Basic Condition: • 12 volt battery voltage 10 - 16 V Operating Condition: • Turn the vehicle to the ON mode, and wait 6 seconds.
Duration	About 6 seconds
DTC Type	• 1 drive cycle

	- SRS indicator on
Fail Safe Action	- None
Possible Cause	- Short to another line or Poor connection between the SRS unit and the driver's seat belt tensioner (LRP+, LRP- lines) - Driver's seat belt internal failure (Driver's seat belt tensioner) - SRS unit internal failure

DTC B0070-2B

DTC B0070-2B : Short to Another Wire Harness in the Driver's Seat Belt Tensioner

NOTE

- Always check "How to troubleshoot the SRS system" and proceed along each "DTC Troubleshooting" procedure.
- Make sure the 12 volt battery is fully charged. If not, the results of tests may not be accurate.
- The SRS indicator will turn on when the 12 volt battery voltage becomes below 10 volts.
- The possible causes shown may not be a complete list of all potential problems, and it is possible that there may be other causes.

Confirmation Procedure	Basic Condition: - 12 volt battery voltage 10 - 16 V Operating Condition: - Turn the vehicle to the ON mode, and wait 6 seconds.
Duration	About 6 seconds
DTC Type	- 1 drive cycle - SRS indicator on
Fail Safe Action	- None
Possible Cause	- Short to another line between the SRS unit and the driver's seat belt tensioner (LRP+, LRP- lines) - SRS unit internal failure

DTC B0072-11

DTC B0072-11 : Short to Ground in the Front Passenger's Seat Belt Tensioner

NOTE

- Always check "How to troubleshoot the SRS system" and proceed along each "DTC Troubleshooting" procedure.
- Make sure the 12 volt battery is fully charged. If not, the results of tests may not be accurate.
- The SRS indicator will turn on when the 12 volt battery voltage becomes below 10 volts.
- The possible causes shown may not be a complete list of all potential problems, and it is possible that there may be other causes.

Confirmation Procedure	Basic Condition: - 12 volt battery voltage 10 - 16 V Operating Condition: - Turn the vehicle to the ON mode, and wait 6 seconds.
Duration	About 6 seconds
DTC Type	- 1 drive cycle - SRS indicator on
Fail Safe Action	- None
Possible Cause	- Short to ground between the SRS unit and the front passenger's seat belt tensioner (RRP+, RRP- lines) - Front passenger's seat belt internal failure (Front passenger's seat belt tensioner) - SRS unit internal failure

DTC B0072-12

DTC B0072-12 : Short to Power in the Front Passenger's Seat Belt Tensioner

NOTE

- Always check "How to troubleshoot the SRS system" and proceed along each "DTC Troubleshooting" procedure.
- Make sure the 12 volt battery is fully charged. If not, the results of tests may not be accurate.
- The SRS indicator will turn on when the 12 volt battery voltage becomes below 10 volts.
- The possible causes shown may not be a complete list of all potential problems, and it is possible that there may be other causes.

Confirmation Procedure	Basic Condition: - 12 volt battery voltage 10 - 16 V Operating Condition: - Turn the vehicle to the ON mode, and wait 6 seconds.
Duration	About 6 seconds
DTC Type	- 1 drive cycle - SRS indicator on
Fail Safe Action	- None
Possible Cause	- Short to power between the SRS unit and the front passenger's seat belt tensioner (RRP+, RRP- lines) - SRS unit internal failure

DTC B0072-13

DTC B0072-13 : Open or Increased Resistance in the Front Passenger's Seat Belt Tensioner

NOTE

- Always check "How to troubleshoot the SRS system" and proceed along each "DTC Troubleshooting" procedure.
- Make sure the 12 volt battery is fully charged. If not, the results of tests may not be accurate.
- The SRS indicator will turn on when the 12 volt battery voltage becomes below 10 volts.
- The possible causes shown may not be a complete list of all potential problems, and it is possible that there may be other causes.

Confirmation Procedure	Basic Condition: • 12 volt battery voltage 10 - 16 V Operating Condition: • Turn the vehicle to the ON mode, and wait 6 seconds.
Duration	About 6 seconds
DTC Type	• 1 drive cycle • SRS indicator on
Fail Safe Action	• None
Possible Cause	• Open or Poor connection between the SRS unit and the front passenger's seat belt tensioner (RRP+, RRP- lines) • Front passenger's seat belt internal failure (Front passenger's seat belt tensioner) • SRS unit internal failure

DTC B0072-1A

DTC B0072-1A : Decreased Resistance in the Front Passenger's Seat Belt Tensioner

NOTE

- Always check "How to troubleshoot the SRS system" and proceed along each "DTC Troubleshooting" procedure.
- Make sure the 12 volt battery is fully charged. If not, the results of tests may not be accurate.
- The SRS indicator will turn on when the 12 volt battery voltage becomes below 10 volts.
- The possible causes shown may not be a complete list of all potential problems, and it is possible that there may be other causes.

Confirmation Procedure	Basic Condition: • 12 volt battery voltage 10 - 16 V Operating Condition: • Turn the vehicle to the ON mode, and wait 6 seconds.
Duration	About 6 seconds
DTC Type	• 1 drive cycle

	- SRS indicator on
Fail Safe Action	- None
Possible Cause	- Short to another line or Poor connection between the SRS unit and the front passenger's seat belt tensioner (RRP+, RRP- lines) - Front passenger's seat belt internal failure (Front passenger's seat belt tensioner) - SRS unit internal failure

DTC B0072-2B

DTC B0072-2B : Short to Another Wire Harness in the Front Passenger's Seat Belt Tensioner

NOTE

- Always check "How to troubleshoot the SRS system" and proceed along each "DTC Troubleshooting" procedure.
- Make sure the 12 volt battery is fully charged. If not, the results of tests may not be accurate.
- The SRS indicator will turn on when the 12 volt battery voltage becomes below 10 volts.
- The possible causes shown may not be a complete list of all potential problems, and it is possible that there may be other causes.

Confirmation Procedure	Basic Condition: - 12 volt battery voltage 10 - 16 V Operating Condition: - Turn the vehicle to the ON mode, and wait 6 seconds.
Duration	About 6 seconds
DTC Type	- 1 drive cycle - SRS indicator on
Fail Safe Action	- None
Possible Cause	- Short to another line between the SRS unit and the front passenger's seat belt tensioner (RRP+, RRP- lines) - SRS unit internal failure

DTC B0079-11

DTC B0079-11 : Short to Ground in the Driver's Seat Belt Outer Lap Tensioner

NOTE

- Always check "How to troubleshoot the SRS system" and proceed along each "DTC Troubleshooting" procedure.
- Make sure the 12 volt battery is fully charged. If not, the results of tests may not be accurate.
- The SRS indicator will turn on when the 12 volt battery voltage becomes below 10 volts.
- The possible causes shown may not be a complete list of all potential problems, and it is possible that there may be other causes.

Confirmation Procedure	Basic Condition: • 12 volt battery voltage 10 - 16 V Operating Condition: • Turn the vehicle to the ON mode, and wait 6 seconds.
Duration	About 6 seconds
DTC Type	• 1 drive cycle • SRS indicator on
Fail Safe Action	• None
Possible Cause	• Short to ground between the SRS unit and the driver's seat belt outer lap tensioner (LLP+, LLP- lines) • Driver's seat belt internal failure (Driver's seat belt outer lap tensioner) • SRS unit internal failure

DTC B0079-12

DTC B0079-12 : Short to Power in the Driver's Seat Belt Outer Lap Tensioner

NOTE

- Always check "How to troubleshoot the SRS system" and proceed along each "DTC Troubleshooting" procedure.
- Make sure the 12 volt battery is fully charged. If not, the results of tests may not be accurate.
- The SRS indicator will turn on when the 12 volt battery voltage becomes below 10 volts.
- The possible causes shown may not be a complete list of all potential problems, and it is possible that there may be other causes.

Confirmation Procedure	Basic Condition: • 12 volt battery voltage 10 - 16 V Operating Condition: • Turn the vehicle to the ON mode, and wait 6 seconds.
Duration	About 6 seconds
DTC Type	• 1 drive cycle • SRS indicator on
Fail Safe Action	• None
Possible Cause	• Short to power between the SRS unit and the driver's seat belt outer lap tensioner (LLP+, LLP- lines) • Driver's seat belt internal failure (Driver's seat belt outer lap tensioner) • SRS unit internal failure

DTC B0079-13

DTC B0079-13 : Open or Increased Resistance in the Driver's Seat Belt Outer Lap Tensioner

NOTE

- Always check "How to troubleshoot the SRS system" and proceed along each "DTC Troubleshooting" procedure.
- Make sure the 12 volt battery is fully charged. If not, the results of tests may not be accurate.
- The SRS indicator will turn on when the 12 volt battery voltage becomes below 10 volts.
- The possible causes shown may not be a complete list of all potential problems, and it is possible that there may be other causes.

Confirmation Procedure	Basic Condition: • 12 volt battery voltage 10 - 16 V Operating Condition: • Turn the vehicle to the ON mode, and wait 6 seconds.
Duration	About 6 seconds
DTC Type	• 1 drive cycle • SRS indicator on
Fail Safe Action	• None
Possible Cause	• Open or Poor connection between the SRS unit and the driver's seat belt outer lap tensioner (LLP+, LLP- lines) • Driver's seat belt internal failure (Driver's seat belt outer lap tensioner) • SRS unit internal failure

DTC B0079-1A

DTC B0079-1A : Decreased Resistance in the Driver's Seat Belt Outer Lap Tensioner

NOTE

- Always check "How to troubleshoot the SRS system" and proceed along each "DTC Troubleshooting" procedure.
- Make sure the 12 volt battery is fully charged. If not, the results of tests may not be accurate.
- The SRS indicator will turn on when the 12 volt battery voltage becomes below 10 volts.
- The possible causes shown may not be a complete list of all potential problems, and it is possible that there may be other causes.

Confirmation Procedure	Basic Condition: • 12 volt battery voltage 10 - 16 V Operating Condition: • Turn the vehicle to the ON mode, and wait 6 seconds.
Duration	About 6 seconds
DTC Type	• 1 drive cycle

	- SRS indicator on
Fail Safe Action	- None
Possible Cause	- Short to another line or Poor connection between the SRS unit and the driver's seat belt outer lap tensioner (LLP+, LLP- lines) - Driver's seat belt internal failure (Driver's seat belt outer lap tensioner) - SRS unit internal failure

DTC B0079-2B

DTC B0079-2B : Short to Another Wire Harness in the Driver's Seat Belt Outer Lap Tensioner

NOTE

- Always check "How to troubleshoot the SRS system" and proceed along each "DTC Troubleshooting" procedure.
- Make sure the 12 volt battery is fully charged. If not, the results of tests may not be accurate.
- The SRS indicator will turn on when the 12 volt battery voltage becomes below 10 volts.
- The possible causes shown may not be a complete list of all potential problems, and it is possible that there may be other causes.

Confirmation Procedure	Basic Condition: - Battery voltage 10 - 16 V Operating Condition: - Turn the vehicle to the ON mode, and wait 6 seconds.
Duration	About 6 seconds
DTC Type	- 1 drive cycle - SRS indicator on
Fail Safe Action	- None
Possible Cause	- Short to another line between the SRS unit and the driver's seat belt outer lap tensioner (LLP+, LLP- lines) - Driver's seat belt outer lap tensioner internal failure - SRS unit internal failure

DTC B007A-11

DTC B007A-11 : Short to Ground in the Front Passenger's Seat Belt Outer Lap Tensioner

NOTE

- Always check "How to troubleshoot the SRS system" and proceed along each "DTC Troubleshooting" procedure.
- Make sure the 12 volt battery is fully charged. If not, the results of tests may not be accurate.
- The SRS indicator will turn on when the 12 volt battery voltage becomes below 10 volts.

- The possible causes shown may not be a complete list of all potential problems, and it is possible that there may be other causes.

Confirmation Procedure	Basic Condition: • 12 volt battery voltage 10 - 16 V Operating Condition: • Turn the vehicle to the ON mode, and wait 6 seconds.
Duration	About 6 seconds
DTC Type	• 1 drive cycle • SRS indicator on
Fail Safe Action	• None
Possible Cause	• Short to ground between the SRS unit and the front passenger's seat belt outer lap tensioner (RLP+, RLP- lines) • Front passenger's seat belt internal failure (Front passenger's seat belt outer lap tensioner) • SRS unit internal failure

DTC B007A-12

DTC B007A-12 : Short to Power in the Front Passenger's Seat Belt Outer Lap Tensioner

NOTE

- Always check "How to troubleshoot the SRS system" and proceed along each "DTC Troubleshooting" procedure.
- Make sure the 12 volt battery is fully charged. If not, the results of tests may not be accurate.
- The SRS indicator will turn on when the 12 volt battery voltage becomes below 10 volts.
- The possible causes shown may not be a complete list of all potential problems, and it is possible that there may be other causes.

Confirmation Procedure	Basic Condition: • 12 volt battery voltage 10 - 16 V Operating Condition: • Turn the vehicle to the ON mode, and wait 6 seconds.
Duration	About 6 seconds
DTC Type	• 1 drive cycle • SRS indicator on
Fail Safe Action	• None
Possible Cause	• Short to power between the SRS unit and the front passenger's seat belt outer lap tensioner (RLP+, RLP- lines)

	• Front passenger's seat belt internal failure (Front passenger's seat belt outer lap tensioner) • SRS unit internal failure

DTC B007A-13

DTC B007A-13 : Open or Increased Resistance in the Front Passenger's Seat Belt Outer Lap Tensioner

NOTE

- Always check "How to troubleshoot the SRS system" and proceed along each "DTC Troubleshooting" procedure.
- Make sure the 12 volt battery is fully charged. If not, the results of tests may not be accurate.
- The SRS indicator will turn on when the 12 volt battery voltage becomes below 10 volts.
- The possible causes shown may not be a complete list of all potential problems, and it is possible that there may be other causes.

Confirmation Procedure	Basic Condition: • 12 volt battery voltage 10 - 16 V Operating Condition: • Turn the vehicle to the ON mode, and wait 6 seconds.
Duration	About 6 seconds
DTC Type	• 1 drive cycle • SRS indicator on
Fail Safe Action	• None
Possible Cause	• Open or Poor connection between the SRS unit and the front passenger's seat belt outer lap tensioner (RLP+, RLP- lines) • Front passenger's seat belt internal failure (Front passenger's seat belt outer lap tensioner) • SRS unit internal failure

DTC B007A-1A

DTC B007A-1A : Decreased Resistance in the Front Passenger's Seat Belt Outer Lap Tensioner

NOTE

- Always check "How to troubleshoot the SRS system" and proceed along each "DTC Troubleshooting" procedure.
- Make sure the 12 volt battery is fully charged. If not, the results of tests may not be accurate.
- The SRS indicator will turn on when the 12 volt battery voltage becomes below 10 volts.
- The possible causes shown may not be a complete list of all potential problems, and it is possible that there may be other causes.

Confirmation Procedure	Basic Condition: • 12 volt battery voltage 10 - 16 V

	Operating Condition: - Turn the vehicle to the ON mode, and wait 6 seconds.
Duration	About 6 seconds
DTC Type	- 1 drive cycle - SRS indicator on
Fail Safe Action	- None
Possible Cause	- Short to another line or Poor connection between the SRS unit and the front passenger's seat belt outer lap tensioner (RLP+, RLP- lines) - Front passenger's seat belt internal failure (Front passenger's seat belt outer lap tensioner) - SRS unit internal failure

DTC B007A-2B

DTC B007A-2B : Short to Another Wire Harness in the Front Passenger's Seat Belt Outer Lap Tensioner

NOTE

- Always check "How to troubleshoot the SRS system" and proceed along each "DTC Troubleshooting" procedure.
- Make sure the 12 volt battery is fully charged. If not, the results of tests may not be accurate.
- The SRS indicator will turn on when the 12 volt battery voltage becomes below 10 volts.
- The possible causes shown may not be a complete list of all potential problems, and it is possible that there may be other causes.

Confirmation Procedure	Basic Condition: - Battery voltage 10 - 16 V Operating Condition: - Turn the vehicle to the ON mode, and wait 6 seconds.
Duration	About 6 seconds
DTC Type	- 1 drive cycle - SRS indicator on
Fail Safe Action	- None
Possible Cause	- Short to another line between the SRS unit and the r front passenger's seat belt outer lap tensioner (RLP+, RLP- lines) - Front passenger's seat belt outer lap tensioner internal failure - SRS unit internal failure

DTC B0082-11

DTC B0082-11 : Short to Ground in the Selectable Energy Absorption Device of the Front Passenger's Seat Belt Tensioner

NOTE

- Always check "How to troubleshoot the SRS system" and proceed along each "DTC Troubleshooting" procedure.
- Make sure the 12 volt battery is fully charged. If not, the results of tests may not be accurate.
- The SRS indicator will turn on when the 12 volt battery voltage becomes below 10 volts.
- The possible causes shown may not be a complete list of all potential problems, and it is possible that there may be other causes.

Confirmation Procedure	Basic Condition: • 12 volt battery voltage 10 - 16 V Operating Condition: • Turn the vehicle to the ON mode, and wait 6 seconds.
Duration	About 6 seconds
DTC Type	• 1 drive cycle • SRS indicator on
Fail Safe Action	• None
Possible Cause	• Short to ground between the SRS unit and the selectable energy absorption device (RVEA+, RVEA- lines) • Front passenger's seat belt internal failure (Selectable energy absorption device) • SRS unit internal failure

DTC B0082-12

DTC B0082-12 : Short to Power in the Selectable Energy Absorption Device of the Front Passenger's Seat Belt Tensioner

NOTE

- Always check "How to troubleshoot the SRS system" and proceed along each "DTC Troubleshooting" procedure.
- Make sure the 12 volt battery is fully charged. If not, the results of tests may not be accurate.
- The SRS indicator will turn on when the 12 volt battery voltage becomes below 10 volts.
- The possible causes shown may not be a complete list of all potential problems, and it is possible that there may be other causes.

Confirmation Procedure	Basic Condition: • 12 volt battery voltage 10 - 16 V Operating Condition: • Turn the vehicle to the ON mode, and wait 6 seconds.
Duration	About 6 seconds

DTC Type	- 1 drive cycle - SRS indicator on
Fail Safe Action	- None
Possible Cause	- Short to power between the SRS unit and the selectable energy absorption device (RVEA+, RVEA- lines) - Front passenger's seat belt internal failure (Selectable energy absorption device) - SRS unit internal failure

DTC B0082-13

DTC B0082-13 : Open or Increased Resistance in the Selectable Energy Absorption Device of the Front Passenger's Seat Belt Tensioner

NOTE

- Always check "How to troubleshoot the SRS system" and proceed along each "DTC Troubleshooting" procedure.
- Make sure the 12 volt battery is fully charged. If not, the results of tests may not be accurate.
- The SRS indicator will turn on when the 12 volt battery voltage becomes below 10 volts.
- The possible causes shown may not be a complete list of all potential problems, and it is possible that there may be other causes.

Confirmation Procedure	Basic Condition: - 12 volt battery voltage 10 - 16 V Operating Condition: - Turn the vehicle to the ON mode, and wait 6 seconds.
Duration	About 6 seconds
DTC Type	- 1 drive cycle - SRS indicator on
Fail Safe Action	- None
Possible Cause	- Open or Poor connection between the SRS unit and the selectable energy absorption device (RVEA+, RVEA- lines) - Front passenger's seat belt internal failure (Selectable energy absorption device) - SRS unit internal failure

DTC B0082-1A

DTC B0082-1A : Decreased Resistance in the Selectable Energy Absorption Device of the Front Passenger's Seat Belt Tensioner

NOTE

- Always check "How to troubleshoot the SRS system" and proceed along each "DTC Troubleshooting" procedure.

- Make sure the 12 volt battery is fully charged. If not, the results of tests may not be accurate.
- The SRS indicator will turn on when the 12 volt battery voltage becomes below 10 volts.
- The possible causes shown may not be a complete list of all potential problems, and it is possible that there may be other causes.

Confirmation Procedure	Basic Condition: • 12 volt battery voltage 10 - 16 V Operating Condition: • Turn the vehicle to the ON mode, and wait 6 seconds.
Duration	About 6 seconds
DTC Type	• 1 drive cycle • SRS indicator on
Fail Safe Action	• None
Possible Cause	• Short to another line or Poor connection between the SRS unit and the selectable energy absorption device (RVEA+, RVEA- lines) • Front passenger's seat belt internal failure (Selectable energy absorption device) • SRS unit internal failure

DTC B0082-2B

DTC B0082-2B : Short to Another Wire Harness in the Selectable Energy Absorption Device of the Front Passenger's Seat Belt Tensioner

NOTE

- Always check "How to troubleshoot the SRS system" and proceed along each "DTC Troubleshooting" procedure.
- Make sure the 12 volt battery is fully charged. If not, the results of tests may not be accurate.
- The SRS indicator will turn on when the 12 volt battery voltage becomes below 10 volts.
- The possible causes shown may not be a complete list of all potential problems, and it is possible that there may be other causes.

Confirmation Procedure	Basic Condition: • 12 volt battery voltage 10 - 16 V Operating Condition: • Turn the vehicle to the ON mode, and wait 6 seconds.
Duration	About 6 seconds
DTC Type	• 1 drive cycle • SRS indicator on
Fail Safe Action	• None

Possible Cause	- Short to another line or Poor connection between the SRS unit and the selectable energy absorption device (RVEA+, RVEA- lines) - Front passenger's seat belt internal failure (Selectable energy absorption device) - SRS unit internal failure

DTC B0090-4A

DTC B0090-4A : Internal Failure of the Left Front Impact Sensor

NOTE

- Always check "How to troubleshoot the SRS system" and proceed along each "DTC Troubleshooting" procedure.
- Make sure the 12 volt battery is fully charged. If not, the results of tests may not be accurate.
- The SRS indicator will turn on when the 12 volt battery voltage becomes below 10 volts.
- The possible causes shown may not be a complete list of all potential problems, and it is possible that there may be other causes.

Confirmation Procedure	Basic Condition: - 12 volt battery voltage 10 - 16 V Operating Condition: - Turn the vehicle to the ON mode, and wait 6 seconds.
Duration	About 6 seconds
DTC Type	- 1 drive cycle - SRS indicator on
Fail Safe Action	- None
Possible Cause	- Incorrect left front impact sensor installed - Incorrect SRS unit installed - Left front impact sensor internal failure - SRS unit internal failure

DTC B0090-87

DTC B0090-87 : No Signal From the Left Front Impact Sensor

NOTE

- Always check "How to troubleshoot the SRS system" and proceed along each "DTC Troubleshooting" procedure.
- Make sure the 12 volt battery is fully charged. If not, the results of tests may not be accurate.
- The SRS indicator will turn on when the 12 volt battery voltage becomes below 10 volts.
- The possible causes shown may not be a complete list of all potential problems, and it is possible that there may be other causes.

Confirmation Procedure	Basic Condition:

	- 12 volt battery voltage 10 - 16 V Operating Condition: - Turn the vehicle to the ON mode, and wait 6 seconds.
Duration	About 6 seconds
DTC Type	- 1 drive cycle - SRS indicator on
Fail Safe Action	- None
Possible Cause	- Open, Short to another line, Short to ground, Short to power, or Poor connection between the SRS unit and the left front impact sensor (LFS+, LFS- lines) - Left front impact sensor internal failure - SRS unit internal failure

DTC B0090-92

DTC B0090-92 : Internal Failure of the Left Front Impact Sensor

NOTE

- Always check "How to troubleshoot the SRS system" and proceed along each "DTC Troubleshooting" procedure.
- Make sure the 12 volt battery is fully charged. If not, the results of tests may not be accurate.
- The SRS indicator will turn on when the 12 volt battery voltage becomes below 10 volts.
- The possible causes shown may not be a complete list of all potential problems, and it is possible that there may be other causes.

Confirmation Procedure	Basic Condition: - 12 volt battery voltage 10 - 16 V Operating Condition: - Turn the vehicle to the ON mode, and wait 6 seconds.
Duration	About 6 seconds
DTC Type	- 1 drive cycle - SRS indicator on
Fail Safe Action	- None
Possible Cause	- Left front impact sensor internal failure - SRS unit internal failure

DTC B0091-4A

DTC B0091-4A : Internal Failure of the Left Side Impact Sensor (first)

NOTE

- Always check "How to troubleshoot the SRS system" and proceed along each "DTC Troubleshooting" procedure.
- Make sure the 12 volt battery is fully charged. If not, the results of tests may not be accurate.
- The SRS indicator will turn on when the 12 volt battery voltage becomes below 10 volts.
- The possible causes shown may not be a complete list of all potential problems, and it is possible that there may be other causes.

Confirmation Procedure	Basic Condition: • 12 volt battery voltage 10 - 16 V Operating Condition: • Turn the vehicle to the ON mode, and wait 6 seconds.
Duration	About 6 seconds
DTC Type	• 1 drive cycle • SRS indicator on
Fail Safe Action	• None
Possible Cause	• Incorrect left side impact sensor (first) installed • Incorrect SRS unit installed • Left side impact sensor (first) internal failure • SRS unit internal failure

DTC B0091-87

DTC B0091-87 : No Signal From the Left Side Impact Sensor (first)

NOTE

- Always check "How to troubleshoot the SRS system" and proceed along each "DTC Troubleshooting" procedure.
- Make sure the 12 volt battery is fully charged. If not, the results of tests may not be accurate.
- The SRS indicator will turn on when the 12 volt battery voltage becomes below 10 volts.
- The possible causes shown may not be a complete list of all potential problems, and it is possible that there may be other causes.

Confirmation Procedure	Basic Condition: • 12 volt battery voltage 10 - 16 V Operating Condition: • Turn the vehicle to the ON mode, and wait 6 seconds.
Duration	About 6 seconds
DTC Type	• 1 drive cycle • SRS indicator on
Fail Safe Action	• None
Possible Cause	• Open, Short to another line, Short to ground, Short to power, or Poor connection between the SRS unit and the left side impact sensor (first) (LS1+, LS1- lines) • Left side impact sensor (first) internal failure • SRS unit internal failure

DTC B0091-92

DTC B0091-92 : Internal Failure of the Left Side Impact Sensor (first)

NOTE

- Always check "How to troubleshoot the SRS system" and proceed along each "DTC Troubleshooting" procedure.
- Make sure the 12 volt battery is fully charged. If not, the results of tests may not be accurate.
- The SRS indicator will turn on when the 12 volt battery voltage becomes below 10 volts.
- The possible causes shown may not be a complete list of all potential problems, and it is possible that there may be other causes.

Confirmation Procedure	Basic Condition: • 12 volt battery voltage 10 - 16 V Operating Condition: • Turn the vehicle to the ON mode, and wait 6 seconds.
Duration	About 6 seconds
DTC Type	• 1 drive cycle • SRS indicator on
Fail Safe Action	• None
Possible Cause	• Left side impact sensor (first) internal failure • SRS unit internal failure

DTC B0092-4A

DTC B0092-4A : Internal Failure of the Left Side Impact Sensor (second)

NOTE

- Always check "How to troubleshoot the SRS system" and proceed along each "DTC Troubleshooting" procedure.
- Make sure the 12 volt battery is fully charged. If not, the results of tests may not be accurate.
- The SRS indicator will turn on when the 12 volt battery voltage becomes below 10 volts.
- The possible causes shown may not be a complete list of all potential problems, and it is possible that there may be other causes.

Confirmation Procedure	Basic Condition: • 12 volt battery voltage 10 - 16 V Operating Condition: • Turn the vehicle to the ON mode, and wait 6 seconds.
Duration	About 6 seconds
DTC Type	• 1 drive cycle • SRS indicator on
Fail Safe Action	• None
Possible Cause	• Incorrect left side impact sensor (second) installed • Incorrect SRS unit installed • Left side impact sensor (second) internal failure • SRS unit internal failure

DTC B0092-87

DTC B0092-87 : No Signal From the Left Side Impact Sensor (second)

NOTE

- Always check "How to troubleshoot the SRS system" and proceed along each "DTC Troubleshooting" procedure.
- Make sure the 12 volt battery is fully charged. If not, the results of tests may not be accurate.
- The SRS indicator will turn on when the 12 volt battery voltage becomes below 10 volts.
- The possible causes shown may not be a complete list of all potential problems, and it is possible that there may be other causes.

Confirmation Procedure	Basic Condition: • 12 volt battery voltage 10 - 16 V Operating Condition: • Turn the vehicle to the ON mode, and wait 6 seconds.
Duration	About 6 seconds
DTC Type	• 1 drive cycle • SRS indicator on

Fail Safe Action	- None
Possible Cause	- Open, Short to another line, Short to ground, Short to power, or Poor connection between the SRS unit and the left side impact sensor (second) (LS2+, LS2- lines) - Left side impact sensor (second) internal failure - SRS unit internal failure

DTC B0092-92

DTC B0092-92 : Internal Failure of the Left Side Impact Sensor (second)

NOTE

- Always check "How to troubleshoot the SRS system" and proceed along each "DTC Troubleshooting" procedure.
- Make sure the 12 volt battery is fully charged. If not, the results of tests may not be accurate.
- The SRS indicator will turn on when the 12 volt battery voltage becomes below 10 volts.
- The possible causes shown may not be a complete list of all potential problems, and it is possible that there may be other causes.

Confirmation Procedure	Basic Condition: - 12 volt battery voltage 10 - 16 V Operating Condition: - Turn the vehicle to the ON mode, and wait 6 seconds.
Duration	About 6 seconds
DTC Type	- 1 drive cycle - SRS indicator on
Fail Safe Action	- None
Possible Cause	- Left side impact sensor (second) internal failure - SRS unit internal failure

DTC B0095-4A

DTC B0095-4A : Internal Failure of the Right Front Impact Sensor

NOTE

- Always check "How to troubleshoot the SRS system" and proceed along each "DTC Troubleshooting" procedure.
- Make sure the 12 volt battery is fully charged. If not, the results of tests may not be accurate.
- The SRS indicator will turn on when the 12 volt battery voltage becomes below 10 volts.
- The possible causes shown may not be a complete list of all potential problems, and it is possible that there may be other causes.

Confirmation Procedure	Basic Condition:

	- 12 volt battery voltage 10 - 16 V Operating Condition: - Turn the vehicle to the ON mode, and wait 6 seconds.
Duration	About 6 seconds
DTC Type	- 1 drive cycle - SRS indicator on
Fail Safe Action	- None
Possible Cause	- Incorrect right front impact sensor installed - Incorrect SRS unit installed - Right front impact sensor internal failure - SRS unit internal failure

DTC B0095-87

DTC B0095-87 : No Signal From the Right Front Impact Sensor

NOTE

- Always check "How to troubleshoot the SRS system" and proceed along each "DTC Troubleshooting" procedure.
- Make sure the 12 volt battery is fully charged. If not, the results of tests may not be accurate.
- The SRS indicator will turn on when the 12 volt battery voltage becomes below 10 volts.
- The possible causes shown may not be a complete list of all potential problems, and it is possible that there may be other causes.

Confirmation Procedure	Basic Condition: - 12 volt battery voltage 10 - 16 V Operating Condition: - Turn the vehicle to the ON mode, and wait 6 seconds.
Duration	About 6 seconds
DTC Type	- 1 drive cycle - SRS indicator on
Fail Safe Action	- None
Possible Cause	- Open, Short to another line, Short to ground, Short to power, or Poor connection between the SRS unit and the right front impact sensor (RFS+, RFS- lines) - Right front impact sensor internal failure - SRS unit internal failure

DTC B0095-92

DTC B0095-92 : Internal Failure of the Right Front Impact Sensor

NOTE

- Always check "How to troubleshoot the SRS system" and proceed along each "DTC Troubleshooting" procedure.
- Make sure the 12 volt battery is fully charged. If not, the results of tests may not be accurate.
- The SRS indicator will turn on when the 12 volt battery voltage becomes below 10 volts.
- The possible causes shown may not be a complete list of all potential problems, and it is possible that there may be other causes.

Confirmation Procedure	Basic Condition: • 12 volt battery voltage 10 - 16 V Operating Condition: • Turn the vehicle to the ON mode, and wait 6 seconds.
Duration	About 6 seconds
DTC Type	• 1 drive cycle • SRS indicator on
Fail Safe Action	• None
Possible Cause	• Right front impact sensor internal failure • SRS unit internal failure

DTC B0096-4A

DTC B0096-4A : Internal Failure of the Right Side Impact Sensor (first)

NOTE

- Always check "How to troubleshoot the SRS system" and proceed along each "DTC Troubleshooting" procedure.
- Make sure the 12 volt battery is fully charged. If not, the results of tests may not be accurate.
- The SRS indicator will turn on when the 12 volt battery voltage becomes below 10 volts.
- The possible causes shown may not be a complete list of all potential problems, and it is possible that there may be other causes.

Confirmation Procedure	Basic Condition: • 12 volt battery voltage 10 - 16 V Operating Condition: • Turn the vehicle to the ON mode, and wait 6 seconds.
Duration	About 6 seconds
DTC Type	• 1 drive cycle • SRS indicator on

Fail Safe Action	- None
Possible Cause	- Incorrect right side impact sensor (first) installed - Incorrect SRS unit installed - Right side impact sensor (first) internal failure - SRS unit internal failure

DTC B0096-87

DTC B0096-87 : No Signal From the Right Side Impact Sensor (first)

NOTE

- Always check "How to troubleshoot the SRS system" and proceed along each "DTC Troubleshooting" procedure.
- Make sure the 12 volt battery is fully charged. If not, the results of tests may not be accurate.
- The SRS indicator will turn on when the 12 volt battery voltage becomes below 10 volts.
- The possible causes shown may not be a complete list of all potential problems, and it is possible that there may be other causes.

Confirmation Procedure	Basic Condition: - 12 volt battery voltage 10 - 16 V Operating Condition: - Turn the vehicle to the ON mode, and wait 6 seconds.
Duration	About 6 seconds
DTC Type	- 1 drive cycle - SRS indicator on
Fail Safe Action	- None
Possible Cause	- Open, Short to another line, Short to ground, Short to power, or Poor connection between the SRS unit and the right side impact sensor (first) (RS1+, RS1- lines) - Right side impact sensor (first) internal failure - SRS unit internal failure

DTC B0096-92

DTC B0096-92 : Internal Failure of the Right Side Impact Sensor (first)

NOTE

- Always check "How to troubleshoot the SRS system" and proceed along each "DTC Troubleshooting" procedure.
- Make sure the 12 volt battery is fully charged. If not, the results of tests may not be accurate.
- The SRS indicator will turn on when the 12 volt battery voltage becomes below 10 volts.
- The possible causes shown may not be a complete list of all potential problems, and it is possible that there may be other causes.

Confirmation Procedure	Basic Condition: • 12 volt battery voltage 10 - 16 V Operating Condition: • Turn the vehicle to the ON mode, and wait 6 seconds.
Duration	About 6 seconds
DTC Type	• 1 drive cycle • SRS indicator on
Fail Safe Action	• None
Possible Cause	• Right side impact sensor (first) internal failure • SRS unit internal failure

DTC B0097-4A

DTC B0097-4A : Internal Failure of the Right Side Impact Sensor (second)

NOTE

- Always check "How to troubleshoot the SRS system" and proceed along each "DTC Troubleshooting" procedure.
- Make sure the 12 volt battery is fully charged. If not, the results of tests may not be accurate.
- The SRS indicator will turn on when the 12 volt battery voltage becomes below 10 volts.
- The possible causes shown may not be a complete list of all potential problems, and it is possible that there may be other causes.

Confirmation Procedure	Basic Condition: • 12 volt battery voltage 10 - 16 V Operating Condition: • Turn the vehicle to the ON mode, and wait 6 seconds.
Duration	About 6 seconds
DTC Type	• 1 drive cycle • SRS indicator on
Fail Safe Action	• None
Possible Cause	• Incorrect right side impact sensor (second) installed • Incorrect SRS unit installed • Right side impact sensor (second) internal failure • SRS unit internal failure

DTC B0097-87

DTC B0097-87 : No Signal From the Right Side Impact Sensor (second)

NOTE

- Always check "How to troubleshoot the SRS system" and proceed along each "DTC Troubleshooting" procedure.
- Make sure the 12 volt battery is fully charged. If not, the results of tests may not be accurate.
- The SRS indicator will turn on when the 12 volt battery voltage becomes below 10 volts.
- The possible causes shown may not be a complete list of all potential problems, and it is possible that there may be other causes.

Confirmation Procedure	Basic Condition: • 12 volt battery voltage 10 - 16 V Operating Condition: • Turn the vehicle to the ON mode, and wait 6 seconds.
Duration	About 6 seconds
DTC Type	• 1 drive cycle • SRS indicator on
Fail Safe Action	• None
Possible Cause	• Open, Short to another line, Short to ground, Short to power, or Poor connection between the SRS unit and the right side impact sensor (second) (RS2+, RS2- lines) • Right side impact sensor (second) internal failure • SRS unit internal failure

DTC B0097-92

DTC B0097-92 : Internal Failure of the Right Side Impact Sensor (second)

NOTE

- Always check "How to troubleshoot the SRS system" and proceed along each "DTC Troubleshooting" procedure.
- Make sure the 12 volt battery is fully charged. If not, the results of tests may not be accurate.
- The SRS indicator will turn on when the 12 volt battery voltage becomes below 10 volts.
- The possible causes shown may not be a complete list of all potential problems, and it is possible that there may be other causes.

Confirmation Procedure	Basic Condition: • 12 volt battery voltage 10 - 16 V Operating Condition: • Turn the vehicle to the ON mode, and wait 6 seconds.
Duration	About 6 seconds
DTC Type	• 1 drive cycle • SRS indicator on
Fail Safe Action	• None
Possible Cause	• Right side impact sensor (second) internal failure • SRS unit internal failure

DTC B00A0-54

DTC B00A0-54 : Front Passenger's Weight Sensor not Calibrated

NOTE

- Always check "How to troubleshoot the SRS system" and proceed along each "DTC Troubleshooting" procedure.
- Make sure the 12 volt battery is fully charged. If not, the results of tests may not be accurate.
- The SRS indicator will turn on when the 12 volt battery voltage becomes below 10 volts.
- The possible causes shown may not be a complete list of all potential problems, and it is possible that there may be other causes.

Confirmation Procedure	Basic Condition: • 12 volt battery voltage 10 - 16 V Operating Condition: • Turn the vehicle to the ON mode, and wait 6 seconds.
Duration	About 6 seconds
DTC Type	• 1 drive cycle • SRS indicator on
Fail Safe Action	• None
Possible Cause	• Front passenger's weight sensor not initialized

DTC B00B5-11

DTC B00B5-11 : Short or Decreased Resistance in the Driver's Seat Position Sensor

NOTE

- Always check "How to troubleshoot the SRS system" and proceed along each "DTC Troubleshooting" procedure.
- Make sure the 12 volt battery is fully charged. If not, the results of tests may not be accurate.
- The SRS indicator will turn on when the 12 volt battery voltage becomes below 10 volts.
- The possible causes shown may not be a complete list of all potential problems, and it is possible that there may be other causes.

Confirmation Procedure	Basic Condition: • 12 volt battery voltage 10 - 16 V Operating Condition: • Turn the vehicle to the ON mode, and wait 6 seconds.
Duration	About 6 seconds
DTC Type	• 1 drive cycle • SRS indicator on
Fail Safe Action	• None
Possible Cause	• Short to ground between the SRS unit and the driver's seat position sensor (SS+ line) • Driver's seat position sensor internal failure • SRS unit internal failure

DTC B00B5-13

DTC B00B5-13 : Open or Increased Resistance in the Driver's Seat Position Sensor

NOTE

- Always check "How to troubleshoot the SRS system" and proceed along each "DTC Troubleshooting" procedure.
- Make sure the 12 volt battery is fully charged. If not, the results of tests may not be accurate.
- The SRS indicator will turn on when the 12 volt battery voltage becomes below 10 volts.
- The possible causes shown may not be a complete list of all potential problems, and it is possible that there may be other causes.

Confirmation Procedure	Basic Condition: • 12 volt battery voltage 10 - 16 V Operating Condition: • Turn the vehicle to the ON mode, and wait 6 seconds.
Duration	About 6 seconds
DTC Type	• 1 drive cycle • SRS indicator on
Fail Safe Action	• None

Possible Cause	- Open or Poor connection between the SRS unit and the driver's seat position sensor (SS+ line) - Open or Poor connection between the driver's seat position sensor and the body ground (GND line) - Driver's seat position sensor internal failure - SRS unit internal failure

DTC B00B5-2B

DTC B00B5-2B : Short to Another Wire Harness in the Driver's Seat Position Sensor

NOTE

- Always check "How to troubleshoot the SRS system" and proceed along each "DTC Troubleshooting" procedure.
- Make sure the 12 volt battery is fully charged. If not, the results of tests may not be accurate.
- The SRS indicator will turn on when the 12 volt battery voltage becomes below 10 volts.
- The possible causes shown may not be a complete list of all potential problems, and it is possible that there may be other causes.

Confirmation Procedure	Basic Condition: - Battery voltage 10 - 16 V Operating Condition: - Turn the vehicle to the ON mode, and wait 6 seconds.
Duration	About 6 seconds
DTC Type	- 1 drive cycle - SRS indicator on
Fail Safe Action	- None
Possible Cause	- Short to another line between the SRS unit and the driver's seat position sensor (SS+ lines) - Driver's seat position sensor internal failure - SRS unit internal failure

DTC B00C0-16

DTC B00C0-16 : Internal Failure of the Front Passenger's Weight Sensor (front inner side)

NOTE

- Always check "How to troubleshoot the SRS system" and proceed along each "DTC Troubleshooting" procedure.
- Make sure the 12 volt battery is fully charged. If not, the results of tests may not be accurate.
- The SRS indicator will turn on when the 12 volt battery voltage becomes below 10 volts.
- The possible causes shown may not be a complete list of all potential problems, and it is possible that there may be other causes.

Confirmation Procedure	Basic Condition: • Battery voltage 10 - 16 V Operating Condition: • Turn the vehicle to the ON mode, and wait 6 seconds.
Duration	About 6 seconds
DTC Type	• 1 drive cycle • SRS indicator on
Fail Safe Action	• None
Possible Cause	Front passenger's seat rail internal failure (Front passenger's weight sensor (front inner side))

DTC B00C0-4A

DTC B00C0-4A : Different Supplier ID/Function ID of the Front Passenger's Weight Sensor (front inner side)

NOTE

- Always check "How to troubleshoot the SRS system" and proceed along each "DTC Troubleshooting" procedure.
- Make sure the 12 volt battery is fully charged. If not, the results of tests may not be accurate.
- The SRS indicator will turn on when the 12 volt battery voltage becomes below 10 volts.
- The possible causes shown may not be a complete list of all potential problems, and it is possible that there may be other causes.

Confirmation Procedure	Basic Condition: • Battery voltage 10 - 16 V Operating Condition: • Turn the vehicle to the ON mode, and wait 6 seconds.
Duration	About 6 seconds
DTC Type	• 1 drive cycle • SRS indicator on
Fail Safe Action	• None
Possible Cause	• Front passenger's weight sensor internal failure (front inner side) • SRS unit internal failure

DTC B00C0-54

DTC B00C0-54 : Different Serial ID of the Front Passenger's Weight Sensor (front inner side)

NOTE

- Always check "How to troubleshoot the SRS system" and proceed along each "DTC Troubleshooting" procedure.
- Make sure the 12 volt battery is fully charged. If not, the results of tests may not be accurate.
- The SRS indicator will turn on when the 12 volt battery voltage becomes below 10 volts.
- The possible causes shown may not be a complete list of all potential problems, and it is possible that there may be other causes.

Confirmation Procedure	Basic Condition: • Battery voltage 10 - 16 V Operating Condition: • Turn the vehicle to the ON mode, and wait 6 seconds.
Duration	About 6 seconds
DTC Type	• 1 drive cycle • SRS indicator on
Fail Safe Action	• None
Possible Cause	SRS unit internal failure

DTC B00C0-87

DTC B00C0-87 : No Signal From the Front Passenger's Weight Sensor (front inner side)

NOTE

- Always check "How to troubleshoot the SRS system" and proceed along each "DTC Troubleshooting" procedure.
- Make sure the 12 volt battery is fully charged. If not, the results of tests may not be accurate.
- The SRS indicator will turn on when the 12 volt battery voltage becomes below 10 volts.
- The possible causes shown may not be a complete list of all potential problems, and it is possible that there may be other causes.

Confirmation Procedure	Basic Condition: • Battery voltage 10 - 16 V Operating Condition: • Turn the vehicle to the ON mode, and wait 6 seconds.
Duration	About 6 seconds
DTC Type	• 1 drive cycle • SRS indicator on
Fail Safe Action	• None
Possible Cause	• Open or poor connection between the SRS unit and the front passenger's weight sensor (front inner side) (SWS+, SWSS, SWS- lines) • Short to power or short to ground between the SRS unit and the front passenger's weight sensor (front inner side) (SWSS line)

	• Short to another line or poor connection between the SRS unit and the front passenger's weight sensor (front inner side) (SWSS to SWS+ lines, SWSS to SWS- lines) • SRS unit internal failure • Front passenger's weight sensor internal failure (front inner side)

DTC B00C0-96

DTC B00C0-96 : Internal Failure of the Front Passenger's Weight Sensor (front inner side)

NOTE

- Always check "How to troubleshoot the SRS system" and proceed along each "DTC Troubleshooting" procedure.
- Make sure the 12 volt battery is fully charged. If not, the results of tests may not be accurate.
- The SRS indicator will turn on when the 12 volt battery voltage becomes below 10 volts.
- The possible causes shown may not be a complete list of all potential problems, and it is possible that there may be other causes.

Confirmation Procedure	Basic Condition: • Battery voltage 10 - 16 V Operating Condition: • Turn the vehicle to the ON mode, and wait 6 seconds.
Duration	About 6 seconds
DTC Type	• 1 drive cycle • SRS indicator on
Fail Safe Action	• None
Possible Cause	Front passenger's seat rail internal failure (Front passenger's weight sensor (front inner side))

DTC B00C2-16

DTC B00C2-16 : Internal Failure of the Front Passenger's Weight Sensor (rear inner side)

NOTE

- Always check "How to troubleshoot the SRS system" and proceed along each "DTC Troubleshooting" procedure.
- Make sure the 12 volt battery is fully charged. If not, the results of tests may not be accurate.
- The SRS indicator will turn on when the 12 volt battery voltage becomes below 10 volts.
- The possible causes shown may not be a complete list of all potential problems, and it is possible that there may be other causes.

Confirmation Procedure	Basic Condition: • Battery voltage 10 - 16 V Operating Condition:

	- Turn the vehicle to the ON mode, and wait 6 seconds.
Duration	About 6 seconds
DTC Type	- 1 drive cycle - SRS indicator on
Fail Safe Action	- None
Possible Cause	Front passenger's seat rail internal failure (Front passenger's weight sensor (rear inner side))

DTC B00C2-4A

DTC B00C2-4A : Different Supplier ID/Function ID of the Front Passenger's Weight Sensor (rear inner side)

NOTE

- Always check "How to troubleshoot the SRS system" and proceed along each "DTC Troubleshooting" procedure.
- Make sure the 12 volt battery is fully charged. If not, the results of tests may not be accurate.
- The SRS indicator will turn on when the 12 volt battery voltage becomes below 10 volts.
- The possible causes shown may not be a complete list of all potential problems, and it is possible that there may be other causes.

Confirmation Procedure	Basic Condition: - Battery voltage 10 - 16 V Operating Condition: - Turn the vehicle to the ON mode, and wait 6 seconds.
Duration	About 6 seconds
DTC Type	- 1 drive cycle - SRS indicator on
Fail Safe Action	- None
Possible Cause	- Front passenger's weight sensor internal failure (rear inner side) - SRS unit internal failure

DTC B00C2-54

DTC B00C2-54 : Different Serial ID of the Front Passenger's Weight Sensor (rear inner side)

NOTE

- Always check "How to troubleshoot the SRS system" and proceed along each "DTC Troubleshooting" procedure.
- Make sure the 12 volt battery is fully charged. If not, the results of tests may not be accurate.
- The SRS indicator will turn on when the 12 volt battery voltage becomes below 10 volts.
- The possible causes shown may not be a complete list of all potential problems, and it is possible that there may be other causes.

Confirmation Procedure	Basic Condition: • Battery voltage 10 - 16 V Operating Condition: • Turn the vehicle to the ON mode, and wait 6 seconds.
Duration	About 6 seconds
DTC Type	• 1 drive cycle • SRS indicator on
Fail Safe Action	• None
Possible Cause	SRS unit internal failure

DTC B00C2-87

DTC B00C2-87 : No Signal From the Front Passenger's Weight Sensor (rear inner side)

NOTE

- Always check "How to troubleshoot the SRS system" and proceed along each "DTC Troubleshooting" procedure.
- Make sure the 12 volt battery is fully charged. If not, the results of tests may not be accurate.
- The SRS indicator will turn on when the 12 volt battery voltage becomes below 10 volts.
- The possible causes shown may not be a complete list of all potential problems, and it is possible that there may be other causes.

Confirmation Procedure	Basic Condition: • Battery voltage 10 - 16 V Operating Condition: • Turn the vehicle to the ON mode, and wait 6 seconds.
Duration	About 6 seconds
DTC Type	• 1 drive cycle • SRS indicator on
Fail Safe Action	• None
Possible Cause	• Open or poor connection between the SRS unit and the front passenger's weight sensor (rear inner side) (SWS+, SWS-, SWSS lines) • SRS unit internal failure • Front passenger's weight sensor internal failure (rear inner side)

DTC B00C2-96

DTC B00C2-96 : Internal Failure of the Front Passenger's Weight Sensor (rear inner side)

NOTE

- Always check "How to troubleshoot the SRS system" and proceed along each "DTC Troubleshooting" procedure.
- Make sure the 12 volt battery is fully charged. If not, the results of tests may not be accurate.
- The SRS indicator will turn on when the 12 volt battery voltage becomes below 10 volts.
- The possible causes shown may not be a complete list of all potential problems, and it is possible that there may be other causes.

Confirmation Procedure	Basic Condition: • Battery voltage 10 - 16 V Operating Condition: • Turn the vehicle to the ON mode, and wait 6 seconds.
Duration	About 6 seconds
DTC Type	• 1 drive cycle • SRS indicator on
Fail Safe Action	• None
Possible Cause	Front passenger's seat rail internal failure (Front passenger's weight sensor (rear inner side))

DTC B00D5-14 (KA/KC)

DTC B00D5-14 : Open or Short to Ground in the Front Passenger's Airbag Cutoff Indicator

NOTE

- Always check "How to troubleshoot the SRS system" and proceed along each "DTC Troubleshooting" procedure.
- Make sure the 12 volt battery is fully charged. If not, the results of tests may not be accurate.
- The SRS indicator will turn on when the 12 volt battery voltage becomes below 10 volts.
- The possible causes shown may not be a complete list of all potential problems, and it is possible that there may be other causes.

Confirmation Procedure	Basic Condition: • 12 volt battery voltage 10 - 16 V Operating Condition: • Turn the vehicle to the ON mode, and wait 9 seconds.
Duration	About 9 seconds
DTC Type	• 1 drive cycle • SRS indicator on
Fail Safe Action	• None
Possible Cause	• Open or Short to ground between the SRS unit and the front passenger's airbag cutoff indicator (OFF PTT line)

	• Open or Short to ground between the 12 volt battery and the front passenger's airbag cutoff indicator • Front passenger's airbag cutoff indicator internal failure • SRS unit internal failure

DTC B00D5-17 (KA/KC)

DTC B00D5-17 : Short to Power in the Front Passenger's Airbag Cutoff Indicator

NOTE

- Always check "How to troubleshoot the SRS system" and proceed along each "DTC Troubleshooting" procedure.
- Make sure the 12 volt battery is fully charged. If not, the results of tests may not be accurate.
- The SRS indicator will turn on when the 12 volt battery voltage becomes below 10 volts.
- The possible causes shown may not be a complete list of all potential problems, and it is possible that there may be other causes.

Confirmation Procedure	Basic Condition: • 12 volt battery voltage 10 - 16 V Operating Condition: • Turn the vehicle to the ON mode, and wait 9 seconds.
Duration	About 9 seconds
DTC Type	• 1 drive cycle • SRS indicator on
Fail Safe Action	• None
Possible Cause	• Short to power between the SRS unit and the front passenger's airbag cutoff indicator (OFF PTT line) • Front passenger's airbag cutoff indicator internal failure • SRS unit internal failure

DTC B2800-49

DTC B2800-49 : Internal Failure of the SRS Unit

NOTE

- Always check "How to troubleshoot the SRS system" and proceed along each "DTC Troubleshooting" procedure.
- Make sure the 12 volt battery is fully charged. If not, the results of tests may not be accurate.
- The SRS indicator will turn on when the 12 volt battery voltage becomes below 10 volts.
- The possible causes shown may not be a complete list of all potential problems, and it is possible that there may be other causes.

Confirmation Procedure	Basic Condition: • 12 volt battery voltage 10 - 16 V

	Operating Condition: • Turn the vehicle to the ON mode, and wait 6 seconds.
Duration	About 6 seconds
DTC Type	• 1 drive cycle • SRS indicator on
Fail Safe Action	• None
Possible Cause	• SRS unit internal failure

DTC B2801-49

DTC B2801-49 : Internal Failure of the SRS Unit

NOTE

- Always check "How to troubleshoot the SRS system" and proceed along each "DTC Troubleshooting" procedure.
- Make sure the 12 volt battery is fully charged. If not, the results of tests may not be accurate.
- The SRS indicator will turn on when the 12 volt battery voltage becomes below 10 volts.
- The possible causes shown may not be a complete list of all potential problems, and it is possible that there may be other causes.

Confirmation Procedure	Basic Condition: • 12 volt battery voltage 10 - 16 V Operating Condition: • Turn the vehicle to the ON mode, and wait 6 seconds.
Duration	About 6 seconds
DTC Type	• 1 drive cycle • SRS indicator on
Fail Safe Action	• None
Possible Cause	• SRS unit internal failure

DTC B2802-49

DTC B2802-49 : Internal Failure of the SRS Unit

NOTE

- Always check "How to troubleshoot the SRS system" and proceed along each "DTC Troubleshooting" procedure.
- Make sure the 12 volt battery is fully charged. If not, the results of tests may not be accurate.
- The SRS indicator will turn on when the 12 volt battery voltage becomes below 10 volts.

- The possible causes shown may not be a complete list of all potential problems, and it is possible that there may be other causes.

Confirmation Procedure	Basic Condition: • 12 volt battery voltage 10 - 16 V Operating Condition: • Turn the vehicle to the ON mode, and wait 6 seconds.
Duration	About 6 seconds
DTC Type	• 1 drive cycle • SRS indicator on
Fail Safe Action	• None
Possible Cause	• SRS unit internal failure

DTC B2840-13

DTC B2840-13 : SRS Unit Connector A Not Properly Installed

NOTE

- Always check "How to troubleshoot the SRS system" and proceed along each "DTC Troubleshooting" procedure.
- Make sure the 12 volt battery is fully charged. If not, the results of tests may not be accurate.
- The SRS indicator will turn on when the 12 volt battery voltage becomes below 10 volts.
- The possible causes shown may not be a complete list of all potential problems, and it is possible that there may be other causes.

Confirmation Procedure	Basic Condition: • 12 volt battery voltage 10 - 16 V Operating Condition: • Turn the vehicle to the ON mode, and wait 6 seconds.
Duration	About 6 seconds
DTC Type	• 1 drive cycle • SRS indicator on
Fail Safe Action	• None
Possible Cause	• Poor connection between the SRS unit and connector A • SRS unit internal failure

DTC B2841-13

DTC B2841-13 : SRS Unit Connector B Not Properly Installed

NOTE

- Always check "How to troubleshoot the SRS system" and proceed along each "DTC Troubleshooting" procedure.
- Make sure the 12 volt battery is fully charged. If not, the results of tests may not be accurate.
- The SRS indicator will turn on when the 12 volt battery voltage becomes below 10 volts.
- The possible causes shown may not be a complete list of all potential problems, and it is possible that there may be other causes.

Confirmation Procedure	Basic Condition: • 12 volt battery voltage 10 - 16 V Operating Condition: • Turn the vehicle to the ON mode, and wait 6 seconds.
Duration	About 6 seconds
DTC Type	• 1 drive cycle • SRS indicator on
Fail Safe Action	• None
Possible Cause	• Poor connection between the SRS unit and connector B • SRS unit internal failure

DTC C0061-96 (SRS UNIT)

DTC C0061-96 : Internal Failure of the SRS Unit

NOTE

- Always check "How to troubleshoot the SRS system" and proceed along each "DTC Troubleshooting" procedure.
- Make sure the 12 volt battery is fully charged. If not, the results of tests may not be accurate.
- The SRS indicator will turn on when the 12 volt battery voltage becomes below 10 volts.
- The possible causes shown may not be a complete list of all potential problems, and it is possible that there may be other causes.

Confirmation Procedure	Basic Condition: • 12 volt battery voltage 10 - 16 V Operating Condition: • Turn the vehicle to the ON mode, and wait 6 seconds.
Duration	About 6 seconds
DTC Type	• 1 drive cycle • SRS indicator on
Fail Safe Action	• None

Possible Cause	- SRS unit internal failure

DTC C0063-96 (SRS UNIT)

DTC C0063-96 : Internal Failure of the SRS Unit

NOTE

- Always check "How to troubleshoot the SRS system" and proceed along each "DTC Troubleshooting" procedure.
- Make sure the 12 volt battery is fully charged. If not, the results of tests may not be accurate.
- The SRS indicator will turn on when the 12 volt battery voltage becomes below 10 volts.
- The possible causes shown may not be a complete list of all potential problems, and it is possible that there may be other causes.

Confirmation Procedure	Basic Condition: • 12 volt battery voltage 10 - 16 V Operating Condition: • Turn the vehicle to the ON mode, and wait 6 seconds.
Duration	About 6 seconds
DTC Type	• 1 drive cycle • SRS indicator on
Fail Safe Action	• None
Possible Cause	• SRS unit internal failure

DTC U0122-00 (SRS UNIT (WITH CAN GATEWAY))

DTC U0122-00 : Lost Communication With the VSA Modulator-Control Unit (wheel speed sensor signal error)

NOTE

- Always check "How to troubleshoot the SRS system" and proceed along each "DTC Troubleshooting" procedure.
- Make sure the 12 volt battery is fully charged. If not, the results of tests may not be accurate.
- The SRS indicator will turn on when the 12 volt battery voltage becomes below 10 volts.
- The possible causes shown may not be a complete list of all potential problems, and it is possible that there may be other causes.

Confirmation Procedure	Basic Condition: • 12 volt battery voltage 10 - 16 V Operating Condition: • Turn the vehicle to the ON mode, and wait 6 seconds.

Duration	About 6 seconds
DTC Type	• 1 drive cycle • SRS indicator on
Fail Safe Action	• None
Possible Cause	• Open or Poor connection between the CAN gateway and the SRS unit (F-CAN B_H, F-CAN B_L lines) • Open or Poor connection between the CAN gateway and the VSA modulator-control unit (F-CAN A_H, F-CAN A_L, F-CAN B_H, F-CAN B_L lines) • VSA modulator-control unit internal failure • SRS unit internal failure

DTC U0122-00 (SRS UNIT (WITHOUT CAN GATEWAY))

DTC U0122-00 : Lost Communication With the VSA Modulator-Control Unit (wheel speed sensor signal error)

NOTE

- Always check "How to troubleshoot the SRS system" and proceed along each "DTC Troubleshooting" procedure.
- Make sure the 12 volt battery is fully charged. If not, the results of tests may not be accurate.
- The SRS indicator will turn on when the 12 volt battery voltage becomes below 10 volts.
- The possible causes shown may not be a complete list of all potential problems, and it is possible that there may be other causes.

Confirmation Procedure	Basic Condition: • 12 volt battery voltage 10 - 16 V Operating Condition: • Turn the vehicle to the ON mode, and wait 6 seconds.
Duration	About 6 seconds
DTC Type	• 1 drive cycle • SRS indicator on
Fail Safe Action	• None
Possible Cause	• Open or Poor connection between the VSA modulator-control unit and the SRS unit (F-CAN_H, F-CAN_L lines) • VSA modulator-control unit internal failure

DTC U3000-49 (SRS UNIT (KA/KC))

DTC U3000-49 : Internal Failure of the SRS Unit

NOTE

- Always check "How to troubleshoot the SRS system" and proceed along each "DTC Troubleshooting" procedure.
- Make sure the 12 volt battery is fully charged. If not, the results of tests may not be accurate.
- The SRS indicator will turn on when the 12 volt battery voltage becomes below 10 volts.
- The possible causes shown may not be a complete list of all potential problems, and it is possible that there may be other causes.

Confirmation Procedure	Basic Condition: • 12 volt battery voltage 10 - 16 V Operating Condition: • Turn the vehicle to the ON mode, and wait 6 seconds.
Duration	About 6 seconds
DTC Type	• 1 drive cycle • SRS indicator on
Fail Safe Action	• None
Possible Cause	• Short to ground or short to power between the SRS unit and the front passenger's weight sensor (front inner side) (SWS+ line) • Short to another line between the SRS unit and the front passenger's weight sensor (front inner side) (SWS+ line to SWS- line) • Short to ground or short to power between the SRS unit and the front passenger's weight sensor (rear inner side) (SWS+ line) • Short to another line between the SRS unit and the front passenger's weight sensor (rear inner side) (SWS+ line to SWS- line) • SRS unit internal failure • Front passenger's weight sensor internal failure

DTC U3000-51 (SRS UNIT)

DTC U3000-51 : SRS Unit Programming Error

NOTE

- Always check "How to troubleshoot the SRS system" and proceed along each "DTC Troubleshooting" procedure.
- Make sure the 12 volt battery is fully charged. If not, the results of tests may not be accurate.
- The SRS indicator will turn on when the 12 volt battery voltage becomes below 10 volts.
- The possible causes shown may not be a complete list of all potential problems, and it is possible that there may be other causes.

Confirmation Procedure	Basic Condition: • 12 volt battery voltage 10 - 16 V Operating Condition: • Turn the vehicle to the ON mode, and wait 6 seconds.

Duration	About 6 seconds
DTC Type	- 1 drive cycle - SRS indicator on
Fail Safe Action	- None
Possible Cause	- SRS unit update is not completed properly - SRS unit internal failure

Supplemental Restraint System (SRS) - DTC Diagnostics (Except Hybrid) (1 Of 2) - CR-V

DTC TROUBLESHOOTING

DTC B0001-11 (KA/KC) (2019 2020 2021)

DTC B0001-11 : Short to Ground in the Driver's Airbag First Inflator

Special Tools Required

-SRS Inflator Simulator 07SAZ-TB4011A

-SRS Simulator Lead J 070AZ-SNAA100

NOTE:

- **Before doing this troubleshooting procedure, find out if the vehicle was in a collision. If so, verify that all the required components were replaced with new components of the correct part number and were properly installed** .
- Before doing this troubleshooting procedure, review **SRS Precautions and Procedures** , **General Troubleshooting Information** , and **12 Volt Battery Terminal Disconnection and Reconnection** .

DTC Description	DTC
B0001-11 Short to ground in the driver's airbag first inflator	B

DTC (SRS)

1. Problem verification

   -1. Clear the DTCs with the HDS.

   -2. Turn the vehicle to the ON mode, then wait for 10 seconds.

   -3. Check for DTCs with the HDS.

DTC Description	DTC
B0001-11 Short to ground in the driver's airbag first inflator	B

   Is DTC B0001-11 indicated?

   YES

   The failure is duplicated. Go to step 2.

   NO

   Intermittent failure, the system is OK at this time. Go to Troubleshooting Intermittent Failures. If another DTC is indicated, troubleshoot the DTC.

2. Driver's airbag inflator check

   -1. Turn the vehicle to the OFF (LOCK) mode.

   -2. Disconnect the negative cable from the 12 volt battery, then wait at least 3 minutes.

   -3. **Remove the driver's airbag** .

-4. Disconnect the following connector.

Driver's airbag first inflator 2P connector (on the cable reel harness)

NOTE: Make sure to work with the driver's airbag first inflator 2P connector (A) that has a guide tab (B) on the right side of the No. 2 terminal as shown.

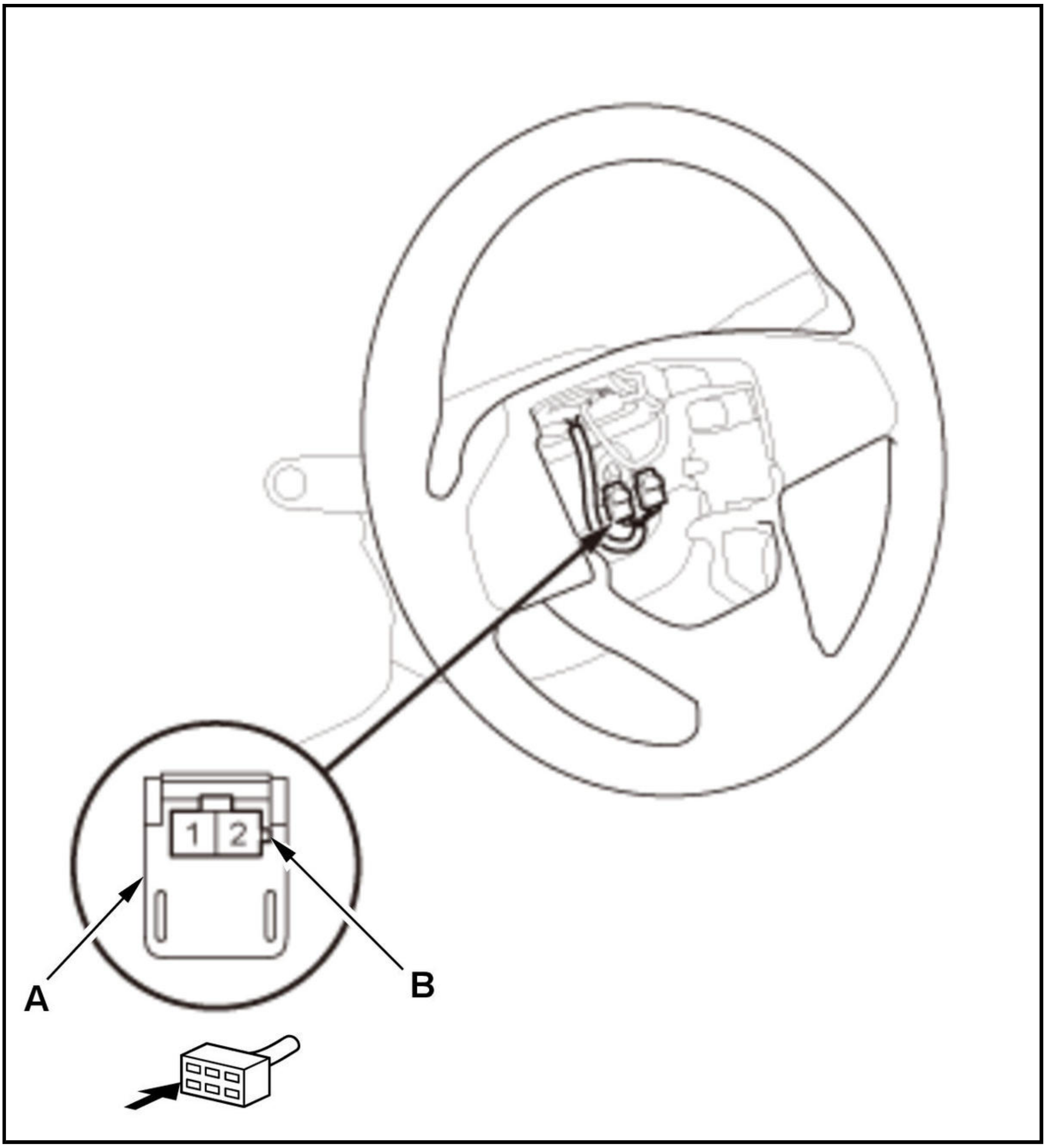

-5. Reconnect the negative cable to the 12 volt battery.

-6. Clear the DTCs with the HDS.

-7. Turn the vehicle to the ON mode, then wait for 10 seconds.

-8. Check for DTCs with the HDS.

DTC Description	DTC
B0001-11 Short to ground in the driver's airbag first inflator	B

Is DTC B0001-11 indicated?

YES

Go to step 3.

NO

Short to ground in the driver's airbag first inflator; **replace the driver's airbag** , then clear the DTC.

3. Cable reel check

-1. Turn the vehicle to the OFF (LOCK) mode.

-2. Disconnect the negative cable from the 12 volt battery, then wait at least 3 minutes.

-3. **Remove the column covers** .

-4. Disconnect cable reel connector B (4P) on the dashboard wire harness.

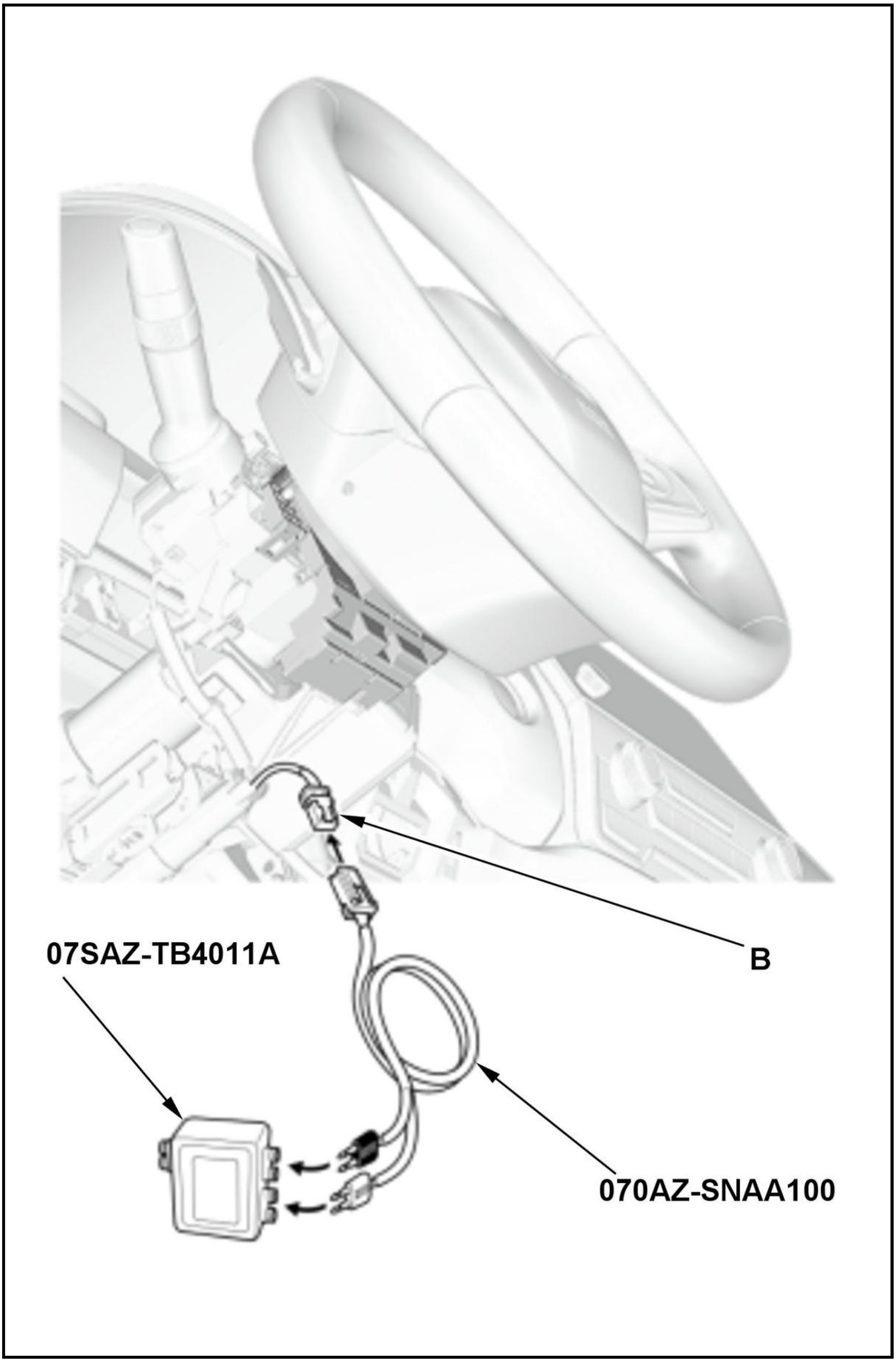
07SAZ-TB4011A
B
070AZ-SNAA100

-5. Connect the terminals of SRS simulator lead J to the SRS inflator simulator (2 Ω connectors), then connect SRS simulator lead J to cable reel connector B (4P) on the dashboard wire harness.

-6. Reconnect the negative cable to the 12 volt battery.

-7. Clear the DTCs with the HDS.

-8. Turn the vehicle to the ON mode, then wait for 10 seconds.

-9. Check for DTCs with the HDS.

DTC Description	DTC
B0001-11 Short to ground in the driver's airbag first inflator	B

Is DTC B0001-11 indicated?

YES

Go to step 4.

NO

Short to ground in the cable reel; **replace the cable reel** , then clear the DTC.

4. Shorted wire check (LA1+, LA1- lines)

-1. Turn the vehicle to the OFF (LOCK) mode.

-2. Disconnect the negative cable from the 12 volt battery, then wait at least 3 minutes.

-3. Disconnect the following connector.

SRS unit connector A (39P)

-4. Disconnect the SRS inflator simulator from SRS simulator lead J. Do not disconnect SRS simulator lead J from cable reel connector B (4P) on the dashboard wire harness.

-5. Measure the resistance between test points 1 and 2.

Test condition	Vehicle OFF (LOCK) mode
	Driver's airbag first inflator 2P connector (on the cable reel harness): disconnected
	Cable reel connector B (4P) (on the dashboard wire harness): disconnected
	SRS unit connector A (39P): disconnected
	Cable reel connector B (4P) (on the dashboard wire harness): connected to SRS simulator lead J
Test point 1	SRS simulator lead J black terminal
Test point 2	Body ground

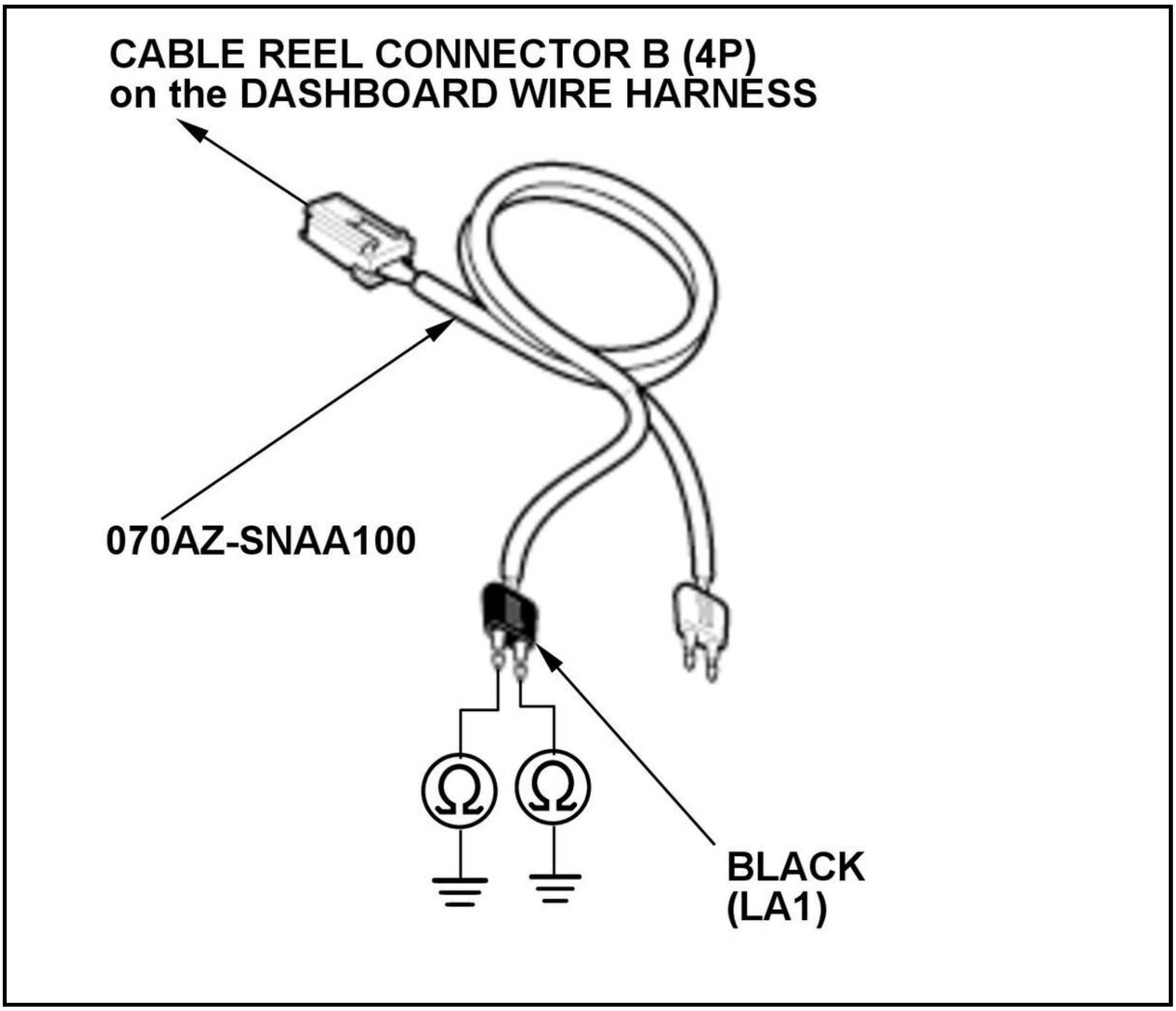

Is there an open circuit, or at least 1 MΩ?

YES

The LA1+ and LA1-wires are OK. Faulty SRS unit or poor connection at SRS unit connector A (39P) and the SRS unit. Check the connection; if the connection is OK, check for any authorized service information related to the DTCs or symptoms you are troubleshooting or replace the SRS unit . If the DTC does not clear, replace the dashboard wire harness.

NO

Short to ground in the dashboard wire harness; replace the dashboard wire harness, then clear the DTC.

DTC B0001-11, B0001-2B

DTC B0001-11 : Short to Ground in the Driver's Airbag First Inflator

DTC B0001-2B : Short to Another Wire Harness in the Driver's Airbag First Inflator

Special Tools Required

-SRS Inflator Simulator 07SAZ-TB4011A

-SRS Simulator Lead K 070AZ-SNAA200

NOTE:

- Before doing this troubleshooting procedure, find out if the vehicle was in a collision. If so, verify that all the required components were replaced with new components of the correct part number

and were properly installed .

- Before doing this troubleshooting procedure, review **SRS Precautions and Procedures** , **General Troubleshooting Information** , and **12 Volt Battery Terminal Disconnection and Reconnection** .

DTC Description	DTC
B0001-11 Short to ground in the driver's airbag first inflator	B
B0001-2B Short to another wire harness in the driver's airbag first inflator	B

DTC (SRS)

1. Problem verification

   -1. Clear the DTCs with the HDS.

   -2. Turn the vehicle to the ON mode, then wait for 10 seconds.

   -3. Check for DTCs with the HDS.

DTC Description	DTC
B0001-11 Short to ground in the driver's airbag first inflator	B
B0001-2B Short to another wire harness in the driver's airbag first inflator	B

   Is DTC B0001-11 or B0001-2B indicated?

   YES

   The failure is duplicated. Go to step 2.

   NO

   Intermittent failure, the system is OK at this time. Go to Troubleshooting Intermittent Failures. If another DTC is indicated, troubleshoot the DTC.

2. Driver's airbag inflator check

   -1. Turn the vehicle to the OFF (LOCK) mode.

   -2. Disconnect the negative cable from the 12 volt battery, then wait at least 3 minutes.

   -3. **Remove the driver's airbag** .

   -4. Disconnect the following connector.

Driver's airbag first inflator 2P connector (on the cable reel harness)

   -5. Reconnect the negative cable to the 12 volt battery.

   -6. Clear the DTCs with the HDS.

   -7. Turn the vehicle to the ON mode, then wait for 10 seconds.

   -8. Check for DTCs with the HDS.

DTC Description	DTC
B0001-11 Short to ground in the driver's airbag first inflator	B
B0001-2B Short to another wire harness in the driver's airbag first inflator	B

   Is DTC B0001-11 or B0001-2B indicated?

YES

Go to step 3.

NO

Short to ground in the driver's airbag first inflator; **replace the driver's airbag** , then clear the DTC.

3. Cable reel check

   -1. Turn the vehicle to the OFF (LOCK) mode.

   -2. Disconnect the negative cable from the 12 volt battery, then wait at least 3 minutes.

   -3. **Remove the column covers** .

   -4. Disconnect cable reel connector B (4P) on the dashboard wire harness.

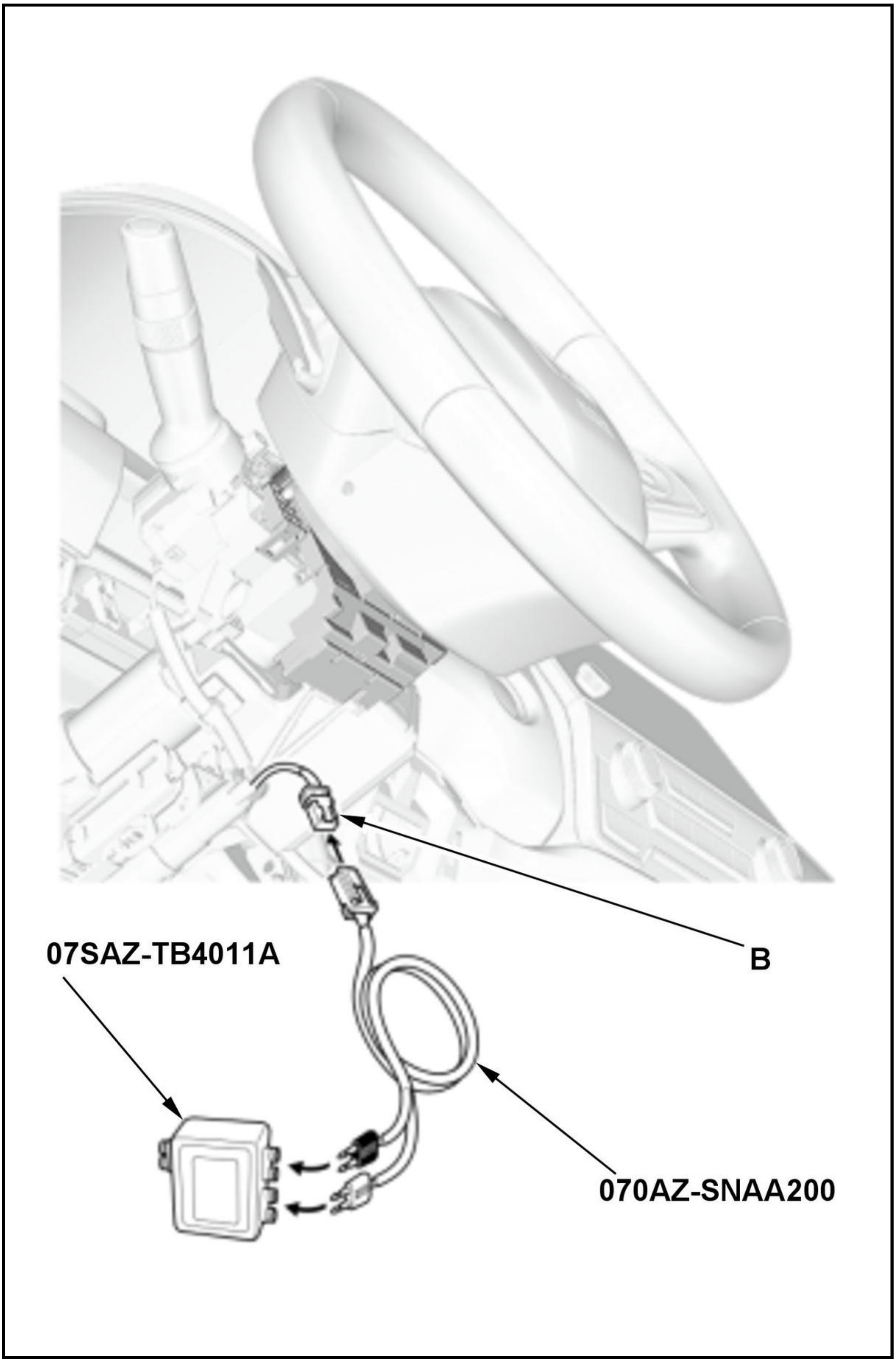
07SAZ-TB4011A
B
070AZ-SNAA200

-5. Connect the terminals of SRS simulator lead K to the SRS inflator simulator (2 Ω connectors), then connect SRS simulator lead K to cable reel connector B (4P) on the dashboard wire harness.

-6. Reconnect the negative cable to the 12 volt battery.

-7. Clear the DTCs with the HDS.

-8. Turn the vehicle to the ON mode, then wait for 10 seconds.

-9. Check for DTCs with the HDS.

DTC Description	DTC
B0001-11 Short to ground in the driver's airbag first inflator	B
B0001-2B Short to another wire harness in the driver's airbag first inflator	B

Is DTC B0001-11 or B0001-2B indicated?

YES

Go to step 4.

NO

Short to ground in the cable reel; **replace the cable reel** , then clear the DTC.

4. Shorted wire check (LA1+, LA1- lines)

-1. Turn the vehicle to the OFF (LOCK) mode.

-2. Disconnect the negative cable from the 12 volt battery, then wait at least 3 minutes.

-3. Disconnect the following connector.

SRS unit connector A (39P)

-4. Disconnect the SRS inflator simulator from SRS simulator lead K. Do not disconnect SRS simulator lead K from cable reel connector B (4P) on the dashboard wire harness.

-5. Measure the resistance between test points 1 and 2.

Test condition	Vehicle OFF (LOCK) mode
	Driver's airbag first inflator 2P connector (on the cable reel harness): disconnected
	Cable reel connector B (4P) (on the dashboard wire harness): disconnected
	SRS unit connector A (39P): disconnected
	Cable reel connector B (4P) (on the dashboard wire harness): connected to SRS simulator lead K
Test point 1	SRS simulator lead K black terminal
Test point 2	Body ground

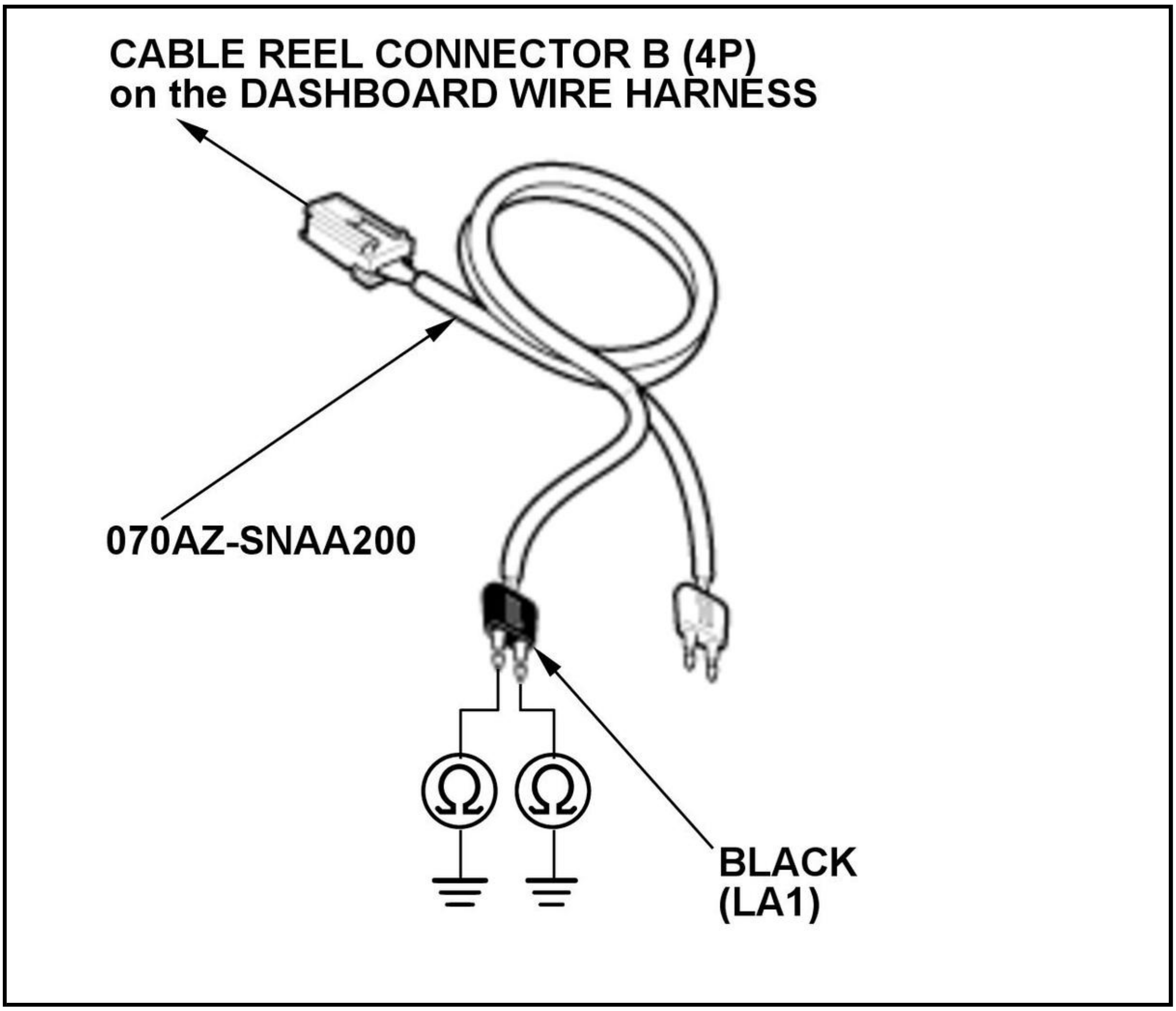

Is there an open circuit, or at least 1 MΩ?

YES

The LA1+ and LA1-wires are OK. Faulty SRS unit or poor connection at SRS unit connector A (39P) and the SRS unit. Check the connection; if the connection is OK, check for any authorized service information related to the DTCs or symptoms you are troubleshooting or **replace the SRS unit** . If the DTC does not clear, replace the dashboard wire harness.

NO

Short to ground in the dashboard wire harness; replace the dashboard wire harness, then clear the DTC.

DTC B0001-12

DTC B0001-12 : Short to Power in the Driver's Airbag First Inflator

Special Tools Required

-SRS Inflator Simulator 07SAZ-TB4011A

-SRS Simulator Lead K 070AZ-SNAA200

NOTE:

- **Before doing this troubleshooting procedure, find out if the vehicle was in a collision. If so, verify that all the required components were replaced with new components of the correct part number and were properly installed** .

- Before doing this troubleshooting procedure, review **SRS Precautions and Procedures** , **General Troubleshooting Information** , and **12 Volt Battery Terminal Disconnection and Reconnection** .

DTC Description	DTC
B0001-12 Short to power in the driver's airbag first inflator	B

DTC (SRS)

1. Problem verification

   -1. Clear the DTCs with the HDS.

   -2. Turn the vehicle to the ON mode, then wait for 10 seconds.

   -3. Check for DTCs with the HDS.

DTC Description	DTC
B0001-12 Short to power in the driver's airbag first inflator	B

   Is DTC B0001-12 indicated?

   YES

   The failure is duplicated. Go to step 2.

   NO

   Intermittent failure, the system is OK at this time. Go to Troubleshooting Intermittent Failures. If another DTC is indicated, troubleshoot the DTC.

2. Driver's airbag inflator check

   -1. Turn the vehicle to the OFF (LOCK) mode.

   -2. Disconnect the negative cable from the 12 volt battery, then wait at least 3 minutes.

   -3. **Remove the driver's airbag** .

   -4. Disconnect the following connector.

Driver's airbag first inflator 2P connector (on the cable reel harness)

   -5. Reconnect the negative cable to the 12 volt battery.

   -6. Clear the DTCs with the HDS.

   -7. Turn the vehicle to the ON mode, then wait for 10 seconds.

   -8. Check for DTCs with the HDS.

DTC Description	DTC
B0001-12 Short to power in the driver's airbag first inflator	B

   Is DTC B0001-12 indicated?

   YES

   Go to step 3.

NO

Short to power in the driver's airbag first inflator; **replace the driver's airbag** , then clear the DTC.

3. Cable reel check

   -1. Turn the vehicle to the OFF (LOCK) mode.

   -2. Disconnect the negative cable from the 12 volt battery, then wait at least 3 minutes.

   -3. Remove the jumper wire from the driver's airbag first inflator 2P connector on the cable reel harness.

   -4. **Remove the column covers** .

   -5. Disconnect cable reel connector B (4P) on the dashboard wire harness.

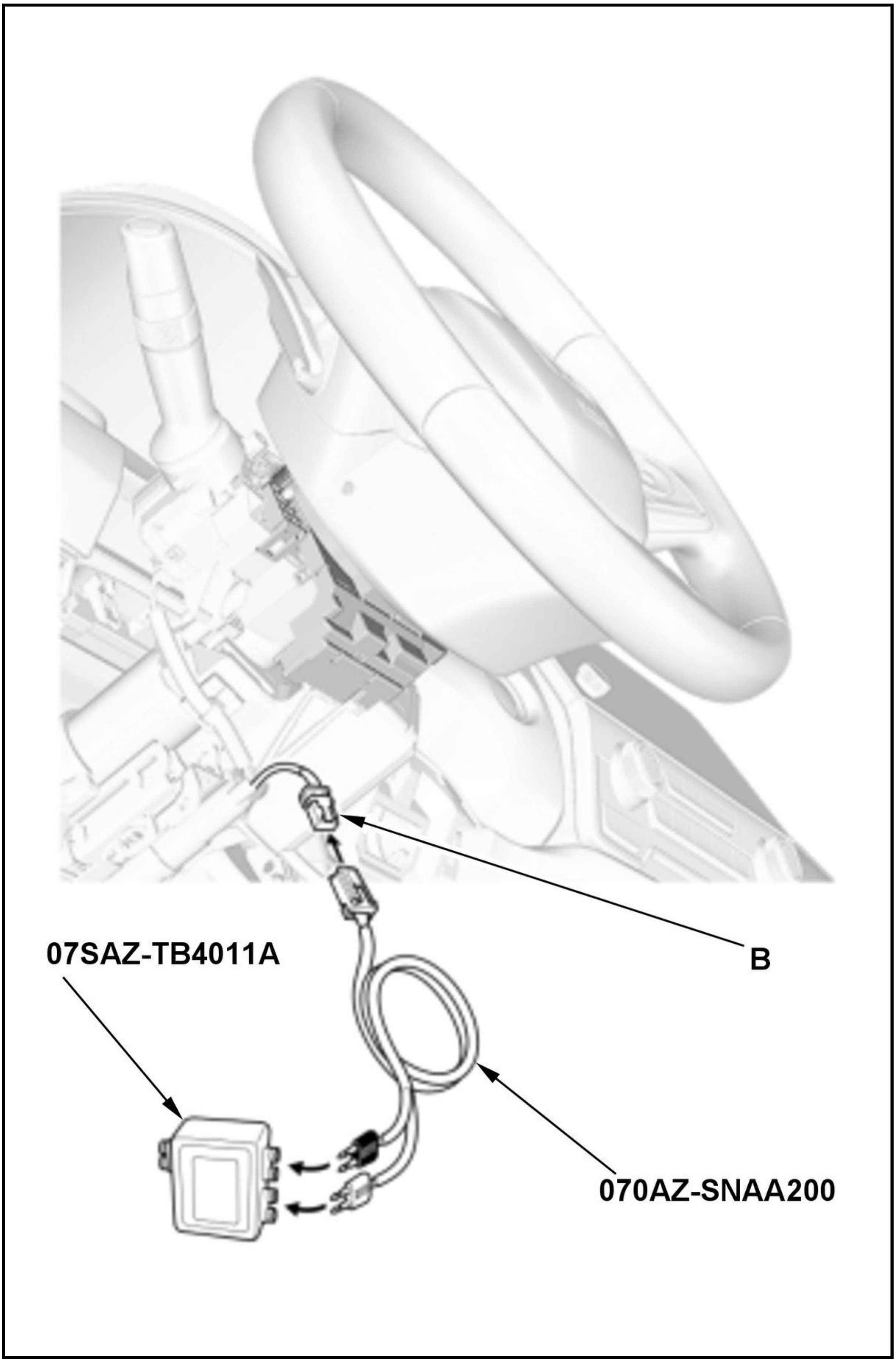
07SAZ-TB4011A
B
070AZ-SNAA200

-6. Connect the terminals of SRS simulator lead K to the SRS inflator simulator (2 Ω connectors), then connect SRS simulator lead K to cable reel connector B (4P) on the dashboard wire harness.

-7. Reconnect the negative cable to the 12 volt battery.

-8. Clear the DTCs with the HDS.

-9. Turn the vehicle to the ON mode, then wait for 10 seconds.

-10.

Check for DTCs with the HDS.

DTC Description	DTC
B0001-12 Short to power in the driver's airbag first inflator	B

Is DTC B0001-12 indicated?

YES

Go to step 4.

NO

Short to power in the cable reel; **replace the cable reel** , then clear the DTC.

4. Shorted wire check (LA1+, LA1- lines to power)

-1. Turn the vehicle to the OFF (LOCK) mode.

-2. Disconnect the negative cable from the 12 volt battery, then wait at least 3 minutes.

-3. Disconnect the following connector.

SRS unit connector A (39P)

-4. Disconnect the SRS inflator simulator from SRS simulator lead K. Do not disconnect SRS simulator lead K from cable reel connector B (4P) on the dashboard wire harness.

-5. Reconnect the negative cable to the 12 volt battery.

-6. Turn the vehicle to the ON mode.

-7. Measure the voltage between test points 1 and 2.

Test condition	Vehicle ON mode
	Driver's airbag first inflator 2P connector (on the cable reel harness): disconnected
	Cable reel connector B (4P) (on the dashboard wire harness): disconnected
	SRS unit connector A (39P): disconnected
	Cable reel connector B (4P) (on the dashboard wire harness): connected to SRS simulator lead K
Test point 1	SRS simulator lead K black terminal
Test point 2	Body ground

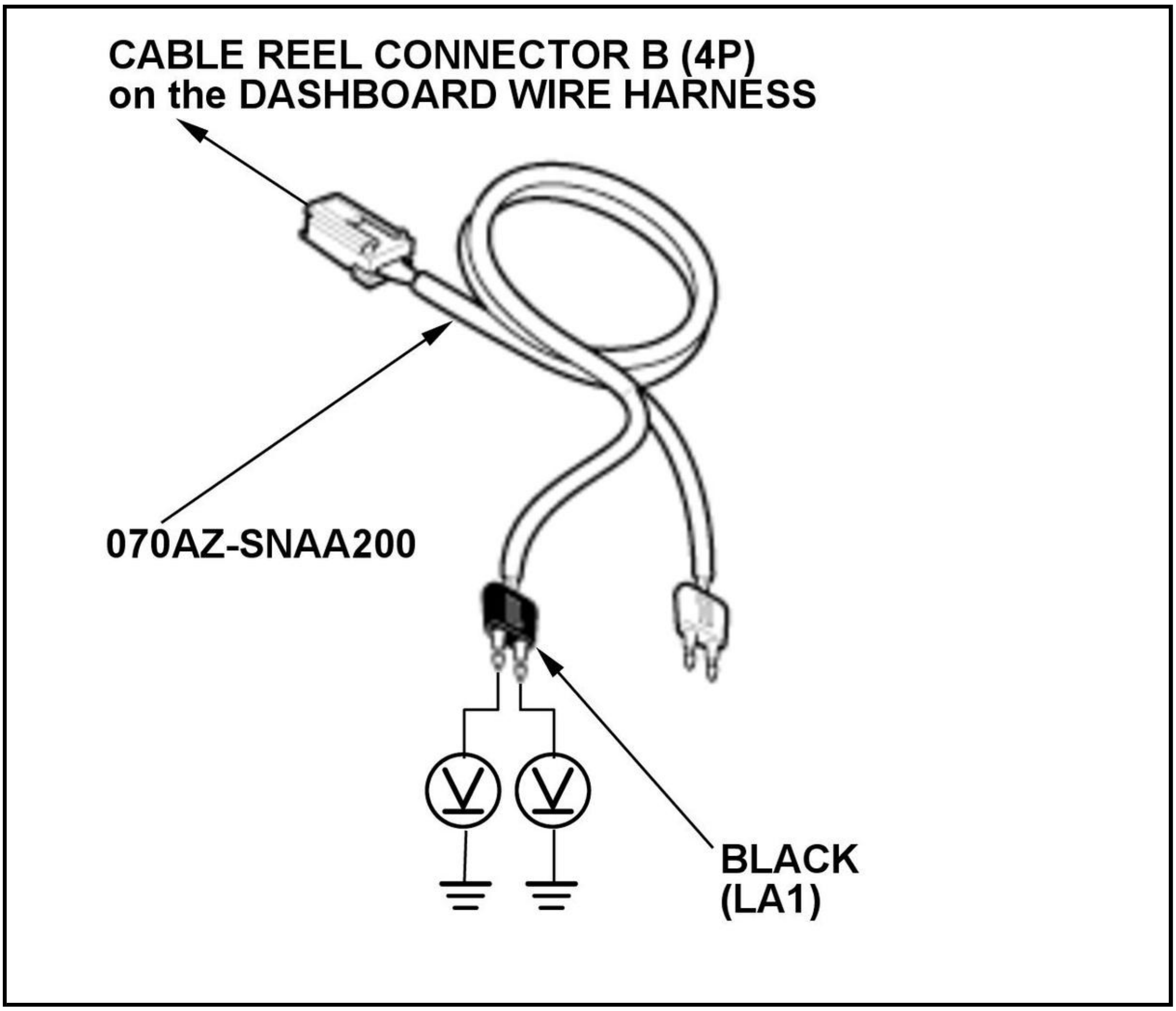

Is there 0.2 V or less?

YES

The LA1+ and LA1-wires are OK. Faulty SRS unit or poor connection at SRS unit connector A (39P) and the SRS unit. Check the connection; if the connection is OK, check for any authorized service information related to the DTCs or symptoms you are troubleshooting or replace the SRS unit . If the DTC does not clear, replace the dashboard wire harness.

NO

Short to power in the dashboard wire harness; replace the dashboard wire harness, then clear the DTC.

DTC B0001-12 (KA/KC) (2019 2020 2021)

DTC B0001-12 : Short to Power in the Driver's Airbag First Inflator

Special Tools Required

-SRS Inflator Simulator 07SAZ-TB4011A

-SRS Simulator Lead J 070AZ-SNAA100

NOTE:

- Before doing this troubleshooting procedure, find out if the vehicle was in a collision. If so, verify that all the required components were replaced with new components of the correct part number and were properly installed .

- Before doing this troubleshooting procedure, review **SRS Precautions and Procedures** , **General Troubleshooting Information** , and **12 Volt Battery Terminal Disconnection and Reconnection** .

DTC Description	DTC
B0001-12 Short to power in the driver's airbag first inflator	B

DTC (SRS)

1. Problem verification

   -1. Clear the DTCs with the HDS.

   -2. Turn the vehicle to the ON mode, then wait for 10 seconds.

   -3. Check for DTCs with the HDS.

DTC Description	DTC
B0001-12 Short to power in the driver's airbag first inflator	B

   Is DTC B0001-12 indicated?

   YES

   The failure is duplicated. Go to step 2.

   NO

   Intermittent failure, the system is OK at this time. Go to Troubleshooting Intermittent Failures. If another DTC is indicated, troubleshoot the DTC.

2. Driver's airbag inflator check

   -1. Turn the vehicle to the OFF (LOCK) mode.

   -2. Disconnect the negative cable from the 12 volt battery, then wait at least 3 minutes.

   -3. **Remove the driver's airbag** .

   -4. Disconnect the following connector.

Driver's airbag first inflator 2P connector (on the cable reel harness)

   NOTE: Make sure to work with the driver's airbag first inflator 2P connector (A) that has a guide tab (B) on the right side of the No. 2 terminal as shown.

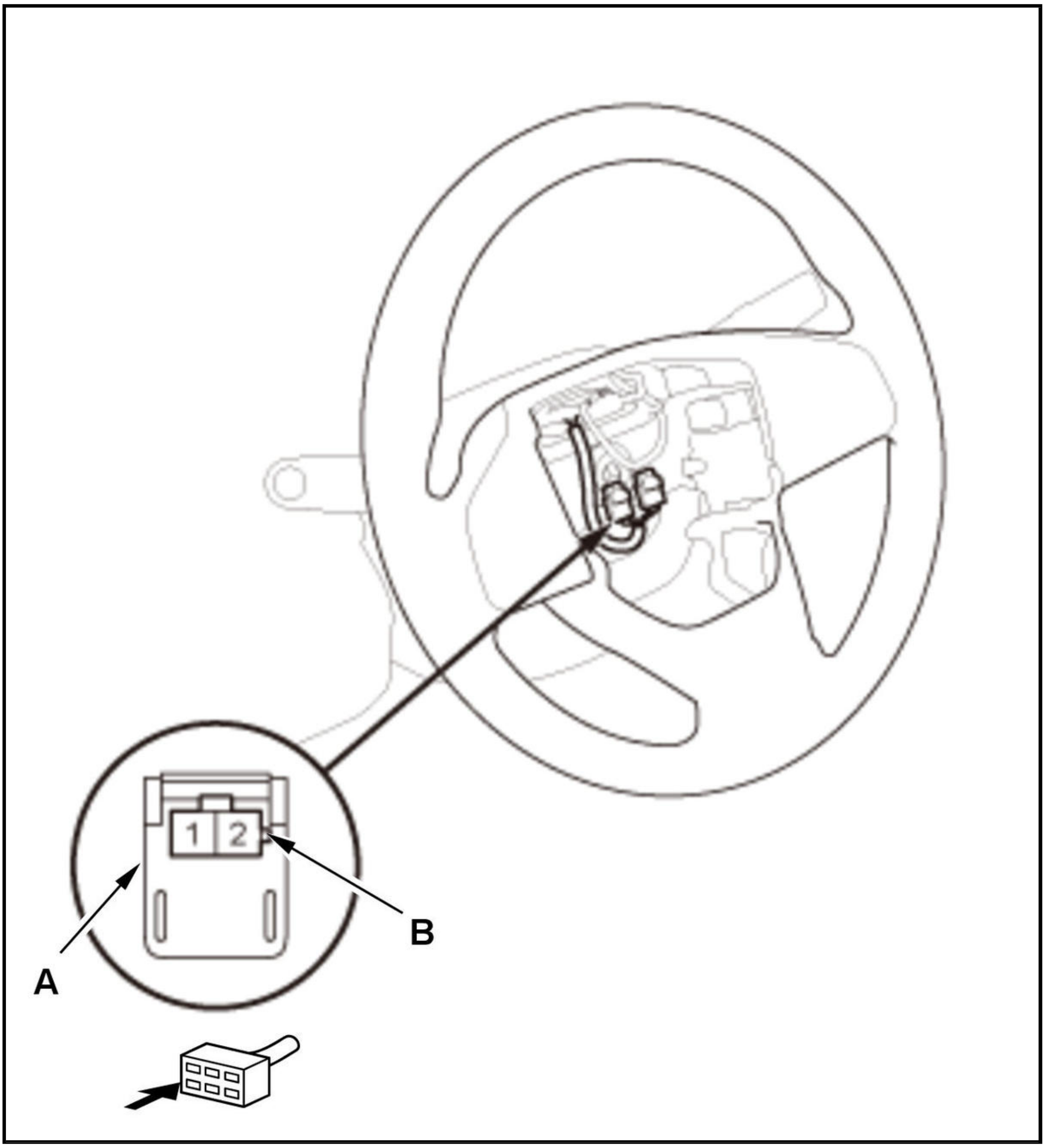

-5. Reconnect the negative cable to the 12 volt battery.

-6. Clear the DTCs with the HDS.

-7. Turn the vehicle to the ON mode, then wait for 10 seconds.

-8. Check for DTCs with the HDS.

DTC Description	DTC
B0001-12 Short to power in the driver's airbag first inflator	B

Is DTC B0001-12 indicated?

YES

Go to step 3.

NO

Short to power in the driver's airbag first inflator; **replace the driver's airbag** , then clear the DTC.

3. Cable reel check

-1. Turn the vehicle to the OFF (LOCK) mode.

-2. Disconnect the negative cable from the 12 volt battery, then wait at least 3 minutes.

-3. **Remove the column covers** .

-4. Disconnect cable reel connector B (4P) on the dashboard wire harness.

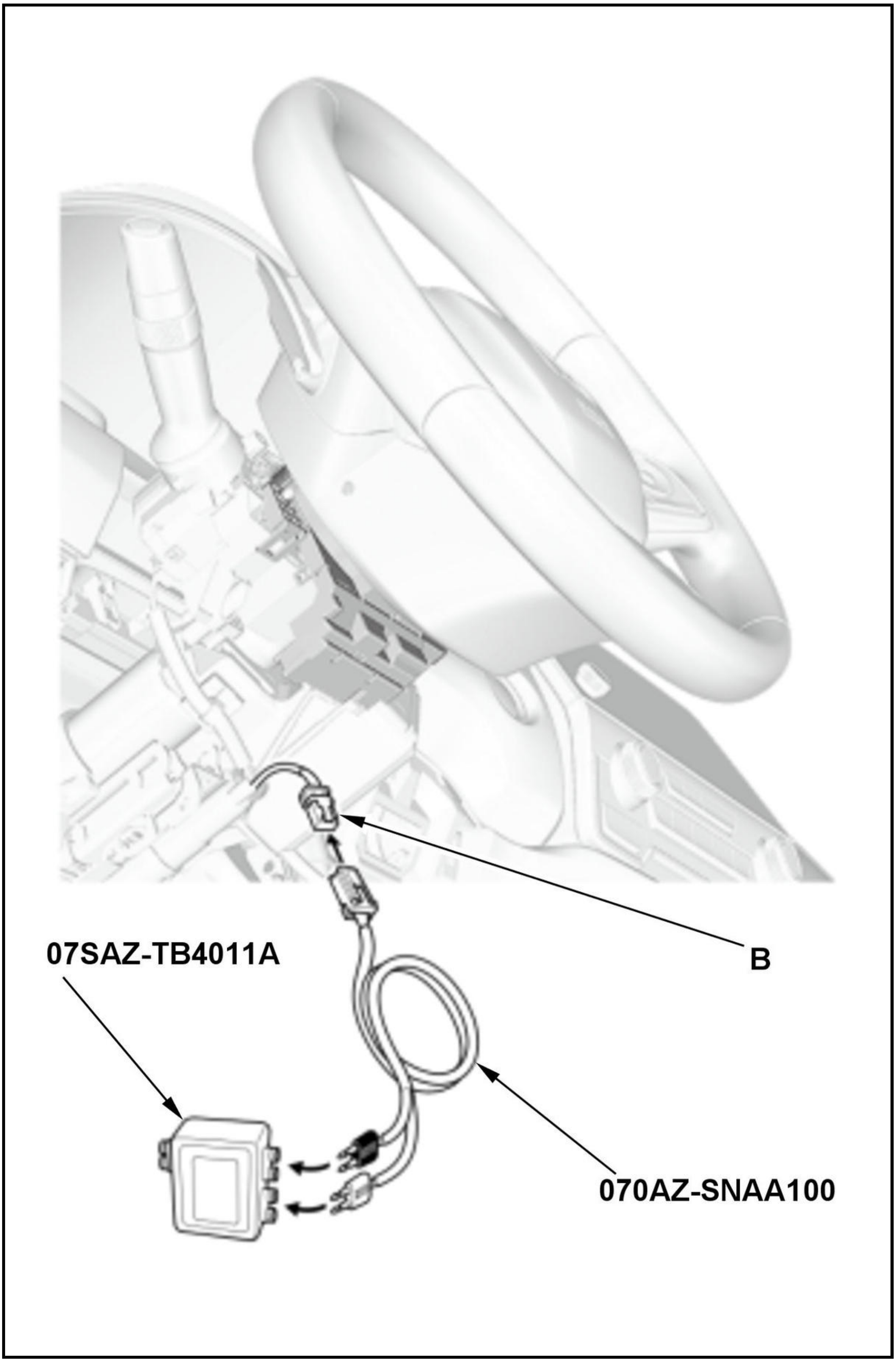
07SAZ-TB4011A
B
070AZ-SNAA100

-5. Connect the terminals of SRS simulator lead J to the SRS inflator simulator (2 Ω connectors), then connect SRS simulator lead J to cable reel connector B (4P) on the dashboard wire harness.

-6. Reconnect the negative cable to the 12 volt battery.

-7. Clear the DTCs with the HDS.

-8. Turn the vehicle to the ON mode, then wait for 10 seconds.

-9. Check for DTCs with the HDS.

DTC Description	DTC
B0001-12 Short to power in the driver's airbag first inflator	B

Is DTC B0001-12 indicated?

YES

Go to step 4.

NO

Short to power in the cable reel; **replace the cable reel** , then clear the DTC.

4. Shorted wire check (LA1+, LA1- lines to power)

-1. Turn the vehicle to the OFF (LOCK) mode.

-2. Disconnect the negative cable from the 12 volt battery, then wait at least 3 minutes.

-3. Disconnect the following connector.

SRS unit connector A (39P)

-4. Disconnect the SRS inflator simulator from SRS simulator lead J. Do not disconnect SRS simulator lead J from cable reel connector B (4P) on the dashboard wire harness.

-5. Reconnect the negative cable to the 12 volt battery.

-6. Turn the vehicle to the ON mode.

-7. Measure the voltage between test points 1 and 2.

Test condition	Vehicle ON mode
	Driver's airbag first inflator 2P connector (on the cable reel harness): disconnected
	Cable reel connector B (4P) (on the dashboard wire harness): disconnected
	SRS unit connector A (39P): disconnected
	Cable reel connector B (4P) (on the dashboard wire harness): connected to SRS simulator lead J
Test point 1	SRS simulator lead J black terminal
Test point 2	Body ground

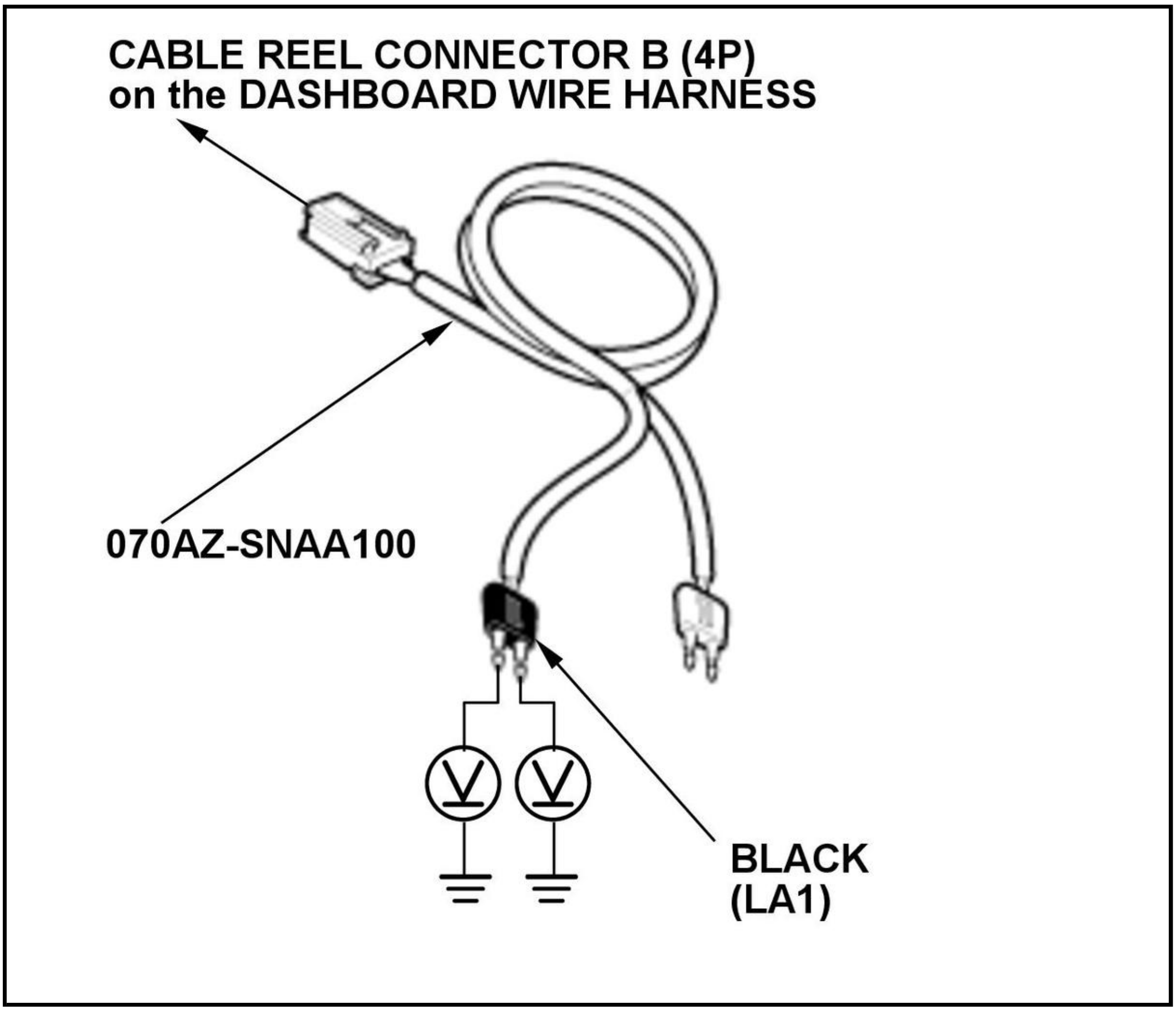

Is there 0.2 V or less?

YES

The LA1+ and LA1-wires are OK. Faulty SRS unit or poor connection at SRS unit connector A (39P) and the SRS unit. Check the connection; if the connection is OK, check for any authorized service information related to the DTCs or symptoms you are troubleshooting or replace the SRS unit . If the DTC does not clear, replace the dashboard wire harness.

NO

Short to power in the dashboard wire harness; replace the dashboard wire harness, then clear the DTC.

DTC B0001-13

DTC B0001-13 : Open or Increased Resistance in the Driver's Airbag First Inflator

Special Tools Required

-SRS Inflator Simulator 07SAZ-TB4011A

-SRS Simulator Lead K 070AZ-SNAA200

NOTE:

- Before doing this troubleshooting procedure, find out if the vehicle was in a collision. If so, verify that all the required components were replaced with new components of the correct part number and were properly installed .

- Before doing this troubleshooting procedure, review **SRS Precautions and Procedures** , **General Troubleshooting Information** , and **12 Volt Battery Terminal Disconnection and Reconnection** .

DTC Description	DTC
B0001-13 Open or increased resistance in the driver's airbag first inflator	B

DTC (SRS)

1. Problem verification

   -1. Clear the DTCs with the HDS.

   -2. Turn the vehicle to the ON mode, then wait for 10 seconds.

   -3. Check for DTCs with the HDS.

DTC Description	DTC
B0001-13 Open or increased resistance in the driver's airbag first inflator	B

   Is DTC B0001-13 indicated?

   YES

   The failure is duplicated. Go to step 2.

   NO

   Intermittent failure, the system is OK at this time. Go to Troubleshooting Intermittent Failures. If another DTC is indicated, troubleshoot the DTC.

2. Driver's airbag inflator check

   -1. Turn the vehicle to the OFF (LOCK) mode.

   -2. Disconnect the negative cable from the 12 volt battery, then wait at least 3 minutes.

   -3. **Remove the driver's airbag** .

   -4. Disconnect the following connector.

Driver's airbag first inflator 2P connector (on the cable reel harness)

   -5. Connect terminals A and B with a jumper wire.

Terminal A	Driver's airbag first inflator 2P connector (female terminals) No. 1 (on the cable reel harness): ①
Terminal B	Driver's airbag first inflator 2P connector (female terminals) No. 2 (on the cable reel harness): ①

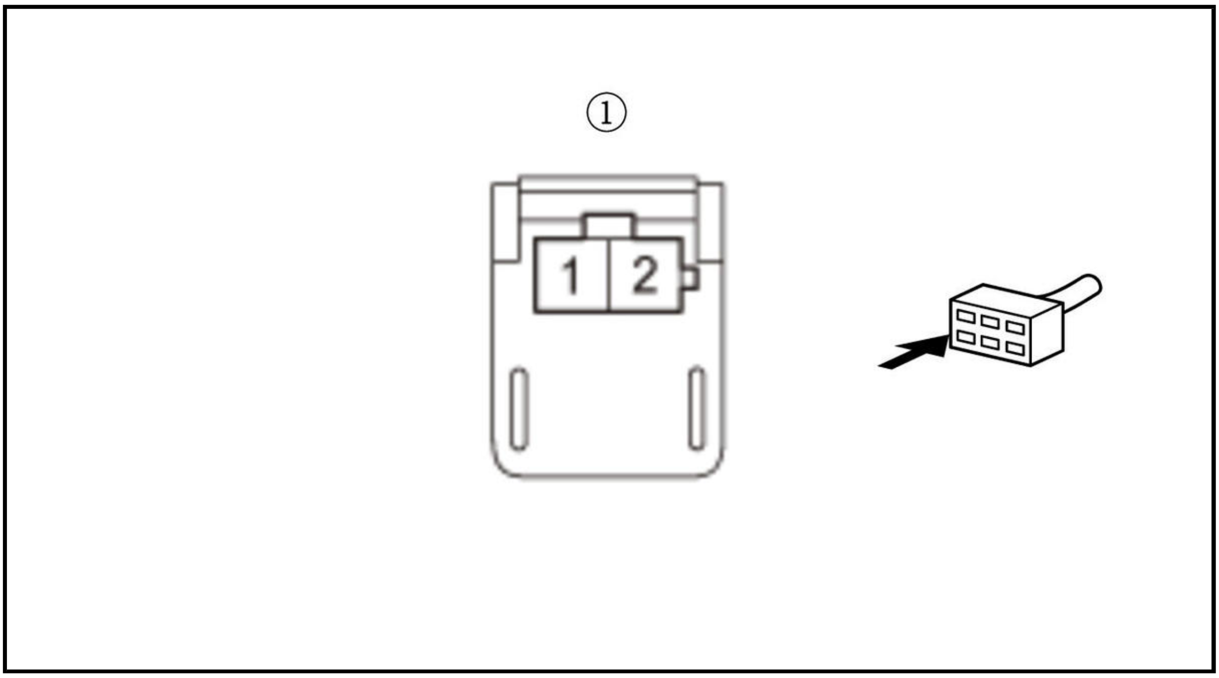

-6. Reconnect the negative cable to the 12 volt battery.

-7. Clear the DTCs with the HDS.

-8. Turn the vehicle to the ON mode, then wait for 10 seconds.

-9. Check for DTCs with the HDS.

DTC Description	DTC
B0001-13 Open or increased resistance in the driver's airbag first inflator	B

Is DTC B0001-13 indicated?

YES

Go to step 3.

NO

Open in the driver's airbag first inflator; **replace the driver's airbag** , then clear the DTC.

3. Cable reel check

-1. Turn the vehicle to the OFF (LOCK) mode.

-2. Disconnect the negative cable from the 12 volt battery, then wait at least 3 minutes.

-3. Remove the jumper wire from the driver's airbag first inflator 2P connector on the cable reel harness.

-4. **Remove the column covers** .

-5. Disconnect cable reel connector B (4P) on the dashboard wire harness.

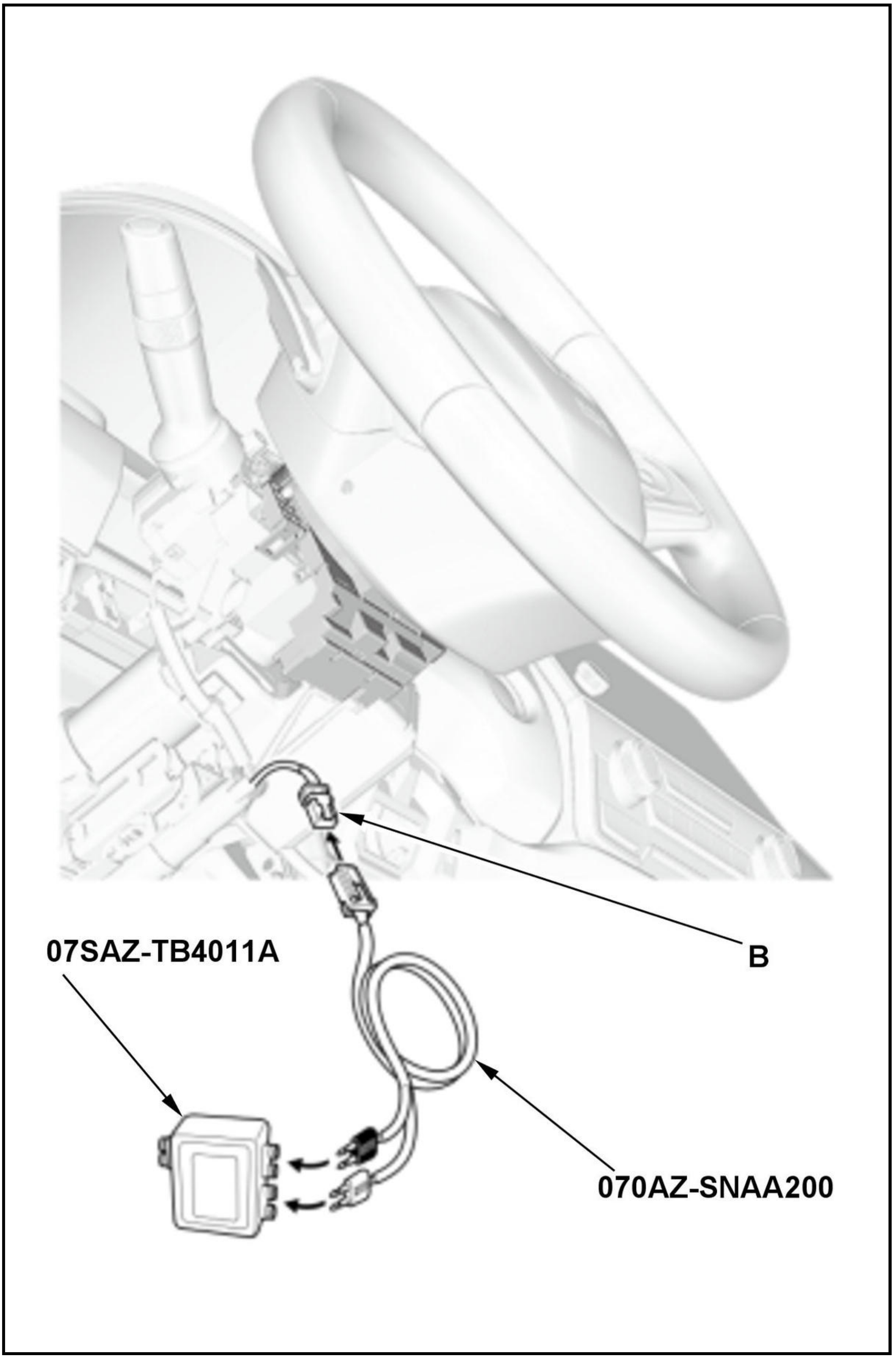
07SAZ-TB4011A
B
070AZ-SNAA200

-6. Connect the terminals of SRS simulator lead K to the SRS inflator simulator (2 Ω connectors), then connect SRS simulator lead K to cable reel connector B (4P) on the dashboard wire harness.

-7. Reconnect the negative cable to the 12 volt battery.

-8. Clear the DTCs with the HDS.

-9. Turn the vehicle to the ON mode, then wait for 10 seconds.

-10.

Check for DTCs with the HDS.

DTC Description	DTC
B0001-13 Open or increased resistance in the driver's airbag first inflator	B

Is DTC B0001-13 indicated?

YES

Go to step 4.

NO

Open in the cable reel; **replace the cable reel** , then clear the DTC.

4. Open wire check (LA1+, LA1- lines)

-1. Turn the vehicle to the OFF (LOCK) mode.

-2. Disconnect the negative cable from the 12 volt battery, then wait at least 3 minutes.

-3. Disconnect the following connector.

SRS unit connector A (39P)

-4. Disconnect the SRS inflator simulator from SRS simulator lead K. Do not disconnect SRS simulator lead K from cable reel connector B (4P) on the dashboard wire harness.

-5. Measure the resistance of the test point.

Test condition	Vehicle OFF (LOCK) mode
	Driver's airbag first inflator 2P connector (on the cable reel harness): disconnected
	Cable reel connector B (4P) (on the dashboard wire harness): disconnected
	SRS unit connector A (39P): disconnected
	Cable reel connector B (4P) (on the dashboard wire harness): connected to SRS simulator lead K
Test point	SRS simulator lead K black terminal

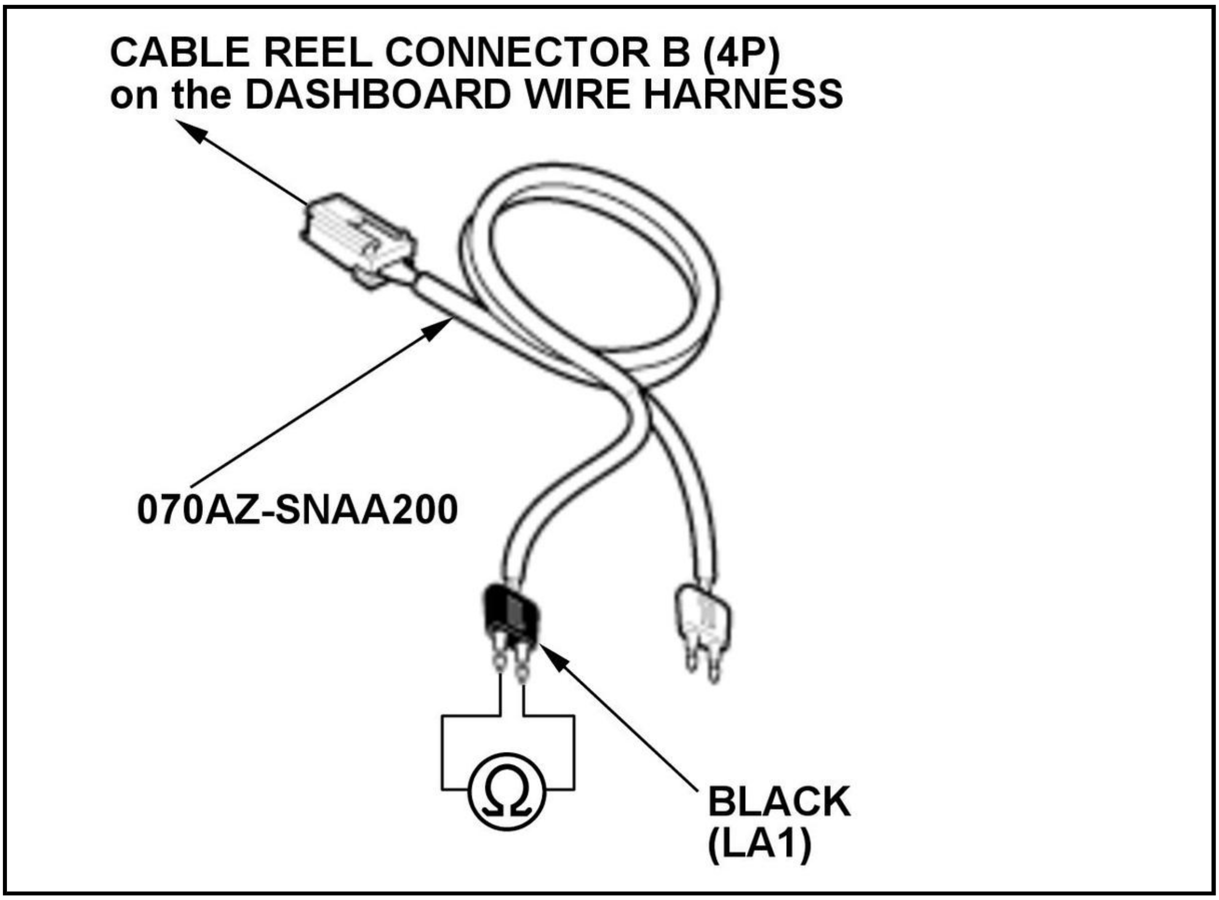

Is there 1.0 Ω or less?

YES

The LA1+ and LA1-wires are OK. Faulty SRS unit or poor connection at SRS unit connector A (39P) and the SRS unit. Check the connection; if the connection is OK, check for any authorized service information related to the DTCs or symptoms you are troubleshooting or **replace the SRS unit** . If the DTC does not clear, replace the dashboard wire harness.

NO

Open in the dashboard wire harness; replace the dashboard wire harness, then clear the DTC.

DTC B0001-13 (KA/KC) (2019 2020 2021)

DTC B0001-13 : Open or Increased Resistance in the Driver's Airbag First Inflator

Special Tools Required

-SRS Inflator Simulator 07SAZ-TB4011A

-SRS Simulator Lead J 070AZ-SNAA100

NOTE:

- **Before doing this troubleshooting procedure, find out if the vehicle was in a collision. If so, verify that all the required components were replaced with new components of the correct part number and were properly installed** .
- Before doing this troubleshooting procedure, review **SRS Precautions and Procedures** , **General Troubleshooting Information** , and **12 Volt Battery Terminal Disconnection and Reconnection** .

DTC Description	DTC
B0001-13 Open or increased resistance in the driver's airbag first inflator	B

DTC (SRS)

1. Problem verification

   -1. Clear the DTCs with the HDS.

   -2. Turn the vehicle to the ON mode, then wait for 10 seconds.

   -3. Check for DTCs with the HDS.

DTC Description	DTC
B0001-13 Open or increased resistance in the driver's airbag first inflator	B

   Is DTC B0001-13 indicated?

   YES

   The failure is duplicated. Go to step 2.

   NO

   Intermittent failure, the system is OK at this time. Go to Troubleshooting Intermittent Failures. If another DTC is indicated, troubleshoot the DTC.

2. Driver's airbag inflator check

   -1. Turn the vehicle to the OFF (LOCK) mode.

   -2. Disconnect the negative cable from the 12 volt battery, then wait at least 3 minutes.

   -3. **Remove the driver's airbag** .

   -4. Disconnect the following connector.

Driver's airbag first inflator 2P connector (on the cable reel harness)

   NOTE: Make sure to work with the driver's airbag first inflator 2P connector (A) that has a guide tab (B) on the right side of the No. 2 terminal as shown.

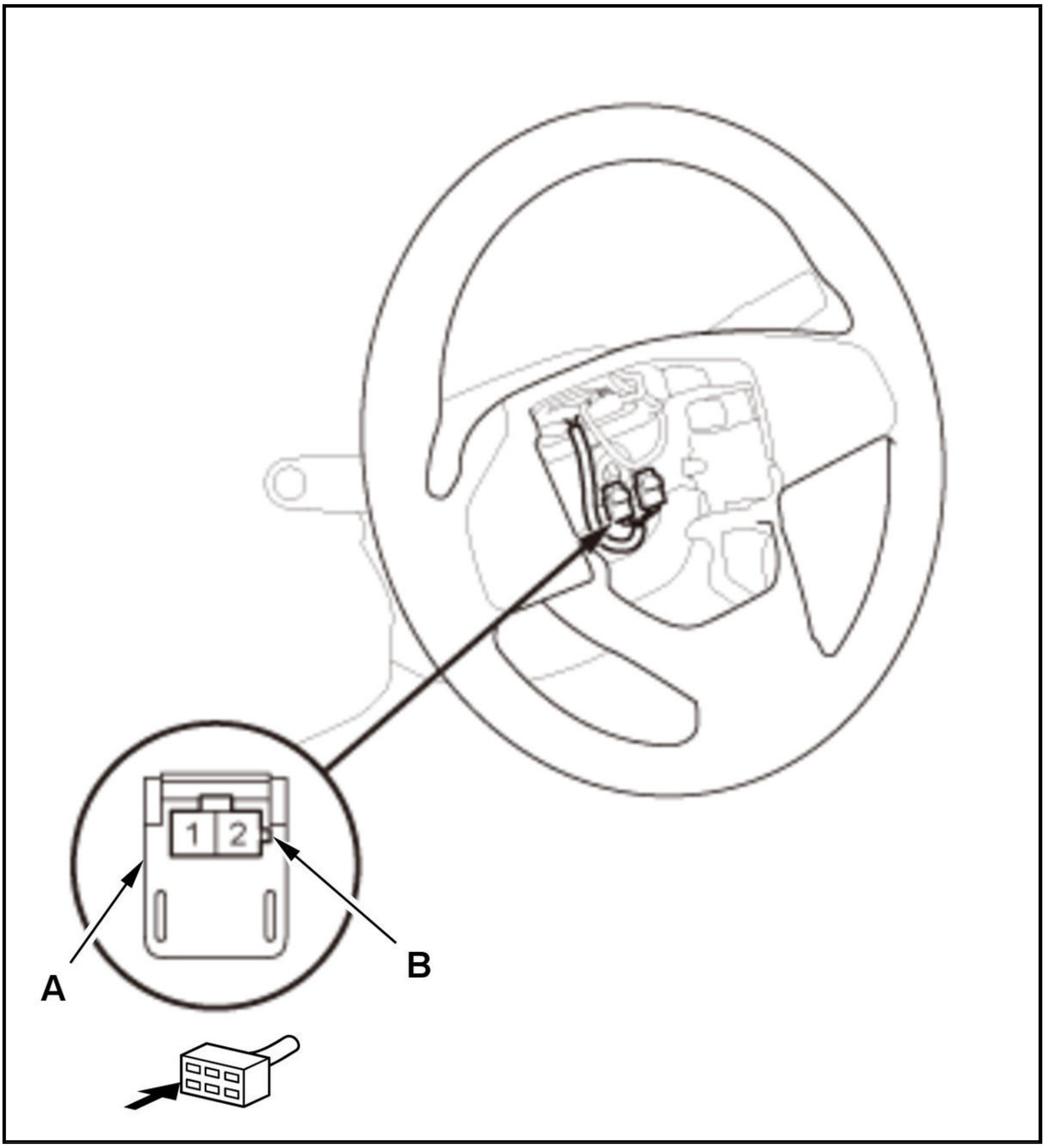

-5. Connect terminals A and B with a jumper wire.

Terminal A	Driver's airbag first inflator 2P connector (female terminals) No. 1 (on the cable reel harness): ①
Terminal B	Driver's airbag first inflator 2P connector (female terminals) No. 2 (on the cable reel harness): ①

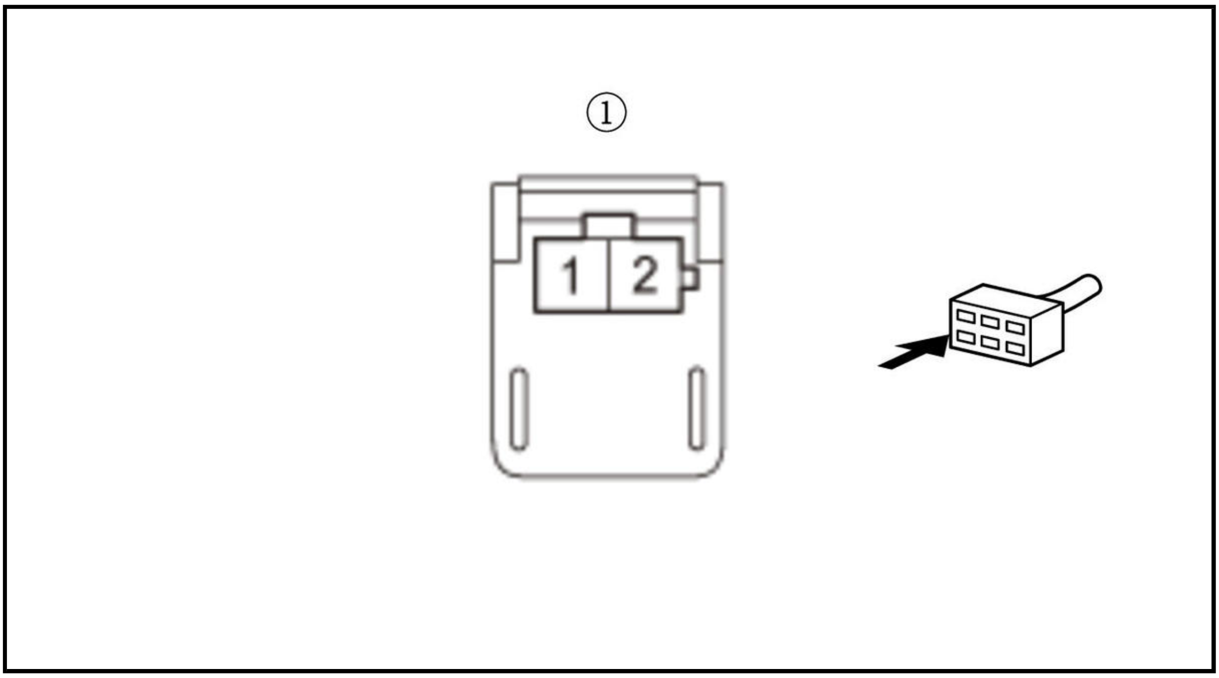

-6. Reconnect the negative cable to the 12 volt battery.

-7. Clear the DTCs with the HDS.

-8. Turn the vehicle to the ON mode, then wait for 10 seconds.

-9. Check for DTCs with the HDS.

DTC Description	DTC
B0001-13 Open or increased resistance in the driver's airbag first inflator	B

Is DTC B0001-13 indicated?

YES

Go to step 3.

NO

Open in the driver's airbag first inflator; **replace the driver's airbag** , then clear the DTC.

3. Cable reel check

-1. Turn the vehicle to the OFF (LOCK) mode.

-2. Disconnect the negative cable from the 12 volt battery, then wait at least 3 minutes.

-3. Remove the jumper wire from the driver's airbag first inflator 2P connector on the cable reel harness.

-4. **Remove the column covers** .

-5. Disconnect cable reel connector B (4P) on the dashboard wire harness.

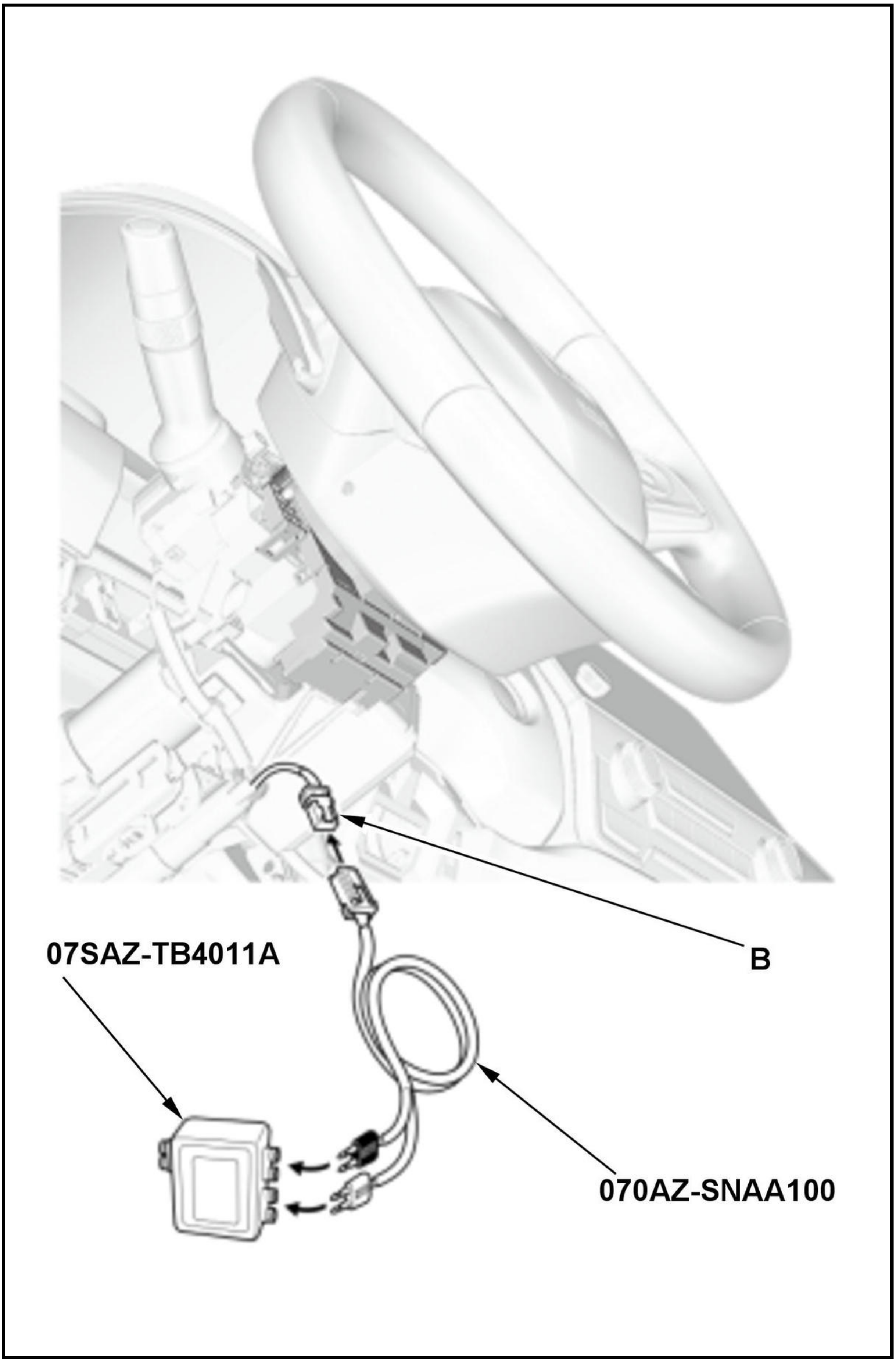
07SAZ-TB4011A
B
070AZ-SNAA100

-6. Connect the terminals of SRS simulator lead J to the SRS inflator simulator (2 Ω connectors), then connect SRS simulator lead J to cable reel connector B (4P) on the dashboard wire harness.

-7. Reconnect the negative cable to the 12 volt battery.

-8. Clear the DTCs with the HDS.

-9. Turn the vehicle to the ON mode, then wait for 10 seconds.

-10.

Check for DTCs with the HDS.

DTC Description	DTC
B0001-13 Open or increased resistance in the driver's airbag first inflator	B

Is DTC B0001-13 indicated?

YES

Go to step 4.

NO

Open in the cable reel; **replace the cable reel** , then clear the DTC.

4. Open wire check (LA1+, LA1- lines)

-1. Turn the vehicle to the OFF (LOCK) mode.

-2. Disconnect the negative cable from the 12 volt battery, then wait at least 3 minutes.

-3. Disconnect the following connector.

SRS unit connector A (39P)

-4. Disconnect the SRS inflator simulator from SRS simulator lead J. Do not disconnect SRS simulator lead J from cable reel connector B (4P) on the dashboard wire harness.

-5. Measure the resistance of the test point.

Test condition	Vehicle OFF (LOCK) mode
	Driver's airbag first inflator 2P connector (on the cable reel harness): disconnected
	Cable reel connector B (4P) (on the dashboard wire harness): disconnected
	SRS unit connector A (39P): disconnected
	Cable reel connector B (4P) (on the dashboard wire harness): connected to SRS simulator lead J
Test point	SRS simulator lead J black terminal

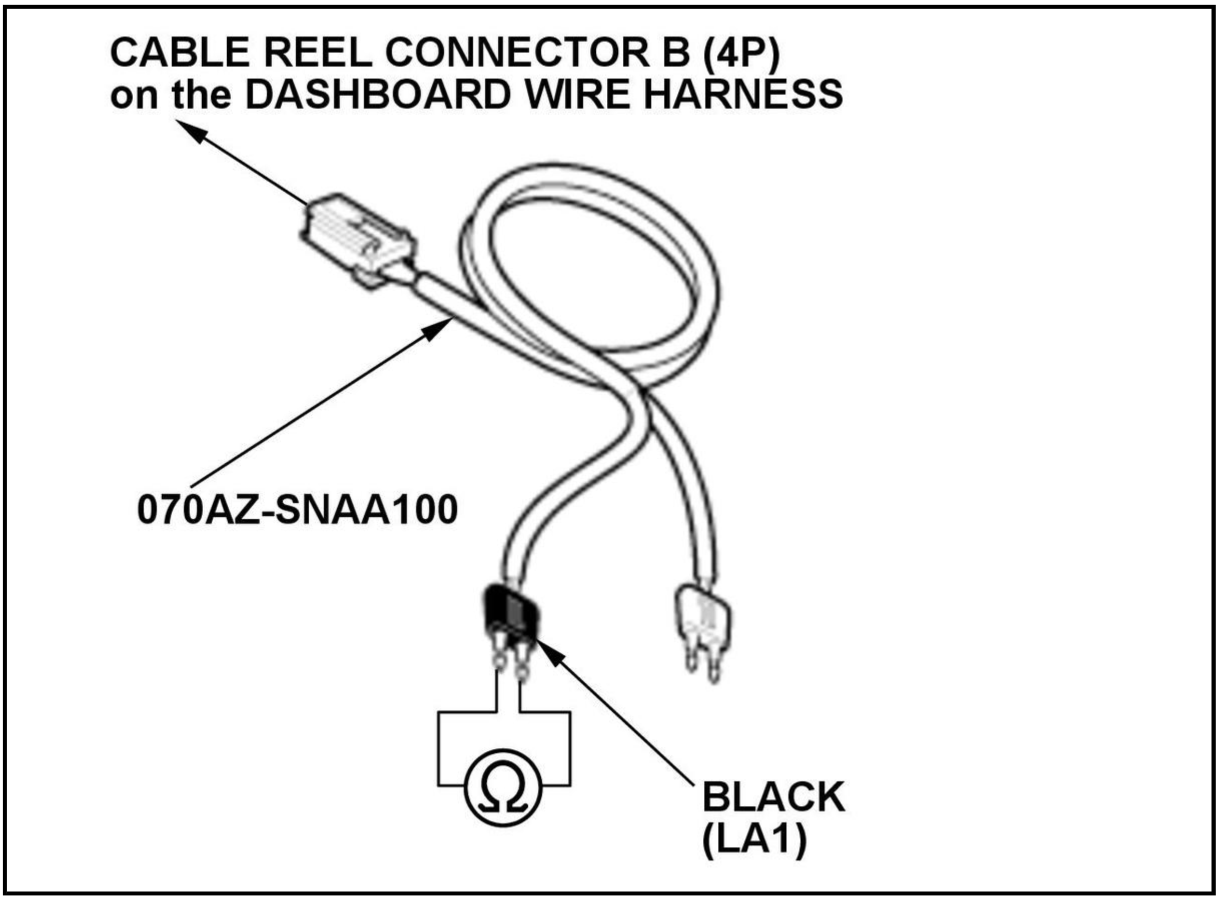

Is there 1.0 Ω or less?

YES

The LA1+ and LA1-wires are OK. Faulty SRS unit or poor connection at SRS unit connector A (39P) and the SRS unit. Check the connection; if the connection is OK, check for any authorized service information related to the DTCs or symptoms you are troubleshooting or **replace the SRS unit** . If the DTC does not clear, replace the dashboard wire harness.

NO

Open or increased resistance in the dashboard wire harness; replace the dashboard wire harness, then clear the DTC.

DTC B0001-1A

DTC B0001-1A : Decreased Resistance in the Driver's Airbag First Inflator

Special Tools Required

-SRS Inflator Simulator 07SAZ-TB4011A

-SRS Simulator Lead K 070AZ-SNAA200

-SRS Short Canceller 070AZ-SAA0100

NOTE:

- **Before doing this troubleshooting procedure, find out if the vehicle was in a collision. If so, verify that all the required components were replaced with new components of the correct part number and were properly installed** .
- Before doing this troubleshooting procedure, review **SRS Precautions and Procedures** , **General Troubleshooting Information** , and **12 Volt Battery Terminal Disconnection and Reconnection** .

DTC Description	DTC
B0001-1A Decreased resistance in the driver's airbag first inflator	B

DTC (SRS)

1. Problem verification

-1. Clear the DTCs with the HDS.

-2. Turn the vehicle to the ON mode, then wait for 10 seconds.

-3. Check for DTCs with the HDS.

DTC Description	DTC
B0001-1A Decreased resistance in the driver's airbag first inflator	B

Is DTC B0001-1A indicated?

YES

The failure is duplicated. Go to step 2.

NO

Intermittent failure, the system is OK at this time. Go to Troubleshooting Intermittent Failures. If another DTC is indicated, troubleshoot the DTC.

2. Driver's airbag inflator check

-1. Turn the vehicle to the OFF (LOCK) mode.

-2. Disconnect the negative cable from the 12 volt battery, then wait at least 3 minutes.

-3. **Remove the driver's airbag** .

-4. Disconnect the following connector.

Driver's airbag first inflator 2P connector (on the cable reel harness)

-5. Reconnect the negative cable to the 12 volt battery.

-6. Clear the DTCs with the HDS.

-7. Turn the vehicle to the ON mode, then wait for 10 seconds.

-8. Check for DTCs with the HDS.

DTC Description	DTC
B0001-1A Decreased resistance in the driver's airbag first inflator	B

Is DTC B0001-1A indicated?

YES

Go to step 3.

NO

Short to another wire in the driver's airbag first inflator; **replace the driver's airbag** , then clear the DTC.

3. Cable reel check

   -1. Turn the vehicle to the OFF (LOCK) mode.

   -2. Disconnect the negative cable from the 12 volt battery, then wait at least 3 minutes.

   -3. **Remove the column covers** .

   -4. Disconnect cable reel connector B (4P) on the dashboard wire harness.

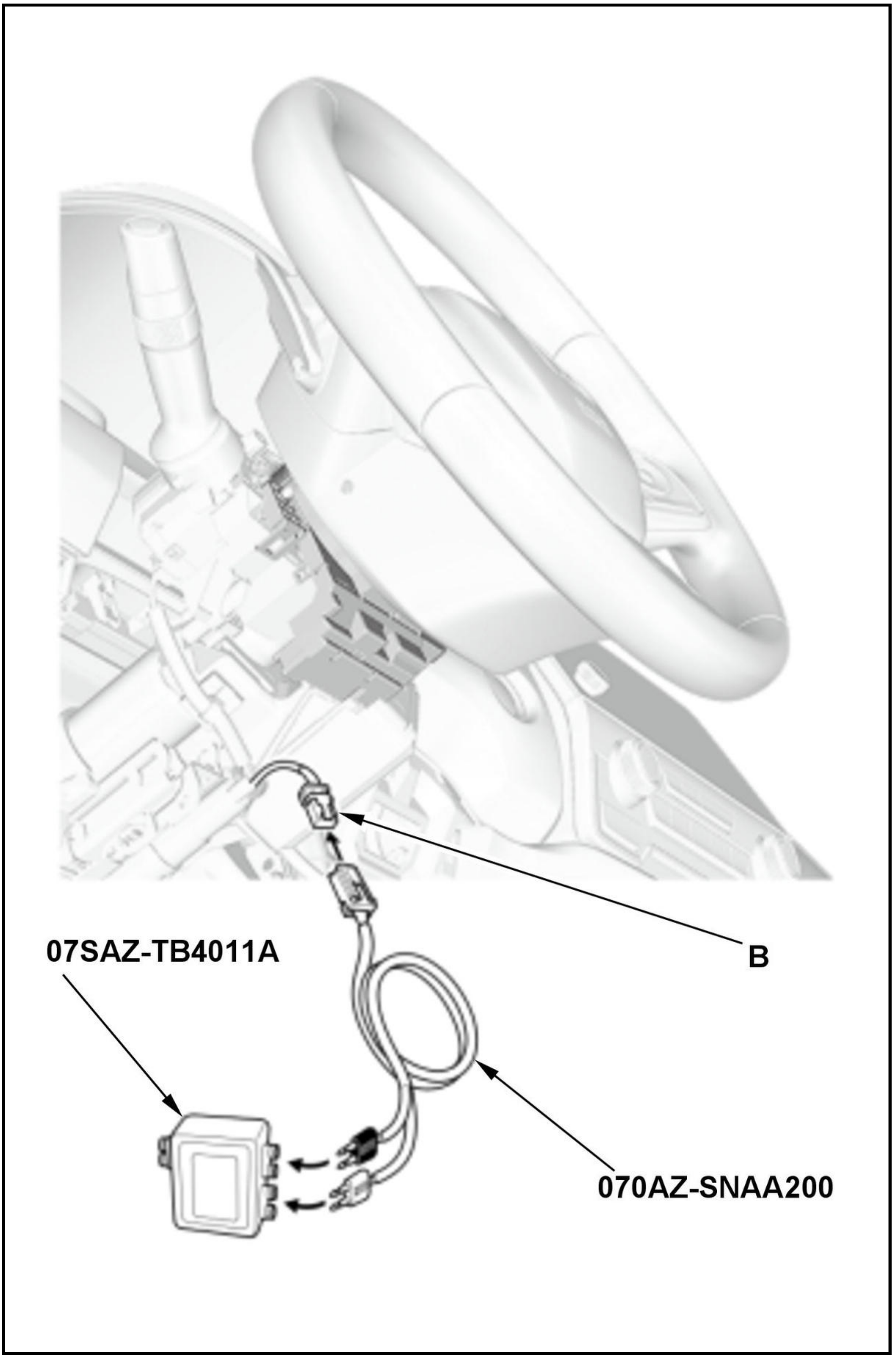
07SAZ-TB4011A
B
070AZ-SNAA200

-5. Connect the terminals of SRS simulator lead K to the SRS inflator simulator (2 Ω connectors), then connect SRS simulator lead K to cable reel connector B (4P) on the dashboard wire harness.

-6. Reconnect the negative cable to the 12 volt battery.

-7. Clear the DTCs with the HDS.

-8. Turn the vehicle to the ON mode, then wait for 10 seconds.

-9. Check for DTCs with the HDS.

DTC Description	DTC
B0001-1A Decreased resistance in the driver's airbag first inflator	B

Is DTC B0001-1A indicated?

YES

Go to step 4.

NO

Short to another wire in the cable reel; **replace the cable reel** , then clear the DTC.

4. Shorted wire check (LA1+ line to LA1- line)

-1. Turn the vehicle to the OFF (LOCK) mode.

-2. Disconnect the negative cable from the 12 volt battery, then wait at least 3 minutes.

-3. Disconnect the following connector.

SRS unit connector A (39P)

-4. Disconnect the SRS inflator simulator from SRS simulator lead K. Do not disconnect SRS simulator lead K from cable reel connector B (4P) on the dashboard wire harness.

-5. **Connect the SRS short canceller to SRS unit connector A (39P) terminals No. 8 and No. 9** .

-6. Measure the resistance of the test point.

Test condition	Vehicle OFF (LOCK) mode
	Driver's airbag first inflator 2P connector (on the cable reel harness): disconnected
	Cable reel connector B (4P) (on the dashboard wire harness): disconnected
	SRS unit connector A (39P): disconnected
	Cable reel connector B (4P) (on the dashboard wire harness): connected to SRS simulator lead K
	SRS unit connector A (39P) No. 8 and No. 9: connected to SRS short canceller
Test point	SRS simulator lead K black terminal

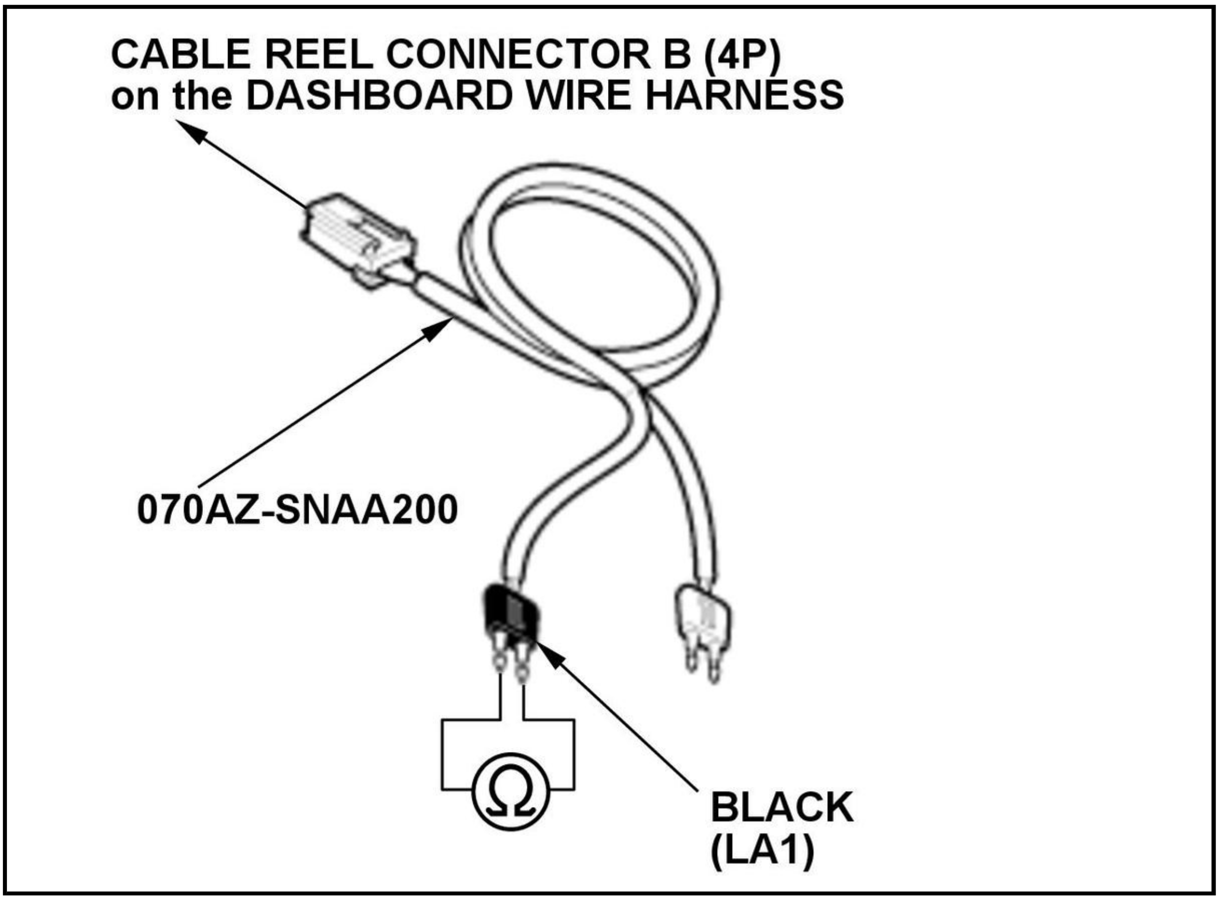

Is there an open circuit, or at least 1 MΩ?

YES

The LA1+ and LA1-wires are OK. Faulty SRS unit or poor connection at SRS unit connector A (39P) and the SRS unit. Check the connection; if the connection is OK, check for any authorized service information related to the DTCs or symptoms you are troubleshooting or **replace the SRS unit** . If the DTC does not clear, replace the dashboard wire harness.

NO

Short to another wire in the dashboard wire harness; replace the dashboard wire harness, then clear the DTC.

DTC B0001-1A (KA/KC) (2019 2020 2021)

DTC B0001-1A : Decreased Resistance in the Driver's Airbag First Inflator

Special Tools Required

-SRS Inflator Simulator 07SAZ-TB4011A

-SRS Simulator Lead J 070AZ-SNAA100

-SRS Short Canceller 070AZ-SAA0100

NOTE:

- **Before doing this troubleshooting procedure, find out if the vehicle was in a collision. If so, verify that all the required components were replaced with new components of the correct part number and were properly installed** .
- Before doing this troubleshooting procedure, review **SRS Precautions and Procedures** , **General Troubleshooting Information** , and **12 Volt Battery Terminal Disconnection and Reconnection** .

DTC Description	DTC
B0001-1A Decreased resistance in the driver's airbag first inflator	B

DTC (SRS)

1. Problem verification

   -1. Clear the DTCs with the HDS.

   -2. Turn the vehicle to the ON mode, then wait for 10 seconds.

   -3. Check for DTCs with the HDS.

DTC Description	DTC
B0001-1A Decreased resistance in the driver's airbag first inflator	B

   Is DTC B0001-1A indicated?

   YES

   The failure is duplicated. Go to step 2.

   NO

   Intermittent failure, the system is OK at this time. Go to Troubleshooting Intermittent Failures. If another DTC is indicated, troubleshoot the DTC.

2. Driver's airbag inflator check

   -1. Turn the vehicle to the OFF (LOCK) mode.

   -2. Disconnect the negative cable from the 12 volt battery, then wait at least 3 minutes.

   -3. **Remove the driver's airbag** .

   -4. Disconnect the following connector.

Driver's airbag first inflator 2P connector (on the cable reel harness)

   NOTE: Make sure to work with the driver's airbag first inflator 2P connector (A) that has a guide tab (B) on the right side of the No. 2 terminal as shown.

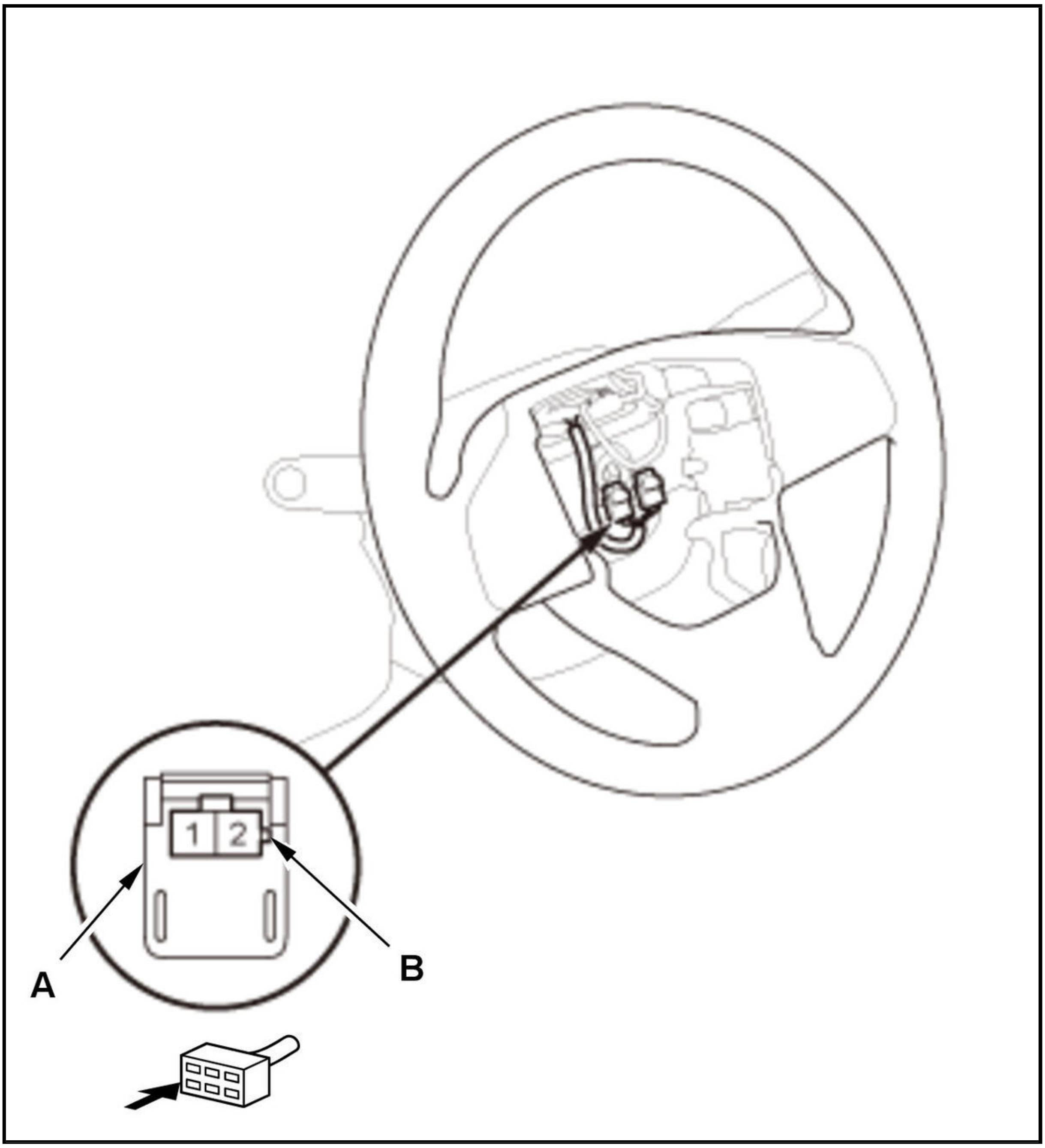

-5. Reconnect the negative cable to the 12 volt battery.

-6. Clear the DTCs with the HDS.

-7. Turn the vehicle to the ON mode, then wait for 10 seconds.

-8. Check for DTCs with the HDS.

DTC Description	DTC
B0001-1A Decreased resistance in the driver's airbag first inflator	B

Is DTC B0001-1A indicated?

YES

Go to step 3.

NO

Short to another wire in the driver's airbag first inflator; **replace the driver's airbag** , then clear the DTC.

3. Cable reel check

   -1. Turn the vehicle to the OFF (LOCK) mode.

   -2. Disconnect the negative cable from the 12 volt battery, then wait at least 3 minutes.

   -3. **Remove the column covers** .

   -4. Disconnect cable reel connector B (4P) on the dashboard wire harness.

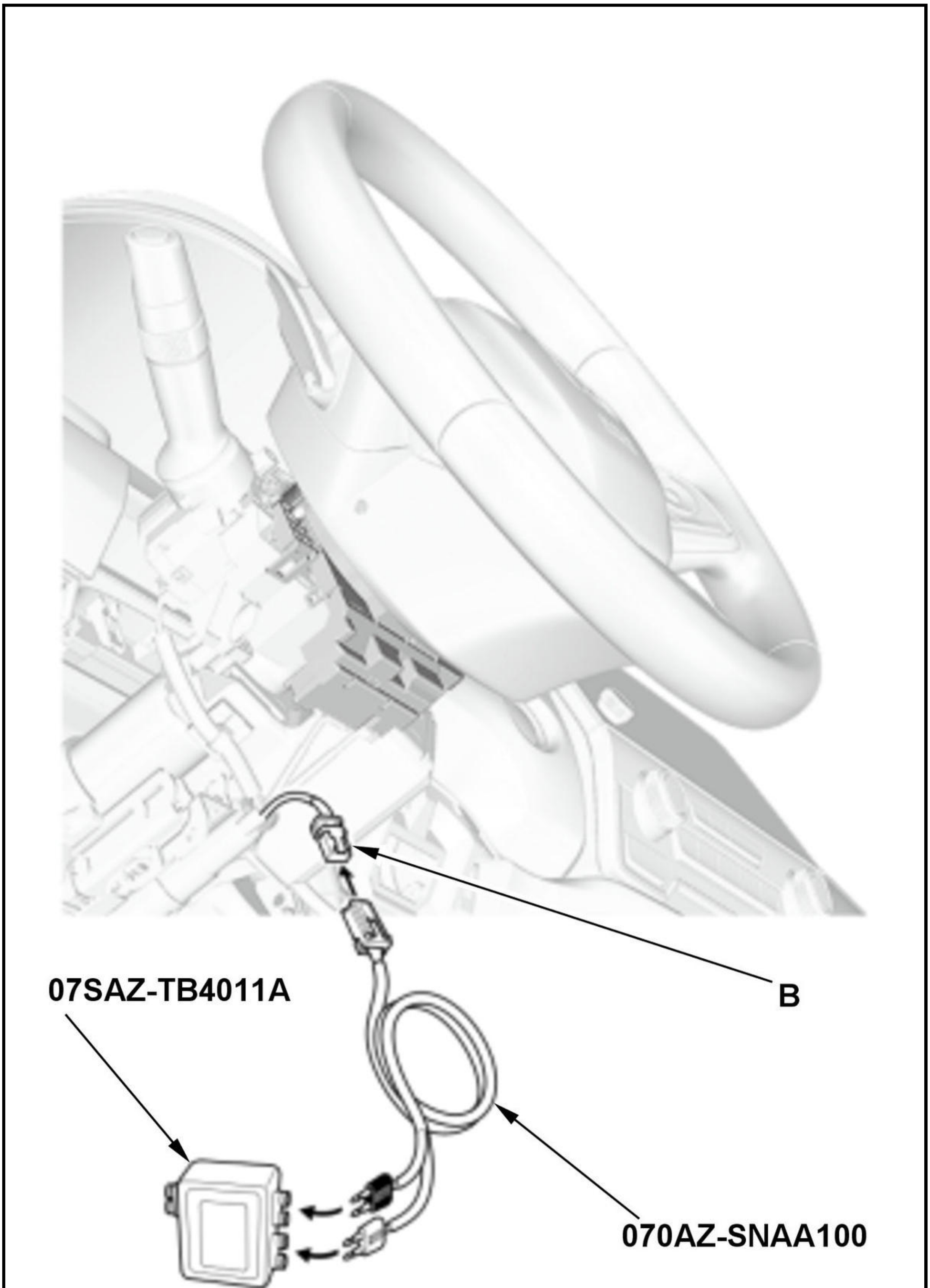
07SAZ-TB4011A
B
070AZ-SNAA100

-5. Connect the terminals of SRS simulator lead J to the SRS inflator simulator (2 Ω connectors), then connect SRS simulator lead J to cable reel connector B (4P) on the dashboard wire harness.

-6. Reconnect the negative cable to the 12 volt battery.

-7. Clear the DTCs with the HDS.

-8. Turn the vehicle to the ON mode, then wait for 10 seconds.

-9. Check for DTCs with the HDS.

DTC Description	DTC
B0001-1A Decreased resistance in the driver's airbag first inflator	B

Is DTC B0001-1A indicated?

YES

Go to step 4.

NO

Short to another wire in the cable reel; replace the cable reel , then clear the DTC.

4. Shorted wire check (LA1+ line to LA1- line)

-1. Turn the vehicle to the OFF (LOCK) mode.

-2. Disconnect the negative cable from the 12 volt battery, then wait at least 3 minutes.

-3. Disconnect the following connector.

SRS unit connector A (39P)

-4. Disconnect the SRS inflator simulator from SRS simulator lead J. Do not disconnect SRS simulator lead J from cable reel connector B (4P) on the dashboard wire harness.

-5. **Connect the SRS short canceller to SRS unit connector A (39P) terminals No. 8 and No. 9** .

-6. Measure the resistance of the test point.

Test condition	Vehicle OFF (LOCK) mode
	Driver's airbag first inflator 2P connector (on the cable reel harness): disconnected
	Cable reel connector B (4P) (on the dashboard wire harness): disconnected
	SRS unit connector A (39P): disconnected
	Cable reel connector B (4P) (on the dashboard wire harness): connected to SRS simulator lead J
	SRS unit connector A (39P) No. 8 and No. 9: connected to SRS short canceller
Test point	SRS simulator lead J black terminal

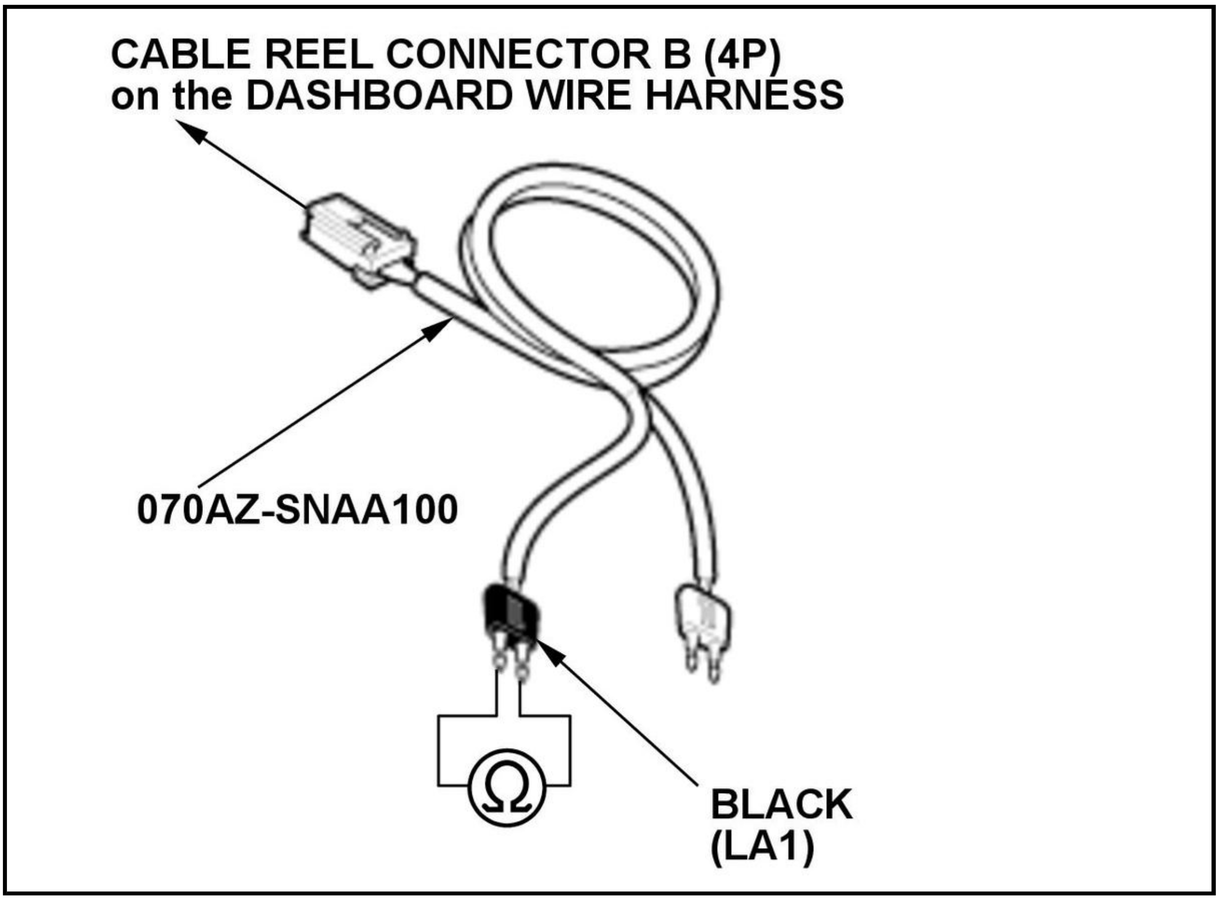

Is there an open circuit, or at least 1 MΩ?

YES

The LA1+ and LA1-wires are OK. Faulty SRS unit or poor connection at SRS unit connector A (39P) and the SRS unit. Check the connection; if the connection is OK, check for any authorized service information related to the DTCs or symptoms you are troubleshooting or **replace the SRS unit** . If the DTC does not clear, replace the dashboard wire harness.

NO

Short to another wire in the dashboard wire harness; replace the dashboard wire harness, then clear the DTC.

DTC B0001-2B (KA/KC) (2019 2020 2021)

DTC B0001-2B : Short to Another Wire Harness in the Driver's Airbag First Inflator

NOTE:

- **Before doing this troubleshooting procedure, find out if the vehicle was in a collision. If so, verify that all the required components were replaced with new components of the correct part number and were properly installed** .
- Before doing this troubleshooting procedure, review **SRS Precautions and Procedures** , **General Troubleshooting Information** , and **12 Volt Battery Terminal Disconnection and Reconnection** .

DTC Description	DTC
B0001-2B Short to another wire harness in the driver's airbag first inflator	B

DTC (SRS)

1. Problem verification

-1. Clear the DTCs with the HDS.

-2. Turn the vehicle to the ON mode, then wait for 10 seconds.

-3. Check for DTCs with the HDS.

DTC Description	DTC
B0001-2B Short to another wire harness in the driver's airbag first inflator	B

Is DTC B0001-2B indicated?

YES

The failure is duplicated. Go to step 2.

NO

Intermittent failure, the system is OK at this time. Go to Troubleshooting Intermittent Failures. If another DTC is indicated, troubleshoot the DTC.

2. DTC check

-1. Check for DTCs with the HDS.

DTC Description	DTC
B0001-2B Short to another wire harness in the driver's airbag first inflator	B
B0002-2B Short to another wire harness in the driver's airbag second inflator	B
B0010-2B Short to another wire harness in the front passenger's airbag first inflator	B
B0011-2B Short to another wire harness in the front passenger's airbag second inflator	B
B0020-2B Short to another wire harness in the left side airbag inflator	B
B0021-2B Short to another wire harness in the left side curtain airbag first inflator	B
B0028-2B Short to another wire harness in the right side airbag inflator	B
B0029-2B Short to another wire harness in the right side curtain airbag first inflator	B
B0070-2B Short to another wire harness in the driver's seat belt tensioner	B
B0072-2B Short to another wire harness in the front passenger's seat belt tensioner	B
B0079-2B Short to another wire harness in the driver's seat belt outer lap tensioner	B

DTC Description	DTC
B007A-2B Short to another wire harness in the front passenger's seat belt outer lap tensioner	B
B0082-2B Short to another wire harness in the selectable energy absorption device of the front passenger's seat belt tensioner	B

Is DTC B0002-2B, B0010-2B, B0011-2B, B0020-2B, B0021-2B, B0028-2B, B0029-2B, B0070-2B, B0072-2B, B0079-2B, B007A-2B or B0082-2B indicated with DTC B0001-2B?

YES

Go to step 3.

NO

Go to step 4.

3. Shorted wire check (LA1 lines to another line)

   -1. Turn the vehicle to the OFF (LOCK) mode.

   -2. Disconnect the negative cable from the 12 volt battery, then wait at least 3 minutes.

   -3. **Remove the driver's airbag** .

   -4. Disconnect the following connectors.

SRS unit connector A (39P)
SRS unit connector B (39P)
Driver's airbag second inflator 2P connector (on the cable reel harness)
Inflator connectors which are assigned to 2B codes listed on HDS

NOTE: Make sure to work with the driver's airbag first inflator 2P connector (A) that has a guide tab (B) on the right side of the No. 2 terminal as shown.

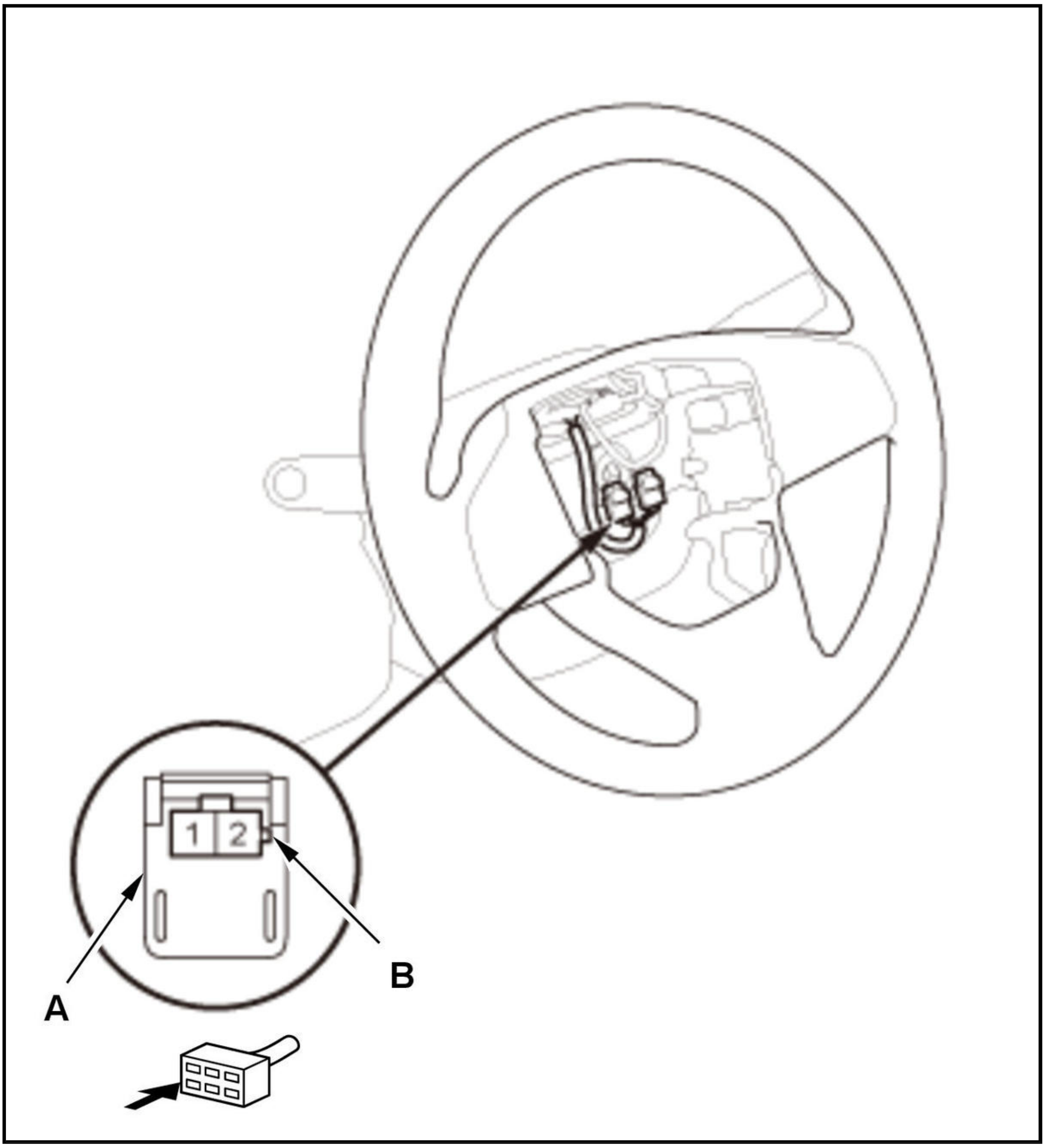

-5. Check for continuity between test points 1 and 2 of SRS unit connector A (39P) and B (39P) according to table.

Test condition	Vehicle OFF (LOCK) mode
	SRS unit connector A (39P): disconnected
	SRS unit connector B (39P): disconnected
	Driver's airbag first inflator 2P connector (on the cable reel harness): disconnected
	Inflator connectors which are assigned to 2B codes listed on HDS: disconnected

DTC	**Test point 1**	**Test point 2**
	From terminal	**To terminal**
B0002-2B	**SRS unit connector A (39P) No. 9**	**SRS unit connector A (39P) No. 10**
	SRS unit connector A (39P) No. 8	**SRS unit connector A (39P) No. 11**
B0010-2B	**SRS unit connector A (39P) No. 9**	**SRS unit connector A (39P) No. 5**
	SRS unit connector A (39P) No. 8	**SRS unit connector A (39P) No. 4**
B0011-2B	**SRS unit connector A (39P) No. 9**	**SRS unit connector A (39P) No. 6**
	SRS unit connector A (39P) No. 8	**SRS unit connector A (39P) No. 7**
B0020-2B	**SRS unit connector A (39P) No. 9**	**SRS unit connector B (39P) No. 5**
	SRS unit connector A (39P) No. 8	**SRS unit connector B (39P) No. 6**
B0021-2B	**SRS unit connector A (39P) No. 9**	**SRS unit connector B (39P) No. 9**
	SRS unit connector A (39P) No. 8	**SRS unit connector B (39P) No. 10**
B0028-2B	**SRS unit connector A (39P) No. 9**	**SRS unit connector B (39P) No. 4**
	SRS unit connector A (39P) No. 8	**SRS unit connector B (39P) No. 3**
B0029-2B	**SRS unit connector A (39P) No. 9**	**SRS unit connector B (39P) No. 8**
	SRS unit connector A (39P) No. 8	**SRS unit connector B (39P) No. 7**
B0070-2B	**SRS unit connector A (39P) No. 9**	**SRS unit connector B (39P) No. 20**
	SRS unit connector A (39P) No. 8	**SRS unit connector B (39P) No. 21**
B0072-2B	**SRS unit connector A (39P) No. 9**	**SRS unit connector B (39P) No. 19**
	SRS unit connector A (39P) No. 8	**SRS unit connector B (39P) No. 18**
B0079-2B	**SRS unit connector A (39P) No. 9**	**SRS unit connector B (39P) No. 24**
	SRS unit connector A (39P) No. 8	**SRS unit connector B (39P) No. 25**
B007A-2B	**SRS unit connector A (39P) No. 9**	**SRS unit connector B (39P) No. 23**
	SRS unit connector A (39P) No. 8	**SRS unit connector B (39P) No. 22**
B0082-2B	**SRS unit connector A (39P) No. 9**	**SRS unit connector A (39P) No. 2**
	SRS unit connector A (39P) No. 8	**SRS unit connector A (39P) No. 3**

Is there continuity?

YES

Short to another wire in the dashboard wire harness or the floor wire harness; replace the faulty harness, then clear the DTC.

NO

The LA1 wires are OK. Faulty SRS unit or poor connection at SRS unit connector A (39P) and the SRS unit, or SRS unit connector B (39P) and the SRS unit. Check the connection; if the connection is OK, check for any authorized service information related to the DTCs or symptoms you are troubleshooting or **replace the SRS unit** . If the DTC does not clear, replace the dashboard wire harness or the floor wire harness.

4. Shorted wire check (LA1+ line to LA2+ line, LA1- line to LA2- line) 1

-1. Turn the vehicle to the OFF (LOCK) mode.

-2. Disconnect the negative cable from the 12 volt battery, then wait at least 3 minutes.

-3. **Remove the driver's airbag** .

-4. Disconnect the following connector.

Driver's airbag first inflator 2P connector (on the cable reel harness)
Driver's airbag second inflator 2P connector (on the cable reel harness)

-5. Check for continuity between test points 1 and 2.

Test condition	Vehicle OFF (LOCK) mode
	Driver's airbag first inflator 2P connector (on the cable reel harness): disconnected
	Driver's airbag second inflator 2P connector (on the cable reel harness): disconnected
Test point 1	Driver's airbag first inflator 2P connector No. 2 (on the cable reel harness) ①
Test point 2	Driver's airbag second inflator 2P connector No. 2 (on the cable reel harness) ②

Test point 1	Driver's airbag first inflator 2P connector No. 1 (on the cable reel harness) ①
Test point 2	Driver's airbag second inflator 2P connector No. 1 (on the cable reel harness) ②

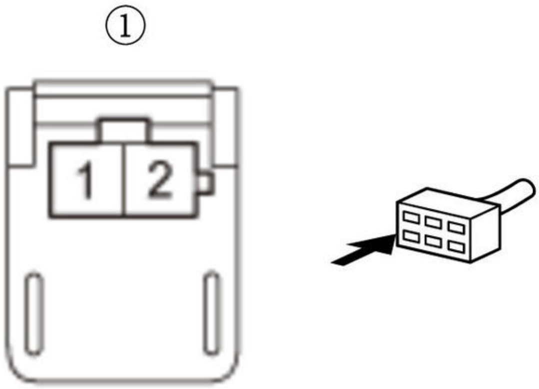

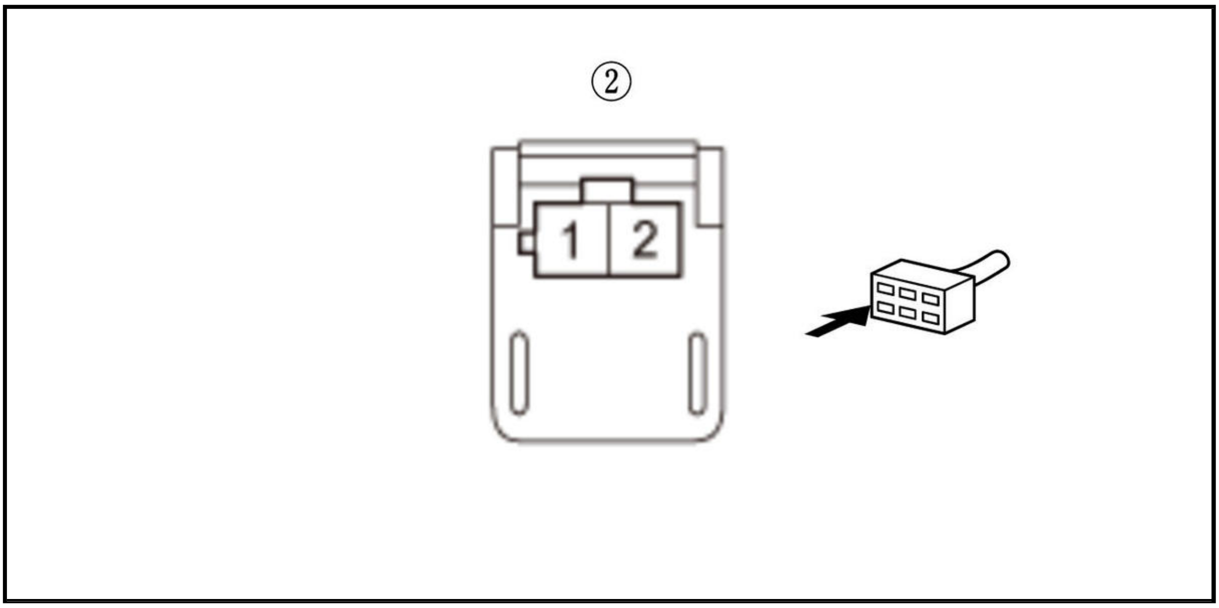

Is there continuity?

YES

Go to step 5.

NO

The LA1+, LA1-, LA2+, and LA2- wires are OK. Faulty driver's airbag second inflator; **replace the driver's airbag** , then clear the DTC.

5. Shorted wire check (LA1+ line to LA2+ line, LA1- line to LA2- line) 2

   -1. **Remove the column covers** .

   -2. Disconnect cable reel connector B (4P) on the dashboard wire harness.

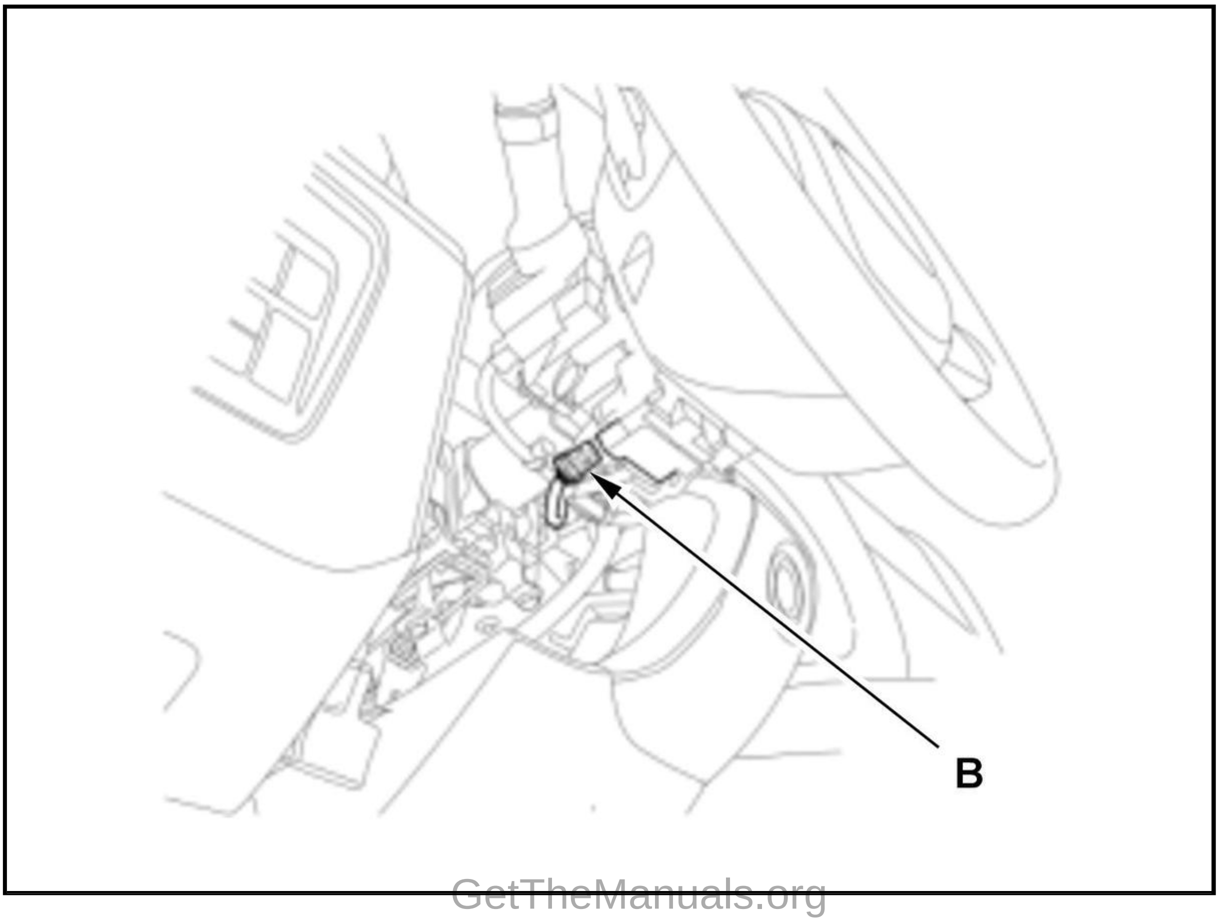

-3. Check for continuity between test points 1 and 2.

Test condition	Vehicle OFF (LOCK) mode
	Driver's airbag first inflator 2P connector (on the cable reel harness): disconnected
	Driver's airbag second inflator 2P connector (on the cable reel harness): disconnected
	Cable reel connector B (4P) (on the dashboard wire harness): disconnected
Test point 1	Driver's airbag first inflator 2P connector No. 2 (on the cable reel harness) ①
Test point 2	Driver's airbag second inflator 2P connector No. 2 (on the cable reel harness) ②

Test point 1	Driver's airbag first inflator 2P connector No. 1 (on the cable reel harness) ①
Test point 2	Driver's airbag second inflator 2P connector No. 1 (on the cable reel harness) ②

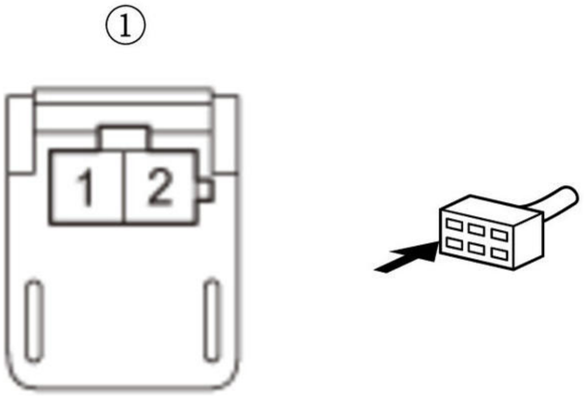

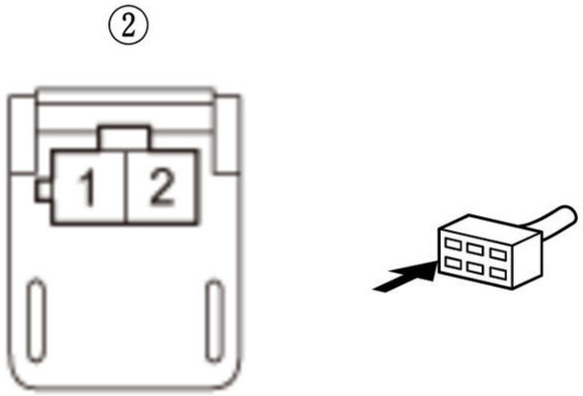

Is there continuity?

YES

Short to another wire in the cable reel; **replace the cable reel** , then clear the DTC.

NO

Go to step 6.

6. Shorted wire check (LA1+ line to LA2+ line, LA1- line to LA2- line) 3

-1. Disconnect the following connectors.

SRS unit connector A (39P)

-2. Check for continuity between test points 1 and 2.

Test condition	Vehicle OFF (LOCK) mode
	SRS unit connector A (39P): disconnected
	Driver's airbag first inflator 2P connector (on the cable reel harness): disconnected
	Driver's airbag second inflator 2P connector (on the cable reel harness): disconnected
	Cable reel connector B (4P) (on the dashboard wire harness): disconnected
Test point 1	**SRS unit connector A (39P) No. 9**
Test point 2	**SRS unit connector A (39P) No. 10**

Test point 1	**SRS unit connector A (39P) No. 8**
Test point 2	**SRS unit connector A (39P) No. 11**

Is there continuity?

YES

Short to another wire in the dashboard wire harness; replace the dashboard wire harness, then clear the DTC.

NO

The LA1+, LA1-, LA2+, and LA2- wires are OK. Faulty SRS unit or poor connection at SRS unit connector A (39P) and the SRS unit. Check the connection; if the connection is OK, check for any authorized service information related to the DTCs or symptoms you are troubleshooting or **replace the SRS unit** . If the DTC does not clear, replace the dashboard wire harness.

DTC B0002-11 (KA/KC) (2019 2020 2021)

DTC B0002-11 : Short to Ground in the Driver's Airbag Second Inflator

Special Tools Required

-SRS Inflator Simulator 07SAZ-TB4011A

-SRS Simulator Lead J 070AZ-SNAA100

NOTE:

- **Before doing this troubleshooting procedure, find out if the vehicle was in a collision. If so, verify that all the required components were replaced with new components of the correct part number and were properly installed** .
- Before doing this troubleshooting procedure, review **SRS Precautions and Procedures** , **General Troubleshooting Information** , and **12 Volt Battery Terminal Disconnection and Reconnection** .

DTC Description	DTC
B0002-11 Short to ground in the driver's airbag second inflator	B

DTC (SRS)

1. Problem verification

   -1. Clear the DTCs with the HDS.

   -2. Turn the vehicle to the ON mode, then wait for 10 seconds.

   -3. Check for DTCs with the HDS.

DTC Description	DTC
B0002-11 Short to ground in the driver's airbag second inflator	B

   Is DTC B0002-11 indicated?

   YES

   The failure is duplicated. Go to step 2.

   NO

   Intermittent failure, the system is OK at this time. Go to Troubleshooting Intermittent Failures. If another DTC is indicated, troubleshoot the DTC.

2. Driver's airbag inflator check

   -1. Turn the vehicle to the OFF (LOCK) mode.

   -2. Disconnect the negative cable from the 12 volt battery, then wait at least 3 minutes.

   -3. **Remove the driver's airbag** .

   -4. Disconnect the following connector.

Driver's airbag second inflator 2P connector (on the cable reel harness)

   NOTE: Make sure to work with the driver's airbag second inflator 2P connector (A) that has a guide tab (B) on the left side of the No. 1 terminal as shown.

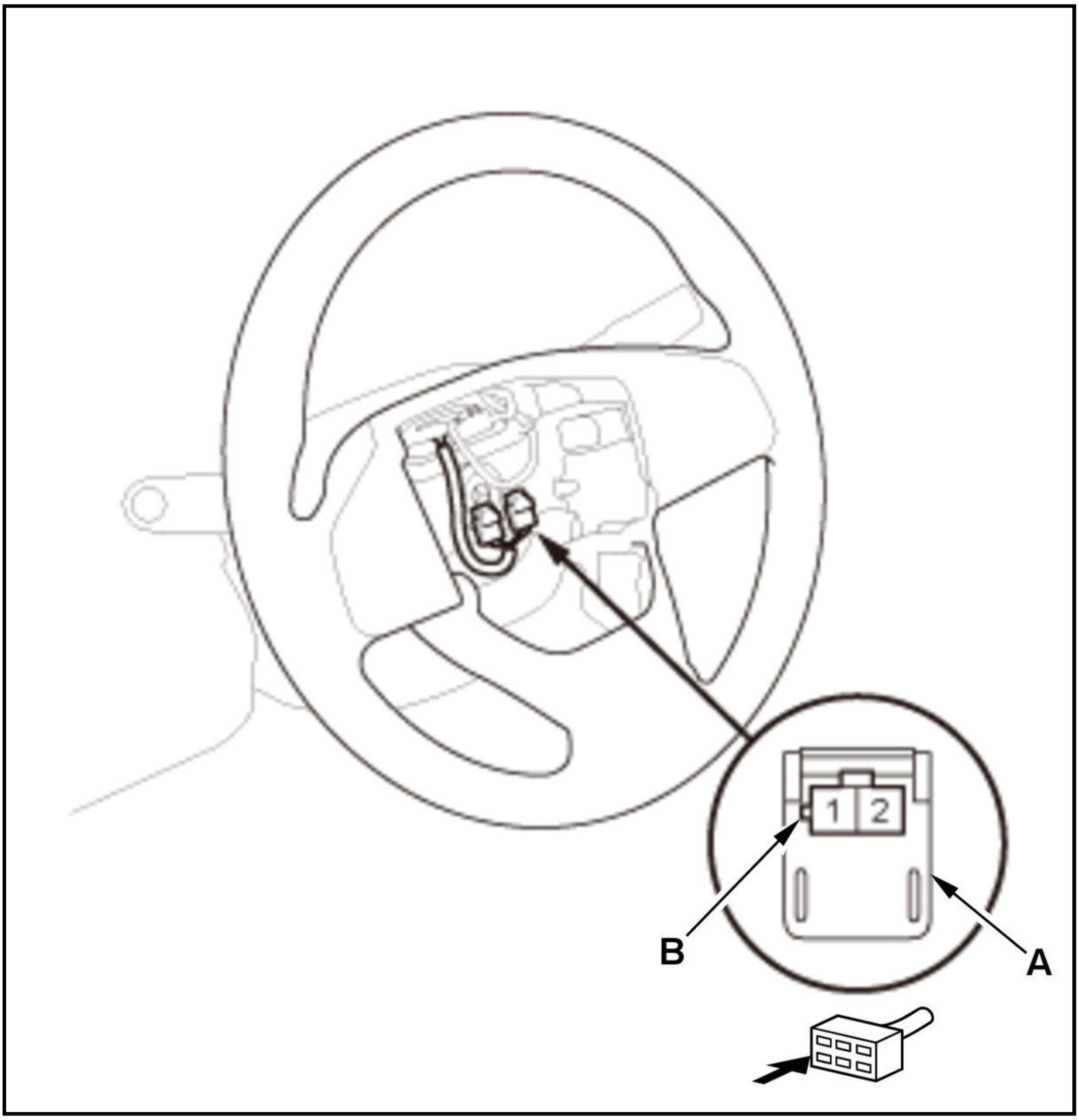

-5. Reconnect the negative cable to the 12 volt battery.

-6. Clear the DTCs with the HDS.

-7. Turn the vehicle to the ON mode, then wait for 10 seconds.

-8. Check for DTCs with the HDS.

DTC Description	DTC
B0002-11 Short to ground in the driver's airbag second inflator	B

Is DTC B0002-11 indicated?

YES

Go to step 3.

NO

Short to ground in the driver's airbag second inflator; **replace the driver's airbag** , then clear the DTC.

3. Cable reel check

-1. Turn the vehicle to the OFF (LOCK) mode.

-2. Disconnect the negative cable from the 12 volt battery, then wait at least 3 minutes.

-3. **Remove the column covers** .

-4. Disconnect cable reel connector B (4P) on the dashboard wire harness.

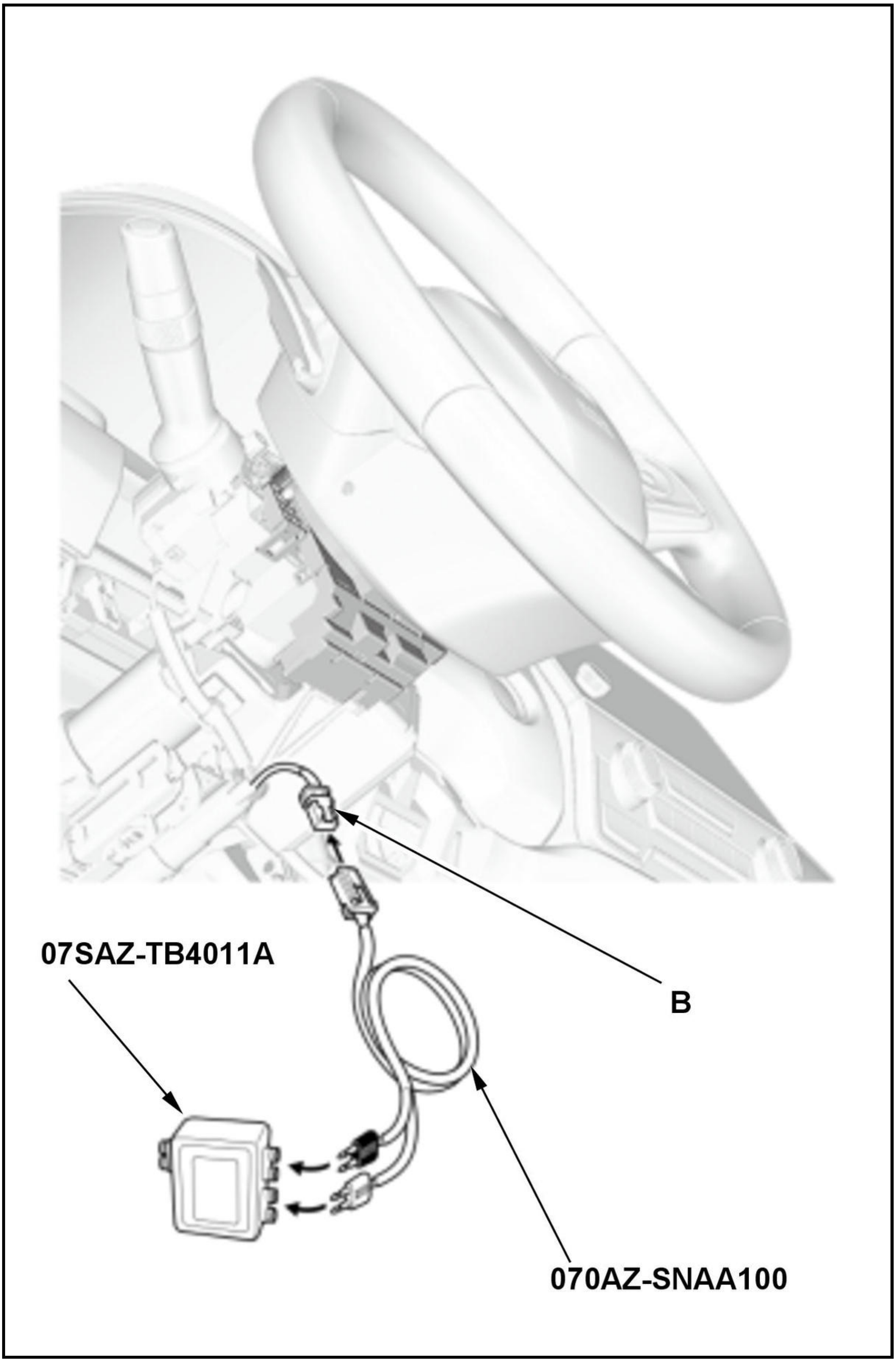
07SAZ-TB4011A
B
070AZ-SNAA100

-5. Connect the terminals of SRS simulator lead J to the SRS inflator simulator (2 Ω connectors), then connect SRS simulator lead J to cable reel connector B (4P) on the dashboard wire harness.

-6. Reconnect the negative cable to the 12 volt battery.

-7. Clear the DTCs with the HDS.

-8. Turn the vehicle to the ON mode, then wait for 10 seconds.

-9. Check for DTCs with the HDS.

DTC Description	DTC
B0002-11 Short to ground in the driver's airbag second inflator	B

Is DTC B0002-11 indicated?

YES

Go to step 4.

NO

Short to ground in the cable reel; **replace the cable reel** , then clear the DTC.

4. Shorted wire check (LA2+, LA2-lines)

-1. Turn the vehicle to the OFF (LOCK) mode.

-2. Disconnect the negative cable from the 12 volt battery, then wait at least 3 minutes.

-3. Disconnect the following connector.

SRS unit connector A (39P)

-4. Disconnect the SRS inflator simulator from SRS simulator lead J. Do not disconnect SRS simulator lead J from cable reel connector B (4P) on the dashboard wire harness.

-5. Measure the resistance between test points 1 and 2.

Test condition	Vehicle OFF (LOCK) mode
	Driver's airbag second inflator 2P connector (on the cable reel harness): disconnected
	Cable reel connector B (4P) (on the dashboard wire harness): disconnected
	SRS unit connector A (39P): disconnected
	Cable reel connector B (4P) (on the dashboard wire harness): connected to SRS simulator lead J
Test point 1	SRS simulator lead J red terminal
Test point 2	Body ground

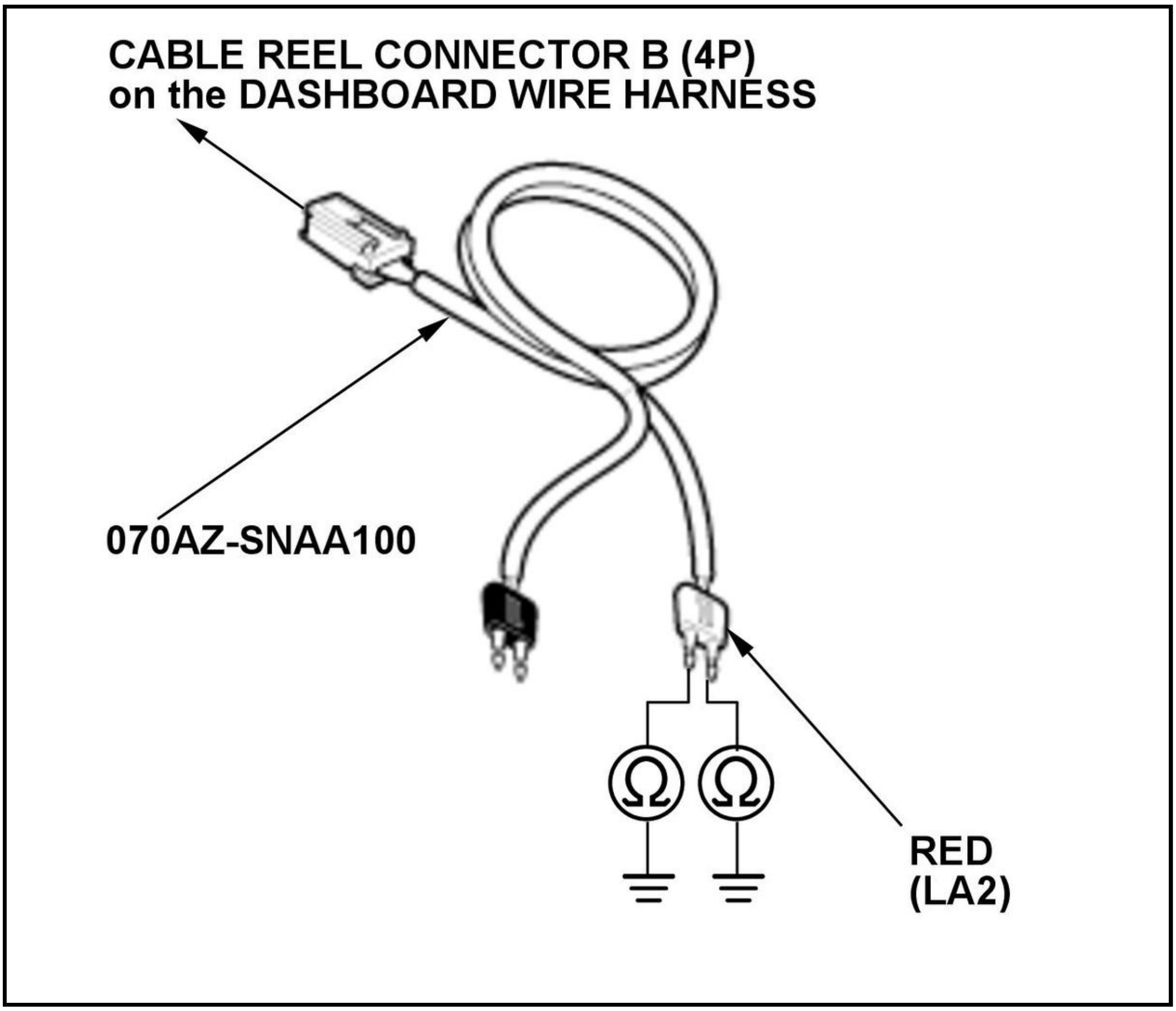

Is there an open circuit, or at least 1 MΩ?

YES

The LA2+ and LA2-wires are OK. Faulty SRS unit or poor connection at SRS unit connector A (39P) and the SRS unit. Check the connection; if the connection is OK, check for any authorized service information related to the DTCs or symptoms you are troubleshooting or replace the SRS unit . If the DTC does not clear, replace the dashboard wire harness.

NO

Short to ground in the dashboard wire harness; replace the dashboard wire harness, then clear the DTC.

DTC B0002-12 (KA/KC) (2019 2020 2021)

DTC B0002-12 : Short to Power in the Driver's Airbag Second Inflator

Special Tools Required

-SRS Inflator Simulator 07SAZ-TB4011A

-SRS Simulator Lead J 070AZ-SNAA100

NOTE:

- Before doing this troubleshooting procedure, find out if the vehicle was in a collision. If so, verify that all the required components were replaced with new components of the correct part number and were properly installed .

- Before doing this troubleshooting procedure, review **SRS Precautions and Procedures** , **General Troubleshooting Information** , and **12 Volt Battery Terminal Disconnection and Reconnection** .

DTC Description	DTC
B0002-12 Short to power in the driver's airbag second inflator	B

DTC (SRS)

1. Problem verification

   -1. Clear the DTCs with the HDS.

   -2. Turn the vehicle to the ON mode, then wait for 10 seconds.

   -3. Check for DTCs with the HDS.

DTC Description	DTC
B0002-12 Short to power in the driver's airbag second inflator	B

   Is DTC B0002-12 indicated?

   YES

   The failure is duplicated. Go to step 2.

   NO

   Intermittent failure, the system is OK at this time. Go to Troubleshooting Intermittent Failures. If another DTC is indicated, troubleshoot the DTC.

2. Driver's airbag inflator check

   -1. Turn the vehicle to the OFF (LOCK) mode.

   -2. Disconnect the negative cable from the 12 volt battery, then wait at least 3 minutes.

   -3. **Remove the driver's airbag** .

   -4. Disconnect the following connector.

Driver's airbag second inflator 2P connector (on the cable reel harness)

   NOTE: Make sure to work with the driver's airbag second inflator 2P connector (A) that has a guide tab (B) on the left side of the No. 1 terminal as shown.

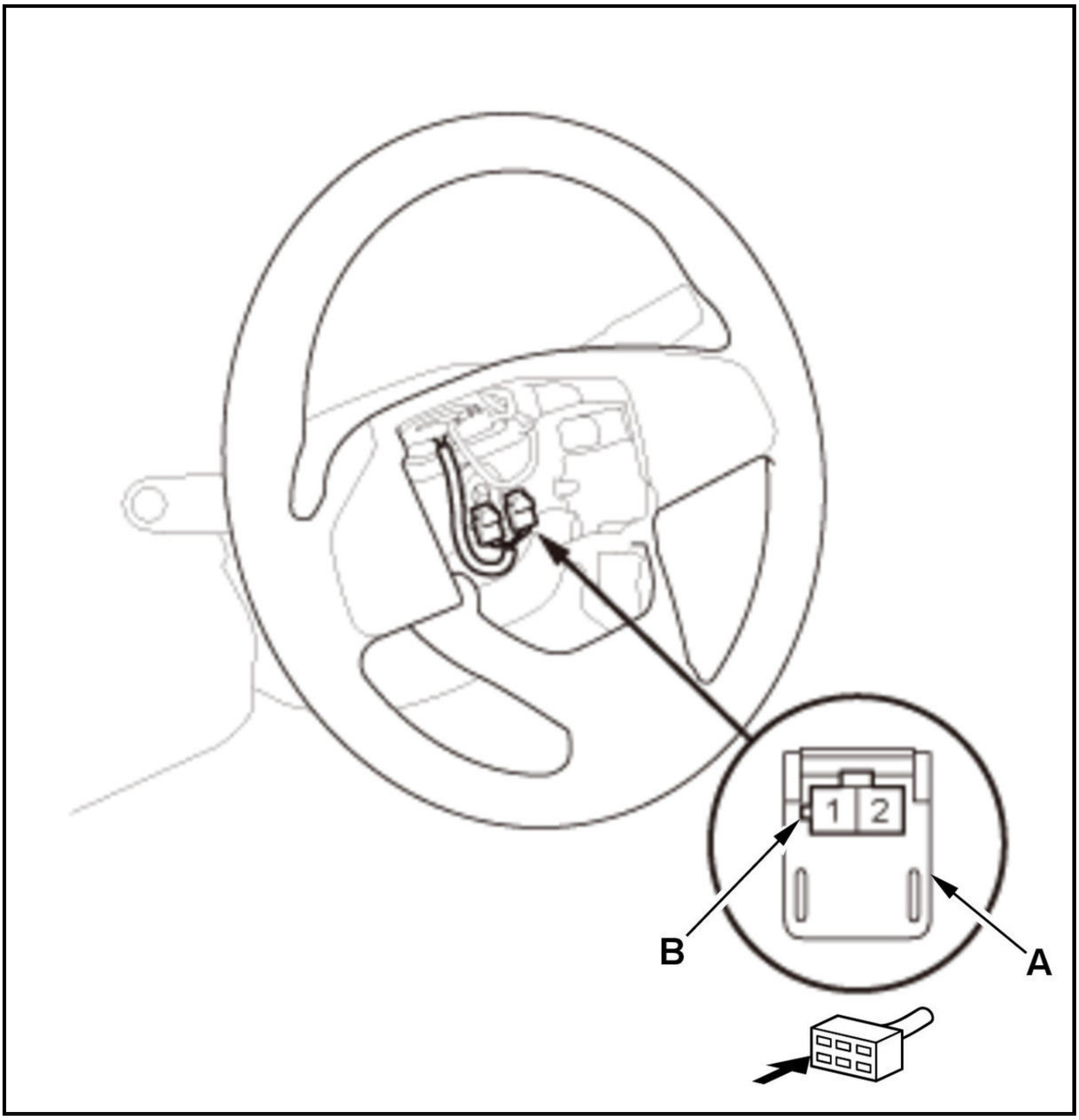

-5. Reconnect the negative cable to the 12 volt battery.

-6. Clear the DTCs with the HDS.

-7. Turn the vehicle to the ON mode, then wait for 10 seconds.

-8. Check for DTCs with the HDS.

DTC Description	DTC
B0002-12 Short to power in the driver's airbag second inflator	B

Is DTC B0002-12 indicated?

YES

Go to step 3.

NO

Short to power in the driver's airbag second inflator; **replace the driver's airbag** , then clear the DTC.

3. Cable reel check

-1. Turn the vehicle to the OFF (LOCK) mode.

-2. Disconnect the negative cable from the 12 volt battery, then wait at least 3 minutes.

-3. **Remove the column covers** .

-4. Disconnect cable reel connector B (4P) on the dashboard wire harness.

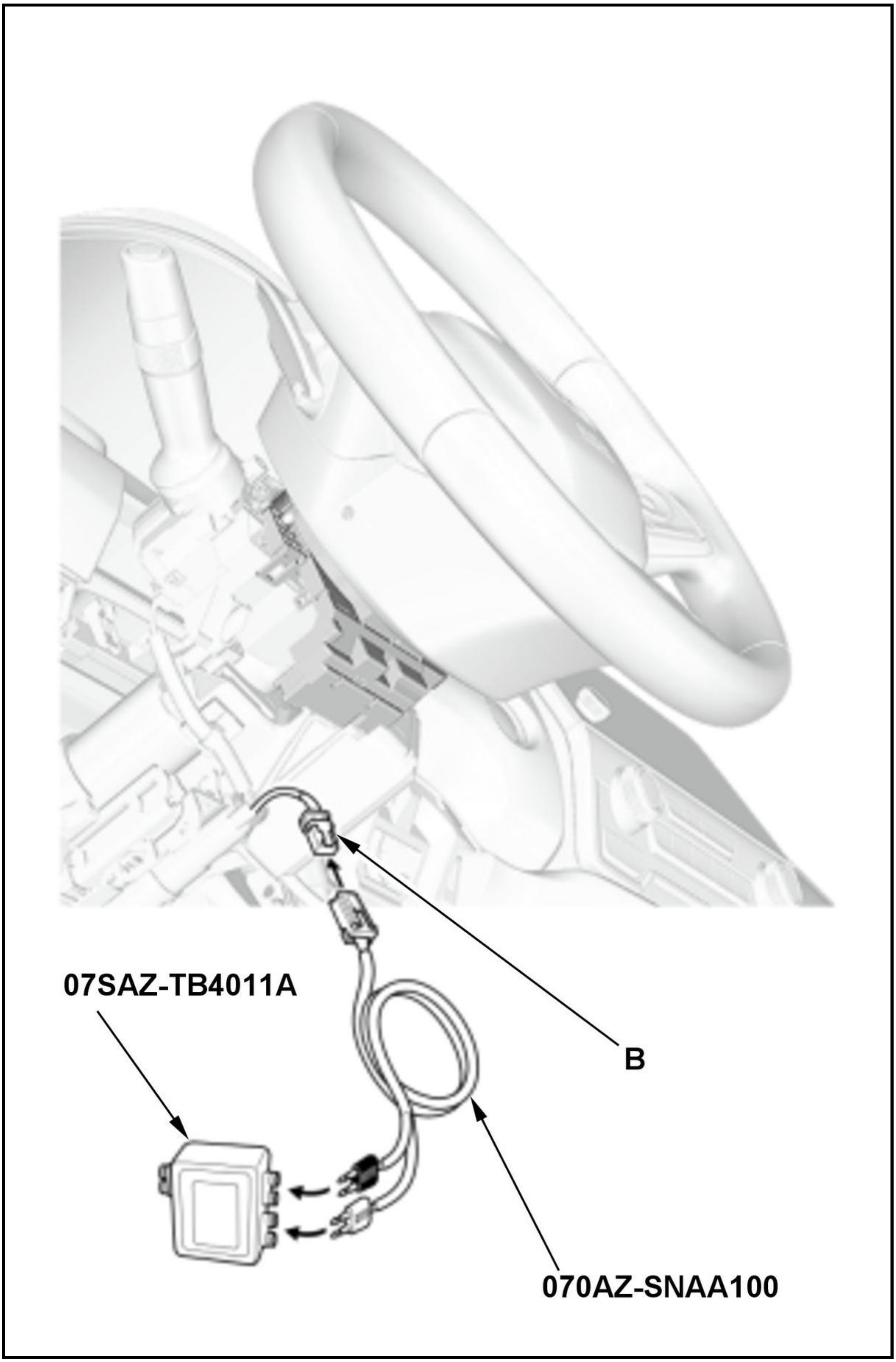
07SAZ-TB4011A
B
070AZ-SNAA100

-5. Connect the terminals of SRS simulator lead J to the SRS inflator simulator (2 Ω connectors), then connect SRS simulator lead J to cable reel connector B (4P) on the dashboard wire harness.

-6. Reconnect the negative cable to the 12 volt battery.

-7. Clear the DTCs with the HDS.

-8. Turn the vehicle to the ON mode, then wait for 10 seconds.

-9. Check for DTCs with the HDS.

DTC Description	DTC
B0002-12 Short to power in the driver's airbag second inflator	B

Is DTC B0002-12 indicated?

YES

Go to step 4.

NO

Short to power in the cable reel; **replace the cable reel** , then clear the DTC.

4. Shorted wire check (LA2+, LA2- lines to power)

-1. Turn the vehicle to the OFF (LOCK) mode.

-2. Disconnect the negative cable from the 12 volt battery, then wait at least 3 minutes.

-3. Disconnect the following connector.

SRS unit connector A (39P)

-4. Disconnect the SRS inflator simulator from SRS simulator lead J. Do not disconnect SRS simulator lead J from cable reel connector B (4P) on the dashboard wire harness.

-5. Reconnect the negative cable to the 12 volt battery.

-6. Turn the vehicle to the ON mode.

-7. Measure the voltage between test points 1 and 2.

Test condition	Vehicle ON mode
	Driver's airbag second inflator 2P connector (on the cable reel harness): disconnected
	Cable reel connector B (4P) (on the dashboard wire harness): disconnected
	SRS unit connector A (39P): disconnected
	Cable reel connector B (4P) (on the dashboard wire harness): connected to SRS simulator lead J
Test point 1	SRS simulator lead J red terminal
Test point 2	Body ground

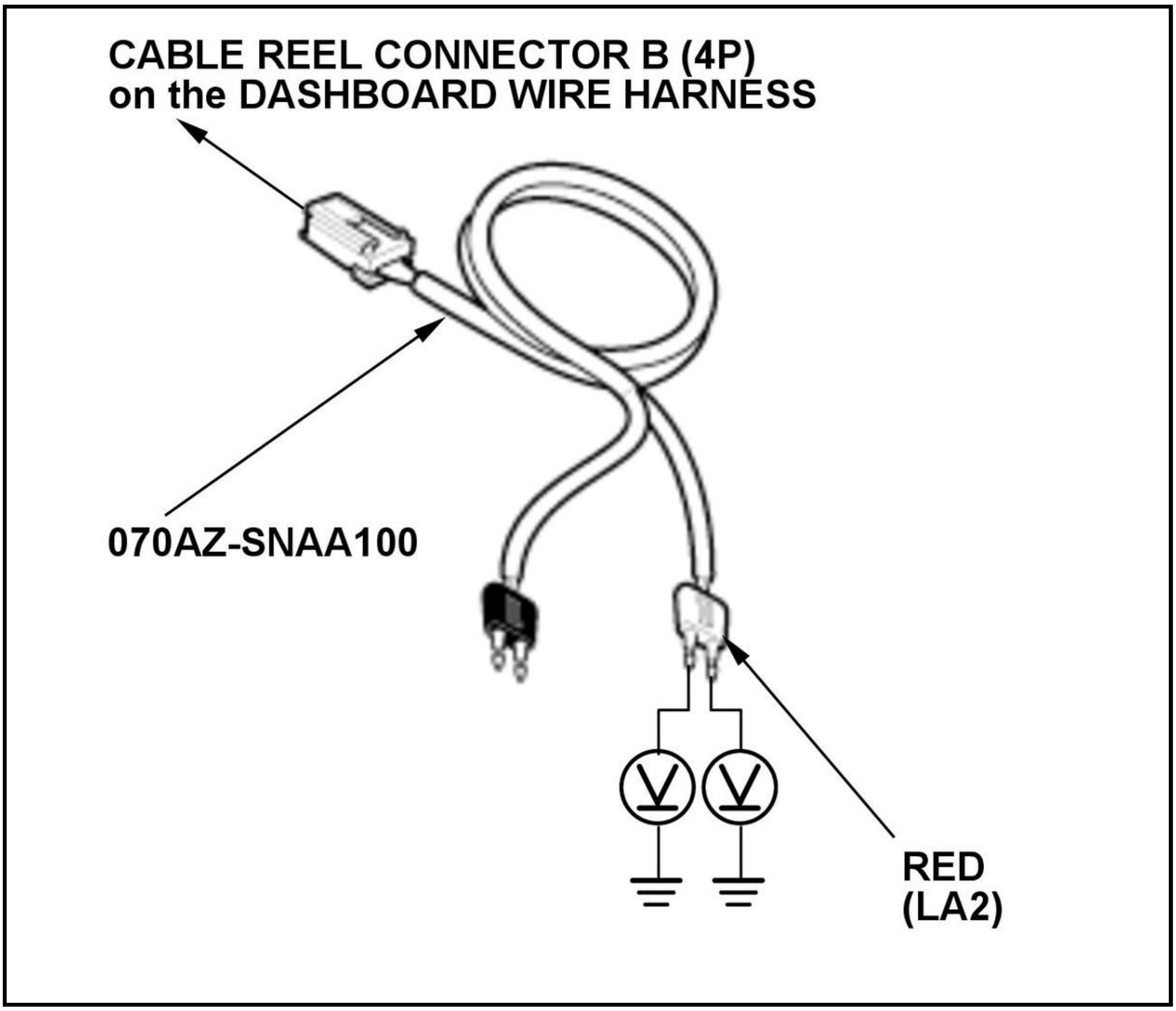

Is there 0.2 V or less?

YES

The LA2+ and LA2-wires are OK. Faulty SRS unit or poor connection at SRS unit connector A (39P) and the SRS unit. Check the connection; if the connection is OK, check for any authorized service information related to the DTCs or symptoms you are troubleshooting or replace the SRS unit . If the DTC does not clear, replace the dashboard wire harness.

NO

Short to power in the dashboard wire harness; replace the dashboard wire harness, then clear the DTC.

DTC B0002-13 (KA/KC) (2019 2020 2021)

DTC B0002-13 : Open or Increased Resistance in the Driver's Airbag Second Inflator

Special Tools Required

-SRS Inflator Simulator 07SAZ-TB4011A

-SRS Simulator Lead J 070AZ-SNAA100

NOTE:

- Before doing this troubleshooting procedure, find out if the vehicle was in a collision. If so, verify that all the required components were replaced with new components of the correct part number and were properly installed .

- Before doing this troubleshooting procedure, review **SRS Precautions and Procedures** , **General Troubleshooting Information** , and **12 Volt Battery Terminal Disconnection and Reconnection** .

DTC Description	DTC
B0002-13 Open or increased resistance in the driver's airbag second inflator	B

DTC (SRS)

1. Problem verification

   -1. Clear the DTCs with the HDS.

   -2. Turn the vehicle to the ON mode, then wait for 10 seconds.

   -3. Check for DTCs with the HDS.

DTC Description	DTC
B0002-13 Open or increased resistance in the driver's airbag second inflator	B

   Is DTC B0002-13 indicated?

   YES

   The failure is duplicated. Go to step 2.

   NO

   Intermittent failure, the system is OK at this time. Go to Troubleshooting Intermittent Failures. If another DTC is indicated, troubleshoot the DTC.

2. Driver's airbag inflator check

   -1. Turn the vehicle to the OFF (LOCK) mode.

   -2. Disconnect the negative cable from the 12 volt battery, then wait at least 3 minutes.

   -3. **Remove the driver's airbag** .

   -4. Disconnect the following connector.

Driver's airbag second inflator 2P connector (on the cable reel harness)

   NOTE: Make sure to work with the driver's airbag second inflator 2P connector (A) that has a guide tab (B) on the left side of the No. 1 terminal as shown.

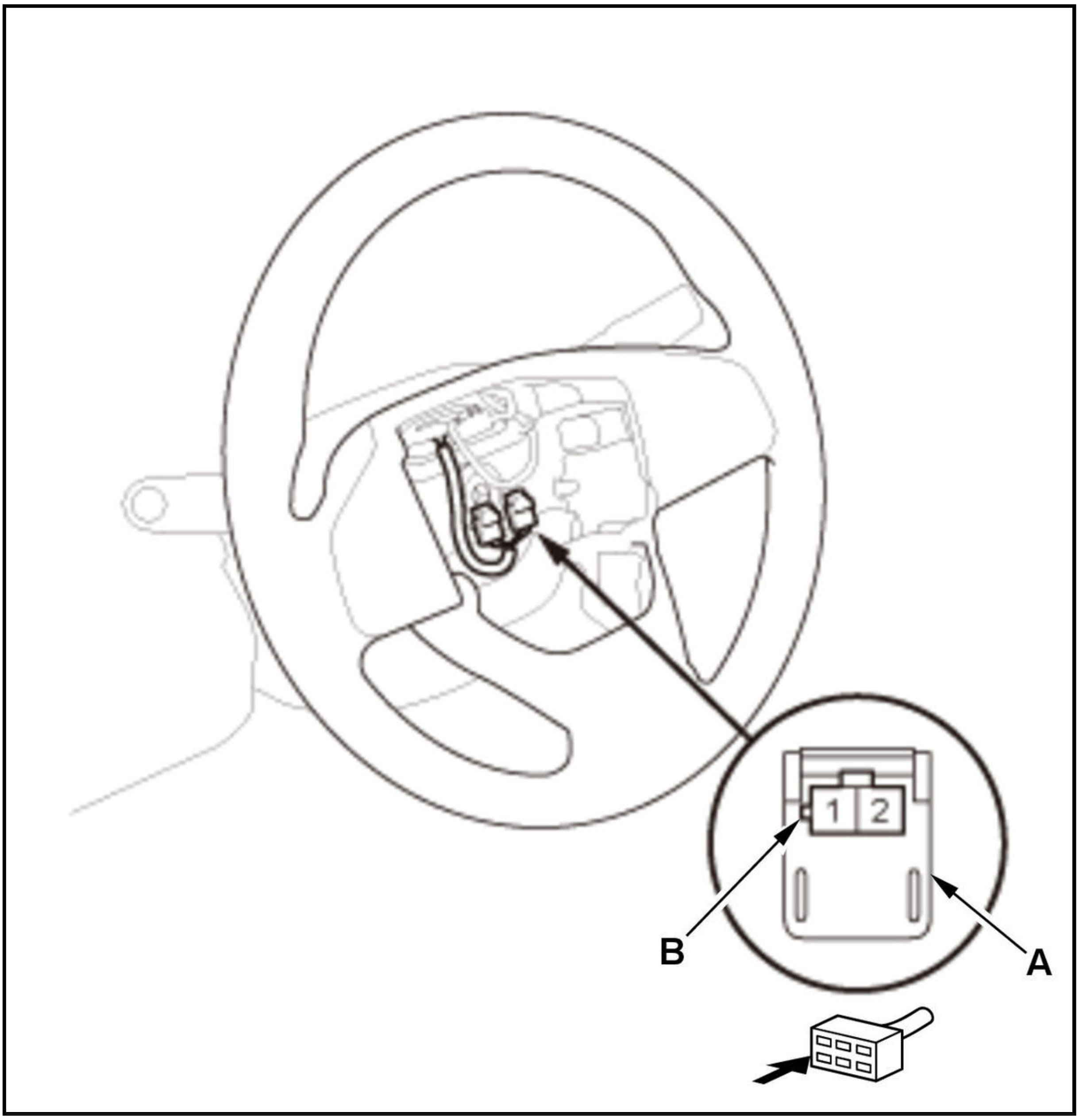

-5. Connect terminals A and B with a jumper wire.

Terminal A	Driver's airbag second inflator 2P connector (female terminals) No. 1 (on the cable reel harness): ①
Terminal B	Driver's airbag second inflator 2P connector (female terminals) No. 2 (on the cable reel harness): ①

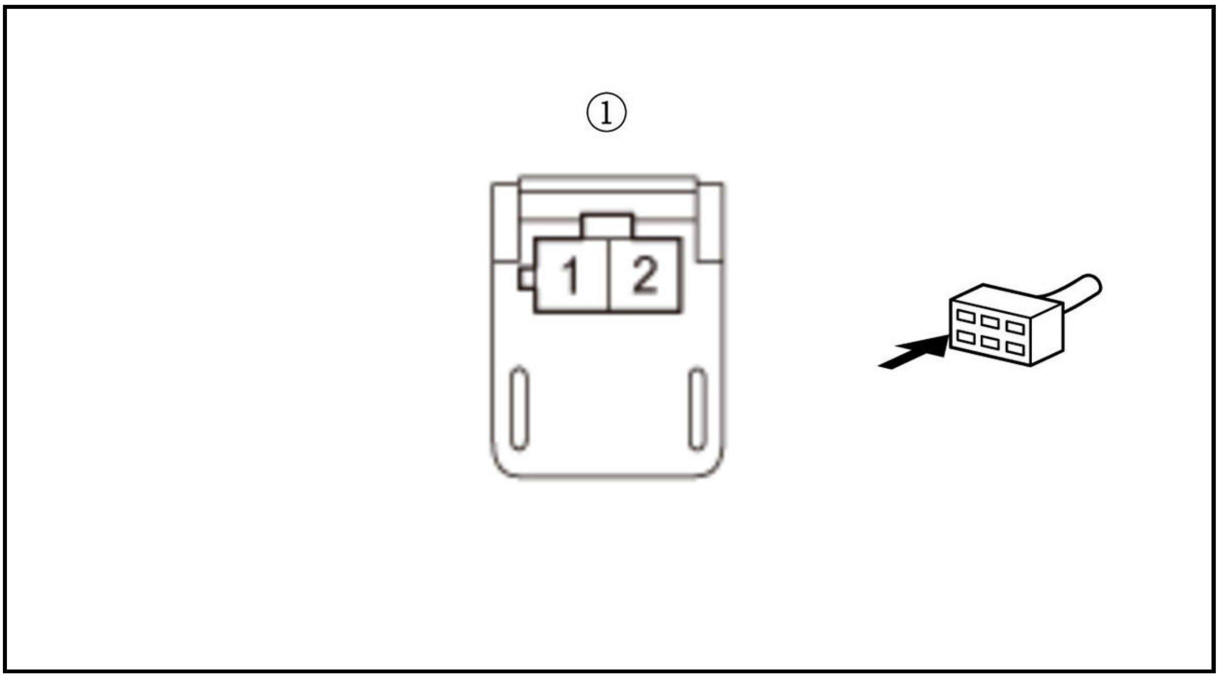

-6. Reconnect the negative cable to the 12 volt battery.

-7. Clear the DTCs with the HDS.

-8. Turn the vehicle to the ON mode, then wait for 10 seconds.

-9. Check for DTCs with the HDS.

DTC Description	DTC
B0002-13 Open or increased resistance in the driver's airbag second inflator	B

Is DTC B0002-13 indicated?

YES

Go to step 3.

NO

Open in the driver's airbag second inflator; **replace the driver's airbag** , then clear the DTC.

3. Cable reel check

-1. Turn the vehicle to the OFF (LOCK) mode.

-2. Disconnect the negative cable from the 12 volt battery, then wait at least 3 minutes.

-3. Remove the jumper wire from the driver's airbag second inflator 2P connector on the cable reel harness.

-4. **Remove the column covers** .

-5. Disconnect cable reel connector B (4P) on the dashboard wire harness.

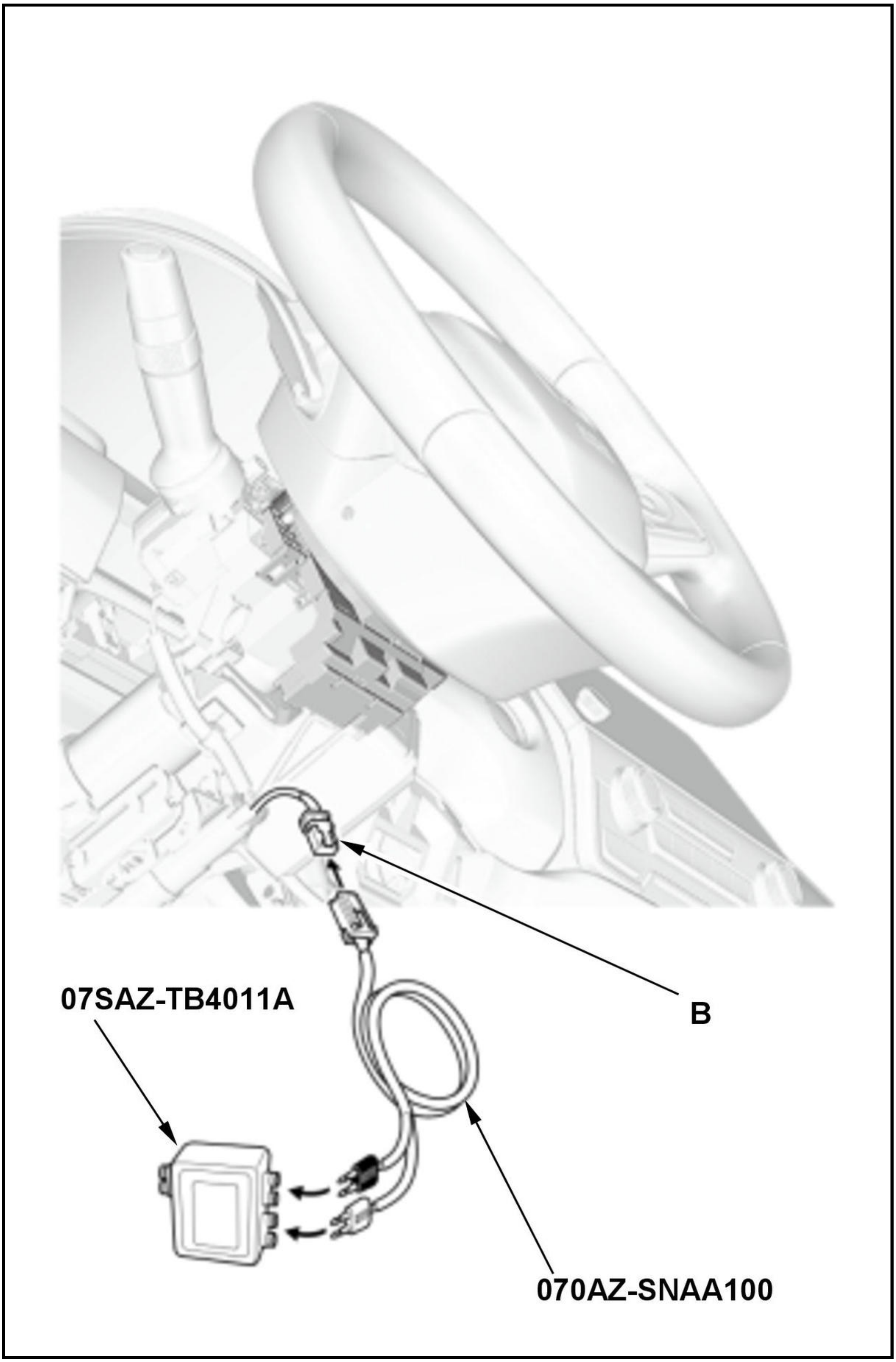
07SAZ-TB4011A
B
070AZ-SNAA100

-6. Connect the terminals of SRS simulator lead J to the SRS inflator simulator (2 Ω connectors), then connect SRS simulator lead J to cable reel connector B (4P) on the dashboard wire harness.

-7. Reconnect the negative cable to the 12 volt battery.

-8. Clear the DTCs with the HDS.

-9. Turn the vehicle to the ON mode, then wait for 10 seconds.

-10.

Check for DTCs with the HDS.

DTC Description	DTC
B0002-13 Open or increased resistance in the driver's airbag second inflator	B

Is DTC B0002-13 indicated?

YES

Go to step 4.

NO

Open in the cable reel; **replace the cable reel** , then clear the DTC.

4. Open wire check (LA2+, LA2- lines)

-1. Turn the vehicle to the OFF (LOCK) mode.

-2. Disconnect the negative cable from the 12 volt battery, then wait at least 3 minutes.

-3. Disconnect the following connector.

SRS unit connector A (39P)

-4. Disconnect the SRS inflator simulator from SRS simulator lead J. Do not disconnect SRS simulator lead J from cable reel connector B (4P) on the dashboard wire harness.

-5. Measure the resistance of the test point.

Test condition	Vehicle OFF (LOCK) mode
	Driver's airbag second inflator 2P connector (on the cable reel harness): disconnected
	Cable reel connector B (4P) (on the dashboard wire harness): disconnected
	SRS unit connector A (39P): disconnected
	Cable reel connector B (4P) (on the dashboard wire harness): connected to SRS simulator lead J
Test point	SRS simulator lead J red terminal

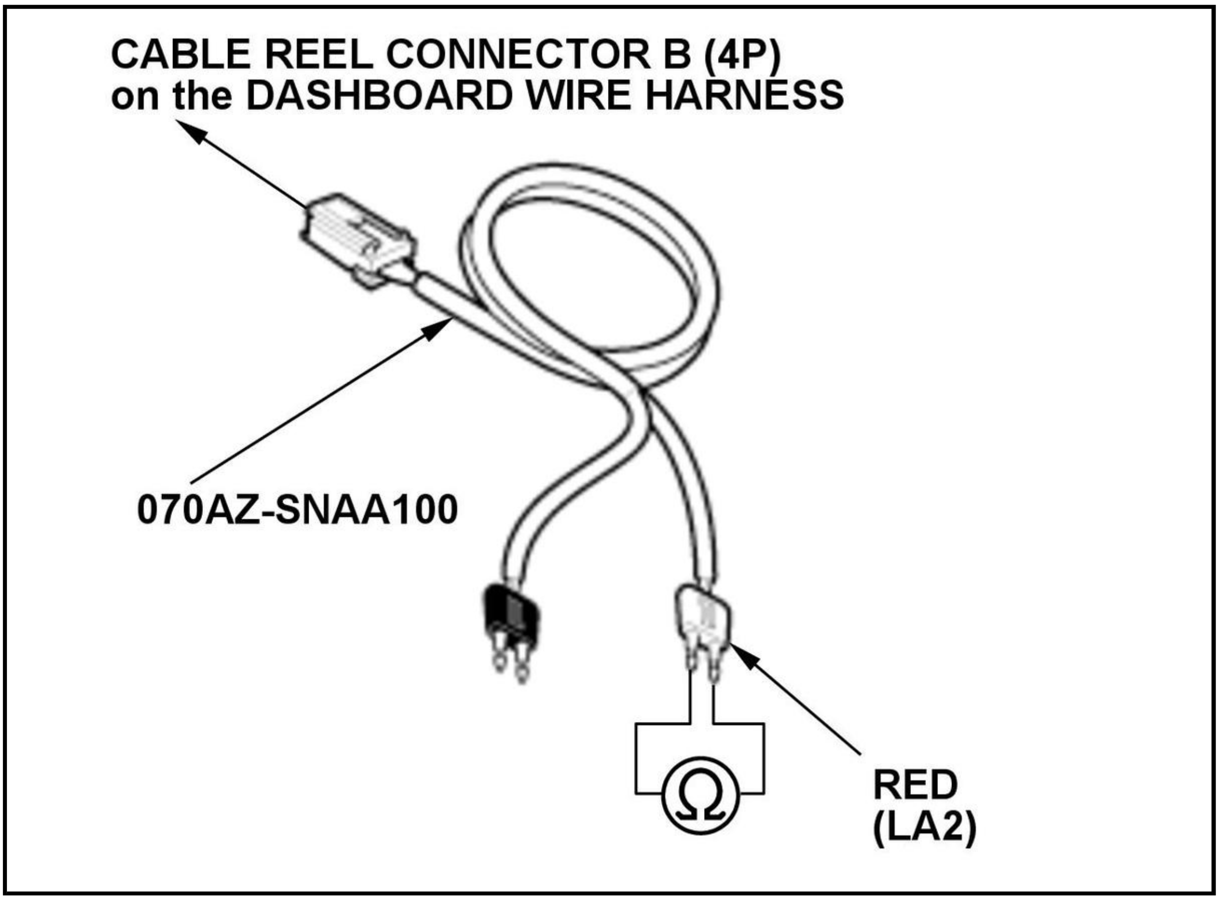

Is there 1.0 Ω or less?

YES

The LA2+ and LA2-wires are OK. Faulty SRS unit or poor connection at SRS unit connector A (39P) and the SRS unit. Check the connection; if the connection is OK, check for any authorized service information related to the DTCs or symptoms you are troubleshooting or **replace the SRS unit** . If the DTC does not clear, replace the dashboard wire harness.

NO

Open or increased resistance in the dashboard wire harness; replace the dashboard wire harness, then clear the DTC.

DTC B0002-1A (KA/KC) (2019 2020 2021)

DTC B0002-1A : Decreased Resistance in the Driver's Airbag Second Inflator

Special Tools Required

-SRS Inflator Simulator 07SAZ-TB4011A

-SRS Simulator Lead J 070AZ-SNAA100

-SRS Short Canceller 070AZ-SAA0100

NOTE:

- **Before doing this troubleshooting procedure, find out if the vehicle was in a collision. If so, verify that all the required components were replaced with new components of the correct part number and were properly installed** .
- Before doing this troubleshooting procedure, review **SRS Precautions and Procedures** , **General Troubleshooting Information** , and **12 Volt Battery Terminal Disconnection and Reconnection** .

DTC Description	DTC
B0002-1A Decreased resistance in the driver's airbag second inflator	B

DTC (SRS)

1. Problem verification

   -1. Clear the DTCs with the HDS.

   -2. Turn the vehicle to the ON mode, then wait for 10 seconds.

   -3. Check for DTCs with the HDS.

DTC Description	DTC
B0002-1A Decreased resistance in the driver's airbag second inflator	B

   Is DTC B0002-1A indicated?

   YES

   The failure is duplicated. Go to step 2.

   NO

   Intermittent failure, the system is OK at this time. Go to Troubleshooting Intermittent Failures. If another DTC is indicated, troubleshoot the DTC.

2. Driver's airbag inflator check

   -1. Turn the vehicle to the OFF (LOCK) mode.

   -2. Disconnect the negative cable from the 12 volt battery, then wait at least 3 minutes.

   -3. **Remove the driver's airbag** .

   -4. Disconnect the following connector.

Driver's airbag second inflator 2P connector (on the cable reel harness)

   NOTE: Make sure to work with the driver's airbag second inflator 2P connector (A) that has a guide tab (B) on the left side of the No. 1 terminal as shown.

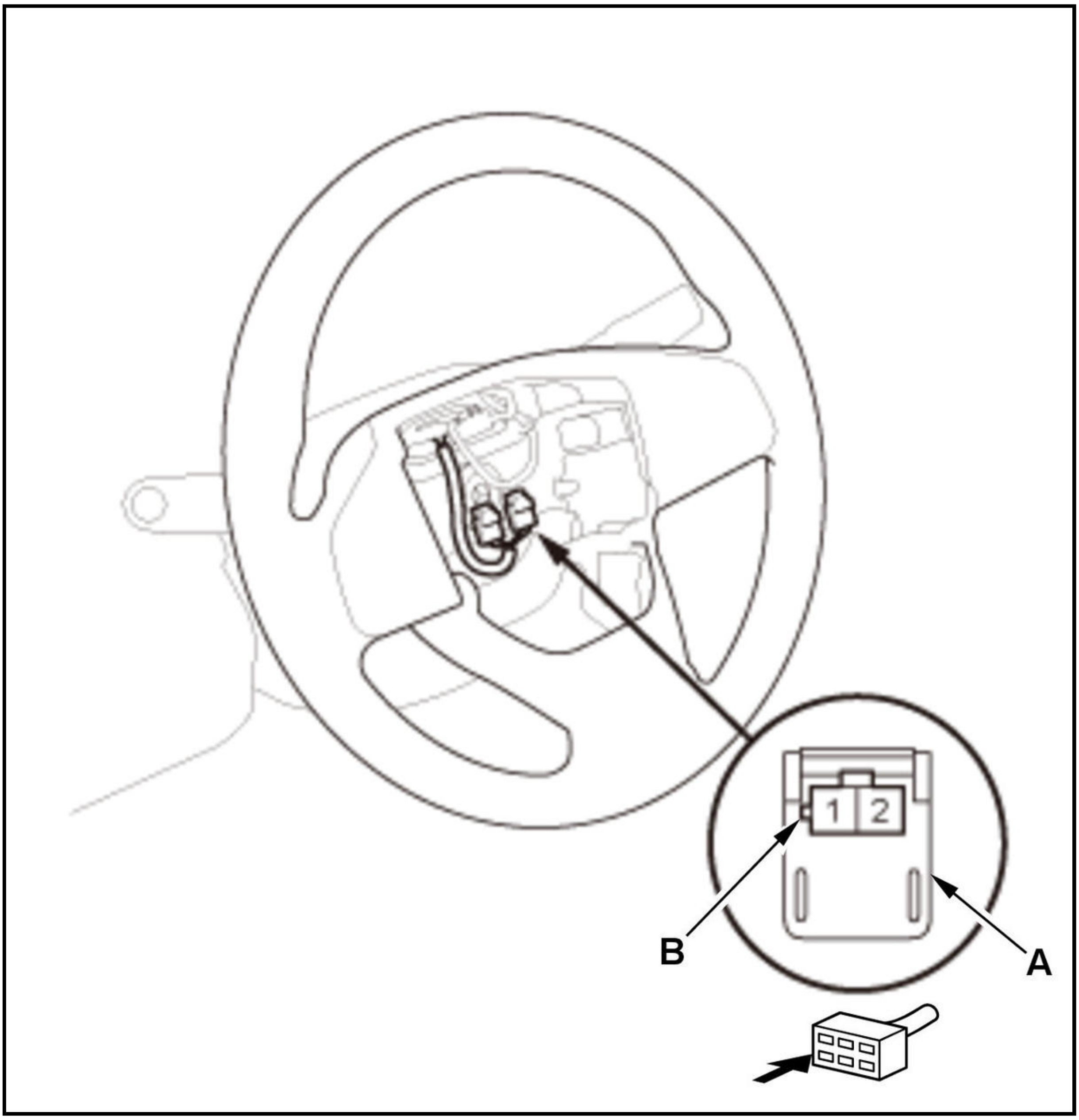

-5. Reconnect the negative cable to the 12 volt battery.

-6. Clear the DTCs with the HDS.

-7. Turn the vehicle to the ON mode, then wait for 10 seconds.

-8. Check for DTCs with the HDS.

DTC Description	DTC
B0002-1A Decreased resistance in the driver's airbag second inflator	B

Is DTC B0002-1A indicated?

YES

Go to step 3.

NO

Short to another wire in the driver's airbag second inflator; **replace the driver's airbag** , then clear the DTC.

3. Cable reel check

-1. Turn the vehicle to the OFF (LOCK) mode.

-2. Disconnect the negative cable from the 12 volt battery, then wait at least 3 minutes.

-3. **Remove the column covers** .

-4. Disconnect cable reel connector B (4P) on the dashboard wire harness.

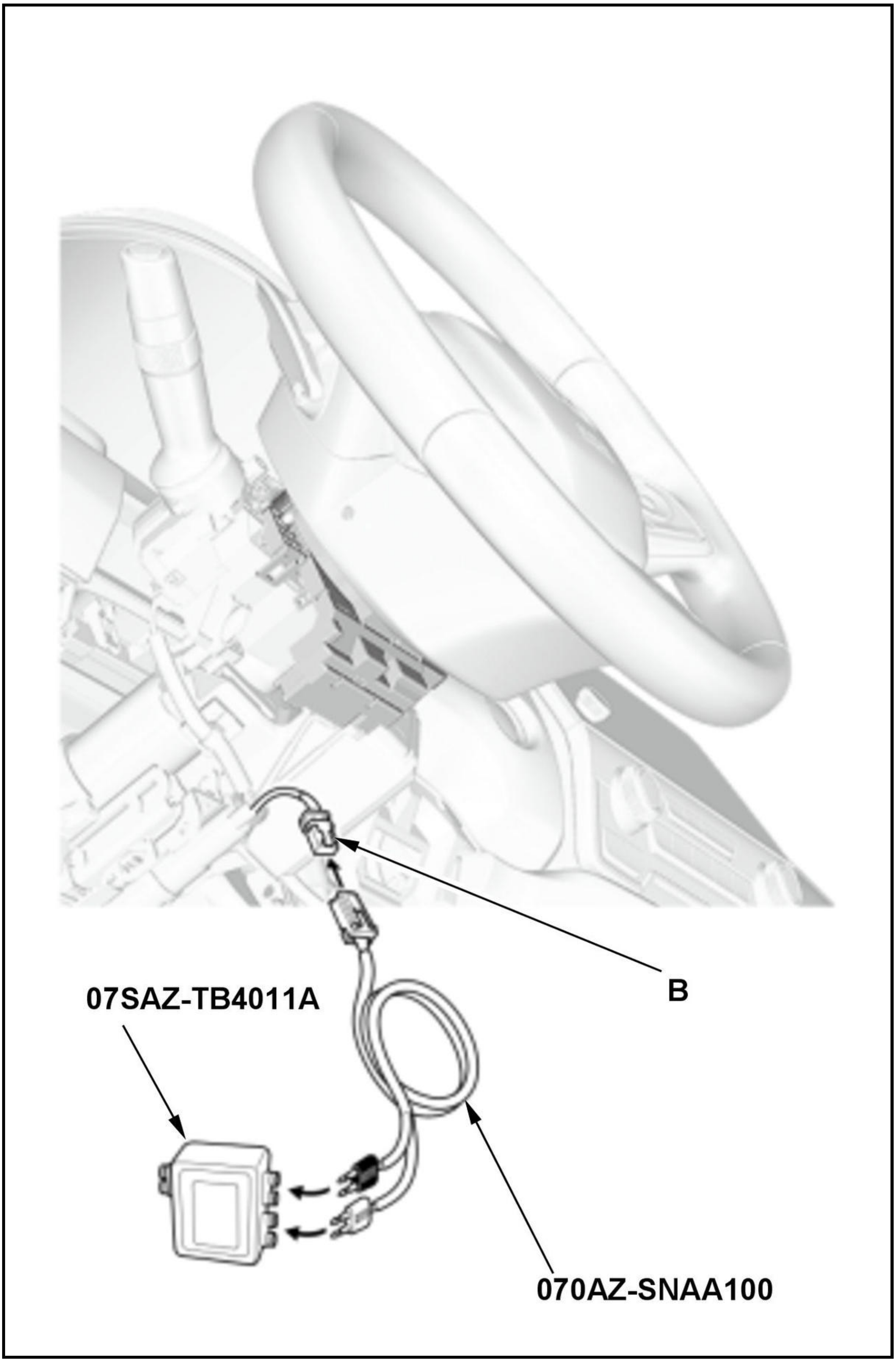
07SAZ-TB4011A
B
070AZ-SNAA100

-5. Connect the terminals of SRS simulator lead J to the SRS inflator simulator (2 Ω connectors), then connect SRS simulator lead J to cable reel connector B (4P) on the dashboard wire harness.

-6. Reconnect the negative cable to the 12 volt battery.

-7. Clear the DTCs with the HDS.

-8. Turn the vehicle to the ON mode, then wait for 10 seconds.

-9. Check for DTCs with the HDS.

DTC Description	DTC
B0002-1A Decreased resistance in the driver's airbag second inflator	B

Is DTC B0002-1A indicated?

YES

Go to step 4.

NO

Short to another wire in the cable reel; **replace the cable reel** , then clear the DTC.

4. Shorted wire check (LA2+ line to LA2- line)

-1. Turn the vehicle to the OFF (LOCK) mode.

-2. Disconnect the negative cable from the 12 volt battery, then wait at least 3 minutes.

-3. Disconnect the following connector.

SRS unit connector A (39P)

-4. Disconnect the SRS inflator simulator from SRS simulator lead J. Do not disconnect SRS simulator lead J from cable reel connector B (4P) on the dashboard wire harness.

-5. **Connect the SRS short canceller to SRS unit connector A (39P) terminals No. 10 and No. 11** .

-6. Measure the resistance of the test point.

Test condition	Vehicle OFF (LOCK) mode
	Driver's airbag second inflator 2P connector (on the cable reel harness): disconnected
	Cable reel connector B (4P) (on the dashboard wire harness): disconnected
	SRS unit connector A (39P): disconnected
	Cable reel connector B (4P) (on the dashboard wire harness): connected to SRS simulator lead J
	SRS unit connector A (39P) No. 10 and No. 11: connected to SRS short canceller
Test point	SRS simulator lead J red terminal

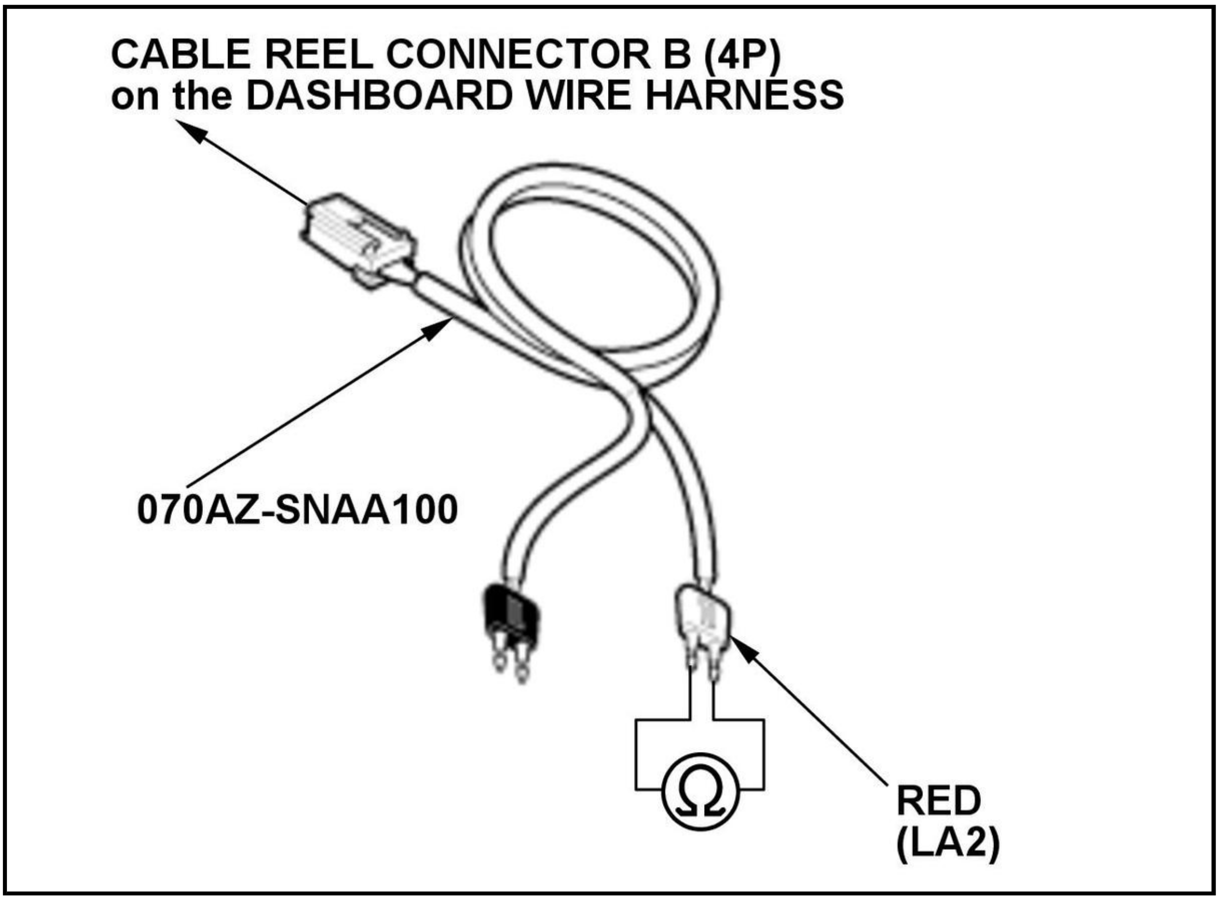

Is there an open circuit, or at least 1 MΩ?

YES

The LA2+ and LA2-wires are OK. Faulty SRS unit or poor connection at SRS unit connector A (39P) and the SRS unit. Check the connection; if the connection is OK, check for any authorized service information related to the DTCs or symptoms you are troubleshooting or **replace the SRS unit** . If the DTC does not clear, replace the dashboard wire harness.

NO

Short to another wire in the dashboard wire harness; replace the dashboard wire harness, then clear the DTC.

DTC B0002-2B (KA/KC) (2019 2020 2021)

DTC B0002-2B : Short to Another Wire Harness in the Driver's Airbag Second Inflator

NOTE:

- **Before doing this troubleshooting procedure, find out if the vehicle was in a collision. If so, verify that all the required components were replaced with new components of the correct part number and were properly installed** .
- Before doing this troubleshooting procedure, review **SRS Precautions and Procedures** , **General Troubleshooting Information** , and **12 Volt Battery Terminal Disconnection and Reconnection** .

DTC Description	DTC
B0002-2B Short to another wire harness in the driver's airbag second inflator	B

DTC (SRS)

1. Problem verification

-1. Clear the DTCs with the HDS.

-2. Turn the vehicle to the ON mode, then wait for 10 seconds.

-3. Check for DTCs with the HDS.

DTC Description	DTC
B0002-2B Short to another wire harness in the driver's airbag second inflator	B

Is DTC B0002-2B indicated?

YES

The failure is duplicated. Go to step 2.

NO

Intermittent failure, the system is OK at this time. Go to Troubleshooting Intermittent Failures. If another DTC is indicated, troubleshoot the DTC.

2. DTC check

-1. Check for DTCs with the HDS.

DTC Description	DTC
B0001-2B Short to another wire harness in the driver's airbag first inflator	B
B0002-2B Short to another wire harness in the driver's airbag second inflator	B
B0010-2B Short to another wire harness in the front passenger's airbag first inflator	B
B0011-2B Short to another wire harness in the front passenger's airbag second inflator	B
B0020-2B Short to another wire harness in the left side airbag inflator	B
B0021-2B Short to another wire harness in the left side curtain airbag first inflator	B
B0028-2B Short to another wire harness in the right side airbag inflator	B
B0029-2B Short to another wire harness in the right side curtain airbag first inflator	B
B0070-2B Short to another wire harness in the driver's seat belt tensioner	B
B0072-2B Short to another wire harness in the front passenger's seat belt tensioner	B
B0079-2B Short to another wire harness in the driver's seat belt outer lap tensioner	B

DTC Description	DTC
B007A-2B Short to another wire harness in the front passenger's seat belt outer lap tensioner	B
B0082-2B Short to another wire harness in the selectable energy absorption device of the front passenger's seat belt tensioner	B

Is DTC B0001-2B, B0010-2B, B0011-2B, B0020-2B, B0021-2B, B0028-2B, B0029-2B, B0070-2B, B0072-2B, B0079-2B, B007A-2B or B0082-2B indicated with DTC B0002-2B?

YES

Go to step 3.

NO

Go to step 4.

3. Shorted wire check (LA2 lines to another line)

-1. Turn the vehicle to the OFF (LOCK) mode.

-2. Disconnect the negative cable from the 12 volt battery, then wait at least 3 minutes.

-3. **Remove the driver's airbag** .

-4. Disconnect the following connectors.

SRS unit connector A (39P)
SRS unit connector B (39P)
Driver's airbag second inflator 2P connector (on the cable reel harness)
Inflator connectors which are assigned to 2B codes listed on HDS

NOTE: Make sure to work with the driver's airbag second inflator 2P connector (A) that has a guide tab (B) on the left side of the No. 1 terminal as shown.

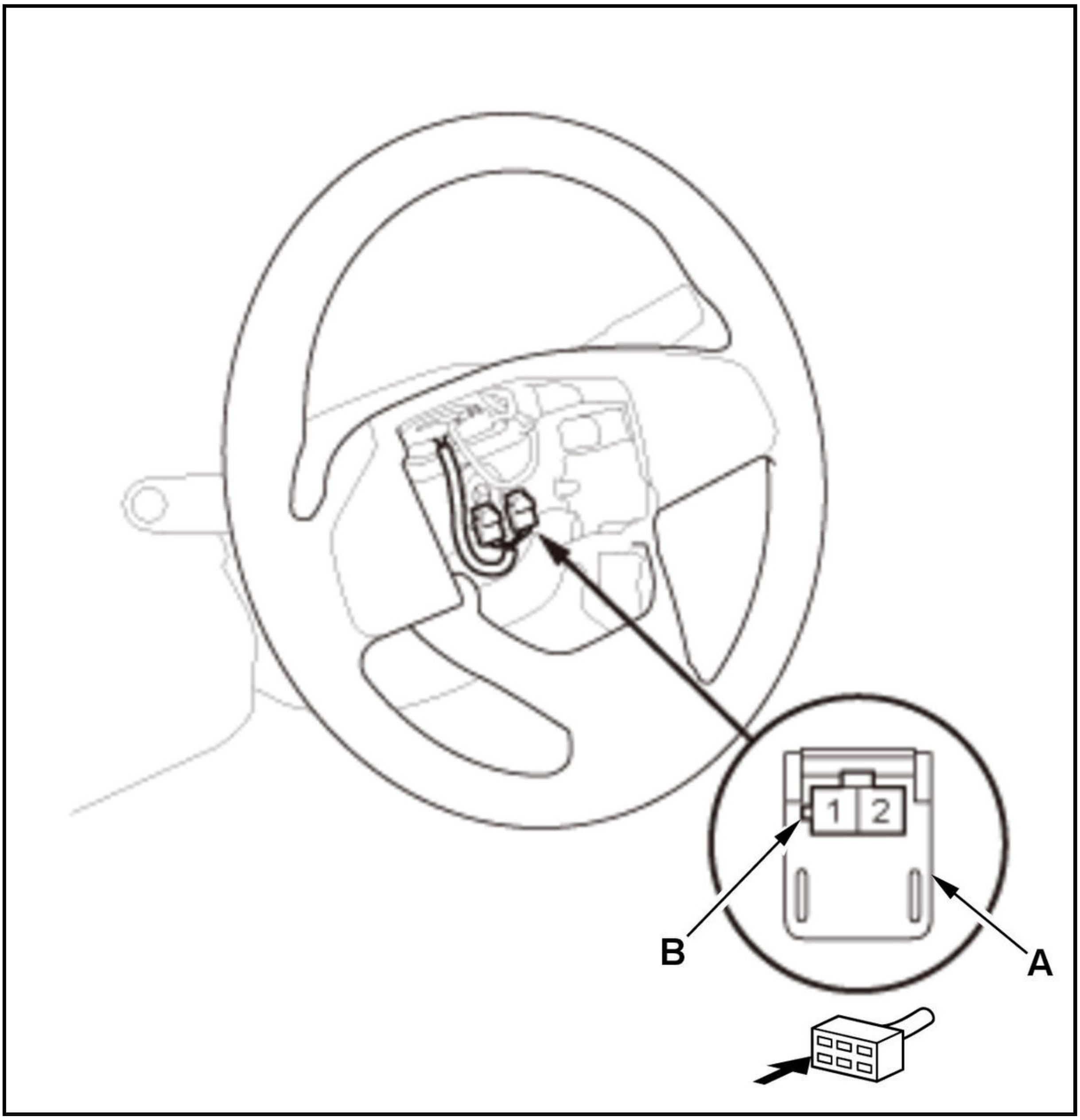

-5. Check for continuity between test points 1 and 2 of SRS unit connector A (39P) and B (39P) according to table.

Test condition	Vehicle OFF (LOCK) mode SRS unit connector A (39P): disconnected SRS unit connector B (39P): disconnected Driver's airbag second inflator 2P connector (on the cable reel harness): disconnected Inflator connectors which are assigned to 2B codes listed on HDS: disconnected

DTC	Test point 1	Test point 2
	From terminal	**To terminal**
B0001-2B	SRS unit connector A (39P) No. 10	SRS unit connector A (39P) No. 9
	SRS unit connector A (39P) No. 11	SRS unit connector A (39P) No. 8
B0010-2B	SRS unit connector A (39P) No. 10	SRS unit connector A (39P) No. 5
	SRS unit connector A (39P) No. 11	SRS unit connector A (39P) No. 4
B0011-2B	SRS unit connector A (39P) No. 10	SRS unit connector A (39P) No. 6
	SRS unit connector A (39P) No. 11	SRS unit connector A (39P) No. 7
B0020-2B	SRS unit connector A (39P) No. 10	SRS unit connector B (39P) No. 5
	SRS unit connector A (39P) No. 11	SRS unit connector B (39P) No. 6
B0021-2B	SRS unit connector A (39P) No. 10	SRS unit connector B (39P) No. 9
	SRS unit connector A (39P) No. 11	SRS unit connector B (39P) No. 10
B0028-2B	SRS unit connector A (39P) No. 10	SRS unit connector B (39P) No. 4
	SRS unit connector A (39P) No. 11	SRS unit connector B (39P) No. 3
B0029-2B	SRS unit connector A (39P) No. 10	SRS unit connector B (39P) No. 8
	SRS unit connector A (39P) No. 11	SRS unit connector B (39P) No. 7
B0070-2B	SRS unit connector A (39P) No. 10	SRS unit connector B (39P) No. 20
	SRS unit connector A (39P) No. 11	SRS unit connector B (39P) No. 21
B0072-2B	SRS unit connector A (39P) No. 10	SRS unit connector B (39P) No. 19
	SRS unit connector A (39P) No. 11	SRS unit connector B (39P) No. 18
B0079-2B	SRS unit connector A (39P) No. 10	SRS unit connector B (39P) No. 24
	SRS unit connector A (39P) No. 11	SRS unit connector B (39P) No. 25
B007A-2B	SRS unit connector A (39P) No. 10	SRS unit connector B (39P) No. 23
	SRS unit connector A (39P) No. 11	SRS unit connector B (39P) No. 22
B0082-2B	SRS unit connector A (39P) No. 10	SRS unit connector A (39P) No. 2
	SRS unit connector A (39P) No. 11	SRS unit connector A (39P) No. 3

Is there continuity?

YES

Short to another wire in the dashboard wire harness or the floor wire harness; replace the faulty harness, then clear the DTC.

NO

The LA2 wires are OK. Faulty SRS unit or poor connection at SRS unit connector A (39P) and the SRS unit, or SRS unit connector B (39P) and the SRS unit. Check the connection; if the connection is OK, check for any authorized service information related to the DTCs or symptoms you are troubleshooting or replace the SRS unit . If the DTC does not clear, replace the dashboard wire harness or the floor wire harness.

4. Shorted wire check (LA1+ line to LA2+ line, LA1- line to LA2- line) 1

-1. Turn the vehicle to the OFF (LOCK) mode.

-2. Disconnect the negative cable from the 12 volt battery, then wait at least 3 minutes.

-3. **Remove the driver's airbag** .

-4. Disconnect the following connector.

Driver's airbag first inflator 2P connector (on the cable reel harness)
Driver's airbag second inflator 2P connector (on the cable reel harness)

-5. Check for continuity between test points 1 and 2.

Test condition	Vehicle OFF (LOCK) mode
	Driver's airbag first inflator 2P connector (on the cable reel harness): disconnected
	Driver's airbag second inflator 2P connector (on the cable reel harness): disconnected
Test point 1	Driver's airbag first inflator 2P connector No. 2 (on the cable reel harness) ①
Test point 2	Driver's airbag second inflator 2P connector No. 2 (on the cable reel harness) ②

Test point 1	Driver's airbag first inflator 2P connector No. 1 (on the cable reel harness) ①
Test point 2	Driver's airbag second inflator 2P connector No. 1 (on the cable reel harness) ②

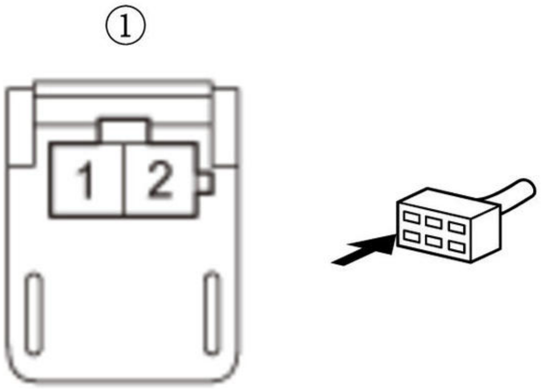

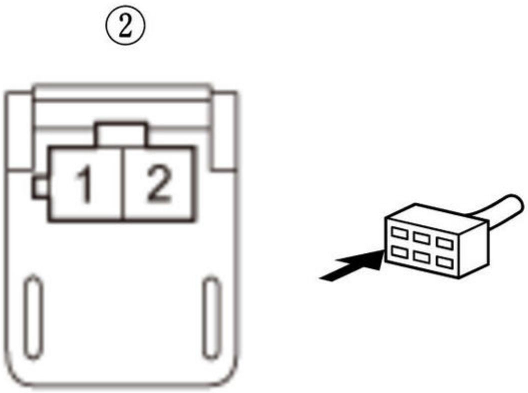

Is there continuity?

YES

Go to step 5.

NO

The LA1+, LA1-, LA2+, and LA2- wires are OK. Faulty driver's airbag second inflator; **replace the driver's airbag** , then clear the DTC.

5. Shorted wire check (LA1+ line to LA2+ line, LA1- line to LA2- line) 2

-1. **Remove the column covers** .

-2. Disconnect cable reel connector B (4P) on the dashboard wire harness.

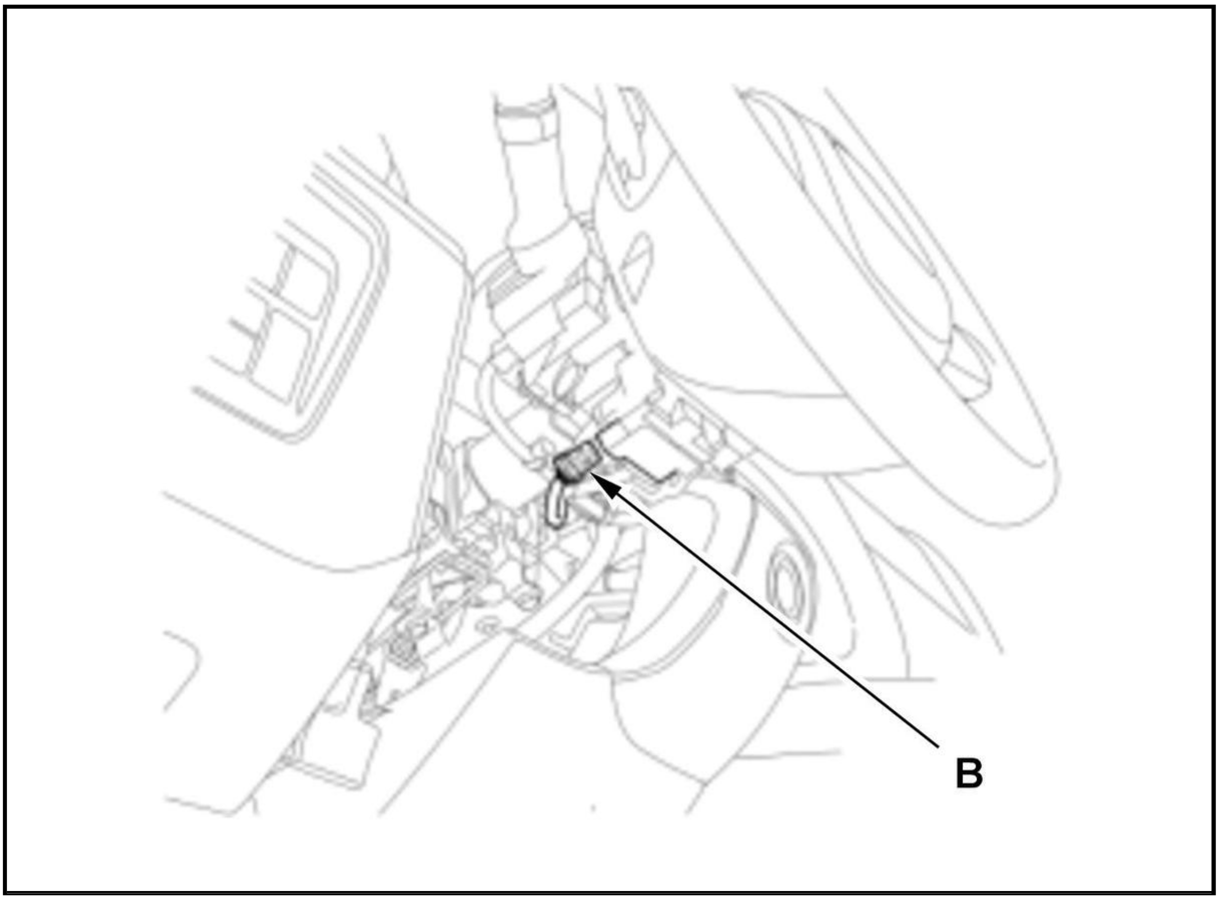

-3. Check for continuity between test points 1 and 2.

Test condition	Vehicle OFF (LOCK) mode
	Driver's airbag first inflator 2P connector (on the cable reel harness): disconnected
	Driver's airbag second inflator 2P connector (on the cable reel harness): disconnected
	Cable reel connector B (4P) (on the dashboard wire harness): disconnected
Test point 1	Driver's airbag first inflator 2P connector No. 2 (on the cable reel harness) ①
Test point 2	Driver's airbag second inflator 2P connector No. 2 (on the cable reel harness) ②

Test point 1	Driver's airbag first inflator 2P connector No. 1 (on the cable reel harness) ①
Test point 2	Driver's airbag second inflator 2P connector No. 1 (on the cable reel harness) ②

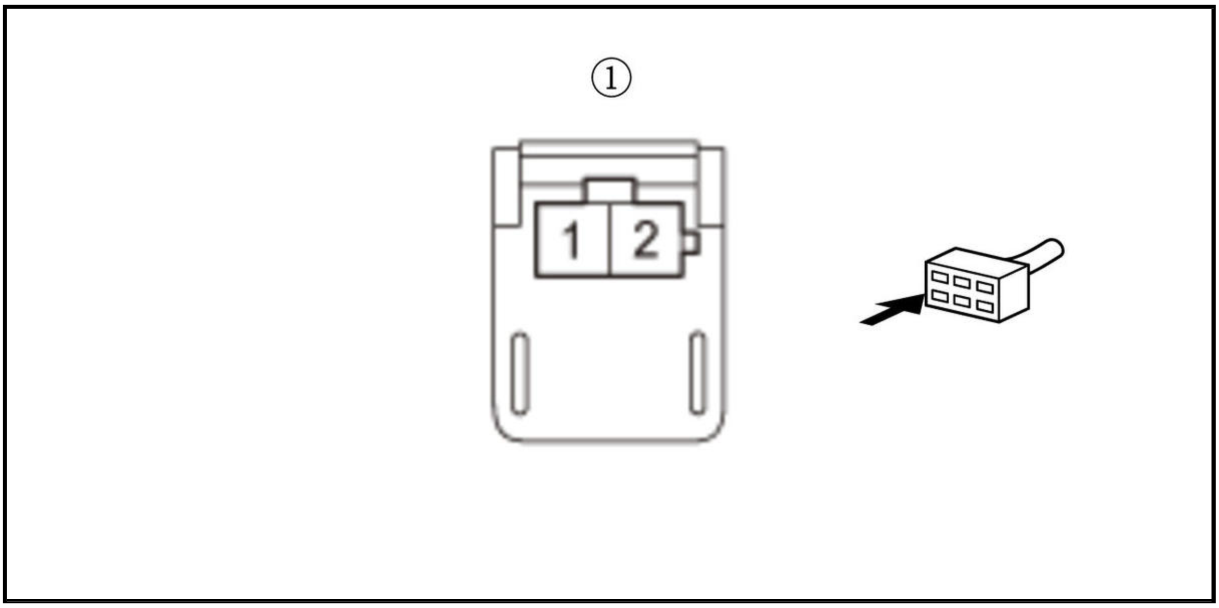

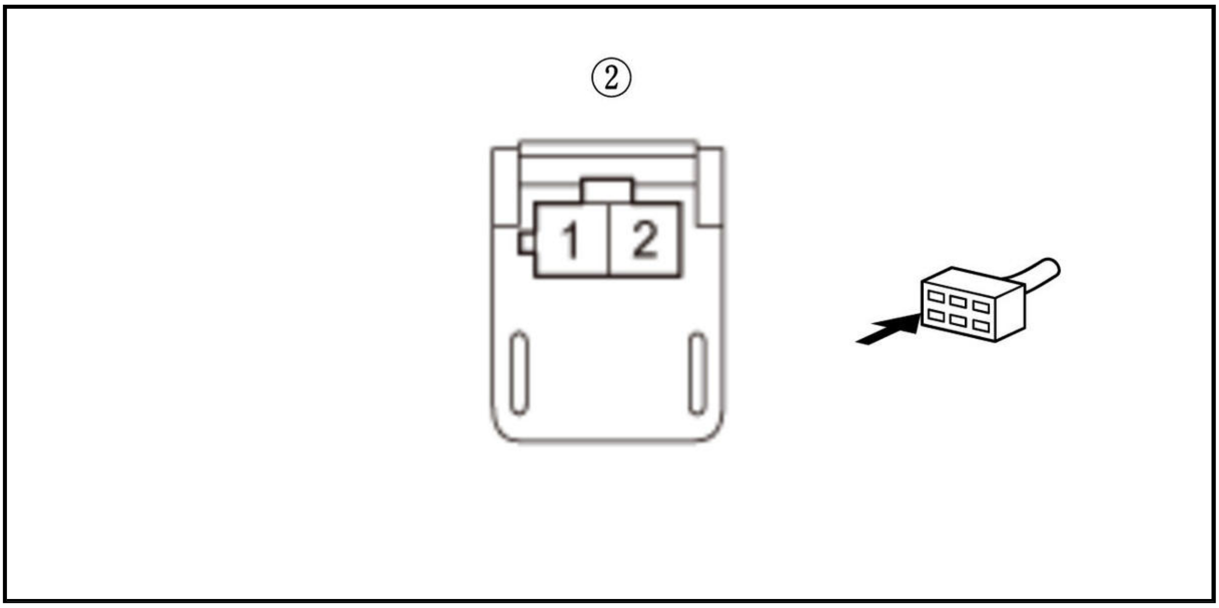

Is there continuity?

YES

Short to another wire in the cable reel; replace the cable reel , then clear the DTC.

NO

Go to step 6.

6. Shorted wire check (LA1+ line to LA2+ line, LA1- line to LA2- line) 3

-1. Disconnect the following connectors.

SRS unit connector A (39P)

-2. Check for continuity between test points 1 and 2.

Test condition	Vehicle OFF (LOCK) mode
	SRS unit connector A (39P): disconnected
	Driver's airbag first inflator 2P connector (on the cable reel harness): disconnected
	Driver's airbag second inflator 2P connector (on the cable reel harness): disconnected
	Cable reel connector B (4P) (on the dashboard wire harness): disconnected

Test point 1	**SRS unit connector A (39P) No. 9**
Test point 2	**SRS unit connector A (39P) No. 10**

Test point 1	**SRS unit connector A (39P) No. 8**
Test point 2	**SRS unit connector A (39P) No. 11**

Is there continuity?

YES

Short to another wire in the dashboard wire harness; replace the dashboard wire harness, then clear the DTC.

NO

The LA1+, LA1-, LA2+, and LA2- wires are OK. Faulty SRS unit or poor connection at SRS unit connector A (39P) and the SRS unit. Check the connection; if the connection is OK, check for any authorized service information related to the DTCs or symptoms you are troubleshooting or **replace the SRS unit** . If the DTC does not clear, replace the dashboard wire harness.

DTC B0010-11, B0011-11 (KA/KC)

DTC B0010-11 : Short to Ground in the Front Passenger's Airbag First Inflator

DTC B0011-11 : Short to Ground in the Front Passenger's Airbag Second Inflator

Special Tools Required

-SRS Inflator Simulator 07SAZ-TB4011A

-SRS Simulator Lead J 070AZ-SNAA100

NOTE:

- **Before doing this troubleshooting procedure, find out if the vehicle was in a collision. If so, verify that all the required components were replaced with new components of the correct part number and were properly installed** .
- Before doing this troubleshooting procedure, review **SRS Precautions and Procedures** , **General Troubleshooting Information** , and **12 Volt Battery Terminal Disconnection and Reconnection** .

DTC Description	DTC
B0010-11 Short to ground in the front passenger's airbag first inflator	B
B0011-11 Short to ground in the front passenger's airbag second inflator	B

DTC (SRS)

1. Problem verification

   -1. Clear the DTCs with the HDS.

   -2. Turn the vehicle to the ON mode, then wait for 10 seconds.

   -3. Check for DTCs with the HDS.

DTC Description	DTC
B0010-11 Short to ground in the front passenger's airbag first inflator	B

DTC Description	DTC
B0011-11 Short to ground in the front passenger's airbag second inflator	B

Is DTC B0010-11 or B0011-11 indicated?

YES

The failure is duplicated. Go to step 2.

NO

Intermittent failure, the system is OK at this time. Go to Troubleshooting Intermittent Failures. If another DTC is indicated, troubleshoot the DTC.

2. Front passenger's airbag inflator check

-1. Turn the vehicle to the OFF (LOCK) mode.

-2. Disconnect the negative cable from the 12 volt battery, then wait at least 3 minutes.

-3. **Remove the glove box** .

-4. Disconnect the front passenger's airbag inflator 4P connector (A) on the dashboard wire harness.

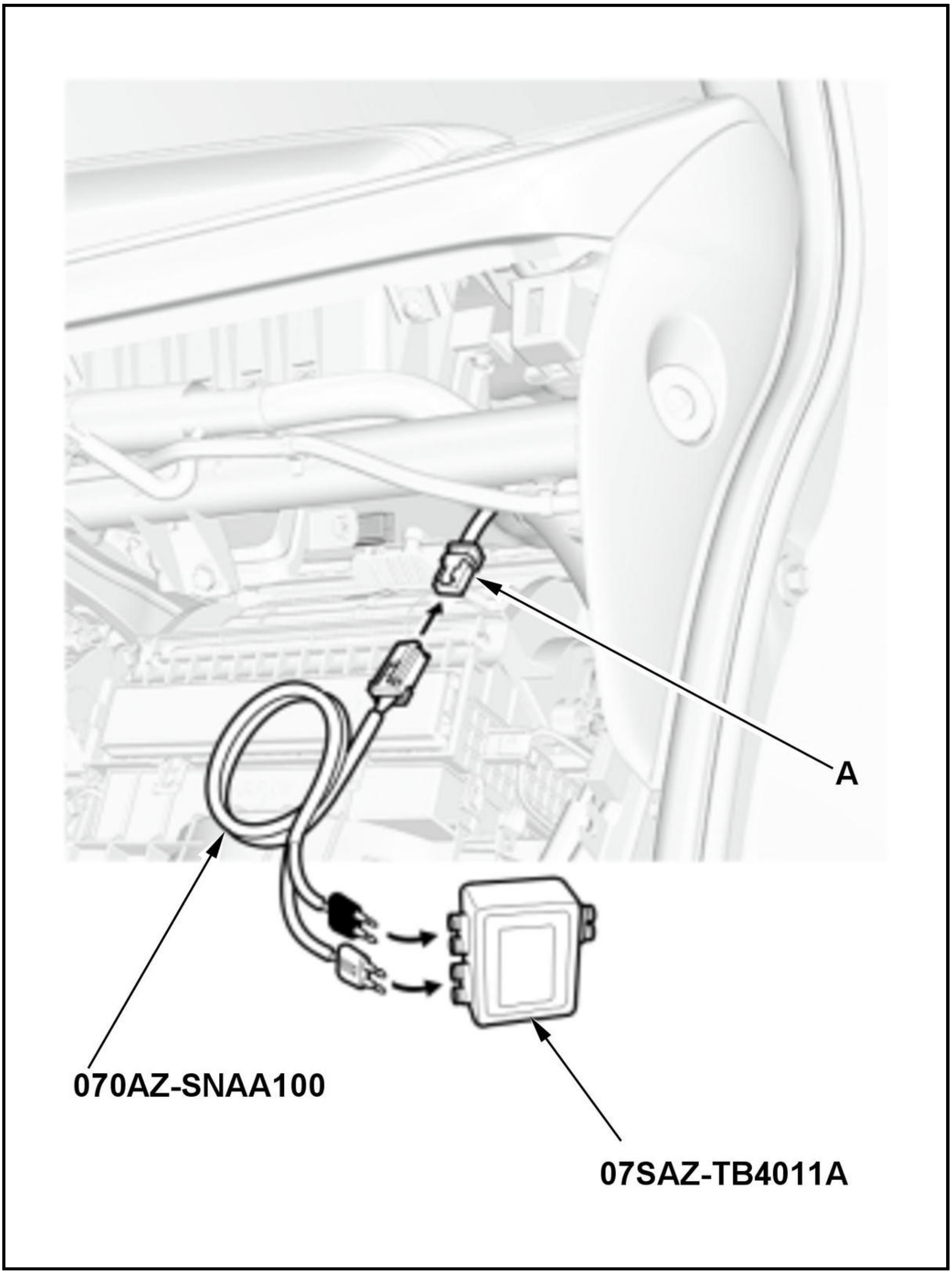

-5. Connect the terminals of SRS simulator lead J to the SRS inflator simulator (2 Ω connectors), then connect SRS simulator lead J to the front passenger's airbag inflator 4P connector on the dashboard wire harness.

-6. Reconnect the negative cable to the 12 volt battery.

-7. Clear the DTCs with the HDS.

-8. Turn the vehicle to the ON mode, then wait for 10 seconds.

-9. Check for DTCs with the HDS.

DTC Description	DTC
B0010-11 Short to ground in the front passenger's airbag first inflator	B
B0011-11 Short to ground in the front passenger's airbag second inflator	B

Is DTC B0010-11 or B0011-11 indicated?

YES

Go to step 3.

NO

Short to ground in the front passenger's airbag first or second inflator; **replace the front passenger's airbag** , then clear the DTC.

3. Shorted wire check (RA1+, RA1-, RA2+, RA2- lines)

-1. Turn the vehicle to the OFF (LOCK) mode.

-2. Disconnect the negative cable from the 12 volt battery, then wait at least 3 minutes.

-3. Disconnect the following connector.

SRS unit connector A (39P)

-4. Disconnect the SRS inflator simulator from SRS simulator lead J. Do not disconnect SRS simulator lead J from the front passenger's airbag inflator 4P connector on the dashboard wire harness.

-5. Measure the resistance between test points 1 and 2.

Test condition	Vehicle OFF (LOCK) mode
	Front passenger's airbag inflator 4P connector (on the dashboard wire harness): disconnected
	SRS unit connector A (39P): disconnected
	Front passenger's airbag inflator 4P connector (on the dashboard wire harness): connected to SRS simulator lead J
Test point 1	SRS simulator lead J black terminal
Test point 2	Body ground

Test point 1	SRS simulator lead J red terminal
Test point 2	Body ground

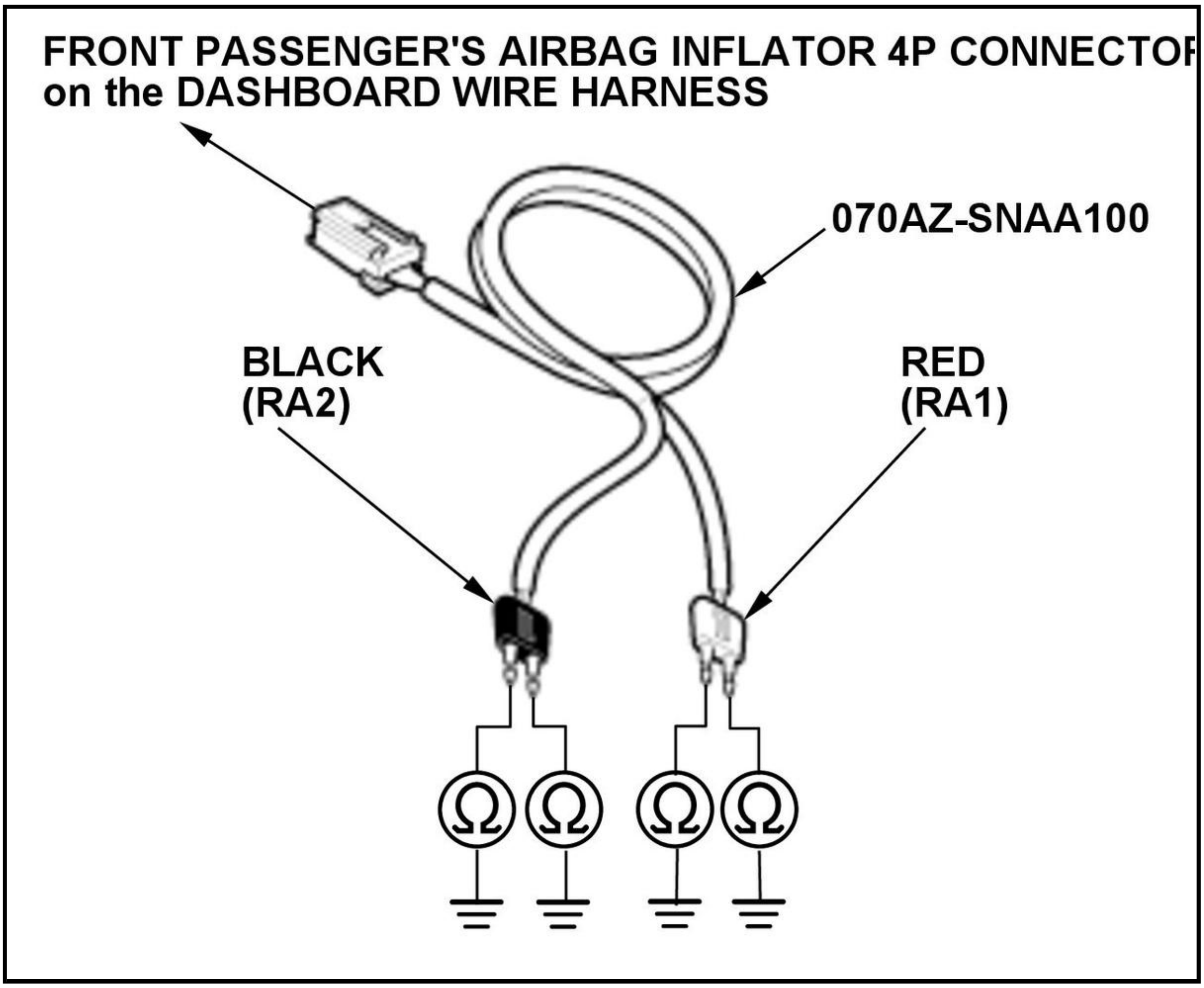
FRONT PASSENGER'S AIRBAG INFLATOR 4P CONNECTO
on the DASHBOARD WIRE HARNESS
070AZ-SNAA100
BLACK
(RA2)
RED
(RA1)

Is there an open circuit, or at least 1 MΩ?

YES

The RA1+, RA1-, RA2+, and RA2- wires are OK. Faulty SRS unit or poor connection at SRS unit connector A (39P) and the SRS unit. Check the connection; if the connection is OK, check for any authorized service information related to the DTCs or symptoms you are troubleshooting or **replace the SRS unit** . If the DTC does not clear, replace the dashboard wire harness.

NO

Short to ground in the dashboard wire harness; replace the dashboard wire harness, then clear the DTC.

DTC B0010-12, B0011-12 (KA/KC)

DTC B0010-12 : Short to Power in the Front Passenger's Airbag First Inflator

DTC B0011-12 : Short to Power in the Front Passenger's Airbag Second Inflator

Special Tools Required

-SRS Inflator Simulator 07SAZ-TB4011A

-SRS Simulator Lead J 070AZ-SNAA100

NOTE:

- **Before doing this troubleshooting procedure, find out if the vehicle was in a collision. If so, verify that all the required components were replaced with new components of the correct part number and were properly installed** .

- Before doing this troubleshooting procedure, review **SRS Precautions and Procedures** , **General Troubleshooting Information** , and **12 Volt Battery Terminal Disconnection and Reconnection** .

DTC Description	DTC
B0010-12 Short to power in the front passenger's airbag first inflator	B
B0011-12 Short to power in the front passenger's airbag second inflator	B

DTC (SRS)

1. Problem verification

   -1. Clear the DTCs with the HDS.

   -2. Turn the vehicle to the ON mode, then wait for 10 seconds.

   -3. Check for DTCs with the HDS.

DTC Description	DTC
B0010-12 Short to power in the front passenger's airbag first inflator	B

DTC Description	DTC
B0011-12 Short to power in the front passenger's airbag second inflator	B

   Is DTC B0010-12 or B0011-12 indicated?

   YES

   The failure is duplicated. Go to step 2.

   NO

   Intermittent failure, the system is OK at this time. Go to Troubleshooting Intermittent Failures. If another DTC is indicated, troubleshoot the DTC.

2. Front passenger's airbag inflator check

   -1. Turn the vehicle to the OFF (LOCK) mode.

   -2. Disconnect the negative cable from the 12 volt battery, then wait at least 3 minutes.

   -3. **Remove the glove box** .

   -4. Disconnect the front passenger's airbag inflator 4P connector (A) on the dashboard wire harness.

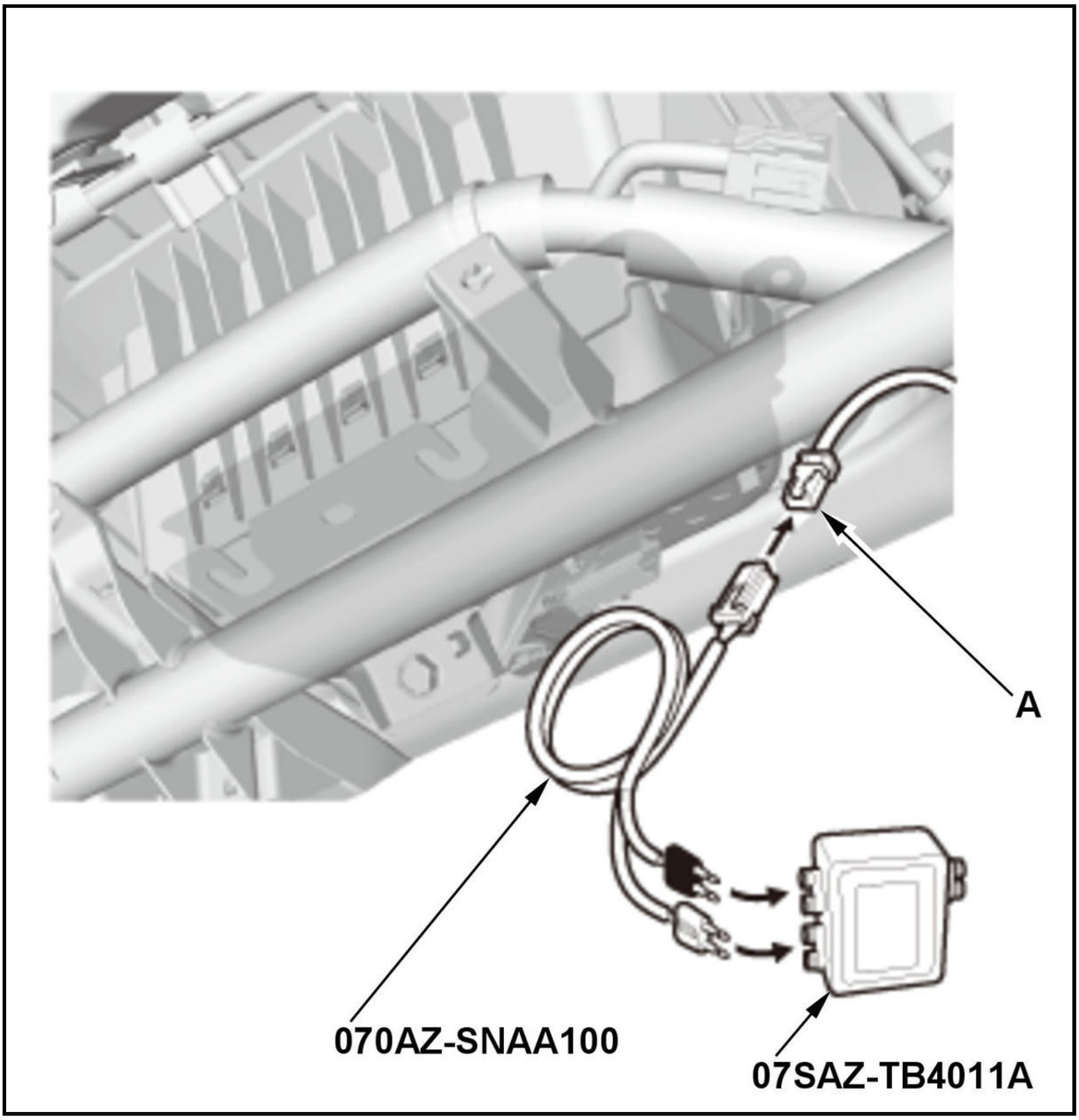

-5. Connect the terminals of SRS simulator lead J to the SRS inflator simulator (2 Ω connectors), then connect SRS simulator lead J to the front passenger's airbag inflator 4P connector on the dashboard wire harness.

-6. Reconnect the negative cable to the 12 volt battery.

-7. Clear the DTCs with the HDS.

-8. Turn the vehicle to the ON mode, then wait for 10 seconds.

-9. Check for DTCs with the HDS.

DTC Description	DTC
B0010-12 Short to power in the front passenger's airbag first inflator	B

DTC Description	DTC
B0011-12 Short to power in the front passenger's airbag second inflator	B

Is DTC B0010-12 or B0011-12 indicated?

YES

Go to step 3.

NO

Short to power in the front passenger's airbag first or second inflator; **replace the front passenger's airbag** , then clear the DTC.

3. Shorted wire check (RA1+, RA1-, RA2+, RA2- lines to power)

-1. Turn the vehicle to the OFF (LOCK) mode.

-2. Disconnect the negative cable from the 12 volt battery, then wait at least 3 minutes.

-3. Disconnect the following connector.

SRS unit connector A (39P)

-4. Disconnect the SRS inflator simulator from SRS simulator lead J. Do not disconnect SRS simulator lead J from the front passenger's airbag inflator 4P connector on the dashboard wire harness.

-5. Reconnect the negative cable to the 12 volt battery.

-6. Turn the vehicle to the ON mode.

-7. Measure the voltage between test points 1 and 2.

Test condition	Vehicle ON mode
	Front passenger's airbag inflator 4P connector (on the dashboard wire harness): disconnected
	SRS unit connector A (39P): disconnected
	Front passenger's airbag inflator 4P connector (on the dashboard wire harness): connected to SRS simulator lead J
Test point 1	SRS simulator lead J black terminal
Test point 2	Body ground

Test point 1	SRS simulator lead J red terminal
Test point 2	Body ground

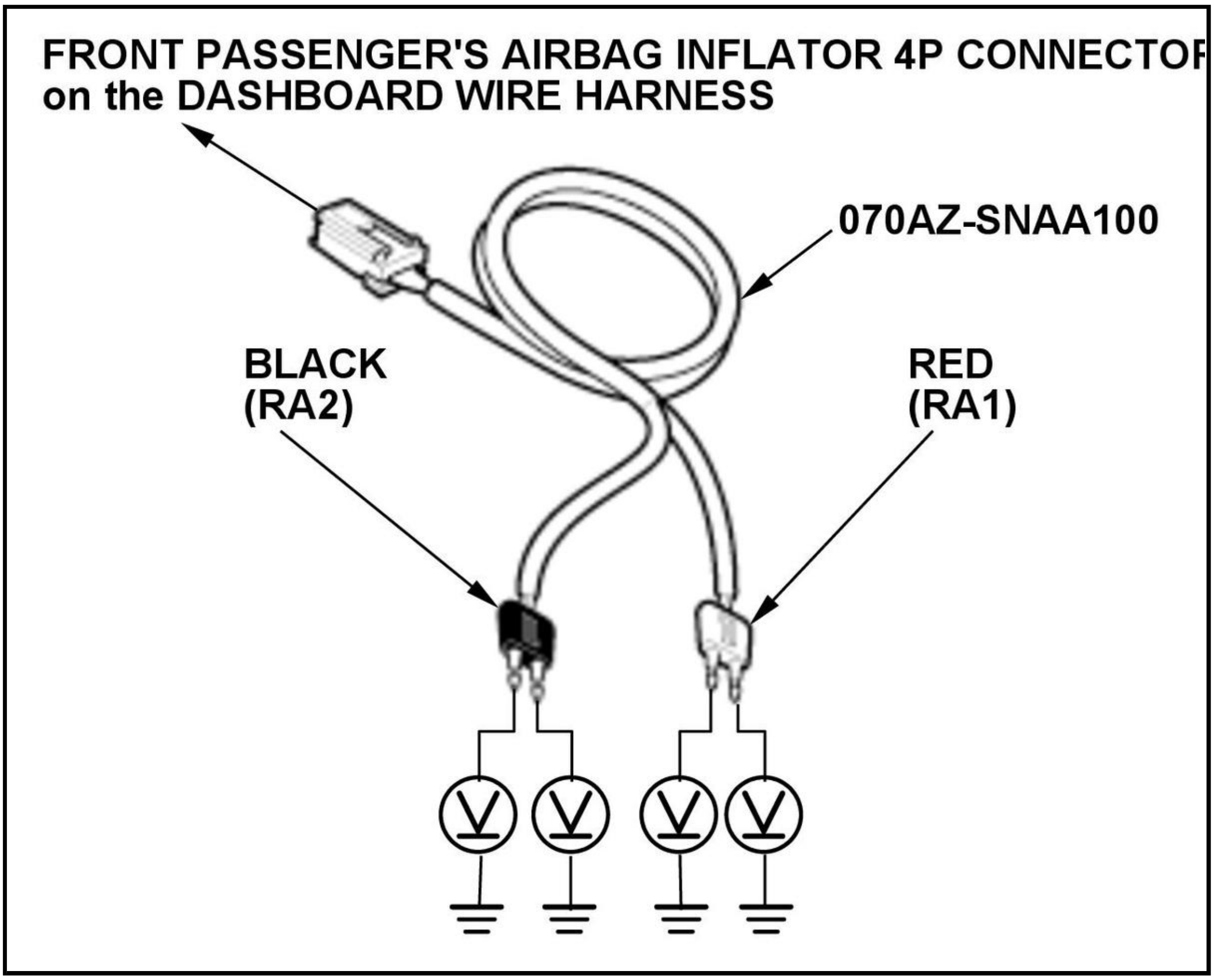
FRONT PASSENGER'S AIRBAG INFLATOR 4P CONNECTOR
on the DASHBOARD WIRE HARNESS
070AZ-SNAA100
BLACK
(RA2)
RED
(RA1)

Is there 0.2 V or less?

YES

The RA1+, RA1-, RA2+, and RA2- wires are OK. Faulty SRS unit or poor connection at SRS unit connector A (39P) and the SRS unit. Check the connection; if the connection is OK, check for any authorized service information related to the DTCs or symptoms you are troubleshooting or replace the SRS unit . If the DTC does not clear, replace the dashboard wire harness.

NO

Short to power in the dashboard wire harness; replace the dashboard wire harness, then clear the DTC.

DTC B0010-13, B0011-13 (KA/KC)

DTC B0010-13 : Open or Increased Resistance in the Front Passenger's Airbag First Inflator

DTC B0011-13 : Open or Increased Resistance in the Front Passenger's Airbag Second Inflator

Special Tools Required

-SRS Inflator Simulator 07SAZ-TB4011A

-SRS Simulator Lead J 070AZ-SNAA100

NOTE:

- Before doing this troubleshooting procedure, find out if the vehicle was in a collision. If so, verify that all the required components were replaced with new components of the correct part number and were properly installed .

- Before doing this troubleshooting procedure, review **SRS Precautions and Procedures** , **General Troubleshooting Information** , and **12 Volt Battery Terminal Disconnection and Reconnection** .

DTC Description	DTC
B0010-13 Open or increased resistance in the front passenger's airbag first inflator	B
B0011-13 Open or increased resistance in the front passenger's airbag second inflator	B

DTC (SRS)

1. Problem verification

   -1. Clear the DTCs with the HDS.

   -2. Turn the vehicle to the ON mode, then wait for 10 seconds.

   -3. Check for DTCs with the HDS.

DTC Description	DTC
B0010-13 Open or increased resistance in the front passenger's airbag first inflator	B
B0011-13 Open or increased resistance in the front passenger's airbag second inflator	B

   Is DTC B0010-13 or B0011-13 indicated?

   YES

   The failure is duplicated. Go to step 2.

   NO

   Intermittent failure, the system is OK at this time. Go to Troubleshooting Intermittent Failures. If another DTC is indicated, troubleshoot the DTC.

2. Front passenger's airbag inflator check

   -1. Turn the vehicle to the OFF (LOCK) mode.

   -2. Disconnect the negative cable from the 12 volt battery, then wait at least 3 minutes.

   -3. **Remove the glove box** .

   -4. Disconnect the front passenger's airbag inflator 4P connector (A) on the dashboard wire harness.

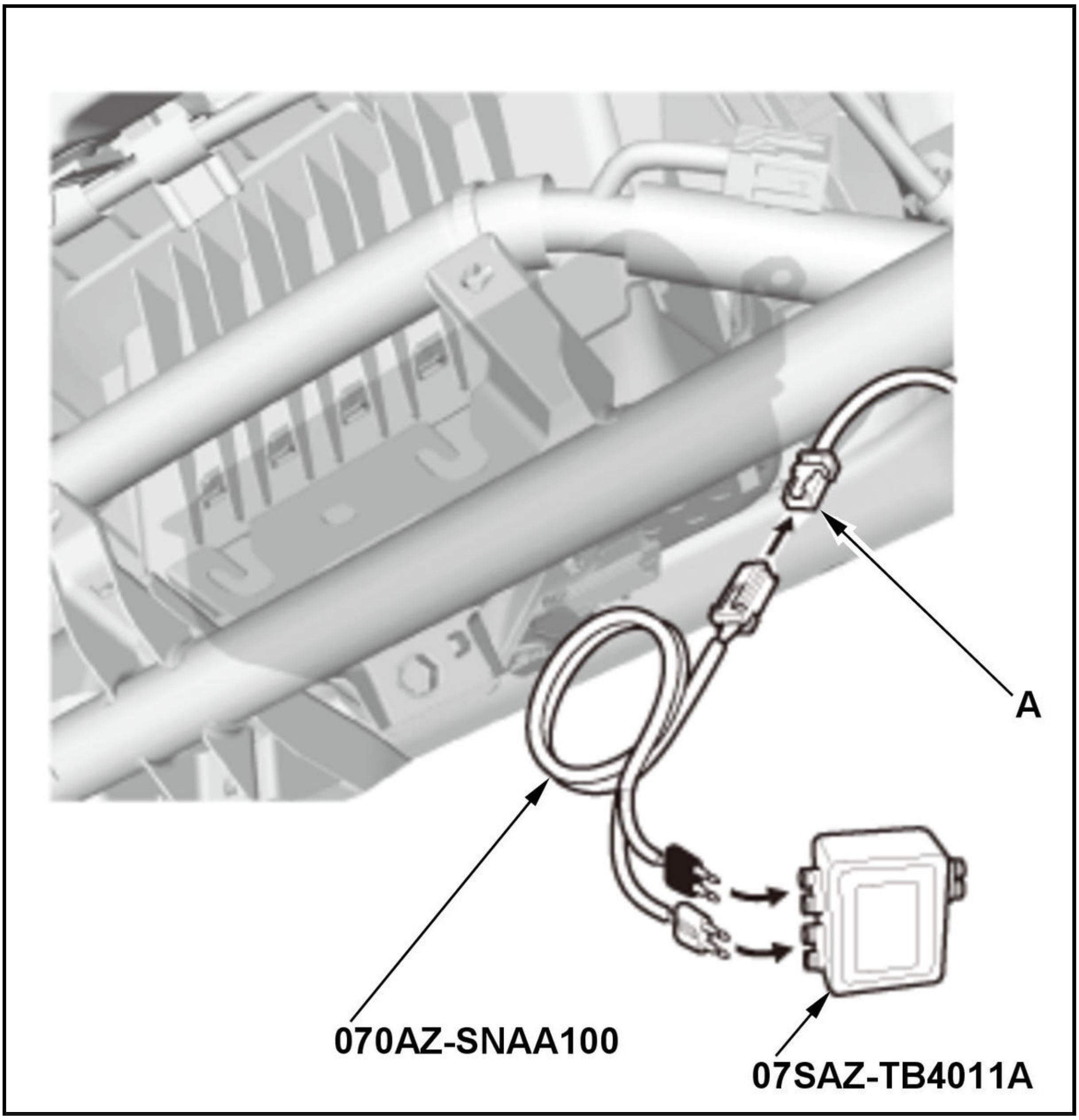

-5. Connect the terminals of SRS simulator lead J to the SRS inflator simulator (2 Ω connectors), then connect SRS simulator lead J to the front passenger's airbag inflator 4P connector on the dashboard wire harness.

-6. Reconnect the negative cable to the 12 volt battery.

-7. Clear the DTCs with the HDS.

-8. Turn the vehicle to the ON mode, then wait for 10 seconds.

-9. Check for DTCs with the HDS.

DTC Description	DTC
B0010-13 Open or increased resistance in the front passenger's airbag first inflator	B
B0011-13 Open or increased resistance in the front passenger's airbag second inflator	B

Is DTC B0010-13 or B0011-13 indicated?

YES

Go to step 3.

NO

Open in the front passenger's airbag first or second inflator; replace the front passenger's airbag , then clear the DTC.

3. Open wire check (RA1+, RA1-, RA2+, RA2- lines)

-1. Turn the vehicle to the OFF (LOCK) mode.

-2. Disconnect the negative cable from the 12 volt battery, then wait at least 3 minutes.

-3. Disconnect the following connector.

SRS unit connector A (39P)

-4. Disconnect the SRS inflator simulator from SRS simulator lead J. Do not disconnect SRS simulator lead J from the front passenger's airbag inflator 4P connector on the dashboard wire harness.

-5. Measure the resistance of the test points.

Test condition	Vehicle OFF (LOCK) mode
	Front passenger's airbag inflator 4P connector (on the dashboard wire harness): disconnected
	SRS unit connector A (39P): disconnected
	Front passenger's airbag inflator 4P connector (on the dashboard wire harness): connected to SRS simulator lead J
Test point	SRS simulator lead J black terminal

Test point	SRS simulator lead J red terminal

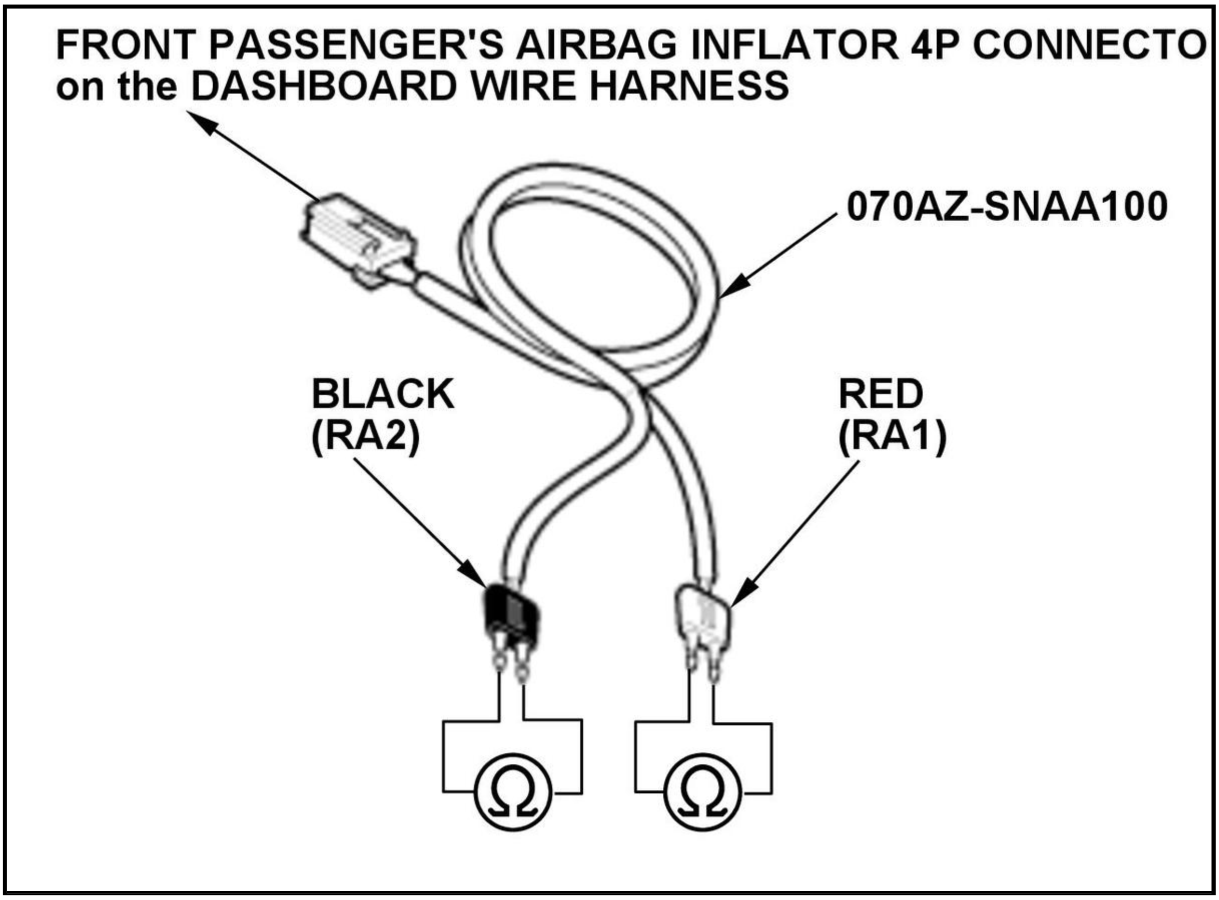
FRONT PASSENGER'S AIRBAG INFLATOR 4P CONNECTO
on the DASHBOARD WIRE HARNESS
070AZ-SNAA100
BLACK
(RA2)
RED
(RA1)
Ω
Ω

Is there 1.0 Ω or less?

YES

The RA1+, RA1-, RA2+, and RA2- wires are OK. Faulty SRS unit or poor connection at SRS unit connector A (39P) and the SRS unit. Check the connection; if the connection is OK, check for any authorized service information related to the DTCs or symptoms you are troubleshooting or **replace the SRS unit** . If the DTC does not clear, replace the dashboard wire harness.

NO

Open in the dashboard wire harness; replace the dashboard wire harness, then clear the DTC.

DTC B0010-1A, B0010-2B, B0011-1A, B0011-2B (KA/KC)

DTC B0010-1A : Decreased Resistance in the Front Passenger's Airbag First Inflator

DTC B0010-2B : Short to Another Wire Harness in the Front Passenger's Airbag First Inflator

DTC B0011-1A : Decreased Resistance in the Front Passenger's Airbag Second Inflator

DTC B0011-2B : Short to Another Wire Harness in the Front Passenger's Airbag Second Inflator

Special Tools Required

-SRS Inflator Simulator 07SAZ-TB4011A

-SRS Simulator Lead J 070AZ-SNAA100

-SRS Short Canceller 070AZ-SAA0100

NOTE:

- **Before doing this troubleshooting procedure, find out if the vehicle was in a collision. If so, verify that all the required components were replaced with new components of the correct part number and were properly installed** .
- Before doing this troubleshooting procedure, review **SRS Precautions and Procedures** , **General Troubleshooting Information** , and **12 Volt Battery Terminal Disconnection and Reconnection** .

DTC Description	DTC
B0010-1A Decreased resistance in the front passenger's airbag first inflator	B
B0010-2B Short to another wire harness in the front passenger's airbag first inflator	B
B0011-1A Decreased resistance in the front passenger's airbag second inflator	B
B0011-2B Short to another wire harness in the front passenger's airbag second inflator	B

DTC (SRS)

1. Problem verification

   -1. Clear the DTCs with the HDS.

   -2. Turn the vehicle to the ON mode, then wait for 10 seconds.

   -3. Check for DTCs with the HDS.

DTC Description	DTC
B0010-1A Decreased resistance in the front passenger's airbag first inflator	B
B0010-2B Short to another wire harness in the front passenger's airbag first inflator	B
B0011-1A Decreased resistance in the front passenger's airbag second inflator	B
B0011-2B Short to another wire harness in the front passenger's airbag second inflator	B

Is DTC B0010-1A, B0010-2B, B0011-1A or B0011-2B indicated?

YES

The failure is duplicated. Go to step 2.

NO

Intermittent failure, the system is OK at this time. Go to Troubleshooting Intermittent Failures. If another DTC is indicated, troubleshoot the DTC.

2. Front passenger's airbag inflator check

-1. Turn the vehicle to the OFF (LOCK) mode.

-2. Disconnect the negative cable from the 12 volt battery, then wait at least 3 minutes.

-3. **Remove the glove box** .

-4. Disconnect the front passenger's airbag inflator 4P connector (A) on the dashboard wire harness.

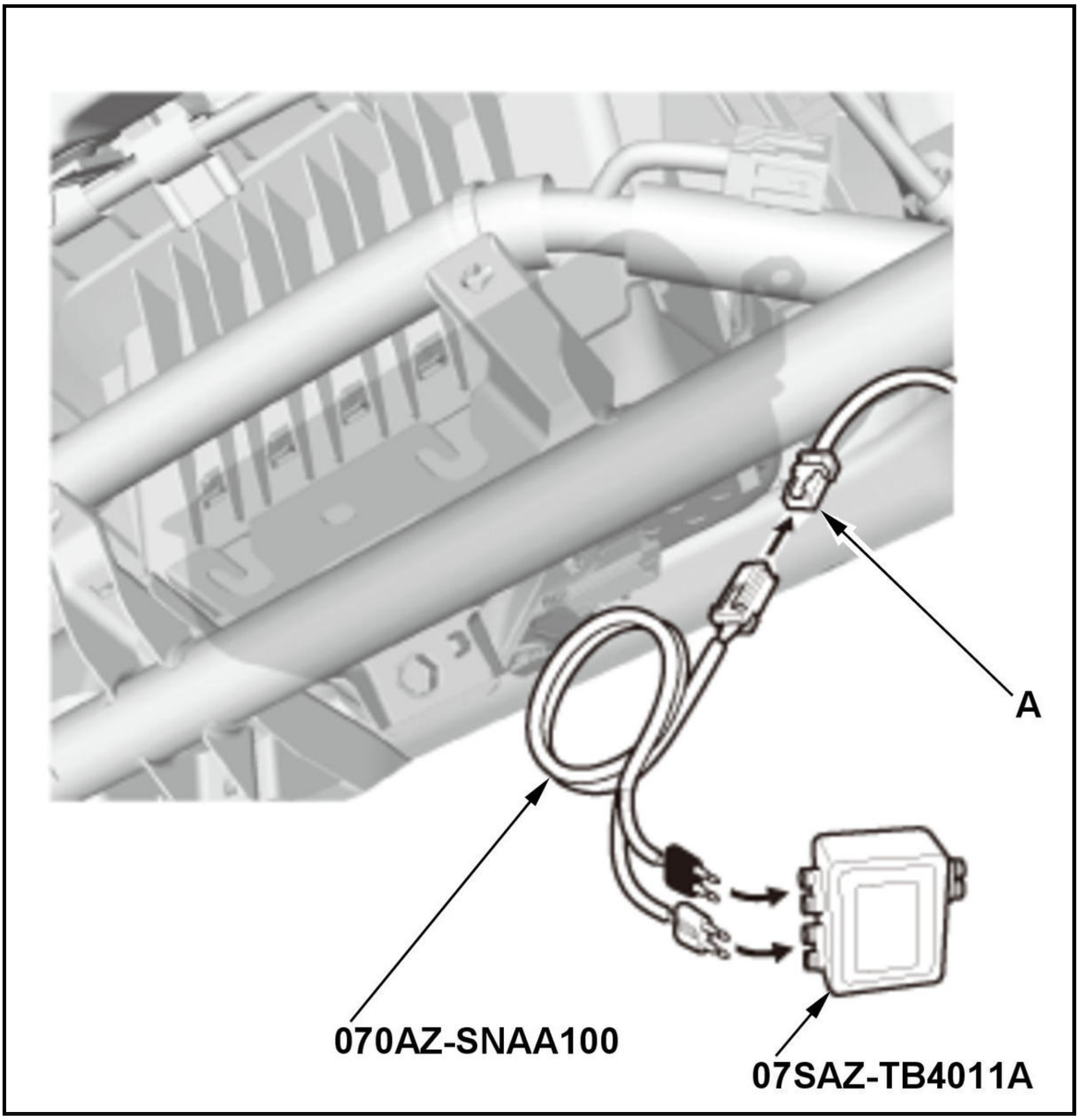

-5. Connect the terminals of SRS simulator lead J to the SRS inflator simulator (2 Ω connectors), then connect SRS simulator lead J to the front passenger's airbag inflator 4P connector on the dashboard wire harness.

-6. Reconnect the negative cable to the 12 volt battery.

-7. Clear the DTCs with the HDS.

-8. Turn the vehicle to the ON mode, then wait for 10 seconds.

-9. Check for DTCs with the HDS.

DTC Description	DTC
B0010-1A Decreased resistance in the front passenger's airbag first inflator	B
B0010-2B Short to another wire harness in the front passenger's airbag first inflator	B
B0011-1A Decreased resistance in the front passenger's airbag second inflator	B
B0011-2B Short to another wire harness in the front passenger's airbag second inflator	B

Is DTC B0010-1A, B0010-2B, B0011-1A or B0011-2B indicated?

YES

Go to step 3.

NO

Short to another wire in the front passenger's airbag first or second inflator; **replace the front passenger's airbag** , then clear the DTC.

3. Shorted wire check (RA1+ line to RA1- line, RA2+ line to RA2- line)

-1. Turn the vehicle to the OFF (LOCK) mode.

-2. Disconnect the negative cable from the 12 volt battery, then wait at least 3 minutes.

-3. Disconnect the following connector.

SRS unit connector A (39P)

-4. Disconnect the SRS inflator simulator from SRS simulator lead J. Do not disconnect SRS simulator lead J from the front passenger's airbag inflator 4P connector on the dashboard wire harness.

-5. **Connect the SRS short cancellers to SRS unit connector A (39P) terminals No. 4 and No. 5, and terminals No. 6 and No. 7** .

-6. Measure the resistance of the test points.

Test condition	Vehicle OFF (LOCK) mode
	Front passenger's airbag inflator 4P connector (on the dashboard wire harness): disconnected
	SRS unit connector A (39P): disconnected
	Front passenger's airbag inflator 4P connector (on the dashboard wire harness): connected to SRS simulator lead J
	SRS unit connector A (39P) No. 4 and No. 5: connected to SRS short canceller
	SRS unit connector A (39P) No. 6 and No. 7: connected to SRS short canceller
Test point	SRS simulator lead J black terminal

Test point	SRS simulator lead J red terminal

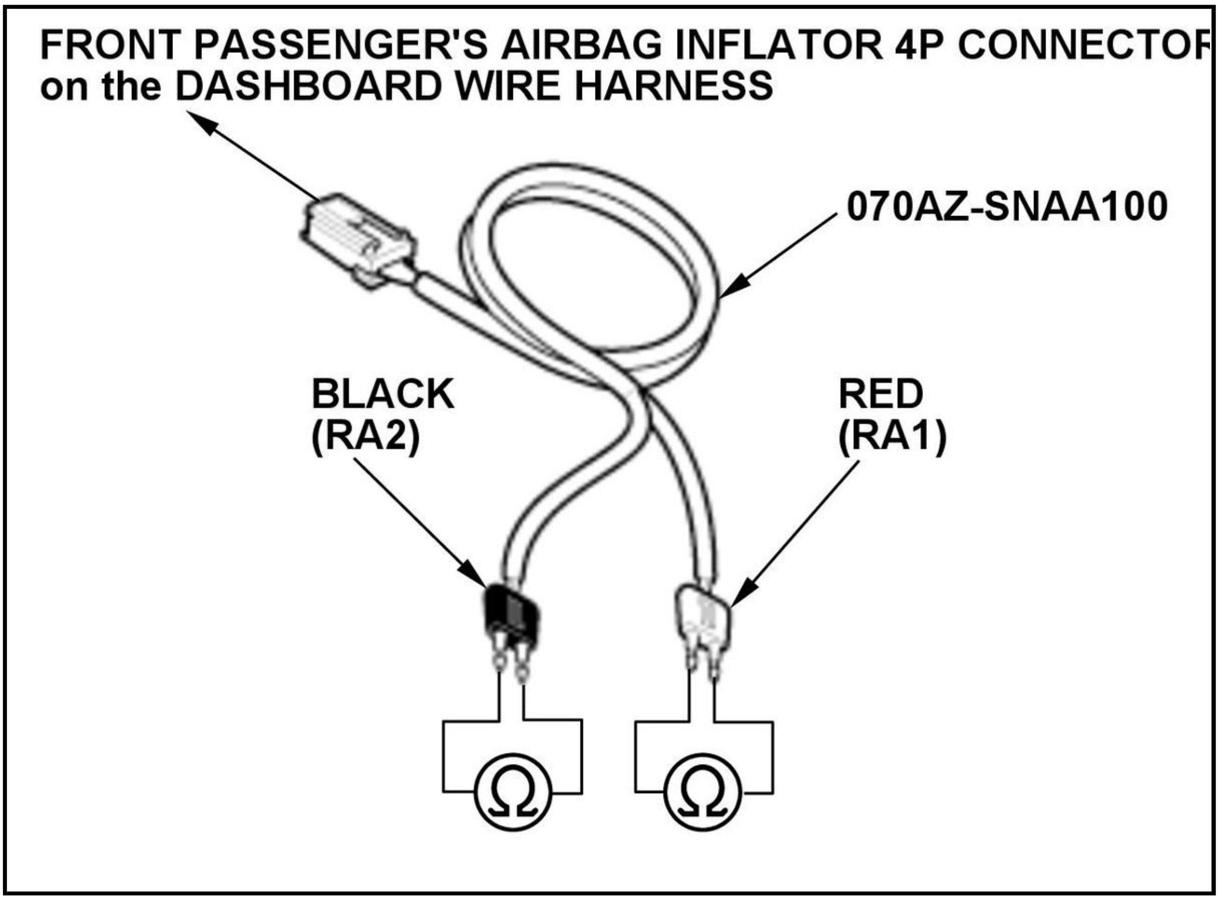
FRONT PASSENGER'S AIRBAG INFLATOR 4P CONNECTOR
on the DASHBOARD WIRE HARNESS
070AZ-SNAA100
BLACK
(RA2)
RED
(RA1)
Ω
Ω

Is there an open circuit, or at least 1 MΩ?

YES

The RA1+, RA1-, RA2+, and RA2- wires are OK. Faulty SRS unit or poor connection at SRS unit connector A (39P) and the SRS unit. Check the connection; if the connection is OK, check for any authorized service information related to the DTCs or symptoms you are troubleshooting or **replace the SRS unit** . If the DTC does not clear, replace the dashboard wire harness.

NO

Short to another wire in the dashboard wire harness; replace the dashboard wire harness, then clear the DTC.

DTC B0020-11

DTC B0020-11 : Short to Ground in the Driver's Side Airbag Inflator

Special Tools Required

-SRS Inflator Simulator 07SAZ-TB4011A

-SRS Simulator Lead L 070AZ-SNA0300

NOTE:

- **Before doing this troubleshooting procedure, find out if the vehicle was in a collision. If so, verify that all the required components were replaced with new components of the correct part number and were properly installed** .
- Before doing this troubleshooting procedure, review **SRS Precautions and Procedures** , **General Troubleshooting Information** , and **12 Volt Battery Terminal Disconnection and Reconnection** .

DTC Description	DTC
B0020-11 Short to ground in the driver's side airbag inflator	B

DTC (SRS)

1. Problem verification

   -1. Clear the DTCs with the HDS.

   -2. Turn the vehicle to the ON mode, then wait for 10 seconds.

   -3. Check for DTCs with the HDS.

DTC Description	DTC
B0020-11 Short to ground in the driver's side airbag inflator	B

   Is DTC B0020-11 indicated?

   YES

   The failure is duplicated. Go to step 2.

   NO

   Intermittent failure, the system is OK at this time. Go to Troubleshooting Intermittent Failures. If another DTC is indicated, troubleshoot the DTC.

2. Driver's side airbag inflator check

   -1. Turn the vehicle to the OFF (LOCK) mode.

   -2. Disconnect the negative cable from the 12 volt battery, then wait at least 3 minutes.

   -3. Disconnect the driver's side airbag inflator 2P connector (A) on the floor wire harness.

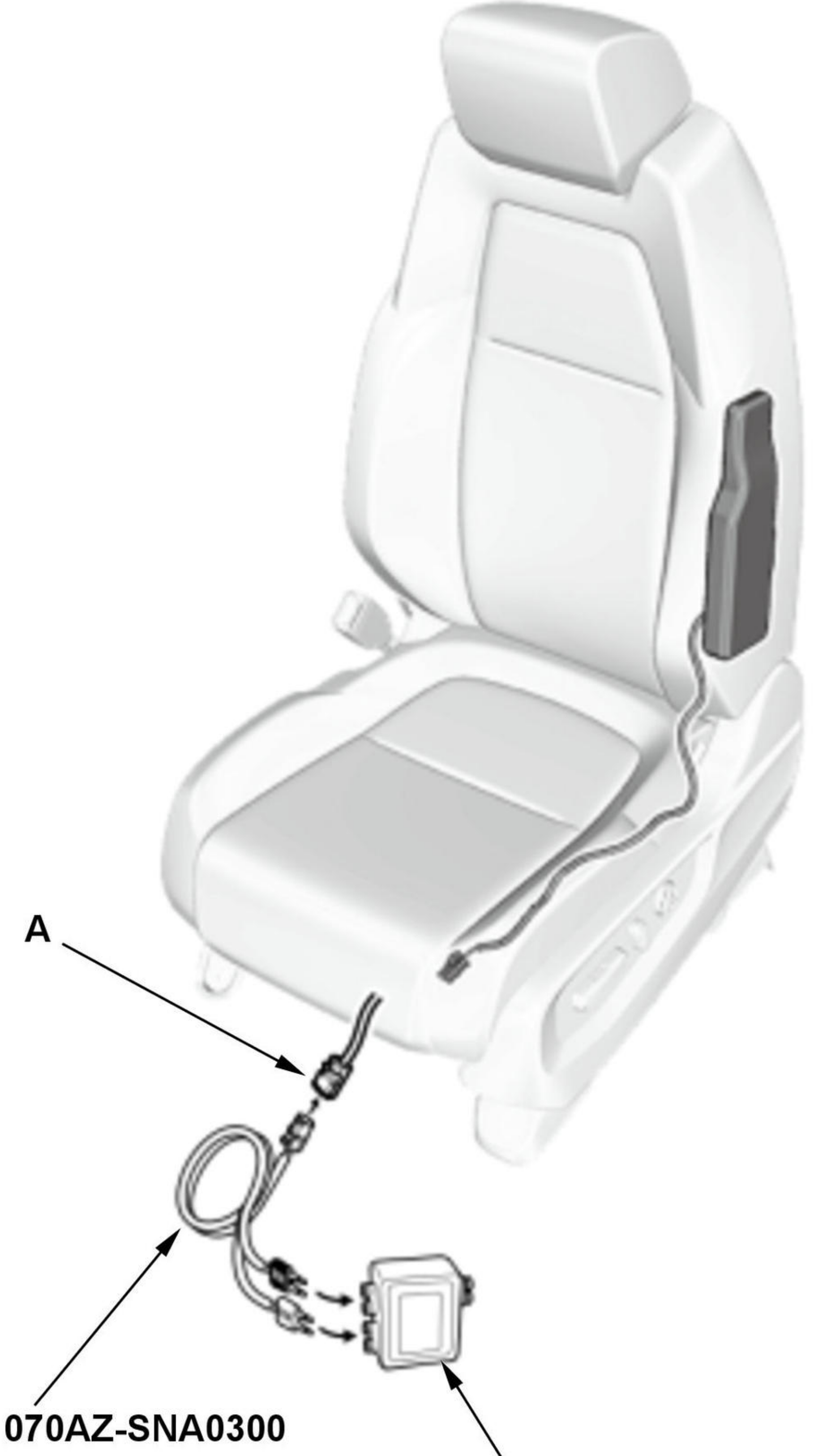
A
070AZ-SNA0300
07SAZ-TB4011A

-4. Connect the terminals of SRS simulator lead L to the SRS inflator simulator (2 Ω connectors), then connect SRS simulator lead L to the driver's side airbag inflator 2P connector on the floor wire harness.

-5. Reconnect the negative cable to the 12 volt battery.

-6. Clear the DTCs with the HDS.

-7. Turn the vehicle to the ON mode, then wait for 10 seconds.

-8. Check for DTCs with the HDS.

DTC Description	DTC
B0020-11 Short to ground in the driver's side airbag inflator	B

Is DTC B0020-11 indicated?

YES

Go to step 3.

NO

Short to ground in the driver's side airbag inflator; **replace the driver's side airbag** , then clear the DTC.

3. Shorted wire check (LSA+, LSA- lines)

-1. Turn the vehicle to the OFF (LOCK) mode.

-2. Disconnect the negative cable from the 12 volt battery, then wait at least 3 minutes.

-3. Disconnect the following connector.

SRS unit connector B (39P)

-4. Disconnect the SRS inflator simulator from SRS simulator lead L. Do not disconnect SRS simulator lead L from the driver's side airbag inflator 2P connector on the floor wire harness.

-5. Measure the resistance between test points 1 and 2.

Test condition	Vehicle OFF (LOCK) mode
	Driver's side airbag inflator 2P connector (on the floor wire harness): disconnected
	SRS unit connector B (39P): disconnected
	Driver's side airbag inflator 2P connector (on the floor wire harness): connected to SRS simulator lead L
Test point 1	SRS simulator lead L black terminal
Test point 2	Body ground

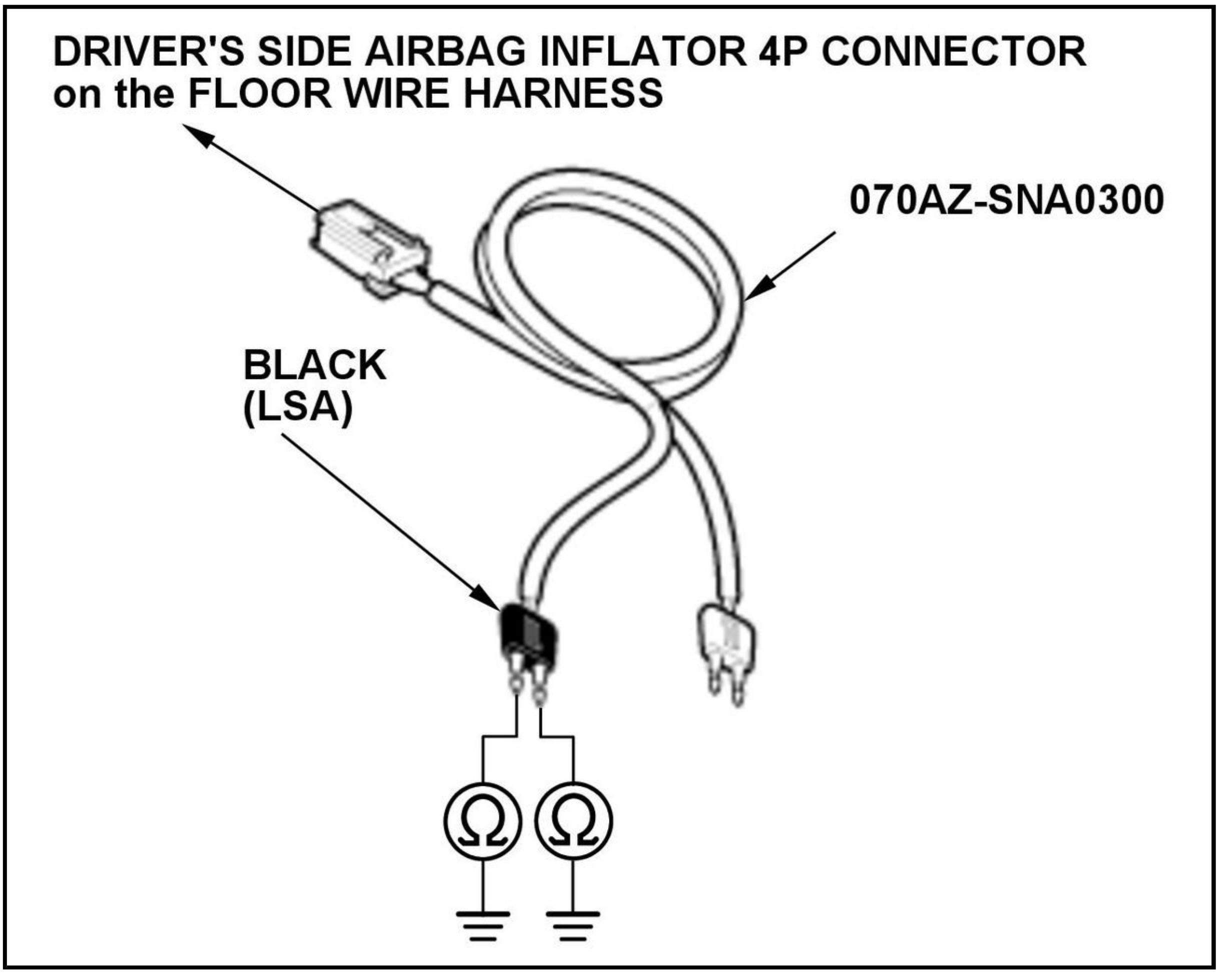
DRIVER'S SIDE AIRBAG INFLATOR 4P CONNECTOR on the FLOOR WIRE HARNESS
070AZ-SNA0300
BLACK (LSA)
Ω
Ω

Is there an open circuit, or at least 1 MΩ?

YES

The LSA+ and LSA- wires are OK. Faulty SRS unit or poor connection at SRS unit connector B (39P) and the SRS unit. Check the connection; if the connection is OK, check for any authorized service information related to the DTCs or symptoms you are troubleshooting or replace the SRS unit . If the DTC does not clear, replace the floor wire harness.

NO

Short to ground in the floor wire harness; replace the floor wire harness, then clear the DTC.

DTC B0020-12

DTC B0020-12 : Short to Power in the Driver's Side Airbag Inflator

Special Tools Required

-SRS Inflator Simulator 07SAZ-TB4011A

-SRS Simulator Lead L 070AZ-SNA0300

NOTE:

- **Before doing this troubleshooting procedure, find out if the vehicle was in a collision. If so, verify that all the required components were replaced with new components of the correct part number and were properly installed** .
- Before doing this troubleshooting procedure, review **SRS Precautions and Procedures** , **General Troubleshooting Information** , and **12 Volt Battery Terminal Disconnection and Reconnection** .

DTC Description	DTC
B0020-12 Short to power in the driver's side airbag inflator	B

DTC (SRS)

1. Problem verification

   -1. Clear the DTCs with the HDS.

   -2. Turn the vehicle to the ON mode, then wait for 10 seconds.

   -3. Check for DTCs with the HDS.

DTC Description	DTC
B0020-12 Short to power in the driver's side airbag inflator	B

   Is DTC B0020-12 indicated?

   YES

   The failure is duplicated. Go to step 2.

   NO

   Intermittent failure, the system is OK at this time. Go to Troubleshooting Intermittent Failures. If another DTC is indicated, troubleshoot the DTC.

2. Driver's side airbag inflator check

   -1. Turn the vehicle to the OFF (LOCK) mode.

   -2. Disconnect the negative cable from the 12 volt battery, then wait at least 3 minutes.

   -3. Disconnect the driver's side airbag inflator 2P connector (A) on the floor wire harness.

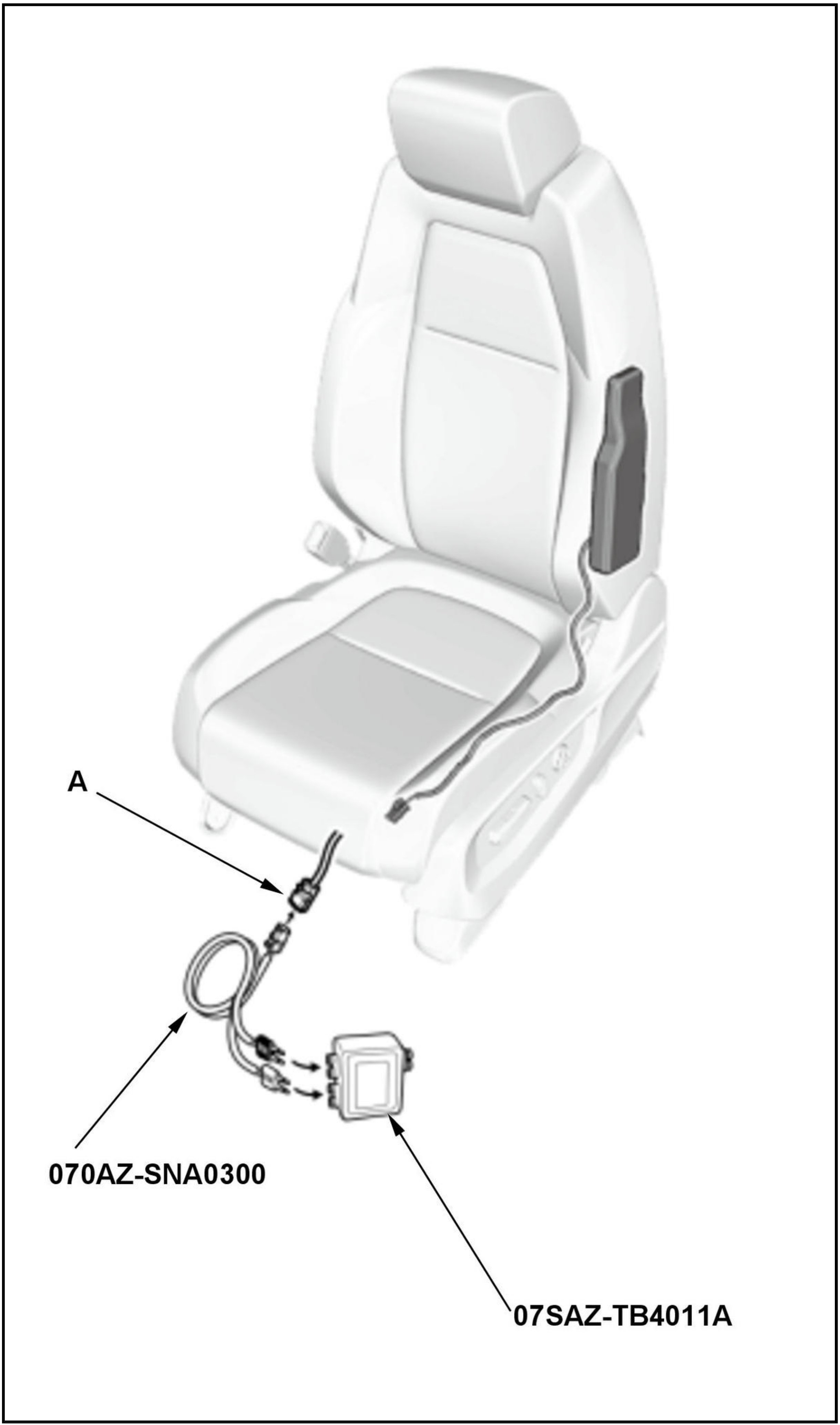
A
070AZ-SNA0300
07SAZ-TB4011A

-4. Connect the terminals of SRS simulator lead L to the SRS inflator simulator (2 Ω connectors), then connect SRS simulator lead L to the driver's side airbag inflator 2P connector on the floor wire harness.

-5. Reconnect the negative cable to the 12 volt battery.

-6. Clear the DTCs with the HDS.

-7. Turn the vehicle to the ON mode, then wait for 10 seconds.

-8. Check for DTCs with the HDS.

DTC Description	DTC
B0020-12 Short to power in the driver's side airbag inflator	B

Is DTC B0020-12 indicated?

YES

Go to step 3.

NO

Short to power in the driver's side airbag inflator; **replace the driver's side airbag** , then clear the DTC.

3. Shorted wire check (LSA+, LSA- lines to power)

-1. Turn the vehicle to the OFF (LOCK) mode.

-2. Disconnect the negative cable from the 12 volt battery, then wait at least 3 minutes.

-3. Disconnect the following connector.

SRS unit connector B (39P)

-4. Disconnect the SRS inflator simulator from SRS simulator lead L. Do not disconnect SRS simulator lead L from the driver's side airbag inflator 2P connector on the floor wire harness.

-5. Reconnect the negative cable to the 12 volt battery.

-6. Turn the vehicle to the ON mode.

-7. Measure the voltage between test points 1 and 2.

Test condition	Vehicle ON mode
	Driver's side airbag inflator 2P connector (on the floor wire harness): disconnected
	SRS unit connector B (39P): disconnected
	Driver's side airbag inflator 2P connector (on the floor wire harness): connected to SRS simulator lead L
Test point 1	SRS simulator lead L black terminal
Test point 2	Body ground

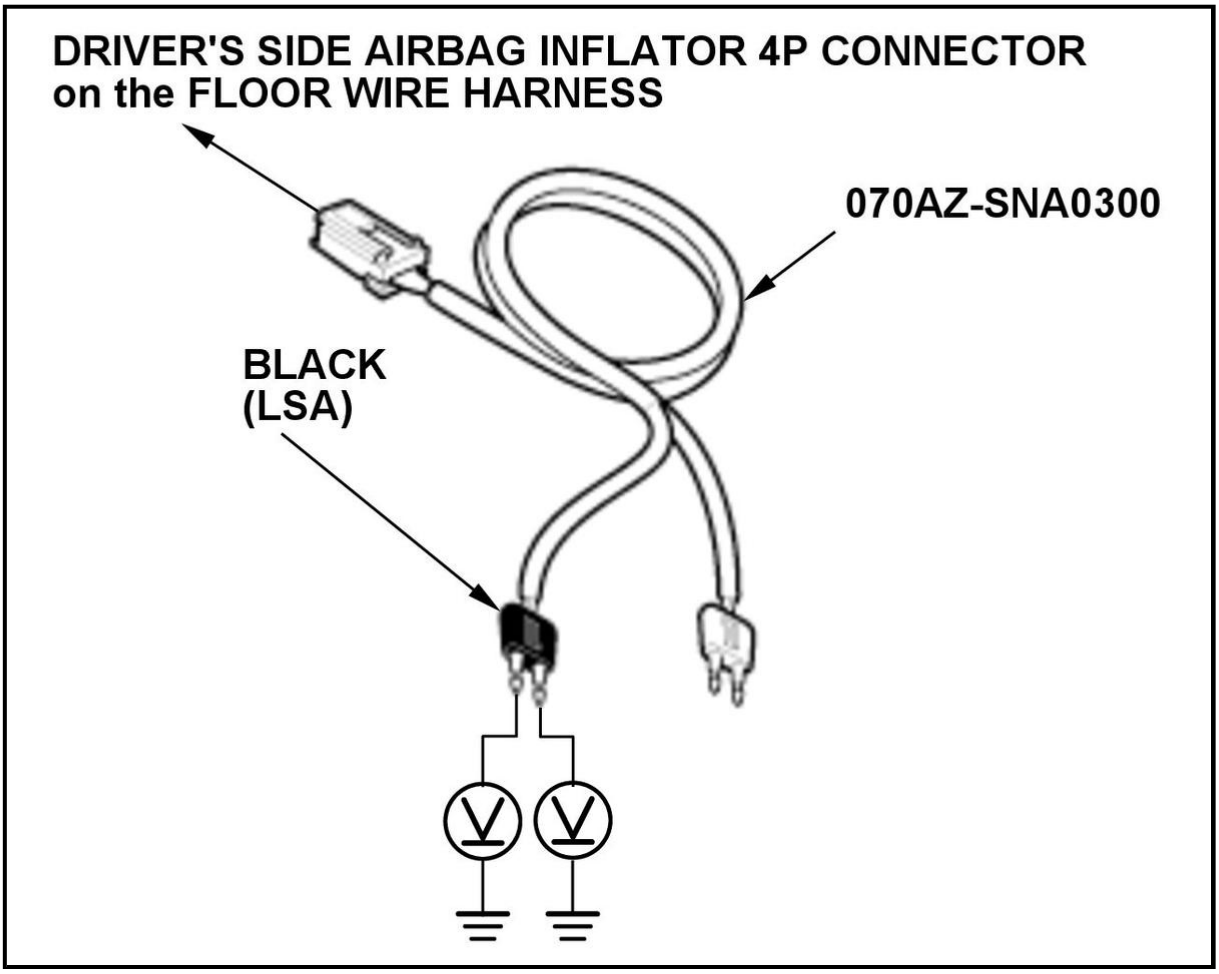
DRIVER'S SIDE AIRBAG INFLATOR 4P CONNECTOR on the FLOOR WIRE HARNESS
070AZ-SNA0300
BLACK (LSA)

Is there 0.2 V or less?

YES

The LSA+ and LSA- wires are OK. Faulty SRS unit or poor connection at SRS unit connector B (39P) and the SRS unit. Check the connection; if the connection is OK, check for any authorized service information related to the DTCs or symptoms you are troubleshooting or replace the SRS unit . If the DTC does not clear, replace the floor wire harness.

NO

Short to power in the floor wire harness; replace the floor wire harness, then clear the DTC.

DTC B0020-13

DTC B0020-13 : Open or Increased Resistance in the Driver's Side Airbag Inflator

Special Tools Required

-SRS Inflator Simulator 07SAZ-TB4011A

-SRS Simulator Lead L 070AZ-SNA0300

NOTE:

- **Before doing this troubleshooting procedure, find out if the vehicle was in a collision. If so, verify that all the required components were replaced with new components of the correct part number and were properly installed** .
- Before doing this troubleshooting procedure, review SRS Precautions and Procedures , General Troubleshooting Information , and 12 Volt Battery Terminal Disconnection and Reconnection .

DTC Description	DTC
B0020-13 Open or increased resistance in the driver's side airbag inflator	B

DTC (SRS)

1. Problem verification

   -1. Clear the DTCs with the HDS.

   -2. Turn the vehicle to the ON mode, then wait for 10 seconds.

   -3. Check for DTCs with the HDS.

DTC Description	DTC
B0020-13 Open or increased resistance in the driver's side airbag inflator	B

   Is DTC B0020-13 indicated?

   YES

   The failure is duplicated. Go to step 2.

   NO

   Intermittent failure, the system is OK at this time. Go to Troubleshooting Intermittent Failures. If another DTC is indicated, troubleshoot the DTC.

2. Driver's side airbag inflator check

   -1. Turn the vehicle to the OFF (LOCK) mode.

   -2. Disconnect the negative cable from the 12 volt battery, then wait at least 3 minutes.

   -3. Disconnect the driver's side airbag inflator 2P connector (A) on the floor wire harness.

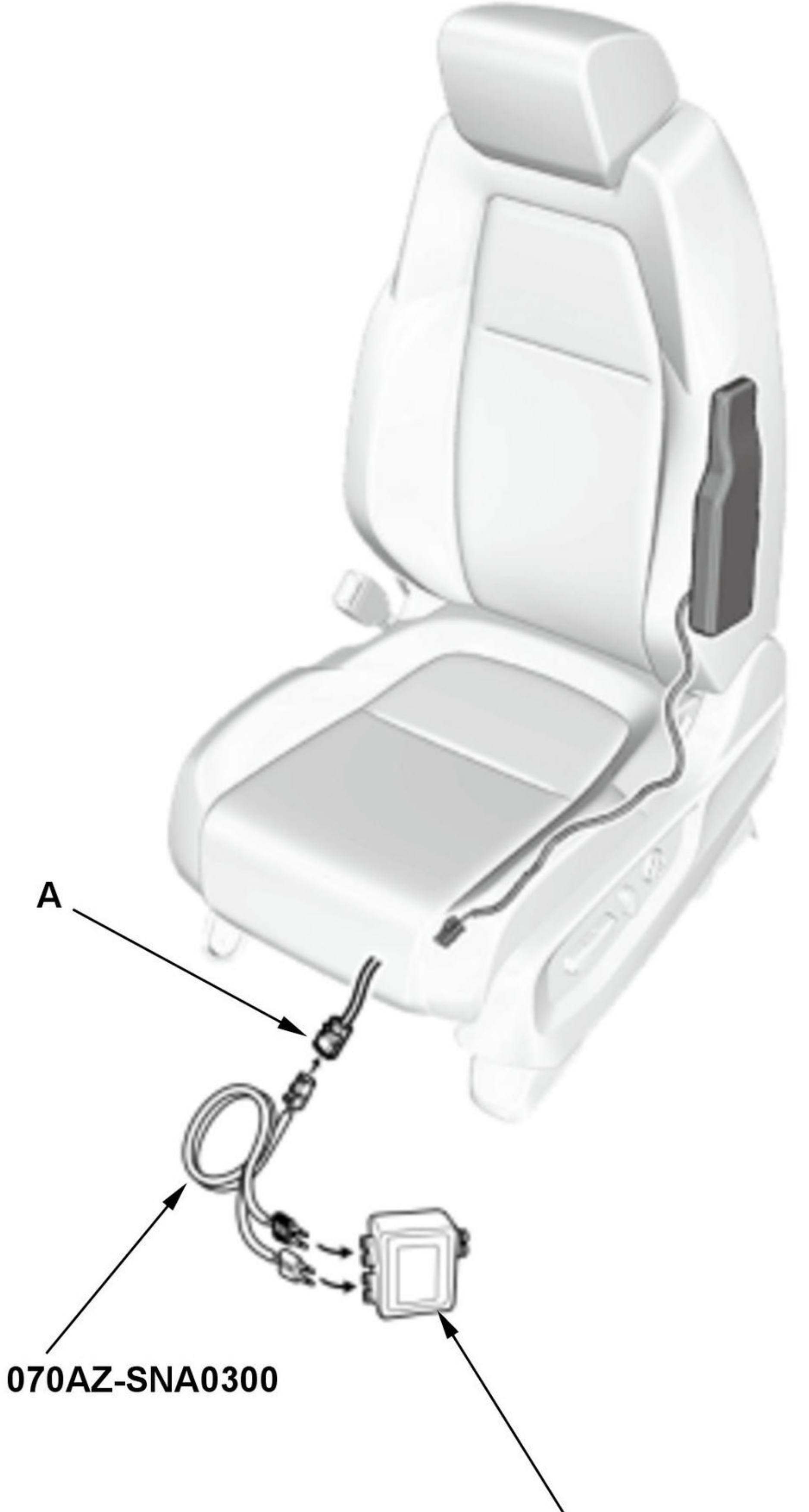
A
070AZ-SNA0300
07SAZ-TB4011A

-4. Connect the terminals of SRS simulator lead L to the SRS inflator simulator (2 Ω connectors), then connect SRS simulator lead L to the driver's side airbag inflator 2P connector on the floor wire harness.

-5. Reconnect the negative cable to the 12 volt battery.

-6. Clear the DTCs with the HDS.

-7. Turn the vehicle to the ON mode, then wait for 10 seconds.

-8. Check for DTCs with the HDS.

DTC Description	DTC
B0020-13 Open or increased resistance in the driver's side airbag inflator	B

Is DTC B0020-13 indicated?

YES

Go to step 3.

NO

Open in the driver's side airbag inflator; **replace the driver's side airbag** , then clear the DTC.

3. Open wire check (LSA+, LSA- lines)

-1. Turn the vehicle to the OFF (LOCK) mode.

-2. Disconnect the negative cable from the 12 volt battery, then wait at least 3 minutes.

-3. Disconnect the following connector.

SRS unit connector B (39P)

-4. Disconnect the SRS inflator simulator from SRS simulator lead L. Do not disconnect SRS simulator lead L from the driver's side airbag inflator 2P connector on the floor wire harness.

-5. Measure the resistance of the test point.

Test condition	Vehicle OFF (LOCK) mode
	Driver's side airbag inflator 2P connector (on the floor wire harness): disconnected
	SRS unit connector B (39P): disconnected
	Driver's side airbag inflator 2P connector (on the floor wire harness): connected to SRS simulator lead L
Test point	SRS simulator lead L black terminal

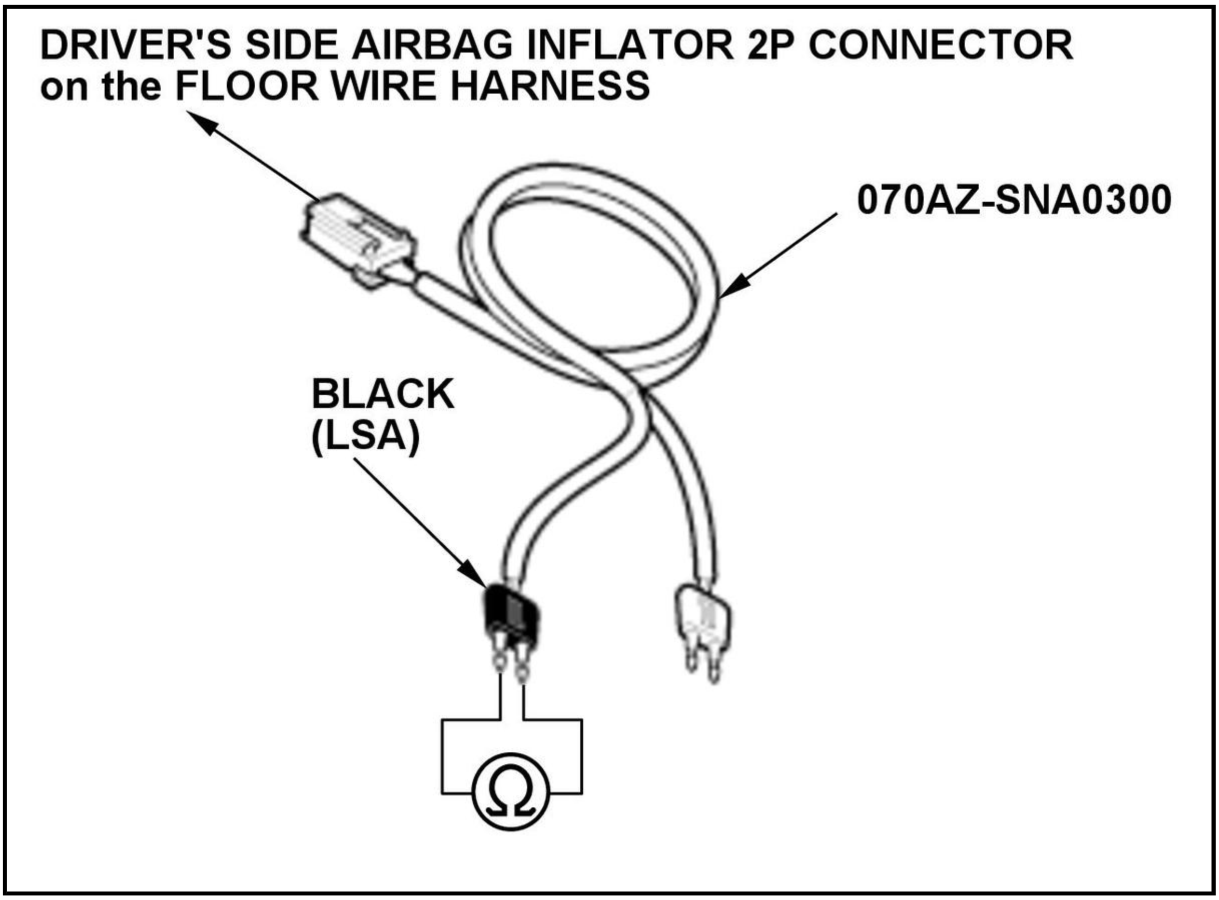
DRIVER'S SIDE AIRBAG INFLATOR 2P CONNECTOR on the FLOOR WIRE HARNESS
070AZ-SNA0300
BLACK (LSA)
Ω

Is there 1.0 Ω or less?

YES

The LSA+ and LSA- wires are OK. Faulty SRS unit or poor connection at SRS unit connector B (39P) and the SRS unit. Check the connection; if the connection is OK, check for any authorized service information related to the DTCs or symptoms you are troubleshooting or **replace the SRS unit** . If the DTC does not clear, replace the floor wire harness.

NO

Open in the floor wire harness; replace the floor wire harness, then clear the DTC.

DTC B0020-1A, B0020-2B

DTC B0020-1A : Decreased Resistance in the Driver's Side Airbag Inflator

DTC B0020-2B : Short to Another Wire Harness in the Driver's Side Airbag Inflator

Special Tools Required

-SRS Inflator Simulator 07SAZ-TB4011A

-SRS Simulator Lead L 070AZ-SNA0300

-SRS Short Canceller 070AZ-SAA0100

NOTE:

- **Before doing this troubleshooting procedure, find out if the vehicle was in a collision. If so, verify that all the required components were replaced with new components of the correct part number and were properly installed** .

- Before doing this troubleshooting procedure, review **SRS Precautions and Procedures** , **General Troubleshooting Information** , and **12 Volt Battery Terminal Disconnection and Reconnection** .

DTC Description	DTC
B0020-1A Decreased resistance in the driver's side airbag inflator	B
B0020-2B Short to another wire harness in the driver's side airbag inflator	B

DTC (SRS)

1. Problem verification

   -1. Clear the DTCs with the HDS.

   -2. Turn the vehicle to the ON mode, then wait for 10 seconds.

   -3. Check for DTCs with the HDS.

DTC Description	DTC
B0020-1A Decreased resistance in the driver's side airbag inflator	B
B0020-2B Short to another wire harness in the driver's side airbag inflator	B

   Is DTC B0020-1A or B0020-2B indicated?

   YES

   The failure is duplicated. Go to step 2.

   NO

   Intermittent failure, the system is OK at this time. Go to Troubleshooting Intermittent Failures. If another DTC is indicated, troubleshoot the DTC.

2. Driver's side airbag inflator check

   -1. Turn the vehicle to the OFF (LOCK) mode.

   -2. Disconnect the negative cable from the 12 volt battery, then wait at least 3 minutes.

   -3. Disconnect the driver's side airbag inflator 2P connector (A) on the floor wire harness.

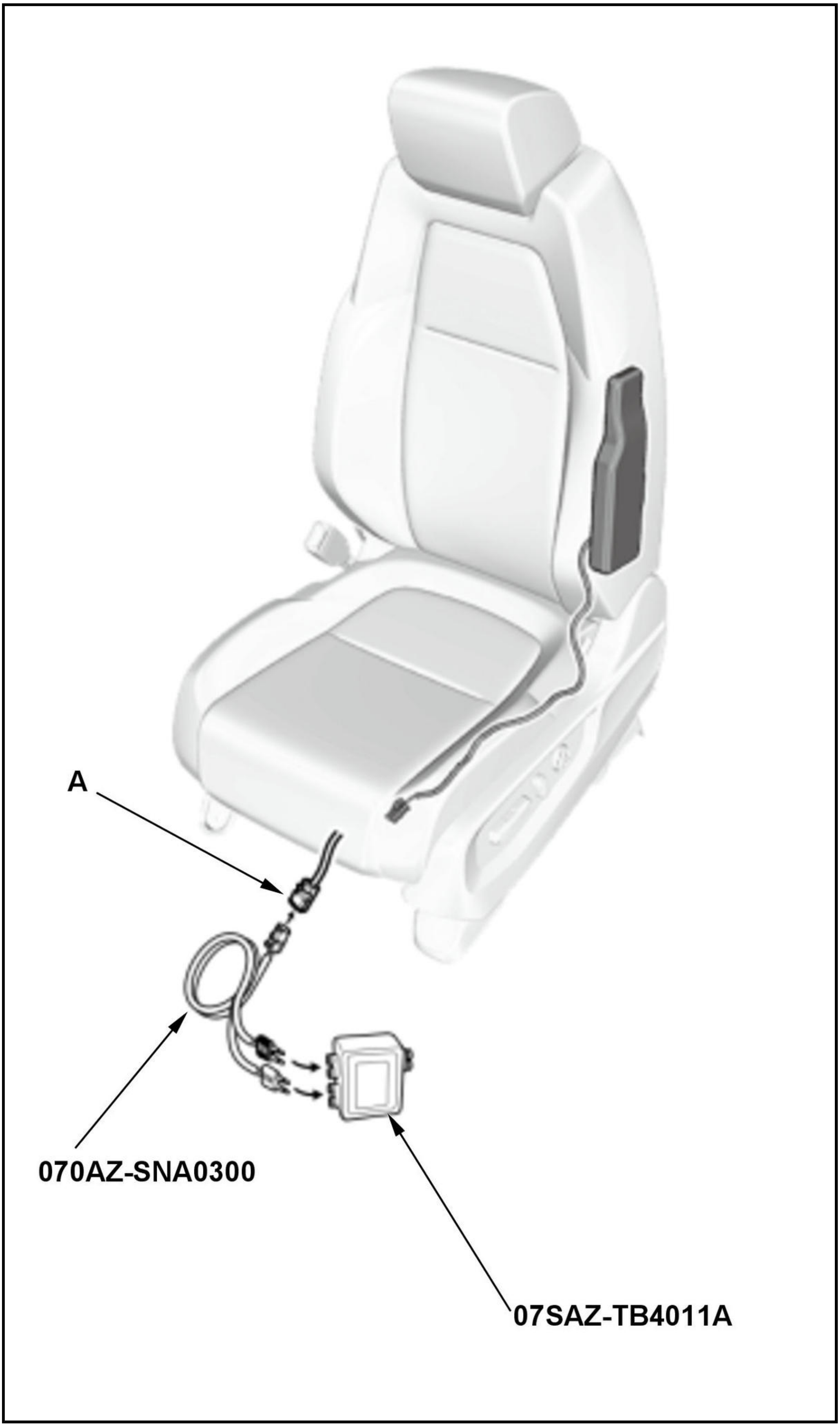
A
070AZ-SNA0300
07SAZ-TB4011A

-4. Connect the terminals of SRS simulator lead L to the SRS inflator simulator (2 Ω connectors), then connect SRS simulator lead L to the driver's side airbag inflator 2P connector on the floor wire harness.

-5. Reconnect the negative cable to the 12 volt battery.

-6. Clear the DTCs with the HDS.

-7. Turn the vehicle to the ON mode, then wait for 10 seconds.

-8. Check for DTCs with the HDS.

DTC Description	DTC
B0020-1A Decreased resistance in the driver's side airbag inflator	B
B0020-2B Short to another wire harness in the driver's side airbag inflator	B

Is DTC B0020-1A or B0020-2B indicated?

YES

Go to step 3.

NO

Short to another wire in the driver's side airbag inflator; **replace the driver's side airbag** , then clear the DTC.

3. Shorted wire check (LSA+ line to LSA- line)

-1. Turn the vehicle to the OFF (LOCK) mode.

-2. Disconnect the negative cable from the 12 volt battery, then wait at least 3 minutes.

-3. Disconnect the following connector.

SRS unit connector B (39P)

-4. Disconnect the SRS inflator simulator from SRS simulator lead L. Do not disconnect SRS simulator lead L from the driver's side airbag inflator 2P connector on the floor wire harness.

-5. **Connect the SRS short canceller to SRS unit connector B (39P) terminals No. 5 and No. 6** .

-6. Measure the resistance of the test point.

Test condition	Vehicle OFF (LOCK) mode
	Driver's side airbag inflator 2P connector (on the floor wire harness): disconnected
	SRS unit connector B (39P): disconnected
	Driver's side airbag inflator 2P connector (on the floor wire harness): connected to SRS simulator lead L
	SRS unit connector B (39P) No. 5 and No. 6: connected to SRS short canceller
Test point	SRS simulator lead L black terminal

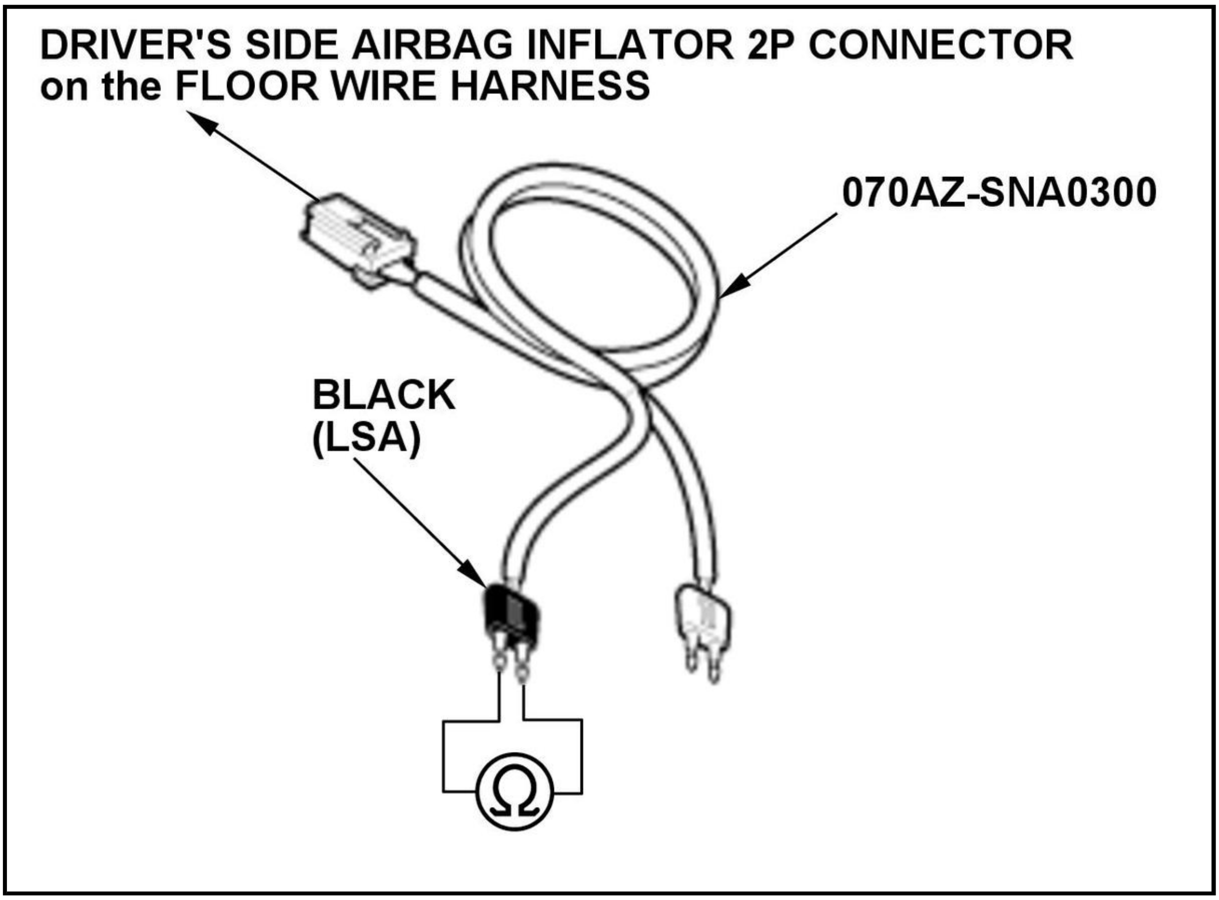
DRIVER'S SIDE AIRBAG INFLATOR 2P CONNECTOR on the FLOOR WIRE HARNESS
070AZ-SNA0300
BLACK (LSA)
Ω

Is there an open circuit, or at least 1 MΩ?

YES

The LSA+ and LSA- wires are OK. Faulty SRS unit or poor connection at SRS unit connector B (39P) and the SRS unit. Check the connection; if the connection is OK, check for any authorized service information related to the DTCs or symptoms you are troubleshooting or **replace the SRS unit** . If the DTC does not clear, replace the floor wire harness.

NO

Short to another wire in the floor wire harness; replace the floor wire harness, then clear the DTC.

DTC B0021-11

DTC B0021-11 : Short to Ground in the Left Side Curtain Airbag First Inflator

NOTE:

- **Before doing this troubleshooting procedure, find out if the vehicle was in a collision. If so, verify that all the required components were replaced with new components of the correct part number and were properly installed** .
- Before doing this troubleshooting procedure, review **SRS Precautions and Procedures** , **General Troubleshooting Information** , and **12 Volt Battery Terminal Disconnection and Reconnection** .

DTC Description	DTC
B0021-11 Short to ground in the left side curtain airbag first inflator	B

DTC (SRS)

1. Problem verification

-1. Clear the DTCs with the HDS.

-2. Turn the vehicle to the ON mode, then wait for 10 seconds.

-3. Check for DTCs with the HDS.

DTC Description	DTC
B0021-11 Short to ground in the left side curtain airbag first inflator	B

Is DTC B0021-11 indicated?

YES

The failure is duplicated. Go to step 2.

NO

Intermittent failure, the system is OK at this time. Go to Troubleshooting Intermittent Failures. If another DTC is indicated, troubleshoot the DTC.

2. Shorted wire check (LCA+, LCA- lines) 1

-1. Turn the vehicle to the OFF (LOCK) mode.

-2. Disconnect the negative cable from the 12 volt battery, then wait at least 3 minutes.

-3. **Remove the headliner** .

-4. Disconnect the following connector.

Left side curtain airbag inflator 2P connector (on the floor wire harness)

-5. Reconnect the negative cable to the 12 volt battery.

-6. Turn the vehicle to the ON mode, then clear the DTC.

-7. Check for DTCs with the HDS.

DTC Description	DTC
B0021-11 Short to ground in the left side curtain airbag first inflator	B

Is DTC B0021-11 indicated?

YES

Go to step 3.

NO

Short to ground in the left side curtain airbag inflator; **replace the left side curtain airbag** , then clear the DTC.

3. Shorted wire check (LCA+, LCA- lines) 2

-1. Turn the vehicle to the OFF (LOCK) mode.

-2. Disconnect the negative cable from the 12 volt battery, then wait at least 3 minutes.

-3. Disconnect the following connector.

SRS unit connector B (39P)

-4. Measure the resistance between test points 1 and 2.

Test condition	Vehicle OFF (LOCK) mode
	SRS unit connector B (39P): disconnected
	Left side curtain airbag inflator 2P connector (on the floor wire harness): disconnected
Test point 1	**SRS unit connector B (39P) No. 9**
Test point 2	Body ground

Test point 1	**SRS unit connector B (39P) No. 10**
Test point 2	Body ground

Is there an open circuit, or at least 1 MΩ?

YES

The LCA+ and LCA- wires are OK. Check for any authorized service information related to the DTCs or symptoms you are troubleshooting or **replace the SRS unit** .

NO

Short to ground in the floor wire harness; replace the floor wire harness, then clear the DTC.

DTC B0021-12

DTC B0021-12 : Short to Power in the Left Side Curtain Airbag First Inflator

NOTE:

- **Before doing this troubleshooting procedure, find out if the vehicle was in a collision. If so, verify that all the required components were replaced with new components of the correct part number and were properly installed** .
- Before doing this troubleshooting procedure, review **SRS Precautions and Procedures** , **General Troubleshooting Information** , and **12 Volt Battery Terminal Disconnection and Reconnection** .

DTC Description	DTC
B0021-12 Short to power in the left side curtain airbag first inflator	B

DTC (SRS)

1. Problem verification

-1. Clear the DTCs with the HDS.

-2. Turn the vehicle to the ON mode, then wait for 10 seconds.

-3. Check for DTCs with the HDS.

DTC Description	DTC
B0021-12 Short to power in the left side curtain airbag first inflator	B

Is DTC B0021-12 indicated?

YES

The failure is duplicated. Go to step 2.

NO

Intermittent failure, the system is OK at this time. Go to Troubleshooting Intermittent Failures. If another DTC is indicated, troubleshoot the DTC.

2. Shorted wire check (LCA+, LCA- lines to power) 1

-1. Turn the vehicle to the OFF (LOCK) mode.

-2. Disconnect the negative cable from the 12 volt battery, then wait at least 3 minutes.

-3. **Remove the headliner** .

-4. Disconnect the following connector.

Left side curtain airbag inflator 2P connector (on the floor wire harness)

-5. Reconnect the negative cable to the 12 volt battery.

-6. Turn the vehicle to the ON mode, then clear the DTC.

-7. Check for DTCs with the HDS.

DTC Description	DTC
B0021-12 Short to power in the left side curtain airbag first inflator	B

Is DTC B0021-12 indicated?

YES

Go to step 3.

NO

Short to power in the left side curtain airbag inflator; **replace the left side curtain airbag** , then clear the DTC.

3. Shorted wire check (LCA+, LCA- lines to power) 2

-1. Turn the vehicle to the OFF (LOCK) mode.

-2. Disconnect the negative cable from the 12 volt battery, then wait at least 3 minutes.

-3. Disconnect the following connector.

SRS unit connector B (39P)

-4. Reconnect the negative cable to the 12 volt battery.

-5. Turn the vehicle to the ON mode.

-6. Measure the voltage between test points 1 and 2.

Test condition	Vehicle ON mode
	SRS unit connector B (39P): disconnected
	Left side curtain airbag inflator 2P connector (on the floor wire harness): disconnected
Test point 1	**SRS unit connector B (39P) No. 9**
Test point 2	Body ground

Test point 1	SRS unit connector B (39P) No. 10
Test point 2	Body ground

Is there 0.2 V or less?

YES

The LCA+ and LCA- wires are OK. Check for any authorized service information related to the DTCs or symptoms you are troubleshooting or replace the SRS unit .

NO

Short to power in the floor wire harness; replace the floor wire harness, then clear the DTC.

DTC B0021-13

DTC B0021-13 : Open or Increased Resistance in the Left Side Curtain Airbag First Inflator

NOTE:

- **Before doing this troubleshooting procedure, find out if the vehicle was in a collision. If so, verify that all the required components were replaced with new components of the correct part number and were properly installed** .
- Before doing this troubleshooting procedure, review **SRS Precautions and Procedures** , **General Troubleshooting Information** , and **12 Volt Battery Terminal Disconnection and Reconnection** .

DTC Description	DTC
B0021-13 Open or increased resistance in the left side curtain airbag first inflator	B

DTC (SRS)

1. Problem verification

   -1. Clear the DTCs with the HDS.

   -2. Turn the vehicle to the ON mode, then wait for 10 seconds.

   -3. Check for DTCs with the HDS.

DTC Description	DTC
B0021-13 Open or increased resistance in the left side curtain airbag first inflator	B

   Is DTC B0021-13 indicated?

   YES

   The failure is duplicated. Go to step 2.

   NO

   Intermittent failure, the system is OK at this time. Go to Troubleshooting Intermittent Failures. If another DTC is indicated, troubleshoot the DTC.

2. Left side curtain airbag inflator check

   -1. Turn the vehicle to the OFF (LOCK) mode.

-2. Disconnect the negative cable from the 12 volt battery, then wait at least 3 minutes.

-3. **Remove the headliner** .

-4. Disconnect the following connector.

Left side curtain airbag inflator 2P connector (on the floor wire harness)

-5. Connect terminals A and B with a jumper wire.

Terminal A	Left side curtain airbag first inflator 2P connector (female terminals) No. 1 (on the floor wire harness): ①
Terminal B	Left side curtain airbag first inflator 2P connector (female terminals) No. 2 (on the floor wire harness): ①

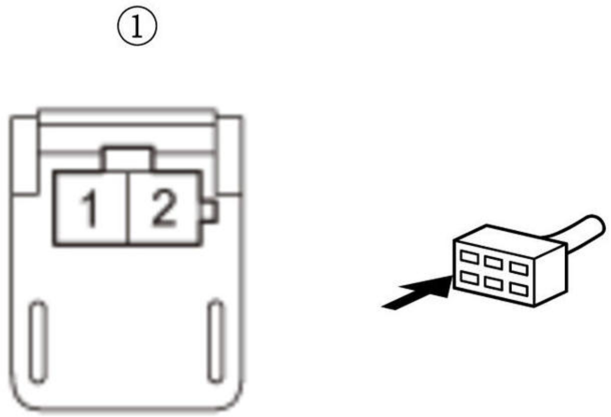

-6. Reconnect the negative cable to the 12 volt battery.

-7. Clear the DTCs with the HDS.

-8. Turn the vehicle to the ON mode, then wait for 10 seconds.

-9. Check for DTCs with the HDS.

DTC Description	DTC
B0021-13 Open or increased resistance in the left side curtain airbag first inflator	B

Is DTC B0021-13 indicated?

YES

Go to step 3.

NO

Open in the left side curtain airbag inflator; **replace the left side curtain airbag** , then clear the DTC.

3. Open wire check (LCA+, LCA- lines)

-1. Turn the vehicle to the OFF (LOCK) mode.

-2. Disconnect the negative cable from the 12 volt battery, then wait at least 3 minutes.

-3. Remove the jumper wire from the left side curtain airbag inflator 2P connector on the floor wire harness.

-4. Disconnect the following connector.

SRS unit connector B (39P)

-5. Connect terminals A and B with a jumper wire.

Terminal A	SRS unit connector B (39P) No. 9
Terminal B	SRS unit connector B (39P) No. 10

-6. Measure the resistance between test points 1 and 2.

Test condition	Vehicle OFF (LOCK) mode
	Left side curtain airbag inflator 2P connector (on the floor wire harness): disconnected
	SRS unit connector B (39P): disconnected
	SRS unit connector B (39P) terminals No. 9 and No. 10: jumped
Test point 1	Left side curtain airbag first inflator 2P connector (female terminals) No. 1 (on the floor wire harness): ①
Test point 2	Left side curtain airbag first inflator 2P connector (female terminals) No. 2 (on the floor wire harness): ①

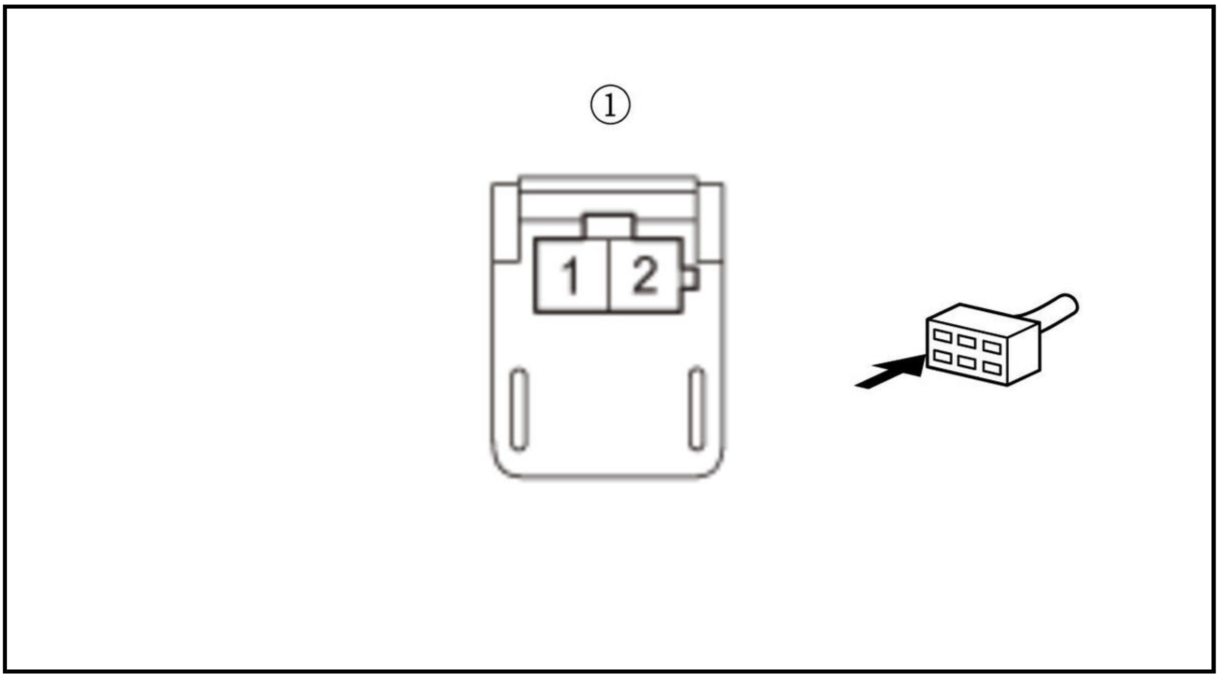

Is there 1.0 Ω or less?

YES

The LCA+ and LCA- wires are OK. Faulty SRS unit or poor connection at SRS unit connector B (39P) and the SRS unit. Check the connection; if the connection is OK, check for any authorized service

information related to the DTCs or symptoms you are troubleshooting or **replace the SRS unit** . If the DTC does not clear, replace the floor wire harness.

NO

Open in the floor wire harness; replace the floor wire harness, then clear the DTC.

DTC B0021-1A

DTC B0021-1A : Decreased Resistance in the Left Side Curtain Airbag First Inflator

Special Tools Required

SRS Short Canceller 070AZ-SAA0100

NOTE:

- **Before doing this troubleshooting procedure, find out if the vehicle was in a collision. If so, verify that all the required components were replaced with new components of the correct part number and were properly installed** .
- Before doing this troubleshooting procedure, review **SRS Precautions and Procedures** , **General Troubleshooting Information** , and **12 Volt Battery Terminal Disconnection and Reconnection** .

DTC Description	DTC
B0021-1A Decreased resistance in the left side curtain airbag first inflator	B

DTC (SRS)

1. Problem verification

-1. Clear the DTCs with the HDS.

-2. Turn the vehicle to the ON mode, then wait for 10 seconds.

-3. Check for DTCs with the HDS.

DTC Description	DTC
B0021-1A Decreased resistance in the left side curtain airbag first inflator	B

Is DTC B0021-1A indicated?

YES

The failure is duplicated. Go to step 2.

NO

Intermittent failure, the system is OK at this time. Go to Troubleshooting Intermittent Failures. If another DTC is indicated, troubleshoot the DTC.

2. Left side curtain airbag inflator check

-1. Turn the vehicle to the OFF (LOCK) mode.

-2. Disconnect the negative cable from the 12 volt battery, then wait at least 3 minutes.

-3. **Remove the headliner** .

-4. Disconnect the following connector.

Left side curtain airbag inflator 2P connector (on the floor wire harness)

-5. Reconnect the negative cable to the 12 volt battery.

-6. Clear the DTCs with the HDS.

-7. Turn the vehicle to the ON mode, then wait for 10 seconds.

-8. Check for DTCs with the HDS.

DTC Description	DTC
B0021-1A Decreased resistance in the left side curtain airbag first inflator	B

Is DTC B0021-1A indicated?

YES

Go to step 3.

NO

Short to another wire in the left side curtain airbag inflator; **replace the left side curtain airbag** , then clear the DTC.

3. Shorted wire check (LCA+ line to LCA- line)

-1. Turn the vehicle to the OFF (LOCK) mode.

-2. Disconnect the negative cable from the 12 volt battery, then wait at least 3 minutes.

-3. Disconnect the following connector.

SRS unit connector B (39P)

-4. **Connect the SRS short canceller to SRS unit connector B (39P) terminals No. 9 and No. 10** .

-5. Measure the resistance between test points 1 and 2.

Test condition	Vehicle OFF (LOCK) mode
	Left side curtain airbag inflator 2P connector (on the floor wire harness): disconnected
	SRS unit connector B (39P): disconnected
	SRS unit connector B (39P) No. 9 and No. 10: connected to SRS short canceller
Test point 1	**SRS unit connector B (39P) No. 9**
Test point 2	**SRS unit connector B (39P) No. 10**

Is there an open circuit, or at least 1 MΩ?

YES

The LCA+ and LCA- wires are OK. Faulty SRS unit or poor connection at SRS unit connector B (39P) and the SRS unit. Check the connection; if the connection is OK, check for any authorized service information related to the DTCs or symptoms you are troubleshooting or **replace the SRS unit** . If the DTC does not clear, replace the floor wire harness.

NO

Short to another wire in the floor wire harness; replace the floor wire harness, then clear the DTC.

DTC B0021-2B

DTC B0021-2B : Short to Another Wire Harness in the Left Side Curtain Airbag First Inflator

NOTE:

- **Before doing this troubleshooting procedure, find out if the vehicle was in a collision. If so, verify that all the required components were replaced with new components of the correct part number and were properly installed** .
- Before doing this troubleshooting procedure, review **SRS Precautions and Procedures** , **General Troubleshooting Information** , and **12 Volt Battery Terminal Disconnection and Reconnection** .

DTC Description	DTC
B0021-2B Short to another wire harness in the left side curtain airbag first inflator	B

DTC (SRS)

1. Problem verification

   -1. Clear the DTCs with the HDS.

   -2. Turn the vehicle to the ON mode, then wait for 10 seconds.

   -3. Check for DTCs with the HDS.

DTC Description	DTC
B0021-2B Short to another wire harness in the left side curtain airbag first inflator	B

   Is DTC B0021-2B indicated?

   YES

   The failure is duplicated. Go to step 2.

   NO

   Intermittent failure, the system is OK at this time. Go to Troubleshooting Intermittent Failures. If another DTC is indicated, troubleshoot the DTC.

2. DTC check

   -1. Check for DTCs with the HDS.

DTC Description	DTC
B0001-2B Short to another wire harness in the driver's airbag first inflator	B
B0002-2B Short to another wire harness in the driver's airbag second inflator	B
B0010-2B Short to another wire harness in the front passenger's airbag first inflator	B
B0011-2B Short to another wire harness in the front passenger's airbag second inflator	B
B0020-2B Short to another wire harness in the left side airbag inflator	B
B0021-2B Short to another wire harness in the left side curtain airbag first inflator	B
B0028-2B Short to another wire harness in the right side airbag inflator	B

DTC Description	DTC
B0029-2B Short to another wire harness in the right side curtain airbag first inflator	B
B0070-2B Short to another wire harness in the driver's seat belt tensioner	B
B0072-2B Short to another wire harness in the front passenger's seat belt tensioner	B
B0079-2B Short to another wire harness in the driver's seat belt outer lap tensioner	B
B007A-2B Short to another wire harness in the front passenger's seat belt outer lap tensioner	B
B0082-2B Short to another wire harness in the selectable energy absorption device of the front passenger's seat belt tensioner	B

Is DTC B0001-2B, B0002-2B, B0010-2B, B0011-2B, B0020-2B, B0028-2B, B0029-2B, B0070-2B, B0072-2B, B0079-2B, B007A-2B or B0082-2B indicated with DTC B0021-2B?

YES

Go to step 3.

NO

Short to another wire in the floor wire harness; replace the floor wire harness, then clear the DTC.

3. Shorted wire check (LCA lines to another line)

-1. Turn the vehicle to the OFF (LOCK) mode.

-2. Disconnect the negative cable from the 12 volt battery, then wait at least 3 minutes.

-3. **Remove the headliner** .

-4. Disconnect the following connectors.

SRS unit connector A (39P)
SRS unit connector B (39P)
Left side curtain airbag inflator 2P connector (on the floor wire harness)
Inflator connectors which are assigned to 2B codes listed on HDS

-5. Check for continuity between test points 1 and 2 of SRS unit connector A (39P) and B (39P) according to table.

Test condition	Vehicle OFF (LOCK) mode
	SRS unit connector A (39P): disconnected
	SRS unit connector B (39P): disconnected
	Left side curtain airbag inflator 2P connector (on the floor wire harness): disconnected
	Inflator connectors which are assigned to 2B codes listed on HDS: disconnected

DTC	Test point 1	Test point 2
	From terminal	**To terminal**
B0001-2B	SRS unit connector B (39P) No. 9	SRS unit connector A (39P) No. 9
	SRS unit connector B (39P) No. 10	SRS unit connector A (39P) No. 8
B0002-2B	SRS unit connector B (39P) No. 9	SRS unit connector A (39P) No. 10
	SRS unit connector B (39P) No. 10	SRS unit connector A (39P) No. 11
B0010-2B	SRS unit connector B (39P) No. 9	SRS unit connector A (39P) No. 5
	SRS unit connector B (39P) No. 10	SRS unit connector A (39P) No. 4
B0011-2B	SRS unit connector B (39P) No. 9	SRS unit connector A (39P) No. 6
	SRS unit connector B (39P) No. 10	SRS unit connector A (39P) No. 7
B0020-2B	SRS unit connector B (39P) No. 9	SRS unit connector B (39P) No. 5
	SRS unit connector B (39P) No. 10	SRS unit connector B (39P) No. 6
B0028-2B	SRS unit connector B (39P) No. 9	SRS unit connector B (39P) No. 4
	SRS unit connector B (39P) No. 10	SRS unit connector B (39P) No. 3
B0029-2B	SRS unit connector B (39P) No. 9	SRS unit connector B (39P) No. 8
	SRS unit connector B (39P) No. 10	SRS unit connector B (39P) No. 7
B0070-2B	SRS unit connector B (39P) No. 9	SRS unit connector B (39P) No. 20
	SRS unit connector B (39P) No. 10	SRS unit connector B (39P) No. 21
B0072-2B	SRS unit connector B (39P) No. 9	SRS unit connector B (39P) No. 19
	SRS unit connector B (39P) No. 10	SRS unit connector B (39P) No. 18
B0079-2B	SRS unit connector B (39P) No. 9	SRS unit connector B (39P) No. 24
	SRS unit connector B (39P) No. 10	SRS unit connector B (39P) No. 25
B007A-2B	SRS unit connector B (39P) No. 9	SRS unit connector B (39P) No. 23
	SRS unit connector B (39P) No. 10	SRS unit connector B (39P) No. 22
B0082-2B	SRS unit connector B (39P) No. 9	SRS unit connector A (39P) No. 2
	SRS unit connector B (39P) No. 10	SRS unit connector A (39P) No. 3

Is there continuity?

YES

Short to another wire in the dashboard wire harness or the floor wire harness; replace the faulty harness, then clear the DTC.

NO

The LCA wires are OK. Faulty SRS unit or poor connection at SRS unit connector A (39P) and the SRS unit, or SRS unit connector B (39P) and the SRS unit. Check the connection; if the connection is OK, check for any authorized service information related to the DTCs or symptoms you are troubleshooting or **replace the SRS unit** . If the DTC does not clear, replace the dashboard wire harness or the floor wire harness.

DTC B0028-11

DTC B0028-11 : Short to Ground in the Front Passenger's Side Airbag Inflator

Special Tools Required

-SRS Inflator Simulator 07SAZ-TB4011A

-SRS Simulator Lead L 070AZ-SNA0300

NOTE:

- **Before doing this troubleshooting procedure, find out if the vehicle was in a collision. If so, verify that all the required components were replaced with new components of the correct part number and were properly installed** .
- Before doing this troubleshooting procedure, review **SRS Precautions and Procedures** , **General Troubleshooting Information** , and **12 Volt Battery Terminal Disconnection and Reconnection** .

DTC Description	DTC
B0028-11 Short to ground in the front passenger's side airbag inflator	B

DTC (SRS)

1. Problem verification

   -1. Clear the DTCs with the HDS.

   -2. Turn the vehicle to the ON mode, then wait for 10 seconds.

   -3. Check for DTCs with the HDS.

DTC Description	DTC
B0028-11 Short to ground in the front passenger's side airbag inflator	B

   Is DTC B0028-11 indicated?

   YES

   The failure is duplicated. Go to step 2.

   NO

   Intermittent failure, the system is OK at this time. Go to Troubleshooting Intermittent Failures. If another DTC is indicated, troubleshoot the DTC.

2. Front passenger's side airbag inflator check

   -1. Turn the vehicle to the OFF (LOCK) mode.

   -2. Disconnect the negative cable from the 12 volt battery, then wait at least 3 minutes.

   -3. Disconnect the front passenger's side airbag inflator 2P connector (A) on the floor wire harness.

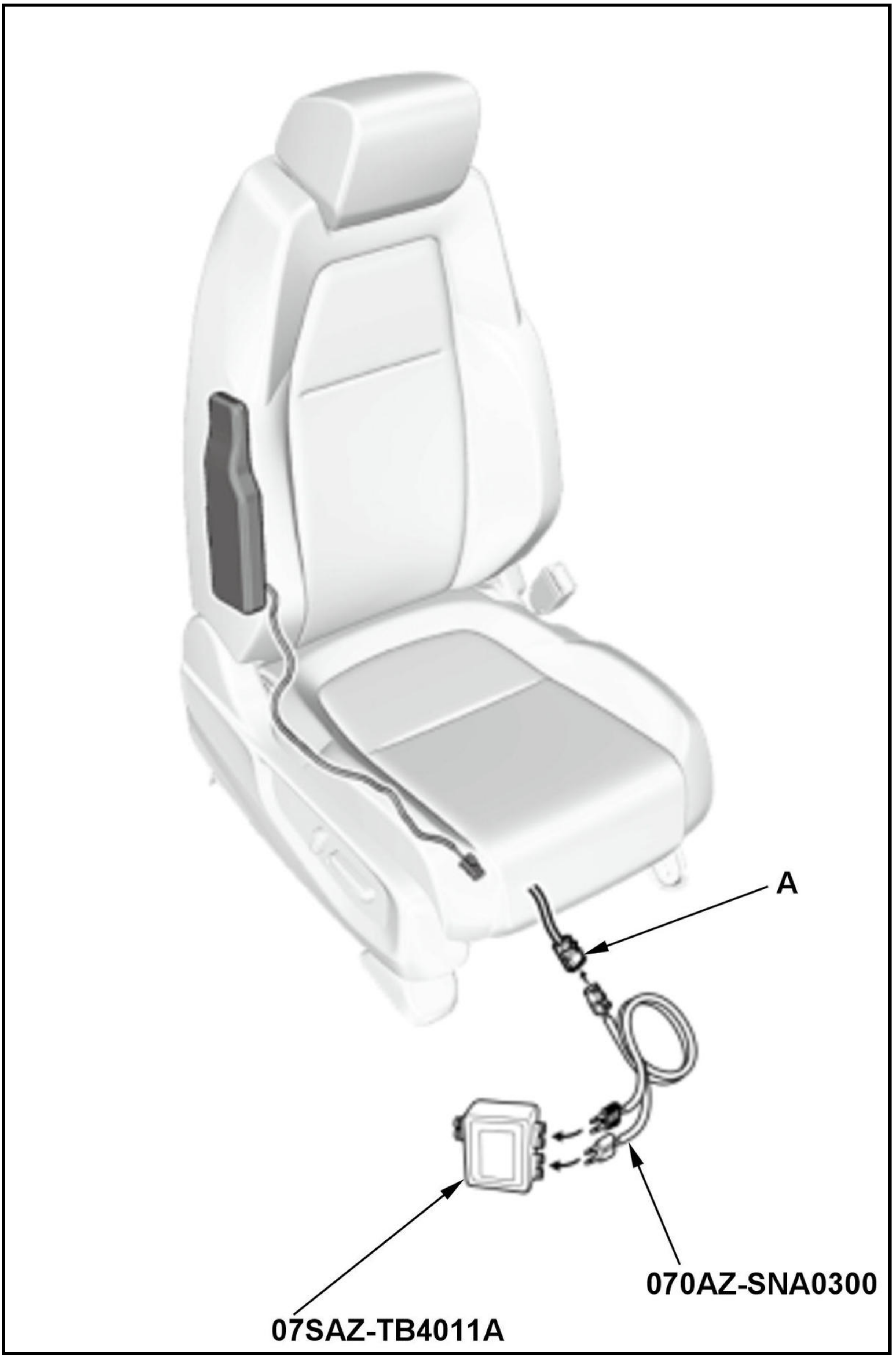
A
070AZ-SNA0300
07SAZ-TB4011A

-4. Connect the terminals of SRS simulator lead L to the SRS inflator simulator (2 Ω connectors), then connect SRS simulator lead L to the front passenger's side airbag inflator 2P connector on the floor wire harness.

-5. Reconnect the negative cable to the 12 volt battery.

-6. Clear the DTCs with the HDS.

-7. Turn the vehicle to the ON mode, then wait for 10 seconds.

-8. Check for DTCs with the HDS.

DTC Description	DTC
B0028-11 Short to ground in the front passenger's side airbag inflator	B

Is DTC B0028-11 indicated?

YES

Go to step 3.

NO

Short to ground in the front passenger's side airbag inflator; **replace the front passenger's side airbag** , then clear the DTC.

3. Shorted wire check (RSA+, RSA- lines)

-1. Turn the vehicle to the OFF (LOCK) mode.

-2. Disconnect the negative cable from the 12 volt battery, then wait at least 3 minutes.

-3. Disconnect the following connector.

SRS unit connector B (39P)

-4. Disconnect the SRS inflator simulator from SRS simulator lead L. Do not disconnect SRS simulator lead L from the front passenger's side airbag inflator 2P connector on the floor wire harness.

-5. Measure the resistance between test points 1 and 2.

Test condition	Vehicle OFF (LOCK) mode
	Front passenger's side airbag inflator 2P connector (on the floor wire harness): disconnected
	SRS unit connector B (39P): disconnected
	Front passenger's side airbag inflator 2P connector (on the floor wire harness): connected to SRS simulator lead L
Test point 1	SRS simulator lead L black terminal
Test point 2	Body ground

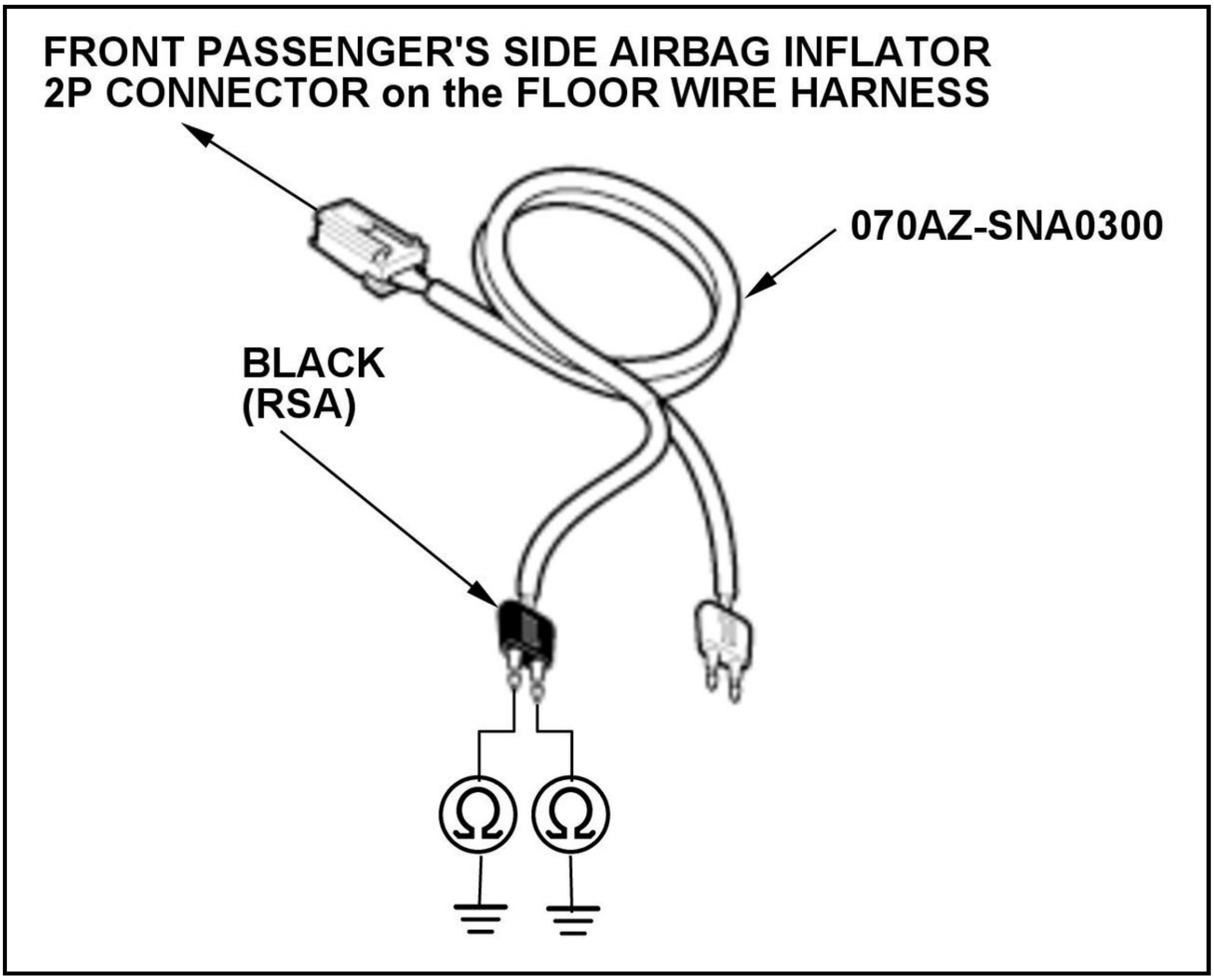
FRONT PASSENGER'S SIDE AIRBAG INFLATOR
2P CONNECTOR on the FLOOR WIRE HARNESS
070AZ-SNA0300
BLACK
(RSA)
Ω
Ω

Is there an open circuit, or at least 1 MΩ?

YES

The RSA+ and RSA- wires are OK. Faulty SRS unit or poor connection at SRS unit connector B (39P) and the SRS unit. Check the connection; if the connection is OK, check for any authorized service information related to the DTCs or symptoms you are troubleshooting or **replace the SRS unit** . If the DTC does not clear, replace the floor wire harness.

NO

Short to ground in the floor wire harness; replace the floor wire harness, then clear the DTC.

DTC B0028-12

DTC B0028-12 : Short to Power in the Front Passenger's Side Airbag Inflator

Special Tools Required

-SRS Inflator Simulator 07SAZ-TB4011A

-SRS Simulator Lead L 070AZ-SNA0300

NOTE:

- **Before doing this troubleshooting procedure, find out if the vehicle was in a collision. If so, verify that all the required components were replaced with new components of the correct part number and were properly installed** .
- Before doing this troubleshooting procedure, review **SRS Precautions and Procedures** , **General Troubleshooting Information** , and **12 Volt Battery Terminal Disconnection and Reconnection** .

DTC Description	DTC
B0028-12 Short to power in the front passenger's side airbag inflator	B

DTC (SRS)

1. Problem verification

   -1. Clear the DTCs with the HDS.

   -2. Turn the vehicle to the ON mode, then wait for 10 seconds.

   -3. Check for DTCs with the HDS.

DTC Description	DTC
B0028-12 Short to power in the front passenger's side airbag inflator	B

   Is DTC B0028-12 indicated?

   YES

   The failure is duplicated. Go to step 2.

   NO

   Intermittent failure, the system is OK at this time. Go to Troubleshooting Intermittent Failures. If another DTC is indicated, troubleshoot the DTC.

2. Front passenger's side airbag inflator check

   -1. Turn the vehicle to the OFF (LOCK) mode.

   -2. Disconnect the negative cable from the 12 volt battery, then wait at least 3 minutes.

   -3. Disconnect the front passenger's side airbag inflator 2P connector (A) on the floor wire harness.

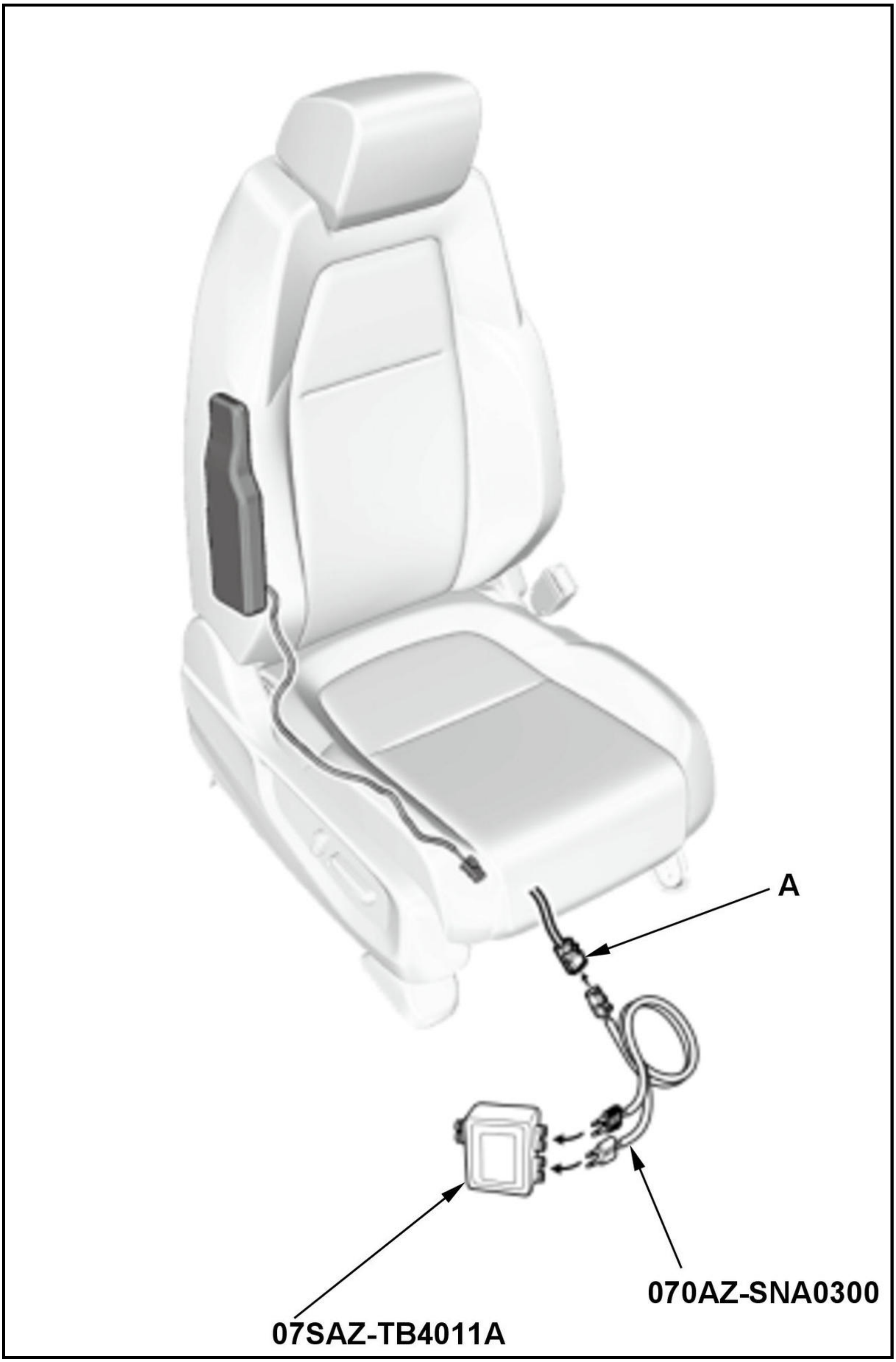
A
070AZ-SNA0300
07SAZ-TB4011A

-4. Connect the terminals of SRS simulator lead L to the SRS inflator simulator (2 Ω connectors), then connect SRS simulator lead L to the front passenger's side airbag inflator 2P connector on the floor wire harness.

-5. Reconnect the negative cable to the 12 volt battery.

-6. Clear the DTCs with the HDS.

-7. Turn the vehicle to the ON mode, then wait for 10 seconds.

-8. Check for DTCs with the HDS.

DTC Description	DTC
B0028-12 Short to power in the front passenger's side airbag inflator	B

Is DTC B0028-12 indicated?

YES

Go to step 3.

NO

Short to power in the front passenger's side airbag inflator; **replace the front passenger's side airbag** , then clear the DTC.

3. Shorted wire check (RSA+, RSA- lines to power)

-1. Turn the vehicle to the OFF (LOCK) mode.

-2. Disconnect the negative cable from the 12 volt battery, then wait at least 3 minutes.

-3. Disconnect the following connector.

SRS unit connector B (39P)

-4. Disconnect the SRS inflator simulator from SRS simulator lead L. Do not disconnect SRS simulator lead L from the front passenger's side airbag inflator 2P connector on the floor wire harness.

-5. Reconnect the negative cable to the 12 volt battery.

-6. Turn the vehicle to the ON mode.

-7. Measure the voltage between test points 1 and 2.

Test condition	Vehicle ON mode
	Front passenger's side airbag inflator 2P connector (on the floor wire harness): disconnected
	SRS unit connector B (39P): disconnected
	Front passenger's side airbag inflator 2P connector (on the floor wire harness): connected to SRS simulator lead L
Test point 1	SRS simulator lead L black terminal
Test point 2	Body ground

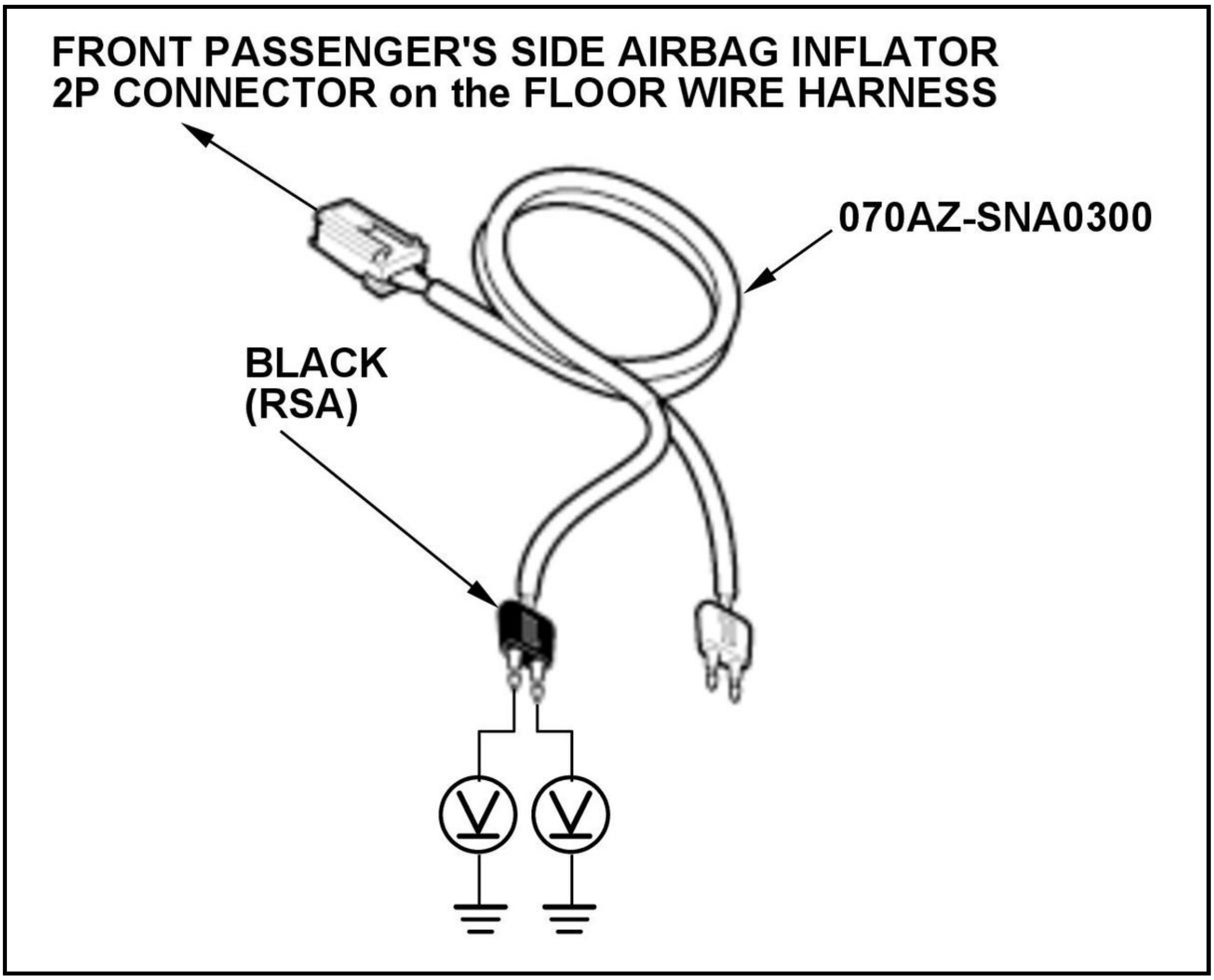
FRONT PASSENGER'S SIDE AIRBAG INFLATOR
2P CONNECTOR on the FLOOR WIRE HARNESS
070AZ-SNA0300
BLACK
(RSA)
V
V

Is there 0.2 V or less?

YES

The RSA+ and RSA- wires are OK. Faulty SRS unit or poor connection at SRS unit connector B (39P) and the SRS unit. Check the connection; if the connection is OK, check for any authorized service information related to the DTCs or symptoms you are troubleshooting or **replace the SRS unit** . If the DTC does not clear, replace the floor wire harness.

NO

Short to power in the floor wire harness; replace the floor wire harness, then clear the DTC.

DTC B0028-13

DTC B0028-13 : Open or Increased Resistance in the Front Passenger's Side Airbag Inflator

Special Tools Required

-SRS Inflator Simulator 07SAZ-TB4011A

-SRS Simulator Lead L 070AZ-SNA0300

NOTE:

- **Before doing this troubleshooting procedure, find out if the vehicle was in a collision. If so, verify that all the required components were replaced with new components of the correct part number and were properly installed** .
- Before doing this troubleshooting procedure, review **SRS Precautions and Procedures** , **General Troubleshooting Information** , and **12 Volt Battery Terminal Disconnection and Reconnection** .

DTC Description	DTC
B0028-13 Open or increased resistance in the front passenger's side airbag inflator	B

DTC (SRS)

1. Problem verification

   -1. Clear the DTCs with the HDS.

   -2. Turn the vehicle to the ON mode, then wait for 10 seconds.

   -3. Check for DTCs with the HDS.

DTC Description	DTC
B0028-13 Open or increased resistance in the front passenger's side airbag inflator	B

   Is DTC B0028-13 indicated?

   YES

   The failure is duplicated. Go to step 2.

   NO

   Intermittent failure, the system is OK at this time. Go to Troubleshooting Intermittent Failures. If another DTC is indicated, troubleshoot the DTC.

2. Front passenger's side airbag inflator check

   -1. Turn the vehicle to the OFF (LOCK) mode.

   -2. Disconnect the negative cable from the 12 volt battery, then wait at least 3 minutes.

   -3. Disconnect the front passenger's side airbag inflator 2P connector (A) on the floor wire harness.

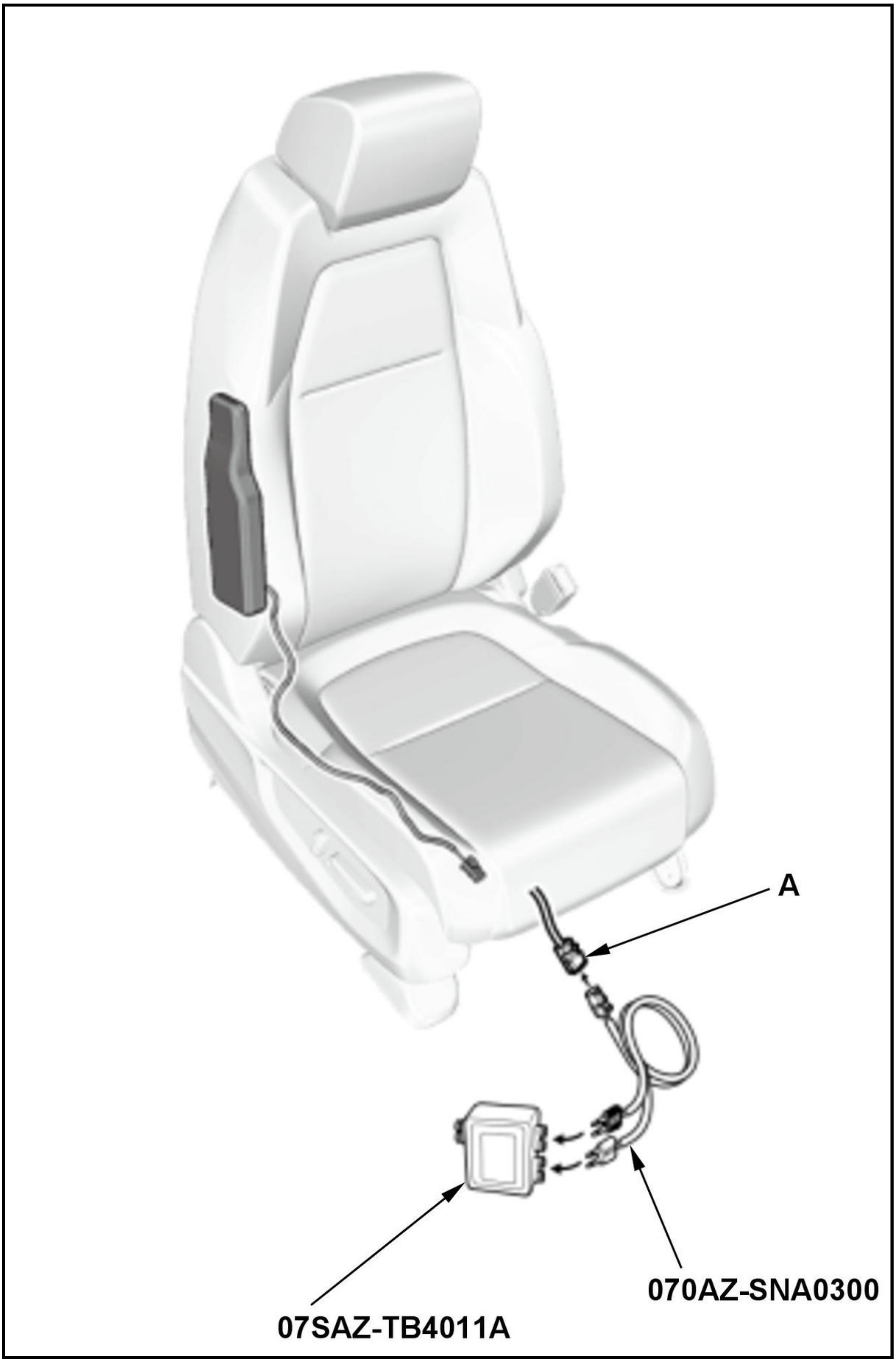
A
070AZ-SNA0300
07SAZ-TB4011A

-4. Connect the terminals of SRS simulator lead L to the SRS inflator simulator (2 Ω connectors), then connect SRS simulator lead L to the front passenger's side airbag inflator 2P connector on the floor wire harness.

-5. Reconnect the negative cable to the 12 volt battery.

-6. Clear the DTCs with the HDS.

-7. Turn the vehicle to the ON mode, then wait for 10 seconds.

-8. Check for DTCs with the HDS.

DTC Description	DTC
B0028-13 Open or increased resistance in the front passenger's side airbag inflator	B

Is DTC B0028-13 indicated?

YES

Go to step 3.

NO

Open in the front passenger's side airbag inflator; **replace the front passenger's side airbag** , then clear the DTC.

3. Open wire check (RSA+, RSA- lines)

-1. Turn the vehicle to the OFF (LOCK) mode.

-2. Disconnect the negative cable from the 12 volt battery, then wait at least 3 minutes.

-3. Disconnect the following connector.

SRS unit connector B (39P)

-4. Disconnect the SRS inflator simulator from SRS simulator lead L. Do not disconnect SRS simulator lead L from the front passenger's side airbag inflator 2P connector on the floor wire harness.

-5. Measure the resistance of the test point.

Test condition	Vehicle OFF (LOCK) mode
	Front passenger's side airbag inflator 2P connector (on the floor wire harness): disconnected
	SRS unit connector B (39P): disconnected
	Front passenger's side airbag inflator 2P connector (on the floor wire harness): connected to SRS simulator lead L
Test point	SRS simulator lead L black terminal

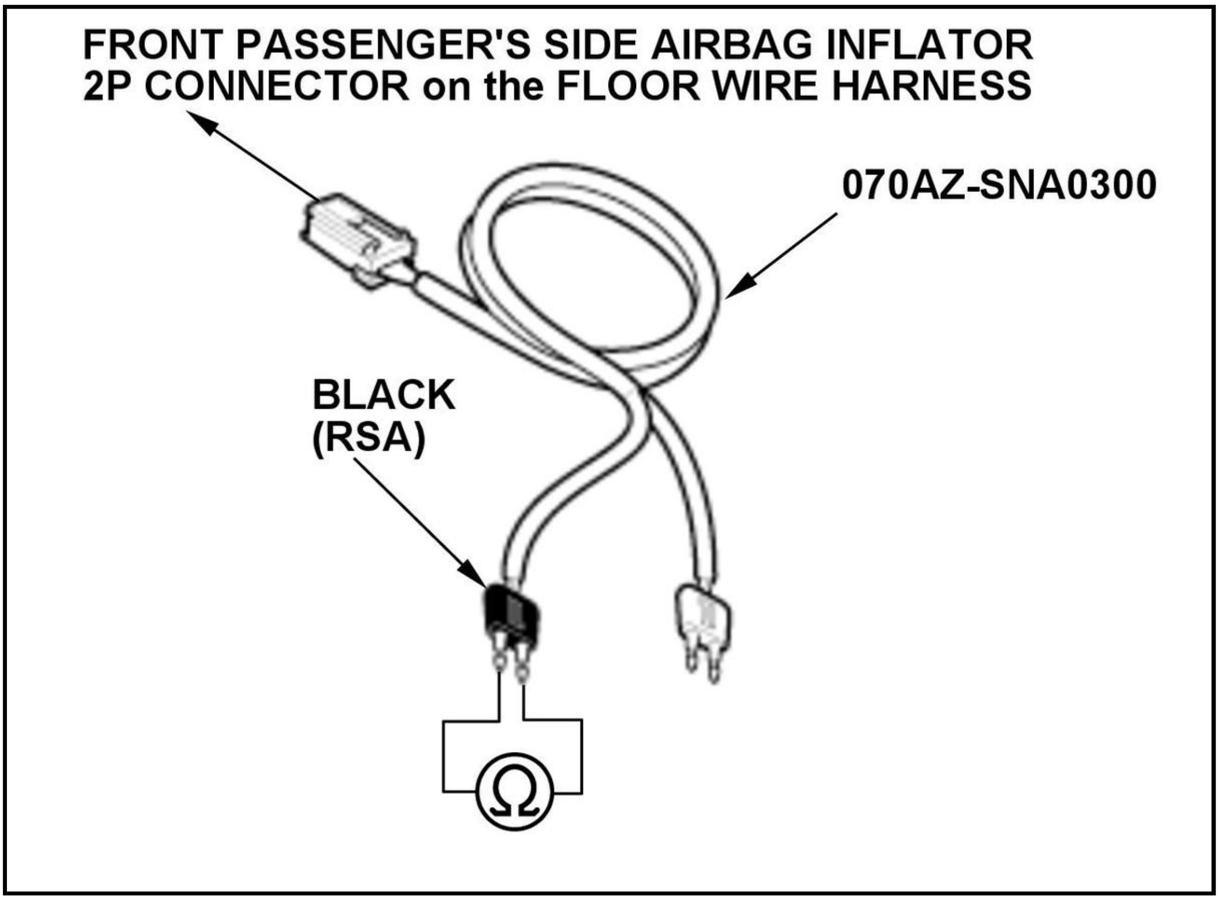
FRONT PASSENGER'S SIDE AIRBAG INFLATOR
2P CONNECTOR on the FLOOR WIRE HARNESS
070AZ-SNA0300
BLACK
(RSA)
Ω

Is there 1.0 Ω or less?

YES

The RSA+ and RSA- wires are OK. Faulty SRS unit or poor connection at SRS unit connector B (39P) and the SRS unit. Check the connection; if the connection is OK, check for any authorized service information related to the DTCs or symptoms you are troubleshooting or **replace the SRS unit** . If the DTC does not clear, replace the floor wire harness.

NO

Open in the floor wire harness; replace the floor wire harness, then clear the DTC.

DTC B0028-1A, B0028-2B

DTC B0028-1A : Decreased Resistance in the Front Passenger's Side Airbag Inflator

DTC B0028-2B : Short to Another Wire Harness in the Front Passenger's Side Airbag Inflator

Special Tools Required

-SRS Inflator Simulator 07SAZ-TB4011A

-SRS Simulator Lead L 070AZ-SNA0300

-SRS Short Canceller 070AZ-SAA0100

NOTE:

- **Before doing this troubleshooting procedure, find out if the vehicle was in a collision. If so, verify that all the required components were replaced with new components of the correct part number and were properly installed** .

- Before doing this troubleshooting procedure, review **SRS Precautions and Procedures** , **General Troubleshooting Information** , and **12 Volt Battery Terminal Disconnection and Reconnection** .

DTC Description	DTC
B0028-1A Decreased Resistance in the front passenger's side airbag inflator	B
B0028-2B Short to another wire in the front passenger's side airbag inflator	B

DTC (SRS)

1. Problem verification

   -1. Clear the DTCs with the HDS.

   -2. Turn the vehicle to the ON mode, then wait for 10 seconds.

   -3. Check for DTCs with the HDS.

DTC Description	DTC
B0028-1A Decreased Resistance in the front passenger's side airbag inflator	B
B0028-2B Short to another wire in the front passenger's side airbag inflator	B

   Is DTC B0028-1A or B0028-2B indicated?

   YES

   The failure is duplicated. Go to step 2.

   NO

   Intermittent failure, the system is OK at this time. Go to Troubleshooting Intermittent Failures. If another DTC is indicated, troubleshoot the DTC.

2. Front passenger's side airbag inflator check

   -1. Turn the vehicle to the OFF (LOCK) mode.

   -2. Disconnect the negative cable from the 12 volt battery, then wait at least 3 minutes.

   -3. Disconnect the front passenger's side airbag inflator 2P connector (A) on the floor wire harness.

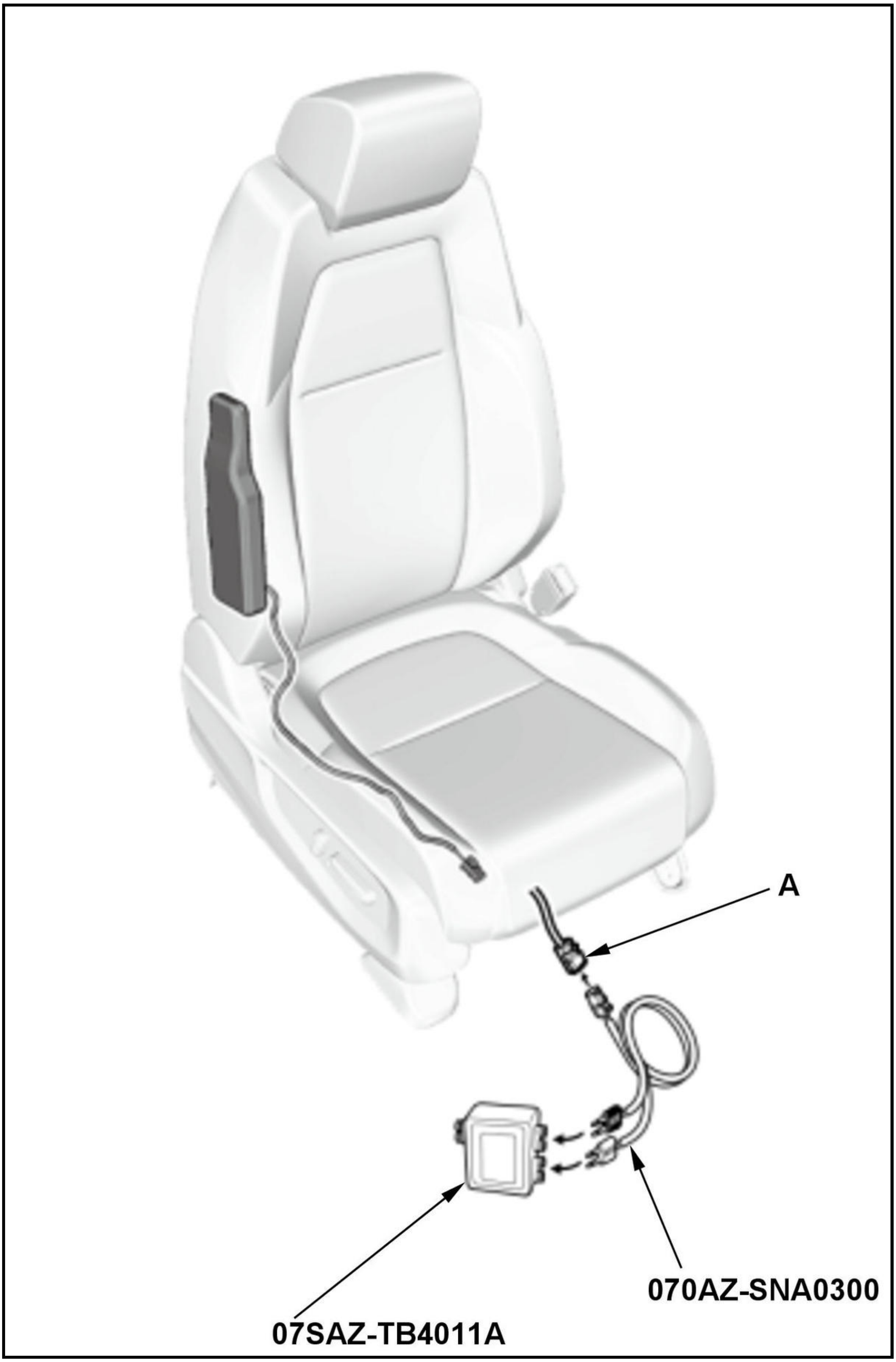
A
070AZ-SNA0300
07SAZ-TB4011A

-4. Connect the terminals of SRS simulator lead L to the SRS inflator simulator (2 Ω connectors), then connect SRS simulator lead L to the front passenger's side airbag inflator 2P connector on the floor wire harness.

-5. Reconnect the negative cable to the 12 volt battery.

-6. Clear the DTCs with the HDS.

-7. Turn the vehicle to the ON mode, then wait for 10 seconds.

-8. Check for DTCs with the HDS.

DTC Description	DTC
B0028-1A Decreased Resistance in the front passenger's side airbag inflator	B
B0028-2B Short to another wire in the front passenger's side airbag inflator	B

Is DTC B0028-1A or B0028-2B indicated?

YES

Go to step 3.

NO

Short to another wire in the front passenger's side airbag inflator; **replace the front passenger's side airbag** , then clear the DTC.

3. Shorted wire check (RSA+ line to RSA- line)

-1. Turn the vehicle to the OFF (LOCK) mode.

-2. Disconnect the negative cable from the 12 volt battery, then wait at least 3 minutes.

-3. Disconnect the following connector.

SRS unit connector B (39P)

-4. Disconnect the SRS inflator simulator from SRS simulator lead L. Do not disconnect SRS simulator lead L from the front passenger's side airbag inflator 2P connector on the floor wire harness.

-5. **Connect the SRS short canceller to SRS unit connector B (39P) terminals No. 3 and No. 4** .

-6. Measure the resistance of the test point.

Test condition	Vehicle OFF (LOCK) mode
	Front passenger's side airbag inflator 2P connector (on the floor wire harness): disconnected
	SRS unit connector B (39P): disconnected
	Front passenger's side airbag inflator 2P connector (on the floor wire harness): connected to SRS simulator lead L
	SRS unit connector B (39P) No. 3 and No. 4: connected to SRS short canceller
Test point	SRS simulator lead L black terminal

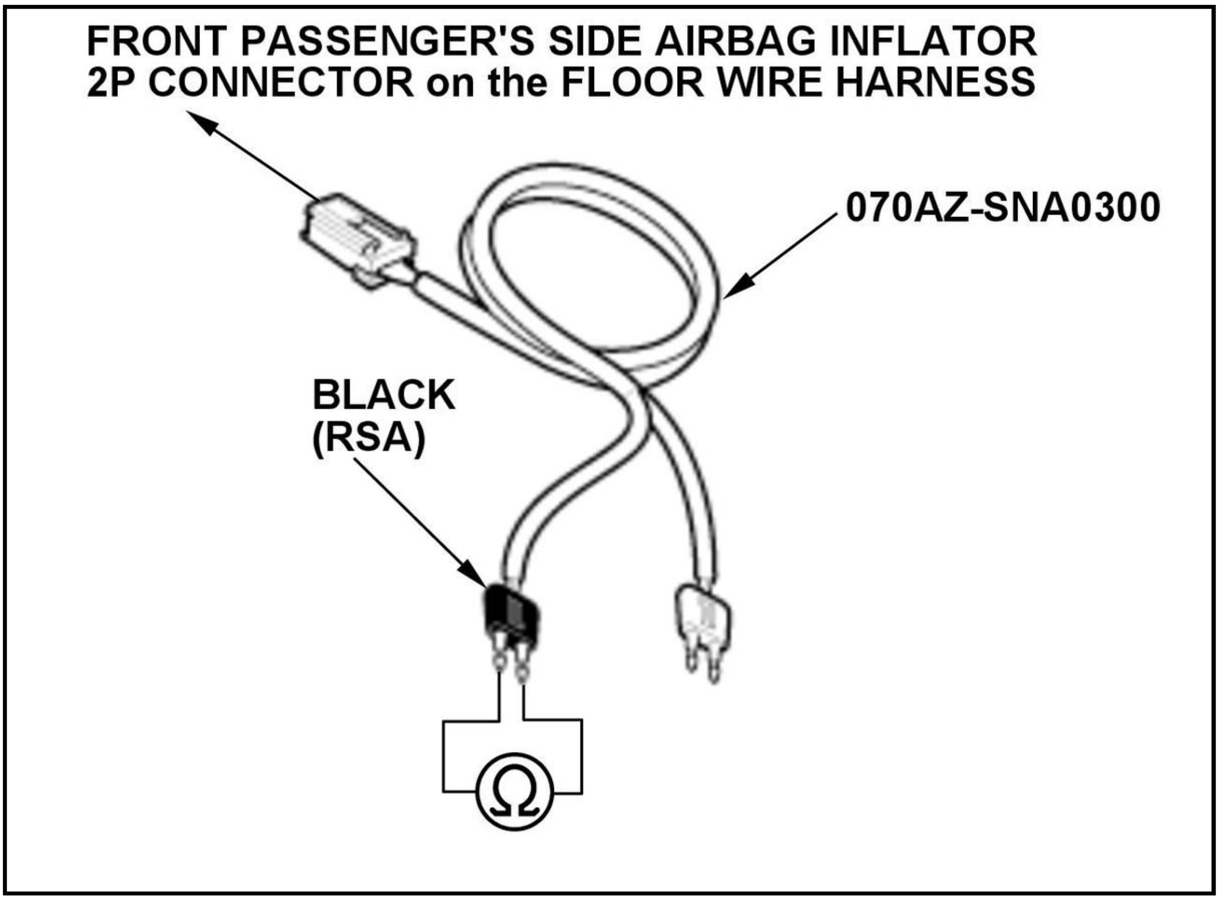
FRONT PASSENGER'S SIDE AIRBAG INFLATOR
2P CONNECTOR on the FLOOR WIRE HARNESS
070AZ-SNA0300
BLACK
(RSA)
Ω

Is there an open circuit, or at least 1 MΩ?

YES

The RSA+ and RSA- wires are OK. Faulty SRS unit or poor connection at SRS unit connector B (39P) and the SRS unit. Check the connection; if the connection is OK, check for any authorized service information related to the DTCs or symptoms you are troubleshooting or **replace the SRS unit** . If the DTC does not clear, replace the floor wire harness.

NO

Short to another wire in the floor wire harness; replace the floor wire harness, then clear the DTC.

DTC B0029-11

DTC B0029-11 : Short to Ground in the Right Side Curtain Airbag First Inflator

NOTE:

- **Before doing this troubleshooting procedure, find out if the vehicle was in a collision. If so, verify that all the required components were replaced with new components of the correct part number and were properly installed** .
- Before doing this troubleshooting procedure, review **SRS Precautions and Procedures** , **General Troubleshooting Information** , and **12 Volt Battery Terminal Disconnection and Reconnection** .

DTC Description	DTC
B0029-11 Short to ground in the right side curtain airbag first inflator	B

DTC (SRS)

1. Problem verification

-1. Clear the DTCs with the HDS.

-2. Turn the vehicle to the ON mode, then wait for 10 seconds.

-3. Check for DTCs with the HDS.

DTC Description	DTC
B0029-11 Short to ground in the right side curtain airbag first inflator	B

Is DTC B0029-11 indicated?

YES

The failure is duplicated. Go to step 2.

NO

Intermittent failure, the system is OK at this time. Go to Troubleshooting Intermittent Failures. If another DTC is indicated, troubleshoot the DTC.

2. Shorted wire check (RCA+, RCA- lines) 1

-1. Turn the vehicle to the OFF (LOCK) mode.

-2. Disconnect the negative cable from the 12 volt battery, then wait at least 3 minutes.

-3. **Remove the headliner** .

-4. Disconnect the following connector.

Right side curtain airbag inflator 2P connector (on the floor wire harness)

-5. Reconnect the negative cable to the 12 volt battery.

-6. Turn the vehicle to the ON mode, then clear the DTC.

-7. Check for DTCs with the HDS.

DTC Description	DTC
B0029-11 Short to ground in the right side curtain airbag first inflator	B

Is DTC B0029-11 indicated?

YES

Go to step 3.

NO

Short to ground in the right side curtain airbag inflator; **replace the right side curtain** , then clear the DTC.

3. Shorted wire check (RCA+, RCA- lines) 2

-1. Turn the vehicle to the OFF (LOCK) mode.

-2. Disconnect the negative cable from the 12 volt battery, then wait at least 3 minutes.

-3. Disconnect the following connector.

SRS unit connector B (39P)

-4. Measure the resistance between test points 1 and 2.

Test condition	Vehicle OFF (LOCK) mode
	SRS unit connector B (39P): disconnected
	Right side curtain airbag inflator 2P connector (on the floor wire harness): disconnected
Test point 1	**SRS unit connector B (39P) No. 7**
Test point 2	Body ground

Test point 1	**SRS unit connector B (39P) No. 8**
Test point 2	Body ground

Is there an open circuit, or at least 1 MΩ?

YES

The RCA+ and RCA- wires are OK. Check for any authorized service information related to the DTCs or symptoms you are troubleshooting or **replace the SRS unit** .

NO

Short to ground in the floor wire harness; replace the floor wire harness, then clear the DTC.

DTC B0029-12

DTC B0029-12 : Short to Power in the Right Side Curtain Airbag First Inflator

NOTE:

- **Before doing this troubleshooting procedure, find out if the vehicle was in a collision. If so, verify that all the required components were replaced with new components of the correct part number and were properly installed** .
- Before doing this troubleshooting procedure, review **SRS Precautions and Procedures** , **General Troubleshooting Information** , and **12 Volt Battery Terminal Disconnection and Reconnection** .

DTC Description	DTC
B0029-12 Short to power in the right side curtain airbag first inflator	B

DTC (SRS)

1. Problem verification

-1. Clear the DTCs with the HDS.

-2. Turn the vehicle to the ON mode, then wait for 10 seconds.

-3. Check for DTCs with the HDS.

DTC Description	DTC
B0029-12 Short to power in the right side curtain airbag first inflator	B

Is DTC B0029-12 indicated?

YES

The failure is duplicated. Go to step 2.

NO

Intermittent failure, the system is OK at this time. Go to Troubleshooting Intermittent Failures. If another DTC is indicated, troubleshoot the DTC.

2. Shorted wire check (RCA+, RCA- lines to power) 1

-1. Turn the vehicle to the OFF (LOCK) mode.

-2. Disconnect the negative cable from the 12 volt battery, then wait at least 3 minutes.

-3. **Remove the headliner** .

-4. Disconnect the following connector.

Right side curtain airbag inflator 2P connector (on the floor wire harness)

-5. Reconnect the negative cable to the 12 volt battery.

-6. Turn the vehicle to the ON mode, then clear the DTC.

-7. Check for DTCs with the HDS.

DTC Description	DTC
B0029-12 Short to power in the right side curtain airbag first inflator	B

Is DTC B0029-12 indicated?

YES

Go to step 3.

NO

Short to power in the right side curtain airbag inflator; **replace the left side curtain airbag** , then clear the DTC.

3. Shorted wire check (RCA+, RCA- lines to power) 2

-1. Turn the vehicle to the OFF (LOCK) mode.

-2. Disconnect the negative cable from the 12 volt battery, then wait at least 3 minutes.

-3. Disconnect the following connector.

SRS unit connector B (39P)

-4. Reconnect the negative cable to the 12 volt battery.

-5. Turn the vehicle to the ON mode.

-6. Measure the voltage between test points 1 and 2.

Test condition	Vehicle ON mode
	Rght side curtain airbag inflator 2P connector (on the floor wire harness): disconnected
	SRS unit connector B (39P): disconnected
Test point 1	**SRS unit connector B (39P) No. 7**
Test point 2	Body ground

Test point 1	SRS unit connector B (39P) No. 8
Test point 2	Body ground

Is there 0.2 V or less?

YES

The RCA+ and RCA- wires are OK. Check for any authorized service information related to the DTCs or symptoms you are troubleshooting or replace the SRS unit .

NO

Short to power in the floor wire harness; replace the floor wire harness, then clear the DTC.

DTC B0029-13

DTC B0029-13 : Open or Increased Resistance in the Right Side Curtain Airbag First Inflator

NOTE:

- Before doing this troubleshooting procedure, find out if the vehicle was in a collision. If so, verify that all the required components were replaced with new components of the correct part number and were properly installed .
- Before doing this troubleshooting procedure, review SRS Precautions and Procedures , General Troubleshooting Information , and 12 Volt Battery Terminal Disconnection and Reconnection .

DTC Description	DTC
B0029-13 Open or increased resistance in the right side curtain airbag first inflator	B

DTC (SRS)

1. Problem verification

   -1. Clear the DTCs with the HDS.

   -2. Turn the vehicle to the ON mode, then wait for 10 seconds.

   -3. Check for DTCs with the HDS.

DTC Description	DTC
B0029-13 Open or increased resistance in the right side curtain airbag first inflator	B

   Is DTC B0029-13 indicated?

   YES

   The failure is duplicated. Go to step 2.

   NO

   Intermittent failure, the system is OK at this time. Go to Troubleshooting Intermittent Failures. If another DTC is indicated, troubleshoot the DTC.

2. Right side curtain airbag inflator check

   -1. Turn the vehicle to the OFF (LOCK) mode.

-2. Disconnect the negative cable from the 12 volt battery, then wait at least 3 minutes.

-3. **Remove the headliner** .

-4. Disconnect the following connector.

Right side curtain airbag inflator 2P connector (on the floor wire harness)

-5. Connect terminals A and B with a jumper wire.

Terminal A	Right side curtain airbag first inflator 2P connector (female terminals) No. 1 (on the floor wire harness): ①
Terminal B	Right side curtain airbag first inflator 2P connector (female terminals) No. 2 (on the floor wire harness): ①

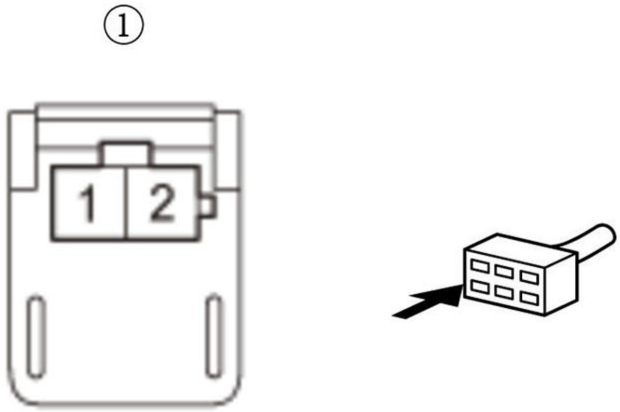

-6. Reconnect the negative cable to the 12 volt battery.

-7. Clear the DTCs with the HDS.

-8. Turn the vehicle to the ON mode, then wait for 10 seconds.

-9. Check for DTCs with the HDS.

DTC Description	DTC
B0029-13 Open or increased resistance in the right side curtain airbag first inflator	B

Is DTC B0029-13 indicated?

YES

Go to step 3.

NO

Open in the right side curtain airbag inflator; **replace the right side curtain airbag** , then clear the DTC.

3. Open wire check (RCA+, RCA- lines)

-1. Turn the vehicle to the OFF (LOCK) mode.

-2. Disconnect the negative cable from the 12 volt battery, then wait at least 3 minutes.

-3. Remove the jumper wire from the right side curtain airbag inflator 2P connector on the floor wire harness.

-4. Disconnect the following connector.

SRS unit connector B (39P)

-5. Connect terminals A and B with a jumper wire.

Terminal A	**SRS unit connector B (39P) No. 7**
Terminal B	**SRS unit connector B (39P) No. 8**

-6. Measure the resistance between test points 1 and 2.

Test condition	Vehicle OFF (LOCK) mode
	Right side curtain airbag inflator 2P connector (on the floor wire harness): disconnected
	SRS unit connector B (39P): disconnected
	SRS unit connector B (39P) terminals No. 7 and No. 8: jumped
Test point 1	Right side curtain airbag first inflator 2P connector (female terminals) No. 1 (on the floor wire harness): ①
Test point 2	Right side curtain airbag first inflator 2P connector (female terminals) No. 2 (on the floor wire harness): ①

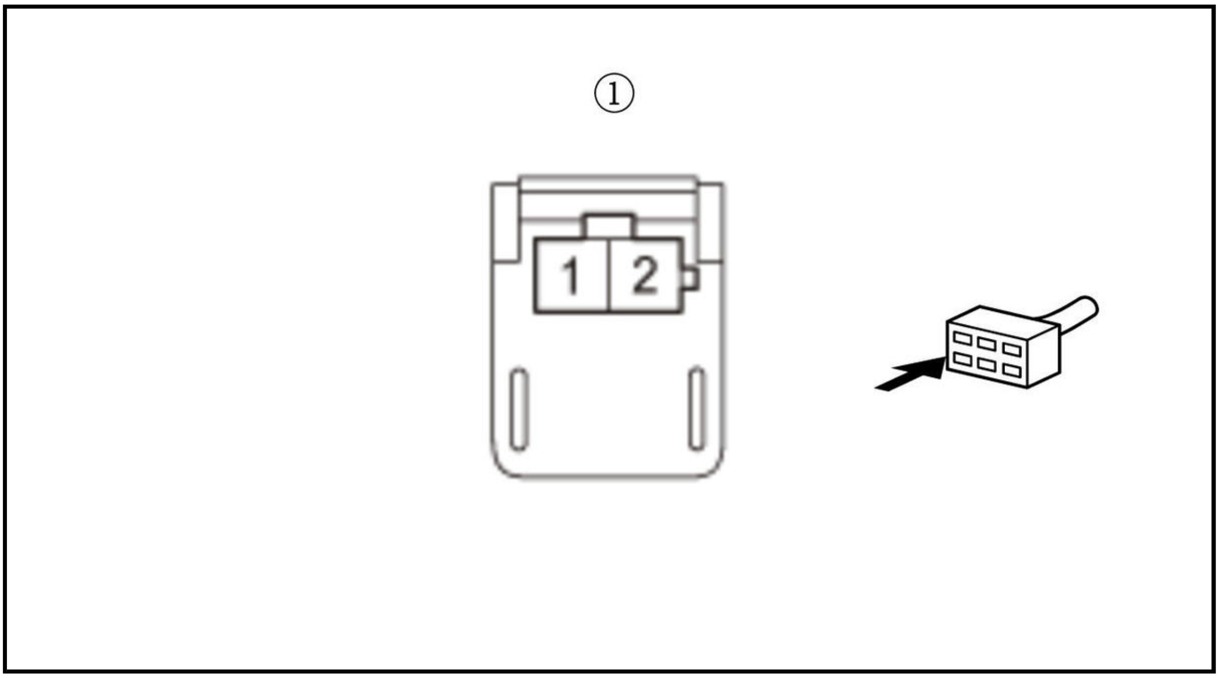

Is there 1.0 Ω or less?

YES

The RCA+ and RCA- wires are OK. Faulty SRS unit or poor connection at SRS unit connector B (39P) and the SRS unit. Check the connection; if the connection is OK, check for any authorized service

information related to the DTCs or symptoms you are troubleshooting or **replace the SRS unit** . If the DTC does not clear, replace the floor wire harness.

NO

Open in the floor wire harness; replace the floor wire harness, then clear the DTC.

DTC B0029-1A

DTC B0029-1A : Decreased Resistance in the Right Side Curtain Airbag First Inflator

Special Tools Required

SRS Short Canceller 070AZ-SAA0100

NOTE:

- **Before doing this troubleshooting procedure, find out if the vehicle was in a collision. If so, verify that all the required components were replaced with new components of the correct part number and were properly installed** .
- Before doing this troubleshooting procedure, review **SRS Precautions and Procedures** , **General Troubleshooting Information** , and **12 Volt Battery Terminal Disconnection and Reconnection** .

DTC Description	DTC
B0029-1A Decreased resistance in the right side curtain airbag first inflator	B

DTC (SRS)

1. Problem verification

   -1. Clear the DTCs with the HDS.

   -2. Turn the vehicle to the ON mode, then wait for 10 seconds.

   -3. Check for DTCs with the HDS.

DTC Description	DTC
B0029-1A Decreased resistance in the right side curtain airbag first inflator	B

   Is DTC B0029-1A indicated?

   YES

   The failure is duplicated. Go to step 2.

   NO

   Intermittent failure, the system is OK at this time. Go to Troubleshooting Intermittent Failures. If another DTC is indicated, troubleshoot the DTC.

2. Right side curtain airbag inflator check

   -1. Turn the vehicle to the OFF (LOCK) mode.

   -2. Disconnect the negative cable from the 12 volt battery, then wait at least 3 minutes.

   -3. **Remove the headliner** .

   -4. Disconnect the following connector.

Right side curtain airbag inflator 2P connector (on the floor wire harness)

-5. Reconnect the negative cable to the 12 volt battery.

-6. Clear the DTCs with the HDS.

-7. Turn the vehicle to the ON mode, then wait for 10 seconds.

-8. Check for DTCs with the HDS.

DTC Description	DTC
B0029-1A Decreased resistance in the right side curtain airbag first inflator	B

Is DTC B0029-1A indicated?

YES

Go to step 3.

NO

Short to another wire in the right side curtain airbag inflator; **replace the right side curtain airbag** , then clear the DTC.

3. Shorted wire check (RCA+ line to RCA- line)

-1. Turn the vehicle to the OFF (LOCK) mode.

-2. Disconnect the negative cable from the 12 volt battery, then wait at least 3 minutes.

-3. Disconnect the following connector.

SRS unit connector B (39P)

-4. **Connect the SRS short canceller to SRS unit connector B (39P) terminals No. 7 and No. 8** .

-5. Measure the resistance between test points 1 and 2.

Test condition	Vehicle OFF (LOCK) mode
	Right side curtain airbag inflator 2P connector (on the floor wire harness): disconnected
	SRS unit connector B (39P): disconnected
	SRS unit connector B (39P) No. 7 and No. 8: connected to SRS short canceller
Test point 1	**SRS unit connector B (39P) No. 7**
Test point 2	**SRS unit connector B (39P) No. 8**

Is there an open circuit, or at least 1 MΩ?

YES

The RCA+ and RCA- wires are OK. Faulty SRS unit or poor connection at SRS unit connector B (39P) and the SRS unit. Check the connection; if the connection is OK, check for any authorized service information related to the DTCs or symptoms you are troubleshooting or **replace the SRS unit** . If the DTC does not clear, replace the floor wire harness.

NO

Short to another wire in the floor wire harness; replace the floor wire harness, then clear the DTC.

DTC B0029-2B

DTC B0029-2B : Short to Another Wire Harness in the Right Side Curtain Airbag First Inflator

NOTE:

- **Before doing this troubleshooting procedure, find out if the vehicle was in a collision. If so, verify that all the required components were replaced with new components of the correct part number and were properly installed** .
- Before doing this troubleshooting procedure, review **SRS Precautions and Procedures** , **General Troubleshooting Information** , and **12 Volt Battery Terminal Disconnection and Reconnection** .

DTC Description	DTC
B0029-2B Short to another wire harness in the right side curtain airbag first inflator	B

DTC (SRS)

1. Problem verification

   -1. Clear the DTCs with the HDS.

   -2. Turn the vehicle to the ON mode, then wait for 10 seconds.

   -3. Check for DTCs with the HDS.

DTC Description	DTC
B0029-2B Short to another wire harness in the right side curtain airbag first inflator	B

   Is DTC B0029-2B indicated?

   YES

   The failure is duplicated. Go to step 2.

   NO

   Intermittent failure, the system is OK at this time. Go to Troubleshooting Intermittent Failures. If another DTC is indicated, troubleshoot the DTC.

2. DTC check

   -1. Check for DTCs with the HDS.

DTC Description	DTC
B0001-2B Short to another wire harness in the driver's airbag first inflator	B
B0002-2B Short to another wire harness in the driver's airbag second inflator	B
B0010-2B Short to another wire harness in the front passenger's airbag first inflator	B
B0011-2B Short to another wire harness in the front passenger's airbag second inflator	B
B0020-2B Short to another wire harness in the left side airbag inflator	B
B0021-2B Short to another wire harness in the left side curtain airbag first inflator	B
B0028-2B Short to another wire harness in the right side airbag inflator	B

DTC Description	DTC
B0029-2B Short to another wire harness in the right side curtain airbag first inflator	B
B0070-2B Short to another wire harness in the driver's seat belt tensioner	B
B0072-2B Short to another wire harness in the front passenger's seat belt tensioner	B
B0079-2B Short to another wire harness in the driver's seat belt outer lap tensioner	B
B007A-2B Short to another wire harness in the front passenger's seat belt outer lap tensioner	B
B0082-2B Short to another wire harness in the selectable energy absorption device of the front passenger's seat belt tensioner	B

Is DTC B0001-2B, B0002-2B, B0010-2B, B0011-2B, B0020-2B, B0021-2B, B0028-2B, B0070-2B, B0072-2B, B0079-2B, B007A-2B or B0082-2B indicated with DTC B0029-2B?

YES

Go to step 3.

NO

Short to another wire in the floor wire harness; replace the floor wire harness, then clear the DTC.

3. Shorted wire check (RCA lines to another line)

-1. Turn the vehicle to the OFF (LOCK) mode.

-2. Disconnect the negative cable from the 12 volt battery, then wait at least 3 minutes.

-3. **Remove the headliner** .

-4. Disconnect the following connectors.

SRS unit connector A (39P)
SRS unit connector B (39P)
Right side curtain airbag inflator 2P connector (on the floor wire harness)
Inflator connectors which are assigned to 2B codes listed on HDS

-5. Check for continuity between test points 1 and 2 of SRS unit connector A (39P) and B (39P) according to table.

Test condition	Vehicle OFF (LOCK) mode
	SRS unit connector A (39P): disconnected
	SRS unit connector B (39P): disconnected
	Right side curtain airbag inflator 2P connector (on the floor wire harness): disconnected
	Inflator connectors which are assigned to 2B codes listed on HDS: disconnected

DTC	Test point 1	Test point 2
	From terminal	To terminal
B0001-2B	SRS unit connector B (39P) No. 8	SRS unit connector A (39P) No. 9
	SRS unit connector B (39P) No. 7	SRS unit connector A (39P) No. 8
B0002-2B	SRS unit connector B (39P) No. 8	SRS unit connector A (39P) No. 10
	SRS unit connector B (39P) No. 7	SRS unit connector A (39P) No. 11
B0010-2B	SRS unit connector B (39P) No. 8	SRS unit connector A (39P) No. 5
	SRS unit connector B (39P) No. 7	SRS unit connector A (39P) No. 4
B0011-2B	SRS unit connector B (39P) No. 8	SRS unit connector A (39P) No. 6
	SRS unit connector B (39P) No. 7	SRS unit connector A (39P) No. 7
B0020-2B	SRS unit connector B (39P) No. 8	SRS unit connector B (39P) No. 5
	SRS unit connector B (39P) No. 7	SRS unit connector B (39P) No. 6
B0021-2B	SRS unit connector B (39P) No. 8	SRS unit connector B (39P) No. 9
	SRS unit connector B (39P) No. 7	SRS unit connector B (39P) No. 10
B0028-2B	SRS unit connector B (39P) No. 8	SRS unit connector B (39P) No. 4
	SRS unit connector B (39P) No. 7	SRS unit connector B (39P) No. 3
B0070-2B	SRS unit connector B (39P) No. 8	SRS unit connector B (39P) No. 20
	SRS unit connector B (39P) No. 7	SRS unit connector B (39P) No. 21
B0072-2B	SRS unit connector B (39P) No. 8	SRS unit connector B (39P) No. 19
	SRS unit connector B (39P) No. 7	SRS unit connector B (39P) No. 18
B0079-2B	SRS unit connector B (39P) No. 8	SRS unit connector B (39P) No. 24
	SRS unit connector B (39P) No. 7	SRS unit connector B (39P) No. 25
B007A-2B	SRS unit connector B (39P) No. 8	SRS unit connector B (39P) No. 23
	SRS unit connector B (39P) No. 7	SRS unit connector B (39P) No. 22

DTC	Test point 1	Test point 2
	From terminal	To terminal
B0082-2B	SRS unit connector B (39P) No. 8	SRS unit connector A (39P) No. 2
	SRS unit connector B (39P) No. 7	SRS unit connector A (39P) No. 3

Is there continuity?

YES

Short to another wire in the dashboard wire harness or the floor wire harness; replace the faulty harness, then clear the DTC.

NO

The RCA wires are OK. Faulty SRS unit or poor connection at SRS unit connector A (39P) and the SRS unit, or SRS unit connector B (39P) and the SRS unit. Check the connection; if the connection is OK, check for any authorized service information related to the DTCs or symptoms you are troubleshooting or **replace the SRS unit** . If the DTC does not clear, replace the dashboard wire harness or the floor wire harness.

DTC B0050-11, B0050-2B

DTC B0050-11 : Short or Decreased Resistance in the Driver's Seat Belt Buckle Switch

DTC B0050-2B : Short to Another Wire Harness in the Driver's Seat Belt Buckle Switch

NOTE:

- **Before doing this troubleshooting procedure, find out if the vehicle was in a collision. If so, verify that all the required components were replaced with new components of the correct part number and were properly installed** .
- Before doing this troubleshooting procedure, review **SRS Precautions and Procedures** and **General Troubleshooting Information** .

DTC Description	DTC
B0050-11 Short or decreased resistance in the driver's seat belt buckle switch	B
B0050-2B Short to another wire harness in the driver's seat belt buckle switch	B

DTC (SRS)

1. Problem verification

   -1. Clear the DTCs with the HDS.

   -2. Turn the vehicle to the ON mode, then wait for 10 seconds. Buckle and unbuckle the driver's seat belt several times.

   -3. Check for DTCs with the HDS.

DTC Description	DTC
B0050-11 Short or decreased resistance in the driver's seat belt buckle switch	B
B0050-2B Short to another wire harness in the driver's seat belt buckle switch	B

   Is DTC B0050-11 or B0050-2B indicated?

   YES

   The failure is duplicated. Go to step 2.

   NO

   Intermittent failure, the system is OK at this time. Go to Troubleshooting Intermittent Failures. If another DTC is indicated, troubleshoot the DTC.

2. Driver's seat belt buckle switch check

   -1. Turn the vehicle to the OFF (LOCK) mode.

   -2. Disconnect the driver's seat belt buckle switch 2P connector (A) on the floor wire harness.

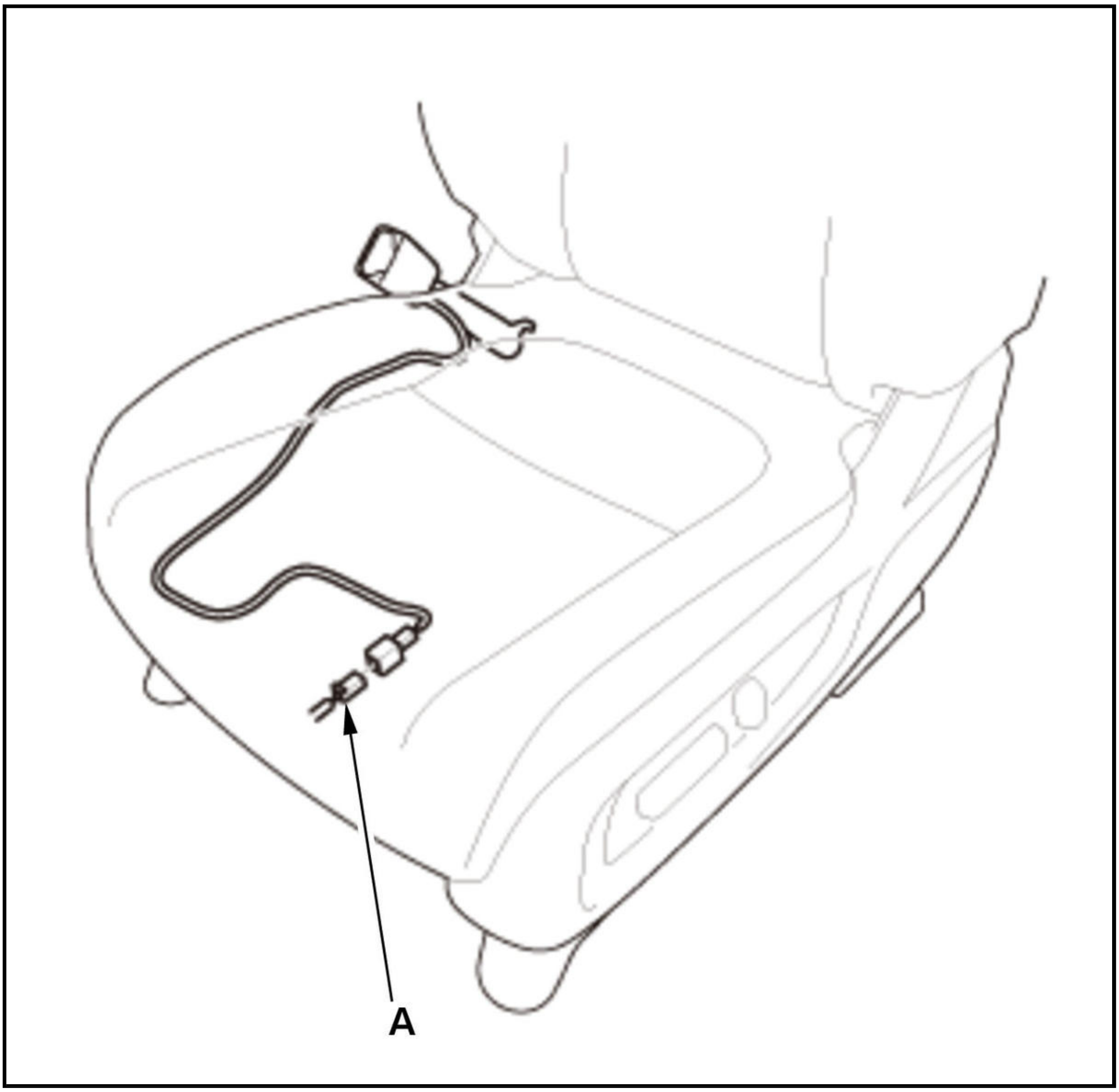

-3. Clear the DTCs with the HDS.

-4. Turn the vehicle to the ON mode, then wait for 10 seconds.

-5. Check for DTCs with the HDS.

DTC Description	DTC
B0050-11 Short or decreased resistance in the driver's seat belt buckle switch	B
B0050-2B Short to another wire harness in the driver's seat belt buckle switch	B

Is DTC B0050-11 or B0050-2B indicated?

YES

Short in the floor wire harness; replace the floor wire harness, then clear the DTC.

NO

Faulty driver's seat belt buckle switch; **replace the driver's seat belt buckle assembly** , then clear the DTC.

DTC B0050-13

DTC B0050-13 : Open or Increased Resistance in the Driver's Seat Belt Buckle Switch

NOTE:

- **Before doing this troubleshooting procedure, find out if the vehicle was in a collision. If so, verify that all the required components were replaced with new components of the correct part number and were properly installed** .
- Before doing this troubleshooting procedure, review **SRS Precautions and Procedures** and **General Troubleshooting Information** .

DTC Description	DTC
B0050-13 Open or increased resistance in the driver's seat belt buckle switch	B

DTC (SRS)

1. Problem verification

   -1. Clear the DTCs with the HDS.

   -2. Turn the vehicle to the ON mode, then wait for 10 seconds. Buckle and unbuckle the driver's seat belt several times.

   -3. Check for DTCs with the HDS.

DTC Description	DTC
B0050-13 Open or increased resistance in the driver's seat belt buckle switch	B

   Is DTC B0050-13 indicated?

   YES

   The failure is duplicated. Go to step 2.

   NO

   Intermittent failure, the system is OK at this time. Go to Troubleshooting Intermittent Failures. If another DTC is indicated, troubleshoot the DTC.

2. Driver's seat belt buckle switch check

   -1. Turn the vehicle to the OFF (LOCK) mode.

   -2. Disconnect the driver's seat belt buckle switch 2P connector (A) on the floor wire harness.

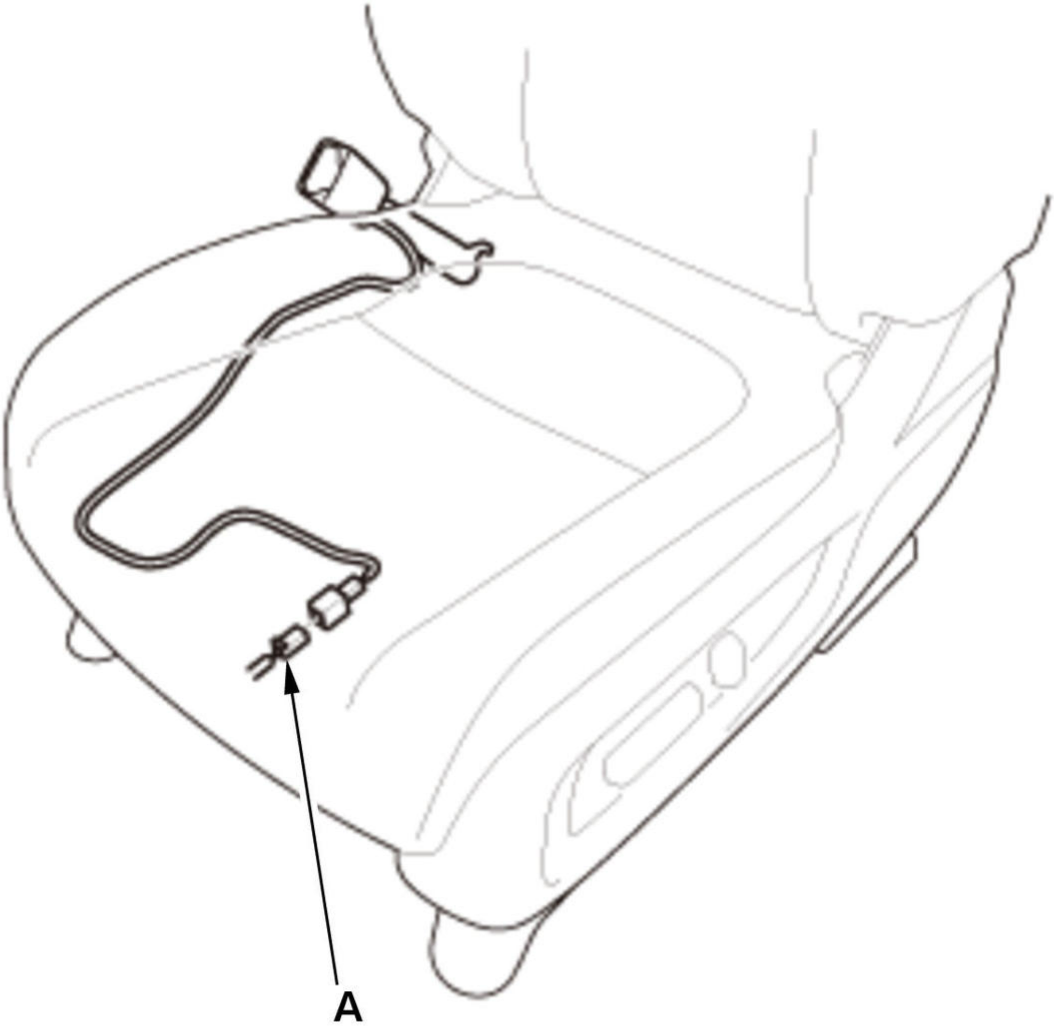

-3. Connect terminals A and B with a jumper wire.

Terminal A	Driver's seat belt buckle switch 2P connector (female terminals) No. 1 (on the floor wire harness): ①
Terminal B	Driver's seat belt buckle switch 2P connector (female terminals) No. 2 (on the floor wire harness): ①

①

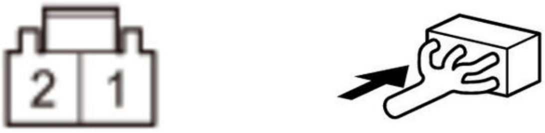

-4. Turn the vehicle to the ON mode, then wait for 10 seconds.

-5. Check for DTCs with the HDS.

DTC Description	DTC
B0050-11 Short or decreased resistance in the driver's seat belt buckle switch	B

Is DTC B0050-11 indicated?

YES

Faulty driver's seat belt buckle switch; **replace the driver's seat belt buckle assembly** , then clear the DTC.

NO

Go to step 3.

3. Open wire check (FLBC line)

-1. Turn the vehicle to the OFF (LOCK) mode.

-2. Disconnect the negative cable from the 12 volt battery, then wait at least 3 minutes.

-3. Remove the jumper wire from the driver's seat belt buckle switch 2P connector on the floor wire harness.

-4. Disconnect the following connector.

SRS unit connector B (39P)

-5. Measure the resistance between test points 1 and 2.

Test condition	Vehicle OFF (LOCK) mode
	Driver's seat belt buckle switch 2P connector (on the floor wire harness): disconnected
	SRS unit connector B (39P): disconnected
Test point 1	Driver's seat belt buckle switch 2P connector (female terminals) No. 1 (on the floor wire harness): ①
Test point 2	**SRS unit connector B (39P) No. 29**

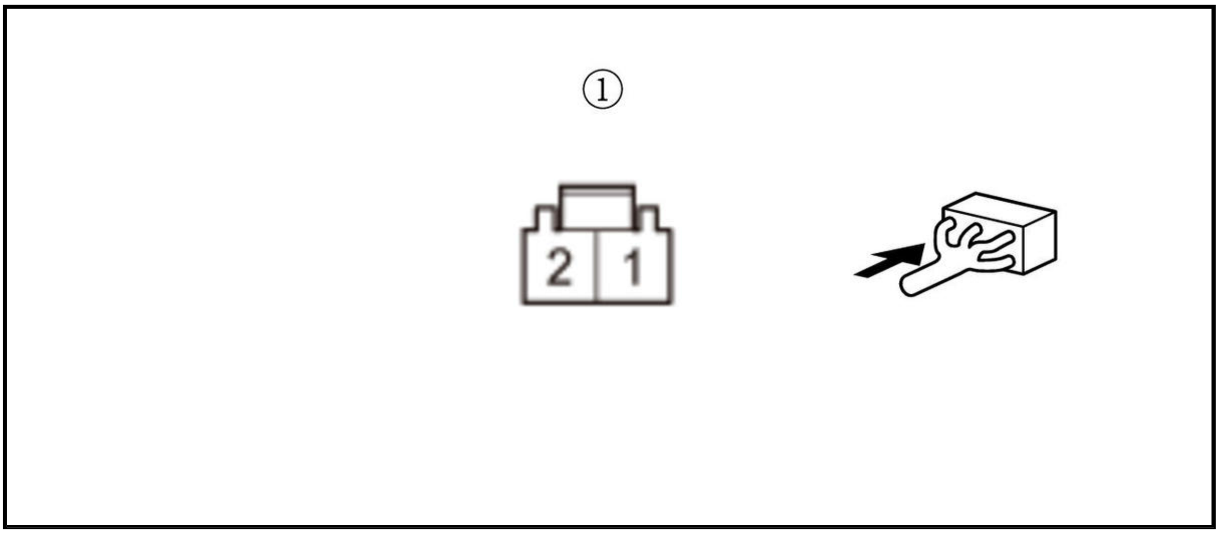

Is there 1.0 Ω or less?

YES

The FLBC wire is OK. Go to step 4.

NO

Open in the floor wire harness; replace the floor wire harness, then clear the DTC.

4. Open wire check (GND line)

-1. Measure the resistance between test points 1 and 2.

Test condition	Vehicle OFF (LOCK) mode
	Driver's seat belt buckle switch 2P connector (on the floor wire harness): disconnected
	SRS unit connector B (39P): disconnected
Test point 1	Driver's seat belt buckle switch 2P connector (female terminals) No. 2 (on the floor wire harness): ①
Test point 2	Body ground

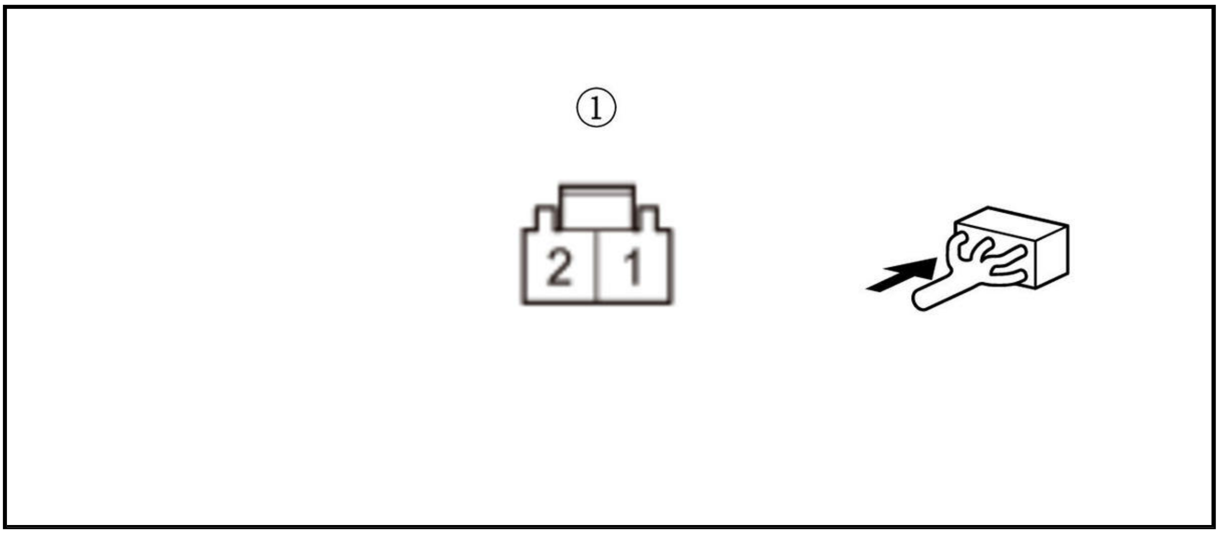

Is there 1.0 Ω or less?

YES

The GND wire is OK. Faulty SRS unit or poor connection at SRS unit connector B (39P) and the SRS unit. Check the connection; if the connection is OK, check for any authorized service information related to the DTCs or symptoms you are troubleshooting or **replace the SRS unit** . If the DTC does not clear, replace the floor wire harness.

NO

Open in the floor wire harness; check for a poor ground at G501. If the ground is OK, replace the floor wire harness, then clear the DTC.

DTC B0052-11, B0052-2B

DTC B0052-11 : Short or Decreased Resistance in the Front Passenger's Seat Belt Buckle Switch

DTC B0052-2B : Short to Another Wire Harness in the Front Passenger's Seat Belt Buckle Switch

NOTE:

- **Before doing this troubleshooting procedure, find out if the vehicle was in a collision. If so, verify that all the required components were replaced with new components of the correct part number and were properly installed** .
- Before doing this troubleshooting procedure, review **SRS Precautions and Procedures** and **General Troubleshooting Information** .

DTC Description	DTC
B0052-11 Short or decreased resistance in the front passenger's seat belt buckle switch	B
B0052-2B Short to another wire harness in the front passenger's seat belt buckle switch	B

DTC (SRS)

1. Problem verification

   -1. Clear the DTCs with the HDS.

   -2. Turn the vehicle to the ON mode, then wait for 10 seconds. Buckle and unbuckle the front passenger's seat belt several times.

   -3. Check for DTCs with the HDS.

DTC Description	DTC
B0052-11 Short or decreased resistance in the front passenger's seat belt buckle switch	B
B0052-2B Short to another wire harness in the front passenger's seat belt buckle switch	B

   Is DTC B0052-11 or B0052-2B indicated?

   YES

   The failure is duplicated. Go to step 2.

   NO

   Intermittent failure, the system is OK at this time. Go to Troubleshooting Intermittent Failures. If another DTC is indicated, troubleshoot the DTC.

2. Front passenger's seat belt buckle switch check

   -1. Turn the vehicle to the OFF (LOCK) mode.

   -2. Disconnect the front passenger's seat belt buckle switch 2P connector (A) on the floor wire harness.

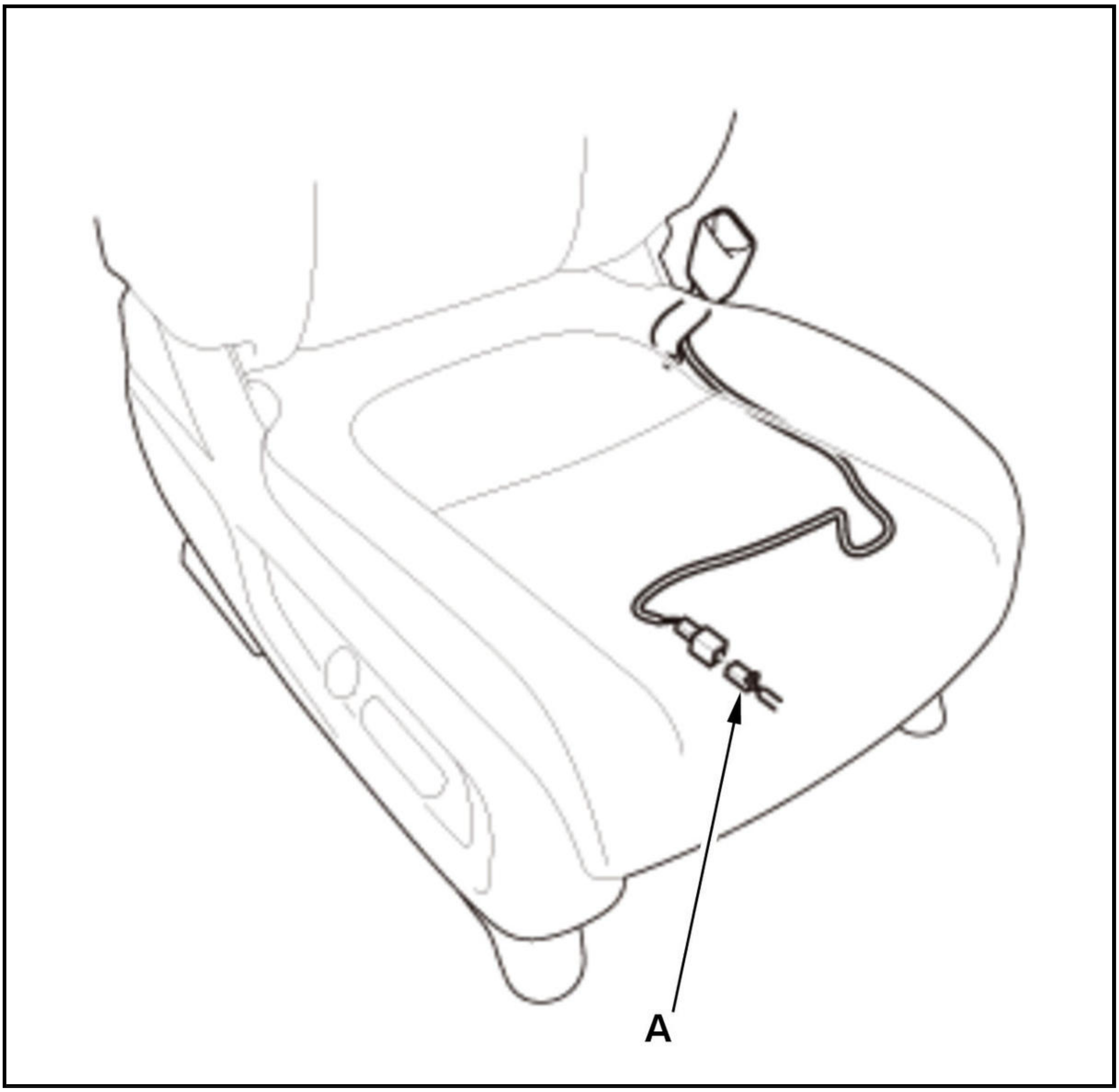

-3. Clear the DTCs with the HDS.

-4. Turn the vehicle to the ON mode, then wait for 10 seconds.

-5. Check for DTCs with the HDS.

DTC Description	DTC
B0052-11 Short or decreased resistance in the front passenger's seat belt buckle switch	B
B0052-2B Short to another wire harness in the front passenger's seat belt buckle switch	B

Is DTC B0052-11 or B0052-2B indicated?

YES

Short in the floor wire harness; replace the floor wire harness, then clear the DTC.

NO

Faulty front passenger's seat belt buckle switch; **replace the front passenger's seat belt buckle assembly** , then clear the DTC.

DTC B0052-13

DTC B0052-13 : Open or Increased Resistance in the Front Passenger's Seat Belt Buckle Switch

NOTE:

- **Before doing this troubleshooting procedure, find out if the vehicle was in a collision. If so, verify that all the required components were replaced with new components of the correct part number and were properly installed** .
- Before doing this troubleshooting procedure, review **SRS Precautions and Procedures** and **General Troubleshooting Information** .

DTC Description	DTC
B0052-13 Open or increased resistance in the front passenger's seat belt buckle switch	B

DTC (SRS)

1. Problem verification

   -1. Clear the DTCs with the HDS.

   -2. Turn the vehicle to the ON mode, then wait for 10 seconds. Buckle and unbuckle the front passenger's seat belt several times.

   -3. Check for DTCs with the HDS.

DTC Description	DTC
B0052-13 Open or increased resistance in the front passenger's seat belt buckle switch	B

   Is DTC B0052-13 indicated?

   YES

   The failure is duplicated. Go to step 2.

   NO

   Intermittent failure, the system is OK at this time. Go to Troubleshooting Intermittent Failures. If another DTC is indicated, troubleshoot the DTC.

2. Front passenger's seat belt buckle switch check

   -1. Turn the vehicle to the OFF (LOCK) mode.

   -2. Disconnect the front passenger's seat belt buckle switch 2P connector (A) on the floor wire harness.

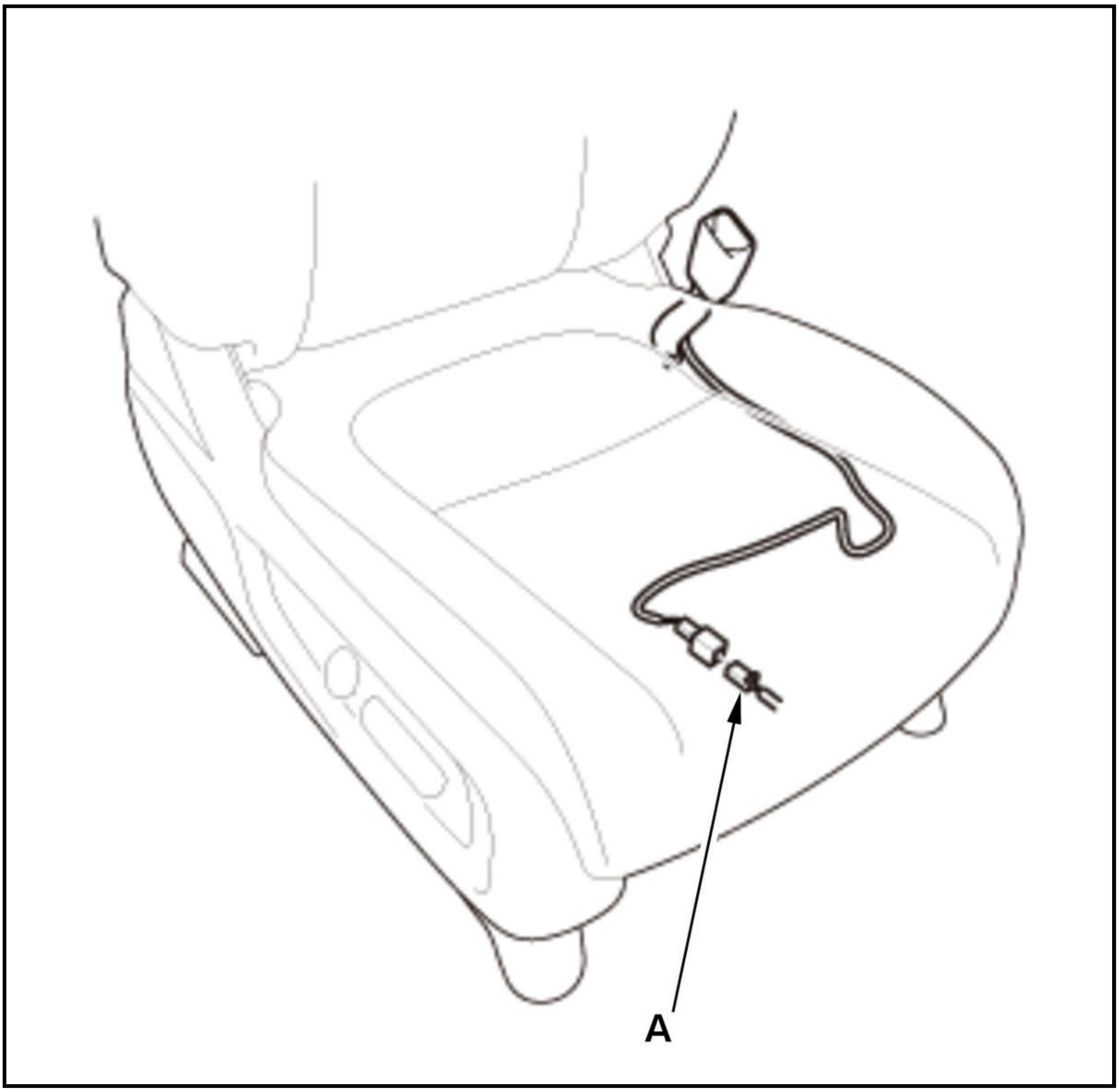

-3. Connect terminals A and B with a jumper wire.

Terminal A	Front passenger's seat belt buckle switch 2P connector (female terminals) No. 1 (on the floor wire harness): ①
Terminal B	Front passenger's seat belt buckle switch 2P connector (female terminals) No. 2 (on the floor wire harness): ①

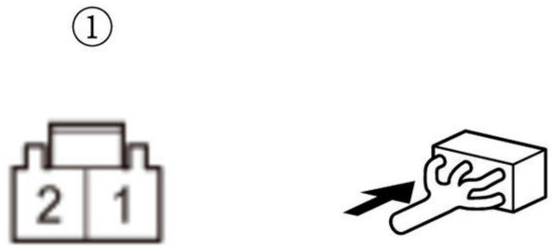

-4. Turn the vehicle to the ON mode, then wait for 10 seconds.

-5. Check for DTCs with the HDS.

DTC Description	**DTC**
B0052-11 Short or decreased resistance in the front passenger's seat belt buckle switch	B

Is DTC B0052-11 indicated?

YES

Faulty front passenger's seat belt buckle switch; **replace the front passenger's seat belt buckle assembly** , then clear the DTC.

NO

Go to step 3.

3. Open wire check (FRBC line)

-1. Turn the vehicle to the OFF (LOCK) mode.

-2. Disconnect the negative cable from the 12 volt battery, then wait at least 3 minutes.

-3. Remove the jumper wire from the front passenger's seat belt buckle switch 2P connector on the floor wire harness.

-4. Disconnect the following connector.

SRS unit connector B (39P)

-5. Measure the resistance between test points 1 and 2.

Test condition	Vehicle OFF (LOCK) mode
	Front passenger's seat belt buckle switch 2P connector (on the front passenger's seat wire harness): disconnected
	SRS unit connector B (39P): disconnected
Test point 1	Front passenger's seat belt buckle switch 2P connector (female terminals) No. 1 (on the front passenger's seat wire harness): ①
Test point 2	**SRS unit connector B (39P) No. 27**

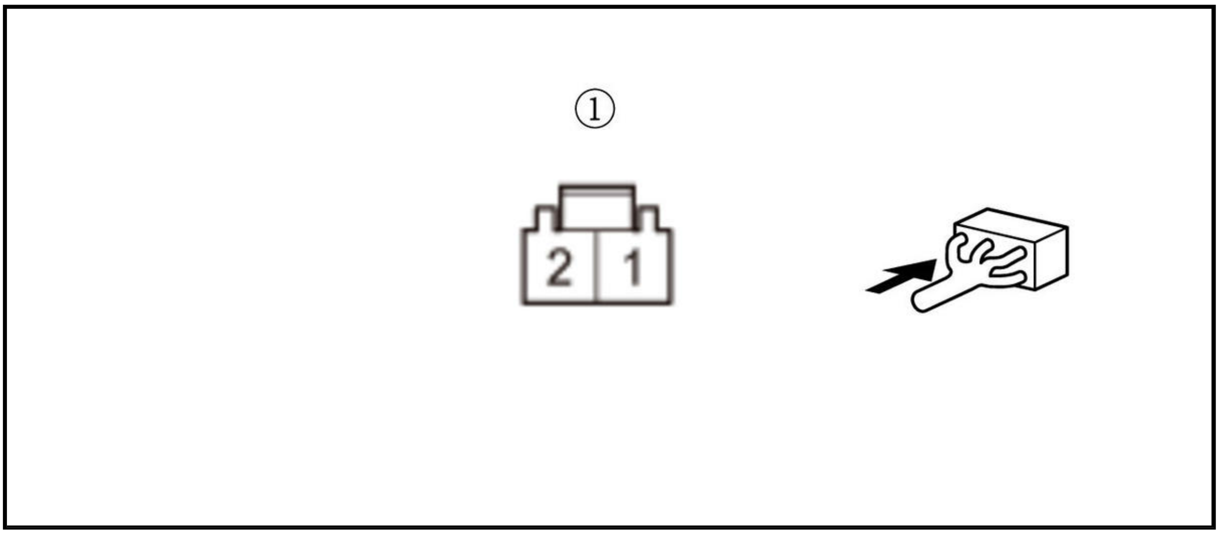

Is there 1.0 Ω or less?

YES

The FRBC wire is OK. Go to step 4.

NO

Open in the floor wire harness; replace the floor wire harness, then clear the DTC.

4. Open wire check (GND line)

-1. Measure the resistance between test points 1 and 2.

Test condition	Vehicle OFF (LOCK) mode Front passenger's seat belt buckle switch 2P connector (on the front passenger's seat wire harness): disconnected SRS unit connector B (39P): disconnected
Test point 1	Front passenger's seat belt buckle switch 2P connector (female terminals) No. 2 (on the front passenger's seat wire harness): ①
Test point 2	Body ground

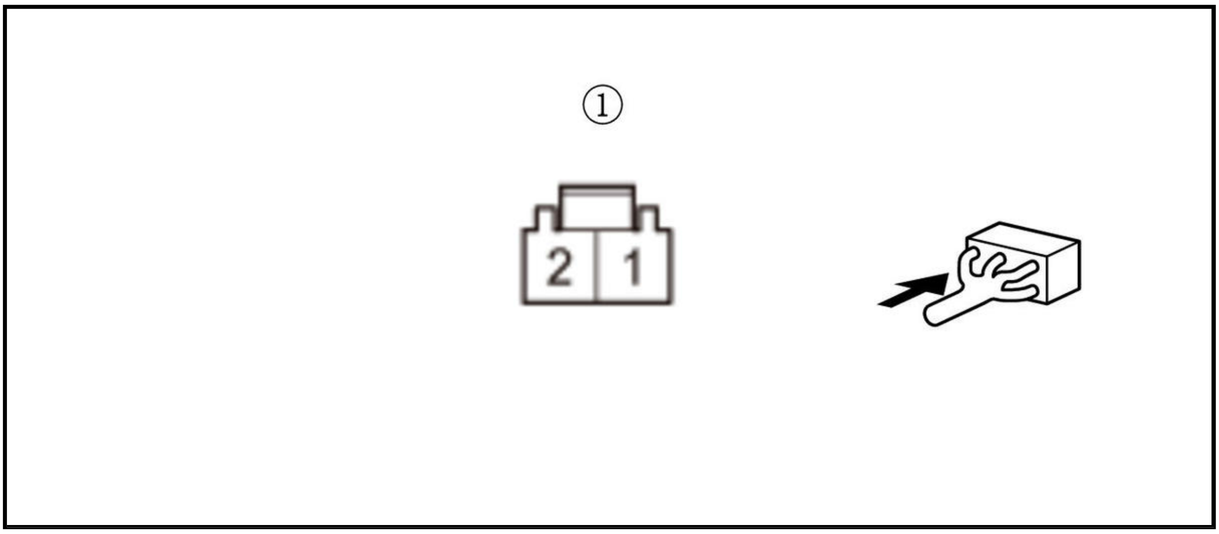

Is there 1.0 Ω or less?

YES

The GND wire is OK. Faulty SRS unit or poor connection at SRS unit connector B (39P) and the SRS unit. Check the connection; if the connection is OK, check for any authorized service information related to the DTCs or symptoms you are troubleshooting or **replace the SRS unit** . If the DTC does not clear, replace the floor wire harness.

NO

Open in the floor wire harness; check for a poor ground at G502. If the ground is OK, replace the floor wire harness, then clear the DTC.

DTC B0070-11

DTC B0070-11 : Short to Ground in the Driver's Seat Belt Tensioner

NOTE:

- **Before doing this troubleshooting procedure, find out if the vehicle was in a collision. If so, verify that all the required components were replaced with new components of the correct part number and were properly installed** .
- Before doing this troubleshooting procedure, review **SRS Precautions and Procedures** , **General Troubleshooting Information** , and **12 Volt Battery Terminal Disconnection and Reconnection** .

DTC Description	DTC
B0070-11 Short to ground in the driver's seat belt tensioner	B

DTC (SRS)

1. Problem verification

   -1. Clear the DTCs with the HDS.

   -2. Turn the vehicle to the ON mode, then wait for 10 seconds.

   -3. Check for DTCs with the HDS.

DTC Description	DTC
B0070-11 Short to ground in the driver's seat belt tensioner	B

   Is DTC B0070-11 indicated?

   YES

   The failure is duplicated. Go to step 2.

   NO

   Intermittent failure, the system is OK at this time. Go to Troubleshooting Intermittent Failures. If another DTC is indicated, troubleshoot the DTC.

2. Shorted wire check (LRP+, LRP- lines) 1

   -1. Turn the vehicle to the OFF (LOCK) mode.

   -2. Disconnect the negative cable from the 12 volt battery, then wait at least 3 minutes.

   -3. **Remove the left side B-pillar lower trim** .

   -4. Disconnect the following connector.

Driver's seat belt tensioner 2P connector (on the floor wire harness)

   -5. Reconnect the negative cable to the 12 volt battery.

   -6. Turn the vehicle to the ON mode, then clear the DTC.

   -7. Check for DTCs with the HDS.

DTC Description	DTC
B0070-11 Short to ground in the driver's seat belt tensioner	B

   Is DTC B0070-11 indicated?

   YES

Go to step 3.

NO

Short to ground in the driver's seat belt tensioner; **replace driver's seat belt tensioner** , then clear the DTC.

3. Shorted wire check (LRP+, LRP- lines) 2

-1. Turn the vehicle to the OFF (LOCK) mode.

-2. Disconnect the negative cable from the 12 volt battery, then wait at least 3 minutes.

-3. Disconnect the following connector.

SRS unit connector B (39P)

-4. Measure the resistance between test points 1 and 2.

Test condition	Vehicle OFF (LOCK) mode
	SRS unit connector B (39P): disconnected
	Driver's seat belt tensioner 2P connector (on the floor wire harness): disconnected
Test point 1	**SRS unit connector B (39P) No. 20**
Test point 2	Body ground

Test point 1	**SRS unit connector B (39P) No. 21**
Test point 2	Body ground

Is there an open circuit, or at least 1 MΩ?

YES

The LRP+ and LRP- wires are OK. Check for any authorized service information related to the DTCs or symptoms you are troubleshooting or **replace the SRS unit** .

NO

Short to ground in the floor wire harness; replace the floor wire harness, then clear the DTC.

DTC B0070-12

DTC B0070-12 : Short to Power in the Driver's Seat Belt Tensioner

NOTE:

- **Before doing this troubleshooting procedure, find out if the vehicle was in a collision. If so, verify that all the required components were replaced with new components of the correct part number and were properly installed** .
- Before doing this troubleshooting procedure, review **SRS Precautions and Procedures** , **General Troubleshooting Information** , and **12 Volt Battery Terminal Disconnection and Reconnection** .

DTC Description	DTC
B0070-12 Short to power in the driver's seat belt tensioner	B

DTC (SRS)

1. Problem verification

-1. Clear the DTCs with the HDS.

-2. Turn the vehicle to the ON mode, then wait for 10 seconds.

-3. Check for DTCs with the HDS.

DTC Description	DTC
B0070-12 Short to power in the driver's seat belt tensioner	B

Is DTC B0070-12 indicated?

YES

The failure is duplicated. Go to step 2.

NO

Intermittent failure, the system is OK at this time. Go to Troubleshooting Intermittent Failures. If another DTC is indicated, troubleshoot the DTC.

2. Shorted wire check (LRP+, LRP- lines to power) 1

-1. Turn the vehicle to the OFF (LOCK) mode.

-2. Disconnect the negative cable from the 12 volt battery, then wait at least 3 minutes.

-3. **Remove the left side B-pillar lower trim** .

-4. Disconnect the following connector.

Driver's seat belt tensioner 2P connector (on the floor wire harness)

-5. Reconnect the negative cable to the 12 volt battery.

-6. Turn the vehicle to the ON mode, then clear the DTC.

-7. Check for DTCs with the HDS.

DTC Description	DTC
B0070-12 Short to power in the driver's seat belt tensioner	B

Is DTC B0070-12 indicated?

YES

Go to step 3.

NO

Short to power in the left side curtain airbag inflator; **replace the driver's seat belt tensioner** , then clear the DTC.

3. Shorted wire check (LRP+, LRP- lines to power) 2

-1. Turn the vehicle to the OFF (LOCK) mode.

-2. Disconnect the negative cable from the 12 volt battery, then wait at least 3 minutes.

-3. Disconnect the following connector.

SRS unit connector B (39P)

-4. Reconnect the negative cable to the 12 volt battery.

-5. Turn the vehicle to the ON mode.

-6. Measure the voltage between test points 1 and 2.

Test condition	Vehicle ON mode
	SRS unit connector B (39P): disconnected
	Driver's seat belt tensioner 2P connector (on the floor wire harness): disconnected
Test point 1	**SRS unit connector B (39P) No. 20**
Test point 2	Body ground

Test point 1	**SRS unit connector B (39P) No. 21**
Test point 2	Body ground

Is there 0.2 V or less?

YES

The LRP+ and LRP- wires are OK. Check for any authorized service information related to the DTCs or symptoms you are troubleshooting or **replace the SRS unit** .

NO

Short to power in the floor wire harness; replace the floor wire harness, then clear the DTC.

DTC B0070-13

DTC B0070-13 : Open or Increased Resistance in the Driver's Seat Belt Tensioner

NOTE:

- **Before doing this troubleshooting procedure, find out if the vehicle was in a collision. If so, verify that all the required components were replaced with new components of the correct part number and were properly installed** .
- Before doing this troubleshooting procedure, review **SRS Precautions and Procedures** , **General Troubleshooting Information** , and **12 Volt Battery Terminal Disconnection and Reconnection** .

DTC Description	DTC
B0070-13 Open or increased resistance in the driver's seat belt tensioner	B

DTC (SRS)

1. Problem verification

-1. Clear the DTCs with the HDS.

-2. Turn the vehicle to the ON mode, then wait for 10 seconds.

-3. Check for DTCs with the HDS.

DTC Description	DTC
B0070-13 Open or increased resistance in the driver's seat belt tensioner	B

Is DTC B0070-13 indicated?

YES

The failure is duplicated. Go to step 2.

NO

Intermittent failure, the system is OK at this time. Go to Troubleshooting Intermittent Failures. If another DTC is indicated, troubleshoot the DTC.

2. Driver's seat belt tensioner check

-1. Turn the vehicle to the OFF (LOCK) mode.

-2. Disconnect the negative cable from the 12 volt battery, then wait at least 3 minutes.

-3. **Remove the left side B-pillar lower trim** .

-4. Disconnect the following connector.

Driver's seat belt tensioner 2P connector (on the floor wire harness)

-5. Connect terminals A and B with a jumper wire.

Terminal A	Driver's seat belt tensioner 2P connector (female terminals) No. 1 (on the floor wire harness): ①
Terminal B	Driver's seat belt tensioner 2P connector (female terminals) No. 2 (on the floor wire harness): ①

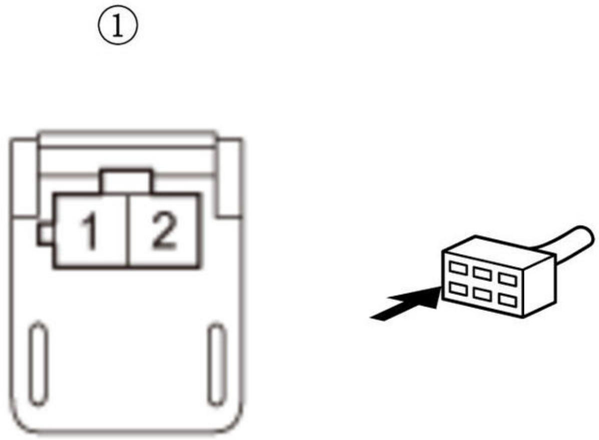

-6. Reconnect the negative cable to the 12 volt battery.

-7. Clear the DTCs with the HDS.

-8. Turn the vehicle to the ON mode, then wait for 10 seconds.

-9. Check for DTCs with the HDS.

DTC Description	DTC
B0070-13 Open or increased resistance in the driver's seat belt tensioner	B

Is DTC B0070-13 indicated?

YES

Go to step 3.

NO

Open in the driver's seat belt tensioner; **replace the driver's seat belt** , then clear the DTC.

3. Open wire check (LRP+, LRP- lines)

-1. Turn the vehicle to the OFF (LOCK) mode.

-2. Disconnect the negative cable from the 12 volt battery, then wait at least 3 minutes.

-3. Remove the jumper wire from the driver's seat belt tensioner 2P connector on the floor wire harness.

-4. Disconnect the following connector.

SRS unit connector B (39P)

-5. Connect terminals A and B with a jumper wire.

Terminal A	**SRS unit connector B (39P) No. 20**
Terminal B	**SRS unit connector B (39P) No. 21**

-6. Measure the resistance between test points 1 and 2.

Test condition	Vehicle OFF (LOCK) mode
	Driver's seat belt tensioner 2P connector (on the floor wire harness): disconnected
	SRS unit connector B (39P): disconnected
	SRS unit connector B (39P) terminals No. 20 and No. 21: jumped
Test point 1	Driver's seat belt tensioner 2P connector (female terminals) No. 1 (on the floor wire harness): ①
Test point 2	Driver's seat belt tensioner 2P connector (female terminals) No. 2 (on the floor wire harness): ①

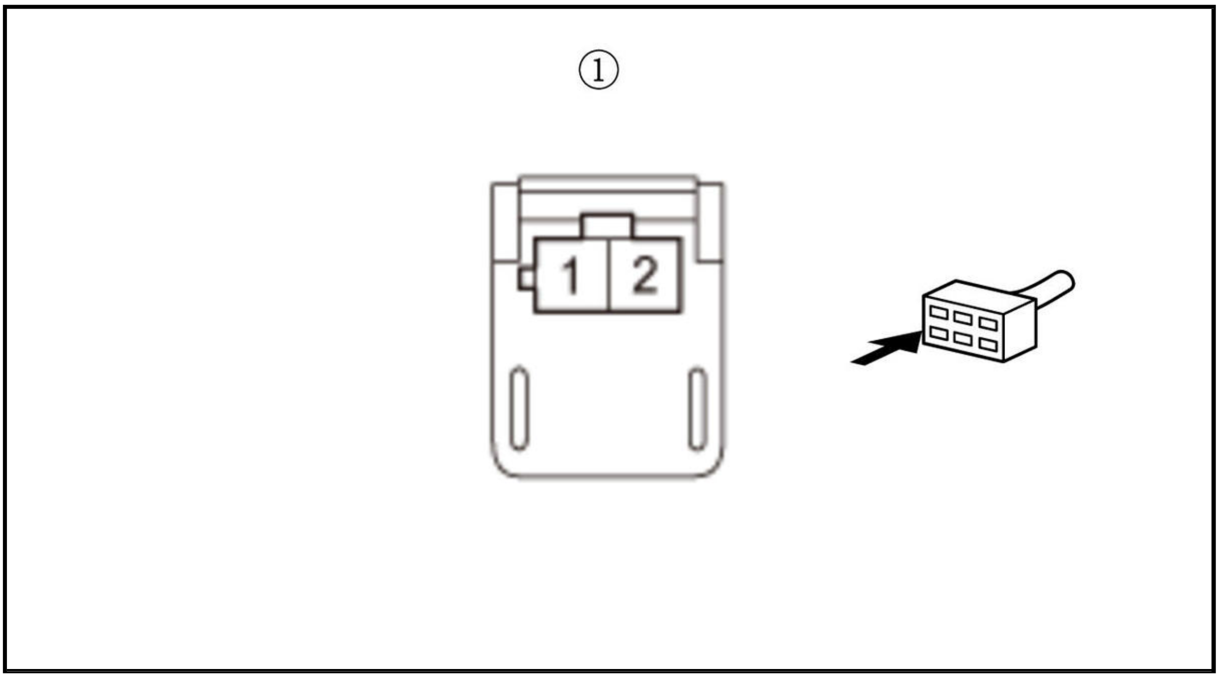

Is there 1.0 Ω or less?

YES

The LRP+ and LRP- wires are OK. Faulty SRS unit or poor connection at SRS unit connector B (39P) and the SRS unit. Check the connection; if the connection is OK, check for any authorized service information related to the DTCs or symptoms you are troubleshooting or **replace the SRS unit** . If the DTC does not clear, replace the floor wire harness.

NO

Open in the floor wire harness; replace the floor wire harness, then clear the DTC.

DTC B0070-1A

DTC B0070-1A : Decreased Resistance in the Driver's Seat Belt Tensioner

NOTE:

- **Before doing this troubleshooting procedure, find out if the vehicle was in a collision. If so, verify that all the required components were replaced with new components of the correct part number and were properly installed** .
- Before doing this troubleshooting procedure, review **SRS Precautions and Procedures** , **General Troubleshooting Information** , and **12 Volt Battery Terminal Disconnection and Reconnection** .

DTC Description	DTC
B0070-1A Decreased resistance in the driver's seat belt tensioner	B

DTC (SRS)

1. Problem verification

   -1. Clear the DTCs with the HDS.

   -2. Turn the vehicle to the ON mode, then wait for 10 seconds.

   -3. Check for DTCs with the HDS.

DTC Description	DTC
B0070-1A Decreased resistance in the driver's seat belt tensioner	B

Is DTC B0070-1A indicated?

YES

The failure is duplicated. Go to step 2.

NO

Intermittent failure, the system is OK at this time. Go to Troubleshooting Intermittent Failures. If another DTC is indicated, troubleshoot the DTC.

2. Driver's seat belt tensioner check

-1. Turn the vehicle to the OFF (LOCK) mode.

-2. Disconnect the negative cable from the 12 volt battery, then wait at least 3 minutes.

-3. **Remove the left side B-pillar lower trim** .

-4. Disconnect the following connector.

Driver's seat belt tensioner 2P connector (on the floor wire harness)

-5. Reconnect the negative cable to the 12 volt battery.

-6. Clear the DTCs with the HDS.

-7. Turn the vehicle to the ON mode, then wait for 10 seconds.

-8. Check for DTCs with the HDS.

DTC Description	DTC
B0070-1A Decreased resistance in the driver's seat belt tensioner	B

Is DTC B0070-1A indicated?

YES

Go to step 3.

NO

Short to another wire in the driver's seat belt tensioner; **replace the driver's seat belt** , then clear the DTC.

3. Shorted wire check (LRP+ line to LRP- line)

-1. Turn the vehicle to the OFF (LOCK) mode.

-2. Disconnect the negative cable from the 12 volt battery, then wait at least 3 minutes.

-3. Disconnect the following connector.

SRS unit connector B (39P)

-4. Measure the resistance between test points 1 and 2.

Test condition	Vehicle OFF (LOCK) mode
	Driver's seat belt tensioner 2P connector (on the floor wire harness): disconnected
	SRS unit connector B (39P): disconnected
Test point 1	**SRS unit connector B (39P) No. 20**
Test point 2	**SRS unit connector B (39P) No. 21**

Is there an open circuit, or at least 1 MΩ?

YES

The LRP+ and LRP- wires are OK. Faulty SRS unit or poor connection at SRS unit connector B (39P) and the SRS unit. Check the connection; if the connection is OK, check for any authorized service information related to the DTCs or symptoms you are troubleshooting or **replace the SRS unit** . If the DTC does not clear, replace the floor wire harness.

NO

Short to another wire in the floor wire harness; replace the floor wire harness, then clear the DTC.

DTC TROUBLESHOOTING

DTC B0070-2B

DTC B0070-2B : Short to Another Wire Harness in the Driver's Seat Belt Tensioner

NOTE:

- **Before doing this troubleshooting procedure, find out if the vehicle was in a collision. If so, verify that all the required components were replaced with new components of the correct part number and were properly installed** .
- Before doing this troubleshooting procedure, review **SRS Precautions and Procedures** , **General Troubleshooting Information** , and **12 Volt Battery Terminal Disconnection and Reconnection** .

DTC Description	DTC
B0070-2B Short to another wire harness in the driver's seat belt tensioner	B

DTC (SRS)

1. Problem verification

   -1. Clear the DTCs with the HDS.

   -2. Turn the vehicle to the ON mode, then wait for 10 seconds.

   -3. Check for DTCs with the HDS.

DTC Description	DTC
B0070-2B Short to another wire harness in the driver's seat belt tensioner	B

   Is DTC B0070-2B indicated?

   YES

   The failure is duplicated. Go to step 2.

   NO

   Intermittent failure, the system is OK at this time. Go to Troubleshooting Intermittent Failures. If another DTC is indicated, troubleshoot the DTC.

2. DTC check

   -1. Check for DTCs with the HDS.

DTC Description	DTC
B0001-2B Short to another wire harness in the driver's airbag first inflator	B
B0002-2B Short to another wire harness in the driver's airbag second inflator	B
B0010-2B Short to another wire harness in the front passenger's airbag first inflator	B
B0011-2B Short to another wire harness in the front passenger's airbag second inflator	B
B0020-2B Short to another wire harness in the left side airbag inflator	B

DTC Description	DTC
B0021-2B Short to another wire harness in the left side curtain airbag first inflator	B
B0028-2B Short to another wire harness in the right side airbag inflator	B
B0029-2B Short to another wire harness in the right side curtain airbag first inflator	B
B0070-2B Short to another wire harness in the driver's seat belt tensioner	B
B0072-2B Short to another wire harness in the front passenger's seat belt tensioner	B
B0079-2B Short to another wire harness in the driver's seat belt outer lap tensioner	B
B007A-2B Short to another wire harness in the front passenger's seat belt outer lap tensioner	B
B0082-2B Short to another wire harness in the selectable energy absorption device of the front passenger's seat belt tensioner	B

Is DTC B0001-2B, B0002-2B, B0010-2B, B0011-2B, B0020-2B, B0021-2B, B0028-2B, B0029-2B, B0072-2B, B0079-2B, B007A-2B or B0082-2B indicated with DTC B0070-2B?

YES

Go to step 3.

NO

Short to another wire in the floor wire harness; replace the floor wire harness, then clear the DTC.

3. Shorted wire check (LRP lines to another line)

-1. Turn the vehicle to the OFF (LOCK) mode.

-2. Disconnect the negative cable from the 12 volt battery, then wait at least 3 minutes.

-3. **Remove the left side center piller lower trim** .

-4. Disconnect the following connectors.

SRS unit connector A (39P)
SRS unit connector B (39P)
Driver's seat belt tensioner 2P connector (on the floor wire harness)
Inflator connectors which are assigned to 2B codes listed on HDS

-5. Check for continuity between test points 1 and 2 of SRS unit connector A (39P) and B (39P) according to table.

Test condition	Vehicle OFF (LOCK) mode
	SRS unit connector A (39P): disconnected
	SRS unit connector B (39P): disconnected
	Driver's seat belt tensioner 2P connector (on the floor wire harness): disconnected
	Inflator connectors which are assigned to 2B codes listed on HDS: disconnected

DTC	Test point 1	Test point 2
	From terminal	To terminal
B0001-2B	SRS unit connector B (39P) No. 20	SRS unit connector A (39P) No. 9
	SRS unit connector B (39P) No. 21	SRS unit connector A (39P) No. 8
B0002-2B	SRS unit connector B (39P) No. 20	SRS unit connector A (39P) No. 10
	SRS unit connector B (39P) No. 21	SRS unit connector A (39P) No. 11
B0010-2B	SRS unit connector B (39P) No. 20	SRS unit connector A (39P) No. 5
	SRS unit connector B (39P) No. 21	SRS unit connector A (39P) No. 4
B0011-2B	SRS unit connector B (39P) No. 20	SRS unit connector A (39P) No. 6
	SRS unit connector B (39P) No. 21	SRS unit connector A (39P) No. 7
B0020-2B	SRS unit connector B (39P) No. 20	SRS unit connector B (39P) No. 5
	SRS unit connector B (39P) No. 21	SRS unit connector B (39P) No. 6
B0021-2B	SRS unit connector B (39P) No. 20	SRS unit connector B (39P) No. 9
	SRS unit connector B (39P) No. 21	SRS unit connector B (39P) No. 10
B0028-2B	SRS unit connector B (39P) No. 20	SRS unit connector B (39P) No. 4
	SRS unit connector B (39P) No. 21	SRS unit connector B (39P) No. 3
B0029-2B	SRS unit connector B (39P) No. 20	SRS unit connector B (39P) No. 8
	SRS unit connector B (39P) No. 21	SRS unit connector B (39P) No. 7
B0072-2B	SRS unit connector B (39P) No. 20	SRS unit connector B (39P) No. 19
	SRS unit connector B (39P) No. 21	SRS unit connector B (39P) No. 18
B0079-2B	SRS unit connector B (39P) No. 20	SRS unit connector B (39P) No. 24
	SRS unit connector B (39P) No. 21	SRS unit connector B (39P) No. 25
B007A-2B	SRS unit connector B (39P) No. 20	SRS unit connector B (39P) No. 23
	SRS unit connector B (39P) No. 21	SRS unit connector B (39P) No. 22
B0082-2B	SRS unit connector B (39P) No. 20	SRS unit connector A (39P) No. 2
	SRS unit connector B (39P) No. 21	SRS unit connector A (39P) No. 3

Is there continuity?

YES

Short to another wire in the dashboard wire harness or the floor wire harness; replace the faulty harness, then clear the DTC.

NO

The LRP wires are OK. Faulty SRS unit or poor connection at SRS unit connector A (39P) and the SRS unit, or SRS unit connector B (39P) and the SRS unit. Check the connection; if the connection is OK, check for any authorized service information related to the DTCs or symptoms you are troubleshooting or replace the SRS unit . If the DTC does not clear, replace the dashboard wire harness or the floor wire harness.

DTC B0072-11

DTC B0072-11 : Short to Ground in the Front Passenger's Seat Belt Tensioner

NOTE:

- Before doing this troubleshooting procedure, find out if the vehicle was in a collision. If so, verify that all the required components were replaced with new components of the correct part number and were properly installed .
- Before doing this troubleshooting procedure, review SRS Precautions and Procedures , General Troubleshooting Information , and 12 Volt Battery Terminal Disconnection and Reconnection .

DTC Description	DTC
B0072-11 Short to ground in the front passenger's seat belt tensioner	B

DTC (SRS)

1. Problem verification

   -1. Clear the DTCs with the HDS.

   -2. Turn the vehicle to the ON mode, then wait for 10 seconds.

   -3. Check for DTCs with the HDS.

DTC Description	DTC
B0072-11 Short to ground in the front passenger's seat belt tensioner	B

   Is DTC B0072-11 indicated?

   YES

   The failure is duplicated. Go to step 2.

   NO

   Intermittent failure, the system is OK at this time. Go to Troubleshooting Intermittent Failures. If another DTC is indicated, troubleshoot the DTC.

2. Shorted wire check (RRP+, RRP- lines) 1

   -1. Turn the vehicle to the OFF (LOCK) mode.

   -2. Disconnect the negative cable from the 12 volt battery, then wait at least 3 minutes.

   -3. **Remove the right side B-pillar lower trim** .

   -4. Disconnect the following connector.

Front passenger's seat belt tensioner 2P connector (on the floor wire harness)

   -5. Reconnect the negative cable to the 12 volt battery.

   -6. Turn the vehicle to the ON mode, then clear the DTC.

   -7. Check for DTCs with the HDS.

DTC Description	DTC
B0072-11 Short to ground in the front passenger's seat belt tensioner	B

   Is DTC B0072-11 indicated?

   NO

   Go to step 3.

   YES

   Short to ground in the front passenger's seat belt tensioner; **replace the front passenger's seat belt tensioner** , then clear the DTC.

3. Shorted wire check (RRP+, RRP- lines) 2

-1. Turn the vehicle to the OFF (LOCK) mode.

-2. Disconnect the negative cable from the 12 volt battery, then wait at least 3 minutes.

-3. Disconnect the following connector.

SRS unit connector B (39P)

-4. Measure the resistance between test points 1 and 2.

Test condition	Vehicle OFF (LOCK) mode
	SRS unit connector B (39P): disconnected
	Front passenger's seat belt tensioner 2P connector (on the floor wire harness): disconnected
Test point 1	**SRS unit connector B (39P) No. 18**
Test point 2	Body ground

Test point 1	**SRS unit connector B (39P) No. 19**
Test point 2	Body ground

Is there an open circuit, or at least 1 MΩ?

YES

The RRP+ and RRP-wires are OK. Check for any authorized service information related to the DTCs or symptoms you are troubleshooting or **replace the SRS unit** .

NO

Short to ground in the floor wire harness; replace the floor wire harness, then clear the DTC.

DTC B0072-12

DTC B0072-12 : Short to Power in the Front Passenger's Seat Belt Tensioner

NOTE:

- **Before doing this troubleshooting procedure, find out if the vehicle was in a collision. If so, verify that all the required components were replaced with new components of the correct part number and were properly installed** .
- Before doing this troubleshooting procedure, review **SRS Precautions and Procedures** , **General Troubleshooting Information** , and **12 Volt Battery Terminal Disconnection and Reconnection** .

DTC Description	DTC
B0072-12 Short to power in the front passenger's seat belt tensioner	B

DTC (SRS)

1. Problem verification

-1. Clear the DTCs with the HDS.

-2. Turn the vehicle to the ON mode, then wait for 10 seconds.

-3. Check for DTCs with the HDS.

DTC Description	DTC
B0072-12 Short to power in the front passenger's seat belt tensioner	B

Is DTC B0072-12 indicated?

YES

The failure is duplicated. Go to step 2.

NO

Intermittent failure, the system is OK at this time. Go to Troubleshooting Intermittent Failures. If another DTC is indicated, troubleshoot the DTC.

2. Shorted wire check (RRP+, RRP- lines to power) 1

-1. Turn the vehicle to the OFF (LOCK) mode.

-2. Disconnect the negative cable from the 12 volt battery, then wait at least 3 minutes.

-3. **Remove the right side B-pillar lower trim** .

-4. Disconnect the following connector.

Front passenger's seat belt tensioner 2P connector (on the floor wire harness)

-5. Reconnect the negative cable to the 12 volt battery.

-6. Turn the vehicle to the ON mode, then clear the DTC.

-7. Check for DTCs with the HDS.

DTC Description	DTC
B0072-12 Short to power in the front passenger's seat belt tensioner	B

Is DTC B0072-12 indicated?

NO

Go to step 3.

YES

Short to power in the front passenger's seat belt tensioner; **replace the front passenger's seat belt tensioner** , then clear the DTC.

3. Shorted wire check (RRP+, RRP- lines to power) 2

-1. Turn the vehicle to the OFF (LOCK) mode.

-2. Disconnect the negative cable from the 12 volt battery, then wait at least 3 minutes.

-3. Disconnect the following connector.

SRS unit connector B (39P)

-4. Reconnect the negative cable to the 12 volt battery.

-5. Turn the vehicle to the ON mode.

-6. Measure the voltage between test points 1 and 2.

Test condition	Vehicle ON mode
	SRS unit connector B (39P): disconnected
	Front passenger's seat belt tensioner 2P connector (on the floor wire harness): disconnected
Test point 1	**SRS unit connector B (39P) No. 18**
Test point 2	Body ground

Test point 1	**SRS unit connector B (39P) No. 19**
Test point 2	Body ground

Is there 0.2 V or less?

YES

The RRP+ and RRP- wires are OK. Check for any authorized service information related to the DTCs or symptoms you are troubleshooting or **replace the SRS unit** .

NO

Short to power in the floor wire harness; replace the floor wire harness, then clear the DTC.

DTC B0072-13

DTC B0072-13 : Open or Increased Resistance in the Front Passenger's Seat Belt Tensioner

NOTE:

- **Before doing this troubleshooting procedure, find out if the vehicle was in a collision. If so, verify that all the required components were replaced with new components of the correct part number and were properly installed** .
- Before doing this troubleshooting procedure, review **SRS Precautions and Procedures** , **General Troubleshooting Information** , and **12 Volt Battery Terminal Disconnection and Reconnection** .

DTC Description	DTC
B0072-13 Open or increased resistance in the front passenger's seat belt tensioner	B

DTC (SRS)

1. Problem verification

-1. Clear the DTCs with the HDS.

-2. Turn the vehicle to the ON mode, then wait for 10 seconds.

-3. Check for DTCs with the HDS.

DTC Description	DTC
B0072-13 Open or increased resistance in the front passenger's seat belt tensioner	B

Is DTC B0072-13 indicated?

YES

The failure is duplicated. Go to step 2.

NO

Intermittent failure, the system is OK at this time. Go to Troubleshooting Intermittent Failures. If another DTC is indicated, troubleshoot the DTC.

2. Front passenger's seat belt tensioner check

-1. Turn the vehicle to the OFF (LOCK) mode.

-2. Disconnect the negative cable from the 12 volt battery, then wait at least 3 minutes.

-3. **Remove the right side B-pillar lower trim** .

-4. Disconnect the following connector.

Front passenger's seat belt tensioner 2P connector (on the floor wire harness)

-5. Connect terminals A and B with a jumper wire.

Terminal A	Front passenger's seat belt tensioner 2P connector (female terminals) No. 1 (on the floor wire harness): ①
Terminal B	Front passenger's seat belt tensioner 2P connector (female terminals) No. 2 (on the floor wire harness): ①

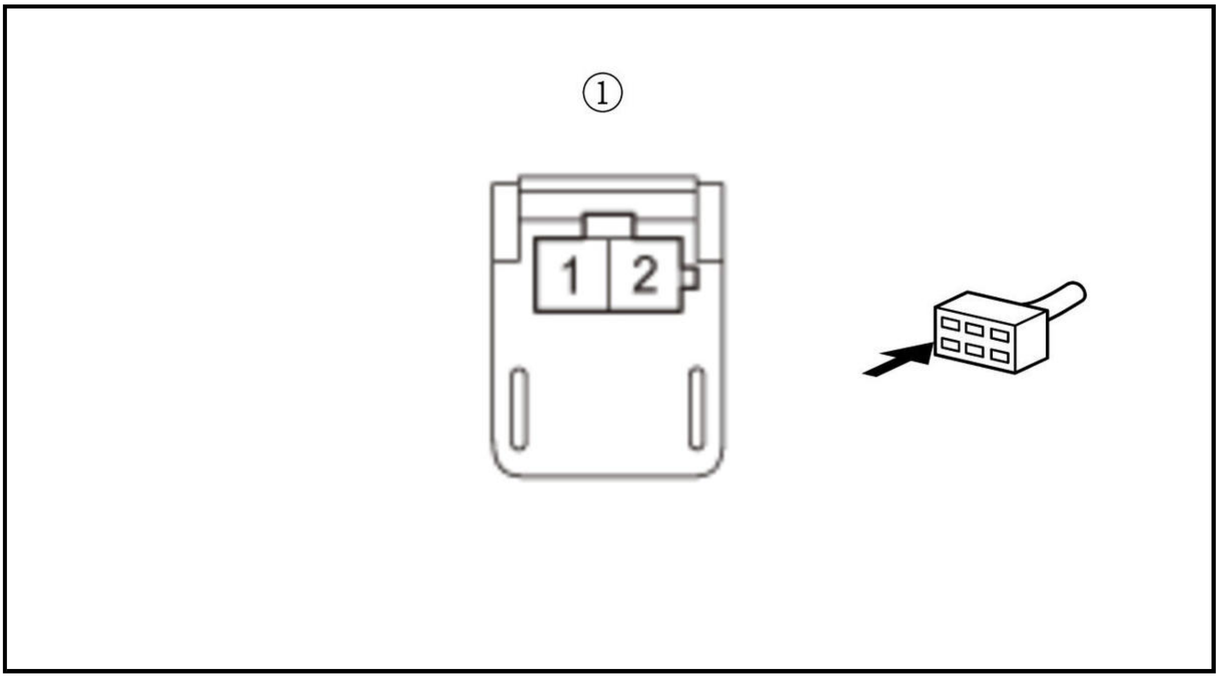

-6. Reconnect the negative cable to the 12 volt battery.

-7. Clear the DTCs with the HDS.

-8. Turn the vehicle to the ON mode, then wait for 10 seconds.

-9. Check for DTCs with the HDS.

DTC Description	DTC
B0072-13 Open or increased resistance in the front passenger's seat belt tensioner	B

Is DTC B0072-13 indicated?

YES

Go to step 3.

NO

Open in the front passenger's seat belt tensioner; **replace the front passenger's seat belt** , then clear the DTC.

3. Open wire check (RRP+, RRP- lines)

-1. Turn the vehicle to the OFF (LOCK) mode.

-2. Disconnect the negative cable from the 12 volt battery, then wait at least 3 minutes.

-3. Remove the jumper wire from the front passenger's seat belt tensioner 2P connector on the floor wire harness.

-4. Disconnect the following connector.

SRS unit connector B (39P)

-5. Connect terminals A and B with a jumper wire.

Terminal A	**SRS unit connector B (39P) No. 18**
Terminal B	**SRS unit connector B (39P) No. 19**

-6. Measure the resistance between test points 1 and 2.

Test condition	Vehicle OFF (LOCK) mode
	Front passenger's seat belt tensioner 2P connector (on the floor wire harness): disconnected
	SRS unit connector B (39P): disconnected
	SRS unit connector B (39P) terminals No. 18 and No. 19: jumped
Test point 1	Front passenger's belt tensioner 2P connector (female terminals) No. 1 (on the floor wire harness): ①
Test point 2	Front passenger's seat belt tensioner 2P connector (female terminals) No. 2 (on the floor wire harness): ①

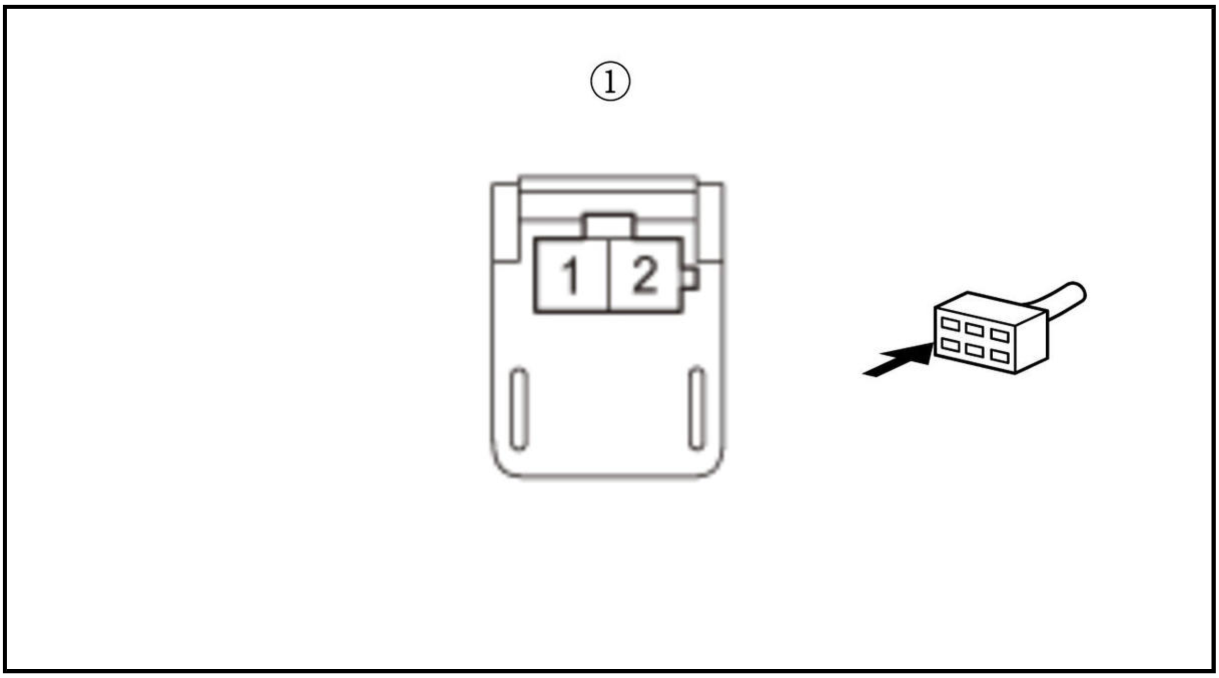

Is there 1.0 Ω or less?

YES

The RRP+ and RRP- wires are OK. Faulty SRS unit or poor connection at SRS unit connector B (39P) and the SRS unit. Check the connection; if the connection is OK, check for any authorized service information related to the DTCs or symptoms you are troubleshooting or **replace the SRS unit** . If the DTC does not clear, replace the floor wire harness.

NO

Open in the floor wire harness; replace the floor wire harness, then clear the DTC.

DTC B0072-1A

DTC B0072-1A : Decreased Resistance in the Front Passenger's Seat Belt Tensioner

NOTE:

- **Before doing this troubleshooting procedure, find out if the vehicle was in a collision. If so, verify that all the required components were replaced with new components of the correct part number and were properly installed** .
- Before doing this troubleshooting procedure, review **SRS Precautions and Procedures** , **General Troubleshooting Information** , and **12 Volt Battery Terminal Disconnection and Reconnection** .

DTC Description	DTC
B0072-1A Decreased resistance in the front passenger's seat belt tensioner	B

DTC (SRS)

1. Problem verification

-1. Clear the DTCs with the HDS.

-2. Turn the vehicle to the ON mode, then wait for 10 seconds.

-3. Check for DTCs with the HDS.

DTC Description	DTC
B0072-1A Decreased resistance in the front passenger's seat belt tensioner	B

Is DTC B0072-1A indicated?

YES

The failure is duplicated. Go to step 2.

NO

Intermittent failure, the system is OK at this time. Go to Troubleshooting Intermittent Failures. If another DTC is indicated, troubleshoot the DTC.

2. Front passenger's seat belt tensioner check

-1. Turn the vehicle to the OFF (LOCK) mode.

-2. Disconnect the negative cable from the 12 volt battery, then wait at least 3 minutes.

-3. **Remove the right side B-pillar lower trim** .

-4. Disconnect the following connector.

Front passenger's seat belt tensioner 2P connector (on the floor wire harness)

-5. Reconnect the negative cable to the 12 volt battery.

-6. Clear the DTCs with the HDS.

-7. Turn the vehicle to the ON mode, then wait for 10 seconds.

-8. Check for DTCs with the HDS.

DTC Description	DTC
B0072-1A Decreased resistance in the front passenger's seat belt tensioner	B

Is DTC B0072-1A indicated?

YES

Go to step 3.

NO

Short to another wire in the front passenger's seat belt tensioner; **replace the front passenger's seat belt** , then clear the DTC.

3. Shorted wire check (RRP+ line to RRP- line)

-1. Turn the vehicle to the OFF (LOCK) mode.

-2. Disconnect the negative cable from the 12 volt battery, then wait at least 3 minutes.

-3. Disconnect the following connector.

SRS unit connector B (39P)

-4. Measure the resistance between test points 1 and 2.

Test condition	Vehicle OFF (LOCK) mode
	Front passenger's seat belt tensioner 2P connector (on the floor wire harness): disconnected
	SRS unit connector B (39P): disconnected
Test point 1	**SRS unit connector B (39P) No. 18**
Test point 2	**SRS unit connector B (39P) No. 19**

Is there an open circuit, or at least 1 MΩ?

YES

The RRP+ and RRP- wires are OK. Faulty SRS unit or poor connection at SRS unit connector B (39P) and the SRS unit. Check the connection; if the connection is OK, check for any authorized service information related to the DTCs or symptoms you are troubleshooting or **replace the SRS unit** . If the DTC does not clear, replace the floor wire harness.

NO

Short to another wire in the floor wire harness; replace the floor wire harness, then clear the DTC.

DTC B0072-2B

DTC B0072-2B : Short to Another Wire Harness in the Front Passenger's Seat Belt Tensioner

NOTE:

- **Before doing this troubleshooting procedure, find out if the vehicle was in a collision. If so, verify that all the required components were replaced with new components of the correct part number and were properly installed** .
- Before doing this troubleshooting procedure, review **SRS Precautions and Procedures** , **General Troubleshooting Information** , and **12 Volt Battery Terminal Disconnection and Reconnection** .

DTC Description	DTC
B0072-2B Short to another wire harness in the front passenger's seat belt tensioner	B

DTC (SRS)

1. Problem verification

-1. Clear the DTCs with the HDS.

-2. Turn the vehicle to the ON mode, then wait for 10 seconds.

-3. Check for DTCs with the HDS.

DTC Description	DTC
B0072-2B Short to another wire harness in the front passenger's seat belt tensioner	B

Is DTC B0072-2B indicated?

YES

The failure is duplicated. Go to step 2.

NO

Intermittent failure, the system is OK at this time. Go to Troubleshooting Intermittent Failures. If another DTC is indicated, troubleshoot the DTC.

2. DTC check

-1. Check for DTCs with the HDS.

DTC Description	DTC
B0001-2B Short to another wire harness in the driver's airbag first inflator	B
B0002-2B Short to another wire harness in the driver's airbag second inflator	B
B0010-2B Short to another wire harness in the front passenger's airbag first inflator	B
B0011-2B Short to another wire harness in the front passenger's airbag second inflator	B
B0020-2B Short to another wire harness in the left side airbag inflator	B
B0021-2B Short to another wire harness in the left side curtain airbag first inflator	B
B0028-2B Short to another wire harness in the right side airbag inflator	B
B0029-2B Short to another wire harness in the right side curtain airbag first inflator	B
B0070-2B Short to another wire harness in the driver's seat belt tensioner	B
B0072-2B Short to another wire harness in the front passenger's seat belt tensioner	B
B0079-2B Short to another wire harness in the driver's seat belt outer lap tensioner	B
B007A-2B Short to another wire harness in the front passenger's seat belt outer lap tensioner	B
B0082-2B Short to another wire harness in the selectable energy absorption device of the front passenger's seat belt tensioner	B

Is DTC B0001-2B, B0002-2B, B0010-2B, B0011-2B, B0020-2B, B0021-2B, B0028-2B, B0029-2B, B0070-2B, B0079-2B, B007A-2B or B0082-2B indicated with DTC B0072-2B?

YES

Go to step 3.

NO

Short to another wire in the floor wire harness; replace the floor wire harness, then clear the DTC.

3. Shorted wire check (RRP lines to another line)

-1. Turn the vehicle to the OFF (LOCK) mode.

-2. Disconnect the negative cable from the 12 volt battery, then wait at least 3 minutes.

-3. **Remove the right side center piller lower trim** .

-4. Disconnect the following connectors.

SRS unit connector A (39P)	
SRS unit connector B (39P)	
Front passenger's seat belt tensioner 2P connector (on the floor wire harness)	
Inflator connectors which are assigned to 2B codes listed on HDS	

-5. Check for continuity between test points 1 and 2 of SRS unit connector A (39P) and B (39P) according to table.

Test condition	Vehicle OFF (LOCK) mode
	SRS unit connector A (39P): disconnected
	SRS unit connector B (39P): disconnected
	Front passenger's seat belt tensioner 2P connector (on the floor wire harness): disconnected
	Inflator connectors which are assigned to 2B codes listed on HDS: disconnected

DTC	Test point 1	Test point 2
	From terminal	To terminal
B0001-2B	SRS unit connector B (39P) No. 19	SRS unit connector A (39P) No. 9
	SRS unit connector B (39P) No. 18	SRS unit connector A (39P) No. 8
B0002-2B	SRS unit connector B (39P) No. 19	SRS unit connector A (39P) No. 10
	SRS unit connector B (39P) No. 18	SRS unit connector A (39P) No. 11
B0010-2B	SRS unit connector B (39P) No. 19	SRS unit connector A (39P) No. 5
	SRS unit connector B (39P) No. 18	SRS unit connector A (39P) No. 4
B0011-2B	SRS unit connector B (39P) No. 19	SRS unit connector A (39P) No. 6
	SRS unit connector B (39P) No. 18	SRS unit connector A (39P) No. 7
B0020-2B	SRS unit connector B (39P) No. 19	SRS unit connector B (39P) No. 5
	SRS unit connector B (39P) No. 18	SRS unit connector B (39P) No. 6
B0021-2B	SRS unit connector B (39P) No. 19	SRS unit connector B (39P) No. 9
	SRS unit connector B (39P) No. 18	SRS unit connector B (39P) No. 10
B0028-2B	SRS unit connector B (39P) No. 19	SRS unit connector B (39P) No. 4
	SRS unit connector B (39P) No. 18	SRS unit connector B (39P) No. 3
B0029-2B	SRS unit connector B (39P) No. 19	SRS unit connector B (39P) No. 8
	SRS unit connector B (39P) No. 18	SRS unit connector B (39P) No. 7
B0070-2B	SRS unit connector B (39P) No. 19	SRS unit connector B (39P) No. 20
	SRS unit connector B (39P) No. 18	SRS unit connector B (39P) No. 21
B0079-2B	SRS unit connector B (39P) No. 19	SRS unit connector B (39P) No. 24
	SRS unit connector B (39P) No. 18	SRS unit connector B (39P) No. 25
B007A-2B	SRS unit connector B (39P) No. 19	SRS unit connector B (39P) No. 23
	SRS unit connector B (39P) No. 18	SRS unit connector B (39P) No. 22

DTC	Test point 1	Test point 2
	From terminal	To terminal
B0082-2B	SRS unit connector B (39P) No. 19	SRS unit connector A (39P) No. 2
	SRS unit connector B (39P) No. 18	SRS unit connector A (39P) No. 3

Is there continuity?

YES

Short to another wire in the dashboard wire harness or the floor wire harness; replace the faulty harness, then clear the DTC.

NO

The RRP wires are OK. Faulty SRS unit or poor connection at SRS unit connector A (39P) and the SRS unit, or SRS unit connector B (39P) and the SRS unit. Check the connection; if the connection is OK, check for any authorized service information related to the DTCs or symptoms you are troubleshooting or **replace the SRS unit** . If the DTC does not clear, replace the dashboard wire harness or the floor wire harness.

DTC B0079-11

DTC B0079-11 : Short to Ground in the Driver's Seat Belt Outer Lap Tensioner

Special Tools Required

-SRS Inflator Simulator 07SAZ-TB4011A

-SRS Simulator Lead M 070AZ-SNA0400

NOTE:

- **Before doing this troubleshooting procedure, find out if the vehicle was in a collision. If so, verify that all the required components were replaced with new components of the correct part number and were properly installed** .
- Before doing this troubleshooting procedure, review **SRS Precautions and Procedures** , **General Troubleshooting Information** , and **12 Volt Battery Terminal Disconnection and Reconnection** .

DTC Description	DTC
B0079-11 Short to ground in the driver's seat belt outer lap tensioner	B

DTC (SRS)

1. Problem verification

   -1. Clear the DTCs with the HDS.

   -2. Turn the vehicle to the ON mode, then wait for 10 seconds.

   -3. Check for DTCs with the HDS.

DTC Description	DTC
B0079-11 Short to ground in the driver's seat belt outer lap tensioner	B

   Is DTC B0079-11 indicated?

   YES

   The failure is duplicated. Go to step 2.

   NO

   Intermittent failure, the system is OK at this time. Go to Troubleshooting Intermittent Failures. If another DTC is indicated, troubleshoot the DTC.

2. Driver's seat belt outer lap tensioner check

   -1. Turn the vehicle to the OFF (LOCK) mode.

   -2. Disconnect the negative cable from the 12 volt battery, then wait at least 3 minutes.

   -3. **Remove the left side B-pillar lower trim cover** .

   -4. Disconnect the driver's seat belt outer lap tensioner 2P connector (A) on the floor wire harness.

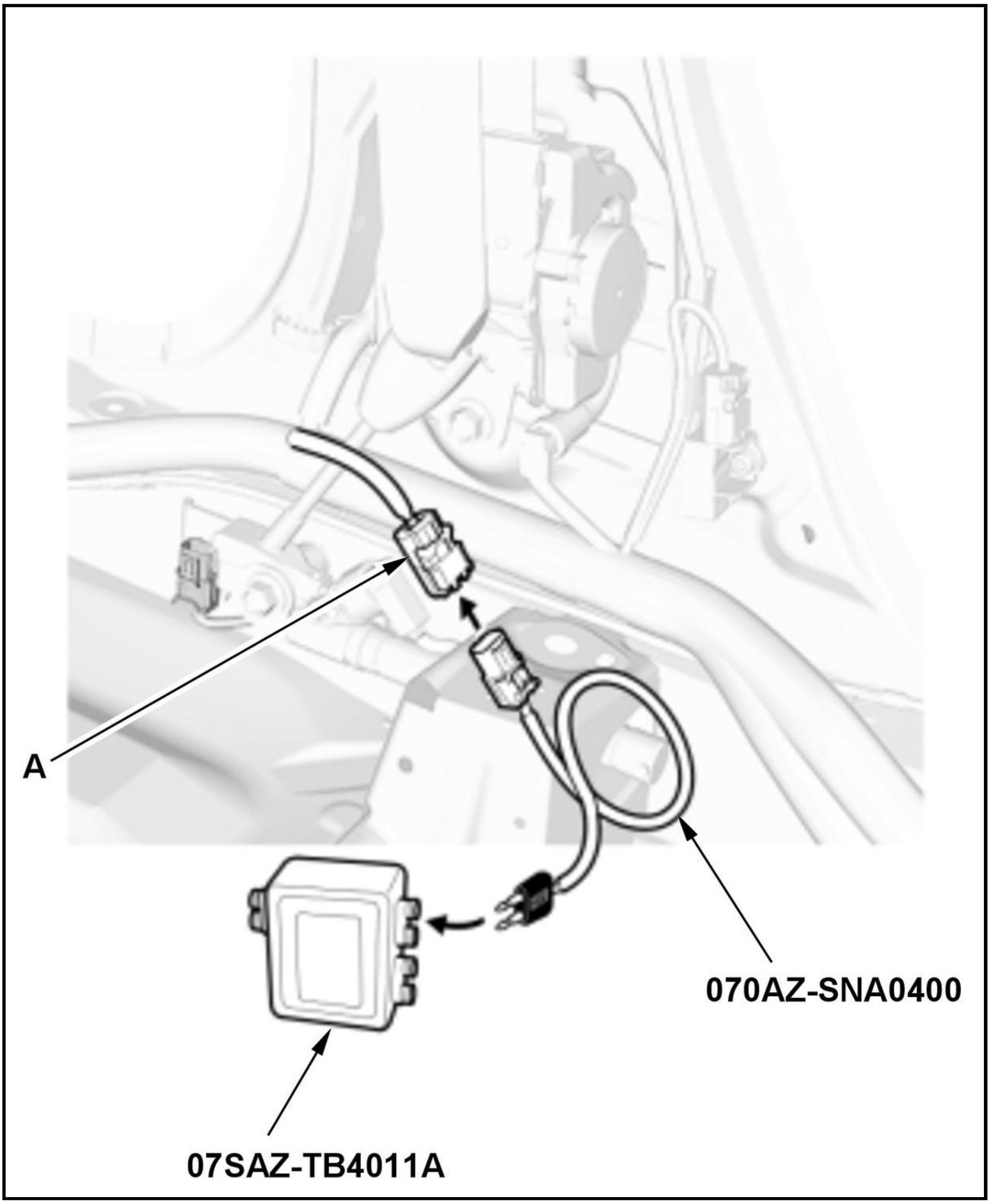

-5. Connect the terminals of SRS simulator lead M to the SRS inflator simulator (2 Ω connectors), then connect SRS simulator lead M to the driver's seat belt outer lap tensioner 2P connector on the floor wire harness.

-6. Reconnect the negative cable to the 12 volt battery.

-7. Clear the DTCs with the HDS.

-8. Turn the vehicle to the ON mode, then wait for 10 seconds.

-9. Check for DTCs with the HDS.

DTC Description	DTC
B0079-11 Short to ground in the driver's seat belt outer lap tensioner	B

Is DTC B0079-11 indicated?

YES

Go to step 3.

NO

Short to ground in the driver's seat belt outer lap tensioner; **replace the driver's seat belt** , then clear the DTC.

3. Shorted wire check (LLP+, LLP- lines)

   -1. Turn the vehicle to the OFF (LOCK) mode.

   -2. Disconnect the negative cable from the 12 volt battery, then wait at least 3 minutes.

   -3. Disconnect the following connector:

SRS unit connector B (39P)

-4. Disconnect SRS simulator lead M from the driver's seat belt outer lap tensioner 2P connector on the floor wire harness.

-5. Measure the resistance between test points 1 and 2.

Test condition	Vehicle OFF (LOCK) mode
	Driver's seat belt outer lap tensioner 2P connector (on the floor wire harness): disconnected
	SRS unit connector B (39P): disconnected
Test point 1	**SRS unit connector B (39P) No. 24**
Test point 2	Body ground

Test point 1	**SRS unit connector B (39P) No. 25**
Test point 2	Body ground

Is there an open circuit, or at least 1 MΩ?

YES

The LLP+ and LLP- wires are OK. Faulty SRS unit or poor connection at SRS unit connector B (39P) and the SRS unit. Check the connection; if the connection is OK, check for any authorized service information related to the DTCs or symptoms you are troubleshooting or **replace the SRS unit** . If the DTC does not clear, replace the floor wire harness.

NO

Short to ground in the floor wire harness; replace the floor wire harness, then clear the DTC.

DTC B0079-12

DTC B0079-12 : Short to Power in the Driver's Seat Belt Outer Lap Tensioner

Special Tools Required

-SRS Inflator Simulator 07SAZ-TB4011A

-SRS Simulator Lead M 070AZ-SNA0400

NOTE:

- **Before doing this troubleshooting procedure, find out if the vehicle was in a collision. If so, verify that all the required components were replaced with new components of the correct part number and were properly installed** .
- Before doing this troubleshooting procedure, review **SRS Precautions and Procedures** , **General Troubleshooting Information** , and **12 Volt Battery Terminal Disconnection and Reconnection** .

DTC Description	DTC
B0079-12 Short to power in the driver's seat belt outer lap tensioner	B

DTC (SRS)

1. Problem verification

   -1. Clear the DTCs with the HDS.

   -2. Turn the vehicle to the ON mode, then wait for 10 seconds.

   -3. Check for DTCs with the HDS.

DTC Description	DTC
B0079-12 Short to power in the driver's seat belt outer lap tensioner	B

   Is DTC B0079-12 indicated?

   YES

   The failure is duplicated. Go to step 2.

   NO

   Intermittent failure, the system is OK at this time. Go to Troubleshooting Intermittent Failures. If another DTC is indicated, troubleshoot the DTC.

2. Driver's seat belt outer lap tensioner check

   -1. Turn the vehicle to the OFF (LOCK) mode.

   -2. Disconnect the negative cable from the 12 volt battery, then wait at least 3 minutes.

   -3. **Remove the left side B-pillar lower trim cover** .

   -4. Disconnect the driver's seat belt outer lap tensioner 2P connector (A) on the floor wire harness.

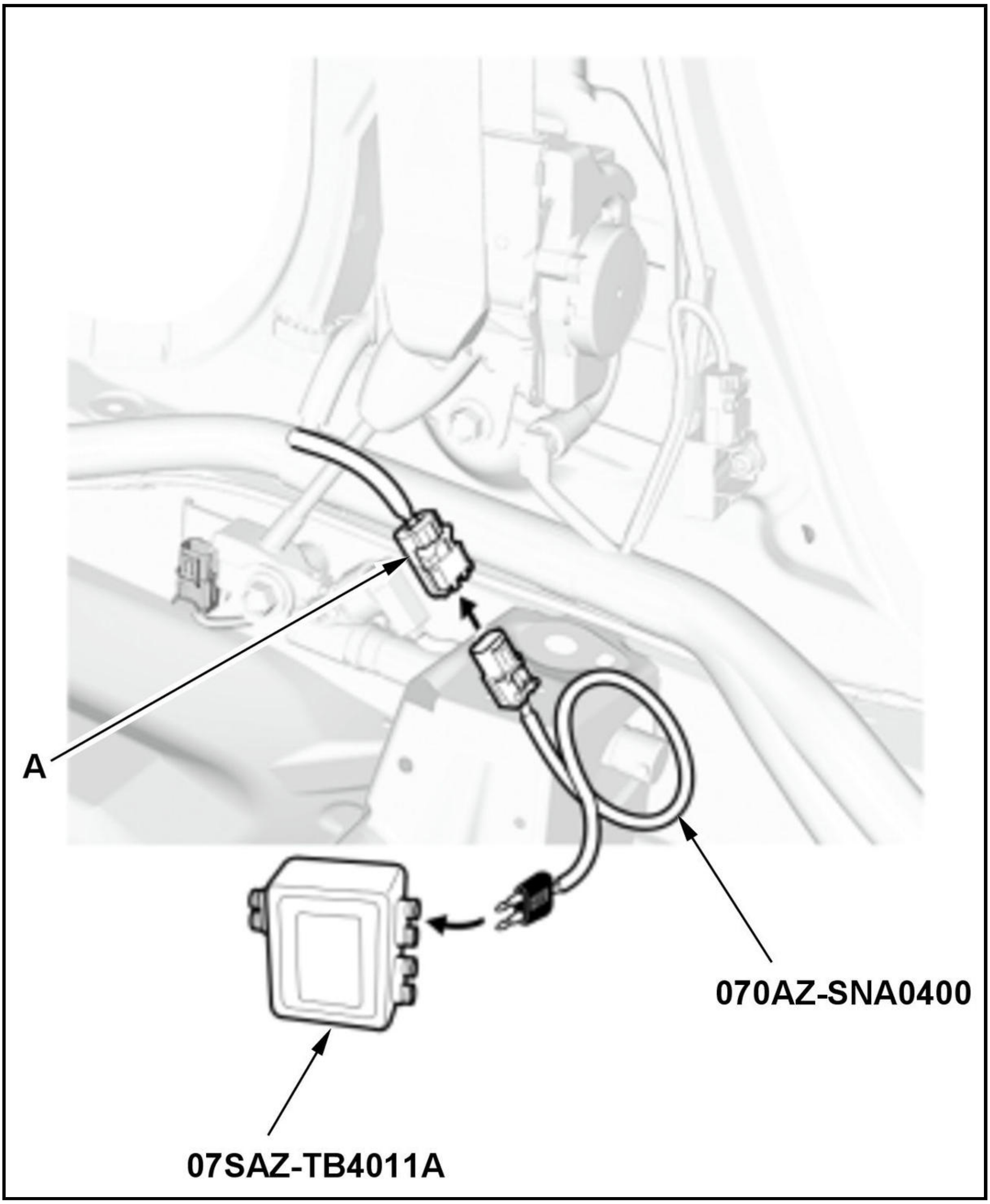

-5. Connect the terminals of SRS simulator lead M to the SRS inflator simulator (2 Ω connectors), then connect SRS simulator lead M to the driver's seat belt outer lap tensioner 2P connector on the floor wire harness.

-6. Reconnect the negative cable to the 12 volt battery.

-7. Clear the DTCs with the HDS.

-8. Turn the vehicle to the ON mode, then wait for 10 seconds.

-9. Check for DTCs with the HDS.

DTC Description	DTC
B0079-12 Short to power in the driver's seat belt outer lap tensioner	B

Is DTC B0079-12 indicated?

YES

Go to step 3.

NO

Short to power in the driver's seat belt outer lap tensioner; **replace the driver's seat belt** , then clear the DTC.

3. Shorted wire check (LLP+, LLP- lines to power)

-1. Turn the vehicle to the OFF (LOCK) mode.

-2. Disconnect the negative cable from the 12 volt battery, then wait at least 3 minutes.

-3. Disconnect the following connector:

SRS unit connector B (39P)

-4. Disconnect SRS simulator lead M from the driver's seat belt outer lap tensioner 2P connector on the floor wire harness.

-5. Reconnect the negative cable to the 12 volt battery.

-6. Turn the vehicle to the ON mode.

-7. Measure the voltage between test points 1 and 2.

Test condition	Vehicle ON mode
	Driver's seat belt outer lap tensioner 2P connector (on the floor wire harness): disconnected
	SRS unit connector B (39P): disconnected
Test point 1	**SRS unit connector B (39P) No. 24**
Test point 2	Body ground

Test point 1	**SRS unit connector B (39P) No. 25**
Test point 2	Body ground

Is there 0.2 V or less?

YES

The LLP+ and LLP- wires are OK. Faulty SRS unit or poor connection at SRS unit connector B (39P) and the SRS unit. Check the connection; if the connection is OK, check for any authorized service information related to the DTCs or symptoms you are troubleshooting or **replace the SRS unit** . If the DTC does not clear, replace the floor wire harness.

NO

Short to power in the floor wire harness; replace the floor wire harness, then clear the DTC.

DTC B0079-13

DTC B0079-13 : Open or Increased Resistance in the Driver's Seat Belt Outer Lap Tensioner

Special Tools Required

-SRS Inflator Simulator 07SAZ-TB4011A

-SRS Simulator Lead M 070AZ-SNA0400

NOTE:

- **Before doing this troubleshooting procedure, find out if the vehicle was in a collision. If so, verify that all the required components were replaced with new components of the correct part number and were properly installed** .
- Before doing this troubleshooting procedure, review **SRS Precautions and Procedures** , **General Troubleshooting Information** , and **12 Volt Battery Terminal Disconnection and Reconnection** .

DTC Description	DTC
B0079-13 Open or increased resistance in the driver's seat belt outer lap tensioner	B

DTC (SRS)

1. Problem verification

   -1. Clear the DTCs with the HDS.

   -2. Turn the vehicle to the ON mode, then wait for 10 seconds.

   -3. Check for DTCs with the HDS.

DTC Description	DTC
B0079-13 Open or increased resistance in the driver's seat belt outer lap tensioner	B

   Is DTC B0079-13 indicated?

   YES

   The failure is duplicated. Go to step 2.

   NO

   Intermittent failure, the system is OK at this time. Go to Troubleshooting Intermittent Failures. If another DTC is indicated, troubleshoot the DTC.

2. Driver's seat belt outer lap tensioner check

   -1. Turn the vehicle to the OFF (LOCK) mode.

   -2. Disconnect the negative cable from the 12 volt battery, then wait at least 3 minutes.

   -3. **Remove the left side B-pillar lower trim cover** .

   -4. Disconnect the driver's seat belt outer lap tensioner 2P connector (A) on the floor wire harness.

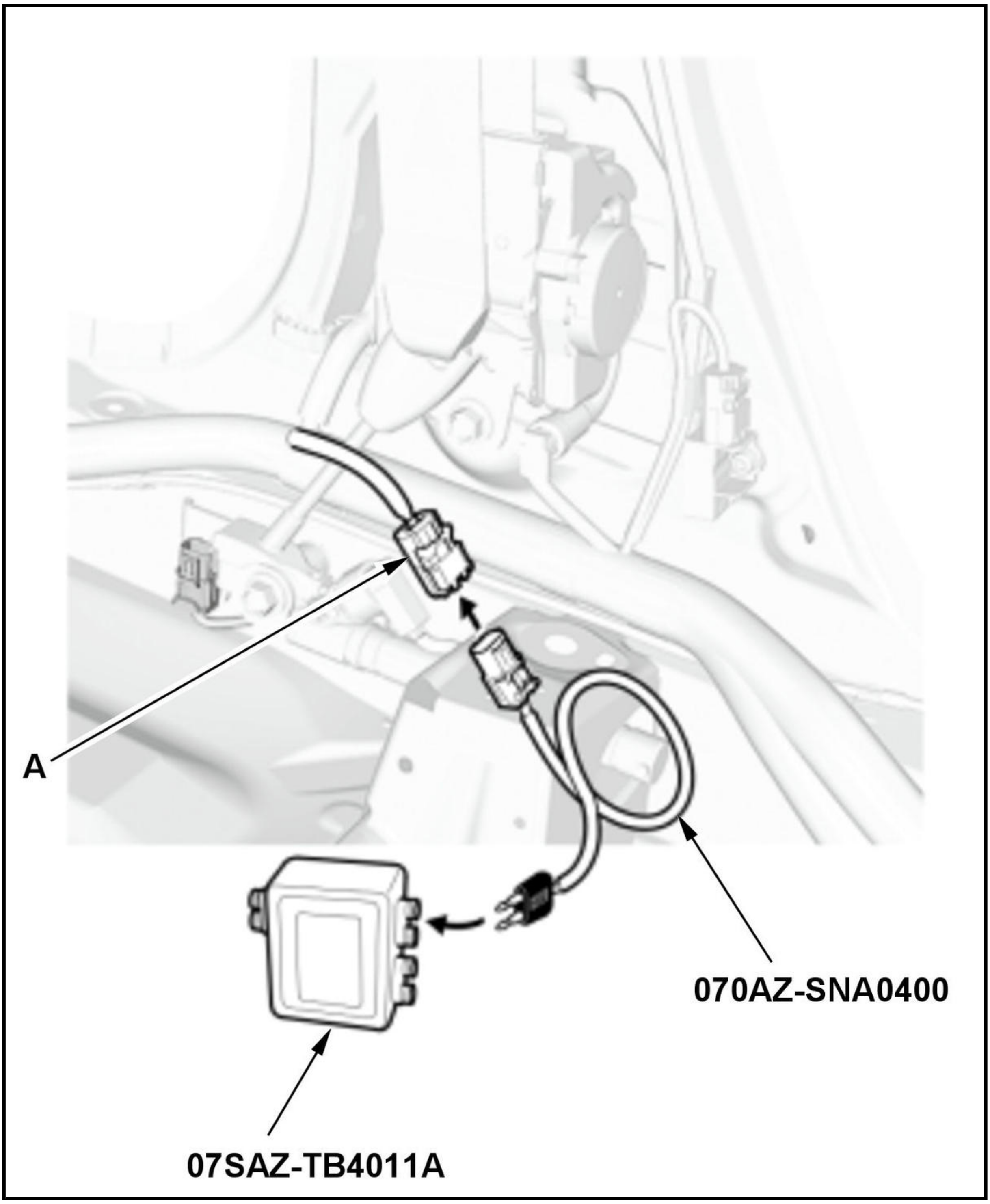

-5. Connect the terminals of SRS simulator lead M to the SRS inflator simulator (2 Ω connectors), then connect SRS simulator lead M to the driver's seat belt outer lap tensioner 2P connector on the floor wire harness.

-6. Reconnect the negative cable to the 12 volt battery.

-7. Clear the DTCs with the HDS.

-8. Turn the vehicle to the ON mode, then wait for 10 seconds.

-9. Check for DTCs with the HDS.

DTC Description	DTC
B0079-13 Open or increased resistance in the driver's seat belt outer lap tensioner	B

Is DTC B0079-13 indicated?

YES

Go to step 3.

NO

Open in the driver's seat belt outer lap tensioner; **replace the driver's seat belt** , then clear the DTC.

3. Open wire check (LLP+, LLP- lines)

-1. Turn the vehicle to the OFF (LOCK) mode.

-2. Disconnect the negative cable from the 12 volt battery, then wait at least 3 minutes.

-3. Disconnect the following connector:

SRS unit connector B (39P)

-4. Measure the resistance between test points 1 and 2.

Test condition	Vehicle OFF (LOCK) mode
	Driver's seat belt outer lap tensioner 2P connector (on the floor wire harness): disconnected
	SRS unit connector B (39P): disconnected
	Driver's seat belt outer lap tensioner 2P connector (on the floor wire harness): connected to SRS simulator lead M
Test point 1	**SRS unit connector B (39P) No. 24**
Test point 2	**SRS unit connector B (39P) No. 25**

Is there 2.0-3.0 Ω?

YES

The LLP+ and LLP- wires are OK. Faulty SRS unit or poor connection at SRS unit connector B (39P) and the SRS unit. Check the connection; if the connection is OK, check for any authorized service information related to the DTCs or symptoms you are troubleshooting or **replace the SRS unit** . If the DTC does not clear, replace the floor wire harness.

NO

Open in the floor wire harness; replace the floor wire harness, then clear the DTC.

DTC B0079-1A, B0079-2B

DTC B0079-1A : Decreased Resistance in the Driver's Seat Belt Outer Lap Tensioner

DTC B0079-2B : Short to Another Wire Harness in the Driver's Seat Belt Outer Lap Tensioner

Special Tools Required

-SRS Inflator Simulator 07SAZ-TB4011A

-SRS Simulator Lead M 070AZ-SNA0400

NOTE:

- **Before doing this troubleshooting procedure, find out if the vehicle was in a collision. If so, verify that all the required components were replaced with new components of the correct part number and were properly installed** .
- Before doing this troubleshooting procedure, review **SRS Precautions and Procedures** , **General Troubleshooting Information** , and **12 Volt Battery Terminal Disconnection and Reconnection** .

DTC Description	DTC
B0079-1A Decreased resistance in the driver's seat belt outer lap tensioner	B
B0079-2B Short to another wire in the driver's seat belt outer lap tensioner	B

DTC (SRS)

1. Problem verification

   -1. Clear the DTCs with the HDS.

   -2. Turn the vehicle to the ON mode, then wait for 10 seconds.

   -3. Check for DTCs with the HDS.

DTC Description	DTC
B0079-1A Decreased resistance in the driver's seat belt outer lap tensioner	B

DTC Description	DTC
B0079-2B Short to another wire in the driver's seat belt outer lap tensioner	B

   Is DTC B0079-1A or B0079-2B indicated?

   YES

   The failure is duplicated. Go to step 2.

   NO

   Intermittent failure, the system is OK at this time. Go to Troubleshooting Intermittent Failures. If another DTC is indicated, troubleshoot the DTC.

2. Driver's seat belt outer lap tensioner check

   -1. Turn the vehicle to the OFF (LOCK) mode.

   -2. Disconnect the negative cable from the 12 volt battery, then wait at least 3 minutes.

   -3. **Remove the left side B-pillar lower trim cover** .

   -4. Disconnect the driver's seat belt outer lap tensioner 2P connector (A) on the floor wire harness.

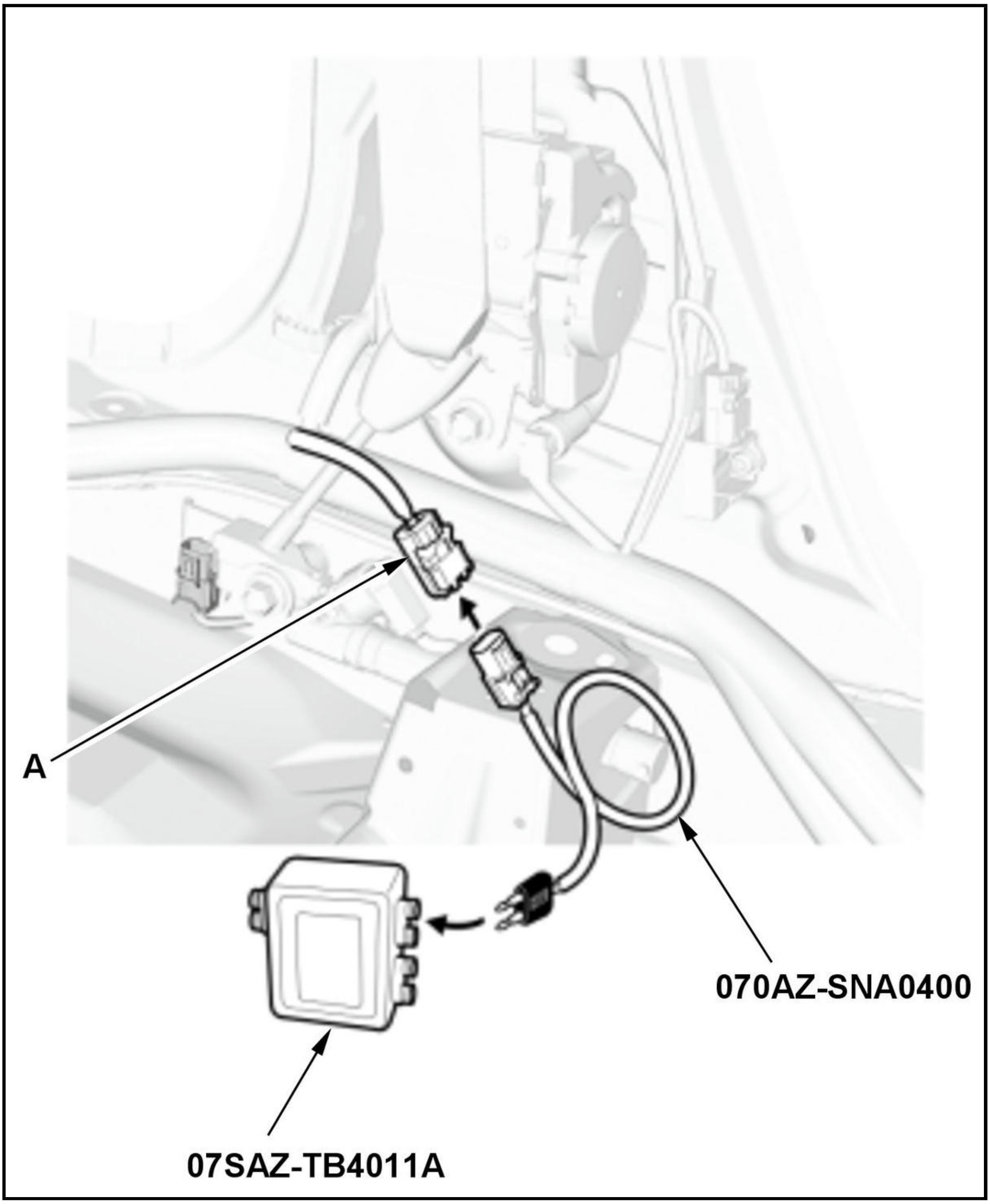

-5. Connect the terminals of SRS simulator lead M to the SRS inflator simulator (2 Ω connectors), then connect SRS simulator lead M to the driver's seat belt outer lap tensioner 2P connector on the floor wire harness.

-6. Reconnect the negative cable to the 12 volt battery.

-7. Clear the DTCs with the HDS.

-8. Turn the vehicle to the ON mode, then wait for 10 seconds.

-9. Check for DTCs with the HDS.

DTC Description	DTC
B0079-1A Decreased resistance in the driver's seat belt outer lap tensioner	B
B0079-2B Short to another wire in the driver's seat belt outer lap tensioner	B

Is DTC B0079-1A or B0079-2B indicated?

YES

Go to step 3.

NO

Short to another wire in the driver's seat belt outer lap tensioner; **replace the driver's seat belt** , then clear the DTC.

3. Shorted wire check (LLP+ line to LLP- line)

   -1. Turn the vehicle to the OFF (LOCK) mode.

   -2. Disconnect the negative cable from the 12 volt battery, then wait at least 3 minutes.

   -3. Disconnect the following connector:

SRS unit connector B (39P)

   -4. Disconnect SRS simulator lead M from the driver's seat belt outer lap tensioner 2P connector on the floor wire harness.

   -5. Measure the resistance between test points 1 and 2.

Test condition	Vehicle OFF (LOCK) mode
	Driver's seat belt outer lap tensioner 2P connector (on the floor wire harness): disconnected
	SRS unit connector B (39P): disconnected
Test point 1	**SRS unit connector B (39P) No. 24**
Test point 2	**SRS unit connector B (39P) No. 25**

Is there an open circuit, or at least 1 MΩ?

YES

The LLP+ and LLP- wires are OK. Faulty SRS unit or poor connection at SRS unit connector B (39P) and the SRS unit. Check the connection; if the connection is OK, check for any authorized service information related to the DTCs or symptoms you are troubleshooting or **replace the SRS unit** . If the DTC does not clear, replace the floor wire harness.

NO

Short to another wire in the floor wire harness; replace the floor wire harness, then clear the DTC.

DTC B007A-11

DTC B007A-11 : Short to Ground in the Front Passenger's Seat Belt Outer Lap Tensioner

Special Tools Required

-SRS Inflator Simulator 07SAZ-TB4011A

-SRS Simulator Lead M 070AZ-SNA0400

NOTE:

- **Before doing this troubleshooting procedure, find out if the vehicle was in a collision. If so, verify that all the required components were replaced with new components of the correct part number**

and were properly installed .

- Before doing this troubleshooting procedure, review **SRS Precautions and Procedures** , **General Troubleshooting Information** , and **12 Volt Battery Terminal Disconnection and Reconnection** .

DTC Description	DTC
B007A-11 Short to ground in the front passenger's seat belt outer lap tensioner	B

DTC (SRS)

1. Problem verification

   -1. Clear the DTCs with the HDS.

   -2. Turn the vehicle to the ON mode, then wait for 10 seconds.

   -3. Check for DTCs with the HDS.

DTC Description	DTC
B007A-11 Short to ground in the front passenger's seat belt outer lap tensioner	B

   Is DTC B007A-11 indicated?

   YES

   The failure is duplicated. Go to step 2.

   NO

   Intermittent failure, the system is OK at this time. Go to Troubleshooting Intermittent Failures. If another DTC is indicated, troubleshoot the DTC.

2. Front passenger's seat belt outer lap tensioner check

   -1. Turn the vehicle to the OFF (LOCK) mode.

   -2. Disconnect the negative cable from the 12 volt battery, then wait at least 3 minutes.

   -3. Disconnect the front passenger's seat belt outer lap tensioner 2P connector (A) on the floor wire harness.

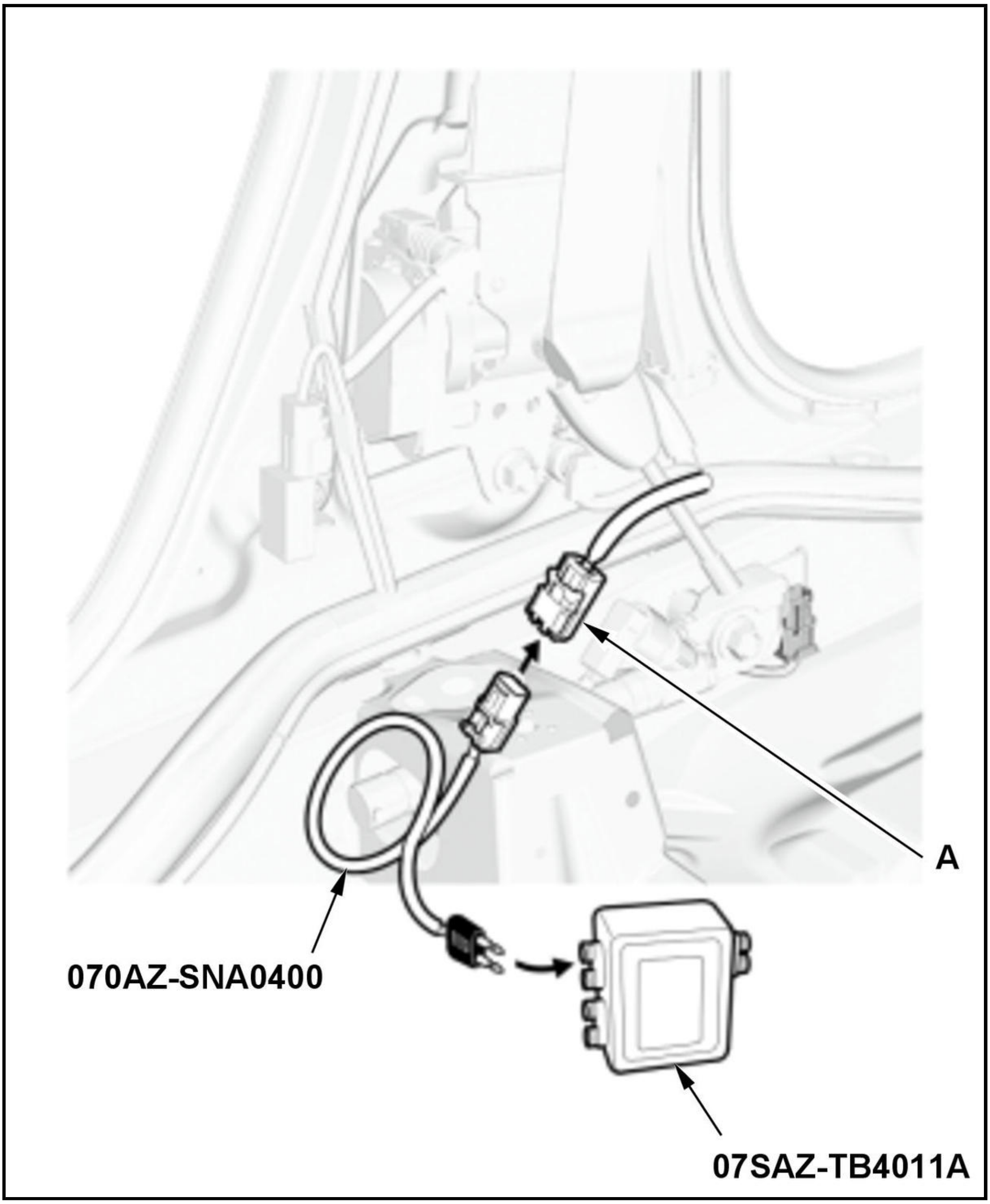

-4. Connect the terminals of SRS simulator lead M to the SRS inflator simulator (2 Ω connectors), then connect SRS simulator lead M to the front passenger's seat belt outer lap tensioner 2P connector on the floor wire harness.

-5. Reconnect the negative cable to the 12 volt battery.

-6. Clear the DTCs with the HDS.

-7. Turn the vehicle to the ON mode, then wait for 10 seconds.

-8. Check for DTCs with the HDS.

DTC Description	DTC
B007A-11 Short to ground in the front passenger's seat belt outer lap tensioner	B

Is DTC B007A-11 indicated?

YES

Go to step 3.

NO

Short to ground in the front passenger's seat belt outer lap tensioner; replace the front passenger's seat belt outer lap tensioner , then clear the DTC.

3. Shorted wire check (RLP+, RLP- lines)

-1. Turn the vehicle to the OFF (LOCK) mode.

-2. Disconnect the negative cable from the 12 volt battery, then wait at least 3 minutes.

-3. Disconnect the following connector:

SRS unit connector B (39P)

-4. Disconnect SRS simulator lead M from the front passenger's seat belt outer lap tensioner 2P connector on the floor wire harness.

-5. Measure the resistance between test points 1 and 2.

Test condition	Vehicle OFF (LOCK) mode
	Front passenger's seat belt outer lap tensioner 2P connector (on the floor wire harness): disconnected
	SRS unit connector B (39P): disconnected
Test point 1	SRS unit connector B (39P) No. 22
Test point 2	Body ground

Test point 1	SRS unit connector B (39P) No. 23
Test point 2	Body ground

Is there an open circuit, or at least 1 MΩ?

YES

The RLP+ and RLP- wires are OK. Faulty SRS unit or poor connection at SRS unit connector B (39P) and the SRS unit. Check the connection; if the connection is OK, replace the SRS unit . If the DTC does not clear, replace the floor wire harness.

NO

Short to ground in the floor wire harness; replace the floor wire harness, then clear the DTC.

DTC B007A-12

DTC B007A-12 : Short to Power in the Front Passenger's Seat Belt Outer Lap Tensioner

Special Tools Required

-SRS Inflator Simulator 07SAZ-TB4011A

-SRS Simulator Lead M 070AZ-SNA0400

NOTE:

- **Before doing this troubleshooting procedure, find out if the vehicle was in a collision. If so, verify that all the required components were replaced with new components of the correct part number and were properly installed** .
- Before doing this troubleshooting procedure, review **SRS Precautions and Procedures** , **General Troubleshooting Information** , and **12 Volt Battery Terminal Disconnection and Reconnection** .

DTC Description	DTC
B007A-12 Short to power in the front passenger's seat belt outer lap tensioner	B

DTC (SRS)

1. Problem verification

   -1. Clear the DTCs with the HDS.

   -2. Turn the vehicle to the ON mode, then wait for 10 seconds.

   -3. Check for DTCs with the HDS.

DTC Description	DTC
B007A-12 Short to power in the front passenger's seat belt outer lap tensioner	B

   Is DTC B007A-12 indicated?

   YES

   The failure is duplicated. Go to step 2.

   NO

   Intermittent failure, the system is OK at this time. Go to Troubleshooting Intermittent Failures. If another DTC is indicated, troubleshoot the DTC.

2. Front passenger's seat belt outer lap tensioner check

   -1. Turn the vehicle to the OFF (LOCK) mode.

   -2. Disconnect the negative cable from the 12 volt battery, then wait at least 3 minutes.

   -3. Disconnect the front passenger's seat belt outer lap tensioner 2P connector (A) on the floor wire harness.

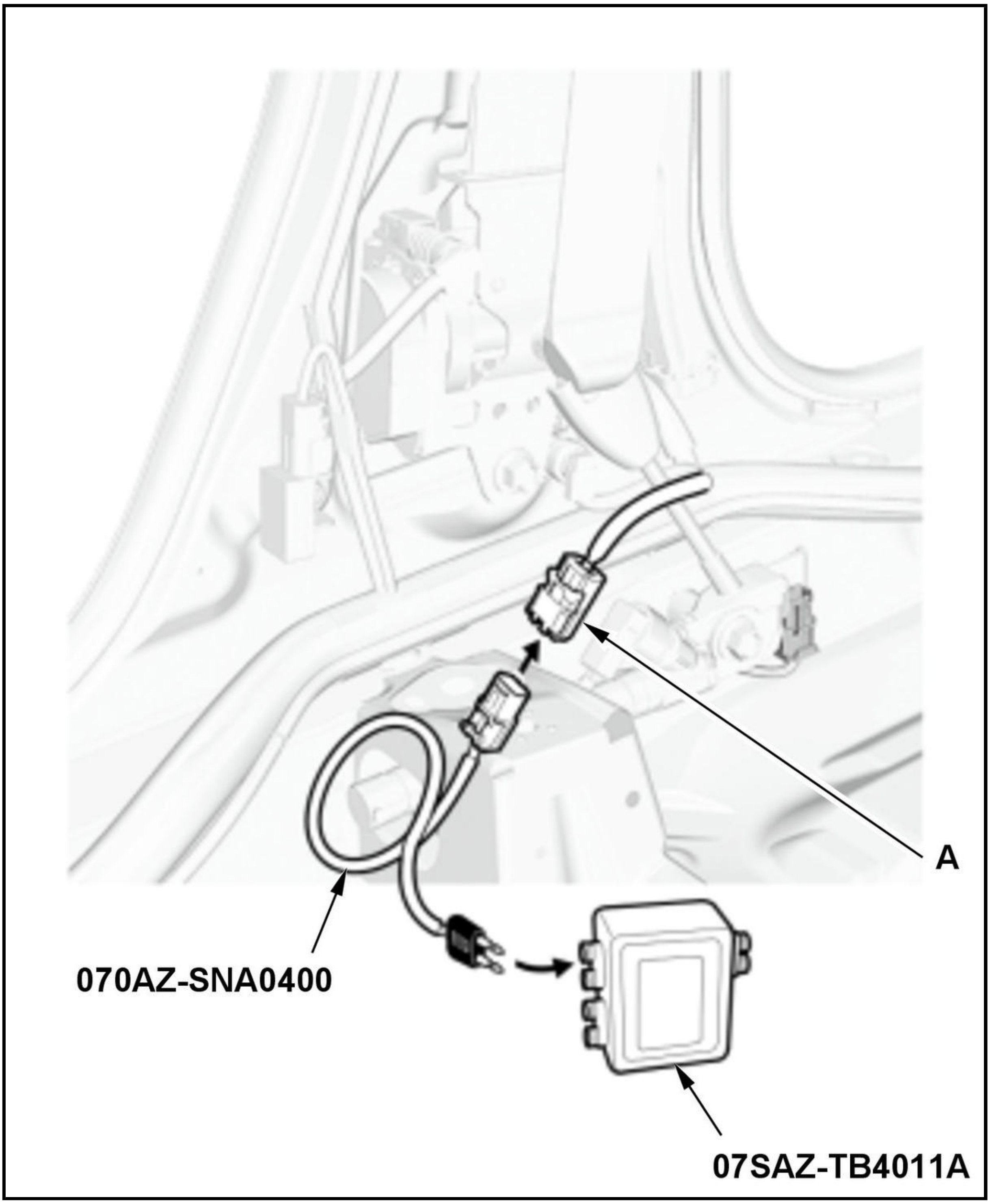

-4. Connect the terminals of SRS simulator lead M to the SRS inflator simulator (2 Ω connectors), then connect SRS simulator lead M to the front passenger's seat belt outer lap tensioner 2P connector on the floor wire harness.

-5. Reconnect the negative cable to the 12 volt battery.

-6. Clear the DTCs with the HDS.

-7. Turn the vehicle to the ON mode, then wait for 10 seconds.

-8. Check for DTCs with the HDS.

DTC Description	DTC
B007A-12 Short to power in the front passenger's seat belt outer lap tensioner	B

Is DTC B007A-12 indicated?

YES

Go to step 3.

NO

Short to power in the front passenger's seat belt outer lap tensioner; **replace the front passenger's seat belt outer lap tensioner** , then clear the DTC.

3. Shorted wire check (RLP+, RLP- lines to power)

-1. Turn the vehicle to the OFF (LOCK) mode.

-2. Disconnect the negative cable from the 12 volt battery, then wait at least 3 minutes.

-3. Disconnect the following connector:

SRS unit connector B (39P)

-4. Disconnect SRS simulator lead M from the front passenger's seat belt outer lap tensioner 2P connector on the floor wire harness.

-5. Reconnect the negative cable to the 12 volt battery.

-6. Turn the vehicle to the ON mode.

-7. Measure the voltage between test points 1 and 2.

Test condition	Vehicle ON mode
	Front passenger's seat belt outer lap tensioner 2P connector (on the floor wire harness): disconnected
	SRS unit connector B (39P): disconnected
Test point 1	**SRS unit connector B (39P) No. 22**
Test point 2	Body ground

Test point 1	**SRS unit connector B (39P) No. 23**
Test point 2	Body ground

Is there 0.2 V or less?

YES

The RLP+ and RLP- wires are OK. Faulty SRS unit or poor connection at SRS unit connector B (39P) and the SRS unit. Check the connection; if the connection is OK, check for any authorized service information related to the DTCs or symptoms you are troubleshooting or **replace the SRS unit** . If the DTC does not clear, replace the floor wire harness.

NO

Short to power in the floor wire harness; replace the floor wire harness, then clear the DTC.

DTC B007A-13

DTC B007A-13 : Open or Increased Resistance in the Front Passenger's Seat Belt Outer Lap Tensioner

Special Tools Required

-SRS Inflator Simulator 07SAZ-TB4011A

-SRS Simulator Lead M 070AZ-SNA0400

NOTE:

- **Before doing this troubleshooting procedure, find out if the vehicle was in a collision. If so, verify that all the required components were replaced with new components of the correct part number and were properly installed** .
- Before doing this troubleshooting procedure, review **SRS Precautions and Procedures** , **General Troubleshooting Information** , and **12 Volt Battery Terminal Disconnection and Reconnection** .

DTC Description	DTC
B007A-13 Open or increased resistance in the front passenger's seat belt outer lap tensioner	B

DTC (SRS)

1. Problem verification

   -1. Clear the DTCs with the HDS.

   -2. Turn the vehicle to the ON mode, then wait for 10 seconds.

   -3. Check for DTCs with the HDS.

DTC Description	DTC
B007A-13 Open or increased resistance in the front passenger's seat belt outer lap tensioner	B

   Is DTC B007A-13 indicated?

   YES

   The failure is duplicated. Go to step 2.

   NO

   Intermittent failure, the system is OK at this time. Go to Troubleshooting Intermittent Failures. If another DTC is indicated, troubleshoot the DTC.

2. Front passenger's seat belt outer lap tensioner check

   -1. Turn the vehicle to the OFF (LOCK) mode.

   -2. Disconnect the negative cable from the 12 volt battery, then wait at least 3 minutes.

   -3. Disconnect the front passenger's seat belt outer lap tensioner 2P connector (A) on the floor wire harness.

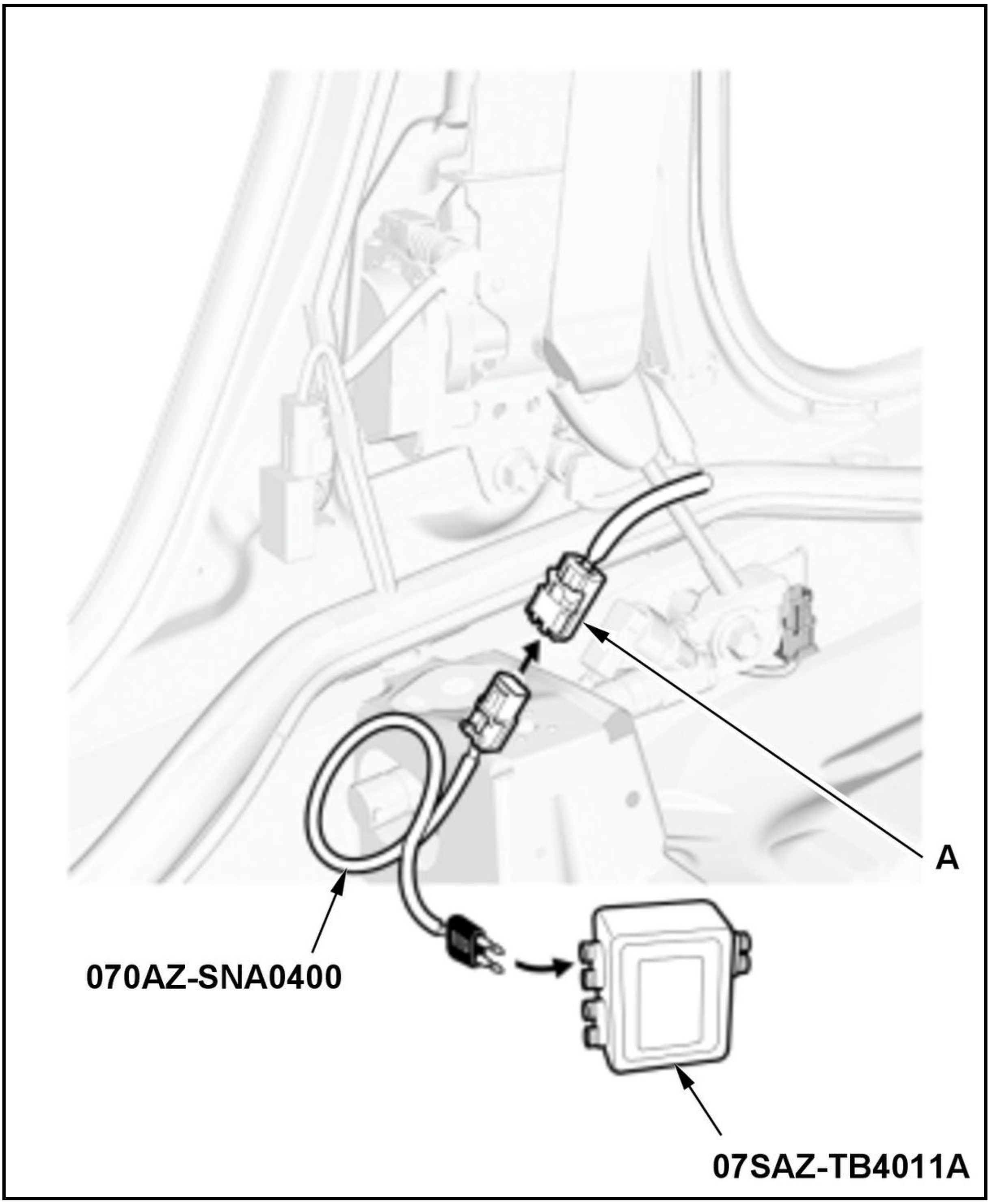

-4. Connect the terminals of SRS simulator lead M to the SRS inflator simulator (2 Ω connectors), then connect SRS simulator lead M to the front passenger's seat belt outer lap tensioner 2P connector on the floor wire harness.

-5. Reconnect the negative cable to the 12 volt battery.

-6. Clear the DTCs with the HDS.

-7. Turn the vehicle to the ON mode, then wait for 10 seconds.

-8. Check for DTCs with the HDS.

DTC Description	DTC
B007A-13 Open or increased resistance in the front passenger's seat belt outer lap tensioner	B

Is DTC B007A-13 indicated?

YES

Go to step 3.

NO

Open in the front passenger's seat belt outer lap tensioner; **replace the front passenger's seat belt outer lap tensioner** , then clear the DTC.

3. Open wire check (RLP+, RLP- lines)

-1. Turn the vehicle to the OFF (LOCK) mode.

-2. Disconnect the negative cable from the 12 volt battery, then wait at least 3 minutes.

-3. Disconnect the following connector:

SRS unit connector B (39P)

-4. Measure the resistance between test points 1 and 2.

Test condition	Vehicle OFF (LOCK) mode
	Front passenger's seat belt outer lap tensioner 2P connector (on the floor wire harness): disconnected
	SRS unit connector B (39P): disconnected
	Front passenger's seat belt outer lap tensioner 2P connector (on the floor wire harness): connected to SRS simulator lead M
Test point 1	**SRS unit connector B (39P) No. 22**
Test point 2	**SRS unit connector B (39P) No. 23**

Is there 2.0-3.0 Ω?

YES

The RLP+ and RLP- wires are OK. Faulty SRS unit or poor connection at SRS unit connector B (39P) and the SRS unit. Check the connection; if the connection is OK, check for any authorized service information related to the DTCs or symptoms you are troubleshooting or **replace the SRS unit** . If the DTC does not clear, replace the floor wire harness.

NO

Open in the floor wire harness; replace the floor wire harness, then clear the DTC.

DTC B007A-1A, B007A-2B

DTC B007A-1A : Decreased Resistance in the Front Passenger's Seat Belt Outer Lap Tensioner

DTC B007A-2B : Short to Another Wire Harness in the Front Passenger's Seat Belt Outer Lap Tensioner

Special Tools Required

-SRS Inflator Simulator 07SAZ-TB4011A

-SRS Simulator Lead M 070AZ-SNA0400

NOTE:

- **Before doing this troubleshooting procedure, find out if the vehicle was in a collision. If so, verify that all the required components were replaced with new components of the correct part number and were properly installed** .
- Before doing this troubleshooting procedure, review **SRS Precautions and Procedures** , **General Troubleshooting Information** , and **12 Volt Battery Terminal Disconnection and Reconnection** .

DTC Description	DTC
B007A-1A Decreased resistance in the front passenger's seat belt outer lap tensioner	B
B007A-2B Short to another wire in the front passenger's seat belt outer lap tensioner	B

DTC (SRS)

1. Problem verification

   -1. Clear the DTCs with the HDS.

   -2. Turn the vehicle to the ON mode, then wait for 10 seconds.

   -3. Check for DTCs with the HDS.

DTC Description	DTC
B007A-1A Decreased resistance in the front passenger's seat belt outer lap tensioner	B
B007A-2B Short to another wire in the front passenger's seat belt outer lap tensioner	B

   Is DTC B007A-1A or B007A-2B indicated?

   YES

   The failure is duplicated. Go to step 2.

   NO

   Intermittent failure, the system is OK at this time. Go to Troubleshooting Intermittent Failures. If another DTC is indicated, troubleshoot the DTC.

2. Front passenger's seat belt outer lap tensioner check

   -1. Turn the vehicle to the OFF (LOCK) mode.

   -2. Disconnect the negative cable from the 12 volt battery, then wait at least 3 minutes.

   -3. Disconnect the front passenger's seat belt outer lap tensioner 2P connector (A) on the floor wire harness.

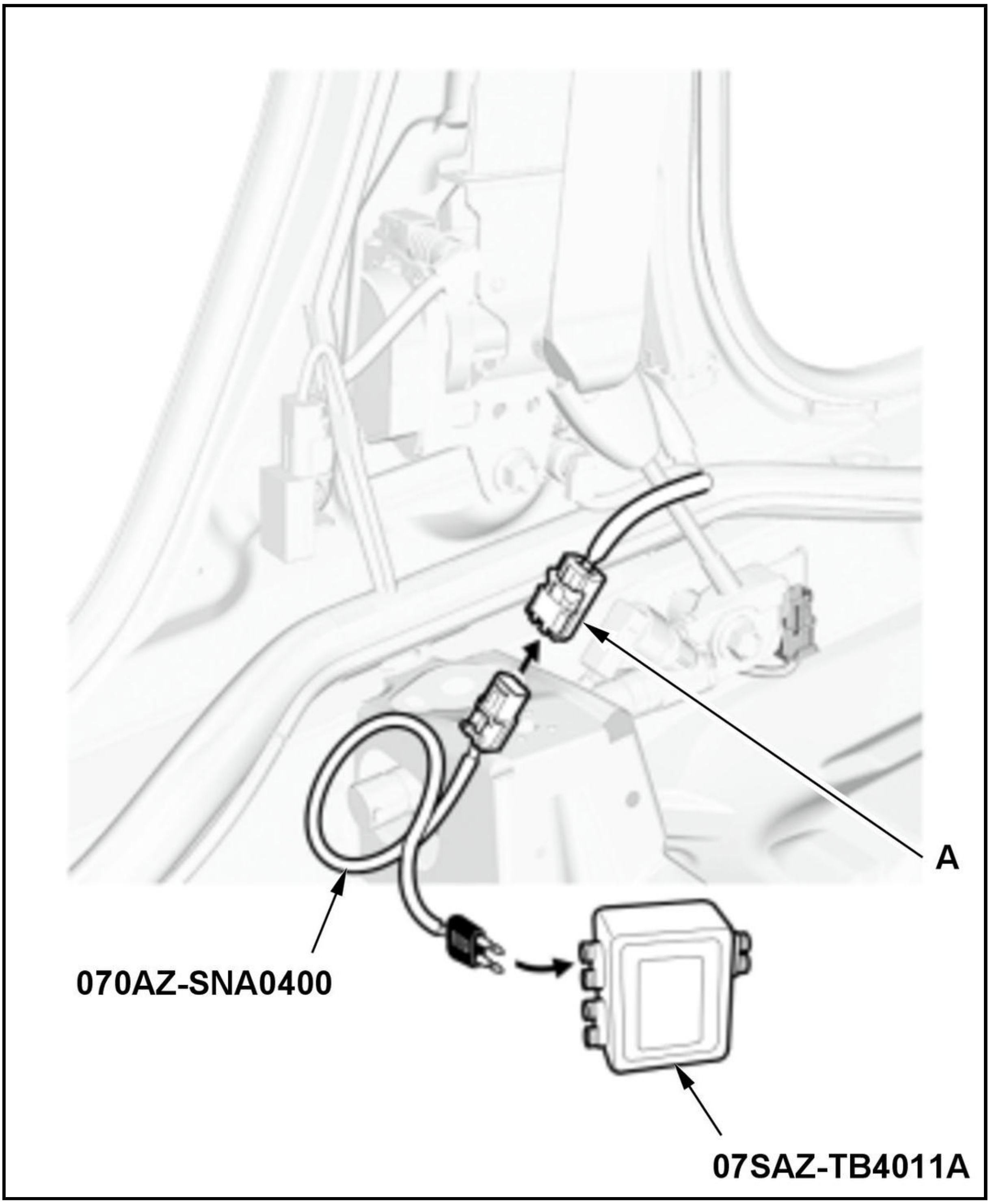

-4. Connect the terminals of SRS simulator lead M to the SRS inflator simulator (2 Ω connectors), then connect SRS simulator lead M to the front passenger's seat belt outer lap tensioner 2P connector on the floor wire harness.

-5. Reconnect the negative cable to the 12 volt battery.

-6. Clear the DTCs with the HDS.

-7. Turn the vehicle to the ON mode, then wait for 10 seconds.

-8. Check for DTCs with the HDS.

DTC Description	DTC
B007A-1A Decreased resistance in the front passenger's seat belt outer lap tensioner	B

DTC Description	DTC
B007A-2B Short to another wire in the front passenger's seat belt outer lap tensioner	B

Is DTC B007A-1A or B007A-2B indicated?

YES

Go to step 3.

NO

Short to another wire in the front passenger's seat belt outer lap tensioner; **replace the front passenger's seat belt outer lap tensioner** , then clear the DTC.

3. Shorted wire check (RLP+ line to RLP- line)

-1. Turn the vehicle to the OFF (LOCK) mode.

-2. Disconnect the negative cable from the 12 volt battery, then wait at least 3 minutes.

-3. Disconnect the following connector:

SRS unit connector B (39P)

-4. Disconnect SRS simulator lead M from the front passenger's seat belt outer lap tensioner 2P connector on the floor wire harness.

-5. Measure the resistance between test points 1 and 2.

Test condition	Vehicle OFF (LOCK) mode
	Front passenger's seat belt outer lap tensioner 2P connector (on the floor wire harness): disconnected
	SRS unit connector B (39P): disconnected
Test point 1	**SRS unit connector B (39P) No. 22**
Test point 2	**SRS unit connector B (39P) No. 23**

Is there an open circuit, or at least 1 MΩ?

YES

The RLP+ and RLP- wires are OK. Faulty SRS unit or poor connection at SRS unit connector B (39P) and the SRS unit. Check the connection; if the connection is OK, check for any authorized service information related to the DTCs or symptoms you are troubleshooting or **replace the SRS unit** . If the DTC does not clear, replace the floor wire harness.

NO

Short to another wire in the floor wire harness; replace the floor wire harness, then clear the DTC.

DTC B0082-11

DTC B0082-11 : Short to Ground in the Selectable Energy Absorption Device of the Front Passenger's Seat Belt Tensioner

NOTE:

- **Before doing this troubleshooting procedure, find out if the vehicle was in a collision. If so, verify that all the required components were replaced with new components of the correct part number**

and were properly installed .

- Before doing this troubleshooting procedure, review **SRS Precautions and Procedures** , **General Troubleshooting Information** , and **12 Volt Battery Terminal Disconnection and Reconnection** .

DTC Description	DTC
B0082-11 Short to ground in the selectable energy absorption device of the front passenger's seat belt tensioner	B

DTC (SRS)

1. Problem verification

-1. Clear the DTCs with the HDS.

-2. Turn the vehicle to the ON mode, then wait for 10 seconds.

-3. Check for DTCs with the HDS.

DTC Description	DTC
B0082-11 Short to ground in the selectable energy absorption device of the front passenger's seat belt tensioner	B

Is DTC B0082-11 indicated?

YES

The failure is duplicated. Go to step 2.

NO

Intermittent failure, the system is OK at this time. Go to Troubleshooting Intermittent Failures. If another DTC is indicated, troubleshoot the DTC.

2. Shorted wire check (RVEA+, RVEA- lines) 1

-1. Turn the vehicle to the OFF (LOCK) mode.

-2. Disconnect the negative cable from the 12 volt battery, then wait at least 3 minutes.

-3. **Remove the right side B-pillar lower trim** .

-4. Disconnect the following connector.

Selectable energy absorption device 2P connector (on the floor wire harness)

-5. Reconnect the negative cable to the 12 volt battery.

-6. Turn the vehicle to the ON mode, then clear the DTC.

-7. Check for DTCs with the HDS.

DTC Description	DTC
B0082-11 Short to ground in the selectable energy absorption device of the front passenger's seat belt tensioner	B

Is DTC B0082-11 indicated?

NO

Go to step 3.

YES

Short to ground in the selectable energy absorption device; **replace the front passenger's seat belt** , then clear the DTC.

3. Shorted wire check (RVEA+, RVEA- lines) 2

-1. Turn the vehicle to the OFF (LOCK) mode.

-2. Disconnect the negative cable from the 12 volt battery, then wait at least 3 minutes.

-3. Disconnect the following connector.

SRS unit connector B (39P)

-4. Measure the resistance between test points 1 and 2.

Test condition	Vehicle OFF (LOCK) mode
	SRS unit connector A (39P): disconnected
	Selectable energy absorption device 2P connector (on the floor wire harness): disconnected
Test point 1	**SRS unit connector A (39P) No. 2**
Test point 2	Body ground

Test point 1	**SRS unit connector A (39P) No. 3**
Test point 2	Body ground

Is there an open circuit, or at least 1 MΩ?

YES

The RVEA+ and RVEA- wires are OK. Check for any authorized service information related to the DTCs or symptoms you are troubleshooting or **replace the SRS unit** .

NO

Short to ground in the floor wire harness; replace the floor wire harness, then clear the DTC.

DTC B0082-12

DTC B0082-12 : Short to Power in the Selectable Energy Absorption Device of the Front Passenger's Seat Belt Tensioner

NOTE:

- **Before doing this troubleshooting procedure, find out if the vehicle was in a collision. If so, verify that all the required components were replaced with new components of the correct part number and were properly installed** .
- Before doing this troubleshooting procedure, review **SRS Precautions and Procedures** , **General Troubleshooting Information** , and **12 Volt Battery Terminal Disconnection and Reconnection** .

DTC Description	DTC
B0082-12 Short to power in the selectable energy absorption device of the front passenger's seat belt tensioner	B

DTC (SRS)

1. Problem verification

   -1. Clear the DTCs with the HDS.

   -2. Turn the vehicle to the ON mode, then wait for 10 seconds.

   -3. Check for DTCs with the HDS.

DTC Description	DTC
B0082-12 Short to power in the selectable energy absorption device of the front passenger's seat belt tensioner	B

   Is DTC B082-12 indicated?

   YES

   The failure is duplicated. Go to step 2.

   NO

   Intermittent failure, the system is OK at this time. Go to Troubleshooting Intermittent Failures. If another DTC is indicated, troubleshoot the DTC.

2. Shorted wire check (RVEA+, RVEA- lines to power) 1

   -1. Turn the vehicle to the OFF (LOCK) mode.

   -2. Disconnect the negative cable from the 12 volt battery, then wait at least 3 minutes.

   -3. **Remove the right side B-pillar lower trim** .

   -4. Disconnect the following connector.

Selectable energy absorption device 2P connector (on the floor wire harness)

   -5. Reconnect the negative cable to the 12 volt battery.

   -6. Turn the vehicle to the ON mode, then clear the DTC.

   -7. Check for DTCs with the HDS.

DTC Description	DTC
B0082-12 Short to power in the selectable energy absorption device of the front passenger's seat belt tensioner	B

   Is DTC B082-12 indicated?

   NO

   Go to step 3.

   YES

   Short to power in the selectable energy absorption device; **replace the front passenger's seat belt** , then clear the DTC.

3. Shorted wire check (RVEA+, RVEA- lines to power) 2

   -1. Turn the vehicle to the OFF (LOCK) mode.

-2. Disconnect the negative cable from the 12 volt battery, then wait at least 3 minutes.

-3. Disconnect the following connector.

SRS unit connector A (39P)

-4. Reconnect the negative cable to the 12 volt battery.

-5. Turn the vehicle to the ON mode.

-6. Measure the voltage between test points 1 and 2.

Test condition	Vehicle ON mode
	SRS unit connector A (39P): disconnected
	Selectable energy absorption device 2P connector (on the floor wire harness): disconnected
Test point 1	**SRS unit connector A (39P) No. 2**
Test point 2	Body ground

Test point 1	**SRS unit connector A (39P) No. 3**
Test point 2	Body ground

Is there 0.2 V or less?

YES

The RVEA+ and RVEA- wires are OK. Check for any authorized service information related to the DTCs or symptoms you are troubleshooting or **replace the SRS unit** .

NO

Short to power in the floor wire harness; replace the floor wire harness, then clear the DTC.

DTC B0082-13

DTC B0082-13 : Open or Increased Resistance in the Selectable Energy Absorption Device of the Front Passenger's Seat Belt Tensioner

NOTE:

- **Before doing this troubleshooting procedure, find out if the vehicle was in a collision. If so, verify that all the required components were replaced with new components of the correct part number and were properly installed** .
- Before doing this troubleshooting procedure, review **SRS Precautions and Procedures** , **General Troubleshooting Information** , and **12 Volt Battery Terminal Disconnection and Reconnection** .

DTC Description	DTC
B0082-13 Open or increased resistance in the selectable energy absorption device of the front passenger's seat belt tensioner	B

DTC (SRS)

1. Problem verification

-1. Clear the DTCs with the HDS.

-2. Turn the vehicle to the ON mode, then wait for 10 seconds.

-3. Check for DTCs with the HDS.

DTC Description	DTC
B0082-13 Open or increased resistance in the selectable energy absorption device of the front passenger's seat belt tensioner	B

Is DTC B0082-13 indicated?

YES

The failure is duplicated. Go to step 2.

NO

Intermittent failure, the system is OK at this time. Go to Troubleshooting Intermittent Failures. If another DTC is indicated, troubleshoot the DTC.

2. Selectable energy absorption device check

-1. Turn the vehicle to the OFF (LOCK) mode.

-2. Disconnect the negative cable from the 12 volt battery, then wait at least 3 minutes.

-3. **Remove the right side B-pillar lower trim** .

-4. Disconnect the following connector.

Selectable energy absorption device 2P connector (on the floor wire harness)

-5. Connect terminals A and B with a jumper wire.

Terminal A	Selectable energy absorption device 2P connector No. 1 (on the floor wire harness)
Terminal B	Selectable energy absorption device 2P connector No. 2 (on the floor wire harness)

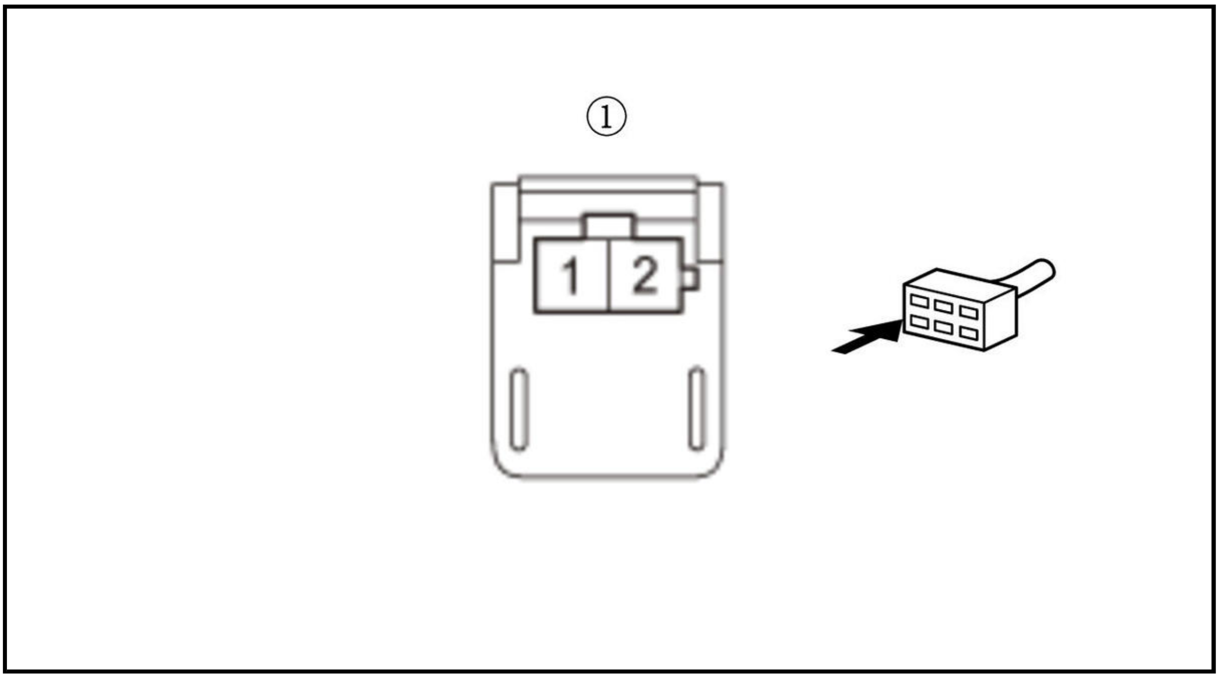

-6. Reconnect the negative cable to the 12 volt battery.

-7. Clear the DTCs with the HDS.

-8. Turn the vehicle to the ON mode, then wait for 10 seconds.

-9. Check for DTCs with the HDS.

DTC Description	DTC
B0082-13 Open or increased resistance in the selectable energy absorption device of the front passenger's seat belt tensioner	B

Is DTC B0082-13 indicated?

YES

Go to step 3.

NO

Open in the selectable energy absorption device; **replace the front passenger's seat belt** , then clear the DTC.

3. Open wire check (RVEA+, RVEA- lines)

-1. Turn the vehicle to the OFF (LOCK) mode.

-2. Disconnect the negative cable from the 12 volt battery, then wait at least 3 minutes.

-3. Remove the jumper wire from the selectable energy absorption device 2P connector on the floor wire harness.

-4. Disconnect the following connector.

SRS unit connector A (39P)

-5. Connect terminals A and B with a jumper wire.

Terminal A	**SRS unit connector A (39P) No. 2**
Terminal B	**SRS unit connector A (39P) No. 3**

-6. Measure the resistance between test points 1 and 2.

Test condition	Vehicle OFF (LOCK) mode
	Selectable energy absorption device 2P connector (on the floor wire harness): disconnected
	SRS unit connector A (39P): disconnected
	SRS unit connector A (39P) terminals No. 2 and No. 3: jumped
Test point 1	Selectable energy absorption device 2P connector No. 1 (on the floor wire harness)
Test point 2	Selectable energy absorption device 2P connector No. 2 (on the floor wire harness)

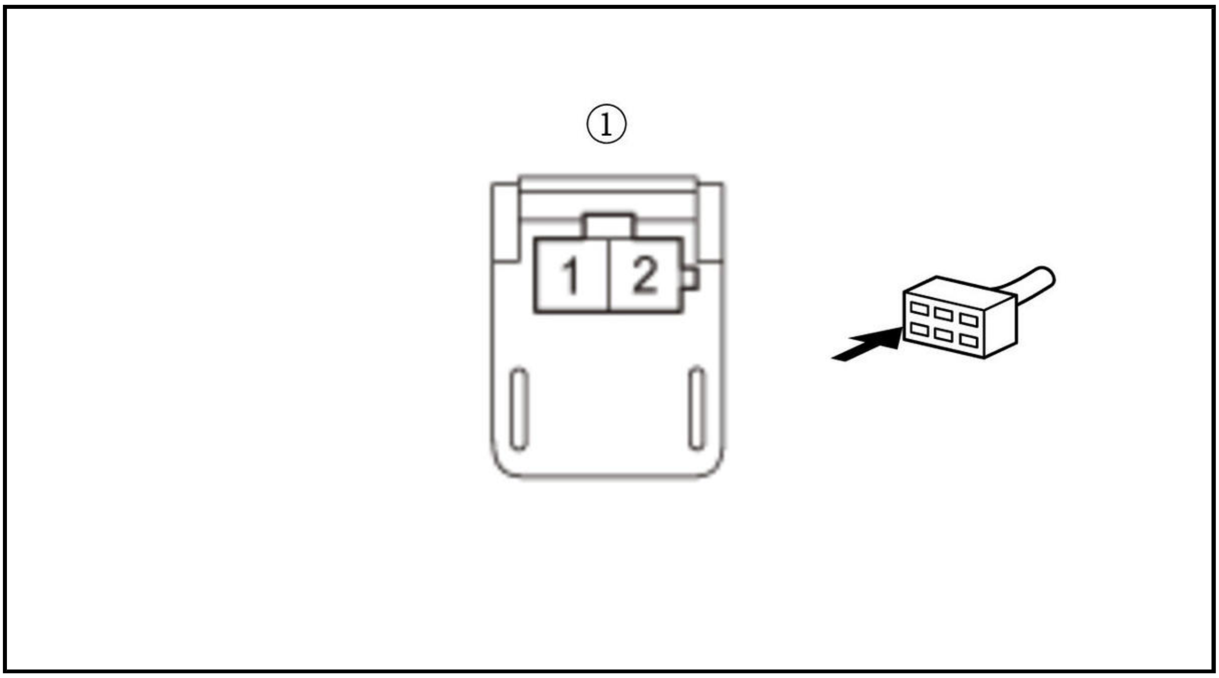

Is there 1.0 Ω or less?

YES

The RVEA+ and RVEA- wires are OK. Faulty SRS unit or poor connection at SRS unit connector B (39P) and the SRS unit. Check the connection; if the connection is OK, **replace the SRS unit** . If the DTC does not clear, replace the floor wire harness.

NO

Open in the floor wire harness; replace the floor wire harness, then clear the DTC.

DTC B0082-1A

DTC B0082-1A : Decreased Resistance in the Selectable Energy Absorption Device of the Front Passenger's Seat Belt Tensioner

Special Tools Required

SRS Short Canceller 070AZ-SAA0100

NOTE:

- **Before doing this troubleshooting procedure, find out if the vehicle was in a collision. If so, verify that all the required components were replaced with new components of the correct part number and were properly installed** .
- Before doing this troubleshooting procedure, review **SRS Precautions and Procedures** , **General Troubleshooting Information** , and **12 Volt Battery Terminal Disconnection and Reconnection** .

DTC Description	DTC
B0082-1A Decreased resistance in the selectable energy absorption device of the front passenger's seat belt tensioner	B

DTC (SRS)

1. Problem verification

   -1. Clear the DTCs with the HDS.

-2. Turn the vehicle to the ON mode, then wait for 10 seconds.

-3. Check for DTCs with the HDS.

DTC Description	DTC
B0082-1A Decreased resistance in the selectable energy absorption device of the front passenger's seat belt tensioner	B

Is DTC B0082-1A indicated?

YES

The failure is duplicated. Go to step 2.

NO

Intermittent failure, the system is OK at this time. Go to Troubleshooting Intermittent Failures. If another DTC is indicated, troubleshoot the DTC.

2. Selectable energy absorption device check

-1. Turn the vehicle to the OFF (LOCK) mode.

-2. Disconnect the negative cable from the 12 volt battery, then wait at least 3 minutes.

-3. **Remove the right side B-pillar lower trim** .

-4. Disconnect the following connector.

Selectable energy absorption device 2P connector (on the floor wire harness)

-5. Reconnect the negative cable to the 12 volt battery.

-6. Clear the DTCs with the HDS.

-7. Turn the vehicle to the ON mode, then wait for 10 seconds.

-8. Check for DTCs with the HDS.

DTC Description	DTC
B0082-1A Decreased resistance in the selectable energy absorption device of the front passenger's seat belt tensioner	B

Is DTC B0082-1A indicated?

YES

Go to step 3.

NO

Short to another wire in the selectable energy absorption device; **replace the front passenger's seat belt** , then clear the DTC.

3. Shorted wire check (RVEA+ line to RVEA- line)

-1. Turn the vehicle to the OFF (LOCK) mode.

-2. Disconnect the negative cable from the 12 volt battery, then wait at least 3 minutes.

-3. Disconnect the following connector.

SRS unit connector A (39P)

-4. **Connect the SRS short canceller to SRS unit connector A (39P) terminals No. 2 and No. 3** .

-5. Measure the resistance between test points 1 and 2.

Test condition	Vehicle OFF (LOCK) mode
	Selectable energy absorption device 2P connector (on the floor wire harness): disconnected
	SRS unit connector A (39P): disconnected
	SRS unit connector A (39P) No. 2 and No. 3: connected to SRS short canceller
Test point 1	**SRS unit connector A (39P) No. 2**
Test point 2	**SRS unit connector A (39P) No. 3**

Is there an open circuit, or at least 1 MΩ?

YES

The RVEA+ and RVEA- wires are OK. Faulty SRS unit or poor connection at SRS unit connector B (39P) and the SRS unit. Check the connection; if the connection is OK, **replace the SRS unit** . If the DTC does not clear, replace the floor wire harness.

NO

Short to another wire in the floor wire harness; replace the floor wire harness, then clear the DTC.

DTC B0082-2B

DTC B0082-2B : Short to Another Wire Harness in the Selectable Energy Absorption Device of the Front Passenger's Seat Belt Tensioner

NOTE:

- **Before doing this troubleshooting procedure, find out if the vehicle was in a collision. If so, verify that all the required components were replaced with new components of the correct part number and were properly installed** .
- Before doing this troubleshooting procedure, review **SRS Precautions and Procedures** and **General Troubleshooting Information** .

DTC Description	DTC
B0082-2B Short to another wire harness in the selectable energy absorption device of the front passenger's seat belt tensioner	B

DTC (SRS)

1. Problem verification

-1. Clear the DTCs with the HDS.

-2. Turn the vehicle to the ON mode, then wait for 10 seconds.

-3. Check for DTCs with the HDS.

DTC Description	DTC
B0082-2B Short to another wire harness in the selectable energy absorption device of the front passenger's seat belt tensioner	B

Is DTC B0082-2B indicated?

YES

The failure is duplicated. Go to step 2.

NO

Intermittent failure, the system is OK at this time. Go to Troubleshooting Intermittent Failures. If another DTC is indicated, troubleshoot the DTC.

2. DTC check

-1. Check for DTCs with the HDS.

DTC Description	DTC
B0001-2B Short to another wire harness in the driver's airbag first inflator	B
B0002-2B Short to another wire harness in the driver's airbag second inflator	B
B0010-2B Short to another wire harness in the front passenger's airbag first inflator	B
B0011-2B Short to another wire harness in the front passenger's airbag second inflator	B
B0020-2B Short to another wire harness in the left side airbag inflator	B
B0021-2B Short to another wire harness in the left side curtain airbag first inflator	B
B0028-2B Short to another wire harness in the right side airbag inflator	B
B0029-2B Short to another wire harness in the right side curtain airbag first inflator	B
B0070-2B Short to another wire harness in the driver's seat belt tensioner	B
B0072-2B Short to another wire harness in the front passenger's seat belt tensioner	B
B0079-2B Short to another wire harness in the driver's seat belt outer lap tensioner	B
B007A-2B Short to another wire harness in the front passenger's seat belt outer lap tensioner	B
B0082-2B Short to another wire harness in the selectable energy absorption device of the front passenger's seat belt tensioner	B

Is DTC B0001-2B, B0002-2B, B0010-2B, B0011-2B, B0020-2B, B0021-2B, B0028-2B, B0029-2B, B0070-2B, B0072-2B, B0079-2B or B007A-2B indicated with DTC B0082-2B?

YES

Go to step 3.

NO

Short to another wire in the floor wire harness; replace the floor wire harness, then clear the DTC.

3. Shorted wire check (RVEA lines to another line)

-1. Turn the vehicle to the OFF (LOCK) mode.

-2. Disconnect the negative cable from the 12 volt battery, then wait at least 3 minutes.

-3. Disconnect the following connectors.

SRS unit connector A (39P)
SRS unit connector B (39P)
Selectable energy absorption device 2P connector (on the floor wire harness)
Inflator connectors which are assigned to 2B codes listed on HDS

-4. Check for continuity between test points 1 and 2 of SRS unit connector A (39P) and B (39P) according to table.

Test condition	Vehicle OFF (LOCK) mode
	SRS unit connector A (39P): disconnected
	SRS unit connector B (39P): disconnected
	Selectable energy absorption device 2P connector (on the floor wire harness): disconnected
	Inflator connectors which are assigned to 2B codes listed on HDS: disconnected

DTC	**Test point 1**	**Test point 2**
	From terminal	**To terminal**
B0001-2B	SRS unit connector B (39P) No. 2	SRS unit connector A (39P) No. 9
	SRS unit connector B (39P) No. 3	SRS unit connector A (39P) No. 8
B0002-2B	SRS unit connector B (39P) No. 2	SRS unit connector A (39P) No. 10
	SRS unit connector B (39P) No. 3	SRS unit connector A (39P) No. 11
B0010-2B	SRS unit connector B (39P) No. 2	SRS unit connector A (39P) No. 5
	SRS unit connector B (39P) No. 3	SRS unit connector A (39P) No. 4
B0011-2B	SRS unit connector B (39P) No. 2	SRS unit connector A (39P) No. 6
	SRS unit connector B (39P) No. 3	SRS unit connector A (39P) No. 7
B0020-2B	SRS unit connector B (39P) No. 2	SRS unit connector B (39P) No. 5
	SRS unit connector B (39P) No. 3	SRS unit connector B (39P) No. 6
B0021-2B	SRS unit connector B (39P) No. 2	SRS unit connector B (39P) No. 9
	SRS unit connector B (39P) No. 3	SRS unit connector B (39P) No. 10
B0028-2B	SRS unit connector B (39P) No. 2	SRS unit connector B (39P) No. 4
	SRS unit connector B (39P) No. 3	SRS unit connector B (39P) No. 3
B0029-2B	SRS unit connector B (39P) No. 2	SRS unit connector B (39P) No. 8
	SRS unit connector B (39P) No. 3	SRS unit connector B (39P) No. 7
B0070-2B	SRS unit connector B (39P) No. 2	SRS unit connector B (39P) No. 20
	SRS unit connector B (39P) No. 3	SRS unit connector B (39P) No. 21
B0072-2B	SRS unit connector B (39P) No. 2	SRS unit connector A (39P) No. 19
	SRS unit connector B (39P) No. 3	SRS unit connector A (39P) No. 18
B0079-2B	SRS unit connector B (39P) No. 2	SRS unit connector B (39P) No. 24
	SRS unit connector B (39P) No. 3	SRS unit connector B (39P) No. 25
B007A-2B	SRS unit connector B (39P) No. 2	SRS unit connector B (39P) No. 23
	SRS unit connector B (39P) No. 3	SRS unit connector B (39P) No. 22

Is there continuity?

YES

Short to another wire in the dashboard wire harness or the floor wire harness; replace the faulty harness, then clear the DTC.

NO

The RVEA wires are OK. Faulty SRS unit or poor connection at SRS unit connector A (39P) and the SRS unit, or SRS unit connector B (39P) and the SRS unit. Check the connection; if the connection is OK, check for any authorized service information related to the DTCs or symptoms you are troubleshooting or **replace the SRS unit** . If the DTC does not clear, replace the dashboard wire harness or the floor wire harness.

DTC B0090-4A, B0090-92

DTC B0090-4A, B0090-92 : Internal Failure of the Left Front Impact Sensor

NOTE:

- **Before doing this troubleshooting procedure, find out if the vehicle was in a collision. If so, verify that all the required components were replaced with new components of the correct part number and were properly installed** .
- Before doing this troubleshooting procedure, review **SRS Precautions and Procedures** and **General Troubleshooting Information** .

DTC Description	DTC
B0090-4A Internal failure of the left front impact sensor	B
B0090-92 Internal failure of the left front impact sensor	B

DTC (SRS)

1. Problem verification

-1. Clear the DTCs with the HDS.

-2. Turn the vehicle to the ON mode, then wait for 10 seconds.

-3. Check for DTCs with the HDS.

DTC Description	DTC
B0090-4A Internal failure of the left front impact sensor	B
B0090-92 Internal failure of the left front impact sensor	B

Is DTC B0090-4A or B0090-92 indicated?

YES

The failure is duplicated. **Replace the left front impact sensor** , then clear the DTC, and retest. If the DTC is still present, check for any authorized service information related to the DTCs or symptoms you are troubleshooting or **replace the SRS unit** .

NO

Intermittent failure, the system is OK at this time. Go to Troubleshooting Intermittent Failures. If another DTC is indicated, troubleshoot the DTC.

DTC B0090-87

DTC B0090-87 : No Signal From the Left Front Impact Sensor

Special Tools Required

-SRS Inflator Simulator 07SAZ-TB4011A

-SRS Simulator Lead L 070AZ-SNA0300

NOTE:

- **Before doing this troubleshooting procedure, find out if the vehicle was in a collision. If so, verify that all the required components were replaced with new components of the correct part number and were properly installed** .
- Before doing this troubleshooting procedure, review **SRS Precautions and Procedures** , **General Troubleshooting Information** , and **12 Volt Battery Terminal Disconnection and Reconnection** .

DTC Description	DTC
B0090-87 No signal from the left front impact sensor	B

DTC (SRS)

1. Problem verification

   -1. Clear the DTCs with the HDS.

   -2. Turn the vehicle to the ON mode, then wait for 10 seconds.

   -3. Check for DTCs with the HDS.

DTC Description	DTC
B0090-87 No signal from the left front impact sensor	B

   Is DTC B0090-87 indicated?

   YES

   The failure is duplicated. Go to step 2.

   NO

   Intermittent failure, the system is OK at this time. Go to Troubleshooting Intermittent Failures. If another DTC is indicated, troubleshoot the DTC.

2. Connector connection check

   -1. Turn the vehicle to the OFF (LOCK) mode.

   -2. Check the following connections.

SRS unit connector A (39P)
Left front impact sensor 2P connector (on the engine compartment wire harness)
Connector between the SRS unit and the left front impact sensor

   Are the connectors OK?

   YES

   Go to step 4.

   NO

   Go to step 3.

3. System check

-1. Reset the loose connections that caused the problem in step 2.

-2. Clear the DTCs with the HDS.

-3. Turn the vehicle to the ON mode, then wait for 10 seconds.

-4. Check for DTCs with the HDS.

DTC Description	DTC
B0090-87 No signal from the left front impact sensor	B

Is DTC B0090-87 indicated?

YES

Turn the vehicle to the OFF (LOCK) mode, then go to step 4.

NO

The system is OK at this time.

4. Shorted wire check (LFS+ line to LFS- line)

-1. Disconnect the negative cable from the 12 volt battery, then wait at least 3 minutes.

-2. Disconnect the following connectors.

SRS unit connector A (39P)
Left front impact sensor 2P connector (on the engine compartment wire harness)

-3. Measure the resistance between test points 1 and 2.

Test condition	Vehicle OFF (LOCK) mode
	SRS unit connector A (39P): disconnected
	Left front impact sensor 2P connector (on the engine compartment wire harness): disconnected
Test point 1	**SRS unit connector A (39P) No. 31**
Test point 2	**SRS unit connector A (39P) No. 32**

Is there an open circuit, or at least 1 MΩ?

YES

The LFS+ and LFS- wires are not shorted. Go to step 5.

NO

Short to another wire in the engine compartment wire harness or the dashboard wire harness; replace the faulty harness, then clear the DTC.

5. Shorted wire check (LFS+, LFS- lines)

-1. Measure the resistance between test points 1 and 2.

Test condition	Vehicle OFF (LOCK) mode
	SRS unit connector A (39P): disconnected
	Left front impact sensor 2P connector (on the engine compartment wire harness): disconnected

Test point 1	**SRS unit connector A (39P) No. 31**
Test point 2	Body ground

Test point 1	**SRS unit connector A (39P) No. 32**
Test point 2	Body ground

Is there an open circuit, or at least 1 MΩ?

YES

The LFS+ and LFS- wires are not shorted. Go to step 6.

NO

Short to ground in the engine compartment wire harness or the dashboard wire harness; replace the faulty harness, then clear the DTC.

6. Shorted wire check (LFS+, LFS- lines to power)

-1. Reconnect the negative cable to the 12 volt battery.

-2. Turn the vehicle to the ON mode.

-3. Measure the voltage between test points 1 and 2.

Test condition	Vehicle ON mode
	SRS unit connector A (39P): disconnected
	Left front impact sensor 2P connector (on the engine compartment wire harness): disconnected
Test point 1	**SRS unit connector A (39P) No. 31**
Test point 2	Body ground

Test point 1	**SRS unit connector A (39P) No. 32**
Test point 2	Body ground

Is there 0.2 V or less?

YES

The LFS+ and LFS- wires are not shorted to power. Go to step 7.

NO

Short to power in the engine compartment wire harness or the dashboard wire harness; replace the faulty harness, then clear the DTC.

7. Open wire check (LFS+, LFS- lines)

-1. Turn the vehicle to the OFF (LOCK) mode.

-2. Connect the black terminal (A) of SRS simulator lead L to the SRS inflator simulator (jumper connector), then connect SRS simulator lead L to the left front impact sensor 2P connector (B) on the engine compartment wire harness.

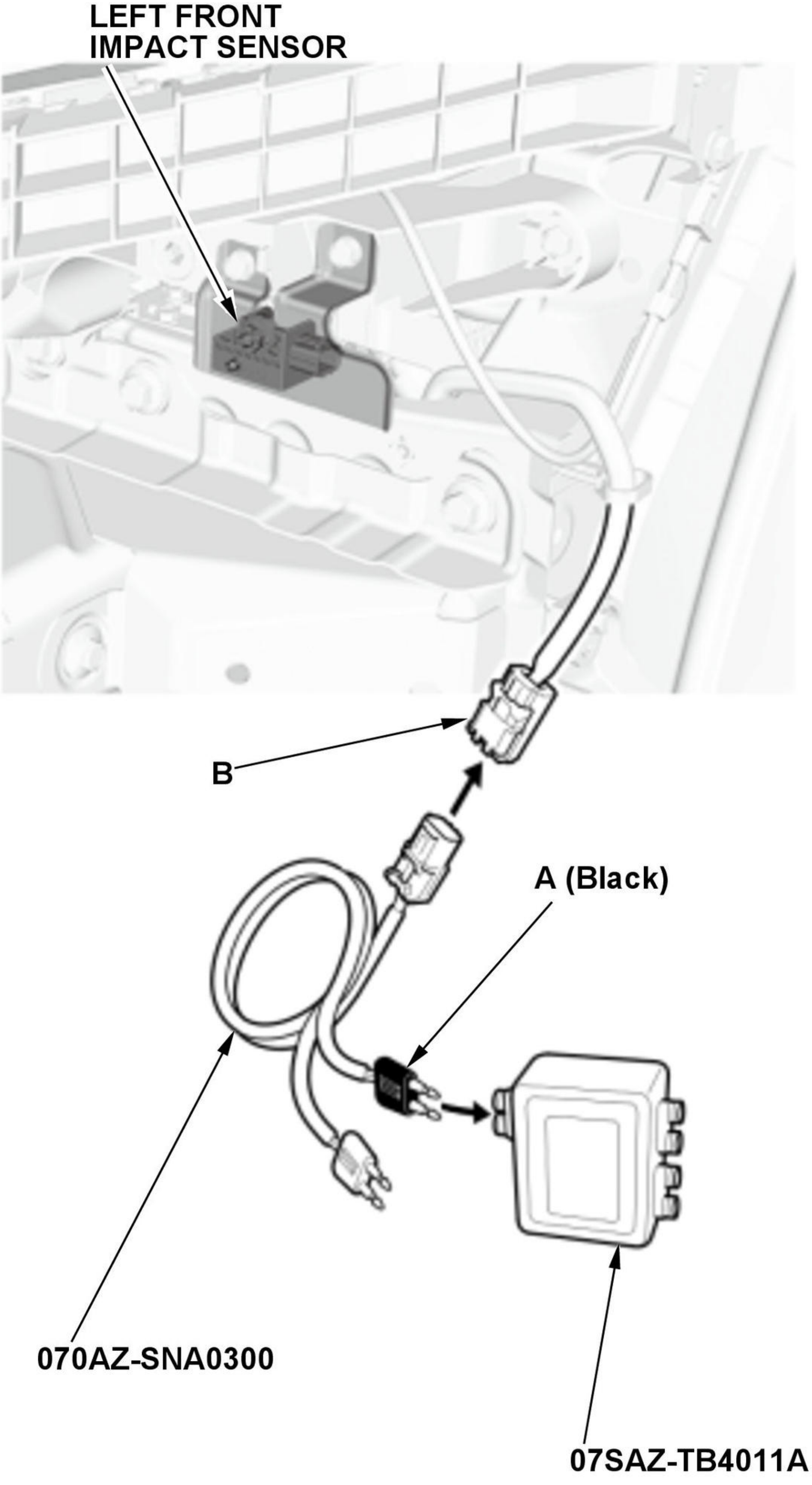
LEFT FRONT IMPACT SENSOR
B
A (Black)
070AZ-SNA0300
07SAZ-TB4011A

-3. Measure the resistance between test points 1 and 2.

Test condition	Vehicle OFF (LOCK) mode
	SRS unit connector A (39P): disconnected
	Left front impact sensor 2P connector (on the engine compartment wire harness): disconnected
	Left front impact sensor 2P connector (on the engine compartment wire harness): connected to SRS simulator lead L
Test point 1	**SRS unit connector A (39P) No. 31**
Test point 2	**SRS unit connector A (39P) No. 32**

Is there 1.0 Ω or less?

YES

The LFS+ and LFS- wires are OK. **Replace the left front impact sensor** , then clear the DTC, and retest. If the DTC is still present, check for any authorized service information related to the DTCs or symptoms you are troubleshooting or **replace the SRS unit** .

NO

Open in the engine compartment wire harness or the dashboard wire harness; replace the faulty harness, then clear the DTC.

DTC B0091-4A, B0091-92

DTC B0091-4A, B0091-92 : Internal Failure of the Left Side Impact Sensor (first)

NOTE:

- **Before doing this troubleshooting procedure, find out if the vehicle was in a collision. If so, verify that all the required components were replaced with new components of the correct part number and were properly installed** .
- Before doing this troubleshooting procedure, review **SRS Precautions and Procedures** and **General Troubleshooting Information** .

DTC Description	DTC
B0091-4A Internal failure of the left side impact sensor (first)	B
B0091-92 Internal failure of the left side impact sensor (first)	B

DTC (SRS)

1. Problem verification

-1. Clear the DTCs with the HDS.

-2. Turn the vehicle to the ON mode, then wait for 10 seconds.

-3. Check for DTCs with the HDS.

DTC Description	DTC
B0091-4A Internal failure of the left side impact sensor (first)	B
B0091-92 Internal failure of the left side impact sensor (first)	B

Is DTC B0091-4A or B0091-92 indicated?

YES

The failure is duplicated. **Replace the left side impact sensor (first)** , then clear the DTC, and retest. If the DTC is still present, check for any authorized service information related to the DTCs or symptoms you are troubleshooting or **replace the SRS unit** .

NO

Intermittent failure, the system is OK at this time. Go to Troubleshooting Intermittent Failures. If another DTC is indicated, troubleshoot the DTC.

DTC B0091-87, B0092-87

DTC B0091-87 : No Signal From the Left Side Impact Sensor (first)

DTC B0092-87 : No Signal From the Left Side Impact Sensor (second)

NOTE:

- **Before doing this troubleshooting procedure, find out if the vehicle was in a collision. If so, verify that all the required components were replaced with new components of the correct part number and were properly installed** .
- Before doing this troubleshooting procedure, review **SRS Precautions and Procedures** , **General Troubleshooting Information** , and **12 Volt Battery Terminal Disconnection and Reconnection** .

DTC Description	DTC
B0091-87 No signal from the left side impact sensor (first)	B
B0092-87 No signal from the left side impact sensor (second)	B

DTC (SRS)

1. DTC check

-1. Clear the DTCs with the HDS.

-2. Turn the vehicle to the ON mode, then wait for 10 seconds.

-3. Check for DTCs with the HDS.

DTC Description	DTC
B0091-4A Internal failure of the left side impact sensor (first)	B
B0091-87 No signal from the left side impact sensor (first)	B
B0091-92 Internal failure of the left side impact sensor (first)	B
B0092-4A Internal failure of the left side impact sensor (second)	B
B0092-87 No signal from the left side impact sensor (second)	B
B0092-92 Internal failure of the left side impact sensor (second)	B

Are DTCs indicated?

DTC B0091-87

Go to step 2.

DTC B0092-87

Go to step 10.

DTC B0091-4A or B0091-92

Replace the left side impact sensor (first) , then clear the DTC.

DTC B0092-4A or B0092-92

Replace the left side impact sensor (second) , then clear the DTC.

NO DTC

Intermittent failure, the system is OK at this time. Go to Troubleshooting Intermittent Failures. If another DTC is indicated, troubleshoot the DTC.

2. Harness visual check

-1. Turn the vehicle to the OFF (LOCK) mode.

-2. Check for damage on the floor wire harness that side impact sensor is connected to.

Is the floor wire harness OK?

YES

Go to step 3.

NO

Replace the floor wire harness, then clear the DTC, and retest.

3. Connector connection check

-1. Check the following connections.

SRS unit connector B (39P)
Left side impact sensor (first) 4P connector (on the floor wire harness)
Left side impact sensor (second) 2P connector (on the floor wire harness)

Are the connectors OK?

YES

Go to step 5.

NO

Go to step 4.

4. System check

-1. Reset the loose connections that caused the problem in step 3.

-2. Clear the DTCs with the HDS.

-3. Turn the vehicle to the ON mode, then wait for 10 seconds.

-4. Check for DTCs with the HDS.

DTC Description	DTC
B0091-87 No signal from the left side impact sensor (first)	B

Is DTC B0091-87 indicated?

YES

Turn the vehicle to the OFF (LOCK) mode, then go to step 5.

NO

The system is OK at this time.

5. Left side impact sensor (first) substituting

-1. Disconnect the negative cable from the 12 volt battery, then wait at least 3 minutes.

-2. **Substitute a known-good left side impact sensor (first)** .

-3. Reconnect the negative cable to the 12 volt battery.

-4. Clear the DTCs with the HDS.

-5. Turn the vehicle to the ON mode, then wait for 10 seconds.

-6. Check for DTCs with the HDS.

DTC Description	DTC
B0091-87 No signal from the left side impact sensor (first)	B

Is DTC B0091-87 indicated?

YES

Go to step 6.

NO

Replace the left side impact sensor (first) , then clear the DTC.

6. Shorted wire check (LS1+ line to LS1- line)

-1. Turn the vehicle to the OFF (LOCK) mode.

-2. Disconnect the negative cable from the 12 volt battery, then wait at least 3 minutes.

-3. Return the left side impact sensor (first) which was replaced.

-4. Disconnect the following connectors.

SRS unit connector B (39P)
Left side impact sensor (first) 4P connector (on the floor wire harness)
Left side impact sensor (second) 2P connector (on the floor wire harness)

-5. Measure the resistance between test points 1 and 2.

Test condition	Vehicle OFF (LOCK) mode
	SRS unit connector B (39P): disconnected
	Left side impact sensor (first) 4P connector (on the floor wire harness): disconnected
	Left side impact sensor (second) 2P connector (on the floor wire harness): disconnected
Test point 1	Left side impact sensor (first) 4P connector (female terminals) No. 2 (on the floor wire harness): ①

Test point 2	Left side impact sensor (first) 4P connector (female terminals) No. 3 (on the floor wire harness): ①

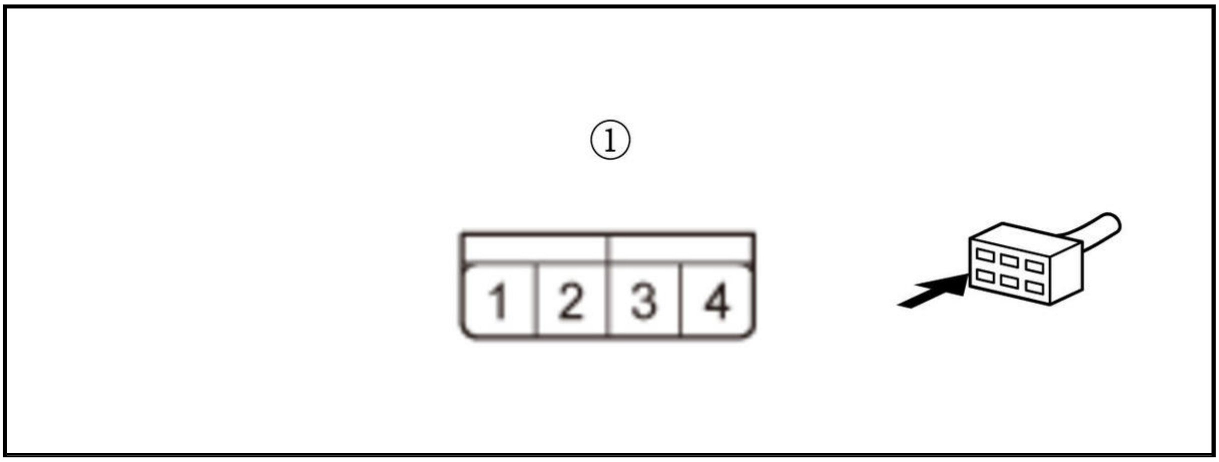

Is there an open circuit, or at least 1 MΩ?

YES

The LS1+ and LS1- wires are not shorted. Go to step 7.

NO

Short to another wire in the floor wire harness between the SRS unit and the left side impact sensor (first); replace the floor wire harness, then clear the DTC.

7. Shorted wire check (LS1+, LS1- lines)

-1. Measure the resistance between test points 1 and 2.

Test condition	Vehicle OFF (LOCK) mode
	SRS unit connector B (39P): disconnected
	Left side impact sensor (first) 4P connector (on the floor wire harness): disconnected
	Left side impact sensor (second) 2P connector (on the floor wire harness): disconnected
Test point 1	Left side impact sensor (first) 4P connector (female terminals) No. 2 (on the floor wire harness): ①
Test point 2	Body ground

Test point 1	Left side impact sensor (first) 4P connector (female terminals) No. 3 (on the floor wire harness): ①
Test point 2	Body ground

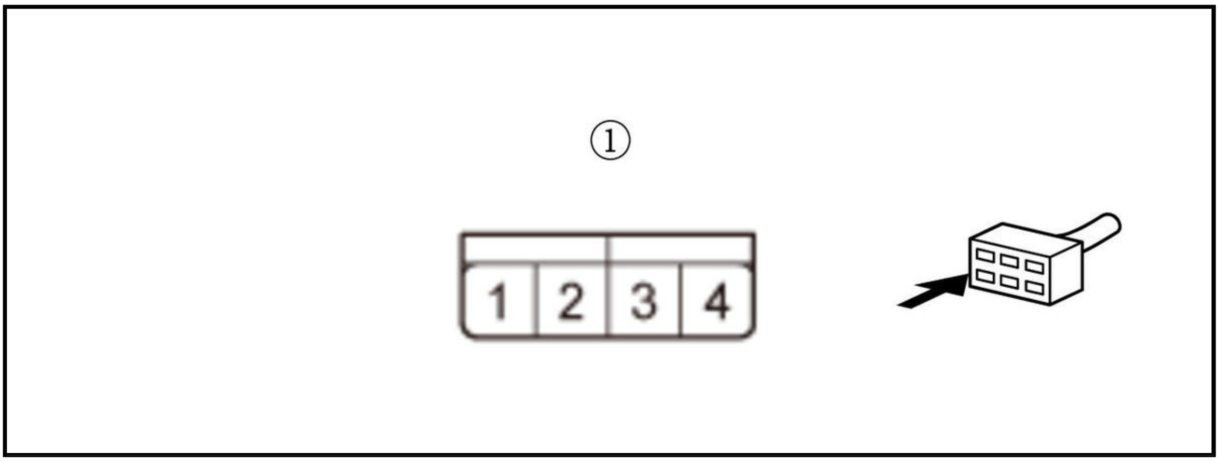

Is there an open circuit, or at least 1 MΩ?

YES

The LS1+ and LS1- wires are not shorted. Go to step 8.

NO

Short to ground in the floor wire harness between the SRS unit and the left side impact sensor (first); replace the floor wire harness, then clear the DTC.

8. Shorted wire check (LS1+, LS1- lines to power)

-1. Reconnect the negative cable to the 12 volt battery.

-2. Turn the vehicle to the ON mode.

-3. Measure the voltage between test points 1 and 2.

Test condition	Vehicle ON mode
	SRS unit connector B (39P): disconnected
	Left side impact sensor (first) 4P connector (on the floor wire harness): disconnected
	Left side impact sensor (second) 2P connector (on the floor wire harness): disconnected
Test point 1	Left side impact sensor (first) 4P connector (female terminals) No. 2 (on the floor wire harness): ①
Test point 2	Body ground

Test point 1	Left side impact sensor (first) 4P connector (female terminals) No. 3 (on the floor wire harness): ①
Test point 2	Body ground

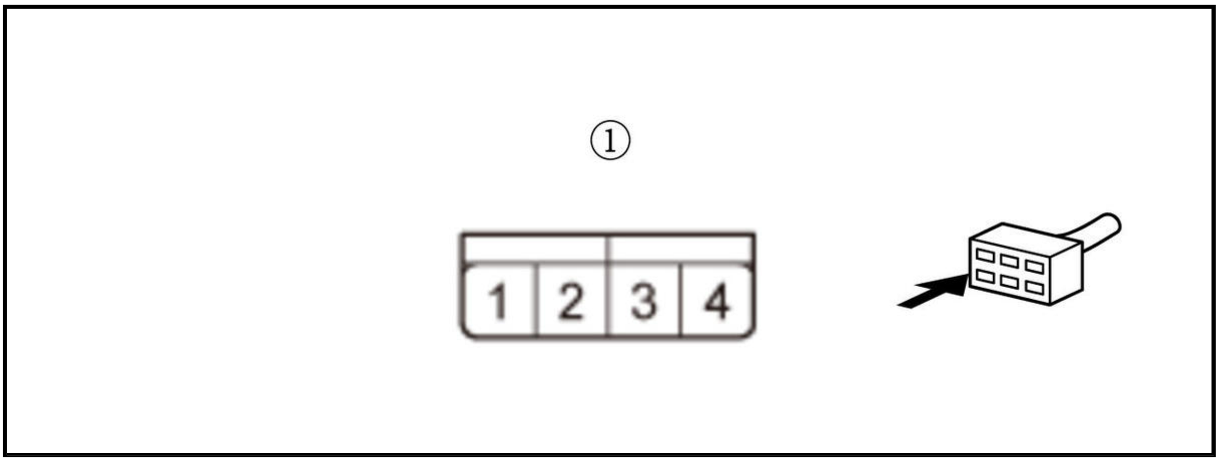

Is there 0.2 V or less?

YES

The LS1+ and LS1- wires are not shorted to power. Go to step 9.

NO

Short to power in the floor wire harness between the SRS unit and the left side impact sensor (first); replace the floor wire harness, then clear the DTC.

9. Open wire check (LS1+, LS1- lines)

   -1. Turn the vehicle to the OFF (LOCK) mode.

   -2. Measure the resistance between test points 1 and 2.

Test condition	Vehicle OFF (LOCK) mode SRS unit connector B (39P): disconnected Left side impact sensor (first) 4P connector (on the floor wire harness): disconnected Left side impact sensor (second) 2P connector (on the floor wire harness): disconnected
Test point 1	SRS unit connector B (39P) No. 38
Test point 2	Left side impact sensor (first) 4P connector (female terminals) No. 3 (on the floor wire harness): ①

Test point 1	SRS unit connector B (39P) No. 39
Test point 2	Left side impact sensor (first) 4P connector (female terminals) No. 2 (on the floor wire harness): ①

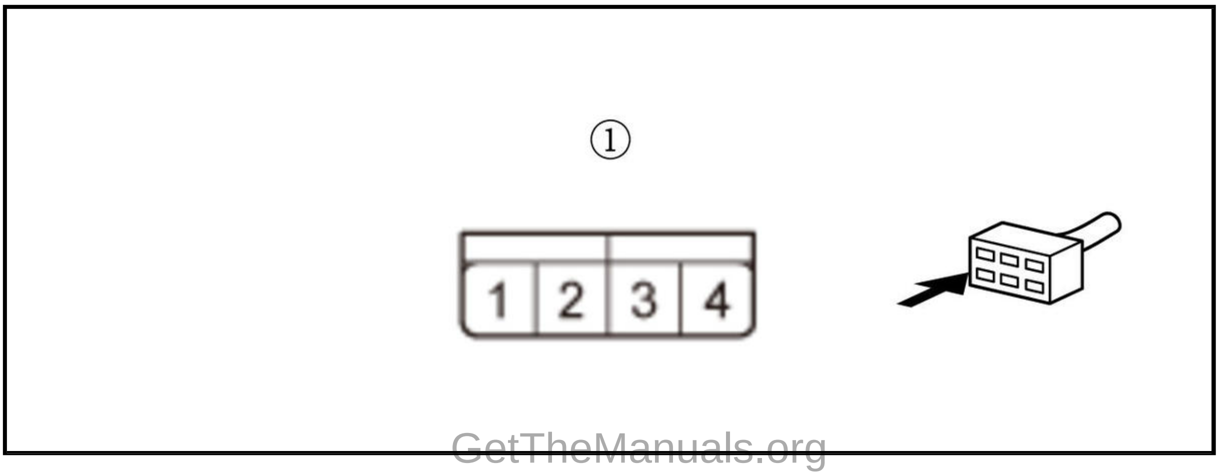

Is there 1.0 Ω or less?

YES

The LS1+ and LS1- wires are OK. Disconnect and reconnect the connector, and then check the DTC again. If the DTC is still present, check for any authorized service information related to the DTCs or symptoms you are troubleshooting or **replace the SRS unit** .

NO

Open in the floor wire harness between the SRS unit and the left side impact sensor (first); replace the floor wire harness, then clear the DTC.

10. Harness visual check

-1. Turn the vehicle to the OFF (LOCK) mode.

-2. Check for damage on the floor wire harness that side impact sensor is connected to.

Is the floor wire harness OK?

YES

Go to step 11.

NO

Replace the floor wire harness, then clear the DTC, and retest.

11. Connector connection check

-1. Check the following connections.

SRS unit connector B (39P)
Left side impact sensor (first) 4P connector (on the floor wire harness)

Left side impact sensor (second) 2P connector (on the floor wire harness)

Are the connectors OK?

YES

Go to step 13.

NO

Go to step 12.

12. System check

-1. Reset the loose connections that caused the problem in step 11.

-2. Clear the DTCs with the HDS.

-3. Turn the vehicle to the ON mode, then wait for 10 seconds.

-4. Check for DTCs with the HDS.

DTC Description	DTC
B0092-87 No signal from the left side impact sensor (second)	B

Is DTC B0092-87 indicated?

YES

Turn the vehicle to the OFF (LOCK) mode, then go to step 13.

NO

The system is OK at this time.

13. Left side impact sensor (second) substituting

-1. Disconnect the negative cable from the 12 volt battery, then wait at least 3 minutes.

-2. **Substitute a known-good left side impact sensor (second)** .

-3. Reconnect the negative cable to the 12 volt battery.

-4. Clear the DTCs with the HDS.

-5. Turn the vehicle to the ON mode, then wait for 10 seconds.

-6. Check for DTCs with the HDS.

DTC Description	DTC
B0092-87 No signal from the left side impact sensor (second)	B

Is DTC B0092-87 indicated?

YES

Go to step 14.

NO

Replace the left side impact sensor (second) , then clear the DTC.

14. Left side impact sensor (first) substituting

-1. Turn the vehicle to the OFF (LOCK) mode.

-2. Disconnect the negative cable from the 12 volt battery, then wait at least 3 minutes.

-3. Return the left side impact sensor (second) which was replaced.

-4. **Substitute a known-good left side impact sensor (first)** .

-5. Reconnect the negative cable to the 12 volt battery.

-6. Clear the DTCs with the HDS.

-7. Turn the vehicle to the ON mode, then wait for 10 seconds.

-8. Check for DTCs with the HDS.

DTC Description	DTC
B0092-87 No signal from the left side impact sensor (second)	B

Is DTC B0092-87 indicated?

YES

Go to step 15.

NO

Replace the left side impact sensor (first) , then clear the DTC.

15. Shorted wire check (LS2+ line to LS2- line)

-1. Turn the vehicle to the OFF (LOCK) mode.

-2. Disconnect the negative cable from the 12 volt battery, then wait at least 3 minutes.

-3. Return the left side impact sensor (first) which was replaced.

-4. Disconnect the following connectors.

SRS unit connector B (39P)
Left side impact sensor (first) 4P connector (on the floor wire harness)
Left side impact sensor (second) 2P connector (on the floor wire harness)

-5. Measure the resistance between test points 1 and 2.

Test condition	Vehicle OFF (LOCK) mode
	SRS unit connector B (39P): disconnected
	Left side impact sensor (first) 4P connector (on the floor wire harness): disconnected
	Left side impact sensor (second) 2P connector (on the floor wire harness): disconnected
Test point 1	Left side impact sensor (second) 2P connector (female terminals) No. 1 (on the floor wire harness): ①
Test point 2	Left side impact sensor (second) 2P connector (female terminals) No. 2 (on the floor wire harness): ①

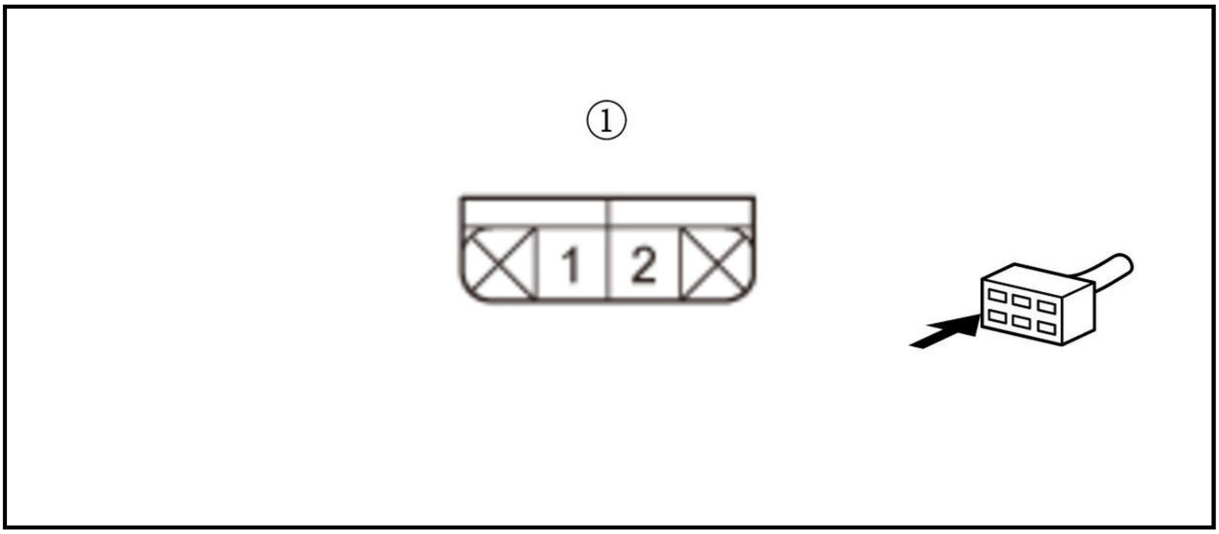

Is there an open circuit, or at least 1 MΩ?

YES

The LS2+ and LS2- wires are not shorted. Go to step 16.

NO

Short to another wire in the floor wire harness between the left side impact sensor (first) and the left side impact sensor (second); replace the floor wire harness, then clear the DTC.

16. Shorted wire check (LS2+, LS2- lines)

-1. Measure the resistance between test points 1 and 2.

Test condition	Vehicle OFF (LOCK) mode
	SRS unit connector B (39P): disconnected
	Left side impact sensor (first) 4P connector (on the floor wire harness): disconnected
	Left side impact sensor (second) 2P connector (on the floor wire harness): disconnected
Test point 1	Left side impact sensor (second) 2P connector (female terminals) No. 1 (on the floor wire harness): ①
Test point 2	Body ground

Test point 1	Left side impact sensor (second) 2P connector (female terminals) No. 2 (on the floor wire harness): ①
Test point 2	Body ground

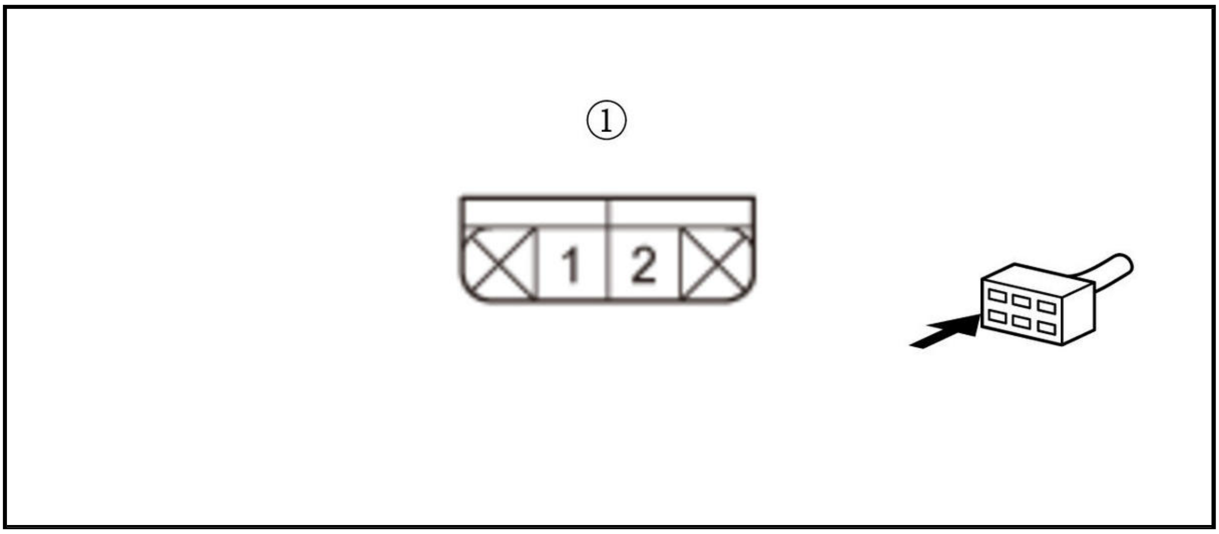

Is there an open circuit, or at least 1 MΩ?

YES

The LS2+ and LS2- wires are not shorted. Go to step 17.

NO

Short to ground in the floor wire harness between the left side impact sensor (first) and the left side impact sensor (second); replace the floor wire harness, then clear the DTC.

17. Shorted wire check (LS2+, LS2- lines to power)

-1. Reconnect the negative cable to the 12 volt battery.

-2. Turn the vehicle to the ON mode.

-3. Measure the voltage between test points 1 and 2.

Test condition	Vehicle ON mode

	SRS unit connector B (39P): disconnected
	Left side impact sensor (first) 4P connector (on the floor wire harness): disconnected
	Left side impact sensor (second) 2P connector (on the floor wire harness): disconnected
Test point 1	Left side impact sensor (second) 2P connector (female terminals) No. 1 (on the floor wire harness): ①
Test point 2	Body ground

Test point 1	Left side impact sensor (second) 2P connector (female terminals) No. 2 (on the floor wire harness): ①
Test point 2	Body ground

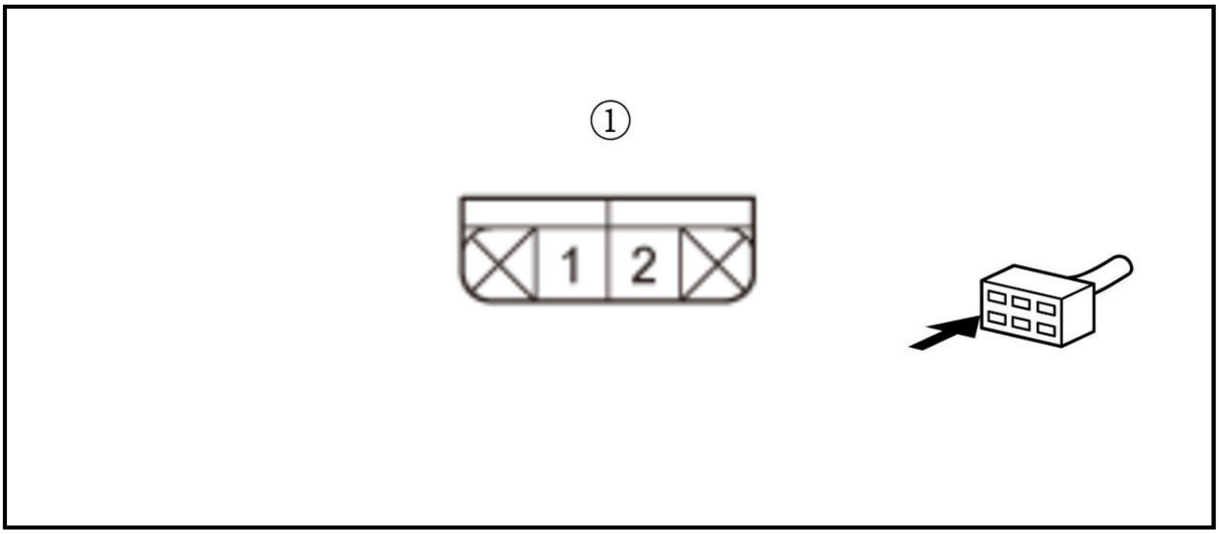

Is there 0.2 V or less?

YES

The LS2+ and LS2- wires are not shorted to power. Go to step 18.

NO

Short to power in the floor wire harness between the left side impact sensor (first) and the left side impact sensor (second); replace the floor wire harness, then clear the DTC.

18. Open wire check (LS2+, LS2- lines)

-1. Turn the vehicle to the OFF (LOCK) mode.

-2. Measure the resistance between test points 1 and 2.

Test condition	Vehicle OFF (LOCK) mode
	SRS unit connector B (39P): disconnected
	Left side impact sensor (first) 4P connector (on the floor wire harness): disconnected
	Left side impact sensor (second) 2P connector (on the floor wire harness): disconnected
Test point 1	Left side impact sensor (first) 4P connector (female terminals) No. 1 (on the floor wire harness): ①

Test point 2	Left side impact sensor (second) 2P connector (female terminals) No. 2 (on the floor wire harness): ②

Test point 1	Left side impact sensor (first) 4P connector (female terminals) No. 4 (on the floor wire harness): ①
Test point 2	Left side impact sensor (second) 2P connector (female terminals) No. 1 (on the floor wire harness): ②

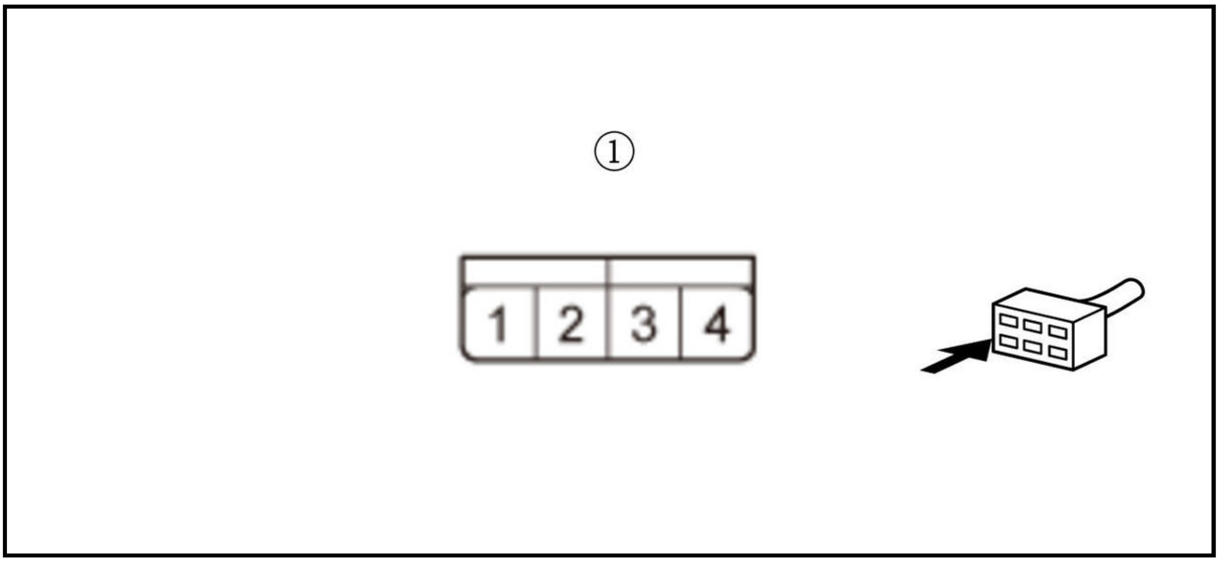

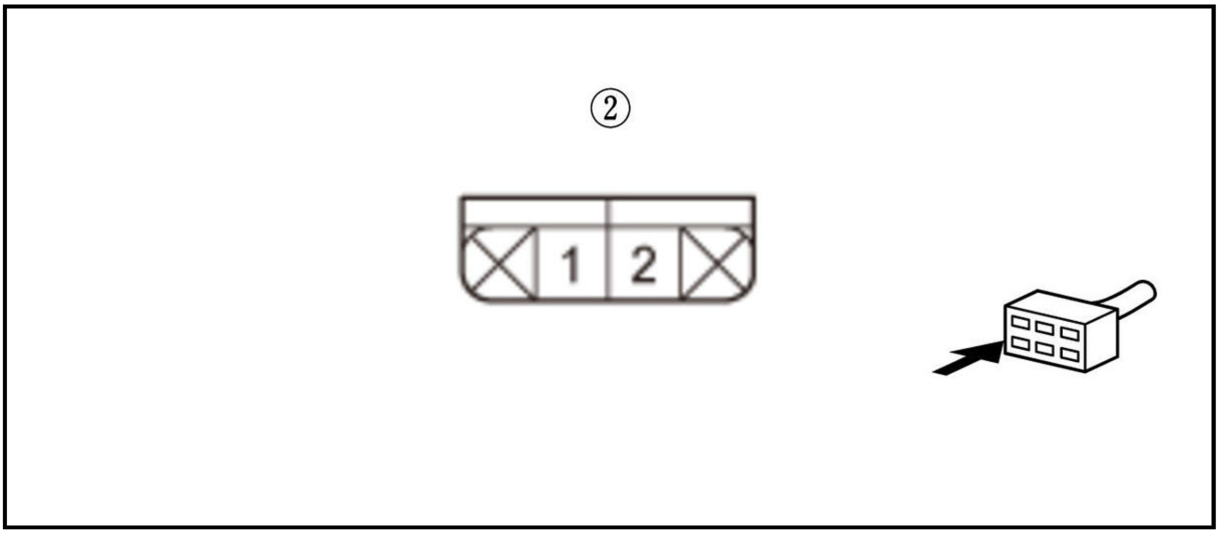

Is there 1.0 Ω or less?

YES

The LS2+ and LS2- wires are OK. Disconnect and reconnect the connector, and then check the DTC again. If the DTC is still present, check for any authorized service information related to the DTCs or symptoms you are troubleshooting or **replace the SRS unit** .

NO

Open in the floor wire harness between the left side impact sensor (first) and the left side impact sensor (second); replace the floor wire harness, then clear the DTC.

DTC B0092-4A, B0092-92

DTC B0092-4A, B0092-92 : Internal Failure of the Left Side Impact Sensor (second)

NOTE:

- **Before doing this troubleshooting procedure, find out if the vehicle was in a collision. If so, verify that all the required components were replaced with new components of the correct part number and were properly installed** .
- Before doing this troubleshooting procedure, review **SRS Precautions and Procedures** and **General Troubleshooting Information** .

DTC Description	DTC
B0092-4A Internal failure of the left side impact sensor (second)	B
B0092-92 Internal failure of the left side impact sensor (second)	B

DTC (SRS)

1. Problem verification

   -1. Clear the DTCs with the HDS.

   -2. Turn the vehicle to the ON mode, then wait for 10 seconds.

   -3. Check for DTCs with the HDS.

DTC Description	DTC
B0092-4A Internal failure of the left side impact sensor (second)	B
B0092-92 Internal failure of the left side impact sensor (second)	B

   Is DTC B0092-4A or B0092-92 indicated?

   YES

   The failure is duplicated. **Replace the left side impact sensor (second)** , then clear the DTC, and retest. If the DTC is still present, check for any authorized service information related to the DTCs or symptoms you are troubleshooting or **replace the SRS unit** .

   NO

   Intermittent failure, the system is OK at this time. Go to Troubleshooting Intermittent Failures. If another DTC is indicated, troubleshoot the DTC.

DTC B0095-4A, B0095-92

DTC B0095-4A, B0095-92 : Internal Failure of the Right Front Impact Sensor

NOTE:

- **Before doing this troubleshooting procedure, find out if the vehicle was in a collision. If so, verify that all the required components were replaced with new components of the correct part number and were properly installed** .
- Before doing this troubleshooting procedure, review **SRS Precautions and Procedures** and **General Troubleshooting Information** .

DTC Description	DTC
B0095-4A Internal failure of the right front impact sensor	B
B0095-92 Internal failure of the right front impact sensor	B

DTC (SRS)

1. Problem verification

   -1. Clear the DTCs with the HDS.

   -2. Turn the vehicle to the ON mode, then wait for 10 seconds.

   -3. Check for DTCs with the HDS.

DTC Description	DTC
B0095-4A Internal failure of the right front impact sensor	B
B0095-92 Internal failure of the right front impact sensor	B

Is DTC B0095-4A or B0095-92 indicated?

YES

The failure is duplicated. **Replace the right front impact sensor** , then clear the DTC, and retest. If the DTC is still present, check for any authorized service information related to the DTCs or symptoms you are troubleshooting or **replace the SRS unit** .

NO

Intermittent failure, the system is OK at this time. Go to Troubleshooting Intermittent Failures. If another DTC is indicated, troubleshoot the DTC.

DTC B0095-87

DTC B0095-87 : No Signal From the Right Front Impact Sensor

Special Tools Required

-SRS Inflator Simulator 07SAZ-TB4011A

-SRS Simulator Lead L 070AZ-SNA0300

NOTE:

- **Before doing this troubleshooting procedure, find out if the vehicle was in a collision. If so, verify that all the required components were replaced with new components of the correct part number and were properly installed** .
- Before doing this troubleshooting procedure, review **SRS Precautions and Procedures** , **General Troubleshooting Information** , and **12 Volt Battery Terminal Disconnection and Reconnection** .

DTC Description	DTC
B0095-87 No signal from the right front impact sensor	B

DTC (SRS)

1. Problem verification

   -1. Clear the DTCs with the HDS.

   -2. Turn the vehicle to the ON mode, then wait for 10 seconds.

   -3. Check for DTCs with the HDS.

DTC Description	DTC
B0095-87 No signal from the right front impact sensor	B

Is DTC B0095-87 indicated?

YES

The failure is duplicated. Go to step 2.

NO

Intermittent failure, the system is OK at this time. Go to Troubleshooting Intermittent Failures. If another DTC is indicated, troubleshoot the DTC.

2. Connector connection check

-1. Turn the vehicle to the OFF (LOCK) mode.

-2. Check the following connections.

SRS unit connector A (39P)
Right front impact sensor 2P connector (on the engine compartment wire harness)
Connector between the SRS unit and the right front impact sensor

Are the connectors OK?

YES

Go to step 4.

NO

Go to step 3.

3. System check

-1. Reset the loose connections that caused the problem in step 2.

-2. Clear the DTCs with the HDS.

-3. Turn the vehicle to the ON mode, then wait for 10 seconds.

-4. Check for DTCs with the HDS.

DTC Description	DTC
B0095-87 No signal from the right front impact sensor	B

Is DTC B0095-87 indicated?

YES

Turn the vehicle to the OFF (LOCK) mode, then go to step 4.

NO

The system is OK at this time.

4. Shorted wire check (RFS+ line to RFS- line)

-1. Disconnect the negative cable from the 12 volt battery, then wait at least 3 minutes.

-2. Disconnect the following connectors.

SRS unit connector A (39P)
Right front impact sensor 2P connector (on the engine compartment wire harness)

-3. Measure the resistance between test points 1 and 2.

Test condition	Vehicle OFF (LOCK) mode
	SRS unit connector A (39P): disconnected
	Right front impact sensor 2P connector (on the engine compartment wire harness): disconnected
Test point 1	**SRS unit connector A (39P) No. 29**
Test point 2	**SRS unit connector A (39P) No. 30**

Is there an open circuit, or at least 1 MΩ?

YES

The RFS+ and RFS- wires are not shorted. Go to step 5.

NO

Short to another wire in the engine compartment wire harness or the dashboard wire harness; replace the faulty harness, then clear the DTC.

5. Shorted wire check (RFS+, RFS- lines)

-1. Measure the resistance between test points 1 and 2.

Test condition	Vehicle OFF (LOCK) mode
	SRS unit connector A (39P): disconnected
	Right front impact sensor 2P connector (on the engine compartment wire harness): disconnected
Test point 1	**SRS unit connector A (39P) No. 29**
Test point 2	Body ground

Test point 1	**SRS unit connector A (39P) No. 30**
Test point 2	Body ground

Is there an open circuit, or at least 1 MΩ?

YES

The RFS+ and RFS- wires are not shorted. Go to step 6.

NO

Short to ground in the engine compartment wire harness or the dashboard wire harness; replace the faulty harness, then clear the DTC.

6. Shorted wire check (RFS+, RFS- lines to power)

-1. Reconnect the negative cable to the 12 volt battery.

-2. Turn the vehicle to the ON mode.

-3. Measure the voltage between test points 1 and 2.

Test condition	Vehicle ON mode SRS unit connector A (39P): disconnected Right front impact sensor 2P connector (on the engine compartment wire harness): disconnected
Test point 1	**SRS unit connector A (39P) No. 29**
Test point 2	Body ground

Test point 1	**SRS unit connector A (39P) No. 30**
Test point 2	Body ground

Is there 0.2 V or less?

YES

The RFS+ and RFS- wires are not shorted to power. Go to step 7.

NO

Short to power in the engine compartment wire harness or the dashboard wire harness; replace the faulty harness, then clear the DTC.

7. Open wire check (RFS+, RFS- lines)

   -1. Turn the vehicle to the OFF (LOCK) mode.

   -2. Connect the black terminal (A) of SRS simulator lead L to the SRS inflator simulator (jumper connector), then connect SRS simulator lead L to the right front impact sensor 2P connector (B) on the engine compartment wire harness.

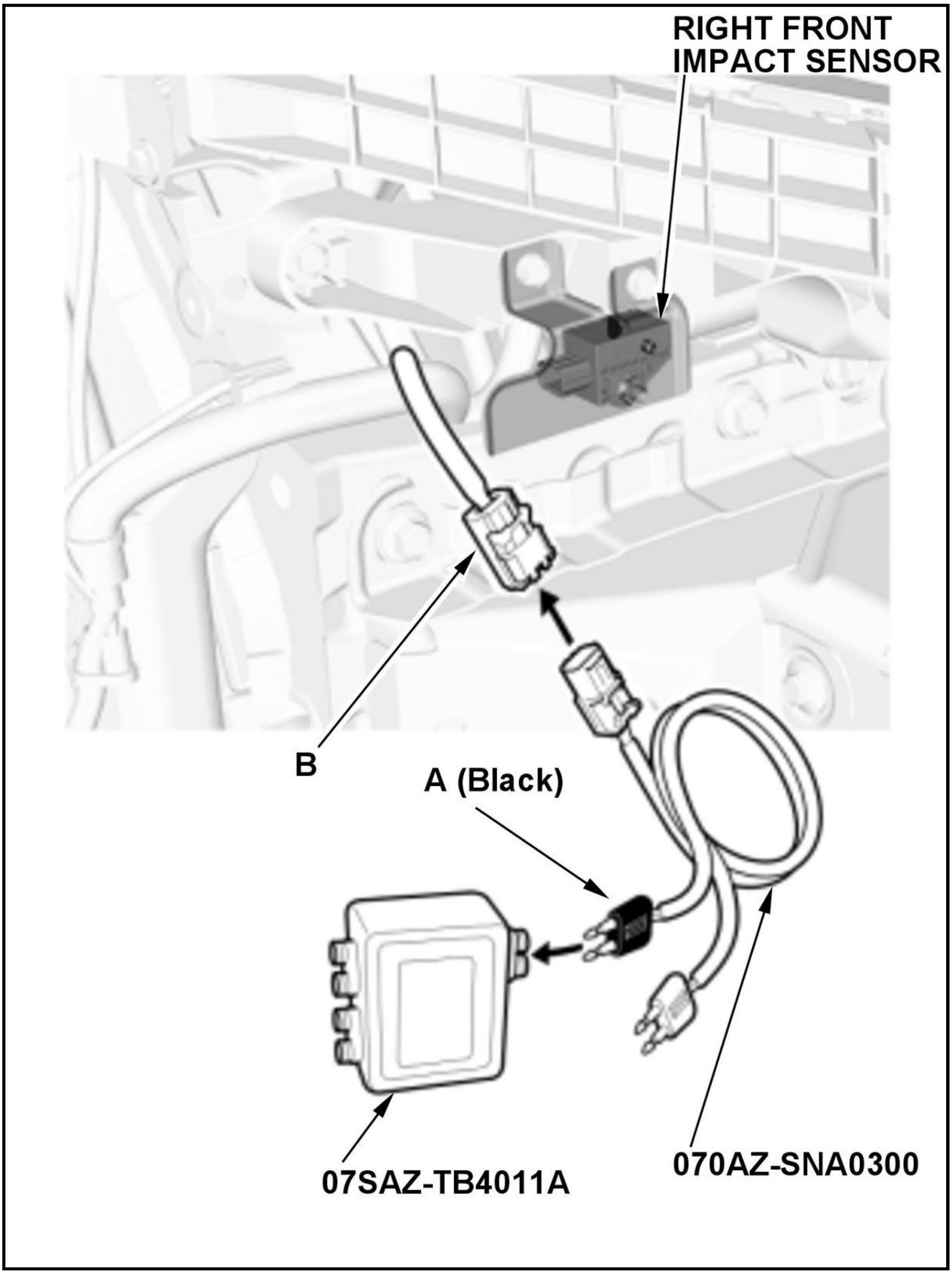
RIGHT FRONT IMPACT SENSOR
B
A (Black)
07SAZ-TB4011A
070AZ-SNA0300

-3. Measure the resistance between test points 1 and 2.

Test condition	Vehicle OFF (LOCK) mode
	SRS unit connector A (39P): disconnected
	Right front impact sensor 2P connector (on the engine compartment wire harness): disconnected
	Right front impact sensor 2P connector (on the engine compartment wire harness): connected to SRS simulator lead L
Test point 1	**SRS unit connector A (39P) No. 29**
Test point 2	**SRS unit connector A (39P) No. 30**

Is there 1.0 Ω or less?

YES

The RFS+ and RFS- wires are OK. **Replace the right front impact sensor** , then clear the DTC, and retest. If the DTC is still present, check for any authorized service information related to the DTCs or symptoms you are troubleshooting or **replace the SRS unit** .

NO

Open in the engine compartment wire harness or the dashboard wire harness; replace the faulty harness, then clear the DTC.

DTC B0096-4A, B0096-92

DTC B0096-4A, B0096-92 : Internal Failure of the Right Side Impact Sensor (first)

NOTE:

- **Before doing this troubleshooting procedure, find out if the vehicle was in a collision. If so, verify that all the required components were replaced with new components of the correct part number and were properly installed** .
- Before doing this troubleshooting procedure, review **SRS Precautions and Procedures** and **General Troubleshooting Information** .

DTC Description	DTC
B0096-4A Internal failure of the right side impact sensor (first)	B
B0096-92 Internal failure of the right side impact sensor (first)	B

DTC (SRS)

1. Problem verification

   -1. Clear the DTCs with the HDS.

   -2. Turn the vehicle to the ON mode, then wait for 10 seconds.

   -3. Check for DTCs with the HDS.

DTC Description	DTC
B0096-4A Internal failure of the right side impact sensor (first)	B
B0096-92 Internal failure of the right side impact sensor (first)	B

Is DTC B0096-4A or B0096-92 indicated?

YES

The failure is duplicated. **Replace the right side impact sensor (first)** , then clear the DTC, and retest. If the DTC is still present, check for any authorized service information related to the DTCs or symptoms you are troubleshooting or **replace the SRS unit** .

NO

Intermittent failure, the system is OK at this time. Go to Troubleshooting Intermittent Failures. If another DTC is indicated, troubleshoot the DTC.

DTC B0096-87, B0097-87

DTC B0096-87 : No Signal From the Right Side Impact Sensor (first)

DTC B0097-87 : No Signal From the Right Side Impact Sensor (second)

NOTE:

- **Before doing this troubleshooting procedure, find out if the vehicle was in a collision. If so, verify that all the required components were replaced with new components of the correct part number and were properly installed** .
- Before doing this troubleshooting procedure, review **SRS Precautions and Procedures** , **General Troubleshooting Information** , and **12 Volt Battery Terminal Disconnection and Reconnection** .

DTC Description	DTC
B0096-87 No signal from the right side impact sensor (first)	B
B0097-87 No signal from the right side impact sensor (second)	B

DTC (SRS)

1. DTC check

   -1. Clear the DTCs with the HDS.

   -2. Turn the vehicle to the ON mode, then wait for 10 seconds.

   -3. Check for DTCs with the HDS.

DTC Description	DTC
B0096-4A Internal failure of the right side impact sensor (first)	B
B0096-87 No signal from the right side impact sensor (first)	B
B0096-92 Internal failure of the right side impact sensor (first)	B
B0097-4A Internal failure of the right side impact sensor (second)	B
B0097-87 No signal from the right side impact sensor (second)	B
B0097-92 Internal failure of the right side impact sensor (second)	B

   Are DTCs indicated?

   DTC B0096-87

   Go to step 2.

   DTC B0097-87

   Go to step 10.

   DTC B0096-4A or B0096-92

   Replace the right side impact sensor (first) , then clear the DTC.

   DTC B0097-4A or B0097-92

   Replace the right side impact sensor (second) , then clear the DTC.

   NO DTC

   Intermittent failure, the system is OK at this time. Go to Troubleshooting Intermittent Failures. If another DTC is indicated, troubleshoot the DTC.

2. Harness visual check

-1. Turn the vehicle to the OFF (LOCK) mode.

-2. Check the damage on the floor wire harness that side impact sensor is connected to.

Is the floor wire harness OK?

YES

Go to step 3.

NO

Replace the floor wire harness, then clear the DTC, and retest.

3. Connector connection check

-1. Check the following connections.

SRS unit connector B (39P)
Right side impact sensor (first) 4P connector (on the floor wire harness)
Right side impact sensor (second) 2P connector (on the floor wire harness)

Are the connectors OK?

YES

Go to step 5.

NO

Go to step 4.

4. System check

-1. Reset the loose connections that caused the problem in step 3.

-2. Clear the DTCs with the HDS.

-3. Turn the vehicle to the ON mode, then wait for 10 seconds.

-4. Check for DTCs with the HDS.

DTC Description	DTC
B0096-87 No signal from the right side impact sensor (first)	B

Is DTC B0096-87 indicated?

YES

Turn the vehicle to the OFF (LOCK) mode, then go to step 5.

NO

The system is OK at this time.

5. Right side impact sensor (first) substituting

-1. Disconnect the negative cable from the 12 volt battery, then wait at least 3 minutes.

-2. **Substitute a known-good right side impact sensor (first)** .

-3. Reconnect the negative cable to the 12 volt battery.

-4. Clear the DTCs with the HDS.

-5. Turn the vehicle to the ON mode, then wait for 10 seconds.

-6. Check for DTCs with the HDS.

DTC Description	DTC
B0096-87 No signal from the right side impact sensor (first)	B

Is DTC B0096-87 indicated?

YES

Go to step 6.

NO

Replace the right side impact sensor (first) , then clear the DTC.

6. Shorted wire check (RS1+ line to RS1- line)

-1. Turn the vehicle to the OFF (LOCK) mode.

-2. Disconnect the negative cable from the 12 volt battery, then wait at least 3 minutes.

-3. Return the right side impact sensor (first) which was replaced.

-4. Disconnect the following connectors.

SRS unit connector B (39P)
Right side impact sensor (first) 4P connector (on the floor wire harness)
Right side impact sensor (second) 2P connector (on the floor wire harness)

-5. Measure the resistance between test points 1 and 2.

Test condition	Vehicle OFF (LOCK) mode
	SRS unit connector B (39P): disconnected
	Right side impact sensor (first) 4P connector (on the floor wire harness): disconnected
	Right side impact sensor (second) 2P connector (on the floor wire harness): disconnected
Test point 1	Right side impact sensor (first) 4P connector (female terminals) No. 2 (on the floor wire harness): ①
Test point 2	Right side impact sensor (first) 4P connector (female terminals) No. 3 (on the floor wire harness): ①

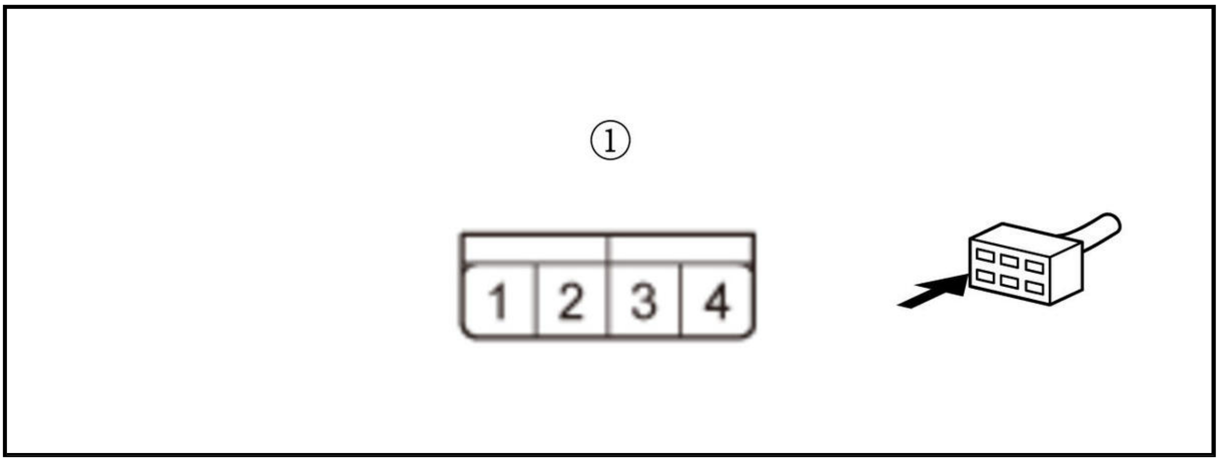

Is there an open circuit, or at least 1 MΩ?

YES

The RS1+ and RS1- wires are not shorted. Go to step 7.

NO

Short to another wire in the floor wire harness between the SRS unit and the right side impact sensor (first); replace the floor wire harness, then clear the DTC.

7. Shorted wire check (RS1+, RS1- lines)

-1. Measure the resistance between test points 1 and 2.

Test condition	Vehicle OFF (LOCK) mode
	SRS unit connector B (39P): disconnected
	Right side impact sensor (first) 4P connector (on the floor wire harness): disconnected
	Right side impact sensor (second) 2P connector (on the floor wire harness): disconnected
Test point 1	Right side impact sensor (first) 4P connector (female terminals) No. 2 (on the floor wire harness): ①
Test point 2	Body ground

Test point 1	Right side impact sensor (first) 4P connector (female terminals) No. 3 (on the floor wire harness): ①
Test point 2	Body ground

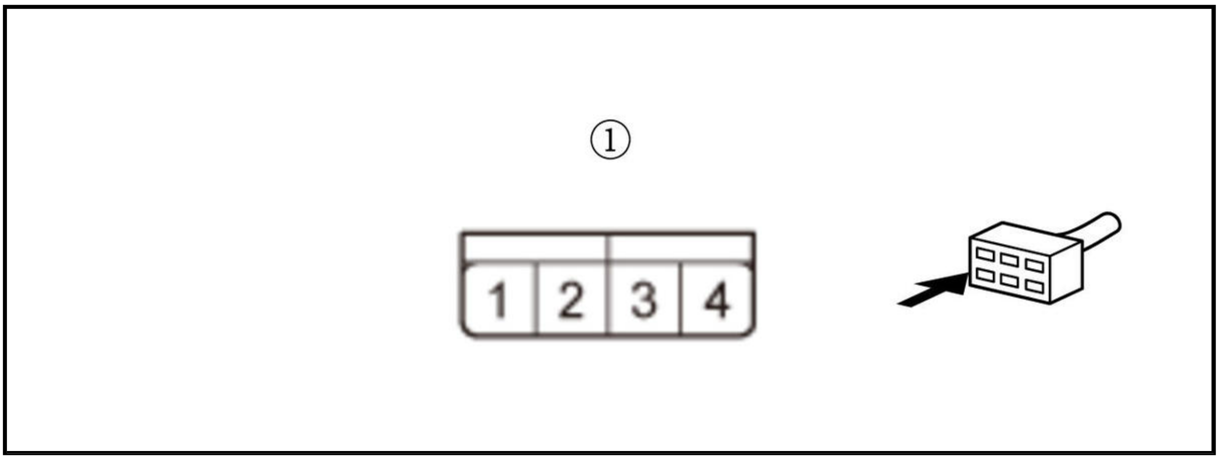

Is there an open circuit, or at least 1 MΩ?

YES

The RS1+ and RS1- wires are not shorted. Go to step 8.

NO

Short to ground in the floor wire harness between the SRS unit and the right side impact sensor (first); replace the floor wire harness, then clear the DTC.

8. Shorted wire check (RS1+, RS1- lines to power)

-1. Reconnect the negative cable to the 12 volt battery.

-2. Turn the vehicle to the ON mode.

-3. Measure the voltage between test points 1 and 2.

Test condition	Vehicle ON mode
	SRS unit connector B (39P): disconnected
	Right side impact sensor (first) 4P connector (on the floor wire harness): disconnected
	Right side impact sensor (second) 2P connector (on the floor wire harness): disconnected
Test point 1	Right side impact sensor (first) 4P connector (female terminals) No. 2 (on the floor wire harness): ①
Test point 2	Body ground

Test point 1	Right side impact sensor (first) 4P connector (female terminals) No. 3 (on the floor wire harness): ①
Test point 2	Body ground

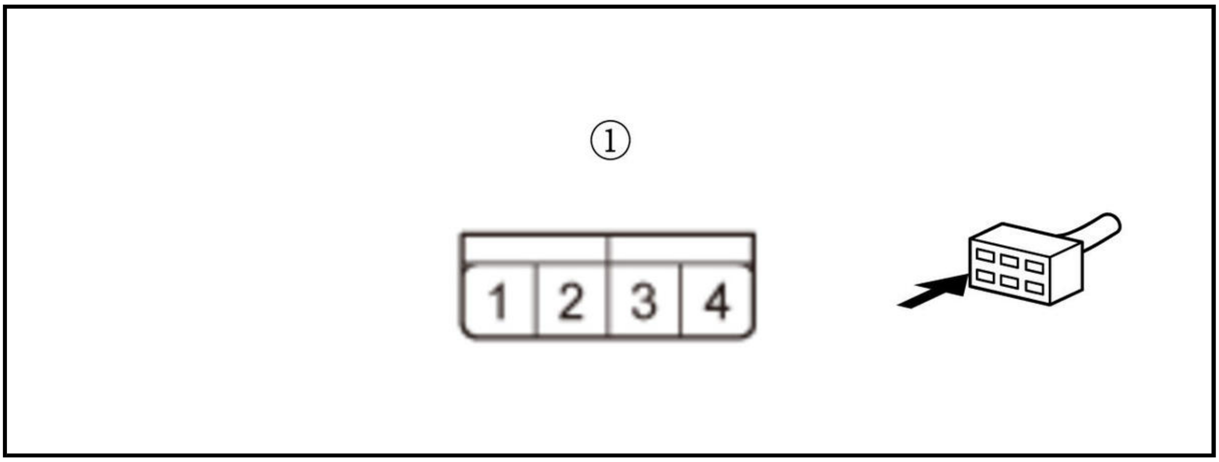

Is there 0.2 V or less?

YES

The RS1+ and RS1- wires are not shorted to power. Go to step 9.

NO

Short to power in the floor wire harness between the SRS unit and the right side impact sensor (first); replace the floor wire harness, then clear the DTC.

9. Open wire check (RS1+, RS1- lines)

 -1. Turn the vehicle to the OFF (LOCK) mode.

 -2. Measure the resistance between test points 1 and 2.

Test condition	Vehicle OFF (LOCK) mode
	SRS unit connector B (39P): disconnected
	Right side impact sensor (first) 4P connector (on the floor wire harness): disconnected
	Right side impact sensor (second) 2P connector (on the floor wire harness): disconnected
Test point 1	SRS unit connector B (39P) No. 36
Test point 2	Right side impact sensor (first) 4P connector (female terminals) No. 3 (on the floor wire harness): ①

Test point 1	SRS unit connector B (39P) No. 37
Test point 2	Right side impact sensor (first) 4P connector (female terminals) No. 2 (on the floor wire harness): ①

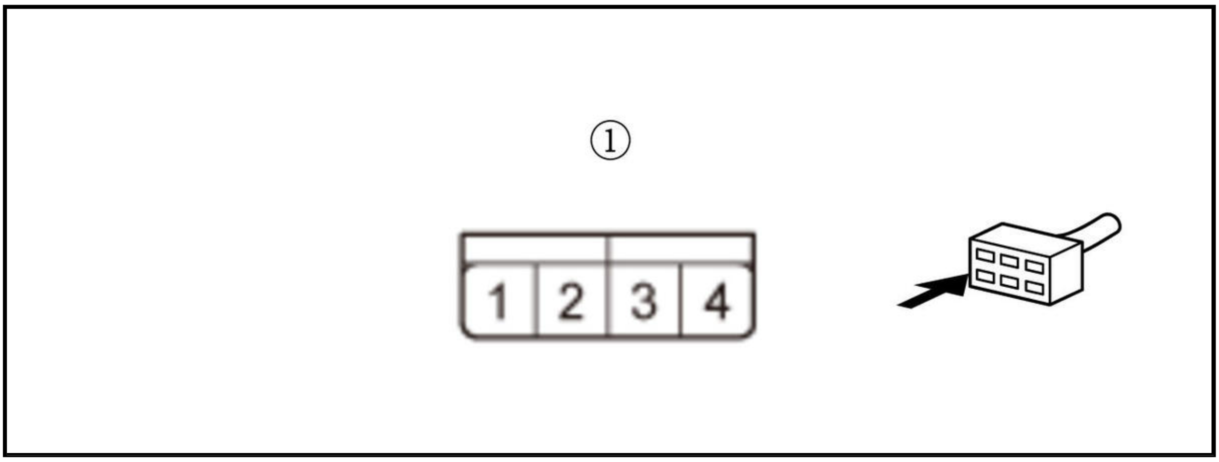

Is there 1.0 Ω or less?

YES

The RS1+ and RS1- wires are OK. Disconnect and reconnect the connector, and then check the DTC again. If the DTC is still present, check for any authorized service information related to the DTCs or symptoms you are troubleshooting or replace the SRS unit .

NO

Open in the floor wire harness between the SRS unit and the right side impact sensor (first); replace the floor wire harness, then clear the DTC.

10. Harness visual check

 -1. Turn the vehicle to the OFF (LOCK) mode.

 -2. Check the damage on the floor wire harness that side impact sensor is connected to.

Is the floor wire harness OK?

YES

Go to step 11.

NO

Replace the floor wire harness, then clear the DTC, and retest.

11. Connector connection check

-1. Check the following connections.

SRS unit connector B (39P)
Right side impact sensor (first) 4P connector (on the floor wire harness)

Right side impact sensor (second) 2P connector (on the floor wire harness)

Are the connectors OK?

YES

Go to step 13.

NO

Go to step 12.

12. System check

-1. Reset the loose connections that caused the problem in step 11.

-2. Clear the DTCs with the HDS.

-3. Turn the vehicle to the ON mode, then wait for 10 seconds.

-4. Check for DTCs with the HDS.

DTC Description	DTC
B0097-87 No signal from the right side impact sensor (second)	B

Is DTC B0097-87 indicated?

YES

Turn the vehicle to the OFF (LOCK) mode, then go to step 13.

NO

The system is OK at this time.

13. Right side impact sensor (second) substituting

-1. Disconnect the negative cable from the 12 volt battery, then wait at least 3 minutes.

-2. **Substitute a known-good right side impact sensor (second)** .

-3. Reconnect the negative cable to the 12 volt battery.

-4. Clear the DTCs with the HDS.

-5. Turn the vehicle to the ON mode, then wait for 10 seconds.

-6. Check for DTCs with the HDS.

DTC Description	DTC
B0097-87 No signal from the right side impact sensor (second)	B

Is DTC B0097-87 indicated?

YES

Go to step 14.

NO

Replace the right side impact sensor (second) , then clear the DTC.

14. Right side impact sensor (first) substituting

-1. Turn the vehicle to the OFF (LOCK) mode.

-2. Disconnect the negative cable from the 12 volt battery, then wait at least 3 minutes.

-3. Return the right side impact sensor (second) which was replaced.

-4. **Substitute a known-good right side impact sensor (first)** .

-5. Reconnect the negative cable to the 12 volt battery.

-6. Clear the DTCs with the HDS.

-7. Turn the vehicle to the ON mode, then wait for 10 seconds.

-8. Check for DTCs with the HDS.

DTC Description	DTC
B0097-87 No signal from the right side impact sensor (second)	B

Is DTC B0097-87 indicated?

YES

Go to step 15.

NO

Replace the right side impact sensor (first) , then clear the DTC.

15. Shorted wire check (RS2+ line to RS2- line)

-1. Turn the vehicle to the OFF (LOCK) mode.

-2. Disconnect the negative cable from the 12 volt battery, then wait at least 3 minutes.

-3. Return the right side impact sensor (first) which was replaced.

-4. Disconnect the following connectors.

SRS unit connector B (39P)
Right side impact sensor (first) 4P connector (on the floor wire harness)
Right side impact sensor (second) 2P connector (on the floor wire harness)

-5. Measure the resistance between test points 1 and 2.

Test condition	Vehicle OFF (LOCK) mode
	SRS unit connector B (39P): disconnected
	Right side impact sensor (first) 4P connector (on the floor wire harness): disconnected
	Right side impact sensor (second) 2P connector (on the floor wire harness): disconnected
Test point 1	Right side impact sensor (second) 2P connector (female terminals) No. 1 (on the floor wire harness): ①
Test point 2	Right side impact sensor (second) 2P connector (female terminals) No. 2 (on the floor wire harness): ①

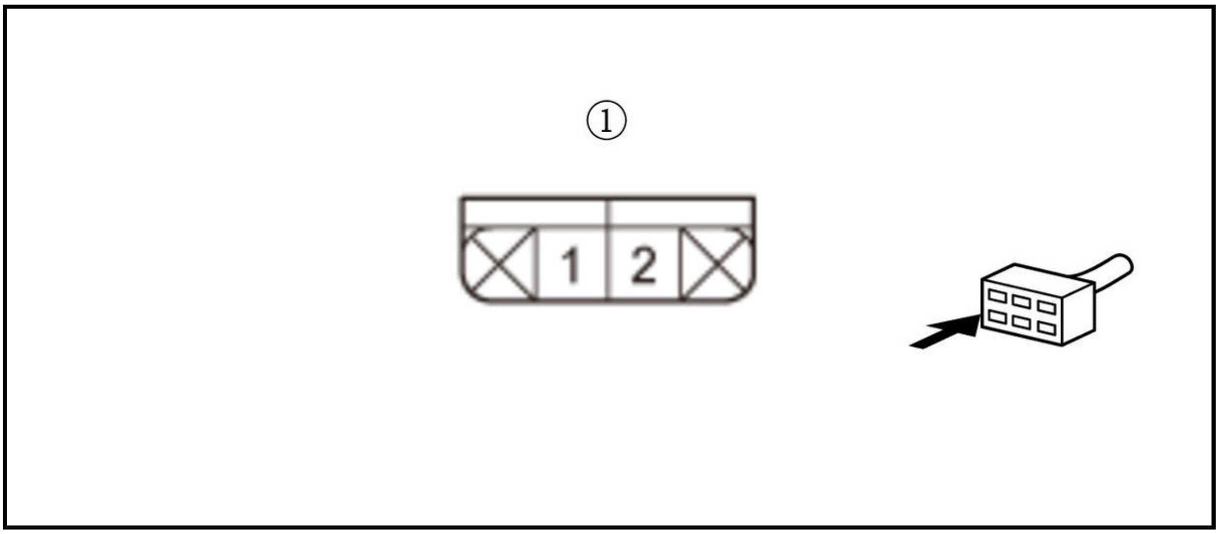

Is there an open circuit, or at least 1 MΩ?

YES

The RS2+ and RS2- wires are not shorted. Go to step 16.

NO

Short to another wire in the floor wire harness between the right side impact sensor (first) and the right side impact sensor (second); replace the floor wire harness, then clear the DTC.

16. Shorted wire check (RS2+, RS2- lines)

-1. Measure the resistance between test points 1 and 2.

Test condition	Vehicle OFF (LOCK) mode
	SRS unit connector B (39P): disconnected
	Right side impact sensor (first) 4P connector (on the floor wire harness): disconnected
	Right side impact sensor (second) 2P connector (on the floor wire harness): disconnected
Test point 1	Right side impact sensor (second) 2P connector (female terminals) No. 1 (on the floor wire harness): ①
Test point 2	Body ground

Test point 1	Right side impact sensor (second) 2P connector (female terminals) No. 2 (on the floor wire harness): ①
Test point 2	Body ground

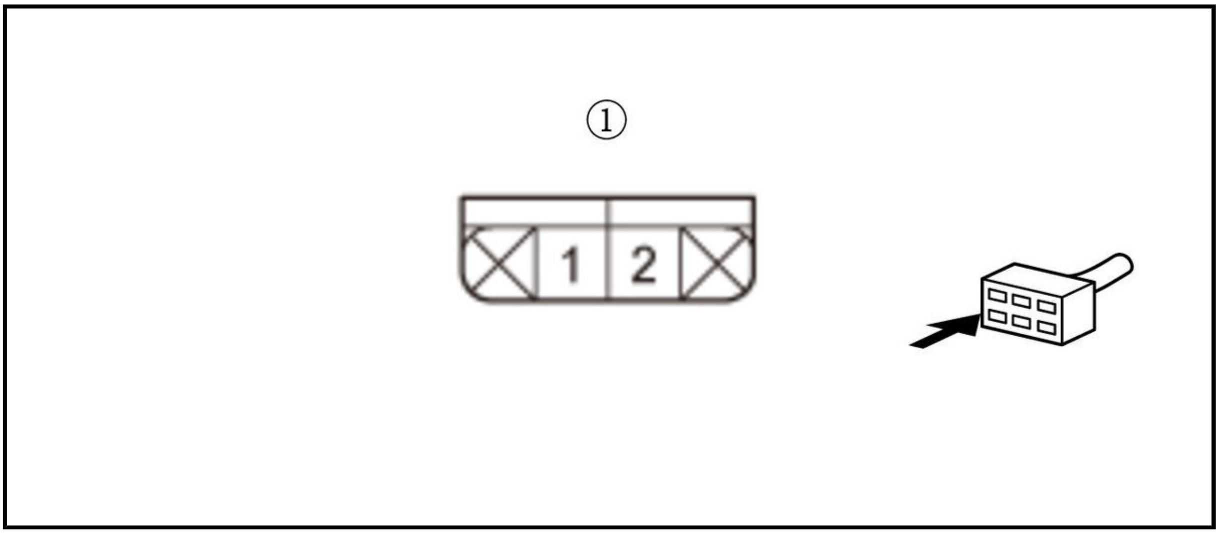

Is there an open circuit, or at least 1 MΩ?

YES

The RS2+ and RS2- wires are not shorted. Go to step 17.

NO

Short to ground in the floor wire harness between the right side impact sensor (first) and the right side impact sensor (second); replace the floor wire harness, then clear the DTC.

17. Shorted wire check (RS2+, RS2- lines to power)

-1. Reconnect the negative cable to the 12 volt battery.

-2. Turn the vehicle to the ON mode.

-3. Measure the voltage between test points 1 and 2.

Test condition	Vehicle ON mode
	SRS unit connector B (39P): disconnected
	Right side impact sensor (first) 4P connector (on the floor wire harness): disconnected
	Right side impact sensor (second) 2P connector (on the floor wire harness): disconnected
Test point 1	Right side impact sensor (second) 2P connector (female terminals) No. 1 (on the floor wire harness): ①
Test point 2	Body ground

Test point 1	Right side impact sensor (second) 2P connector (female terminals) No. 2 (on the floor wire harness): ①
Test point 2	Body ground

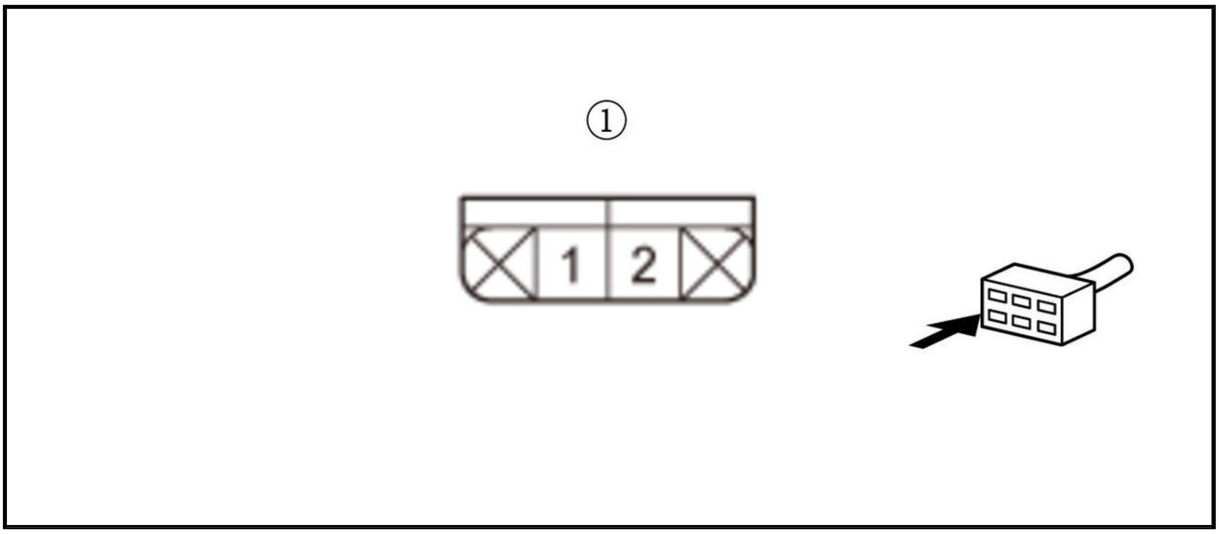

Is there 0.2 V or less?

YES

The RS2+ and RS2- wires are not shorted to power. Go to step 18.

NO

Short to power in the floor wire harness between the right side impact sensor (first) and the right side impact sensor (second); replace the floor wire harness, then clear the DTC.

18. Open wire check (RS2+, RS2- lines)

-1. Turn the vehicle to the OFF (LOCK) mode.

-2. Measure the resistance between test points 1 and 2.

Test condition	Vehicle OFF (LOCK) mode
	SRS unit connector B (39P): disconnected
	Right side impact sensor (first) 4P connector (on the floor wire harness): disconnected
	Right side impact sensor (second) 2P connector (on the floor wire harness): disconnected
Test point 1	Right side impact sensor (first) 4P connector (female terminals) No. 1 (on the floor wire harness): ①
Test point 2	Right side impact sensor (second) 2P connector (female terminals) No. 2 (on the floor wire harness): ②

Test point 1	Right side impact sensor (first) 4P connector (female terminals) No. 4 (on the floor wire harness): ①
Test point 2	Right side impact sensor (second) 2P connector (female terminals) No. 1 (on the floor wire harness): ②

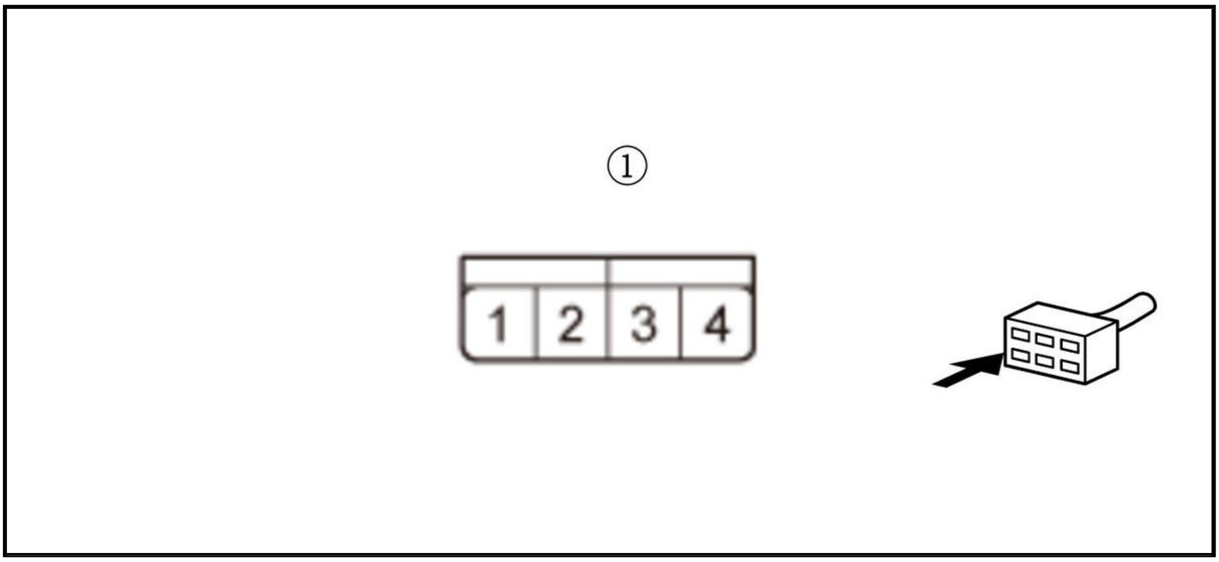

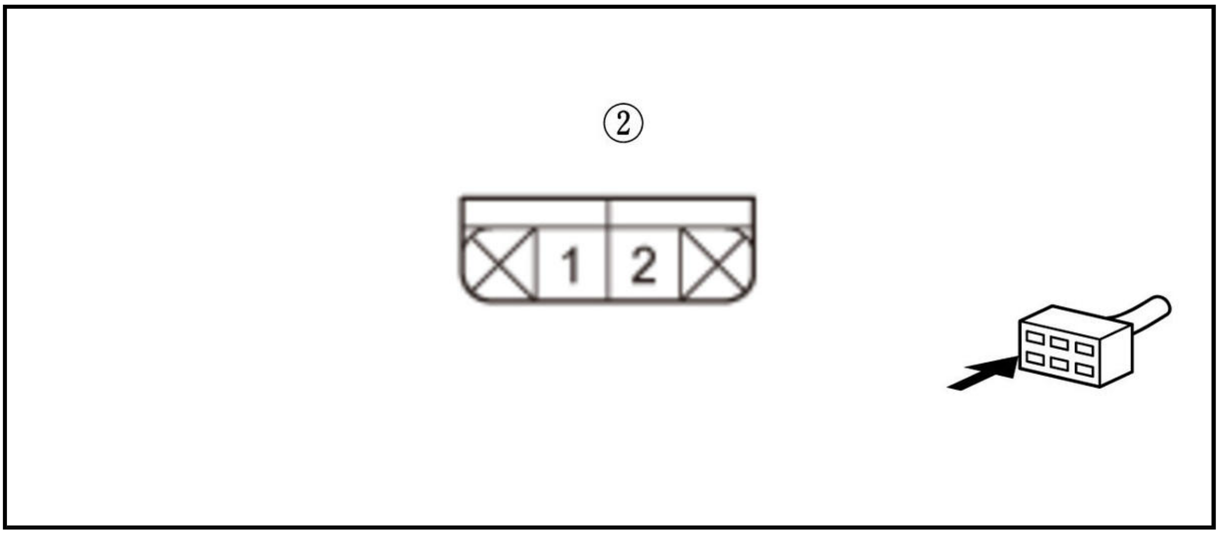

Is there 1.0 Ω or less?

YES

The RS2+ and RS2- wires are OK. Disconnect and reconnect the connector, and then check the DTC again. If the DTC is still present, check for any authorized service information related to the DTCs or symptoms you are troubleshooting or **replace the SRS unit** .

NO

Open in the floor wire harness between the right side impact sensor (first) and the right side impact sensor (second); replace the floor wire harness, then clear the DTC.

DTC B0097-4A, B0097-92

DTC B0097-4A, B0097-92 : Internal Failure of the Right Side Impact Sensor (second)

NOTE:

- **Before doing this troubleshooting procedure, find out if the vehicle was in a collision. If so, verify that all the required components were replaced with new components of the correct part number and were properly installed** .
- Before doing this troubleshooting procedure, review **SRS Precautions and Procedures** and **General Troubleshooting Information** .

DTC Description	DTC
B0097-4A Internal failure of the right side impact sensor (second)	B
B0097-92 Internal failure of the right side impact sensor (second)	B

DTC (SRS)

1. Problem verification

   -1. Clear the DTCs with the HDS.

   -2. Turn the vehicle to the ON mode, then wait for 10 seconds.

   -3. Check for DTCs with the HDS.

DTC Description	DTC
B0097-4A Internal failure of the right side impact sensor (second)	B
B0097-92 Internal failure of the right side impact sensor (second)	B

   Is DTC B0097-4A or B0097-92 indicated?

   YES

   The failure is duplicated. **Replace the right side impact sensor (second)** , then clear the DTC, and retest. If the DTC is still present, check for any authorized service information related to the DTCs or symptoms you are troubleshooting or **replace the SRS unit** .

   NO

   Intermittent failure, the system is OK at this time. Go to Troubleshooting Intermittent Failures. If another DTC is indicated, troubleshoot the DTC.

DTC B00A0-54

DTC B00A0-54 : Front Passenger's Weight Sensor not Calibrated

NOTE:

- **Before doing this troubleshooting procedure, find out if the vehicle was in a collision. If so, verify that all the required components were replaced with new components of the correct part number and were properly installed** .
- Before doing this troubleshooting procedure, review **SRS Precautions and Procedures** and **General Troubleshooting Information** .

DTC Description	DTC
B00A0-54 Front passenger's weight sensor not calibrated	B

DTC (SRS)

1. Problem verification

   -1. Clear the DTCs with the HDS.

   -2. Turn the vehicle to the ON mode, then wait for 10 seconds.

   -3. Check for DTCs with the HDS.

DTC Description	DTC
B00A0-54 Front passenger's weight sensor not calibrated	B

Is DTC B00A0-54 indicated?

YES

The failure is duplicated. **Do the front passenger's weight sensor initialization** .

NO

Intermittent failure, the system is OK at this time. Go to Troubleshooting Intermittent Failures. If another DTC is indicated, troubleshoot the DTC.

DTC B00B5-11, B00B5-2B

DTC B00B5-11 : Short or Decreased Resistance in the Driver's Seat Position Sensor

DTC B00B5-2B : Short to Another Wire Harness in the Driver's Seat Position Sensor

NOTE:

- **Before doing this troubleshooting procedure, find out if the vehicle was in a collision. If so, verify that all the required components were replaced with new components of the correct part number and were properly installed** .
- Before doing this troubleshooting procedure, review **SRS Precautions and Procedures** , **General Troubleshooting Information** , and **12 Volt Battery Terminal Disconnection and Reconnection** .

DTC Description	DTC
B00B5-11 Short or decreased resistance in the driver's seat position sensor	B
B00B5-2B Short to another wire harness in the driver's seat position sensor	B

DTC (SRS)

1. Problem verification

-1. Raise the driver's seat all the way up, and position all the way rearward.

-2. Clear the DTCs with the HDS.

-3. Turn the vehicle to the ON mode, then wait for 10 seconds.

-4. Check for DTCs with the HDS.

DTC Description	DTC
B00B5-11 Short or decreased resistance in the driver's seat position sensor	B
B00B5-2B Short to another wire harness in the driver's seat position sensor	B

Is DTC B00B5-11 or DTC B00B5-2B indicated?

YES

The failure is duplicated. Go to step 2.

NO

Intermittent failure, the system is OK at this time. Go to Troubleshooting Intermittent Failures. If another DTC is indicated, troubleshoot the DTC.

2. Driver's seat position sensor check

-1. Turn the vehicle to the OFF (LOCK) mode.

-2. Disconnect the following connector.

Driver's seat position sensor 2P connector (on the driver's seat wire harness)

-3. Clear the DTCs with the HDS.

-4. Turn the vehicle to the ON mode, then wait for 10 seconds.

-5. Check for DTCs with the HDS.

DTC Description	DTC
B00B5-11 Short or decreased resistance in the driver's seat position sensor	B
B00B5-2B Short to another wire harness in the driver's seat position sensor	B

Is DTC B00B5-11 or DTC B00B5-2B indicated?

YES

Go to step 3.

NO

Replace the driver's seat position sensor , then clear the DTC.

3. Shorted wire check (SS+ line)

-1. Turn the vehicle to the OFF (LOCK) mode.

-2. Disconnect the negative cable from the 12 volt battery, then wait at least 3 minutes.

-3. Disconnect the following connector.

SRS unit connector B (39P)

-4. Measure the resistance between test points 1 and 2.

Test condition	Vehicle OFF (LOCK) mode
	Driver's seat position sensor 2P connector (on the driver's seat wire harness): disconnected
	SRS unit connector B (39P): disconnected
Test point 1	**SRS unit connector B (39P) No. 11**

Test point 2	Body ground

Is there an open circuit, or at least 1 MΩ?

YES

The SS+ wire is OK. **Replace the driver's seat position sensor** , then clear the DTC, and retest. If the DTC is still present, check for any authorized service information related to the DTCs or symptoms you are troubleshooting or **replace the SRS unit** .

NO

Short to ground in the floor wire harness or the driver's seat wire harness; replace the faulty harness, then clear the DTC.

DTC B00B5-13

DTC B00B5-13 : Open or Increased Resistance in the Driver's Seat Position Sensor

NOTE:

- **Before doing this troubleshooting procedure, find out if the vehicle was in a collision. If so, verify that all the required components were replaced with new components of the correct part number and were properly installed** .
- Before doing this troubleshooting procedure, review **SRS Precautions and Procedures** , **General Troubleshooting Information** , and **12 Volt Battery Terminal Disconnection and Reconnection** .

DTC Description	DTC
B00B5-13 Open or increased resistance in the driver's seat position sensor	B

DTC (SRS)

1. Problem verification

   -1. Raise the driver's seat all the way up, and position all the way rearward.

   -2. Clear the DTCs with the HDS.

   -3. Turn the vehicle to the ON mode, then wait for 10 seconds.

   -4. Check for DTCs with the HDS.

DTC Description	DTC
B00B5-13 Open or increased resistance in the driver's seat position sensor	B

   Is DTC B00B5-13 indicated?

   YES

   The failure is duplicated. Go to step 2.

   NO

   Intermittent failure, the system is OK at this time. Go to Troubleshooting Intermittent Failures. If another DTC is indicated, troubleshoot the DTC.

2. Connector connection check

   -1. Turn the vehicle to the OFF (LOCK) mode.

   -2. Check the following connections.

SRS unit connector B (39P)
Driver's seat position sensor 2P connector (on the driver's seat wire harness)
Connector between the SRS unit and the driver's seat position sensor

   Are the connectors OK?

   YES

Go to step 4.

NO

Go to step 3.

3. System check

-1. Reset the loose connections that caused the problem in step 2.

-2. Clear the DTCs with the HDS.

-3. Turn the vehicle to the ON mode, then wait for 10 seconds.

-4. Check for DTCs with the HDS.

DTC Description	DTC
B00B5-13 Open or increased resistance in the driver's seat position sensor	B

Is DTC B00B5-13 indicated?

YES

Turn the vehicle to the OFF (LOCK) mode, then go to step 4.

NO

The system is OK at this time.

4. Open wire check (SS+, GND lines)

-1. Disconnect the following connector.

Driver's seat position sensor 2P connector (on the driver's seat wire harness)

-2. Connect terminals A and B with a jumper wire.

Terminal A	Driver's seat position sensor 2P connector (female terminals) No. 1 (on the driver's seat wire harness): ①
Terminal B	Driver's seat position sensor 2P connector (female terminals) No. 2 (on the driver's seat wire harness): ①

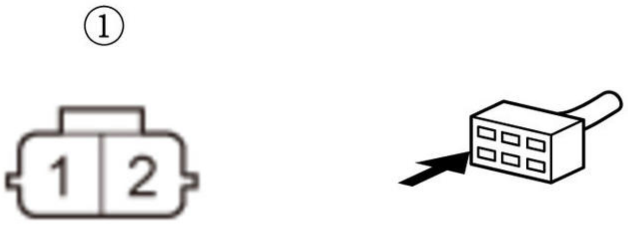

-3. Disconnect the negative cable from the 12 volt battery, then wait at least 3 minutes.

-4. Disconnect the following connector.

SRS unit connector B (39P)

-5. Measure the resistance between test points 1 and 2.

Test condition	Vehicle OFF (LOCK) mode
	Driver's seat position sensor 2P connector (on the driver's seat wire harness): disconnected
	SRS unit connector B (39P): disconnected
	Driver's seat position sensor 2P connector terminals No. 1 and No. 2 (on the driver's seat wire harness): jumped
Test point 1	**SRS unit connector B (39P) No. 11**
Test point 2	Body ground

Is there 1.0 Ω or less?

YES

The SS+ and GND wires are OK. **Replace the driver's seat position sensor** , then clear the DTC, and retest. If the DTC is still present, check for any authorized service information related to the DTCs or symptoms you are troubleshooting or **replace the SRS unit** .

NO

Open in the floor wire harness or the driver's seat wire harness; check for a poor ground at G501. If the ground is OK, replace the faulty harness, then clear the DTC.

DTC B00C0-16, B00C0-96, B00C2-16, B00C2-96

DTC B00C0-16, B00C0-96 : Internal Failure of the Front Passenger's Weight Sensor (front inner side)

DTC B00C2-16, B00C2-96 : Internal Failure of the Front Passenger's Weight Sensor (rear inner side)

NOTE:

- **Before doing this troubleshooting procedure, find out if the vehicle was in a collision. If so, verify that all the required components were replaced with new components of the correct part number and were properly installed** .
- Before doing this troubleshooting procedure, review **SRS Precautions and Procedures** and **General Troubleshooting Information** .
- Before doing this troubleshooting procedure, **check the condition of the 12 volt battery** .
- If DTC U3000-49 stored, troubleshoot DTC U3000-49 before doing this troubleshooting procedure.

DTC Description	DTC
B00C0-16 Internal failure of the front passenger's weight sensor (front inner side)	B
B00C0-96 Internal failure of the front passenger's weight sensor (front inner side)	B
B00C2-16 Internal failure of the front passenger's weight sensor (rear inner side)	B
B00C2-96 Internal failure of the front passenger's weight sensor (rear inner side)	B

DTC (SRS)

1. Problem verification

   -1. Clear the DTCs with the HDS.

   -2. Turn the vehicle to the ON mode, then wait for 10 seconds.

   -3. Check for DTCs with the HDS.

DTC Description	DTC
B00C0-16 Internal failure of the front passenger's weight sensor (front inner side)	B
B00C0-96 Internal failure of the front passenger's weight sensor (front inner side)	B

DTC Description	DTC
B00C2-16 Internal failure of the front passenger's weight sensor (rear inner side)	B
B00C2-96 Internal failure of the front passenger's weight sensor (rear inner side)	B

Is DTC B00C0-16, B00C0-96, B00C2-16, or B00C2-96 indicated?

YES

The failure is duplicated. Faulty front passenger's weight sensor. **Replace the front passenger's weight sensors as an assembly** .

NO

Intermittent failure, the system is OK at this time. Go to Troubleshooting Intermittent Failures. If another DTC is indicated, troubleshoot the DTC.

DTC B00C0-4A, B00C2-4A

DTC B00C0-4A : Different Supplier ID/Function ID of the Front Passenger's Weight Sensor (front inner side)

DTC B00C2-4A : Different Supplier ID/Function ID of the Front Passenger's Weight Sensor (rear inner side)

NOTE:

- **Before doing this troubleshooting procedure, find out if the vehicle was in a collision. If so, verify that all the required components were replaced with new components of the correct part number and were properly installed** .
- Before doing this troubleshooting procedure, review **SRS Precautions and Procedures** and **General Troubleshooting Information** .
- If DTC U3000-49 is stored, troubleshoot DTC U3000-49 before doing this troubleshooting procedure.

DTC Description	DTC
B00C0-4A Different supplier ID/function ID of the front passenger's weight sensor (front inner side)	B
B00C2-4A Different supplier ID/function ID of the front passenger's weight sensor (rear inner side)	B

DTC (SRS)

1. Problem verification

-1. Clear the DTCs with the HDS.

-2. Turn the vehicle to the ON mode, then wait for 10 seconds.

-3. Check for DTCs with the HDS.

DTC Description	DTC
B00C0-4A Different supplier ID/function ID of the front passenger's weight sensor (front inner side)	B
B00C2-4A Different supplier ID/function ID of the front passenger's weight sensor (rear inner side)	B

Is DTC B00C0-4A or B00C2-4A indicated?

YES

The failure is duplicated. Faulty front passenger's weight sensor. **Replace the front passenger's weight sensors as an assembly** , then clear the DTC, and retest. If the DTC is still present, check for any authorized service information related to the DTCs or symptoms you are troubleshooting or **replace the SRS unit** .

NO

Intermittent failure, the system is OK at this time. Go to Troubleshooting Intermittent Failures. If another DTC is indicated, troubleshoot the DTC.

DTC B00C0-54, B00C2-54

DTC B00C0-54 : Different Serial ID of the Front Passenger's Weight Sensor (front inner side)

DTC B00C2-54 : Different Serial ID of the Front Passenger's Weight Sensor (rear inner side)

NOTE:

- **Before doing this troubleshooting procedure, find out if the vehicle was in a collision. If so, verify that all the required components were replaced with new components of the correct part number and were properly installed** .
- Before doing this troubleshooting procedure, review **SRS Precautions and Procedures** and **General Troubleshooting Information** .
- Those DTCs are stored when replace the front passenger's weight sensor and do not the front passenger's weight sensor initialization.

DTC Description	DTC
B00C0-54 Different serial ID of the front passenger's weight sensor (front inner side)	B
B00C2-54 Different serial ID of the front passenger's weight sensor (rear inner side)	B

DTC (SRS)

1. Problem verification

-1. **Do the front passenger's weight sensor initialization procedure** .

-2. Clear the DTCs with the HDS.

-3. Turn the vehicle to the ON mode, then wait for 10 seconds.

-4. Check for DTCs with the HDS.

DTC Description	DTC
B00C0-54 Different serial ID of the front passenger's weight sensor (front inner side)	B
B00C2-54 Different serial ID of the front passenger's weight sensor (rear inner side)	B

Is DTC B00C0-54 or B00C2-54 indicated?

YES

The failure is duplicated. Check for any authorized service information related to the DTCs or symptoms you are troubleshooting or **replace the SRS unit** .

NO

Intermittent failure, the system is OK at this time. Go to Troubleshooting Intermittent Failures. If another DTC is indicated, troubleshoot the DTC.

DTC B00C0-87

DTC B00C0-87 : No Signal From the Front Passenger's Weight Sensor (front inner side)

NOTE:

- **Before doing this troubleshooting procedure, find out if the vehicle was in a collision. If so, verify that all the required components were replaced with new components of the correct part number and were properly installed** .
- Before doing this troubleshooting procedure, review **SRS Precautions and Procedures** , **General Troubleshooting Information** , and **12 Volt Battery Terminal Disconnection and Reconnection** .

DTC Description	DTC
B00C0-87 No signal from the front passenger's weight sensor (front inner side)	B

DTC (SRS)

1. Problem verification

-1. Clear the DTCs with the HDS.

-2. Turn the vehicle to the ON mode, then wait for 10 seconds.

-3. Check for DTCs with the HDS.

DTC Description	DTC
B00C0-87 No signal from the front passenger's weight sensor (front inner side)	B

Is DTC B00C0-87 indicated?

YES

The failure is duplicated. Go to step 2.

NO

Intermittent failure, the system is OK at this time. Go to Troubleshooting Intermittent Failures. If another DTC is indicated, troubleshoot the DTC.

2. Open wire check (SWS+/PWR SWS line)

-1. Turn the vehicle to the OFF (LOCK) mode.

-2. Disconnect the negative cable from the 12 volt battery, then wait at least 3 minutes.

-3. Disconnect the following connectors.

SRS unit connector B (39P)
Front passenger's weight sensor (front inner side) 3P connector (on the front passenger's seat wire harness)

-4. Measure the resistance between test points 1 and 2.

Test condition	Vehicle OFF (LOCK) mode
	SRS unit connector B (39P): disconnected
	Front passenger's weight sensor (front inner side) 3P connector (on the front passenger's seat wire harness): disconnected
Test point 1	**SRS unit connector B (39P) No. 26**
Test point 2	Front passenger's weight sensor (front inner side) 3P connector (female terminals) No. 1 (on the front passenger's seat wire harness): ①

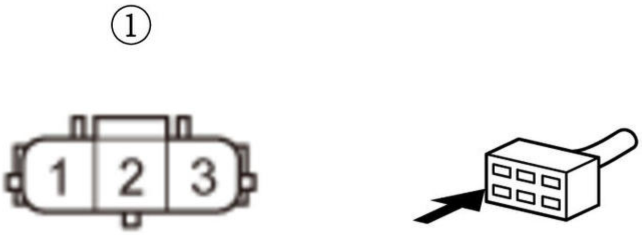

Is there 1.0 Ω or less?

YES

The SWS+/PWR SWS wire is OK. Go to step 3.

NO

Open in the floor wire harness or the front passenger's seat wire harness; replace the faulty harness, then clear the DTC.

3. Open wire check (SWS-/GND SWS line)

-1. Measure the resistance between test points 1 and 2.

Test condition	Vehicle OFF (LOCK) mode
	SRS unit connector B (39P): disconnected
	Front passenger's weight sensor (front inner side) 3P connector (on the front passenger's seat wire harness): disconnected
Test point 1	**SRS unit connector B (39P) No. 28**
Test point 2	Front passenger's weight sensor (front inner side) 3P connector (female terminals) No. 3 (on the front passenger's seat wire harness): ①

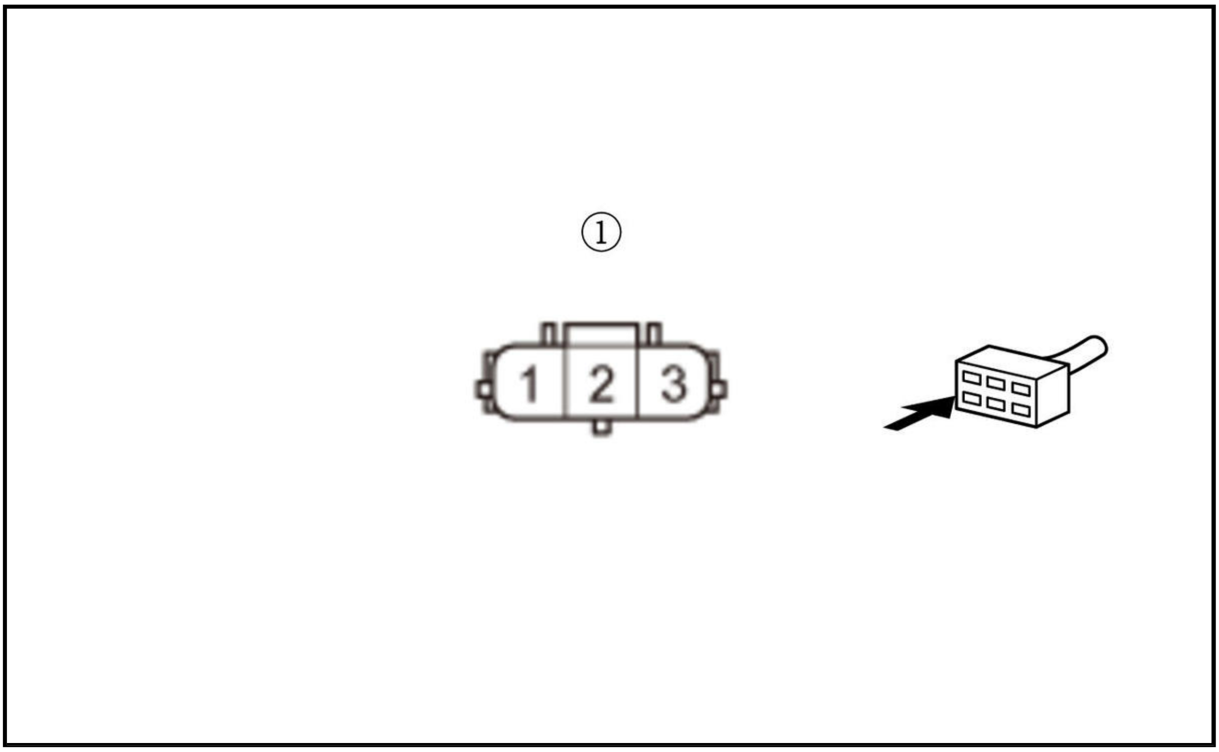

Is there 1.0 Ω or less?

YES

The SWS-/GND SWS wire is OK. Go to step 4.

NO

Open in the floor wire harness or the front passenger's seat wire harness; replace the faulty harness, then clear the DTC.

4. Open wire check (SWSS/LIN SWS line)

-1. Measure the resistance between test points 1 and 2.

Test condition	Vehicle OFF (LOCK) mode
	SRS unit connector B (39P): disconnected
	Front passenger's weight sensor (front inner side) 3P connector (on the front passenger's seat wire harness): disconnected
Test point 1	**SRS unit connector B (39P) No. 30**

Test point 2	Front passenger's weight sensor (front inner side) 3P connector (female terminals) No. 2 (on the front passenger's seat wire harness): ①

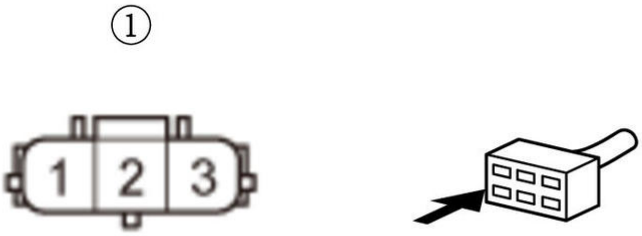

Is there 1.0 Ω or less?

YES

The SWSS/LIN SWS wire is not open. Go to step 5.

NO

Open in the floor wire harness or the front passenger's seat wire harness; replace the faulty harness, then clear the DTC.

5. Shorted wire check (SWSS/LIN SWS line to power)

-1. Disconnect the following connector.

Front passenger's weight sensor (rear inner side) 3P connector (on the front passenger's seat wire harness)

-2. Reconnect the negative cable to the 12 volt battery.

-3. Turn the vehicle to the ON mode.

-4. Measure the voltage between test points 1 and 2.

Test condition	Vehicle ON mode
	SRS unit connector B (39P): disconnected
	Front passenger's weight sensor (front inner side) 3P connector (on the front passenger's seat wire harness): disconnected
	Front passenger's weight sensor (rear inner side) 3P connector (on the front passenger's seat wire harness): disconnected
Test point 1	**SRS unit connector B (39P) No. 30**
Test point 2	Body ground

Is there 0.2 V or less?

YES

The SWSS/LIN SWS wire is not shorted to power. Go to step 6.

NO

Short to power in the floor wire harness or the front passenger's seat wire harness; replace the faulty harness, then clear the DTC.

6. Shorted wire check (SWSS/LIN SWS line)

-1. Turn the vehicle to the OFF (LOCK) mode.

-2. Measure the resistance between test points 1 and 2.

Test condition	Vehicle OFF (LOCK) mode
	SRS unit connector B (39P): disconnected
	Front passenger's weight sensor (front inner side) 3P connector (on the front passenger's seat wire harness): disconnected
	Front passenger's weight sensor (rear inner side) 3P connector (on the front passenger's seat wire harness): disconnected
Test point 1	**SRS unit connector B (39P) No. 30**
Test point 2	Body ground

Is there an open circuit, or at least 1 MΩ?

YES

The SWSS/LIN SWS wire is not shorted. Go to step 7.

NO

Short to ground in the floor wire harness or the front passenger's seat wire harness; replace the faulty harness, then clear the DTC.

7. Shorted wire check (SWSS/LIN SWS line to SWS-/GND SWS line)

-1. Measure the resistance between test points 1 and 2.

Test condition	Vehicle OFF (LOCK) mode
	SRS unit connector B (39P): disconnected
	Front passenger's weight sensor (front inner side) 3P connector (on the front passenger's seat wire harness): disconnected
	Front passenger's weight sensor (rear inner side) 3P connector (on the front passenger's seat wire harness): disconnected
Test point 1	**SRS unit connector B (39P) No. 30**
Test point 2	**SRS unit connector B (39P) No. 28**

Is there an open circuit, or at least 1 MΩ?

YES

The SWSS/LIN SWS and SWS-/GND SWS wires are not shorted. Go to step 8.

NO

Short to another wire in the floor wire harness or the front passenger's seat wire harness; replace the faulty harness, then clear the DTC.

8. Shorted wire check (SWSS/LIN SWS line to SWS+/PWR SWS line)

-1. Measure the resistance between test points 1 and 2.

Test condition	Vehicle OFF (LOCK) mode
	SRS unit connector B (39P): disconnected
	Front passenger's weight sensor (front inner side) 3P connector (on the front passenger's seat wire harness): disconnected
	Front passenger's weight sensor (rear inner side) 3P connector (on the front passenger's seat wire harness): disconnected
Test point 1	**SRS unit connector B (39P) No. 30**
Test point 2	**SRS unit connector B (39P) No. 26**

Is there an open circuit, or at least 1 MΩ?

YES

The SWSS/LIN SWS and SWS+/PWR SWS wires are OK. Go to step 9.

NO

Short to another wire in the floor wire harness or the front passenger's seat wire harness; replace the faulty harness, then clear the DTC.

9. Front passenger's weight sensor check

-1. **Substitute a known-good front passenger's weight sensors as an assembly** .

-2. Reconnect the following connectors.

SRS unit connector B (39P)
Front passenger's weight sensor (front inner side) 3P connector (on the front passenger's seat wire harness)
Front passenger's weight sensor (rear inner side) 3P connector (on the front passenger's seat wire harness)

-3. Reconnect the negative cable to the 12 volt battery.

-4. Clear the DTCs with the HDS.

-5. Turn the vehicle to the ON mode, then wait for 10 seconds.

-6. Check for DTCs with the HDS.

DTC Description	DTC
B00C0-87 No signal from the front passenger's weight sensor (front inner side)	B

Is DTC B00C0-87 indicated?

YES

The front passenger's weight sensor is OK. Faulty SRS unit or poor connection at SRS unit connector B (39P) and the SRS unit. Check the connection; if the connection is OK, check for any authorized service information related to the DTCs or symptoms you are troubleshooting or **replace the SRS unit** . If the DTC does not clear, replace the floor wire harness or the front passenger's seat wire harness.

NO

Faulty front passenger's weight sensor. **Replace the front passenger's weight sensors as an assembly** .

DTC B00C2-87

DTC B00C2-87 : No Signal From the Front Passenger's Weight Sensor (rear inner side)

NOTE:

- **Before doing this troubleshooting procedure, find out if the vehicle was in a collision. If so, verify that all the required components were replaced with new components of the correct part number and were properly installed** .
- Before doing this troubleshooting procedure, review **SRS Precautions and Procedures** , **General Troubleshooting Information** , and **12 Volt Battery Terminal Disconnection and Reconnection** .

DTC Description	DTC
B00C2-87 No signal from the front passenger's weight sensor (rear inner side)	B

DTC (SRS)

1. Problem verification

-1. Clear the DTCs with the HDS.

-2. Turn the vehicle to the ON mode, then wait for 10 seconds.

-3. Check for DTCs with the HDS.

DTC Description	DTC
B00C2-87 No signal from the front passenger's weight sensor (rear inner side)	B

Is DTC B00C2-87 indicated?

YES

The failure is duplicated. Go to step 2.

NO

Intermittent failure, the system is OK at this time. Go to Troubleshooting Intermittent Failures. If another DTC is indicated, troubleshoot the DTC.

2. Open wire check (SWS+/PWR SWS line)

-1. Turn the vehicle to the OFF (LOCK) mode.

-2. Disconnect the negative cable from the 12 volt battery, then wait at least 3 minutes.

-3. Disconnect the following connectors.

SRS unit connector B (39P)
Front passenger's weight sensor (rear inner side) 3P connector (on the front passenger's seat wire harness)

-4. Measure the resistance between test points 1 and 2.

Test condition	Vehicle OFF (LOCK) mode SRS unit connector B (39P): disconnected Front passenger's weight sensor (rear inner side) 3P connector (on the front passenger's seat wire harness): disconnected
Test point 1	**SRS unit connector B (39P) No. 26**
Test point 2	Front passenger's weight sensor (rear inner side) 3P connector (female terminals) No. 1 (on the front passenger's seat wire harness): ①

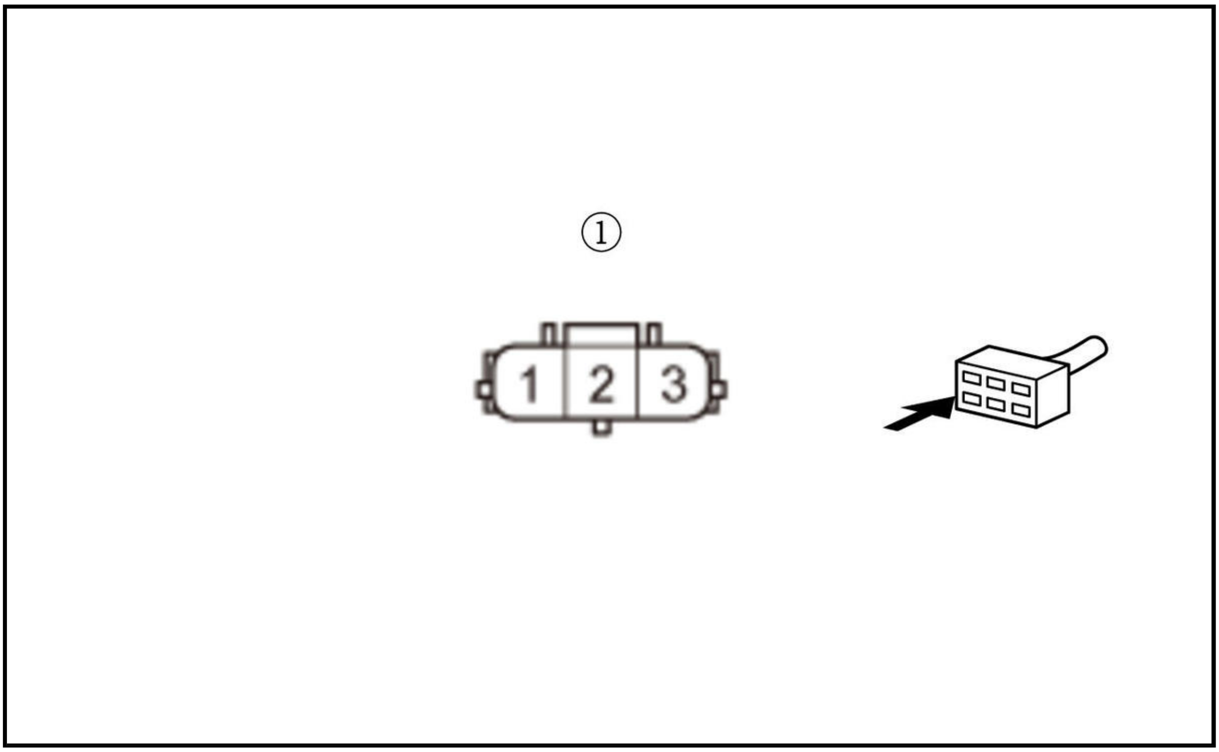

Is there 1.0 Ω or less?

YES

The SWS+/PWR SWS wire is OK. Go to step 3.

NO

Open in the floor wire harness or the front passenger's seat wire harness; replace the faulty harness, then clear the DTC.

3. Open wire check (SWS-/GND SWS line)

-1. Measure the resistance between test points 1 and 2.

Test condition	Vehicle OFF (LOCK) mode SRS unit connector B (39P): disconnected Front passenger's weight sensor (rear inner side) 3P connector (on the front passenger's seat wire harness): disconnected

Test point 1	**SRS unit connector B (39P) No. 28**
Test point 2	Front passenger's weight sensor (rear inner side) 3P connector (female terminals) No. 3 (on the front passenger's seat wire harness): ①

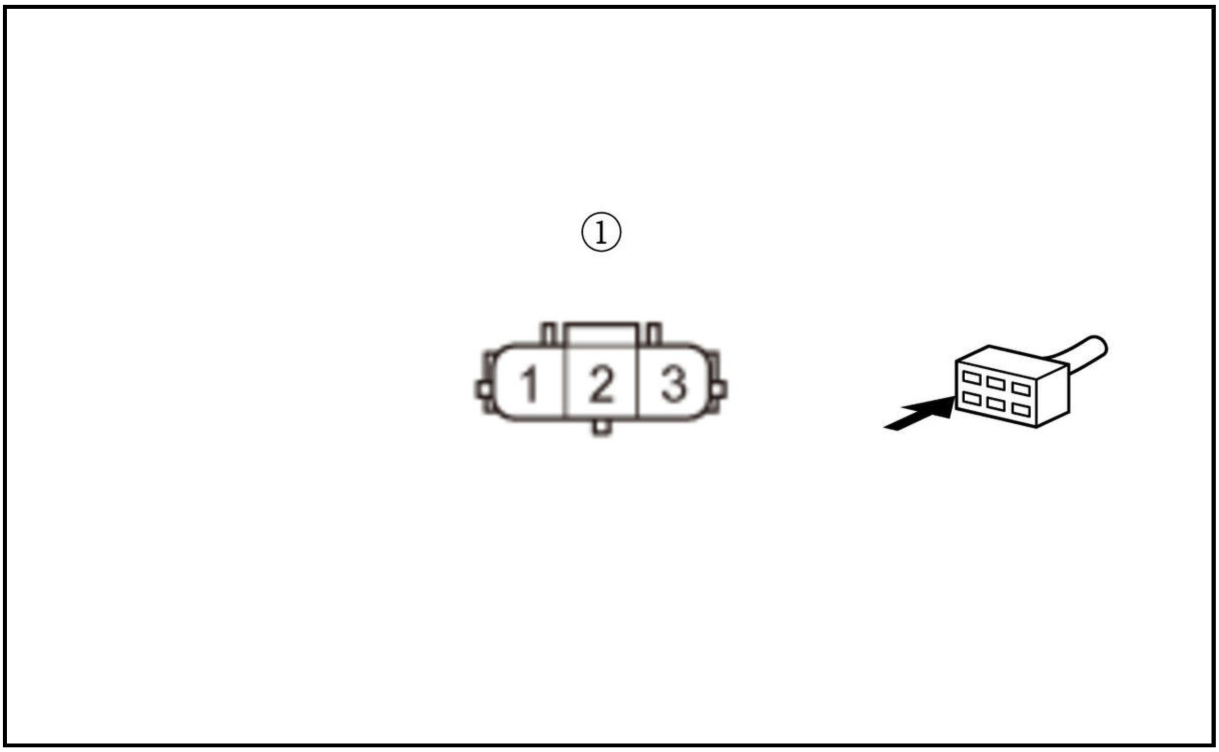

Is there 1.0 Ω or less?

YES

The SWS-/GND SWS wire is OK. Go to step 4.

NO

Open in the floor wire harness or the front passenger's seat wire harness; replace the faulty harness, then clear the DTC.

4. Open wire check (SWSS/LIN SWS line)

-1. Measure the resistance between test points 1 and 2.

Test condition	Vehicle OFF (LOCK) mode
	SRS unit connector B (39P): disconnected
	Front passenger's weight sensor (rear inner side) 3P connector (on the front passenger's seat wire harness): disconnected
Test point 1	**SRS unit connector B (39P) No. 30**
Test point 2	Front passenger's weight sensor (rear inner side) 3P connector (female terminals) No. 2 (on the front passenger's seat wire harness): ①

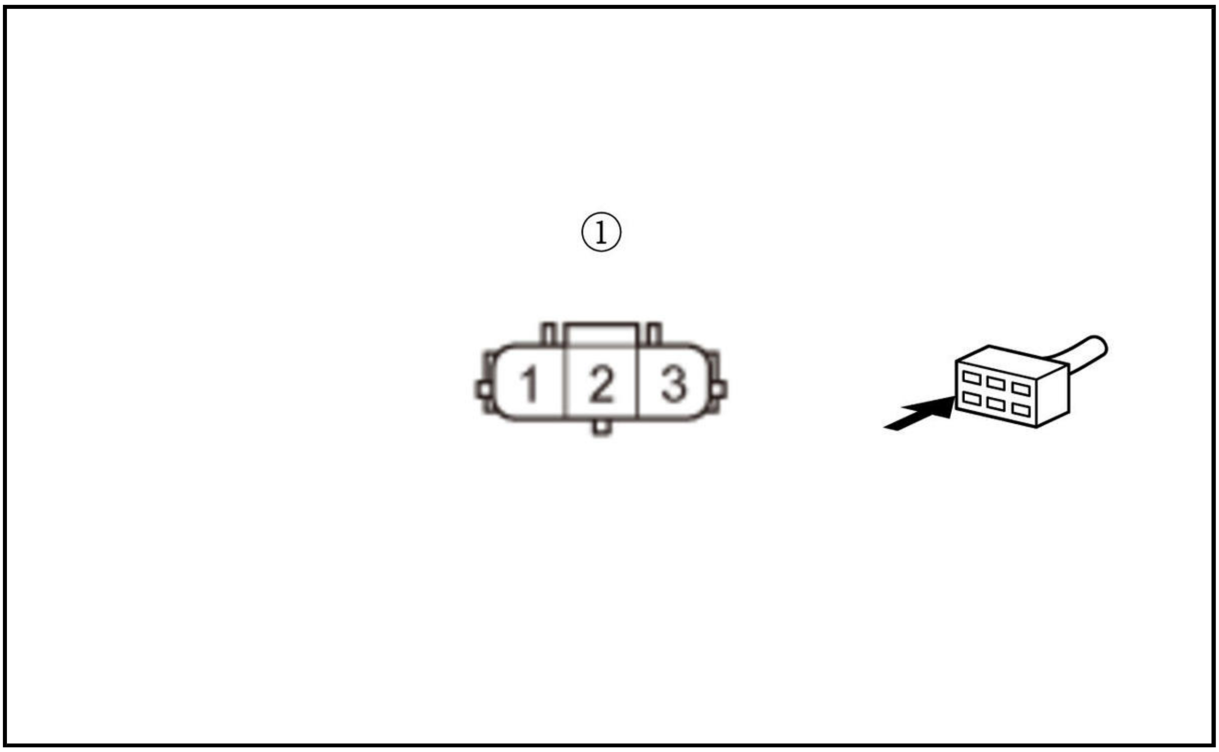

Is there 1.0 Ω or less?

YES

The SWSS/LIN SWS wire is OK. Go to step 5.

NO

Open in the floor wire harness or the front passenger's seat wire harness; replace the faulty harness, then clear the DTC.

5. Front passenger's weight sensor check

-1. **Substitute a known-good front passenger's weight sensors as an assembly** .

-2. Reconnect the following connectors.

SRS unit connector B (39P)

Front passenger's weight sensor (rear inner side) 3P connector (on the front passenger's seat wire harness)

-3. Reconnect the negative cable to the 12 volt battery.

-4. Clear the DTCs with the HDS.

-5. Turn the vehicle to the ON mode, then wait for 10 seconds.

-6. Check for DTCs with the HDS.

DTC Description	DTC
B00C2-87 No signal from the front passenger's weight sensor (rear inner side)	B

Is DTC B00C2-87 indicated?

YES

The front passenger's weight sensor is OK. Faulty SRS unit or poor connection at SRS unit connector B (39P) and the SRS unit. Check the connection; if the connection is OK, check for any authorized service information related to the DTCs or symptoms you are troubleshooting or replace the SRS unit . If the DTC does not clear, replace the floor wire harness or the front passenger's seat wire harness.

NO

Faulty front passenger's weight sensor. Replace the front passenger's weight sensors as an assembly .

DTC B00D5-14 (KA/KC)

DTC B00D5-14 : Open or Short to Ground in the Front Passenger's Airbag Cutoff Indicator

NOTE:

- Before doing this troubleshooting procedure, find out if the vehicle was in a collision. If so, verify that all the required components were replaced with new components of the correct part number and were properly installed .
- Before doing this troubleshooting procedure, review SRS Precautions and Procedures , General Troubleshooting Information , and 12 Volt Battery Terminal Disconnection and Reconnection .
- If there are other DTCs stored with B00D5-14; troubleshoot them first.

DTC Description	DTC
B00D5-14 Open or short to ground in the front passenger's airbag cutoff indicator	B

DTC (SRS)

1. Problem verification

   -1. Clear the DTCs with the HDS.

   -2. Turn the vehicle to the ON mode, then wait for 10 seconds.

   -3. Check for DTCs with the HDS.

DTC Description	DTC
B00D5-14 Open or short to ground in the front passenger's airbag cutoff indicator	B

   Is DTC B00D5-14 indicated?

   YES

   The failure is duplicated. Go to step 2.

   NO

   Intermittent failure, the system is OK at this time. Go to Troubleshooting Intermittent Failures. If another DTC is indicated, troubleshoot the DTC.

2. Open wire check (OFF PTT line)

   -1. Turn the vehicle to the OFF (LOCK) mode.

   -2. Disconnect the negative cable from the 12 volt battery, then wait at least 3 minutes.

   -3. Disconnect the following connectors.

Climate control panel 20P connector (on the dashboard wire harness)
SRS unit connector A (39P)

-4. Measure the resistance between test points 1 and 2.

Test condition	Vehicle OFF (LOCK) mode
	Climate control panel 20P connector (on the dashboard wire harness): disconnected
	SRS unit connector A (39P): disconnected
Test point 1	**SRS unit connector A (39P) No. 28**
Test point 2	Climate control panel 20P connector (female terminals) No. 7 (on the dashboard wire harness): ①

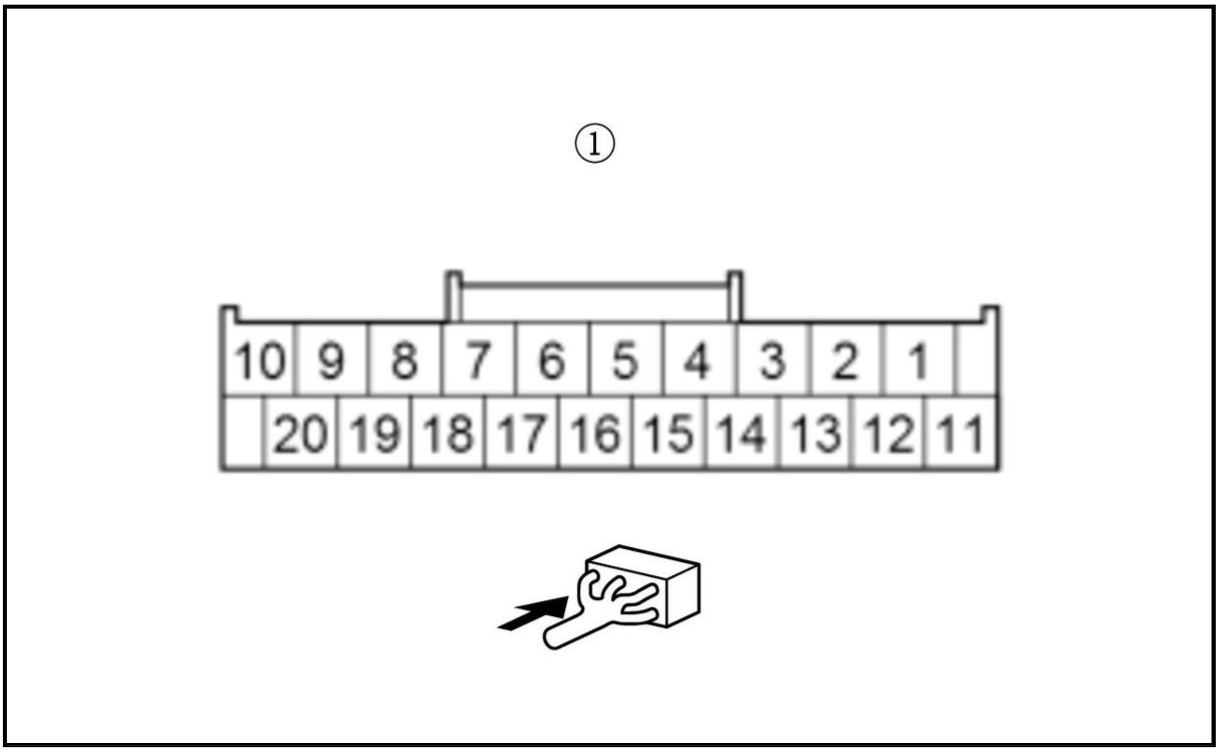

Is there 1.0 Ω or less?

YES

The OFF PTT wire is not open. Go to step 3.

NO

Open in the dashboard wire harness; replace the dashboard wire harness, then clear the DTC.

3. Shorted wire check (OFF PTT line)

-1. Measure the resistance between test points 1 and 2.

Test condition	Vehicle OFF (LOCK) mode
	Climate control panel 20P connector (on the dashboard wire harness): disconnected
	SRS unit connector A (39P): disconnected
Test point 1	**SRS unit connector A (39P) No. 28**
Test point 2	Body ground

Is there an open circuit, or at least 1 MΩ?

YES

The OFF PTT wire is OK. **Replace the front passenger's airbag cutoff indicator** , then clear the DTC, and retest. If the DTC is still present, check for any authorized service information related to the DTCs or symptoms you are troubleshooting or **replace the SRS unit** .

NO

Short to ground in the dashboard wire harness; replace the dashboard wire harness, then clear the DTC.

DTC B00D5-17 (KA/KC)

DTC B00D5-17 : Short to Power in the Front Passenger's Airbag Cutoff Indicator

NOTE:

- **Before doing this troubleshooting procedure, find out if the vehicle was in a collision. If so, verify that all the required components were replaced with new components of the correct part number and were properly installed** .
- Before doing this troubleshooting procedure, review **SRS Precautions and Procedures** , **General Troubleshooting Information** , and **12 Volt Battery Terminal Disconnection and Reconnection** .
- If there are other DTCs stored with B00D5-17; troubleshoot them first.

DTC Description	DTC
B00D5-17 Short to power in the front passenger's airbag cutoff indicator	B

DTC (SRS)

1. Problem verification

   -1. Clear the DTCs with the HDS.

   -2. Turn the vehicle to the ON mode, then wait for 10 seconds.

   -3. Check for DTCs with the HDS.

DTC Description	DTC
B00D5-17 Short to power in the front passenger's airbag cutoff indicator	B

   Is DTC B00D5-17 indicated?

   YES

   The failure is duplicated. Go to step 2.

   NO

   Intermittent failure, the system is OK at this time. Go to Troubleshooting Intermittent Failures. If another DTC is indicated, troubleshoot the DTC.

2. Shorted wire check (OFF PTT line to power)

   -1. Turn the vehicle to the OFF (LOCK) mode.

   -2. Disconnect the negative cable from the 12 volt battery, then wait at least 3 minutes.

   -3. Disconnect the following connectors.

Climate control panel 20P connector (on the dashboard wire harness)
SRS unit connector A (39P)

-4. Reconnect the negative cable to the 12 volt battery.

-5. Turn the vehicle to the ON mode.

-6. Measure the voltage between test points 1 and 2.

Test condition	Vehicle ON mode
	Climate control panel 20P connector (on the dashboard wire harness): disconnected
	SRS unit connector A (39P): disconnected
Test point 1	**SRS unit connector A (39P) No. 28**
Test point 2	Body ground

Is there 0.2 V or less?

YES

The OFF PTT wire is OK. **Replace the front passenger's airbag cutoff indicator** , then clear the DTC, and retest. If the DTC is still present, check for any authorized service information related to the DTCs or symptoms you are troubleshooting or **replace the SRS unit** .

NO

Short to power in the dashboard wire harness; replace the dashboard wire harness, then clear the DTC.

DTC B00DF-11, B00DF-2B

DTC B00DF-11 : Short in the Front Passenger's Airbag ON/OFF Switch

NOTE:

- **Before doing this troubleshooting procedure, find out if the vehicle was in a collision. If so, verify that all the required components were replaced with new components of the correct part number and were properly installed** .
- Before doing this troubleshooting procedure, review **SRS Precautions and Procedures** , **General Troubleshooting Information** , and **12 Volt Battery Terminal Disconnection and Reconnection** .

DTC Description	DTC
B00DF-11 Short in the front passenger's airbag ON/OFF switch	B
B00DF-2B Short to another wire harness in the front passenger's airbag ON/OFF switch	B

DTC (SRS)

1. Problem verification

-1. Clear the DTCs with the HDS.

-2. Turn the vehicle to the ON mode, then wait for 10 seconds.

-3. Push and release the front passenger's airbag ON/OFF switch 5 times repeatedly.

-4. Check for DTCs with the HDS.

DTC Description	DTC
B00DF-11 Short in the front passenger's airbag ON/OFF switch	B
B00DF-2B Short to another wire harness in the front passenger's airbag ON/OFF switch	B

Is DTC B00DF-11 or B00DF-2B indicated?

YES

The failure is duplicated. Go to step 2.

NO

Intermittent failure, the system is OK at this time. Go to Troubleshooting Intermittent Failures. If another DTC is indicated, troubleshoot the DTC.

2. Front passenger's airbag ON/OFF switch check

-1. Turn the vehicle to the OFF (LOCK) mode.

-2. Disconnect the following connector.

Front passenger's airbag ON/OFF switch 4P connector (on the dashboard wire harness)

-3. Clear the DTCs with the HDS.

-4. Turn the vehicle to the ON mode, then wait for 10 seconds.

-5. Check for DTCs with the HDS.

DTC Description	DTC
B00DF-11 Short in the front passenger's airbag ON/OFF switch	B
B00DF-2B Short to another wire harness in the front passenger's airbag ON/OFF switch	B

Is DTC B00DF-11 or B00DF-2B indicated?

YES

Go to step 3.

NO

Replace the component , then clear the DTC.

3. Shorted wire check (ACS line)

-1. Turn the vehicle to the OFF (LOCK) mode.

-2. Disconnect the negative cable from the 12 volt battery, then wait at least 3 minutes.

-3. Disconnect the following connector.

SRS unit connector A (39P)

-4. Measure the resistance between test points 1 and 2.

Test condition	Vehicle OFF (LOCK) mode
	Front passenger's airbag ON/OFF switch 4P connector (on the dashboard wire harness): disconnected
	SRS unit connector A (39P): disconnected
Test point 1	Front passenger's airbag ON/OFF switch 4P connector (female terminals) No. 4 (on the dashboard wire harness): ①

Test point 2	Body ground

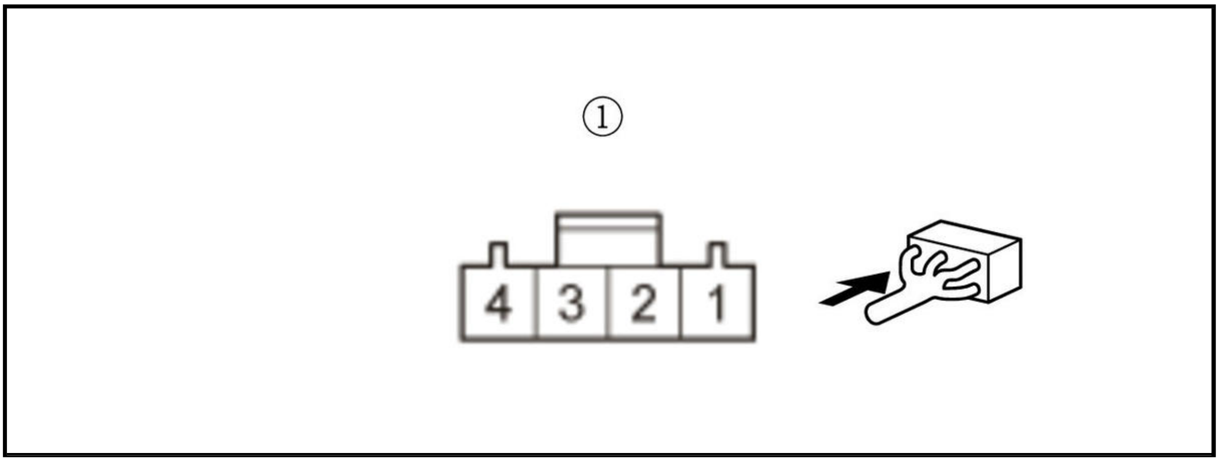

Is there an open circuit, or at least 1 MΩ?

YES

The ACS wire is OK. Check for any authorized service information related to the DTCs or symptoms you are troubleshooting or **replace the SRS unit** .

NO

Short to ground in the dashboard wire harness; replace the dashboard wire harness, then clear the DTC.

DTC B00DF-13

DTC B00DF-13 : Open in the Front Passenger's Airbag ON/OFF Switch

NOTE:

- **Before doing this troubleshooting procedure, find out if the vehicle was in a collision. If so, verify that all the required components were replaced with new components of the correct part number and were properly installed** .
- Before doing this troubleshooting procedure, review **SRS Precautions and Procedures** , **General Troubleshooting Information** , and **12 Volt Battery Terminal Disconnection and Reconnection** .

DTC Description	DTC
B00DF-13 Open in the front passenger's airbag ON/OFF switch	B

DTC (SRS)

1. Problem verification

   -1. Clear the DTCs with the HDS.

   -2. Turn the vehicle to the ON mode, then wait for 10 seconds.

   -3. Push and release the front passenger's airbag ON/OFF switch 5 times repeatedly.

   -4. Check for DTCs with the HDS.

DTC Description	DTC
B00DF-13 Open in the front passenger's airbag ON/OFF switch	B

Is DTC B00DF-13 indicated?

YES

The failure is duplicated. Go to step 2.

NO

Intermittent failure, the system is OK at this time. Go to Troubleshooting Intermittent Failures. If another DTC is indicated, troubleshoot the DTC.

2. Front passenger's airbag ON/OFF switch check

-1. Turn the vehicle to the OFF (LOCK) mode.

-2. Disconnect the following connector.

Front passenger's airbag ON/OFF switch 4P connector (on the dashboard wire harness)

-3. Measure the resistance between test points 1 and 2.

Test condition	Vehicle OFF (LOCK) mode Front Passenger's airbag ON/OFF switch 4P connector (on the dashboard wire harness): disconnected
Test point 1	Front passenger's airbag ON/OFF switch 4P connector (male terminals) No. 1: ①
Test point 2	Front passenger's airbag ON/OFF switch 4P connector (male terminals) No. 4: ①

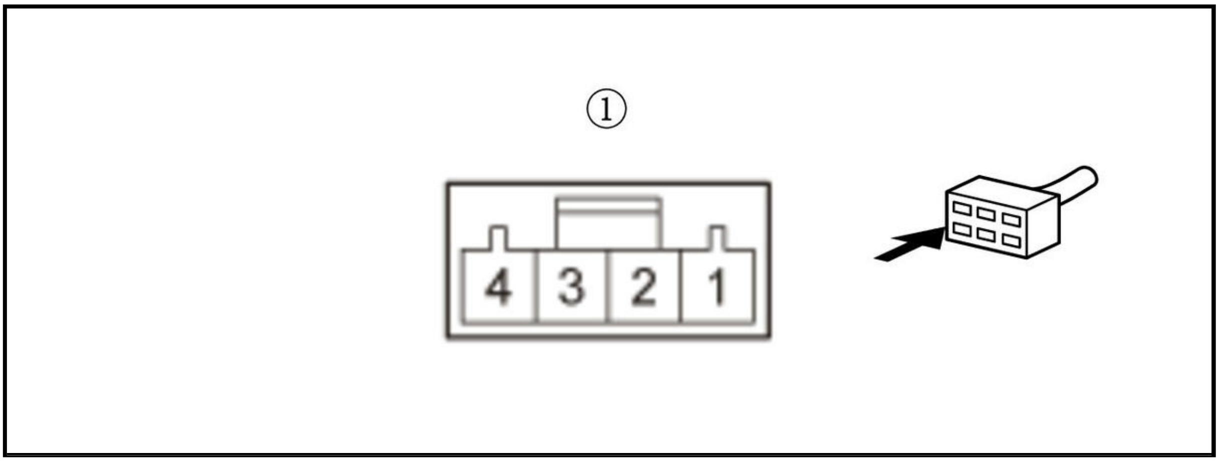

Position	Resistance
ON	3.11-3.80 kΩ
OFF	0.68-0.83 kΩ

Is the resistance as specified?

YES

Go to step 3.

NO

Faulty front passenger's airbag ON/OFF switch or poor connection at front passenger's airbag ON/OFF switch 4P connector and the front passenger's airbag ON/OFF switch. Check the connection; if the connection is OK, Replace the component , then clear the DTC.

3. Shorted wire check (ACS, GND lines to power)

-1. Turn the vehicle to the ON mode.

-2. Measure the voltage between test points 1 and 2.

Test condition	Vehicle ON mode
	Front passenger's airbag ON/OFF switch 4P connector (on the dashboard wire harness): disconnected
Test point 1	Front passenger's airbag ON/OFF switch 4P connector (female terminals) No. 1 (on the dashboard wire harness): ①
Test point 2	Front passenger's airbag ON/OFF switch 4P connector (female terminals) No. 4 (on the dashboard wire harness): ①

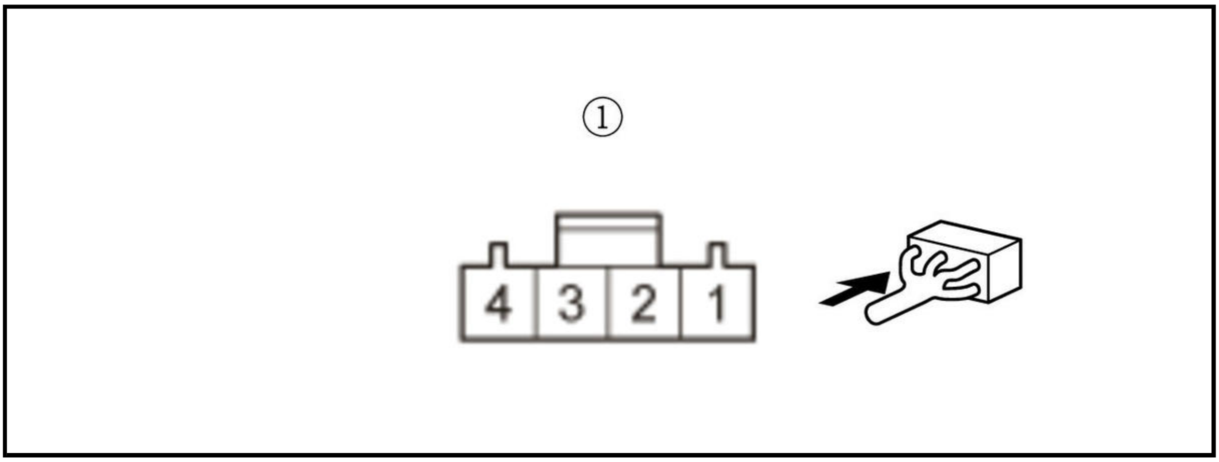

Is there 0.2 V or less?

YES

The ACS and GND wires are not shorted to power. Go to step 4.

NO

Short to power in the dashboard wire harness; replace the dashboard wire harness, then clear the DTC.

4. Open wire check (ACS line)

-1. Turn the vehicle to the OFF (LOCK) mode.

-2. Disconnect the negative cable from the 12 volt battery, then wait at least 3 minutes.

-3. Disconnect the following connector.

SRS unit connector A (39P)

-4. Measure the resistance between test points 1 and 2.

Test condition	Vehicle OFF (LOCK) mode
	Front passenger's airbag ON/OFF switch 4P connector (on the dashboard wire harness): disconnected
	SRS unit connector A (39P): disconnected
Test point 1	**SRS unit connector A (39P) No. 19**
Test point 2	Passenger's airbag ON/OFF switch 4P connector (female terminals) No. 4 (on the dashboard wire harness): ①

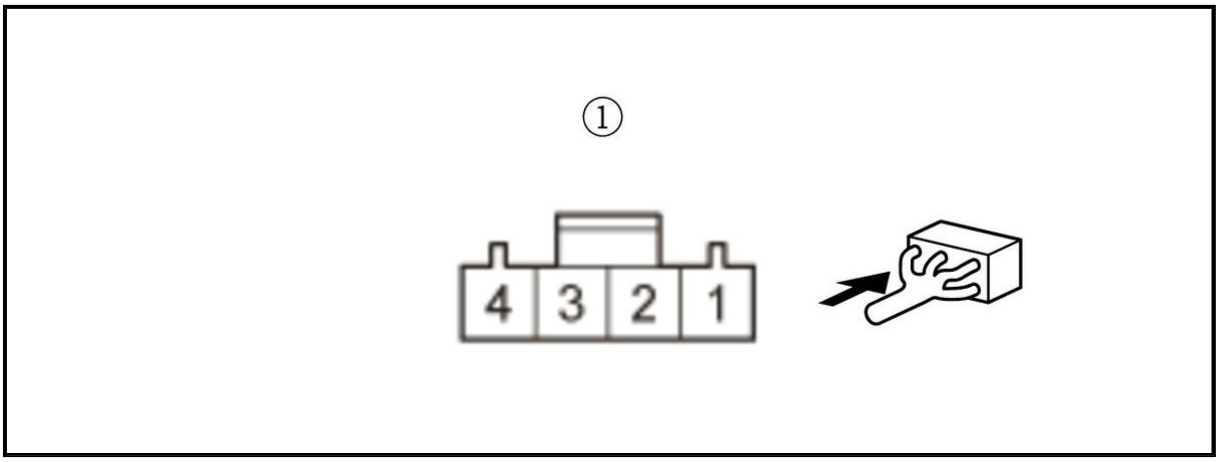

Is there 1.0 Ω or less?

YES

The ACS wire is OK. Go to step 5.

NO

Open in the dashboard wire harness; replace the dashboard wire harness, then clear the DTC.

5. Open wire check (GND line)

-1. Measure the resistance between test points 1 and 2.

Test condition	Vehicle OFF (LOCK) mode
	Front passenger's airbag ON/OFF switch 4P connector (on the dashboard wire harness): disconnected
	SRS unit connector A (39P): disconnected
Test point 1	Front passenger's airbag ON/OFF switch 4P connector (female terminals) No. 1 (on the dashboard wire harness): ①
Test point 2	Body ground

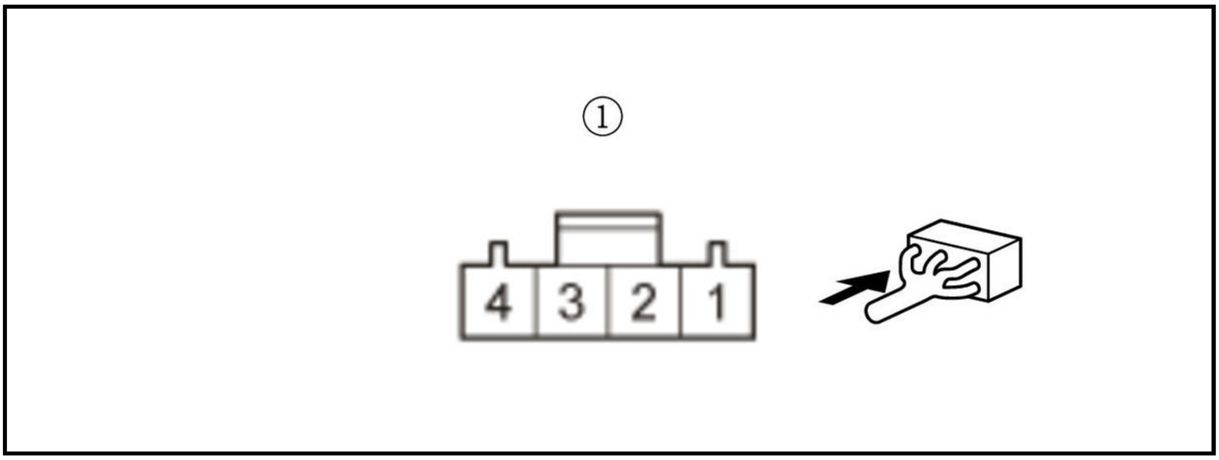

Is there 1.0 Ω or less?

YES

The GND wire is OK. Check for any authorized service information related to the DTCs or symptoms you are troubleshooting or **replace the SRS unit** .

NO

Open in the dashboard wire harness; check for a poor ground at G503. If the ground is OK, replace the dashboard wire harness, then clear the DTC.

DTC B2800-49, B2801-49, B2802-49, C0061-96, C0063-96, U3000-49 (SRS UNIT)

DTC B2800-49, B2801-49, B2802-49, C0061-96, C0063-96, U3000-49 : Internal Failure of the SRS Unit

NOTE:

- **Before doing this troubleshooting procedure, find out if the vehicle was in a collision. If so, verify that all the required components were replaced with new components of the correct part number and were properly installed** .
- Before troubleshooting any of these DTCs, **check the 12 volt battery/system voltage and 12 volt battery cable connections** . If the voltage is low, repair the charging system, test and charge the 12 volt battery, or replace the 12 volt battery before troubleshooting the SRS. If the 12 volt battery/system voltage is OK, ask the customer if the 12 volt battery ever went dead or if the engine was started and run with the 12 volt battery in a low state of charge. A dead 12 volt battery may trigger one or more of these DTCs.
- Before doing this troubleshooting procedure, review **SRS Precautions and Procedures** and **General Troubleshooting Information** .

DTC Description	DTC
B2800-49 Internal failure of the SRS unit	B
B2801-49 Internal failure of the SRS unit	B
B2802-49 Internal failure of the SRS unit	B
C0061-96 Internal failure of the SRS unit	B
C0063-96 Internal failure of the SRS unit	B
U3000-49 Internal failure of the SRS unit	B

DTC (SRS)

1. Problem verification

-1. Clear the DTCs with the HDS.

-2. Turn the vehicle to the ON mode, then wait for 10 seconds.

-3. Check for DTCs with the HDS.

DTC Description	DTC
B2800-49 Internal failure of the SRS unit	B
B2801-49 Internal failure of the SRS unit	B
B2802-49 Internal failure of the SRS unit	B
C0061-96 Internal failure of the SRS unit	B
C0063-96 Internal failure of the SRS unit	B
U3000-49 Internal failure of the SRS unit	B

Is DTC B2800-49, B2801-49, B2802-49, C0061-96, C0063-96, or U3000-49 indicated?

YES

The failure is duplicated. Check for any authorized service information related to the DTCs or symptoms you are troubleshooting or **replace the SRS unit** .

NO

Intermittent failure, the system is OK at this time. Go to Troubleshooting Intermittent Failures. If another DTC is indicated, troubleshoot the DTC.

DTC B2840-13

DTC B2840-13 : SRS Unit Connector A Not Properly Installed

NOTE:

- **Before doing this troubleshooting procedure, find out if the vehicle was in a collision. If so, verify that all the required components were replaced with new components of the correct part number and were properly installed** .
- Before doing this troubleshooting procedure, review **SRS Precautions and Procedures** , **General Troubleshooting Information** , and **12 Volt Battery Terminal Disconnection and Reconnection** .

DTC Description	DTC
B2840-13 SRS unit connector A not properly installed	B

DTC (SRS)

1. Problem verification

   -1. Clear the DTCs with the HDS.

   -2. Turn the vehicle to the ON mode, then wait for 10 seconds.

   -3. Check for DTCs with the HDS.

DTC Description	DTC
B2840-13 SRS unit connector A not properly installed	B

   Is DTC B2840-13 indicated?

   YES

   The failure is duplicated. Go to step 2.

   NO

   Intermittent failure, the system is OK at this time. Go to Troubleshooting Intermittent Failures. If another DTC is indicated, troubleshoot the DTC.

2. Connector connection check

   -1. Turn the vehicle to the OFF (LOCK) mode.

   -2. Check the following connection.

SRS unit connector A (39P)

   Is the connector OK?

   YES

   Go to step 4.

   NO

   Go to step 3.

3. System check

-1. Reset the loose connections that caused the problem in step 2.

-2. Clear the DTCs with the HDS.

-3. Turn the vehicle to the ON mode, then wait for 10 seconds.

-4. Check for DTCs with the HDS.

DTC Description	DTC
B2840-13 SRS unit connector A not properly installed	B

Is DTC B2840-13 indicated?

YES

Turn the vehicle to the OFF (LOCK) mode, then go to step 4.

NO

The system is OK at this time.

4. SRS unit check

-1. Disconnect the negative cable from the 12 volt battery, then wait at least 3 minutes.

-2. Disconnect the following connector.

SRS unit connector A (39P)

-3. Check for bent or damaged terminals on the SRS unit.

Are any terminals bent or damaged?

YES

Check for any authorized service information related to the DTCs or symptoms you are troubleshooting or **replace the SRS unit** .

NO

Replace the dashboard wire harness, then clear the DTC.

DTC B2841-13

DTC B2841-13 : SRS Unit Connector B Not Properly Installed

NOTE:

- **Before doing this troubleshooting procedure, find out if the vehicle was in a collision. If so, verify that all the required components were replaced with new components of the correct part number and were properly installed** .
- Before doing this troubleshooting procedure, review **SRS Precautions and Procedures** , **General Troubleshooting Information** , and **12 Volt Battery Terminal Disconnection and Reconnection** .

DTC Description	DTC
B2841-13 SRS unit connector B not properly installed	B

DTC (SRS)

1. Problem verification

   -1. Clear the DTCs with the HDS.

   -2. Turn the vehicle to the ON mode, then wait for 10 seconds.

   -3. Check for DTCs with the HDS.

DTC Description	DTC
B2841-13 SRS unit connector B not properly installed	B

   Is DTC B2841-13 indicated?

   YES

   The failure is duplicated. Go to step 2.

   NO

   Intermittent failure, the system is OK at this time. Go to Troubleshooting Intermittent Failures. If another DTC is indicated, troubleshoot the DTC.

2. Connector connection check

   -1. Turn the vehicle to the OFF (LOCK) mode.

   -2. Check the following connection.

SRS unit connector B (39P)

   Is the connector OK?

   YES

   Go to step 4.

   NO

   Go to step 3.

3. System check

   -1. Reset the loose connections that caused the problem in step 2.

   -2. Clear the DTCs with the HDS.

   -3. Turn the vehicle to the ON mode, then wait for 10 seconds.

   -4. Check for DTCs with the HDS.

DTC Description	DTC
B2841-13 SRS unit connector B not properly installed	B

   Is DTC B2841-13 indicated?

   YES

Turn the vehicle to the OFF (LOCK) mode, then go to step 4.

NO

The system is OK at this time.

4. SRS unit check

-1. Disconnect the negative cable from the 12 volt battery, then wait at least 3 minutes.

-2. Disconnect the following connector.

SRS unit connector B (39P)

-3. Check for bent or damaged terminals on the SRS unit.

Are any terminals bent or damaged?

YES

Check for any authorized service information related to the DTCs or symptoms you are troubleshooting or **replace the SRS unit** .

NO

Replace the floor wire harness, then clear the DTC.

DTC U0122-00 (SRS UNIT (WITH CAN GATEWAY))

DTC U0122-00 : Lost Communication With the VSA Modulator-Control Unit (wheel speed sensor signal error)

NOTE:

- **Before doing this troubleshooting procedure, find out if the vehicle was in a collision. If so, verify that all the required components were replaced with new components of the correct part number and were properly installed** .
- Before doing this troubleshooting procedure, review **SRS Precautions and Procedures** , **General Troubleshooting Information** , and **12 Volt Battery Terminal Disconnection and Reconnection** .
- According to the detected DTC(s), check for the power circuit and the ground circuit of the control unit which cannot communicate with the SRS unit.
- Refer to the DTC shown on the display, then inspect the connectors and terminals based on the instructions.
- Information marked with an asterisk (*) applies to the CAN gateway (16P connector type).

DTC Description	DTC
U0122-00 Lost communication with the VSA modulator-control unit (wheel speed sensor signal error)	B

DTC (SRS)

1. CAN gateway system DTC check

-1. Turn the vehicle to the ON mode.

-2. Check for CAN gateway system DTCs with the HDS.

DTC Description	DTC
U0029-00 CAN Gateway F-CAN ch A Bus Off	B
U0047-00 CAN Gateway F-CAN ch B Bus Off	B
U3000-49 CAN Gateway Internal Failure	B

Is DTC U0029-00, U0047-00, and/or U3000-49 indicated?

YES

Go to the troubleshooting for CAN gateway system DTC(s) .

NO

Go to step 2.

2. F-CAN circuit communication check (Receiving control unit)

-1. Select the FUNCTION TEST in the CAN gateway with the HDS, then select the F-CAN Bus Connected Unit Check.

F-CAN Bus Connected Unit Check

Does the SRS unit detect the CAN gateway Bus channels B?

Bus B is Not Available

Go to step 3.

Bus B is Available

Go to step 4.

3. Open wire check (F-CAN B_H, F-CAN B_L lines)

-1. Turn the vehicle to the OFF (LOCK) mode.

-2. Disconnect the negative cable from the 12 volt battery.

-3. Disconnect the following connectors.

CAN gateway 12P (16P)* connector

SRS unit connector A (39P)

-4. Measure the resistance between test points 1 and 2.

Test condition	Vehicle OFF (LOCK) mode
B	CAN gateway 12P (16P)* connector: disconnected
B	SRS unit connector A (39P): disconnected
Test point 1	CAN gateway 12P connector (female terminals) No. 12 (on the dashboard wire harness): ① CAN gateway 16P connector (female terminals) No. 6 (on the dashboard wire harness): ② *
Test point 2	**SRS unit connector A (39P) No. 34**

Test point 1	CAN gateway 12P connector (female terminals) No. 5 (on the dashboard wire harness): ① CAN gateway 16P connector (female terminals) No. 14 (on the dashboard wire harness): ② *
Test point 2	**SRS unit connector A (39P) No. 35**

12P Connector Type

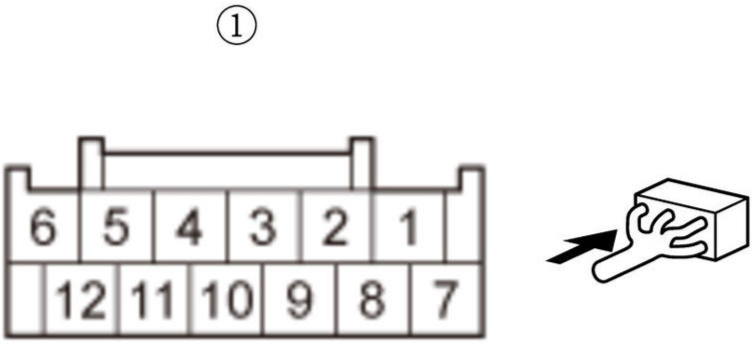

16P Connector Type*

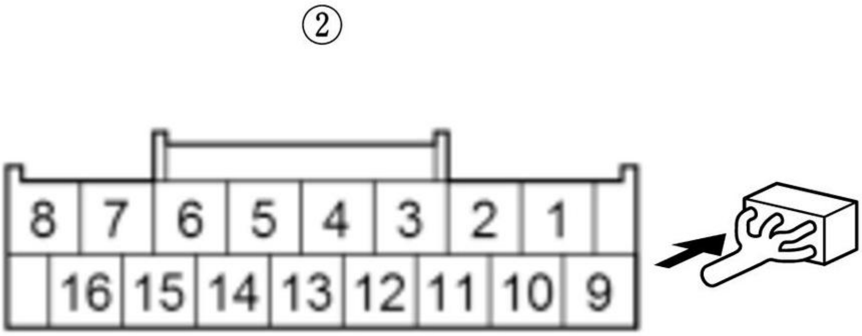

Is there 1.0 Ω or less?

YES

The F-CAN B_H and the F-CAN B_L wires are OK. Check for poor connections or loose terminals at the CAN gateway and the SRS unit. If the connection is OK, check for any authorized service information related to the DTCs or symptoms you are troubleshooting, or **replace the SRS unit** .

NO

Replace an open in the wire between the CAN gateway and the SRS unit.

4. F-CAN circuit communication check (Transmitting control unit)

-1. Select the FUNCTION TEST in the CAN gateway with the HDS, then select the F-CAN Bus Connected Unit Check.

F-CAN Bus Connected Unit Check

According to the detected DTC on the following table, make sure that the transmitting control unit detects the CAN gateway Bus channel(s) normally.

DTC	Transmitting control unit	Detected CAN gateway Bus channel(s) at normal
U0122-00	VSA modulator-control unit	A, B

Is it detected normally?

Detected normal

Intermittent failure, the system is OK at this time. Check for poor connections or loose terminals at the transmitting control unit and the CAN gateway.

U0122-00: VSA modulator-control unit is Not Available for Bus A

Go to step 5.

U0122-00: VSA modulator-control unit is Not Available for Bus B

Go to step 6.

5. Open wire check (F-CAN A_H, F-CAN A_L lines)

-1. Turn the vehicle to the OFF (LOCK) mode.

-2. According to the detected DTC on the following table, disconnect the transmitting control unit connector(s).

DTC	Connector
-	CAN gateway 12P (16P)* connector
U0122-00	VSA modulator-control unit 46P connector

-3. Measure the resistance between test points 1 and 2.

Test condition	Vehicle OFF (LOCK) mode
B	CAN gateway 12P (16P)* connector: disconnected
B	Transmitting control unit connector(s) for indicated DTCs: disconnected

DTC	Circuit name	Receiving control unit		Transmitting control unit	
		Connector	Terminal	Connector	Terminal
U0122-00	F-CAN A_H	CAN gateway 12P connector (female terminals): ① CAN gateway 16P	No. 3	VSA modulator-control unit 46P connector	No. 40
	F-CAN A_L		No. 9 (11)*		No. 28

DTC	Circuit name	Receiving control unit		Transmitting control unit	
		Connector	Terminal	Connector	Terminal
		connector (female terminals): ② *			

12P Connector Type

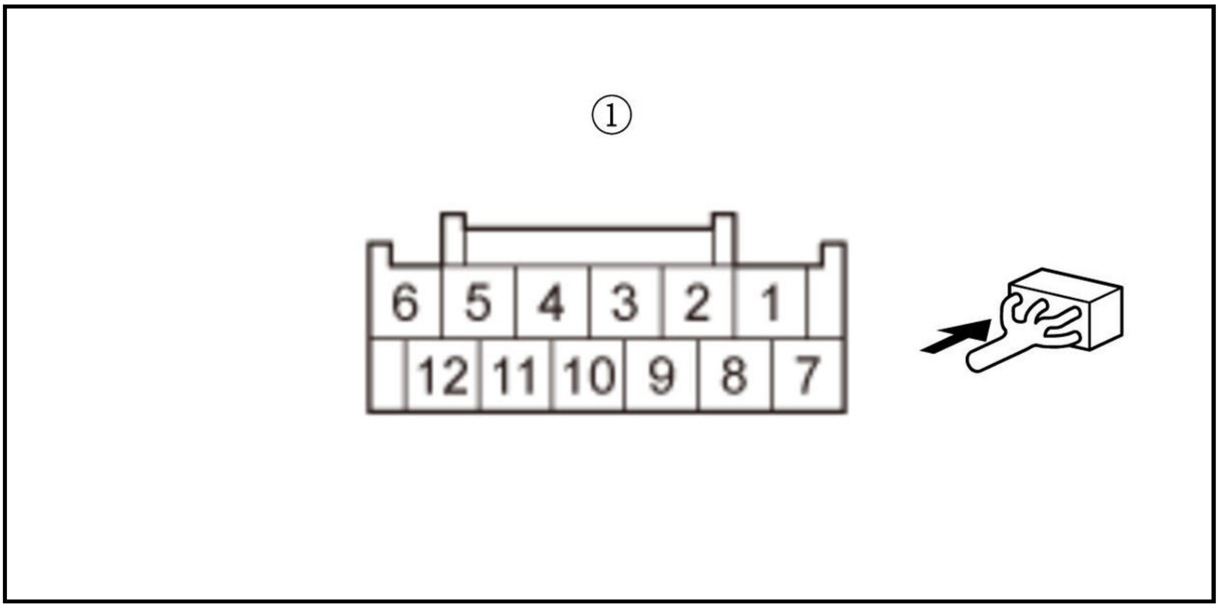

16P Connector Type*

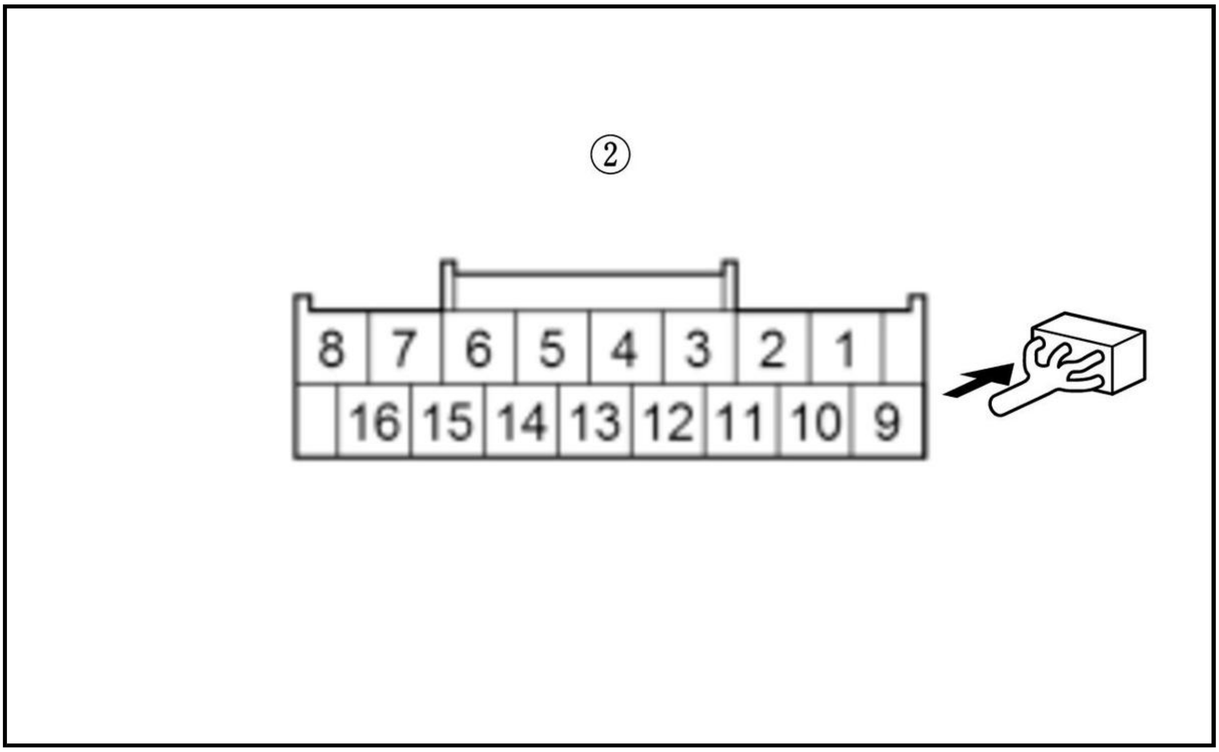

Is there 1.0 Ω or less?

YES

The F-CAN_H and the F-CAN_L wires are OK. Check for poor connections or loose terminals at the SRS unit and the VSA modulator-control unit. Check for any authorized service information related to the DTCs or symptoms you are troubleshooting. If they are OK, **replace the VSA modulator-control unit** .

NO

Repair an open in the wire between the transmitting control unit and the CAN gateway.

6. Open wire check (F-CAN B_H, F-CAN B_L lines)

-1. Turn the vehicle to the OFF (LOCK) mode.

-2. According to the detected DTC on the following table, disconnect the transmitting control unit connector(s).

DTC	Connector
-	CAN gateway 12P (16P)* connector
U0122-00	VSA modulator-control unit 46P connector

-3. Measure the resistance between test points 1 and 2.

Test condition	Vehicle OFF (LOCK) mode
B	CAN gateway 12P (16P)* connector: disconnected
B	Transmitting control unit connector(s) for indicated DTCs: disconnected

DTC	Circuit name	Receiving control unit		Transmitting control unit	
		Connector	Terminal	Connector	Terminal
U0122-00	F-CAN B_H	CAN gateway 12P connector (female terminals): ① CAN gateway 16P connector (female terminals): ② *	No. 12 (6)*	**VSA modulator-control unit 46P connector**	No. 46
	F-CAN B_L		No. 5 (14)*		No. 34

12P Connector Type

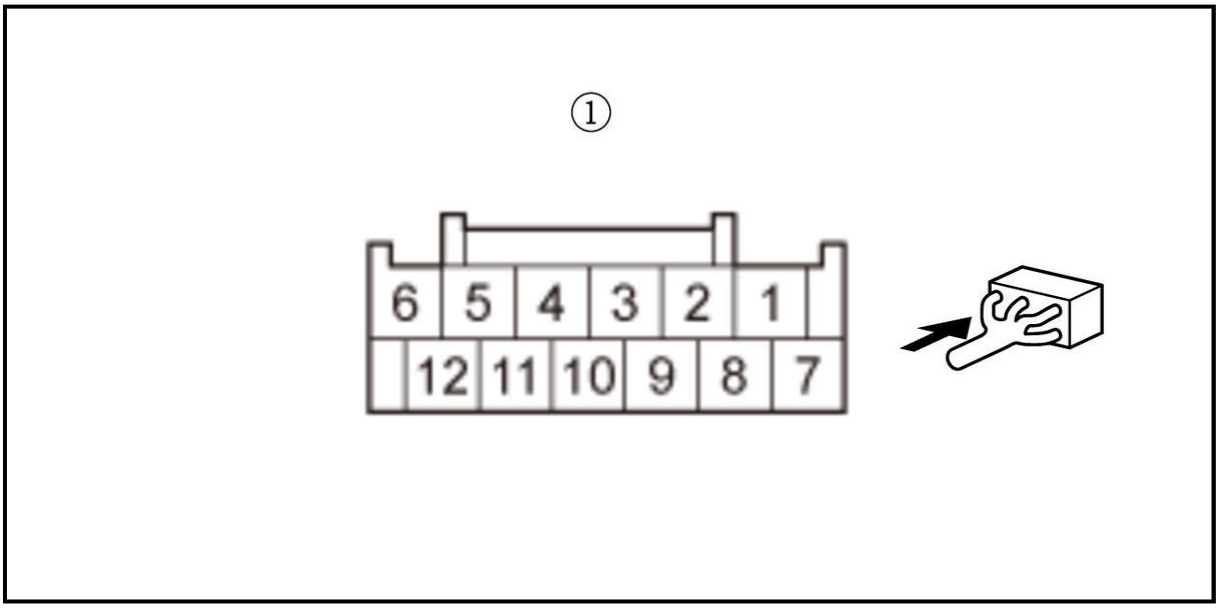

16P Connector Type*

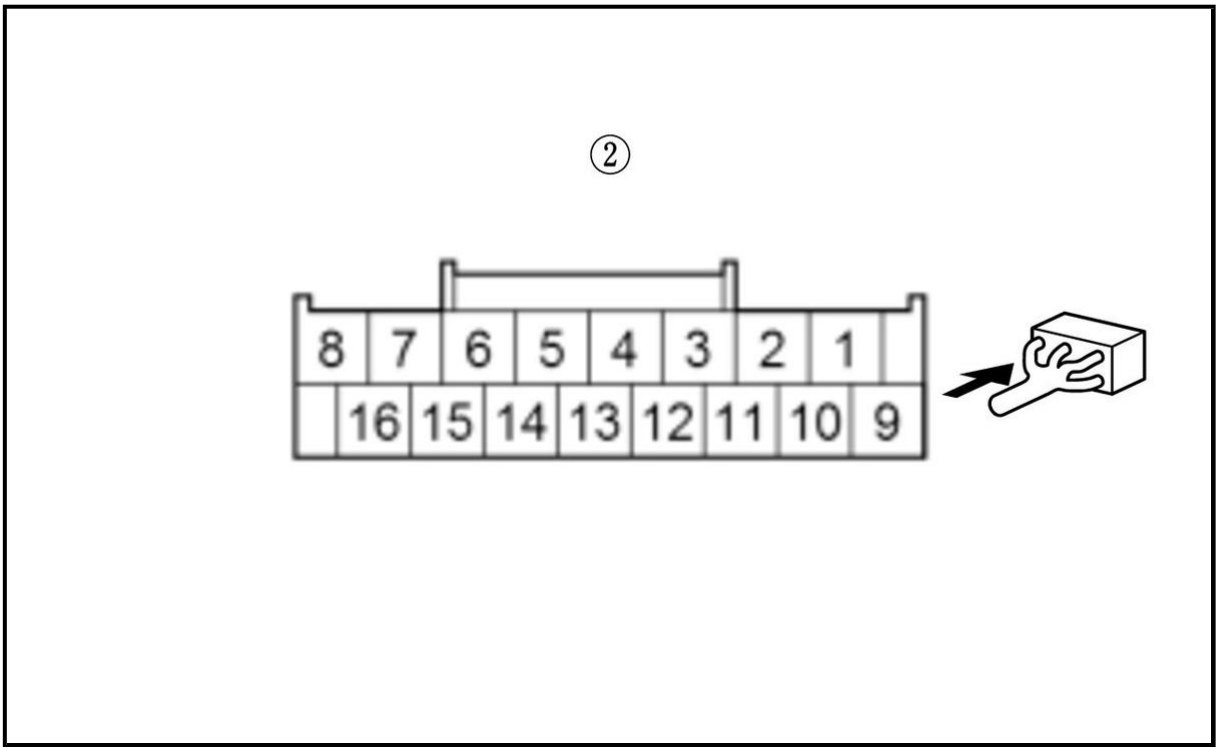

Is there 1.0 Ω or less?

YES

According to the detected DTC on the following table, substitute or replace the correspond control unit. Check for poor connections or loose terminals at the SRS unit and the VSA modulator-control unit. Check for any authorized service information related to the DTCs or symptoms you are troubleshooting. If they are OK, replace the VSA modulator-control unit.

DTC	Operation for transmitting control unit
U0122-00	Replace the VSA modulator-control unit .

NO

Repair an open in the wire between the transmitting control unit and the CAN gateway.

DTC U0122-00 (SRS UNIT (WITHOUT CAN GATEWAY))

DTC U0122-00 : Lost Communication With the VSA Modulator-Control Unit (wheel speed sensor signal error)

NOTE:

- **Before doing this troubleshooting procedure, find out if the vehicle was in a collision. If so, verify that all the required components were replaced with new components of the correct part number and were properly installed** .
- Before doing this troubleshooting procedure, review **SRS Precautions and Procedures** , **General Troubleshooting Information** , and **12 Volt Battery Terminal Disconnection and Reconnection** .
- According to the detected DTC(s), check for the power circuit and the ground circuit of the control unit which cannot communicate with the SRS unit.
- Refer to the DTC shown on the display, then inspect the connectors and terminals based on the instructions.

DTC Description	DTC
U0122-00 Lost communication with the VSA modulator-control unit (wheel	B

DTC Description	DTC
speed sensor signal error)	

DTC (SRS)

1. Problem verification

   -1. Clear the DTCs with the HDS.

   -2. Turn the vehicle to the ON mode, then wait for 10 seconds.

   -3. Check for DTCs with the HDS.

DTC Description	DTC
U0122-00 Lost communication with the VSA modulator-control unit (wheel speed sensor signal error)	B

Is DTC U0122-00 indicated?

YES

The failure is duplicated. Go to step 2.

NO

Intermittent failure, the system is OK at this time. Go to Troubleshooting Intermittent Failures. If another DTC is indicated, troubleshoot the DTC.

2. Open wire check (F-CAN_H, F-CAN_L lines)

   -1. Turn the vehicle to the OFF (LOCK) mode.

   -2. Disconnect the negative cable from the 12 volt battery, then wait at least 3 minutes.

   -3. Disconnect the receiving control unit connector(s).

SRS unit connector A (39P)

-4. Disconnect the transmitting control unit connector(s).

Refer to the DTC shown on the display, then disconnect the connector(s) based on the instructions (see table).

DTC	Connector
U0122-00	VSA modulator-control unit 46P connector

-5. Check for continuity between the receiving control unit and the transmitting control unit on the F-CAN_H circuit and the F-CAN_L circuit.

Test condition	Vehicle OFF (LOCK) mode
B	Receiving control unit connector(s): disconnected
B	Transmitting control unit connector(s) for indicated DTCs: disconnected

DTC	Circuit name	Receiving control unit		Transmitting control unit	
		Connector	Terminal	Connector	Terminal
U0122-00	F-CAN_H	SRS unit connector A (39P)	No. 34	VSA modulator-control unit 46P	No. 40
	F-CAN_L		No. 35		No. 28

DTC	Circuit name	Receiving control unit		Transmitting control unit	
		Connector	Terminal	Connector	Terminal

connector

Is there continuity?

YES

The F-CAN_H and the F-CAN_L wires are OK. Check for poor connections or loose terminals at the SRS unit and the VSA modulator-control unit. Check for any authorized service information related to the DTCs or symptoms you are troubleshooting. If they are OK, **replace the VSA modulator-control unit** .

NO

Replace an open in the wire between the transmitting control unit and the SRS unit.

DTC U3000-49 (SRS UNIT (KA/KC))

DTC U3000-49 : Internal Failure of the SRS Unit

NOTE:

- **Before doing this troubleshooting procedure, find out if the vehicle was in a collision. If so, verify that all the required components were replaced with new components of the correct part number and were properly installed** .
- Before doing this troubleshooting procedure, review **SRS Precautions and Procedures** , **General Troubleshooting Information** , and **12 Volt Battery Terminal Disconnection and Reconnection** .

DTC Description	DTC
U3000-49 Internal failure of the SRS unit	B

DTC (SRS)

1. Problem verification

   -1. Clear the DTCs with the HDS.

   -2. Turn the vehicle to the ON mode, then wait for 10 seconds.

   -3. Check for DTCs with the HDS.

DTC Description	DTC
U3000-49 Internal failure of the SRS unit	B

   Is DTC U3000-49 indicated?

   YES

   The failure is duplicated. Go to step 2.

   NO

   Intermittent failure, the system is OK at this time. Go to Troubleshooting Intermittent Failures. If another DTC is indicated, troubleshoot the DTC.

2. Shorted wire check (SWS+/PWR SWS line to power)

   -1. Turn the vehicle to the OFF (LOCK) mode.

-2. Disconnect the negative cable from the 12 volt battery, then wait at least 3 minutes.

-3. Disconnect the following connectors.

SRS unit connector B (39P)
Front passenger's weight sensor (front inner side) 3P connector (on the front passenger's seat wire harness)
Front passenger's weight sensor (rear inner side) 3P connector (on the front passenger's seat wire harness)

-4. Reconnect the negative cable to the 12 volt battery.

-5. Turn the vehicle to the ON mode.

-6. Measure the voltage between test points 1 and 2.

Test condition	Vehicle ON mode
	SRS unit connector B (39P): disconnected
B	Front passenger's weight sensor (front inner side) 3P connector (on the front passenger's seat wire harness): disconnected
B	Front passenger's weight sensor (rear inner side) 3P connector (on the front passenger's seat wire harness): disconnected
Test point 1	**SRS unit connector B (39P) No. 26**
Test point 2	Body ground

Is there 0.2 V or less?

YES

The SWS+/PWR SWS wire is not shorted to power. Go to step 3.

NO

Short to power in the floor wire harness or the front passenger's seat wire harness; replace the faulty harness, then clear the DTC.

3. Shorted wire check (SWS+/PWR SWS line)

-1. Turn the vehicle to the OFF (LOCK) mode.

-2. Disconnect the negative cable from the 12 volt battery, then wait at least 3 minutes.

-3. Measure the resistance between test points 1 and 2.

Test condition	Vehicle OFF (LOCK) mode
	SRS unit connector B (39P): disconnected
B	Front passenger's weight sensor (front inner side) 3P connector (on the front passenger's seat wire harness): disconnected
B	Front passenger's weight sensor (rear inner side) 3P connector (on the front passenger's seat wire harness): disconnected
Test point 1	**SRS unit connector B (39P) No. 26**
Test point 2	Body ground

Is there an open circuit, or at least 1 MΩ?

YES

The SWS+/PWR SWS wire is not shorted. Go to step 4.

NO

Short to ground in the floor wire harness or the front passenger's seat wire harness; replace the faulty harness, then clear the DTC.

4. Shorted wire check (SWS+/PWR SWS line to SWS-/GND SWS line)

-1. Measure the resistance between test points 1 and 2.

Test condition	Vehicle OFF (LOCK) mode
	SRS unit connector B (39P): disconnected
B	Front passenger's weight sensor (front inner side) 3P connector (on the front passenger's seat wire harness): disconnected
B	Front passenger's weight sensor (rear inner side) 3P connector (on the front passenger's seat wire harness): disconnected
Test point 1	**SRS unit connector B (39P) No. 26**
Test point 2	**SRS unit connector B (39P) No. 28**

Is there an open circuit, or at least 1 MΩ?

YES

The SWS+/PWR SWS to SWS-/GND SWS wires are OK. Go to step 5.

NO

Short to another wire in the floor wire harness or the front passenger's seat wire harness; replace the faulty harness, then clear the DTC.

5. Front passenger's weight sensor check

-1. **Substitute a known-good front passenger's weight sensors as an assembly** .

-2. Reconnect the following connectors.

SRS unit connector B (39P)
Front passenger's weight sensor (front inner side) 3P connector (on the front passenger's seat wire harness)
Front passenger's weight sensor (rear inner side) 3P connector (on the front passenger's seat wire harness)

-3. Reconnect the negative cable to the 12 volt battery.

-4. Clear the DTCs with the HDS.

-5. Turn the vehicle to the ON mode, then wait for 10 seconds.

-6. Check for DTCs with the HDS.

DTC Description	DTC
U3000-49 Internal failure of the SRS unit	B

Is DTC U3000-49 indicated?

YES

The front passenger's weight sensor is OK. Faulty SRS unit or poor connection at SRS unit connector B (39P) and the SRS unit. Check the connection; if the connection is OK, check for any authorized service information related to the DTCs or symptoms you are troubleshooting or **replace the SRS unit** . If the DTC does not clear, replace the floor wire harness or the front passenger's seat wire harness.

NO

Faulty front passenger's weight sensor. **Replace the front passenger's weight sensors as an assembly** .

DTC U3000-51 (SRS UNIT)

DTC U3000-51 : SRS Unit Programming Error

NOTE:

- **Before doing this troubleshooting procedure, find out if the vehicle was in a collision. If so, verify that all the required components were replaced with new components of the correct part number and were properly installed** .
- This DTC is indicated when the SRS unit update is not completed properly.
- Never press the engine start/stop switch, while updating the SRS unit. If you press the engine start/stop switch, before you complete the SRS unit update procedure, the SRS unit can be damaged. If there is a problem with the update, keep the vehicle in ON mode.
- Before doing this troubleshooting procedure, review **SRS Precautions and Procedures** and **General Troubleshooting Information** .

DTC Description	DTC
U3000-51 SRS unit programming error	B

DTC (SRS)

1. Problem verification (update)

-1. **Do the SRS unit update procedure** .

-2. Clear the DTCs with the HDS.

-3. Turn the vehicle to the ON mode, then wait for 10 seconds.

-4. Check for DTCs with the HDS.

DTC Description	DTC
U3000-51 SRS unit programming error	B

Is DTC U3000-51 indicated?

YES

The failure is duplicated. **Replace the SRS unit** .

NO

Update is complete.

2020-22 RESTRAINTS

Supplemental Restraint System (SRS) - DTC Diagnostics (1 Of 2) - CR-V (Hybrid)

DTC TROUBLESHOOTING INDEX

SRS DTC TROUBLESHOOTING INDEX

DTC	Detection Item
B0001-11	Short to ground in the driver's airbag first inflator
B0001-12	Short to power in the driver's airbag first inflator
B0001-13	Open or increased resistance in the driver's airbag first inflator
B0001-1A	Decreased resistance in the driver's airbag first inflator
B0001-2B	Short to another wire harness in the driver's airbag first inflator
B0002-11	Short to ground in the driver's airbag second inflator
B0002-12	Short to power in the driver's airbag second inflator
B0002-13	Open or increased resistance in the driver's airbag second inflator
B0002-1A	Decreased resistance in the driver's airbag second inflator
B0002-2B	Short to another wire harness in the driver's airbag second inflator
B0010-11	Short to ground in the front passenger's airbag first inflator
B0010-12	Short to power in the front passenger's airbag first inflator
B0010-13	Open or increased resistance in the front passenger's airbag first inflator
B0010-1A	Decreased resistance in the front passenger's airbag first inflator
B0010-2B	Short to another wire harness in the front passenger's airbag first inflator
B0011-11	Short to ground in the front passenger's airbag second inflator
B0011-12	Short to power in the front passenger's airbag second inflator
B0011-13	Open or increased resistance in the front passenger's airbag second inflator
B0011-1A	Decreased resistance in the front passenger's airbag second inflator
B0011-2B	Short to another wire harness in the front passenger's airbag second inflator
B0020-11	Short to ground in the driver's side airbag inflator
B0020-12	Short to power in the driver's side airbag inflator
B0020-13	Open or increased resistance in the driver's side airbag inflator
B0020-1A	Decreased resistance in the driver's side airbag inflator
B0020-2B	Short to another wire harness in the driver's side airbag inflator
B0021-11	Short to ground in the left side curtain airbag first inflator
B0021-12	Short to power in the left side curtain airbag first inflator
B0021-13	Open or increased resistance in the left side curtain airbag first inflator
B0021-1A	Decreased resistance in the left side curtain airbag first inflator
B0021-2B	Short to another wire harness in the left side curtain airbag first inflator
B0028-11	Short to ground in the front passenger's side airbag inflator
B0028-12	Short to power in the front passenger's side airbag inflator
B0028-13	Open or increased resistance in the front passenger's side airbag inflator
B0028-1A	Decreased resistance in the front passenger's side airbag inflator
B0028-2B	Short to another wire harness in the front passenger's side airbag inflator
B0029-11	Short to ground in the right side curtain airbag first inflator
B0029-12	Short to power in the right side curtain airbag first inflator
B0029-13	Open or increased resistance in the right side curtain airbag first inflator
B0029-1A	Decreased resistance in the right side curtain airbag first inflator
B0029-2B	Short to another wire harness in the right side curtain airbag first inflator
B0050-11	Short or decreased resistance in the driver's seat belt buckle switch

DTC	Detection Item
B0050-13	Open or increased resistance in the driver's seat belt buckle switch
B0050-2B	Short to another wire harness in the driver's seat belt buckle switch
B0052-11	Short or decreased resistance in the front passenger's seat belt buckle switch
B0052-13	Open or increased resistance in the front passenger's seat belt buckle switch
B0052-2B	Short to another wire harness in the front passenger's seat belt buckle switch
B0070-11	Short to ground in the driver's seat belt tensioner

DTC	Detection Item
B0070-12	Short to power in the driver's seat belt tensioner
B0070-13	Open or increased resistance in the driver's seat belt tensioner
B0070-1A	Decreased resistance in the driver's seat belt tensioner
B0070-2B	Short to another wire harness in the driver's seat belt tensioner
B0072-11	Short to ground in the front passenger's seat belt tensioner
B0072-12	Short to power in the front passenger's seat belt tensioner
B0072-13	Open or increased resistance in the front passenger's seat belt tensioner
B0072-1A	Decreased resistance in the front passenger's seat belt tensioner
B0072-2B	Short to another wire harness in the front passenger's seat belt tensioner
B0079-11	Short to ground in the driver's seat belt outer lap tensioner
B0079-12	Short to power in the driver's seat belt outer lap tensioner
B0079-13	Open or increased resistance in the driver's seat belt outer lap tensioner
B0079-1A	Decreased resistance in the driver's seat belt outer lap tensioner
B0079-2B	Short to another wire harness in the driver's seat belt outer lap tensioner
B007A-11	Short to ground in the front passenger's seat belt outer lap tensioner
B007A-12	Short to power in the front passenger's seat belt outer lap tensioner
B007A-13	Open or increased resistance in the front passenger's seat belt outer lap tensioner
B007A-1A	Decreased resistance in the front passenger's seat belt outer lap tensioner
B007A-2B	Short to another wire harness in the front passenger's seat belt outer lap tensioner
B0082-11	Short to ground in the selectable energy absorption device of the front passenger's seat belt tensioner
B0082-12	Short to power in the selectable energy absorption device of the front passenger's seat belt tensioner
B0082-13	Open or increased resistance in the selectable energy absorption device of the front passenger's seat belt tensioner
B0082-1A	Decreased resistance in the selectable energy absorption device of the front passenger's seat belt tensioner
B0082-2B	Short to another wire harness in the selectable energy absorption device of the front passenger's seat belt tensioner
B0090-4A	Internal failure of the left front impact sensor
B0090-87	No signal from the left front impact sensor
B0090-92	Internal failure of the left front impact sensor
B0091-4A	Internal failure of the left side impact sensor (first)
B0091-87	No signal from the left side impact sensor (first)
B0091-92	Internal failure of the left side impact sensor (first)
B0092-4A	Internal failure of the left side impact sensor (second)
B0092-87	No signal from the left side impact sensor (second)
B0092-92	Internal failure of the left side impact sensor (second)
B0095-4A	Internal failure of the right front impact sensor
B0095-87	No signal from the right front impact sensor
B0095-92	Internal failure of the right front impact sensor

DTC	Detection Item
B0096-4A	Internal failure of the right side impact sensor (first)
B0096-87	No signal from the right side impact sensor (first)
B0096-92	Internal failure of the right side impact sensor (first)
B0097-4A	Internal failure of the right side impact sensor (second)
B0097-87	No signal from the right side impact sensor (second)
B0097-92	Internal failure of the right side impact sensor (second)
B00A0-54	Front passenger's weight sensor not calibrated
B00B5-11	Short or decreased resistance in the driver's seat position sensor

DTC	Detection Item
B00B5-13	Open or increased resistance in the driver's seat position sensor
B00B5-2B	Short to another wire harness in the driver's seat position sensor
B00C0-16	Internal failure of the front passenger's weight sensor (front inner side)
B00C0-4A	Different supplier ID/function ID of the front passenger's weight sensor (front inner side)
B00C0-54	Different serial ID of the front passenger's weight sensor (front inner side)
B00C0-87	No signal from the front passenger's weight sensor (front inner side)
B00C0-96	Internal failure of the front passenger's weight sensor (front inner side)
B00C2-16	Internal failure of the front passenger's weight sensor (rear inner side)
B00C2-4A	Different supplier ID/function ID of the front passenger's weight sensor (rear inner side)
B00C2-54	Different Serial ID of the front passenger's weight sensor (rear inner side)
B00C2-87	No signal from the front passenger's weight sensor (rear inner side)
B00C2-96	Internal failure of the front passenger's weight sensor (rear inner side)
B00D5-14	Open or short to ground in the front passenger's airbag cutoff indicator
B00D5-17	Short to power in the front passenger's airbag cutoff indicator
B2800-49	Internal failure of the SRS unit
B2801-49	Internal failure of the SRS unit
B2802-49	Internal failure of the SRS unit
B2840-13	SRS unit connector A not properly installed
B2841-13	SRS unit connector B not properly installed
C0061-96	Internal failure of the SRS unit
C0063-96	Internal failure of the SRS unit
U0122-00	Lost communication with the VSA modulator-control unit (wheel speed sensor signal error)
U3000-49	Internal failure of the SRS unit
U3000-51	SRS unit programming error

HOW TO INFORMATION

HOW TO TROUBLESHOOT THE SRS

SRS Indicator

The SRS indicator (A) on the gauge control module indicates problems related with SRS function.

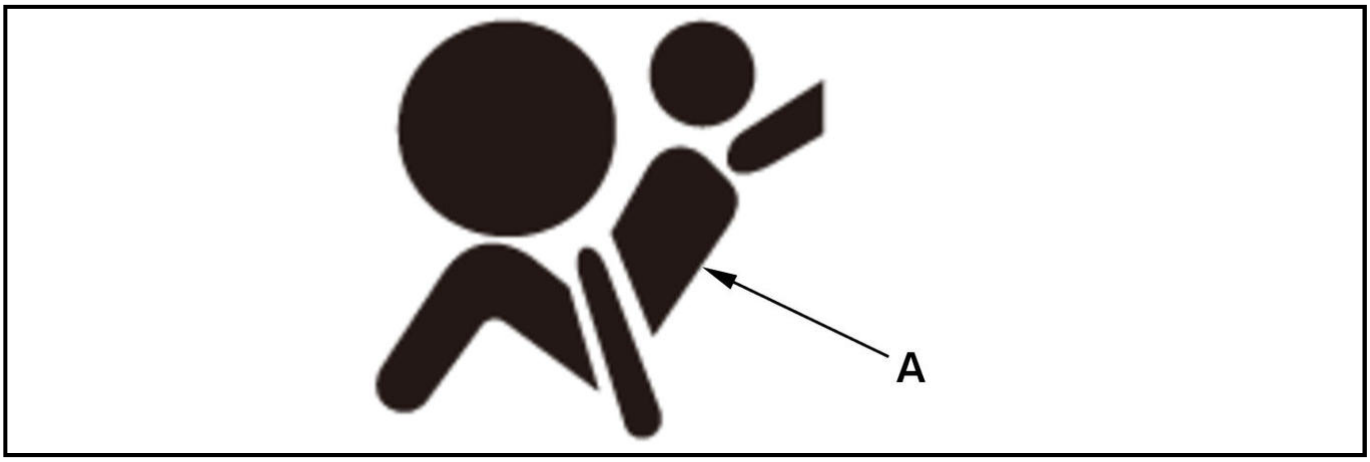

If the system is OK, the SRS indicator should come on when you turn the vehicle to the ON mode, and then go off 6 seconds later. If it does not, there is a problem with the system.

NOTE: If the SRS indicator comes on, and SRS DTCs are not indicated, do the SRS symptom troubleshooting.

How to Troubleshoot Circuits at the Connectors Especially for Connectors with Terminal Test Ports

Special Tools Required

Male Pin Probe 07ZAJ-RDJA110

NOTE:

- Make sure the 12 volt battery is fully charged when doing an electrical test. If the 12 volt battery is not fully charged, the results of the tests may not be accurate.
- To prevent damage to the connector terminals, do not insert test equipment probes, paper clips, or other substitutes. Damaged terminals cause a poor connection and an incorrect measurement.

1. When diagnosing or troubleshooting the circuits at the connectors (A), use the appropriate terminal test port as shown. Gently insert the pin probe of the tester or jumper wire at the terminal test port from the terminal side.

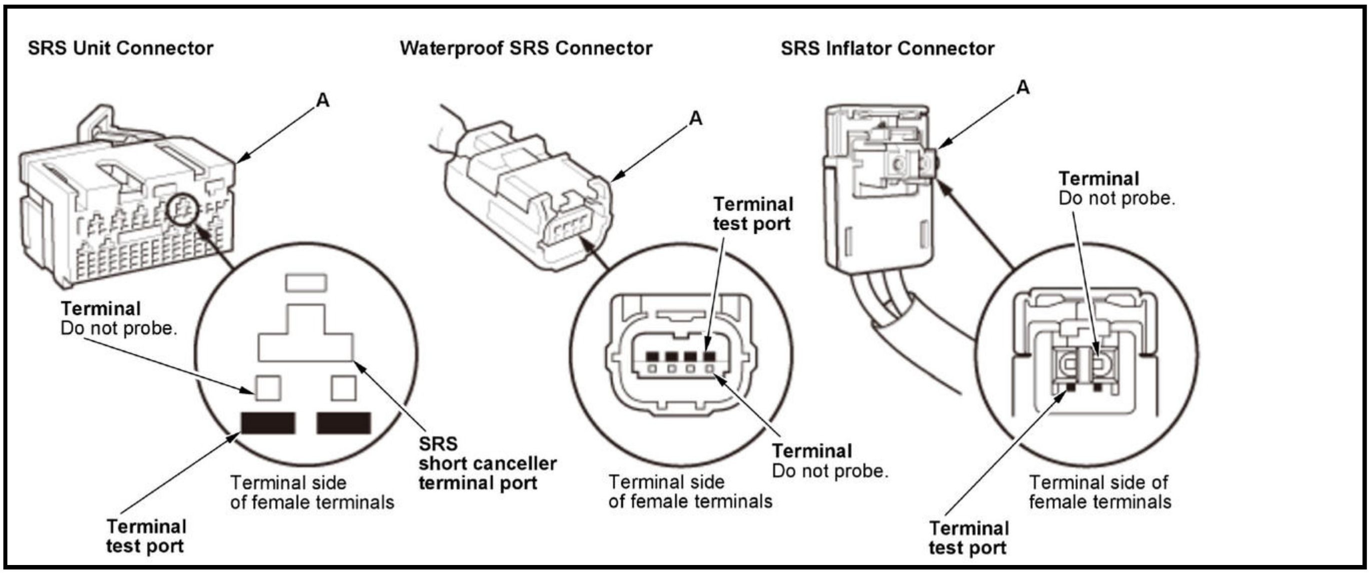
SRS Unit Connector
A
Terminal
Do not probe.
Terminal side
of female terminals
SRS
short canceller
terminal port
Terminal
test port
Waterproof SRS Connector
A
Terminal
test port
Terminal side
of female terminals
Terminal
Do not probe.
SRS Inflator Connector
A
Terminal
Do not probe.
Terminal side of
female terminals
Terminal
test port

NOTE:

- Do not insert the pin probes of the tester or a jumper wire at the terminal or the SRS short canceller terminal port.
- To prevent damage to the connector terminals, do not insert the test equipment probes, paper clips, or other substitutes as they can damage the terminals. Damaged terminals cause a poor connection and an

incorrect measurement.

2. Connect one side of the patch cord terminals (A) to a commercially available digital multimeter (B), and connect the other side of the terminals (C) to the male pin probe.

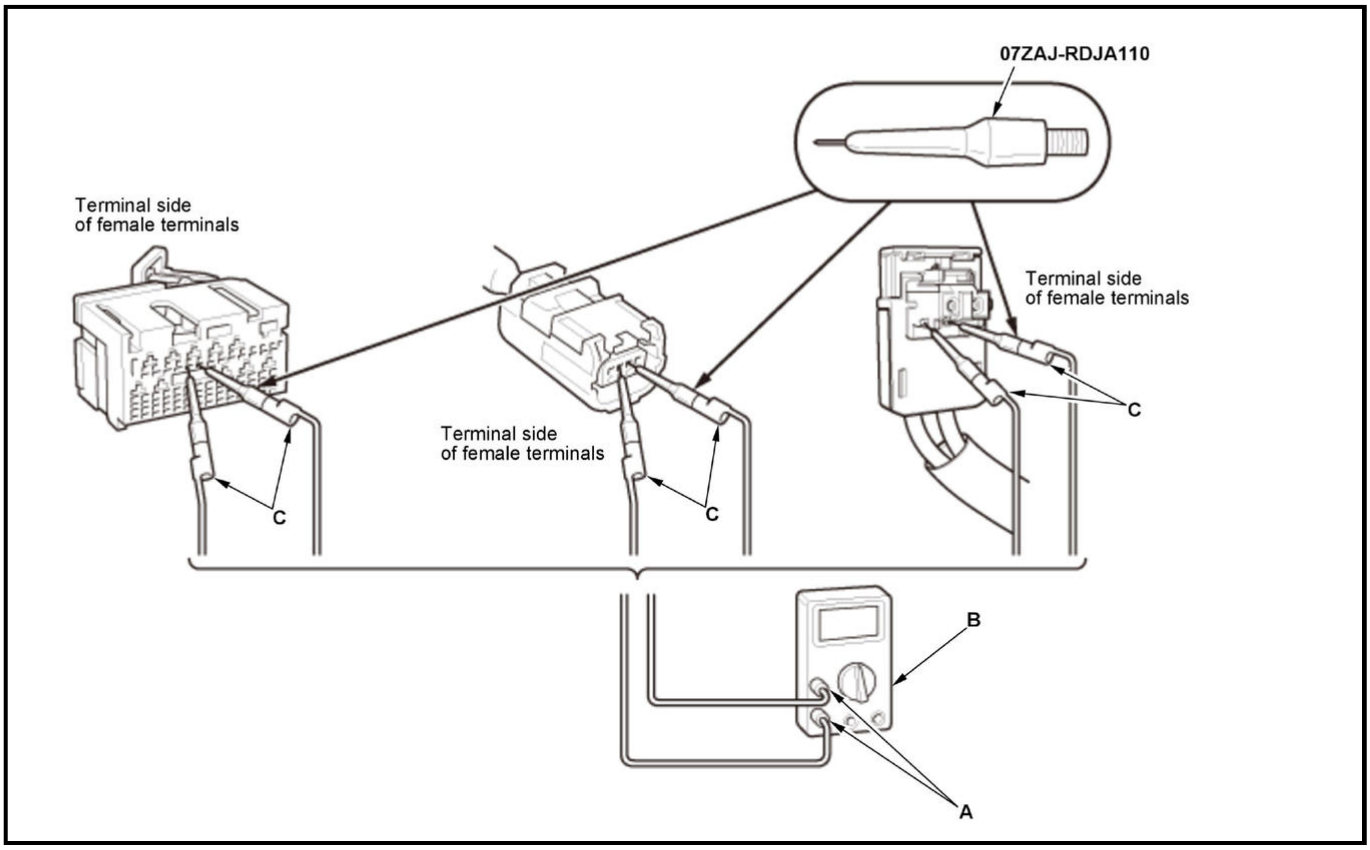
07ZAJ-RDJA110
Terminal side of female terminals
Terminal side of female terminals
Terminal side of female terminals
C
C
C
B
A

Gently contact the male pin probe at the terminal test port from the terminal side. Do not force the tips into the terminals.

NOTE:

- For accurate results, always use the male pin probe.
- To prevent damage to the connector terminals, do not insert test equipment probes, paper clips, or other substitutes. Damaged terminals cause a poor connection and an incorrect measurement.
- Do not puncture the insulation on a wire. Punctures can cause poor or intermittent electrical connections.

How to Troubleshoot Circuits at the Connectors Except for Connectors with Terminal Test Ports

Special Tools Required

Back Probe Adapter, 17 mm 07TAZ-001020A

When using electrical test equipment, insert the back probe adapter, 17 mm of the tester into the wire side of the connector (except for connectors with terminal test ports).

NOTE:

- Make sure the 12 volt battery is fully charged when doing an electrical test. If the 12 volt battery is not fully charged, the results of the tests may not be accurate.
- Do not insert the probe of the tester into the terminal side of the connector, and do not tamper with the connector.
- To prevent damage to the connector, do not insert test equipment probes, paper clips, or other substitutes. Damaged terminals cause a poor connection and an incorrect measurement.
- Do not puncture the insulation on a wire. Punctures can cause poor or intermittent electrical connections.

- Do not insert the probe forcibly.
- Use specified service connectors in troubleshooting. Using improper tools could cause a diagnostic error due to poor metal-to-metal contact.

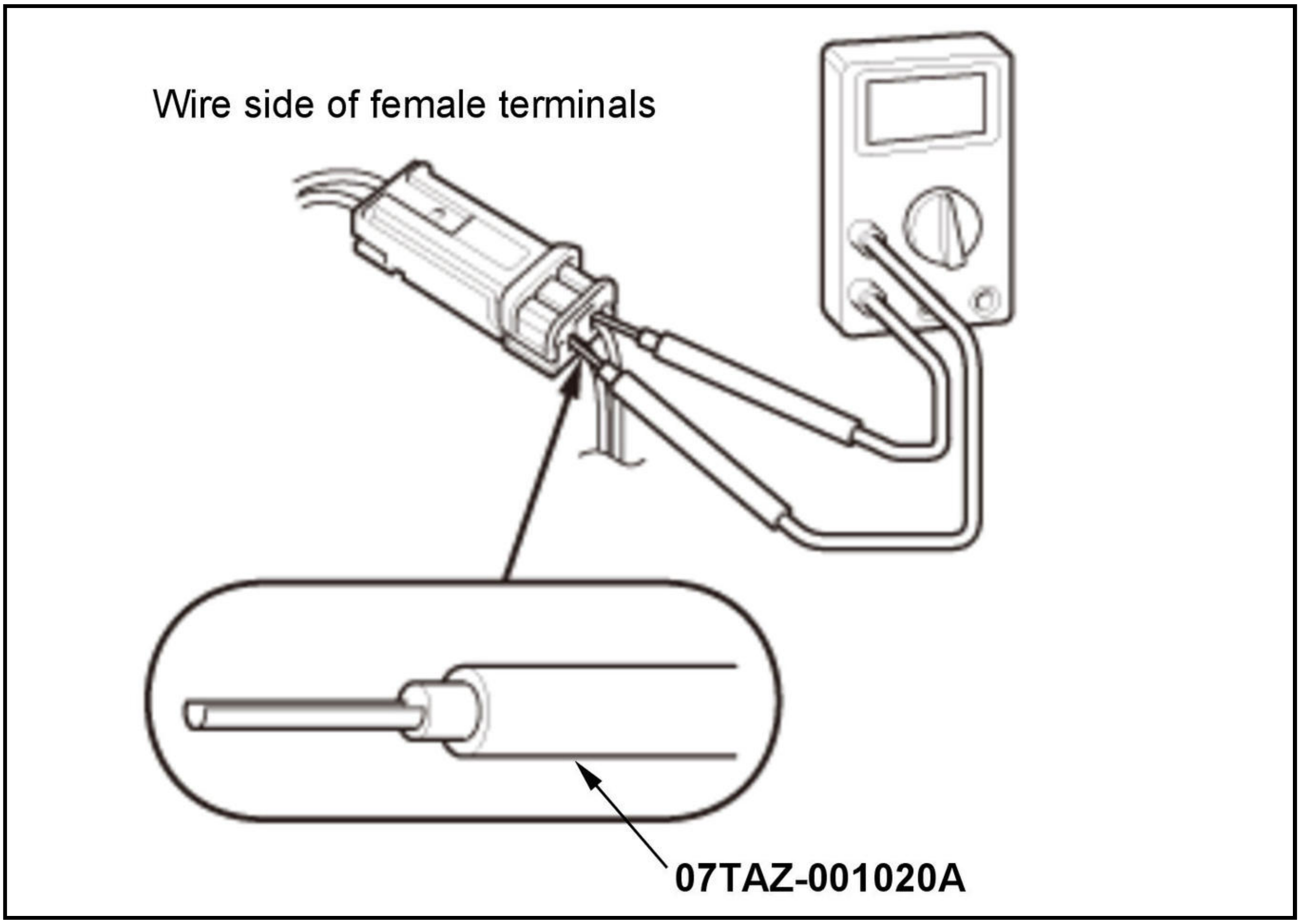

Opening the SRS Unit Shorting Connectors for Diagnosis

Special Tools Required

SRS Short Canceller 070AZ-SAA0100

NOTE:

- To prevent damage to the connector cavity, insert an SRS short canceller straight into the cavity from the terminal side.
- Before installing an SRS short canceller, wash it with electrical contact cleaner, then dry it with compressed air.
- Do not use an SRS short canceller if it is damaged.
- Make sure to remove an SRS short canceller before reconnecting the SRS unit connector.
- Some systems store data in memory that is lost when the 12 volt battery is disconnected. Before disconnecting the 12 volt battery, **refer to 12 Volt Battery Terminal Disconnection and Reconnection** .

When SRS unit connectors A (39P) and B (39P) are disconnected, short circuits are automatically created in the connector to prevent accidental deployment of an airbag. The circuit may need to be opened sometimes when diagnosing the system. Insert an SRS short canceller in the specified cavities when necessary to keep the circuit open for diagnosis.

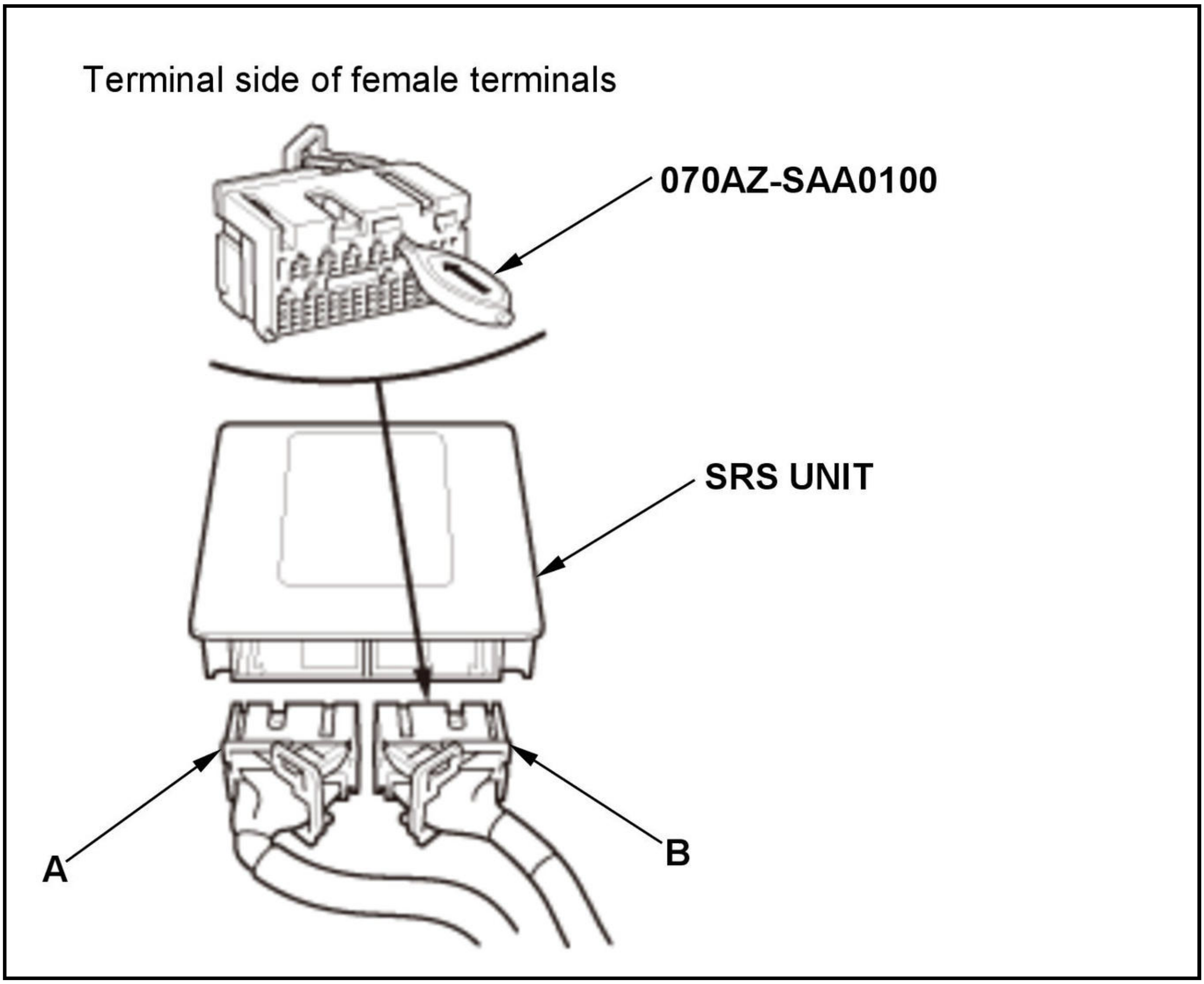
Terminal side of female terminals
070AZ-SAA0100
SRS UNIT
A
B

Terminal numbers are shown on the terminal side of the female terminals. Insert the SRS short canceller(s) into the cavities on the terminal side of the connector.

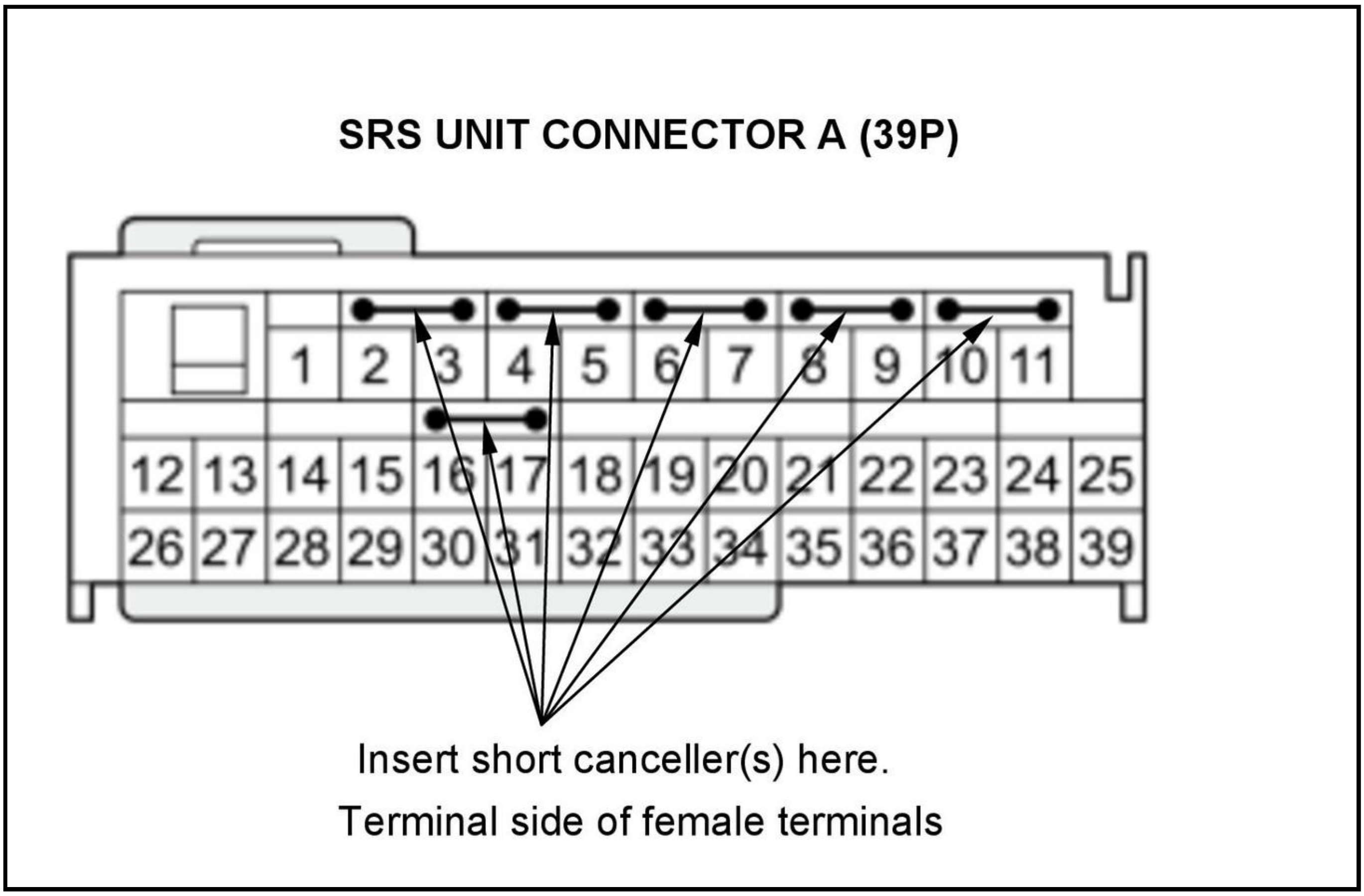
SRS UNIT CONNECTOR A (39P)
1
2
3
4
5
6
7
8
9
10
11
12
13
14
15
16
17
18
19
20
21
22
23
24
25
26
27
28
29
30
31
32
33
34
35
36
37
38
39
Insert short canceller(s) here.
Terminal side of female terminals

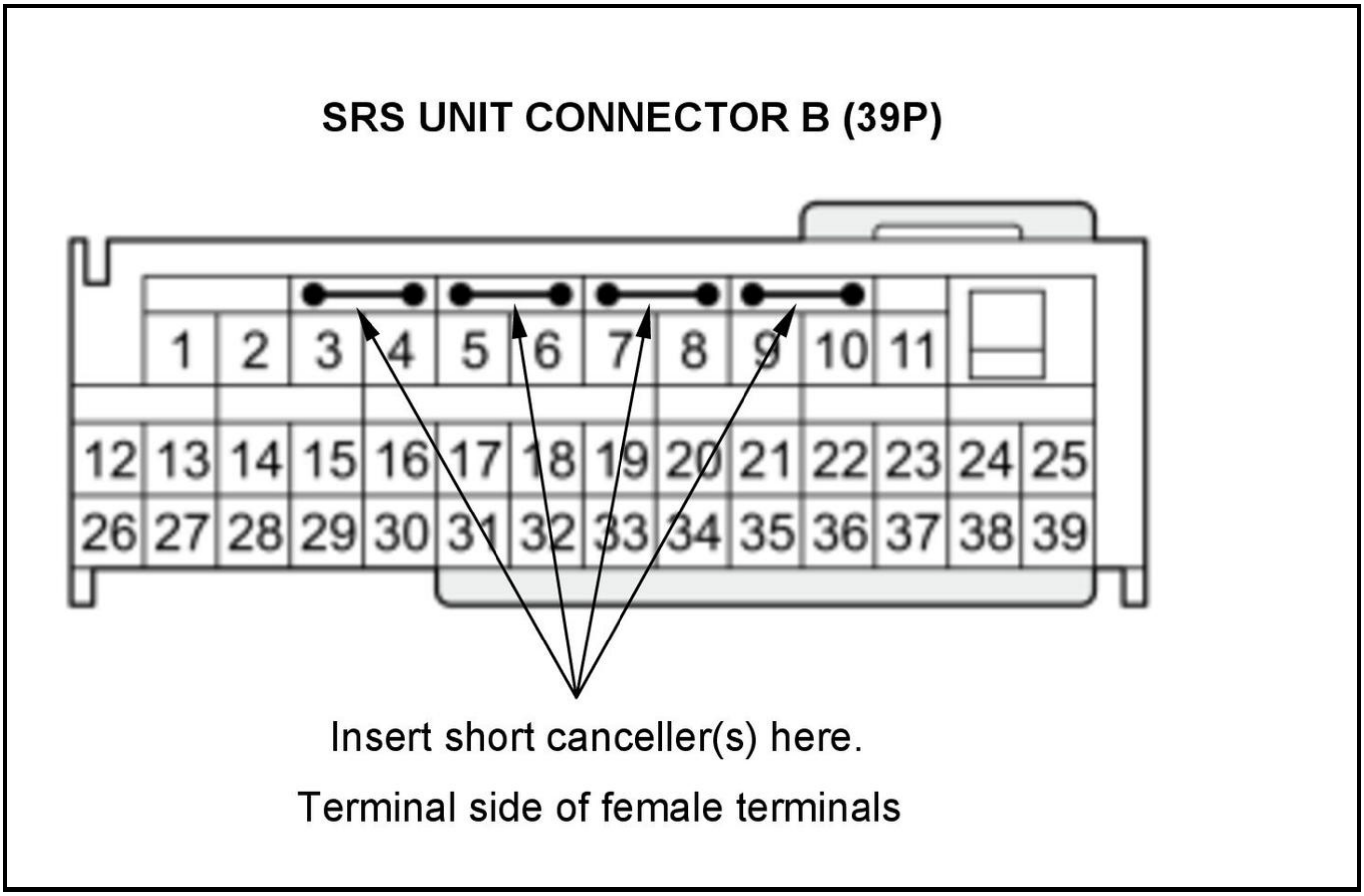
SRS UNIT CONNECTOR B (39P)
1
2
3
4
5
6
7
8
9
10
11
12
13
14
15
16
17
18
19
20
21
22
23
24
25
26
27
28
29
30
31
32
33
34
35
36
37
38
39
Insert short canceller(s) here.
Terminal side of female terminals

DTC (Diagnostic Trouble Codes)

The self-diagnostic function of the SRS unit allows it to locate the causes of system problems and store this information in memory. For easier troubleshooting, this data can be retrieved with the HDS via the data link circuit.

- When you turn the vehicle to the ON mode, the SRS indicator should come on. If it goes off after 6 seconds, the system is normal and is not currently detecting any problems.
- If there is a problem, the system locates and defines the problem, stores this information in the memory, and turns on the SRS indicator. The data remains in the memory even if the vehicle is turned to the OFF (LOCK) mode or the 12 volt battery is disconnected.
- The data is stored in memory as a diagnostic trouble code (DTC).
- DTCs are either latching or resetting depending on the malfunction. With resetting DTCs, the SRS indicator goes off the next time the vehicle is turned to the ON mode, and the system is normal, but the DTC is still stored. With latching DTCs, the SRS indicator does not turn off until the malfunction is repaired and the DTC is cleared.
- When you connect the HDS to the data link connector (DLC), you can retrieve a more detailed DTC in the HDS "SRS" menu.
- After reading and recording the DTC, go to the troubleshooting procedure for that code.

Precautions

- Make sure the 12 volt battery is fully charged. If the 12 volt battery is dead or low, electrical measurement values may not be correct.
- Use only a digital multimeter to check the system. Make sure its output is 10 mA (0.01 A) or less when switched to the smallest value in the ohmmeter range. A tester with a higher output could damage the airbag circuit or cause accidental airbag deployment and possible injury.
- Whenever the vehicle is turned to the ON mode, or the vehicle is in the OFF (LOCK) mode for less than 3 minutes, be careful not to bump the SRS unit; the system could falsely interpret an impact or rollover, deploying airbags in response and cause damage or injuries.
- Before removing the dashboard wire harness or floor wire harness, disconnect the driver's airbag inflator connector, the front passenger's airbag inflator connector, both side airbag inflator connectors, both side curtain airbag inflator connectors, and both front seat belt tensioner connectors.
-

How to Read DTCs

NOTE: Make sure the 12 volt battery is fully charged before you begin.

1. Turn the vehicle to the OFF (LOCK) mode, then wait for 10 seconds.

2. Connect the HDS to the data link connector (DLC)

3. Use the HDS to check for SRS DTCs.

4. Read and record the DTC.

NOTE: Do not clear the DTC until instructed by the troubleshooting procedure.

5. Turn the vehicle to the OFF (LOCK) mode, then wait for 10 seconds.

6. Do the troubleshooting procedure for the DTC.

How to Clear DTCs

NOTE: Make sure the 12 volt battery is fully charged before you begin.

1. Turn the vehicle to the OFF (LOCK) mode, then wait for 10 seconds.

2. Connect the HDS to the data link connector (DLC)

3. Clear the DTC(s) by following the screen prompts on the HDS.

4. Turn the vehicle to the OFF (LOCK) mode, then wait for 10 seconds.

Troubleshooting Intermittent Failures

If there was a malfunction that sets a DTC, but it does not recur, a DTC will be stored in the memory, and the SRS indicator may come on depending on the malfunction detected.

NOTE:

- **Check the condition of the 12 volt battery** . Low battery voltage may cause some intermittent failures.
- A faulty or damaged cable reel can cause intermittent problems related to the driver's airbag inflator DTCs.

After checking the DTC, troubleshoot as follows:

1. Check for DTCs with the HDS.

2. Clear the DTCs with the HDS.

3. Set the parking brake, then start the engine, and let it idle.

4. The SRS indicator comes on for about 6 seconds and then goes off.

5. Shake the related wire harnesses and the connectors, and look for loose connections, poor pin fits, and poor grounds.

6. Take a test-drive (quick acceleration, quick braking, and cornering), turn the steering wheel fully left and right, and hold it there for 5 to 10 seconds. If the problem recurs, the SRS indicator will come on.

7. If you cannot duplicate the concern, ask the customer about the conditions when it occurred, or ask the customer to demonstrate the concern.

8. If you cannot duplicate the intermittent failure, the system is OK at this time.

DTC TROUBLESHOOTING

DTC B0001-11

DTC B0001-11 : Short to Ground in the Driver's Airbag First Inflator

Special Tools Required

SRS Inflator Simulator 07SAZ-TB4011A

SRS Simulator Lead J 070AZ-SNAA100

NOTE:

- **Before doing this troubleshooting procedure, find out if the vehicle was in a collision. If so, verify that all the required components were replaced with new components of the correct part number and were properly installed** .
- Before doing this troubleshooting procedure, review **SRS Precautions and Procedures** , **General Troubleshooting Information**, and **12 Volt Battery Terminal Disconnection and Reconnection** .

DTC Description	DTC
B0001-11 Short to ground in the driver's airbag first inflator	B

DTC (SRS)

1. Problem verification

   -1. Clear the DTCs with the HDS.

   -2. Turn the vehicle to the ON mode, then wait for 10 seconds.

   -3. Check for DTCs with the HDS.

DTC Description	DTC
B0001-11 Short to ground in the driver's airbag first inflator	B

   Is DTC B0001-11 indicated?

   YES

   The failure is duplicated. Go to step 2.

   NO

   Intermittent failure, the system is OK at this time. Go to Troubleshooting Intermittent Failures. If another DTC is indicated, troubleshoot the DTC.

2. Driver's airbag inflator check

   -1. Turn the vehicle to the OFF (LOCK) mode.

   -2. Disconnect the negative cable from the 12 volt battery, then wait at least 3 minutes.

   -3. **Remove the driver's airbag** .

   -4. Disconnect the following connector.

Driver's airbag first inflator 2P connector (on the cable reel harness)

   NOTE: Make sure to work with the driver's airbag first inflator 2P connector (A) that has a guide tab (B) on the right side of the No. 2 terminal as shown.

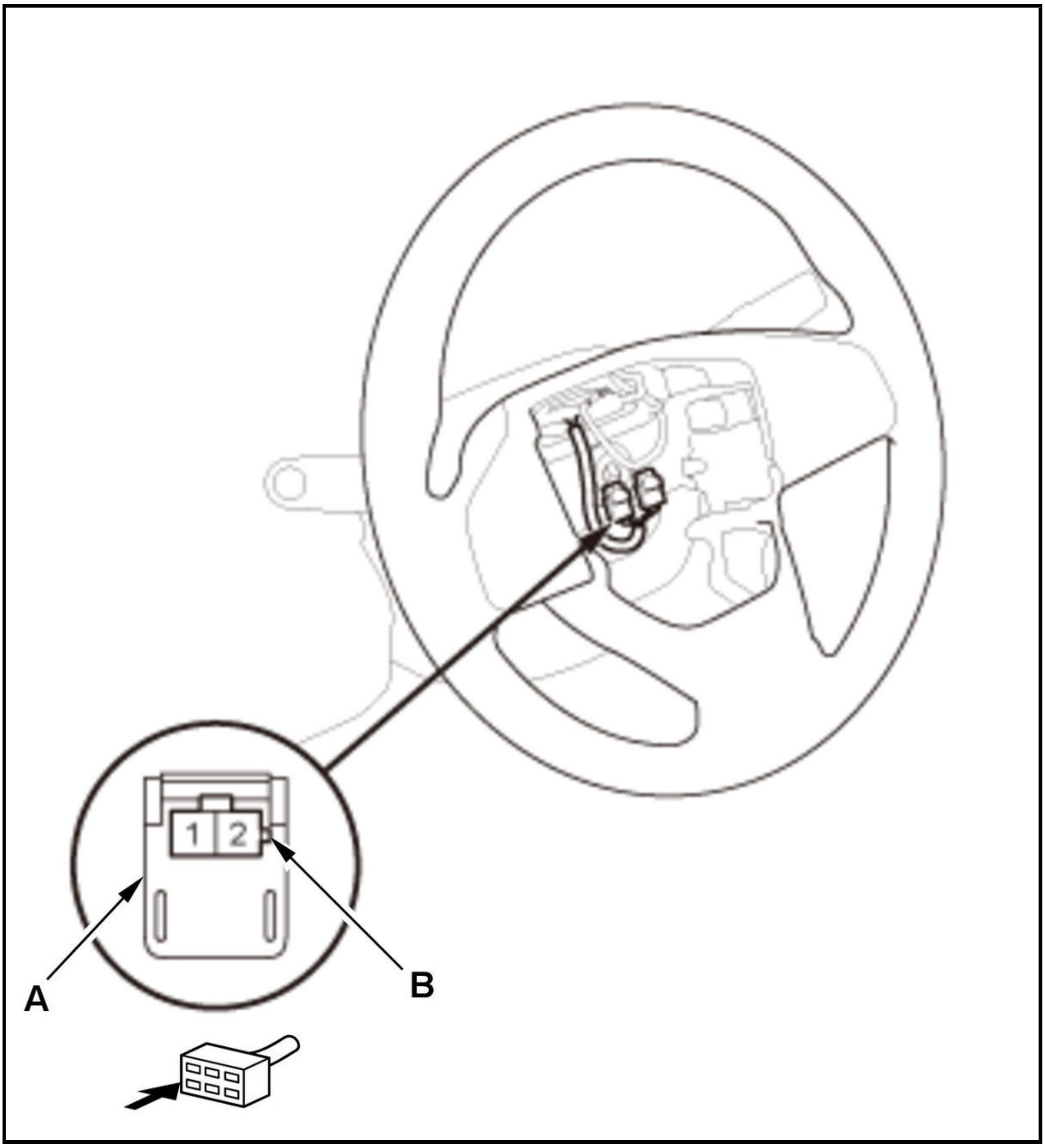

-5. Reconnect the negative cable to the 12 volt battery.

-6. Clear the DTCs with the HDS.

-7. Turn the vehicle to the ON mode, then wait for 10 seconds.

-8. Check for DTCs with the HDS.

DTC Description	DTC
B0001-11 Short to ground in the driver's airbag first inflator	B

Is DTC B0001-11 indicated?

YES

Go to step 3.

NO

Short to ground in the driver's airbag first inflator; **replace the driver's airbag** , then clear the DTC.

3. Cable reel check

-1. Turn the vehicle to the OFF (LOCK) mode.

-2. Disconnect the negative cable from the 12 volt battery, then wait at least 3 minutes.

-3. **Remove the column covers** .

-4. Disconnect cable reel connector B (4P) on the dashboard wire harness.

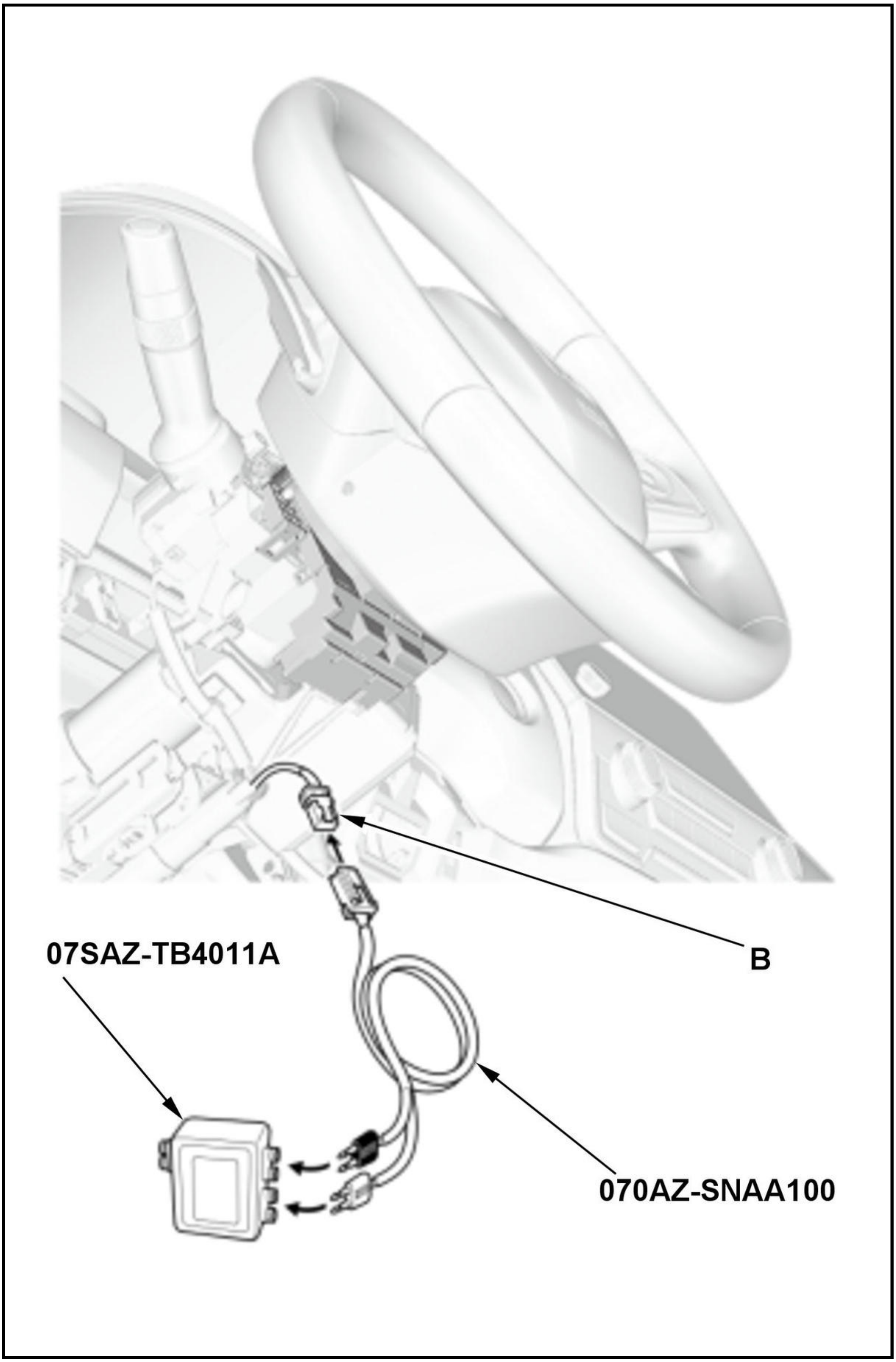
07SAZ-TB4011A
B
070AZ-SNAA100

-5. Connect the terminals of SRS simulator lead J to the SRS inflator simulator (2 Ω connectors), then connect SRS simulator lead J to cable reel connector B (4P) on the dashboard wire harness.

-6. Reconnect the negative cable to the 12 volt battery.

-7. Clear the DTCs with the HDS.

-8. Turn the vehicle to the ON mode, then wait for 10 seconds.

-9. Check for DTCs with the HDS.

DTC Description	DTC
B0001-11 Short to ground in the driver's airbag first inflator	B

Is DTC B0001-11 indicated?

YES

Go to step 4.

NO

Short to ground in the cable reel; **replace the cable reel** , then clear the DTC.

4. Shorted wire check (LA1+, LA1- lines)

-1. Turn the vehicle to the OFF (LOCK) mode.

-2. Disconnect the negative cable from the 12 volt battery, then wait at least 3 minutes.

-3. Disconnect the following connector.

SRS unit connector A (39P)

-4. Disconnect the SRS inflator simulator from SRS simulator lead J. Do not disconnect SRS simulator lead J from cable reel connector B (4P) on the dashboard wire harness.

-5. Measure the resistance between test points 1 and 2.

Test condition	Vehicle OFF (LOCK) mode
	Driver's airbag first inflator 2P connector (on the cable reel harness): disconnected
	Cable reel connector B (4P) (on the dashboard wire harness): disconnected
	SRS unit connector A (39P): disconnected
	Cable reel connector B (4P) (on the dashboard wire harness): connected to SRS simulator lead J
Test point 1	SRS simulator lead J red terminal
Test point 2	Body ground

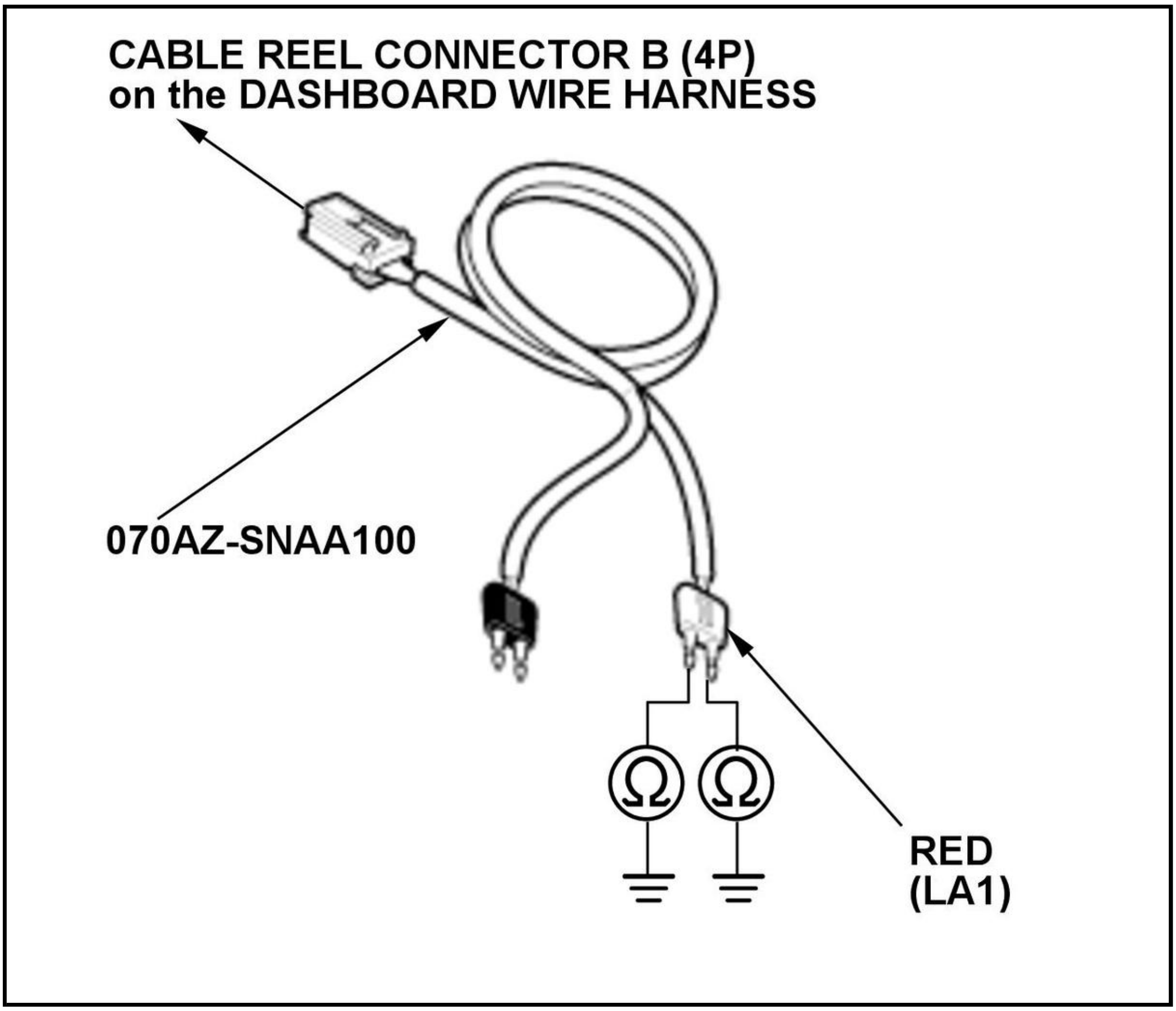

Is there an open circuit, or at least 1 MΩ?

YES

The LA1+ and LA1- wires are OK. Faulty SRS unit or poor connection at SRS unit connector A (39P) and the SRS unit. Check the connection; if the connection is OK, check for any authorized service information related to the DTCs or symptoms you are troubleshooting or replace the SRS unit . If the DTC does not clear, replace the dashboard wire harness.

NO

Short to ground in the dashboard wire harness; replace the dashboard wire harness, then clear the DTC.

DTC B0001-12

DTC B0001-12 : Short to Power in the Driver's Airbag First Inflator

Special Tools Required

SRS Inflator Simulator 07SAZ-TB4011A

SRS Simulator Lead J 070AZ-SNAA100

NOTE:

- Before doing this troubleshooting procedure, find out if the vehicle was in a collision. If so, verify that all the required components were replaced with new components of the correct part number and were properly installed .

- Before doing this troubleshooting procedure, review SRS Precautions and Procedures , General Troubleshooting Information, and 12 Volt Battery Terminal Disconnection and Reconnection .

DTC Description	DTC
B0001-12 Short to power in the driver's airbag first inflator	B

DTC (SRS)

1. Problem verification

   -1. Clear the DTCs with the HDS.

   -2. Turn the vehicle to the ON mode, then wait for 10 seconds.

   -3. Check for DTCs with the HDS.

DTC Description	DTC
B0001-12 Short to power in the driver's airbag first inflator	B

   Is DTC B0001-12 indicated?

   YES

   The failure is duplicated. Go to step 2.

   NO

   Intermittent failure, the system is OK at this time. Go to Troubleshooting Intermittent Failures. If another DTC is indicated, troubleshoot the DTC.

2. Driver's airbag inflator check

   -1. Turn the vehicle to the OFF (LOCK) mode.

   -2. Disconnect the negative cable from the 12 volt battery, then wait at least 3 minutes.

   -3. Remove the driver's airbag .

   -4. Disconnect the following connector.

Driver's airbag first inflator 2P connector (on the cable reel harness)

   NOTE: Make sure to work with the driver's airbag first inflator 2P connector (A) that has a guide tab (B) on the right side of the No. 2 terminal as shown.

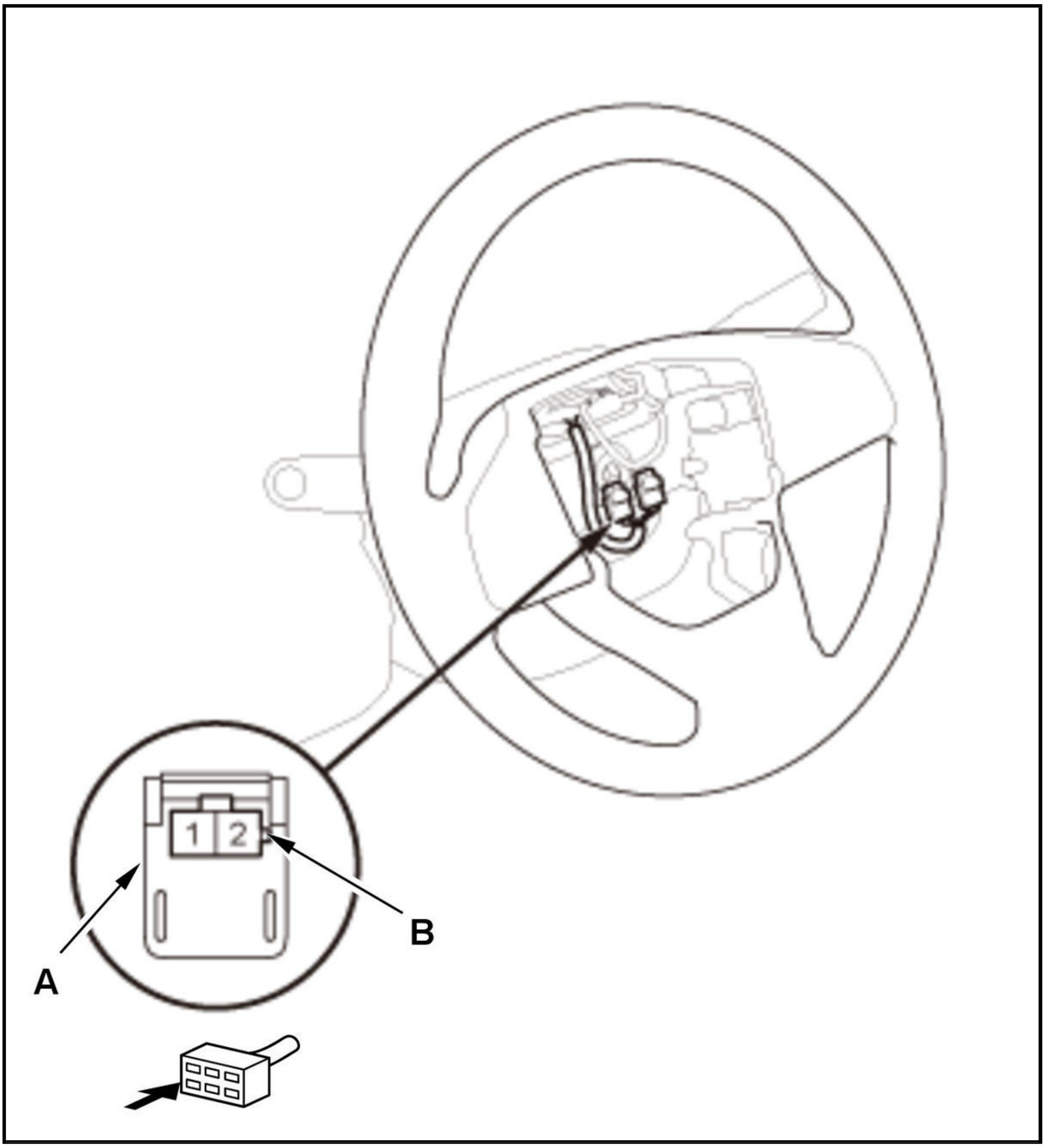

-5. Reconnect the negative cable to the 12 volt battery.

-6. Clear the DTCs with the HDS.

-7. Turn the vehicle to the ON mode, then wait for 10 seconds.

-8. Check for DTCs with the HDS.

DTC Description	DTC
B0001-12 Short to power in the driver's airbag first inflator	B

Is DTC B0001-12 indicated?

YES

Go to step 3.

NO

Short to power in the driver's airbag first inflator; **replace the driver's airbag** , then clear the DTC.

3. Cable reel check

-1. Turn the vehicle to the OFF (LOCK) mode.

-2. Disconnect the negative cable from the 12 volt battery, then wait at least 3 minutes.

-3. **Remove the column covers** .

-4. Disconnect cable reel connector B (4P) on the dashboard wire harness.

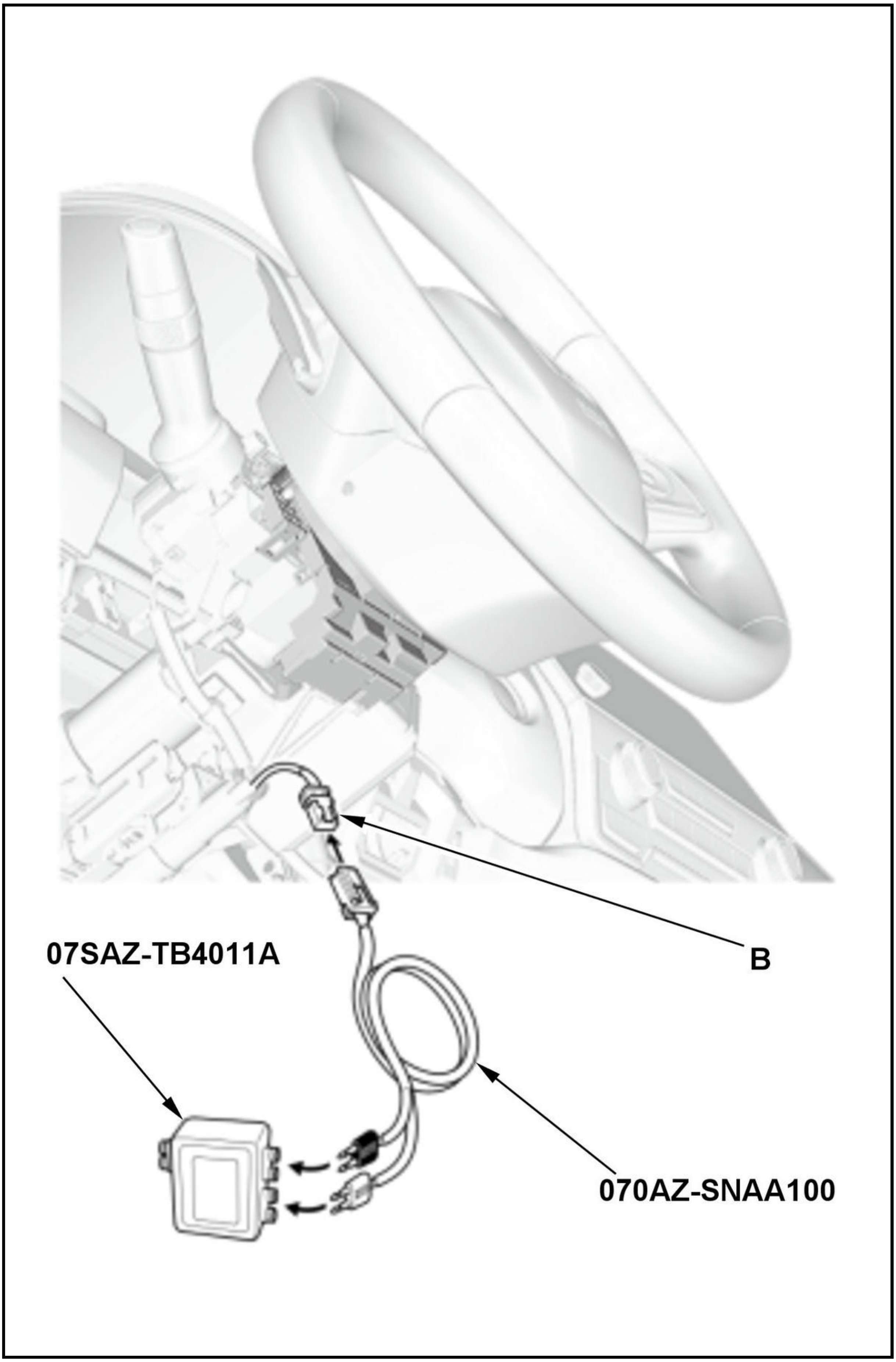
07SAZ-TB4011A
B
070AZ-SNAA100

-5. Connect the terminals of SRS simulator lead J to the SRS inflator simulator (2 Ω connectors), then connect SRS simulator lead J to cable reel connector B (4P) on the dashboard wire harness.

-6. Reconnect the negative cable to the 12 volt battery.

-7. Clear the DTCs with the HDS.

-8. Turn the vehicle to the ON mode, then wait for 10 seconds.

-9. Check for DTCs with the HDS.

DTC Description	DTC
B0001-12 Short to power in the driver's airbag first inflator	B

Is DTC B0001-12 indicated?

YES

Go to step 4.

NO

Short to power in the cable reel; **replace the cable reel** , then clear the DTC.

4. Shorted wire check (LA1+, LA1- lines to power)

-1. Turn the vehicle to the OFF (LOCK) mode.

-2. Disconnect the negative cable from the 12 volt battery, then wait at least 3 minutes.

-3. Disconnect the following connector.

SRS unit connector A (39P)

-4. Disconnect the SRS inflator simulator from SRS simulator lead J. Do not disconnect SRS simulator lead J from cable reel connector B (4P) on the dashboard wire harness.

-5. Reconnect the negative cable to the 12 volt battery.

-6. Turn the vehicle to the ON mode.

-7. Measure the voltage between test points 1 and 2.

Test condition	Vehicle ON mode
	Driver's airbag first inflator 2P connector (on the cable reel harness): disconnected
	Cable reel connector B (4P) (on the dashboard wire harness): disconnected
	SRS unit connector A (39P): disconnected
	Cable reel connector B (4P) (on the dashboard wire harness): connected to SRS simulator lead J
Test point 1	SRS simulator lead J red terminal
Test point 2	Body ground

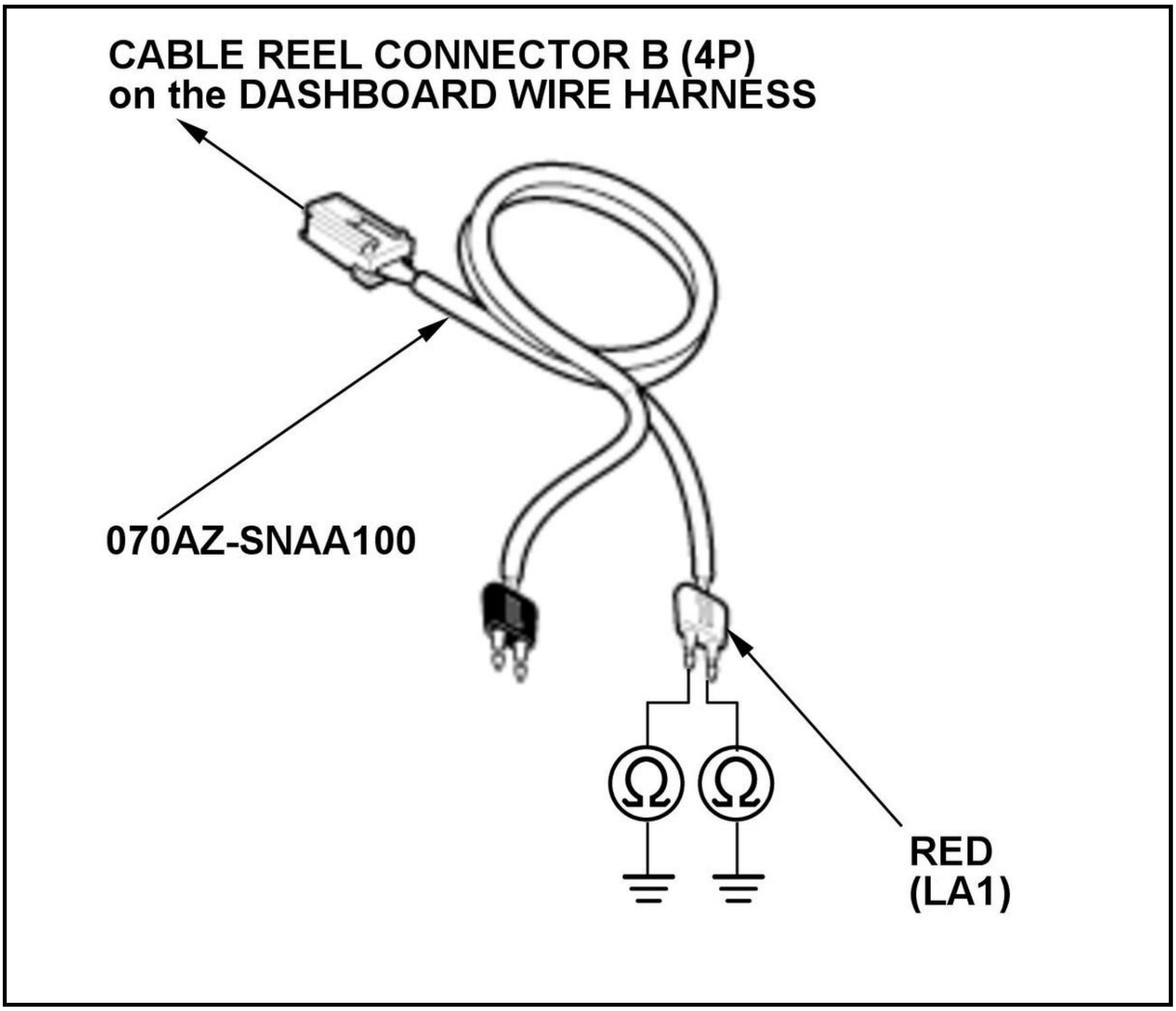

Is there 0.2 V or less?

YES

The LA1+ and LA1- wires are OK. Faulty SRS unit or poor connection at SRS unit connector A (39P) and the SRS unit. Check the connection; if the connection is OK, check for any authorized service information related to the DTCs or symptoms you are troubleshooting or replace the SRS unit . If the DTC does not clear, replace the dashboard wire harness.

NO

Short to power in the dashboard wire harness; replace the dashboard wire harness, then clear the DTC.

DTC B0001-13

DTC B0001-13 : Open or Increased Resistance in the Driver's Airbag First Inflator

Special Tools Required

SRS Inflator Simulator 07SAZ-TB4011A

SRS Simulator Lead J 070AZ-SNAA100

NOTE:

- Before doing this troubleshooting procedure, find out if the vehicle was in a collision. If so, verify that all the required components were replaced with new components of the correct part number and were properly installed .

- Before doing this troubleshooting procedure, review **SRS Precautions and Procedures** , **General Troubleshooting Information**, and **12 Volt Battery Terminal Disconnection and Reconnection** .

DTC Description	DTC
B0001-13 Open or increased resistance in the driver's airbag first inflator	B

DTC (SRS)

1. Problem verification

   -1. Clear the DTCs with the HDS.

   -2. Turn the vehicle to the ON mode, then wait for 10 seconds.

   -3. Check for DTCs with the HDS.

DTC Description	DTC
B0001-13 Open or increased resistance in the driver's airbag first inflator	B

   Is DTC B0001-13 indicated?

   YES

   The failure is duplicated. Go to step 2.

   NO

   Intermittent failure, the system is OK at this time. Go to Troubleshooting Intermittent Failures. If another DTC is indicated, troubleshoot the DTC.

2. Driver's airbag inflator check

   -1. Turn the vehicle to the OFF (LOCK) mode.

   -2. Disconnect the negative cable from the 12 volt battery, then wait at least 3 minutes.

   -3. **Remove the driver's airbag** .

   -4. Disconnect the following connector.

Driver's airbag first inflator 2P connector (on the cable reel harness)

   NOTE: Make sure to work with the driver's airbag first inflator 2P connector (A) that has a guide tab (B) on the right side of the No. 2 terminal as shown.

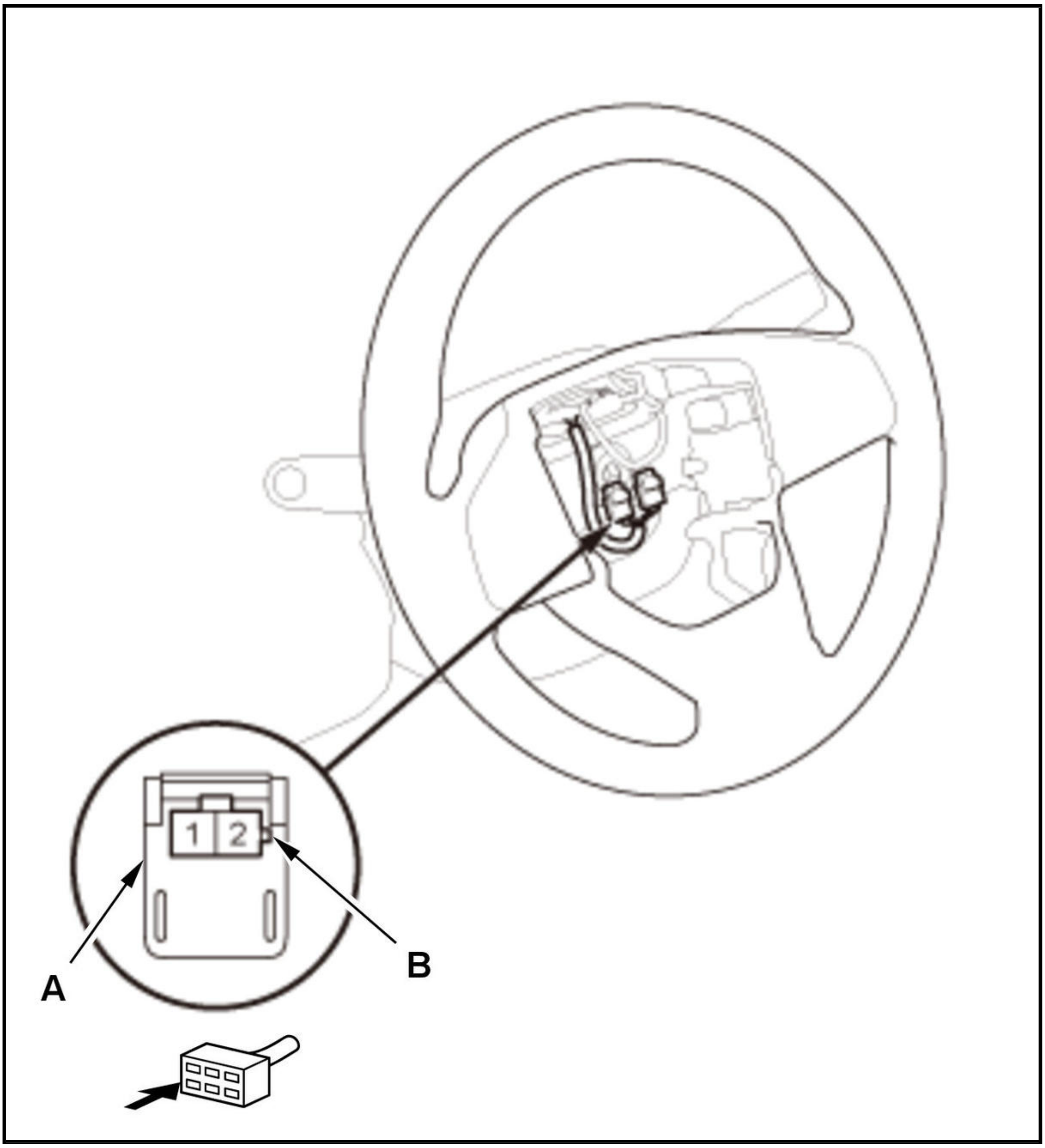

-5. Connect terminals A and B with a jumper wire.

Terminal A	Driver's airbag first inflator 2P connector (female terminals) No. 1 (on the cable reel harness): ①
Terminal B	Driver's airbag first inflator 2P connector (female terminals) No. 2 (on the cable reel harness): ①

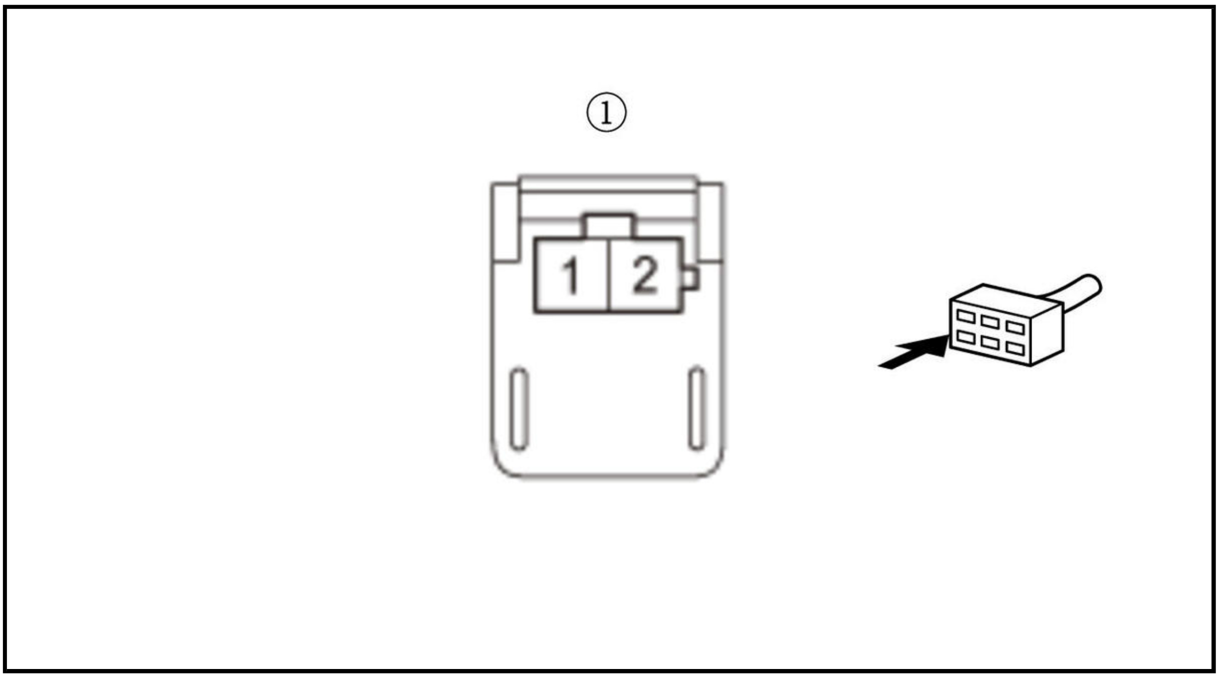

-6. Reconnect the negative cable to the 12 volt battery.

-7. Clear the DTCs with the HDS.

-8. Turn the vehicle to the ON mode, then wait for 10 seconds.

-9. Check for DTCs with the HDS.

DTC Description	DTC
B0001-13 Open or increased resistance in the driver's airbag first inflator	B

Is DTC B0001-13 indicated?

YES

Go to step 3.

NO

Open in the driver's airbag first inflator; **replace the driver's airbag** , then clear the DTC.

3. Cable reel check

-1. Turn the vehicle to the OFF (LOCK) mode.

-2. Disconnect the negative cable from the 12 volt battery, then wait at least 3 minutes.

-3. Remove the jumper wire from the driver's airbag first inflator 2P connector on the cable reel harness.

-4. **Remove the column covers** .

-5. Disconnect cable reel connector B (4P) on the dashboard wire harness.

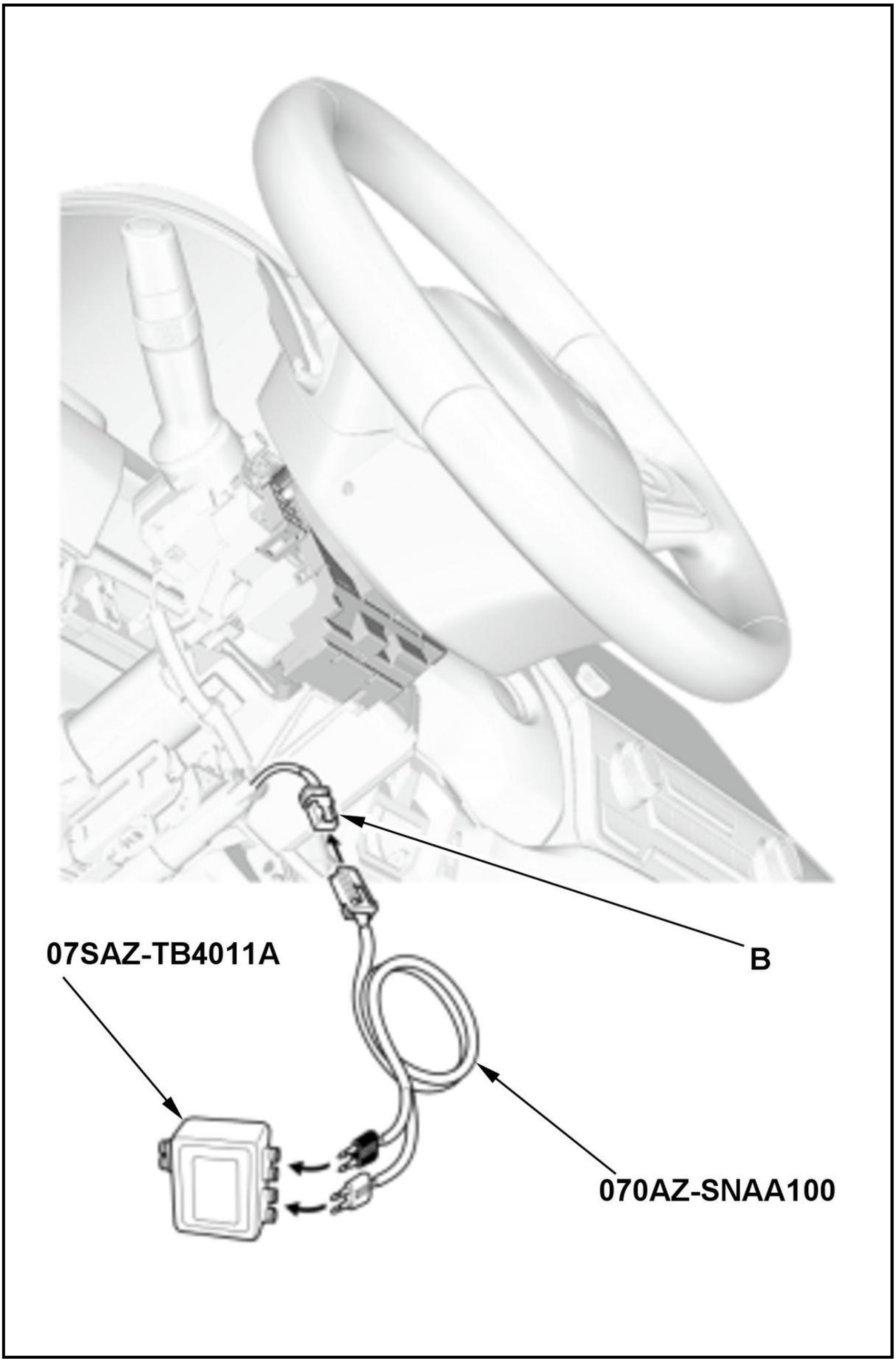
07SAZ-TB4011A
B
070AZ-SNAA100

-6. Connect the terminals of SRS simulator lead J to the SRS inflator simulator (2 Ω connectors), then connect SRS simulator lead J to cable reel connector B (4P) on the dashboard wire harness.

-7. Reconnect the negative cable to the 12 volt battery.

-8. Clear the DTCs with the HDS.

-9. Turn the vehicle to the ON mode, then wait for 10 seconds.

-10.

Check for DTCs with the HDS.

DTC Description	DTC
B0001-13 Open or increased resistance in the driver's airbag first inflator	B

Is DTC B0001-13 indicated?

YES

Go to step 4.

NO

Open in the cable reel; **replace the cable reel** , then clear the DTC.

4. Open wire check (LA1+, LA1- lines)

-1. Turn the vehicle to the OFF (LOCK) mode.

-2. Disconnect the negative cable from the 12 volt battery, then wait at least 3 minutes.

-3. Disconnect the following connector.

SRS unit connector A (39P)

-4. Disconnect the SRS inflator simulator from SRS simulator lead J. Do not disconnect SRS simulator lead J from cable reel connector B (4P) on the dashboard wire harness.

-5. Measure the resistance of the test point.

Test condition	Vehicle OFF (LOCK) mode
	Driver's airbag first inflator 2P connector (on the cable reel harness): disconnected
	Cable reel connector B (4P) (on the dashboard wire harness): disconnected
	SRS unit connector A (39P): disconnected
	Cable reel connector B (4P) (on the dashboard wire harness): connected to SRS simulator lead J
Test point	SRS simulator lead J red terminal

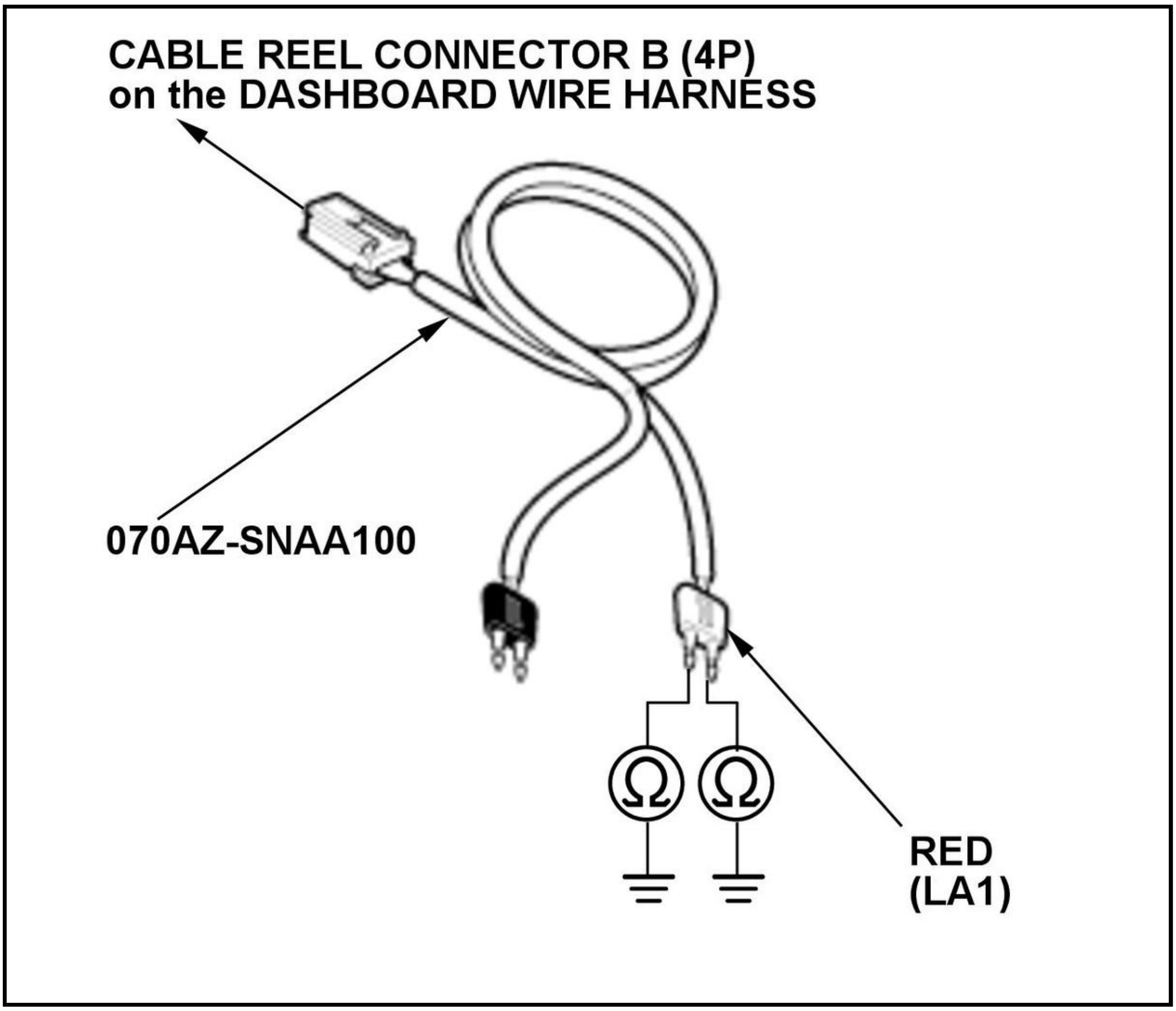
CABLE REEL CONNECTOR B (4P)
on the DASHBOARD WIRE HARNESS
070AZ-SNAA100
Ω
Ω
RED
(LA1)

Is there 1.0 Ω or less?

YES

The LA1+ and LA1- wires are OK. Faulty SRS unit or poor connection at SRS unit connector A (39P) and the SRS unit. Check the connection; if the connection is OK, check for any authorized service information related to the DTCs or symptoms you are troubleshooting or **replace the SRS unit** . If the DTC does not clear, replace the dashboard wire harness.

NO

Open or increased resistance in the dashboard wire harness; replace the dashboard wire harness, then clear the DTC.

DTC B0001-1A

DTC B0001-1A : Decreased Resistance in the Driver's Airbag First Inflator

Special Tools Required

SRS Inflator Simulator 07SAZ-TB4011A

SRS Simulator Lead J 070AZ-SNAA100

SRS Short Canceller 070AZ-SAA0100

NOTE:

- **Before doing this troubleshooting procedure, find out if the vehicle was in a collision. If so, verify that all the required components were replaced with new components of the correct part number and were properly installed** .
- Before doing this troubleshooting procedure, review **SRS Precautions and Procedures** , **General Troubleshooting Information**, and **12 Volt Battery Terminal Disconnection and Reconnection** .

DTC Description	DTC
B0001-1A Decreased resistance in the driver's airbag first inflator	B

DTC (SRS)

1. Problem verification

   -1. Clear the DTCs with the HDS.

   -2. Turn the vehicle to the ON mode, then wait for 10 seconds.

   -3. Check for DTCs with the HDS.

DTC Description	DTC
B0001-1A Decreased resistance in the driver's airbag first inflator	B

   Is DTC B0001-1A indicated?

   YES

   The failure is duplicated. Go to step 2.

   NO

   Intermittent failure, the system is OK at this time. Go to Troubleshooting Intermittent Failures. If another DTC is indicated, troubleshoot the DTC.

2. Driver's airbag inflator check

   -1. Turn the vehicle to the OFF (LOCK) mode.

   -2. Disconnect the negative cable from the 12 volt battery, then wait at least 3 minutes.

   -3. **Remove the driver's airbag** .

   -4. Disconnect the following connector.

Driver's airbag first inflator 2P connector (on the cable reel harness)

   NOTE: Make sure to work with the driver's airbag first inflator 2P connector (A) that has a guide tab (B) on the right side of the No. 2 terminal as shown.

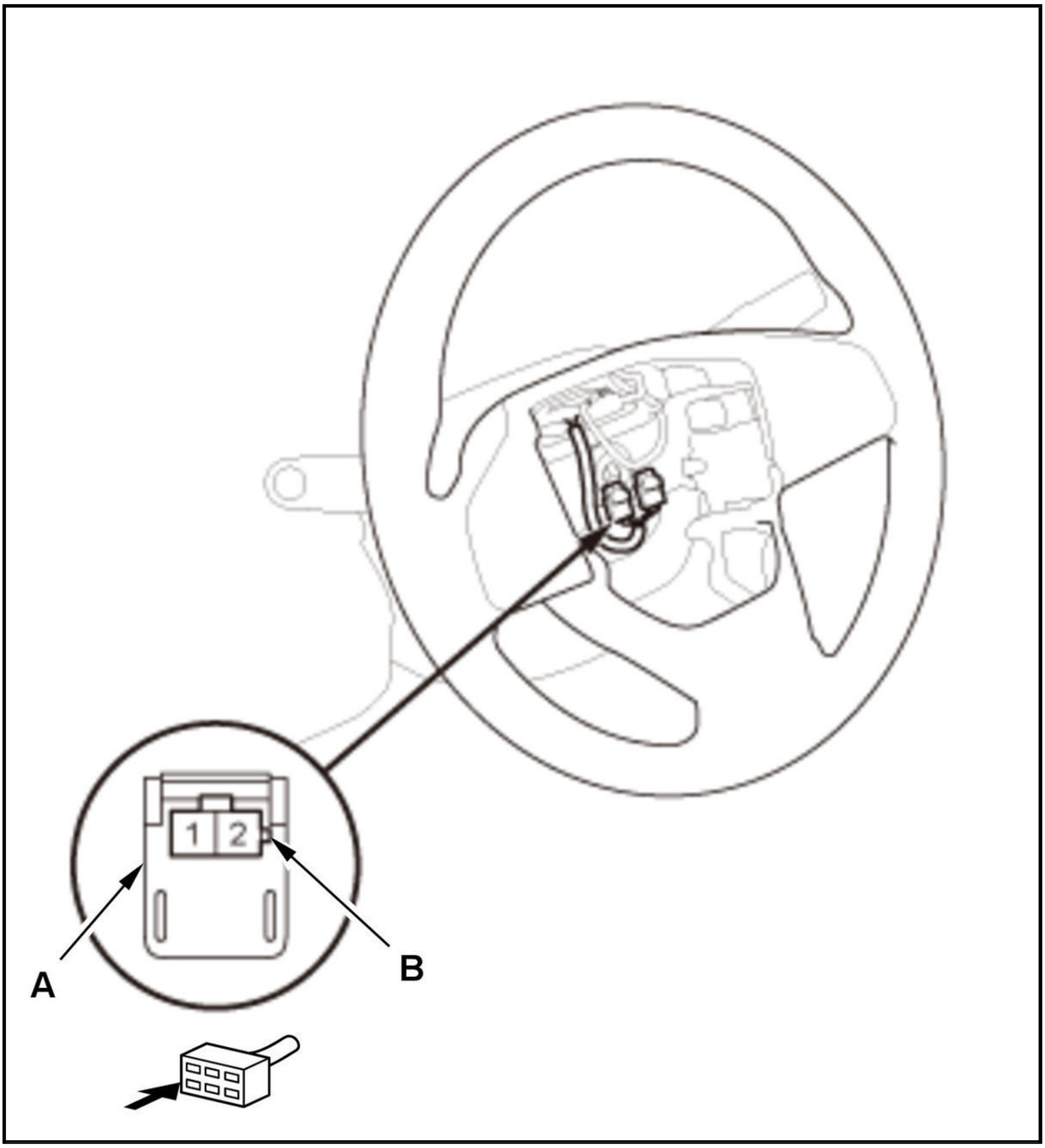

-5. Reconnect the negative cable to the 12 volt battery.

-6. Clear the DTCs with the HDS.

-7. Turn the vehicle to the ON mode, then wait for 10 seconds.

-8. Check for DTCs with the HDS.

DTC Description	DTC
B0001-1A Decreased resistance in the driver's airbag first inflator	B

Is DTC B0001-1A indicated?

YES

Go to step 3.

NO

Short to another wire in the driver's airbag first inflator; **replace the driver's airbag** , then clear the DTC.

3. Cable reel check

   -1. Turn the vehicle to the OFF (LOCK) mode.

   -2. Disconnect the negative cable from the 12 volt battery, then wait at least 3 minutes.

   -3. **Remove the column covers** .

   -4. Disconnect cable reel connector B (4P) on the dashboard wire harness.

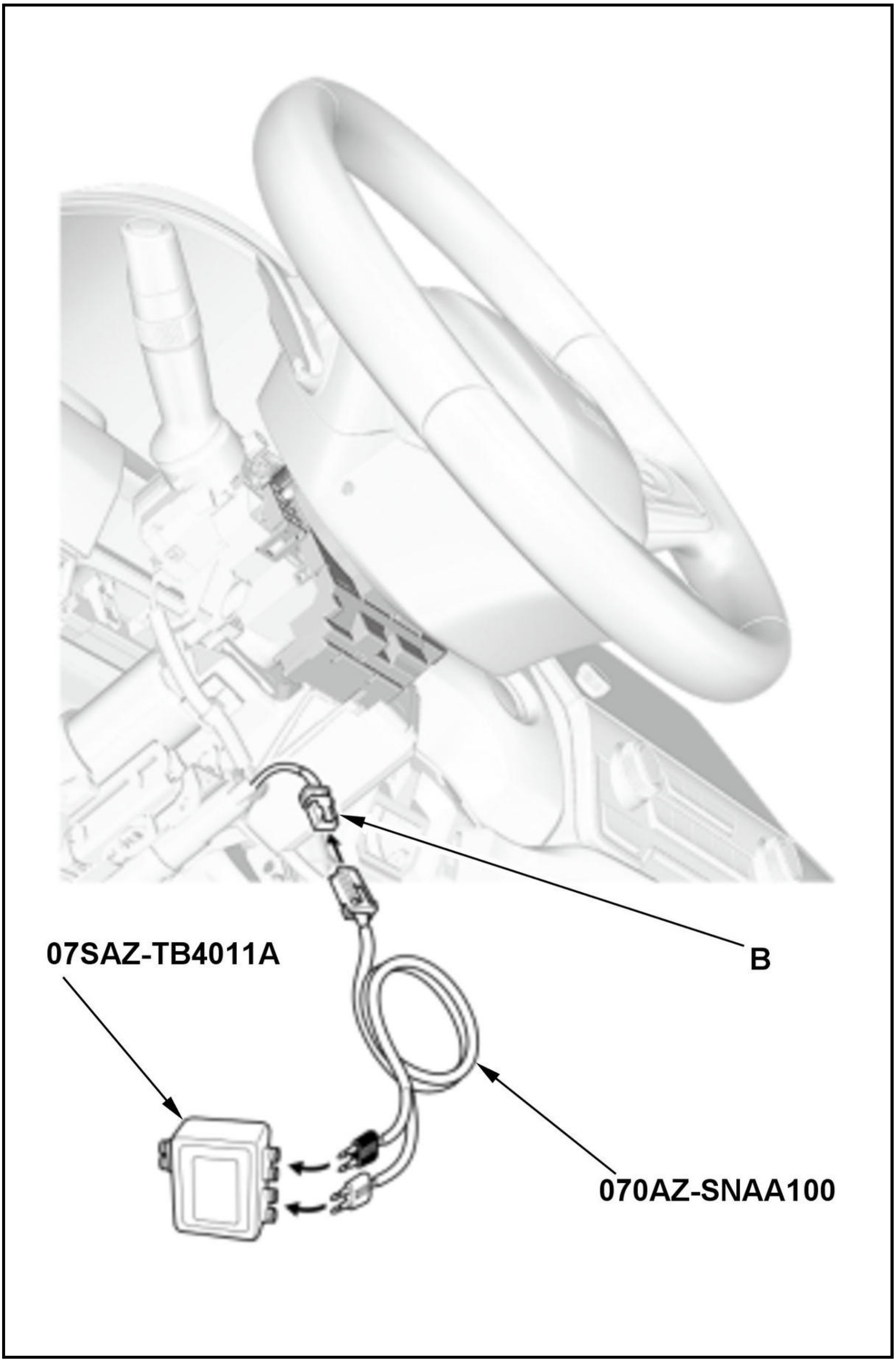
07SAZ-TB4011A
B
070AZ-SNAA100

-5. Connect the terminals of SRS simulator lead J to the SRS inflator simulator (2 Ω connectors), then connect SRS simulator lead J to cable reel connector B (4P) on the dashboard wire harness.

-6. Reconnect the negative cable to the 12 volt battery.

-7. Clear the DTCs with the HDS.

-8. Turn the vehicle to the ON mode, then wait for 10 seconds.

-9. Check for DTCs with the HDS.

DTC Description	DTC
B0001-1A Decreased resistance in the driver's airbag first inflator	B

Is DTC B0001-1A indicated?

YES

Go to step 4.

NO

Short to another wire in the cable reel; **replace the cable reel** , then clear the DTC.

4. Shorted wire check (LA1+ line to LA1- line)

-1. Turn the vehicle to the OFF (LOCK) mode.

-2. Disconnect the negative cable from the 12 volt battery, then wait at least 3 minutes.

-3. Disconnect the following connector.

SRS unit connector A (39P)

-4. Disconnect the SRS inflator simulator from SRS simulator lead J. Do not disconnect SRS simulator lead J from cable reel connector B (4P) on the dashboard wire harness.

-5. **Connect the SRS short canceller to SRS unit connector A (39P) terminals No. 8 and No. 9**.

-6. Measure the resistance of the test point.

Test condition	Vehicle OFF (LOCK) mode
	Driver's airbag first inflator 2P connector (on the cable reel harness): disconnected
	Cable reel connector B (4P) (on the dashboard wire harness): disconnected
	SRS unit connector A (39P): disconnected
	Cable reel connector B (4P) (on the dashboard wire harness): connected to SRS simulator lead J
	SRS unit connector A (39P) No. 8 and No. 9: connected to SRS short canceller
Test point	SRS simulator lead J red terminal

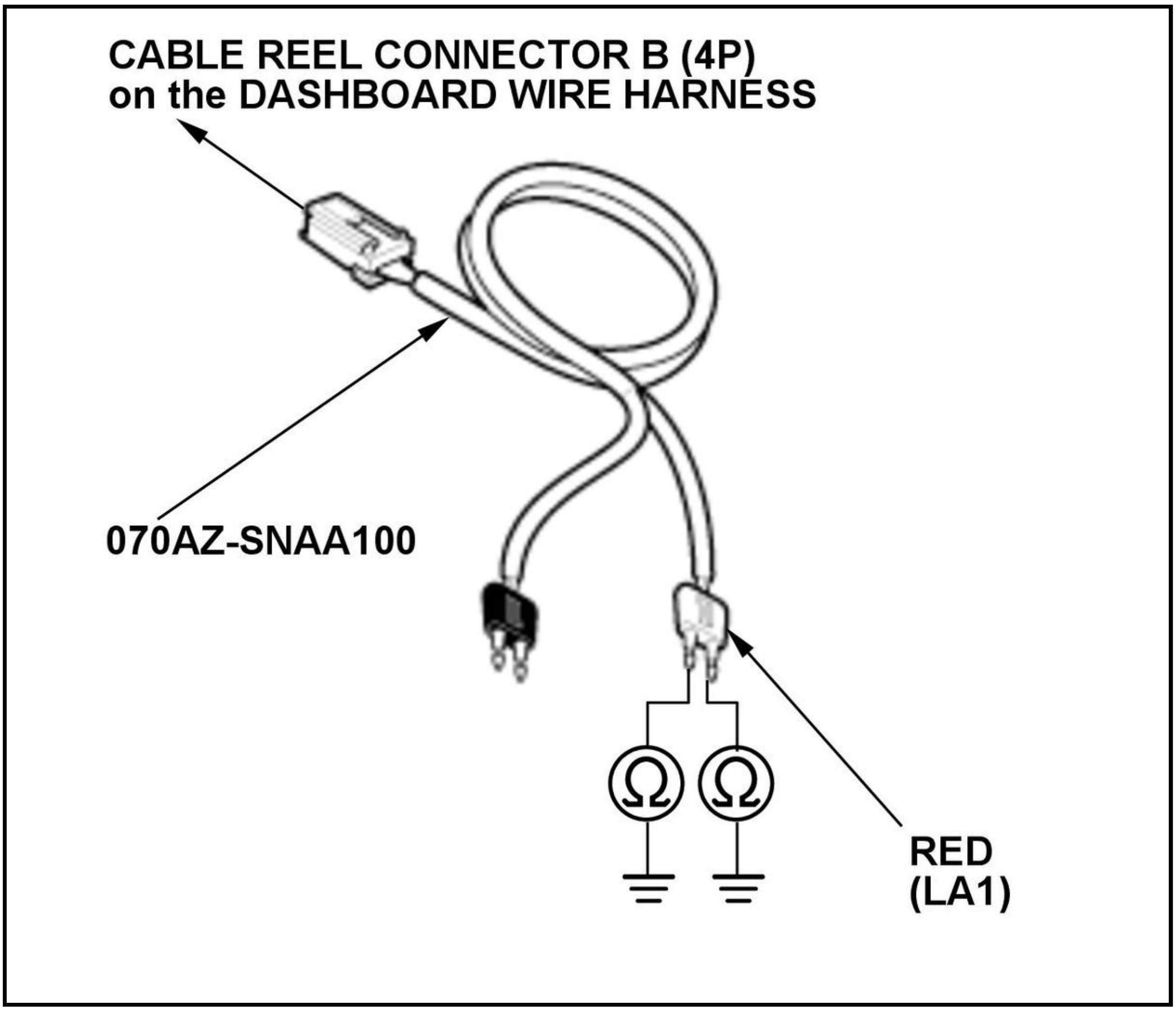

Is there an open circuit, or at least 1 MΩ?

YES

The LA1+ and LA1- wires are OK. Faulty SRS unit or poor connection at SRS unit connector A (39P) and the SRS unit. Check the connection; if the connection is OK, check for any authorized service information related to the DTCs or symptoms you are troubleshooting or replace the SRS unit . If the DTC does not clear, replace the dashboard wire harness.

NO

Short to another wire in the dashboard wire harness; replace the dashboard wire harness, then clear the DTC.

DTC B0001-2B

DTC B0001-2B : Short to Another Wire Harness in the Driver's Airbag First Inflator

NOTE:

- **Before doing this troubleshooting procedure, find out if the vehicle was in a collision. If so, verify that all the required components were replaced with new components of the correct part number and were properly installed** .
- Before doing this troubleshooting procedure, review **SRS Precautions and Procedures** , **General Troubleshooting Information**, and **12 Volt Battery Terminal Disconnection and Reconnection** .

DTC Description	DTC
B0001-2B Short to another wire harness in the driver's airbag first inflator	B

DTC (SRS)

1. Problem verification

   -1. Clear the DTCs with the HDS.

   -2. Turn the vehicle to the ON mode, then wait for 10 seconds.

   -3. Check for DTCs with the HDS.

DTC Description	DTC
B0001-2B Short to another wire harness in the driver's airbag first inflator	B

Is DTC B0001-2B indicated?

YES

The failure is duplicated. Go to step 2.

NO

Intermittent failure, the system is OK at this time. Go to Troubleshooting Intermittent Failures. If another DTC is indicated, troubleshoot the DTC.

2. DTC check

   -1. Check for DTCs with the HDS.

DTC Description	DTC
B0001-2B Short to another wire harness in the driver's airbag first inflator	B
B0002-2B Short to another wire harness in the driver's airbag second inflator	B
B0010-2B Short to another wire harness in the front passenger's airbag first inflator	B
B0011-2B Short to another wire harness in the front passenger's airbag second inflator	B
B0020-2B Short to another wire harness in the driver's side airbag inflator	B
B0021-2B Short to another wire harness in the left side curtain airbag first inflator	B
B0028-2B Short to another wire harness in the front passenger's side airbag inflator	B
B0029-2B Short to another wire harness in the right side curtain airbag first inflator	B
B0070-2B Short to another wire harness in the driver's seat belt tensioner	B
B0072-2B Short to another wire harness in the front passenger's seat belt tensioner	B
B0079-2B Short to another wire harness in the driver's seat belt outer lap tensioner	B

DTC Description	DTC
B007A-2B Short to another wire harness in the front passenger's seat belt outer lap tensioner	B
B0082-2B Short to another wire harness in the selectable energy absorption device of the front passenger's seat belt tensioner	B

Is DTC B0002-2B, B0010-2B, B0011-2B, B0020-2B, B0021-2B, B0028-2B, B0029-2B, B0070-2B, B0072-2B, B0079-2B, B007A-2B or B0082-2B indicated with DTC B0001-2B?

YES

Go to step 3.

NO

Go to step 4.

3. Shorted wire check (LA1 lines to another line)

-1. Turn the vehicle to the OFF (LOCK) mode.

-2. Disconnect the negative cable from the 12 volt battery, then wait at least 3 minutes.

-3. **Remove the driver's airbag** .

-4. Disconnect the following connectors.

SRS unit connector A (39P)
SRS unit connector B (39P)
Driver's airbag second inflator 2P connector (on the cable reel harness)
Inflator connectors which are assigned to 2B codes listed on HDS

NOTE: Make sure to work with the driver's airbag first inflator 2P connector (A) that has a guide tab (B) on the right side of the No. 2 terminal as shown.

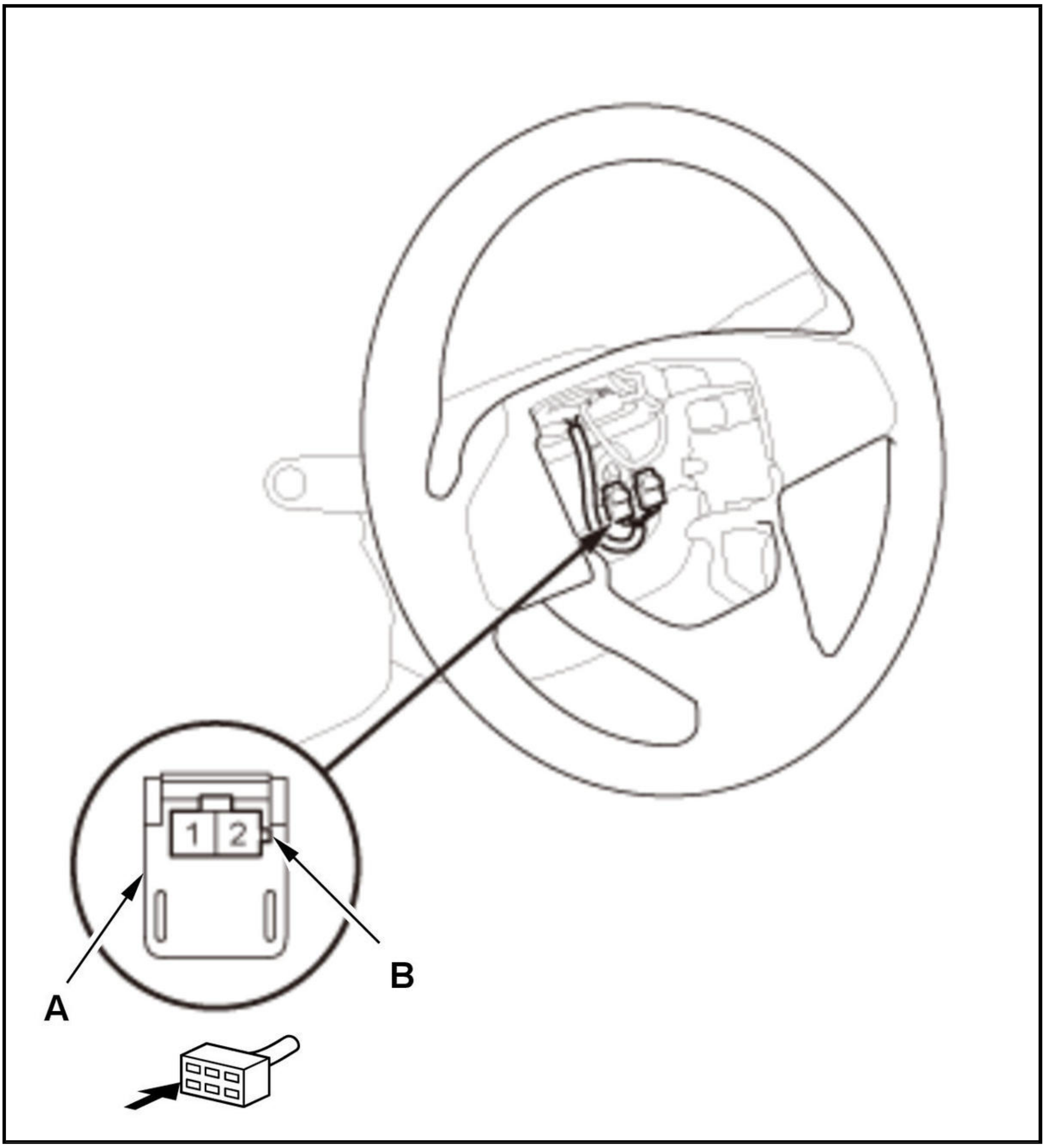

-5. Measure the resistance between test points 1 and 2 of SRS unit connector A (39P) and B (39P) according to table.

Test condition	Vehicle OFF (LOCK) mode
	SRS unit connector A (39P): disconnected
	SRS unit connector B (39P): disconnected
	Driver's airbag first inflator 2P connector (on the cable reel harness): disconnected
	Inflator connectors which are assigned to 2B codes listed on HDS: disconnected

DTC	Test point 1	Test point 2
	From terminal	To terminal
B0002-2B	SRS unit connector A (39P) No. 9	SRS unit connector A (39P) No. 10
	SRS unit connector A (39P) No. 8	SRS unit connector A (39P) No. 11
B0010-2B	SRS unit connector A (39P) No. 9	SRS unit connector A (39P) No. 5
	SRS unit connector A (39P) No. 8	SRS unit connector A (39P) No. 4
B0011-2B	SRS unit connector A (39P) No. 9	SRS unit connector A (39P) No. 6
	SRS unit connector A (39P) No. 8	SRS unit connector A (39P) No. 7
B0020-2B	SRS unit connector A (39P) No. 9	SRS unit connector B (39P) No. 5
	SRS unit connector A (39P) No. 8	SRS unit connector B (39P) No. 6
B0021-2B	SRS unit connector A (39P) No. 9	SRS unit connector B (39P) No. 9
	SRS unit connector A (39P) No. 8	SRS unit connector B (39P) No. 10
B0028-2B	SRS unit connector A (39P) No. 9	SRS unit connector B (39P) No. 4
	SRS unit connector A (39P) No. 8	SRS unit connector B (39P) No. 3
B0029-2B	SRS unit connector A (39P) No. 9	SRS unit connector B (39P) No. 8
	SRS unit connector A (39P) No. 8	SRS unit connector B (39P) No. 7
B0070-2B	SRS unit connector A (39P) No. 9	SRS unit connector B (39P) No. 20
	SRS unit connector A (39P) No. 8	SRS unit connector B (39P) No. 21
B0072-2B	SRS unit connector A (39P) No. 9	SRS unit connector B (39P) No. 19
	SRS unit connector A (39P) No. 8	SRS unit connector B (39P) No. 18
B0079-2B	SRS unit connector A (39P) No. 9	SRS unit connector B (39P) No. 24
	SRS unit connector A (39P) No. 8	SRS unit connector B (39P) No. 25
B007A-2B	SRS unit connector A (39P) No. 9	SRS unit connector B (39P) No. 23
	SRS unit connector A (39P) No. 8	SRS unit connector B (39P) No. 22
B0082-2B	SRS unit connector A (39P) No. 9	SRS unit connector A (39P) No. 2
	SRS unit connector A (39P) No. 8	SRS unit connector A (39P) No. 3

Is there 1 MΩ or more?

YES

The LA1 wires are OK. Faulty SRS unit or poor connection at SRS unit connector A (39P) and the SRS unit, or SRS unit connector B (39P) and the SRS unit. Check the connection; if the connection is OK, check for any authorized service information related to the DTCs or symptoms you are troubleshooting or **replace the SRS unit** . If the DTC does not clear, replace the dashboard wire harness or the floor wire harness.

NO

Short to another wire in the dashboard wire harness or the floor wire harness; replace the faulty harness, then clear the DTC.

4. Shorted wire check (LA1+ line to LA2+ line, LA1- line to LA2- line) 1

-1. Turn the vehicle to the OFF (LOCK) mode.

-2. Disconnect the negative cable from the 12 volt battery, then wait at least 3 minutes.

-3. **Remove the driver's airbag** .

-4. Disconnect the following connector.

Driver's airbag first inflator 2P connector (on the cable reel harness)
Driver's airbag second inflator 2P connector (on the cable reel harness)

-5. Measure the resistance between test points 1 and 2.

Test condition	Vehicle OFF (LOCK) mode
	Driver's airbag first inflator 2P connector (on the cable reel harness): disconnected
	Driver's airbag second inflator 2P connector (on the cable reel harness): disconnected
Test point 1	Driver's airbag first inflator 2P connector No. 2 (on the cable reel harness) ①
Test point 2	Driver's airbag second inflator 2P connector No. 2 (on the cable reel harness) ②

Test point 1	Driver's airbag first inflator 2P connector No. 1 (on the cable reel harness) ①
Test point 2	Driver's airbag second inflator 2P connector No. 1 (on the cable reel harness) ②

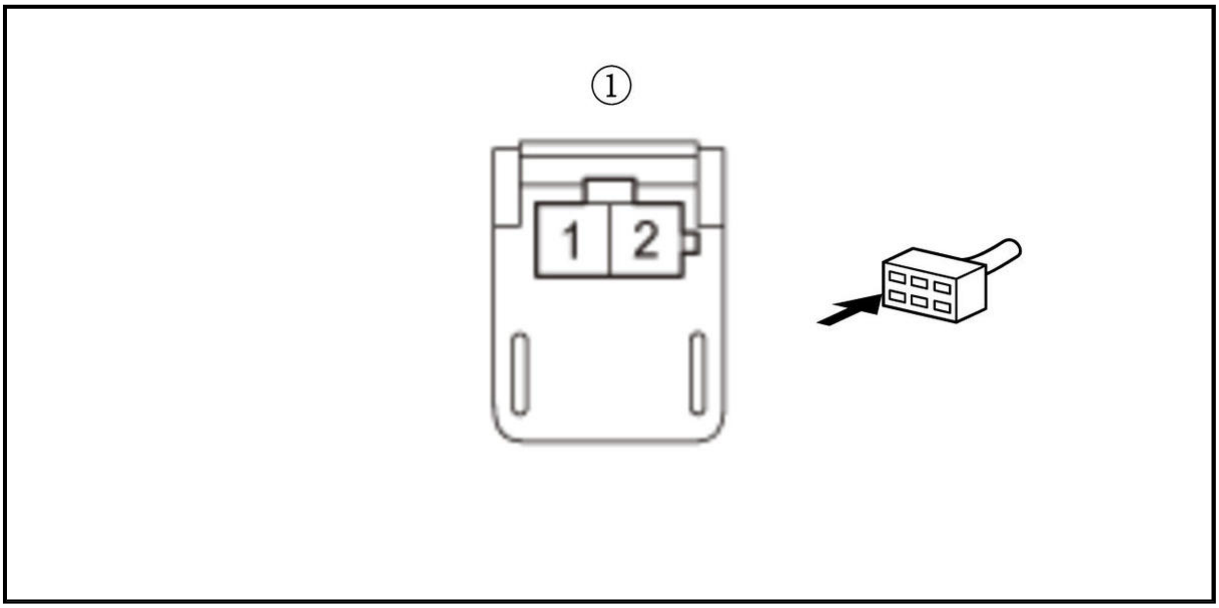

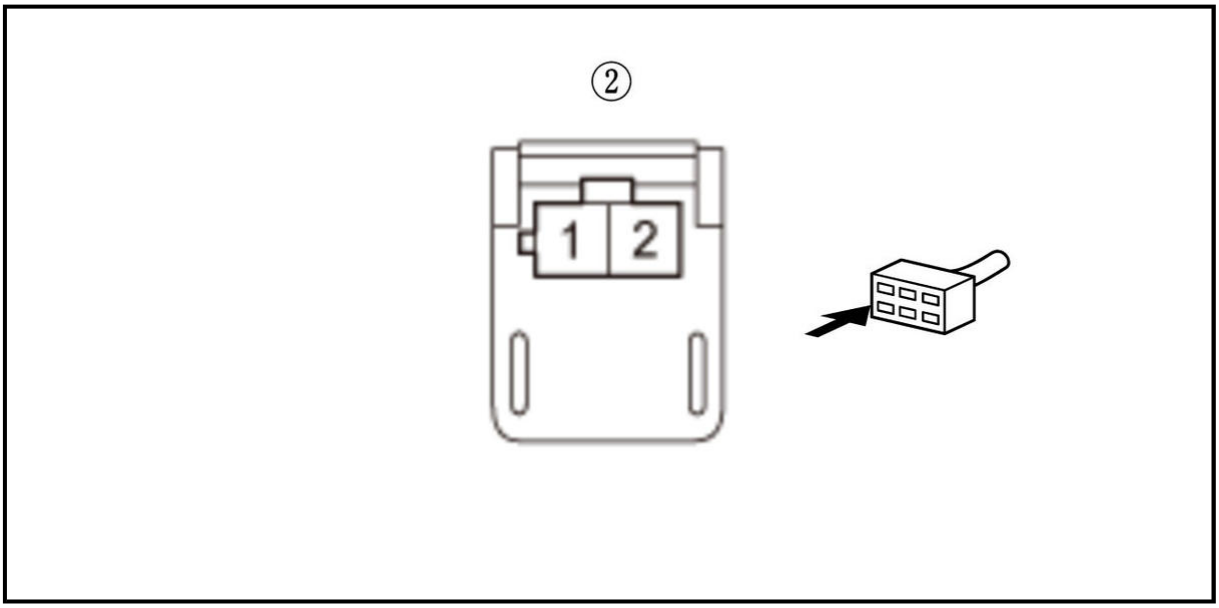

Is there 1 MΩ or more?

YES

The LA1+, LA1-, LA2+, and LA2- wires are OK. Faulty driver's airbag second inflator; **replace the driver's airbag** , then clear the DTC.

NO

Go to step 5.

5. Shorted wire check (LA1+ line to LA2+ line, LA1- line to LA2- line) 2

-1. **Remove the column covers** .

-2. Disconnect cable reel connector B (4P) on the dashboard wire harness.

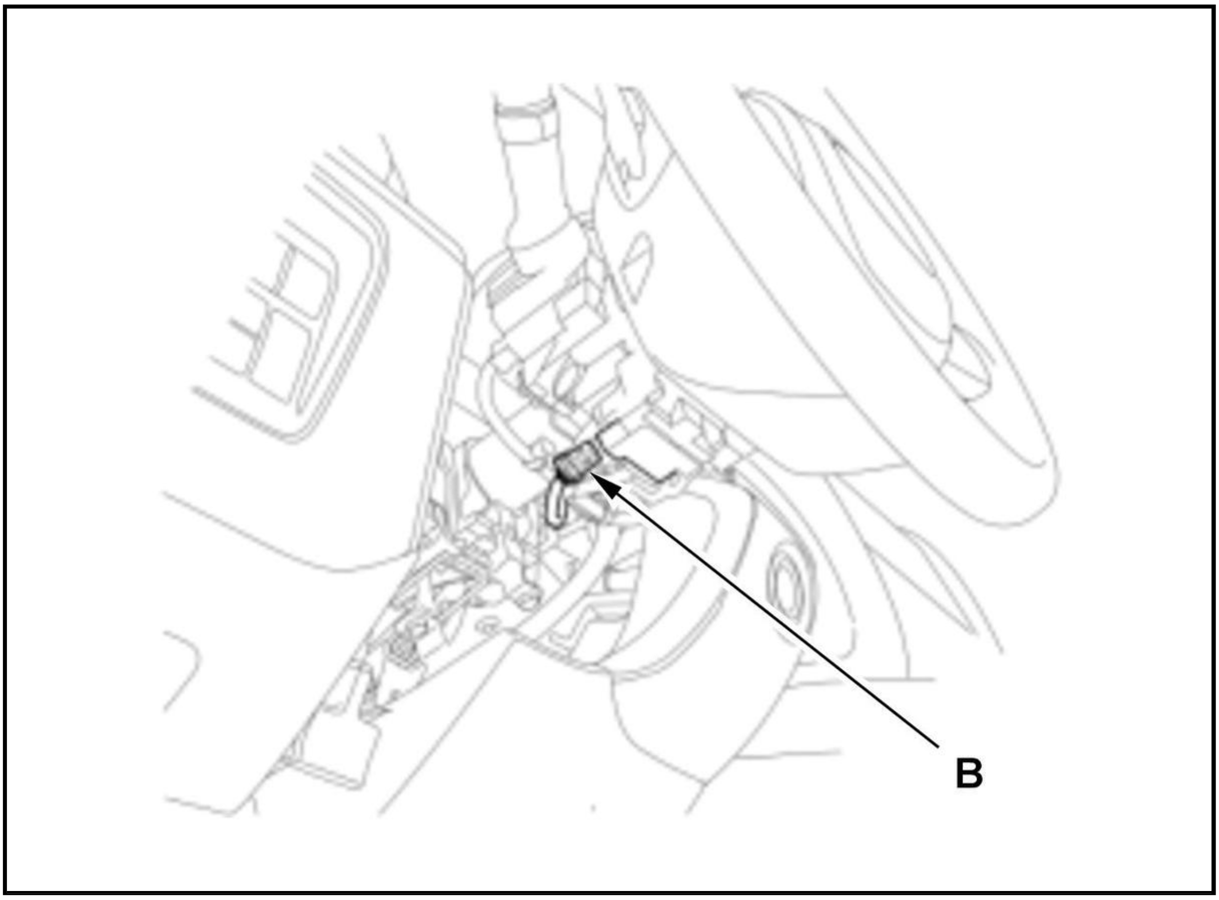

-3. Measure the resistance between test points 1 and 2.

Test condition	Vehicle OFF (LOCK) mode Driver's airbag first inflator 2P connector (on the cable reel harness): disconnected Driver's airbag second inflator 2P connector (on the cable reel harness): disconnected Cable reel connector B (4P) (on the dashboard wire harness): disconnected
Test point 1	Driver's airbag first inflator 2P connector No. 2 (on the cable reel harness) ①
Test point 2	Driver's airbag second inflator 2P connector No. 2 (on the cable reel harness) ②

Test point 1	Driver's airbag first inflator 2P connector No. 1 (on the cable reel harness) ①
Test point 2	Driver's airbag second inflator 2P connector No. 1 (on the cable reel harness) ②

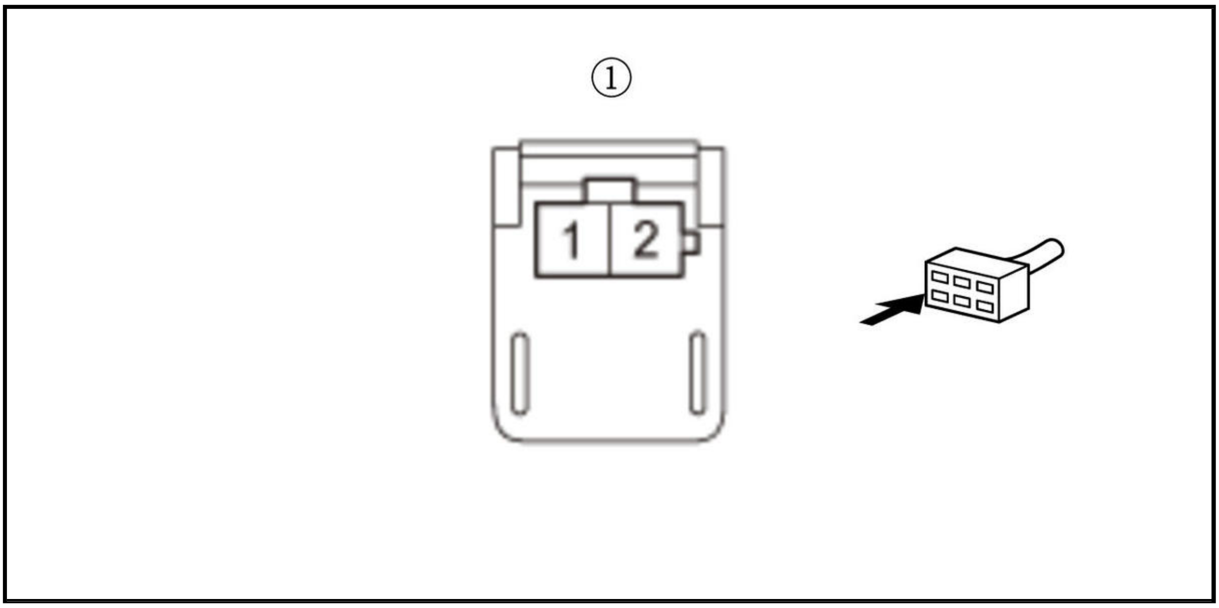

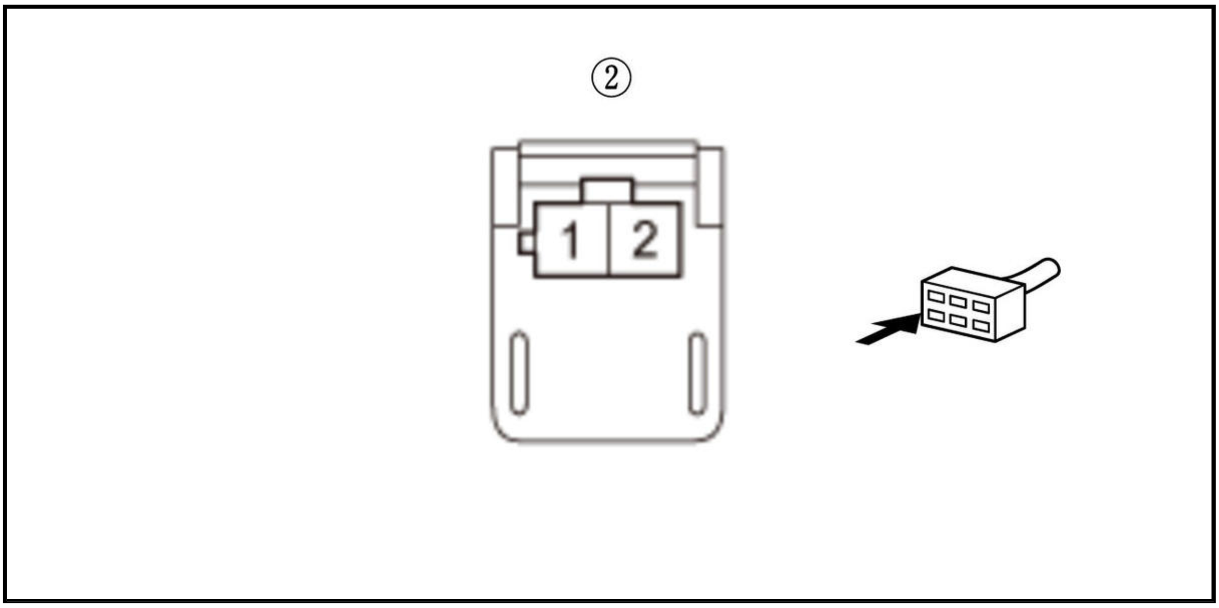

Is there 1 MΩ or more?

YES

Go to step 6.

NO

Short to another wire in the cable reel; replace the cable reel , then clear the DTC.

6. Shorted wire check (LA1+ line to LA2+ line, LA1- line to LA2- line) 3

-1. Disconnect the following connectors.

SRS unit connector A (39P)

-2. Measure the resistance between test points 1 and 2.

Test condition	Vehicle OFF (LOCK) mode
	SRS unit connector A (39P): disconnected
	Driver's airbag first inflator 2P connector (on the cable reel harness): disconnected
	Driver's airbag second inflator 2P connector (on the cable reel harness): disconnected
	Cable reel connector B (4P) (on the dashboard wire harness): disconnected

Test point 1	SRS unit connector A (39P) No. 9
Test point 2	SRS unit connector A (39P) No. 10

Test point 1	SRS unit connector A (39P) No. 8
Test point 2	SRS unit connector A (39P) No. 11

Is there 1 MΩ or more?

YES

The LA1+, LA1-, LA2+, and LA2- wires are OK. Faulty SRS unit or poor connection at SRS unit connector A (39P) and the SRS unit. Check the connection; if the connection is OK, check for any authorized service information related to the DTCs or symptoms you are troubleshooting or **replace the SRS unit** . If the DTC does not clear, replace the dashboard wire harness.

NO

Short to another wire in the dashboard wire harness; replace the dashboard wire harness, then clear the DTC.

DTC B0002-11

DTC B0002-11 : Short to Ground in the Driver's Airbag Second Inflator

Special Tools Required

SRS Inflator Simulator 07SAZ-TB4011A

SRS Simulator Lead J 070AZ-SNAA100

NOTE:

- **Before doing this troubleshooting procedure, find out if the vehicle was in a collision. If so, verify that all the required components were replaced with new components of the correct part number and were properly installed** .
- Before doing this troubleshooting procedure, review **SRS Precautions and Procedures** , **General Troubleshooting Information**, and **12 Volt Battery Terminal Disconnection and Reconnection** .

DTC Description	DTC
B0002-11 Short to ground in the driver's airbag second inflator	B

DTC (SRS)

1. Problem verification

-1. Clear the DTCs with the HDS.

-2. Turn the vehicle to the ON mode, then wait for 10 seconds.

-3. Check for DTCs with the HDS.

DTC Description	DTC
B0002-11 Short to ground in the driver's airbag second inflator	B

Is DTC B0002-11 indicated?

YES

The failure is duplicated. Go to step 2.

NO

Intermittent failure, the system is OK at this time. Go to Troubleshooting Intermittent Failures. If another DTC is indicated, troubleshoot the DTC.

2. Driver's airbag inflator check

-1. Turn the vehicle to the OFF (LOCK) mode.

-2. Disconnect the negative cable from the 12 volt battery, then wait at least 3 minutes.

-3. **Remove the driver's airbag** .

-4. Disconnect the following connector.

Driver's airbag second inflator 2P connector (on the cable reel harness)

NOTE: Make sure to work with the driver's airbag second inflator 2P connector (A) that has a guide tab (B) on the left side of the No. 1 terminal as shown.

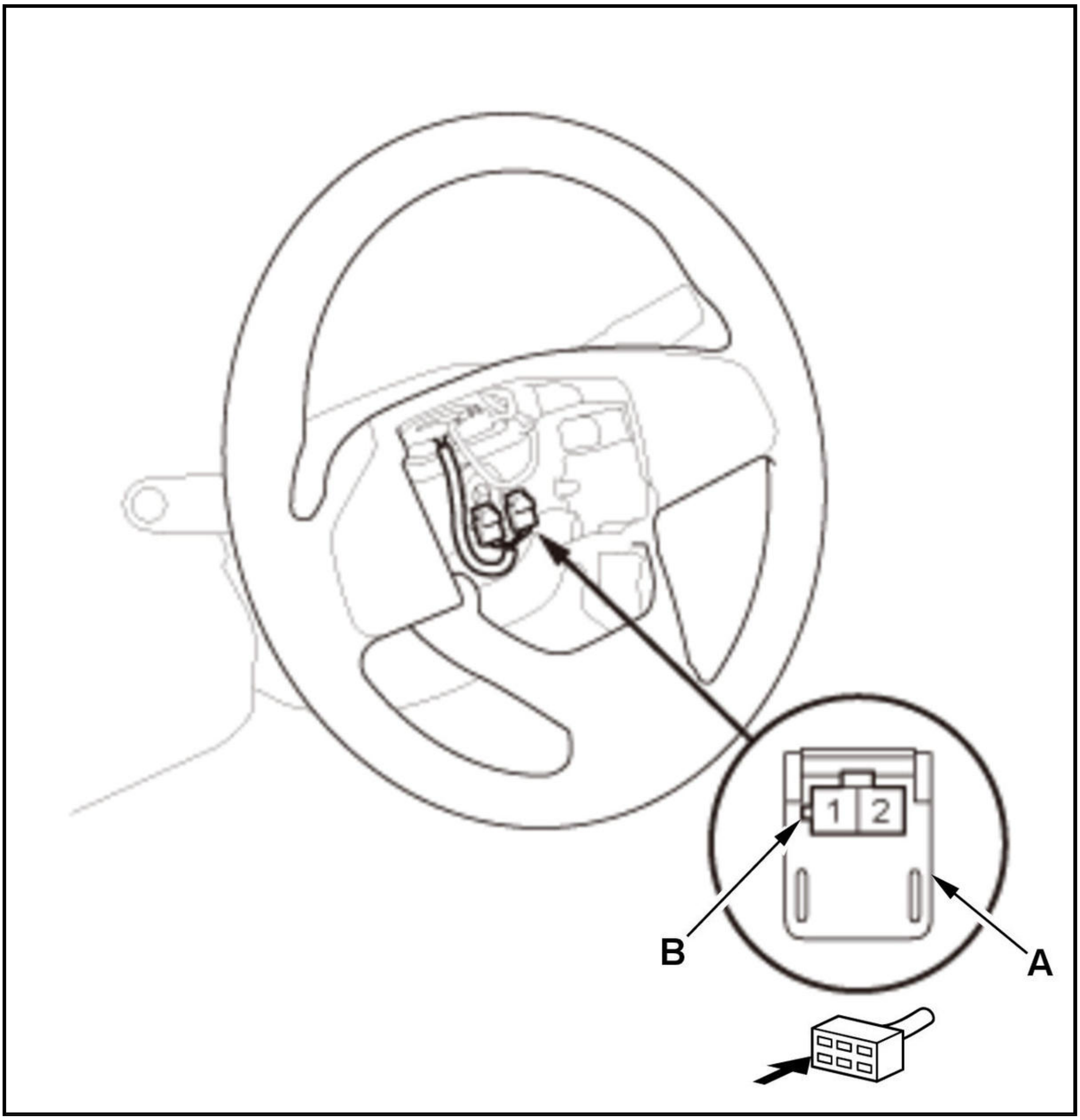

-5. Reconnect the negative cable to the 12 volt battery.

-6. Clear the DTCs with the HDS.

-7. Turn the vehicle to the ON mode, then wait for 10 seconds.

-8. Check for DTCs with the HDS.

DTC Description	DTC
B0002-11 Short to ground in the driver's airbag second inflator	B

Is DTC B0002-11 indicated?

YES

Go to step 3.

NO

Short to ground in the driver's airbag second inflator; **replace the driver's airbag** , then clear the DTC.

3. Cable reel check

-1. Turn the vehicle to the OFF (LOCK) mode.

-2. Disconnect the negative cable from the 12 volt battery, then wait at least 3 minutes.

-3. **Remove the column covers** .

-4. Disconnect cable reel connector B (4P) on the dashboard wire harness.

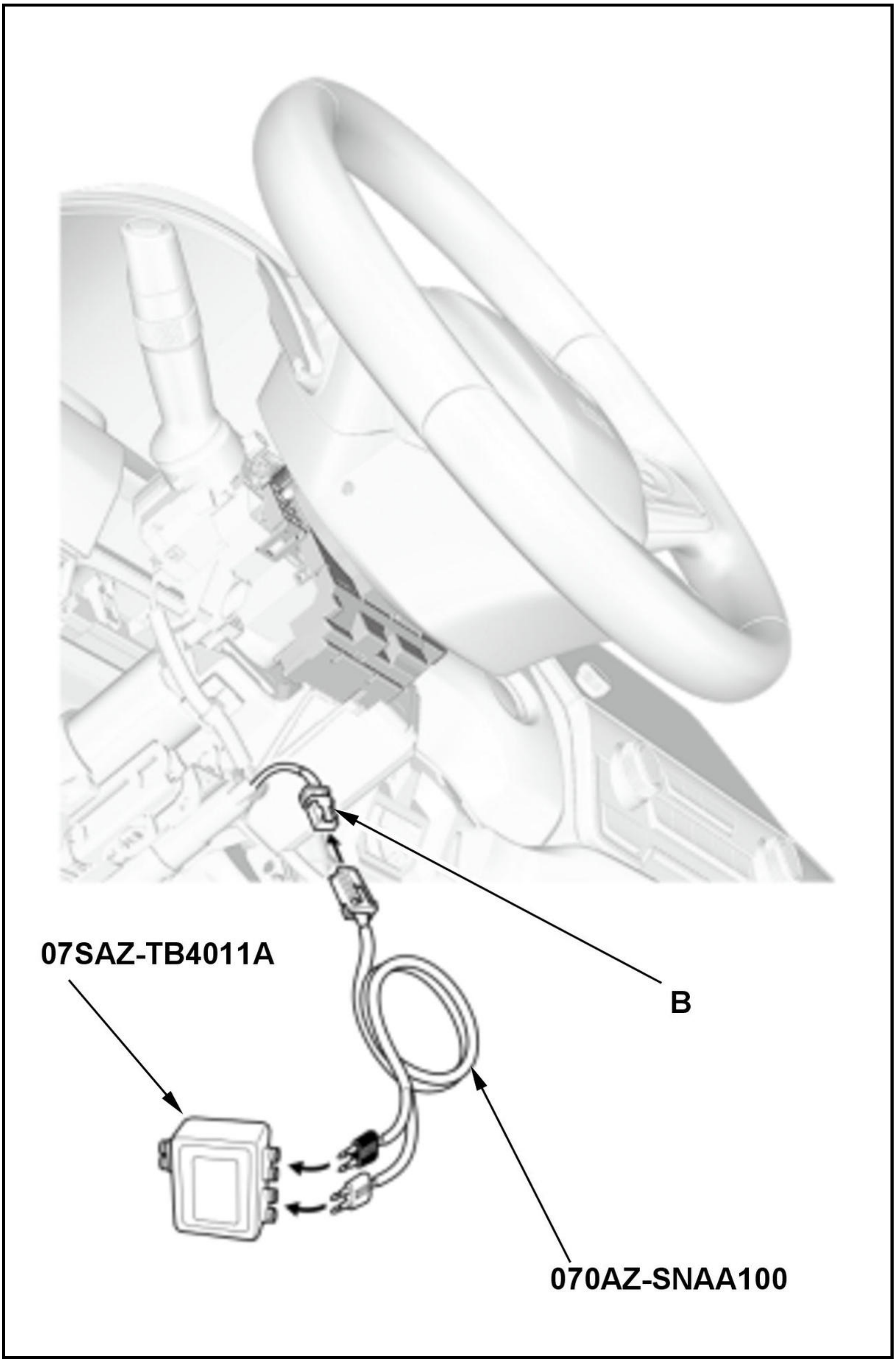
07SAZ-TB4011A
B
070AZ-SNAA100

-5. Connect the terminals of SRS simulator lead J to the SRS inflator simulator (2 Ω connectors), then connect SRS simulator lead J to cable reel connector B (4P) on the dashboard wire harness.

-6. Reconnect the negative cable to the 12 volt battery.

-7. Clear the DTCs with the HDS.

-8. Turn the vehicle to the ON mode, then wait for 10 seconds.

-9. Check for DTCs with the HDS.

DTC Description	DTC
B0002-11 Short to ground in the driver's airbag second inflator	B

Is DTC B0002-11 indicated?

YES

Go to step 4.

NO

Short to ground in the cable reel; **replace the cable reel** , then clear the DTC.

4. Shorted wire check (LA2+, LA2- lines)

-1. Turn the vehicle to the OFF (LOCK) mode.

-2. Disconnect the negative cable from the 12 volt battery, then wait at least 3 minutes.

-3. Disconnect the following connector.

SRS unit connector A (39P)

-4. Disconnect the SRS inflator simulator from SRS simulator lead J. Do not disconnect SRS simulator lead J from cable reel connector B (4P) on the dashboard wire harness.

-5. Measure the resistance between test points 1 and 2.

Test condition	Vehicle OFF (LOCK) mode
	Driver's airbag second inflator 2P connector (on the cable reel harness): disconnected
	Cable reel connector B (4P) (on the dashboard wire harness): disconnected
	SRS unit connector A (39P): disconnected
	Cable reel connector B (4P) (on the dashboard wire harness): connected to SRS simulator lead J
Test point 1	SRS simulator lead J black terminal
Test point 2	Body ground

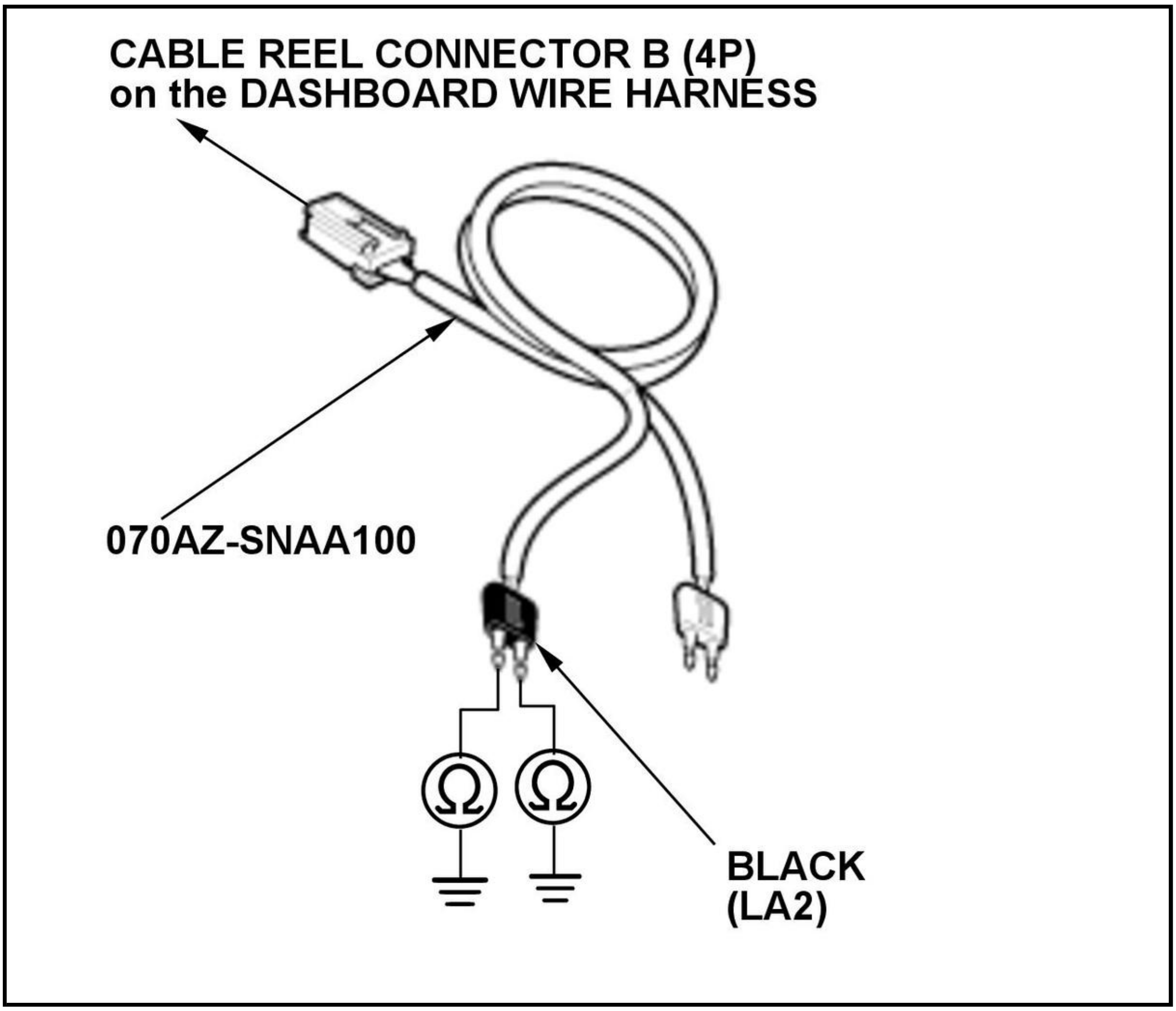

Is there an open circuit, or at least 1 MΩ?

YES

The LA2+ and LA2- wires are OK. Faulty SRS unit or poor connection at SRS unit connector A (39P) and the SRS unit. Check the connection; if the connection is OK, check for any authorized service information related to the DTCs or symptoms you are troubleshooting or **replace the SRS unit** . If the DTC does not clear, replace the dashboard wire harness.

NO

Short to ground in the dashboard wire harness; replace the dashboard wire harness, then clear the DTC.

DTC B0002-12

DTC B0002-12 : Short to Power in the Driver's Airbag Second Inflator

Special Tools Required

SRS Inflator Simulator 07SAZ-TB4011A

SRS Simulator Lead J 070AZ-SNAA100

NOTE:

- **Before doing this troubleshooting procedure, find out if the vehicle was in a collision. If so, verify that all the required components were replaced with new components of the correct part number and were properly installed** .

- Before doing this troubleshooting procedure, review **SRS Precautions and Procedures** , **General Troubleshooting Information**, and **12 Volt Battery Terminal Disconnection and Reconnection** .

DTC Description	DTC
B0002-12 Short to power in the driver's airbag second inflator	B

DTC (SRS)

1. Problem verification

   -1. Clear the DTCs with the HDS.

   -2. Turn the vehicle to the ON mode, then wait for 10 seconds.

   -3. Check for DTCs with the HDS.

DTC Description	DTC
B0002-12 Short to power in the driver's airbag second inflator	B

   Is DTC B0002-12 indicated?

   YES

   The failure is duplicated. Go to step 2.

   NO

   Intermittent failure, the system is OK at this time. Go to Troubleshooting Intermittent Failures. If another DTC is indicated, troubleshoot the DTC.

2. Driver's airbag inflator check

   -1. Turn the vehicle to the OFF (LOCK) mode.

   -2. Disconnect the negative cable from the 12 volt battery, then wait at least 3 minutes.

   -3. **Remove the driver's airbag** .

   -4. Disconnect the following connector.

Driver's airbag second inflator 2P connector (on the cable reel harness)

   NOTE: Make sure to work with the driver's airbag second inflator 2P connector (A) that has a guide tab (B) on the left side of the No. 1 terminal as shown.

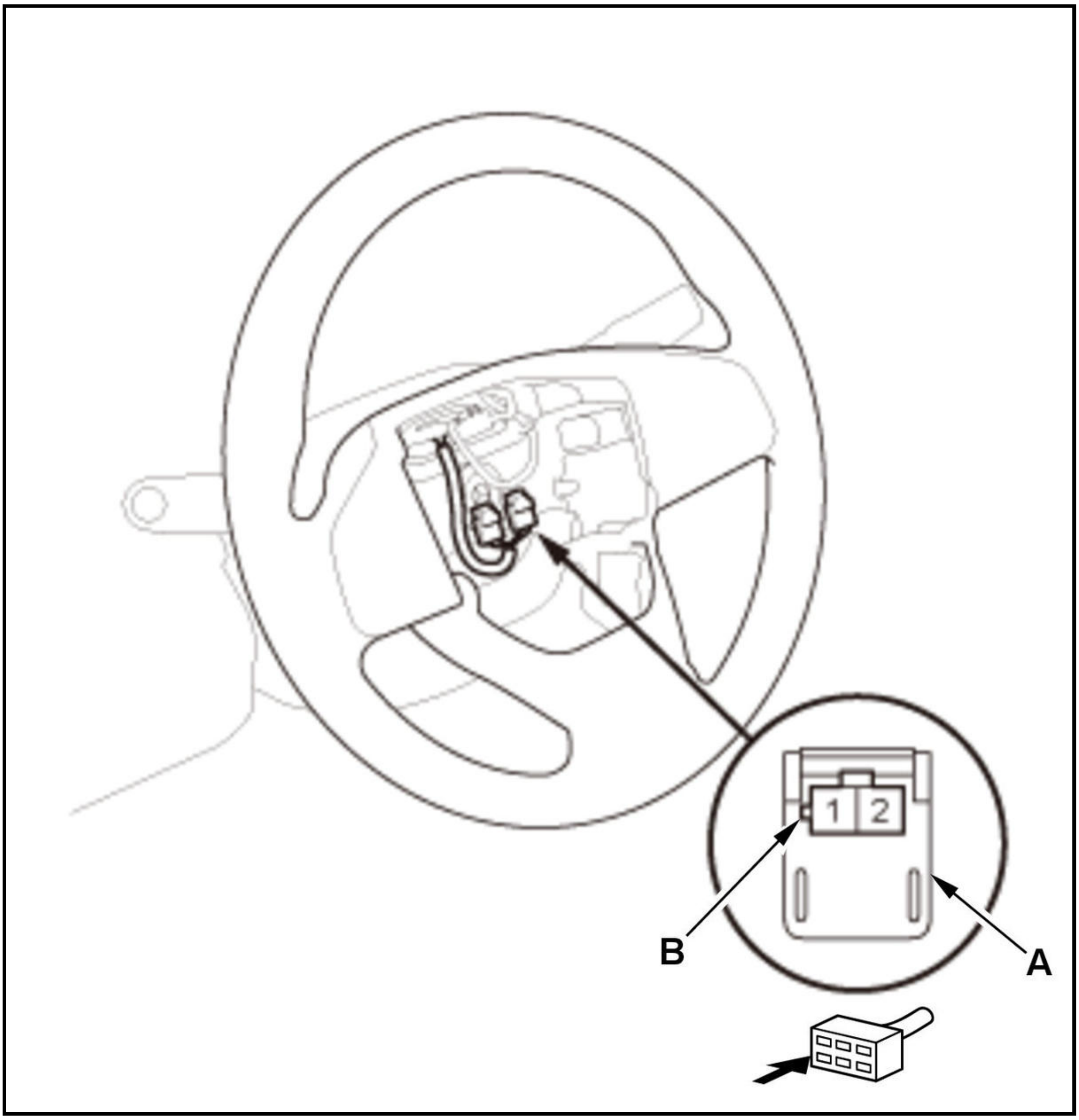

-5. Reconnect the negative cable to the 12 volt battery.

-6. Clear the DTCs with the HDS.

-7. Turn the vehicle to the ON mode, then wait for 10 seconds.

-8. Check for DTCs with the HDS.

DTC Description	DTC
B0002-12 Short to power in the driver's airbag second inflator	B

Is DTC B0002-12 indicated?

YES

Go to step 3.

NO

Short to power in the driver's airbag second inflator; **replace the driver's airbag** , then clear the DTC.

3. Cable reel check

-1. Turn the vehicle to the OFF (LOCK) mode.

-2. Disconnect the negative cable from the 12 volt battery, then wait at least 3 minutes.

-3. **Remove the column covers** .

-4. Disconnect cable reel connector B (4P) on the dashboard wire harness.

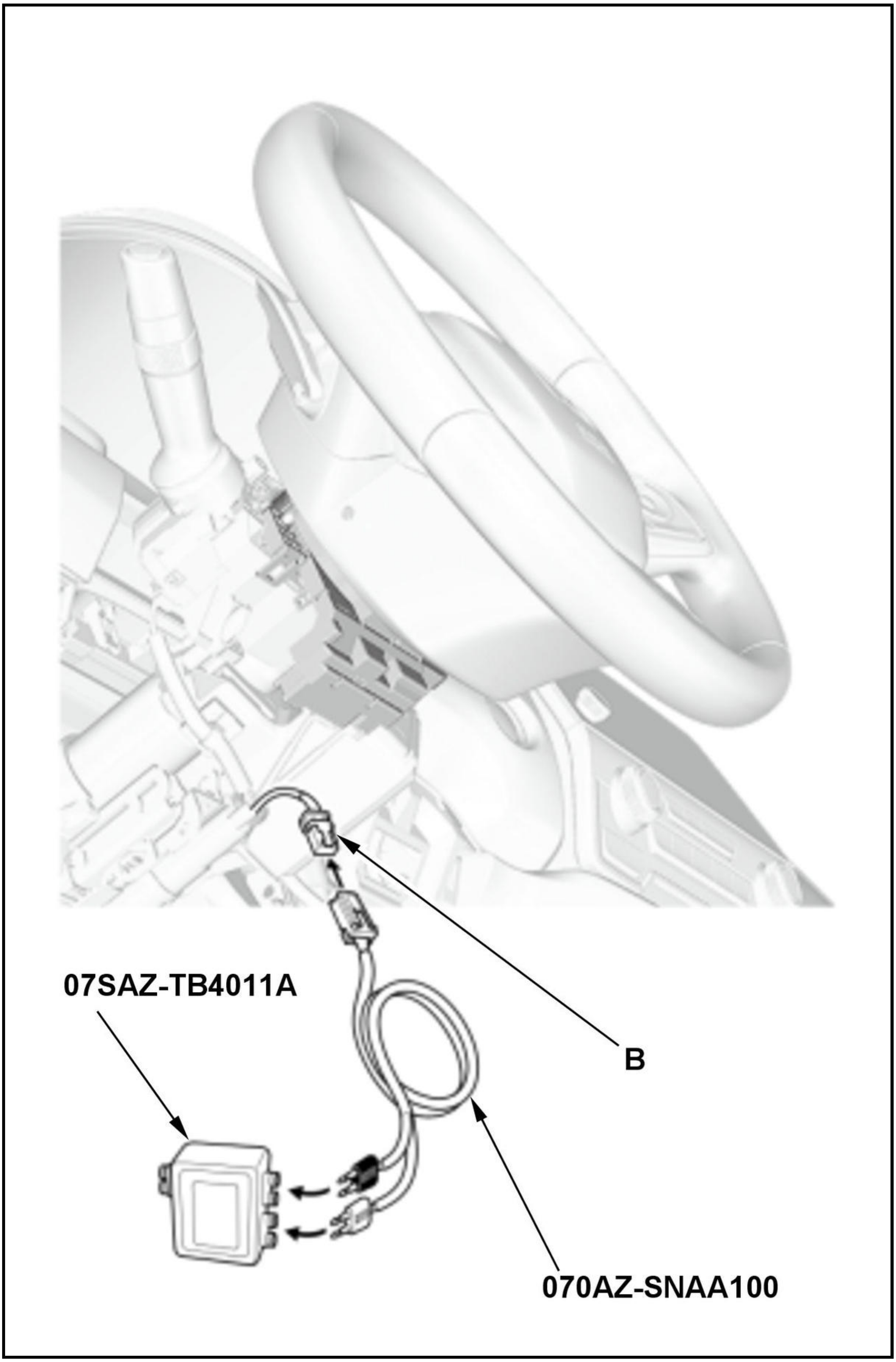
07SAZ-TB4011A
B
070AZ-SNAA100

-5. Connect the terminals of SRS simulator lead J to the SRS inflator simulator (2 Ω connectors), then connect SRS simulator lead J to cable reel connector B (4P) on the dashboard wire harness.

-6. Reconnect the negative cable to the 12 volt battery.

-7. Clear the DTCs with the HDS.

-8. Turn the vehicle to the ON mode, then wait for 10 seconds.

-9. Check for DTCs with the HDS.

DTC Description	DTC
B0002-12 Short to power in the driver's airbag second inflator	B

Is DTC B0002-12 indicated?

YES

Go to step 4.

NO

Short to power in the cable reel; **replace the cable reel** , then clear the DTC.

4. Shorted wire check (LA2+, LA2- lines to power)

-1. Turn the vehicle to the OFF (LOCK) mode.

-2. Disconnect the negative cable from the 12 volt battery, then wait at least 3 minutes.

-3. Disconnect the following connector.

SRS unit connector A (39P)

-4. Disconnect the SRS inflator simulator from SRS simulator lead J. Do not disconnect SRS simulator lead J from cable reel connector B (4P) on the dashboard wire harness.

-5. Reconnect the negative cable to the 12 volt battery.

-6. Turn the vehicle to the ON mode.

-7. Measure the voltage between test points 1 and 2.

Test condition	Vehicle ON mode
	Driver's airbag second inflator 2P connector (on the cable reel harness): disconnected
	Cable reel connector B (4P) (on the dashboard wire harness): disconnected
	SRS unit connector A (39P): disconnected
	Cable reel connector B (4P) (on the dashboard wire harness): connected to SRS simulator lead J
Test point 1	SRS simulator lead J black terminal
Test point 2	Body ground

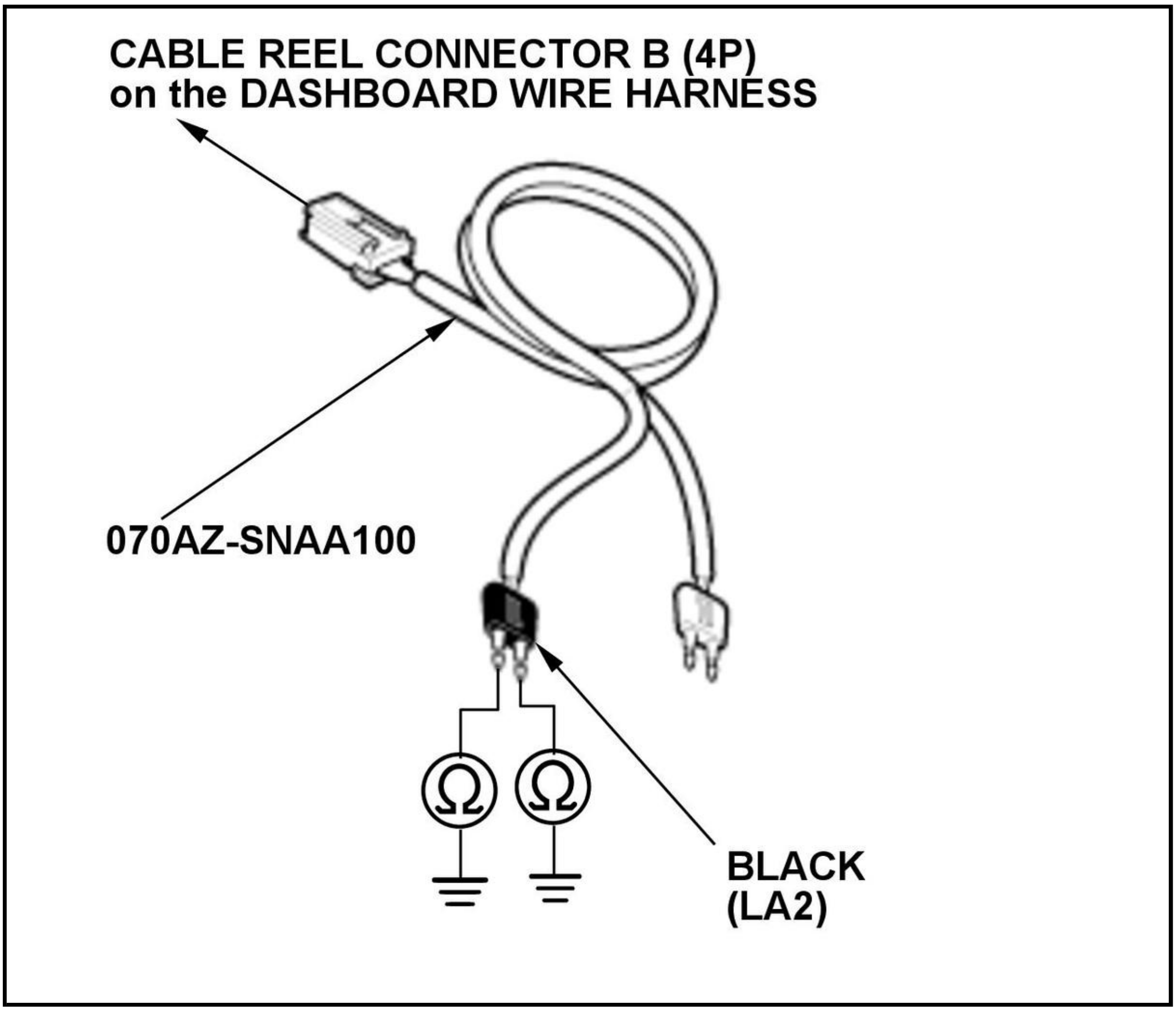

Is there 0.2 V or less?

YES

The LA2+ and LA2- wires are OK. Faulty SRS unit or poor connection at SRS unit connector A (39P) and the SRS unit. Check the connection; if the connection is OK, check for any authorized service information related to the DTCs or symptoms you are troubleshooting or replace the SRS unit . If the DTC does not clear, replace the dashboard wire harness.

NO

Short to power in the dashboard wire harness; replace the dashboard wire harness, then clear the DTC.

DTC B0002-13

DTC B0002-13 : Open or Increased Resistance in the Driver's Airbag Second Inflator

Special Tools Required

SRS Inflator Simulator 07SAZ-TB4011A

SRS Simulator Lead J 070AZ-SNAA100

NOTE:

- Before doing this troubleshooting procedure, find out if the vehicle was in a collision. If so, verify that all the required components were replaced with new components of the correct part number and were properly installed .

- Before doing this troubleshooting procedure, review **SRS Precautions and Procedures** , **General Troubleshooting Information**, and **12 Volt Battery Terminal Disconnection and Reconnection** .

DTC Description	DTC
B0002-13 Open or increased resistance in the driver's airbag second inflator	B

DTC (SRS)

1. Problem verification

   -1. Clear the DTCs with the HDS.

   -2. Turn the vehicle to the ON mode, then wait for 10 seconds.

   -3. Check for DTCs with the HDS.

DTC Description	DTC
B0002-13 Open or increased resistance in the driver's airbag second inflator	B

   Is DTC B0002-13 indicated?

   YES

   The failure is duplicated. Go to step 2.

   NO

   Intermittent failure, the system is OK at this time. Go to Troubleshooting Intermittent Failures. If another DTC is indicated, troubleshoot the DTC.

2. Driver's airbag inflator check

   -1. Turn the vehicle to the OFF (LOCK) mode.

   -2. Disconnect the negative cable from the 12 volt battery, then wait at least 3 minutes.

   -3. **Remove the driver's airbag** .

   -4. Disconnect the following connector.

Driver's airbag second inflator 2P connector (on the cable reel harness)

   NOTE: Make sure to work with the driver's airbag second inflator 2P connector (A) that has a guide tab (B) on the left side of the No. 1 terminal as shown.

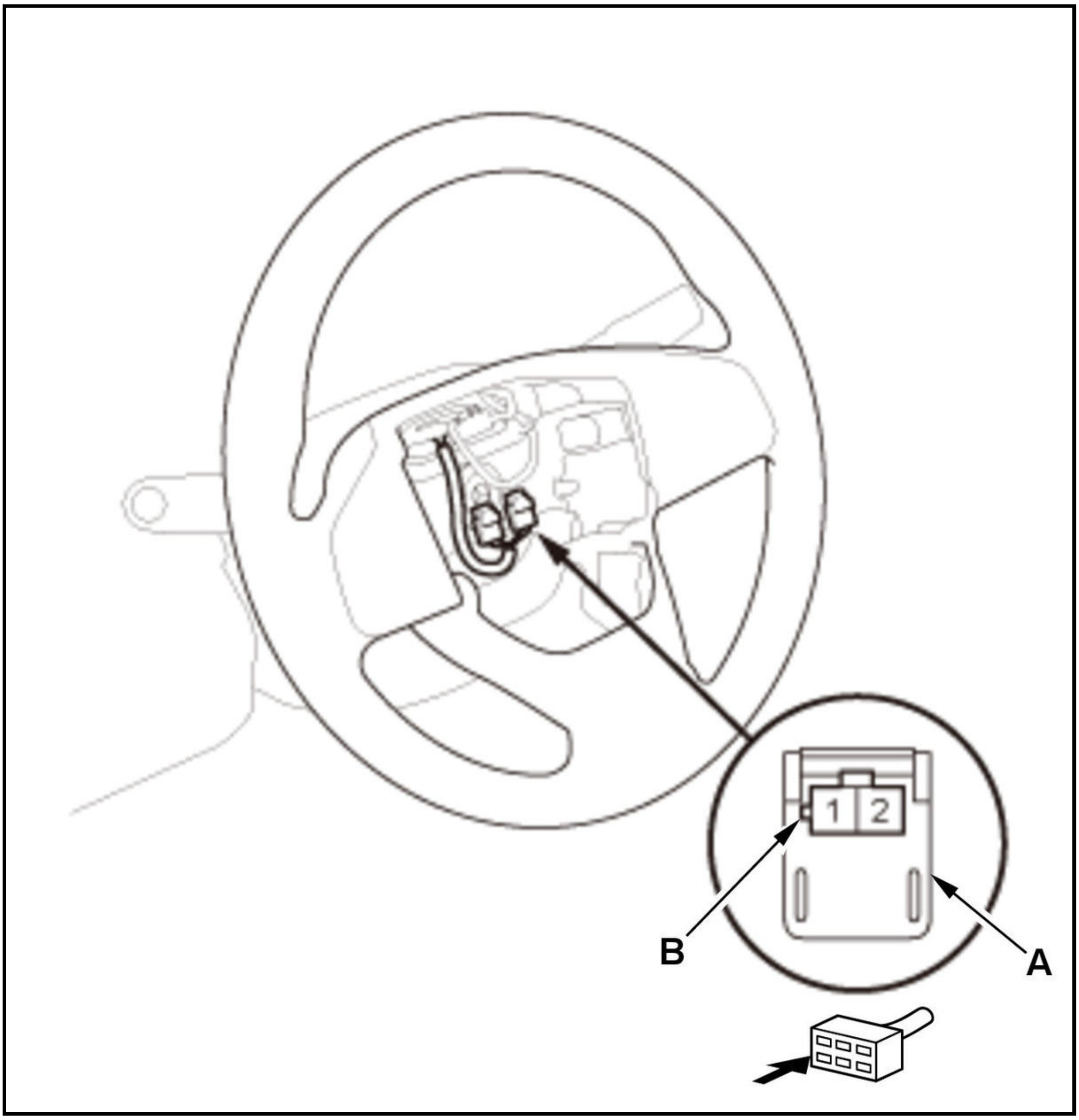

-5. Connect terminals A and B with a jumper wire.

Terminal A	Driver's airbag second inflator 2P connector (female terminals) No. 1 (on the cable reel harness): ①
Terminal B	Driver's airbag second inflator 2P connector (female terminals) No. 2 (on the cable reel harness): ①

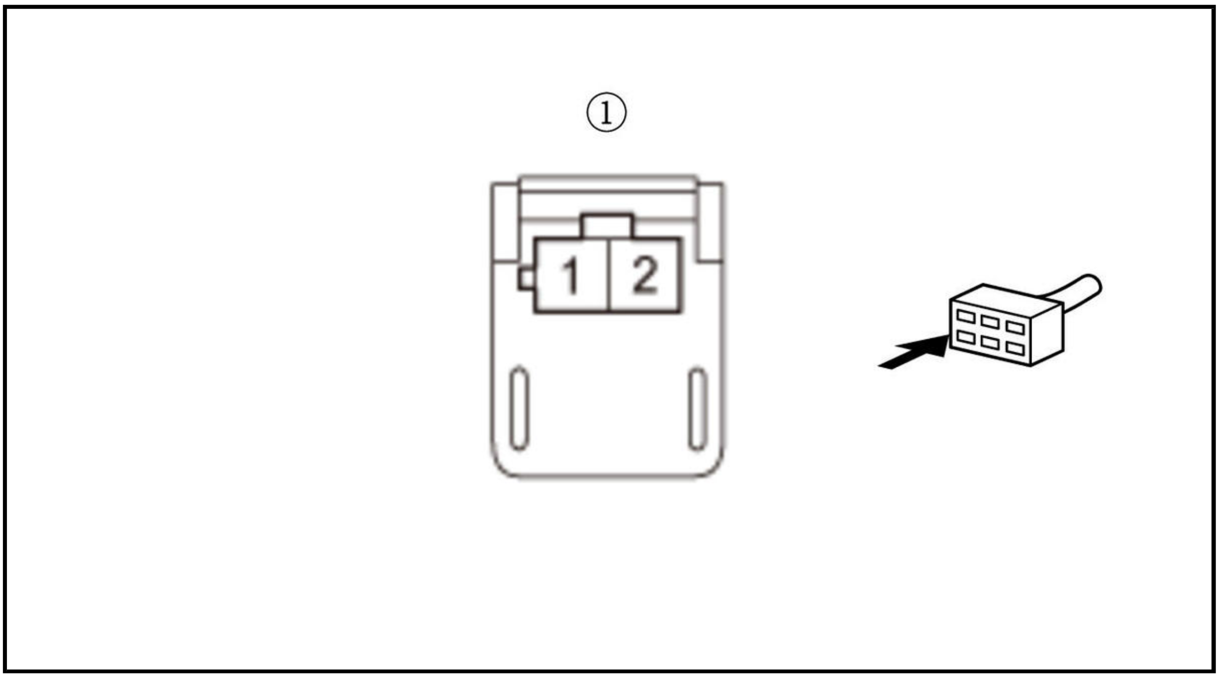

-6. Reconnect the negative cable to the 12 volt battery.

-7. Clear the DTCs with the HDS.

-8. Turn the vehicle to the ON mode, then wait for 10 seconds.

-9. Check for DTCs with the HDS.

DTC Description	DTC
B0002-13 Open or increased resistance in the driver's airbag second inflator	B

Is DTC B0002-13 indicated?

YES

Go to step 3.

NO

Open in the driver's airbag second inflator; **replace the driver's airbag** , then clear the DTC.

3. Cable reel check

-1. Turn the vehicle to the OFF (LOCK) mode.

-2. Disconnect the negative cable from the 12 volt battery, then wait at least 3 minutes.

-3. Remove the jumper wire from the driver's airbag second inflator 2P connector on the cable reel harness.

-4. **Remove the column covers** .

-5. Disconnect cable reel connector B (4P) on the dashboard wire harness.

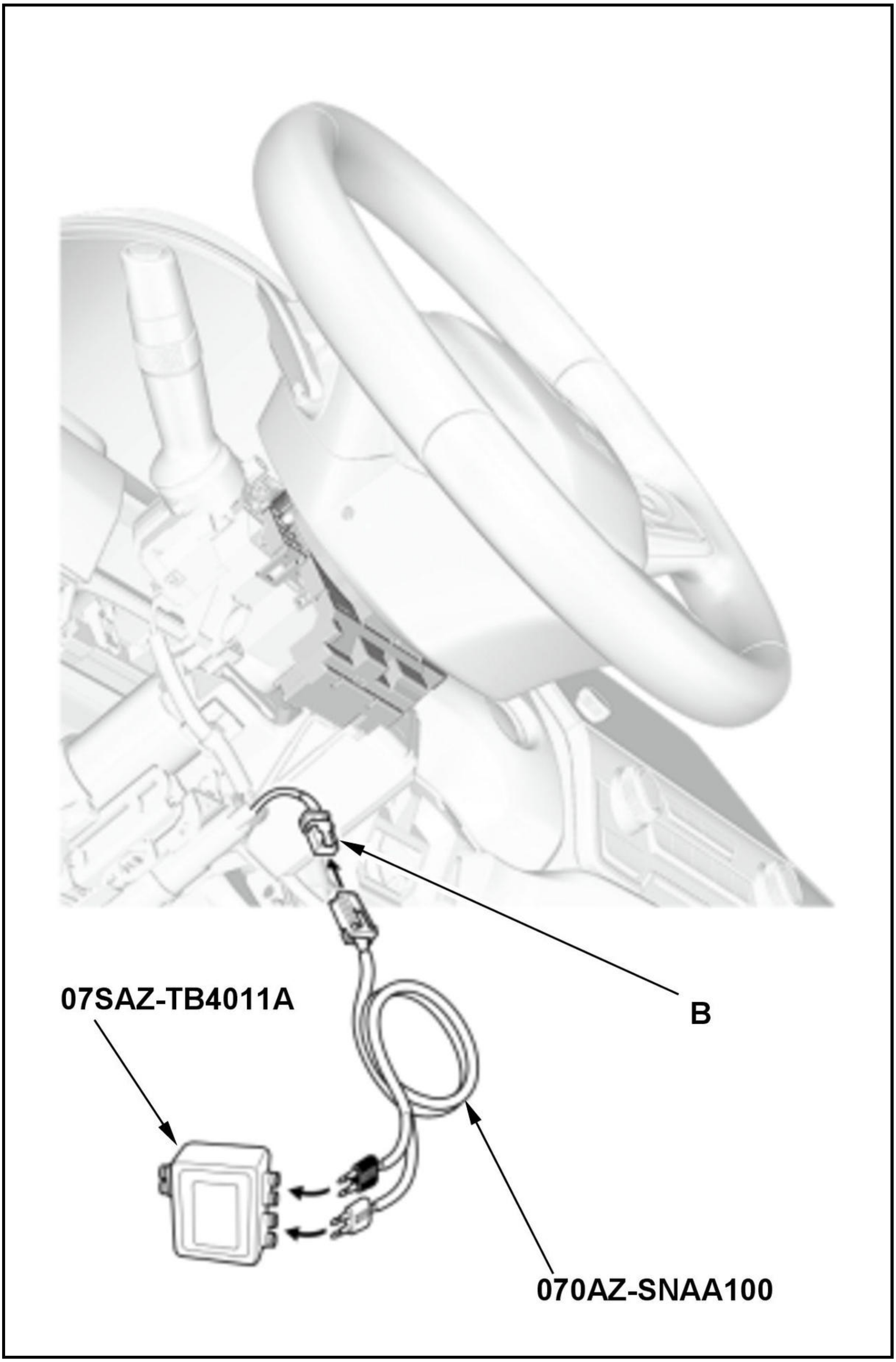
07SAZ-TB4011A
B
070AZ-SNAA100

-6. Connect the terminals of SRS simulator lead J to the SRS inflator simulator (2 Ω connectors), then connect SRS simulator lead J to cable reel connector B (4P) on the dashboard wire harness.

-7. Reconnect the negative cable to the 12 volt battery.

-8. Clear the DTCs with the HDS.

-9. Turn the vehicle to the ON mode, then wait for 10 seconds.

-10.

Check for DTCs with the HDS.

DTC Description	DTC
B0002-13 Open or increased resistance in the driver's airbag second inflator	B

Is DTC B0002-13 indicated?

YES

Go to step 4.

NO

Open in the cable reel; **replace the cable reel** , then clear the DTC.

4. Open wire check (LA2+, LA2- lines)

-1. Turn the vehicle to the OFF (LOCK) mode.

-2. Disconnect the negative cable from the 12 volt battery, then wait at least 3 minutes.

-3. Disconnect the following connector.

SRS unit connector A (39P)

-4. Disconnect the SRS inflator simulator from SRS simulator lead J. Do not disconnect SRS simulator lead J from cable reel connector B (4P) on the dashboard wire harness.

-5. Measure the resistance of the test point.

Test condition	Vehicle OFF (LOCK) mode
	Driver's airbag second inflator 2P connector (on the cable reel harness): disconnected
	Cable reel connector B (4P) (on the dashboard wire harness): disconnected
	SRS unit connector A (39P): disconnected
	Cable reel connector B (4P) (on the dashboard wire harness): connected to SRS simulator lead J
Test point	SRS simulator lead J black terminal

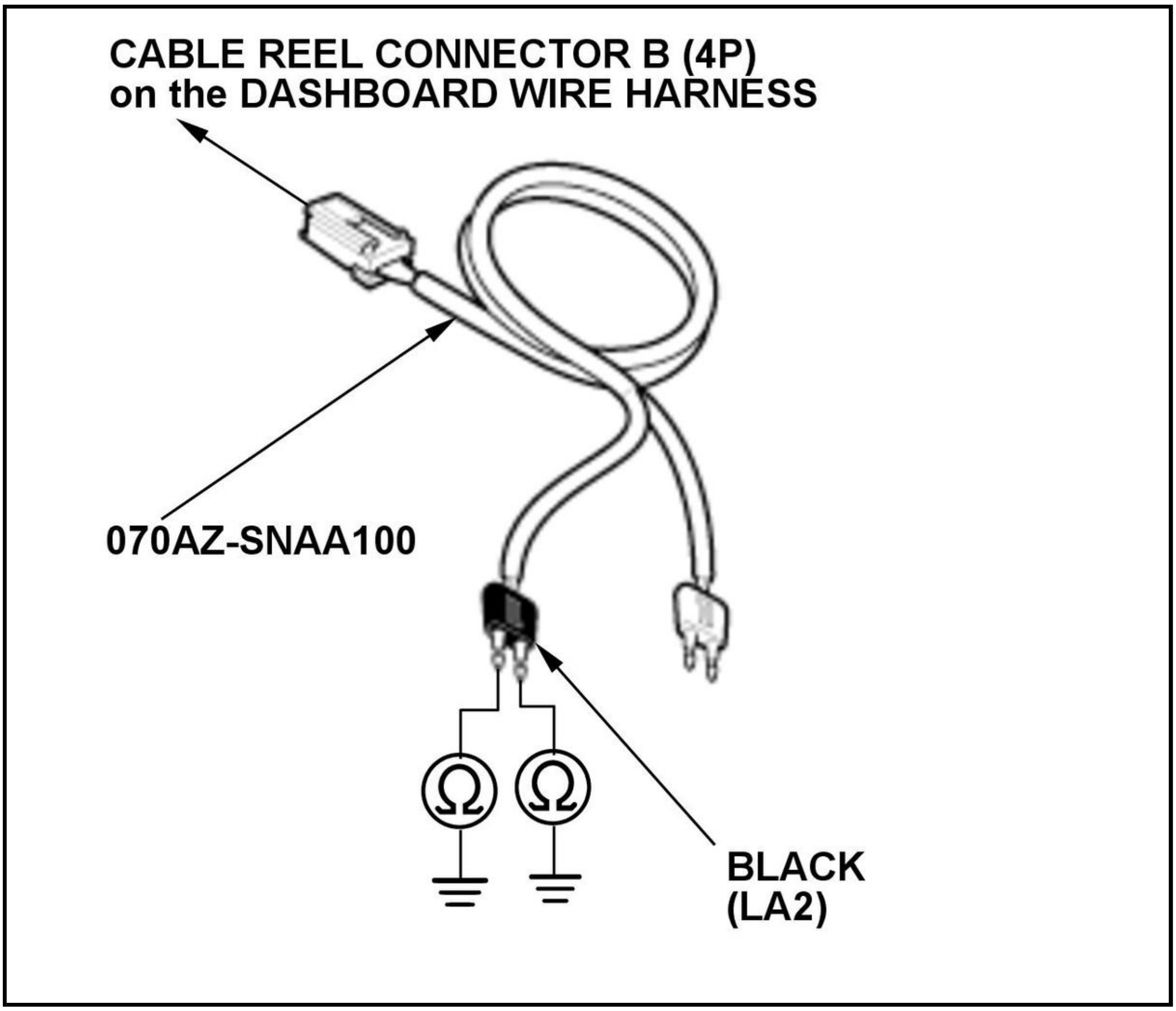
CABLE REEL CONNECTOR B (4P)
on the DASHBOARD WIRE HARNESS
070AZ-SNAA100
BLACK
(LA2)

Is there 1.0 Ω or less?

YES

The LA2+ and LA2- wires are OK. Faulty SRS unit or poor connection at SRS unit connector A (39P) and the SRS unit. Check the connection; if the connection is OK, check for any authorized service information related to the DTCs or symptoms you are troubleshooting or **replace the SRS unit** . If the DTC does not clear, replace the dashboard wire harness.

NO

Open or increased resistance in the dashboard wire harness; replace the dashboard wire harness, then clear the DTC.

DTC B0002-1A

DTC B0002-1A : Decreased Resistance in the Driver's Airbag Second Inflator

Special Tools Required

SRS Inflator Simulator 07SAZ-TB4011A

SRS Simulator Lead J 070AZ-SNAA100

SRS Short Canceller 070AZ-SAA0100

NOTE:

- **Before doing this troubleshooting procedure, find out if the vehicle was in a collision. If so, verify that all the required components were replaced with new components of the correct part number and were properly installed** .
- Before doing this troubleshooting procedure, review **SRS Precautions and Procedures** , **General Troubleshooting Information**, and **12 Volt Battery Terminal Disconnection and Reconnection** .

DTC Description	DTC
B0002-1A Decreased resistance in the driver's airbag second inflator	B

DTC (SRS)

1. Problem verification

   -1. Clear the DTCs with the HDS.

   -2. Turn the vehicle to the ON mode, then wait for 10 seconds.

   -3. Check for DTCs with the HDS.

DTC Description	DTC
B0002-1A Decreased resistance in the driver's airbag second inflator	B

   Is DTC B0002-1A indicated?

   YES

   The failure is duplicated. Go to step 2.

   NO

   Intermittent failure, the system is OK at this time. Go to Troubleshooting Intermittent Failures. If another DTC is indicated, troubleshoot the DTC.

2. Driver's airbag inflator check

   -1. Turn the vehicle to the OFF (LOCK) mode.

   -2. Disconnect the negative cable from the 12 volt battery, then wait at least 3 minutes.

   -3. **Remove the driver's airbag** .

   -4. Disconnect the following connector.

Driver's airbag second inflator 2P connector (on the cable reel harness)

   NOTE: Make sure to work with the driver's airbag second inflator 2P connector (A) that has a guide tab (B) on the left side of the No. 1 terminal as shown.

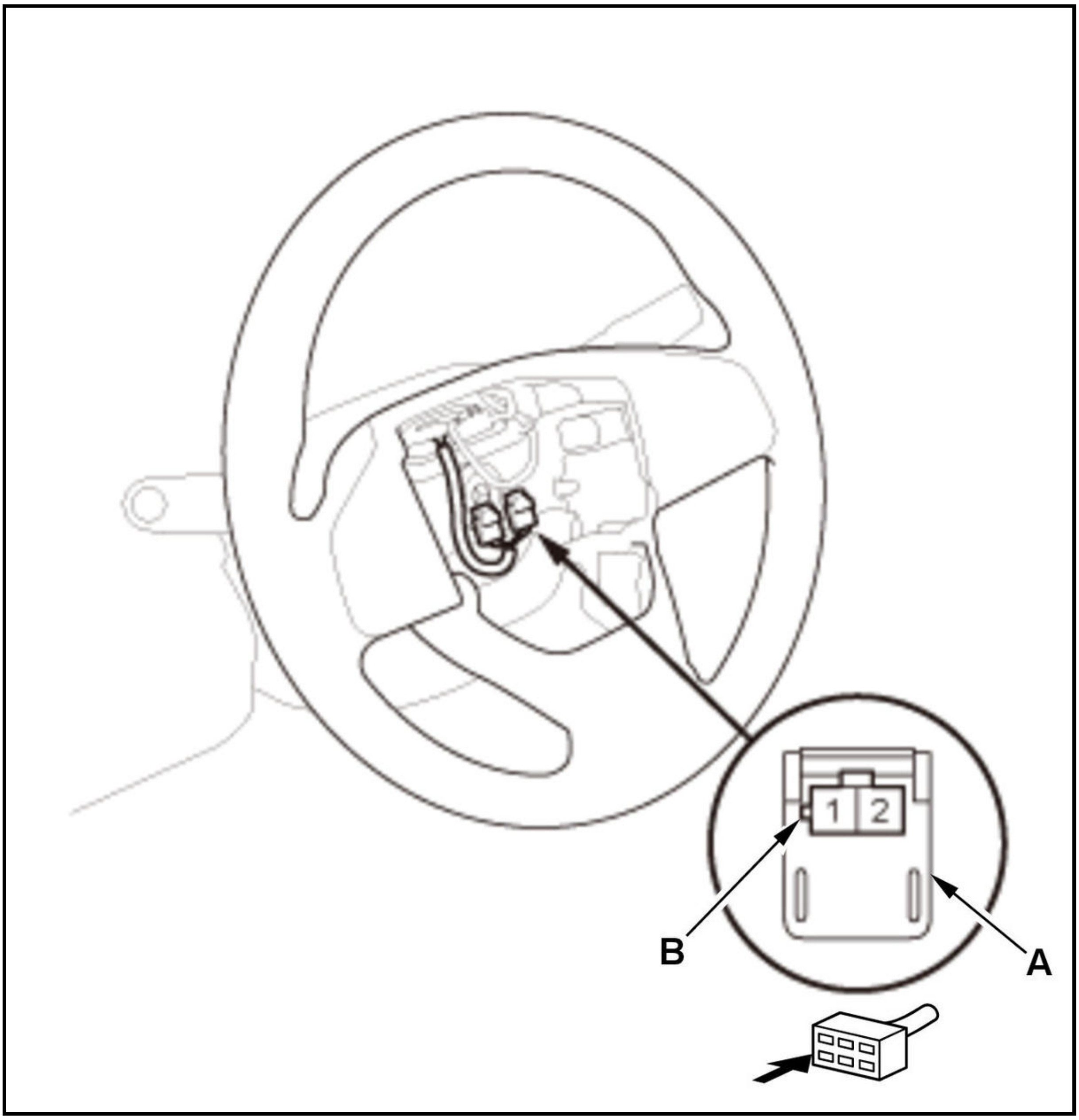

-5. Reconnect the negative cable to the 12 volt battery.

-6. Clear the DTCs with the HDS.

-7. Turn the vehicle to the ON mode, then wait for 10 seconds.

-8. Check for DTCs with the HDS.

DTC Description	DTC
B0002-1A Decreased resistance in the driver's airbag second inflator	B

Is DTC B0002-1A indicated?

YES

Go to step 3.

NO

Short to another wire in the driver's airbag second inflator; **replace the driver's airbag** , then clear the DTC.

3. Cable reel check

-1. Turn the vehicle to the OFF (LOCK) mode.

-2. Disconnect the negative cable from the 12 volt battery, then wait at least 3 minutes.

-3. **Remove the column covers** .

-4. Disconnect cable reel connector B (4P) on the dashboard wire harness.

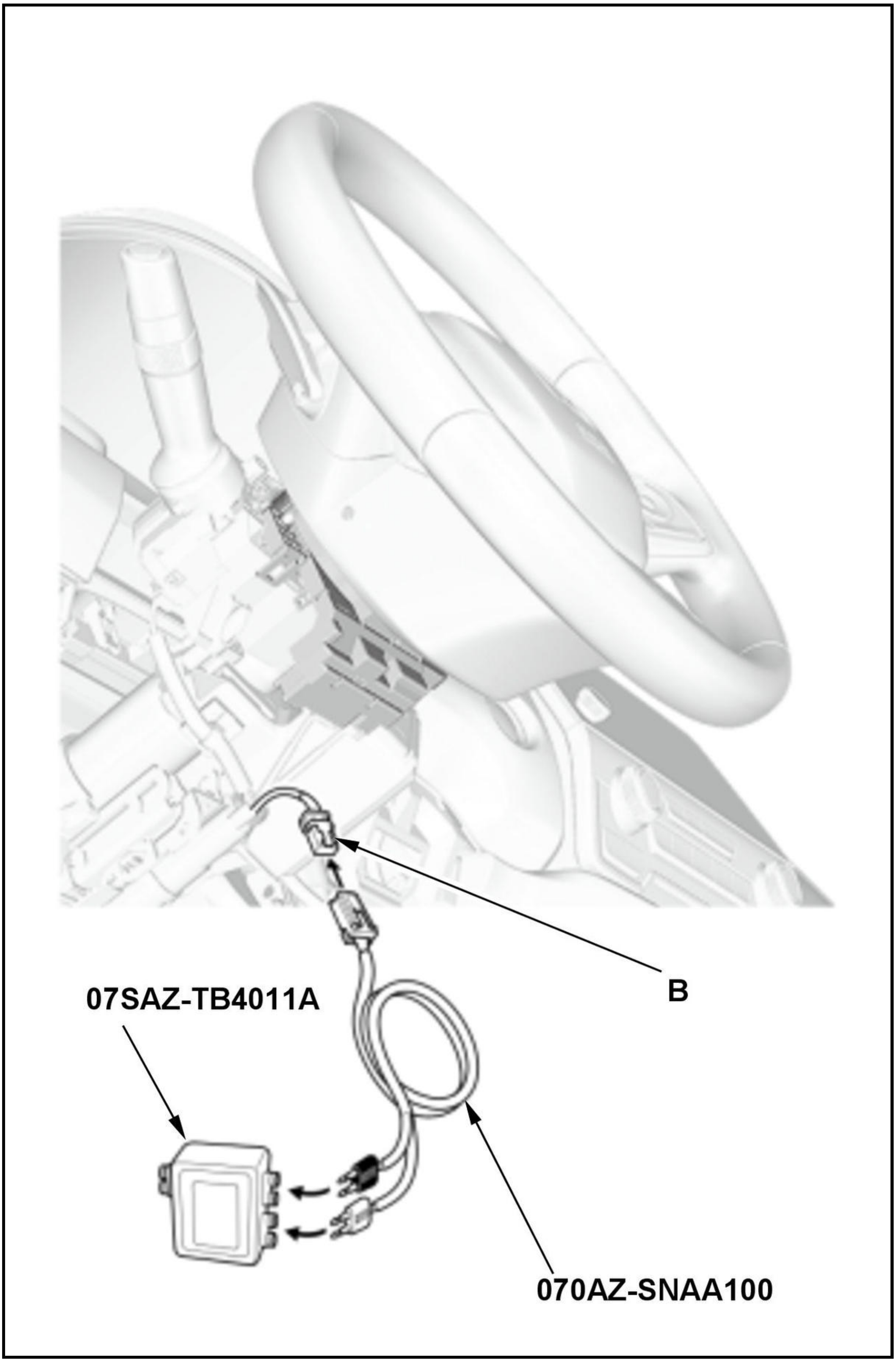
07SAZ-TB4011A
B
070AZ-SNAA100

-5. Connect the terminals of SRS simulator lead J to the SRS inflator simulator (2 Ω connectors), then connect SRS simulator lead J to cable reel connector B (4P) on the dashboard wire harness.

-6. Reconnect the negative cable to the 12 volt battery.

-7. Clear the DTCs with the HDS.

-8. Turn the vehicle to the ON mode, then wait for 10 seconds.

-9. Check for DTCs with the HDS.

DTC Description	DTC
B0002-1A Decreased resistance in the driver's airbag second inflator	B

Is DTC B0002-1A indicated?

YES

Go to step 4.

NO

Short to another wire in the cable reel; **replace the cable reel** , then clear the DTC.

4. Shorted wire check (LA2+ line to LA2- line)

-1. Turn the vehicle to the OFF (LOCK) mode.

-2. Disconnect the negative cable from the 12 volt battery, then wait at least 3 minutes.

-3. Disconnect the following connector.

SRS unit connector A (39P)

-4. Disconnect the SRS inflator simulator from SRS simulator lead J. Do not disconnect SRS simulator lead J from cable reel connector B (4P) on the dashboard wire harness.

-5. **Connect the SRS short canceller to SRS unit connector A (39P) terminals No. 10 and No. 11**.

-6. Measure the resistance of the test point.

Test condition	Vehicle OFF (LOCK) mode
	Driver's airbag second inflator 2P connector (on the cable reel harness): disconnected
	Cable reel connector B (4P) (on the dashboard wire harness): disconnected
	SRS unit connector A (39P): disconnected
	Cable reel connector B (4P) (on the dashboard wire harness): connected to SRS simulator lead J
	SRS unit connector A (39P) No. 10 and No. 11: connected to SRS short canceller
Test point	SRS simulator lead J black terminal

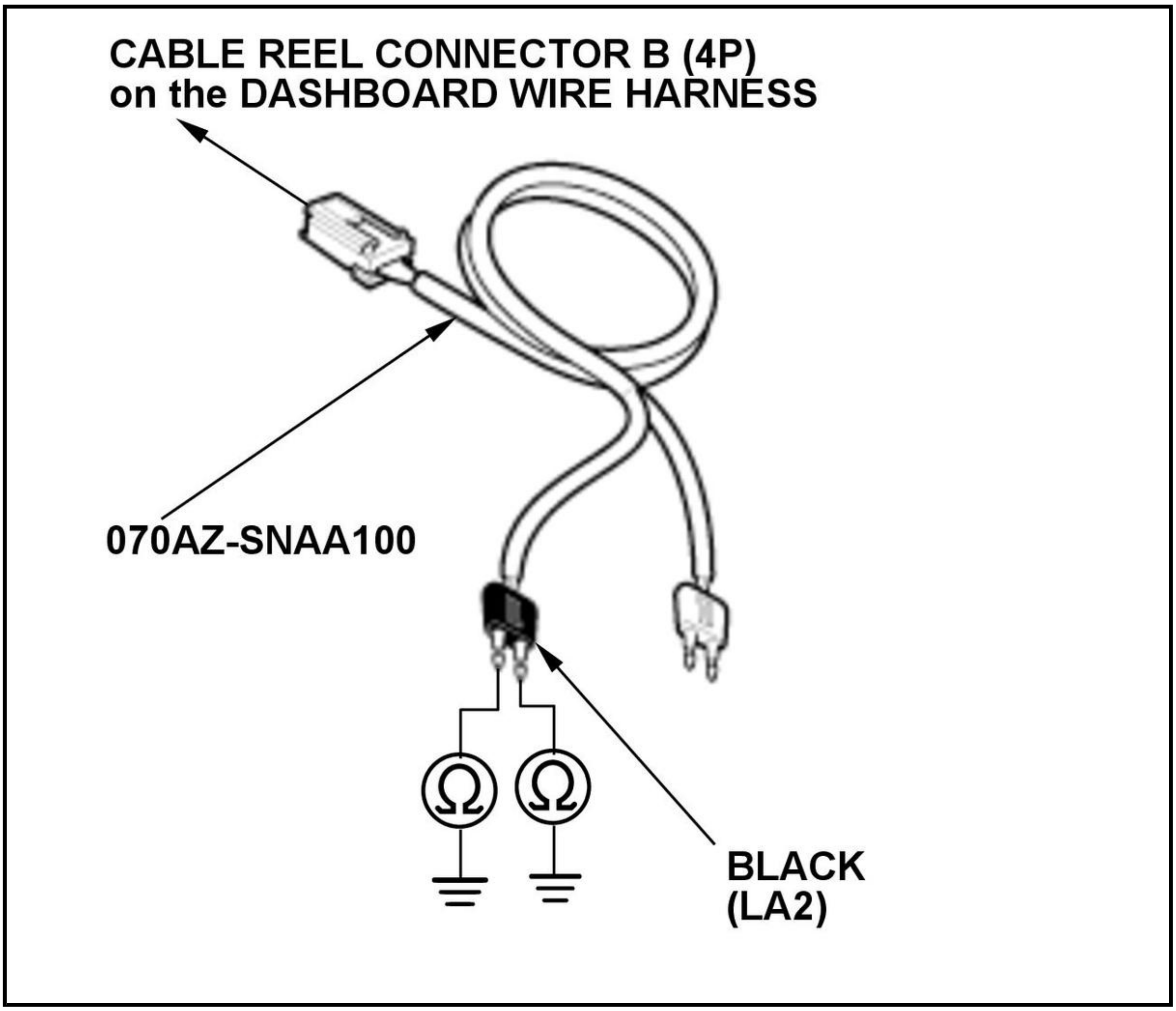

Is there an open circuit, or at least 1 MΩ?

YES

The LA2+ and LA2- wires are OK. Faulty SRS unit or poor connection at SRS unit connector A (39P) and the SRS unit. Check the connection; if the connection is OK, check for any authorized service information related to the DTCs or symptoms you are troubleshooting or **replace the SRS unit** . If the DTC does not clear, replace the dashboard wire harness.

NO

Short to another wire in the dashboard wire harness; replace the dashboard wire harness, then clear the DTC.

DTC B0002-2B

DTC B0002-2B : Short to Another Wire Harness in the Driver's Airbag Second Inflator

NOTE:

- **Before doing this troubleshooting procedure, find out if the vehicle was in a collision. If so, verify that all the required components were replaced with new components of the correct part number and were properly installed** .
- Before doing this troubleshooting procedure, review **SRS Precautions and Procedures** , **General Troubleshooting Information**, and **12 Volt Battery Terminal Disconnection and Reconnection** .

DTC Description	DTC
B0002-2B Short to another wire harness in the driver's airbag second inflator	B

DTC (SRS)

1. Problem verification

   -1. Clear the DTCs with the HDS.

   -2. Turn the vehicle to the ON mode, then wait for 10 seconds.

   -3. Check for DTCs with the HDS.

DTC Description	DTC
B0002-2B Short to another wire harness in the driver's airbag second inflator	B

Is DTC B0002-2B indicated?

YES

The failure is duplicated. Go to step 2.

NO

Intermittent failure, the system is OK at this time. Go to Troubleshooting Intermittent Failures. If another DTC is indicated, troubleshoot the DTC.

2. DTC check

   -1. Check for DTCs with the HDS.

DTC Description	DTC
B0001-2B Short to another wire harness in the driver's airbag first inflator	B
B0002-2B Short to another wire harness in the driver's airbag second inflator	B
B0010-2B Short to another wire harness in the front passenger's airbag first inflator	B
B0011-2B Short to another wire harness in the front passenger's airbag second inflator	B
B0020-2B Short to another wire harness in the driver's side airbag inflator	B
B0021-2B Short to another wire harness in the left side curtain airbag first inflator	B
B0028-2B Short to another wire harness in the front passenger's side airbag inflator	B
B0029-2B Short to another wire harness in the right side curtain airbag first inflator	B
B0070-2B Short to another wire harness in the driver's seat belt tensioner	B
B0072-2B Short to another wire harness in the front passenger's seat belt tensioner	B
B0079-2B Short to another wire harness in the driver's seat belt outer lap tensioner	B

DTC Description	DTC
B007A-2B Short to another wire harness in the front passenger's seat belt outer lap tensioner	B
B0082-2B Short to another wire harness in the selectable energy absorption device of the front passenger's seat belt tensioner	B

Is DTC B0001-2B, B0010-2B, B0011-2B, B0020-2B, B0021-2B, B0028-2B, B0029-2B, B0070-2B, B0072-2B, B0079-2B, B007A-2B or B0082-2B indicated with DTC B0002-2B?

YES

Go to step 3.

NO

Go to step 4.

3. Shorted wire check (LA2 lines to another line)

-1. Turn the vehicle to the OFF (LOCK) mode.

-2. Disconnect the negative cable from the 12 volt battery, then wait at least 3 minutes.

-3. **Remove the driver's airbag** .

-4. Disconnect the following connectors.

SRS unit connector A (39P)
SRS unit connector B (39P)
Driver's airbag second inflator 2P connector (on the cable reel harness)
Inflator connectors which are assigned to 2B codes listed on HDS

NOTE: Make sure to work with the driver's airbag second inflator 2P connector (A) that has a guide tab (B) on the left side of the No. 1 terminal as shown.

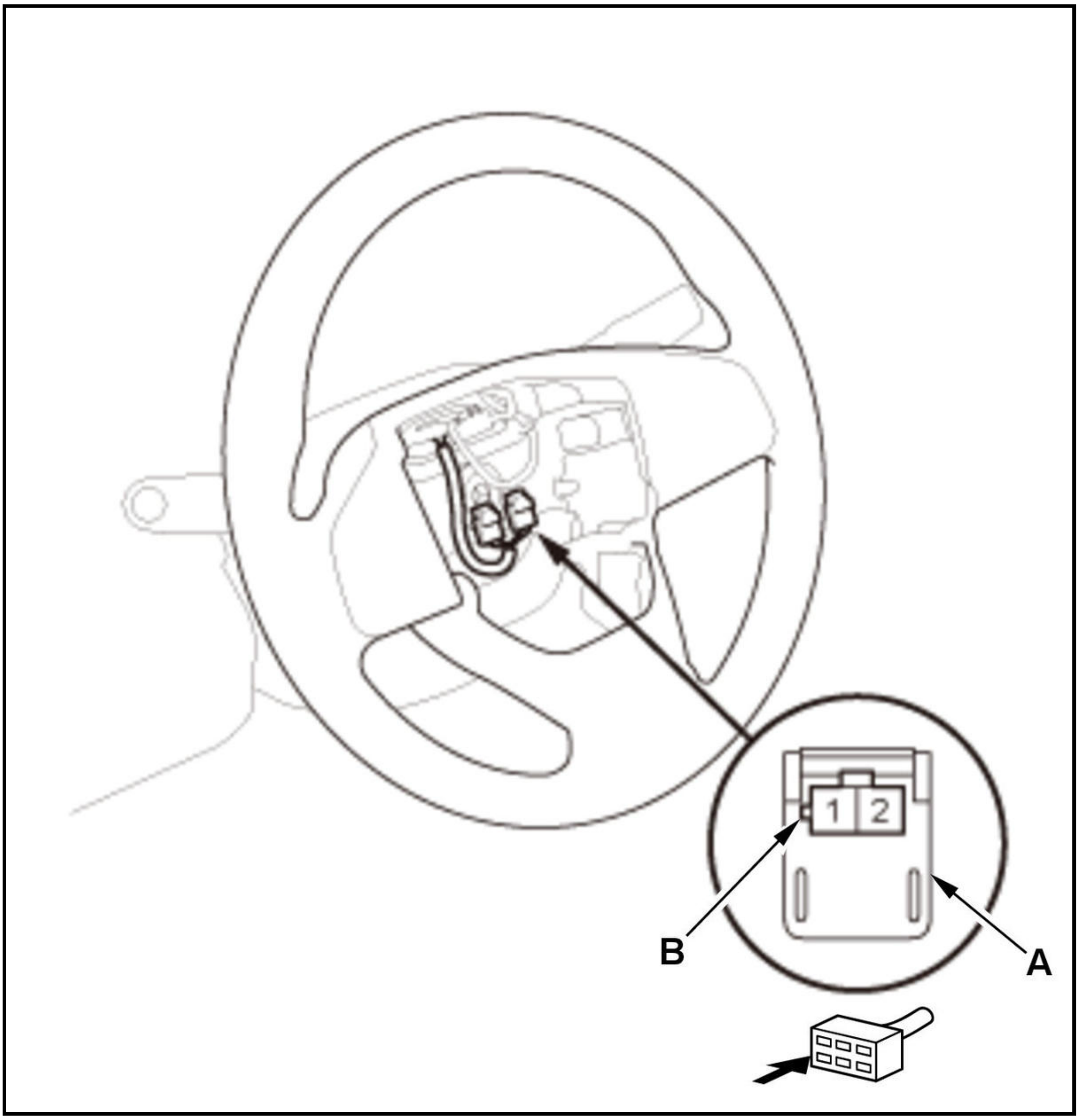

-5. Measure the resistance between test points 1 and 2 of SRS unit connector A (39P) and B (39P) according to table.

Test condition	Vehicle OFF (LOCK) mode
	SRS unit connector A (39P): disconnected
	SRS unit connector B (39P): disconnected
	Driver's airbag second inflator 2P connector (on the cable reel harness): disconnected
	Inflator connectors which are assigned to 2B codes listed on HDS: disconnected

DTC	**Test point 1**	**Test point 2**
	From terminal	**To terminal**
B0001-2B	SRS unit connector A (39P) No. 10	SRS unit connector A (39P) No. 9
	SRS unit connector A (39P) No. 11	SRS unit connector A (39P) No. 8
B0010-2B	SRS unit connector A (39P) No. 10	SRS unit connector A (39P) No. 5
	SRS unit connector A (39P) No. 11	SRS unit connector A (39P) No. 4
B0011-2B	SRS unit connector A (39P) No. 10	SRS unit connector A (39P) No. 6
	SRS unit connector A (39P) No. 11	SRS unit connector A (39P) No. 7
B0020-2B	SRS unit connector A (39P) No. 10	SRS unit connector B (39P) No. 5
	SRS unit connector A (39P) No. 11	SRS unit connector B (39P) No. 6

DTC	Test point 1	Test point 2
	From terminal	To terminal
B0021-2B	SRS unit connector A (39P) No. 10	SRS unit connector B (39P) No. 9
	SRS unit connector A (39P) No. 11	SRS unit connector B (39P) No. 10
B0028-2B	SRS unit connector A (39P) No. 10	SRS unit connector B (39P) No. 4
	SRS unit connector A (39P) No. 11	SRS unit connector B (39P) No. 3
B0029-2B	SRS unit connector A (39P) No. 10	SRS unit connector B (39P) No. 8
	SRS unit connector A (39P) No. 11	SRS unit connector B (39P) No. 7
B0070-2B	SRS unit connector A (39P) No. 10	SRS unit connector B (39P) No. 20
	SRS unit connector A (39P) No. 11	SRS unit connector B (39P) No. 21
B0072-2B	SRS unit connector A (39P) No. 10	SRS unit connector B (39P) No. 19
	SRS unit connector A (39P) No. 11	SRS unit connector B (39P) No. 18
B0079-2B	SRS unit connector A (39P) No. 10	SRS unit connector B (39P) No. 24
	SRS unit connector A (39P) No. 11	SRS unit connector B (39P) No. 25
B007A-2B	SRS unit connector A (39P) No. 10	SRS unit connector B (39P) No. 23
	SRS unit connector A (39P) No. 11	SRS unit connector B (39P) No. 22
B0082-2B	SRS unit connector A (39P) No. 10	SRS unit connector A (39P) No. 2
	SRS unit connector A (39P) No. 11	SRS unit connector A (39P) No. 3

Is there 1 MΩ or more?

YES

The LA2 wires are OK. Faulty SRS unit or poor connection at SRS unit connector A (39P) and the SRS unit, or SRS unit connector B (39P) and the SRS unit. Check the connection; if the connection is OK, check for any authorized service information related to the DTCs or symptoms you are troubleshooting or **replace the SRS unit** . If the DTC does not clear, replace the dashboard wire harness or the floor wire harness.

NO

Short to another wire in the dashboard wire harness or the floor wire harness; replace the faulty harness, then clear the DTC.

4. Shorted wire check (LA1+ line to LA2+ line, LA1- line to LA2- line) 1

-1. Turn the vehicle to the OFF (LOCK) mode.

-2. Disconnect the negative cable from the 12 volt battery, then wait at least 3 minutes.

-3. **Remove the driver's airbag** .

-4. Disconnect the following connector.

Driver's airbag first inflator 2P connector (on the cable reel harness)
Driver's airbag second inflator 2P connector (on the cable reel harness)

-5. Measure the resistance between test points 1 and 2.

Test condition	Vehicle OFF (LOCK) mode
	Driver's airbag first inflator 2P connector (on the cable reel harness): disconnected
	Driver's airbag second inflator 2P connector (on the cable reel harness): disconnected
Test point 1	Driver's airbag first inflator 2P connector No. 2 (on the cable reel harness) ①

Test point 2	Driver's airbag second inflator 2P connector No. 2 (on the cable reel harness) ②

Test point 1	Driver's airbag first inflator 2P connector No. 1 (on the cable reel harness) ①
Test point 2	Driver's airbag second inflator 2P connector No. 1 (on the cable reel harness) ②

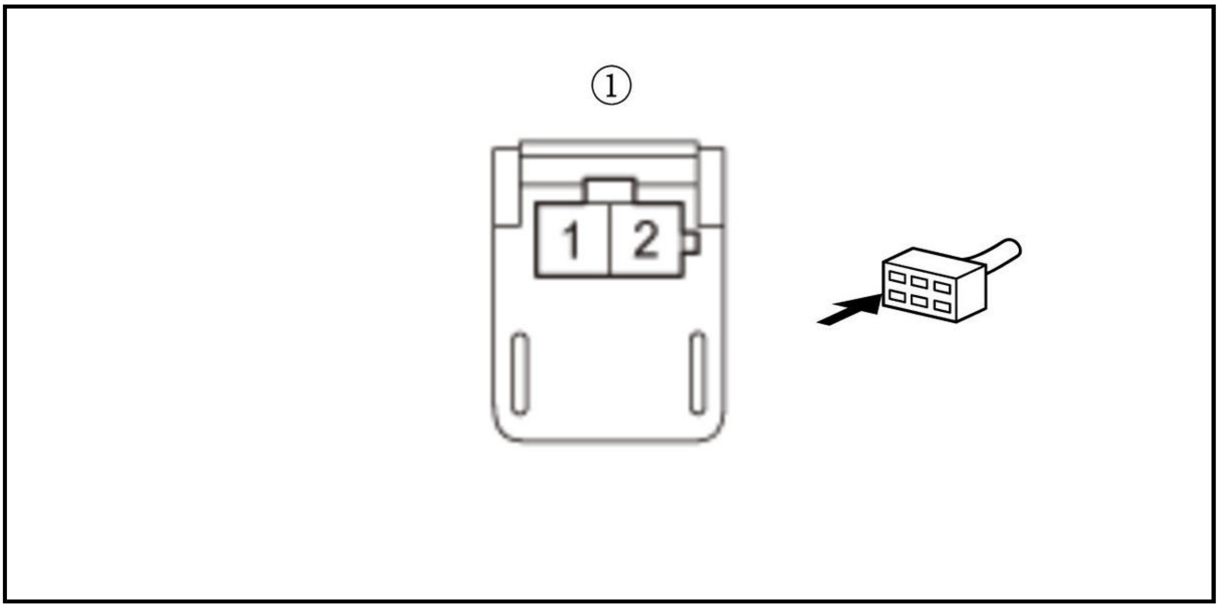

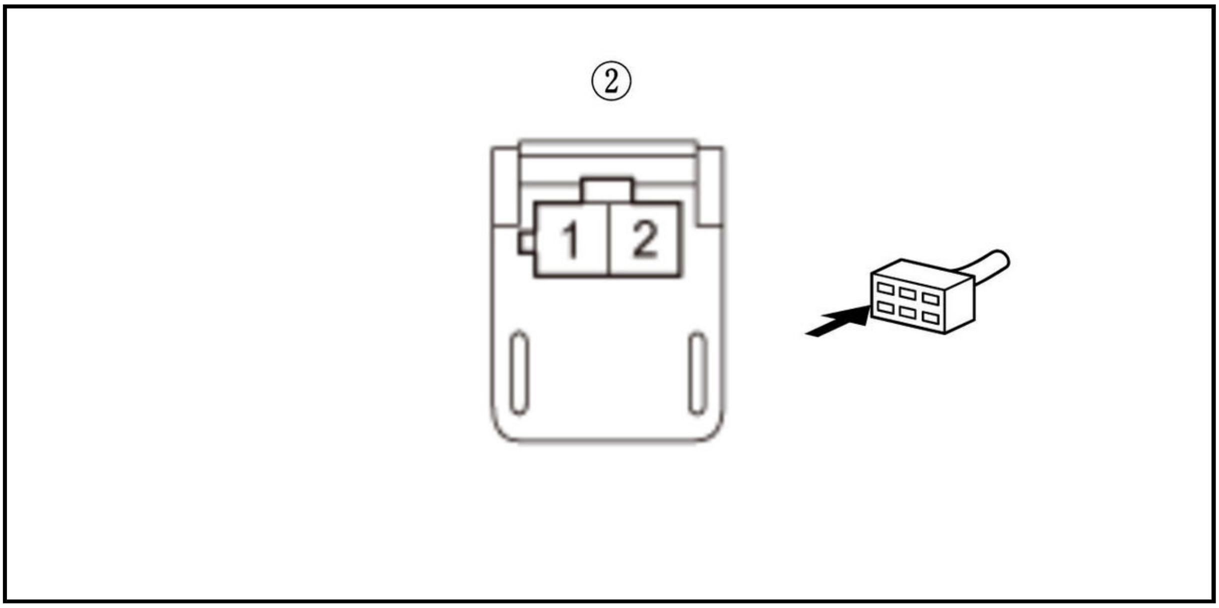

Is there 1 MΩ or more?

YES

The LA1+, LA1-, LA2+, and LA2- wires are OK. Faulty driver's airbag second inflator; **replace the driver's airbag** , then clear the DTC.

NO

Go to step 5.

5. Shorted wire check (LA1+ line to LA2+ line, LA1- line to LA2- line) 2

-1. **Remove the column covers** .

-2. Disconnect cable reel connector B (4P) on the dashboard wire harness.

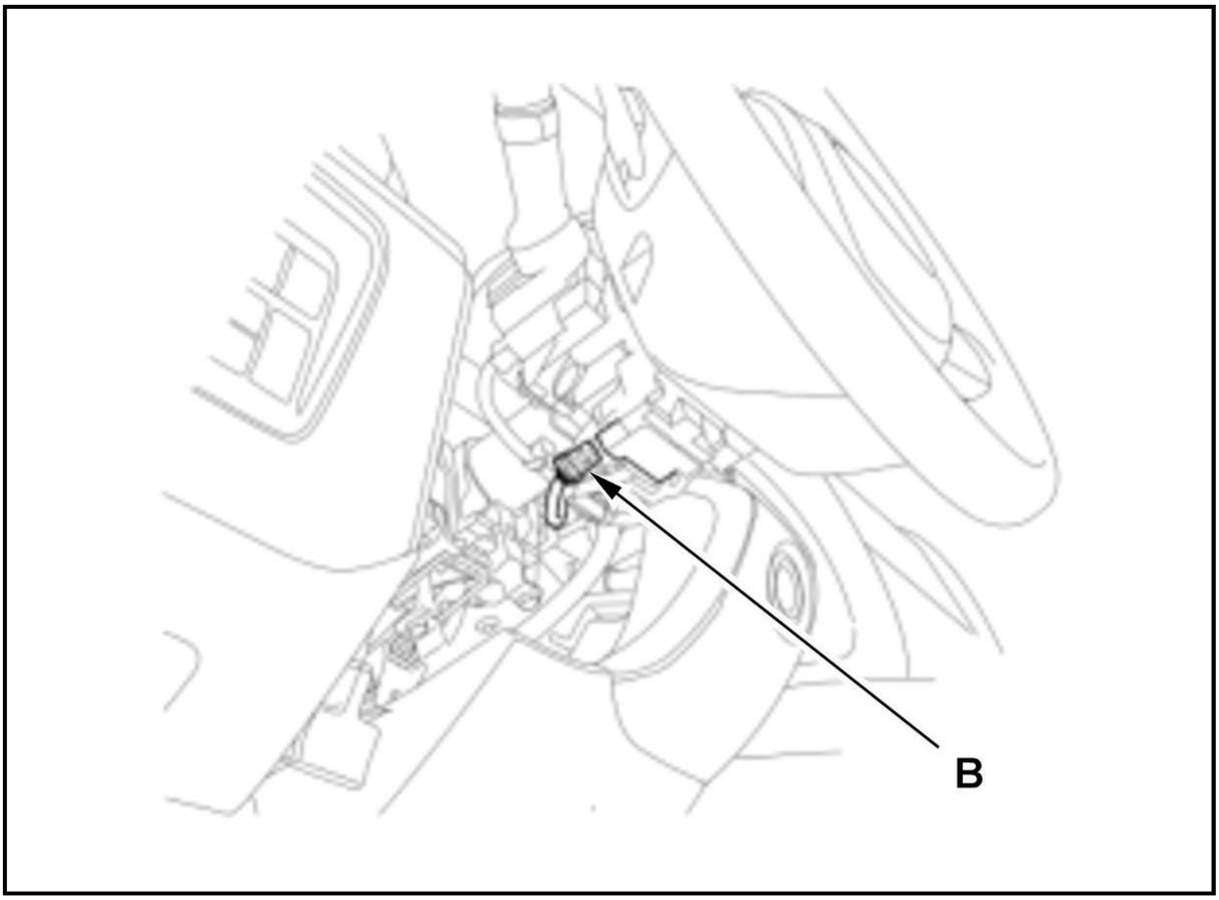

-3. Measure the resistance between test points 1 and 2.

Test condition	Vehicle OFF (LOCK) mode
	Driver's airbag first inflator 2P connector (on the cable reel harness): disconnected
	Driver's airbag second inflator 2P connector (on the cable reel harness): disconnected
	Cable reel connector B (4P) (on the dashboard wire harness): disconnected
Test point 1	Driver's airbag first inflator 2P connector No. 2 (on the cable reel harness) ①
Test point 2	Driver's airbag second inflator 2P connector No. 2 (on the cable reel harness) ②

Test point 1	Driver's airbag first inflator 2P connector No. 1 (on the cable reel harness) ①
Test point 2	Driver's airbag second inflator 2P connector No. 1 (on the cable reel harness) ②

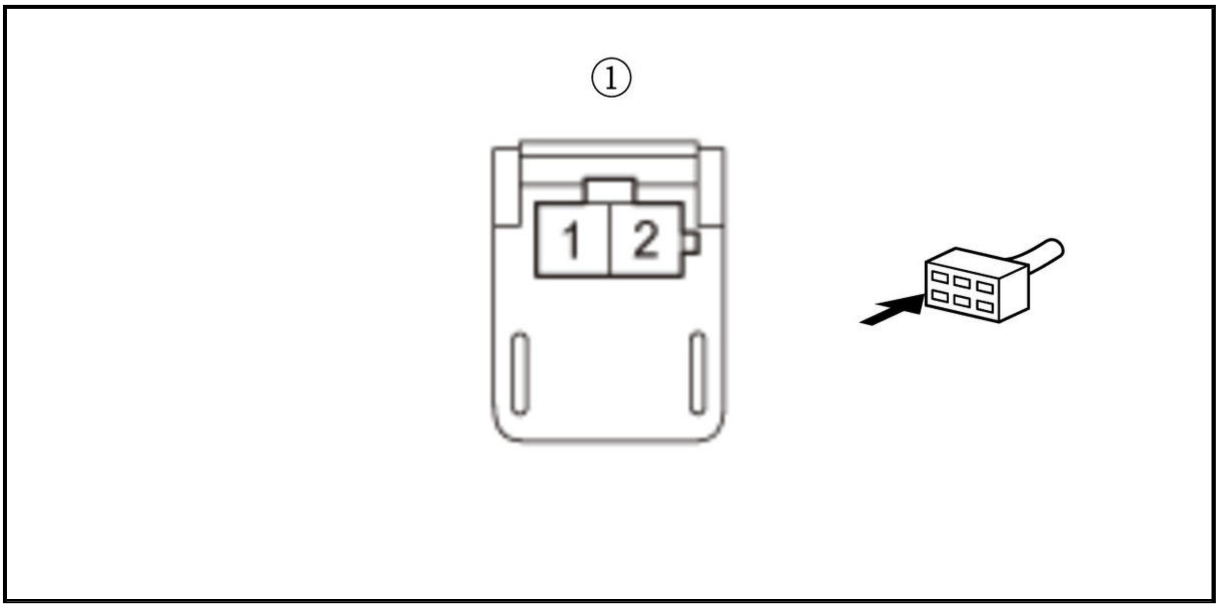

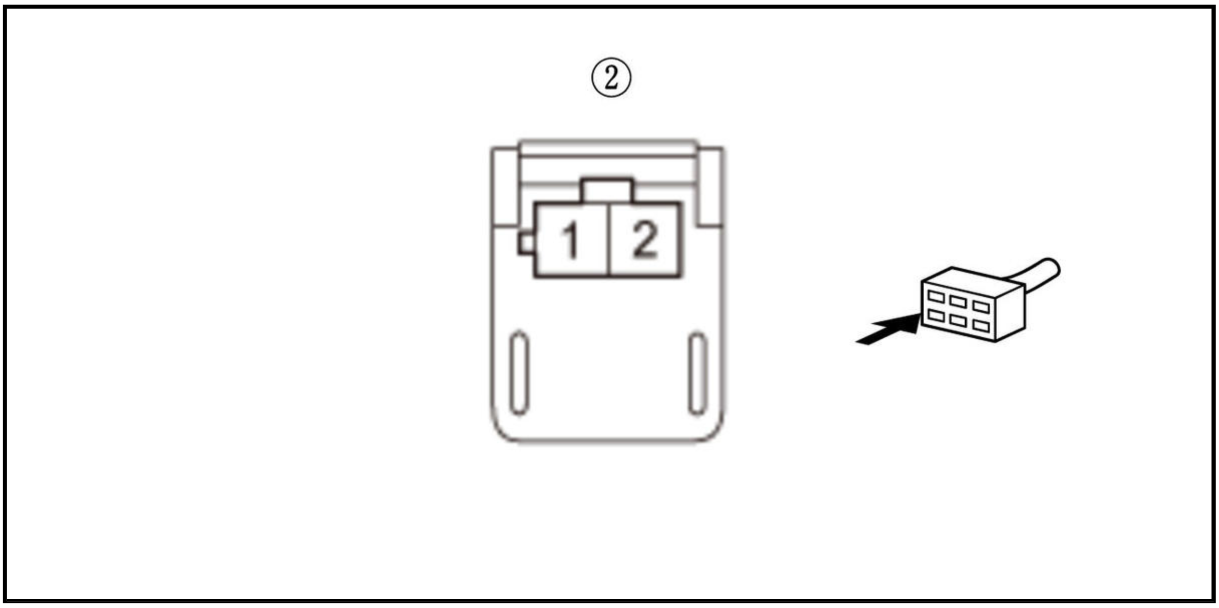

Is there 1 MΩ or more?

YES

Go to step 6.

NO

Short to another wire in the cable reel; replace the cable reel , then clear the DTC.

6. Shorted wire check (LA1+ line to LA2+ line, LA1- line to LA2- line) 3

-1. Disconnect the following connectors.

SRS unit connector A (39P)

-2. Measure the resistance between test points 1 and 2.

Test condition	Vehicle OFF (LOCK) mode
	SRS unit connector A (39P): disconnected
	Driver's airbag first inflator 2P connector (on the cable reel harness): disconnected
	Driver's airbag second inflator 2P connector (on the cable reel harness): disconnected
	Cable reel connector B (4P) (on the dashboard wire harness): disconnected

Test point 1	SRS unit connector A (39P) No. 9
Test point 2	SRS unit connector A (39P) No. 10

Test point 1	SRS unit connector A (39P) No. 8
Test point 2	SRS unit connector A (39P) No. 11

Is there 1 MΩ or more?

YES

The LA1+, LA1-, LA2+, and LA2- wires are OK. Faulty SRS unit or poor connection at SRS unit connector A (39P) and the SRS unit. Check the connection; if the connection is OK, check for any authorized service information related to the DTCs or symptoms you are troubleshooting or **replace the SRS unit** . If the DTC does not clear, replace the dashboard wire harness.

NO

Short to another wire in the dashboard wire harness; replace the dashboard wire harness, then clear the DTC.

DTC B0010-11, B0011-11

DTC B0010-11 : Short to Ground in the Front Passenger's Airbag First Inflator

DTC B0011-11 : Short to Ground in the Front Passenger's Airbag Second Inflator

Special Tools Required

SRS Inflator Simulator 07SAZ-TB4011A

SRS Simulator Lead J 070AZ-SNAA100

NOTE:

- **Before doing this troubleshooting procedure, find out if the vehicle was in a collision. If so, verify that all the required components were replaced with new components of the correct part number and were properly installed** .
- Before doing this troubleshooting procedure, review **SRS Precautions and Procedures** , **General Troubleshooting Information**, and **12 Volt Battery Terminal Disconnection and Reconnection** .

DTC Description	DTC
B0010-11 Short to ground in the front passenger's airbag first inflator	B
B0011-11 Short to ground in the front passenger's airbag second inflator	B

DTC (SRS)

1. Problem verification

   -1. Clear the DTCs with the HDS.

   -2. Turn the vehicle to the ON mode, then wait for 10 seconds.

   -3. Check for DTCs with the HDS.

DTC Description	DTC
B0010-11 Short to ground in the front passenger's airbag first inflator	B

DTC Description	DTC
B0011-11 Short to ground in the front passenger's airbag second inflator	B

Is DTC B0010-11 or B0011-11 indicated?

YES

The failure is duplicated. Go to step 2.

NO

Intermittent failure, the system is OK at this time. Go to Troubleshooting Intermittent Failures. If another DTC is indicated, troubleshoot the DTC.

2. Front passenger's airbag inflator check

-1. Turn the vehicle to the OFF (LOCK) mode.

-2. Disconnect the negative cable from the 12 volt battery, then wait at least 3 minutes.

-3. **Remove the glove box** .

-4. Disconnect the front passenger's airbag inflator 4P connector (A) on the dashboard wire harness.

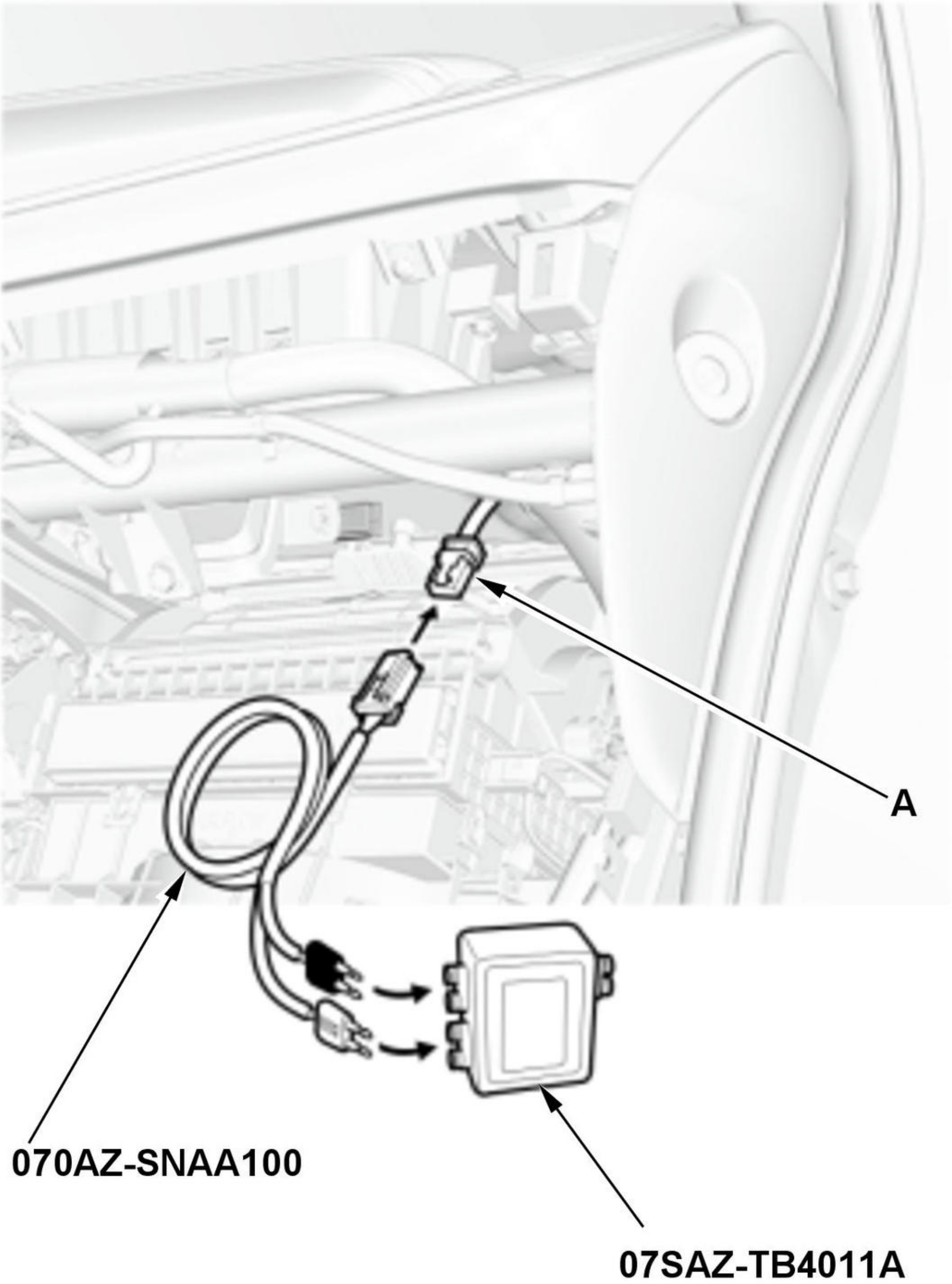

-5. Connect the terminals of SRS simulator lead J to the SRS inflator simulator (2 Ω connectors), then connect SRS simulator lead J to the front passenger's airbag inflator 4P connector on the dashboard wire harness.

-6. Reconnect the negative cable to the 12 volt battery.

-7. Clear the DTCs with the HDS.

-8. Turn the vehicle to the ON mode, then wait for 10 seconds.

-9. Check for DTCs with the HDS.

DTC Description	DTC
B0010-11 Short to ground in the front passenger's airbag first inflator	B
B0011-11 Short to ground in the front passenger's airbag second inflator	B

Is DTC B0010-11 or B0011-11 indicated?

YES

Go to step 3.

NO

Short to ground in the front passenger's airbag first or second inflator; **replace the front passenger's airbag** , then clear the DTC.

3. Shorted wire check (RA1+, RA1-, RA2+, RA2- lines)

   -1. Turn the vehicle to the OFF (LOCK) mode.

   -2. Disconnect the negative cable from the 12 volt battery, then wait at least 3 minutes.

   -3. Disconnect the following connector.

SRS unit connector A (39P)

   -4. Disconnect the SRS inflator simulator from SRS simulator lead J. Do not disconnect SRS simulator lead J from the front passenger's airbag inflator 4P connector on the dashboard wire harness.

   -5. Measure the resistance between test points 1 and 2.

Test condition	Vehicle OFF (LOCK) mode
	Front passenger's airbag inflator 4P connector (on the dashboard wire harness): disconnected
	SRS unit connector A (39P): disconnected
	Front passenger's airbag inflator 4P connector (on the dashboard wire harness): connected to SRS simulator lead J
Test point 1	SRS simulator lead J black terminal
Test point 2	Body ground

Test point 1	SRS simulator lead J red terminal
Test point 2	Body ground

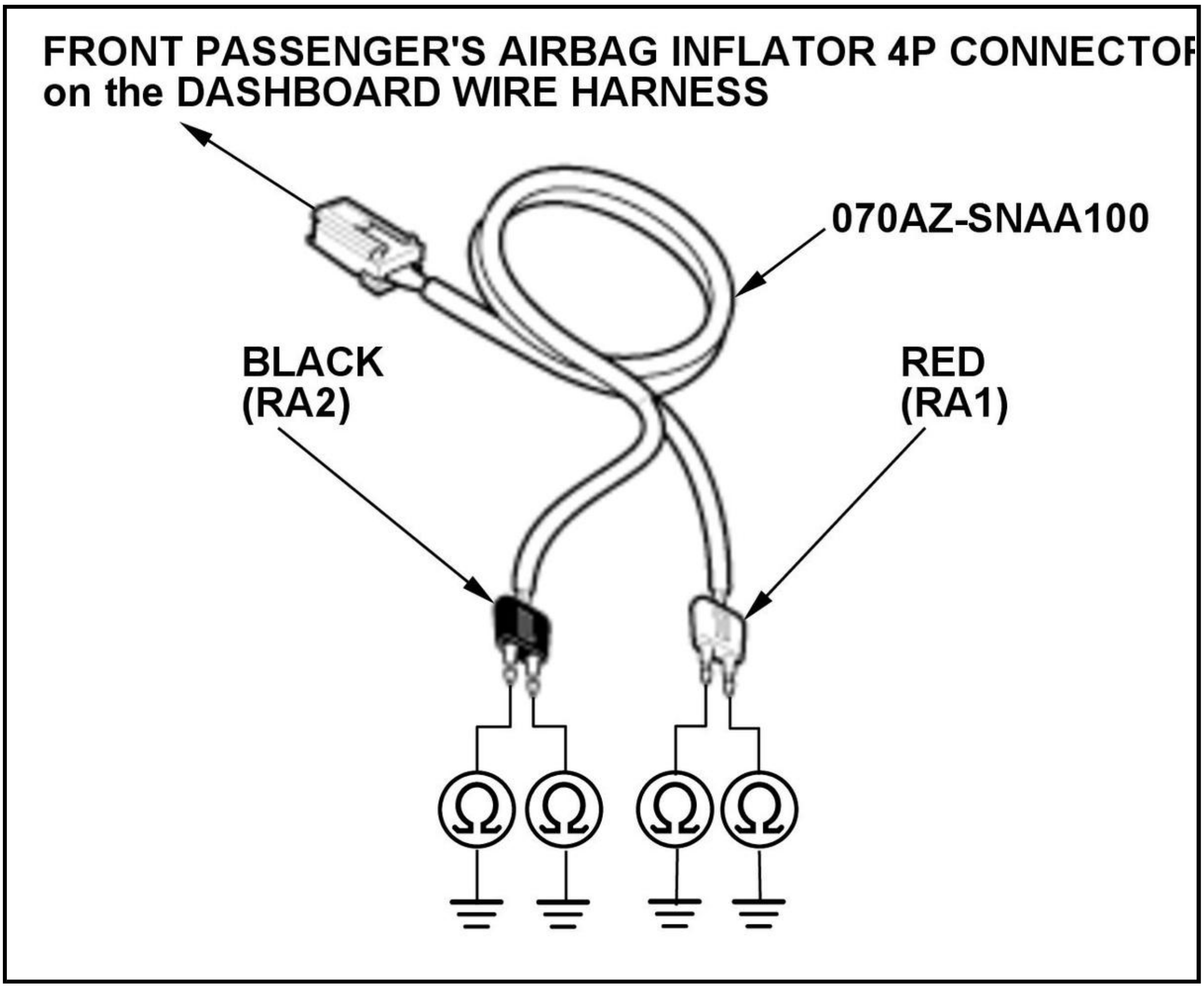
FRONT PASSENGER'S AIRBAG INFLATOR 4P CONNECTOR
on the DASHBOARD WIRE HARNESS
070AZ-SNAA100
BLACK
(RA2)
RED
(RA1)
Ω
Ω
Ω
Ω

Is there an open circuit, or at least 1 MΩ?

YES

The RA1+, RA1-, RA2+, and RA2- wires are OK. Faulty SRS unit or poor connection at SRS unit connector A (39P) and the SRS unit. Check the connection; if the connection is OK, check for any authorized service information related to the DTCs or symptoms you are troubleshooting or replace the SRS unit . If the DTC does not clear, replace the dashboard wire harness.

NO

Short to ground in the dashboard wire harness; replace the dashboard wire harness, then clear the DTC.

DTC B0010-12, B0011-12

DTC B0010-12 : Short to Power in the Front Passenger's Airbag First Inflator

DTC B0011-12 : Short to Power in the Front Passenger's Airbag Second Inflator

Special Tools Required

SRS Inflator Simulator 07SAZ-TB4011A

SRS Simulator Lead J 070AZ-SNAA100

NOTE:

- **Before doing this troubleshooting procedure, find out if the vehicle was in a collision. If so, verify that all the required components were replaced with new components of the correct part number and were properly installed** .

- Before doing this troubleshooting procedure, review **SRS Precautions and Procedures** , **General Troubleshooting Information**, and **12 Volt Battery Terminal Disconnection and Reconnection** .

DTC Description	DTC
B0010-12 Short to power in the front passenger's airbag first inflator	B
B0011-12 Short to power in the front passenger's airbag second inflator	B

DTC (SRS)

1. Problem verification

   -1. Clear the DTCs with the HDS.

   -2. Turn the vehicle to the ON mode, then wait for 10 seconds.

   -3. Check for DTCs with the HDS.

DTC Description	DTC
B0010-12 Short to power in the front passenger's airbag first inflator	B

DTC Description	DTC
B0011-12 Short to power in the front passenger's airbag second inflator	B

   Is DTC B0010-12 or B0011-12 indicated?

   YES

   The failure is duplicated. Go to step 2.

   NO

   Intermittent failure, the system is OK at this time. Go to Troubleshooting Intermittent Failures. If another DTC is indicated, troubleshoot the DTC.

2. Front passenger's airbag inflator check

   -1. Turn the vehicle to the OFF (LOCK) mode.

   -2. Disconnect the negative cable from the 12 volt battery, then wait at least 3 minutes.

   -3. **Remove the glove box** .

   -4. Disconnect the front passenger's airbag inflator 4P connector (A) on the dashboard wire harness.

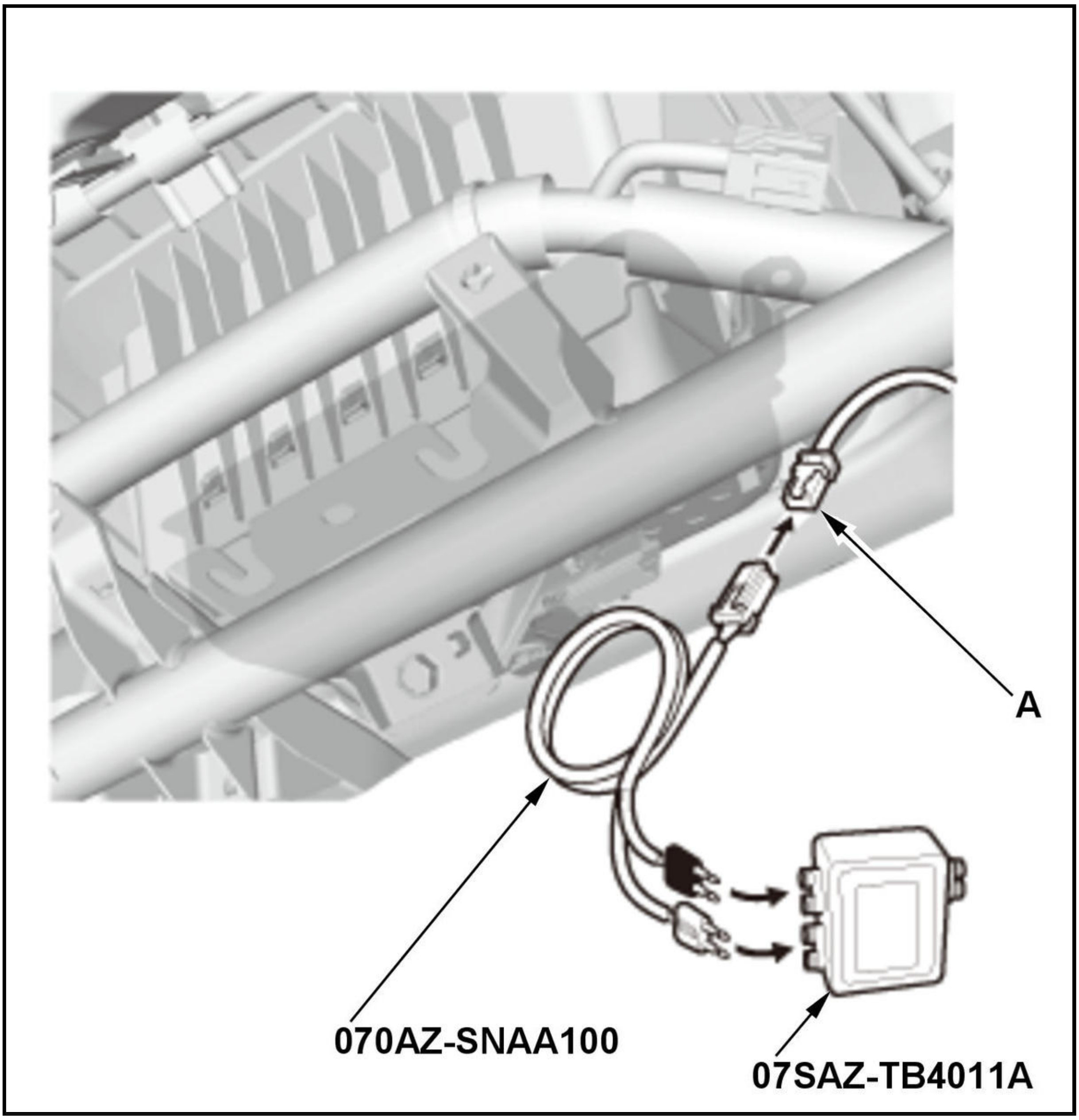

-5. Connect the terminals of SRS simulator lead J to the SRS inflator simulator (2 Ω connectors), then connect SRS simulator lead J to the front passenger's airbag inflator 4P connector on the dashboard wire harness.

-6. Reconnect the negative cable to the 12 volt battery.

-7. Clear the DTCs with the HDS.

-8. Turn the vehicle to the ON mode, then wait for 10 seconds.

-9. Check for DTCs with the HDS.

DTC Description	DTC
B0010-12 Short to power in the front passenger's airbag first inflator	B

DTC Description	DTC
B0011-12 Short to power in the front passenger's airbag second inflator	B

Is DTC B0010-12 or B0011-12 indicated?

YES

Go to step 3.

NO

Short to power in the front passenger's airbag first or second inflator; **replace the front passenger's airbag** , then clear the DTC.

3. Shorted wire check (RA1+, RA1-, RA2+, RA2- lines to power)

-1. Turn the vehicle to the OFF (LOCK) mode.

-2. Disconnect the negative cable from the 12 volt battery, then wait at least 3 minutes.

-3. Disconnect the following connector.

SRS unit connector A (39P)

-4. Disconnect the SRS inflator simulator from SRS simulator lead J. Do not disconnect SRS simulator lead J from the front passenger's airbag inflator 4P connector on the dashboard wire harness.

-5. Reconnect the negative cable to the 12 volt battery.

-6. Turn the vehicle to the ON mode.

-7. Measure the voltage between test points 1 and 2.

Test condition	Vehicle ON mode
	Front passenger's airbag inflator 4P connector (on the dashboard wire harness): disconnected
	SRS unit connector A (39P): disconnected
	Front passenger's airbag inflator 4P connector (on the dashboard wire harness): connected to SRS simulator lead J
Test point 1	SRS simulator lead J black terminal
Test point 2	Body ground

Test point 1	SRS simulator lead J red terminal
Test point 2	Body ground

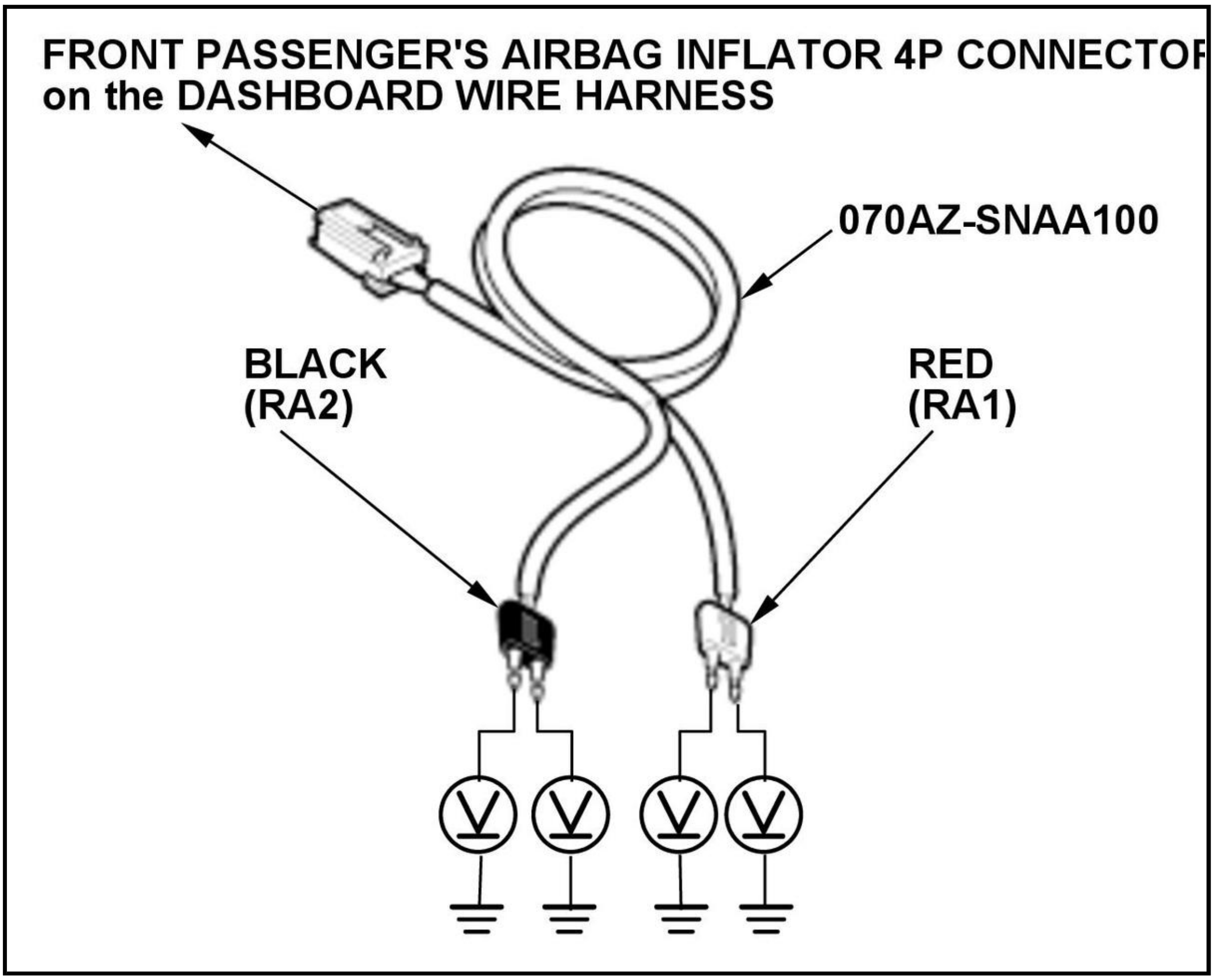
FRONT PASSENGER'S AIRBAG INFLATOR 4P CONNECTOR
on the DASHBOARD WIRE HARNESS
070AZ-SNAA100
BLACK
(RA2)
RED
(RA1)

Is there 0.2 V or less?

YES

The RA1+, RA1-, RA2+, and RA2- wires are OK. Faulty SRS unit or poor connection at SRS unit connector A (39P) and the SRS unit. Check the connection; if the connection is OK, check for any authorized service information related to the DTCs or symptoms you are troubleshooting or replace the SRS unit . If the DTC does not clear, replace the dashboard wire harness.

NO

Short to power in the dashboard wire harness; replace the dashboard wire harness, then clear the DTC.

DTC B0010-13, B0011-13

DTC B0010-13 : Open or Increased Resistance in the Front Passenger's Airbag First Inflator

DTC B0011-13 : Open or Increased Resistance in the Front Passenger's Airbag Second Inflator

Special Tools Required

SRS Inflator Simulator 07SAZ-TB4011A

SRS Simulator Lead J 070AZ-SNAA100

NOTE:

- Before doing this troubleshooting procedure, find out if the vehicle was in a collision. If so, verify that all the required components were replaced with new components of the correct part number and were properly installed .

- Before doing this troubleshooting procedure, review **SRS Precautions and Procedures** , **General Troubleshooting Information**, and **12 Volt Battery Terminal Disconnection and Reconnection** .

DTC Description	DTC
B0010-13 Open or increased resistance in the front passenger's airbag first inflator	B
B0011-13 Open or increased resistance in the front passenger's airbag second inflator	B

DTC (SRS)

1. Problem verification

   -1. Clear the DTCs with the HDS.

   -2. Turn the vehicle to the ON mode, then wait for 10 seconds.

   -3. Check for DTCs with the HDS.

DTC Description	DTC
B0010-13 Open or increased resistance in the front passenger's airbag first inflator	B
B0011-13 Open or increased resistance in the front passenger's airbag second inflator	B

   Is DTC B0010-13 or B0011-13 indicated?

   YES

   The failure is duplicated. Go to step 2.

   NO

   Intermittent failure, the system is OK at this time. Go to Troubleshooting Intermittent Failures. If another DTC is indicated, troubleshoot the DTC.

2. Front passenger's airbag inflator check

   -1. Turn the vehicle to the OFF (LOCK) mode.

   -2. Disconnect the negative cable from the 12 volt battery, then wait at least 3 minutes.

   -3. **Remove the glove box** .

   -4. Disconnect the front passenger's airbag inflator 4P connector (A) on the dashboard wire harness.

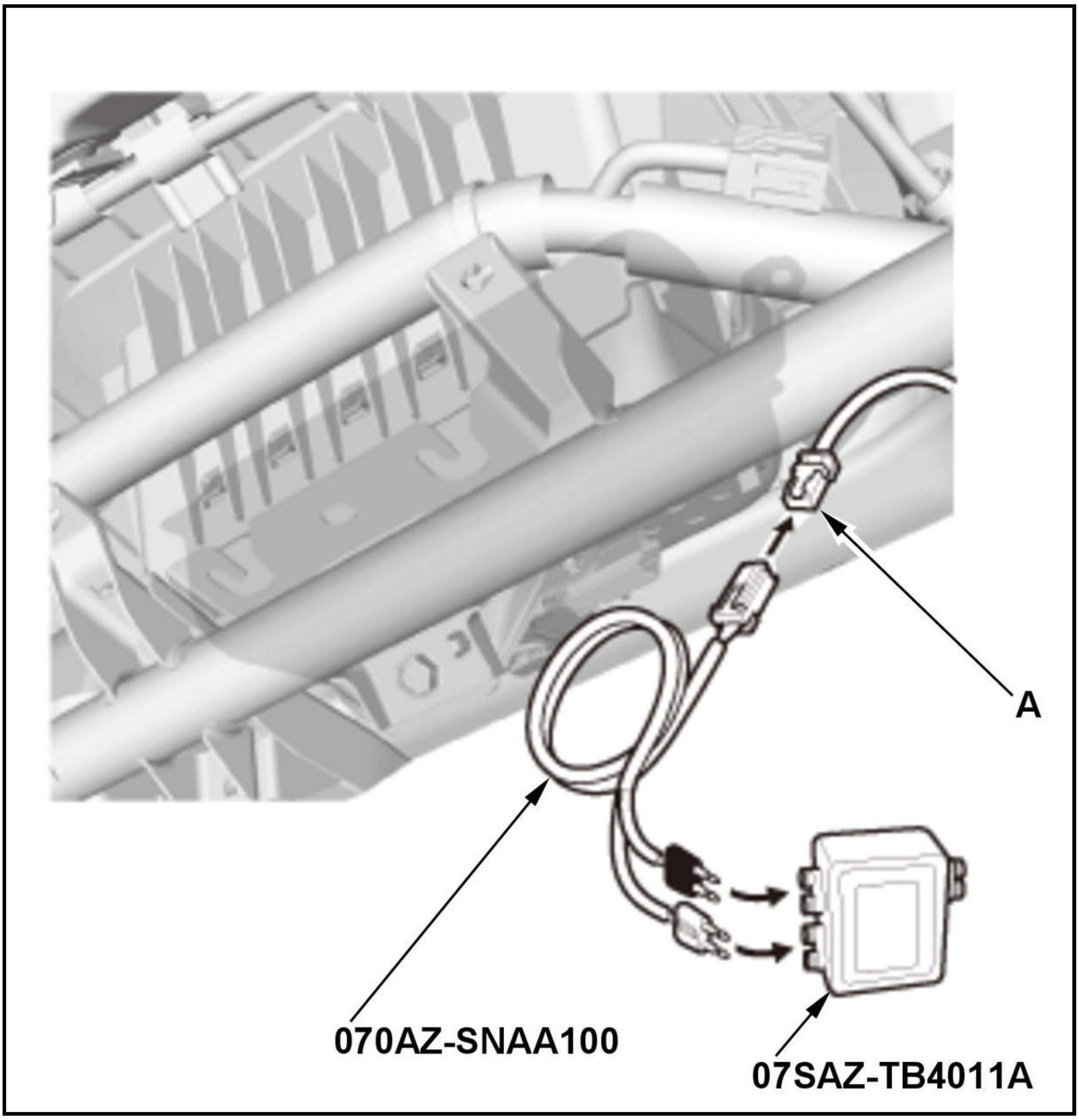

-5. Connect the terminals of SRS simulator lead J to the SRS inflator simulator (2 Ω connectors), then connect SRS simulator lead J to the front passenger's airbag inflator 4P connector on the dashboard wire harness.

-6. Reconnect the negative cable to the 12 volt battery.

-7. Clear the DTCs with the HDS.

-8. Turn the vehicle to the ON mode, then wait for 10 seconds.

-9. Check for DTCs with the HDS.

DTC Description	DTC
B0010-13 Open or increased resistance in the front passenger's airbag first inflator	B
B0011-13 Open or increased resistance in the front passenger's airbag second inflator	B

Is DTC B0010-13 or B0011-13 indicated?

YES

Go to step 3.

NO

Open in the front passenger's airbag first or second inflator; **replace the front passenger's airbag** , then clear the DTC.

3. Open wire check (RA1+, RA1-, RA2+, RA2- lines)

-1. Turn the vehicle to the OFF (LOCK) mode.

-2. Disconnect the negative cable from the 12 volt battery, then wait at least 3 minutes.

-3. Disconnect the following connector.

SRS unit connector A (39P)

-4. Disconnect the SRS inflator simulator from SRS simulator lead J. Do not disconnect SRS simulator lead J from the front passenger's airbag inflator 4P connector on the dashboard wire harness.

-5. Measure the resistance of the test points.

Test condition	Vehicle OFF (LOCK) mode
	Front passenger's airbag inflator 4P connector (on the dashboard wire harness): disconnected
	SRS unit connector A (39P): disconnected
	Front passenger's airbag inflator 4P connector (on the dashboard wire harness): connected to SRS simulator lead J
Test point	SRS simulator lead J black terminal

Test point	SRS simulator lead J red terminal

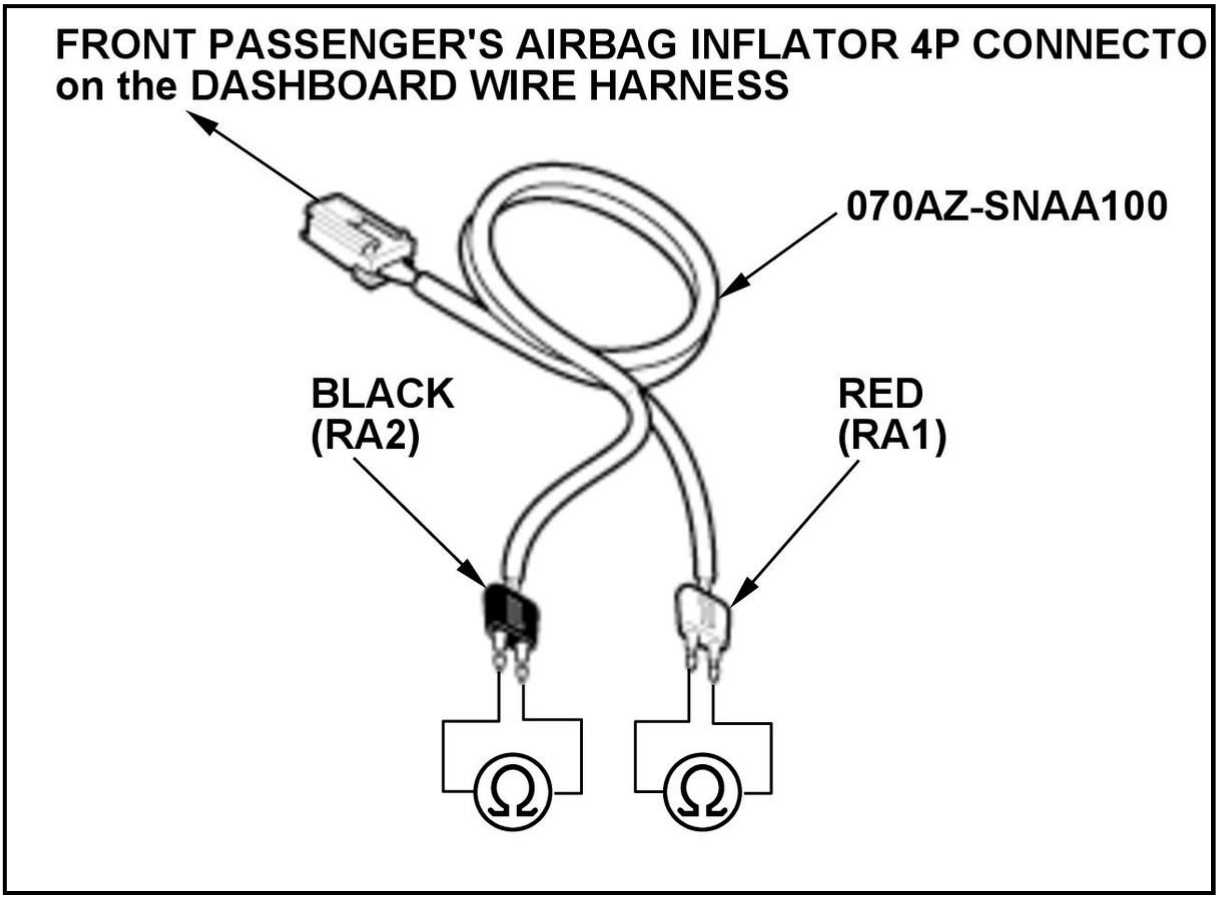
FRONT PASSENGER'S AIRBAG INFLATOR 4P CONNECTO
on the DASHBOARD WIRE HARNESS
070AZ-SNAA100
BLACK
(RA2)
RED
(RA1)
Ω
Ω

Is there 1.0 Ω or less?

YES

The RA1+, RA1-, RA2+, and RA2- wires are OK. Faulty SRS unit or poor connection at SRS unit connector A (39P) and the SRS unit. Check the connection; if the connection is OK, check for any authorized service information related to the DTCs or symptoms you are troubleshooting or **replace the SRS unit** . If the DTC does not clear, replace the dashboard wire harness.

NO

Open in the dashboard wire harness; replace the dashboard wire harness, then clear the DTC.

DTC B0010-1A, B0010-2B, B0011-1A, B0011-2B

DTC B0010-1A : Decreased Resistance in the Front Passenger's Airbag First Inflator

DTC B0010-2B : Short to Another Wire Harness in the Front Passenger's Airbag First Inflator

DTC B0011-1A : Decreased Resistance in the Front Passenger's Airbag Second Inflator

DTC B0011-2B : Short to Another Wire Harness in the Front Passenger's Airbag Second Inflator

Special Tools Required

SRS Inflator Simulator 07SAZ-TB4011A

SRS Simulator Lead J 070AZ-SNAA100

SRS Short Canceller 070AZ-SAA0100

NOTE:

- **Before doing this troubleshooting procedure, find out if the vehicle was in a collision. If so, verify that all the required components were replaced with new components of the correct part number and were properly installed** .
- Before doing this troubleshooting procedure, review **SRS Precautions and Procedures** , **General Troubleshooting Information**, and **12 Volt Battery Terminal Disconnection and Reconnection** .

DTC Description	DTC
B0010-1A Decreased resistance in the front passenger's airbag first inflator	B
B0010-2B Short to another wire harness in the front passenger's airbag first inflator	B
B0011-1A Decreased resistance in the front passenger's airbag second inflator	B
B0011-2B Short to another wire harness in the front passenger's airbag second inflator	B

DTC (SRS)

1. Problem verification

   -1. Clear the DTCs with the HDS.

   -2. Turn the vehicle to the ON mode, then wait for 10 seconds.

   -3. Check for DTCs with the HDS.

DTC Description	DTC
B0010-1A Decreased resistance in the front passenger's airbag first inflator	B
B0010-2B Short to another wire harness in the front passenger's airbag first inflator	B
B0011-1A Decreased resistance in the front passenger's airbag second inflator	B
B0011-2B Short to another wire harness in the front passenger's airbag second inflator	B

Is DTC B0010-1A, B0010-2B, B0011-1A or B0011-2B indicated?

YES

The failure is duplicated. Go to step 2.

NO

Intermittent failure, the system is OK at this time. Go to Troubleshooting Intermittent Failures. If another DTC is indicated, troubleshoot the DTC.

2. Front passenger's airbag inflator check

   -1. Turn the vehicle to the OFF (LOCK) mode.

   -2. Disconnect the negative cable from the 12 volt battery, then wait at least 3 minutes.

   -3. **Remove the glove box** .

   -4. Disconnect the front passenger's airbag inflator 4P connector (A) on the dashboard wire harness.

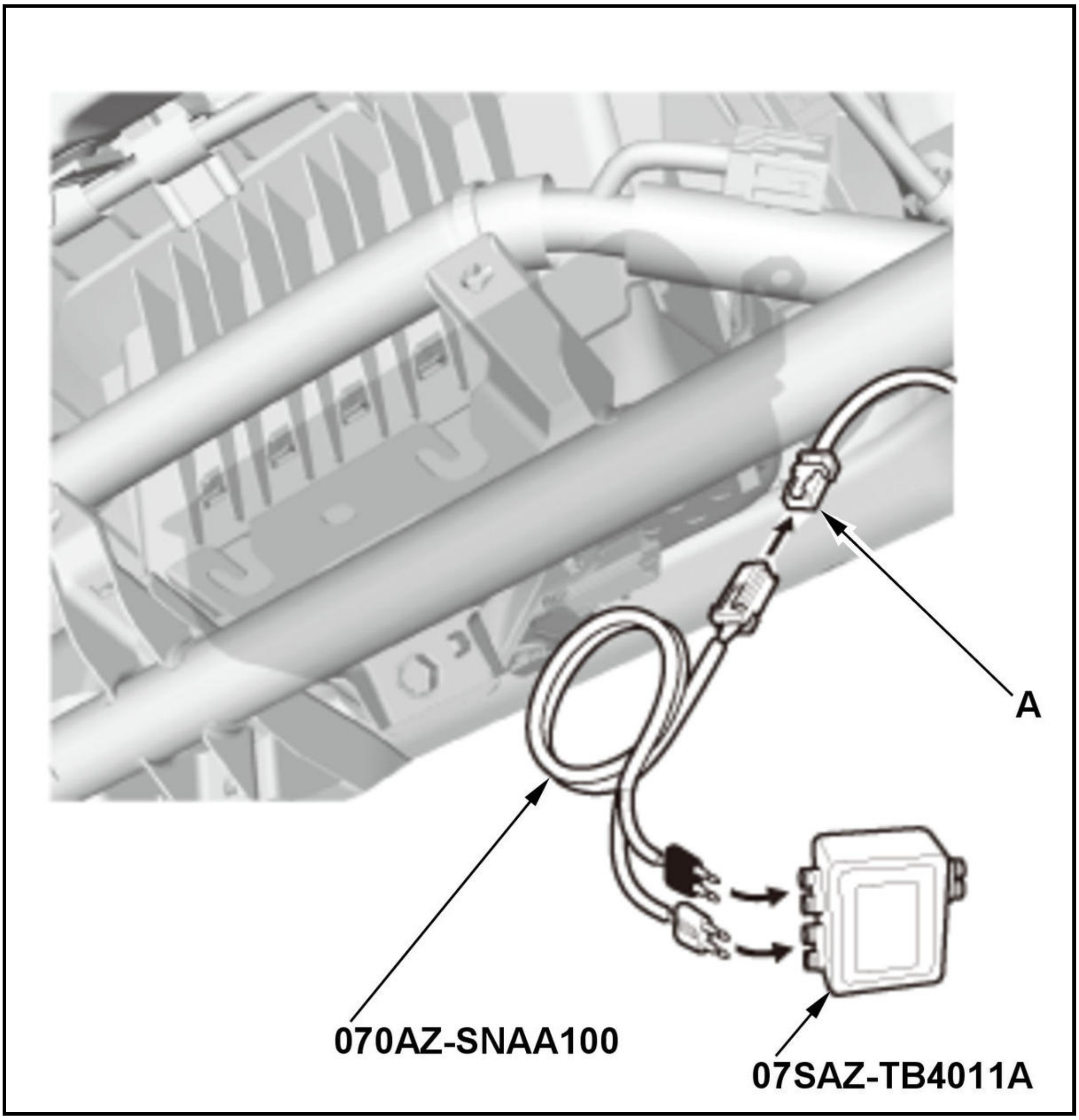

-5. Connect the terminals of SRS simulator lead J to the SRS inflator simulator (2 Ω connectors), then connect SRS simulator lead J to the front passenger's airbag inflator 4P connector on the dashboard wire harness.

-6. Reconnect the negative cable to the 12 volt battery.

-7. Clear the DTCs with the HDS.

-8. Turn the vehicle to the ON mode, then wait for 10 seconds.

-9. Check for DTCs with the HDS.

DTC Description	DTC
B0010-1A Decreased resistance in the front passenger's airbag first inflator	B
B0010-2B Short to another wire harness in the front passenger's airbag first inflator	B
B0011-1A Decreased resistance in the front passenger's airbag second inflator	B
B0011-2B Short to another wire harness in the front passenger's airbag second inflator	B

Is DTC B0010-1A, B0010-2B, B0011-1A or B0011-2B indicated?

YES

Go to step 3.

NO

Short to another wire in the front passenger's airbag first or second inflator; **replace the front passenger's airbag** , then clear the DTC.

3. Shorted wire check (RA1+ line to RA1- line, RA2+ line to RA2- line)

-1. Turn the vehicle to the OFF (LOCK) mode.

-2. Disconnect the negative cable from the 12 volt battery, then wait at least 3 minutes.

-3. Disconnect the following connector.

SRS unit connector A (39P)

-4. Disconnect the SRS inflator simulator from SRS simulator lead J. Do not disconnect SRS simulator lead J from the front passenger's airbag inflator 4P connector on the dashboard wire harness.

-5. **Connect the SRS short cancellers to SRS unit connector A (39P) terminals No. 4 and No. 5, and terminals No. 6 and No. 7**.

-6. Measure the resistance of the test points.

Test condition	Vehicle OFF (LOCK) mode
	Front passenger's airbag inflator 4P connector (on the dashboard wire harness): disconnected
	SRS unit connector A (39P): disconnected
	Front passenger's airbag inflator 4P connector (on the dashboard wire harness): connected to SRS simulator lead J
	SRS unit connector A (39P) No. 4 and No. 5: connected to SRS short canceller
	SRS unit connector A (39P) No. 6 and No. 7: connected to SRS short canceller
Test point	SRS simulator lead J black terminal

Test point	SRS simulator lead J red terminal

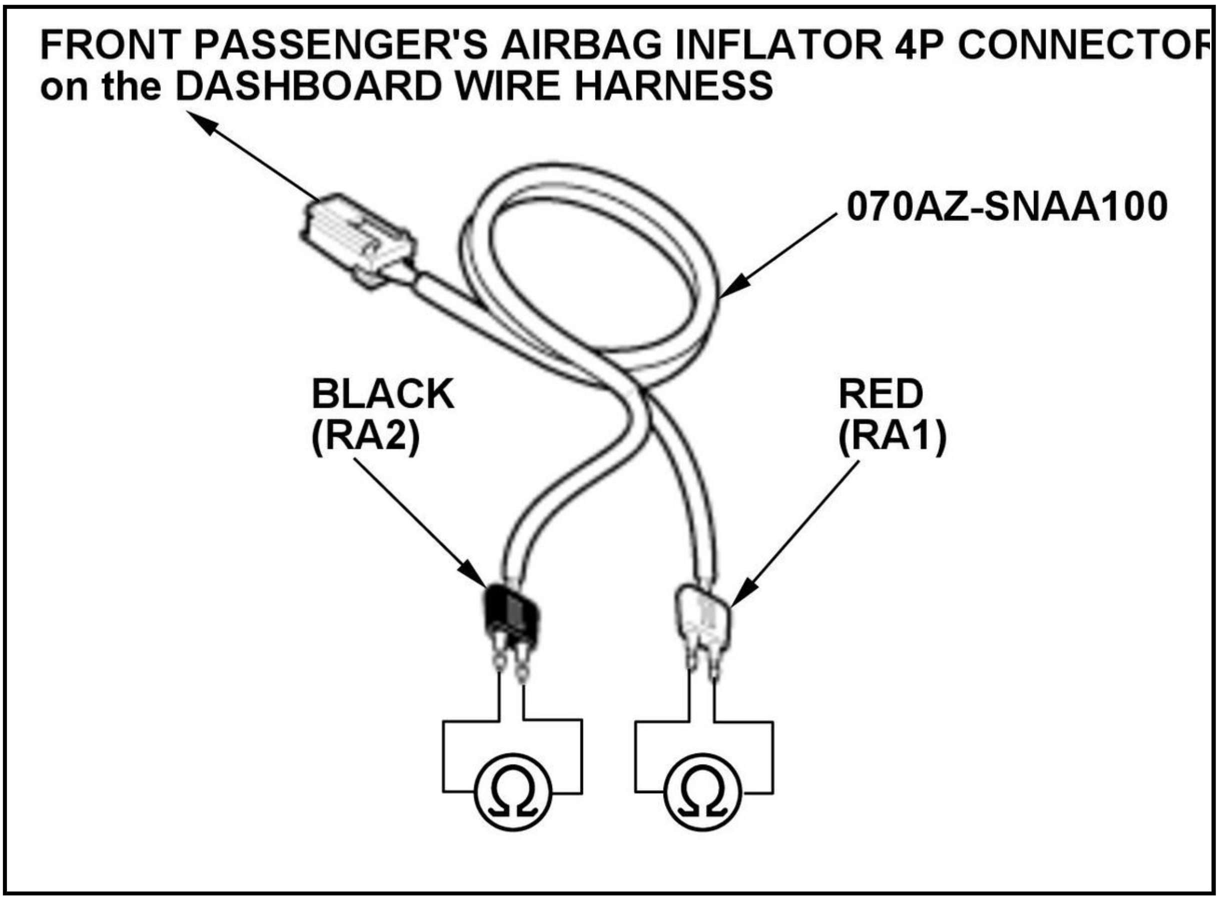
FRONT PASSENGER'S AIRBAG INFLATOR 4P CONNECTOR
on the DASHBOARD WIRE HARNESS
070AZ-SNAA100
BLACK
(RA2)
RED
(RA1)
Ω
Ω

Is there an open circuit, or at least 1 MΩ?

YES

The RA1+, RA1-, RA2+, and RA2- wires are OK. Faulty SRS unit or poor connection at SRS unit connector A (39P) and the SRS unit. Check the connection; if the connection is OK, check for any authorized service information related to the DTCs or symptoms you are troubleshooting or replace the SRS unit . If the DTC does not clear, replace the dashboard wire harness.

NO

Short to another wire in the dashboard wire harness; replace the dashboard wire harness, then clear the DTC.

DTC B0020-11

DTC B0020-11 : Short to Ground in the Driver's Side Airbag Inflator

Special Tools Required

SRS Inflator Simulator 07SAZ-TB4011A

SRS Simulator Lead L 070AZ-SNA0300

NOTE:

- **Before doing this troubleshooting procedure, find out if the vehicle was in a collision. If so, verify that all the required components were replaced with new components of the correct part number and were properly installed** .
- Before doing this troubleshooting procedure, review **SRS Precautions and Procedures** , **General Troubleshooting Information**, and **12 Volt Battery Terminal Disconnection and Reconnection** .

DTC Description	DTC
B0020-11 Short to ground in the driver's side airbag inflator	B

DTC (SRS)

1. Problem verification

   -1. Clear the DTCs with the HDS.

   -2. Turn the vehicle to the ON mode, then wait for 10 seconds.

   -3. Check for DTCs with the HDS.

DTC Description	DTC
B0020-11 Short to ground in the driver's side airbag inflator	B

   Is DTC B0020-11 indicated?

   YES

   The failure is duplicated. Go to step 2.

   NO

   Intermittent failure, the system is OK at this time. Go to Troubleshooting Intermittent Failures. If another DTC is indicated, troubleshoot the DTC.

2. Driver's side airbag inflator check

   -1. Turn the vehicle to the OFF (LOCK) mode.

   -2. Disconnect the negative cable from the 12 volt battery, then wait at least 3 minutes.

   -3. Disconnect the driver's side airbag inflator 2P connector (A) on the floor wire harness.

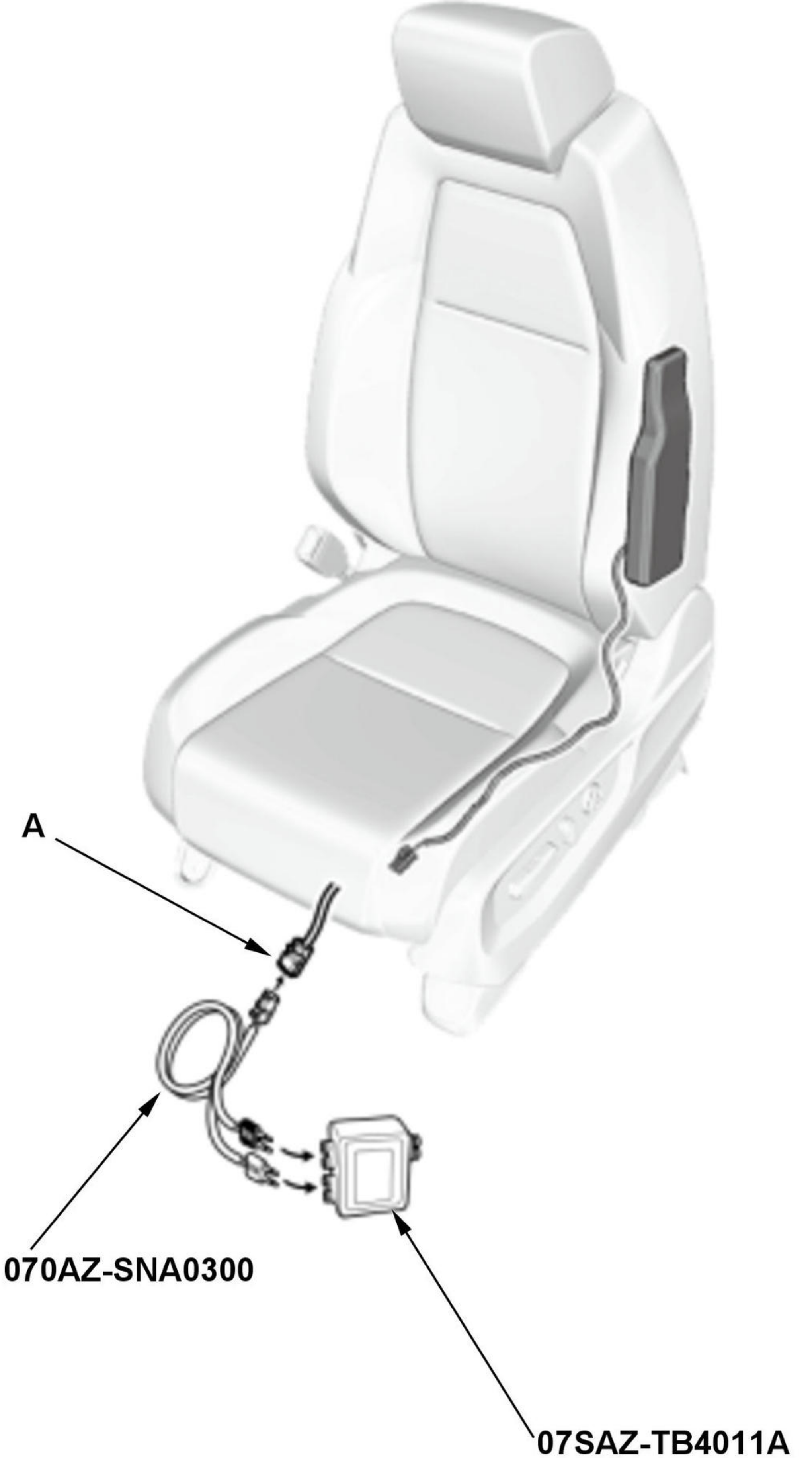
A
070AZ-SNA0300
07SAZ-TB4011A

-4. Connect the terminals of SRS simulator lead L to the SRS inflator simulator (2 Ω connectors), then connect SRS simulator lead L to the driver's side airbag inflator 2P connector on the floor wire harness.

-5. Reconnect the negative cable to the 12 volt battery.

-6. Clear the DTCs with the HDS.

-7. Turn the vehicle to the ON mode, then wait for 10 seconds.

-8. Check for DTCs with the HDS.

DTC Description	DTC
B0020-11 Short to ground in the driver's side airbag inflator	B

Is DTC B0020-11 indicated?

YES

Go to step 3.

NO

Short to ground in the driver's side airbag inflator; **replace the driver's side airbag** , then clear the DTC.

3. Shorted wire check (LSA+, LSA- lines)

-1. Turn the vehicle to the OFF (LOCK) mode.

-2. Disconnect the negative cable from the 12 volt battery, then wait at least 3 minutes.

-3. Disconnect the following connector.

SRS unit connector B (39P)

-4. Disconnect the SRS inflator simulator from SRS simulator lead L. Do not disconnect SRS simulator lead L from the driver's side airbag inflator 2P connector on the floor wire harness.

-5. Measure the resistance between test points 1 and 2.

Test condition	Vehicle OFF (LOCK) mode
	Driver's side airbag inflator 2P connector (on the floor wire harness): disconnected
	SRS unit connector B (39P): disconnected
	Driver's side airbag inflator 2P connector (on the floor wire harness): connected to SRS simulator lead L
Test point 1	SRS simulator lead L black terminal
Test point 2	Body ground

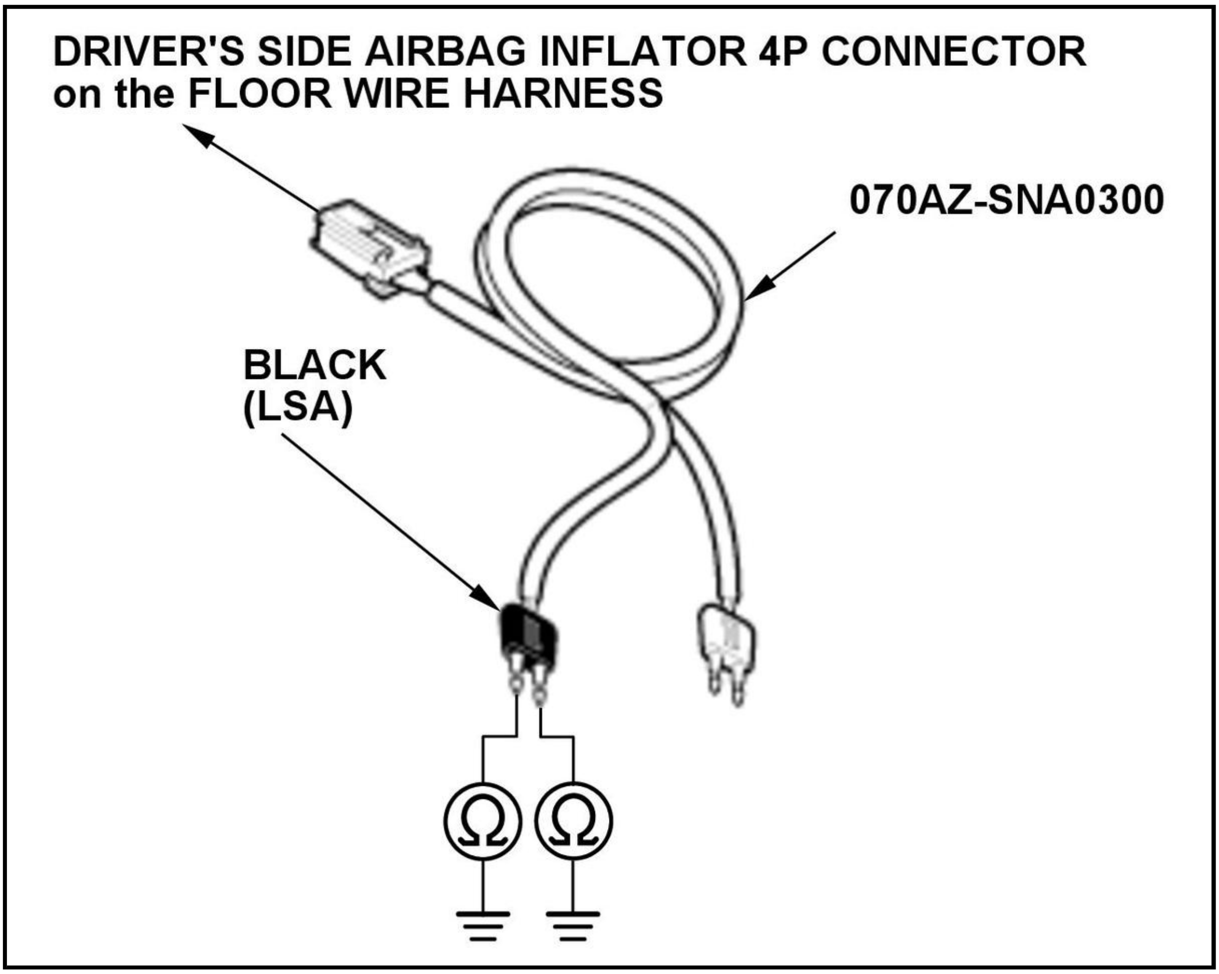
DRIVER'S SIDE AIRBAG INFLATOR 4P CONNECTOR on the FLOOR WIRE HARNESS
070AZ-SNA0300
BLACK (LSA)
Ω
Ω

Is there an open circuit, or at least 1 MΩ?

YES

The LSA+ and LSA- wires are OK. Faulty SRS unit or poor connection at SRS unit connector B (39P) and the SRS unit. Check the connection; if the connection is OK, check for any authorized service information related to the DTCs or symptoms you are troubleshooting or replace the SRS unit . If the DTC does not clear, replace the floor wire harness.

NO

Short to ground in the floor wire harness; replace the floor wire harness, then clear the DTC.

DTC B0020-12

DTC B0020-12 : Short to Power in the Driver's Side Airbag Inflator

Special Tools Required

SRS Inflator Simulator 07SAZ-TB4011A

SRS Simulator Lead L 070AZ-SNA0300

NOTE:

- **Before doing this troubleshooting procedure, find out if the vehicle was in a collision. If so, verify that all the required components were replaced with new components of the correct part number and were properly installed** .
- Before doing this troubleshooting procedure, review SRS Precautions and Procedures , General Troubleshooting Information, and 12 Volt Battery Terminal Disconnection and Reconnection .

DTC Description	DTC
B0020-12 Short to power in the driver's side airbag inflator	B

DTC (SRS)

1. Problem verification

   -1. Clear the DTCs with the HDS.

   -2. Turn the vehicle to the ON mode, then wait for 10 seconds.

   -3. Check for DTCs with the HDS.

DTC Description	DTC
B0020-12 Short to power in the driver's side airbag inflator	B

   Is DTC B0020-12 indicated?

   YES

   The failure is duplicated. Go to step 2.

   NO

   Intermittent failure, the system is OK at this time. Go to Troubleshooting Intermittent Failures. If another DTC is indicated, troubleshoot the DTC.

2. Driver's side airbag inflator check

   -1. Turn the vehicle to the OFF (LOCK) mode.

   -2. Disconnect the negative cable from the 12 volt battery, then wait at least 3 minutes.

   -3. Disconnect the driver's side airbag inflator 2P connector (A) on the floor wire harness.

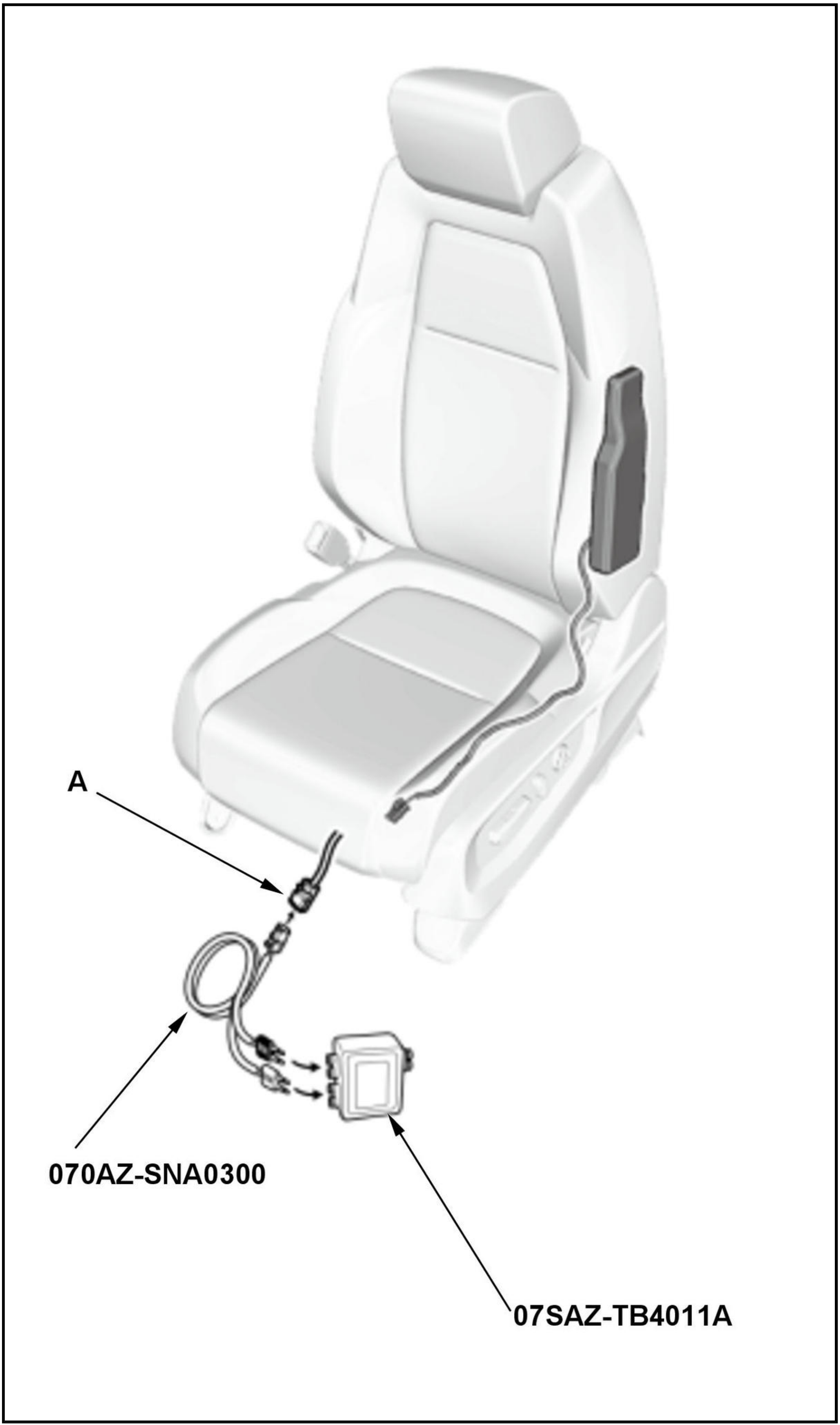
A
070AZ-SNA0300
07SAZ-TB4011A

-4. Connect the terminals of SRS simulator lead L to the SRS inflator simulator (2 Ω connectors), then connect SRS simulator lead L to the driver's side airbag inflator 2P connector on the floor wire harness.

-5. Reconnect the negative cable to the 12 volt battery.

-6. Clear the DTCs with the HDS.

-7. Turn the vehicle to the ON mode, then wait for 10 seconds.

-8. Check for DTCs with the HDS.

DTC Description	DTC
B0020-12 Short to power in the driver's side airbag inflator	B

Is DTC B0020-12 indicated?

YES

Go to step 3.

NO

Short to power in the driver's side airbag inflator; **replace the driver's side airbag** , then clear the DTC.

3. Shorted wire check (LSA+, LSA- lines to power)

-1. Turn the vehicle to the OFF (LOCK) mode.

-2. Disconnect the negative cable from the 12 volt battery, then wait at least 3 minutes.

-3. Disconnect the following connector.

SRS unit connector B (39P)

-4. Disconnect the SRS inflator simulator from SRS simulator lead L. Do not disconnect SRS simulator lead L from the driver's side airbag inflator 2P connector on the floor wire harness.

-5. Reconnect the negative cable to the 12 volt battery.

-6. Turn the vehicle to the ON mode.

-7. Measure the voltage between test points 1 and 2.

Test condition	Vehicle ON mode
	Driver's side airbag inflator 2P connector (on the floor wire harness): disconnected
	SRS unit connector B (39P): disconnected
	Driver's side airbag inflator 2P connector (on the floor wire harness): connected to SRS simulator lead L
Test point 1	SRS simulator lead L black terminal
Test point 2	Body ground

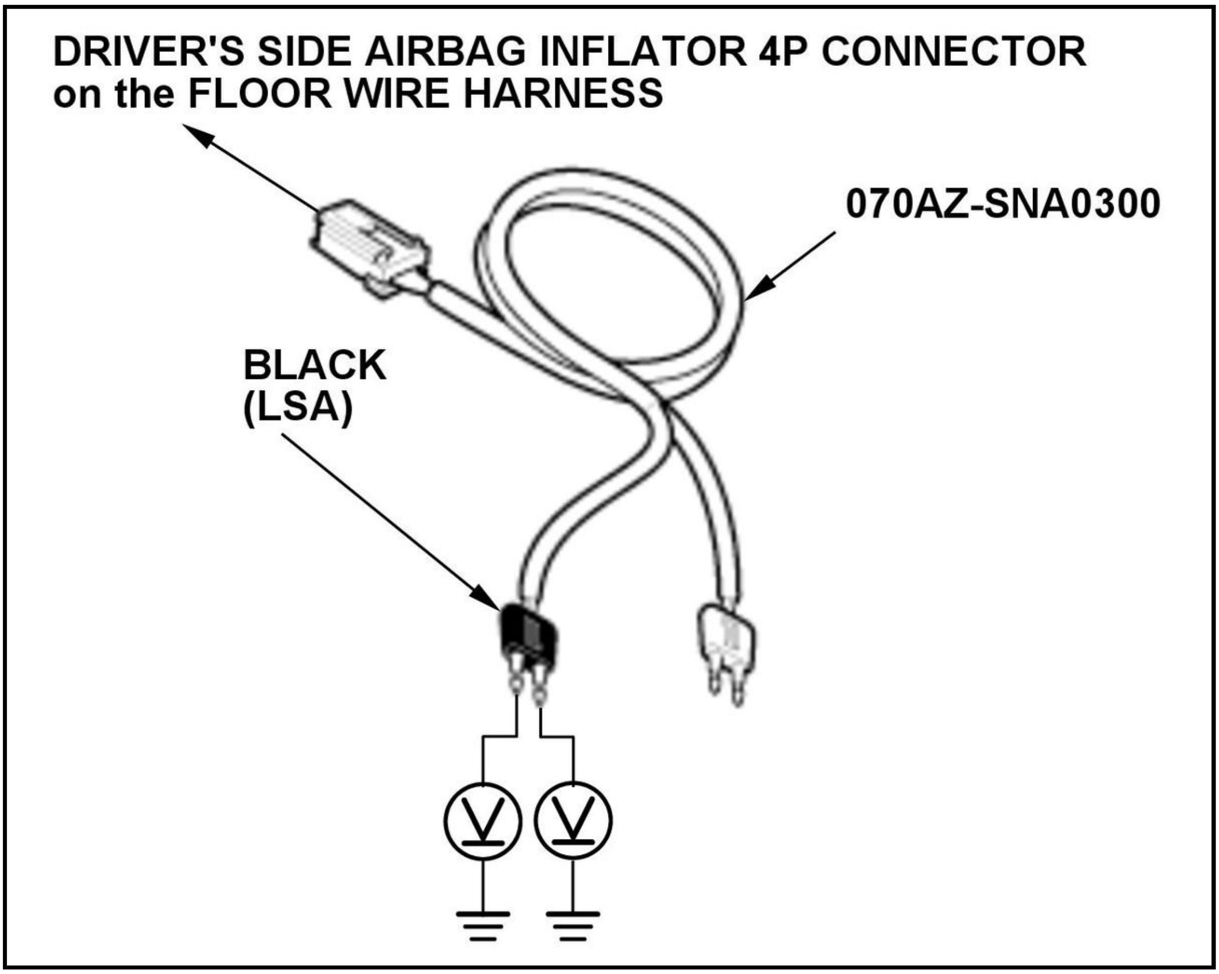
DRIVER'S SIDE AIRBAG INFLATOR 4P CONNECTOR on the FLOOR WIRE HARNESS
070AZ-SNA0300
BLACK (LSA)

Is there 0.2 V or less?

YES

The LSA+ and LSA- wires are OK. Faulty SRS unit or poor connection at SRS unit connector B (39P) and the SRS unit. Check the connection; if the connection is OK, check for any authorized service information related to the DTCs or symptoms you are troubleshooting or replace the SRS unit . If the DTC does not clear, replace the floor wire harness.

NO

Short to power in the floor wire harness; replace the floor wire harness, then clear the DTC.

DTC B0020-13

DTC B0020-13 : Open or Increased Resistance in the Driver's Side Airbag Inflator

Special Tools Required

SRS Inflator Simulator 07SAZ-TB4011A

SRS Simulator Lead L 070AZ-SNA0300

NOTE:

- **Before doing this troubleshooting procedure, find out if the vehicle was in a collision. If so, verify that all the required components were replaced with new components of the correct part number and were properly installed** .
- Before doing this troubleshooting procedure, review SRS Precautions and Procedures , General Troubleshooting Information, and 12 Volt Battery Terminal Disconnection and Reconnection .

DTC Description	DTC
B0020-13 Open or increased resistance in the driver's side airbag inflator	B

DTC (SRS)

1. Problem verification

    -1. Clear the DTCs with the HDS.

    -2. Turn the vehicle to the ON mode, then wait for 10 seconds.

    -3. Check for DTCs with the HDS.

DTC Description	DTC
B0020-13 Open or increased resistance in the driver's side airbag inflator	B

    Is DTC B0020-13 indicated?

    YES

    The failure is duplicated. Go to step 2.

    NO

    Intermittent failure, the system is OK at this time. Go to Troubleshooting Intermittent Failures. If another DTC is indicated, troubleshoot the DTC.

2. Driver's side airbag inflator check

    -1. Turn the vehicle to the OFF (LOCK) mode.

    -2. Disconnect the negative cable from the 12 volt battery, then wait at least 3 minutes.

    -3. Disconnect the driver's side airbag inflator 2P connector (A) on the floor wire harness.

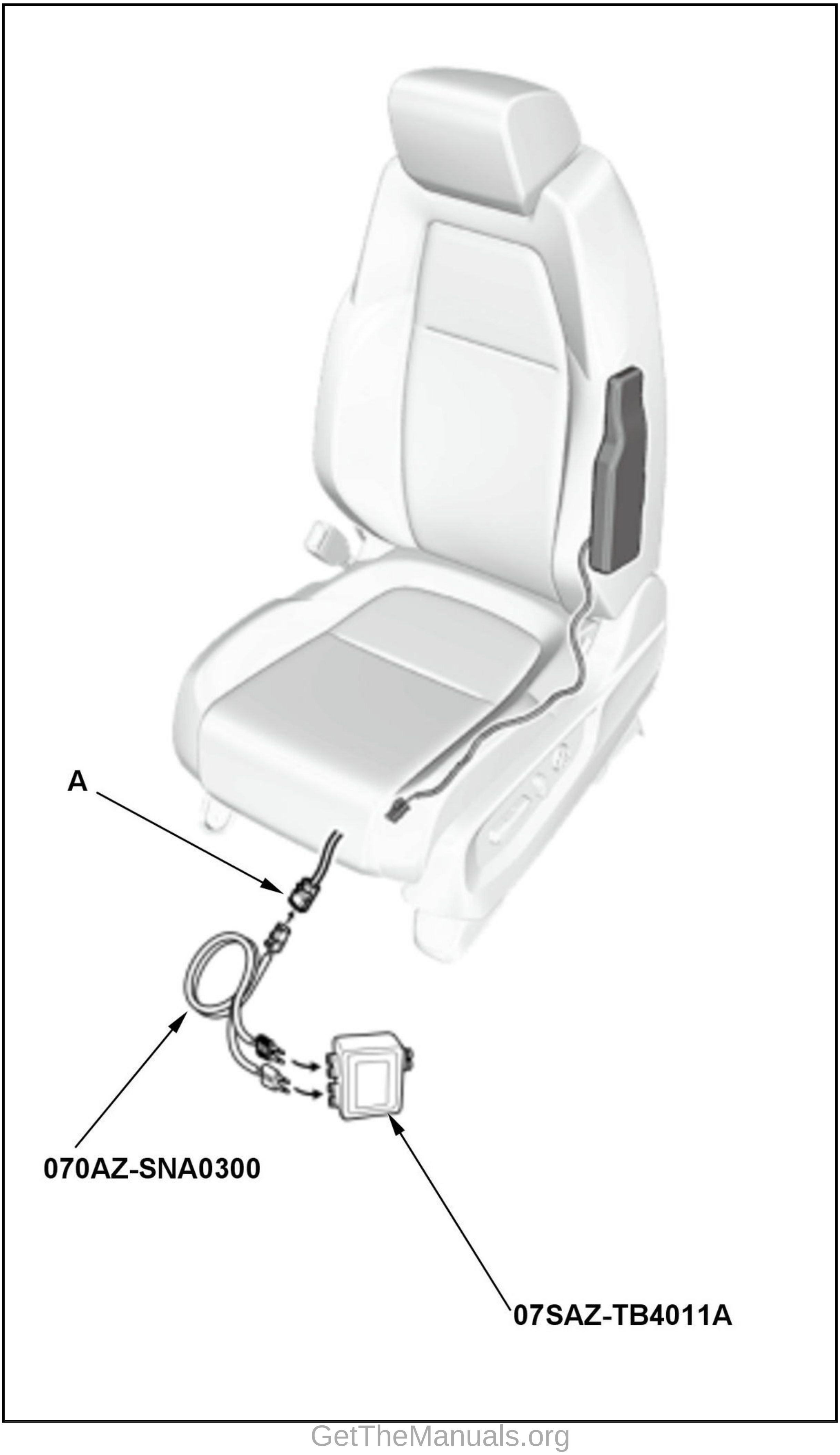
A
070AZ-SNA0300
07SAZ-TB4011A

-4. Connect the terminals of SRS simulator lead L to the SRS inflator simulator (2 Ω connectors), then connect SRS simulator lead L to the driver's side airbag inflator 2P connector on the floor wire harness.

-5. Reconnect the negative cable to the 12 volt battery.

-6. Clear the DTCs with the HDS.

-7. Turn the vehicle to the ON mode, then wait for 10 seconds.

-8. Check for DTCs with the HDS.

DTC Description	DTC
B0020-13 Open or increased resistance in the driver's side airbag inflator	B

Is DTC B0020-13 indicated?

YES

Go to step 3.

NO

Open in the driver's side airbag inflator; **replace the driver's side airbag** , then clear the DTC.

3. Open wire check (LSA+, LSA- lines)

-1. Turn the vehicle to the OFF (LOCK) mode.

-2. Disconnect the negative cable from the 12 volt battery, then wait at least 3 minutes.

-3. Disconnect the following connector.

SRS unit connector B (39P)

-4. Disconnect the SRS inflator simulator from SRS simulator lead L. Do not disconnect SRS simulator lead L from the driver's side airbag inflator 2P connector on the floor wire harness.

-5. Measure the resistance of the test point.

Test condition	Vehicle OFF (LOCK) mode
	Driver's side airbag inflator 2P connector (on the floor wire harness): disconnected
	SRS unit connector B (39P): disconnected
	Driver's side airbag inflator 2P connector (on the floor wire harness): connected to SRS simulator lead L
Test point	SRS simulator lead L black terminal

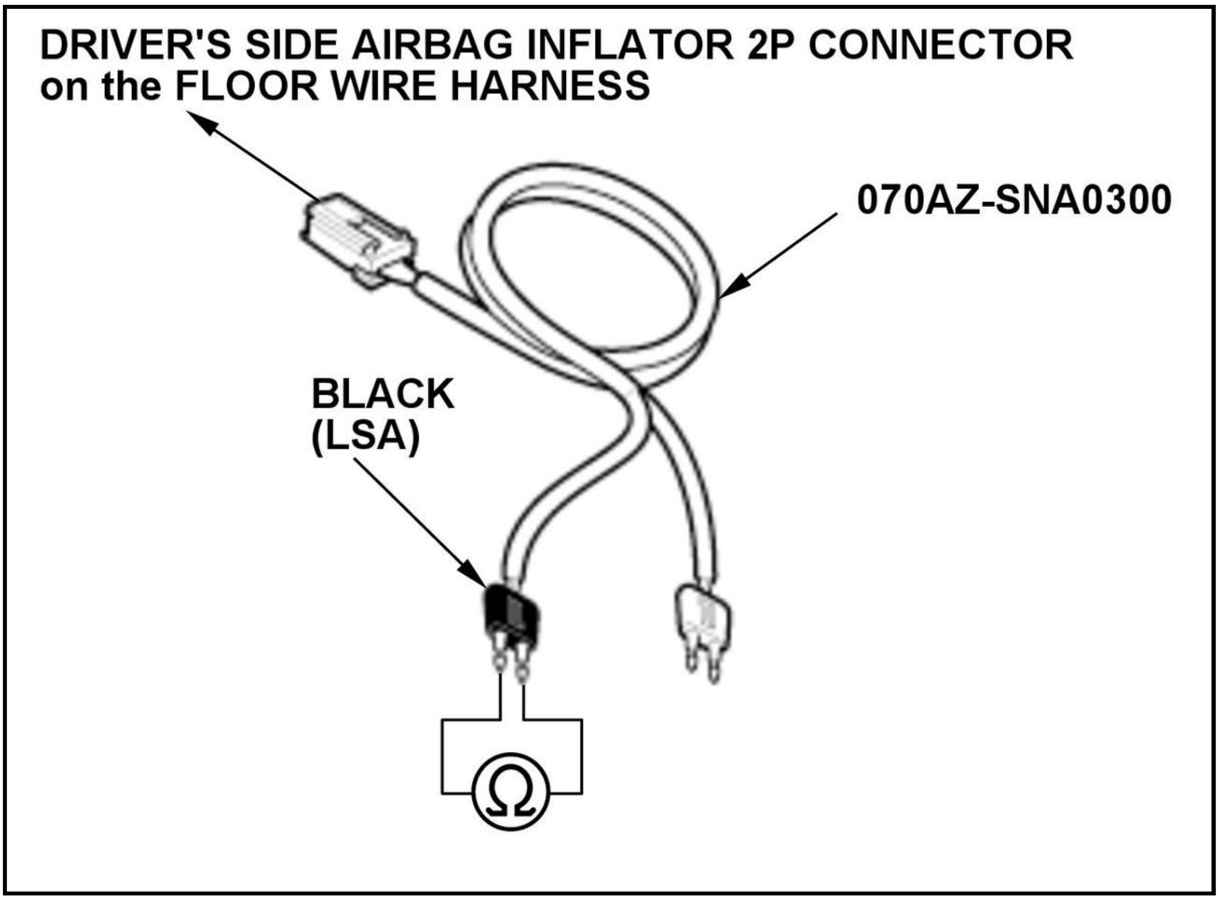
DRIVER'S SIDE AIRBAG INFLATOR 2P CONNECTOR on the FLOOR WIRE HARNESS
070AZ-SNA0300
BLACK (LSA)
Ω

Is there 1.0 Ω or less?

YES

The LSA+ and LSA- wires are OK. Faulty SRS unit or poor connection at SRS unit connector B (39P) and the SRS unit. Check the connection; if the connection is OK, check for any authorized service information related to the DTCs or symptoms you are troubleshooting or **replace the SRS unit** . If the DTC does not clear, replace the floor wire harness.

NO

Open in the floor wire harness; replace the floor wire harness, then clear the DTC.

DTC B0020-1A, B0020-2B

DTC B0020-1A : Decreased Resistance in the Driver's Side Airbag Inflator

DTC B0020-2B : Short to Another Wire Harness in the Driver's Side Airbag Inflator

Special Tools Required

SRS Inflator Simulator 07SAZ-TB4011A

SRS Simulator Lead L 070AZ-SNA0300

SRS Short Canceller 070AZ-SAA0100

NOTE:

- **Before doing this troubleshooting procedure, find out if the vehicle was in a collision. If so, verify that all the required components were replaced with new components of the correct part number and were properly installed** .

- Before doing this troubleshooting procedure, review **SRS Precautions and Procedures** , **General Troubleshooting Information**, and **12 Volt Battery Terminal Disconnection and Reconnection** .

DTC Description	DTC
B0020-1A Decreased resistance in the driver's side airbag inflator	B
B0020-2B Short to another wire harness in the driver's side airbag inflator	B

DTC (SRS)

1. Problem verification

   -1. Clear the DTCs with the HDS.

   -2. Turn the vehicle to the ON mode, then wait for 10 seconds.

   -3. Check for DTCs with the HDS.

DTC Description	DTC
B0020-1A Decreased resistance in the driver's side airbag inflator	B
B0020-2B Short to another wire harness in the driver's side airbag inflator	B

   Is DTC B0020-1A or B0020-2B indicated?

   YES

   The failure is duplicated. Go to step 2.

   NO

   Intermittent failure, the system is OK at this time. Go to Troubleshooting Intermittent Failures. If another DTC is indicated, troubleshoot the DTC.

2. Driver's side airbag inflator check

   -1. Turn the vehicle to the OFF (LOCK) mode.

   -2. Disconnect the negative cable from the 12 volt battery, then wait at least 3 minutes.

   -3. Disconnect the driver's side airbag inflator 2P connector (A) on the floor wire harness.

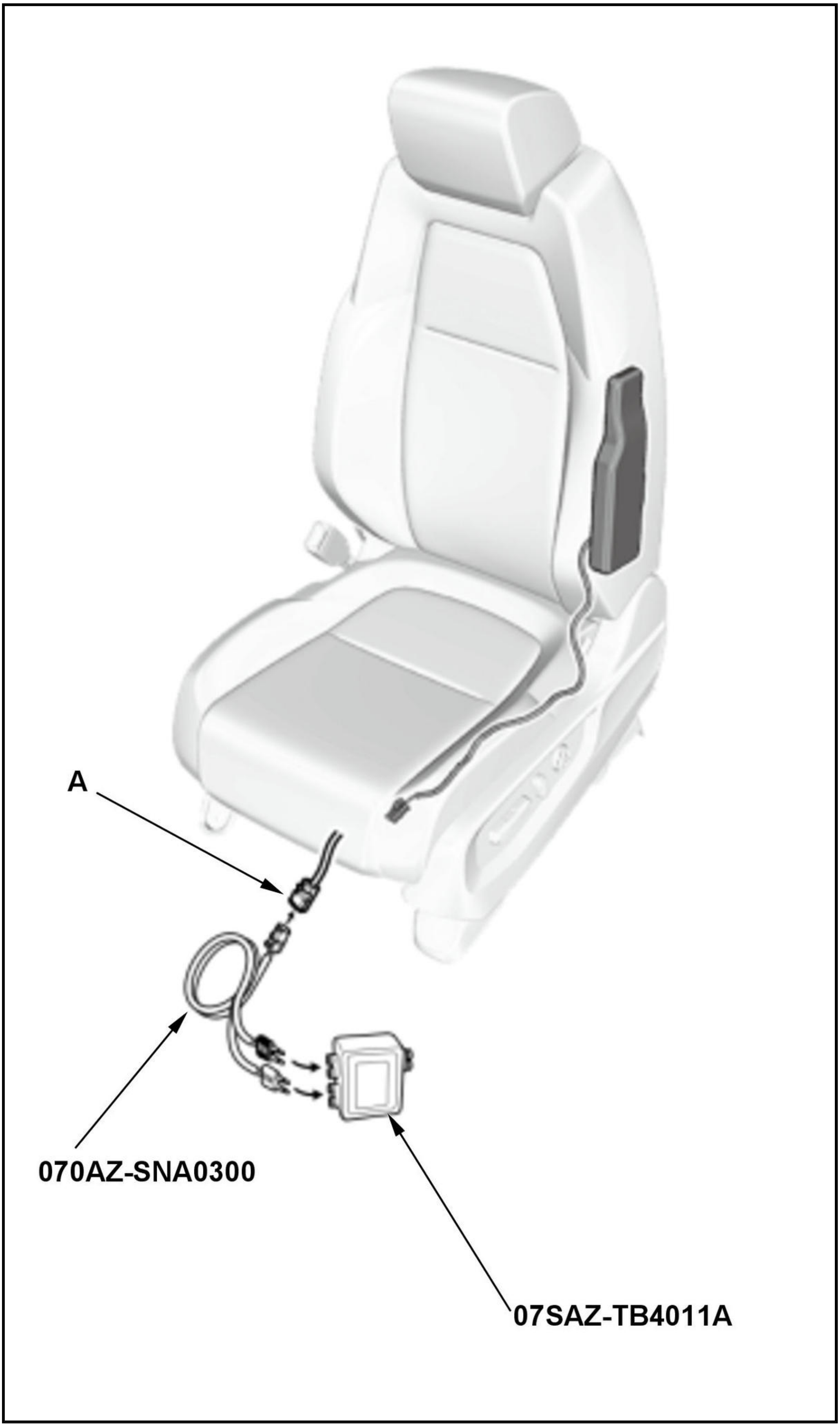
A
070AZ-SNA0300
07SAZ-TB4011A

-4. Connect the terminals of SRS simulator lead L to the SRS inflator simulator (2 Ω connectors), then connect SRS simulator lead L to the driver's side airbag inflator 2P connector on the floor wire harness.

-5. Reconnect the negative cable to the 12 volt battery.

-6. Clear the DTCs with the HDS.

-7. Turn the vehicle to the ON mode, then wait for 10 seconds.

-8. Check for DTCs with the HDS.

DTC Description	DTC
B0020-1A Decreased resistance in the driver's side airbag inflator	B
B0020-2B Short to another wire harness in the driver's side airbag inflator	B

Is DTC B0020-1A or B0020-2B indicated?

YES

Go to step 3.

NO

Short to another wire in the driver's side airbag inflator; **replace the driver's side airbag** , then clear the DTC.

3. Shorted wire check (LSA+ line to LSA- line)

-1. Turn the vehicle to the OFF (LOCK) mode.

-2. Disconnect the negative cable from the 12 volt battery, then wait at least 3 minutes.

-3. Disconnect the following connector.

SRS unit connector B (39P)

-4. Disconnect the SRS inflator simulator from SRS simulator lead L. Do not disconnect SRS simulator lead L from the driver's side airbag inflator 2P connector on the floor wire harness.

-5. **Connect the SRS short canceller to SRS unit connector B (39P) terminals No. 5 and No. 6**.

-6. Measure the resistance of the test point.

Test condition	Vehicle OFF (LOCK) mode
	Driver's side airbag inflator 2P connector (on the floor wire harness): disconnected
	SRS unit connector B (39P): disconnected
	Driver's side airbag inflator 2P connector (on the floor wire harness): connected to SRS simulator lead L
	SRS unit connector B (39P) No. 5 and No. 6: connected to SRS short canceller
Test point	SRS simulator lead L black terminal

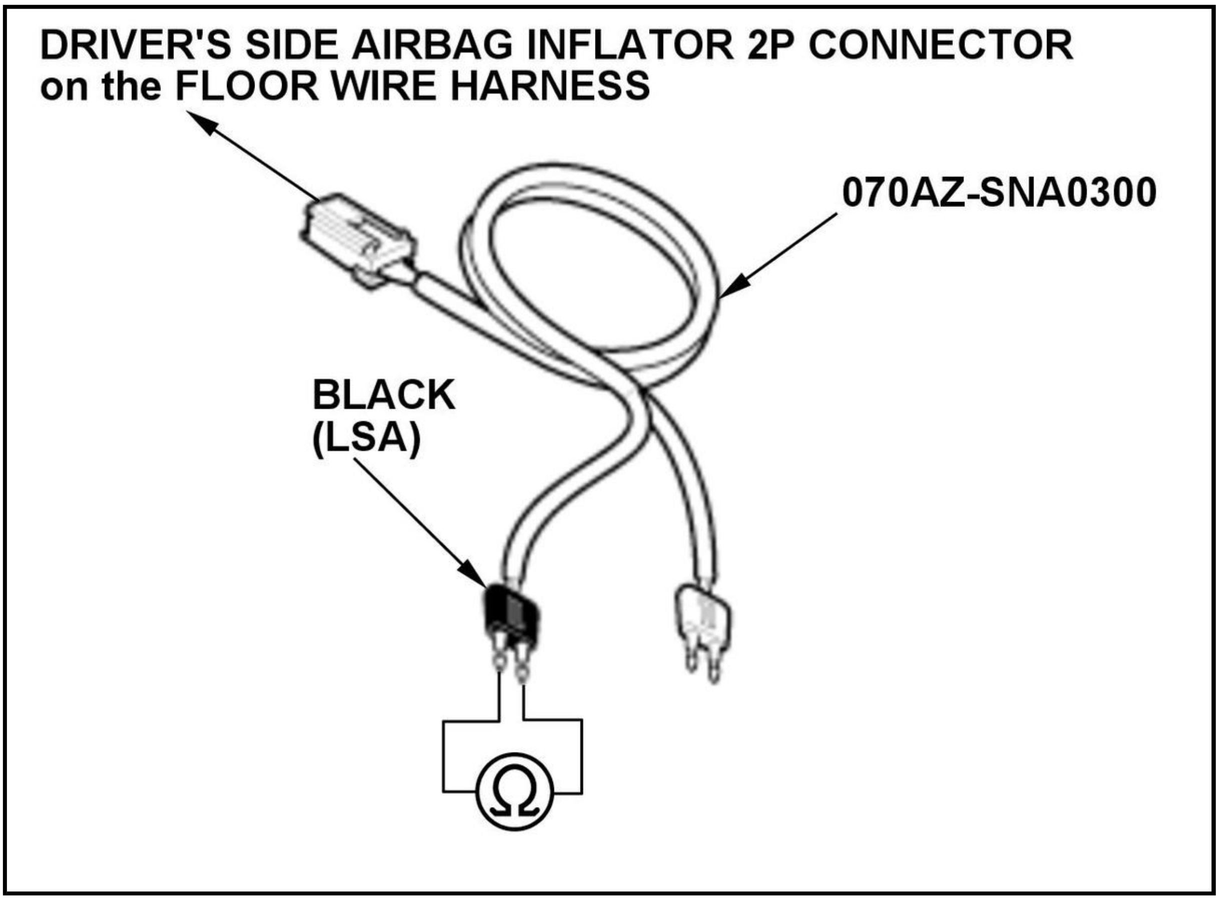
DRIVER'S SIDE AIRBAG INFLATOR 2P CONNECTOR on the FLOOR WIRE HARNESS
070AZ-SNA0300
BLACK (LSA)
Ω

Is there an open circuit, or at least 1 MΩ?

YES

The LSA+ and LSA- wires are OK. Faulty SRS unit or poor connection at SRS unit connector B (39P) and the SRS unit. Check the connection; if the connection is OK, check for any authorized service information related to the DTCs or symptoms you are troubleshooting or **replace the SRS unit** . If the DTC does not clear, replace the floor wire harness.

NO

Short to another wire in the floor wire harness; replace the floor wire harness, then clear the DTC.

DTC B0021-11

DTC B0021-11 : Short to Ground in the Left Side Curtain Airbag First Inflator

NOTE:

- **Before doing this troubleshooting procedure, find out if the vehicle was in a collision. If so, verify that all the required components were replaced with new components of the correct part number and were properly installed** .
- Before doing this troubleshooting procedure, review **SRS Precautions and Procedures** , **General Troubleshooting Information**, and **12 Volt Battery Terminal Disconnection and Reconnection** .

DTC Description	DTC
B0021-11 Short to ground in the left side curtain airbag first inflator	B

DTC (SRS)

1. Problem verification

-1. Clear the DTCs with the HDS.

-2. Turn the vehicle to the ON mode, then wait for 10 seconds.

-3. Check for DTCs with the HDS.

DTC Description	DTC
B0021-11 Short to ground in the left side curtain airbag first inflator	B

Is DTC B0021-11 indicated?

YES

The failure is duplicated. Go to step 2.

NO

Intermittent failure, the system is OK at this time. Go to Troubleshooting Intermittent Failures. If another DTC is indicated, troubleshoot the DTC.

2. Shorted wire check (LCA+, LCA- lines) 1

-1. Turn the vehicle to the OFF (LOCK) mode.

-2. Disconnect the negative cable from the 12 volt battery, then wait at least 3 minutes.

-3. **Remove the headliner** .

-4. Disconnect the following connector.

Left side curtain airbag inflator 2P connector (on the floor wire harness)

-5. Reconnect the negative cable to the 12 volt battery.

-6. Turn the vehicle to the ON mode, then clear the DTC.

-7. Check for DTCs with the HDS.

DTC Description	DTC
B0021-11 Short to ground in the left side curtain airbag first inflator	B

Is DTC B0021-11 indicated?

YES

Go to step 3.

NO

Short to ground in the left side curtain airbag inflator; **replace the left side curtain airbag** , then clear the DTC.

3. Shorted wire check (LCA+, LCA- lines) 2

-1. Turn the vehicle to the OFF (LOCK) mode.

-2. Disconnect the negative cable from the 12 volt battery, then wait at least 3 minutes.

-3. Disconnect the following connector.

SRS unit connector B (39P)

-4. Measure the resistance between test points 1 and 2.

Test condition	Vehicle OFF (LOCK) mode
	SRS unit connector B (39P): disconnected
	Left side curtain airbag inflator 2P connector (on the floor wire harness): disconnected
Test point 1	**SRS unit connector B (39P) No. 9**
Test point 2	Body ground

Test point 1	**SRS unit connector B (39P) No. 10**
Test point 2	Body ground

Is there an open circuit, or at least 1 MΩ?

YES

The LCA+ and LCA- wires are OK. Check for any authorized service information related to the DTCs or symptoms you are troubleshooting or **replace the SRS unit** .

NO

Short to ground in the floor wire harness; replace the floor wire harness, then clear the DTC.

DTC B0021-12

DTC B0021-12 : Short to Power in the Left Side Curtain Airbag First Inflator

NOTE:

- **Before doing this troubleshooting procedure, find out if the vehicle was in a collision. If so, verify that all the required components were replaced with new components of the correct part number and were properly installed** .
- Before doing this troubleshooting procedure, review **SRS Precautions and Procedures** , **General Troubleshooting Information**, and **12 Volt Battery Terminal Disconnection and Reconnection** .

DTC Description	DTC
B0021-12 Short to power in the left side curtain airbag first inflator	B

DTC (SRS)

1. Problem verification

-1. Clear the DTCs with the HDS.

-2. Turn the vehicle to the ON mode, then wait for 10 seconds.

-3. Check for DTCs with the HDS.

DTC Description	DTC
B0021-12 Short to power in the left side curtain airbag first inflator	B

Is DTC B0021-12 indicated?

YES

The failure is duplicated. Go to step 2.

NO

Intermittent failure, the system is OK at this time. Go to Troubleshooting Intermittent Failures. If another DTC is indicated, troubleshoot the DTC.

2. Shorted wire check (LCA+, LCA- lines to power) 1

-1. Turn the vehicle to the OFF (LOCK) mode.

-2. Disconnect the negative cable from the 12 volt battery, then wait at least 3 minutes.

-3. **Remove the headliner** .

-4. Disconnect the following connector.

Left side curtain airbag inflator 2P connector (on the floor wire harness)

-5. Reconnect the negative cable to the 12 volt battery.

-6. Turn the vehicle to the ON mode, then clear the DTC.

-7. Check for DTCs with the HDS.

DTC Description	DTC
B0021-12 Short to power in the left side curtain airbag first inflator	B

Is DTC B0021-12 indicated?

YES

Go to step 3.

NO

Short to power in the left side curtain airbag inflator; **replace the left side curtain airbag** , then clear the DTC.

3. Shorted wire check (LCA+, LCA- lines to power) 2

-1. Turn the vehicle to the OFF (LOCK) mode.

-2. Disconnect the negative cable from the 12 volt battery, then wait at least 3 minutes.

-3. Disconnect the following connector.

SRS unit connector B (39P)

-4. Reconnect the negative cable to the 12 volt battery.

-5. Turn the vehicle to the ON mode.

-6. Measure the voltage between test points 1 and 2.

Test condition	Vehicle ON mode
	SRS unit connector B (39P): disconnected
	Left side curtain airbag inflator 2P connector (on the floor wire harness): disconnected
Test point 1	**SRS unit connector B (39P) No. 9**
Test point 2	Body ground

Test point 1	**SRS unit connector B (39P) No. 10**
Test point 2	Body ground

Is there 0.2 V or less?

YES

The LCA+ and LCA- wires are OK. Check for any authorized service information related to the DTCs or symptoms you are troubleshooting or **replace the SRS unit** .

NO

Short to power in the floor wire harness; replace the floor wire harness, then clear the DTC.

DTC B0021-13

DTC B0021-13 : Open or Increased Resistance in the Left Side Curtain Airbag First Inflator

NOTE:

- **Before doing this troubleshooting procedure, find out if the vehicle was in a collision. If so, verify that all the required components were replaced with new components of the correct part number and were properly installed** .
- Before doing this troubleshooting procedure, review **SRS Precautions and Procedures** , **General Troubleshooting Information**, and **12 Volt Battery Terminal Disconnection and Reconnection** .

DTC Description	DTC
B0021-13 Open or increased resistance in the left side curtain airbag first inflator	B

DTC (SRS)

1. Problem verification

-1. Clear the DTCs with the HDS.

-2. Turn the vehicle to the ON mode, then wait for 10 seconds.

-3. Check for DTCs with the HDS.

DTC Description	DTC
B0021-13 Open or increased resistance in the left side curtain airbag first inflator	B

Is DTC B0021-13 indicated?

YES

The failure is duplicated. Go to step 2.

NO

Intermittent failure, the system is OK at this time. Go to Troubleshooting Intermittent Failures. If another DTC is indicated, troubleshoot the DTC.

2. Left side curtain airbag inflator check

-1. Turn the vehicle to the OFF (LOCK) mode.

-2. Disconnect the negative cable from the 12 volt battery, then wait at least 3 minutes.

-3. **Remove the headliner** .

-4. Disconnect the following connector.

Left side curtain airbag inflator 2P connector (on the floor wire harness)

-5. Connect terminals A and B with a jumper wire.

Terminal A	Left side curtain airbag inflator 2P connector (female terminals) No. 1 (on the floor wire harness): ①
Terminal B	Left side curtain airbag inflator 2P connector (female terminals) No. 2 (on the floor wire harness): ①

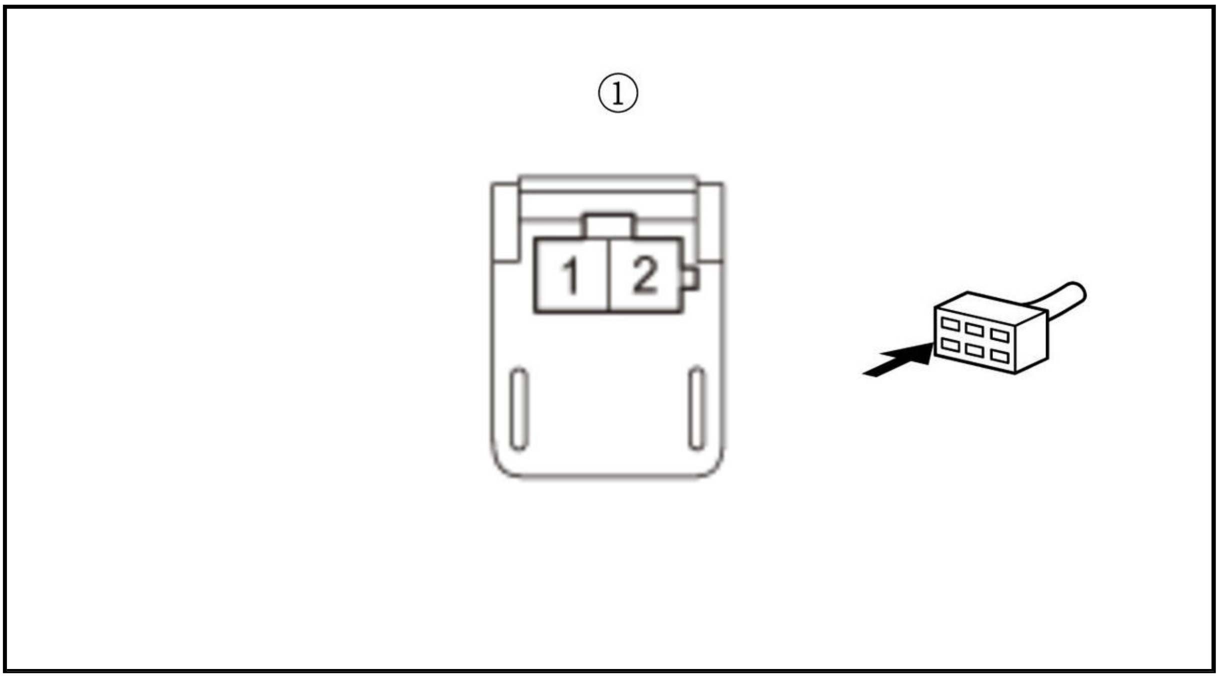

-6. Reconnect the negative cable to the 12 volt battery.

-7. Clear the DTCs with the HDS.

-8. Turn the vehicle to the ON mode, then wait for 10 seconds.

-9. Check for DTCs with the HDS.

DTC Description	DTC
B0021-13 Open or increased resistance in the left side curtain airbag first inflator	B

Is DTC B0021-13 indicated?

YES

Go to step 3.

NO

Open in the left side curtain airbag inflator; **replace the left side curtain airbag** , then clear the DTC.

3. Open wire check (LCA+, LCA- lines)

-1. Turn the vehicle to the OFF (LOCK) mode.

-2. Disconnect the negative cable from the 12 volt battery, then wait at least 3 minutes.

-3. Remove the jumper wire from the left side curtain airbag inflator 2P connector on the floor wire harness.

-4. Disconnect the following connector.

SRS unit connector B (39P)

-5. Connect terminals A and B with a jumper wire.

Terminal A	**SRS unit connector B (39P) No. 9**
Terminal B	**SRS unit connector B (39P) No. 10**

-6. Measure the resistance between test points 1 and 2.

Test condition	Vehicle OFF (LOCK) mode
	Left side curtain airbag inflator 2P connector (on the floor wire harness): disconnected
	SRS unit connector B (39P): disconnected
	SRS unit connector B (39P) terminals No. 9 and No. 10: jumped
Test point 1	Left side curtain airbag inflator 2P connector (female terminals) No. 1 (on the floor wire harness): ①
Test point 2	Left side curtain airbag inflator 2P connector (female terminals) No. 2 (on the floor wire harness): ①

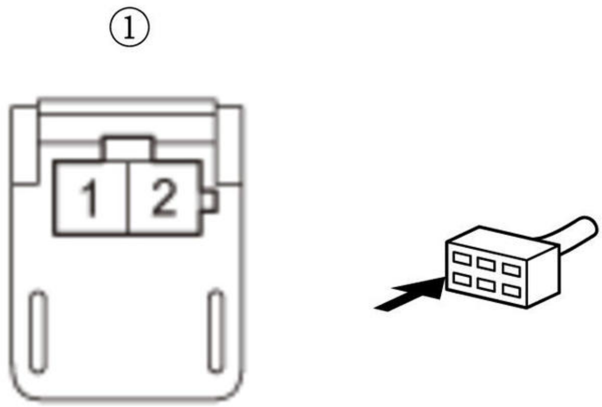

Is there 1.0 Ω or less?

YES

The LCA+ and LCA- wires are OK. Faulty SRS unit or poor connection at SRS unit connector B (39P) and the SRS unit. Check the connection; if the connection is OK, check for any authorized service

information related to the DTCs or symptoms you are troubleshooting or **replace the SRS unit** . If the DTC does not clear, replace the floor wire harness.

NO

Open in the floor wire harness; replace the floor wire harness, then clear the DTC.

DTC B0021-1A

DTC B0021-1A : Decreased Resistance in the Left Side Curtain Airbag First Inflator

Special Tools Required

SRS Short Canceller 070AZ-SAA0100

NOTE:

- **Before doing this troubleshooting procedure, find out if the vehicle was in a collision. If so, verify that all the required components were replaced with new components of the correct part number and were properly installed** .
- Before doing this troubleshooting procedure, review **SRS Precautions and Procedures** , **General Troubleshooting Information**, and **12 Volt Battery Terminal Disconnection and Reconnection** .

DTC Description	DTC
B0021-1A Decreased resistance in the left side curtain airbag first inflator	B

DTC (SRS)

1. Problem verification

   -1. Clear the DTCs with the HDS.

   -2. Turn the vehicle to the ON mode, then wait for 10 seconds.

   -3. Check for DTCs with the HDS.

DTC Description	DTC
B0021-1A Decreased resistance in the left side curtain airbag first inflator	B

   Is DTC B0021-1A indicated?

   YES

   The failure is duplicated. Go to step 2.

   NO

   Intermittent failure, the system is OK at this time. Go to Troubleshooting Intermittent Failures. If another DTC is indicated, troubleshoot the DTC.

2. Left side curtain airbag inflator check

   -1. Turn the vehicle to the OFF (LOCK) mode.

   -2. Disconnect the negative cable from the 12 volt battery, then wait at least 3 minutes.

   -3. **Remove the headliner** .

   -4. Disconnect the following connector.

Left side curtain airbag inflator 2P connector (on the floor wire harness)

-5. Reconnect the negative cable to the 12 volt battery.

-6. Clear the DTCs with the HDS.

-7. Turn the vehicle to the ON mode, then wait for 10 seconds.

-8. Check for DTCs with the HDS.

DTC Description	DTC
B0021-1A Decreased resistance in the left side curtain airbag first inflator	B

Is DTC B0021-1A indicated?

YES

Go to step 3.

NO

Short to another wire in the left side curtain airbag inflator; **replace the left side curtain airbag** , then clear the DTC.

3. Shorted wire check (LCA+ line to LCA- line)

-1. Turn the vehicle to the OFF (LOCK) mode.

-2. Disconnect the negative cable from the 12 volt battery, then wait at least 3 minutes.

-3. Disconnect the following connector.

SRS unit connector B (39P)

-4. **Connect the SRS short canceller to SRS unit connector B (39P) terminals No. 9 and No. 10**.

-5. Measure the resistance between test points 1 and 2.

Test condition	Vehicle OFF (LOCK) mode
	Left side curtain airbag inflator 2P connector (on the floor wire harness): disconnected
	SRS unit connector B (39P): disconnected
	SRS unit connector B (39P) No. 9 and No. 10: connected to SRS short canceller
Test point 1	**SRS unit connector B (39P) No. 9**
Test point 2	**SRS unit connector B (39P) No. 10**

Is there an open circuit, or at least 1 MΩ?

YES

The LCA+ and LCA- wires are OK. Faulty SRS unit or poor connection at SRS unit connector B (39P) and the SRS unit. Check the connection; if the connection is OK, check for any authorized service information related to the DTCs or symptoms you are troubleshooting or **replace the SRS unit** . If the DTC does not clear, replace the floor wire harness.

NO

Short to another wire in the floor wire harness; replace the floor wire harness, then clear the DTC.

DTC B0021-2B

DTC B0021-2B : Short to Another Wire Harness in the Left Side Curtain Airbag First Inflator

NOTE:

- **Before doing this troubleshooting procedure, find out if the vehicle was in a collision. If so, verify that all the required components were replaced with new components of the correct part number and were properly installed** .
- Before doing this troubleshooting procedure, review **SRS Precautions and Procedures** , **General Troubleshooting Information**, and **12 Volt Battery Terminal Disconnection and Reconnection** .

DTC Description	DTC
B0021-2B Short to another wire harness in the left side curtain airbag first inflator	B

DTC (SRS)

1. Problem verification

   -1. Clear the DTCs with the HDS.

   -2. Turn the vehicle to the ON mode, then wait for 10 seconds.

   -3. Check for DTCs with the HDS.

DTC Description	DTC
B0021-2B Short to another wire harness in the left side curtain airbag first inflator	B

   Is DTC B0021-2B indicated?

   YES

   The failure is duplicated. Go to step 2.

   NO

   Intermittent failure, the system is OK at this time. Go to Troubleshooting Intermittent Failures. If another DTC is indicated, troubleshoot the DTC.

2. DTC check

   -1. Check for DTCs with the HDS.

DTC Description	DTC
B0001-2B Short to another wire harness in the driver's airbag first inflator	B
B0002-2B Short to another wire harness in the driver's airbag second inflator	B
B0010-2B Short to another wire harness in the front passenger's airbag first inflator	B
B0011-2B Short to another wire harness in the front passenger's airbag second inflator	B
B0020-2B Short to another wire harness in the driver's side airbag inflator	B
B0021-2B Short to another wire harness in the left side curtain airbag first inflator	B
B0028-2B Short to another wire harness in the front passenger's side airbag inflator	B

DTC Description	DTC
B0029-2B Short to another wire harness in the right side curtain airbag first inflator	B
B0070-2B Short to another wire harness in the driver's seat belt tensioner	B
B0072-2B Short to another wire harness in the front passenger's seat belt tensioner	B
B0079-2B Short to another wire harness in the driver's seat belt outer lap tensioner	B
B007A-2B Short to another wire harness in the front passenger's seat belt outer lap tensioner	B
B0082-2B Short to another wire harness in the selectable energy absorption device of the front passenger's seat belt tensioner	B

Is DTC B0001-2B, B0002-2B, B0010-2B, B0011-2B, B0020-2B, B0028-2B, B0029-2B, B0070-2B, B0072-2B, B0079-2B, B007A-2B or B0082-2B indicated with DTC B0021-2B?

YES

Go to step 3.

NO

Short to another wire in the floor wire harness; replace the floor wire harness, then clear the DTC.

3. Shorted wire check (LCA lines to another line)

-1. Turn the vehicle to the OFF (LOCK) mode.

-2. Disconnect the negative cable from the 12 volt battery, then wait at least 3 minutes.

-3. **Remove the headliner** .

-4. Disconnect the following connectors.

SRS unit connector A (39P)
SRS unit connector B (39P)
Left side curtain airbag inflator 2P connector (on the floor wire harness)
Inflator connectors which are assigned to 2B codes listed on HDS

-5. Measure the resistance between test points 1 and 2 of SRS unit connector A (39P) and B (39P) according to table.

Test condition	Vehicle OFF (LOCK) mode
	SRS unit connector A (39P): disconnected
	SRS unit connector B (39P): disconnected
	Left side curtain airbag inflator 2P connector (on the floor wire harness): disconnected
	Inflator connectors which are assigned to 2B codes listed on HDS: disconnected

DTC	Test point 1	Test point 2
	From terminal	To terminal
B0001-2B	SRS unit connector B (39P) No. 9	SRS unit connector A (39P) No. 9
	SRS unit connector B (39P) No. 10	SRS unit connector A (39P) No. 8
B0002-2B	SRS unit connector B (39P) No. 9	SRS unit connector A (39P) No. 10
	SRS unit connector B (39P) No. 10	SRS unit connector A (39P) No. 11
B0010-2B	SRS unit connector B (39P) No. 9	SRS unit connector A (39P) No. 5
	SRS unit connector B (39P) No. 10	SRS unit connector A (39P) No. 4
B0011-2B	SRS unit connector B (39P) No. 9	SRS unit connector A (39P) No. 6
	SRS unit connector B (39P) No. 10	SRS unit connector A (39P) No. 7
B0020-2B	SRS unit connector B (39P) No. 9	SRS unit connector B (39P) No. 5
	SRS unit connector B (39P) No. 10	SRS unit connector B (39P) No. 6
B0028-2B	SRS unit connector B (39P) No. 9	SRS unit connector B (39P) No. 4
	SRS unit connector B (39P) No. 10	SRS unit connector B (39P) No. 3
B0029-2B	SRS unit connector B (39P) No. 9	SRS unit connector B (39P) No. 8
	SRS unit connector B (39P) No. 10	SRS unit connector B (39P) No. 7
B0070-2B	SRS unit connector B (39P) No. 9	SRS unit connector B (39P) No. 20
	SRS unit connector B (39P) No. 10	SRS unit connector B (39P) No. 21
B0072-2B	SRS unit connector B (39P) No. 9	SRS unit connector B (39P) No. 19
	SRS unit connector B (39P) No. 10	SRS unit connector B (39P) No. 18
B0079-2B	SRS unit connector B (39P) No. 9	SRS unit connector B (39P) No. 24
	SRS unit connector B (39P) No. 10	SRS unit connector B (39P) No. 25
B007A-2B	SRS unit connector B (39P) No. 9	SRS unit connector B (39P) No. 23
	SRS unit connector B (39P) No. 10	SRS unit connector B (39P) No. 22
B0082-2B	SRS unit connector B (39P) No. 9	SRS unit connector A (39P) No. 2
	SRS unit connector B (39P) No. 10	SRS unit connector A (39P) No. 3

Is there 1 MΩ or more?

YES

The LCA wires are OK. Faulty SRS unit or poor connection at SRS unit connector A (39P) and the SRS unit, or SRS unit connector B (39P) and the SRS unit. Check the connection; if the connection is OK, check for any authorized service information related to the DTCs or symptoms you are troubleshooting or **replace the SRS unit** . If the DTC does not clear, replace the dashboard wire harness or the floor wire harness.

NO

Short to another wire in the dashboard wire harness or the floor wire harness; replace the faulty harness, then clear the DTC.

DTC B0028-11

DTC B0028-11 : Short to Ground in the Front Passenger's Side Airbag Inflator

Special Tools Required

SRS Inflator Simulator 07SAZ-TB4011A

SRS Simulator Lead L 070AZ-SNA0300

NOTE:

- **Before doing this troubleshooting procedure, find out if the vehicle was in a collision. If so, verify that all the required components were replaced with new components of the correct part number and were properly installed** .
- Before doing this troubleshooting procedure, review **SRS Precautions and Procedures** , **General Troubleshooting Information**, and **12 Volt Battery Terminal Disconnection and Reconnection** .

DTC Description	DTC
B0028-11 Short to ground in the front passenger's side airbag inflator	B

DTC (SRS)

1. Problem verification

   -1. Clear the DTCs with the HDS.

   -2. Turn the vehicle to the ON mode, then wait for 10 seconds.

   -3. Check for DTCs with the HDS.

DTC Description	DTC
B0028-11 Short to ground in the front passenger's side airbag inflator	B

   Is DTC B0028-11 indicated?

   YES

   The failure is duplicated. Go to step 2.

   NO

   Intermittent failure, the system is OK at this time. Go to Troubleshooting Intermittent Failures. If another DTC is indicated, troubleshoot the DTC.

2. Front passenger's side airbag inflator check

   -1. Turn the vehicle to the OFF (LOCK) mode.

   -2. Disconnect the negative cable from the 12 volt battery, then wait at least 3 minutes.

   -3. Disconnect the front passenger's side airbag inflator 2P connector (A) on the floor wire harness.

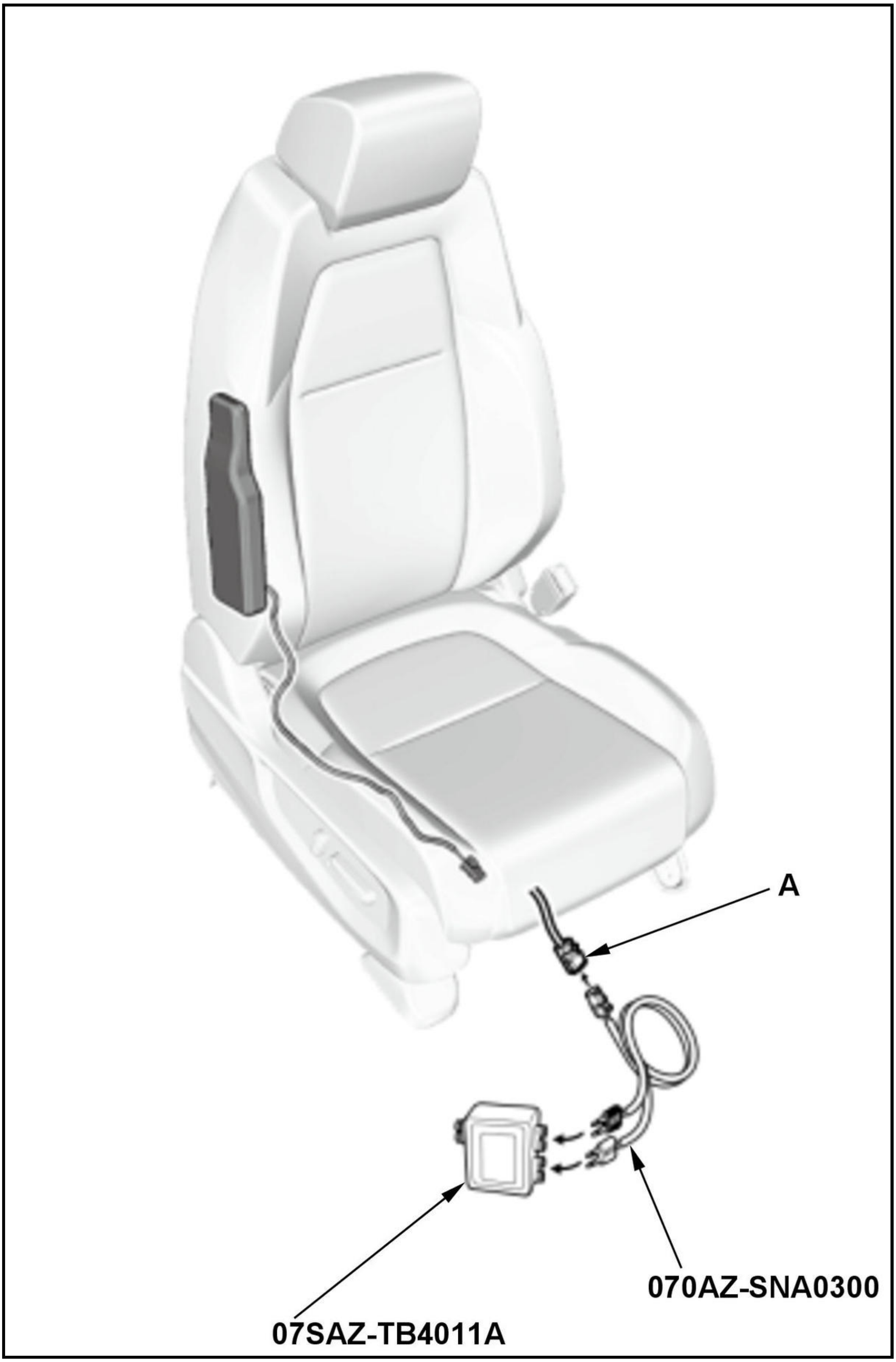
A
070AZ-SNA0300
07SAZ-TB4011A

-4. Connect the terminals of SRS simulator lead L to the SRS inflator simulator (2 Ω connectors), then connect SRS simulator lead L to the front passenger's side airbag inflator 2P connector on the floor wire harness.

-5. Reconnect the negative cable to the 12 volt battery.

-6. Clear the DTCs with the HDS.

-7. Turn the vehicle to the ON mode, then wait for 10 seconds.

-8. Check for DTCs with the HDS.

DTC Description	DTC
B0028-11 Short to ground in the front passenger's side airbag inflator	B

Is DTC B0028-11 indicated?

YES

Go to step 3.

NO

Short to ground in the front passenger's side airbag inflator; **replace the front passenger's side airbag** , then clear the DTC.

3. Shorted wire check (RSA+, RSA- lines)

-1. Turn the vehicle to the OFF (LOCK) mode.

-2. Disconnect the negative cable from the 12 volt battery, then wait at least 3 minutes.

-3. Disconnect the following connector.

SRS unit connector B (39P)

-4. Disconnect the SRS inflator simulator from SRS simulator lead L. Do not disconnect SRS simulator lead L from the front passenger's side airbag inflator 2P connector on the floor wire harness.

-5. Measure the resistance between test points 1 and 2.

Test condition	Vehicle OFF (LOCK) mode
	Front passenger's side airbag inflator 2P connector (on the floor wire harness): disconnected
	SRS unit connector B (39P): disconnected
	Front passenger's side airbag inflator 2P connector (on the floor wire harness): connected to SRS simulator lead L
Test point 1	SRS simulator lead L black terminal
Test point 2	Body ground

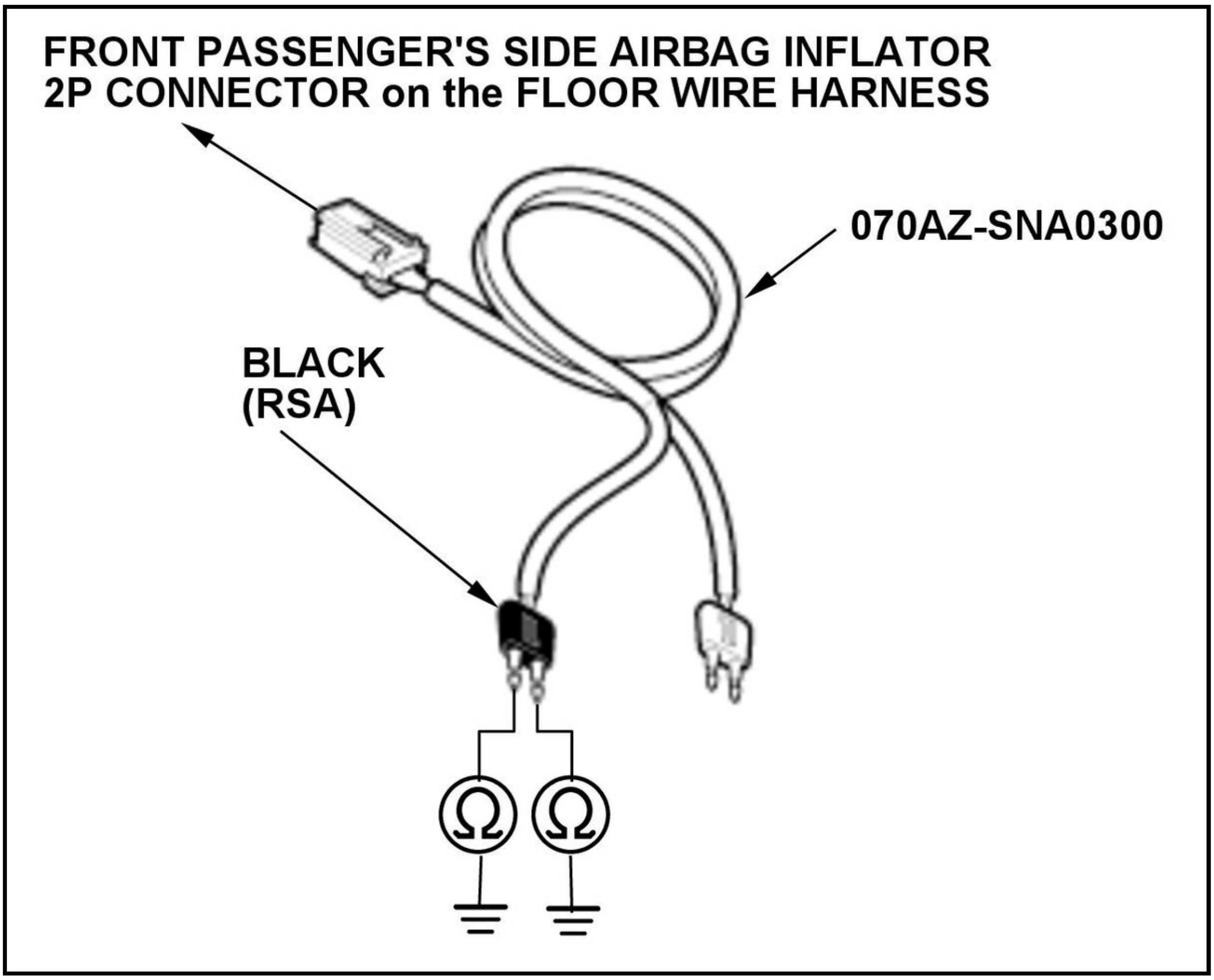
FRONT PASSENGER'S SIDE AIRBAG INFLATOR
2P CONNECTOR on the FLOOR WIRE HARNESS
070AZ-SNA0300
BLACK
(RSA)
Ω
Ω

Is there an open circuit, or at least 1 MΩ?

YES

The RSA+ and RSA- wires are OK. Faulty SRS unit or poor connection at SRS unit connector B (39P) and the SRS unit. Check the connection; if the connection is OK, check for any authorized service information related to the DTCs or symptoms you are troubleshooting or **replace the SRS unit** . If the DTC does not clear, replace the floor wire harness.

NO

Short to ground in the floor wire harness; replace the floor wire harness, then clear the DTC.

DTC B0028-12

DTC B0028-12 : Short to Power in the Front Passenger's Side Airbag Inflator

Special Tools Required

SRS Inflator Simulator 07SAZ-TB4011A

SRS Simulator Lead L 070AZ-SNA0300

NOTE:

- **Before doing this troubleshooting procedure, find out if the vehicle was in a collision. If so, verify that all the required components were replaced with new components of the correct part number and were properly installed** .
- Before doing this troubleshooting procedure, review **SRS Precautions and Procedures** , **General Troubleshooting Information**, and **12 Volt Battery Terminal Disconnection and Reconnection** .

DTC Description	DTC
B0028-12 Short to power in the front passenger's side airbag inflator	B

DTC (SRS)

1. Problem verification

   -1. Clear the DTCs with the HDS.

   -2. Turn the vehicle to the ON mode, then wait for 10 seconds.

   -3. Check for DTCs with the HDS.

DTC Description	DTC
B0028-12 Short to power in the front passenger's side airbag inflator	B

   Is DTC B0028-12 indicated?

   YES

   The failure is duplicated. Go to step 2.

   NO

   Intermittent failure, the system is OK at this time. Go to Troubleshooting Intermittent Failures. If another DTC is indicated, troubleshoot the DTC.

2. Front passenger's side airbag inflator check

   -1. Turn the vehicle to the OFF (LOCK) mode.

   -2. Disconnect the negative cable from the 12 volt battery, then wait at least 3 minutes.

   -3. Disconnect the front passenger's side airbag inflator 2P connector (A) on the floor wire harness.

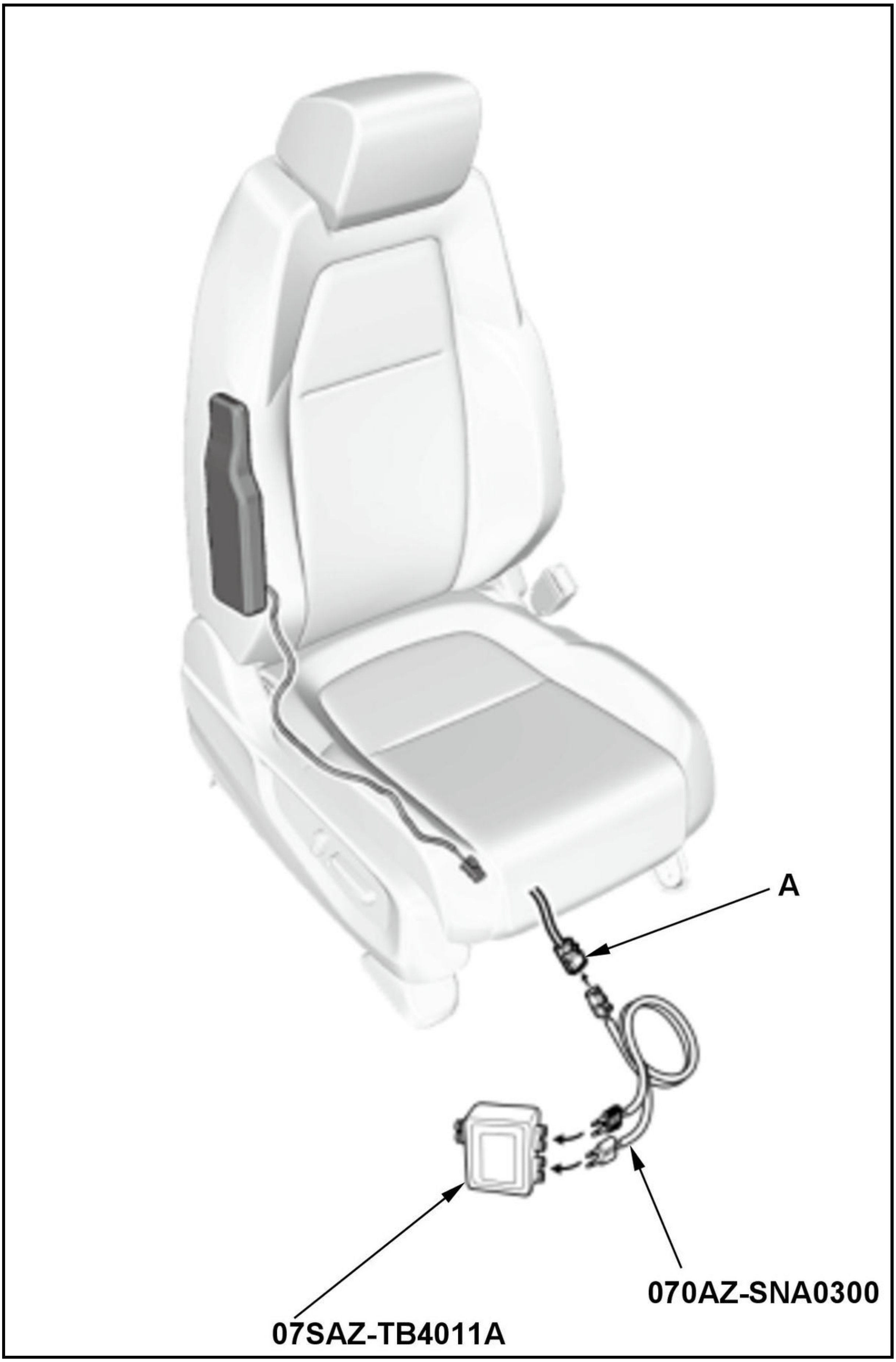
A
070AZ-SNA0300
07SAZ-TB4011A

-4. Connect the terminals of SRS simulator lead L to the SRS inflator simulator (2 Ω connectors), then connect SRS simulator lead L to the front passenger's side airbag inflator 2P connector on the floor wire harness.

-5. Reconnect the negative cable to the 12 volt battery.

-6. Clear the DTCs with the HDS.

-7. Turn the vehicle to the ON mode, then wait for 10 seconds.

-8. Check for DTCs with the HDS.

DTC Description	DTC
B0028-12 Short to power in the front passenger's side airbag inflator	B

Is DTC B0028-12 indicated?

YES

Go to step 3.

NO

Short to power in the front passenger's side airbag inflator; **replace the front passenger's side airbag** , then clear the DTC.

3. Shorted wire check (RSA+, RSA- lines to power)

-1. Turn the vehicle to the OFF (LOCK) mode.

-2. Disconnect the negative cable from the 12 volt battery, then wait at least 3 minutes.

-3. Disconnect the following connector.

SRS unit connector B (39P)

-4. Disconnect the SRS inflator simulator from SRS simulator lead L. Do not disconnect SRS simulator lead L from the front passenger's side airbag inflator 2P connector on the floor wire harness.

-5. Reconnect the negative cable to the 12 volt battery.

-6. Turn the vehicle to the ON mode.

-7. Measure the voltage between test points 1 and 2.

Test condition	Vehicle ON mode
	Front passenger's side airbag inflator 2P connector (on the floor wire harness): disconnected
	SRS unit connector B (39P): disconnected
	Front passenger's side airbag inflator 2P connector (on the floor wire harness): connected to SRS simulator lead L
Test point 1	SRS simulator lead L black terminal
Test point 2	Body ground

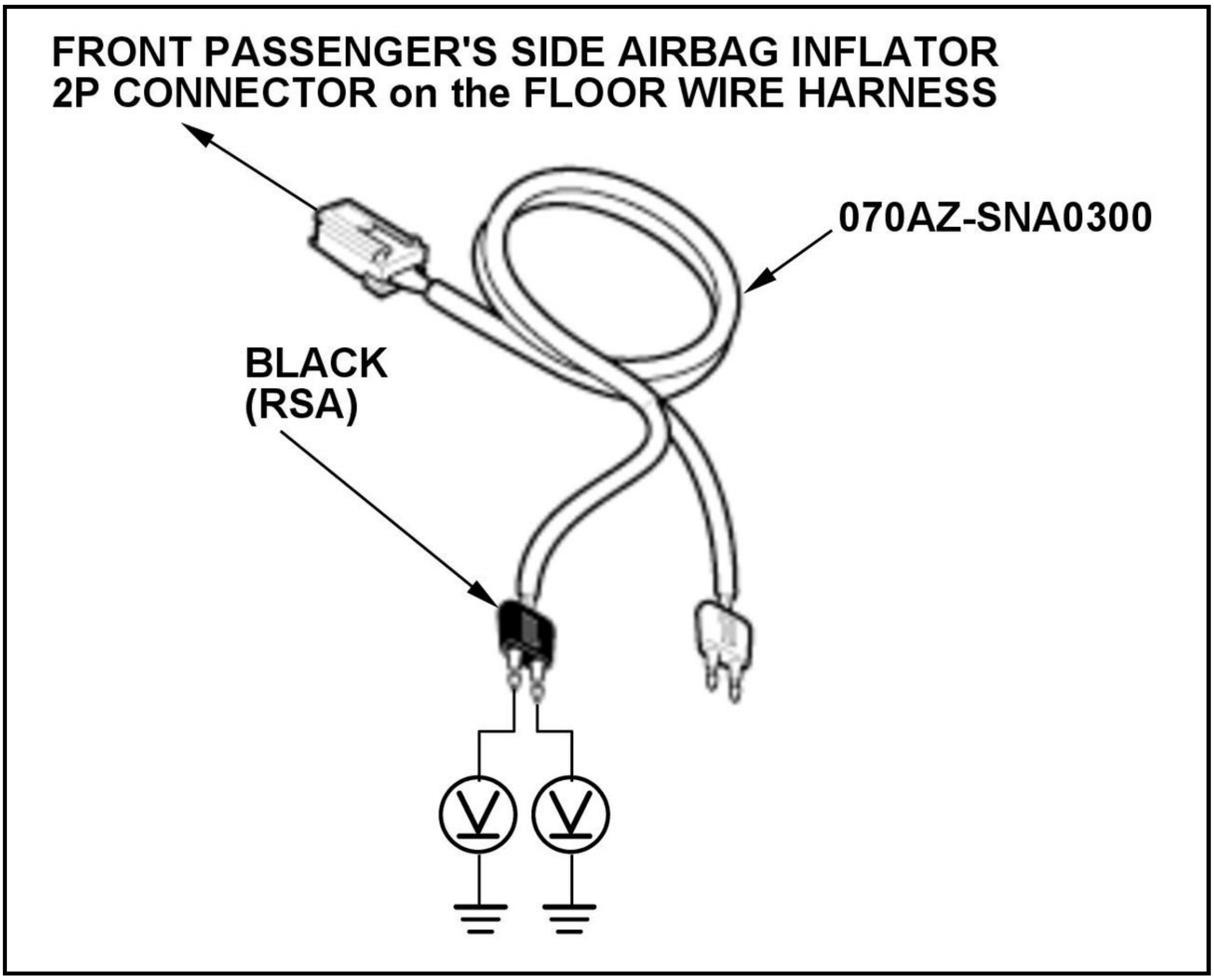
FRONT PASSENGER'S SIDE AIRBAG INFLATOR
2P CONNECTOR on the FLOOR WIRE HARNESS
070AZ-SNA0300
BLACK
(RSA)
V
V

Is there 0.2 V or less?

YES

The RSA+ and RSA- wires are OK. Faulty SRS unit or poor connection at SRS unit connector B (39P) and the SRS unit. Check the connection; if the connection is OK, check for any authorized service information related to the DTCs or symptoms you are troubleshooting or **replace the SRS unit** . If the DTC does not clear, replace the floor wire harness.

NO

Short to power in the floor wire harness; replace the floor wire harness, then clear the DTC.

DTC B0028-13

DTC B0028-13 : Open or Increased Resistance in the Front Passenger's Side Airbag Inflator

Special Tools Required

SRS Inflator Simulator 07SAZ-TB4011A

SRS Simulator Lead L 070AZ-SNA0300

NOTE:

- **Before doing this troubleshooting procedure, find out if the vehicle was in a collision. If so, verify that all the required components were replaced with new components of the correct part number and were properly installed** .
- Before doing this troubleshooting procedure, review **SRS Precautions and Procedures** , **General Troubleshooting Information**, and **12 Volt Battery Terminal Disconnection and Reconnection** .

DTC Description	DTC
B0028-13 Open or increased resistance in the front passenger's side airbag inflator	B

DTC (SRS)

1. Problem verification

   -1. Clear the DTCs with the HDS.

   -2. Turn the vehicle to the ON mode, then wait for 10 seconds.

   -3. Check for DTCs with the HDS.

DTC Description	DTC
B0028-13 Open or increased resistance in the front passenger's side airbag inflator	B

   Is DTC B0028-13 indicated?

   YES

   The failure is duplicated. Go to step 2.

   NO

   Intermittent failure, the system is OK at this time. Go to Troubleshooting Intermittent Failures. If another DTC is indicated, troubleshoot the DTC.

2. Front passenger's side airbag inflator check

   -1. Turn the vehicle to the OFF (LOCK) mode.

   -2. Disconnect the negative cable from the 12 volt battery, then wait at least 3 minutes.

   -3. Disconnect the front passenger's side airbag inflator 2P connector (A) on the floor wire harness.

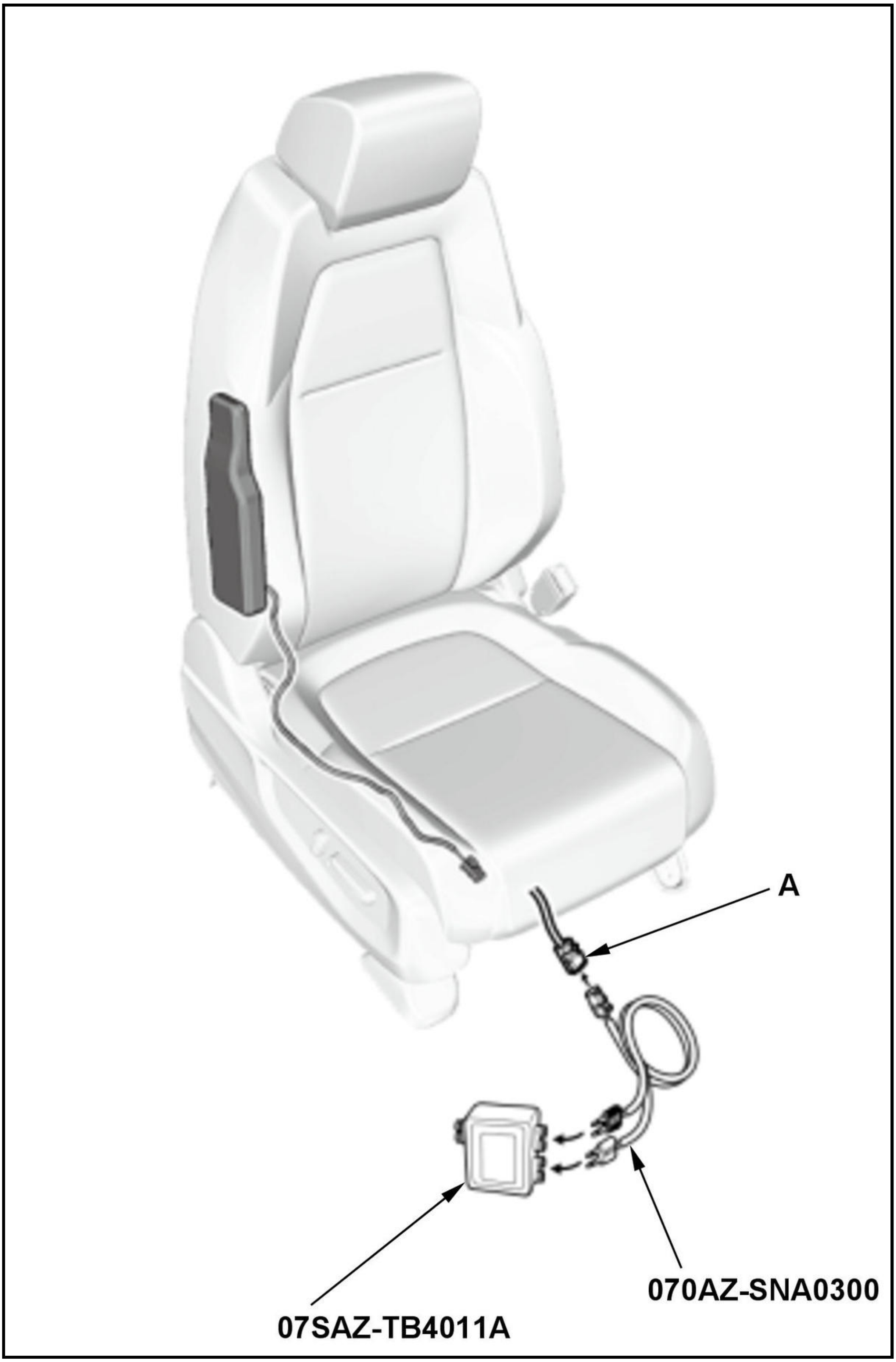
A
070AZ-SNA0300
07SAZ-TB4011A

-4. Connect the terminals of SRS simulator lead L to the SRS inflator simulator (2 Ω connectors), then connect SRS simulator lead L to the front passenger's side airbag inflator 2P connector on the floor wire harness.

-5. Reconnect the negative cable to the 12 volt battery.

-6. Clear the DTCs with the HDS.

-7. Turn the vehicle to the ON mode, then wait for 10 seconds.

-8. Check for DTCs with the HDS.

DTC Description	DTC
B0028-13 Open or increased resistance in the front passenger's side airbag inflator	B

Is DTC B0028-13 indicated?

YES

Go to step 3.

NO

Open in the front passenger's side airbag inflator; **replace the front passenger's side airbag** , then clear the DTC.

3. Open wire check (RSA+, RSA- lines)

-1. Turn the vehicle to the OFF (LOCK) mode.

-2. Disconnect the negative cable from the 12 volt battery, then wait at least 3 minutes.

-3. Disconnect the following connector.

SRS unit connector B (39P)

-4. Disconnect the SRS inflator simulator from SRS simulator lead L. Do not disconnect SRS simulator lead L from the front passenger's side airbag inflator 2P connector on the floor wire harness.

-5. Measure the resistance of the test point.

Test condition	Vehicle OFF (LOCK) mode
	Front passenger's side airbag inflator 2P connector (on the floor wire harness): disconnected
	SRS unit connector B (39P): disconnected
	Front passenger's side airbag inflator 2P connector (on the floor wire harness): connected to SRS simulator lead L
Test point	SRS simulator lead L black terminal

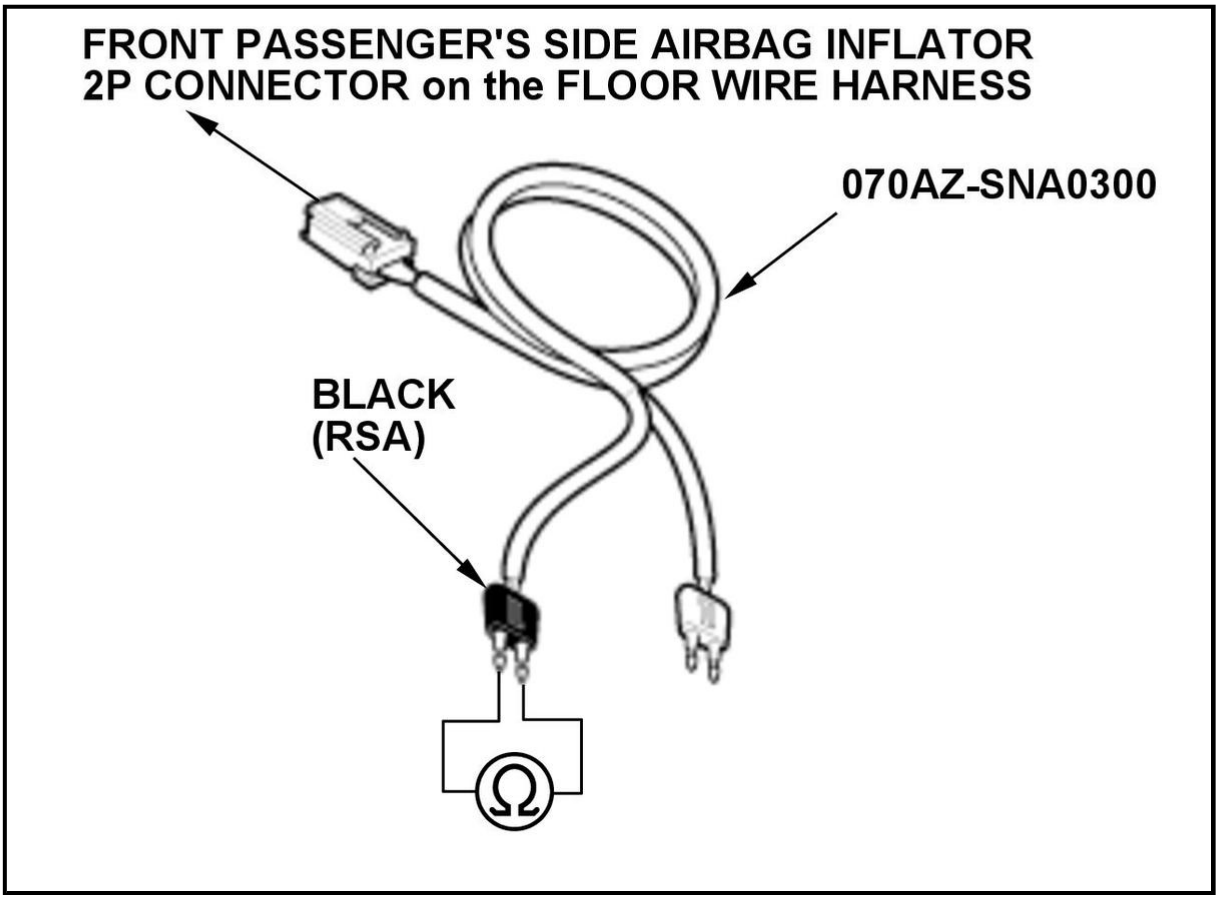
FRONT PASSENGER'S SIDE AIRBAG INFLATOR
2P CONNECTOR on the FLOOR WIRE HARNESS
070AZ-SNA0300
BLACK
(RSA)
Ω

Is there 1.0 Ω or less?

YES

The RSA+ and RSA- wires are OK. Faulty SRS unit or poor connection at SRS unit connector B (39P) and the SRS unit. Check the connection; if the connection is OK, check for any authorized service information related to the DTCs or symptoms you are troubleshooting or replace the SRS unit . If the DTC does not clear, replace the floor wire harness.

NO

Open in the floor wire harness; replace the floor wire harness, then clear the DTC.

DTC B0028-1A, B0028-2B

DTC B0028-1A : Decreased Resistance in the Front Passenger's Side Airbag Inflator

DTC B0028-2B : Short to Another Wire Harness in the Front Passenger's Side Airbag Inflator

Special Tools Required

SRS Inflator Simulator 07SAZ-TB4011A

SRS Simulator Lead L 070AZ-SNA0300

SRS Short Canceller 070AZ-SAA0100

NOTE:

- Before doing this troubleshooting procedure, find out if the vehicle was in a collision. If so, verify that all the required components were replaced with new components of the correct part number and were properly installed .

- Before doing this troubleshooting procedure, review **SRS Precautions and Procedures** , **General Troubleshooting Information**, and **12 Volt Battery Terminal Disconnection and Reconnection** .

DTC Description	DTC
B0028-1A Decreased Resistance in the front passenger's side airbag inflator	B
B0028-2B Short to another wire in the front passenger's side airbag inflator	B

DTC (SRS)

1. Problem verification

   -1. Clear the DTCs with the HDS.

   -2. Turn the vehicle to the ON mode, then wait for 10 seconds.

   -3. Check for DTCs with the HDS.

DTC Description	DTC
B0028-1A Decreased Resistance in the front passenger's side airbag inflator	B
B0028-2B Short to another wire in the front passenger's side airbag inflator	B

   Is DTC B0028-1A or B0028-2B indicated?

   YES

   The failure is duplicated. Go to step 2.

   NO

   Intermittent failure, the system is OK at this time. Go to Troubleshooting Intermittent Failures. If another DTC is indicated, troubleshoot the DTC.

2. Front passenger's side airbag inflator check

   -1. Turn the vehicle to the OFF (LOCK) mode.

   -2. Disconnect the negative cable from the 12 volt battery, then wait at least 3 minutes.

   -3. Disconnect the front passenger's side airbag inflator 2P connector (A) on the floor wire harness.

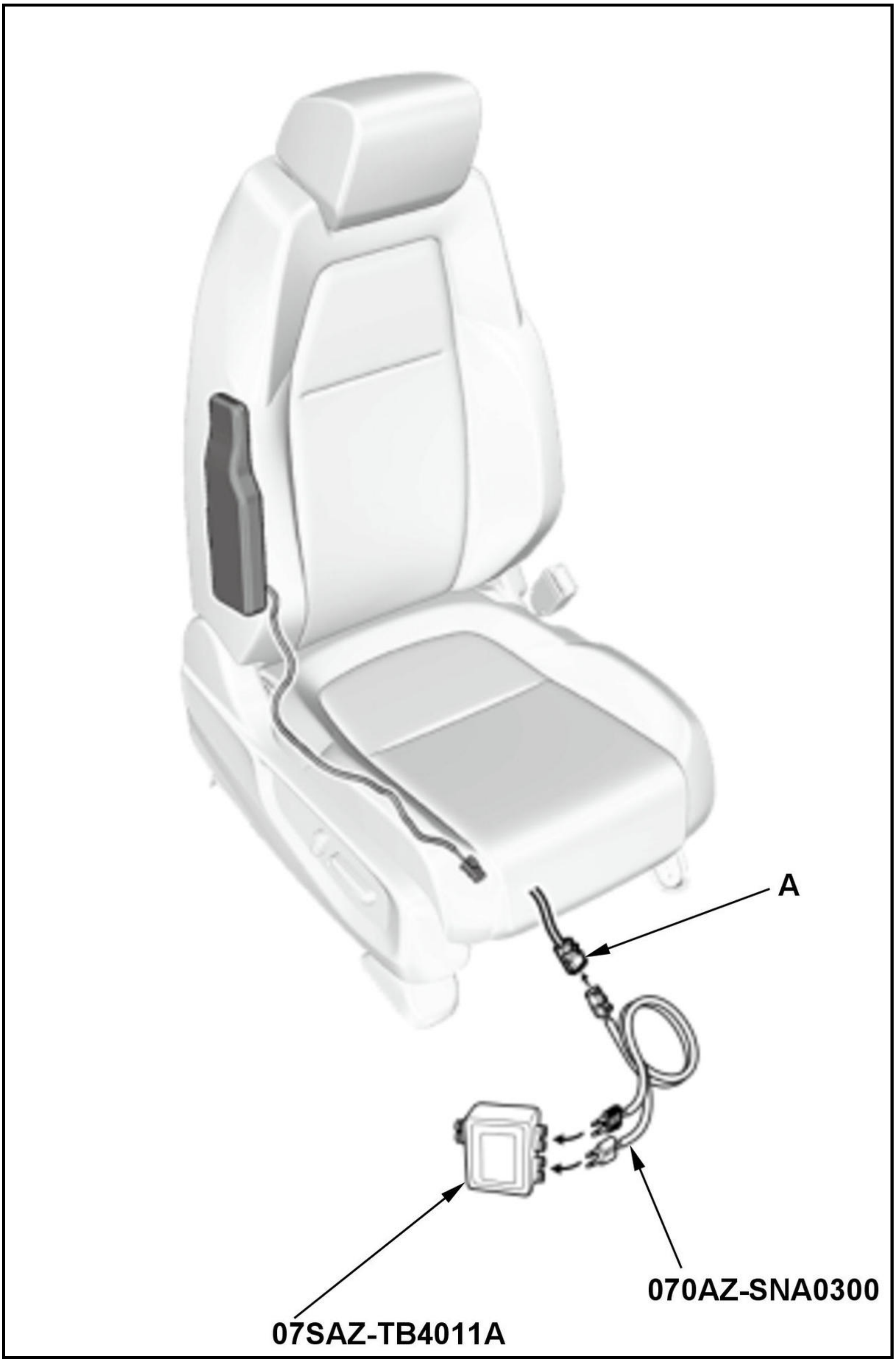
A
070AZ-SNA0300
07SAZ-TB4011A

-4. Connect the terminals of SRS simulator lead L to the SRS inflator simulator (2 Ω connectors), then connect SRS simulator lead L to the front passenger's side airbag inflator 2P connector on the floor wire harness.

-5. Reconnect the negative cable to the 12 volt battery.

-6. Clear the DTCs with the HDS.

-7. Turn the vehicle to the ON mode, then wait for 10 seconds.

-8. Check for DTCs with the HDS.

DTC Description	DTC
B0028-1A Decreased Resistance in the front passenger's side airbag inflator	B
B0028-2B Short to another wire in the front passenger's side airbag inflator	B

Is DTC B0028-1A or B0028-2B indicated?

YES

Go to step 3.

NO

Short to another wire in the front passenger's side airbag inflator; **replace the front passenger's side airbag** , then clear the DTC.

3. Shorted wire check (RSA+ line to RSA- line)

-1. Turn the vehicle to the OFF (LOCK) mode.

-2. Disconnect the negative cable from the 12 volt battery, then wait at least 3 minutes.

-3. Disconnect the following connector.

SRS unit connector B (39P)

-4. Disconnect the SRS inflator simulator from SRS simulator lead L. Do not disconnect SRS simulator lead L from the front passenger's side airbag inflator 2P connector on the floor wire harness.

-5. **Connect the SRS short canceller to SRS unit connector B (39P) terminals No. 3 and No. 4**.

-6. Measure the resistance of the test point.

Test condition	Vehicle OFF (LOCK) mode
	Front passenger's side airbag inflator 2P connector (on the floor wire harness): disconnected
	SRS unit connector B (39P): disconnected
	Front passenger's side airbag inflator 2P connector (on the floor wire harness): connected to SRS simulator lead L
	SRS unit connector B (39P) No. 3 and No. 4: connected to SRS short canceller
Test point	SRS simulator lead L black terminal

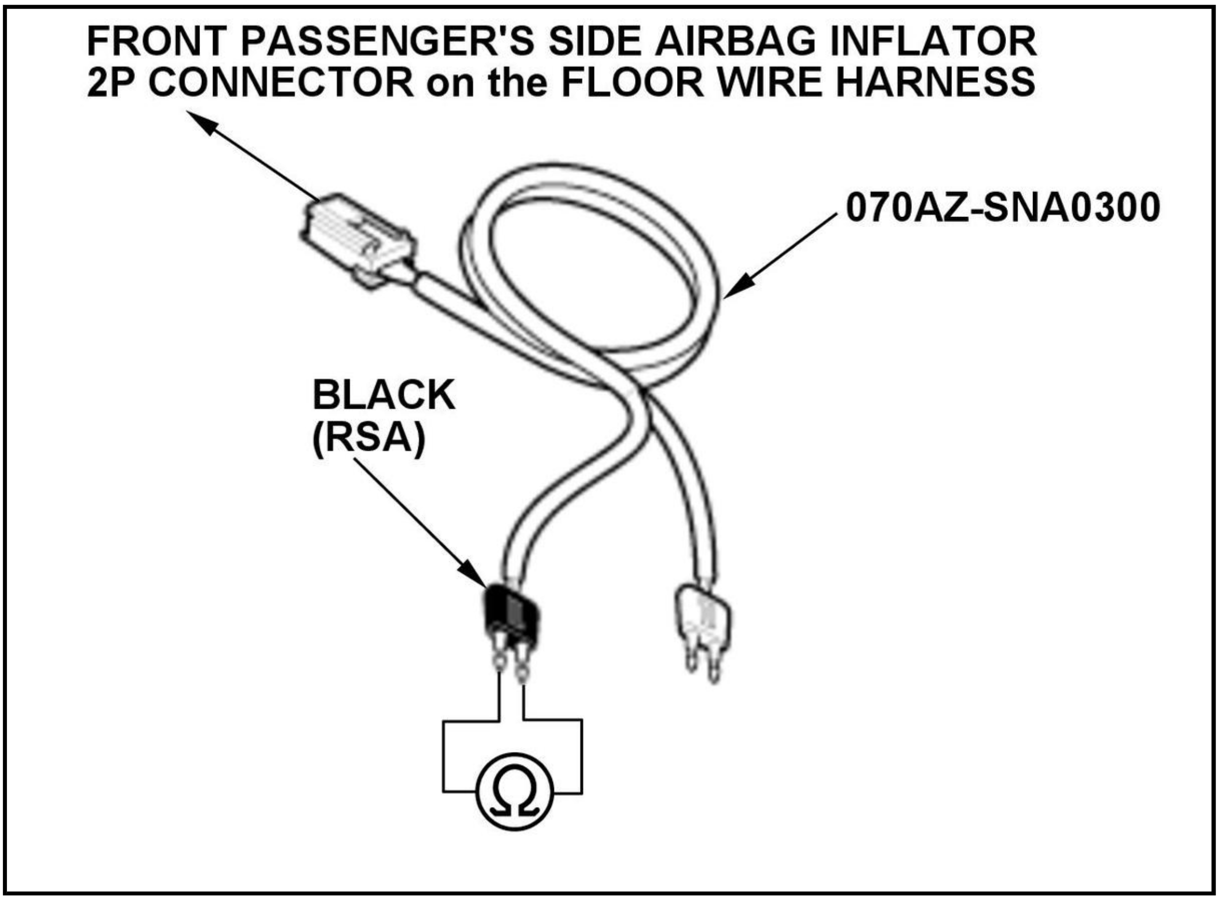
FRONT PASSENGER'S SIDE AIRBAG INFLATOR
2P CONNECTOR on the FLOOR WIRE HARNESS
070AZ-SNA0300
BLACK
(RSA)
Ω

Is there an open circuit, or at least 1 MΩ?

YES

The RSA+ and RSA- wires are OK. Faulty SRS unit or poor connection at SRS unit connector B (39P) and the SRS unit. Check the connection; if the connection is OK, check for any authorized service information related to the DTCs or symptoms you are troubleshooting or **replace the SRS unit** . If the DTC does not clear, replace the floor wire harness.

NO

Short to another wire in the floor wire harness; replace the floor wire harness, then clear the DTC.

DTC B0029-11

DTC B0029-11 : Short to Ground in the Right Side Curtain Airbag First Inflator

NOTE:

- **Before doing this troubleshooting procedure, find out if the vehicle was in a collision. If so, verify that all the required components were replaced with new components of the correct part number and were properly installed** .
- Before doing this troubleshooting procedure, review **SRS Precautions and Procedures** , **General Troubleshooting Information**, and **12 Volt Battery Terminal Disconnection and Reconnection** .

DTC Description	DTC
B0029-11 Short to ground in the right side curtain airbag first inflator	B

DTC (SRS)

1. Problem verification

-1. Clear the DTCs with the HDS.

-2. Turn the vehicle to the ON mode, then wait for 10 seconds.

-3. Check for DTCs with the HDS.

DTC Description	DTC
B0029-11 Short to ground in the right side curtain airbag first inflator	B

Is DTC B0029-11 indicated?

YES

The failure is duplicated. Go to step 2.

NO

Intermittent failure, the system is OK at this time. Go to Troubleshooting Intermittent Failures. If another DTC is indicated, troubleshoot the DTC.

2. Shorted wire check (RCA+, RCA- lines) 1

-1. Turn the vehicle to the OFF (LOCK) mode.

-2. Disconnect the negative cable from the 12 volt battery, then wait at least 3 minutes.

-3. **Remove the headliner** .

-4. Disconnect the following connector.

Right side curtain airbag inflator 2P connector (on the floor wire harness)

-5. Reconnect the negative cable to the 12 volt battery.

-6. Turn the vehicle to the ON mode, then clear the DTC.

-7. Check for DTCs with the HDS.

DTC Description	DTC
B0029-11 Short to ground in the right side curtain airbag first inflator	B

Is DTC B0029-11 indicated?

YES

Go to step 3.

NO

Short to ground in the right side curtain airbag inflator; **replace the right side curtain** , then clear the DTC.

3. Shorted wire check (RCA+, RCA- lines) 2

-1. Turn the vehicle to the OFF (LOCK) mode.

-2. Disconnect the negative cable from the 12 volt battery, then wait at least 3 minutes.

-3. Disconnect the following connector.

SRS unit connector B (39P)

-4. Measure the resistance between test points 1 and 2.

Test condition	Vehicle OFF (LOCK) mode
	SRS unit connector B (39P): disconnected
	Right side curtain airbag inflator 2P connector (on the floor wire harness): disconnected
Test point 1	**SRS unit connector B (39P) No. 7**
Test point 2	Body ground

Test point 1	**SRS unit connector B (39P) No. 8**
Test point 2	Body ground

Is there an open circuit, or at least 1 MΩ?

YES

The RCA+ and RCA- wires are OK. Check for any authorized service information related to the DTCs or symptoms you are troubleshooting or **replace the SRS unit** .

NO

Short to ground in the floor wire harness; replace the floor wire harness, then clear the DTC.

DTC B0029-12

DTC B0029-12 : Short to Power in the Right Side Curtain Airbag First Inflator

NOTE:

- **Before doing this troubleshooting procedure, find out if the vehicle was in a collision. If so, verify that all the required components were replaced with new components of the correct part number and were properly installed** .
- Before doing this troubleshooting procedure, review **SRS Precautions and Procedures** , **General Troubleshooting Information**, and **12 Volt Battery Terminal Disconnection and Reconnection** .

DTC Description	DTC
B0029-12 Short to power in the right side curtain airbag first inflator	B

DTC (SRS)

1. Problem verification

-1. Clear the DTCs with the HDS.

-2. Turn the vehicle to the ON mode, then wait for 10 seconds.

-3. Check for DTCs with the HDS.

DTC Description	DTC
B0029-12 Short to power in the right side curtain airbag first inflator	B

Is DTC B0029-12 indicated?

YES

The failure is duplicated. Go to step 2.

NO

Intermittent failure, the system is OK at this time. Go to Troubleshooting Intermittent Failures. If another DTC is indicated, troubleshoot the DTC.

2. Shorted wire check (RCA+, RCA- lines to power) 1

-1. Turn the vehicle to the OFF (LOCK) mode.

-2. Disconnect the negative cable from the 12 volt battery, then wait at least 3 minutes.

-3. **Remove the headliner** .

-4. Disconnect the following connector.

Right side curtain airbag inflator 2P connector (on the floor wire harness)

-5. Reconnect the negative cable to the 12 volt battery.

-6. Turn the vehicle to the ON mode, then clear the DTC.

-7. Check for DTCs with the HDS.

DTC Description	DTC
B0029-12 Short to power in the right side curtain airbag first inflator	B

Is DTC B0029-12 indicated?

YES

Go to step 3.

NO

Short to power in the right side curtain airbag inflator; **replace the right side curtain airbag** , then clear the DTC.

3. Shorted wire check (RCA+, RCA- lines to power) 2

-1. Turn the vehicle to the OFF (LOCK) mode.

-2. Disconnect the negative cable from the 12 volt battery, then wait at least 3 minutes.

-3. Disconnect the following connector.

SRS unit connector B (39P)

-4. Reconnect the negative cable to the 12 volt battery.

-5. Turn the vehicle to the ON mode.

-6. Measure the voltage between test points 1 and 2.

Test condition	Vehicle ON mode
	Right side curtain airbag inflator 2P connector (on the floor wire harness): disconnected
	SRS unit connector B (39P): disconnected
Test point 1	**SRS unit connector B (39P) No. 7**
Test point 2	Body ground

Test point 1	SRS unit connector B (39P) No. 8
Test point 2	Body ground

Is there 0.2 V or less?

YES

The RCA+ and RCA- wires are OK. Check for any authorized service information related to the DTCs or symptoms you are troubleshooting or replace the SRS unit .

NO

Short to power in the floor wire harness; replace the floor wire harness, then clear the DTC.

DTC B0029-13

DTC B0029-13 : Open or Increased Resistance in the Right Side Curtain Airbag First Inflator

NOTE:

- **Before doing this troubleshooting procedure, find out if the vehicle was in a collision. If so, verify that all the required components were replaced with new components of the correct part number and were properly installed** .
- Before doing this troubleshooting procedure, review **SRS Precautions and Procedures** , **General Troubleshooting Information**, and **12 Volt Battery Terminal Disconnection and Reconnection** .

DTC Description	DTC
B0029-13 Open or increased resistance in the right side curtain airbag first inflator	B

DTC (SRS)

1. Problem verification

-1. Clear the DTCs with the HDS.

-2. Turn the vehicle to the ON mode, then wait for 10 seconds.

-3. Check for DTCs with the HDS.

DTC Description	DTC
B0029-13 Open or increased resistance in the right side curtain airbag first inflator	B

Is DTC B0029-13 indicated?

YES

The failure is duplicated. Go to step 2.

NO

Intermittent failure, the system is OK at this time. Go to Troubleshooting Intermittent Failures. If another DTC is indicated, troubleshoot the DTC.

2. Right side curtain airbag inflator check

-1. Turn the vehicle to the OFF (LOCK) mode.

-2. Disconnect the negative cable from the 12 volt battery, then wait at least 3 minutes.

-3. **Remove the headliner** .

-4. Disconnect the following connector.

Right side curtain airbag inflator 2P connector (on the floor wire harness)

-5. Connect terminals A and B with a jumper wire.

Terminal A	Right side curtain airbag inflator 2P connector (female terminals) No. 1 (on the floor wire harness): ①
Terminal B	Right side curtain airbag inflator 2P connector (female terminals) No. 2 (on the floor wire harness): ①

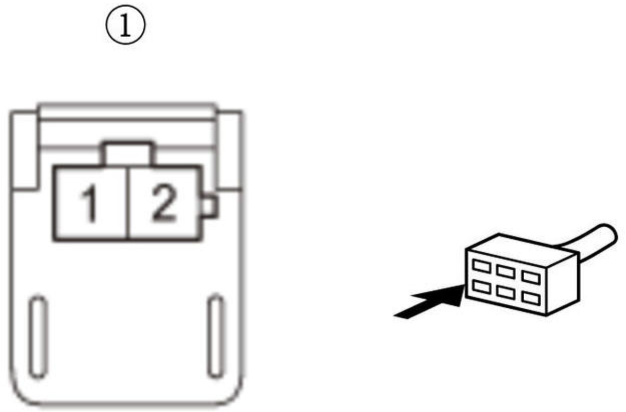

-6. Reconnect the negative cable to the 12 volt battery.

-7. Clear the DTCs with the HDS.

-8. Turn the vehicle to the ON mode, then wait for 10 seconds.

-9. Check for DTCs with the HDS.

DTC Description	DTC
B0029-13 Open or increased resistance in the right side curtain airbag first inflator	B

Is DTC B0029-13 indicated?

YES

Go to step 3.

NO

Open in the right side curtain airbag inflator; **replace the right side curtain airbag** , then clear the DTC.

3. Open wire check (RCA+, RCA- lines)

-1. Turn the vehicle to the OFF (LOCK) mode.

-2. Disconnect the negative cable from the 12 volt battery, then wait at least 3 minutes.

-3. Remove the jumper wire from the right side curtain airbag inflator 2P connector on the floor wire harness.

-4. Disconnect the following connector.

SRS unit connector B (39P)

-5. Connect terminals A and B with a jumper wire.

Terminal A	**SRS unit connector B (39P) No. 7**
Terminal B	**SRS unit connector B (39P) No. 8**

-6. Measure the resistance between test points 1 and 2.

Test condition	Vehicle OFF (LOCK) mode
	Right side curtain airbag inflator 2P connector (on the floor wire harness): disconnected
	SRS unit connector B (39P): disconnected
	SRS unit connector B (39P) terminals No. 7 and No. 8: jumped
Test point 1	Right side curtain airbag inflator 2P connector (female terminals) No. 1 (on the floor wire harness): ①
Test point 2	Right side curtain airbag inflator 2P connector (female terminals) No. 2 (on the floor wire harness): ①

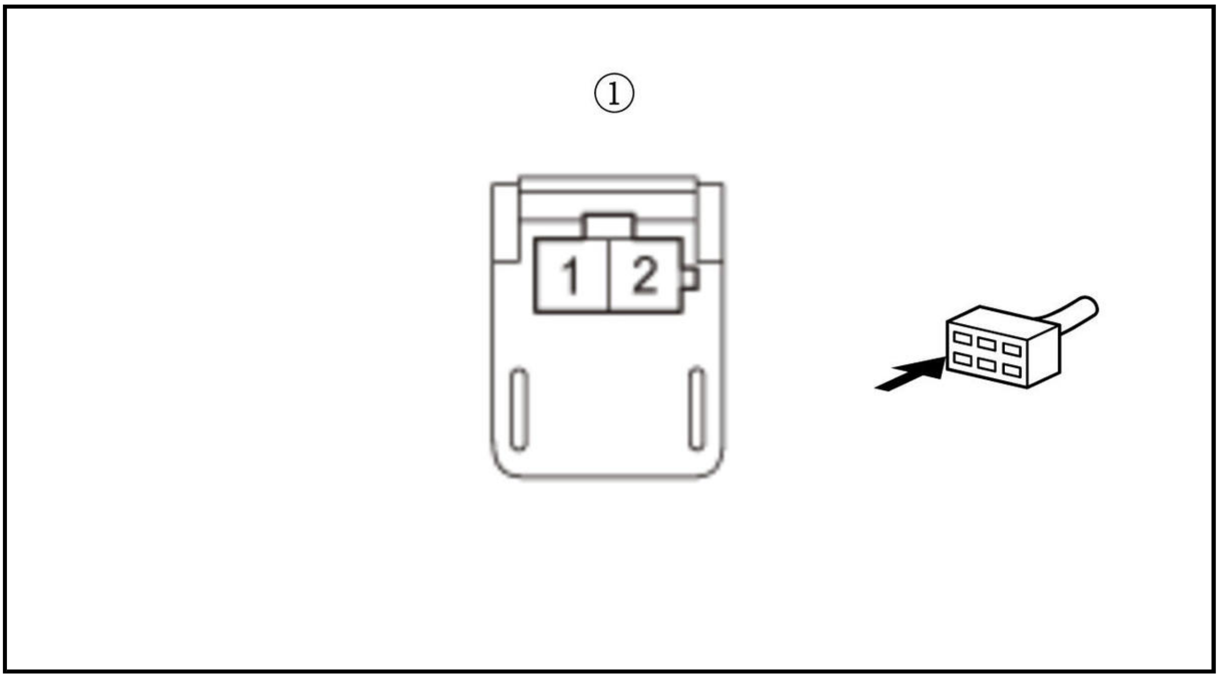

Is there 1.0 Ω or less?

YES

The RCA+ and RCA- wires are OK. Faulty SRS unit or poor connection at SRS unit connector B (39P) and the SRS unit. Check the connection; if the connection is OK, check for any authorized service

information related to the DTCs or symptoms you are troubleshooting or **replace the SRS unit** . If the DTC does not clear, replace the floor wire harness.

NO

Open in the floor wire harness; replace the floor wire harness, then clear the DTC.

DTC B0029-1A

DTC B0029-1A : Decreased Resistance in the Right Side Curtain Airbag First Inflator

Special Tools Required

SRS Short Canceller 070AZ-SAA0100

NOTE:

- **Before doing this troubleshooting procedure, find out if the vehicle was in a collision. If so, verify that all the required components were replaced with new components of the correct part number and were properly installed** .
- Before doing this troubleshooting procedure, review **SRS Precautions and Procedures** , **General Troubleshooting Information**, and **12 Volt Battery Terminal Disconnection and Reconnection** .

DTC Description	DTC
B0029-1A Decreased resistance in the right side curtain airbag first inflator	B

DTC (SRS)

1. Problem verification

   -1. Clear the DTCs with the HDS.

   -2. Turn the vehicle to the ON mode, then wait for 10 seconds.

   -3. Check for DTCs with the HDS.

DTC Description	DTC
B0029-1A Decreased resistance in the right side curtain airbag first inflator	B

   Is DTC B0029-1A indicated?

   YES

   The failure is duplicated. Go to step 2.

   NO

   Intermittent failure, the system is OK at this time. Go to Troubleshooting Intermittent Failures. If another DTC is indicated, troubleshoot the DTC.

2. Right side curtain airbag inflator check

   -1. Turn the vehicle to the OFF (LOCK) mode.

   -2. Disconnect the negative cable from the 12 volt battery, then wait at least 3 minutes.

   -3. **Remove the headliner** .

   -4. Disconnect the following connector.

Right side curtain airbag inflator 2P connector (on the floor wire harness)

-5. Reconnect the negative cable to the 12 volt battery.

-6. Clear the DTCs with the HDS.

-7. Turn the vehicle to the ON mode, then wait for 10 seconds.

-8. Check for DTCs with the HDS.

DTC Description	DTC
B0029-1A Decreased resistance in the right side curtain airbag first inflator	B

Is DTC B0029-1A indicated?

YES

Go to step 3.

NO

Short to another wire in the right side curtain airbag inflator; **replace the right side curtain airbag** , then clear the DTC.

3. Shorted wire check (RCA+ line to RCA- line)

-1. Turn the vehicle to the OFF (LOCK) mode.

-2. Disconnect the negative cable from the 12 volt battery, then wait at least 3 minutes.

-3. Disconnect the following connector.

SRS unit connector B (39P)

-4. **Connect the SRS short canceller to SRS unit connector B (39P) terminals No. 7 and No. 8**.

-5. Measure the resistance between test points 1 and 2.

Test condition	Vehicle OFF (LOCK) mode
	Right side curtain airbag inflator 2P connector (on the floor wire harness): disconnected
	SRS unit connector B (39P): disconnected
	SRS unit connector B (39P) No. 7 and No. 8: connected to SRS short canceller
Test point 1	**SRS unit connector B (39P) No. 7**
Test point 2	**SRS unit connector B (39P) No. 8**

Is there an open circuit, or at least 1 MΩ?

YES

The RCA+ and RCA- wires are OK. Faulty SRS unit or poor connection at SRS unit connector B (39P) and the SRS unit. Check the connection; if the connection is OK, check for any authorized service information related to the DTCs or symptoms you are troubleshooting or **replace the SRS unit** . If the DTC does not clear, replace the floor wire harness.

NO

Short to another wire in the floor wire harness; replace the floor wire harness, then clear the DTC.

DTC B0029-2B

DTC B0029-2B : Short to Another Wire Harness in the Right Side Curtain Airbag First Inflator

NOTE:

- **Before doing this troubleshooting procedure, find out if the vehicle was in a collision. If so, verify that all the required components were replaced with new components of the correct part number and were properly installed** .
- Before doing this troubleshooting procedure, review **SRS Precautions and Procedures** , **General Troubleshooting Information**, and **12 Volt Battery Terminal Disconnection and Reconnection** .

DTC Description	DTC
B0029-2B Short to another wire harness in the right side curtain airbag first inflator	B

DTC (SRS)

1. Problem verification

   -1. Clear the DTCs with the HDS.

   -2. Turn the vehicle to the ON mode, then wait for 10 seconds.

   -3. Check for DTCs with the HDS.

DTC Description	DTC
B0029-2B Short to another wire harness in the right side curtain airbag first inflator	B

   Is DTC B0029-2B indicated?

   YES

   The failure is duplicated. Go to step 2.

   NO

   Intermittent failure, the system is OK at this time. Go to Troubleshooting Intermittent Failures. If another DTC is indicated, troubleshoot the DTC.

2. DTC check

   -1. Check for DTCs with the HDS.

DTC Description	DTC
B0001-2B Short to another wire harness in the driver's airbag first inflator	B
B0002-2B Short to another wire harness in the driver's airbag second inflator	B
B0010-2B Short to another wire harness in the front passenger's airbag first inflator	B
B0011-2B Short to another wire harness in the front passenger's airbag second inflator	B
B0020-2B Short to another wire harness in the driver's side airbag inflator	B
B0021-2B Short to another wire harness in the left side curtain airbag first inflator	B
B0028-2B Short to another wire harness in the front passenger's side airbag inflator	B

DTC Description	DTC
B0029-2B Short to another wire harness in the right side curtain airbag first inflator	B
B0070-2B Short to another wire harness in the driver's seat belt tensioner	B
B0072-2B Short to another wire harness in the front passenger's seat belt tensioner	B
B0079-2B Short to another wire harness in the driver's seat belt outer lap tensioner	B
B007A-2B Short to another wire harness in the front passenger's seat belt outer lap tensioner	B
B0082-2B Short to another wire harness in the selectable energy absorption device of the front passenger's seat belt tensioner	B

Is DTC B0001-2B, B0002-2B, B0010-2B, B0011-2B, B0020-2B, B0021-2B, B0028-2B, B0070-2B, B0072-2B, B0079-2B, B007A-2B or B0082-2B indicated with DTC B0029-2B?

YES

Go to step 3.

NO

Short to another wire in the floor wire harness; replace the floor wire harness, then clear the DTC.

3. Shorted wire check (RCA lines to another line)

-1. Turn the vehicle to the OFF (LOCK) mode.

-2. Disconnect the negative cable from the 12 volt battery, then wait at least 3 minutes.

-3. **Remove the headliner** .

-4. Disconnect the following connectors.

SRS unit connector A (39P)
SRS unit connector B (39P)
Right side curtain airbag inflator 2P connector (on the floor wire harness)
Inflator connectors which are assigned to 2B codes listed on HDS

-5. Measure the resistance between test points 1 and 2 of SRS unit connector A (39P) and B (39P) according to table.

Test condition	Vehicle OFF (LOCK) mode
	SRS unit connector A (39P): disconnected
	SRS unit connector B (39P): disconnected
	Right side curtain airbag inflator 2P connector (on the floor wire harness): disconnected
	Inflator connectors which are assigned to 2B codes listed on HDS: disconnected

DTC	Test point 1	Test point 2
	From terminal	To terminal
B0001-2B	SRS unit connector B (39P) No. 8	SRS unit connector A (39P) No. 9
	SRS unit connector B (39P) No. 7	SRS unit connector A (39P) No. 8
B0002-2B	SRS unit connector B (39P) No. 8	SRS unit connector A (39P) No. 10
	SRS unit connector B (39P) No. 7	SRS unit connector A (39P) No. 11
B0010-2B	SRS unit connector B (39P) No. 8	SRS unit connector A (39P) No. 5
	SRS unit connector B (39P) No. 7	SRS unit connector A (39P) No. 4
B0011-2B	SRS unit connector B (39P) No. 8	SRS unit connector A (39P) No. 6
	SRS unit connector B (39P) No. 7	SRS unit connector A (39P) No. 7
B0020-2B	SRS unit connector B (39P) No. 8	SRS unit connector B (39P) No. 5
	SRS unit connector B (39P) No. 7	SRS unit connector B (39P) No. 6
B0021-2B	SRS unit connector B (39P) No. 8	SRS unit connector B (39P) No. 9
	SRS unit connector B (39P) No. 7	SRS unit connector B (39P) No. 10
B0028-2B	SRS unit connector B (39P) No. 8	SRS unit connector B (39P) No. 4
	SRS unit connector B (39P) No. 7	SRS unit connector B (39P) No. 3
B0070-2B	SRS unit connector B (39P) No. 8	SRS unit connector B (39P) No. 20
	SRS unit connector B (39P) No. 7	SRS unit connector B (39P) No. 21
B0072-2B	SRS unit connector B (39P) No. 8	SRS unit connector B (39P) No. 19
	SRS unit connector B (39P) No. 7	SRS unit connector B (39P) No. 18
B0079-2B	SRS unit connector B (39P) No. 8	SRS unit connector B (39P) No. 24
	SRS unit connector B (39P) No. 7	SRS unit connector B (39P) No. 25
B007A-2B	SRS unit connector B (39P) No. 8	SRS unit connector B (39P) No. 23
	SRS unit connector B (39P) No. 7	SRS unit connector B (39P) No. 22

DTC	Test point 1	Test point 2
	From terminal	To terminal
B0082-2B	SRS unit connector B (39P) No. 8	SRS unit connector A (39P) No. 2
	SRS unit connector B (39P) No. 7	SRS unit connector A (39P) No. 3

Is there 1 MΩ or more?

YES

The RCA wires are OK. Faulty SRS unit or poor connection at SRS unit connector A (39P) and the SRS unit, or SRS unit connector B (39P) and the SRS unit. Check the connection; if the connection is OK, check for any authorized service information related to the DTCs or symptoms you are troubleshooting or **replace the SRS unit** . If the DTC does not clear, replace the dashboard wire harness or the floor wire harness.

NO

Short to another wire in the dashboard wire harness or the floor wire harness; replace the faulty harness, then clear the DTC.

DTC B0050-11, B0050-2B

DTC B0050-11 : Short or Decreased Resistance in the Driver's Seat Belt Buckle Switch

DTC B0050-2B : Short to Another Wire Harness in the Driver's Seat Belt Buckle Switch

NOTE:

- **Before doing this troubleshooting procedure, find out if the vehicle was in a collision. If so, verify that all the required components were replaced with new components of the correct part number and were properly installed** .
- Before doing this troubleshooting procedure, review **SRS Precautions and Procedures** and **General Troubleshooting Information**.

DTC Description	DTC
B0050-11 Short or decreased resistance in the driver's seat belt buckle switch	B
B0050-2B Short to another wire harness in the driver's seat belt buckle switch	B

DTC (SRS)

1. Problem verification

   -1. Clear the DTCs with the HDS.

   -2. Turn the vehicle to the ON mode, then wait for 10 seconds. Buckle and unbuckle the driver's seat belt several times.

   -3. Check for DTCs with the HDS.

DTC Description	DTC
B0050-11 Short or decreased resistance in the driver's seat belt buckle switch	B
B0050-2B Short to another wire harness in the driver's seat belt buckle switch	B

   Is DTC B0050-11 or B0050-2B indicated?

   YES

   The failure is duplicated. Go to step 2.

   NO

   Intermittent failure, the system is OK at this time. Go to Troubleshooting Intermittent Failures. If another DTC is indicated, troubleshoot the DTC.

2. Driver's seat belt buckle switch check

   -1. Turn the vehicle to the OFF (LOCK) mode.

   -2. Disconnect the driver's seat belt buckle switch 2P connector (A) on the floor wire harness.

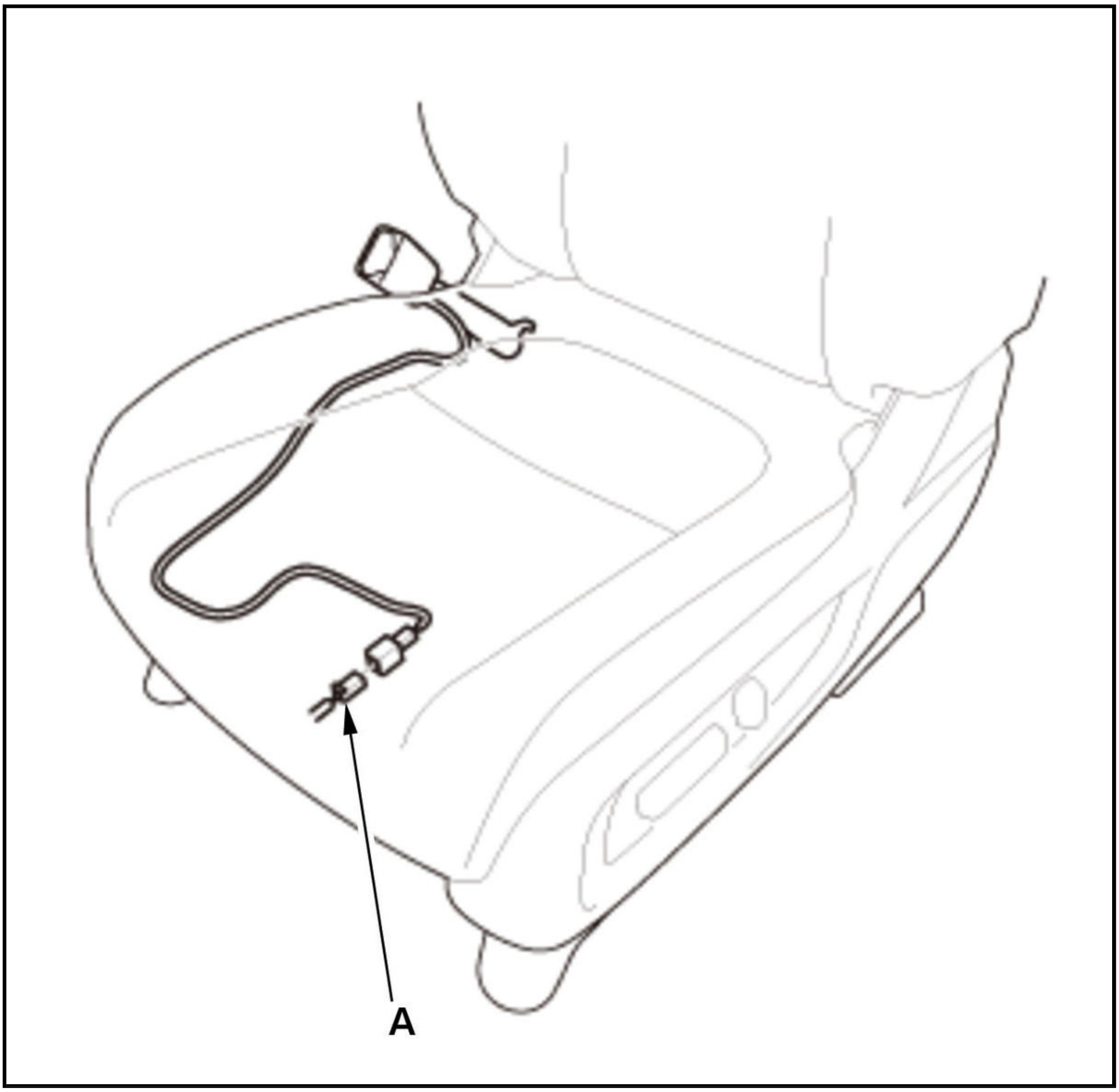

-3. Clear the DTCs with the HDS.

-4. Turn the vehicle to the ON mode, then wait for 10 seconds.

-5. Check for DTCs with the HDS.

DTC Description	DTC
B0050-11 Short or decreased resistance in the driver's seat belt buckle switch	B
B0050-2B Short to another wire harness in the driver's seat belt buckle switch	B

Is DTC B0050-11 or B0050-2B indicated?

YES

Short in the floor wire harness; replace the floor wire harness, then clear the DTC.

NO

Faulty driver's seat belt buckle switch; **replace the driver's seat belt buckle assembly** , then clear the DTC.

DTC B0050-13

DTC B0050-13 : Open or Increased Resistance in the Driver's Seat Belt Buckle Switch

NOTE:

- **Before doing this troubleshooting procedure, find out if the vehicle was in a collision. If so, verify that all the required components were replaced with new components of the correct part number and were properly installed** .
- Before doing this troubleshooting procedure, review **SRS Precautions and Procedures** and **General Troubleshooting Information**.

DTC Description	DTC
B0050-13 Open or increased resistance in the driver's seat belt buckle switch	B

DTC (SRS)

1. Problem verification

   -1. Clear the DTCs with the HDS.

   -2. Turn the vehicle to the ON mode, then wait for 10 seconds. Buckle and unbuckle the driver's seat belt several times.

   -3. Check for DTCs with the HDS.

DTC Description	DTC
B0050-13 Open or increased resistance in the driver's seat belt buckle switch	B

   Is DTC B0050-13 indicated?

   YES

   The failure is duplicated. Go to step 2.

   NO

   Intermittent failure, the system is OK at this time. Go to Troubleshooting Intermittent Failures. If another DTC is indicated, troubleshoot the DTC.

2. Driver's seat belt buckle switch check

   -1. Turn the vehicle to the OFF (LOCK) mode.

   -2. Disconnect the driver's seat belt buckle switch 2P connector (A) on the floor wire harness.

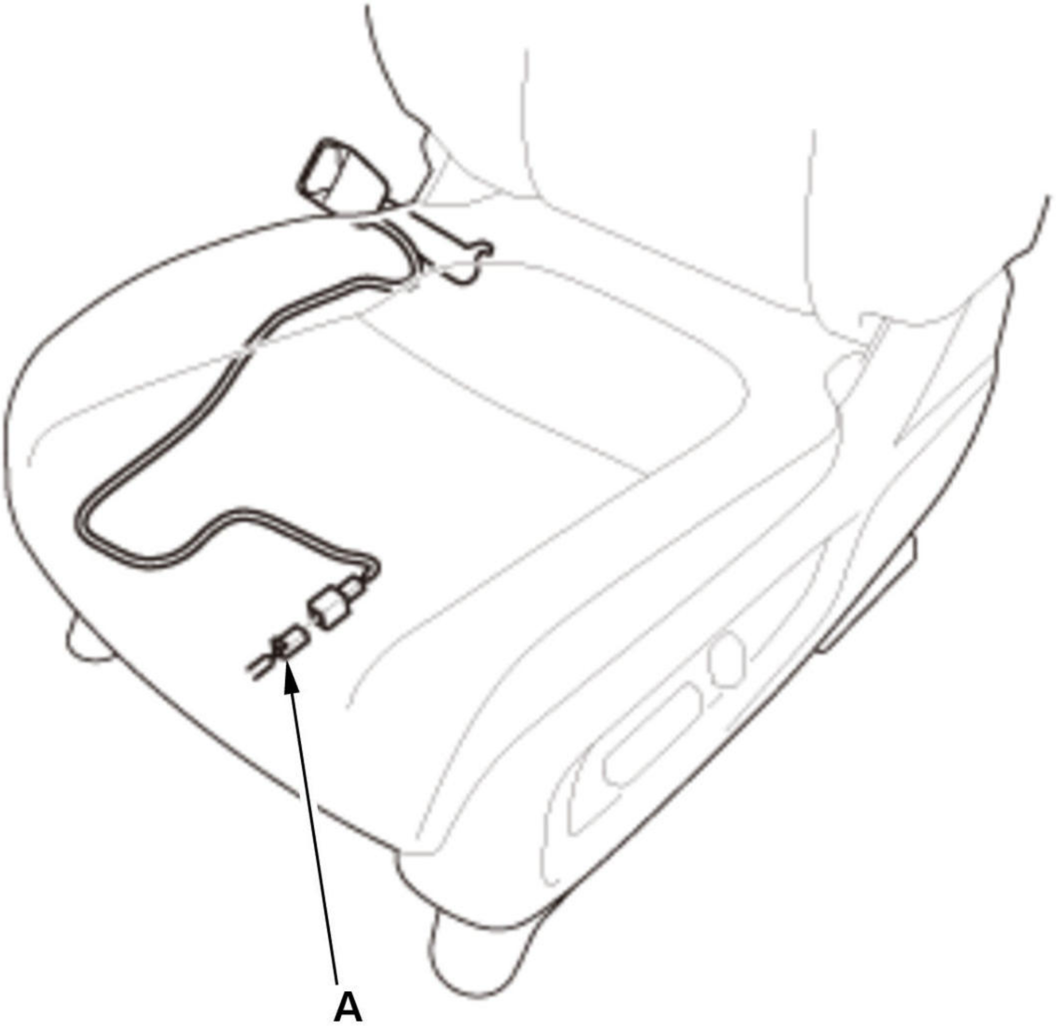

-3. Connect terminals A and B with a jumper wire.

Terminal A	Driver's seat belt buckle switch 2P connector (female terminals) No. 1 (on the floor wire harness): ①
Terminal B	Driver's seat belt buckle switch 2P connector (female terminals) No. 2 (on the floor wire harness): ①

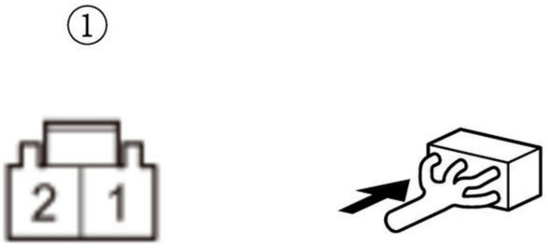

-4. Turn the vehicle to the ON mode, then wait for 10 seconds.

-5. Check for DTCs with the HDS.

DTC Description	DTC
B0050-11 Short or decreased resistance in the driver's seat belt buckle switch	B

Is DTC B0050-11 indicated?

YES

Faulty driver's seat belt buckle switch; **replace the driver's seat belt buckle assembly** , then clear the DTC.

NO

Go to step 3.

3. Open wire check (FLBC line)

-1. Turn the vehicle to the OFF (LOCK) mode.

-2. Disconnect the negative cable from the 12 volt battery, then wait at least 3 minutes.

-3. Remove the jumper wire from the driver's seat belt buckle switch 2P connector on the floor wire harness.

-4. Disconnect the following connector.

SRS unit connector B (39P)

-5. Measure the resistance between test points 1 and 2.

Test condition	Vehicle OFF (LOCK) mode
	Driver's seat belt buckle switch 2P connector (on the floor wire harness): disconnected
	SRS unit connector B (39P): disconnected
Test point 1	Driver's seat belt buckle switch 2P connector (female terminals) No. 1 (on the floor wire harness): ①
Test point 2	**SRS unit connector B (39P) No. 29**

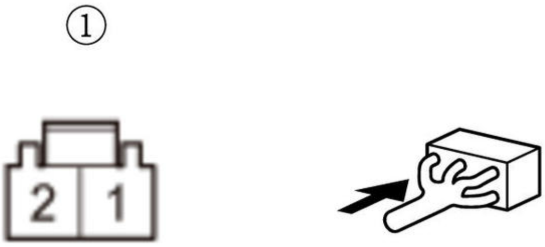

Is there 1.0 Ω or less?

YES

The FLBC wire is OK. Go to step 4.

NO

Open in the floor wire harness; replace the floor wire harness, then clear the DTC.

4. Open wire check (GND line)

-1. Measure the resistance between test points 1 and 2.

Test condition	Vehicle OFF (LOCK) mode
	Driver's seat belt buckle switch 2P connector (on the floor wire harness): disconnected
	SRS unit connector B (39P): disconnected
Test point 1	Driver's seat belt buckle switch 2P connector (female terminals) No. 2 (on the floor wire harness): ①
Test point 2	Body ground

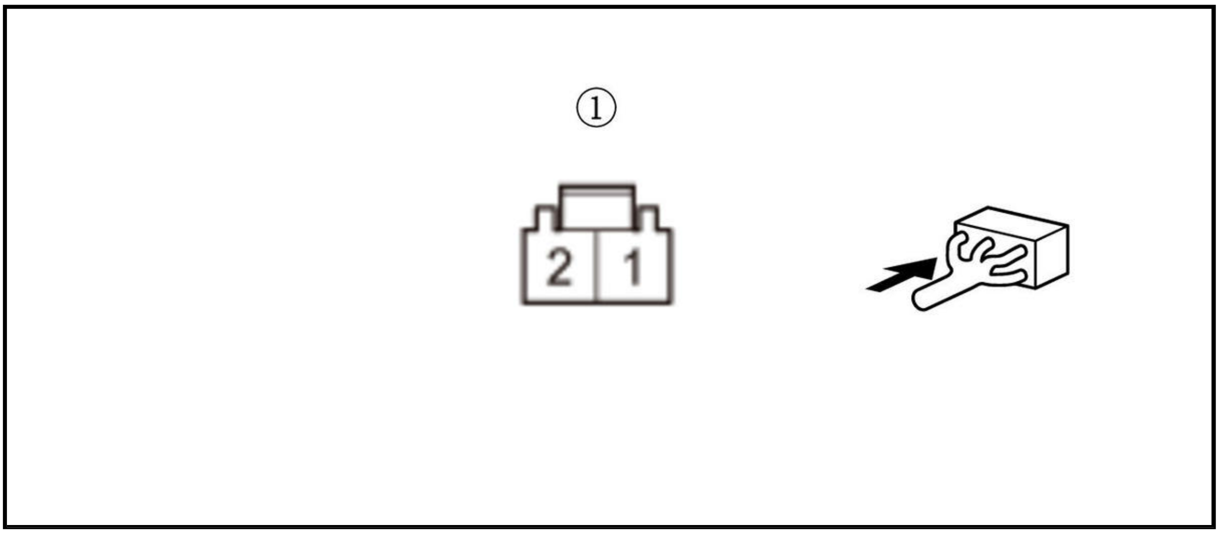

Is there 1.0 Ω or less?

YES

The GND wire is OK. Faulty SRS unit or poor connection at SRS unit connector B (39P) and the SRS unit. Check the connection; if the connection is OK, check for any authorized service information related to the DTCs or symptoms you are troubleshooting or **replace the SRS unit** . If the DTC does not clear, replace the floor wire harness.

NO

Open in the floor wire harness; check for a poor ground at G501. If the ground is OK, replace the floor wire harness, then clear the DTC.

DTC B0052-11, B0052-2B

DTC B0052-11 : Short or Decreased Resistance in the Front Passenger's Seat Belt Buckle Switch

DTC B0052-2B : Short to Another Wire Harness in the Front Passenger's Seat Belt Buckle Switch

NOTE:

- **Before doing this troubleshooting procedure, find out if the vehicle was in a collision. If so, verify that all the required components were replaced with new components of the correct part number and were properly installed** .
- Before doing this troubleshooting procedure, review **SRS Precautions and Procedures** and **General Troubleshooting Information**.

DTC Description	DTC
B0052-11 Short or decreased resistance in the front passenger's seat belt buckle switch	B
B0052-2B Short to another wire harness in the front passenger's seat belt buckle switch	B

DTC (SRS)

1. Problem verification

   -1. Clear the DTCs with the HDS.

   -2. Turn the vehicle to the ON mode, then wait for 10 seconds. Buckle and unbuckle the front passenger's seat belt several times.

   -3. Check for DTCs with the HDS.

DTC Description	DTC
B0052-11 Short or decreased resistance in the front passenger's seat belt buckle switch	B
B0052-2B Short to another wire harness in the front passenger's seat belt buckle switch	B

   Is DTC B0052-11 or B0052-2B indicated?

   YES

   The failure is duplicated. Go to step 2.

   NO

   Intermittent failure, the system is OK at this time. Go to Troubleshooting Intermittent Failures. If another DTC is indicated, troubleshoot the DTC.

2. Front passenger's seat belt buckle switch check

   -1. Turn the vehicle to the OFF (LOCK) mode.

   -2. Disconnect the front passenger's seat belt buckle switch 2P connector (A) on the floor wire harness.

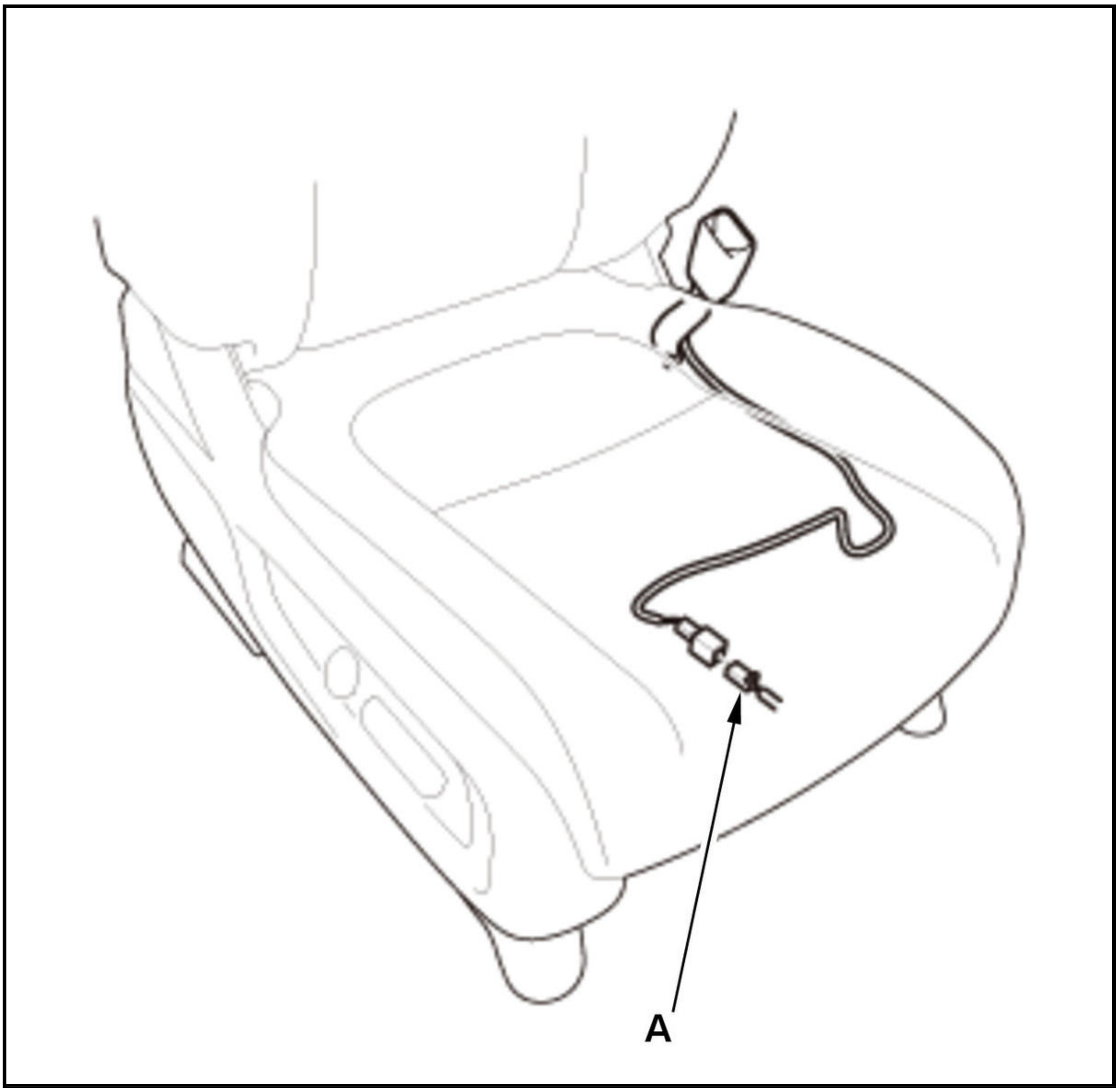

-3. Clear the DTCs with the HDS.

-4. Turn the vehicle to the ON mode, then wait for 10 seconds.

-5. Check for DTCs with the HDS.

DTC Description	DTC
B0052-11 Short or decreased resistance in the front passenger's seat belt buckle switch	B
B0052-2B Short to another wire harness in the front passenger's seat belt buckle switch	B

Is DTC B0052-11 or B0052-2B indicated?

YES

Short in the floor wire harness; replace the floor wire harness, then clear the DTC.

NO

Faulty front passenger's seat belt buckle switch; **replace the front passenger's seat belt buckle assembly** , then clear the DTC.

DTC B0052-13

DTC B0052-13 : Open or Increased Resistance in the Front Passenger's Seat Belt Buckle Switch

NOTE:

- **Before doing this troubleshooting procedure, find out if the vehicle was in a collision. If so, verify that all the required components were replaced with new components of the correct part number and were properly installed** .
- Before doing this troubleshooting procedure, review **SRS Precautions and Procedures** and **General Troubleshooting Information**.

DTC Description	DTC
B0052-13 Open or increased resistance in the front passenger's seat belt buckle switch	B

DTC (SRS)

1. Problem verification

   -1. Clear the DTCs with the HDS.

   -2. Turn the vehicle to the ON mode, then wait for 10 seconds. Buckle and unbuckle the front passenger's seat belt several times.

   -3. Check for DTCs with the HDS.

DTC Description	DTC
B0052-13 Open or increased resistance in the front passenger's seat belt buckle switch	B

   Is DTC B0052-13 indicated?

   YES

   The failure is duplicated. Go to step 2.

   NO

   Intermittent failure, the system is OK at this time. Go to Troubleshooting Intermittent Failures. If another DTC is indicated, troubleshoot the DTC.

2. Front passenger's seat belt buckle switch check

   -1. Turn the vehicle to the OFF (LOCK) mode.

   -2. Disconnect the front passenger's seat belt buckle switch 2P connector (A) on the floor wire harness.

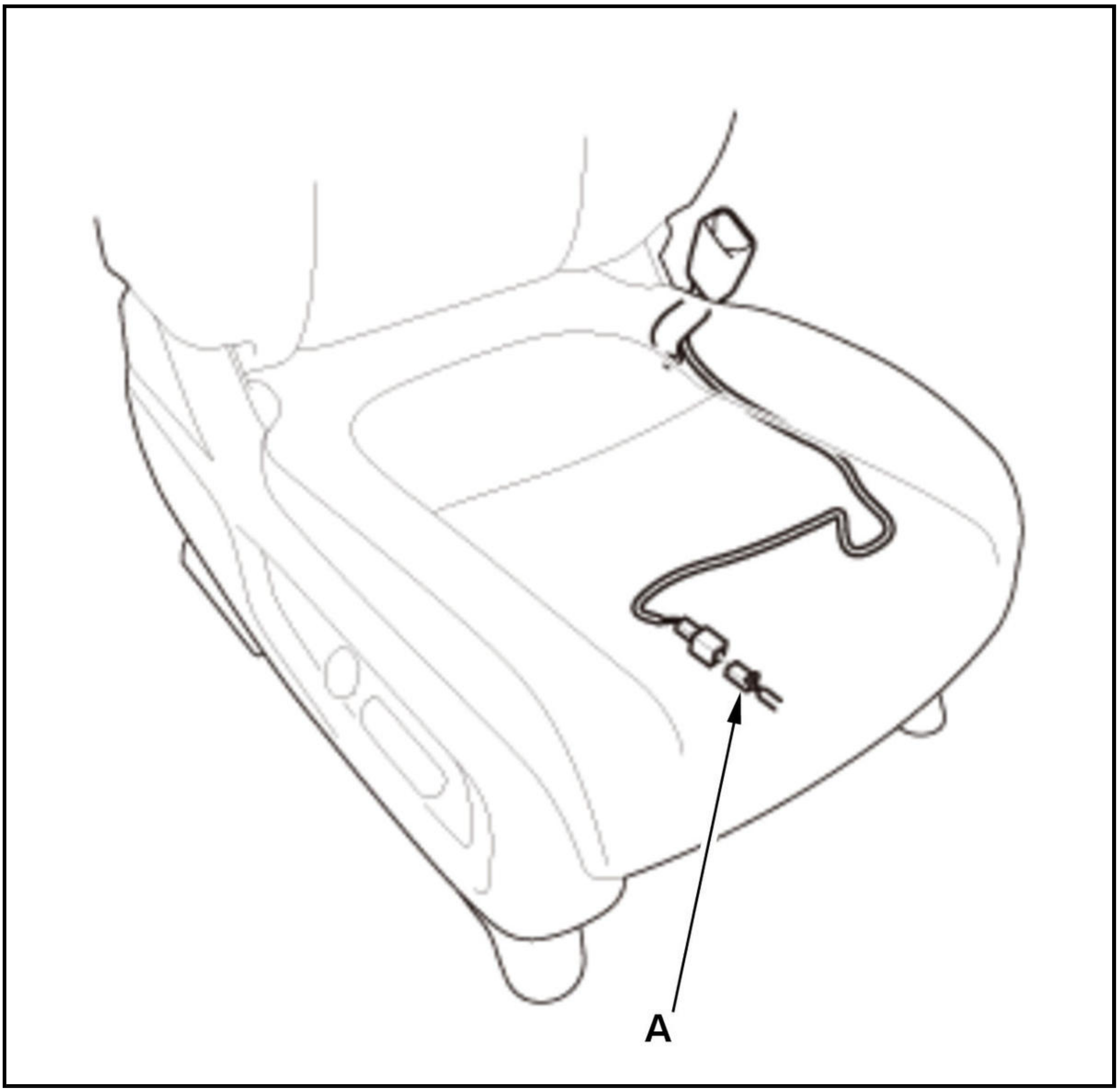

-3. Connect terminals A and B with a jumper wire.

Terminal A	Front passenger's seat belt buckle switch 2P connector (female terminals) No. 1 (on the floor wire harness): ①
Terminal B	Front passenger's seat belt buckle switch 2P connector (female terminals) No. 2 (on the floor wire harness): ①

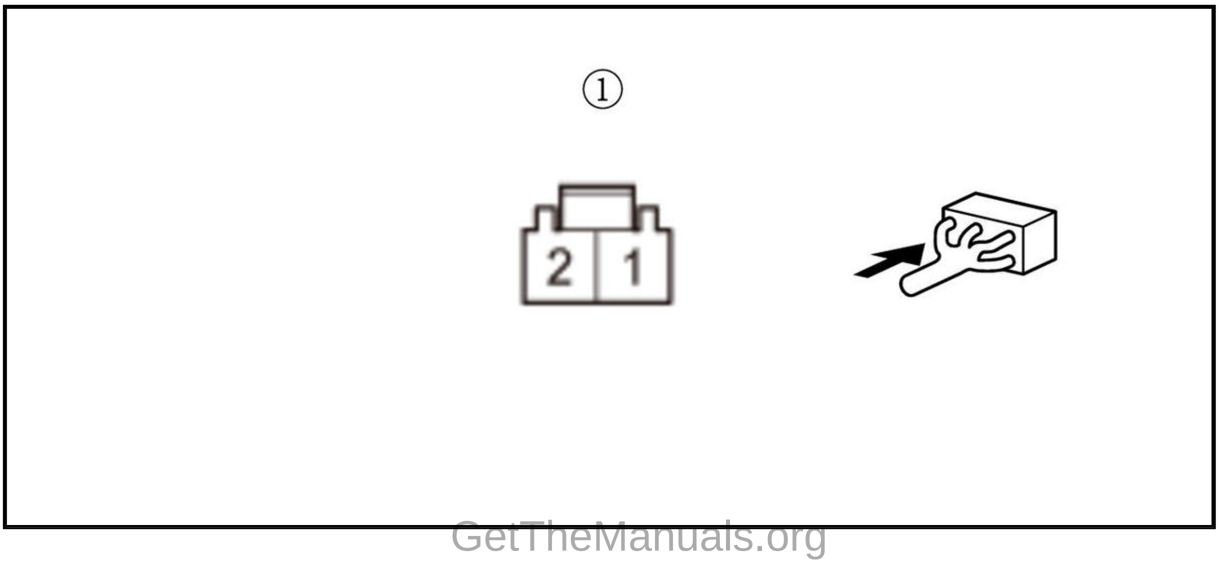

-4. Turn the vehicle to the ON mode, then wait for 10 seconds.

-5. Check for DTCs with the HDS.

DTC Description	DTC
B0052-11 Short or decreased resistance in the front passenger's seat belt buckle switch	B

Is DTC B0052-11 indicated?

YES

Faulty front passenger's seat belt buckle switch; **replace the front passenger's seat belt buckle assembly** , then clear the DTC.

NO

Go to step 3.

3. Open wire check (FRBC line)

-1. Turn the vehicle to the OFF (LOCK) mode.

-2. Disconnect the negative cable from the 12 volt battery, then wait at least 3 minutes.

-3. Remove the jumper wire from the front passenger's seat belt buckle switch 2P connector on the floor wire harness.

-4. Disconnect the following connector.

SRS unit connector B (39P)

-5. Measure the resistance between test points 1 and 2.

Test condition	Vehicle OFF (LOCK) mode
	Front passenger's seat belt buckle switch 2P connector (on the front passenger's seat wire harness): disconnected
	SRS unit connector B (39P): disconnected
Test point 1	Front passenger's seat belt buckle switch 2P connector (female terminals) No. 1 (on the front passenger's seat wire harness): ①
Test point 2	**SRS unit connector B (39P) No. 27**

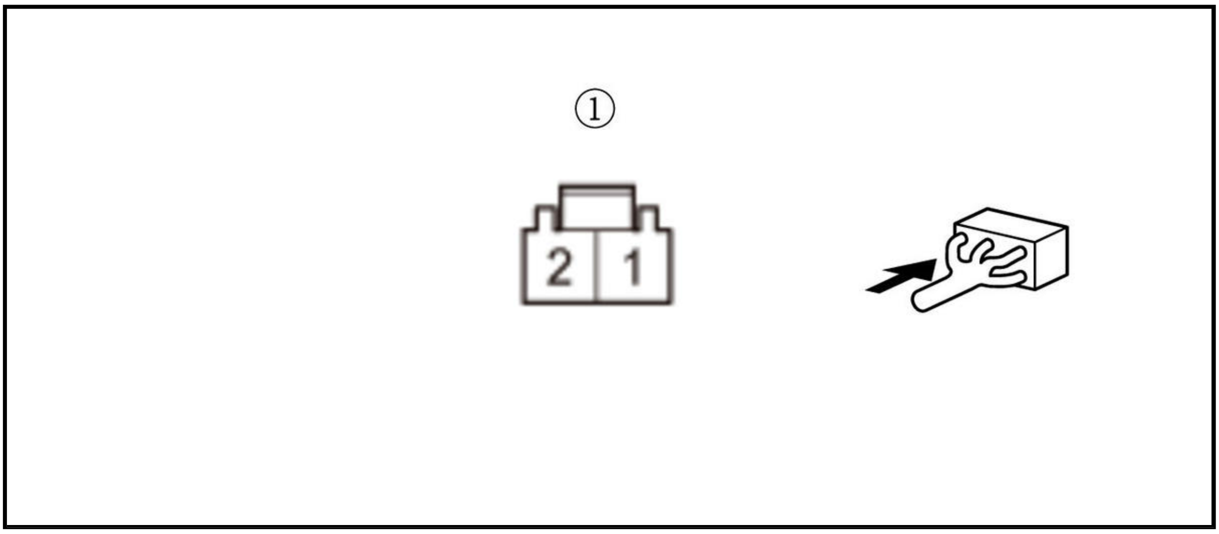

Is there 1.0 Ω or less?

YES

The FRBC wire is OK. Go to step 4.

NO

Open in the floor wire harness; replace the floor wire harness, then clear the DTC.

4. Open wire check (GND line)

-1. Measure the resistance between test points 1 and 2.

Test condition	Vehicle OFF (LOCK) mode
	Front passenger's seat belt buckle switch 2P connector (on the floor wire harness): disconnected
	SRS unit connector B (39P): disconnected
Test point 1	Front passenger's seat belt buckle switch 2P connector (female terminals) No. 2 (on the floor wire harness): ①
Test point 2	Body ground

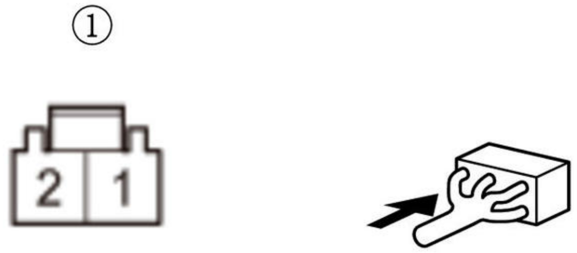

Is there 1.0 Ω or less?

YES

The GND wire is OK. Faulty SRS unit or poor connection at SRS unit connector B (39P) and the SRS unit. Check the connection; if the connection is OK, check for any authorized service information related to the DTCs or symptoms you are troubleshooting or **replace the SRS unit** . If the DTC does not clear, replace the floor wire harness.

NO

Open in the floor wire harness; check for a poor ground at G502. If the ground is OK, replace the floor wire harness, then clear the DTC.

DTC B0070-11

DTC B0070-11 : Short to Ground in the Driver's Seat Belt Tensioner

NOTE:

- **Before doing this troubleshooting procedure, find out if the vehicle was in a collision. If so, verify that all the required components were replaced with new components of the correct part number and were properly installed** .
- Before doing this troubleshooting procedure, review **SRS Precautions and Procedures** , **General Troubleshooting Information**, and **12 Volt Battery Terminal Disconnection and Reconnection** .

DTC Description	DTC
B0070-11 Short to ground in the driver's seat belt tensioner	B

DTC (SRS)

1. Problem verification

   -1. Clear the DTCs with the HDS.

   -2. Turn the vehicle to the ON mode, then wait for 10 seconds.

   -3. Check for DTCs with the HDS.

DTC Description	DTC
B0070-11 Short to ground in the driver's seat belt tensioner	B

   Is DTC B0070-11 indicated?

   YES

   The failure is duplicated. Go to step 2.

   NO

   Intermittent failure, the system is OK at this time. Go to Troubleshooting Intermittent Failures. If another DTC is indicated, troubleshoot the DTC.

2. Shorted wire check (LRP+, LRP- lines) 1

   -1. Turn the vehicle to the OFF (LOCK) mode.

   -2. Disconnect the negative cable from the 12 volt battery, then wait at least 3 minutes.

   -3. **Remove the left side B-pillar lower trim** .

   -4. Disconnect the following connector.

Driver's seat belt tensioner 2P connector (on the floor wire harness)

   -5. Reconnect the negative cable to the 12 volt battery.

   -6. Turn the vehicle to the ON mode, then clear the DTC.

   -7. Check for DTCs with the HDS.

DTC Description	DTC
B0070-11 Short to ground in the driver's seat belt tensioner	B

   Is DTC B0070-11 indicated?

   YES

Go to step 3.

NO

Short to ground in the driver's seat belt tensioner; **replace the driver's seat belt** , then clear the DTC.

3. Shorted wire check (LRP+, LRP- lines) 2

-1. Turn the vehicle to the OFF (LOCK) mode.

-2. Disconnect the negative cable from the 12 volt battery, then wait at least 3 minutes.

-3. Disconnect the following connector.

SRS unit connector B (39P)

-4. Measure the resistance between test points 1 and 2.

Test condition	Vehicle OFF (LOCK) mode
	SRS unit connector B (39P): disconnected
	Driver's seat belt tensioner 2P connector (on the floor wire harness): disconnected
Test point 1	**SRS unit connector B (39P) No. 20**
Test point 2	Body ground

Test point 1	**SRS unit connector B (39P) No. 21**
Test point 2	Body ground

Is there an open circuit, or at least 1 MΩ?

YES

The LRP+ and LRP- wires are OK. Check for any authorized service information related to the DTCs or symptoms you are troubleshooting or **replace the SRS unit** .

NO

Short to ground in the floor wire harness; replace the floor wire harness, then clear the DTC.

DTC TROUBLESHOOTING

DTC B0070-12

DTC B0070-12 : Short to Power in the Driver's Seat Belt Tensioner

NOTE:

- **Before doing this troubleshooting procedure, find out if the vehicle was in a collision. If so, verify that all the required components were replaced with new components of the correct part number and were properly installed** .
- Before doing this troubleshooting procedure, review **SRS Precautions and Procedures** , **General Troubleshooting Information** , and **12 Volt Battery Terminal Disconnection and Reconnection** .

DTC Description	DTC
B0070-12 Short to power in the driver's seat belt tensioner	B

DTC (SRS)

1. Problem verification

-1. Clear the DTCs with the HDS.

-2. Turn the vehicle to the ON mode, then wait for 10 seconds.

-3. Check for DTCs with the HDS.

DTC Description	DTC
B0070-12 Short to power in the driver's seat belt tensioner	B

Is DTC B0070-12 indicated?

YES

The failure is duplicated. Go to step 2.

NO

Intermittent failure, the system is OK at this time. Go to Troubleshooting Intermittent Failures. If another DTC is indicated, troubleshoot the DTC.

2. Shorted wire check (LRP+, LRP- lines to power) 1

-1. Turn the vehicle to the OFF (LOCK) mode.

-2. Disconnect the negative cable from the 12 volt battery, then wait at least 3 minutes.

-3. **Remove the left side B-pillar lower trim** .

-4. Disconnect the following connector.

Driver's seat belt tensioner 2P connector (on the floor wire harness)

-5. Reconnect the negative cable to the 12 volt battery.

-6. Turn the vehicle to the ON mode, then clear the DTC.

-7. Check for DTCs with the HDS.

DTC Description	DTC
B0070-12 Short to power in the driver's seat belt tensioner	B

Is DTC B0070-12 indicated?

YES

Go to step 3.

NO

Short to power in the driver's seat belt tensioner; **replace the driver's seat belt** , then clear the DTC.

3. Shorted wire check (LRP+, LRP- lines to power) 2

-1. Turn the vehicle to the OFF (LOCK) mode.

-2. Disconnect the negative cable from the 12 volt battery, then wait at least 3 minutes.

-3. Disconnect the following connector.

SRS unit connector B (39P)

-4. Reconnect the negative cable to the 12 volt battery.

-5. Turn the vehicle to the ON mode.

-6. Measure the voltage between test points 1 and 2.

Test condition	Vehicle ON mode
	SRS unit connector B (39P): disconnected
	Driver's seat belt tensioner 2P connector (on the floor wire harness): disconnected
Test point 1	**SRS unit connector B (39P) No. 20**
Test point 2	Body ground

Test point 1	**SRS unit connector B (39P) No. 21**
Test point 2	Body ground

Is there 0.2 V or less?

YES

The LRP+ and LRP- wires are OK. Check for any authorized service information related to the DTCs or symptoms you are troubleshooting or **replace the SRS unit** .

NO

Short to power in the floor wire harness; replace the floor wire harness, then clear the DTC.

DTC B0070-13

DTC B0070-13 : Open or Increased Resistance in the Driver's Seat Belt Tensioner

NOTE:

- **Before doing this troubleshooting procedure, find out if the vehicle was in a collision. If so, verify that all the required components were replaced with new components of the correct part number and were properly installed** .
- Before doing this troubleshooting procedure, review **SRS Precautions and Procedures** , **General Troubleshooting Information** , and **12 Volt Battery Terminal Disconnection and Reconnection** .

DTC Description	DTC
B0070-13 Open or increased resistance in the driver's seat belt tensioner	B

DTC (SRS)

1. Problem verification

   -1. Clear the DTCs with the HDS.

   -2. Turn the vehicle to the ON mode, then wait for 10 seconds.

   -3. Check for DTCs with the HDS.

DTC Description	DTC
B0070-13 Open or increased resistance in the driver's seat belt tensioner	B

   Is DTC B0070-13 indicated?

   YES

   The failure is duplicated. Go to step 2.

   NO

   Intermittent failure, the system is OK at this time. Go to Troubleshooting Intermittent Failures. If another DTC is indicated, troubleshoot the DTC.

2. Driver's seat belt tensioner check

   -1. Turn the vehicle to the OFF (LOCK) mode.

   -2. Disconnect the negative cable from the 12 volt battery, then wait at least 3 minutes.

   -3. **Remove the left side B-pillar lower trim** .

   -4. Disconnect the following connector.

Driver's seat belt tensioner 2P connector (on the floor wire harness)

   -5. Connect terminals A and B with a jumper wire.

Terminal A	Driver's seat belt tensioner 2P connector (female terminals) No. 1 (on the floor wire harness): ①
Terminal B	Driver's seat belt tensioner 2P connector (female terminals) No. 2 (on the floor wire harness): ①

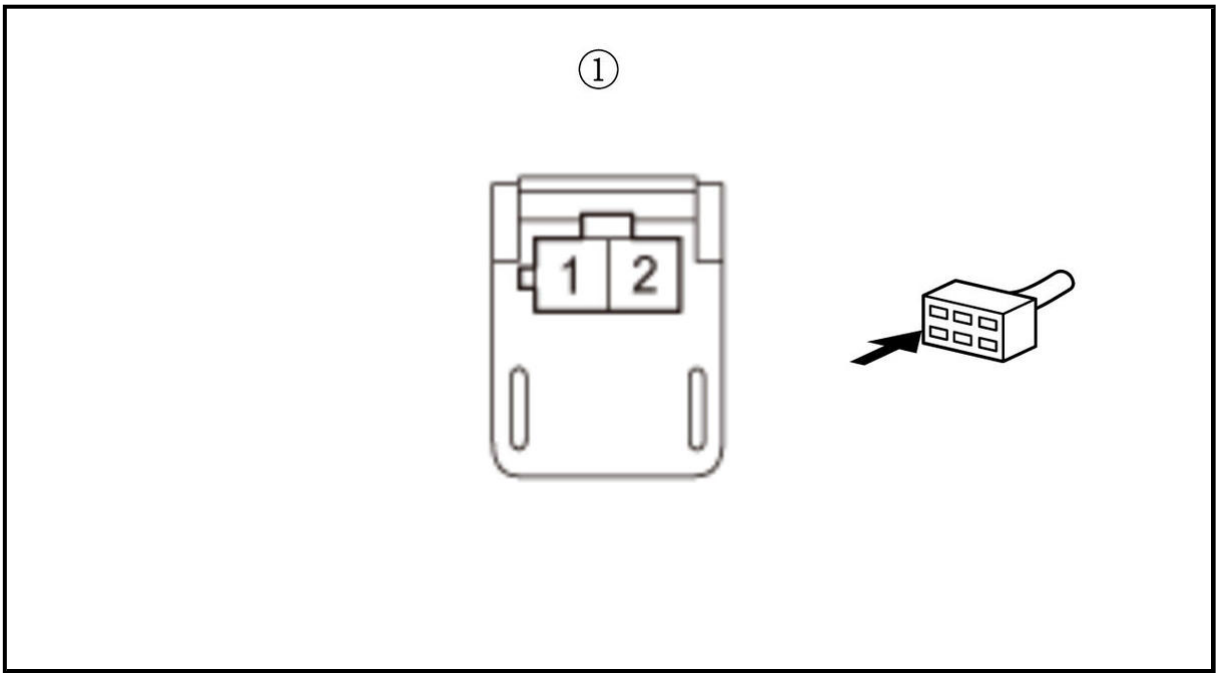

-6. Reconnect the negative cable to the 12 volt battery.

-7. Clear the DTCs with the HDS.

-8. Turn the vehicle to the ON mode, then wait for 10 seconds.

-9. Check for DTCs with the HDS.

DTC Description	DTC
B0070-13 Open or increased resistance in the driver's seat belt tensioner	B

Is DTC B0070-13 indicated?

YES

Go to step 3.

NO

Open in the driver's seat belt tensioner; **replace the driver's seat belt** , then clear the DTC.

3. Open wire check (LRP+, LRP- lines)

-1. Turn the vehicle to the OFF (LOCK) mode.

-2. Disconnect the negative cable from the 12 volt battery, then wait at least 3 minutes.

-3. Remove the jumper wire from the driver's seat belt tensioner 2P connector on the floor wire harness.

-4. Disconnect the following connector.

SRS unit connector B (39P)

-5. Connect terminals A and B with a jumper wire.

Terminal A	**SRS unit connector B (39P) No. 20**
Terminal B	**SRS unit connector B (39P) No. 21**

-6. Measure the resistance between test points 1 and 2.

Test condition	Vehicle OFF (LOCK) mode Driver's seat belt tensioner 2P connector (on the floor wire harness): disconnected SRS unit connector B (39P): disconnected SRS unit connector B (39P) terminals No. 20 and No. 21: jumped
Test point 1	Driver's seat belt tensioner 2P connector (female terminals) No. 1 (on the floor wire harness): ①
Test point 2	Driver's seat belt tensioner 2P connector (female terminals) No. 2 (on the floor wire harness): ①

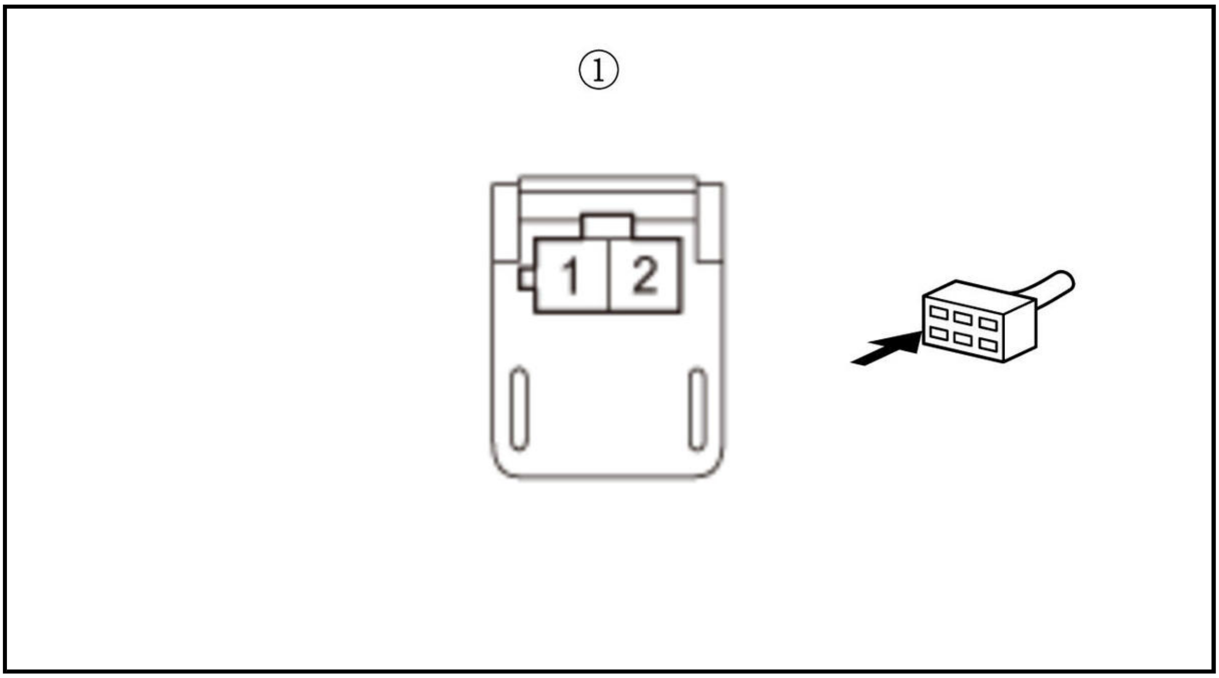

Is there 1.0 Ω or less?

YES

The LRP+ and LRP- wires are OK. Faulty SRS unit or poor connection at SRS unit connector B (39P) and the SRS unit. Check the connection; if the connection is OK, check for any authorized service information related to the DTCs or symptoms you are troubleshooting or replace the SRS unit . If the DTC does not clear, replace the floor wire harness.

NO

Open in the floor wire harness; replace the floor wire harness, then clear the DTC.

DTC B0070-1A

DTC B0070-1A : Decreased Resistance in the Driver's Seat Belt Tensioner

NOTE:

- **Before doing this troubleshooting procedure, find out if the vehicle was in a collision. If so, verify that all the required components were replaced with new components of the correct part number and were properly installed** .
- Before doing this troubleshooting procedure, review **SRS Precautions and Procedures** , **General Troubleshooting Information** , and **12 Volt Battery Terminal Disconnection and Reconnection** .

DTC Description	DTC
B0070-1A Decreased resistance in the driver's seat belt tensioner	B

DTC (SRS)

1. Problem verification

-1. Clear the DTCs with the HDS.

-2. Turn the vehicle to the ON mode, then wait for 10 seconds.

-3. Check for DTCs with the HDS.

DTC Description	DTC
B0070-1A Decreased resistance in the driver's seat belt tensioner	B

Is DTC B0070-1A indicated?

YES

The failure is duplicated. Go to step 2.

NO

Intermittent failure, the system is OK at this time. Go to Troubleshooting Intermittent Failures. If another DTC is indicated, troubleshoot the DTC.

2. Driver's seat belt tensioner check

-1. Turn the vehicle to the OFF (LOCK) mode.

-2. Disconnect the negative cable from the 12 volt battery, then wait at least 3 minutes.

-3. **Remove the left side B-pillar lower trim** .

-4. Disconnect the following connector.

Driver's seat belt tensioner 2P connector (on the floor wire harness)

-5. Reconnect the negative cable to the 12 volt battery.

-6. Clear the DTCs with the HDS.

-7. Turn the vehicle to the ON mode, then wait for 10 seconds.

-8. Check for DTCs with the HDS.

DTC Description	DTC
B0070-1A Decreased resistance in the driver's seat belt tensioner	B

Is DTC B0070-1A indicated?

YES

Go to step 3.

NO

Short to another wire in the driver's seat belt tensioner; **replace the driver's seat belt** , then clear the DTC.

3. Shorted wire check (LRP+ line to LRP- line)

   -1. Turn the vehicle to the OFF (LOCK) mode.

   -2. Disconnect the negative cable from the 12 volt battery, then wait at least 3 minutes.

   -3. Disconnect the following connector.

SRS unit connector B (39P)

   -4. Measure the resistance between test points 1 and 2.

Test condition	Vehicle OFF (LOCK) mode
	Driver's seat belt tensioner 2P connector (on the floor wire harness): disconnected
	SRS unit connector B (39P): disconnected
Test point 1	**SRS unit connector B (39P) No. 20**
Test point 2	**SRS unit connector B (39P) No. 21**

   Is there an open circuit, or at least 1 MΩ?

   YES

   The LRP+ and LRP- wires are OK. Faulty SRS unit or poor connection at SRS unit connector B (39P) and the SRS unit. Check the connection; if the connection is OK, check for any authorized service information related to the DTCs or symptoms you are troubleshooting or **replace the SRS unit** . If the DTC does not clear, replace the floor wire harness.

   NO

   Short to another wire in the floor wire harness; replace the floor wire harness, then clear the DTC.

DTC B0070-2B

DTC B0070-2B : Short to Another Wire Harness in the Driver's Seat Belt Tensioner

NOTE:

- **Before doing this troubleshooting procedure, find out if the vehicle was in a collision. If so, verify that all the required components were replaced with new components of the correct part number and were properly installed** .
- Before doing this troubleshooting procedure, review **SRS Precautions and Procedures** , **General Troubleshooting Information** , and **12 Volt Battery Terminal Disconnection and Reconnection** .

DTC Description	DTC
B0070-2B Short to another wire harness in the driver's seat belt tensioner	B

DTC (SRS)

1. Problem verification

   -1. Clear the DTCs with the HDS.

   -2. Turn the vehicle to the ON mode, then wait for 10 seconds.

   -3. Check for DTCs with the HDS.

DTC Description	DTC
B0070-2B Short to another wire harness in the driver's seat belt tensioner	B

Is DTC B0070-2B indicated?

YES

The failure is duplicated. Go to step 2.

NO

Intermittent failure, the system is OK at this time. Go to Troubleshooting Intermittent Failures. If another DTC is indicated, troubleshoot the DTC.

2. DTC check

-1. Check for DTCs with the HDS.

DTC Description	DTC
B0001-2B Short to another wire harness in the driver's airbag first inflator	B
B0002-2B Short to another wire harness in the driver's airbag second inflator	B
B0010-2B Short to another wire harness in the front passenger's airbag first inflator	B
B0011-2B Short to another wire harness in the front passenger's airbag second inflator	B
B0020-2B Short to another wire harness in the driver's side airbag inflator	B
B0021-2B Short to another wire harness in the left side curtain airbag first inflator	B
B0028-2B Short to another wire harness in the front passenger's side airbag inflator	B
B0029-2B Short to another wire harness in the right side curtain airbag first inflator	B
B0070-2B Short to another wire harness in the driver's seat belt tensioner	B
B0072-2B Short to another wire harness in the front passenger's seat belt tensioner	B
B0079-2B Short to another wire harness in the driver's seat belt outer lap tensioner	B
B007A-2B Short to another wire harness in the front passenger's seat belt outer lap tensioner	B
B0082-2B Short to another wire harness in the selectable energy absorption device of the front passenger's seat belt tensioner	B

Is DTC B0001-2B, B0002-2B, B0010-2B, B0011-2B, B0020-2B, B0021-2B, B0028-2B, B0029-2B, B0072-2B, B0079-2B, B007A-2B or B0082-2B indicated with DTC B0070-2B?

YES

Go to step 3.

NO

Short to another wire in the floor wire harness; replace the floor wire harness, then clear the DTC.

3. Shorted wire check (LRP lines to another line)

-1. Turn the vehicle to the OFF (LOCK) mode.

-2. Disconnect the negative cable from the 12 volt battery, then wait at least 3 minutes.

-3. **Remove the left side B-pillar lower trim** .

-4. Disconnect the following connectors.

SRS unit connector A (39P)
SRS unit connector B (39P)
Driver's seat belt tensioner 2P connector (on the floor wire harness)
Inflator connectors which are assigned to 2B codes listed on HDS

-5. Measure the resistance between test points 1 and 2 of SRS unit connector A (39P) and B (39P) according to table.

Test condition	Vehicle OFF (LOCK) mode
	SRS unit connector A (39P): disconnected
	SRS unit connector B (39P): disconnected
	Driver's seat belt tensioner 2P connector (on the floor wire harness): disconnected
	Inflator connectors which are assigned to 2B codes listed on HDS: disconnected

DTC	Test point 1	Test point 2
	From terminal	To terminal
B0001-2B	**SRS unit connector B (39P) No. 20**	**SRS unit connector A (39P) No. 9**
	SRS unit connector B (39P) No. 21	**SRS unit connector A (39P) No. 8**
B0002-2B	**SRS unit connector B (39P) No. 20**	**SRS unit connector A (39P) No. 10**
	SRS unit connector B (39P) No. 21	**SRS unit connector A (39P) No. 11**
B0010-2B	**SRS unit connector B (39P) No. 20**	**SRS unit connector A (39P) No. 5**
	SRS unit connector B (39P) No. 21	**SRS unit connector A (39P) No. 4**
B0011-2B	**SRS unit connector B (39P) No. 20**	**SRS unit connector A (39P) No. 6**
	SRS unit connector B (39P) No. 21	**SRS unit connector A (39P) No. 7**
B0020-2B	**SRS unit connector B (39P) No. 20**	**SRS unit connector B (39P) No. 5**
	SRS unit connector B (39P) No. 21	**SRS unit connector B (39P) No. 6**
B0021-2B	**SRS unit connector B (39P) No. 20**	**SRS unit connector B (39P) No. 9**
	SRS unit connector B (39P) No. 21	**SRS unit connector B (39P) No. 10**
B0028-2B	**SRS unit connector B (39P) No. 20**	**SRS unit connector B (39P) No. 4**
	SRS unit connector B (39P) No. 21	**SRS unit connector B (39P) No. 3**
B0029-2B	**SRS unit connector B (39P) No. 20**	**SRS unit connector B (39P) No. 8**
	SRS unit connector B (39P) No. 21	**SRS unit connector B (39P) No. 7**
B0072-2B	**SRS unit connector B (39P) No. 20**	**SRS unit connector B (39P) No. 19**
	SRS unit connector B (39P) No. 21	**SRS unit connector B (39P) No. 18**
B0079-2B	**SRS unit connector B (39P) No. 20**	**SRS unit connector B (39P) No. 24**
	SRS unit connector B (39P) No. 21	**SRS unit connector B (39P) No. 25**
B007A-2B	**SRS unit connector B (39P) No. 20**	**SRS unit connector B (39P) No. 23**
	SRS unit connector B (39P) No. 21	**SRS unit connector B (39P) No. 22**
B0082-2B	**SRS unit connector B (39P) No. 20**	**SRS unit connector A (39P) No. 2**
	SRS unit connector B (39P) No. 21	**SRS unit connector A (39P) No. 3**

Is there 1 MΩ or more?

YES

The LRP wires are OK. Faulty SRS unit or poor connection at SRS unit connector A (39P) and the SRS unit, or SRS unit connector B (39P) and the SRS unit. Check the connection; if the connection is OK, check for any authorized service information related to the DTCs or symptoms you are troubleshooting or **replace the SRS unit** . If the DTC does not clear, replace the dashboard wire harness or the floor wire harness.

NO

Short to another wire in the dashboard wire harness or the floor wire harness; replace the faulty harness, then clear the DTC.

DTC B0072-11

DTC B0072-11 : Short to Ground in the Front Passenger's Seat Belt Tensioner

NOTE:

- **Before doing this troubleshooting procedure, find out if the vehicle was in a collision. If so, verify that all the required components were replaced with new components of the correct part number and were properly installed** .
- Before doing this troubleshooting procedure, review **SRS Precautions and Procedures** , **General Troubleshooting Information** , and **12 Volt Battery Terminal Disconnection and Reconnection** .

DTC Description	DTC
B0072-11 Short to ground in the front passenger's seat belt tensioner	B

DTC (SRS)

1. Problem verification

   -1. Clear the DTCs with the HDS.

   -2. Turn the vehicle to the ON mode, then wait for 10 seconds.

   -3. Check for DTCs with the HDS.

DTC Description	DTC
B0072-11 Short to ground in the front passenger's seat belt tensioner	B

   Is DTC B0072-11 indicated?

   YES

   The failure is duplicated. Go to step 2.

   NO

   Intermittent failure, the system is OK at this time. Go to Troubleshooting Intermittent Failures. If another DTC is indicated, troubleshoot the DTC.

2. Shorted wire check (RRP+, RRP- lines) 1

   -1. Turn the vehicle to the OFF (LOCK) mode.

   -2. Disconnect the negative cable from the 12 volt battery, then wait at least 3 minutes.

   -3. **Remove the right side B-pillar lower trim** .

   -4. Disconnect the following connector.

Front passenger's seat belt tensioner 2P connector (on the floor wire harness)

-5. Reconnect the negative cable to the 12 volt battery.

-6. Turn the vehicle to the ON mode, then clear the DTC.

-7. Check for DTCs with the HDS.

DTC Description	DTC
B0072-11 Short to ground in the front passenger's seat belt tensioner	B

Is DTC B0072-11 indicated?

NO

Go to step 3.

YES

Short to ground in the front passenger's seat belt tensioner; **replace the front passenger's seat belt** , then clear the DTC.

3. Shorted wire check (RRP+, RRP- lines) 2

-1. Turn the vehicle to the OFF (LOCK) mode.

-2. Disconnect the negative cable from the 12 volt battery, then wait at least 3 minutes.

-3. Disconnect the following connector.

SRS unit connector B (39P)

-4. Measure the resistance between test points 1 and 2.

Test condition	Vehicle OFF (LOCK) mode
	SRS unit connector B (39P): disconnected
	Front passenger's seat belt tensioner 2P connector (on the floor wire harness): disconnected
Test point 1	**SRS unit connector B (39P) No. 18**
Test point 2	Body ground

Test point 1	**SRS unit connector B (39P) No. 19**
Test point 2	Body ground

Is there an open circuit, or at least 1 MΩ?

YES

The RRP+ and RRP- wires are OK. Check for any authorized service information related to the DTCs or symptoms you are troubleshooting or **replace the SRS unit** .

NO

Short to ground in the floor wire harness; replace the floor wire harness, then clear the DTC.

DTC B0072-12

DTC B0072-12 : Short to Power in the Front Passenger's Seat Belt Tensioner

NOTE:

- **Before doing this troubleshooting procedure, find out if the vehicle was in a collision. If so, verify that all the required components were replaced with new components of the correct part number and were properly installed** .
- Before doing this troubleshooting procedure, review **SRS Precautions and Procedures** , **General Troubleshooting Information** , and **12 Volt Battery Terminal Disconnection and Reconnection** .

DTC Description	DTC
B0072-12 Short to power in the front passenger's seat belt tensioner	B

DTC (SRS)

1. Problem verification

-1. Clear the DTCs with the HDS.

-2. Turn the vehicle to the ON mode, then wait for 10 seconds.

-3. Check for DTCs with the HDS.

DTC Description	DTC
B0072-12 Short to power in the front passenger's seat belt tensioner	B

Is DTC B0072-12 indicated?

YES

The failure is duplicated. Go to step 2.

NO

Intermittent failure, the system is OK at this time. Go to Troubleshooting Intermittent Failures. If another DTC is indicated, troubleshoot the DTC.

2. Shorted wire check (RRP+, RRP- lines to power) 1

-1. Turn the vehicle to the OFF (LOCK) mode.

-2. Disconnect the negative cable from the 12 volt battery, then wait at least 3 minutes.

-3. **Remove the right side B-pillar lower trim** .

-4. Disconnect the following connector.

Front passenger's seat belt tensioner 2P connector (on the floor wire harness)

-5. Reconnect the negative cable to the 12 volt battery.

-6. Turn the vehicle to the ON mode, then clear the DTC.

-7. Check for DTCs with the HDS.

DTC Description	DTC
B0072-12 Short to power in the front passenger's seat belt tensioner	B

Is DTC B0072-12 indicated?

NO

Go to step 3.

YES

Short to power in the front passenger's seat belt tensioner; **replace the front passenger's seat belt** , then clear the DTC.

3. Shorted wire check (RRP+, RRP- lines to power) 2

-1. Turn the vehicle to the OFF (LOCK) mode.

-2. Disconnect the negative cable from the 12 volt battery, then wait at least 3 minutes.

-3. Disconnect the following connector.

SRS unit connector B (39P)

-4. Reconnect the negative cable to the 12 volt battery.

-5. Turn the vehicle to the ON mode.

-6. Measure the voltage between test points 1 and 2.

Test condition	Vehicle ON mode
	SRS unit connector B (39P): disconnected
	Front passenger's seat belt tensioner 2P connector (on the floor wire harness): disconnected
Test point 1	**SRS unit connector B (39P) No. 18**
Test point 2	Body ground

Test point 1	**SRS unit connector B (39P) No. 19**
Test point 2	Body ground

Is there 0.2 V or less?

YES

The RRP+ and RRP- wires are OK. Check for any authorized service information related to the DTCs or symptoms you are troubleshooting or **replace the SRS unit** .

NO

Short to power in the floor wire harness; replace the floor wire harness, then clear the DTC.

DTC B0072-13

DTC B0072-13 : Open or Increased Resistance in the Front Passenger's Seat Belt Tensioner

NOTE:

- **Before doing this troubleshooting procedure, find out if the vehicle was in a collision. If so, verify that all the required components were replaced with new components of the correct part number and were properly installed** .
- Before doing this troubleshooting procedure, review **SRS Precautions and Procedures** , **General Troubleshooting Information** , and **12 Volt Battery Terminal Disconnection and Reconnection** .

DTC Description	DTC
B0072-13 Open or increased resistance in the front passenger's seat belt tensioner	B

DTC (SRS)

1. Problem verification

   -1. Clear the DTCs with the HDS.

   -2. Turn the vehicle to the ON mode, then wait for 10 seconds.

   -3. Check for DTCs with the HDS.

DTC Description	DTC
B0072-13 Open or increased resistance in the front passenger's seat belt tensioner	B

   Is DTC B0072-13 indicated?

   YES

   The failure is duplicated. Go to step 2.

   NO

   Intermittent failure, the system is OK at this time. Go to Troubleshooting Intermittent Failures. If another DTC is indicated, troubleshoot the DTC.

2. Front passenger's seat belt tensioner check

   -1. Turn the vehicle to the OFF (LOCK) mode.

   -2. Disconnect the negative cable from the 12 volt battery, then wait at least 3 minutes.

   -3. **Remove the right side B-pillar lower trim** .

   -4. Disconnect the following connector.

Front passenger's seat belt tensioner 2P connector (on the floor wire harness)

   -5. Connect terminals A and B with a jumper wire.

Terminal A	Front passenger's seat belt tensioner 2P connector (female terminals) No. 1 (on the floor wire harness): ①
Terminal B	Front passenger's seat belt tensioner 2P connector (female terminals) No. 2 (on the floor wire harness): ①

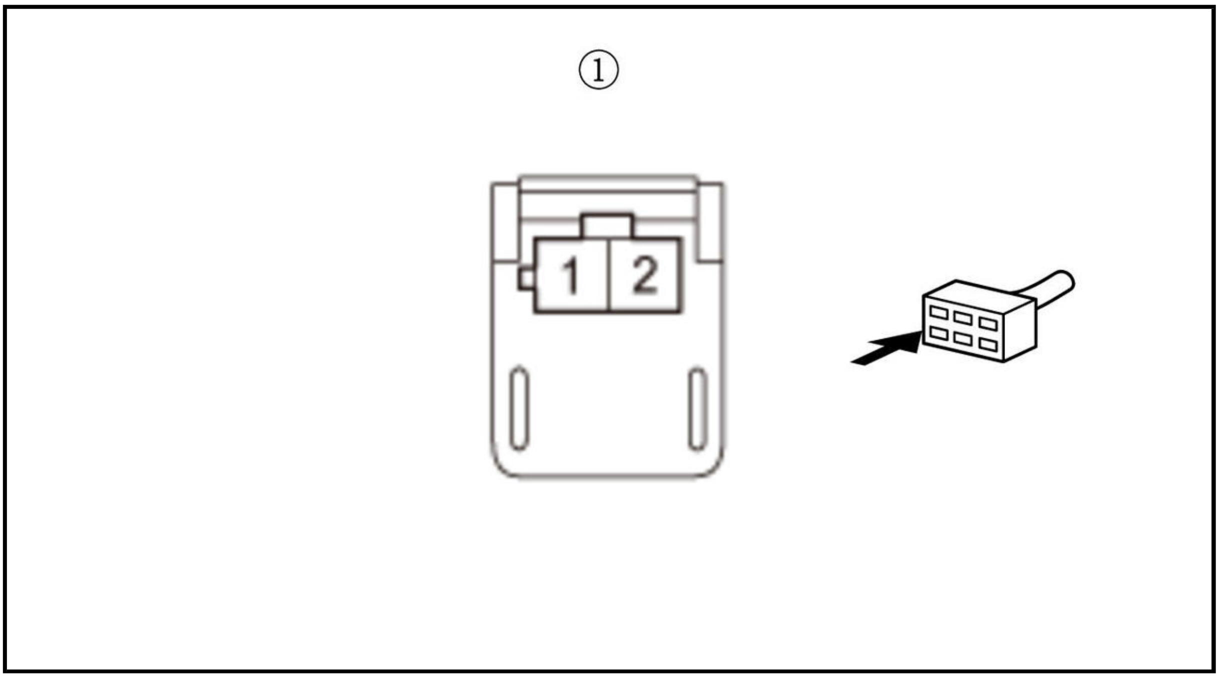

-6. Reconnect the negative cable to the 12 volt battery.

-7. Clear the DTCs with the HDS.

-8. Turn the vehicle to the ON mode, then wait for 10 seconds.

-9. Check for DTCs with the HDS.

DTC Description	DTC
B0072-13 Open or increased resistance in the front passenger's seat belt tensioner	B

Is DTC B0072-13 indicated?

YES

Go to step 3.

NO

Open in the front passenger's seat belt tensioner; **replace the front passenger's seat belt** , then clear the DTC.

3. Open wire check (RRP+, RRP- lines)

-1. Turn the vehicle to the OFF (LOCK) mode.

-2. Disconnect the negative cable from the 12 volt battery, then wait at least 3 minutes.

-3. Remove the jumper wire from the front passenger's seat belt tensioner 2P connector on the floor wire harness.

-4. Disconnect the following connector.

SRS unit connector B (39P)

-5. Connect terminals A and B with a jumper wire.

Terminal A	**SRS unit connector B (39P) No. 18**

Terminal B	SRS unit connector B (39P) No. 19

-6. Measure the resistance between test points 1 and 2.

Test condition	Vehicle OFF (LOCK) mode
	Front passenger's seat belt tensioner 2P connector (on the floor wire harness): disconnected
	SRS unit connector B (39P): disconnected
	SRS unit connector B (39P) terminals No. 18 and No. 19: jumped
Test point 1	Front passenger's belt tensioner 2P connector (female terminals) No. 1 (on the floor wire harness): ①
Test point 2	Front passenger's seat belt tensioner 2P connector (female terminals) No. 2 (on the floor wire harness): ①

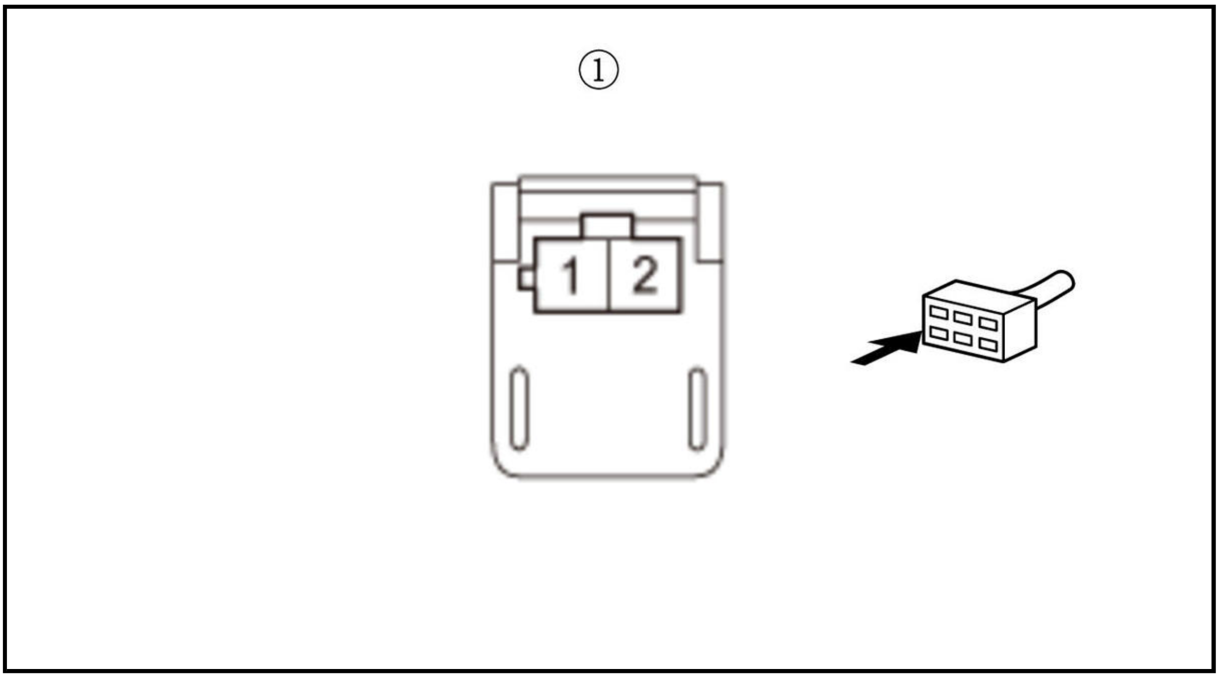

Is there 1.0 Ω or less?

YES

The RRP+ and RRP- wires are OK. Faulty SRS unit or poor connection at SRS unit connector B (39P) and the SRS unit. Check the connection; if the connection is OK, check for any authorized service information related to the DTCs or symptoms you are troubleshooting or replace the SRS unit . If the DTC does not clear, replace the floor wire harness.

NO

Open in the floor wire harness; replace the floor wire harness, then clear the DTC.

DTC B0072-1A

DTC B0072-1A : Decreased Resistance in the Front Passenger's Seat Belt Tensioner

NOTE:

- Before doing this troubleshooting procedure, find out if the vehicle was in a collision. If so, verify that all the required components were replaced with new components of the correct part number and were properly installed .

- Before doing this troubleshooting procedure, review **SRS Precautions and Procedures** , **General Troubleshooting Information** , and **12 Volt Battery Terminal Disconnection and Reconnection** .

DTC Description	DTC
B0072-1A Decreased resistance in the front passenger's seat belt tensioner	B

DTC (SRS)

1. Problem verification

   -1. Clear the DTCs with the HDS.

   -2. Turn the vehicle to the ON mode, then wait for 10 seconds.

   -3. Check for DTCs with the HDS.

DTC Description	DTC
B0072-1A Decreased resistance in the front passenger's seat belt tensioner	B

   Is DTC B0072-1A indicated?

   YES

   The failure is duplicated. Go to step 2.

   NO

   Intermittent failure, the system is OK at this time. Go to Troubleshooting Intermittent Failures. If another DTC is indicated, troubleshoot the DTC.

2. Front passenger's seat belt tensioner check

   -1. Turn the vehicle to the OFF (LOCK) mode.

   -2. Disconnect the negative cable from the 12 volt battery, then wait at least 3 minutes.

   -3. **Remove the right side B-pillar lower trim** .

   -4. Disconnect the following connector.

Front passenger's seat belt tensioner 2P connector (on the floor wire harness)

   -5. Reconnect the negative cable to the 12 volt battery.

   -6. Clear the DTCs with the HDS.

   -7. Turn the vehicle to the ON mode, then wait for 10 seconds.

   -8. Check for DTCs with the HDS.

DTC Description	DTC
B0072-1A Decreased resistance in the front passenger's seat belt tensioner	B

   Is DTC B0072-1A indicated?

   YES

   Go to step 3.

NO

Short to another wire in the front passenger's seat belt tensioner; **replace the front passenger's seat belt** , then clear the DTC.

3. Shorted wire check (RRP+ line to RRP- line)

-1. Turn the vehicle to the OFF (LOCK) mode.

-2. Disconnect the negative cable from the 12 volt battery, then wait at least 3 minutes.

-3. Disconnect the following connector.

SRS unit connector B (39P)

-4. Measure the resistance between test points 1 and 2.

Test condition	Vehicle OFF (LOCK) mode
	Front passenger's seat belt tensioner 2P connector (on the floor wire harness): disconnected
	SRS unit connector B (39P): disconnected
Test point 1	**SRS unit connector B (39P) No. 18**
Test point 2	**SRS unit connector B (39P) No. 19**

Is there an open circuit, or at least 1 MΩ?

YES

The RRP+ and RRP- wires are OK. Faulty SRS unit or poor connection at SRS unit connector B (39P) and the SRS unit. Check the connection; if the connection is OK, check for any authorized service information related to the DTCs or symptoms you are troubleshooting or **replace the SRS unit** . If the DTC does not clear, replace the floor wire harness.

NO

Short to another wire in the floor wire harness; replace the floor wire harness, then clear the DTC.

DTC B0072-2B

DTC B0072-2B : Short to Another Wire Harness in the Front Passenger's Seat Belt Tensioner

NOTE:

- **Before doing this troubleshooting procedure, find out if the vehicle was in a collision. If so, verify that all the required components were replaced with new components of the correct part number and were properly installed** .
- Before doing this troubleshooting procedure, review **SRS Precautions and Procedures** , **General Troubleshooting Information** , and **12 Volt Battery Terminal Disconnection and Reconnection** .

DTC Description	DTC
B0072-2B Short to another wire harness in the front passenger's seat belt tensioner	B

DTC (SRS)

1. Problem verification

-1. Clear the DTCs with the HDS.

-2. Turn the vehicle to the ON mode, then wait for 10 seconds.

-3. Check for DTCs with the HDS.

DTC Description	DTC
B0072-2B Short to another wire harness in the front passenger's seat belt tensioner	B

Is DTC B0072-2B indicated?

YES

The failure is duplicated. Go to step 2.

NO

Intermittent failure, the system is OK at this time. Go to Troubleshooting Intermittent Failures. If another DTC is indicated, troubleshoot the DTC.

2. DTC check

-1. Check for DTCs with the HDS.

DTC Description	DTC
B0001-2B Short to another wire harness in the driver's airbag first inflator	B
B0002-2B Short to another wire harness in the driver's airbag second inflator	B
B0010-2B Short to another wire harness in the front passenger's airbag first inflator	B
B0011-2B Short to another wire harness in the front passenger's airbag second inflator	B
B0020-2B Short to another wire harness in the driver's side airbag inflator	B
B0021-2B Short to another wire harness in the left side curtain airbag first inflator	B
B0028-2B Short to another wire harness in the front passenger's side airbag inflator	B
B0029-2B Short to another wire harness in the right side curtain airbag first inflator	B
B0070-2B Short to another wire harness in the driver's seat belt tensioner	B
B0072-2B Short to another wire harness in the front passenger's seat belt tensioner	B
B0079-2B Short to another wire harness in the driver's seat belt outer lap tensioner	B
B007A-2B Short to another wire harness in the front passenger's seat belt outer lap tensioner	B
B0082-2B Short to another wire harness in the selectable energy absorption device of the front passenger's seat belt tensioner	B

Is DTC B0001-2B, B0002-2B, B0010-2B, B0011-2B, B0020-2B, B0021-2B, B0028-2B, B0029-2B, B0070-2B, B0079-2B, B007A-2B or B0082-2B indicated with DTC B0072-2B?

YES

Go to step 3.

NO

Short to another wire in the floor wire harness; replace the floor wire harness, then clear the DTC.

3. Shorted wire check (RRP lines to another line)

-1. Turn the vehicle to the OFF (LOCK) mode.

-2. Disconnect the negative cable from the 12 volt battery, then wait at least 3 minutes.

-3. **Remove the right side B-pillar lower trim** .

-4. Disconnect the following connectors.

SRS unit connector A (39P)
SRS unit connector B (39P)
Front passenger's seat belt tensioner 2P connector (on the floor wire harness)
Inflator connectors which are assigned to 2B codes listed on HDS

-5. Measure the resistance between test points 1 and 2 of SRS unit connector A (39P) and B (39P) according to table.

Test condition	Vehicle OFF (LOCK) mode
	SRS unit connector A (39P): disconnected
	SRS unit connector B (39P): disconnected
	Front passenger's seat belt tensioner 2P connector (on the floor wire harness): disconnected
	Inflator connectors which are assigned to 2B codes listed on HDS: disconnected

DTC	**Test point 1**	**Test point 2**
	From terminal	**To terminal**
B0001-2B	**SRS unit connector B (39P) No. 19**	**SRS unit connector A (39P) No. 9**
	SRS unit connector B (39P) No. 18	**SRS unit connector A (39P) No. 8**
B0002-2B	**SRS unit connector B (39P) No. 19**	**SRS unit connector A (39P) No. 10**
	SRS unit connector B (39P) No. 18	**SRS unit connector A (39P) No. 11**
B0010-2B	**SRS unit connector B (39P) No. 19**	**SRS unit connector A (39P) No. 5**
	SRS unit connector B (39P) No. 18	**SRS unit connector A (39P) No. 4**
B0011-2B	**SRS unit connector B (39P) No. 19**	**SRS unit connector A (39P) No. 6**
	SRS unit connector B (39P) No. 18	**SRS unit connector A (39P) No. 7**
B0020-2B	**SRS unit connector B (39P) No. 19**	**SRS unit connector B (39P) No. 5**
	SRS unit connector B (39P) No. 18	**SRS unit connector B (39P) No. 6**
B0021-2B	**SRS unit connector B (39P) No. 19**	**SRS unit connector B (39P) No. 9**
	SRS unit connector B (39P) No. 18	**SRS unit connector B (39P) No. 10**
B0028-2B	**SRS unit connector B (39P) No. 19**	**SRS unit connector B (39P) No. 4**
	SRS unit connector B (39P) No. 18	**SRS unit connector B (39P) No. 3**
B0029-2B	**SRS unit connector B (39P) No. 19**	**SRS unit connector B (39P) No. 8**
	SRS unit connector B (39P) No. 18	**SRS unit connector B (39P) No. 7**
B0070-2B	**SRS unit connector B (39P) No. 19**	**SRS unit connector B (39P) No. 20**
	SRS unit connector B (39P) No. 18	**SRS unit connector B (39P) No. 21**
B0079-2B	**SRS unit connector B (39P) No. 19**	**SRS unit connector B (39P) No. 24**
	SRS unit connector B (39P) No. 18	**SRS unit connector B (39P) No. 25**
B007A-2B	**SRS unit connector B (39P) No. 19**	**SRS unit connector B (39P) No. 23**
	SRS unit connector B (39P) No. 18	**SRS unit connector B (39P) No. 22**

DTC	Test point 1	Test point 2
	From terminal	To terminal
B0082-2B	SRS unit connector B (39P) No. 19	SRS unit connector A (39P) No. 2
	SRS unit connector B (39P) No. 18	SRS unit connector A (39P) No. 3

Is there 1 MΩ or more?

YES

The RRP wires are OK. Faulty SRS unit or poor connection at SRS unit connector A (39P) and the SRS unit, or SRS unit connector B (39P) and the SRS unit. Check the connection; if the connection is OK, check for any authorized service information related to the DTCs or symptoms you are troubleshooting or **replace the SRS unit** . If the DTC does not clear, replace the dashboard wire harness or the floor wire harness.

NO

Short to another wire in the dashboard wire harness or the floor wire harness; replace the faulty harness, then clear the DTC.

DTC B0079-11

DTC B0079-11 : Short to Ground in the Driver's Seat Belt Outer Lap Tensioner

Special Tools Required

SRS Inflator Simulator 07SAZ-TB4011A

SRS Simulator Lead M 070AZ-SNA0400

NOTE:

- **Before doing this troubleshooting procedure, find out if the vehicle was in a collision. If so, verify that all the required components were replaced with new components of the correct part number and were properly installed** .
- Before doing this troubleshooting procedure, review **SRS Precautions and Procedures** , **General Troubleshooting Information** , and **12 Volt Battery Terminal Disconnection and Reconnection** .

DTC Description	DTC
B0079-11 Short to ground in the driver's seat belt outer lap tensioner	B

DTC (SRS)

1. Problem verification

   -1. Clear the DTCs with the HDS.

   -2. Turn the vehicle to the ON mode, then wait for 10 seconds.

   -3. Check for DTCs with the HDS.

DTC Description	DTC
B0079-11 Short to ground in the driver's seat belt outer lap tensioner	B

Is DTC B0079-11 indicated?

YES

The failure is duplicated. Go to step 2.

NO

Intermittent failure, the system is OK at this time. Go to Troubleshooting Intermittent Failures. If another DTC is indicated, troubleshoot the DTC.

2. Driver's seat belt outer lap tensioner check

-1. Turn the vehicle to the OFF (LOCK) mode.

-2. Disconnect the negative cable from the 12 volt battery, then wait at least 3 minutes.

-3. **Remove the left side B-pillar lower trim cover** .

-4. Disconnect the driver's seat belt outer lap tensioner 2P connector (A) on the floor wire harness.

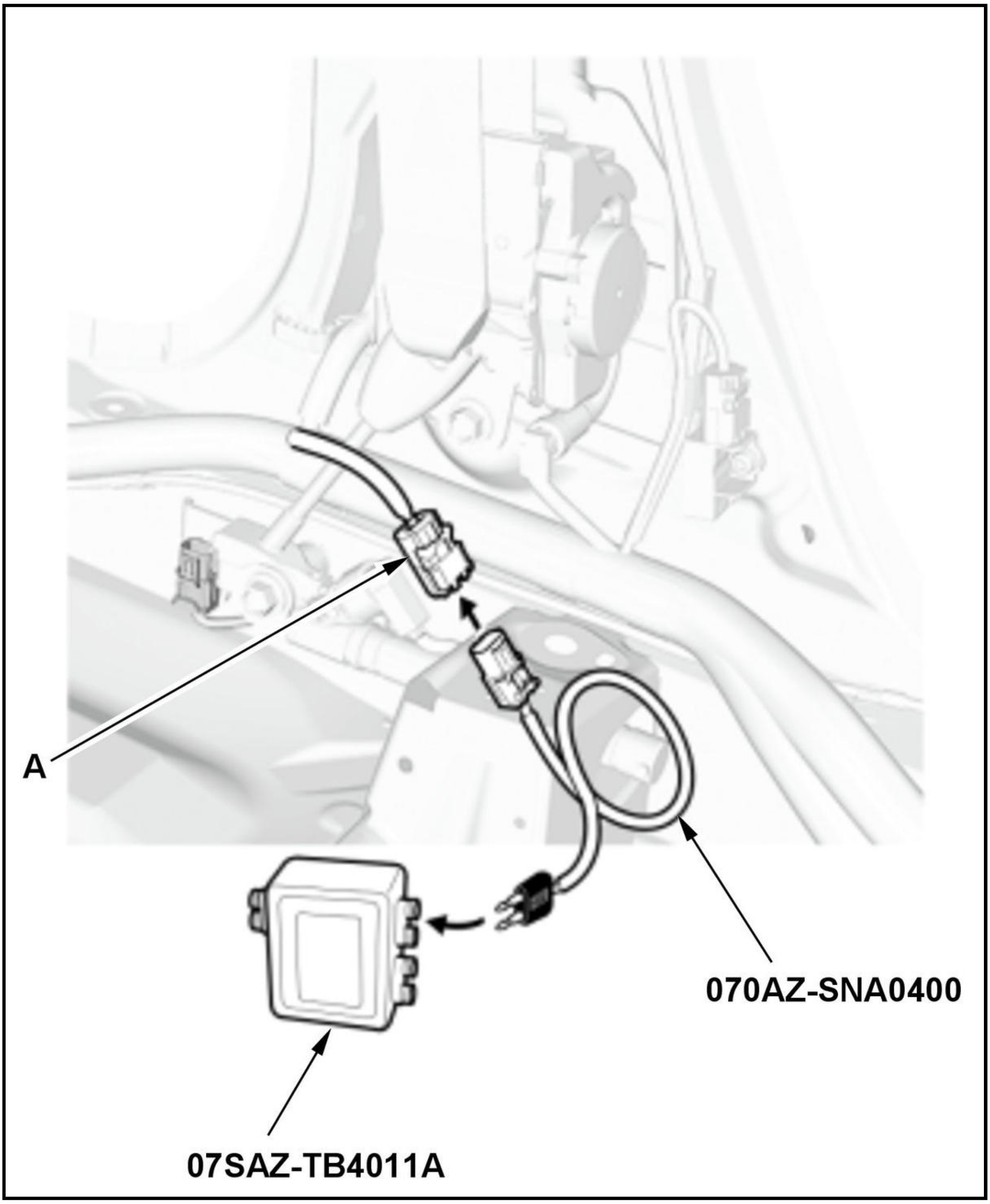

-5. Connect the terminals of SRS simulator lead M to the SRS inflator simulator (2 Ω connectors), then connect SRS simulator lead M to the driver's seat belt outer lap tensioner 2P connector on the floor wire harness.

-6. Reconnect the negative cable to the 12 volt battery.

-7. Clear the DTCs with the HDS.

-8. Turn the vehicle to the ON mode, then wait for 10 seconds.

-9. Check for DTCs with the HDS.

DTC Description	DTC
B0079-11 Short to ground in the driver's seat belt outer lap tensioner	B

Is DTC B0079-11 indicated?

YES

Go to step 3.

NO

Short to ground in the driver's seat belt outer lap tensioner; **replace the driver's seat belt** , then clear the DTC.

3. Shorted wire check (LLP+, LLP- lines)

-1. Turn the vehicle to the OFF (LOCK) mode.

-2. Disconnect the negative cable from the 12 volt battery, then wait at least 3 minutes.

-3. Disconnect the following connector.

SRS unit connector B (39P)

-4. Disconnect SRS simulator lead M from the driver's seat belt outer lap tensioner 2P connector on the floor wire harness.

-5. Measure the resistance between test points 1 and 2.

Test condition	Vehicle OFF (LOCK) mode
	Driver's seat belt outer lap tensioner 2P connector (on the floor wire harness): disconnected
	SRS unit connector B (39P): disconnected
Test point 1	**SRS unit connector B (39P) No. 24**
Test point 2	Body ground

Test point 1	**SRS unit connector B (39P) No. 25**
Test point 2	Body ground

Is there an open circuit, or at least 1 MΩ?

YES

The LLP+ and LLP- wires are OK. Faulty SRS unit or poor connection at SRS unit connector B (39P) and the SRS unit. Check the connection; if the connection is OK, check for any authorized service

information related to the DTCs or symptoms you are troubleshooting or **replace the SRS unit** . If the DTC does not clear, replace the floor wire harness.

NO

Short to ground in the floor wire harness; replace the floor wire harness, then clear the DTC.

DTC B0079-12

DTC B0079-12 : Short to Power in the Driver's Seat Belt Outer Lap Tensioner

Special Tools Required

SRS Inflator Simulator 07SAZ-TB4011A

SRS Simulator Lead M 070AZ-SNA0400

NOTE:

- **Before doing this troubleshooting procedure, find out if the vehicle was in a collision. If so, verify that all the required components were replaced with new components of the correct part number and were properly installed** .
- Before doing this troubleshooting procedure, review **SRS Precautions and Procedures** , **General Troubleshooting Information** , and **12 Volt Battery Terminal Disconnection and Reconnection** .

DTC Description	DTC
B0079-12 Short to power in the driver's seat belt outer lap tensioner	B

DTC (SRS)

1. Problem verification

   -1. Clear the DTCs with the HDS.

   -2. Turn the vehicle to the ON mode, then wait for 10 seconds.

   -3. Check for DTCs with the HDS.

DTC Description	DTC
B0079-12 Short to power in the driver's seat belt outer lap tensioner	B

   Is DTC B0079-12 indicated?

   YES

   The failure is duplicated. Go to step 2.

   NO

   Intermittent failure, the system is OK at this time. Go to Troubleshooting Intermittent Failures. If another DTC is indicated, troubleshoot the DTC.

2. Driver's seat belt outer lap tensioner check

   -1. Turn the vehicle to the OFF (LOCK) mode.

   -2. Disconnect the negative cable from the 12 volt battery, then wait at least 3 minutes.

   -3. **Remove the left side B-pillar lower trim cover** .

-4. Disconnect the driver's seat belt outer lap tensioner 2P connector (A) on the floor wire harness.

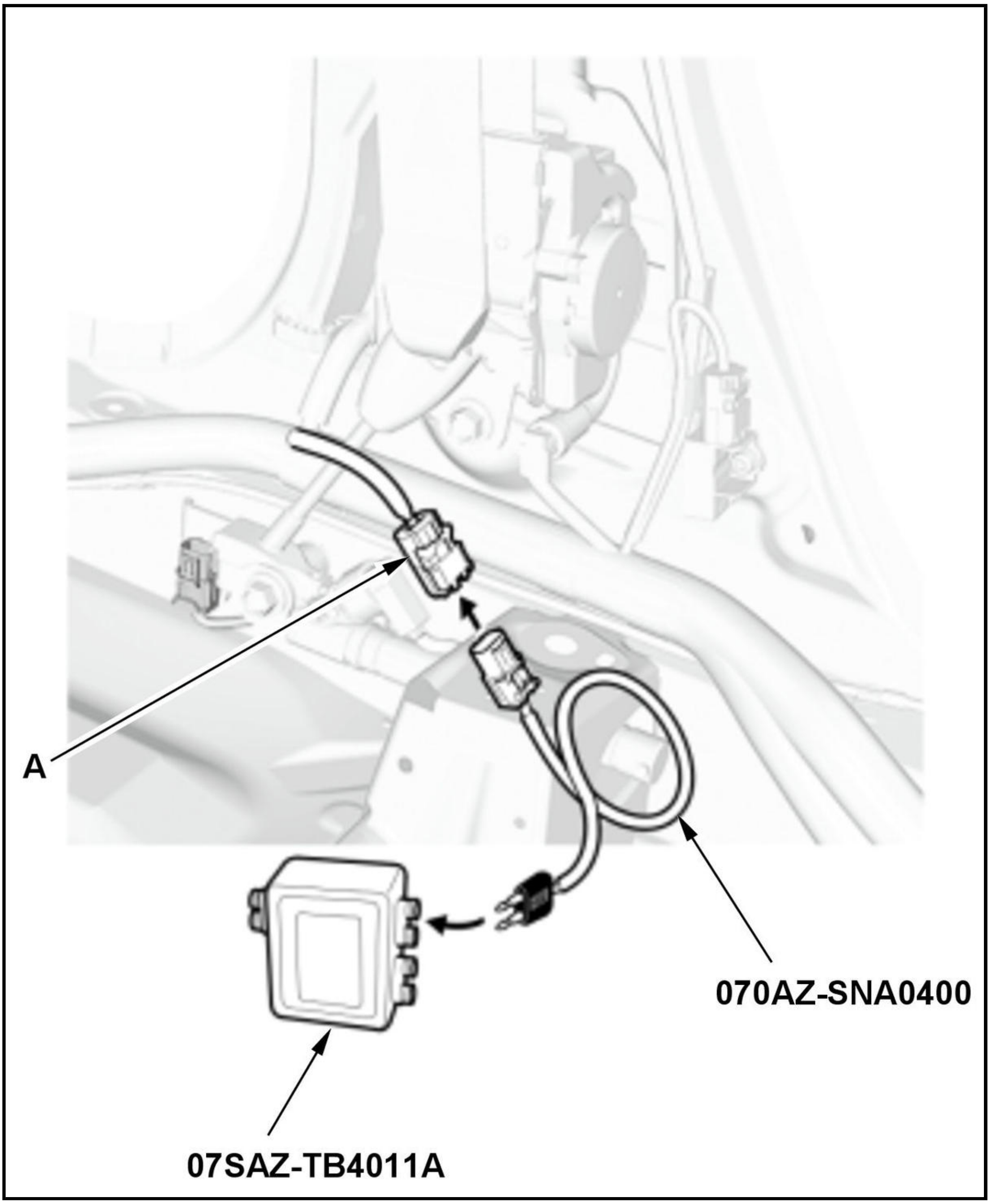

-5. Connect the terminals of SRS simulator lead M to the SRS inflator simulator (2 Ω connectors), then connect SRS simulator lead M to the driver's seat belt outer lap tensioner 2P connector on the floor wire harness.

-6. Reconnect the negative cable to the 12 volt battery.

-7. Clear the DTCs with the HDS.

-8. Turn the vehicle to the ON mode, then wait for 10 seconds.

-9. Check for DTCs with the HDS.

DTC Description	DTC
B0079-12 Short to power in the driver's seat belt outer lap tensioner	B

Is DTC B0079-12 indicated?

YES

Go to step 3.

NO

Short to power in the driver's seat belt outer lap tensioner; **replace the driver's seat belt** , then clear the DTC.

3. Shorted wire check (LLP+, LLP- lines to power)

-1. Turn the vehicle to the OFF (LOCK) mode.

-2. Disconnect the negative cable from the 12 volt battery, then wait at least 3 minutes.

-3. Disconnect the following connector.

SRS unit connector B (39P)

-4. Disconnect SRS simulator lead M from the driver's seat belt outer lap tensioner 2P connector on the floor wire harness.

-5. Reconnect the negative cable to the 12 volt battery.

-6. Turn the vehicle to the ON mode.

-7. Measure the voltage between test points 1 and 2.

Test condition	Vehicle ON mode
	Driver's seat belt outer lap tensioner 2P connector (on the floor wire harness): disconnected
	SRS unit connector B (39P): disconnected
Test point 1	**SRS unit connector B (39P) No. 24**
Test point 2	Body ground

Test point 1	**SRS unit connector B (39P) No. 25**
Test point 2	Body ground

Is there 0.2 V or less?

YES

The LLP+ and LLP- wires are OK. Faulty SRS unit or poor connection at SRS unit connector B (39P) and the SRS unit. Check the connection; if the connection is OK, check for any authorized service information related to the DTCs or symptoms you are troubleshooting or **replace the SRS unit** . If the DTC does not clear, replace the floor wire harness.

NO

Short to power in the floor wire harness; replace the floor wire harness, then clear the DTC.

DTC B0079-13

DTC B0079-13 : Open or Increased Resistance in the Driver's Seat Belt Outer Lap Tensioner

Special Tools Required

SRS Inflator Simulator 07SAZ-TB4011A

SRS Simulator Lead M 070AZ-SNA0400

NOTE:

- **Before doing this troubleshooting procedure, find out if the vehicle was in a collision. If so, verify that all the required components were replaced with new components of the correct part number and were properly installed** .
- Before doing this troubleshooting procedure, review **SRS Precautions and Procedures** , **General Troubleshooting Information** , and **12 Volt Battery Terminal Disconnection and Reconnection** .

DTC Description	DTC
B0079-13 Open or increased resistance in the driver's seat belt outer lap tensioner	B

DTC (SRS)

1. Problem verification

   -1. Clear the DTCs with the HDS.

   -2. Turn the vehicle to the ON mode, then wait for 10 seconds.

   -3. Check for DTCs with the HDS.

DTC Description	DTC
B0079-13 Open or increased resistance in the driver's seat belt outer lap tensioner	B

   Is DTC B0079-13 indicated?

   YES

   The failure is duplicated. Go to step 2.

   NO

   Intermittent failure, the system is OK at this time. Go to Troubleshooting Intermittent Failures. If another DTC is indicated, troubleshoot the DTC.

2. Driver's seat belt outer lap tensioner check

   -1. Turn the vehicle to the OFF (LOCK) mode.

   -2. Disconnect the negative cable from the 12 volt battery, then wait at least 3 minutes.

   -3. **Remove the left side B-pillar lower trim cover** .

   -4. Disconnect the driver's seat belt outer lap tensioner 2P connector (A) on the floor wire harness.

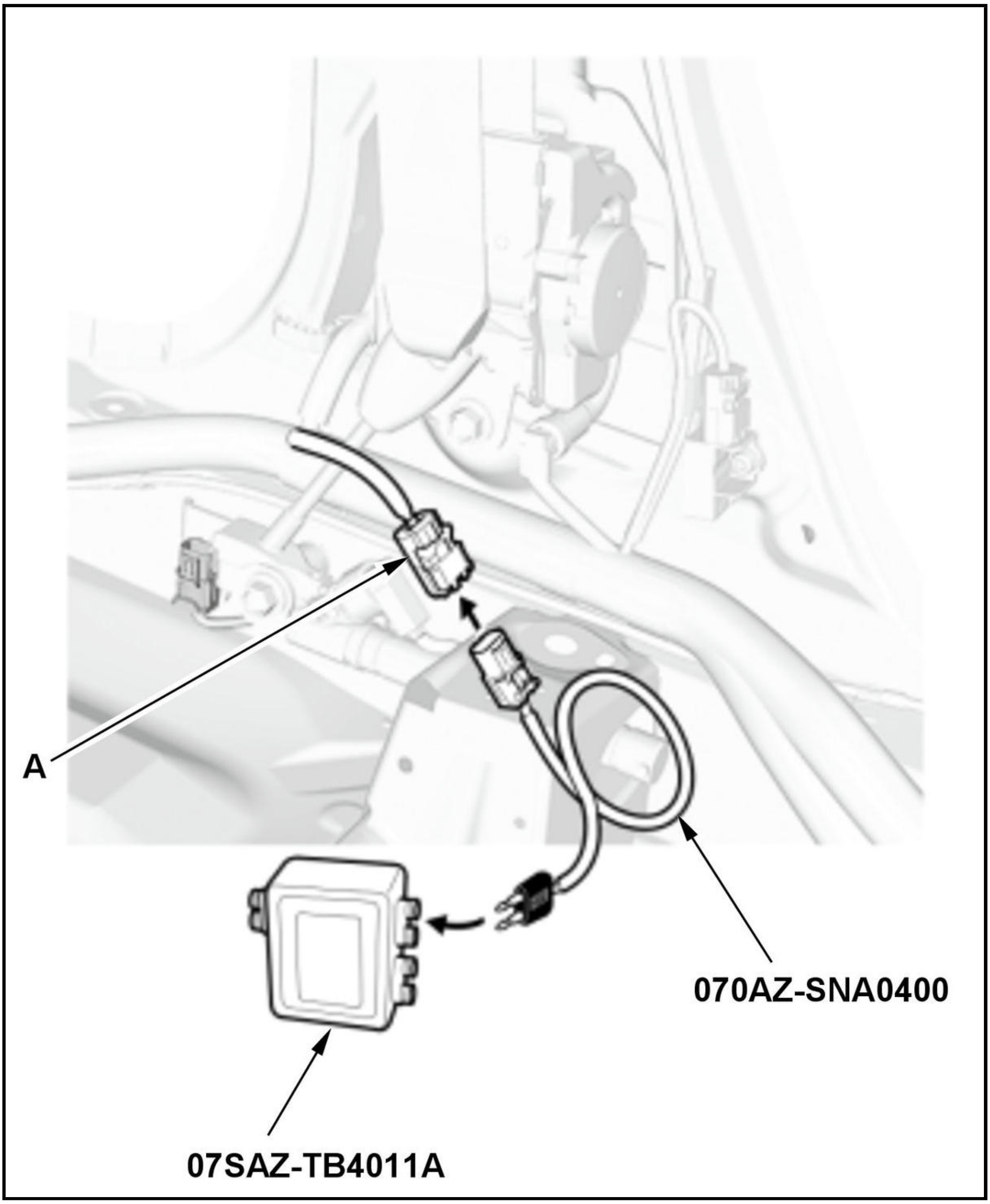

-5. Connect the terminals of SRS simulator lead M to the SRS inflator simulator (2 Ω connectors), then connect SRS simulator lead M to the driver's seat belt outer lap tensioner 2P connector on the floor wire harness.

-6. Reconnect the negative cable to the 12 volt battery.

-7. Clear the DTCs with the HDS.

-8. Turn the vehicle to the ON mode, then wait for 10 seconds.

-9. Check for DTCs with the HDS.

DTC Description	DTC
B0079-13 Open or increased resistance in the driver's seat belt outer lap tensioner	B

Is DTC B0079-13 indicated?

YES

Go to step 3.

NO

Open in the driver's seat belt outer lap tensioner; **replace the driver's seat belt** , then clear the DTC.

3. Open wire check (LLP+, LLP- lines)

-1. Turn the vehicle to the OFF (LOCK) mode.

-2. Disconnect the negative cable from the 12 volt battery, then wait at least 3 minutes.

-3. Disconnect the following connector.

SRS unit connector B (39P)

-4. Measure the resistance between test points 1 and 2.

Test condition	Vehicle OFF (LOCK) mode
	Driver's seat belt outer lap tensioner 2P connector (on the floor wire harness): disconnected
	SRS unit connector B (39P): disconnected
	Driver's seat belt outer lap tensioner 2P connector (on the floor wire harness): connected to SRS simulator lead M
Test point 1	**SRS unit connector B (39P) No. 24**
Test point 2	**SRS unit connector B (39P) No. 25**

Is there 2.0-3.0 Ω?

YES

The LLP+ and LLP- wires are OK. Faulty SRS unit or poor connection at SRS unit connector B (39P) and the SRS unit. Check the connection; if the connection is OK, check for any authorized service information related to the DTCs or symptoms you are troubleshooting or **replace the SRS unit** . If the DTC does not clear, replace the floor wire harness.

NO

Open in the floor wire harness; replace the floor wire harness, then clear the DTC.

DTC B0079-1A, B0079-2B

DTC B0079-1A : Decreased Resistance in the Driver's Seat Belt Outer Lap Tensioner

DTC B0079-2B : Short to Another Wire Harness in the Driver's Seat Belt Outer Lap Tensioner

Special Tools Required

SRS Inflator Simulator 07SAZ-TB4011A

SRS Simulator Lead M 070AZ-SNA0400

NOTE:

- **Before doing this troubleshooting procedure, find out if the vehicle was in a collision. If so, verify that all the required components were replaced with new components of the correct part number and were properly installed** .
- Before doing this troubleshooting procedure, review **SRS Precautions and Procedures** , **General Troubleshooting Information** , and **12 Volt Battery Terminal Disconnection and Reconnection** .

DTC Description	DTC
B0079-1A Decreased resistance in the driver's seat belt outer lap tensioner	B
B0079-2B Short to another wire harness in the driver's seat belt outer lap tensioner	B

DTC (SRS)

1. Problem verification

   -1. Clear the DTCs with the HDS.

   -2. Turn the vehicle to the ON mode, then wait for 10 seconds.

   -3. Check for DTCs with the HDS.

DTC Description	DTC
B0079-1A Decreased resistance in the driver's seat belt outer lap tensioner	B
B0079-2B Short to another wire harness in the driver's seat belt outer lap tensioner	B

   Is DTC B0079-1A or B0079-2B indicated?

   YES

   The failure is duplicated. Go to step 2.

   NO

   Intermittent failure, the system is OK at this time. Go to Troubleshooting Intermittent Failures. If another DTC is indicated, troubleshoot the DTC.

2. Driver's seat belt outer lap tensioner check

   -1. Turn the vehicle to the OFF (LOCK) mode.

   -2. Disconnect the negative cable from the 12 volt battery, then wait at least 3 minutes.

   -3. **Remove the left side B-pillar lower trim cover** .

   -4. Disconnect the driver's seat belt outer lap tensioner 2P connector (A) on the floor wire harness.

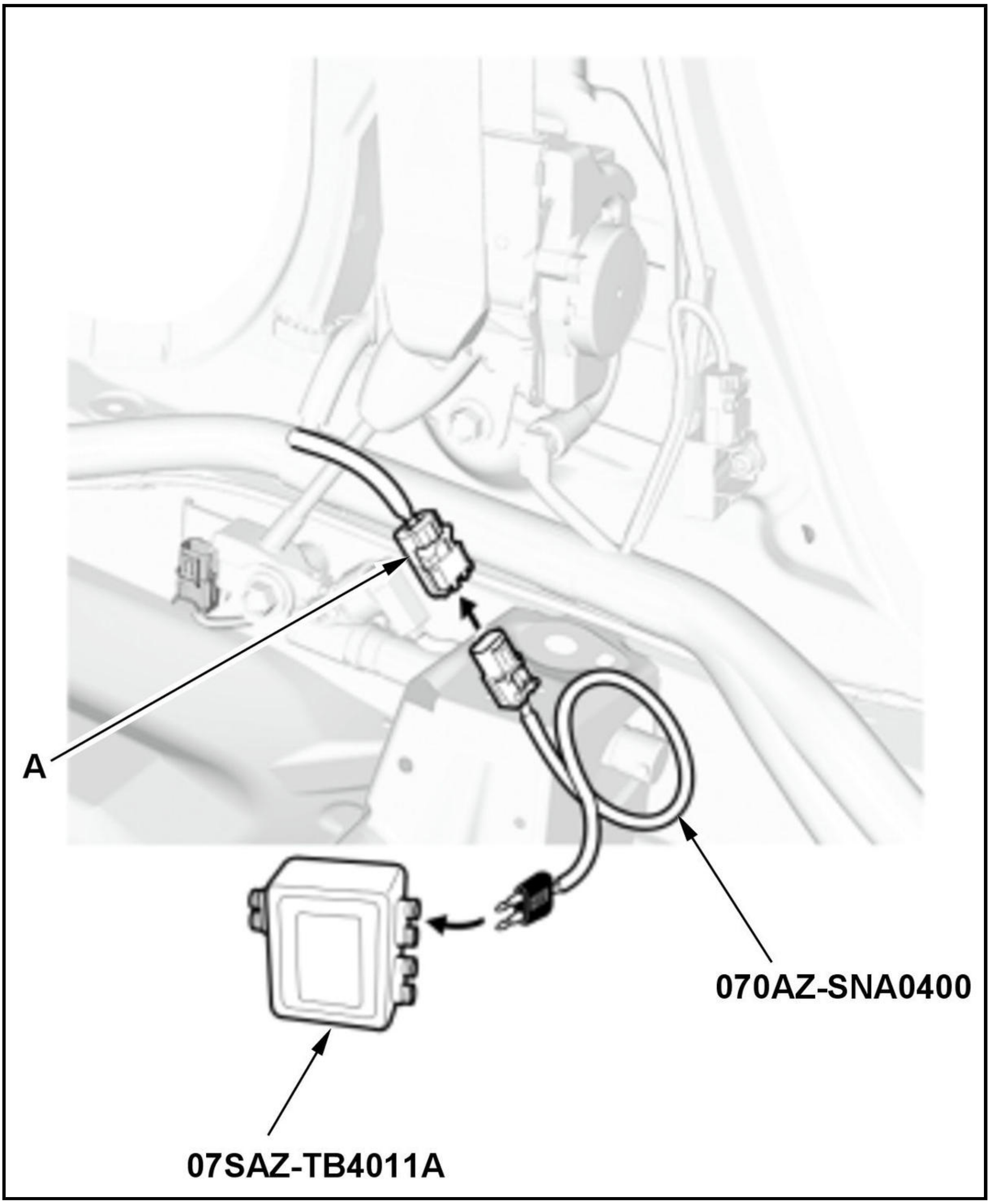

-5. Connect the terminals of SRS simulator lead M to the SRS inflator simulator (2 Ω connectors), then connect SRS simulator lead M to the driver's seat belt outer lap tensioner 2P connector on the floor wire harness.

-6. Reconnect the negative cable to the 12 volt battery.

-7. Clear the DTCs with the HDS.

-8. Turn the vehicle to the ON mode, then wait for 10 seconds.

-9. Check for DTCs with the HDS.

DTC Description	DTC
B0079-1A Decreased resistance in the driver's seat belt outer lap tensioner	B
B0079-2B Short to another wire harness in the driver's seat belt outer lap tensioner	B

Is DTC B0079-1A or B0079-2B indicated?

YES

Go to step 3.

NO

Short to another wire in the driver's seat belt outer lap tensioner; **replace the driver's seat belt** , then clear the DTC.

3. Shorted wire check (LLP+ line to LLP- line)

-1. Turn the vehicle to the OFF (LOCK) mode.

-2. Disconnect the negative cable from the 12 volt battery, then wait at least 3 minutes.

-3. Disconnect the following connector.

SRS unit connector B (39P)

-4. Disconnect SRS simulator lead M from the driver's seat belt outer lap tensioner 2P connector on the floor wire harness.

-5. Measure the resistance between test points 1 and 2.

Test condition	Vehicle OFF (LOCK) mode
	Driver's seat belt outer lap tensioner 2P connector (on the floor wire harness): disconnected
	SRS unit connector B (39P): disconnected
Test point 1	**SRS unit connector B (39P) No. 24**
Test point 2	**SRS unit connector B (39P) No. 25**

Is there an open circuit, or at least 1 MΩ?

YES

The LLP+ and LLP- wires are OK. Faulty SRS unit or poor connection at SRS unit connector B (39P) and the SRS unit. Check the connection; if the connection is OK, check for any authorized service information related to the DTCs or symptoms you are troubleshooting or **replace the SRS unit** . If the DTC does not clear, replace the floor wire harness.

NO

Short to another wire in the floor wire harness; replace the floor wire harness, then clear the DTC.

DTC B007A-11

DTC B007A-11 : Short to Ground in the Front Passenger's Seat Belt Outer Lap Tensioner

Special Tools Required

SRS Inflator Simulator 07SAZ-TB4011A

SRS Simulator Lead M 070AZ-SNA0400

NOTE:

- **Before doing this troubleshooting procedure, find out if the vehicle was in a collision. If so, verify that all the required components were replaced with new components of the correct part number**

and were properly installed .

- Before doing this troubleshooting procedure, review **SRS Precautions and Procedures** , **General Troubleshooting Information** , and **12 Volt Battery Terminal Disconnection and Reconnection** .

DTC Description	DTC
B007A-11 Short to ground in the front passenger's seat belt outer lap tensioner	B

DTC (SRS)

1. Problem verification

   -1. Clear the DTCs with the HDS.

   -2. Turn the vehicle to the ON mode, then wait for 10 seconds.

   -3. Check for DTCs with the HDS.

DTC Description	DTC
B007A-11 Short to ground in the front passenger's seat belt outer lap tensioner	B

   Is DTC B007A-11 indicated?

   YES

   The failure is duplicated. Go to step 2.

   NO

   Intermittent failure, the system is OK at this time. Go to Troubleshooting Intermittent Failures. If another DTC is indicated, troubleshoot the DTC.

2. Front passenger's seat belt outer lap tensioner check

   -1. Turn the vehicle to the OFF (LOCK) mode.

   -2. Disconnect the negative cable from the 12 volt battery, then wait at least 3 minutes.

   -3. **Remove the right side B-pillar lower trim cover** .

   -4. Disconnect the front passenger's seat belt outer lap tensioner 2P connector (A) on the floor wire harness.

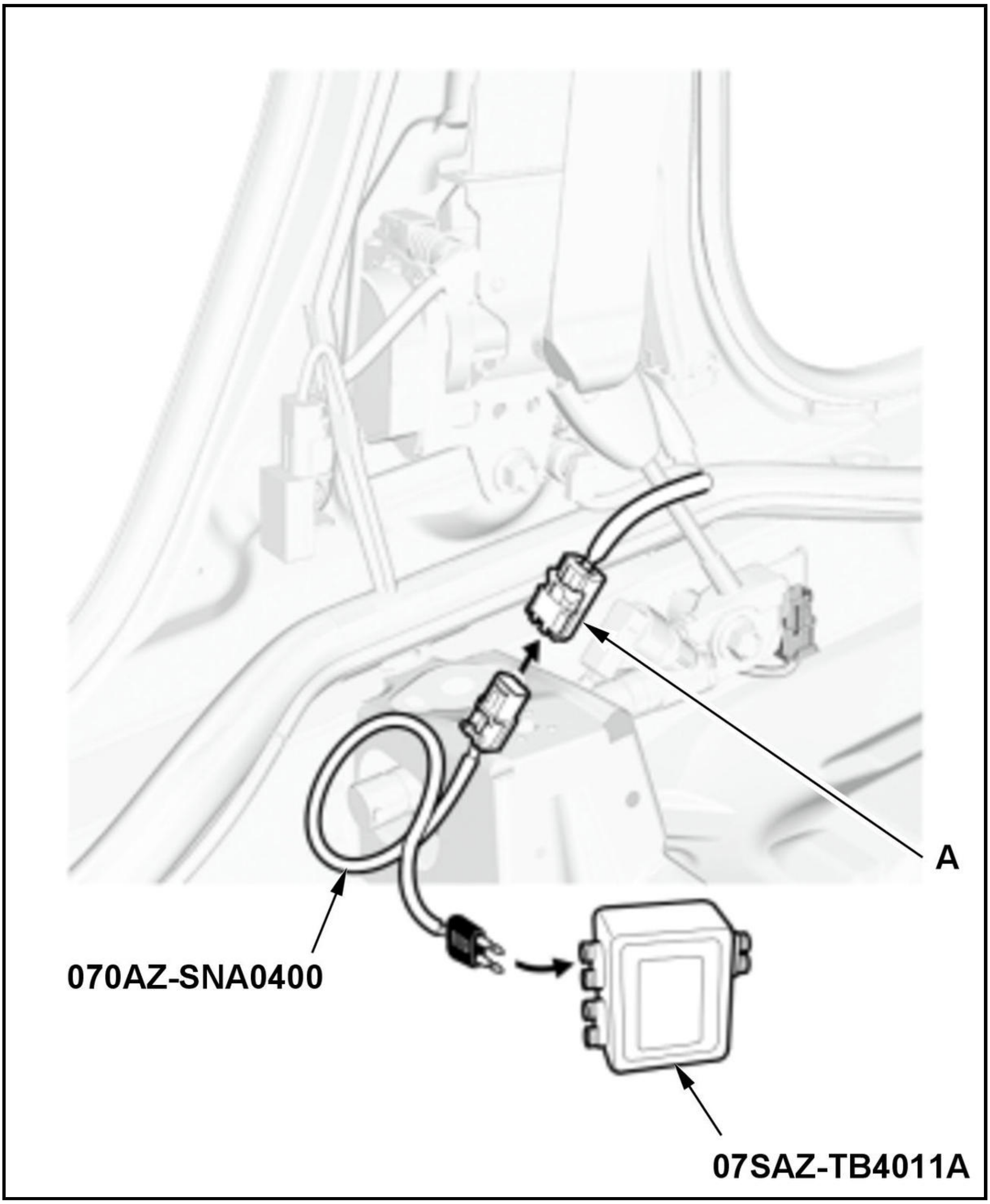

-5. Connect the terminals of SRS simulator lead M to the SRS inflator simulator (2 Ω connectors), then connect SRS simulator lead M to the front passenger's seat belt outer lap tensioner 2P connector on the floor wire harness.

-6. Reconnect the negative cable to the 12 volt battery.

-7. Clear the DTCs with the HDS.

-8. Turn the vehicle to the ON mode, then wait for 10 seconds.

-9. Check for DTCs with the HDS.

DTC Description	DTC
B007A-11 Short to ground in the front passenger's seat belt outer lap tensioner	B

Is DTC B007A-11 indicated?

YES

Go to step 3.

NO

Short to ground in the front passenger's seat belt outer lap tensioner; **replace the front passenger's seat belt** , then clear the DTC.

3. Shorted wire check (RLP+, RLP- lines)

-1. Turn the vehicle to the OFF (LOCK) mode.

-2. Disconnect the negative cable from the 12 volt battery, then wait at least 3 minutes.

-3. Disconnect the following connector.

SRS unit connector B (39P)

-4. Disconnect SRS simulator lead M from the front passenger's seat belt outer lap tensioner 2P connector on the floor wire harness.

-5. Measure the resistance between test points 1 and 2.

Test condition	Vehicle OFF (LOCK) mode
	Front passenger's seat belt outer lap tensioner 2P connector (on the floor wire harness): disconnected
	SRS unit connector B (39P): disconnected
Test point 1	**SRS unit connector B (39P) No. 22**
Test point 2	Body ground

Test point 1	**SRS unit connector B (39P) No. 23**
Test point 2	Body ground

Is there an open circuit, or at least 1 MΩ?

YES

The RLP+ and RLP- wires are OK. Faulty SRS unit or poor connection at SRS unit connector B (39P) and the SRS unit. Check the connection; if the connection is OK, **replace the SRS unit** . If the DTC does not clear, replace the floor wire harness.

NO

Short to ground in the floor wire harness; replace the floor wire harness, then clear the DTC.

DTC B007A-12

DTC B007A-12 : Short to Power in the Front Passenger's Seat Belt Outer Lap Tensioner

Special Tools Required

SRS Inflator Simulator 07SAZ-TB4011A

SRS Simulator Lead M 070AZ-SNA0400

NOTE:

- **Before doing this troubleshooting procedure, find out if the vehicle was in a collision. If so, verify that all the required components were replaced with new components of the correct part number and were properly installed** .
- Before doing this troubleshooting procedure, review **SRS Precautions and Procedures** , **General Troubleshooting Information** , and **12 Volt Battery Terminal Disconnection and Reconnection** .

DTC Description	DTC
B007A-12 Short to power in the front passenger's seat belt outer lap tensioner	B

DTC (SRS)

1. Problem verification

   -1. Clear the DTCs with the HDS.

   -2. Turn the vehicle to the ON mode, then wait for 10 seconds.

   -3. Check for DTCs with the HDS.

DTC Description	DTC
B007A-12 Short to power in the front passenger's seat belt outer lap tensioner	B

   Is DTC B007A-12 indicated?

   YES

   The failure is duplicated. Go to step 2.

   NO

   Intermittent failure, the system is OK at this time. Go to Troubleshooting Intermittent Failures. If another DTC is indicated, troubleshoot the DTC.

2. Front passenger's seat belt outer lap tensioner check

   -1. Turn the vehicle to the OFF (LOCK) mode.

   -2. Disconnect the negative cable from the 12 volt battery, then wait at least 3 minutes.

   -3. **Remove the right side B-pillar lower trim cover** .

   -4. Disconnect the front passenger's seat belt outer lap tensioner 2P connector (A) on the floor wire harness.

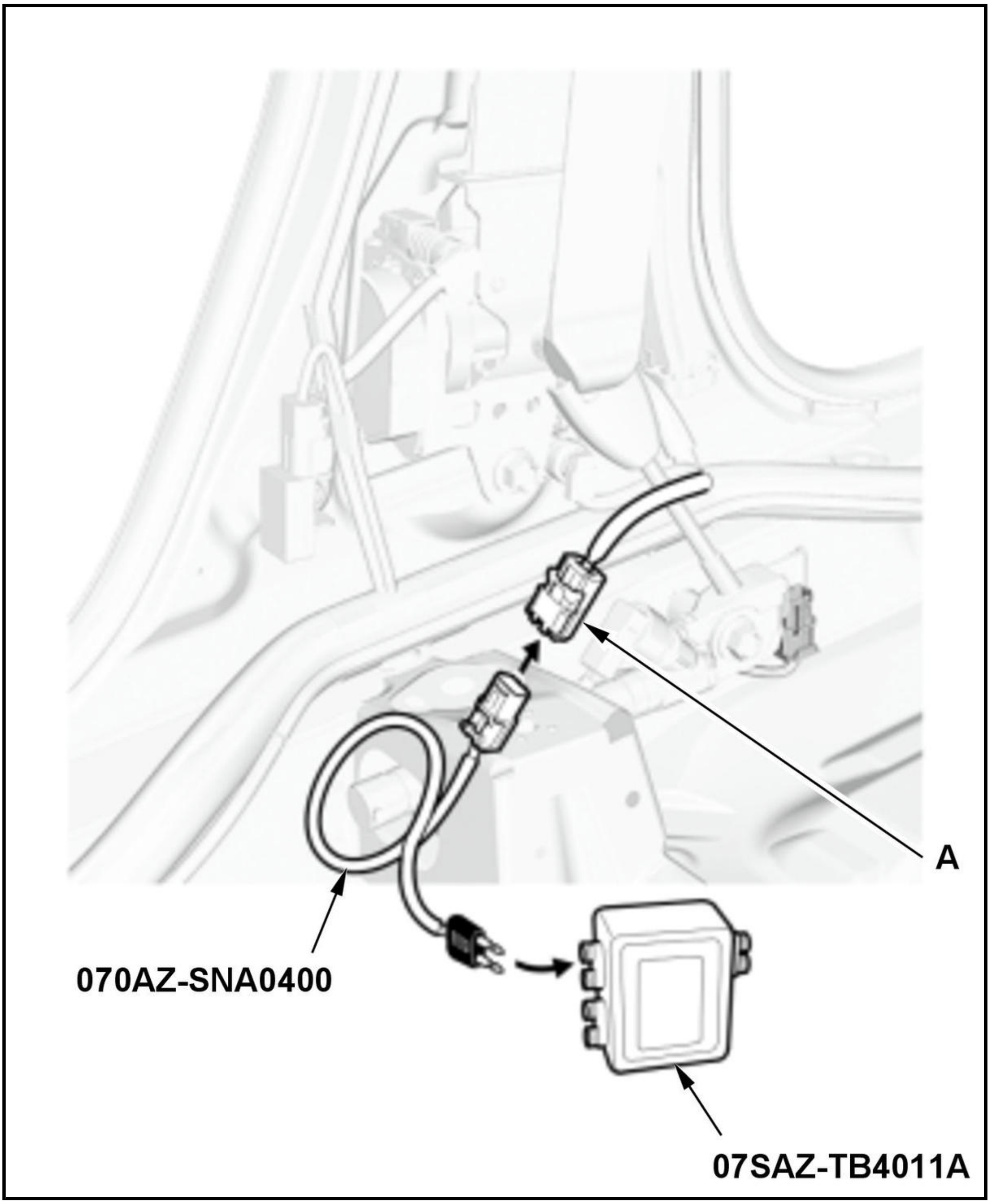

-5. Connect the terminals of SRS simulator lead M to the SRS inflator simulator (2 Ω connectors), then connect SRS simulator lead M to the front passenger's seat belt outer lap tensioner 2P connector on the floor wire harness.

-6. Reconnect the negative cable to the 12 volt battery.

-7. Clear the DTCs with the HDS.

-8. Turn the vehicle to the ON mode, then wait for 10 seconds.

-9. Check for DTCs with the HDS.

DTC Description	DTC
B007A-12 Short to power in the front passenger's seat belt outer lap tensioner	B

Is DTC B007A-12 indicated?

YES

Go to step 3.

NO

Short to power in the front passenger's seat belt outer lap tensioner; **replace the front passenger's seat belt** , then clear the DTC.

3. Shorted wire check (RLP+, RLP- lines to power)

   -1. Turn the vehicle to the OFF (LOCK) mode.

   -2. Disconnect the negative cable from the 12 volt battery, then wait at least 3 minutes.

   -3. Disconnect the following connector.

SRS unit connector B (39P)

-4. Disconnect SRS simulator lead M from the front passenger's seat belt outer lap tensioner 2P connector on the floor wire harness.

-5. Reconnect the negative cable to the 12 volt battery.

-6. Turn the vehicle to the ON mode.

-7. Measure the voltage between test points 1 and 2.

Test condition	Vehicle ON mode
	Front passenger's seat belt outer lap tensioner 2P connector (on the floor wire harness): disconnected
	SRS unit connector B (39P): disconnected
Test point 1	**SRS unit connector B (39P) No. 22**
Test point 2	Body ground

Test point 1	**SRS unit connector B (39P) No. 23**
Test point 2	Body ground

Is there 0.2 V or less?

YES

The RLP+ and RLP- wires are OK. Faulty SRS unit or poor connection at SRS unit connector B (39P) and the SRS unit. Check the connection; if the connection is OK, check for any authorized service information related to the DTCs or symptoms you are troubleshooting or **replace the SRS unit** . If the DTC does not clear, replace the floor wire harness.

NO

Short to power in the floor wire harness; replace the floor wire harness, then clear the DTC.

DTC B007A-13

DTC B007A-13 : Open or Increased Resistance in the Front Passenger's Seat Belt Outer Lap Tensioner

Special Tools Required

SRS Inflator Simulator 07SAZ-TB4011A

SRS Simulator Lead M 070AZ-SNA0400

NOTE:

- **Before doing this troubleshooting procedure, find out if the vehicle was in a collision. If so, verify that all the required components were replaced with new components of the correct part number and were properly installed** .
- Before doing this troubleshooting procedure, review **SRS Precautions and Procedures** , **General Troubleshooting Information** , and **12 Volt Battery Terminal Disconnection and Reconnection** .

DTC Description	DTC
B007A-13 Open or increased resistance in the front passenger's seat belt outer lap tensioner	B

DTC (SRS)

1. Problem verification

   -1. Clear the DTCs with the HDS.

   -2. Turn the vehicle to the ON mode, then wait for 10 seconds.

   -3. Check for DTCs with the HDS.

DTC Description	DTC
B007A-13 Open or increased resistance in the front passenger's seat belt outer lap tensioner	B

   Is DTC B007A-13 indicated?

   YES

   The failure is duplicated. Go to step 2.

   NO

   Intermittent failure, the system is OK at this time. Go to Troubleshooting Intermittent Failures. If another DTC is indicated, troubleshoot the DTC.

2. Front passenger's seat belt outer lap tensioner check

   -1. Turn the vehicle to the OFF (LOCK) mode.

   -2. Disconnect the negative cable from the 12 volt battery, then wait at least 3 minutes.

   -3. **Remove the right side B-pillar lower trim cover** .

   -4. Disconnect the front passenger's seat belt outer lap tensioner 2P connector (A) on the floor wire harness.

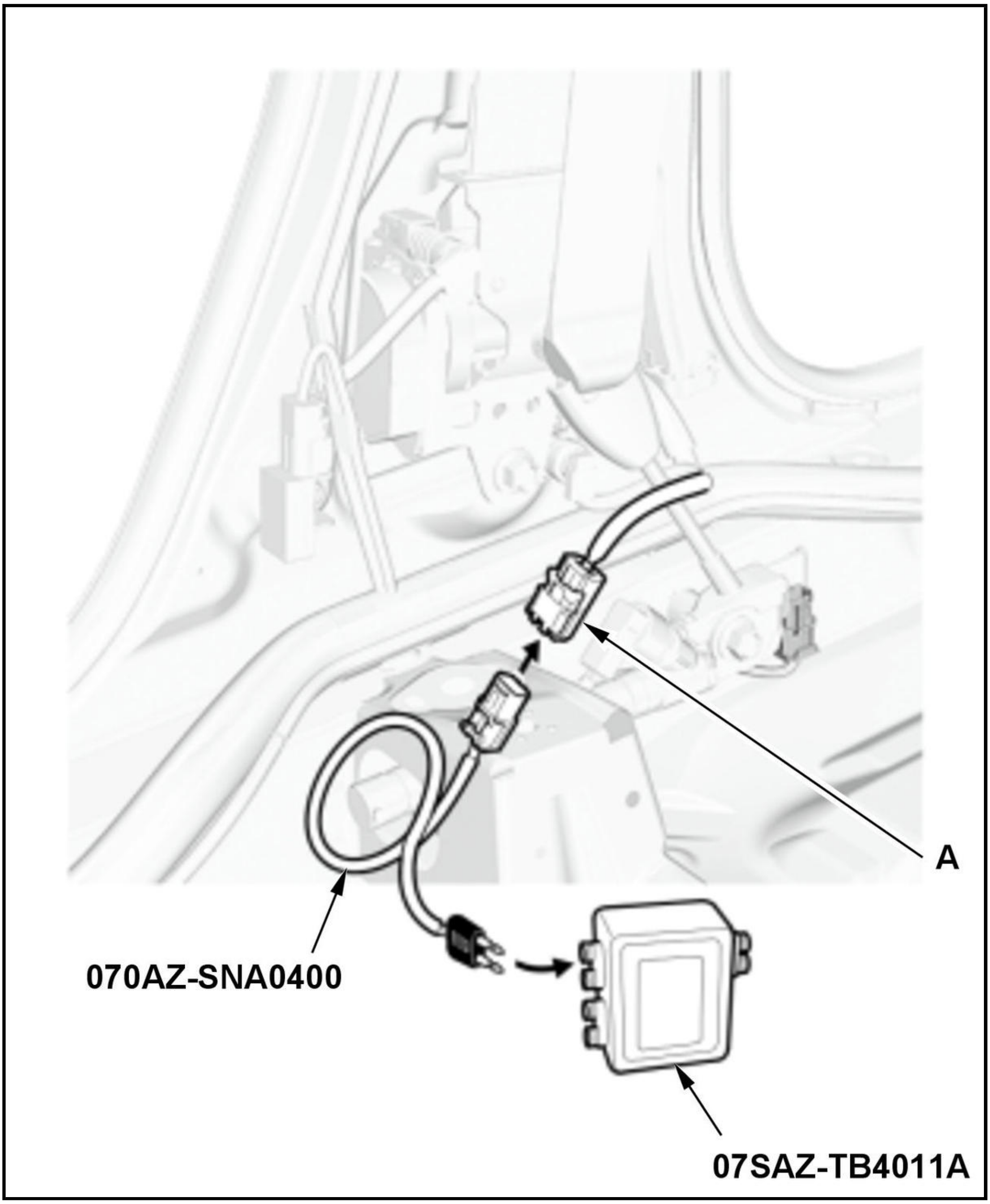

-5. Connect the terminals of SRS simulator lead M to the SRS inflator simulator (2 Ω connectors), then connect SRS simulator lead M to the front passenger's seat belt outer lap tensioner 2P connector on the floor wire harness.

-6. Reconnect the negative cable to the 12 volt battery.

-7. Clear the DTCs with the HDS.

-8. Turn the vehicle to the ON mode, then wait for 10 seconds.

-9. Check for DTCs with the HDS.

DTC Description	DTC
B007A-13 Open or increased resistance in the front passenger's seat belt outer lap tensioner	B

Is DTC B007A-13 indicated?

YES

Go to step 3.

NO

Open in the front passenger's seat belt outer lap tensioner; **replace the front passenger's seat belt** , then clear the DTC.

3. Open wire check (RLP+, RLP- lines)

-1. Turn the vehicle to the OFF (LOCK) mode.

-2. Disconnect the negative cable from the 12 volt battery, then wait at least 3 minutes.

-3. Disconnect the following connector.

SRS unit connector B (39P)

-4. Measure the resistance between test points 1 and 2.

Test condition	Vehicle OFF (LOCK) mode
	Front passenger's seat belt outer lap tensioner 2P connector (on the floor wire harness): disconnected
	SRS unit connector B (39P): disconnected
	Front passenger's seat belt outer lap tensioner 2P connector (on the floor wire harness): connected to SRS simulator lead M
Test point 1	**SRS unit connector B (39P) No. 22**
Test point 2	**SRS unit connector B (39P) No. 23**

Is there 2.0-3.0 Ω?

YES

The RLP+ and RLP- wires are OK. Faulty SRS unit or poor connection at SRS unit connector B (39P) and the SRS unit. Check the connection; if the connection is OK, check for any authorized service information related to the DTCs or symptoms you are troubleshooting or **replace the SRS unit** . If the DTC does not clear, replace the floor wire harness.

NO

Open in the floor wire harness; replace the floor wire harness, then clear the DTC.

DTC B007A-1A, B007A-2B

DTC B007A-1A : Decreased Resistance in the Front Passenger's Seat Belt Outer Lap Tensioner

DTC B007A-2B : Short to Another Wire Harness in the Front Passenger's Seat Belt Outer Lap Tensioner

Special Tools Required

SRS Inflator Simulator 07SAZ-TB4011A

SRS Simulator Lead M 070AZ-SNA0400

NOTE:

- **Before doing this troubleshooting procedure, find out if the vehicle was in a collision. If so, verify that all the required components were replaced with new components of the correct part number and were properly installed** .
- Before doing this troubleshooting procedure, review **SRS Precautions and Procedures** , **General Troubleshooting Information** , and **12 Volt Battery Terminal Disconnection and Reconnection** .

DTC Description	DTC
B007A-1A Decreased resistance in the front passenger's seat belt outer lap tensioner	B
B007A-2B Short to another wire harness in the front passenger's seat belt outer lap tensioner	B

DTC (SRS)

1. Problem verification

   -1. Clear the DTCs with the HDS.

   -2. Turn the vehicle to the ON mode, then wait for 10 seconds.

   -3. Check for DTCs with the HDS.

DTC Description	DTC
B007A-1A Decreased resistance in the front passenger's seat belt outer lap tensioner	B
B007A-2B Short to another wire harness in the front passenger's seat belt outer lap tensioner	B

   Is DTC B007A-1A or B007A-2B indicated?

   YES

   The failure is duplicated. Go to step 2.

   NO

   Intermittent failure, the system is OK at this time. Go to Troubleshooting Intermittent Failures. If another DTC is indicated, troubleshoot the DTC.

2. Front passenger's seat belt outer lap tensioner check

   -1. Turn the vehicle to the OFF (LOCK) mode.

   -2. Disconnect the negative cable from the 12 volt battery, then wait at least 3 minutes.

   -3. **Remove the right side B-pillar lower trim cover** .

   -4. Disconnect the front passenger's seat belt outer lap tensioner 2P connector (A) on the floor wire harness.

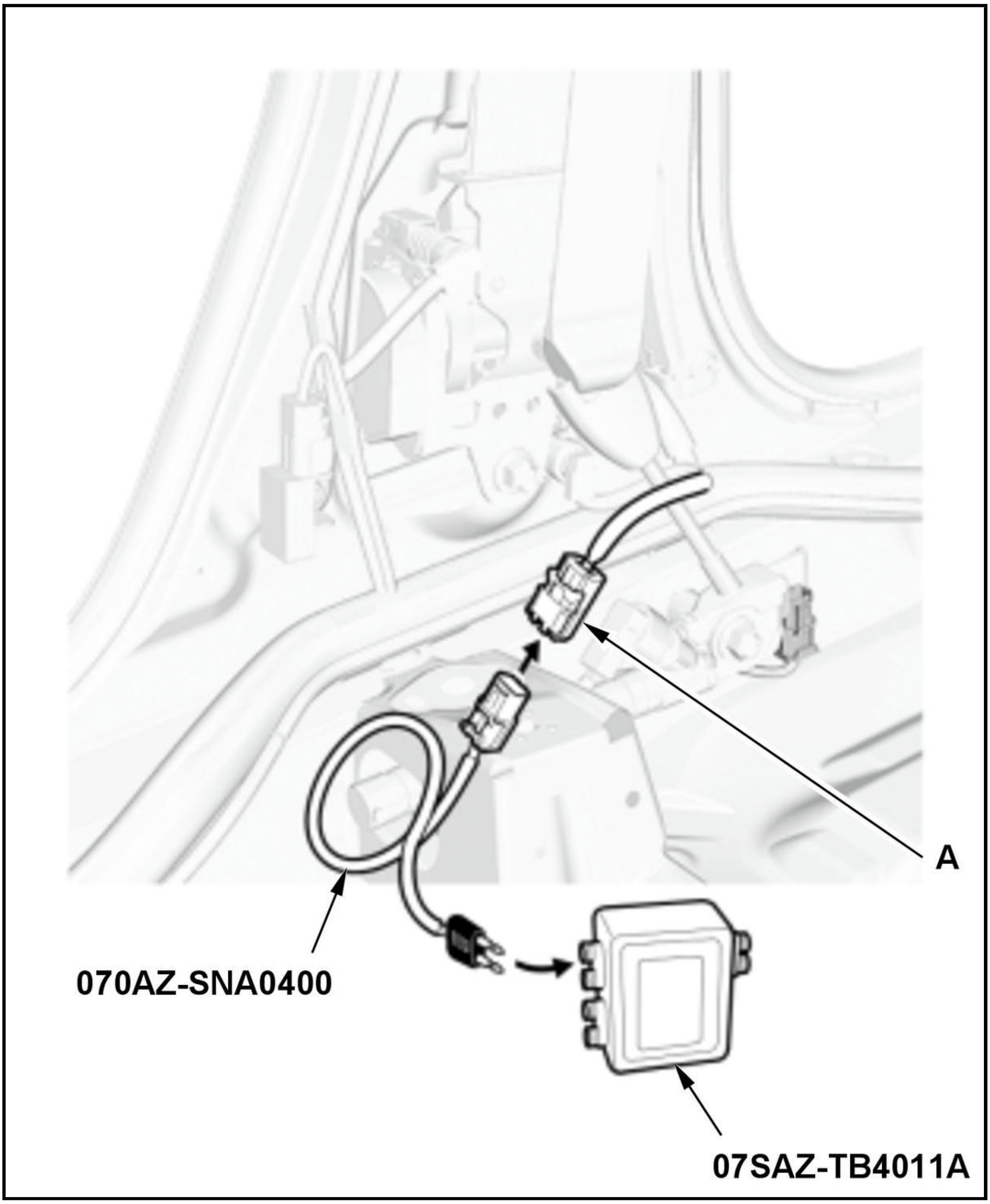

-5. Connect the terminals of SRS simulator lead M to the SRS inflator simulator (2 Ω connectors), then connect SRS simulator lead M to the front passenger's seat belt outer lap tensioner 2P connector on the floor wire harness.

-6. Reconnect the negative cable to the 12 volt battery.

-7. Clear the DTCs with the HDS.

-8. Turn the vehicle to the ON mode, then wait for 10 seconds.

-9. Check for DTCs with the HDS.

DTC Description	DTC
B007A-1A Decreased resistance in the front passenger's seat belt outer lap tensioner	B

DTC Description	DTC
B007A-2B Short to another wire harness in the front passenger's seat belt outer lap tensioner	B

Is DTC B007A-1A or B007A-2B indicated?

YES

Go to step 3.

NO

Short to another wire in the front passenger's seat belt outer lap tensioner; **replace the front passenger's seat belt** , then clear the DTC.

3. Shorted wire check (RLP+ line to RLP- line)

   -1. Turn the vehicle to the OFF (LOCK) mode.

   -2. Disconnect the negative cable from the 12 volt battery, then wait at least 3 minutes.

   -3. Disconnect the following connector.

SRS unit connector B (39P)

   -4. Disconnect SRS simulator lead M from the front passenger's seat belt outer lap tensioner 2P connector on the floor wire harness.

   -5. Measure the resistance between test points 1 and 2.

Test condition	Vehicle OFF (LOCK) mode
	Front passenger's seat belt outer lap tensioner 2P connector (on the floor wire harness): disconnected
	SRS unit connector B (39P): disconnected
Test point 1	**SRS unit connector B (39P) No. 22**
Test point 2	**SRS unit connector B (39P) No. 23**

Is there an open circuit, or at least 1 MΩ?

YES

The RLP+ and RLP- wires are OK. Faulty SRS unit or poor connection at SRS unit connector B (39P) and the SRS unit. Check the connection; if the connection is OK, check for any authorized service information related to the DTCs or symptoms you are troubleshooting or **replace the SRS unit** . If the DTC does not clear, replace the floor wire harness.

NO

Short to another wire in the floor wire harness; replace the floor wire harness, then clear the DTC.

DTC B0082-11

DTC B0082-11 : Short to Ground in the Selectable Energy Absorption Device of the Front Passenger's Seat Belt Tensioner

NOTE:

- **Before doing this troubleshooting procedure, find out if the vehicle was in a collision. If so, verify that all the required components were replaced with new components of the correct part number**

and were properly installed .

- Before doing this troubleshooting procedure, review **SRS Precautions and Procedures** , **General Troubleshooting Information** , and **12 Volt Battery Terminal Disconnection and Reconnection** .

DTC Description	DTC
B0082-11 Short to ground in the selectable energy absorption device of the front passenger's seat belt tensioner	B

DTC (SRS)

1. Problem verification

   -1. Clear the DTCs with the HDS.

   -2. Turn the vehicle to the ON mode, then wait for 10 seconds.

   -3. Check for DTCs with the HDS.

DTC Description	DTC
B0082-11 Short to ground in the selectable energy absorption device of the front passenger's seat belt tensioner	B

   Is DTC B0082-11 indicated?

   YES

   The failure is duplicated. Go to step 2.

   NO

   Intermittent failure, the system is OK at this time. Go to Troubleshooting Intermittent Failures. If another DTC is indicated, troubleshoot the DTC.

2. Shorted wire check (RVEA+, RVEA- lines) 1

   -1. Turn the vehicle to the OFF (LOCK) mode.

   -2. Disconnect the negative cable from the 12 volt battery, then wait at least 3 minutes.

   -3. **Remove the right side B-pillar lower trim** .

   -4. Disconnect the following connector.

Selectable energy absorption device 2P connector (on the floor wire harness)

   -5. Reconnect the negative cable to the 12 volt battery.

   -6. Turn the vehicle to the ON mode, then clear the DTC.

   -7. Check for DTCs with the HDS.

DTC Description	DTC
B0082-11 Short to ground in the selectable energy absorption device of the front passenger's seat belt tensioner	B

   Is DTC B0082-11 indicated?

   NO

Go to step 3.

YES

Short to ground in the selectable energy absorption device; replace the front passenger's seat belt , then clear the DTC.

3. Shorted wire check (RVEA+, RVEA- lines) 2

-1. Turn the vehicle to the OFF (LOCK) mode.

-2. Disconnect the negative cable from the 12 volt battery, then wait at least 3 minutes.

-3. Disconnect the following connector.

SRS unit connector B (39P)

-4. Measure the resistance between test points 1 and 2.

Test condition	Vehicle OFF (LOCK) mode
	SRS unit connector A (39P): disconnected
	Selectable energy absorption device 2P connector (on the floor wire harness): disconnected
Test point 1	SRS unit connector A (39P) No. 2
Test point 2	Body ground

Test point 1	SRS unit connector A (39P) No. 3
Test point 2	Body ground

Is there an open circuit, or at least 1 MΩ?

YES

The RVEA+ and RVEA- wires are OK. Check for any authorized service information related to the DTCs or symptoms you are troubleshooting or replace the SRS unit .

NO

Short to ground in the floor wire harness; replace the floor wire harness, then clear the DTC.

DTC B0082-12

DTC B0082-12 : Short to Power in the Selectable Energy Absorption Device of the Front Passenger's Seat Belt Tensioner

NOTE:

- Before doing this troubleshooting procedure, find out if the vehicle was in a collision. If so, verify that all the required components were replaced with new components of the correct part number and were properly installed .
- Before doing this troubleshooting procedure, review SRS Precautions and Procedures , General Troubleshooting Information , and 12 Volt Battery Terminal Disconnection and Reconnection .

DTC Description	DTC
B0082-12 Short to power in the selectable energy absorption device of the front passenger's seat belt tensioner	B

DTC (SRS)

1. Problem verification

   -1. Clear the DTCs with the HDS.

   -2. Turn the vehicle to the ON mode, then wait for 10 seconds.

   -3. Check for DTCs with the HDS.

DTC Description	DTC
B0082-12 Short to power in the selectable energy absorption device of the front passenger's seat belt tensioner	B

   Is DTC B082-12 indicated?

   YES

   The failure is duplicated. Go to step 2.

   NO

   Intermittent failure, the system is OK at this time. Go to Troubleshooting Intermittent Failures. If another DTC is indicated, troubleshoot the DTC.

2. Shorted wire check (RVEA+, RVEA- lines to power) 1

   -1. Turn the vehicle to the OFF (LOCK) mode.

   -2. Disconnect the negative cable from the 12 volt battery, then wait at least 3 minutes.

   -3. **Remove the right side B-pillar lower trim** .

   -4. Disconnect the following connector.

Selectable energy absorption device 2P connector (on the floor wire harness)

   -5. Reconnect the negative cable to the 12 volt battery.

   -6. Turn the vehicle to the ON mode, then clear the DTC.

   -7. Check for DTCs with the HDS.

DTC Description	DTC
B0082-12 Short to power in the selectable energy absorption device of the front passenger's seat belt tensioner	B

   Is DTC B082-12 indicated?

   NO

   Go to step 3.

   YES

   Short to power in the selectable energy absorption device; **replace the front passenger's seat belt** , then clear the DTC.

3. Shorted wire check (RVEA+, RVEA- lines to power) 2

   -1. Turn the vehicle to the OFF (LOCK) mode.

-2. Disconnect the negative cable from the 12 volt battery, then wait at least 3 minutes.

-3. Disconnect the following connector.

SRS unit connector A (39P)

-4. Reconnect the negative cable to the 12 volt battery.

-5. Turn the vehicle to the ON mode.

-6. Measure the voltage between test points 1 and 2.

Test condition	Vehicle ON mode
	SRS unit connector A (39P): disconnected
	Selectable energy absorption device 2P connector (on the floor wire harness): disconnected
Test point 1	**SRS unit connector A (39P) No. 2**
Test point 2	Body ground

Test point 1	**SRS unit connector A (39P) No. 3**
Test point 2	Body ground

Is there 0.2 V or less?

YES

The RVEA+ and RVEA- wires are OK. Check for any authorized service information related to the DTCs or symptoms you are troubleshooting or **replace the SRS unit** .

NO

Short to power in the floor wire harness; replace the floor wire harness, then clear the DTC.

DTC B0082-13

DTC B0082-13 : Open or Increased Resistance in the Selectable Energy Absorption Device of the Front Passenger's Seat Belt Tensioner

NOTE:

- **Before doing this troubleshooting procedure, find out if the vehicle was in a collision. If so, verify that all the required components were replaced with new components of the correct part number and were properly installed** .
- Before doing this troubleshooting procedure, review **SRS Precautions and Procedures** , **General Troubleshooting Information** , and **12 Volt Battery Terminal Disconnection and Reconnection** .

DTC Description	DTC
B0082-13 Open or increased resistance in the selectable energy absorption device of the front passenger's seat belt tensioner	B

DTC (SRS)

1. Problem verification

-1. Clear the DTCs with the HDS.

-2. Turn the vehicle to the ON mode, then wait for 10 seconds.

-3. Check for DTCs with the HDS.

DTC Description	DTC
B0082-13 Open or increased resistance in the selectable energy absorption device of the front passenger's seat belt tensioner	B

Is DTC B0082-13 indicated?

YES

The failure is duplicated. Go to step 2.

NO

Intermittent failure, the system is OK at this time. Go to Troubleshooting Intermittent Failures. If another DTC is indicated, troubleshoot the DTC.

2. Selectable energy absorption device check

-1. Turn the vehicle to the OFF (LOCK) mode.

-2. Disconnect the negative cable from the 12 volt battery, then wait at least 3 minutes.

-3. **Remove the right side B-pillar lower trim** .

-4. Disconnect the following connector.

Selectable energy absorption device 2P connector (on the floor wire harness)

-5. Connect terminals A and B with a jumper wire.

Terminal A	Selectable energy absorption device 2P connector No. 1 (on the floor wire harness)
Terminal B	Selectable energy absorption device 2P connector No. 2 (on the floor wire harness)

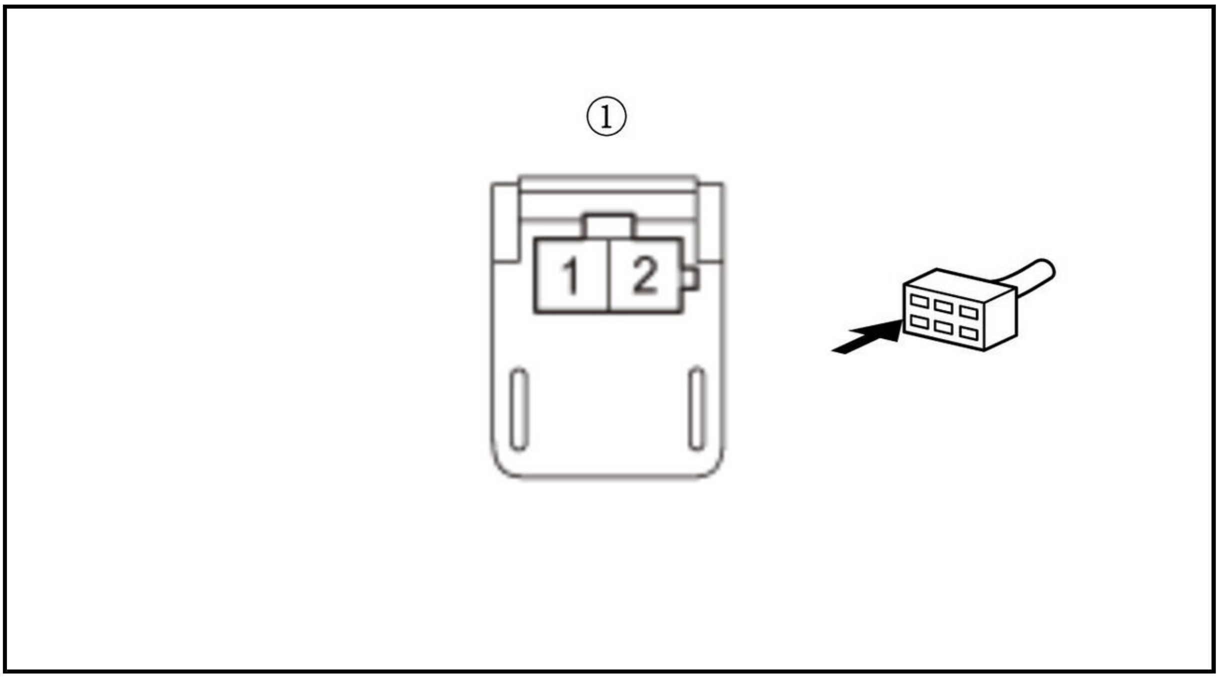

-6. Reconnect the negative cable to the 12 volt battery.

-7. Clear the DTCs with the HDS.

-8. Turn the vehicle to the ON mode, then wait for 10 seconds.

-9. Check for DTCs with the HDS.

DTC Description	DTC
B0082-13 Open or increased resistance in the selectable energy absorption device of the front passenger's seat belt tensioner	B

Is DTC B0082-13 indicated?

YES

Go to step 3.

NO

Open in the selectable energy absorption device; **replace the front passenger's seat belt** , then clear the DTC.

3. Open wire check (RVEA+, RVEA- lines)

-1. Turn the vehicle to the OFF (LOCK) mode.

-2. Disconnect the negative cable from the 12 volt battery, then wait at least 3 minutes.

-3. Remove the jumper wire from the selectable energy absorption device 2P connector on the floor wire harness.

-4. Disconnect the following connector.

SRS unit connector A (39P)

-5. Connect terminals A and B with a jumper wire.

Terminal A	**SRS unit connector A (39P) No. 2**
Terminal B	**SRS unit connector A (39P) No. 3**

-6. Measure the resistance between test points 1 and 2.

Test condition	Vehicle OFF (LOCK) mode
	Selectable energy absorption device 2P connector (on the floor wire harness): disconnected
	SRS unit connector A (39P): disconnected
	SRS unit connector A (39P) terminals No. 2 and No. 3: jumped
Test point 1	Selectable energy absorption device 2P connector No. 1 (on the floor wire harness)
Test point 2	Selectable energy absorption device 2P connector No. 2 (on the floor wire harness)

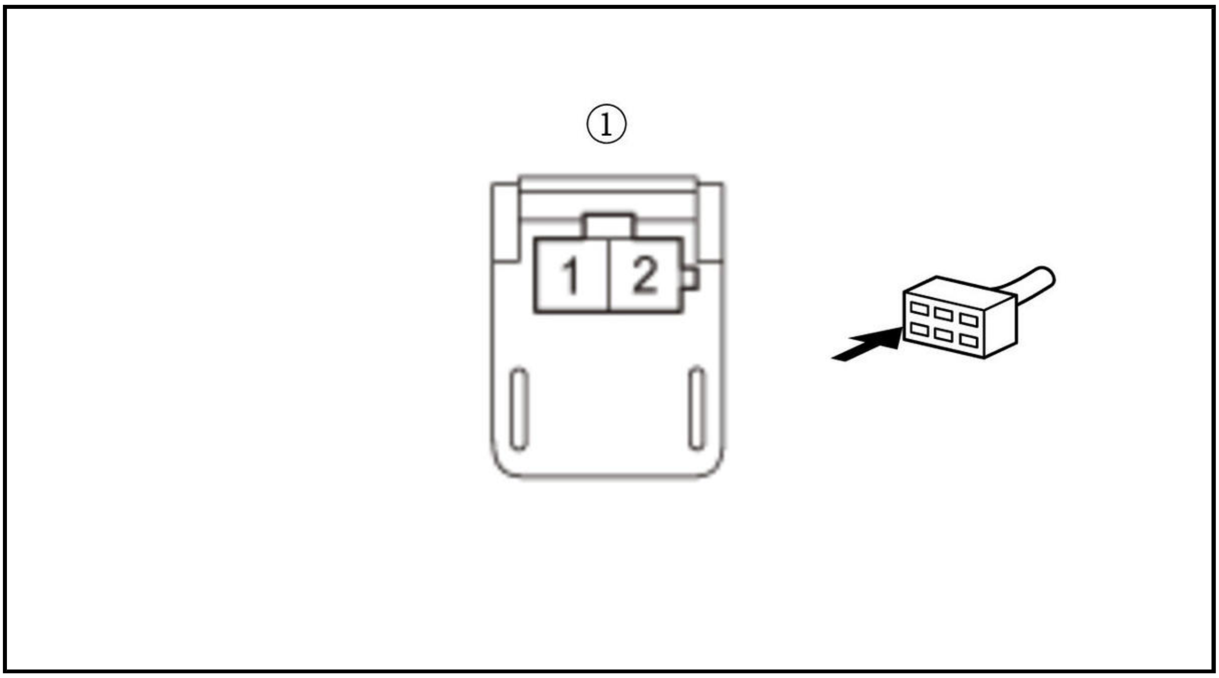

Is there 1.0 Ω or less?

YES

The RVEA+ and RVEA- wires are OK. Faulty SRS unit or poor connection at SRS unit connector A (39P) and the SRS unit. Check the connection; if the connection is OK, **replace the SRS unit** . If the DTC does not clear, replace the floor wire harness.

NO

Open in the floor wire harness; replace the floor wire harness, then clear the DTC.

DTC B0082-1A

DTC B0082-1A : Decreased Resistance in the Selectable Energy Absorption Device of the Front Passenger's Seat Belt Tensioner

Special Tools Required

SRS Short Canceller 070AZ-SAA0100

NOTE:

- **Before doing this troubleshooting procedure, find out if the vehicle was in a collision. If so, verify that all the required components were replaced with new components of the correct part number and were properly installed** .
- Before doing this troubleshooting procedure, review **SRS Precautions and Procedures** , **General Troubleshooting Information** , and **12 Volt Battery Terminal Disconnection and Reconnection** .

DTC Description	DTC
B0082-1A Decreased resistance in the selectable energy absorption device of the front passenger's seat belt tensioner	B

DTC (SRS)

1. Problem verification

   -1. Clear the DTCs with the HDS.

-2. Turn the vehicle to the ON mode, then wait for 10 seconds.

-3. Check for DTCs with the HDS.

DTC Description	DTC
B0082-1A Decreased resistance in the selectable energy absorption device of the front passenger's seat belt tensioner	B

Is DTC B0082-1A indicated?

YES

The failure is duplicated. Go to step 2.

NO

Intermittent failure, the system is OK at this time. Go to Troubleshooting Intermittent Failures. If another DTC is indicated, troubleshoot the DTC.

2. Selectable energy absorption device check

-1. Turn the vehicle to the OFF (LOCK) mode.

-2. Disconnect the negative cable from the 12 volt battery, then wait at least 3 minutes.

-3. **Remove the right side B-pillar lower trim** .

-4. Disconnect the following connector.

Selectable energy absorption device 2P connector (on the floor wire harness)

-5. Reconnect the negative cable to the 12 volt battery.

-6. Clear the DTCs with the HDS.

-7. Turn the vehicle to the ON mode, then wait for 10 seconds.

-8. Check for DTCs with the HDS.

DTC Description	DTC
B0082-1A Decreased resistance in the selectable energy absorption device of the front passenger's seat belt tensioner	B

Is DTC B0082-1A indicated?

YES

Go to step 3.

NO

Short to another wire in the selectable energy absorption device; **replace the front passenger's seat belt** , then clear the DTC.

3. Shorted wire check (RVEA+ line to RVEA- line)

-1. Turn the vehicle to the OFF (LOCK) mode.

-2. Disconnect the negative cable from the 12 volt battery, then wait at least 3 minutes.

-3. Disconnect the following connector.

SRS unit connector A (39P)

-4. **Connect the SRS short canceller to SRS unit connector A (39P) terminals No. 2 and No. 3** .

-5. Measure the resistance between test points 1 and 2.

Test condition	Vehicle OFF (LOCK) mode
	Selectable energy absorption device 2P connector (on the floor wire harness): disconnected
	SRS unit connector A (39P): disconnected
	SRS unit connector A (39P) No. 2 and No. 3: connected to SRS short canceller
Test point 1	**SRS unit connector A (39P) No. 2**
Test point 2	**SRS unit connector A (39P) No. 3**

Is there an open circuit, or at least 1 MΩ?

YES

The RVEA+ and RVEA- wires are OK. Faulty SRS unit or poor connection at SRS unit connector A (39P) and the SRS unit. Check the connection; if the connection is OK, **replace the SRS unit** . If the DTC does not clear, replace the floor wire harness.

NO

Short to another wire in the floor wire harness; replace the floor wire harness, then clear the DTC.

DTC B0082-2B

DTC B0082-2B : Short to Another Wire Harness in the Selectable Energy Absorption Device of the Front Passenger's Seat Belt Tensioner

NOTE:

- **Before doing this troubleshooting procedure, find out if the vehicle was in a collision. If so, verify that all the required components were replaced with new components of the correct part number and were properly installed** .
- Before doing this troubleshooting procedure, review **SRS Precautions and Procedures** , **General Troubleshooting Information** , and **12 Volt Battery Terminal Disconnection and Reconnection** .

DTC Description	DTC
B0082-2B Short to another wire harness in the selectable energy absorption device of the front passenger's seat belt tensioner	B

DTC (SRS)

1. Problem verification

-1. Clear the DTCs with the HDS.

-2. Turn the vehicle to the ON mode, then wait for 10 seconds.

-3. Check for DTCs with the HDS.

DTC Description	DTC
B0082-2B Short to another wire harness in the selectable energy absorption device of the front passenger's seat belt tensioner	B

Is DTC B0082-2B indicated?

YES

The failure is duplicated. Go to step 2.

NO

Intermittent failure, the system is OK at this time. Go to Troubleshooting Intermittent Failures. If another DTC is indicated, troubleshoot the DTC.

2. DTC check

-1. Check for DTCs with the HDS.

DTC Description	DTC
B0001-2B Short to another wire harness in the driver's airbag first inflator	B
B0002-2B Short to another wire harness in the driver's airbag second inflator	B
B0010-2B Short to another wire harness in the front passenger's airbag first inflator	B
B0011-2B Short to another wire harness in the front passenger's airbag second inflator	B
B0020-2B Short to another wire harness in the driver's side airbag inflator	B
B0021-2B Short to another wire harness in the left side curtain airbag first inflator	B
B0028-2B Short to another wire harness in the front passenger's side airbag inflator	B
B0029-2B Short to another wire harness in the right side curtain airbag first inflator	B
B0070-2B Short to another wire harness in the driver's seat belt tensioner	B
B0072-2B Short to another wire harness in the front passenger's seat belt tensioner	B
B0079-2B Short to another wire harness in the driver's seat belt outer lap tensioner	B
B007A-2B Short to another wire harness in the front passenger's seat belt outer lap tensioner	B
B0082-2B Short to another wire harness in the selectable energy absorption device of the front passenger's seat belt tensioner	B

Is DTC B0001-2B, B0002-2B, B0010-2B, B0011-2B, B0020-2B, B0021-2B, B0028-2B, B0029-2B, B0070-2B, B0072-2B, B0079-2B or B007A-2B indicated with DTC B0082-2B?

YES

Go to step 3.

NO

Short to another wire in the floor wire harness; replace the floor wire harness, then clear the DTC.

3. Shorted wire check (RVEA lines to another line)

-1. Turn the vehicle to the OFF (LOCK) mode.

-2. Disconnect the negative cable from the 12 volt battery, then wait at least 3 minutes.

-3. **Remove the right side B-pillar lower trim** .

-4. Disconnect the following connectors.

SRS unit connector A (39P)
SRS unit connector B (39P)
Selectable energy absorption device 2P connector (on the floor wire harness)
Inflator connectors which are assigned to 2B codes listed on HDS

-5. Measure the resistance between test points 1 and 2 of SRS unit connector A (39P) and B (39P) according to table.

Test condition	Vehicle OFF (LOCK) mode
	SRS unit connector A (39P): disconnected
	SRS unit connector B (39P): disconnected
	Selectable energy absorption device 2P connector (on the floor wire harness): disconnected
	Inflator connectors which are assigned to 2B codes listed on HDS: disconnected

DTC	Test point 1	Test point 2
	From terminal	To terminal
B0001-2B	**SRS unit connector A (39P) No. 2**	**SRS unit connector A (39P) No. 9**
	SRS unit connector A (39P) No. 3	**SRS unit connector A (39P) No. 8**
B0002-2B	**SRS unit connector A (39P) No. 2**	**SRS unit connector A (39P) No. 10**
	SRS unit connector A (39P) No. 3	**SRS unit connector A (39P) No. 11**
B0010-2B	**SRS unit connector A (39P) No. 2**	**SRS unit connector A (39P) No. 5**
	SRS unit connector A (39P) No. 3	**SRS unit connector A (39P) No. 4**
B0011-2B	**SRS unit connector A (39P) No. 2**	**SRS unit connector A (39P) No. 6**
	SRS unit connector A (39P) No. 3	**SRS unit connector A (39P) No. 7**
B0020-2B	**SRS unit connector A (39P) No. 2**	**SRS unit connector B (39P) No. 5**
	SRS unit connector A (39P) No. 3	**SRS unit connector B (39P) No. 6**
B0021-2B	**SRS unit connector A (39P) No. 2**	**SRS unit connector B (39P) No. 9**
	SRS unit connector A (39P) No. 3	**SRS unit connector B (39P) No. 10**
B0028-2B	**SRS unit connector A (39P) No. 2**	**SRS unit connector B (39P) No. 4**
	SRS unit connector A (39P) No. 3	**SRS unit connector B (39P) No. 3**
B0029-2B	**SRS unit connector A (39P) No. 2**	**SRS unit connector B (39P) No. 8**
	SRS unit connector A (39P) No. 3	**SRS unit connector B (39P) No. 7**
B0070-2B	**SRS unit connector A (39P) No. 2**	**SRS unit connector B (39P) No. 20**
	SRS unit connector A (39P) No. 3	**SRS unit connector B (39P) No. 21**
B0072-2B	**SRS unit connector A (39P) No. 2**	**SRS unit connector B (39P) No. 19**
	SRS unit connector A (39P) No. 3	**SRS unit connector B (39P) No. 18**
B0079-2B	**SRS unit connector A (39P) No. 2**	**SRS unit connector B (39P) No. 24**
	SRS unit connector A (39P) No. 3	**SRS unit connector B (39P) No. 25**

DTC	Test point 1	Test point 2
	From terminal	To terminal
B007A-2B	**SRS unit connector A (39P) No. 2**	**SRS unit connector B (39P) No. 23**
	SRS unit connector A (39P) No. 3	**SRS unit connector B (39P) No. 22**

Is there 1 MΩ or more?

YES

The RVEA wires are OK. Faulty SRS unit or poor connection at SRS unit connector A (39P) and the SRS unit, or SRS unit connector B (39P) and the SRS unit. Check the connection; if the connection is OK, check for any authorized service information related to the DTCs or symptoms you are troubleshooting or **replace the SRS unit** . If the DTC does not clear, replace the dashboard wire harness or the floor wire harness.

NO

Short to another wire in the dashboard wire harness or the floor wire harness; replace the faulty harness, then clear the DTC.

DTC B0090-4A, B0090-92

DTC B0090-4A, B0090-92 : Internal Failure of the Left Front Impact Sensor

NOTE:

- **Before doing this troubleshooting procedure, find out if the vehicle was in a collision. If so, verify that all the required components were replaced with new components of the correct part number and were properly installed** .
- Before doing this troubleshooting procedure, review **SRS Precautions and Procedures** and **General Troubleshooting Information** .

DTC Description	DTC
B0090-4A Internal failure of the left front impact sensor	B
B0090-92 Internal failure of the left front impact sensor	B

DTC (SRS)

1. Problem verification

-1. Clear the DTCs with the HDS.

-2. Turn the vehicle to the ON mode, then wait for 10 seconds.

-3. Check for DTCs with the HDS.

DTC Description	DTC
B0090-4A Internal failure of the left front impact sensor	B
B0090-92 Internal failure of the left front impact sensor	B

Is DTC B0090-4A or B0090-92 indicated?

YES

The failure is duplicated. **Replace the left front impact sensor** , then clear the DTC, and retest. If the DTC is still present, check for any authorized service information related to the DTCs or symptoms you are troubleshooting or **replace the SRS unit** .

NO

Intermittent failure, the system is OK at this time. Go to Troubleshooting Intermittent Failures. If another DTC is indicated, troubleshoot the DTC.

DTC B0090-87

DTC B0090-87 : No Signal From the Left Front Impact Sensor

Special Tools Required

SRS Inflator Simulator 07SAZ-TB4011A

SRS Simulator Lead L 070AZ-SNA0300

NOTE:

- **Before doing this troubleshooting procedure, find out if the vehicle was in a collision. If so, verify that all the required components were replaced with new components of the correct part number and were properly installed** .
- Before doing this troubleshooting procedure, review **SRS Precautions and Procedures** , **General Troubleshooting Information** , and **12 Volt Battery Terminal Disconnection and Reconnection** .

DTC Description	DTC
B0090-87 No signal from the left front impact sensor	B

DTC (SRS)

1. Problem verification

   -1. Clear the DTCs with the HDS.

   -2. Turn the vehicle to the ON mode, then wait for 10 seconds.

   -3. Check for DTCs with the HDS.

DTC Description	DTC
B0090-87 No signal from the left front impact sensor	B

   Is DTC B0090-87 indicated?

   YES

   The failure is duplicated. Go to step 2.

   NO

   Intermittent failure, the system is OK at this time. Go to Troubleshooting Intermittent Failures. If another DTC is indicated, troubleshoot the DTC.

2. Connector connection check

   -1. Turn the vehicle to the OFF (LOCK) mode.

   -2. Check the following connections.

SRS unit connector A (39P)
Left front impact sensor 2P connector (on the engine compartment wire harness)
Connector between the SRS unit and the left front impact sensor

   Are the connectors OK?

   YES

   Go to step 4.

NO

Go to step 3.

3. System check

-1. Reset the loose connections that caused the problem in step 2.

-2. Clear the DTCs with the HDS.

-3. Turn the vehicle to the ON mode, then wait for 10 seconds.

-4. Check for DTCs with the HDS.

DTC Description	DTC
B0090-87 No signal from the left front impact sensor	B

Is DTC B0090-87 indicated?

YES

Turn the vehicle to the OFF (LOCK) mode, then go to step 4.

NO

The system is OK at this time.

4. Shorted wire check (LFS+ line to LFS- line)

-1. Disconnect the negative cable from the 12 volt battery, then wait at least 3 minutes.

-2. Disconnect the following connectors.

SRS unit connector A (39P)
Left front impact sensor 2P connector (on the engine compartment wire harness)

-3. Measure the resistance between test points 1 and 2.

Test condition	Vehicle OFF (LOCK) mode
	SRS unit connector A (39P): disconnected
	Left front impact sensor 2P connector (on the engine compartment wire harness): disconnected
Test point 1	**SRS unit connector A (39P) No. 31**
Test point 2	**SRS unit connector A (39P) No. 32**

Is there an open circuit, or at least 1 MΩ?

YES

The LFS+ and LFS- wires are not shorted. Go to step 5.

NO

Short to another wire in the engine compartment wire harness or the dashboard wire harness; replace the faulty harness, then clear the DTC.

5. Shorted wire check (LFS+, LFS- lines)

-1. Measure the resistance between test points 1 and 2.

Test condition	Vehicle OFF (LOCK) mode
	SRS unit connector A (39P): disconnected
	Left front impact sensor 2P connector (on the engine compartment wire harness): disconnected
Test point 1	**SRS unit connector A (39P) No. 31**
Test point 2	Body ground

Test point 1	**SRS unit connector A (39P) No. 32**
Test point 2	Body ground

Is there an open circuit, or at least 1 MΩ?

YES

The LFS+ and LFS- wires are not shorted. Go to step 6.

NO

Short to ground in the engine compartment wire harness or the dashboard wire harness; replace the faulty harness, then clear the DTC.

6. Shorted wire check (LFS+, LFS- lines to power)

-1. Reconnect the negative cable to the 12 volt battery.

-2. Turn the vehicle to the ON mode.

-3. Measure the voltage between test points 1 and 2.

Test condition	Vehicle ON mode
	SRS unit connector A (39P): disconnected
	Left front impact sensor 2P connector (on the engine compartment wire harness): disconnected
Test point 1	**SRS unit connector A (39P) No. 31**
Test point 2	Body ground

Test point 1	**SRS unit connector A (39P) No. 32**
Test point 2	Body ground

Is there 0.2 V or less?

YES

The LFS+ and LFS- wires are not shorted to power. Go to step 7.

NO

Short to power in the engine compartment wire harness or the dashboard wire harness; replace the faulty harness, then clear the DTC.

7. Open wire check (LFS+, LFS- lines)

-1. Turn the vehicle to the OFF (LOCK) mode.

-2. Connect the black terminal (A) of SRS simulator lead L to the SRS inflator simulator (jumper connector), then connect SRS simulator lead L to the left front impact sensor 2P connector (B) on the engine compartment wire harness.

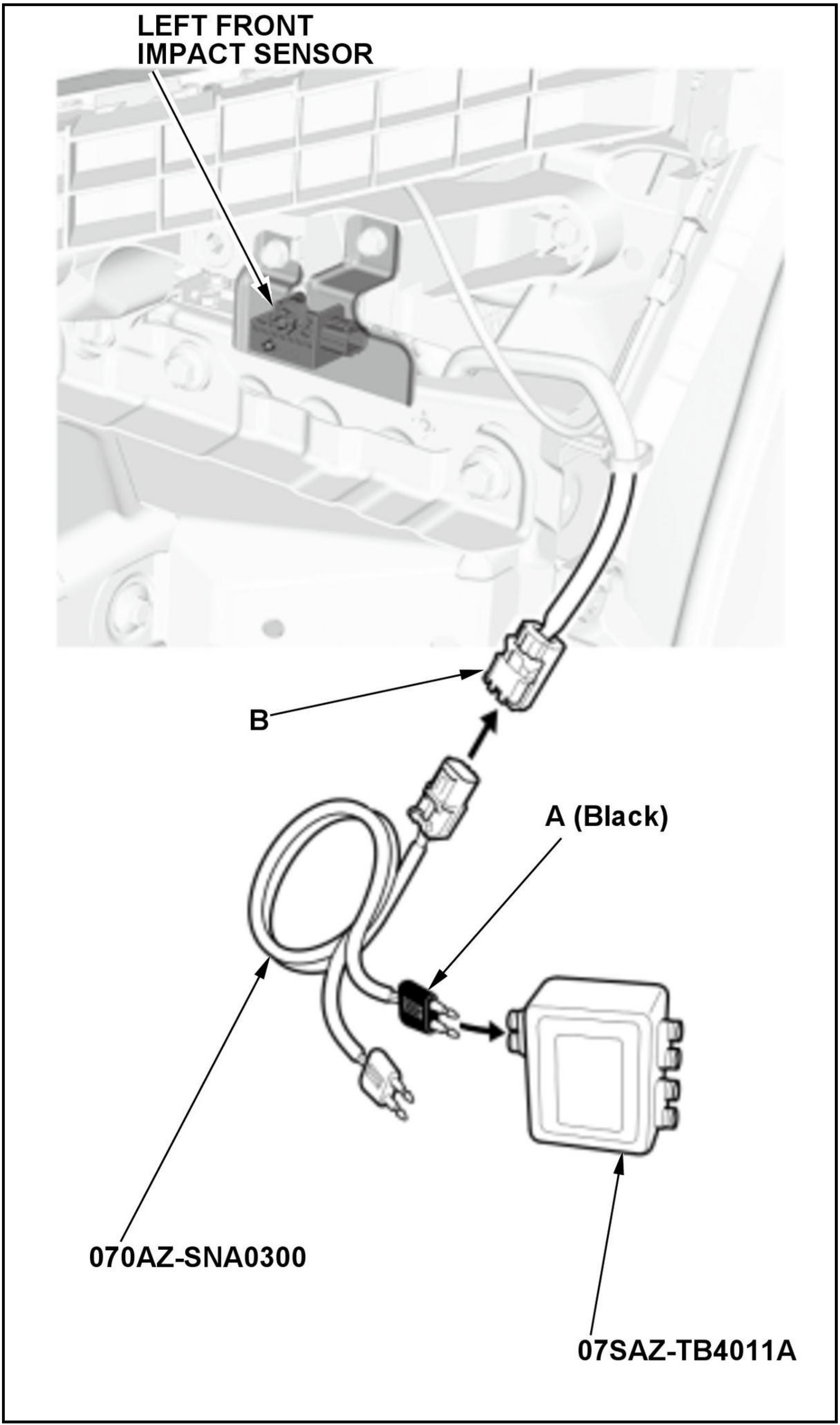
LEFT FRONT
IMPACT SENSOR
B
A (Black)
070AZ-SNA0300
07SAZ-TB4011A

-3. Measure the resistance between test points 1 and 2.

Test condition	Vehicle OFF (LOCK) mode
	SRS unit connector A (39P): disconnected
	Left front impact sensor 2P connector (on the engine compartment wire harness): disconnected
	Left front impact sensor 2P connector (on the engine compartment wire harness): connected to SRS simulator lead L
Test point 1	**SRS unit connector A (39P) No. 31**
Test point 2	**SRS unit connector A (39P) No. 32**

Is there 1.0 Ω or less?

YES

The LFS+ and LFS- wires are OK. **Replace the left front impact sensor** , then clear the DTC, and retest. If the DTC is still present, check for any authorized service information related to the DTCs or symptoms you are troubleshooting or **replace the SRS unit** .

NO

Open in the engine compartment wire harness or the dashboard wire harness; replace the faulty harness, then clear the DTC.

DTC B0091-4A, B0091-92

DTC B0091-4A, B0091-92 : Internal Failure of the Left Side Impact Sensor (first)

NOTE:

- **Before doing this troubleshooting procedure, find out if the vehicle was in a collision. If so, verify that all the required components were replaced with new components of the correct part number and were properly installed** .
- Before doing this troubleshooting procedure, review **SRS Precautions and Procedures** and **General Troubleshooting Information** .

DTC Description	DTC
B0091-4A Internal failure of the left side impact sensor (first)	B
B0091-92 Internal failure of the left side impact sensor (first)	B

DTC (SRS)

1. Problem verification

-1. Clear the DTCs with the HDS.

-2. Turn the vehicle to the ON mode, then wait for 10 seconds.

-3. Check for DTCs with the HDS.

DTC Description	DTC
B0091-4A Internal failure of the left side impact sensor (first)	B
B0091-92 Internal failure of the left side impact sensor (first)	B

Is DTC B0091-4A or B0091-92 indicated?

YES

The failure is duplicated. **Replace the left side impact sensor (first)** , then clear the DTC, and retest. If the DTC is still present, check for any authorized service information related to the DTCs or symptoms you are troubleshooting or **replace the SRS unit** .

NO

Intermittent failure, the system is OK at this time. Go to Troubleshooting Intermittent Failures. If another DTC is indicated, troubleshoot the DTC.

DTC B0091-87, B0092-87

DTC B0091-87 : No Signal From the Left Side Impact Sensor (first)

DTC B0092-87 : No Signal From the Left Side Impact Sensor (second)

NOTE:

- **Before doing this troubleshooting procedure, find out if the vehicle was in a collision. If so, verify that all the required components were replaced with new components of the correct part number and were properly installed** .
- Before doing this troubleshooting procedure, review **SRS Precautions and Procedures** , **General Troubleshooting Information** , and **12 Volt Battery Terminal Disconnection and Reconnection** .

DTC Description	DTC
B0091-87 No signal from the left side impact sensor (first)	B
B0092-87 No signal from the left side impact sensor (second)	B

DTC (SRS)

1. DTC check

-1. Clear the DTCs with the HDS.

-2. Turn the vehicle to the ON mode, then wait for 10 seconds.

-3. Check for DTCs with the HDS.

DTC Description	DTC
B0091-4A Internal failure of the left side impact sensor (first)	B
B0091-87 No signal from the left side impact sensor (first)	B
B0091-92 Internal failure of the left side impact sensor (first)	B
B0092-4A Internal failure of the left side impact sensor (second)	B
B0092-87 No signal from the left side impact sensor (second)	B
B0092-92 Internal failure of the left side impact sensor (second)	B

Are DTCs indicated?

DTC B0091-87

Go to step 2.

DTC B0092-87

Go to step 10.

DTC B0091-4A or B0091-92

Replace the left side impact sensor (first) , then clear the DTC.

DTC B0092-4A or B0092-92

Replace the left side impact sensor (second) , then clear the DTC.

NO DTC

Intermittent failure, the system is OK at this time. Go to Troubleshooting Intermittent Failures. If another DTC is indicated, troubleshoot the DTC.

2. Harness visual check

-1. Turn the vehicle to the OFF (LOCK) mode.

-2. Check for damage on the floor wire harness that side impact sensor is connected to.

Is the floor wire harness OK?

YES

Go to step 3.

NO

Replace the floor wire harness, then clear the DTC, and retest.

3. Connector connection check

-1. Check the following connections.

SRS unit connector B (39P)
Left side impact sensor (first) 4P connector (on the floor wire harness)
Left side impact sensor (second) 2P connector (on the floor wire harness)

Are the connectors OK?

YES

Go to step 5.

NO

Go to step 4.

4. System check

-1. Reset the loose connections that caused the problem in step 3.

-2. Clear the DTCs with the HDS.

-3. Turn the vehicle to the ON mode, then wait for 10 seconds.

-4. Check for DTCs with the HDS.

DTC Description	DTC
B0091-87 No signal from the left side impact sensor (first)	B

Is DTC B0091-87 indicated?

YES

Turn the vehicle to the OFF (LOCK) mode, then go to step 5.

NO

The system is OK at this time.

5. Left side impact sensor (first) substituting

-1. Disconnect the negative cable from the 12 volt battery, then wait at least 3 minutes.

-2. **Substitute a known-good left side impact sensor (first)** .

-3. Reconnect the negative cable to the 12 volt battery.

-4. Clear the DTCs with the HDS.

-5. Turn the vehicle to the ON mode, then wait for 10 seconds.

-6. Check for DTCs with the HDS.

DTC Description	DTC
B0091-87 No signal from the left side impact sensor (first)	B

Is DTC B0091-87 indicated?

YES

Go to step 6.

NO

Replace the left side impact sensor (first) , then clear the DTC.

6. Shorted wire check (LS1+ line to LS1- line)

-1. Turn the vehicle to the OFF (LOCK) mode.

-2. Disconnect the negative cable from the 12 volt battery, then wait at least 3 minutes.

-3. Return the left side impact sensor (first) which was replaced.

-4. Disconnect the following connectors.

SRS unit connector B (39P)
Left side impact sensor (first) 4P connector (on the floor wire harness)
Left side impact sensor (second) 2P connector (on the floor wire harness)

-5. Measure the resistance between test points 1 and 2.

Test condition	Vehicle OFF (LOCK) mode
	SRS unit connector B (39P): disconnected
	Left side impact sensor (first) 4P connector (on the floor wire harness): disconnected
	Left side impact sensor (second) 2P connector (on the floor wire harness): disconnected
Test point 1	Left side impact sensor (first) 4P connector (female terminals) No. 2 (on the floor wire harness): ①

Test point 2	Left side impact sensor (first) 4P connector (female terminals) No. 3 (on the floor wire harness): ①

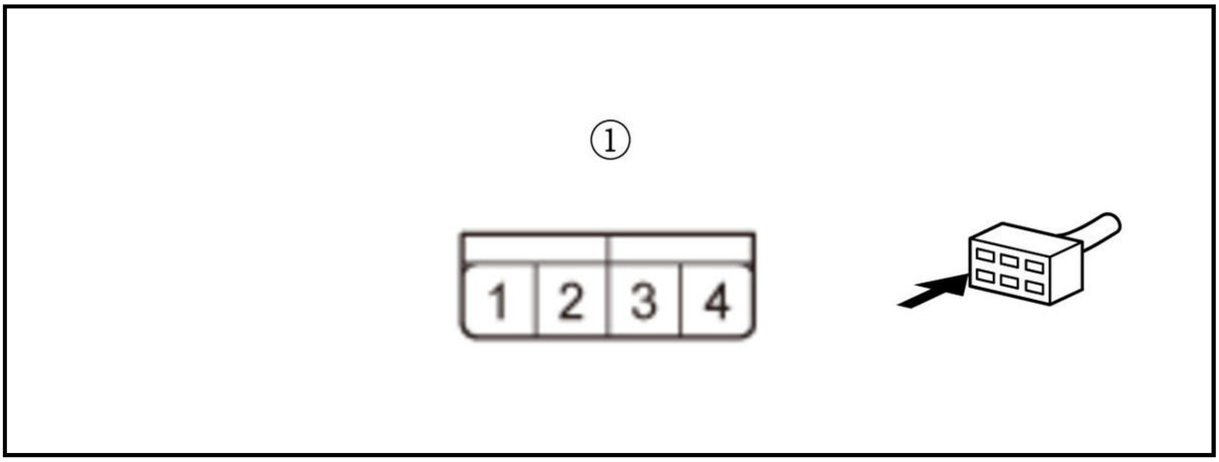

Is there an open circuit, or at least 1 MΩ?

YES

The LS1+ and LS1- wires are not shorted. Go to step 7.

NO

Short to another wire in the floor wire harness between the SRS unit and the left side impact sensor (first); replace the floor wire harness, then clear the DTC.

7. Shorted wire check (LS1+, LS1- lines)

-1. Measure the resistance between test points 1 and 2.

Test condition	Vehicle OFF (LOCK) mode
	SRS unit connector B (39P): disconnected
	Left side impact sensor (first) 4P connector (on the floor wire harness): disconnected
	Left side impact sensor (second) 2P connector (on the floor wire harness): disconnected
Test point 1	Left side impact sensor (first) 4P connector (female terminals) No. 2 (on the floor wire harness): ①
Test point 2	Body ground

Test point 1	Left side impact sensor (first) 4P connector (female terminals) No. 3 (on the floor wire harness): ①
Test point 2	Body ground

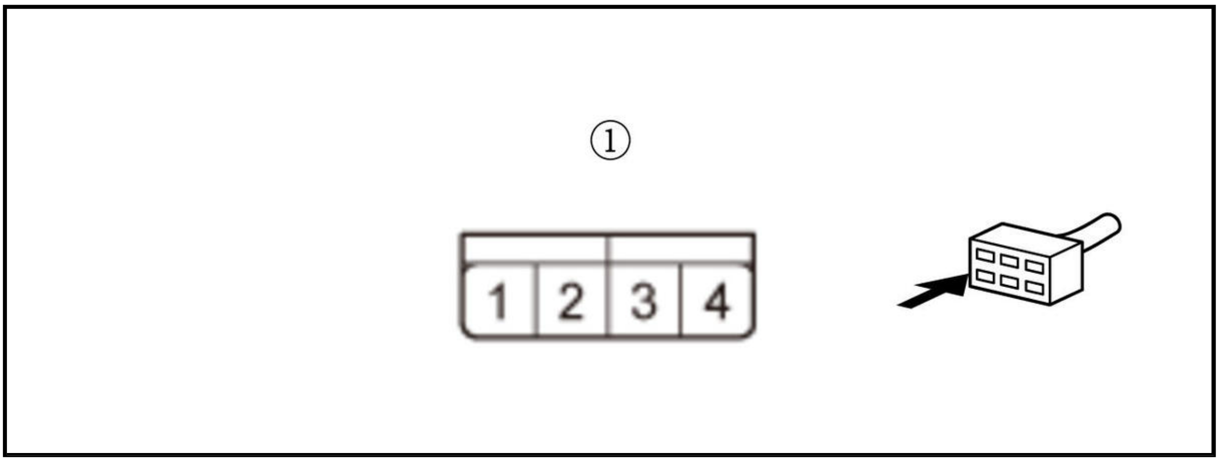

Is there an open circuit, or at least 1 MΩ?

YES

The LS1+ and LS1- wires are not shorted. Go to step 8.

NO

Short to ground in the floor wire harness between the SRS unit and the left side impact sensor (first); replace the floor wire harness, then clear the DTC.

8. Shorted wire check (LS1+, LS1- lines to power)

-1. Reconnect the negative cable to the 12 volt battery.

-2. Turn the vehicle to the ON mode.

-3. Measure the voltage between test points 1 and 2.

Test condition	Vehicle ON mode
	SRS unit connector B (39P): disconnected
	Left side impact sensor (first) 4P connector (on the floor wire harness): disconnected
	Left side impact sensor (second) 2P connector (on the floor wire harness): disconnected
Test point 1	Left side impact sensor (first) 4P connector (female terminals) No. 2 (on the floor wire harness): ①
Test point 2	Body ground

Test point 1	Left side impact sensor (first) 4P connector (female terminals) No. 3 (on the floor wire harness): ①
Test point 2	Body ground

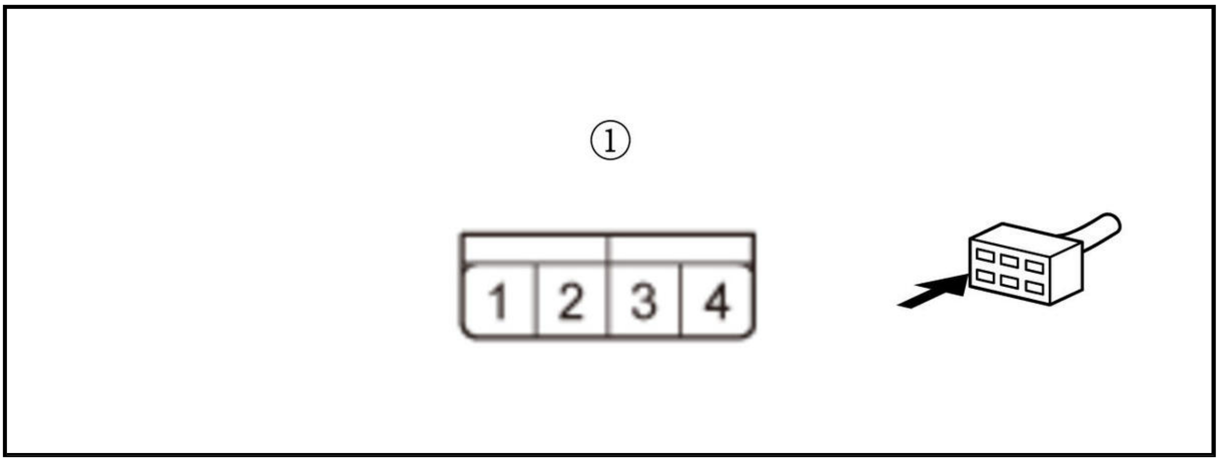

Is there 0.2 V or less?

YES

The LS1+ and LS1- wires are not shorted to power. Go to step 9.

NO

Short to power in the floor wire harness between the SRS unit and the left side impact sensor (first); replace the floor wire harness, then clear the DTC.

9. Open wire check (LS1+, LS1- lines)

   -1. Turn the vehicle to the OFF (LOCK) mode.

   -2. Measure the resistance between test points 1 and 2.

Test condition	Vehicle OFF (LOCK) mode
	SRS unit connector B (39P): disconnected
	Left side impact sensor (first) 4P connector (on the floor wire harness): disconnected
	Left side impact sensor (second) 2P connector (on the floor wire harness): disconnected
Test point 1	SRS unit connector B (39P) No. 38
Test point 2	Left side impact sensor (first) 4P connector (female terminals) No. 3 (on the floor wire harness): ①

Test point 1	SRS unit connector B (39P) No. 39
Test point 2	Left side impact sensor (first) 4P connector (female terminals) No. 2 (on the floor wire harness): ①

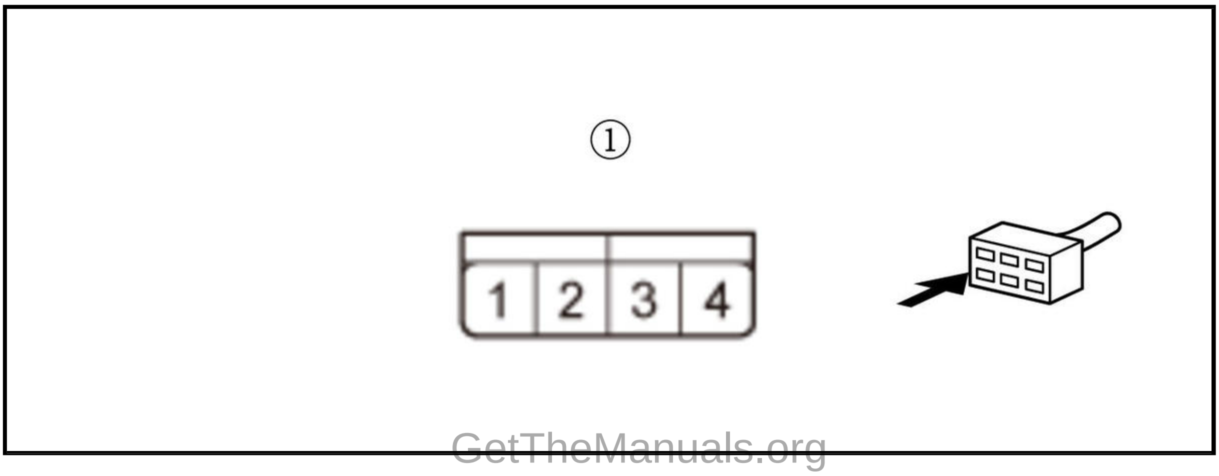

Is there 1.0 Ω or less?

YES

The LS1+ and LS1- wires are OK. Disconnect and reconnect the connector, and then check the DTC again. If the DTC is still present, check for any authorized service information related to the DTCs or symptoms you are troubleshooting or **replace the SRS unit** .

NO

Open in the floor wire harness between the SRS unit and the left side impact sensor (first); replace the floor wire harness, then clear the DTC.

10. Harness visual check

-1. Turn the vehicle to the OFF (LOCK) mode.

-2. Check for damage on the floor wire harness that side impact sensor is connected to.

Is the floor wire harness OK?

YES

Go to step 11.

NO

Replace the floor wire harness, then clear the DTC, and retest.

11. Connector connection check

-1. Check the following connections.

SRS unit connector B (39P)
Left side impact sensor (first) 4P connector (on the floor wire harness)

Left side impact sensor (second) 2P connector (on the floor wire harness)

Are the connectors OK?

YES

Go to step 13.

NO

Go to step 12.

12. System check

-1. Reset the loose connections that caused the problem in step 11.

-2. Clear the DTCs with the HDS.

-3. Turn the vehicle to the ON mode, then wait for 10 seconds.

-4. Check for DTCs with the HDS.

DTC Description	DTC
B0092-87 No signal from the left side impact sensor (second)	B

Is DTC B0092-87 indicated?

YES

Turn the vehicle to the OFF (LOCK) mode, then go to step 13.

NO

The system is OK at this time.

13. Left side impact sensor (second) substituting

    -1. Disconnect the negative cable from the 12 volt battery, then wait at least 3 minutes.

    -2. **Substitute a known-good left side impact sensor (second)** .

    -3. Reconnect the negative cable to the 12 volt battery.

    -4. Clear the DTCs with the HDS.

    -5. Turn the vehicle to the ON mode, then wait for 10 seconds.

    -6. Check for DTCs with the HDS.

DTC Description	DTC
B0092-87 No signal from the left side impact sensor (second)	B

Is DTC B0092-87 indicated?

YES

Go to step 14.

NO

Replace the left side impact sensor (second) , then clear the DTC.

14. Left side impact sensor (first) substituting

    -1. Turn the vehicle to the OFF (LOCK) mode.

    -2. Disconnect the negative cable from the 12 volt battery, then wait at least 3 minutes.

    -3. Return the left side impact sensor (second) which was replaced.

    -4. **Substitute a known-good left side impact sensor (first)** .

    -5. Reconnect the negative cable to the 12 volt battery.

    -6. Clear the DTCs with the HDS.

    -7. Turn the vehicle to the ON mode, then wait for 10 seconds.

    -8. Check for DTCs with the HDS.

DTC Description	DTC
B0092-87 No signal from the left side impact sensor (second)	B

Is DTC B0092-87 indicated?

YES

Go to step 15.

NO

Replace the left side impact sensor (first) , then clear the DTC.

15. Shorted wire check (LS2+ line to LS2- line)

-1. Turn the vehicle to the OFF (LOCK) mode.

-2. Disconnect the negative cable from the 12 volt battery, then wait at least 3 minutes.

-3. Return the left side impact sensor (first) which was replaced.

-4. Disconnect the following connectors.

SRS unit connector B (39P)
Left side impact sensor (first) 4P connector (on the floor wire harness)
Left side impact sensor (second) 2P connector (on the floor wire harness)

-5. Measure the resistance between test points 1 and 2.

Test condition	Vehicle OFF (LOCK) mode
	SRS unit connector B (39P): disconnected
	Left side impact sensor (first) 4P connector (on the floor wire harness): disconnected
	Left side impact sensor (second) 2P connector (on the floor wire harness): disconnected
Test point 1	Left side impact sensor (second) 2P connector (female terminals) No. 1 (on the floor wire harness): ①
Test point 2	Left side impact sensor (second) 2P connector (female terminals) No. 2 (on the floor wire harness): ①

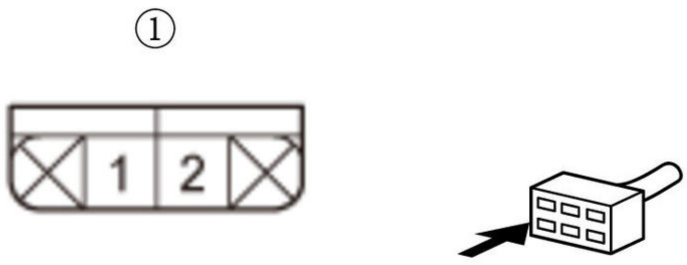

Is there an open circuit, or at least 1 MΩ?

YES

The LS2+ and LS2- wires are not shorted. Go to step 16.

NO

Short to another wire in the floor wire harness between the left side impact sensor (first) and the left side impact sensor (second); replace the floor wire harness, then clear the DTC.

16. Shorted wire check (LS2+, LS2- lines)

-1. Measure the resistance between test points 1 and 2.

Test condition	Vehicle OFF (LOCK) mode
	SRS unit connector B (39P): disconnected
	Left side impact sensor (first) 4P connector (on the floor wire harness): disconnected
	Left side impact sensor (second) 2P connector (on the floor wire harness): disconnected
Test point 1	Left side impact sensor (second) 2P connector (female terminals) No. 1 (on the floor wire harness): ①
Test point 2	Body ground

Test point 1	Left side impact sensor (second) 2P connector (female terminals) No. 2 (on the floor wire harness): ①
Test point 2	Body ground

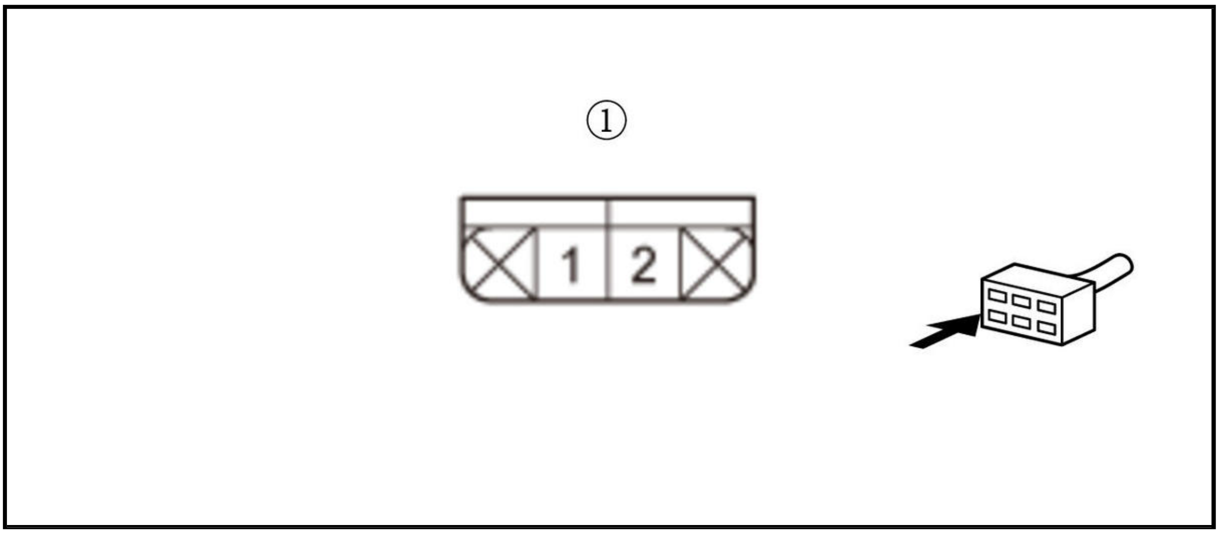

Is there an open circuit, or at least 1 MΩ?

YES

The LS2+ and LS2- wires are not shorted. Go to step 17.

NO

Short to ground in the floor wire harness between the left side impact sensor (first) and the left side impact sensor (second); replace the floor wire harness, then clear the DTC.

17. Shorted wire check (LS2+, LS2- lines to power)

-1. Reconnect the negative cable to the 12 volt battery.

-2. Turn the vehicle to the ON mode.

-3. Measure the voltage between test points 1 and 2.

Test condition	Vehicle ON mode

	SRS unit connector B (39P): disconnected
	Left side impact sensor (first) 4P connector (on the floor wire harness): disconnected
	Left side impact sensor (second) 2P connector (on the floor wire harness): disconnected
Test point 1	Left side impact sensor (second) 2P connector (female terminals) No. 1 (on the floor wire harness): ①
Test point 2	Body ground

Test point 1	Left side impact sensor (second) 2P connector (female terminals) No. 2 (on the floor wire harness): ①
Test point 2	Body ground

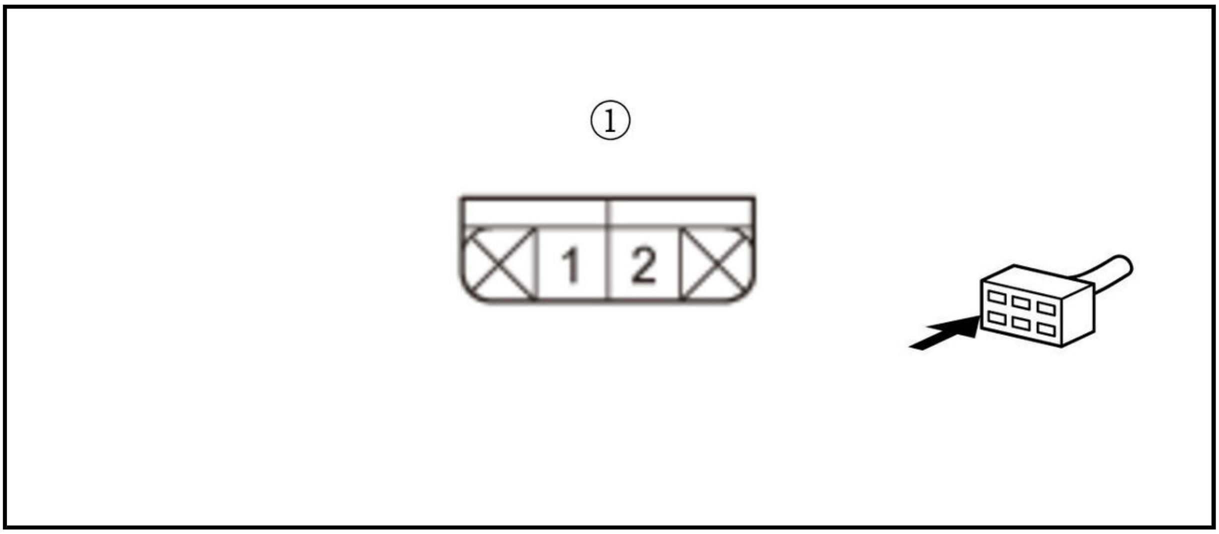

Is there 0.2 V or less?

YES

The LS2+ and LS2- wires are not shorted to power. Go to step 18.

NO

Short to power in the floor wire harness between the left side impact sensor (first) and the left side impact sensor (second); replace the floor wire harness, then clear the DTC.

18. Open wire check (LS2+, LS2- lines)

-1. Turn the vehicle to the OFF (LOCK) mode.

-2. Measure the resistance between test points 1 and 2.

Test condition	Vehicle OFF (LOCK) mode
	SRS unit connector B (39P): disconnected
	Left side impact sensor (first) 4P connector (on the floor wire harness): disconnected
	Left side impact sensor (second) 2P connector (on the floor wire harness): disconnected
Test point 1	Left side impact sensor (first) 4P connector (female terminals) No. 1 (on the floor wire harness): ①

Test point 2	Left side impact sensor (second) 2P connector (female terminals) No. 2 (on the floor wire harness): ②

Test point 1	Left side impact sensor (first) 4P connector (female terminals) No. 4 (on the floor wire harness): ①
Test point 2	Left side impact sensor (second) 2P connector (female terminals) No. 1 (on the floor wire harness): ②

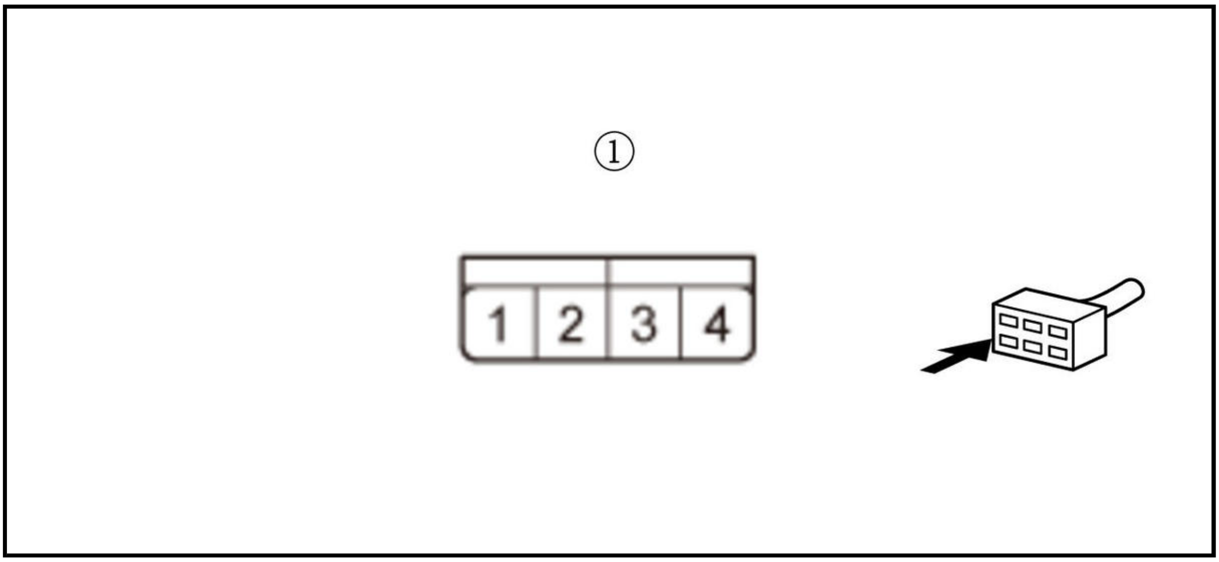

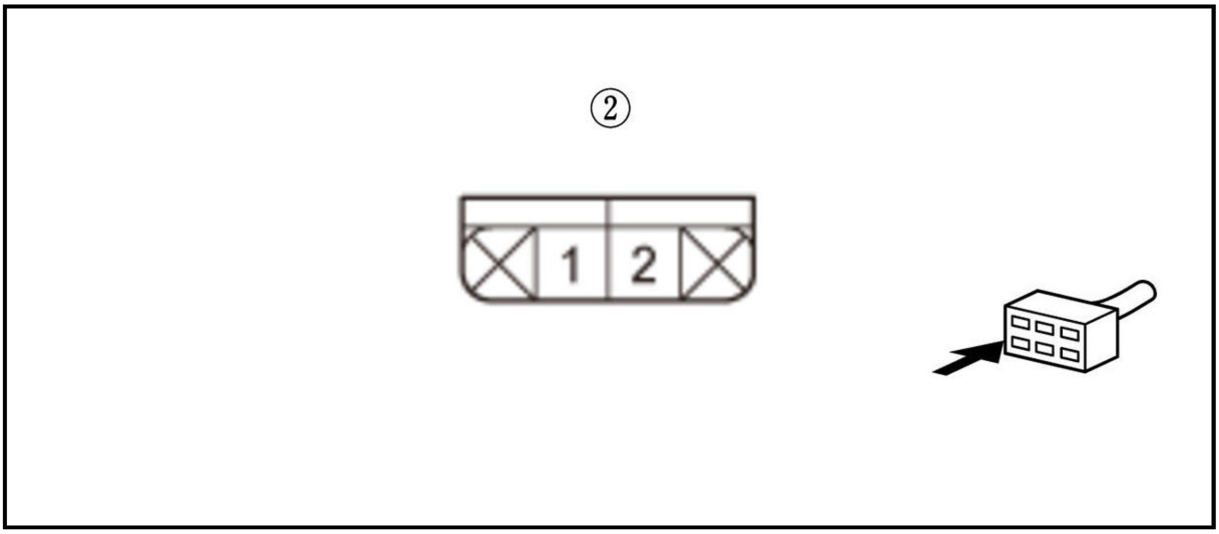

Is there 1.0 Ω or less?

YES

The LS2+ and LS2- wires are OK. Disconnect and reconnect the connector, and then check the DTC again. If the DTC is still present, check for any authorized service information related to the DTCs or symptoms you are troubleshooting or **replace the SRS unit** .

NO

Open in the floor wire harness between the left side impact sensor (first) and the left side impact sensor (second); replace the floor wire harness, then clear the DTC.

DTC B0092-4A, B0092-92

DTC B0092-4A, B0092-92 : Internal Failure of the Left Side Impact Sensor (second)

NOTE:

- **Before doing this troubleshooting procedure, find out if the vehicle was in a collision. If so, verify that all the required components were replaced with new components of the correct part number and were properly installed** .
- Before doing this troubleshooting procedure, review **SRS Precautions and Procedures** and **General Troubleshooting Information** .

DTC Description	DTC
B0092-4A Internal failure of the left side impact sensor (second)	B
B0092-92 Internal failure of the left side impact sensor (second)	B

DTC (SRS)

1. Problem verification

   -1. Clear the DTCs with the HDS.

   -2. Turn the vehicle to the ON mode, then wait for 10 seconds.

   -3. Check for DTCs with the HDS.

DTC Description	DTC
B0092-4A Internal failure of the left side impact sensor (second)	B
B0092-92 Internal failure of the left side impact sensor (second)	B

   Is DTC B0092-4A or B0092-92 indicated?

   YES

   The failure is duplicated. **Replace the left side impact sensor (second)** , then clear the DTC, and retest. If the DTC is still present, check for any authorized service information related to the DTCs or symptoms you are troubleshooting or **replace the SRS unit** .

   NO

   Intermittent failure, the system is OK at this time. Go to Troubleshooting Intermittent Failures. If another DTC is indicated, troubleshoot the DTC.

DTC B0095-4A, B0095-92

DTC B0095-4A, B0095-92 : Internal Failure of the Right Front Impact Sensor

NOTE:

- **Before doing this troubleshooting procedure, find out if the vehicle was in a collision. If so, verify that all the required components were replaced with new components of the correct part number and were properly installed** .
- Before doing this troubleshooting procedure, review **SRS Precautions and Procedures** and **General Troubleshooting Information** .

DTC Description	DTC
B0095-4A Internal failure of the right front impact sensor	B
B0095-92 Internal failure of the right front impact sensor	B

DTC (SRS)

1. Problem verification

   -1. Clear the DTCs with the HDS.

   -2. Turn the vehicle to the ON mode, then wait for 10 seconds.

   -3. Check for DTCs with the HDS.

DTC Description	DTC
B0095-4A Internal failure of the right front impact sensor	B
B0095-92 Internal failure of the right front impact sensor	B

   Is DTC B0095-4A or B0095-92 indicated?

   YES

   The failure is duplicated. **Replace the right front impact sensor** , then clear the DTC, and retest. If the DTC is still present, check for any authorized service information related to the DTCs or symptoms you are troubleshooting or **replace the SRS unit** .

   NO

   Intermittent failure, the system is OK at this time. Go to Troubleshooting Intermittent Failures. If another DTC is indicated, troubleshoot the DTC.

DTC B0095-87

DTC B0095-87 : No Signal From the Right Front Impact Sensor

Special Tools Required

SRS Inflator Simulator 07SAZ-TB4011A

SRS Simulator Lead L 070AZ-SNA0300

NOTE:

- **Before doing this troubleshooting procedure, find out if the vehicle was in a collision. If so, verify that all the required components were replaced with new components of the correct part number and were properly installed** .
- Before doing this troubleshooting procedure, review **SRS Precautions and Procedures** , **General Troubleshooting Information** , and **12 Volt Battery Terminal Disconnection and Reconnection** .

DTC Description	DTC
B0095-87 No signal from the right front impact sensor	B

DTC (SRS)

1. Problem verification

   -1. Clear the DTCs with the HDS.

   -2. Turn the vehicle to the ON mode, then wait for 10 seconds.

   -3. Check for DTCs with the HDS.

DTC Description	DTC
B0095-87 No signal from the right front impact sensor	B

Is DTC B0095-87 indicated?

YES

The failure is duplicated. Go to step 2.

NO

Intermittent failure, the system is OK at this time. Go to Troubleshooting Intermittent Failures. If another DTC is indicated, troubleshoot the DTC.

2. Connector connection check

-1. Turn the vehicle to the OFF (LOCK) mode.

-2. Check the following connections.

SRS unit connector A (39P)
Right front impact sensor 2P connector (on the engine compartment wire harness)
Connector between the SRS unit and the right front impact sensor

Are the connectors OK?

YES

Go to step 4.

NO

Go to step 3.

3. System check

-1. Reset the loose connections that caused the problem in step 2.

-2. Clear the DTCs with the HDS.

-3. Turn the vehicle to the ON mode, then wait for 10 seconds.

-4. Check for DTCs with the HDS.

DTC Description	DTC
B0095-87 No signal from the right front impact sensor	B

Is DTC B0095-87 indicated?

YES

Turn the vehicle to the OFF (LOCK) mode, then go to step 4.

NO

The system is OK at this time.

4. Shorted wire check (RFS+ line to RFS- line)

-1. Disconnect the negative cable from the 12 volt battery, then wait at least 3 minutes.

-2. Disconnect the following connectors.

SRS unit connector A (39P)
Right front impact sensor 2P connector (on the engine compartment wire harness)

-3. Measure the resistance between test points 1 and 2.

Test condition	Vehicle OFF (LOCK) mode
	SRS unit connector A (39P): disconnected
	Right front impact sensor 2P connector (on the engine compartment wire harness): disconnected
Test point 1	**SRS unit connector A (39P) No. 29**
Test point 2	**SRS unit connector A (39P) No. 30**

Is there an open circuit, or at least 1 MΩ?

YES

The RFS+ and RFS- wires are not shorted. Go to step 5.

NO

Short to another wire in the engine compartment wire harness or the dashboard wire harness; replace the faulty harness, then clear the DTC.

5. Shorted wire check (RFS+, RFS- lines)

-1. Measure the resistance between test points 1 and 2.

Test condition	Vehicle OFF (LOCK) mode
	SRS unit connector A (39P): disconnected
	Right front impact sensor 2P connector (on the engine compartment wire harness): disconnected
Test point 1	**SRS unit connector A (39P) No. 29**
Test point 2	Body ground

Test point 1	**SRS unit connector A (39P) No. 30**
Test point 2	Body ground

Is there an open circuit, or at least 1 MΩ?

YES

The RFS+ and RFS- wires are not shorted. Go to step 6.

NO

Short to ground in the engine compartment wire harness or the dashboard wire harness; replace the faulty harness, then clear the DTC.

6. Shorted wire check (RFS+, RFS- lines to power)

-1. Reconnect the negative cable to the 12 volt battery.

-2. Turn the vehicle to the ON mode.

-3. Measure the voltage between test points 1 and 2.

Test condition	Vehicle ON mode SRS unit connector A (39P): disconnected Right front impact sensor 2P connector (on the engine compartment wire harness): disconnected
Test point 1	**SRS unit connector A (39P) No. 29**
Test point 2	Body ground

Test point 1	**SRS unit connector A (39P) No. 30**
Test point 2	Body ground

Is there 0.2 V or less?

YES

The RFS+ and RFS- wires are not shorted to power. Go to step 7.

NO

Short to power in the engine compartment wire harness or the dashboard wire harness; replace the faulty harness, then clear the DTC.

7. Open wire check (RFS+, RFS- lines)

   -1. Turn the vehicle to the OFF (LOCK) mode.

   -2. Connect the black terminal (A) of SRS simulator lead L to the SRS inflator simulator (jumper connector), then connect SRS simulator lead L to the right front impact sensor 2P connector (B) on the engine compartment wire harness.

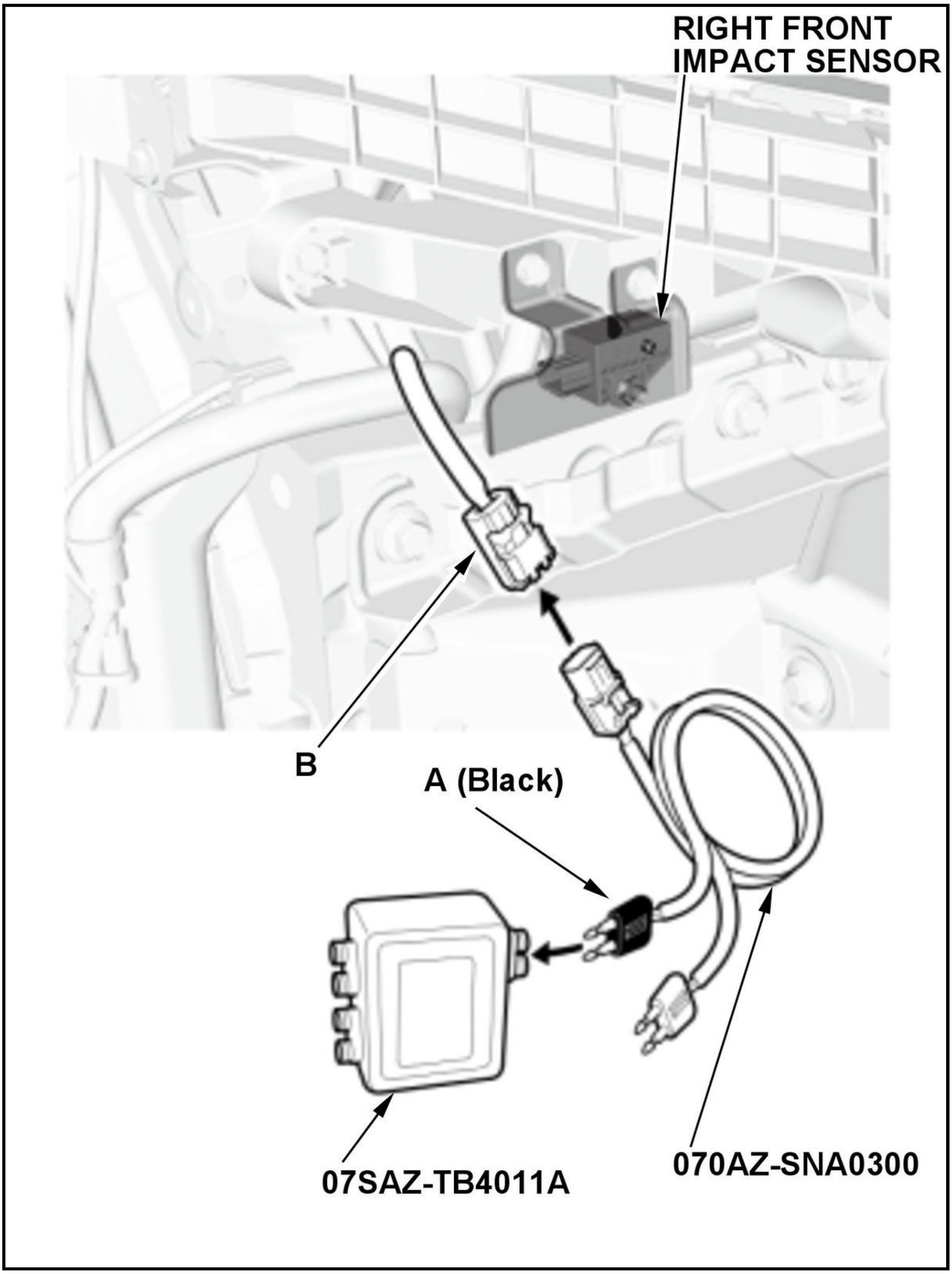
RIGHT FRONT IMPACT SENSOR
B
A (Black)
07SAZ-TB4011A
070AZ-SNA0300

-3. Measure the resistance between test points 1 and 2.

Test condition	Vehicle OFF (LOCK) mode
	SRS unit connector A (39P): disconnected
	Right front impact sensor 2P connector (on the engine compartment wire harness): disconnected
	Right front impact sensor 2P connector (on the engine compartment wire harness): connected to SRS simulator lead L
Test point 1	**SRS unit connector A (39P) No. 29**
Test point 2	**SRS unit connector A (39P) No. 30**

Is there 1.0 Ω or less?

YES

The RFS+ and RFS- wires are OK. **Replace the right front impact sensor** , then clear the DTC, and retest. If the DTC is still present, check for any authorized service information related to the DTCs or symptoms you are troubleshooting or **replace the SRS unit** .

NO

Open in the engine compartment wire harness or the dashboard wire harness; replace the faulty harness, then clear the DTC.

DTC B0096-4A, B0096-92

DTC B0096-4A, B0096-92 : Internal Failure of the Right Side Impact Sensor (first)

NOTE:

- **Before doing this troubleshooting procedure, find out if the vehicle was in a collision. If so, verify that all the required components were replaced with new components of the correct part number and were properly installed** .
- Before doing this troubleshooting procedure, review **SRS Precautions and Procedures** and **General Troubleshooting Information** .

DTC Description	DTC
B0096-4A Internal failure of the right side impact sensor (first)	B
B0096-92 Internal failure of the right side impact sensor (first)	B

DTC (SRS)

1. Problem verification

-1. Clear the DTCs with the HDS.

-2. Turn the vehicle to the ON mode, then wait for 10 seconds.

-3. Check for DTCs with the HDS.

DTC Description	DTC
B0096-4A Internal failure of the right side impact sensor (first)	B
B0096-92 Internal failure of the right side impact sensor (first)	B

Is DTC B0096-4A or B0096-92 indicated?

YES

The failure is duplicated. **Replace the right side impact sensor (first)** , then clear the DTC, and retest. If the DTC is still present, check for any authorized service information related to the DTCs or symptoms you are troubleshooting or **replace the SRS unit** .

NO

Intermittent failure, the system is OK at this time. Go to Troubleshooting Intermittent Failures. If another DTC is indicated, troubleshoot the DTC.

DTC B0096-87, B0097-87

DTC B0096-87 : No Signal From the Right Side Impact Sensor (first)

DTC B0097-87 : No Signal From the Right Side Impact Sensor (second)

NOTE:

- **Before doing this troubleshooting procedure, find out if the vehicle was in a collision. If so, verify that all the required components were replaced with new components of the correct part number and were properly installed** .
- Before doing this troubleshooting procedure, review **SRS Precautions and Procedures** , **General Troubleshooting Information** , and **12 Volt Battery Terminal Disconnection and Reconnection** .

DTC Description	DTC
B0096-87 No signal from the right side impact sensor (first)	B
B0097-87 No signal from the right side impact sensor (second)	B

DTC (SRS)

1. DTC check

   -1. Clear the DTCs with the HDS.

   -2. Turn the vehicle to the ON mode, then wait for 10 seconds.

   -3. Check for DTCs with the HDS.

DTC Description	DTC
B0096-4A Internal failure of the right side impact sensor (first)	B
B0096-87 No signal from the right side impact sensor (first)	B
B0096-92 Internal failure of the right side impact sensor (first)	B
B0097-4A Internal failure of the right side impact sensor (second)	B
B0097-87 No signal from the right side impact sensor (second)	B
B0097-92 Internal failure of the right side impact sensor (second)	B

   Are DTCs indicated?

   DTC B0096-87

   Go to step 2.

   DTC B0097-87

   Go to step 10.

   DTC B0096-4A or B0096-92

   Replace the right side impact sensor (first) , then clear the DTC.

   DTC B0097-4A or B0097-92

   Replace the right side impact sensor (second) , then clear the DTC.

   NO DTC

   Intermittent failure, the system is OK at this time. Go to Troubleshooting Intermittent Failures. If another DTC is indicated, troubleshoot the DTC.

2. Harness visual check

-1. Turn the vehicle to the OFF (LOCK) mode.

-2. Check the damage on the floor wire harness that side impact sensor is connected to.

Is the floor wire harness OK?

YES

Go to step 3.

NO

Replace the floor wire harness, then clear the DTC, and retest.

3. Connector connection check

-1. Check the following connections.

SRS unit connector B (39P)
Right side impact sensor (first) 4P connector (on the floor wire harness)
Right side impact sensor (second) 2P connector (on the floor wire harness)

Are the connectors OK?

YES

Go to step 5.

NO

Go to step 4.

4. System check

-1. Reset the loose connections that caused the problem in step 3.

-2. Clear the DTCs with the HDS.

-3. Turn the vehicle to the ON mode, then wait for 10 seconds.

-4. Check for DTCs with the HDS.

DTC Description	DTC
B0096-87 No signal from the right side impact sensor (first)	B

Is DTC B0096-87 indicated?

YES

Turn the vehicle to the OFF (LOCK) mode, then go to step 5.

NO

The system is OK at this time.

5. Right side impact sensor (first) substituting

-1. Disconnect the negative cable from the 12 volt battery, then wait at least 3 minutes.

-2. **Substitute a known-good right side impact sensor (first)** .

-3. Reconnect the negative cable to the 12 volt battery.

-4. Clear the DTCs with the HDS.

-5. Turn the vehicle to the ON mode, then wait for 10 seconds.

-6. Check for DTCs with the HDS.

DTC Description	DTC
B0096-87 No signal from the right side impact sensor (first)	B

Is DTC B0096-87 indicated?

YES

Go to step 6.

NO

Replace the right side impact sensor (first) , then clear the DTC.

6. Shorted wire check (RS1+ line to RS1- line)

-1. Turn the vehicle to the OFF (LOCK) mode.

-2. Disconnect the negative cable from the 12 volt battery, then wait at least 3 minutes.

-3. Return the right side impact sensor (first) which was replaced.

-4. Disconnect the following connectors.

SRS unit connector B (39P)
Right side impact sensor (first) 4P connector (on the floor wire harness)
Right side impact sensor (second) 2P connector (on the floor wire harness)

-5. Measure the resistance between test points 1 and 2.

Test condition	Vehicle OFF (LOCK) mode
	SRS unit connector B (39P): disconnected
	Right side impact sensor (first) 4P connector (on the floor wire harness): disconnected
	Right side impact sensor (second) 2P connector (on the floor wire harness): disconnected
Test point 1	Right side impact sensor (first) 4P connector (female terminals) No. 2 (on the floor wire harness): ①
Test point 2	Right side impact sensor (first) 4P connector (female terminals) No. 3 (on the floor wire harness): ①

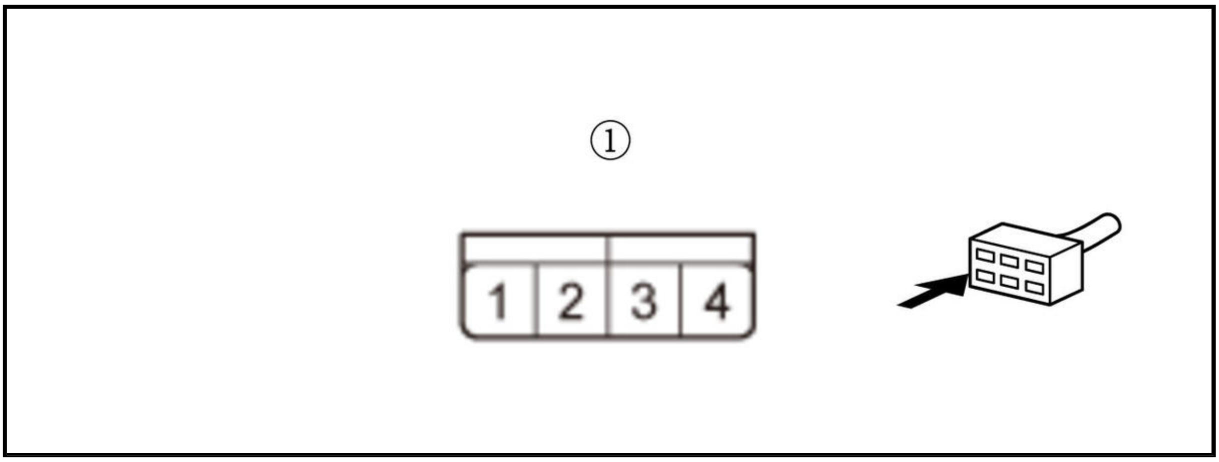

Is there an open circuit, or at least 1 MΩ?

YES

The RS1+ and RS1- wires are not shorted. Go to step 7.

NO

Short to another wire in the floor wire harness between the SRS unit and the right side impact sensor (first); replace the floor wire harness, then clear the DTC.

7. Shorted wire check (RS1+, RS1- lines)

-1. Measure the resistance between test points 1 and 2.

Test condition	Vehicle OFF (LOCK) mode
	SRS unit connector B (39P): disconnected
	Right side impact sensor (first) 4P connector (on the floor wire harness): disconnected
	Right side impact sensor (second) 2P connector (on the floor wire harness): disconnected
Test point 1	Right side impact sensor (first) 4P connector (female terminals) No. 2 (on the floor wire harness): ①
Test point 2	Body ground

Test point 1	Right side impact sensor (first) 4P connector (female terminals) No. 3 (on the floor wire harness): ①
Test point 2	Body ground

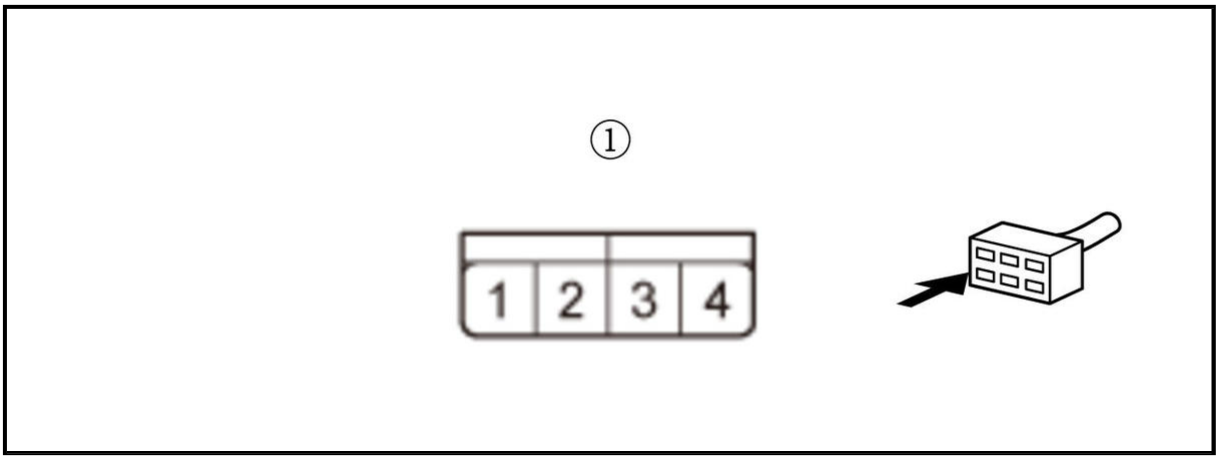

Is there an open circuit, or at least 1 MΩ?

YES

The RS1+ and RS1- wires are not shorted. Go to step 8.

NO

Short to ground in the floor wire harness between the SRS unit and the right side impact sensor (first); replace the floor wire harness, then clear the DTC.

8. Shorted wire check (RS1+, RS1- lines to power)

-1. Reconnect the negative cable to the 12 volt battery.

-2. Turn the vehicle to the ON mode.

-3. Measure the voltage between test points 1 and 2.

Test condition	Vehicle ON mode
	SRS unit connector B (39P): disconnected
	Right side impact sensor (first) 4P connector (on the floor wire harness): disconnected
	Right side impact sensor (second) 2P connector (on the floor wire harness): disconnected
Test point 1	Right side impact sensor (first) 4P connector (female terminals) No. 2 (on the floor wire harness): ①
Test point 2	Body ground

Test point 1	Right side impact sensor (first) 4P connector (female terminals) No. 3 (on the floor wire harness): ①
Test point 2	Body ground

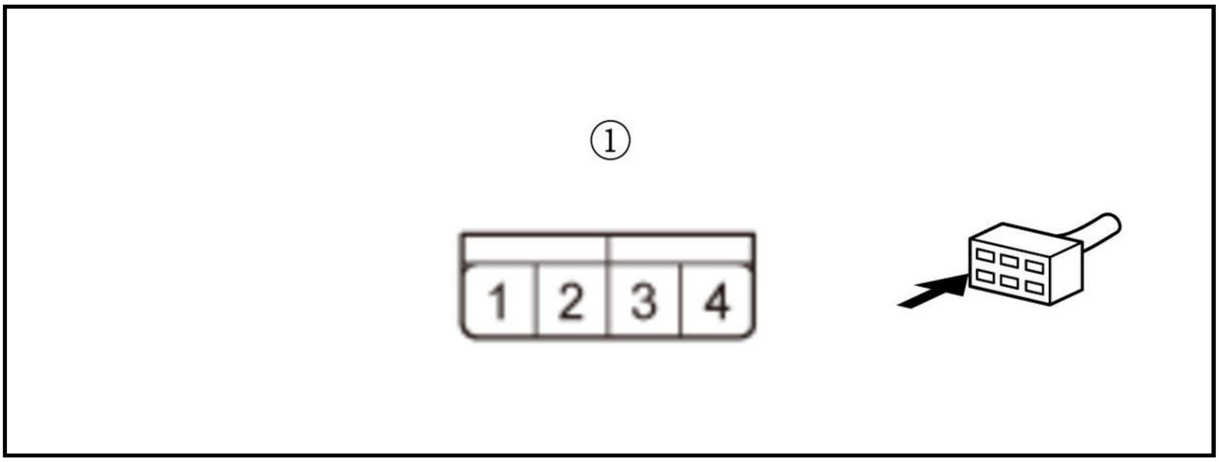

Is there 0.2 V or less?

YES

The RS1+ and RS1- wires are not shorted to power. Go to step 9.

NO

Short to power in the floor wire harness between the SRS unit and the right side impact sensor (first); replace the floor wire harness, then clear the DTC.

9. Open wire check (RS1+, RS1- lines)

-1. Turn the vehicle to the OFF (LOCK) mode.

-2. Measure the resistance between test points 1 and 2.

Test condition	Vehicle OFF (LOCK) mode
	SRS unit connector B (39P): disconnected
	Right side impact sensor (first) 4P connector (on the floor wire harness): disconnected
	Right side impact sensor (second) 2P connector (on the floor wire harness): disconnected
Test point 1	**SRS unit connector B (39P) No. 36**
Test point 2	Right side impact sensor (first) 4P connector (female terminals) No. 3 (on the floor wire harness): ①

Test point 1	**SRS unit connector B (39P) No. 37**
Test point 2	Right side impact sensor (first) 4P connector (female terminals) No. 2 (on the floor wire harness): ①

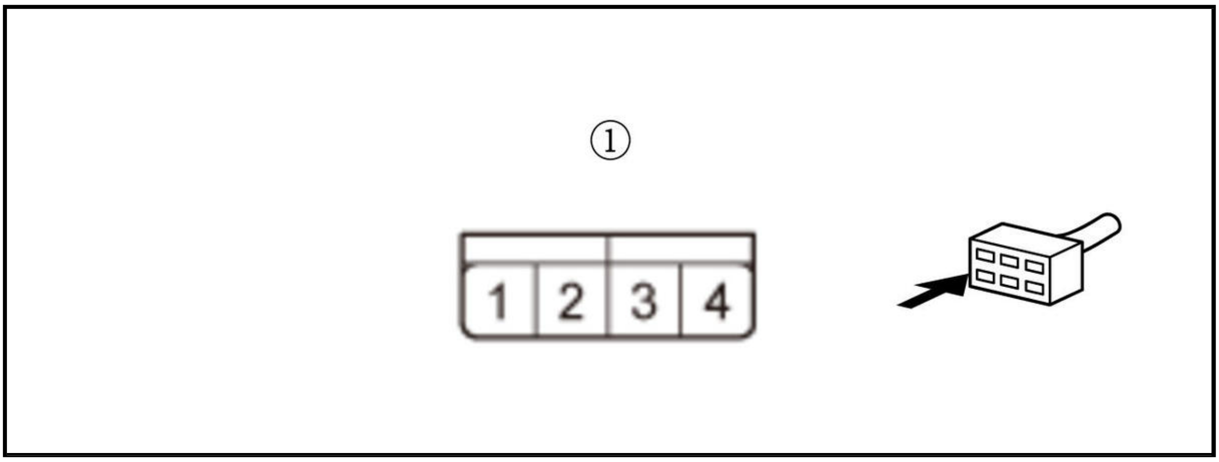

Is there 1.0 Ω or less?

YES

The RS1+ and RS1- wires are OK. Disconnect and reconnect the connector, and then check the DTC again. If the DTC is still present, check for any authorized service information related to the DTCs or symptoms you are troubleshooting or **replace the SRS unit** .

NO

Open in the floor wire harness between the SRS unit and the right side impact sensor (first); replace the floor wire harness, then clear the DTC.

10. Harness visual check

-1. Turn the vehicle to the OFF (LOCK) mode.

-2. Check the damage on the floor wire harness that side impact sensor is connected to.

Is the floor wire harness OK?

YES

Go to step 11.

NO

Replace the floor wire harness, then clear the DTC, and retest.

11. Connector connection check

-1. Check the following connections.

SRS unit connector B (39P)
Right side impact sensor (first) 4P connector (on the floor wire harness)

Right side impact sensor (second) 2P connector (on the floor wire harness)

Are the connectors OK?

YES

Go to step 13.

NO

Go to step 12.

12. System check

-1. Reset the loose connections that caused the problem in step 11.

-2. Clear the DTCs with the HDS.

-3. Turn the vehicle to the ON mode, then wait for 10 seconds.

-4. Check for DTCs with the HDS.

DTC Description	DTC
B0097-87 No signal from the right side impact sensor (second)	B

Is DTC B0097-87 indicated?

YES

Turn the vehicle to the OFF (LOCK) mode, then go to step 13.

NO

The system is OK at this time.

13. Right side impact sensor (second) substituting

-1. Disconnect the negative cable from the 12 volt battery, then wait at least 3 minutes.

-2. **Substitute a known-good right side impact sensor (second)** .

-3. Reconnect the negative cable to the 12 volt battery.

-4. Clear the DTCs with the HDS.

-5. Turn the vehicle to the ON mode, then wait for 10 seconds.

-6. Check for DTCs with the HDS.

DTC Description	DTC
B0097-87 No signal from the right side impact sensor (second)	B

Is DTC B0097-87 indicated?

YES

Go to step 14.

NO

Replace the right side impact sensor (second) , then clear the DTC.

14. Right side impact sensor (first) substituting

-1. Turn the vehicle to the OFF (LOCK) mode.

-2. Disconnect the negative cable from the 12 volt battery, then wait at least 3 minutes.

-3. Return the right side impact sensor (second) which was replaced.

-4. **Substitute a known-good right side impact sensor (first)** .

-5. Reconnect the negative cable to the 12 volt battery.

-6. Clear the DTCs with the HDS.

-7. Turn the vehicle to the ON mode, then wait for 10 seconds.

-8. Check for DTCs with the HDS.

DTC Description	DTC
B0097-87 No signal from the right side impact sensor (second)	B

Is DTC B0097-87 indicated?

YES

Go to step 15.

NO

Replace the right side impact sensor (first) , then clear the DTC.

15. Shorted wire check (RS2+ line to RS2- line)

-1. Turn the vehicle to the OFF (LOCK) mode.

-2. Disconnect the negative cable from the 12 volt battery, then wait at least 3 minutes.

-3. Return the right side impact sensor (first) which was replaced.

-4. Disconnect the following connectors.

SRS unit connector B (39P)
Right side impact sensor (first) 4P connector (on the floor wire harness)
Right side impact sensor (second) 2P connector (on the floor wire harness)

-5. Measure the resistance between test points 1 and 2.

Test condition	Vehicle OFF (LOCK) mode
	SRS unit connector B (39P): disconnected
	Right side impact sensor (first) 4P connector (on the floor wire harness): disconnected
	Right side impact sensor (second) 2P connector (on the floor wire harness): disconnected
Test point 1	Right side impact sensor (second) 2P connector (female terminals) No. 1 (on the floor wire harness): ①
Test point 2	Right side impact sensor (second) 2P connector (female terminals) No. 2 (on the floor wire harness): ①

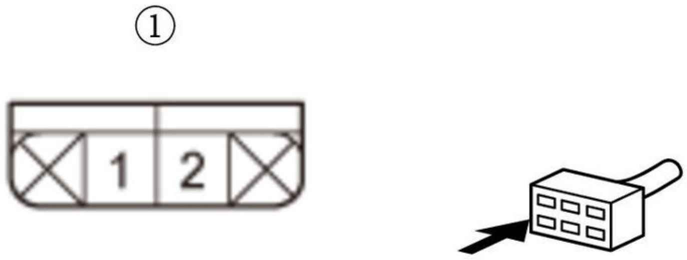

Is there an open circuit, or at least 1 MΩ?

YES

The RS2+ and RS2- wires are not shorted. Go to step 16.

NO

Short to another wire in the floor wire harness between the right side impact sensor (first) and the right side impact sensor (second); replace the floor wire harness, then clear the DTC.

16. Shorted wire check (RS2+, RS2- lines)

-1. Measure the resistance between test points 1 and 2.

Test condition	Vehicle OFF (LOCK) mode
	SRS unit connector B (39P): disconnected
	Right side impact sensor (first) 4P connector (on the floor wire harness): disconnected
	Right side impact sensor (second) 2P connector (on the floor wire harness): disconnected
Test point 1	Right side impact sensor (second) 2P connector (female terminals) No. 1 (on the floor wire harness): ①
Test point 2	Body ground

Test point 1	Right side impact sensor (second) 2P connector (female terminals) No. 2 (on the floor wire harness): ①
Test point 2	Body ground

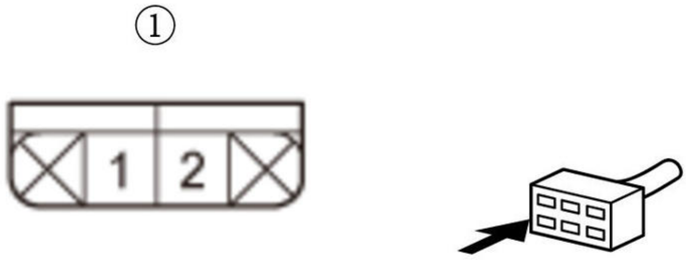

Is there an open circuit, or at least 1 MΩ?

YES

The RS2+ and RS2- wires are not shorted. Go to step 17.

NO

Short to ground in the floor wire harness between the right side impact sensor (first) and the right side impact sensor (second); replace the floor wire harness, then clear the DTC.

17. Shorted wire check (RS2+, RS2- lines to power)

-1. Reconnect the negative cable to the 12 volt battery.

-2. Turn the vehicle to the ON mode.

-3. Measure the voltage between test points 1 and 2.

Test condition	Vehicle ON mode
	SRS unit connector B (39P): disconnected
	Right side impact sensor (first) 4P connector (on the floor wire harness): disconnected
	Right side impact sensor (second) 2P connector (on the floor wire harness): disconnected
Test point 1	Right side impact sensor (second) 2P connector (female terminals) No. 1 (on the floor wire harness): ①
Test point 2	Body ground

Test point 1	Right side impact sensor (second) 2P connector (female terminals) No. 2 (on the floor wire harness): ①
Test point 2	Body ground

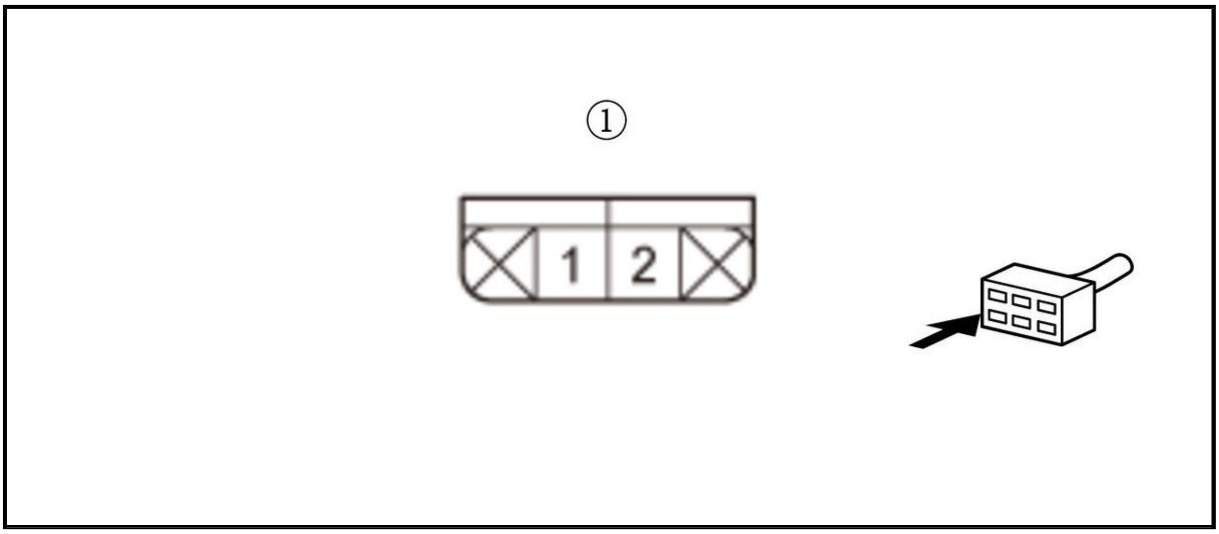

Is there 0.2 V or less?

YES

The RS2+ and RS2- wires are not shorted to power. Go to step 18.

NO

Short to power in the floor wire harness between the right side impact sensor (first) and the right side impact sensor (second); replace the floor wire harness, then clear the DTC.

18. Open wire check (RS2+, RS2- lines)

-1. Turn the vehicle to the OFF (LOCK) mode.

-2. Measure the resistance between test points 1 and 2.

Test condition	Vehicle OFF (LOCK) mode
	SRS unit connector B (39P): disconnected
	Right side impact sensor (first) 4P connector (on the floor wire harness): disconnected
	Right side impact sensor (second) 2P connector (on the floor wire harness): disconnected
Test point 1	Right side impact sensor (first) 4P connector (female terminals) No. 1 (on the floor wire harness): ①
Test point 2	Right side impact sensor (second) 2P connector (female terminals) No. 2 (on the floor wire harness): ②

Test point 1	Right side impact sensor (first) 4P connector (female terminals) No. 4 (on the floor wire harness): ①
Test point 2	Right side impact sensor (second) 2P connector (female terminals) No. 1 (on the floor wire harness): ②

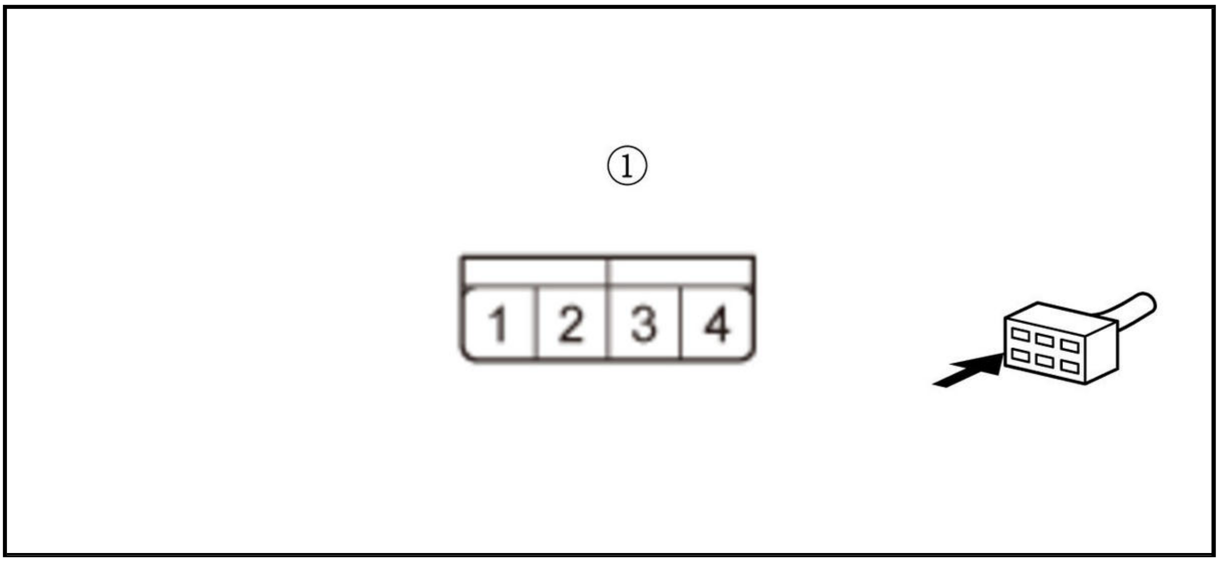

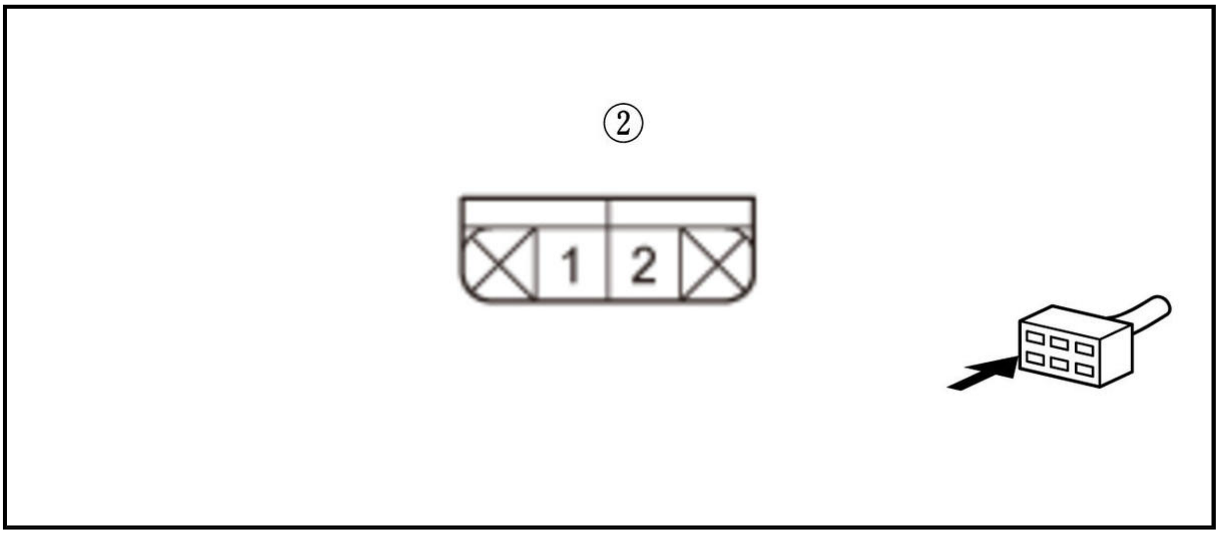

Is there 1.0 Ω or less?

YES

The RS2+ and RS2- wires are OK. Disconnect and reconnect the connector, and then check the DTC again. If the DTC is still present, check for any authorized service information related to the DTCs or symptoms you are troubleshooting or **replace the SRS unit** .

NO

Open in the floor wire harness between the right side impact sensor (first) and the right side impact sensor (second); replace the floor wire harness, then clear the DTC.

DTC B0097-4A, B0097-92

DTC B0097-4A, B0097-92 : Internal Failure of the Right Side Impact Sensor (second)

NOTE:

- **Before doing this troubleshooting procedure, find out if the vehicle was in a collision. If so, verify that all the required components were replaced with new components of the correct part number and were properly installed** .
- Before doing this troubleshooting procedure, review **SRS Precautions and Procedures** and **General Troubleshooting Information** .

DTC Description	DTC
B0097-4A Internal failure of the right side impact sensor (second)	B
B0097-92 Internal failure of the right side impact sensor (second)	B

DTC (SRS)

1. Problem verification

   -1. Clear the DTCs with the HDS.

   -2. Turn the vehicle to the ON mode, then wait for 10 seconds.

   -3. Check for DTCs with the HDS.

DTC Description	DTC
B0097-4A Internal failure of the right side impact sensor (second)	B
B0097-92 Internal failure of the right side impact sensor (second)	B

   Is DTC B0097-4A or B0097-92 indicated?

   YES

   The failure is duplicated. **Replace the right side impact sensor (second)** , then clear the DTC, and retest. If the DTC is still present, check for any authorized service information related to the DTCs or symptoms you are troubleshooting or **replace the SRS unit** .

   NO

   Intermittent failure, the system is OK at this time. Go to Troubleshooting Intermittent Failures. If another DTC is indicated, troubleshoot the DTC.

DTC B00A0-54

DTC B00A0-54 : Front Passenger's Weight Sensor not Calibrated

NOTE:

- **Before doing this troubleshooting procedure, find out if the vehicle was in a collision. If so, verify that all the required components were replaced with new components of the correct part number and were properly installed** .
- Before doing this troubleshooting procedure, review **SRS Precautions and Procedures** and **General Troubleshooting Information** .

DTC Description	DTC
B00A0-54 Front passenger's weight sensor not calibrated	B

DTC (SRS)

1. Problem verification

   -1. Clear the DTCs with the HDS.

   -2. Turn the vehicle to the ON mode, then wait for 10 seconds.

   -3. Check for DTCs with the HDS.

DTC Description	DTC
B00A0-54 Front passenger's weight sensor not calibrated	B

Is DTC B00A0-54 indicated?

YES

The failure is duplicated. **Do the front passenger's weight sensor initialization** .

NO

Intermittent failure, the system is OK at this time. Go to Troubleshooting Intermittent Failures. If another DTC is indicated, troubleshoot the DTC.

DTC B00B5-11, B00B5-2B

DTC B00B5-11 : Short or Decreased Resistance in the Driver's Seat Position Sensor

DTC B00B5-2B : Short to Another Wire Harness in the Driver's Seat Position Sensor

NOTE:

- **Before doing this troubleshooting procedure, find out if the vehicle was in a collision. If so, verify that all the required components were replaced with new components of the correct part number and were properly installed** .
- Before doing this troubleshooting procedure, review **SRS Precautions and Procedures** , **General Troubleshooting Information** , and **12 Volt Battery Terminal Disconnection and Reconnection** .

DTC Description	DTC
B00B5-11 Short or decreased resistance in the driver's seat position sensor	B
B00B5-2B Short to another wire harness in the driver's seat position sensor	B

DTC (SRS)

1. Problem verification

-1. Raise the driver's seat all the way up, and position all the way rearward.

-2. Clear the DTCs with the HDS.

-3. Turn the vehicle to the ON mode, then wait for 10 seconds.

-4. Check for DTCs with the HDS.

DTC Description	DTC
B00B5-11 Short or decreased resistance in the driver's seat position sensor	B
B00B5-2B Short to another wire harness in the driver's seat position sensor	B

Is DTC B00B5-11 or DTC B00B5-2B indicated?

YES

The failure is duplicated. Go to step 2.

NO

Intermittent failure, the system is OK at this time. Go to Troubleshooting Intermittent Failures. If another DTC is indicated, troubleshoot the DTC.

2. Driver's seat position sensor check

-1. Turn the vehicle to the OFF (LOCK) mode.

-2. Disconnect the following connector.

Driver's seat position sensor 2P connector (on the driver's seat wire harness)

-3. Clear the DTCs with the HDS.

-4. Turn the vehicle to the ON mode, then wait for 10 seconds.

-5. Check for DTCs with the HDS.

DTC Description	DTC
B00B5-11 Short or decreased resistance in the driver's seat position sensor	B
B00B5-2B Short to another wire harness in the driver's seat position sensor	B

Is DTC B00B5-11 or DTC B00B5-2B indicated?

YES

Go to step 3.

NO

Replace the driver's seat position sensor , then clear the DTC.

3. Shorted wire check (SS+/SS+ SPS line)

-1. Turn the vehicle to the OFF (LOCK) mode.

-2. Disconnect the negative cable from the 12 volt battery, then wait at least 3 minutes.

-3. Disconnect the following connector.

SRS unit connector B (39P)

-4. Measure the resistance between test points 1 and 2.

Test condition	Vehicle OFF (LOCK) mode
	Driver's seat position sensor 2P connector (on the driver's seat wire harness): disconnected
	SRS unit connector B (39P): disconnected
Test point 1	**SRS unit connector B (39P) No. 11**

Test point 2	Body ground

Is there an open circuit, or at least 1 MΩ?

YES

The SS+/SS+ SPS wire is OK. **Replace the driver's seat position sensor** , then clear the DTC, and retest. If the DTC is still present, check for any authorized service information related to the DTCs or symptoms you are troubleshooting or **replace the SRS unit** .

NO

Short to ground in the floor wire harness or the driver's seat wire harness; replace the faulty harness, then clear the DTC.

DTC B00B5-13

DTC B00B5-13 : Open or Increased Resistance in the Driver's Seat Position Sensor

NOTE:

- **Before doing this troubleshooting procedure, find out if the vehicle was in a collision. If so, verify that all the required components were replaced with new components of the correct part number and were properly installed** .
- Before doing this troubleshooting procedure, review **SRS Precautions and Procedures** , **General Troubleshooting Information** , and **12 Volt Battery Terminal Disconnection and Reconnection** .

DTC Description	DTC
B00B5-13 Open or increased resistance in the driver's seat position sensor	B

DTC (SRS)

1. Problem verification

   -1. Raise the driver's seat all the way up, and position all the way rearward.

   -2. Clear the DTCs with the HDS.

   -3. Turn the vehicle to the ON mode, then wait for 10 seconds.

   -4. Check for DTCs with the HDS.

DTC Description	DTC
B00B5-13 Open or increased resistance in the driver's seat position sensor	B

   Is DTC B00B5-13 indicated?

   YES

   The failure is duplicated. Go to step 2.

   NO

   Intermittent failure, the system is OK at this time. Go to Troubleshooting Intermittent Failures. If another DTC is indicated, troubleshoot the DTC.

2. Connector connection check

   -1. Turn the vehicle to the OFF (LOCK) mode.

   -2. Check the following connections.

SRS unit connector B (39P)
Driver's seat position sensor 2P connector (on the driver's seat wire harness)
Connector between the SRS unit and the driver's seat position sensor

   Are the connectors OK?

   YES

Go to step 4.

NO

Go to step 3.

3. System check

-1. Reset the loose connections that caused the problem in step 2.

-2. Clear the DTCs with the HDS.

-3. Turn the vehicle to the ON mode, then wait for 10 seconds.

-4. Check for DTCs with the HDS.

DTC Description	DTC
B00B5-13 Open or increased resistance in the driver's seat position sensor	B

Is DTC B00B5-13 indicated?

YES

Turn the vehicle to the OFF (LOCK) mode, then go to step 4.

NO

The system is OK at this time.

4. Open wire check (SS+/SS+ SPS, GND/GND SPS lines)

-1. Disconnect the following connector.

Driver's seat position sensor 2P connector (on the driver's seat wire harness)

-2. Connect terminals A and B with a jumper wire.

Terminal A	Driver's seat position sensor 2P connector (female terminals) No. 1 (on the driver's seat wire harness): ①
Terminal B	Driver's seat position sensor 2P connector (female terminals) No. 2 (on the driver's seat wire harness): ①

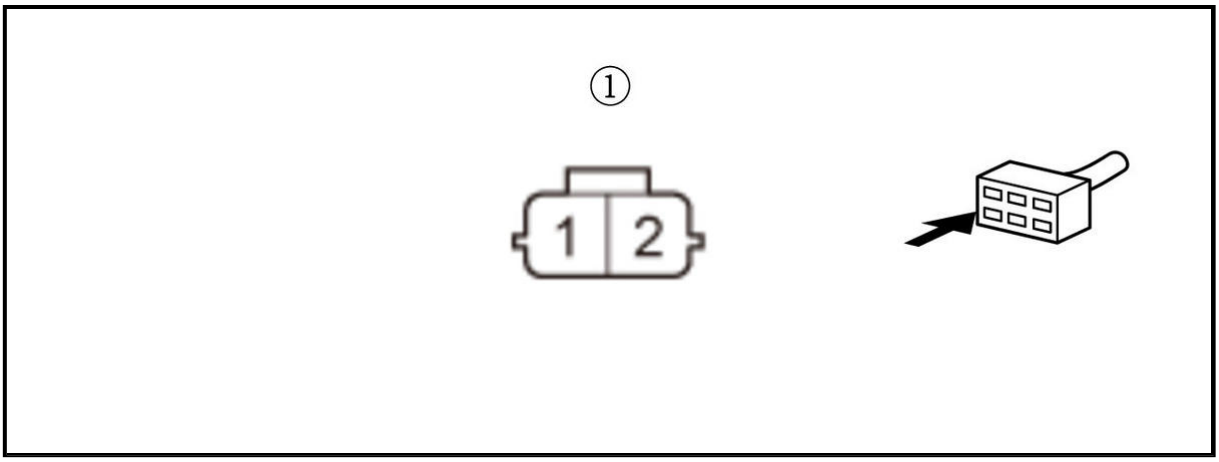

-3. Disconnect the negative cable from the 12 volt battery, then wait at least 3 minutes.

-4. Disconnect the following connector.

SRS unit connector B (39P)

-5. Measure the resistance between test points 1 and 2.

Test condition	Vehicle OFF (LOCK) mode
	Driver's seat position sensor 2P connector (on the driver's seat wire harness): disconnected
	SRS unit connector B (39P): disconnected
	Driver's seat position sensor 2P connector terminals No. 1 and No. 2 (on the driver's seat wire harness): jumped
Test point 1	**SRS unit connector B (39P) No. 11**
Test point 2	Body ground

Is there 1.0 Ω or less?

YES

The SS+/SS+ SPS and GND/GND SPS wires are OK. **Replace the driver's seat position sensor** , then clear the DTC, and retest. If the DTC is still present, check for any authorized service information related to the DTCs or symptoms you are troubleshooting or **replace the SRS unit** .

NO

Open in the floor wire harness or the driver's seat wire harness; check for a poor ground at G501. If the ground is OK, replace the faulty harness, then clear the DTC.

DTC B00C0-16, B00C0-96, B00C2-16, B00C2-96

DTC B00C0-16, B00C0-96 : Internal Failure of the Front Passenger's Weight Sensor (front inner side)

DTC B00C2-16, B00C2-96 : Internal Failure of the Front Passenger's Weight Sensor (rear inner side)

NOTE:

- **Before doing this troubleshooting procedure, find out if the vehicle was in a collision. If so, verify that all the required components were replaced with new components of the correct part number and were properly installed** .
- Before doing this troubleshooting procedure, review **SRS Precautions and Procedures** and **General Troubleshooting Information** .
- Before doing this troubleshooting procedure, **check the condition of the 12 volt battery** .
- If DTC U3000-49 stored, troubleshoot DTC U3000-49 before doing this troubleshooting procedure.

DTC Description	DTC
B00C0-16 Internal failure of the front passenger's weight sensor (front inner side)	B
B00C0-96 Internal failure of the front passenger's weight sensor (front inner side)	B
B00C2-16 Internal failure of the front passenger's weight sensor (rear inner side)	B
B00C2-96 Internal failure of the front passenger's weight sensor (rear inner side)	B

DTC (SRS)

1. Problem verification

   -1. Clear the DTCs with the HDS.

   -2. Turn the vehicle to the ON mode, then wait for 10 seconds.

   -3. Check for DTCs with the HDS.

DTC Description	DTC
B00C0-16 Internal failure of the front passenger's weight sensor (front inner side)	B
B00C0-96 Internal failure of the front passenger's weight sensor (front inner side)	B

DTC Description	DTC
B00C2-16 Internal failure of the front passenger's weight sensor (rear inner side)	B
B00C2-96 Internal failure of the front passenger's weight sensor (rear inner side)	B

Is DTC B00C0-16, B00C0-96, B00C2-16, or B00C2-96 indicated?

YES

The failure is duplicated. Faulty front passenger's weight sensor. **Replace the front passenger's weight sensors as an assembly** .

NO

Intermittent failure, the system is OK at this time. Go to Troubleshooting Intermittent Failures. If another DTC is indicated, troubleshoot the DTC.

DTC B00C0-4A, B00C2-4A

DTC B00C0-4A : Different Supplier ID/Function ID of the Front Passenger's Weight Sensor (front inner side)

DTC B00C2-4A : Different Supplier ID/Function ID of the Front Passenger's Weight Sensor (rear inner side)

NOTE:

- **Before doing this troubleshooting procedure, find out if the vehicle was in a collision. If so, verify that all the required components were replaced with new components of the correct part number and were properly installed** .
- Before doing this troubleshooting procedure, review **SRS Precautions and Procedures** and **General Troubleshooting Information** .
- If DTC U3000-49 is stored, troubleshoot DTC U3000-49 before doing this troubleshooting procedure.

DTC Description	DTC
B00C0-4A Different supplier ID/function ID of the front passenger's weight sensor (front inner side)	B
B00C2-4A Different supplier ID/function ID of the front passenger's weight sensor (rear inner side)	B

DTC (SRS)

1. Problem verification

-1. Clear the DTCs with the HDS.

-2. Turn the vehicle to the ON mode, then wait for 10 seconds.

-3. Check for DTCs with the HDS.

DTC Description	DTC
B00C0-4A Different supplier ID/function ID of the front passenger's weight sensor (front inner side)	B
B00C2-4A Different supplier ID/function ID of the front passenger's weight sensor (rear inner side)	B

Is DTC B00C0-4A or B00C2-4A indicated?

YES

The failure is duplicated. Faulty front passenger's weight sensor. **Replace the front passenger's weight sensors as an assembly** , then clear the DTC, and retest. If the DTC is still present, check for any authorized service information related to the DTCs or symptoms you are troubleshooting or **replace the SRS unit** .

NO

Intermittent failure, the system is OK at this time. Go to Troubleshooting Intermittent Failures. If another DTC is indicated, troubleshoot the DTC.

DTC B00C0-54, B00C2-54

DTC B00C0-54 : Different Serial ID of the Front Passenger's Weight Sensor (front inner side)

DTC B00C2-54 : Different Serial ID of the Front Passenger's Weight Sensor (rear inner side)

NOTE:

- **Before doing this troubleshooting procedure, find out if the vehicle was in a collision. If so, verify that all the required components were replaced with new components of the correct part number and were properly installed** .
- Before doing this troubleshooting procedure, review **SRS Precautions and Procedures** and **General Troubleshooting Information** .
- Those DTCs are stored when replace the front passenger's weight sensor and do not the front passenger's weight sensor initialization.

DTC Description	DTC
B00C0-54 Different serial ID of the front passenger's weight sensor (front inner side)	B
B00C2-54 Different serial ID of the front passenger's weight sensor (rear inner side)	B

DTC (SRS)

1. Problem verification

-1. **Do the front passenger's weight sensor initialization procedure** .

-2. Clear the DTCs with the HDS.

-3. Turn the vehicle to the ON mode, then wait for 10 seconds.

-4. Check for DTCs with the HDS.

DTC Description	DTC
B00C0-54 Different serial ID of the front passenger's weight sensor (front inner side)	B
B00C2-54 Different serial ID of the front passenger's weight sensor (rear inner side)	B

Is DTC B00C0-54 or B00C2-54 indicated?

YES

The failure is duplicated. Check for any authorized service information related to the DTCs or symptoms you are troubleshooting or **replace the SRS unit** .

NO

Intermittent failure, the system is OK at this time. Go to Troubleshooting Intermittent Failures. If another DTC is indicated, troubleshoot the DTC.

DTC B00C0-87

DTC B00C0-87 : No Signal From the Front Passenger's Weight Sensor (front inner side)

NOTE:

- **Before doing this troubleshooting procedure, find out if the vehicle was in a collision. If so, verify that all the required components were replaced with new components of the correct part number and were properly installed** .
- Before doing this troubleshooting procedure, review **SRS Precautions and Procedures** , **General Troubleshooting Information** , and **12 Volt Battery Terminal Disconnection and Reconnection** .

DTC Description	DTC
B00C0-87 No signal from the front passenger's weight sensor (front inner side)	B

DTC (SRS)

1. Problem verification

-1. Clear the DTCs with the HDS.

-2. Turn the vehicle to the ON mode, then wait for 10 seconds.

-3. Check for DTCs with the HDS.

DTC Description	DTC
B00C0-87 No signal from the front passenger's weight sensor (front inner side)	B

Is DTC B00C0-87 indicated?

YES

The failure is duplicated. Go to step 2.

NO

Intermittent failure, the system is OK at this time. Go to Troubleshooting Intermittent Failures. If another DTC is indicated, troubleshoot the DTC.

2. Open wire check (SWS+/PWR SWS line)

-1. Turn the vehicle to the OFF (LOCK) mode.

-2. Disconnect the negative cable from the 12 volt battery, then wait at least 3 minutes.

-3. Disconnect the following connectors.

SRS unit connector B (39P)
Front passenger's weight sensor (front inner side) 3P connector (on the front passenger's seat wire harness)

-4. Measure the resistance between test points 1 and 2.

Test condition	Vehicle OFF (LOCK) mode
	SRS unit connector B (39P): disconnected
	Front passenger's weight sensor (front inner side) 3P connector (on the front passenger's seat wire harness): disconnected
Test point 1	**SRS unit connector B (39P) No. 26**
Test point 2	Front passenger's weight sensor (front inner side) 3P connector (female terminals) No. 1 (on the front passenger's seat wire harness): ①

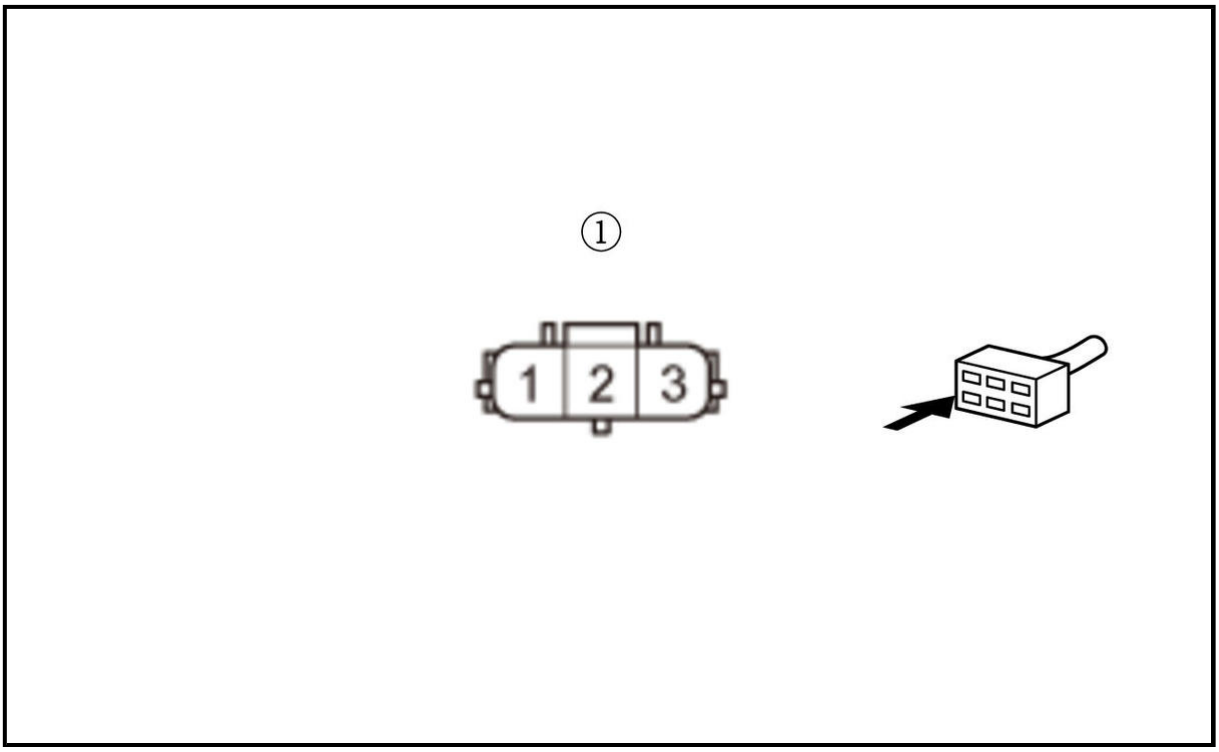

Is there 1.0 Ω or less?

YES

The SWS+/PWR SWS wire is OK. Go to step 3.

NO

Open in the floor wire harness or the front passenger's seat wire harness; replace the faulty harness, then clear the DTC.

3. Open wire check (SWS-/GND SWS line)

-1. Measure the resistance between test points 1 and 2.

Test condition	Vehicle OFF (LOCK) mode
	SRS unit connector B (39P): disconnected
	Front passenger's weight sensor (front inner side) 3P connector (on the front passenger's seat wire harness): disconnected
Test point 1	**SRS unit connector B (39P) No. 28**
Test point 2	Front passenger's weight sensor (front inner side) 3P connector (female terminals) No. 3 (on the front passenger's seat wire harness): ①

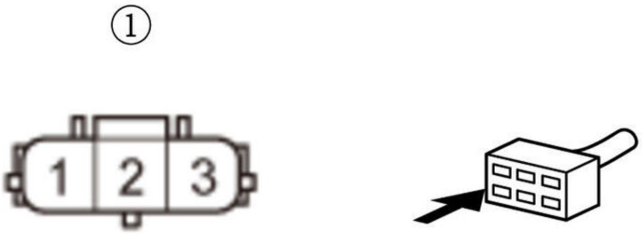

Is there 1.0 Ω or less?

YES

The SWS-/GND SWS wire is OK. Go to step 4.

NO

Open in the floor wire harness or the front passenger's seat wire harness; replace the faulty harness, then clear the DTC.

4. Open wire check (SWSS/LIN SWS line)

-1. Measure the resistance between test points 1 and 2.

Test condition	Vehicle OFF (LOCK) mode
	SRS unit connector B (39P): disconnected
	Front passenger's weight sensor (front inner side) 3P connector (on the front passenger's seat wire harness): disconnected
Test point 1	**SRS unit connector B (39P) No. 30**

Test point 2	Front passenger's weight sensor (front inner side) 3P connector (female terminals) No. 2 (on the front passenger's seat wire harness): ①

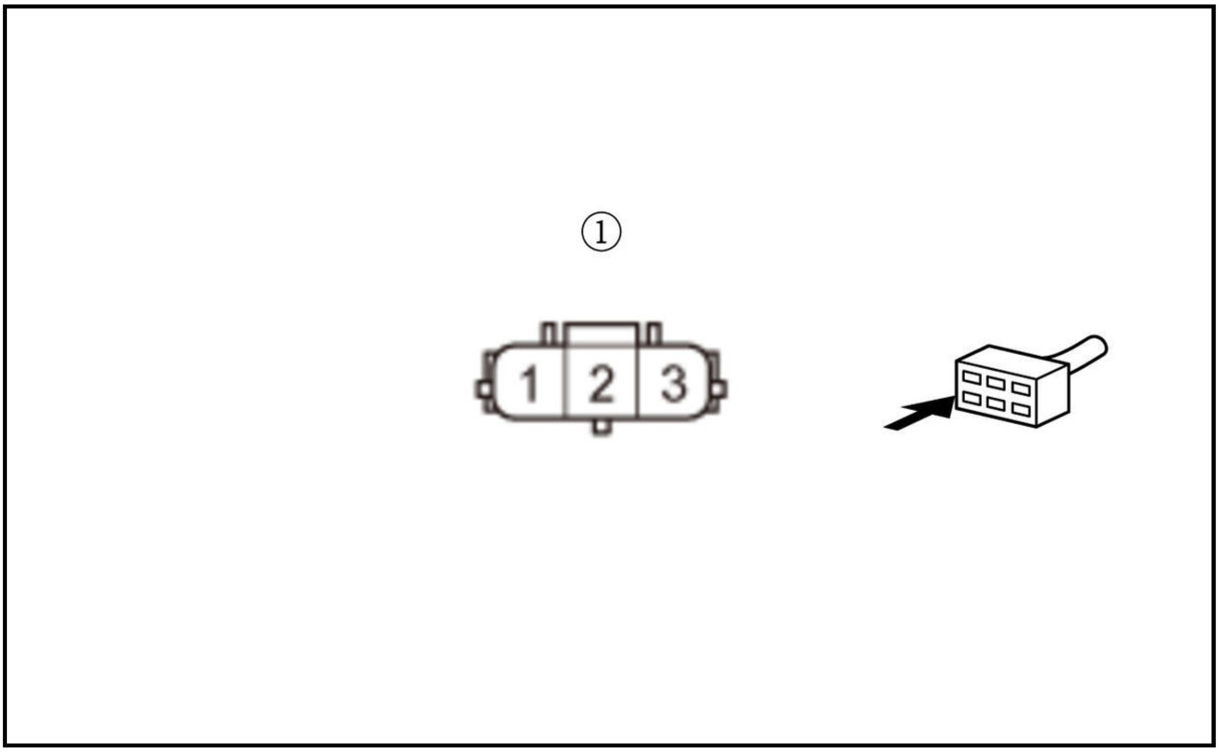

Is there 1.0 Ω or less?

YES

The SWSS/LIN SWS wire is not open. Go to step 5.

NO

Open in the floor wire harness or the front passenger's seat wire harness; replace the faulty harness, then clear the DTC.

5. Shorted wire check (SWSS/LIN SWS line to power)

-1. Disconnect the following connector.

Front passenger's weight sensor (rear inner side) 3P connector (on the front passenger's seat wire harness)

-2. Reconnect the negative cable to the 12 volt battery.

-3. Turn the vehicle to the ON mode.

-4. Measure the voltage between test points 1 and 2.

Test condition	Vehicle ON mode
	SRS unit connector B (39P): disconnected
	Front passenger's weight sensor (front inner side) 3P connector (on the front passenger's seat wire harness): disconnected
	Front passenger's weight sensor (rear inner side) 3P connector (on the front passenger's seat wire harness): disconnected
Test point 1	**SRS unit connector B (39P) No. 30**
Test point 2	Body ground

Is there 0.2 V or less?

YES

The SWSS/LIN SWS wire is not shorted to power. Go to step 6.

NO

Short to power in the floor wire harness or the front passenger's seat wire harness; replace the faulty harness, then clear the DTC.

6. Shorted wire check (SWSS/LIN SWS line)

-1. Turn the vehicle to the OFF (LOCK) mode.

-2. Measure the resistance between test points 1 and 2.

Test condition	Vehicle OFF (LOCK) mode
	SRS unit connector B (39P): disconnected
	Front passenger's weight sensor (front inner side) 3P connector (on the front passenger's seat wire harness): disconnected
	Front passenger's weight sensor (rear inner side) 3P connector (on the front passenger's seat wire harness): disconnected
Test point 1	**SRS unit connector B (39P) No. 30**

Test point 2	Body ground

Is there an open circuit, or at least 1 MΩ?

YES

The SWSS/LIN SWS wire is not shorted. Go to step 7.

NO

Short to ground in the floor wire harness or the front passenger's seat wire harness; replace the faulty harness, then clear the DTC.

7. Shorted wire check (SWSS/LIN SWS line to SWS-/GND SWS line)

-1. Measure the resistance between test points 1 and 2.

Test condition	Vehicle OFF (LOCK) mode
	SRS unit connector B (39P): disconnected
	Front passenger's weight sensor (front inner side) 3P connector (on the front passenger's seat wire harness): disconnected
	Front passenger's weight sensor (rear inner side) 3P connector (on the front passenger's seat wire harness): disconnected
Test point 1	**SRS unit connector B (39P) No. 30**
Test point 2	**SRS unit connector B (39P) No. 28**

Is there an open circuit, or at least 1 MΩ?

YES

The SWSS/LIN SWS and SWS-/GND SWS wires are not shorted. Go to step 8.

NO

Short to another wire in the floor wire harness or the front passenger's seat wire harness; replace the faulty harness, then clear the DTC.

8. Shorted wire check (SWSS/LIN SWS line to SWS+/PWR SWS line)

-1. Measure the resistance between test points 1 and 2.

Test condition	Vehicle OFF (LOCK) mode SRS unit connector B (39P): disconnected Front passenger's weight sensor (front inner side) 3P connector (on the front passenger's seat wire harness): disconnected Front passenger's weight sensor (rear inner side) 3P connector (on the front passenger's seat wire harness): disconnected
Test point 1	**SRS unit connector B (39P) No. 30**
Test point 2	**SRS unit connector B (39P) No. 26**

Is there an open circuit, or at least 1 MΩ?

YES

The SWSS/LIN SWS and SWS+/PWR SWS wires are OK. Go to step 9.

NO

Short to another wire in the floor wire harness or the front passenger's seat wire harness; replace the faulty harness, then clear the DTC.

9. Front passenger's weight sensor check

-1. **Substitute a known-good front passenger's weight sensors as an assembly** .

-2. Reconnect the following connectors.

SRS unit connector B (39P)
Front passenger's weight sensor (front inner side) 3P connector (on the front passenger's seat wire harness)
Front passenger's weight sensor (rear inner side) 3P connector (on the front passenger's seat wire harness)

-3. Reconnect the negative cable to the 12 volt battery.

-4. Clear the DTCs with the HDS.

-5. Turn the vehicle to the ON mode, then wait for 10 seconds.

-6. Check for DTCs with the HDS.

DTC Description	DTC
B00C0-87 No signal from the front passenger's weight sensor (front inner side)	B

Is DTC B00C0-87 indicated?

YES

The front passenger's weight sensor is OK. Faulty SRS unit or poor connection at SRS unit connector B (39P) and the SRS unit. Check the connection; if the connection is OK, check for any authorized service information related to the DTCs or symptoms you are troubleshooting or replace the SRS unit . If the DTC does not clear, replace the floor wire harness or the front passenger's seat wire harness.

NO

Faulty front passenger's weight sensor. Replace the front passenger's weight sensors as an assembly .

DTC B00C2-87

DTC B00C2-87 : No Signal From the Front Passenger's Weight Sensor (rear inner side)

NOTE:

- Before doing this troubleshooting procedure, find out if the vehicle was in a collision. If so, verify that all the required components were replaced with new components of the correct part number and were properly installed .
- Before doing this troubleshooting procedure, review SRS Precautions and Procedures , General Troubleshooting Information , and 12 Volt Battery Terminal Disconnection and Reconnection .

DTC Description	DTC
B00C2-87 No signal from the front passenger's weight sensor (rear inner side)	B

DTC (SRS)

1. Problem verification

-1. Clear the DTCs with the HDS.

-2. Turn the vehicle to the ON mode, then wait for 10 seconds.

-3. Check for DTCs with the HDS.

DTC Description	DTC
B00C2-87 No signal from the front passenger's weight sensor (rear inner side)	B

Is DTC B00C2-87 indicated?

YES

The failure is duplicated. Go to step 2.

NO

Intermittent failure, the system is OK at this time. Go to Troubleshooting Intermittent Failures. If another DTC is indicated, troubleshoot the DTC.

2. Open wire check (SWS+/PWR SWS line)

-1. Turn the vehicle to the OFF (LOCK) mode.

-2. Disconnect the negative cable from the 12 volt battery, then wait at least 3 minutes.

-3. Disconnect the following connectors.

SRS unit connector B (39P)
Front passenger's weight sensor (rear inner side) 3P connector (on the front passenger's seat wire harness)

-4. Measure the resistance between test points 1 and 2.

Test condition	Vehicle OFF (LOCK) mode
	SRS unit connector B (39P): disconnected
	Front passenger's weight sensor (rear inner side) 3P connector (on the front passenger's seat wire harness): disconnected
Test point 1	**SRS unit connector B (39P) No. 26**
Test point 2	Front passenger's weight sensor (rear inner side) 3P connector (female terminals) No. 1 (on the front passenger's seat wire harness): ①

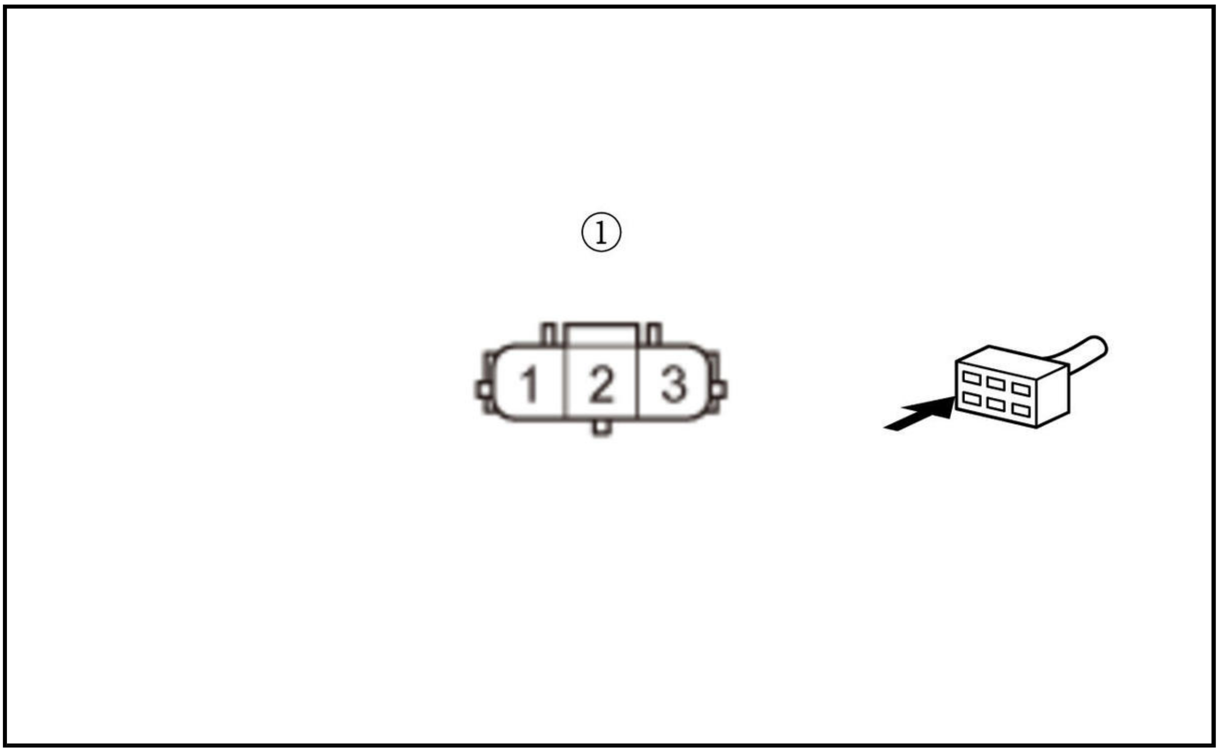

Is there 1.0 Ω or less?

YES

The SWS+/PWR SWS wire is OK. Go to step 3.

NO

Open in the floor wire harness or the front passenger's seat wire harness; replace the faulty harness, then clear the DTC.

3. Open wire check (SWS-/GND SWS line)

-1. Measure the resistance between test points 1 and 2.

Test condition	Vehicle OFF (LOCK) mode
	SRS unit connector B (39P): disconnected
	Front passenger's weight sensor (rear inner side) 3P connector (on the front passenger's seat wire harness): disconnected

Test point 1	**SRS unit connector B (39P) No. 28**
Test point 2	Front passenger's weight sensor (rear inner side) 3P connector (female terminals) No. 3 (on the front passenger's seat wire harness): ①

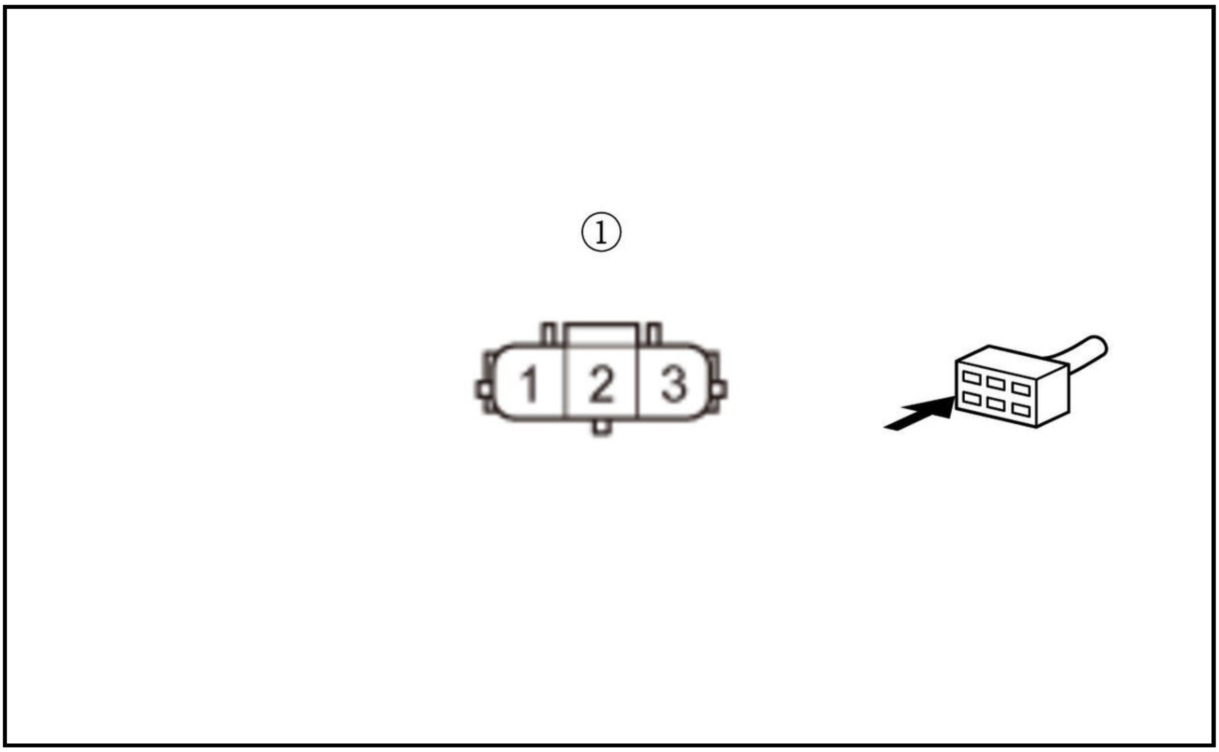

Is there 1.0 Ω or less?

YES

The SWS-/GND SWS wire is OK. Go to step 4.

NO

Open in the floor wire harness or the front passenger's seat wire harness; replace the faulty harness, then clear the DTC.

4. Open wire check (SWSS/LIN SWS line)

-1. Measure the resistance between test points 1 and 2.

Test condition	Vehicle OFF (LOCK) mode
	SRS unit connector B (39P): disconnected
	Front passenger's weight sensor (rear inner side) 3P connector (on the front passenger's seat wire harness): disconnected
Test point 1	**SRS unit connector B (39P) No. 30**
Test point 2	Front passenger's weight sensor (rear inner side) 3P connector (female terminals) No. 2 (on the front passenger's seat wire harness): ①

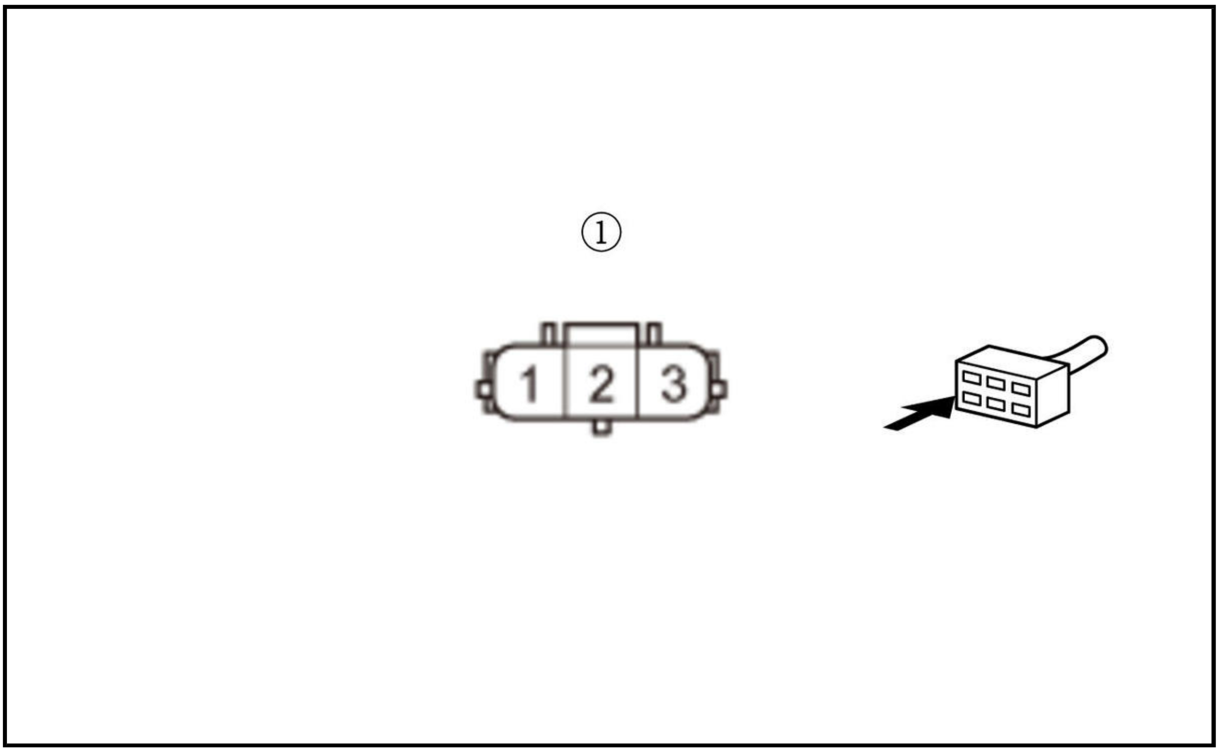

Is there 1.0 Ω or less?

YES

The SWSS/LIN SWS wire is OK. Go to step 5.

NO

Open in the floor wire harness or the front passenger's seat wire harness; replace the faulty harness, then clear the DTC.

5. Front passenger's weight sensor check

-1. **Substitute a known-good front passenger's weight sensors as an assembly** .

-2. Reconnect the following connectors.

SRS unit connector B (39P)

Front passenger's weight sensor (rear inner side) 3P connector (on the front passenger's seat wire harness)

-3. Reconnect the negative cable to the 12 volt battery.

-4. Clear the DTCs with the HDS.

-5. Turn the vehicle to the ON mode, then wait for 10 seconds.

-6. Check for DTCs with the HDS.

DTC Description	DTC
B00C2-87 No signal from the front passenger's weight sensor (rear inner side)	B

Is DTC B00C2-87 indicated?

YES

The front passenger's weight sensor is OK. Faulty SRS unit or poor connection at SRS unit connector B (39P) and the SRS unit. Check the connection; if the connection is OK, check for any authorized service information related to the DTCs or symptoms you are troubleshooting or **replace the SRS unit** . If the DTC does not clear, replace the floor wire harness or the front passenger's seat wire harness.

NO

Faulty front passenger's weight sensor. **Replace the front passenger's weight sensors as an assembly** .

DTC B00D5-14

DTC B00D5-14 : Open or Short to Ground in the Front Passenger's Airbag Cutoff Indicator

NOTE:

- **Before doing this troubleshooting procedure, find out if the vehicle was in a collision. If so, verify that all the required components were replaced with new components of the correct part number and were properly installed** .
- Before doing this troubleshooting procedure, review **SRS Precautions and Procedures** , **General Troubleshooting Information** , and **12 Volt Battery Terminal Disconnection and Reconnection** .
- If there are other DTCs stored with B00D5-14; troubleshoot them first.

DTC Description	DTC
B00D5-14 Open or short to ground in the front passenger's airbag cutoff indicator	B

DTC (SRS)

1. Problem verification

-1. Clear the DTCs with the HDS.

-2. Turn the vehicle to the ON mode, then wait for 10 seconds.

-3. Check for DTCs with the HDS.

DTC Description	DTC
B00D5-14 Open or short to ground in the front passenger's airbag cutoff indicator	B

Is DTC B00D5-14 indicated?

YES

The failure is duplicated. Go to step 2.

NO

Intermittent failure, the system is OK at this time. Go to Troubleshooting Intermittent Failures. If another DTC is indicated, troubleshoot the DTC.

2. Open wire check (OFF_PTT line)

-1. Turn the vehicle to the OFF (LOCK) mode.

-2. Disconnect the negative cable from the 12 volt battery, then wait at least 3 minutes.

-3. Disconnect the following connectors.

Climate control panel 20P connector (on the dashboard wire harness)
SRS unit connector A (39P)

-4. Measure the resistance between test points 1 and 2.

Test condition	Vehicle OFF (LOCK) mode Climate control panel 20P connector (on the dashboard wire harness): disconnected SRS unit connector A (39P): disconnected
Test point 1	**SRS unit connector A (39P) No. 28**
Test point 2	Climate control panel 20P connector (female terminals) No. 7 (on the dashboard wire harness): ①

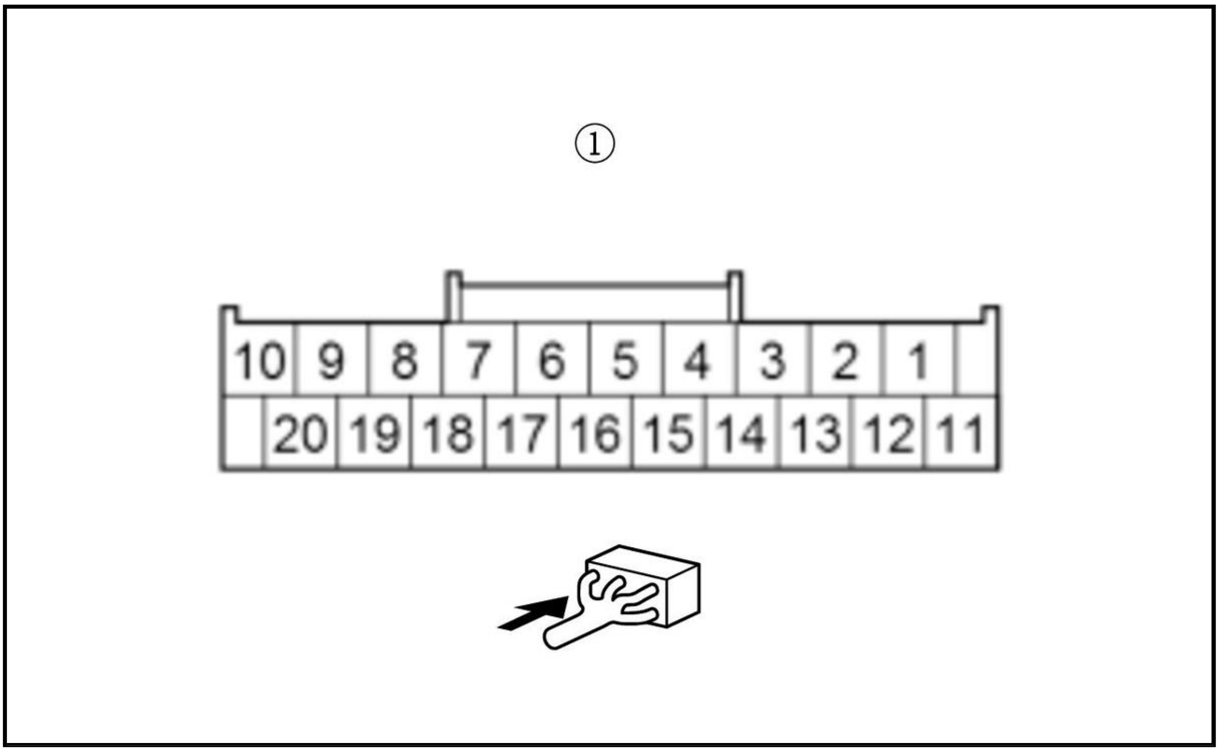

Is there 1.0 Ω or less?

YES

The OFF_PTT wire is not open. Go to step 3.

NO

Open in the dashboard wire harness; replace the dashboard wire harness, then clear the DTC.

3. Shorted wire check (OFF_PTT line)

-1. Measure the resistance between test points 1 and 2.

Test condition	Vehicle OFF (LOCK) mode Climate control panel 20P connector (on the dashboard wire harness): disconnected SRS unit connector A (39P): disconnected
Test point 1	**SRS unit connector A (39P) No. 28**
Test point 2	Body ground

Is there an open circuit, or at least 1 MΩ?

YES

The OFF_PTT wire is OK. **Replace the front passenger's airbag cutoff indicator** , then clear the DTC, and retest. If the DTC is still present, check for any authorized service information related to the DTCs or symptoms you are troubleshooting or **replace the SRS unit** .

NO

Short to ground in the dashboard wire harness; replace the dashboard wire harness, then clear the DTC.

DTC B00D5-17

DTC B00D5-17 : Short to Power in the Front Passenger's Airbag Cutoff Indicator

NOTE:

- **Before doing this troubleshooting procedure, find out if the vehicle was in a collision. If so, verify that all the required components were replaced with new components of the correct part number and were properly installed** .
- Before doing this troubleshooting procedure, review **SRS Precautions and Procedures** , **General Troubleshooting Information** , and **12 Volt Battery Terminal Disconnection and Reconnection** .
- If there are other DTCs stored with B00D5-17; troubleshoot them first.

DTC Description	DTC
B00D5-17 Short to power in the front passenger's airbag cutoff indicator	B

DTC (SRS)

1. Problem verification

   -1. Clear the DTCs with the HDS.

   -2. Turn the vehicle to the ON mode, then wait for 10 seconds.

   -3. Check for DTCs with the HDS.

DTC Description	DTC
B00D5-17 Short to power in the front passenger's airbag cutoff indicator	B

   Is DTC B00D5-17 indicated?

   YES

   The failure is duplicated. Go to step 2.

   NO

   Intermittent failure, the system is OK at this time. Go to Troubleshooting Intermittent Failures. If another DTC is indicated, troubleshoot the DTC.

2. Shorted wire check (OFF_PTT line to power)

   -1. Turn the vehicle to the OFF (LOCK) mode.

   -2. Disconnect the negative cable from the 12 volt battery, then wait at least 3 minutes.

   -3. Disconnect the following connectors.

Climate control panel 20P connector (on the dashboard wire harness)	
SRS unit connector A (39P)	

-4. Reconnect the negative cable to the 12 volt battery.

-5. Turn the vehicle to the ON mode.

-6. Measure the voltage between test points 1 and 2.

Test condition	Vehicle ON mode
	Climate control panel 20P connector (on the dashboard wire harness): disconnected
	SRS unit connector A (39P): disconnected
Test point 1	**SRS unit connector A (39P) No. 28**
Test point 2	Body ground

Is there 0.2 V or less?

YES

The OFF_PTT wire is OK. **Replace the front passenger's airbag cutoff indicator** , then clear the DTC, and retest. If the DTC is still present, check for any authorized service information related to the DTCs or symptoms you are troubleshooting or **replace the SRS unit** .

NO

Short to power in the dashboard wire harness; replace the dashboard wire harness, then clear the DTC.

DTC B2800-49, B2801-49, B2802-49, C0061-96, C0063-96

DTC B2800-49, B2801-49, B2802-49, C0061-96, C0063-96 : Internal Failure of the SRS Unit

NOTE:

- **Before doing this troubleshooting procedure, find out if the vehicle was in a collision. If so, verify that all the required components were replaced with new components of the correct part number and were properly installed** .
- Before troubleshooting any of these DTCs, **check the 12 volt battery/system voltage and 12 volt battery cable connections** . If the voltage is low, repair the charging system, test and charge the 12 volt battery, or replace the 12 volt battery before troubleshooting the SRS. If the 12 volt battery/system voltage is OK, ask the customer if the 12 volt battery ever went dead or if the engine was started and run with the 12 volt battery in a low state of charge. A dead 12 volt battery may trigger one or more of these DTCs.
- Before doing this troubleshooting procedure, review **SRS Precautions and Procedures** and **General Troubleshooting Information** .

DTC Description	DTC
B2800-49 Internal failure of the SRS unit	B
B2801-49 Internal failure of the SRS unit	B
B2802-49 Internal failure of the SRS unit	B
C0061-96 Internal failure of the SRS unit	B
C0063-96 Internal failure of the SRS unit	B

DTC (SRS)

1. Problem verification

-1. Clear the DTCs with the HDS.

-2. Turn the vehicle to the ON mode, then wait for 10 seconds.

-3. Check for DTCs with the HDS.

DTC Description	DTC
B2800-49 Internal failure of the SRS unit	B
B2801-49 Internal failure of the SRS unit	B
B2802-49 Internal failure of the SRS unit	B
C0061-96 Internal failure of the SRS unit	B
C0063-96 Internal failure of the SRS unit	B

Is DTC B2800-49, B2801-49, B2802-49, C0061-96, or C0063-96 indicated?

YES

The failure is duplicated. Check for any authorized service information related to the DTCs or symptoms you are troubleshooting or **replace the SRS unit** .

NO

Intermittent failure, the system is OK at this time. Go to Troubleshooting Intermittent Failures. If another DTC is indicated, troubleshoot the DTC.

DTC B2840-13

DTC B2840-13 : SRS Unit Connector A Not Properly Installed

NOTE:

- **Before doing this troubleshooting procedure, find out if the vehicle was in a collision. If so, verify that all the required components were replaced with new components of the correct part number and were properly installed** .
- Before doing this troubleshooting procedure, review **SRS Precautions and Procedures** , **General Troubleshooting Information** , and **12 Volt Battery Terminal Disconnection and Reconnection** .

DTC Description	DTC
B2840-13 SRS unit connector A not properly installed	B

DTC (SRS)

1. Problem verification

-1. Clear the DTCs with the HDS.

-2. Turn the vehicle to the ON mode, then wait for 10 seconds.

-3. Check for DTCs with the HDS.

DTC Description	DTC
B2840-13 SRS unit connector A not properly installed	B

Is DTC B2840-13 indicated?

YES

The failure is duplicated. Go to step 2.

NO

Intermittent failure, the system is OK at this time. Go to Troubleshooting Intermittent Failures. If another DTC is indicated, troubleshoot the DTC.

2. Connector connection check

   -1. Turn the vehicle to the OFF (LOCK) mode.

   -2. Check the following connection.

SRS unit connector A (39P)

   Is the connector OK?

   YES

   Go to step 3.

   NO

   Repair the poor connector(s) connection which was the cause of the problem.

3. SRS unit check

   -1. Disconnect the negative cable from the 12 volt battery, then wait at least 3 minutes.

   -2. Disconnect the following connector.

SRS unit connector A (39P)

   -3. Check for bent or damaged terminals on the SRS unit.

   Are any terminals bent or damaged?

   YES

   Check for any authorized service information related to the DTCs or symptoms you are troubleshooting or **replace the SRS unit** .

   NO

   Substitute a known-good SRS unit , then clear the DTC. If the DTC is still present, replace the dashboard wire harness.

DTC B2841-13

DTC B2841-13 : SRS Unit Connector B Not Properly Installed

NOTE:

- **Before doing this troubleshooting procedure, find out if the vehicle was in a collision. If so, verify that all the required components were replaced with new components of the correct part number and were properly installed** .
- Before doing this troubleshooting procedure, review **SRS Precautions and Procedures** , **General Troubleshooting Information** , and **12 Volt Battery Terminal Disconnection and Reconnection** .

DTC Description	DTC
B2841-13 SRS unit connector B not properly installed	B

DTC (SRS)

1. Problem verification

   -1. Clear the DTCs with the HDS.

   -2. Turn the vehicle to the ON mode, then wait for 10 seconds.

   -3. Check for DTCs with the HDS.

DTC Description	DTC
B2841-13 SRS unit connector B not properly installed	B

   Is DTC B2841-13 indicated?

   YES

   The failure is duplicated. Go to step 2.

   NO

   Intermittent failure, the system is OK at this time. Go to Troubleshooting Intermittent Failures. If another DTC is indicated, troubleshoot the DTC.

2. Connector connection check

   -1. Turn the vehicle to the OFF (LOCK) mode.

   -2. Check the following connection.

SRS unit connector B (39P)

   Is the connector OK?

   YES

   Go to step 3.

   NO

   Repair the poor connector(s) connection which was the cause of the problem.

3. SRS unit check

   -1. Disconnect the negative cable from the 12 volt battery, then wait at least 3 minutes.

   -2. Disconnect the following connector.

SRS unit connector B (39P)

   -3. Check for bent or damaged terminals on the SRS unit.

   Are any terminals bent or damaged?

   YES

   Check for any authorized service information related to the DTCs or symptoms you are troubleshooting or **replace the SRS unit** .

   NO

Substitute a known-good SRS unit , then clear the DTC. If the DTC is still present, replace the floor wire harness.

DTC U0122-00 (SRS UNIT)

DTC U0122-00 : Lost Communication With the VSA Modulator-Control Unit (wheel speed sensor signal error)

NOTE:

- **Before doing this troubleshooting procedure, find out if the vehicle was in a collision. If so, verify that all the required components were replaced with new components of the correct part number and were properly installed** .
- Before doing this troubleshooting procedure, review **SRS Precautions and Procedures** , **General Troubleshooting Information** , and **12 Volt Battery Terminal Disconnection and Reconnection** .
- Check for the power circuit and the ground circuit of the VSA modulator-control unit which cannot communicate with the SRS unit.

DTC Description	DTC
U0122-00 Lost communication with the VSA modulator-control unit (Wheel speed sensor signal error)	B

DTC (SRS)

1. CAN gateway system DTC check

   -1. Turn the vehicle to the ON mode.

   -2. Check for CAN gateway system DTCs with the HDS.

DTC Description	DTC
B	B

   Are any DTCs indicated?

   YES

   Go to the troubleshooting for CAN gateway system DTC(s) .

   NO

   Go to step 2.

2. F-CAN circuit communication check (Receiving control unit)

   -1. Select the FUNCTION TEST in the CAN gateway with the HDS, then select the F-CAN Bus Connected Unit Check.

   F-CAN Bus Connected Unit Check

   Does the SRS unit detect the CAN gateway Bus channels C?

   Bus C is Not Available

   Go to step 3.

   Bus C is Available

   Go to step 4.

3. Open wire check (F-CAN C_H, F-CAN C_L lines)

-1. Turn the vehicle to the OFF (LOCK) mode.

-2. Disconnect the negative cable from the 12 volt battery.

-3. Disconnect the following connectors.

CAN gateway 16P connector
SRS unit connector A (39P)

-4. Measure the resistance between test points 1 and 2.

Test condition	Vehicle OFF (LOCK) mode
B	CAN gateway 12P connector: disconnected
B	SRS unit connector A (39P): disconnected
Test point 1	CAN gateway 16P connector (female terminals) No. 5 (on the dashboard wire harness): ①
Test point 2	**SRS unit connector A (39P) No. 34**

Test point 1	CAN gateway 16P connector (female terminals) No. 13 (on the dashboard wire harness): ①
Test point 2	**SRS unit connector A (39P) No. 35**

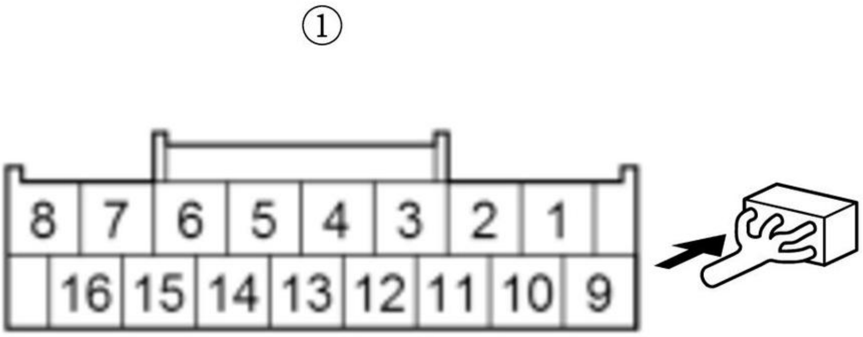

Is there 1.0 Ω or less?

YES

The F-CAN C_H and the F-CAN C_L wires are OK. Check for poor connections or loose terminals at the CAN gateway and the SRS unit. If the connection is OK, check for any authorized service information related to the DTCs or symptoms you are troubleshooting, or **replace the SRS unit** .

NO

Replace an open in the wire between the CAN gateway and the SRS unit.

4. F-CAN circuit communication check

-1. Select the FUNCTION TEST in the CAN gateway with the HDS, then select the F-CAN Bus Connected Unit Check.

F-CAN Bus Connected Unit Check

Which result is indicated?

VSA modulator-control unit is Detected

Intermittent failure, the system is OK at this time. Check for poor connections or loose terminals at the transmitting control unit and the CAN gateway.

VSA modulator-control unit (Bus B) is Not Available

Go to step 5.

VSA modulator-control unit (Bus C) is Not Available

Go to step 6.

5. Open wire check (F-CAN B_H, F-CAN B_L lines)

-1. Turn the vehicle to the OFF (LOCK) mode.

-2. Disconnect the following connectors.

CAN gateway 16P connector
VSA modulator-control unit 46P connector

-3. Measure the resistance between test points 1 and 2.

Test condition	Vehicle OFF (LOCK) mode
B	CAN gateway 16P connector: disconnected
B	VSA modulator-control unit 46P connector
Test point 1	CAN gateway 16P connector (female terminals) No. 6: ①
Test point 2	**VSA modulator-control unit 46P connector No. 40**

Test point 1	CAN gateway 16P connector (female terminals) No. 14: ①
Test point 2	**VSA modulator-control unit 46P connector No. 28**

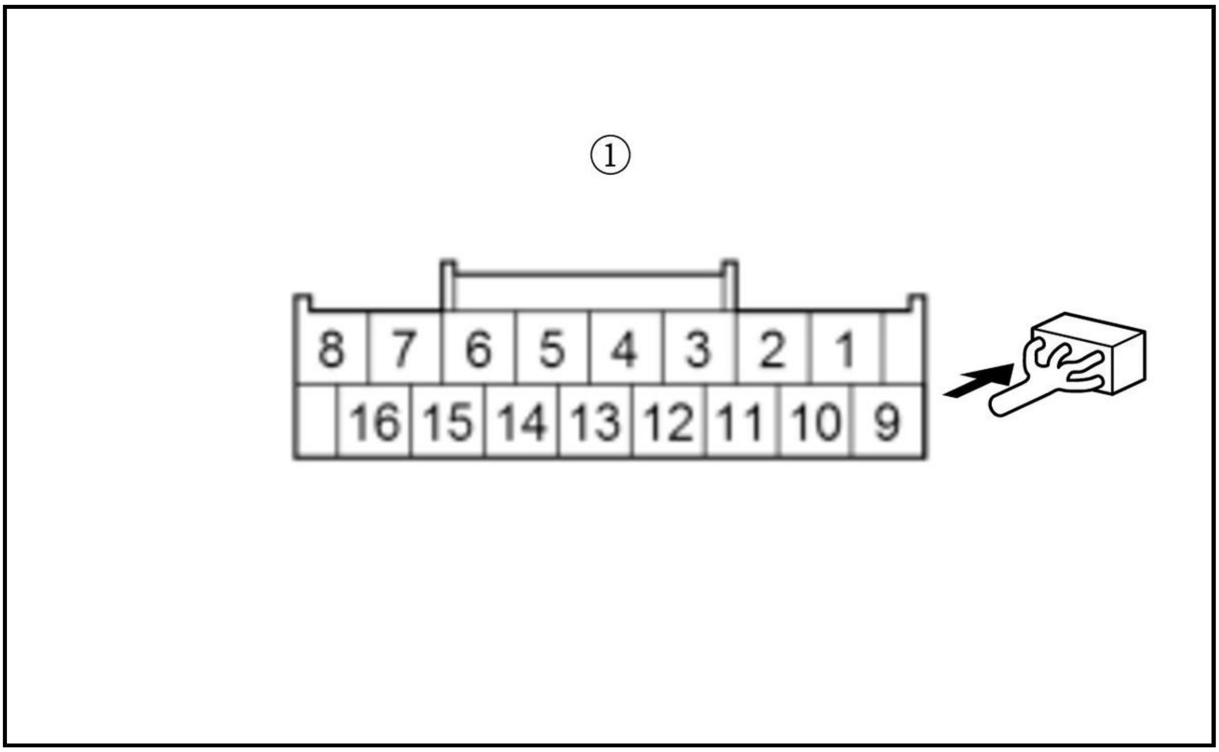

Is there 1.0 Ω or less?

YES

The F-CAN B_H and the F-CAN B_L wires are OK. Check for poor connections or loose terminals at the SRS unit and the VSA modulator-control unit. Check for any authorized service information related to the DTCs or symptoms you are troubleshooting or **replace the VSA modulator-control unit** .

NO

Repair an open in the wire between the VSA modulator-control unit and the CAN gateway.

6. Open wire check (F-CAN C_H, F-CAN C_L lines)

-1. Turn the vehicle to the OFF (LOCK) mode.

-2. Disconnect the following connectors.

CAN gateway 16P connector
VSA modulator-control unit 46P connector

-3. Measure the resistance between test points 1 and 2.

Test condition	Vehicle OFF (LOCK) mode
B	CAN gateway 16P connector: disconnected
B	VSA modulator-control unit 46P connector
Test point 1	CAN gateway 16P connector (female terminals) No. 5: ①
Test point 2	**VSA modulator-control unit 46P connector No. 46**

Test point 1	CAN gateway 16P connector (female terminals) No. 13: ①
Test point 2	**VSA modulator-control unit 46P connector No. 34**

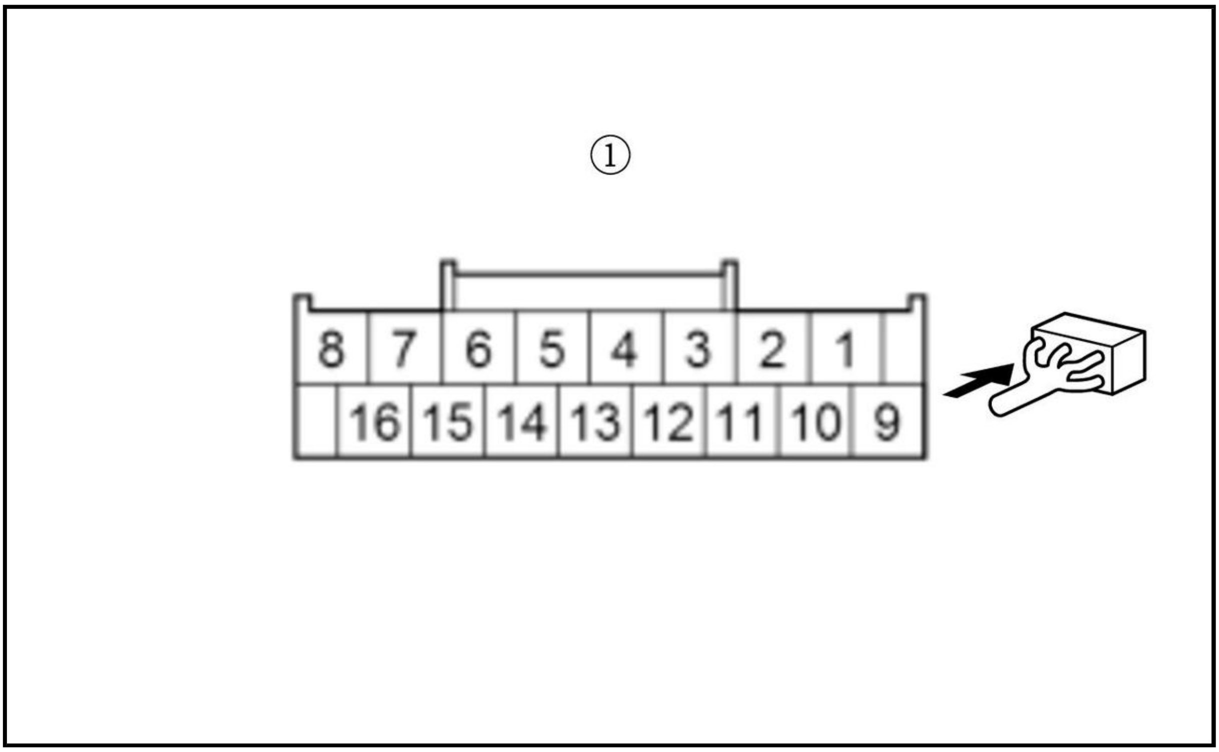

Is there 1.0 Ω or less?

YES

The F-CAN C_H and the F-CAN C_L wires are OK. Check for poor connections or loose terminals at the SRS unit and the VSA modulator-control unit. Check for any authorized service information related to the DTCs or symptoms you are troubleshooting or **replace the VSA modulator-control unit** .

NO

Repair an open in the wire between the VSA modulator-control unit and the CAN gateway.

DTC U3000-49 (SRS UNIT)

DTC U3000-49 : Internal Failure of the SRS Unit

NOTE:

- **Before doing this troubleshooting procedure, find out if the vehicle was in a collision. If so, verify that all the required components were replaced with new components of the correct part number and were properly installed** .
- Before doing this troubleshooting procedure, review **SRS Precautions and Procedures** , **General Troubleshooting Information** , and **12 Volt Battery Terminal Disconnection and Reconnection** .

DTC Description	DTC
U3000-49 Internal failure of the SRS unit	B

DTC (SRS)

1. Problem verification

   -1. Clear the DTCs with the HDS.

   -2. Turn the vehicle to the ON mode, then wait for 10 seconds.

   -3. Check for DTCs with the HDS.

DTC Description	DTC
U3000-49 Internal failure of the SRS unit	B

Is DTC U3000-49 indicated?

YES

The failure is duplicated. Go to step 2.

NO

Intermittent failure, the system is OK at this time. Go to Troubleshooting Intermittent Failures. If another DTC is indicated, troubleshoot the DTC.

2. Shorted wire check (SWS+/PWR SWS line to power)

-1. Turn the vehicle to the OFF (LOCK) mode.

-2. Disconnect the negative cable from the 12 volt battery, then wait at least 3 minutes.

-3. Disconnect the following connectors.

SRS unit connector B (39P)
Front passenger's weight sensor (front inner side) 3P connector (on the front passenger's seat wire harness)
Front passenger's weight sensor (rear inner side) 3P connector (on the front passenger's seat wire harness)

-4. Reconnect the negative cable to the 12 volt battery.

-5. Turn the vehicle to the ON mode.

-6. Measure the voltage between test points 1 and 2.

Test condition	Vehicle ON mode
	SRS unit connector B (39P): disconnected
B	Front passenger's weight sensor (front inner side) 3P connector (on the front passenger's seat wire harness): disconnected
B	Front passenger's weight sensor (rear inner side) 3P connector (on the front passenger's seat wire harness): disconnected
Test point 1	**SRS unit connector B (39P) No. 26**
Test point 2	Body ground

Is there 0.2 V or less?

YES

The SWS+/PWR SWS wire is not shorted to power. Go to step 3.

NO

Short to power in the floor wire harness or the front passenger's seat wire harness; replace the faulty harness, then clear the DTC.

3. Shorted wire check (SWS+/PWR SWS line)

-1. Turn the vehicle to the OFF (LOCK) mode.

-2. Disconnect the negative cable from the 12 volt battery, then wait at least 3 minutes.

-3. Measure the resistance between test points 1 and 2.

Test condition	Vehicle OFF (LOCK) mode
	SRS unit connector B (39P): disconnected
B	Front passenger's weight sensor (front inner side) 3P connector (on the front passenger's seat wire harness): disconnected
B	Front passenger's weight sensor (rear inner side) 3P connector (on the front passenger's seat wire harness): disconnected
Test point 1	**SRS unit connector B (39P) No. 26**
Test point 2	Body ground

Is there an open circuit, or at least 1 MΩ?

YES

The SWS+/PWR SWS wire is not shorted. Go to step 4.

NO

Short to ground in the floor wire harness or the front passenger's seat wire harness; replace the faulty harness, then clear the DTC.

4. Shorted wire check (SWS+/PWR SWS line to SWS-/GND SWS line)

-1. Measure the resistance between test points 1 and 2.

Test condition	Vehicle OFF (LOCK) mode
	SRS unit connector B (39P): disconnected
B	Front passenger's weight sensor (front inner side) 3P connector (on the front passenger's seat wire harness): disconnected
B	Front passenger's weight sensor (rear inner side) 3P connector (on the front passenger's seat wire harness): disconnected
Test point 1	**SRS unit connector B (39P) No. 26**
Test point 2	**SRS unit connector B (39P) No. 28**

Is there an open circuit, or at least 1 MΩ?

YES

The SWS+/PWR SWS to SWS-/GND SWS wires are OK. Go to step 5.

NO

Short to another wire in the floor wire harness or the front passenger's seat wire harness; replace the faulty harness, then clear the DTC.

5. Front passenger's weight sensor check

-1. **Substitute a known-good front passenger's weight sensors as an assembly** .

-2. Reconnect the following connectors.

SRS unit connector B (39P)
Front passenger's weight sensor (front inner side) 3P connector (on the front passenger's seat wire harness)

Front passenger's weight sensor (rear inner side) 3P connector (on the front passenger's seat wire harness)

-3. Reconnect the negative cable to the 12 volt battery.

-4. Clear the DTCs with the HDS.

-5. Turn the vehicle to the ON mode, then wait for 10 seconds.

-6. Check for DTCs with the HDS.

DTC Description	DTC
U3000-49 Internal failure of the SRS unit	B

Is DTC U3000-49 indicated?

YES

The front passenger's weight sensor is OK. Faulty SRS unit or poor connection at SRS unit connector B (39P) and the SRS unit. Check the connection; if the connection is OK, check for any authorized service information related to the DTCs or symptoms you are troubleshooting or **replace the SRS unit** . If the DTC does not clear, replace the floor wire harness or the front passenger's seat wire harness.

NO

Faulty front passenger's weight sensor. **Replace the front passenger's weight sensors as an assembly** .

DTC U3000-51 (SRS UNIT)

DTC U3000-51 : SRS Unit Programming Error

NOTE:

- **Before doing this troubleshooting procedure, find out if the vehicle was in a collision. If so, verify that all the required components were replaced with new components of the correct part number and were properly installed** .
- This DTC is indicated when the SRS unit update is not completed properly.
- Never press the engine start/stop switch, while updating the SRS unit. If you press the engine start/stop switch, before you complete the SRS unit update procedure, the SRS unit can be damaged. If there is a problem with the update, keep the vehicle in ON mode.
- Before doing this troubleshooting procedure, review **SRS Precautions and Procedures** and **General Troubleshooting Information** .

DTC Description	DTC
U3000-51 SRS unit programming error	B

DTC (SRS)

1. Problem verification (update)

-1. **Do the SRS unit update procedure** .

-2. Clear the DTCs with the HDS.

-3. Turn the vehicle to the ON mode, then wait for 10 seconds.

-4. Check for DTCs with the HDS.

DTC Description	DTC
U3000-51 SRS unit programming error	B

Is DTC U3000-51 indicated?

YES

The failure is duplicated. **Replace the SRS unit** .

NO

Update is complete.

HOW TO INFORMATION

HOW TO TROUBLESHOOT THE LANE KEEPING ASSIST SYSTEM (LKAS)

LKAS Indicator (Amber)

When the LKAS detects a problem while operating, the LKAS stops operating, and the LKAS indicator stays on.

NOTE:

- For LKAS function, **review the Lane Keeping Assist System (LKAS) Description** .
- The LKAS communicates with other control units via F-CAN. For LKAS diagram, **refer to the System Diagram for LKAS** . If a connected unit malfunctions, the LKAS will not operate. In this case, both LKAS indicator and connected unit indicator come on and stay on (except for the gauge control module).

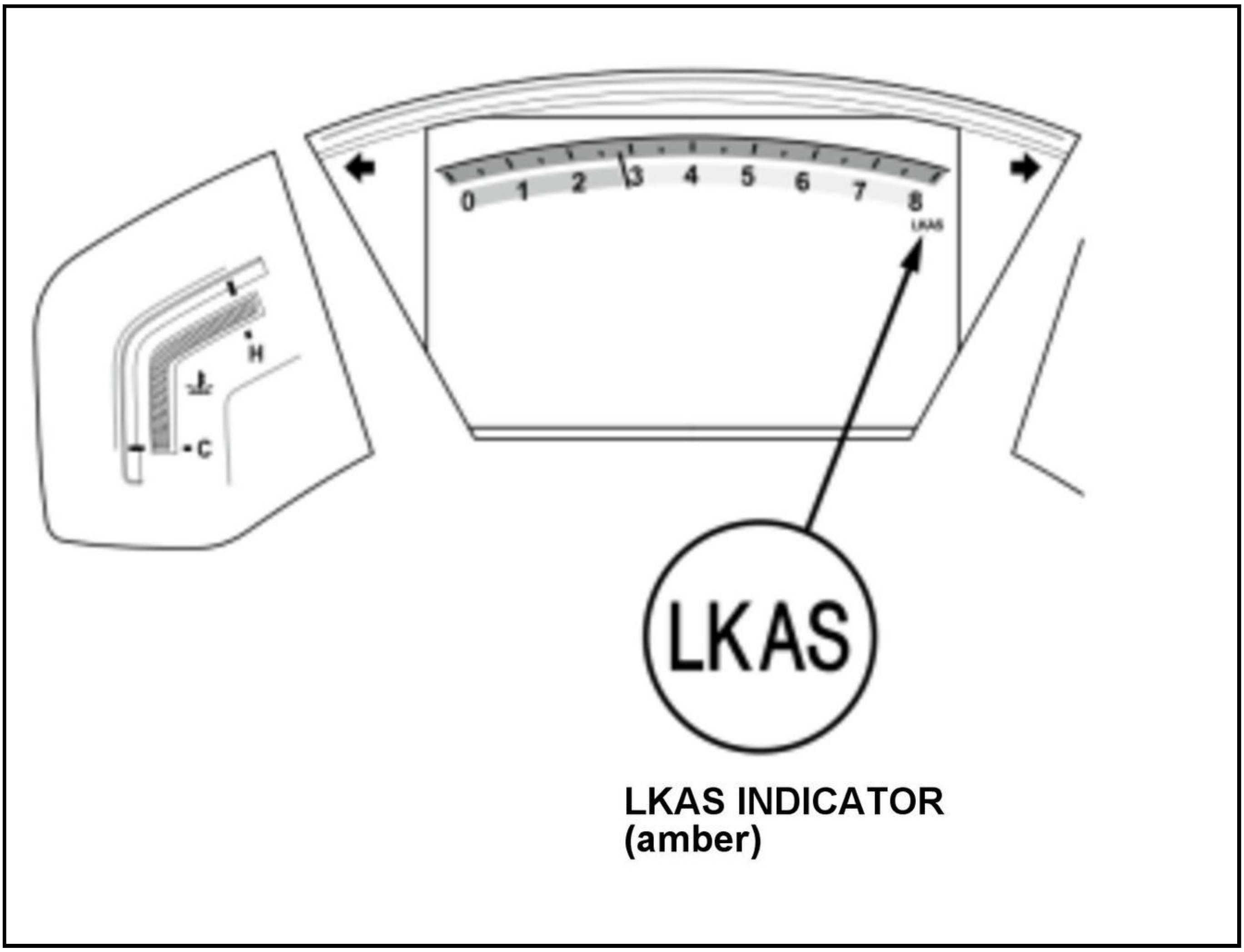

Multi-Information Display (MID) Indication

When the LKAS is OK, the LKAS indicates its operation on the MID when the MAIN switch is ON.

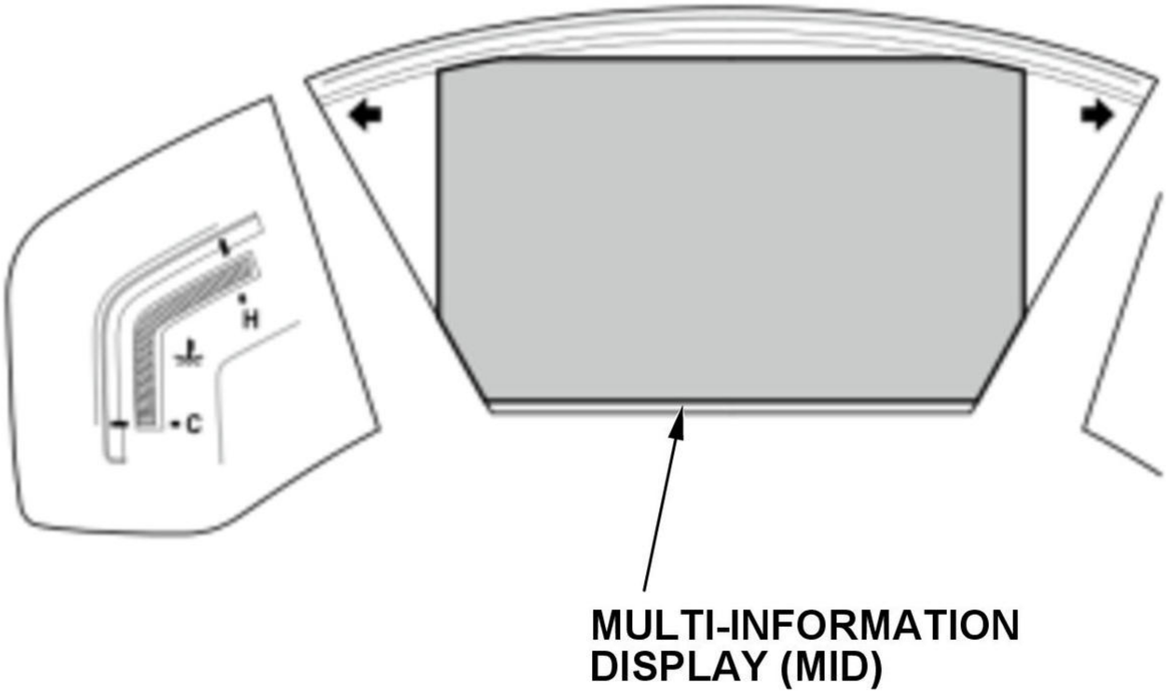

Self-Diagnostic Function

The LKAS has a self-diagnostic function. If the self-diagnostic function detects a malfunction, the LKAS stops operating. The LKAS indicator comes on, and the LKAS indicates "Lane Keeping Assist Problem" on the MID.

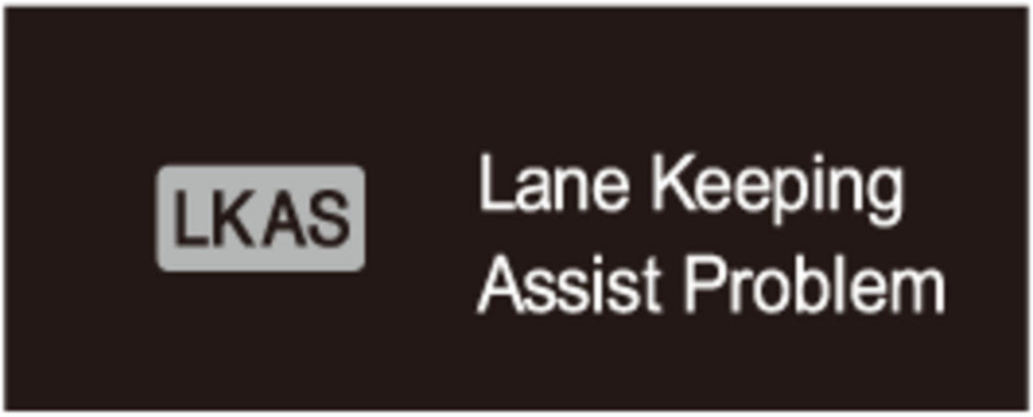

Lane Keeping Assist Problem

Millimeter Wave Radar

The millimeter wave radar measures the distance between your vehicle and the vehicle directly ahead to calculate the difference in speed between the vehicles.

The millimeter wave radar has a self-diagnostic function. If the system detects a problem, it disables the LKAS, and turns on the LKAS indicator.

Multipurpose Camera Unit

Multipurpose camera unit function sends the lane image which was received by the multipurpose camera to the multipurpose camera unit. Also, it is equipped with an error detection feature which sends error data to the multipurpose camera unit when a malfunction is detected.The multipurpose camera unit communicates with the gauge control module to send a warning signal.

The multipurpose camera unit also has an error detection function which sends a signal to the millimeter wave radar if an error is detected. The millimeter wave radar receives this information from the multipurpose camera unit.

Dirt or dust detective function (CLEAN FRONT WINDSHIELD Indication)

If the following message appears on the MID, the camera lens or the windshield has enough dirt so that the camera view is obstructed, the LKAS stops operating.

Clean any dirt or contamination on the camera lens or the windshield. Once the camera's view is unobstructed, the indicator on the MID turns off and the LKAS automatically turns back to ON.

NOTE: When millimeter wave radar detected dirt or dust on the multipurpose camera lens or the windshield surface, DTC B2A60-97 is stored as a past failure.

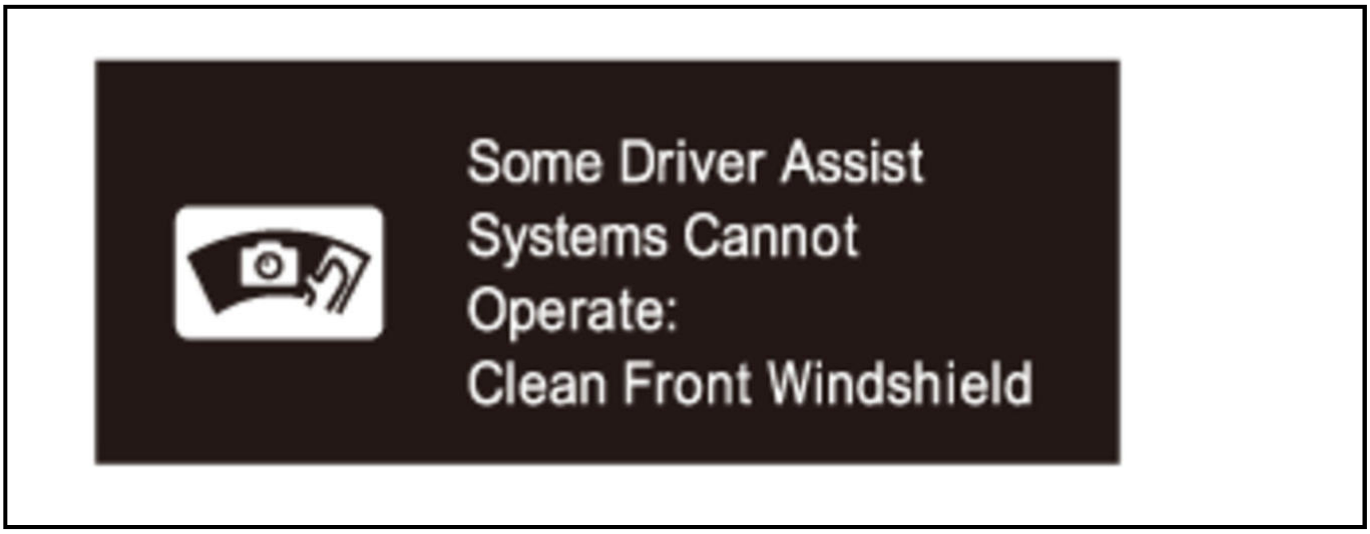
Some Driver Assist
Systems Cannot
Operate:
Clean Front Windshield

System Protect Function (High temperature) (MULTIPURPOSE CAMERA HOT Indication)

If the following message appears on the MID, the LKAS stops operating, and stores a DTC.

When the multipurpose camera temperature cools down to its proper operating temperature, the indicator on the MID turns off, and the LKAS automatically resumes operation.

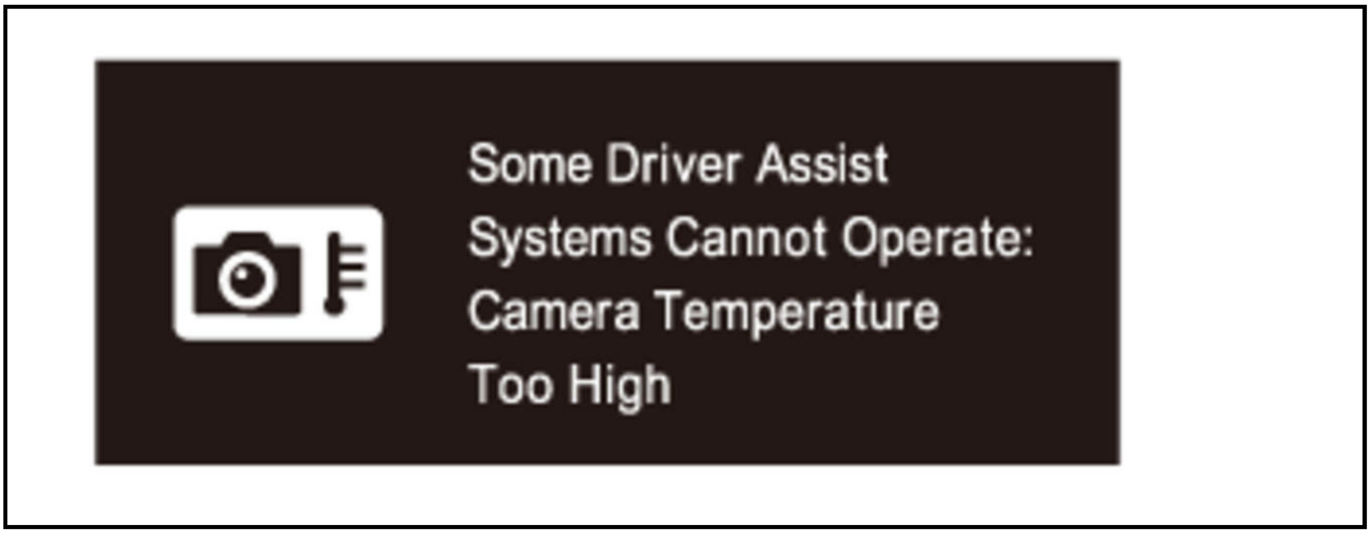
Some Driver Assist
Systems Cannot Operate:
Camera Temperature
Too High

Multipurpose Camera Aiming Function

If the multipurpose camera unit is removed or replaced, you must do the multipurpose camera aiming procedure. If the aiming is incomplete, the LKAS indicator blinks.

CAN Communication

The LKAS communicates with other control units via F-CAN. For LKAS diagram, **refer to the System Diagram for LKAS** .

If the millimeter wave radar and the multipurpose camera unit detects a communication error or a malfunction in another connected unit, the LKAS system will not operate even though it is OK. In this case, both the LKAS indicator and the related unit indicator will come on and stay on.

Intermittent Failures

The term "intermittent failure" means a system may have had a failure, but it checks OK now. If you cannot reproduce the condition, check for intermittent failure DTCs. If intermittent failure DTCs are not stored, check for loose connections and terminals. Also check ground and power connections related to the circuit that you are troubleshooting.

How to Troubleshoot DTCs

Check the DTCs with the HDS.

NOTE: For LKAS DTCs, **refer to the DTC troubleshooting index** .

Before troubleshooting, check and note these items:

- Ask the customer about the conditions when the problem occurred, and try to reproduce the same conditions for troubleshooting.
- If the symptom does not appear and the LKAS indicator does not come on while test-driving and if your troubleshooting was based on a DTC, check for poor connections or loose terminals at all connectors related to the circuit that you are troubleshooting.
- After the troubleshooting or repairs are done, clear the DTCs, and test-drive the vehicle under the same conditions as when the DTC was originally set. Make sure the LKAS indicator does not come on.
- The LKAS sometimes stops operating because of the environment (weather, road conditions, driving conditions, etc.). A code may be stored in these cases.

How to Retrieve DTCs

NOTE: Make sure the 12 volt battery is fully charged before you begin.

1. **Connect the HDS**

2. Use the HDS to check for Integrated Driver Support System DTCs.

3. Read and record the DTC.

4. Turn the vehicle to the OFF (LOCK) mode.

5. Disconnect the HDS.

6. Do the troubleshooting procedure for the DTC.

How to Clear DTCs

NOTE: Make sure the 12 volt battery is fully charged before you begin.

1. **Connect the HDS**

2. In the Driving Support of the HDS, select Integrated Driver Support System, then DTCs, choose the clear DTCs icon, and follow the prompts.

3. Turn the vehicle to the OFF (LOCK) mode.

4. Disconnect the HDS.

ADVANCED DIAGNOSTICS

DTC C0037-F0

DTC C0037-F0 : (Left Rear Wheel Speed Sensor Malfunction)

NOTE

- Initial Diagnosis:

  The initial on-board diagnosis occurs right after the vehicle condition is turned to the ON mode, and the EPS indicator comes on, and continues until the indicator goes off.

- Regular Diagnosis:

  The regular on-board diagnosis begins right after the EPS indicator goes off, and it continues until the vehicle condition is turned to the OFF (LOCK) mode.

- Review "How to troubleshoot the EPS system" before doing the DTC troubleshooting procedure.
- Test-drive the vehicle according to local traffic conditions and regulations. Do not test-drive on a lift unless specified.
- The possible causes shown may not be a complete list of all potential problems, and it is possible that there may be other causes.

Confirmation Procedure	Basic Condition: • 12 volt battery voltage 10 - 16 V • IG voltage continued more than 10 V for at least 1 second With the Driving Pattern: • Turn the vehicle to the ON mode. • Wait 30 seconds or more.
Execution	Regular Diagnosis
Duration	About 30 seconds
DTC Type	• 1 drive cycle • EPS indicator on
Fail Safe Action	• Continue EPS function/assist
Possible Cause	• Left-rear wheel speed sensor failure

DTC C003A-F0

DTC C003A-F0 : (Right Rear Wheel Speed Sensor Malfunction)

NOTE

- Initial Diagnosis:

The initial on-board diagnosis occurs right after the vehicle condition is turned to the ON mode, and the EPS indicator comes on, and continues until the indicator goes off.

- Regular Diagnosis:

  The regular on-board diagnosis begins right after the EPS indicator goes off, and it continues until the vehicle condition is turned to the OFF (LOCK) mode.

- Review "How to troubleshoot the EPS system" before doing the DTC troubleshooting procedure.
- Test-drive the vehicle according to local traffic conditions and regulations. Do not test-drive on a lift unless specified.
- The possible causes shown may not be a complete list of all potential problems, and it is possible that there may be other causes.

Confirmation Procedure	Basic Condition: • 12 volt battery voltage 10 - 16 V • IG voltage continued more than 10 V for at least 1 second With the Driving Pattern: • Turn the vehicle to the ON mode. • Wait 30 seconds or more.
Execution	Regular Diagnosis
Duration	About 30 seconds
DTC Type	• 1 drive cycle • EPS indicator on
Fail Safe Action	• Continue EPS function/assist
Possible Cause	• Right-rear wheel speed sensor failure

DTC C0062-96 (EPS CONTROL UNIT)

DTC C0062-96 : Longitudinal Acceleration Sensor Malfunction

NOTE

- Initial Diagnosis:

  The initial on-board diagnosis occurs right after the vehicle condition is turned to the ON mode, and the EPS indicator comes on, and continues until the indicator goes off.

- Regular Diagnosis:

  The regular on-board diagnosis begins right after the EPS indicator goes off, and it continues until the vehicle condition is turned to the OFF (LOCK) mode.

- Review "How to troubleshoot the EPS system" before doing the DTC troubleshooting procedure.
- Test-drive the vehicle according to local traffic conditions and regulations. Do not test-drive on a lift unless specified.
- The possible causes shown may not be a complete list of all potential problems, and it is possible that there may be other causes.

Confirmation Procedure	Basic Condition: • 12 volt battery voltage 10 - 16 V • IG voltage continued more than 10 V for at least 1 second With the Driving Pattern: • Turn the vehicle to the ON mode. • Wait 30 seconds or more.
Execution	Regular Diagnosis
Duration	About 30 seconds
DTC Type	• 1 drive cycle • EPS indicator on
Fail Safe Action	• Continue EPS function/assist
Possible Cause	• SRS unit internal failure

DTC C0063-96 (EPS CONTROL UNIT)

DTC C0063-96 : Yaw-Rate Sensor Malfunction

NOTE

- Initial Diagnosis:

  The initial on-board diagnosis occurs right after the vehicle condition is turned to the ON mode, and the EPS indicator comes on, and continues until the indicator goes off.

- Regular Diagnosis:

  The regular on-board diagnosis begins right after the EPS indicator goes off, and it continues until the vehicle condition is turned to the OFF (LOCK) mode.

- Review "How to troubleshoot the EPS system" before doing the DTC troubleshooting procedure.
- Test-drive the vehicle according to local traffic conditions and regulations. Do not test-drive on a lift unless specified.
- The possible causes shown may not be a complete list of all potential problems, and it is possible that there may be other causes.

Confirmation Procedure	Basic Condition: • 12 volt battery voltage 10 - 16 V • IG voltage continued more than 10 V for at least 1 second With the Driving Pattern: • Turn the vehicle to the ON mode. • Wait 30 seconds or more.
Execution	Regular Diagnosis
Duration	About 30 seconds
DTC Type	• 1 drive cycle

	- EPS indicator on
Fail Safe Action	- Continue EPS function/assist - Stop motion adaptive-EPS function/assist
Possible Cause	- SRS unit internal failure

DTC C1400-11

DTC C1400-11 : Motor Current Malfunction

NOTE

- Initial Diagnosis:

  The initial on-board diagnosis occurs right after the vehicle condition is turned to the ON mode, and the EPS indicator comes on, and continues until the indicator goes off.

- Regular Diagnosis:

  The regular on-board diagnosis begins right after the EPS indicator goes off, and it continues until the vehicle condition is turned to the OFF (LOCK) mode.

- Review "How to troubleshoot the EPS system" before doing the DTC troubleshooting procedure.
- Test-drive the vehicle according to local traffic conditions and regulations. Do not test-drive on a lift unless specified.
- The possible causes shown may not be a complete list of all potential problems, and it is possible that there may be other causes.

Confirmation Procedure	With the Driving Pattern: - Turn the vehicle to the READY TO DRIVE mode. - Turn the steering wheel to left and right several times, and keep holding each direction for 10 seconds.
Execution	Regular Diagnosis
Duration	About 1 second
DTC Type	- 1 drive cycle - EPS indicator on
Fail Safe Action	- Stop EPS function/assist
Possible Cause	- EPS motor/control unit internal failure

DTC C1400-13

DTC C1400-13 : EPS Motor Circuit Open

NOTE

- Initial Diagnosis:

  The initial on-board diagnosis occurs right after the vehicle condition is turned to the ON mode, and the EPS indicator comes on, and continues until the indicator goes off.

- Regular Diagnosis:

  The regular on-board diagnosis begins right after the EPS indicator goes off, and it continues until the vehicle condition is turned to the OFF (LOCK) mode.

- Review "How to troubleshoot the EPS system" before doing the DTC troubleshooting procedure.
- Test-drive the vehicle according to local traffic conditions and regulations. Do not test-drive on a lift unless specified.
- The possible causes shown may not be a complete list of all potential problems, and it is possible that there may be other causes.

Confirmation Procedure	With the Driving Pattern: • Turn the vehicle to the READY TO DRIVE mode. • Turn the steering wheel to left and right several times, and keep holding each direction for 10 seconds.
Execution	Regular Diagnosis
Duration	About 1 second
DTC Type	• 1 drive cycle • EPS indicator on
Fail Safe Action	• Stop EPS function/assist
Possible Cause	• EPS motor/control unit internal failure

DTC C1400-14

DTC C1400-14 : Motor Voltage Malfunction

NOTE

- Initial Diagnosis:

  The initial on-board diagnosis occurs right after the vehicle condition is turned to the ON mode, and the EPS indicator comes on, and continues until the indicator goes off.

- Regular Diagnosis:

  The regular on-board diagnosis begins right after the EPS indicator goes off, and it continues until the vehicle condition is turned to the OFF (LOCK) mode.

- Review "How to troubleshoot the EPS system" before doing the DTC troubleshooting procedure.
- Test-drive the vehicle according to local traffic conditions and regulations. Do not test-drive on a lift unless specified.
- The possible causes shown may not be a complete list of all potential problems, and it is possible that there may be other causes.

Confirmation Procedure	With the Driving Pattern: • Turn the vehicle to the READY TO DRIVE mode. • Turn the steering wheel to left and right several times, and keep holding each direction for 10 seconds.

Execution	Initial Diagnosis/Regular Diagnosis
Duration	About 1 second
DTC Type	- 1 drive cycle - EPS indicator on
Fail Safe Action	- Stop EPS function/assist
Possible Cause	- EPS motor/control unit internal failure

DTC C1403-14

DTC C1403-14 : Motor Angle Sensor (SIN/COS) Signals Incorrect

NOTE

- Initial Diagnosis:

  The initial on-board diagnosis occurs right after the vehicle condition is turned to the ON mode, and the EPS indicator comes on, and continues until the indicator goes off.

- Regular Diagnosis:

  The regular on-board diagnosis begins right after the EPS indicator goes off, and it continues until the vehicle condition is turned to the OFF (LOCK) mode.

- Review "How to troubleshoot the EPS system" before doing the DTC troubleshooting procedure.
- Test-drive the vehicle according to local traffic conditions and regulations. Do not test-drive on a lift unless specified.
- The possible causes shown may not be a complete list of all potential problems, and it is possible that there may be other causes.

Confirmation Procedure	With the Driving Pattern: - Turn the vehicle to the ON mode.
Execution	Regular Diagnosis
Duration	About 1 second
DTC Type	- 1 drive cycle - EPS indicator on
Fail Safe Action	- Stop EPS function/assist
Possible Cause	- EPS motor/control unit internal failure

DTC C1403-29

DTC C1403-29 : Motor Angle Sensor (SIN/COS) Signals Incorrect Correlation

NOTE

- Initial Diagnosis:

The initial on-board diagnosis occurs right after the vehicle condition is turned to the ON mode, and the EPS indicator comes on, and continues until the indicator goes off.

- Regular Diagnosis:

  The regular on-board diagnosis begins right after the EPS indicator goes off, and it continues until the vehicle condition is turned to the OFF (LOCK) mode.

- Review "How to troubleshoot the EPS system" before doing the DTC troubleshooting procedure.
- Test-drive the vehicle according to local traffic conditions and regulations. Do not test-drive on a lift unless specified.
- The possible causes shown may not be a complete list of all potential problems, and it is possible that there may be other causes.

Confirmation Procedure	With the Driving Pattern: • Turn the vehicle to the ON mode.
Execution	Regular Diagnosis
Duration	About 1 second
DTC Type	• 1 drive cycle • EPS indicator on
Fail Safe Action	• Stop EPS function/assist
Possible Cause	• EPS motor/control unit internal failure

DTC C1404-13

DTC C1404-13 : EPS Motor U Phase Circuit High Voltage

NOTE

- Initial Diagnosis:

  The initial on-board diagnosis occurs right after the vehicle condition is turned to the ON mode, and the EPS indicator comes on, and continues until the indicator goes off.

- Regular Diagnosis:

  The regular on-board diagnosis begins right after the EPS indicator goes off, and it continues until the vehicle condition is turned to the OFF (LOCK) mode.

- Review "How to troubleshoot the EPS system" before doing the DTC troubleshooting procedure.
- Test-drive the vehicle according to local traffic conditions and regulations. Do not test-drive on a lift unless specified.
- The possible causes shown may not be a complete list of all potential problems, and it is possible that there may be other causes.

Confirmation Procedure	With the Driving Pattern: • Turn the vehicle to the READY TO DRIVE mode. • Turn the steering wheel to left and right several times, and keep holding each direction for 10 seconds.

Execution	Regular Diagnosis
Duration	About 1 second
DTC Type	1 drive cycle EPS indicator on
Fail Safe Action	Stop EPS function/assist (Dependent upon the conditions) Stop motion adaptive-EPS function/assist
Possible Cause	EPS motor/control unit internal failure

DTC C1405-13

DTC C1405-13 : EPS Motor V Phase Circuit High Voltage

NOTE

- Initial Diagnosis:

  The initial on-board diagnosis occurs right after the vehicle condition is turned to the ON mode, and the EPS indicator comes on, and continues until the indicator goes off.

- Regular Diagnosis:

  The regular on-board diagnosis begins right after the EPS indicator goes off, and it continues until the vehicle condition is turned to the OFF (LOCK) mode.

- Review "How to troubleshoot the EPS system" before doing the DTC troubleshooting procedure.
- Test-drive the vehicle according to local traffic conditions and regulations. Do not test-drive on a lift unless specified.
- The possible causes shown may not be a complete list of all potential problems, and it is possible that there may be other causes.

Confirmation Procedure	With the Driving Pattern: Turn the vehicle to the READY TO DRIVE mode. Turn the steering wheel to left and right several times, and keep holding each direction for 10 seconds.
Execution	Regular Diagnosis
Duration	About 1 second
DTC Type	1 drive cycle EPS indicator on
Fail Safe Action	Stop EPS function/assist (Dependent upon the conditions) Stop motion adaptive-EPS function/assist
Possible Cause	EPS motor/control unit internal failure

DTC C1406-13

DTC C1406-13 : EPS Motor W Phase Circuit High Voltage

NOTE

- Initial Diagnosis:

  The initial on-board diagnosis occurs right after the vehicle condition is turned to the ON mode, and the EPS indicator comes on, and continues until the indicator goes off.

- Regular Diagnosis:

  The regular on-board diagnosis begins right after the EPS indicator goes off, and it continues until the vehicle condition is turned to the OFF (LOCK) mode.

- Review "How to troubleshoot the EPS system" before doing the DTC troubleshooting procedure.
- Test-drive the vehicle according to local traffic conditions and regulations. Do not test-drive on a lift unless specified.
- The possible causes shown may not be a complete list of all potential problems, and it is possible that there may be other causes.

Confirmation Procedure	With the Driving Pattern: • Turn the vehicle to the READY TO DRIVE mode. • Turn the steering wheel to left and right several times, and keep holding each direction for 10 seconds.
Execution	Regular Diagnosis
Duration	About 1 second
DTC Type	• 1 drive cycle • EPS indicator on
Fail Safe Action	• Stop EPS function/assist (Dependent upon the conditions) • Stop motion adaptive-EPS function/assist
Possible Cause	• EPS motor/control unit internal failure

DTC C1420-29

DTC C1420-29 : Main Torque Sensor and Sub Torque Sensor Incorrect Correlation

NOTE

- Initial Diagnosis:

  The initial on-board diagnosis occurs right after the vehicle condition is turned to the ON mode, and the EPS indicator comes on, and continues until the indicator goes off.

- Regular Diagnosis:

  The regular on-board diagnosis begins right after the EPS indicator goes off, and it continues until the vehicle condition is turned to the OFF (LOCK) mode.

- Review "How to troubleshoot the EPS system" before doing the DTC troubleshooting procedure.
- Test-drive the vehicle according to local traffic conditions and regulations. Do not test-drive on a lift unless specified.
- The possible causes shown may not be a complete list of all potential problems, and it is possible that there may be other causes.

Confirmation Procedure	Basic Condition: - Torque sensor power supply voltage 4.5 - 5.5 V With the Driving Pattern: - Turn the vehicle to the READY TO DRIVE mode. - Turn the steering wheel to left and right several times, and keep holding each direction for 10 seconds.
Execution	Regular Diagnosis
Duration	About 1 second
DTC Type	- 1 drive cycle - EPS indicator on
Fail Safe Action	- Stop or continue EPS function/assist (Limited assist) (Dependent upon the conditions) - Stop motion adaptive-EPS function/assist
Possible Cause	- EPS motor/control unit internal failure - Steering gearbox internal failure (Torque sensor)

DTC C1421-14

DTC C1421-14 : Main Torque Sensor Malfunction

NOTE

- Initial Diagnosis:

  The initial on-board diagnosis occurs right after the vehicle condition is turned to the ON mode, and the EPS indicator comes on, and continues until the indicator goes off.

- Regular Diagnosis:

  The regular on-board diagnosis begins right after the EPS indicator goes off, and it continues until the vehicle condition is turned to the OFF (LOCK) mode.

- Review "How to troubleshoot the EPS system" before doing the DTC troubleshooting procedure.
- Test-drive the vehicle according to local traffic conditions and regulations. Do not test-drive on a lift unless specified.
- The possible causes shown may not be a complete list of all potential problems, and it is possible that there may be other causes.

Confirmation Procedure	Basic Condition: - Torque sensor power supply voltage 4.5 - 5.5 V With the Driving Pattern: - Turn the vehicle to the READY TO DRIVE mode. - Turn the steering wheel to left and right several times, and keep holding each direction for 10 seconds.

Execution	Regular Diagnosis
Duration	About 1 second
DTC Type	• 1 drive cycle • EPS indicator on
Fail Safe Action	• Stop or continue EPS function/assist (Limited assist) (Dependent upon the conditions) • Stop motion adaptive-EPS function/assist
Possible Cause	• Open, short to ground, short to power, or poor connection between the EPS motor/control unit and the torque sensor (TSM line) • Open between the EPS motor/control unit and the torque sensor (T/S_VDD line) • Open between the EPS motor/control unit and the torque sensor (T/S_GND line) • EPS motor/control unit internal failure • Steering gearbox internal failure (Torque sensor)

DTC C1422-14

DTC C1422-14 : Sub Torque Sensor Malfunction

NOTE

- Initial Diagnosis:

  The initial on-board diagnosis occurs right after the vehicle condition is turned to the ON mode, and the EPS indicator comes on, and continues until the indicator goes off.

- Regular Diagnosis:

  The regular on-board diagnosis begins right after the EPS indicator goes off, and it continues until the vehicle condition is turned to the OFF (LOCK) mode.

- Review "How to troubleshoot the EPS system" before doing the DTC troubleshooting procedure.
- Test-drive the vehicle according to local traffic conditions and regulations. Do not test-drive on a lift unless specified.
- The possible causes shown may not be a complete list of all potential problems, and it is possible that there may be other causes.

Confirmation Procedure	Basic Condition: • Torque sensor power supply voltage 4.5 - 5.5 V With the Driving Pattern: • Turn the vehicle to the READY TO DRIVE mode. • Turn the steering wheel to left and right several times, and keep holding each direction for 10 seconds.
Execution	Regular Diagnosis
Duration	About 1 second
DTC Type	• 1 drive cycle • EPS indicator on

Fail Safe Action	- Stop or continue EPS function/assist (Limited assist) (Dependent upon the conditions) - Stop motion adaptive-EPS function/assist
Possible Cause	- Open, short to ground, short to power, or poor connection between the EPS motor/control unit and the torque sensor (TSS line) - Open between the EPS motor/control unit and the torque sensor (T/S_VDD line) - Open between the EPS motor/control unit and the torque sensor (T/S_GND line) - EPS motor/control unit internal failure - Steering gearbox internal failure (Torque sensor)

DTC C1423-14

DTC C1423-14 : Torque Sensor Power Source Circuit Malfunction

NOTE

- Initial Diagnosis:

  The initial on-board diagnosis occurs right after the vehicle condition is turned to the ON mode, and the EPS indicator comes on, and continues until the indicator goes off.

- Regular Diagnosis:

  The regular on-board diagnosis begins right after the EPS indicator goes off, and it continues until the vehicle condition is turned to the OFF (LOCK) mode.

- Review "How to troubleshoot the EPS system" before doing the DTC troubleshooting procedure.
- Test-drive the vehicle according to local traffic conditions and regulations. Do not test-drive on a lift unless specified.
- The possible causes shown may not be a complete list of all potential problems, and it is possible that there may be other causes.

Confirmation Procedure	With the Driving Pattern: - Turn the vehicle to the ON mode.
Execution	Regular Diagnosis
Duration	About 1 second
DTC Type	- 1 drive cycle - EPS indicator on
Fail Safe Action	- Stop or continue EPS function/assist (Limited assist) (Dependent upon the conditions) - Stop motion adaptive-EPS function/assist
Possible Cause	- Short to ground between the EPS motor/control unit and the torque sensor (T/S_VDD line) - EPS motor/control unit internal failure - Steering gearbox internal failure (Torque sensor)

DTC C1432-62

DTC C1432-62 : Vehicle Speed and the Engine Speed Incorrect Correlation

NOTE

- Initial Diagnosis:

  The initial on-board diagnosis occurs right after the vehicle condition is turned to the ON mode, and the EPS indicator comes on, and continues until the indicator goes off.

- Regular Diagnosis:

  The regular on-board diagnosis begins right after the EPS indicator goes off, and it continues until the vehicle condition is turned to the OFF (LOCK) mode.

- Review "How to troubleshoot the EPS system" before doing the DTC troubleshooting procedure.
- Test-drive the vehicle according to local traffic conditions and regulations. Do not test-drive on a lift unless specified.
- The possible causes shown may not be a complete list of all potential problems, and it is possible that there may be other causes.

Confirmation Procedure	Basic Condition: • 12 volt battery voltage 10 - 16 V • IG voltage continued more than 10 V for at least 1 second With the Driving Pattern: • Turn the vehicle to the READY TO DRIVE mode. • Test-drive the vehicle at a steady speed of 13 mph (20 km/h) or more for at least 60 seconds. (Be careful of the surrounding traffic conditions.)
Execution	Regular Diagnosis
Duration	About 60 seconds
DTC Type	• 1 drive cycle • EPS indicator on
Fail Safe Action	• Continue EPS function/assist (Limited assist) (Continue system diagnosis: EPS function/assist will return to normal when the vehicle speed signal returns to normal) • Stop motion adaptive-EPS function/assist
Possible Cause	• PCM internal failure • EPS motor/control unit internal failure

DTC U0029-00 (EPS CONTROL UNIT)

DTC U0029-00 : F-CAN Malfunction (Bus-Off)

NOTE

- Initial Diagnosis:

  The initial on-board diagnosis occurs right after the vehicle condition is turned to the ON mode, and the EPS indicator comes on, and continues until the indicator goes off.

- Regular Diagnosis:

  The regular on-board diagnosis begins right after the EPS indicator goes off, and it continues until the vehicle condition is turned to the OFF (LOCK) mode.

- Review "How to troubleshoot the EPS system" before doing the DTC troubleshooting procedure.
- Test-drive the vehicle according to local traffic conditions and regulations. Do not test-drive on a lift unless specified.
- The possible causes shown may not be a complete list of all potential problems, and it is possible that there may be other causes.

Confirmation Procedure	Basic Condition: • 12 volt battery voltage 10 - 16 V • IG voltage continued more than 10 V for at least 1 second With the Driving Pattern: • Turn the vehicle to the ON mode.
Execution	Initial Diagnosis/Regular Diagnosis
Duration	About 1 second
DTC Type	• 1 drive cycle • EPS indicator on
Fail Safe Action	• Continue EPS function/assist (Limited assist) (Continue system diagnosis: EPS function/assist will return to normal after the system returns to normal) • Stop motion adaptive-EPS function/assist
Possible Cause	• Open, short, or poor connection between the EPS control unit and other control units (F-CAN lines) • Internal failure of another unit on F-CAN • EPS motor/control unit internal failure

DTC U0100-00 (EPS CONTROL UNIT)

DTC U0100-00 : F-CAN Malfunction (EPS Control Unit-PCM/TCM)

NOTE

- Initial Diagnosis:

  The initial on-board diagnosis occurs right after the vehicle condition is turned to the ON mode, and the EPS indicator comes on, and continues until the indicator goes off.

- Regular Diagnosis:

  The regular on-board diagnosis begins right after the EPS indicator goes off, and it continues until the vehicle condition is turned to the OFF (LOCK) mode.

- Review "How to troubleshoot the EPS system" before doing the DTC troubleshooting procedure.
- Test-drive the vehicle according to local traffic conditions and regulations. Do not test-drive on a lift unless specified.

- The possible causes shown may not be a complete list of all potential problems, and it is possible that there may be other causes.

Confirmation Procedure	Basic Condition: • 12 volt battery voltage 10 - 16 V • IG voltage continued more than 10 V for at least 1 second With the Driving Pattern: • Turn the vehicle to the ON mode.
Execution	Initial Diagnosis/Regular Diagnosis
Duration	About 5 seconds
DTC Type	• 1 drive cycle • EPS indicator on
Fail Safe Action	• Continue EPS function/assist (Limited assist) (Continue system diagnosis: EPS function/assist will return to normal after the system returns to normal)
Possible Cause	• Open or poor connection between the EPS control unit and the PCM (F-CAN lines) • PCM internal failure • EPS motor/control unit internal failure

DTC U0122-00 (EPS CONTROL UNIT)

DTC U0122-00 : F-CAN Malfunction (EPS Control Unit-VSA/ABS Modulator-Control Unit)

NOTE

- Initial Diagnosis:

  The initial on-board diagnosis occurs right after the vehicle condition is turned to the ON mode, and the EPS indicator comes on, and continues until the indicator goes off.

- Regular Diagnosis:

  The regular on-board diagnosis begins right after the EPS indicator goes off, and it continues until the vehicle condition is turned to the OFF (LOCK) mode.

- Review "How to troubleshoot the EPS system" before doing the DTC troubleshooting procedure.
- Test-drive the vehicle according to local traffic conditions and regulations. Do not test-drive on a lift unless specified.
- The possible causes shown may not be a complete list of all potential problems, and it is possible that there may be other causes.

Confirmation Procedure	Basic Condition: • 12 volt battery voltage 10 - 16 V • IG voltage continued more than 10 V for at least 1 second With the Driving Pattern: • Turn the vehicle to the ON mode.
Execution	Initial Diagnosis/Regular Diagnosis
Duration	About 10 seconds
DTC Type	• 1 drive cycle • EPS indicator on
Fail Safe Action	• Continue EPS function/assist • Stop motion adaptive-EPS function/assist (Dependent upon the conditions) (Continue system diagnosis: EPS function/assist will return to normal after the system returns to normal)
Possible Cause	• Open or poor connection between the EPS control unit and the VSA modulator-control unit (F-CAN lines) • VSA modulator-control unit internal failure • EPS motor/control unit internal failure

DTC U0151-00 (EPS CONTROL UNIT)

DTC U0151-00 : F-CAN Malfunction (EPS Control Unit-SRS Unit)

NOTE

- Initial Diagnosis:

  The initial on-board diagnosis occurs right after the vehicle condition is turned to the ON mode, and the EPS indicator comes on, and continues until the indicator goes off.

- Regular Diagnosis:

  The regular on-board diagnosis begins right after the EPS indicator goes off, and it continues until the vehicle condition is turned to the OFF (LOCK) mode.

- Review "How to troubleshoot the EPS system" before doing the DTC troubleshooting procedure.
- Test-drive the vehicle according to local traffic conditions and regulations. Do not test-drive on a lift unless specified.
- The possible causes shown may not be a complete list of all potential problems, and it is possible that there may be other causes.

Confirmation Procedure	Basic Condition: - 12 volt battery voltage 10 - 16 V - IG voltage continued more than 10 V for at least 1 second With the Driving Pattern: - Turn the vehicle to the ON mode.
Execution	Initial Diagnosis/Regular Diagnosis
Duration	About 10 seconds
DTC Type	- 1 drive cycle - EPS indicator on
Fail Safe Action	- Continue EPS function/assist - Stop motion adaptive-EPS function/assist(Continue system diagnosis: EPS function/assist will return to normal after the system returns to normal)
Possible Cause	- Open or poor connection between the EPS control unit and the SRS unit (F-CAN lines) - SRS unit internal failure - EPS motor/control unit internal failure

DTC U0416-68 (EPS CONTROL UNIT)

DTC U0416-68 : (VSA System Malfunction)

NOTE

- Initial Diagnosis:

  The initial on-board diagnosis occurs right after the vehicle condition is turned to the ON mode, and the EPS indicator comes on, and continues until the indicator goes off.

- Regular Diagnosis:

  The regular on-board diagnosis begins right after the EPS indicator goes off, and it continues until the vehicle condition is turned to the OFF (LOCK) mode.

- Review "How to troubleshoot the EPS system" before doing the DTC troubleshooting procedure.
- Test-drive the vehicle according to local traffic conditions and regulations. Do not test-drive on a lift unless specified.
- The possible causes shown may not be a complete list of all potential problems, and it is possible that there may be other causes.

Confirmation Procedure	Basic Condition: • 12 volt battery voltage 10 - 16 V • IG voltage continued more than 10 V for at least 1 second With the Driving Pattern: • Turn the vehicle to the READY TO DRIVE mode. • Wait 60 seconds or more.
Execution	Regular Diagnosis
Duration	About 60 seconds
DTC Type	• 1 drive cycle • EPS indicator on
Fail Safe Action	• Continue EPS function/assist • Stop motion adaptive-EPS function/assist (Continue system diagnosis: EPS function/assist will return to normal after the system returns to normal)
Possible Cause	• VSA modulator-control unit internal failure • VSA system failure

DTC U129C-00 (EPS CONTROL UNIT)

DTC U129C-00 : F-CAN Malfunction (EPS Control Unit-Driving Support System Control Unit)

NOTE

- Initial Diagnosis:

  The initial on-board diagnosis occurs right after the vehicle condition is turned to the ON mode, and the EPS indicator comes on, and continues until the indicator goes off.

- Regular Diagnosis:

  The regular on-board diagnosis begins right after the EPS indicator goes off, and it continues until the vehicle condition is turned to the OFF (LOCK) mode.

- Review "How to troubleshoot the EPS system" before doing the DTC troubleshooting procedure.
- Test-drive the vehicle according to local traffic conditions and regulations. Do not test-drive on a lift unless specified.
- The possible causes shown may not be a complete list of all potential problems, and it is possible that there may be other causes.

Confirmation Procedure	Basic Condition: • 12 volt battery voltage 10 - 16 V • IG voltage continued more than 10 V for at least 1 second With the Driving Pattern: • Turn the vehicle to the ON mode.
Execution	Regular Diagnosis

Duration	About 10 seconds
DTC Type	- 1 drive cycle
Fail Safe Action	- Continue EPS function/assist - Stop LKAS function/assist
Possible Cause	- Open or poor connection between the EPS control unit and the millimeter wave radar (F-CAN lines) - Millimeter wave radar internal failure - EPS motor/control unit internal failure

DTC U1483-68 (EPS CONTROL UNIT)

DTC U1483-68 : (LKAS Malfunction (Indicator value check))

NOTE

- Initial Diagnosis:

  The initial on-board diagnosis occurs right after the vehicle condition is turned to the ON mode, and the EPS indicator comes on, and continues until the indicator goes off.

- Regular Diagnosis:

  The regular on-board diagnosis begins right after the EPS indicator goes off, and it continues until the vehicle condition is turned to the OFF (LOCK) mode.

- Review "How to troubleshoot the EPS system" before doing the DTC troubleshooting procedure.
- Test-drive the vehicle according to local traffic conditions and regulations. Do not test-drive on a lift unless specified.
- The possible causes shown may not be a complete list of all potential problems, and it is possible that there may be other causes.

Confirmation Procedure	Basic Condition: - 12 volt battery voltage 10 - 16 V - IG voltage continued more than 10 V for at least 1 second With the Driving Pattern: - Turn the vehicle to the ON mode.
Execution	Regular Diagnosis
Duration	About 10 seconds
DTC Type	- 1 drive cycle
Fail Safe Action	- Continue EPS function/assist - Stop LKAS function/assist
Possible Cause	- Millimeter wave radar internal failure

DTC U1483-94 (EPS CONTROL UNIT)

DTC U1483-94 : (LKAS Malfunction)

NOTE

- Initial Diagnosis:

  The initial on-board diagnosis occurs right after the vehicle condition is turned to the ON mode, and the EPS indicator comes on, and continues until the indicator goes off.

- Regular Diagnosis:

  The regular on-board diagnosis begins right after the EPS indicator goes off, and it continues until the vehicle condition is turned to the OFF (LOCK) mode.

- Review "How to troubleshoot the EPS system" before doing the DTC troubleshooting procedure.
- Test-drive the vehicle according to local traffic conditions and regulations. Do not test-drive on a lift unless specified.
- The possible causes shown may not be a complete list of all potential problems, and it is possible that there may be other causes.

Confirmation Procedure	Basic Condition: • 12 volt battery voltage 10 - 16 V • IG voltage continued more than 10 V for at least 1 second With the Driving Pattern: • Turn the vehicle to the ON mode.
Execution	Regular Diagnosis
Duration	About 10 seconds
DTC Type	• 1 drive cycle
Fail Safe Action	• Continue EPS function/assist • Stop LKAS function/assist
Possible Cause	• Millimeter wave radar internal failure

DTC U3000-49 (EPS CONTROL UNIT)

DTC U3000-49 : EPS Control Unit Internal Circuit Malfunction

NOTE

- Initial Diagnosis:

  The initial on-board diagnosis occurs right after the vehicle condition is turned to the ON mode, and the EPS indicator comes on, and continues until the indicator goes off.

- Regular Diagnosis:

  The regular on-board diagnosis begins right after the EPS indicator goes off, and it continues until the vehicle condition is turned to the OFF (LOCK) mode.

- Review "How to troubleshoot the EPS system" before doing the DTC troubleshooting procedure.

- Test-drive the vehicle according to local traffic conditions and regulations. Do not test-drive on a lift unless specified.
- The possible causes shown may not be a complete list of all potential problems, and it is possible that there may be other causes.

Confirmation Procedure	With the Driving Pattern: • Turn the vehicle to the ON mode.
Execution	Initial Diagnosis/Regular Diagnosis
Duration	About 5 seconds
DTC Type	• 1 drive cycle • EPS indicator on (Dependent upon the conditions)
Fail Safe Action	• Continue or stop EPS function/assist (Dependent upon the conditions) • Continue or stop motion adaptive-EPS function/assist (Dependent upon the conditions)
Possible Cause	• EPS motor/control unit internal failure

DTC U3000-51 (EPS CONTROL UNIT)

DTC U3000-51 : ECU Software Update Failure

NOTE

- Initial Diagnosis:

  The initial on-board diagnosis occurs right after the vehicle condition is turned to the ON mode, and the EPS indicator comes on, and continues until the indicator goes off.

- Regular Diagnosis:

  The regular on-board diagnosis begins right after the EPS indicator goes off, and it continues until the vehicle condition is turned to the OFF (LOCK) mode.

- Review "How to troubleshoot the EPS system" before doing the DTC troubleshooting procedure.
- Test-drive the vehicle according to local traffic conditions and regulations. Do not test-drive on a lift unless specified.
- The possible causes shown may not be a complete list of all potential problems, and it is possible that there may be other causes.

Confirmation Procedure	With the Driving Pattern: - Turn the vehicle to the ON mode.
Execution	Initial Diagnosis
Duration	-
DTC Type	- 1 drive cycle - EPS indicator on
Fail Safe Action	- Stop EPS function/assist - Stop motion adaptive-EPS function/assist
Possible Cause	- EPS control unit update not completed

DTC U3000-55 (EPS CONTROL UNIT)

DTC U3000-55 : EPS Control Unit Internal Malfunction

NOTE

- Initial Diagnosis:

  The initial on-board diagnosis occurs right after the vehicle condition is turned to the ON mode, and the EPS indicator comes on, and continues until the indicator goes off.

- Regular Diagnosis:

  The regular on-board diagnosis begins right after the EPS indicator goes off, and it continues until the vehicle condition is turned to the OFF (LOCK) mode.

- Review "How to troubleshoot the EPS system" before doing the DTC troubleshooting procedure.
- Test-drive the vehicle according to local traffic conditions and regulations. Do not test-drive on a lift unless specified.
- The possible causes shown may not be a complete list of all potential problems, and it is possible that there may be other causes.

Confirmation Procedure	With the Driving Pattern: - Turn the vehicle to the ON mode.
Execution	Initial Diagnosis
Duration	-
DTC Type	- 1 drive cycle - EPS indicator blink
Fail Safe Action	- Continue EPS function/assist (Limited assist)
Possible Cause	- EPS motor/control unit internal failure

DTC U3003-16 (EPS CONTROL UNIT)

DTC U3003-16 : Battery Voltage Low

NOTE

- Initial Diagnosis:

  The initial on-board diagnosis occurs right after the vehicle condition is turned to the ON mode, and the EPS indicator comes on, and continues until the indicator goes off.

- Regular Diagnosis:

  The regular on-board diagnosis begins right after the EPS indicator goes off, and it continues until the vehicle condition is turned to the OFF (LOCK) mode.

- Review "How to troubleshoot the EPS system" before doing the DTC troubleshooting procedure.
- Test-drive the vehicle according to local traffic conditions and regulations. Do not test-drive on a lift unless specified.
- The possible causes shown may not be a complete list of all potential problems, and it is possible that there may be other causes.

Confirmation Procedure	With the Driving Pattern: • Turn the vehicle to the READY TO DRIVE mode. • Wait 15 seconds or more.
Execution	Regular Diagnosis
Duration	About 15 seconds
DTC Type	• 1 drive cycle • EPS indicator on
Fail Safe Action	• Stop or continue EPS function/assist (Dependent upon the conditions) (Continue system diagnosis: EPS function/assist will return to normal after the system returns to normal) • Stop motion adaptive-EPS function/assist
Possible Cause	• Open, Short to ground, or Poor connection between the under-hood fuse/relay box and the EPS control unit (+B_EPS line) • Fuse failure (Under-hood fuse/relay box No. A2-1) • Abnormal 12 volt battery • Electric powertrain system failure • EPS motor/control unit internal failure

DTC U3003-17 (EPS CONTROL UNIT)

DTC U3003-17 : Battery Voltage High

NOTE

- Initial Diagnosis:

  The initial on-board diagnosis occurs right after the vehicle condition is turned to the ON mode, and the EPS indicator comes on, and continues until the indicator goes off.

- Regular Diagnosis:

The regular on-board diagnosis begins right after the EPS indicator goes off, and it continues until the vehicle condition is turned to the OFF (LOCK) mode.

- Review "How to troubleshoot the EPS system" before doing the DTC troubleshooting procedure.
- Test-drive the vehicle according to local traffic conditions and regulations. Do not test-drive on a lift unless specified.
- The possible causes shown may not be a complete list of all potential problems, and it is possible that there may be other causes.

Confirmation Procedure	With the Driving Pattern: • Turn the vehicle to the READY TO DRIVE mode.
Execution	Regular Diagnosis
Duration	About 1 second
DTC Type	• 1 drive cycle • EPS indicator on
Fail Safe Action	• Stop EPS function/assist(Continue system diagnosis: EPS function/assist will return to normal after the system returns to normal) • Stop motion adaptive-EPS function/assist
Possible Cause	• Abnormal 12 volt battery • Electric powertrain system failure • EPS motor/control unit internal failure

---

ADVANCED DIAGNOSTICS

DTC C0037-F0

DTC C0037-F0 : Left Rear Wheel Speed Sensor Malfunction

NOTE

- Initial Diagnosis:

  The initial on-board diagnosis occurs right after the vehicle condition is turned to the ON mode, and the EPS indicator comes on, and continues until the indicator goes off.

- Regular Diagnosis:

  The regular on-board diagnosis begins right after the EPS indicator goes off, and it continues until the vehicle condition is turned to the OFF (LOCK) mode.

- Review "How to troubleshoot the EPS system" before doing the DTC troubleshooting procedure.
- Test-drive the vehicle according to local traffic conditions and regulations. Do not test-drive on a lift unless specified.
- The possible causes shown may not be a complete list of all potential problems, and it is possible that there may be other causes.

Confirmation Procedure	Basic Condition: • 12 volt battery voltage 10 - 16 V • IG voltage continued more than 10 V for at least 1 second With the Driving Pattern: • Turn the vehicle to the ON mode. • Wait 30 seconds or more.
Execution	Regular Diagnosis
Duration	About 30 seconds
DTC Type	• 1 drive cycle • EPS indicator on
Fail Safe Action	• Continue EPS function/assist
Possible Cause	• Left-rear wheel speed sensor failure

DTC C003A-F0

DTC C003A-F0 : Right Rear Wheel Speed Sensor Malfunction

NOTE

- Initial Diagnosis:

The initial on-board diagnosis occurs right after the vehicle condition is turned to the ON mode, and the EPS indicator comes on, and continues until the indicator goes off.

- Regular Diagnosis:

  The regular on-board diagnosis begins right after the EPS indicator goes off, and it continues until the vehicle condition is turned to the OFF (LOCK) mode.

- Review "How to troubleshoot the EPS system" before doing the DTC troubleshooting procedure.
- Test-drive the vehicle according to local traffic conditions and regulations. Do not test-drive on a lift unless specified.
- The possible causes shown may not be a complete list of all potential problems, and it is possible that there may be other causes.

Confirmation Procedure	Basic Condition: • 12 volt battery voltage 10 - 16 V • IG voltage continued more than 10 V for at least 1 second With the Driving Pattern: • Turn the vehicle to the ON mode. • Wait 30 seconds or more.
Execution	Regular Diagnosis
Duration	About 30 seconds
DTC Type	• 1 drive cycle • EPS indicator on
Fail Safe Action	• Continue EPS function/assist
Possible Cause	• Right-rear wheel speed sensor failure

DTC C0062-96 (EPS CONTROL UNIT)

DTC C0062-96 : Longitudinal Acceleration Sensor Malfunction

NOTE

- Initial Diagnosis:

  The initial on-board diagnosis occurs right after the vehicle condition is turned to the ON mode, and the EPS indicator comes on, and continues until the indicator goes off.

- Regular Diagnosis:

  The regular on-board diagnosis begins right after the EPS indicator goes off, and it continues until the vehicle condition is turned to the OFF (LOCK) mode.

- Review "How to troubleshoot the EPS system" before doing the DTC troubleshooting procedure.
- Test-drive the vehicle according to local traffic conditions and regulations. Do not test-drive on a lift unless specified.
- The possible causes shown may not be a complete list of all potential problems, and it is possible that there may be other causes.

Confirmation Procedure	Basic Condition: - 12 volt battery voltage 10 - 16 V - IG voltage continued more than 10 V for at least 1 second With the Driving Pattern: - Turn the vehicle to the ON mode. - Wait 30 seconds or more.
Execution	Regular Diagnosis
Duration	About 30 seconds
DTC Type	- 1 drive cycle - EPS indicator on
Fail Safe Action	- Continue EPS function/assist
Possible Cause	- SRS unit internal failure

DTC C0063-96 (EPS CONTROL UNIT)

DTC C0063-96 : Yaw-Rate Sensor Malfunction

NOTE

- Initial Diagnosis:

  The initial on-board diagnosis occurs right after the vehicle condition is turned to the ON mode, and the EPS indicator comes on, and continues until the indicator goes off.

- Regular Diagnosis:

  The regular on-board diagnosis begins right after the EPS indicator goes off, and it continues until the vehicle condition is turned to the OFF (LOCK) mode.

- Review "How to troubleshoot the EPS system" before doing the DTC troubleshooting procedure.
- Test-drive the vehicle according to local traffic conditions and regulations. Do not test-drive on a lift unless specified.
- The possible causes shown may not be a complete list of all potential problems, and it is possible that there may be other causes.

Confirmation Procedure	Basic Condition: - 12 volt battery voltage 10 - 16 V - IG voltage continued more than 10 V for at least 1 second With the Driving Pattern: - Turn the vehicle to the ON mode. - Wait 30 seconds or more.
Execution	Regular Diagnosis
Duration	About 30 seconds
DTC Type	- 1 drive cycle

	- EPS indicator on
Fail Safe Action	- Continue EPS function/assist - Stop motion adaptive-EPS function/assist
Possible Cause	- SRS unit internal failure

DTC C1400-11

DTC C1400-11 : Motor Current Malfunction

NOTE

- Initial Diagnosis:

  The initial on-board diagnosis occurs right after the vehicle condition is turned to the ON mode, and the EPS indicator comes on, and continues until the indicator goes off.

- Regular Diagnosis:

  The regular on-board diagnosis begins right after the EPS indicator goes off, and it continues until the vehicle condition is turned to the OFF (LOCK) mode.

- Review "How to troubleshoot the EPS system" before doing the DTC troubleshooting procedure.
- Test-drive the vehicle according to local traffic conditions and regulations. Do not test-drive on a lift unless specified.
- The possible causes shown may not be a complete list of all potential problems, and it is possible that there may be other causes.

Confirmation Procedure	With the Driving Pattern: - Start the engine. - Turn the steering wheel to left and right several times, and keep holding each direction for 10 seconds.
Execution	Regular Diagnosis
Duration	About 1 second
DTC Type	- 1 drive cycle - EPS indicator on
Fail Safe Action	- Stop EPS function/assist
Possible Cause	- EPS motor/control unit internal failure

DTC C1400-13 (2020 2021)

DTC C1400-13 : EPS Motor Circuit Open

NOTE

- Initial Diagnosis:

  The initial on-board diagnosis occurs right after the vehicle condition is turned to the ON mode, and the EPS indicator comes on, and continues until the indicator goes off.

- Regular Diagnosis:

  The regular on-board diagnosis begins right after the EPS indicator goes off, and it continues until the vehicle condition is turned to the OFF (LOCK) mode.

- Review "How to troubleshoot the EPS system" before doing the DTC troubleshooting procedure.
- Test-drive the vehicle according to local traffic conditions and regulations. Do not test-drive on a lift unless specified.
- The possible causes shown may not be a complete list of all potential problems, and it is possible that there may be other causes.

Confirmation Procedure	With the Driving Pattern: • Start the engine. • Turn the steering wheel to left and right several times, and keep holding each direction for 10 seconds.
Execution	Regular Diagnosis
Duration	About 1 second
DTC Type	• 1 drive cycle • EPS indicator on
Fail Safe Action	• Stop EPS function/assist
Possible Cause	• EPS motor/control unit internal failure

DTC C1400-14

DTC C1400-14 : Motor Voltage Malfunction

NOTE

- Initial Diagnosis:

  The initial on-board diagnosis occurs right after the vehicle condition is turned to the ON mode, and the EPS indicator comes on, and continues until the indicator goes off.

- Regular Diagnosis:

  The regular on-board diagnosis begins right after the EPS indicator goes off, and it continues until the vehicle condition is turned to the OFF (LOCK) mode.

- Review "How to troubleshoot the EPS system" before doing the DTC troubleshooting procedure.
- Test-drive the vehicle according to local traffic conditions and regulations. Do not test-drive on a lift unless specified.
- The possible causes shown may not be a complete list of all potential problems, and it is possible that there may be other causes.

Confirmation Procedure	With the Driving Pattern: • Start the engine. • Turn the steering wheel to left and right several times, and keep holding each direction for 10 seconds.

Execution	Initial Diagnosis/Regular Diagnosis
Duration	About 1 second
DTC Type	- 1 drive cycle - EPS indicator on
Fail Safe Action	- Stop EPS function/assist
Possible Cause	- EPS motor/control unit internal failure

DTC C1403-14

DTC C1403-14 : Motor Angle Sensor (SIN/COS) Signals Incorrect

NOTE

- Initial Diagnosis:

  The initial on-board diagnosis occurs right after the vehicle condition is turned to the ON mode, and the EPS indicator comes on, and continues until the indicator goes off.

- Regular Diagnosis:

  The regular on-board diagnosis begins right after the EPS indicator goes off, and it continues until the vehicle condition is turned to the OFF (LOCK) mode.

- Review "How to troubleshoot the EPS system" before doing the DTC troubleshooting procedure.
- Test-drive the vehicle according to local traffic conditions and regulations. Do not test-drive on a lift unless specified.
- The possible causes shown may not be a complete list of all potential problems, and it is possible that there may be other causes.

Confirmation Procedure	With the Driving Pattern: - Turn the vehicle to the ON mode.
Execution	Regular Diagnosis
Duration	About 1 second
DTC Type	- 1 drive cycle - EPS indicator on
Fail Safe Action	- Stop EPS function/assist
Possible Cause	- EPS motor/control unit internal failure

DTC C1403-29

DTC C1403-29 : Motor Angle Sensor (SIN/COS) Signals Incorrect Correlation

NOTE

- Initial Diagnosis:

The initial on-board diagnosis occurs right after the vehicle condition is turned to the ON mode, and the EPS indicator comes on, and continues until the indicator goes off.

- Regular Diagnosis:

  The regular on-board diagnosis begins right after the EPS indicator goes off, and it continues until the vehicle condition is turned to the OFF (LOCK) mode.

- Review "How to troubleshoot the EPS system" before doing the DTC troubleshooting procedure.
- Test-drive the vehicle according to local traffic conditions and regulations. Do not test-drive on a lift unless specified.
- The possible causes shown may not be a complete list of all potential problems, and it is possible that there may be other causes.

Confirmation Procedure	With the Driving Pattern: • Turn the vehicle to the ON mode.
Execution	Regular Diagnosis
Duration	About 1 second
DTC Type	• 1 drive cycle • EPS indicator on
Fail Safe Action	• Stop EPS function/assist
Possible Cause	• EPS motor/control unit internal failure

DTC C1404-13

DTC C1404-13 : EPS Motor U Phase Circuit High Voltage

NOTE

- Initial Diagnosis:

  The initial on-board diagnosis occurs right after the vehicle condition is turned to the ON mode, and the EPS indicator comes on, and continues until the indicator goes off.

- Regular Diagnosis:

  The regular on-board diagnosis begins right after the EPS indicator goes off, and it continues until the vehicle condition is turned to the OFF (LOCK) mode.

- Review "How to troubleshoot the EPS system" before doing the DTC troubleshooting procedure.
- Test-drive the vehicle according to local traffic conditions and regulations. Do not test-drive on a lift unless specified.
- The possible causes shown may not be a complete list of all potential problems, and it is possible that there may be other causes.

Confirmation Procedure	With the Driving Pattern: • Start the engine. • Turn the steering wheel to left and right several times, and keep holding each direction for 10 seconds.

Execution	Initial Diagnosis/Regular Diagnosis
Duration	About 1 second
DTC Type	• 1 drive cycle • EPS indicator on
Fail Safe Action	• Stop EPS function/assist (Dependant upon the conditions) • Stop motion adaptive-EPS function/assist
Possible Cause	• EPS motor/control unit internal failure

DTC C1405-13

DTC C1405-13 : EPS Motor V Phase Circuit High Voltage

NOTE

- Initial Diagnosis:

  The initial on-board diagnosis occurs right after the vehicle condition is turned to the ON mode, and the EPS indicator comes on, and continues until the indicator goes off.

- Regular Diagnosis:

  The regular on-board diagnosis begins right after the EPS indicator goes off, and it continues until the vehicle condition is turned to the OFF (LOCK) mode.

- Review "How to troubleshoot the EPS system" before doing the DTC troubleshooting procedure.
- Test-drive the vehicle according to local traffic conditions and regulations. Do not test-drive on a lift unless specified.
- The possible causes shown may not be a complete list of all potential problems, and it is possible that there may be other causes.

Confirmation Procedure	With the Driving Pattern: • Start the engine. • Turn the steering wheel to left and right several times, and keep holding each direction for 10 seconds.
Execution	Initial Diagnosis/Regular Diagnosis
Duration	About 1 second
DTC Type	• 1 drive cycle • EPS indicator on
Fail Safe Action	• Stop EPS function/assist (Dependant upon the conditions) • Stop motion adaptive-EPS function/assist
Possible Cause	• EPS motor/control unit internal failure

DTC C1406-13

DTC C1406-13 : EPS Motor W Phase Circuit High Voltage

NOTE

- Initial Diagnosis:

  The initial on-board diagnosis occurs right after the vehicle condition is turned to the ON mode, and the EPS indicator comes on, and continues until the indicator goes off.

- Regular Diagnosis:

  The regular on-board diagnosis begins right after the EPS indicator goes off, and it continues until the vehicle condition is turned to the OFF (LOCK) mode.

- Review "How to troubleshoot the EPS system" before doing the DTC troubleshooting procedure.
- Test-drive the vehicle according to local traffic conditions and regulations. Do not test-drive on a lift unless specified.
- The possible causes shown may not be a complete list of all potential problems, and it is possible that there may be other causes.

Confirmation Procedure	With the Driving Pattern: • Start the engine. • Turn the steering wheel to left and right several times, and keep holding each direction for 10 seconds.
Execution	Initial Diagnosis/Regular Diagnosis
Duration	About 1 second
DTC Type	• 1 drive cycle • EPS indicator on
Fail Safe Action	• Stop EPS function/assist (Dependant upon the conditions) • Stop motion adaptive-EPS function/assist
Possible Cause	• EPS motor/control unit internal failure

DTC C1420-29

DTC C1420-29 : Main Torque Sensor and Sub Torque Sensor Incorrect Correlation

NOTE

- Initial Diagnosis:

  The initial on-board diagnosis occurs right after the vehicle condition is turned to the ON mode, and the EPS indicator comes on, and continues until the indicator goes off.

- Regular Diagnosis:

  The regular on-board diagnosis begins right after the EPS indicator goes off, and it continues until the vehicle condition is turned to the OFF (LOCK) mode.

- Review "How to troubleshoot the EPS system" before doing the DTC troubleshooting procedure.
- Test-drive the vehicle according to local traffic conditions and regulations. Do not test-drive on a lift unless specified.
- The possible causes shown may not be a complete list of all potential problems, and it is possible that there may be other causes.

Confirmation Procedure	Basic Condition: • Torque sensor power supply voltage 4.5 - 5.5 V With the Driving Pattern: • Start the engine. • Turn the steering wheel to left and right several times, and keep holding each direction for 10 seconds.
Execution	Regular Diagnosis
Duration	About 1 second
DTC Type	• 1 drive cycle • EPS indicator on
Fail Safe Action	• Stop or continue EPS function/assist (Limited assist) (Dependant upon the conditions) • Stop motion adaptive-EPS function/assist
Possible Cause	• EPS motor/control unit internal failure • Steering gearbox internal failure (Torque sensor)

DTC C1421-14

DTC C1421-14 : Main Torque Sensor Malfunction

NOTE

- Initial Diagnosis:

  The initial on-board diagnosis occurs right after the vehicle condition is turned to the ON mode, and the EPS indicator comes on, and continues until the indicator goes off.

- Regular Diagnosis:

  The regular on-board diagnosis begins right after the EPS indicator goes off, and it continues until the vehicle condition is turned to the OFF (LOCK) mode.

- Review "How to troubleshoot the EPS system" before doing the DTC troubleshooting procedure.
- Test-drive the vehicle according to local traffic conditions and regulations. Do not test-drive on a lift unless specified.
- The possible causes shown may not be a complete list of all potential problems, and it is possible that there may be other causes.

Confirmation Procedure	Basic Condition: • Torque sensor power supply voltage 4.5 - 5.5 V With the Driving Pattern: • Start the engine. • Turn the steering wheel to left and right several times, and keep holding each direction for 10 seconds.

Execution	Regular Diagnosis
Duration	About 1 second
DTC Type	• 1 drive cycle • EPS indicator on
Fail Safe Action	• Stop or continue EPS function/assist (Limited assist) (Dependant upon the conditions) • Stop motion adaptive-EPS function/assist
Possible Cause	• Open, Short to ground, Short to power, or Poor connection between the EPS motor/control unit and the torque sensor (TSM line) • Open between the EPS motor/control unit and the torque sensor (T/S VDD line) • Open between the EPS motor/control unit and the torque sensor (T/S GND line) • EPS motor/control unit internal failure • Steering gearbox internal failure (Torque sensor)

DTC C1422-14

DTC C1422-14 : Sub Torque Sensor Malfunction

NOTE

- Initial Diagnosis:

  The initial on-board diagnosis occurs right after the vehicle condition is turned to the ON mode, and the EPS indicator comes on, and continues until the indicator goes off.

- Regular Diagnosis:

  The regular on-board diagnosis begins right after the EPS indicator goes off, and it continues until the vehicle condition is turned to the OFF (LOCK) mode.

- Review "How to troubleshoot the EPS system" before doing the DTC troubleshooting procedure.
- Test-drive the vehicle according to local traffic conditions and regulations. Do not test-drive on a lift unless specified.
- The possible causes shown may not be a complete list of all potential problems, and it is possible that there may be other causes.

Confirmation Procedure	Basic Condition: • Torque sensor power supply voltage 4.5 - 5.5 V With the Driving Pattern: • Start the engine. • Turn the steering wheel to left and right several times, and keep holding each direction for 10 seconds.
Execution	Regular Diagnosis
Duration	About 1 second
DTC Type	• 1 drive cycle • EPS indicator on

Fail Safe Action	- Stop or continue EPS function/assist (Limited assist) (Dependant upon the conditions) - Stop motion adaptive-EPS function/assist
Possible Cause	- Open, Short to ground, Short to power, or Poor connection between the EPS motor/control unit and the torque sensor (TSS line) - Open between the EPS motor/control unit and the torque sensor (T/S VDD line) - Open between the EPS motor/control unit and the torque sensor (T/S GND line) - EPS motor/control unit internal failure - Steering gearbox internal failure (Torque sensor)

DTC C1423-14

DTC C1423-14 : Torque Sensor Power Source Circuit Malfunction

NOTE

- Initial Diagnosis:

  The initial on-board diagnosis occurs right after the vehicle condition is turned to the ON mode, and the EPS indicator comes on, and continues until the indicator goes off.

- Regular Diagnosis:

  The regular on-board diagnosis begins right after the EPS indicator goes off, and it continues until the vehicle condition is turned to the OFF (LOCK) mode.

- Review "How to troubleshoot the EPS system" before doing the DTC troubleshooting procedure.
- Test-drive the vehicle according to local traffic conditions and regulations. Do not test-drive on a lift unless specified.
- The possible causes shown may not be a complete list of all potential problems, and it is possible that there may be other causes.

Confirmation Procedure	With the Driving Pattern: - Turn the vehicle to the ON mode.
Execution	Regular Diagnosis
Duration	About 1 second
DTC Type	- 1 drive cycle - EPS indicator on
Fail Safe Action	- Stop or continue EPS function/assist (Limited assist) (Dependant upon the conditions) - Stop motion adaptive-EPS function/assist
Possible Cause	- Short to ground between the EPS motor/control unit and the torque sensor (T/S VDD line) - EPS motor/control unit internal failure - Steering gearbox internal failure (Torque sensor)

DTC C1432-62

DTC C1432-62 : Vehicle Speed and the Engine Speed Incorrect Correlation

NOTE

- Initial Diagnosis:

  The initial on-board diagnosis occurs right after the vehicle condition is turned to the ON mode, and the EPS indicator comes on, and continues until the indicator goes off.

- Regular Diagnosis:

  The regular on-board diagnosis begins right after the EPS indicator goes off, and it continues until the vehicle condition is turned to the OFF (LOCK) mode.

- Review "How to troubleshoot the EPS system" before doing the DTC troubleshooting procedure.
- Test-drive the vehicle according to local traffic conditions and regulations. Do not test-drive on a lift unless specified.
- The possible causes shown may not be a complete list of all potential problems, and it is possible that there may be other causes.

Confirmation Procedure	Basic Condition: • 12 volt battery voltage 10 - 16 V • IG voltage continued more than 10 V for at least 1 second With the Driving Pattern: • Start the engine. • Test-drive the vehicle at a steady speed of 13 mph (20 km/h) or more for at least 60 seconds.(Be careful of the surrounding traffic conditions.)
Execution	Regular Diagnosis
Duration	About 60 seconds
DTC Type	• 1 drive cycle • EPS indicator on
Fail Safe Action	• Continue EPS function/assist (Limited assist) (Continue system diagnosis: EPS function/assist will return to normal when the vehicle speed signal returns to normal) • Stop motion adaptive-EPS function/assist
Possible Cause	• PCM internal failure • EPS motor/control unit internal failure

DTC U0029-00 (EPS CONTROL UNIT)

DTC U0029-00 : F-CAN Malfunction (Bus-Off)

NOTE

- Initial Diagnosis:

  The initial on-board diagnosis occurs right after the vehicle condition is turned to the ON mode, and the EPS indicator comes on, and continues until the indicator goes off.

- Regular Diagnosis:

  The regular on-board diagnosis begins right after the EPS indicator goes off, and it continues until the vehicle condition is turned to the OFF (LOCK) mode.

- Review "How to troubleshoot the EPS system" before doing the DTC troubleshooting procedure.
- Test-drive the vehicle according to local traffic conditions and regulations. Do not test-drive on a lift unless specified.
- The possible causes shown may not be a complete list of all potential problems, and it is possible that there may be other causes.

Confirmation Procedure	Basic Condition: • 12 volt battery voltage 10 - 16 V • IG voltage continued more than 10 V for at least 1 second With the Driving Pattern: • Turn the vehicle to the ON mode.
Execution	Initial Diagnosis/Regular Diagnosis
Duration	About 1 second
DTC Type	• 1 drive cycle • EPS indicator on
Fail Safe Action	• Continue EPS function/assist (Limited assist) (Continue system diagnosis: EPS function/assist will return to normal after the system returns to normal) • Stop motion adaptive-EPS function/assist
Possible Cause	• Open, Short, or Poor connection between the EPS control unit and other control units (F-CAN lines) • Internal failure of another unit on F-CAN • EPS motor/control unit internal failure

DTC U0100-00 (EPS CONTROL UNIT)

DTC U0100-00 : F-CAN Malfunction (EPS Control Unit-PCM/TCM)

NOTE

- Initial Diagnosis:

  The initial on-board diagnosis occurs right after the vehicle condition is turned to the ON mode, and the EPS indicator comes on, and continues until the indicator goes off.

- Regular Diagnosis:

  The regular on-board diagnosis begins right after the EPS indicator goes off, and it continues until the vehicle condition is turned to the OFF (LOCK) mode.

- Review "How to troubleshoot the EPS system" before doing the DTC troubleshooting procedure.
- Test-drive the vehicle according to local traffic conditions and regulations. Do not test-drive on a lift unless specified.

- The possible causes shown may not be a complete list of all potential problems, and it is possible that there may be other causes.

Confirmation Procedure	Basic Condition: • 12 volt battery voltage 10 - 16 V • IG voltage continued more than 10 V for at least 1 second With the Driving Pattern: • Turn the vehicle to the ON mode.
Execution	Initial Diagnosis/Regular Diagnosis
Duration	About 5 seconds
DTC Type	• 1 drive cycle • EPS indicator on
Fail Safe Action	• Continue EPS function/assist (Limited assist) (Continue system diagnosis: EPS function/assist will return to normal after the system returns to normal)
Possible Cause	• Open or Poor connection between the EPS control unit and the PCM (F-CAN lines) • Open or Poor connection between the EPS control unit and the TCM (F-CAN lines) *1 • PCM internal failure • TCM internal failure *1 • EPS motor/control unit internal failure

*1: L15BE engine

DTC U0122-00 (EPS CONTROL UNIT)

DTC U0122-00 : F-CAN Malfunction (EPS Control Unit-VSA Modulator-Control Unit)

NOTE

- Initial Diagnosis:

  The initial on-board diagnosis occurs right after the vehicle condition is turned to the ON mode, and the EPS indicator comes on, and continues until the indicator goes off.

- Regular Diagnosis:

  The regular on-board diagnosis begins right after the EPS indicator goes off, and it continues until the vehicle condition is turned to the OFF (LOCK) mode.

- Review "How to troubleshoot the EPS system" before doing the DTC troubleshooting procedure.
- Test-drive the vehicle according to local traffic conditions and regulations. Do not test-drive on a lift unless specified.
- The possible causes shown may not be a complete list of all potential problems, and it is possible that there may be other causes.

Confirmation Procedure	Basic Condition:

	• 12 volt battery voltage 10 - 16 V • IG voltage continued more than 10 V for at least 1 second With the Driving Pattern: • Turn the vehicle to the ON mode.
Execution	Initial Diagnosis/Regular Diagnosis
Duration	About 10 seconds
DTC Type	• 1 drive cycle • EPS indicator on
Fail Safe Action	• Continue EPS function/assist • Stop motion adaptive-EPS function/assist (Dependant upon the conditions) (Continue system diagnosis: EPS function/assist will return to normal after the system returns to normal)
Possible Cause	• Open or Poor connection between the EPS control unit and the VSA modulator-control unit (F-CAN lines) • VSA modulator-control unit internal failure • EPS motor/control unit internal failure

DTC U0151-00 (EPS CONTROL UNIT)

DTC U0151-00 : F-CAN Malfunction (EPS Control Unit-SRS Unit)

NOTE

- Initial Diagnosis:

  The initial on-board diagnosis occurs right after the vehicle condition is turned to the ON mode, and the EPS indicator comes on, and continues until the indicator goes off.

- Regular Diagnosis:

  The regular on-board diagnosis begins right after the EPS indicator goes off, and it continues until the vehicle condition is turned to the OFF (LOCK) mode.

- Review "How to troubleshoot the EPS system" before doing the DTC troubleshooting procedure.
- Test-drive the vehicle according to local traffic conditions and regulations. Do not test-drive on a lift unless specified.
- The possible causes shown may not be a complete list of all potential problems, and it is possible that there may be other causes.

Confirmation Procedure	Basic Condition: • 12 volt battery voltage 10 - 16 V • IG voltage continued more than 10 V for at least 1 second With the Driving Pattern: • Turn the vehicle to the ON mode.
Execution	Initial Diagnosis/Regular Diagnosis

Duration	About 10 seconds
DTC Type	• 1 drive cycle • EPS indicator on
Fail Safe Action	• Continue EPS function/assist • Stop motion adaptive-EPS function/assist(Continue system diagnosis: EPS function/assist will return to normal after the system returns to normal)
Possible Cause	• Open or Poor connection between the EPS control unit and the SRS unit (F-CAN lines) • SRS unit internal failure • EPS motor/control unit internal failure

DTC U0416-68 (EPS CONTROL UNIT)

DTC U0416-68 : VSA System Malfunction

NOTE

- Initial Diagnosis:

  The initial on-board diagnosis occurs right after the vehicle condition is turned to the ON mode, and the EPS indicator comes on, and continues until the indicator goes off.

- Regular Diagnosis:

  The regular on-board diagnosis begins right after the EPS indicator goes off, and it continues until the vehicle condition is turned to the OFF (LOCK) mode.

- Review "How to troubleshoot the EPS system" before doing the DTC troubleshooting procedure.
- Test-drive the vehicle according to local traffic conditions and regulations. Do not test-drive on a lift unless specified.
- The possible causes shown may not be a complete list of all potential problems, and it is possible that there may be other causes.

Confirmation Procedure	Basic Condition: • 12 volt battery voltage 10 - 16 V • IG voltage continued more than 10 V for at least 1 second With the Driving Pattern: • Start the engine. • Wait 60 seconds or more.
Execution	Regular Diagnosis
Duration	About 60 seconds
DTC Type	• 1 drive cycle • EPS indicator on
Fail Safe Action	• Continue EPS function/assist • Stop motion adaptive-EPS function/assist(Continue system diagnosis: EPS function/assist will return to normal after the system returns to normal)
Possible Cause	• VSA modulator-control unit internal failure • VSA system failure

DTC U129C-00 (EPS CONTROL UNIT)

DTC U129C-00 : F-CAN Malfunction (EPS Control Unit-Driving Support System Control Unit)

NOTE

- Initial Diagnosis:

  The initial on-board diagnosis occurs right after the vehicle condition is turned to the ON mode, and the EPS indicator comes on, and continues until the indicator goes off.

- Regular Diagnosis:

  The regular on-board diagnosis begins right after the EPS indicator goes off, and it continues until the vehicle condition is turned to the OFF (LOCK) mode.

- Review "How to troubleshoot the EPS system" before doing the DTC troubleshooting procedure.
- Test-drive the vehicle according to local traffic conditions and regulations. Do not test-drive on a lift unless specified.
- The possible causes shown may not be a complete list of all potential problems, and it is possible that there may be other causes.

Confirmation Procedure	Basic Condition: • 12 volt battery voltage 10 - 16 V • IG voltage continued more than 10 V for at least 1 second With the Driving Pattern: • Turn the vehicle to the ON mode.
Execution	Regular Diagnosis

Duration	About 10 seconds
DTC Type	• 1 drive cycle
Fail Safe Action	• Continue EPS function/assist • Stop LKAS function/assist
Possible Cause	• Open or Poor connection between the EPS control unit and the millimeter wave radar (F-CAN lines) • Millimeter wave radar internal failure • EPS motor/control unit internal failure

DTC U1483-68 (EPS CONTROL UNIT)

DTC U1483-68 : LKAS Malfunction (Indicator value check)

NOTE

- Initial Diagnosis:

  The initial on-board diagnosis occurs right after the vehicle condition is turned to the ON mode, and the EPS indicator comes on, and continues until the indicator goes off.

- Regular Diagnosis:

  The regular on-board diagnosis begins right after the EPS indicator goes off, and it continues until the vehicle condition is turned to the OFF (LOCK) mode.

- Review "How to troubleshoot the EPS system" before doing the DTC troubleshooting procedure.
- Test-drive the vehicle according to local traffic conditions and regulations. Do not test-drive on a lift unless specified.
- The possible causes shown may not be a complete list of all potential problems, and it is possible that there may be other causes.

Confirmation Procedure	Basic Condition: • 12 volt battery voltage 10 - 16 V • IG voltage continued more than 10 V for at least 1 second With the Driving Pattern: • Turn the vehicle to the ON mode.
Execution	Regular Diagnosis
Duration	About 10 seconds
DTC Type	• 1 drive cycle
Fail Safe Action	• Continue EPS function/assist • Stop LKAS function/assist
Possible Cause	• Millimeter wave radar internal failure

DTC U1483-94 (EPS CONTROL UNIT)

DTC U1483-94 : LKAS Malfunction

NOTE

- Initial Diagnosis:

  The initial on-board diagnosis occurs right after the vehicle condition is turned to the ON mode, and the EPS indicator comes on, and continues until the indicator goes off.

- Regular Diagnosis:

  The regular on-board diagnosis begins right after the EPS indicator goes off, and it continues until the vehicle condition is turned to the OFF (LOCK) mode.

- Review "How to troubleshoot the EPS system" before doing the DTC troubleshooting procedure.
- Test-drive the vehicle according to local traffic conditions and regulations. Do not test-drive on a lift unless specified.
- The possible causes shown may not be a complete list of all potential problems, and it is possible that there may be other causes.

Confirmation Procedure	Basic Condition: • 12 volt battery voltage 10 - 16 V • IG voltage continued more than 10 V for at least 1 second With the Driving Pattern: • Turn the vehicle to the ON mode.
Execution	Regular Diagnosis
Duration	About 10 seconds
DTC Type	• 1 drive cycle
Fail Safe Action	• Continue EPS function/assist • Stop LKAS function/assist
Possible Cause	• Millimeter wave radar internal failure

DTC U3000-13 (EPS CONTROL UNIT) (2017 2018 2019)

DTC U3000-13 : EPS Motor Circuit Open

NOTE

- Initial Diagnosis:

  The initial on-board diagnosis occurs right after the vehicle condition is turned to the ON mode, and the EPS indicator comes on, and continues until the indicator goes off.

- Regular Diagnosis:

  The regular on-board diagnosis begins right after the EPS indicator goes off, and it continues until the vehicle condition is turned to the OFF (LOCK) mode.

- Review "How to troubleshoot the EPS system" before doing the DTC troubleshooting procedure.

- Test-drive the vehicle according to local traffic conditions and regulations. Do not test-drive on a lift unless specified.
- The possible causes shown may not be a complete list of all potential problems, and it is possible that there may be other causes.

Confirmation Procedure	With the Driving Pattern: • Start the engine. • Turn the steering wheel to left and right several times, and keep holding each direction for 10 seconds.
Execution	Regular Diagnosis
Duration	About 1 second
DTC Type	• 1 drive cycle • EPS indicator on
Fail Safe Action	• Stop EPS function/assist
Possible Cause	• EPS motor/control unit internal failure

DTC U3000-49 (EPS CONTROL UNIT)

DTC U3000-49 : EPS Control Unit Internal Circuit Malfunction

NOTE

- Initial Diagnosis:

  The initial on-board diagnosis occurs right after the vehicle condition is turned to the ON mode, and the EPS indicator comes on, and continues until the indicator goes off.

- Regular Diagnosis:

  The regular on-board diagnosis begins right after the EPS indicator goes off, and it continues until the vehicle condition is turned to the OFF (LOCK) mode.

- Review "How to troubleshoot the EPS system" before doing the DTC troubleshooting procedure.
- Test-drive the vehicle according to local traffic conditions and regulations. Do not test-drive on a lift unless specified.
- The possible causes shown may not be a complete list of all potential problems, and it is possible that there may be other causes.

Confirmation Procedure	With the Driving Pattern: • Turn the vehicle to the ON mode.
Execution	Initial Diagnosis/Regular Diagnosis
Duration	About 5 seconds
DTC Type	• 1 drive cycle • EPS indicator on (Dependant upon the conditions)
Fail Safe Action	• Continue or stop EPS function/assist (Dependant upon the conditions)

	- Continue or stop motion adaptive-EPS function/assist (Dependant upon the conditions)
Possible Cause	- EPS motor/control unit internal failure

DTC U3000-51 (EPS CONTROL UNIT)

DTC U3000-51 : ECU Software Update Failure

NOTE

- Initial Diagnosis:

  The initial on-board diagnosis occurs right after the vehicle condition is turned to the ON mode, and the EPS indicator comes on, and continues until the indicator goes off.

- Regular Diagnosis:

  The regular on-board diagnosis begins right after the EPS indicator goes off, and it continues until the vehicle condition is turned to the OFF (LOCK) mode.

- Review "How to troubleshoot the EPS system" before doing the DTC troubleshooting procedure.
- Test-drive the vehicle according to local traffic conditions and regulations. Do not test-drive on a lift unless specified.
- The possible causes shown may not be a complete list of all potential problems, and it is possible that there may be other causes.

Confirmation Procedure	With the Driving Pattern: - Turn the vehicle to the ON mode.
Execution	Initial Diagnosis
Duration	-
DTC Type	- 1 drive cycle - EPS indicator on
Fail Safe Action	- Stop EPS function/assist - Stop motion adaptive-EPS function/assist
Possible Cause	- EPS control unit update not completed

DTC U3000-55 (EPS CONTROL UNIT)

DTC U3000-55 : EPS Control Unit Internal Malfunction

NOTE

- Initial Diagnosis:

  The initial on-board diagnosis occurs right after the vehicle condition is turned to the ON mode, and the EPS indicator comes on, and continues until the indicator goes off.

- Regular Diagnosis:

The regular on-board diagnosis begins right after the EPS indicator goes off, and it continues until the vehicle condition is turned to the OFF (LOCK) mode.

- Review "How to troubleshoot the EPS system" before doing the DTC troubleshooting procedure.
- Test-drive the vehicle according to local traffic conditions and regulations. Do not test-drive on a lift unless specified.
- The possible causes shown may not be a complete list of all potential problems, and it is possible that there may be other causes.

Confirmation Procedure	With the Driving Pattern: • Turn the vehicle to the ON mode.
Execution	Initial Diagnosis/Regular Diagnosis
Duration	-
DTC Type	• 1 drive cycle • EPS indicator blink
Fail Safe Action	• Continue EPS function/assist (Limited assist)
Possible Cause	• EPS motor/control unit internal failure

DTC U3003-16 (EPS CONTROL UNIT)

DTC U3003-16 : Battery Voltage Low

NOTE

- Initial Diagnosis:

  The initial on-board diagnosis occurs right after the vehicle condition is turned to the ON mode, and the EPS indicator comes on, and continues until the indicator goes off.

- Regular Diagnosis:

  The regular on-board diagnosis begins right after the EPS indicator goes off, and it continues until the vehicle condition is turned to the OFF (LOCK) mode.

- Review "How to troubleshoot the EPS system" before doing the DTC troubleshooting procedure.
- Test-drive the vehicle according to local traffic conditions and regulations. Do not test-drive on a lift unless specified.
- The possible causes shown may not be a complete list of all potential problems, and it is possible that there may be other causes.

Confirmation Procedure	With the Driving Pattern: • Start the engine. • Wait 15 seconds or more.
Execution	Regular Diagnosis
Duration	About 15 seconds
DTC Type	• 1 drive cycle • EPS indicator on

Fail Safe Action	- Stop or continue EPS function/assist (Dependant upon the conditions) (Continue system diagnosis: EPS function/assist will return to normal after the system returns to normal) - Stop motion adaptive-EPS function/assist
Possible Cause	- Open, Short to ground, or Poor connection between the under-hood fuse/relay box and the EPS control unit (+B EPS line) - Fuse failure (Under-hood fuse/relay box No. A2-1 (70 A)) - Alternator failure - Abnormal 12 volt battery - EPS motor/control unit internal failure

DTC U3003-17 (EPS CONTROL UNIT)

DTC U3003-17 : Battery Voltage High

NOTE

- Initial Diagnosis:

  The initial on-board diagnosis occurs right after the vehicle condition is turned to the ON mode, and the EPS indicator comes on, and continues until the indicator goes off.

- Regular Diagnosis:

  The regular on-board diagnosis begins right after the EPS indicator goes off, and it continues until the vehicle condition is turned to the OFF (LOCK) mode.

- Review "How to troubleshoot the EPS system" before doing the DTC troubleshooting procedure.
- Test-drive the vehicle according to local traffic conditions and regulations. Do not test-drive on a lift unless specified.
- The possible causes shown may not be a complete list of all potential problems, and it is possible that there may be other causes.

Confirmation Procedure	With the Driving Pattern: - Start the engine.
Execution	Regular Diagnosis
Duration	About 1 second
DTC Type	- 1 drive cycle - EPS indicator on
Fail Safe Action	- Stop EPS function/assist(Continue system diagnosis: EPS function/assist will return to normal after the system returns to normal) - Stop motion adaptive-EPS function/assist
Possible Cause	- Alternator failure - Abnormal 12 volt battery - EPS motor/control unit internal failure

DTC TROUBLESHOOTING INDEX

EPS DTC TROUBLESHOOTING INDEX

DTC		Detection Item
C0037	-F0	(Left Rear Wheel Speed Sensor Malfunction)
C003A	-F0	(Right Rear Wheel Speed Sensor Malfunction)
C0062	-96	Longitudinal Acceleration Sensor Malfunction
C0063	-96	Yaw-Rate Sensor Malfunction
C1400	-11	Motor Current Malfunction
	-13	EPS Motor Circuit Open
	-14	Motor Voltage Malfunction
C1403	-14	Motor Angle Sensor (SIN/COS) Signals Incorrect
	-29	Motor Angle Sensor (SIN/COS) Signals Incorrect Correlation
C1404	-13	EPS Motor U Phase Circuit High Voltage
C1405	-13	EPS Motor V Phase Circuit High Voltage
C1406	-13	EPS Motor W Phase Circuit High Voltage
C1420	-29	Main Torque Sensor and Sub Torque Sensor Incorrect Correlation
C1421	-14	Main Torque Sensor Malfunction
C1422	-14	Sub Torque Sensor Malfunction
C1423	-14	Torque Sensor Power Source Circuit Malfunction
C1432	-62	Vehicle Speed and the Engine Speed Incorrect Correlation
U0029	-00	F-CAN Malfunction (Bus-Off)
U0100	-00	F-CAN Malfunction (EPS Control Unit-PCM/TCM)
U0122	-00	F-CAN Malfunction (EPS Control Unit-VSA/ABS Modulator-Control Unit)
U0151	-00	F-CAN Malfunction (EPS Control Unit-SRS Unit)
U0416	-68	(VSA System Malfunction)
U129C	-00	F-CAN Malfunction (EPS Control Unit-Driving Support System Control Unit)
U1483	-68	(LKAS Malfunction (Indicator value check))
	-94	(LKAS Malfunction)
U3000	-49	EPS Control Unit Internal Circuit Malfunction
	-51	ECU Software Update Failure
	-55	EPS Control Unit Internal Malfunction
U3003	-16	Battery Voltage Low
	-17	Battery Voltage High

HOW TO INFORMATION

HOW TO TROUBLESHOOT THE EPS

System Indicator

This system has two indicators on the gauge control module.

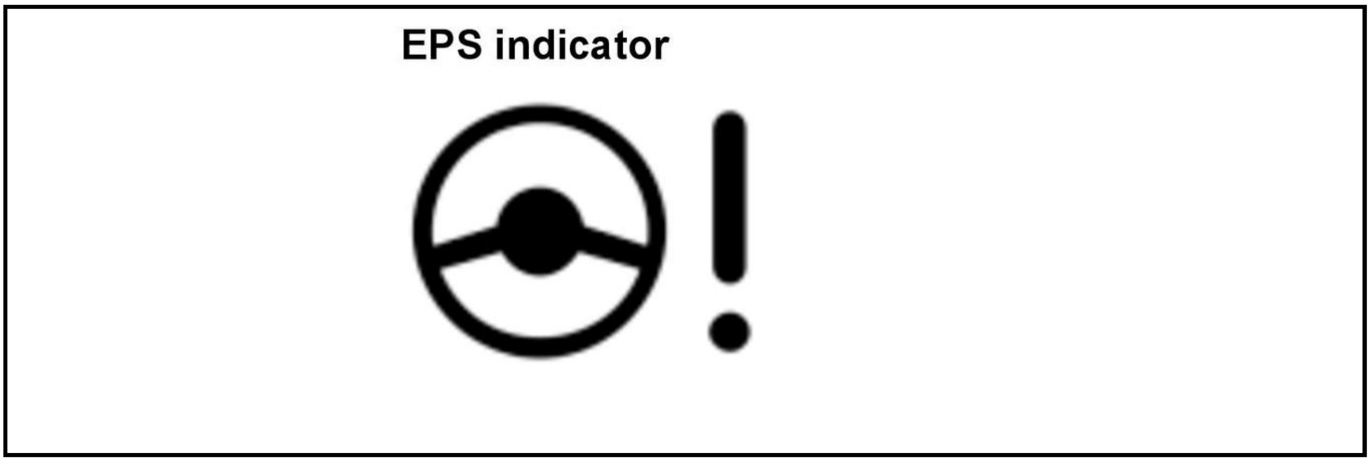

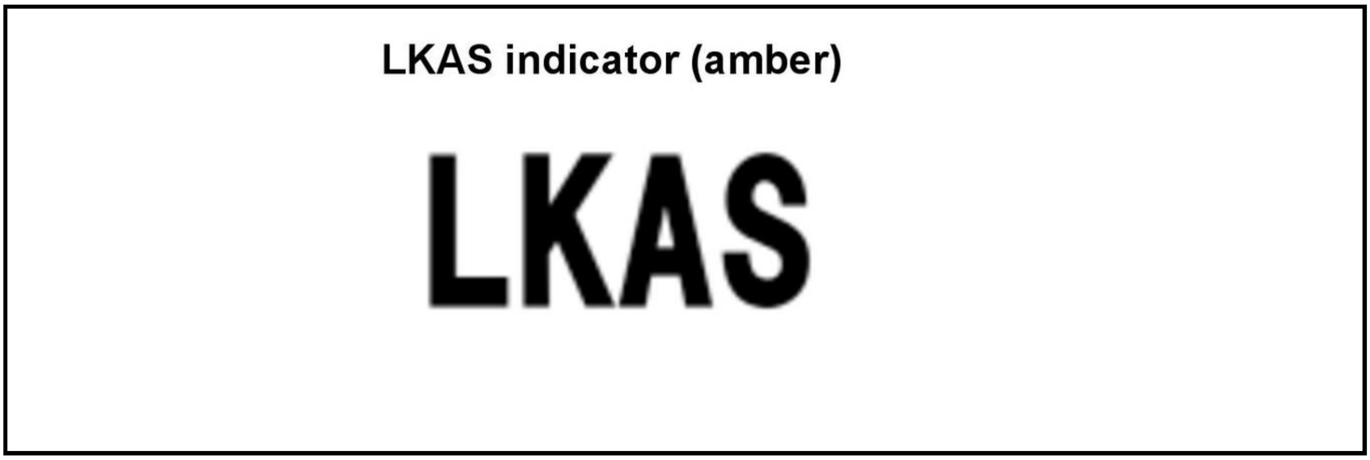

NOTE: For locations of each indicator, refer to gauge control module component location index .

EPS Indicator

Under normal conditions, the EPS indicator comes on when turning the vehicle to the ON mode, then turns off after turning the vehicle to the READY TO DRIVE mode. This indicates that the LED and its circuit are operating correctly.

- If there is a failure in the system after turning the vehicle to the READY TO DRIVE mode, the EPS indicator will stay on and stores a DTC, and the power assist is turned off or restricted.
- The EPS indicator will blink when the DTC U3000-55 is detected.

When a problem is detected, the EPS indicator will turn on and remain on until the DTC is erased. There are cases when the indicator remains on until the vehicle is set to the OFF (LOCK) mode as well as other cases where the indicator automatically turns off when the system returns to normal. Under certain conditions, the EPS indicator will turn on even though the system is operating normally; for example when the vehicle is stopped with the engine at high revolutions with constant input from the steering wheel.

To determine the actual cause of the problem, question the customer about the conditions during which the problem occurred, taking the above conditions into consideration.

LKAS Indicator (amber)

This EPS system works in conjunction with the LKAS. When an LKAS related problem is detected, the LKAS indicator (amber) will come on. However, when the EPS control fails while the LKAS control is activated, the LKAS indicator (amber) will also come on. In this case, the EPS indicator will not come on, but the EPS control unit memorizes the DTC. If the LKAS indicator (amber) comes on, it deactivates the LKAS control. The power assist works as usual after deactivating the LKAS, but it may stop the power assist depending on the detected malfunction.

Diagnostic Trouble Code (DTC)

- If the CPU cannot be activated, or if it fails, the EPS indicator comes on, but no EPS DTC is stored.
- The memory can hold any number of DTCs. However, when the same DTC is detected more than once, the most recent DTC is written over the prior DTC, therefore only one occurrence is stored.
- The DTCs are stored in the EEPROM (non-volatile memory), therefore the stored DTCs cannot be erased by disconnecting the 12 volt battery. Do the specified procedures to clear the DTCs.

Self-Diagnosis

Self-diagnosis can be classified into three categories:

- Initial diagnosis: Done right after turning the vehicle to the READY TO DRIVE mode and until the EPS indicator goes off.
- Regular diagnosis: Done right after the initial diagnosis and continues until turning the vehicle to the OFF (LOCK) mode.
- Steering diagnosis: Done during regular diagnosis while turning the steering wheel.

Restriction on Power Assist Operation

Repeated extreme steering force, such as turning the steering wheel continuously back-and-forth with the vehicle stopped, causes an increase in electrical current draw by the EPS motor. The increase of electric current causes the EPS motor and EPS control unit to heat up. Because this heat adversely affects the system, the control unit monitors the electric current draw of the EPS motor.

When the control unit detects heat build-up in the EPS motor, it reduces the electric current to the EPS motor gradually to protect the system, and it restricts the power assist operation. The EPS indicator does not come on during this function.

When steering torque is not applied to the steering wheel, or when turning the vehicle to the OFF (LOCK) mode and the EPS motor cools, the control unit will restore the power assist gradually until it's fully restored (after about 20 minutes).

How to Troubleshoot DTCs

The troubleshooting procedures assume that the cause of the problem is still present and the EPS indicator is still on. Following the procedure when the EPS indicator does not come on can result in incorrect diagnosis.

1. Question the customer about the conditions when the problem occurred, and try to reproduce the same conditions for troubleshooting. Find out when the EPS indicator came on, such as while turning, after turning, when the vehicle was at a certain speed, etc.

2. When the EPS indicator does not come on during the test-drive, but troubleshooting is done based on the DTC, check for loose connectors, poor terminal contact, etc., in the affected circuit before you start troubleshooting.

3. After troubleshooting, clear the DTC and test-drive the vehicle. Be sure the EPS indicator does not come on.

Intermittent Failures

The term "intermittent failure" means a system may have had a failure, but it checks OK now. If you cannot reproduce the condition, check for loose connections and terminals. Also check ground and power connections related to the circuit that you are troubleshooting.

How to Use the HDS (Honda Diagnostic System)

NOTE: Make sure the 12 volt battery is in good condition and fully charged.

1. If the system indicator(s) stay on, connect the HDS to the data link connector (DLC)

2. Turn the vehicle to the ON mode.

3. Make sure the HDS communicates with the vehicle and the EPS control unit. If it does not, go to the DTC troubleshooting index

Check the diagnostic trouble code (DTC) and the freeze data, for all systems, troubleshoot the powertrain DTCs first. Then refer to the indicated DTC's troubleshooting, and do the appropriate troubleshooting procedure.**NOTE:**

- Freeze data indicates the EPS conditions when the first system malfunction that activated the indicator was detected.
- The HDS can read the DTC, the freeze data, the current data, and other system data.
- For specific operations, refer to the Help menu that came with the HDS.

How to Retrieve DTCs

1. With the vehicle in OFF (LOCK) mode, connect the HDS to the data link connector (DLC)

2. Turn the vehicle to the ON mode.

3. Make sure the HDS communicates with the vehicle and the EPS control unit. If it does not, go to the DTC troubleshooting index

4. Follow the prompts on the HDS to display the DTC(s) on the screen. After determining the DTC, refer to the DTC troubleshooting. Do the all systems DTC check, and troubleshoot any powertrain DTCs first.

5. Turn the vehicle to the OFF (LOCK) mode.

How to Clear DTCs

1. With the vehicle in OFF (LOCK) mode, connect the HDS to the data link connector (DLC)

2. Turn the vehicle to the ON mode.

3. Make sure the HDS communicates with the vehicle and the EPS control unit. If it does not, go to the DTC troubleshooting index

4. Clear the DTC(s) by following the screen prompts on the HDS.

5. Turn the vehicle to the OFF (LOCK) mode.

DTC TROUBLESHOOTING

DTC C0037-F0, C003A-F0

DTC C0037-F0 : (Left Rear Wheel Speed Sensor Malfunction)

DTC C003A-F0 : (Right Rear Wheel Speed Sensor Malfunction)

NOTE: Before you troubleshoot, review the general troubleshooting information.

DTC Description	DTC	Freeze Frame
C0037-F0 (Left Rear Wheel Speed Sensor Malfunction)	B	B
C003A-F0 (Right Rear Wheel Speed Sensor Malfunction)	B	B

DTC (EPS)

1. Problem verification

   -1. Turn the vehicle to the ON mode.

-2. Clear the DTC with the HDS.

-3. Turn the vehicle to the OFF (LOCK) mode, then to the ON mode.

-4. Wait for 30 seconds or more.

-5. Check for DTCs with the HDS.

DTC Description	DTC	Freeze Frame
C0037-F0 (Left Rear Wheel Speed Sensor Malfunction)	B	B
C003A-F0 (Right Rear Wheel Speed Sensor Malfunction)	B	B

Is DTC C0037-F0 or C003A-F0 indicated?

YES

The failure is duplicated. **Go to VSA system troubleshooting** .

NO

Intermittent failure, the system is OK at this time. **Refer to intermittent failures troubleshooting**. If the freeze data/on-board snapshot of this DTC is recorded, try to reproduce the failure under the same conditions with the freeze data/on-board snapshot.

DTC C0062-96 (EPS CONTROL UNIT)

DTC C0062-96 : Longitudinal Acceleration Sensor Malfunction

NOTE: Before you troubleshoot, review the general troubleshooting information.

DTC Description	DTC	Freeze Frame
C0062-96 Longitudinal Acceleration Sensor Malfunction	B	B

DTC (EPS)

1. Problem verification

-1. Turn the vehicle to the ON mode.

-2. Clear the DTC with the HDS.

-3. Turn the vehicle to the OFF (LOCK) mode, then to the ON mode.

-4. Wait for 30 seconds or more.

-5. Check for DTCs with the HDS.

DTC Description	DTC	Freeze Frame
C0062-96 Longitudinal Acceleration Sensor Malfunction	B	B

Is DTC C0062-96 indicated?

YES

The failure is duplicated. **Replace the SRS unit** .

NO

Intermittent failure, the system is OK at this time. Refer to intermittent failures troubleshooting. If the freeze data/on-board snapshot of this DTC is recorded, try to reproduce the failure under the same conditions with the freeze data/on-board snapshot.

DTC C0063-96 (EPS CONTROL UNIT)

DTC C0063-96 : Yaw-Rate Sensor Malfunction

NOTE: Before you troubleshoot, review the general troubleshooting information.

DTC Description	DTC	Freeze Frame
C0063-96 Yaw-Rate Sensor Malfunction	B	B

DTC (EPS)

1. Problem verification

   -1. Turn the vehicle to the ON mode.

   -2. Clear the DTC with the HDS.

   -3. Turn the vehicle to the OFF (LOCK) mode, then to the ON mode.

   -4. Wait for 30 seconds or more.

   -5. Check for DTCs with the HDS.

DTC Description	DTC	Freeze Frame
C0063-96 Yaw-Rate Sensor Malfunction	B	B

   Is DTC C0063-96 indicated?

   YES

   The failure is duplicated. Replace the SRS unit .

   NO

   Intermittent failure, the system is OK at this time. Refer to intermittent failures troubleshooting. If the freeze data/on-board snapshot of this DTC is recorded, try to reproduce the failure under the same conditions with the freeze data/on-board snapshot.

DTC C1400-11, C1400-13, C1400-14, C1403-14, C1403-29, C1404-13, C1405-13, C1406-13, U3000-49 (EPS CONTROL UNIT)

DTC C1400-11 : Motor Current Malfunction

DTC C1400-13 : EPS Motor Circuit Open

DTC C1400-14 : Motor Voltage Malfunction

DTC C1403-14 : Motor Angle Sensor (SIN/COS) Signals Incorrect

DTC C1403-29 : Motor Angle Sensor (SIN/COS) Signals Incorrect Correlation

DTC C1404-13 : EPS Motor U Phase Circuit High Voltage

DTC C1405-13 : EPS Motor V Phase Circuit High Voltage

DTC C1406-13 : EPS Motor W Phase Circuit High Voltage

GetFreeManuals.org

DTC U3000-49 : EPS Control Unit Internal Circuit Malfunction

NOTE: Before you troubleshoot, review the general troubleshooting information.

DTC Description	DTC	Freeze Frame
C1400-11 Motor Current Malfunction	B	B
C1400-13 EPS Motor Circuit Open	B	B
C1400-14 Motor Voltage Malfunction	B	B
C1403-14 Motor Angle Sensor (SIN/COS) Signals Incorrect	B	B
C1403-29 Motor Angle Sensor (SIN/COS) Signals Incorrect Correlation	B	B
C1404-13 EPS Motor U Phase Circuit High Voltage	B	B
C1405-13 EPS Motor V Phase Circuit High Voltage	B	B
C1406-13 EPS Motor W Phase Circuit High Voltage	B	B
U3000-49 EPS Control Unit Internal Circuit Malfunction	B	B

DTC (EPS)

1. Problem verification

-1. Turn the vehicle to the ON mode.

-2. Clear the DTC with the HDS.

-3. Turn the vehicle to the OFF (LOCK) mode, then to the READY TO DRIVE mode.

-4. Turn the steering wheel to left and right several times, and keep holding each direction for 10 seconds.

-5. Check for DTCs with the HDS.

DTC Description	DTC	Freeze Frame
C1400-11 Motor Current Malfunction	B	B
C1400-13 EPS Motor Circuit Open	B	B
C1400-14 Motor Voltage Malfunction	B	B
C1403-14 Motor Angle Sensor (SIN/COS) Signals Incorrect	B	B
C1403-29 Motor Angle Sensor (SIN/COS) Signals Incorrect Correlation	B	B
C1404-13 EPS Motor U Phase Circuit High Voltage	B	B
C1405-13 EPS Motor V Phase Circuit High Voltage	B	B
C1406-13 EPS Motor W Phase Circuit High Voltage	B	B
U3000-49 EPS Control Unit Internal Circuit Malfunction	B	B

Is DTC C1400-11, C1400-13, C1400-14, C1403-14, C1403-29, C1404-13, C1405-13, C1406-13, or U3000-49 indicated?

YES

The failure is duplicated. Check for loose terminals and poor connections at the EPS control unit connectors. Check for any authorized service information related to the DTCs or symptoms you are troubleshooting or **substitute a known-good EPS motor/control unit** , then recheck. If the symptom/indication goes away with a known-good EPS motor/control unit, **replace the original EPS motor/control unit** .

NO

Intermittent failure, the system is OK at this time. **Refer to intermittent failures troubleshooting**. If the freeze data/on-board snapshot of this DTC is recorded, try to reproduce the failure under the same conditions with the freeze data/on-board snapshot.

DTC C1420-29

DTC C1420-29 : Main Torque Sensor and Sub Torque Sensor Incorrect Correlation

NOTE: **Before you troubleshoot, review the general troubleshooting information**.

DTC Description	DTC	Freeze Frame
C1420-29 Main Torque Sensor and Sub Torque Sensor Incorrect Correlation	B	B

DTC (EPS)

1. DTC check

-1. Turn the vehicle to the OFF (LOCK) mode, then to the ON mode.

-2. Clear the DTC with the HDS.

-3. Turn the vehicle to the OFF (LOCK) mode, then to the READY TO DRIVE mode.

-4. Turn the steering wheel to left and right several times, and keep holding each direction for 10 seconds.

-5. Check for DTCs with the HDS.

DTC Description	DTC	Freeze Frame
C1420-29 Main Torque Sensor and Sub Torque Sensor Incorrect Correlation	B	B
C1421-14 Main Torque Sensor Malfunction	B	B
C1422-14 Sub Torque Sensor Malfunction	B	B

Is DTC C1420-29 indicated?

YES

Go to step 2.

YES

If DTC C1421-14 or C1422-14 are also indicated, go to DTC **C1421-14** or **C1422-14** troubleshooting.

NO

Intermittent failure, the system is OK at this time. **Refer to intermittent failures troubleshooting**. If the freeze data/on-board snapshot of this DTC is recorded, try to reproduce the failure under the same conditions with the freeze data/on-board snapshot.

2. Torque sensor internal resistance check

-1. Turn the vehicle to the OFF (LOCK) mode.

-2. Disconnect the following connector.

Torque sensor 6P connector

-3. On the sensor side, measure the resistance between test points 1 and 2 individually (see table).

Test condition	Vehicle OFF (LOCK) mode
B	Torque sensor 6P connector: disconnected

Test Circuit	Torque Sensor 6P Connector (male terminals): ①		Reference resistance value
	Test point 1	Test point 2	
T/S_VDD - T/S_GND	No. 5	No. 3	141-175 Ω
TSM - T/S_GND	No. 2	No. 3	179-244 Ω
TSS - T/S_GND	No. 4	No. 3	179-244 Ω

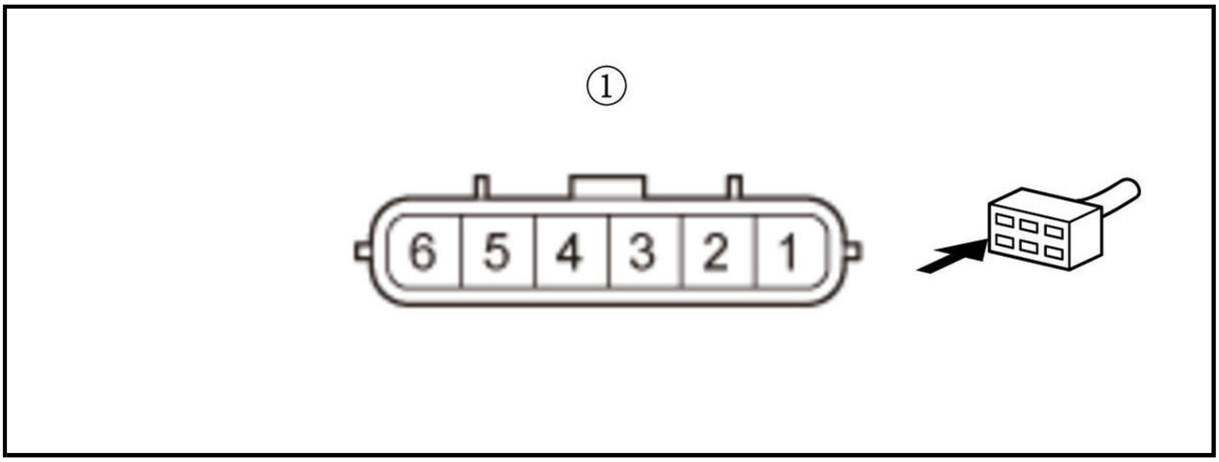

Is the resistance OK?

YES

Check for loose terminals and poor connections at the EPS control unit connectors. Check for any authorized service information related to the DTCs or symptoms you are troubleshooting or **substitute a known-good EPS motor/control unit** , then recheck. If the symptom/indication goes away with a known-good EPS motor/control unit, **replace the original EPS motor/control unit** .

NO

Replace the steering gearbox .

DTC C1421-14

DTC C1421-14 : Main Torque Sensor Malfunction

NOTE: **Before you troubleshoot, review the general troubleshooting information**.

DTC Description	DTC	Freeze Frame
C1421-14 Main Torque Sensor Malfunction	B	B

DTC (EPS)

1. DTC check

-1. Turn the vehicle to the ON mode.

-2. Clear the DTC with the HDS.

-3. Turn the vehicle to the OFF (LOCK) mode, then to the READY TO DRIVE mode.

-4. Turn the steering wheel to left and right several times, and keep holding each direction for 10 seconds.

-5. Check for DTCs with the HDS.

DTC Description	DTC	Freeze Frame
C1421-14 Main Torque Sensor Malfunction	B	B
C1423-14 Torque Sensor Power Source Circuit Malfunction	B	B

Is DTC C1421-14 indicated?

YES

Go to step 2.

YES

If DTC C1423-14 is also indicated, go to DTC **C1423-14** troubleshooting.

NO

Intermittent failure, the system is OK at this time. **Refer to intermittent failures troubleshooting**. If the freeze data/on-board snapshot of this DTC is recorded, try to reproduce the failure under the same conditions with the freeze data/on-board snapshot.

2. Torque sensor performance check

-1. Turn the steering wheel to the right and left several times.

-2. Check the parameter(s) below with the HDS.

Signal	Current conditions	
	Values	Unit
TORQUE SENSOR MAIN	B	B

Is there less than about 0.3 V or more than about 4.7 V?

YES (Less than about 0.3 V)

Go to step 3.

YES (More than about 4.7 V)

Go to step 7.

NO

Check for loose terminals and poor connections at the EPS control unit connectors. Check for any authorized service information related to the DTCs or symptoms you are troubleshooting or **substitute a known-good EPS motor/control unit** , then recheck. If the symptom/indication goes away with a known-good EPS motor/control unit, **replace the original EPS motor/control unit** .

3. Torque sensor check

-1. Turn the vehicle to the OFF (LOCK) mode.

-2. Disconnect the following connector.

Torque sensor 6P connector

-3. Connect terminals A and B with a jumper wire.

Terminal A	Torque sensor 6P connector (female terminals) No. 5: ①
Terminal B	Torque sensor 6P connector (female terminals) No. 2: ①

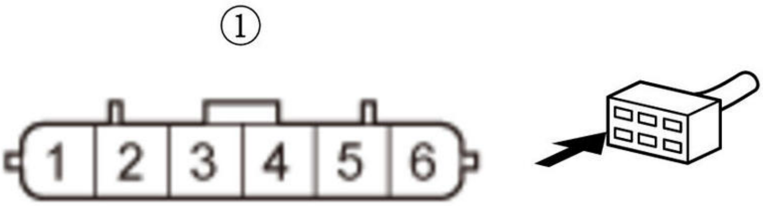

-4. Turn the vehicle to the ON mode.

-5. Check the parameter(s) below with the HDS.

Signal	Current conditions	
	Values	**Unit**
TORQUE SENSOR MAIN	B	B

Is there about 5 V?

YES

Replace the steering gearbox .

NO

Go to step 4.

4. Open wire check (T/S_VDD line)

-1. Turn the vehicle to the OFF (LOCK) mode.

-2. Disconnect the following connector.

EPS control unit connector C (4P)

-3. Measure the resistance between test points 1 and 2.

Test condition	Vehicle OFF (LOCK) mode
B	Torque sensor 6P connector: disconnected
B	EPS control unit connector C (4P): disconnected
Test point 1	Torque sensor 6P connector (female terminals) No. 5: ①
Test point 2	**EPS control unit connector C (4P) No. 1**

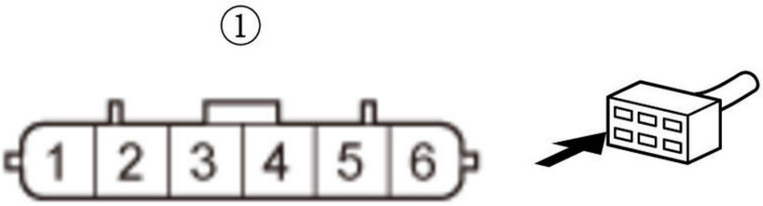

Is there 1.0 Ω or less?

YES

The T/S_VDD wire is OK. Go to step 5.

NO

Repair an open in the wire between the EPS control unit and the torque sensor.

5. Open wire check (TSM line)

-1. Measure the resistance between test points 1 and 2.

Test condition	Vehicle OFF (LOCK) mode
B	Torque sensor 6P connector: disconnected
B	EPS control unit connector C (4P): disconnected
Test point 1	Torque sensor 6P connector (female terminals) No. 2: ①
Test point 2	**EPS control unit connector C (4P) No. 4**

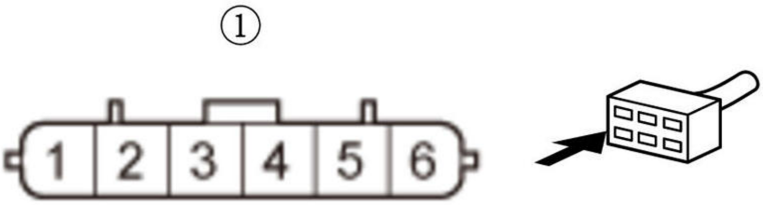

Is there 1.0 Ω or less?

YES

The TSM wire is not open. Go to step 6.

NO

Repair an open in the wire between the EPS control unit and the torque sensor.

6. Shorted wire check (TSM line)

-1. Measure the resistance between test points 1 and 2.

Test condition	Vehicle OFF (LOCK) mode
B	Torque sensor 6P connector: disconnected
B	EPS control unit connector C (4P): disconnected
Test point 1	**EPS control unit connector C (4P) No. 4**
Test point 2	Body ground

Is there 1 MΩ or more?

YES

The TSM wire is OK. Check for loose terminals and poor connections at the EPS control unit connectors. Check for any authorized service information related to the DTCs or symptoms you are troubleshooting or **substitute a known-good EPS motor/control unit** , then recheck. If the symptom/indication goes away with a known-good EPS motor/control unit, **replace the original EPS motor/control unit** .

NO

Repair a short to ground in the wire between the EPS control unit and the torque sensor.

7. EPS control unit check

-1. Turn the vehicle to the OFF (LOCK) mode.

-2. Disconnect the following connector.

EPS control unit connector C (4P)

-3. Turn the vehicle to the ON mode.

-4. Check the parameter(s) below with the HDS.

Signal	**Current conditions**	
	Values	**Unit**
TORQUE SENSOR MAIN	B	B

Is there about 5 V?

YES

Check for loose terminals and poor connections at the EPS control unit connectors. Check for any authorized service information related to the DTCs or symptoms you are troubleshooting or **substitute a known-good EPS motor/control unit** , then recheck. If the symptom/indication goes away with a known-good EPS motor/control unit, **replace the original EPS motor/control unit** .

NO

Go to step 8.

8. Shorted wire check (TSM line to power)

-1. Turn the vehicle to the OFF (LOCK) mode.

-2. Disconnect the following connector.

Torque sensor 6P connector

-3. Measure the resistance between test points 1 and 2.

Test condition	Vehicle OFF (LOCK) mode
B	EPS control unit connector C (4P): disconnected
B	Torque sensor 6P connector: disconnected
Test point 1	**EPS control unit connector C (4P) No. 1**
Test point 2	**EPS control unit connector C (4P) No. 4**

Is there 1 MΩ or more?

YES

Go to step 9.

NO

Repair a short in the wire between the EPS control unit and the torque sensor.

9. Open wire check (T/S_GND line)

-1. Measure the resistance between test points 1 and 2.

Test condition	Vehicle OFF (LOCK) mode
B	EPS control unit connector C (4P): disconnected
B	Torque sensor 6P connector: disconnected
Test point 1	**EPS control unit connector C (4P) No. 2**
Test point 2	Torque sensor 6P connector (female terminals) No. 3: ①

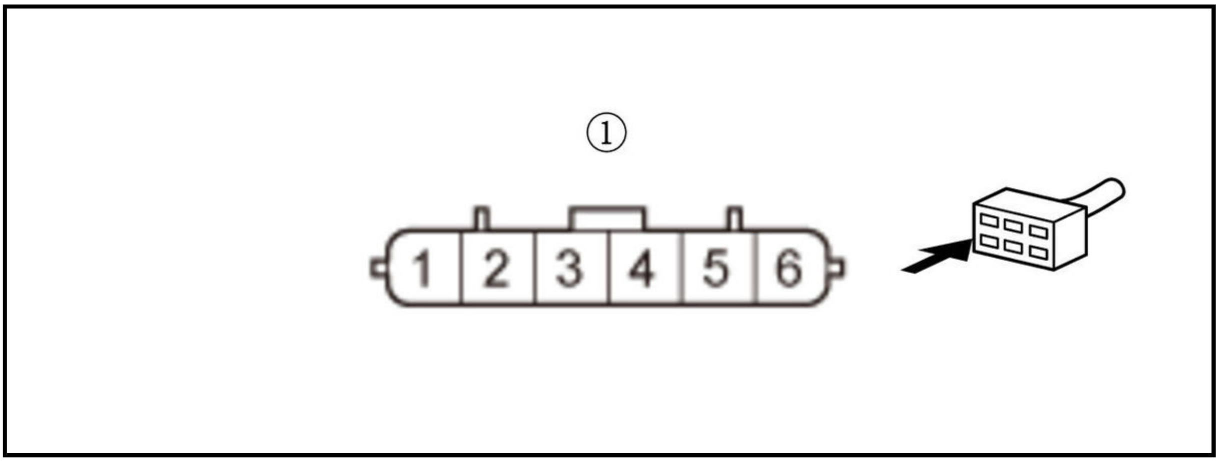

Is there 1.0 Ω or less?

YES

The T/S_GND wire is OK. **Replace the steering gearbox** .

NO

Repair an open in the wire between the EPS control unit and the torque sensor.

DTC C1422-14

DTC C1422-14 : Sub Torque Sensor Malfunction

NOTE: **Before you troubleshoot, review the general troubleshooting information**.

DTC Description	DTC	Freeze Frame
C1422-14 Sub Torque Sensor Malfunction	B	B

DTC (EPS)

1. DTC check

   -1. Turn the vehicle to the ON mode.

   -2. Clear the DTC with the HDS.

   -3. Turn the vehicle to the OFF (LOCK) mode, then to the READY TO DRIVE mode.

   -4. Turn the steering wheel to left and right several times, and keep holding each direction for 10 seconds.

   -5. Check for DTCs with the HDS.

DTC Description	DTC	Freeze Frame
C1422-14 Sub Torque Sensor Malfunction	B	B
C1423-14 Torque Sensor Power Source Circuit Malfunction	B	B

   Is DTC C1422-14 indicated?

   YES

   Go to step 2.

   YES

   If DTC C1423-14 is also indicated, go to DTC **C1423-14** troubleshooting.

   NO

   Intermittent failure, the system is OK at this time. **Refer to intermittent failures troubleshooting**. If the freeze data/on-board snapshot of this DTC is recorded, try to reproduce the failure under the same conditions with the freeze data/on-board snapshot.

2. Torque sensor performance check

   -1. Turn the steering wheel to the right and left several times.

   -2. Check the parameter(s) below with the HDS.

Signal	Current conditions	
	Values	Unit
TORQUE SENSOR SUB	B	B

   Is there less than about 0.3 V or more than about 4.7 V?

   YES (Less than about 0.3 V)

   Go to step 3.

   YES (More than about 4.7 V)

   Go to step 7.

   NO

Check for loose terminals and poor connections at the EPS control unit connectors. Check for any authorized service information related to the DTCs or symptoms you are troubleshooting or **substitute a known-good EPS motor/control unit** , then recheck. If the symptom/indication goes away with a known-good EPS motor/control unit, **replace the original EPS motor/control unit** .

3. Torque sensor check

-1. Turn the vehicle to the OFF (LOCK) mode.

-2. Disconnect the following connector.

Torque sensor 6P connector

-3. Connect terminals A and B with a jumper wire.

Terminal A	Torque sensor 6P connector (female terminals) No. 5: ①
Terminal B	Torque sensor 6P connector (female terminals) No. 4: ①

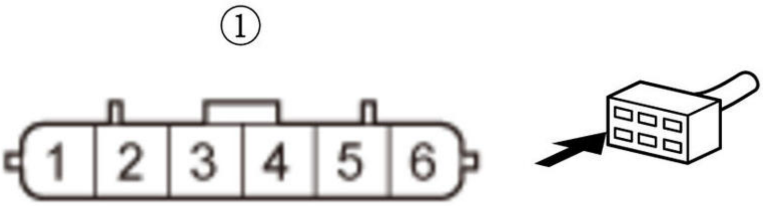

-4. Turn the vehicle to the ON mode.

-5. Check the parameter(s) below with the HDS.

Signal	Current conditions	
	Values	Unit
TORQUE SENSOR SUB	B	B

Is there about 5 V?

YES

Replace the steering gearbox .

NO

Go to step 4.

4. Open wire check (T/S_VDD line)

-1. Turn the vehicle to the OFF (LOCK) mode.

-2. Disconnect the following connector.

EPS control unit connector C (4P)

-3. Measure the resistance between test points 1 and 2.

Test condition	Vehicle OFF (LOCK) mode
B	Torque sensor 6P connector: disconnected
B	EPS control unit connector C (4P): disconnected
Test point 1	Torque sensor 6P connector (female terminals) No. 5: ①
Test point 2	**EPS control unit connector C (4P) No. 1**

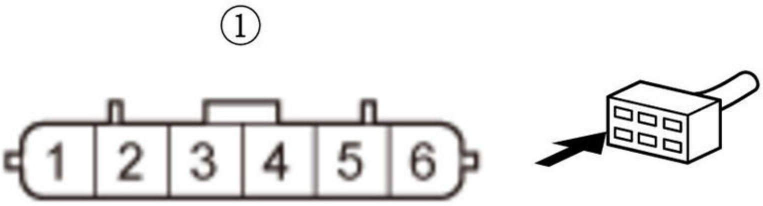

Is there 1.0 Ω or less?

YES

The T/S_VDD wire is OK. Go to step 5.

NO

Repair an open in the wire between the EPS control unit and the torque sensor.

5. Open wire check (TSS line)

-1. Measure the resistance between test points 1 and 2.

Test condition	Vehicle OFF (LOCK) mode
B	Torque sensor 6P connector: disconnected
B	EPS control unit connector C (4P): disconnected
Test point 1	Torque sensor 6P connector (female terminals) No. 4: ①
Test point 2	**EPS control unit connector C (4P) No. 3**

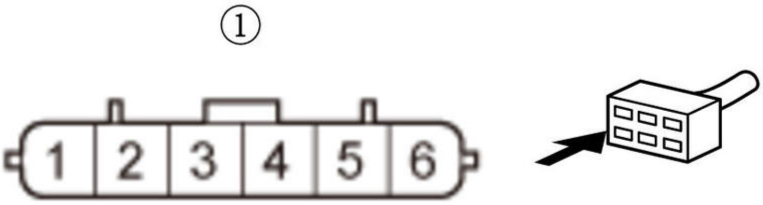

Is there 1.0 Ω or less?

YES

The TSS wire is not open. Go to step 6.

NO

Repair an open in the wire between the EPS control unit and the torque sensor.

6. Shorted wire check (TSS line)

-1. Measure the resistance between test points 1 and 2.

Test condition	Vehicle OFF (LOCK) mode
B	Torque sensor 6P connector: disconnected
B	EPS control unit connector C (4P): disconnected
Test point 1	**EPS control unit connector C (4P) No. 3**
Test point 2	Body ground

Is there 1 MΩ or more?

YES

The TSS wire is OK. Check for loose terminals and poor connections at the EPS control unit connectors. Check for any authorized service information related to the DTCs or symptoms you are troubleshooting or **substitute a known-good EPS motor/control unit** , then recheck. If the symptom/indication goes away with a known-good EPS motor/control unit, **replace the original EPS motor/control unit** .

NO

Repair a short to ground in the wire between the EPS control unit and the torque sensor.

7. EPS control unit check

-1. Turn the vehicle to the OFF (LOCK) mode.

-2. Disconnect the following connector.

EPS control unit connector C (4P)

-3. Turn the vehicle to the ON mode.

-4. Check the parameter(s) below with the HDS.

Signal	**Current conditions**	
	Values	**Unit**
TORQUE SENSOR SUB	B	B

Is there about 5 V?

YES

Check for loose terminals and poor connections at the EPS control unit connectors. Check for any authorized service information related to the DTCs or symptoms you are troubleshooting or **substitute a known-good EPS motor/control unit** , then recheck. If the symptom/indication goes away with a known-good EPS motor/control unit, **replace the original EPS motor/control unit** .

NO

Go to step 8.

8. Shorted wire check (TSS line to power)

-1. Turn the vehicle to the OFF (LOCK) mode.

-2. Disconnect the following connector.

Torque sensor 6P connector

-3. Measure the resistance between test points 1 and 2.

Test condition	Vehicle OFF (LOCK) mode
B	EPS control unit connector C (4P): disconnected
B	Torque sensor 6P connector: disconnected
Test point 1	**EPS control unit connector C (4P) No. 1**
Test point 2	**EPS control unit connector C (4P) No. 3**

Is there 1 MΩ or more?

YES

Go to step 9.

NO

Repair a short in the wire between the EPS control unit and the torque sensor.

9. Open wire check (T/S_GND line)

-1. Measure the resistance between test points 1 and 2.

Test condition	Vehicle OFF (LOCK) mode
B	EPS control unit connector C (4P): disconnected
B	Torque sensor 6P connector: disconnected
Test point 1	**EPS control unit connector C (4P) No. 2**
Test point 2	Torque sensor 6P connector (female terminals) No. 3: ①

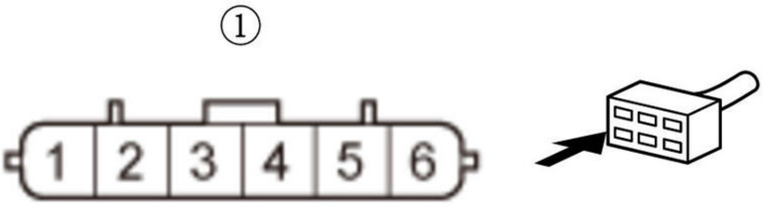

Is there 1.0 Ω or less?

YES

The T/S_GND wire is OK. **Replace the steering gearbox** .

NO

Repair an open in the wire between the EPS control unit and the torque sensor.

DTC C1423-14

DTC C1423-14 : Torque Sensor Power Source Circuit Malfunction

NOTE: **Before you troubleshoot, review the general troubleshooting information**.

DTC Description	DTC	Freeze Frame
C1423-14 Torque Sensor Power Source Circuit Malfunction	B	B

DTC (EPS)

1. Problem verification

   -1. Turn the vehicle to the ON mode.

   -2. Clear the DTC with the HDS.

   -3. Turn the vehicle to the OFF (LOCK) mode, then to the ON mode.

   -4. Check for DTCs with the HDS.

DTC Description	DTC	Freeze Frame
C1423-14 Torque Sensor Power Source Circuit Malfunction	B	B

Is DTC C1423-14 indicated?

YES

The failure is duplicated. Go to step 2.

NO

Intermittent failure, the system is OK at this time. **Refer to intermittent failures troubleshooting**. If the freeze data/on-board snapshot of this DTC is recorded, try to reproduce the failure under the same conditions with the freeze data/on-board snapshot.

2. Torque sensor check

   -1. Turn the vehicle to the OFF (LOCK) mode.

   -2. Disconnect the following connector.

Torque sensor 6P connector

   -3. Turn the vehicle to the ON mode.

   -4. Check the parameter(s) below with the HDS.

Signal	Current conditions	
	Values	Unit
Torque sensor input voltage	B	B

Is the voltage between 4.5-5.5 V?

YES

Replace the steering gearbox .

NO

Go to step 3.

3. Shorted wire check (T/S_VDD line)

   -1. Turn the vehicle to the OFF (LOCK) mode.

   -2. Disconnect the following connector.

EPS control unit connector C (4P)

   -3. Turn the vehicle to the ON mode.

   -4. Check the parameter(s) below with the HDS.

Signal	Current conditions	
	Values	Unit
Torque sensor input voltage	B	B

   Is the voltage between 4.5-5.5 V?

   YES

   Repair a short to ground in the wire between the EPS control unit and the torque sensor.

   NO

   The T/S_VDD wire is OK. Check for loose terminals and poor connections at the EPS control unit connectors. Check for any authorized service information related to the DTCs or symptoms you are troubleshooting or **substitute a known-good EPS motor/control unit** , then recheck. If the symptom/indication goes away with a known-good EPS motor/control unit, **replace the original EPS motor/control unit** .

DTC C1432-62

DTC C1432-62 : Vehicle Speed and the Engine Speed Incorrect Correlation

NOTE:

- **Before you troubleshoot, review the general troubleshooting information**.
- VSA DTCs may set during this troubleshooting. If so, clear them.

DTC Description	DTC	Freeze Frame
C1432-62 Vehicle Speed and the Engine Speed Incorrect Correlation	B	B

DTC (EPS)

1. Problem verification

   -1. Turn the vehicle to the ON mode.

   -2. Clear the DTC with the HDS.

   -3. Turn the vehicle to the OFF (LOCK) mode, then to the READY TO DRIVE mode.

   -4. Test-drive the vehicle at 12 mph (20 km/h) or more for 30 seconds or more.

NOTE: Drive the vehicle on the road, not on a lift.

-5. Check for DTCs with the HDS.

DTC Description	DTC	Freeze Frame
C1432-62 Vehicle Speed and the Engine Speed Incorrect Correlation	B	B

Is DTC C1432-62 indicated?

YES

The failure is duplicated. Go to step 2.

NO

Intermittent failure, the system is OK at this time. **Refer to intermittent failures troubleshooting**. If the freeze data/on-board snapshot of this DTC is recorded, try to reproduce the failure under the same conditions with the freeze data/on-board snapshot.

2. Vehicle speed signal check

-1. Turn the vehicle to the OFF (LOCK) mode.

-2. **Raise and support the vehicle** , and allow all wheels to rotate freely.

-3. Turn the vehicle to the READY TO DRIVE mode.

-4. Turn off the VSA function by using the VSA OFF switch.

-5. Run the vehicle while in the D position/mode.

-6. Check the parameter(s) below with the HDS.

Signal	Current conditions	
	Values	Unit
VEHICLE SPEED	B	B

Is 0 mph (0 km/h) indicated?

YES

Check for any authorized service information related to the DTCs or symptoms you are troubleshooting or **substitute a known-good PCM** , then recheck. If the symptom/indication goes away with a known-good PCM, **replace the original PCM** .

NO

Check for loose terminals and poor connections at the EPS control unit connectors. Check for any authorized service information related to the DTCs or symptoms you are troubleshooting or **substitute a known-good EPS motor/control unit** , then recheck. If the symptom/indication goes away with a known-good EPS motor/control unit, **replace the original EPS motor/control unit** .

DTC U0029-00 (EPS CONTROL UNIT)

DTC U0029-00 : F-CAN Malfunction (Bus-Off)

NOTE: **Before you troubleshoot, review the general troubleshooting information**.

DTC Description	DTC	Freeze Frame
U0029-00 F-CAN Malfunction (Bus-Off)	B	B

DTC (EPS)

1. Problem verification

   -1. Turn the vehicle to the ON mode.

   -2. Clear the DTC with the HDS.

   -3. Turn the vehicle to the OFF (LOCK) mode, then to the READY TO DRIVE mode.

   -4. Check for DTCs with the HDS.

DTC Description	DTC	Freeze Frame
U0029-00 F-CAN Malfunction (Bus-Off)	B	B

   Is DTC U0029-00 indicated?

   YES

   The failure is duplicated. Go to step 2.

   NO

   Intermittent failure, the system is OK at this time. **Refer to intermittent failures troubleshooting**. If the freeze data/on-board snapshot of this DTC is recorded, try to reproduce the failure under the same conditions with the freeze data/on-board snapshot.

2. DTC check (CAN gateway system)

   -1. Check for CAN gateway system DTCs with the HDS.

DTC Description	DTC
B	B

   Are DTC(s) indicated?

   YES

   Go to indicated DTC's troubleshooting.

   NO

   Go to step 3.

3. F-CAN circuit communication check

   -1. Select the FUNCTION TEST in the CAN gateway with the HDS, then select the F-CAN Bus Connected Unit Check.

   F-CAN Bus Connected Unit Check

   Which result is indicated?

   EPS control unit (Bus C) is Not Available

   Go to step 4.

EPS control unit (Bus C) is Available

Check for loose terminals and poor connections at the EPS control unit connectors. Check for any authorized service information related to the DTCs or symptoms you are troubleshooting or **substitute a known-good EPS motor/control unit** , then recheck. If the symptom/indication goes away with a known-good EPS motor/control unit, **replace the original EPS motor/control unit** .

4. Open wire check (F-CAN C_H, F-CAN C_L lines)

-1. Turn the vehicle to the OFF (LOCK) mode.

-2. Disconnect the following connectors.

EPS control unit connector B (6P)
CAN gateway 16P connector

-3. Measure the resistance between test points 1 and 2.

Test condition	Vehicle OFF (LOCK) mode
B	EPS control unit connector B (6P): disconnected
B	CAN gateway 16P connector: disconnected
Test circuit 1	B
Test point 1	**EPS control unit connector B (6P) No. 1**
Test point 2	CAN gateway 16P connector (female terminals) No. 5: ①

Test circuit 2	B
Test point 1	**EPS control unit connector B (6P) No. 3**
Test point 2	CAN gateway 16P connector (female terminals) No. 13: ①

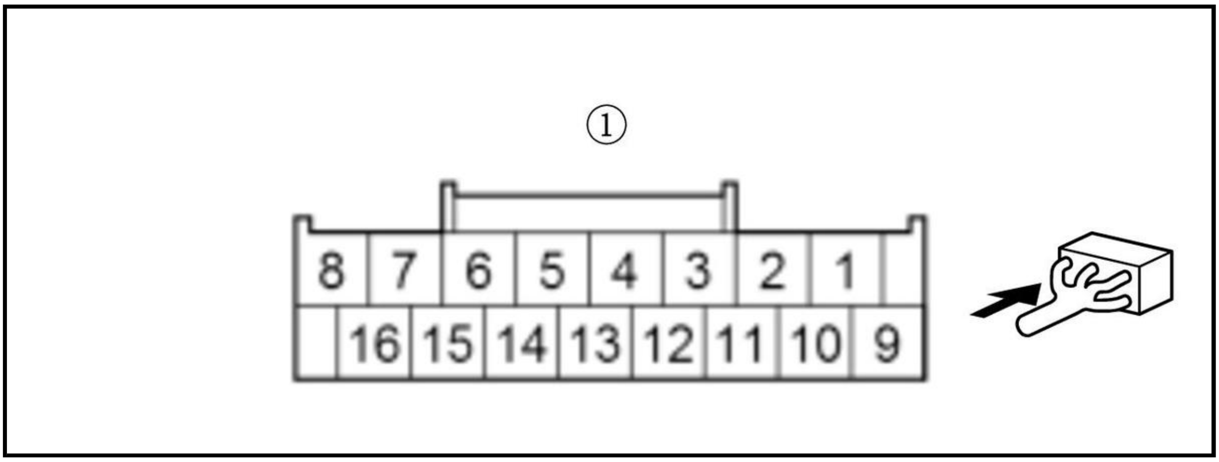

Is there 1.0 Ω or less?

YES

The F-CAN C_H and F-CAN C_L wires are OK. Check for loose terminals and poor connections at the EPS control unit connectors. Check for any authorized service information related to the DTCs or symptoms you are troubleshooting or **substitute a known-good EPS motor/control unit** , then recheck. If the symptom/indication goes away with a known-good EPS motor/control unit, **replace the original EPS motor/control unit** .

NO

Repair an open in the wire between the EPS control unit and the CAN gateway.

DTC U0100-00, U0122-00, U0151-00, U129C-00 (EPS CONTROL UNIT)

DTC U0100-00 : F-CAN Malfunction (EPS Control Unit-PCM/TCM)

DTC U0122-00 : F-CAN Malfunction (EPS Control Unit-VSA/ABS Modulator-Control Unit)

DTC U0151-00 : F-CAN Malfunction (EPS Control Unit-SRS Unit)

DTC U129C-00 : F-CAN Malfunction (EPS Control Unit-Driving Support System Control Unit)

NOTE:

- **Before you troubleshoot, review the general troubleshooting information**.
- According to the detected DTC(s), confirm the control unit that the EPS control unit lost communication with has the proper power supply and ground connection. Refer to the input testing for that control unit if necessary.

DTC Description	DTC	Freeze Frame
U0100-00 F-CAN Malfunction (EPS Control Unit-PCM/TCM)	B	B
U0122-00 F-CAN Malfunction (EPS Control Unit-VSA/ABS Modulator-Control Unit)	B	B
U0151-00 F-CAN Malfunction (EPS Control Unit-SRS Unit)	B	B
U129C-00 F-CAN Malfunction (EPS Control Unit-Driving Support System Control Unit)	B	B

DTC (EPS)

1. DTC check

   -1. Turn the vehicle to the ON mode.

   -2. Clear the DTC with the HDS.

   -3. Turn the vehicle to the OFF (LOCK) mode, then to the READY TO DRIVE mode.

   -4. Wait 10 seconds or more.

   -5. Check for DTCs with the HDS.

DTC Description	DTC	Freeze Frame
U0100-00 F-CAN Malfunction (EPS Control Unit-PCM/TCM)	B	B
U0122-00 F-CAN Malfunction (EPS Control Unit-VSA/ABS Modulator-Control Unit)	B	B
U0151-00 F-CAN Malfunction (EPS Control Unit-SRS Unit)	B	B
U129C-00 F-CAN Malfunction (EPS Control Unit-Driving Support System Control Unit)	B	B

   Is DTC indicated?

   YES

   Go to step 2.

   NO

Intermittent failure, the system is OK at this time. **Refer to intermittent failures troubleshooting**. If the freeze data/on-board snapshot of this DTC is recorded, try to reproduce the failure under the same conditions with the freeze data/on-board snapshot.

2. DTC check (CAN gateway system)

-1. Check for CAN gateway system DTCs with the HDS.

DTC Description	DTC
B	B

Are DTC(s) indicated?

YES

Go to indicated DTC's troubleshooting.

NO

Go to step 3.

3. F-CAN circuit communication check (Receiving control unit)

-1. Select the FUNCTION TEST in the CAN gateway with the HDS, then select the F-CAN Bus Connected Unit Check.

F-CAN Bus Connected Unit Check

Which result is indicated?

EPS control unit (Bus C) is Not Available

Go to step 4.

EPS control unit (Bus C) is Available

Go to step 5.

4. Open wire check (F-CAN C_H, F-CAN C_L lines)

-1. Turn the vehicle to the OFF (LOCK) mode.

-2. Disconnect the following connectors.

EPS control unit connector B (6P)
CAN gateway 16P connector

-3. Measure the resistance between test points 1 and 2.

Test condition	Vehicle OFF (LOCK) mode
B	EPS control unit connector B (6P): disconnected
B	CAN gateway 16P connector: disconnected
Test circuit 1	B
Test point 1	**EPS control unit connector B (6P) No. 1**
Test point 2	CAN gateway 16P connector (female terminals) No. 5: ①

Test circuit 2	B

Test point 1	**EPS control unit connector B (6P) No. 3**
Test point 2	CAN gateway 16P connector (female terminals) No. 13: ①

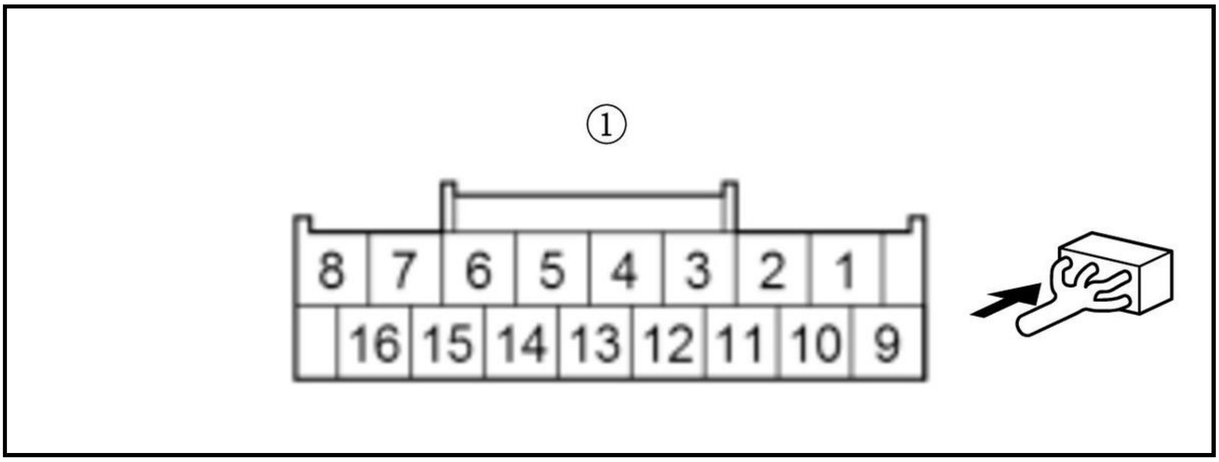

Is there 1.0 Ω or less?

YES

The F-CAN C_H and F-CAN C_L wires are OK. Check for loose terminals and poor connections at the EPS control unit connectors. Check for any authorized service information related to the DTCs or symptoms you are troubleshooting or **substitute a known-good EPS motor/control unit** , then recheck. If the symptom/indication goes away with a known-good EPS motor/control unit, **replace the original EPS motor/control unit** .

NO

Repair an open in the wire between the EPS control unit and the CAN gateway.

5. F-CAN circuit communication check (Transmitting control unit)

-1. Select the FUNCTION TEST in the CAN gateway with the HDS, then select the F-CAN Bus Connected Unit Check.

F-CAN Bus Connected Unit Check

According to the detected DTC on the following table, make sure that the transmitting control unit detects the CAN gateway Bus channel(s) normally.

DTC	Transmitting control unit	Detected CAN gateway Bus channel(s) at normal
U0100-00	PCM	A, B
U0122-00	VSA modulator-control unit	B, C
U0151-00	SRS unit	C
U129C-00	Millimeter wave radar	C

Is it detected normally?

Detected normal

Intermittent failure, the system is OK at this time. **Refer to intermittent failures troubleshooting**. If the freeze data/on-board snapshot of this DTC is recorded, try to reproduce the failure under the same conditions with the freeze data/on-board snapshot.

U0100-00: PCM (Bus A) is Not Available

Go to step 6.

U0100-00: PCM (Bus B) is Not Available

Go to step 7.

U0122-00: VSA modulator-control unit (Bus B) is Not Available

Go to step 7.

U0122-00: VSA modulator-control unit (Bus C) is Not Available

Go to step 8.

U0151-00: SRS unit (Bus C) is Not Available

Go to step 8.

U129C-00: Millimeter wave radar (Bus C) is Not Available

Go to step 8.

6. Open wire check (F-CAN A_H, F-CAN A_L lines)

-1. Turn the vehicle to the OFF (LOCK) mode.

-2. Disconnect the following connectors according to the detected DTC.

DTC	Connector
B	CAN gateway 16P connector
U0100-00	PCM connector A (50P)

NOTE: Jump the SCS line with the HDS, and wait more than 1 minute when disconnecting the PCM connector.

-3. Measure the resistance between test points 1 and 2.

Test condition	Vehicle OFF (LOCK) mode
B	Transmitting control unit connector(s) for indicated DTCs: disconnected
B	CAN gateway 16P connector: disconnected

DTC	Circuit name	Test point 1 (Receiving control unit)		Test point 2 (Transmitting control unit)	
		Connector	Terminal	Connector	Terminal
U0100-00	F-CAN A_H	CAN gateway 16P connector (female terminals): ①	No. 3	PCM connector A (50P)	No. 37
	F-CAN A_L		No. 11		No. 36

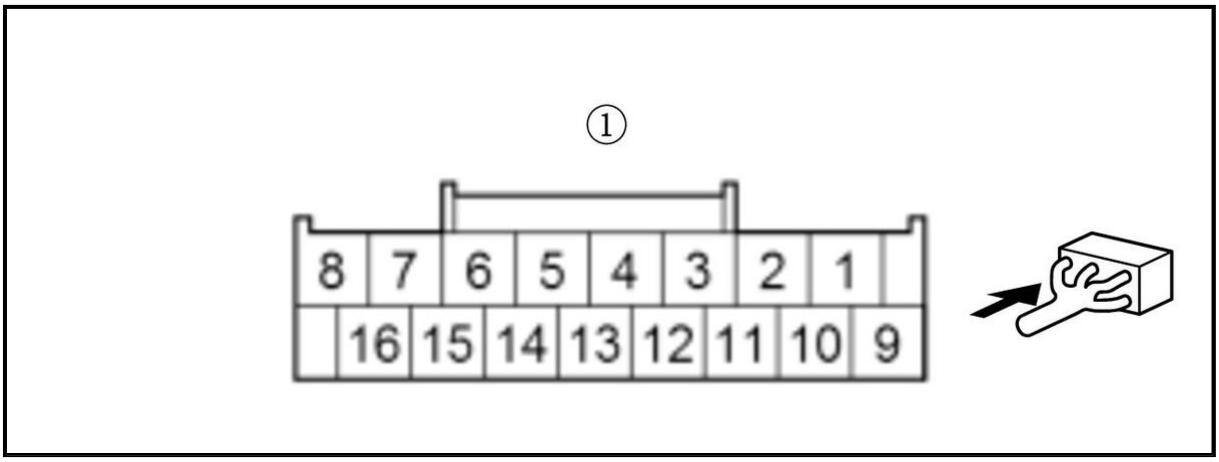

Is there 1.0 Ω or less?

YES

The F-CAN A_H and F-CAN A_L wires are OK. Check for any authorized service information related to the DTCs or symptoms you are troubleshooting. According to the detected DTC on the following table, replace the correspond control unit.

DTC	Transmitting Control Unit
U0100-00	PCM

NO

Repair an open in the wire between the receiving control unit and the transmitting control unit.

7. Open wire check (F-CAN B_H, F-CAN B_L lines)

-1. Turn the vehicle to the OFF (LOCK) mode.

-2. Disconnect the following connectors according to the detected DTC.

DTC	Connector
B	CAN gateway 16P connector
U0100-00	PCM connector A (50P)
U0122-00	VSA modulator-control unit 46P connector

NOTE: Jump the SCS line with the HDS, and wait more than 1 minute when disconnecting the PCM connector.

-3. Measure the resistance between test points 1 and 2.

Test condition	Vehicle OFF (LOCK) mode
B	Transmitting control unit connector(s) for indicated DTCs: disconnected
B	CAN gateway 16P connector: disconnected

DTC	Circuit name	Test point 1 (Receiving control unit)		Test point 2 (Transmitting control unit)	
		Connector	Terminal	Connector	Terminal
U0100-00	F-CAN B_H	CAN gateway 16P connector (female terminals): ①	No. 6	PCM connector A (50P)	No. 39
	F-CAN B_L		No. 14		No. 38

DTC	Circuit name	Test point 1 (Receiving control unit)		Test point 2 (Transmitting control unit)	
		Connector	Terminal	Connector	Terminal
U0122-00	F-CAN B_H	CAN gateway 16P connector (female terminals): ①	No. 6	**VSA modulator-control unit 46P connector**	No. 40
	F-CAN B_L		No. 14		No. 28

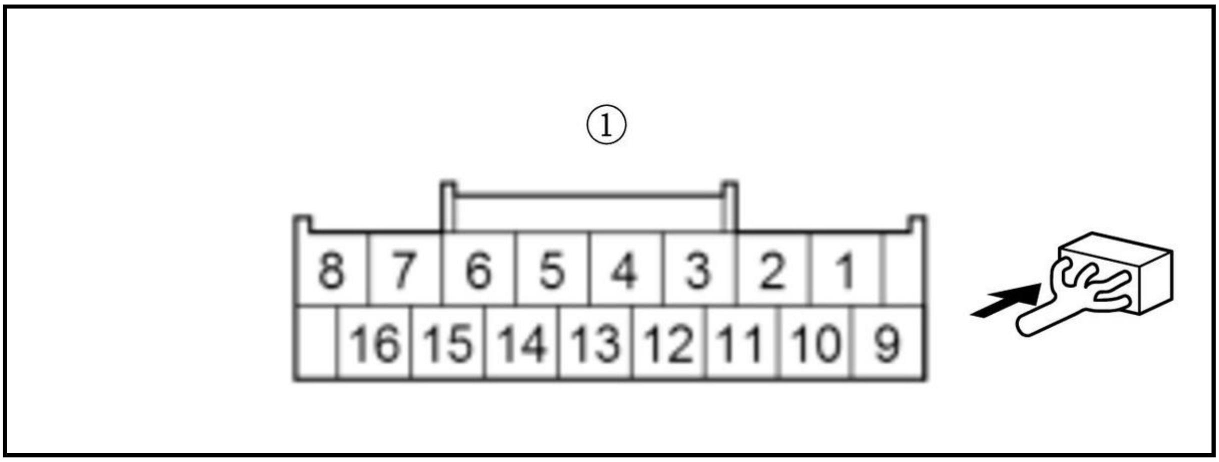

Is there 1.0 Ω or less?

YES

The F-CAN B_H and F-CAN B_L wires are OK. Check for any authorized service information related to the DTCs or symptoms you are troubleshooting. According to the detected DTC on the following table, replace the correspond control unit.

DTC	Transmitting Control Unit
U0100-00	**PCM**
U0122-00	**VSA modulator-control unit**

NO

Repair an open in the wire between the receiving control unit and the transmitting control unit.

8. Open wire check (F-CAN C_H, F-CAN C_L lines)

-1. Turn the vehicle to the OFF (LOCK) mode.

-2. Disconnect the following connectors according to the detected DTC.

DTC	Connector
B	CAN gateway 16P connector
U0122-00	VSA modulator-control unit 46P connector
U0151-00	SRS unit connector A (39P)
U129C-00	Millimeter wave radar 8P connector

NOTE: Before disconnecting the SRS unit connector, **do the 12 volt battery terminal disconnection procedure** and wait for at least 3 minutes.

-3. Measure the resistance between test points 1 and 2.

Test condition	Vehicle OFF (LOCK) mode
B	Transmitting control unit connector(s) for indicated DTCs: disconnected

B	CAN gateway 16P connector: disconnected

DTC	Circuit name	Test point 1 (Receiving control unit)		Test point 2 (Transmitting control unit)	
		Connector	Terminal	Connector	Terminal
U0122-00	F-CAN C_H	CAN gateway 16P connector (female terminals): ①	No. 5	**VSA modulator-control unit 46P connector**	No. 46
	F-CAN C_L		No. 13		No. 34
U0151-00	F-CAN C_H	CAN gateway 16P connector (female terminals): ①	No. 5	**SRS unit connector A (39P)**	No. 34
	F-CAN C_L		No. 13		No. 35
U129C-00	F-CAN C_H	CAN gateway 16P connector (female terminals): ①	No. 5	**Millimeter wave radar 8P connector**	No. 7
	F-CAN C_L		No. 13		No. 6

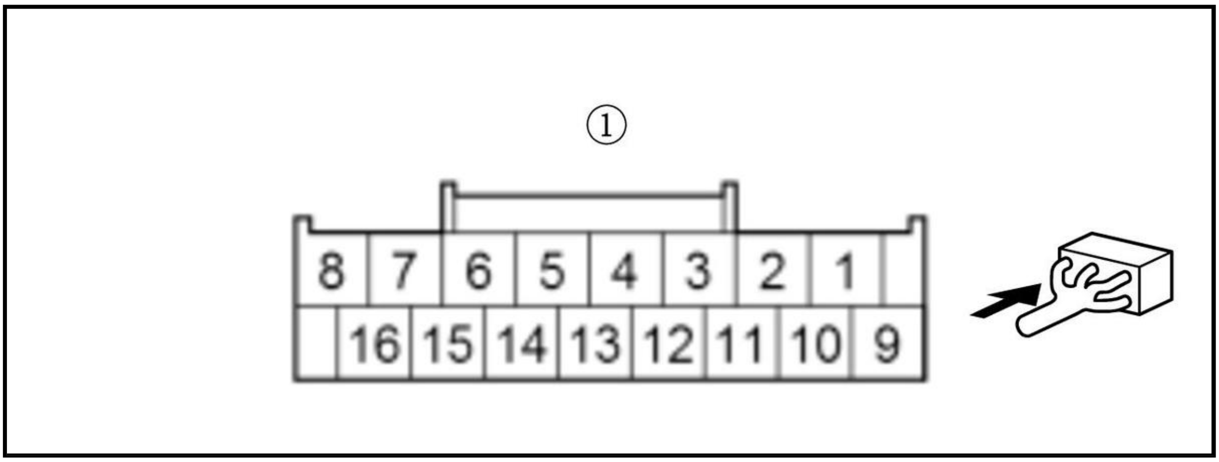

Is there 1.0 Ω or less?

YES

The F-CAN C_H and F-CAN C_L wires are OK. Check for any authorized service information related to the DTCs or symptoms you are troubleshooting. According to the detected DTC on the following table, replace the correspond control unit.

DTC	Transmitting Control Unit
U0122-00	**VSA modulator-control unit**
U0151-00	**SRS unit**
U129C-00	**Millimeter wave radar**

NO

Repair an open in the wire between the receiving control unit and the transmitting control unit.

DTC U0416-68 (EPS CONTROL UNIT)

DTC U0416-68 : (VSA System Malfunction)

NOTE:

- **Before you troubleshoot, review the general troubleshooting information**.

- This DTC is stored by VSA system malfunction. If the VSA indicator on, **troubleshoot the VSA system** first.

DTC Description	DTC	Freeze Frame
U0416-68 (VSA System Malfunction)	B	B

DTC (EPS)

1. Problem verification

   -1. Turn the vehicle to the ON mode.

   -2. Clear the DTC with the HDS.

   -3. Turn the vehicle to the OFF (LOCK) mode, then to the READY TO DRIVE mode.

   -4. Wait for 60 seconds or more.

   -5. Check for DTCs with the HDS.

DTC Description	DTC	Freeze Frame
U0416-68 (VSA System Malfunction)	B	B

   Is DTC U0416-68 indicated?

   YES

   The failure is duplicated. **Go to VSA system troubleshooting** .

   NO

   Intermittent failure, the system is OK at this time. **Refer to intermittent failures troubleshooting**. If the freeze data/on-board snapshot of this DTC is recorded, try to reproduce the failure under the same conditions with the freeze data/on-board snapshot.

DTC U1483-68, U1483-94 (EPS CONTROL UNIT)

DTC U1483-68 : (LKAS Malfunction (Indicate value check))

DTC U1483-94 : (LKAS Malfunction)

NOTE: **Before you troubleshoot, review the general troubleshooting information**.

DTC Description	DTC	Freeze Frame
U1483-68 LKAS Malfunction (Indicate value check)	B	B
U1483-94 LKAS Malfunction	B	B

1. DTC check

   -1. Turn the vehicle to the ON mode.

   -2. Clear the DTC with the HDS.

   -3. Turn the vehicle to the OFF (LOCK) mode, then to the ON mode.

   -4. Wait for 10 seconds or more.

   -5. Check for DTCs with the HDS.

DTC Description	DTC	Freeze Frame
U129C-00 F-CAN Malfunction (EPS Control Unit-Driving Support System Control Unit)	B	B
U1483-68 (LKAS Malfunction (Indicate value check))	B	B
U1483-94 (LKAS Malfunction)	B	B

Is DTC U1483-68 or U1483-94 indicated?

YES

Check for any authorized service information related to the DTCs or symptoms you are troubleshooting or **substitute a known-good millimeter wave radar** , then recheck. If the symptom/indication goes away with a known-good millimeter wave radar, **replace the original millimeter wave radar** .

YES

If DTC U129C-00 is also indicated, **go to DTC U129C-00**.

NO

Intermittent failure, the system is OK at this time. **Refer to intermittent failures troubleshooting**. If the freeze data/on-board snapshot of this DTC is recorded, try to reproduce the failure under the same conditions with the freeze data/on-board snapshot.

DTC U3000-51 (EPS CONTROL UNIT)

DTC U3000-51 : ECU Software Update Failure

NOTE:

- **Before you troubleshoot, review the general troubleshooting information**.
- Do not turn the vehicle to the OFF (LOCK) mode while updating the EPS control unit. If you turn the vehicle to the OFF (LOCK) mode before completion, the EPS control unit will be damaged.

DTC Description	DTC	Freeze Frame
U3000-51 ECU Software Update Failure	B	B

DTC (EPS)

1. Problem verification

-1. Turn the vehicle to the ON mode.

-2. Clear the DTC with the HDS.

-3. Turn the vehicle to the OFF (LOCK) mode, then to the READY TO DRIVE mode.

-4. Check for DTCs with the HDS.

DTC Description	DTC	Freeze Frame
U3000-51 ECU Software Update Failure	B	B

Is DTC U3000-51 indicated?

YES

The failure is duplicated. Go to step 2.

NO

Intermittent failure, the system is OK at this time. Refer to intermittent failures troubleshooting. If the freeze data/on-board snapshot of this DTC is recorded, try to reproduce the failure under the same conditions with the freeze data/on-board snapshot.

2. EPS control unit check (update)

-1. Update the EPS control unit .

-2. Turn the vehicle to the OFF (LOCK) mode, then to the READY TO DRIVE mode.

-3. Check for DTCs with the HDS.

DTC Description	DTC	Freeze Frame
U3000-51 ECU Software Update Failure	B	B

Is DTC U3000-51 indicated?

YES

Check for loose terminals and poor connections at the EPS control unit connectors. Check for any authorized service information related to the DTCs or symptoms you are troubleshooting or substitute a known-good EPS motor/control unit , then recheck. If the symptom/indication goes away with a known-good EPS motor/control unit, replace the original EPS motor/control unit .

NO

Troubleshooting is complete.

DTC U3000-55 (EPS CONTROL UNIT)

DTC U3000-55 : EPS Control Unit Internal Malfunction

NOTE: Before you troubleshoot, review the general troubleshooting information.

DTC Description	DTC	Freeze Frame
U3000-55 EPS Control Unit Internal Malfunction	B	B

DTC (EPS)

1. Problem verification

-1. Turn the vehicle to the ON mode.

-2. Clear the DTC with the HDS.

-3. Turn the vehicle to the OFF (LOCK) mode, then to the ON mode.

-4. Check for DTCs with the HDS.

DTC Description	DTC	Freeze Frame
U3000-55 EPS Control Unit Internal Malfunction	B	B

Is DTC U3000-55 indicated?

YES

The failure is duplicated. Check for loose terminals and poor connections at the EPS control unit connectors. Check for any authorized service information related to the DTCs or symptoms you are troubleshooting or substitute a known-good EPS motor/control unit , then recheck. If the symptom/indication goes away with a known-good EPS motor/control unit, replace the original EPS motor/control unit .

NO

Intermittent failure, the system is OK at this time. Refer to intermittent failures troubleshooting. If the freeze data/on-board snapshot of this DTC is recorded, try to reproduce the failure under the same conditions with the freeze data/on-board snapshot.

DTC U3003-16 (EPS CONTROL UNIT)

DTC U3003-16 : Battery Voltage Low

NOTE: Before you troubleshoot, review the general troubleshooting information.

DTC Description	DTC	Freeze Frame
U3003-16 Battery Voltage Low	B	B

DTC (EPS)

1. Problem verification

   -1. Turn the vehicle to the ON mode.

   -2. Clear the DTC with the HDS.

   -3. Turn the vehicle to the OFF (LOCK) mode, then to the READY TO DRIVE mode.

   -4. Wait 15 seconds or more.

   -5. Check for DTCs with the HDS.

DTC Description	DTC	Freeze Frame
U3003-16 Battery Voltage Low	B	B

   Is DTC U3003-16 indicated?

   YES

   The failure is duplicated. Go to step 2.

   NO

   Intermittent failure, the system is OK at this time. Refer to intermittent failures troubleshooting. If the freeze data/on-board snapshot of this DTC is recorded, try to reproduce the failure under the same conditions with the freeze data/on-board snapshot.

2. Power source performance check

   -1. Check and note the parameter(s) below with the HDS.

Signal	Threshold		Current conditions	
	Values	Unit	Values	Unit
BATTERY VOLTAGE	About 8.9	V	B	B

   Do the current condition(s) match the threshold?

   YES

Check the 12 volt battery , and **check the electric powertrain system DTCs** .

NO

Go to step 3.

3. Fuse check

-1. Turn the vehicle to the OFF (LOCK) mode.

-2. Check the following fuse.

Fuse	**No. A2-1**

Is the fuse OK?

YES

The fuse is OK. Reinstall the fuse, then go to step 4.

NO

Replace the fuse. If the fuse blows again, repair a short to ground in the No. A2-1 fuse circuit.

4. Open wire check (+B_EPS line)

-1. Disconnect the following connector.

EPS control unit connector A (2P)

-2. Measure the voltage between test points 1 and 2.

Test condition	Vehicle OFF (LOCK) mode
B	EPS control unit connector A (2P): disconnected
Test point 1	**EPS control unit connector A (2P) No. 1**
Test point 2	Body ground

Is there battery voltage?

YES

Check for loose terminals and poor connections at the EPS control unit connectors. Check for any authorized service information related to the DTCs or symptoms you are troubleshooting or **substitute a known-good EPS motor/control unit** , then recheck. If the symptom/indication goes away with a known-good EPS motor/control unit, **replace the original EPS motor/control unit** .

NO

Repair an open in the wire between the under-hood fuse/relay box and the EPS control unit.

DTC U3003-17 (EPS CONTROL UNIT)

DTC U3003-17 : Battery Voltage High

NOTE: **Before you troubleshoot, review the general troubleshooting information**.

DTC Description	DTC	Freeze Frame
U3003-17 Battery Voltage High	B	B

DTC (EPS)

1. Problem verification

   -1. Turn the vehicle to the ON mode.

   -2. Clear the DTC with the HDS.

   -3. Turn the vehicle to the OFF (LOCK) mode, then to the READY TO DRIVE mode.

   -4. Check for DTCs with the HDS.

DTC Description	DTC	Freeze Frame
U3003-17 Battery Voltage High	B	B

   Is DTC U3003-17 indicated?

   YES

   The failure is duplicated. Go to step 2.

   NO

   Intermittent failure, the system is OK at this time. **Refer to intermittent failures troubleshooting**. If the freeze data/on-board snapshot of this DTC is recorded, try to reproduce the failure under the same conditions with the freeze data/on-board snapshot.

2. Power source performance check

   -1. Check and note the parameter(s) below with the HDS.

Signal	Threshold		Current conditions	
	Values	Unit	Values	Unit
BATTERY VOLTAGE	More than 19.2	V	B	B

   Do the current condition(s) match the threshold?

   YES

   Check the 12 volt battery , and **check the electric powertrain system DTCs** .

   NO

   Check for loose terminals and poor connections at the EPS control unit connectors. Check for any authorized service information related to the DTCs or symptoms you are troubleshooting or **substitute a known-good EPS motor/control unit** , then recheck. If the symptom/indication goes away with a known-good EPS motor/control unit, **replace the original EPS motor/control unit** .

DTC TROUBLESHOOTING

DTC C0037-F0, C003A-F0

DTC C0037-F0 : Left Rear Wheel Speed Sensor Malfunction

DTC C003A-F0 : Right Rear Wheel Speed Sensor Malfunction

NOTE: Before you troubleshoot, review the general troubleshooting information.

DTC Description	DTC	Freeze Frame
C0037-F0 Left Rear Wheel Speed Sensor Malfunction	B	B
C003A-F0 Right Rear Wheel Speed Sensor Malfunction	B	B

DTC (EPS)

1. Problem verification

   -1. Turn the vehicle to the ON mode.

   -2. Clear the DTC with the HDS.

   -3. Turn the vehicle to the OFF (LOCK) mode, then to the ON mode.

   -4. Wait for 30 seconds or more.

   -5. Check for DTCs with the HDS.

DTC Description	DTC	Freeze Frame
C0037-F0 Left Rear Wheel Speed Sensor Malfunction	B	B
C003A-F0 Right Rear Wheel Speed Sensor Malfunction	B	B

Is DTC C0037-F0 or C003A-F0 indicated?

YES

The failure is duplicated. Go to VSA system troubleshooting .

NO

Intermittent failure, the system is OK at this time. Refer to intermittent failures troubleshooting. If the freeze data/on-board snapshot of this DTC is recorded, try to reproduce the failure under the same conditions with the freeze data/on-board snapshot.

DTC C0062-96(EPS CONTROL UNIT)

DTC C0062-96 : Longitudinal Acceleration Sensor Malfunction

NOTE: Before you troubleshoot, review the general troubleshooting information.

DTC Description	DTC	Freeze Frame
C0062-96 Longitudinal Acceleration Sensor Malfunction	B	B

DTC (EPS)

1. Problem verification

   -1. Turn the vehicle to the ON mode.

   -2. Clear the DTC with the HDS.

   -3. Turn the vehicle to the OFF (LOCK) mode, then to the ON mode.

   -4. Wait for 30 seconds or more.

   -5. Check for DTCs with the HDS.

DTC Description	DTC	Freeze Frame
C0062-96 Longitudinal Acceleration Sensor Malfunction	B	B

Is DTC C0062-96 indicated?

YES

The failure is duplicated. **Replace the SRS unit** .

NO

Intermittent failure, the system is OK at this time. **Refer to intermittent failures troubleshooting**. If the freeze data/on-board snapshot of this DTC is recorded, try to reproduce the failure under the same conditions with the freeze data/on-board snapshot.

DTC C0063-96(EPS CONTROL UNIT)

DTC C0063-96 : Yaw-Rate Sensor Malfunction

NOTE: **Before you troubleshoot, review the general troubleshooting information**.

DTC Description	DTC	Freeze Frame
C0063-96 Yaw-Rate Sensor Malfunction	B	B

DTC (EPS)

1. Problem verification

   -1. Turn the vehicle to the ON mode.

   -2. Clear the DTC with the HDS.

   -3. Turn the vehicle to the OFF (LOCK) mode, then to the ON mode.

   -4. Wait for 30 seconds or more.

   -5. Check for DTCs with the HDS.

DTC Description	DTC	Freeze Frame
C0063-96 Yaw-Rate Sensor Malfunction	B	B

Is DTC C0063-96 indicated?

YES

The failure is duplicated. **Replace the SRS unit** .

NO

Intermittent failure, the system is OK at this time. Refer to intermittent failures troubleshooting. If the freeze data/on-board snapshot of this DTC is recorded, try to reproduce the failure under the same conditions with the freeze data/on-board snapshot.

DTC C1400-11, C1400-13, C1400-14, C1403-14, C1403-29, C1404-13, C1405-13, C1406-13, U3000-13, U3000-49

DTC C1400-11 : Motor Current Malfunction

DTC C1400-13 : EPS Motor Circuit Open

DTC C1400-14 : Motor Voltage Malfunction

DTC C1403-14 : Motor Angle Sensor (SIN/COS) Signals Incorrect

DTC C1403-29 : Motor Angle Sensor (SIN/COS) Signals Incorrect Correlation

DTC C1404-13 : EPS Motor U Phase Circuit High Voltage

DTC C1405-13 : EPS Motor V Phase Circuit High Voltage

DTC C1406-13 : EPS Motor W Phase Circuit High Voltage

DTC U3000-13 : EPS Motor Circuit Open

DTC U3000-49 : EPS Control Unit Internal Circuit Malfunction

NOTE: Before you troubleshoot, review the general troubleshooting information.

DTC Description	DTC	Freeze Frame
C1400-11 Motor Current Malfunction	B	B
C1400-13 EPS Motor Circuit Open	B	B
C1400-14 Motor Voltage Malfunction	B	B
C1403-14 Motor Angle Sensor (SIN/COS) Signals Incorrect	B	B
C1403-29 Motor Angle Sensor (SIN/COS) Signals Incorrect Correlation	B	B
C1404-13 EPS Motor U Phase Circuit High Voltage	B	B
C1405-13 EPS Motor V Phase Circuit High Voltage	B	B
C1406-13 EPS Motor W Phase Circuit High Voltage	B	B
U3003-13 EPS Motor Circuit Open	B	B
U3000-49 EPS Control Unit Internal Circuit Malfunction	B	B

DTC (EPS)

1. Problem verification

   -1. Turn the vehicle to the ON mode.

   -2. Clear the DTC with the HDS.

   -3. Turn the vehicle to the OFF (LOCK) mode, then start the engine.

   -4. Turn the steering wheel to left and right several times, and keep holding each direction for 10 seconds.

   -5. Check for DTCs with the HDS.

DTC Description	DTC	Freeze Frame
C1400-11 Motor Current Malfunction	B	B
C1400-13 EPS Motor Circuit Open	B	B
C1400-14 Motor Voltage Malfunction	B	B
C1403-14 Motor Angle Sensor (SIN/COS) Signals Incorrect	B	B
C1403-29 Motor Angle Sensor (SIN/COS) Signals Incorrect Correlation	B	B
C1404-13 EPS Motor U Phase Circuit High Voltage	B	B
C1405-13 EPS Motor V Phase Circuit High Voltage	B	B
C1406-13 EPS Motor W Phase Circuit High Voltage	B	B
U3003-13 EPS Motor Circuit Open	B	B
U3000-49 EPS Control Unit Internal Circuit Malfunction	B	B

Is DTC C1400-11, C1400-13, C1400-14, C1403-14, C1403-29, C1404-13, C1405-13, C1406-13, U3000-13, or U3000-49 indicated?

YES

The failure is duplicated. Check for loose terminals and poor connections at the EPS control unit connectors. Check for any authorized service information related to the DTCs or symptoms you are troubleshooting or **substitute a known-good EPS motor/control unit** , then recheck. If the symptom/indication goes away with a known-good EPS motor/control unit, **replace the original EPS motor/control unit** .

NO

Intermittent failure, the system is OK at this time. **Refer to intermittent failures troubleshooting**. If the freeze data/on-board snapshot of this DTC is recorded, try to reproduce the failure under the same conditions with the freeze data/on-board snapshot.

DTC C1420-29

DTC C1420-29 : Main Torque Sensor and Sub Torque Sensor Incorrect Correlation

NOTE: **Before you troubleshoot, review the general troubleshooting information**.

DTC Description	DTC	Freeze Frame
C1420-29 Main Torque Sensor and Sub Torque Sensor Incorrect Correlation	B	B

DTC (EPS)

1. DTC check

-1. Turn the vehicle to the OFF (LOCK) mode, then to the ON mode.

-2. Clear the DTC with the HDS.

-3. Turn the vehicle to the OFF (LOCK) mode, then start the engine.

-4. Turn the steering wheel to left and right several times, and keep holding each direction for 10 seconds.

-5. Check for DTCs with the HDS.

DTC Description	DTC	Freeze Frame
C1420-29 Main Torque Sensor and Sub Torque Sensor Incorrect Correlation	B	B

DTC Description	DTC	Freeze Frame
C1421-14 Main Torque Sensor Malfunction	B	B
C1422-14 Sub Torque Sensor Malfunction	B	B

Is DTC C1420-29 indicated?

YES

Go to step 2.

YES

If DTC C1421-14 or C1422-14 are also indicated, go to DTC **C1421-14** or **C1422-14** troubleshooting.

NO

Intermittent failure, the system is OK at this time. **Refer to intermittent failures troubleshooting**. If the freeze data/on-board snapshot of this DTC is recorded, try to reproduce the failure under the same conditions with the freeze data/on-board snapshot.

2. Torque sensor internal resistance check

-1. Turn the vehicle to the OFF (LOCK) mode.

-2. Disconnect the following connector.

Torque sensor 6P connector

-3. On the sensor side, measure the resistance between test points 1 and 2 individually (see table).

Test condition	Vehicle OFF (LOCK) mode
B	Torque sensor 6P connector: disconnected

Test Circuit	Torque Sensor6P Connector(male terminals): ①		Reference resistance value
	Test point 1	Test point 2	
T/S VDD - T/S GND	No. 5	No. 3	141-175 Ω
TSM - T/S GND	No. 2	No. 3	179-244 Ω
TSS - T/S GND	No. 4	No. 3	179-244 Ω

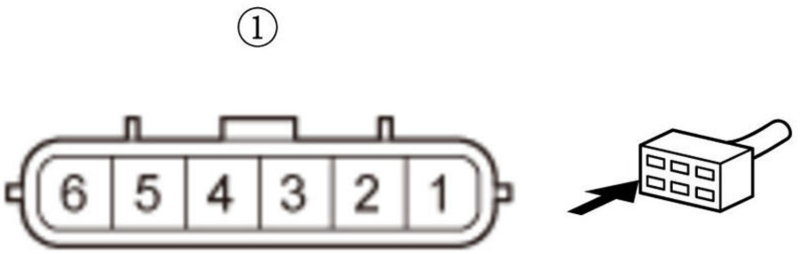

Is the resistance OK?

YES

Check for loose terminals and poor connections at the EPS control unit connectors. Check for any authorized service information related to the DTCs or symptoms you are troubleshooting or **substitute a known-good EPS motor/control unit** , then recheck. If the symptom/indication goes away with a known-good EPS motor/control unit, **replace the original EPS motor/control unit** .

NO

Replace the steering gearbox .

DTC C1421-14

DTC C1421-14 : Main Torque Sensor Malfunction

NOTE: **Before you troubleshoot, review the general troubleshooting information**.

DTC Description	DTC	Freeze Frame
C1421-14 Main Torque Sensor Malfunction	B	B

DTC (EPS)

1. DTC check

   -1. Turn the vehicle to the ON mode.

   -2. Clear the DTC with the HDS.

   -3. Turn the vehicle to the OFF (LOCK) mode, then start the engine.

   -4. Turn the steering wheel to left and right several times, and keep holding each direction for 10 seconds.

   -5. Check for DTCs with the HDS.

DTC Description	DTC	Freeze Frame
C1421-14 Main Torque Sensor Malfunction	B	B
C1423-14 Torque Sensor Power Source Circuit Malfunction	B	B

   Is DTC C1421-14 indicated?

   YES

   Go to step 2.

   YES

   If DTC C1423-14 is also indicated, go to DTC **C1423-14** troubleshooting.

   NO

   Intermittent failure, the system is OK at this time. **Refer to intermittent failures troubleshooting**. If the freeze data/on-board snapshot of this DTC is recorded, try to reproduce the failure under the same conditions with the freeze data/on-board snapshot.

2. Torque sensor performance check

   -1. Turn the steering wheel to the right and left several times.

   -2. Check the parameter(s) below with the HDS.

Signal	Current conditions	
	Values	**Unit**
TORQUE SENSOR MAIN	B	B

Is there less than about 0.3 V or more than about 4.8 V?

YES (Less than about 0.3 V)

Go to step 3.

YES (More than about 4.8 V)

Go to step 7.

NO

Check for loose terminals and poor connections at the EPS control unit connectors. Check for any authorized service information related to the DTCs or symptoms you are troubleshooting or **substitute a known-good EPS motor/control unit** , then recheck. If the symptom/indication goes away with a known-good EPS motor/control unit, **replace the original EPS motor/control unit** .

3. Torque sensor check

-1. Turn the vehicle to the OFF (LOCK) mode.

-2. Disconnect the following connector.

Torque sensor 6P connector

-3. Connect terminals A and B with a jumper wire.

Terminal A	Torque sensor 6P connector (female terminals) No. 5: ①
Terminal B	Torque sensor 6P connector (female terminals) No. 2: ①

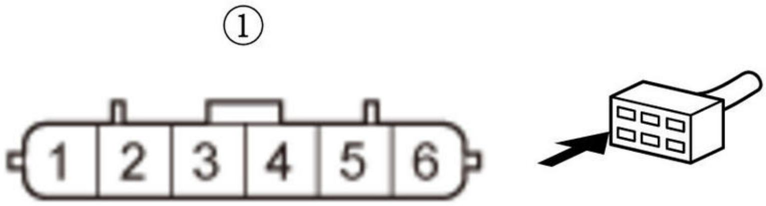

-4. Turn the vehicle to the ON mode.

-5. Check the parameter(s) below with the HDS.

Signal	Current conditions	
	Values	**Unit**
TORQUE SENSOR MAIN	B	B

Is there about 5 V?

YES

Replace the steering gearbox .

NO

Go to step 4.

4. Open wire check (T/S VDD line)

-1. Turn the vehicle to the OFF (LOCK) mode.

-2. Disconnect the following connector.

EPS control unit connector C (4P)

-3. Check for continuity between test points 1 and 2.

Test condition	Vehicle OFF (LOCK) mode
B	Torque sensor 6P connector: disconnected
B	EPS control unit connector C (4P): disconnected
Test point 1	Torque sensor 6P connector (female terminals) No. 5: ①
Test point 2	**EPS control unit connector C (4P) No. 2**

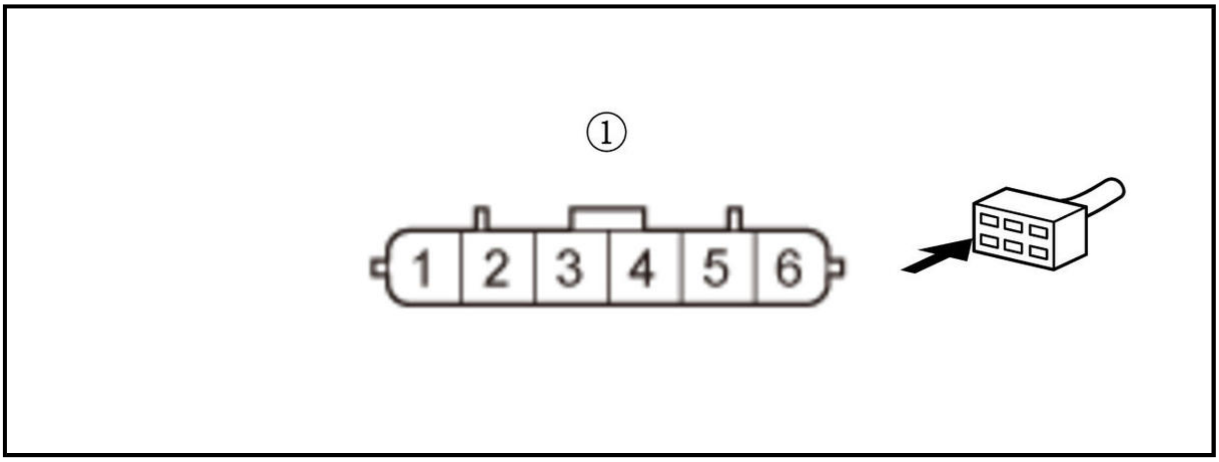

Is there continuity?

YES

The T/S VDD wire is OK. Go to step 5.

NO

Repair an open in the wire between the EPS control unit and the torque sensor.

5. Open wire check (TSM line)

-1. Check for continuity between test points 1 and 2.

Test condition	Vehicle OFF (LOCK) mode
B	Torque sensor 6P connector: disconnected
B	EPS control unit connector C (4P): disconnected
Test point 1	Torque sensor 6P connector (female terminals) No. 2: ①

Test point 2	**EPS control unit connector C (4P) No. 3**

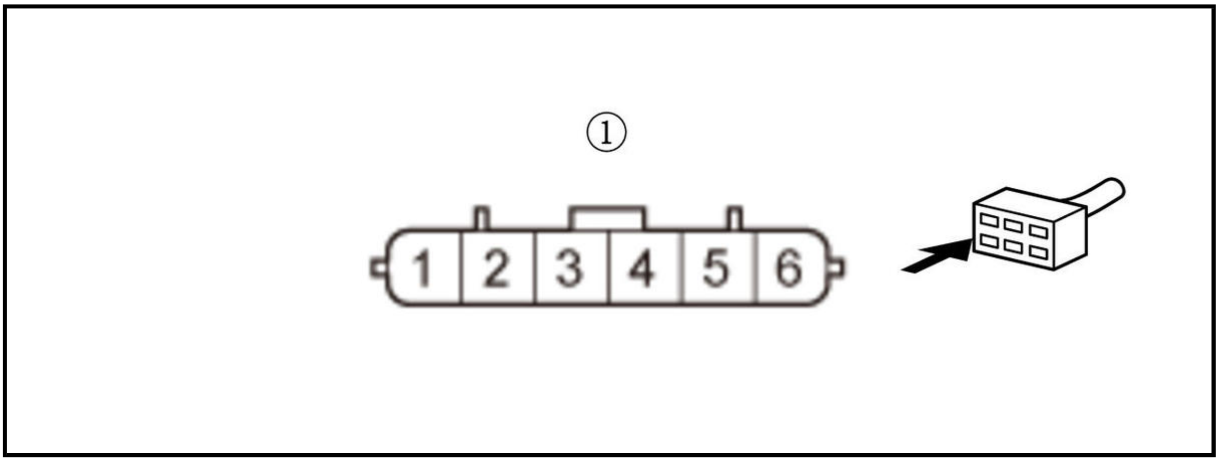

Is there continuity?

YES

The TSM wire is not open. Go to step 6.

NO

Repair an open in the wire between the EPS control unit and the torque sensor.

6. Shorted wire check (TSM line)

-1. Check for continuity between test points 1 and 2.

Test condition	Vehicle OFF (LOCK) mode
B	Torque sensor 6P connector: disconnected
B	EPS control unit connector C (4P): disconnected
Test point 1	**EPS control unit connector C (4P) No. 3**
Test point 2	Body ground

Is there continuity?

YES

Repair a short to ground in the wire between the EPS control unit and the torque sensor.

NO

The TSM wire is OK. Check for loose terminals and poor connections at the EPS control unit connectors. Check for any authorized service information related to the DTCs or symptoms you are troubleshooting or **substitute a known-good EPS motor/control unit** , then recheck. If the symptom/indication goes away with a known-good EPS motor/control unit, **replace the original EPS motor/control unit** .

7. EPS control unit check

-1. Turn the vehicle to the OFF (LOCK) mode.

-2. Disconnect the following connector.

EPS control unit connector C (4P)

-3. Turn the vehicle to the ON mode.

-4. Check the parameter(s) below with the HDS.

Signal	Current conditions	
	Values	Unit
TORQUE SENSOR MAIN	B	B

Is there about 5 V?

YES

Check for loose terminals and poor connections at the EPS control unit connectors. Check for any authorized service information related to the DTCs or symptoms you are troubleshooting or **substitute a known-good EPS motor/control unit** , then recheck. If the symptom/indication goes away with a known-good EPS motor/control unit, **replace the original EPS motor/control unit** .

NO

Go to step 8.

8. Shorted wire check (TSM line to power)

-1. Turn the vehicle to the OFF (LOCK) mode.

-2. Disconnect the following connector.

Torque sensor 6P connector

-3. Check for continuity between test points 1 and 2.

Test condition	Vehicle OFF (LOCK) mode
B	EPS control unit connector C (4P): disconnected
B	Torque sensor 6P connector: disconnected
Test point 1	**EPS control unit connector C (4P) No. 2**
Test point 2	**EPS control unit connector C (4P) No. 3**

Is there continuity?

YES

Repair a short in the wire between the EPS control unit and the torque sensor.

NO

Go to step 9.

9. Open wire check (T/S GND line)

-1. Check for continuity between test points 1 and 2.

Test condition	Vehicle OFF (LOCK) mode
B	EPS control unit connector C (4P): disconnected
B	Torque sensor 6P connector: disconnected
Test point 1	**EPS control unit connector C (4P) No. 1**
Test point 2	Torque sensor 6P connector (female terminals) No. 3: ①

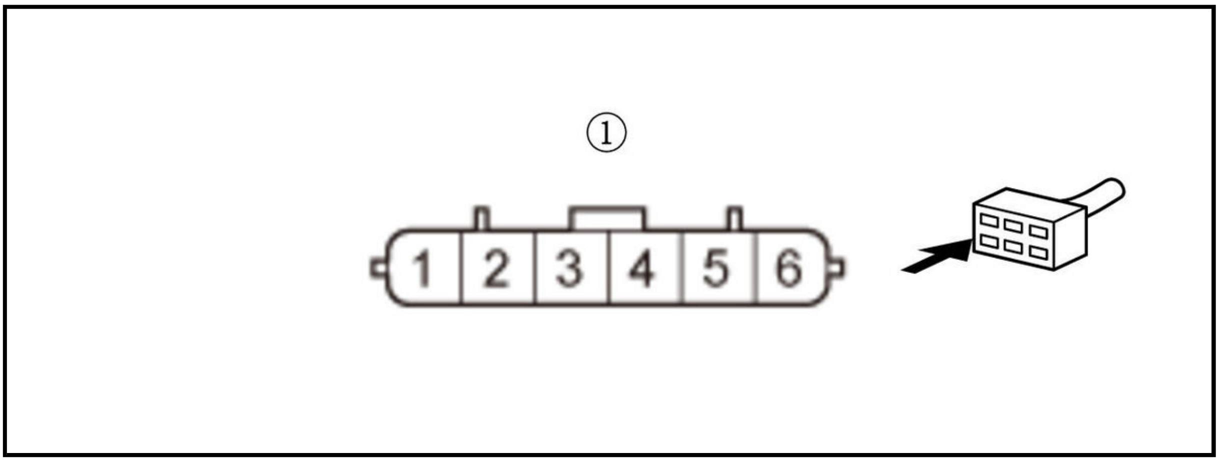

Is there continuity?

YES

The T/S GND wire is OK. **Replace the steering gearbox** .

NO

Repair an open in the wire between the EPS control unit and the torque sensor.

DTC C1422-14

DTC C1422-14 : Sub Torque Sensor Malfunction

NOTE: Before you troubleshoot, review the general troubleshooting information.

DTC Description	DTC	Freeze Frame
C1422-14 Sub Torque Sensor Malfunction	B	B

DTC (EPS)

1. DTC check

-1. Turn the vehicle to the ON mode.

-2. Clear the DTC with the HDS.

-3. Turn the vehicle to the OFF (LOCK) mode, then start the engine.

-4. Turn the steering wheel to left and right several times, and keep holding each direction for 10 seconds.

-5. Check for DTCs with the HDS.

DTC Description	DTC	Freeze Frame
C1422-14 Sub Torque Sensor Malfunction	B	B
C1423-14 Torque Sensor Power Source Circuit Malfunction	B	B

Is DTC C1422-14 indicated?

YES

Go to step 2.

YES

If DTC C1423-14 is also indicated, go to DTC C1423-14 troubleshooting.

NO

Intermittent failure, the system is OK at this time. **Refer to intermittent failures troubleshooting**. If the freeze data/on-board snapshot of this DTC is recorded, try to reproduce the failure under the same conditions with the freeze data/on-board snapshot.

2. Torque sensor performance check

-1. Turn the steering wheel to the right and left several times.

-2. Check the parameter(s) below with the HDS.

Signal	**Current conditions**	
	Values	**Unit**
TORQUE SENSOR SUB	B	B

Is there less than about 0.3 V or more than about 4.8 V?

YES (Less than about 0.3 V)

Go to step 3.

YES (More than about 4.8 V)

Go to step 7.

NO

Check for loose terminals and poor connections at the EPS control unit connectors. Check for any authorized service information related to the DTCs or symptoms you are troubleshooting or **substitute a known-good EPS motor/control unit** , then recheck. If the symptom/indication goes away with a known-good EPS motor/control unit, **replace the original EPS motor/control unit** .

3. Torque sensor check

-1. Turn the vehicle to the OFF (LOCK) mode.

-2. Disconnect the following connector.

Torque sensor 6P connector

-3. Connect terminals A and B with a jumper wire.

Terminal A	Torque sensor 6P connector (female terminals) No. 5: ①
Terminal B	Torque sensor 6P connector (female terminals) No. 4: ①

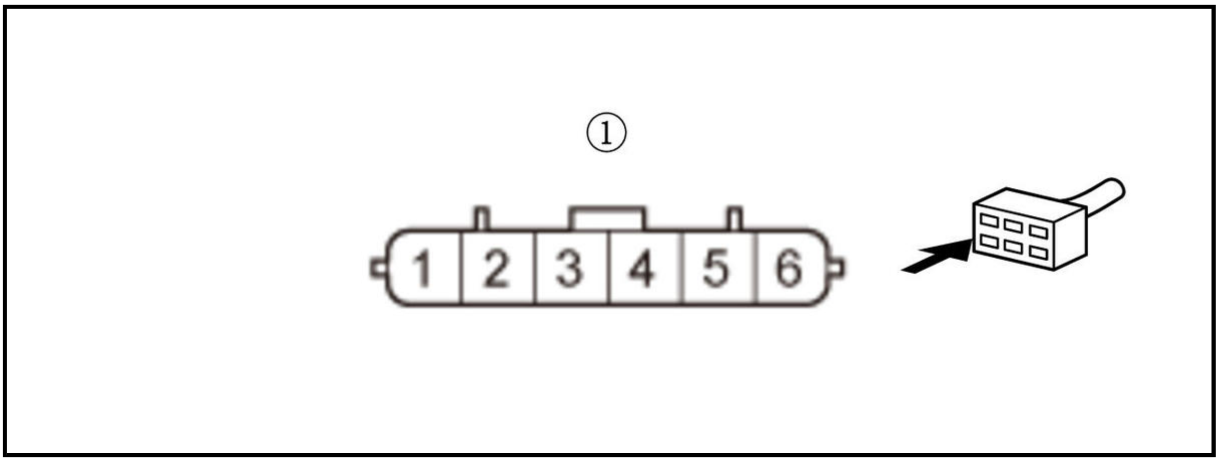

-4. Turn the vehicle to the ON mode.

-5. Check the parameter(s) below with the HDS.

Signal	**Current conditions**	
	Values	**Unit**
TORQUE SENSOR SUB	B	B

Is there about 5 V?

YES

Replace the steering gearbox .

NO

Go to step 4.

4. Open wire check (T/S VDD line)

-1. Turn the vehicle to the OFF (LOCK) mode.

-2. Disconnect the following connector.

EPS control unit connector C (4P)

-3. Check for continuity between test points 1 and 2.

Test condition	Vehicle OFF (LOCK) mode
B	Torque sensor 6P connector: disconnected
B	EPS control unit connector C (4P): disconnected
Test point 1	Torque sensor 6P connector (female terminals) No. 5: ①
Test point 2	**EPS control unit connector C (4P) No. 2**

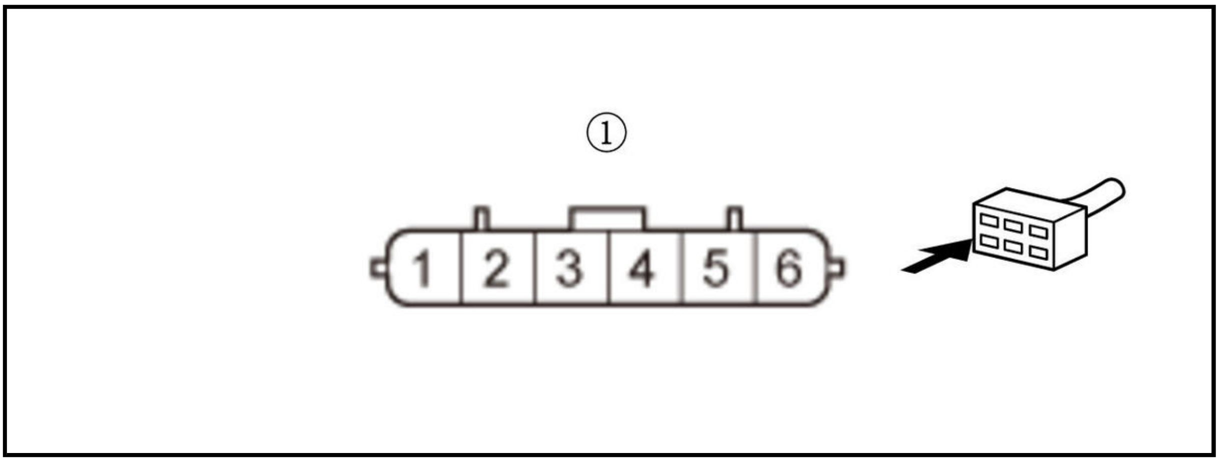

Is there continuity?

YES

The T/S VDD wire is OK. Go to step 5.

NO

Repair an open in the wire between the EPS control unit and the torque sensor.

5. Open wire check (TSS line)

-1. Check for continuity between test points 1 and 2.

Test condition	Vehicle OFF (LOCK) mode
B	Torque sensor 6P connector: disconnected
B	EPS control unit connector C (4P): disconnected
Test point 1	Torque sensor 6P connector (female terminals) No. 4: ①
Test point 2	**EPS control unit connector C (4P) No. 4**

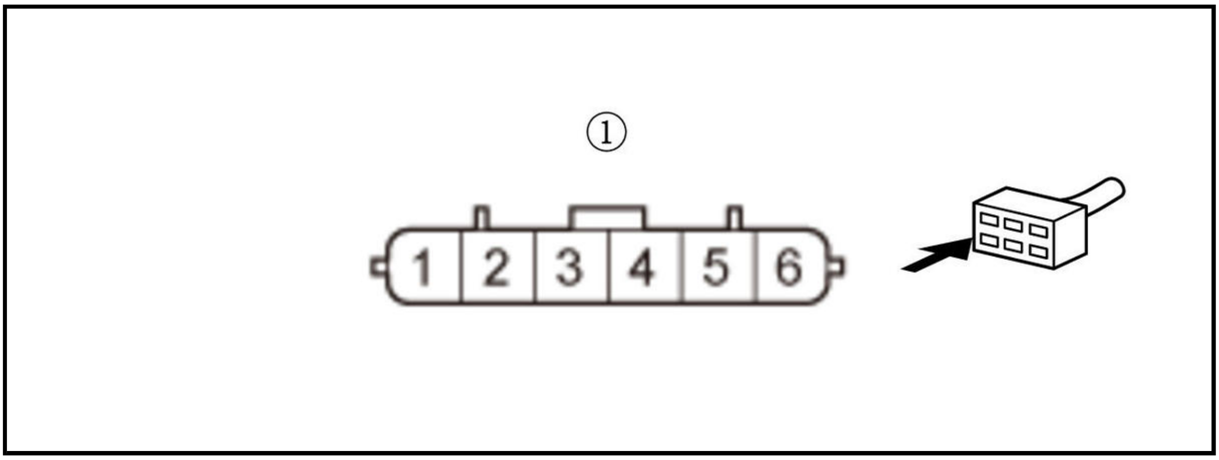

Is there continuity?

YES

The TSS wire is not open. Go to step 6.

NO

Repair an open in the wire between the EPS control unit and the torque sensor.

6. Shorted wire check (TSS line)

-1. Check for continuity between test points 1 and 2.

Test condition	Vehicle OFF (LOCK) mode
B	Torque sensor 6P connector: disconnected
B	EPS control unit connector C (4P): disconnected
Test point 1	**EPS control unit connector C (4P) No. 4**
Test point 2	Body ground

Is there continuity?

YES

Repair a short to ground in the wire between the EPS control unit and the torque sensor.

NO

The TSS wire is OK. Check for loose terminals and poor connections at the EPS control unit connectors. Check for any authorized service information related to the DTCs or symptoms you are troubleshooting or **substitute a known-good EPS motor/control unit** , then recheck. If the symptom/indication goes away with a known-good EPS motor/control unit, **replace the original EPS motor/control unit** .

7. EPS control unit check

-1. Turn the vehicle to the OFF (LOCK) mode.

-2. Disconnect the following connector.

EPS control unit connector C (4P)

-3. Turn the vehicle to the ON mode.

-4. Check the parameter(s) below with the HDS.

Signal	Current conditions	
	Values	Unit
TORQUE SENSOR SUB	B	B

Is there about 5 V?

YES

Check for loose terminals and poor connections at the EPS control unit connectors. Check for any authorized service information related to the DTCs or symptoms you are troubleshooting or **substitute a known-good EPS motor/control unit** , then recheck. If the symptom/indication goes away with a known-good EPS motor/control unit, **replace the original EPS motor/control unit** .

NO

Go to step 8.

8. Shorted wire check (TSS line to power)

-1. Turn the vehicle to the OFF (LOCK) mode.

-2. Disconnect the following connector.

Torque sensor 6P connector

-3. Check for continuity between test points 1 and 2.

Test condition	Vehicle OFF (LOCK) mode
B	EPS control unit connector C (4P): disconnected
B	Torque sensor 6P connector: disconnected
Test point 1	**EPS control unit connector C (4P) No. 2**
Test point 2	**EPS control unit connector C (4P) No. 4**

Is there continuity?

YES

Repair a short in the wire between the EPS control unit and the torque sensor.

NO

Go to step 9.

9. Open wire check (T/S GND line)

-1. Check for continuity between test points 1 and 2.

Test condition	Vehicle OFF (LOCK) mode
B	EPS control unit connector C (4P): disconnected
B	Torque sensor 6P connector: disconnected
Test point 1	**EPS control unit connector C (4P) No. 1**
Test point 2	Torque sensor 6P connector (female terminals) No. 3: ①

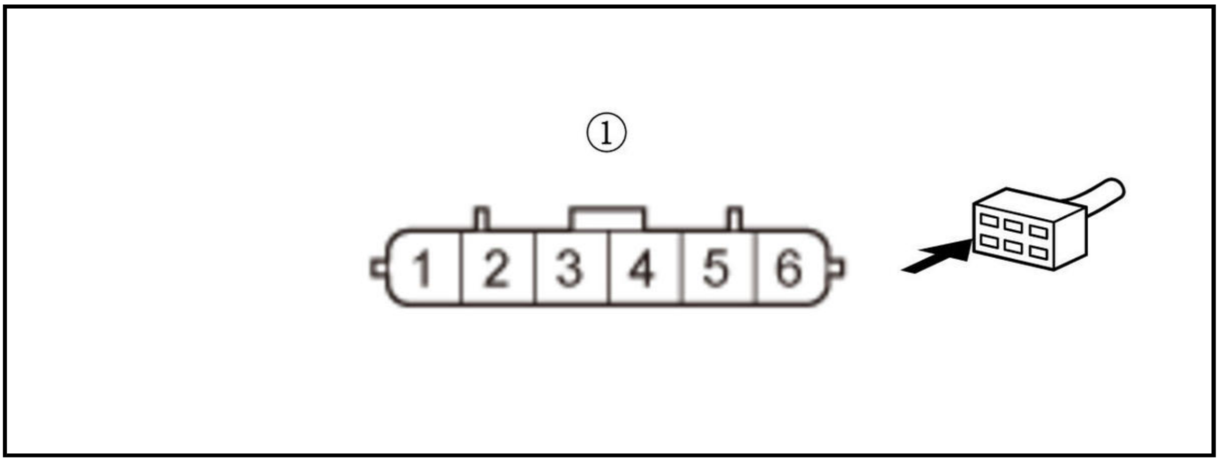

Is there continuity?

YES

The T/S GND wire is OK. **Replace the steering gearbox** .

NO

Repair an open in the wire between the EPS control unit and the torque sensor.

DTC C1423-14

DTC C1423-14 : Torque Sensor Power Source Circuit Malfunction

NOTE: **Before you troubleshoot, review the general troubleshooting information**.

DTC Description	DTC	Freeze Frame
C1423-14 Torque Sensor Power Source Circuit Malfunction	B	B

DTC (EPS)

1. Problem verification

   -1. Turn the vehicle to the ON mode.

   -2. Clear the DTC with the HDS.

   -3. Turn the vehicle to the OFF (LOCK) mode, then to the ON mode.

   -4. Check for DTCs with the HDS.

DTC Description	DTC	Freeze Frame
C1423-14 Torque Sensor Power Source Circuit Malfunction	B	B

   Is DTC C1423-14 indicated?

   YES

   The failure is duplicated. Go to step 2.

   NO

   Intermittent failure, the system is OK at this time. **Refer to intermittent failures troubleshooting**. If the freeze data/on-board snapshot of this DTC is recorded, try to reproduce the failure under the same conditions with the freeze data/on-board snapshot.

2. Torque sensor check

   -1. Turn the vehicle to the OFF (LOCK) mode.

   -2. Disconnect the following connector.

Torque sensor 6P connector

   -3. Turn the vehicle to the ON mode.

   -4. Check the parameter(s) below with the HDS.

Signal	Current conditions	
	Values	Unit
Torque sensor input voltage	B	B

   Is the voltage between 4.5-5.5 V?

   YES

   Replace the steering gearbox .

   NO

   Go to step 3.

3. Shorted wire check (T/S VDD line)

   -1. Turn the vehicle to the OFF (LOCK) mode.

-2. Disconnect the following connector.

EPS control unit connector C (4P)

-3. Turn the vehicle to the ON mode.

-4. Check the parameter(s) below with the HDS.

Signal	Current conditions	
	Values	**Unit**
Torque sensor input voltage	B	B

Is the voltage between 4.5-5.5 V?

YES

Repair a short to ground in the wire between the EPS control unit and the torque sensor.

NO

The T/S VDD wire is OK. Check for loose terminals and poor connections at the EPS control unit connectors. Check for any authorized service information related to the DTCs or symptoms you are troubleshooting or **substitute a known-good EPS motor/control unit** , then recheck. If the symptom/indication goes away with a known-good EPS motor/control unit, **replace the original EPS motor/control unit** .

DTC C1432-62

DTC C1432-62 : Vehicle Speed and the Engine Speed Incorrect Correlation

NOTE:

- **Before you troubleshoot, review the general troubleshooting information**.
- VSA DTCs may set during this troubleshooting. If so, clear them.

DTC Description	DTC	Freeze Frame
C1432-62 Vehicle Speed and the Engine Speed Incorrect Correlation	B	B

DTC (EPS)

1. Problem verification

-1. Turn the vehicle to the ON mode.

-2. Clear the DTC with the HDS.

-3. Turn the vehicle to the OFF (LOCK) mode, then start the engine.

-4. Test-drive the vehicle at 12 mph (20 km/h) or more for 30 seconds or more.

NOTE: Drive the vehicle on the road, not on a lift.

-5. Check for DTCs with the HDS.

DTC Description	DTC	Freeze Frame
C1432-62 Vehicle Speed and the Engine Speed Incorrect Correlation	B	B

Is DTC C1432-62 indicated?

YES

The failure is duplicated. Go to step 2.

NO

Intermittent failure, the system is OK at this time. **Refer to intermittent failures troubleshooting**. If the freeze data/on-board snapshot of this DTC is recorded, try to reproduce the failure under the same conditions with the freeze data/on-board snapshot.

2. Vehicle speed signal check

-1. Turn the vehicle to the OFF (LOCK) mode.

-2. **Raise and support the vehicle** , and allow all wheels to rotate freely.

-3. Start the engine.

-4. Turn off the VSA function by using the VSA OFF switch.

-5. Run the vehicle while in the D position/mode.

-6. Check the parameter(s) below with the HDS.

Signal	Current conditions	
	Values	Unit
VEHICLE SPEED	B	B

Is 0 mph (0 km/h) indicated?

YES

Check for any authorized service information related to the DTCs or symptoms you are troubleshooting or **substitute a known-good PCM** , then recheck. If the symptom/indication goes away with a known-good PCM, **replace the original PCM** .

NO

Check for loose terminals and poor connections at the EPS control unit connectors. Check for any authorized service information related to the DTCs or symptoms you are troubleshooting or **substitute a known-good EPS motor/control unit** , then recheck. If the symptom/indication goes away with a known-good EPS motor/control unit, **replace the original EPS motor/control unit** .

DTC U0029-00(EPS CONTROL UNIT (WITH CAN GATEWAY))

DTC U0029-00 : F-CAN Malfunction (Bus-Off)

NOTE: **Before you troubleshoot, review the general troubleshooting information**.

*1: CAN gateway 12P connector type*2: CAN gateway 16P connector type

DTC Description	DTC	Freeze Frame
U0029-00 F-CAN Malfunction (Bus-Off)	B	B

DTC (EPS)

1. Problem verification

-1. Turn the vehicle to the ON mode.

-2. Clear the DTC with the HDS.

-3. Turn the vehicle to the OFF (LOCK) mode, then start the engine.

-4. Check for DTCs with the HDS.

DTC Description	DTC	Freeze Frame
U0029-00 F-CAN Malfunction (Bus-Off)	B	B

Is DTC U0029-00 indicated?

YES

The failure is duplicated. Go to step 2.

NO

Intermittent failure, the system is OK at this time. **Refer to intermittent failures troubleshooting**. If the freeze data/on-board snapshot of this DTC is recorded, try to reproduce the failure under the same conditions with the freeze data/on-board snapshot.

2. DTC check (CAN gateway system)

-1. Check for CAN gateway system DTCs with the HDS.

DTC Description	DTC
B	B

Is DTC indicated?

YES

Go to indicated DTC's troubleshooting.

NO

Go to step 3.

3. F-CAN circuit communication check

-1. Select the FUNCTION TEST in the CAN gateway with the HDS, then select the F-CAN Bus Connected Unit Check.

F-CAN Bus Connected Unit Check

Which result is indicated?

EPS control unit (Bus B) is Not Available

Go to step 4.

EPS control unit (Bus B) is Available

Check for loose terminals and poor connections at the EPS control unit connectors. Check for any authorized service information related to the DTCs or symptoms you are troubleshooting or **substitute a known-good EPS motor/control unit** , then recheck. If the symptom/indication goes away with a known-good EPS motor/control unit, **replace the original EPS motor/control unit** .

4. Open wire check (F-CAN B_H, F-CAN B_L lines)

-1. Turn the vehicle to the OFF (LOCK) mode.

-2. Disconnect the following connectors.

EPS control unit connector B (6P)
CAN gateway 12P connector *1
CAN gateway 16P connector *2

-3. Measure the resistance between test points 1 and 2.

Test condition	Vehicle OFF (LOCK) mode
B	EPS control unit connector B (6P): disconnected
B	CAN gateway 12P connector *1: disconnected
B	CAN gateway 16P connector *2: disconnected
Test circuit 1	B
Test point 1	**EPS control unit connector B (6P) No. 3**
Test point 2	CAN gateway 12P connector *1 (female terminals) No. 12: ①
B	CAN gateway 16P connector *2 (female terminals) No. 6: ②

Test circuit 2	B
Test point 1	**EPS control unit connector B (6P) No. 1**
Test point 2	CAN gateway 12P connector *1 (female terminals) No. 5: ①
B	CAN gateway 16P connector *2 (female terminals) No. 14: ②

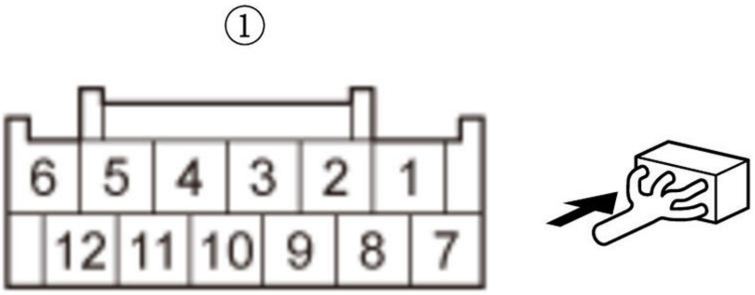

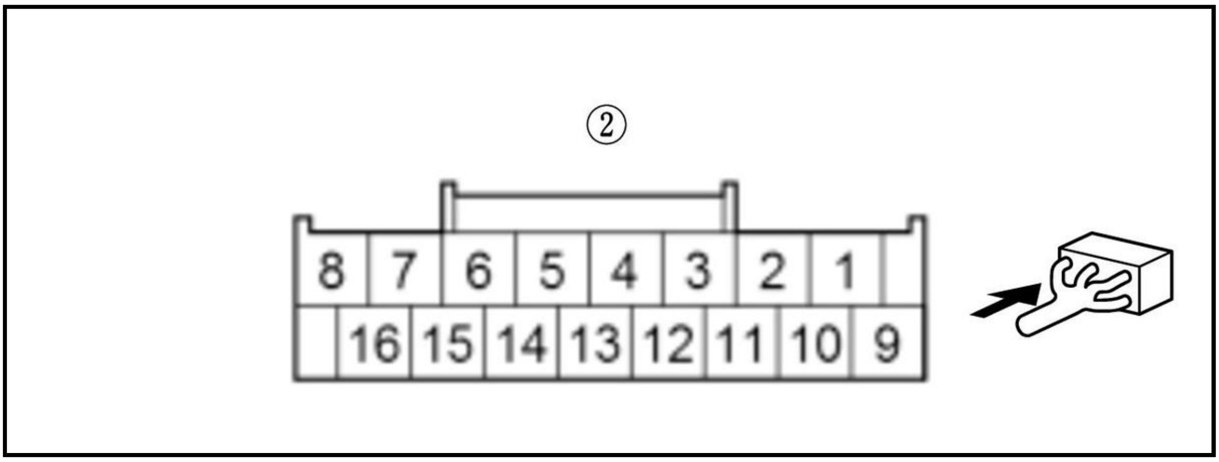

Is there 1.0 Ω or less?

YES

The F-CAN B_H and F-CAN B_L wires are OK. Check for loose terminals and poor connections at the EPS control unit connectors. Check for any authorized service information related to the DTCs or symptoms you are troubleshooting or **substitute a known-good EPS motor/control unit** , then recheck. If the symptom/indication goes away with a known-good EPS motor/control unit, **replace the original EPS motor/control unit** .

NO

Repair an open in the wire between the EPS control unit and the CAN gateway.

DTC U0029-00(EPS CONTROL UNIT (WITHOUT CAN GATEWAY)) (2017 2018 2019)

DTC U0029-00 : F-CAN Malfunction (Bus-Off)

NOTE:

- **Before you troubleshoot, review the general troubleshooting information**.
- This DTC is stored by communication failure between the F-CAN line and the EPS control unit. When DTC U0029-00 is indicated, the F-CAN line has already returned to normal. Check for loose terminals and poor connections in the connectors. If the connectors are OK, clear the DTC and following this troubleshooting.

DTC Description	DTC	Freeze Frame
U0029-00 F-CAN Malfunction (Bus-Off)	B	B

DTC (EPS)

1. EPS control unit communication check

   -1. Start the engine.

   -2. Check for communication between the EPS control unit and the HDS.

   Is there communication between the EPS control unit and the HDS?

   YES

   Intermittent failure, the system is OK at this time. **Refer to intermittent failures troubleshooting**. If the freeze data/on-board snapshot of this DTC is recorded, try to reproduce the failure under the same conditions with the freeze data/on-board snapshot.

NO

Go to step 2.

2. Open wire check (F-CAN_H, F-CAN_L lines)

-1. Turn the vehicle to the OFF (LOCK) mode.

-2. Jump the SCS line with the HDS, and wait more than 1 minute.

-3. Disconnect the following connectors.

EPS control unit connector B (6P)
PCM connector A (51P)

-4. Check for continuity between test points 1 and 2.

Test condition	Vehicle OFF (LOCK) mode
B	EPS control unit connector B (6P): disconnected
B	PCM connector A (51P): disconnected
Test circuit 1	B
Test point 1	**EPS control unit connector B (6P) No. 3**
Test point 2	**PCM connector A (51P) No. 2**

Test circuit 2	B
Test point 1	**EPS control unit connector B (6P) No. 1**
Test point 2	**PCM connector A (51P) No. 1**

Is there continuity?

YES

The F-CAN_H and F-CAN_L wires are OK. Check for loose terminals and poor connections at the EPS control unit connectors. Check for any authorized service information related to the DTCs or symptoms you are troubleshooting or **substitute a known-good EPS motor/control unit** , then recheck. If the symptom/indication goes away with a known-good EPS motor/control unit, **replace the original EPS motor/control unit** .

NO

Repair an open in the wire between the EPS control unit and the PCM.

DTC TROUBLESHOOTING: U0100-00, U0122-00, U0151-00(EPS CONTROL UNIT (WITHOUT CAN GATEWAY)) (2017 2018 2019)

DTC U0100-00 : F-CAN Malfunction (EPS Control Unit-PCM/TCM)

DTC U0122-00 : F-CAN Malfunction (EPS Control Unit-VSA Modulator-Control Unit)

DTC U0151-00 : F-CAN Malfunction (EPS Control Unit-SRS Unit)

NOTE:

- **Before you troubleshoot, review the general troubleshooting information**.
- According to the detected DTC(s), check for the power circuit and the ground circuit of the control unit which cannot communicate with the EPS control unit.

DTC Description	DTC	Freeze Frame
U0100-00 F-CAN Malfunction (EPS Control Unit-PCM/TCM)	B	B
U0122-00 F-CAN Malfunction (EPS Control Unit-VSA Modulator-Control Unit)	B	B
U0151-00 F-CAN Malfunction (EPS Control Unit-SRS Unit)	B	B

DTC (EPS)

1. DTC check

   -1. Turn the vehicle to the ON mode.

   -2. Clear the DTC with the HDS.

   -3. Turn the vehicle to the OFF (LOCK) mode, then start the engine.

   -4. Wait 10 seconds or more.

   -5. Check for DTCs with the HDS.

DTC Description	DTC	Freeze Frame
U0100-00 F-CAN Malfunction (EPS Control Unit-PCM/TCM)	B	B
U0122-00 F-CAN Malfunction (EPS Control Unit-VSA Modulator-Control Unit)	B	B

DTC Description	DTC	Freeze Frame
U0151-00 F-CAN Malfunction (EPS Control Unit-SRS Unit)	B	B

   Is DTC indicated?

   YES

   Go to step 2.

   NO

   Intermittent failure, the system is OK at this time. **Refer to intermittent failures troubleshooting**. If the freeze data/on-board snapshot of this DTC is recorded, try to reproduce the failure under the same conditions with the freeze data/on-board snapshot.

2. Open wire check (F-CAN_H, F-CAN_L lines)

   -1. Turn the vehicle to the OFF (LOCK) mode.

   -2. Disconnect the following connector.

EPS control unit connector B (6P)

   -3. Disconnect the following connectors according to the detected DTC.

DTC	Connector
U0100-00	PCM connector A (51P)
U0122-00	VSA modulator-control unit 46P connector
U0151-00	SRS unit connector A (39P)

NOTE: Jump the SCS line with the HDS, and wait more than 1 minute when disconnecting the PCM connector.

-4. Check for continuity between the receiving control unit and the transmitting control unit according to the detected DTC.

Test condition	Vehicle OFF (LOCK) mode
B	EPS control unit connector B (6P): disconnected
B	Transmitting control unit connector(s) for indicated DTCs: disconnected

DTC	Circuit name	Test point 1 (Receiving control unit)		Test point 2 (Transmitting control unit)	
		Connector	Terminal	Connector	Terminal
U0100-00	F-CAN_H	**EPS control unit connector B (6P)**	No. 3	**PCM connector A (51P)**	No. 2
	F-CAN_L		No. 1		No. 1
U0122-00	F-CAN_H	**EPS control unit connector B (6P)**	No. 3	**VSA modulator-control unit 46P connector**	No. 40
	F-CAN_L		No. 1		No. 28
U0122-00	F-CAN_H	**EPS control unit connector B (6P)**	No. 3	**SRS unit connector A (39P)**	No. 34
	F-CAN_L		No. 1		No. 35

Is there continuity?

YES

The F-CAN_H and F-CAN_L wires are OK. Check for any authorized service information related to the DTCs or symptoms you are troubleshooting. According to the detected DTC on the following table, replace the correspond control unit.

DTC	Transmitting Control Unit
U0100-00	**PCM**
U0122-00	**VSA modulator-control unit**
U0151-00	**SRS unit**

NO

Repair an open in the wire between the receiving control unit and the transmitting control unit.

DTC U0100-00, U0122-00, U0151-00, U129C-00(EPS CONTROL UNIT (WITH CAN GATEWAY))

DTC U0100-00 : F-CAN Malfunction (EPS Control Unit-PCM/TCM)

DTC U0122-00 : F-CAN Malfunction (EPS Control Unit-VSA/ABS Modulator-Control Unit)

DTC U0151-00 : F-CAN Malfunction (EPS Control Unit-SRS Unit)

DTC U129C-00 : F-CAN Malfunction (EPS Control Unit-Driving Support System Control Unit)

NOTE:

- **Before you troubleshoot, review the general troubleshooting information**.
- According to the detected DTC(s), check for the power circuit and the ground circuit of the control unit which cannot communicate with the EPS control unit.

*1: CAN gateway 12P connector type*2: CAN gateway 16P connector type

DTC Description	DTC	Freeze Frame
U0100-00 F-CAN Malfunction (EPS Control Unit-PCM/TCM)	B	B
U0122-00 F-CAN Malfunction (EPS Control Unit-VSA/ABS Modulator-Control Unit)	B	B
U0151-00 F-CAN Malfunction (EPS Control Unit-SRS Unit)	B	B
U129C-00 F-CAN Malfunction (EPS Control Unit-Driving Support System Control Unit)	B	B

DTC (EPS)

1. DTC check

   -1. Turn the vehicle to the ON mode.

   -2. Clear the DTC with the HDS.

   -3. Turn the vehicle to the OFF (LOCK) mode, then start the engine.

   -4. Wait 10 seconds or more.

   -5. Check for DTCs with the HDS.

DTC Description	DTC	Freeze Frame
U0100-00 F-CAN Malfunction (EPS Control Unit-PCM/TCM)	B	B
U0122-00 F-CAN Malfunction (EPS Control Unit-VSA/ABS Modulator-Control Unit)	B	B
U0151-00 F-CAN Malfunction (EPS Control Unit-SRS Unit)	B	B
U129C-00 F-CAN Malfunction (EPS Control Unit-Driving Support System Control Unit)	B	B

   Is DTC indicated?

   YES

   Go to step 2.

   NO

   Intermittent failure, the system is OK at this time. **Refer to intermittent failures troubleshooting**. If the freeze data/on-board snapshot of this DTC is recorded, try to reproduce the failure under the same conditions with the freeze data/on-board snapshot.

2. DTC check (CAN gateway system)

   -1. Check for CAN gateway system DTCs with the HDS.

DTC Description	DTC
B	B

   Are DTC(s) indicated?

   YES

   Go to indicated DTC's troubleshooting.

NO

Go to step 3.

3. F-CAN circuit communication check (Receiving control unit)

   -1. Select the FUNCTION TEST in the CAN gateway with the HDS, then select the F-CAN Bus Connected Unit Check.

   F-CAN Bus Connected Unit Check

   Which result is indicated?

   EPS control unit (Bus B) is Not Available

   Go to step 4.

   EPS control unit (Bus B) is Available

   Go to step 5.

4. Open wire check (F-CAN B_H, F-CAN B_L lines)

   -1. Turn the vehicle to the OFF (LOCK) mode.

   -2. Disconnect the following connectors.

EPS control unit connector B (6P)
CAN gateway 12P connector *1CAN gateway 16P connector *2

-3. Measure the resistance between test points 1 and 2.

Test condition	Vehicle OFF (LOCK) mode
B	EPS control unit connector B (6P): disconnected
B	CAN gateway 12P connector *1: disconnected
B	CAN gateway 16P connector *2: disconnected
Test circuit 1	B
Test point 1	**EPS control unit connector B (6P) No. 3**
Test point 2	CAN gateway 12P connector *1 (female terminals) No. 12: ①
B	CAN gateway 16P connector *2 (female terminals) No. 6: ②

Test circuit 2	B
Test point 1	**EPS control unit connector B (6P) No. 1**
Test point 2	CAN gateway 12P connector *1 (female terminals) No. 5: ①
B	CAN gateway 16P connector *2 (female terminals) No. 14: ②

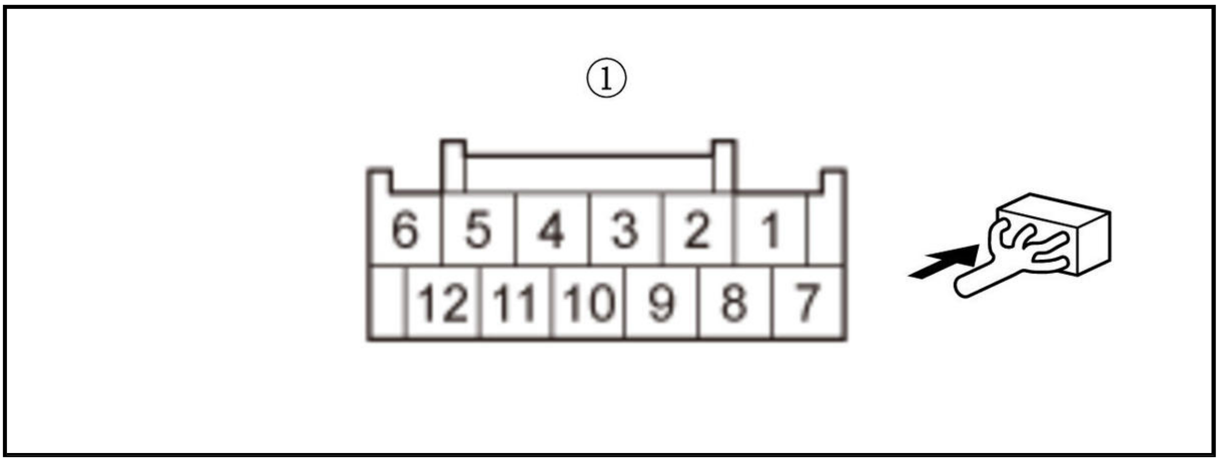

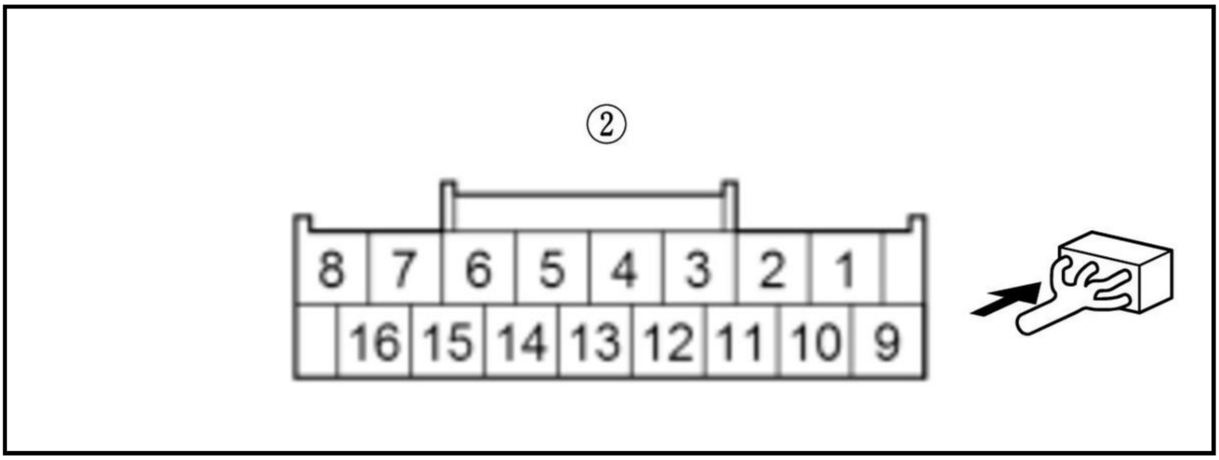

Is there 1.0 Ω or less?

YES

The F-CAN B_H and F-CAN B_L wires are OK. Check for loose terminals and poor connections at the EPS control unit connectors. Check for any authorized service information related to the DTCs or symptoms you are troubleshooting or **substitute a known-good EPS motor/control unit** , then recheck. If the symptom/indication goes away with a known-good EPS motor/control unit, **replace the original EPS motor/control unit** .

NO

Repair an open in the wire between the EPS control unit and the CAN gateway.

5. F-CAN circuit communication check (Transmitting control unit)

-1. Select the FUNCTION TEST in the CAN gateway with the HDS, then select the F-CAN Bus Connected Unit Check.

F-CAN Bus Connected Unit Check

According to the detected DTC on the following table, make sure that the transmitting control unit detects the CAN gateway Bus channel(s) normally.

DTC	Transmitting control unit	Detected CAN gateway Bus channel(s) at normal
U0100-00	PCM	A, B
U0122-00	VSA modulator-control unit	A, B
U0151-00	SRS unit	B
U129C-00	Millimeter wave radar	B

Is it detected normally?

Detected normal

Intermittent failure, the system is OK at this time. **Refer to intermittent failures troubleshooting**. If the freeze data/on-board snapshot of this DTC is recorded, try to reproduce the failure under the same conditions with the freeze data/on-board snapshot.

U0100-00: PCM (Bus A) is Not Available

Go to step 6.

U0100-00: PCM (Bus B) is Not Available

Go to step 7.

U0122-00: VSA modulator-control unit (Bus A) is Not Available

Go to step 6.

U0122-00: VSA modulator-control unit (Bus B) is Not Available

Go to step 7.

U0151-00: SRS unit (Bus B) is Not Available

Go to step 7.

U129C-00: Millimeter wave radar (Bus B) is Not Available

Go to step 7.

6. Open wire check (F-CAN A_H, F-CAN A_L lines)

-1. Turn the vehicle to the OFF (LOCK) mode.

-2. Disconnect the following connectors according to the detected DTC.

DTC	Connector
B	CAN gateway 12P connector *1CAN gateway 16P connector *2
U0100-00	PCM connector A (50P)
U0122-00	VSA modulator-control unit 46P connector

NOTE: Jump the SCS line with the HDS, and wait more than 1 minute when disconnecting the PCM connector.

-3. Measure the resistance between test points 1 and 2.

Test condition	Vehicle OFF (LOCK) mode
B	Transmitting control unit connector(s) for indicated DTCs: disconnected
B	CAN gateway 12P connector *1: disconnected
B	CAN gateway 16P connector *2: disconnected

DTC	Circuit name	Test point 1 (Receiving control unit)		Test point 2 (Transmitting control unit)	
		Connector	Terminal	Connector	Terminal
U0100-00	F-CAN A_H	CAN gateway 12P connector *1 (female terminals): ①	No. 3	**PCM connector A (50P)**	No. 37
	F-CAN A_L		No. 9		No. 36

DTC	Circuit name	Test point 1 (Receiving control unit)		Test point 2 (Transmitting control unit)	
		Connector	Terminal	Connector	Terminal
	F-CAN A_H	CAN gateway 16P connector *2 (female terminals): ②	No. 3		No. 37
	F-CAN A_L		No. 11		No. 36
U0122-00	F-CAN A_H	CAN gateway 12P connector *1 (female terminals): ①	No. 3	**VSA modulator-control unit 46P connector**	No. 40
	F-CAN A_L		No. 9		No. 28
	F-CAN A_H	CAN gateway 16P connector *2 (female terminals): ②	No. 3		No. 40
	F-CAN A_L		No. 11		No. 28

①

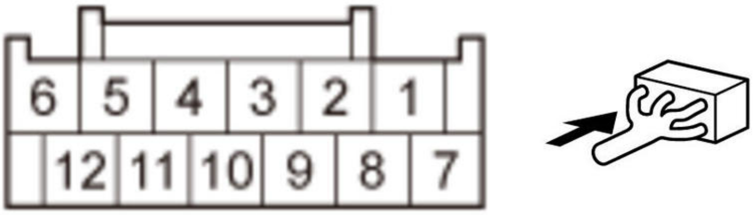

②

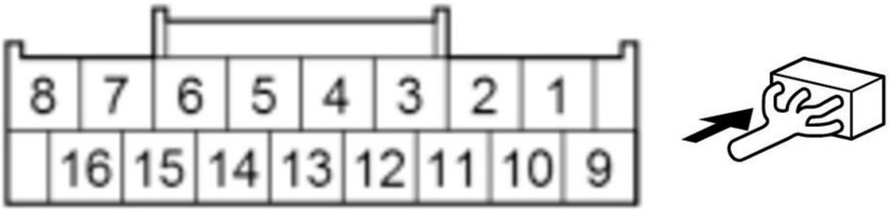

Is there 1.0 Ω or less?

YES

The F-CAN A_H and F-CAN A_L wires are OK. Check for any authorized service information related to the DTCs or symptoms you are troubleshooting. According to the detected DTC on the following table, replace the correspond control unit.

DTC	Transmitting Control Unit
U0100-00	**PCM**
U0122-00	**VSA modulator-control unit**

NO

Repair an open in the wire between the receiving control unit and the transmitting control unit.

7. Open wire check (F-CAN B_H, F-CAN B_L lines)

-1. Turn the vehicle to the OFF (LOCK) mode.

-2. Disconnect the following connectors according to the detected DTC.

DTC	Connector
B	CAN gateway 12P connector *1CAN gateway 16P connector *2
U0100-00	PCM connector A (50P)
U0122-00	VSA modulator-control unit 46P connector
U0151-00	SRS unit connector A (39P)
U129C-00	Millimeter wave radar 8P connector

NOTE: Jump the SCS line with the HDS, and wait more than 1 minute when disconnecting the PCM connector.

-3. Measure the resistance between test points 1 and 2.

Test condition	Vehicle OFF (LOCK) mode
B	Transmitting control unit connector(s) for indicated DTCs: disconnected
B	CAN gateway 12P connector *1: disconnected
B	CAN gateway 16P connector *2: disconnected

DTC	Circuit name	Test point 1 (Receiving control unit)		Test point 2 (Transmitting control unit)	
		Connector	Terminal	Connector	Terminal
U0100-00	F-CAN B_H	CAN gateway 12P connector *1 (female terminals): ①	No. 12	**PCM connector A (50P)**	No. 39
	F-CAN B_L		No. 5		No. 38
	F-CAN B_H	CAN gateway 16P connector *2 (female terminals): ②	No. 6		No. 39
	F-CAN B_L		No. 14		No. 38
U0122-00	F-CAN B_H	CAN gateway 12P connector *1 (female terminals): ①	No. 12	**VSA modulator-control unit 46P connector**	No. 46
	F-CAN B_L		No. 5		No. 34
	F-CAN B_H	CAN gateway 16P connector *2 (female terminals): ②	No. 6		No. 46
	F-CAN B_L		No. 14		No. 34
U0151-00	F-CAN B_H	CAN gateway 12P connector *1 (female terminals): ①	No. 12	**SRS unit connector A (39P)**	No. 34
	F-CAN B_L		No. 5		No. 35
	F-CAN B_H	CAN gateway 16P connector *2 (female terminals): ②	No. 6		No. 34
	F-CAN B_L		No. 14		No. 35
U129C-00	F-CAN B_H	CAN gateway 12P connector *1 (female terminals): ①	No. 12	**Millimeter wave radar 8P connector**	No. 7
	F-CAN B_L		No. 5		No. 6

DTC	Circuit name	Test point 1 (Receiving control unit)		Test point 2 (Transmitting control unit)	
		Connector	Terminal	Connector	Terminal
	F-CAN B_H	CAN gateway 16P connector *2 (female terminals): ②	No. 6		No. 7
	F-CAN B_L		No. 14		No. 6

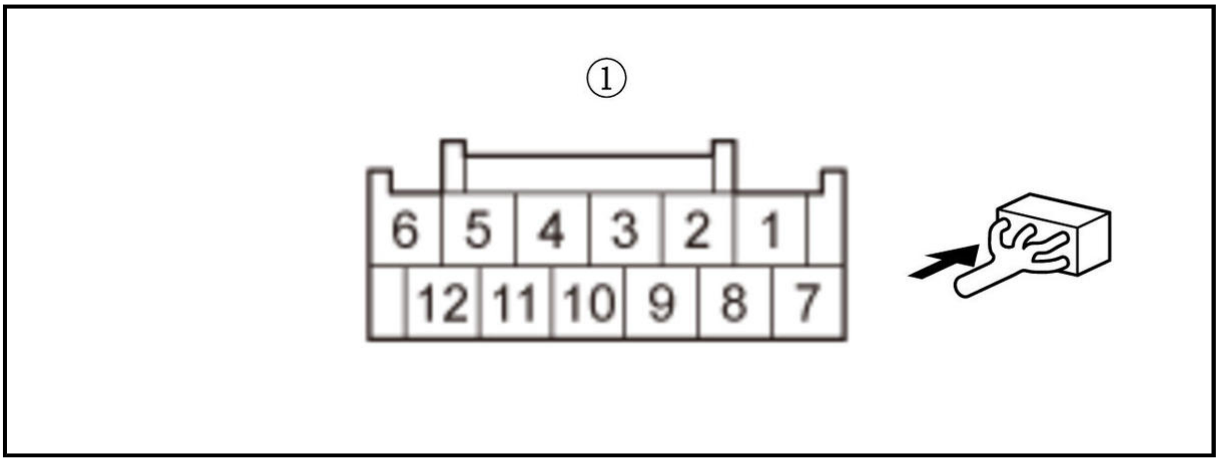

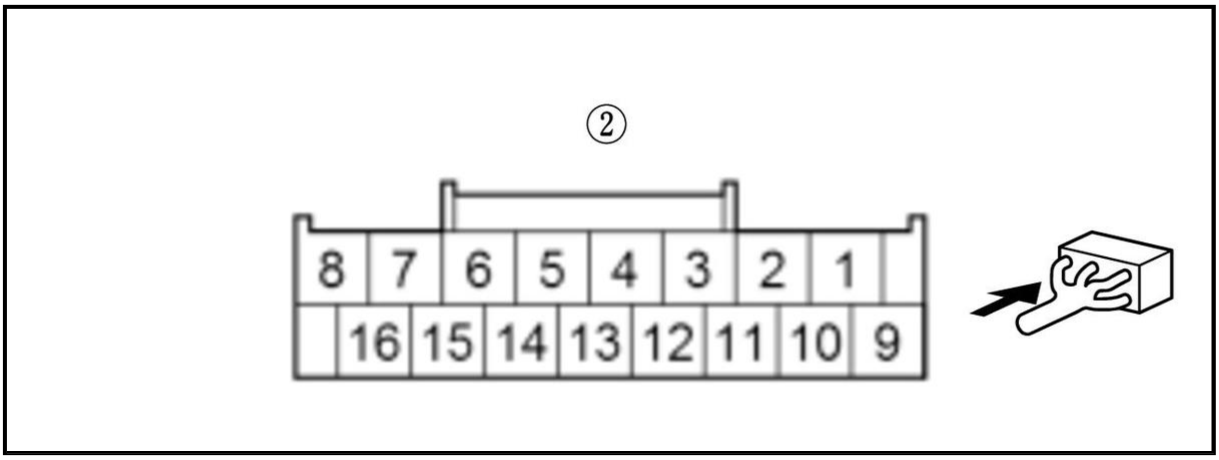

Is there 1.0 Ω or less?

YES

The F-CAN B_H and F-CAN B_L wires are OK. Check for any authorized service information related to the DTCs or symptoms you are troubleshooting. According to the detected DTC on the following table, replace the correspond control unit.

DTC	Transmitting Control Unit
U0100-00	PCM
U0122-00	VSA modulator-control unit
U0151-00	SRS unit
U129C-00	Millimeter wave radar

NO

Repair an open in the wire between the receiving control unit and the transmitting control unit.

DTC TROUBLESHOOTING: U0416-68 (EPS CONTROL UNIT)

DTC U0416-68 : VSA System Malfunction

NOTE:

- **Before you troubleshoot, review the general troubleshooting information**.
- This DTC is stored by VSA system malfunction. If the VSA indicator on, **troubleshoot the VSA system** first.

DTC Description	DTC	Freeze Frame
U0416-68 VSA System Malfunction	B	B

DTC (EPS)

1. Problem verification

   -1. Turn the vehicle to the ON mode.

   -2. Clear the DTC with the HDS.

   -3. Turn the vehicle to the OFF (LOCK) mode, then start the engine.

   -4. Wait for 60 seconds or more.

   -5. Check for DTCs with the HDS.

DTC Description	DTC	Freeze Frame
U0416-68 VSA System Malfunction	B	B

   Is DTC U0416-68 indicated?

   YES

   The failure is duplicated. **Go to VSA system troubleshooting** .

   NO

   Intermittent failure, the system is OK at this time. **Refer to intermittent failures troubleshooting**. If the freeze data/on-board snapshot of this DTC is recorded, try to reproduce the failure under the same conditions with the freeze data/on-board snapshot.

DTC TROUBLESHOOTING: U1483-68, U1483-94 (EPS CONTROL UNIT)

DTC U1483-68 : LKAS Malfunction (Indicate value check)

DTC U1483-94 : LKAS Malfunction

NOTE: **Before you troubleshoot, review the general troubleshooting information**.

DTC Description	DTC	Freeze Frame
U1483-68 LKAS Malfunction (Indicate value check)	B	B
U1483-94 LKAS Malfunction	B	B

1. DTC check

   -1. Turn the vehicle to the ON mode.

   -2. Clear the DTC with the HDS.

   -3. Turn the vehicle to the OFF (LOCK) mode, then to the ON mode.

-4. Wait for 10 seconds or more.

-5. Check for DTCs with the HDS.

DTC Description	DTC	Freeze Frame
U129C-00 F-CAN Malfunction (EPS Control Unit-Driving Support System Control Unit)	B	B
U1483-68 LKAS Malfunction (Indicate value check)	B	B
U1483-94 LKAS Malfunction	B	B

Is DTC U1483-68 or U1483-94 indicated?

YES

Check for any authorized service information related to the DTCs or symptoms you are troubleshooting or **substitute a known-good millimeter wave radar** , then recheck. If the symptom/indication goes away with a known-good millimeter wave radar, **replace the original millimeter wave radar** .

YES

If DTC U129C-00 is also indicated, **go to DTC U129C-00**.

NO

Intermittent failure, the system is OK at this time. **Refer to intermittent failures troubleshooting**. If the freeze data/on-board snapshot of this DTC is recorded, try to reproduce the failure under the same conditions with the freeze data/on-board snapshot.

DTC TROUBLESHOOTING: U3000-51 (EPS CONTROL UNIT)

DTC U3000-51 : ECU Software Update Failure

NOTE:

- **Before you troubleshoot, review the general troubleshooting information**.
- Do not turn the vehicle to the OFF (LOCK) mode while updating the EPS control unit. If you turn the vehicle to the OFF (LOCK) mode before completion, the EPS control unit will be damaged.

DTC Description	DTC	Freeze Frame
U3000-51 ECU Software Update Failure	B	B

DTC (EPS)

1. Problem verification

-1. Turn the vehicle to the ON mode.

-2. Clear the DTC with the HDS.

-3. Turn the vehicle to the OFF (LOCK) mode, then start the engine.

-4. Check for DTCs with the HDS.

DTC Description	DTC	Freeze Frame
U3000-51 ECU Software Update Failure	B	B

Is DTC U3000-51 indicated?

YES

The failure is duplicated. Go to step 2.

NO

Intermittent failure, the system is OK at this time. **Refer to intermittent failures troubleshooting**. If the freeze data/on-board snapshot of this DTC is recorded, try to reproduce the failure under the same conditions with the freeze data/on-board snapshot.

2. EPS control unit check (update)

-1. **Update the EPS control unit** .

-2. Turn the vehicle to the OFF (LOCK) mode, then start the engine.

-3. Check for DTCs with the HDS.

DTC Description	DTC	Freeze Frame
U3000-51 ECU Software Update Failure	B	B

Is DTC U3000-51 indicated?

YES

Check for loose terminals and poor connections at the EPS control unit connectors. Check for any authorized service information related to the DTCs or symptoms you are troubleshooting or **substitute a known-good EPS motor/control unit** , then recheck. If the symptom/indication goes away with a known-good EPS motor/control unit, **replace the original EPS motor/control unit** .

NO

Troubleshooting is complete.

DTC TROUBLESHOOTING: U3000-55 (EPS CONTROL UNIT)

DTC U3000-55 : EPS Control Unit Internal Malfunction

NOTE: **Before you troubleshoot, review the general troubleshooting information**.

DTC Description	DTC	Freeze Frame
U3000-55 EPS Control Unit Internal Malfunction	B	B

DTC (EPS)

1. Problem verification

-1. Turn the vehicle to the ON mode.

-2. Clear the DTC with the HDS.

-3. Turn the vehicle to the OFF (LOCK) mode, then to the ON mode.

-4. Check for DTCs with the HDS.

DTC Description	DTC	Freeze Frame
U3000-55 EPS Control Unit Internal Malfunction	B	B

Is DTC U3000-55 indicated?

YES

The failure is duplicated. Check for loose terminals and poor connections at the EPS control unit connectors. Check for any authorized service information related to the DTCs or symptoms you are troubleshooting or **substitute a known-good EPS motor/control unit** , then recheck. If the symptom/indication goes away with a known-good EPS motor/control unit, **replace the original EPS motor/control unit** .

NO

Intermittent failure, the system is OK at this time. **Refer to intermittent failures troubleshooting**. If the freeze data/on-board snapshot of this DTC is recorded, try to reproduce the failure under the same conditions with the freeze data/on-board snapshot.

DTC TROUBLESHOOTING: U3003-16 (EPS CONTROL UNIT)

DTC U3003-16 : Battery Voltage Low

NOTE: **Before you troubleshoot, review the general troubleshooting information**.

DTC Description	DTC	Freeze Frame
U3003-16 Battery Voltage Low	B	B

DTC (EPS)

1. Problem verification

   -1. Turn the vehicle to the ON mode.

   -2. Clear the DTC with the HDS.

   -3. Turn the vehicle to the OFF (LOCK) mode, then start the engine.

   -4. Wait 15 seconds or more.

   -5. Check for DTCs with the HDS.

DTC Description	DTC	Freeze Frame
U3003-16 Battery Voltage Low	B	B

   Is DTC U3003-16 indicated?

   YES

   The failure is duplicated. Go to step 2.

   NO

   Intermittent failure, the system is OK at this time. **Refer to intermittent failures troubleshooting**. If the freeze data/on-board snapshot of this DTC is recorded, try to reproduce the failure under the same conditions with the freeze data/on-board snapshot.

2. Power source performance check

   -1. Check and note the parameter(s) below with the HDS.

Signal	Threshold		Current conditions	
	Values	Unit	Values	Unit
BATTERY VOLTAGE	About 8.9	V	B	B

Do the current condition(s) match the threshold?

YES

Check the 12 volt battery , and **check the PGM-FI DTCs** .

NO

Go to step 3.

3. Fuse check

-1. Turn the vehicle to the OFF (LOCK) mode.

-2. Check the following fuse.

Fuse	**No. A2-1**

Is the fuse OK?

YES

The fuse is OK. Reinstall the fuse, then go to step 4.

NO

Replace the fuse. If the fuse blows again, repair a short to ground in the No. A2-1 fuse circuit.

4. Open wire check (+B EPS line)

-1. Disconnect the following connector.

EPS control unit connector A (2P)

-2. Measure the voltage between test points 1 and 2.

Test condition	Vehicle OFF (LOCK) mode
B	EPS control unit connector A (2P): disconnected
Test point 1	**EPS control unit connector A (2P) No. 2**
Test point 2	Body ground

Is there battery voltage?

YES

Check for loose terminals and poor connections at the EPS control unit connectors. Check for any authorized service information related to the DTCs or symptoms you are troubleshooting or **substitute a known-good EPS motor/control unit** , then recheck. If the symptom/indication goes away with a known-good EPS motor/control unit, **replace the original EPS motor/control unit** .

NO

Repair an open in the wire between the under-hood fuse/relay box and the EPS control unit.

DTC TROUBLESHOOTING: U3003-17 (EPS CONTROL UNIT)

DTC U3003-17 : Battery Voltage High

NOTE: **Before you troubleshoot, review the general troubleshooting information**.

DTC Description	DTC	Freeze Frame
U3003-17 Battery Voltage High	B	B

DTC (EPS)

1. Problem verification

   -1. Turn the vehicle to the ON mode.

   -2. Clear the DTC with the HDS.

   -3. Turn the vehicle to the OFF (LOCK) mode, then start the engine.

   -4. Check for DTCs with the HDS.

DTC Description	DTC	Freeze Frame
U3003-17 Battery Voltage High	B	B

   Is DTC U3003-17 indicated?

   YES

   The failure is duplicated. Go to step 2.

   NO

   Intermittent failure, the system is OK at this time. **Refer to intermittent failures troubleshooting**. If the freeze data/on-board snapshot of this DTC is recorded, try to reproduce the failure under the same conditions with the freeze data/on-board snapshot.

2. Power source performance check

   -1. Check and note the parameter(s) below with the HDS.

Signal	Threshold		Current conditions	
	Values	Unit	Values	Unit
BATTERY VOLTAGE	More than 19.2	V	B	B

   Do the current condition(s) match the threshold?

   YES

   Check the 12 volt battery , and **check the PGM-FI DTCs** .

   NO

   Check for loose terminals and poor connections at the EPS control unit connectors. Check for any authorized service information related to the DTCs or symptoms you are troubleshooting or **substitute a known-good EPS motor/control unit** , then recheck. If the symptom/indication goes away with a known-good EPS motor/control unit, **replace the original EPS motor/control unit** .

DTC TROUBLESHOOTING INDEX

EPS DTC TROUBLESHOOTING INDEX

DTC		Detection Item
C0037	**-F0**	(Left Rear Wheel Speed Sensor Malfunction)
C003A	**-F0**	(Right Rear Wheel Speed Sensor Malfunction)

DTC		Detection Item
C0062	-96	Longitudinal Acceleration Sensor Malfunction
C0063	-96	Yaw-Rate Sensor Malfunction
C1400	-11	Motor Current Malfunction
	-13	EPS Motor Circuit Open
	-14	Motor Voltage Malfunction
C1403	-14	Motor Angle Sensor (SIN/COS) Signals Incorrect
	-29	Motor Angle Sensor (SIN/COS) Signals Incorrect Correlation
C1404	-13	EPS Motor U Phase Circuit High Voltage
C1405	-13	EPS Motor V Phase Circuit High Voltage
C1406	-13	EPS Motor W Phase Circuit High Voltage
C1420	-29	Main Torque Sensor and Sub Torque Sensor Incorrect Correlation
C1421	-14	Main Torque Sensor Malfunction
C1422	-14	Sub Torque Sensor Malfunction
C1423	-14	Torque Sensor Power Source Circuit Malfunction
C1432	-62	Vehicle Speed and the Engine Speed Incorrect Correlation
U0029	-00	F-CAN Malfunction (Bus-Off)
U0100	-00	F-CAN Malfunction (EPS Control Unit-PCM/TCM)
U0122	-00	F-CAN Malfunction (EPS Control Unit-VSA/ABS Modulator-Control Unit)
U0151	-00	F-CAN Malfunction (EPS Control Unit-SRS Unit)
U0416	-68	(VSA System Malfunction)
U129C	-00	F-CAN Malfunction (EPS Control Unit-Driving Support System Control Unit)
U1483	-68	(LKAS Malfunction (Indicator value check))
	-94	(LKAS Malfunction)
U3000	-13	EPS Motor Circuit Open
	-49	EPS Control Unit Internal Circuit Malfunction
	-51	ECU Software Update Failure
	-55	EPS Control Unit Internal Malfunction
U3003	-16	Battery Voltage Low
	-17	Battery Voltage High

HOW TO INFORMATION

HOW TO TROUBLESHOOT THE EPS

System Indicator

This system has one (without LKAS) or two (with LKAS) indicators on the gauge control module.

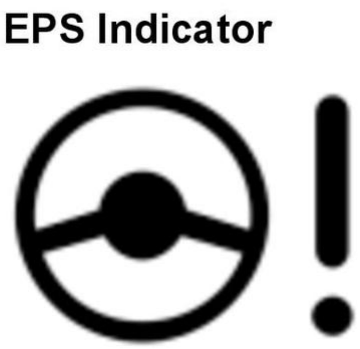

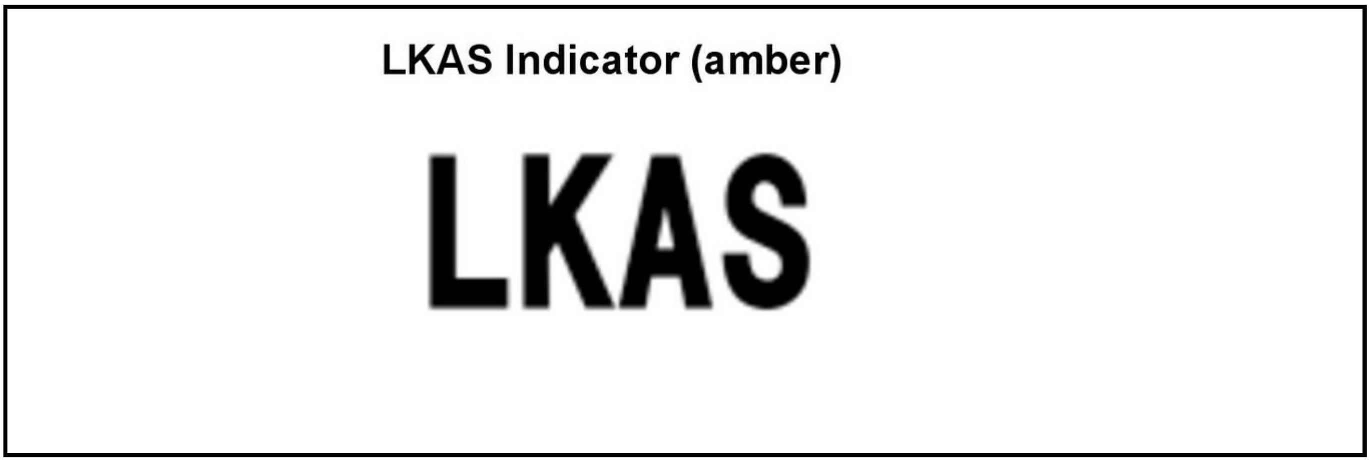

NOTE: For locations of each indicator, refer to gauge control module component location index .

EPS Indicator

Under normal conditions, the EPS indicator comes on when turning the vehicle to the ON mode, then turns off after the engine is started. This indicates that the LED and its circuit are operating correctly.

- If there is a failure in the system after the engine is started, the EPS indicator will stay on and stores a DTC, and the power assist is turned off or restricted.
- The EPS indicator will blink when the DTC U3000-55 is detected.

When a problem is detected, the EPS indicator will turn on and remain on until the DTC is erased. There are cases when the indicator remains on until the vehicle is set to the OFF (LOCK) mode as well as other cases where the indicator automatically turns off when the system returns to normal. Under certain conditions, the EPS indicator will turn on even though the system is operating normally; for example when the vehicle is stopped with the engine at high revolutions with constant input from the steering wheel.

To determine the actual cause of the problem, question the customer about the conditions during which the problem occurred, taking the above conditions into consideration.

LKAS Indicator (amber)

This EPS system works in conjunction with the LKAS. When an LKAS related problem is detected, the LKAS indicator (amber) will come on. However, when the EPS control fails while the LKAS control is activated, the LKAS indicator (amber) will also come on. In this case, the EPS indicator will not come on, but the EPS control unit memorizes the DTC. If the LKAS indicator (amber) comes on, it deactivates the LKAS control. The power assist works as usual after deactivating the LKAS, but it may stop the power assist depending on the detected malfunction.

Diagnostic Trouble Code (DTC)

- If the CPU cannot be activated, or if it fails, the EPS indicator comes on, but no EPS DTC is stored.
- The memory can hold any number of DTCs. However, when the same DTC is detected more than once, the most recent DTC is written over the prior DTC, therefore only one occurrence is stored.
- The DTCs are stored in the EEPROM (non-volatile memory), therefore the stored DTCs cannot be erased by disconnecting the 12 volt battery. Do the specified procedures to clear the DTCs.

Self-Diagnosis

Self-diagnosis can be classified into three categories:

- Initial diagnosis: Done right after the engine starts and until the EPS indicator goes off.
- Regular diagnosis: Done right after the initial diagnosis and continues until turning the vehicle to the OFF (LOCK) mode.
- Steering diagnosis: Done during regular diagnosis while turning the steering wheel.

Restriction on Power Assist Operation

Repeated extreme steering force, such as turning the steering wheel continuously back-and-forth with the vehicle stopped, causes an increase in electrical current draw by the EPS motor. The increase of electric current causes the EPS motor and EPS control unit to heat up. Because this heat adversely affects the system, the control unit monitors the electric current draw of the EPS motor.

When the control unit detects heat build-up in the EPS motor, it reduces the electric current to the EPS motor gradually to protect the system, and it restricts the power assist operation. The EPS indicator does not come on during this function.

When steering torque is not applied to the steering wheel, or when turning the vehicle to the OFF (LOCK) mode and the EPS motor cools, the control unit will restore the power assist gradually until it's fully restored (after about 20 minutes).

How to Troubleshoot DTCs

The troubleshooting procedures assume that the cause of the problem is still present and the EPS indicator is still on. Following the procedure when the EPS indicator does not come on can result in incorrect diagnosis.

1. Question the customer about the conditions when the problem occurred, and try to reproduce the same conditions for troubleshooting. Find out when the EPS indicator came on, such as while turning, after turning, when the vehicle was at a certain speed, etc.

2. When the EPS indicator does not come on during the test-drive, but troubleshooting is done based on the DTC, check for loose connectors, poor terminal contact, etc., in the affected circuit before you start troubleshooting.

3. After troubleshooting, clear the DTC and test-drive the vehicle. Be sure the EPS indicator does not come on.

Intermittent Failures

The term "intermittent failure" means a system may have had a failure, but it checks OK now. If you cannot reproduce the condition, check for loose connections and terminals. Also check ground and power connections related to the circuit that you are troubleshooting.

How to Use the HDS (Honda Diagnostic System)

NOTE: Make sure the 12 volt battery is in good condition and fully charged.

1. If the system indicator(s) stay on, **connect the HDS to the data link connector (DLC)**

2. Turn the vehicle to the ON mode.

3. Make sure the HDS communicates with the vehicle and the EPS control unit. If it does not, **go to the F-CAN circuit troubleshooting**

4. Check the diagnostic trouble code (DTC) and the freeze data, for all systems, troubleshoot the powertrain DTCs first. Then refer to the indicated DTC's troubleshooting, and do the appropriate troubleshooting procedure.

NOTE:

- Freeze data indicates the EPS conditions when the first system malfunction that activated the indicator was detected.
- The HDS can read the DTC, the freeze data, the current data, and other system data.
- For specific operations, refer to the Help menu that came with the HDS.

How to Retrieve DTCs

1. With the vehicle in OFF (LOCK) mode, **connect the HDS to the data link connector (DLC)**

2. Turn the vehicle to the ON mode.

3. Make sure the HDS communicates with the vehicle and the EPS control unit. If it does not, **go to the F-CAN circuit troubleshooting**

4. Follow the prompts on the HDS to display the DTC(s) on the screen. After determining the DTC, refer to the DTC troubleshooting. Do the all systems DTC check, and troubleshoot any powertrain DTCs first.

5. Turn the vehicle to the OFF (LOCK) mode.

How to Clear DTCs

1. With the vehicle in OFF (LOCK) mode, **connect the HDS to the data link connector (DLC)**

2. Turn the vehicle to the ON mode.

3. Make sure the HDS communicates with the vehicle and the EPS control unit. If it does not, **go to the F-CAN circuit troubleshooting**

4. Clear the DTC(s) by following the screen prompts on the HDS.

5. Turn the vehicle to the OFF (LOCK) mode.

Steering Service Specifications - CR-V (Hybrid)

STEERING

Item	Measurement	Qualification	Standard or New	Service Limit
Steering wheel	Rotational play measured at outside edge	B	0-10 mm (0-0.39 in)	-
	Initial turning load measured at outside edge with READY TO DRIVE mode	B	34 N (3.5 kgf, 7.6 lbf) max.	-

STANDARDS AND SERVICE LIMITS (2020-21)

STEERING

Item	Measurement	Qualification	Standard or New	Service Limit
Steering wheel	Rotational play measured at outside edge	B	0-10 mm (0-0.39 in)	-
	Initial turning load measured at outside edge with engine running	B	34 N (3.5 kgf, 7.7 lbf) max.	-

DISASSEMBLY AND REASSEMBLY

STEERING GEARBOX DISASSEMBLY AND REASSEMBLY

Exploded View

NOTE:

- For these operations, refer to the complete procedure as needed.
-
    - Rack end removal and installation
    - Tie-rod end ball joint boot replacement
    - EPS motor/control unit removal and installation
- Check for deterioration and damage to each part during removal.

1. Steering Gearbox

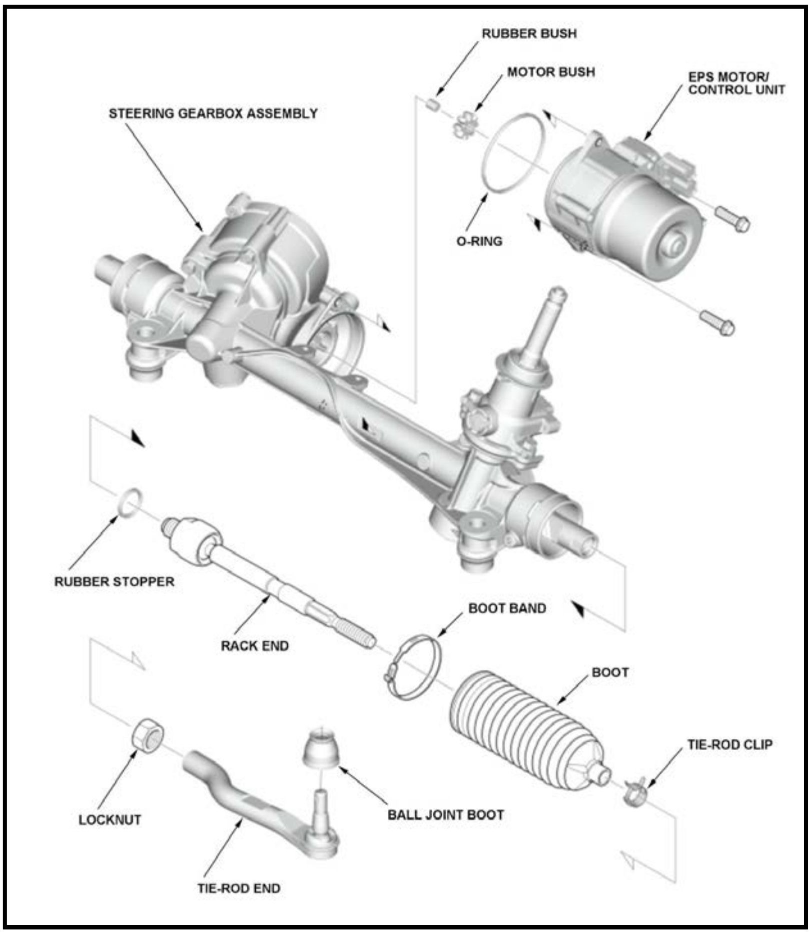
RUBBER BUSH
MOTOR BUSH
EPS MOTOR/ CONTROL UNIT
STEERING GEARBOX ASSEMBLY
O-RING
RUBBER STOPPER
RACK END
BOOT BAND
BOOT
TIE-ROD CLIP
LOCKNUT
BALL JOINT BOOT
TIE-ROD END

STEERING WHEEL DISASSEMBLY AND REASSEMBLY

Exploded View

1. Steering Wheel

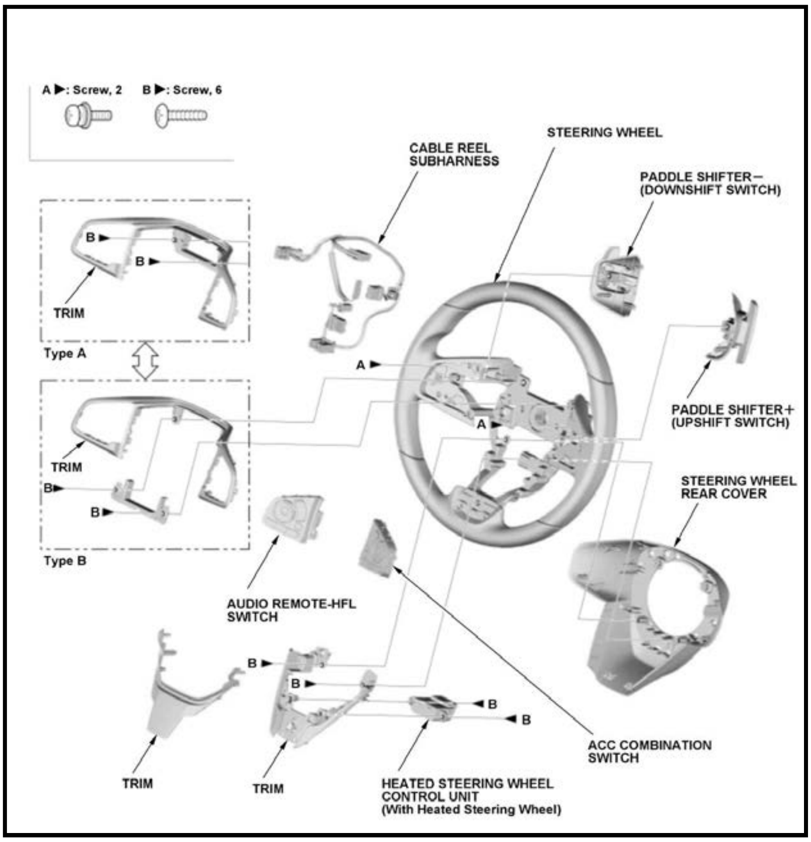
A ▶: Screw, 2
B ▶: Screw, 6
CABLE REEL SUBHARNESS
STEERING WHEEL
PADDLE SHIFTER– (DOWNSHIFT SWITCH)
B
B
TRIM
Type A
A
PADDLE SHIFTER+ (UPSHIFT SWITCH)
A
TRIM
B
B
Type B
STEERING WHEEL REAR COVER
AUDIO REMOTE-HFL SWITCH
B
B
B
B
ACC COMBINATION SWITCH
TRIM
TRIM
HEATED STEERING WHEEL CONTROL UNIT (With Heated Steering Wheel)

REMOVAL AND INSTALLATION

EPS MOTOR/CONTROL UNIT REMOVAL AND INSTALLATION

Removal

NOTE: Do not allow dust, dirt, or other foreign materials to enter the steering gearbox.

Procedure

NOTE: **Numbered call-outs in figure pertain to list numbers in following procedure.**

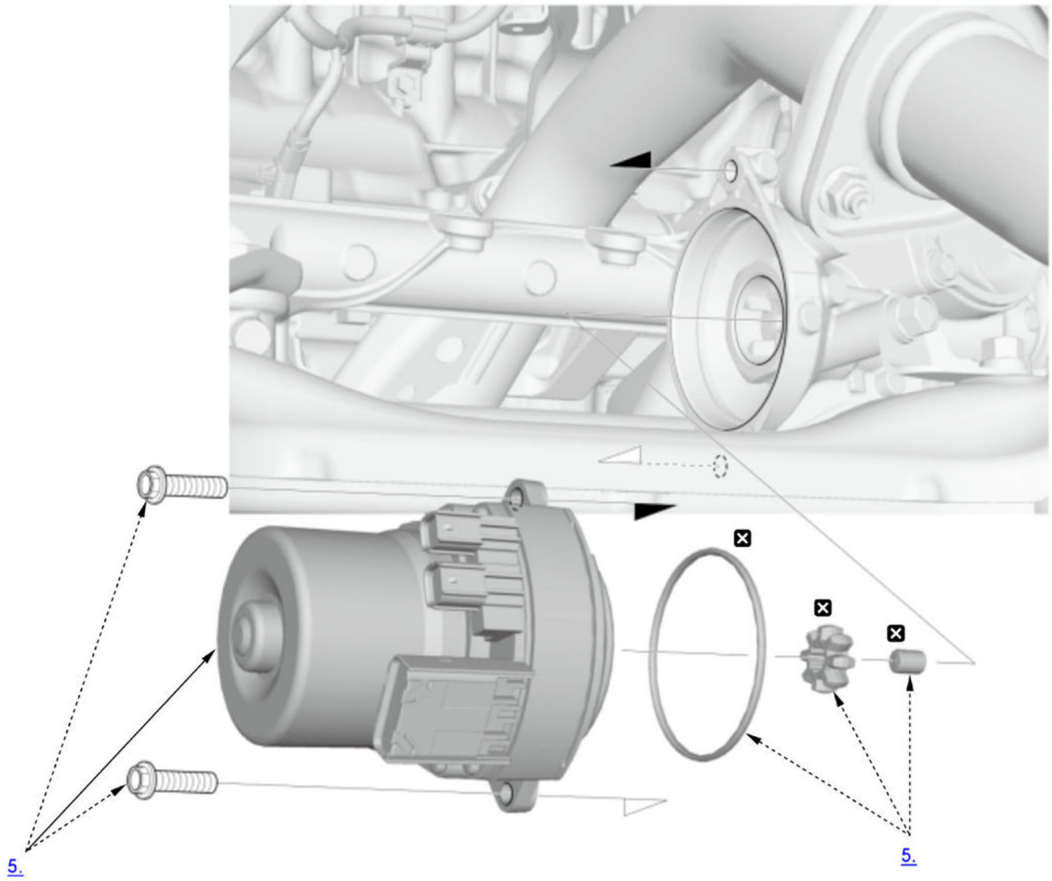

Fig. 1: Exploded View Of EPS Motor/Control Unit Components
Courtesy of HONDA, U.S.A., INC.

☒	Replace

1. 12 Volt Battery Terminal - Disconnect
2. Vehicle - Lift
3. Engine Undercover - Remove
4. Heat Baffle - Remove
5. EPS Motor/Control Unit - Remove

Installation

NOTE: Do not allow dust, dirt, or other foreign materials to enter the steering gearbox.

Procedure

NOTE: **Numbered call-outs in figure pertain to list numbers in following procedure.**

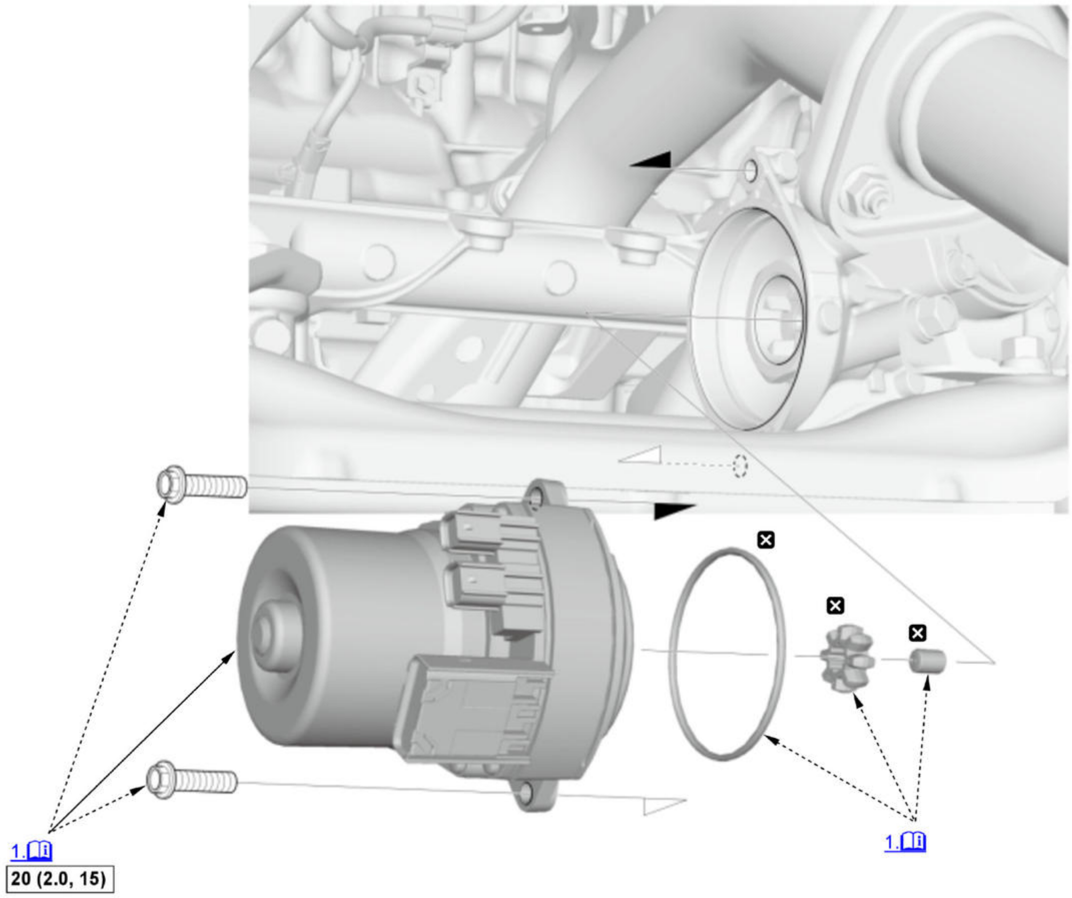

Fig. 2: Exploded View Of EPS Motor/Control Unit Components With Torque Specifications
Courtesy of HONDA, U.S.A., INC.

☐	Torque: N.m (kgf.m, lbf.ft)
☒	Replace

1. EPS Motor/Control Unit - Install

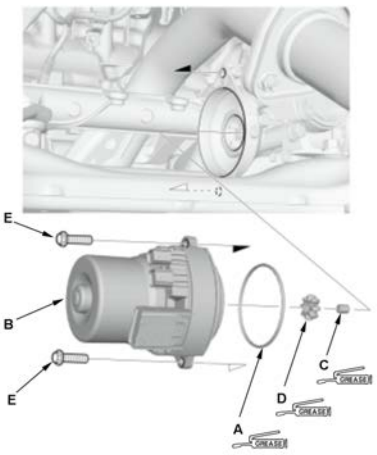	1. Install a new O-ring (A) onto the EPS motor/control unit (B). **NOTE:** Apply steering grease to the O-ring if necessary. 2. Check the rubber bush (C) and motor bush (D) for damage and cracks. If the rubber bush and motor bush are cracked, replace the rubber bush and motor bush. **NOTE:** If the rubber bush and motor bush are removed, apply steering grease to the rubber bush and motor bush, then install them to the EPS motor/control unit.

	3. Loosely install the EPS motor/control unit mounting bolts (E) by hand but do not tighten. **NOTE:** Make sure the EPS motor/control unit is evenly seated. 4. Tighten the EPS motor/control unit mounting bolts to the specified torque.

2. Heat Baffle - Install
3. Engine Undercover - Install
4. 12 Volt Battery Terminal - Connect
5. EPS Control Unit Software - Check

1. Make sure the EPS control unit has the latest software. If it does not have the latest, update the software in the EPS control unit .

6. VSA Sensor Neutral Position - Memorize
7. EPS Control Unit After Install - Check

1. After installation, check these items:
   - Check for noise and abnormality by turning the steering wheel fully to the right and left several times.
   - Check that the EPS indicator does not come on.

STEERING COLUMN REMOVAL AND INSTALLATION

Removal

SRS components are located in this area. Review the SRS component locations , and the precautions and procedures before doing repairs or service.

NOTE: Do not release the lock lever until the steering column is installed. If the lock lever is released before installation, adjust the steering column after installation.

Procedure

NOTE: **Numbered call-outs in figure pertain to list numbers in following procedure.**

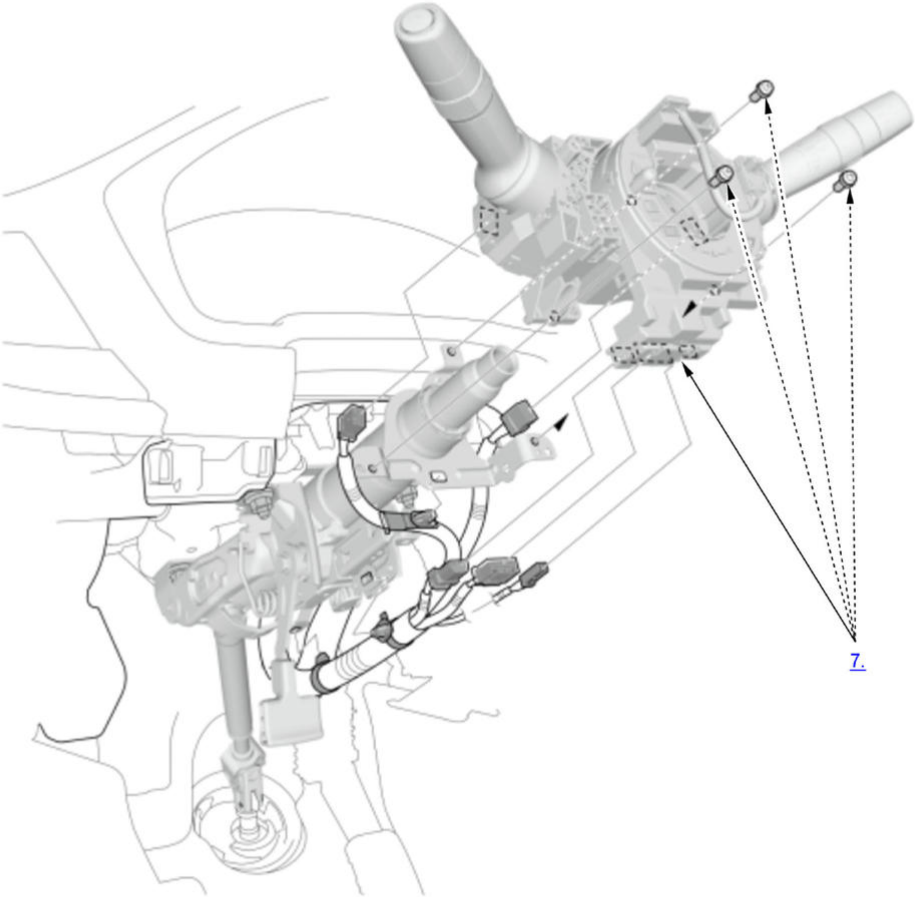

Fig. 3: Exploded View Of Steering Column Components (1 Of 2)
Courtesy of HONDA, U.S.A., INC.

NOTE: **Numbered call-outs in figure pertain to list numbers in following procedure.**

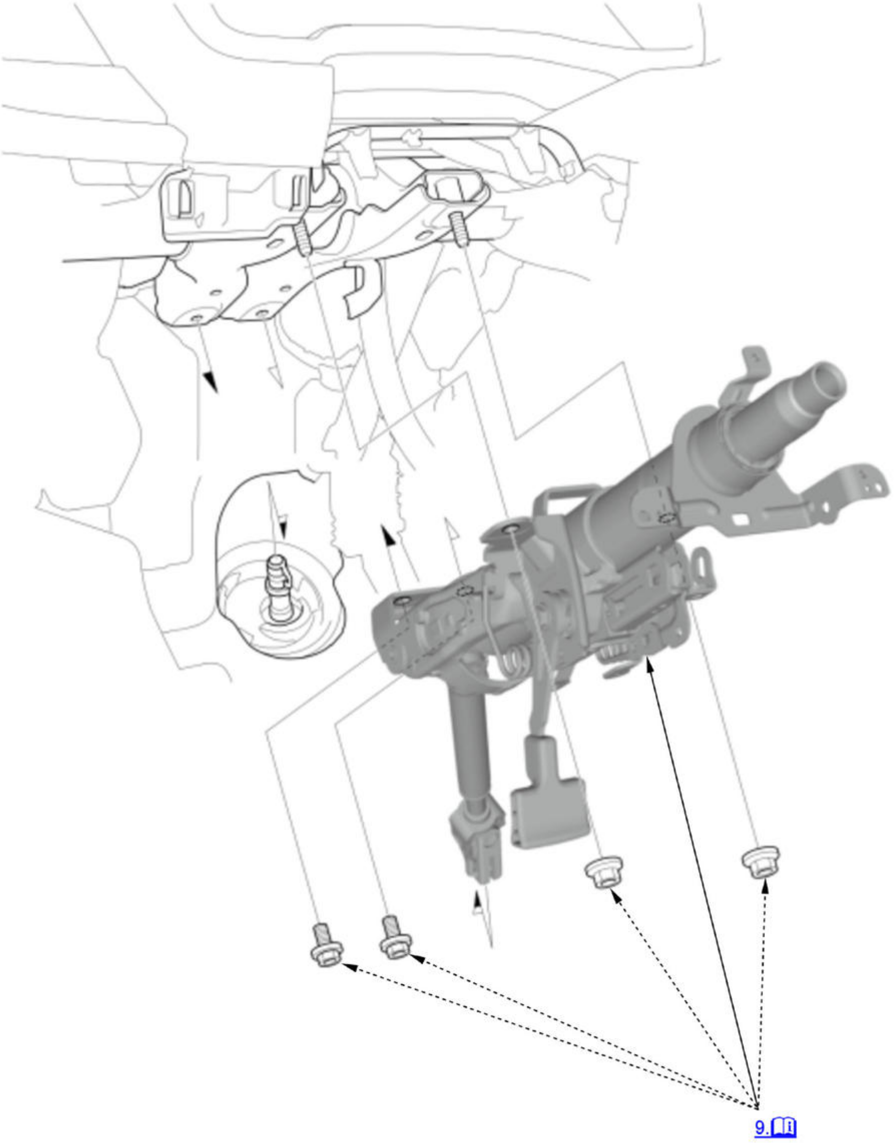

Fig. 4: Exploded View Of Steering Column Components (2 Of 2)
Courtesy of HONDA, U.S.A., INC.

1. 12 Volt Battery Terminal - Disconnect

   NOTE: Wait at least 3 minutes before starting work.

2. Driver's Airbag - Remove
3. Steering Wheel - Remove
4. Driver's Dashboard Undercover - Remove
5. Driver's Dashboard Lower Cover - Remove
6. Column Cover - Remove
7. Combination Switch Body Assembly - Remove
8. Steering Joint - Disconnect
9. Steering Column - Remove

   NOTE: Be careful not to damage the brake pedal position switch.

Installation

SRS components are located in this area. Review the **SRS component locations** , and the **precautions and procedures** before doing repairs or service.

NOTE: Do not release the lock lever until the steering column is installed. If the lock lever is released before installation, adjust the steering column after installation.

Procedure

NOTE: **Numbered call-outs in figure pertain to list numbers in following procedure.**

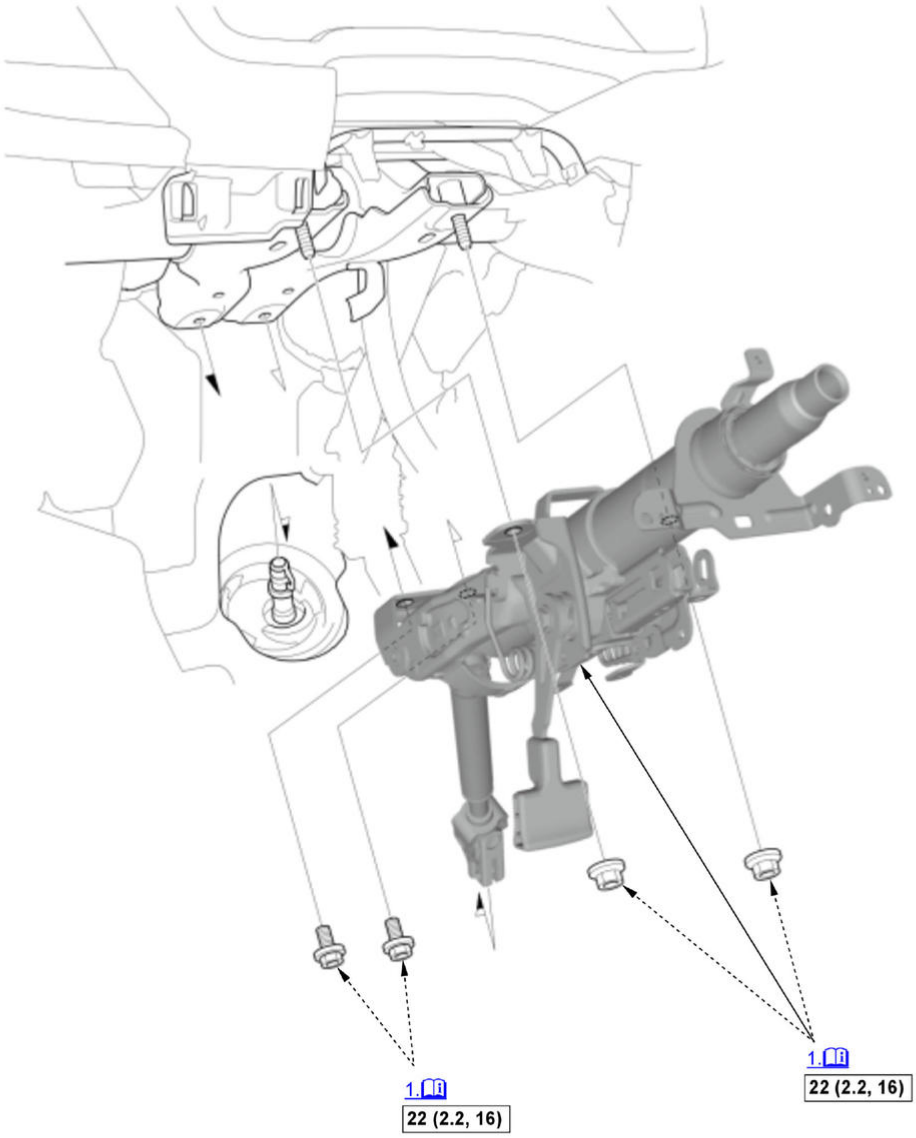

Fig. 5: Exploded View Of Steering Column Components With Torque Specifications (1 Of 2)
Courtesy of HONDA, U.S.A., INC.

▭	Torque: N.m (kgf.m, lbf.ft)

NOTE: **Numbered call-outs in figure pertain to list numbers in following procedure.**

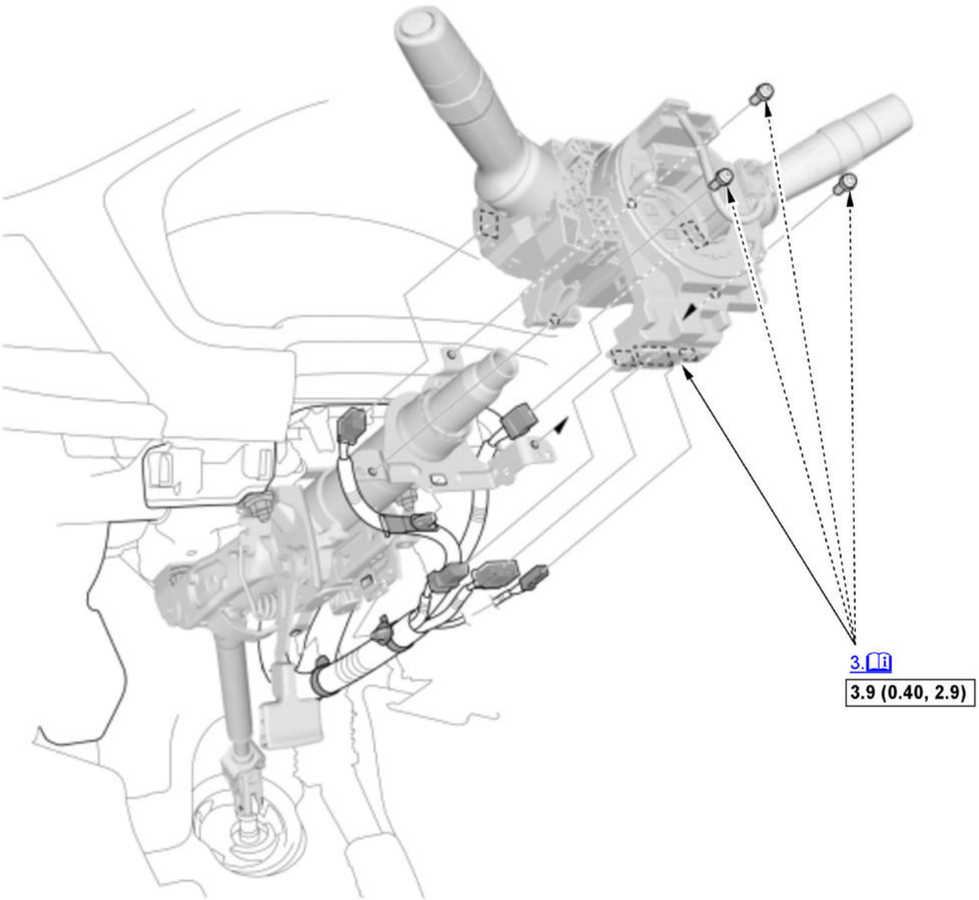

Fig. 6: Exploded View Of Steering Column Components With Torque Specifications (2 Of 2)
Courtesy of HONDA, U.S.A., INC.

	Torque: N.m (kgf.m, lbf.ft)

1. Steering Column - Install

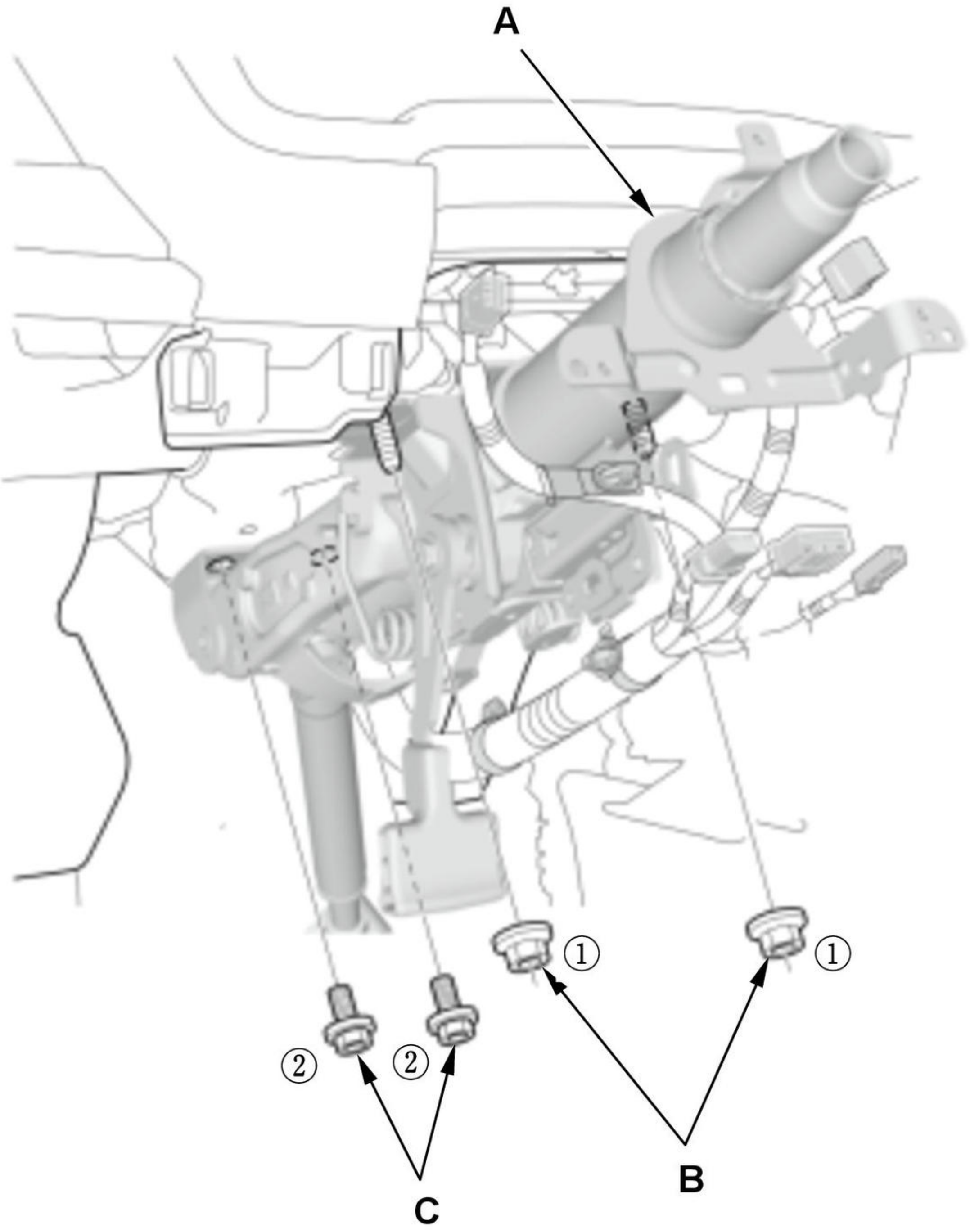

Fig. 7: Steering Column Bolts And Nuts With Tightening Sequence
Courtesy of HONDA, U.S.A., INC.

1. Install the steering column (A).

NOTE: Be careful not to damage the brake pedal position switch.

2. Loosely install the attaching nuts (B) and bolts (C).

3. Tighten the attaching nuts and bolts to the specified torque in the numbered sequence shown.

2. Steering Joint - Connect
3. Combination Switch Body Assembly - Install

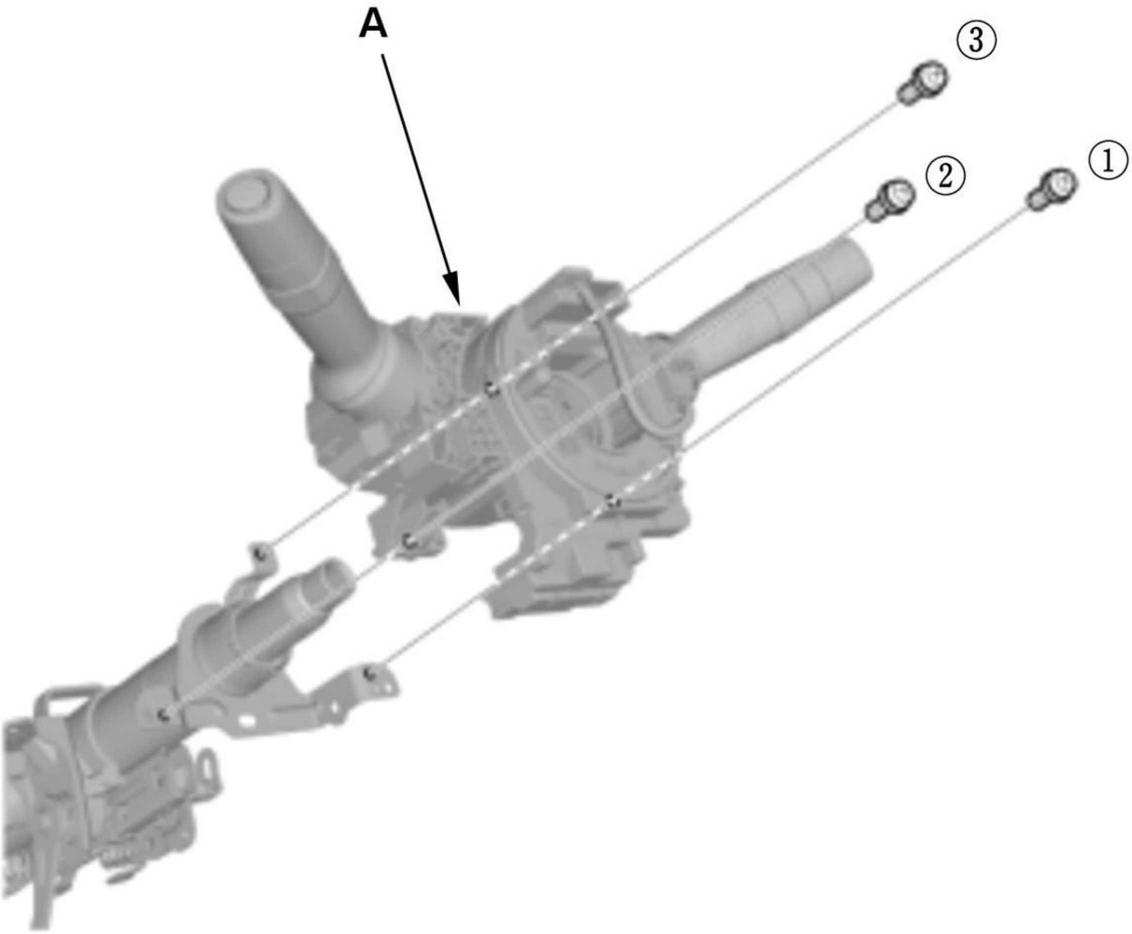

Fig. 8: Combination Switch Body Assembly And Screws With Tightening Sequence
Courtesy of HONDA, U.S.A., INC.

1. Install the combination switch body assembly (A). **NOTE:** Tighten the screws in the numbered sequence shown.

4. **Column Cover - Install**
5. **Driver's Dashboard Lower Cover - Install**
6. **Driver's Dashboard Undercover - Install**
7. **Steering Wheel - Install**
8. **Driver's Airbag - Install**
9. **12 Volt Battery Terminal - Connect**
10. Steering - Check

1. After installation, check these items:
    - Check the tilt mechanism and the telescopic mechanism for movement and damage.
    - With the front wheels straight ahead, make sure the steering wheel is centered and the turning revolutions from center to full lock (left and right) is equal. If not, check the installation of the steering wheel and the engagement of the joint/pinion shaft splines.

11. Wheel Alignment - Check
12. VSA Sensor Neutral Position - Memorize

STEERING GEARBOX REMOVAL AND INSTALLATION

Special Tools Required

Image	Description/Tool Number
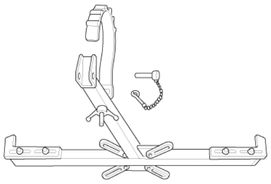	Subframe Adapter VSB02C000016*

*: Available through the Honda Tool and Equipment Program 888-424-6857.

Removal

NOTE:

- Using clean solvent and a brush, wash any oil and dirt off the end of the steering gearbox. Blow dry with compressed air.
- Lower the front subframe from the body, and remove the steering gearbox through the gap produced by lowering the front subframe.
- The electric powertrain components are located in this area. The electric powertrain is a high-voltage system. You must be familiar with the electric powertrain system before working on or around it. Make sure you have read the electric powertrain service precautions before doing repairs or service.

Procedure

NOTE: **Numbered call-outs in figure pertain to list numbers in following procedure.**

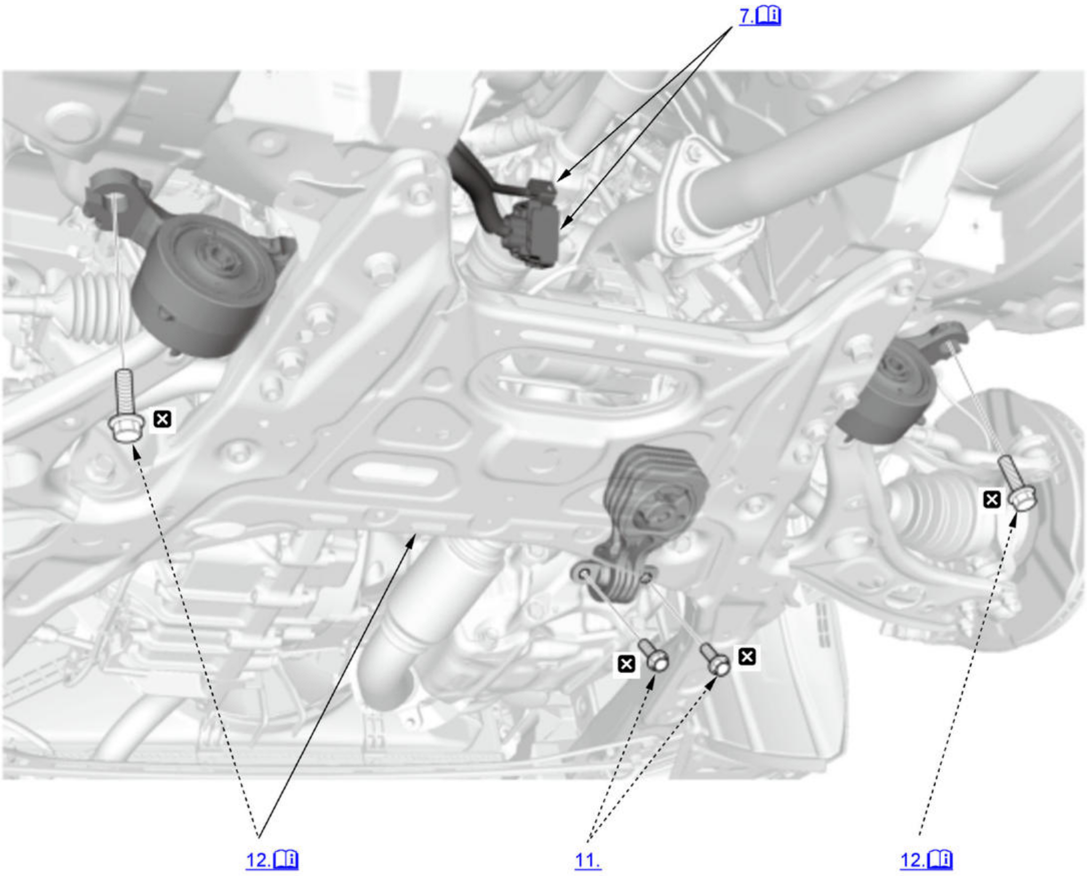

Fig. 9: Exploded View Of Steering Gearbox Components (1 Of 3)
Courtesy of HONDA, U.S.A., INC.

☒	Replace

NOTE: **Numbered call-outs in figure pertain to list numbers in following procedure.**

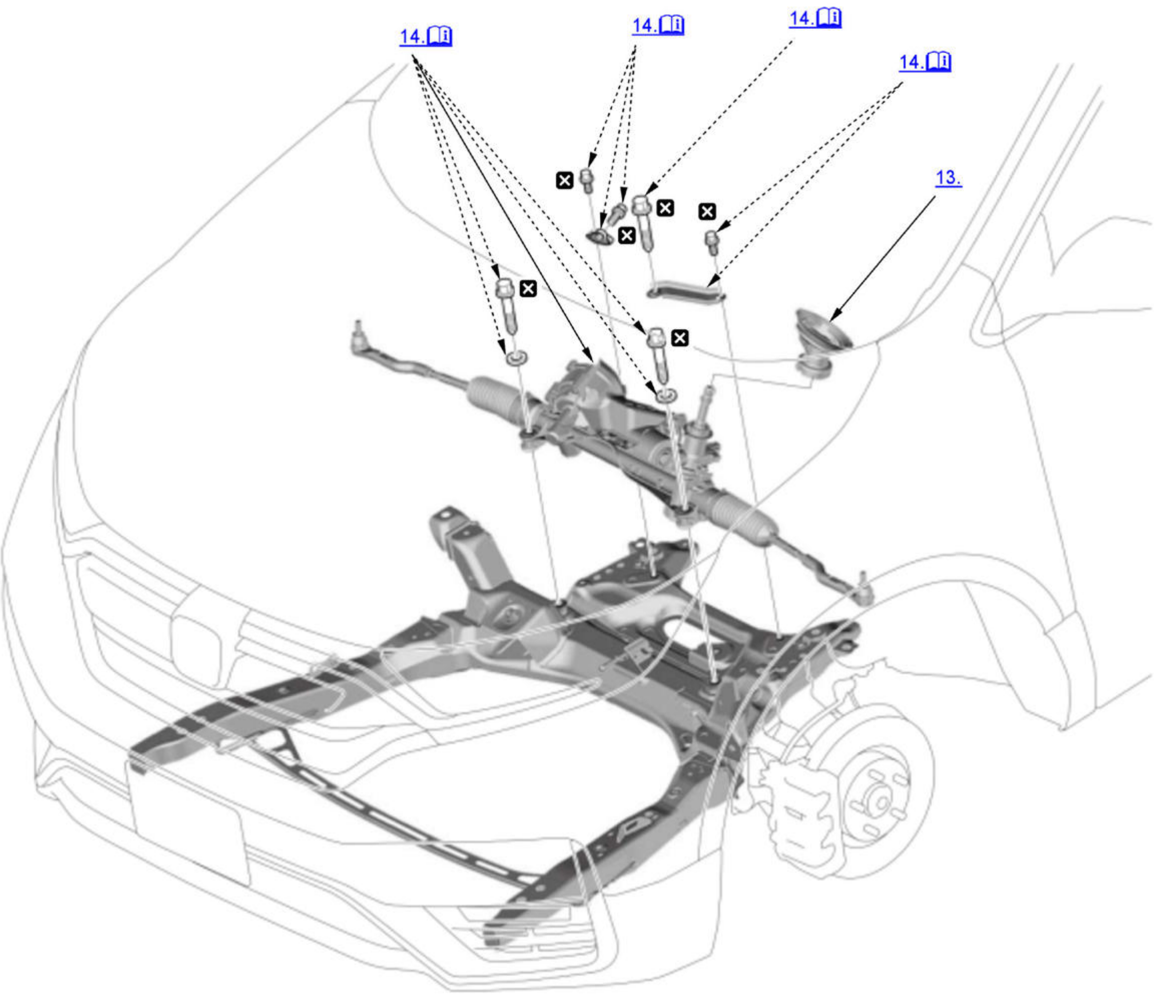

[Fig. 10: Exploded View Of Steering Gearbox Components (2 Of 3)]
Courtesy of HONDA, U.S.A., INC.

☒	Replace

NOTE: **Numbered call-outs in figure pertain to list numbers in following procedure.**

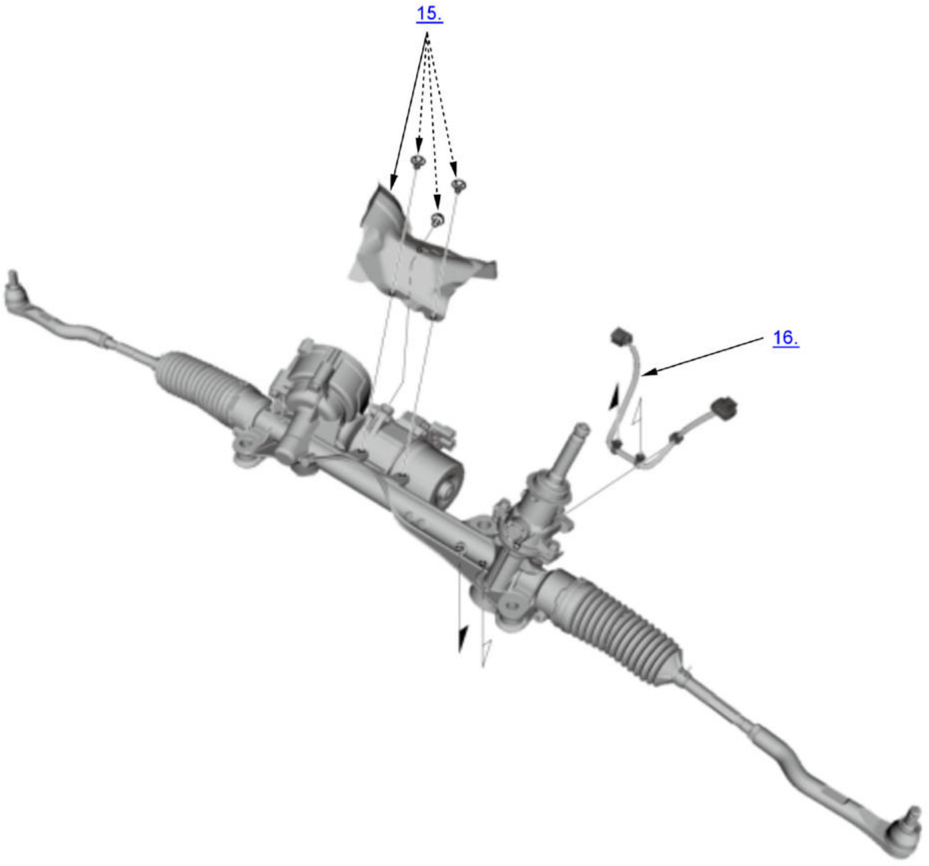

Fig. 11: Exploded View Of Steering Gearbox Components (3 Of 3)
Courtesy of HONDA, U.S.A., INC.

1. 12 Volt Battery Terminal - Disconnect
2. Vehicle - Lift
3. Front Wheels - Remove
4. Steering Joint - Disconnect
5. Tie-Rod End Ball Joint - Disconnect (Both Sides)
6. Engine Undercover - Remove
7. Connectors (EPS Motor/Control Unit) - Disconnect

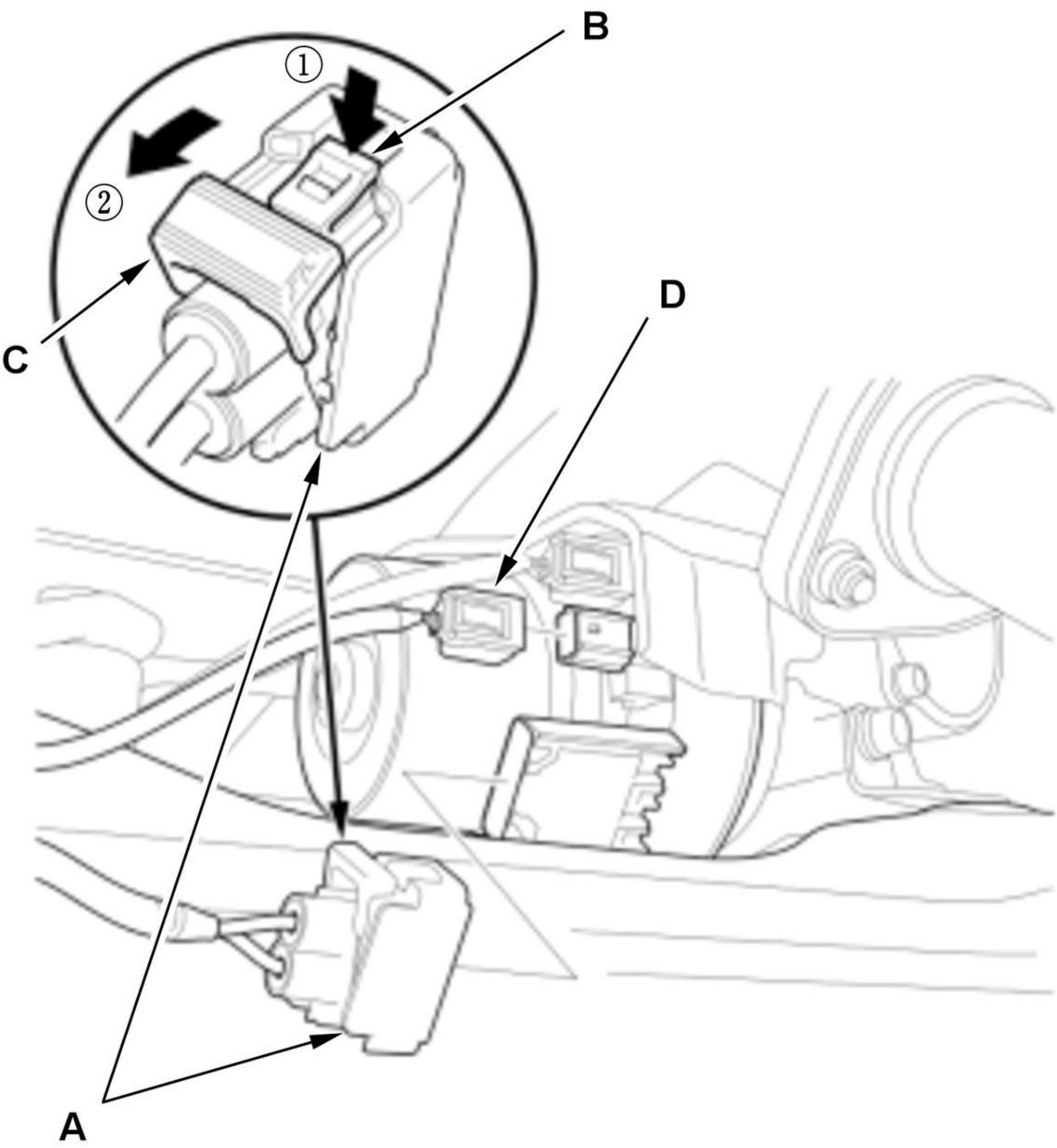

Fig. 12: EPS Motor/Control Unit Connector With Disconnection Sequence
Courtesy of HONDA, U.S.A., INC.

1. Disconnect the connector (A) by pushing the lock (B) and the lever (C) up in the numbered sequence shown.

2. Disconnect the connector (D).

NOTE: Wrap the connectors with vinyl tape to avoid contamination from grease or water.

8. Stabilizer Link - Disconnect

1. Disconnect both sides of the stabilizer link from the stabilizer bar .

9. Front Lower Arm - Disconnect

1. **Disconnect both sides of the front lower arm from the ball joints** .

10. **Exhaust Pipe A - Remove**
11. Lower Torque Rod Mounting Bolt - Remove
12. Front Subframe - Lift Down

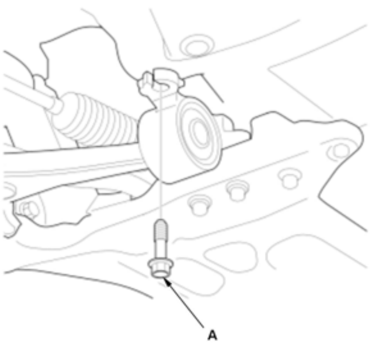	1. Remove both sides of the front lower arm mounting bolt (A) from the body.

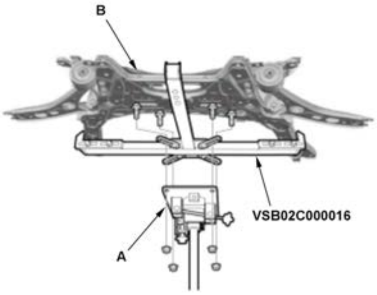	2. Set the subframe adapter (VSB02C000016) on a transmission jack (A), line up the slots in the arms with the bolt holes on the corner of the jack base, and tighten the bolts. 3. Attach the subframe adapter to the front subframe (B). 4. **Remove the front subframe mounting bolts** . 5. Lower the front subframe until dropped from the body. **NOTE:** Do not lower the front subframe more than required.

13. Pinion Shaft Grommet - Remove
14. Steering Gearbox - Remove

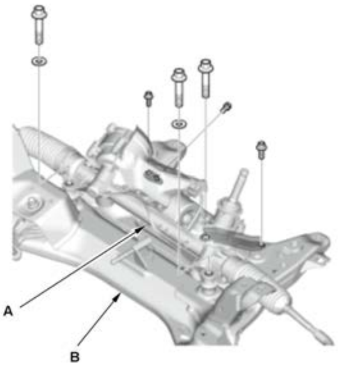	1. Remove the steering gearbox (A) from the front subframe (B).

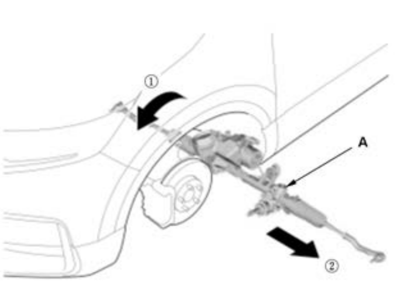	2. Carefully rotate the steering gearbox so that the top of the pinion shaft points towards the front of the vehicle. 3. Remove the steering gearbox (A) through the wheelwell opening on the driver's side. **NOTE:** Be careful not to damage the steering gearbox.

15. Heat Baffle - Remove
16. EPS Harness - Remove

Installation

NOTE:

- Using clean solvent and a brush, wash any oil and dirt off the end of the steering gearbox. Blow dry with compressed air.
- The electric powertrain components are located in this area. The electric powertrain is a high-voltage system. You must be familiar with the electric powertrain system before working on or around it. Make sure you have read the electric powertrain **service precautions** before doing repairs or service.

Procedure

NOTE: **Numbered call-outs in figure pertain to list numbers in following procedure.**

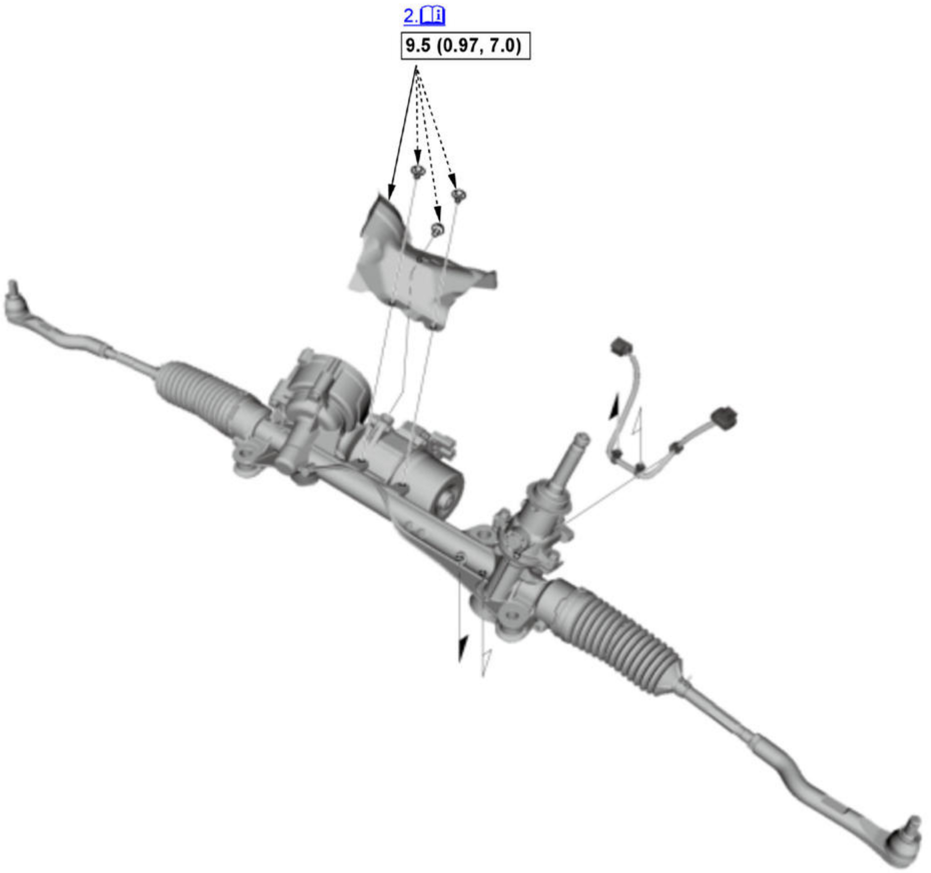

Fig. 13: Exploded View Of Steering Gearbox Components With Torque Specifications (1 Of 3)
Courtesy of HONDA, U.S.A., INC.

☐	Torque: N.m (kgf.m, lbf.ft)

NOTE: **Numbered call-outs in figure pertain to list numbers in following procedure.**

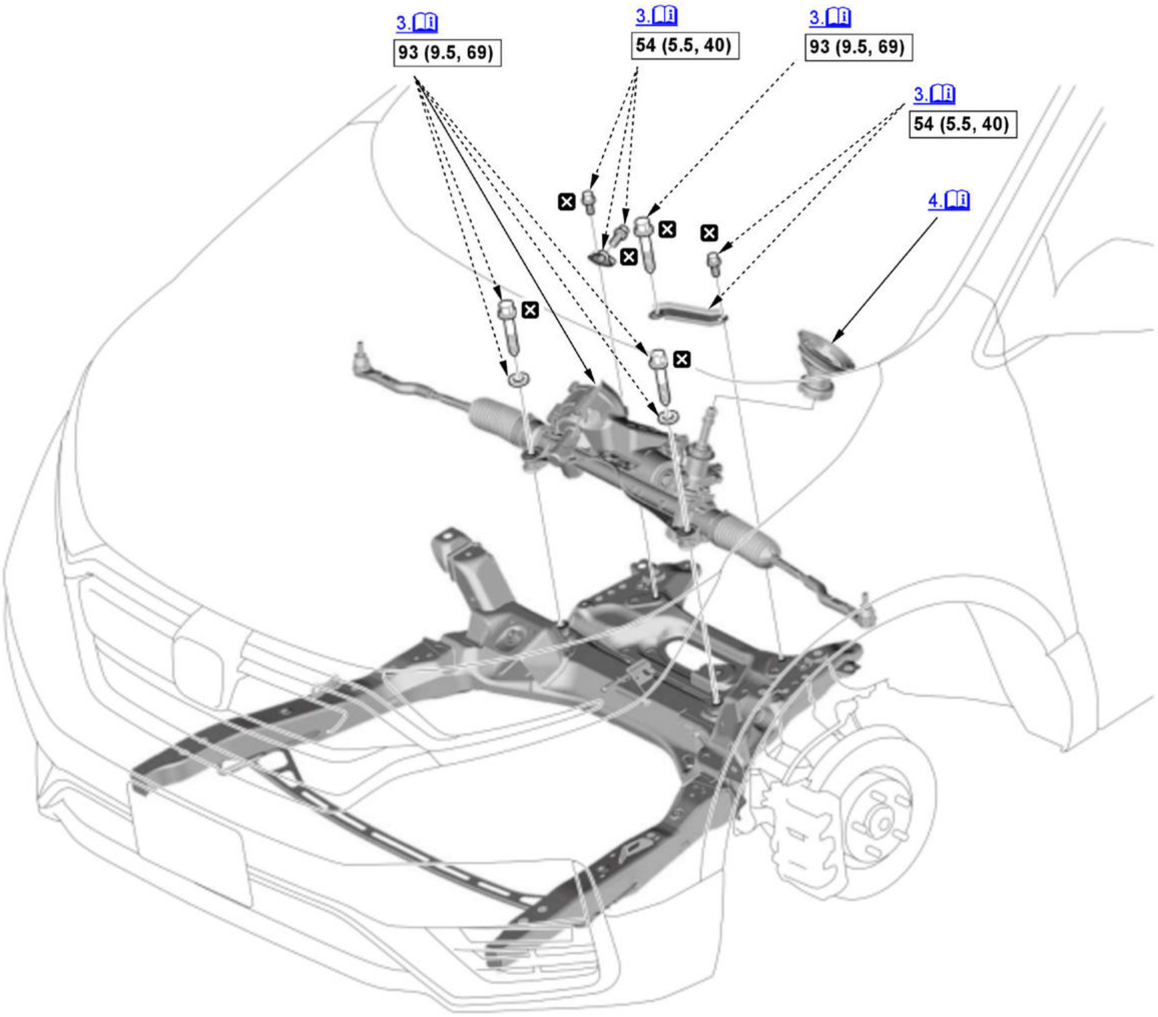

Fig. 14: Exploded View Of Steering Gearbox Components With Torque Specifications (2 Of 3)
Courtesy of HONDA, U.S.A., INC.

☐	Torque: N.m (kgf.m, lbf.ft)
☒	Replace

NOTE: **Numbered call-outs in figure pertain to list numbers in following procedure.**

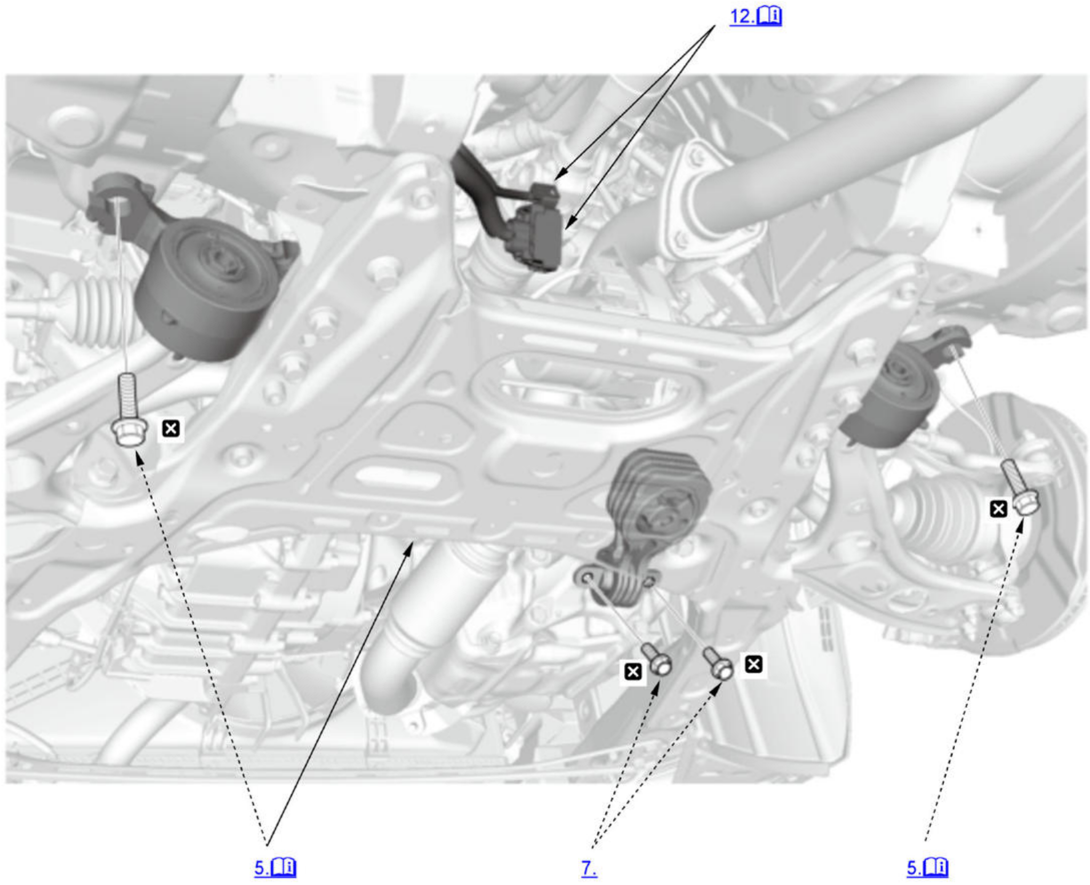

[Fig. 15: Exploded View Of Steering Gearbox Components (3 Of 3)]()
Courtesy of HONDA, U.S.A., INC.

☒	Replace

1. EPS Harness - Install
2. Heat Baffle - Install

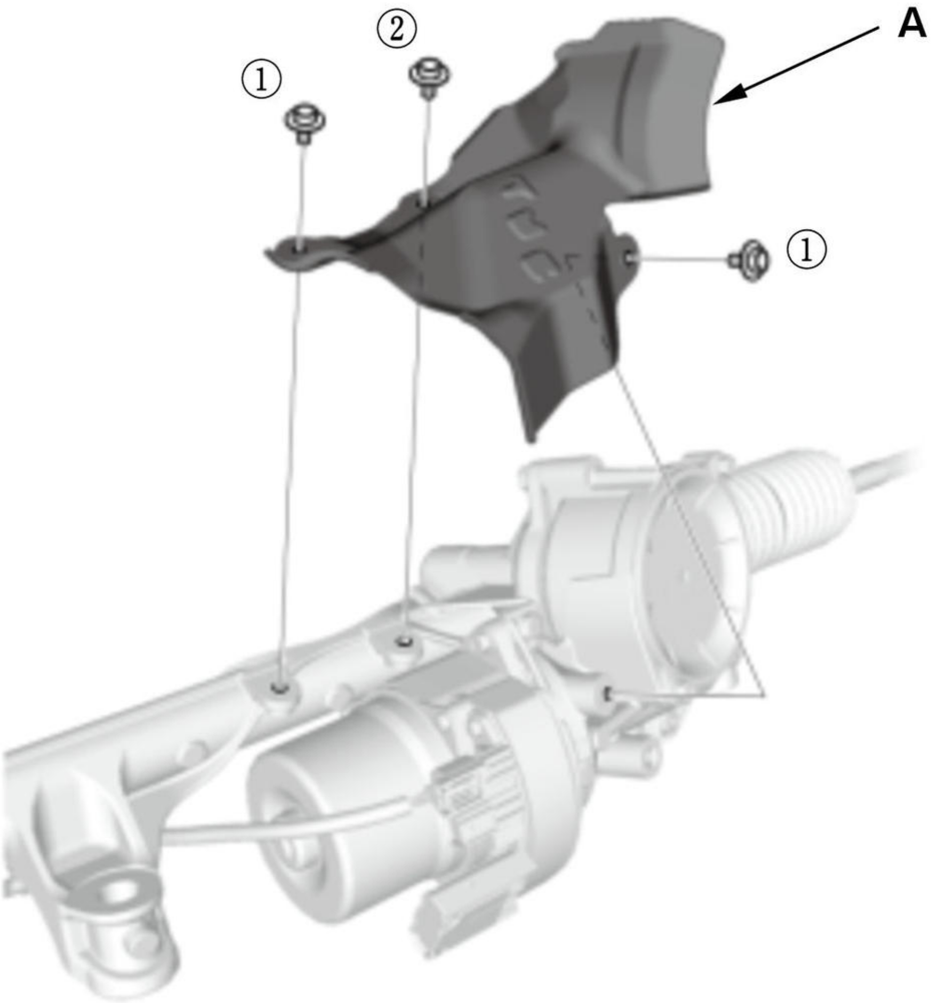

Fig. 16: Heat Baffle And Mounting Bolts With Tightening Sequence
Courtesy of HONDA, U.S.A., INC.

1. Loosely install the heat baffle (A), then tighten the mounting bolts to the specified torque in the sequence shown.

3. Steering Gearbox - Install

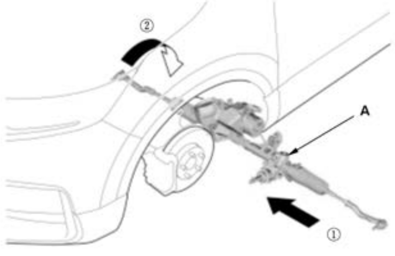	1. Slide the steering gearbox (A) between the front subframe and the body from the driver's side. **NOTE:** Be careful not to damage the steering gearbox. 2. Install the steering gearbox until the steering gearbox is in position.

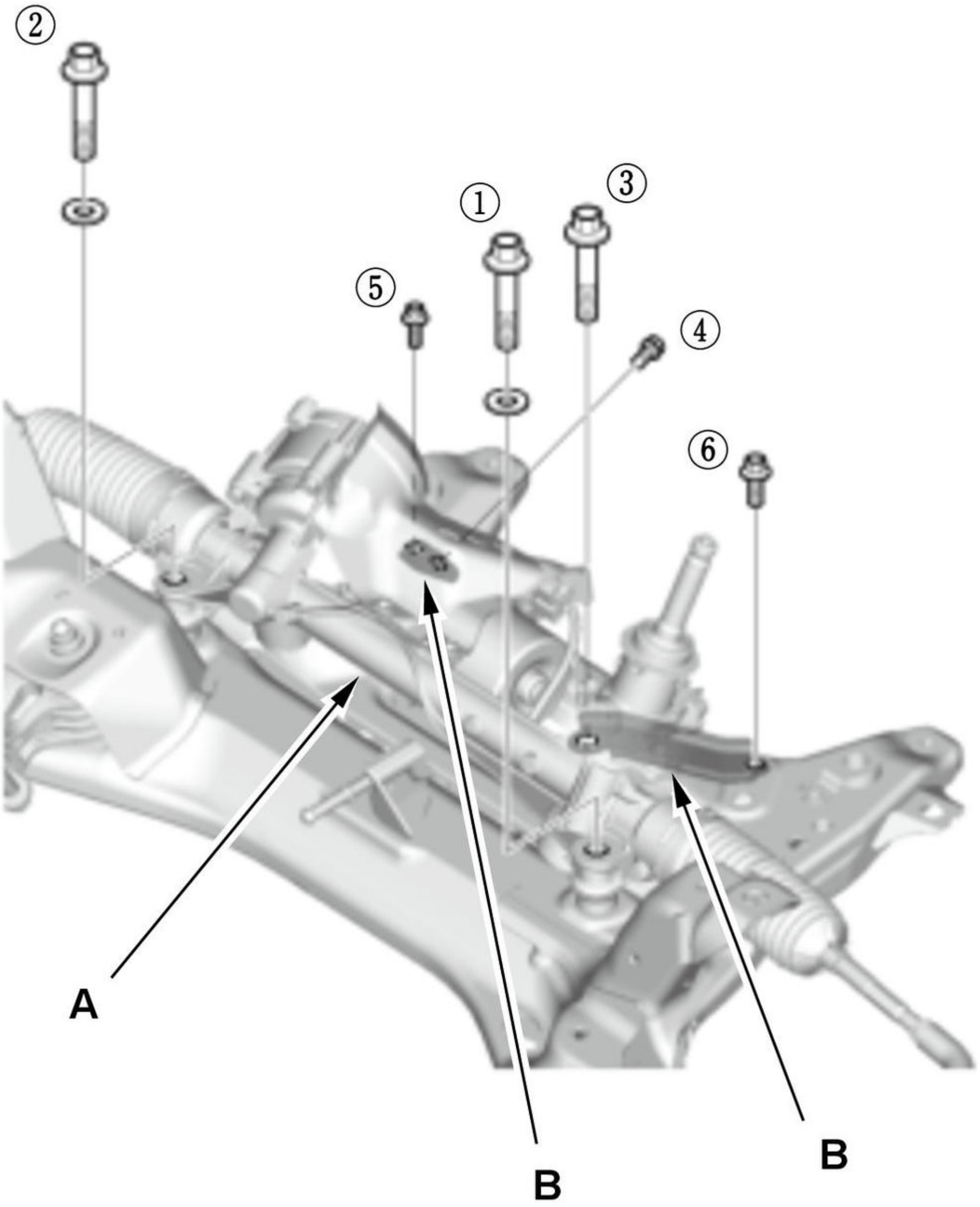

Fig. 17: Steering Gearbox And Steering Gearbox Stiffener Components With Tightening Sequence
Courtesy of HONDA, U.S.A., INC.

3. Loosely install the steering gearbox (A) and steering gearbox stiffeners (B) to the front subframe with new mounting bolts.

4. Tighten the mounting bolts to the specified torque in the numbered sequence shown.

4. Pinion Shaft Grommet - Install

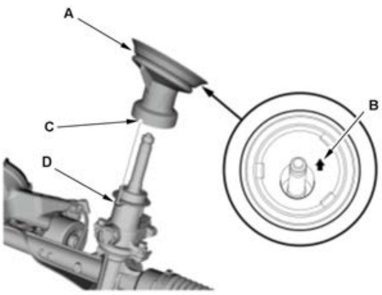	1. Install the pinion shaft grommet (A). **NOTE:** - Align the arrow mark (B) on the pinion shaft grommet with forward of the vehicle. - Align the cutout portion (C) with the lug portion (D).

5. Front Subframe - Lift Up

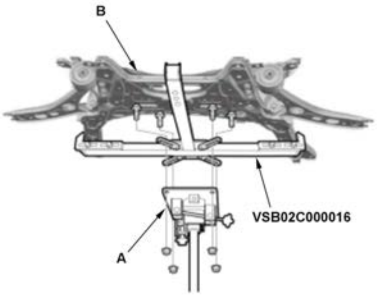	1. Set the subframe adapter (VSB02C000016) on a transmission jack (A), line up the slots in the arms with the bolt holes on the corner of the jack base, and tighten the bolts. 2. Attach the subframe adapter to the front subframe (B). 3. Upper the front subframe. 4. **Install the front subframe mounting bolts to the body** .

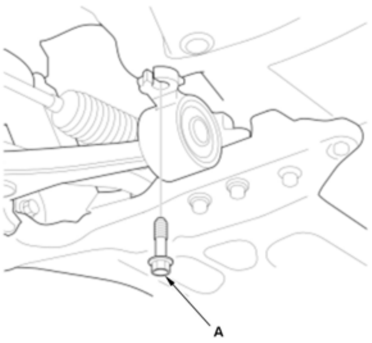	5. Install both sides of the front lower arm mounting bolt (A) to the body. **Then tighten the bolt to the specified torque** .

6. **Front Subframe - Tighten**
7. Lower Torque Rod Mounting Bolt - Loosely Install
8. **Engine/Transmission Mount - Tightening Procedure**
9. **Exhaust Pipe A - Install**
10. Front Lower Arm - Connect

1. **Connect both sides of the front lower arm to the ball joints** .

11. Stabilizer Link - Connect

1. Connect both sides of the stabilizer link to the stabilizer bar .

12. Connectors (EPS Motor/Control Unit) - Connect

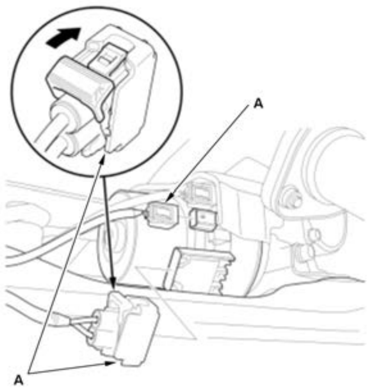	1. Connect the connectors (A).

13. Engine Undercover - Install
14. Tie-Rod End Ball Joint - Connect (Both Sides)
15. Steering Joint - Connect
16. Front Wheels - Install
17. 12 Volt Battery Terminal - Connect
18. Wheel Alignment - Check
19. Steering Gearbox After Install - Check

1. After installation, check these items: • With the front wheels straight ahead, make sure the steering wheel is centered and the turning revolutions from center to full lock (left and right) is equal. If not, check the installation of the steering wheel and the engagement of the joint/pinion shaft splines. • With the tires raised off the ground, check for noise and abnormality by turning the steering wheel fully to the right and left several times. • Check the power steering assist . • Check that the EPS indicator does not come on.

20. VSA Sensor Neutral Position - Memorize

STEERING JOINT DISCONNECTION AND RECONNECTION

Removal and Installation

NOTE:

- Set the steering wheel to the straight ahead position before disconnecting the steering shaft.
- Do not turn a steering wheel while disconnecting a steering joint.
- If the center guide is in place and has not moved, leave it in place.
- If the center guide has come off, discard it.
- Be careful not to pull out the lower side from the steering shaft during working.

Procedure

NOTE: **Numbered call-outs in figure pertain to list numbers in following procedure.**

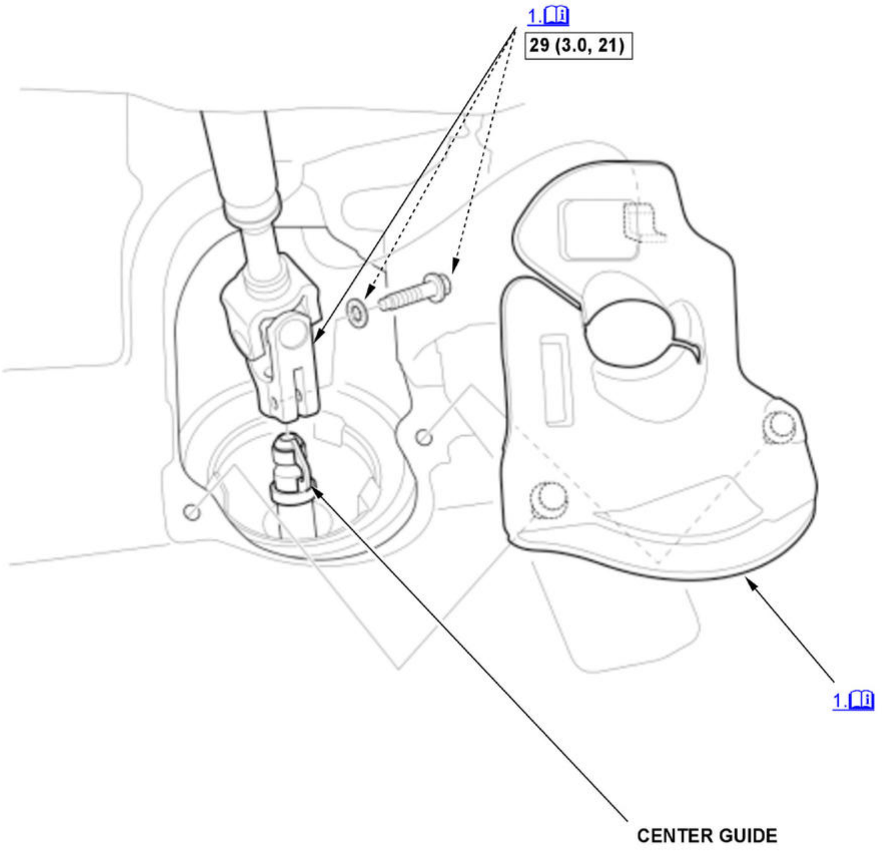

Fig. 18: Exploded View Of Steering Joint Components With Torque Specifications
Courtesy of HONDA, U.S.A., INC.

☐	Torque: N.m (kgf.m, lbf.ft)

1. Steering Joint - Disconnect

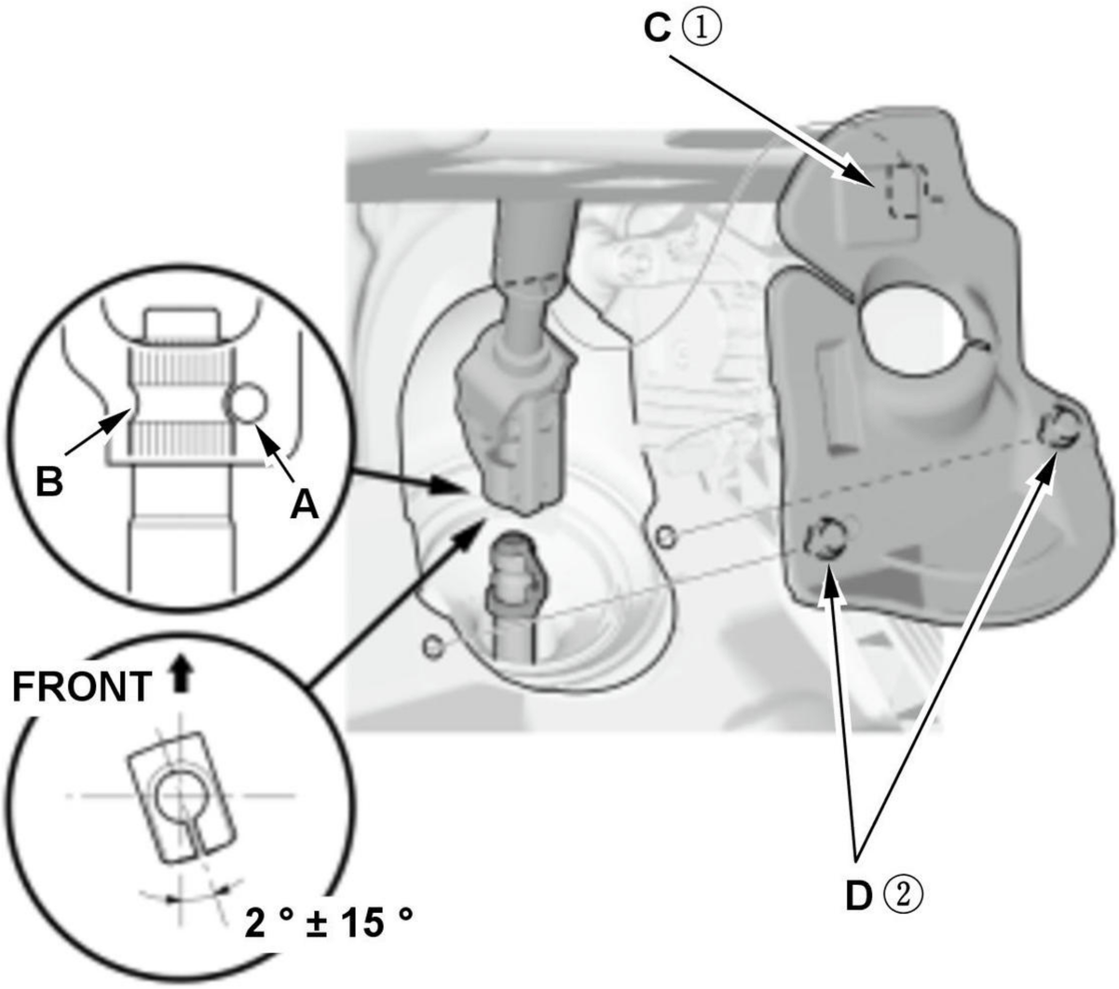

Fig. 19: Steering Joint Cover Hook And Clips With Installation Sequence
Courtesy of HONDA, U.S.A., INC.

Note for installation

- Pinion shaft without center guide: Position the steering column by aligning the gap within the angle.
- Align the bolt hole (A) on the steering joint with the groove (B) around the pinion shaft.
- When tightening the joint bolt, turn the steering wheel, if necessary.
- Install the hook (C) and the clips (D) in the numbered sequence shown.
- Check the steering joint cover for damage and cracks. If the steering joint cover is cracked, replace the steering joint cover.

2. All Removed Parts - Install

1. Install all removed parts in the reverse order of removal.

3. VSA Sensor Neutral Position - Memorize

STEERING RACK END REMOVAL AND INSTALLATION

Removal

NOTE:

- Do not allow dust, dirt, or other foreign materials to enter the steering gearbox.
- Refer to **Steering Gearbox Disassembly and Reassembly** as needed during this procedure.

1. **Steering Gearbox - Remove**
2. Tie-Rod End - Remove

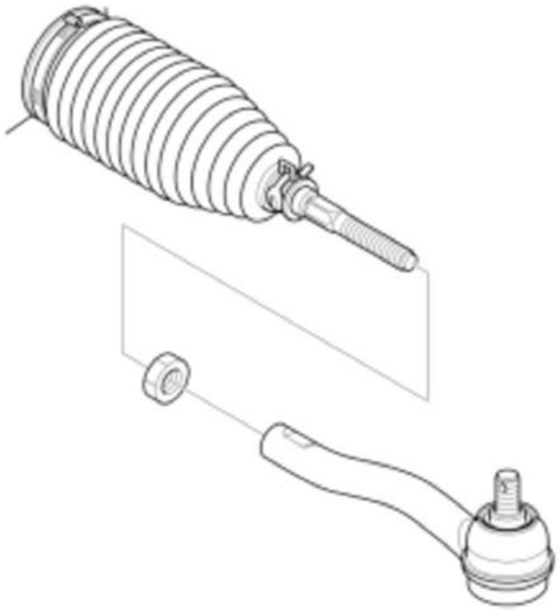

3. Rack End Boot - Remove

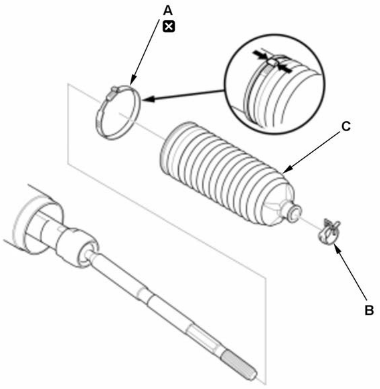	1. Remove the boot band (A). 2. Remove the tie-rod clip (B). 3. Pull the boot (C) away from the ends of the steering gearbox.

4. Rack End - Remove

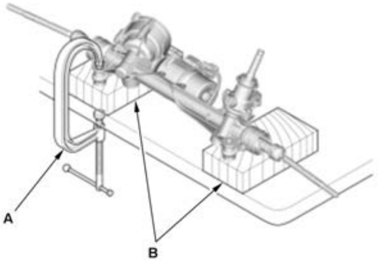	1. Hold the gearbox housing using a C-clamp (A) and wooden blocks (B) to a workbench as shown. **NOTE:** - Be careful not to damage the mounting surface with a C-clamp. - Do not clamp the cylinder part of the gearbox housing with a C-clamp.

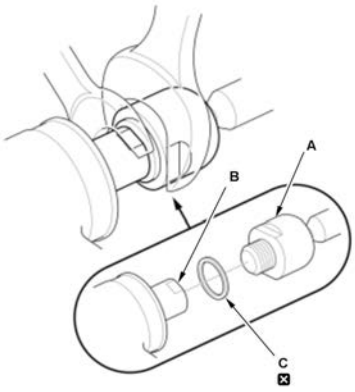	2. Unscrew the rack end (A) with a wrench. **NOTE:** - Hold the flat surfaces (B) with a wrench when unscrewing both rack ends. - Be careful not to damage the rack surface. 3. Remove the rack end and the rubber stopper (C).

Installation

NOTE:

- **How to read the torque specifications** .
- Do not allow dust, dirt, or other foreign materials to enter the steering gearbox.
- Refer to **Steering Gearbox Disassembly and Reassembly** as needed during this procedure.

1. Rack End - Install

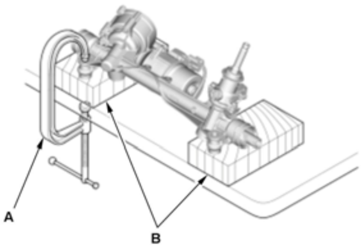	1. Hold the gearbox housing using a C-clamp (A) and wooden blocks (B) to a workbench as shown. **NOTE:** - Be careful not to damage the mounting surface with a C-clamp. - Do not clamp the cylinder part of the gearbox housing with a C-clamp.

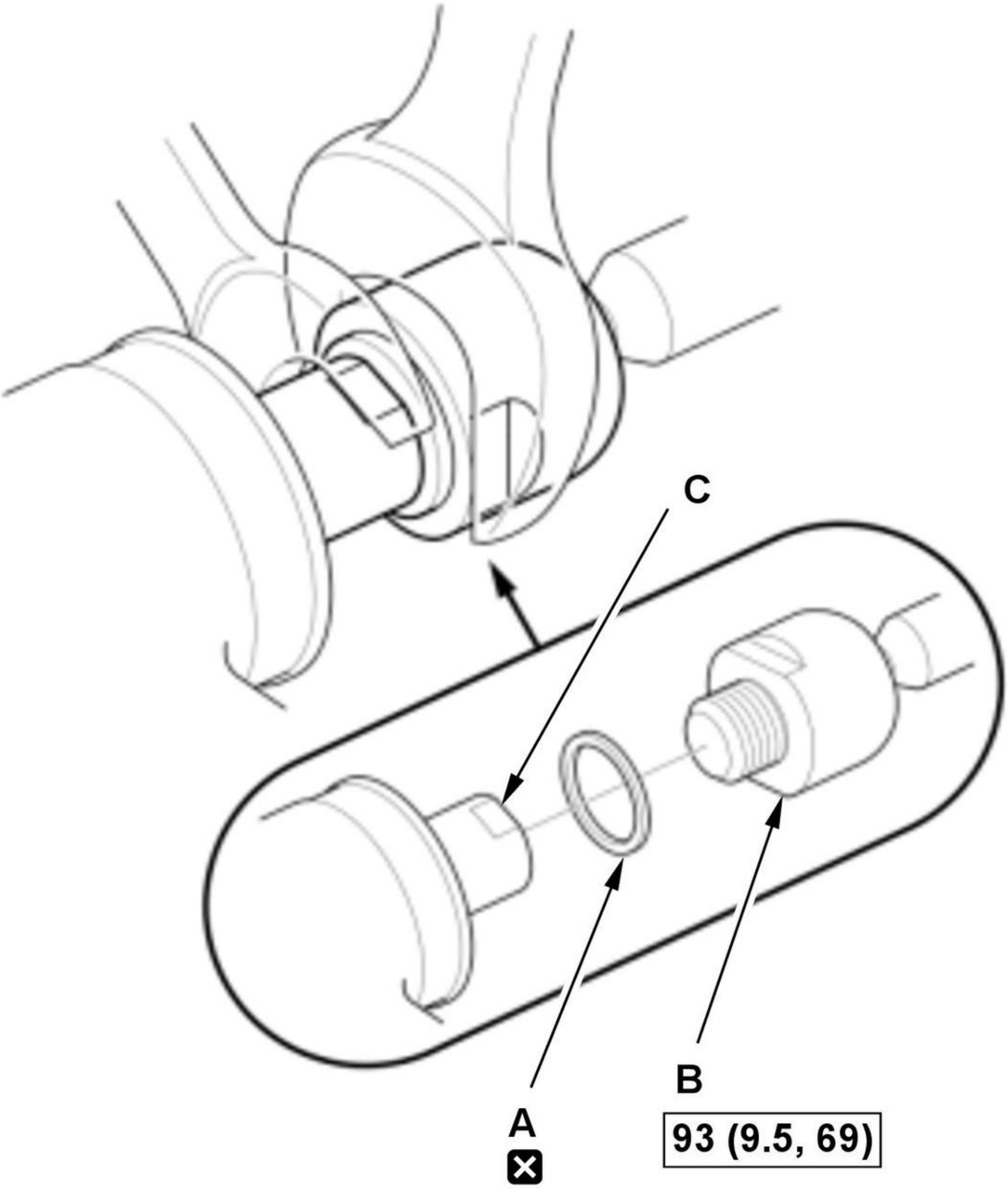

Fig. 20: Steering Rack End Components With Torque Specifications
Courtesy of HONDA, U.S.A., INC.

2. Install a new rubber stopper (A).

3. Tighten the rack end (B) with a wrench.

NOTE:

- Be careful not to damage the rack surface.
- Hold the flat surfaces (C) with a wrench when tightening both rack ends.

2. Rack End Boot - Install

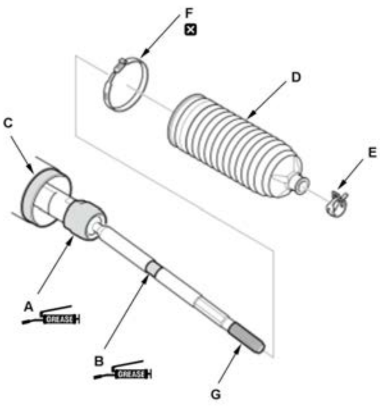	1. Apply multipurpose grease to the rack end joint housing (A) and the boot installation grooves (B). 2. Clean off any grease or contamination from the boot installation groove (C) around the gearbox housing. 3. Install the boot (D) on the rack end with the tie-rod clip (E) and a new boot band (F). **NOTE:** • Fit the boot end in the installation grooves in the housing properly. • After installing the boots, wipe the grease off the threaded section (G) of the rack end.
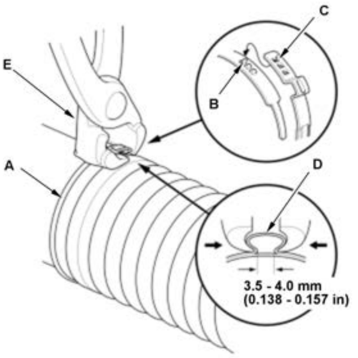	4. Set the boot band (A) by aligning the tabs (B) with the holes (C) on the band. 5. Close the ear portion (D) of the boot band with pincers Oetiker 1098, commercially available or equivalent (E). 6. Slide the rack right and left to be certain that the boots are not deformed or twisted.

3. Tie-Rod End - Install

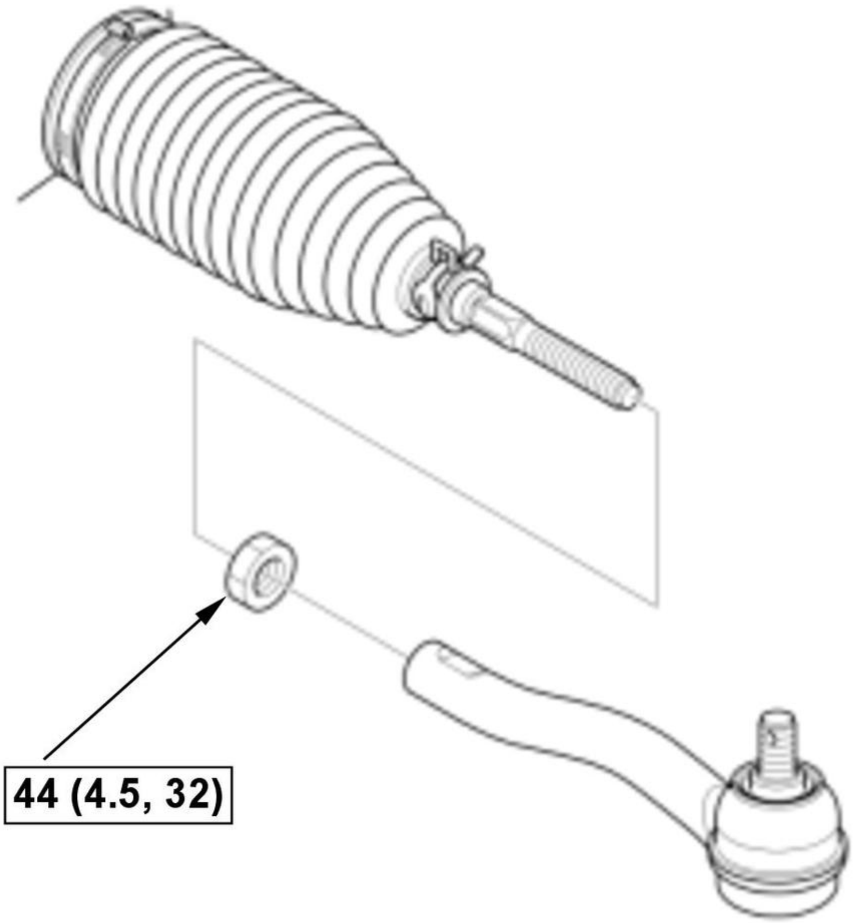

Fig. 21: Tie-Rod End Locknut With Torque Specifications
Courtesy of HONDA, U.S.A., INC.

4. Steering Gearbox - Install

STEERING WHEEL REMOVAL AND INSTALLATION

Removal

SRS components are located in this area. Review the SRS component locations , and the precautions and procedures before doing repairs or service.

Procedure

NOTE: **Numbered call-outs in figure pertain to list numbers in following procedure.**

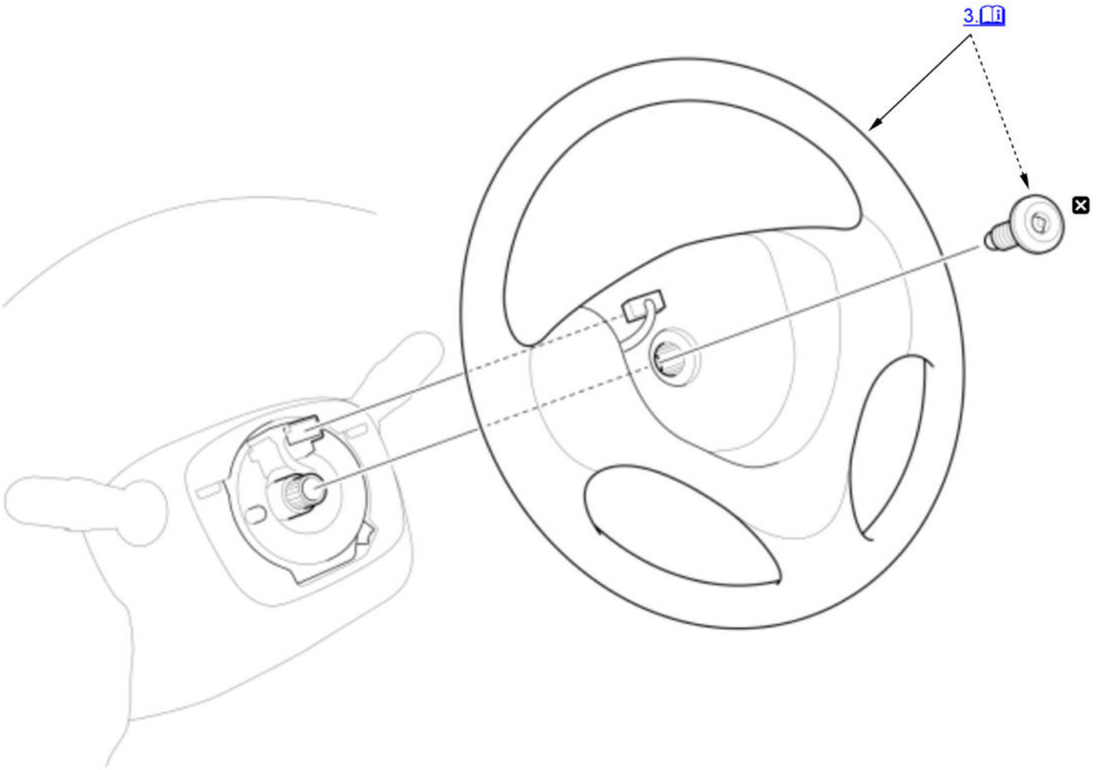

Fig. 22: Exploded View Of Steering Wheel Components
Courtesy of HONDA, U.S.A., INC.

☒	Replace

1. 12 Volt Battery Terminal - Disconnect

   NOTE: Wait at least 3 minutes to start the following work.

2. Driver's Airbag - Remove
3. Steering Wheel - Remove

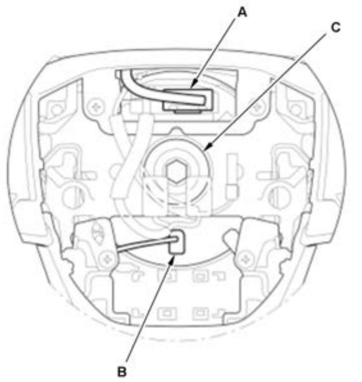	1. Set the front wheels in the straight ahead position. 2. Disconnect the connector (A). 3. With heated steering wheel: Disconnect the connector (B). 4. Loosen the steering wheel bolt (C) three turns.

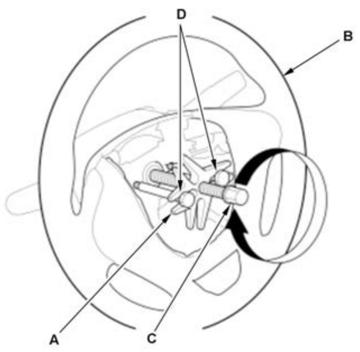

5. Install a commercially available steering wheel puller (A) on the steering wheel (B).

6. Free the steering wheel from the steering column shaft by turning the pressure bolt (C) of the puller.

Note these items when removing the steering wheel:

- Do not tap on the steering wheel or the steering column shaft when removing the steering wheel.
- If you thread the puller bolts (D) into the wheel hub more than five threads, the bolts will hit the cable reel and damage it. To prevent this, install a pair of jam nuts five threads up on each puller bolt.

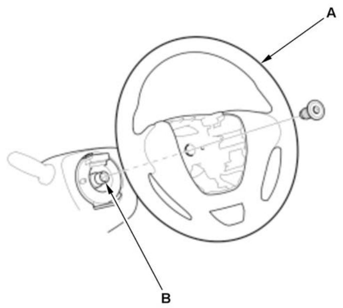

7. Remove the steering wheel puller.

8. Remove the steering wheel (A).

NOTE: Remove the old sealant from the threads (B) in the column shaft.

Installation

SRS components are located in this area. Review the **SRS component locations** , and the **precautions and procedures** before doing repairs or service.

Procedure

NOTE: **Numbered call-outs in figure pertain to list numbers in following procedure.**

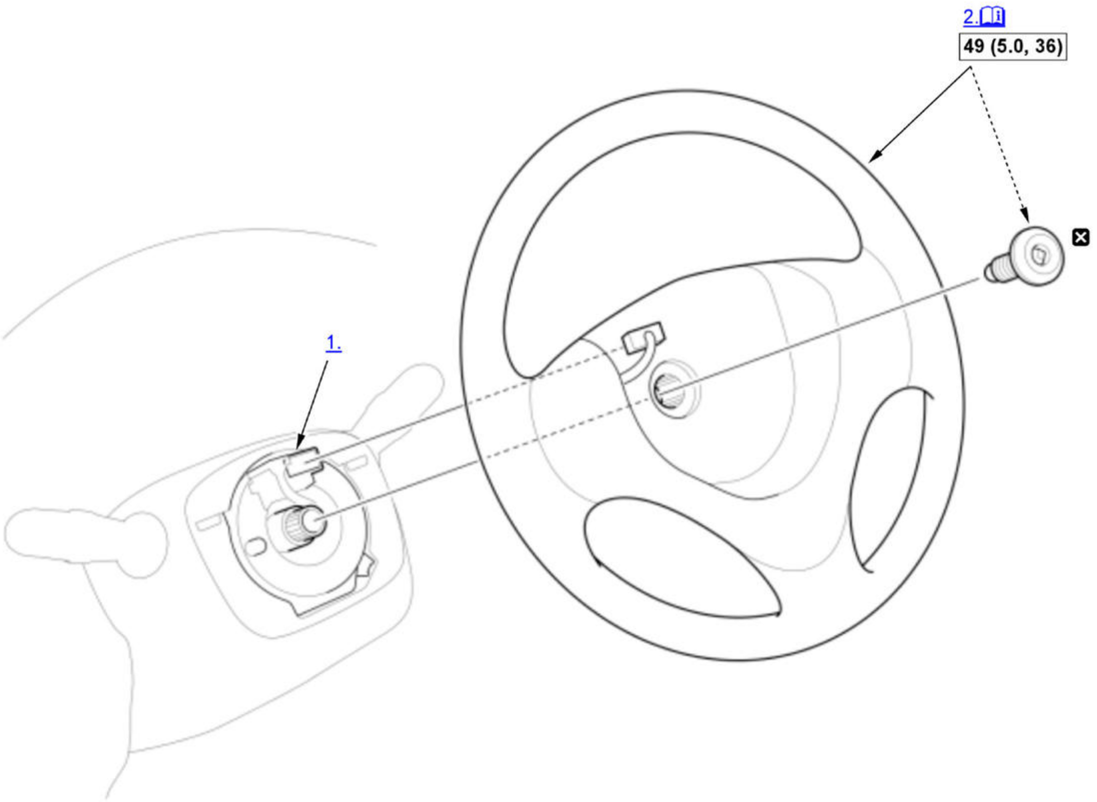

Fig. 23: Exploded View Of Steering Wheel Components With Torque Specifications
Courtesy of HONDA, U.S.A., INC.

☐	Torque: N.m (kgf.m, lbf.ft)
☒	Replace

1. Cable Reel - Align
2. Steering Wheel - Install

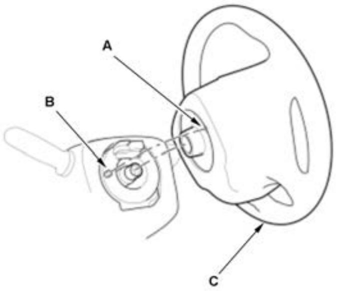	1. Position the steering wheel hub (A) so that it engages the pin (B) of the cable reel. 2. Install the steering wheel (C) onto the steering column shaft. **NOTE:** Do not tap on the steering wheel or the steering column shaft when installing the steering wheel.

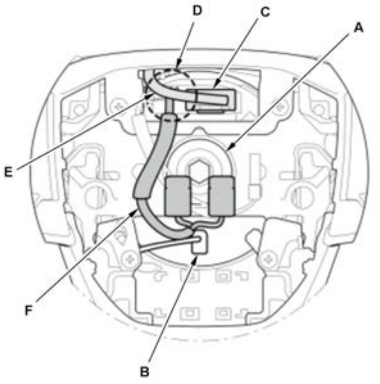	3. Install a new steering wheel bolt (A), and tighten it to the specified torque. **NOTE:** Install the steering wheel bolt and tighten it within 5 minutes using the specified tightening torque. 4. With heated steering wheel: Connect the connector (B). 5. Connect the connector (C). 6. At point (D), make sure that the cable reel subharness (E) is routed above the SRS harness (F).

3. Driver's Airbag - Install
4. 12 Volt Battery Terminal - Connect
5. Steering Wheel Spoke Angle - Check

1. Check the steering wheel spoke angle.

2. With the front wheels straight ahead, make sure the steering wheel is centered and the turning revolutions from center to full lock (left and right) is equal. If not, check the installation of the steering wheel and the engagement of the joint/pinion shaft splines.

6. VSA Sensor Neutral Position - Memorize

TIE-ROD END BALL JOINT DISCONNECTION AND RECONNECTION

Special Tools Required

Image	Description/Tool Number
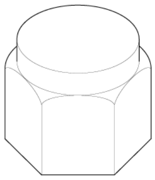	Ball Joint Thread Protector, 12 mm 07AAF-SDAA100
	Ball Joint Remover, 28 mm 07MAC-SL00202

Removal and Installation

NOTE: How to read the torque specifications .

1. Vehicle - Lift
2. Front Wheel - Remove
3. Tie-Rod End Ball Joint - Disconnect

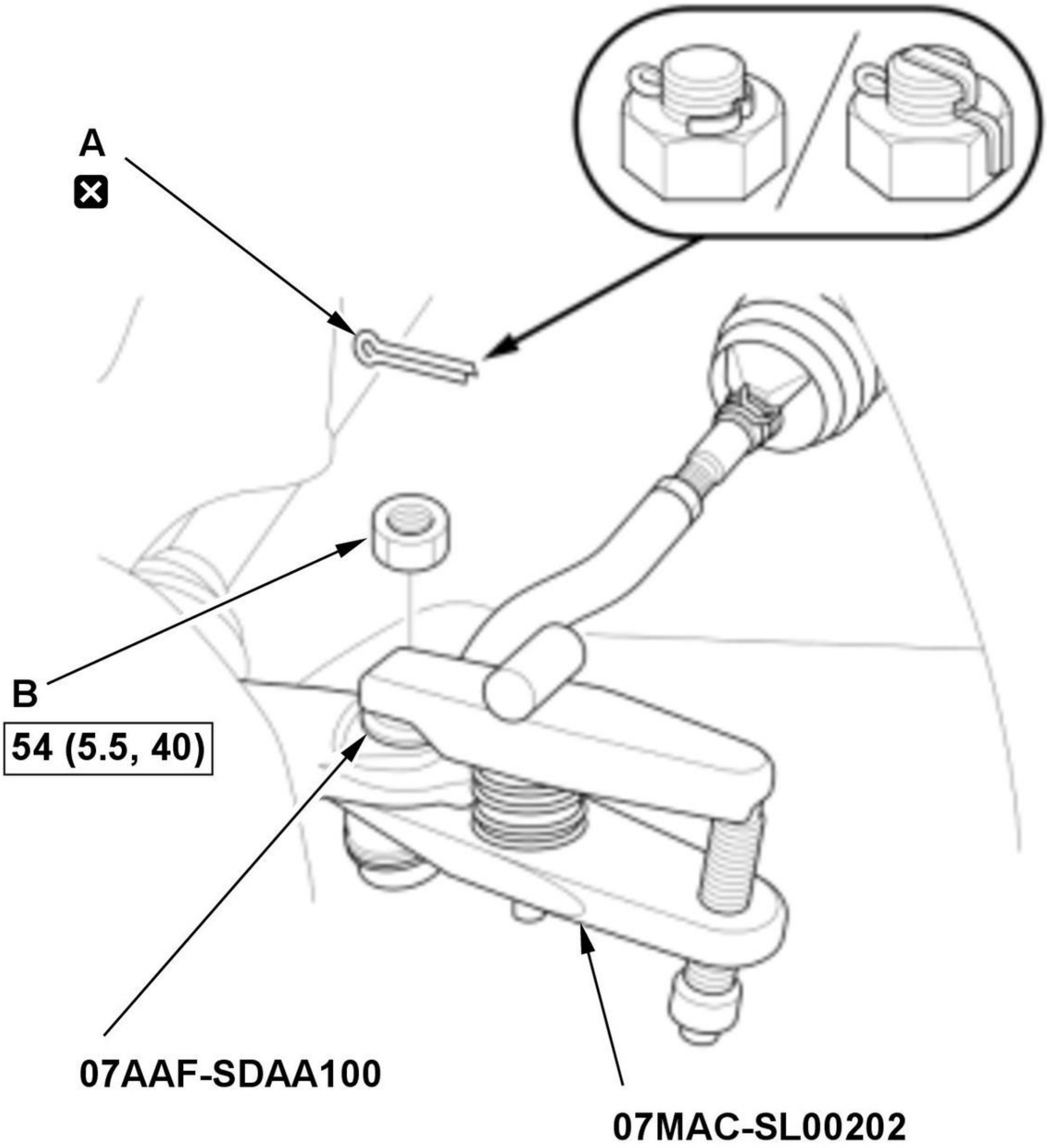

Fig. 24: Tie-Rod End Ball Joint Components With Torque Specifications
Courtesy of HONDA, U.S.A., INC.

1. Remove the cotter pin (A).

2. Remove the nut (B).

3. Disconnect the tie-rod end ball joint from the knuckle using the ball joint thread protector and the ball joint remover .

NOTE:

- Be careful not to damage the ball joint boot when installing the ball joint remover.

- During installation, install a new cotter pin after tightening the nut, and bend its end as shown.

4. All Removed Parts - Install

1. Install all removed parts in the reverse order of removal.

DISASSEMBLY AND REASSEMBLY

STEERING GEARBOX DISASSEMBLY AND REASSEMBLY

Exploded View

NOTE:

- How to read the torque specifications .
- For these operations, refer to the complete procedure as needed.
-
    - Rack end removal and installation
    - Tie-rod end ball joint boot replacement
    - EPS motor/control unit removal and installation
- Check for deterioration and damage to each part during removal.

1. Steering Gearbox

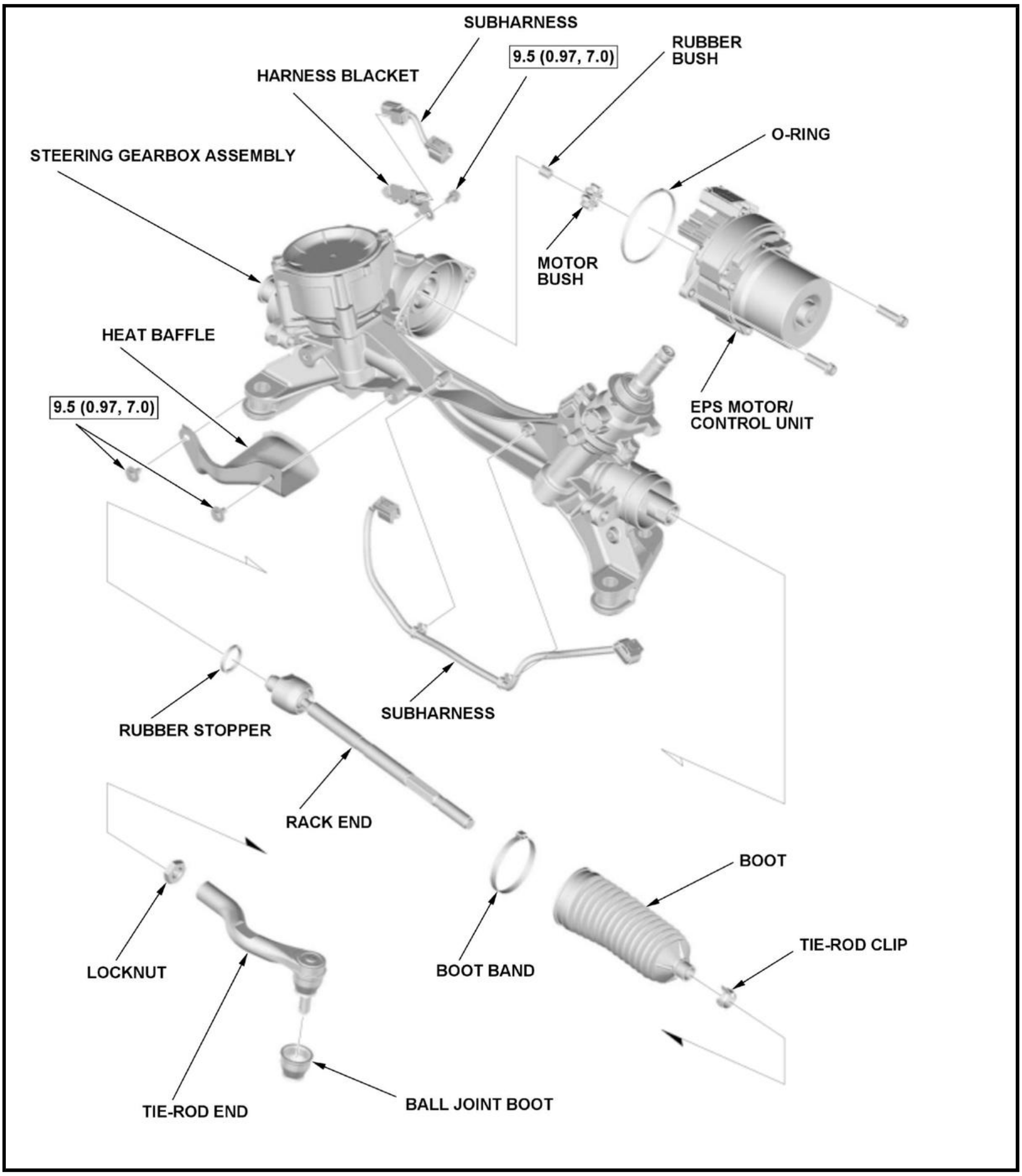
SUBHARNESS
9.5 (0.97, 7.0)
RUBBER BUSH
HARNESS BLACKET
O-RING
STEERING GEARBOX ASSEMBLY
MOTOR BUSH
HEAT BAFFLE
9.5 (0.97, 7.0)
EPS MOTOR/ CONTROL UNIT
SUBHARNESS
RUBBER STOPPER
RACK END
BOOT
TIE-ROD CLIP
LOCKNUT
BOOT BAND
TIE-ROD END
BALL JOINT BOOT

STEERING WHEEL DISASSEMBLY AND REASSEMBLY

Exploded View

1. Steering Wheel

Exploded view

Single Inflator Type

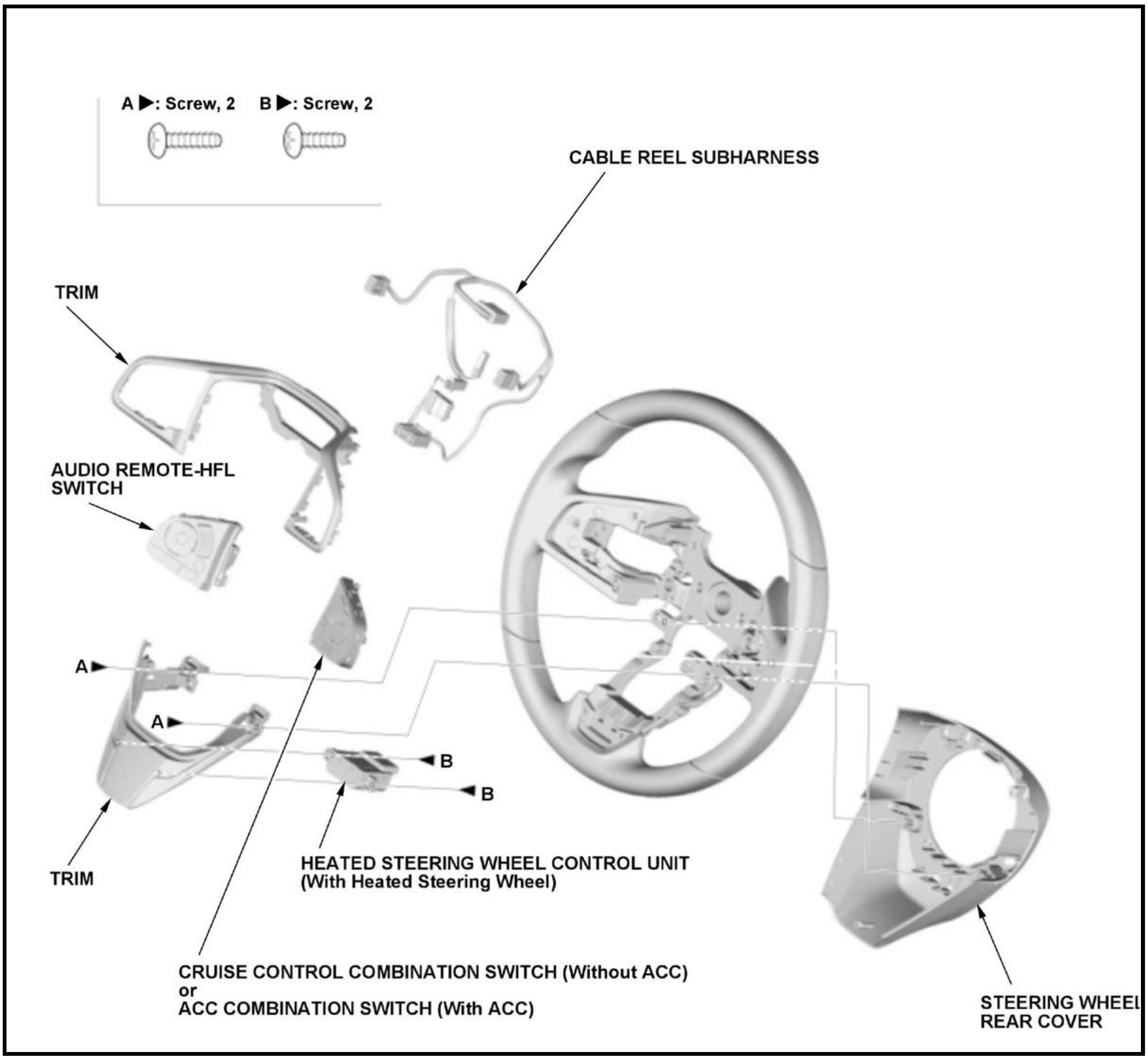
A ▶: Screw, 2
B ▶: Screw, 2
CABLE REEL SUBHARNESS
TRIM
AUDIO REMOTE-HFL SWITCH
A▶
A▶
◀ B
◀ B
TRIM
HEATED STEERING WHEEL CONTROL UNIT (With Heated Steering Wheel)
CRUISE CONTROL COMBINATION SWITCH (Without ACC)
or
ACC COMBINATION SWITCH (With ACC)
STEERING WHEEL
REAR COVER

Dual Inflators Type

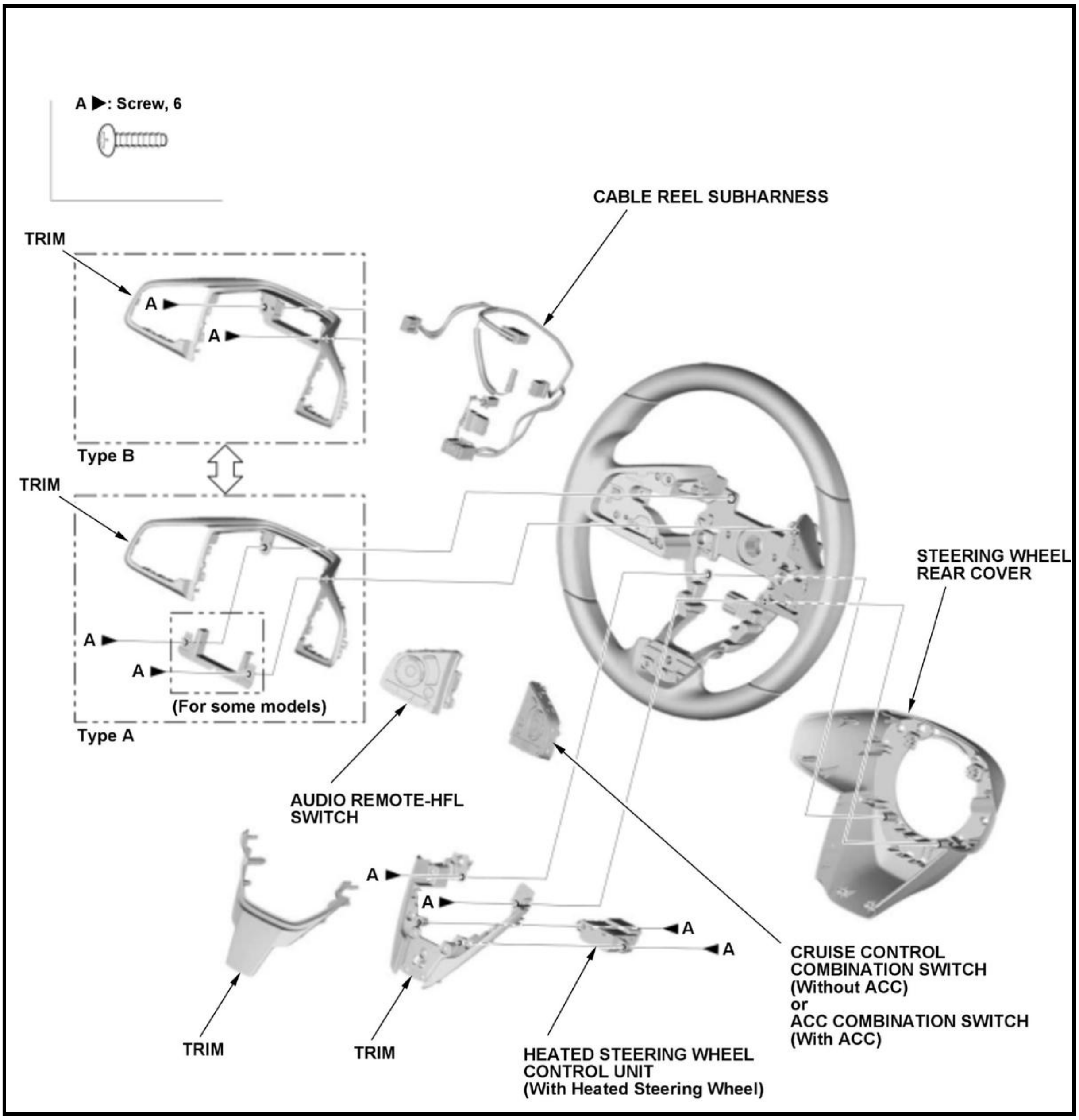
A ►: Screw, 6
CABLE REEL SUBHARNESS
TRIM
A ►
A ►
Type B
TRIM
A ►
A ►
(For some models)
Type A
STEERING WHEEL REAR COVER
AUDIO REMOTE-HFL SWITCH
A ►
A ►
◄A
◄A
CRUISE CONTROL COMBINATION SWITCH (Without ACC) or ACC COMBINATION SWITCH (With ACC)
TRIM
TRIM
HEATED STEERING WHEEL CONTROL UNIT (With Heated Steering Wheel)

REMOVAL, INSTALLATION, AND TEST

HEATED STEERING WHEEL SWITCH REMOVAL, INSTALLATION, AND TEST

Removal and Installation

NOTE:

- SRS components are located in this area. Review the SRS component locations and the precautions and procedures before doing repairs or service.
- The heated steering wheel switch is built into the steering wheel assembly.

1. Driver's Airbag - Remove
2. Steering Wheel Trim - Remove
3. Heated Steering Wheel Switch - Remove
4. All Remove Parts - Install

1. Install the parts in the reverse order of removal.

Test

1. Heated Steering Wheel Switch - Test

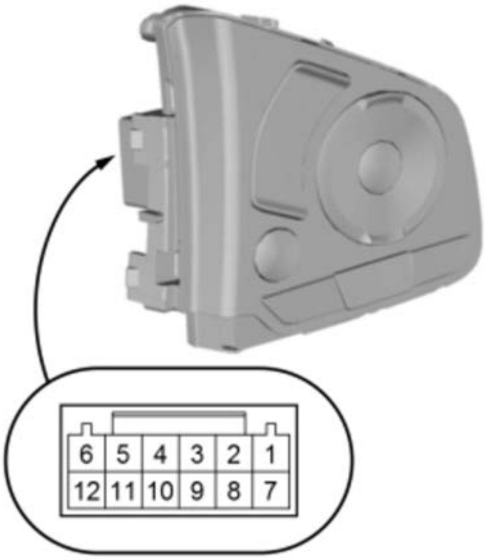

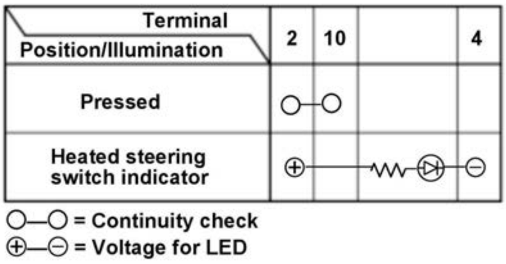

Terminal / Position/Illumination	2	10		4
Pressed	○—	—○		
Heated steering switch indicator	⊕—	—	—ʍʍ—⊳|—	—⊖

○—○ = Continuity check
⊕—⊖ = Voltage for LED

1. Check for continuity between the terminals in each switch position according to the table.

NOTE:

- When an LED is located between terminals, check if the LED illuminates by connecting power and ground to the LED.
- Note this important operating characteristic; diode bias causes a diode to fully conduct electricity in one direction (forward), while not at all in the opposite direction (reverse).

2. If the result is not as specified, replace the heated steering wheel switch.

REMOVAL AND INSTALLATION

DASHBOARD/STEERING HANGER BEAM REMOVAL AND INSTALLATION

Removal and Installation

NOTE:

- How to read the torque specifications
- SRS components are located in this area. Review the SRS component locations and the precautions and procedures before doing repairs or service.

1. 12 Volt Battery Terminal - Disconnect

   NOTE: Wait at least 3 minutes before starting work.

2. Both A Pillar Trims - Removal
3. Driver's Dashboard Lower Cover - Remove
4. Both Dashboard Undercover - Remove
5. Both Dashboard Side Lid - Remove
6. Column Cover - Remove
7. Center Console - Remove
8. Center Console Bracket - Remove
9. Shift Cable (Shift Lever Side) - Disconnect
10. Brake Pedal Position Switch - Remove
11. Linkage Assembly - Remove

12. Dashboard/Steering Hanger Beam - Remove

Driver's Side 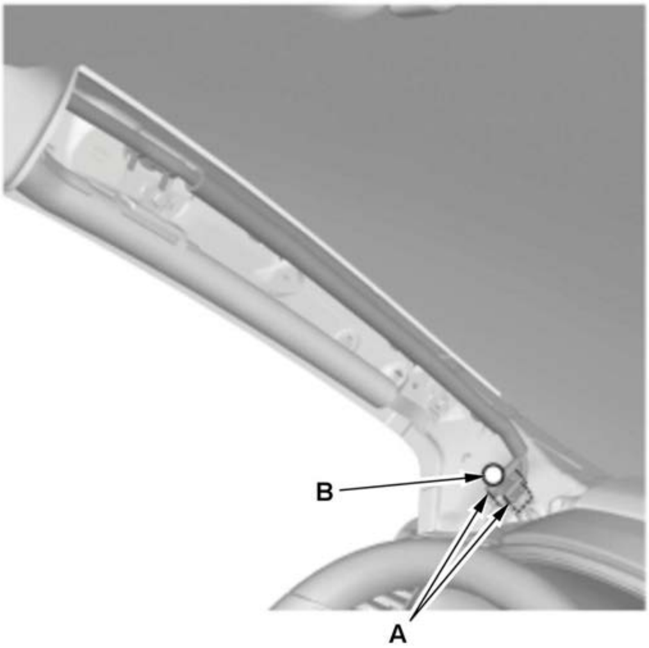 **Passenger's Side** 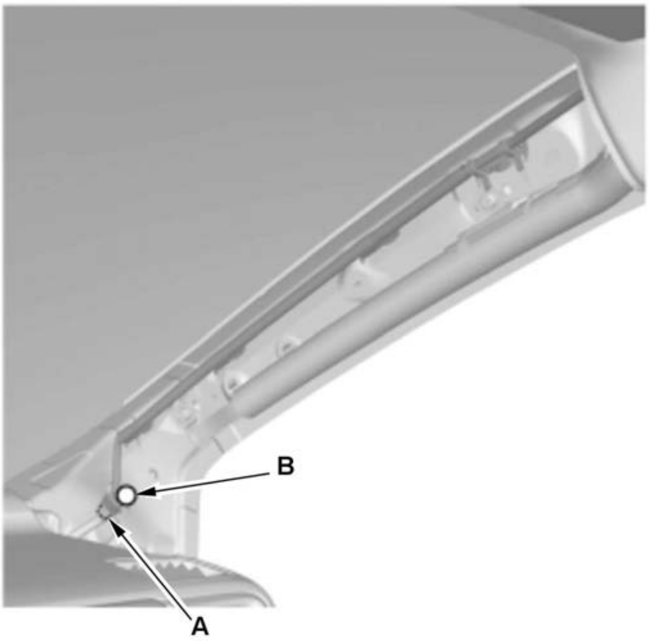	**A-Pillar Area** 1. Disconnect the connectors (A) and remove the clips (B). **NOTE:** The positions and number of connectors vary depending on model type.

Steering Column Area

2. Disconnect the connectors (A) and remove the clips (B).

NOTE: The positions and number of connectors vary depending on model type.

Without Keyless Access System

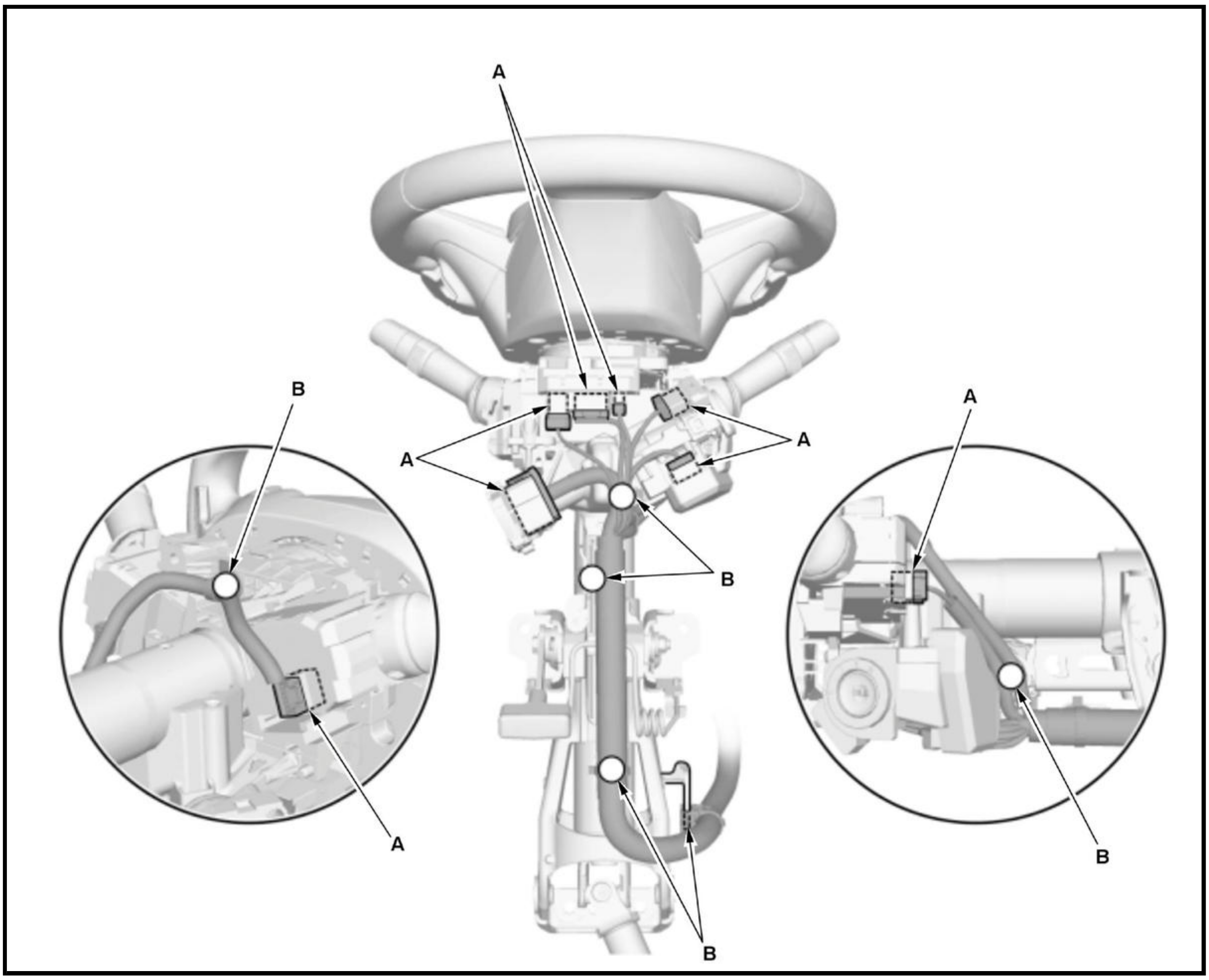
A
B
A
A
A
B
A
B
A
B
B

With Keyless Access System

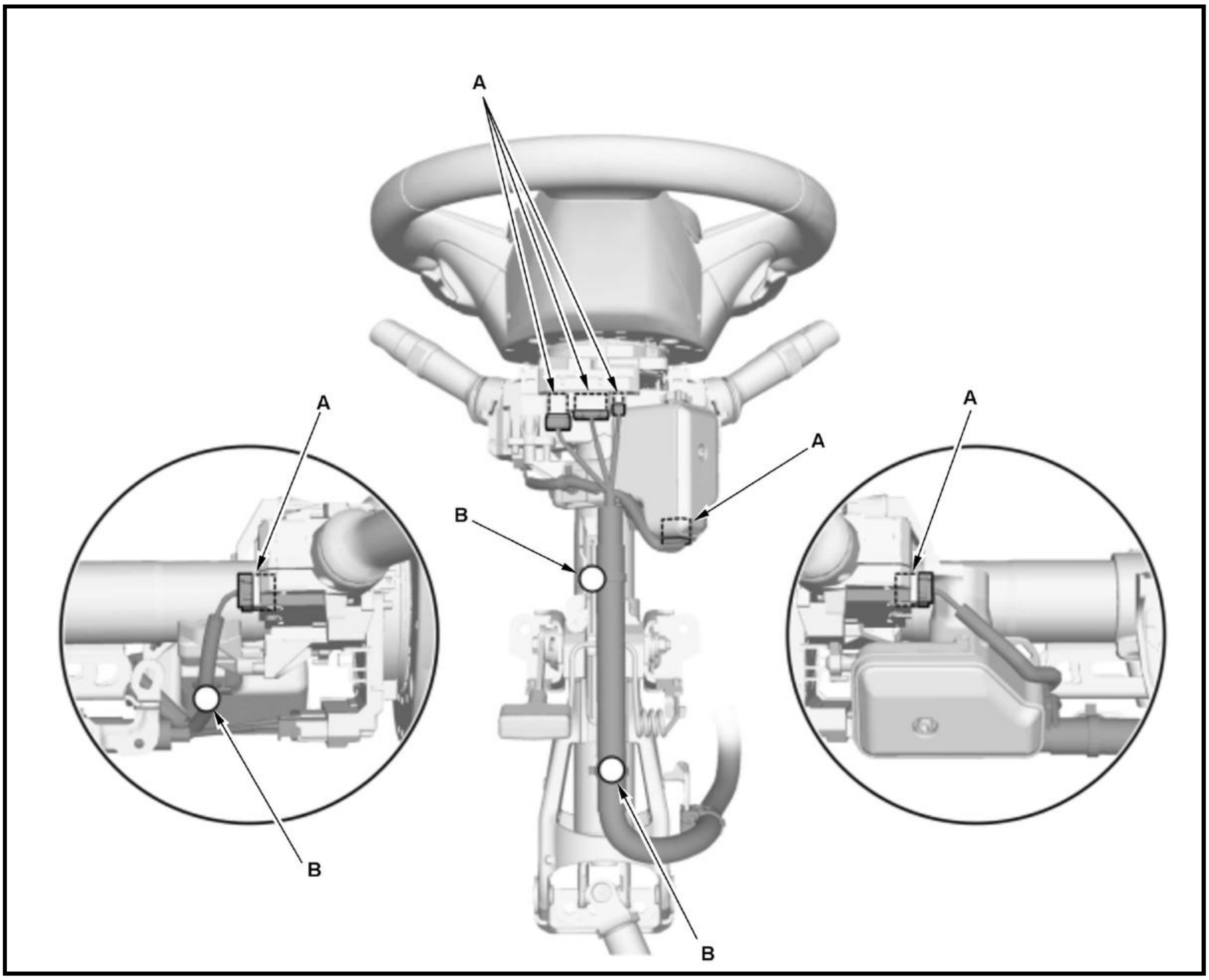

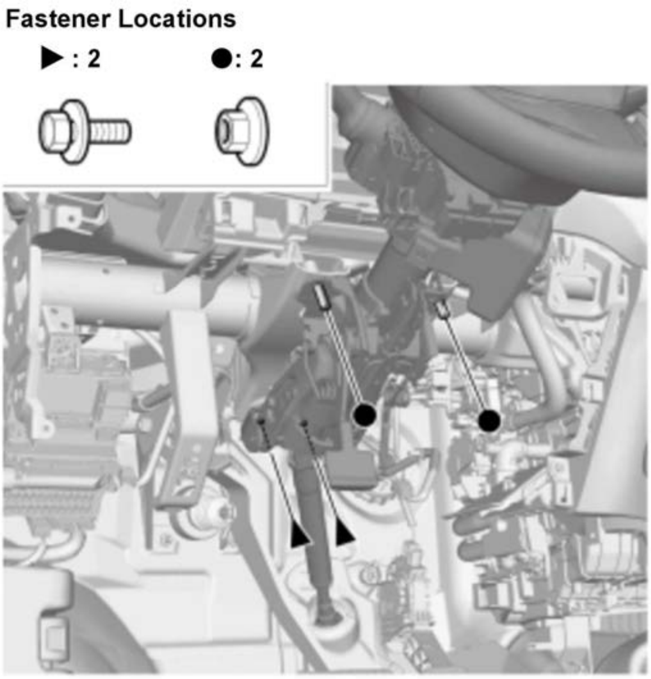

3. Remove the bolts and nuts.

4. Lay the steering column on the driver's floor.

NOTE: Wrap the steering column in a shop towel to avoid any damage.

Driver's Side

5. Disconnect the connectors (A) and remove the clip (B).

NOTE: The positions and number of connectors vary depending on model type.

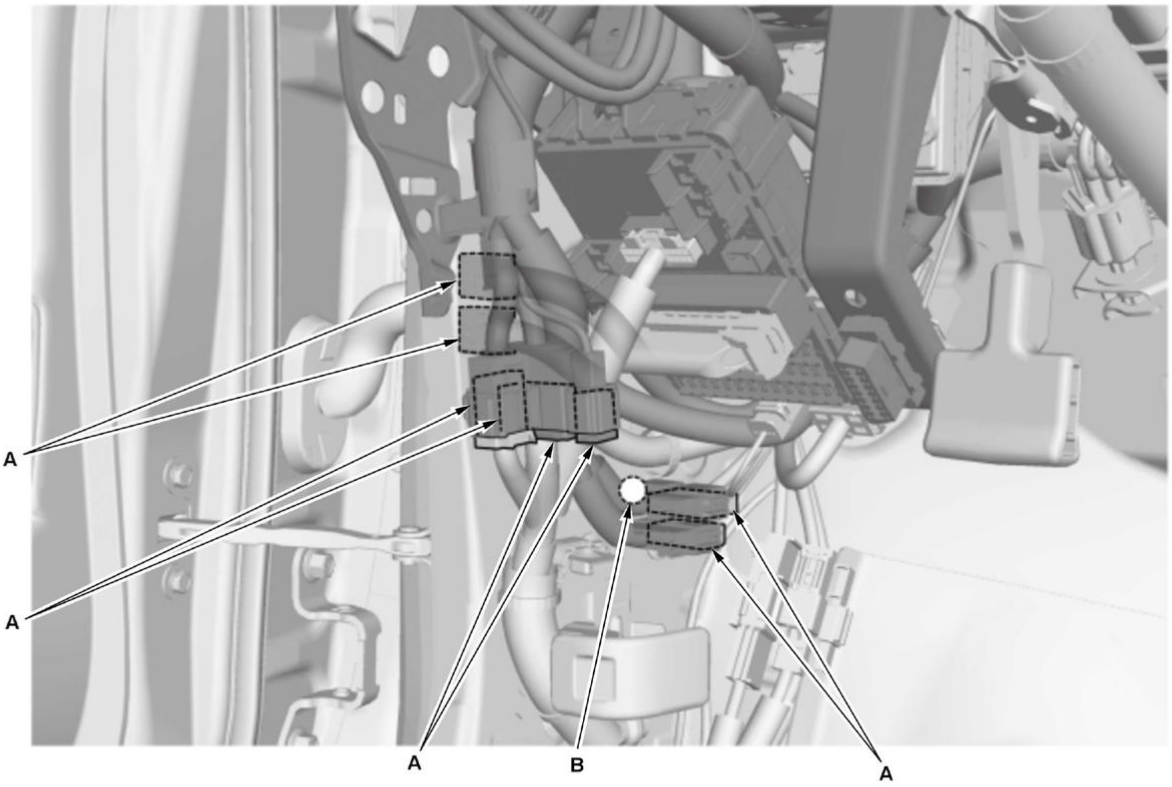

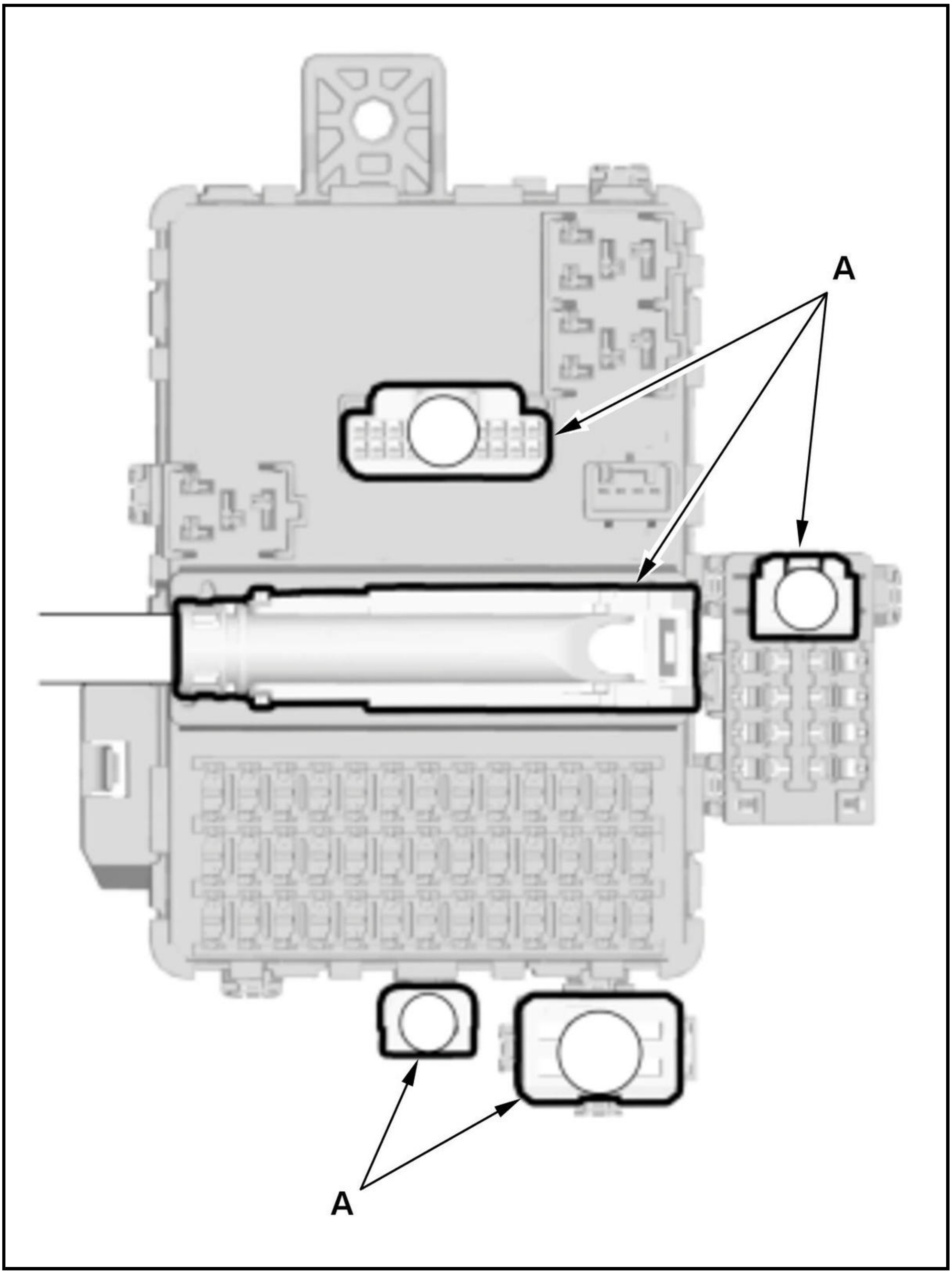

Passenger's Side

6. Disconnect the connectors (A).

NOTE: The positions and number of connectors vary depending on model type.

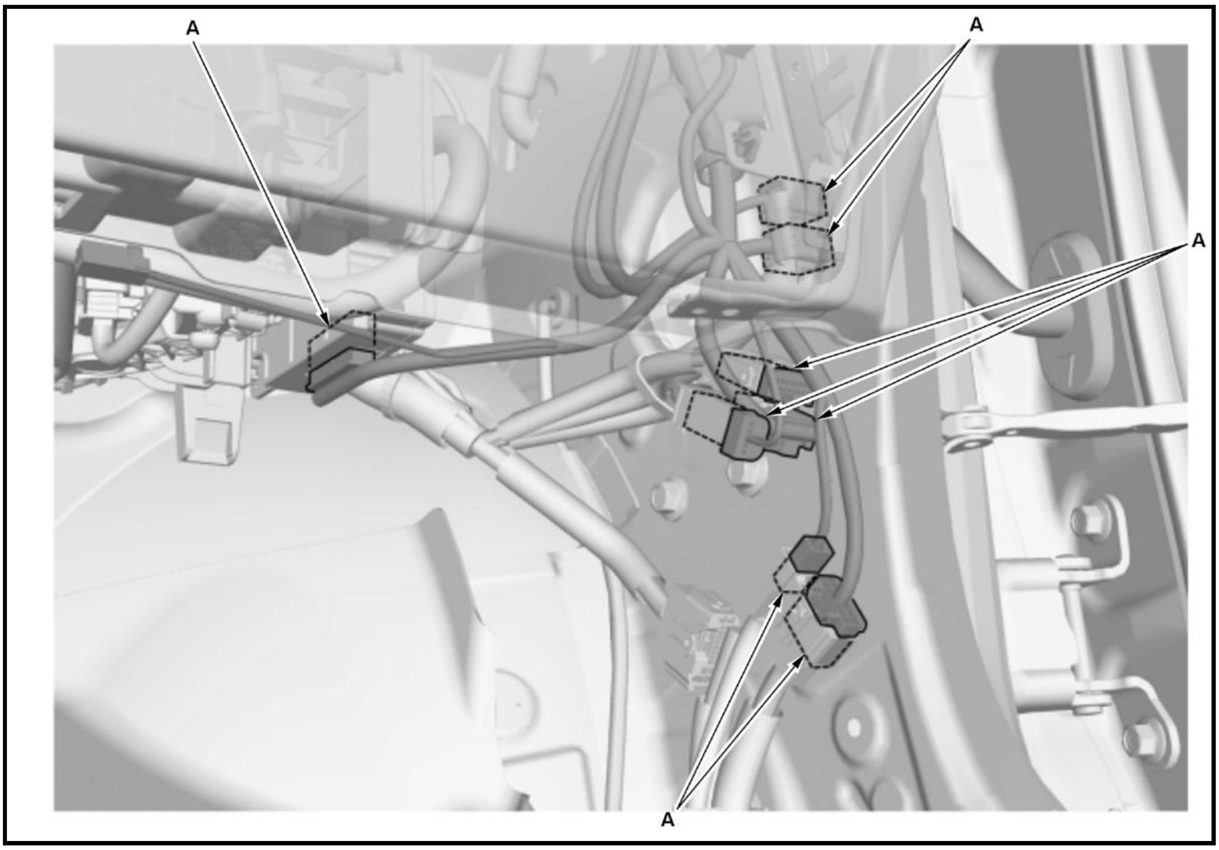

Center Area

7. Disconnect the connectors (A) and remove the clips (B).

NOTE: The positions and number of connectors vary depending on model type.

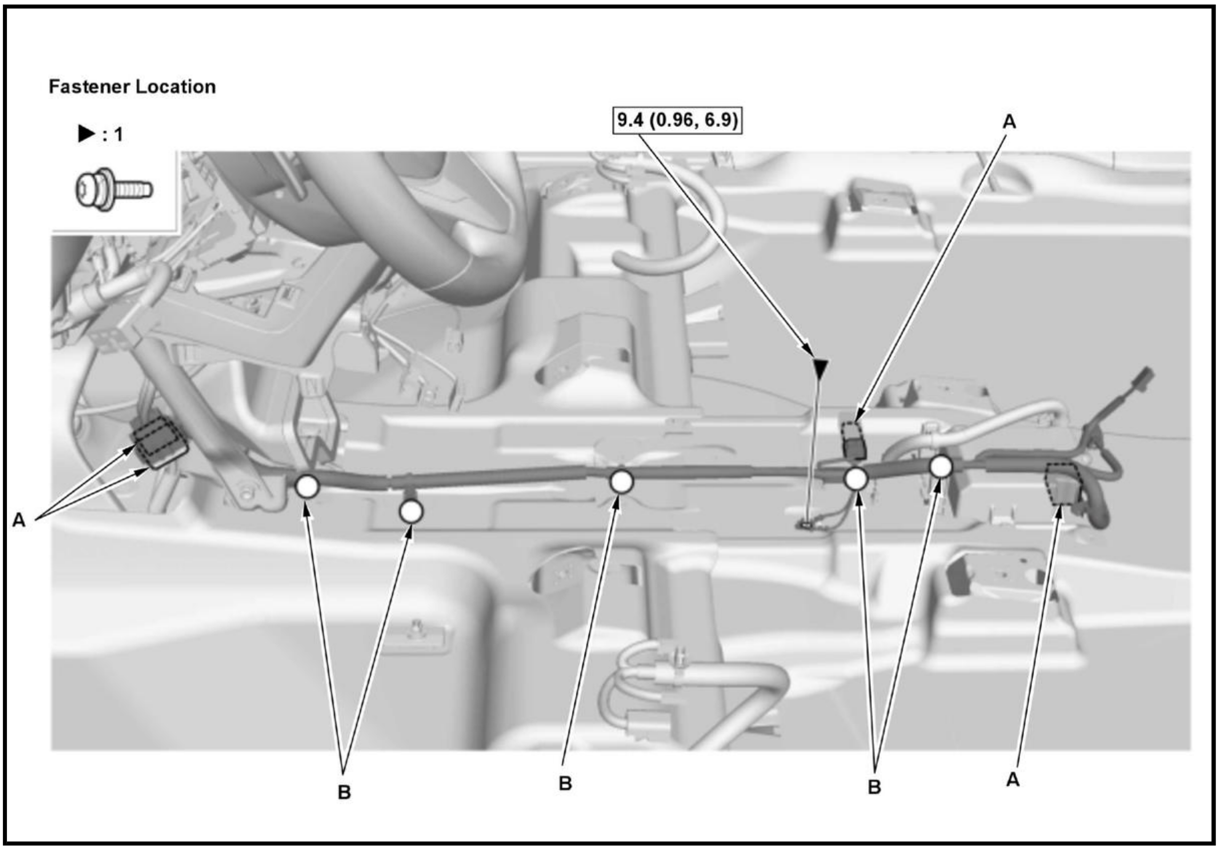
Fastener Location
▶ : 1
9.4 (0.96, 6.9)
A
A
B
B
B
A

8. Remove the bolt.

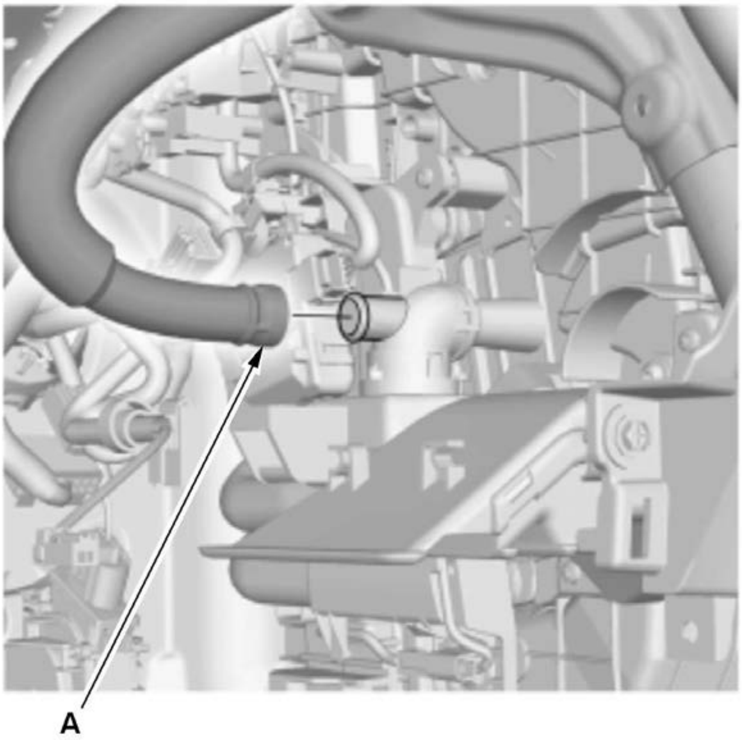	9. Disconnect the aspirator hose (A).
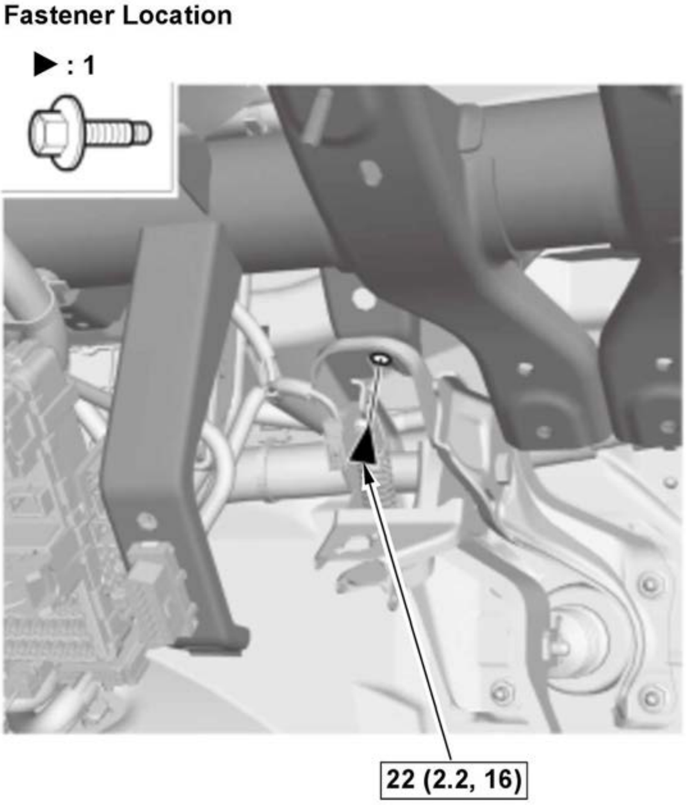 Fastener Location ▶ : 1 22 (2.2, 16) **Driver's Side** **Center Area**	**Dashboard/Steering Hanger Beam** 10. Remove the bolts, and remove the clip.

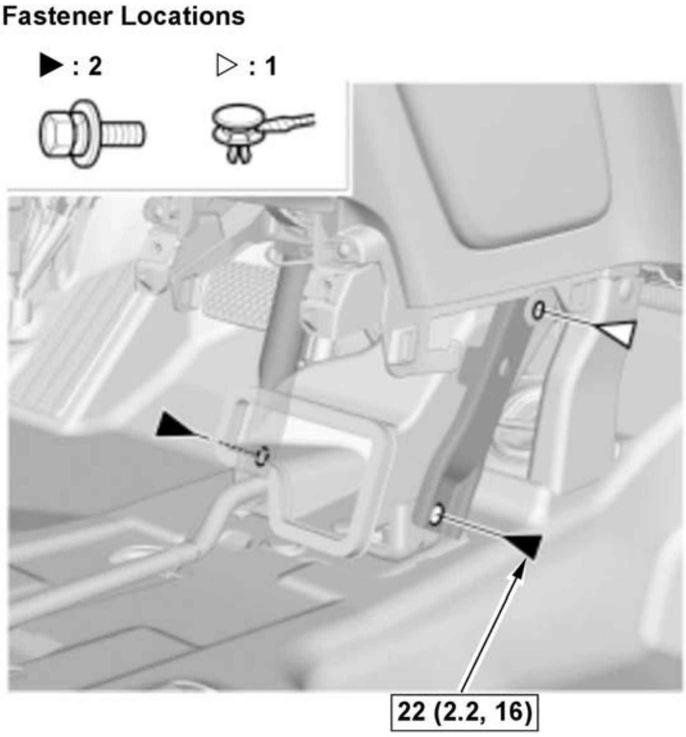
Fastener Locations
▶ : 2
▷ : 1
22 (2.2, 16)

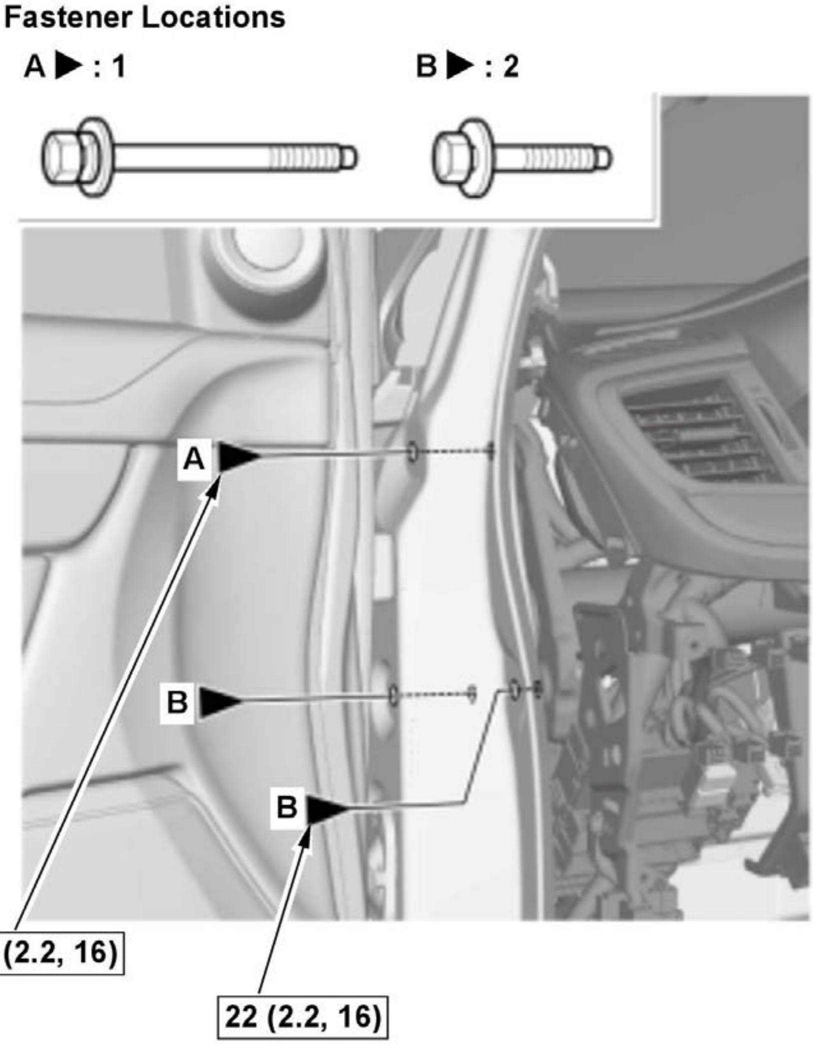
Fastener Locations
A ▶ : 1
B ▶ : 2
A
B
B
22 (2.2, 16)
22 (2.2, 16)

Driver's Side

11. Remove the bolts (A, B).

Passenger's Side

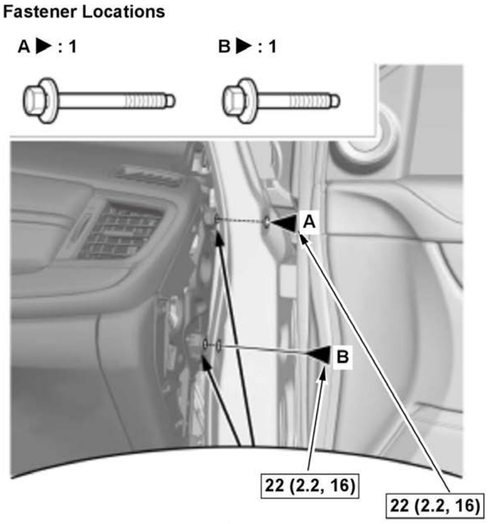

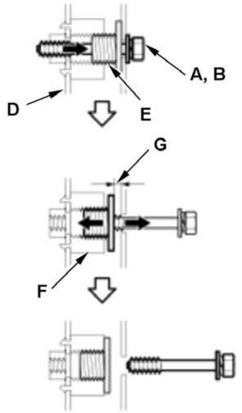

12. Loosen the special bolts (A, B, C) until they disengage from the threads on the hanger beam (D), and engage the inside threads of the collar bolts (E). The thread lock on the special bolts makes the special bolts and the collar bolts turn together.

13. Continue to loosen the special bolts to turn the collar bolts into the fixed space adjusters (F) until the collar bolts engage the adjuster brackets. This creates a gap (G) between the collar bolts and the body.

14. Remove the special bolts.

NOTE: The special bolt (A) remains in the body side.

Engine Compartment Area

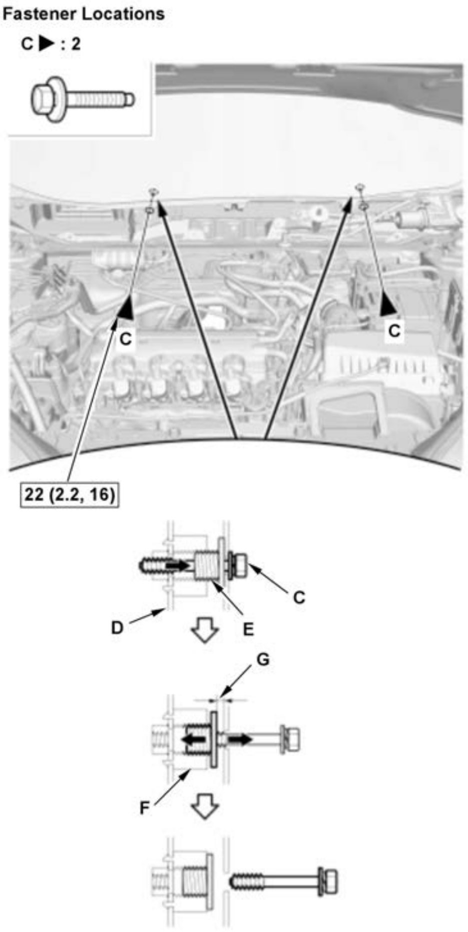
Fastener Locations
C ▶ : 2
C
C
22 (2.2, 16)
C
D
E
G
F

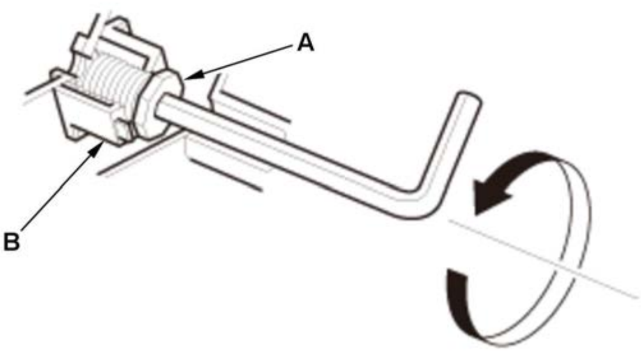

15. Check that the collar bolts (A) are seated in the fixed space adjusters (B).

NOTE: If either collar bolt was not seated, replace the special bolts.

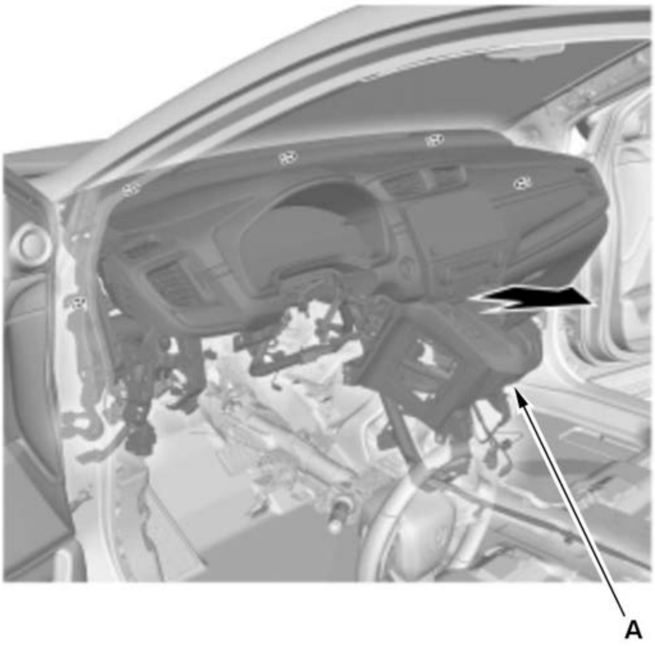	16. Remove the dashboard/steering hanger beam (A).

13. All Removed Parts - Install

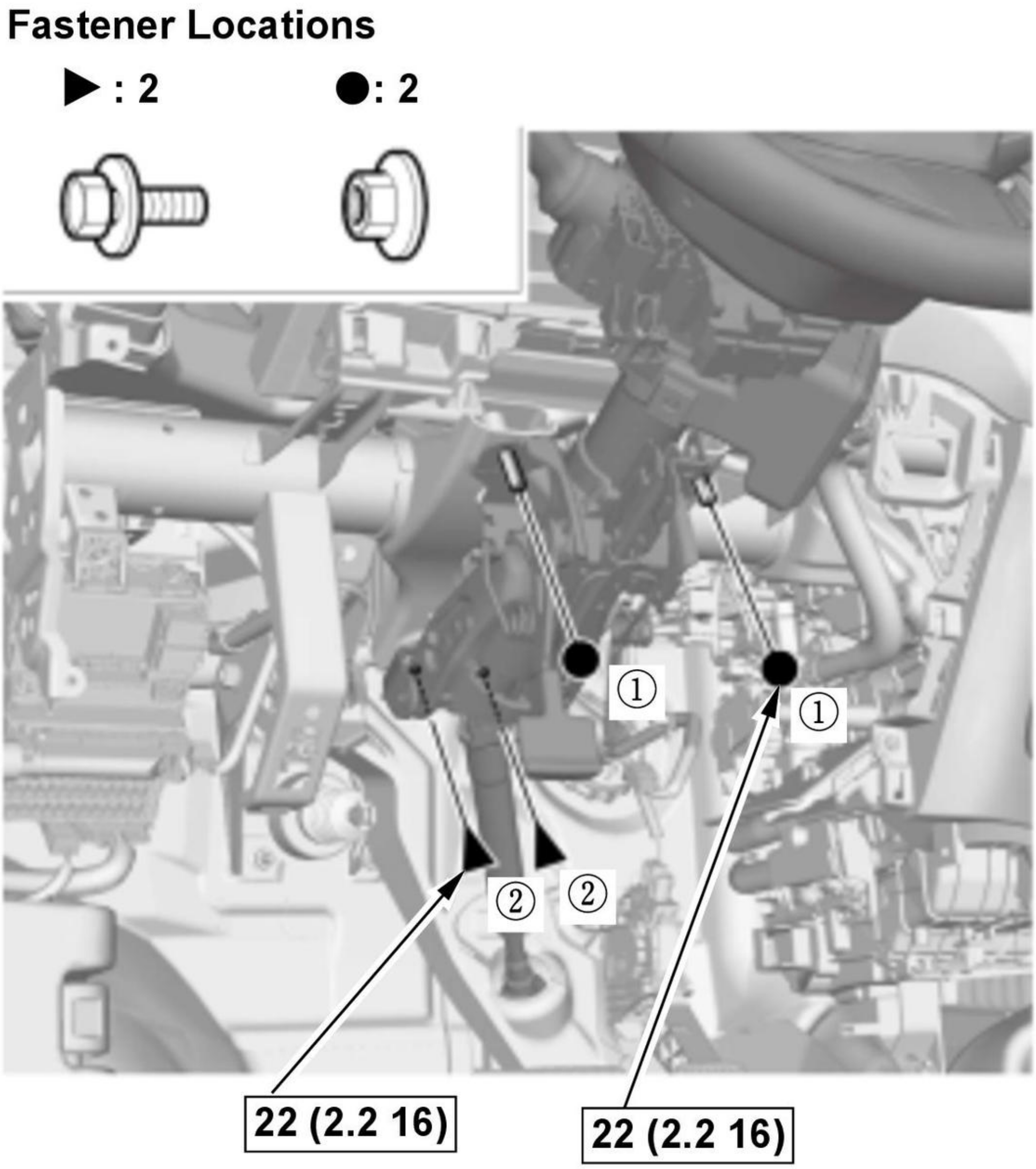

Fig. 1: Steering Column Tightening Sequence With Torque Specifications
Courtesy of HONDA, U.S.A., INC.

Special Bolt Tightening 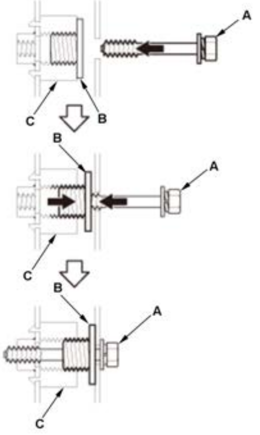 **Steering Column**	1. Install the parts in the reverse order of removal, and note these items: **NOTE:** • Before reinstalling the dashboard, screw the special bolt (A) into the collar bolt (B), and check that they turn together. If they do not turn together, replace the special bolts. • Before reinstalling the dashboard, be sure the collar bolts can be screwed/unscrewed lightly by hand, and then screw them into the fixed space adjusters (C) fully by hand. Do not tighten them with any tools. • Make sure the dashboard fits onto the guide pins correctly. • Before tightening the bolts, make sure the wire harnesses are not pinched. • Make sure the connectors are plugged in properly.

	- After setting the dashboard in the body, reinstall all of the mounting bolts but do not tighten them. First tighten the driver's side mounting bolts to the specified torque, then tighten the remaining special bolts. As you tighten the bolts, the collar bolts screw out of the space adjuster until they contact the body. Continue tightening the special bolts to the specified torque. - When installing the steering column, tighten the nuts and bolts to the specified torque in the numbered sequence shown. - **Do the 12 volt battery terminal connection procedure** . - Check for any DTCs that may have been set during repairs, and clear them.

EPS MOTOR/CONTROL UNIT REMOVAL AND INSTALLATION

Removal

NOTE: Do not allow dust, dirt, or other foreign materials to enter the steering gearbox.

1

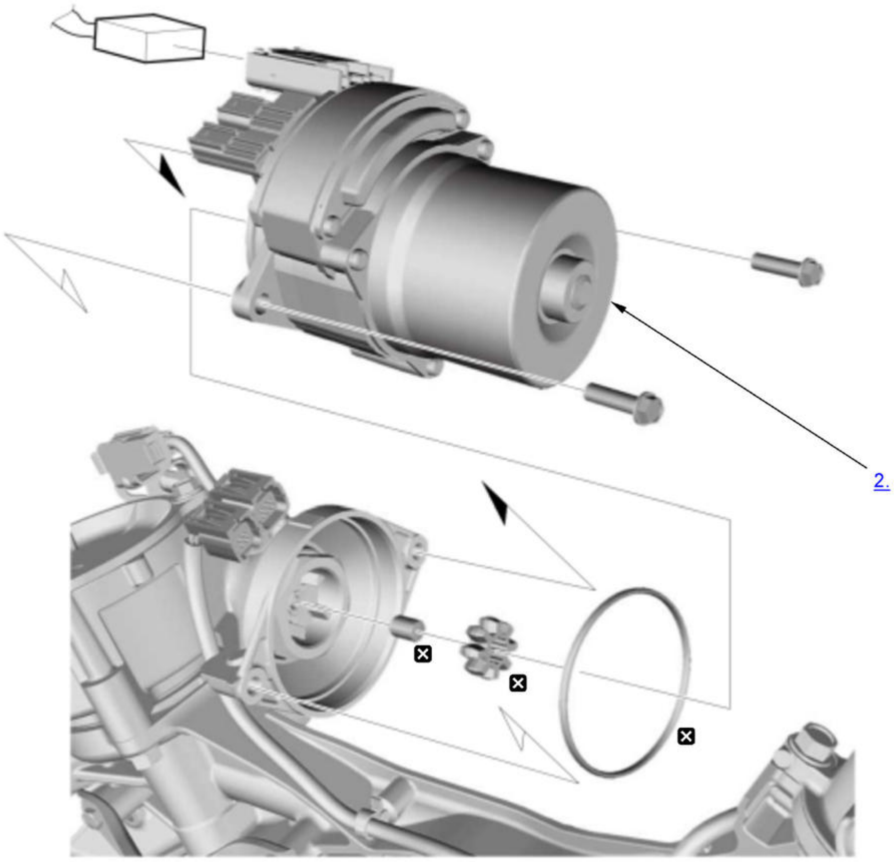

☒	Replace

1. **Engine Undercover - Remove**

2. EPS Motor/Control Unit - Remove

Installation

NOTE: Do not allow dust, dirt, or other foreign materials to enter the steering gearbox.

1

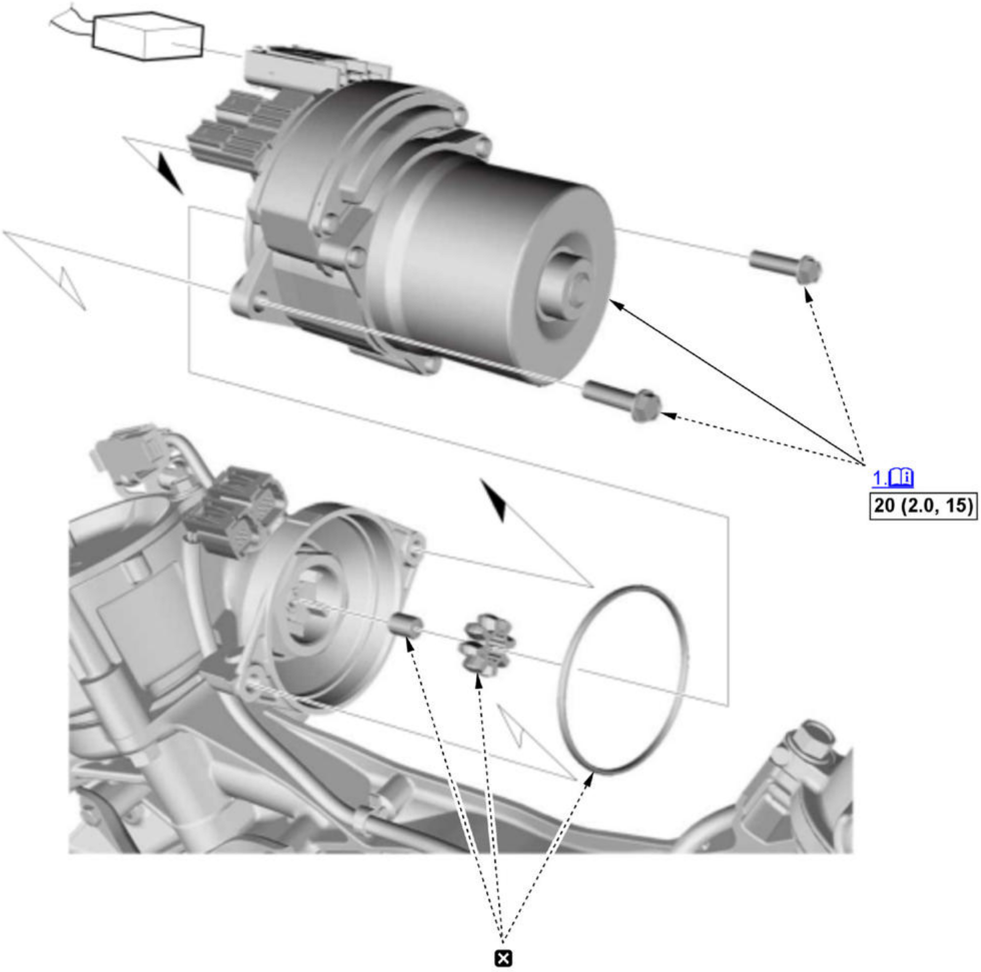

ℹ	Detailed information, notes and precautions
▭	Torque: N.m (kgf.m, lbf.ft)
☒	Replace

1. EPS Motor/Control Unit - Install

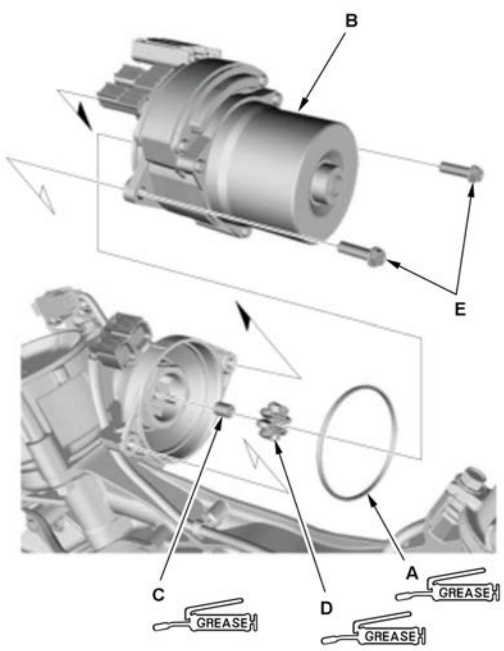	1. Install a new O-ring (A) to the EPS motor/control unit (B). **NOTE:** Apply steering grease to the O-ring if necessary. 2. Check the rubber bush (C) and motor bush (D) for damage and cracks. If the rubber bush and motor bush are cracked, replace the rubber bush and motor bush. **NOTE:** If the rubber bush and motor bush are removed, apply steering grease to the rubber bush and motor bush, then install them to the EPS motor/control unit. 3. Install the EPS motor/control unit, but do not install the mounting bolts. 4. Turn the EPS motor/control unit two or three times to the right and left about 45 degrees. 5. Loosely install the EPS motor/control unit mounting bolts (E) by hand but do not tighten. **NOTE:** Make sure the EPS motor/control unit is evenly seated. 6. Tighten the EPS motor/control unit mounting bolts to the specified torque.

2. **Engine Undercover - Install**
3. EPS Control Unit Software - Check

1. Make sure the EPS control unit has the latest software. If it does not have the latest, **update the software in the EPS control unit** .

4. **VSA Sensor Neutral Position - Memorize**
5. EPS System - Check

1. After installation, check these items:
   - Start the engine, allow it to idle, and turn the steering wheel from lock to lock several times.
   - Check that the EPS indicator does not come on.

HEATED STEERING WHEEL CONTROL UNIT REMOVAL AND INSTALLATION

Removal and Installation

NOTE:

- SRS components are located in this area. Review the **SRS component locations** and the **precautions and procedures** before doing repairs or service.
- The heated steering wheel control unit is built into the steering wheel assembly.

1. **Driver's Airbag - Remove**
2. **Heated Steering Wheel Control Unit - Remove**
3. All Remove Parts - Install

1. Install the parts in the reverse order of removal.

STEERING COLUMN REMOVAL AND INSTALLATION

Removal

SRS components are located in this area. Review the **SRS component locations** , and the **precautions and procedures** before doing repairs or service.

NOTE: Do not release the lock lever until the steering column is installed. If the lock lever is released before installation, adjust the steering column after installation.

1

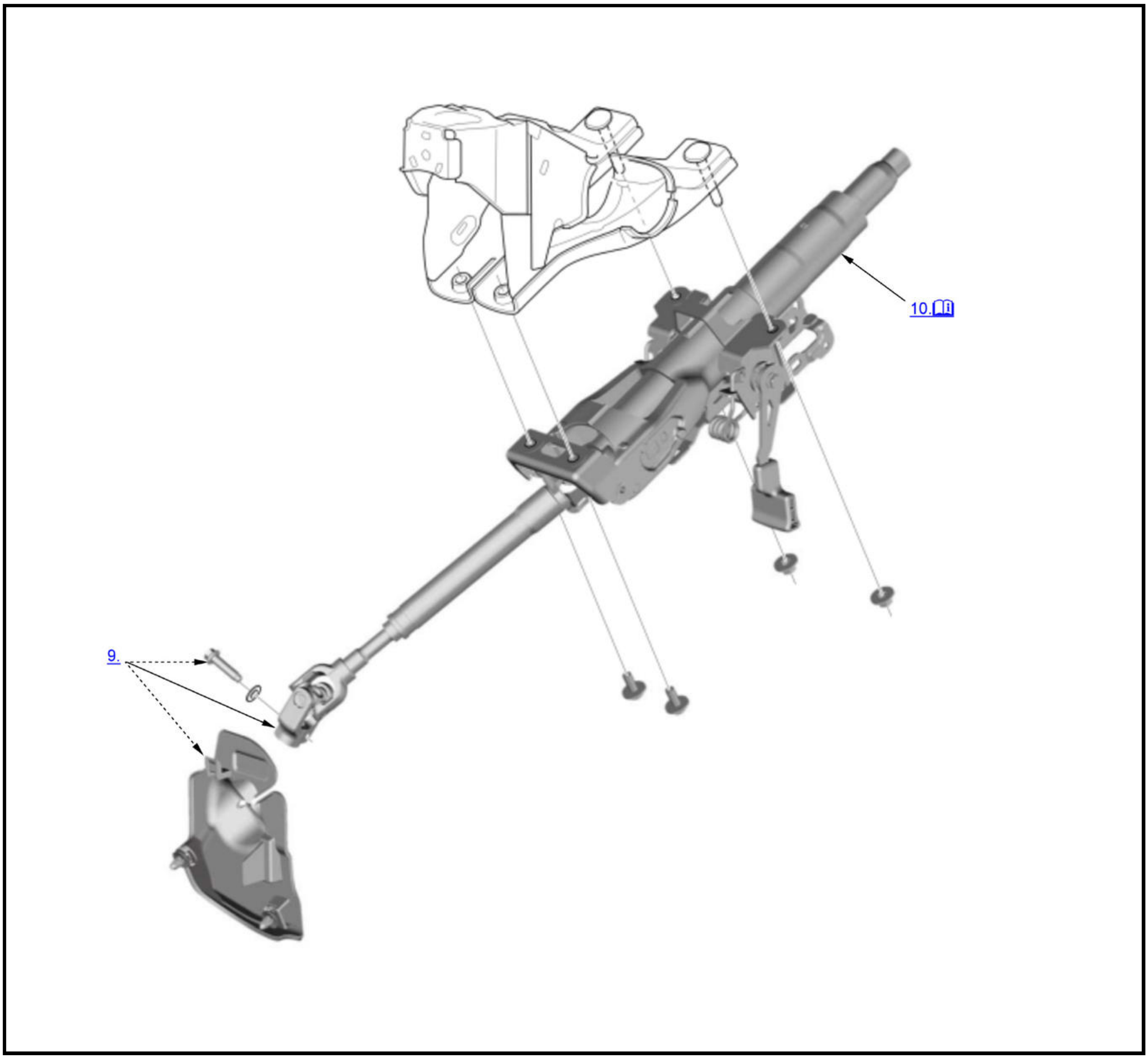

1. Steering Column Tilt and Telescopic Position - Set

   1. Set the steering column to the highest tilt position, and to the longest telescopic position.

2. **12 Volt Battery Terminal - Disconnect**

   NOTE: Wait at least 3 minutes to start the following work.

3. **Driver's Airbag - Remove**

4. **Steering Wheel - Remove**
5. **Driver's Dashboard Undercover - Remove**
6. **Driver's Dashboard Lower Cover - Remove**
7. **Column Cover - Remove**
8. Combination Switch - Remove

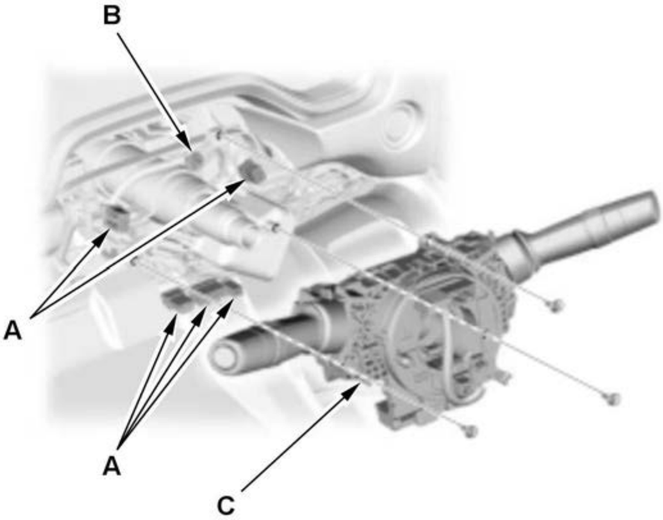	1. Disconnect the connectors (A). 2. Remove the harness clip (B). 3. Remove the combination switch body assembly (C).

9. **Steering Joint - Disconnect**
10. Steering Column - Remove

    NOTE: Be careful not to damage the brake pedal position switch.

Installation

SRS components are located in this area. Review the **SRS component locations** , and the **precautions and procedures** before doing repairs or service.

NOTE: Do not release the lock lever until the steering column is installed. If the lock lever is released before installation, adjust the steering column after installation.

1

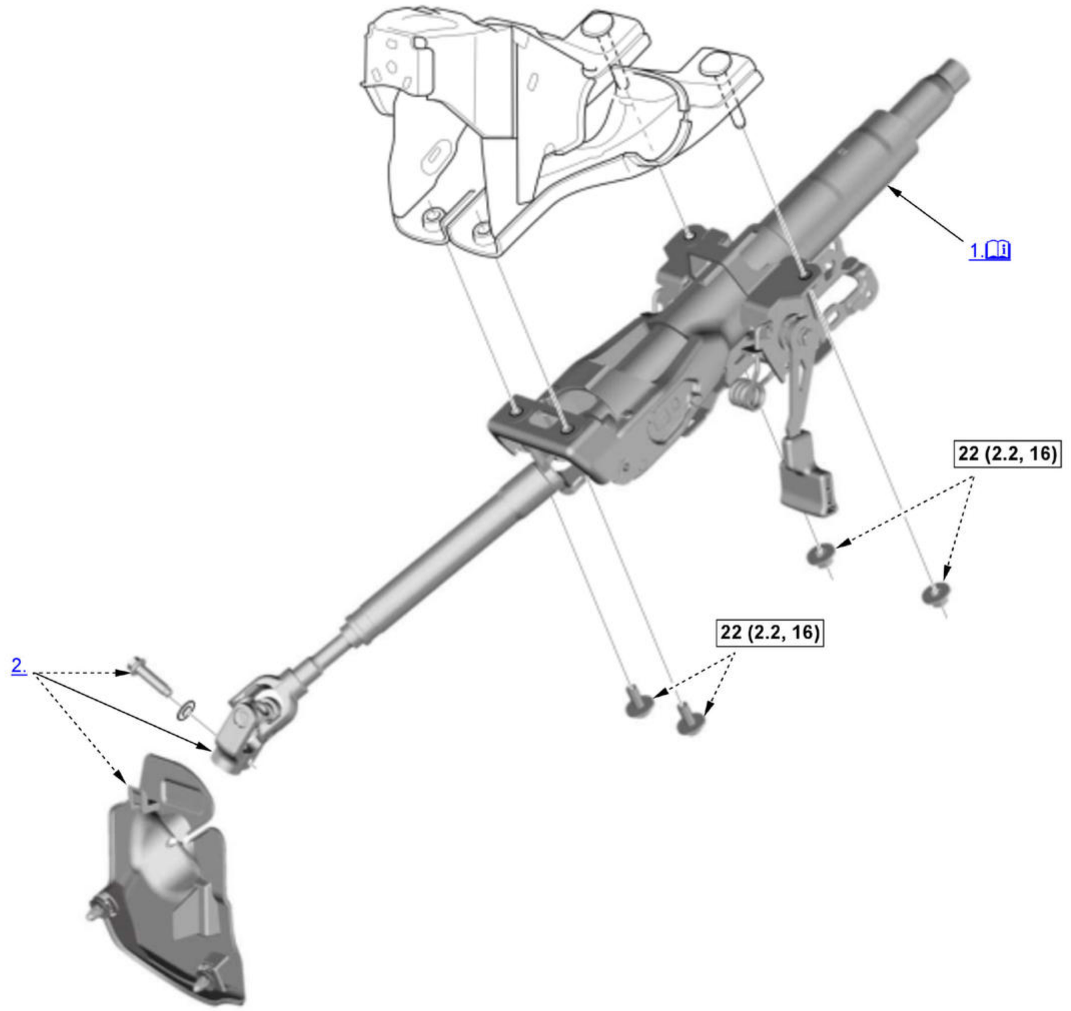
1.
22 (2.2, 16)
22 (2.2, 16)
2.

ℹ	Detailed information, notes and precautions
▭	Torque: N.m (kgf.m, lbf.ft)

1. Steering Column - Install

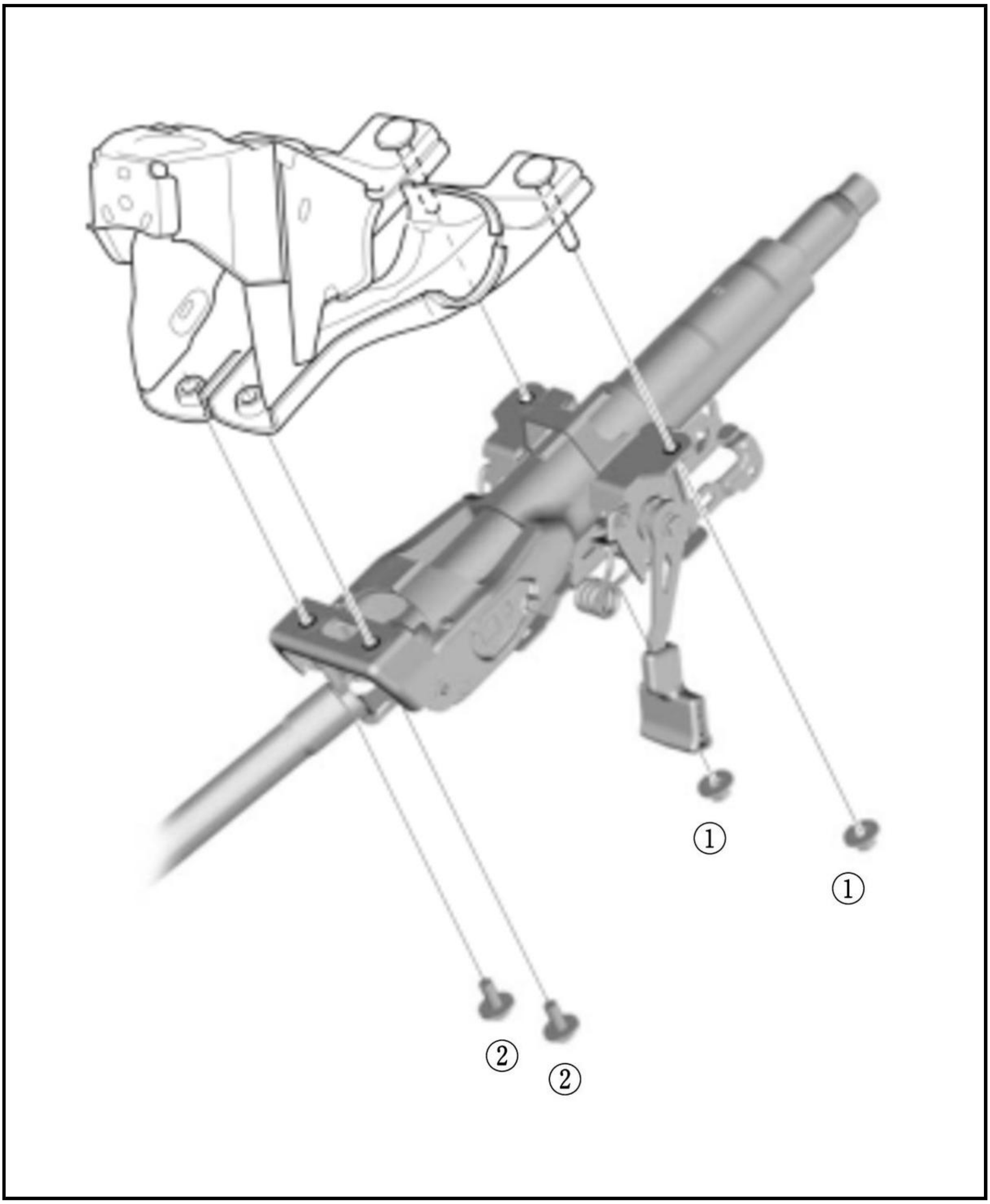

NOTE:

- During installation of the steering column, loosely tighten all mounting bolts and nuts. Then tighten them to the specified torque in the numbered sequence shown.
- Be careful not to damage the brake pedal position switch.

2. **Steering Joint - Connect**
3. Combination Switch - Install

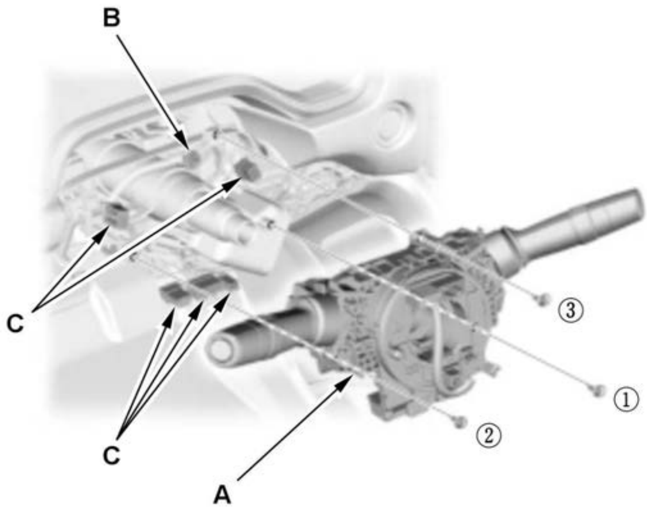	1. Install the combination switch body assembly (A). **NOTE:** Tighten the screws in the numbered sequence shown. 2. Install the harness clip (B). 3. Connect the connectors (C).

4. Column Cover - Install
5. Driver's Dashboard Lower Cover - Install
6. Driver's Dashboard Undercover - Remove
7. Steering Wheel - Install
8. Driver's Airbag - Install
9. 12 Volt Battery Terminal - Connect
10. Steering - Check

    1. After installation, check these items:
        - Start the engine, allow it to idle, and turn the steering wheel from lock to lock several times.
        - Check that the EPS indicator does not come on.
        - With the front wheels straight ahead, make sure the steering wheel is centered and the turning revolutions from center to full lock (left and right) is equal. If not, check the installation of the steering wheel and the engagement of the joint/pinion shaft splines.

11. Brake Pedal Position Switch - Adjust
12. Wheel Alignment - Check
13. VSA Sensor Neutral Position - Memorize

STEERING GEARBOX REMOVAL AND INSTALLATION

*: Available through the Honda Tool and Equipment Program 888-424-6857.

Special Tools Required

Image	Description/Tool Number
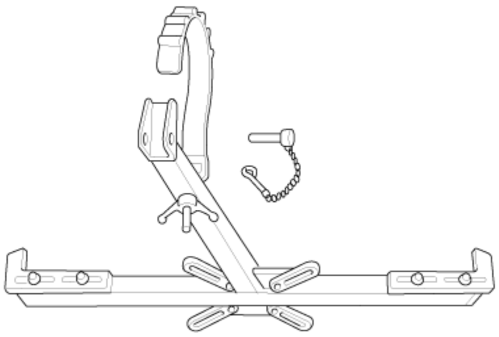	Subframe Adapter VSB02C000016*

*: Available through the Honda Tool and Equipment Program 888-424-6857.

Removal

NOTE:

- ℹ Icon indicates information.
- Using clean solvent and a brush, wash any oil and dirt off the end of the steering gearbox. Blow dry with compressed air.
- Lower the front subframe from the body, and remove the steering gearbox through the gap produced by lowering the front subframe.
- Unless otherwise indicated, illustrations used in the procedure are for AWD model.

1

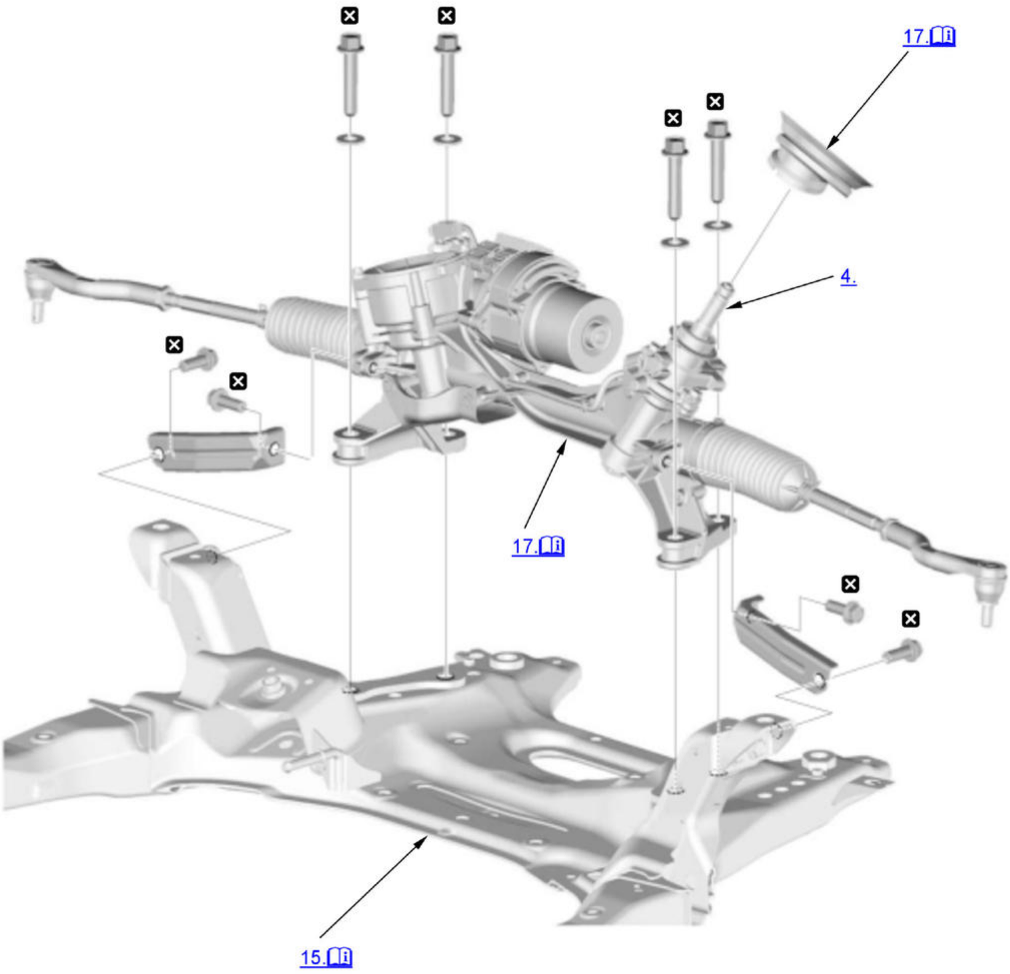

ℹ	Detailed information, notes and precautions
☒	Replace

1. **12 Volt Battery Terminal - Disconnect**
2. **Vehicle - Lift**
3. **Front Wheel - Remove**
4. **Steering Joint - Disconnect**
5. **Tie-Rod End Ball Joint - Disconnect (Both Sides)**
6. **Engine Undercover - Remove**
7. Connectors (EPS Harness) - Disconnect

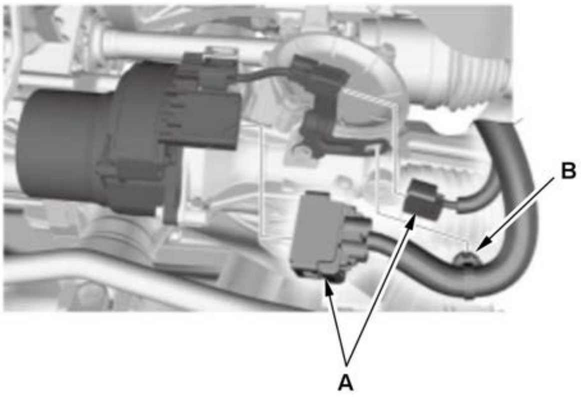	1. Disconnect the connectors (A). **NOTE:** Wrap the connectors with vinyl tape to avoid contamination from grease or water. 2. Remove the harness clip (B).

8. Stabilizer Link - Disconnect

    1. **Disconnect both sides of the stabilizer link from the stabilizer bar** .

9. Front Lower Arm - Disconnect

    1. **Disconnect both sides of the front lower arm from the ball joints** .

10. **Exhaust Pipe A - Remove**
11. **Propeller Shaft - Remove (AWD)**
12. **Front Subframe Brace - Remove**
13. **Lower Torque Rod - Remove**
14. Front Lower Arm Mounting Bolt - Remove

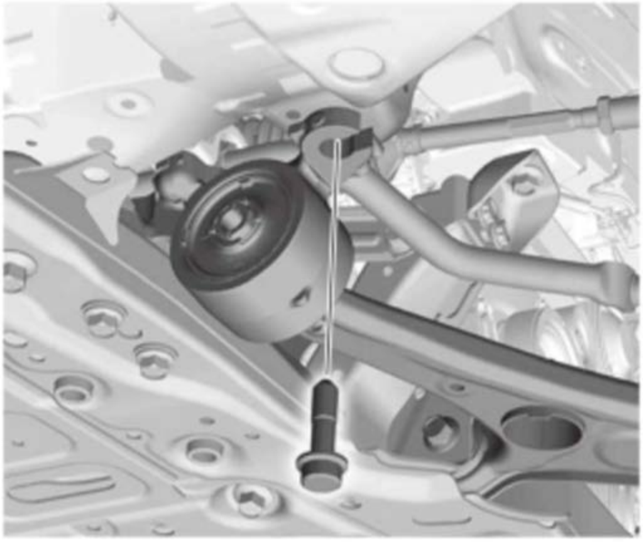	1. **Remove both sides of the front lower arm mounting bolt from the body** .

15. Front Subframe - Lift Down

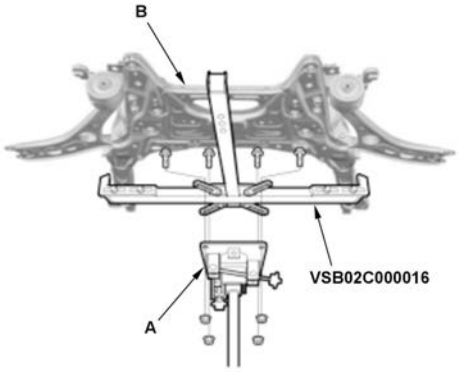	1. Set the subframe adapter (VSB02C000016) on a transmission jack (A), line up the slots in the arms with the bolt holes on the corner of the jack base, and tighten the bolts. 2. Attach the subframe adapter to the front subframe (B). 3. **Using the transmission jack, lower the front subframe until dropped from the body** .**NOTE:** Do not lower the front subframe more than required.

16. Front Stabilizer Bar Bushing Holder - Remove

1. **Remove both sides of the front stabilizer bar bushing holder** .

17. Steering Gearbox - Remove

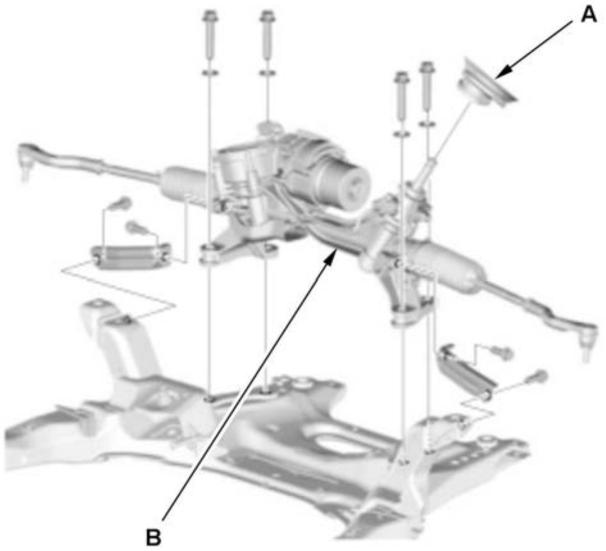	1. Remove the pinion shaft grommet (A). 2. Remove the steering gearbox (B) through the clearance of the body and the front subframe.

Installation

NOTE:

- ℹ Where icon is shown, further information shown below.
- Using clean solvent and a brush, wash any oil and dirt off the end of the steering gearbox. Blow dry with compressed air.
- Unless otherwise indicated, illustrations used in the procedure are for AWD model.

1

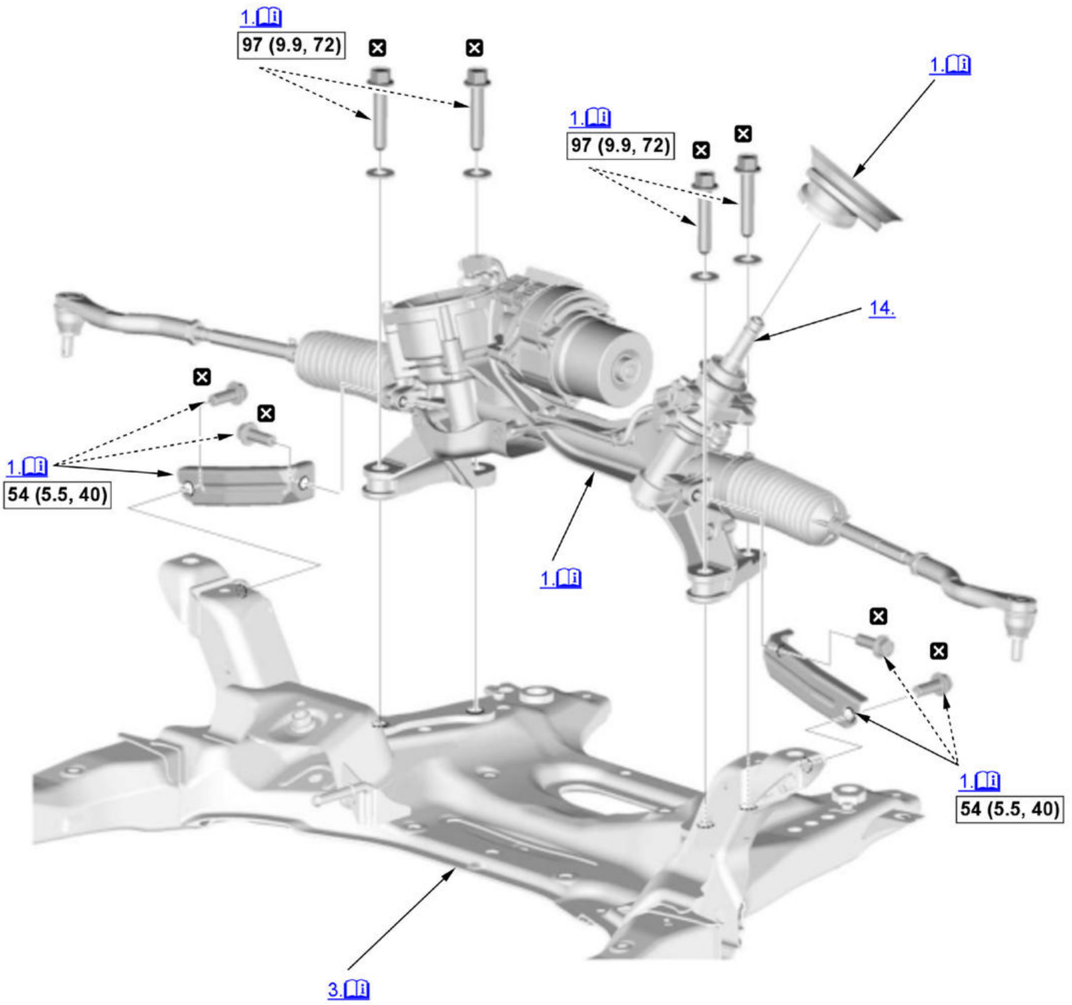
1.
97 (9.9, 72)
1.
1.
97 (9.9, 72)
14.
1.
54 (5.5, 40)
1.
1.
54 (5.5, 40)
3.

📖	Detailed information, notes and precautions
▭	Torque: N.m (kgf.m, lbf.ft)
☒	Replace

1. Steering Gearbox - Install

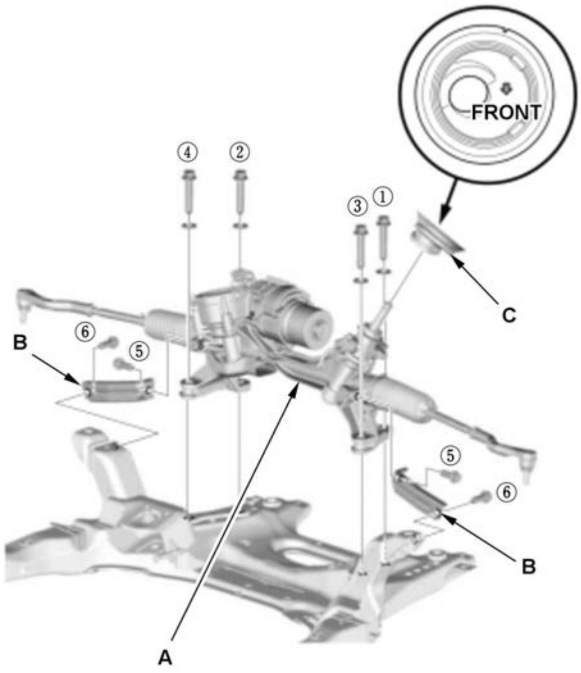 FRONT ④ ② ③ ① C B ⑥ ⑤ ⑤ ⑥ B A	1. Loosely install the steering gearbox (A) and steering gearbox stiffeners (B) to the front subframe with new mounting bolts. 2. Tighten the mounting bolts to the specified torque in the numbered sequence shown. 3. Install the pinion shaft grommet (C). **NOTE:** Install the grommet with the arrow facing towards the front of the vehicle.

2. Front Stabilizer Bar Bushing Holder - Install

1. **Install both sides of the front stabilizer bar bushing holder** .

3. Front Subframe - Install

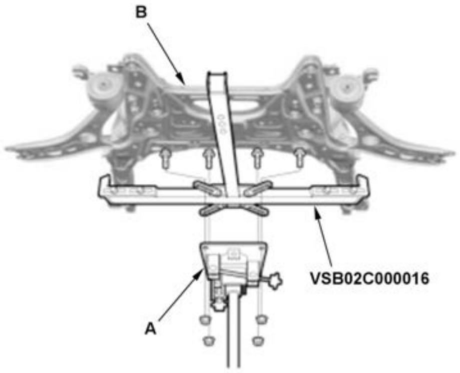	1. Set the subframe adapter (VSB02C000016) on a transmission jack (A), line up the slots in the arms with the bolt holes on the corner of the jack base, and tighten the bolts. 2. Attach the subframe adapter to the front subframe (B). 3. **Install the front subframe** .

4. Front Lower Arm Mounting Bolt - Install

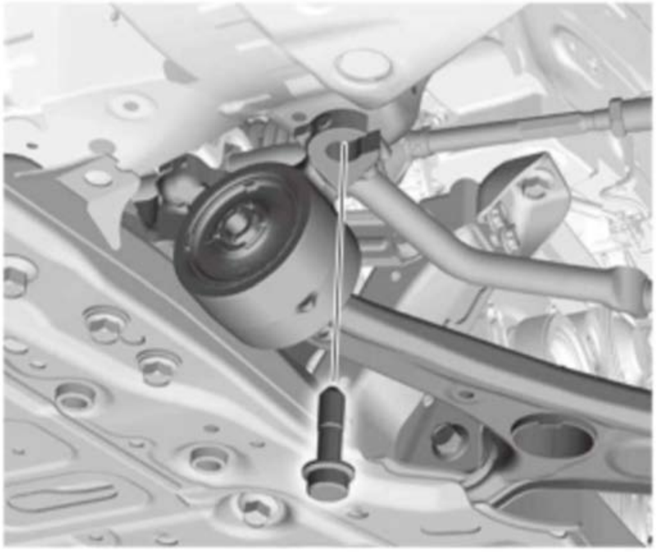	1. **Install both sides of the front lower arm mounting bolt to the body** .

5. **Lower Torque Rod - Install**
6. **Front Subframe Brace - Install**
7. **Propeller Shaft - Install (AWD)**
8. **Exhaust Pipe A - Install**
9. Front Lower Arm - Connect

1. **Connect both sides of the front lower arm to the ball joints** .

10. Stabilizer Link - Connect

1. **Connect both sides of the stabilizer link to the stabilizer bar** .

11. Connectors (EPS Harness) - Connect

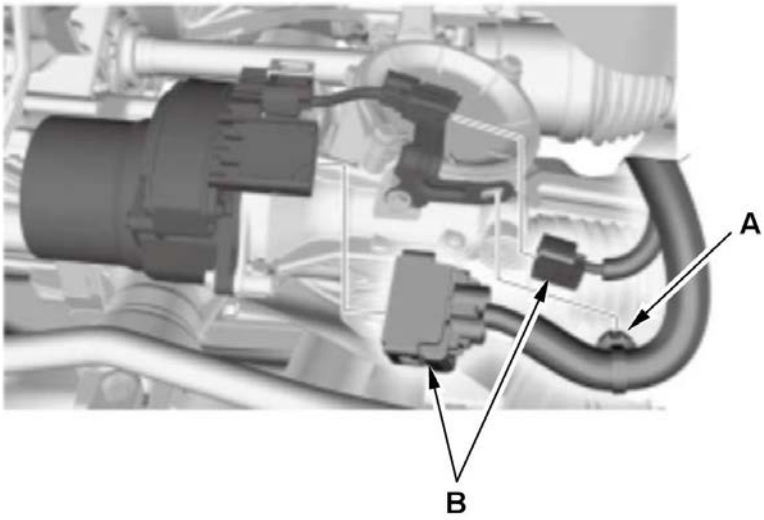	1. Install the harness clip (A). 2. Connect the connectors (B).

12. Engine Undercover - Install
13. Tie-Rod End Ball Joint - Connect (Both Sides)
14. Steering Joint - Connect
15. Front Wheel - Install
16. 12 Volt Battery Terminal - Connect
17. Wheel Alignment - Check
18. Steering Gearbox After Install - Check

1. After installation, check these items:
   - With the front wheels straight ahead, make sure the steering wheel is centered and the turning revolutions from center to full lock (left and right) is equal. If not, check the installation of the steering wheel and the engagement of the joint/pinion shaft splines.
   - With the tires raised off the ground, check for noise and abnormality by turning the steering wheel fully to the right and left several times.
   - Check the power steering assist .
   - Check that the EPS indicator does not come on.

19. VSA Sensor Neutral Position - Memorize

STEERING JOINT DISCONNECTION AND RECONNECTION

Removal

NOTE:

- ℹ Where icon is shown, further information shown below.
- Do not turn a steering wheel while disconnecting a steering joint.

1

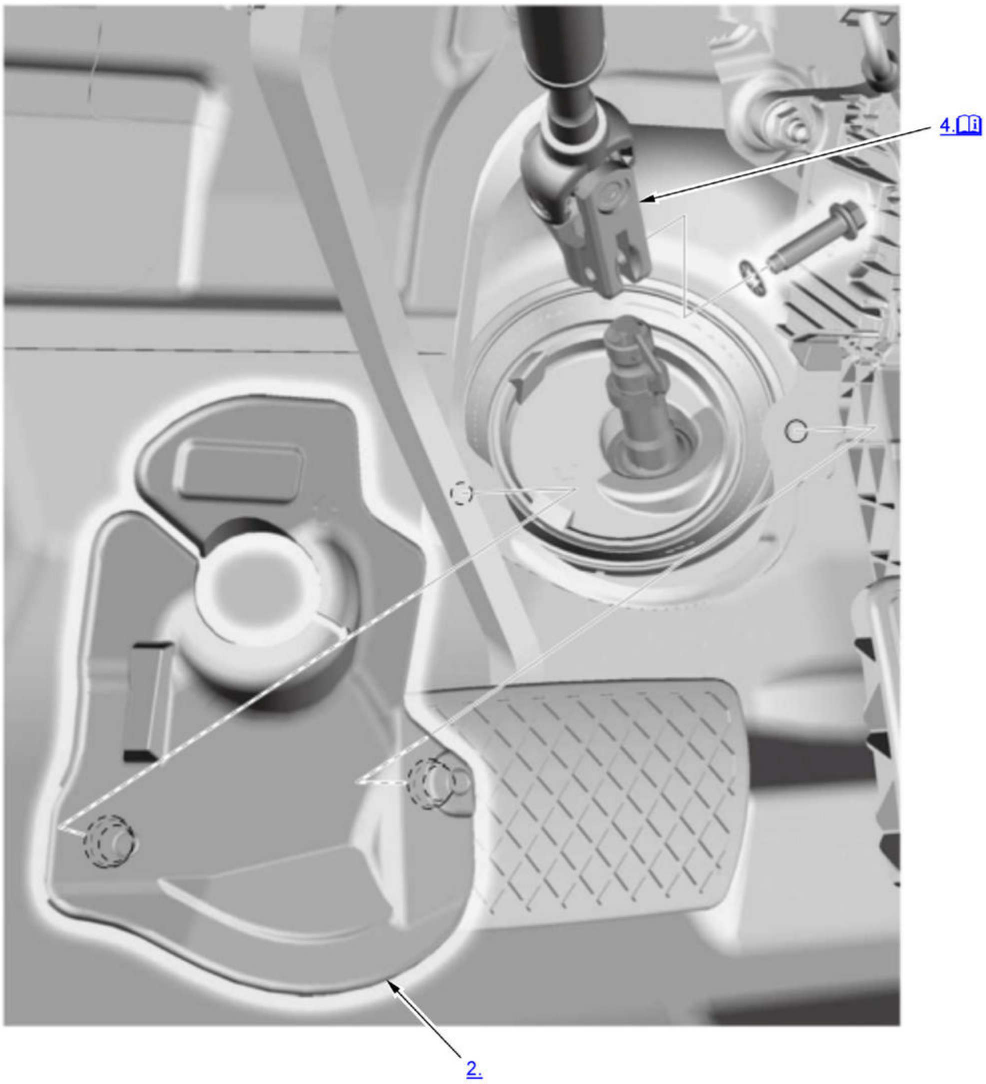

🕮	Detailed information, notes and precautions

1. Steering Wheel Holder Tool - Install

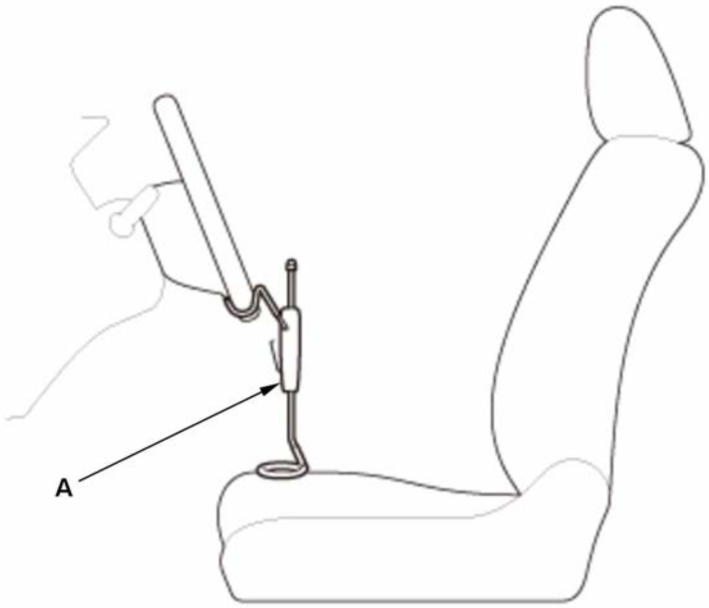	1. Center the steering wheel spoke angle. 2. Install a commercially available steering wheel holder tool (A).

2. Steering Joint Cover - Remove
3. Lower Slide Shaft - Hold

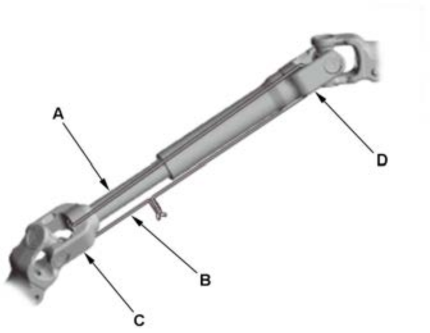	1. Hold the lower slide shaft (A) on the column with a piece of wire (B) between the joint yoke (C) of the lower slide shaft and the joint yoke (D) of the upper slide shaft to prevent the lower slide shaft from pulling out.

4. Steering Joint - Disconnect

NOTE:

- If the center guide is in place and has not moved, leave it in place.
- If the center guide has come off, discard it.

Installation

NOTE:

- ℹ Where icon is shown, further information shown below.
- Do not turn a steering wheel while connecting a steering joint.

1

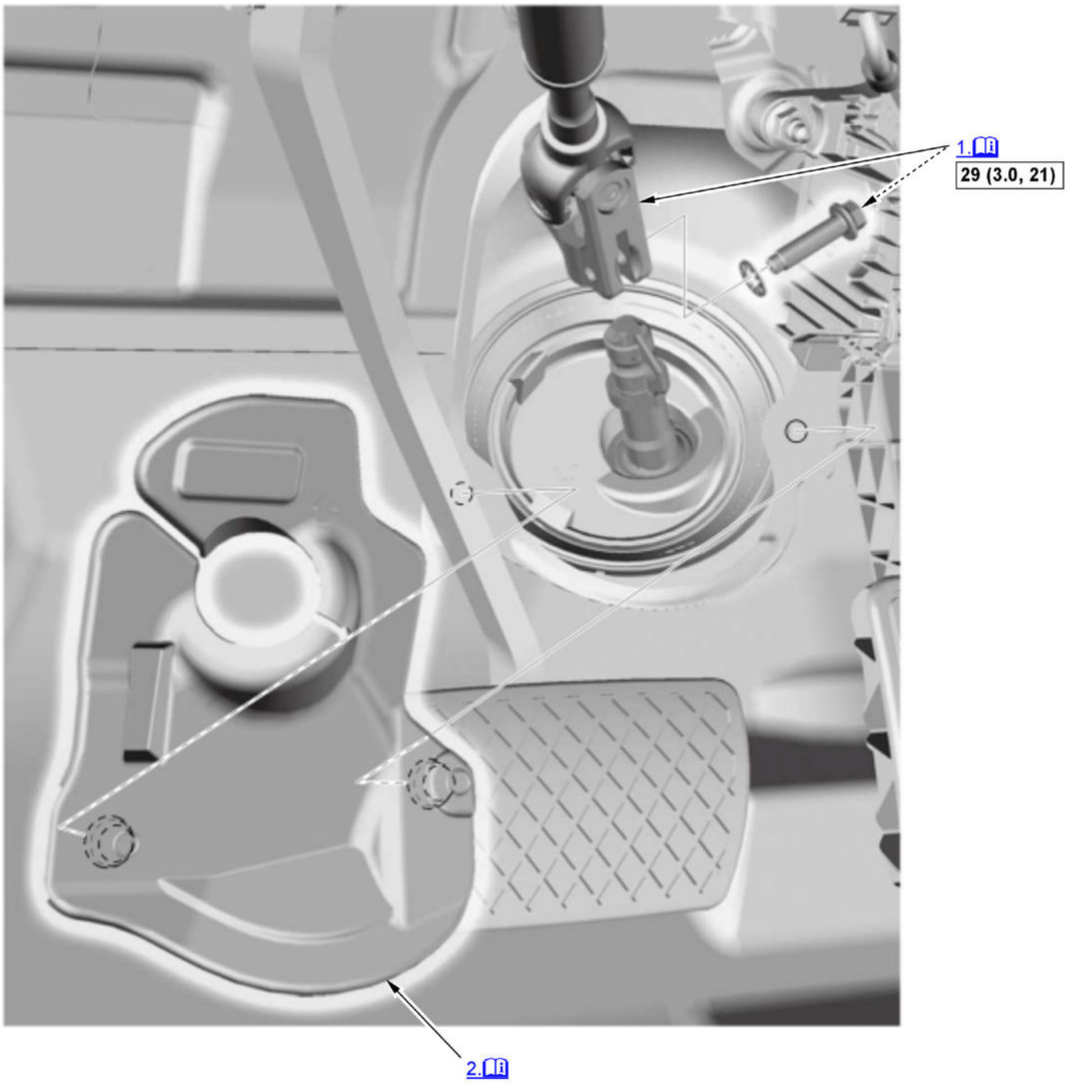

ℹ	Detailed information, notes and precautions
☐	Torque: N.m (kgf.m, lbf.ft)

1. Steering Joint - Connect

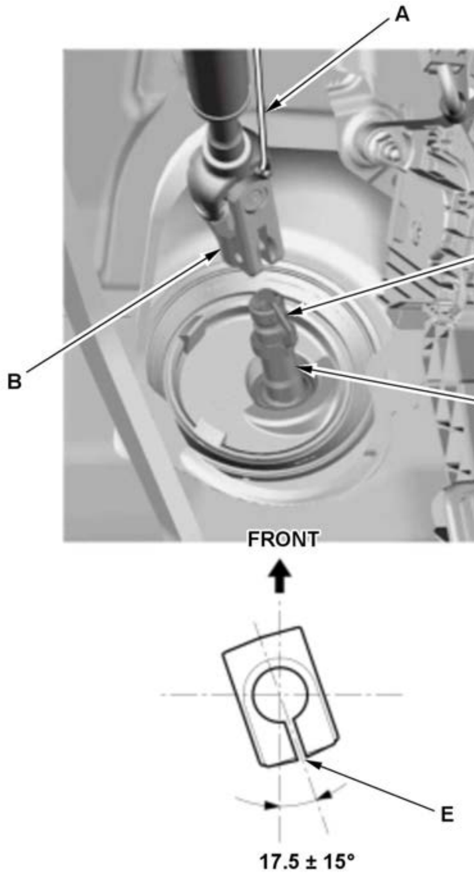	1. Cut the lower slide shaft holding wire (A). 2. Slip the lower end of the steering joint (B) onto the pinion shaft (C). **NOTE:** • Pinion shaft with center guide: Install the steering joint by aligning the center guide (D). • Pinion shaft without center guide: Position the steering column by aligning the gap (E) within the angle.

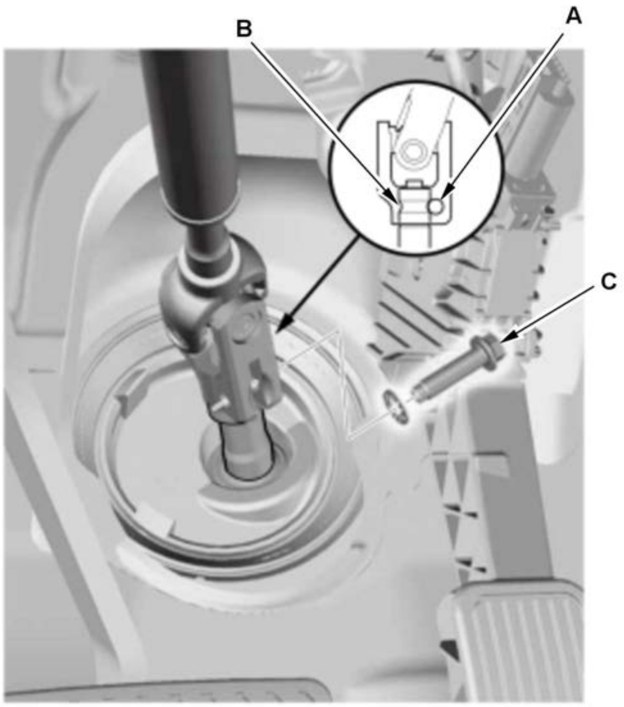	3. Align the bolt hole (A) on the steering joint with the groove (B) around the pinion shaft. 4. Loosely install the steering joint bolt (C). 5. Be sure that the joint bolt is securely in the groove in the pinion shaft. 6. Pull on the steering joint to make sure that the steering joint is fully seated. 7. Tighten the steering joint bolt to the specified torque.

2. Steering Joint Cover - Install

   NOTE: Check the steering joint cover for damage and cracks. If the steering joint cover is cracked, replace the steering joint cover.

3. Steering Wheel Holder Tool - Remove
4. **VSA Sensor Neutral Position - Memorize**

STEERING LOCK REMOVAL AND INSTALLATION

Removal

WARNING:

Wear goggles or safety glasses to prevent eye injury.

SRS components are located in this area. Review the **SRS component locations** , and the **precautions and procedures** before doing repairs or service.

1. **Immobilizer-Keyless Control Unit - Remove (Without Keyless Access System)**
2. **Steering Column - Remove**
3. Steering Lock - Remove

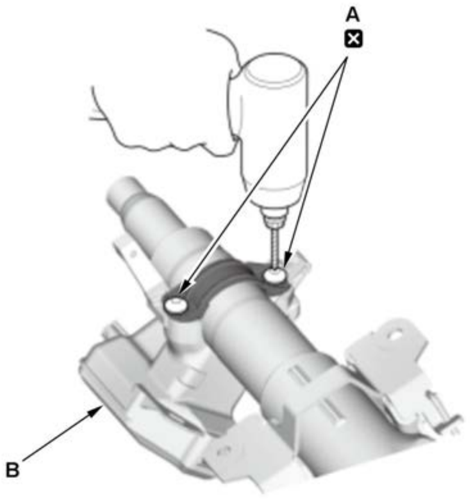	1. Center-punch both of the two shear bolts (A). 2. Drill their heads off with a 5 mm (0.20 in) drill bit. Be careful not to damage the steering lock when removing the shear bolts. **NOTE:** The shear bolts have left-hand threads. 3. Remove the steering lock (B).

Installation

SRS components are located in this area. Review the **SRS component locations** , and the **precautions and procedures** before doing repairs or service.

1. Steering Lock - Install

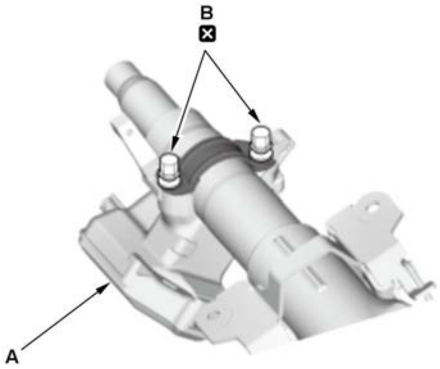	1. Install the steering lock (A). 2. Loosely tighten new shear bolts (B). **NOTE:** The shear bolts have left-hand threads. 3. Without keyless access system: Insert the ignition key, and check for proper operation of the steering wheel lock and that the ignition key turns freely.

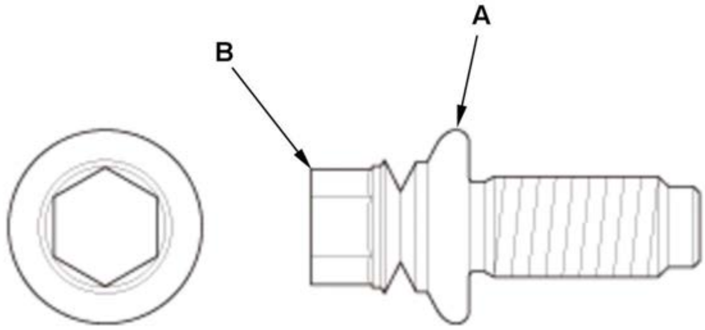	4. Tighten the shear bolts (A) until the hex heads (B) twist off. **NOTE:** The shear bolts have left-hand threads.

2. Steering Column - Install
3. Immobilizer-Keyless Control Unit (Without Keyless Access System) - Install
4. Keyless Access System - Register (With Keyless Access System)

STEERING RACK END REMOVAL AND INSTALLATION

Removal

NOTE:

- Do not allow dust, dirt, or other foreign materials to enter the steering gearbox.
- Refer to Steering Gearbox Disassembly and Reassembly as needed during this procedure.

1. Steering Gearbox - Remove
2. Tie-Rod End - Remove

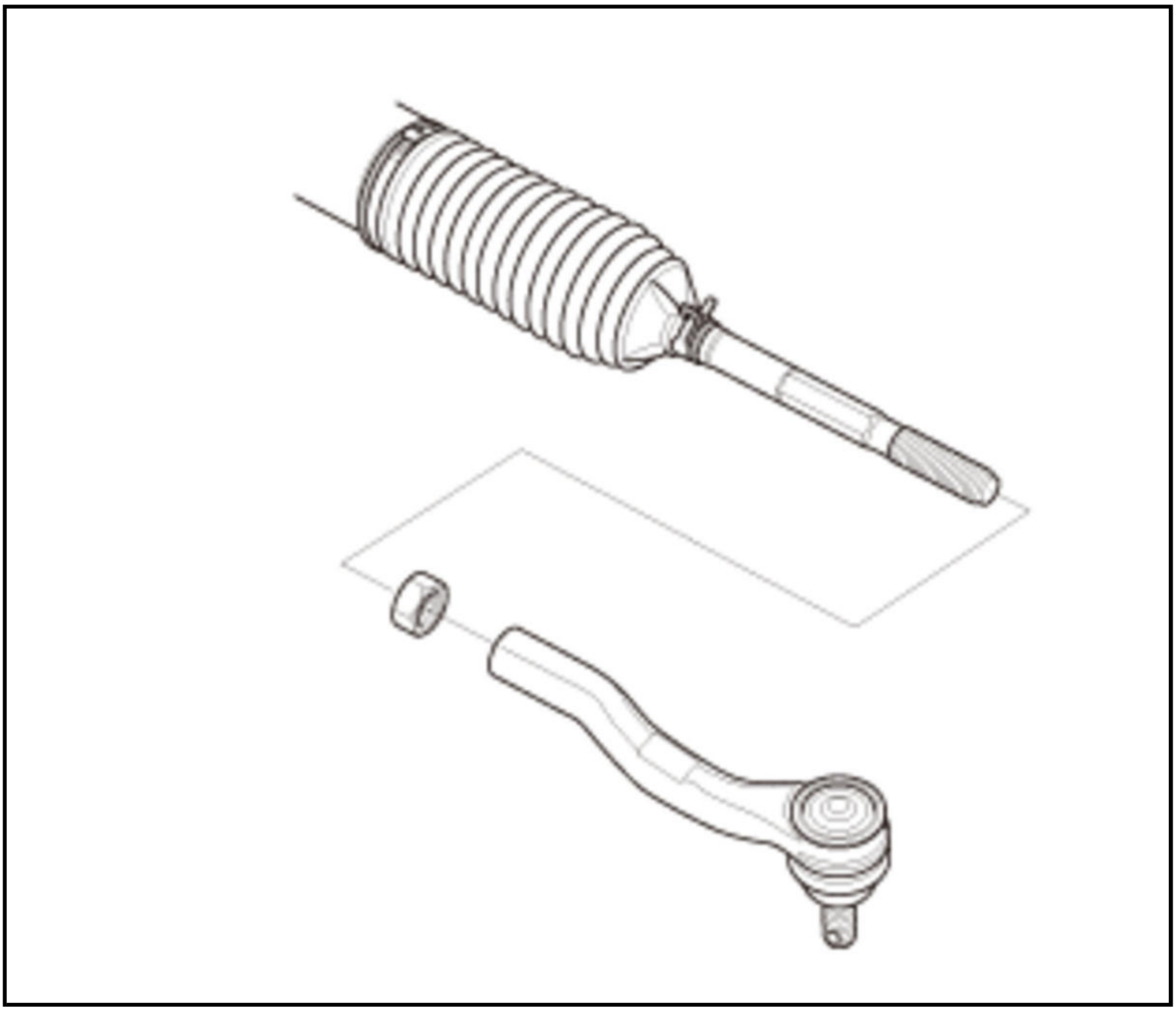

3. Rack End Boot - Remove

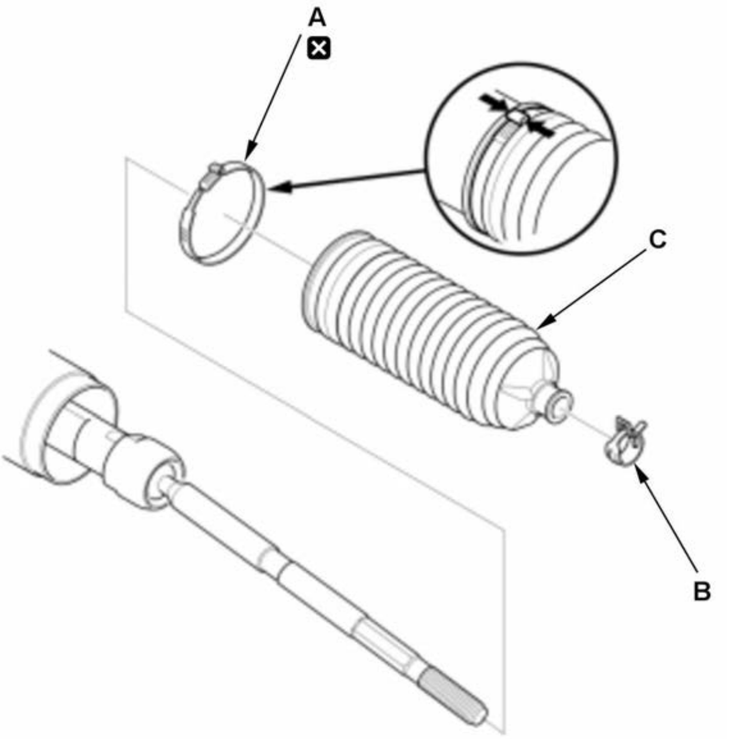	1. Remove the boot band (A). 2. Remove the tie-rod clip (B). 3. Pull the boot (C) away from the ends of the steering gearbox.

4. Rack End - Remove

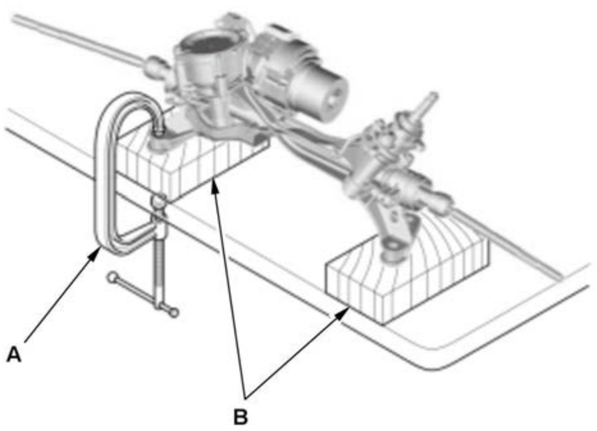	1. Hold the gearbox housing using a C-clamp (A) and wooden blocks (B) to a workbench as shown. **NOTE:** • Be careful not to damage the mounting surface with a C-clamp. • Do not clamp the cylinder part of the gearbox housing with a C-clamp.

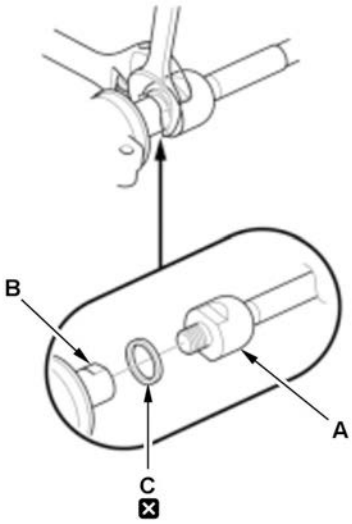	2. Unscrew the rack end (A) with a wrench. **NOTE:** • Hold the flat surfaces (B) with a wrench when unscrewing both rack ends. • Be careful not to damage the rack surface. 3. Remove the rack end and the rubber stopper (C).

Installation

NOTE:

- **How to read the torque specifications** .
- Do not allow dust, dirt, or other foreign materials to enter the steering gearbox.
- Refer to **Steering Gearbox Disassembly and Reassembly** as needed during this procedure.

1. Rack End - Install

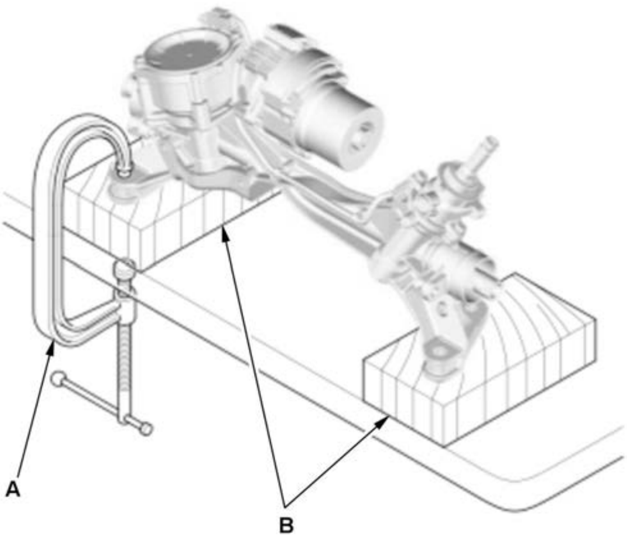

1. Hold the gearbox housing using a C-clamp (A) and wooden blocks (B) to a workbench as shown.

NOTE:

- Be careful not to damage the mounting surface with a C-clamp.
- Do not clamp the cylinder part of the gearbox housing with a C-clamp.

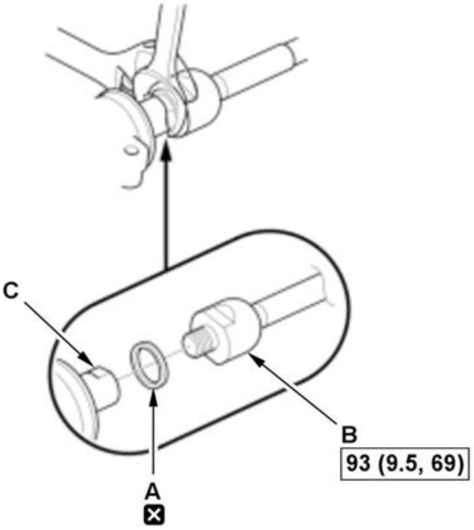

2. Install a new rubber stopper (A).

3. Tighten the rack end (B) with a wrench.

NOTE:

- Be careful not to damage the rack surface.
- Hold the flat surfaces (C) with a wrench when tightening both rack ends.

2. Rack End Boot - Install

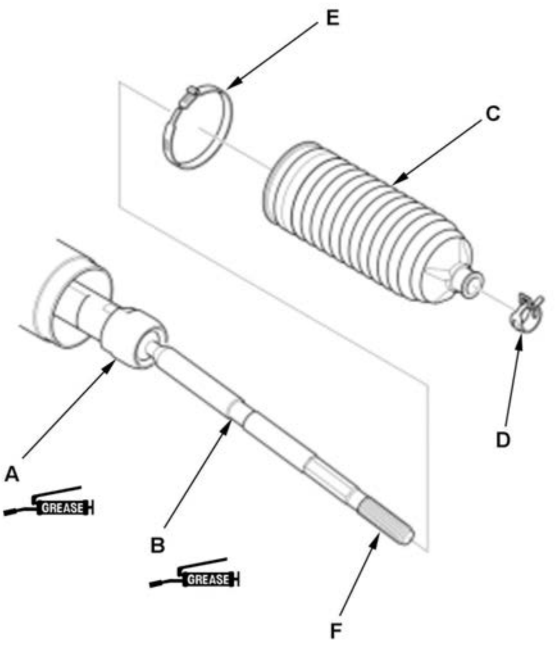

1. Apply multipurpose grease to the rack end joint housing (A) and the boot installation grooves (B).

2. Install the boot (C) on the rack end with the tie-rod clip (D) and a new boot band (E).

NOTE:

- Fit the boot end in the installation grooves in the housing properly.
- After installing the boots, wipe the grease off the threaded section (F) of the rack end.

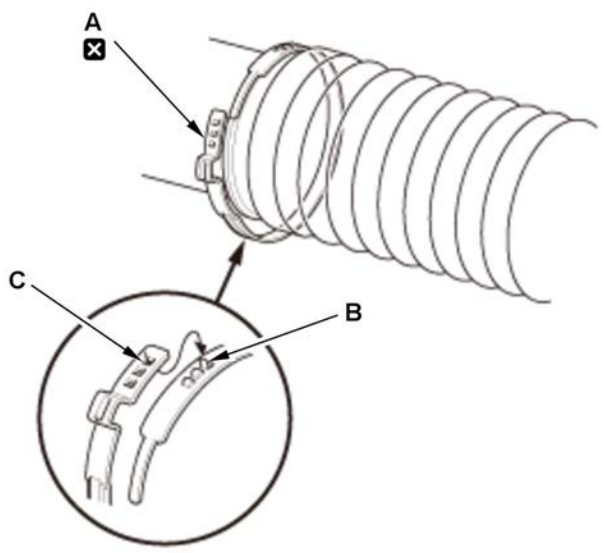

3. Set the boot band (A) by aligning the tabs (B) with the holes (C) on the band.

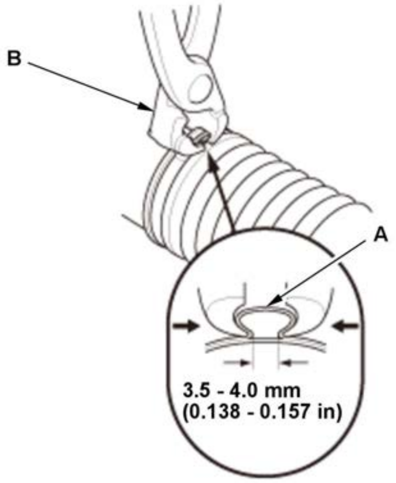

4. Close the ear portion (A) of the boot band with pincers Oetiker 1098, commercially available or equivalent (B).

5. Slide the rack right and left to be certain that the boots are not deformed or twisted.

3. Tie-Rod End - Install

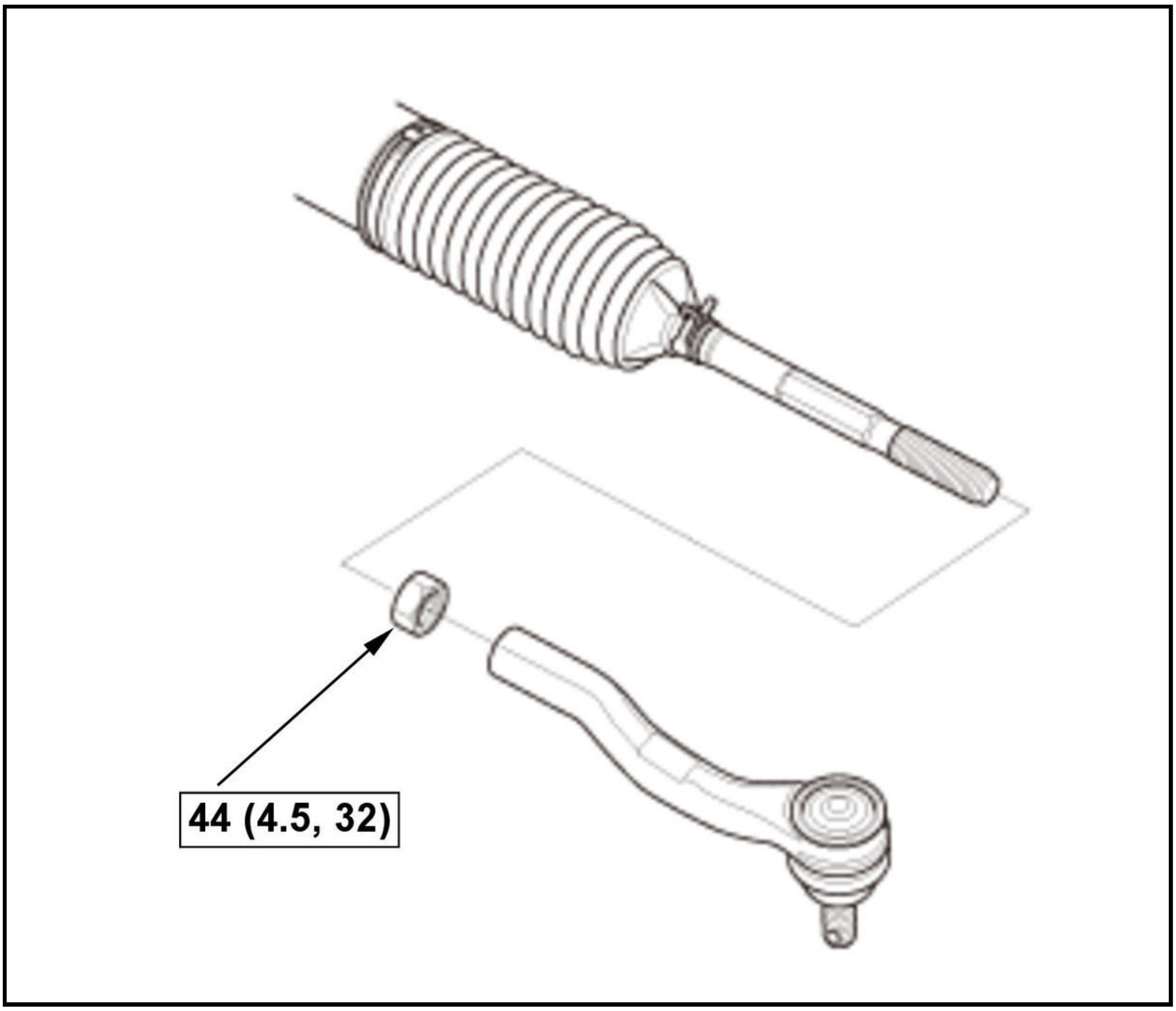

4. Steering Gearbox - Install

STEERING WHEEL REMOVAL AND INSTALLATION

Removal

SRS components are located in this area. Review the SRS component locations , and the precautions and procedures before doing repairs or service.

NOTE: 🛈 Where icon is shown, further information shown below.

1

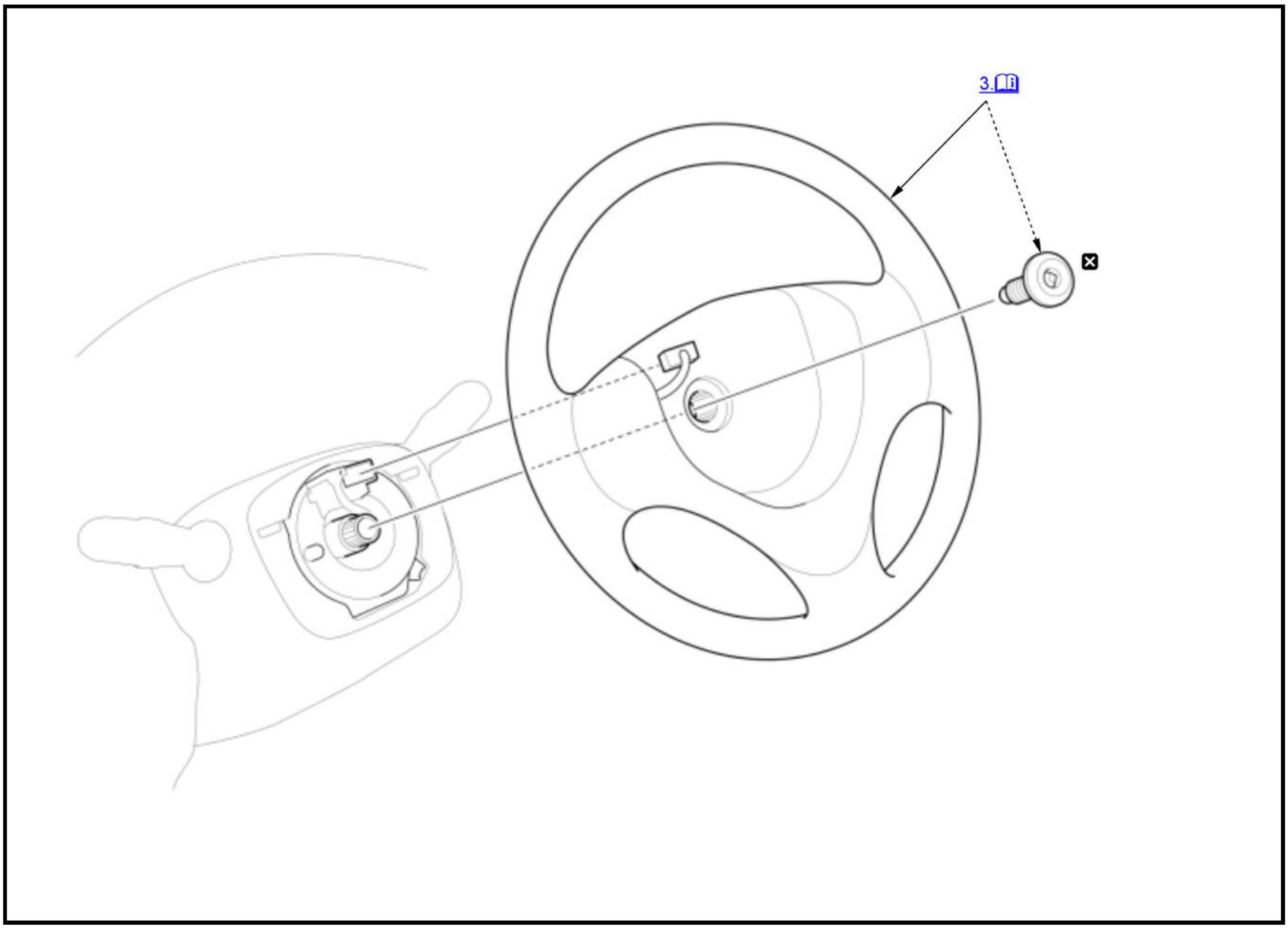

ℹ	Detailed information, notes and precautions
☒	Replace

1. **12 Volt Battery Terminal - Disconnect**

   NOTE: Wait at least 3 minutes to start the following work.

2. **Driver's Airbag - Remove**
3. Steering Wheel - Remove

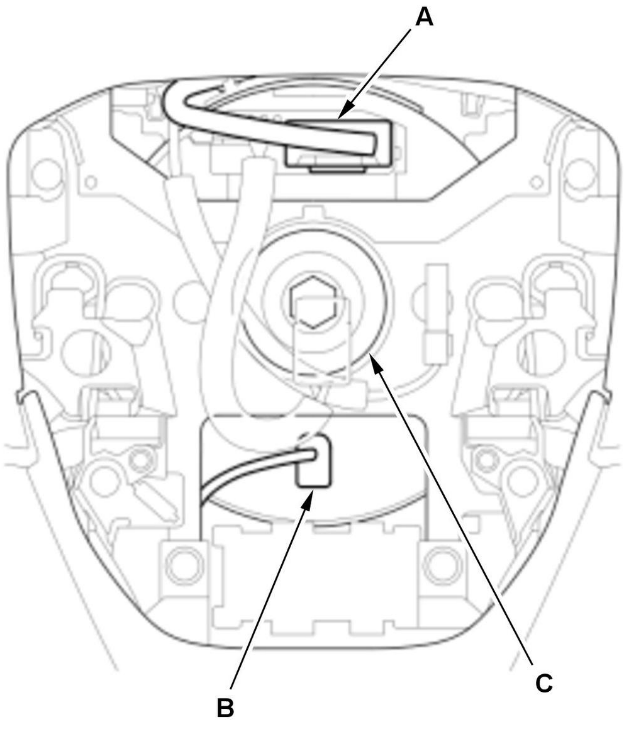

1. Set the front wheels in the straight ahead position.

2. Disconnect the connector (A).

3. With heated steering wheel: Disconnect the connector (B).

4. Loosen the steering wheel bolt (C) three turns.

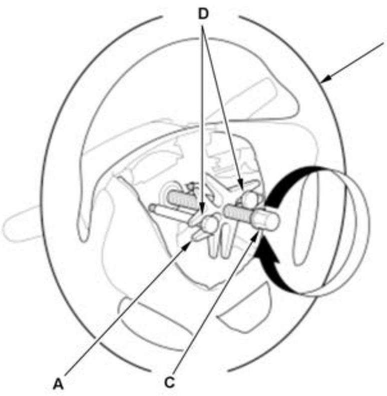

5. Install a commercially available steering wheel puller (A) on the steering wheel (B).

6. Free the steering wheel from the steering column shaft by turning the pressure bolt (C) of the puller. Note these items when removing the steering wheel:

- Do not tap on the steering wheel or the steering column shaft when removing the steering wheel.
- If you thread the puller bolts (D) into the wheel hub more than five threads, the bolts will hit the cable reel and damage it. To prevent this, install a pair of jam nuts five threads up on each puller bolt.

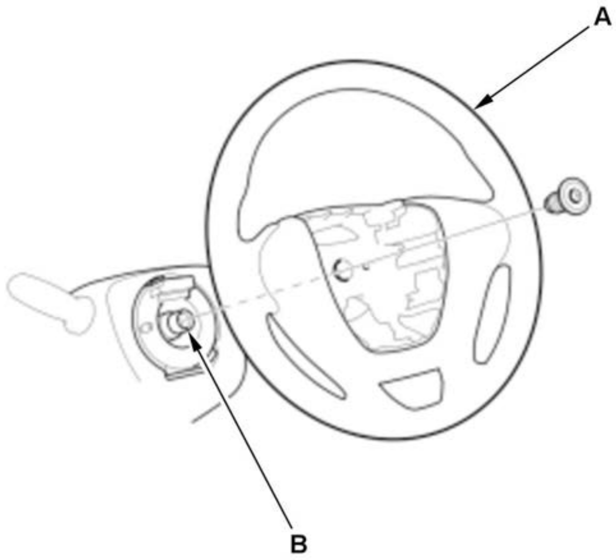

7. Remove the steering wheel puller.

8. Remove the steering wheel (A).

NOTE: Remove the old sealant from the threads (B) in the column shaft.

Installation

SRS components are located in this area. Review the **SRS component locations** , and the **precautions and procedures** before doing repairs or service.

NOTE: ℹ Where icon is shown, further information shown below.

1

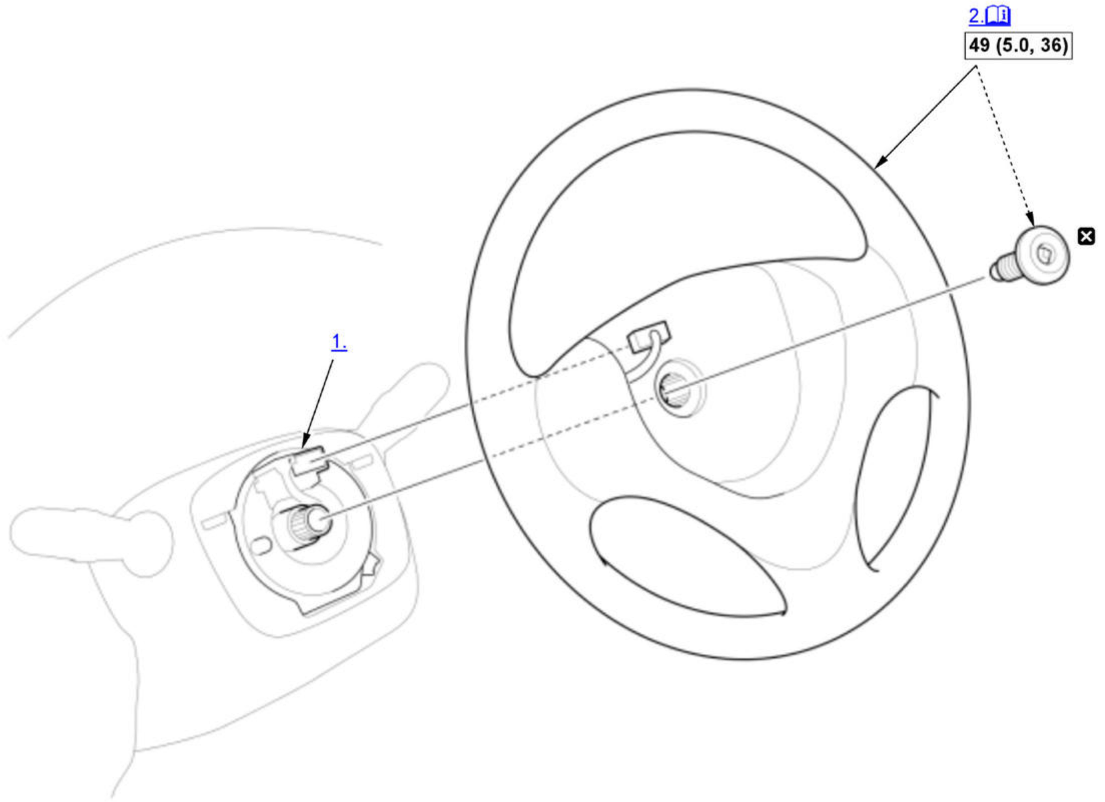

ℹ	Detailed information, notes and precautions
☐	Torque: N.m (kgf.m, lbf.ft)
☒	Replace

1. **Cable Reel - Align**
2. Steering Wheel - Install

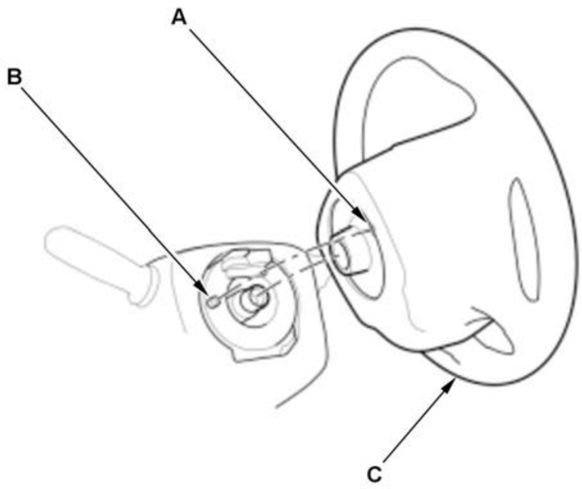	1. Position the steering wheel hub (A) so that it engages the pin (B) of the cable reel. 2. Install the steering wheel (C) onto the steering column shaft. **NOTE:** Do not tap on the steering wheel or the steering column shaft when installing the steering wheel.

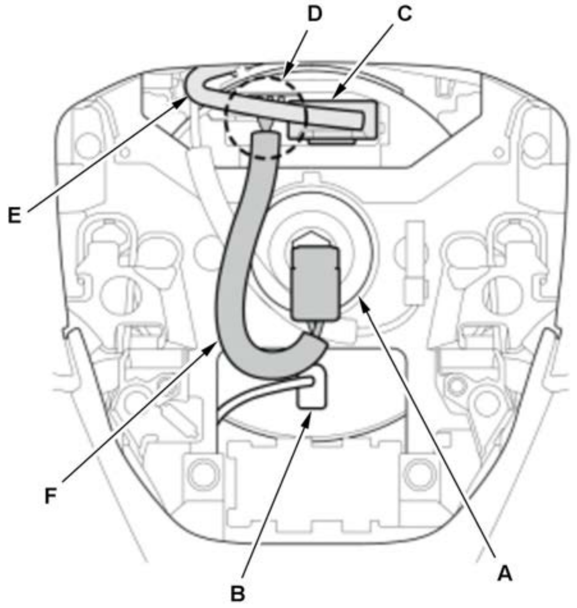	3. Install a new steering wheel bolt (A), and tighten it to the specified torque. **NOTE:** Install the steering wheel bolt and tighten it within 5 minutes using the specified tightening torque. 4. With heated steering wheel: Connect the connector (B). 5. Connect the connector (C). 6. At point (D), make sure that the cable reel subharness (E) is routed above the SRS harness (F).

3. Driver's Airbag - Install
4. 12 Volt Battery Terminal - Connect
5. Steering Wheel Spoke Angle - Check

1. Check the steering wheel spoke angle. 2. With the front wheels straight ahead, make sure the steering wheel is centered and the turning revolutions from center to full lock (left and right) is equal. If not, check the installation of the steering wheel and the engagement of the joint/pinion shaft splines.

6. VSA Sensor Neutral Position - Memorize

TIE-ROD END BALL JOINT DISCONNECTION AND RECONNECTION

Special Tools Required

Image	Description/Tool Number
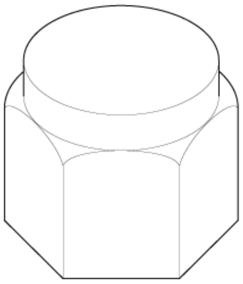	Ball Joint Thread Protector, 12 mm 07AAF-SDAA100
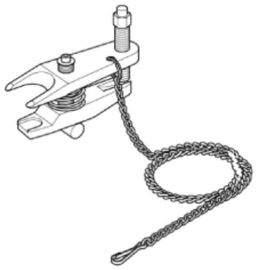	Ball Joint Remover, 28 mm 07MAC-SL00202

Removal and Installation

NOTE: How to read the torque specifications .

1. Vehicle - Lift
2. Front Wheel - Remove
3. Tie-Rod End Ball Joint - Disconnect

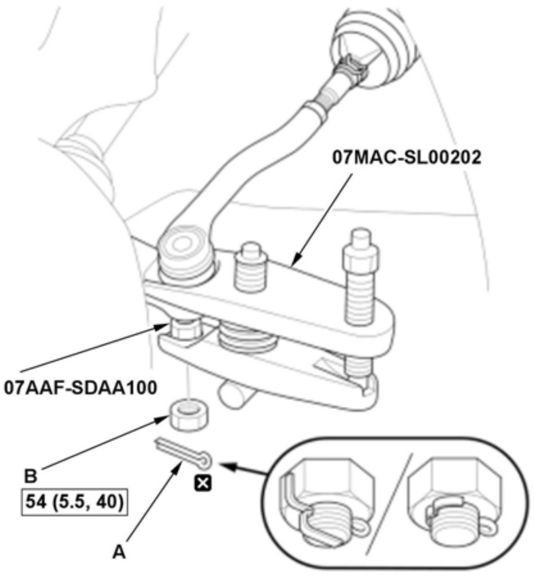 07MAC-SL00202 07AAF-SDAA100 B 54 (5.5, 40) ☒ A	1. Remove the cotter pin (A). 2. Remove the nut (B). 3. **Disconnect the tie-rod end ball joint from the knuckle using the ball joint thread protector and the ball joint remover** . **NOTE:** • Be careful not to damage the ball joint boot when installing the ball joint remover. • During installation, install the new cotter pin after tightening the nut, and bend its end as shown.

4. All Removed Parts - Install

1. Install all removed parts in the reverse order of removal.

DESCRIPTION & OPERATION

EPS SYSTEM DESCRIPTION

Overview

This vehicle is equipped with electrical power steering (EPS). The driver's steering force is assisted by an electric motor at the steering gearbox, instead of an engine-driven oil pump to generate oil pressure, so the EPS system improves engine efficiency.

The EPS control unit monitors and controls the EPS motor's assisting force to match driving conditions.

- Low vehicle speeds: High power assist (for easy handling)
- High speed driving: Low power assist (for stable driving)
- Low speed to high speed driving: Change smoothly from high assist to low assist

EPS Control

The EPS control unit calculates the assistance torque based on the steering torque signal and the vehicle speed signal, and activates the motor to assist the steering force. To protect the system, the EPS control unit reduces motor current when repeated extreme steering force, such as turning the steering wheel continuously with the vehicle stopped or holding the steering at the lock position (full right or left). Also, the EPS control unit assists the steering force when the EPS control unit receives the steering assist request from the driving support system.

Steering Wheel Return Control

The steering wheel return control controls the return speed of the steering wheel based upon the steering angle and the vehicle speed. This control is responsible for the returning the steering wheel to the neutral position.

EPS Motor Control Circuit

The EPS motor control circuit is composed of a system control CPU, the FET (field-effect transistor) bridge, the FET drive circuit, the power relay, the fail-safe relays, the relay drive circuit, the electric current detection circuit, and the EPS motor. With the signal from the input sensor, the CPU calculates and duty cycle outputs the appropriate three-phase current for the FET drive circuit. This operation is duty controlled.

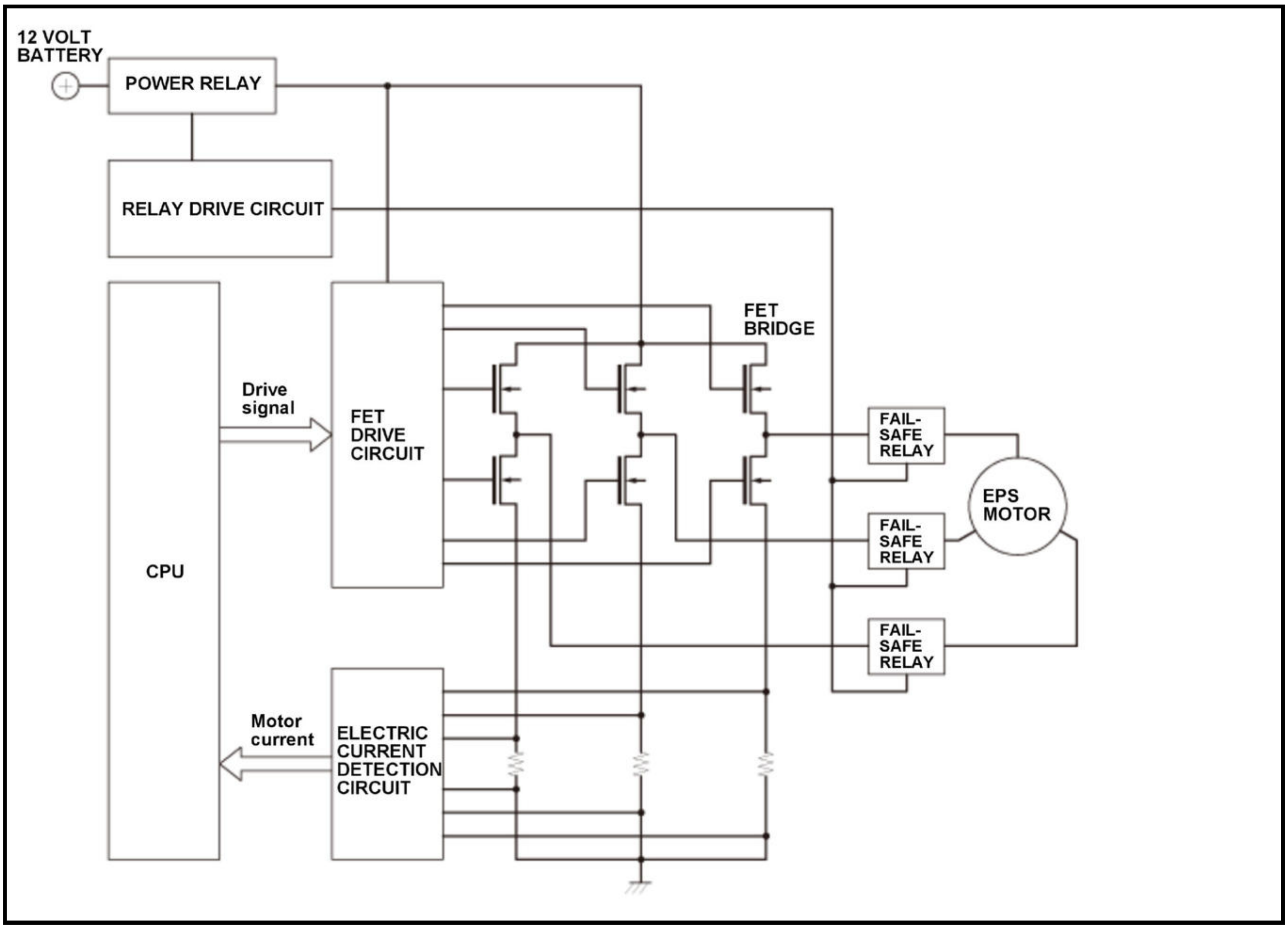
12 VOLT BATTERY
POWER RELAY
RELAY DRIVE CIRCUIT
CPU
Drive signal
FET DRIVE CIRCUIT
FET BRIDGE
FAIL-SAFE RELAY
FAIL-SAFE RELAY
FAIL-SAFE RELAY
EPS MOTOR
Motor current
ELECTRIC CURRENT DETECTION CIRCUIT

Steering Angle Detection

The EPS control unit calculates a steering angle from the motor angle sensor value.

The EPS control unit detects the motor rotational angle (A) with the motor angle sensor, and calculates the assist pinion shaft angle (B) by multiplying the motor rotational angle by the reduction ratio of the worm gear. The assist pinion shaft angle and the initial steering angle are converted by using the VGR (Variable Gear Ratio) conversion map, and the manual pinion shaft angle (C) is calculated. The EPS control unit also corrects the torsional angle of the torsion bar based on the torque sensor value for the manual pinion shaft angle, and calculates the steering wheel angle (D).

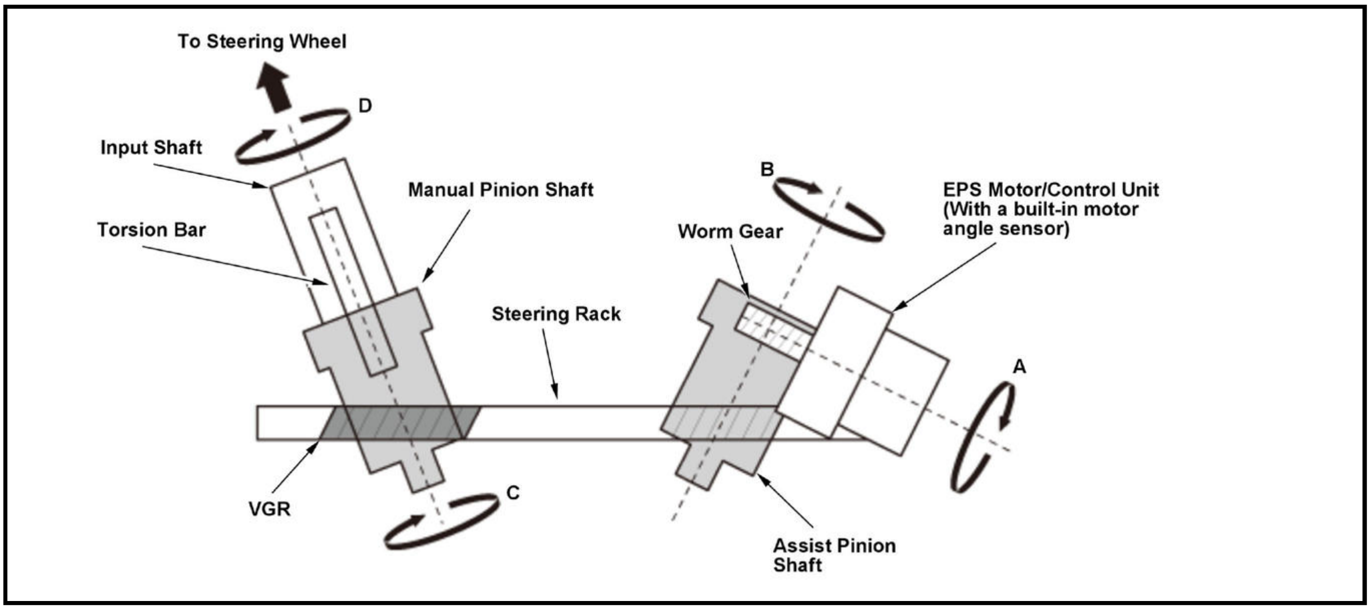
To Steering Wheel
D
Input Shaft
Manual Pinion Shaft
Torsion Bar
B
Worm Gear
EPS Motor/Control Unit (With a built-in motor angle sensor)
Steering Rack
A
VGR
C
Assist Pinion Shaft

Steering Angle Neutral Position Learning

The EPS control unit learns the steering angle neutral position to detect an initial steering angle when turning the vehicle to the ON mode.

The steering angle neutral position learning is classified into initial learning and the regular learning.

Initial Learning

The initial learning is performed automatically at the time of the first driving after steering angle neutral position is cleared.

When the EPS control unit judges that the vehicle is going straight based on each sensor signals, the steering angle neutral position is learned.

For more details of the learning procedure, refer to **Steering Angle Neutral Position Learning**.

The steering angle neutral position is cleared whenever you do any of these actions:

- Replacing the EPS motor/control unit.
- Disconnecting the 12 volt battery cable from the 12 volt battery.
- Disconnecting the power from the EPS control unit.
- Decreasing the power supply voltage for the EPS control unit.

Regular Learning

The regular learning revises a gap of the neutral position that occurs due to normal wear and tear of the vehicle and a change of the wheel alignment during driving.

Learning using the HDS

The VSA sensor neutral position memorization for VSA system is performed using the HDS, the steering angle neutral position is cleared and overwritten.

Driver Attention Monitor Function

Overview

To help avoid a crash or collision due to drowsiness or fatigue, the driver attention monitor function can detect if the driver is tired or inattentive and prompt the driver to take a break.

System Description

The driver attention monitor function can detect driver drowsiness by analyzing the driving behavior based on the steering angle and the yaw rate when the vehicle speed is above a set point. If the system detects driver drowsiness or inattention, the driver attention monitor function warns the driver to take a break by showing a message on the multi-information display (MID) and/or vibrating the steering wheel.

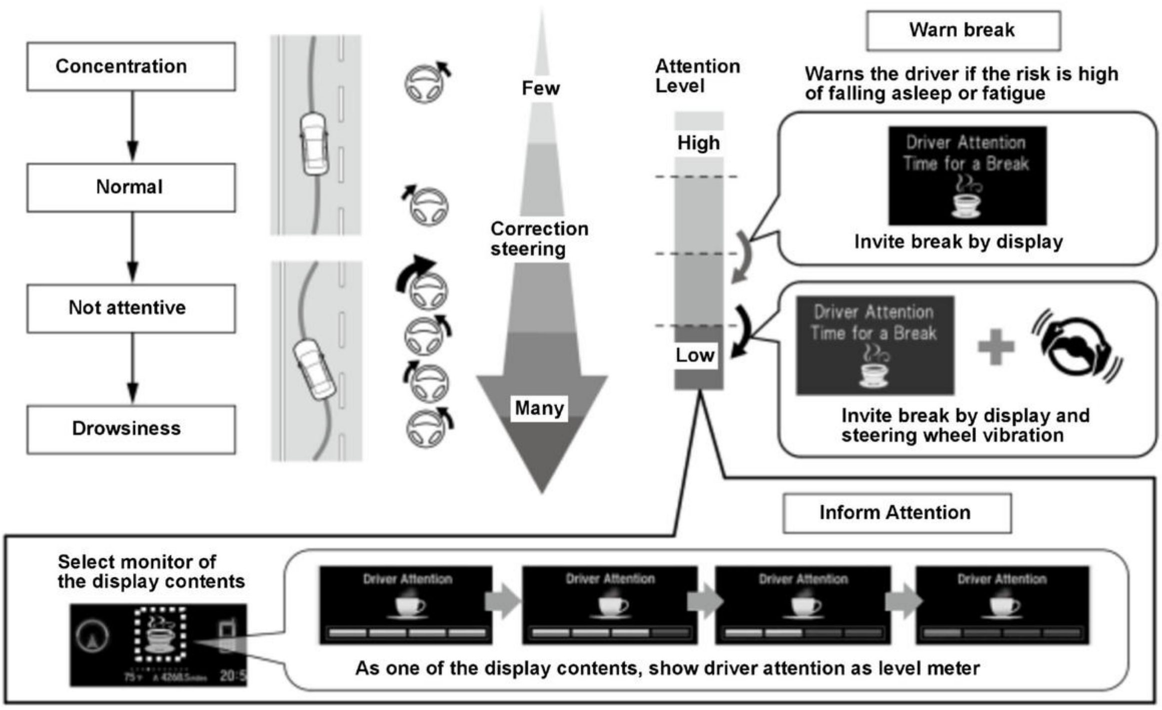
Concentration
Normal
Not attentive
Drowsiness
Few
Correction steering
Many
Attention Level
High
Low
Warn break
Warns the driver if the risk is high of falling asleep or fatigue
Driver Attention
Time for a Break
Invite break by display
Driver Attention
Time for a Break
Invite break by display and steering wheel vibration
Inform Attention
Select monitor of the display contents
Driver Attention
Driver Attention
Driver Attention
Driver Attention
As one of the display contents, show driver attention as level meter

NOTE: This illustration shows a typical sample of attention display.

Operation Conditions

The driver attention monitor function operates under these conditions:

- Vehicle speed is 25 - 112 mph (40 - 180 km/h).
- The EPS system, the SRS, and/or the gear system does not have a malfunction.

Function Prohibition

The driver attention monitor function is not activated under these conditions:

- Driving duration is less than 30 minutes.
- Driving on rough roads.
- Driving in a strong side wind.
- Active driving situation (changing the traffic lane or the vehicle speed).

Attention Level Reset

The driver attention monitor function resets the attention level displayed on the multi-information display (MID) if detects these conditions.

- The vehicle is turned to the OFF (LOCK) mode.
- The driver releases the seat belt and opens the driver's door with the vehicle in ON mode.

Motion Adaptive-EPS Control

Overview

The motion adaptive-EPS control performs the steering torque correction control coordinated with VSA system for stabilizing the vehicle when the steering is unstable.

The EPS system determines the state of the vehicle based on the data calculated by the VSA modulator-control unit, and the data from the yaw rate sensor and the acceleration sensor. When the system determines that the vehicle behavior is abnormal, the EPS control unit calculates the correction current based on the vehicle behavior and corrects the steering torque.

The motion adaptive-EPS control is stopped in the event of failure in the VSA system.

Mitigates Oversteer Control

When oversteer occurs, it compensates for steering torque to steer in the countersteer direction, and enhances vehicle control.

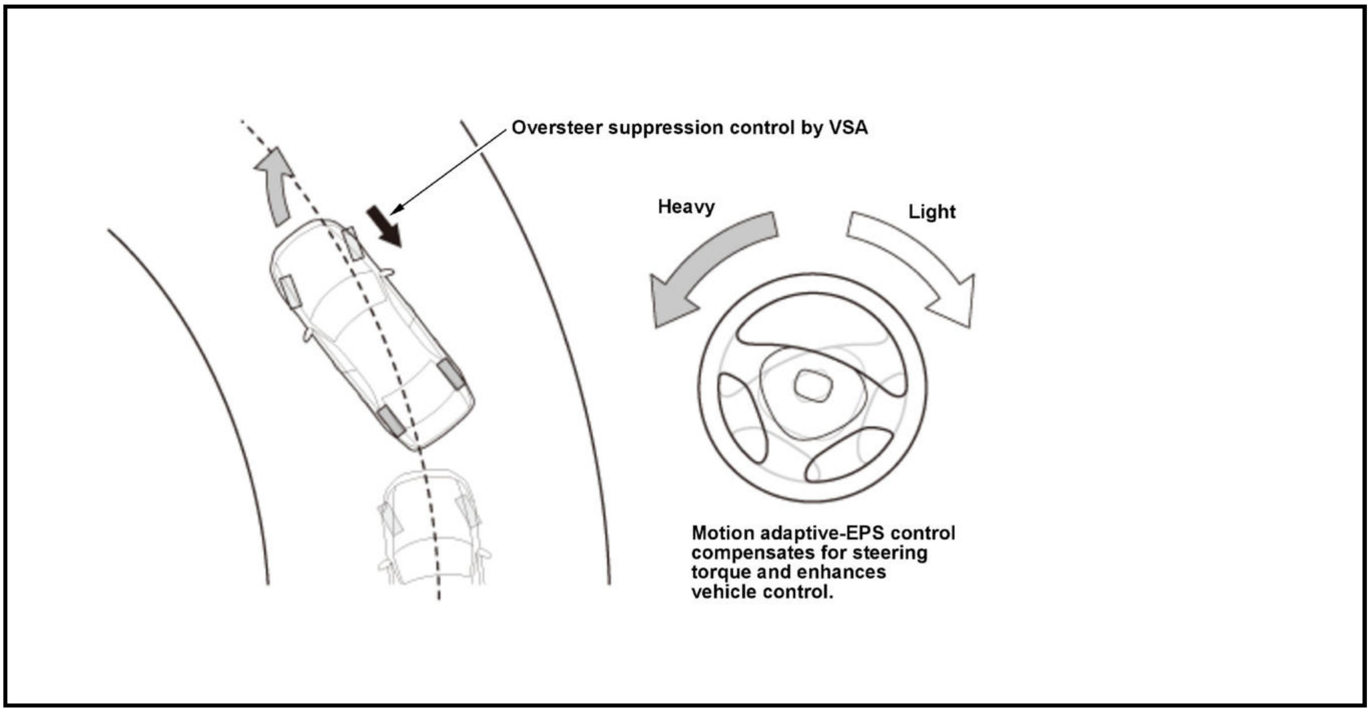
Oversteer suppression control by VSA
Heavy
Light
Motion adaptive-EPS control compensates for steering torque and enhances vehicle control.

Mitigates Understeer Control

When understeer occurs, it compensates for steering torque to control the oversteer, then holds the tire grip to enhance vehicle control.

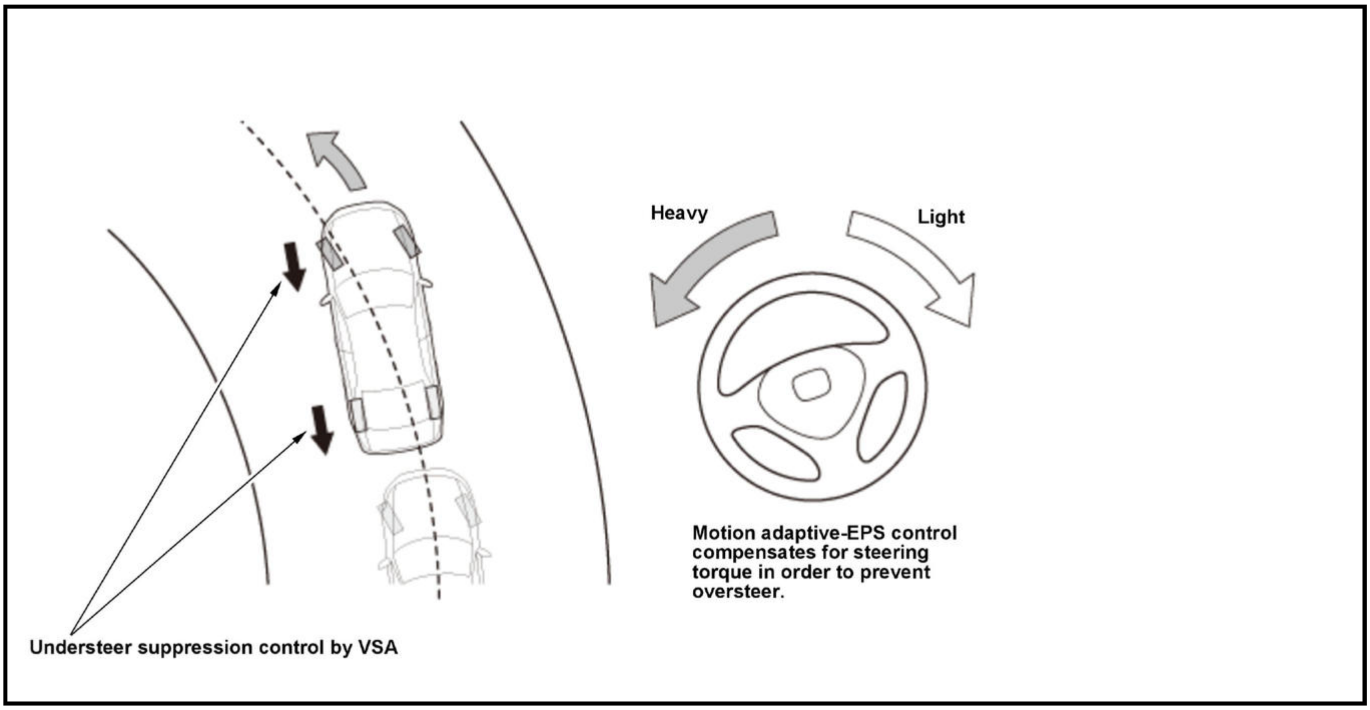
Heavy
Light
Motion adaptive-EPS control compensates for steering torque in order to prevent oversteer.
Understeer suppression control by VSA

Stabilizes Braking on Road Surfaces With Different Friction Coefficients Control

When the vehicle behavior is abnormal while braking on an uneven road surface, it compensates for steering torque to enhance vehicle control.

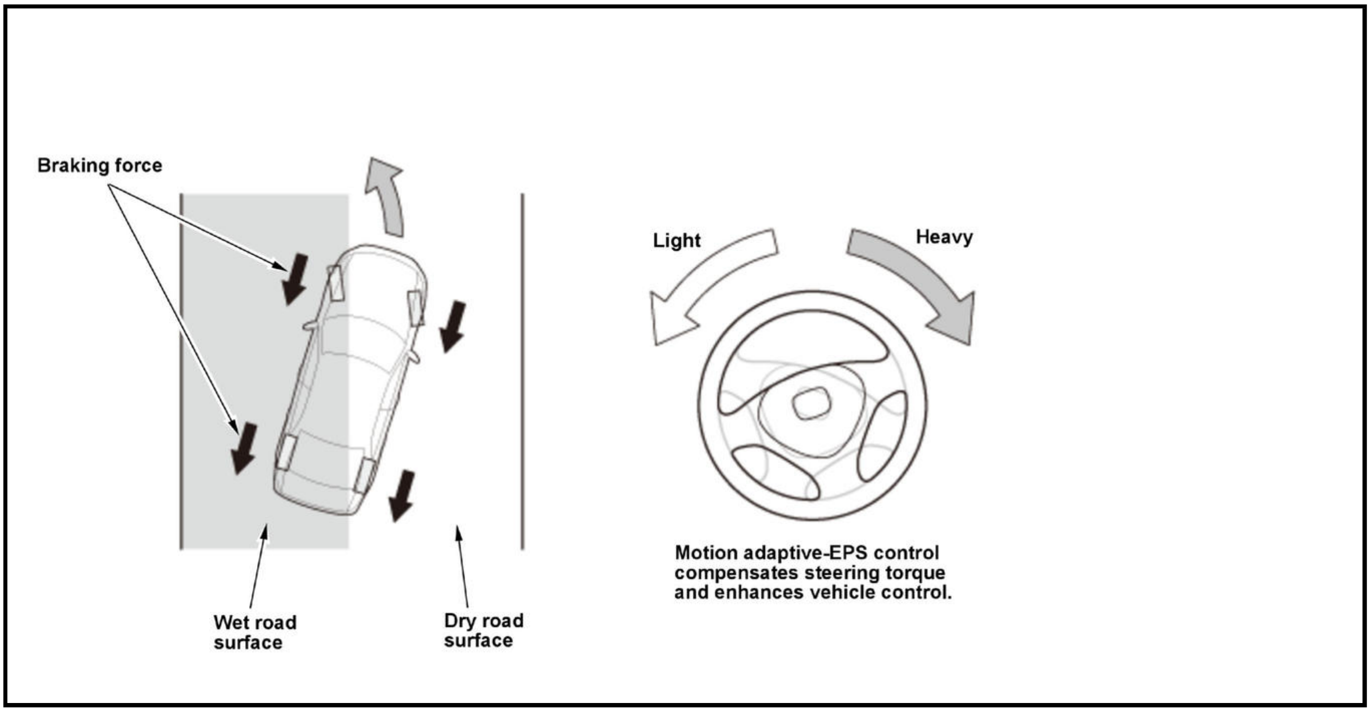
Braking force
Wet road surface
Dry road surface
Light
Heavy
Motion adaptive-EPS control compensates steering torque and enhances vehicle control.

Straight Driving Assist

Steering effort is detected and reduced by applying EPS motor assist when driving on a sloped road. This control will return to normal when no longer driving on a sloped road. This function only operates when the cruise control is on and the speed is set.

Assist image

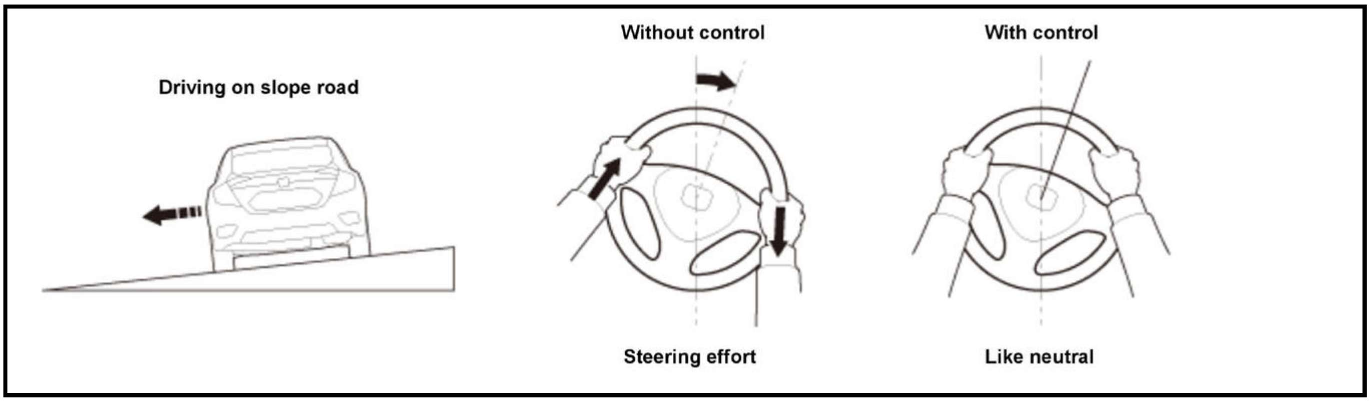
Driving on slope road
Without control
With control
Steering effort
Like neutral

Fail-Safe

The EPS control unit diagnoses and monitors the motor system, the torque sensor system, the power supply system, the communication system, and the CPU. When a failure is detected, the EPS indicator comes on and the unit takes one of the following fail-safe actions:

- Stop assist
- Limit assist
- Start alternative assist (limited control)

EPS SYSTEM DESCRIPTION - COMPONENTS

Components

The EPS system mainly consists of the following parts:

- EPS control unit
- EPS motor
- Torque sensor
- Steering gearbox
- System indicator

For functions of indicator, refer to How to Troubleshoot the EPS System .

Steering Gearbox

The EPS system is rack-assist type, and the steering gearbox is a dual pinion type, which includes two pinions that are engaged with steering rack.

The assist pinion shaft transmits the EPS motor power to the steering rack. The EPS motor power is transmitted to the worm wheel by the worm gear. The assist pinion shaft moves the steering rack with the EPS motor power that is increased and transmitted by the worm wheel.

The manual pinion shaft transmits the steering torque from the steering wheel to the steering rack. The steering torque is transmitted from the steering column shaft to the input shaft, and the manual pinion shaft connecting with the input shaft by the torsion bar moves the steering rack.

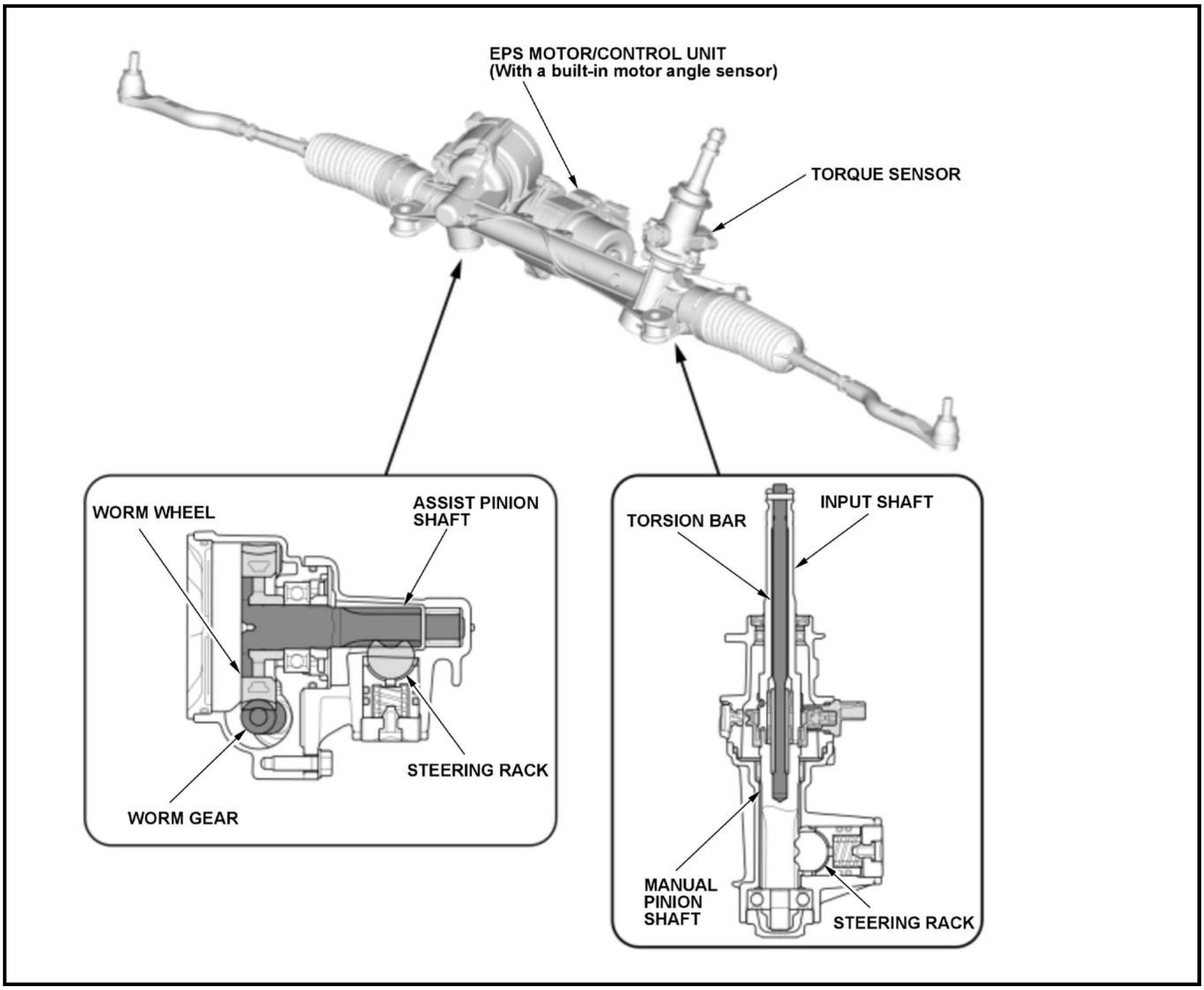
EPS MOTOR/CONTROL UNIT
(With a built-in motor angle sensor)
TORQUE SENSOR
WORM WHEEL
ASSIST PINION SHAFT
STEERING RACK
WORM GEAR
TORSION BAR
INPUT SHAFT
MANUAL PINION SHAFT
STEERING RACK

VGR (Variable Gear Ratio)

The VGR is applied to the manual pinion shaft side of the steering rack. The normal gear ratio is applied to the near the straight ahead position of the steering rack for smooth start of steering operation. The quick gear ratio is applied for a large steering angle, which reduces lock-to-lock steering.

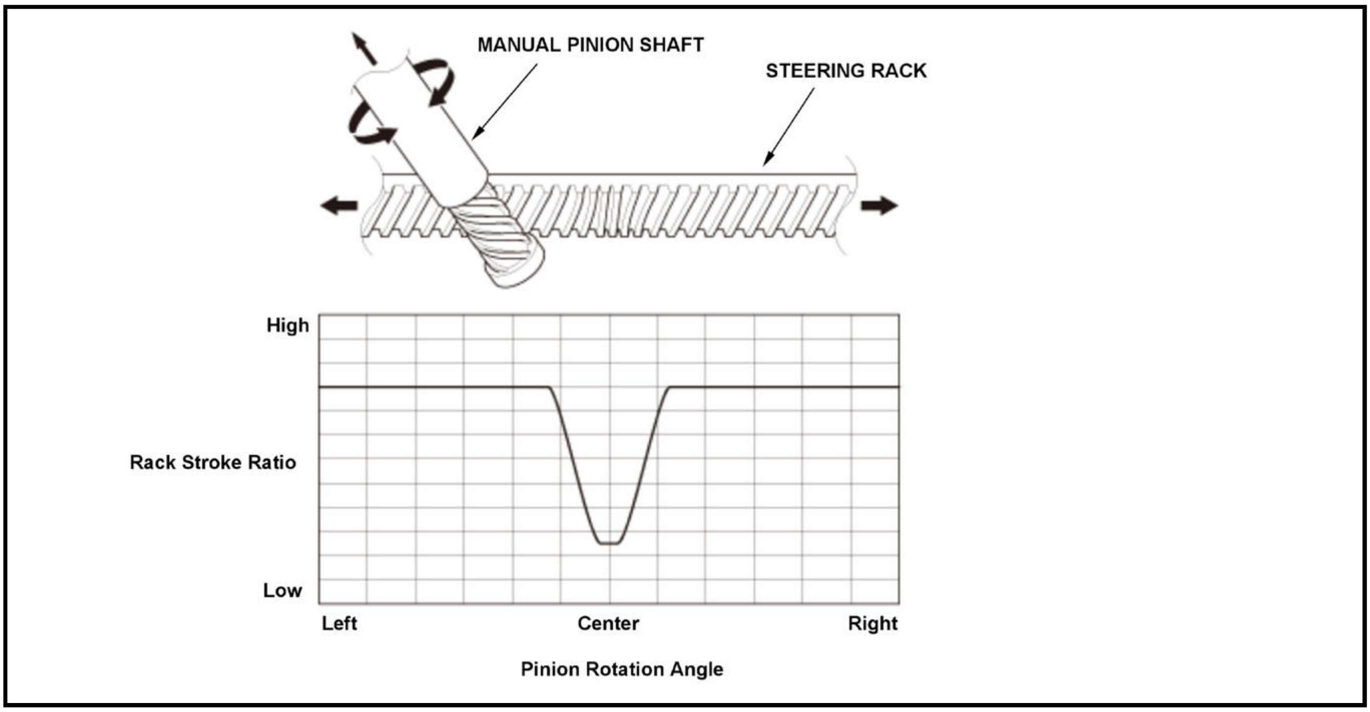

Torque Sensor

Overview

The torque sensor is built into the steering gearbox, using a Hall IC sensor to detect steering wheel torque forces. The torque sensor consists of the input shaft, the torsion bar, the manual pinion shaft, and the torque sensor unit.

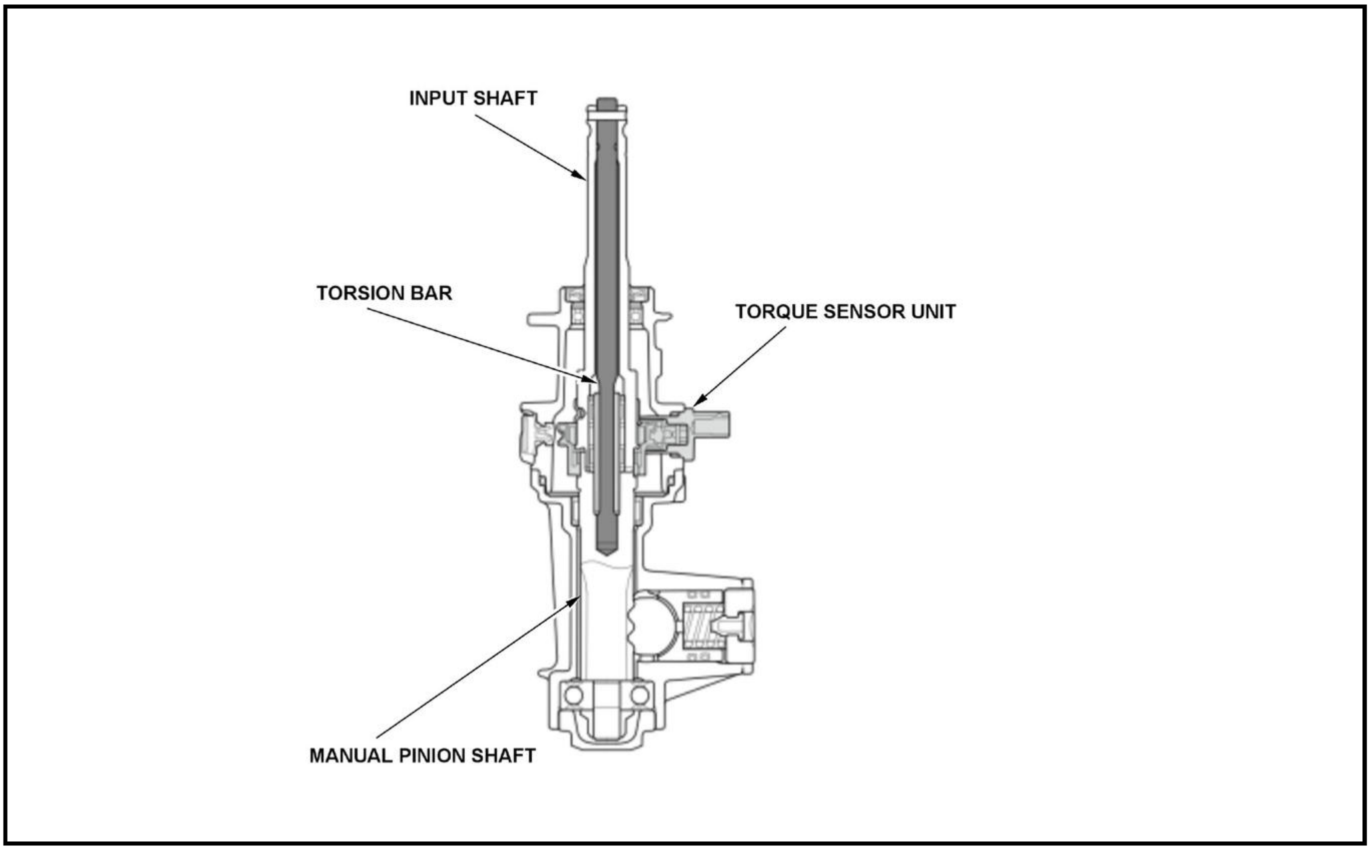

EPS SYSTEM DESCRIPTION - SYSTEM DIAGRAM

- The steering force of the steering wheel is detected by the torque sensor, and the signal is sent to the EPS control unit. The EPS control unit calculates the assistance torque based on the steering torque signal and vehicle speed signal, and activates the motor to assists the steering force.

- To activate the three-phase brushless motor properly, the motor angle sensor detects the motor angle, and sends the signal to the EPS control unit.
- The EPS control unit sends the motor load status to the PCM.
- The EPS control unit receives the vehicle behavior information from the VSA modulator-control unit.
- The EPS control unit assists the steering force when the EPS control unit receives the steering assist request from the millimeter wave radar.
- When the EPS system detects a problem, the EPS control unit stores the DTC, and sends the signal to the gauge control module to cause the EPS indicator to come on.

For locations of each component on vehicle, refer to Component Location Index:

- **EPS control unit, EPS motor, Torque sensor, EPS motor angle sensor**
- **Gauge control module**
- **PCM**
- **VSA modulator-control unit**
- **SRS unit**
- **Driver's seat belt buckle switch**
- **Body control module**
- **Driver's door switch**
- **Wiper/washer switch**
- **Millimeter wave radar**

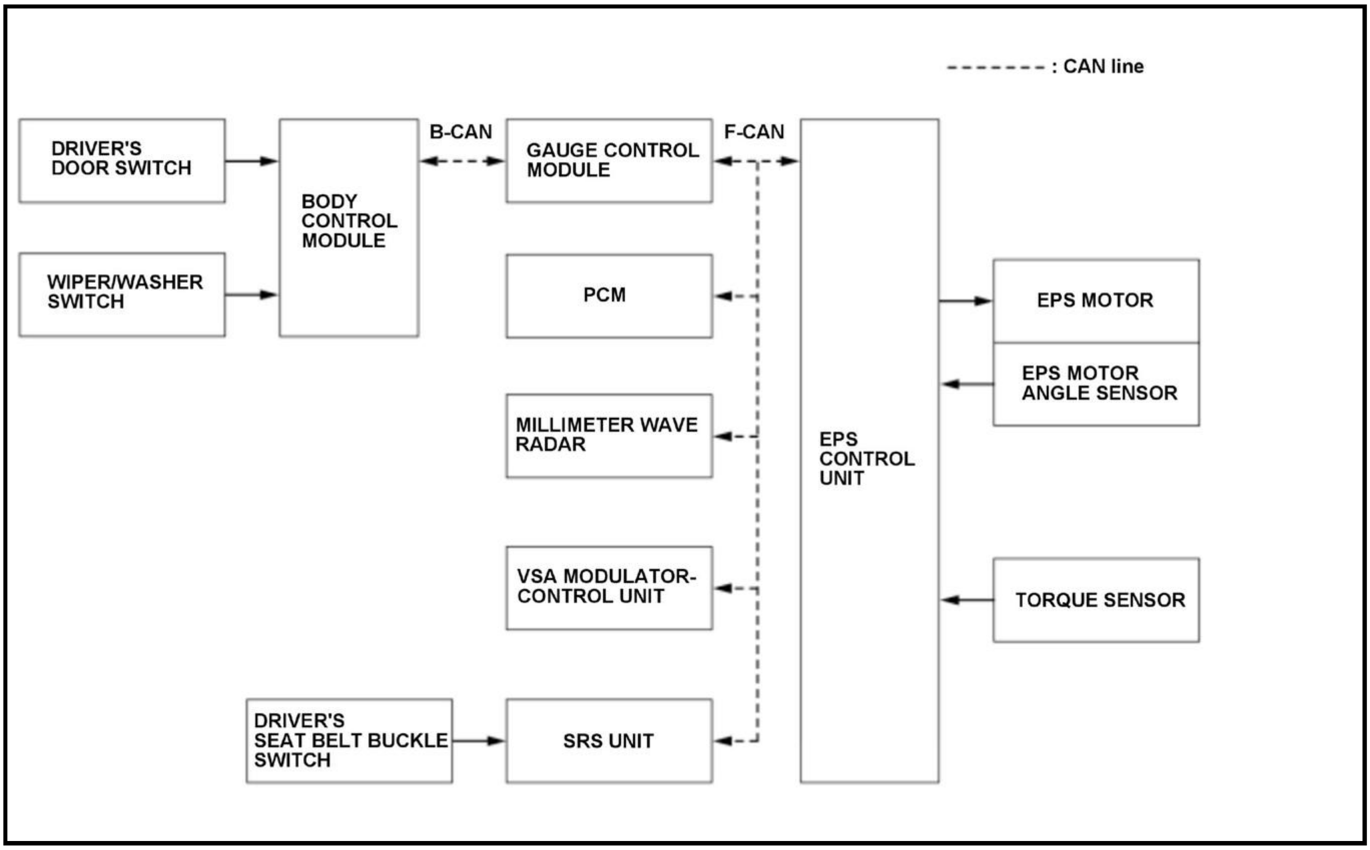

-------- : CAN line
DRIVER'S DOOR SWITCH
WIPER/WASHER SWITCH
BODY CONTROL MODULE
B-CAN
GAUGE CONTROL MODULE
F-CAN
PCM
MILLIMETER WAVE RADAR
VSA MODULATOR-CONTROL UNIT
DRIVER'S SEAT BELT BUCKLE SWITCH
SRS UNIT
EPS CONTROL UNIT
EPS MOTOR
EPS MOTOR ANGLE SENSOR
TORQUE SENSOR

F-CAN Communication Data

EPS System Receiving Signal

Transmitting Unit	Signal Name
Gauge control module	- Driver's door switch signal

Transmitting Unit	Signal Name
	• Wiper switch status • Customize information
PCM	• Engine speed signal • Vehicle speed signal • Shift position signal • Idle stop status • Cruise control status • Service check signal • System failure information
Millimeter wave radar	• LKAS mode signal • Instructing current signal • System failure information
VSA modulator-control unit	• Wheel speed signal • System operating state signal • Vehicle understeering state • Vehicle estimated longitudinal acceleration signal • Estimated L/R µ differential signal • System failure information
SRS unit	• Yaw rate signal • Lateral acceleration signal • Longitudinal acceleration signal • Driver's seat belt buckle switch status

EPS System Transmitting Signal

Transmitting Unit	Signal Name
EPS control unit	• Indicator drive signal • Motor load status • Steering angle signal • Steering speed signal • System failure Information • Attentiveness level indication request • Steering torque signal • Motor speed signal

CHECK

POWER STEERING ASSIST CHECK

Check

1. Power Steering Assist - Check

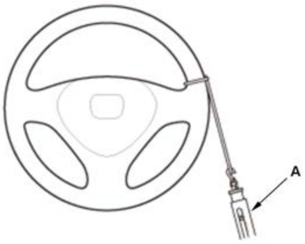	**NOTE:** This test should be done with original equipment tires and wheels at the correct tire pressure. 1. Turn the vehicle to the READY TO DRIVE mode. 2. Park the vehicle on a clean, dry floor and attach a commercially available spring scale (A) to the steering wheel. With the vehicle in READY TO DRIVE mode, pull the scale as shown and note the reading as soon as the tires begin to turn. 3. If the scale reads less than the specification, the power assist is OK. If it reads more, check these items: • Steering linkage • EPS system • Wheel alignment

Initial turning load:	**34 N (3.5 kgf, 7.6 lbf) max.**

STEERING WHEEL ROTATIONAL PLAY CHECK

Check

1. Steering Wheel Rotational Play - Check

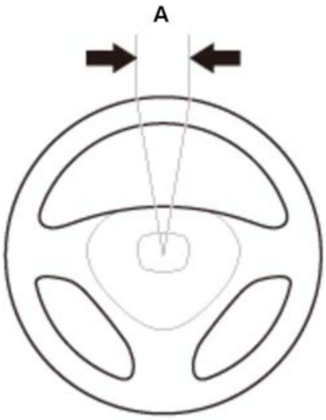	1. Set the front wheels in the straight ahead position. 2. Measure how far you can turn the steering wheel left and right without moving the front wheels. • If the play is within the limit, the steering gearbox and the steering linkage are OK. • If the play exceeds the limit, inspect the steering linkage and the steering gearbox.

Rotational play (A):	**0-10 mm (0-0.39 in)**

INSPECTION

STEERING COLUMN INSPECTION

Inspection

Check of Tilting Force

1. Check of Tilting Force

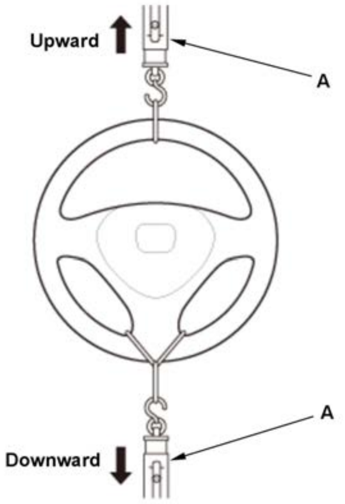	1. Set the steering wheel in the straight ahead driving position, and loosen the lock lever fully. 2. Attach a commercially available spring scale (A) to the highest point of the steering wheel, and tilt the steering column to the lowest position. 3. Pull the spring scale straight up, and read the force required to move the steering column. 4. Attach the spring scale to the lowest point of the steering wheel. 5. Pull the spring scale straight down, and read the force required to move the steering column. 6. If the measurement is higher than the specified, replace the steering column as an assembly.

Tilting force (upward/downward):	
Standard:	**69 N (7.0 kgf, 15.5 lbf) max.**

Check of Telescoping Force

2. Check of Telescoping Force

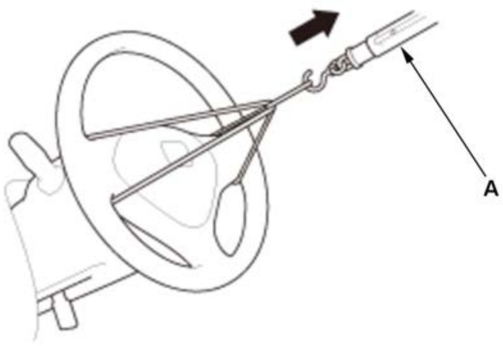	1. Set the steering wheel in the straight ahead driving position, and loosen the lock lever fully. 2. Attach a commercially available spring scale (A) to the center point of the steering wheel as shown. 3. Pull the spring scale, and read the force required to move the steering column during telescoping out. 4. If the measurement is higher than specified, replace the steering column as an assembly.

Telescoping force:	
Standard:	**106 N (10.8 kgf, 23.8 lbf) max.**

Check of Lock Lever Force

3. Check of Lock Lever Force

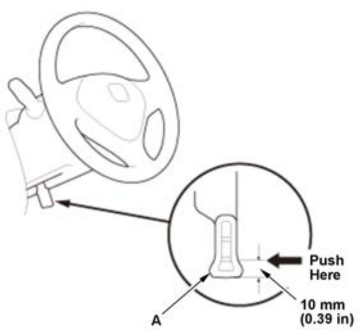	1. Move the lock lever (A) from the loosened position to the locked position three to five times, then release the lock lever. Adjust the steering column to the center tilt position and also to the full telescopic out position, and hold the steering wheel. 2. Using a commercially available push-pull gauge, push up the lock lever 10 mm (0.39 in) in from its end, and measure the force required to move the lock lever. 3. If the measurement is higher than specified, replace the steering column as an assembly.

Lock lever force:	
Standard:	**82 N (8.4 kgf, 18.4 lbf) max.**

Steering Column Inspect

4. Steering Column - Inspect

   1. Check these items:

      - Check the column shaft bearings (A) for play and proper movement. If bearing is noisy or has excessive play, replace the steering column as an assembly.
      - Check the steering joint bearings (B) for play and proper movement. If any bearing is noisy or has excessive play, replace the steering column as an assembly.
      - Check the lower slide shaft (C) for smooth movement in and out.
      - Check the tilt mechanism and telescopic mechanism for movement and damage.
      - Apply multipurpose grease to the steering column.

      NOTE: Do not use silicone grease.

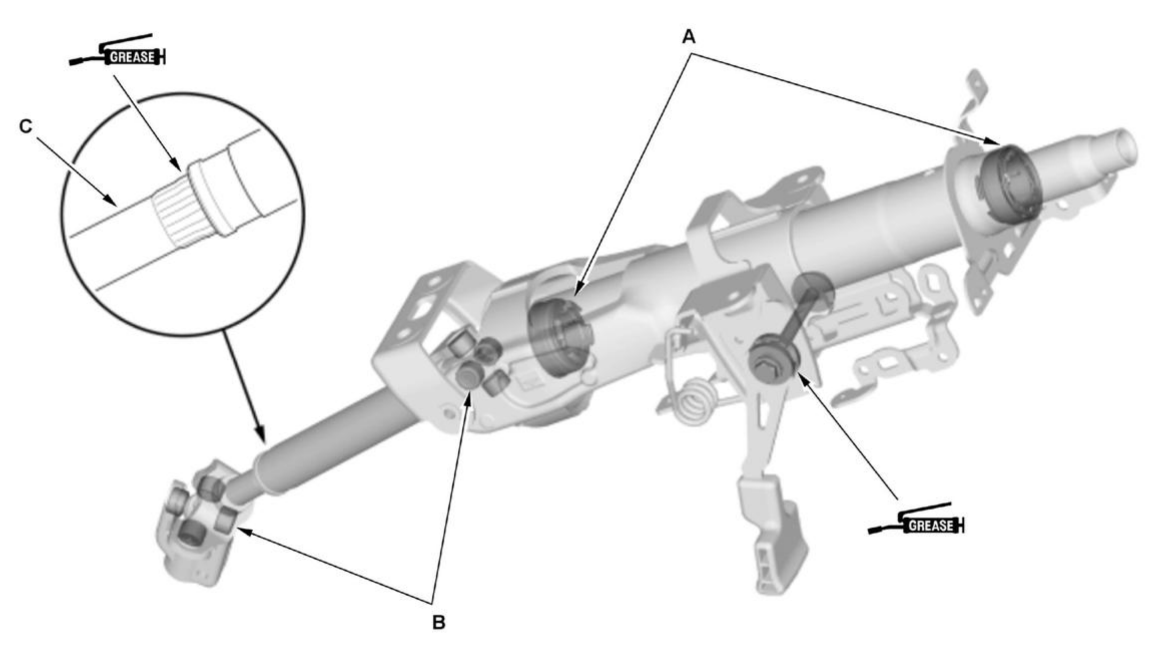

STEERING LINKAGE AND GEARBOX INSPECTION

Inspection

1. Steering Linkage and Gearbox - Inspect
   - -

Inspect for noise and clearance for the longitudinal and lateral directions of the steering wheel.

- -

  Inspect for noise, clearance and unevenness of the handle steering while rotating the steering wheel.

- -

  Inspect for each point below.

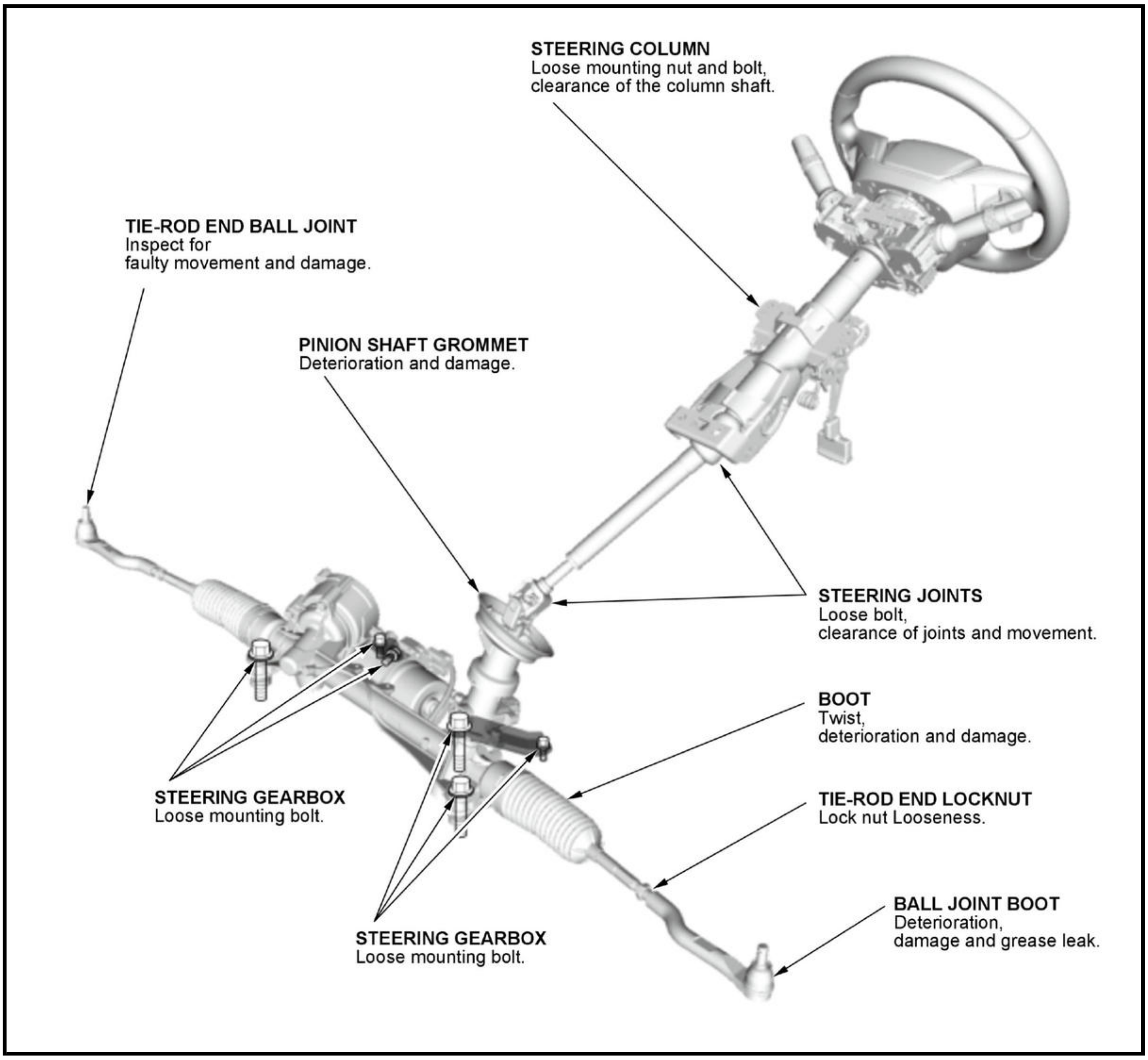

STEERING COLUMN
Loose mounting nut and bolt,
clearance of the column shaft.
TIE-ROD END BALL JOINT
Inspect for
faulty movement and damage.
PINION SHAFT GROMMET
Deterioration and damage.
STEERING JOINTS
Loose bolt,
clearance of joints and movement.
BOOT
Twist,
deterioration and damage.
STEERING GEARBOX
Loose mounting bolt.
TIE-ROD END LOCKNUT
Lock nut Looseness.
BALL JOINT BOOT
Deterioration,
damage and grease leak.
STEERING GEARBOX
Loose mounting bolt.

SYMPTOM TROUBLESHOOTING INDEX FOR VIEWER

EPS INDICATOR DOES NOT COME ON

Diagnostic Procedure

- Do the gauge control module self-diagnostic function .

EPS INDICATOR DOES NOT GO OFF

Diagnostic Procedure

NOTE: If any of the CAN communication failure DTC is indicated in other system, troubleshoot the DTC first.

- Check for open wire or short wire in the F-CAN circuit;
-

    - Between the gauge control module and the CAN gateway (F-CAN D_H, F-CAN D_L).
    - Between the EPS control unit and the CAN gateway (F-CAN C_H, F-CAN C_L).
- Check the EPS control unit power circuit.
-
    - +B_EPS, IG1_VSA/ABS
- Check the EPS control unit ground circuit (GND).
- **Do the gauge control module self-diagnostic function** .

Also check for

Refer to the followings about the indicator operating condition;

- **How to Troubleshoot the EPS**

Refer to the followings about the circuit troubleshooting;

- **Gauge control module connector for inputs and outputs**
- **EPS control unit connector for inputs and outputs**
- **EPS system circuit diagram**
- **Fuse to components index**
- **Ground to components index**

HDS DOES NOT COMMUNICATE WITH THE EPS CONTROL UNIT OR THE VEHICLE

Diagnostic Procedure

- **Go to the DTC troubleshooting index** .

Also check for

Faulty data link cable

SYMPTOM TROUBLESHOOTING INDEX

EPS SYMPTOM TROUBLESHOOTING INDEX

When the vehicle has one of these symptoms, check for a diagnostic trouble code (DTC) with the HDS. If there is no DTC, do the diagnostic procedure for the symptom, in the sequence listed, until you find the cause.

Symptom	Diagnostic Procedure	Also check for
HDS does not communicate with the EPS control unit or the vehicle	**Go to the DTC troubleshooting index** .	Faulty data link cable
EPS indicator does not come on	**Do the gauge control module self-diagnostic function** .	B
EPS indicator does not go off	**NOTE:** If any of the CAN communication failure DTC is indicated in other system, troubleshoot the DTC first. - Check for open wire or short wire in the F-CAN circuit; - - Between the gauge control module and the CAN gateway (F-CAN D_H, F-CAN	Refer to the followings about the indicator operating condition; - **How to Troubleshoot the EPS**

Symptom	Diagnostic Procedure	Also check for
	D_L). - Between the EPS control unit and the CAN gateway (F-CAN C_H, F-CAN C_L). - Check the EPS control unit power circuit. - - +B_EPS, IG1_VSA/ABS - Check the EPS control unit ground circuit (GND). - **Do the gauge control module self-diagnostic function** .	Refer to the followings about the circuit troubleshooting; - **Gauge control module connector for inputs and outputs** - **EPS control unit connector for inputs and outputs** - **EPS system circuit diagram** - **Fuse to components index** - **Ground to components index**

REPLACEMENT

STEERING TIE-ROD END BALL JOINT BOOT REPLACEMENT

Special Tools Required

Image	Description/Tool Number
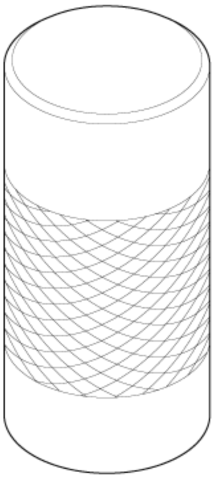	Driver, 32.5 mm 070AD-SAAA100

Replacement

1. Tie-Rod End Ball Joint Boot - Remove

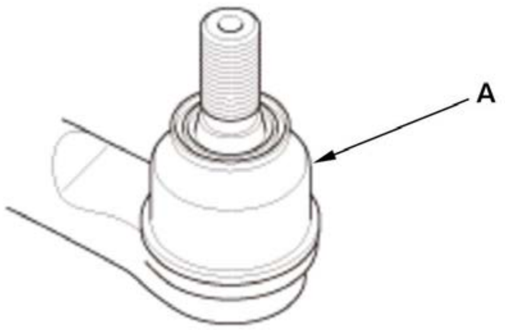

1. Remove the ball joint boot (A) from the tie-rod end.

2. Wipe the old grease off the ball pin.

2. Tie-Rod End Ball Joint Boot - Install

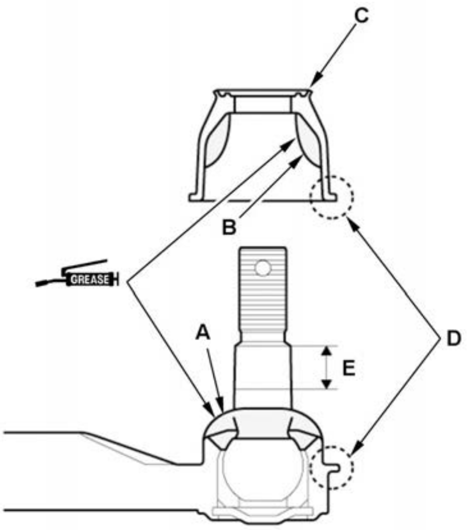

1. Pack the lower area of the ball pin (A) with fresh multipurpose grease.

2. Pack the interior of a new ball joint boot (B) and the lip (C) with fresh multipurpose grease.

Note these items when installing new grease:

- Use the grease that comes with the tie-rod end boot set, or multipurpose grease.
- Keep grease off the boot mounting area (D) and the tapered section (E) of the ball pin.
- Do not allow dust, dirt, or other foreign materials to enter the boot.

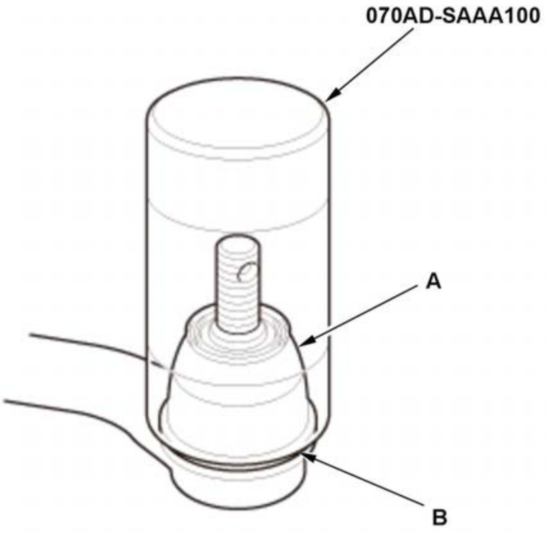

3. Install the ball joint boot (A) using the driver.

4. The ball joint boot must not have a gap at the ball joint boot installation sections (B).

5. After installing the ball joint boot, check the ball pin tapered section for grease contamination.

6. Wipe the ball pin tapered section if necessary.

REWRITE

EPS CONTROL UNIT UPDATE

Procedure

1. EPS Control Unit - Update

   NOTE: When updating control units, use the most current version of the HDS software and interface device. Check any official service information website for more information about updating control units.

CONNECTOR VIEW

EPS CONTROL UNIT CONNECTOR FOR INPUTS AND OUTPUTS

EPS Control Unit Connector for Inputs and Outputs

Connector Index
EPS Control Unit Connector A (2P)
EPS Control Unit Connector B (6P)
EPS Control Unit Connector C (4P)

EPS Control Unit Inputs and Outputs for Connector A (2P) (female terminals)

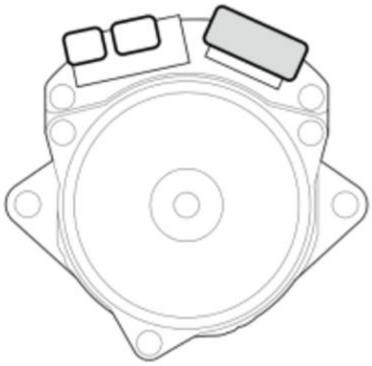

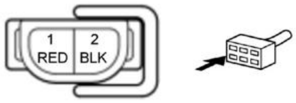

Terminal number	Terminal sign	Description
1	+B_EPS	Power source for the EPS motor
2	GND	Ground for the EPS control unit

EPS Control Unit Inputs and Outputs for Connector B (6P) (female terminals)

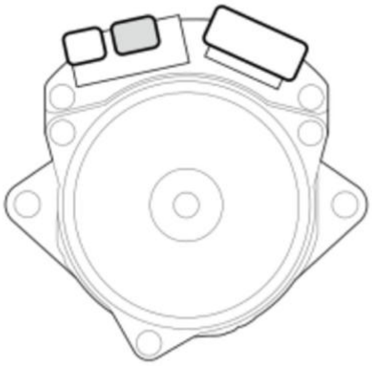

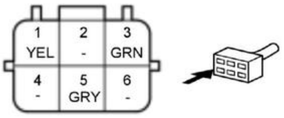

Terminal number	Terminal sign	Description
1	F-CAN C_H	F-CAN communication circuit
2	Not used	---
3	F-CAN C_L	F-CAN communication circuit
4	Not used	---

Terminal number	Terminal sign	Description
5	IG1_VSA/ABS	Power source for activating the system
6	Not used	---

EPS Control Unit Inputs and Outputs for Connector C (4P) (female terminals)

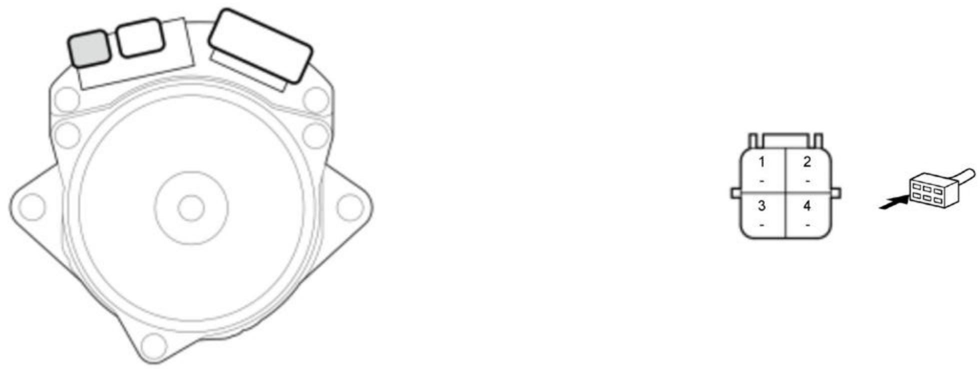

Terminal number	Terminal sign	Description
1	T/S_VDD	Power source for the torque sensor
2	T/S_GND	Ground for the torque sensor
3	TSS	Detects torque sensor sub signal
4	TSM	Detects torque sensor main signal

CIRCUIT DIAGRAM

EPS CIRCUIT DIAGRAM

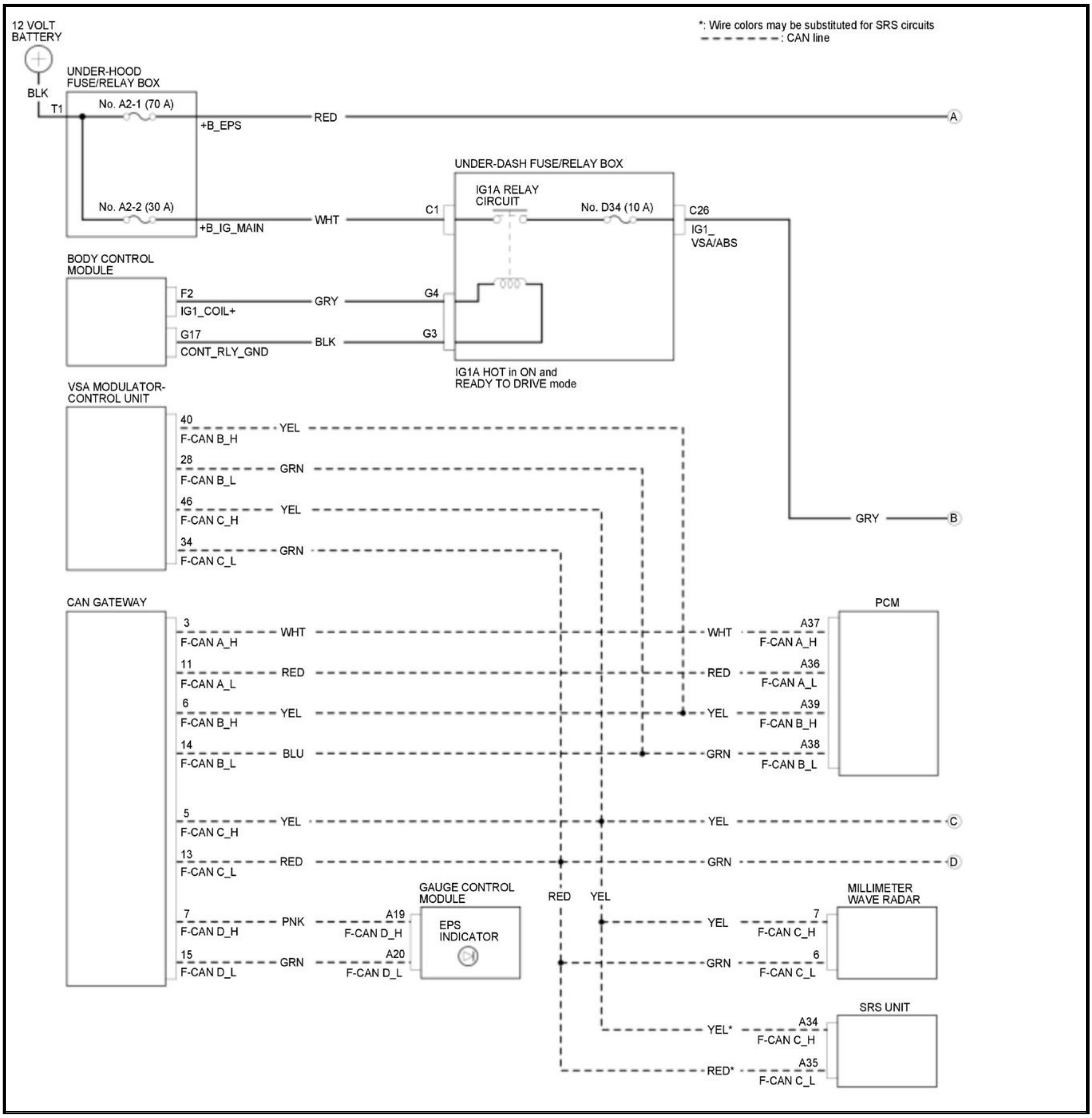
*: Wire colors may be substituted for SRS circuits
- - - - - - - - : CAN line
12 VOLT BATTERY
BLK
T1
UNDER-HOOD FUSE/RELAY BOX
No. A2-1 (70 A)
+B_EPS
RED
A
No. A2-2 (30 A)
+B_IG_MAIN
WHT
UNDER-DASH FUSE/RELAY BOX
IG1A RELAY CIRCUIT
C1
No. D34 (10 A)
C26
IG1_ VSA/ABS
BODY CONTROL MODULE
F2
IG1_COIL+
GRY
G4
G17
CONT_RLY_GND
BLK
G3
IG1A HOT in ON and READY TO DRIVE mode
VSA MODULATOR-CONTROL UNIT
40
F-CAN B_H
YEL
28
F-CAN B_L
GRN
46
F-CAN C_H
YEL
34
F-CAN C_L
GRN
GRY
B
CAN GATEWAY
3
F-CAN A_H
WHT
11
F-CAN A_L
RED
6
F-CAN B_H
YEL
14
F-CAN B_L
BLU
5
F-CAN C_H
YEL
13
F-CAN C_L
RED
7
F-CAN D_H
PNK
15
F-CAN D_L
GRN
PCM
WHT
A37
F-CAN A_H
RED
A36
F-CAN A_L
YEL
A39
F-CAN B_H
GRN
A38
F-CAN B_L
YEL
C
GRN
D
GAUGE CONTROL MODULE
A19
F-CAN D_H
A20
F-CAN D_L
EPS INDICATOR
RED
YEL
MILLIMETER WAVE RADAR
YEL
7
F-CAN C_H
GRN
6
F-CAN C_L
SRS UNIT
YEL*
A34
F-CAN C_H
RED*
A35
F-CAN C_L

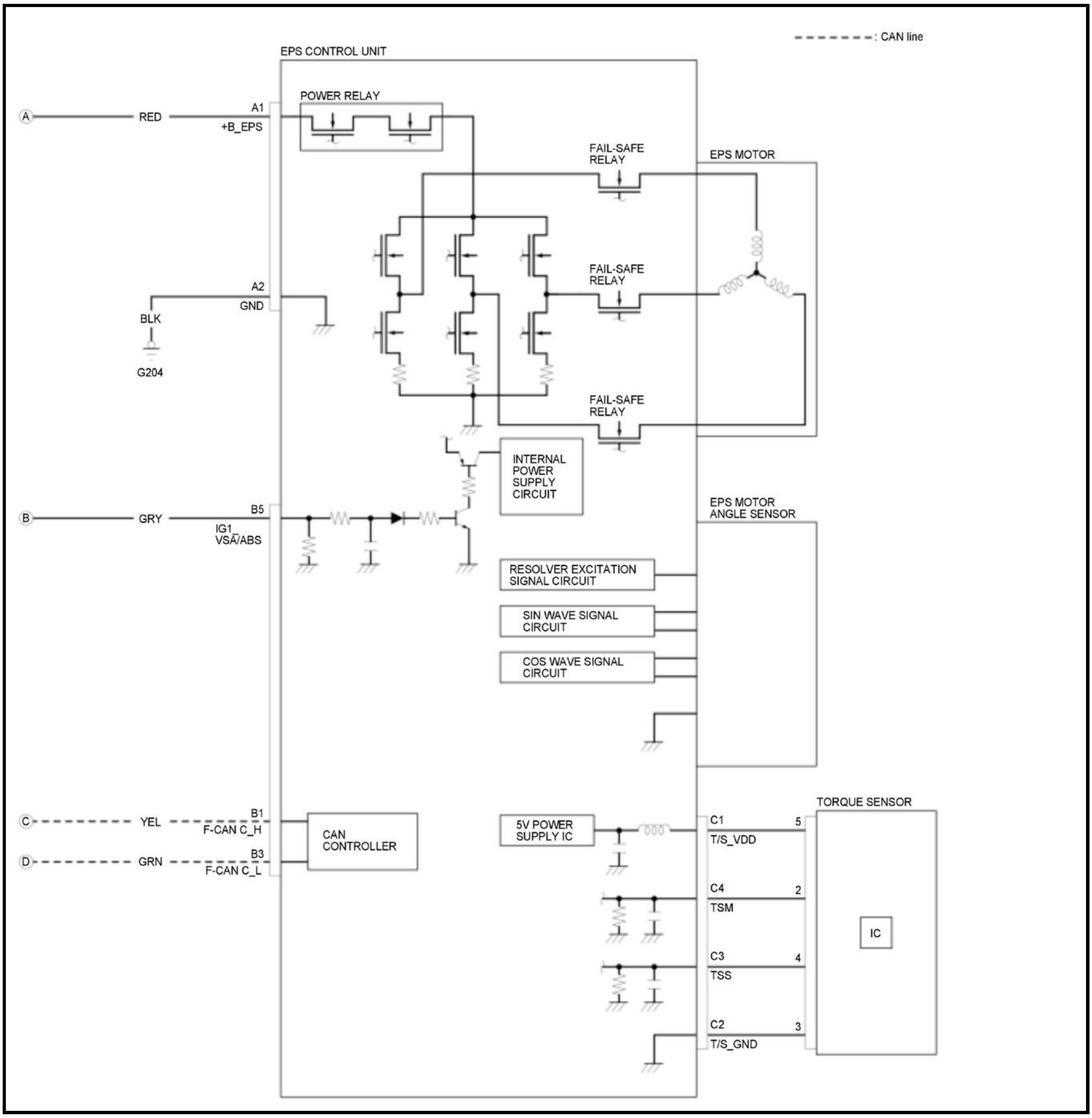

CAN line
EPS CONTROL UNIT
POWER RELAY
A
RED
A1
+B_EPS
FAIL-SAFE RELAY
EPS MOTOR
FAIL-SAFE RELAY
A2
GND
BLK
G204
FAIL-SAFE RELAY
INTERNAL POWER SUPPLY CIRCUIT
EPS MOTOR ANGLE SENSOR
B
GRY
B5
IG1_VSA/ABS
RESOLVER EXCITATION SIGNAL CIRCUIT
SIN WAVE SIGNAL CIRCUIT
COS WAVE SIGNAL CIRCUIT
TORQUE SENSOR
C
YEL
B1
F-CAN C_H
CAN CONTROLLER
5V POWER SUPPLY IC
C1
T/S_VDD
5
D
GRN
B3
F-CAN C_L
C4
TSM
2
IC
C3
TSS
4
C2
T/S_GND
3

COMPONENT LOCATION INDEX

EPS COMPONENT LOCATION INDEX

For relationships between signals in a system, refer to System Diagram.

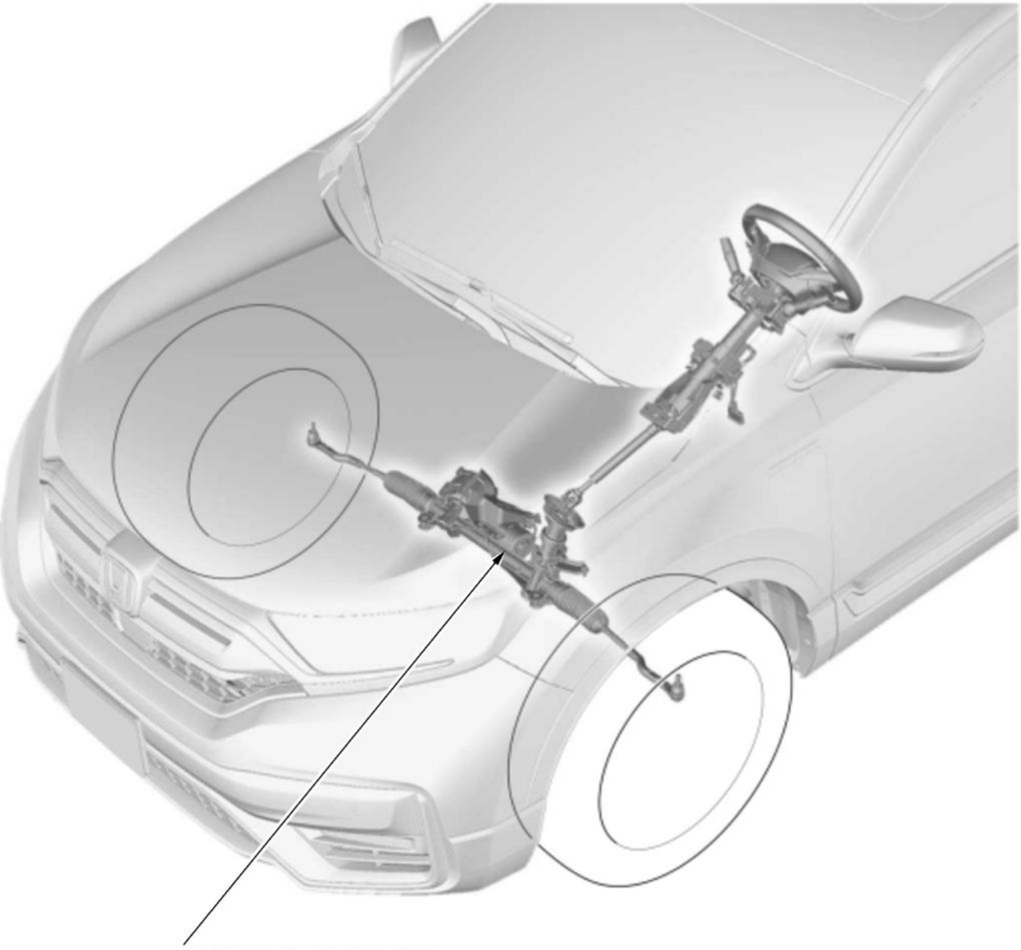

EPS MOTOR/CONTROL UNIT
(With a built-in motor angle sensor)
Steering Angle Neutral Position Learning
Update
Removal and Installation

STEERING COMPONENT LOCATION INDEX

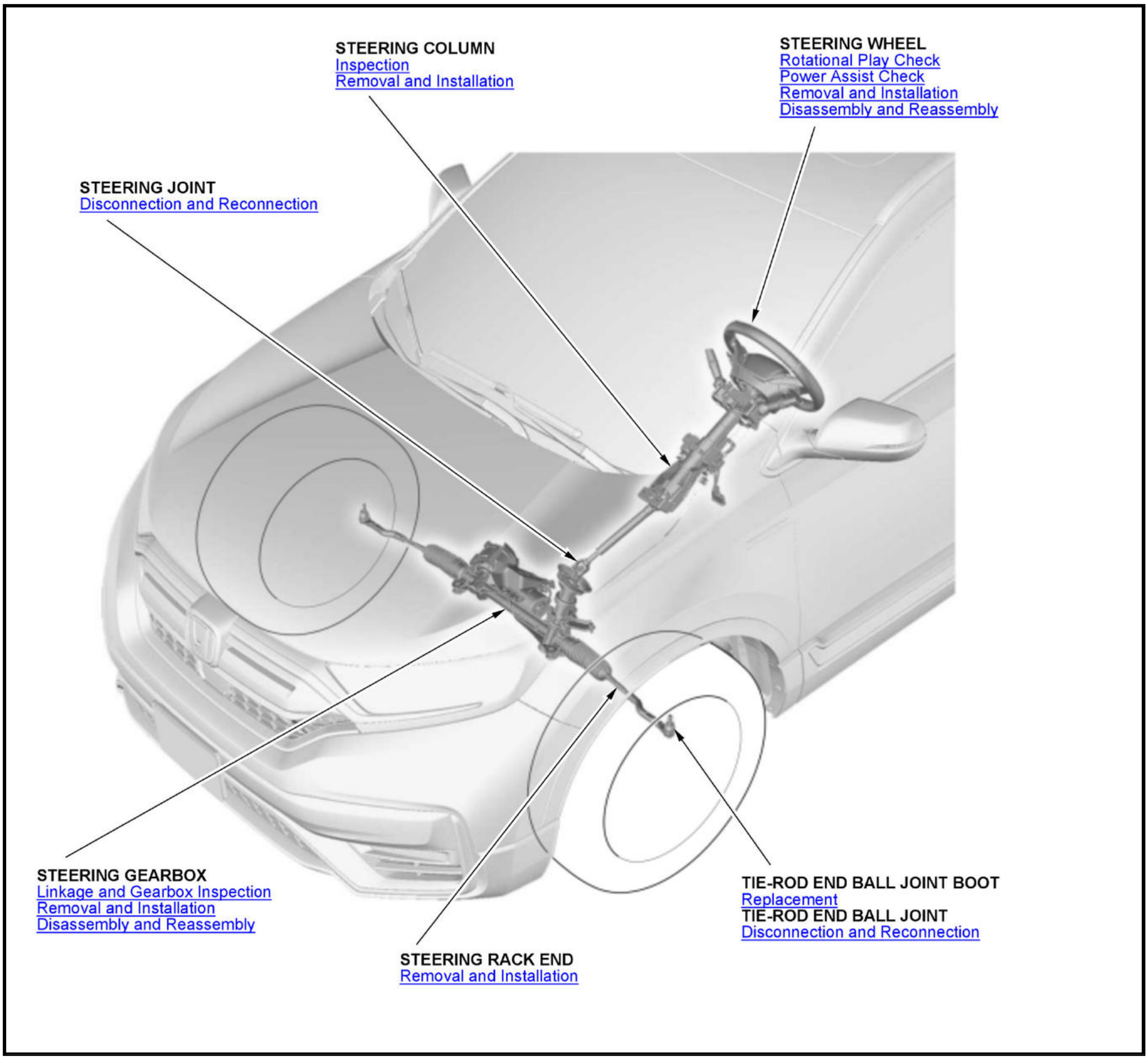
STEERING COLUMN
Inspection
Removal and Installation
STEERING WHEEL
Rotational Play Check
Power Assist Check
Removal and Installation
Disassembly and Reassembly
STEERING JOINT
Disconnection and Reconnection
STEERING GEARBOX
Linkage and Gearbox Inspection
Removal and Installation
Disassembly and Reassembly
TIE-ROD END BALL JOINT BOOT
Replacement
TIE-ROD END BALL JOINT
Disconnection and Reconnection
STEERING RACK END
Removal and Installation

LEARNING/RESET/CLEAR

STEERING ANGLE NEUTRAL POSITION LEARNING

Procedure

NOTE:

- If the steering angle neutral position is cleared, do the steering angle neutral position learning procedure.
- The steering angle neutral position is cleared whenever you do any of these actions:
-
    - EPS motor/control unit replacement, removal, or installation.
    - 12 volt battery terminal is disconnected from the 12 volt battery.
    - The power is disconnected from the EPS control unit.
    - The power supply voltage for the EPS control unit is decreased.
- If the steering angle neutral position is cleared, the VSA indicator, VSA OFF indicator, low tire pressure/TPMS indicator, and CMBS indicator will come on.
- There are two learning methods.
- The learning cannot be done when the EPS indicator is on.

- If the learning does not complete, **check the EPS system** .

1. Steering Angle Neutral Position - Learn

   Learning method without the HDS

   1. Drive the vehicle in a straight line at speeds of 10 mph (15 km/h) or more until the indicators go off.

   NOTE:

   - The learning will complete after driving in a straight line for about 10 seconds.
   - Difficult situations for learning are below:
   -
     - Driving on a non straight line.
     - Driving on a rough road.
     - Driving under 10 mph (15 km/h) or less.
     - Driving on a sloped road.
     - Rapid acceleration and deceleration.

   2. Check that the indicators go off.

   Learning method with the HDS

   1. **Do the VSA sensor neutral position memorization** .

   NOTE: When the VSA sensor neutral position memorization is performed, the current position is cleared and overwritten.

DESCRIPTION AND OPERATION

EPS SYSTEM

System Description

System Outline

This vehicle is equipped with electrical power steering (EPS). The driver's steering force is assisted by an electric motor at the steering gearbox, instead of an engine-driven oil pump to generate oil pressure, so the EPS system improves engine efficiency.

The EPS control unit monitors and controls the EPS motor's assisting force to match driving conditions.

- Low vehicle speeds: High power assist (for easy handling)
- High speed driving: Low power assist (for stable driving)
- Low speed to high speed driving: Change smoothly from high assist to low assist

Components

The EPS system is rack-assist type, and the steering gearbox is a dual pinion type, which includes two pinions that are engaged with steering rack.

The EPS system mainly consists of the following parts:

- The EPS control unit: Control the EPS motor
- The EPS motor: Generate the assisting torque
- The torque sensor: Measure the steering force applied to the steering wheel
- The steering gearbox: Transmit the steering force
- System indicator: Indicates system status

The EPS control unit, the EPS motor, and the torque sensor are combined into the steering gearbox.

For locations of each component on the vehicle, **refer to Components**, and for functions of indicator, **refer to How to Troubleshoot the EPS System** .

EPS Control

Base Current

The base current is a basic current value to drive the motor and is calculated using the steering torque and the vehicle speed.

Inertia Compensation

The torque of the EPS motor tends to be lower as the vehicle begins to move and higher as it decreases in speed due to the inertia of the rotating body. To reduce the impact of the inertia, the inertia compensation increases the base current in acceleration and decreases in deceleration. The current of the inertia compensation is calculated by using the steering torque, vehicle speed, and motor speed.

Damping Compensation

The steering wheel receives vibration from the road surface during braking or cornering. The damping compensation reduces the vibration of the steering wheel by applying a damping effect through the motor current control. The damping compensation current is calculated by the steering torque, the vehicle speed, and the motor speed.

Target Current

The target current is a value necessary to perform feedback control of the motor and is determined by applying inertia and damping compensation to the base current and adding steering torque direction.

Current Feedback Control

Current feedback control monitors the motor current through sensors and reduces any deviation of motor current compared to the target current, thus accurately running the motor.

Unloader Control

The unloader control reduces motor current at the lock to lock (full right or left) of the steering wheel to protect the system. This value is determined by using the target current and the motor speed.

Steering Speed Feedback Control

The steering speed feedback control improves stability in the high speed range by controlling the hysteresis of the steering torque. The steering speed feedback control current is calculated by using the deviation between the target and actual steering angle speed to adjust to the base current.

EPS Motor Control Circuit

The EPS motor control circuit is composed of a system control CPU, the FET (field-effect transistor) bridge drive circuit, the power relays, the fail-safe relays, the electric current detection circuit, and the EPS motor. With the signal from the input sensor, the CPU calculates and duty cycle outputs the appropriate three-phase current for the FET drive circuit. This operation is duty controlled.

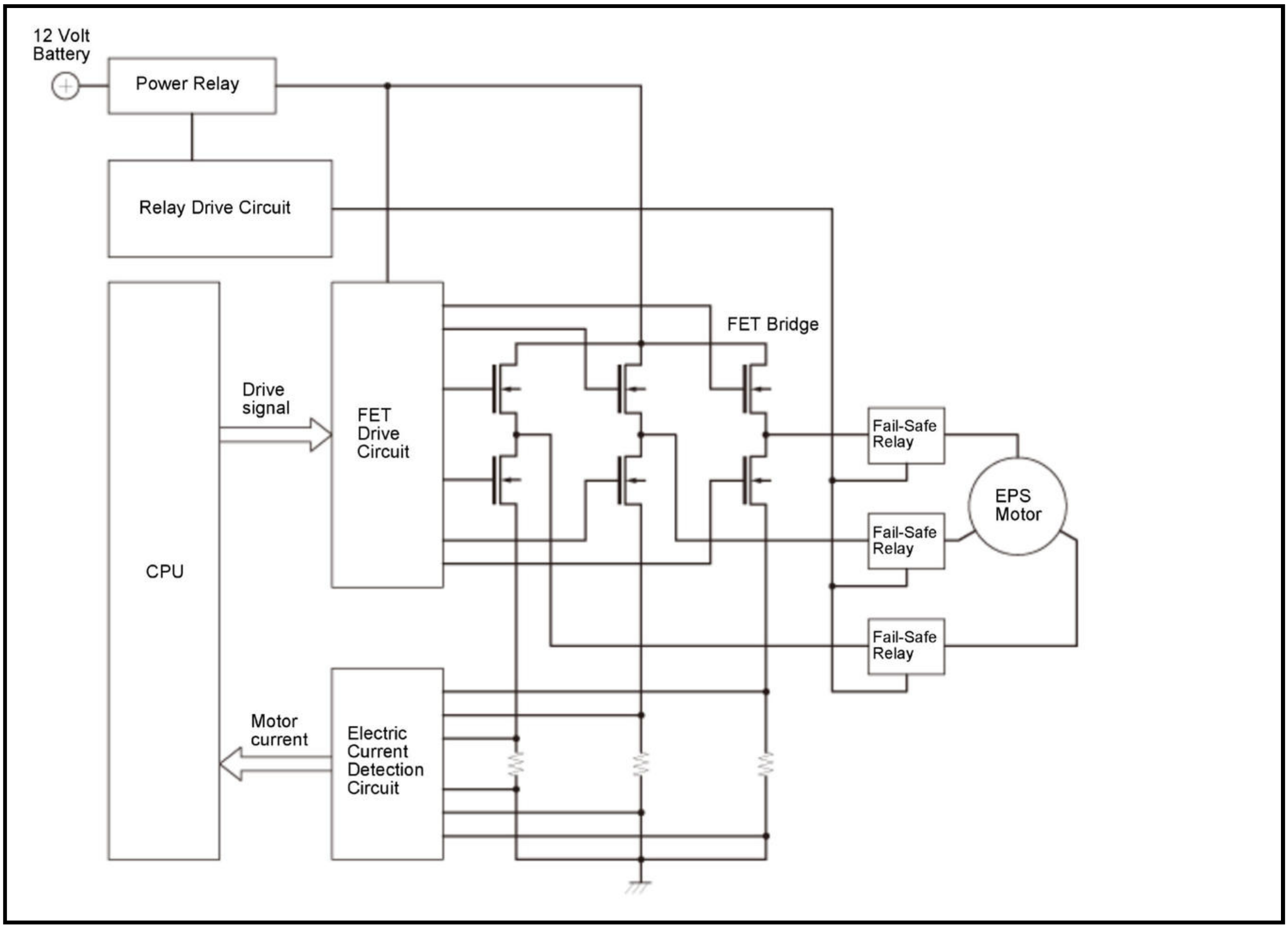
12 Volt Battery
Power Relay
Relay Drive Circuit
CPU
Drive signal
FET Drive Circuit
FET Bridge
Fail-Safe Relay
Fail-Safe Relay
Fail-Safe Relay
EPS Motor
Motor current
Electric Current Detection Circuit

Motor Output Limit Control

The motor output limit control reduces the motor current in the event of repeated turning of the steering wheel when the vehicle is not in motion. This control gradually reduces power assist force. The power assist force resumes gradually from the steering torque of 0 N.m (0 kgf.m, 0 lbf.ft) or from having the ignition switch in the off position and it may take up to 20 minutes to go back to normal assist force conditions. The activation of the motor limit control is based on the motor and the internal temperature of the control system.

Steering Angle Detection

The EPS control unit calculates the steering angle from the motor angle sensor value.The EPS control unit detects the motor rotational angle (A) with the motor angle sensor, and calculates the assist pinion shaft angle (B) by multiplying the motor rotational angle by the reduction ratio of the worm gear. The assist pinion shaft angle and the initial steering angle are converted by using the VGR (Variable Gear Ratio) conversion map, and the manual pinion shaft angle (C) is calculated. The EPS control unit also corrects the torsional angle of the torsion bar based on the torque sensor value for the manual pinion shaft angle, and calculates the steering wheel angle (D).

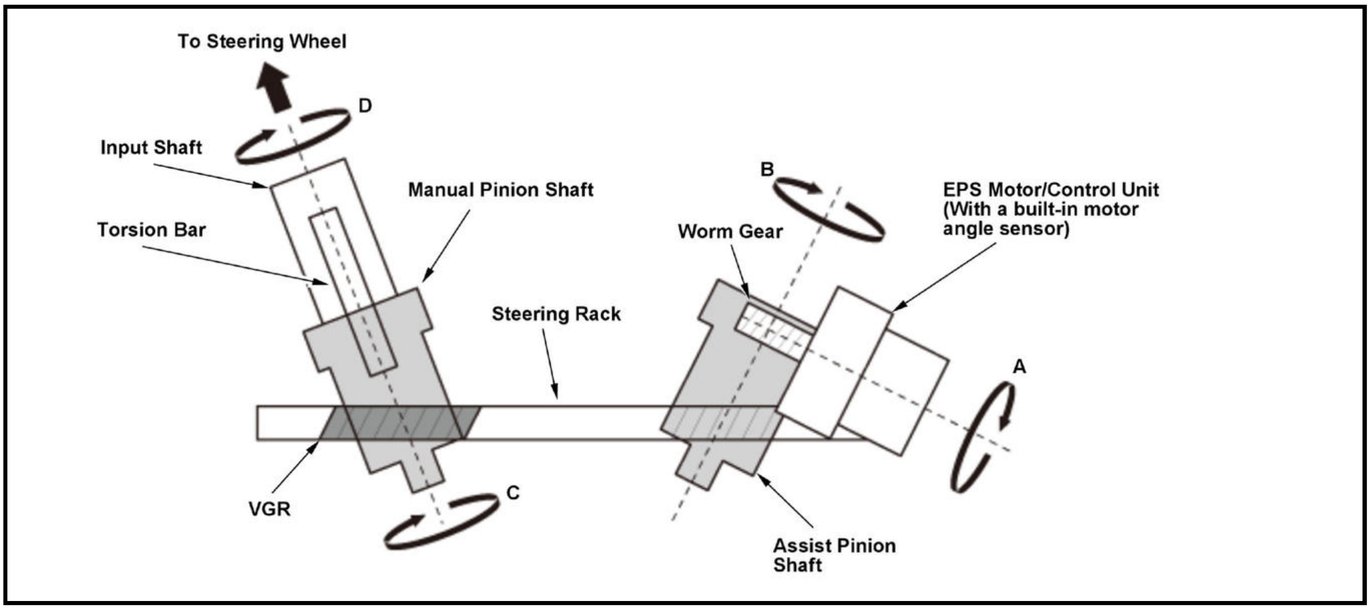

Steering Angle Neutral Position Learning

The EPS control unit learns the steering angle neutral position to detect an initial steering angle when turning the vehicle to the ON mode.The steering angle neutral position learning is classified into initial learning and the regular learning.

Initial Learning

The initial learning is performed automatically at the time of the first driving after steering angle neutral position is cleared.When the EPS control unit judges that the vehicle is going straight based on each sensor signals, the steering angle neutral position is learned. For more details of the learning procedure, refer to **Steering Angle Neutral Position Learning**.

The steering angle neutral position is cleared whenever you do any of these actions:

- Replacing the EPS motor/control unit.
- Disconnecting the 12 volt battery cable from the 12 volt battery.
- Disconnecting the power from the EPS control unit.
- Decreasing the power supply voltage for the EPS control unit.

Regular Learning

The regular learning revises a gap of the neutral position that occurs due to normal wear and tear of the vehicle and a change of the wheel alignment during driving.

Learning method with the HDS

The VSA sensor neutral position memorization for VSA system is performed using the HDS, the steering angle neutral position is cleared and overwritten.

Driver Attention Monitor Function (For some models)

Overview

To help avoid a crash or collision due to drowsiness or fatigue, the driver attention monitor function can detect if the driver is tired or inattentive and prompt the driver to take a break.

System Description

The driver attention monitor function can detect driver drowsiness by analyzing the driving behavior based on the steering angle and the yaw rate when the vehicle speed is above a set point. If the system detects driver drowsiness or inattention, the driver attention monitor function warns the driver to take a break by showing a message on the multi-information display (MID) and/or vibrating the steering wheel.

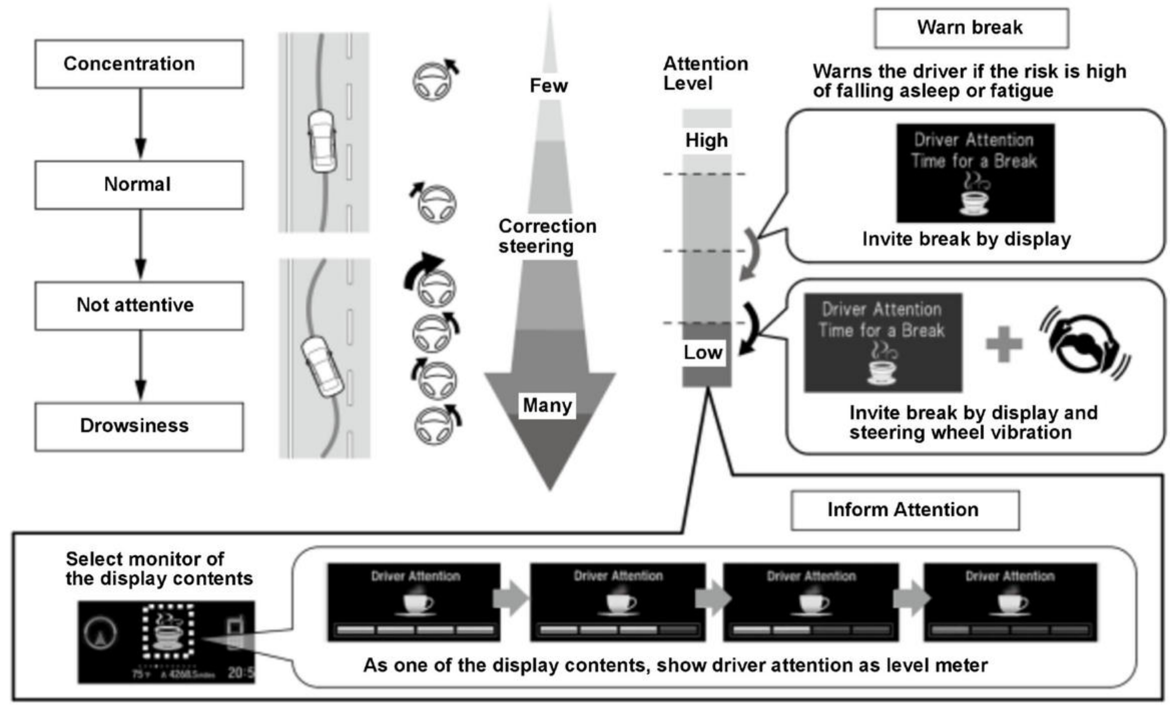
Concentration
Normal
Not attentive
Drowsiness
Few
Correction steering
Many
Attention Level
High
Low
Warn break
Warns the driver if the risk is high of falling asleep or fatigue
Driver Attention Time for a Break
Invite break by display
Driver Attention Time for a Break
Invite break by display and steering wheel vibration
Inform Attention
Select monitor of the display contents
Driver Attention
Driver Attention
Driver Attention
Driver Attention
As one of the display contents, show driver attention as level meter

NOTE: This illustration shows a typical sample of attention display.

Operation Conditions

The driver attention monitor function operates under these conditions:

- Vehicle speed is 25 - 112 mph (40 - 180 km/h).
- The EPS system, the SRS, and/or the transmission system does not have a malfunction.

Function Prohibition

The driver attention monitor function is not activated under these conditions:

- Driving duration is less than 30 minutes.

- Driving on rough roads.
- Driving in a strong side wind.
- Active driving situation (changing the traffic lane or the vehicle speed).

Attention Level Reset

The driver attention monitor function resets the attention level displayed on the multi-information display (MID) if detects these conditions.

- The vehicle is turned to the OFF (LOCK) mode.
- The driver releases the seat belt and opens the driver's door with the vehicle in ON mode.

Motion Adaptive-EPS Control

Overview

The motion adaptive-EPS control performs the steering torque correction control coordinated with VSA system for stabilizing the vehicle when the steering is unstable. The EPS system determines the state of the vehicle based on the data calculated by the VSA modulator-control unit, and the data from the yaw rate sensor and the acceleration sensor. When the system determines that the vehicle behavior is abnormal, the EPS control unit calculates the correction current based on the vehicle behavior and corrects the steering torque. The motion adaptive-EPS control is stopped in the event of failure in the VSA system.

Mitigates Oversteer Control

When oversteer occurs, it compensates for steering torque to steer in the countersteer direction, and enhances vehicle control.

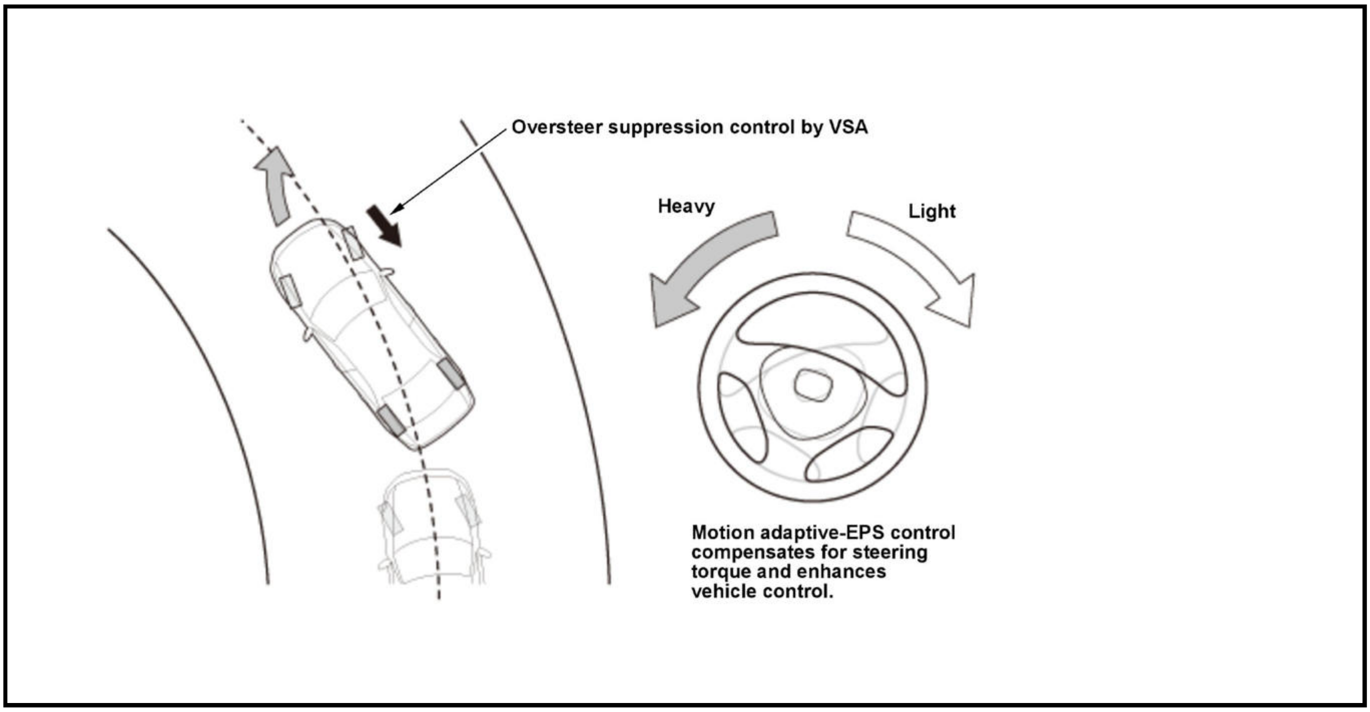
Oversteer suppression control by VSA
Heavy
Light
Motion adaptive-EPS control compensates for steering torque and enhances vehicle control.

Mitigates Understeer Control

When understeer occurs, it compensates for steering torque to control the oversteer, then holds the tire grip to enhance vehicle control.

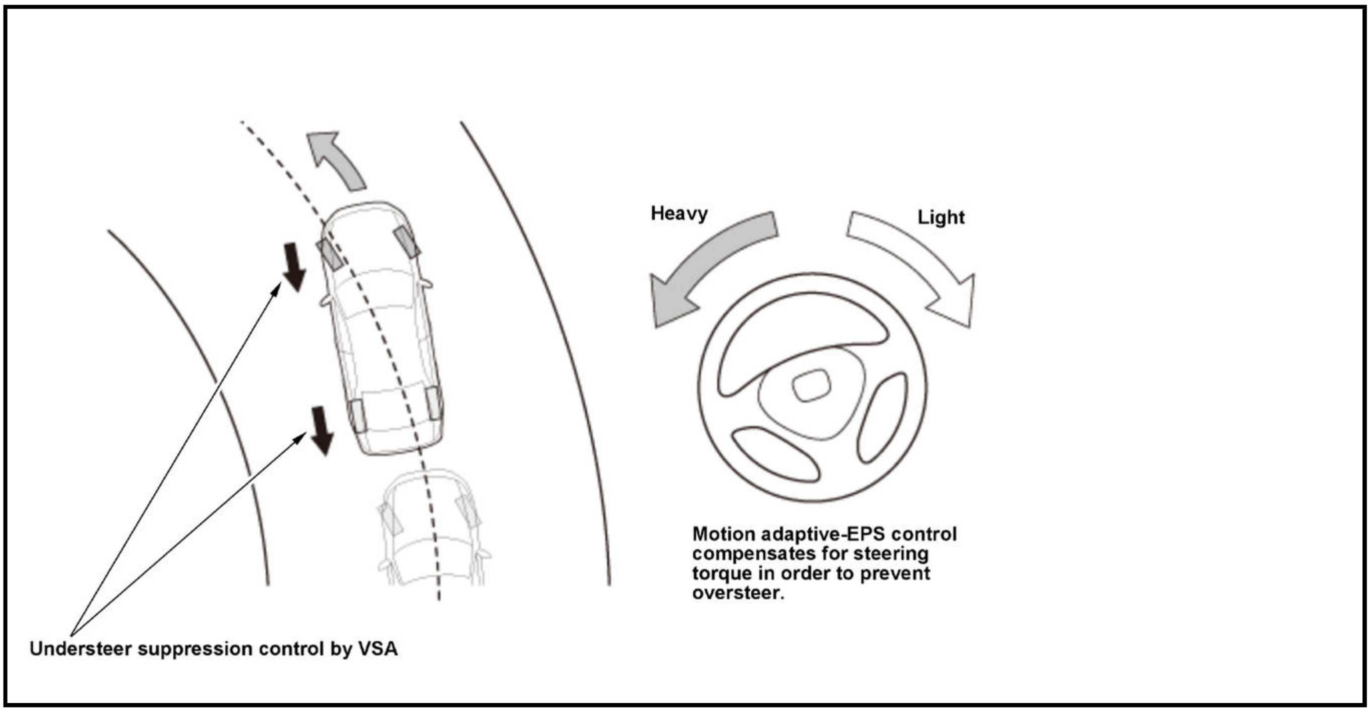
Heavy
Light
Motion adaptive-EPS control compensates for steering torque in order to prevent oversteer.
Understeer suppression control by VSA

Stabilizes Braking on Road Surfaces With Different Friction Coefficients Control

When the vehicle behavior is abnormal while braking on an uneven road surface, it compensates for steering torque to enhance vehicle control.

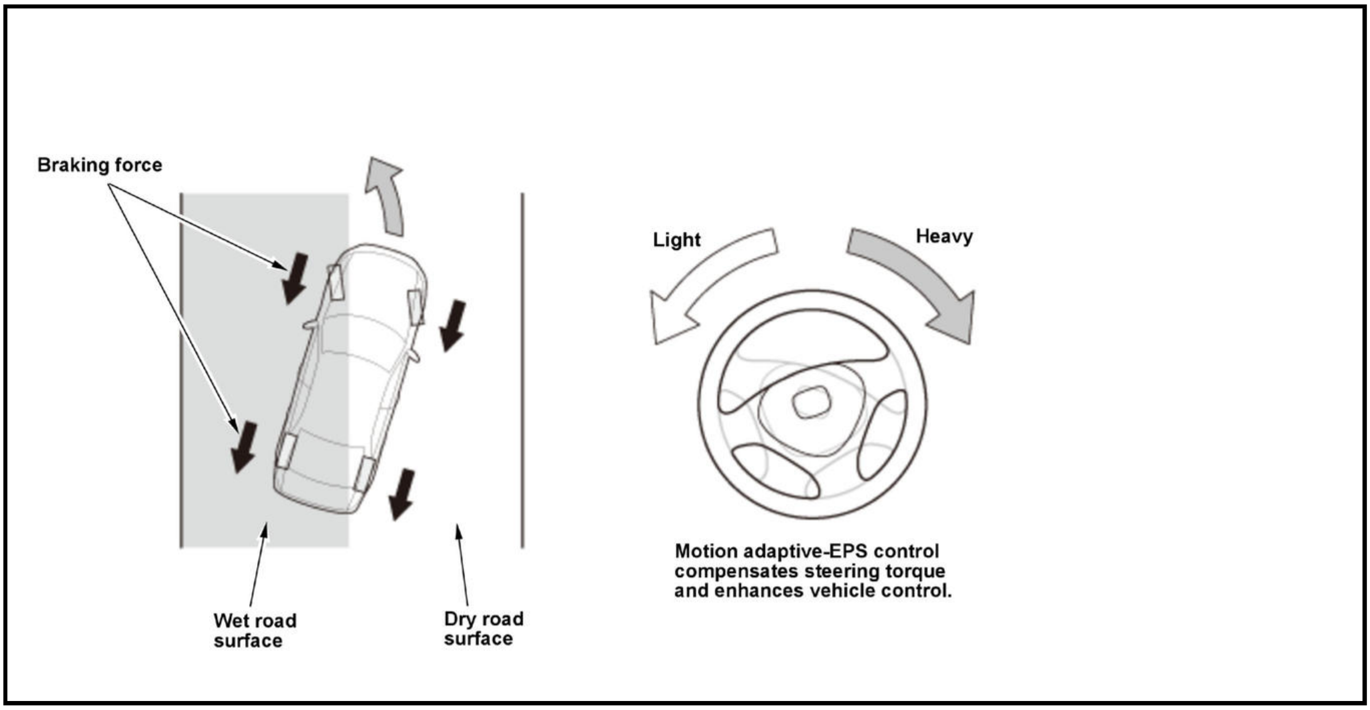
Braking force
Light
Heavy
Motion adaptive-EPS control compensates steering torque and enhances vehicle control.
Wet road surface
Dry road surface

Straight Driving Assist

Steering effort is detected and reduced by applying EPS motor assist when driving on a sloped road. This control will return to normal when no longer driving on a sloped road. This function only operates when the cruise control is on and the speed is set.

Assist image

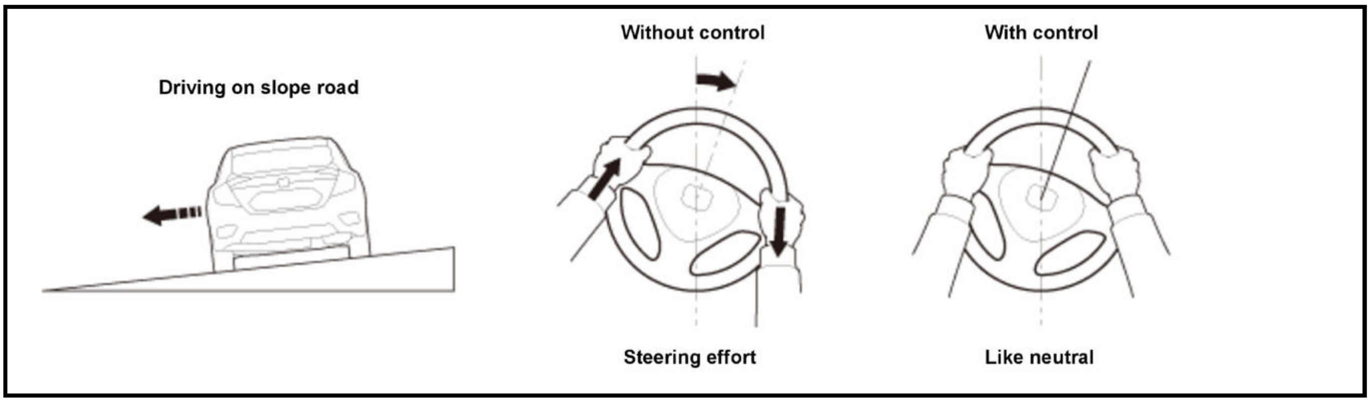

Fail-safe

The EPS control unit diagnoses and monitors the motor system, the torque sensor system, the power supply system, the communication system, and the CPU. When a failure is detected, the EPS indicator comes on and the unit takes one of the following fail-safe actions:

- Stop assist
- Limit assist
- Start alternative assist (vehicle speed fixed control)

Components

Steering Gearbox

The assist pinion shaft transmits the EPS motor power to the steering rack. The EPS motor power is transmitted to the worm wheel by the worm gear. The assist pinion shaft moves the steering rack with the EPS motor power that is increased and transmitted by the worm wheel.The manual pinion shaft transmits the steering torque from the steering wheel to the steering rack. The steering torque is transmitted from the steering column shaft to the input shaft, and the manual pinion shaft connecting with the input shaft by the torsion bar moves the steering rack.

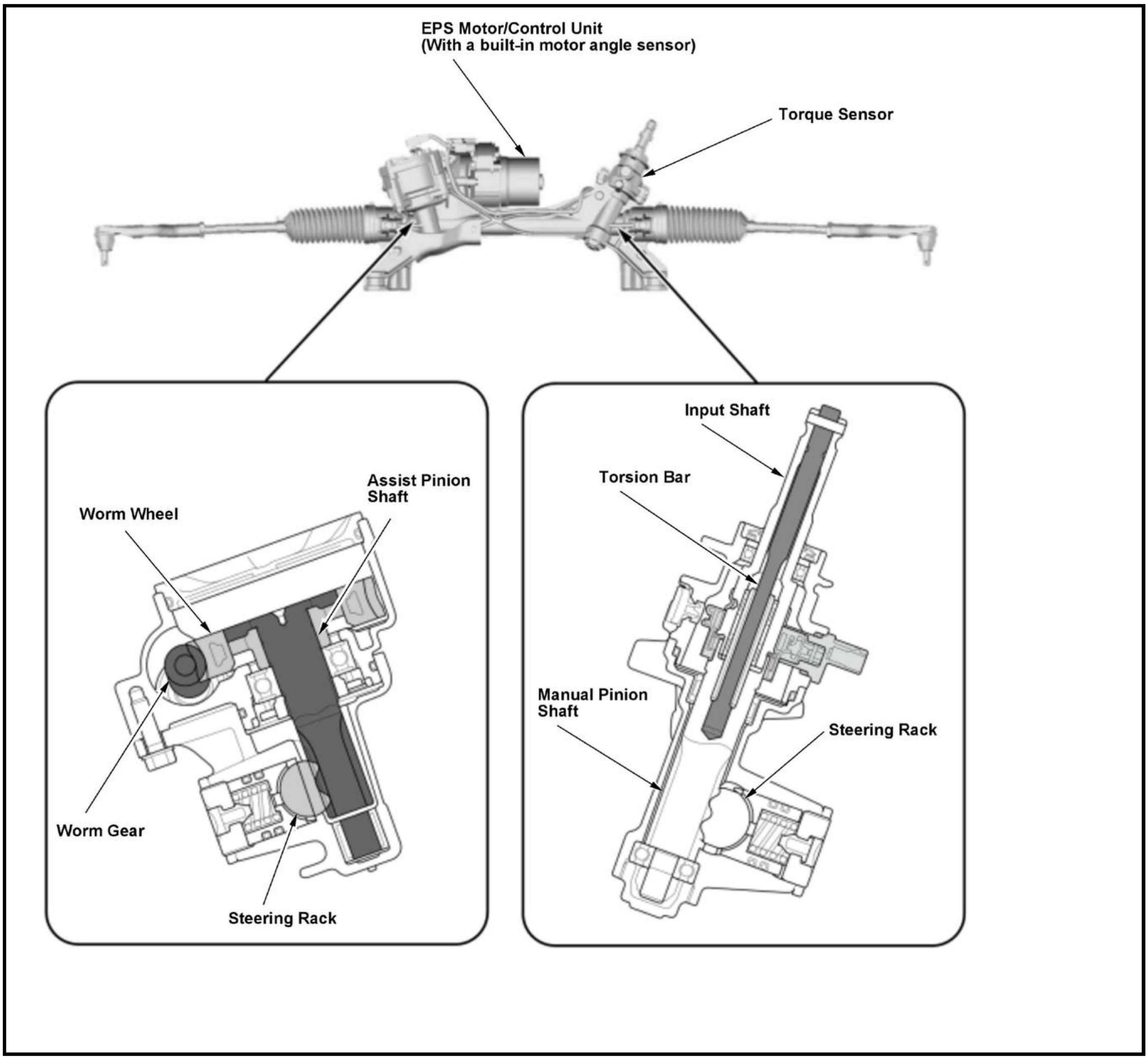
EPS Motor/Control Unit
(With a built-in motor angle sensor)
Torque Sensor
Assist Pinion Shaft
Worm Wheel
Worm Gear
Steering Rack
Input Shaft
Torsion Bar
Manual Pinion Shaft
Steering Rack

VGR (Variable Gear Ratio)

The VGR is applied to the manual pinion shaft side of the steering rack. The normal gear ratio is applied near the straight ahead position of the steering rack for smooth start of steering operation. The quick gear ratio is applied for a large steering angle, which reduces lock-to-lock steering.

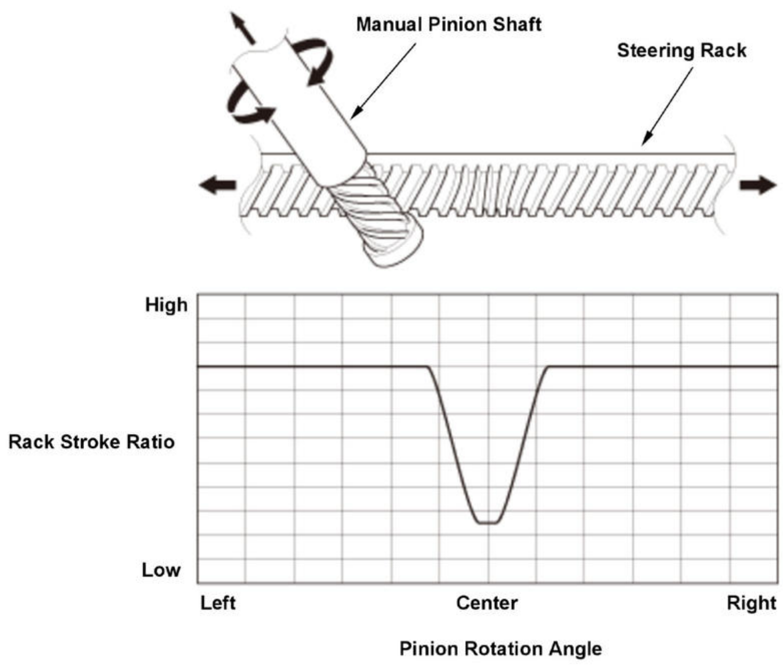

Torque Sensor

Overview

The torque sensor is built into the steering gearbox, using a Hall IC sensor to detect steering wheel torque forces. The torque sensor consists of the input shaft, the torsion bar, the manual pinion shaft, and the torque sensor unit.

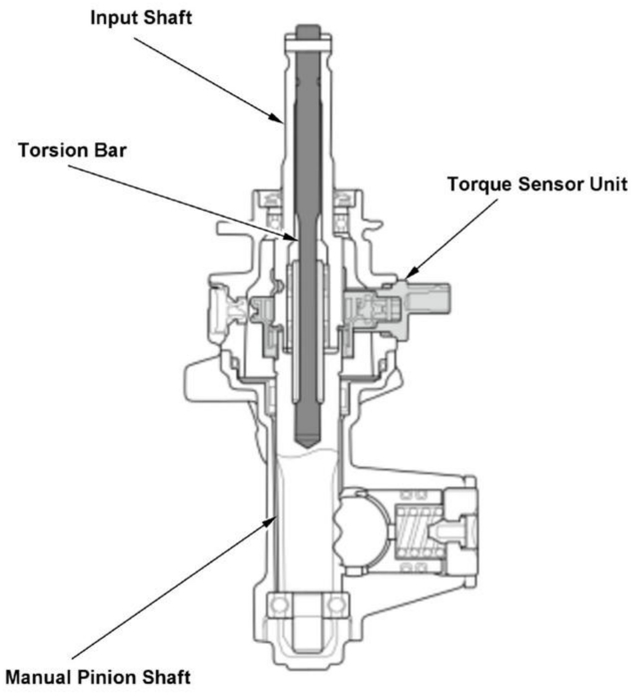
Input Shaft
Torsion Bar
Torque Sensor Unit
Manual Pinion Shaft

System Diagram

- The steering force of the steering wheel is detected by the torque sensor, and the signal is sent to the EPS control unit. The EPS control unit calculates the assistance torque based on the steering torque signal and vehicle speed signal, and activates the motor to assists the steering force.

- To activate the three-phase brushless motor properly, the motor angle sensor detects the motor angle, and sends the signal to the EPS control unit.
- The EPS control unit sends the motor load status to the PCM. If the electric load of the motor is high while the vehicle is idling or running at a low speed, the PCM increases the idling speed to avoid engine stall.
- The EPS control unit receives the vehicle behavior information from the VSA modulator-control unit.
- When the EPS system detects a problem, the EPS control unit stores the DTC, and sends the signal to the gauge control module to cause the EPS indicator to come on.
- With LKAS: The EPS control unit assists the steering force when the EPS control unit receives the steering assist request from the millimeter wave radar.

For locations of each component on vehicle, refer to Component Location Index:

- **EPS control unit, EPS motor, torque sensor, EPS motor angle sensor**
- **Gauge control module**
- **PCM**
- **TCM**
- **VSA modulator-control unit**
- **SRS unit**
- **Driver's seat belt buckle**
- **Body control module**
- **Driver's door switch**
- **Wiper/washer switch**
- **Millimeter wave radar**

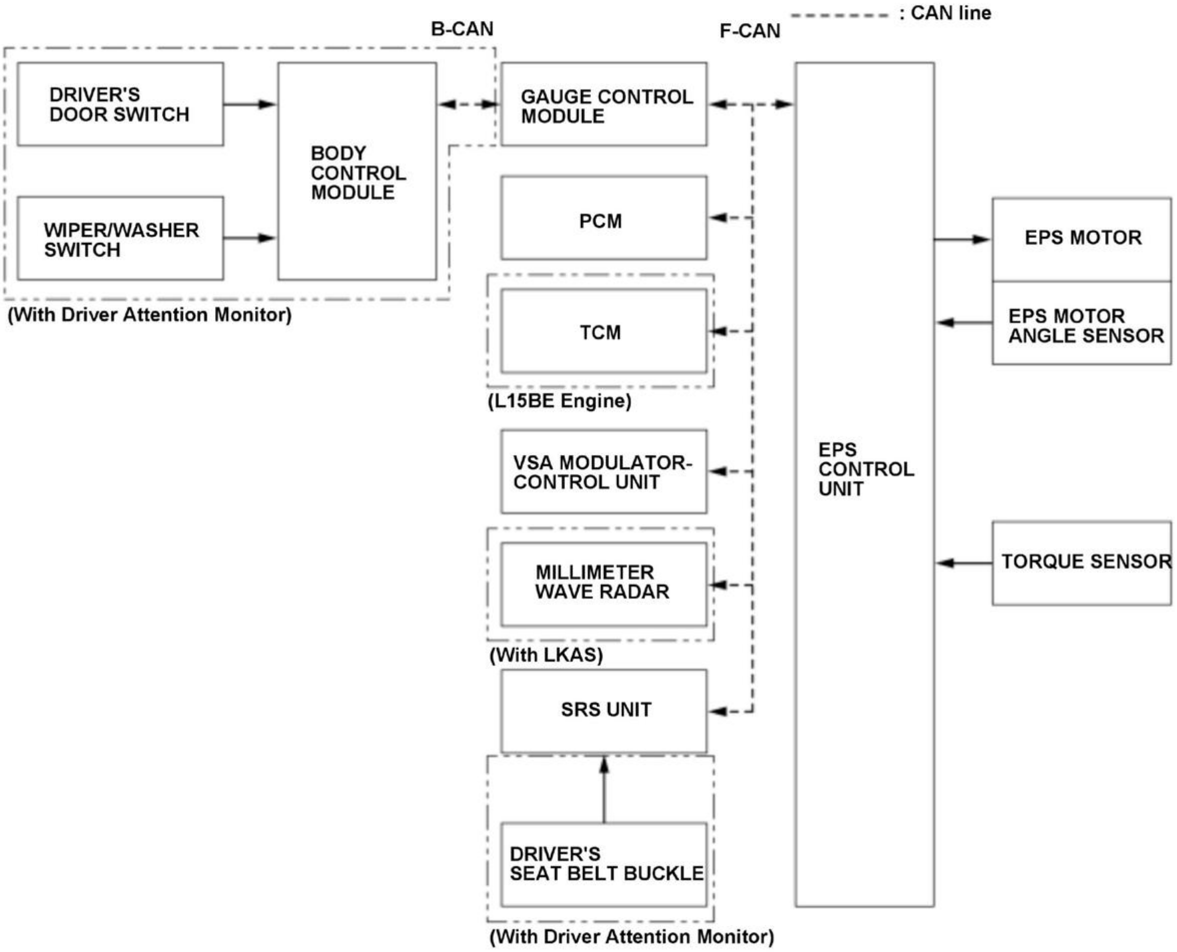

: CAN line
B-CAN
F-CAN
DRIVER'S DOOR SWITCH
WIPER/WASHER SWITCH
BODY CONTROL MODULE
(With Driver Attention Monitor)
GAUGE CONTROL MODULE
PCM
TCM
(L15BE Engine)
VSA MODULATOR-CONTROL UNIT
MILLIMETER WAVE RADAR
(With LKAS)
SRS UNIT
DRIVER'S SEAT BELT BUCKLE
(With Driver Attention Monitor)
EPS CONTROL UNIT
EPS MOTOR
EPS MOTOR ANGLE SENSOR
TORQUE SENSOR

F-CAN Communication Data

EPS System Receiving Signal

Transmitting Unit	Signal Name
Gauge control module	• Driver's door switch signal* 1 • Wiper switch status* 1 • System operating state signal* 1
PCM	• Engine speed signal • Vehicle speed signal* 2 • Shift position signal* 2 • Service check signal • System failure Information
TCM* 3	• Vehicle speed signal • Shift position signal

*1: With driver attention monitor

*2: K24W9/K24V9 engine

*3: L15BE engine

*4: With LKAS

Transmitting Unit	Signal Name
VSA modulator-control unit	- Wheel speed signals - System operating state signal - System failure Information
SRS unit	- Yaw rate signal - Lateral acceleration signal - Longitudinal acceleration signal - Driver's seat belt buckle switch status* 1
Millimeter wave radar *4	- LKAS mode signal - Instructing current signal

1: With driver attention monitor

2: K24W9/K24V9 engine

*3: L15BE engine

*4: With LKAS

EPS System Transmitting Signal

Transmitting Unit	Signal Name
EPS control unit	- Indicator drive signal - Motor load status - Idle control demand - Steering angle signal - System failure Information - Driver attention monitor information signal* 1 - Steering torque signal *2 - Motor speed signal *2

*1: With driver attention monitor

*2: With LKAS

HEATED STEERING WHEEL SYSTEM

System Description

Basic Control/Function

The heated steering wheel switch turns on or off the heated steering wheel system. When the heated steering wheel switch is pressed, the switch sends on signals to the heated steering wheel control unit and turns on the heated steering wheel indicator. The heated steering wheel control unit controls outputs to the steering heater based on the heater temperature sensor values. While the heater is working, the heated steering wheel control unit receives the illumination signal via LIN, and adjusts the brightness of the indicator.

Automatic Control

When the remote engine start control system is activated, the climate control system turns on the seat heater system based on the vehicle temperature. When the seat heater is turned on by the remote engine start control system, the gauge control module sends ON commands to the heated steering wheel control unit, and provides power to the heater pad. When the seat heater is turned on in this mode, the heated steering wheel indicator does not turn on.

Transition to Off State

The heater output shall transition to the off state under any of the following conditions

- HTR +B power is off.
- The current operation state is off.
- Thermistor open/short failure is detected (DTC store).
- Heater current abnormal failure is detected (DTC store).
- Steering wheel not heating failure is detected (DTC store).
- Main heater switch failure is detected (DTC store).
- Heated steering wheel switch failure is detected.

Components

Steering Heater

Heating is done by the current from the heated steering wheel control unit.

Heated Steering Wheel Switch

The heated steering wheel switch is a momentary switch and performs input to the heated steering wheel control unit. The heated steering wheel indicator is driven by the heated steering wheel control unit.

Heater Temperature Sensor

The temperature of the steering heater is fedback to the heated steering wheel control unit.

CHECK

POWER STEERING ASSIST CHECK

Check

1. Power Steering Assist - Check

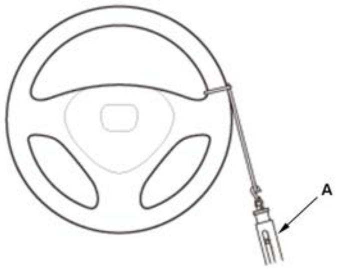	**NOTE:** This test should be done with original equipment tires and wheels at the correct tire pressure. 1. Start the engine, and let it idle. 2. Attach a commercially available spring scale (A) to the steering wheel. With the engine idling and the vehicle on a clean, dry floor, pull the scale as shown, and read it as soon as the tires begin to turn. 3. If the scale reads less than the specification, the power assist is OK. If it reads more, check these items: • Steering linkage • EPS system

	• Wheel alignment

B	**Initial turning load:**	**34 N (3.5 kgf, 7.7 lbf) max.**

STEERING WHEEL ROTATIONAL PLAY CHECK

Check

1. Steering Wheel Rotational Play - Check

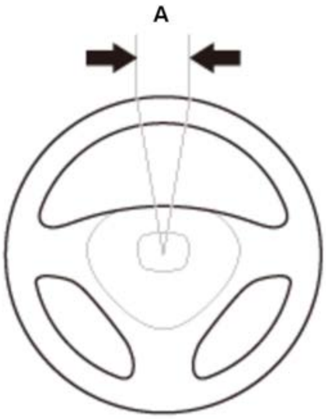	1. Set the front wheels in the straight ahead position. 2. Measure how far you can turn the steering wheel left and right without moving the front wheels. • If the play is within the limit, the steering gearbox and the steering linkage are OK. • If the play exceeds the limit, inspect the steering linkage and the steering gearbox.

Rotational play (A):	**0-10 mm (0-0.39 in)**

COMPONENT LOCATION INDEX

EPS COMPONENT LOCATION INDEX

For relationships between signals in a system, refer to System Diagram.

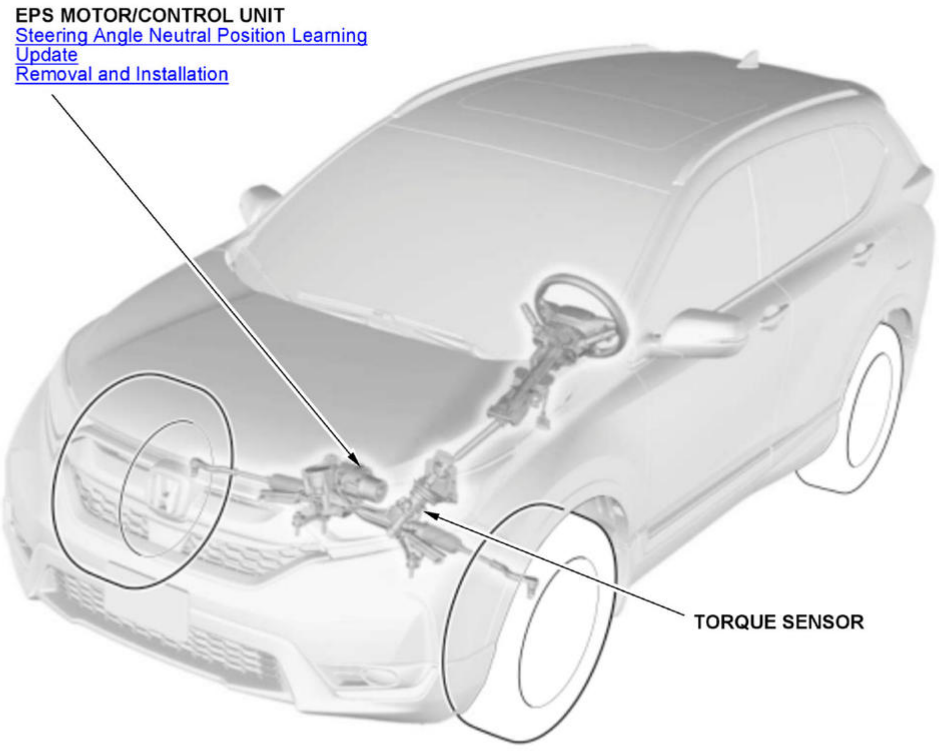
EPS MOTOR/CONTROL UNIT
Steering Angle Neutral Position Learning
Update
Removal and Installation
TORQUE SENSOR

STEERING COMPONENT LOCATION INDEX

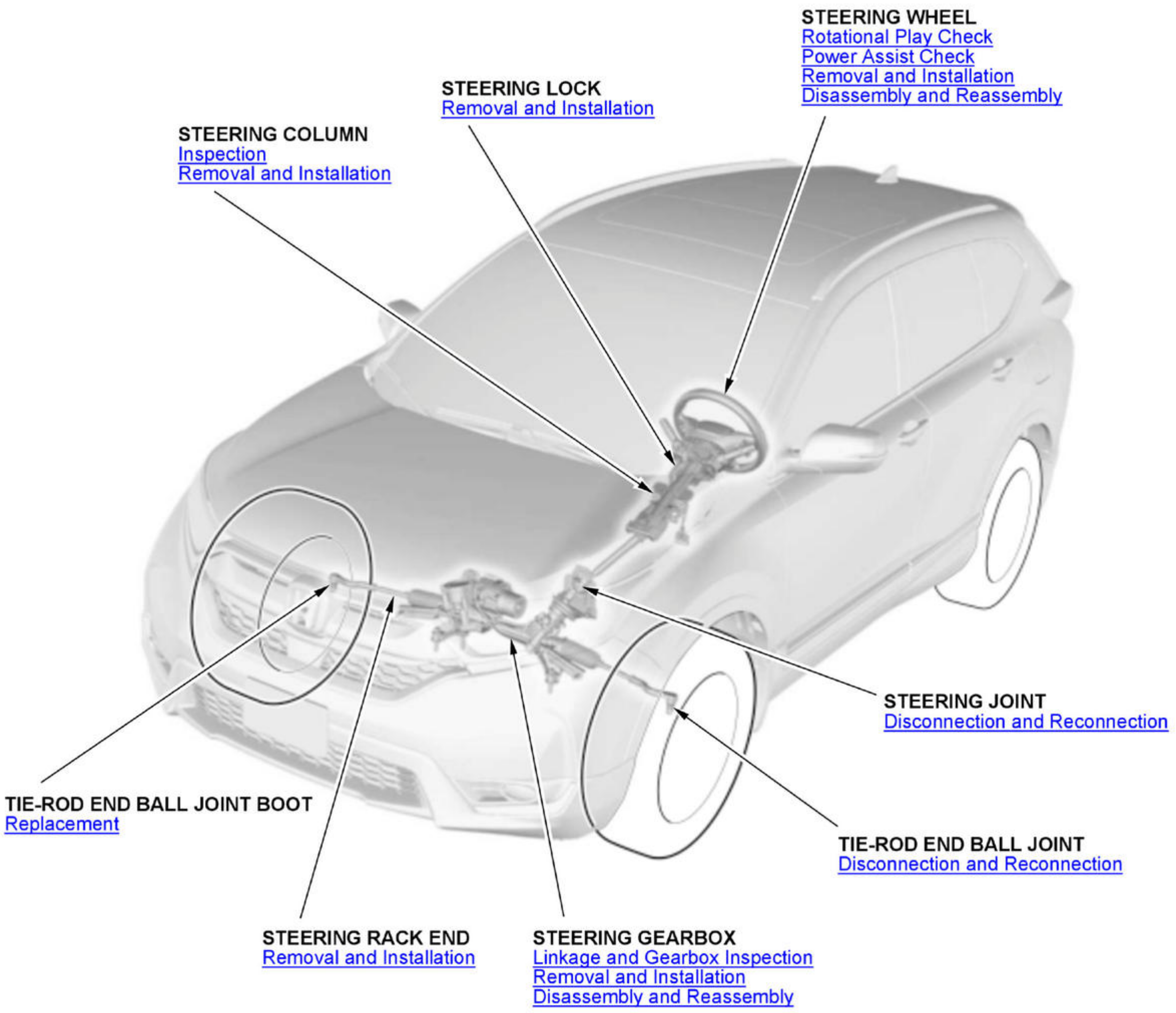
STEERING WHEEL
Rotational Play Check
Power Assist Check
Removal and Installation
Disassembly and Reassembly
STEERING LOCK
Removal and Installation
STEERING COLUMN
Inspection
Removal and Installation
STEERING JOINT
Disconnection and Reconnection
TIE-ROD END BALL JOINT BOOT
Replacement
TIE-ROD END BALL JOINT
Disconnection and Reconnection
STEERING RACK END
Removal and Installation
STEERING GEARBOX
Linkage and Gearbox Inspection
Removal and Installation
Disassembly and Reassembly

CONNECTOR VIEW

EPS CONTROL UNIT CONNECTOR FOR INPUTS AND OUTPUTS

Connector Index
EPS Control Unit Connector A (2P)
EPS Control Unit Connector B (6P)
EPS Control Unit Connector C (4P)

EPS Control Unit Inputs and Outputs for Connector A (2P) (female terminals)

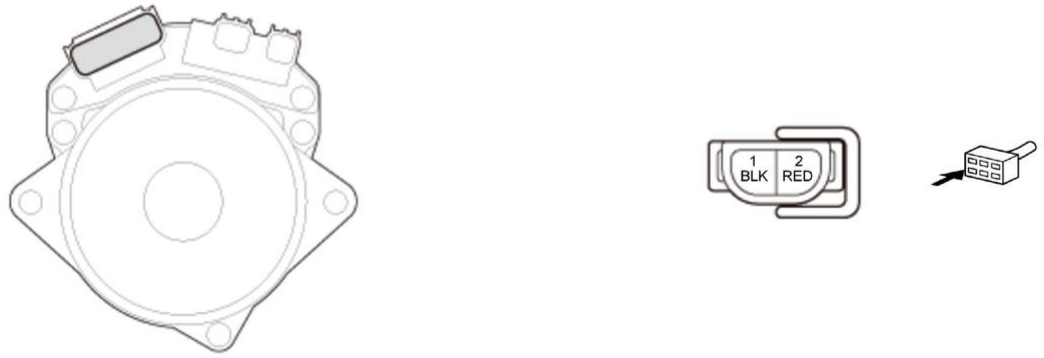

Terminal number	Terminal sign	Description
1	GND	Ground for the EPS control unit
2	+B EPS	Power source for the actuator EPS motor

EPS Control Unit Inputs and Outputs for Connector B (6P) (female terminals)

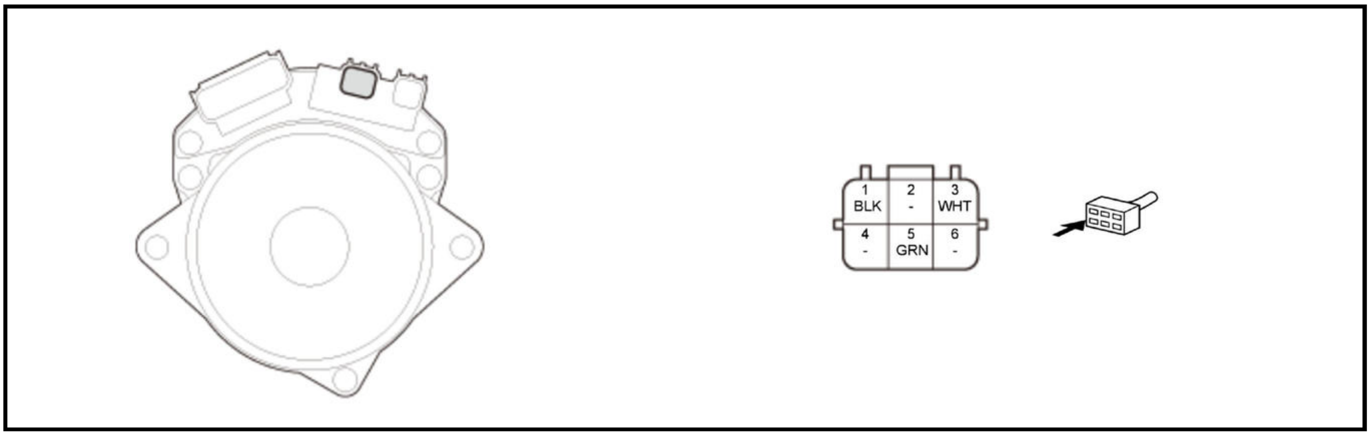

Terminal number	Terminal sign	Description
1	F-CAN_L *1F-CAN B_L *2	F-CAN communication circuit
2	Not used	---
3	F-CAN_H *1F-CAN B_H *2	F-CAN communication circuit
4	Not used	---
5	IG1	Power source for activating the system
6	Not used	---

*1: Without CAN gateway

*2: With CAN gateway

EPS Control Unit Inputs and Outputs for Connector C (4P) (female terminals)

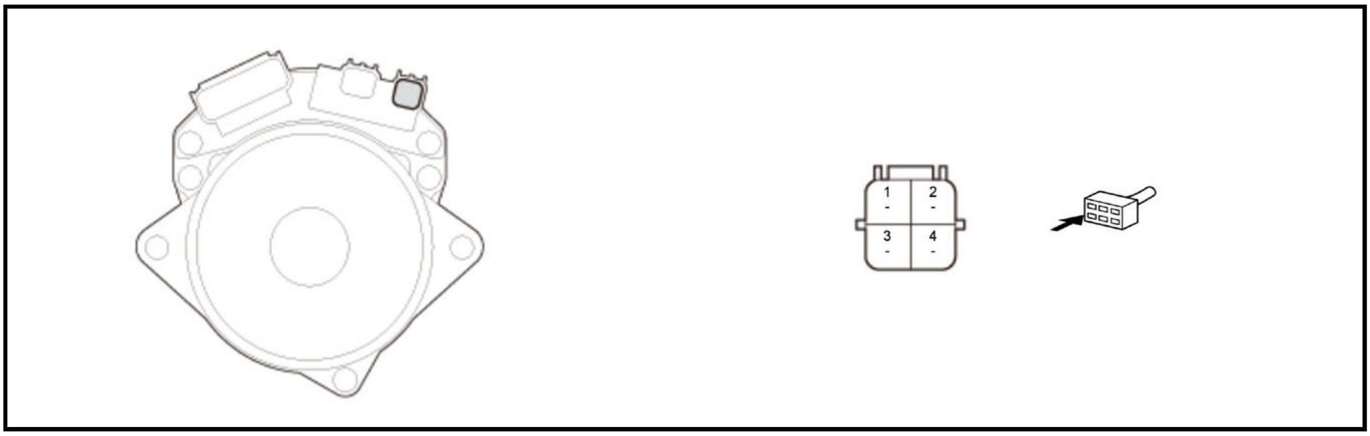

Terminal number	Terminal sign	Description
1	T/S GND	Ground for the torque sensor
2	T/S VDD	Power source for torque sensor
3	TSM	Detects torque sensor main signal
4	TSS	Detects torque sensor sub signal

HEATED STEERING WHEEL CONTROL UNIT CONNECTOR FOR INPUTS AND OUTPUTS

Heated Steering Wheel Control Unit 14P Connector (female terminals)

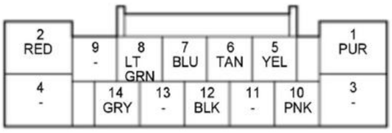

Terminal number	Terminal name	Description	Signal
1	HSW HEATER	Outputs heated steering wheel signal	With heated steering operation: pulse (depending on steering temperature)Without heated steering wheel operation: less than 0.2 V
2	+B HSW	Detects heated steering wheel relay signal	With vehicle in ON mode: about battery voltage
3	---	Not used	---
4	---	Not used	---
5	HSW SW	Detects heated steering wheel switch signal	With vehicle in ON mode and heated steering wheel switch ON: about battery voltageIf none of above conditions are met: less than 0.2 V
6	NTC TH+	Detects heater temperature signal	---
7	NTC TH-	Detects heater temperature signal	---
8*	HSW LIN	Communication line	---
9	---	Not used	---
10	HSW IND	Detects heated steering wheel switch indicator signal	---
11	---	Not used	---
12*	STRG GND	Heated steering wheel control unit ground	Less than 0.2 V at all times
13	---	Not used	---
14	HSW SW +B	Drives heated steering wheel switch	With vehicle in ON mode: about battery voltage

*: With multi-information display

CIRCUIT DIAGRAM

EPS CIRCUIT DIAGRAM(WITH CAN GATEWAY (WITH AUTO IDLE STOP SYSTEM)) (2020 2021)

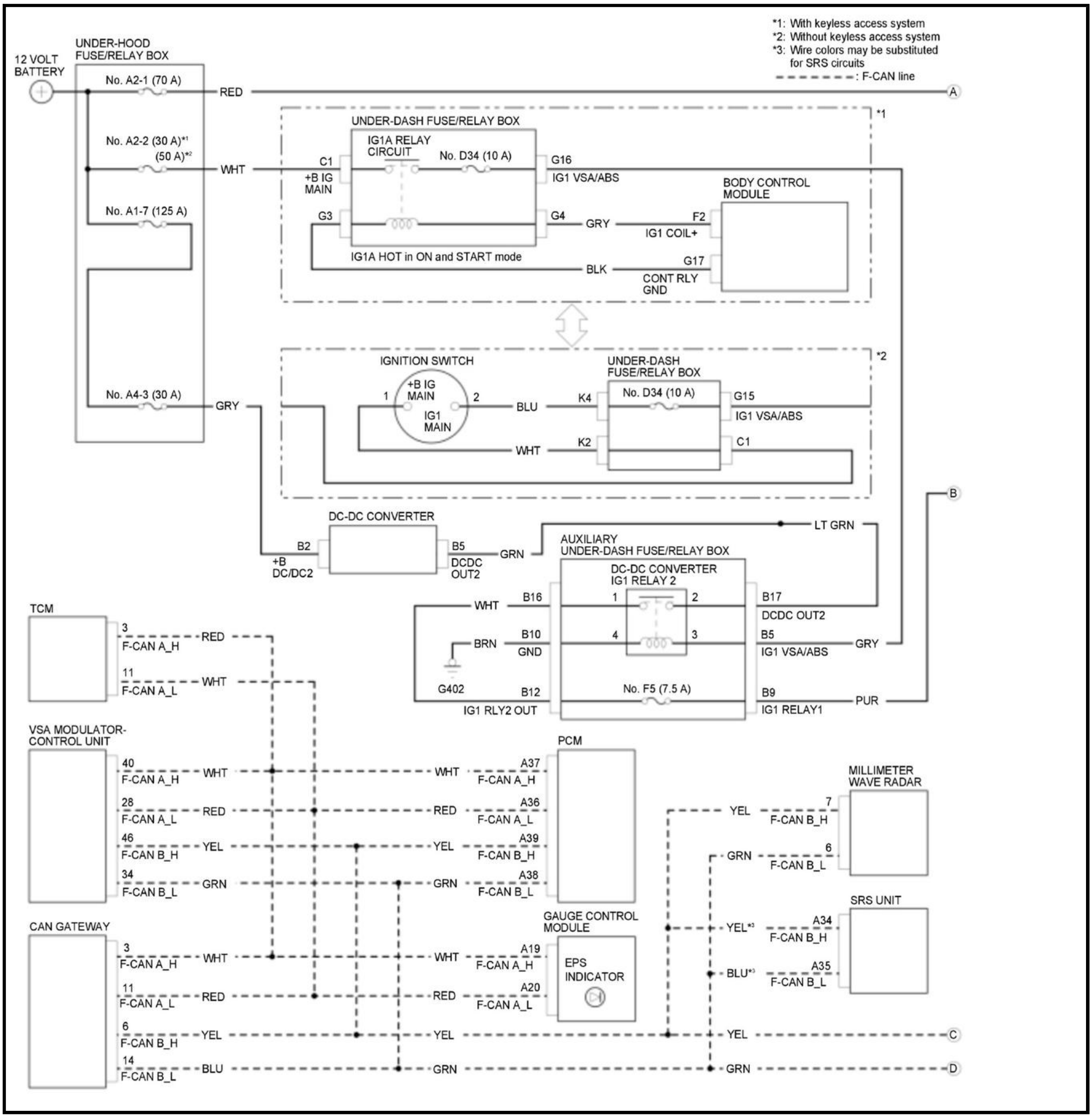
*1: With keyless access system
*2: Without keyless access system
*3: Wire colors may be substituted for SRS circuits
: F-CAN line
12 VOLT BATTERY
UNDER-HOOD FUSE/RELAY BOX
No. A2-1 (70 A)
RED
A
No. A2-2 (30 A)*1 (50 A)*2
WHT
No. A1-7 (125 A)
No. A4-3 (30 A)
GRY
UNDER-DASH FUSE/RELAY BOX
*1
IG1A RELAY CIRCUIT
No. D34 (10 A)
C1
+B IG MAIN
G16
IG1 VSA/ABS
G3
G4
GRY
F2
IG1 COIL+
BODY CONTROL MODULE
IG1A HOT in ON and START mode
BLK
G17
CONT RLY GND
*2
IGNITION SWITCH
+B IG MAIN
IG1 MAIN
1
2
BLU
K4
UNDER-DASH FUSE/RELAY BOX
No. D34 (10 A)
G15
IG1 VSA/ABS
WHT
K2
C1
B
DC-DC CONVERTER
B2
+B DC/DC2
B5
DCDC OUT2
GRN
LT GRN
AUXILIARY UNDER-DASH FUSE/RELAY BOX
DC-DC CONVERTER IG1 RELAY 2
WHT
B16
1
2
B17
DCDC OUT2
BRN
B10
GND
4
3
B5
IG1 VSA/ABS
GRY
G402
B12
IG1 RLY2 OUT
No. F5 (7.5 A)
B9
IG1 RELAY1
PUR
TCM
3
F-CAN A_H
RED
11
F-CAN A_L
WHT
VSA MODULATOR-CONTROL UNIT
40
F-CAN A_H
WHT
28
F-CAN A_L
RED
46
F-CAN B_H
YEL
34
F-CAN B_L
GRN
PCM
WHT
A37
F-CAN A_H
RED
A36
F-CAN A_L
YEL
A39
F-CAN B_H
GRN
A38
F-CAN B_L
MILLIMETER WAVE RADAR
YEL
7
F-CAN B_H
GRN
6
F-CAN B_L
SRS UNIT
YEL*3
A34
F-CAN B_H
BLU*3
A35
F-CAN B_L
CAN GATEWAY
3
F-CAN A_H
WHT
11
F-CAN A_L
RED
6
F-CAN B_H
YEL
14
F-CAN B_L
BLU
GAUGE CONTROL MODULE
EPS INDICATOR
WHT
A19
F-CAN A_H
RED
A20
F-CAN A_L
YEL
C
GRN
D

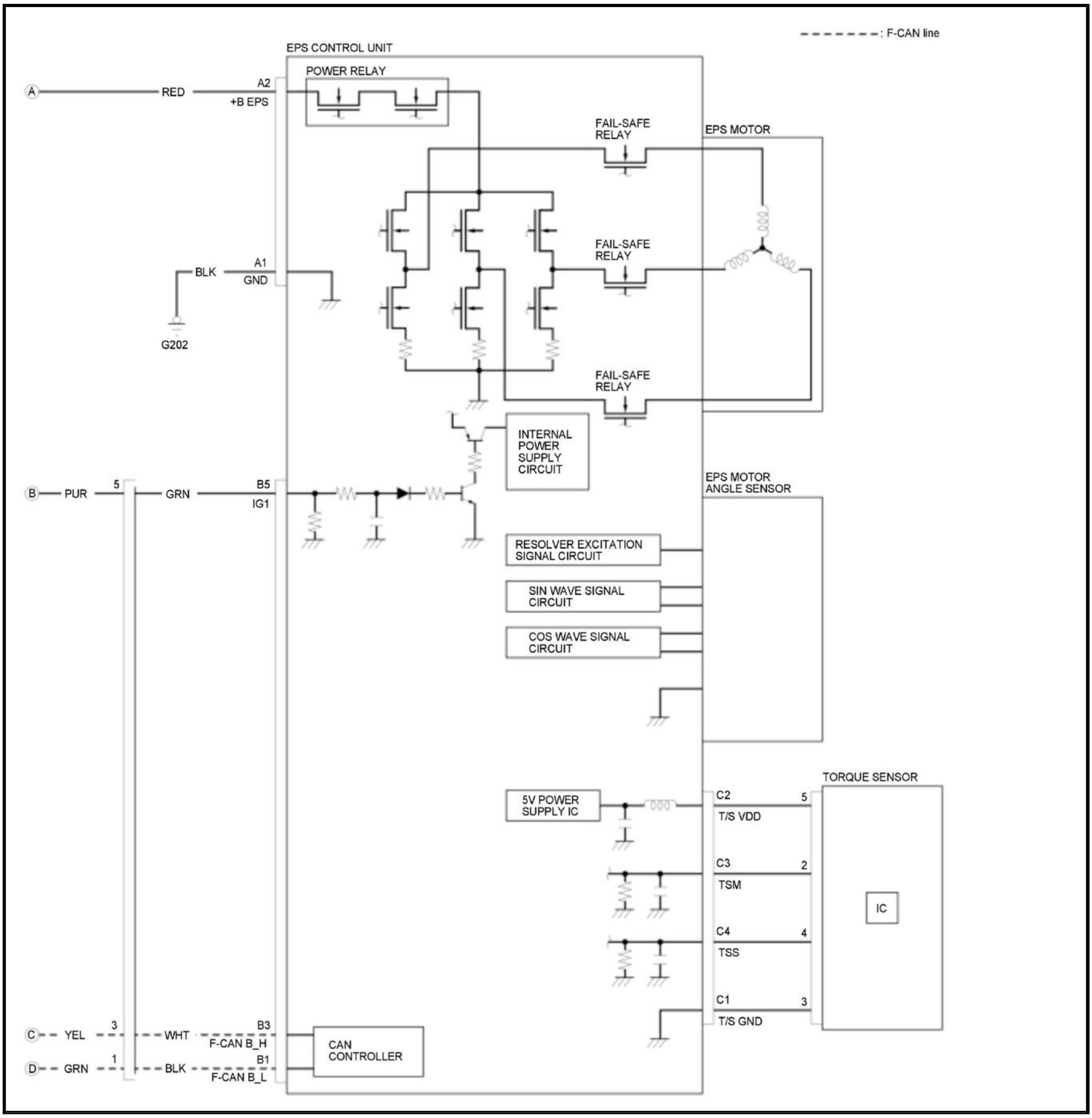
- - - - - - - : F-CAN line
EPS CONTROL UNIT
POWER RELAY
A
RED
A2
+B EPS
FAIL-SAFE RELAY
EPS MOTOR
FAIL-SAFE RELAY
BLK
A1
GND
G202
FAIL-SAFE RELAY
INTERNAL POWER SUPPLY CIRCUIT
EPS MOTOR ANGLE SENSOR
B
PUR
5
GRN
B5
IG1
RESOLVER EXCITATION SIGNAL CIRCUIT
SIN WAVE SIGNAL CIRCUIT
COS WAVE SIGNAL CIRCUIT
TORQUE SENSOR
5V POWER SUPPLY IC
C2
T/S VDD
5
C3
TSM
2
IC
C4
TSS
4
C1
T/S GND
3
C
YEL
3
WHT
B3
F-CAN B_H
D
GRN
1
BLK
B1
F-CAN B_L
CAN CONTROLLER

EPS CIRCUIT DIAGRAM(WITH CAN GATEWAY (WITHOUT AUTO IDLE STOP SYSTEM))

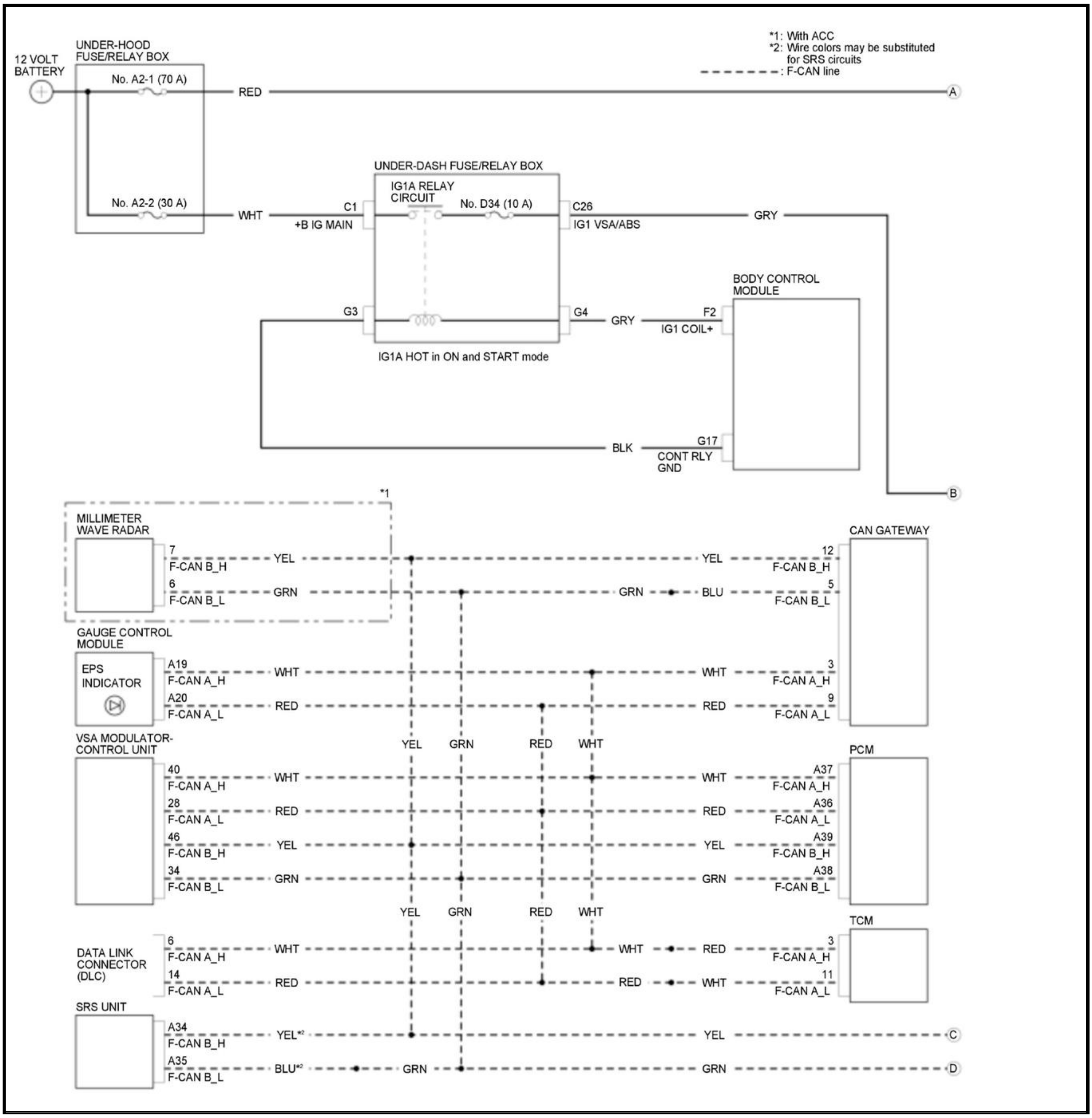
*1: With ACC
*2: Wire colors may be substituted for SRS circuits
: F-CAN line
12 VOLT BATTERY
UNDER-HOOD FUSE/RELAY BOX
No. A2-1 (70 A)
RED
A
No. A2-2 (30 A)
WHT
UNDER-DASH FUSE/RELAY BOX
IG1A RELAY CIRCUIT
C1
+B IG MAIN
No. D34 (10 A)
C26
IG1 VSA/ABS
GRY
BODY CONTROL MODULE
G3
G4
GRY
F2
IG1 COIL+
IG1A HOT in ON and START mode
BLK
G17
CONT RLY GND
B
*1
MILLIMETER WAVE RADAR
7
F-CAN B_H
YEL
6
F-CAN B_L
GRN
CAN GATEWAY
YEL
12
F-CAN B_H
GRN
BLU
5
F-CAN B_L
GAUGE CONTROL MODULE
EPS INDICATOR
A19
F-CAN A_H
WHT
A20
F-CAN A_L
RED
WHT
3
F-CAN A_H
RED
9
F-CAN A_L
YEL
GRN
RED
WHT
VSA MODULATOR-CONTROL UNIT
40
F-CAN A_H
WHT
28
F-CAN A_L
RED
46
F-CAN B_H
YEL
34
F-CAN B_L
GRN
PCM
WHT
A37
F-CAN A_H
RED
A36
F-CAN A_L
YEL
A39
F-CAN B_H
GRN
A38
F-CAN B_L
YEL
GRN
RED
WHT
DATA LINK CONNECTOR (DLC)
6
F-CAN A_H
WHT
14
F-CAN A_L
RED
TCM
WHT
RED
3
F-CAN A_H
RED
WHT
11
F-CAN A_L
SRS UNIT
A34
F-CAN B_H
YEL*2
YEL
C
A35
F-CAN B_L
BLU*2
GRN
GRN
D

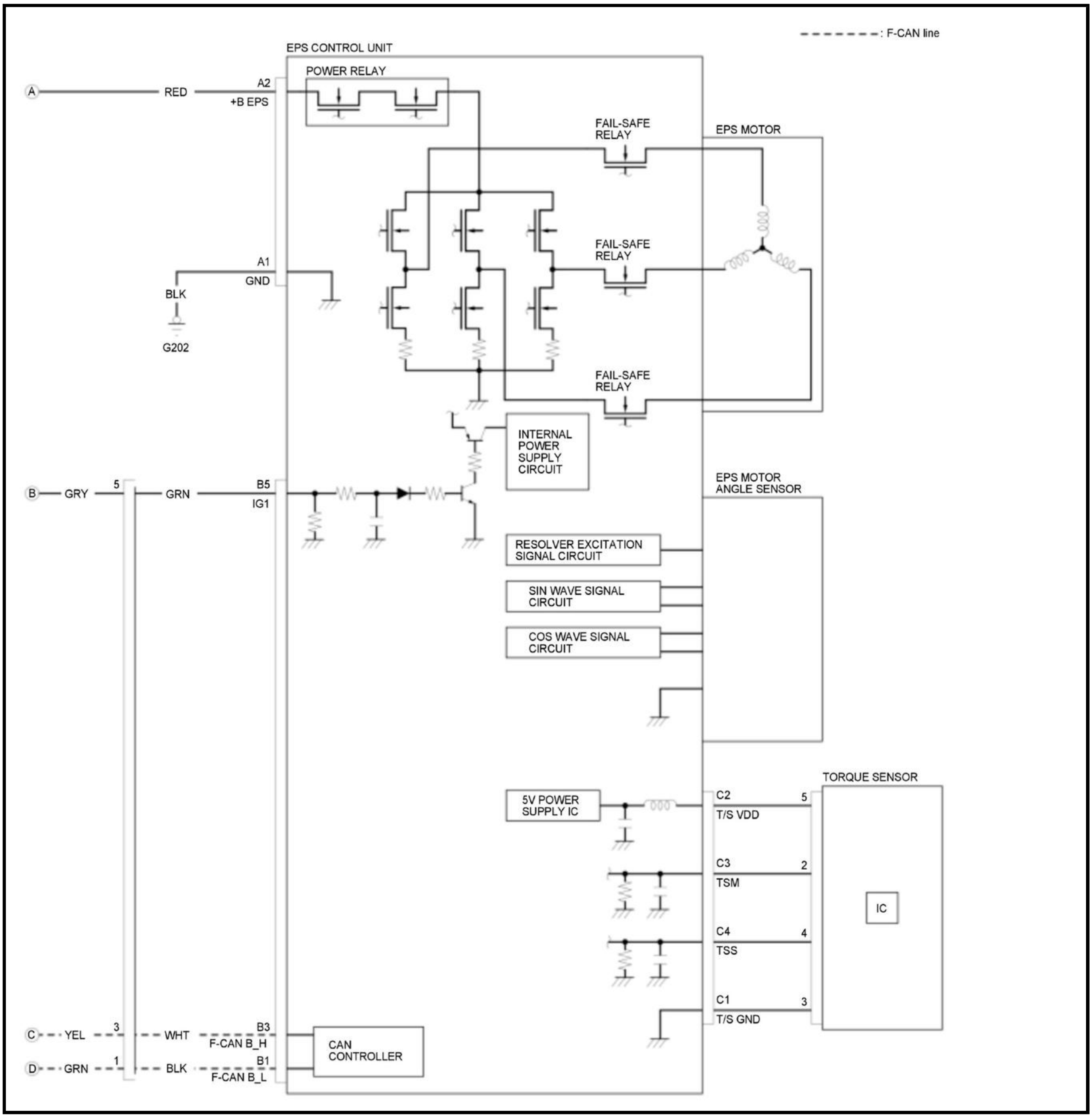
: F-CAN line
EPS CONTROL UNIT
POWER RELAY
A
RED
A2
+B EPS
FAIL-SAFE RELAY
EPS MOTOR
FAIL-SAFE RELAY
A1
GND
BLK
G202
FAIL-SAFE RELAY
INTERNAL POWER SUPPLY CIRCUIT
EPS MOTOR ANGLE SENSOR
B
GRY
5
GRN
B5
IG1
RESOLVER EXCITATION SIGNAL CIRCUIT
SIN WAVE SIGNAL CIRCUIT
COS WAVE SIGNAL CIRCUIT
TORQUE SENSOR
5V POWER SUPPLY IC
C2
T/S VDD
5
C3
TSM
2
IC
C4
TSS
4
C1
T/S GND
3
C
YEL
3
WHT
B3
F-CAN B_H
D
GRN
1
BLK
B1
F-CAN B_L
CAN CONTROLLER

EPS CIRCUIT DIAGRAM(WITHOUT CAN GATEWAY) (2017 2018 2019)

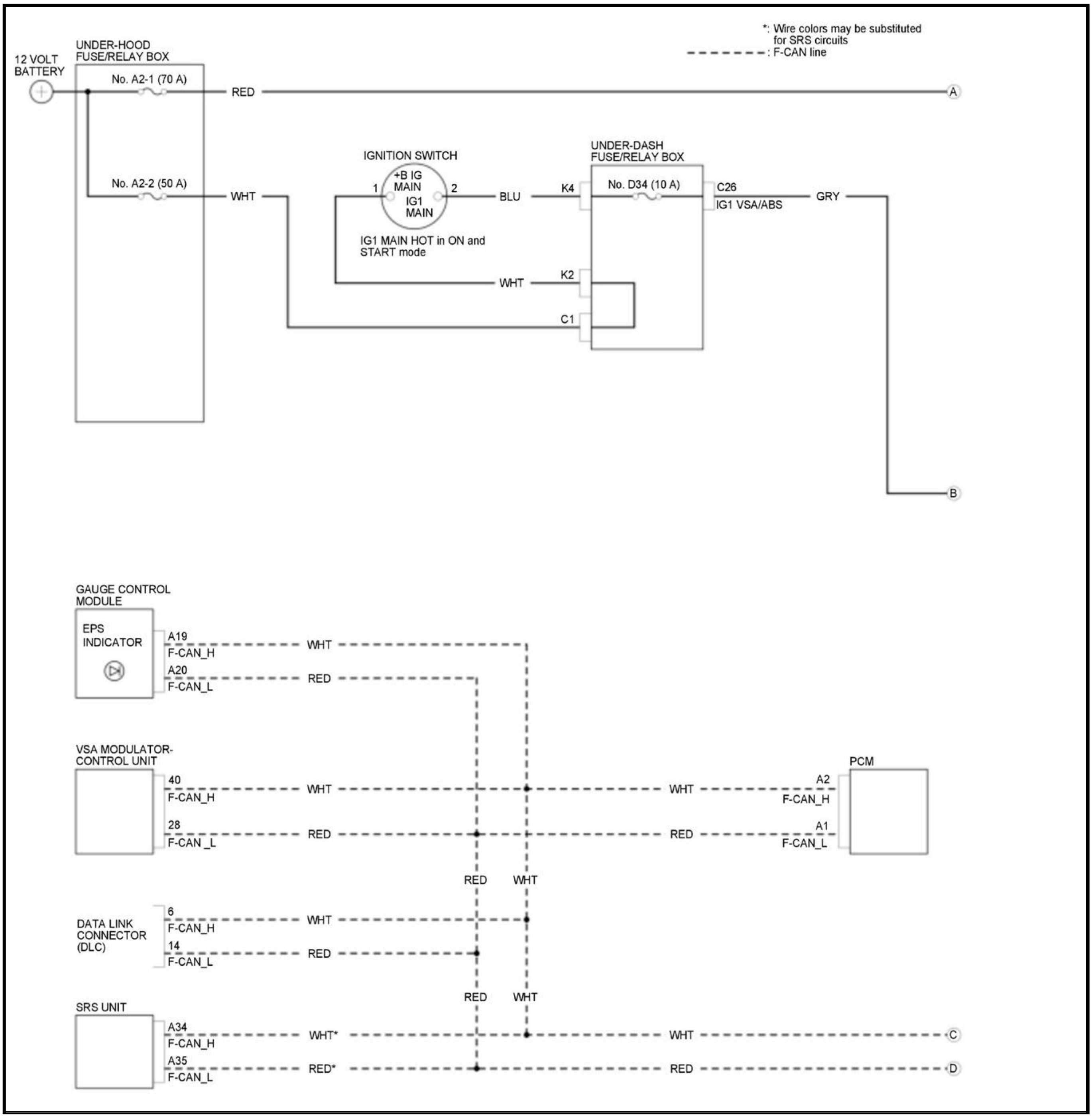
*: Wire colors may be substituted for SRS circuits
: F-CAN line
12 VOLT BATTERY
UNDER-HOOD FUSE/RELAY BOX
No. A2-1 (70 A)
RED
A
No. A2-2 (50 A)
WHT
IGNITION SWITCH
+B IG MAIN
IG1 MAIN
1
2
IG1 MAIN HOT in ON and START mode
BLU
UNDER-DASH FUSE/RELAY BOX
K4
No. D34 (10 A)
C26
IG1 VSA/ABS
GRY
K2
WHT
C1
B
GAUGE CONTROL MODULE
EPS INDICATOR
A19
F-CAN_H
WHT
A20
F-CAN_L
RED
VSA MODULATOR-CONTROL UNIT
40
F-CAN_H
WHT
28
F-CAN_L
RED
PCM
A2
F-CAN_H
A1
F-CAN_L
WHT
RED
RED
WHT
DATA LINK CONNECTOR (DLC)
6
F-CAN_H
WHT
14
F-CAN_L
RED
RED
WHT
SRS UNIT
A34
F-CAN_H
WHT*
A35
F-CAN_L
RED*
WHT
RED
C
D

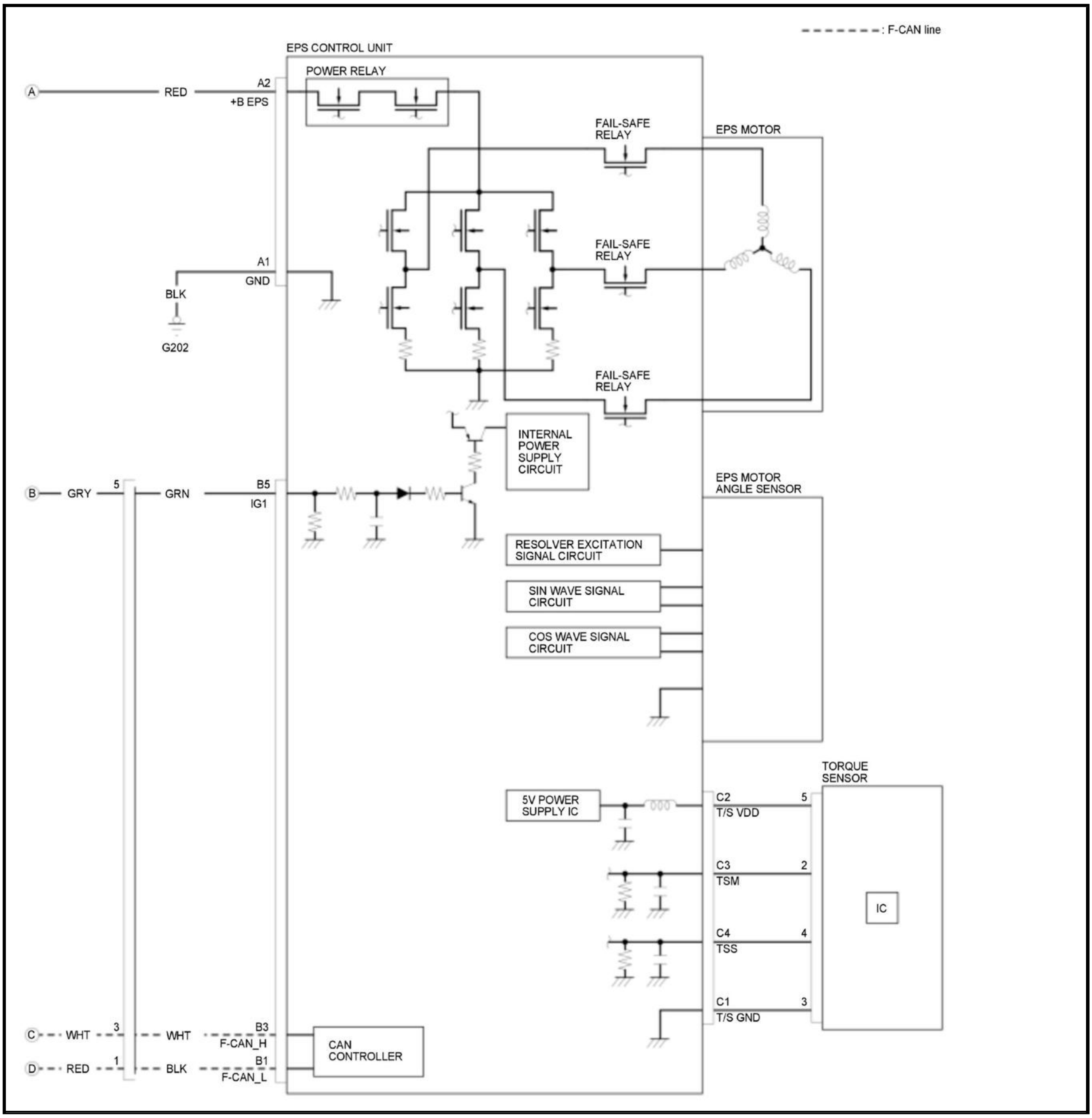

- - - - - - - : F-CAN line
EPS CONTROL UNIT
POWER RELAY
A
RED
A2
+B EPS
FAIL-SAFE RELAY
EPS MOTOR
FAIL-SAFE RELAY
A1
GND
BLK
G202
FAIL-SAFE RELAY
INTERNAL POWER SUPPLY CIRCUIT
EPS MOTOR ANGLE SENSOR
B
GRY
5
GRN
B5
IG1
RESOLVER EXCITATION SIGNAL CIRCUIT
SIN WAVE SIGNAL CIRCUIT
COS WAVE SIGNAL CIRCUIT
TORQUE SENSOR
5V POWER SUPPLY IC
C2
T/S VDD
5
C3
TSM
2
IC
C4
TSS
4
C1
T/S GND
3
C
WHT
3
WHT
B3
F-CAN_H
CAN CONTROLLER
D
RED
1
BLK
B1
F-CAN_L

INSPECTION

STEERING COLUMN INSPECTION

Inspection

Check of Tilting Force

1. Check of Tilting Force

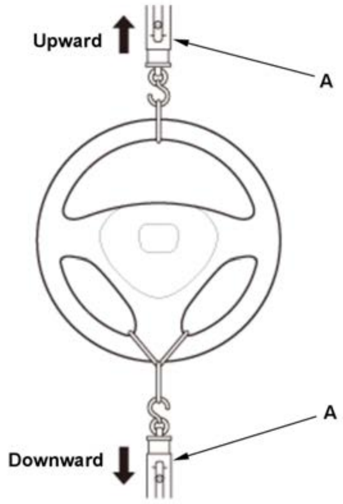	1. Set the steering wheel in the straight ahead driving position, and loosen the lock lever fully. 2. Attach a commercially available spring scale (A) to the highest point of the steering wheel, and tilt the steering column to the lowest position. 3. Pull the spring scale straight up, and read the force required to move the steering column. 4. Attach the spring scale to the lowest point of the steering wheel. 5. Pull the spring scale straight down, and read the force required to move the steering column. 6. If the measurement is higher than the specified, **replace the steering column as an assembly** .

Tilting force (upward/downward):	
Standard:	**69 N (7.0 kgf, 15.5 lbf) max.**

Check of Telescoping Force

2. Check of Telescoping Force

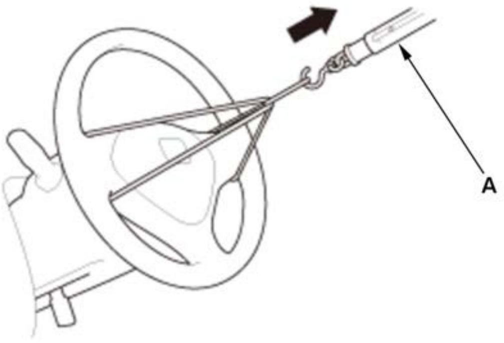	1. Set the steering wheel in the straight ahead driving position, and loosen the lock lever fully. 2. Attach a commercially available spring scale (A) to the center point of the steering wheel as shown. 3. Pull the spring scale, and read the force required to move the steering column during telescoping out. 4. If the measurement is higher than specified, **replace the steering column as an assembly** .

Telescoping force:	
Standard:	**106 N (10.8 kgf, 23.8 lbf) max.**

Check of Lock Lever Force

3. Check of Lock Lever Force

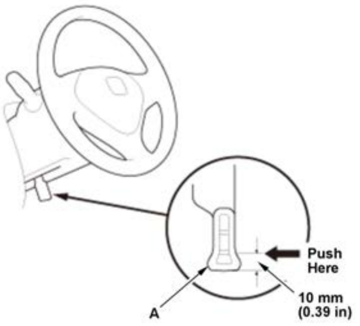 	1. Move the lock lever (A) from the loosened position to the locked position three to five times, then release the lock lever. Adjust the steering column to the center tilt position and also to the full telescopic out position, and hold the steering wheel. 2. Using a commercially available push-pull gauge, push up the lock lever 10 mm (0.39 in) in from its end, and measure the force required to move the lock lever. 3. If the measurement is higher than specified, **replace the steering column as an assembly** .

Lock lever force:	
Standard:	**82 N (8.4 kgf, 18.4 lbf) max.**

Steering Column Inspect

4. Steering Column - Inspect

1. Check these items:

- Check the column shaft bearings (A) for play and proper movement. If bearing is noisy or has excessive play, replace the steering column as an assembly.
- Check the steering joint bearings (B) for play and proper movement. If any bearing is noisy or has excessive play, replace the steering column as an assembly.
- Check the lower slide shaft (C) for smooth movement in and out. If the lower slide shaft is removed, slip it into the upper slide shaft by aligning the paint or stamped marks (D). If it sticks or binds, replace the steering column as an assembly.
- Check the tilt mechanism and telescopic mechanism for movement and damage.
- Apply multipurpose grease to the steering column.

NOTE: Do not use silicone grease.

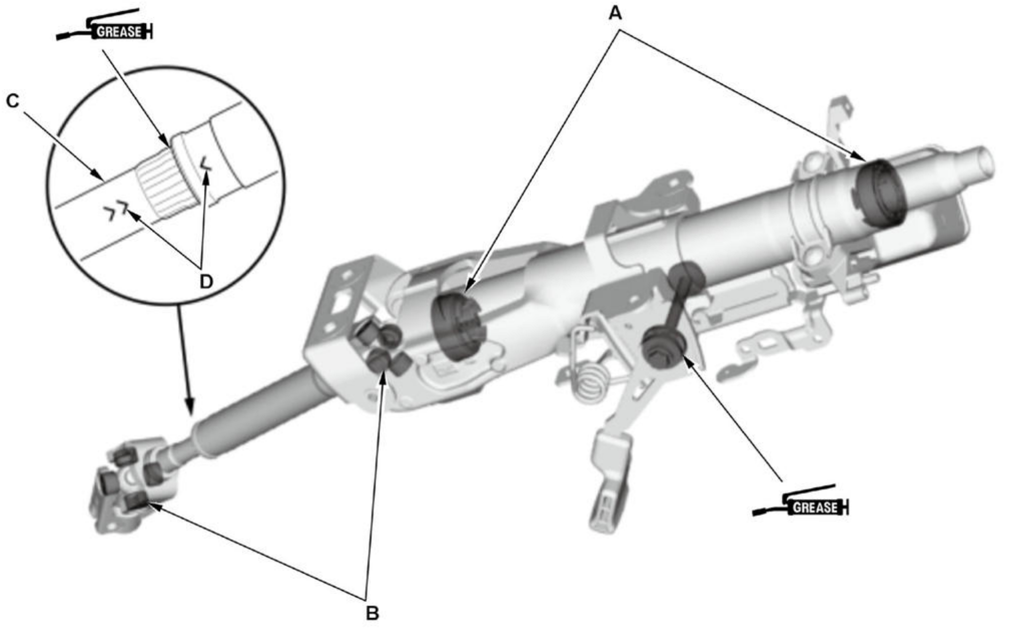

STEERING LINKAGE AND GEARBOX INSPECTION

Inspection

1. Steering Linkage and Gearbox - Inspect

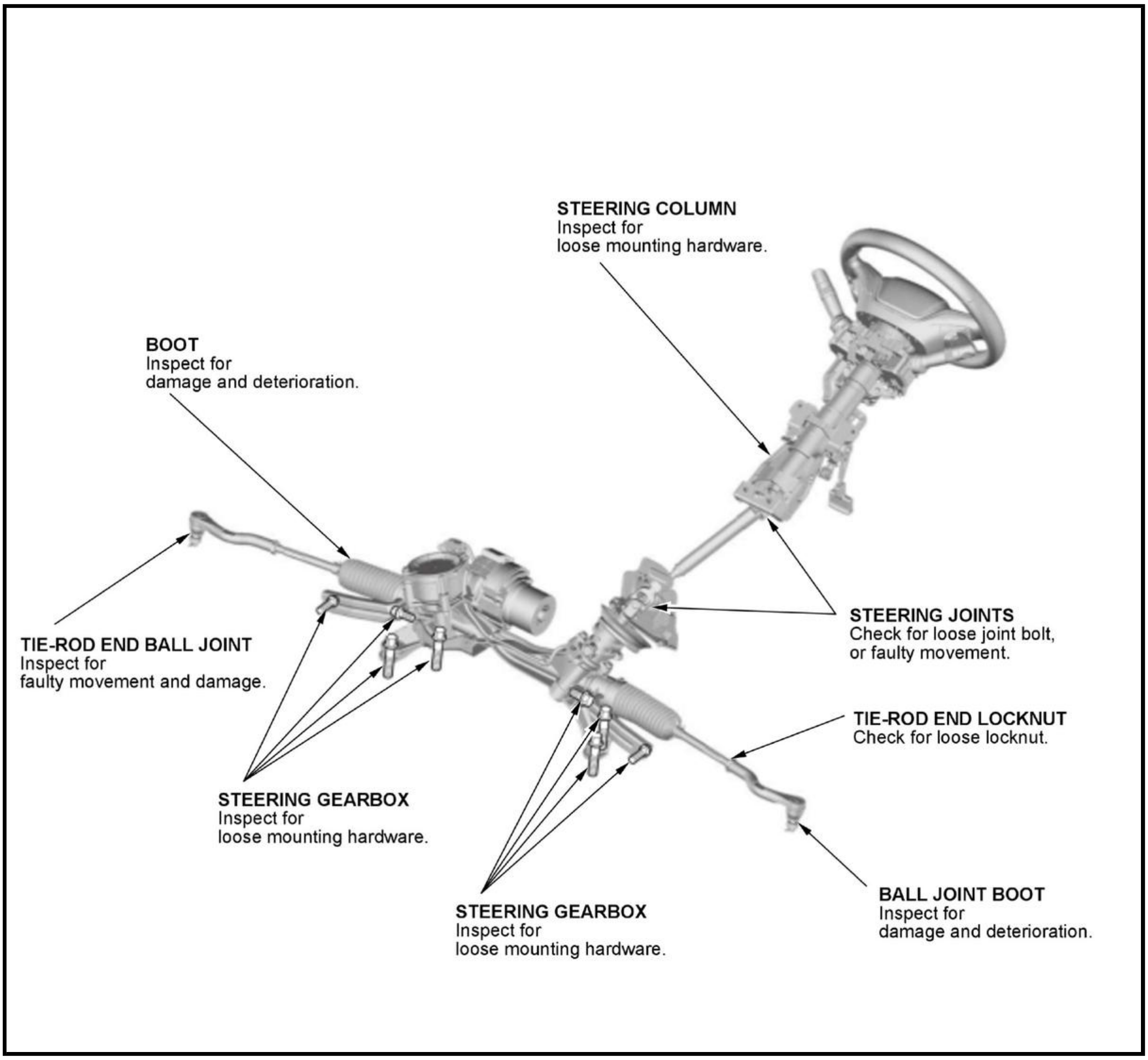
STEERING COLUMN
Inspect for
loose mounting hardware.
BOOT
Inspect for
damage and deterioration.
TIE-ROD END BALL JOINT
Inspect for
faulty movement and damage.
STEERING JOINTS
Check for loose joint bolt,
or faulty movement.
TIE-ROD END LOCKNUT
Check for loose locknut.
STEERING GEARBOX
Inspect for
loose mounting hardware.
STEERING GEARBOX
Inspect for
loose mounting hardware.
BALL JOINT BOOT
Inspect for
damage and deterioration.

LEARNING RESET CLEAR

STEERING ANGLE NEUTRAL POSITION LEARNING

Procedure

NOTE:

- If the steering angle neutral position is cleared, do the steering angle neutral position learning procedure.
- The steering angle neutral position is cleared whenever you do any of these actions:
-
    - EPS motor/control unit replacement, removal, or installation.
    - 12 volt battery terminal is disconnected from the 12 volt battery.
    - The power is disconnected from the EPS control unit.
    - The power supply voltage for the EPS control unit is decreased.
- If the steering angle neutral position is cleared, the VSA indicator, VSA OFF indicator, deflation warning system indicator, and CMBS indicator (if equipped) will come on.
- There are two learning methods.
- The learning cannot be done when the EPS indicator is on.
- If the learning does not complete, **check the EPS system** .

1. Steering Angle Neutral Position - Learn

   Learning method without the HDS

   1. Drive the vehicle in a straight line at speeds of 10 mph (15 km/h) or more until the indicators go off.

   NOTE:

   - The learning will complete after driving in a straight line for about 10 seconds.
   - Difficult situations for learning are below:
   -
     - Driving on a non straight line.
     - Driving on a rough road.
     - Driving under 10 mph (15 km/h) or less.
     - Driving on a sloped road.
     - Rapid acceleration and deceleration.

   2. Check that the indicators go off.

   Learning method with the HDS

   1. **Do the VSA sensor neutral position memorization** .

   NOTE: When the VSA sensor neutral position memorization is performed, the current position is cleared and overwritten.

REPAIR PROCEDURES AND TESTS

BALL JOINT DISCONNECTION

Special Tools Required

Image	Description/Tool Number
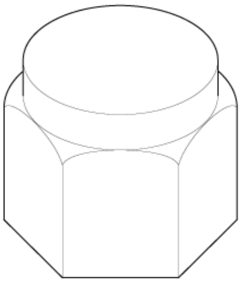	Ball Joint Thread Protector, 14 mm 07AAE-SJAA100

Image	Description/Tool Number
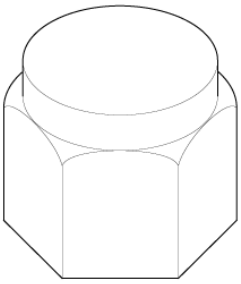	Ball Joint Thread Protector, 12 mm 07AAF-SDAA100
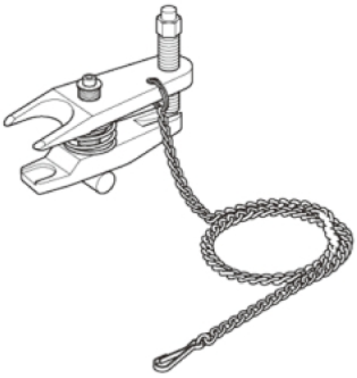	Ball Joint Remover, 32 mm 07MAC-SL00102
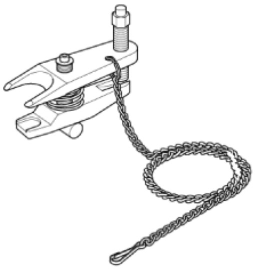	Ball Joint Remover, 28 mm 07MAC-SL00202

Removal

NOTICE:

Always use a ball joint remover to disconnect a ball joint. Do not strike the housing or any other part of the ball joint connection to disconnect it.

1. Ball Joint - Disconnection

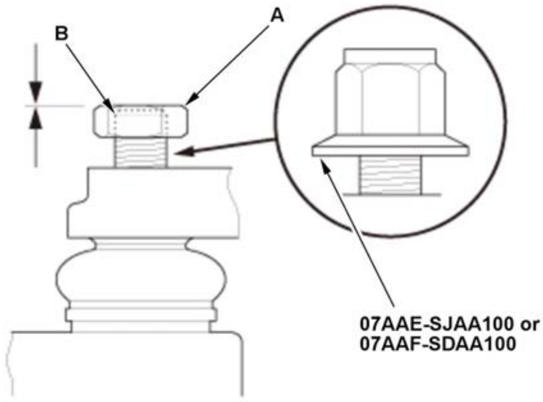

1. Install a hex nut (A) or the ball joint thread protector onto the threads of the ball joint (B).
NOTE: When using a hex nut, make sure the nut is flush with the ball joint pin end to prevent damage to the threaded end of the ball joint pin.

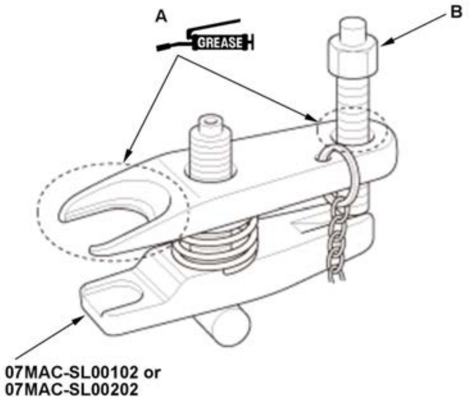

2. Apply multipurpose grease to the ball joint remover on the areas as shown (A). This will ease the installation of the tool, and prevent damage to the pressure bolt (B) threads.

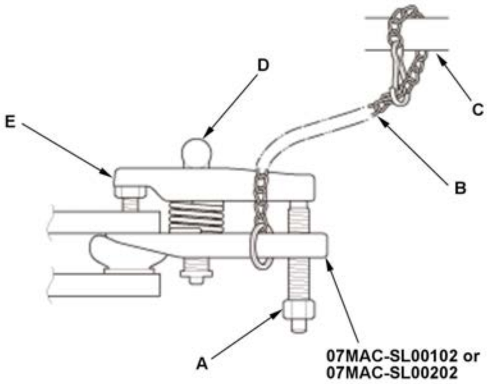

3. Loosen the pressure bolt (A), and install the ball joint remover as shown.
NOTE:

- Insert the jaws carefully, making sure not to damage the ball joint boot.
- Fasten the safety chain (B) securely to a suspension arm or the subframe (C). Do not fasten it to a brake line or wire harness.

4. Adjust the jaw spacing by turning the adjusting bolt (D).

5. Make sure the head of the adjusting bolt is in the position shown to allow the jaw (E) to pivot.

6. Tighten the pressure bolt until the ball joint pin pops loose from the ball joint connecting hole. If necessary, apply penetrating type lubricant to loosen the ball joint pin.

NOTE: Do not use pneumatic or electric tools on the pressure bolt.

7. Remove the ball joint remover.

8. Remove the nut or the ball joint thread protector.

9. Pull the ball joint out of the ball joint connecting hole.

	10. Inspect the ball joint boot, and replace it if damaged.

REPLACEMENT

STEERING TIE-ROD END BALL JOINT BOOT REPLACEMENT

Special Tools Required

Image	Description/Tool Number
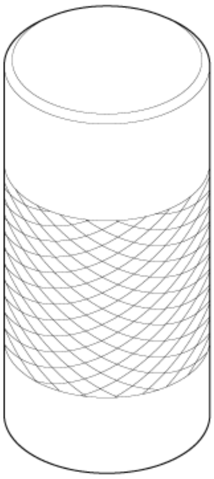	Driver, 32.5 mm 070AD-SAAA100

Replacement

1. Tie-Rod End Ball Joint Boot - Remove

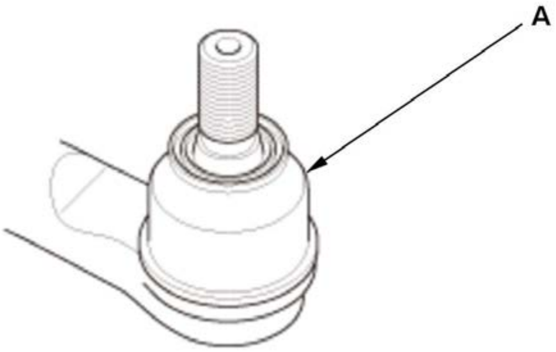	1. Remove the ball joint boot (A) from the tie-rod end. 2. Wipe the old grease off the ball pin.

2. Tie-Rod End Ball Joint Boot - Install

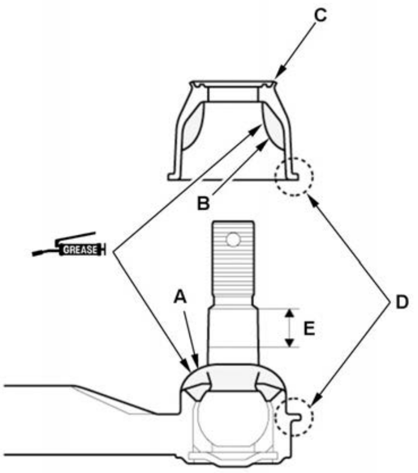

1. Pack the lower area of the ball pin (A) with fresh multipurpose grease.

2. Pack the interior of the ball joint boot (B) and the lip (C) with fresh multipurpose grease. Note these items when installing new grease:

- Keep grease off the boot mounting area (D) and the tapered section (E) of the ball pin.
- Do not allow dust, dirt, or other foreign materials to enter the boot.

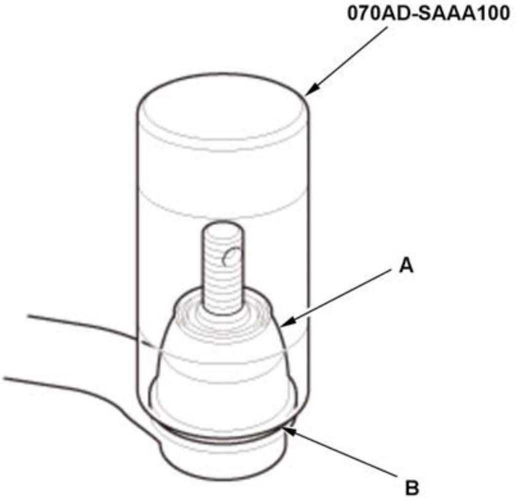

3. Install the ball joint boot (A) using the driver.

NOTE:

- The ball joint boot must not have a gap at the ball joint boot installation sections (B).
- After installing the ball joint boot, check the ball pin tapered section for grease contamination.

REWRITE

EPS CONTROL UNIT UPDATE

Procedure

1. EPS Control Unit - Update

   NOTE: When updating control units, use the most current version of the HDS software and interface device. Check any official service information website for more information about updating control units.

SYMPTOM TROUBLESHOOTING

EPS SYMPTOM TROUBLESHOOTING

EPS indicator does not go off (With CAN Gateway (With Auto Idle Stop System)) (2020 2021)

NOTE:

- The indicator comes on when the reprogramming fails.
- Do the reprogramming of the EPS control unit again.
- The all sensor learn in the VSA system may not have properly completed.

1. Problem verification

   -1. Start the engine.

-2. Check the EPS indicator.

Does the EPS indicator come on, then go off?

YES

Intermittent failure, the system is OK at this time. **Refer to intermittent failures troubleshooting** .

NO

Go to step 2.

2. All DTCs check

   -1. All DTCs check with the HDS.

   All DTCs

   Are there DTCs indicated?

   YES

   Go to indicated DTC's troubleshooting.

   NO

   Go to step 3.

3. Fuse check 1

   -1. Turn the vehicle to the OFF (LOCK) mode.

   -2. Check the following fuse.

Fuse	**No. A2-1**

   Is the fuse OK?

   YES

   The fuse is OK. Reinstall the fuse, then go to step 4.

   NO

   Replace the fuse. If the fuse blows again, repair a short to ground in the No. A2-1 fuse circuit.

4. Fuse check 2

   -1. Check the following fuse.

Fuse	**No. D34**

   Is the fuse OK?

   YES

   The fuse is OK. Reinstall the fuse, then go to step 5.

   NO

Replace the fuse. Turn the vehicle to the ON mode, then to the OFF (LOCK) mode. If the fuse blows again, repair a short to ground in the No. D34 fuse circuit.

5. Fuse check 3

-1. Check the following fuse.

Fuse	**No. F5**

Is the fuse OK?

YES

The fuse is OK. Reinstall the fuse, then go to step 6.

NO

Replace the fuse. Turn the vehicle to the ON mode, then to the OFF (LOCK) mode. If the fuse blows again, repair a short to ground in the No. F5 fuse circuit.

6. DC-DC converter IG1 relay 2 check

-1. **Remove the DC-DC converter IG1 relay 2** , and **test it** .

Is the relay OK?

YES

The relay is OK. Reinstall the relay, then go to step 7.

NO

Replace the DC-DC converter IG1 relay 2 .

7. Open wire check (IG1 RELAY1/IG1 line)

-1. Disconnect the following connector.

EPS control unit connector B (6P)

-2. Turn the vehicle to the ON mode.

-3. Measure the voltage between test points 1 and 2.

Test condition	Vehicle ON mode
B	EPS control unit connector B (6P): disconnected
Test point 1	**EPS control unit connector B (6P) No. 5**
Test point 2	Body ground

Is there battery voltage?

YES

The IG1 RELAY1/IG1 wire is OK. Go to step 12.

NO

Go to step 8.

8. Open wire check (IG1 RELAY1/IG1, IG1 RLY2 OUT lines)

-1. Turn the vehicle to the OFF (LOCK) mode.

-2. **Remove the DC-DC converter IG1 relay 2** .

-3. Measure the resistance between test points 1 and 2.

Test condition	Vehicle OFF (LOCK) mode
B	EPS control unit connector B (6P): disconnected
B	DC-DC converter IG1 relay 2: removed
Test point 1	**EPS control unit connector B (6P) No. 5**
Test point 2	DC-DC converter IG1 relay 2 4P socket (female terminals) No. 1: ①

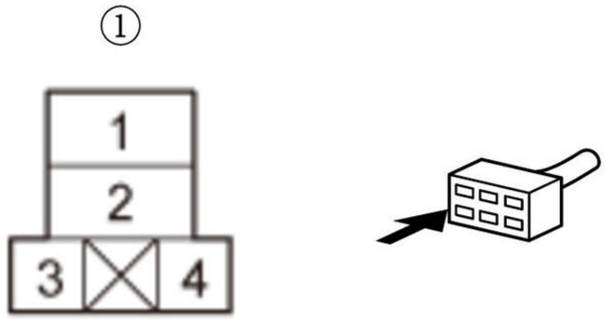

Is there 1.0 Ω or less?

YES

The IG1 RELAY1/IG1 and the IG1 RLY2 OUT wires are OK. Go to step 9.

NO

Repair an open in the wire between the EPS control unit and the DC-DC converter IG1 relay 2.

9. Open wire check (DCDC OUT2 line)

-1. Disconnect the following connector.

DC-DC converter connector B (5P)

-2. Measure the resistance between test points 1 and 2.

Test condition	Vehicle OFF (LOCK) mode
B	EPS control unit connector B (6P): disconnected
B	DC-DC converter IG1 relay 2: removed
B	DC-DC converter connector B (5P): disconnected
Test point 1	DC-DC converter IG1 relay 2 4P socket (female terminals) No. 2: ①
Test point 2	DC-DC converter connector B (5P) (female terminals) No. 5: ②

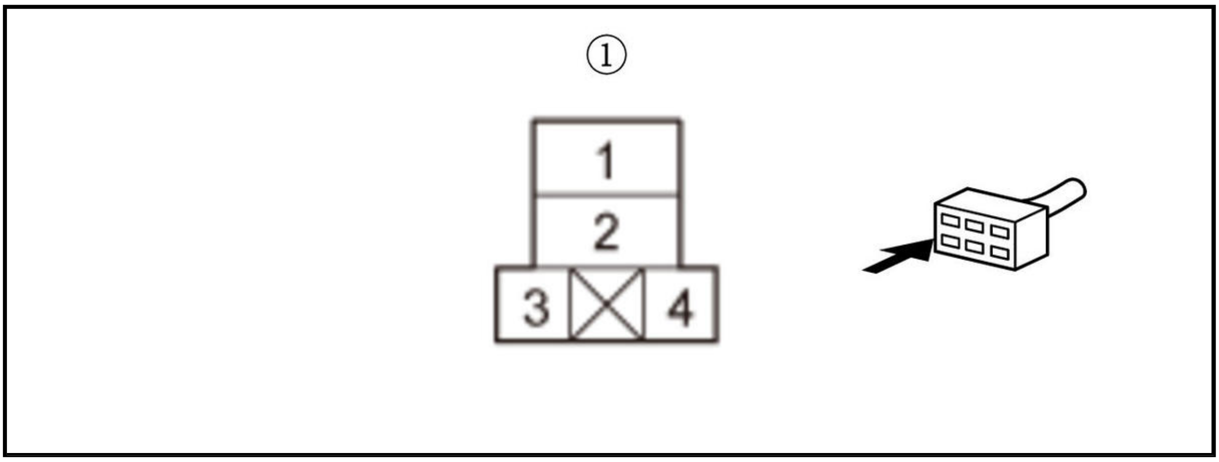

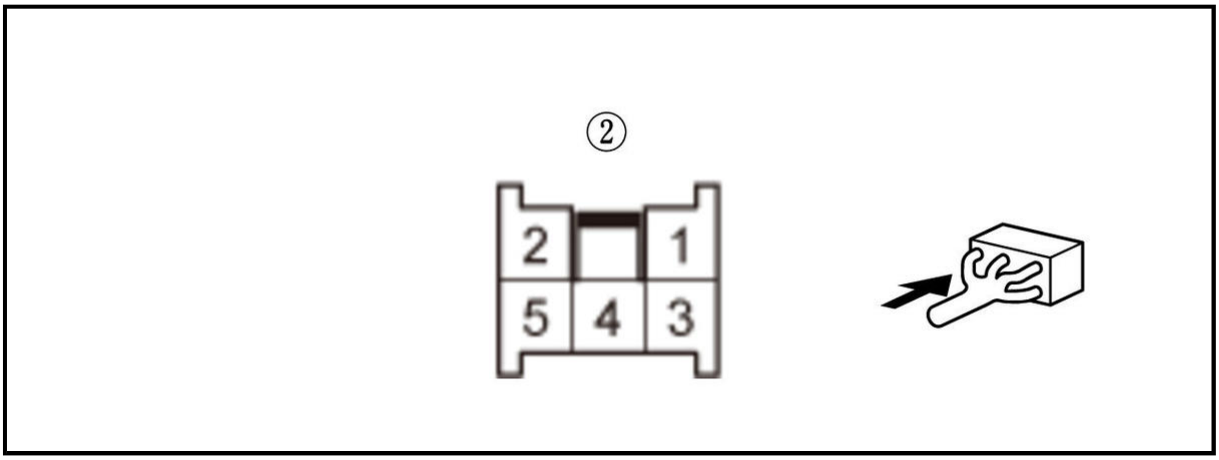

Is there 1.0 Ω or less?

YES

The DCDC OUT2 wire is OK. Go to step 10.

NO

Repair an open in the wire between the DC-DC converter and the DC-DC converter IG1 relay 2.

10. Open wire check (IG1 VSA/ABS line)

-1. Turn the vehicle to the ON mode.

-2. Measure the voltage between test points 1 and 2.

Test condition	Vehicle ON mode
B	EPS control unit connector B (6P): disconnected
B	DC-DC converter IG1 relay 2: removed

B	DC-DC converter connector B (5P): disconnected
Test point 1	DC-DC converter IG1 relay 2 4P socket (female terminals) No. 3: ①
Test point 2	Body ground

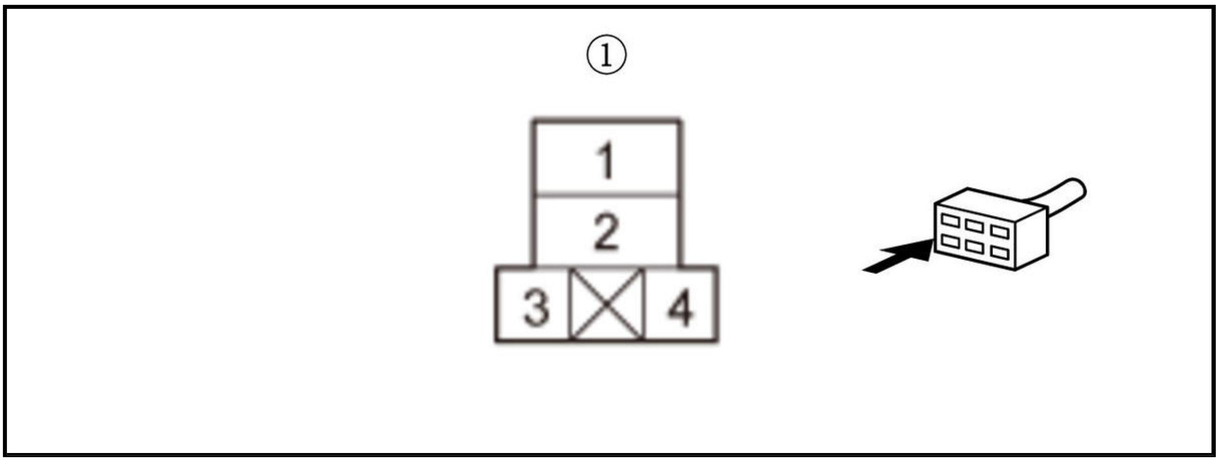

Is there battery voltage?

YES

The IG1 VSA/ABS wire is OK. Go to step 11.

NO

Repair an open in the wire between the under-dash fuse/relay box and the DC-DC converter IG1 relay 2.

11. Open wire check (GND line)

-1. Turn the vehicle to the OFF (LOCK) mode.

-2. Measure the resistance between test points 1 and 2.

Test condition	Vehicle OFF (LOCK) mode
B	EPS control unit connector B (6P): disconnected
B	DC-DC converter IG1 relay 2: removed
B	DC-DC converter connector B (5P): disconnected
Test point 1	DC-DC converter IG1 relay 2 4P socket (female terminals) No. 4: ①
Test point 2	Body ground

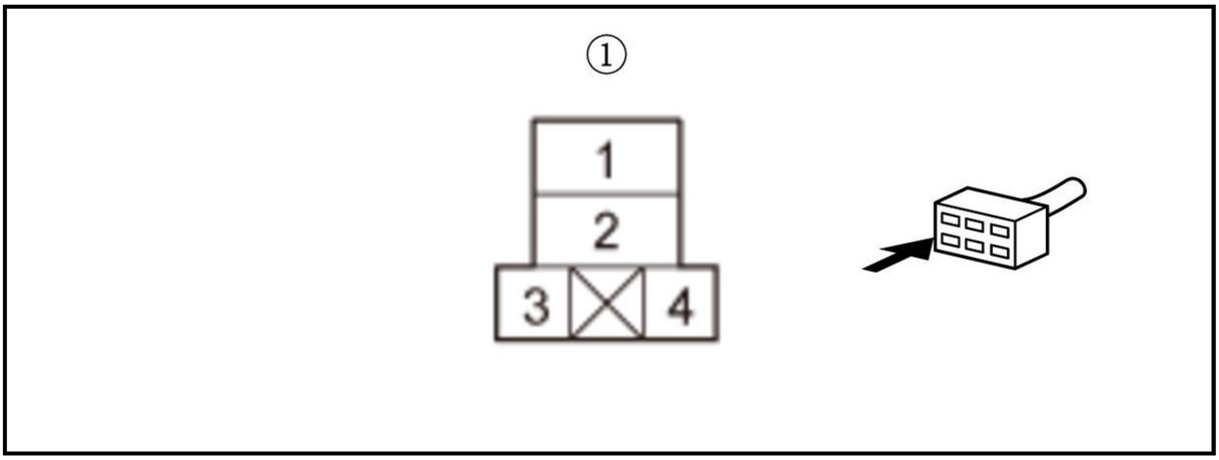

Is there 1.0 Ω or less?

YES

The GND wire is OK. Replace the DC-DC converter .

NO

Repair an open in the wire between the DC-DC converter IG1 relay 2 and body ground (G402).

12. Open wire check (+B EPS line)

-1. Turn the vehicle to the OFF (LOCK) mode.

-2. Disconnect the following connector.

EPS control unit connector A (2P)

-3. Measure the voltage between test points 1 and 2.

Test condition	Vehicle OFF (LOCK) mode
B	EPS control unit connector A (2P): disconnected
B	EPS control unit connector B (6P): disconnected
Test point 1	**EPS control unit connector A (2P) No. 2**

Test point 2	Body ground

Is there battery voltage?

YES

The +B EPS wire is OK. Go to step 13.

NO

Repair an open in the wire between the under-hood fuse/relay box and the EPS control unit.

13. Open wire check (GND line)

-1. Measure the resistance between test points 1 and 2.

Test condition	Vehicle OFF (LOCK) mode
B	EPS control unit connector A (2P): disconnected
B	EPS control unit connector B (6P): disconnected
Test point 1	**EPS control unit connector A (2P) No. 1**
Test point 2	Body ground

Is there 1.0 Ω or less?

YES

The GND wire is OK. Go to step 14.

NO

Repair an open in the wire between the EPS control unit and body ground (G202).

14. F-CAN circuit communication check

-1. Reconnect the following connectors.

EPS control unit connector A (2P)
EPS control unit connector B (6P)

-2. Select the FUNCTION TEST in the CAN gateway with the HDS, then select the F-CAN Bus Connected Unit Check.

F-CAN Bus Connected Unit Check

Which result is indicated?

Gauge control module (Bus A) is Not Available

Go to step 15.

EPS control unit (Bus B) is Not Available

Go to step 16.

Gauge control module and EPS control unit are Available

Intermittent failure, the system is OK at this time. **Refer to intermittent failures troubleshooting** .

15. Open wire check (F-CAN A_H, F-CAN A_L lines)

-1. Turn the vehicle to the OFF (LOCK) mode.

-2. Disconnect the following connectors.

Gauge control module connector A (32P)
CAN gateway 16P connector

-3. Measure the resistance between test points 1 and 2.

Test condition	Vehicle OFF (LOCK) mode
B	Gauge control module connector A (32P): disconnected
B	CAN gateway 16P connector: disconnected
Test circuit 1	B
Test point 1	**Gauge control module connector A (32P) No. 19**
Test point 2	CAN gateway 16P connector (female terminals) No. 3: ①
Test circuit 2	B
Test point 1	**Gauge control module connector A (32P) No. 20**
Test point 2	CAN gateway 16P connector (female terminals) No. 11: ①

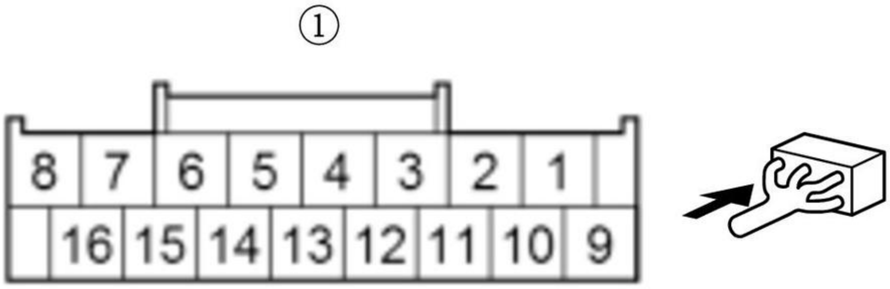

Is there 1.0 Ω or less?

YES

The F-CAN A_H and F-CAN A_L wires are OK. Check for any authorized service information related to the DTCs or symptoms you are troubleshooting or **substitute a known-good gauge control module** , then recheck. If the symptom/indication goes away with a known-good gauge control module, **replace the original gauge control module** .

NO

Repair an open in the wire between the gauge control module and the CAN gateway.

16. Open wire check (F-CAN B_H, F-CAN B_L lines)

-1. Turn the vehicle to the OFF (LOCK) mode.

-2. Disconnect the following connectors.

EPS control unit connector B (6P)
CAN gateway 16P connector

-3. Measure the resistance between test points 1 and 2.

Test condition	Vehicle OFF (LOCK) mode
B	EPS control unit connector B (6P): disconnected
B	CAN gateway 16P connector: disconnected
Test circuit 1	B
Test point 1	**EPS control unit connector B (6P) No. 3**
Test point 2	CAN gateway 16P connector (female terminals) No. 6: ①

Test circuit 2	B
Test point 1	**EPS control unit connector B (6P) No. 1**
Test point 2	CAN gateway 16P connector (female terminals) No. 14: ①

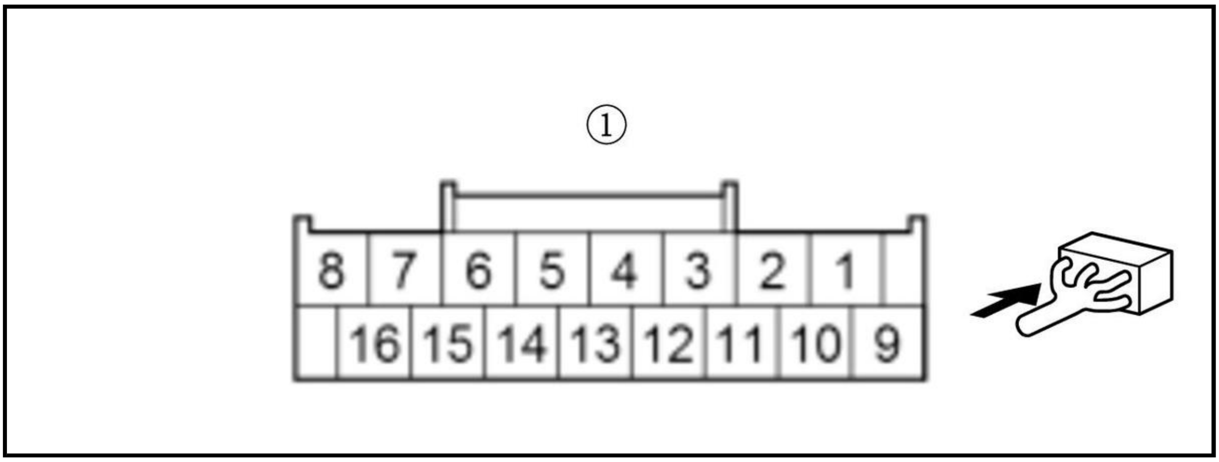

Is there 1.0 Ω or less?

YES

The F-CAN B_H and F-CAN B_L wires are OK. Check for loose terminals and poor connections at the EPS control unit connectors. Check for any authorized service information related to the DTCs or symptoms you are troubleshooting or **substitute a known-good EPS motor/control unit** , then recheck. If the symptom/indication goes away with a known-good EPS motor/control unit, **replace the original EPS motor/control unit** .

NO

Repair an open in the wire between the EPS control unit and the CAN gateway.

EPS indicator does not go off (With CAN Gateway (Without Auto Idle Stop System))

NOTE:

- The indicator comes on when the reprogramming fails.
- Do the reprogramming of the EPS control unit again.

1. Problem verification

   -1. Start the engine.

   -2. Check the EPS indicator.

   Does the EPS indicator come on, then go off?

   YES

   Intermittent failure, the system is OK at this time. **Refer to intermittent failures troubleshooting** .

   NO

   Go to step 2.

2. DTC check (EPS control unit)

   -1. Check for DTCs with the HDS.

DTC Description	DTC	Freeze Frame
B	B	B

   Is DTC indicated?

   YES

   Go to indicated DTC's troubleshooting.

   NO

   Go to step 3.

3. Gauge control module operation check

   -1. **Do the gauge control module self-diagnostic function** .

   Is the gauge control module OK?

   YES

   Go to step 4.

   NO

   Replace the gauge control module .

4. DTC check (CAN gateway system)

   -1. Check for CAN gateway system DTCs with the HDS.

DTC Description	DTC
B	B

Is DTC indicated?

YES

Go to indicated DTC's troubleshooting.

NO

Go to step 5.

5. Fuse check 1

-1. Turn the vehicle to the OFF (LOCK) mode.

-2. Check the following fuse.

Fuse	No. A2-1 (70 A)

Location	Under-hood fuse/relay box

Is the fuse OK?

YES

The fuse is OK. Reinstall the fuse, then go to step 6.

NO

Replace the fuse. If the fuse blows again, repair a short to ground in the No. A2-1 (70 A) fuse circuit.

6. Fuse check 2

-1. Check the following fuse.

Fuse	No. D34 (10 A)
Location	Under-dash fuse/relay box

Is the fuse OK?

YES

The fuse is OK. Reinstall the fuse, then go to step 7.

NO

Replace the fuse. Turn the vehicle to the ON mode, then to the OFF (LOCK) mode. If the fuse blows again, repair a short to ground in the No. D34 (10 A) fuse circuit.

7. Open wire check (IG1/IG1 VSA/ABS line)

-1. Disconnect the following connector.

EPS control unit connector B (6P)

-2. Turn the vehicle to the ON mode.

-3. Measure the voltage between test points 1 and 2.

Test condition	Vehicle ON mode
B	EPS control unit connector B (6P): disconnected
Test point 1	**EPS control unit connector B (6P) No. 5**
Test point 2	Body ground

Is there battery voltage?

YES

The IG1/IG1 VSA/ABS wire is OK. Go to step 8.

NO

Repair an open in the wire between the under-dash fuse/relay box and the EPS control unit.

8. Open wire check (+B EPS line)

-1. Turn the vehicle to the OFF (LOCK) mode.

-2. Disconnect the following connector.

EPS control unit connector A (2P)

-3. Measure the voltage between test points 1 and 2.

Test condition	Vehicle OFF (LOCK) mode
B	EPS control unit connector A (2P): disconnected
B	EPS control unit connector B (6P): disconnected
Test point 1	**EPS control unit connector A (2P) No. 2**
Test point 2	Body ground

Is there battery voltage?

YES

The +B EPS wire is OK. Go to step 9.

NO

Repair an open in the wire between the under-hood fuse/relay box and the EPS control unit.

9. Open wire check (GND line)

-1. Check for continuity between test points 1 and 2.

Test condition	Vehicle OFF (LOCK) mode
B	EPS control unit connector A (2P): disconnected
B	EPS control unit connector B (6P): disconnected
Test point 1	**EPS control unit connector A (2P) No. 1**
Test point 2	Body ground

Is there continuity?

YES

The GND wire is OK. Go to step 10.

NO

Repair an open in the wire between the EPS control unit and body ground (G202).

10. F-CAN circuit communication check

-1. Reconnect the following connectors.

EPS control unit connector A (2P)
EPS control unit connector B (6P)

-2. Select the FUNCTION TEST in the CAN gateway with the HDS, then select the F-CAN Bus Connected Unit Check.

F-CAN Bus Connected Unit Check

Which result is indicated?

Gauge control module (Bus A) is Not Available

Go to step 11.

EPS control unit (Bus B) is Not Available

Go to step 12.

Gauge control module and EPS control unit are Available

Intermittent failure, the system is OK at this time. **Refer to intermittent failures troubleshooting** .

11. Open wire check (F-CAN A_H, F-CAN A_L lines)

-1. Turn the vehicle to the OFF (LOCK) mode.

-2. Disconnect the following connectors.

Gauge control module connector A (32P)
CAN gateway 12P connector

-3. Check for continuity between test points 1 and 2.

Test condition	Vehicle OFF (LOCK) mode
B	Gauge control module connector A (32P): disconnected
B	CAN gateway 12P connector: disconnected
Test circuit 1	B
Test point 1	**Gauge control module connector A (32P) No. 19**
Test point 2	CAN gateway 12P connector (female terminals) No. 3: ①

Test circuit 2	B
Test point 1	**Gauge control module connector A (32P) No. 20**

Test point 2	CAN gateway 12P connector (female terminals) No. 9: ①

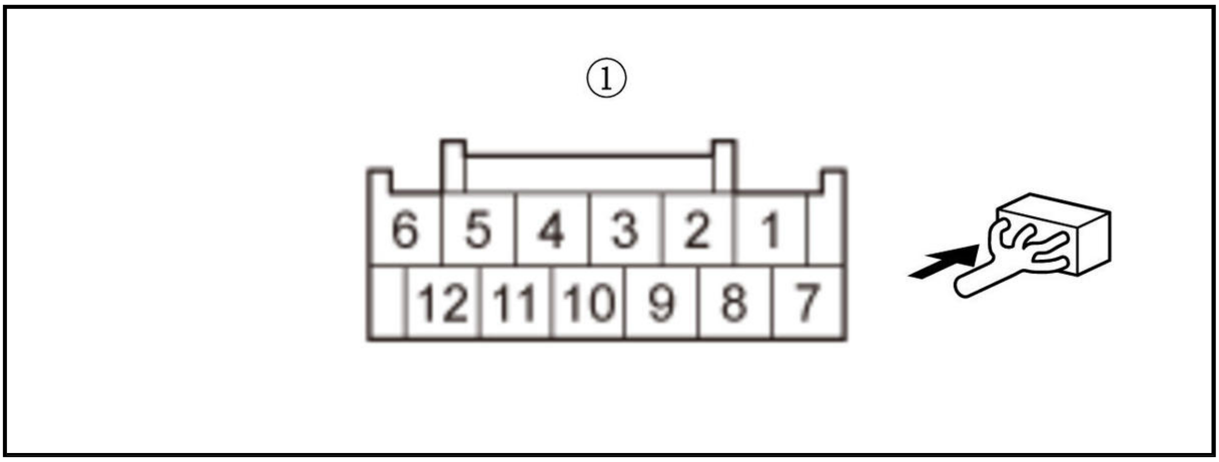

Is there continuity?

YES

The F-CAN A_H and F-CAN A_L wires are OK. Check for any authorized service information related to the DTCs or symptoms you are troubleshooting or **substitute a known-good gauge control module** , then recheck. If the symptom/indication goes away with a known-good gauge control module, **replace the original gauge control module** .

NO

Repair an open in the wire between the gauge control module and the CAN gateway.

12. Open wire check (F-CAN B_H, F-CAN B_L lines)

-1. Turn the vehicle to the OFF (LOCK) mode.

-2. Disconnect the following connectors.

EPS control unit connector B (6P)
CAN gateway 12P connector

-3. Check for continuity between test points 1 and 2.

Test condition	Vehicle OFF (LOCK) mode
B	EPS control unit connector B (6P): disconnected
B	CAN gateway 12P connector: disconnected
Test circuit 1	B
Test point 1	**EPS control unit connector B (6P) No. 3**
Test point 2	CAN gateway 12P connector (female terminals) No. 12: ①

Test circuit 2	B
Test point 1	**EPS control unit connector B (6P) No. 1**
Test point 2	CAN gateway 12P connector (female terminals) No. 5: ①

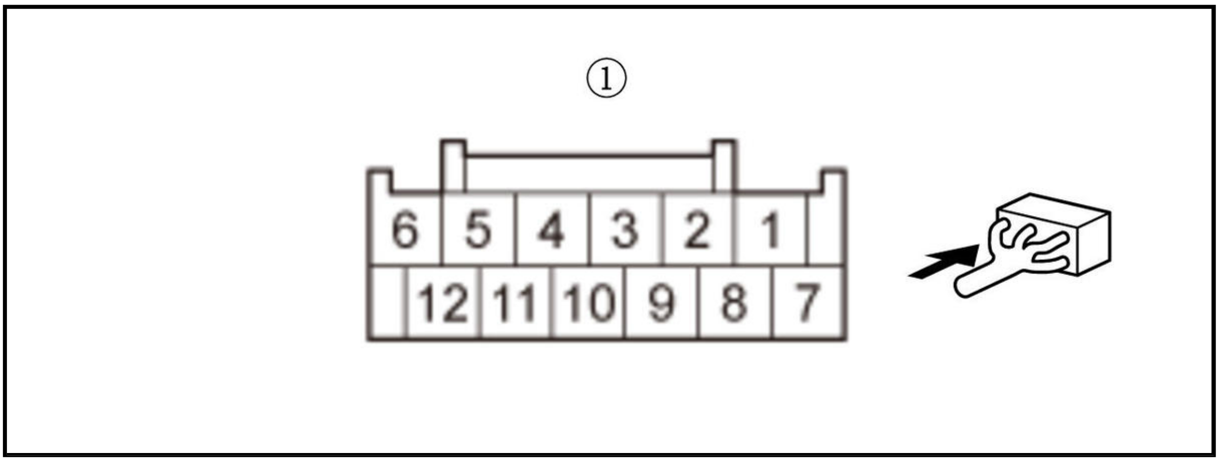

Is there continuity?

YES

The F-CAN B_H and F-CAN B_L wires are OK. Check for loose terminals and poor connections at the EPS control unit connectors. Check for any authorized service information related to the DTCs or symptoms you are troubleshooting or **substitute a known-good EPS motor/control unit** , then recheck. If the symptom/indication goes away with a known-good EPS motor/control unit, **replace the original EPS motor/control unit** .

NO

Repair an open in the wire between the EPS control unit and the CAN gateway.

EPS indicator does not go off (Without CAN Gateway) (2017 2018 2019)

NOTE:

- The indicator comes on when the reprogramming fails.
- Do the reprogramming of the EPS control unit again.

1. Problem verification

-1. Start the engine.

-2. Check the EPS indicator.

Does the EPS indicator come on, then go off?

YES

Intermittent failure, the system is OK at this time. **Refer to intermittent failures troubleshooting** .

NO

Go to step 2.

2. DTC check (EPS control unit)

-1. Check for DTCs with the HDS.

DTC Description	DTC	Freeze Frame
B	B	B

Is DTC indicated?

YES

Go to indicated DTC's troubleshooting.

NO

Go to step 3.

3. Gauge control module operation check

   -1. **Do the gauge control module self-diagnostic function** .

   Is the gauge control module OK?

   YES

   Go to step 4.

   NO

   Replace the gauge control module .

4. Fuse check 1

   -1. Turn the vehicle to the OFF (LOCK) mode.

   -2. Check the following fuse.

Fuse	No. A2-1 (70 A)
Location	Under-hood fuse/relay box

   Is the fuse OK?

   YES

   The fuse is OK. Reinstall the fuse, then go to step 5.

   NO

   Replace the fuse. If the fuse blows again, repair a short to ground in the No. A2-1 (70 A) fuse circuit.

5. Fuse check 2

   -1. Check the following fuse.

Fuse	No. D34 (10 A)
Location	Under-dash fuse/relay box

   Is the fuse OK?

   YES

   The fuse is OK. Reinstall the fuse, then go to step 6.

   NO

   Replace the fuse. Turn the vehicle to the ON mode, then to the OFF (LOCK) mode. If the fuse blows again, repair a short to ground in the No. D34 (10 A) fuse circuit.

6. Open wire check (IG1/IG1 VSA/ABS line)

-1. Disconnect the following connector.

EPS control unit connector B (6P)

-2. Turn the vehicle to the ON mode.

-3. Measure the voltage between test points 1 and 2.

Test condition	Vehicle ON mode
B	EPS control unit connector B (6P): disconnected
Test point 1	**EPS control unit connector B (6P) No. 5**
Test point 2	Body ground

Is there battery voltage?

YES

The IG1/IG1 VSA/ABS wire is OK. Go to step 7.

NO

Repair an open in the wire between the under-dash fuse/relay box and the EPS control unit.

7. Open wire check (+B EPS line)

-1. Turn the vehicle to the OFF (LOCK) mode.

-2. Disconnect the following connector.

EPS control unit connector A (2P)

-3. Measure the voltage between test points 1 and 2.

Test condition	Vehicle OFF (LOCK) mode
B	EPS control unit connector A (2P): disconnected
B	EPS control unit connector B (6P): disconnected
Test point 1	**EPS control unit connector A (2P) No. 2**
Test point 2	Body ground

Is there battery voltage?

YES

The +B EPS wire is OK. Go to step 8.

NO

Repair an open in the wire between the under-hood fuse/relay box and the EPS control unit.

8. Open wire check (GND line)

-1. Check for continuity between test points 1 and 2.

Test condition	Vehicle OFF (LOCK) mode
B	EPS control unit connector A (2P): disconnected
B	EPS control unit connector B (6P): disconnected
Test point 1	**EPS control unit connector A (2P) No. 1**

Test point 2	Body ground

Is there continuity?

YES

The GND wire is OK. Go to step 9.

NO

Repair an open in the wire between the EPS control unit and body ground (G202).

9. Open wire check (F-CAN_H, F-CAN_L lines)

-1. Disconnect the following connector.

Gauge control module connector A (32P)

-2. Check for continuity between test points 1 and 2.

Test condition	Vehicle OFF (LOCK) mode
B	EPS control unit connector A (2P): disconnected
B	EPS control unit connector B (6P): disconnected
B	Gauge control module connector A (32P): disconnected
Test circuit 1	B
Test point 1	**EPS control unit connector B (6P) No. 3**
Test point 2	**Gauge control module connector A (32P) No. 19**

Test circuit 2	B
Test point 1	**EPS control unit connector B (6P) No. 1**
Test point 2	**Gauge control module connector A (32P) No. 20**

Is there continuity?

YES

The F-CAN_H and F-CAN_L wires are OK. Check for loose terminals and poor connections at the EPS control unit connectors. Check for any authorized service information related to the DTCs or symptoms you are troubleshooting or **substitute a known-good EPS motor/control unit** , then recheck. If the symptom/indication goes away with a known-good EPS motor/control unit, **replace the original EPS motor/control unit** .

NO

Repair an open in the wire between the EPS control unit and the gauge control module.

SYMPTOM TROUBLESHOOTING INDEX

EPS SYMPTOM TROUBLESHOOTING INDEX

When the vehicle has one of these symptoms, check for a diagnostic trouble code (DTC) with the HDS. If there is no DTC, do the diagnostic procedure for the symptom, in the sequence listed, until you find the cause.

Symptom	Diagnostic Procedure	Also check for
HDS does not communicate with the EPS control unit or the vehicle	**Troubleshoot the F-CAN circuit** .	Faulty data link cable

Symptom	Diagnostic Procedure	Also check for
EPS indicator does not come on	**Do the gauge control module self-diagnostic function** .	B
EPS indicator does not go off	**Symptom Troubleshooting**	B

SYMPTOM TROUBLESHOOTING INDEX FOR VIEWER

EPS INDICATOR DOES NOT COME ON

Diagnostic Procedure

- **Do the gauge control module self-diagnostic function** .

EPS INDICATOR DOES NOT GO OFF

Diagnostic Procedure

- **Symptom Troubleshooting**

HDS DOES NOT COMMUNICATE WITH THE EPS CONTROL UNIT OR THE VEHICLE

Diagnostic Procedure

- **Troubleshoot the F-CAN circuit** .

Also check for

Faulty data link cable

TEST

HEATED STEERING WHEEL TEMPERATURE SENSOR TEST

Test

NOTE: SRS components are located in this area. Review the **SRS component locations** and the **precautions and procedures** before doing repairs or service.

1. **Driver's Airbag - Remove**
2. Steering Wheel Temperature Sensor - Test

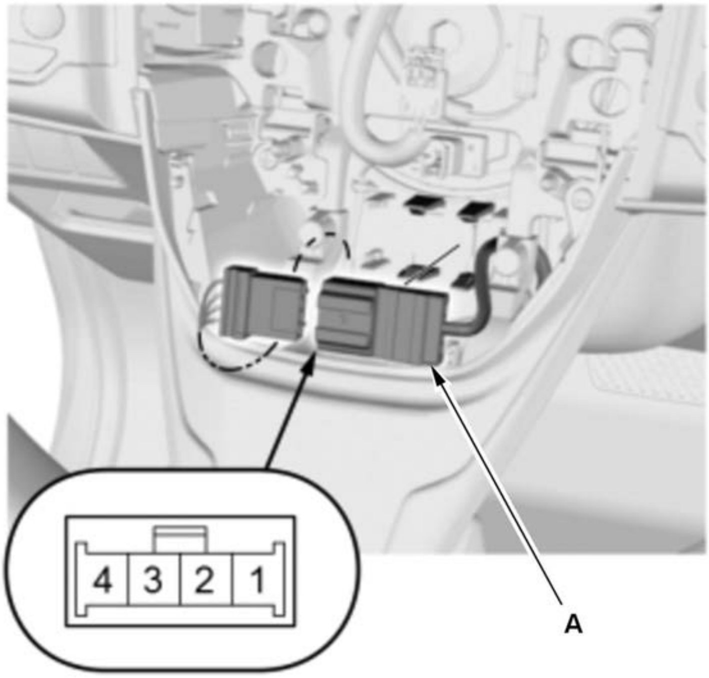

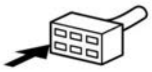

Terminal	3		4
	○		○

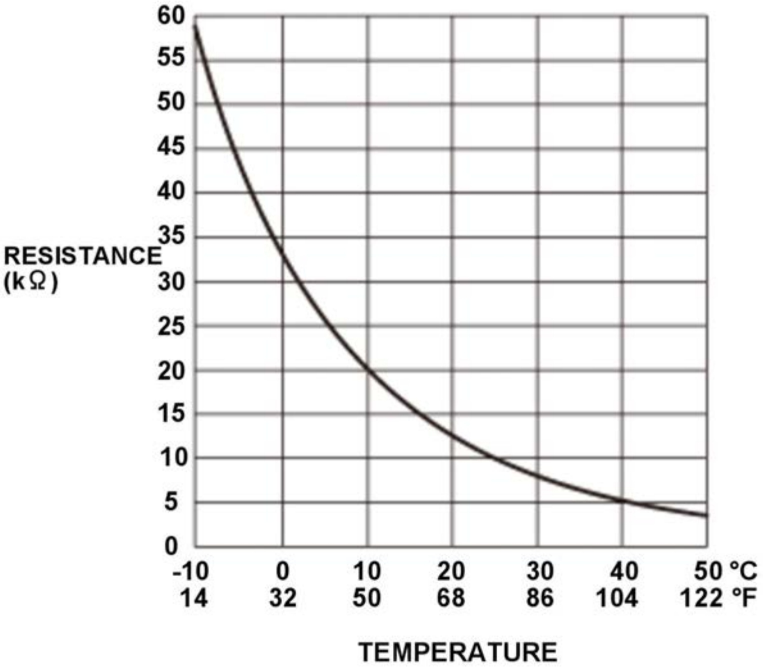

1. Disconnect the connector.

2. Measure the resistance between the terminals according to the table.

3. Compare the resistance readings with the specifications shown in the graph; the resistance should be within the specifications.

4. If the resistance is not as specified, the steering wheel temperature sensor (A) is faulty; **replace the steering wheel assembly** .

3. All Remove Parts - Install

1. Install the parts in the reverse order of removal.

STEERING HEATER TEST

Test

NOTE: SRS components are located in this area. Review the **SRS component locations** and the **precautions and procedures** before doing repairs or service.

1. **Driver's Airbag - Remove**
2. Steering Heater - Test

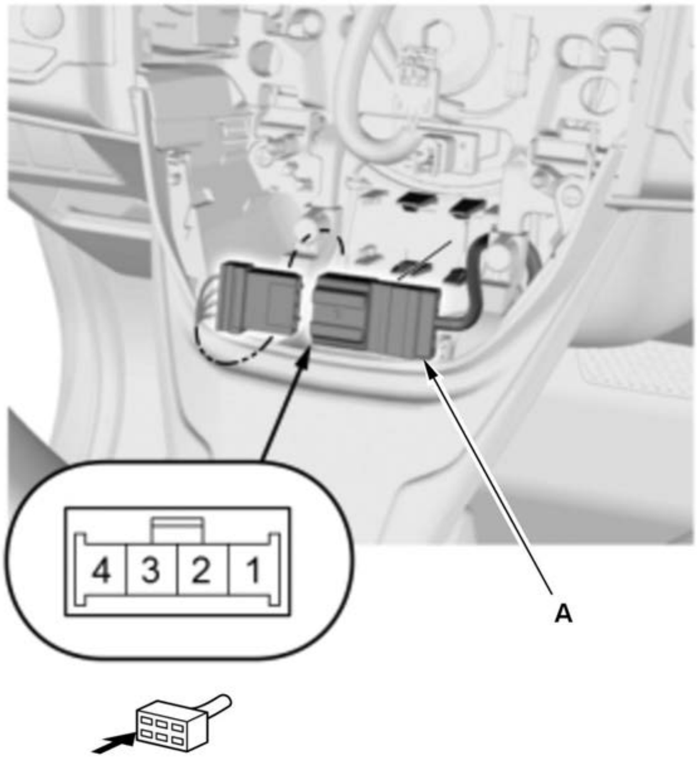

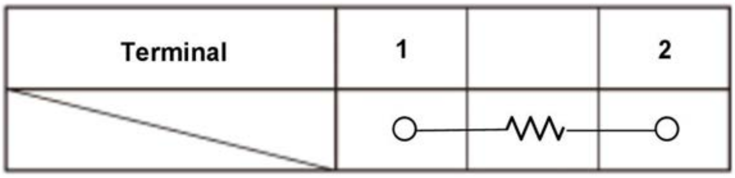

Terminal	1		2
	○	—^^^^—	○

1. Disconnect the connector.

2. Check for continuity between the terminals according to the table. There should be continuity.

NOTE: When the steering heater temperature is 73 deg.F (23 deg.C), resistance value is 2.0

0.20 Ω.

3. If the continuity is not as specified, the steering heater (A) is faulty; **replace the steering wheel assembly**

.

3. All Remove Parts - Install

1. Install the parts in the reverse order of removal.

WHEEL ALIGNMENT SPECIFICATIONS

CR-V 2WD

CR-V 2WD

Measurement	Minimum	Preferred	Maximum
Left Front Caster (B°)	4.67	5.17	5.67
Right Front Caster (B°)	4.67	5.17	5.67
Left Front Camber (B°)	-0.8	-0.3	0.2
Right Front Camber (B°)	-0.8	-0.3	0.2
Front Toe (B°)	0	0.16	0.32
Left SAI (B°)	0	0	0
Right SAI (B°)	0	0	0
Left Rear Camber (B°)	-2.25	-1.5	-0.75
Right Rear Camber (B°)	-2.25	-1.5	-0.75
Rear Toe (B°)	0.12	0.28	0.36
Thrust Angle (B°)	0	0	0
Left Toe Out, Inward (B°)	0	0	0
Right Toe Out, Inward (B°)	0	0	0
Left Toe Out, Outward (B°)	0	0	0
Right Toe Out, Outward (B°)	0	0	0
Left Max Turn, Inward (B°)	35.33	37.33	39.33
Right Max Turn, Inward (B°)	35.33	37.33	39.33
Left Max Turn, Outward (B°)	30.88	30.88	30.88
Right Max Turn, Outward (B°)	30.88	30.88	30.88

CR-V AWD

CR-V AWD

Measurement	Minimum	Preferred	Maximum
Left Front Caster (B°)	4.57	5.07	5.57
Right Front Caster (B°)	4.57	5.07	5.57
Left Front Camber (B°)	-0.7	-0.2	0.3
Right Front Camber (B°)	-0.7	-0.2	0.3
Front Toe (B°)	0	0.16	0.32
Left SAI (B°)	0	0	0
Right SAI (B°)	0	0	0
Left Rear Camber (B°)	-1.95	-1.2	-0.45
Right Rear Camber (B°)	-1.95	-1.2	-0.45
Rear Toe (B°)	0.12	0.28	0.36
Thrust Angle (B°)	0	0	0
Left Toe Out, Inward (B°)	0	0	0
Right Toe Out, Inward (B°)	0	0	0
Left Toe Out, Outward (B°)	0	0	0
Right Toe Out, Outward (B°)	0	0	0
Left Max Turn, Inward (B°)	35.67	37.67	39.67
Right Max Turn, Inward (B°)	35.67	37.67	39.67

Measurement	**Minimum**	**Preferred**	**Maximum**
Left Max Turn, Outward (B°)	31.03	31.03	31.03
Right Max Turn, Outward (B°)	31.03	31.03	31.03

2020-22 SUSPENSION

Suspension Service Specifications - CR-V (Hybrid)

SUSPENSION

Item	Measurement	Qualification	Standard or New	Service Limit
Wheel alignment	Camber	Front	-0B° 12 ' +/-30 '	
		Rear	-1B° 12 ' +/-45 '	
	Caster	Front	5B° 04 ' +/-30 '	
	Total toe-in	Front	2 +/- 2 mm (0.08 +/- 0.08 in)	
		Rear	3.5 +1 -2 mm ($0.138^{+0.04}_{-0.08}$ in)	
	Front wheel turning angle	Inward	37B° 38 ' +/-2B°	
		Outward (reference)	31B° 01 '	
Wheel	Runout	Axial	0-0.3 mm (0-0.012 in)	2.0 mm (0.079 in)
		Radial	0-0.3 mm (0-0.012 in)	1.5 mm (0.059 in)
Wheel bearing	End play	Front/Rear	0-0.05 mm (0-0.0020 in)	-

STANDARDS AND SERVICE LIMITS (2020-21)

SUSPENSION

Item	Measurement	Qualification	Standard or New	Service Limit
Wheel alignment (2WD)	Camber	Front	-0 deg. 18 '+/-30 '	
		Rear	-1 deg. 30 '+/-45 '	
	Caster	Front	5 deg. 10 '+/-30 '	
	Total toe-in	Front	2 +/- 2 mm (0.08 +/- 0.08 in)	
		Rear	3.5 +1 -2 mm (0.138 +0.04 -0.08 in)	
	Front wheel turning angle	Inward	37 deg. 20 '+/-2 deg.	
		Outward (reference)	30 deg. 53 '	
Wheel alignment (AWD)	Camber	Front	-0 deg. 12 '+/-30 '	
		Rear	-1 deg. 12 '+/-45 '	
	Caster	Front	5 deg. 04 '+/-30 '	
	Total toe-in	Front	2 +/- 2 mm (0.08 +/- 0.08 in)	
		Rear	3.5 +1 -2 mm (0.138 +0.04 -0.08 in)	
	Front wheel turning angle	Inward	37 deg. 40 '+/-2 deg.	
		Outward (reference)	31 deg. 02 '	
Wheel	Runout	Axial	0-0.3 mm (0-0.012 in)	2.0 mm (0.079 in)
		Radial	0-0.3 mm (0-0.012 in)	1.5 mm (0.059 in)
Wheel bearing	End play	Front/Rear	0-0.05 mm (0-0.0020 in)	-

REPLACEMENT

FRONT KNUCKLE/HUB/WHEEL BEARING REPLACEMENT

Special Tools Required

Image	Description/Tool Number
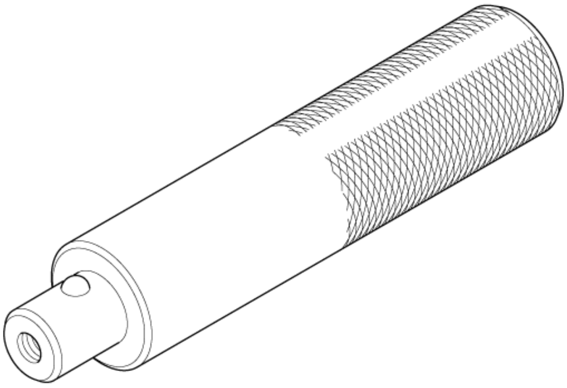	Driver Handle, 15 x 135L 07749-0010000
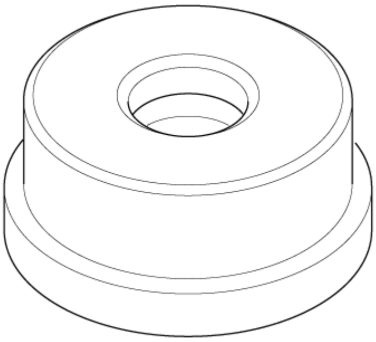	Bearing Driver Attachment, 42 x 47 mm 07746-0010300
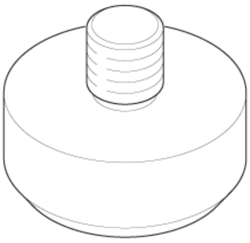	Pilot, 28 mm 07746-0041100

Image	Description/Tool Number
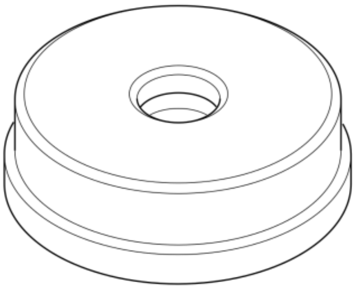	Bearing Driver Attachment, 62 x 68 mm 07746-0010500
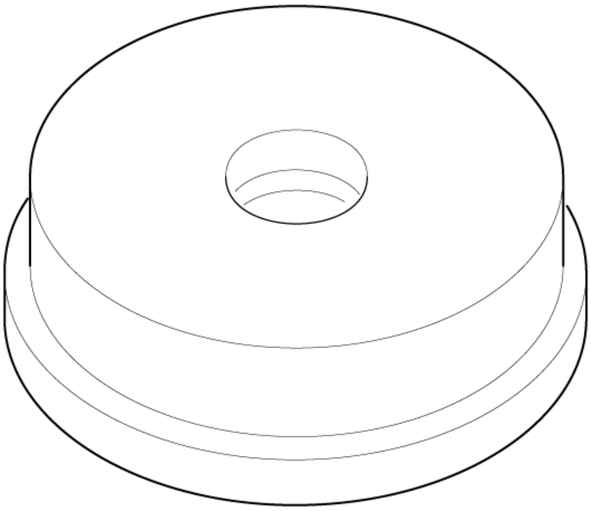	Attachment, 78 x 90 mm 07GAD-SD40101
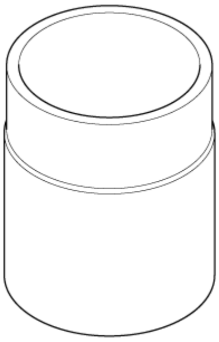	Support Base 07965-SD90100

Exploded View

NOTE: How to read the torque specifications .

1. Knuckle/Hub/Wheel Bearing

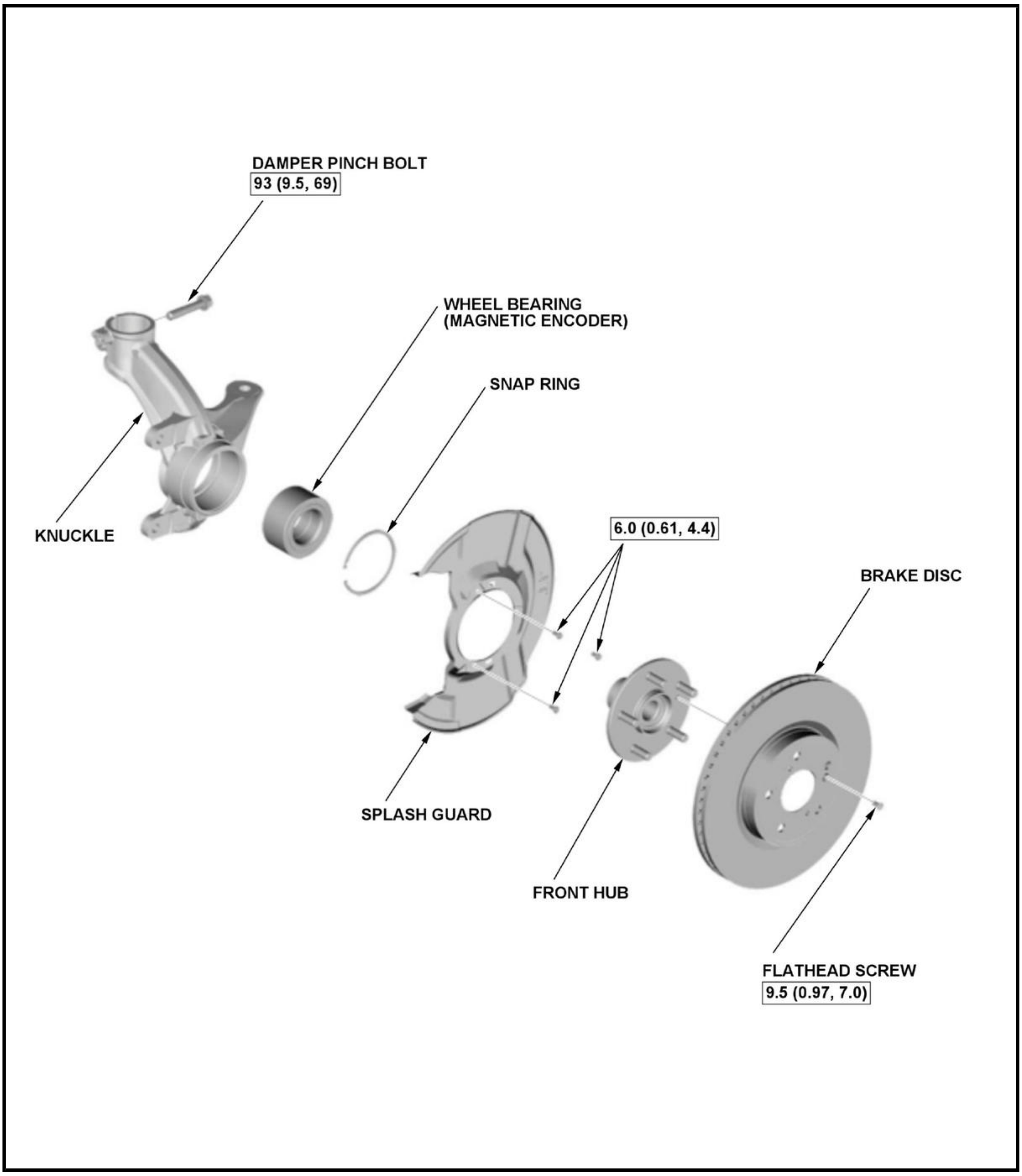
DAMPER PINCH BOLT
93 (9.5, 69)
WHEEL BEARING (MAGNETIC ENCODER)
SNAP RING
KNUCKLE
6.0 (0.61, 4.4)
BRAKE DISC
SPLASH GUARD
FRONT HUB
FLATHEAD SCREW
9.5 (0.97, 7.0)

Removal and Installation

NOTE:

- How to read the torque specifications .
- Refer to the Exploded View as needed during the following procedures.
- Check for deterioration and damage to each part during removal.

Knuckle/Hub

1. Vehicle - Lift
2. Front Wheel - Remove
3. Front Wheel Speed Sensor - Remove

   NOTE: Do not disconnect the wheel speed sensor connector.

4. Brake Hose Bracket - Remove

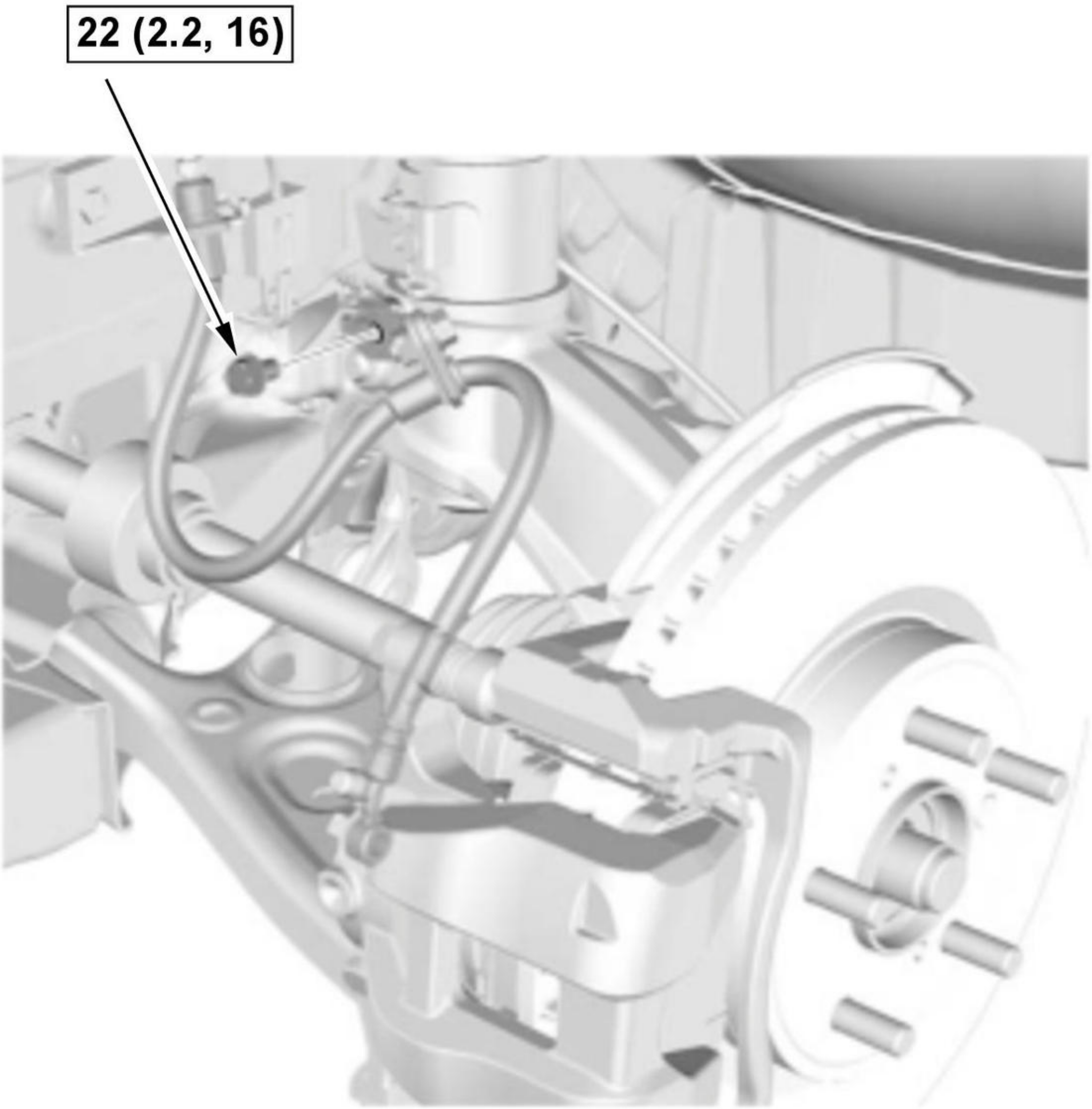

5. Brake Caliper - Remove

1. Remove the caliper assembly without disconnecting the brake hose from the caliper body .

NOTE:

- **To prevent damage to the caliper assembly or brake hose, use a short piece of wire to hang the caliper assembly from the undercarriage.**
- **Do not twist the brake**

hose excessively.

6. Front Spindle Nut - Remove
7. Front Brake Disc - Remove
8. Hub for Damage and Cracks - Check
9. Tie-Rod End Ball Joint - Disconnect
10. Lower Arm Ball Joint - Remove

    1. Disconnect the lower arm ball joint from the lower arm and the knuckle .

11. Knuckle/Hub Assembly - Remove

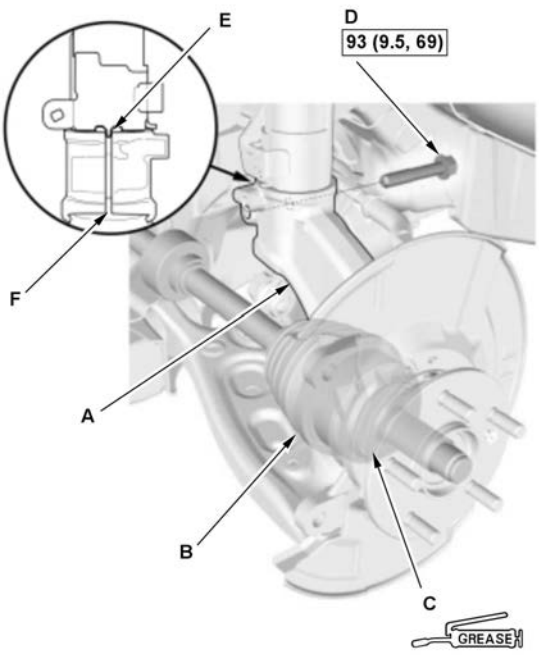	1. Pull the knuckle (A) outward, and separate the outboard joint (B) from the front hub using a soft face hammer outward.**NOTE:** • Do not pull the driveshaft end outward. The inner driveshaft inboard joint may come apart. • During installation, apply specified grease to the contact area (C) of the outboard joint and the front wheel bearing . 2. Remove the damper pinch bolt (D). 3. Move the knuckle downward, and remove the knuckle from the damper. **NOTE:** **During installation, install the aligning tab (E) on the damper unit into the slot (F) of the knuckle.**

12. All Removed Parts - Install

    1. Install all removed parts in the reverse order of removal.

13. Wheel Alignment - Check

Replacement

NOTE:

- How to read the torque specifications .
- Refer to the Exploded View as needed during the following procedures.
- Check for deterioration and damage to each part during removal.

Wheel Bearing

1. Hub - Remove

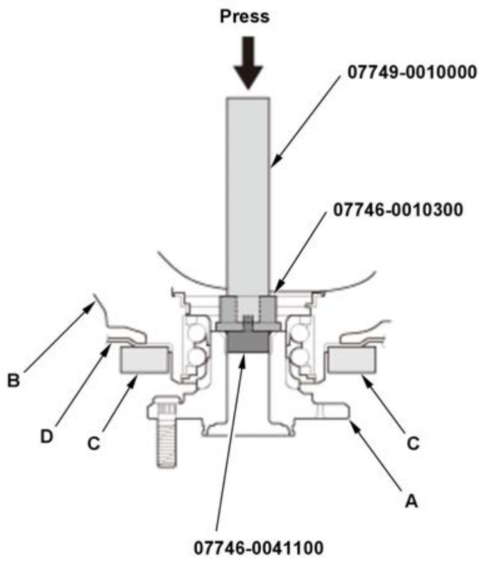
Press
07749-0010000
07746-0010300
B
D
C
C
A
07746-0041100

1. Separate the hub (A) from the knuckle (B) using the driver handle, the bearing driver attachment, the pilot, and a hydraulic press.**NOTE:**

- Hold the knuckle with the attachment (C) of the hydraulic press or equivalent tool.
- Be careful not to damage or deform the splash guard (D).
- Hold onto the hub to keep it from falling when pressed clear.

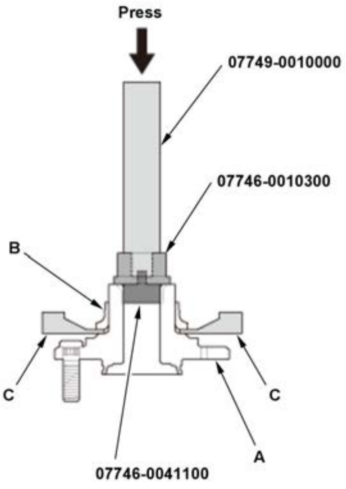
Press
07749-0010000
07746-0010300
B
C
C
A
07746-0041100

2. Press out the hub (A) from the wheel bearing inner race (B) using the driver handle, the bearing driver attachment, the pilot, a commercially available bearing separator (C), and a hydraulic press.

2. Splash Guard and Snap Ring - Remove

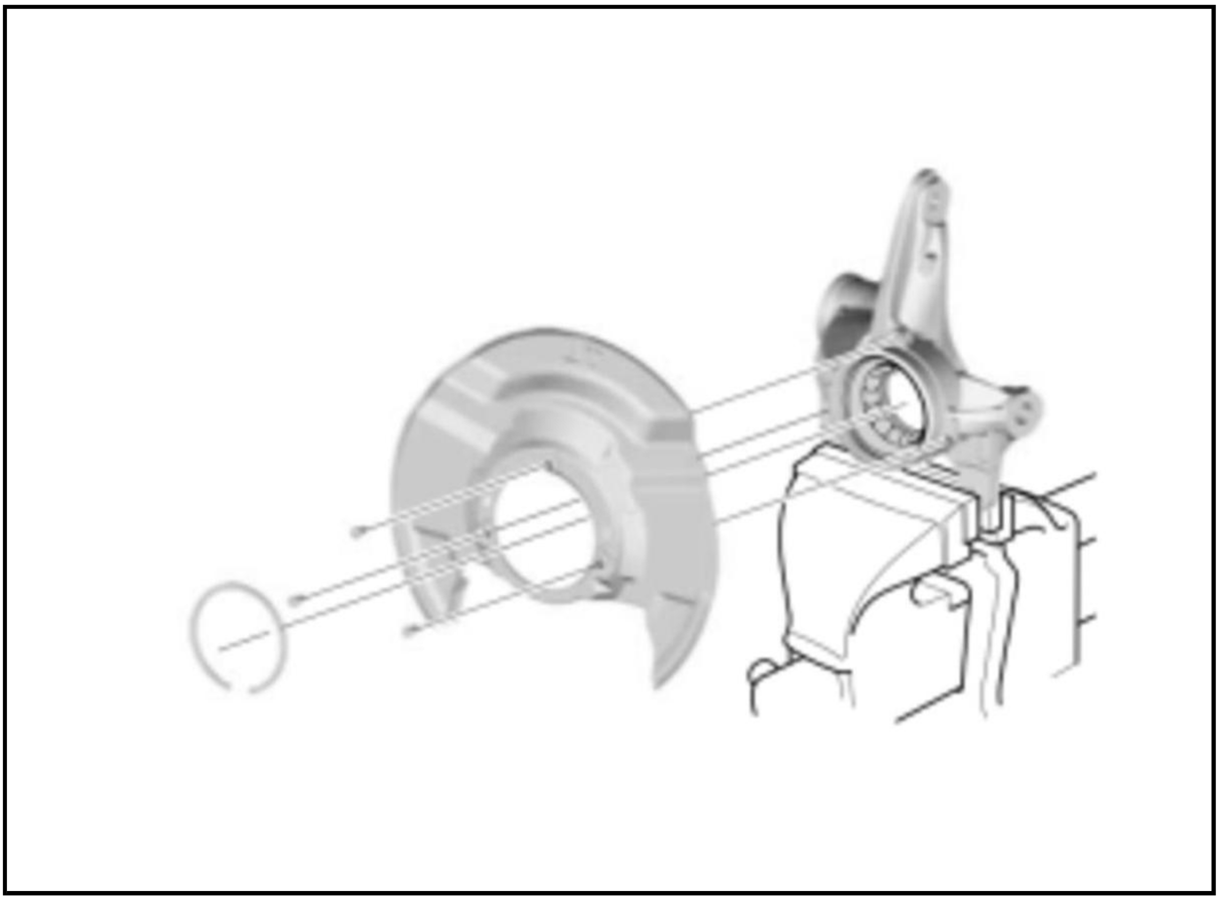

NOTE: Check for damaged or deformed snap ring, and replace it if damaged.

3. Bearing - Remove

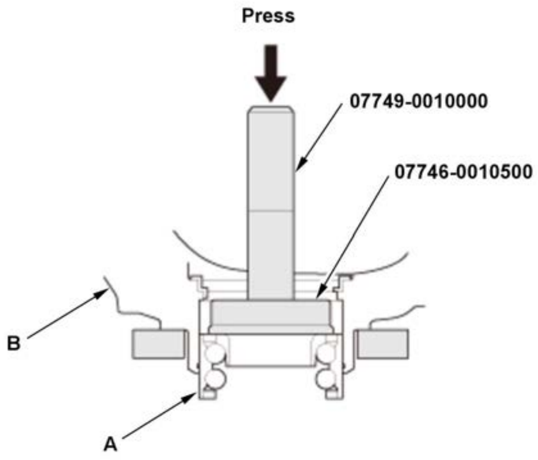 Press 07749-0010000 07746-0010500 B A	1. Press out the wheel bearing (A) from the knuckle (B) using the driver handle, the bearing driver attachment, and a hydraulic press.

4. Bearing - Install

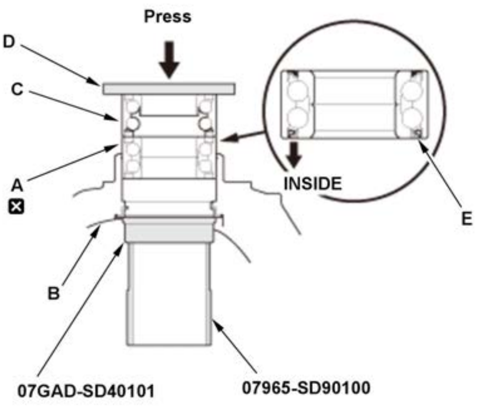

1. Wash the knuckle and the hub thoroughly in high flash point solvent before reassembly.

2. Press a new wheel bearing (A) into the knuckle (B) using the old bearing (C), a steel plate (D), the attachment, the support base, and a hydraulic press.

NOTE:

- **Install the wheel bearing with the wheel speed sensor magnetic encoder (E) (brown color) toward the inside of the knuckle.**
- **Remove any oil, grease, dust, metal debris, and other foreign material from the encoder surface.**
- **Keep any magnetic tools away from the encoder surface.**
- **Keep the wheel bearing and magnetic encoder away from any magnetic**

	field. The encoder can be damaged or erased. • **Be careful not to damage the encoder surface when you insert the wheel bearing.**

5. Splash Guard and Snap Ring - Install

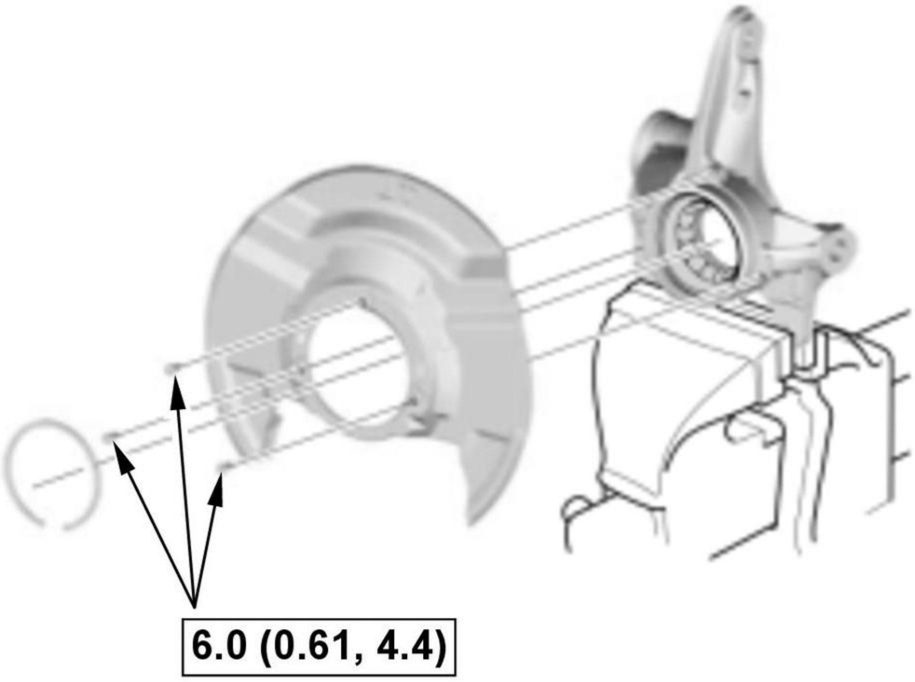

NOTE: Check for damaged or deformed snap ring, and replace it if damaged.

6. Hub - Install

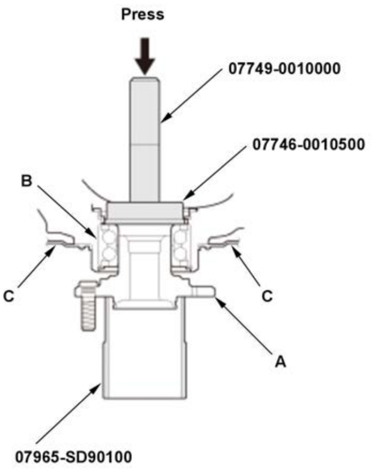 Press 07749-0010000 07746-0010500 B C C A 07965-SD90100	1. Install the hub (A) into the wheel bearing (B) using the bearing driver attachment, the driver handle, the support base, and a hydraulic press.**NOTE:** Be careful not to damage the splash guard (C).

OVERHAUL

FRONT DAMPER/SPRING DISASSEMBLY, REASSEMBLY, AND INSPECTION

Special Tools Required

Image	Description/Tool Number
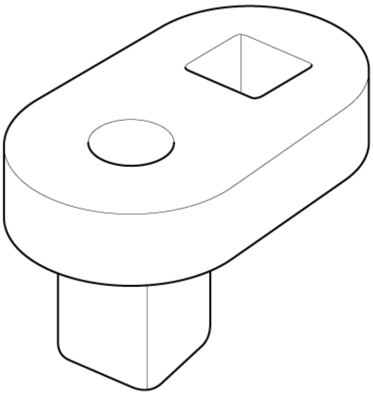	Strut Nut Adapter 07AAA-SVAA100

Disassembly

NOTE:

- ℹ Where icon is shown, further information shown below.
- When compressing the damper spring, use a commercially available strut spring compressor according to the manufacturer's instructions.
- Check for deterioration and damage to each part during removal.

1

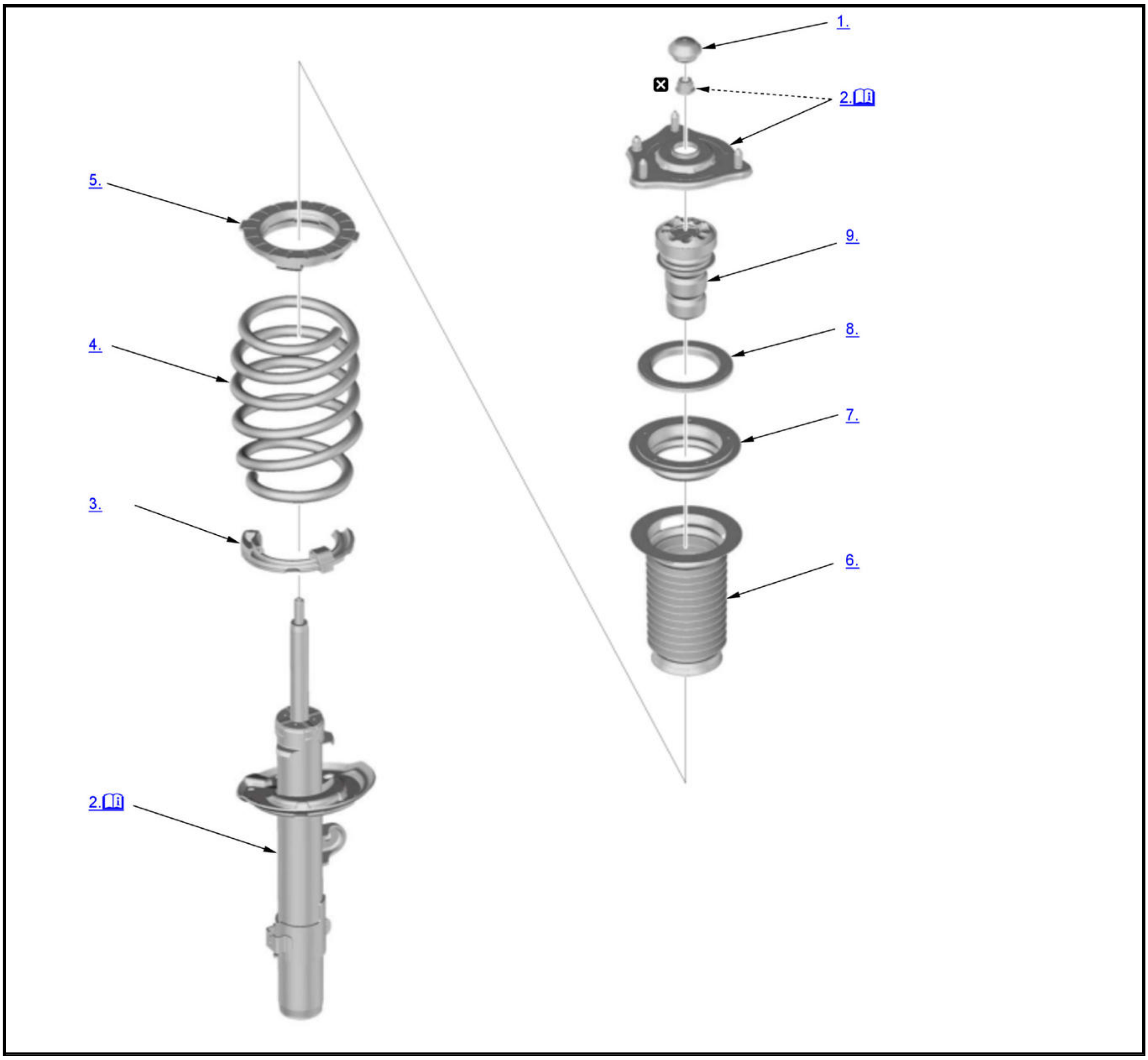

ℹ	Detailed information, notes, and precautions
☒	Replace

1. Damper Cap - Remove
2. Damper Unit, Damper Mounting Base - Remove

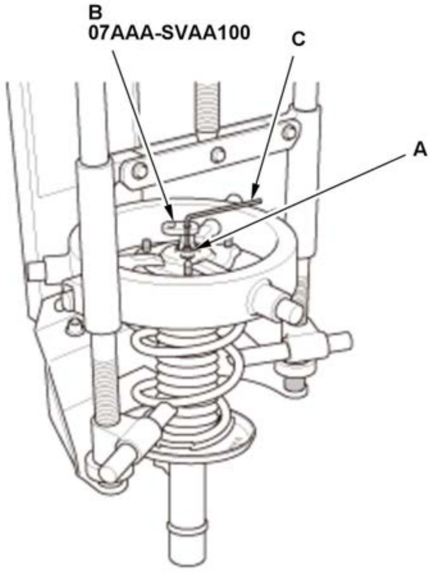	1. Set the damper/spring to the strut spring compressor. 2. Compress the damper spring. **NOTE:** **Do not compress the spring more than necessary to remove the nut.** 3. Remove the self-locking nut (A) with the strut nut adapter (B), while holding the damper shaft with a hex wrench (C). 4. Remove the damper unit. 5. Release the pressure from the strut spring compressor. 6. Remove the damper mounting base/damper spring from the strut spring compressor.

3. Lower Spring Seat Rubber - Remove
4. Damper Spring - Remove
5. Upper Spring Seat Rubber - Remove
6. Dust Cover - Remove
7. Upper Spring Seat - Remove
8. Damper Mounting Bearing - Remove
9. Bump Stop - Remove

Inspection

1. Damper/Spring - Inspect

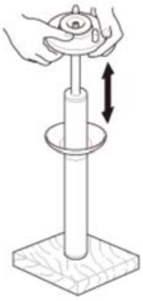	1. Reassemble the damper mounting base and the self-locking nut. 2. Compress the damper assembly by hand, and check for smooth operation through a full stroke, both compression and extension. The damper should extend smoothly and constantly when compression is released. If it does not, the gas is leaking and the damper should be replaced. 3. Check for oil leaks, abnormal noises, or binding during these tests.

Reassembly

NOTE:

- ℹ Where icon is shown, further information shown below.
- When compressing the damper spring, use a commercially available strut spring compressor according to the manufacturer's instructions.

1

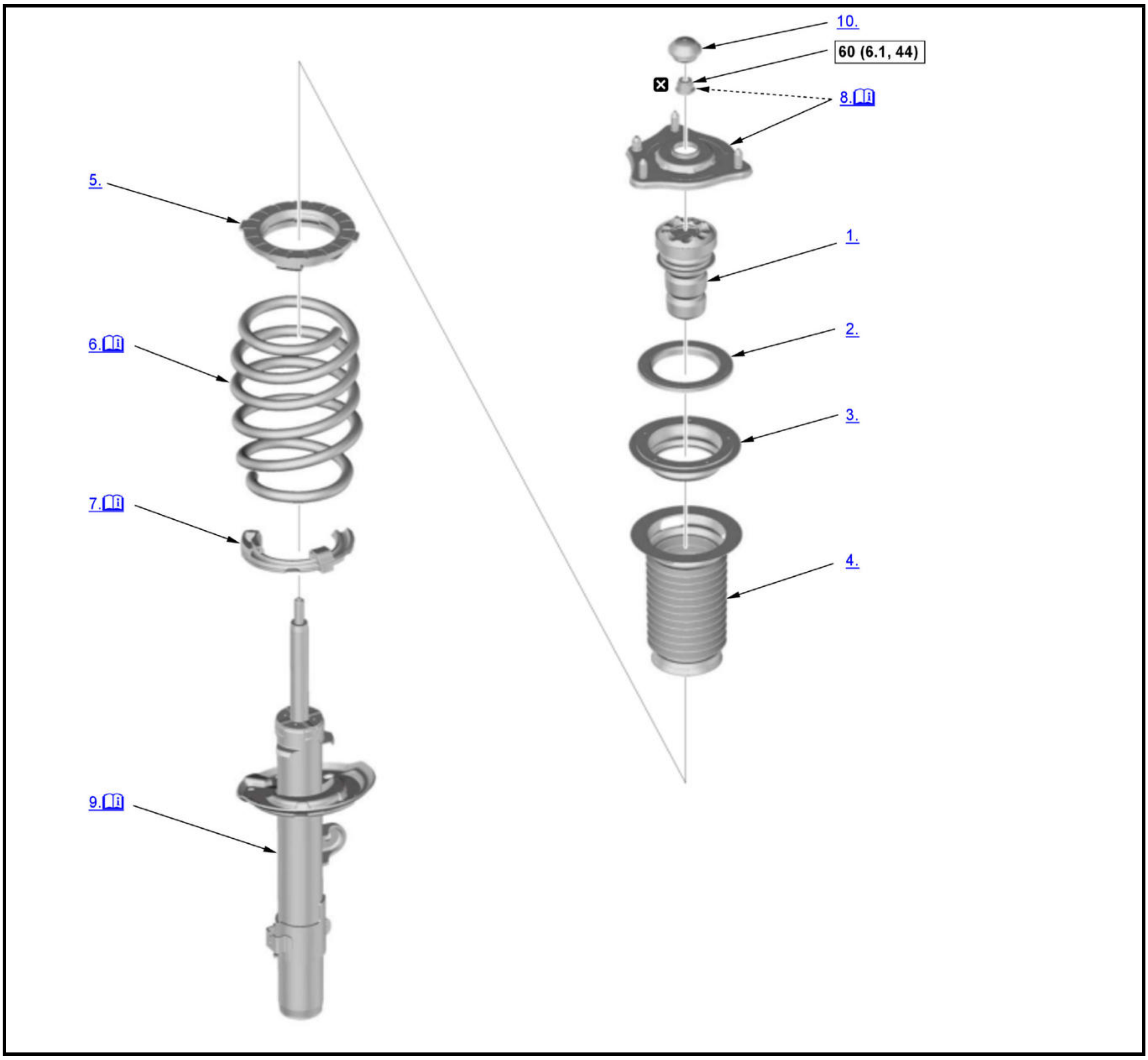

📖	Detailed information, notes, and precautions
▭	Torque: N.m (kgf.m, lbf.ft)
☒	Replace

1. Bump Stop - Install
2. Damper Mounting Bearing - Install
3. Upper Spring Seat - Install
4. Dust Cover - Install
5. Upper Spring Seat Rubber - Install
6. Damper Spring - Install

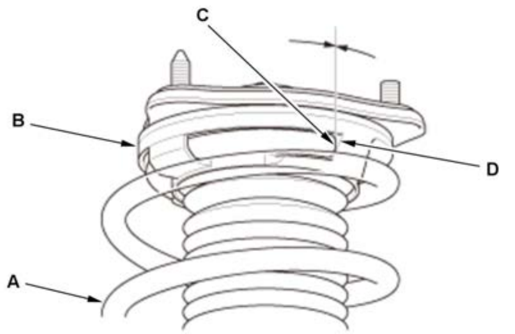

1. Install the damper spring (A) on the upper spring seat rubber (B) by aligning the upper end (C) of the damper spring with the ledge portion (D) of the upper spring seat rubber.

7. Lower Spring Seat Rubber - Remove

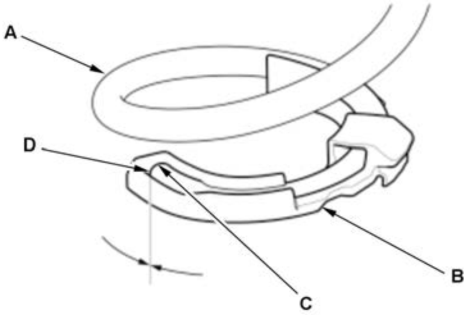

1. Install the damper spring (A) on the lower spring seat rubber (B) by aligning the upper end (C) of the damper spring with the ledge portion (D) of the lower spring seat.

8. Damper Mounting Base - Set

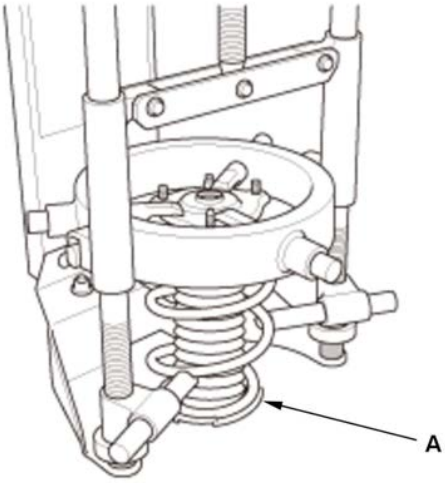

1. Set the damper mounting base/damper spring (A) to the strut spring compressor.

2. Compress the damper spring.

NOTE:

Do not compress the spring excessively.

9. Damper Unit - Install

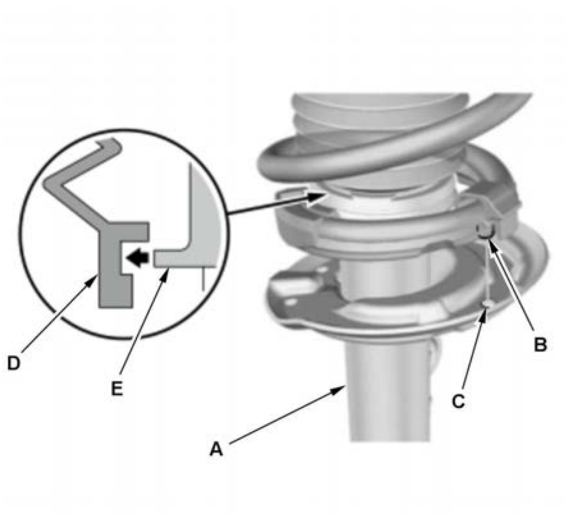

1. Install the damper unit (A) to the damper spring/damper mounting base.

2. Align the raised portion (B) of the lower spring seat rubber and the hole (C) of the lower spring seat on the damper unit.

NOTE:

After reassembling the damper/spring, make sure that the dust cover (D) are properly positioned into the raised portion (E) of the damper unit.

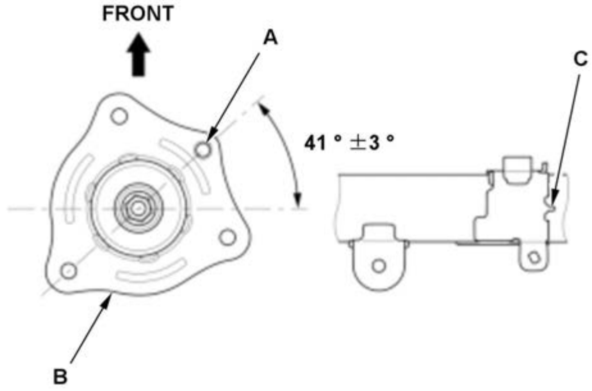

Left side

Right side

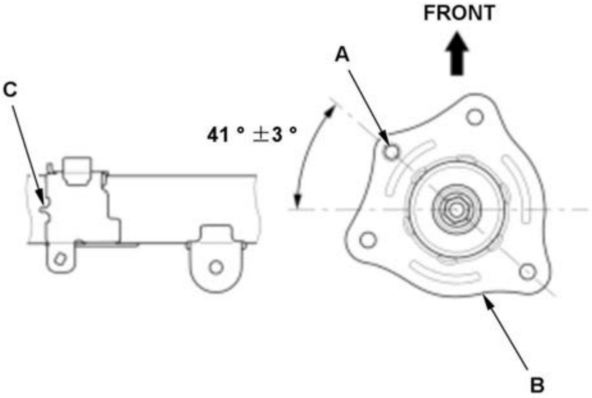

3. Align the angle of the hole (A) on the damper mounting base (B) with the aligning tab (C) on the bottom of the damper unit as shown.

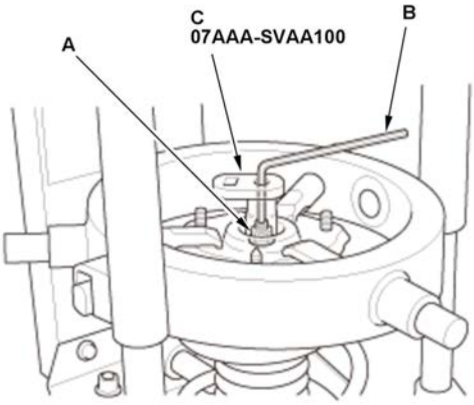	4. Install the self-locking nut (A). 5. Hold the damper shaft using a hex wrench (B), and tighten the self-locking nut using the strut nut adapter (C) to the specified torque. 6. Remove the damper/spring from the strut spring compressor.

10. Damper Cap - Install

ADJUSTMENT

WHEEL ALIGNMENT (2017 2018 2019)

Check

1. Pre-Alignment - Check

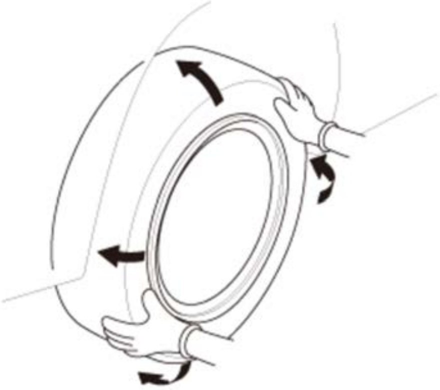	For proper inspection and adjustment of the wheel alignment, do these checks: 1. Release the parking brake to avoid an incorrect measurement. 2. Make sure the suspension is not modified. 3. Make sure the fuel tank is full and the spare tire, jack, and tools are in place inside the vehicle. 4. Check the tire size and tire pressure according to the tire information. 5. Set the steering column to the middle tilt position and telescopic position (if equipped). 6. Check the runout of the wheels and tires Hold a tire with your hands, and move it up and down and right and left to check for movement). 7. Check the suspension ball joints (Raise and support the vehicle 8. Before doing alignment inspections, be sure to remove all extra weight from the vehicle, and no one should be inside the vehicle (driver or passengers). 9. Lower the vehicle to the ground. Bounce the vehicle up and down several times to stabilize the suspension.

Inspection

Use a commercially available computerized four wheel alignment equipment to measure wheel alignment (caster, camber, toe, and turning angle). Follow the equipment manufacturer's instructions.

1. Caster - Inspect

1. Check the caster angle.
   - If the measurement is within the specifications, measure the camber angle.
   - If the measurement is not within the specifications, check for bent or damaged suspension components.

Caster angle:		
B	**2WD:**	**5B° 10 '+/-30 '**
B	**AWD:**	**5B° 04 '+/-30 '**

2. Camber - Inspect

1. Check the camber angle.
   - If the measurement is within the specification, measure the toe-in.
   - If the measurement for the front camber is not within specification, go to front camber adjustment.
   - If the measurement for the rear camber is not within specification, check for bent or damaged suspension components.

Camber angle:			
B	**2WD:**		
B	B	**Front:**	**-0B° 18 '+/-30 '**
B	B	**Rear:**	**-1B° 30 '+/-45 '**
B	**AWD:**		
B	B	**Front:**	**-0B° 12 '+/-30 '**
B	B	**Rear:**	**-1B° 12 '+/-45 '**
(Maximum difference between the right and left side: 0B° 45 ')			

3. Rear Toe - Inspect

NOTE: Do the rear toe inspection before the front toe inspection.

1. Release the parking brake to avoid an incorrect measurement.

2. Check the toe.

   - If adjustment is required, go to rear toe adjustment.
   - If no adjustment is required, go to front toe inspection.

Rear total toe-in:	**3.5 +1 -2 mm (0.138 +0.04 -0.08 in)**

4. Front Toe - Inspect

NOTE: Do the rear toe inspection before the front toe inspection.

1. Set the steering column to the middle tilt position and telescopic position (if equipped).

2. Center the steering wheel spokes, and hold it.

3. Check the toe with the wheels pointed straight ahead. • If adjustment is required, go to the front toe adjustment. • If no adjustment is required, remove the alignment equipment.

Front total toe-in:	**0 +/- 2 mm (0.00 +/- 0.08 in)**

5. Turning Angle - Inspect

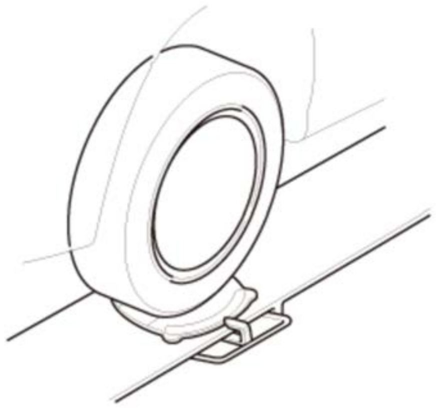	1. Turn the wheel right and left while applying the brake, and measure the turning angle of both wheels. • If the measurement is not within specifications, even up both sides of the tie-rod threaded section while adjusting the front toe. • If it is correct, but the turning angle is not within the specifications, check for bent or damaged suspension components.

Turning angle:			
B	**2WD:**		
B	B	**Inward:**	**37B° 20 '+/-2B°**
B	B	**Outward (reference):**	**30B° 53 '**
B	**AWD:**		
B	B	**Inward:**	**37B° 40 '+/-2B°**
B	B	**Outward (reference):**	**31B° 02 '**

Adjustment

The suspension can be adjusted for front camber, front toe, and rear toe. However, each of these adjustments are related to each other. For example, when you adjust camber, the toe will change.

NOTE:

- **How to read the torque specifications** .
- After adjusting the wheel alignment, **do the VSA sensor neutral position memorization** .
- Unless otherwise indicated, illustrations used in the procedure are for AWD model.

1. **Vehicle - Lift**
2. Front Camber - Adjust

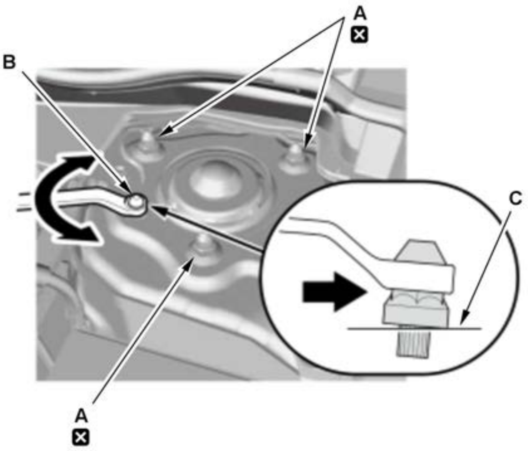

1. Replace the flange nuts (A) with new ones, and lightly tighten them.

2. If the guide pin (B) is equipped, use a wrench to rock the guide pin left and right while pulling it out from the damper mounting base (C).

NOTE:

The guide pin is for factory assembly use only and can be discarded after removal.

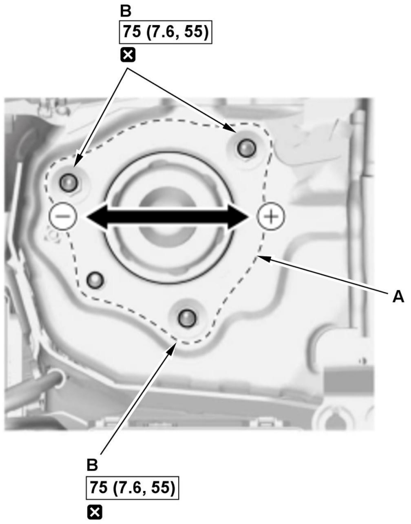

3. Adjust the camber angle by moving the upper part of the damper (A).**NOTE:**

NOTE:

The camber angle can be adjusted +/-15 '.

4. Tighten the flange nuts (B) to the specified torque.

5. Lower the vehicle to the ground, and bounce the front of the vehicle up and down several times to stabilize the suspension.

6. Measure the camber angle. If the camber angle is not within specification, readjust the camber angle. If the camber measurement is correct, measure toe-in, and adjust it if necessary.

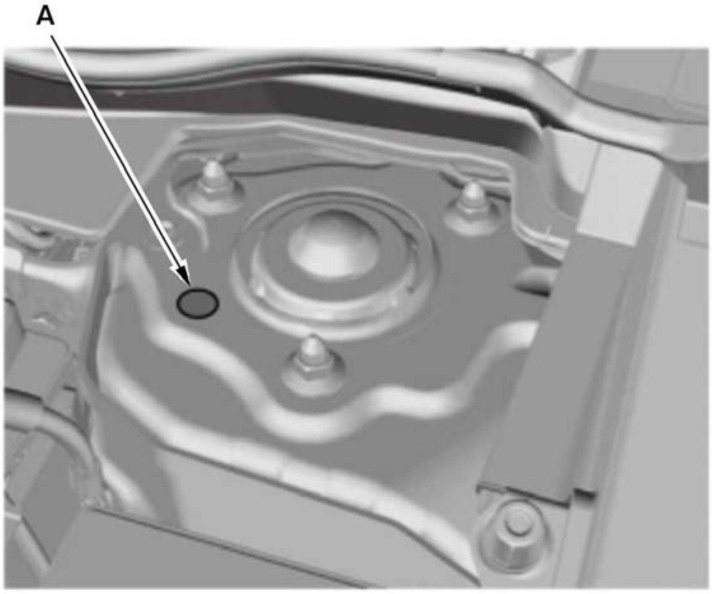

7. Install the hole seal (A) after the guide pin is removed.

NOTE:

Refer to the Parts Catalog for the hole seal.

3. Rear Toe - Adjust

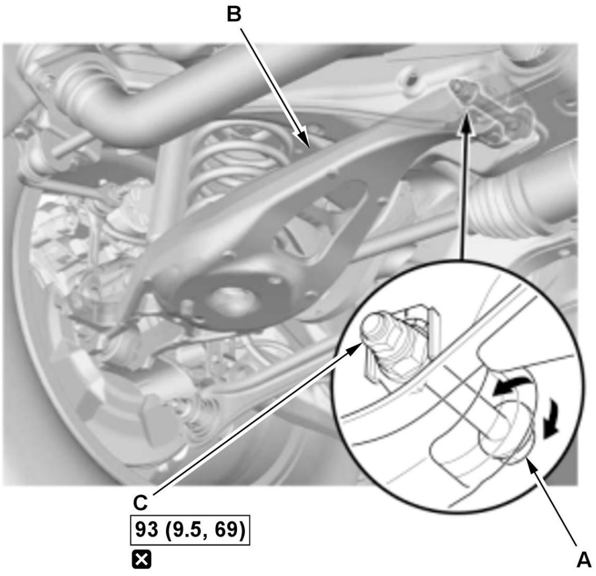

NOTE: Do the rear toe adjustment before the front toe adjustment.

1. Hold the adjusting bolt (A) on lower arm B, and remove the self-locking nut (C).

2. Replace the self-locking nut with a new one, and lightly tighten it.

NOTE:

- **Always use a new self-locking nut whenever it has been loosened.**
- **Reassemble the adjusting bolt and the adjusting cam plate with the eccentric facing up.**

3. Adjust the rear toe by turning the adjusting bolt until the toe is correct.

4. Tighten the self-locking nut to the specified torque while holding the adjusting bolt.

4. Front Toe - Adjust

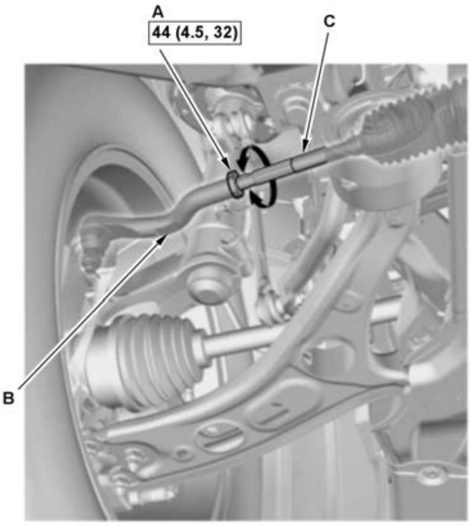	**NOTE:** Do the rear toe adjustment before the front toe adjustment. 1. Loosen the tie-rod end locknuts (A) while holding the flat surface sections (B) of the tie-rod end with a wrench, and turn both tie-rods (C) until the front toe is within specifications. 2. After adjusting, tighten the tie-rod end locknuts to the specified torque. **NOTE:** **Reposition the rack-end boot if it is twisted or displaced.**

5. VSA Sensor Neutral Position - Memorize

WHEEL ALIGNMENT (2020 2021)

Check

1. Pre-Alignment - Check

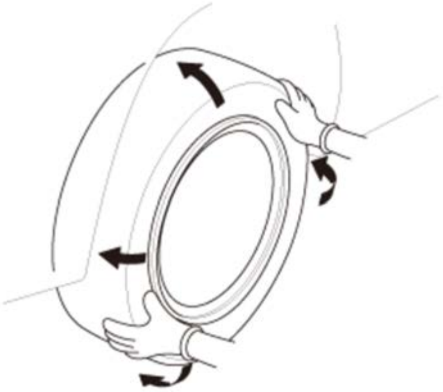	For proper inspection and adjustment of the wheel alignment, do these checks: 1. Release the parking brake to avoid an incorrect measurement. 2. Make sure the suspension is not modified. 3. Make sure the fuel tank is full and the spare tire, jack, and tools are in place inside the vehicle. 4. Check the tire size and tire pressure according to the tire information. 5. Set the steering column to the middle tilt position and telescopic position (if equipped). 6. Check the runout of the wheels and tires Hold a tire with your hands, and move it up and down and right and left to check for movement). 7. Check the suspension ball joints (Raise and support the vehicle 8. Before doing alignment inspections, be sure to remove all extra weight from the vehicle, and no one should be inside the vehicle (driver or passengers).

	9. Lower the vehicle to the ground. Bounce the vehicle up and down several times to stabilize the suspension.

Inspection

Use a commercially available computerized four wheel alignment equipment to measure wheel alignment (caster, camber, toe, and turning angle). Follow the equipment manufacturer's instructions.

1. Caster - Inspect

1. Check the caster angle.
    - If the measurement is within the specifications, measure the camber angle.
    - If the measurement is not within the specifications, check for bent or damaged suspension components.

Caster angle:		
B	**2WD:**	**5B° 10 '+/-30 '**
B	**AWD:**	**5B° 04 '+/-30 '**

2. Camber - Inspect

1. Check the camber angle.
    - If the measurement is within the specification, measure the toe-in.
    - If the measurement for the front camber is not within specification, go to front camber adjustment.
    - If the measurement for the rear camber is not within specification, check for bent or damaged suspension components.

Camber angle:			
B	**2WD:**		
B	B	**Front:**	**-0B° 18 '+/-30 '**
B	B	**Rear:**	**-1B° 30 '+/-45 '**
B	**AWD:**		
B	B	**Front:**	**-0B° 12 '+/-30 '**
B	B	**Rear:**	**-1B° 12 '+/-45 '**
(Maximum difference between the right and left side: 0B° 45 ')			

3. Rear Toe - Inspect

NOTE: Do the rear toe inspection before the front toe inspection.

1. Release the parking brake to avoid an incorrect measurement.

2. Check the toe.

- If adjustment is required, go to rear toe adjustment.
- If no adjustment is required, go to front toe inspection.

Rear total toe-in:	**3.5 +1 -2 mm (0.138 +0.04 -0.08 in)**

4. Front Toe - Inspect

NOTE: Do the rear toe inspection before the front toe inspection.

1. Set the steering column to the middle tilt position and telescopic position (if equipped). 2. Center the steering wheel spokes, and hold it. 3. Check the toe with the wheels pointed straight ahead. • If adjustment is required, go to the front toe adjustment. • If no adjustment is required, remove the alignment equipment.

Front total toe-in:	**2 +/- 2 mm (0.08 +/- 0.08 in)**

5. Turning Angle - Inspect

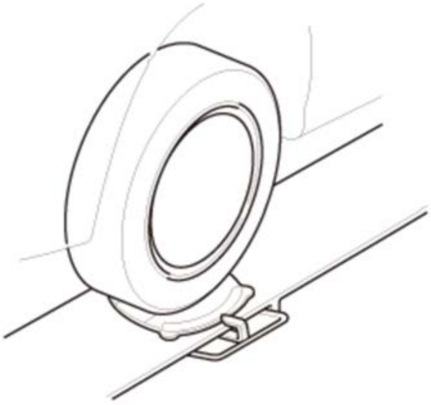	1. Turn the wheel right and left while applying the brake, and measure the turning angle of both wheels. • If the measurement is not within specifications, even up both sides of the tie-rod threaded section while adjusting the front toe. • If it is correct, but the turning angle is not within the specifications, check for bent or damaged suspension components.

Turning angle:			
B	**2WD:**		
B	B	**Inward:**	**37B° 20 '+/-2B°**
B	B	**Outward (reference):**	**30B° 53 '**
B	**AWD:**		
B	B	**Inward:**	**37B° 40 '+/-2B°**
B	B	**Outward (reference):**	**31B° 02 '**

Adjustment

The suspension can be adjusted for front camber, front toe, and rear toe. However, each of these adjustments are related to each other. For example, when you adjust camber, the toe will change.

NOTE:

- **How to read the torque specifications** .
- After adjusting the wheel alignment, **do the VSA sensor neutral position memorization** .
- Unless otherwise indicated, illustrations used in the procedure are for AWD model.

1. **Vehicle - Lift**
2. Front Camber - Adjust

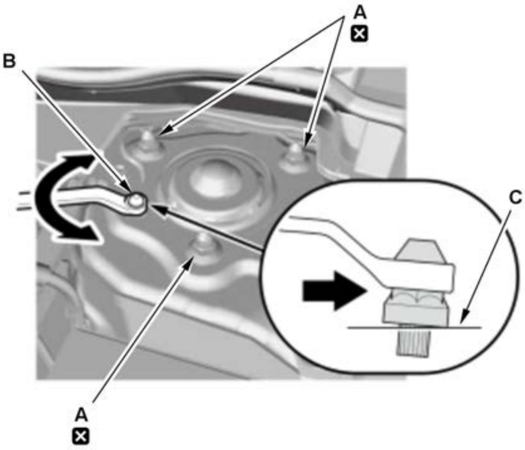

1. Replace the flange nuts (A) with new ones, and lightly tighten them.

2. If the guide pin (B) is equipped, use a wrench to rock the guide pin left and right while pulling it out from the damper mounting base (C).

NOTE:

The guide pin is for factory assembly use only and can be discarded after removal.

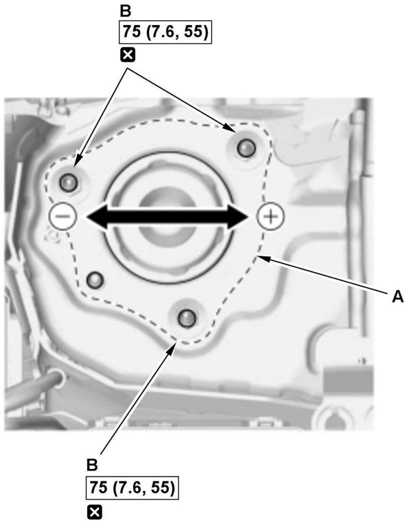

3. Adjust the camber angle by moving the upper part of the damper (A).

NOTE:

The camber angle can be adjusted +/-15 '.

4. Tighten the flange nuts (B) to the specified torque.

5. Lower the vehicle to the ground, and bounce the front of the vehicle up and down several times to stabilize the suspension.

6. Measure the camber angle. If the camber angle is not within specification, readjust the camber angle. If the camber measurement is correct, measure toe-in, and adjust it if necessary.

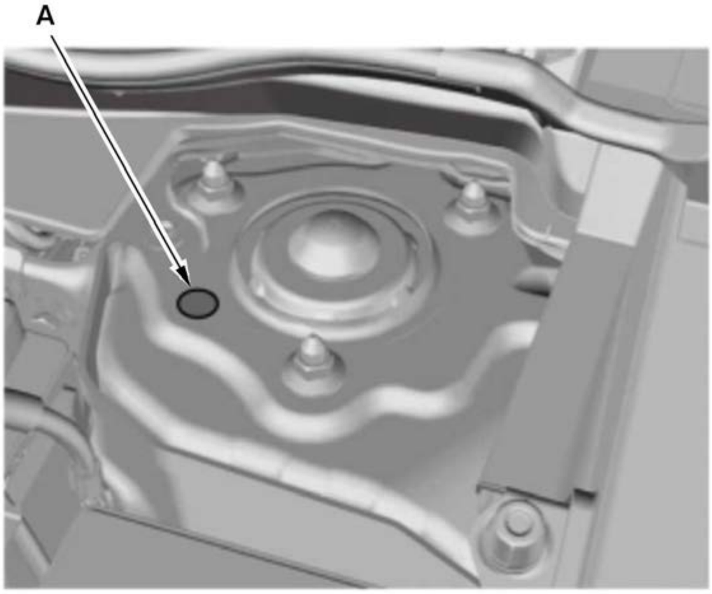

7. Install the hole seal (A) after the guide pin is removed.

NOTE:

Refer to the Parts Catalog for the hole seal.

3. Rear Toe - Adjust

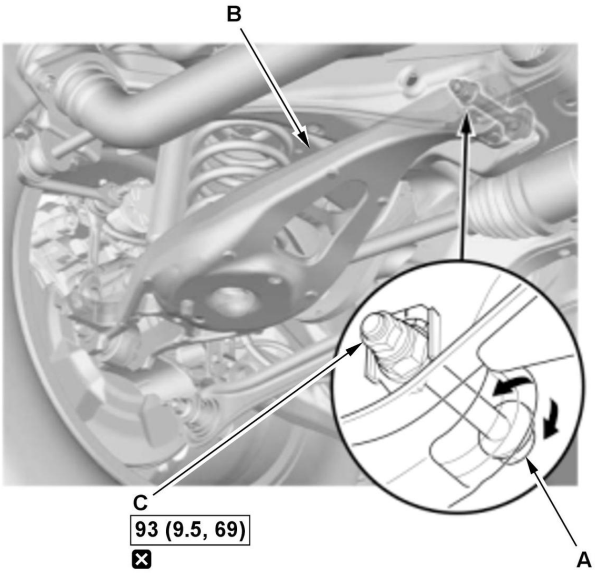

NOTE: Do the rear toe adjustment before the front toe adjustment.

1. Hold the adjusting bolt (A) on lower arm B, and remove the self-locking nut (C).

2. Replace the self-locking nut with a new one, and lightly tighten it.

NOTE:

- **Always use a new self-locking nut whenever it has been loosened.**
- **Reassemble the adjusting bolt and the adjusting cam plate with the eccentric facing up.**

3. Adjust the rear toe by turning the adjusting bolt until the toe is correct.

4. Tighten the self-locking nut to the specified torque while holding the adjusting bolt.

4. Front Toe - Adjust

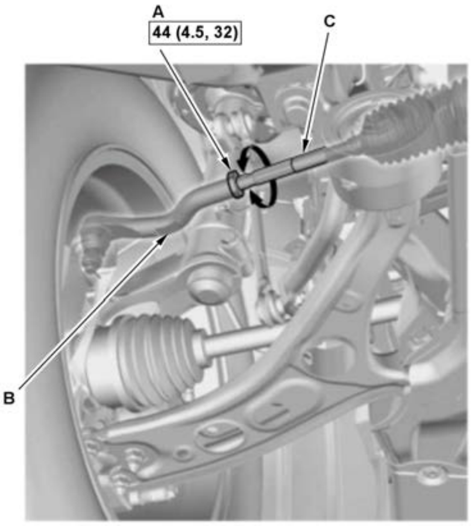	**NOTE:** Do the rear toe adjustment before the front toe adjustment. 1. Loosen the tie-rod end locknuts (A) while holding the flat surface sections (B) of the tie-rod end with a wrench, and turn both tie-rods (C) until the front toe is within specifications. 2. After adjusting, tighten the tie-rod end locknuts to the specified torque. **NOTE:** **Reposition the rack-end boot if it is twisted or displaced.**

5. VSA Sensor Neutral Position - Memorize

INSPECTION

FRONT LOWER ARM BALL JOINT INSPECTION

Inspection

NOTICE:

When inspecting the ball joint, the vehicle will be shake strongly. Make sure support the front jacking bracket correctly with the suitable jack.

1. Vehicle - Lift
2. Front Wheel - Remove
3. Lower Ball Joint - Inspect

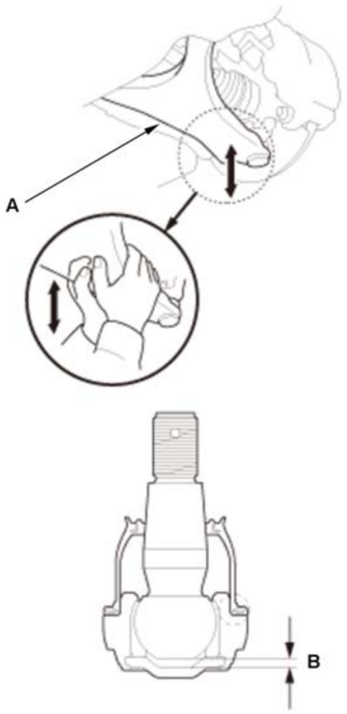 	1. Check all bolts, nuts, and bushings on the suspension components, and make sure that there are not looseness, deteriorated or damaged. 2. Hold the outside of lower arm (A) with your hands, and move it up and down to check for abnormal noise or wobbling.**NOTE:** - If the lower ball joint is abnormal, replace the lower ball joint . - A problem on the lower ball joint may be caused by an abnormal clearance (B).

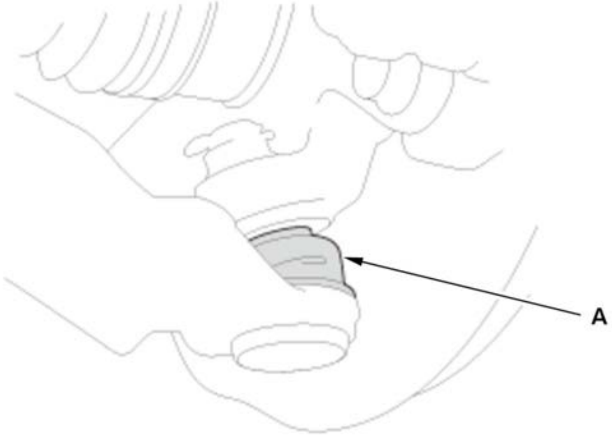 	3. Check the ball joint boot (A) for weakness, damage, cracks, and inner boot grease leaks. **NOTE:** **If the ball joint boot is damaged, weakness, and cracks replace the lower ball joint .**

4. Front Wheel - Install

WHEEL BEARING END PLAY INSPECTION

Inspection

NOTE: How to read the torque specifications .

1. Vehicle - Lift
2. Front Wheels and Rear Wheels - Remove
3. Wheel Bearing End Play - Inspect

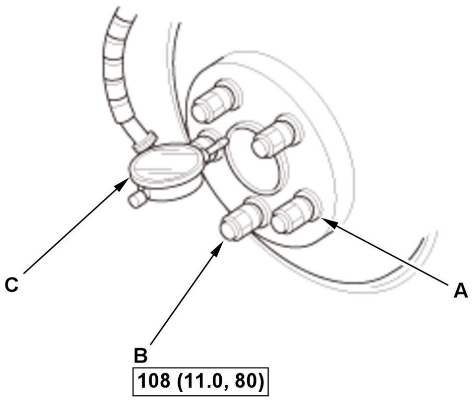	1. Install suitable flat washers (A). 2. Install the wheel nuts (B). 3. Tighten the nuts to the specified torque to hold the brake disc securely against the hub. 4. Attach the dial gauge (C). 5. Place the dial gauge against the hub flange. 6. Measure the bearing end play while moving the brake disc inward and outward. 7. If the bearing end play measurement is more than the standard, **replace the wheel bearing** or **the hub bearing unit** .

Wheel bearing end play:		
B	**Front/Rear:**	**0-0.05 mm (0-0.0020 in)**

4. **Front Wheels and Rear Wheels - Install**

WHEEL RUNOUT INSPECTION

Inspection

1. **Vehicle - Lift**
2. Wheel Runout - Inspect

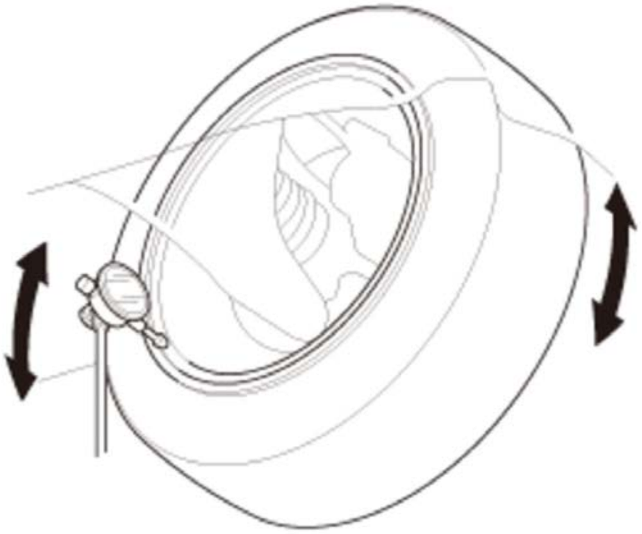**Axial runout**	1. Check for bent or deformed wheels. 2. Set up the dial gauge as shown. 3. Measure the axial runout by turning the wheel.

Front and rear wheel axial runout:		
B	**Standard:**	**0-0.3 mm (0-0.012 in)**
B	**Service limit:**	**2.0 mm (0.079 in)**

Radial runout 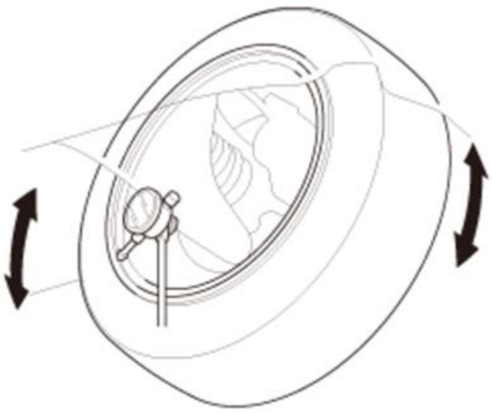	4. Reset the dial gauge to the position shown. 5. Measure the radial runout. 6. If the wheel runout is not within the specification, **check the wheel bearing end play** , and make sure the mating surfaces between the brake disc and the inside of the wheel are clean. 7. If the bearing end play is within the specification but the wheel runout is more than the service limit, **replace the wheel** .

Front and rear wheel radial runout:		
B	**Standard:**	**0-0.3 mm (0-0.012 in)**
B	**Service limit:**	**1.5 mm (0.059 in)**

COMPONENT LOCATION INDEX

FRONT AND REAR SUSPENSION COMPONENT LOCATION INDEX

Front Suspension

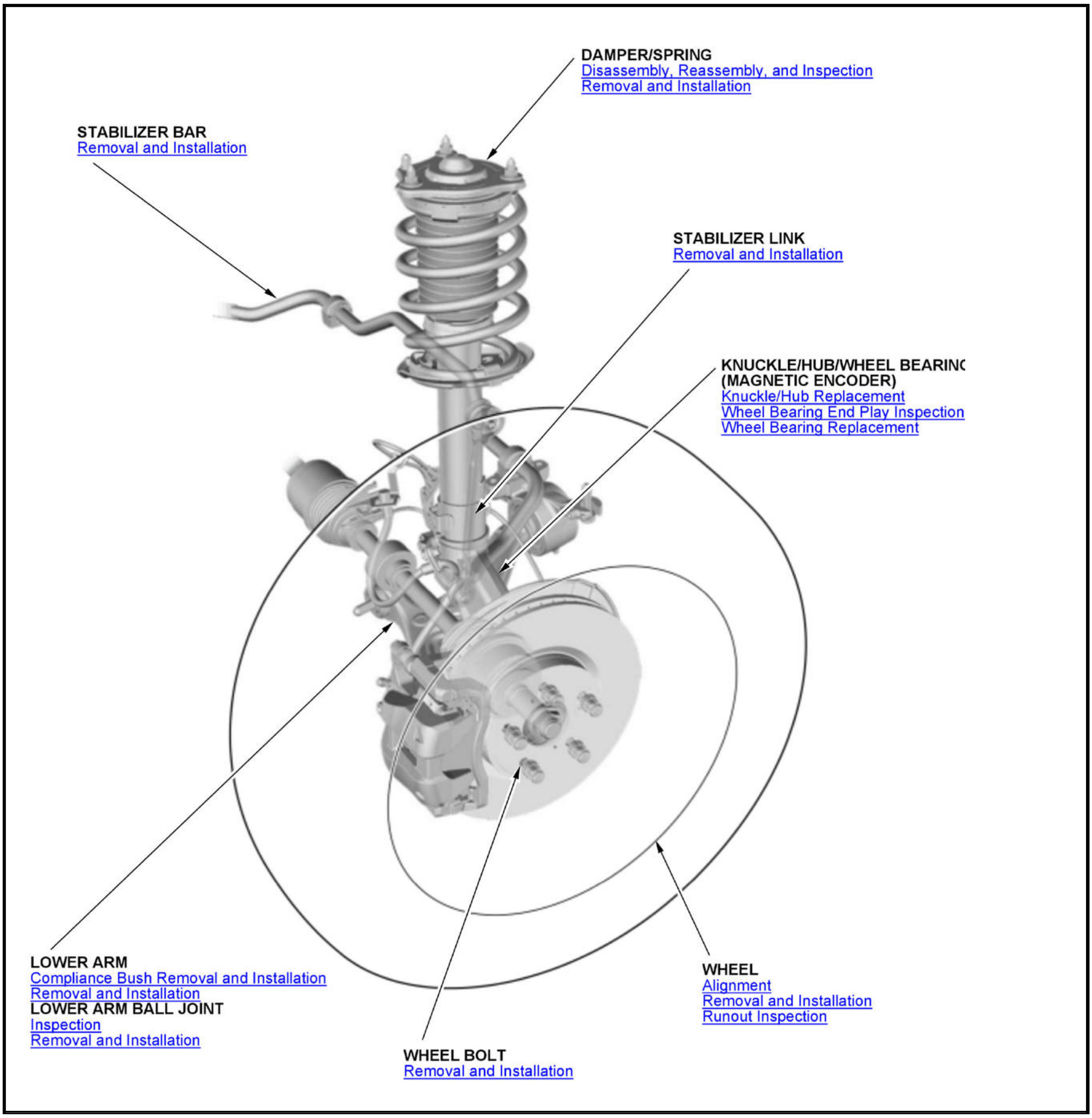
DAMPER/SPRING
Disassembly, Reassembly, and Inspection
Removal and Installation
STABILIZER BAR
Removal and Installation
STABILIZER LINK
Removal and Installation
KNUCKLE/HUB/WHEEL BEARING
(MAGNETIC ENCODER)
Knuckle/Hub Replacement
Wheel Bearing End Play Inspection
Wheel Bearing Replacement
LOWER ARM
Compliance Bush Removal and Installation
Removal and Installation
LOWER ARM BALL JOINT
Inspection
Removal and Installation
WHEEL BOLT
Removal and Installation
WHEEL
Alignment
Removal and Installation
Runout Inspection

Rear Suspension (2WD)

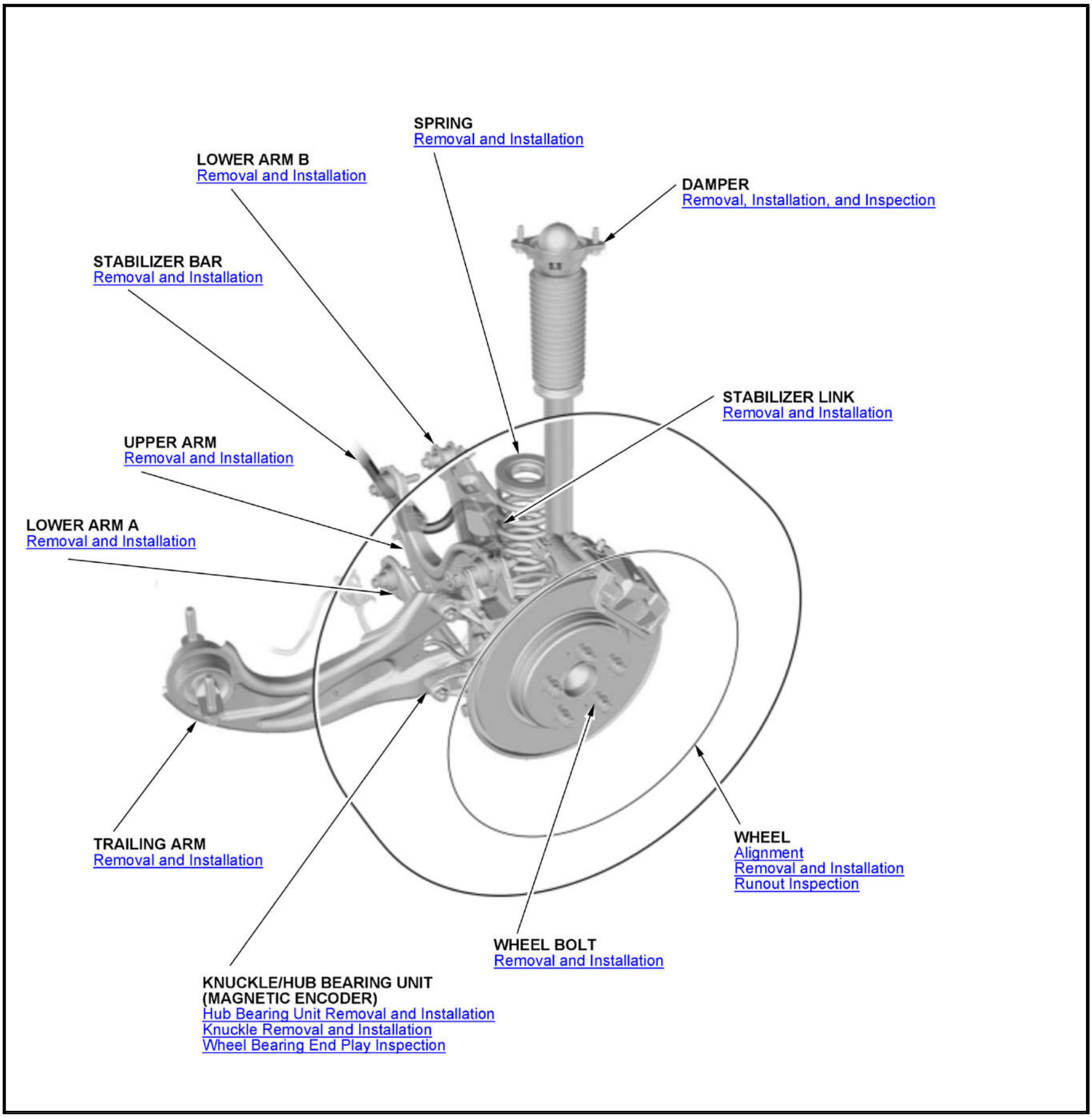
SPRING
Removal and Installation
LOWER ARM B
Removal and Installation
DAMPER
Removal, Installation, and Inspection
STABILIZER BAR
Removal and Installation
STABILIZER LINK
Removal and Installation
UPPER ARM
Removal and Installation
LOWER ARM A
Removal and Installation
TRAILING ARM
Removal and Installation
WHEEL
Alignment
Removal and Installation
Runout Inspection
WHEEL BOLT
Removal and Installation
KNUCKLE/HUB BEARING UNIT
(MAGNETIC ENCODER)
Hub Bearing Unit Removal and Installation
Knuckle Removal and Installation
Wheel Bearing End Play Inspection

Rear Suspension (AWD)

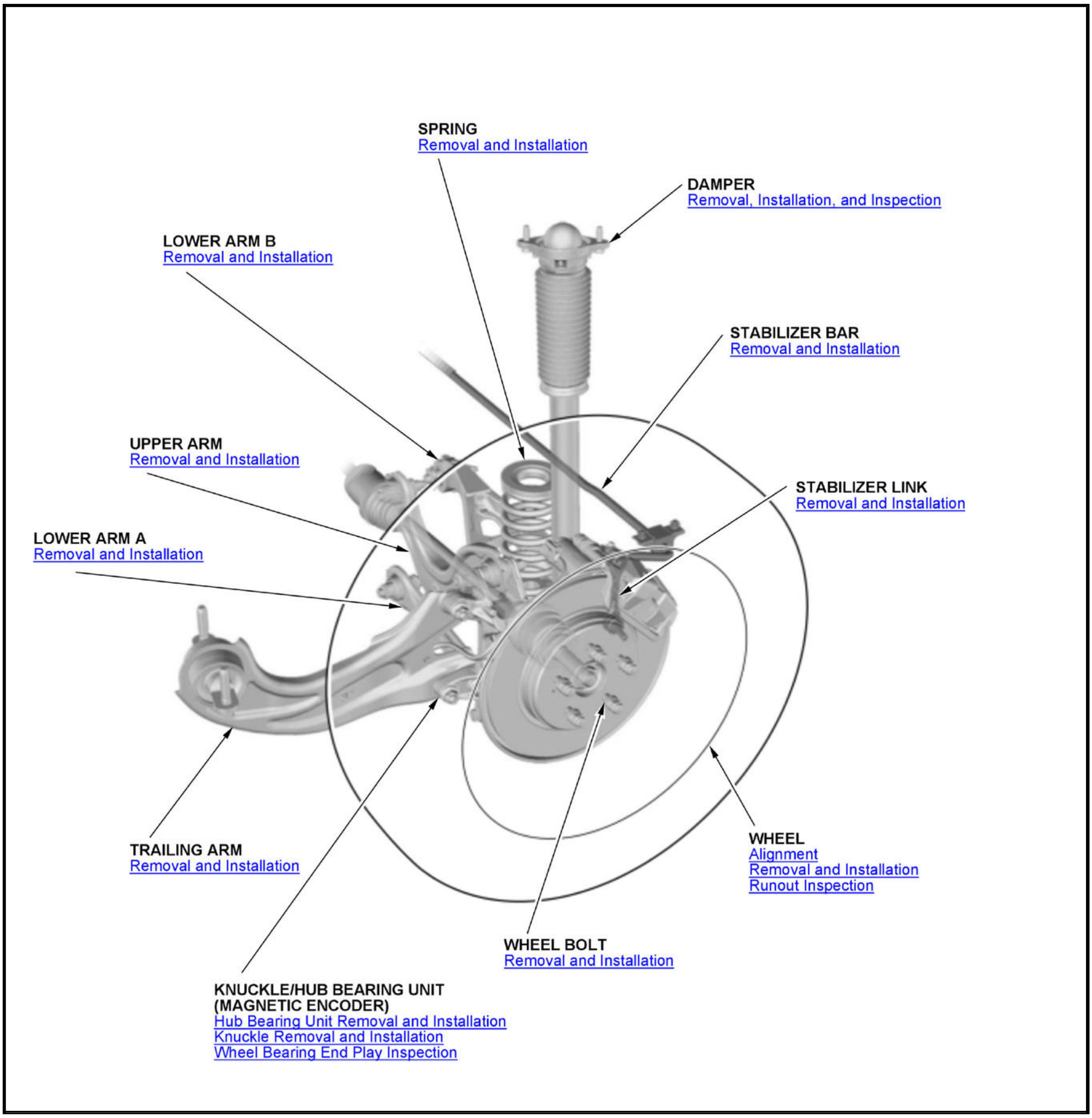
SPRING
Removal and Installation
DAMPER
Removal, Installation, and Inspection
LOWER ARM B
Removal and Installation
STABILIZER BAR
Removal and Installation
UPPER ARM
Removal and Installation
STABILIZER LINK
Removal and Installation
LOWER ARM A
Removal and Installation
TRAILING ARM
Removal and Installation
WHEEL
Alignment
Removal and Installation
Runout Inspection
WHEEL BOLT
Removal and Installation
KNUCKLE/HUB BEARING UNIT
(MAGNETIC ENCODER)
Hub Bearing Unit Removal and Installation
Knuckle Removal and Installation
Wheel Bearing End Play Inspection

REMOVAL & INSTALLATION INSPECTION

REAR DAMPER REMOVAL, INSTALLATION, AND INSPECTION

Exploded View

NOTE: How to read the torque specifications .

1. Rear Damper

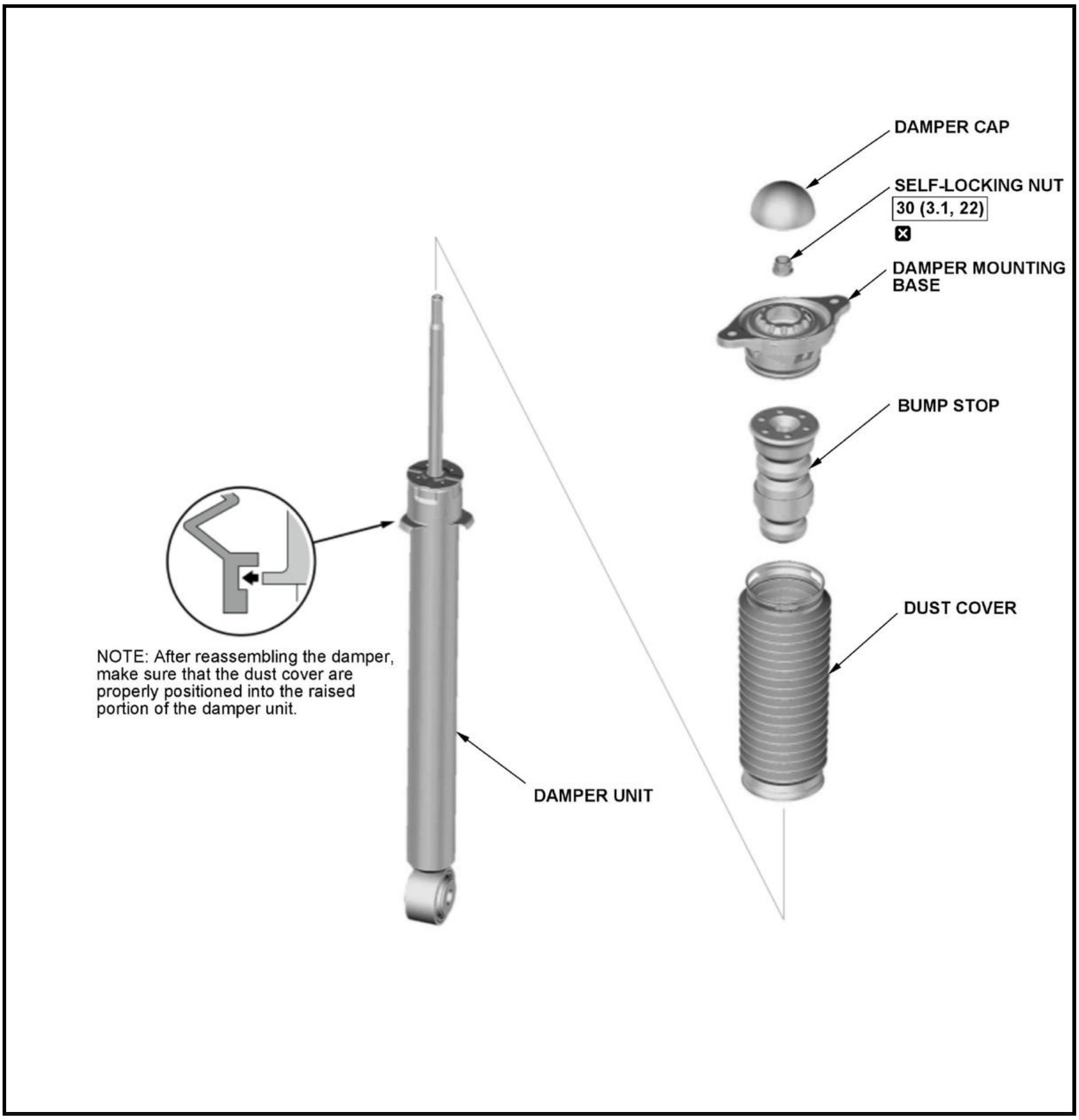
DAMPER CAP
SELF-LOCKING NUT
30 (3.1, 22)
☒
DAMPER MOUNTING BASE
BUMP STOP
DUST COVER
DAMPER UNIT

NOTE: After reassembling the damper, make sure that the dust cover are properly positioned into the raised portion of the damper unit.

Removal and Installation

NOTE:

- **How to read the torque specifications** .
- Refer to the Exploded View as needed during the following procedures.
- Check for deterioration and damage to each part during removal.
- Unless otherwise indicated, illustrations used in the procedure are for AWD model.

1. **Vehicle - Lift**
2. **Rear Wheel - Remove**
3. Damper - Remove

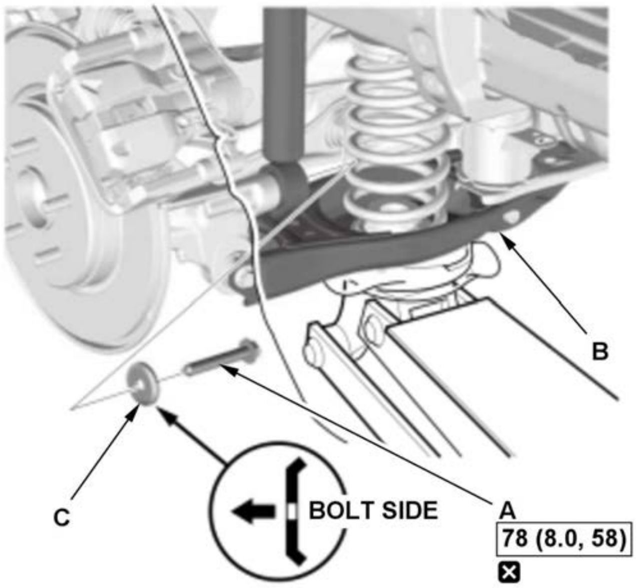

1. Position a floor jack under lower arm B.

2. Raise the floor jack until the suspension begins to compress.

3. Remove the damper lower mounting bolt (A) and the washer (C).

NOTE:

Use a new bolt during reassembly.

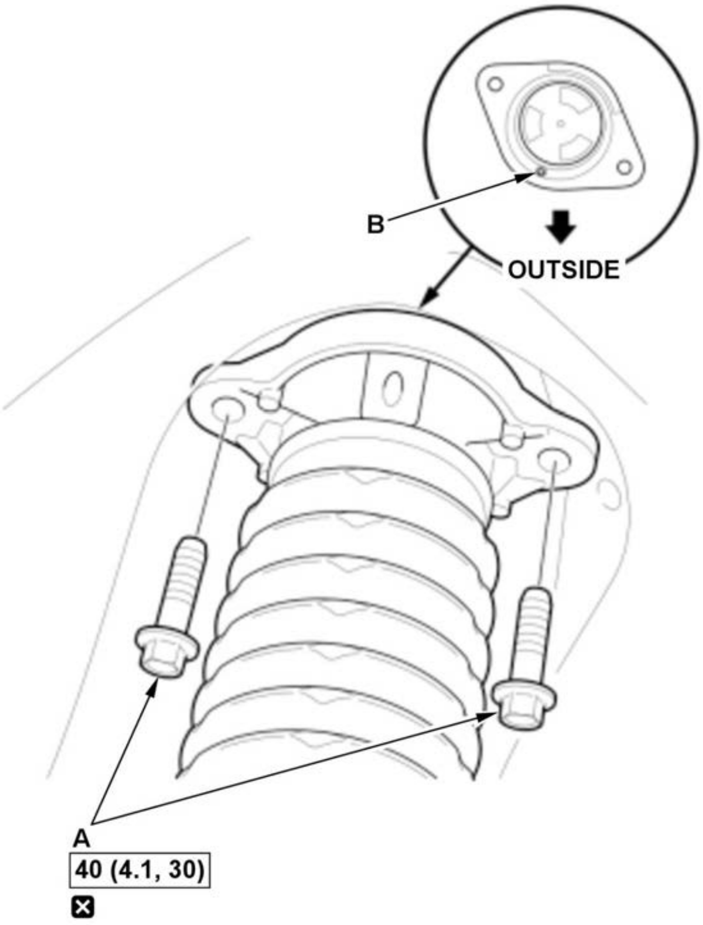

4. Remove the damper upper mounting bolts (A).

NOTE:

- **During installation, install the damper unit in the body with the hole (B) facing outside.**
- **Do not let the damper drop down under its own weight.**
- **Be careful not to damage the body.**
- **Use new flange bolts during reassembly.**

4. All Removed Parts - Install

1. Install all removed parts in the reverse order of removal.

NOTE:

Loosely install the nuts and/or bolts to install the bushings, load the suspension with the vehicle's weight, and then tighten the nuts and/or bolts to the specified torque.

5. Wheel Alignment - Check

Inspection

1. Rear Damper - Inspect

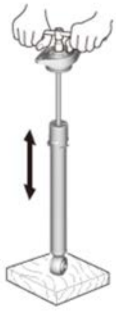	1. Install the damper mounting base and the self-locking nut. 2. Compress the damper assembly by hand, and check for smooth operation through a full stroke, both compression and extension. The damper should extend smoothly and constantly when compression is released. If it does not, the gas is leaking and the damper should be replaced. 3. Check for oil leaks, abnormal noises, and binding during these tests.

REMOVAL AND INSTALLATION

FRONT DAMPER/SPRING REMOVAL AND INSTALLATION

Removal and Installation

NOTE: How to read the torque specifications .

1. Vehicle - Lift
2. Front Wheel - Remove
3. Front Wheel Speed Sensor - Remove

NOTE: **Do not disconnect the wheel speed sensor connector.**

4. Brake Hose Bracket - Remove

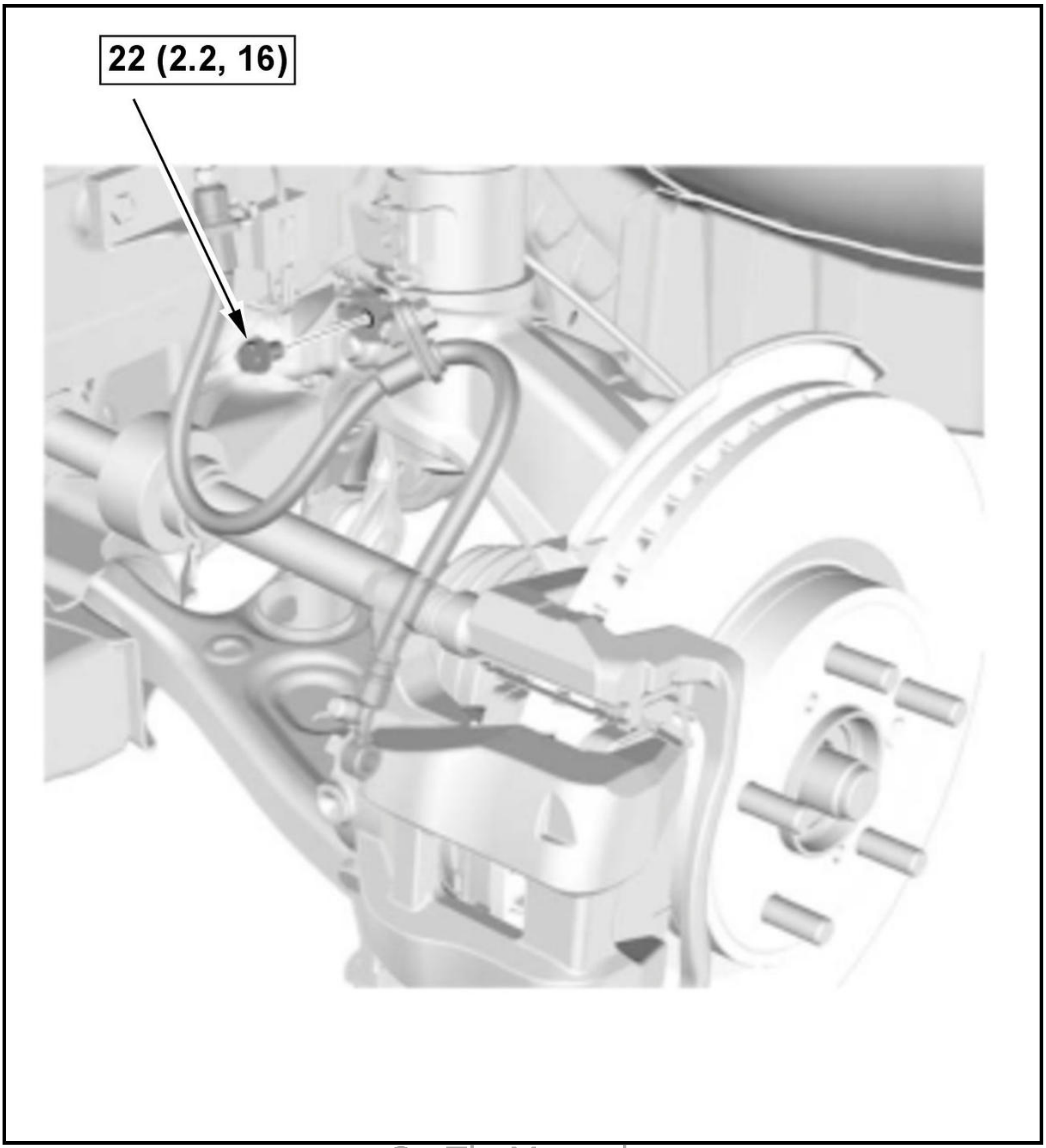

5. Brake Caliper - Remove

1. Remove the caliper assembly without disconnecting the brake hose from the caliper body .

NOTE:

- **To prevent damage to the caliper assembly or brake hose, use a short piece of wire to hang the caliper assembly from the undercarriage.**
- **Do not twist the brake hose excessively.**

6. Stabilizer Link - Disconnect

1. Disconnect both sides of the stabilizer link from the damper.

7. Front Spindle Nut - Remove
8. Tie-Rod End Ball Joint - Disconnect
9. Lower Arm Ball Joint - Disconnect

1. Disconnect the lower arm ball joint from the lower arm.

10. Knuckle/Hub Assembly - Remove

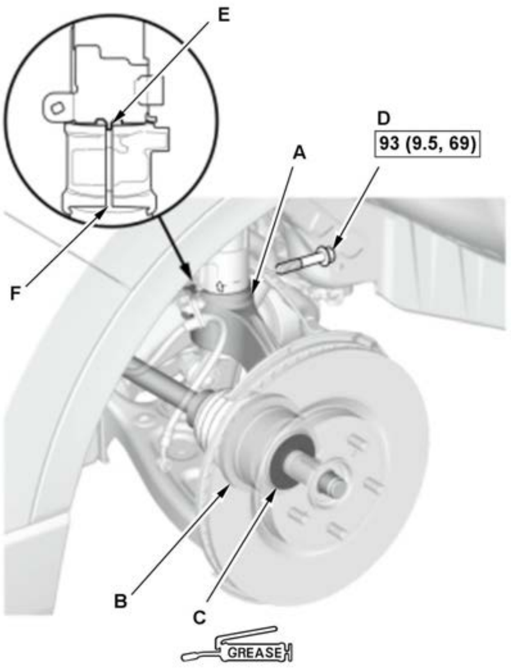

1. Pull the knuckle (A) outward, and separate the outboard joint (B) from the front hub using a soft face hammer outward.

NOTE:

- **Do not pull the driveshaft end outward. The inner driveshaft inboard joint may come apart.**
- **During installation, apply specified grease to**

	the contact area (C) of the outboard joint and the front wheel bearing . 2. Remove the damper pinch bolt (D). 3. Move the knuckle downward, and remove the knuckle from the damper. **NOTE:** **During installation, install the aligning tab (E) on the damper unit into the slot (F) of the knuckle.**

11. Damper/Spring - Remove

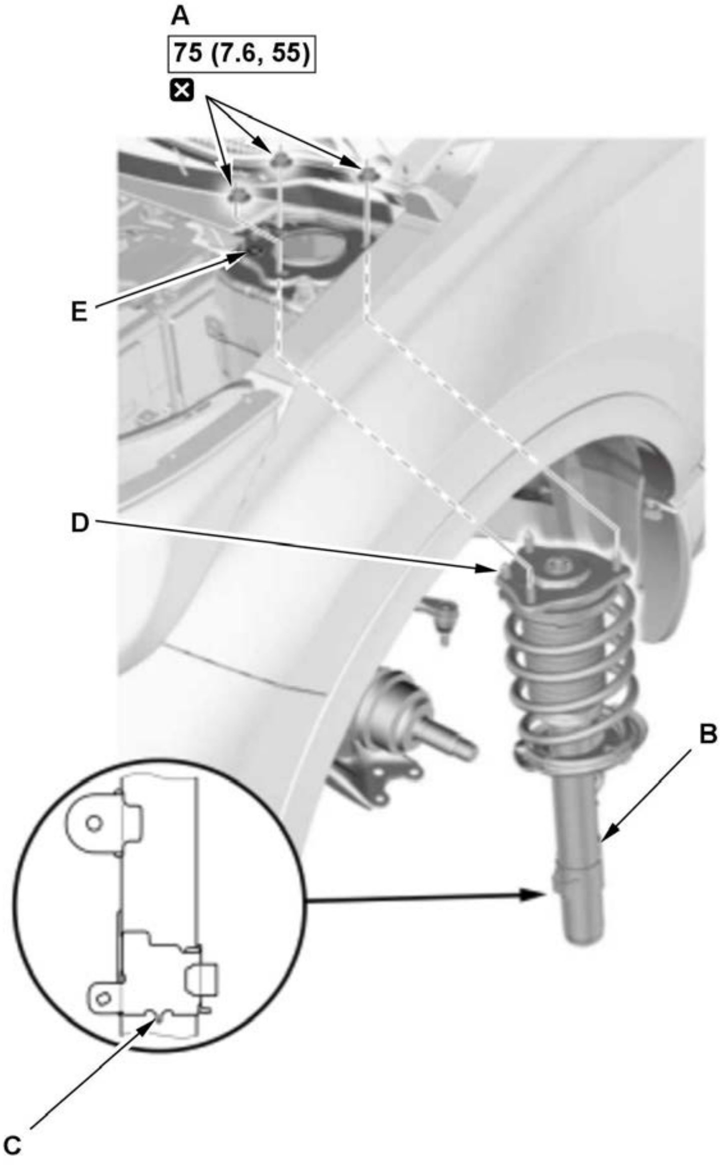

1. Remove the flange nuts (A).

NOTE:

- **Do not let the damper/spring drop down under its own weight.**
- **Use new flange nuts during reassembly.**

2. Remove the damper/spring (B).

NOTE:

- **Be careful not to damage the body.**
- **During installation, install the damper/spring in the body with the aligning tab (C) facing inside.**
- **During installation, if the guide pin (D) is equipped, align the guide pin with the body hole (E).**

12. All Removed Parts - Install

1. Install all removed parts in the reverse order of removal.

13. Wheel Alignment - Check

FRONT LOWER ARM BALL JOINT REMOVAL AND INSTALLATION

Special Tools Required

Image	Description/Tool Number
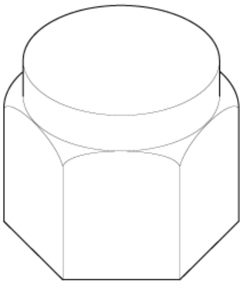	Ball Joint Thread Protector, 14 mm 07AAE-SJAA100
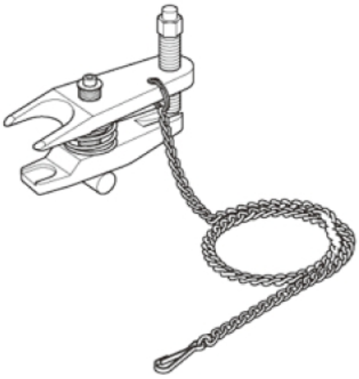	Ball Joint Remover, 32 mm 07MAC-SL00102

Removal and Installation

NOTE: How to read the torque specifications .

1. Vehicle - Lift
2. Front Wheel - Remove
3. Lower Arm Ball Joint - Disconnect

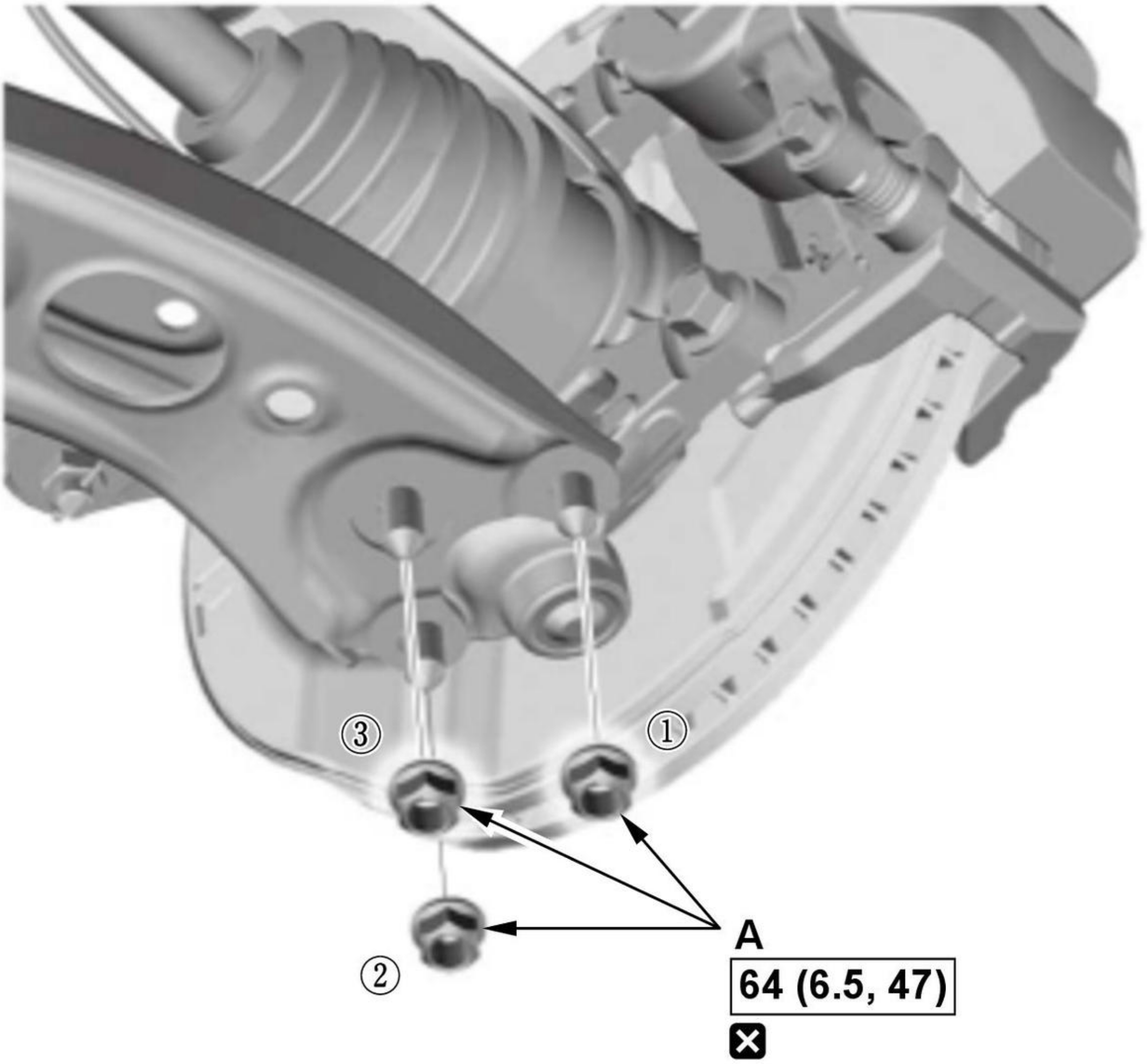

Fig. 1: Tightening Lower Arm Ball Joint Nuts With Torque Specifications
Courtesy of HONDA, U.S.A., INC.

NOTE: During reassembly, loosely install new flange nuts (A), then tighten them to the specified torque in the numbered sequence shown in illustration.

4. **Front Spindle Nut - Remove**
5. Driveshaft - Disconnect

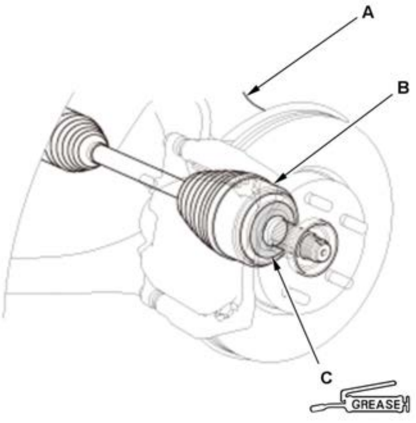	1. Pull the knuckle (A) outward, and separate the outboard joint (B) from the front hub using a soft face hammer outward, then move aside the knuckle/hub. **NOTE:** - **Do not pull the driveshaft end outward. The inner driveshaft inboard joint may**

	come apart. - During installation, apply specified grease to the contact area (C) of the outboard joint and the front wheel bearing .

6. Lower Arm Ball Joint - Remove

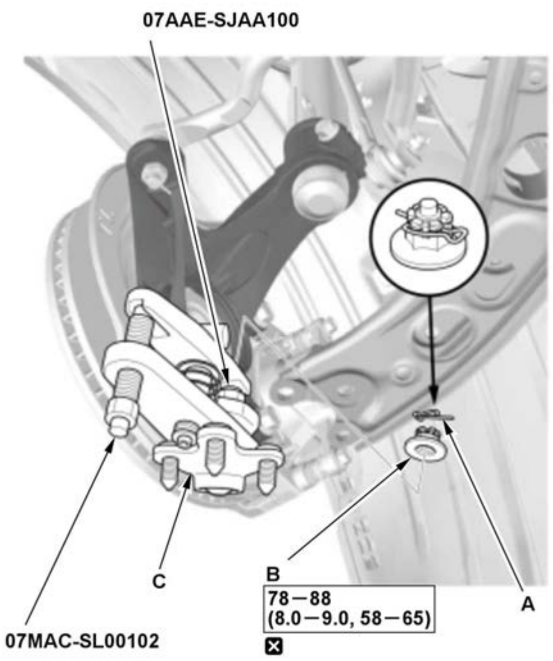 07AAE-SJAA100 B 78−88 (8.0−9.0, 58−65) ☒ C A 07MAC-SL00102	1. Remove the lock pin (A). **NOTE:** **During installation, install the lock pin as shown after tightening the new castle nut.** 2. Remove the castle nut (B). **NOTE:** **Use a new castle nut during reassembly.** 3. Disconnect the lower ball joint (C) from the knuckle using the ball joint thread protector and the ball joint remover .**NOTE:** Be careful not to damage the ball joint boot when installing the ball joint remover.

7. All Removed Parts - Install

1. Install all removed parts in the reverse order of removal. **NOTE:** - **Be careful not to damage the ball joint boot when**

connecting the knuckle.

- **Before connecting the ball joint, degrease the threaded section and the tapered portion of the ball joint pin, the ball joint connecting hole, the threaded section, and the mating surfaces of the castle nut.**
- **Torque the castle nut to the lower torque specification, then tighten it only far enough to align the slot with the ball joint pin hole. Do not align the castle nut by loosening it.**

8. Wheel Alignment - Check

FRONT LOWER ARM COMPLIANCE BUSH REMOVAL AND INSTALLATION

Removal

1. Vehicle - Lift
2. Front Wheel - Remove
3. Lower Arm - Remove
4. Lower Arm Compliance Bushing - Remove

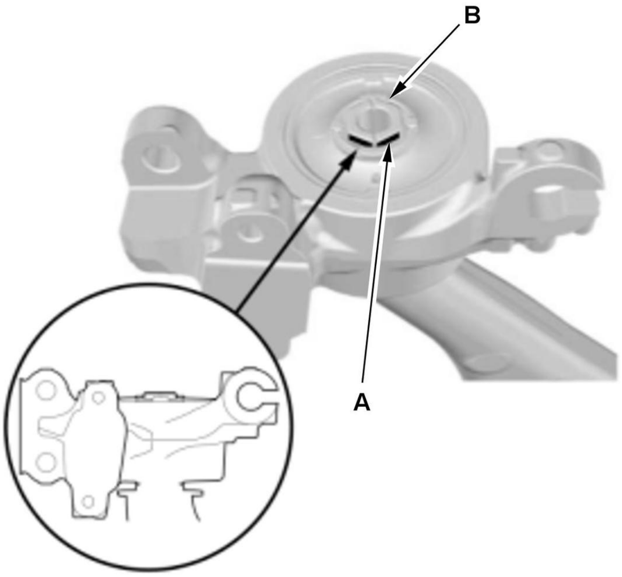	1. Make a mark (A) on the lower arm (B) right above the bushing opening. **NOTE:** **This mark will aid you during the bushing installation process.**

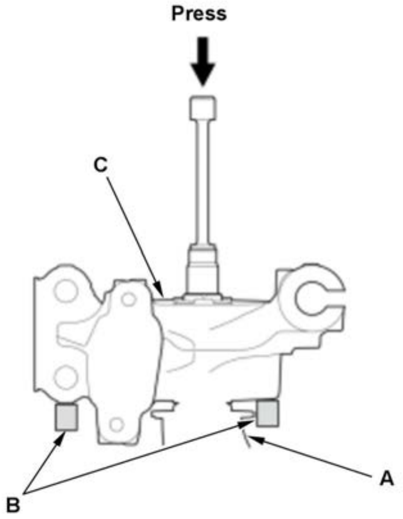	2. Support the lower arm (A) on suitable bar (B) as shown in illustration. 3. Press out the lower arm with a suitable socket and a hydraulic press, and remove the lower arm from the bushing (C). **NOTE:** **Be careful not to damage the inside of the bushing hole when pressing on the bushing.**

Installation

1. Lower Arm Compliance Bushing - Install

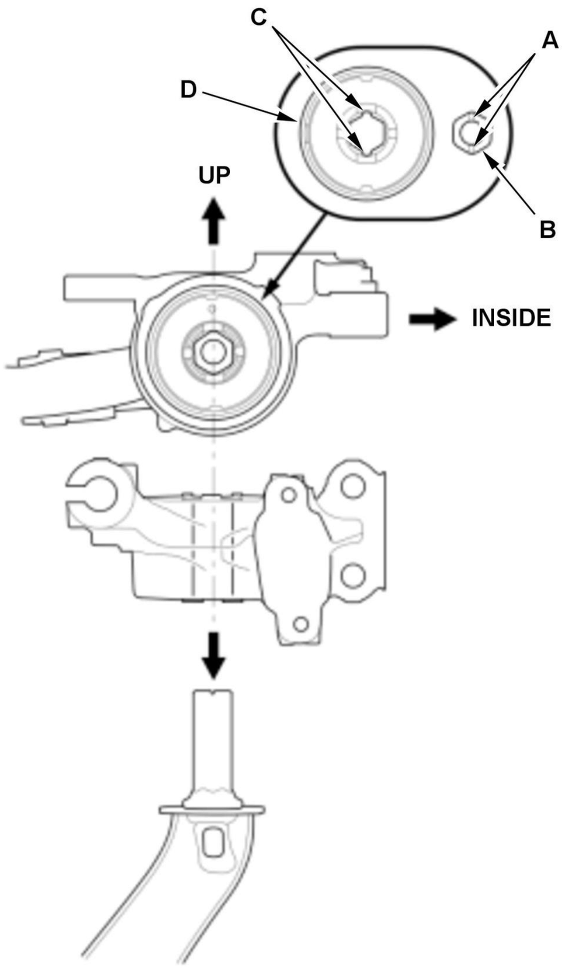

1. Clean the mating surfaces of the new bushing and the lower arm.

2. Apply a mild soap and water solution to the bushing surface.

3. Align the grooves (A) of the lower arm (B) and the groove (C) of the bushing (D).

4. Press in the bushing by hand first.

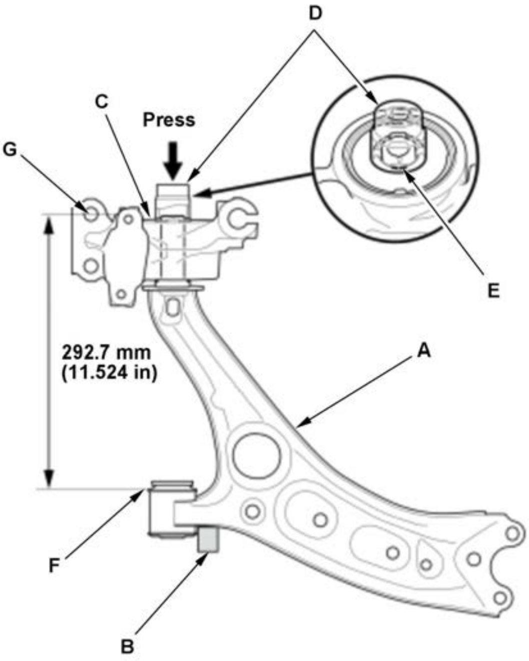

5. Support the lower arm (A) on suitable square lumber (B) as shown.

6. Press in the bushing (C) with a suitable socket (D) and a hydraulic press.

NOTE:

Press the bushing into the lower arm until the mark (E) meets the edge of the bushing opening.

7. Make sure the distance between the lower arm mounting surface (F) and the center of the bolt hole (G) is within the dimension shown.

2. Lower Arm - Install
3. Front Wheel - Install
4. Wheel Alignment - Check

Removal and Installation

NOTE: **How to read the torque specifications** .

1. **Vehicle - Lift**
2. **Front Wheel - Remove**
3. **Engine Undercover - Remove**
4. Stabilizer Link - Disconnect

    1. **Disconnect both sides of the stabilizer link from the stabilizer bar**.

5. Stabilizer Bushing Holder - Remove

    1. **Remove both sides of the stabilizer bushing holder from the stabilizer bar**.

6. Lower Arm - Remove

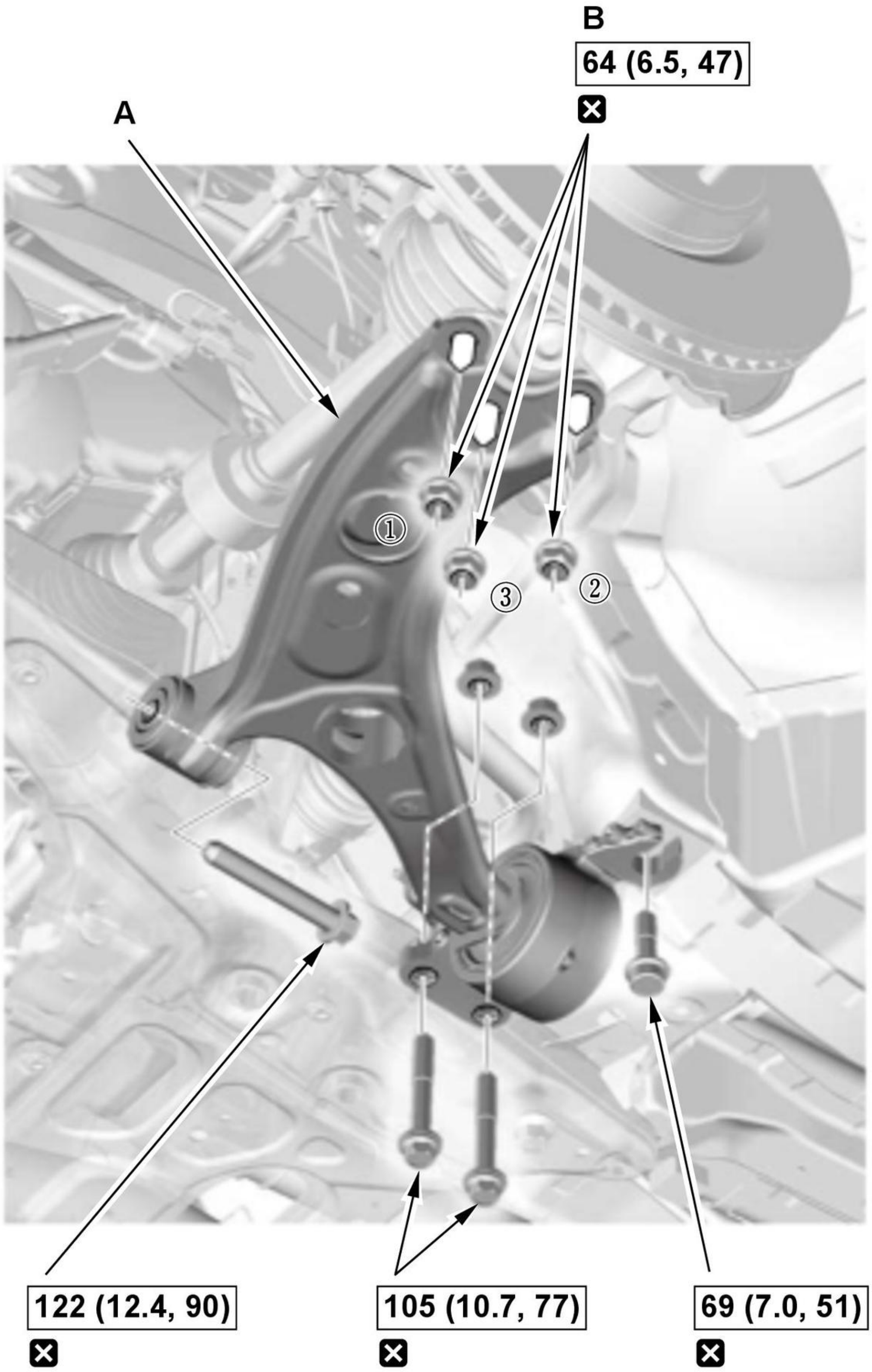
B
64 (6.5, 47)
A
①
③
②
122 (12.4, 90)
105 (10.7, 77)
69 (7.0, 51)

Fig. 2: Tightening Lower Arm Nuts With Torque Specifications
Courtesy of HONDA, U.S.A., INC.

1. Remove the lower arm (A).

NOTE:

- **Use new lower arm mounting bolts during reassembly.**

- **During reassembly, loosely install new flange nuts (B), then tighten them to the specified torque in the numbered sequence shown in illustration.**
- **Loosely install the nuts and/or bolts to install the bushings, load the suspension with the vehicle's weight, and then tighten the nuts and/or bolts to the specified torque.**

7. All Removed Parts - Install

    1. Install all removed parts in the reverse order of removal.

8. Wheel Alignment - Check

FRONT STABILIZER BAR REMOVAL AND INSTALLATION

Removal and Installation

NOTE: How to read the torque specifications .

1. Vehicle - Lift
2. Front Wheels - Remove
3. Steering Gearbox - Remove
4. Stabilizer Bar - Remove

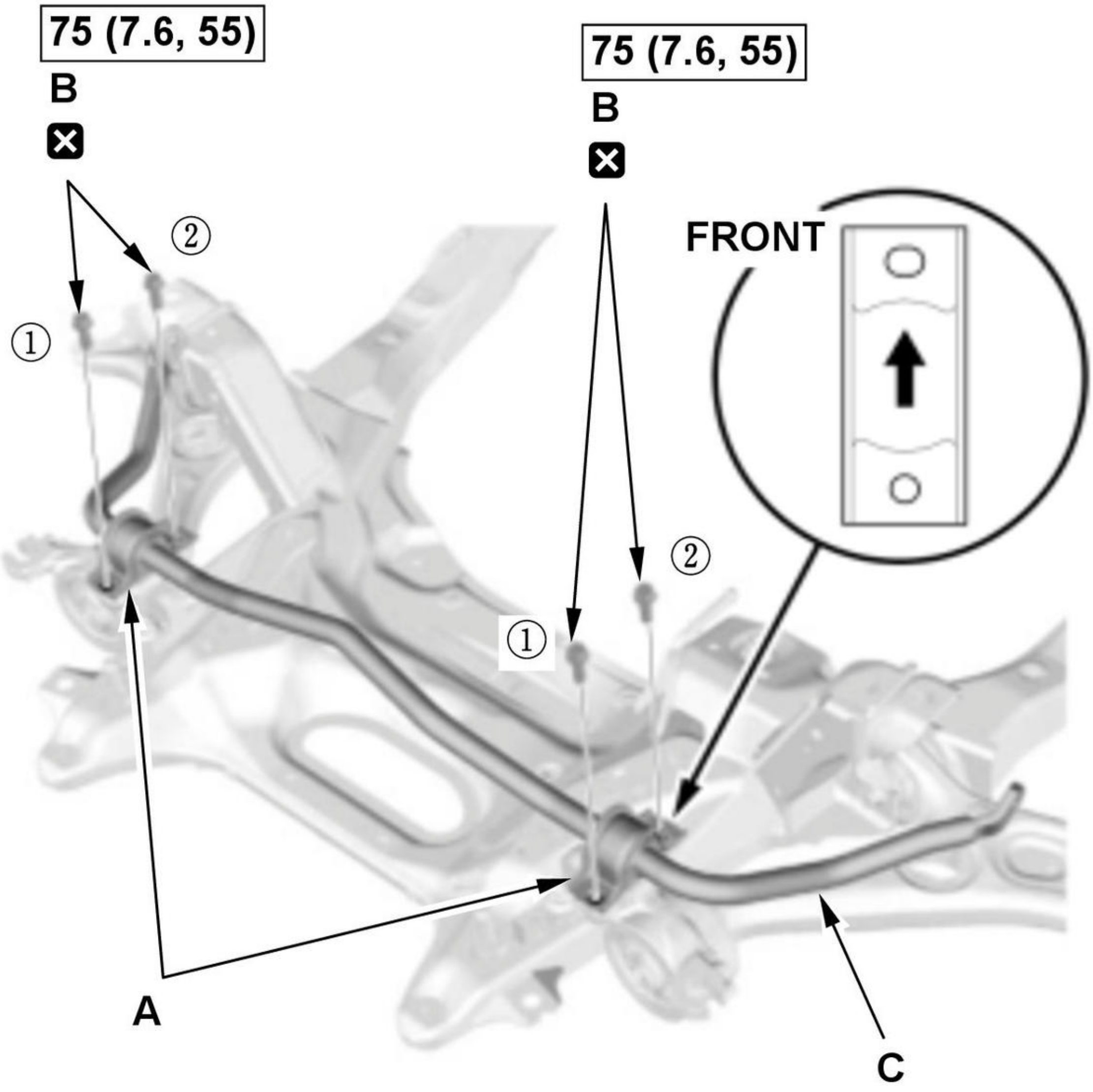

[Fig. 3: Tightening Stabilizer Bar Mounting Bolts In Sequence](#)
Courtesy of HONDA, U.S.A., INC.

1. Remove the bushing holders (A).

NOTE:

During installation, note these items.

- Note the direction of installation for the holders.
- Use new bolts during reassembly.
- Install the bushing holder mounting bolts as follows.
-
    - Loosely install the mounting bolts (B).
    - Tighten the mounting bolts to the specified torque in the sequence shown in illustration.

2. Remove the stabilizer bar (C).

NOTE:

Do not try to remove the stabilizer bushings. Replace the stabilizer bar if the bushings need replacement.

5. All Removed Parts - Install

1. Install all removed parts in the reverse order of removal.

6. Wheel Alignment - Check

FRONT STABILIZER LINK REMOVAL AND INSTALLATION

Removal and Installation

NOTE: How to read the torque specifications .

1. Vehicle - Lift
2. Front Wheel - Remove
3. Stabilizer Link - Remove

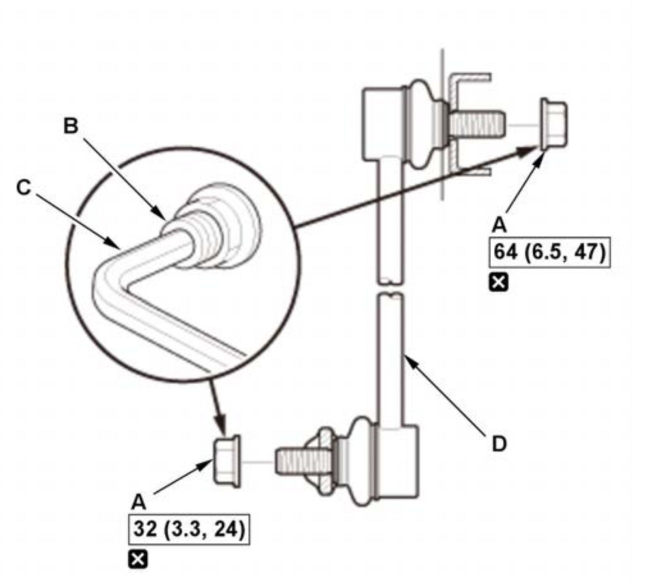

1. Remove the flange nuts (A) while holding the respective joint pin (B) with a hex wrench (C).

NOTE:

Use new flange nuts during reassembly.

2. Remove the stabilizer link (D).

4. All Removed Parts - Install

1. Install all removed parts in the reverse order of removal.

REAR KNUCKLE/HUB BEARING UNIT REMOVAL AND INSTALLATION

Exploded View

NOTE: How to read the torque specifications .

1. Knuckle/Hub Bearing Unit

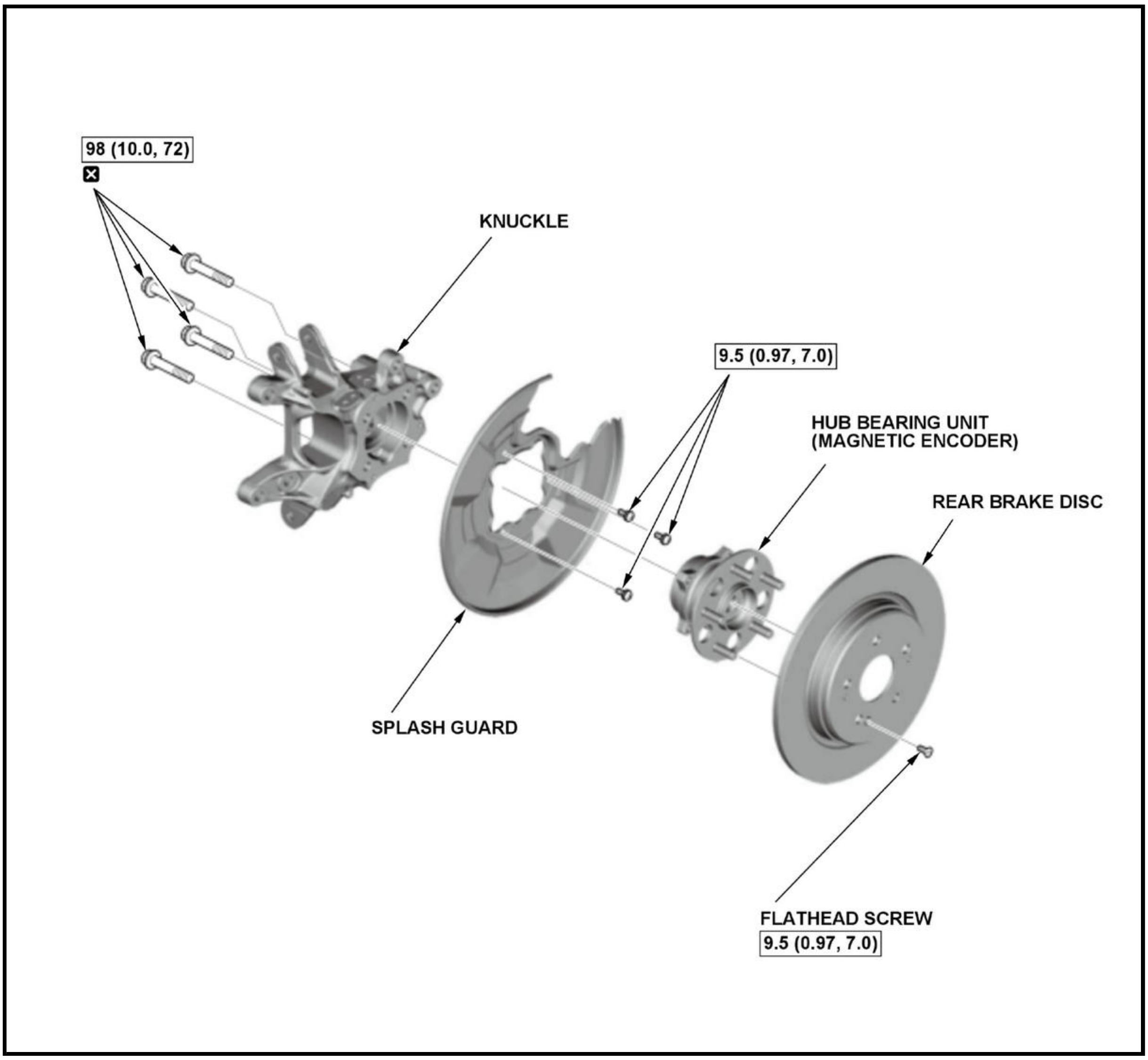
98 (10.0, 72)
☒
KNUCKLE
9.5 (0.97, 7.0)
HUB BEARING UNIT (MAGNETIC ENCODER)
REAR BRAKE DISC
SPLASH GUARD
FLATHEAD SCREW
9.5 (0.97, 7.0)

Removal and Installation

NOTE:

- How to read the torque specifications .
- Refer to the Exploded View as needed during the following procedures.
- Check for deterioration and damage to each part during removal.
- Unless otherwise indicated, illustrations used in the procedure are for AWD model.

Hub Bearing Unit

1. Vehicle - Lift
2. Rear Wheel - Remove
3. Parking Brake - Release

   NOTE: Only necessary if the automatic parking brake function is turned on.

4. Brake Hose Bracket Mounting Bolt - Remove

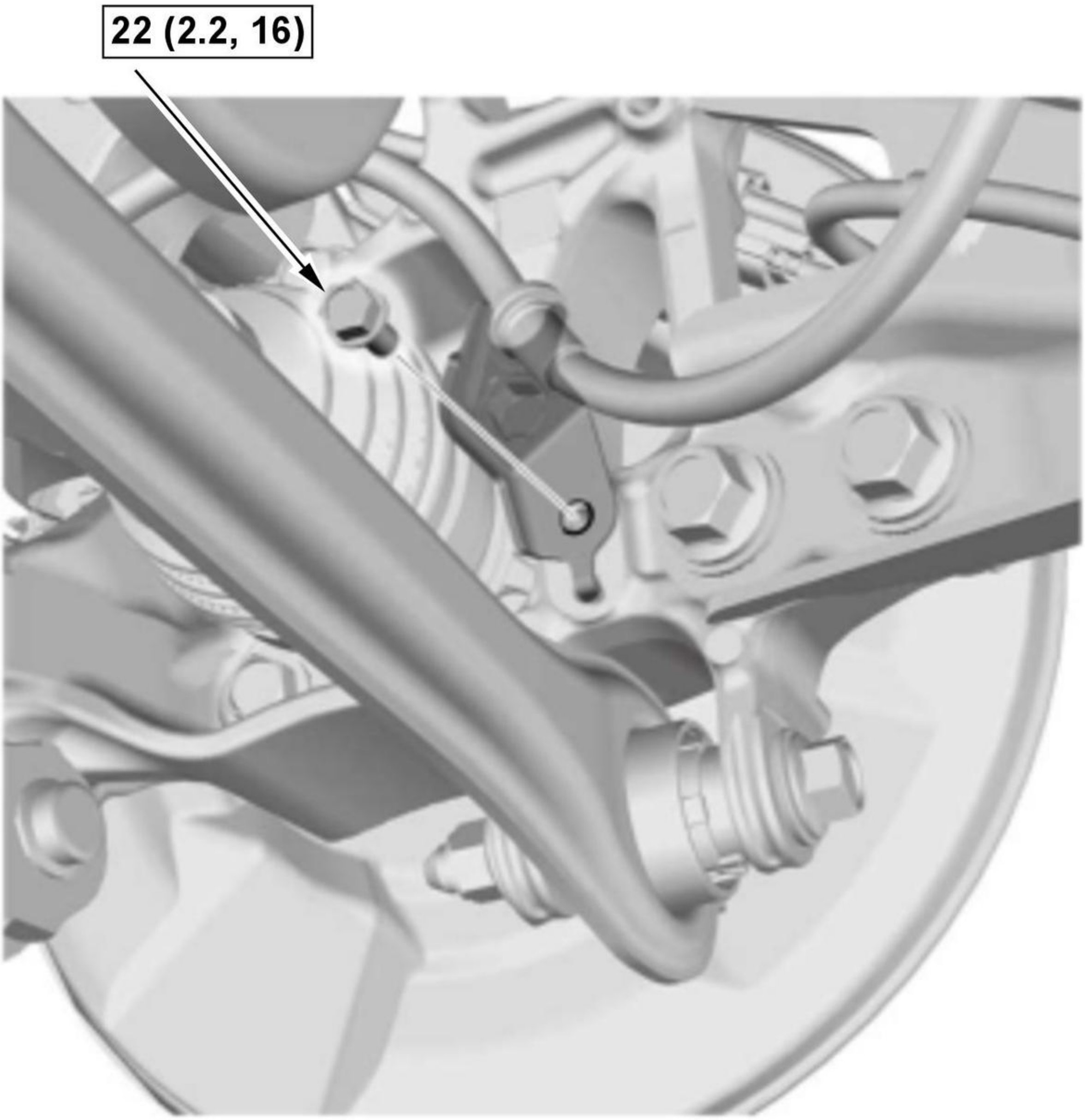

5. Brake Caliper - Remove

1. **Remove the caliper assembly without disconnecting the brake hose from the caliper body** .

NOTE:

- **To prevent damage to the caliper assembly or brake hose, use a short piece of wire to hang the caliper assembly**

from the undercarriage.

- **Do not twist the brake hose excessively.**

6. Rear Spindle Nut - Remove (AWD)
7. Rear Brake Disc - Remove
8. Hub Bearing Unit - Remove

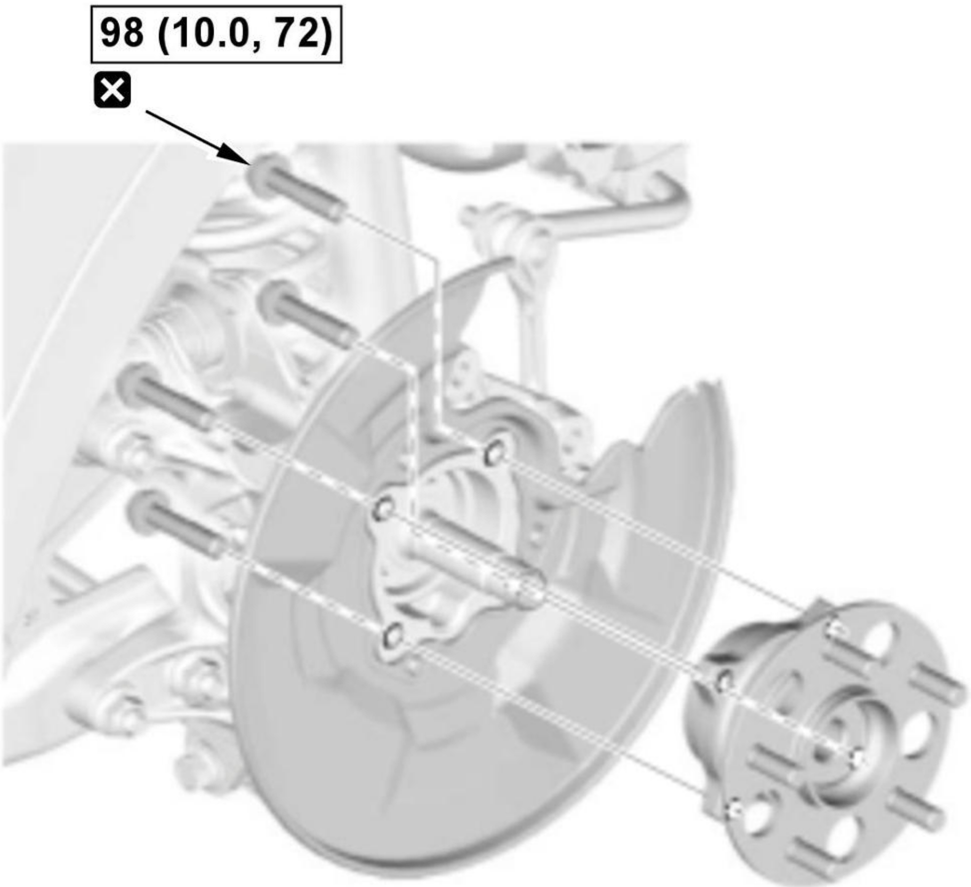

NOTE:

- Use new bolts during reassembly.
- Keep the wheel bearing/encoder away from any magnetic field. The encoder can be damaged or erased.

9. Hub Bearing Unit for Damage and Cracks - Check
10. All Removed Parts - Install

1. Install all removed parts in the reverse order of removal.

11. Wheel Alignment - Check

Knuckle

12. Hub Bearing Unit - Remove
13. Splash Guard - Remove

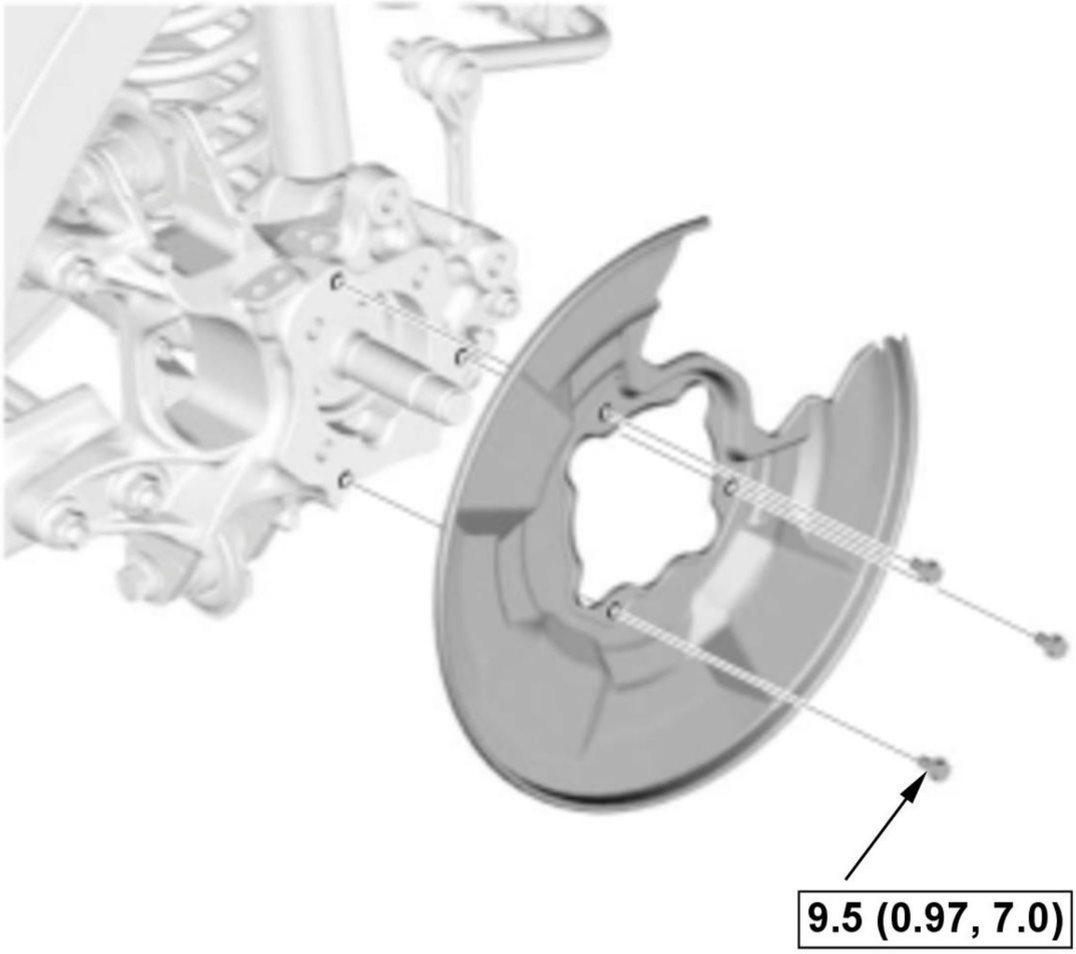

14. Rear Wheel Speed Sensor - Remove

    NOTE: Do not disconnect the wheel speed sensor connector.

15. Rear Damper - Disconnect

    1. Disconnect the rear damper from the knuckle .

16. Knuckle - Remove

    2WD

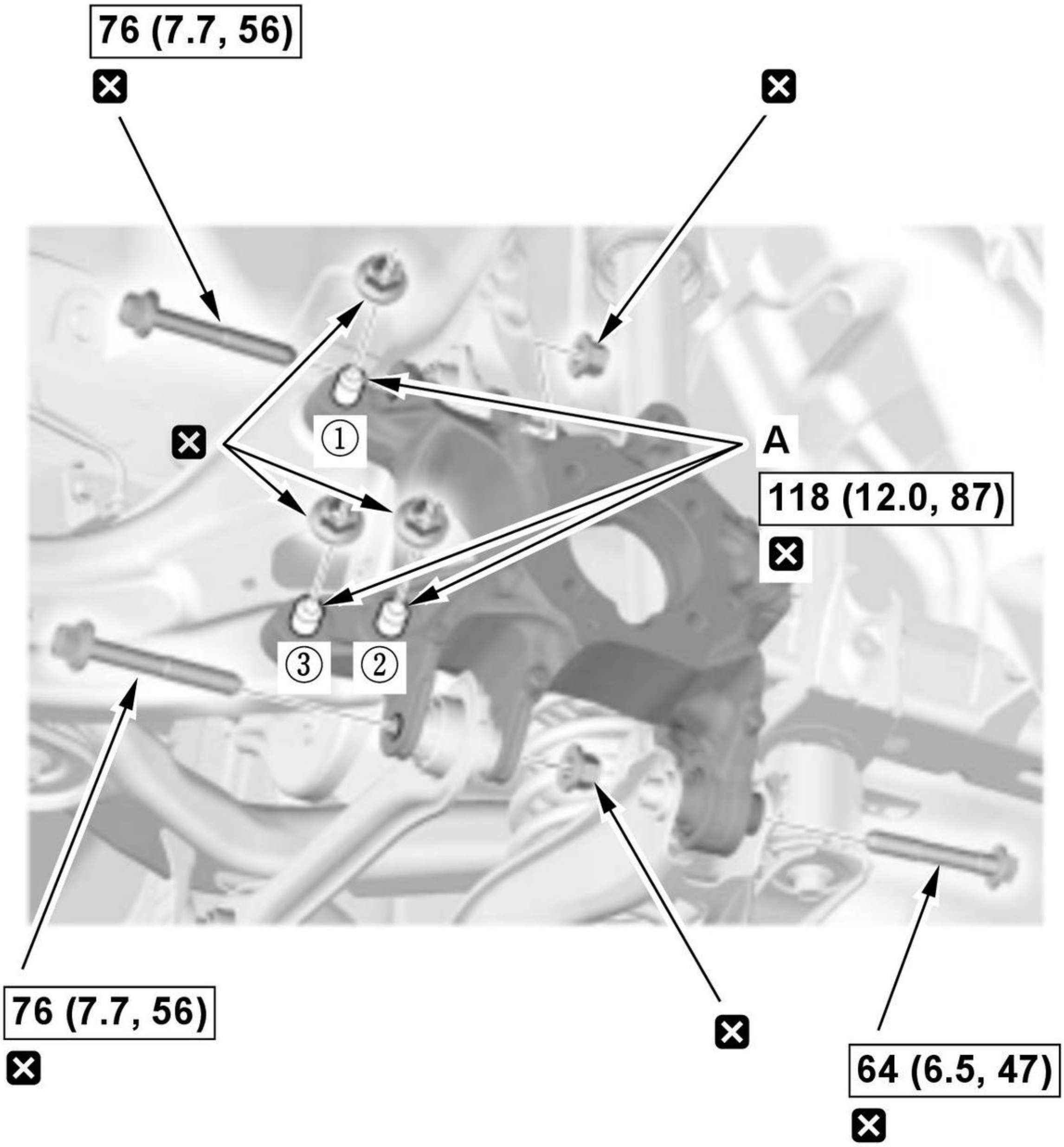
76 (7.7, 56)
☒
☒
☒
A
118 (12.0, 87)
☒
①
③
②
76 (7.7, 56)
☒
☒
64 (6.5, 47)
☒

Fig. 4: Tightening Trailing Arm Mounting Bolts In Sequence With Torque Specifications
Courtesy of HONDA, U.S.A., INC.

AWD

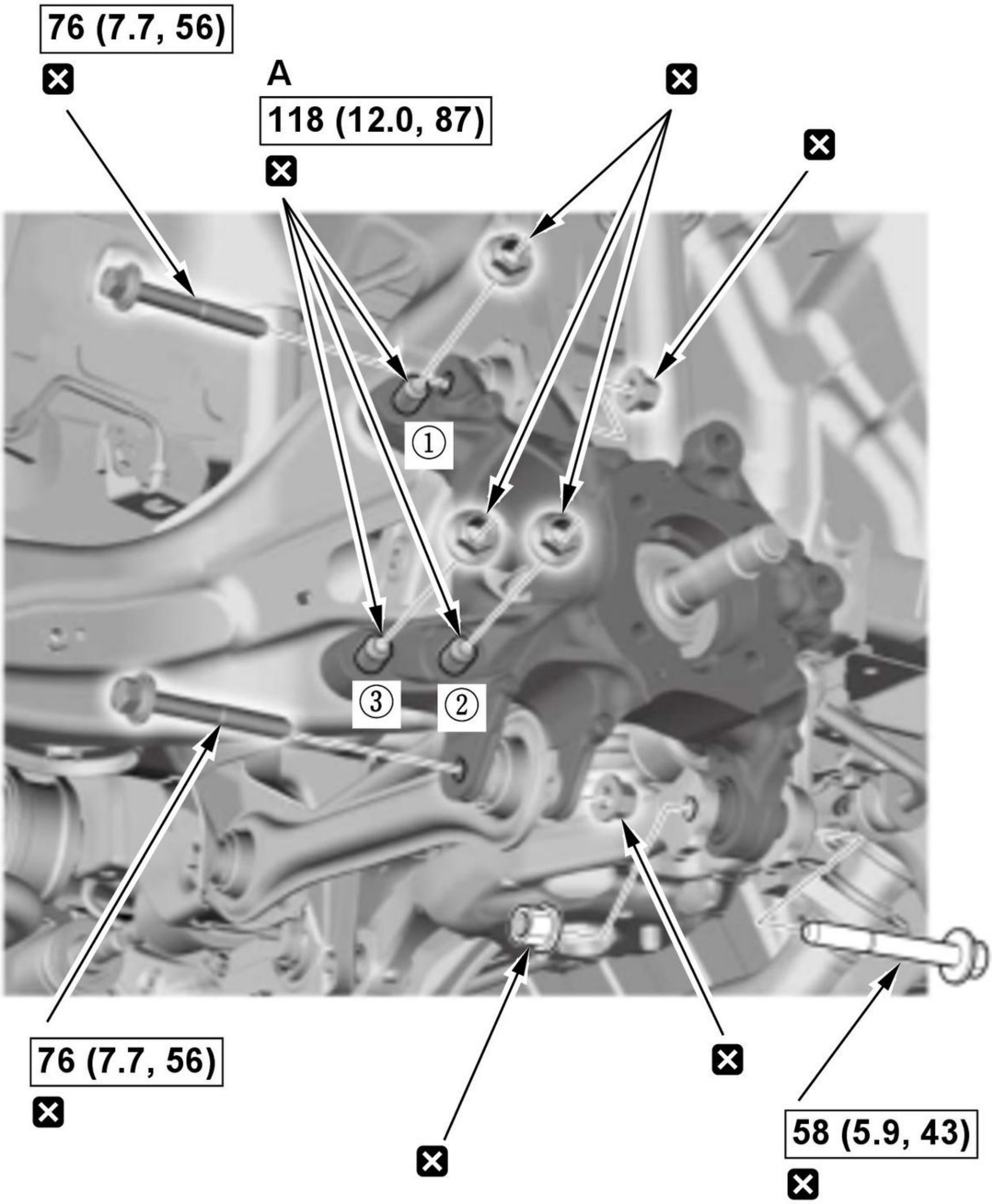

Fig. 5: Tightening Trailing Arm Mounting Bolts In Sequence With Torque Specifications
Courtesy of HONDA, U.S.A., INC.

NOTE:

- Use new bolts and nuts during reassembly.
- During installation, tighten the trailing arm mounting bolts (A) in the numbered sequence shown in illustration.

17. All Removed Parts - Install

1. Install all removed parts in the reverse order of removal.

NOTE:

Loosely install nuts and/or bolts

to install the bushings, load the suspension with the vehicle's weight, and then tighten the nuts and/or bolts to the specified torque.

18. Wheel Alignment - Check

REAR LOWER ARM A REMOVAL AND INSTALLATION

Removal and Installation

NOTE:

- How to read the torque specifications .
- Unless otherwise indicated, illustrations used in the procedure are for AWD model.

1. Vehicle - Lift
2. Rear Wheel - Remove
3. Lower Arm A - Remove

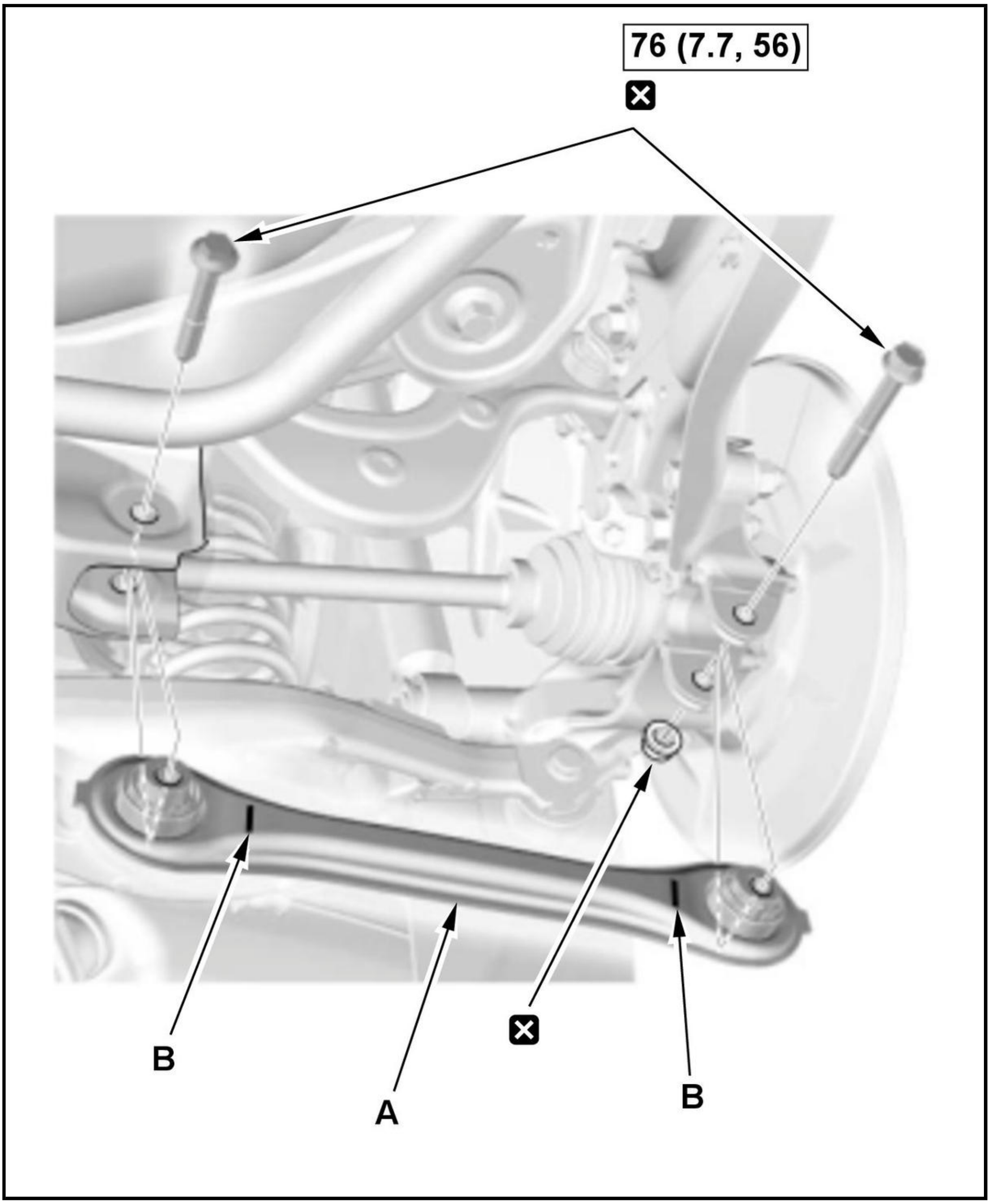

NOTE:

- Use new mounting bolts and nut during reassembly.
- Rear lower arm A must be installed in the specified direction. An instruction is given in the area (B) shown in the figure. Follow the instruction to install rear lower arm A.

4. All Removed Parts - Install

1. Install all removed parts in the reverse order of removal.

NOTE:

Loosely install nuts and/or bolts to install the bushings,

load the suspension with the vehicle's weight, and then tighten the nuts and/or bolts to the specified torque.

5. Wheel Alignment - Check

REAR LOWER ARM B REMOVAL AND INSTALLATION

Removal

NOTE: Unless otherwise indicated, illustrations used in the procedure are for AWD model.

1. Vehicle - Lift
2. Rear Wheel - Remove
3. Rear Spring - Remove
4. Lower Arm B - Remove

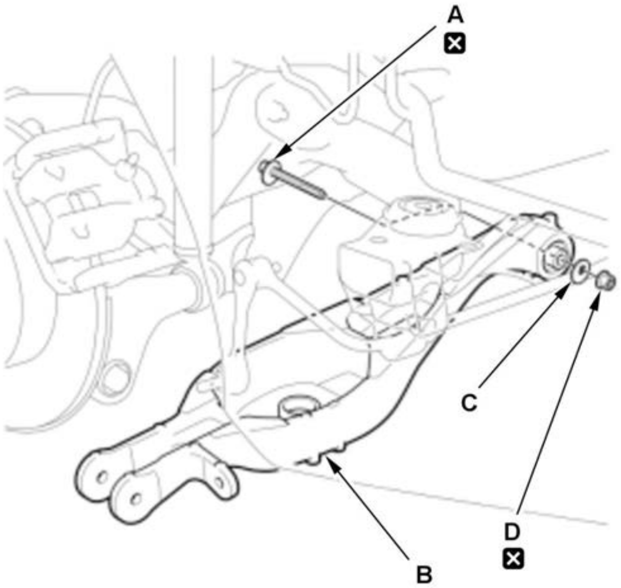	1. Mark the cam positions of the adjusting bolt (A) and the adjusting cam plate (C). 2. Remove the self-locking nut (D), the adjusting cam plate, and the adjusting bolt. 3. Remove the lower arm B.

Installation

NOTE:

- How to read the torque specifications .
- Unless otherwise indicated, illustrations used in the procedure are for AWD model.

1. Lower Arm B - Install

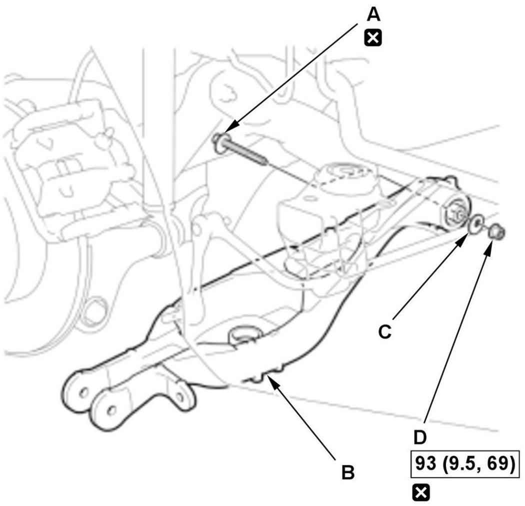

1. Position lower arm B.

2. Install a new adjusting bolt (A), the adjusting cam plate (C), and a new self-locking nut (D) but do not tighten it.

NOTE:

- **Align the cam positions of the adjusting bolt and the adjusting cam plate with the marked positions on the frame when tightening the self-locking nut.**
- **Tighten the self-locking nut during the rear spring installation procedure.**

2. Rear Spring - Install
3. Rear Wheel - Install
4. Wheel Alignment - Check

REAR SPRING REMOVAL AND INSTALLATION

Removal

1. Vehicle - Lift
2. Rear Wheel - Remove
3. Stabilizer Link - Disconnect

1. Disconnect both sides of the stabilizer link from lower arm B.

4. Rear Spring - Remove

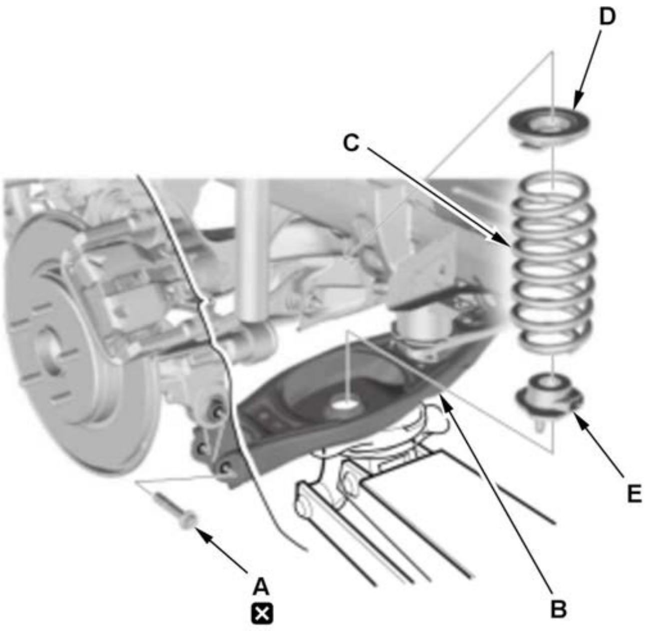

2WD

AWD

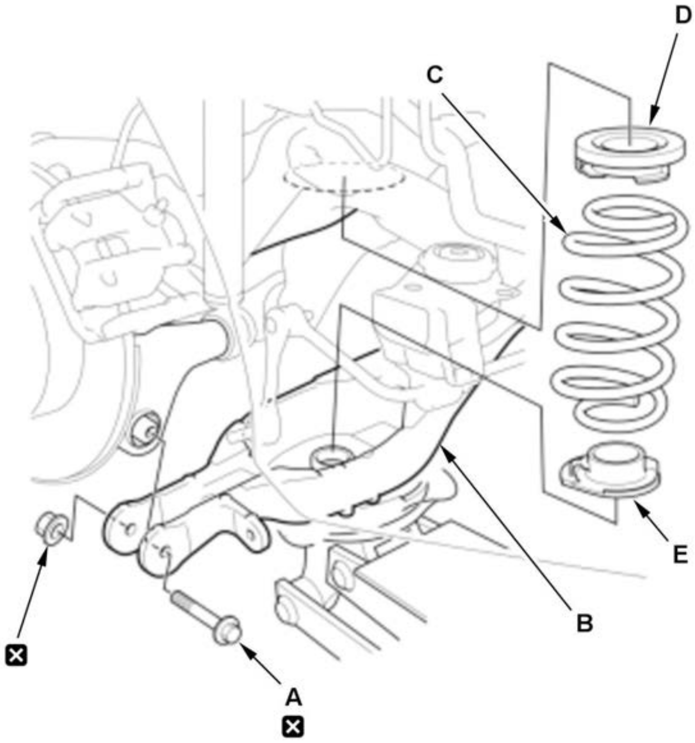

1. Position a floor jack under lower arm B.

2. Raise the floor jack until the suspension begins to compress.

3. Remove lower arm B mounting bolt (A).

4. Lower the floor jack gradually.

5. Remove the spring (C), upper rubber mount (D), and lower rubber mount (E).

Installation

NOTE:

- How to read the torque specifications .
- Unless otherwise indicated, illustrations used in the procedure are for AWD model.

1. Spring - Install

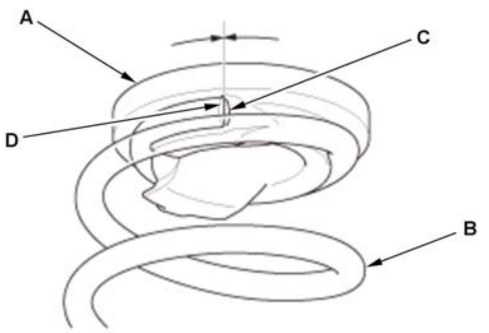	1. Install the upper rubber mount (A) on the spring (B) by aligning the upper end (C) of the spring with the ledge portion (D) of the upper rubber mount.
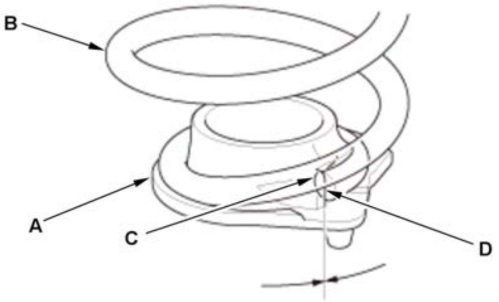	2. Install the lower rubber mount (A) on the spring (B) by aligning the lower end (C) of the spring with the ledge portion (D) of the lower rubber mount.
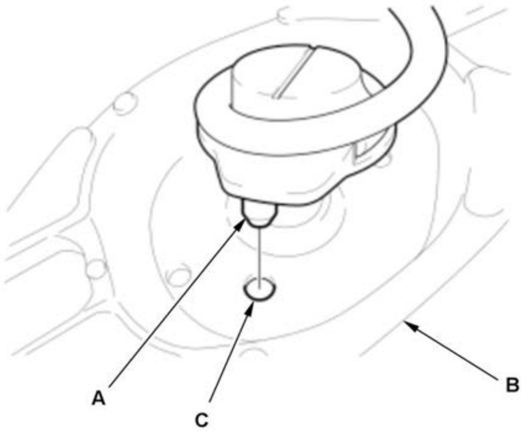	3. Install the tab (A) of the lower rubber mount into the groove (C) of the lower arm B and install the spring assembly. **NOTE:** - **Make sure that the tab of the lower rubber mount is properly installed into lower arm B.** - **Make sure that the spring was installed correctly.**

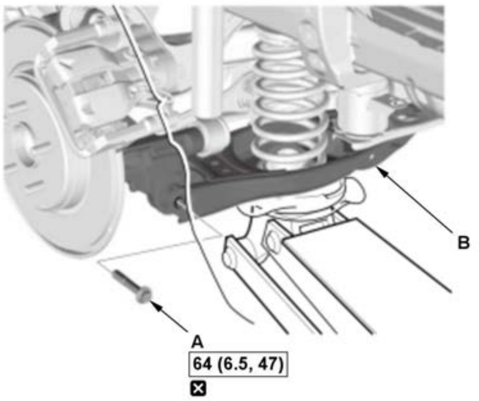 **2WD** **AWD** 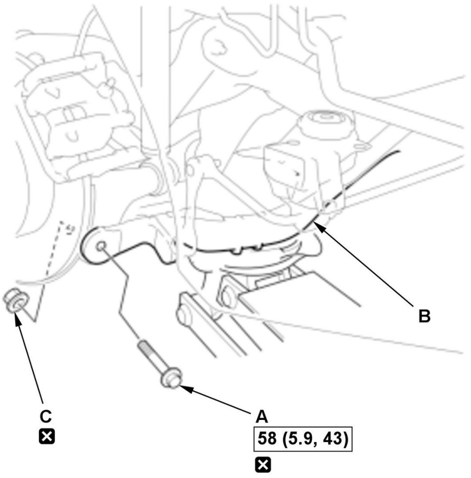	4. Slowly raise the floor jack until you align the bolt hole with the holes in lower arm B and the knuckle. 5. 2WD: Loosely install new lower arm B mounting bolt (A), but do not tighten it.AWD: Loosely install new lower arm B mounting bolt (A) and a new nut (C), but do not tighten it. 6. Load the suspension with the vehicle's weight, and tighten the bolt to the specified torque. **NOTE:** **If the rear lower arm B was removed or replaced from another procedure, tighten the adjusting bolt at the same time.**

2. Stabilizer Link - Connect

1. Connect both sides of the stabilizer link to lower arm B.

3. Rear Wheel - Install
4. Wheel Alignment - Check

REAR STABILIZER BAR REMOVAL AND INSTALLATION

Removal and Installation

NOTE: How to read the torque specifications .

1. Vehicle - Lift
2. Rear Wheels - Remove
3. Stabilizer Link - Disconnect

1. Disconnect both sides of the stabilizer link from the stabilizer bar.

4. Stabilizer Bar - Remove

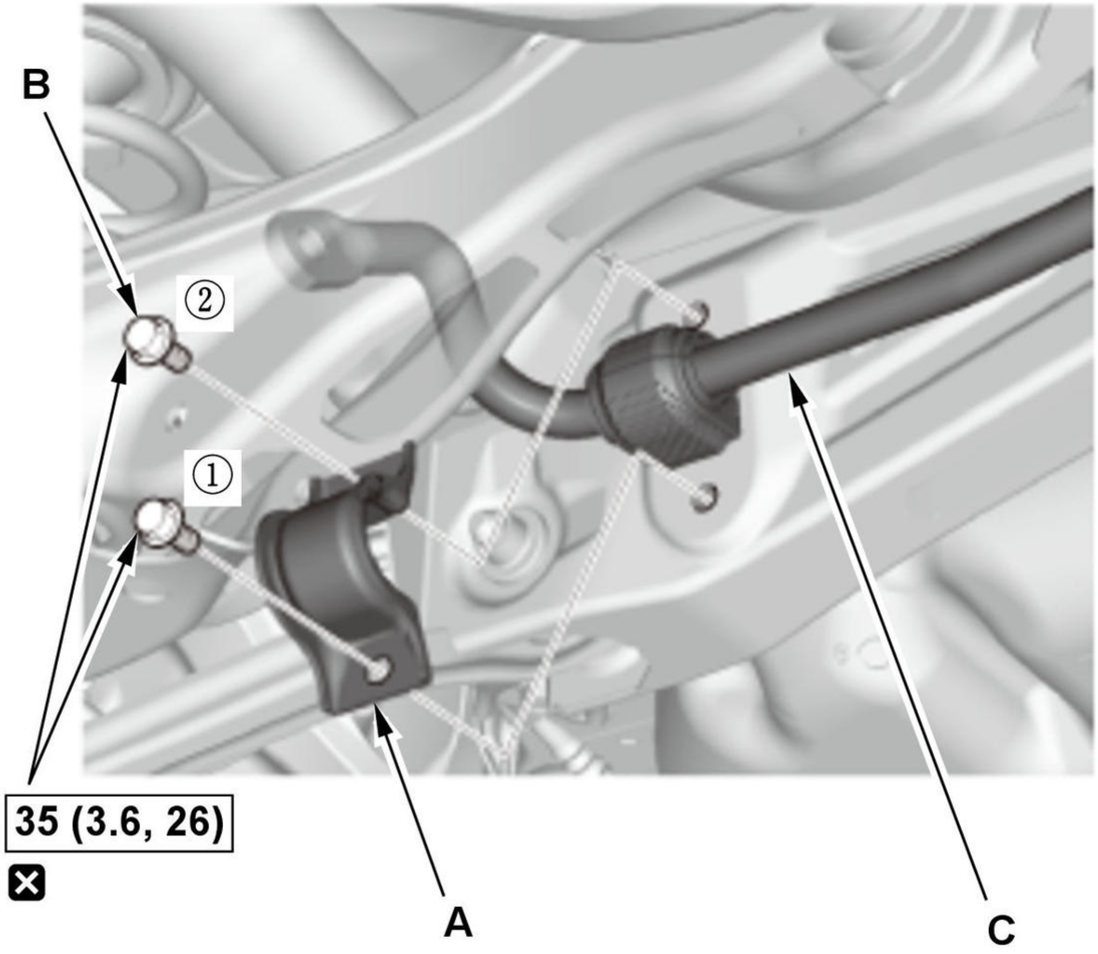

Fig. 6: Tightening Stabilizer Bar Mounting Bolts In Sequence With Torque Specifications
Courtesy of HONDA, U.S.A., INC.

2WD

1. Remove the bushing holders (A).

NOTE: **During installation, note these items.**

- Use new bolts during reassembly.
- Install the bushing holder mounting bolts as follows.
-
    - Loosely install the mounting bolts (B).
    - Tighten the mounting bolts to the specified torque in the sequence shown.

2. Remove the stabilizer bar (C).

NOTE: **Do not try to remove the stabilizer bushings. Replace the stabilizer assembly if the bushings need replacement.**

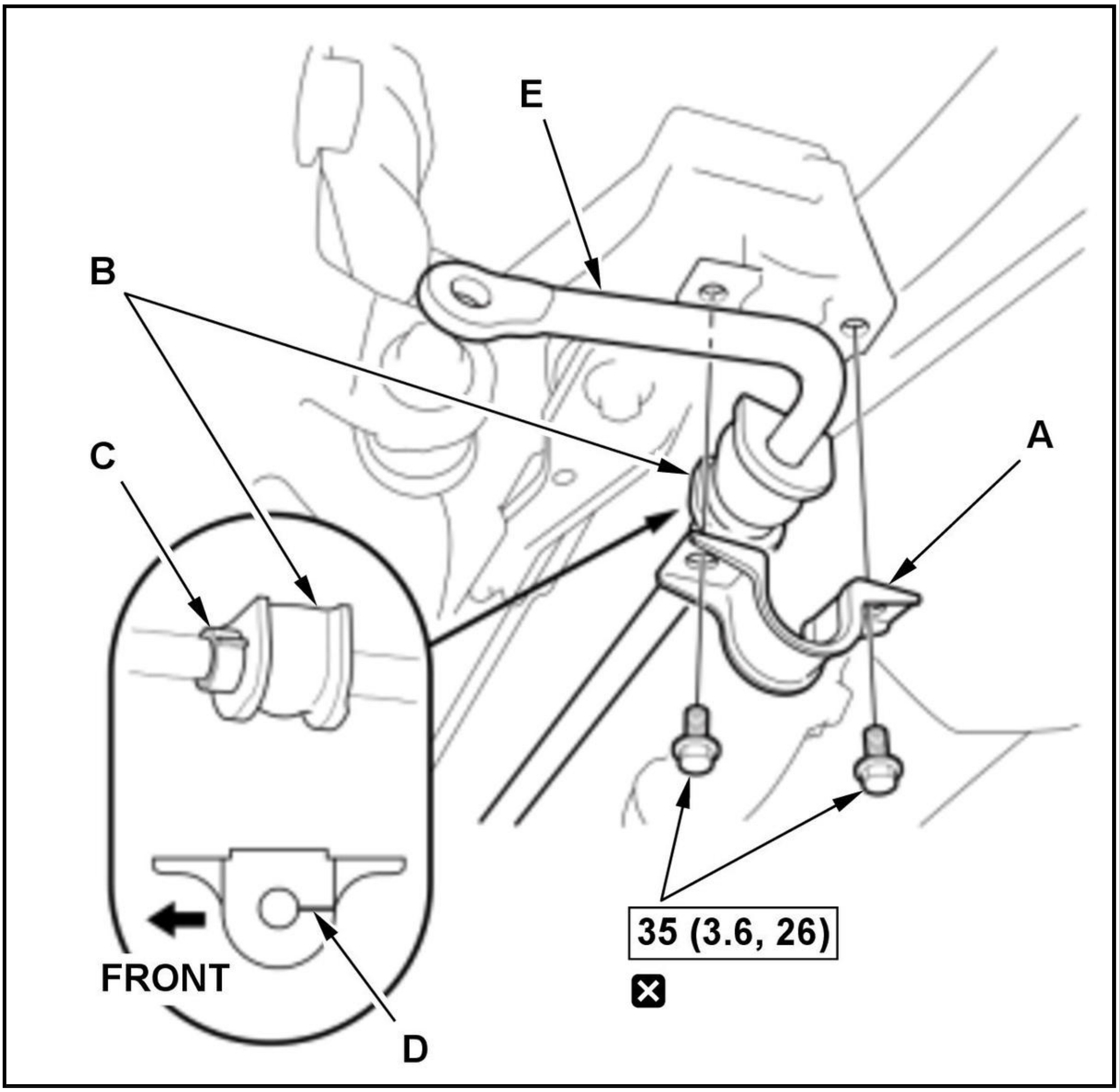

AWD

1. Remove the bushing holders (A).

NOTE: **Use new bolts during reassembly.**

2. Remove the stabilizer bushings (B).

NOTE: **During installation, note these items.**

- Align the side of the bushing with the stabilizer band clamp (C) on the stabilizer bar.
- The slit (D) of the stabilizer bushing must be directed to the vehicle rear side.

3. Remove the stabilizer bar (E).

5. All Removed Parts - Install

1. Install all removed parts in the reverse order of removal.

REAR STABILIZER LINK REMOVAL AND INSTALLATION

Removal and Installation

NOTE: How to read the torque specifications .

1. Vehicle - Lift
2. Rear Wheel - Remove
3. Stabilizer Link - Remove

2WD

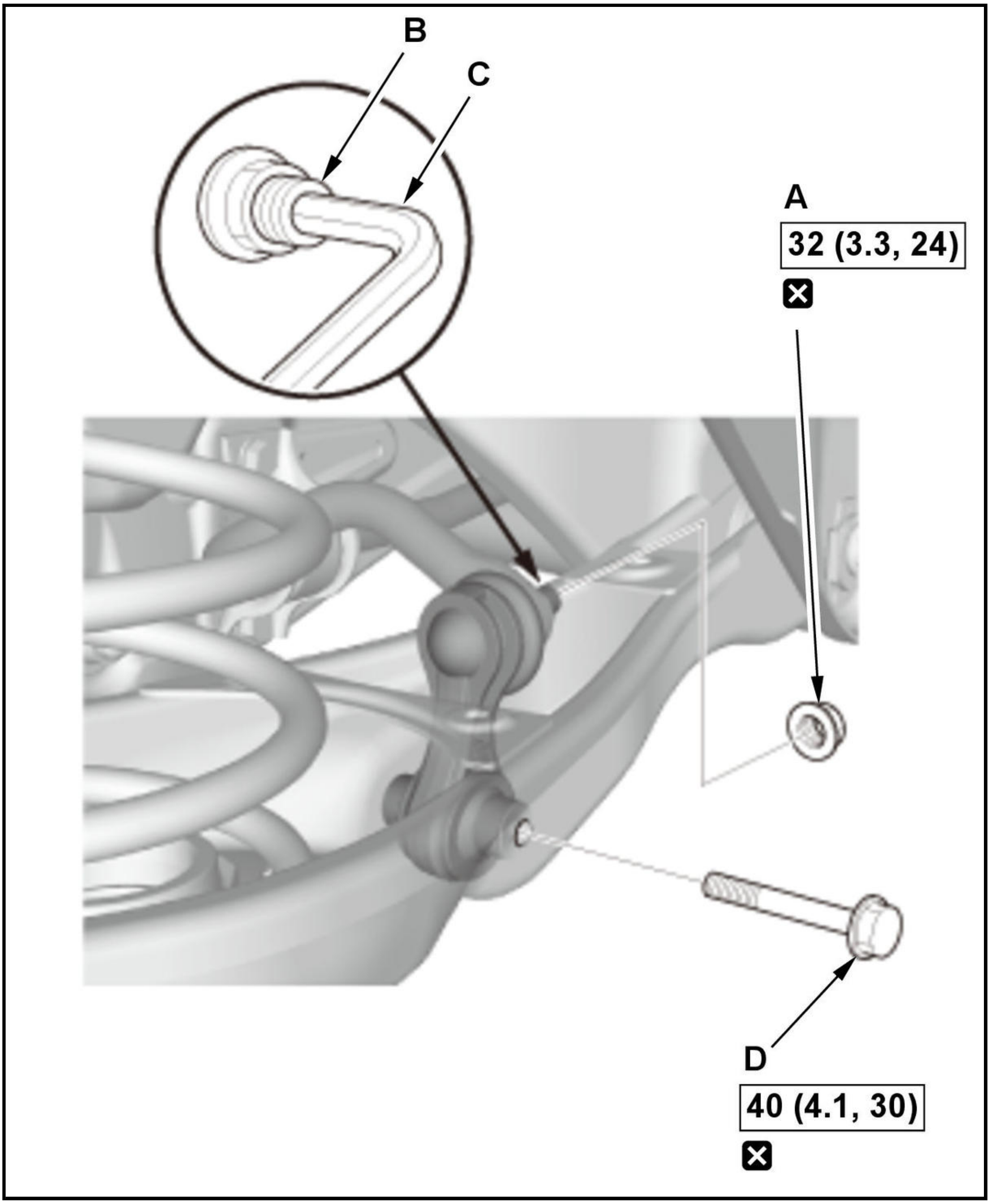

2WD

1. Remove the flange nut (A) while holding the respective joint pin (B) with a hex wrench (C).

NOTE: **Use a new flange nut during reassembly.**

2. Remove the stabilizer link lower mounting bolt (D).

NOTE: **Use a new bolt during reassembly.**

AWD

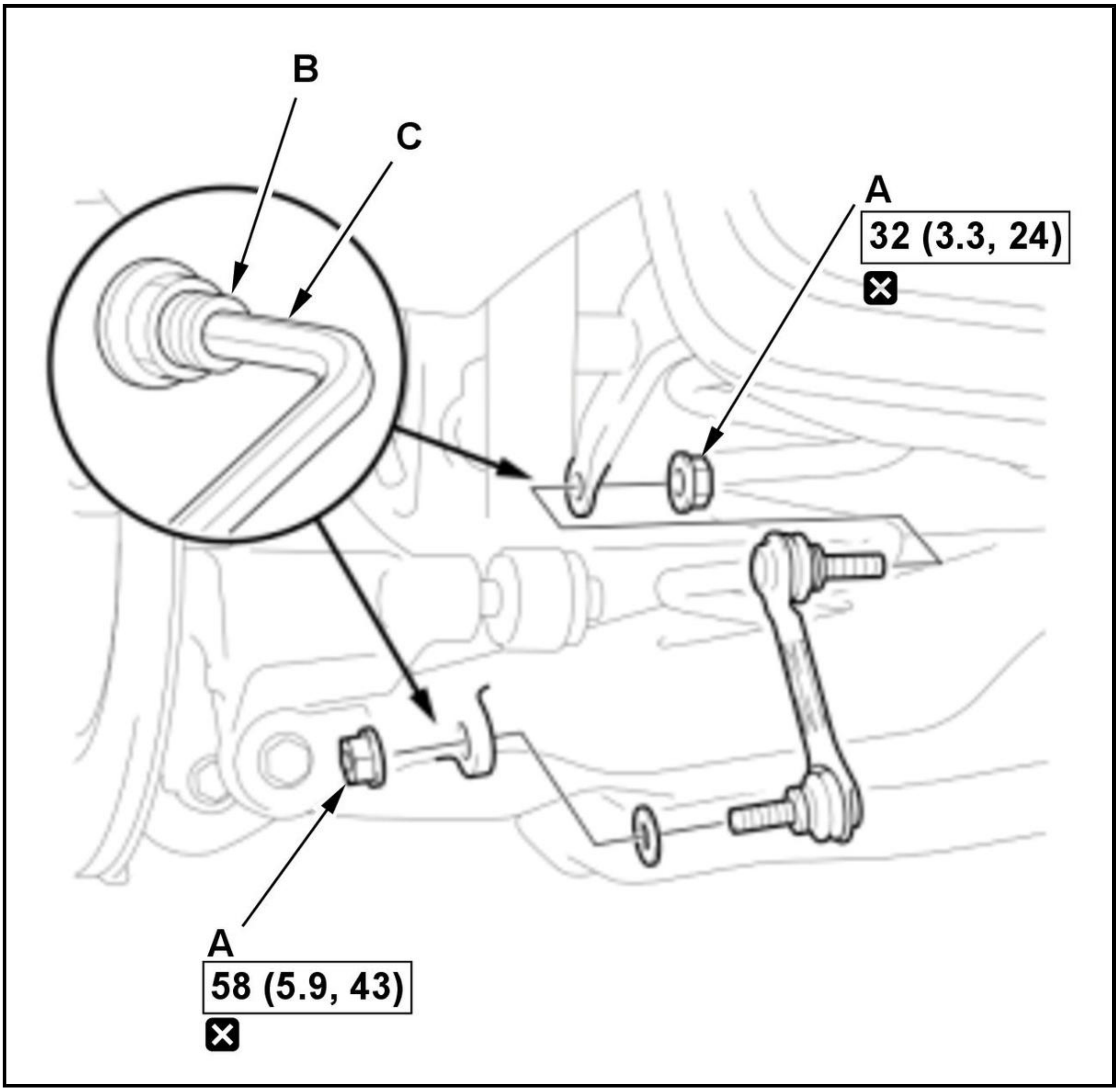

AWD

1. Remove the flange nuts (A) while holding the respective joint pin (B) with a hex wrench (C).

NOTE: **Use new flange nuts during reassembly.**

4. All Removed Parts - Install

1. Install all removed parts in the reverse order of removal.

REAR TRAILING ARM REMOVAL AND INSTALLATION

Removal and Installation

NOTE:

- How to read the torque specifications .
- Unless otherwise indicated, illustrations used in the procedure are for AWD model.

1. Vehicle - Lift
2. Rear Wheel - Remove
3. Rear Wheel Speed Sensor - Remove

1. Remove the rear wheel speed sensor from the trailing arm .

NOTE:

Do not disconnect the wheel speed sensor connector.

4. Trailing Arm - Remove

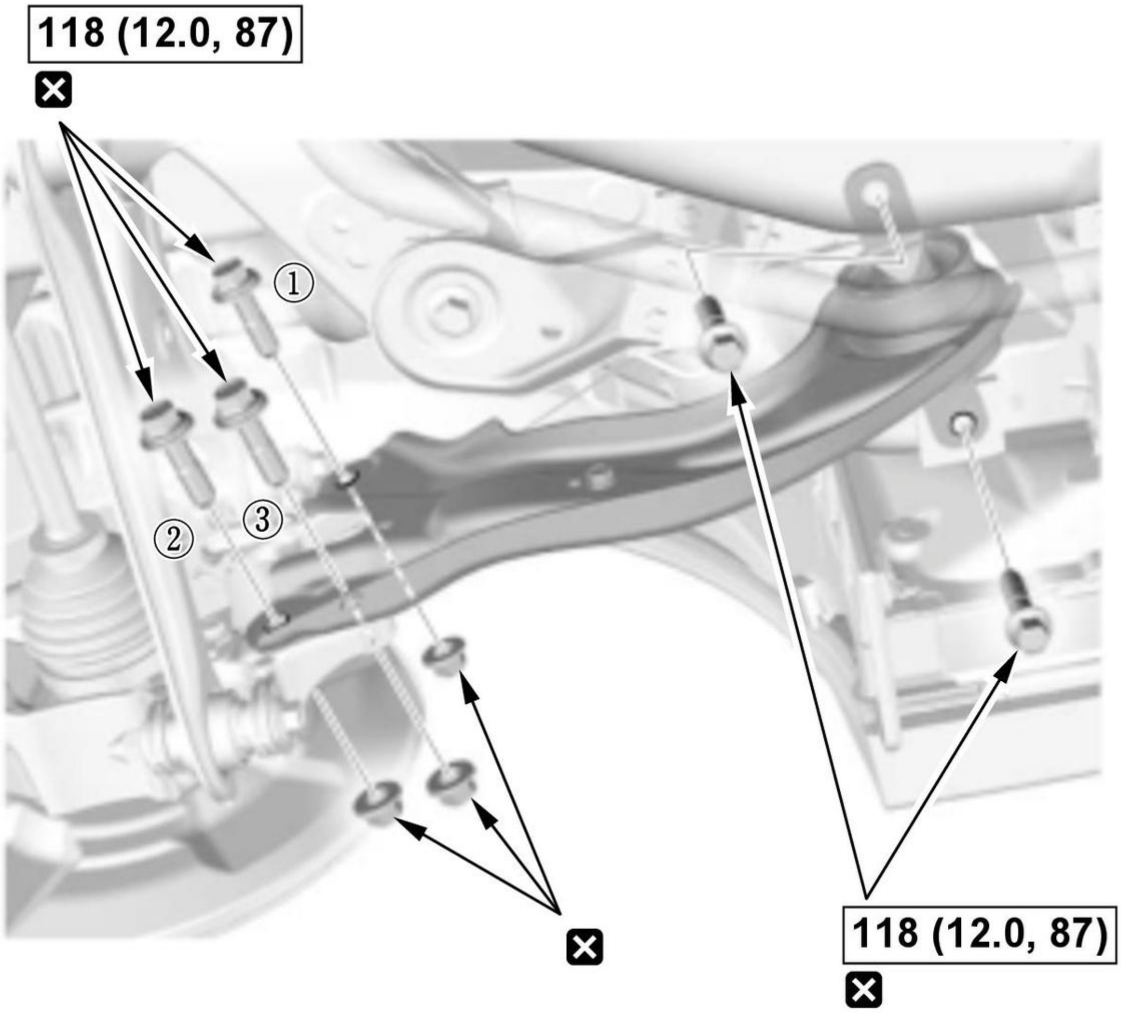

Fig. 7: Tightening Trailing Arm Bolt In Sequence With Torque Specifications
Courtesy of HONDA, U.S.A., INC.

NOTE:

- Use new bolts and nuts during reassembly.
- Tighten the bolt side to the specified torque in the numbered sequence shown in illustration.

5. All Removed Parts - Install

1. Install all removed parts in the reverse order of removal.

NOTE:

Loosely install the

nuts and/or bolts to install the bushings, load the suspension with the vehicle's weight, and then tighten the nuts and/or bolts to the specified torque.

6. Wheel Alignment - Check

REAR UPPER ARM REMOVAL AND INSTALLATION

Removal

1. Vehicle - Lift
2. Rear Wheel - Remove
3. Upper Arm - Remove

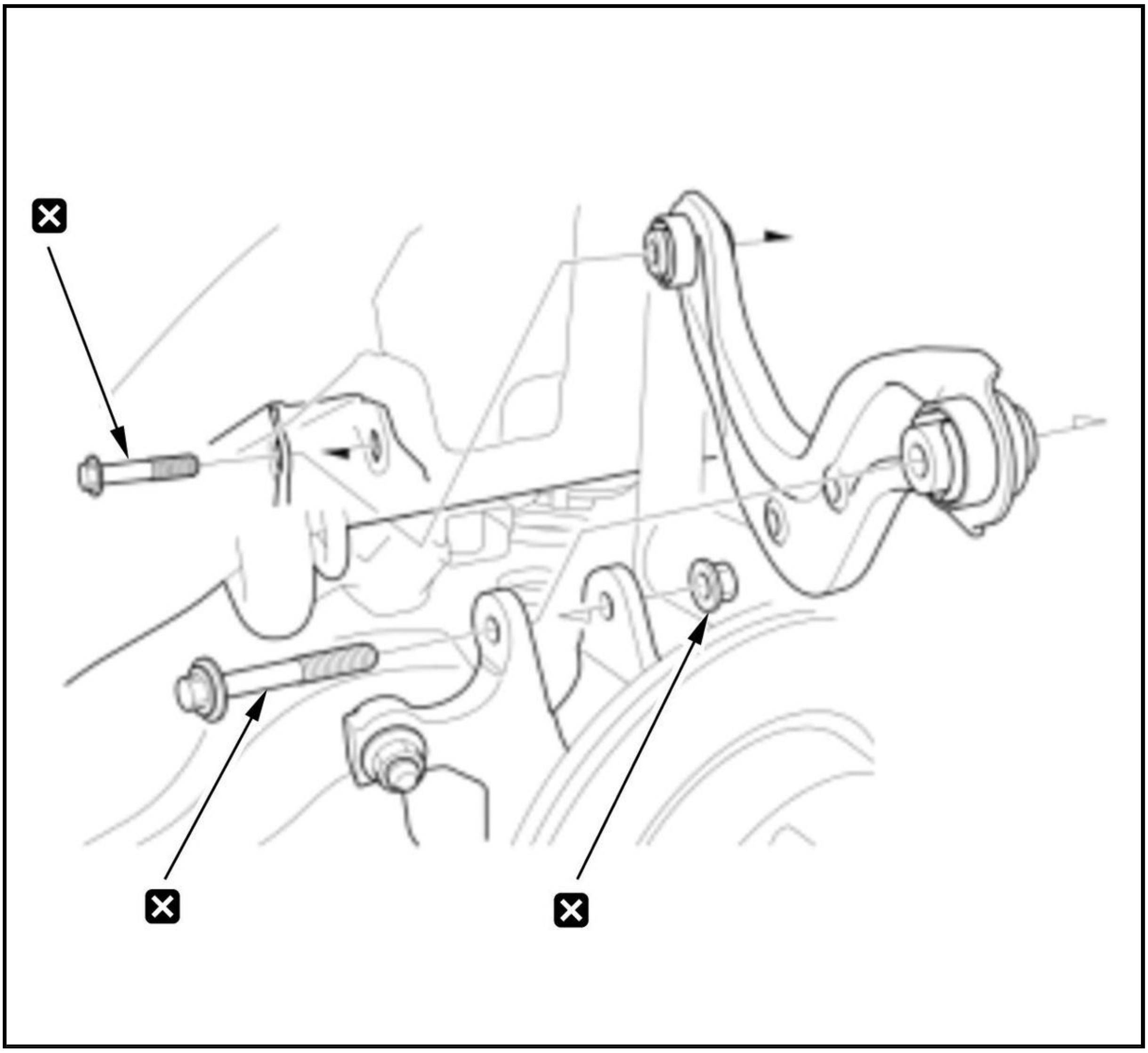

Installation

NOTE: How to read the torque specifications .

1. Upper Arm - Install

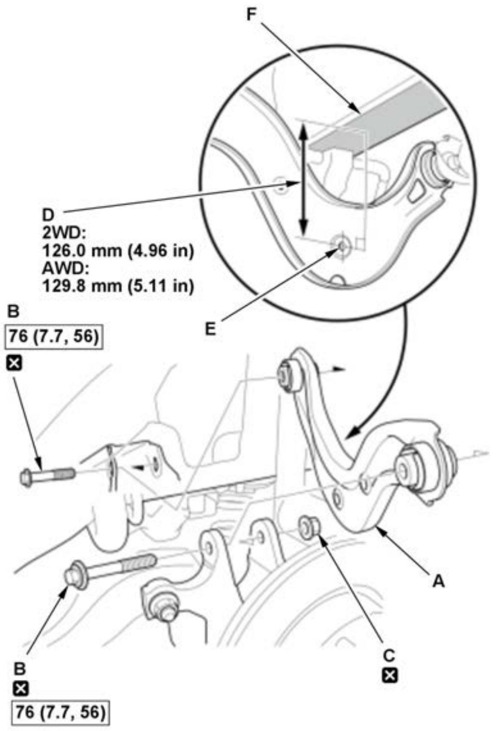 F D 2WD: 126.0 mm (4.96 in) AWD: 129.8 mm (5.11 in) B 76 (7.7, 56) ☒ E A B ☒ 76 (7.7, 56) C ☒	1. Loosely install the upper arm (A) with the mounting bolts (B) and the nut (C). **NOTE:** **Use new bolts and nut during reassembly.** 2. Place a floor jack under the under lower arm B. 3. Raise the suspension until the indicated clearance (D) is achieved between the hole of the upper arm (E) and the lower surface of the rear frame (F) as shown. 4. Tighten the upper arm mounting bolts to the specified torque.

2. Rear Wheel - Install
3. Wheel Alignment - Check

WHEEL BOLT REMOVAL AND INSTALLATION

Special Tools Required

Image	Description/Tool Number
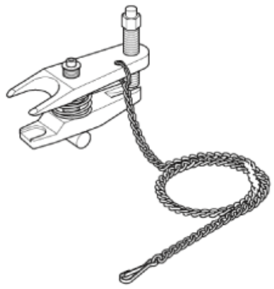	Ball Joint Remover, 28 mm 07MAC-SL00202

Removal

NOTICE:

- Do not use a hammer or impact tools (pneumatic or electric).
- Be careful not to damage the threads of the wheel bolts.

Front

1. Vehicle - Lift
2. Front Wheel - Remove
3. Front Hub - Remove
4. Wheel Bolt - Remove

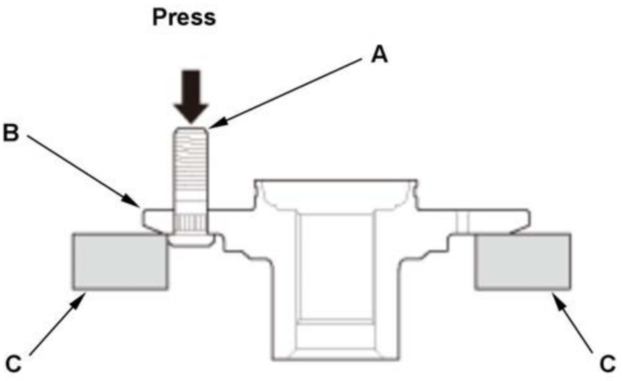	1. Separate the wheel bolt (A) from the hub (B) using a hydraulic press. **NOTE:** **Support the hub with hydraulic press attachments (C) or equivalent tools.**

Rear

5. Vehicle - Lift
6. Rear Wheel - Remove
7. Rear Brake Disc - Remove
8. Wheel Bolt - Remove

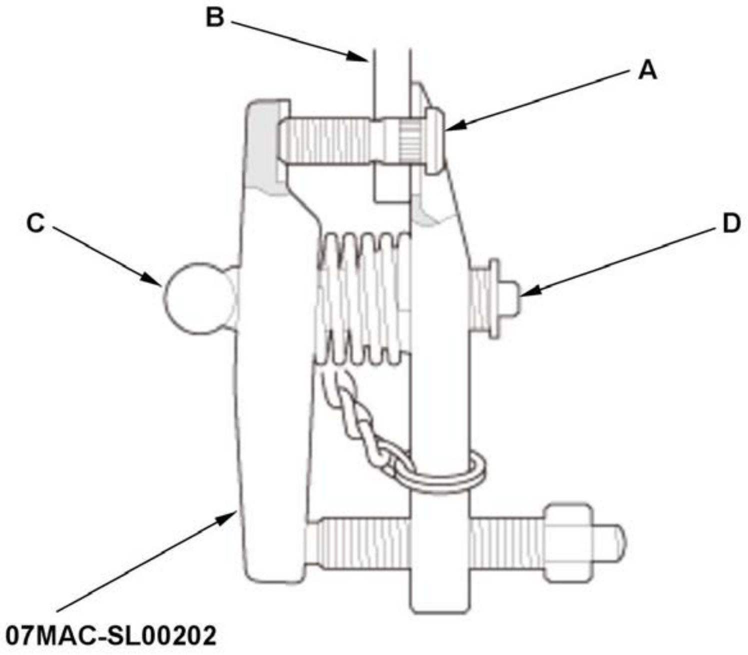	1. Separate the wheel bolt (A) from the hub (B). **NOTE:** **If the angle of the remover against the wheel bolt is not vertical, readjust the ball joint remover by turning the head (C) of the adjusting bolt (D).**

Installation

NOTICE:

- Do not use a hammer or impact tools (pneumatic or electric).
- Be careful not to damage the threads of the wheel bolts.

Front

1. Wheel Bolt - Install

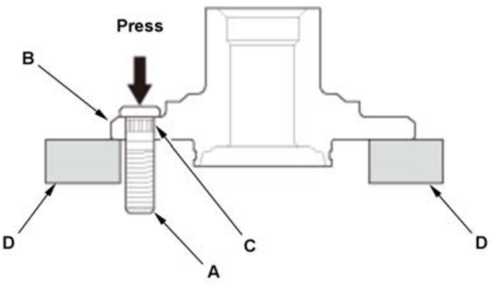	1. Insert a new wheel bolt (A) into the hub (B) while aligning the splined surfaces (C) on the hub hole with the wheel bolt.**NOTE:** • Degrease the area around the wheel bolt. • Make sure the wheel bolt is installed vertically to the hub disc surface. • Before installing the new wheel bolt, clean the mating surfaces on the bolt and the hub. 2. Install the wheel bolt using a hydraulic press until the wheel bolt shoulder is fully seated. Support the hub with hydraulic press attachments (D) or equivalent tools.

2. **Front Hub - Install**
3. **Front Wheel - Install**

NOTE: If you cannot tighten the wheel nut to the specified torque when installing the wheel, **replace the front hub** .

Rear

4. Wheel Bolt - Install

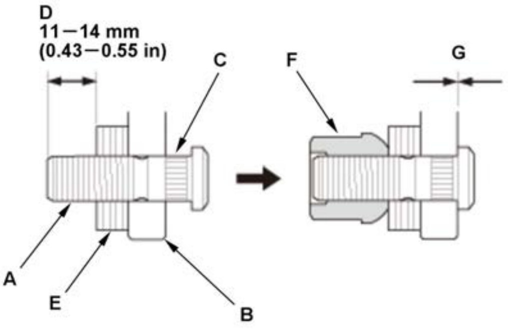 D 11−14 mm (0.43−0.55 in) C F G A E B	1. Insert a new wheel bolt (A) into the hub (B) while aligning the splined surfaces (C) on the hub hole with the wheel bolt.**NOTE:** • Before installing the new wheel bolt, clean the mating surfaces on the bolt and the hub. • Degrease the area around the wheel bolt and the threaded section of the nut. 2. Adjust the measurement (D) with the washers (P/N 94101-12800 or equivalent) (E). 3. Install a nut (P/N 90304-SC2-000 or equivalent) (F) hand-tight. **NOTE:** • **Make sure the wheel bolt is installed vertically to the hub disc surface.** • **Do not install the nut and the**

	- washers that have been used as tools on a vehicle. 4. Tighten the nut. **NOTE:** - Do not exceed the maximum torque limit. - Make sure there is no gap (G) between the bolt and the hub. **Limited torque: 108 N.m (11.0 kgf.m, 80 lbf.ft) max.** **NOTE:** **If you cannot tighten the wheel nut to the specified torque when installing the wheel, replace the rear hub bearing unit as an assembly.**

5. **Rear Brake Disc - Install**
6. **Rear Wheel - Install**

WHEEL REMOVAL AND INSTALLATION

Removal and Installation

NOTE: **How to read the torque specifications** .

1. **Vehicle - Lift**
2. Wheel - Remove

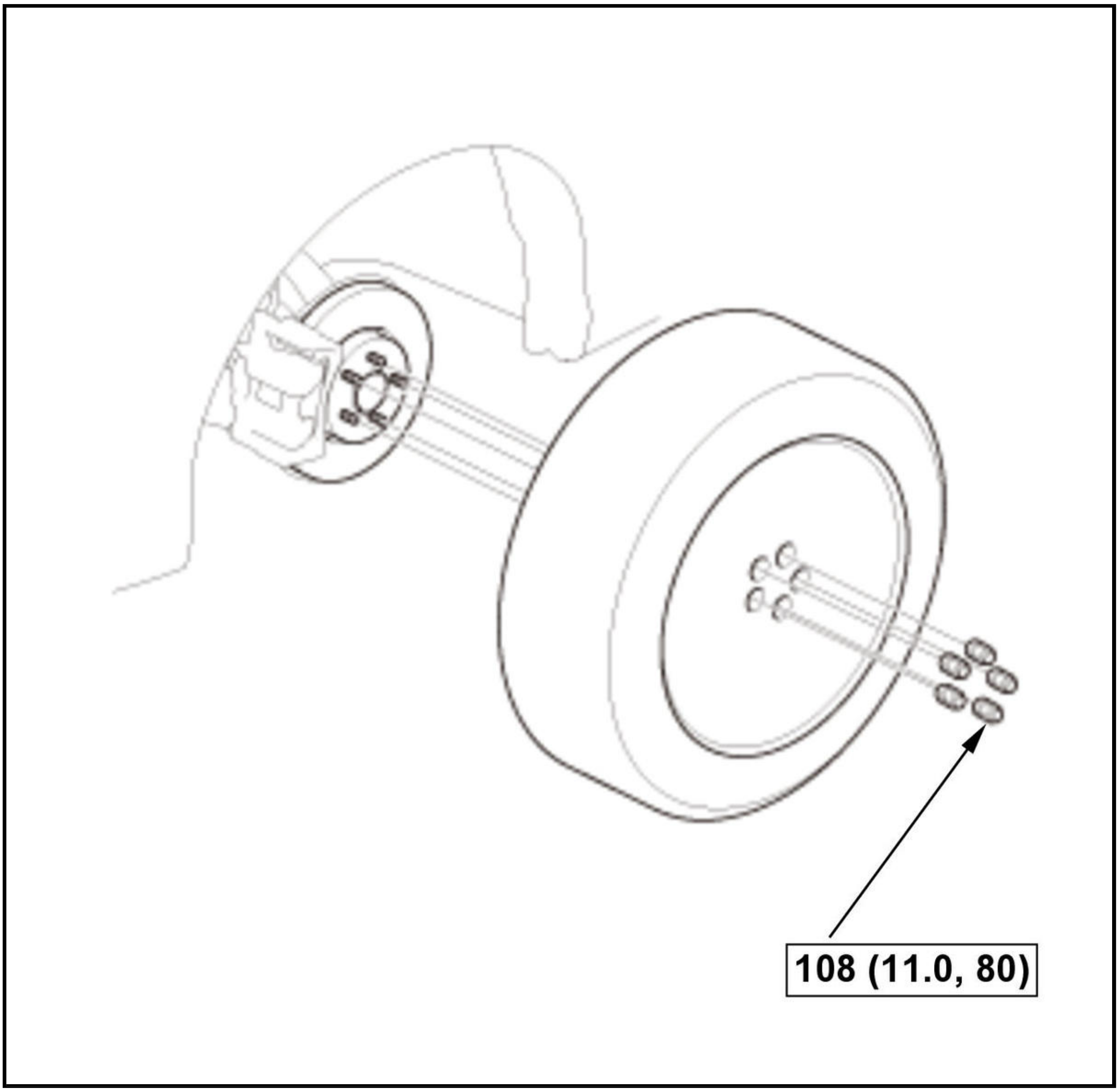

3. All Removed Parts - Install

1. Install all removed parts in the reverse order of removal.

NOTE:

Before installing the wheel, clean the mating surfaces between the brake disc and the inside of the wheel.

REMOVAL AND INSTALLATION

FRONT DAMPER/SPRING REMOVAL AND INSTALLATION

Removal and Installation

NOTE: How to read the torque specifications .

1. Vehicle - Lift
2. Front Wheel - Remove
3. Front Wheel Speed Sensor - Remove

   NOTE: Do not disconnect the wheel speed sensor connector.

4. Damper/Spring Items - Remove

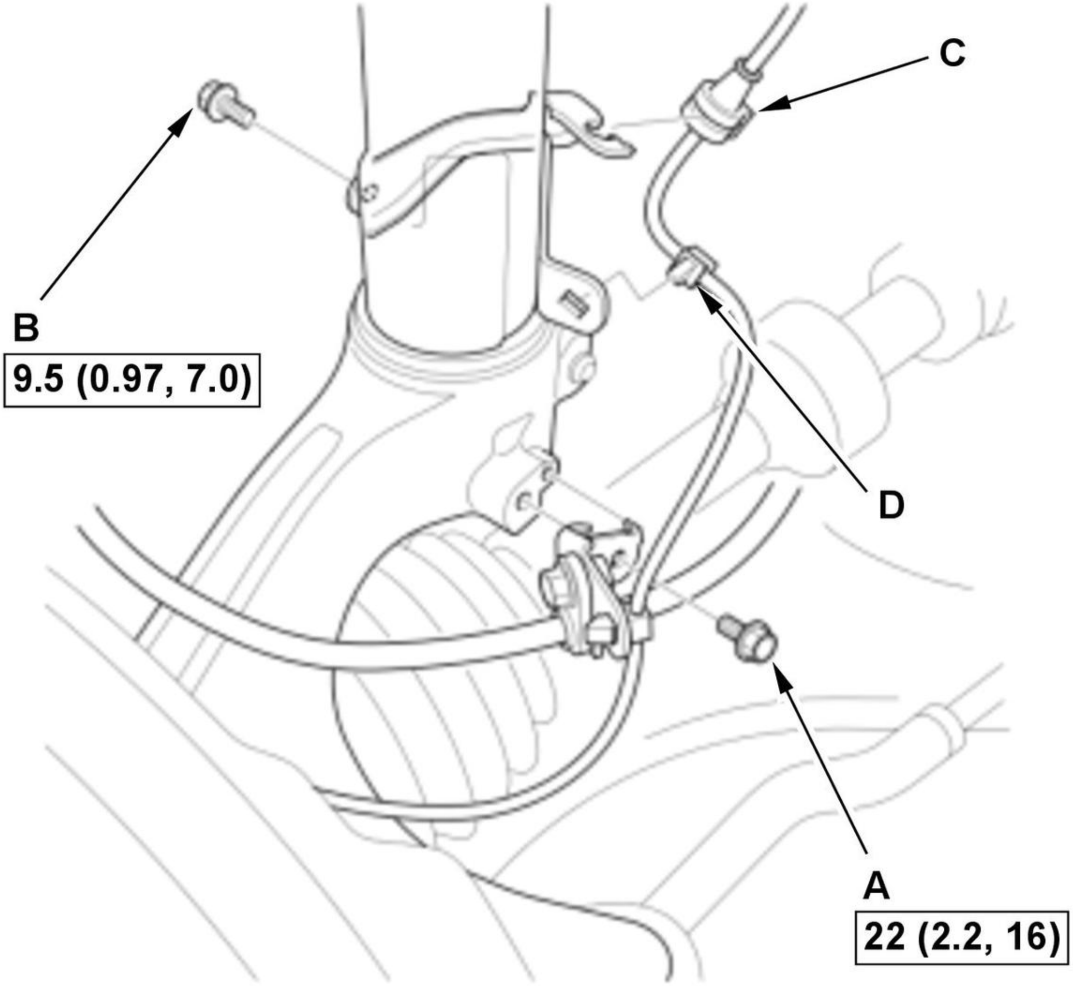

Fig. 1: Front Brake Hose Bracket And Wheel Speed Sensor Wire Bracket Components With Torque Specifications
Courtesy of HONDA, U.S.A., INC.

1. Remove the brake hose bracket mounting bolt (A) and wheel speed sensor wire bracket mounting bolt (B).

2. Remove the wheel speed sensor wire guide rubber (C) and the clip (D).

5. Brake Caliper - Remove

   1. **Remove the caliper assembly without disconnecting the brake hose from the caliper body** .**NOTE:**
      - To prevent damage to the caliper assembly or brake hose, use a short piece of wire to hang the caliper assembly from the undercarriage.
      - Do not twist the brake hose excessively.

6. Stabilizer Link - Disconnect

   1. **Disconnect the stabilizer link from the damper**.

7. **Front Spindle Nut - Remove**
8. **Tie-Rod End Ball Joint - Disconnect**
9. Lower Arm - Disconnect

   1. **Disconnect the lower arm from the lower arm ball joint**.

10. Knuckle/Hub Assembly - Remove

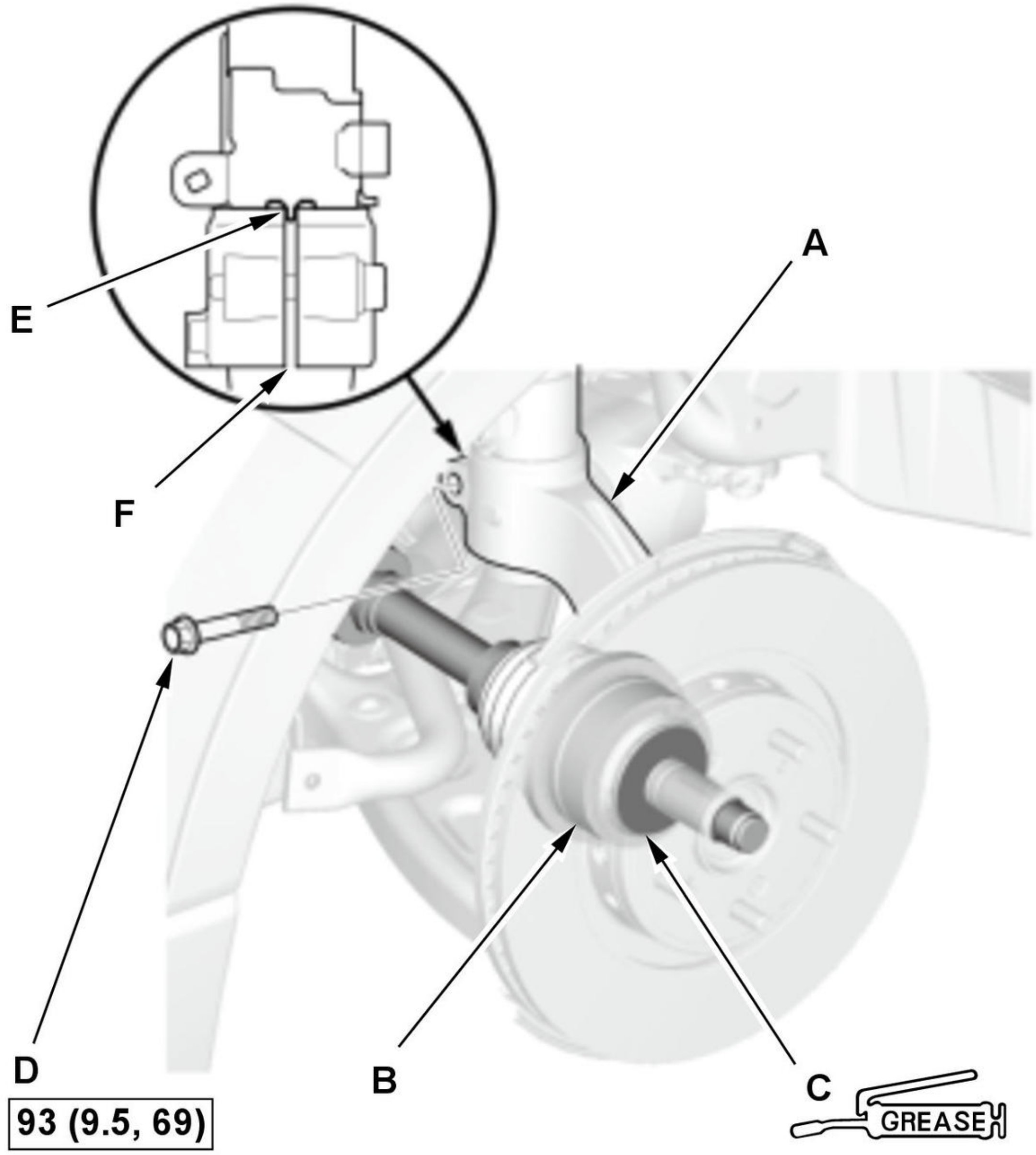

Fig. 2: Front Knuckle/Hub Assembly Components And Damper Pinch Bolt With Torque Specifications
Courtesy of HONDA, U.S.A., INC.

1. Pull the knuckle (A) outward, and separate the outboard joint (B) from the front hub using a soft face hammer outward.

NOTE:

- Do not pull the driveshaft end outward. The inner driveshaft inboard joint may come apart.
- During installation, **apply specified grease to the contact area (C) of the outboard joint and the front wheel bearing** .

2. Remove the damper pinch bolt (D).

3. Move the knuckle downward, and remove the knuckle from the damper.

NOTE: During installation, install the aligning tab (E) on the damper unit into the slot (F) of the knuckle.

11. Damper/Spring - Remove

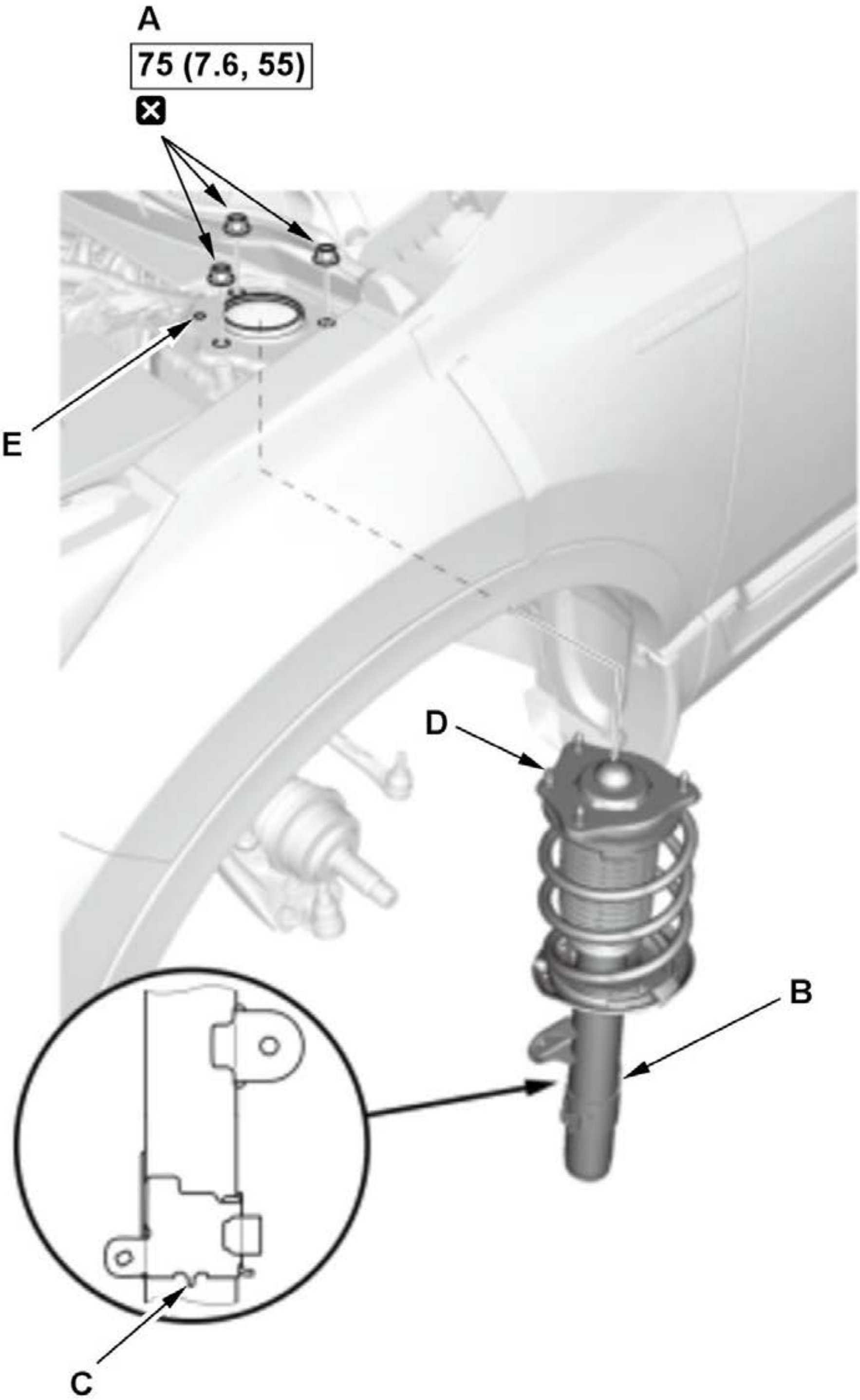

Fig. 3: Front Damper Spring Components With Torque Specifications
Courtesy of HONDA, U.S.A., INC.

1. Remove the flange nuts (A).
NOTE:

- Do not let the damper/spring drop down under its own weight.
- Use new flange nuts during reassembly.

2. Remove the damper/spring (B).

NOTE:

- Be careful not to damage the body.

- During installation, install the damper/spring in the body with the aligning tab (C) facing inside.
- During installation, if the guide pin (D) is equipped, align the guide pin with the body hole (E).

12. All Removed Parts - Install

1. Install all removed parts in the reverse order of removal.

13. Wheel Alignment - Check

FRONT LOWER ARM BALL JOINT REMOVAL AND INSTALLATION

Special Tools Required

Image	Description/Tool Number
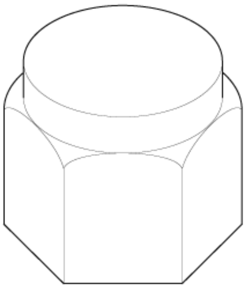	Ball Joint Thread Protector, 14 mm 07AAE-SJAA100
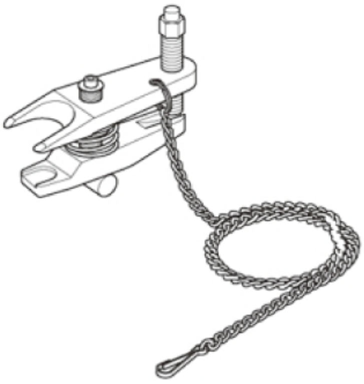	Ball Joint Remover, 32 mm 07MAC-SL00102

Removal and Installation

NOTE: How to read the torque specifications .

1. Vehicle - Lift
2. Front Wheel - Remove
3. Lower Arm - Disconnect

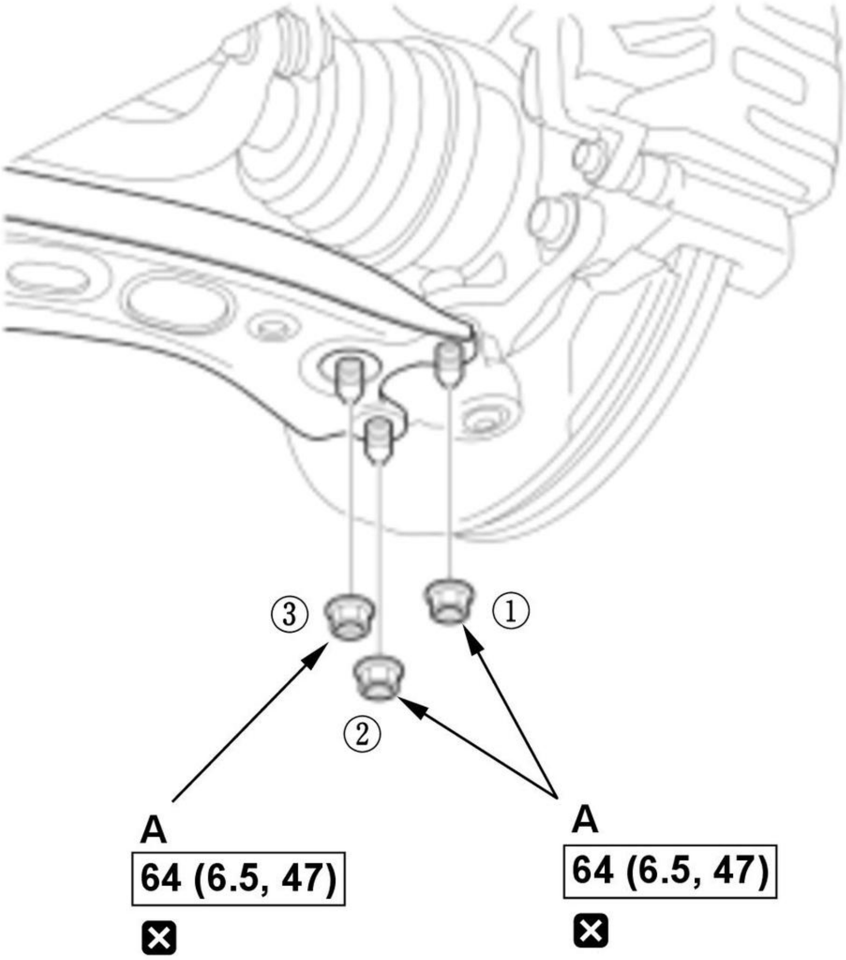

Fig. 4: Front Lower Arm Flange Nuts With Tightening Sequence And Torque Specifications
Courtesy of HONDA, U.S.A., INC.

NOTE: During reassembly, loosely install new flange nuts (A), then tighten them to the specified torque in the numbered sequence shown.

4. Front Spindle Nut - Remove
5. Driveshaft - Disconnect

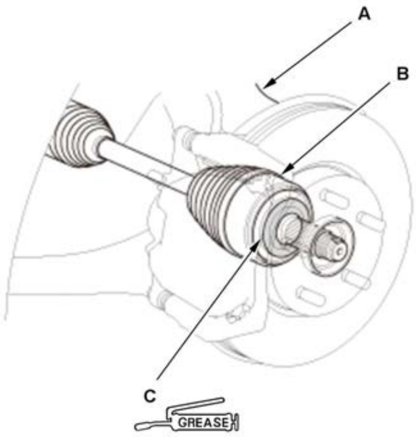	1. Pull the knuckle (A) outward, and separate the outboard joint (B) from the front hub using a soft face hammer outward, then move aside the knuckle/hub. **NOTE:** • Do not pull the driveshaft end outward. The inner driveshaft inboard joint may come apart. • During installation, apply specified grease to the contact area (C) of the outboard joint and the front wheel bearing .

6. Lower Arm Ball Joint - Remove

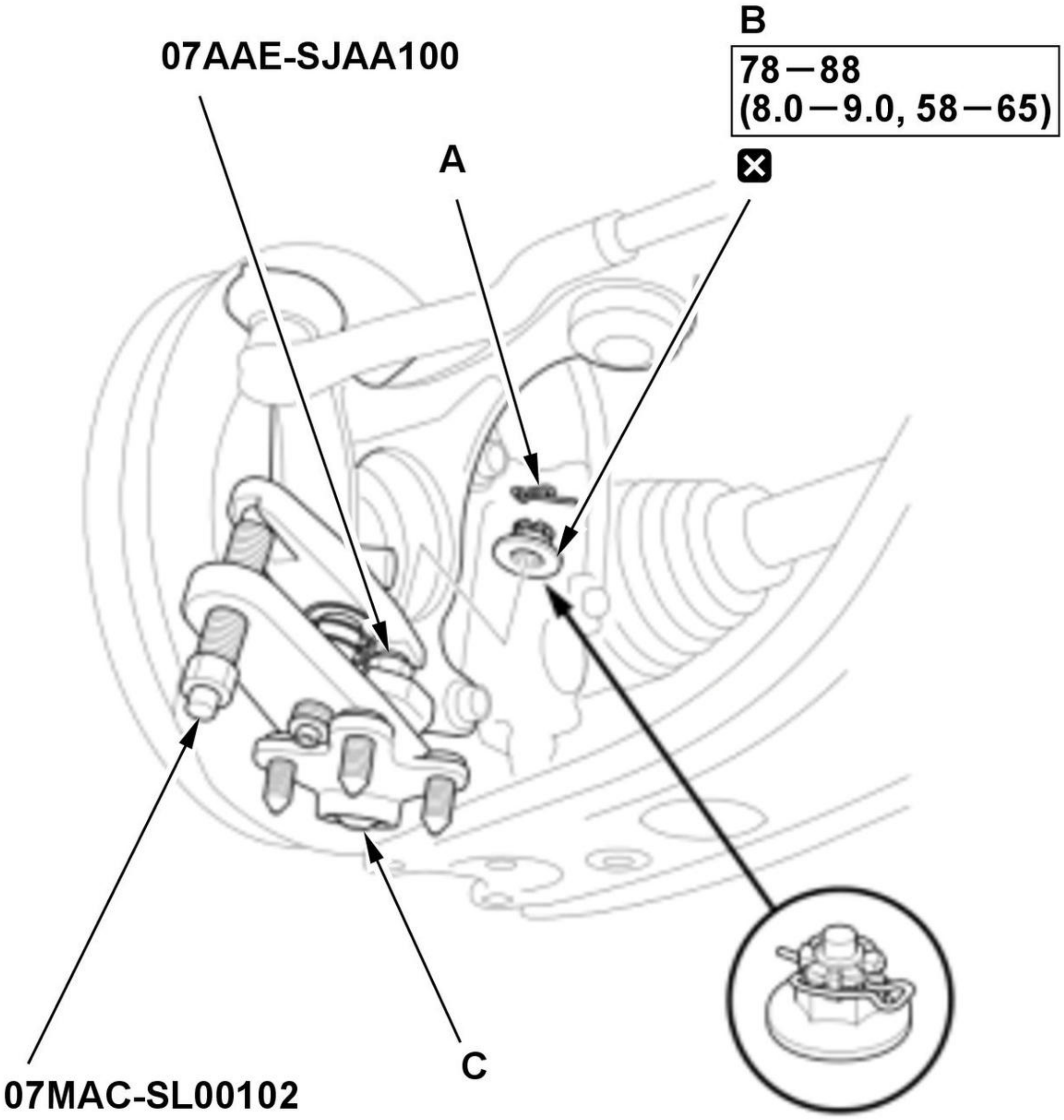

Fig. 5: Front Lower Arm Ball Joint Components With Torque Specifications
Courtesy of HONDA, U.S.A., INC.

1. Remove the lock pin (A).

NOTE: During installation, install the lock pin as shown after tightening the new castle nut.

2. Remove the castle nut (B).

NOTE: During installation, note these items.

- Use a new castle nut.
- Torque the castle nut to the lower torque specification, then tighten it only far enough to align the slot with the ball joint pin hole. Do not align the castle nut by loosening it.

3. Disconnect the lower ball joint (C) from the knuckle using the ball joint thread protector and the ball joint

remover .

NOTE:

- Be careful not to damage the ball joint boot when installing the ball joint remover.
- During installation, note these items.
-
    - Be careful not to damage the ball joint boot when connecting the knuckle.
    - Before connecting the ball joint, degrease the threaded section and the tapered portion of the ball joint pin, the ball joint connecting hole, the threaded section, and the mating surfaces of the castle nut.

7. All Removed Parts - Install

1. Install all removed parts in the reverse order of removal.

8. Wheel Alignment - Check

FRONT LOWER ARM COMPLIANCE BUSH REMOVAL AND INSTALLATION

Removal

1. Vehicle - Lift
2. Front Wheel - Remove
3. Lower Arm - Remove
4. Lower Arm Compliance Bushing - Remove

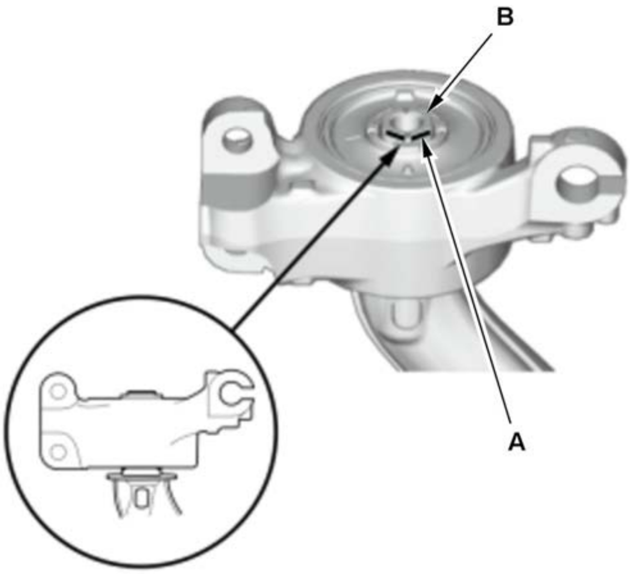	1. Make a mark (A) on the lower arm (B) right above the bushing opening. **NOTE:** This mark will aid you during the bushing installation process.

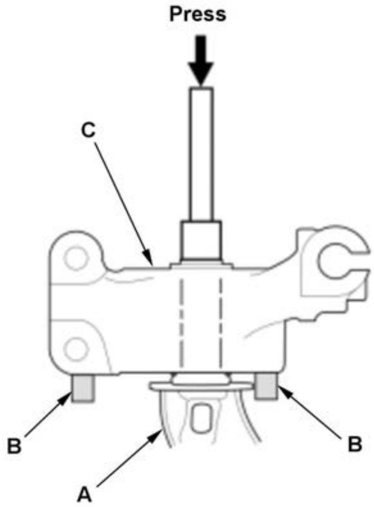	2. Support the lower arm (A) on suitable bar (B) as shown. 3. Press out the lower arm with a suitable socket and a hydraulic press, and remove the lower arm from the bushing (C). **NOTE:** Be careful not to damage the inside of the bushing hole when pressing on the bushing.

Installation

1. Lower Arm Compliance Bushing - Install

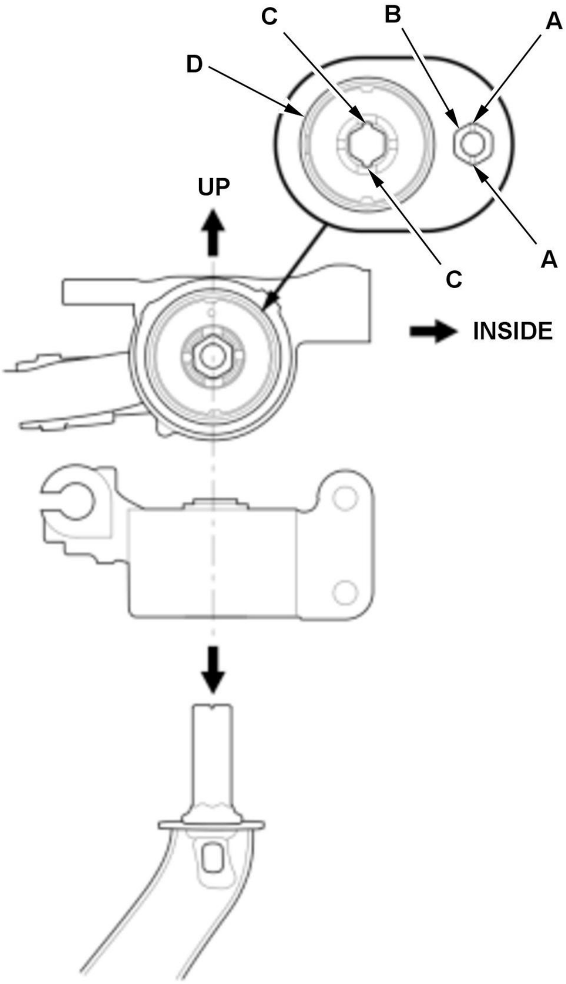	1. Clean the mating surfaces of the new bushing and the lower arm. 2. Apply a mild soap and water solution to the bushing surface. 3. Align the grooves (A) of the lower arm (B) and the grooves (C) of the bushing (D). 4. Press in the bushing by hand first.

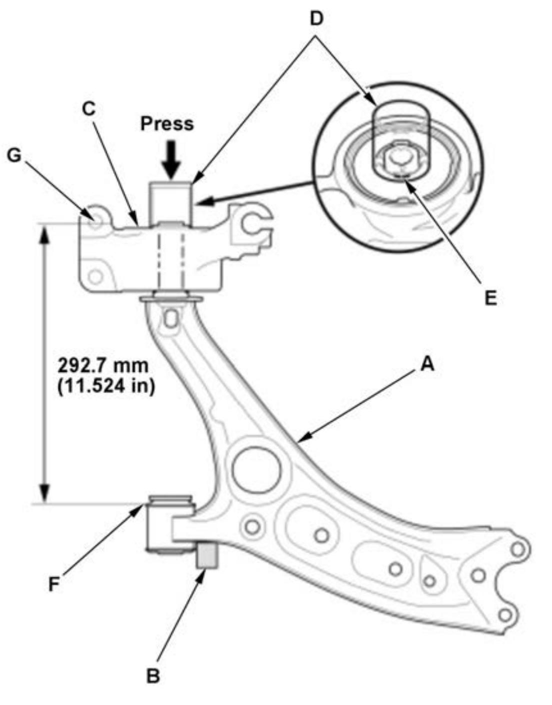 D C Press G E 292.7 mm (11.524 in) A F B	5. Support the lower arm (A) on suitable square lumber (B) as shown. 6. Press in the bushing (C) with a suitable socket (D) and a hydraulic press. **NOTE:** Press the bushing into the lower arm until the mark (E) meets the edge of the bushing opening. 7. Make sure the distance between the lower arm mounting surface (F) and the center of the bolt hole (G) is within the dimension shown.

2. Lower Arm - Install
3. Front Wheel - Install
4. Wheel Alignment - Check

FRONT LOWER ARM REMOVAL AND INSTALLATION

Removal and Installation

NOTE: How to read the torque specifications .

1. Vehicle - Lift
2. Front Wheel - Remove
3. Engine Undercover - Remove
4. Stabilizer Link - Disconnect

    1. Disconnect the stabilizer link from the stabilizer bar.

5. Lower Arm Ball Joint - Remove

    1. Disconnect the lower arm ball joint from the lower arm.

6. Lower Arm - Remove

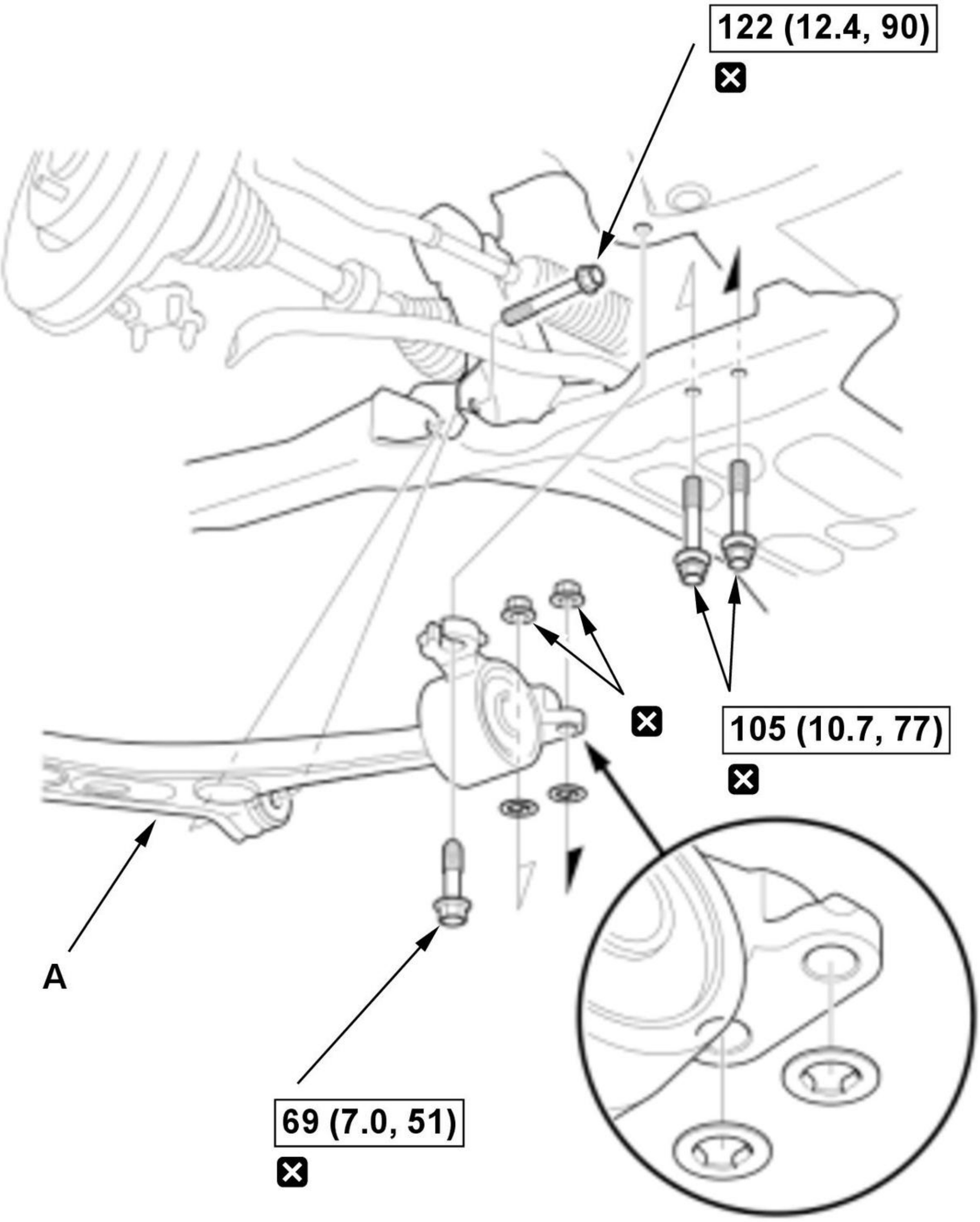

Fig. 6: Front Lower Arm And Mounting Components With Torque Specifications
Courtesy of HONDA, U.S.A., INC.

1. Remove the lower arm (A).

NOTE: During installation, note these items.

- Use new lower arm mounting bolts.
- Loosely install the nuts and/or bolts to install the bushings, load the suspension with the vehicle's weight, and then tighten the nuts and/or bolts to the specified torque.

7. All Removed Parts - Install

1. Install all removed parts in the reverse order of removal.

8. **Wheel Alignment - Check**

FRONT STABILIZER BAR REMOVAL AND INSTALLATION

Removal and Installation

NOTE: How to read the torque specifications .

1. Vehicle - Lift
2. Front Wheels - Remove
3. Steering Gearbox - Remove
4. Stabilizer Bar - Remove

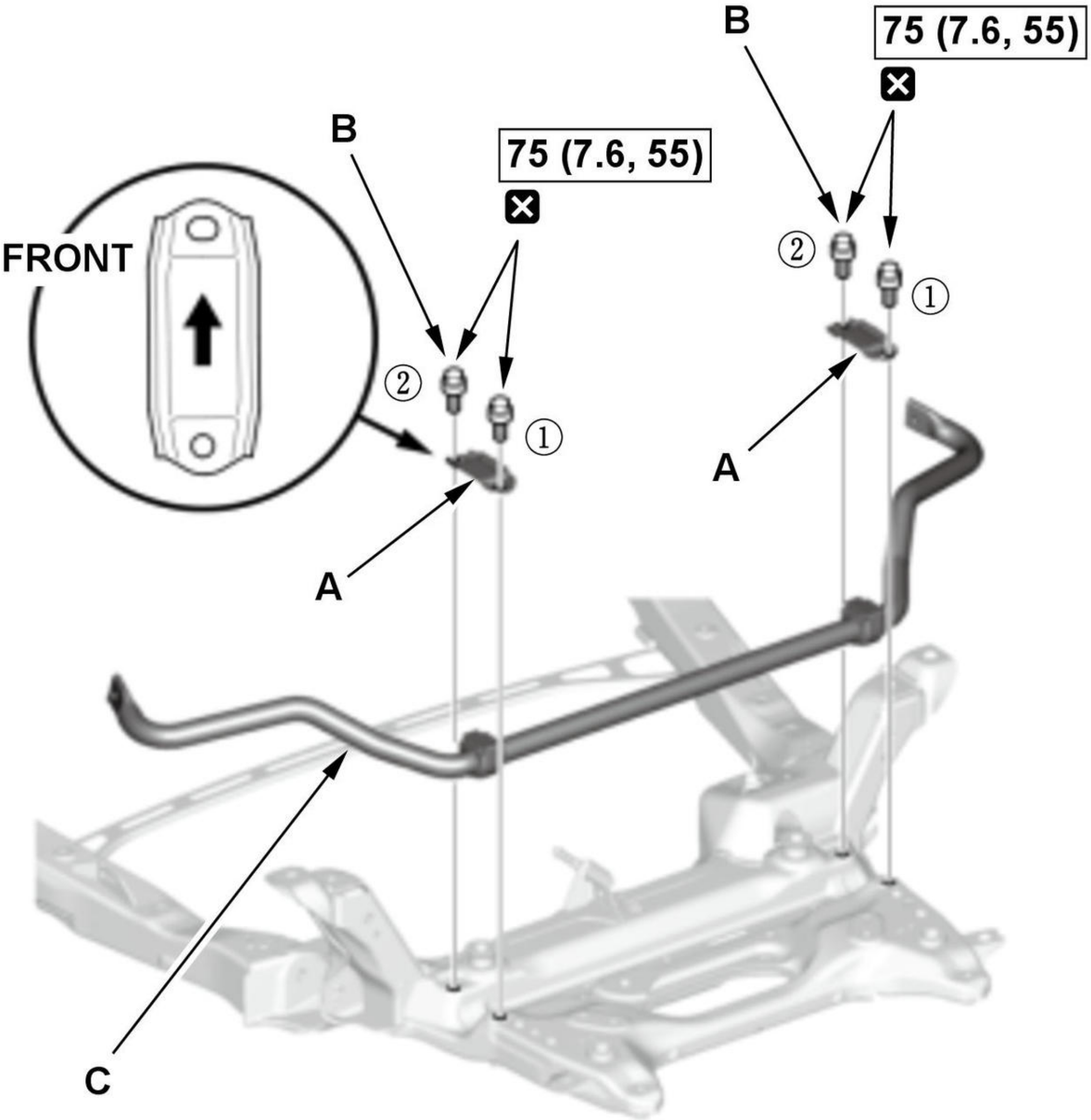

Fig. 7: Front Stabilizer Bar Components With Tightening Sequence And Torque Specifications
Courtesy of HONDA, U.S.A., INC.

1. Remove the bushing holders (A).

NOTE: During installation, note these items.

- Note the direction of installation for the holders.
- Use new bolts during reassembly.
- Install the bushing holder mounting bolts as follows.
-
    - Loosely install the mounting bolts (B).

- Tighten the mounting bolts to the specified torque in the sequence shown.

2. Remove the stabilizer bar (C).

NOTE: Do not try to remove the stabilizer bushings. Replace the stabilizer bar if the bushings need replacement.

5. All Removed Parts - Install

1. Install all removed parts in the reverse order of removal.

6. **Wheel Alignment - Check**

FRONT STABILIZER LINK REMOVAL AND INSTALLATION

Removal and Installation

NOTE: **How to read the torque specifications** .

1. **Vehicle - Lift**
2. **Front Wheel - Remove**
3. Stabilizer Link - Remove

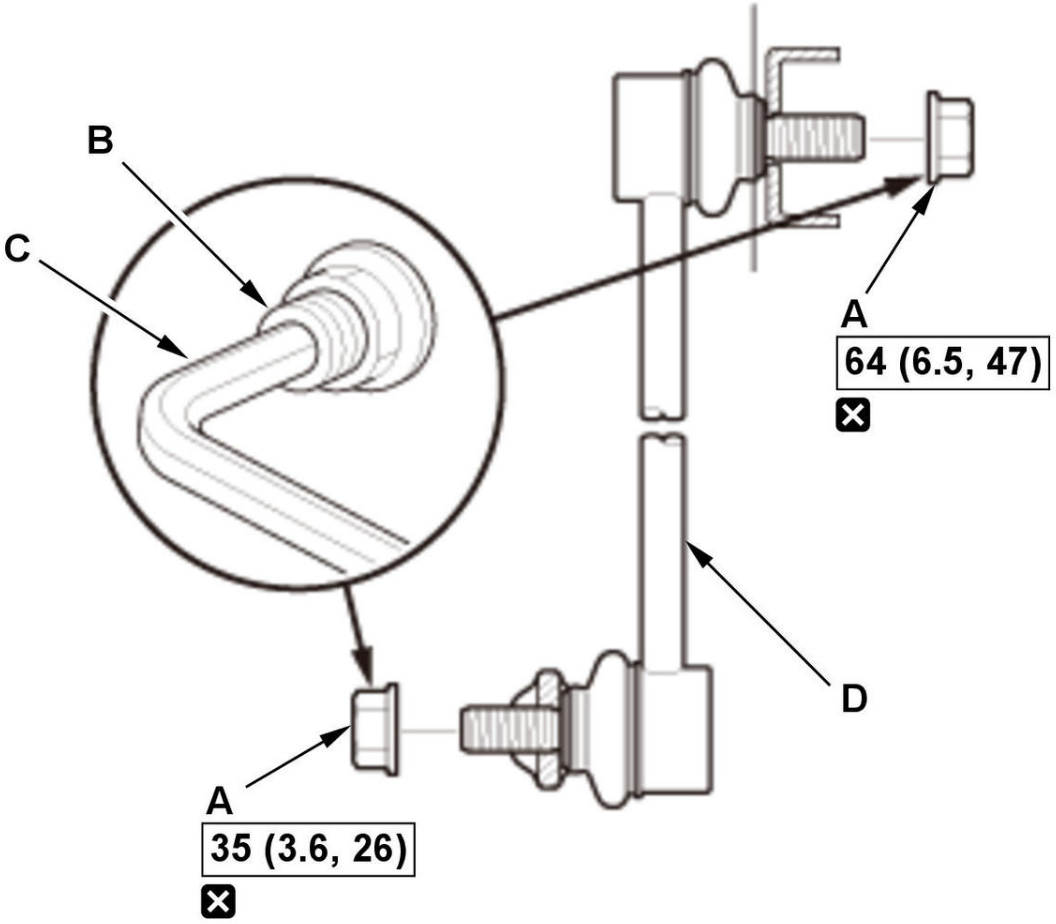

Fig. 8: Front Stabilizer Link Components With Torque Specifications
Courtesy of HONDA, U.S.A., INC.

1. Remove the flange nuts (A) while holding the respective joint pin (B) with a hex wrench (C).

NOTE: Use new flange nuts during reassembly.

2. Remove the stabilizer link (D).

4. All Removed Parts - Install

1. Install all removed parts in the reverse order of removal.

REAR KNUCKLE/HUB BEARING UNIT REMOVAL AND INSTALLATION

Exploded View

NOTE: How to read the torque specifications .

1. Knuckle/Hub Bearing Unit

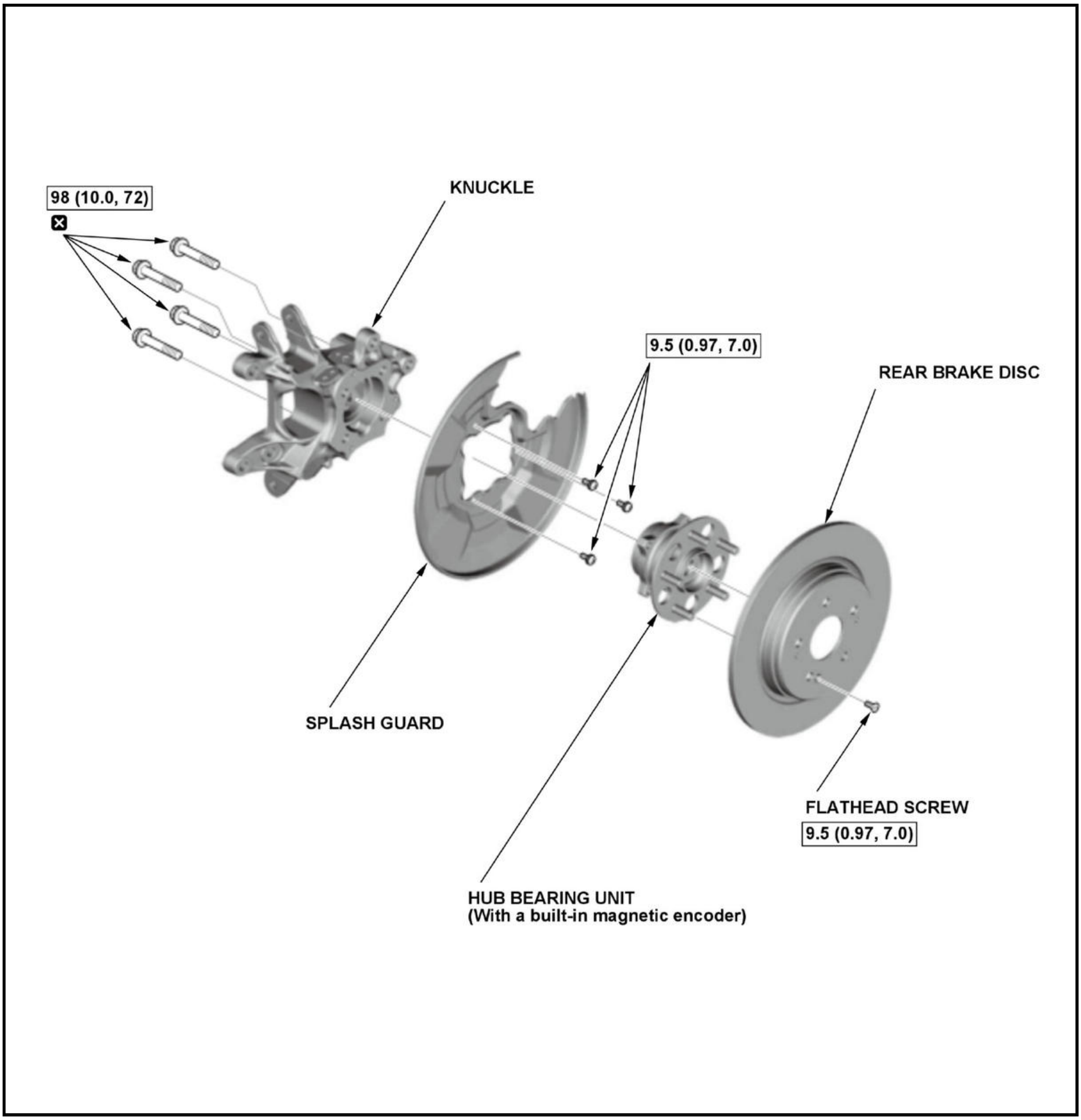
98 (10.0, 72)
☒
KNUCKLE
9.5 (0.97, 7.0)
REAR BRAKE DISC
SPLASH GUARD
FLATHEAD SCREW
9.5 (0.97, 7.0)
HUB BEARING UNIT
(With a built-in magnetic encoder)

Removal and Installation

NOTE:

- How to read the torque specifications .
- Refer to the Exploded View as needed during the following procedures.

- Check for deterioration and damage to each part during removal.

Hub Bearing Unit

1. Vehicle - Lift
2. Rear Wheel - Remove
3. Parking Brake - Release

   NOTE: Only necessary if the automatic parking brake function is turned on.

4. Brake Hose Bracket Mounting Bolt - Remove

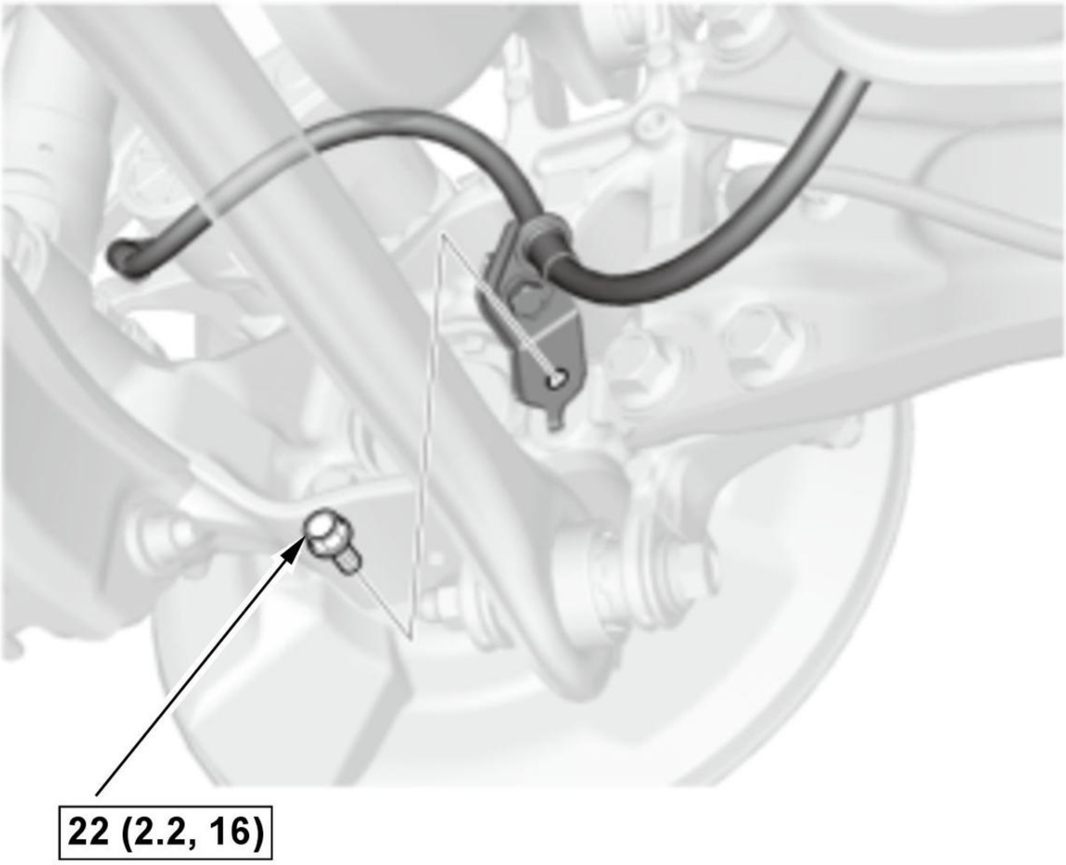

Fig. 9: Rear Brake Hose Bracket Mounting Bolt With Torque Specifications
Courtesy of HONDA, U.S.A., INC.

5. Rear Brake Caliper - Remove

1. Remove the caliper assembly without disconnecting the brake hose from the caliper body .**NOTE:** • To prevent damage to the caliper assembly or brake hose, use a short piece of wire to hang the caliper assembly from the undercarriage. • Do not twist the brake hose excessively.

6. Rear Spindle Nut - Remove
7. Rear Brake Disc - Remove
8. Hub Bearing Unit - Remove

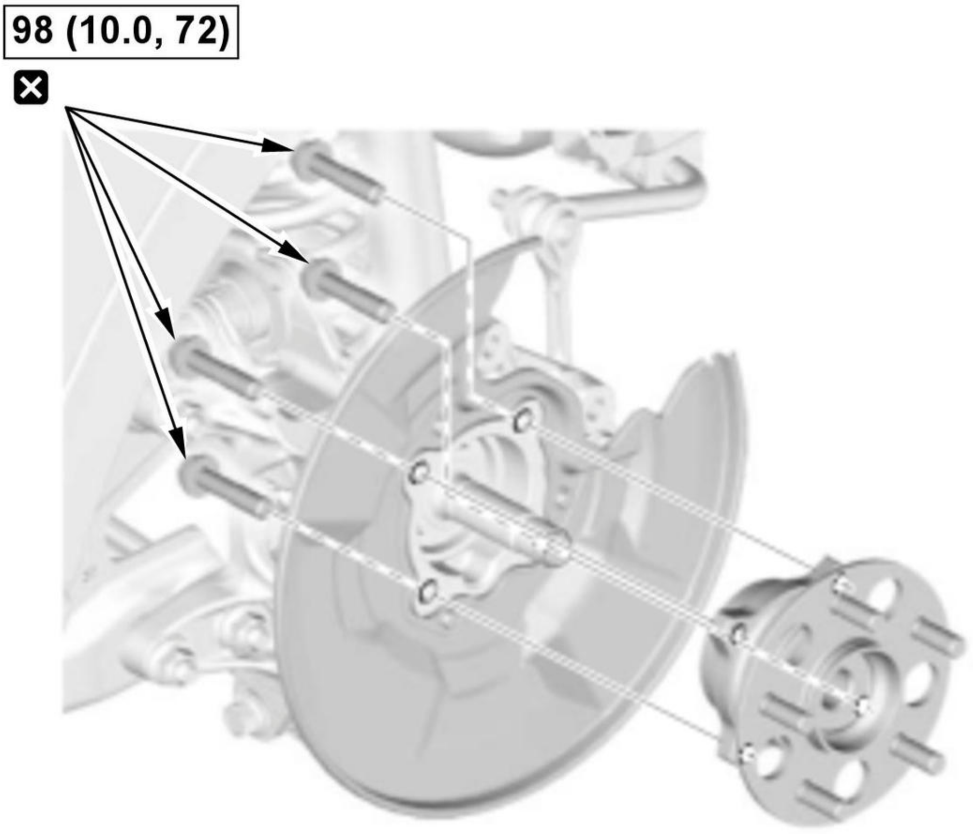

Fig. 10: Rear Hub Bearing Unit And Bolts With Torque Specifications
Courtesy of HONDA, U.S.A., INC.

NOTE:

- Use new bolts during reassembly.
- Keep the wheel bearing/encoder away from any magnetic field. The encoder can be damaged or erased.

9. Hub Bearing Unit for Damage and Cracks - Check
10. All Removed Parts - Install

    1. Install all removed parts in the reverse order of removal.

11. **Wheel Alignment - Check**

Knuckle

12. Hub Bearing Unit - Remove
13. Splash Guard - Remove

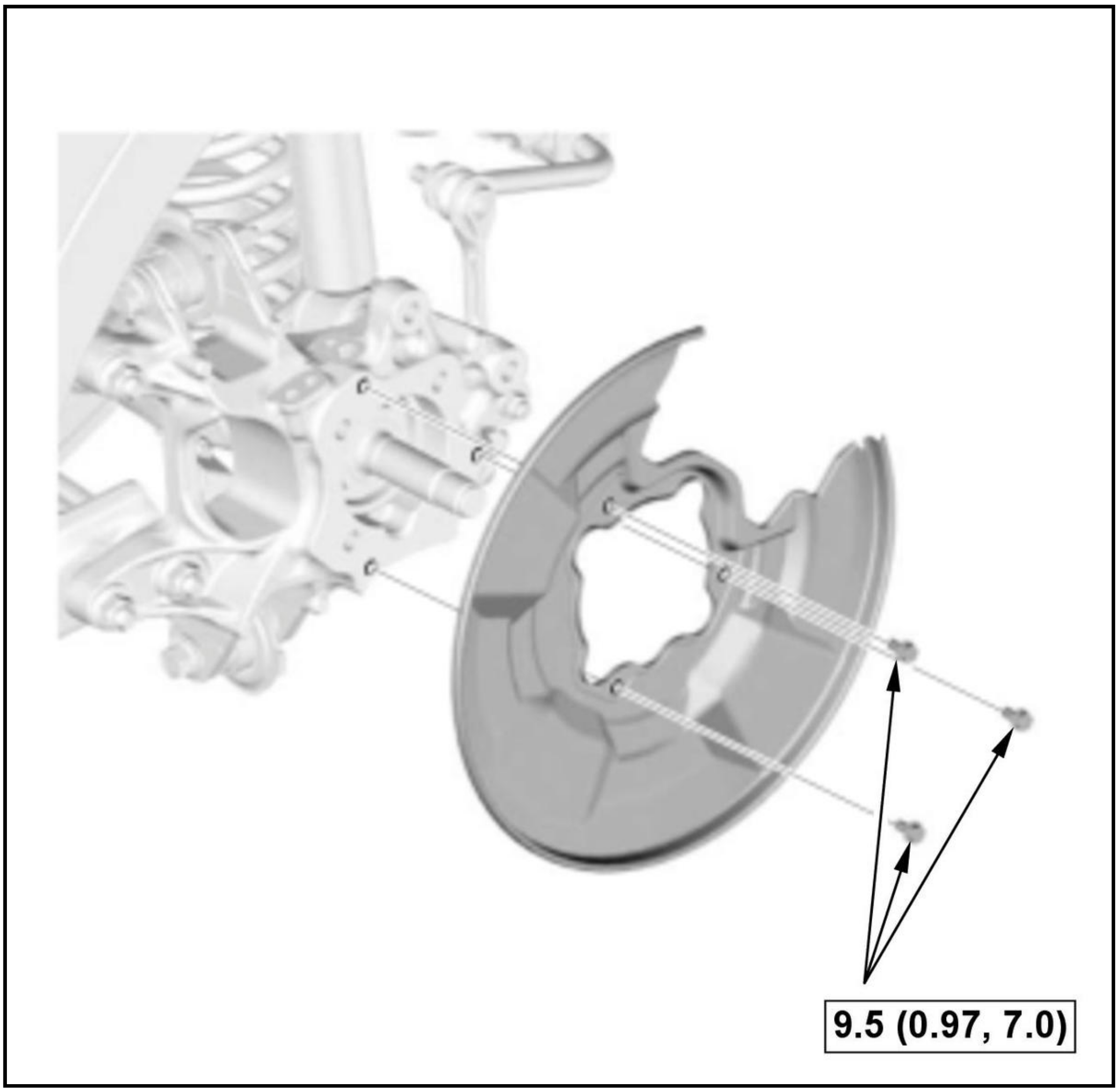

14. Rear Wheel Speed Sensor - Remove

    NOTE: Do not disconnect the wheel speed sensor connector.

15. Rear Damper - Disconnect

    1. Disconnect the rear damper from the knuckle .

16. Knuckle - Remove

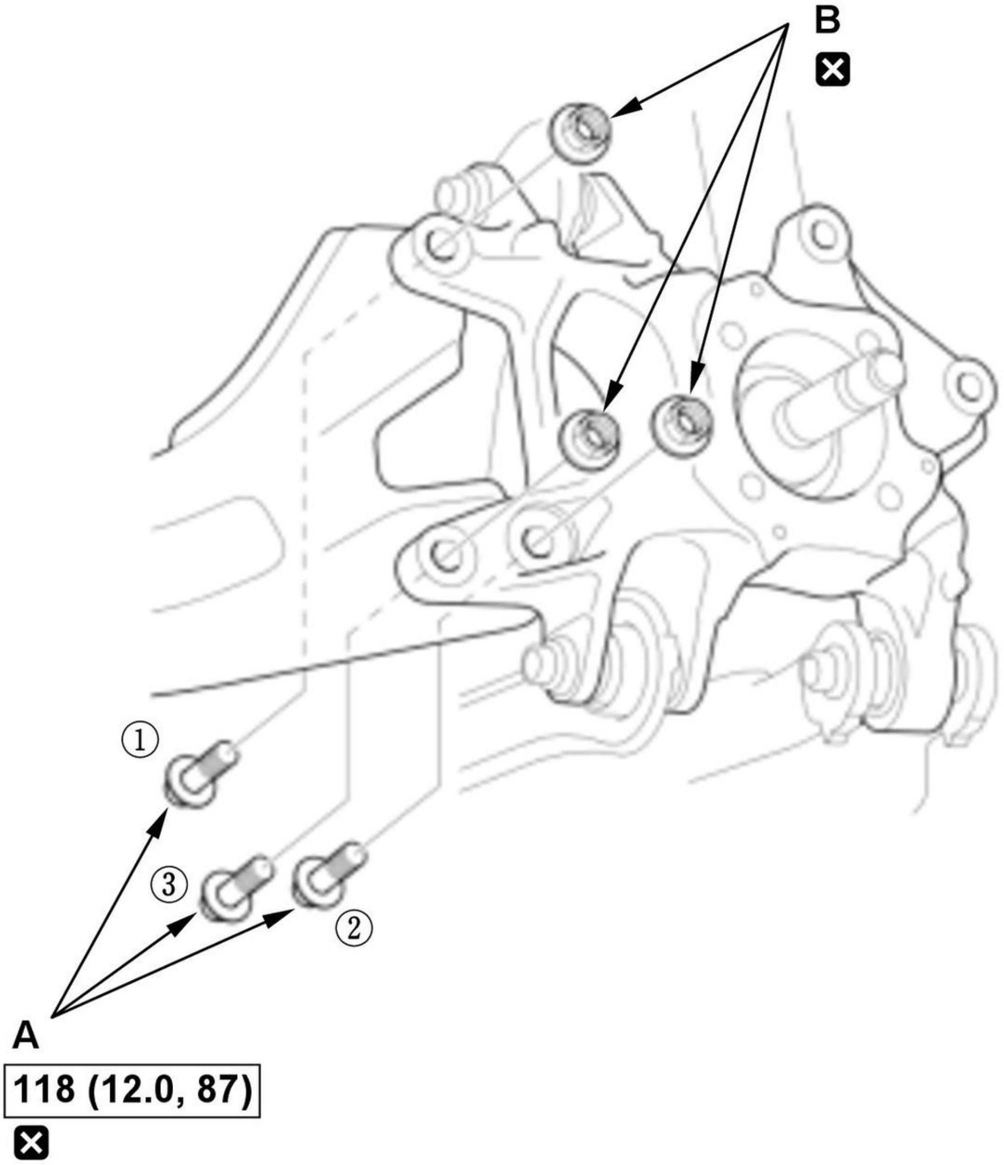

Fig. 11: Rear Trailing Arm Mounting Bolts/Nuts With Tightening Sequence And Torque Specifications
Courtesy of HONDA, U.S.A., INC.

1. Remove the trailing arm mounting bolts (A) and nuts (B).

NOTE:

- Use new bolts and nuts during reassembly.
- During installation, tighten the trailing arm mounting bolts in the numbered sequence shown.

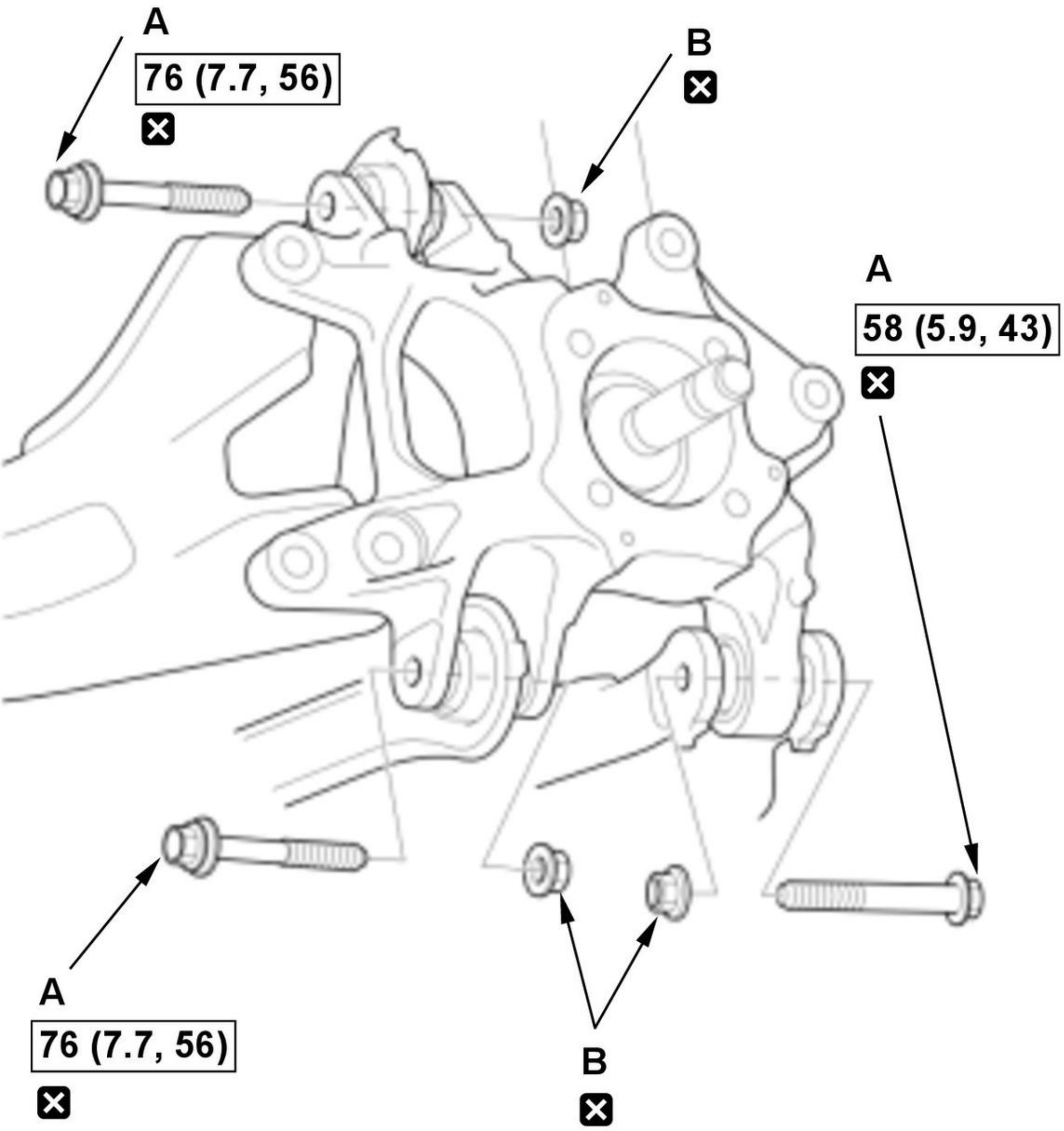

Fig. 12: Rear Knuckle Mounting Bolts/Nuts With Torque Specifications
Courtesy of HONDA, U.S.A., INC.

2. Remove the mounting bolts (A) and nuts (B). **NOTE:** Use new bolts and nuts during reassembly.

17. All Removed Parts - Install

1. Install all removed parts in the reverse order of removal. **NOTE:** Loosely install nuts and/or bolts to install the bushings, load the suspension with the vehicle's weight, and then tighten the nuts and/or bolts to the specified torque.

18. Wheel Alignment - Check

REAR LOWER ARM A REMOVAL AND INSTALLATION

Removal and Installation

NOTE: How to read the torque specifications .

1. Vehicle - Lift
2. Rear Wheel - Remove
3. Lower Arm A - Remove

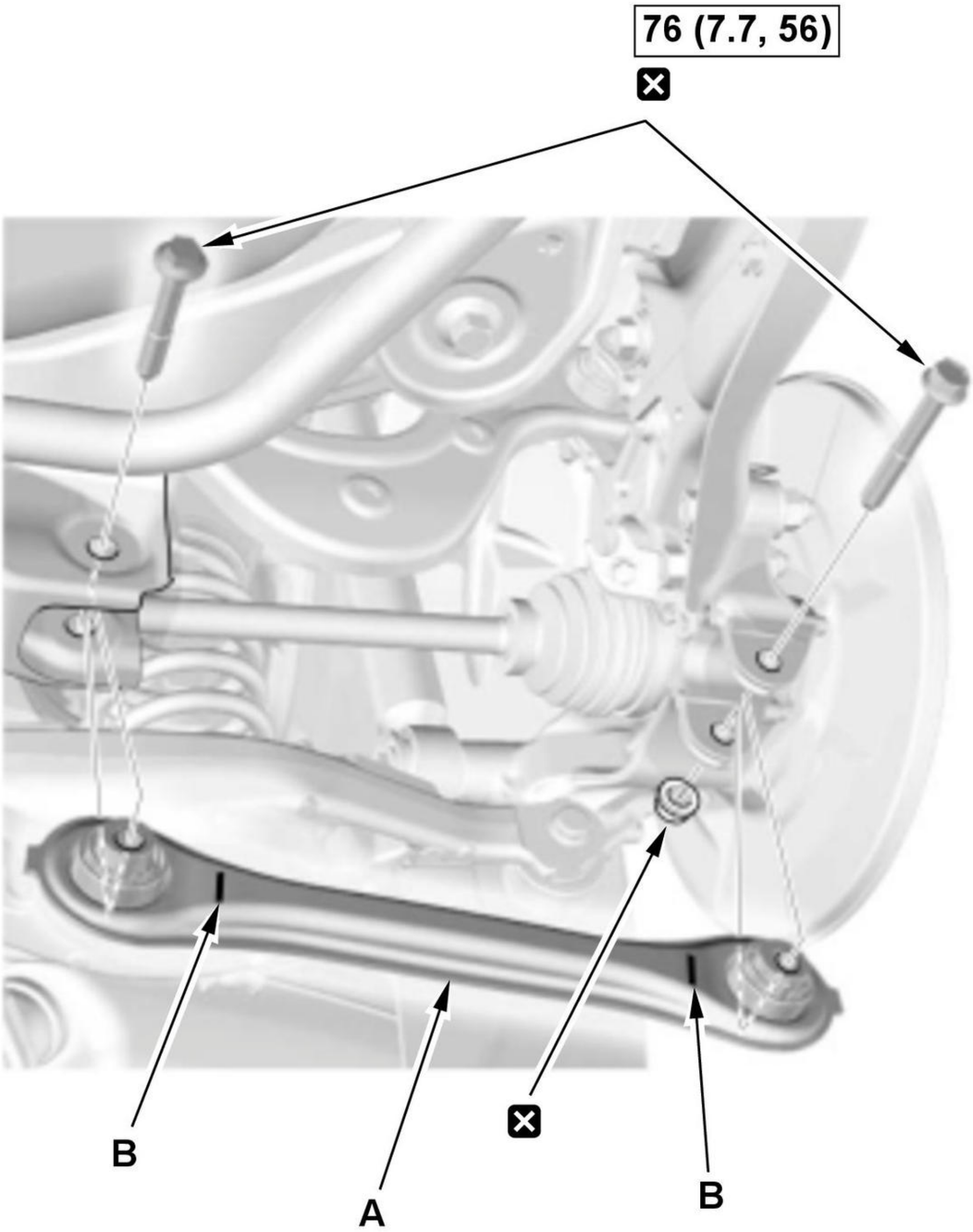

[Fig. 13: Rear Lower Arm A Components With Torque Specifications](#)
Courtesy of HONDA, U.S.A., INC.

NOTE:

- Use new mounting bolts and nut during reassembly.
- Rear lower arm A must be installed in the specified direction. An instruction is given in the area (B) shown in the figure. Follow the instruction to install rear lower arm A.

4. All Removed Parts - Install

1. Install all removed parts in the reverse order of removal. **NOTE:** Loosely install nuts and/or bolts to install the bushings, load the suspension with the vehicle's weight, and then tighten the nuts and/or bolts to the specified torque.

5. [Wheel Alignment - Check](#)

REAR LOWER ARM B REMOVAL AND INSTALLATION

Removal

1. **Vehicle - Lift**
2. **Rear Wheel - Remove**
3. **Rear Spring - Remove**
4. Lower Arm B - Remove

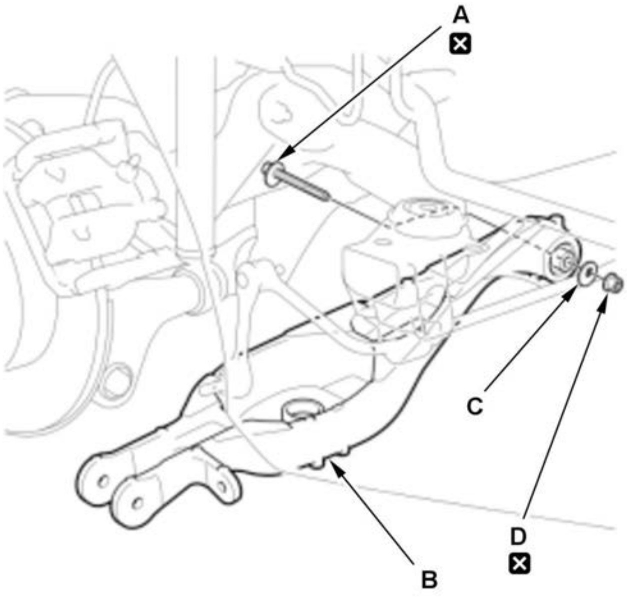	1. Mark the cam positions of the adjusting bolt (A) and the adjusting cam plate (C). 2. Remove the self-locking nut (D), the adjusting cam plate, and the adjusting bolt. 3. Remove lower arm B.

Installation

NOTE: **How to read the torque specifications** .

1. Lower Arm B - Install

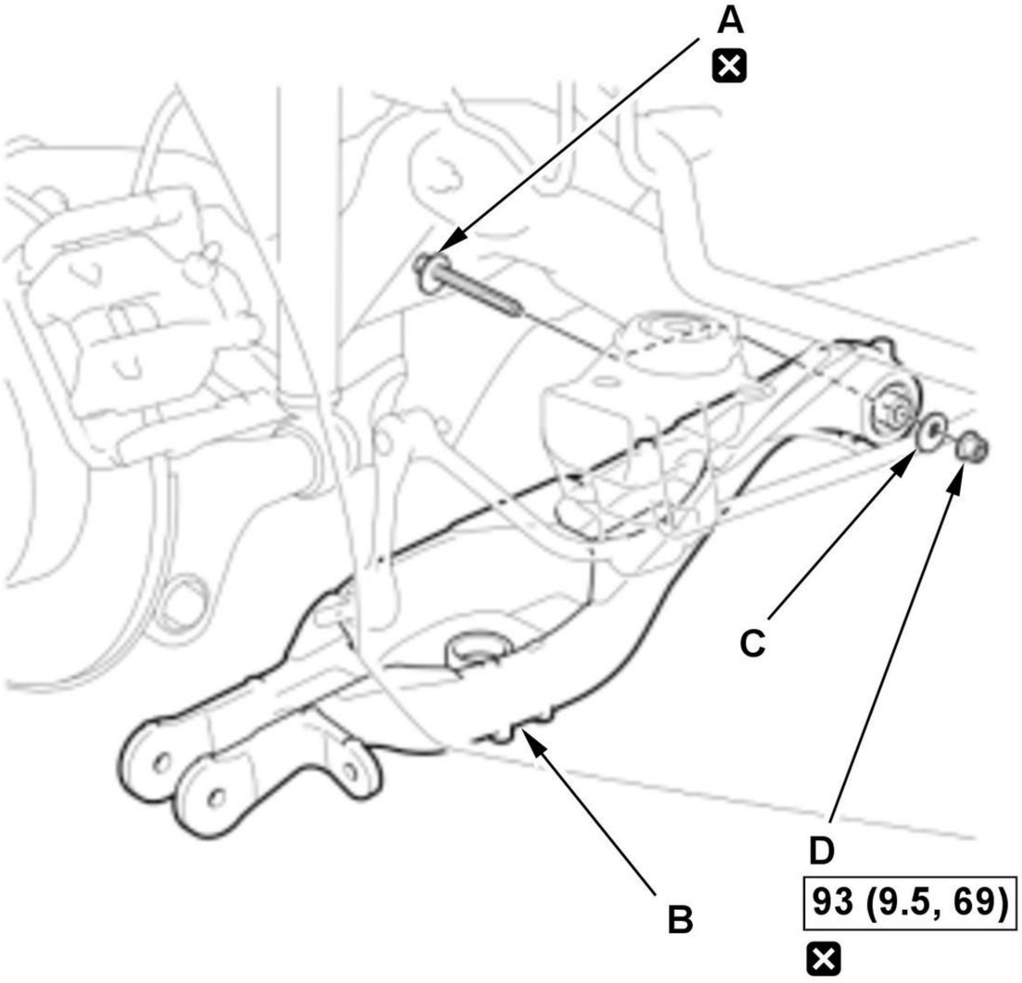

Fig. 14: Rear Lower Arm B Components With Torque Specifications
Courtesy of HONDA, U.S.A., INC.

1. Position lower arm B.

2. Install a new adjusting bolt (A), the adjusting cam plate (C), and a new self-locking nut (D) but do not tighten it.

NOTE:

- Align the cam positions of the adjusting bolt and the adjusting cam plate with the marked positions on the frame when tightening the self-locking nut.
- Tighten the self-locking nut during the rear spring installation procedure.

2. Rear Spring - Install
3. Rear Wheel - Install
4. Wheel Alignment - Check

REAR SPRING REMOVAL AND INSTALLATION

Removal

1. Vehicle - Lift
2. Rear Wheel - Remove
3. Stabilizer Link - Disconnect

1. Disconnect both sides of the stabilizer link from lower arm B.

4. Rear Spring - Remove

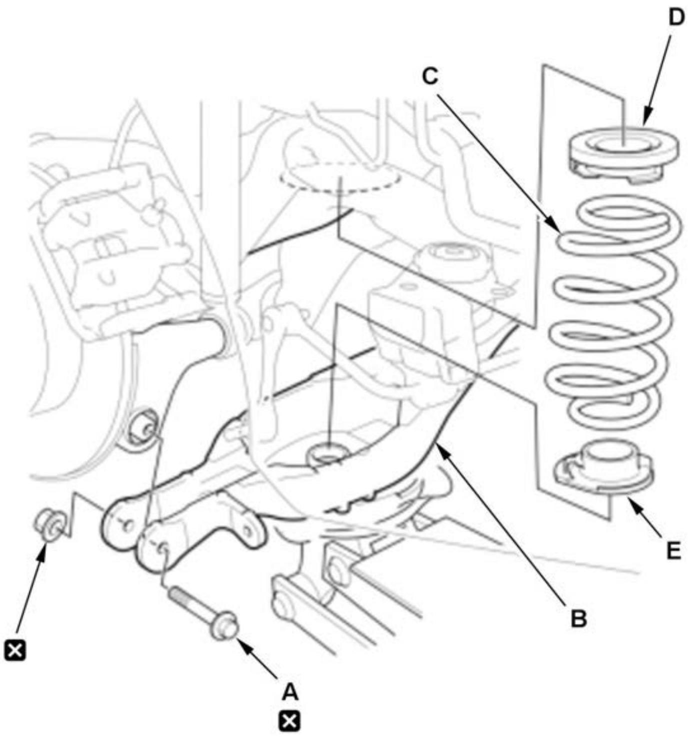	1. Position a floor jack under lower arm B. 2. Raise the floor jack until the suspension begins to compress. 3. Remove the lower arm B mounting bolt (A). 4. Lower the floor jack gradually. 5. Remove the spring (C), upper rubber mount (D), and lower rubber mount (E).

Installation

NOTE: How to read the torque specifications .

1. Spring - Install

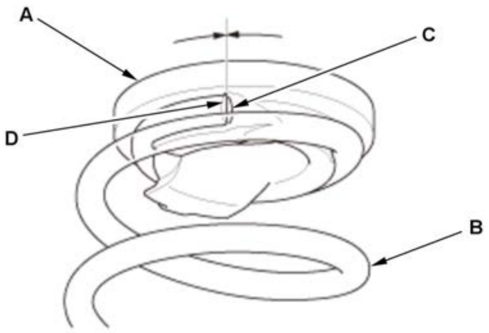	1. Install the upper rubber mount (A) on the spring (B) by aligning the upper end (C) of the spring with the ledge portion (D) of the upper rubber mount.

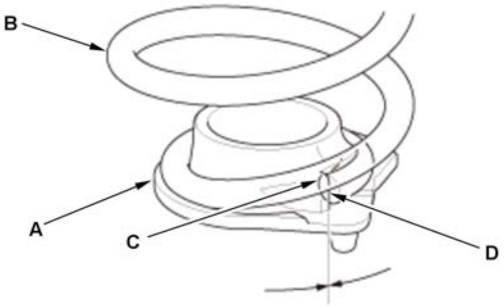	2. Install the lower rubber mount (A) on the spring (B) by aligning the lower end (C) of the spring with the ledge portion (D) of the lower rubber mount.

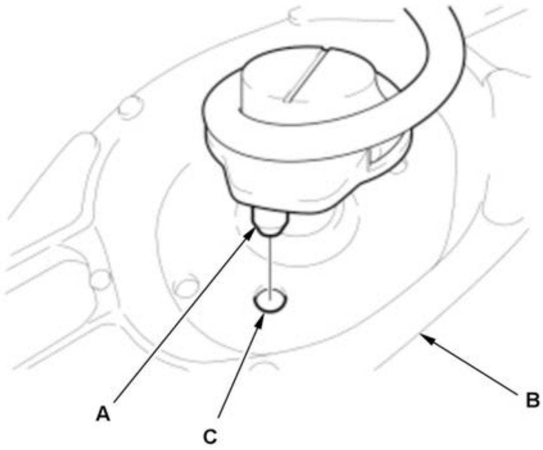	3. Install the tab (A) of the lower rubber mount into the groove (C) of the lower arm B and install the spring assembly. **NOTE:** • Make sure that the tab of the lower rubber mount is properly installed into lower arm B. • Make sure that the spring was installed correctly.

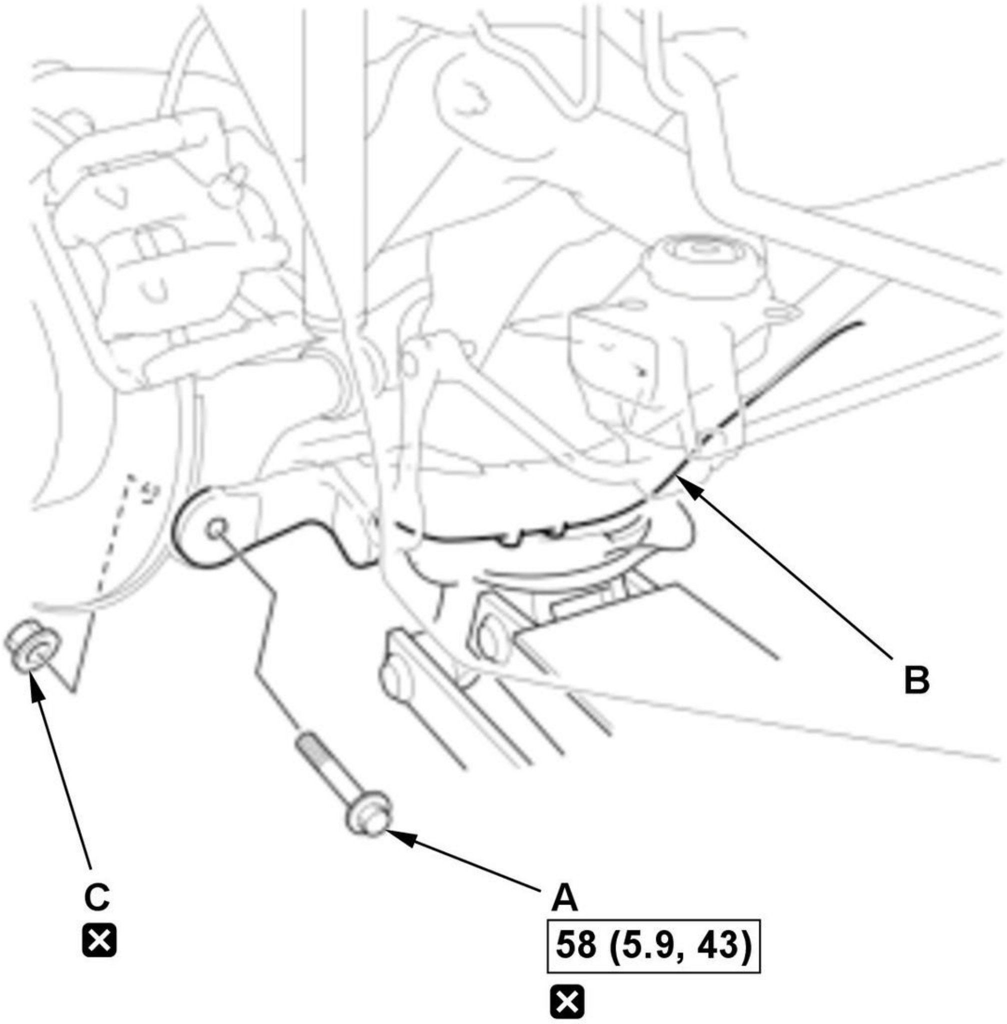

Fig. 15: Rear Lower Arm B Components With Torque Specifications
Courtesy of HONDA, U.S.A., INC.

4. Slowly raise the floor jack until you align the bolt hole with the holes in lower arm B and the knuckle.

5. Loosely install new lower arm B mounting bolt (A) and a new nut (C), but do not tighten it.

6. Load the suspension with the vehicle's weight, and tighten the bolt to the specified torque.

NOTE: If the rear lower arm B was removed or replaced from another procedure, tighten the adjusting bolt at the same time.

2. Stabilizer Link - Connect

   1. Connect both sides of the stabilizer link to lower arm B.

3. Rear Wheel - Install
4. Wheel Alignment - Check

REAR STABILIZER BAR REMOVAL AND INSTALLATION

Removal and Installation

NOTE: How to read the torque specifications .

1. Vehicle - Lift
2. Rear Wheels - Remove
3. Stabilizer Link - Disconnect

   1. Disconnect both sides of the stabilizer link from the stabilizer bar.

4. Stabilizer Bar - Remove

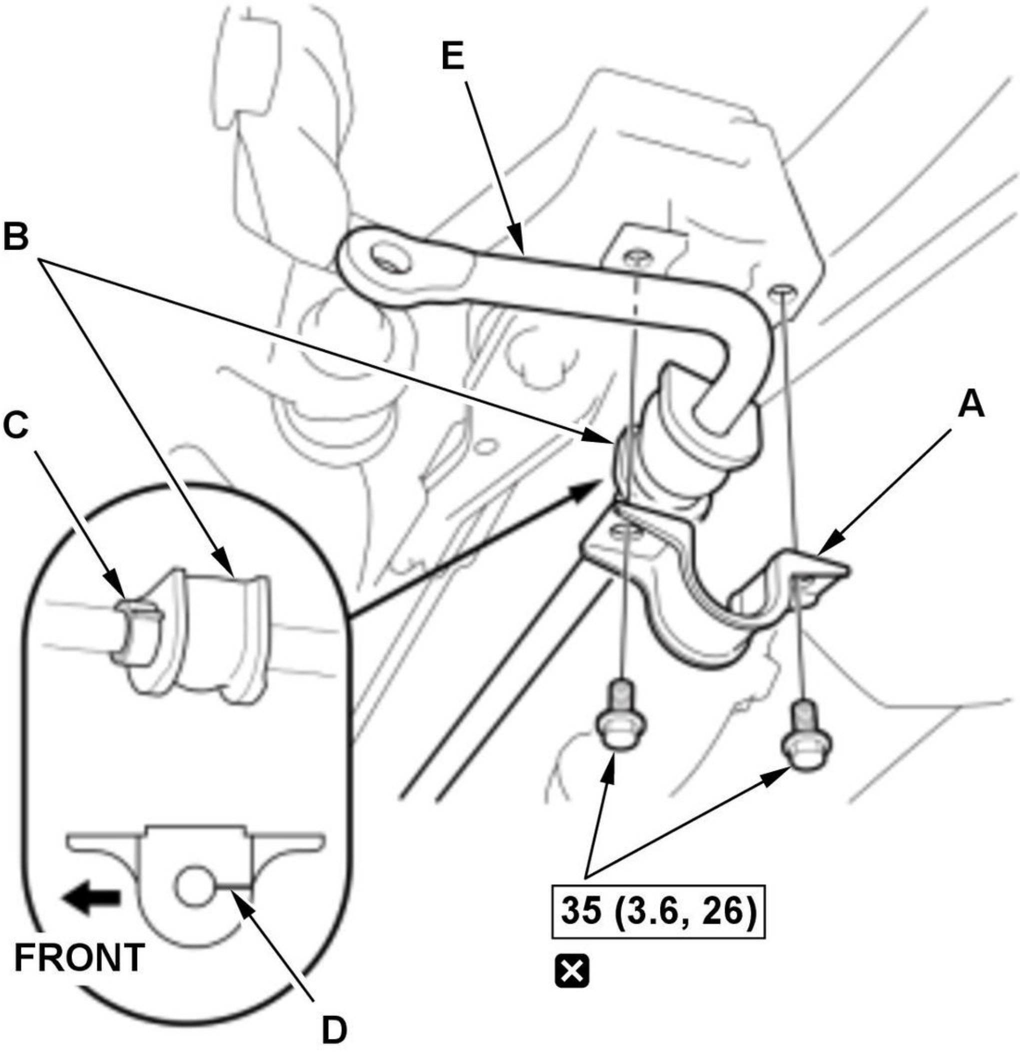

Fig. 16: Rear Stabilizer Bar Components With Torque Specifications
Courtesy of HONDA, U.S.A., INC.

1. Remove the bushing holders (A).

NOTE: Use new bolts during reassembly.

2. Remove the stabilizer bushings (B).

NOTE: During installation, note these items.

- Align the side of the bushing with the stabilizer band clamp (C) on the stabilizer bar.
- The slit (D) of the stabilizer bushing must be directed to the vehicle rear side.

3. Remove the stabilizer bar (E).

5. All Removed Parts - Install

1. Install all removed parts in the reverse order of removal.

REAR STABILIZER LINK REMOVAL AND INSTALLATION

Removal and Installation

NOTE: How to read the torque specifications .

1. Vehicle - Lift

2. Rear Wheel - Remove
3. Stabilizer Link - Remove

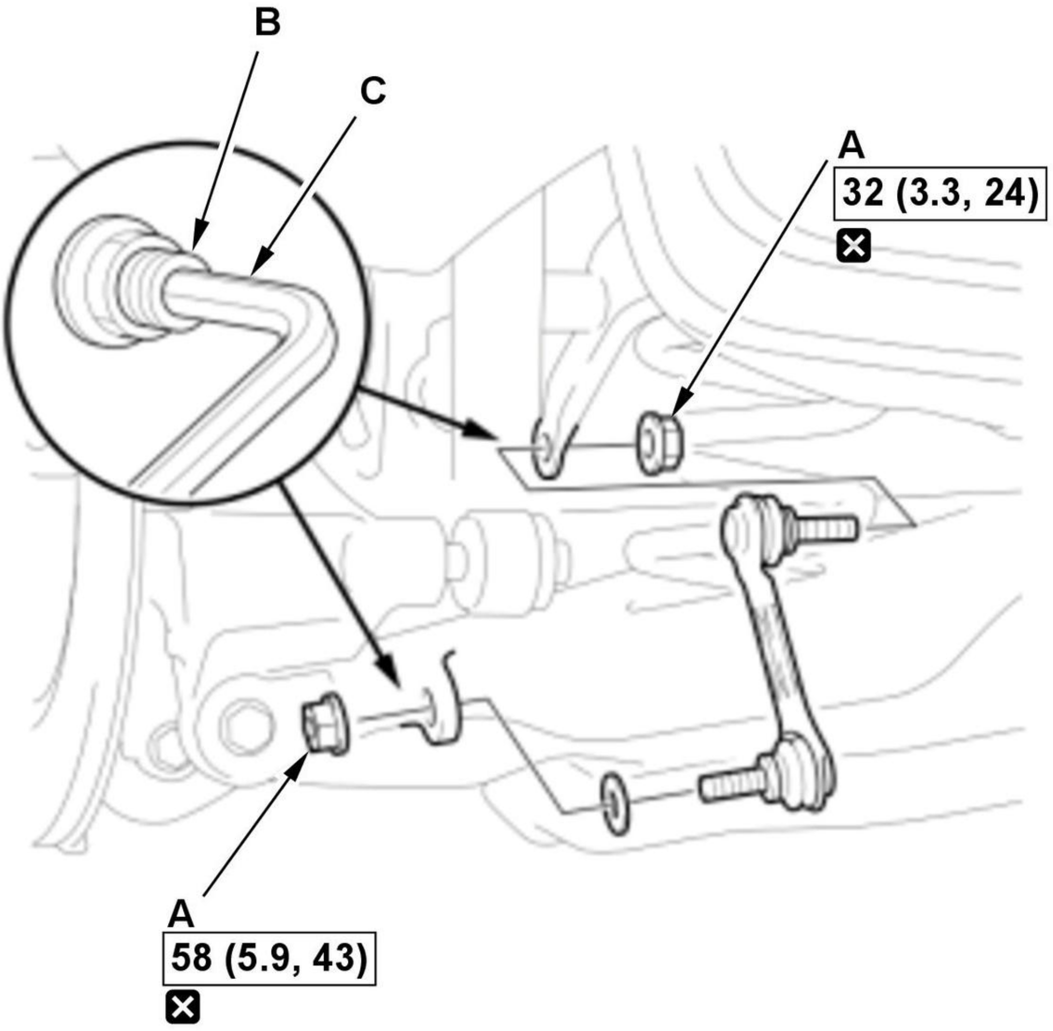

Fig. 17: Rear Stabilizer Link Components With Torque Specifications
Courtesy of HONDA, U.S.A., INC.

1. Remove the flange nuts (A) while holding the respective joint pin (B) with a hex wrench (C).
NOTE: Use new flange nuts during reassembly.

4. All Removed Parts - Install

1. Install all removed parts in the reverse order of removal.

REAR TRAILING ARM REMOVAL AND INSTALLATION

Removal and Installation

NOTE: How to read the torque specifications .

1. Vehicle - Lift
2. Rear Wheel - Remove
3. Rear Wheel Speed Sensor - Remove

1. Remove the rear wheel speed sensor from the trailing arm .
NOTE: Do not disconnect the wheel speed sensor connector.

4. Trailing Arm - Remove

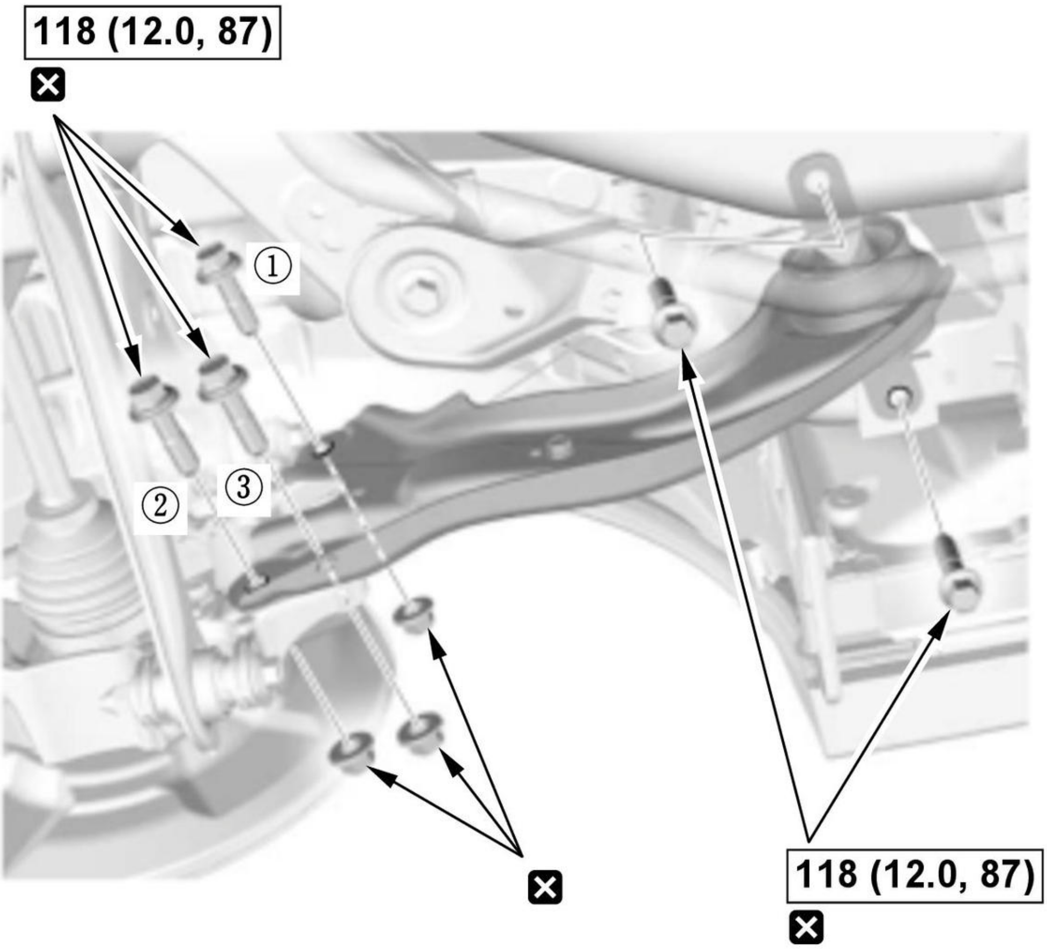

Fig. 18: Rear Trailing Arm Components With Tightening Sequence And Torque Specifications
Courtesy of HONDA, U.S.A., INC.

NOTE: During installation, note these items.

- Use new bolts and nuts.
- Tighten the knuckle mounting bolts to the specified torque in the numbered sequence shown.

5. All Removed Parts - Install

1. Install all removed parts in the reverse order of removal. **NOTE:** Loosely install the nuts and/or bolts to install the bushings, load the suspension with the vehicle's weight, and then tighten the nuts and/or bolts to the specified torque.

6. Wheel Alignment - Check

REAR UPPER ARM REMOVAL AND INSTALLATION

Removal

1. Vehicle - Lift
2. Rear Wheel - Remove
3. Upper Arm - Remove

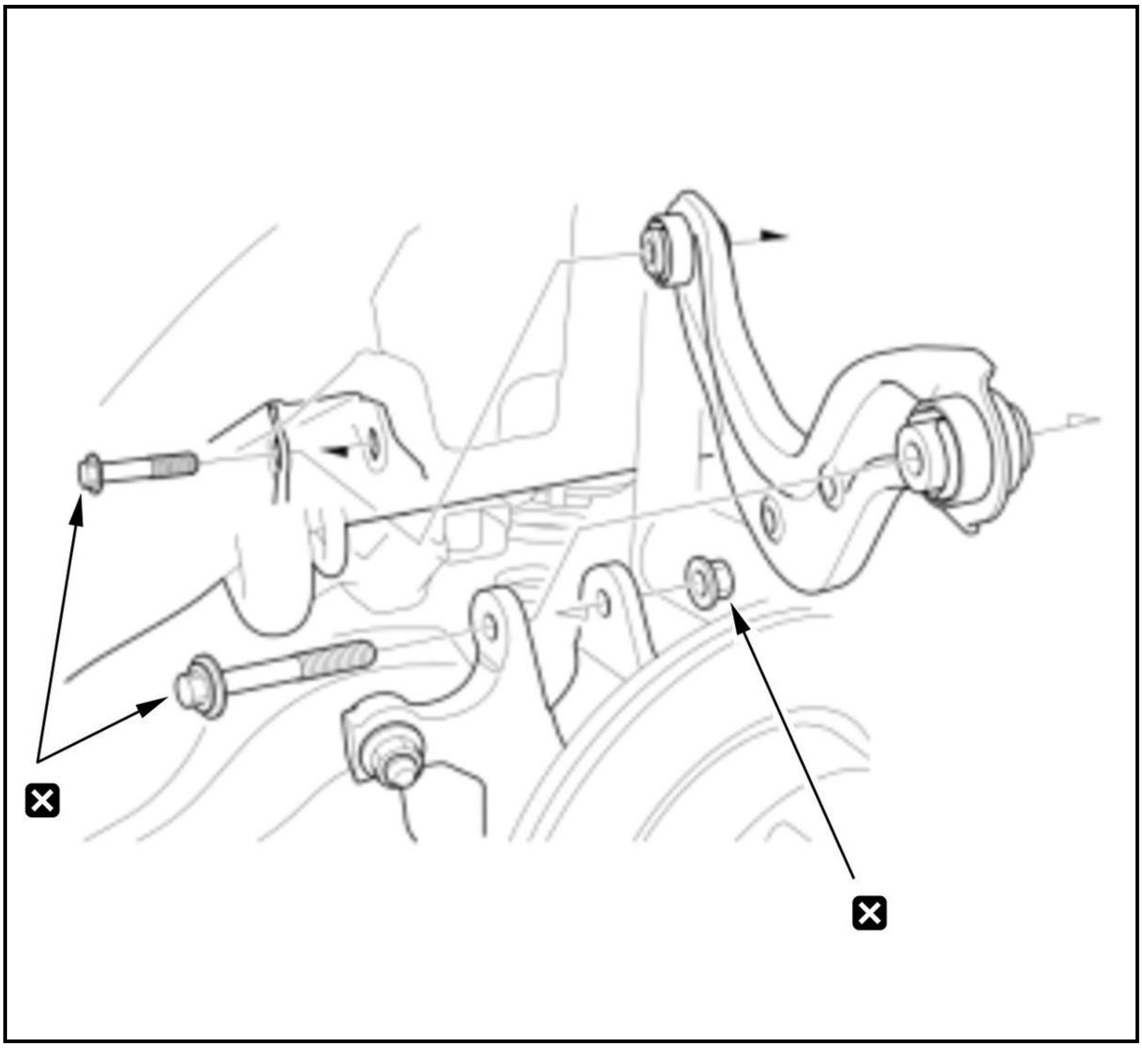

Installation

NOTE: How to read the torque specifications .

1. Upper Arm - Install

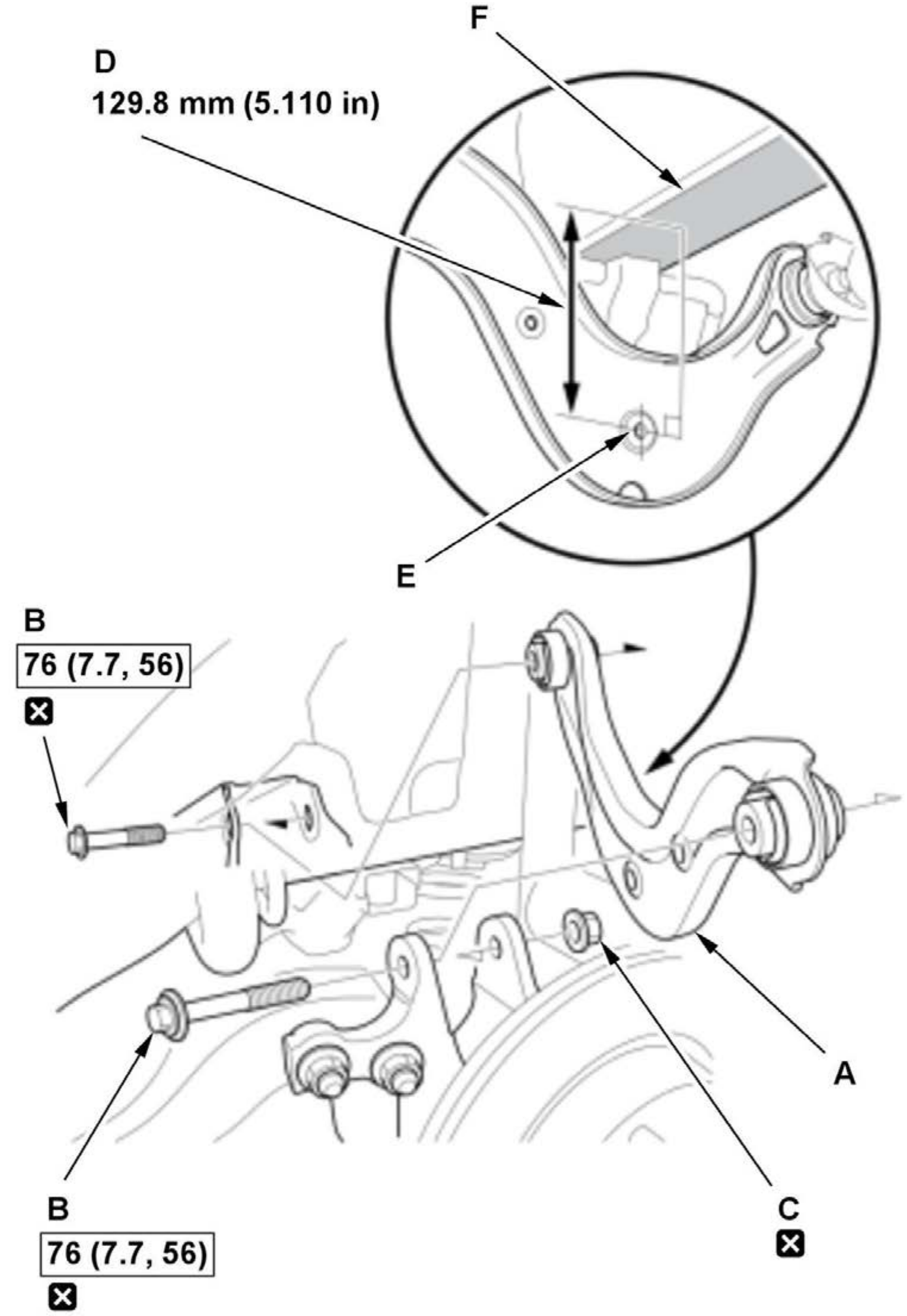

Fig. 19: Rear Upper Arm Components With Torque Specifications
Courtesy of HONDA, U.S.A., INC.

1. Loosely install the upper arm (A) with the mounting bolts (B) and the nut (C).

NOTE: Use new bolts and nut during reassembly.

2. Place a floor jack under the under lower arm B.

3. Raise the suspension until the indicated clearance (D) is achieved between the hole of the upper arm (E) and the lower surface of the rear frame (F) as shown.

4. Tighten the upper arm mounting bolts to the specified torque.

2. Rear Wheel - Install
3. Wheel Alignment - Check

WHEEL BOLT REMOVAL AND INSTALLATION

Special Tools Required

Image	Description/Tool Number
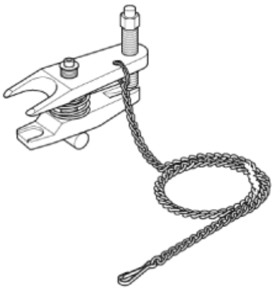	Ball Joint Remover, 28 mm 07MAC-SL00202

Removal

NOTICE:

- Do not use a hammer or impact tools (pneumatic or electric).
- Be careful not to damage the threads of the wheel bolts.

Front

1. Vehicle - Lift
2. Front Wheel - Remove
3. Front Hub - Remove
4. Wheel Bolt - Remove

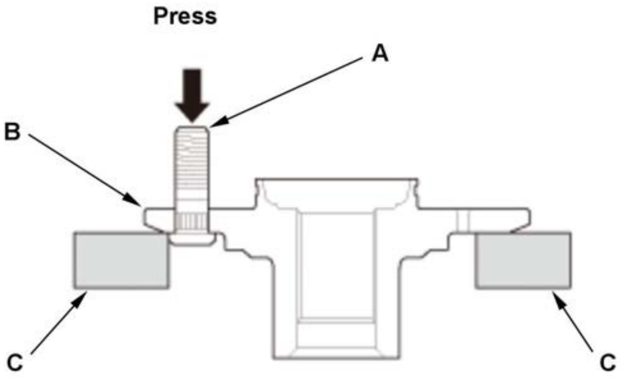	1. Separate the wheel bolt (A) from the hub (B) using a hydraulic press. **NOTE:** Support the hub with hydraulic press attachments (C) or equivalent tools.

Rear

1. Vehicle - Lift
2. Rear Wheel - Remove
3. Rear Brake Disc - Remove

4. Wheel Bolt - Remove

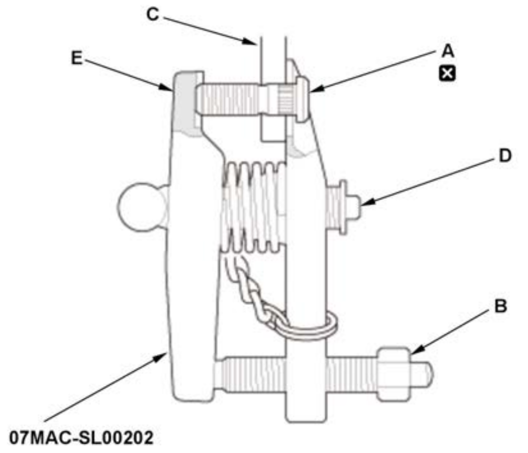	1. Attach the ball joint remover to the wheel bolt (A) as shown. **NOTE:** **Review to how to using the ball joint remover** 2. Turn the pressure bolt (B) to separate the wheel bolt from the hub (C). **NOTE:** Adjust the adjusting bolt (D) so that the angle between the wheel bolt and the jaw portion (E) of the ball joint remover is kept at perpendicular.

Installation

NOTICE:

- Do not use a hammer or impact tools (pneumatic or electric).
- Be careful not to damage the threads of the wheel bolts.

Front

1. Wheel Bolt - Install

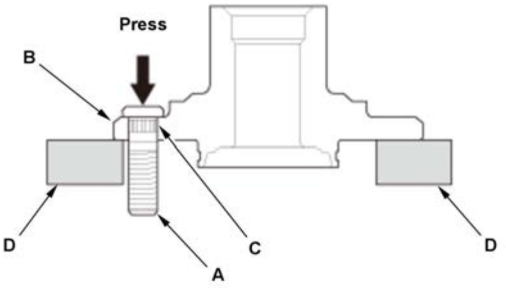	1. Insert a new wheel bolt (A) into the hub (B) while aligning the splined surfaces (C) on the hub hole with the wheel bolt. **NOTE:** • Degrease the area around the wheel bolt. • Make sure the wheel bolt is installed vertically to the hub disc surface. • Before installing the new wheel bolt, clean the mating surfaces on the bolt and the hub. 2. Install the wheel bolt using a hydraulic press until the wheel bolt shoulder is fully seated. Support the hub with hydraulic press attachments (D) or equivalent tools.

2. **Front Hub - Install**
3. **Front Wheel - Install**

   NOTE: If you cannot tighten the wheel nut to the specified torque when installing the wheel, **replace the front hub** .

Rear

1. Wheel Bolt - Install

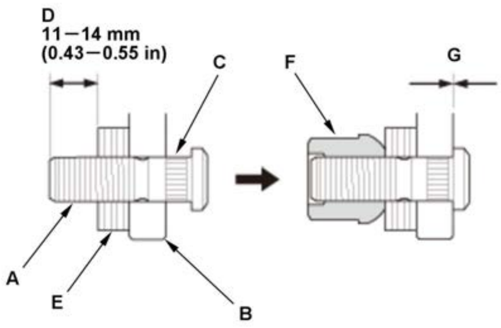

1. Insert a new wheel bolt (A) into the hub (B) while aligning the splined surfaces (C) on the hub hole with the wheel bolt.

NOTE:

- Before installing the new wheel bolt, clean the mating surfaces on the bolt and the hub.
- Degrease the area around the wheel bolt and the threaded section of the nut.

2. Adjust the measurement (D) with the washers (P/N 94101-12800 or equivalent) (E).

3. Install a nut (P/N 90304-SC2-000 or equivalent) (F) hand-tight.

NOTE:

- Make sure the wheel bolt is installed vertically to the hub disc surface.
- Do not install the nut and the washers that have been used as tools on a vehicle.

4. Tighten the nut.

NOTE:

- Do not exceed the maximum torque limit.
- Make sure there is no gap (G) between the bolt and the hub.

Limited torque: 108 N.m (11.0 kgf.m, 80 lbf.ft) max.

NOTE: If you cannot tighten the wheel nut to the specified torque when installing the wheel, replace the rear hub bearing unit as an assembly.

2. Rear Brake Disc - Install
3. Rear Wheel - Install

WHEEL REMOVAL AND INSTALLATION

Removal and Installation

NOTE: How to read the torque specifications .

1. Vehicle - Lift
2. Wheel - Remove

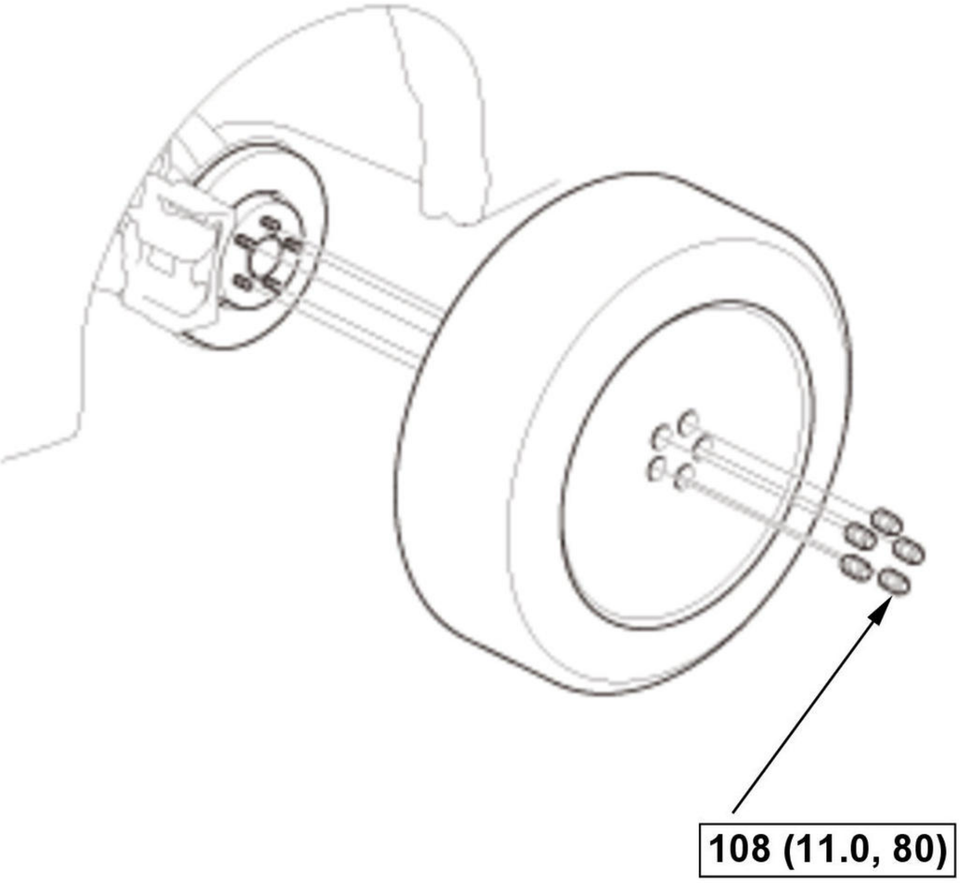

Fig. 20: Wheel Lug Nuts With Torque Specifications
Courtesy of HONDA, U.S.A., INC.

3. All Removed Parts - Install

1. Install all removed parts in the reverse order of removal. **NOTE:** Before installing the wheel, clean the mating surfaces between the brake disc and the inside of the wheel.

REMOVAL, INSTALLATION & INSPECTION

REAR DAMPER REMOVAL, INSTALLATION, AND INSPECTION

Exploded View

NOTE: How to read the torque specifications .

1. Rear Damper

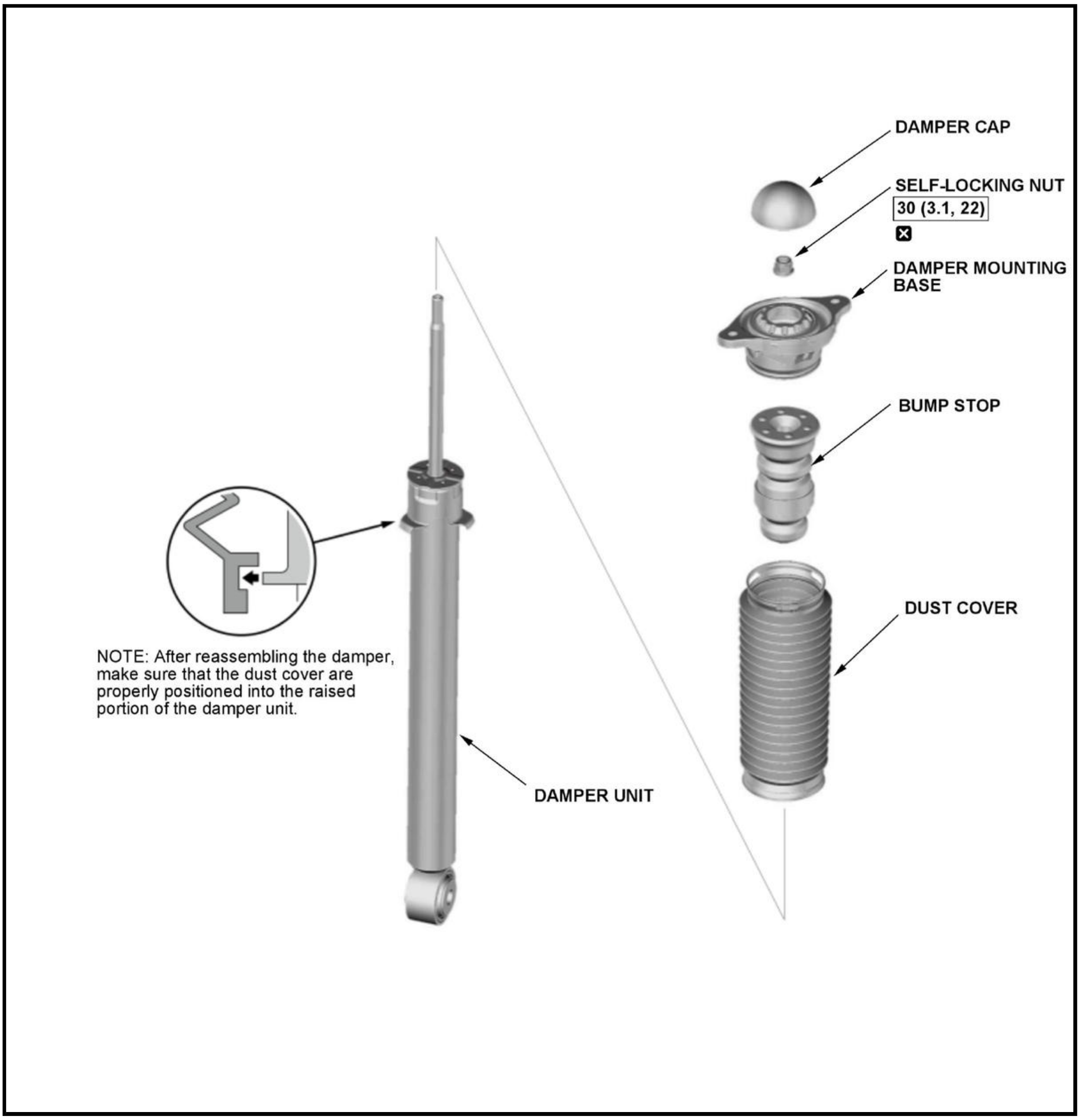
DAMPER CAP
SELF-LOCKING NUT
30 (3.1, 22)
☒
DAMPER MOUNTING BASE
BUMP STOP
DUST COVER
DAMPER UNIT

NOTE: After reassembling the damper, make sure that the dust cover are properly positioned into the raised portion of the damper unit.

Removal and Installation

NOTE:

- How to read the torque specifications .
- Refer to the Exploded View as needed during the following procedures.
- Check for deterioration and damage to each part during removal.

1. Vehicle - Lift
2. Rear Wheel - Remove
3. Damper - Remove

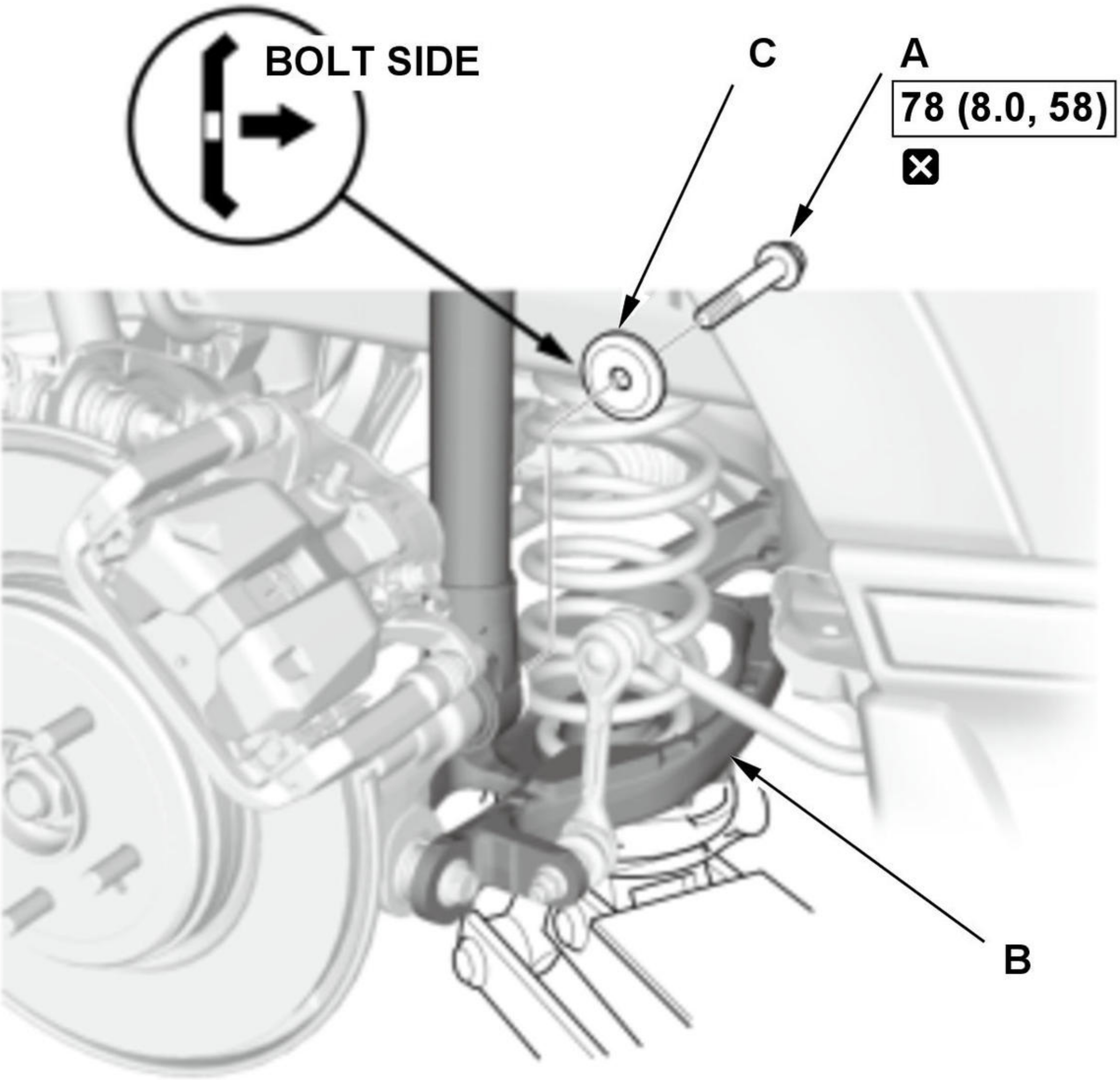

Fig. 1: Rear Damper Lower Mounting Components With Torque Specifications
Courtesy of HONDA, U.S.A., INC.

1. Position a floor jack under lower arm B.

2. Raise the floor jack until the suspension begins to compress.

3. Remove the damper lower mounting bolt (A) and the washer (C).

NOTE: Use a new bolt during reassembly.

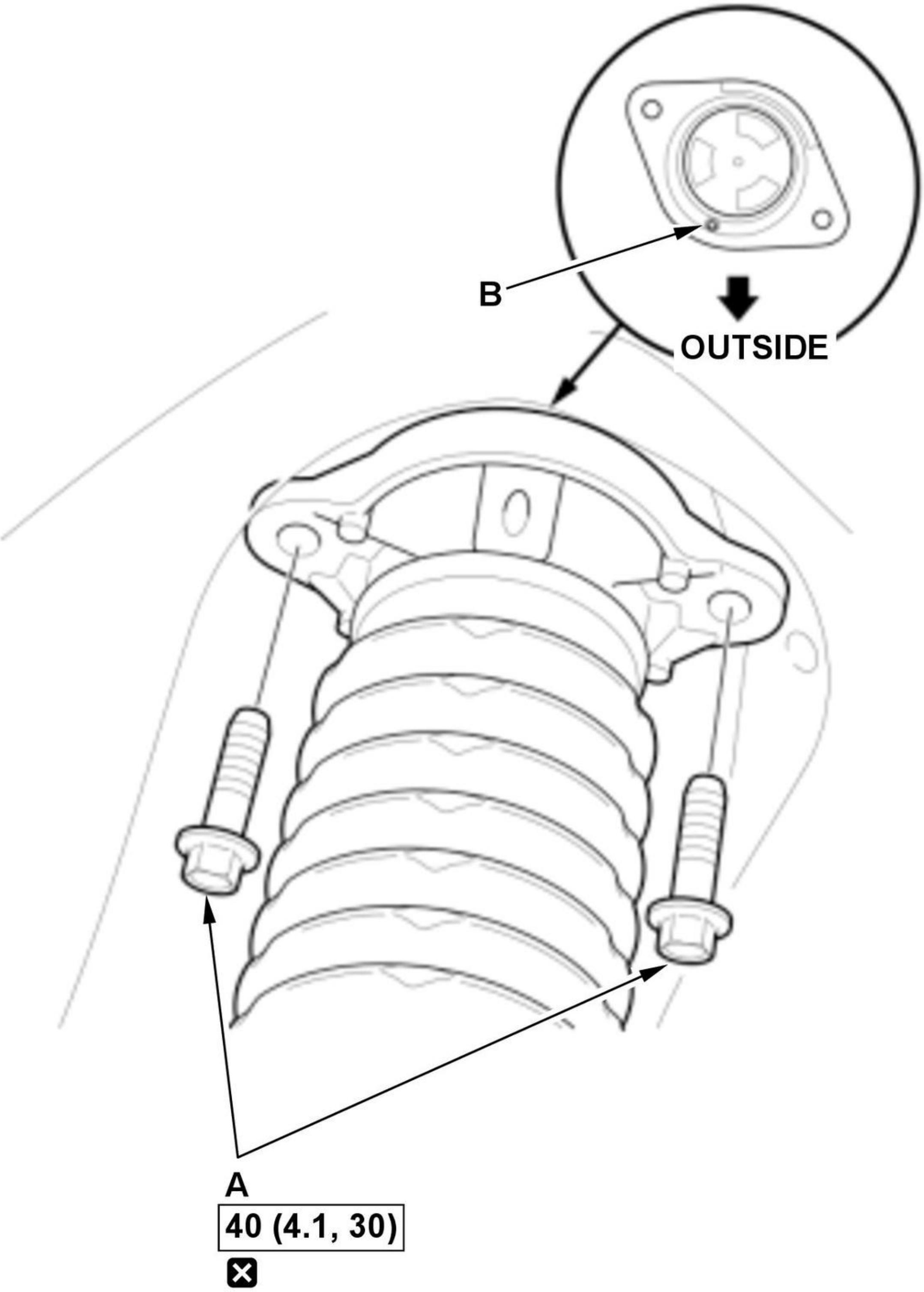

Fig. 2: Rear Damper Upper Mounting Components With Torque Specifications
Courtesy of HONDA, U.S.A., INC.

4. Remove the damper upper mounting bolts (A).

NOTE:

- Be careful not to damage the body.
- Do not let the damper drop down under its own weight.
- During installation, note these items.

- Install the damper unit in the body with the hole (B) facing outside. - Use new flange bolts during reassembly.

4. All Removed Parts - Install

1. Install all removed parts in the reverse order of removal. **NOTE:** Loosely install the nuts and/or bolts to install the bushings, load the suspension with the vehicle's weight, and then tighten the nuts and/or bolts to the specified torque.

5. **Wheel Alignment - Check**

Inspection

1. Rear Damper - Inspect

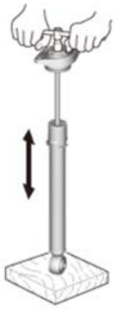	1. Install the damper mounting base and the self-locking nut. 2. Compress the damper assembly by hand, and check for smooth operation through a full stroke, both compression and extension. The damper should extend smoothly and constantly when compression is released. If it does not, the gas is leaking and the damper should be replaced. 3. Check for oil leaks, abnormal noises, and binding during these tests.

INSPECTION

FRONT LOWER ARM BALL JOINT INSPECTION

Inspection

NOTICE:

When inspecting the ball joint, the vehicle will be shaken strongly. Make sure to support the front jacking bracket correctly with the suitable jack.

1. **Vehicle - Lift**
2. **Front Wheel - Remove**
3. Lower Ball Joint - Inspect

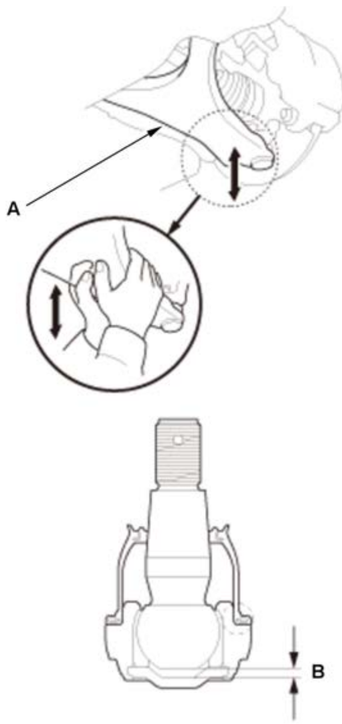

1. Check all bolts, nuts, and bushings on the suspension components, and make sure that there are not looseness, deteriorated or damaged.

2. Hold the outside of lower arm (A) with your hands, and move it up and down to check for abnormal noise or wobbling.

NOTE:

- If the lower ball joint is abnormal, **replace the lower ball joint** .
- A problem on the lower ball joint may be caused by an abnormal clearance (B).

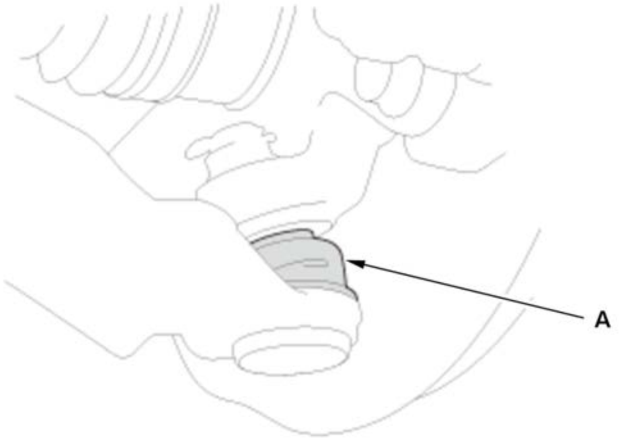

3. Check the ball joint boot (A) for weakness, damage, cracks, and inner boot grease leaks.
NOTE: If the ball joint boot shows damage, weakness, or cracks **replace the lower ball joint** .

4. **Front Wheel - Install**

WHEEL BEARING END PLAY INSPECTION

Inspection

NOTE: **How to read the torque specifications** .

1. **Vehicle - Lift**
2. **Front Wheels and Rear Wheels - Remove**
3. Wheel Bearing End Play - Inspect

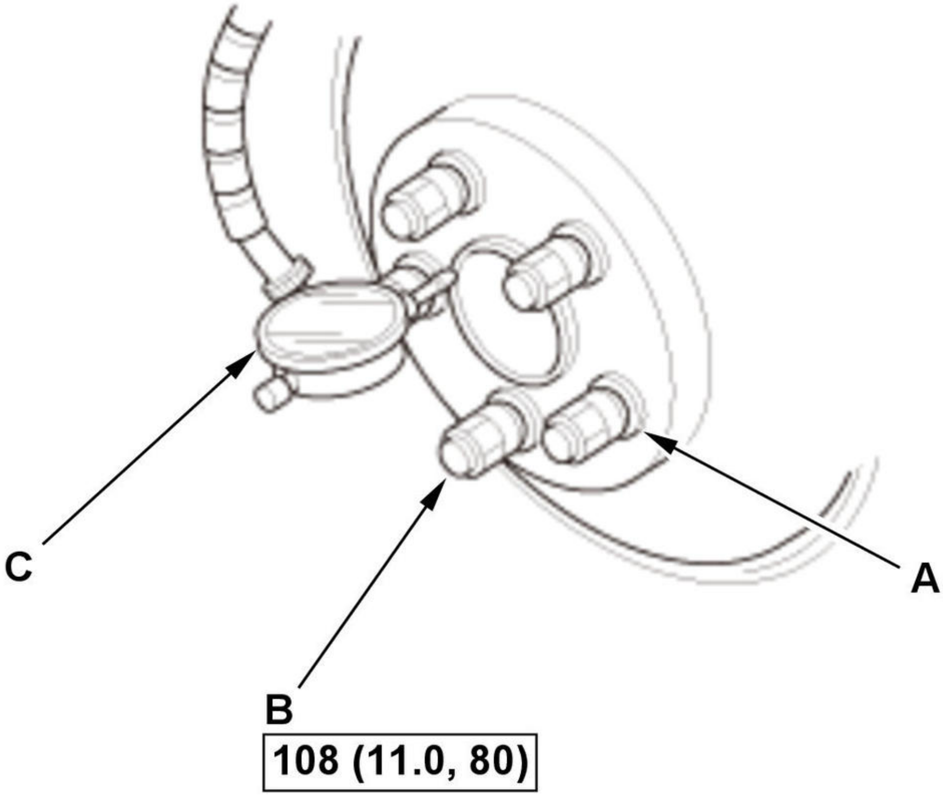

Fig. 3: Wheel Bearing End Play Inspection Components And Wheel Nuts With Torque Specifications
Courtesy of HONDA, U.S.A., INC.

1. Install suitable flat washers (A).

2. Install the wheel nuts (B).

3. Tighten the nuts to the specified torque to hold the brake disc securely against the hub.

4. Attach the dial gauge (C).

5. Place the dial gauge against the hub flange.

6. Measure the bearing end play while moving the brake disc inward and outward.

7. If the bearing end play measurement is more than the standard, replace the wheel bearing or the hub bearing unit .

Wheel bearing end play:		
B	**Front/Rear:**	**0-0.05 mm (0-0.0020 in)**

4. Front Wheels and Rear Wheels - Install

WHEEL RUNOUT INSPECTION

Inspection

1. Vehicle - Lift
2. Wheel Runout - Inspect

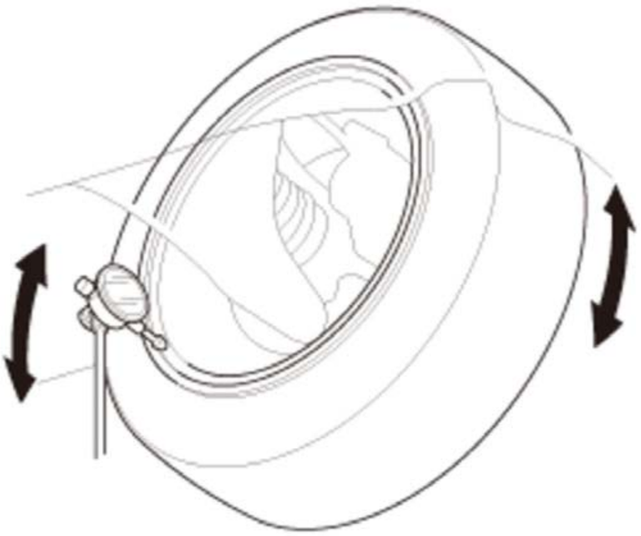 **Axial runout**	1. Check for bent or deformed wheels. 2. Set up the dial gauge as shown. 3. Measure the axial runout by turning the wheel.

Front and rear wheel axial runout:		
B	**Standard:**	**0-0.3 mm (0-0.012 in)**
B	**Service limit:**	**2.0 mm (0.079 in)**

Radial runout 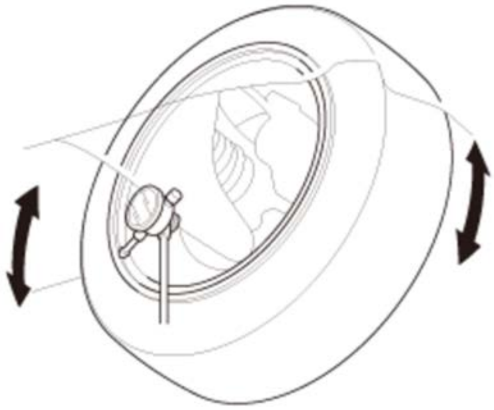	4. Reset the dial gauge to the position shown. 5. Measure the radial runout. 6. If the wheel runout is not within the specification, check the wheel bearing end play , and make sure the mating surfaces between the brake disc and the inside of the wheel are clean. 7. If the bearing end play is within the specification but the wheel runout is more than the service limit, replace the wheel .

Front and rear wheel radial runout:		
B	**Standard:**	**0-0.3 mm (0-0.012 in)**
B	**Service limit:**	**1.5 mm (0.059 in)**

REPLACEMENT

FRONT KNUCKLE/HUB/WHEEL BEARING REPLACEMENT

Special Tools Required

Image	Description/Tool Number
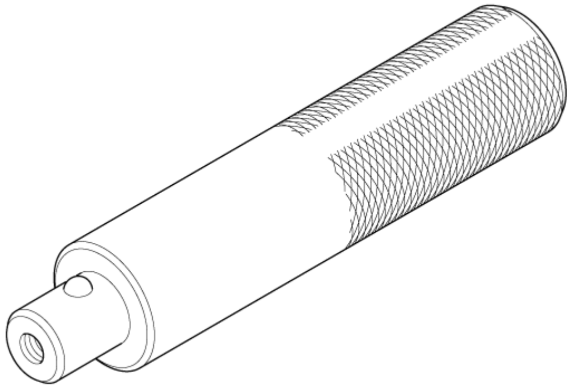	Driver Handle, 15 x 135L 07749-0010000
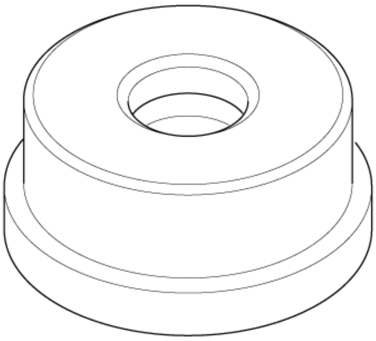	Bearing Driver Attachment, 42 x 47 mm 07746-0010300
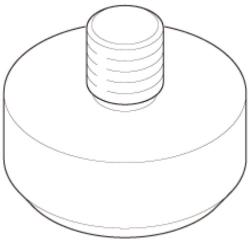	Pilot, 28 mm 07746-0041100
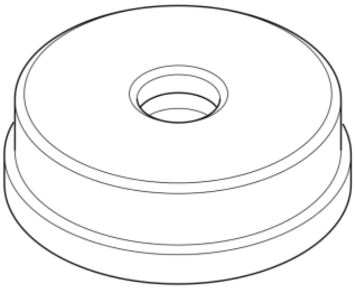	Bearing Driver Attachment, 62 x 68 mm 07746-0010500

Image	Description/Tool Number
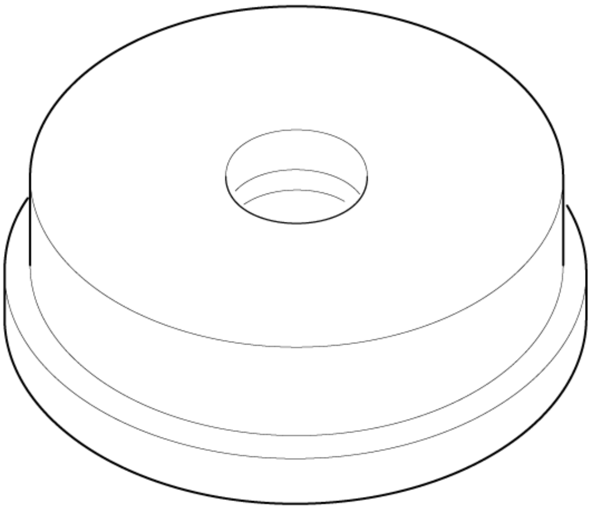	Attachment, 78 x 90 mm 07GAD-SD40101
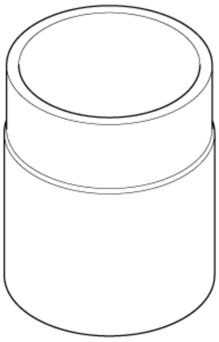	Support Base 07965-SD90100

Exploded View

NOTE: **How to read the torque specifications** .

1. Knuckle/Hub/Wheel Bearing

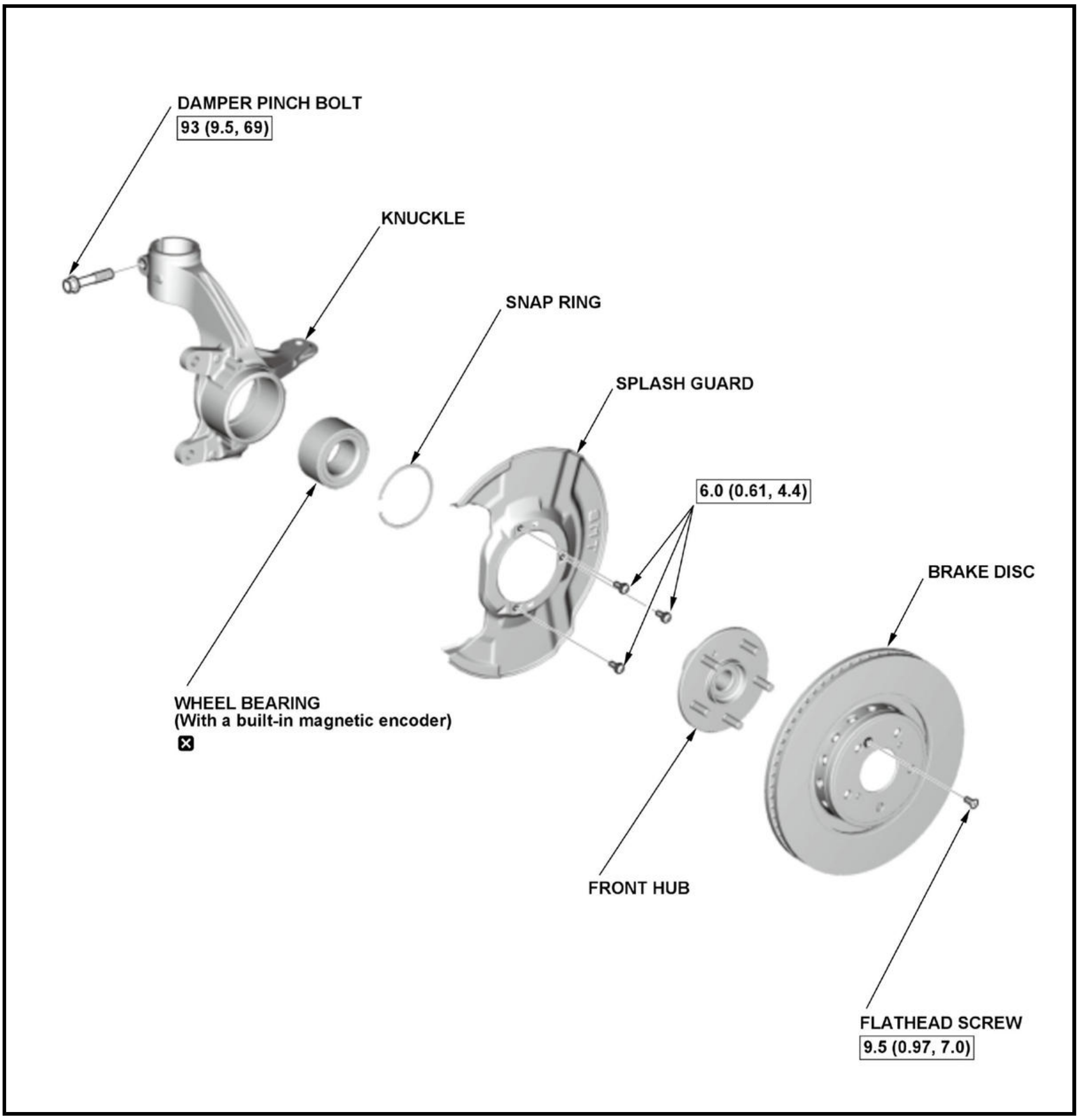
DAMPER PINCH BOLT
93 (9.5, 69)
KNUCKLE
SNAP RING
SPLASH GUARD
6.0 (0.61, 4.4)
BRAKE DISC
WHEEL BEARING
(With a built-in magnetic encoder)
☒
FRONT HUB
FLATHEAD SCREW
9.5 (0.97, 7.0)

Removal and Installation

NOTE:

- **How to read the torque specifications** .
- Refer to the Exploded View as needed during the following procedures.
- Check for deterioration and damage to each part during removal.

Knuckle/Hub

1. **Vehicle - Lift**
2. **Front Wheel - Remove**
3. **Front Wheel Speed Sensor - Remove**

   NOTE: Do not disconnect the wheel speed sensor connector.

4. Brake Hose Bracket - Remove

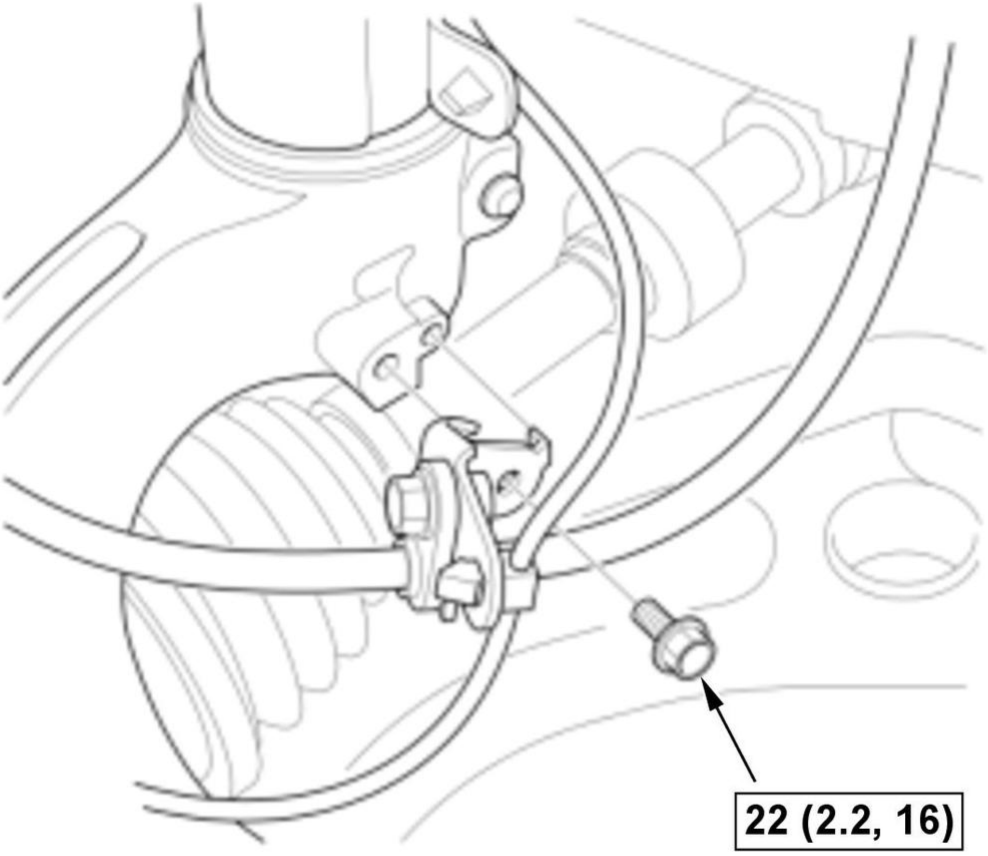

Fig. 4: Front Brake Hose Bracket Bolt With Torque Specifications
Courtesy of HONDA, U.S.A., INC.

5. Brake Caliper - Remove

> 1. Remove the caliper assembly without disconnecting the brake hose from the caliper body .
> **NOTE:**
>
> - To prevent damage to the caliper assembly or brake hose, use a short piece of wire to hang the caliper assembly from the undercarriage.
> - Do not twist the brake hose excessively.

6. Front Spindle Nut - Remove
7. Front Brake Disc - Remove
8. Hub for Damage and Cracks - Check
9. Tie-Rod End Ball Joint - Disconnect
10. Lower Arm Ball Joint - Remove
11. Knuckle/Hub Assembly - Remove

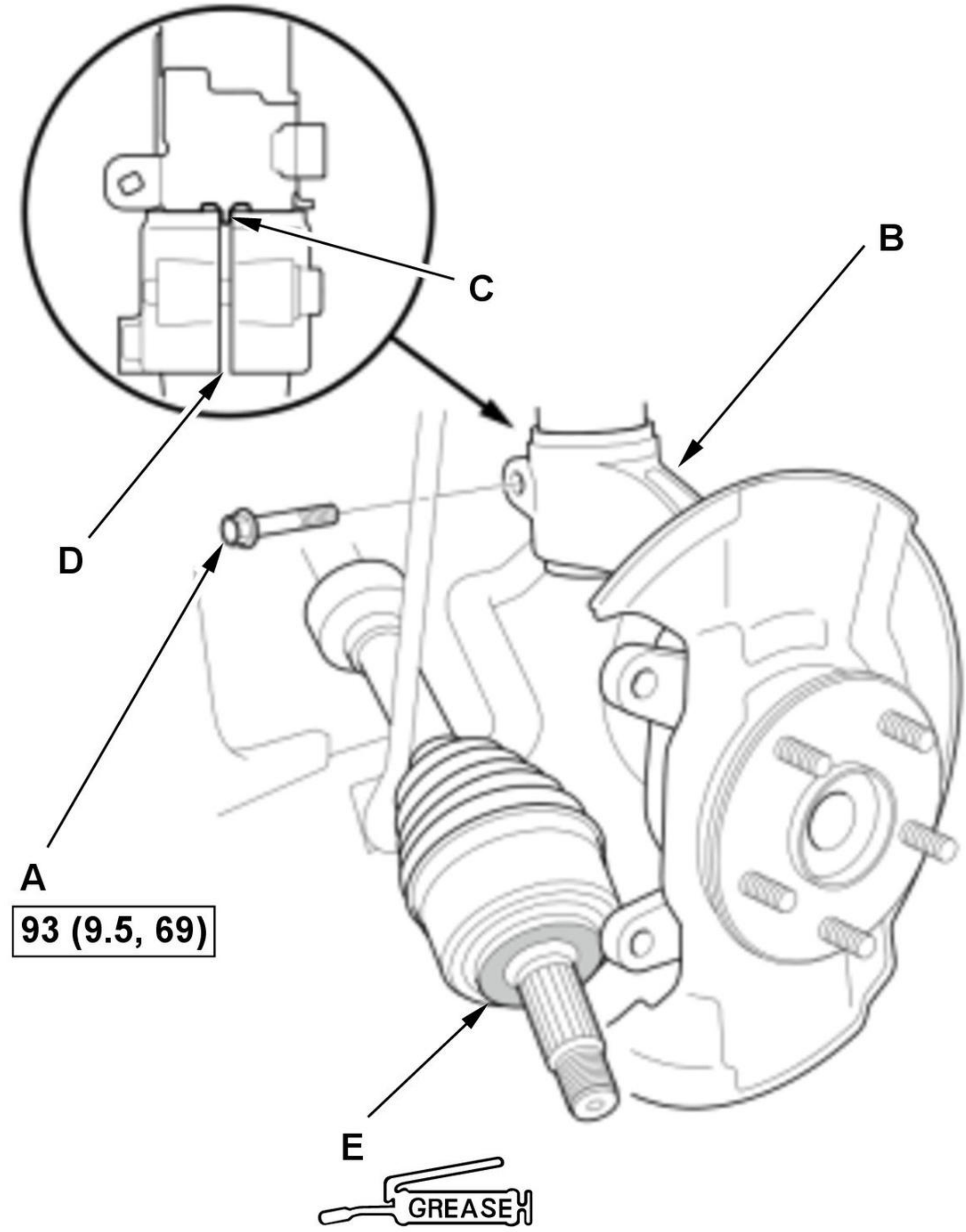

Fig. 5: Front Knuckle/Hub Assembly Components And Damper Pinch Bolt With Torque Specifications
Courtesy of HONDA, U.S.A., INC.

1. Remove the damper pinch bolt (A).

2. Move the knuckle (B) downward, and remove the knuckle from the damper.

NOTE:

- Do not pull the driveshaft end outward. The inner driveshaft inboard joint may come apart.
- During installation, note these items.
-

- Install the aligning tab (C) on the damper unit into the slot (D) of the knuckle.
- **Apply specified grease to the contact area (E) of the outboard joint and the front wheel bearing** .

12. All Removed Parts - Install

1. Install all removed parts in the reverse order of removal.

13. **Wheel Alignment - Check**

Replacement

NOTE:

- **How to read the torque specifications** .
- Refer to the Exploded View as needed during the following procedures.
- Check for deterioration and damage to each part during removal.

Wheel Bearing

1. Hub - Remove

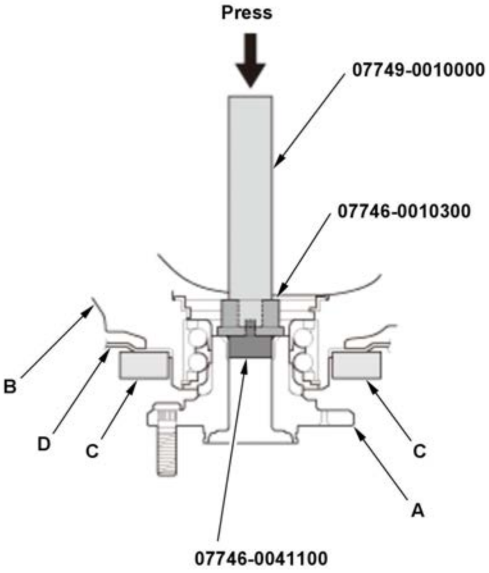 Press 07749-0010000 07746-0010300 B D C C A 07746-0041100	1. Separate the hub (A) from the knuckle (B) using the driver handle, the bearing driver attachment, the pilot, and a hydraulic press. **NOTE:** - Hold the knuckle with the attachment (C) of the hydraulic press or equivalent tool. - Be careful not to damage or deform the splash guard (D). - Hold onto the hub to keep it from falling when pressed clear.

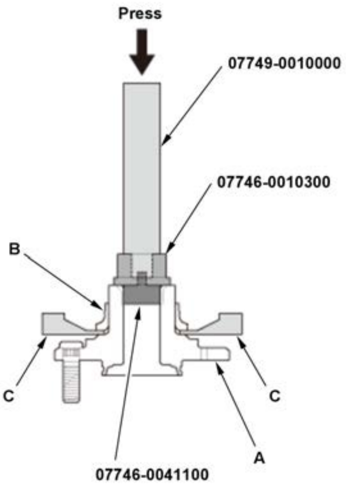 Press 07749-0010000 07746-0010300 B C C A 07746-0041100	2. Press out the hub (A) from the wheel bearing inner race (B) using the driver handle, the bearing driver attachment, the pilot, a commercially available bearing separator (C), and a hydraulic press.

2. Splash Guard and Snap Ring - Remove

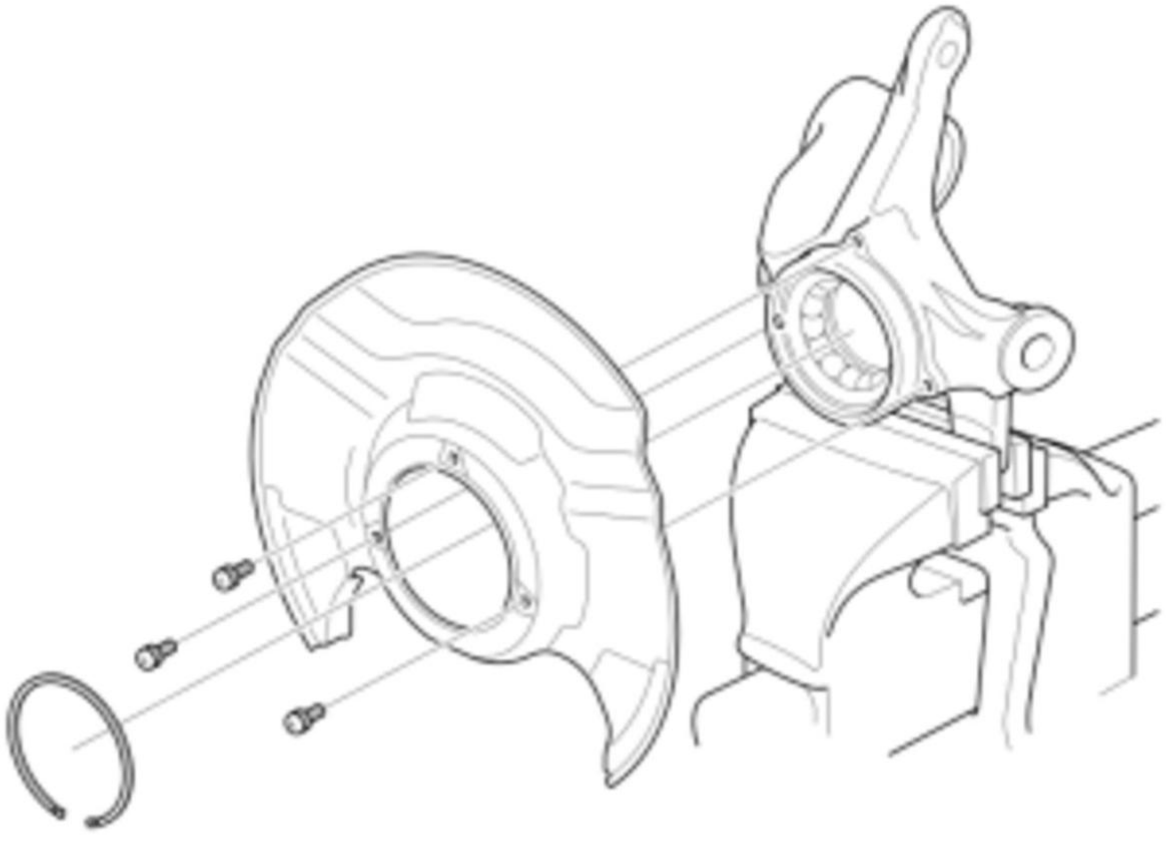

NOTE: Check for damaged or deformed snap ring, and replace it if damaged.

3. Wheel Bearing - Remove

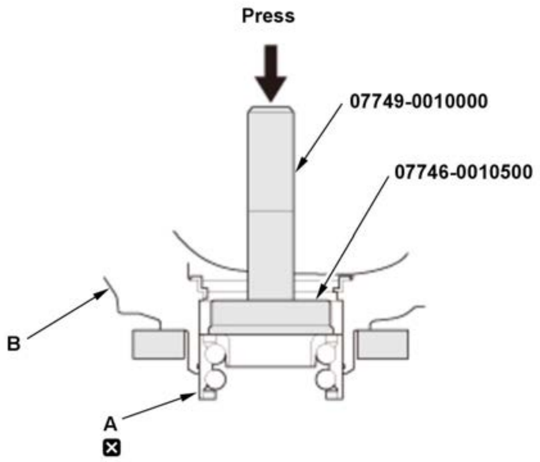 Press 07749-0010000 07746-0010500 B A ☒	1. Press out the wheel bearing (A) from the knuckle (B) using the driver handle, the bearing driver attachment, and a hydraulic press.

4. Wheel Bearing - Install

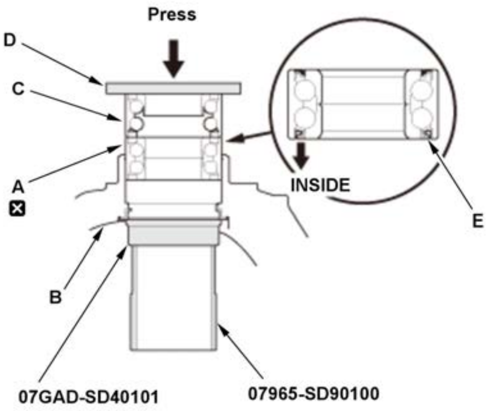

1. Wash the knuckle and the hub thoroughly in high flash point solvent before reassembly.

2. Press a new wheel bearing (A) into the knuckle (B) using the old bearing (C), a steel plate (D), the attachment, the support base, and a hydraulic press.

NOTE:

- Install the wheel bearing with the wheel speed sensor magnetic encoder (E) (brown color) toward the inside of the knuckle.
- Remove any oil, grease, dust, metal debris, and other foreign material from the encoder surface.
- Keep any magnetic tools away from the encoder surface.
- Keep the wheel bearing and magnetic encoder away from any magnetic field. The encoder can be damaged or erased.
- Be careful not to damage the encoder surface when you insert the wheel bearing.

5. Splash Guard and Snap Ring - Install

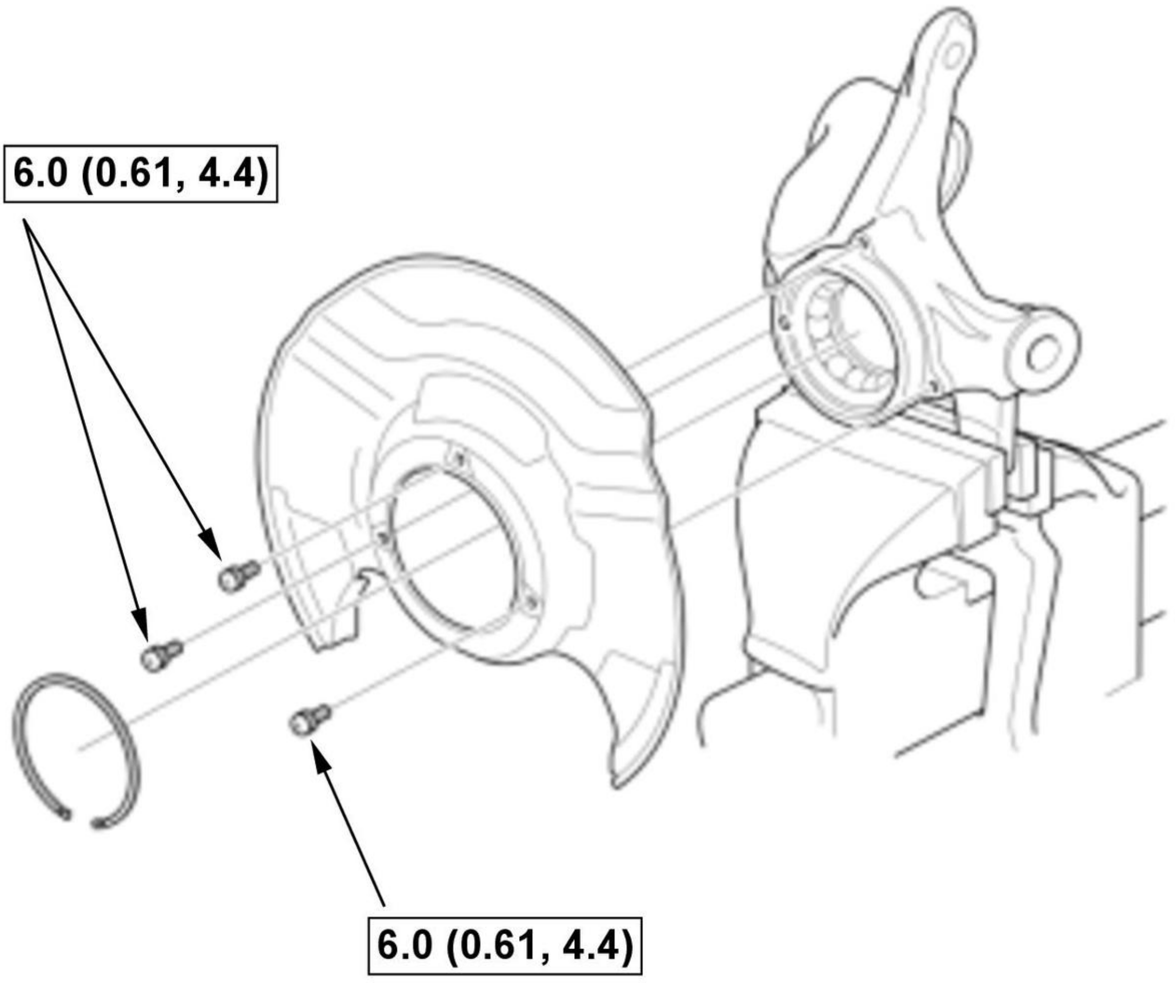

NOTE: Check for damaged or deformed snap ring, and replace it if damaged.

6. Hub - Install

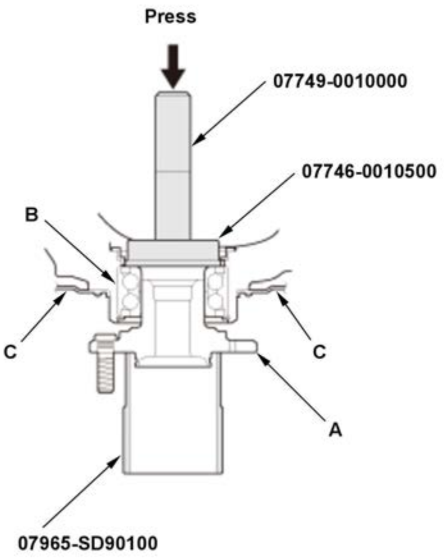 Press 07749-0010000 07746-0010500 B C C A 07965-SD90100	1. Install the hub (A) into the wheel bearing (B) using the bearing driver attachment, the driver handle, the support base, and a hydraulic press. **NOTE:** Be careful not to damage the splash guard (C).

TIRE SEALANT BOTTLE REPLACEMENT

Replacement

1. Tire Sealant Bottle - Remove

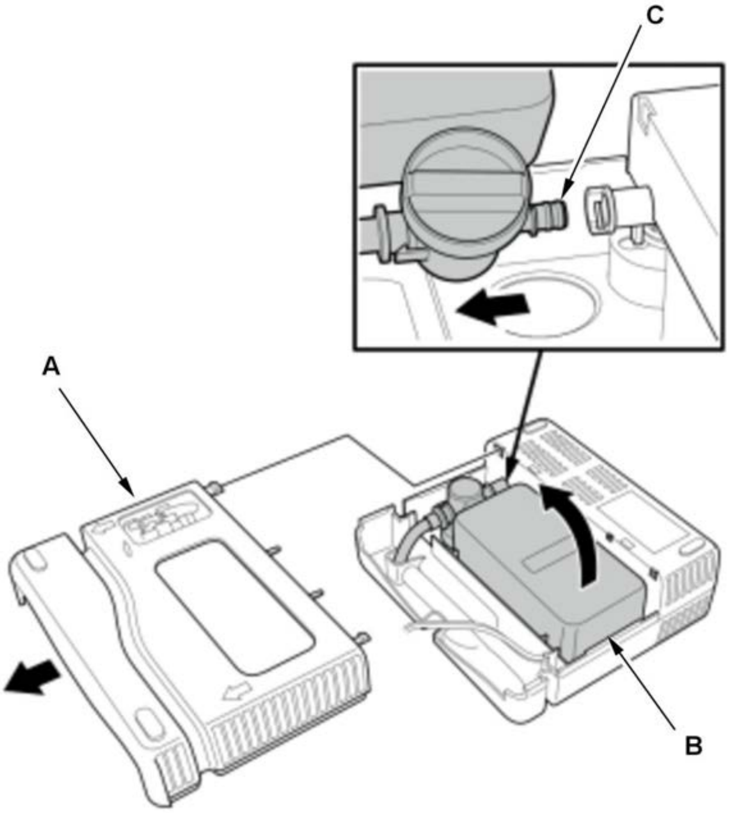	1. Remove the cover (A). 2. Rotate the sealant bottle (B) as shown. 3. Disconnect the joint (C), then remove the tire sealant bottle.

2. All Removed Parts - Install

1. Install all removed parts in the reverse order of removal.

SERVICING

BALL JOINT DISCONNECTION

Special Tools Required

Image	Description/Tool Number
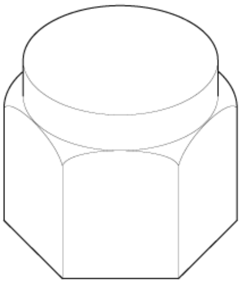	Ball Joint Thread Protector, 14 mm 07AAE-SJAA100
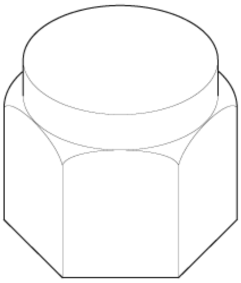	Ball Joint Thread Protector, 12 mm 07AAF-SDAA100
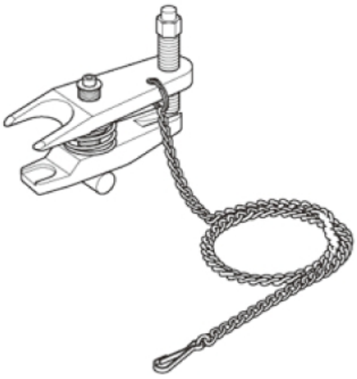	Ball Joint Remover, 32 mm 07MAC-SL00102
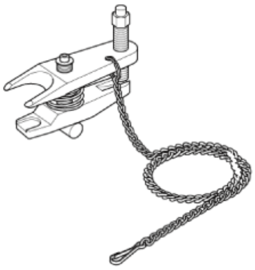	Ball Joint Remover, 28 mm 07MAC-SL00202

Removal

NOTICE:

Always use a ball joint remover to disconnect a ball joint. Do not strike the housing or any other part of the ball joint connection to disconnect it.

1. Ball Joint - Disconnection

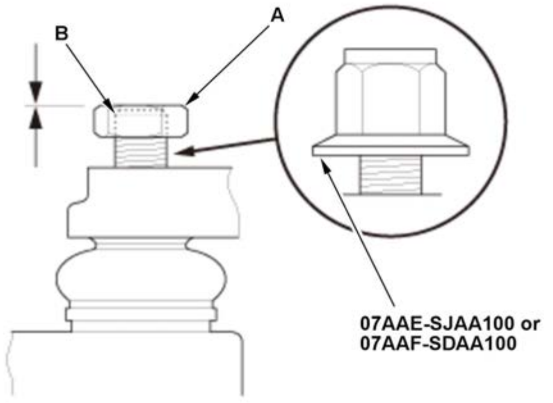	1. Install a hex nut (A) or the ball joint thread protector onto the threads of the ball joint (B). **NOTE:** When using a hex nut, make sure the nut is flush with the ball joint pin end to prevent damage to the threaded end of the ball joint pin.

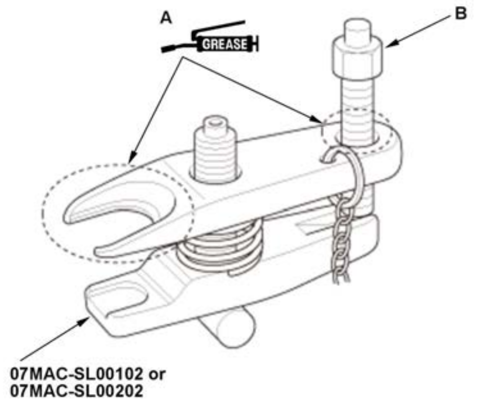	2. Apply multipurpose grease to the ball joint remover on the areas as shown (A). This will ease the installation of the tool, and prevent damage to the pressure bolt (B) threads.

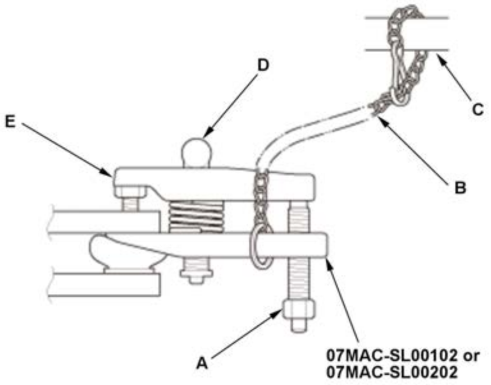	3. Loosen the pressure bolt (A), and install the ball joint remover as shown. **NOTE:** - Insert the jaws carefully, making sure not to damage the ball joint boot. - Fasten the safety chain (B) securely to a suspension arm or the subframe (C). Do not fasten it to a brake line or wire harness. 4. Adjust the jaw spacing by turning the adjusting bolt (D). 5. Make sure the head of the adjusting bolt is in the position shown to allow the jaw (E) to pivot. 6. Tighten the pressure bolt until the ball joint pin pops loose from the ball joint connecting hole. If necessary, apply penetrating type lubricant to loosen the ball joint pin. **NOTE:** Do not use pneumatic or electric tools on the pressure bolt. 7. Remove the ball joint remover.

	8. Remove the nut or the ball joint thread protector. 9. Pull the ball joint out of the ball joint connecting hole. 10. Inspect the ball joint boot, and replace it if damaged.

FRONT DAMPER/SPRING DISASSEMBLY, REASSEMBLY, AND INSPECTION

Special Tools Required

Image	Description/Tool Number
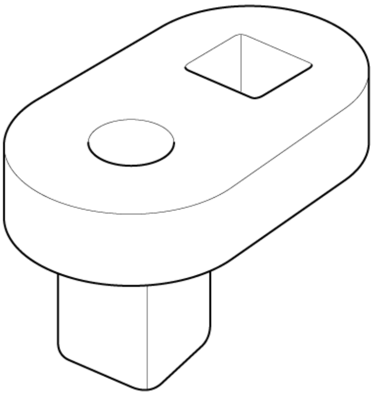	Strut Nut Adapter 07AAA-SVAA100

Disassembly

NOTE:

- When compressing the damper spring, use a commercially available strut spring compressor according to the manufacturer's instructions.
- Check for deterioration and damage to each part during removal.

Procedure

NOTE: **Numbered call-outs in figure pertain to list numbers in following procedure.**

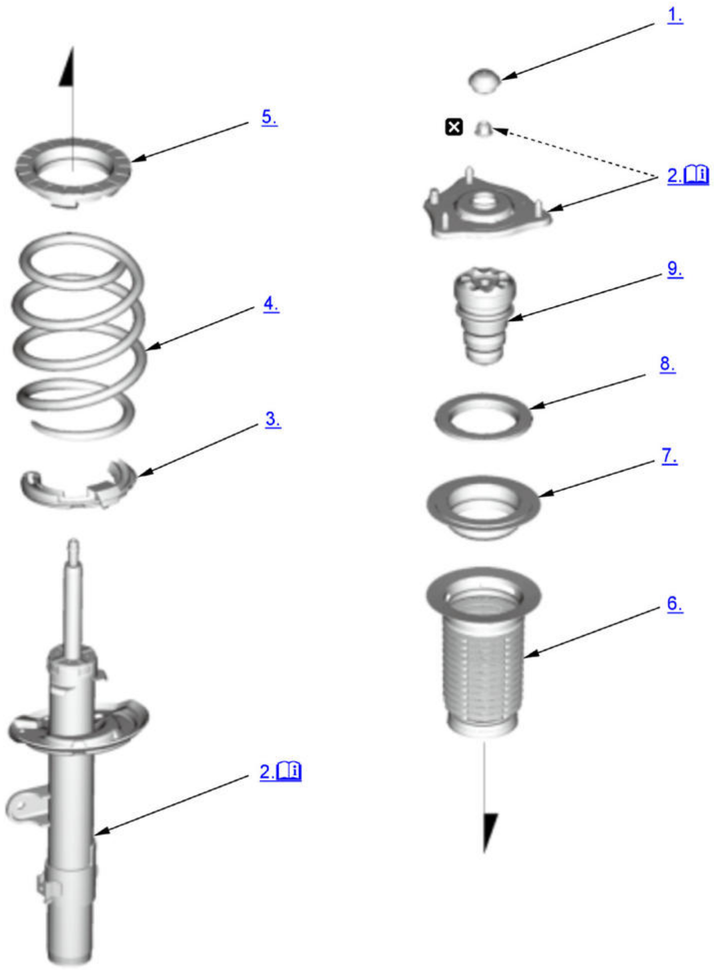

Fig. 6: Exploded View Of Front Damper/Spring Disassembly Components
Courtesy of HONDA, U.S.A., INC.

☒	Replace

1. Damper Cap - Remove
2. Damper Unit, Damper Mounting Base - Remove

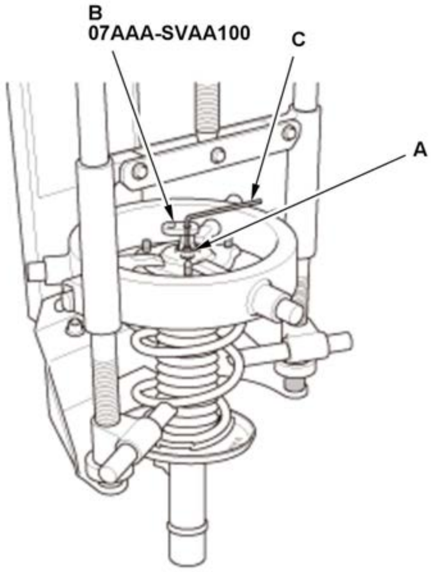	1. Set the damper/spring to the strut spring compressor. 2. Compress the damper spring. **NOTE:** Do not compress the spring more than necessary to remove the nut. 3. Remove the self-locking nut (A) with the strut nut adapter (B), while holding the damper shaft with a hex wrench (C). 4. Remove the damper unit. 5. Release the pressure from the strut spring compressor. 6. Remove the damper mounting base/damper spring from the strut spring compressor.

3. Lower Spring Seat Rubber - Remove
4. Damper Spring - Remove
5. Upper Spring Seat Rubber - Remove
6. Dust Cover - Remove
7. Upper Spring Seat - Remove
8. Damper Mounting Bearing - Remove
9. Bump Stop - Remove

Inspection

1. Damper/Spring - Inspect

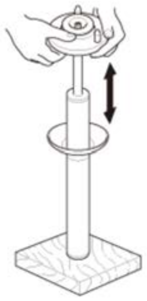	1. Reassemble the damper mounting base and the self-locking nut. 2. Compress the damper assembly by hand, and check for smooth operation through a full stroke, both compression and extension. The damper should extend smoothly and constantly when compression is released. If it does not, the gas is leaking and the damper should be replaced. 3. Check for oil leaks, abnormal noises, or binding during these tests.

Reassembly

NOTE:

- When compressing the damper spring, use a commercially available strut spring compressor according to the manufacturer's instructions.

Procedure

NOTE: **Numbered call-outs in figure pertain to list numbers in following procedure.**

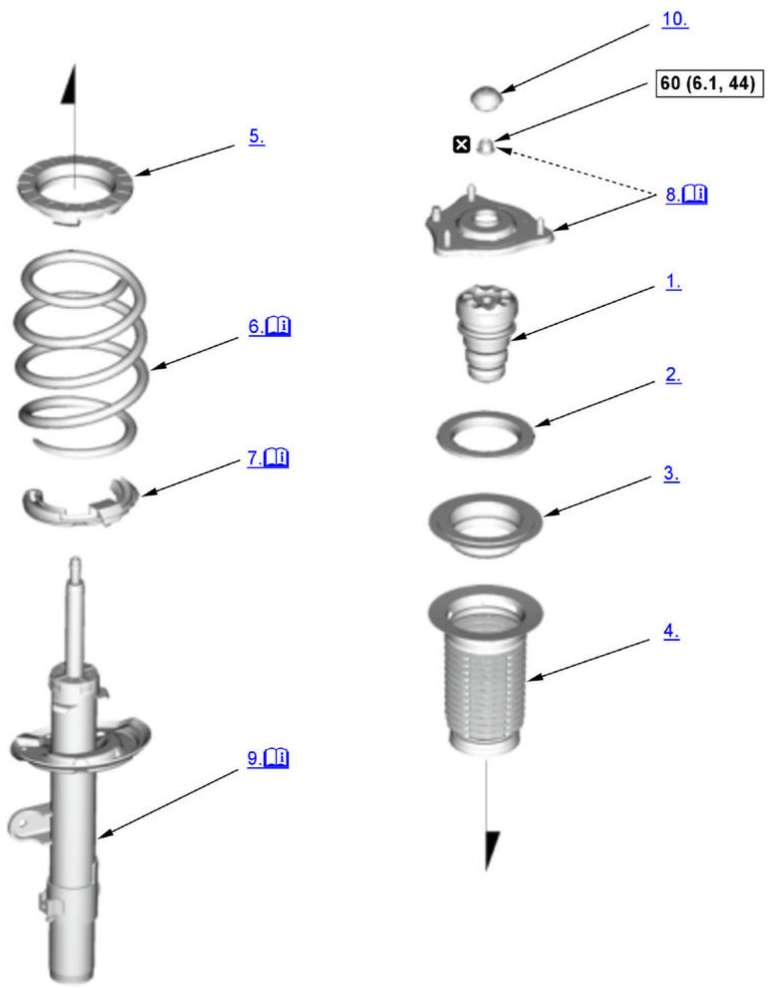

Fig. 7: Exploded View Of Front Damper/Spring Reassembly Components With Torque Specifications
Courtesy of HONDA, U.S.A., INC.

☐	Torque: N.m (kgf.m, lbf.ft)
☒	Replace

1. Bump Stop - Install
2. Damper Mounting Bearing - Install
3. Upper Spring Seat - Install
4. Dust Cover - Install
5. Upper Spring Seat Rubber - Install
6. Damper Spring - Install

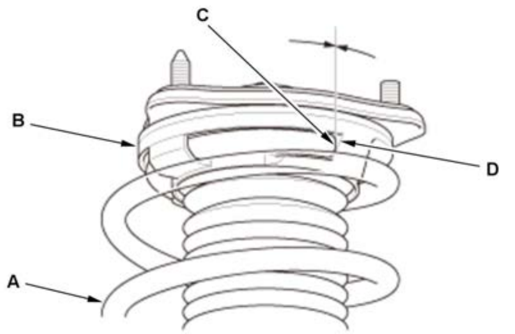

1. Install the damper spring (A) on the upper spring seat rubber (B) by aligning the upper end (C) of the damper spring with the ledge portion (D) of the upper spring seat rubber.

7. Lower Spring Seat Rubber - Remove

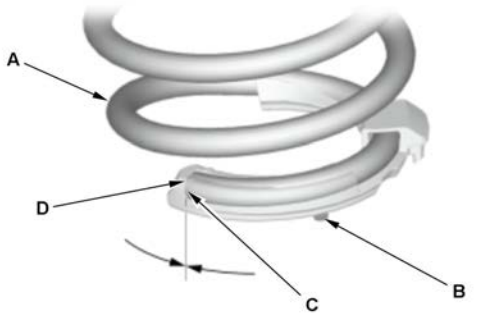

1. Install the damper spring (A) on the lower spring seat rubber (B) by aligning the upper end (C) of the damper spring with the ledge portion (D) of the lower spring seat.

8. Damper Mounting Base - Set

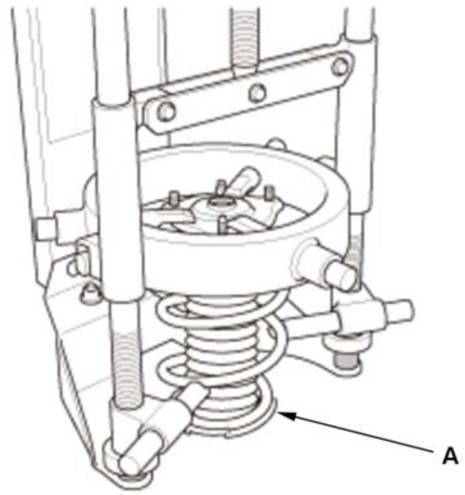

1. Set the damper mounting base/damper spring (A) to the strut spring compressor.

2. Compress the damper spring.

NOTE: Do not compress the spring excessively.

9. Damper Unit - Install

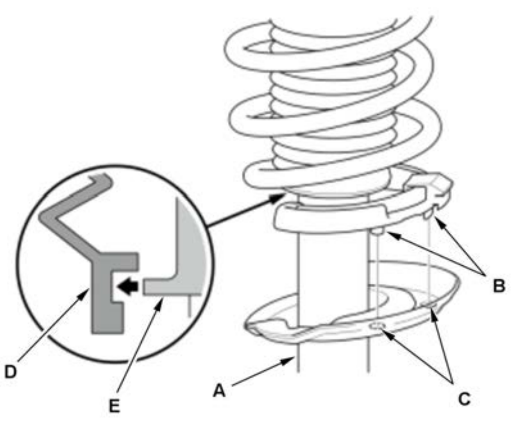

1. Install the damper unit (A) to the damper spring/damper mounting base.

2. Align the raised portions (B) of the lower spring seat rubber and the holes (C) of the lower spring seat on the damper unit.

NOTE: After reassembling the damper/spring, make sure that the dust cover (D) are properly positioned into the raised portion (E) of the damper unit.

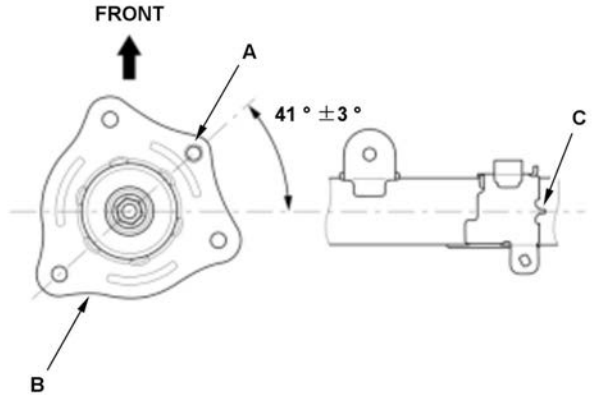

Left side

Right side

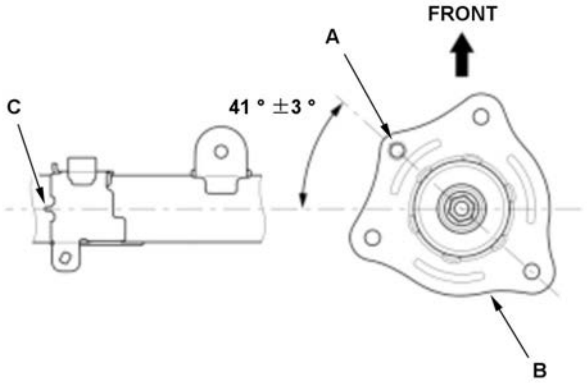

3. Align the angle of the stud (A) on the damper mounting base (B) with the aligning tab (C) on the bottom of the damper unit as shown.

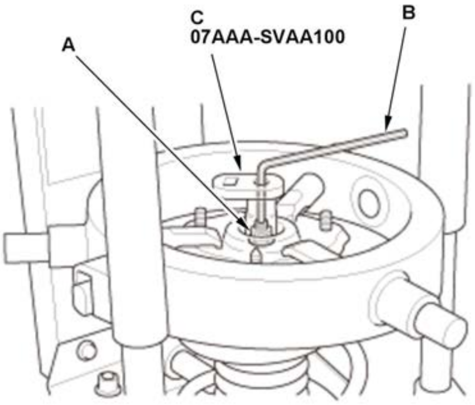

4. Install the self-locking nut (A).

5. Hold the damper shaft using a hex wrench (B), and tighten the self-locking nut using the strut nut adapter (C) to the specified torque.

6. Remove the damper/spring from the strut spring compressor.

10. Damper Cap - Install

TIRE SEALANT REMOVAL

Removal

NOTE:

- This procedure is only to be used with the temporary tire repair kit.
- The tire inflator and temporary repair sealant are used on vehicles without a spare tire.
- The temporary repair sealant used to repair the tire must be removed before the tire is permanently repaired.
- The temporary repair sealant (once used or past the expiration date) is considered hazardous waste, and must be disposed of in an environmentally safe manner (such as used engine oil and coolant). Check with your local regulations for proper disposal.
- The expiration date of the temporary repair sealant is printed on the container.

NOTICE:

Do not dispose a tire with the fluid sealant filled.

1. Vehicle - Lift
2. Wheel - Remove
3. Tire Sealant - Remove

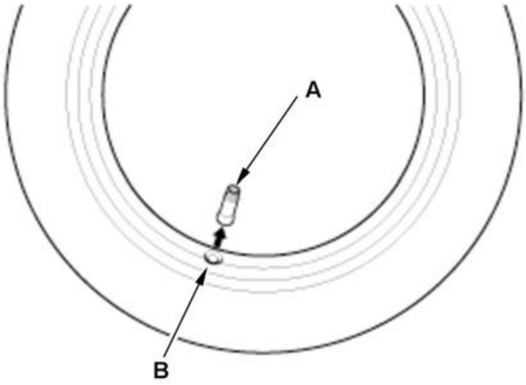	1. Deflate the tire. 2. Place the wheel and tire assembly upright with the tire valve hole at the 6 o'clock position. 3. Cut off the valve (A) at its base. 4. Push the remaining rubber portion of the valve into the tire. **NOTICE:** Avoid damage to the wheel when using the tools. **NOTE:** Replace the valve with a new one when reassembling the tire. 5. Put the tire on the working table, and set it up. **NOTE:** Be careful not to spill the fluid sealant from the drain hole (B).

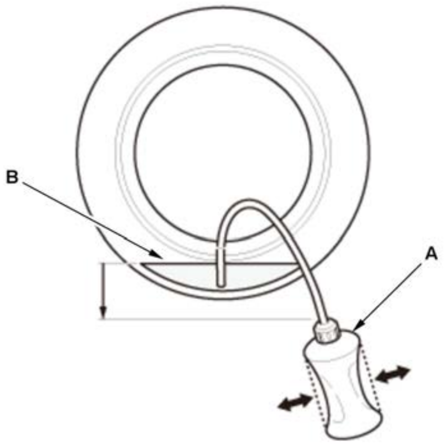

6. Use a commercially available squeeze bottle (A), a siphon gun, or a hand vacuum tool with a proper tube to remove the tire sealant.

7. Insert the tube into the tire through the drain hole, and aim it down until the end of the tube is immersed into the fluid sealant (B).

8. Remove the tire sealant.

NOTE: If using the bottle with the tube, set the bottle in a lower position than the tire and squeeze the bottle to siphon the tire sealant into the bottle.

9. Completely seal and dispose of the bottle containing the tire sealant in the proper manner for hazardous waste. Check with your local regulations.

10. If you are going to reuse the tire, completely remove the fluid sealant and replace the tire valve.

- Wipe the fluid sealant completely so that the beaded edge of the tire and the mating portion of the wheel rim and the bead are clean.
- Tire damaged such as punctures may be filled with the fluid sealant, and can be difficult to locate depending on the extent of the damage.
- When you drive with a flat tire with fluid sealant, check the tire pressure often until the vehicle can be safely taken to a repair facility.

4. Wheel - Install

1. Inflate the tire to the specified tire pressure listed on the doorjamb label.

2. **Install the wheel**

.

ADJUSTMENT

WHEEL ALIGNMENT

Check

1. Pre-Alignment - Check

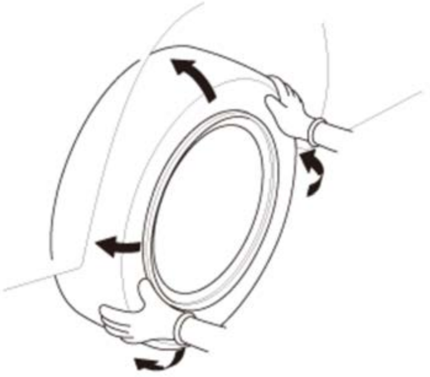	For proper inspection and adjustment of the wheel alignment, do these checks: 1. Release the parking brake to avoid an incorrect measurement. 2. Make sure the suspension is not modified. 3. Make sure the fuel tank is full and the spare tire or tire repair kit, jack, and tools are in place inside the vehicle. 4. Check the tire size and tire pressure according to the tire information. 5. Set the steering column to the middle tilt position and telescopic position (if equipped). 6. **Check the runout of the wheels and tires**. 7. Check the suspension ball joints (**Raise and support the vehicle** . Hold a tire with your hands, and move it up and down and right and left to check for movement). 8. Before doing alignment inspections, be sure to remove all extra weight from the vehicle, and no one should be inside the vehicle (driver or passengers). 9. Lower the vehicle to the ground. Bounce the vehicle up and down several times to stabilize the suspension.

Inspection

Use a commercially available computerized four wheel alignment equipment to measure wheel alignment (caster, camber, toe, and turning angle). Follow the equipment manufacturer's instructions.

1. Caster - Inspect

1. Check the caster angle. - If the measurement is within the specifications, measure the camber angle. - If the measurement is not within the specifications, check for bent or damaged suspension components.

Caster angle:	**5 B° 04 ' +/-30 '**

2. Camber - Inspect

1. Check the camber angle. - If the measurement is within the specification, measure the toe-in. - If the measurement for the front camber is not within specification, go to front camber adjustment. - If the measurement for the rear camber is not within specification, check for bent or damaged suspension components.

Camber angle:

B	**Front:**	**-0 B° 12 ' +/-30 '**
B	**Rear:**	**-1 B° 12 ' +/-45 '**
(Maximum difference between the right and left side: 0 B° 45 ')		

3. Rear Toe - Inspect

NOTE: Do the rear toe inspection before the front toe inspection.

1. Release the parking brake to avoid an incorrect measurement.

2. Check the toe.

- If adjustment is required, go to rear toe adjustment.
- If no adjustment is required, go to front toe inspection.

Rear total toe-in:	**3.5^{+1}_{-2} mm ($0.138^{+0.04}_{-0.08}$ in)**

4. Front Toe - Inspect

NOTE: Do the rear toe inspection before the front toe inspection.

1. Set the steering column to the middle tilt position and telescopic position (if equipped).

2. Center the steering wheel spokes, and hold it.

3. Check the toe with the wheels pointed straight ahead.

- If adjustment is required, go to the front toe adjustment.
- If no adjustment is required, remove the alignment equipment.

Front total toe-in:	**2 +/- 2 mm (0.08 +/- 0.08 in)**

5. Turning Angle - Inspect

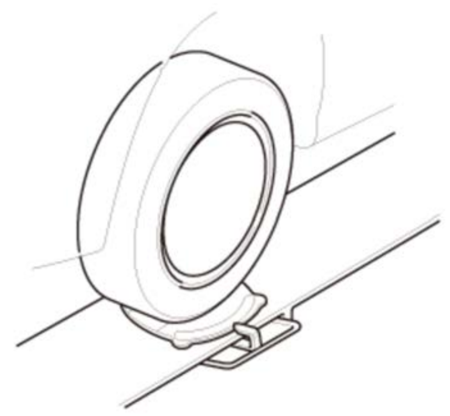

1. Turn the wheel right and left while applying the brake, and measure the turning angle of both wheels.

- If the measurement is not within specifications, even up both sides of the tie-rod threaded section while adjusting the front toe.
- If it is correct, but the turning angle is not within the specifications, check for bent or damaged suspension components.

Turning angle:		
B	**Inward:**	**37 B° 38 ' +/-2 B°**
B	**Outward (reference):**	**31 B° 01 '**

Adjustment

The suspension can be adjusted for front camber, front toe, and rear toe. However, each of these adjustments are related to each other. For example, when you adjust camber, the toe will change.

NOTE:

- **How to read the torque specifications** .
- After adjusting the wheel alignment, **do the VSA sensor neutral position memorization** .

1. **Vehicle - Lift**
2. Front Camber - Adjust

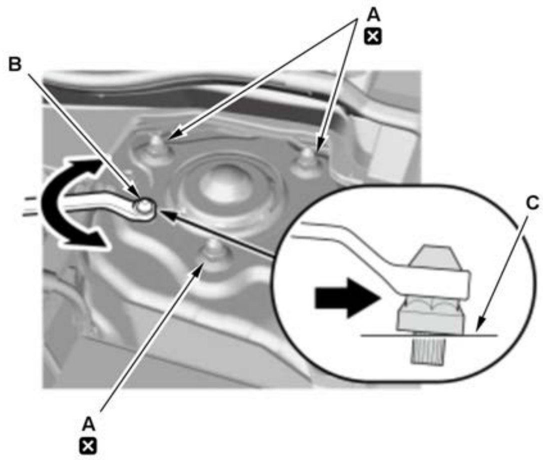	1. Replace the flange nuts (A) with new ones, and lightly tighten them. 2. If the guide pin (B) is equipped, use a wrench to rock the guide pin left and right while pulling it out from the damper mounting base (C). **NOTE:** The guide pin is for factory assembly use only and can be discarded after removal.

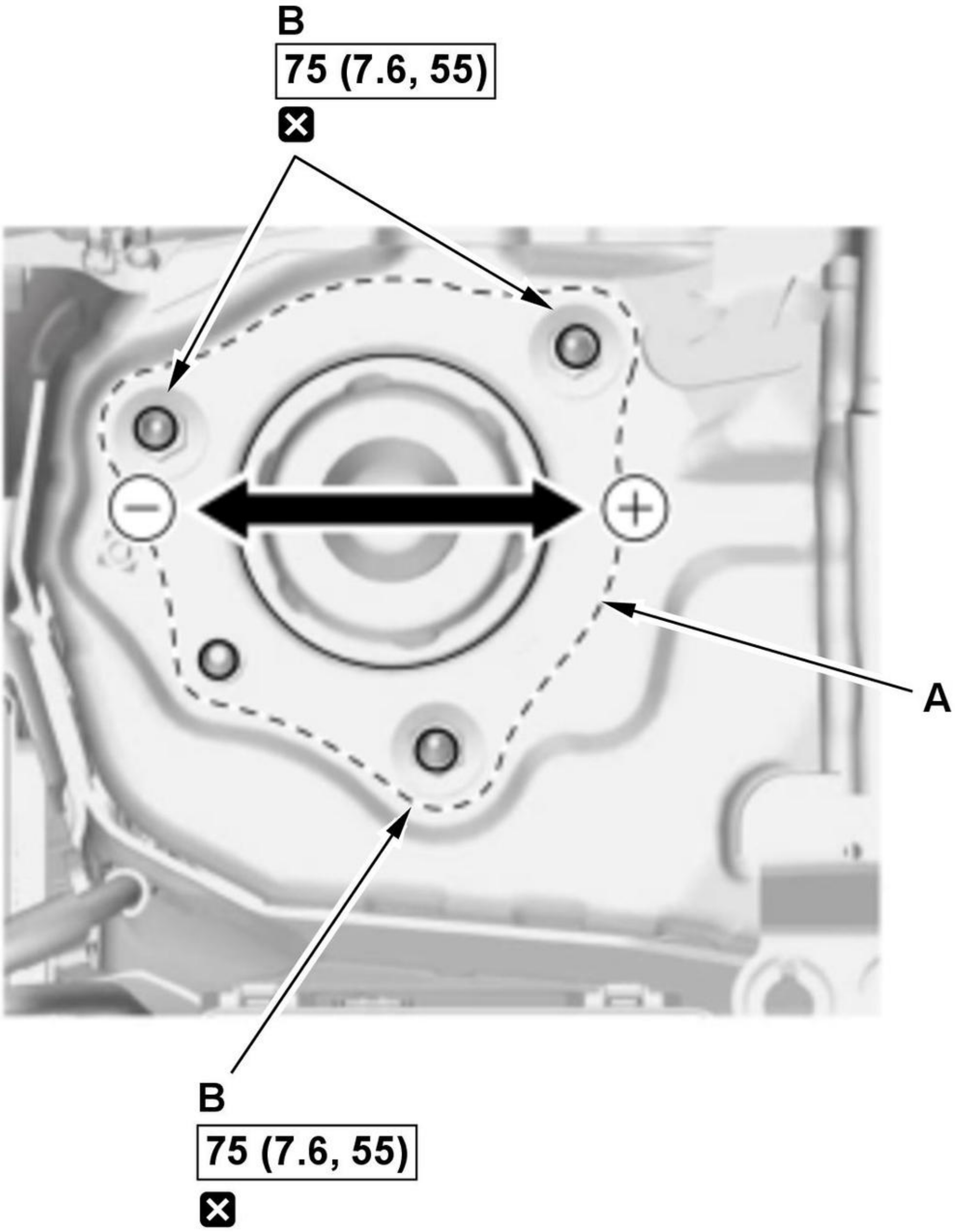

Fig. 8: Front Damper Flange Nuts With Torque Specifications
Courtesy of HONDA, U.S.A., INC.

3. Adjust the camber angle by moving the upper part of the damper (A).
NOTE: The camber angle can be adjusted B± 15 '.

4. Tighten the flange nuts (B) to the specified torque.

5. Lower the vehicle to the ground, and bounce the front of the vehicle up and down several times to stabilize the suspension.

6. Measure the camber angle. If the camber angle is not within specification, readjust the camber angle. If the camber measurement is correct, measure toe-in, and adjust it if necessary.

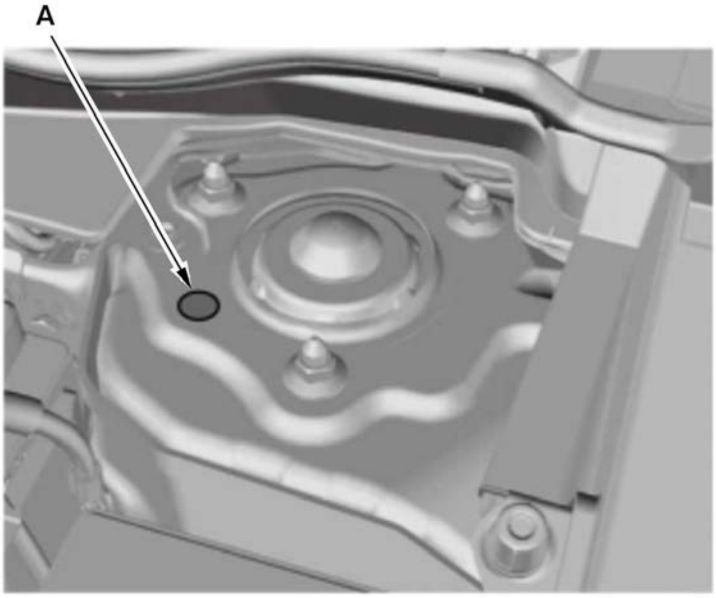	7. Install the hole seal (A) after the guide pin is removed. **NOTE:** Refer to the Parts Catalog for the hole seal.

3. Rear Toe - Adjust

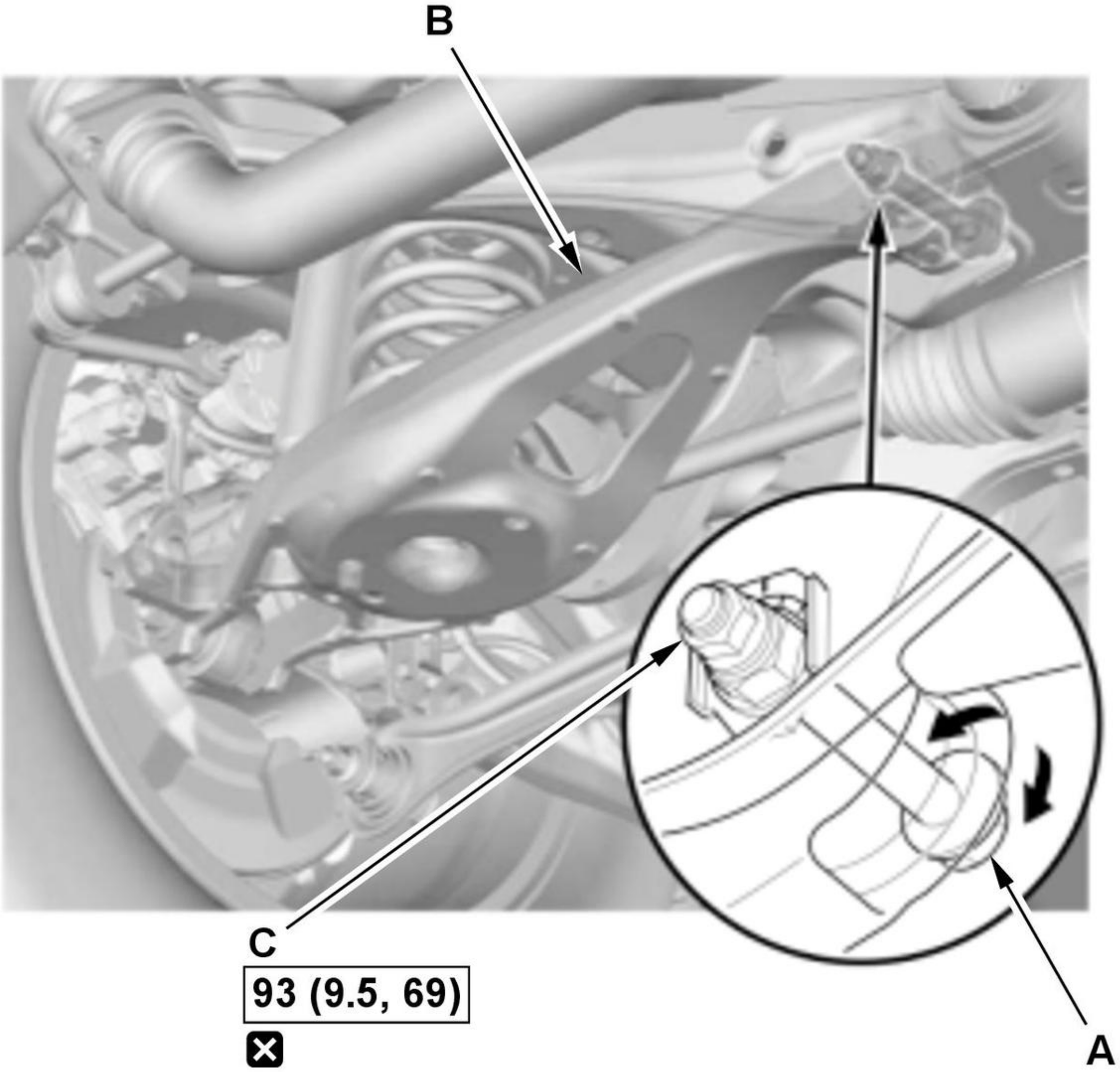

[Fig. 9: Rear Toe Adjusting Bolt And Nut With Torque Specifications](#)

Courtesy of HONDA, U.S.A., INC.

NOTE: Do the rear toe adjustment before the front toe adjustment.

1. Hold the adjusting bolt (A) on lower arm B, and remove the self-locking nut (C).

2. Replace the self-locking nut with a new one, and lightly tighten it.

NOTE:

- Always use a new self-locking nut whenever it has been loosened.
- Reassemble the adjusting bolt and the adjusting cam plate with the eccentric facing up.

3. Adjust the rear toe by turning the adjusting bolt until the toe is correct.

4. Tighten the self-locking nut to the specified torque while holding the adjusting bolt.

4. Front Toe - Adjust

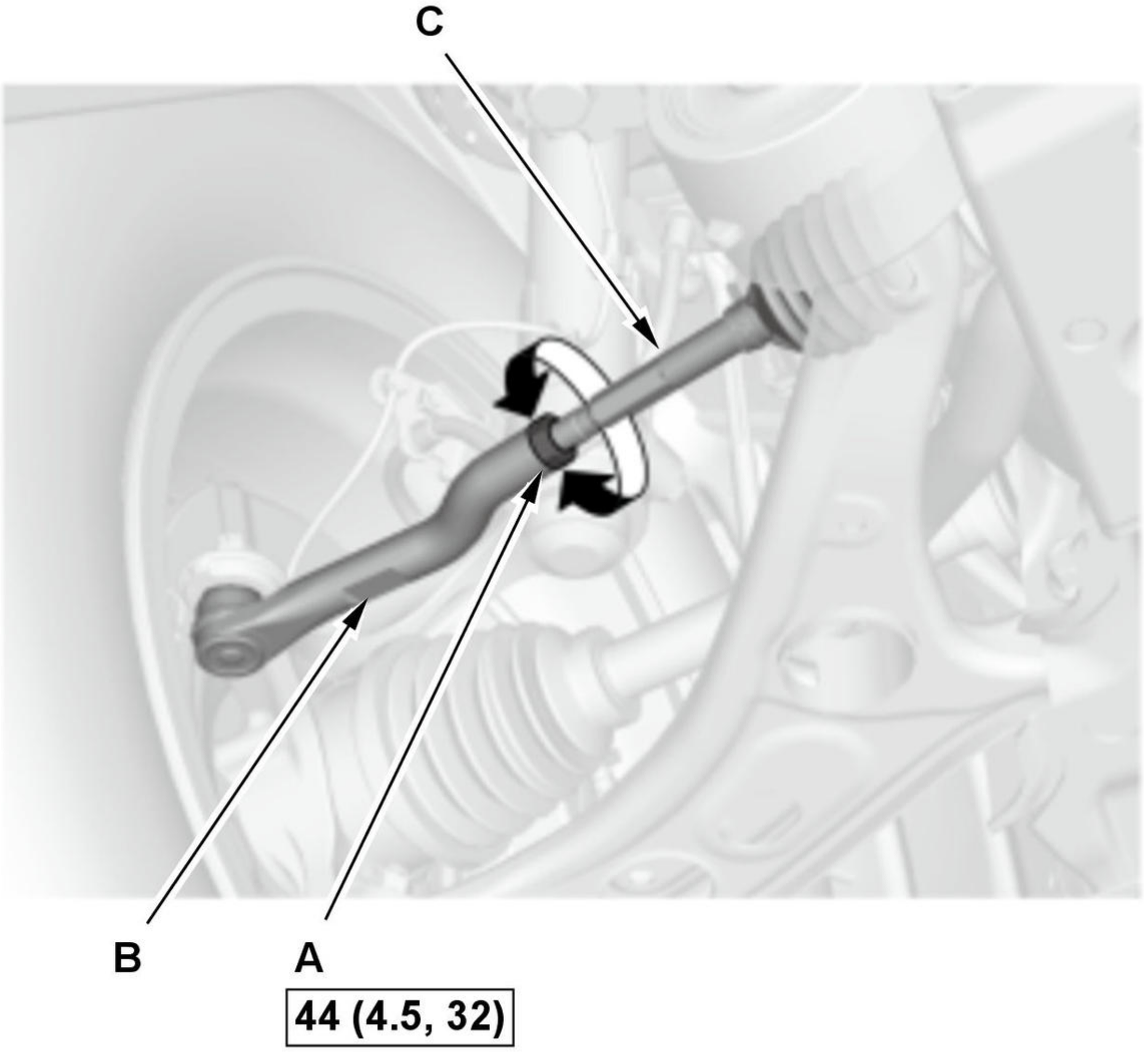

Fig. 10: Front Tie-Rod End And Locknut With Torque Specifications
Courtesy of HONDA, U.S.A., INC.

NOTE: Do the rear toe adjustment before the front toe adjustment.

1. Loosen the tie-rod end locknuts (A) while holding the flat surface sections (B) of the tie-rod end with a wrench, and turn both tie-rods (C) until the front toe is within specifications.

2. After adjusting, tighten the tie-rod end locknuts to the specified torque.

NOTE: Reposition the rack-end boot if it is twisted or displaced.

5. VSA Sensor Neutral Position - Memorize

COMPONENT LOCATION INDEX

FRONT AND REAR SUSPENSION COMPONENT LOCATION INDEX

Front Suspension

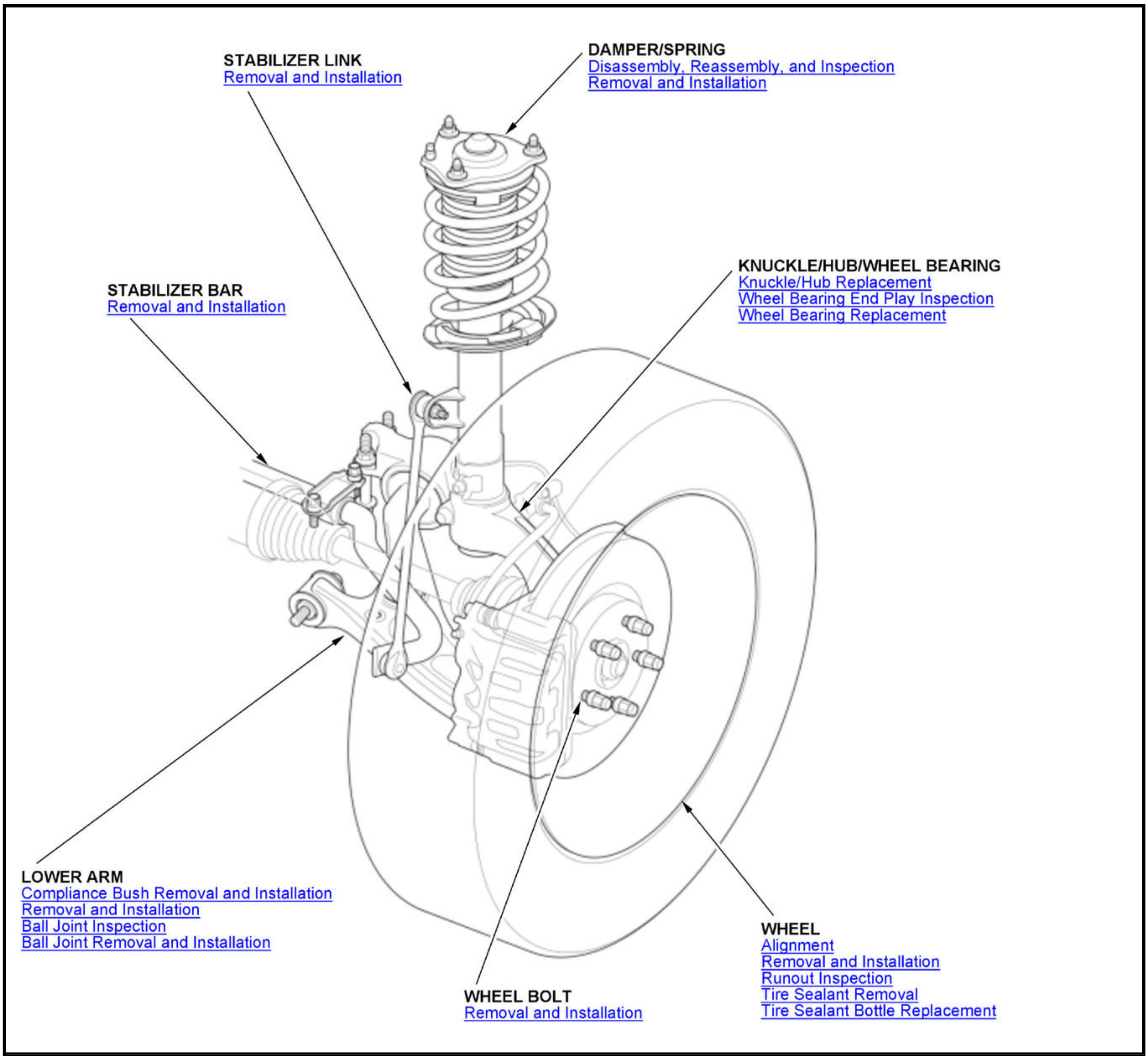
STABILIZER LINK
Removal and Installation
DAMPER/SPRING
Disassembly, Reassembly, and Inspection
Removal and Installation
STABILIZER BAR
Removal and Installation
KNUCKLE/HUB/WHEEL BEARING
Knuckle/Hub Replacement
Wheel Bearing End Play Inspection
Wheel Bearing Replacement
LOWER ARM
Compliance Bush Removal and Installation
Removal and Installation
Ball Joint Inspection
Ball Joint Removal and Installation
WHEEL BOLT
Removal and Installation
WHEEL
Alignment
Removal and Installation
Runout Inspection
Tire Sealant Removal
Tire Sealant Bottle Replacement

Rear Suspension

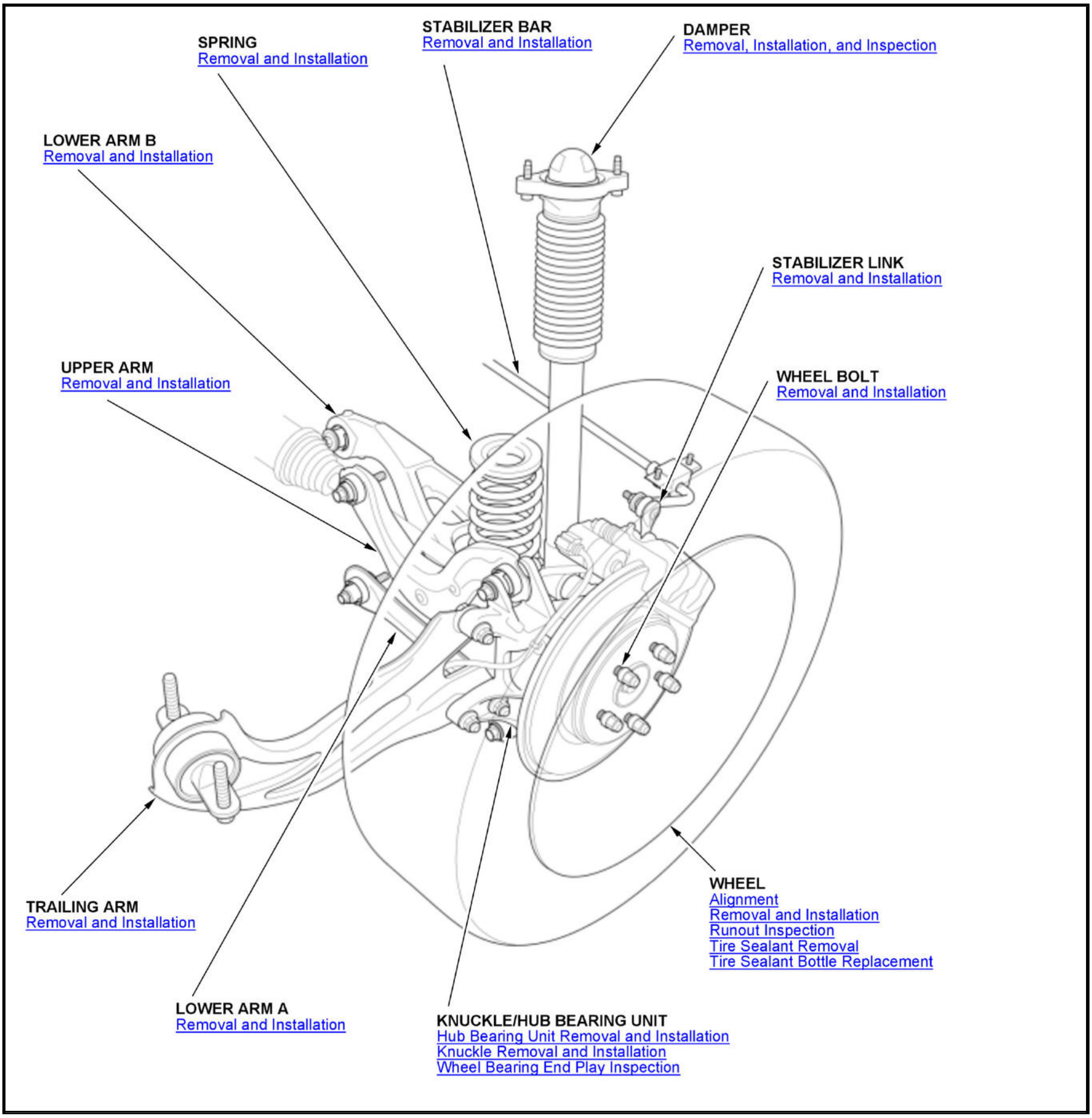
SPRING
Removal and Installation
STABILIZER BAR
Removal and Installation
DAMPER
Removal, Installation, and Inspection
LOWER ARM B
Removal and Installation
STABILIZER LINK
Removal and Installation
UPPER ARM
Removal and Installation
WHEEL BOLT
Removal and Installation
TRAILING ARM
Removal and Installation
WHEEL
Alignment
Removal and Installation
Runout Inspection
Tire Sealant Removal
Tire Sealant Bottle Replacement
LOWER ARM A
Removal and Installation
KNUCKLE/HUB BEARING UNIT
Hub Bearing Unit Removal and Installation
Knuckle Removal and Installation
Wheel Bearing End Play Inspection

REMOVAL INSTALLATION TEST

TPMS SWITCH REMOVAL, INSTALLATION, AND TEST

Removal and Installation

1. Driver's Dashboard Undercover - Remove
2. Driver's Dashboard Lower Cover- Remove
3. TPMS Switch - Remove

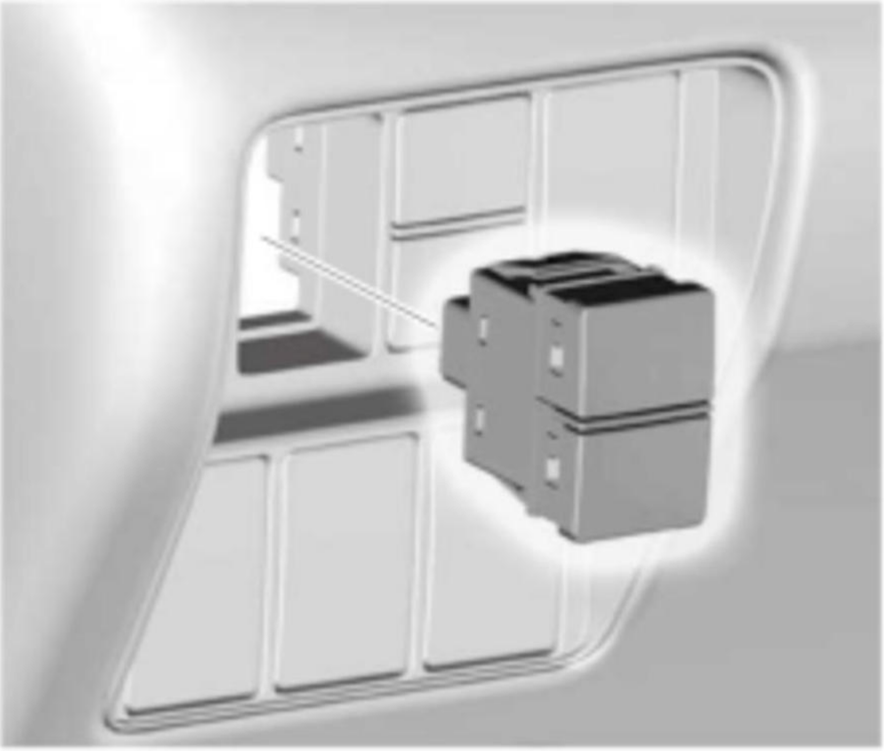

NOTE: Position of the switch is different depending on the model.

4. All Removed Parts - Install

1. Install all removed parts in the reverse order of removal.

Test

1. TPMS Switch - Test

<table>
<tr>
<td>
TPMS switch 5P connector (male terminals)
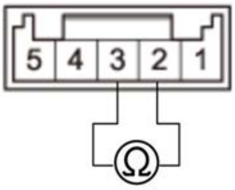

<table>
<tr><th>Position \ Terminal</th><th>2</th><th>3</th></tr>
<tr><td>RELEASED</td><td>○</td><td>○</td></tr>
<tr><td>PRESSED</td><td></td><td></td></tr>
</table>
</td>
<td>
1. On the switch side, check for continuity between the connector terminal in each switch position according to the table.
2. If the switch does not work as described in the table, replace the switch.
</td>
</tr>
</table>

DESCRIPTION & OPERATION

TPMS SYSTEM DESCRIPTION

Overview

The Indirect Tire Pressure Monitoring System (TPMS) establishes a baseline tire pressure reading using the wheel speed sensors and indirectly monitors tire pressure to detect pressure loss in any of the four tires. The low tire pressure/TPMS indicator turns ON appear when the tire pressure of any tire, or tires, falls below the specified threshold or a system malfunction is detected.

The system is controlled by the VSA modulator-control unit.

The TPMS consists of the following primary components:

- VSA modulator-control unit
- Wheel speed sensors
- Outside air temperature sensor
- System indicator

For locations of each component on vehicle, **refer to Component Location Index**, and for functions of indicator, **refer to How to Troubleshoot the TPMS** .

Control

The Indirect TPMS establishes a baseline tire pressure reading using the wheel speed sensors and indirectly monitors tire pressure to detect pressure loss in any of the four tires. The system does not monitor the tires when driving at low speed.

The system uses these two methods to determine loss of tire pressure:

- Wheel speed differential
- Peak tire resonance

Wheel Speed Differential

When monitoring tire pressure using the wheel speed differential method, the TPMS module compares the speed of the wheels in three different configurations:

- Diagonal comparison between the front and rear wheels
- Comparison between the two front and two rear wheels
- Comparison between the two right and two left wheels

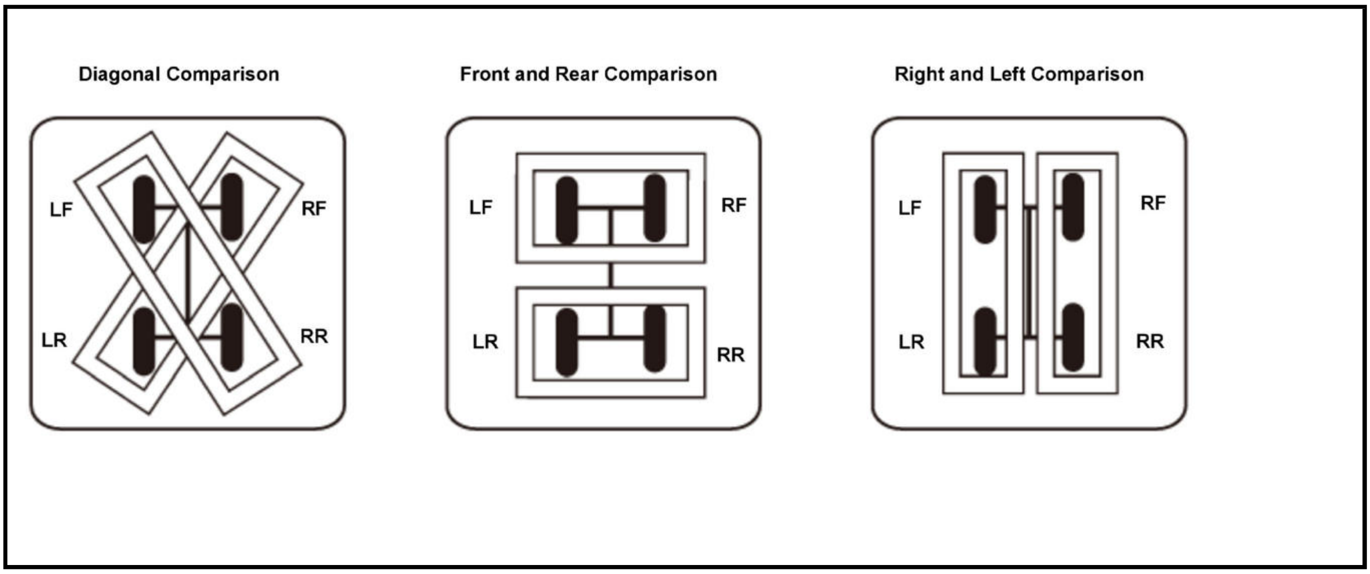
Diagonal Comparison
LF
RF
LR
RR
Front and Rear Comparison
LF
RF
LR
RR
Right and Left Comparison
LF
RF
LR
RR

Tire diameter shrinks as the tire deflates, causing the wheel speed to increase.Consequently, if the difference in wheel speeds exceeds the threshold, the low tire pressure/TPMS indicator turns on as shown in the step-to-step diagram below.

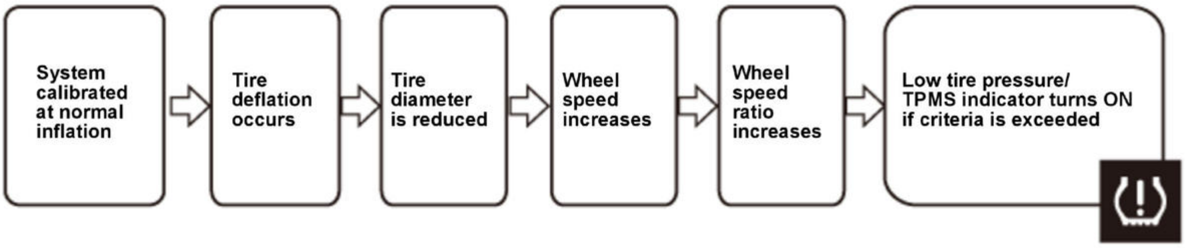
System calibrated at normal inflation
Tire deflation occurs
Tire diameter is reduced
Wheel speed increases
Wheel speed ratio increases
Low tire pressure/ TPMS indicator turns ON if criteria is exceeded

Peak Tire Resonance

Peak resonance frequency value learned during calibration becomes the initial value. The peak resonance frequency method compares the initial peak resonance frequency value of the two front tires and the present peak resonance frequency value of the two front tires, and detects reduced pressure of the tires. If the present peak resonance value drops below the threshold, the low tire pressure/TPMS indicator turns ON as shown in the step-to-step diagram below.

Resonance frequency is corrected based on the outside air temperature sensor information, because resonance frequency is changed by the outside air temperature.

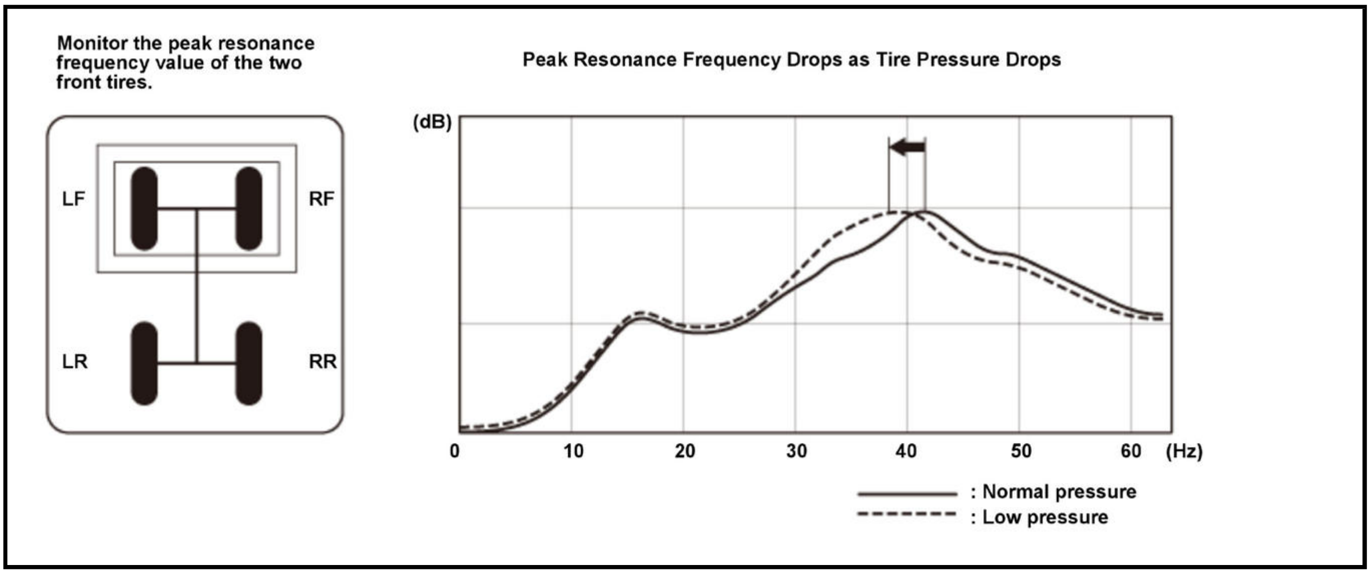

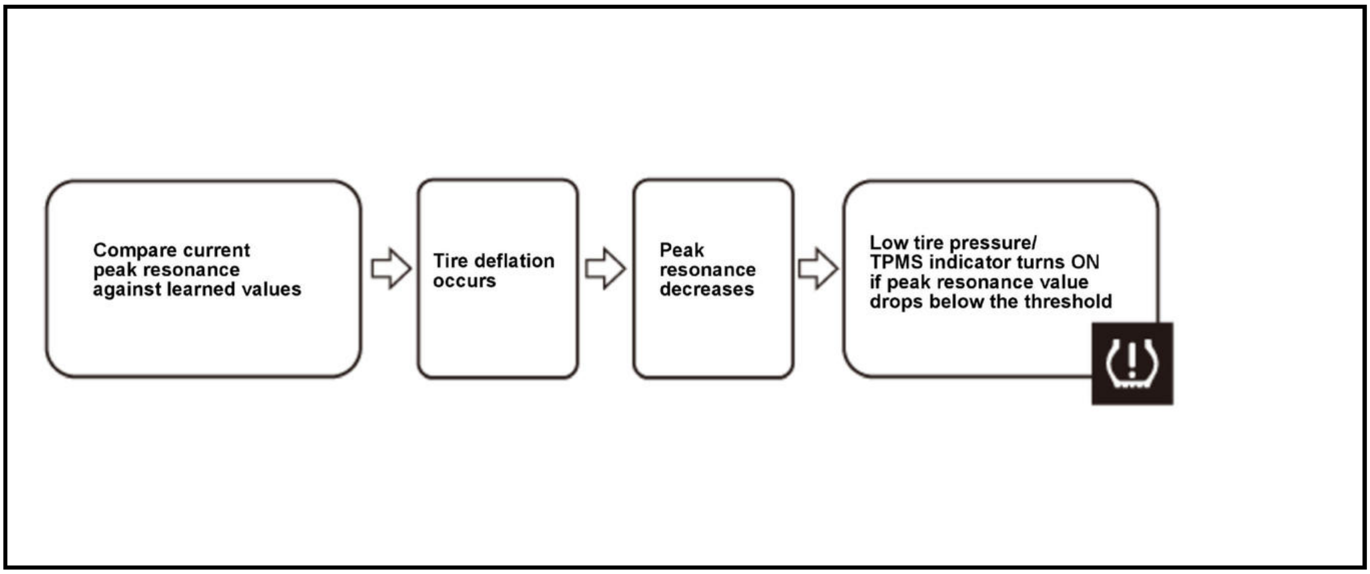
Compare current peak resonance against learned values
Tire deflation occurs
Peak resonance decreases
Low tire pressure/ TPMS indicator turns ON if peak resonance value drops below the threshold

The TPMS module compares the peak resonance values learned at calibration. If the value drops below the threshold, the low tire pressure/TPMS indicator turns on.

Temporary Suspension

Certain situations, such as when the vehicle is turning, accelerating, decelerating, or braking will temporarily prevent the system from monitoring tire pressures due to varying tire loads.

Calibration

A calibration process is required for the TPMS module to learn the initial rolling radii of the four tires and peak tire resonance values. The calibration procedure must be performed any time the tire pressures are adjusted, or when the tires are rotated or replaced. The TPMS calibration procedure is initiated by pressing the TPMS switch (if equipped) or doing customization (without TPMS switch).Upon the completion of system calibration, vehicle mileage and calibration data is stored in the VSA modulator-control unit. If larger diameter accessory wheels have been installed, the TPMS system needs to be calibrated to recognize the new wheel size. This procedure is performed using the HDS threshold rewriting function.

TPMS SYSTEM DESCRIPTION - SYSTEM DIAGRAM

The TPMS module is integrated into the VSA modulator-control unit. In order to control tire pressure monitoring, the TPMS module first receives inputs from the VSA system, which includes the wheel speed sensors, the hydraulic pressure sensor, the PCM, the SRS unit, the EPS control unit, and the gauge control module. Then, the TPMS module sends commands to the gauge control module through the VSA modulator-control unit and issues warnings to the driver.

For locations of each component on vehicle, refer to Component Location Index:

- **VSA modulator-control unit, Wheel speed sensors, TPMS switch, Outside air temperature sensor**
- **EPS control unit**
- **PCM**
-
- **Gauge control module**
- **Climate control unit**

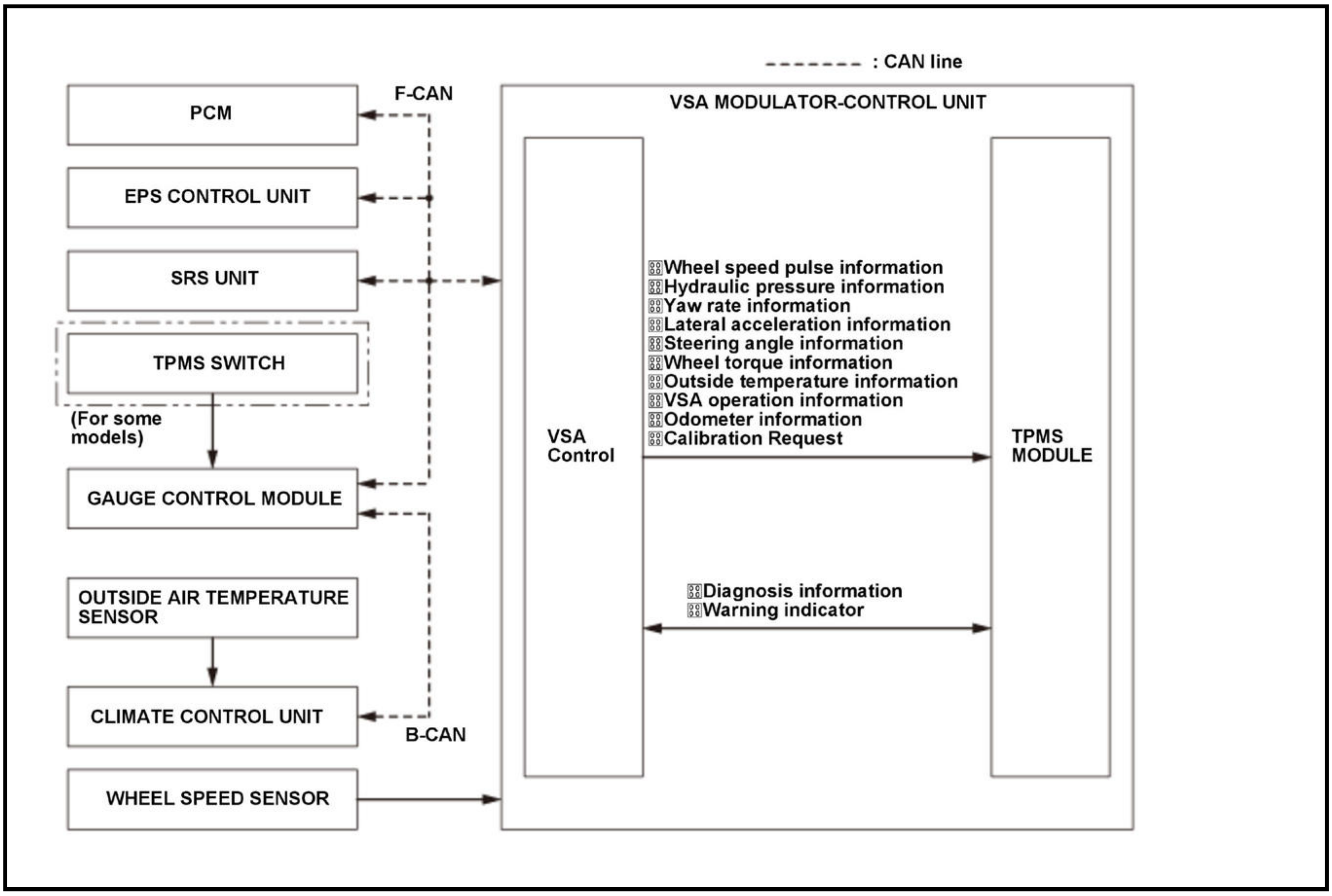
: CAN line
PCM
F-CAN
VSA MODULATOR-CONTROL UNIT
EPS CONTROL UNIT
SRS UNIT
TPMS SWITCH
(For some models)
GAUGE CONTROL MODULE
OUTSIDE AIR TEMPERATURE SENSOR
CLIMATE CONTROL UNIT
B-CAN
WHEEL SPEED SENSOR
VSA Control
TPMS MODULE
Wheel speed pulse information
Hydraulic pressure information
Yaw rate information
Lateral acceleration information
Steering angle information
Wheel torque information
Outside temperature information
VSA operation information
Odometer information
Calibration Request
Diagnosis information
Warning indicator

CALIBRATION CORRECTION

TPMS CALIBRATION

Procedure

NOTE:

- Make sure the tire pressure is properly adjusted to the specified tire pressure listed on the doorjamb label before doing the TPMS calibration.
- The calibration begins when the calibration is selected through the Multi-information display or the TPMS switch is pressed. The calibration is completed after driving in an ideal driving condition (28 to 65 mph (45 to 105 km/h), driving steadily without much acceleration or deceleration) for about 20 minutes. Full functionality of the system cannot be performed properly if the calibration is not completed.
- Do the TPMS calibration after doing the following items.
-
    - -

      Adjust the tire pressure.

    - -

    Rotating the tires.

  - -

    Replacing the tire(s).

  - -

    Update the VSA modulator-control unit.

  - -

    Replace the VSA modulator-control unit.

- Calibration check method.

  Check if the calibration is completed by doing the following items.

-
  - Stop the vehicle and shift into P or N position/mode.
  - Turn the vehicle to the OFF (LOCK) mode.
  - Turn the vehicle to the ON mode and wait to see the low pressure/TPMS indicator come on for 2 seconds and then off.
  - Do not drive the vehicle and wait for 45 seconds as is.
  - If the calibration is completed, the indicator does not come on. If the calibration is not yet completed, then the indicator comes on for 2 seconds and then goes off.

The calibration check process gets interrupted if the vehicle moves. Do the troubleshooting if the indicator does not go off after 2 seconds, keeps blinking or stays on when the vehicle is in the ON mode.

1. TPMS - Calibrate (Without TPMS Switch)

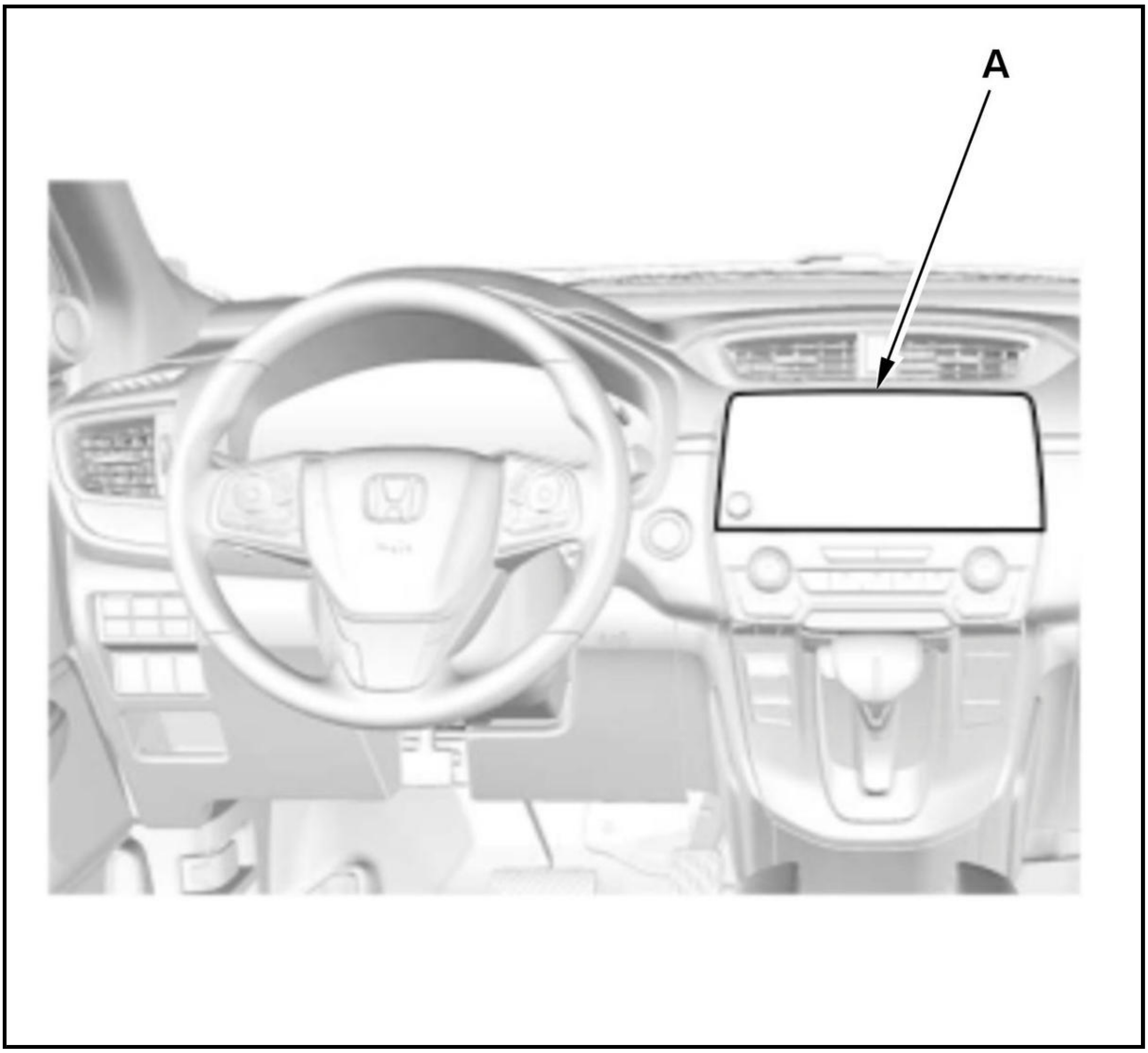

With display audio type (7-inch screen)

1. Make sure the tires are inflated to the specified tire pressure listed on the doorjamb label.

2. Turn the vehicle to the ON mode.**NOTE:**

Vehicle must be stopped with the transmission in P or N position/mode.

3. Select the HOME button on the screen (A).

4. Select the SETTINGS.

5. Select the VEHICLE.

6. Select the TPMS CALIBRATION.

7. Select the CALIBRATE.

8. When the calibration successfully begins, "Calibration Started" is displayed on the screen when the system received the calibration.**NOTE:**

If the calibration does not begin successfully, "Unable to initialize TPMS" is displayed on the screen and **do the TPMS symptom troubleshooting**.

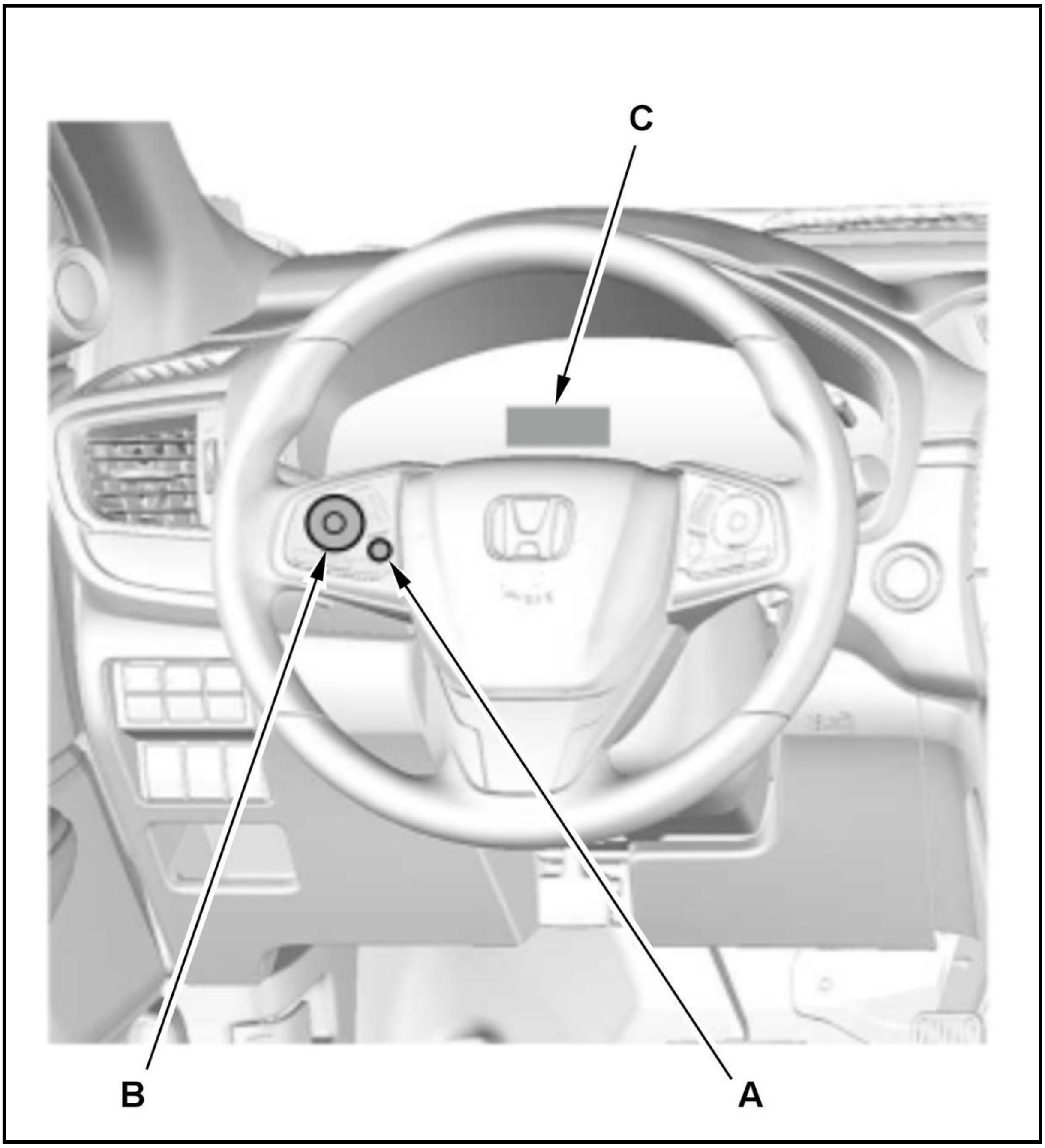

With color audio type (5-inch screen)

1. Make sure the tires are inflated to the specified tire pressure listed on the doorjamb label.

2. Turn the vehicle to the ON mode.**NOTE:**

Vehicle must be stopped with the transmission in P or N position/mode.

3. Press the information button (A), then press the audio remote button (B) to select the VEHICLE SETTINGS.

4. Press the audio remote button to select TPMS CALIBRATION.

5. Press the audio remote button to select CALIBRATE.

6. When the calibration successfully begins, "Calibration Started" is displayed on Multi-information display (C) when the system received the calibration.**NOTE:**

If the calibration does not begin successfully, "Calibration Failed to Start" is displayed on Multi-information display and **do the TPMS symptom troubleshooting**.

2. TPMS - Calibrate (With TPMS Switch)

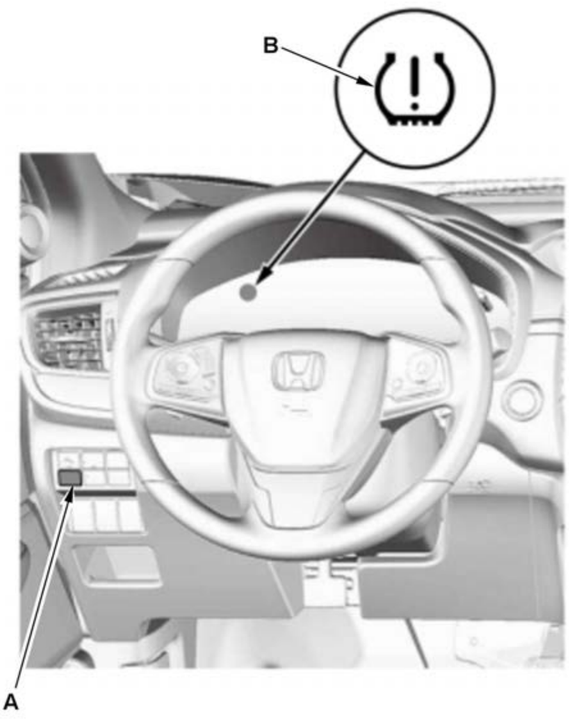

1. Make sure the tires are inflated to the specified tire pressure listed on the doorjamb label.

2. Turn the vehicle to the ON mode.**NOTE:**

Vehicle must be stopped with the transmission in P or N position/mode.

3. Press and hold the TPMS switch (A) for 3 seconds.

4. When the calibration successfully begins, the indicator (B) blinks twice.**NOTE:**

If the indicator does not blink, **do the TPMS symptom troubleshooting**.

DTC TROUBLESHOOTING INDEX

TPMS DTC TROUBLESHOOTING INDEX

DTC		Detection Item
C0077	**-78**	Low Tire Air Pressure
C0078	**-4A**	Different Diameter Tire Detection
C1030	**-11**	TPMS Switch Circuit Short

CIRCUIT DIAGRAM

TPMS CIRCUIT DIAGRAM (WITH CAN GATEWAY)

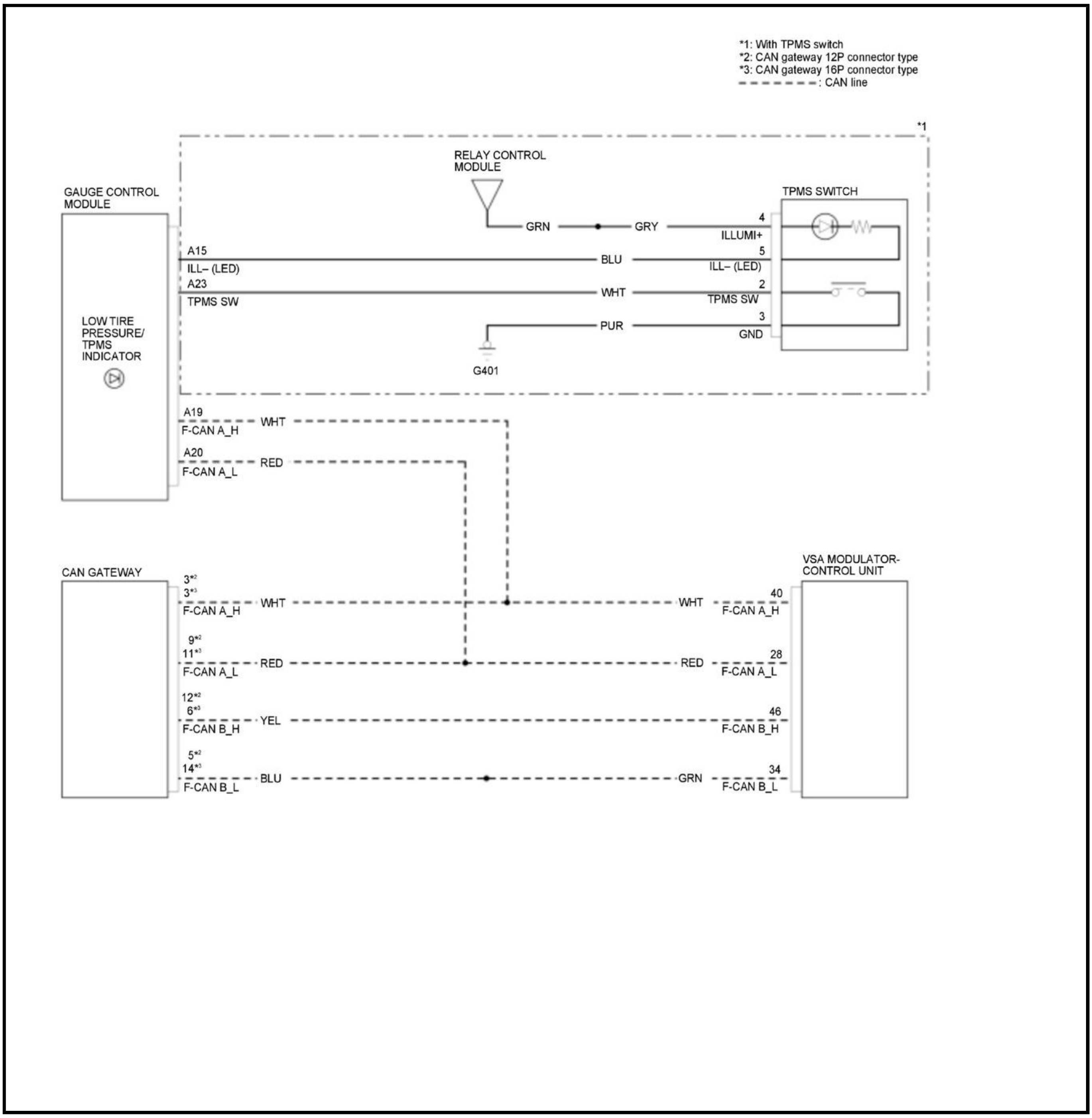
*1: With TPMS switch
*2: CAN gateway 12P connector type
*3: CAN gateway 16P connector type
CAN line
*1
RELAY CONTROL MODULE
GAUGE CONTROL MODULE
TPMS SWITCH
GRN
GRY
4
ILLUMI+
A15
ILL– (LED)
BLU
5
ILL– (LED)
A23
TPMS SW
WHT
2
TPMS SW
LOW TIRE PRESSURE/ TPMS INDICATOR
PUR
3
GND
G401
A19
F-CAN A_H
WHT
A20
F-CAN A_L
RED
CAN GATEWAY
VSA MODULATOR-CONTROL UNIT
3*2
3*3
F-CAN A_H
WHT
WHT
40
F-CAN A_H
9*2
11*3
F-CAN A_L
RED
RED
28
F-CAN A_L
12*2
6*3
F-CAN B_H
YEL
46
F-CAN B_H
5*2
14*3
F-CAN B_L
BLU
GRN
34
F-CAN B_L

TPMS CIRCUIT DIAGRAM (WITHOUT CAN GATEWAY) (2017 2018 2019)

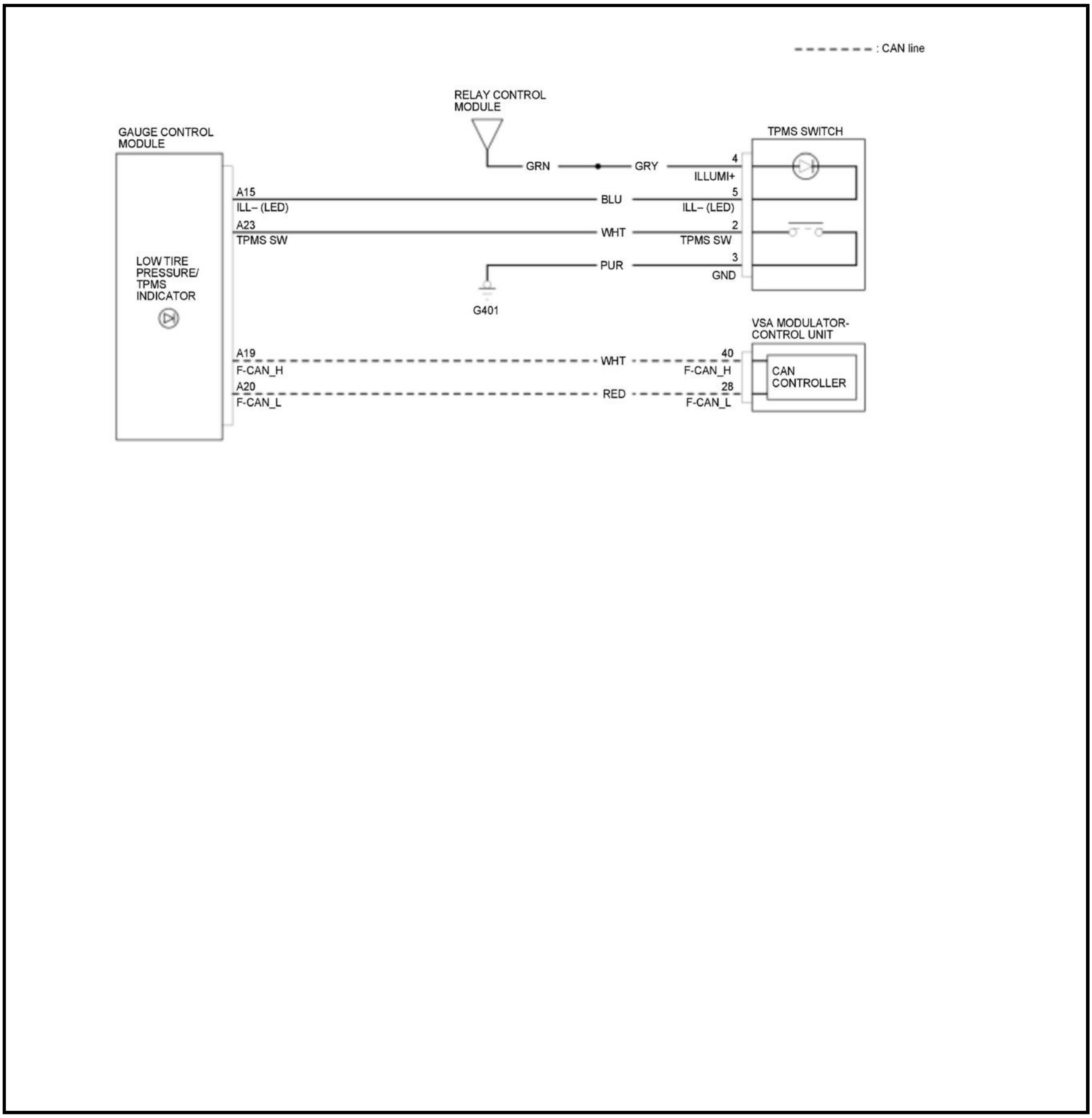
: CAN line
RELAY CONTROL MODULE
GAUGE CONTROL MODULE
TPMS SWITCH
GRN
GRY
4
ILLUMI+
A15
ILL– (LED)
BLU
5
ILL– (LED)
A23
TPMS SW
WHT
2
TPMS SW
PUR
3
GND
LOW TIRE PRESSURE/ TPMS INDICATOR
G401
VSA MODULATOR-CONTROL UNIT
A19
F-CAN_H
WHT
40
F-CAN_H
CAN CONTROLLER
A20
F-CAN_L
RED
28
F-CAN_L

COMPONENT LOCATION INDEX

TPMS COMPONENT LOCATION INDEX

For relationships between signals in a system, refer to System Diagram.

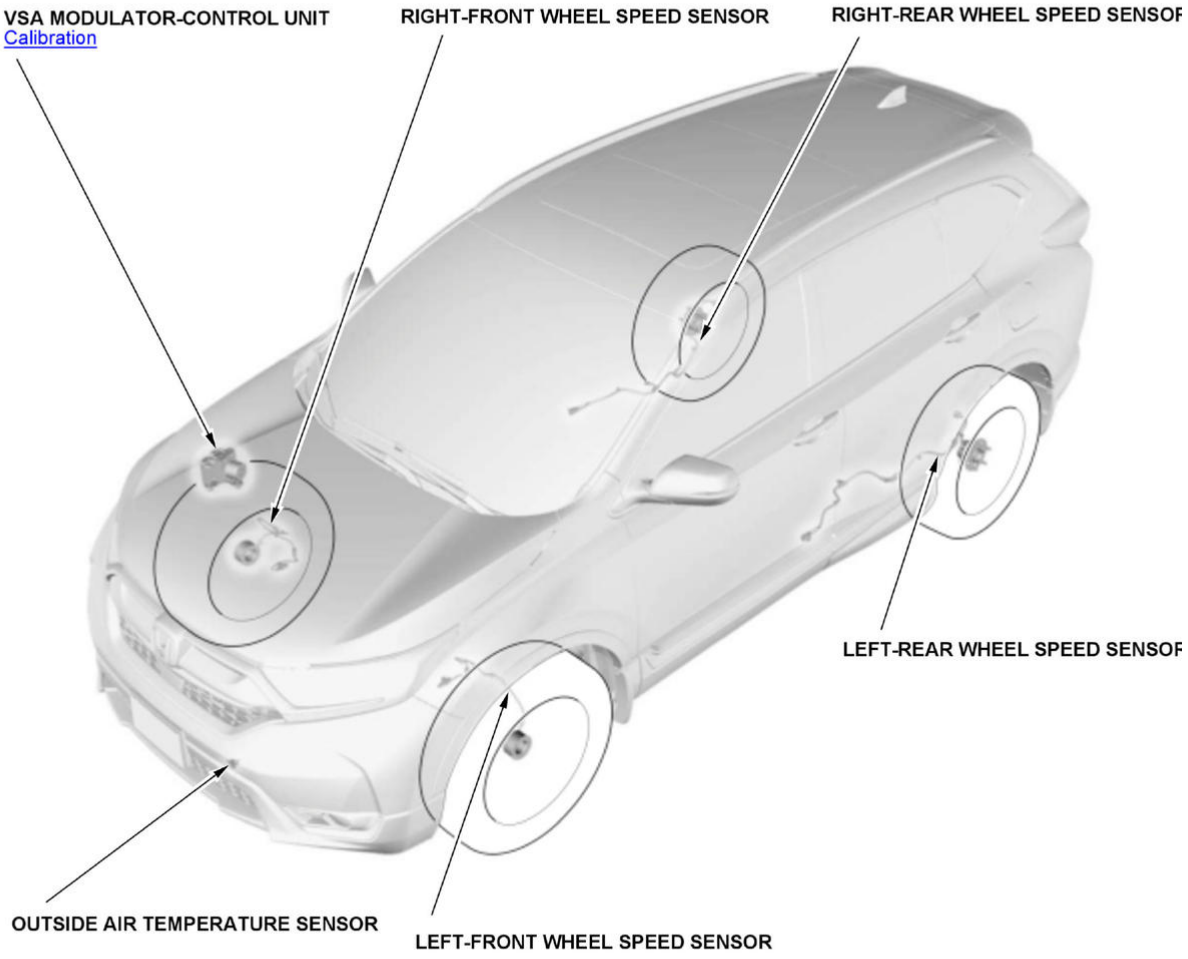
VSA MODULATOR-CONTROL UNIT
Calibration
RIGHT-FRONT WHEEL SPEED SENSOR
RIGHT-REAR WHEEL SPEED SENSOF
LEFT-REAR WHEEL SPEED SENSOF
OUTSIDE AIR TEMPERATURE SENSOR
LEFT-FRONT WHEEL SPEED SENSOR

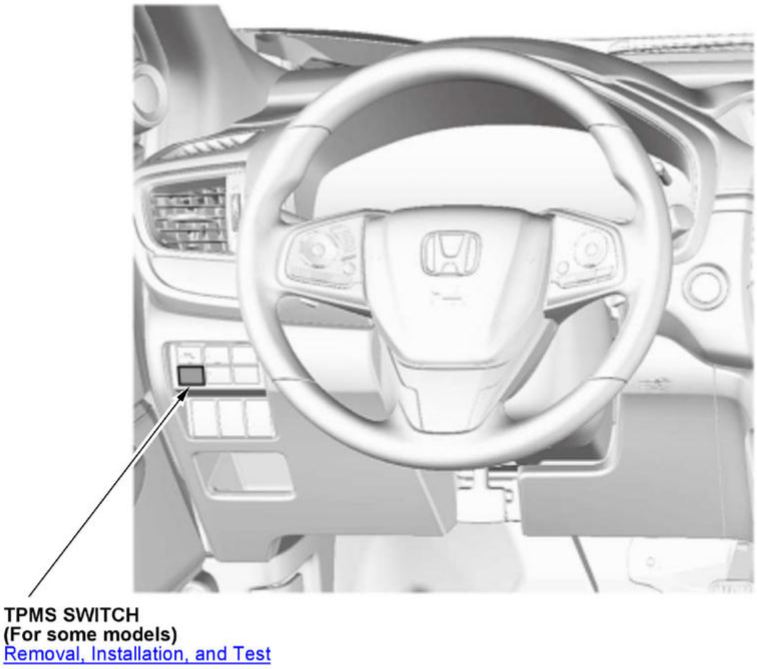
TPMS SWITCH
(For some models)
Removal, Installation, and Test

SYMPTOM TROUBLESHOOTING

TPMS SYMPTOM TROUBLESHOOTING - CALIBRATION CANNOT BE STARTED(WITH TPMS SWITCH)

Calibration cannot be started

NOTE:

- If any gauge control module or VSA system DTCs are indicated, do the troubleshooting for these DTCs first.
- Check the number of miles on the gauge control module. After proceeding TPMS calibration, DATA LIST with the HDS shows the same number of miles on the gauge control module. When TPMS switch is not working, DATA LIST with the HDS shows the number of miles of the last TPMS calibration previously done.

1. TPMS calibration check

   -1. Turn the vehicle to the ON mode.

   -2. Check the number of miles on the gauge control module.

   -3. Make sure that all four tires are the correct size, specified tire pressure, same speed rating, same brand/model, and are evenly worn.

   -4. **Do the TPMS calibration**.

   -5. Check the parameter(s) below with the HDS.

Signal	Current conditions	
	Values	Unit
INITIALIZED ODOMETER	B	B

   Does the value on the HDS match the number of miles on the gauge control module?

   YES

   Intermittent failure, the system is OK at this time.

   NO

   Go to step 2.

2. TPMS switch check

   -1. Turn the vehicle to the OFF (LOCK) mode.

   -2. **Check the TPMS switch** .

   Is the TPMS switch OK?

   YES

   Go to step 3.

   NO

   Replace the TPMS switch .

3. Determine possible failure area (TPMS SW line, GND line)

-1. Disconnect the following connector.

TPMS switch 5P connector

-2. Turn the vehicle to the ON mode.

-3. Measure the voltage between test points 1 and 2.

Test condition	Vehicle ON mode
B	TPMS switch 5P connector: disconnected
Test point 1	TPMS switch 5P connector (female terminals) No. 2: ①
Test point 2	Body ground

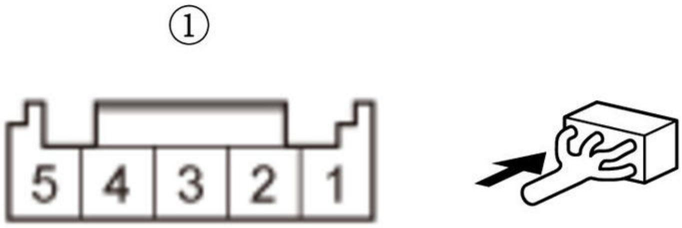

Is there battery voltage?

YES

Repair an open in the wire between the TPMS switch and body ground (G401).

NO

Go to step 4.

4. Shorted wire check (TPMS SW line)

-1. Turn the vehicle to the OFF (LOCK) mode.

-2. Disconnect the following connector.

Gauge control module connector A (32P)

-3. Check for continuity between test points 1 and 2.

Test condition	Vehicle OFF (LOCK) mode
B	TPMS switch 5P connector: disconnected
B	Gauge control module connector A (32P): disconnected
Test point 1	TPMS switch 5P connector (female terminals) No. 2: ①
Test point 2	Body ground

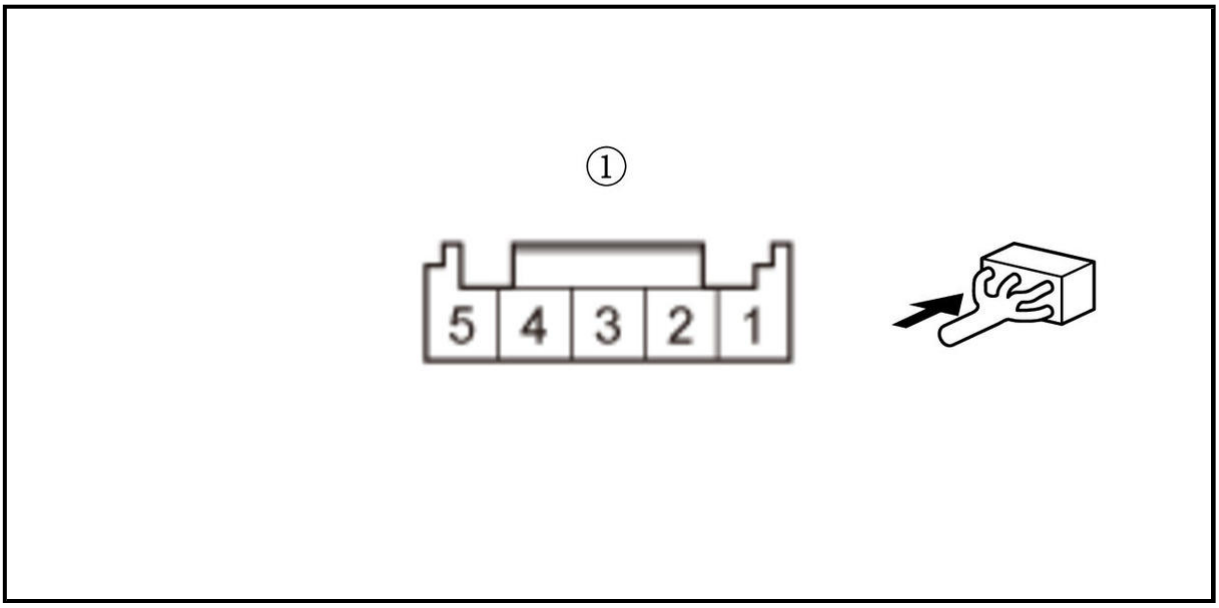

Is there continuity?

YES

Repair a short to body ground in the wire between the gauge control module and the TPMS switch.

NO

Go to step 5.

5. Open wire check (TPMS SW line)

-1. Check for continuity between test points 1 and 2.

Test condition	Vehicle OFF (LOCK) mode
B	TPMS switch 5P connector: disconnected
B	Gauge control module connector A (32P): disconnected
Test point 1	TPMS switch 5P connector (female terminals) No. 2: ①
Test point 2	**Gauge control module connector A (32P) No. 23**

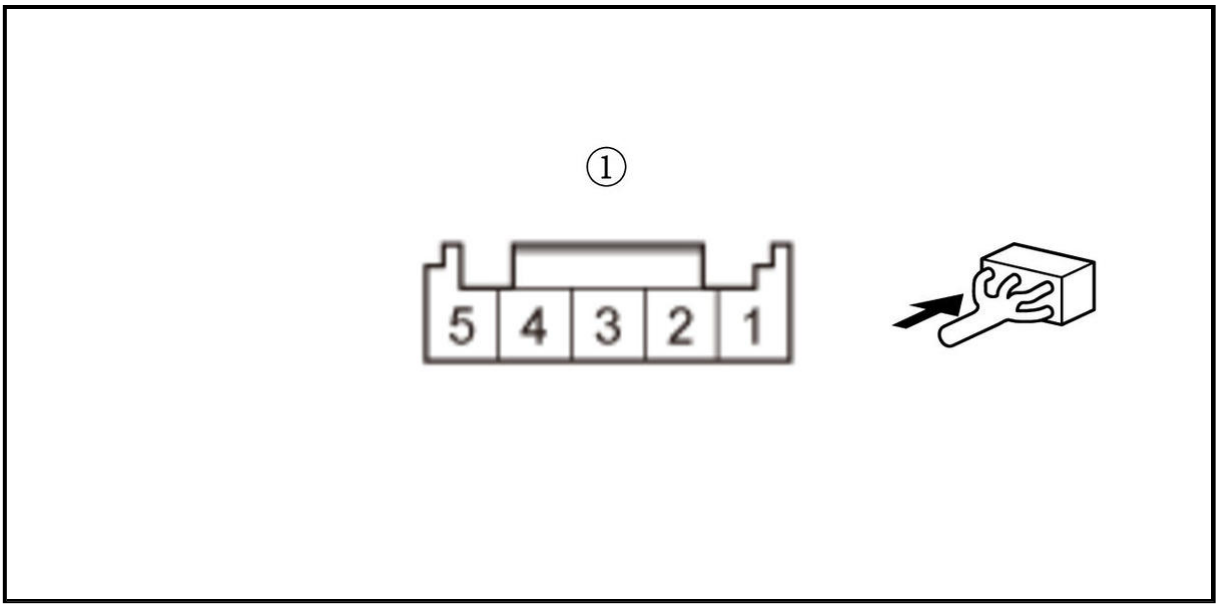

Is there continuity?

YES

The TPMS SW wire is OK. **Replace the gauge control module** .

NO

Repair an open in the wire between the gauge control module and the TPMS switch.

TPMS SYMPTOM TROUBLESHOOTING - CALIBRATION CANNOT BE STARTED(WITHOUT TPMS SWITCH)

Calibration cannot be started

NOTE:

- If any gauge control module or VSA system DTCs are indicated, do the troubleshooting for these DTCs first.
- Check the number of miles on the gauge control module. After proceeding TPMS calibration, DATA LIST with the HDS shows the same number of miles on the gauge control module. When TPMS switch is not working, DATA LIST with the HDS shows the number of miles of the last TPMS calibration previously done.

1. TPMS calibration check

   -1. Turn the vehicle to the ON mode.

   -2. Check the number of miles on the gauge control module.

   -3. Make sure that all four tires are the correct size, specified tire pressure, same speed rating, same brand/model, and are evenly worn.

   -4. **Do the TPMS calibration**.

   -5. Check the parameter(s) below with the HDS.

Signal	Current conditions	
	Values	Unit
INITIALIZED ODOMETER	B	B

Does the value on the HDS match the number of miles on the gauge control module?

YES

Intermittent failure, the system is OK at this time.

NO

Replace the gauge control module .

SYMPTOM TROUBLESHOOTING INDEX

TPMS SYMPTOM TROUBLESHOOTING INDEX(TPMS)

Symptom	Diagnostic procedure	Also check for
HDS does not communicate with the VSA modulator-control unit or the vehicle	**Troubleshoot the F-CAN circuit** .	B
Calibration cannot be started	- **Symptom troubleshooting**.	B

Symptom	Diagnostic procedure	Also check for
	- Replace the VSA modulator-control unit .	
TPMS warning is indicated	- Check for VSA system DTCs . - Check for the VSA indicator. If VSA indicator turns on, do the VSA system symptom troubleshooting "ABS indicator, brake system indicator (red), VSA indicator, and brake system indicator (amber) do not go off" . - Replace the VSA modulator-control unit .	B
Low tire pressure/TPMS indicator comes on	- Check the tire size and tire pressure according to tire information. - Make sure all four tires are the same brand/model, and have the same speed rating. - Inspect all four tires for even wear. - Do the TPMS calibration.	B
Low tire pressure/TPMS indicator does not come on when the tire pressure has decreased	- See general troubleshooting information "condition for data rejection, and case TPMS cannot operate normally" (Even if a system is normal, there is a possibility that cannot detect low tire pressure) . - Do the gauge control module self-diagnostic function . - Do the TPMS calibration. - Replace the VSA modulator-control unit .	B

SYMPTOM TROUBLESHOOTING INDEX FOR VIEWER

CALIBRATION CANNOT BE STARTED(TPMS)

Diagnostic procedure

- Symptom troubleshooting.
- Replace the VSA modulator-control unit .

HDS DOES NOT COMMUNICATE WITH THE VSA MODULATOR-CONTROL UNIT OR THE VEHICLE(TPMS)

Diagnostic procedure

- Troubleshoot the F-CAN circuit .

LOW TIRE PRESSURE/TPMS INDICATOR COMES ON(TPMS)

Diagnostic procedure

- Check the tire size and tire pressure according to tire information.
- Make sure all four tires are the same brand/model, and have the same speed rating.

- Inspect all four tires for even wear.
- Do the TPMS calibration.

LOW TIRE PRESSURE/TPMS INDICATOR DOES NOT COME ON WHEN THE TIRE PRESSURE HAS DECREASED(TPMS)

Diagnostic procedure

- See general troubleshooting information "condition for data rejection, and case TPMS cannot operate normally" (Even if a system is normal, there is a possibility that cannot detect low tire pressure) .
- Do the gauge control module self-diagnostic function .
- Do the TPMS calibration.
- Replace the VSA modulator-control unit .

TPMS WARNING IS INDICATED(TPMS)

Diagnostic procedure

- Check for VSA system DTCs .
- Check for the VSA indicator.

  If VSA indicator turns on, do the VSA system symptom troubleshooting "ABS indicator, brake system indicator (red), VSA indicator, and brake system indicator (amber) do not go off" .

- Replace the VSA modulator-control unit .

SYMPTOM TROUBLESHOOTING INDEX FOR VIEWER

CALIBRATION CANNOT BE STARTED (TPMS)

Diagnostic procedure

- **Symptom troubleshooting**.
- **Replace the VSA modulator-control unit** .

HDS DOES NOT COMMUNICATE WITH THE VSA MODULATOR-CONTROL UNIT OR THE VEHICLE (TPMS)

Diagnostic procedure

- **Go to the DTC troubleshooting index** .

LOW TIRE PRESSURE/TPMS INDICATOR COMES ON (TPMS)

Diagnostic procedure

- Check the tire size and tire pressure according to tire information.
- Make sure all four tires are the same brand/model, and have the same speed rating.
- Inspect all four tires for even wear.
- **Do the TPMS calibration**.

LOW TIRE PRESSURE/TPMS INDICATOR DOES NOT COME ON WHEN THE TIRE PRESSURE HAS DECREASED (TPMS)

Diagnostic procedure

- **See general troubleshooting information "condition for data rejection, and case TPMS cannot operate normally" (Even if a system is normal, there is a possibility that cannot detect low tire pressure)** .
- **Do the gauge control module self-diagnostic function** .
- **Do the TPMS calibration**.
- **Replace the VSA modulator-control unit** .

TPMS WARNING IS INDICATED (TPMS)

Diagnostic procedure

- **Check for VSA system DTCs** .
- Check for the VSA indicator.

  If VSA indicator turns on, do the VSA system symptom troubleshooting "ABS indicator, brake system indicator (red), VSA indicator, and brake system indicator (amber) do not go off" .

- **Replace the VSA modulator-control unit** .

DESCRIPTION & OPERATION

TPMS SYSTEM DESCRIPTION

Overview

The Indirect Tire Pressure Monitoring System (TPMS) establishes a baseline tire pressure reading using the wheel speed sensors and indirectly monitors tire pressure to detect pressure loss in any of the four tires. The low tire pressure/TPMS indicator turns ON appear when the tire pressure of any tire, or tires, falls below the specified threshold or a system malfunction is detected.

The system is controlled by the VSA modulator-control unit.

The TPMS consists of the following primary components:

- VSA modulator-control unit
- Wheel speed sensors
- Outside air temperature sensor
- System indicator

For locations of each component on vehicle, **refer to Component Location Index**, and for functions of indicator, **refer to How to Troubleshoot the TPMS** .

Control

The Indirect TPMS establishes a baseline tire pressure reading using the wheel speed sensors and indirectly monitors tire pressure to detect pressure loss in any of the four tires. The system does not monitor the tires when driving at low speed.

The system uses these two methods to determine loss of tire pressure:

- Wheel speed differential
- Peak tire resonance

Wheel Speed Differential

When monitoring tire pressure using the wheel speed differential method, the TPMS module compares the speed of the wheels in three different configurations:

- Diagonal comparison between the front and rear wheels
- Comparison between the two front and two rear wheels
- Comparison between the two right and two left wheels

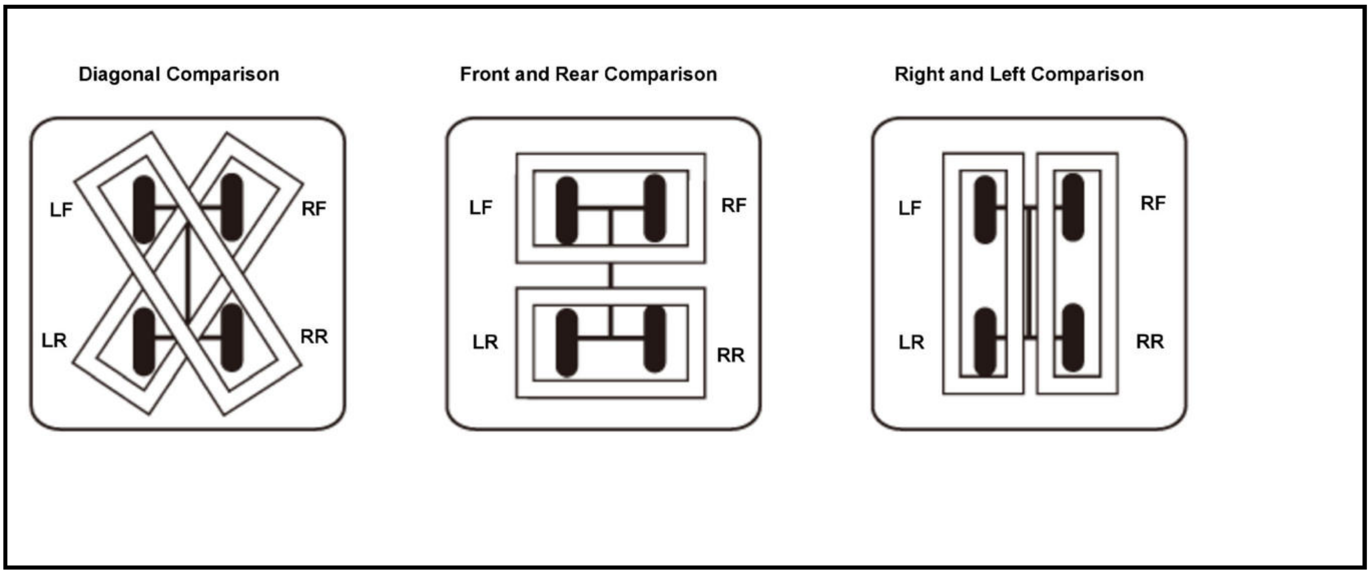

Tire diameter shrinks as the tire deflates, causing the wheel speed to increase.

Consequently, if the difference in wheel speeds exceeds the threshold, the low tire pressure/TPMS indicator turns on as shown in the step-to-step diagram below.

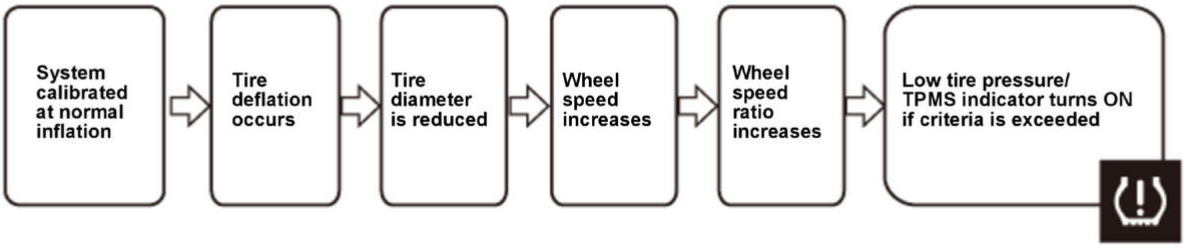
System calibrated at normal inflation
Tire deflation occurs
Tire diameter is reduced
Wheel speed increases
Wheel speed ratio increases
Low tire pressure/ TPMS indicator turns ON if criteria is exceeded

Peak Tire Resonance

Peak resonance frequency value learned during calibration becomes the initial value. The peak resonance frequency method compares the initial peak resonance frequency value of the two front tires and the present peak resonance frequency value of the two front tires, and detects reduced pressure of the tires. If the present peak resonance value drops below the threshold, the low tire pressure/TPMS indicator turns ON as shown in the step-to-step diagram below.

Resonance frequency is corrected based on the outside air temperature sensor information, because resonance frequency is changed by the outside air temperature.

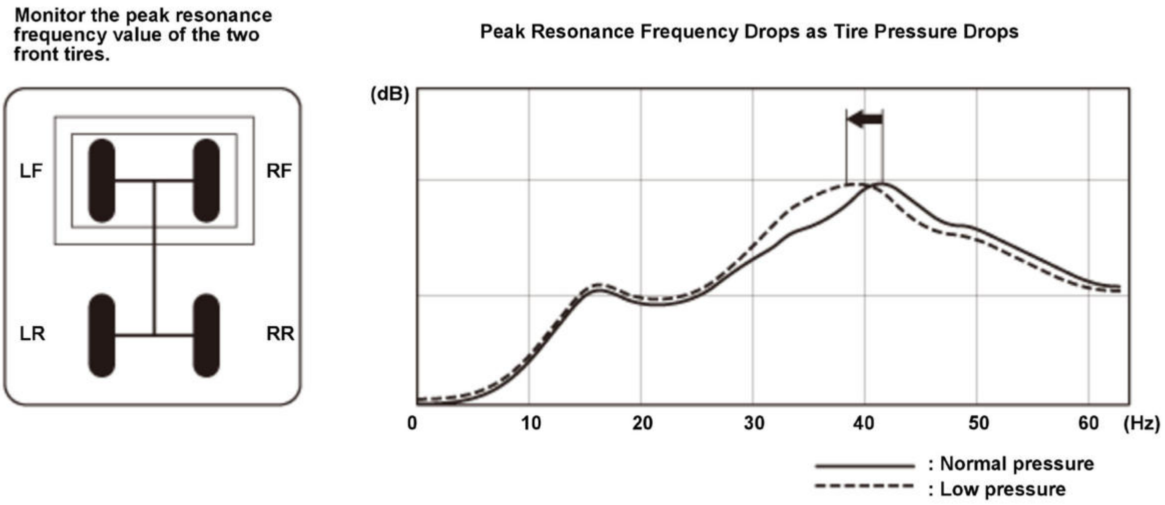

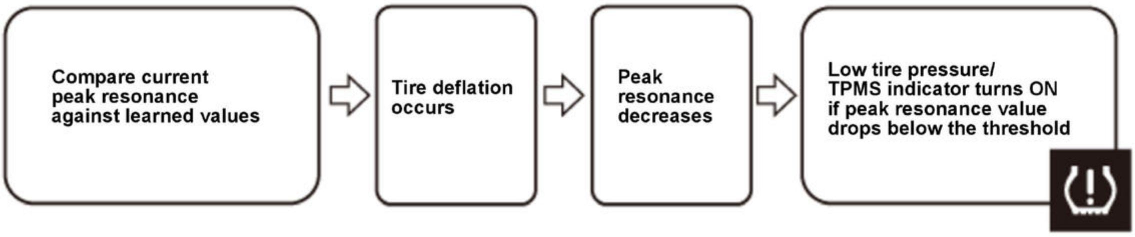
Compare current peak resonance against learned values
Tire deflation occurs
Peak resonance decreases
Low tire pressure/ TPMS indicator turns ON if peak resonance value drops below the threshold

The TPMS module compares the peak resonance values learned at calibration. If the value drops below the threshold, the low tire pressure/TPMS indicator turns on.

Temporary Suspension

Certain situations, such as when the vehicle is turning, accelerating, decelerating, or braking will temporarily prevent the system from monitoring tire pressures due to varying tire loads.

Calibration

A calibration process is required for the TPMS module to learn the initial rolling radii of the four tires and peak tire resonance values. The calibration procedure must be performed any time the tire pressures are adjusted, or when the tires are rotated or replaced. The TPMS calibration procedure is initiated by pressing the TPMS switch (if equipped) or doing customization (without TPMS switch).

Upon the completion of system calibration, vehicle mileage and calibration data is stored in the VSA modulator-control unit. If larger diameter accessory wheels have been installed, the TPMS system needs to be calibrated to recognize the new wheel size. This procedure is performed using the HDS threshold rewriting function.

TPMS SYSTEM DESCRIPTION - SYSTEM DIAGRAM

The TPMS module is integrated into the VSA modulator-control unit. In order to control tire pressure monitoring, the TPMS module first receives inputs from the VSA system, which includes the wheel speed sensors, the hydraulic pressure sensor, the PCM, the SRS unit, the EPS control unit, and the gauge control module. Then, the TPMS module sends commands to the gauge control module through the VSA modulator-control unit and issues warnings to the driver.

For locations of each component on vehicle, refer to Component Location Index:

- VSA modulator-control unit, Wheel speed sensors,
- EPS control unit
- PCM
- SRS unit
- Gauge control module
- Climate control unit, Outside air temperature sensor

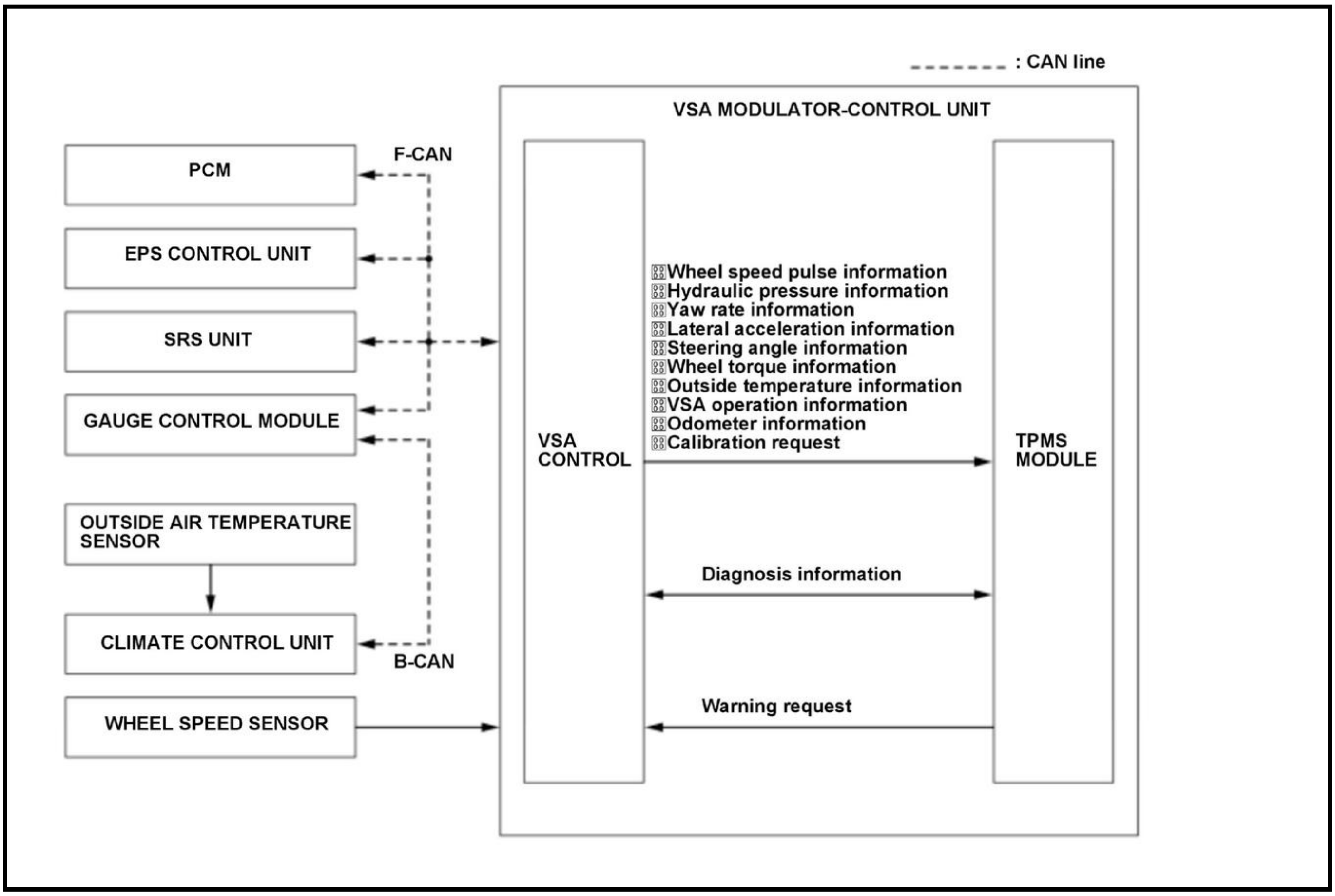
: CAN line
VSA MODULATOR-CONTROL UNIT
PCM
F-CAN
EPS CONTROL UNIT
SRS UNIT
GAUGE CONTROL MODULE
OUTSIDE AIR TEMPERATURE SENSOR
CLIMATE CONTROL UNIT
B-CAN
WHEEL SPEED SENSOR
VSA CONTROL
TPMS MODULE
Wheel speed pulse information
Hydraulic pressure information
Yaw rate information
Lateral acceleration information
Steering angle information
Wheel torque information
Outside temperature information
VSA operation information
Odometer information
Calibration request
Diagnosis information
Warning request

CALIBRATION CORRECTION

TPMS CALIBRATION

Procedure

NOTE:

- Make sure the tire pressure is properly adjusted to the specified tire pressure listed on the doorjamb label before doing the TPMS calibration.
- The calibration begins when the calibration is selected through the Multi-information display. The calibration is completed after driving in an ideal driving condition (28 to 65 mph (45 to 105 km/h), driving steadily without much acceleration or deceleration) for about 18 minutes. Full functionality of the system cannot be performed properly if the calibration is not completed.
- Do the TPMS calibration after doing the following items.
-
    - Adjust the tire pressure.
    - Rotating the tires.
    - Replacing the tire(s).
    - Updating the VSA modulator-control unit.
    - Replacing the VSA modulator-control unit.
- Calibration check method.

  Check if the calibration is completed by doing the following items.
-
    - Stop the vehicle and shift into P or N position/mode.
    - Turn the vehicle to the OFF (LOCK) mode.

- Turn the vehicle to the ON mode and wait to see the low tire pressure/TPMS indicator come on for 2 seconds and then off.
- Do not drive the vehicle and wait for 45 seconds as is.
- If the calibration is completed, the indicator does not come on. If the calibration is not yet completed, then the indicator comes on for 2 seconds and then goes off.

The calibration check process gets interrupted if the vehicle moves. Do the troubleshooting if the indicator does not go off after 2 seconds, keeps blinking or stays on when the vehicle is in the ON mode.

1. TPMS - Calibrate

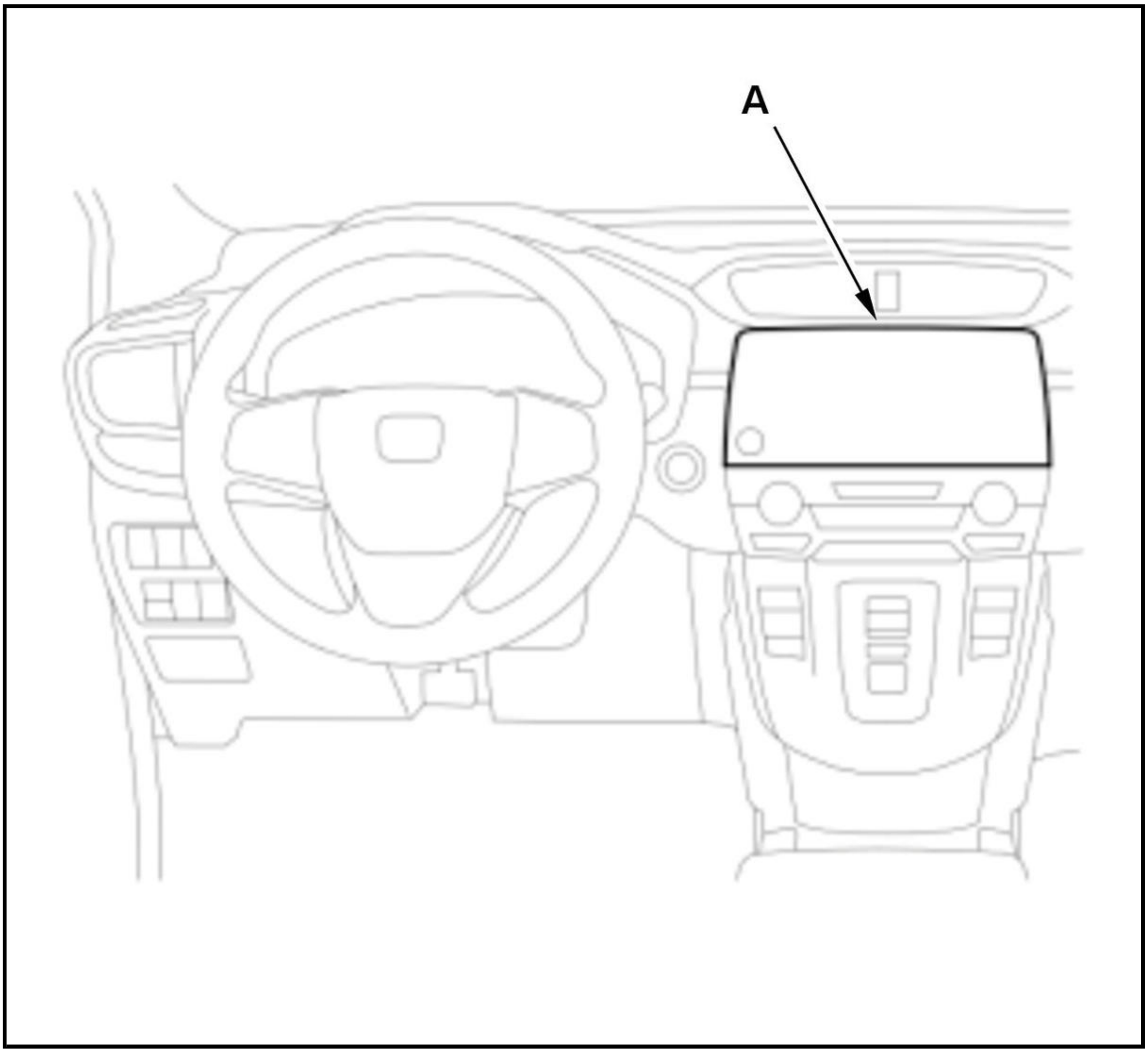

With display audio type (7-inch screen)

1. Make sure the tires are inflated to the specified tire pressure listed on the doorjamb label.

2. Turn the vehicle to the ON mode.

NOTE: Vehicle must be stopped with the transmission in P or N position/mode.

3. Select the HOME button on the screen (A).

4. Select the SETTINGS.

5. Select the VEHICLE.

6. Select the TPMS CALIBRATION.

7. Select the CALIBRATE.

8. When the calibration successfully begins, "Calibration Started" is displayed on the screen when the system received the calibration.

NOTE: If the calibration does not begin successfully, "Unable to initialize TPMS" is displayed on the screen and **do the TPMS symptom troubleshooting**.

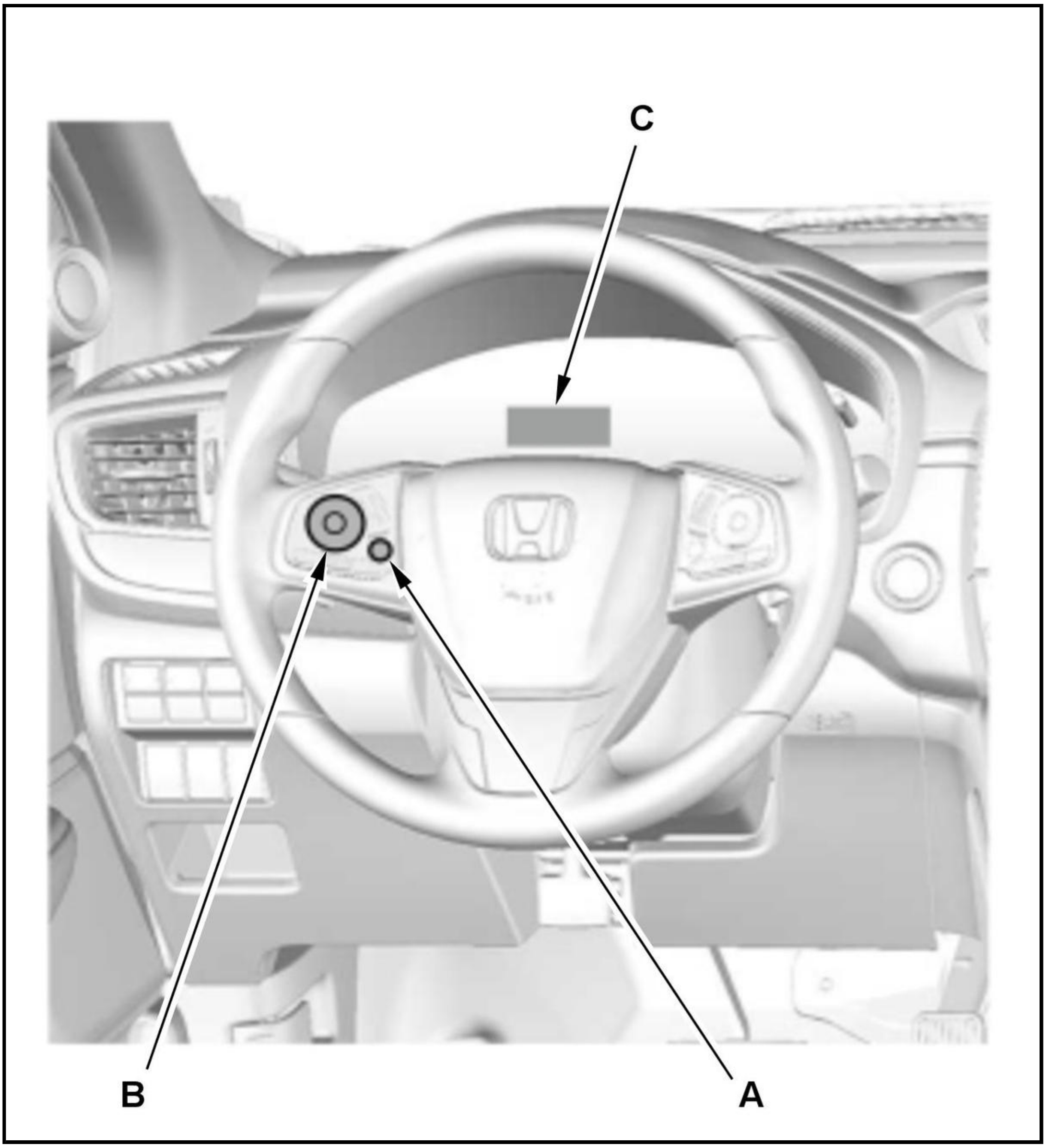

With color audio type (5-inch screen)

1. Make sure the tires are inflated to the specified tire pressure listed on the doorjamb label.

2. Turn the vehicle to the ON mode.

NOTE: Vehicle must be stopped with the transmission in P or N position/mode.

3. Press the information button (A), then press the audio remote button (B) to select the VEHICLE SETTINGS.

4. Press the audio remote button to select TPMS CALIBRATION.

5. Press the audio remote button to select CALIBRATE.

6. When the calibration successfully begins, "Calibration Started" is displayed on Multi-information display (C) when the system received the calibration.

NOTE: If the calibration does not begin successfully, "Calibration Failed to Start" is displayed on Multi-information display and do the TPMS symptom troubleshooting.

SYMPTOM TROUBLESHOOTING INDEX

TPMS SYMPTOM TROUBLESHOOTING INDEX (TPMS)

Symptom	Diagnostic procedure	Also check for
HDS does not communicate with the VSA modulator-control unit or the vehicle	Go to the DTC troubleshooting index .	B
Calibration cannot be started	• Symptom troubleshooting. • Replace the VSA modulator-control unit .	B
TPMS warning is indicated	• Check for VSA system DTCs . • Check for the VSA indicator. If VSA indicator turns on, do the VSA system symptom troubleshooting "ABS indicator, brake system indicator (red), VSA indicator, and brake system indicator (amber) do not go off" . • Replace the VSA modulator-control unit .	B
Low tire pressure/TPMS indicator comes on	• Check the tire size and tire pressure according to tire information. • Make sure all four tires are the same brand/model, and have the same speed rating. • Inspect all four tires for even wear. • Do the TPMS calibration.	B
Low tire pressure/TPMS indicator does not come on when the tire pressure has decreased	• See general troubleshooting information "condition for data rejection, and case TPMS cannot operate normally" (Even if a system is normal, there is a possibility that cannot detect low tire pressure) . • Do the gauge control module self-diagnostic function . • Do the TPMS calibration. • Replace the VSA modulator-control unit .	B

TPMS SYMPTOM TROUBLESHOOTING

CALIBRATION CANNOT BE STARTED

NOTE:

- If any gauge control module or VSA system DTCs are indicated, do the troubleshooting for these DTCs first.
- Check the number of miles on the gauge control module. After proceeding TPMS calibration, DATA LIST with the HDS shows the same number of miles on the gauge control module. When TPMS switch is not working, DATA LIST with the HDS shows the number of miles of the last TPMS calibration previously done.

1. TPMS calibration check

   -1. Turn the vehicle to the ON mode.

   -2. Check the number of miles on the gauge control module.

   -3. Make sure that all four tires are the correct size, specified tire pressure, same speed rating, same brand/model, and are evenly worn.

   -4. **Do the TPMS calibration**.

   -5. Check the parameter(s) below with the HDS.

Signal	**Current conditions**	
	Values	**Unit**
INITIALIZED ODOMETER	B	B

   Does the value on the HDS match the number of miles on the gauge control module?

   YES

   Intermittent failure, the system is OK at this time.

   NO

   Replace the gauge control module .

CIRCUIT DIAGRAM

TPMS CIRCUIT DIAGRAM

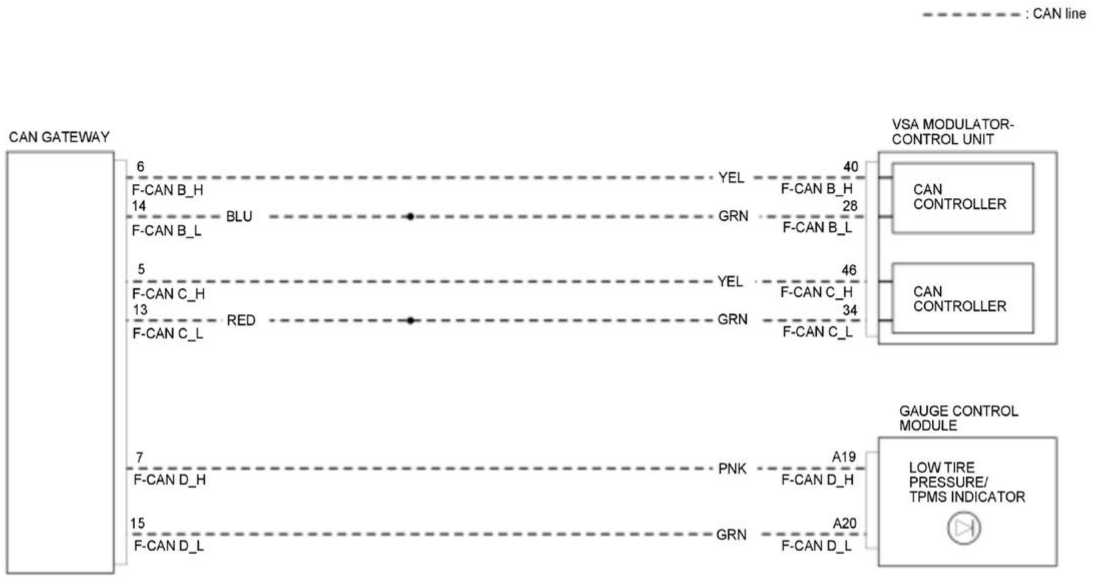
- - - - - - - : CAN line
CAN GATEWAY
VSA MODULATOR-CONTROL UNIT
CAN CONTROLLER
CAN CONTROLLER
GAUGE CONTROL MODULE
LOW TIRE PRESSURE/ TPMS INDICATOR
6
F-CAN B_H
YEL
40
F-CAN B_H
14
F-CAN B_L
BLU
GRN
28
F-CAN B_L
5
F-CAN C_H
YEL
46
F-CAN C_H
13
F-CAN C_L
RED
GRN
34
F-CAN C_L
7
F-CAN D_H
PNK
A19
F-CAN D_H
15
F-CAN D_L
GRN
A20
F-CAN D_L

COMPONENT LOCATION INDEX

TPMS COMPONENT LOCATION INDEX

For relationships between signals in a system, refer to System Diagram.

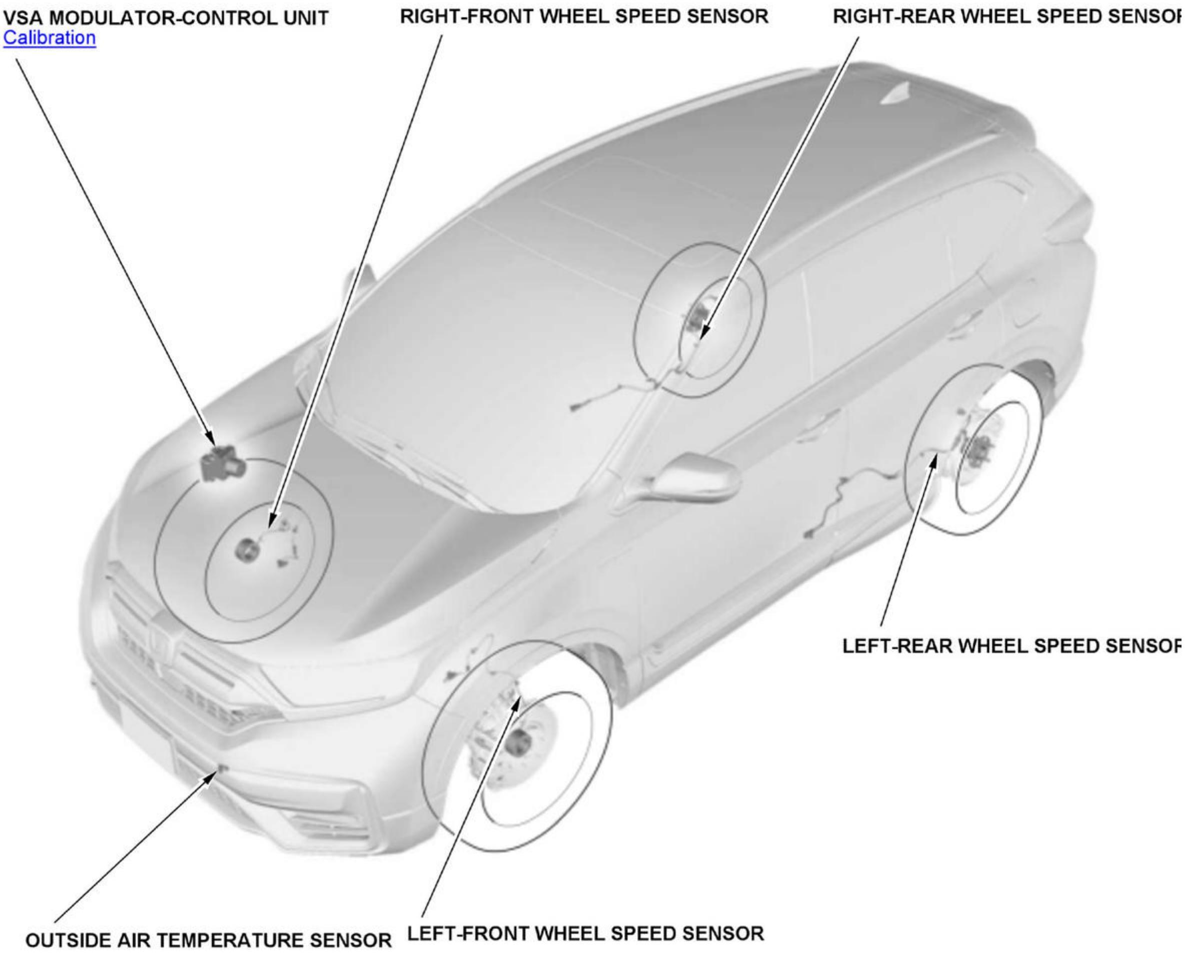
VSA MODULATOR-CONTROL UNIT
Calibration
RIGHT-FRONT WHEEL SPEED SENSOR
RIGHT-REAR WHEEL SPEED SENSOF
LEFT-REAR WHEEL SPEED SENSOF
OUTSIDE AIR TEMPERATURE SENSOR
LEFT-FRONT WHEEL SPEED SENSOR

TRACTION CONTROL DISABLE

WARNING: **Placing a non-compatible vehicle on a single-axle dynamometer could result in a safety hazard to technicians and damage to vehicle. Vehicles which use All-Wheel Drive (AWD) or traction control may not be clearly marked. Use common sense and take all necessary precautions when placing any vehicle on the dynamometer. Determine between full-time 4WD and All-Wheel Drive (AWD) for testing purposes. The following tables include information related to full-time 4WD and AWD vehicles, and how to disable the traction control system (if disengageable).**

WARNING: **DO NOT operate vehicle on a 2-wheel dynamometer if the DO NOT TEST column is marked.**

HONDA

Application	FWD	RWD	Part Time 4WD	Full Time 4WD	AWD	TCS	Do Not Test
Accord							
2001-07	X	...	...	...	...	X (1)	...
2008-22	X	...	...	...	...	X (2)	...
Accord Crosstour							
2010-11 (FWD)	X	...	...	...	...	X (2)	...
2010-11 (4WD)	X	...	...	X (4)	...	...	X
Civic							
2007	X	...	...	...	...	X (1)	...
2008-22	X	...	...	...	...	X (2)	...
Civic Wagon							
1987-91	...	...	X (3)	...	...	...	...
Clarity							
2017-22	X	...	...	...	...	X (2)	...
CR-V							
2005-06 (FWD)	X	...	...	...	...	X (1)	...
1997-22 (AWD)	...	...	...	...	X	...	X
2007-22 (FWD)	X	...	...	...	...	X (2)	...
CR-Z							
2012-16	X	...	...	...	...	X (2)	...
Crosstour							
2012-15 (FWD)	X	...	...	...	...	X (2)	...
2012-15 (4WD)	...	...	...	X (4)	...	...	X
Element							
2003-11 (AWD)	...	...	...	...	X	...	X
2007-08 (FWD)	X	...	...	...	...	X (1)	...
2009-10 (FWD)	X	...	...	...	...	X (2)	...
Fit							

Application	FWD	RWD	Part Time 4WD	Full Time 4WD	AWD	TCS	Do Not Test
2007-22	X	...	...	...	...	X (2)	...
HR-V							
2016-22 (FWD)	X	...	...	...	...	X (2)	...
2016-22 (AWD)	...	...	...	...	X	...	X
Insight							
2010-14	X	...	...	...	...	X (2)	...
Odyssey							
1999-09	X	...	...	...	...	X (1)	...
2010-22	X	...	...	...	...	X (2)	...
Passport							
1994-97 (4WD)	...	...	X (5)	...	...	...	...
1998-02 (4WD)	...	...	X (6)	...	...	...	...
Pilot							
2005-08 (FWD)	X	...	...	...	...	X (1)	...
2009-22 (FWD)	X	...	...	...	...	X (2)	...
2005-22 (AWD)	...	...	...	...	X	...	X
Ridgeline							
2006-13	...	...	...	X (4)	...	X (2)	X
2014-22 (AWD)	...	...	...	...	X	...	X
2014-22 (FWD)	X	...	...	...	...	X (2)	...

(1) Press TCS (or VSA) switch near left side vent. TCS indicator light will illuminate when system is disabled.

(2) Press VSA switch to the left of the steering wheel until a beep is heard. VSA indicator light will illuminate when system is disabled.

(3) On A/T models, locate disengagement plate on rear of transaxle case behind the right front wheel. Loosen lock bolt on plate. Turn middle bolt on plate. Turn middle bolt counterclockwise until plate rotates about 150 degrees and is stopped by lock bolt. Tighten lock bolt. On M/T models, locate Orange disengagement lever at rear of engine. Loosen lock bolt at slotted lever. Turn middle bolt on lever counterclockwise and tighten lock bolt.

(4) Cannot be shifted to 2WD.

(5) Shift transfer case lever into 2WD position. Ensure 4WD indicator light is off.

(6) Shift transfer case lever into HIGH position. The 4WD button is located on left side of dash. Ensure 4WD indicator light is off.

ADVANCED DIAGNOSTICS

DTC P0501 (CVT (TCM))

DTC P0501: CVT Speed Sensor Circuit Range/Performance

General Description

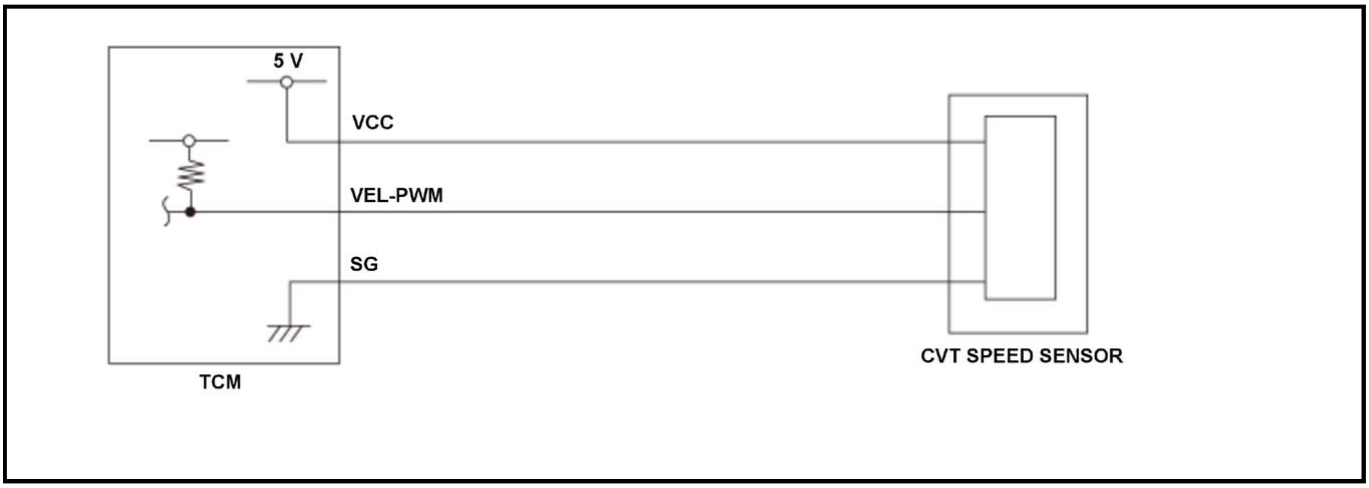

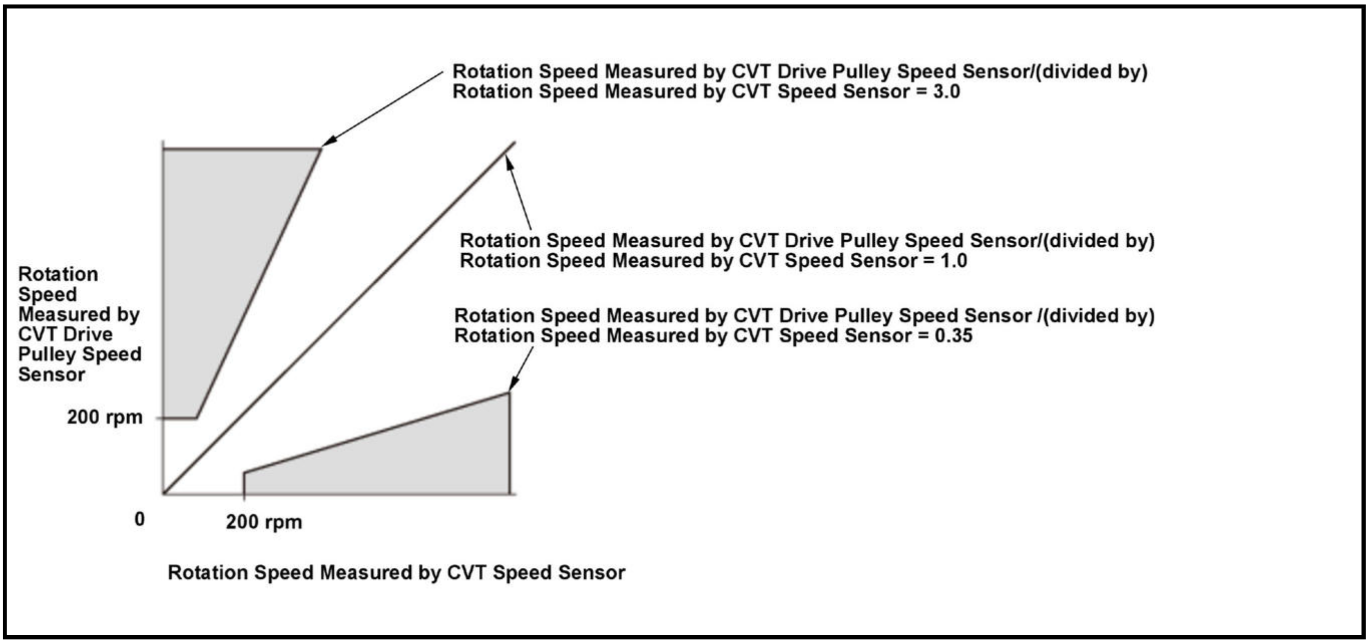

The CVT speed sensor is attached to the outside of the torque converter housing. The CVT speed sensor detects the number of revolutions of the secondary driven gear and sends a pulsing signal to the transmission control module (TCM). The TCM converts the pulsing signal into vehicle speed. If no pulses occur with the secondary driven gear rotating, the TCM detects a malfunction that may be caused by an open, an intermittent open, or a short to ground. Based on the correlation between the CVT speed sensor and the CVT drive pulley speed sensor, the TCM detects a malfunction and stores a DTC.

Monitor Execution, Sequence, Duration, DTC Type

Execution	Continuous
Sequence	None
Duration	4 seconds or more

DTC Type	One drive cycle, MIL on, Shift position indicator blinks

Enable Conditions

Condition	Minimum	Maximum
Engine speed [Engine Speed]	500 rpm	-
Drive pulley speed [Input Shaft (Drive Pulley) Speed rpm]	200 rpm	-
12 volt battery voltage [Battery Voltage]	10.0 V	-
Shift lever position/mode	D, S, L	
Other	Rotation speed [Secondary Shaft Speed 1 (rpm)] measured by CVT speed sensor is 200 rpm or more	
	No electrical noise in the CVT speed sensor output circuit	
	Decelerate and fuel cut-off for at least 3 seconds	

[ ]:HDS Parameter

Malfunction Threshold

One of these conditions is met:

- The rotation speed [Secondary Shaft Speed 1 (rpm)] measured by the CVT speed sensor is less than the rotation speed [Input Shaft (Drive Pulley) Speed rpm] measured by the CVT drive pulley speed sensor by a factor of 0.33 for at least 4 seconds.
- The rotation speed [Secondary Shaft Speed 1 (rpm)] measured by the CVT speed sensor is more than the rotation speed [Input Shaft (Drive Pulley) Speed rpm] measured by the CVT drive pulley speed sensor by a factor of 2.85 for at least 4 seconds.

Possible Cause

NOTE: The causes shown may not be a complete list of all potential problems, and it is possible that there may be other causes.

- CVT speed sensor VEL-PWM line open (includes connector loose connection or disconnection)
- CVT speed sensor VEL-PWM line short to ground
- CVT speed sensor failure
- TCM internal circuit failure

Confirmation Procedure

Operating Condition

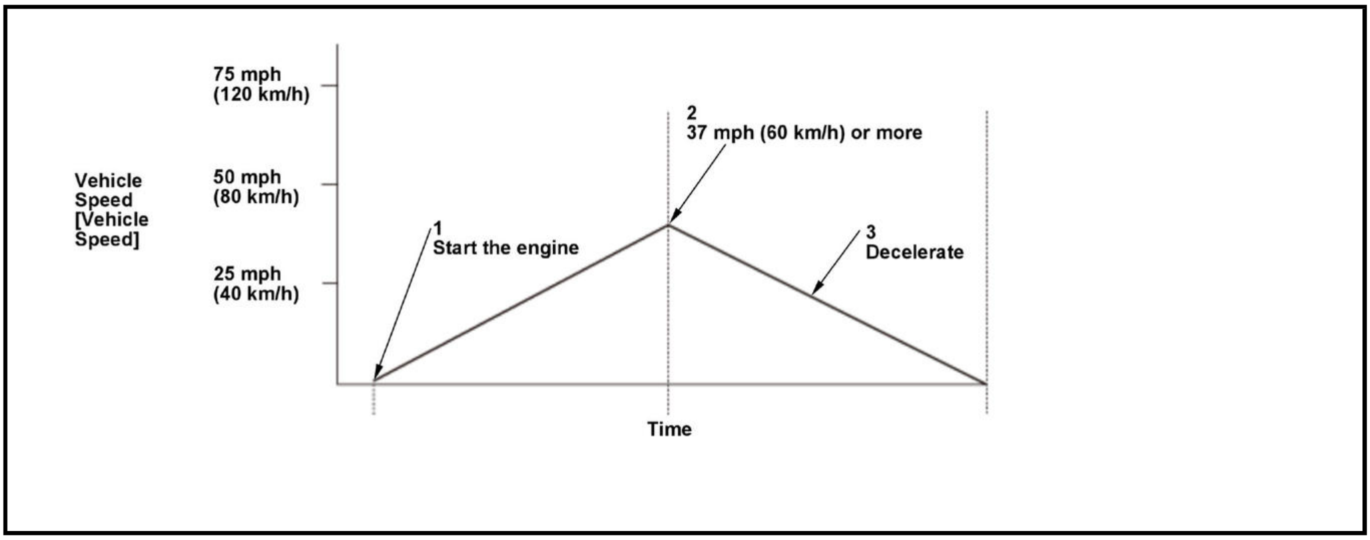

- Start the engine.
- Drive the vehicle at a speed of 37 mph (60 km/h) or more.
- Release the accelerator pedal, and slow the vehicle.

- Drive the vehicle in this manner only if the traffic regulations and ambient conditions allow.

With the HDS

None.

Diagnosis Details

Conditions for setting the DTC

When a malfunction is detected, the MIL comes on, the shift position indicator blinks, and a Pending DTC, a Confirmed DTC, and the freeze data are stored in the TCM memory.

Conditions for clearing the DTC

The shift position indicator comes off by turning the vehicle to the OFF (LOCK) mode. The MIL is cleared if the malfunction does not return in three consecutive trips in which the diagnostic runs. The MIL, the Pending DTC, the Confirmed DTC, and the freeze data can be cleared with the scan tool Clear command.

DTC P0502 (CVT (TCM))

DTC P0502: CVT Speed Sensor Circuit Open/Short

General Description

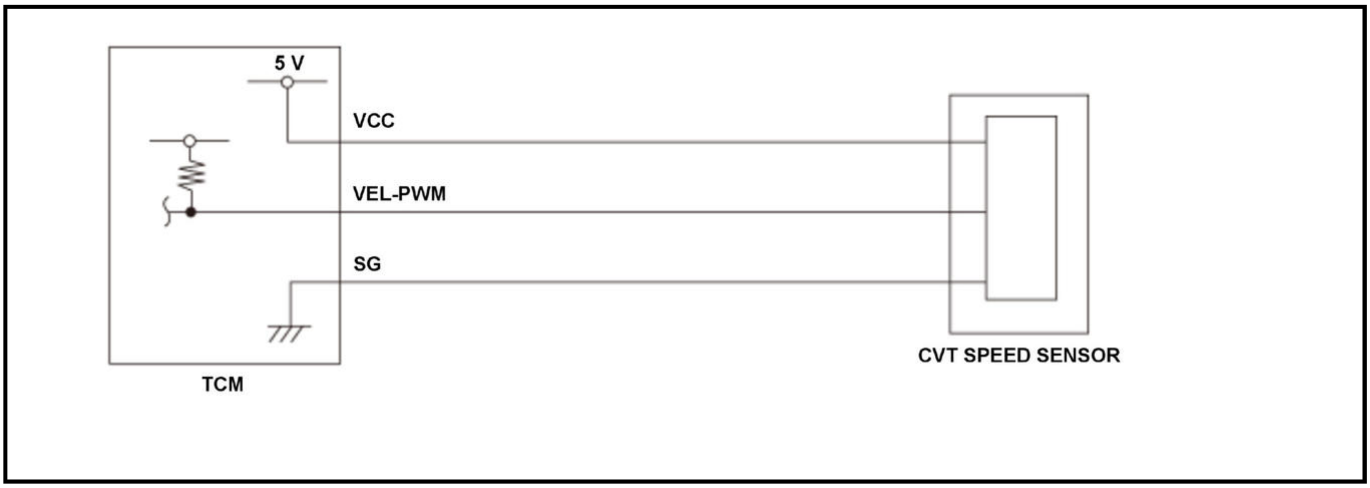

The CVT speed sensor is attached to the outside of the torque converter housing. The CVT speed sensor detects the number of revolutions of the secondary driven gear and sends a pulsing signal to the transmission control module (TCM). The TCM converts the pulsing signal into vehicle speed. If no pulses occur with the secondary driven gear rotating, the TCM detects a malfunction that may be caused by an open, an intermittent open, or a short to ground. If no signal from the CVT speed sensor is received for a set time, the TCM detects a malfunction and stores a DTC.

Monitor Execution, Sequence, Duration, DTC Type

Execution	Continuous
Sequence	None
Duration	4 seconds or more
DTC Type	One drive cycle, MIL on, Shift position indicator blinks

Enable Conditions

Condition	Minimum	Maximum
Engine speed [Engine Speed]	500 rpm	-
Drive pulley speed [Input Shaft (Drive Pulley) Speed rpm]	200 rpm	-
12 volt battery voltage [Battery Voltage]	10.0 V	-
Shift lever position/mode	D, S, L	
Other	No electrical noise in the CVT speed sensor output circuit	
	Decelerate and fuel cut-off for at least 3 seconds	

[ ]: HDS Parameter

Malfunction Threshold

No signal from the CVT speed sensor is detected for at least 4 seconds.

Possible Cause

NOTE: The causes shown may not be a complete list of all potential problems, and it is possible that there may be other causes.

- CVT speed sensor VEL-PWM line open (includes connector loose connection or disconnection)
- CVT speed sensor VCC line open (includes connector loose connection or disconnection)
- CVT speed sensor SG line open (includes connector loose connection or disconnection)
- CVT speed sensor VEL-PWM line short to ground
- CVT speed sensor failure
- TCM internal circuit failure

Confirmation Procedure

Operating Condition

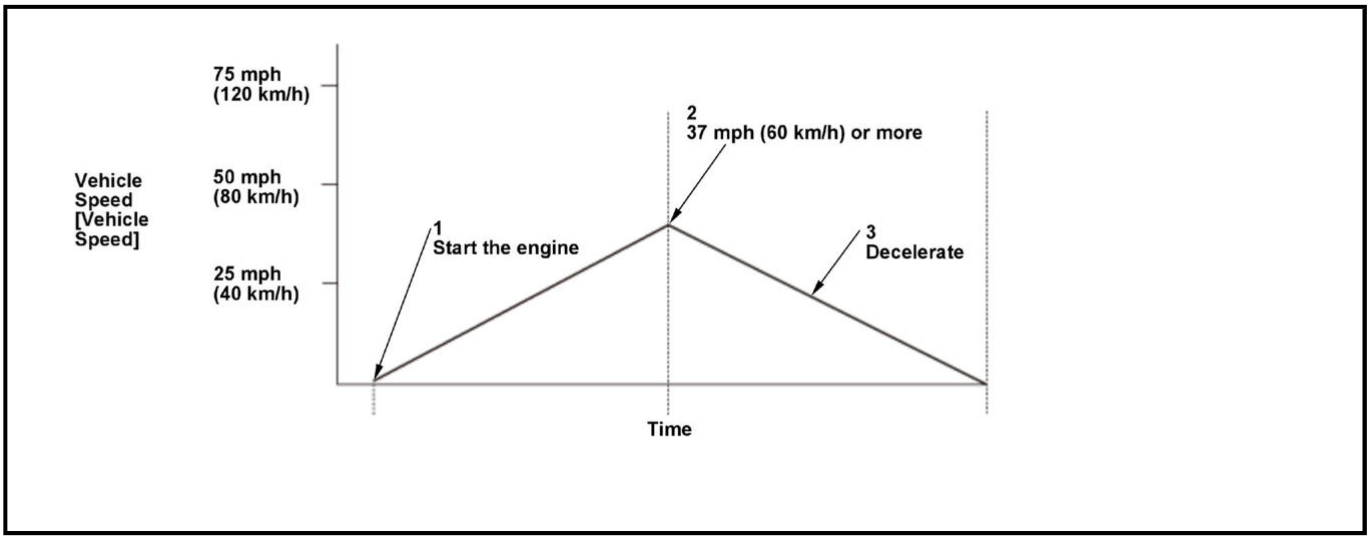

- Start the engine.
- Drive the vehicle at a speed of 37 mph (60 km/h) or more.
- Release the accelerator pedal, and slow the vehicle.

- Drive the vehicle in this manner only if the traffic regulations and ambient conditions allow.

With the HDS

None.

Diagnosis Details

Conditions for setting the DTC

When a malfunction is detected, the MIL comes on, the shift position indicator blinks, and a Pending DTC, a Confirmed DTC, and the freeze data are stored in the TCM memory.

Conditions for clearing the DTC

The shift position indicator comes off by turning the vehicle to the OFF (LOCK) mode. The MIL is cleared if the malfunction does not return in three consecutive trips in which the diagnostic runs. The MIL, the Pending DTC, the Confirmed DTC, and the freeze data can be cleared with the scan tool Clear command.

DTC P0600 (CVT (TCM))

DTC P0600: Serial Communication

General Description

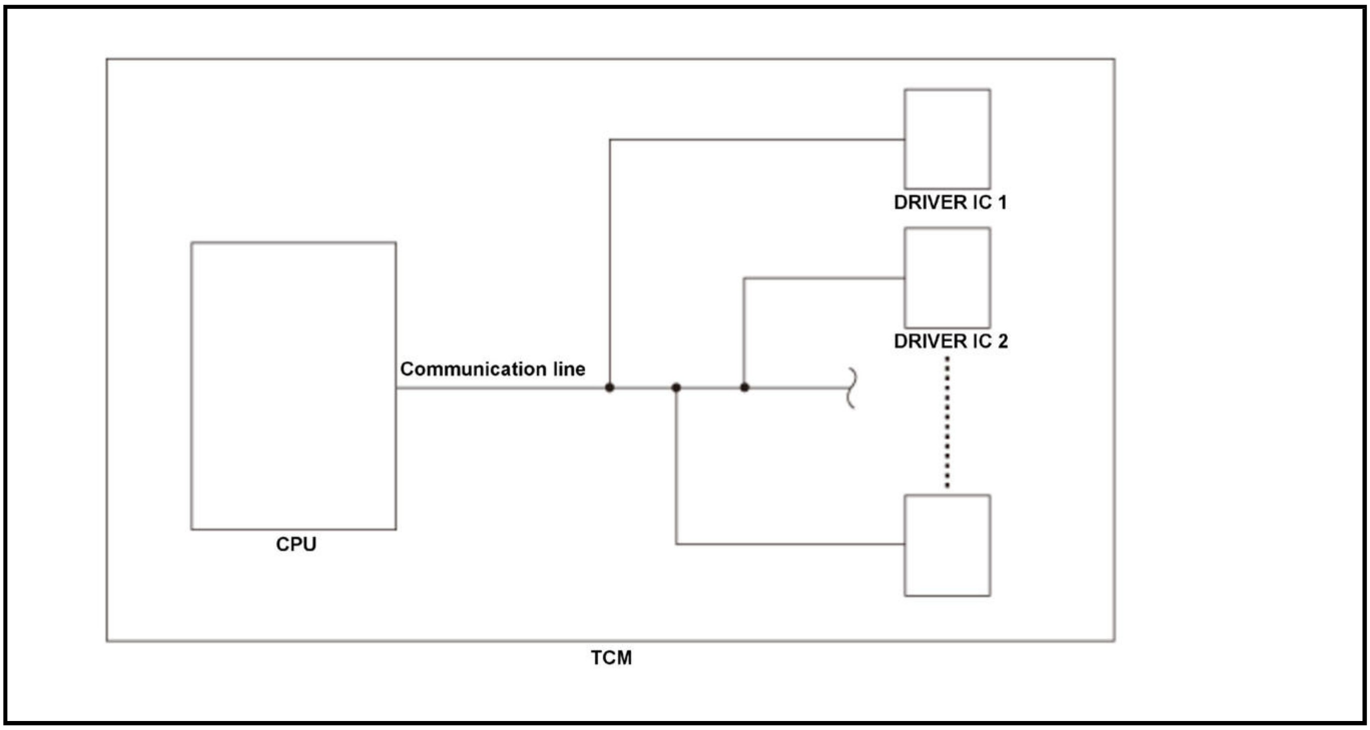

The driver IC which has diagnostic function and the CPU are built into the transmission control module (TCM). If the CPU cannot receive diagnostic information from the driver IC for a specified duration due to occurrence of communication abnormality between the driver IC and the CPU, the TCM detects a malfunction and stores a DTC.

Monitor Execution, Sequence, Duration, DTC Type

Execution	Continuous
Sequence	None
Duration	5 seconds or more
DTC Type	One drive cycle, MIL on, Shift position indicator blinks

Enable Conditions

Condition	B
Other	When the vehicle is turned to the ON or OFF (LOCK) mode

Malfunction Threshold

One of the conditions is met for at least 5 seconds:

- The CPU does not receive signal from the driver IC via the communication lines.
- The signal sent from the driver IC is abnormal.

Possible Cause

NOTE: The causes shown may not be a complete list of all potential problems, and it is possible that there may be other causes.

- TCM internal circuit failure

Diagnosis Details

Conditions for setting the DTC

When a malfunction is detected, the MIL comes on, the shift position indicator blinks, and a Pending DTC, a Confirmed DTC, and the freeze data are stored in the TCM memory.

Conditions for clearing the DTC

The shift position indicator comes off by turning the vehicle to the OFF (LOCK) mode. The MIL is cleared if the malfunction does not return in three consecutive trips in which the diagnostic runs. The MIL, the Pending DTC, the Confirmed DTC, and the freeze data can be cleared with the scan tool Clear command.

DTC P0602 (CVT (TCM))

DTC P0602: Boot Mode(Programming Error)

General Description

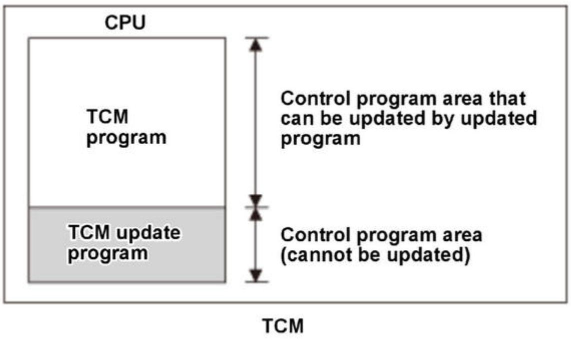
CPU
TCM program
TCM update program
Control program area that can be updated by updated program
Control program area (cannot be updated)
TCM

The transmission control module (TCM) is equipped with an update program to update its control program. The programs in the CPU of the TCM are classified as a TCM program (update-capable program) and a program for the update function (non-updatable program). The program update only updates the TCM program. When the TCM power is turned off during an update, the power for the update function is lost, and the update process stops. When the program update is stopped before it is completed, the TCM stores a DTC that indicates the update is not finished.

Monitor Execution, Sequence, Duration, DTC Type

Execution	Continuous
Sequence	None
Duration	1 second or less
DTC Type	One drive cycle, MIL on, Shift position indicator off

Enable Conditions

Condition	B
Vehicle	ON mode

Malfunction Threshold

The TCM program update stops 1 second before it is finished.

Possible Cause

NOTE: The causes shown may not be a complete list of all potential problems, and it is possible that there may be other causes.

- TCM program unwritten
- TCM internal circuit failure

Diagnosis Details

Conditions for setting the DTC

When the TCM program is not written in the TCM, the MIL comes on and a Pending DTC and a Confirmed DTC are stored in the TCM memory. The shift position indicator does not blink.

Conditions for clearing the DTC

The MIL, the Pending DTC, and the Confirmed DTC are cleared when the TCM program update is completed.

DTC P062F (CVT (TCM))

DTC P062F: TCM Internal Control Module Error

General Description

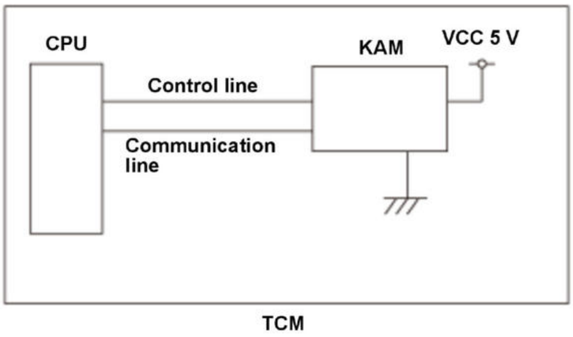

The transmission control module (TCM) is equipped with a keep alive memory (KAM). The data (control learn data, etc.) for powertrain control and information (vehicle identification number (VIN), etc.) related to the vehicle control is stored in the KAM, so that it can be maintained even when power is not supplied to the TCM, such as when the 12 volt battery is disconnected. When powered up, the CPU retrieves the stored information from the KAM, as well as writes data to the KAM (control related data is written when the vehicle condition is turned to the ON mode, and vehicle information when commanded from the HDS). When the data retrieval or data writing process is not finished normally, the TCM detects a malfunction and stores a DTC.

Monitor Execution, Sequence, Duration, DTC Type

Execution	Continuous
Sequence	None
Duration	1 second or more
DTC Type	One drive cycle, MIL on, Shift position indicator blinks

Enable Conditions

Condition	B
Other	When the vehicle is turned to the ON or OFF (LOCK) mode

Malfunction Threshold

A malfunction is detected whenever the keep alive data retrieval and writing process is not completed normally.

Possible Cause

NOTE: The causes shown may not be a complete list of all potential problems, and it is possible that there may be other causes.

- TCM internal circuit failure

Diagnosis Details

Conditions for setting the DTC

When a malfunction is detected, the MIL comes on, the shift position indicator blinks, and a Pending DTC, a Confirmed DTC, and the freeze data are stored in the TCM memory.

Conditions for clearing the DTC

The shift position indicator comes off by turning the vehicle to the OFF (LOCK) mode. The MIL is cleared if the malfunction does not return in three consecutive trips in which the diagnostic runs. The MIL, the Pending DTC, the Confirmed DTC, and the freeze data can be cleared with the scan tool Clear command.

DTC P0641 (CVT (TCM))

DTC P0641: Sensor Reference Voltage 1 Circuit Malfunction

General Description

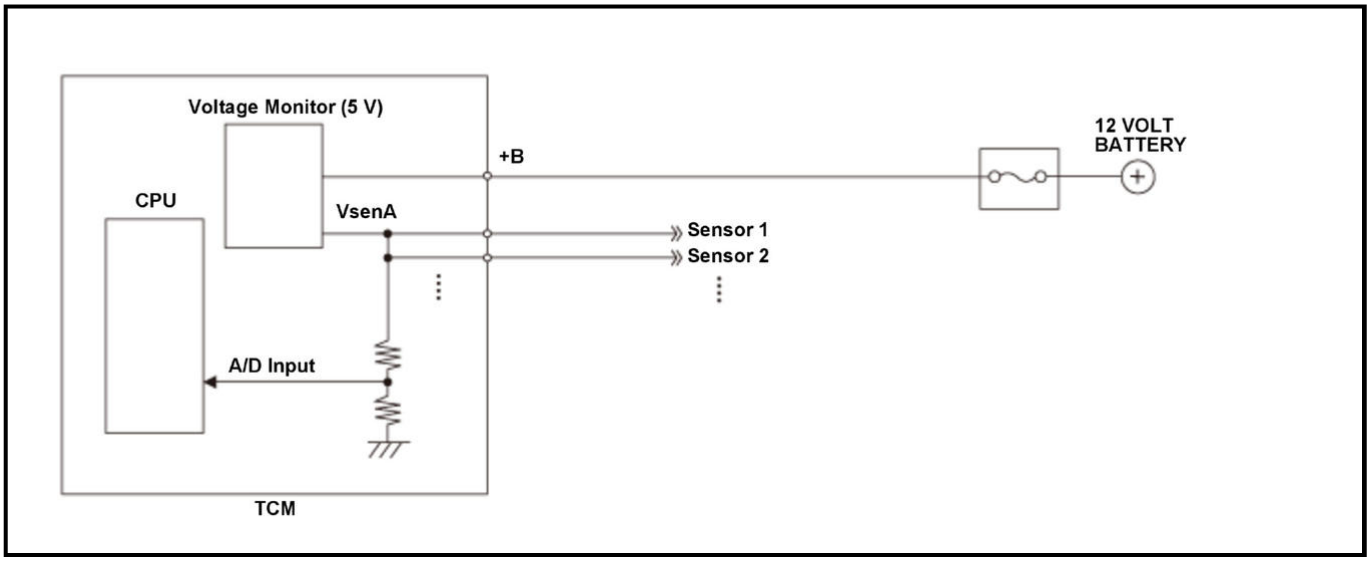

The transmission control module (TCM) is equipped with a voltage monitor (5 V power source) to supply a stable 5 V to each sensor as reference voltage. The correct voltages for the sensors are loaded in the CPU of the TCM (A/D input) and when the sensor power voltage is a set value (high or low) for a certain time, the TCM detects a malfunction and stores a DTC.

Monitor Execution, Sequence, Duration, DTC Type

Execution	Continuous
Sequence	None
Duration	2 seconds or more
DTC Type	One drive cycle, MIL on, Shift position indicator blinks

Enable Conditions

Condition	B
Vehicle	ON mode

Malfunction Threshold

The sensor power voltage is specified value or more, or specified value or less, for at least 2 seconds.

Possible Cause

NOTE: The causes shown may not be a complete list of all potential problems, and it is possible that there may be other causes.

- CVT drive pulley speed sensor VCC line short to power
- CVT driven pulley pressure sensor VCC line short to power
- CVT drive pulley speed sensor VCC line short to ground
- CVT driven pulley pressure sensor VCC line short to ground
- TCM internal circuit failure

Diagnosis Details

Conditions for setting the DTC

When a malfunction is detected, the MIL comes on, the shift position indicator blinks, and a Pending DTC, a Confirmed DTC, and the freeze data are stored in the TCM memory.

Conditions for clearing the DTC

The shift position indicator comes off by turning the vehicle to the OFF (LOCK) mode. The MIL is cleared if the malfunction does not return in three consecutive trips in which the diagnostic runs. The MIL, the Pending DTC, the Confirmed DTC, and the freeze data can be cleared with the scan tool Clear command.

DTC P0651 (CVT (TCM))

DTC P0651: Sensor Reference Voltage 2 Circuit Malfunc

General Description

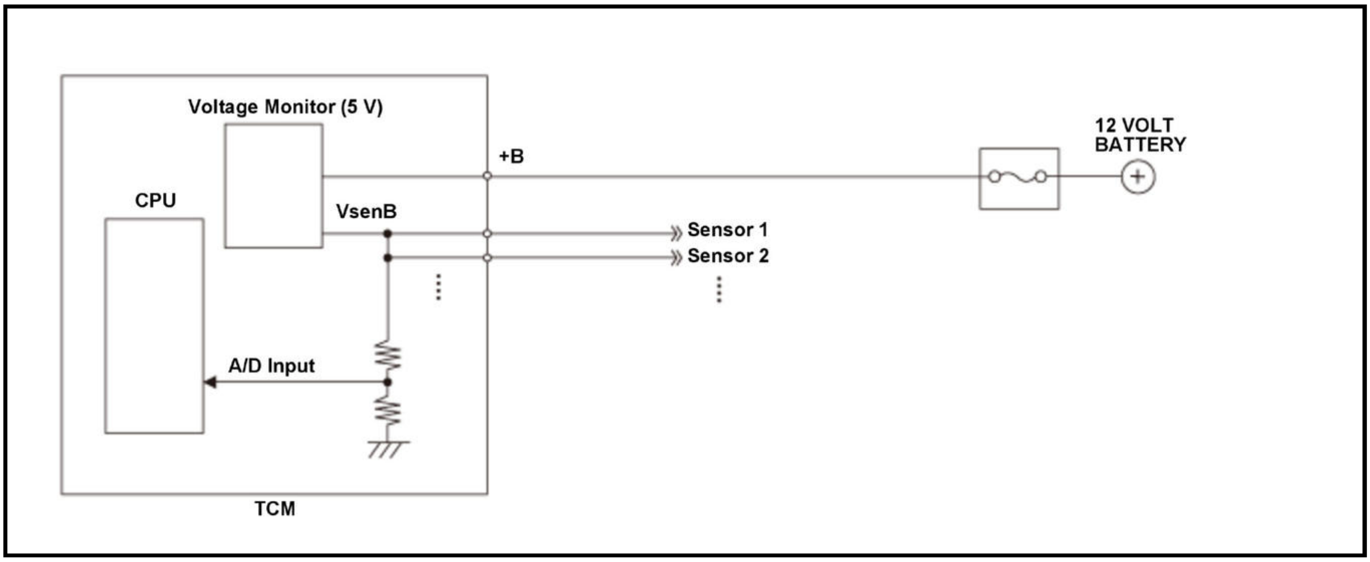

The transmission control module (TCM) is equipped with a voltage monitor (5 V power source) to supply a stable 5 V to each sensor as reference voltage. The correct voltages for the sensors are loaded in the CPU of the TCM (A/D input) and when the sensor power voltage is a set value (high or low) for a certain time, the TCM detects a malfunction and stores a DTC.

Monitor Execution, Sequence, Duration, DTC Type

Execution	Continuous
Sequence	None
Duration	2 seconds or more
DTC Type	One drive cycle, MIL on, Shift position indicator blinks

Enable Conditions

Condition	B
Vehicle	ON mode

Malfunction Threshold

The sensor power voltage is specified value or more, or specified value or less, for at least 2 seconds.

Possible Cause

NOTE: The causes shown may not be a complete list of all potential problems, and it is possible that there may be other causes.

- CVT speed sensor VCC line short to power
- Torque converter turbine speed sensor VCC line short to power
- CVT speed sensor VCC line short to ground
- Torque converter turbine speed sensor VCC line short to ground
- TCM internal circuit failure

Diagnosis Details

Conditions for setting the DTC

When a malfunction is detected, the MIL comes on, the shift position indicator blinks, and a Pending DTC, a Confirmed DTC, and the freeze data are stored in the TCM memory.

Conditions for clearing the DTC

The shift position indicator comes off by turning the vehicle to the OFF (LOCK) mode. The MIL is cleared if the malfunction does not return in three consecutive trips in which the diagnostic runs. The MIL, the Pending DTC, the Confirmed DTC, and the freeze data can be cleared with the scan tool Clear command.

DTC P06A8 (CVT (TCM))

DTC P06A8: Internal VCC Power Malfunction

General Description

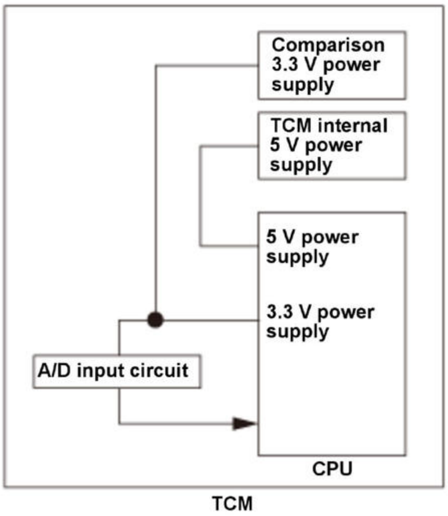

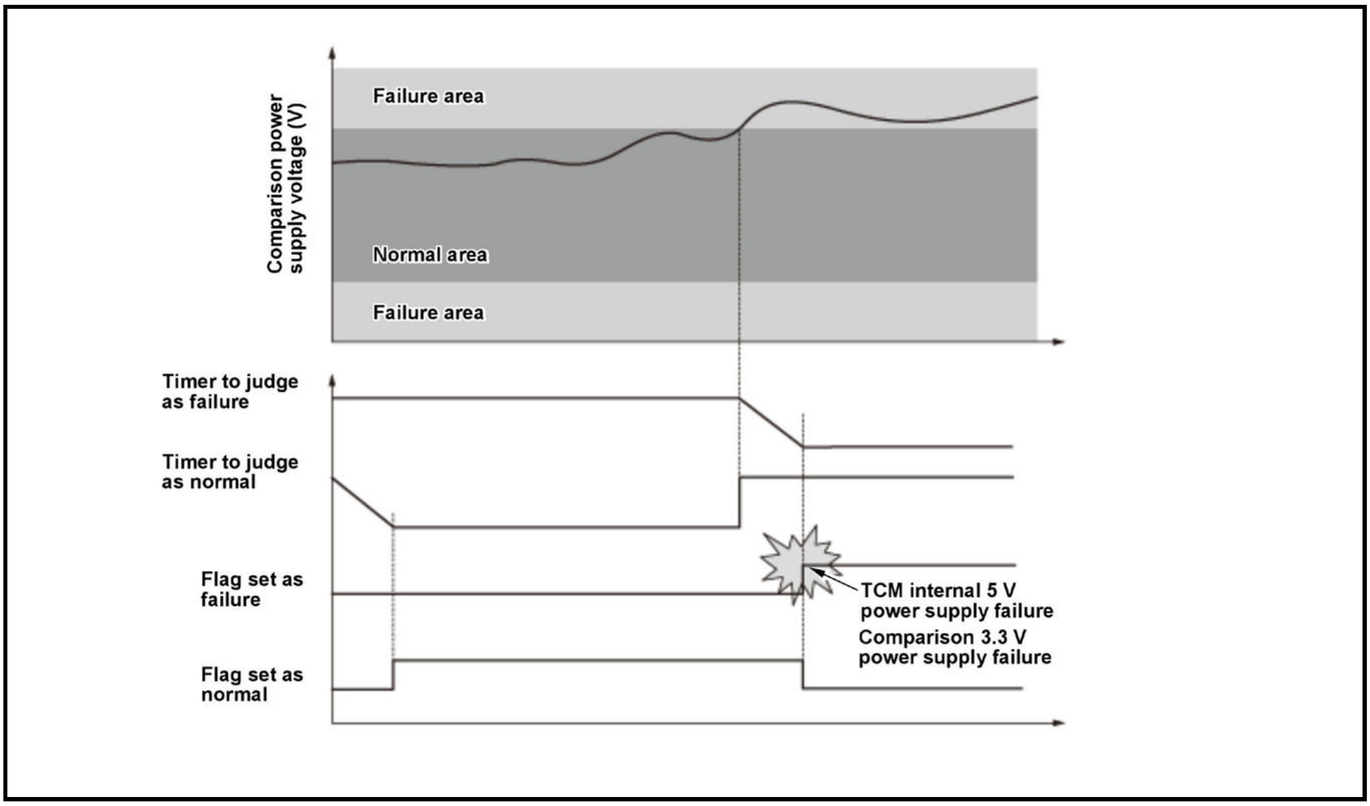
Comparison power supply voltage (V)
Failure area
Normal area
Failure area
Timer to judge as failure
Timer to judge as normal
Flag set as failure
Flag set as normal
TCM internal 5 V power supply failure
Comparison 3.3 V power supply failure

The transmission control module (TCM) monitors the internal 5 V power supply by comparing it to the A/D input power supply voltage (3.3 V). When the 5 V power supply is normal, the comparison power supply voltage (3.3 V) falls within a normal area. But if the 5 V power supply malfunctions, the comparison power supply voltage (3.3 V) exceeds the range of normal area. If the comparison power supply voltage is out of permissible range for a set time, the TCM detects a malfunction and stores a DTC.

Monitor Execution, Sequence, Duration, DTC Type

Execution	Continuous
Sequence	None
Duration	2 seconds or more
DTC Type	One drive cycle, MIL on, Shift position indicator blinks

Enable Conditions

Condition	B
Vehicle	ON mode

Malfunction Threshold

The TCM internal comparison power supply voltage is specified value or less, specified value or more for at least 2 seconds.

Possible Cause

NOTE: The causes shown may not be a complete list of all potential problems, and it is possible that there may be other causes.

- TCM (internal 3.3 V or 5 V power supply circuit) failure

Diagnosis Details

Conditions for setting the DTC

When a malfunction is detected, the MIL comes on, the shift position indicator blinks, and a Pending DTC, a Confirmed DTC, and the freeze data are stored in the TCM memory.

Conditions for clearing the DTC

The shift position indicator comes off by turning the vehicle to the OFF (LOCK) mode. The MIL is cleared if the malfunction does not return in three consecutive trips in which the diagnostic runs. The MIL, the Pending DTC, the Confirmed DTC, and the freeze data can be cleared with the scan tool Clear command.

DTC P0705(CVT (TCM))

DTC P0705: Transmission Range Switch Multiple Shift Position Input

General Description

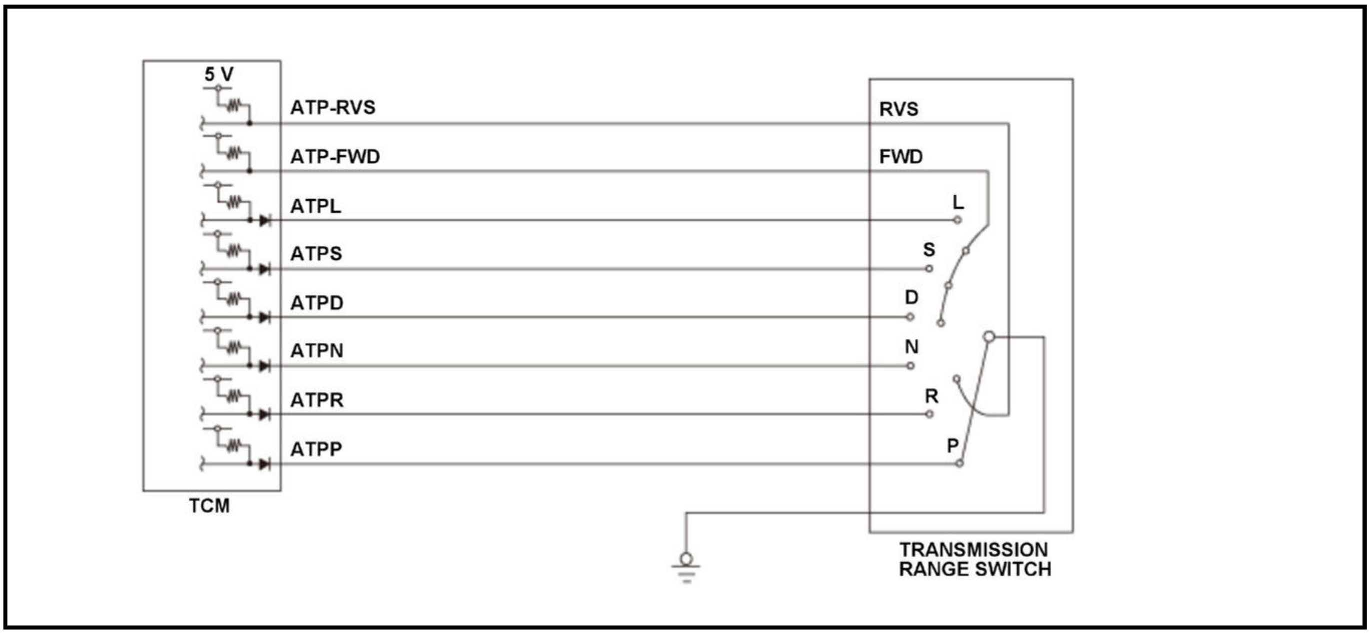

Transmission range switch contact point input matrix

Shift lever position/mode	Input per switch							
	ATPP	ATPR	ATP-RVS	ATPN	ATPD	ATPS	ATPL	ATP-FWD
P	O	X	X	X	X	X	X	X
R	X	O	O	X	X	X	X	X
N	X	X	X	O	X	X	X	X
D	X	X	X	X	O	X	X	O
S	X	X	X	X	X	O	X	O
L	X	X	X	X	X	X	O	O

The transmission range switch is attached to a control shaft. Operating the shift lever makes the control shaft rotate via the shift cable. The shift position indicator shows which position is selected according to the Low/High signal combinations, which vary based on the control shaft rotational angle. The control shaft changes the position of the transmission range switch, activates the manual valve, and switches hydraulic pressure to shift the transmission through forward/neutral/reverse. The transmission range switch signal is used to determine the shift schedule. The voltage is high (5 V or 12 V) at the transmission control module (TCM) input terminal when each transmission range switch position is open, and it is low (0 V) when each switch is closed. If the TCM detects multiple switch inputs instead of the correct switch input for the selected range at that time, it detects a malfunction and stores a DTC.

Monitor Execution, Sequence, Duration, DTC Type

Execution	Continuous
Sequence	None
Duration	1 second or more
DTC Type	One drive cycle, MIL on, Shift position indicator blinks

Enable Conditions

Condition	Minimum	Maximum
12 volt battery voltage [Battery Voltage]	10.0 V	-

[ ]: HDS Parameter

Malfunction Threshold

One of these conditions occurs.

- The TCM detects the selected range switch input and another range switch input (except FWD switch input [Forward Switch]) simultaneously for at least 1 second.
- The TCM detects the P, R, or N range switch input [A/T P, R, or N Switch] and the FWD switch input [Forward Switch] simultaneously for at least 1 second.

Possible Cause

NOTE: The causes shown may not be a complete list of all potential problems, and it is possible that there may be other causes.

- Transmission range switch line short to ground
- Transmission range switch failure
- TCM internal circuit failure

Confirmation Procedure

Operating Condition

- Start the engine.
- With the brake pedal pressed, place the shift lever in each position/mode for at least 1 second.

With the HDS

None.

Diagnosis Details

Conditions for setting the DTC

When a malfunction is detected, the MIL comes on, the shift position indicator blinks, and a Pending DTC, a Confirmed DTC, and the freeze data are stored in the TCM memory.

Conditions for clearing the DTC

The shift position indicator comes off by turning the vehicle to the OFF (LOCK) mode. The MIL is cleared if the malfunction does not return in three consecutive trips in which the diagnostic runs. The MIL, the Pending DTC, the Confirmed DTC, and the freeze data can be cleared with the scan tool Clear command.

DTC P0706(CVT (TCM))

DTC P0706: Transmission Range Switch Open

General Description

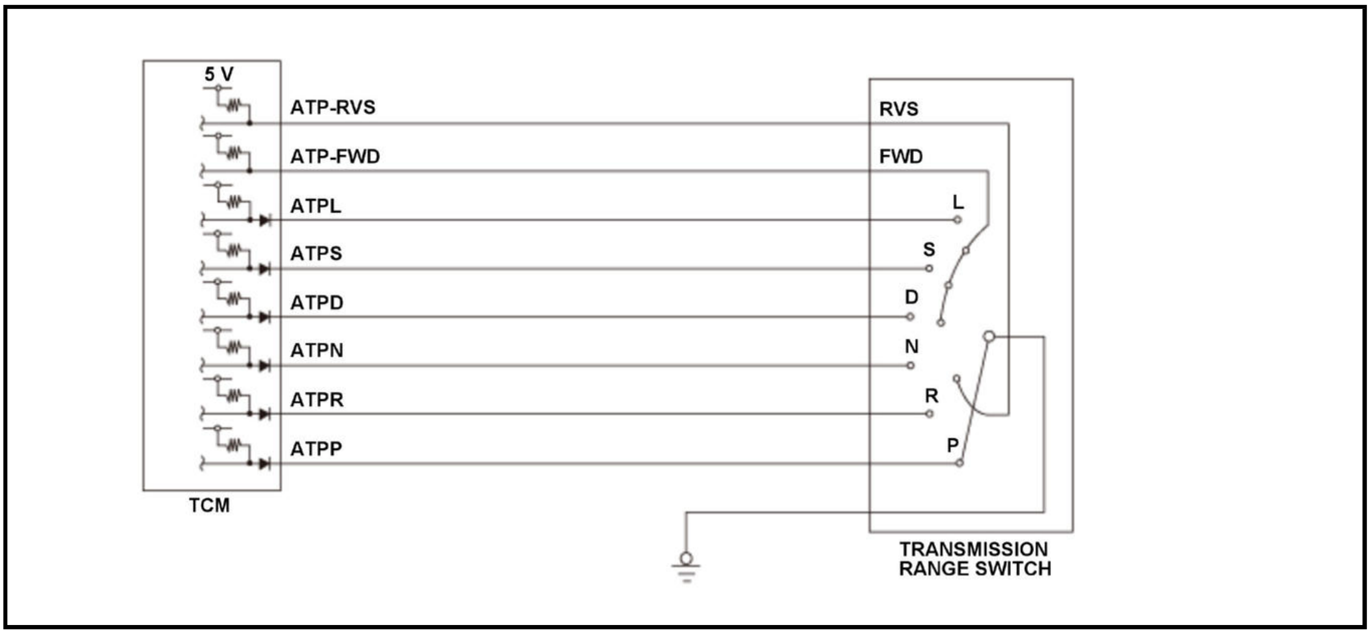

Transmission range switch contact point input matrix

Shift lever position/mode	Input per switch							
	ATPP	ATPR	ATP-RVS	ATPN	ATPD	ATPS	ATPL	ATP-FWD
P	O	X	X	X	X	X	X	X
R	X	O	O	X	X	X	X	X
N	X	X	X	O	X	X	X	X
D	X	X	X	X	O	X	X	O
S	X	X	X	X	X	O	X	O
L	X	X	X	X	X	X	O	O

The transmission range switch is attached to a control shaft. Operating the shift lever makes the control shaft rotate via the shift cable. The shift position indicator shows which position is selected according to the Low/High signal combinations, which vary based on the control shaft rotational angle. The control shaft changes the position of the transmission range switch, activates the manual valve, and switches hydraulic pressure to shift the transmission through forward/neutral/reverse. The transmission range switch signal is used to determine the shift schedule. The voltage is high (5 V or 12 V) at the transmission control module (TCM) input terminal when each transmission range switch position is open, and it is low (0 V) when each switch is closed. If the TCM detects multiple switch inputs instead of the correct switch input for the selected range at that time, it detects a malfunction and stores a DTC.

Monitor Execution, Sequence, Duration, DTC Type

Execution	Continuous
Sequence	None
Duration	Depending on the driving conditions
DTC Type	Two drive cycles, MIL on, Shift position indicator off

Enable Conditions

Condition	B
Shift lever position/mode	D, S, L

Malfunction Threshold

No FWD position signal [Forward Switch] is detected when the vehicle speed [Vehicle Speed] changes from 6 mph (10 km/h) -> 25 mph (40 km/h) -> 6 mph (10 km/h) in D, S, and L position/mode.

[ ]: HDS Parameter

Possible Cause

NOTE: The causes shown may not be a complete list of all potential problems, and it is possible that there may be other causes.

- Transmission range switch ATP-FWD line open (includes connector loose connection or disconnection)
- Transmission range switch failure
- Shift cable adjustment failure
- TCM internal circuit failure

Confirmation Procedure

Operating Condition

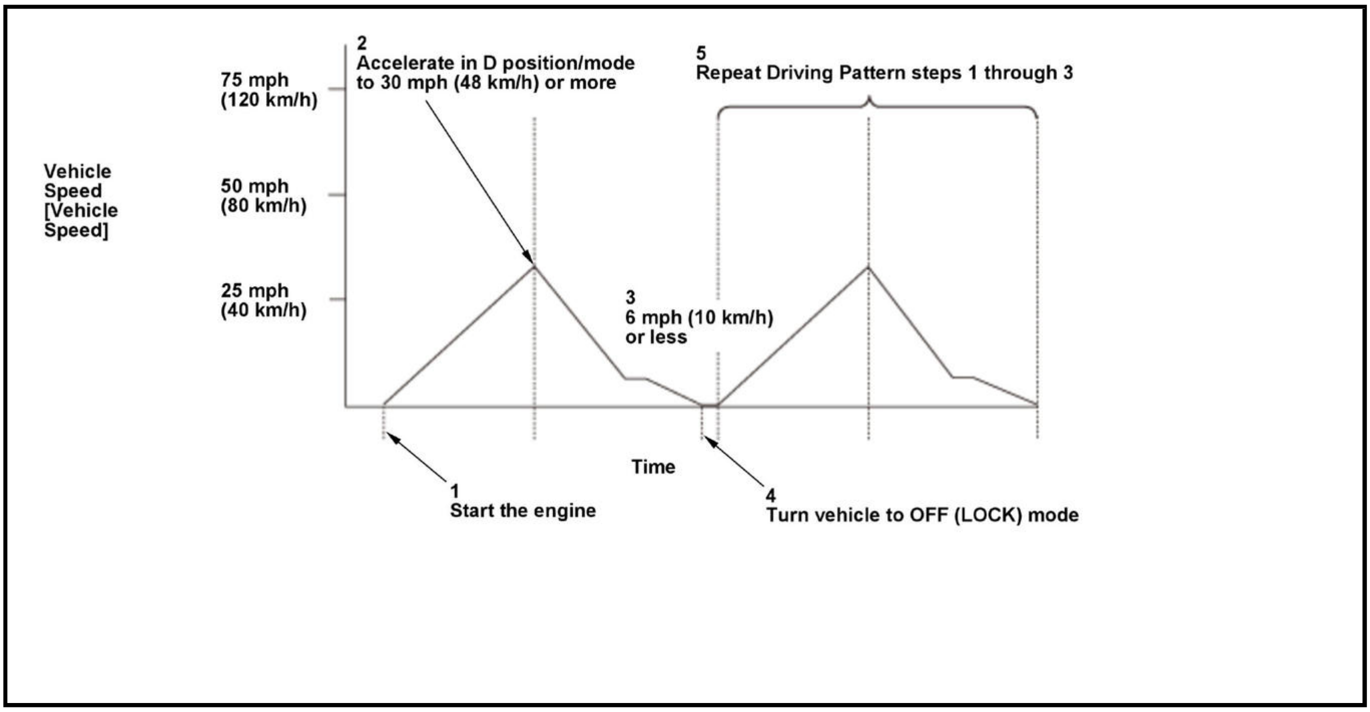

- Start the engine.
- Accelerate the vehicle in D position/mode to 30 mph (48 km/h) or more.
- Slow down to 6 mph (10 km/h) for several seconds.
- Stop the vehicle, and turn the vehicle to the OFF (LOCK) mode.
- Repeat Driving Pattern steps 1 through 3.

- Drive the vehicle in this manner only if the traffic regulations and ambient conditions allow.

With the HDS

None.

Diagnosis Details

Conditions for setting the DTC

When a malfunction is detected during the first drive cycle, a Pending DTC is stored in the TCM memory. If the malfunction returns in the next (second) drive cycle, the MIL comes on and a Confirmed DTC and the freeze data are stored. The shift position indicator does not blink.

Conditions for clearing the DTC

The MIL is cleared if the malfunction does not return in three consecutive trips in which the diagnostic runs. The MIL, the Pending DTC, the Confirmed DTC, and the freeze data can be cleared with the scan tool Clear command.

DTC P0710 (CVT (TCM)) (2018 2019 2020 2021)

DTC P0710: CVT Fluid Temperature Sensor (Out of Range)

General Description

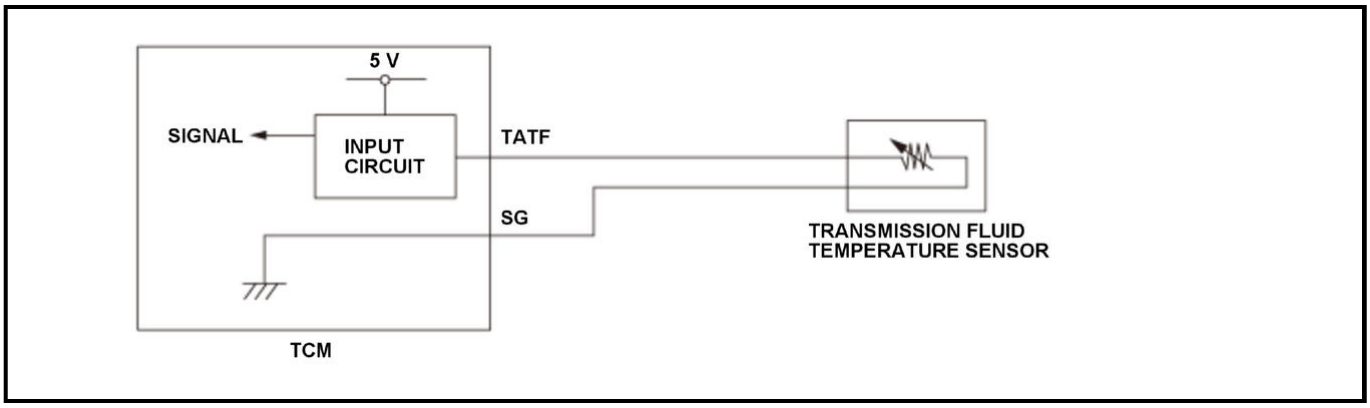

The transmission fluid temperature sensor is a thermistor type sensor that changes resistance according to the change in transmission fluid temperature. The transmission control module (TCM) sends a 5 V reference signal to the sensor through a pull-up resistor. When the transmission fluid temperature is low, the sensor resistance increases and the TCM detects a high signal voltage. As the transmission fluid temperature rises, the sensor resistance decreases and the TCM detects a low signal voltage. When the transmission fluid temperature sensor signal voltage to the TCM is a specified range for a specified time, the TCM detects a malfunction and stores a DTC.

Monitor Execution, Sequence, Duration, DTC Type

Execution	Continuous
Sequence	None
Duration	11 seconds or more
DTC Type	Two drive cycles, MIL on, A/T Gear position indicator blinks

Enable Conditions

Condition	Minimum	Maximum
12 volt battery voltage [Battery Voltage]	10 V	-

[ ]: HDS Parameter

Malfunction Threshold

One of these conditions is met for at least 11 seconds.

- The transmission fluid temperature sensor output voltage [CVTF Temp Sensor (V)] is in between 0.05 V and 0.09 V.
- The transmission fluid temperature sensor output voltage [CVTF Temp Sensor (V)] is in between 4.83 V and 4.92 V.

Possible Cause

NOTE: The causes shown may not be a complete list of all potential problems, and it is possible that there may be other causes.

- Transmission fluid temperature sensor failure

Confirmation Procedure

Operating Condition

- Start the engine.
- Shift to P position/mode, and wait for at least 11 seconds.

With the HDS

None.

Diagnosis Details

Conditions for setting the DTC

When a malfunction is detected during the first drive cycle, a Pending DTC is stored in the TCM memory. If the malfunction returns in the next (second) drive cycle, the MIL comes on, the shift position indicator blinks, and a Confirmed DTC and the freeze data are stored.

Conditions for clearing the DTC

The shift position indicator comes off by turning the vehicle to the OFF (LOCK) mode. The MIL is cleared if the malfunction does not return in three consecutive trips in which the diagnostic runs. The MIL, the Pending DTC, the Confirmed DTC, and the freeze data can be cleared with the scan tool Clear command.

DTC P0711(CVT (TCM))

DTC P0711: CVT Fluid Temperature Sensor (Range/Performance)

General Description

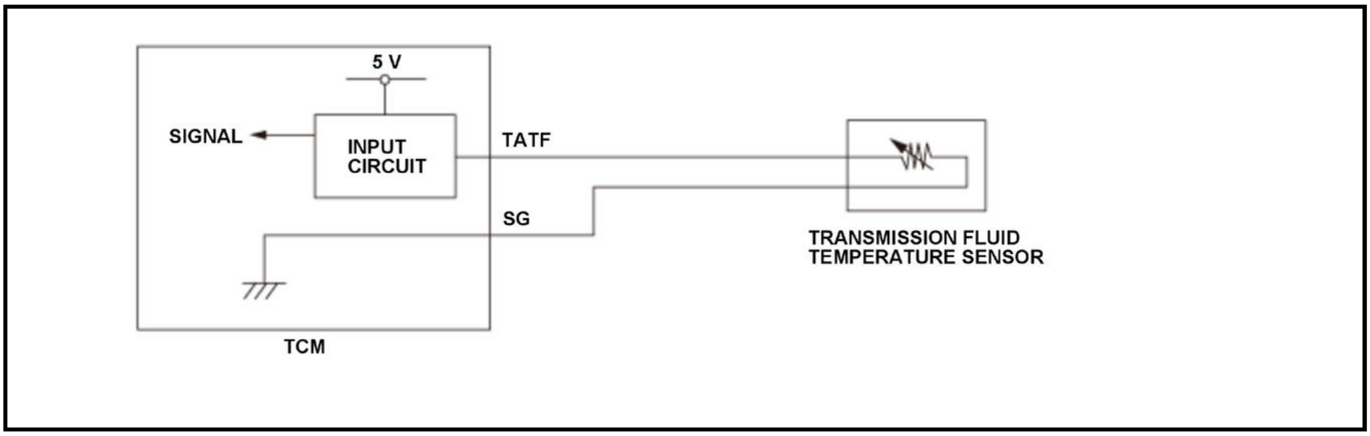

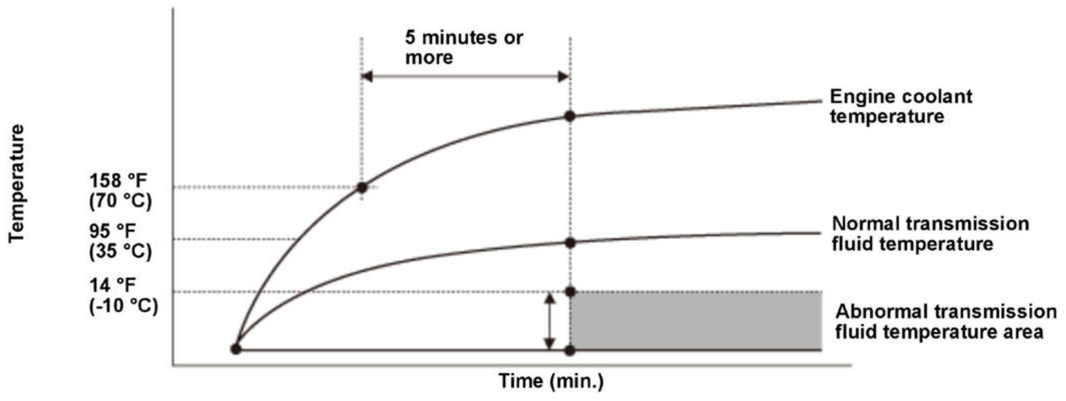

The transmission fluid temperature sensor is a thermistor type sensor that changes resistance according to the change in transmission fluid temperature. The transmission control module (TCM) sends a 5 V reference signal to the sensor through a pull-up resistor. When the transmission fluid temperature is low, the sensor resistance increases and the TCM detects a high signal voltage. As the transmission fluid temperature rises, the sensor resistance decreases and the TCM detects a low signal voltage. If the transmission fluid temperature sensor signal does not change, the TCM detects a malfunction and stores a DTC.

Monitor Execution, Sequence, Duration, DTC Type

Execution	Once per driving cycle
Sequence	None
Duration	5 minutes or more
DTC Type	Two drive cycles, MIL on, Shift position indicator blinks

Enable Conditions

Condition	Minimum	Maximum
Engine coolant temperature [Engine Coolant Temperature]	158 deg.F (70 deg.C)	-
Initial engine coolant temperature [Engine Coolant Temperature]	-	95 deg.F (35 deg.C)

[ ]: HDS Parameter

Condition	Minimum	Maximum
Transmission fluid temperature [CVTF Temperature]	-	14 deg.F (-10 deg.C)
Initial transmission fluid temperature [CVTF Temperature]	-	14 deg.F (-10 deg.C)
Vehicle speed [Vehicle Speed]	19 mph (30 km/h)	-
Throttle position	4 deg.	-
Other	After the engine coolant temperature [Engine Coolant Temperature] reaches the fixed value, both the vehicle speed [Vehicle Speed] and the throttle position meet the conditions for at least 5 minutes	

[ ]: HDS Parameter

Malfunction Threshold

The current transmission fluid temperature [CVTF Temperature] is 14 deg.F (-10 deg.C) or less after Enable Conditions.

Possible Cause

NOTE: The causes shown may not be a complete list of all potential problems, and it is possible that there may be other causes.

- Transmission fluid temperature sensor failure
- TCM internal circuit failure

Confirmation Procedure

Operating Condition

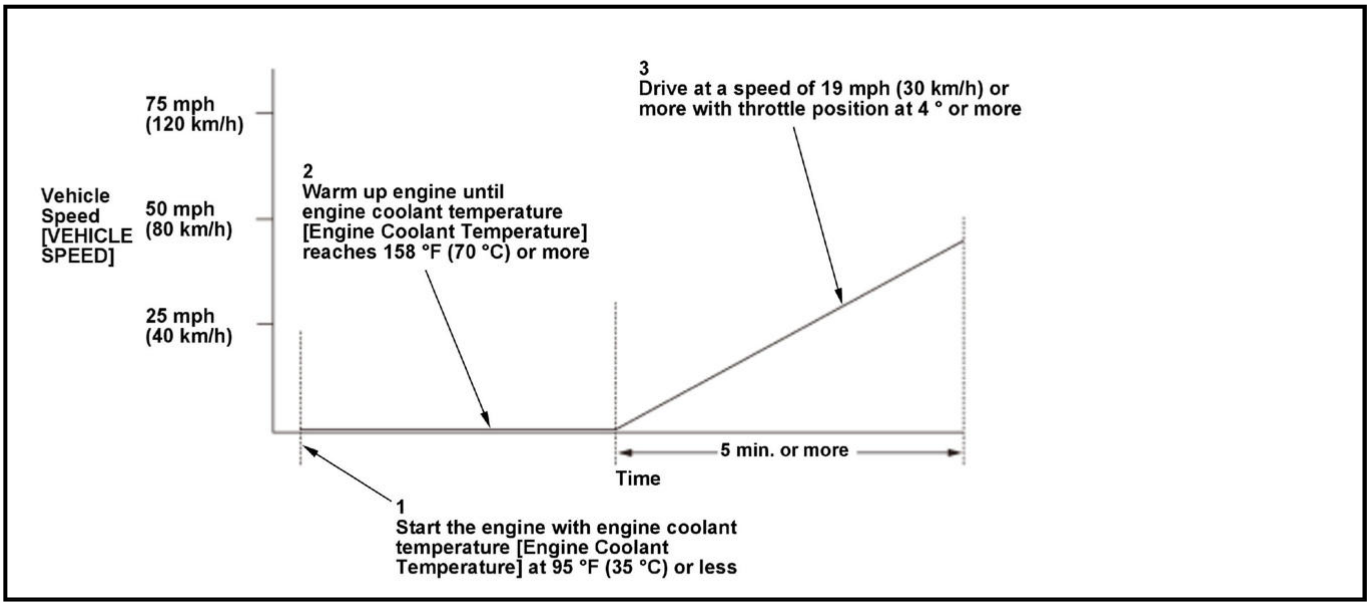

- Start the engine with the engine coolant temperature [Engine Coolant Temperature] at 95 deg.F (35 deg.C) or less.
- Warm up the engine until the engine coolant temperature [Engine Coolant Temperature] reaches 158 deg.F (70 deg.C) or more.
- Drive the vehicle at a speed of 19 mph (30 km/h) or more with the throttle position at 4 deg. or more for at least 5 minutes.

- Drive the vehicle in this manner only if the traffic regulations and ambient conditions allow.

With the HDS

None.

Diagnosis Details

Conditions for setting the DTC

When a malfunction is detected during the first drive cycle, a Pending DTC is stored in the TCM memory. If the malfunction returns in the next (second) drive cycle, the MIL comes on, the shift position indicator blinks, and a Confirmed DTC and the freeze data are stored.

Conditions for clearing the DTC

The shift position indicator comes off by turning the vehicle to the OFF (LOCK) mode. The MIL is cleared if the malfunction does not return in three consecutive trips in which the diagnostic runs. The MIL, the Pending DTC, the Confirmed DTC, and the freeze data can be cleared with the scan tool Clear command.

DTC P0712, P0713 (CVT (TCM))

DTC P0712: CVT Fluid Temperature Sensor (Short)**DTC P0713:** CVT Fluid Temperature Sensor (Open)

General Description

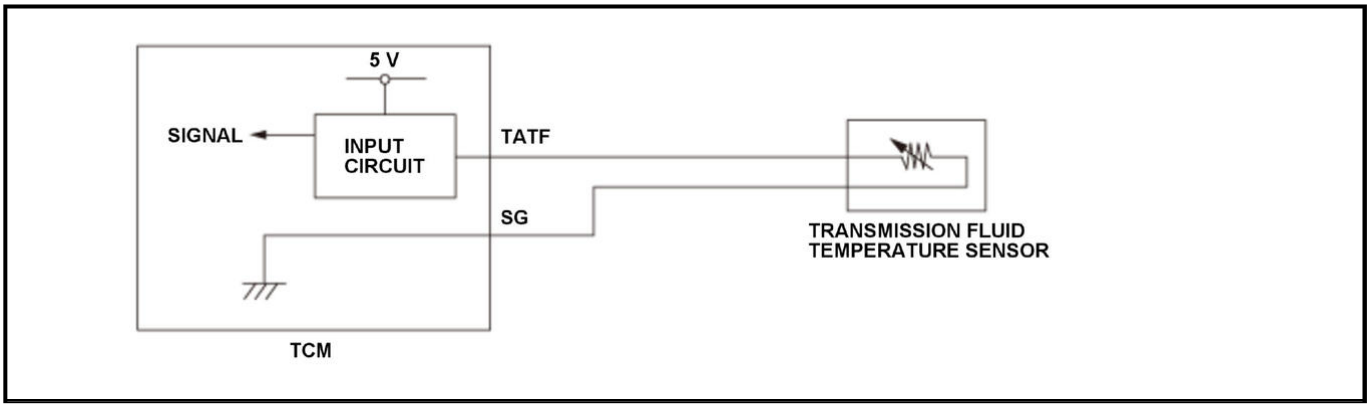

The transmission fluid temperature sensor is a thermistor type sensor that changes resistance according to the change in transmission fluid temperature. The transmission control module (TCM) sends a 5 V reference signal to the sensor through a pull-up resistor. When the transmission fluid temperature is low, the sensor resistance increases and the TCM detects a high signal voltage. As the transmission fluid temperature rises, the sensor resistance decreases and the TCM detects a low signal voltage. When the transmission fluid temperature sensor signal voltage to the TCM is below specification or above specification, indicating that the temperature is above specification (a short to ground) or below specification (open), the TCM detects a malfunction and stores a DTC.

Monitor Execution, Sequence, Duration, DTC Type

Execution	Continuous
Sequence	None
Duration	10 seconds or more
DTC Type	Two drive cycles, MIL on, Shift position indicator blinks

Enable Conditions

Condition	Minimum	Maximum
12 volt battery voltage [Battery Voltage]	11 V	-

[ ]: HDS Parameter

Malfunction Threshold

DTC: P0712

The transmission fluid temperature sensor output voltage [CVTF Temp Sensor (V)] is less than 0.07 V for at least 10 seconds.

DTC: P0713

The transmission fluid temperature sensor output voltage [CVTF Temp Sensor (V)] is more than 4.93 V for at least 10 seconds.

Possible Cause

NOTE: The causes shown may not be a complete list of all potential problems, and it is possible that there may be other causes.

DTC: P0712

- Transmission fluid temperature sensor TATF line short to ground

DTC: P0713

- Transmission fluid temperature sensor TATF line open (includes connector loose connection or disconnection)

Common

- Transmission fluid temperature sensor failure
- TCM internal circuit failure

Confirmation Procedure

Operating Condition

- Start the engine.
- Shift to P position/mode, and wait for at least 10 seconds.

With the HDS

None.

Diagnosis Details

Conditions for setting the DTC

When a malfunction is detected during the first drive cycle, a Pending DTC is stored in the TCM memory. If the malfunction returns in the next (second) drive cycle, the MIL comes on, the shift position indicator blinks, and a Confirmed DTC and the freeze data are stored.

Conditions for clearing the DTC

The shift position indicator comes off by turning the vehicle to the OFF (LOCK) mode. The MIL is cleared if the malfunction does not return in three consecutive trips in which the diagnostic runs. The MIL, the Pending DTC, the Confirmed DTC, and the freeze data can be cleared with the scan tool Clear command.

DTC P0714 (CVT (TCM))

DTC P0714: CVT Fluid Temperature Sensor (Intermittent Failure)

General Description

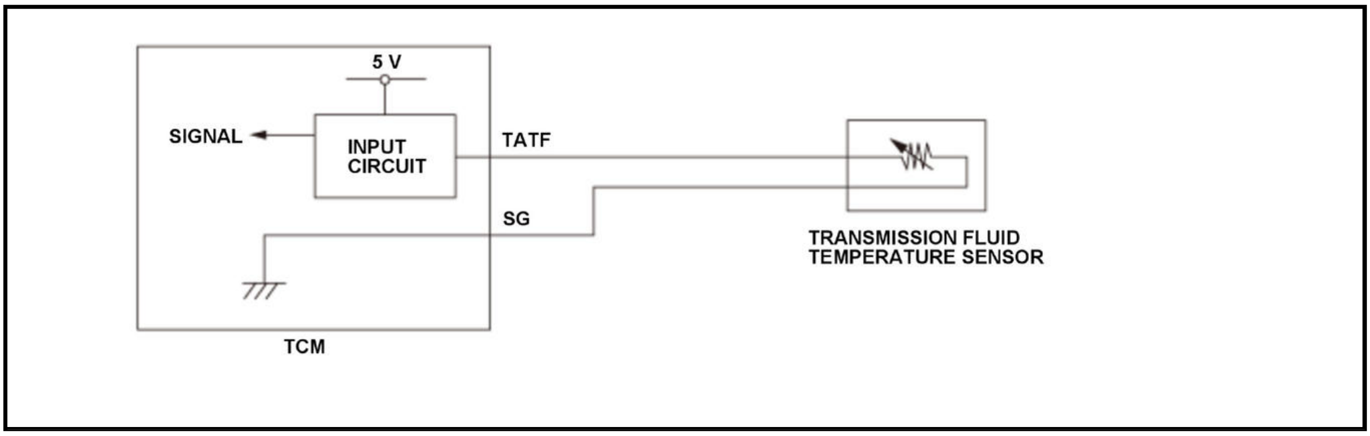

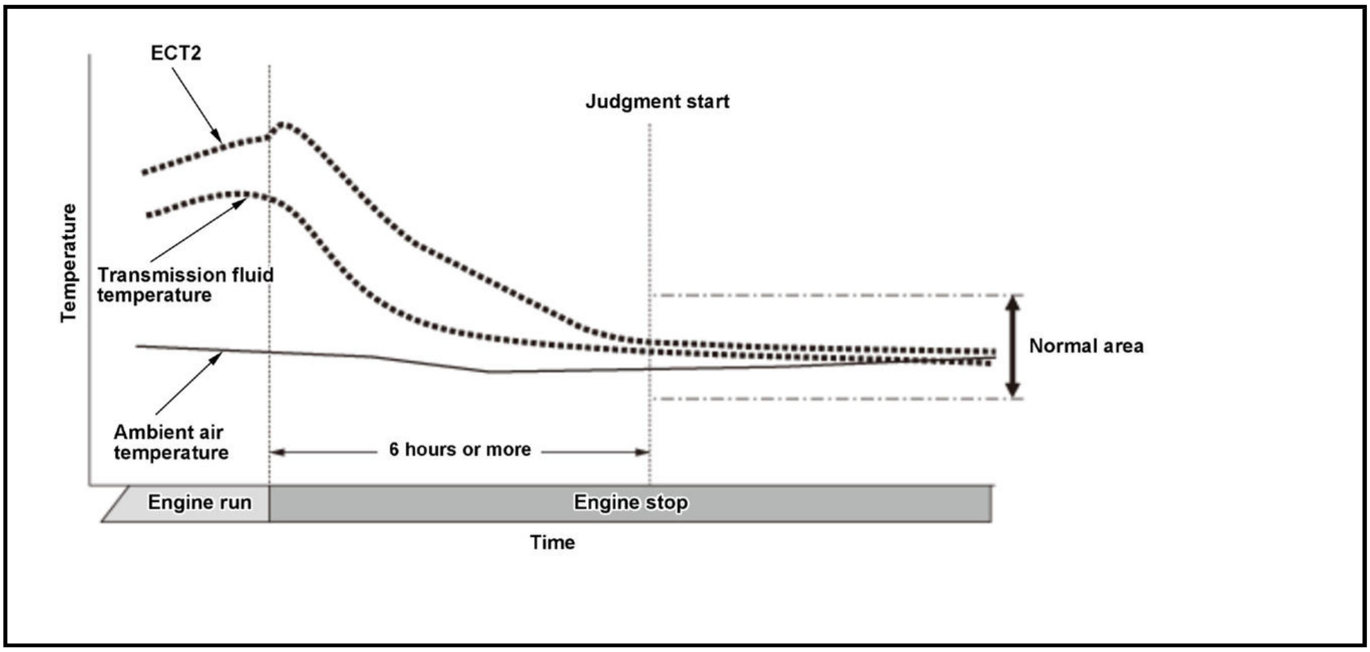

The transmission fluid temperature sensor is a thermistor type sensor that changes resistance according to the change in transmission fluid temperature. The transmission control module (TCM) sends a 5 V reference signal to the sensor through a pull-up resistor. When the transmission fluid temperature is low, the sensor resistance increases and the TCM detects a high signal voltage. As the transmission fluid temperature rises, the sensor resistance decreases and the TCM detects a low signal voltage. When the engine is stopped and enough time has passed, the transmission fluid temperature will equalize to the engine coolant temperature. When the temperature in the transmission fluid temperature sensor deviates from the temperature in engine coolant temperature (ECT) sensor 2 after the engine is stopped and enough time has passed, the TCM detects a malfunction and stores a DTC.

Monitor Execution, Sequence, Duration, DTC Type

Execution	Once per driving cycle
Sequence	P0111, P0112, P0113, P0116, P0117, P0118, P011A, P011B, P0125, P0128, P2183, P2184, P2185 are judged as OK
Duration	10 seconds or more
DTC Type	Two drive cycles, MIL on, Shift position indicator blinks

Enable Conditions

Condition	Minimum	Maximum
Elapsed time after the vehicle condition is turned to the OFF (LOCK) mode	6 hours	-
Other	Not to be towed during engine stop	

Malfunction Threshold

The temperature in the transmission fluid temperature sensor deviates from the temperature in ECT sensor 2, less than -43 deg.F (-24 deg.C) or greater than 57 deg.F (32 deg.C)*.

*: Greater than 108 deg.F (60 deg.C) if engine block heater is equipped.

Possible Cause

NOTE: The causes shown may not be a complete list of all potential problems, and it is possible that there may be other causes.

- Transmission fluid temperature sensor failure

- TCM internal circuit failure

Confirmation Procedure

Operating Condition

- Turn the vehicle to the OFF (LOCK) mode in P position/mode, and wait for at least 6 hours.
- Start the engine in P position/mode, and wait for at least 10 seconds.

With the HDS

None.

Diagnosis Details

Conditions for setting the DTC

When a malfunction is detected during the first drive cycle, a Pending DTC is stored in the TCM memory. If the malfunction returns in the next (second) drive cycle, the MIL comes on, the shift position indicator blinks, and a Confirmed DTC and the freeze data are stored.

Conditions for clearing the DTC

The shift position indicator comes off by turning the vehicle to the OFF (LOCK) mode. The MIL is cleared if the malfunction does not return in three consecutive trips in which the diagnostic runs. The MIL, the Pending DTC, the Confirmed DTC, and the freeze data can be cleared with the scan tool Clear command.

DTC P0716 (CVT (TCM))

DTC P0716: CVT Input Shaft (Drive Pulley) Speed Sensor A Circuit Range/Performance / Input/Turbine Speed Sensor A Circuit Range/Performance

General Description

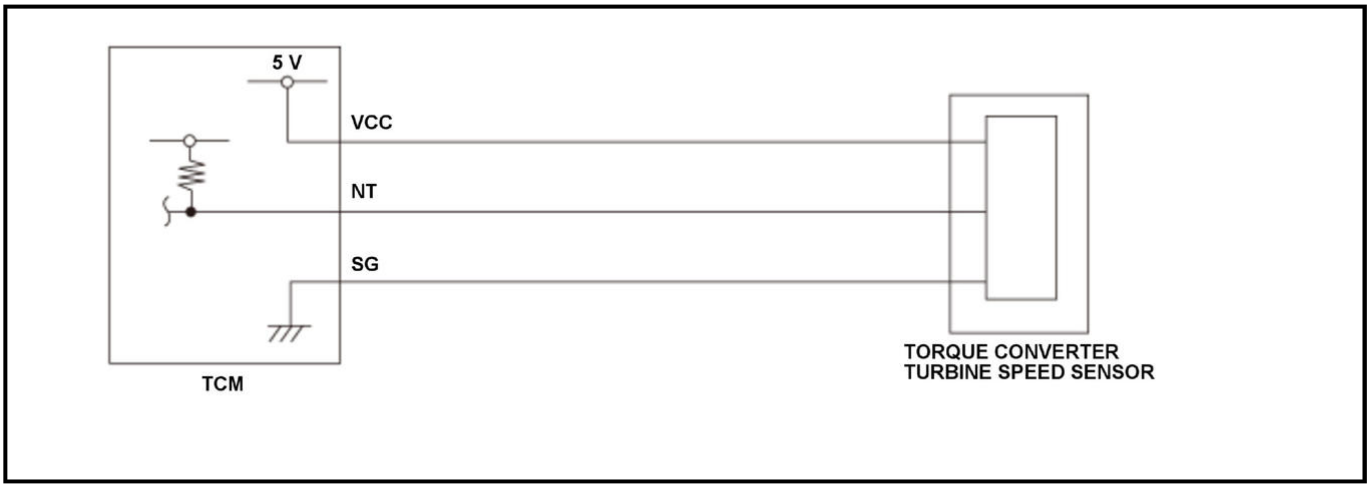

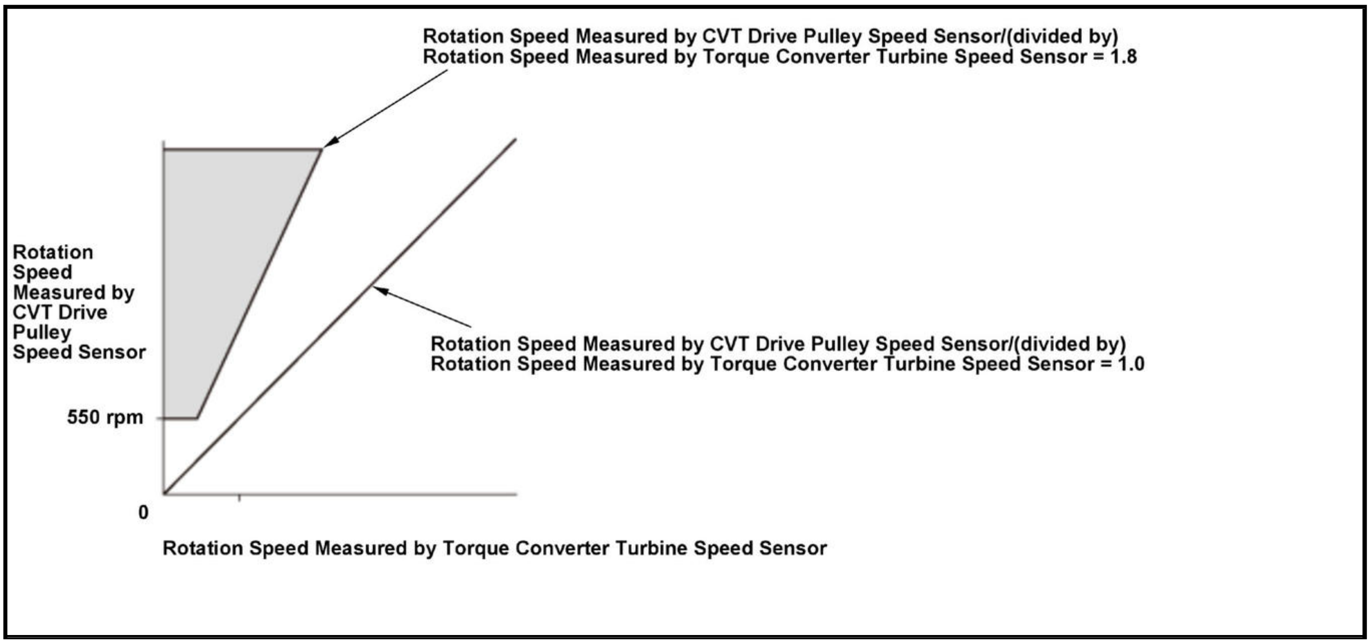

The torque converter turbine speed sensor is attached to the outside of the transmission housing. The torque converter turbine speed sensor detects the number of revolutions of the gear on the input shaft and sends a pulsing signal to the transmission control module (TCM). The TCM converts the pulses to torque converter turbine speed. If no pulses occur with the input shaft rotating, the TCM detects a malfunction that may be caused by an open, an intermittent open, or a short to ground. Based on the correlation between the torque converter turbine speed sensor and the CVT drive pulley speed sensor, the TCM detects a malfunction and stores a DTC.

Monitor Execution, Sequence, Duration, DTC Type

Execution	Continuous
Sequence	None
Duration	10 seconds or more
DTC Type	One drive cycle, MIL on, Shift position indicator blinks

Enable Conditions

Condition	Minimum	Maximum
Engine speed [Engine Speed]	500 rpm	-
Drive pulley speed [Input Shaft (Drive Pulley) Speed rpm]	550 rpm	-
Torque converter turbine speed [Torque Converter Turbine Speed]	500 rpm	-
12 volt battery voltage [Battery Voltage]	10.0 V	-
Shift lever position/mode	D, S, L	
Other	Not when the shift lever is being shifted	
	No electrical noise in the torque converter turbine speed sensor output circuit	
	When the accelerator pedal is pressed	

[ ]:HDS Parameter

Malfunction Threshold

The rotation speed [Torque Converter Turbine Speed] measured by the torque converter turbine speed sensor is less than the rotation speed [Input Shaft (Drive Pulley) Speed rpm] measured by the CVT drive pulley speed sensor by a factor of 0.56 for at least 10 seconds.

Possible Cause

NOTE: The causes shown may not be a complete list of all potential problems, and it is possible that there may be other causes.

- Torque converter turbine speed sensor NT line open (includes connector loose connection or disconnection)
- Torque converter turbine speed sensor NT line short to ground
- Torque converter turbine speed sensor failure
- TCM internal circuit failure

Confirmation Procedure

Operating Condition

- Start the engine.
- Drive the vehicle at a speed of 19 mph (30 km/h) or more for at least 30 seconds.

- Drive the vehicle in this manner only if the traffic regulations and ambient conditions allow.

With the HDS

None.

Diagnosis Details

Conditions for setting the DTC

When a malfunction is detected, the MIL comes on, the shift position indicator blinks, and a Pending DTC, a Confirmed DTC, and the freeze data are stored in the TCM memory.

Conditions for clearing the DTC

The shift position indicator comes off by turning the vehicle to the OFF (LOCK) mode. The MIL is cleared if the malfunction does not return in three consecutive trips in which the diagnostic runs. The MIL, the Pending DTC, the Confirmed DTC, and the freeze data can be cleared with the scan tool Clear command.

DTC P0717 (CVT (TCM))

DTC P0717: CVT Input Shaft (Drive Pulley) Speed Sensor A Circuit No Signal / Input/Turbine Speed Sensor A Circuit No Signal

General Description

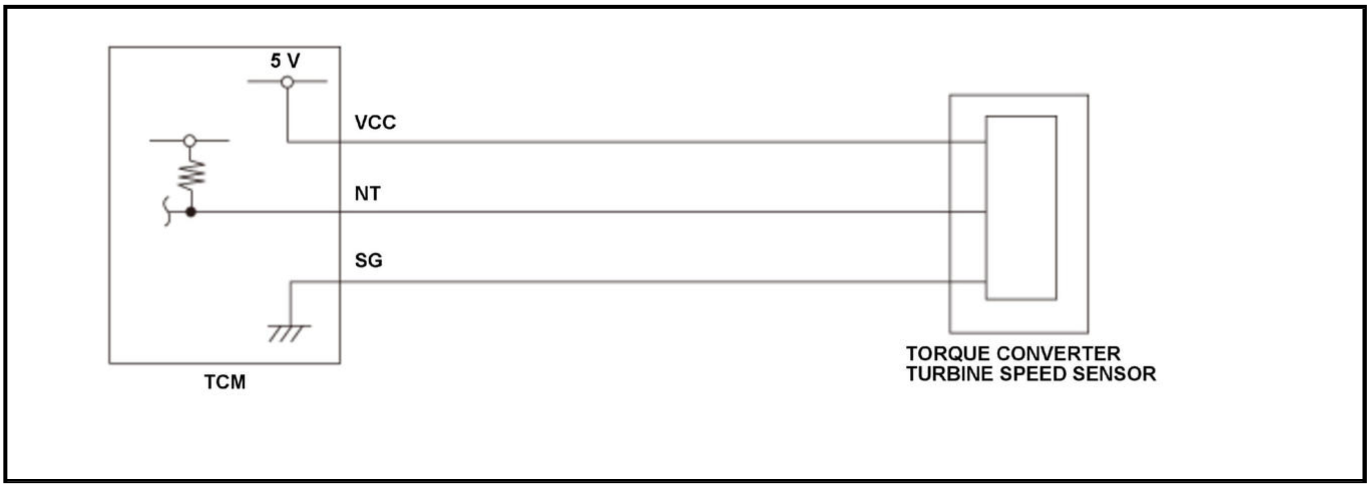

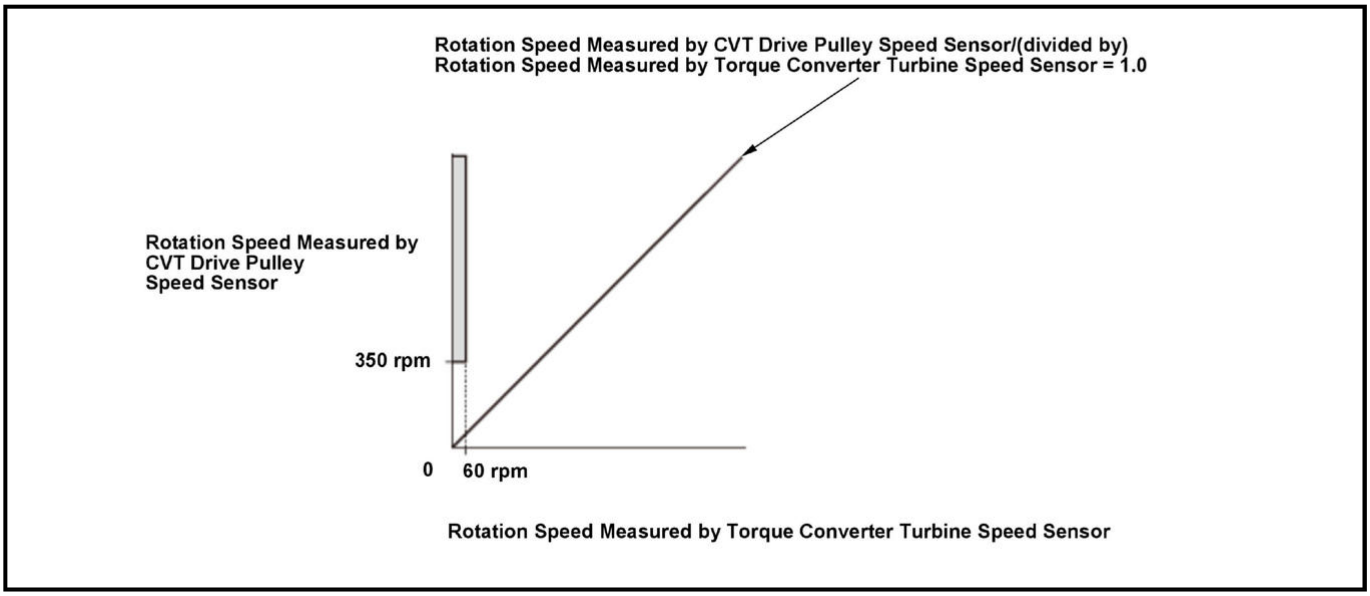

The torque converter turbine speed sensor is attached to the outside of the transmission housing. The torque converter turbine speed sensor detects the number of revolutions of the gear on the input shaft and sends a pulsing signal to the transmission control module (TCM). The TCM converts the pulses to torque converter turbine speed. If no pulses occur with the input shaft rotating, the TCM detects a malfunction that may be caused by an open, an intermittent open, or a short to ground. Based on the correlation between the torque converter turbine speed sensor and the CVT drive pulley speed sensor, the TCM detects a malfunction and stores a DTC.

Monitor Execution, Sequence, Duration, DTC Type

Execution	Continuous
Sequence	None
Duration	10 seconds or more
DTC Type	One drive cycle, MIL on, Shift position indicator blinks

Enable Conditions

Condition	Minimum	Maximum
Engine speed [Engine Speed]	550 rpm	-
Drive pulley speed [Input Shaft (Drive Pulley) Speed rpm]	350 rpm	-
12 volt battery voltage [Battery Voltage]	10.0 V	-
Shift lever position/mode	D, S, L	
Other	Not when the shift lever is being shifted	

Condition	Minimum	Maximum
	No electrical noise in the torque converter turbine speed sensor output circuit	

[ ]:HDS Parameter

Malfunction Threshold

The rotation speed [Torque Converter Turbine Speed] measured by the torque converter turbine speed sensor is 60 rpm or less for at least 10 seconds when the rotation speed [Input Shaft (Drive Pulley) Speed rpm] measured by the CVT drive pulley speed sensor is 350 rpm or more.

Possible Cause

NOTE: The causes shown may not be a complete list of all potential problems, and it is possible that there may be other causes.

- Torque converter turbine speed sensor NT line open (includes connector loose connection or disconnection)
- Torque converter turbine speed sensor VCC line open (includes connector loose connection or disconnection)
- Torque converter turbine speed sensor SG line open (includes connector loose connection or disconnection)
- Torque converter turbine speed sensor NT line short to ground
- Torque converter turbine speed sensor failure
- TCM internal circuit failure

Confirmation Procedure

Operating Condition

- Start the engine.
- Drive the vehicle at a speed of 19 mph (30 km/h) or more for at least 30 seconds.

- Drive the vehicle in this manner only if the traffic regulations and ambient conditions allow.

With the HDS

None.

Diagnosis Details

Conditions for setting the DTC

When a malfunction is detected, the MIL comes on, the shift position indicator blinks, and a Pending DTC, a Confirmed DTC, and the freeze data are stored in the TCM memory.

Conditions for clearing the DTC

The shift position indicator comes off by turning the vehicle to the OFF (LOCK) mode. The MIL is cleared if the malfunction does not return in three consecutive trips in which the diagnostic runs. The MIL, the Pending DTC, the Confirmed DTC, and the freeze data can be cleared with the scan tool Clear command.

DTC P0741(CVT (TCM))

DTC P0741: Torque Converter Clutch Circuit Performance or Stuck OFF

General Description

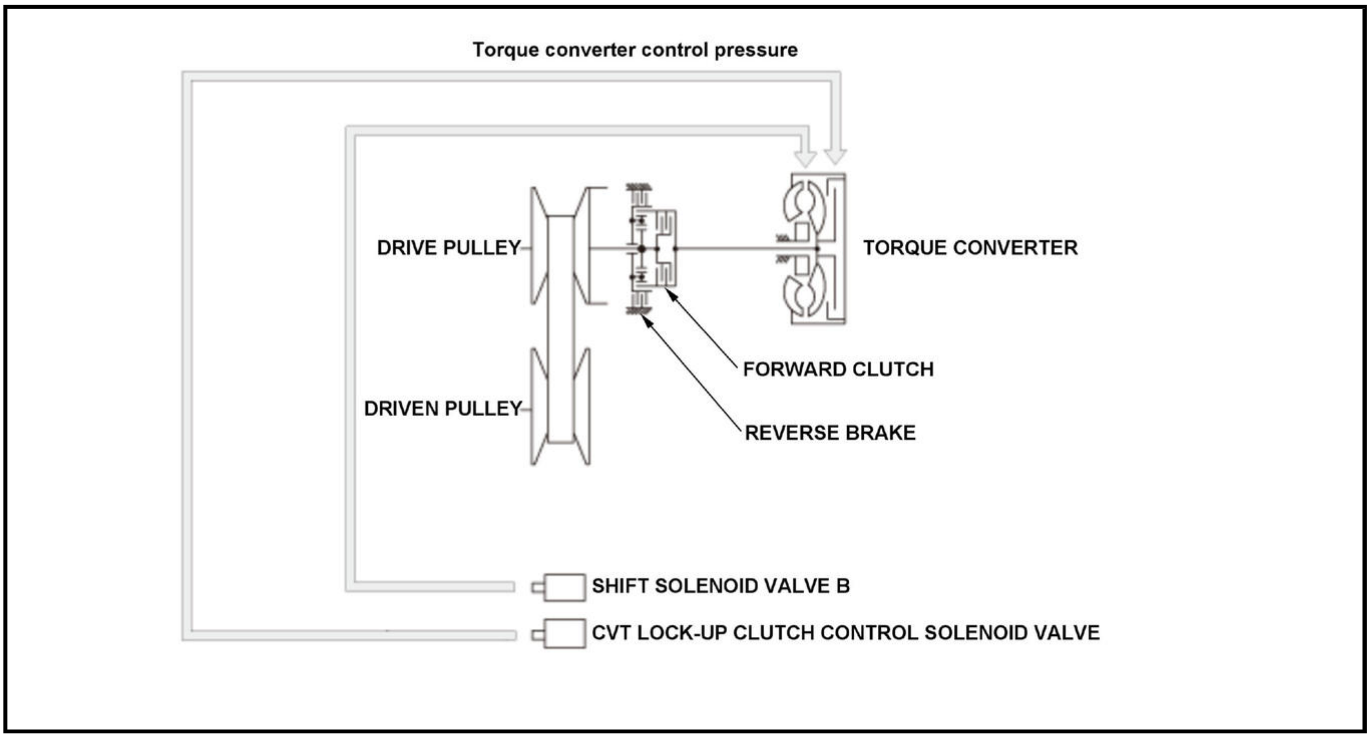

The power transfer capacity of the torque converter clutch is controlled by the balance of transmission fluid supply to and discharge from the torque converter. When hydraulic pressure is applied internally, the torque converter clutch turns ON, and when hydraulic pressure is applied from the back pressure side, the torque converter clutch turns OFF. As the hydraulic pressure from the internal pressure side increases, the power transfer capacity of the torque converter clutch increases. The direction of hydraulic pressure supply is switched by shift solenoid valve B and the LC shift valve. Transmission fluid is supplied from the internal pressure side to shift solenoid valve B when the signal from the transmission control module (TCM) is ON (12 V), and transmission fluid is supplied from the back pressure side when it is OFF (0 V). The balance of internal pressure and back pressure is controlled by the CVT lock-up clutch control solenoid valve and the LC control valve. The CVT lock-up clutch control solenoid valve maximizes the power transfer capacity of the torque converter clutch when the signal from the TCM is ON (1 A), and it minimizes the power transfer capacity of the torque converter clutch when the signal from the TCM is OFF (0 A). If the ratio of engine speed and input shaft speed is not about 1:1 while the TCM is issuing the command to turn shift solenoid valve B and the CVT lock-up clutch control solenoid valve ON, the TCM detects a faulty lock-up control system and stores a DTC.

Monitor Execution, Sequence, Duration, DTC Type

Execution	Continuous
Sequence	None
Duration	30 seconds or more
DTC Type	Two drive cycles, MIL on, Shift position indicator blinks

Enable Conditions

Condition	Minimum	Maximum
Engine speed [Engine Speed]	1, 000 rpm	-
Vehicle speed [Vehicle Speed]	28 mph (45 km/h)	-
Accelerator pedal position variation	-	13 deg./1 second
Shift lever position/mode	D, S, L	

[ ]: HDS Parameter

Malfunction Threshold

Difference between target torque converter slip rate and actual torque converter slip rate is more than 15 % for at least 30 seconds or more.

Possible Cause

NOTE: The causes shown may not be a complete list of all potential problems, and it is possible that there may be other causes.

- Torque converter clutch failure
- CVT lock-up clutch control solenoid valve stuck off
- Shift solenoid valve B stuck off
- LC shift valve stuck
- LC control valve stuck

Confirmation Procedure

Operating Condition

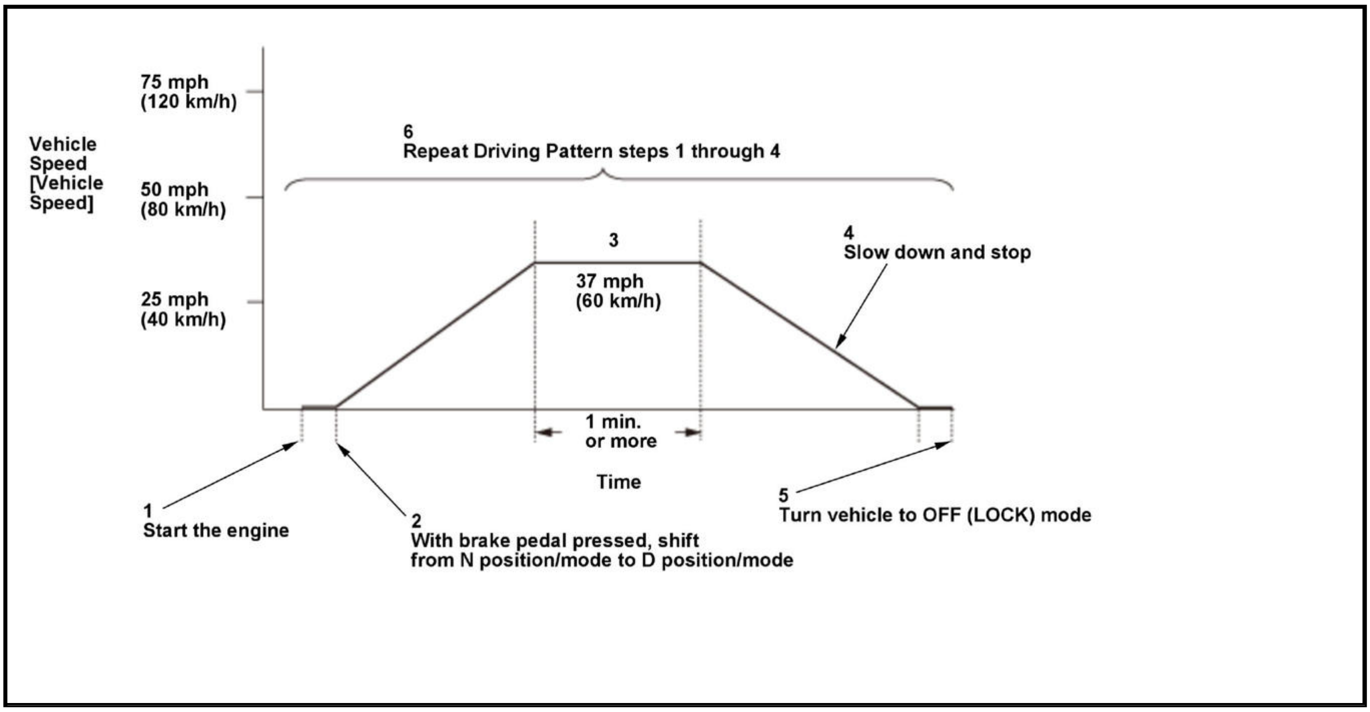

- Start the engine.
- With the brake pedal pressed, place the shift lever in from N position/mode to D position/mode.
- Drive the vehicle at a steady speed of 37 mph (60 km/h), for at least 1 minute.
- Slow down and stop the vehicle.
- Turn the vehicle to the OFF (LOCK) mode.
- Repeat Driving Pattern steps 1 through 4.

- Drive the vehicle in this manner only if the traffic regulations and ambient conditions allow.

With the HDS

None.

Diagnosis Details

Conditions for setting the DTC

When a malfunction is detected during the first drive cycle, a Pending DTC is stored in the TCM memory. If the malfunction returns in the next (second) drive cycle, the MIL comes on, the shift position indicator blinks, and a Confirmed DTC and the freeze data are stored.

Conditions for clearing the DTC

The shift position indicator comes off by turning the vehicle to the OFF (LOCK) mode. The MIL is cleared if the malfunction does not return in three consecutive trips in which the diagnostic runs. The MIL, the Pending DTC, the Confirmed DTC, and the freeze data can be cleared with the scan tool Clear command.

DTC P0746 (CVT (TCM))

DTC P0746: CVT Drive Pulley Pressure Control Solenoid Valve Stuck OFF

General Description

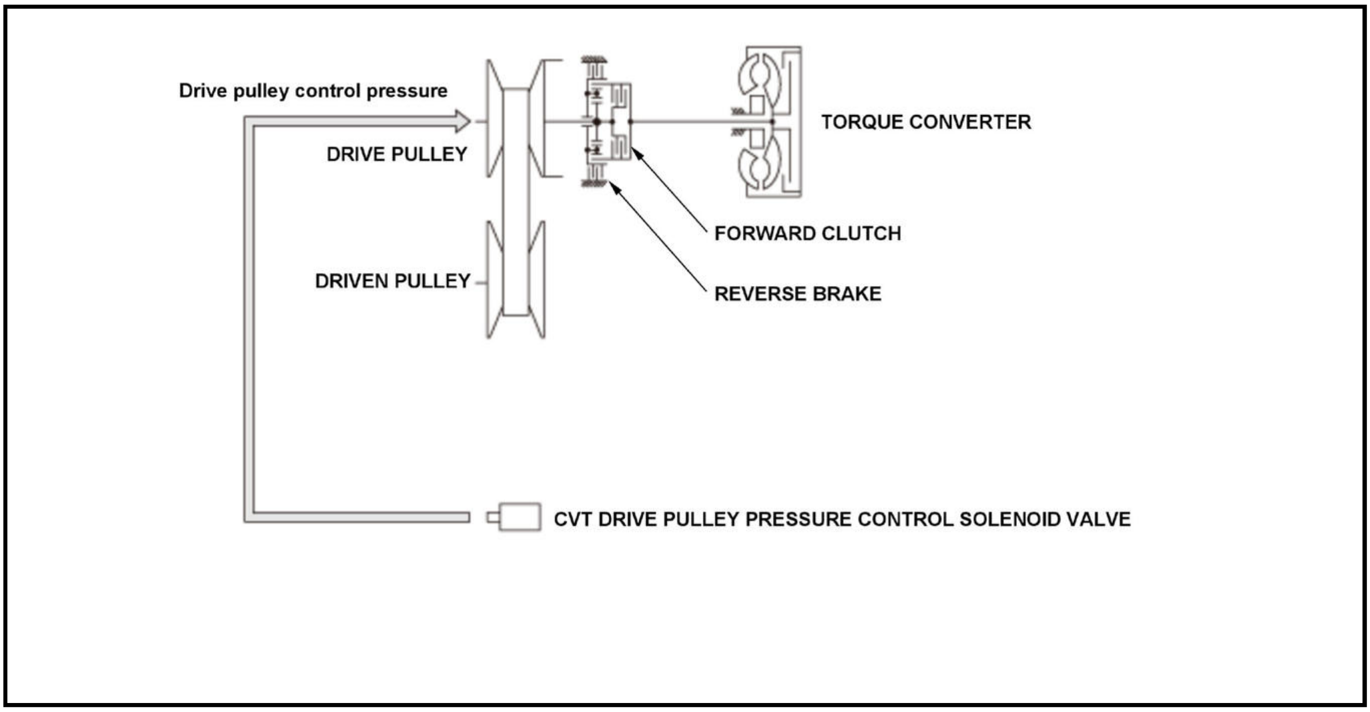
Drive pulley control pressure
DRIVE PULLEY
TORQUE CONVERTER
FORWARD CLUTCH
DRIVEN PULLEY
REVERSE BRAKE
CVT DRIVE PULLEY PRESSURE CONTROL SOLENOID VALVE

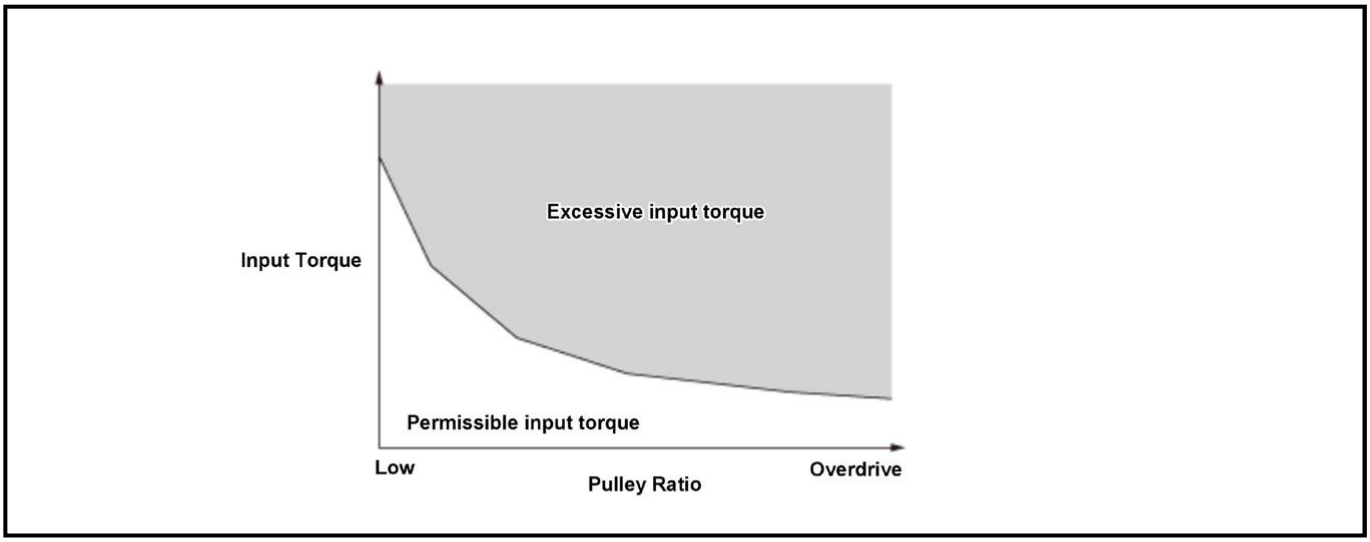

The CVT drive pulley pressure control solenoid valve controls hydraulic pressure to the drive pulley. The CVT drive pulley pressure control solenoid valve is controlled by duty cycle output. The spool in the CVT drive pulley pressure control solenoid valve moves the valve according to the current, and produces hydraulic pressure in proportion to the current. To shift the transmission properly, the transmission control module (TCM) outputs a drive pulley hydraulic pressure control signal. If the pulley ratio is overdrive while the vehicle is stopped with the forward clutch engaged, and the estimated input torque when starting is a specified value or more and belt slippage does not occur when driving, the TCM detects a CVT drive pulley pressure control solenoid valve stuck OFF failure and stores a DTC.

Monitor Execution, Sequence, Duration, DTC Type

Execution	Continuous
Sequence	None
Duration	Depending on the driving conditions

DTC Type	Two drive cycles, MIL on, Shift position indicator blinks

Enable Conditions

Condition	Minimum	Maximum
Engine speed [Engine Speed]	500 rpm	-
Vehicle speed [Vehicle Speed]*	-	3 mph (5 km/h)
Accelerator pedal position	-	2.7 deg.*
	4 deg.**	-
	30 deg.***	-
Shift lever position/mode	D	

*: Symptom 1

** : Symptom 2-A

***: Symptom 2-B

[ ]: HDS Parameter

Malfunction Threshold

Symptom 1, Symptom 2-A, and Symptom 2-B occur.

Symptom		Vehicle conditions	TCM detection
1		Stopped with forward clutch engaged	Pulley ratio [Pulley Ratio] is more than 0.3, or less than 0.6 for at least 2.5 seconds
2	2-A	Starting	Excessive Input torque
	2-B	Running	Pulley ratio [Pulley Ratio] is less than 3.0

Possible Cause

NOTE: The causes shown may not be a complete list of all potential problems, and it is possible that there may be other causes.

- CVT drive pulley pressure control solenoid valve stuck off

Confirmation Procedure

Operating Condition

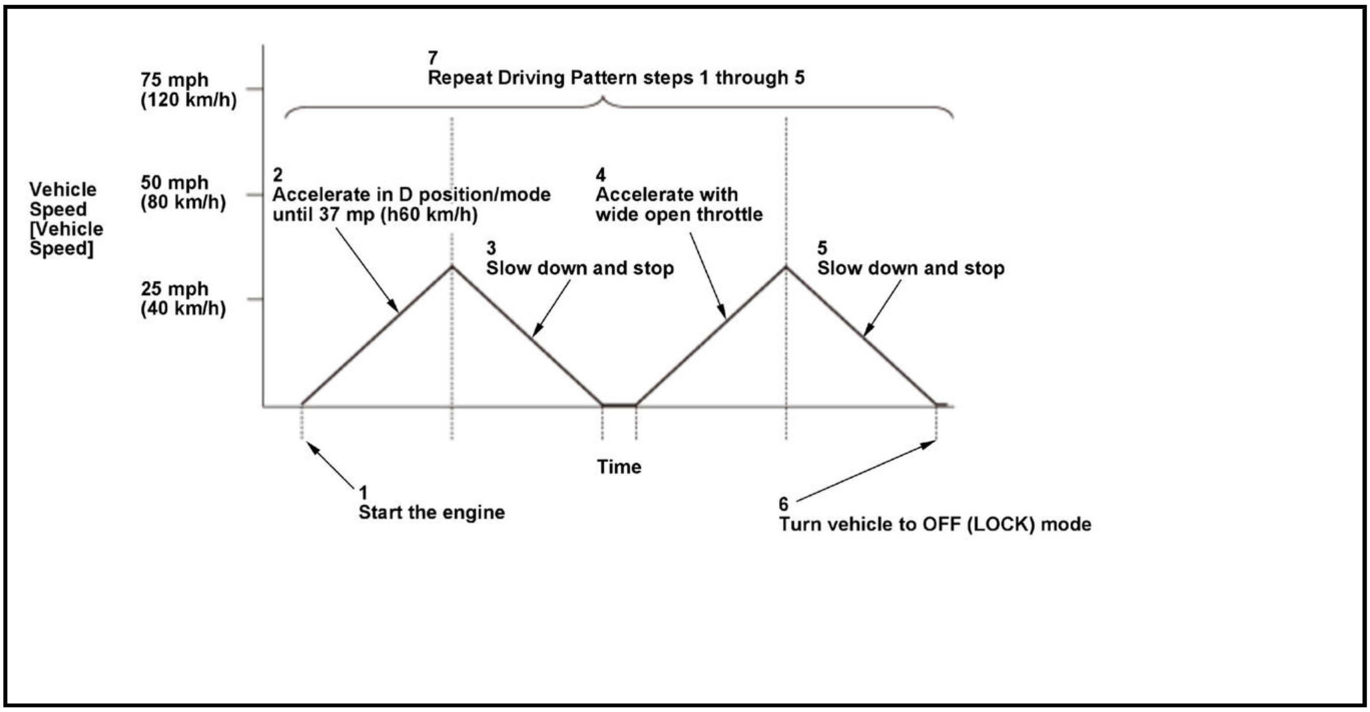

- Start the engine.
- Accelerate the vehicle in D position/mode until the speed reaches 37 mph (60 km/h).
- Slow down and stop the vehicle.
- Accelerate the vehicle with wide open throttle.
- Slow down and stop the vehicle.
- Turn the vehicle to the OFF (LOCK) mode.
- Repeat Driving Pattern steps 1 through 5.

- Drive the vehicle in this manner only if the traffic regulations and ambient conditions allow.

With the HDS

None.

Diagnosis Details

Conditions for setting the DTC

When a malfunction is detected during the first drive cycle, a Pending DTC is stored in the TCM memory. If the malfunction returns in the next (second) drive cycle, the MIL comes on, the shift position indicator blinks, and a Confirmed DTC and the freeze data are stored.

Conditions for clearing the DTC

The shift position indicator comes off by turning the vehicle to the OFF (LOCK) mode. The MIL is cleared if the malfunction does not return in three consecutive trips in which the diagnostic runs. The MIL, the Pending DTC, the Confirmed DTC, and the freeze data can be cleared with the scan tool Clear command.

DTC P0777 (CVT (TCM))

DTC P0777: CVT Driven Pulley Pressure Control Solenoid Valve Stuck ON

General Description

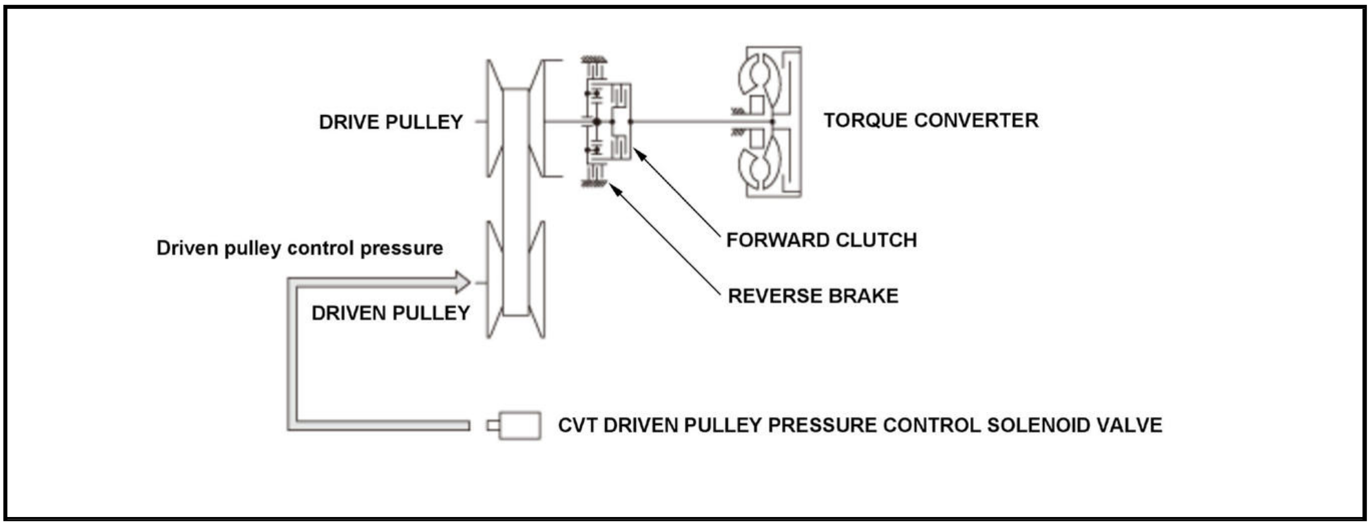
DRIVE PULLEY
TORQUE CONVERTER
FORWARD CLUTCH
Driven pulley control pressure
REVERSE BRAKE
DRIVEN PULLEY
CVT DRIVEN PULLEY PRESSURE CONTROL SOLENOID VALVE

The CVT driven pulley pressure control solenoid valve controls hydraulic pressure to the driven pulley. The CVT driven pulley pressure control solenoid valve is controlled by duty cycle output. The spool in the CVT driven pulley pressure control solenoid valve moves the valve according to the current, and produces hydraulic pressure in proportion to the current. To shift the transmission properly, the transmission control module (TCM) outputs a driven pulley hydraulic pressure control signal. If the pulley ratio is overdrive while the vehicle is stopped with the forward clutch engaged and belt slippage occurs when driving, the TCM detects a CVT driven pulley pressure control solenoid valve stuck ON failure and stores a DTC.

Monitor Execution, Sequence, Duration, DTC Type

Execution	Continuous
Sequence	None
Duration	Depending on the driving conditions
DTC Type	Two drive cycles, MIL on, Shift position indicator blinks

Enable Conditions

Condition	Minimum	Maximum
Engine speed [Engine Speed]	500 rpm	-
Vehicle speed [Vehicle Speed]	-	3 mph (5 km/h)*
	-	8 mph (13 km/h)**
Accelerator pedal position	-	2.7 deg.*
	4 deg.**	-
Shift lever position/mode	D	

*: Symptom 1

** : Symptom 2

[ ]: HDS Parameter

Malfunction Threshold

Symptom 1 and Symptom 2 occur.

Symptom	Vehicle conditions	TCM detection
1	Stopped with forward clutch engaged	Pulley ratio [Pulley Ratio] is more than 0.3, or less than 0.6 for at least 2.5 seconds
2	Running	Pulley ratio [Pulley Ratio] is more than 3.0

Possible Cause

NOTE: The causes shown may not be a complete list of all potential problems, and it is possible that there may be other causes.

- CVT driven pulley pressure control solenoid valve stuck on

Confirmation Procedure

Operating Condition

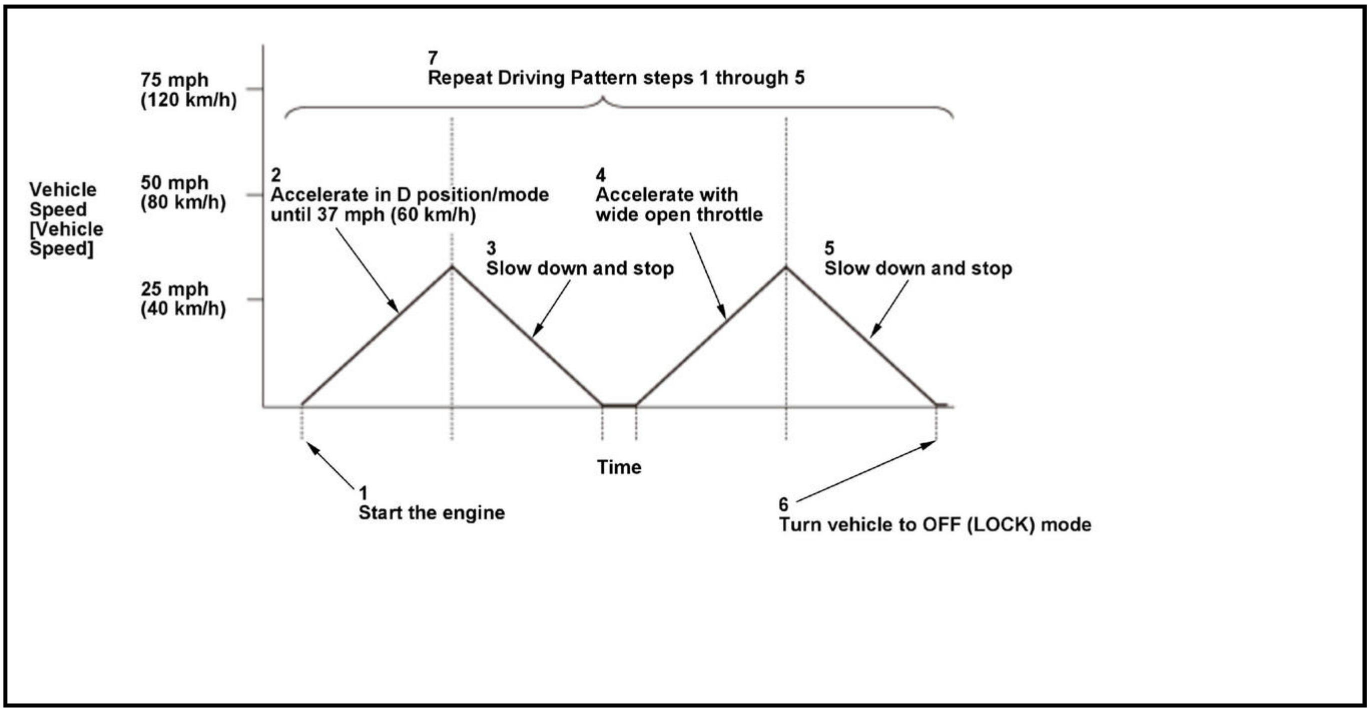

- Start the engine.
- Accelerate the vehicle in D position/mode until the speed reaches 37 mph (60 km/h).
- Slow down and stop the vehicle.
- Accelerate the vehicle with wide open throttle.
- Slow down and stop the vehicle.
- Turn the vehicle to the OFF (LOCK) mode.
- Repeat Driving Pattern steps 1 through 5.

- Drive the vehicle in this manner only if the traffic regulations and ambient conditions allow.

With the HDS

None.

Diagnosis Details

Conditions for setting the DTC

When a malfunction is detected during the first drive cycle, a Pending DTC is stored in the TCM memory. If the malfunction returns in the next (second) drive cycle, the MIL comes on, the shift position indicator blinks, and a Confirmed DTC and the freeze data are stored.

Conditions for clearing the DTC

The shift position indicator comes off by turning the vehicle to the OFF (LOCK) mode. The MIL is cleared if the malfunction does not return in three consecutive trips in which the diagnostic runs. The MIL, the Pending

DTC, the Confirmed DTC, and the freeze data can be cleared with the scan tool Clear command.

DTC P0780 (CVT (TCM))

DTC P0780: Shift Error

General Description

DTC P0780 is stored when P1898 (CVT drive pulley pressure control valve stuck ON or CVT driven pulley pressure control valve stuck OFF), or P1899 (CVT drive pulley pressure control valve stuck OFF or CVT driven pulley pressure control valve stuck ON) codes is stored.

Monitor Execution, Sequence, Duration, DTC Type

Execution	Continuous
Sequence	None
Duration	Depending on the driving conditions
DTC Type	Two drive cycles, MIL on, Shift position indicator blinks

Enable Conditions

Refer to the specific DTC information for P1898 or P1899.

Malfunction Threshold

Either P1898 or P1899 is stored.

Possible Cause

NOTE: The causes shown may not be a complete list of all potential problems, and it is possible that there may be other causes.

- Refer to the specific DTC information for P1898 or P1899

Confirmation Procedure

Operating Condition

Refer to the specific DTC information for P1898 or P1899.

With the HDS

None.

Diagnosis Details

Conditions for setting the DTC

When a malfunction is detected during the first drive cycle, a Pending DTC is stored in the TCM memory. If the malfunction returns in the next (second) drive cycle, the MIL comes on, the shift position indicator blinks, and a Confirmed DTC and the freeze data are stored.

Conditions for clearing the DTC

The shift position indicator comes off by turning the vehicle to the OFF (LOCK) mode. The MIL is cleared if the malfunction does not return in three consecutive trips in which the diagnostic runs. The MIL, the Pending DTC, the Confirmed DTC, and the freeze data can be cleared with the scan tool Clear command.

DTC P0792 (CVT (TCM))

DTC P0792: Intermediate Shaft Speed Sensor A Circuit Range/Performance

General Description

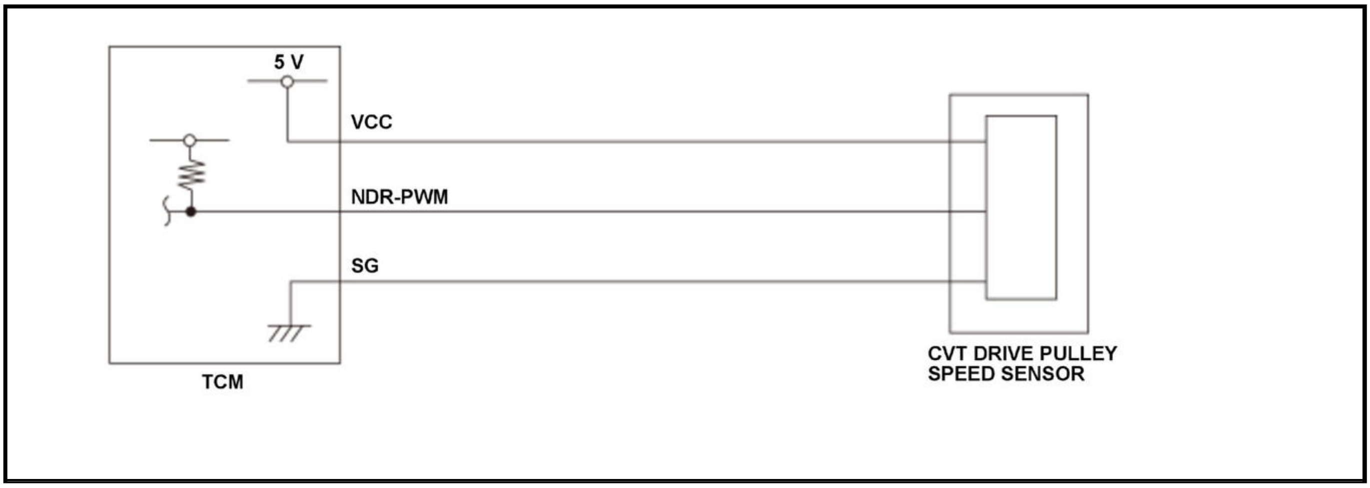

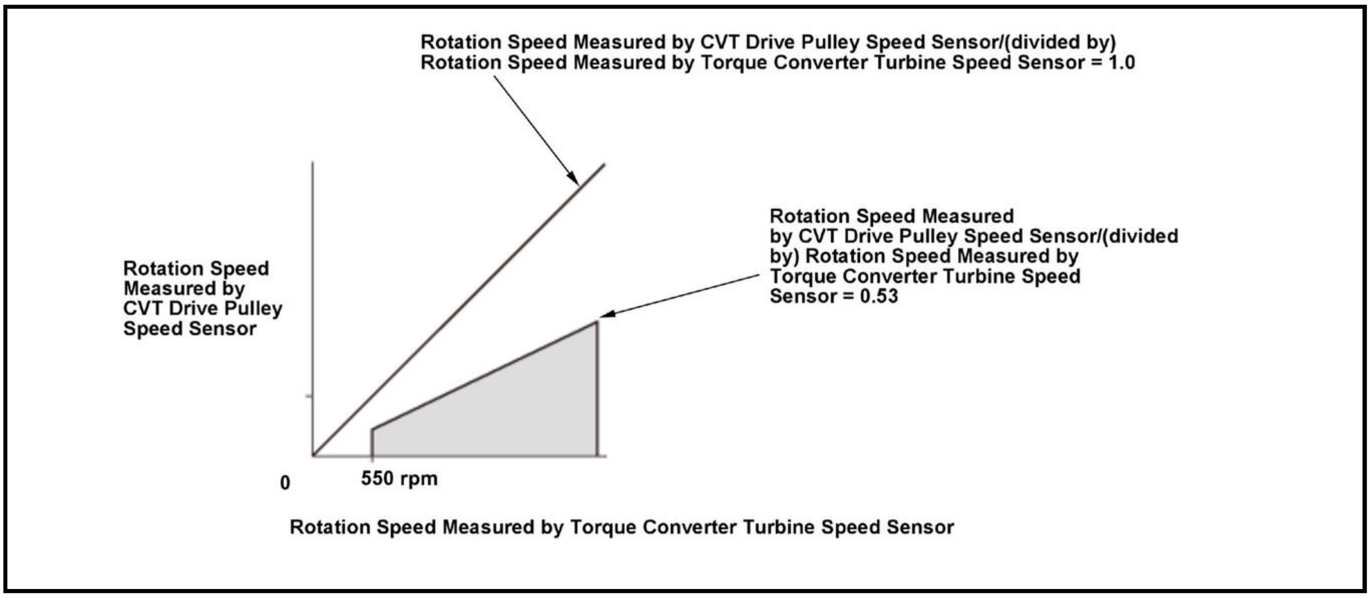

The CVT drive pulley speed sensor is attached to the outside of the end cover. The CVT drive pulley speed sensor detects the number of revolutions of the gear on the drive pulley and sends a pulsing signal to the transmission control module (TCM). The TCM converts the pulses to drive pulley speed. If no pulses occur with the drive pulley rotating, the TCM detects a malfunction that may be caused by an open, an intermittent open, or a short to ground. Based on the correlation between the CVT drive pulley speed sensor and the torque converter turbine speed sensor, the TCM detects a malfunction and stores a DTC.

Monitor Execution, Sequence, Duration, DTC Type

Execution	Continuous
Sequence	None
Duration	10 seconds or more
DTC Type	One drive cycle, MIL on, Shift position indicator blinks

Enable Conditions

Condition	Minimum	Maximum
Engine speed [Engine Speed]	500 rpm	-
Drive pulley speed [Input Shaft (Drive Pulley) Speed rpm]	500 rpm	-

Condition	Minimum	Maximum
Torque converter turbine speed [Torque Converter Turbine Speed]	550 rpm	-
12 volt battery voltage [Battery Voltage]	10.0 V	-
Shift lever position/mode	D, S, L	
Other	Not when the shift lever is being shifted	
	No electrical noise in the CVT drive pulley speed sensor output circuit	
	Accelerator pedal pressed	

[ ]:HDS Parameter

Malfunction Threshold

The rotation speed [Input Shaft (Drive Pulley) Speed rpm] measured by the CVT drive pulley speed sensor is less than the rotation speed [Torque Converter Turbine Speed] measured by the torque converter turbine speed sensor by a factor of 0.53 for at least 10 seconds.

Possible Cause

NOTE: The causes shown may not be a complete list of all potential problems, and it is possible that there may be other causes.

- CVT drive pulley speed sensor NDR-PWM line open (includes connector loose connection or disconnection)
- CVT drive pulley speed sensor NDR-PWM line short to ground
- CVT drive pulley speed sensor failure
- TCM internal circuit failure

Confirmation Procedure

Operating Condition

- Start the engine.
- Drive the vehicle at a speed of 19 mph (30 km/h) or more for at least 30 seconds.

- Drive the vehicle in this manner only if the traffic regulations and ambient conditions allow.

With the HDS

None.

Diagnosis Details

Conditions for setting the DTC

When a malfunction is detected, the MIL comes on, the shift position indicator blinks, and a Pending DTC, a Confirmed DTC, and the freeze data are stored in the TCM memory.

Conditions for clearing the DTC

The shift position indicator comes off by turning the vehicle to the OFF (LOCK) mode. The MIL is cleared if the malfunction does not return in three consecutive trips in which the diagnostic runs. The MIL, the Pending DTC, the Confirmed DTC, and the freeze data can be cleared with the scan tool Clear command.

DTC P0793 (CVT (TCM))

DTC P0793: Intermediate Shaft Speed Sensor A Circuit No Signal

General Description

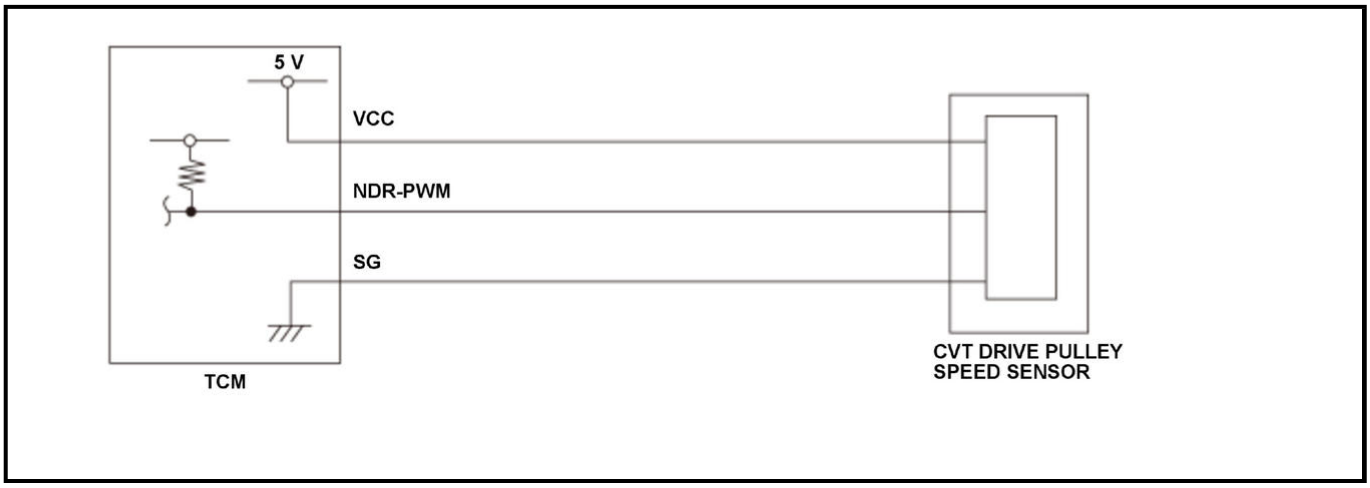

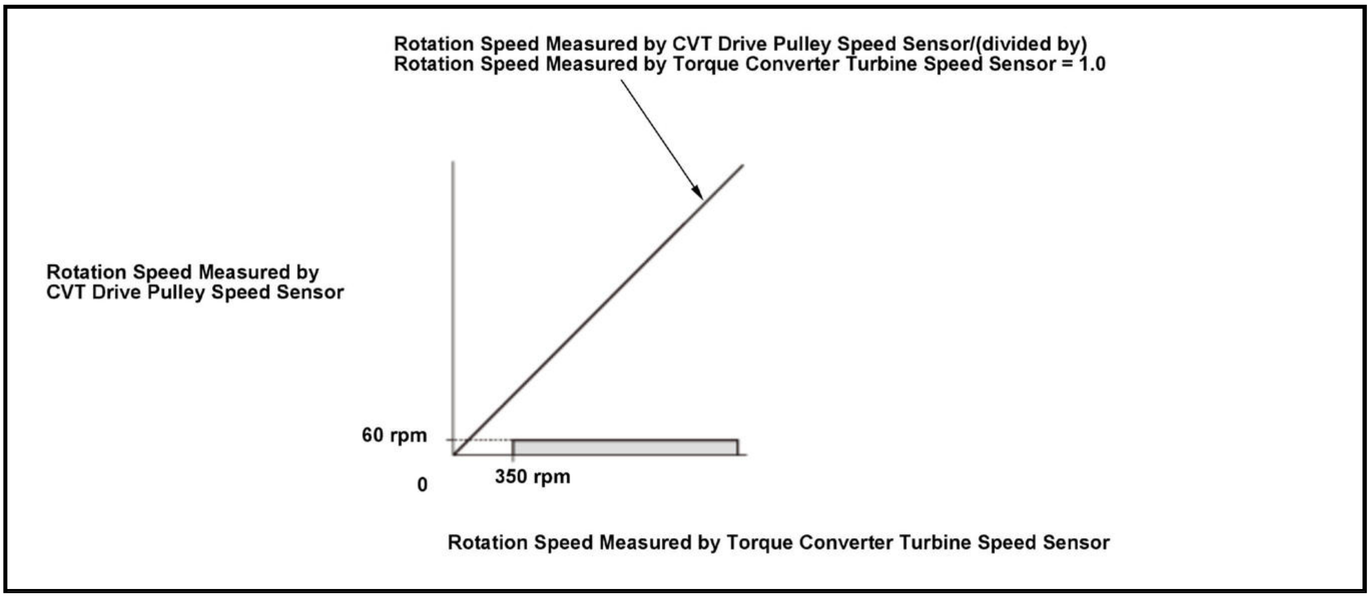

The CVT drive pulley speed sensor is attached to the outside of the end cover. The CVT drive pulley speed sensor detects the number of revolutions of the gear on the drive pulley and sends a pulsing signal to the transmission control module (TCM). The TCM converts the pulses to drive pulley speed. If no pulses occur with the drive pulley rotating, the TCM detects a malfunction that may be caused by an open, an intermittent open, or a short to ground. Based on the correlation between the CVT drive pulley speed sensor and the torque converter turbine speed sensor, the TCM detects a malfunction and stores a DTC.

Monitor Execution, Sequence, Duration, DTC Type

Execution	Continuous
Sequence	None
Duration	10 seconds or more
DTC Type	One drive cycle, MIL on, Shift position indicator blinks

Enable Conditions

Condition	Minimum	Maximum
Engine speed [Engine Speed]	550 rpm	-
Torque converter turbine speed [Torque Converter Turbine Speed]	350 rpm	-

Condition	Minimum	Maximum
12 volt battery voltage [Battery Voltage]	10.0 V	-
Shift lever position/mode	D, S, L	
Other	Not when the shift lever is being shifted	
	Rotation speed [Secondary Shaft Speed 1 (rpm)] measured by CVT speed sensor is 350 rpm or more	
	No electrical noise in the CVT drive pulley speed sensor output circuit	

[ ]:HDS Parameter

Malfunction Threshold

The rotation speed [Input Shaft (Drive Pulley) Speed rpm] measured by the CVT drive pulley speed sensor is 60 rpm or less for at least 10 seconds when the rotation speed [Torque Converter Turbine Speed] measured by the torque converter turbine speed sensor is 350 rpm or more.

Possible Cause

NOTE: The causes shown may not be a complete list of all potential problems, and it is possible that there may be other causes.

- CVT drive pulley speed sensor NDR-PWM line open (includes connector loose connection or disconnection)
- CVT drive pulley speed sensor VCC line open (includes connector loose connection or disconnection)
- CVT drive pulley speed sensor SG line open (includes connector loose connection or disconnection)
- CVT drive pulley speed sensor NDR-PWM line short to ground
- CVT drive pulley speed sensor failure
- TCM internal circuit failure

Confirmation Procedure

Operating Condition

- Start the engine.
- Drive the vehicle at a speed of 19 mph (30 km/h) or more for at least 30 seconds.

- Drive the vehicle in this manner only if the traffic regulations and ambient conditions allow.

With the HDS

None.

Diagnosis Details

Conditions for setting the DTC

When a malfunction is detected, the MIL comes on, the shift position indicator blinks, and a Pending DTC, a Confirmed DTC, and the freeze data are stored in the TCM memory.

Conditions for clearing the DTC

The shift position indicator comes off by turning the vehicle to the OFF (LOCK) mode. The MIL is cleared if the malfunction does not return in three consecutive trips in which the diagnostic runs. The MIL, the Pending DTC, the Confirmed DTC, and the freeze data can be cleared with the scan tool Clear command.

DTC P0796 (CVT (TCM))

DTC P0796: Pressure Control Solenoid Valve C Performance or Stuck OFF

General Description

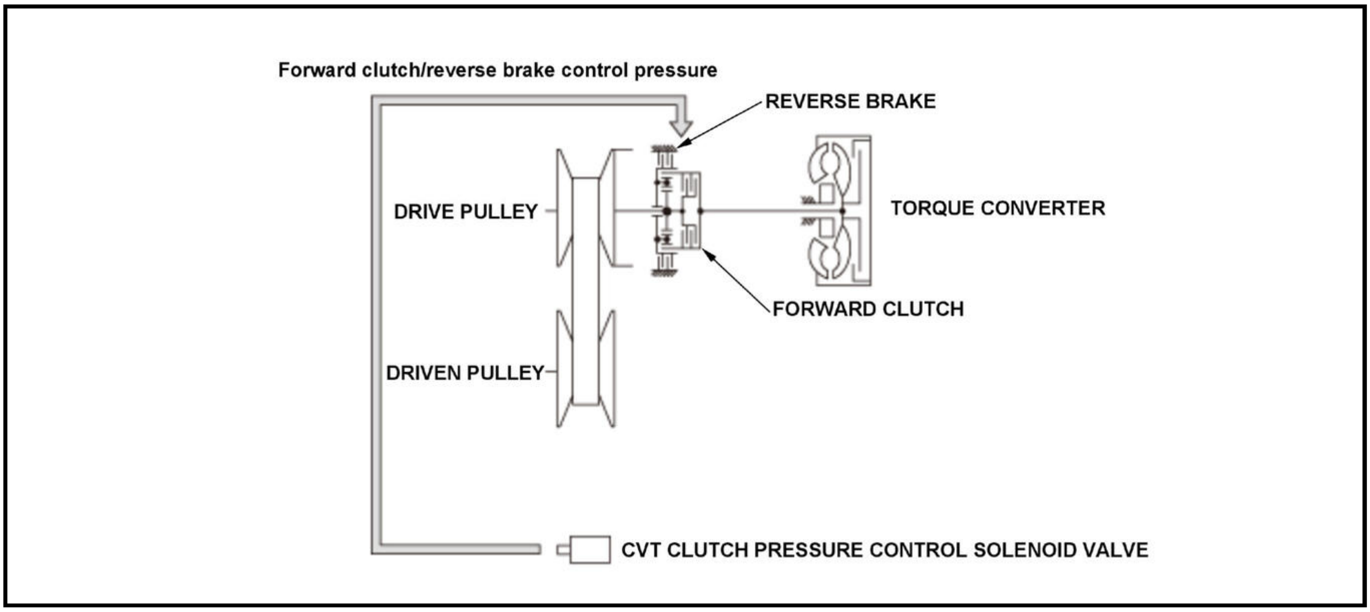
Forward clutch/reverse brake control pressure
REVERSE BRAKE
DRIVE PULLEY
TORQUE CONVERTER
FORWARD CLUTCH
DRIVEN PULLEY
CVT CLUTCH PRESSURE CONTROL SOLENOID VALVE

The CVT clutch pressure control solenoid valve controls hydraulic pressure to the forward clutch and the reverse brake. The CVT clutch pressure control solenoid valve is controlled by duty cycle output. The spool in the CVT clutch pressure control solenoid valve moves the valve according to the current, and produces hydraulic pressure in proportion to the current. To supply proper forward clutch/reverse brake hydraulic pressure, the transmission control module (TCM) outputs a CVT clutch pressure control solenoid valve hydraulic pressure control signal. If the torque converter turbine speed and drive pulley speed does not match when forward clutch/reverse brake is engaged at a specified vehicle speed condition, the TCM detects a CVT clutch pressure control solenoid valve stuck OFF failure and stores a DTC.

Monitor Execution, Sequence, Duration, DTC Type

Execution	Continuous
Sequence	None
Duration	30 seconds or less
DTC Type	Two drive cycles, MIL on, Shift position indicator blinks

Enable Conditions

Condition	Minimum	Maximum
Engine speed [Engine Speed]	500 rpm	-
Forward clutch/reverse brake commanded pressure	206 kPa (2.1 kgf/cm 2, 29.9 psi)	-
Vehicle speed [Vehicle Speed]	-	1 mph (3 km/h)
Shift lever position/mode	D, S, L, R	

[ ]: HDS Parameter

Malfunction Threshold

The rotation speed between the torque converter turbine speed [Torque Converter Turbine Speed] and the drive pulley speed [Input Shaft (Drive Pulley) Speed rpm] is 250 rpm or more.

Possible Cause

NOTE: The causes shown may not be a complete list of all potential problems, and it is possible that there may be other causes.

- CVT clutch pressure control solenoid valve stuck off

Confirmation Procedure

Operating Condition

- Start the engine.
- With the brake pedal pressed, place the shift lever in from N position/mode to D position/mode, and wait for at least 30 seconds.
- Turn the vehicle to the OFF (LOCK) mode.
- Repeat Driving Pattern steps 1 through 2.

With the HDS

None.

Diagnosis Details

Conditions for setting the DTC

When a malfunction is detected during the first drive cycle, a Pending DTC is stored in the TCM memory. If the malfunction returns in the next (second) drive cycle, the MIL comes on, the shift position indicator blinks, and a Confirmed DTC and the freeze data are stored.

Conditions for clearing the DTC

The shift position indicator comes off by turning the vehicle to the OFF (LOCK) mode. The MIL is cleared if the malfunction does not return in three consecutive trips in which the diagnostic runs. The MIL, the Pending DTC, the Confirmed DTC, and the freeze data can be cleared with the scan tool Clear command.

DTC P0797 (CVT (TCM))

DTC P0797: Pressure Control Solenoid Valve C Stuck ON

General Description

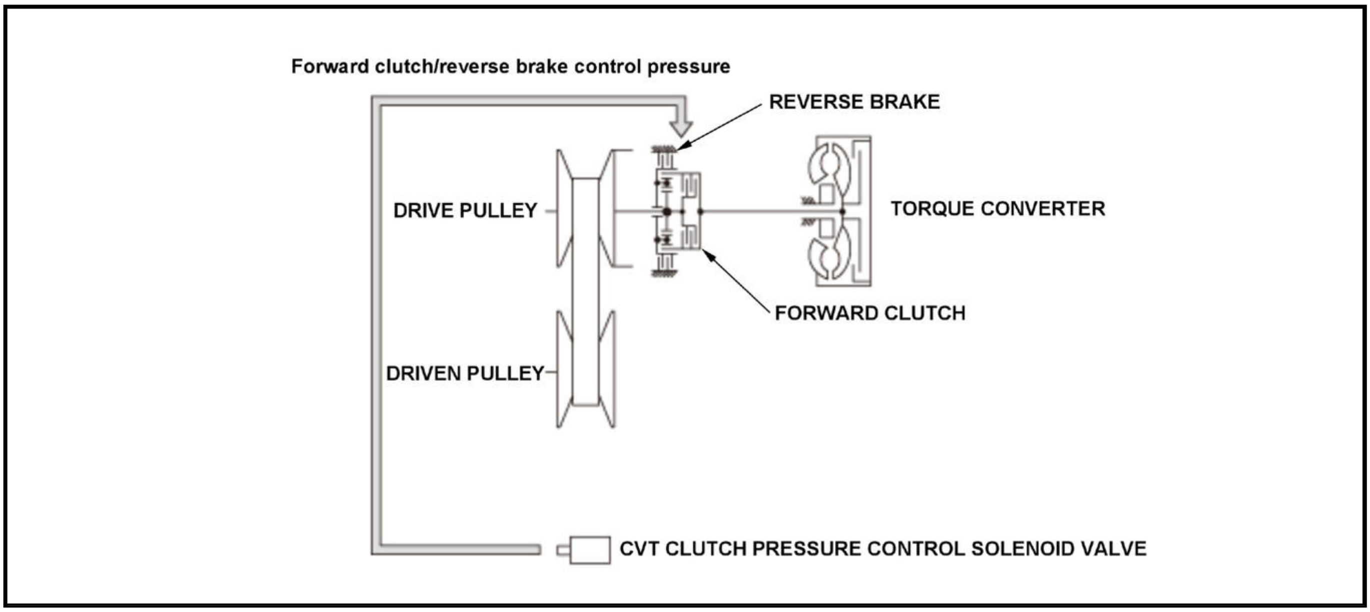
Forward clutch/reverse brake control pressure
REVERSE BRAKE
DRIVE PULLEY
TORQUE CONVERTER
FORWARD CLUTCH
DRIVEN PULLEY
CVT CLUTCH PRESSURE CONTROL SOLENOID VALVE

The CVT clutch pressure control solenoid valve controls hydraulic pressure to the forward clutch and the reverse brake. The CVT clutch pressure control solenoid valve is controlled by duty cycle output. The spool in the CVT clutch pressure control solenoid valve moves the valve according to the current, and produces hydraulic pressure in proportion to the current. To supply proper forward clutch/reverse brake hydraulic pressure, the transmission control module (TCM) outputs a CVT clutch pressure control solenoid valve hydraulic pressure control signal. If the duration of the forward clutch/reverse brake engage operation from start to completion is short, the TCM detects a CVT clutch pressure control solenoid valve stuck ON failure and stores a DTC.

Monitor Execution, Sequence, Duration, DTC Type

Execution	Continuous
Sequence	None
Duration	Depending on the driving conditions
DTC Type	Two drive cycles, MIL on, Shift position indicator blinks

Enable Conditions

Condition	Minimum	Maximum
Engine speed [Engine Speed]	500 rpm	-
Vehicle speed [Vehicle Speed]	-	1 mph (3 km/h)
Accelerator pedal position	-	0.6 deg.
Shift lever position/mode	D, S, L	

[ ]: HDS Parameter

Malfunction Threshold

Forward clutch engagement when shifted from N position/mode to D position/mode takes less than 0.4 second.

Possible Cause

NOTE: The causes shown may not be a complete list of all potential problems, and it is possible that there may be other causes.

- CVT clutch pressure control solenoid valve stuck on

Confirmation Procedure

Operating Condition

- Start the engine.
- With the brake pedal pressed, place the shift lever in from N position/mode to D position/mode, then shift to N position/mode, and wait for at least 2 seconds.
- Repeat Driving Pattern step 2, five times.
- Turn the vehicle to the OFF (LOCK) mode.
- Repeat Driving Pattern steps 1 through 3.

With the HDS

None.

Diagnosis Details

Conditions for setting the DTC

When a malfunction is detected during the first drive cycle, a Pending DTC is stored in the TCM memory. If the malfunction returns in the next (second) drive cycle, the MIL comes on, the shift position indicator blinks, and a Confirmed DTC and the freeze data are stored.

Conditions for clearing the DTC

The shift position indicator comes off by turning the vehicle to the OFF (LOCK) mode. The MIL is cleared if the malfunction does not return in three consecutive trips in which the diagnostic runs. The MIL, the Pending DTC, the Confirmed DTC, and the freeze data can be cleared with the scan tool Clear command.

DTC P0842, P0843(CVT (TCM))

DTC P0842: Transmission Fluid Pressure Sensor/Switch A Circuit Low **DTC P0843:** Transmission Fluid Pressure Sensor/Switch A Circuit High

General Description

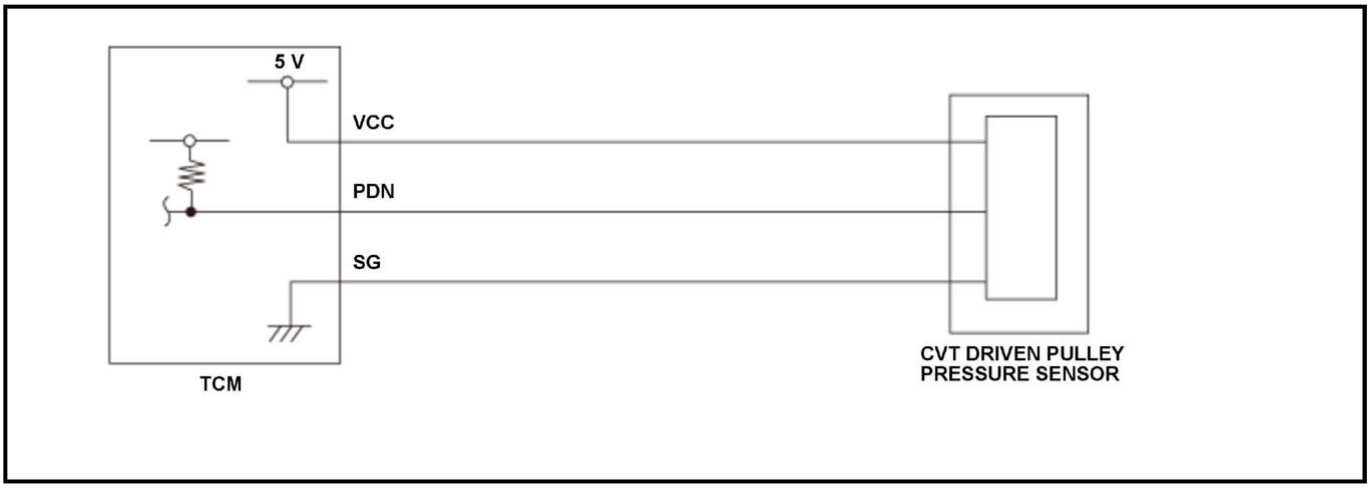

The CVT driven pulley pressure sensor uses a strain gauge. The output voltage changes depending on the driven pulley pressure. The transmission control module (TCM) sends a 5 V reference voltage to the sensor through a pull-up resistor. When the driven pulley pressure is low, the sensor resistance decreases and the TCM detects a low signal voltage. Conversely, when the driven pulley pressure is high, the sensor resistance increases and the TCM detects a high signal voltage. If the CVT driven pulley pressure sensor signal voltage is a specified voltage for a set time, the TCM detects a malfunction and stores a DTC.

Monitor Execution, Sequence, Duration, DTC Type

Execution	Continuous
Sequence	None
Duration	10 seconds or more
DTC Type	Two drive cycles, MIL off, Shift position indicator blinks

Enable Conditions

Condition	B
State of the engine	Running

Malfunction Threshold

DTC: P0842

The CVT driven pulley pressure sensor output voltage [Driven Pulley Pressure Sensor(V)] is less than 0.21 V for at least 10 seconds.

DTC: P0843

The CVT driven pulley pressure sensor output voltage [Driven Pulley Pressure Sensor(V)] is more than 4.84 V for at least 10 seconds.

[ ]: HDS Parameter

Possible Cause

NOTE: The causes shown may not be a complete list of all potential problems, and it is possible that there may be other causes.

DTC: P0842

- CVT driven pulley pressure sensor PDN line short to ground

DTC: P0843

- CVT driven pulley pressure sensor PDN line open (includes connector loose connection or disconnection)
- CVT driven pulley pressure sensor SG line open (includes connector loose connection or disconnection)

Common

- CVT driven pulley pressure sensor VCC line open (includes connector loose connection or disconnection)
- CVT driven pulley pressure sensor failure
- TCM internal circuit failure

Confirmation Procedure

Operating Condition

- Start the engine.
- Shift to P position/mode, and wait for at least 10 seconds.
- Turn the vehicle to the OFF (LOCK) mode.
- Repeat Driving Pattern steps 1 through 2.

With the HDS

None.

Diagnosis Details

Conditions for setting the DTC

When a malfunction is detected during the first drive cycle, a Pending DTC is stored in the TCM memory. If the malfunction returns in the next (second) drive cycle, the shift position indicator blinks and a Confirmed DTC and the freeze data are stored. The MIL does not come on.

Conditions for clearing the DTC

The shift position indicator comes off by turning the vehicle to the OFF (LOCK) mode. The Pending DTC, the Confirmed DTC, and the freeze data can be cleared with the scan tool Clear command.

DTC P0962 (CVT (TCM))

DTC P0962: CVT Drive Pulley Pressure Control Valve Circuit Low

General Description

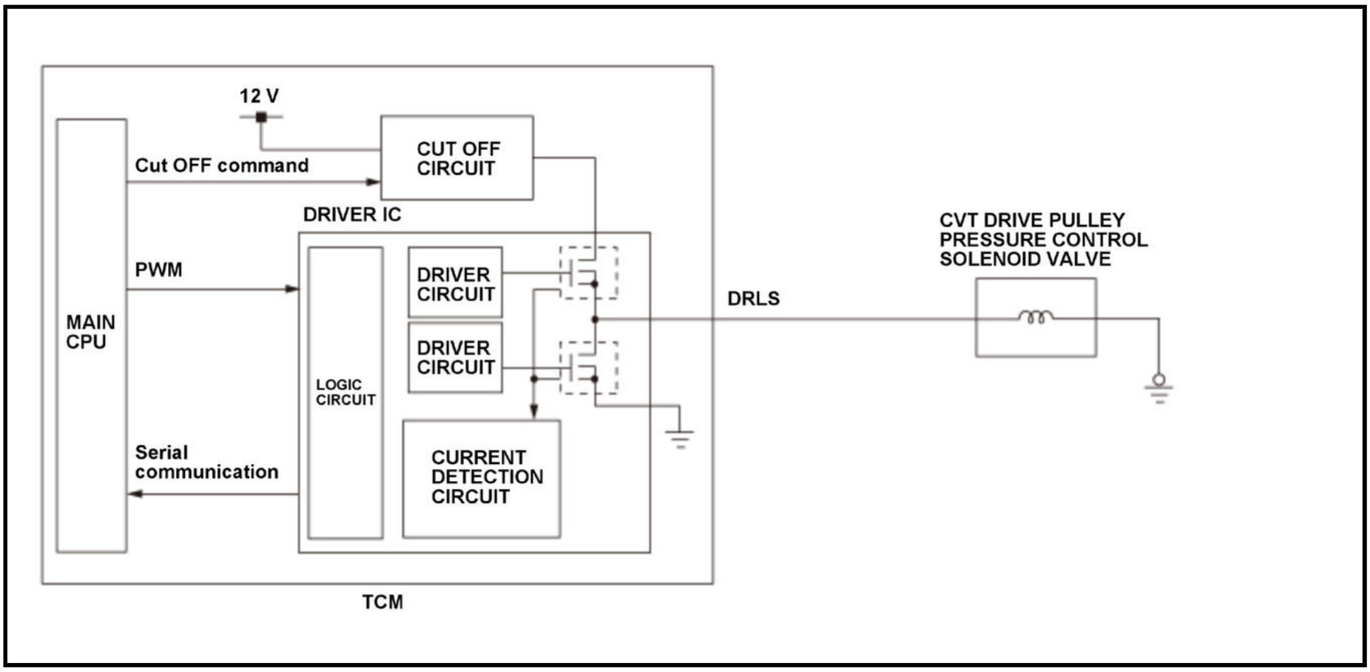
12 V
Cut OFF command
CUT OFF CIRCUIT
DRIVER IC
PWM
MAIN CPU
DRIVER CIRCUIT
DRIVER CIRCUIT
LOGIC CIRCUIT
Serial communication
CURRENT DETECTION CIRCUIT
TCM
DRLS
CVT DRIVE PULLEY PRESSURE CONTROL SOLENOID VALVE

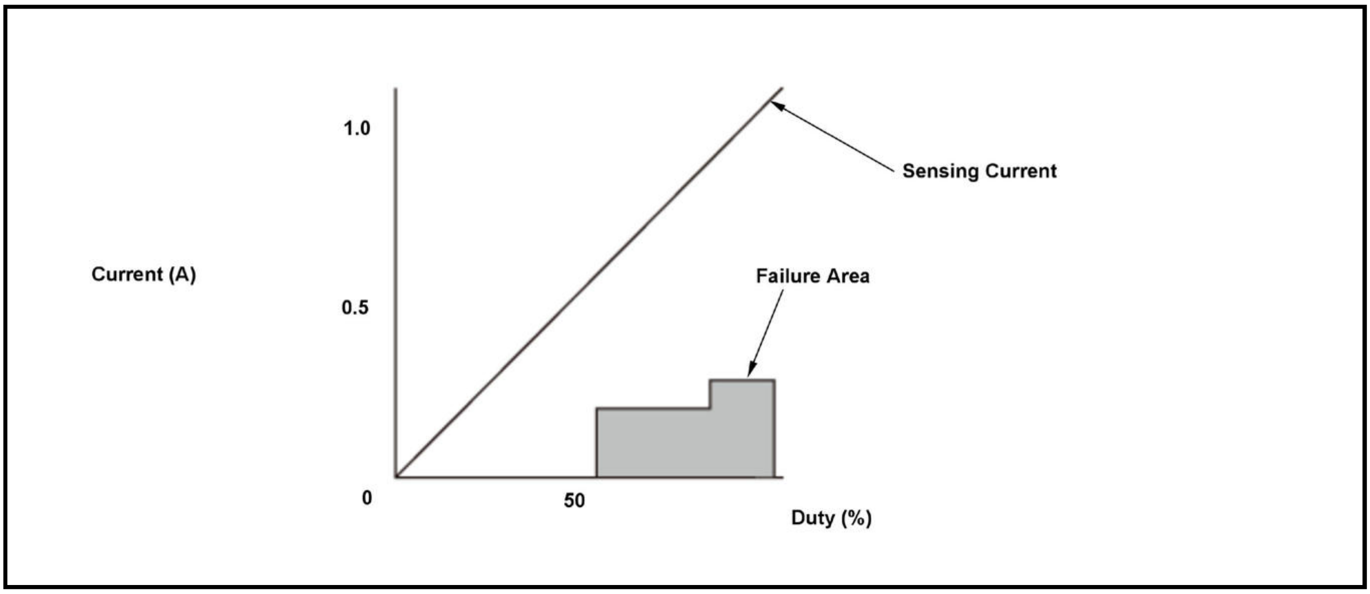

The CVT drive pulley pressure control solenoid valve controls hydraulic pressure to the drive pulley. The CVT drive pulley pressure control solenoid valve is controlled by duty cycle output. The spool in the CVT drive pulley pressure control solenoid valve moves the valve according to the current, and produces hydraulic pressure in proportion to the current. The transmission control module (TCM) measures the current that passes through the CVT drive pulley pressure control solenoid valve and uses feedback control to compensate for the difference between the measured current and the commanded one. The failure occurs by an open circuit or an intermittent open circuit. If the TCM internal driver IC detects its abnormal or the measured current is not equal to the duty cycle command, the TCM detects a malfunction and stores a DTC.

Monitor Execution, Sequence, Duration, DTC Type

Execution	Continuous
Sequence	None

Duration	1 second or more
DTC Type	One drive cycle, MIL on, Shift position indicator blinks

Enable Conditions

Condition	Minimum	Maximum
12 volt battery voltage [Battery Voltage]	10.0 V	-

[ ]: HDS Parameter

Malfunction Threshold

One of the conditions is met for at least 1 second:

- TCM internal driver IC detects its abnormal.
- The measured current for the TCM's command value is as specified here.

Duty (%)	Current (A)	Failure mode
56.5 - 90.2	Less than 0.19	Low Input
More than 90.2	Less than 0.27	Low Input

Possible Cause

NOTE: The causes shown may not be a complete list of all potential problems, and it is possible that there may be other causes.

- CVT drive pulley pressure control solenoid valve DRLS line open (includes connector loose connection or disconnection)
- CVT drive pulley pressure control solenoid valve internal circuit open
- TCM internal circuit failure

Confirmation Procedure

Operating Condition

Start the engine, and wait for at least 1 second.

With the HDS

None.

Diagnosis Details

Conditions for setting the DTC

When a malfunction is detected, the MIL comes on, the shift position indicator blinks, and a Pending DTC, a Confirmed DTC, and the freeze data are stored in the TCM memory.

Conditions for clearing the DTC

The shift position indicator comes off by turning the vehicle to the OFF (LOCK) mode. The MIL is cleared if the malfunction does not return in three consecutive trips in which the diagnostic runs. The MIL, the Pending DTC, the Confirmed DTC, and the freeze data can be cleared with the scan tool Clear command.

DTC P0963 (CVT (TCM))

DTC P0962: CVT Drive Pulley Pressure Control Valve Circuit High

General Description

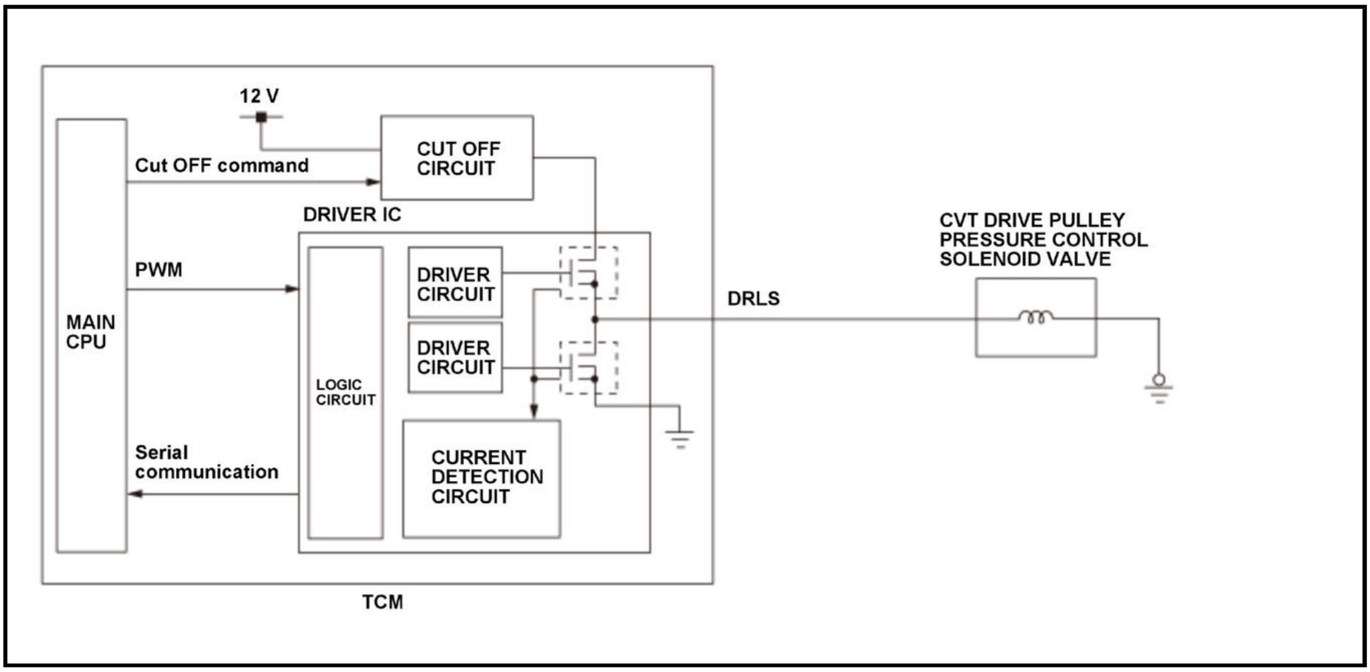
12 V
CUT OFF CIRCUIT
Cut OFF command
DRIVER IC
PWM
MAIN CPU
DRIVER CIRCUIT
DRIVER CIRCUIT
LOGIC CIRCUIT
CURRENT DETECTION CIRCUIT
Serial communication
TCM
DRLS
CVT DRIVE PULLEY PRESSURE CONTROL SOLENOID VALVE

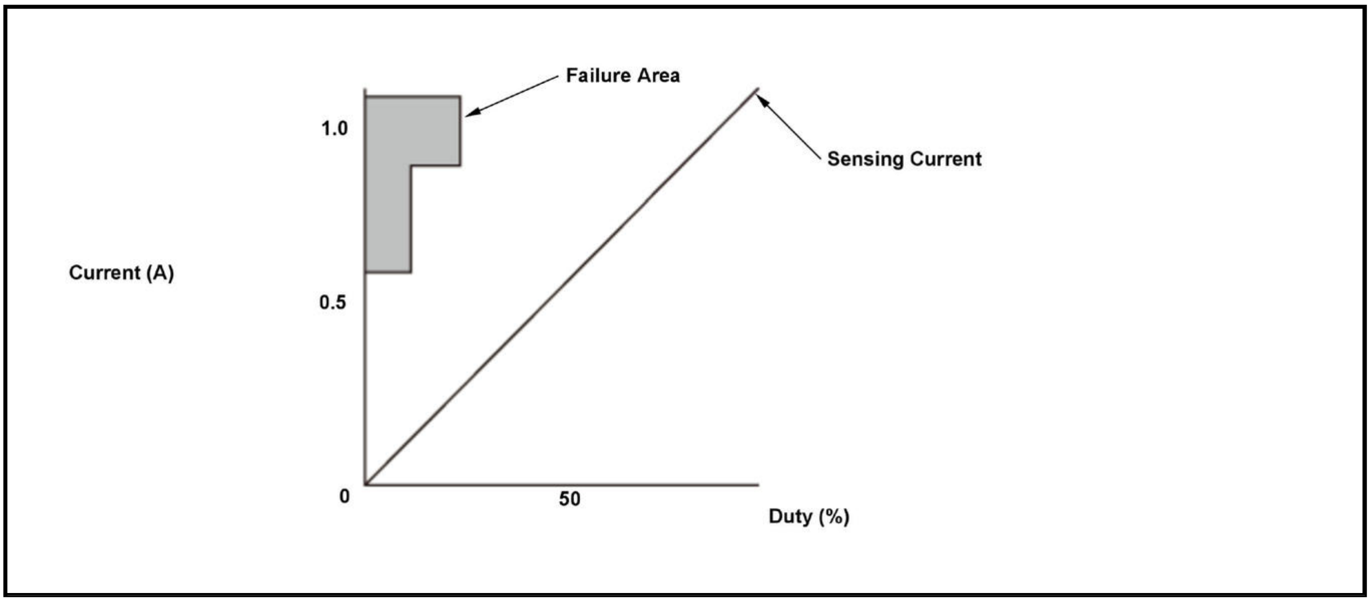

The CVT drive pulley pressure control solenoid valve controls hydraulic pressure to the drive pulley. The CVT drive pulley pressure control solenoid valve is controlled by duty cycle output. The spool in the CVT drive pulley pressure control solenoid valve moves the valve according to the current, and produces hydraulic pressure in proportion to the current. The transmission control module (TCM) measures the current that passes through the CVT drive pulley pressure control solenoid valve and uses feedback control to compensate for the difference between the measured current and the commanded one. The failure occurs by a short circuit or an intermittent short circuit. If the TCM internal driver IC detects its abnormal or the measured current is not equal to the duty cycle command, the TCM detects a malfunction and stores a DTC.

Monitor Execution, Sequence, Duration, DTC Type

Execution	Continuous
Sequence	None

Duration	1 second or more
DTC Type	One drive cycle, MIL on, Shift position indicator blinks

Enable Conditions

Condition	Minimum	Maximum
12 volt battery voltage [Battery Voltage]	10.0 V	-

[ ]: HDS Parameter

Malfunction Threshold

One of the conditions is met for at least 1 second:

- TCM internal driver IC detects its abnormal.
- The measured current for the TCM's command value is as specified here.

Duty (%)	Current (A)	Failure mode
Less than 13.7	More than 0.57	High Input
13.7 - 27.4	More than 0.88	High Input

Possible Cause

NOTE: The causes shown may not be a complete list of all potential problems, and it is possible that there may be other causes.

- CVT drive pulley pressure control solenoid valve DRLS line short
- CVT drive pulley pressure control solenoid valve internal circuit short
- TCM internal circuit failure

Confirmation Procedure

Operating Condition

Start the engine, and wait for at least 1 second.

With the HDS

None.

Diagnosis Details

Conditions for setting the DTC

When a malfunction is detected, the MIL comes on, the shift position indicator blinks, and a Pending DTC, a Confirmed DTC, and the freeze data are stored in the TCM memory.

Conditions for clearing the DTC

The shift position indicator comes off by turning the vehicle to the OFF (LOCK) mode. The MIL is cleared if the malfunction does not return in three consecutive trips in which the diagnostic runs. The MIL, the Pending DTC, the Confirmed DTC, and the freeze data can be cleared with the scan tool Clear command.

DTC P0966 (CVT (TCM))

DTC P0966: CVT Driven Pulley Pressure Control Valve Circuit Low

General Description

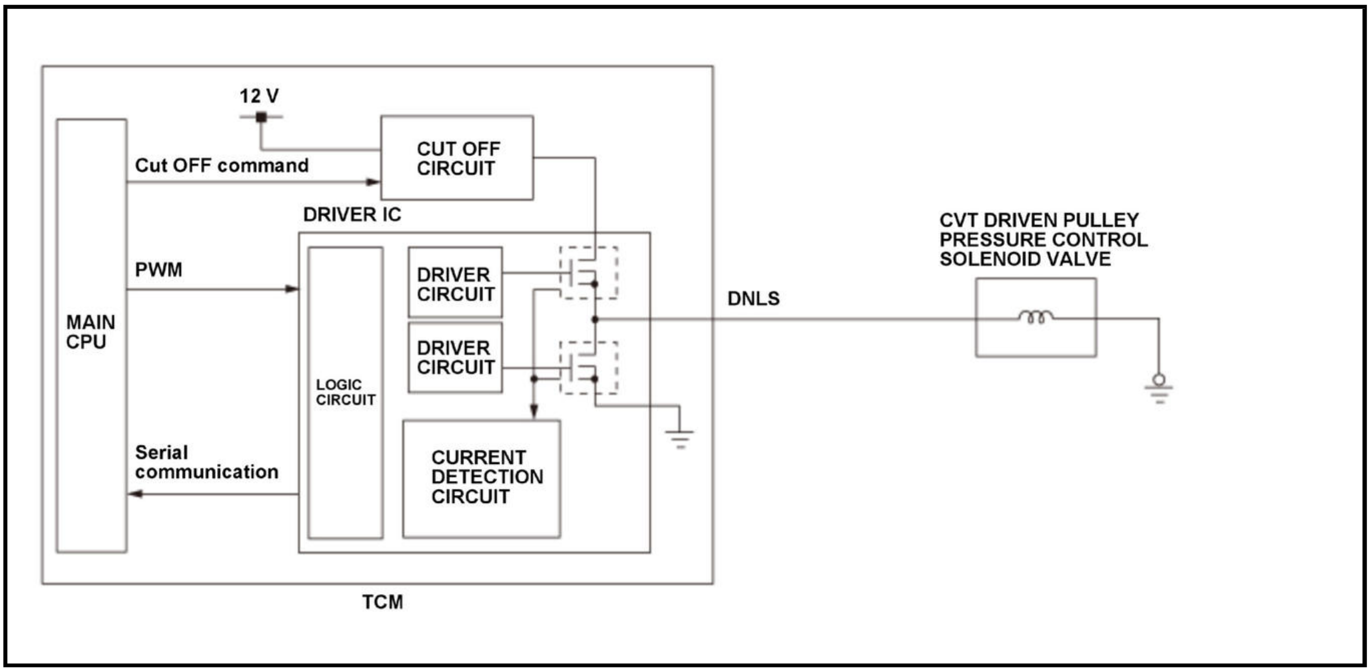
12 V
Cut OFF command
CUT OFF CIRCUIT
DRIVER IC
PWM
MAIN CPU
DRIVER CIRCUIT
DRIVER CIRCUIT
LOGIC CIRCUIT
CURRENT DETECTION CIRCUIT
Serial communication
TCM
DNLS
CVT DRIVEN PULLEY PRESSURE CONTROL SOLENOID VALVE

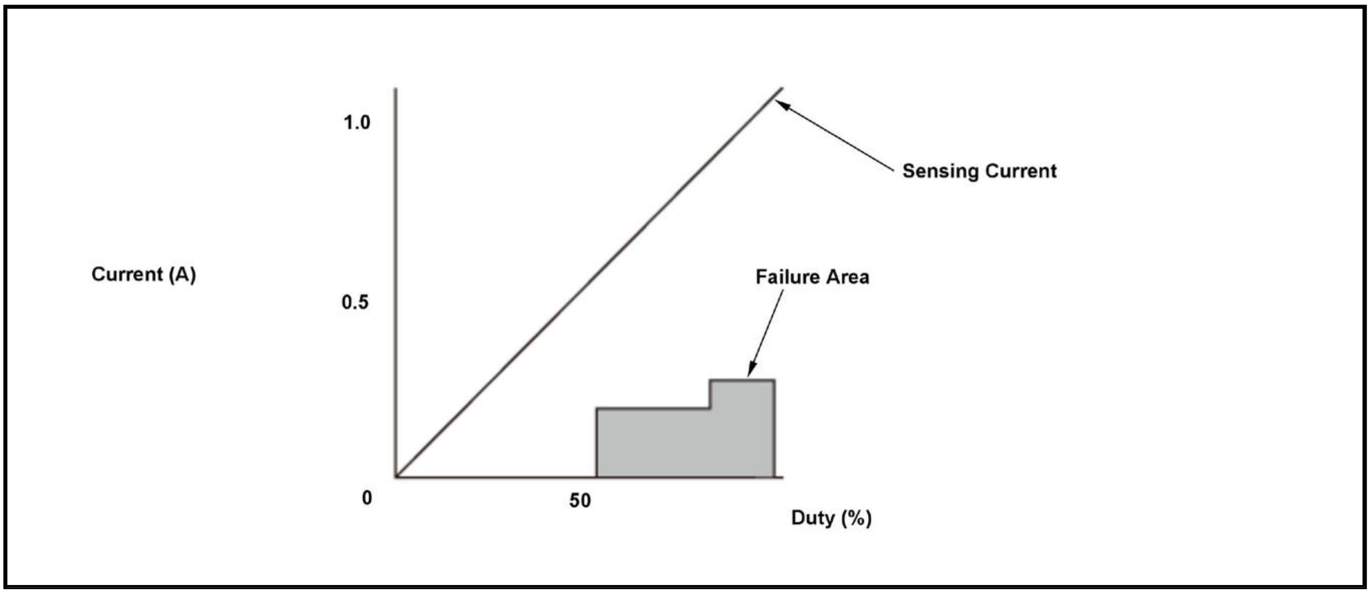

The CVT driven pulley pressure control solenoid valve controls hydraulic pressure to the driven pulley. The CVT driven pulley pressure control solenoid valve is controlled by duty cycle output. The spool in the CVT driven pulley pressure control solenoid valve moves the valve according to the current, and produces hydraulic pressure in proportion to the current. The transmission control module (TCM) measures the current that passes through the CVT driven pulley pressure control solenoid valve and uses feedback control to compensate for the difference between the measured current and the commanded one. The failure occurs by an open circuit or an intermittent open circuit. If the TCM internal driver IC detects its abnormal or the measured current is not equal to the duty cycle command, the TCM detects a malfunction and stores a DTC.

Monitor Execution, Sequence, Duration, DTC Type

Execution	Continuous
Sequence	None

Duration	1 second or more
DTC Type	One drive cycle, MIL on, Shift position indicator blinks

Enable Conditions

Condition	Minimum	Maximum
12 volt battery voltage [Battery Voltage]	10.0 V	-

[ ]: HDS Parameter

Malfunction Threshold

One of the conditions is met for at least 1 second:

- TCM internal driver IC detects its abnormal.
- The measured current for the TCM's command value is as specified here.

Duty (%)	Current (A)	Failure mode
56.5 - 90.2	Less than 0.19	Low Input
More than 90.2	Less than 0.27	Low Input

Possible Cause

NOTE: The causes shown may not be a complete list of all potential problems, and it is possible that there may be other causes.

- CVT driven pulley pressure control solenoid valve DNLS line open (includes connector loose connection or disconnection)
- CVT driven pulley pressure control solenoid valve internal circuit open
- TCM internal circuit failure

Confirmation Procedure

Operating Condition

Start the engine, and wait for at least 1 second.

With the HDS

None.

Diagnosis Details

Conditions for setting the DTC

When a malfunction is detected, the MIL comes on, the shift position indicator blinks, and a Pending DTC, a Confirmed DTC, and the freeze data are stored in the TCM memory.

Conditions for clearing the DTC

The shift position indicator comes off by turning the vehicle to the OFF (LOCK) mode. The MIL is cleared if the malfunction does not return in three consecutive trips in which the diagnostic runs. The MIL, the Pending DTC, the Confirmed DTC, and the freeze data can be cleared with the scan tool Clear command.

DTC P0967 (CVT (TCM))

DTC P0967: CVT Driven Pulley Pressure Control Valve Circuit High

General Description

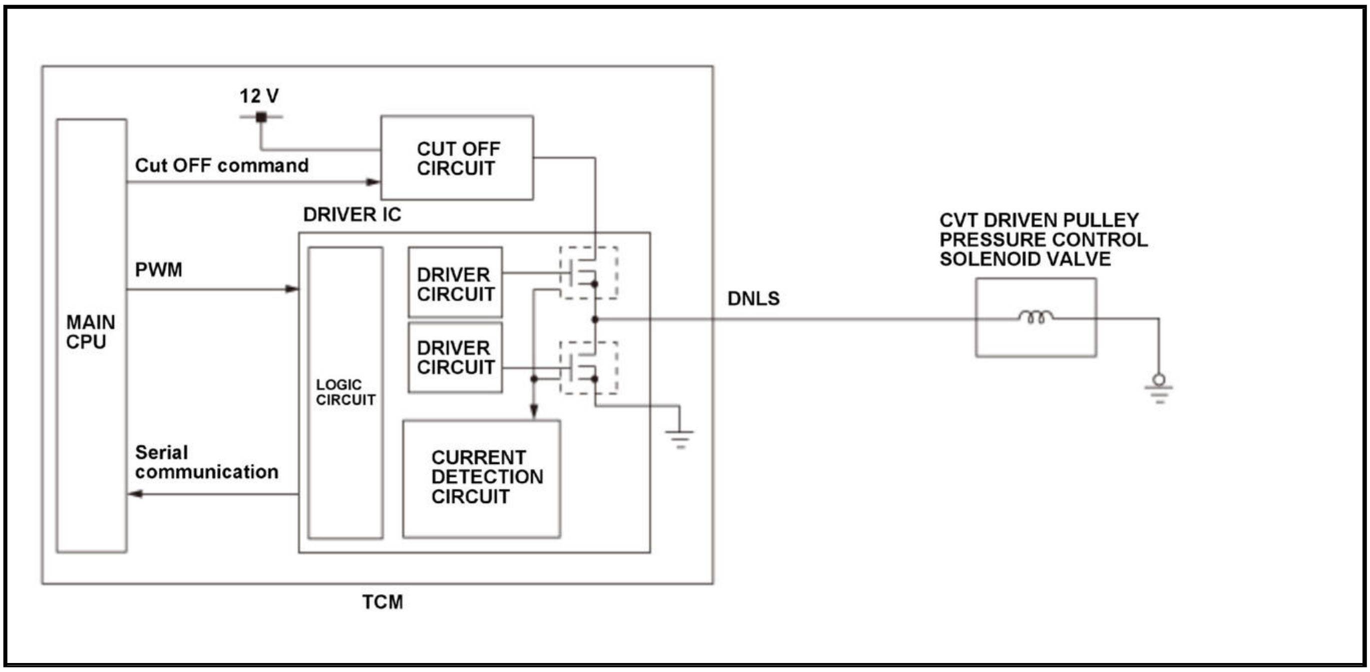

12 V
CUT OFF CIRCUIT
Cut OFF command
DRIVER IC
PWM
MAIN CPU
DRIVER CIRCUIT
DRIVER CIRCUIT
LOGIC CIRCUIT
Serial communication
CURRENT DETECTION CIRCUIT
TCM
DNLS
CVT DRIVEN PULLEY PRESSURE CONTROL SOLENOID VALVE

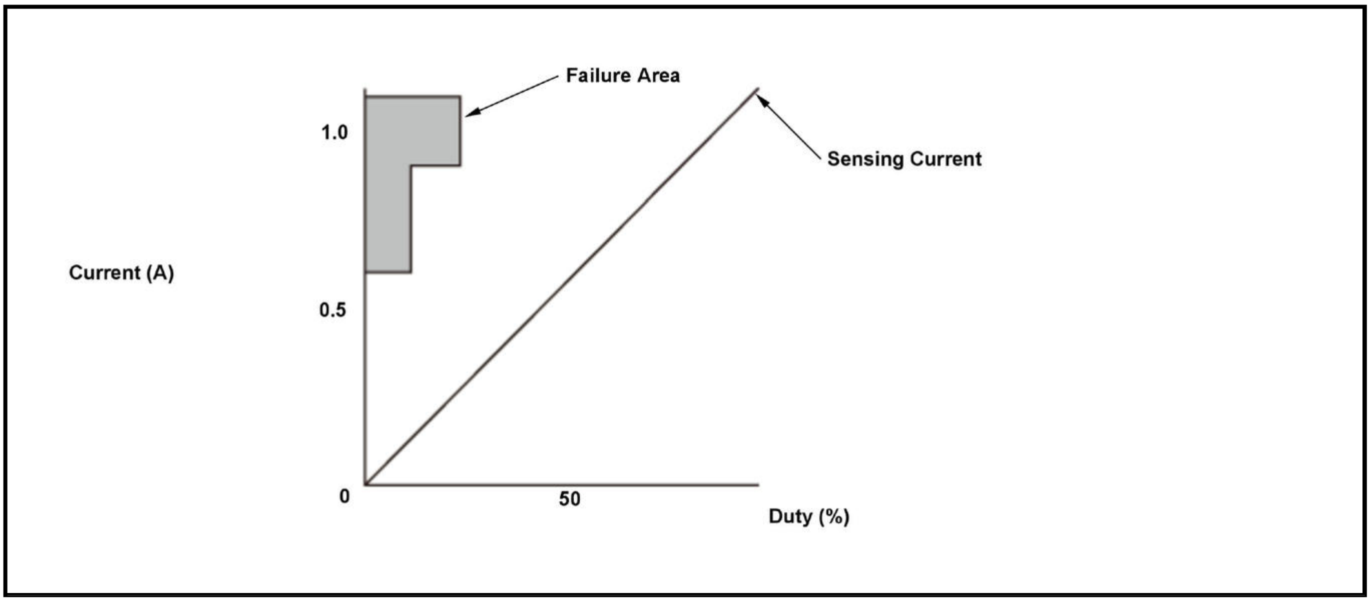

The CVT driven pulley pressure control solenoid valve controls hydraulic pressure to the driven pulley. The CVT driven pulley pressure control solenoid valve is controlled by duty cycle output. The spool in the CVT driven pulley pressure control solenoid valve moves the valve according to the current, and produces hydraulic pressure in proportion to the current. The transmission control module (TCM) measures the current that passes through the CVT driven pulley pressure control solenoid valve and uses feedback control to compensate for the difference between the measured current and the commanded one. The failure occurs by a short circuit or an intermittent short circuit. If the TCM internal driver IC detects its abnormal or the measured current is not equal to the duty cycle command, the TCM detects a malfunction and stores a DTC.

Monitor Execution, Sequence, Duration, DTC Type

Execution	Continuous
Sequence	None

Duration	1 second or more
DTC Type	One drive cycle, MIL on, Shift position indicator blinks

Enable Conditions

Condition	Minimum	Maximum
12 volt battery voltage [Battery Voltage]	10.0 V	-

[ ]: HDS Parameter

Malfunction Threshold

One of the conditions is met for at least 1 second:

- TCM internal driver IC detects its abnormal.
- The measured current for the TCM's command value is as specified here.

Duty (%)	Current (A)	Failure mode
Less than 13.7	More than 0.57	High Input
13.7 - 27.4	More than 0.88	High Input

Possible Cause

NOTE: The causes shown may not be a complete list of all potential problems, and it is possible that there may be other causes.

- CVT driven pulley pressure control solenoid valve DNLS line short
- CVT driven pulley pressure control solenoid valve internal circuit short
- TCM internal circuit failure

Confirmation Procedure

Operating Condition

Start the engine, and wait for at least 1 second.

With the HDS

None.

Diagnosis Details

Conditions for setting the DTC

When a malfunction is detected, the MIL comes on, the shift position indicator blinks, and a Pending DTC, a Confirmed DTC, and the freeze data are stored in the TCM memory.

Conditions for clearing the DTC

The shift position indicator comes off by turning the vehicle to the OFF (LOCK) mode. The MIL is cleared if the malfunction does not return in three consecutive trips in which the diagnostic runs. The MIL, the Pending DTC, the Confirmed DTC, and the freeze data can be cleared with the scan tool Clear command.

DTC P0970 (CVT (TCM))

DTC P0970: Pressure Control Solenoid C Control Circuit Low

General Description

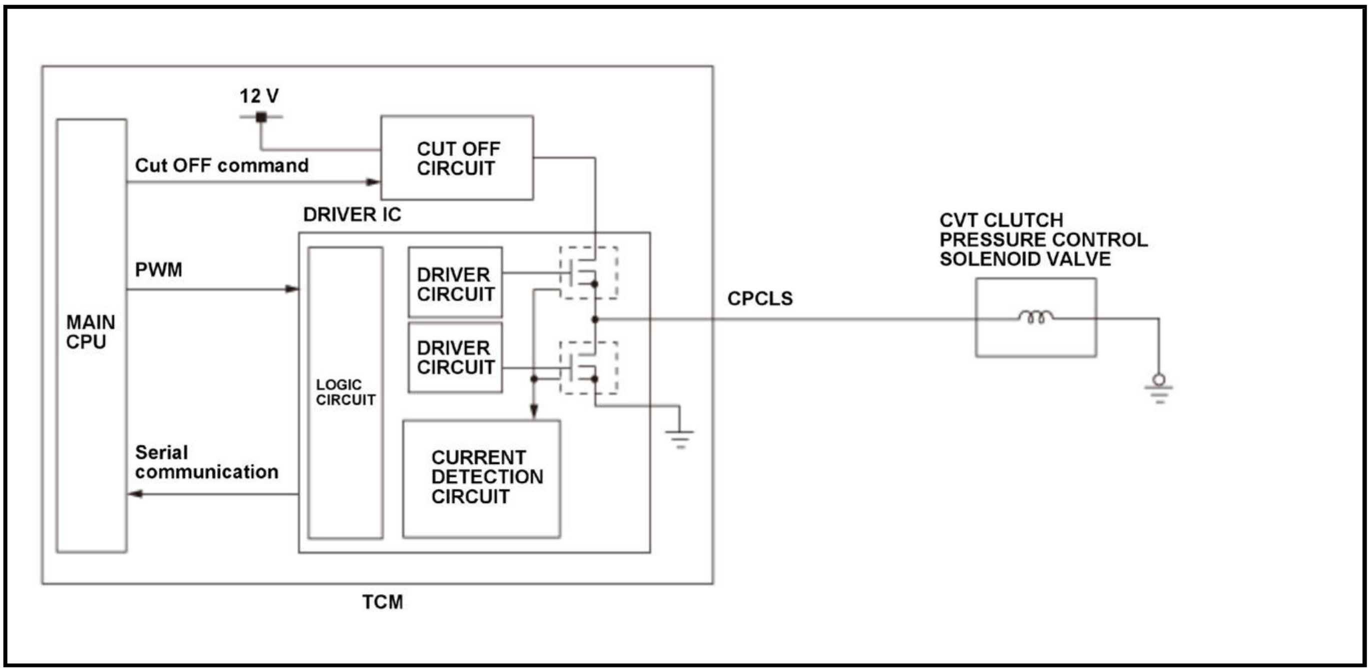

12 V
Cut OFF command
CUT OFF CIRCUIT
DRIVER IC
PWM
MAIN CPU
DRIVER CIRCUIT
DRIVER CIRCUIT
LOGIC CIRCUIT
CURRENT DETECTION CIRCUIT
Serial communication
TCM
CVT CLUTCH PRESSURE CONTROL SOLENOID VALVE
CPCLS

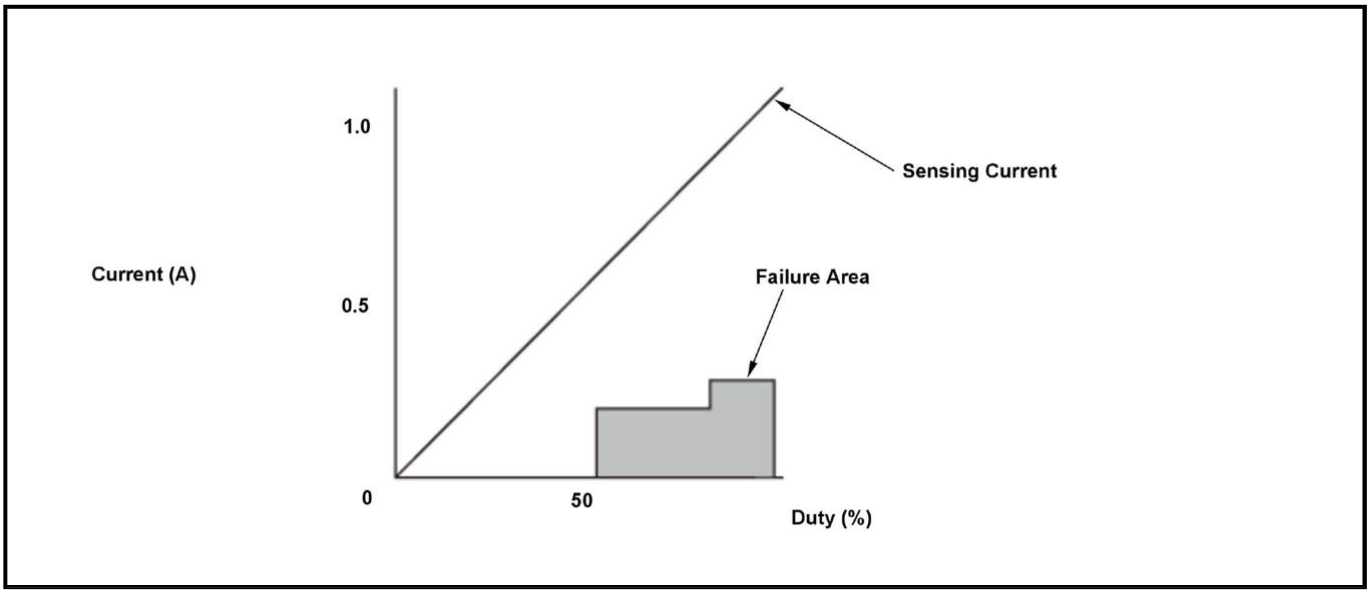

The CVT clutch pressure control solenoid valve controls hydraulic pressure to the forward clutch and the reverse brake. The CVT clutch pressure control solenoid valve is controlled by duty cycle output. The spool in the CVT clutch pressure control solenoid valve moves the valve according to the current, and produces hydraulic pressure in proportion to the current. The transmission control module (TCM) measures the current that passes through the CVT clutch pressure control solenoid valve and uses feedback control to compensate for the difference between the measured current and the commanded one. The failure occurs by an open circuit or an intermittent open circuit. If the TCM internal driver IC detects its abnormal or the measured current is not equal to the duty cycle command, the TCM detects a malfunction and stores a DTC.

Monitor Execution, Sequence, Duration, DTC Type

Execution	Continuous
Sequence	None

Duration	1 second or more
DTC Type	One drive cycle, MIL on, Shift position indicator blinks

Enable Conditions

Condition	Minimum	Maximum
12 volt battery voltage [Battery Voltage]	10.0 V	-

[ ]: HDS Parameter

Malfunction Threshold

One of the conditions is met for at least 1 second:

- TCM internal driver IC detects its abnormal.
- The measured current for the TCM's command value is as specified here.

Duty (%)	Current (A)	Failure mode
56.5 - 90.2	Less than 0.19	Low Input
More than 90.2	Less than 0.27	Low Input

Possible Cause

NOTE: The causes shown may not be a complete list of all potential problems, and it is possible that there may be other causes.

- CVT clutch pressure control solenoid valve CPCLS line open (includes connector loose connection or disconnection)
- CVT clutch pressure control solenoid valve internal circuit open
- TCM internal circuit failure

Confirmation Procedure

Operating Condition

Start the engine, and wait for at least 1 second.

With the HDS

None.

Diagnosis Details

Conditions for setting the DTC

When a malfunction is detected, the MIL comes on, the shift position indicator blinks, and a Pending DTC, a Confirmed DTC, and the freeze data are stored in the TCM memory.

Conditions for clearing the DTC

The shift position indicator comes off by turning the vehicle to the OFF (LOCK) mode. The MIL is cleared if the malfunction does not return in three consecutive trips in which the diagnostic runs. The MIL, the Pending DTC, the Confirmed DTC, and the freeze data can be cleared with the scan tool Clear command.

DTC P0971 (CVT (TCM))

DTC P0971: Pressure Control Solenoid C Control Circuit High

General Description

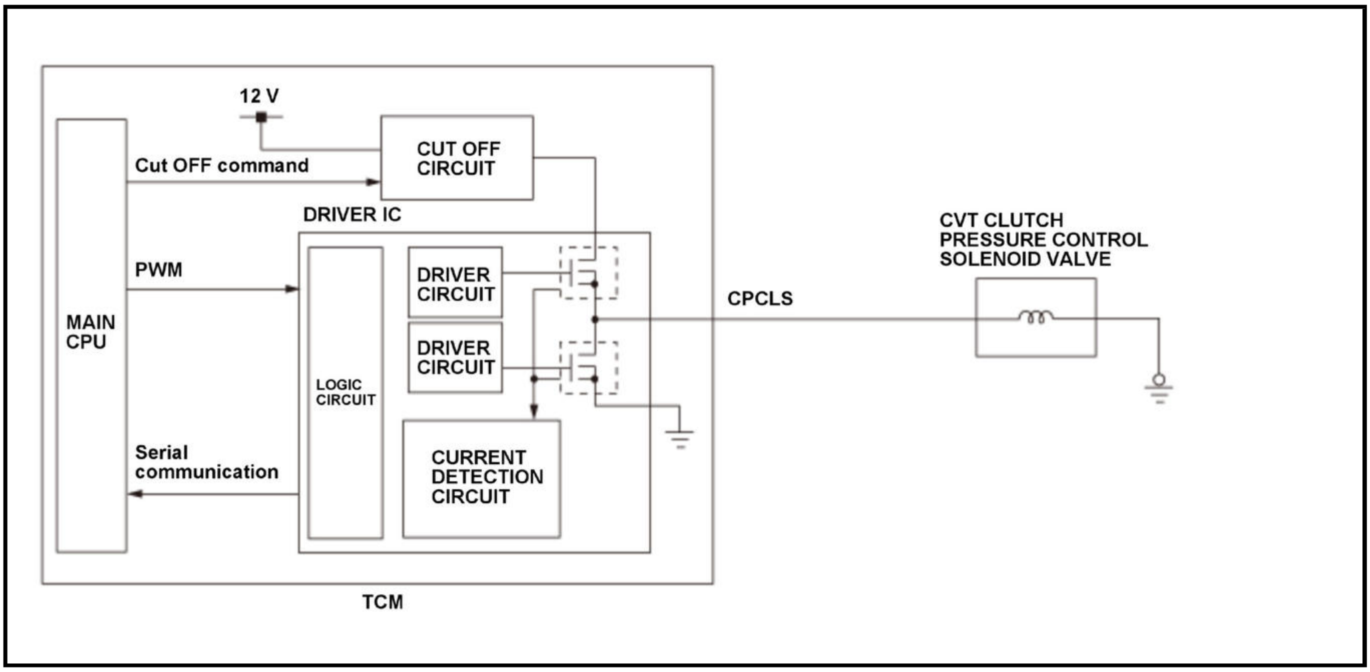
12 V
Cut OFF command
CUT OFF CIRCUIT
DRIVER IC
PWM
MAIN CPU
DRIVER CIRCUIT
DRIVER CIRCUIT
LOGIC CIRCUIT
Serial communication
CURRENT DETECTION CIRCUIT
TCM
CPCLS
CVT CLUTCH PRESSURE CONTROL SOLENOID VALVE

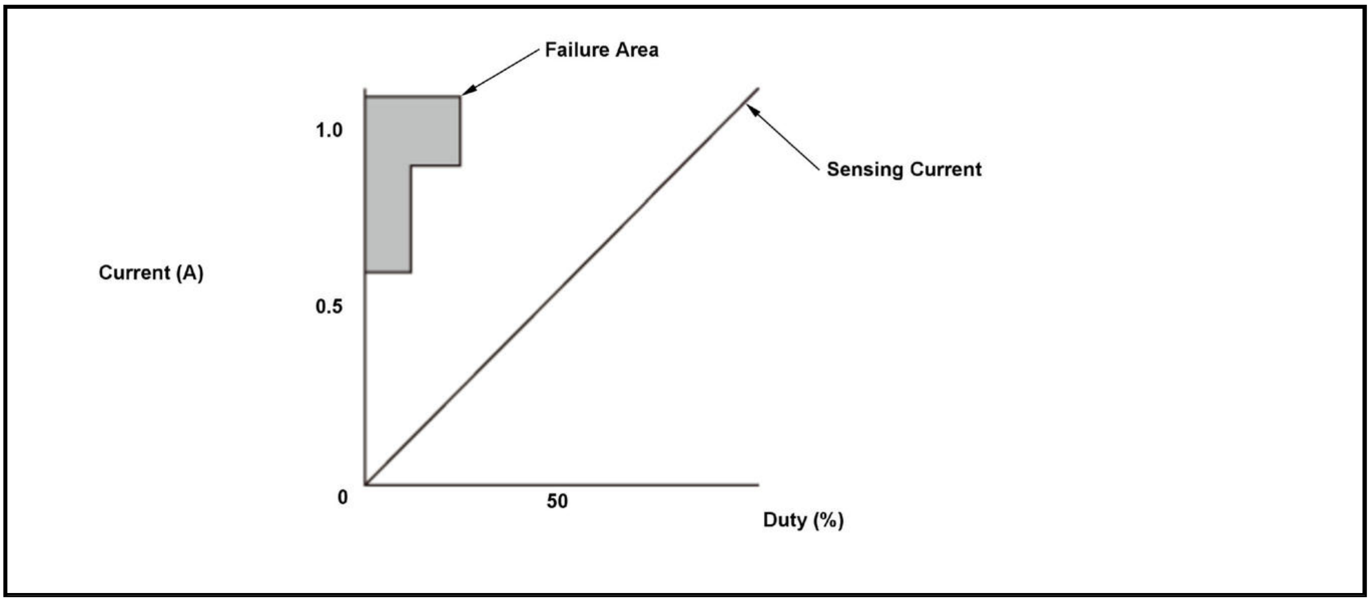

The CVT clutch pressure control solenoid valve controls hydraulic pressure to the forward clutch and the reverse brake. The CVT clutch pressure control solenoid valve is controlled by duty cycle output. The spool in the CVT clutch pressure control solenoid valve moves the valve according to the current, and produces hydraulic pressure in proportion to the current. The transmission control module (TCM) measures the current that passes through the CVT clutch pressure control solenoid valve and uses feedback control to compensate for the difference between the measured current and the commanded one. The failure occurs by a short circuit or an intermittent short circuit. If the TCM internal driver IC detects its abnormal or the measured current is not equal to the duty cycle command, the TCM detects a malfunction and stores a DTC.

Monitor Execution, Sequence, Duration, DTC Type

Execution	Continuous
Sequence	None

Duration	1 second or more
DTC Type	One drive cycle, MIL on, Shift position indicator blinks

Enable Conditions

Condition	Minimum	Maximum
12 volt battery voltage [Battery Voltage]	10.0 V	-

[ ]: HDS Parameter

Malfunction Threshold

One of the conditions is met for at least 1 second:

- TCM internal driver IC detects its abnormal.
- The measured current for the TCM's command value is as specified here.

Duty (%)	Current (A)	Failure mode
Less than 13.7	More than 0.57	High Input
13.7 - 27.4	More than 0.88	High Input

Possible Cause

NOTE: The causes shown may not be a complete list of all potential problems, and it is possible that there may be other causes.

- CVT clutch pressure control solenoid valve CPCLS line short
- CVT clutch pressure control solenoid valve internal circuit short
- TCM internal circuit failure

Confirmation Procedure

Operating Condition

Start the engine, and wait for at least 1 second.

With the HDS

None.

Diagnosis Details

Conditions for setting the DTC

When a malfunction is detected, the MIL comes on, the shift position indicator blinks, and a Pending DTC, a Confirmed DTC, and the freeze data are stored in the TCM memory.

Conditions for clearing the DTC

The shift position indicator comes off by turning the vehicle to the OFF (LOCK) mode. The MIL is cleared if the malfunction does not return in three consecutive trips in which the diagnostic runs. The MIL, the Pending DTC, the Confirmed DTC, and the freeze data can be cleared with the scan tool Clear command.

DTC P0976(CVT (TCM))

DTC P0976: Shift Solenoid Valve B Circuit Low

General Description

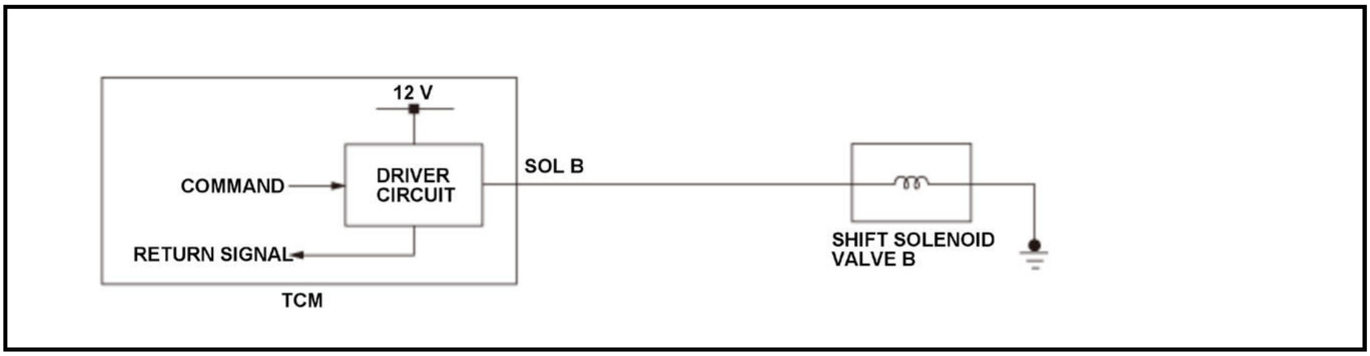

Torque converter clutch status by shift solenoid valve B output

Torque Converter Clutch	Shift Solenoid Valve B
OFF	OFF
ON	ON

Shift solenoid valve B controls the drain circuit close/open commanded by the transmission control module (TCM) ON/OFF commands. Fluid passages which supply/discharge the hydraulic pressure to torque converter clutch is switched by shift solenoid valve B ON/OFF control. The TCM commands the driver circuit to turn on shift solenoid valve B. The circuit diagnoses malfunctions such as a circuit short or open, and sends back a return signal during the TCM's command. When the return signal does not match the TCM command to turn ON shift solenoid valve B, the TCM detects a malfunction and stores a DTC.

Monitor Execution, Sequence, Duration, DTC Type

Execution	Continuous
Sequence	None
Duration	1 second or more
DTC Type	Two drive cycles, MIL on, Shift position indicator blinks

Enable Conditions

Condition	Minimum	Maximum
12 volt battery voltage [Battery Voltage]	10.0 V	-

[ ]: HDS Parameter

Malfunction Threshold

The return signal does not match the command to turn ON shift solenoid valve B [Shift Sol B] for at least 1 second.

Possible Cause

NOTE: The causes shown may not be a complete list of all potential problems, and it is possible that there may be other causes.

- Shift solenoid valve B SOL B line short to ground
- Shift solenoid valve B internal circuit short
- TCM internal circuit failure

Confirmation Procedure

Operating Condition

- Start the engine, and warm it up to normal operating temperature (the radiator fan comes on twice).
- Drive the vehicle in D position/mode at a steady speed of 37 mph (60 km/h), for at least 10 seconds.

- Drive the vehicle in this manner only if the traffic regulations and ambient conditions allow.

With the HDS

None.

Diagnosis Details

Conditions for setting the DTC

When a malfunction is detected during the first drive cycle, a Pending DTC is stored in the TCM memory. If the malfunction returns in the next (second) drive cycle, the MIL comes on, the shift position indicator blinks, and a Confirmed DTC and the freeze data are stored.

Conditions for clearing the DTC

The shift position indicator comes off by turning the vehicle to the OFF (LOCK) mode. The MIL is cleared if the malfunction does not return in three consecutive trips in which the diagnostic runs. The MIL, the Pending DTC, the Confirmed DTC, and the freeze data can be cleared with the scan tool Clear command.

DTC P0977 (CVT (TCM))

DTC P0976: Shift Solenoid Valve B Circuit High

General Description

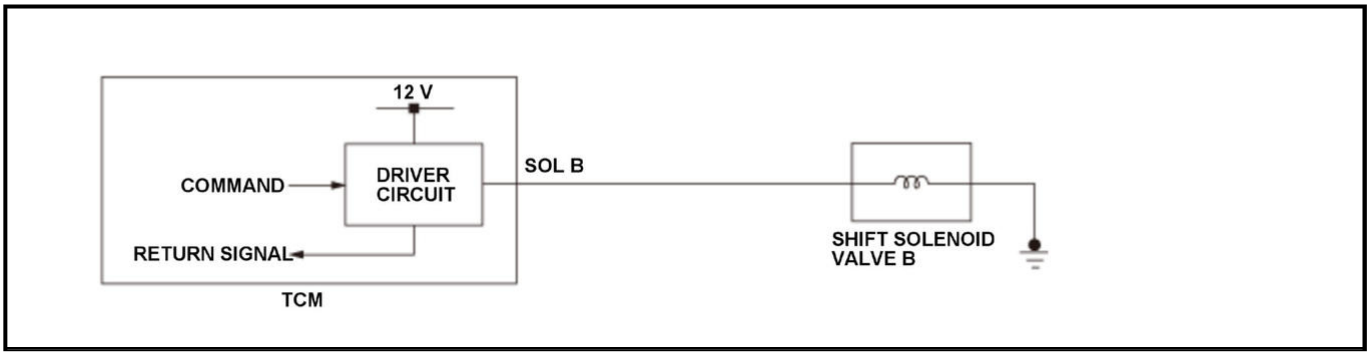

Torque converter clutch status by shift solenoid valve B output

Torque Converter Clutch	Shift Solenoid Valve B
OFF	OFF
ON	ON

Shift solenoid valve B controls the drain circuit close/open commanded by the transmission control module (TCM) ON/OFF commands. Fluid passages which supply/discharge the hydraulic pressure to torque converter clutch is switched by shift solenoid valve B ON/OFF control. The TCM commands the driver circuit to turn on shift solenoid valve B. The circuit diagnoses malfunctions such as a circuit short or open, and sends back a return signal during the TCM's command. When the return signal does not match the TCM command to turn OFF shift solenoid valve B, the TCM detects a malfunction and stores a DTC.

Monitor Execution, Sequence, Duration, DTC Type

Execution	Continuous
Sequence	None
Duration	1 second or more

DTC Type	Two drive cycles, MIL on, Shift position indicator blinks

Enable Conditions

Condition	Minimum	Maximum
12 volt battery voltage [Battery Voltage]	10.0 V	-

[ ]: HDS Parameter

Malfunction Threshold

The return signal does not match the command to turn OFF shift solenoid valve B [Shift Sol B] for at least 1 second.

Possible Cause

NOTE: The causes shown may not be a complete list of all potential problems, and it is possible that there may be other causes.

- Shift solenoid valve B SOL B line open (includes connector loose connection or disconnection)
- Shift solenoid valve B internal circuit open
- TCM internal circuit failure

Confirmation Procedure

Operating Condition

- Shift the transmission to P position/mode.
- Start the engine, and wait for at least 10 seconds.

With the HDS

None.

Diagnosis Details

Conditions for setting the DTC

When a malfunction is detected during the first drive cycle, a Pending DTC is stored in the TCM memory. If the malfunction returns in the next (second) drive cycle, the MIL comes on, the shift position indicator blinks, and a Confirmed DTC and the freeze data are stored.

Conditions for clearing the DTC

The shift position indicator comes off by turning the vehicle to the OFF (LOCK) mode. The MIL is cleared if the malfunction does not return in three consecutive trips in which the diagnostic runs. The MIL, the Pending DTC, the Confirmed DTC, and the freeze data can be cleared with the scan tool Clear command.

DTC P1717 (CVT (TCM))

DTC P1717: Transmission Range Switch ATP RVS Switch (Open or Short)

General Description

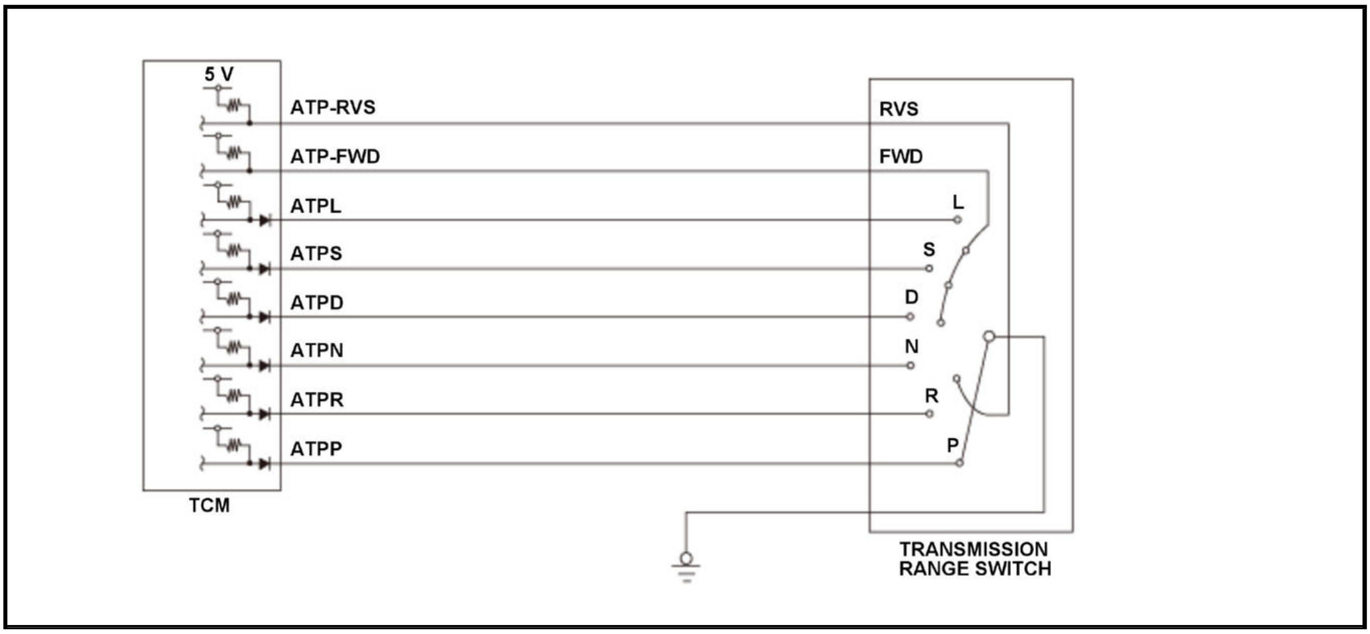

Transmission range switch contact point input matrix

Shift lever position/mode	Input per switch							
	ATPP	ATPR	ATP-RVS	ATPN	ATPD	ATPS	ATPL	ATP-FWD
P	O	X	X	X	X	X	X	X
R	X	O	O	X	X	X	X	X
N	X	X	X	O	X	X	X	X
D	X	X	X	X	O	X	X	O
S	X	X	X	X	X	O	X	O
L	X	X	X	X	X	X	O	O

The transmission range switch is attached to a control shaft. Operating the shift lever makes the control shaft rotate via the shift cable. The shift position indicator shows which position is selected according to the Low/High signal combinations, which vary based on the control shaft rotational angle. The control shaft changes the position of the transmission range switch, activates the manual valve, and switches hydraulic pressure to shift the transmission through forward/neutral/reverse. The transmission range switch signal is used to determine the shift schedule. The voltage is high (5 V or 12 V) at the transmission control module (TCM) input terminal when each transmission range switch position is open, and it is low (0 V) when each switch is closed. If the TCM detects multiple switch inputs instead of the correct switch input for the selected range at that time, it detects a malfunction and stores a DTC.

Monitor Execution, Sequence, Duration, DTC Type

Execution	Continuous
Sequence	None
Duration	320 milliseconds or more
DTC Type	Two drive cycles, MIL off, Shift position indicator blinks

Enable Conditions

Condition	Minimum	Maximum
12 volt battery voltage [Battery Voltage]	11 V	-

[ ]: HDS Parameter

Malfunction Threshold

No RVS signal [Reverse Switch(ATPRVS)] is detected with the shift lever in R position/mode while shifting between P, R, and N position/mode.

Possible Cause

NOTE: The causes shown may not be a complete list of all potential problems, and it is possible that there may be other causes.

- Transmission range switch ATP-RVS line open (includes connector loose connection or disconnection)
- Transmission range switch failure
- Shift cable adjustment failure
- TCM internal circuit failure

Confirmation Procedure

Operating Condition

- Start the engine.
- With the brake pedal pressed, shift to P, R, through N position/mode, then shift to R position/mode again, and wait for at least 320 milliseconds.

With the HDS

None.

Diagnosis Details

Conditions for setting the DTC

When a malfunction is detected during the first drive cycle, a Pending DTC is stored in the TCM memory. If the malfunction returns in the next (second) drive cycle, the shift position indicator blinks and a Confirmed DTC and the freeze data are stored. The MIL does not come on.

Conditions for clearing the DTC

The shift position indicator comes off by turning the vehicle to the OFF (LOCK) mode. The Pending DTC, the Confirmed DTC, and the freeze data can be cleared with the scan tool Clear command.

DTC P1840 (CVT (TCM))

DTC P1840: CVT Speed Sensor Circuit Forward Rotation Range/Performance

General Description

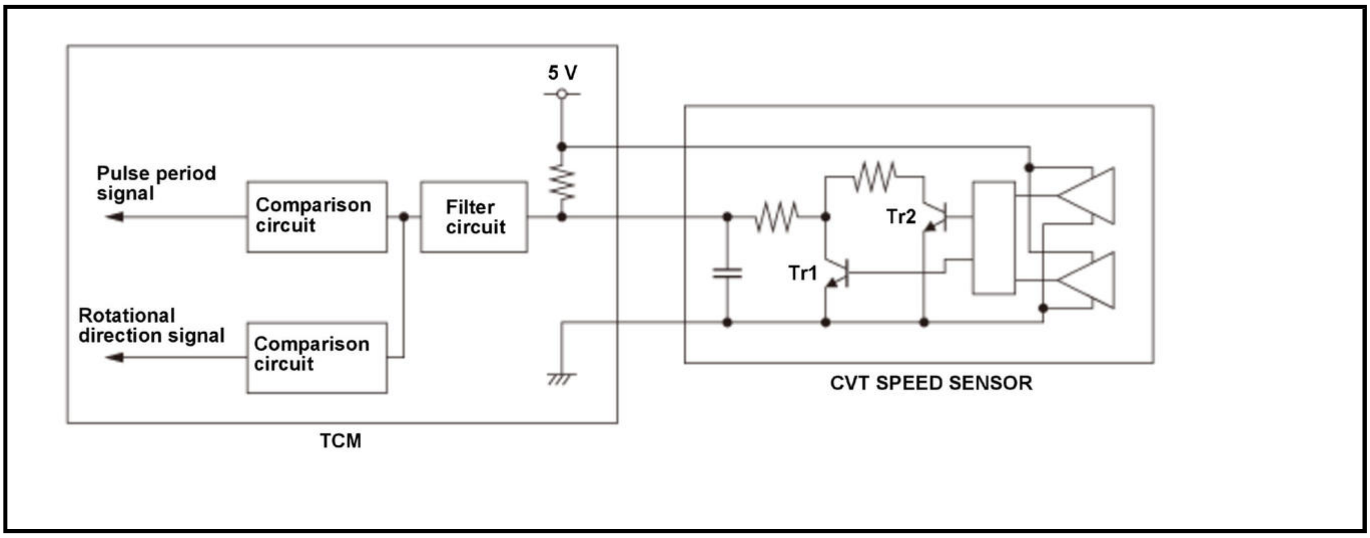
5 V
Pulse period signal
Comparison circuit
Filter circuit
Rotational direction signal
Comparison circuit
TCM
Tr2
Tr1
CVT SPEED SENSOR

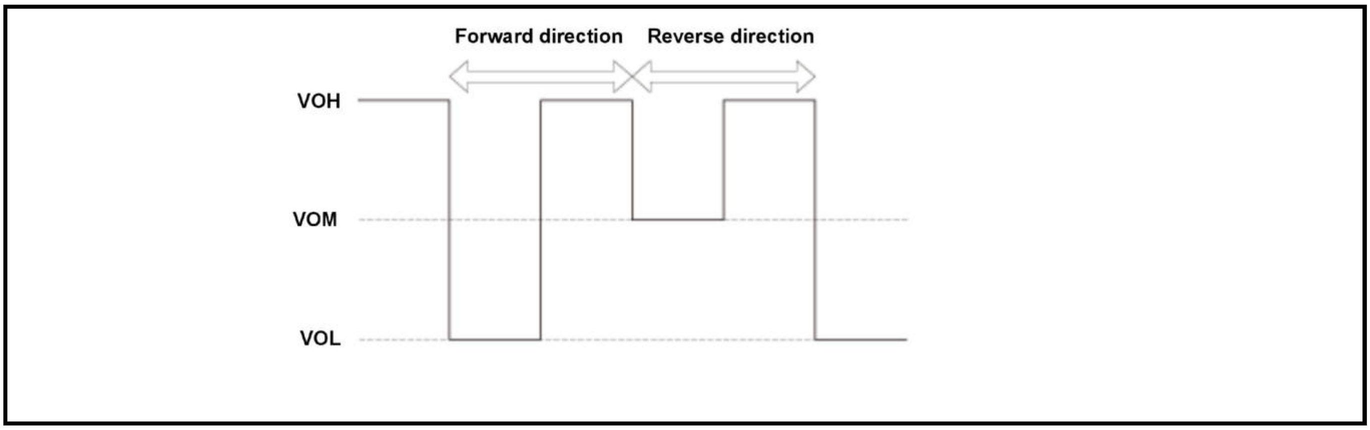

Tr1	Tr2	Pulse signal voltage level
OFF	OFF	VOH
OFF	ON	VOM
ON	OFF	VOL

The CVT speed sensor is attached to the outside of the torque converter housing. The CVT speed sensor consists of a semiconductor to detect the position of the secondary driven gear. When the secondary driven gear rotates, the magnetic flux in the CVT speed sensor changes. The changes of magnetic flux are converted into pulsing signals to the transmission control module (TCM). The rotational direction of the secondary driven gear is detected by the voltage level of the pulsing signals. If the driving condition and the detected voltage level of the pulsing signals do not match, the TCM detects a malfunction and stores a DTC.

Monitor Execution, Sequence, Duration, DTC Type

Execution	Continuous
Sequence	None
Duration	2 seconds or more
DTC Type	Two drive cycles, MIL off, Shift position indicator blinks

Enable Conditions

Condition	Minimum	Maximum
Elapsed time after forward clutch engage completion	3 seconds	-
Engine speed [Engine Speed]	500 rpm	-
Drive pulley speed [Input Shaft (Drive Pulley) Speed rpm]	500 rpm	-

Condition	Minimum	Maximum
Forward clutch commanded pressure	295 kPa (3.0 kgf/cm 2, 42.7 psi)	-
Vehicle speed [Vehicle Speed]	19 mph (30 km/h)	-
Shift lever position/mode	D, S, L	
Drive pulley rotational direction [Direction of Drive Pulley Rotation]	Forward direction	
Other	Not when the shift lever is being shifted	

[ ]: HDS Parameter

Malfunction Threshold

The CVT speed sensor outputs [Direction of Secondary-shaft Rotation] a reverse direction signal for at least 2 seconds when driving in forward position.

Possible Cause

NOTE: The causes shown may not be a complete list of all potential problems, and it is possible that there may be other causes.

- CVT speed sensor failure
- TCM internal circuit failure

Confirmation Procedure

Operating Condition

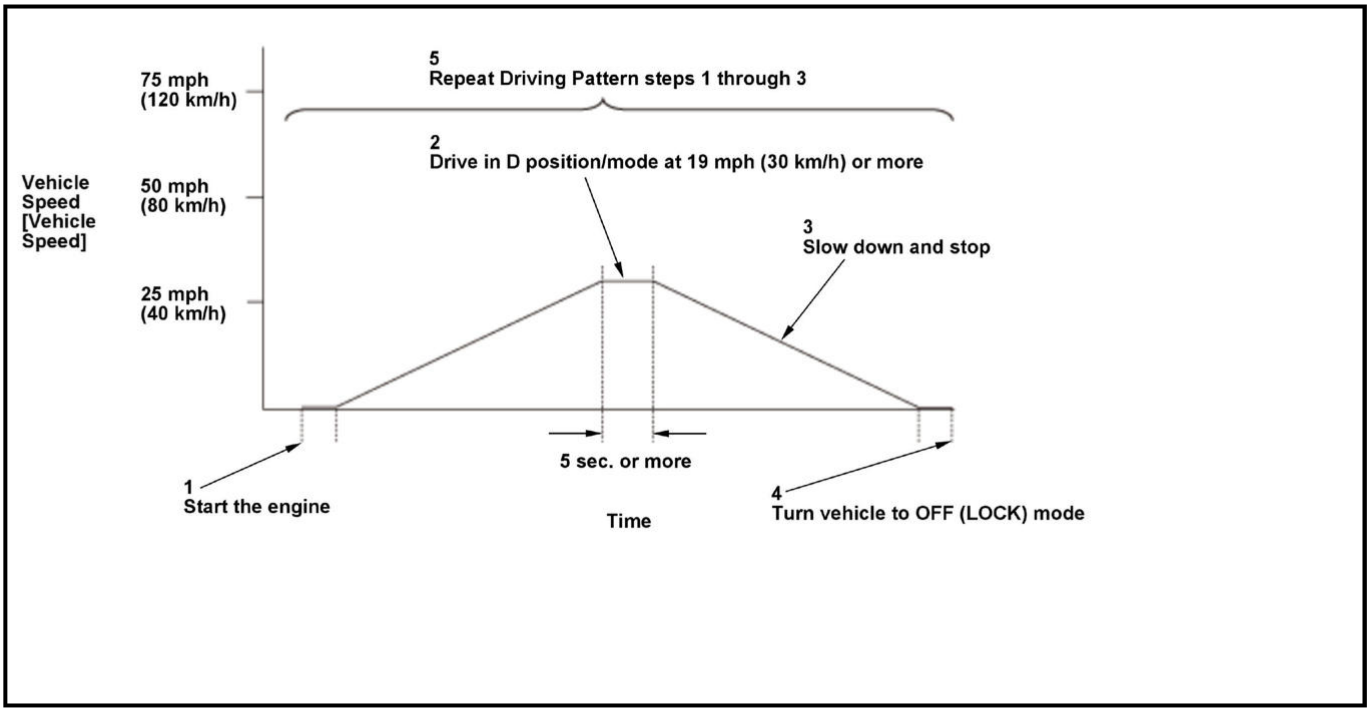

- Start the engine.
- Drive the vehicle in D position/mode at a speed of 19 mph (30 km/h) or more for at least 5 seconds.
- Slow down and stop the vehicle.
- Turn the vehicle to the OFF (LOCK) mode.
- Repeat Driving Pattern steps 1 through 3.

- Drive the vehicle in this manner only if the traffic regulations and ambient conditions allow.

With the HDS

None.

Diagnosis Details

Conditions for setting the DTC

When a malfunction is detected during the first drive cycle, a Pending DTC is stored in the TCM memory. If the malfunction returns in the next (second) drive cycle, the shift position indicator blinks and a Confirmed DTC and the freeze data are stored. The MIL does not come on.

Conditions for clearing the DTC

The shift position indicator comes off by turning the vehicle to the OFF (LOCK) mode. The Pending DTC, the Confirmed DTC, and the freeze data can be cleared with the scan tool Clear command.

DTC P1841 (CVT (TCM))

DTC P1841: CVT Speed Sensor Circuit Reverse Rotation Range/Performance

General Description

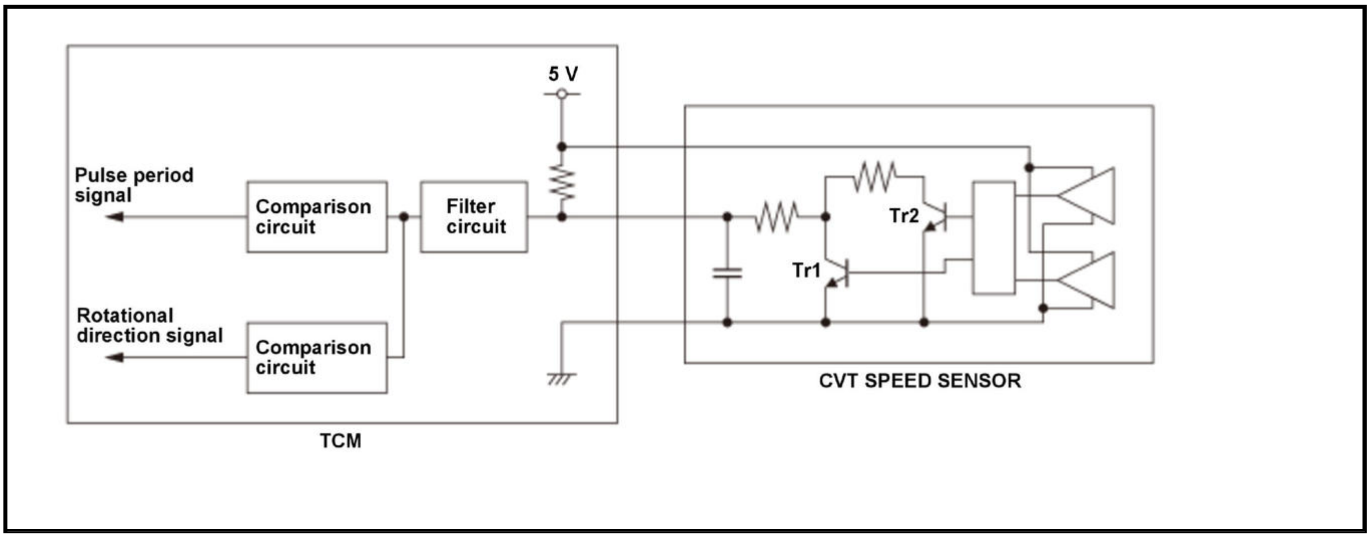
5 V
Pulse period signal
Comparison circuit
Filter circuit
Rotational direction signal
Comparison circuit
TCM
Tr1
Tr2
CVT SPEED SENSOR

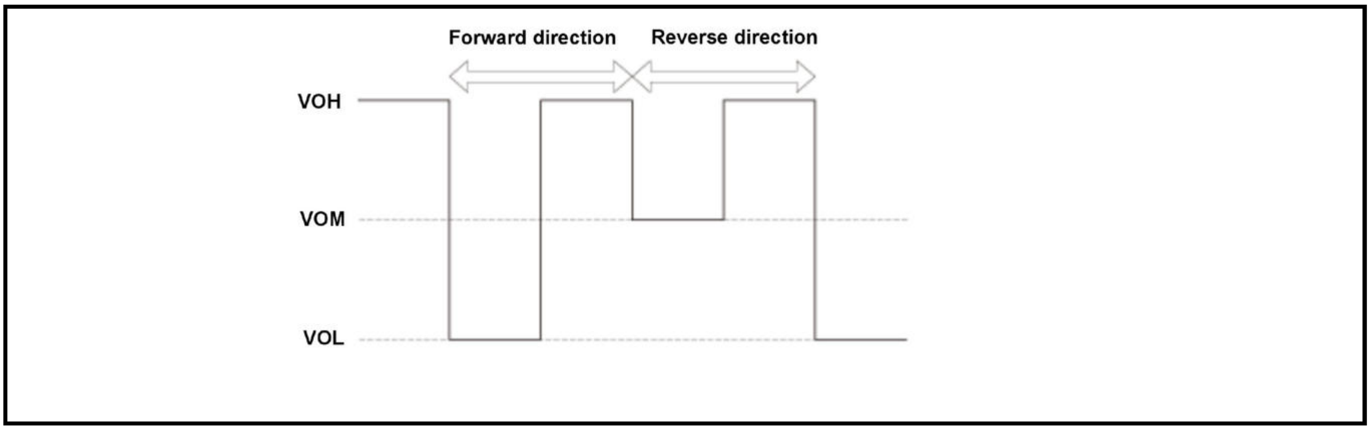

Tr1	Tr2	Pulse signal voltage level
OFF	OFF	VOH
OFF	ON	VOM
ON	OFF	VOL

The CVT speed sensor is attached to the outside of the torque converter housing. The CVT speed sensor consists of a semiconductor to detect the position of the secondary driven gear. When the secondary driven gear rotates, the magnetic flux in the CVT speed sensor changes. The changes of magnetic flux are converted into pulsing signals to the transmission control module (TCM). The rotational direction of the secondary driven gear is detected by the voltage level of the pulsing signals. If the driving condition and the detected voltage level of the pulsing signals do not match, the TCM detects a malfunction and stores a DTC.

Monitor Execution, Sequence, Duration, DTC Type

Execution	Continuous
Sequence	None
Duration	2 seconds or more
DTC Type	Two drive cycles, MIL off, Shift position indicator blinks

Enable Conditions

Condition	Minimum	Maximum
Elapsed time reverse brake engage completion	3 seconds	-
Engine speed [Engine Speed]	500 rpm	-
Drive pulley speed [Input Shaft (Drive Pulley) Speed rpm]	500 rpm	-
Reverse brake commanded pressure	295 kPa (3.0 kgf/cm 2, 42.7 psi)	-
Vehicle speed [Vehicle Speed]	19 mph (30 km/h)	-
Shift lever position/mode	R	
Drive pulley rotational direction [Direction of Drive Pulley Rotation]	Reverse direction	
Other	Not when the shift lever is being shifted	

[ ]: HDS Parameter

Malfunction Threshold

The CVT speed sensor outputs [Direction of Secondary-shaft Rotation] a forward direction signal for at least 2 seconds when driving in reverse position.

Possible Cause

NOTE: The causes shown may not be a complete list of all potential problems, and it is possible that there may be other causes.

- CVT speed sensor failure
- TCM internal circuit failure

Confirmation Procedure

Operating Condition

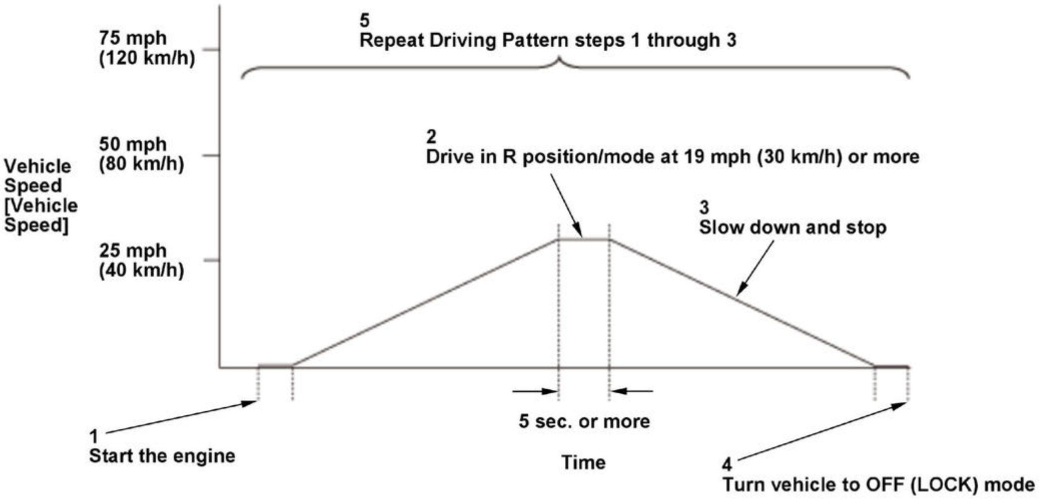

- Start the engine.
- Drive the vehicle in R position/mode at a speed of 19 mph (30 km/h) or more for at least 5 seconds.
- Slow down and stop the vehicle.
- Turn the vehicle to the OFF (LOCK) mode.
- Repeat Driving Pattern steps 1 through 3.

- To avoid risks by a reverse run, do the Driving Pattern with the vehicle raised on a lift to free the wheels and disable the VSA function if equipped.

With the HDS

None.

Diagnosis Details

Conditions for setting the DTC

When a malfunction is detected during the first drive cycle, a Pending DTC is stored in the TCM memory. If the malfunction returns in the next (second) drive cycle, the shift position indicator blinks and a Confirmed DTC and the freeze data are stored. The MIL does not come on.

Conditions for clearing the DTC

The shift position indicator comes off by turning the vehicle to the OFF (LOCK) mode. The Pending DTC, the Confirmed DTC, and the freeze data can be cleared with the scan tool Clear command.

DTC P1844 (CVT (TCM))

DTC P1844: CVT Input Shaft Speed Sensor Circuit Forward Rotation Range/Performance

General Description

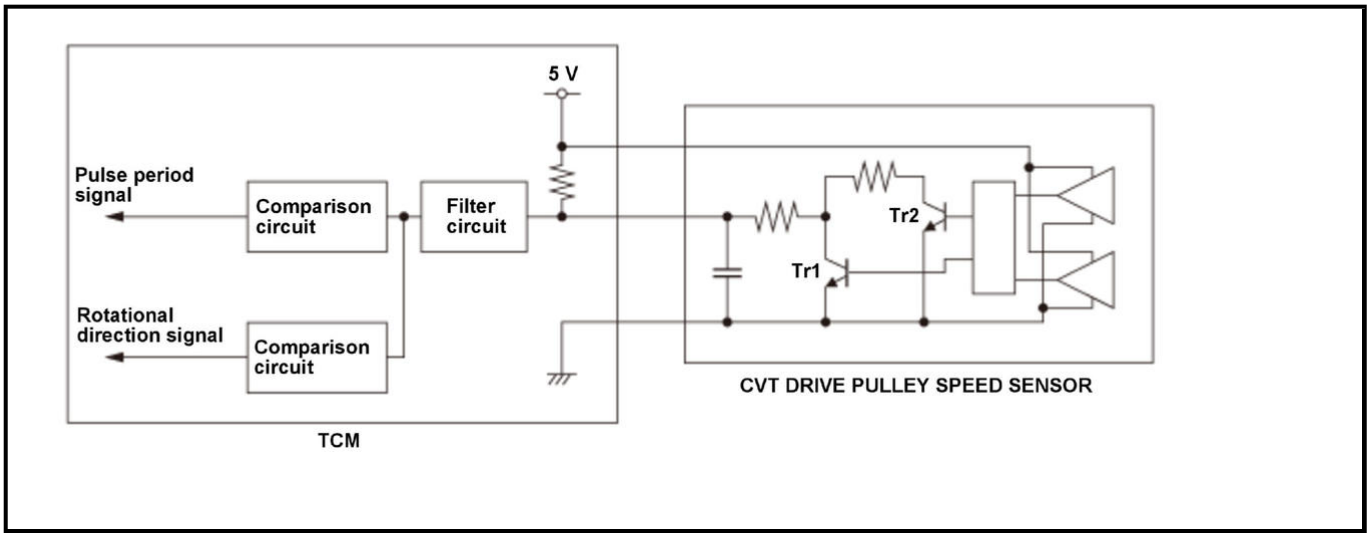
5 V
Pulse period signal
Comparison circuit
Filter circuit
Rotational direction signal
Comparison circuit
TCM
Tr2
Tr1
CVT DRIVE PULLEY SPEED SENSOR

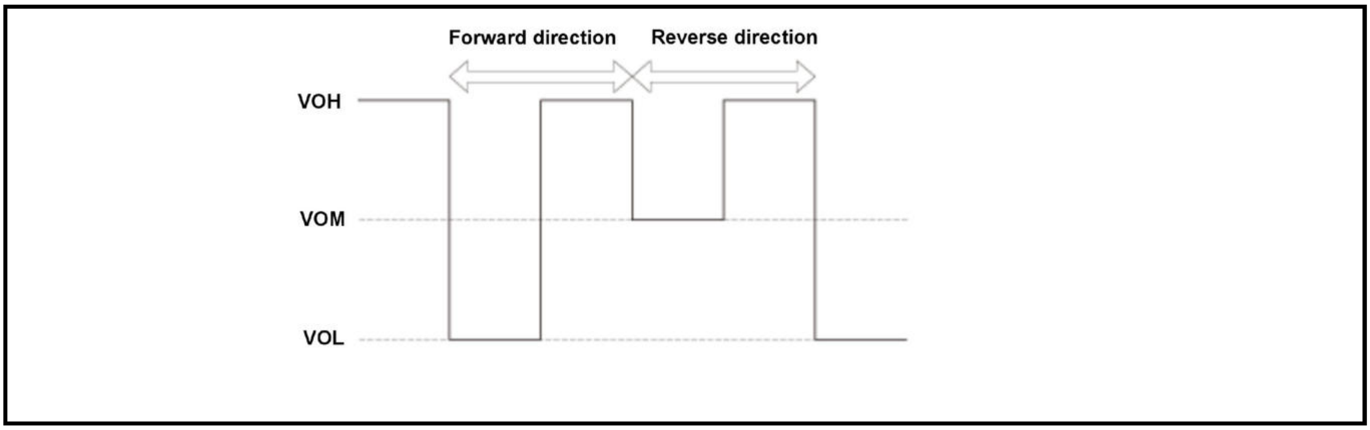

Tr1	Tr2	Pulse signal voltage level
OFF	OFF	VOH
OFF	ON	VOM
ON	OFF	VOL

The CVT drive pulley speed sensor is attached to the outside of the end cover. The CVT drive pulley speed sensor consists of a semiconductor to detect the position of the drive pulley. When the drive pulley rotates, the magnetic flux in the CVT drive pulley speed sensor changes. The changes of magnetic flux are converted into pulsing signals to the transmission control module (TCM). The rotational direction of the drive pulley is detected by the voltage level of the pulsing signals. If the driving condition and the detected voltage level of the pulsing signals do not match, the TCM detects a malfunction and stores a DTC.

Monitor Execution, Sequence, Duration, DTC Type

Execution	Continuous
Sequence	None
Duration	2 seconds or more
DTC Type	Two drive cycles, MIL off, Shift position indicator blinks

Enable Conditions

Condition	Minimum	Maximum
Elapsed time after forward clutch engage completion	3 seconds	-
Engine speed [Engine Speed]	500 rpm	-
Forward clutch commanded pressure	295 kPa (3.0 kgf/cm 2, 42.7 psi)	-

Condition	Minimum	Maximum
Vehicle speed [Vehicle Speed]	19 mph (30 km/h)	-
Shift lever position/mode	D, S, L	
Other	Not when the shift lever is being shifted	
	Rotation speed [Secondary Shaft Speed 1 (rpm)] measured by CVT speed sensor is more than 500 rpm	
	Rotational direction [Direction of Secondary-shaft Rotation] measured by CVT speed sensor is forward direction	

[ ]: HDS Parameter

Malfunction Threshold

The CVT drive pulley speed sensor outputs [Direction of Drive Pulley Rotation] a reverse direction signal for at least 2 seconds when driving in forward position.

Possible Cause

NOTE: The causes shown may not be a complete list of all potential problems, and it is possible that there may be other causes.

- CVT drive pulley speed sensor failure
- TCM internal circuit failure

Confirmation Procedure

Operating Condition

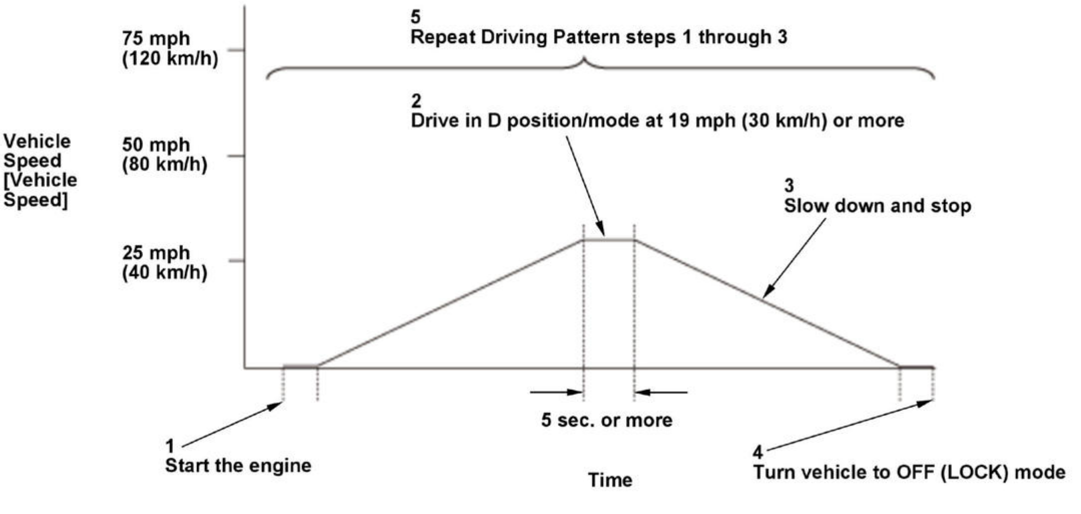

- Start the engine.
- Drive the vehicle in D position/mode at a speed of 19 mph (30 km/h) or more for at least 5 seconds.
- Slow down and stop the vehicle.
- Turn the vehicle to the OFF (LOCK) mode.
- Repeat Driving Pattern steps 1 through 3.

- Drive the vehicle in this manner only if the traffic regulations and ambient conditions allow.

With the HDS

None.

Diagnosis Details

Conditions for setting the DTC

When a malfunction is detected during the first drive cycle, a Pending DTC is stored in the TCM memory. If the malfunction returns in the next (second) drive cycle, the shift position indicator blinks and a Confirmed DTC and the freeze data are stored. The MIL does not come on.

Conditions for clearing the DTC

The shift position indicator comes off by turning the vehicle to the OFF (LOCK) mode. The Pending DTC, the Confirmed DTC, and the freeze data can be cleared with the scan tool Clear command.

DTC P1845 (CVT (TCM))

DTC P1845: CVT Input Shaft Speed Sensor Circuit Reverse Rotation Range/Performance

General Description

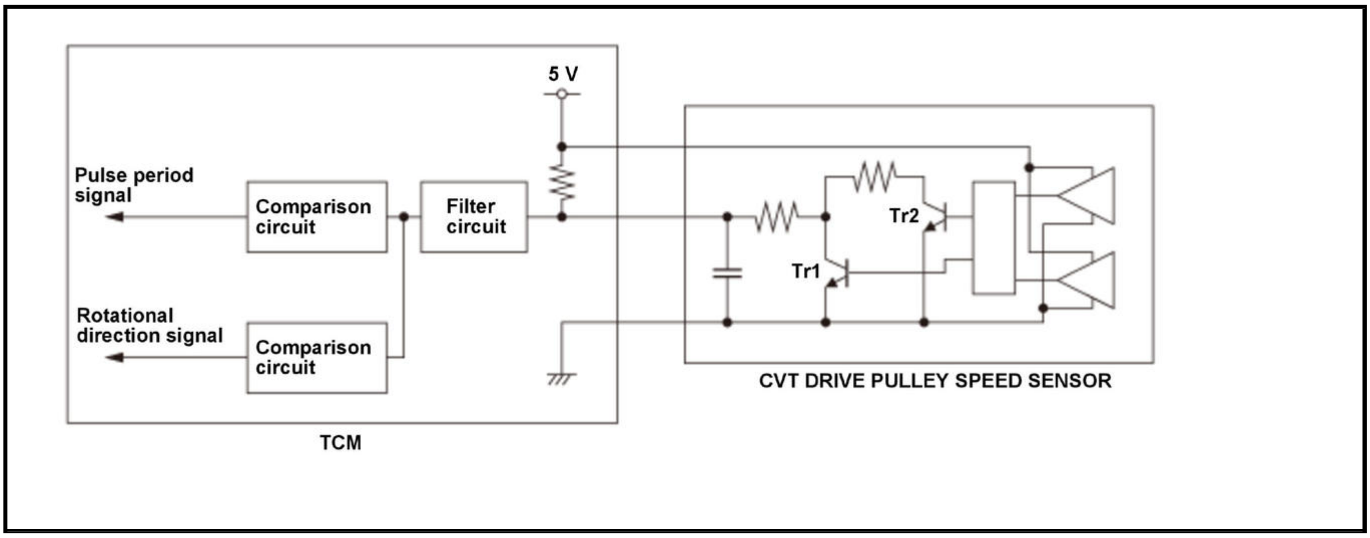
5 V
Pulse period signal
Comparison circuit
Filter circuit
Rotational direction signal
Comparison circuit
Tr2
Tr1
CVT DRIVE PULLEY SPEED SENSOR
TCM

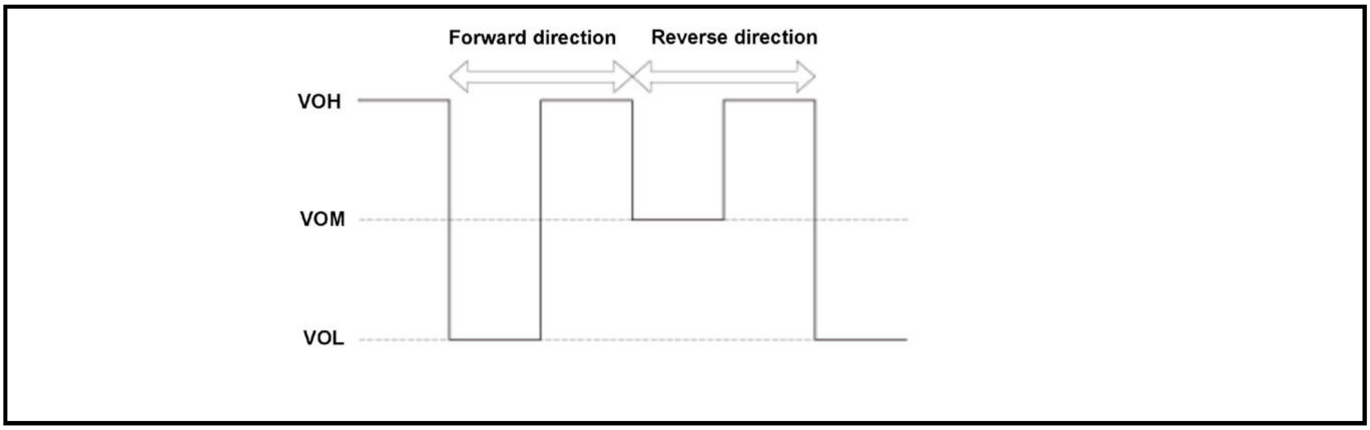

Tr1	Tr2	Pulse signal voltage level
OFF	OFF	VOH
OFF	ON	VOM
ON	OFF	VOL

The CVT drive pulley speed sensor is attached to the outside of the end cover. The CVT drive pulley speed sensor consists of a semiconductor to detect the position of the drive pulley. When the drive pulley rotates, the magnetic flux in the CVT drive pulley speed sensor changes. The changes of magnetic flux are converted into pulsing signals to the transmission control module (TCM). The rotational direction of the drive pulley is detected by the voltage level of the pulsing signals. If the driving condition and the detected voltage level of the pulsing signals do not match, the TCM detects a malfunction and stores a DTC.

Monitor Execution, Sequence, Duration, DTC Type

Execution	Continuous
Sequence	None
Duration	2 seconds or more
DTC Type	Two drive cycles, MIL off, Shift position indicator blinks

Enable Conditions

Condition	Minimum	Maximum
Elapsed time reverse brake engage completion	3 seconds	-
Engine speed [Engine Speed]	500 rpm	-
Reverse brake commanded pressure	295 kPa (3.0 kgf/cm 2, 42.7 psi)	-
Vehicle speed [Vehicle Speed]	19 mph (30 km/h)	-
Shift lever position/mode	R	
Other	Not when the shift lever is being shifted	
	Rotation speed [Secondary Shaft Speed 1 (rpm)] measured by CVT speed sensor is more than 500 rpm	
	Rotational direction [Direction of Secondary-shaft Rotation] measured by CVT speed sensor is reverse direction	

[ ]: HDS Parameter

Malfunction Threshold

The CVT drive pulley speed sensor outputs [Direction of Drive Pulley Rotation] a forward direction signal for at least 2 seconds when driving in reverse position.

Possible Cause

NOTE: The causes shown may not be a complete list of all potential problems, and it is possible that there may be other causes.

- CVT drive pulley speed sensor failure
- TCM internal circuit failure

Confirmation Procedure

Operating Condition

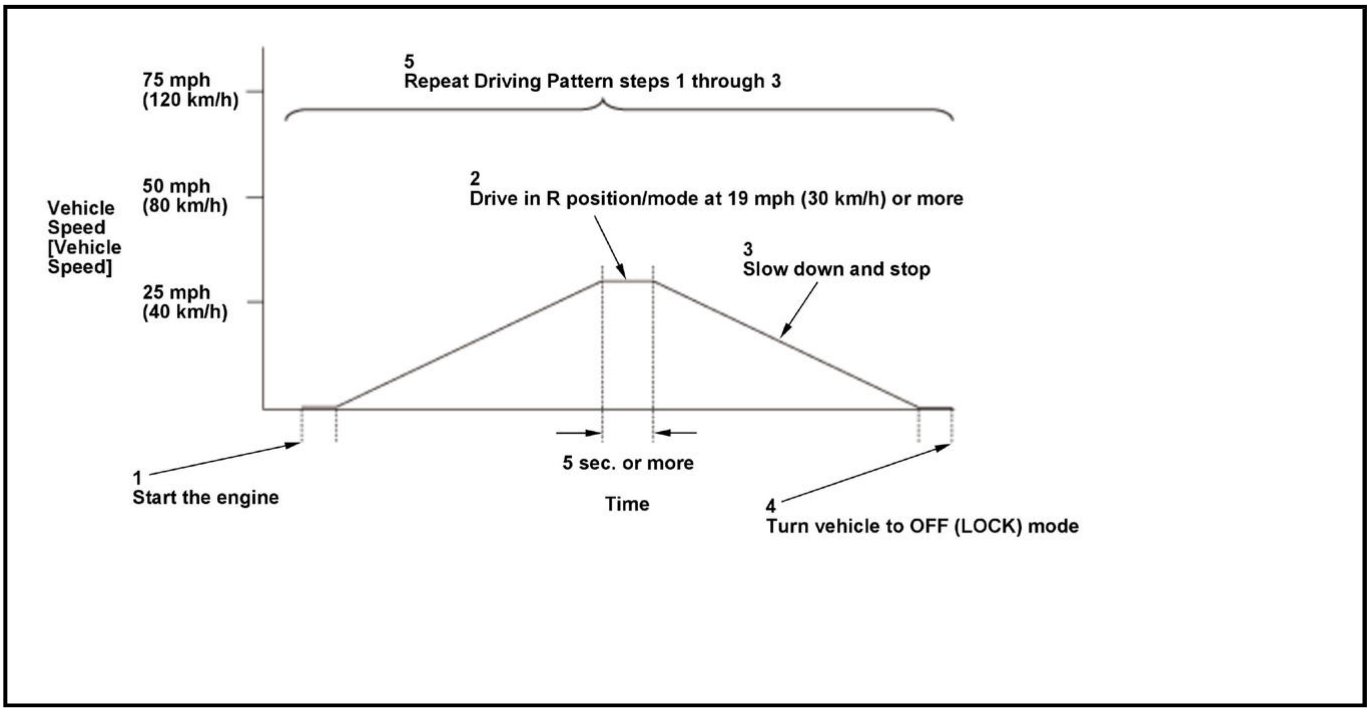

- Start the engine.
- Drive the vehicle in R position/mode at a speed of 19 mph (30 km/h) or more for at least 5 seconds.
- Slow down and stop the vehicle.
- Turn the vehicle to the OFF (LOCK) mode.
- Repeat Driving Pattern steps 1 through 3.

- To avoid risks by a reverse run, do the Driving Pattern with the vehicle raised on a lift to free the wheels and disable the VSA function if equipped.

With the HDS

None.

Diagnosis Details

Conditions for setting the DTC

When a malfunction is detected during the first drive cycle, a Pending DTC is stored in the TCM memory. If the malfunction returns in the next (second) drive cycle, the shift position indicator blinks and a Confirmed DTC and the freeze data are stored. The MIL does not come on.

Conditions for clearing the DTC

The shift position indicator comes off by turning the vehicle to the OFF (LOCK) mode. The Pending DTC, the Confirmed DTC, and the freeze data can be cleared with the scan tool Clear command.

DTC P1855 (CVT (TCM)) (2020 2021)

DTC P1855: Inclination Sensor Circuit Range/Performance

General Description

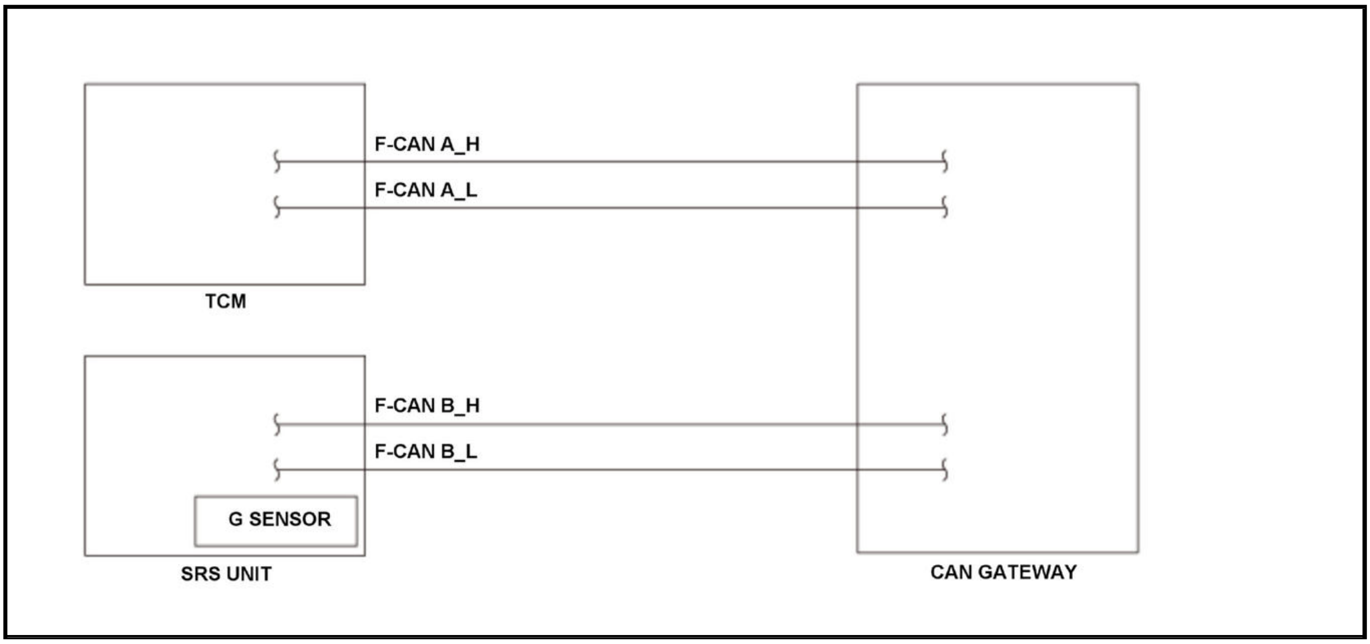

The G sensor is built into the SRS unit. The G sensor detects the road gradient at the time of vehicle stop and outputs information to the transmission control module (TCM). The TCM uses the G sensor output received by F-CAN lines for vehicle creeping torque switching. If the G sensor output voltage is less changed during the condition there is a forward and backward acceleration, the TCM detects a malfunction and stores a DTC.

Monitor Execution, Sequence, Duration, DTC Type

Execution	Continuous
Sequence	None
Duration	Depending on the driving conditions
DTC Type	Two drive cycles, MIL off, Shift position indicator off

Enable Conditions

Condition	Minimum	Maximum
Engine speed [Engine Speed]	500 rpm	-
Difference of front wheel right-and-left average speed and rear wheel right-and-left average speed	-	3 mph (5 km/h)
Shift position/mode	D, S, L	

[ ]: HDS Parameter

Malfunction Threshold

The G sensor output voltage change width is less than 0.03 V after the vehicle is driven at following conditions:

- Drive the vehicle at accelerator pedal position 1/16 or more and vehicle speed more than 4 mph (5 km/h) for at least 1 second.
- Reach the vehicle speed [Vehicle Speed] to 14 mph (21 km/h) or more.
- Decelerate to more than 4 mph (5 km/h) with throttle fully closed for at least 1 second.
- Stop the vehicle.

Possible Cause

NOTE: The causes shown may not be a complete list of all potential problems, and it is possible that there may be other causes.

- SRS unit internal failure (G sensor)

Confirmation Procedure

Operating Condition

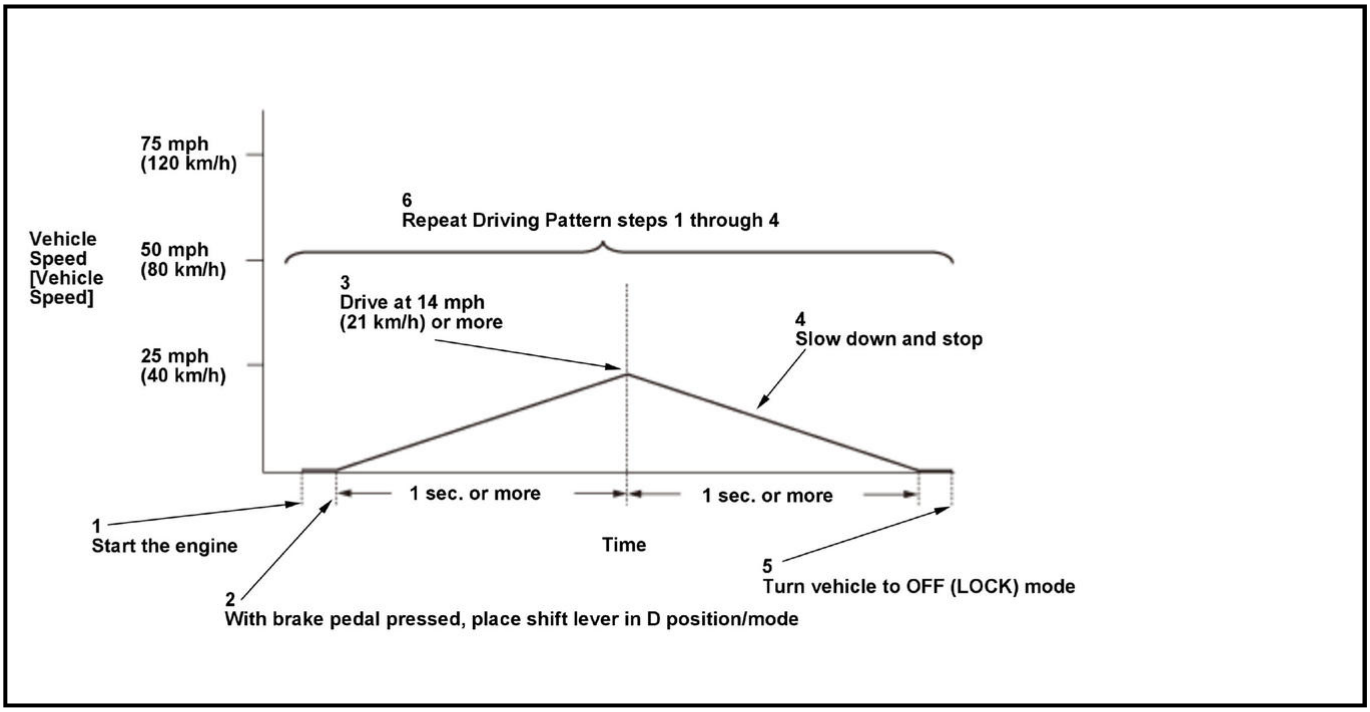

- Start the engine.
- With the brake pedal pressed, place the shift lever in D position/mode.
- Drive the vehicle at a speed of 14 mph (21 km/h) or more. (Accelerate for at least 1 second.)
- Release the accelerator pedal, and slow down the vehicle. (Take at least 1 second to decelerate to more than 4 mph (5 km/h).)
- Turn the vehicle to the OFF (LOCK) mode.
- Repeat Driving Pattern steps 1 through 4.

- Drive the vehicle in this manner only if the traffic regulations and ambient conditions allow.

With the HDS

None.

Diagnosis Details

Conditions for setting the DTC

When a malfunction is detected during the first drive cycle, a Pending DTC is stored in the TCM memory. If the malfunction returns in the next (second) drive cycle, a Confirmed DTC and the freeze data are stored. The MIL does not come on and the shift position indicator does not blink.

Conditions for clearing the DTC

The Pending DTC, the Confirmed DTC, and the freeze data can be cleared with the scan tool Clear command.

DTC P1890 (CVT (TCM))

DTC P1890: CVT Speed Control System

General Description

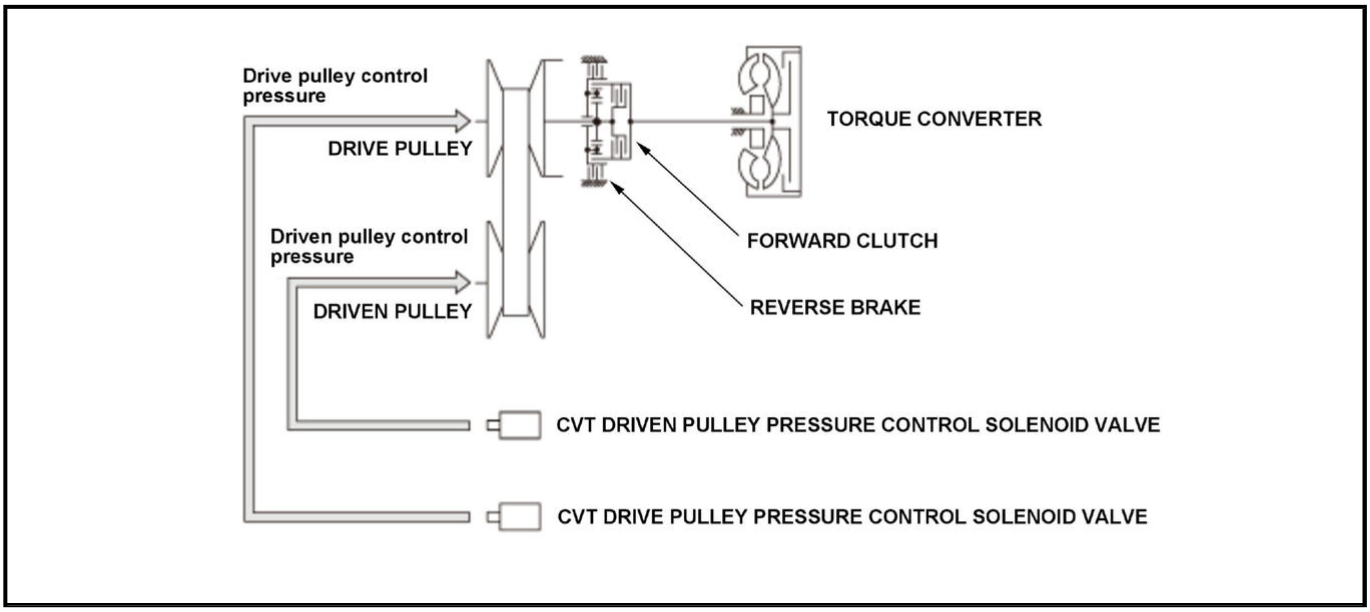
Drive pulley control pressure
DRIVE PULLEY
Driven pulley control pressure
DRIVEN PULLEY
TORQUE CONVERTER
FORWARD CLUTCH
REVERSE BRAKE
CVT DRIVEN PULLEY PRESSURE CONTROL SOLENOID VALVE
CVT DRIVE PULLEY PRESSURE CONTROL SOLENOID VALVE

The shift control system controls each gear position using a map stored in the transmission control module (TCM) memory. The shift control system controls the CVT drive pulley pressure control solenoid valve and the CVT driven pulley pressure control solenoid valve based on vehicle speed and the throttle position to keep the drive pulley speed close to the target rpm. It does this by varying the hydraulic pressure applied to the drive and driven pulleys and providing feedback on the difference between the target drive pulley speed and the actual drive pulley speed when driving. It supplies high hydraulic pressure to the driven pulley and enlarges the driven pulley belt diameter when shifting to a lower ratio. It supplies high hydraulic pressure to the drive pulley and enlarges the drive pulley belt diameter when shifting to a higher ratio. If the difference between the target drive pulley speed and the actual drive pulley speed falls within a certain range when in D, S, L, or R position/mode, the TCM detects a malfunction in the CVT shift function and stores a DTC.

Monitor Execution, Sequence, Duration, DTC Type

Execution	Continuous
Sequence	None
Duration	18 seconds or more
DTC Type	One drive cycle, MIL off, Shift position indicator blinks

Enable Conditions

Condition	Minimum	Maximum
Drive pulley speed [Input Shaft (Drive Pulley) Speed rpm]	576 rpm	-
Vehicle speed [Vehicle Speed]	9 mph (14 km/h)	-
Accelerator pedal position	4.7 deg.	-
Shift lever position/mode	D, S, L, R	

[ ]: HDS Parameter

Malfunction Threshold

The difference between the target drive pulley speed and the actual drive pulley speed [Input Shaft (Drive Pulley) Speed rpm] is 500 rpm or more for at least 18 seconds.

Possible Cause

NOTE: The causes shown may not be a complete list of all potential problems, and it is possible that there may be other causes.

- CVT shift function failure

Confirmation Procedure

Operating Condition

- Start the engine.
- Accelerate gradually to 37 mph (60 km/h) and drive at least 1 minute at 37 mph (60 km/h).

- Drive the vehicle in this manner only if the traffic regulations and ambient conditions allow.

With the HDS

None.

Diagnosis Details

Conditions for setting the DTC

When a malfunction is detected, the shift position indicator blinks and a Pending DTC, a Confirmed DTC, and the freeze data are stored in the TCM memory. The MIL does not come on.

Conditions for clearing the DTC

The shift position indicator comes off by turning the vehicle to the OFF (LOCK) mode. The Pending DTC, the Confirmed DTC, and the freeze data can be cleared with the scan tool Clear command.

DTC P1898 (CVT (TCM))

DTC P1898: CVT Drive Pulley Pressure Control Valve Stuck ON or CVT Driven Pulley Pressure Control Valve Stuck OFF

General Description

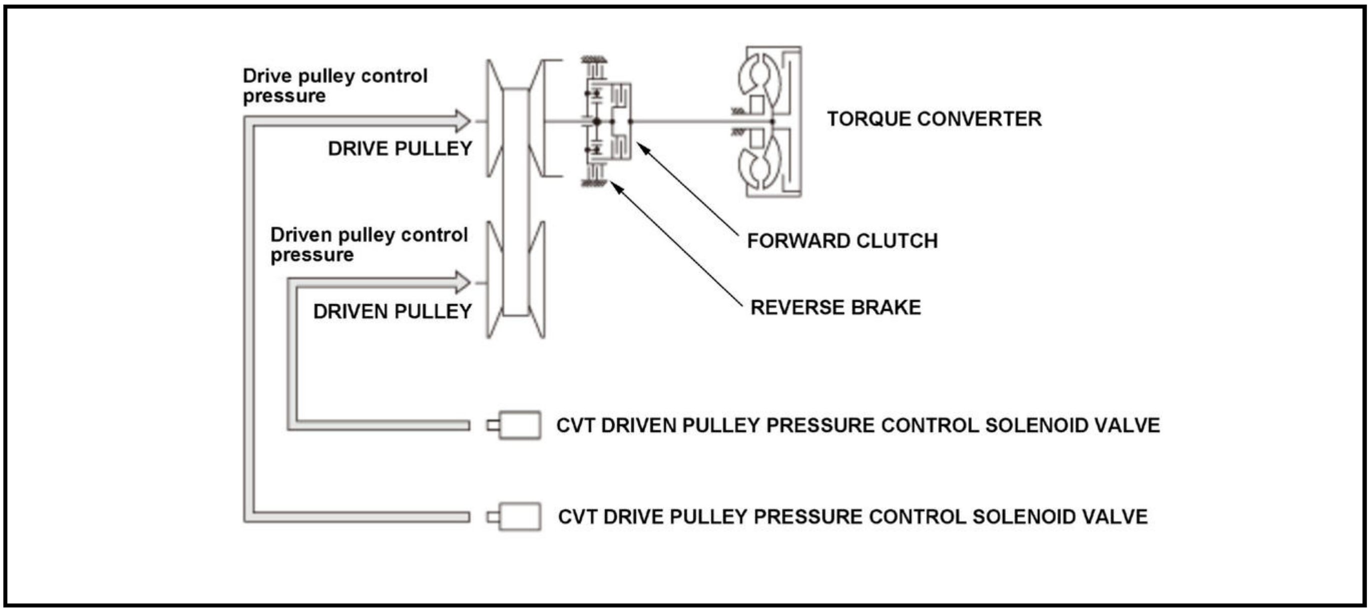
Drive pulley control pressure
DRIVE PULLEY
TORQUE CONVERTER
FORWARD CLUTCH
Driven pulley control pressure
DRIVEN PULLEY
REVERSE BRAKE
CVT DRIVEN PULLEY PRESSURE CONTROL SOLENOID VALVE
CVT DRIVE PULLEY PRESSURE CONTROL SOLENOID VALVE

The CVT drive pulley pressure control solenoid valve and the CVT driven pulley pressure control solenoid valve control hydraulic pressure. The CVT drive pulley pressure control solenoid valve and the CVT driven pulley pressure control solenoid valve are controlled by duty cycle output. The spool in the CVT drive pulley pressure control solenoid valve and the CVT driven pulley pressure control solenoid valve moves the valve according to the current, and produces hydraulic pressure in proportion to the current. The transmission control module (TCM) measures the current that passes through the CVT drive pulley pressure control solenoid valve and the CVT driven pulley pressure control solenoid valve and uses feedback control to compensate for the difference between the measured current and the commanded one. To shift the transmission properly, the TCM outputs a drive/driven pulley hydraulic pressure control signal. If the pulley ratio is out of specified range from the vehicle stopped with the forward clutch engaged to the vehicle running, the TCM detects a CVT drive pulley pressure control solenoid valve stuck ON failure or a CVT driven pulley pressure control solenoid valve stuck OFF and stores a DTC.

Monitor Execution, Sequence, Duration, DTC Type

Execution	Continuous
Sequence	None
Duration	Depending on the driving conditions
DTC Type	Two drive cycles, MIL on, Shift position indicator blinks

Enable Conditions

Condition	Minimum	Maximum
Engine speed [Engine Speed]	500 rpm	-
Vehicle speed [Vehicle Speed]	-	3 mph (5 km/h)*
	9 mph (13 km/h)**	-
Accelerator pedal position	2.7 deg.	-
Shift lever position/mode	D	

*: Symptom 1

**: Symptom 2

[ ]: HDS Parameter

Malfunction Threshold

One of these symptoms occurs.

Symptom	Vehicle conditions	TCM detection
1	Stopped with forward clutch engaged	Pulley ratio [Pulley Ratio] is more than 2, or less than 3 for at least 0.4 second
2	Running	Pulley ratio [Pulley Ratio] is more than 1.8, or less than 3

Possible Cause

NOTE: The causes shown may not be a complete list of all potential problems, and it is possible that there may be other causes.

- CVT drive pulley pressure control solenoid valve stuck on
- CVT driven pulley pressure control solenoid valve stuck off

Confirmation Procedure

Operating Condition

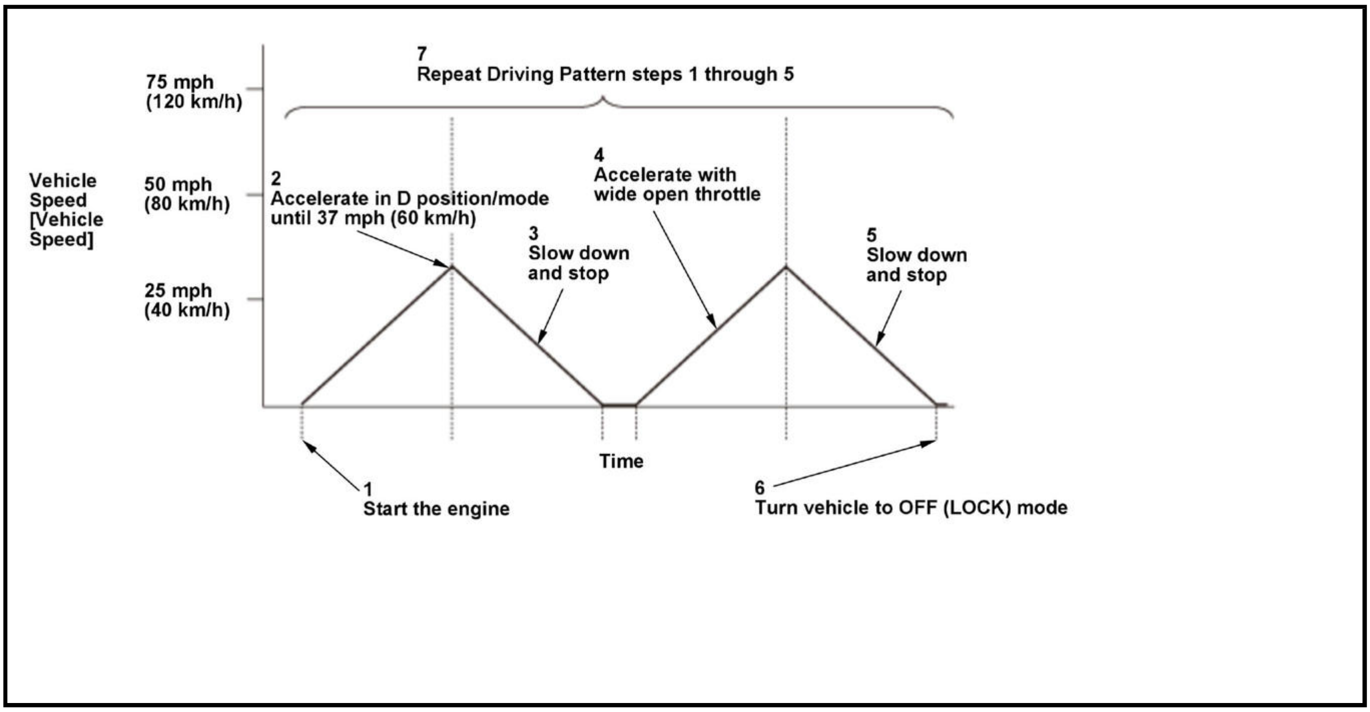
Vehicle Speed [Vehicle Speed]
75 mph (120 km/h)
50 mph (80 km/h)
25 mph (40 km/h)
7
Repeat Driving Pattern steps 1 through 5
2
Accelerate in D position/mode until 37 mph (60 km/h)
4
Accelerate with wide open throttle
3
Slow down and stop
5
Slow down and stop
Time
1
Start the engine
6
Turn vehicle to OFF (LOCK) mode

- Start the engine.
- Accelerate the vehicle in D position/mode until the speed reaches 37 mph (60 km/h).
- Slow down and stop the vehicle.
- Accelerate the vehicle with wide open throttle.
- Slow down and stop the vehicle.
- Turn the vehicle to the OFF (LOCK) mode.
- Repeat Driving Pattern steps 1 through 5.

- Drive the vehicle in this manner only if the traffic regulations and ambient conditions allow.

With the HDS

None.

Diagnosis Details

Conditions for setting the DTC

When a malfunction is detected during the first drive cycle, a Pending DTC is stored in the TCM memory. If the malfunction returns in the next (second) drive cycle, the MIL comes on, the shift position indicator blinks, and a Confirmed DTC and the freeze data are stored.

Conditions for clearing the DTC

The shift position indicator comes off by turning the vehicle to the OFF (LOCK) mode. The MIL is cleared if the malfunction does not return in three consecutive trips in which the diagnostic runs. The MIL, the Pending DTC, the Confirmed DTC, and the freeze data can be cleared with the scan tool Clear command.

DTC P1899 (CVT (TCM))

DTC P1899: CVT Drive Pulley Pressure Control Valve Stuck OFF or CVT Driven Pulley Pressure Control Valve Stuck ON

General Description

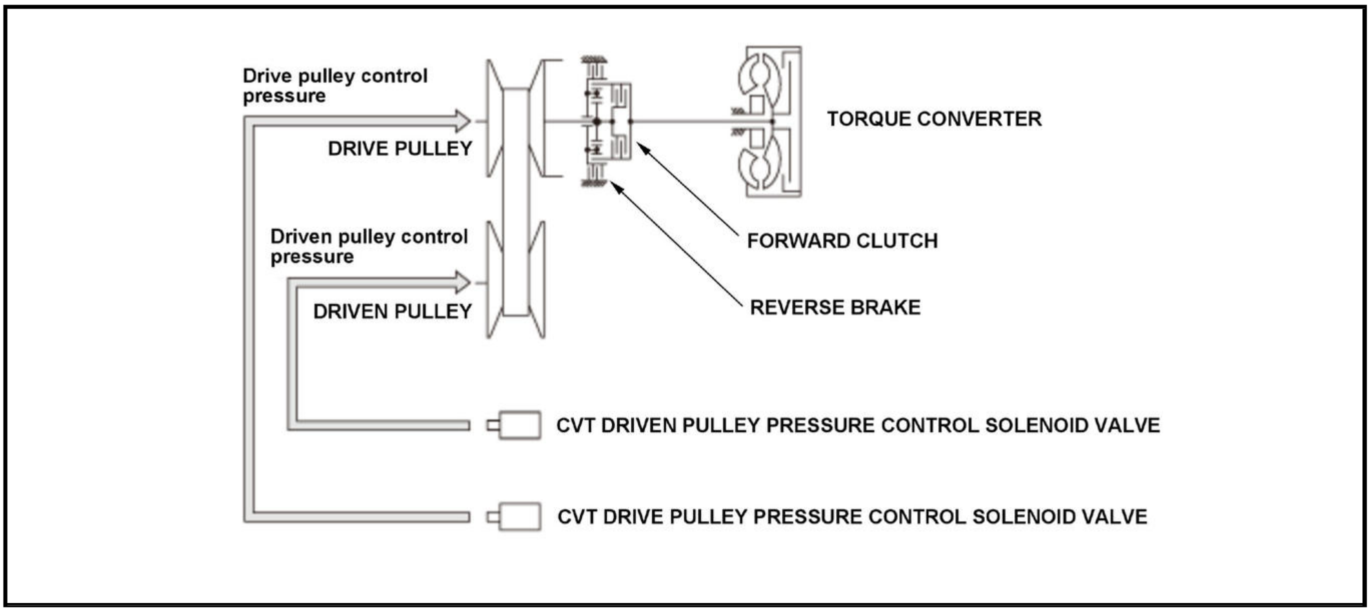
Drive pulley control pressure
DRIVE PULLEY
Driven pulley control pressure
DRIVEN PULLEY
TORQUE CONVERTER
FORWARD CLUTCH
REVERSE BRAKE
CVT DRIVEN PULLEY PRESSURE CONTROL SOLENOID VALVE
CVT DRIVE PULLEY PRESSURE CONTROL SOLENOID VALVE

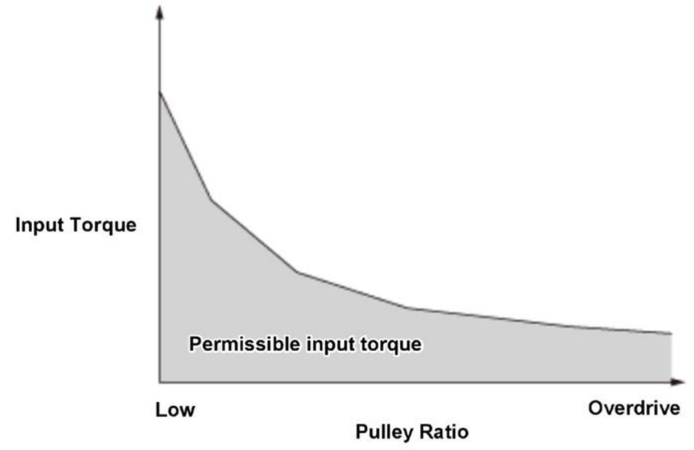

The CVT drive pulley pressure control solenoid valve and the CVT driven pulley pressure control solenoid valve control hydraulic pressure. The CVT drive pulley pressure control solenoid valve and the CVT driven pulley pressure control solenoid valve are controlled by duty cycle output. The spool in the CVT drive pulley pressure control solenoid valve and the CVT driven pulley pressure control solenoid valve moves the valve according to the current, and produces hydraulic pressure in proportion to the current. The transmission control module (TCM) measures the current that passes through the CVT drive pulley pressure control solenoid valve and the CVT driven pulley pressure control solenoid valve and uses feedback control to compensate for the difference between the measured current and the commanded one. To shift the transmission properly, the TCM outputs a drive/driven pulley hydraulic pressure control signal. If the pulley ratio is overdrive while the vehicle is stopped with the forward clutch engaged, and the estimated input torque when starting is a specified value or less and belt slippage does not occur when driving, the TCM detects a CVT drive pulley pressure control solenoid valve stuck OFF failure or a CVT driven pulley pressure control solenoid valve stuck ON and stores a DTC.

Monitor Execution, Sequence, Duration, DTC Type

Execution	Continuous
Sequence	None

Duration	Depending on the driving conditions
DTC Type	Two drive cycles, MIL on, Shift position indicator blinks

Enable Conditions

Condition	Minimum	Maximum
Engine speed [Engine Speed]	500 rpm	-
Vehicle speed [Vehicle Speed]*	-	3 mph (5 km/h)
Accelerator pedal position	-	2.7 deg.*
	4 deg.**	-
Shift lever position/mode	D	

*: Symptom 1

**: Symptom 2

[ ]: HDS Parameter

Malfunction Threshold

One of these conditions occurs:

- Both Symptom 1 and Symptom 2-A occur.
- Both Symptom 1 and Symptom 2-B occur.

Symptom		Vehicle conditions	TCM detection
1		Stopped with forward clutch engaged	Pulley ratio [Pulley Ratio] is more than 0.3, or less than 0.6 for at least 2.5 seconds
2	2-A	Starting	Low input torque
	2-B	Running	Pulley ratio [Pulley Ratio] is more than 3.0

Possible Cause

NOTE: The causes shown may not be a complete list of all potential problems, and it is possible that there may be other causes.

- CVT drive pulley pressure control solenoid valve stuck off
- CVT driven pulley pressure control solenoid valve stuck on

Confirmation Procedure

Operating Condition

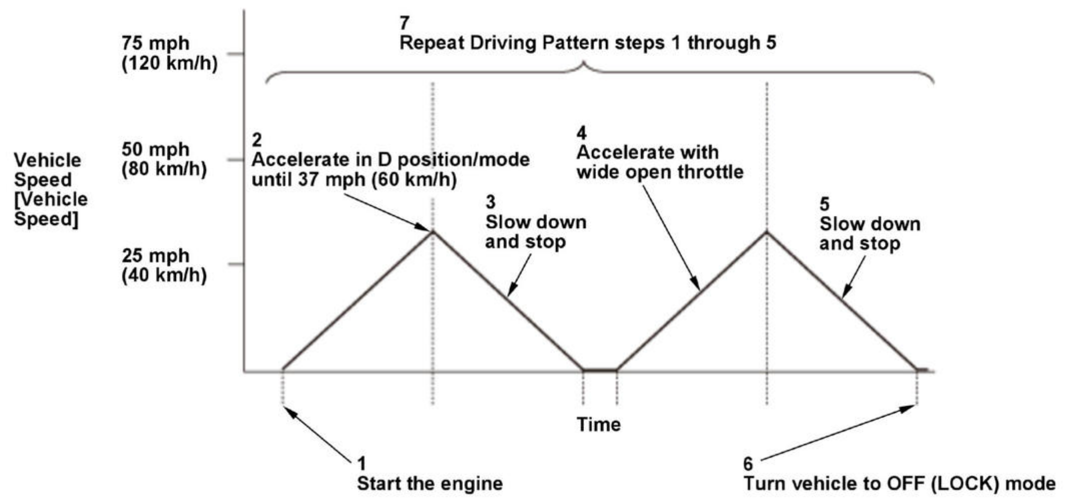

- Start the engine.
- Accelerate the vehicle in D position/mode until the speed reaches 37 mph (60 km/h).
- Slow down and stop the vehicle.
- Accelerate the vehicle with wide open throttle.
- Slow down and stop the vehicle.
- Turn the vehicle to the OFF (LOCK) mode.
- Repeat Driving Pattern steps 1 through 5.

- Drive the vehicle in this manner only if the traffic regulations and ambient conditions allow.

With the HDS

None.

Diagnosis Details

Conditions for setting the DTC

When a malfunction is detected during the first drive cycle, a Pending DTC is stored in the TCM memory. If the malfunction returns in the next (second) drive cycle, the MIL comes on, the shift position indicator blinks, and a Confirmed DTC and the freeze data are stored.

Conditions for clearing the DTC

The shift position indicator comes off by turning the vehicle to the OFF (LOCK) mode. The MIL is cleared if the malfunction does not return in three consecutive trips in which the diagnostic runs. The MIL, the Pending DTC, the Confirmed DTC, and the freeze data can be cleared with the scan tool Clear command.

DTC P1900 (CVT (TCM)) (2020 2021)

DTC P1900: EOP-RELAY High Input

General Description

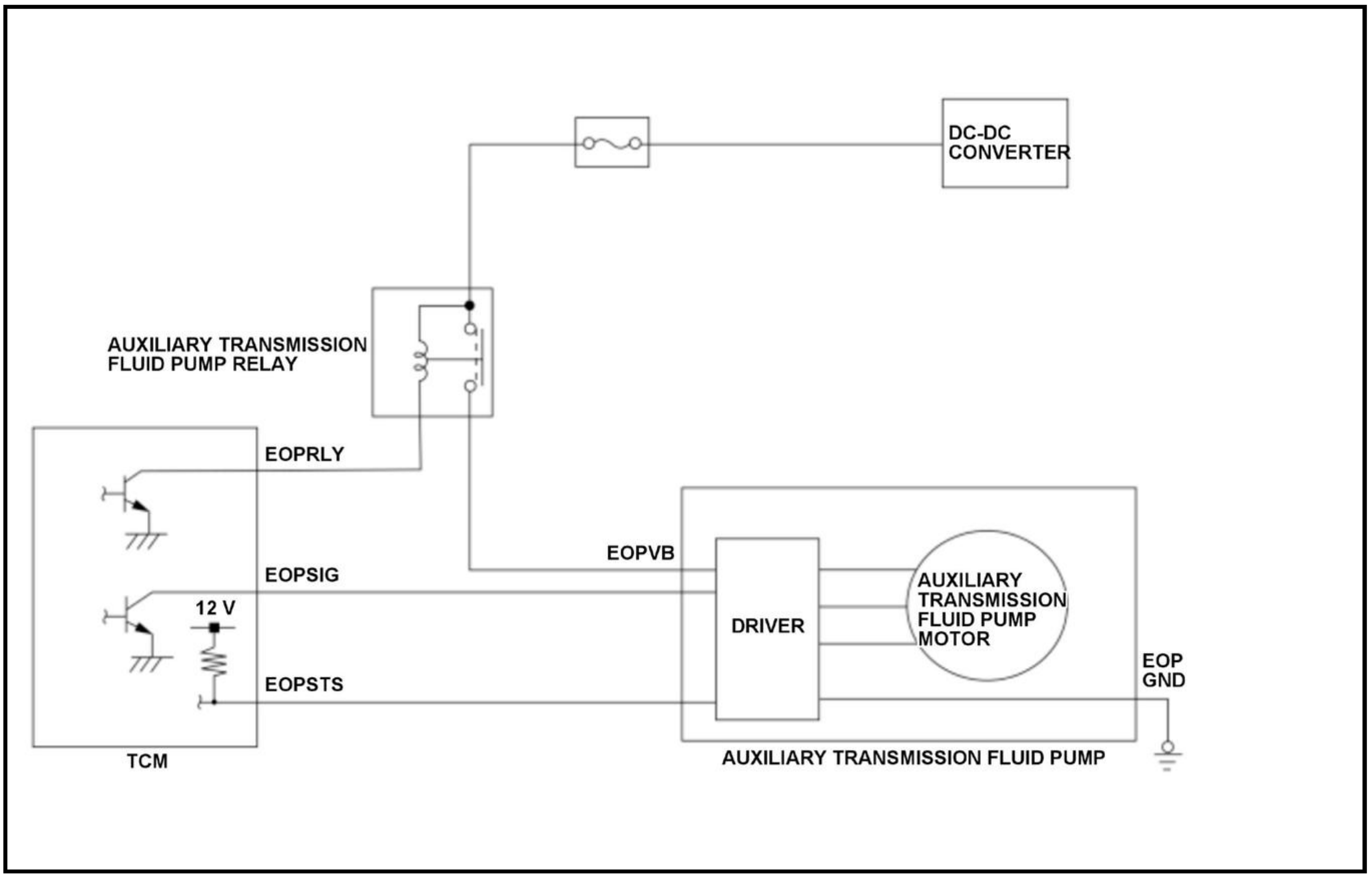
DC-DC CONVERTER
AUXILIARY TRANSMISSION FLUID PUMP RELAY
EOPRLY
EOPSIG
12 V
EOPSTS
TCM
EOPVB
DRIVER
AUXILIARY TRANSMISSION FLUID PUMP MOTOR
EOP GND
AUXILIARY TRANSMISSION FLUID PUMP

The auxiliary transmission fluid pump provides hydraulic pressure to control the CVT instead of the transmission fluid pump that would stop at auto idle stop. The auxiliary transmission fluid pump system consists of the three-phase brushless motor (to drive the fluid pump), the driver, and the auxiliary transmission fluid pump relay. The power source that drives the auxiliary transmission fluid pump is provided from the DC-DC converter via the auxiliary transmission fluid pump relay that is controlled by the transmission control module (TCM). The TCM and the auxiliary transmission fluid pump are connected by two communication lines (EOPSIG, EOPSTS). The TCM sends a start command (90 % duty ratio) or a stop command (5 % duty ratio) to the auxiliary transmission fluid pump by pulse width modulation (PWM) (100 Hz). In accordance to the start (or stop) command from the TCM, the auxiliary transmission fluid pump starts (or stops) the auxiliary transmission fluid pump motor. The auxiliary transmission fluid pump sends its motor speed data to the TCM using the pulse. The auxiliary transmission fluid pump motor rotates at a motor speed of 1, 000 - 5, 000 min-1 (rpm) which varies depending on transmission fluid temperature. The motor speed could be obtained from the product of 30 times pulse frequency (Hz) (ex. 3, 000 min-1 (rpm) when 100 Hz). Just after the vehicle is turned to the ON mode, the auxiliary transmission fluid pump relay is OFF and the output line EOPSTS is HIGH. And then, the auxiliary transmission fluid pump relay turns to ON and the output line EOPSTS turns to LOW. If the auxiliary transmission fluid pump motor speed is at normal speed range for certain period of time when the auxiliary transmission fluid pump relay is ON (EOPSTS: LOW) just after the vehicle is turned to the ON mode, the TCM detects a malfunction and stores a DTC.

Monitor Execution, Sequence, Duration, DTC Type

Execution	Continuous
Sequence	None
Duration	5 seconds or more
DTC Type	Two drive cycles, MIL off, Shift position indicator blinks

Enable Conditions

Condition	Minimum	Maximum
12 volt battery voltage [Battery Voltage]	10 V	-
State of the engine	During auto idle stop operation	

[ ]: HDS Parameter

Malfunction Threshold

The auxiliary transmission fluid pump motor speed is 301 - 8, 737 min-1 (rpm) for at least 5 seconds when the auxiliary transmission fluid pump relay is ON (EOPSTS: LOW) just after the vehicle is turned to the ON mode.

Possible Cause

NOTE: The causes shown may not be a complete list of all potential problems, and it is possible that there may be other causes.

- TCM EOPRLY line short to ground
- Auxiliary transmission fluid pump EOPVB line short to power
- Auxiliary transmission fluid pump relay stuck on
- TCM internal failure

Confirmation Procedure

Operating Condition

- Turn the vehicle to the ON mode, and wait for at least 5 seconds.
- Start the engine and wait for at least 5 seconds in auto idle stop condition.

With the HDS

- Turn the vehicle to the ON mode, and wait for at least 5 seconds.
- Select the Auxiliary Transmission Fluid Pump Test in the Miscellaneous Test Menu, and drive the auxiliary transmission fluid pump for at least 5 seconds with the HDS.

Diagnosis Details

Conditions for setting the DTC

When a malfunction is detected during the first drive cycle, a Pending DTC is stored in the TCM memory. If the malfunction returns in the next (second) drive cycle, the shift position indicator blinks and a Confirmed DTC and the freeze data are stored. The MIL does not come on.

Conditions for clearing the DTC

The shift position indicator comes off by turning the vehicle to the OFF (LOCK) mode. The Pending DTC, the Confirmed DTC, and the freeze data can be cleared with the scan tool Clear command.

DTC P2715 (CVT (TCM))

DTC P2715: Pressure Control Solenoid D Stuck On

General Description

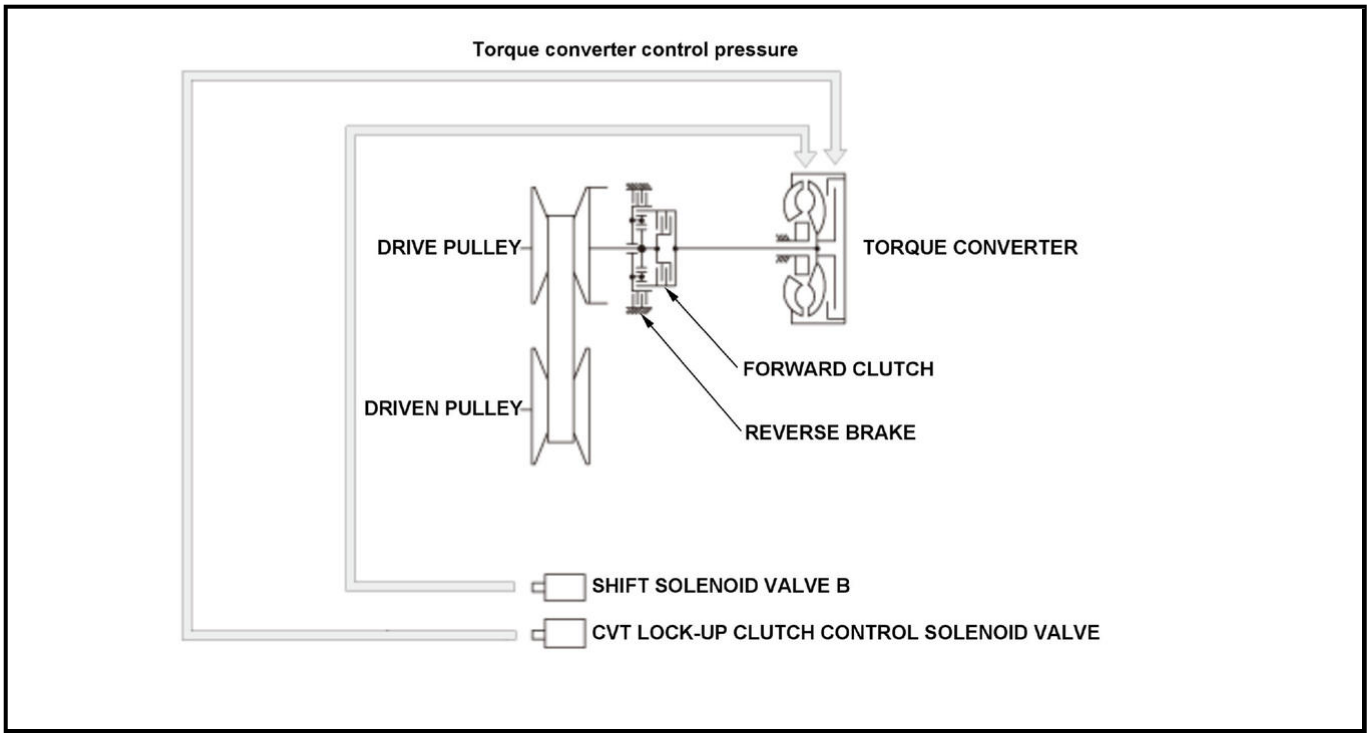
Torque converter control pressure
DRIVE PULLEY
TORQUE CONVERTER
FORWARD CLUTCH
DRIVEN PULLEY
REVERSE BRAKE
SHIFT SOLENOID VALVE B
CVT LOCK-UP CLUTCH CONTROL SOLENOID VALVE

The CVT lock-up clutch control solenoid valve controls hydraulic pressure to the torque converter clutch. The CVT lock-up clutch control solenoid valve is controlled by duty cycle output. The spool in the CVT lock-up clutch control solenoid valve moves the valve according to the current, and produces hydraulic pressure in proportion to the current. To supply proper torque converter clutch hydraulic pressure, the transmission control module (TCM) outputs a CVT lock-up clutch control solenoid valve hydraulic pressure control signal. If the torque converter clutch is judged as stuck ON, the TCM detects a CVT lock-up clutch control solenoid valve stuck ON malfunction and stores a DTC.

Monitor Execution, Sequence, Duration, DTC Type

Execution	Continuous
Sequence	None
Duration	Depending on the driving conditions
DTC Type	Two drive cycles, MIL on, Shift position indicator blinks

Enable Conditions

Condition	Minimum	Maximum
Engine speed [Engine Speed]	500 rpm	-
Vehicle speed [Vehicle Speed]*	-	13 mph (21 km/h)
Acceleration**	-	3.2 ft/s 2 (0.98 m/s 2)
Throttle position	4 deg.	42 deg.
Accelerator pedal position variation	-	13 deg./1 second
Shift lever position/mode	D, S, L	

*: Symptom 1

** : Symptom 2

[ ]: HDS Parameter

Malfunction Threshold

Symptom 2 occurs after Symptom 1 occurs.

- Symptom 1: Actual torque converter slip rate [ETR] is more than 99 %, or less than 130 % for at least 0.6 second when target torque converter slip rate is less than 97 %.
- Symptom 2: Actual torque converter slip rate [ETR] is more than 99 %, or less than 130 % for at least 1 second.

Possible Cause

NOTE: The causes shown may not be a complete list of all potential problems, and it is possible that there may be other causes.

- CVT lock-up clutch control solenoid valve stuck on

Confirmation Procedure

Operating Condition

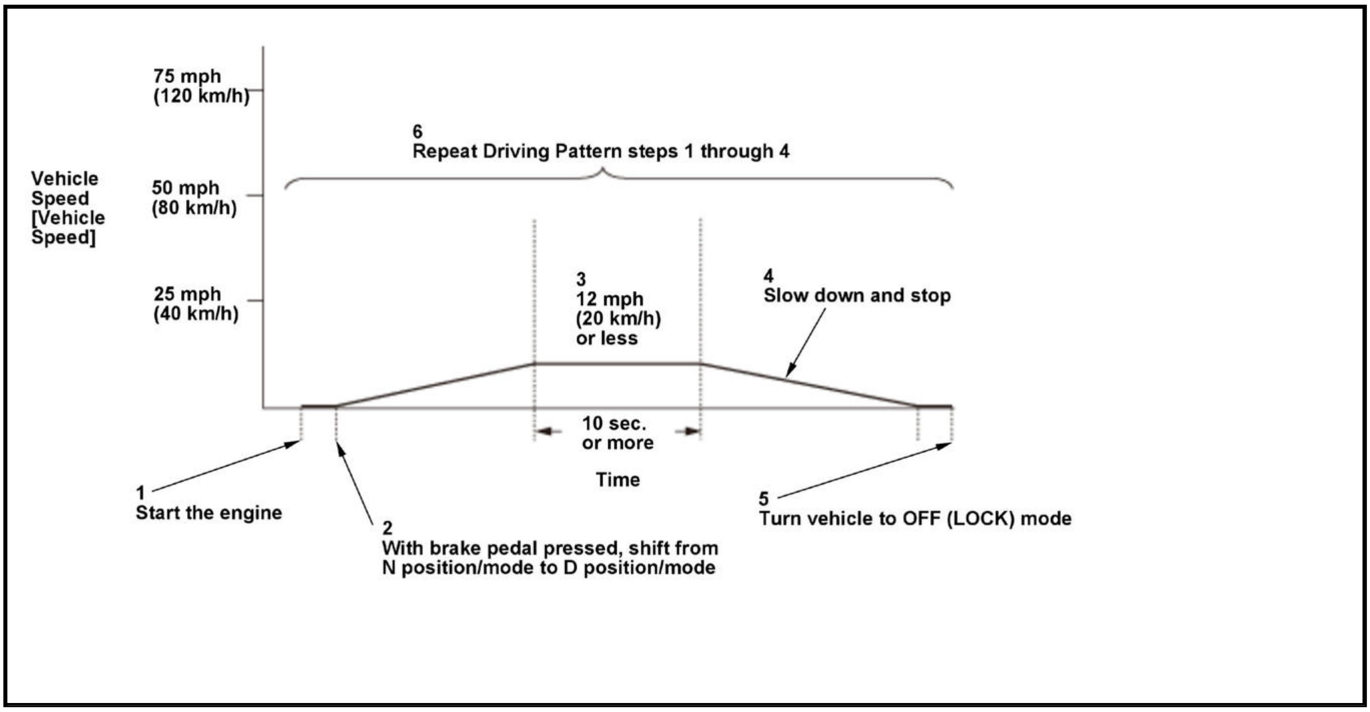

- Start the engine.
- With the brake pedal pressed, place the shift lever in from N position/mode to D position/mode.
- Drive the vehicle at 12 mph (20 km/h) or less for at least 10 seconds.
- Slow down and stop the vehicle.
- Turn the vehicle to the OFF (LOCK) mode.
- Repeat Driving Pattern steps 1 through 4.

- Drive the vehicle in this manner only if the traffic regulations and ambient conditions allow.

With the HDS

None.

Diagnosis Details

Conditions for setting the DTC

When a malfunction is detected during the first drive cycle, a Pending DTC is stored in the TCM memory. If the malfunction returns in the next (second) drive cycle, the MIL comes on, the shift position indicator blinks, and a Confirmed DTC and the freeze data are stored.

Conditions for clearing the DTC

The shift position indicator comes off by turning the vehicle to the OFF (LOCK) mode. The MIL is cleared if the malfunction does not return in three consecutive trips in which the diagnostic runs. The MIL, the Pending DTC, the Confirmed DTC, and the freeze data can be cleared with the scan tool Clear command.

DTC P2720 (CVT (TCM))

DTC P2720: Pressure Control Solenoid D Control Circuit Low

General Description

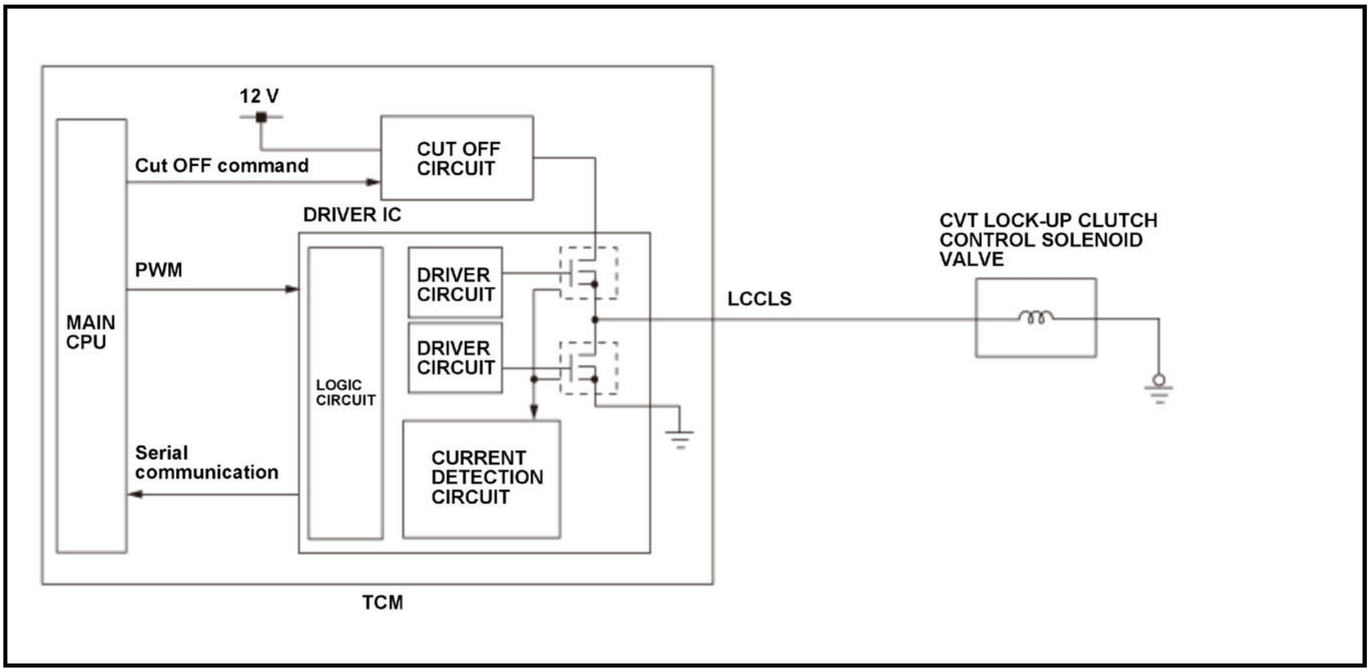
12 V
CUT OFF CIRCUIT
Cut OFF command
DRIVER IC
PWM
MAIN CPU
DRIVER CIRCUIT
DRIVER CIRCUIT
LOGIC CIRCUIT
Serial communication
CURRENT DETECTION CIRCUIT
TCM
LCCLS
CVT LOCK-UP CLUTCH CONTROL SOLENOID VALVE

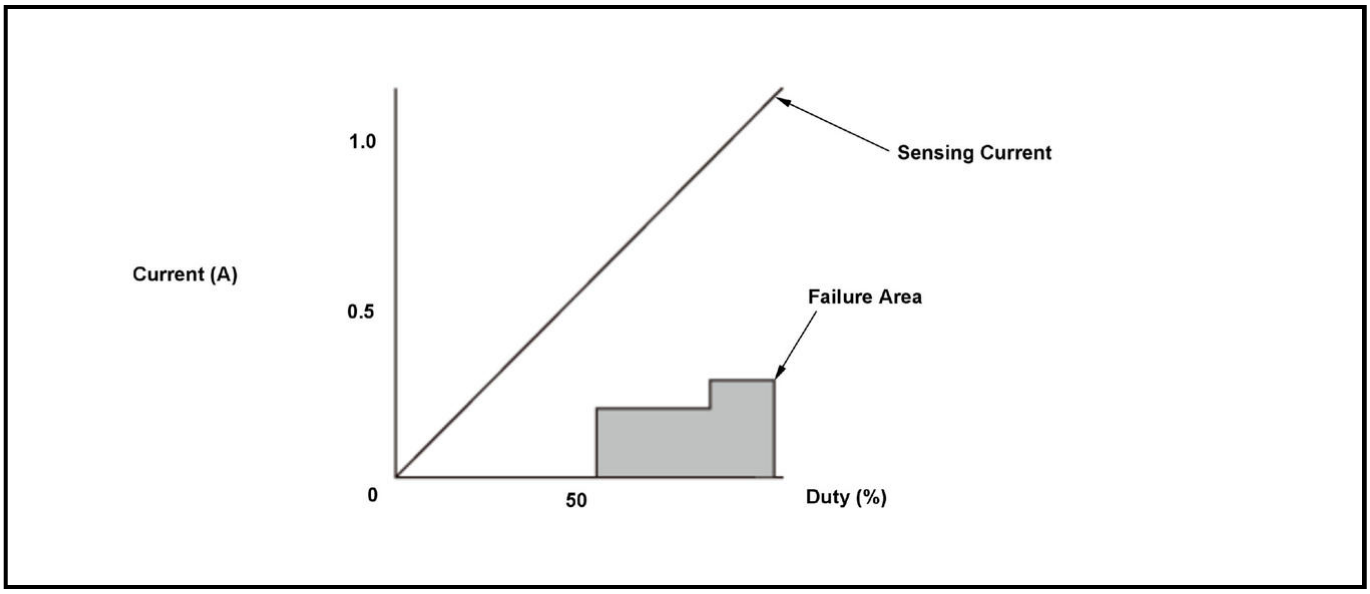

The CVT lock-up clutch control solenoid valve controls hydraulic pressure to the torque converter clutch. The CVT lock-up clutch control solenoid valve is controlled by duty cycle output. The spool in the CVT lock-up clutch control solenoid valve moves the valve according to the current, and produces hydraulic pressure in proportion to the current. The transmission control module (TCM) measures the current that passes through the CVT lock-up clutch control solenoid valve and uses feedback control to compensate for the difference between the measured current and the commanded one. The failure occurs by an open circuit or an intermittent open circuit. If the TCM internal driver IC detects its abnormal or the measured current is not equal to the duty cycle command, the TCM detects a malfunction and stores a DTC.

Monitor Execution, Sequence, Duration, DTC Type

Execution	Continuous
Sequence	None

Duration	1 second or more
DTC Type	Two drive cycles, MIL on, Shift position indicator blinks

Enable Conditions

Condition	Minimum	Maximum
12 volt battery voltage [Battery Voltage]	10.0 V	-

[ ]: HDS Parameter

Malfunction Threshold

One of the conditions is met for at least 1 second:

- TCM internal driver IC detects its abnormal.
- The measured current for the TCM's command value is as specified here.

Duty (%)	Current (A)	Failure mode
56.5 - 90.2	Less than 0.19	Low Input
More than 90.2	Less than 0.27	Low Input

Possible Cause

NOTE: The causes shown may not be a complete list of all potential problems, and it is possible that there may be other causes.

- CVT lock-up clutch control solenoid valve LCCLS line open (includes connector loose connection or disconnection)
- CVT lock-up clutch control solenoid valve internal circuit open
- TCM internal circuit failure

Confirmation Procedure

Operating Condition

Start the engine, and wait for at least 1 second.

With the HDS

None.

Diagnosis Details

Conditions for setting the DTC

When a malfunction is detected during the first drive cycle, a Pending DTC is stored in the TCM memory. If the malfunction returns in the next (second) drive cycle, the MIL comes on, the shift position indicator blinks, and a Confirmed DTC and the freeze data are stored.

Conditions for clearing the DTC

The shift position indicator comes off by turning the vehicle to the OFF (LOCK) mode. The MIL is cleared if the malfunction does not return in three consecutive trips in which the diagnostic runs. The MIL, the Pending

DTC, the Confirmed DTC, and the freeze data can be cleared with the scan tool Clear command.

DTC P2721 (CVT (TCM))

DTC P2721: Pressure Control Solenoid D Control Circuit High

General Description

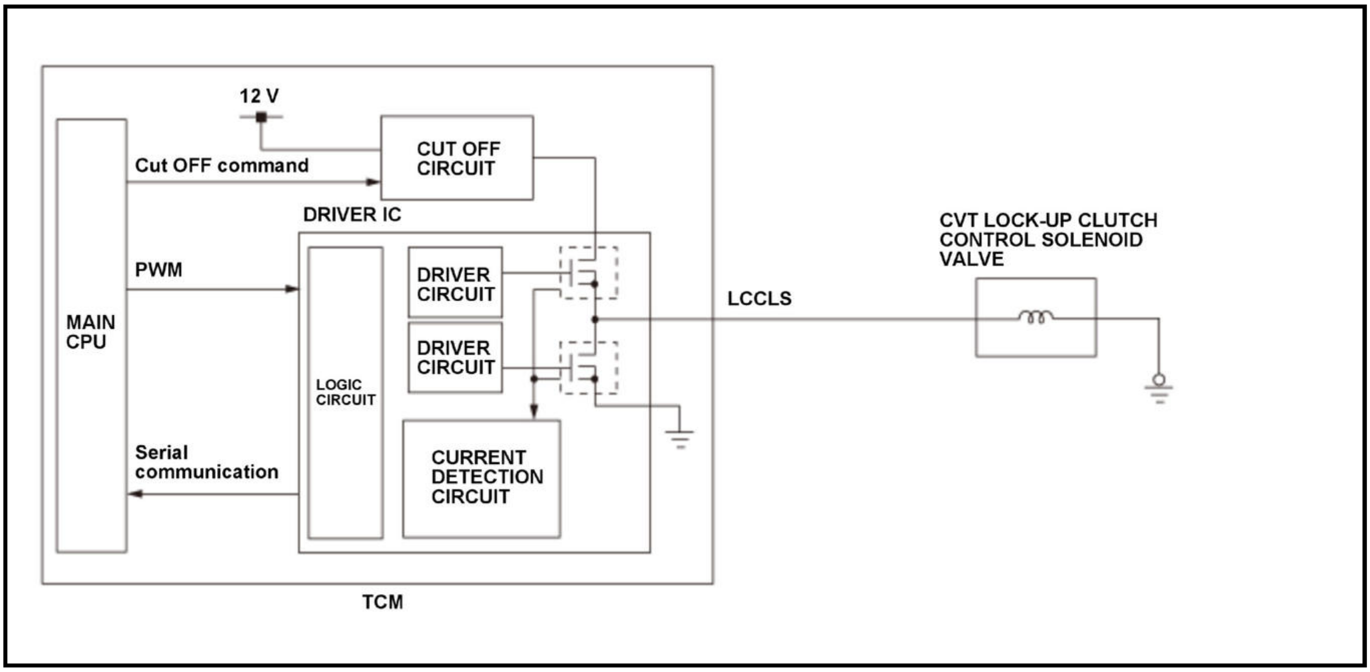
12 V
Cut OFF command
CUT OFF CIRCUIT
DRIVER IC
PWM
MAIN CPU
DRIVER CIRCUIT
DRIVER CIRCUIT
LOGIC CIRCUIT
CURRENT DETECTION CIRCUIT
Serial communication
TCM
LCCLS
CVT LOCK-UP CLUTCH CONTROL SOLENOID VALVE

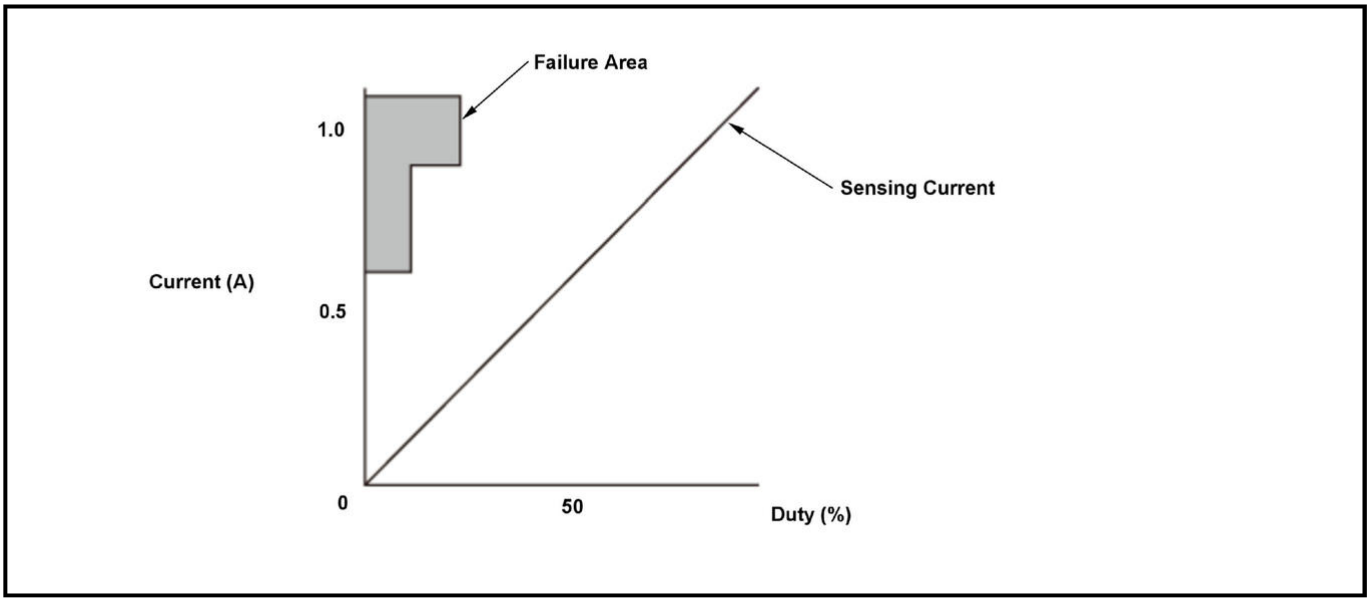

The CVT lock-up clutch control solenoid valve controls hydraulic pressure to the torque converter clutch. The CVT lock-up clutch control solenoid valve is controlled by duty cycle output. The spool in the CVT lock-up clutch control solenoid valve moves the valve according to the current, and produces hydraulic pressure in proportion to the current. The transmission control module (TCM) measures the current that passes through the CVT lock-up clutch control solenoid valve and uses feedback control to compensate for the difference between the measured current and the commanded one. The failure occurs by a short circuit or an intermittent short circuit. If the TCM internal driver IC detects its abnormal or the measured current is not equal to the duty cycle command, the TCM detects a malfunction and stores a DTC.

Monitor Execution, Sequence, Duration, DTC Type

Execution	Continuous
Sequence	None

Duration	1 second or more
DTC Type	Two drive cycles, MIL on, Shift position indicator blinks

Enable Conditions

Condition	Minimum	Maximum
12 volt battery voltage [Battery Voltage]	10.0 V	-

[ ]: HDS Parameter

Malfunction Threshold

One of the conditions is met for at least 1 second:

- TCM internal driver IC detects its abnormal.
- The measured current for the TCM's command value is as specified here.

Duty (%)	Current (A)	Failure mode
Less than 13.7	More than 0.57	High Input
13.7 - 27.4	More than 0.88	High Input

Possible Cause

NOTE: The causes shown may not be a complete list of all potential problems, and it is possible that there may be other causes.

- CVT lock-up clutch control solenoid valve LCCLS line short
- CVT lock-up clutch control solenoid valve internal circuit short
- TCM internal circuit failure

Confirmation Procedure

Operating Condition

Start the engine, and wait for at least 1 second.

With the HDS

None.

Diagnosis Details

Conditions for setting the DTC

When a malfunction is detected during the first drive cycle, a Pending DTC is stored in the TCM memory. If the malfunction returns in the next (second) drive cycle, the MIL comes on, the shift position indicator blinks, and a Confirmed DTC and the freeze data are stored.

Conditions for clearing the DTC

The shift position indicator comes off by turning the vehicle to the OFF (LOCK) mode. The MIL is cleared if the malfunction does not return in three consecutive trips in which the diagnostic runs. The MIL, the Pending DTC, the Confirmed DTC, and the freeze data can be cleared with the scan tool Clear command.

DTC P2797 (CVT (TCM)) (2020 2021)

DTC P2797: Auxiliary Transmission Fluid Pump Performance

General Description

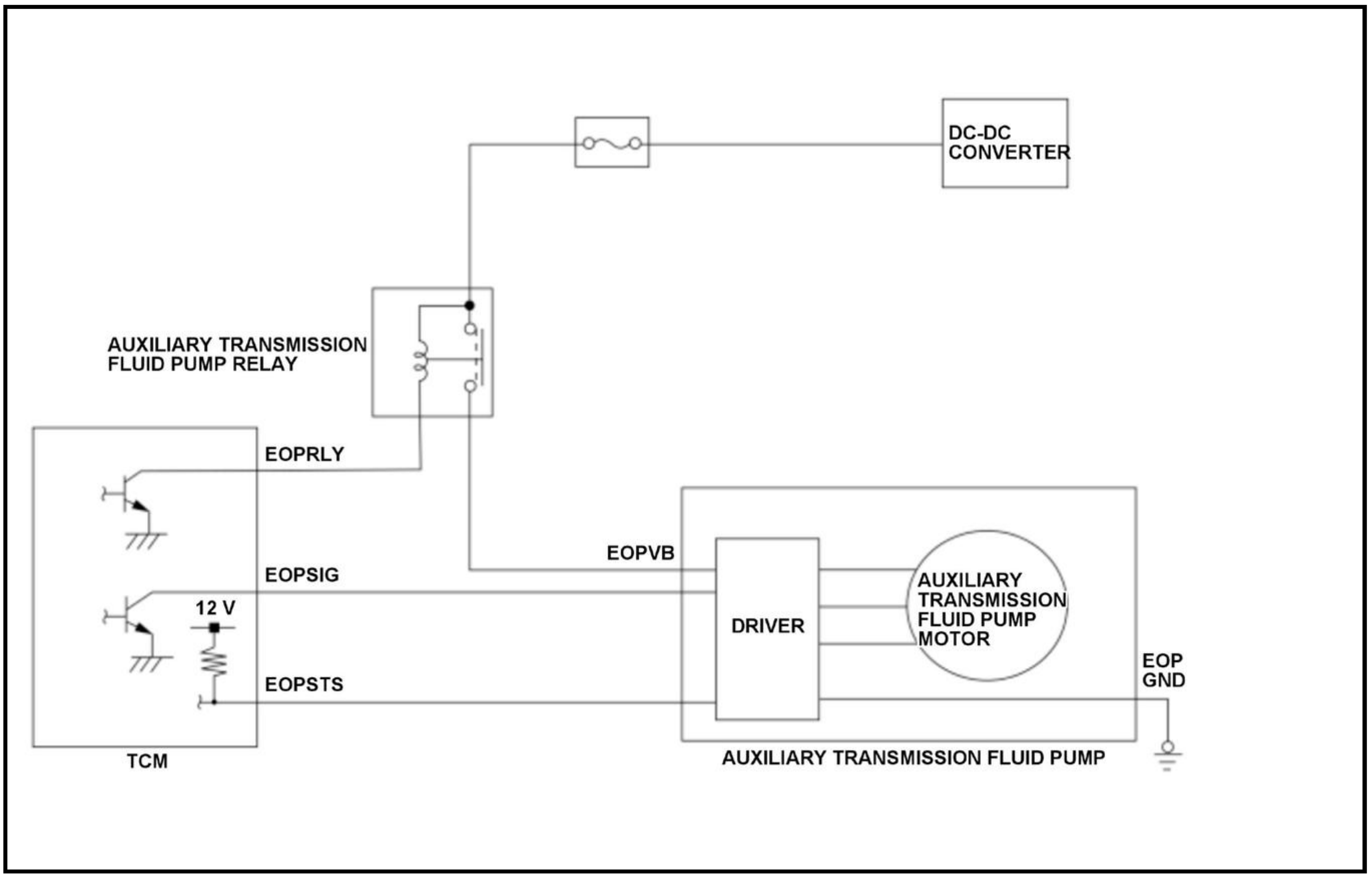
DC-DC CONVERTER
AUXILIARY TRANSMISSION FLUID PUMP RELAY
EOPRLY
EOPSIG
12 V
EOPSTS
TCM
EOPVB
DRIVER
AUXILIARY TRANSMISSION FLUID PUMP MOTOR
EOP GND
AUXILIARY TRANSMISSION FLUID PUMP

The auxiliary transmission fluid pump provides hydraulic pressure to control the CVT instead of the transmission fluid pump that would stop at auto idle stop. The auxiliary transmission fluid pump system consists of the three-phase brushless motor (to drive the fluid pump), the driver, and the auxiliary transmission fluid pump relay. The power source that drives the auxiliary transmission fluid pump is provided from the DC-DC converter via the auxiliary transmission fluid pump relay that is controlled by the transmission control module (TCM). The TCM and the auxiliary transmission fluid pump are connected by two communication lines (EOPSIG, EOPSTS). The TCM sends a start command (90 % duty ratio) or a stop command (5 % duty ratio) to the auxiliary transmission fluid pump by pulse width modulation (PWM) (100 Hz). In accordance to the start (or stop) command from the TCM, the auxiliary transmission fluid pump starts (or stops) the auxiliary transmission fluid pump motor. The auxiliary transmission fluid pump sends its motor speed data to the TCM using the pulse. The auxiliary transmission fluid pump motor rotates at a motor speed of 1, 000 - 5, 000 min-1 (rpm) which varies depending on transmission fluid temperature. The motor speed could be obtained from the product of 30 times pulse frequency (Hz) (ex. 3, 000 min-1 (rpm) when 100 Hz). If the auxiliary transmission fluid pump motor speed is a specified speed for certain period of time when the TCM sends a start command (100 Hz, 90 % duty ratio), the TCM detects a malfunction and stores a DTC.

Monitor Execution, Sequence, Duration, DTC Type

Execution	Continuous
Sequence	None
Duration	5 seconds or more
DTC Type	Two drive cycles, MIL off, Shift position indicator blinks

Enable Conditions

Condition	Minimum	Maximum
12 volt battery voltage [Battery Voltage]	10 V	-
State of the engine	During auto idle stop operation	

[ ]: HDS Parameter

Malfunction Threshold

The auxiliary transmission fluid pump motor speed is 8, 737 min-1 (rpm) or more for at least 5 seconds when the TCM sends a start command (100 Hz, 90 % duty ratio).

Possible Cause

NOTE: The causes shown may not be a complete list of all potential problems, and it is possible that there may be other causes.

- Auxiliary transmission fluid pump EOPSIG line electrical noise overlapped
- Auxiliary transmission fluid pump EOPSTS line electrical noise overlapped
- DC-DC converter power supply abnormal
- Auxiliary transmission fluid pump failure
- TCM internal circuit failure

Confirmation Procedure

Operating Condition

Start the engine and wait for at least 5 seconds in auto idle stop condition.

With the HDS

- Turn the vehicle to the ON mode.
- Select the Auxiliary Transmission Fluid Pump Test in the Miscellaneous Test Menu, and drive the auxiliary transmission fluid pump for at least 5 seconds with the HDS.

Diagnosis Details

Conditions for setting the DTC

When a malfunction is detected during the first drive cycle, a Pending DTC is stored in the TCM memory. If the malfunction returns in the next (second) drive cycle, the shift position indicator blinks and a Confirmed DTC and the freeze data are stored. The MIL does not come on.

Conditions for clearing the DTC

The shift position indicator comes off by turning the vehicle to the OFF (LOCK) mode. The Pending DTC, the Confirmed DTC, and the freeze data can be cleared with the scan tool Clear command.

DTC P2817 (CVT (TCM))

DTC P2817: Shift Solenoid Valve O/P (Pressure Control Solenoid H) Stuck Off

General Description

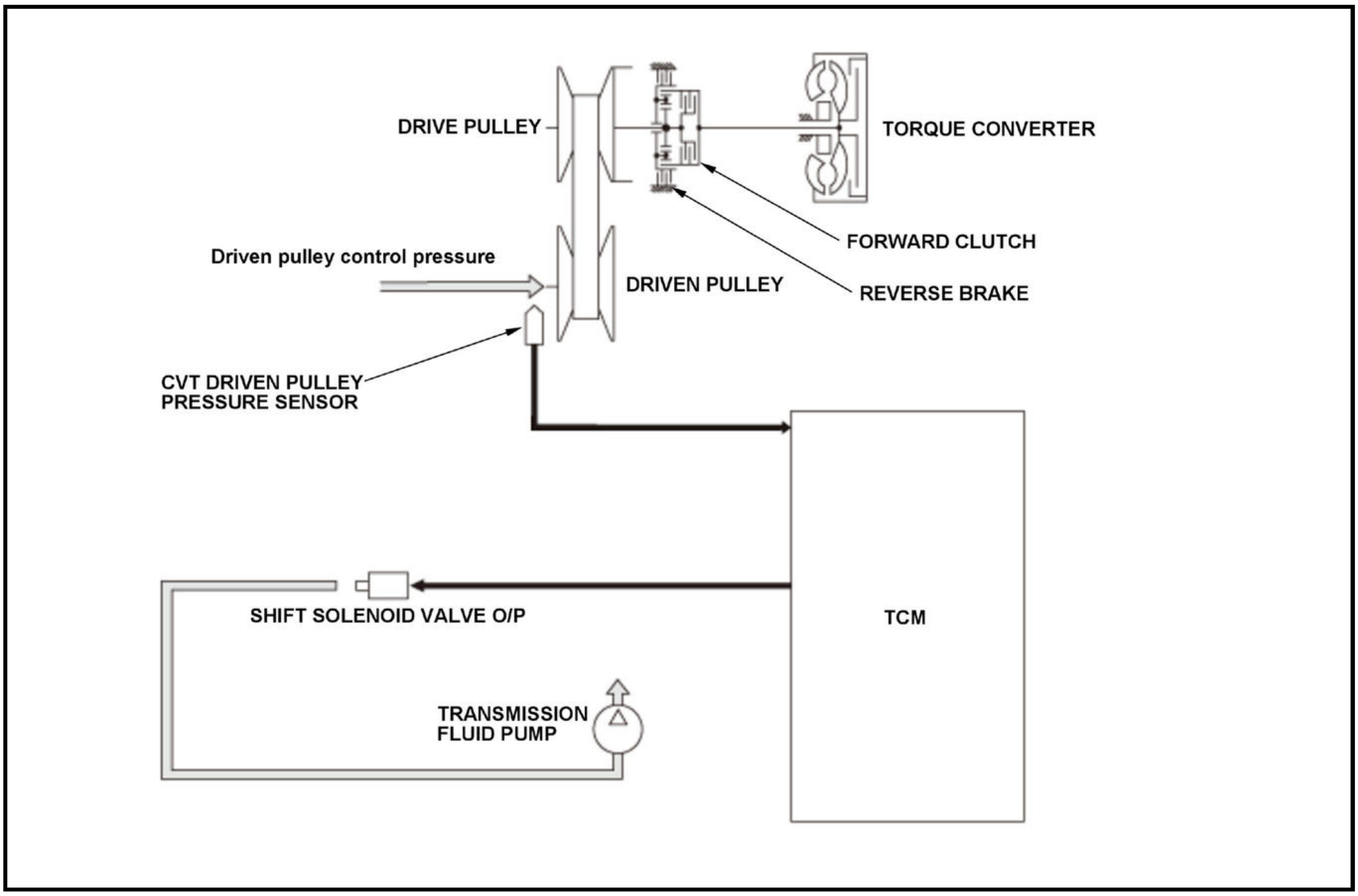
DRIVE PULLEY
TORQUE CONVERTER
FORWARD CLUTCH
Driven pulley control pressure
DRIVEN PULLEY
REVERSE BRAKE
CVT DRIVEN PULLEY PRESSURE SENSOR
SHIFT SOLENOID VALVE O/P
TCM
TRANSMISSION FLUID PUMP

Transmission fluid pump volume changes by shift solenoid valve O/P ON/OFF control

Transmission fluid pump volume	Shift Solenoid Valve O/P
High	OFF
Low	ON

The shift solenoid valve O/P controls the drain circuit close/open commanded by the transmission control module (TCM) ON/OFF commands. The transmission fluid pump volume is changed by switching the shift solenoid valve O/P ON/OFF control. The TCM commands the driver circuit to turn on the shift solenoid valve O/P. The TCM temporarily increases the driven pulley pressure up to target value. As the commanded driven pulley pressure reaches the target value, the TCM monitors the driven pulley pressure when the shift solenoid valve O/P is ON and OFF. If the driven pulley pressure does not change, the TCM detects a shift solenoid valve O/P stuck OFF malfunction and stores a DTC.

Monitor Execution, Sequence, Duration, DTC Type

Execution	Once per driving cycle
Sequence	None
Duration	10 seconds or less
DTC Type	Two drive cycles, MIL off, Shift position indicator blinks

Enable Conditions

Condition	Minimum	Maximum
Engine speed [Engine Speed]	700 rpm	750 rpm

[ ]: HDS Parameter

Condition	Minimum	Maximum
Transmission fluid temperature [CVTF Temperature]	248 deg.F (120 deg.C)	-
Vehicle speed [Vehicle Speed]	-	1 mph (3 km/h)
Shift lever position/mode	D	
Other	Accelerator pedal released	
	Brake pedal pressed	

[ ]: HDS Parameter

Malfunction Threshold

Judgments 1 and 2 are executed sequentially, and if the driven pulley pressure does not change when the shift solenoid valve O/P [Shift Sol O/P] is ON and OFF.

Judgment	Shift solenoid valve O/P	Commanded driven pulley pressure	Driven pulley pressure	Detection time
1	OFF	About 1, 961 kPa(20.0 kgf/cm 2, 284 psi)	About 1, 961 kPa(20.0 kgf/cm 2, 284 psi)	5.0 seconds
2	ON	About 1, 961 kPa(20.0 kgf/cm 2, 284 psi)	About 1, 961 kPa(20.0 kgf/cm 2, 284 psi)	5.0 seconds

Possible Cause

NOTE: The causes shown may not be a complete list of all potential problems, and it is possible that there may be other causes.

- Shift solenoid valve O/P stuck off

Confirmation Procedure

Operating Condition

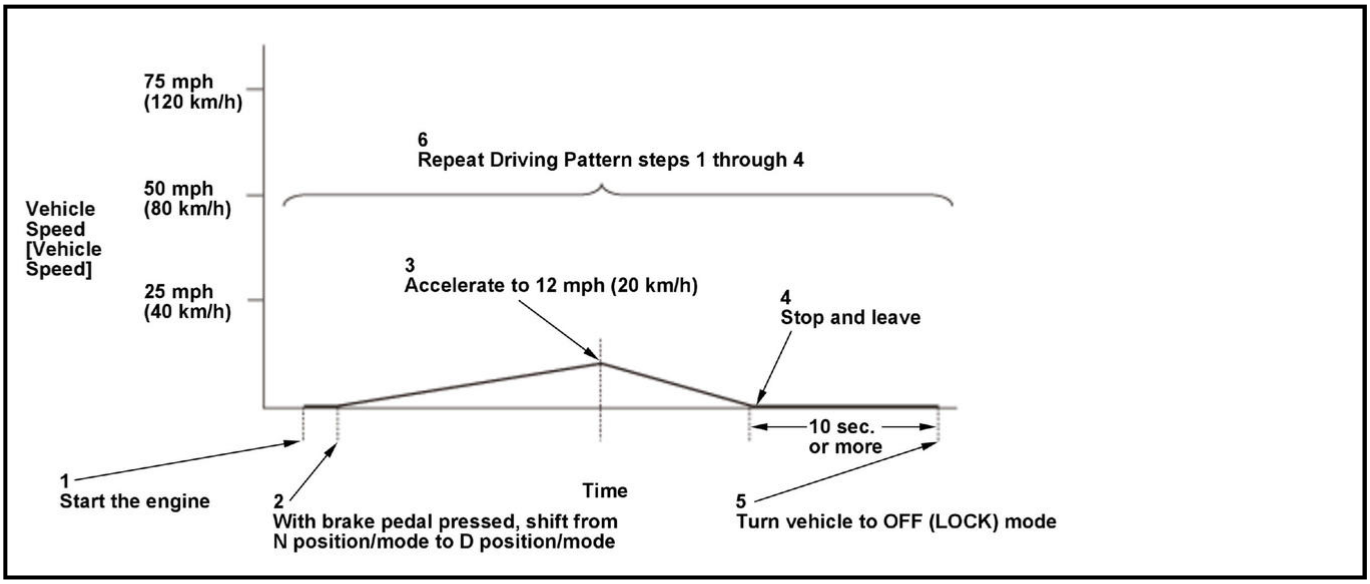

- Start the engine.
- With the brake pedal pressed, place the shift lever in from N position/mode to D position/mode.
- Accelerate the vehicle to 12 mph (20 km/h).
- Stop and leave the vehicle for at least 10 seconds.
- Turn the vehicle to the OFF (LOCK) mode.
- Repeat Driving Pattern steps 1 through 4.

- Drive the vehicle in this manner only if the traffic regulations and ambient conditions allow.

With the HDS

None.

Diagnosis Details

Conditions for setting the DTC

When a malfunction is detected during the first drive cycle, a Pending DTC is stored in the TCM memory. If the malfunction returns in the next (second) drive cycle, the shift position indicator blinks and a Confirmed DTC and the freeze data are stored. The MIL does not come on.

Conditions for clearing the DTC

The shift position indicator comes off by turning the vehicle to the OFF (LOCK) mode. The Pending DTC, the Confirmed DTC, and the freeze data can be cleared with the scan tool Clear command.

DTC P2818 (CVT (TCM))

DTC P2818: Shift Solenoid Valve O/P (Pressure Control Solenoid H) Stuck On

General Description

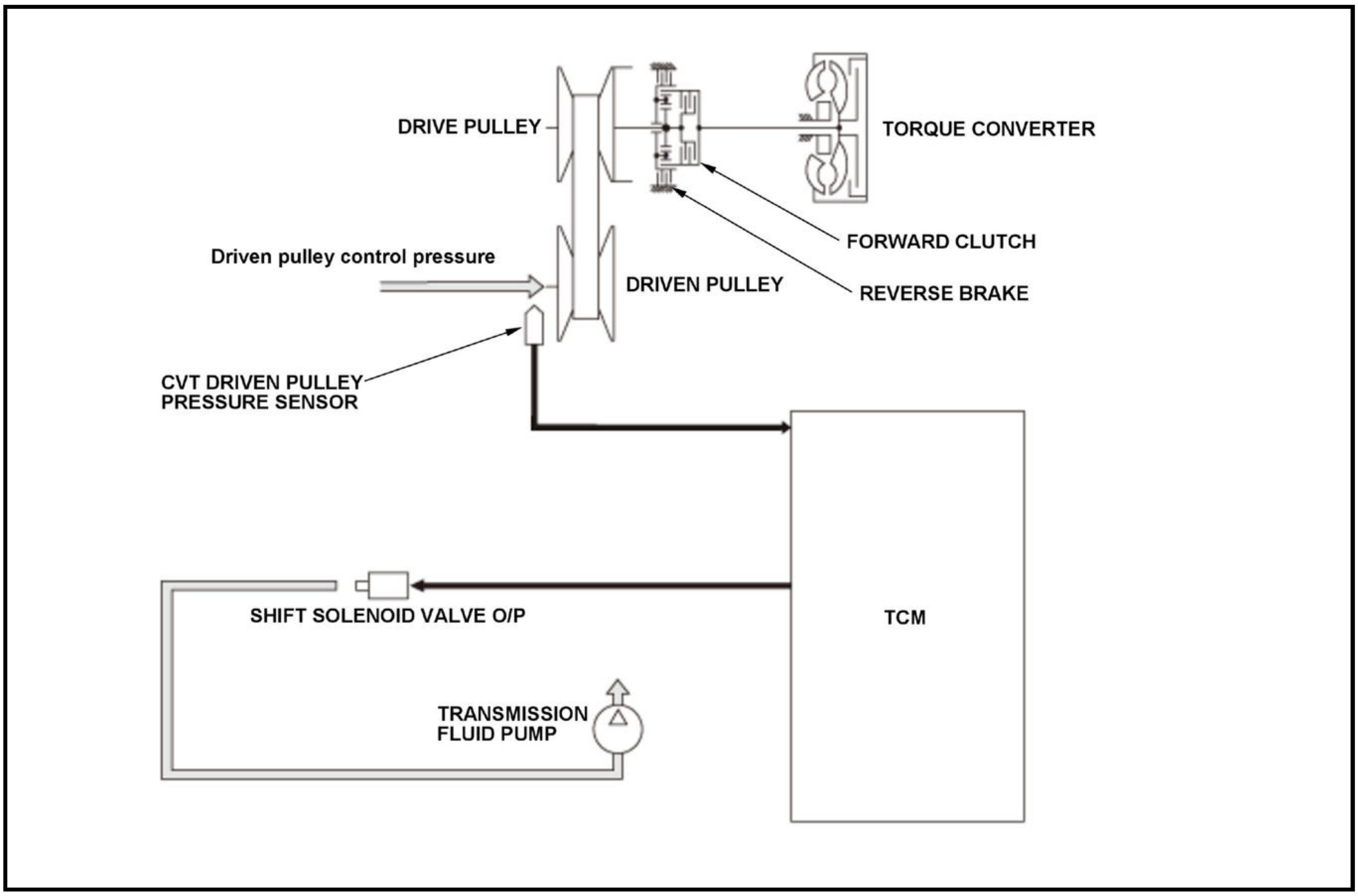
DRIVE PULLEY
TORQUE CONVERTER
FORWARD CLUTCH
Driven pulley control pressure
DRIVEN PULLEY
REVERSE BRAKE
CVT DRIVEN PULLEY PRESSURE SENSOR
SHIFT SOLENOID VALVE O/P
TCM
TRANSMISSION FLUID PUMP

Transmission fluid pump volume changes by shift solenoid valve O/P ON/OFF control

Transmission fluid pump volume	Shift Solenoid Valve O/P
High	OFF
Low	ON

The shift solenoid valve O/P controls the drain circuit close/open commanded by the transmission control module (TCM) ON/OFF commands. The transmission fluid pump volume is changed by switching the shift solenoid valve O/P ON/OFF control. The TCM commands the driver circuit to turn on the shift solenoid valve O/P. The TCM temporarily increases the driven pulley pressure up to target value. As the commanded driven pulley pressure reaches the target value, the TCM monitors the driven pulley pressure when the shift solenoid valve O/P is ON and OFF. If the driven pulley pressure does not change, or the pulley ratio is at a specified value when decelerated to a stop, the TCM detects a shift solenoid valve O/P stuck ON malfunction and stores a DTC.

Monitor Execution, Sequence, Duration, DTC Type

Execution	Once per driving cycle
Sequence	None
Duration	10 seconds or less
DTC Type	Two drive cycles, MIL off, Shift position indicator blinks

Enable Conditions

Condition	Minimum	Maximum
Engine speed [Engine Speed]*	700 rpm	740 rpm

*: Symptom 1

** : Symptom 2

[ ]: HDS Parameter

Condition	Minimum	Maximum
Transmission fluid temperature [CVTF Temperature]	248 deg.F (120 deg.C)*	-
	194 deg.F (90 deg.C)**	-
Vehicle speed [Vehicle Speed]*	-	1 mph (3 km/h)
Acceleration**	-11.1 ft/s 2 (-3.4 m/s 2)	-7.6 ft/s 2 (-2.3 m/s 2)
Shift lever position/mode	D	
Other	Accelerator pedal released*	
	Brake pedal pressed	

*: Symptom 1

** : Symptom 2

[ ]: HDS Parameter

Malfunction Threshold

One of these symptoms occurs:

Symptom 1: Judgments 1 and 2 are executed sequentially, and if the driven pulley pressure does not change when the shift solenoid valve O/P [Shift Sol O/P] is ON and OFF.

Judgment	Shift solenoid valve O/P	Commanded driven pulley pressure	Driven pulley pressure	Detection time
1	OFF	About 1, 961 kPa(20.0 kgf/cm 2, 284 psi)	About 1, 177 kPa(12.0 kgf/cm 2, 171 psi)	5.0 seconds
2	ON	About 1, 961 kPa(20.0 kgf/cm 2, 284 psi)	About 1, 177 kPa(12.0 kgf/cm 2, 171 psi)	5.0 seconds

Symptom 2: The pulley ratio [Pulley Ratio] is less than 2.0 when the vehicle is stopped.

Possible Cause

NOTE: The causes shown may not be a complete list of all potential problems, and it is possible that there may be other causes.

- Shift solenoid valve O/P stuck on

Confirmation Procedure

Operating Condition

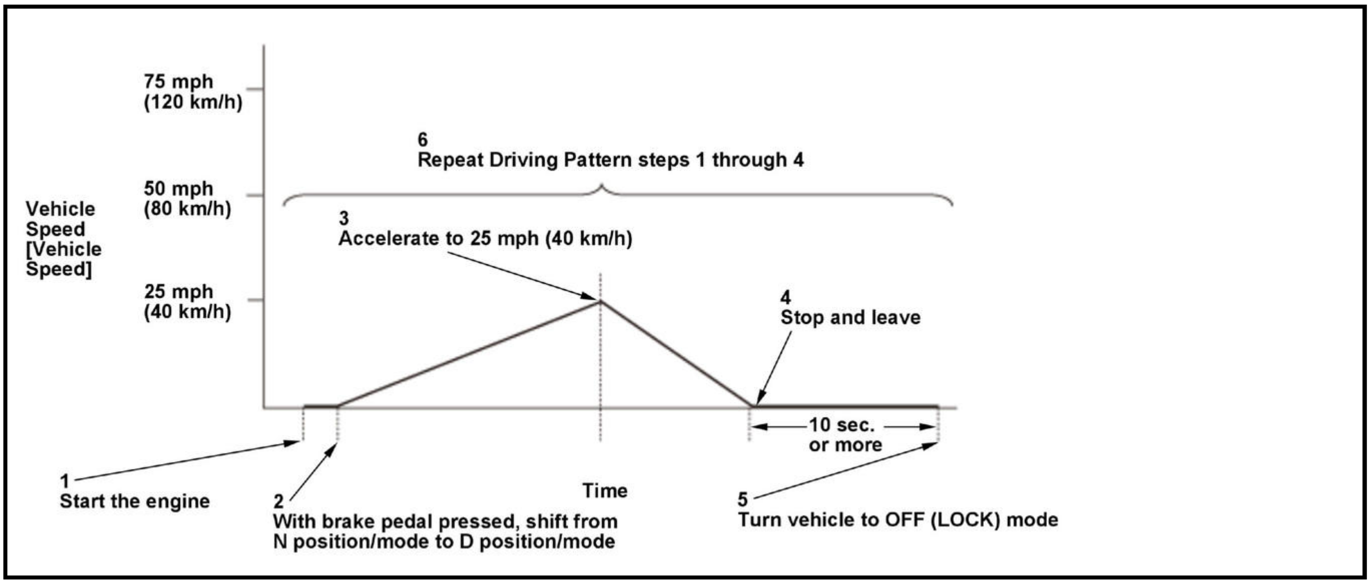

- Start the engine.
- With the brake pedal pressed, place the shift lever in from N position/mode to D position/mode.
- Accelerate the vehicle to 25 mph (40 km/h).
- Stop and leave the vehicle for at least 10 seconds.
- Turn the vehicle to the OFF (LOCK) mode.
- Repeat Driving Pattern steps 1 through 4.

- Drive the vehicle in this manner only if the traffic regulations and ambient conditions allow.

With the HDS

None.

Diagnosis Details

Conditions for setting the DTC

When a malfunction is detected during the first drive cycle, a Pending DTC is stored in the TCM memory. If the malfunction returns in the next (second) drive cycle, the shift position indicator blinks and a Confirmed DTC and the freeze data are stored. The MIL does not come on.

Conditions for clearing the DTC

The shift position indicator comes off by turning the vehicle to the OFF (LOCK) mode. The Pending DTC, the Confirmed DTC, and the freeze data can be cleared with the scan tool Clear command.

DTC 281D (CVT (TCM))

DTC P281D: Shift Solenoid Valve O/P (Pressure Control Solenoid H) Control Circuit Low

General Description

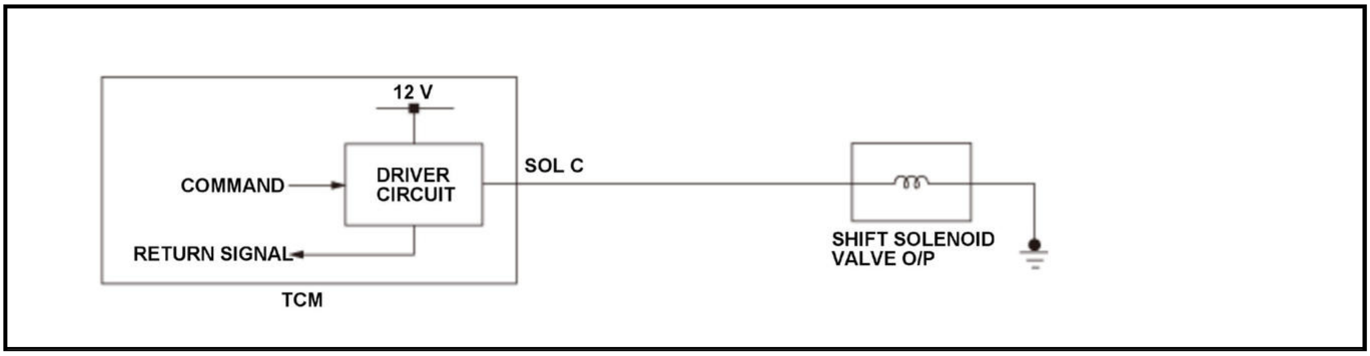

Transmission fluid pump volume changes by shift solenoid valve O/P ON/OFF control

Transmission fluid pump volume	Shift Solenoid Valve O/P
High	OFF
Low	ON

The shift solenoid valve O/P controls the drain circuit close/open commanded by the transmission control module (TCM) ON/OFF commands. The transmission fluid pump volume is changed by switching the shift solenoid valve O/P ON/OFF control. The TCM commands the driver circuit to turn on the shift solenoid valve O/P. The circuit diagnoses malfunctions such as a circuit short or open, and sends back a return signal during the TCM's command. When the return signal does not match the TCM command to turn ON the shift solenoid valve O/P, the TCM detects a malfunction and stores a DTC.

Monitor Execution, Sequence, Duration, DTC Type

Execution	Continuous
Sequence	None
Duration	1 second or more
DTC Type	One drive cycle, MIL off, Shift position indicator blinks

Enable Conditions

Condition	Minimum	Maximum
12 volt battery voltage [Battery Voltage]	10.0 V	-

[ ]: HDS Parameter

Malfunction Threshold

The return signal does not match the command to turn ON shift solenoid valve O/P [Shift Sol O/P] for at least 1 second.

Possible Cause

NOTE: The causes shown may not be a complete list of all potential problems, and it is possible that there may be other causes.

- Shift solenoid valve O/P SOL C line short to ground
- Shift solenoid valve O/P internal circuit short
- TCM internal circuit failure

Confirmation Procedure

Operating Condition

- Start the engine.
- Shift the transmission to D position/mode while pressing the brake pedal, and wait for at least 30 seconds.

With the HDS

None.

Diagnosis Details

Conditions for setting the DTC

When a malfunction is detected, the shift position indicator blinks and a Pending DTC, a Confirmed DTC, and the freeze data are stored in the TCM memory. The MIL does not come on.

Conditions for clearing the DTC

The shift position indicator comes off by turning the vehicle to the OFF (LOCK) mode. The Pending DTC, the Confirmed DTC, and the freeze data can be cleared with the scan tool Clear command.

DTC P281E (CVT (TCM))

DTC P281E: Shift Solenoid Valve O/P (Pressure Control Solenoid H) Control Circuit High

General Description

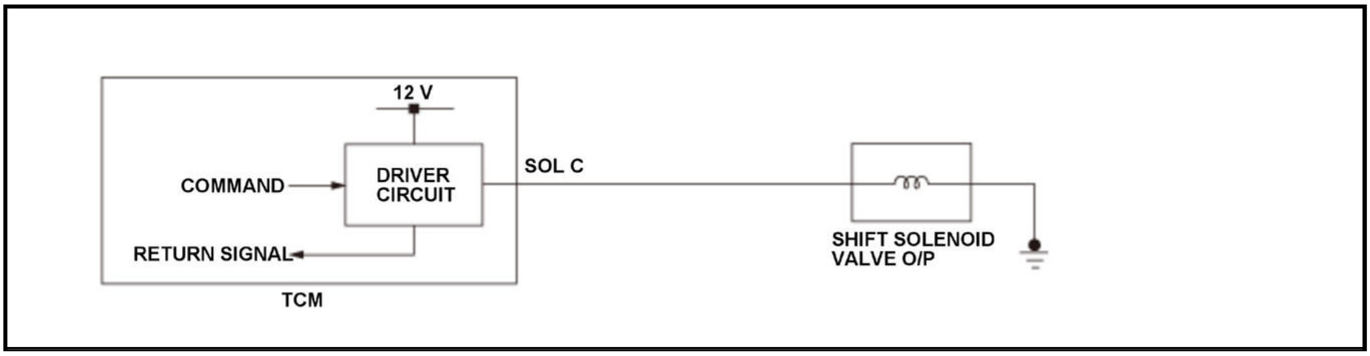

Transmission fluid pump volume changes by shift solenoid valve O/P ON/OFF control

Transmission fluid pump volume	Shift Solenoid Valve O/P
High	OFF
Low	ON

The shift solenoid valve O/P controls the drain circuit close/open commanded by the transmission control module (TCM) ON/OFF commands. The transmission fluid pump volume is changed by switching the shift solenoid valve O/P ON/OFF control. The TCM commands the driver circuit to turn on the shift solenoid valve O/P. The circuit diagnoses malfunctions such as a circuit short or open, and sends back a return signal during the TCM's command. When the return signal does not match the TCM command to turn OFF the shift solenoid valve O/P, the TCM detects a malfunction and stores a DTC.

Monitor Execution, Sequence, Duration, DTC Type

Execution	Continuous
Sequence	None

Duration	1 second or more
DTC Type	One drive cycle, MIL off, Shift position indicator blinks

Enable Conditions

Condition	Minimum	Maximum
12 volt battery voltage [Battery Voltage]	10.0 V	-

[ ]: HDS Parameter

Malfunction Threshold

The return signal does not match the command to turn OFF shift solenoid valve O/P [Shift Sol O/P] for at least 1 second.

Possible Cause

NOTE: The causes shown may not be a complete list of all potential problems, and it is possible that there may be other causes.

- Shift solenoid valve O/P SOL C line open (includes connector loose connection or disconnection)
- Shift solenoid valve O/P internal circuit open
- TCM internal circuit failure

Confirmation Procedure

Operating Condition

- Start the engine.
- Shift the transmission to D position/mode while pressing the brake pedal, and wait for at least 30 seconds.
- Shift the transmission to P position/mode.
- Turn the vehicle to the OFF (LOCK) mode.
- Start the engine, and wait for at least 1 second.

With the HDS

None.

Diagnosis Details

Conditions for setting the DTC

When a malfunction is detected, the shift position indicator blinks and a Pending DTC, a Confirmed DTC, and the freeze data are stored in the TCM memory. The MIL does not come on.

Conditions for clearing the DTC

The shift position indicator comes off by turning the vehicle to the OFF (LOCK) mode. The Pending DTC, the Confirmed DTC, and the freeze data can be cleared with the scan tool Clear command.

DTC U0029 (CVT (TCM))

DTC U0029: F-CAN Malfunction (F-CAN Bus OFF)

General Description

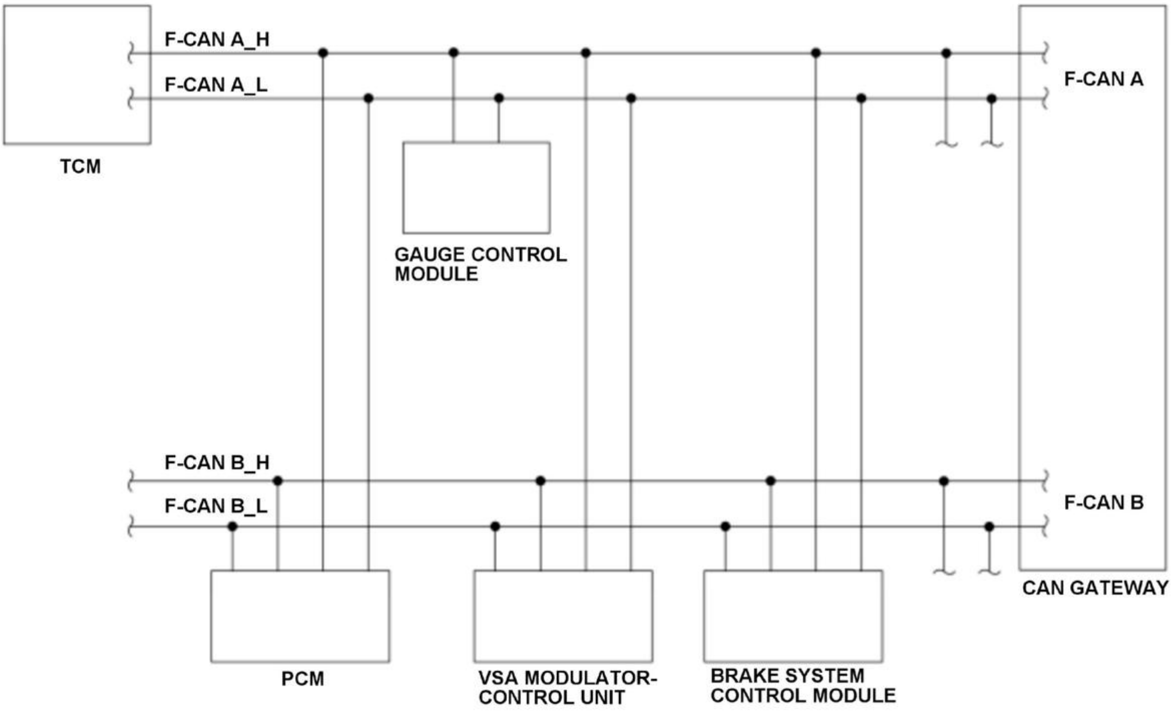
F-CAN A_H
F-CAN A_L
TCM
F-CAN A
GAUGE CONTROL MODULE
F-CAN B_H
F-CAN B_L
F-CAN B
CAN GATEWAY
PCM
VSA MODULATOR-CONTROL UNIT
BRAKE SYSTEM CONTROL MODULE

The controller area network (CAN) transmits/receives pulsing signals to/from the control modules simultaneously by using two signal lines (F-CAN A_H and F-CAN A_L). When the transmission control module (TCM) cannot send the signals via the F-CAN lines for a set time, the TCM detects a malfunction and stores a DTC.

Monitor Execution, Sequence, Duration, DTC Type

Execution	Continuous
Sequence	None
Duration	1 second or more
DTC Type	One drive cycle, MIL on, Shift position indicator blinks

Enable Conditions

Condition	Minimum	Maximum
Elapsed time after the vehicle condition is turned to the ON mode	3 seconds	-
12 volt battery voltage [Battery Voltage]	10.0 V	-

[ ]: HDS Parameter

Malfunction Threshold

The TCM cannot send any signals via the F-CAN lines for at least 1 second.

Possible Cause

NOTE: The causes shown may not be a complete list of all potential problems, and it is possible that there may be other causes.

- F-CAN circuit F-CAN A_H line open
- F-CAN circuit F-CAN A_L line open
- F-CAN circuit F-CAN A_H line short to ground
- F-CAN circuit F-CAN A_L line short to ground
- TCM internal circuit failure

Diagnosis Details

Conditions for setting the DTC

When a malfunction is detected, the MIL comes on, the shift position indicator blinks, and a Pending DTC, a Confirmed DTC, and the freeze data are stored in the TCM memory.

Conditions for clearing the DTC

The shift position indicator comes off by turning the vehicle to the OFF (LOCK) mode. The MIL is cleared if the malfunction does not return in three consecutive trips in which the diagnostic runs. The MIL, the Pending DTC, the Confirmed DTC, and the freeze data can be cleared with the scan tool Clear command.

DTC U0038 (CVT (TCM))

DTC U0038: TM-CAN Malfunction (TCM-PCM)

General Description

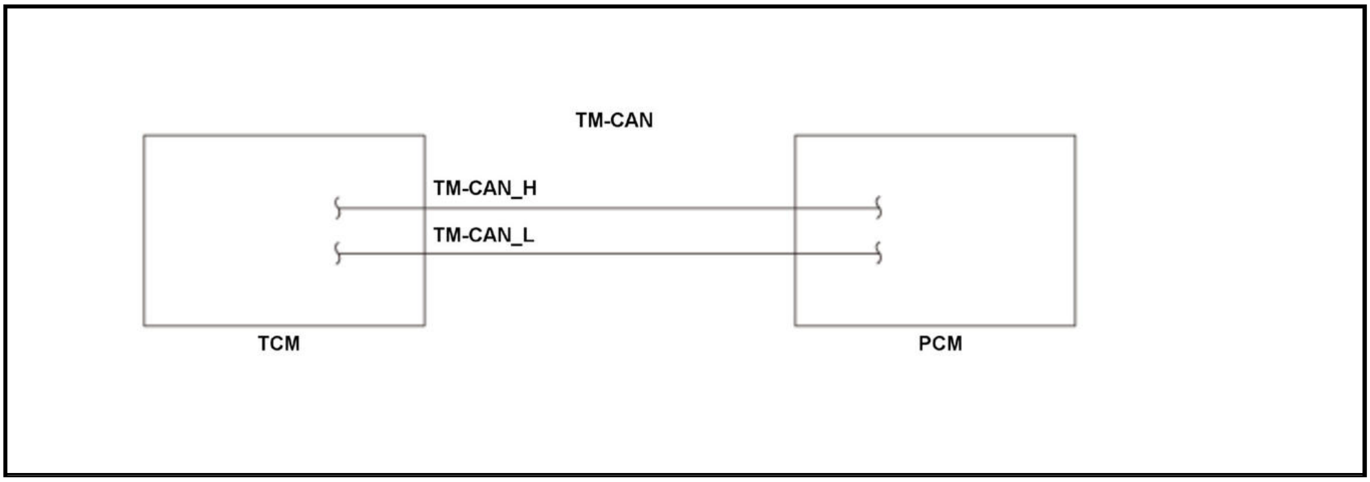

The transmission control module (TCM) and the powertrain control module (PCM) uses communication line (TM-CAN_H and TM-CAN_L) to transmit/receive multiple signals simultaneously. When the information is not sent from the PCM via the TM-CAN lines and this condition continues for a specified time, the TCM detects a malfunction and stores a DTC.

Monitor Execution, Sequence, Duration, DTC Type

Execution	Continuous
Sequence	None
Duration	1.5 seconds or more
DTC Type	One drive cycle, MIL on, Shift position indicator blinks

Enable Conditions

Condition	Minimum	Maximum
12 volt battery voltage [Battery Voltage]	10.0 V	-

[ ]: HDS Parameter

Malfunction Threshold

The TCM does not receive any signals via the TM-CAN lines for at least 1.5 seconds.

Possible Cause

NOTE: The causes shown may not be a complete list of all potential problems, and it is possible that there may be other causes.

- PCM failure (include fuse fall-outs)
- TM-CAN circuit TM-CAN_H line open
- TM-CAN circuit TM-CAN_L line open
- TM-CAN circuit TM-CAN_H line short to ground
- TM-CAN circuit TM-CAN_L line short to ground
- TCM internal circuit failure

Diagnosis Details

Conditions for setting the DTC

When a malfunction is detected, the MIL comes on, the shift position indicator blinks, and a Pending DTC, a Confirmed DTC, and the freeze data are stored in the TCM memory.

Conditions for clearing the DTC

The shift position indicator comes off by turning the vehicle to the OFF (LOCK) mode. The MIL is cleared if the malfunction does not return in three consecutive trips in which the diagnostic runs. The MIL, the Pending DTC, the Confirmed DTC, and the freeze data can be cleared with the scan tool Clear command.

DTC U0100 (CVT (TCM))

DTC U0100: F-CAN Malfunction (TCM - FI Control Module)

General Description

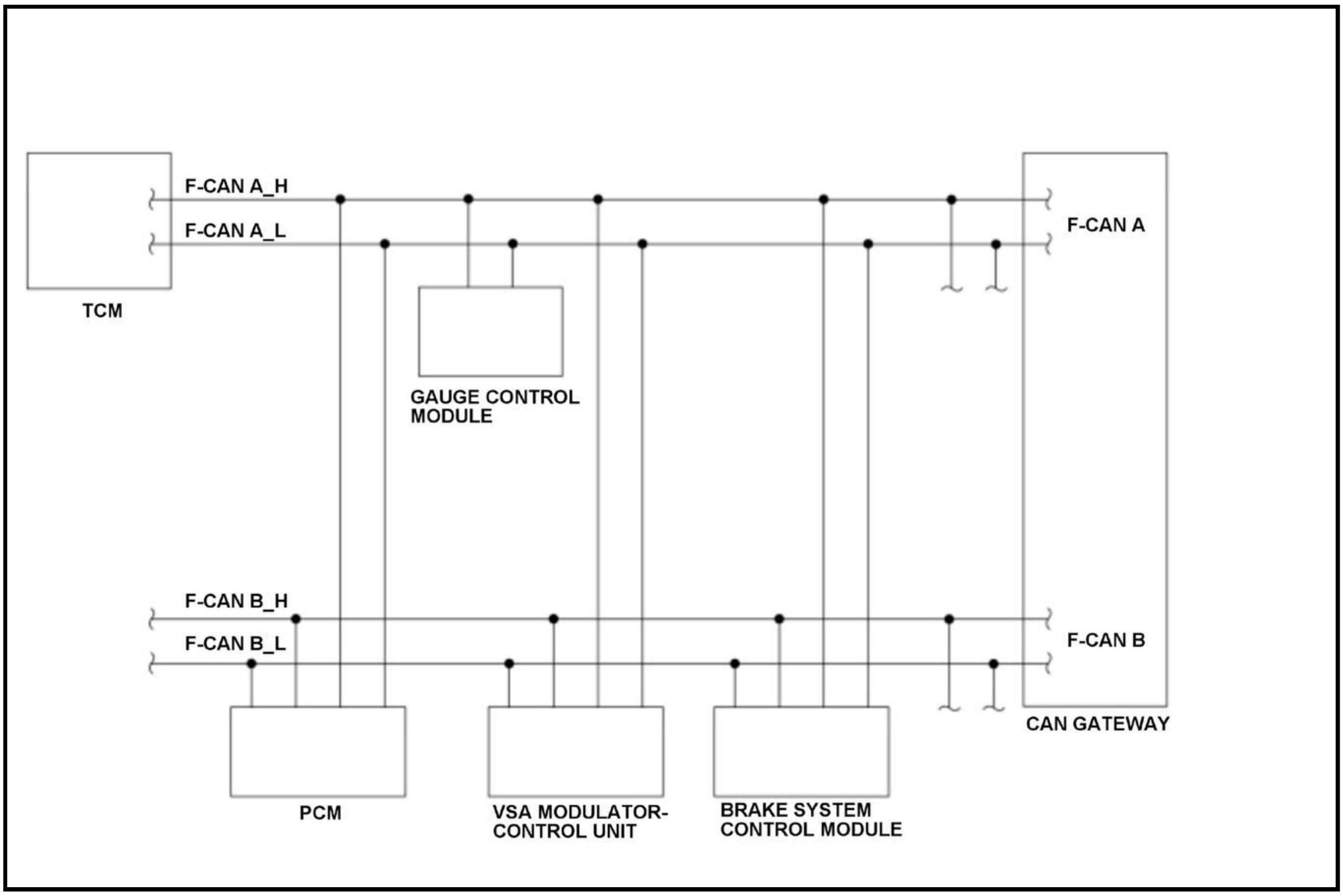
F-CAN A_H
F-CAN A_L
TCM
GAUGE CONTROL MODULE
F-CAN A
F-CAN B_H
F-CAN B_L
F-CAN B
CAN GATEWAY
PCM
VSA MODULATOR-CONTROL UNIT
BRAKE SYSTEM CONTROL MODULE

The controller area network (CAN) transmits/receives pulsing signals to/from the control modules simultaneously by using two signal lines (F-CAN A_H and F-CAN A_L). When the information is not sent from the powertrain control module (PCM) via the F-CAN lines and this condition continues for a specified time or when the information sent from the PCM is abnormal and this condition continues for a specified cycle, the transmission control module (TCM) detects a malfunction and stores a DTC.

Monitor Execution, Sequence, Duration, DTC Type

Execution	Continuous
Sequence	None
Duration	1.5 seconds or more
DTC Type	One drive cycle, MIL on, Shift position indicator blinks

Enable Conditions

Condition	Minimum	Maximum
12 volt battery voltage [Battery Voltage]	10.0 V	-

[ ]: HDS Parameter

Malfunction Threshold

One of these conditions is met:

- The TCM does not receive any signals from the PCM via F-CAN lines for at least 1.5 seconds.
- The information sent from the PCM is abnormal at least 20 times.

Possible Cause

NOTE: The causes shown may not be a complete list of all potential problems, and it is possible that there may be other causes.

- PCM failure (include fuse fall-outs)
- F-CAN circuit F-CAN A_H line open
- F-CAN circuit F-CAN A_L line open
- F-CAN circuit F-CAN A_H line short to ground
- F-CAN circuit F-CAN A_L line short to ground
- F-CAN circuit F-CAN B_H line open
- F-CAN circuit F-CAN B_L line open
- F-CAN circuit F-CAN B_H line short to ground
- F-CAN circuit F-CAN B_L line short to ground
- TCM internal circuit failure

Diagnosis Details

Conditions for setting the DTC

When a malfunction is detected, the MIL comes on, the shift position indicator blinks, and a Pending DTC, a Confirmed DTC, and the freeze data are stored in the TCM memory.

Conditions for clearing the DTC

The shift position indicator comes off by turning the vehicle to the OFF (LOCK) mode. The MIL is cleared if the malfunction does not return in three consecutive trips in which the diagnostic runs. The MIL, the Pending DTC, the Confirmed DTC, and the freeze data can be cleared with the scan tool Clear command.

DTC U0122 (CVT (TCM))

DTC U0122: Lost Communication With Vehicle Dynamics Control Module

General Description

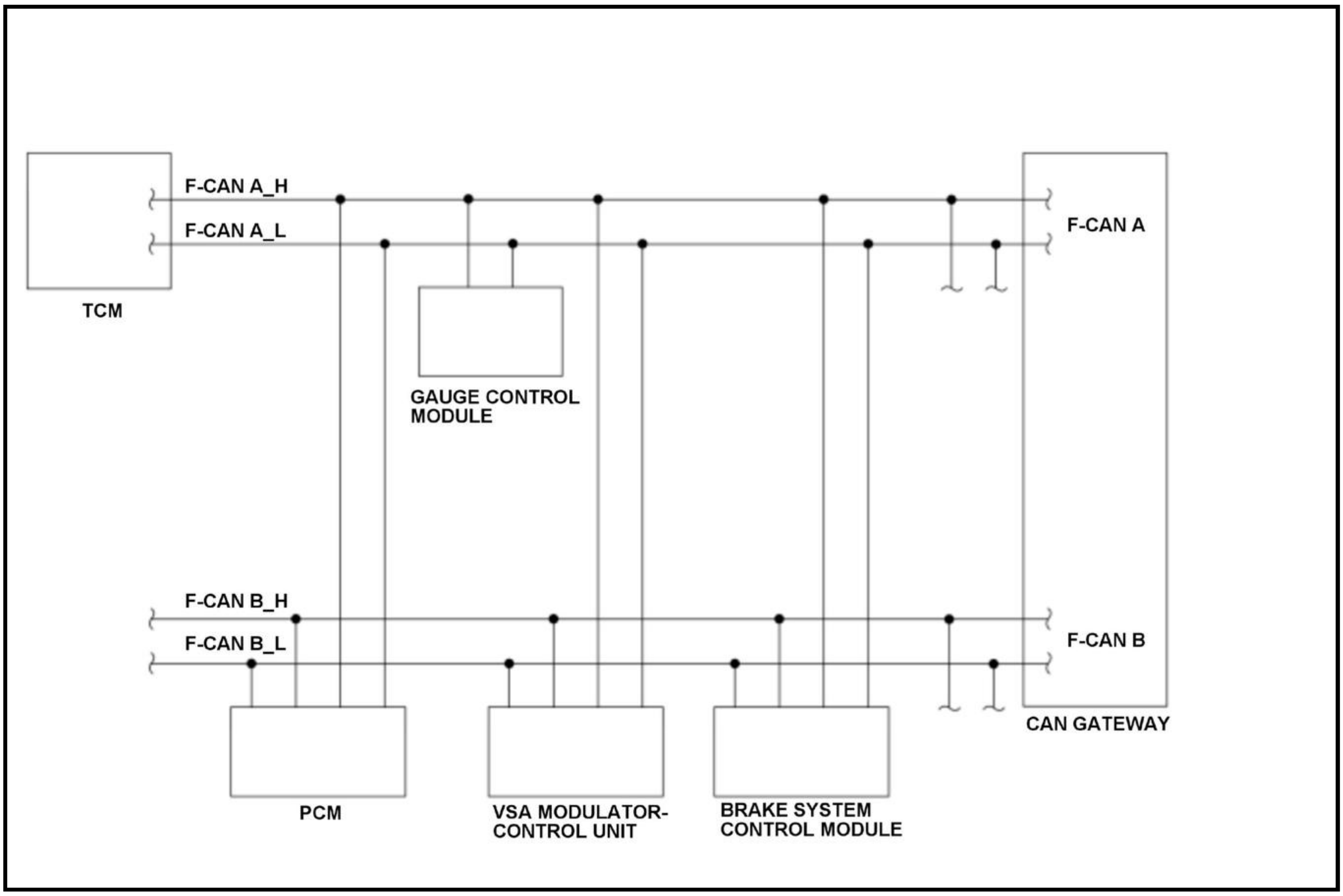
F-CAN A_H
F-CAN A_L
TCM
F-CAN A
GAUGE CONTROL MODULE
F-CAN B_H
F-CAN B_L
F-CAN B
CAN GATEWAY
PCM
VSA MODULATOR-CONTROL UNIT
BRAKE SYSTEM CONTROL MODULE

The controller area network (CAN) transmits/receives pulsing signals to/from the control modules simultaneously by using two signal lines (F-CAN A_H and F-CAN A_L). When the information is not sent from the VSA modulator-control unit via the F-CAN lines and this condition continues for a specified time or when the information sent from the VSA modulator-control unit is abnormal and this condition continues for a specified cycle, the transmission control module (TCM) detects a malfunction and stores a DTC.

Monitor Execution, Sequence, Duration, DTC Type

Execution	Continuous
Sequence	None
Duration	1.5 seconds or more
DTC Type	One drive cycle, MIL off, Shift position indicator blinks

Enable Conditions

Condition	Minimum	Maximum
12 volt battery voltage [Battery Voltage]	10.0 V	-

[ ]: HDS Parameter

Malfunction Threshold

One of these conditions is met:

- The TCM does not receive any signals from the VSA modulator-control unit via F-CAN lines for at least 1.5 seconds.
- The information sent from the VSA modulator-control unit is abnormal at least 20 times.

Possible Cause

NOTE: The causes shown may not be a complete list of all potential problems, and it is possible that there may be other causes.

- VSA modulator-control unit failure (include fuse fall-outs)
- F-CAN circuit F-CAN A_H line open
- F-CAN circuit F-CAN A_L line open
- F-CAN circuit F-CAN A_H line short to ground
- F-CAN circuit F-CAN A_L line short to ground
- F-CAN circuit F-CAN B_H line open
- F-CAN circuit F-CAN B_L line open
- F-CAN circuit F-CAN B_H line short to ground
- F-CAN circuit F-CAN B_L line short to ground
- TCM internal circuit failure

Diagnosis Details

Conditions for setting the DTC

When a malfunction is detected, the MIL comes on, the shift position indicator blinks, and a Pending DTC, a Confirmed DTC, and the freeze data are stored in the TCM memory.

Conditions for clearing the DTC

The shift position indicator comes off by turning the vehicle to the OFF (LOCK) mode. The MIL is cleared if the malfunction does not return in three consecutive trips in which the diagnostic runs. The MIL, the Pending DTC, the Confirmed DTC, and the freeze data can be cleared with the scan tool Clear command.

DTC U0129 (CVT (TCM))

DTC U0129: Lost Communication With Brake System Control Module

General Description

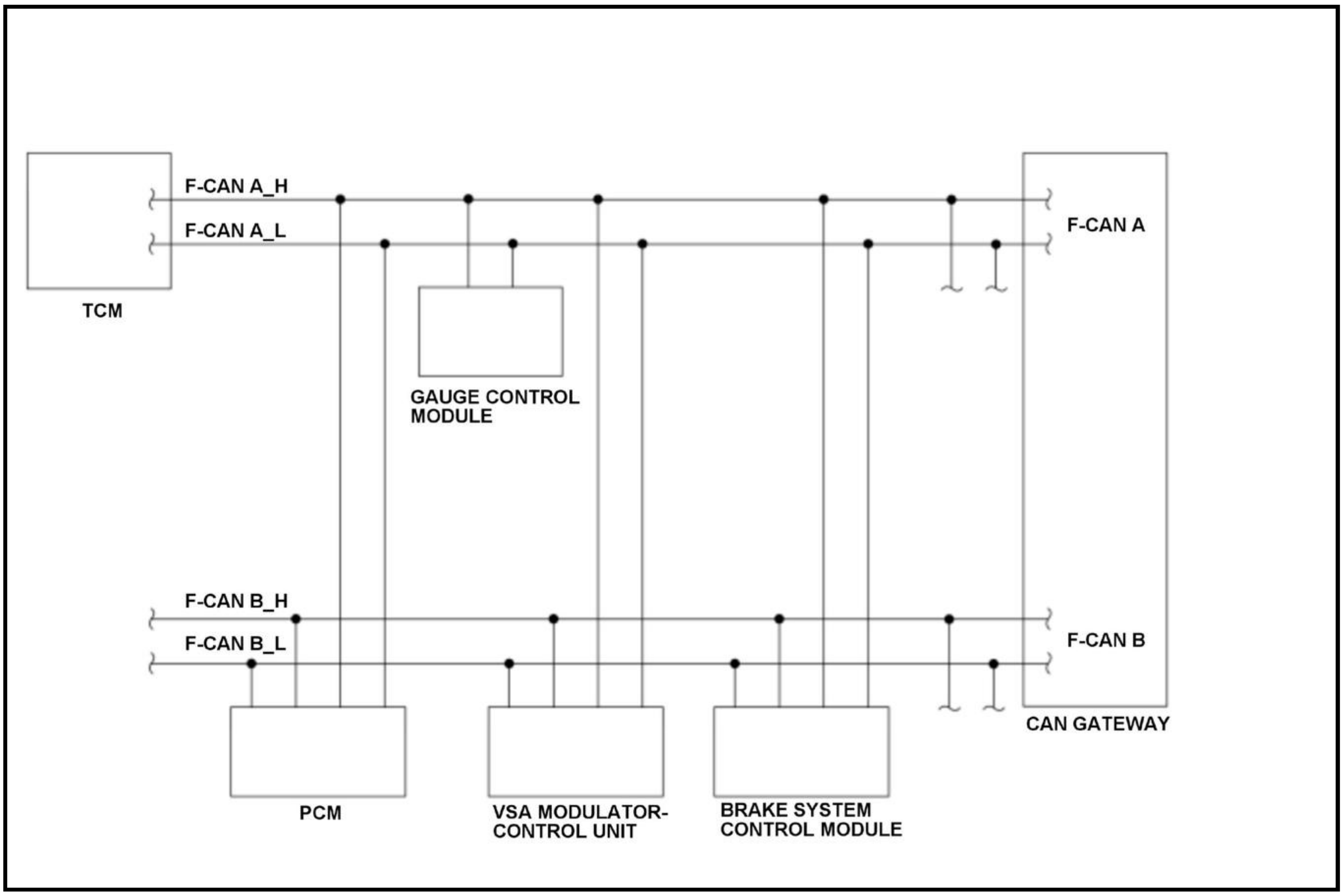
F-CAN A_H
F-CAN A_L
TCM
F-CAN A
GAUGE CONTROL MODULE
F-CAN B_H
F-CAN B_L
F-CAN B
CAN GATEWAY
PCM
VSA MODULATOR-CONTROL UNIT
BRAKE SYSTEM CONTROL MODULE

The controller area network (CAN) transmits/receives pulsing signals to/from the control modules simultaneously by using two signal lines (F-CAN_H/F-CAN A_H and F-CAN_L/F-CAN A_L). When the information is not sent from the powertrain control module (PCM) via the F-CAN lines and this condition continues for a specified time or when the information sent from the PCM is abnormal and this condition continues for a specified cycle, the transmission control module (TCM) detects a malfunction and stores a DTC.

Monitor Execution, Sequence, Duration, DTC Type

Execution	Continuous
Sequence	None
Duration	1.5 seconds or more
DTC Type	One drive cycle, MIL on, Shift position indicator blinks

Enable Conditions

Condition	Minimum	Maximum
12 volt battery voltage [Battery Voltage]	10.0 V	-

[ ]: HDS Parameter

Malfunction Threshold

One of these conditions is met:

- The TCM does not receive any signals from the PCM via F-CAN lines for at least 1.5 seconds.
- The information sent from the PCM is abnormal at least 20 times.

Possible Cause

NOTE: The causes shown may not be a complete list of all potential problems, and it is possible that there may be other causes.

- PCM failure (include fuse fall-outs)
- F-CAN circuit F-CAN A_H line open
- F-CAN circuit F-CAN A_L line open
- F-CAN circuit F-CAN A_H line short to ground
- F-CAN circuit F-CAN A_L line short to ground
- F-CAN circuit F-CAN B_H line open
- F-CAN circuit F-CAN B_L line open
- F-CAN circuit F-CAN B_H line short to ground
- F-CAN circuit F-CAN B_L line short to ground
- TCM internal circuit failure

Diagnosis Details

Conditions for setting the DTC

When a malfunction is detected, the MIL comes on, the shift position indicator blinks, and a Pending DTC, a Confirmed DTC, and the freeze data are stored in the TCM memory.

Conditions for clearing the DTC

The shift position indicator comes off by turning the vehicle to the OFF (LOCK) mode. The MIL is cleared if the malfunction does not return in three consecutive trips in which the diagnostic runs. The MIL, the Pending DTC, the Confirmed DTC, and the freeze data can be cleared with the scan tool Clear command.

DTC U0151 (CVT (TCM)) (2020 2021)

DTC U0151: Lost Communication With SRS Unit

General Description

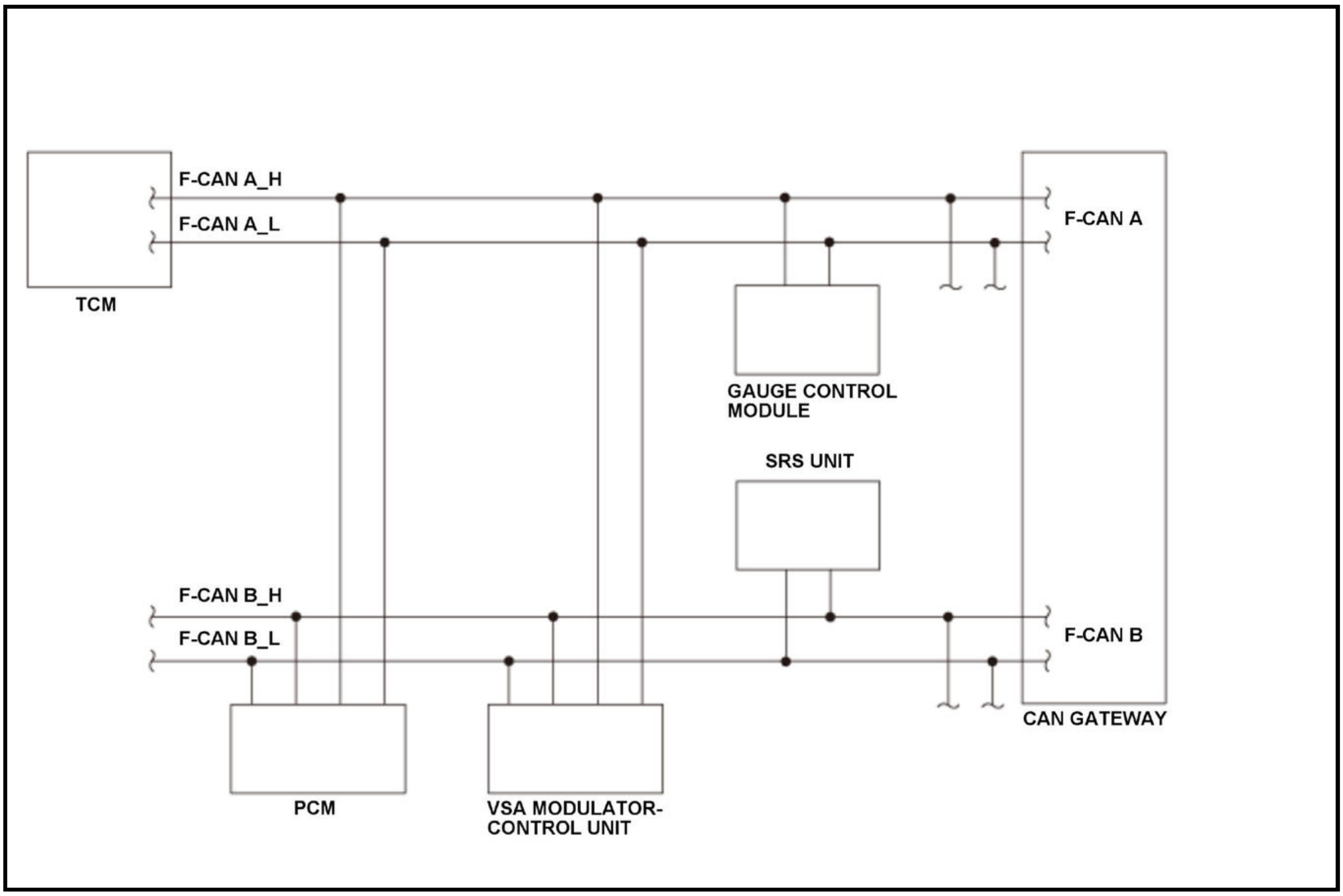
TCM
F-CAN A_H
F-CAN A_L
F-CAN A
GAUGE CONTROL MODULE
SRS UNIT
F-CAN B_H
F-CAN B_L
F-CAN B
CAN GATEWAY
PCM
VSA MODULATOR-CONTROL UNIT

The controller area network (CAN) transmits/receives pulsing signals to/from the control modules simultaneously by using two signal lines (F-CAN_H/F-CAN A_H and F-CAN_L/F-CAN A_L). When the information is not sent from the SRS unit via the F-CAN lines and this condition continues for a specified time or when the information sent from the SRS unit is abnormal and this condition continues for a specified cycle, the transmission control module (TCM) detects a malfunction and stores a DTC.

Monitor Execution, Sequence, Duration, DTC Type

Execution	Continuous
Sequence	None
Duration	1.5 seconds or more
DTC Type	One drive cycle, MIL off, Shift position indicator blinks

Enable Conditions

Condition	Minimum	Maximum
12 volt battery voltage [Battery Voltage]	10.0 V	-

[ ]: HDS Parameter

Malfunction Threshold

One of these conditions is met:

- The TCM does not receive any signals from the SRS unit via F-CAN lines for at least 1.5 seconds.
- The information sent from the SRS unit is abnormal at least 20 times.

Possible Cause

NOTE: The causes shown may not be a complete list of all potential problems, and it is possible that there may be other causes.

- SRS unit failure (include fuse fall-outs)
- F-CAN circuit F-CAN A_H line open
- F-CAN circuit F-CAN A_L line open
- F-CAN circuit F-CAN A_H line short to ground
- F-CAN circuit F-CAN A_L line short to ground
- F-CAN circuit F-CAN B_H line open
- F-CAN circuit F-CAN B_L line open
- F-CAN circuit F-CAN B_H line short to ground
- F-CAN circuit F-CAN B_L line short to ground
- TCM internal circuit failure

Diagnosis Details

Conditions for setting the DTC

When a malfunction is detected, the shift position indicator blinks and a Pending DTC, a Confirmed DTC, and the freeze data are stored in the TCM memory. The MIL does not come on.

Conditions for clearing the DTC

The shift position indicator comes off by turning the vehicle to the OFF (LOCK) mode. The Pending DTC, the Confirmed DTC, and the freeze data can be cleared with the scan tool Clear command.

DTC U0155 (CVT (TCM))

DTC U0155: Lost Communication With Gauge Control Module

General Description

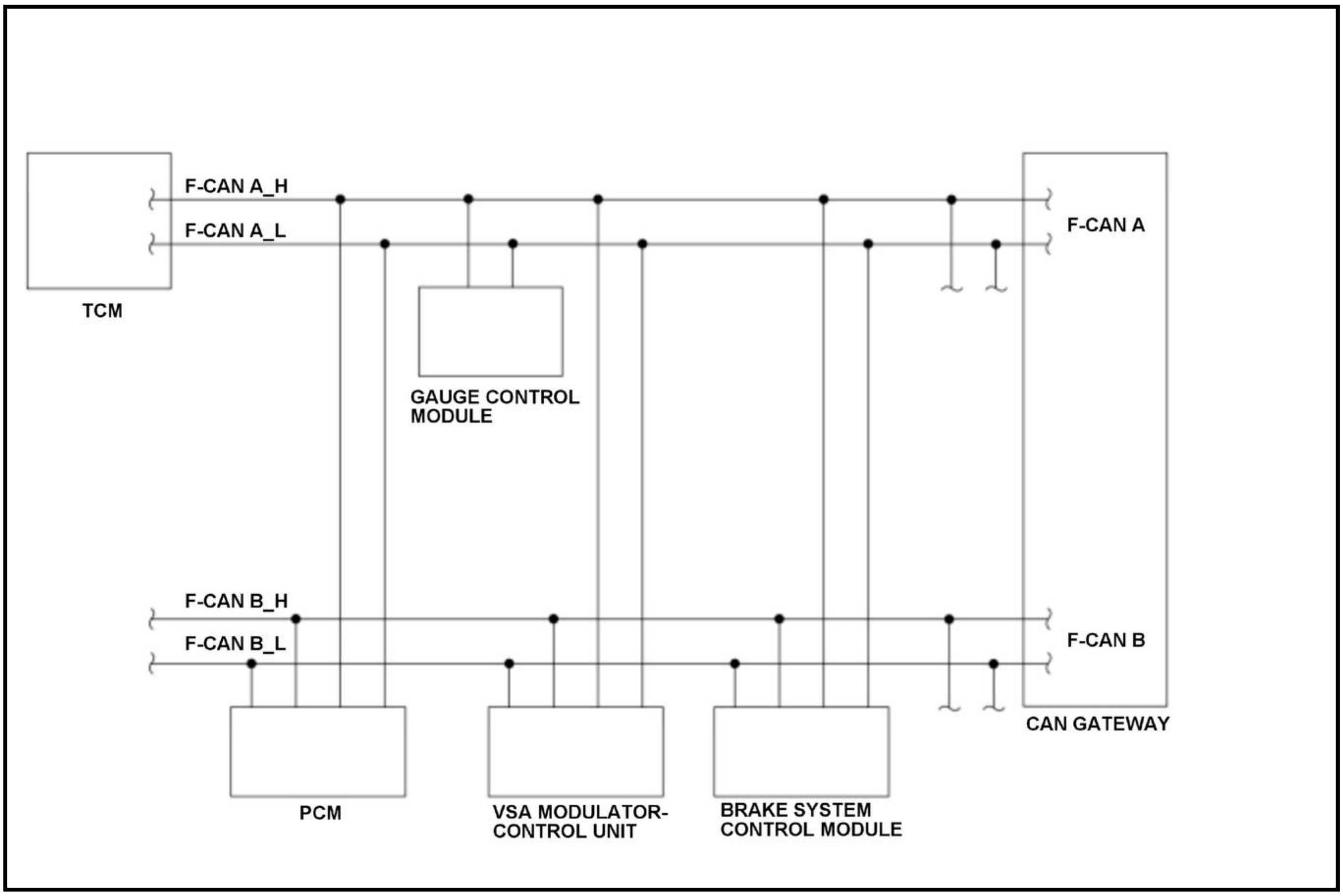
F-CAN A_H
F-CAN A_L
TCM
GAUGE CONTROL MODULE
F-CAN A
F-CAN B_H
F-CAN B_L
F-CAN B
CAN GATEWAY
PCM
VSA MODULATOR-CONTROL UNIT
BRAKE SYSTEM CONTROL MODULE

The controller area network (CAN) transmits/receives pulsing signals to/from the control modules simultaneously by using two signal lines (F-CAN A_H and F-CAN A_L). When the information is not sent from the gauge control module via the F-CAN lines and this condition continues for a specified time or when the information sent from the gauge control module is abnormal and this condition continues for a specified cycle, the transmission control module (TCM) detects a malfunction and stores a DTC.

Monitor Execution, Sequence, Duration, DTC Type

Execution	Continuous
Sequence	None
Duration	1.5 seconds or more
DTC Type	One drive cycle, MIL off, Shift position indicator blinks

Enable Conditions

Condition	Minimum	Maximum
12 volt battery voltage [Battery Voltage]	10.0 V	-

[ ]: HDS Parameter

Malfunction Threshold

One of these conditions is met:

- The TCM does not receive any signals from the gauge control module via F-CAN lines for at least 1.5 seconds.
- The information sent from the gauge control module is abnormal at least 20 times.

Possible Cause

NOTE: The causes shown may not be a complete list of all potential problems, and it is possible that there may be other causes.

- Gauge control module failure (include fuse fall-outs)
- F-CAN circuit F-CAN A_H line open
- F-CAN circuit F-CAN A_L line open
- F-CAN circuit F-CAN A_H line short to ground
- F-CAN circuit F-CAN A_L line short to ground
- F-CAN circuit F-CAN B_H line open
- F-CAN circuit F-CAN B_L line open
- F-CAN circuit F-CAN B_H line short to ground
- F-CAN circuit F-CAN B_L line short to ground
- TCM internal circuit failure

Diagnosis Details

Conditions for setting the DTC

When a malfunction is detected, the MIL comes on, the shift position indicator blinks, and a Pending DTC, a Confirmed DTC, and the freeze data are stored in the TCM memory.

Conditions for clearing the DTC

The shift position indicator comes off by turning the vehicle to the OFF (LOCK) mode. The MIL is cleared if the malfunction does not return in three consecutive trips in which the diagnostic runs. The MIL, the Pending DTC, the Confirmed DTC, and the freeze data can be cleared with the scan tool Clear command.

DTC U0302 (CVT (TCM))

DTC U0302: PGM-FI System and A/T System Program Version Mismatch

General Description

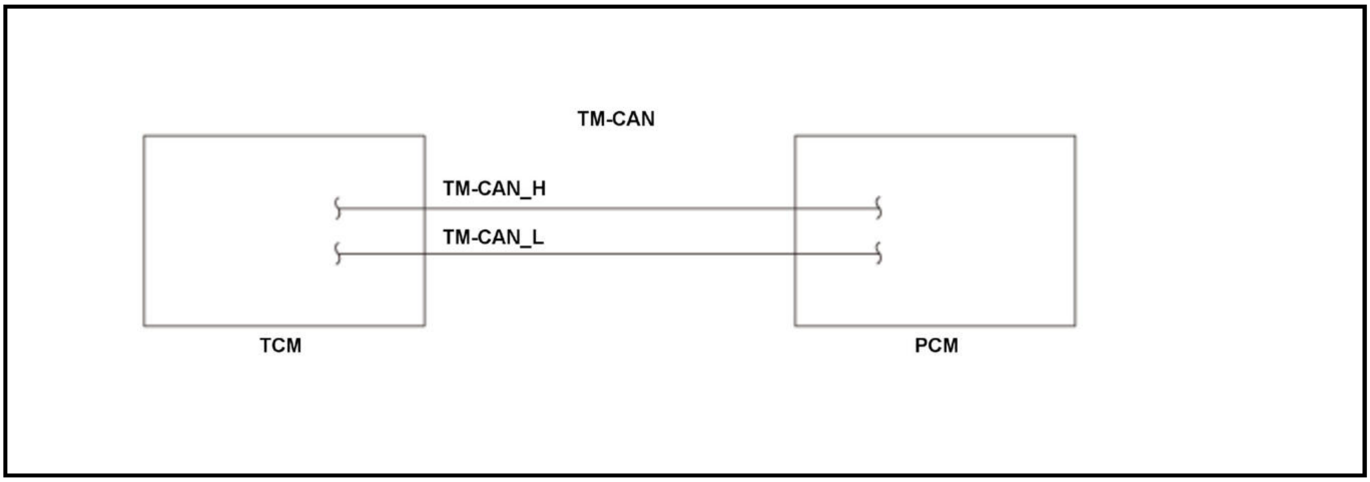

The transmission control module (TCM) and the powertrain control module (PCM) uses communication line (TM-CAN_H and TM-CAN_L) to transmit/receive multiple signals simultaneously. When the software version in the TCM and software version sent from the PCM via the TM-CAN lines are mismatched (software version of the TCM is old compared to the PCM) for a set time, the TCM detects a malfunction and stores a DTC.

Monitor Execution, Sequence, Duration, DTC Type

Execution	Continuous
Sequence	None

Duration	1 second or more
DTC Type	One drive cycle, MIL on, Shift position indicator blinks

Enable Conditions

Condition	B
Vehicle	ON mode

Malfunction Threshold

The software version in the TCM and software version sent from the PCM via the TM-CAN lines are mismatched (software version of the TCM is old compared to the PCM) for at least 1 second.

Possible Cause

NOTE: The causes shown may not be a complete list of all potential problems, and it is possible that there may be other causes.

- Software version of the TCM is old compared to the PCM

Diagnosis Details

Conditions for setting the DTC

When a malfunction is detected, the MIL comes on, the shift position indicator blinks, and a Pending DTC, a Confirmed DTC, and the freeze data are stored in the TCM memory.

Conditions for clearing the DTC

The shift position indicator comes off by turning the vehicle to the OFF (LOCK) mode. The MIL is cleared if the malfunction does not return in three consecutive trips in which the diagnostic runs. The MIL, the Pending DTC, the Confirmed DTC, and the freeze data can be cleared with the scan tool Clear command.

DTC U1260 (CVT (TCM)) (2020 2021)

DTC U1260: Lost Communication With Auxiliary Transmission Fluid Pump

General Description

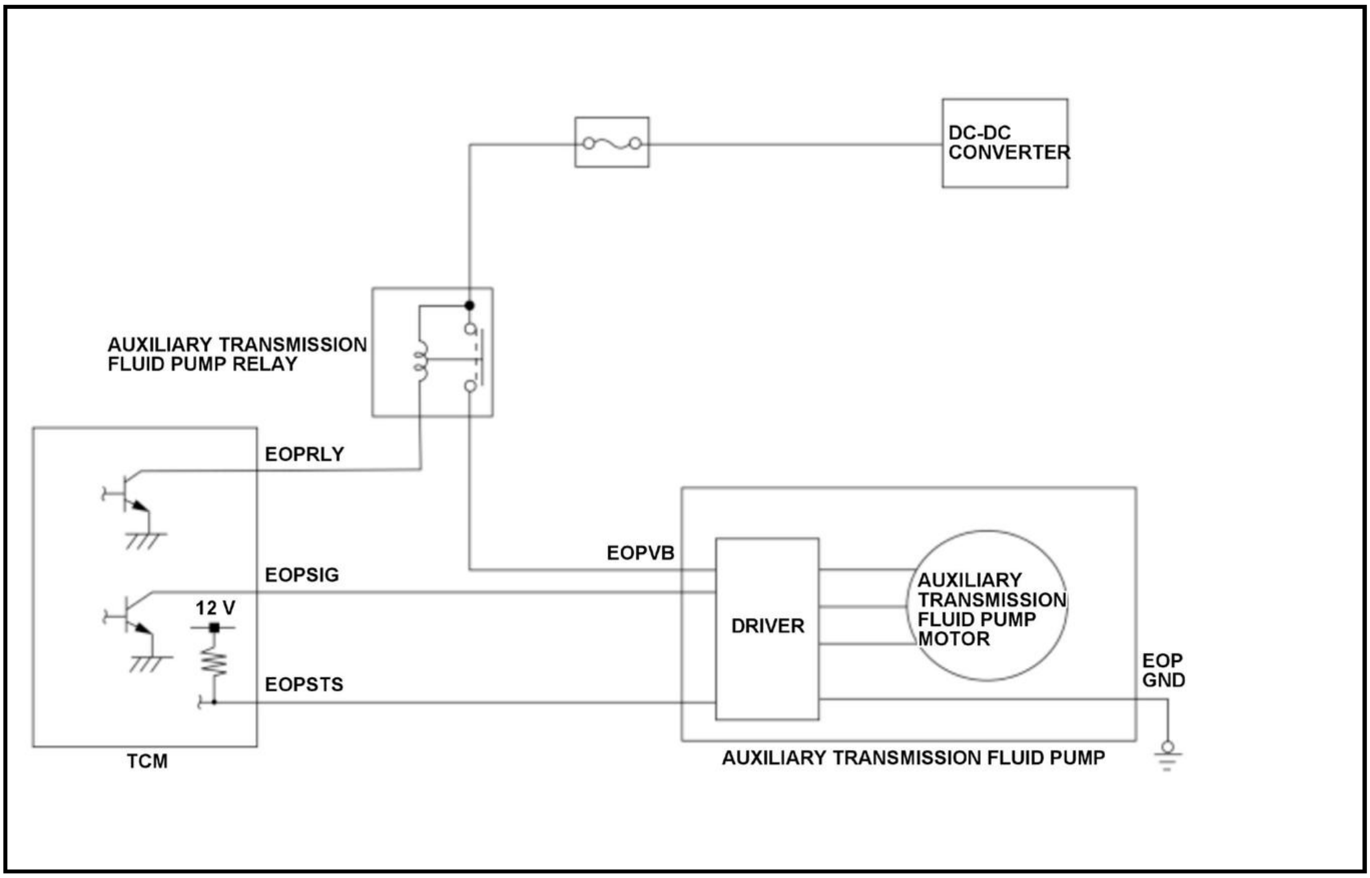
DC-DC CONVERTER
AUXILIARY TRANSMISSION FLUID PUMP RELAY
EOPRLY
EOPSIG
12 V
EOPSTS
TCM
EOPVB
DRIVER
AUXILIARY TRANSMISSION FLUID PUMP MOTOR
EOP GND
AUXILIARY TRANSMISSION FLUID PUMP

The auxiliary transmission fluid pump provides hydraulic pressure to control the CVT instead of the transmission fluid pump that would stop at auto idle stop. The auxiliary transmission fluid pump system consists of the three-phase brushless motor (to drive the fluid pump), the driver, and the auxiliary transmission fluid pump relay. The power source that drives the auxiliary transmission fluid pump is provided from the DC-DC converter via the auxiliary transmission fluid pump relay that is controlled by the transmission control module (TCM). The TCM and the auxiliary transmission fluid pump are connected by two communication lines (EOPSIG, EOPSTS). The TCM sends a start command (90 % duty ratio) or a stop command (5 % duty ratio) to the auxiliary transmission fluid pump by pulse width modulation (PWM) (100 Hz). In accordance to the start (or stop) command from the TCM, the auxiliary transmission fluid pump starts (or stops) the auxiliary transmission fluid pump motor. The auxiliary transmission fluid pump sends its motor speed data to the TCM using the pulse. The auxiliary transmission fluid pump motor rotates at a motor speed of 1, 000 - 5, 000 min-1 (rpm) which varies depending on transmission fluid temperature. The motor speed could be obtained from the product of 30 times pulse frequency (Hz) (ex. 3, 000 min-1 (rpm) when 100 Hz). If the auxiliary transmission fluid pump motor speed is a specified speed for certain period of time when the TCM sends a start command (100 Hz, 90 % duty ratio), the TCM detects a malfunction and stores a DTC.

Monitor Execution, Sequence, Duration, DTC Type

Execution	Continuous
Sequence	None
Duration	5 seconds or more
DTC Type	Two drive cycles, MIL off, Shift position indicator blinks

Enable Conditions

Condition	Minimum	Maximum
12 volt battery voltage [Battery Voltage]	10 V	-
State of the engine	During auto idle stop operation	

[ ]: HDS Parameter

Malfunction Threshold

The auxiliary transmission fluid pump motor speed is 301 min-1 (rpm) or less for at least 5 seconds when the TCM sends a start command (100 Hz, 90 % duty ratio).

Possible Cause

NOTE: The causes shown may not be a complete list of all potential problems, and it is possible that there may be other causes.

- Auxiliary transmission fluid pump EOPSTS line open
- Auxiliary transmission fluid pump EOPSIG line open
- Auxiliary transmission fluid pump EOPSTS line short to ground
- Auxiliary transmission fluid pump EOPSIG line short to ground
- Auxiliary transmission fluid pump EOPSTS line electrical noise overlapped
- Auxiliary transmission fluid pump EOPSIG line electrical noise overlapped
- Auxiliary transmission fluid pump EOPGND line open
- Auxiliary transmission fluid pump EOPVB line open
- TCM EOPRLY line open
- Auxiliary transmission fluid pump relay stuck off
- DC-DC converter power supply abnormal
- Auxiliary transmission fluid pump failure
- TCM internal circuit failure

Confirmation Procedure

Operating Condition

Start the engine and wait for at least 5 seconds in auto idle stop condition.

With the HDS

- Turn the vehicle to the ON mode.
- Select the Auxiliary Transmission Fluid Pump Test in the Miscellaneous Test Menu, and drive the auxiliary transmission fluid pump for at least 5 seconds with the HDS.

Diagnosis Details

Conditions for setting the DTC

When a malfunction is detected during the first drive cycle, a Pending DTC is stored in the TCM memory. If the malfunction returns in the next (second) drive cycle, the shift position indicator blinks and a Confirmed DTC and the freeze data are stored. The MIL does not come on.

Conditions for clearing the DTC

The shift position indicator comes off by turning the vehicle to the OFF (LOCK) mode. The Pending DTC, the Confirmed DTC, and the freeze data can be cleared with the scan tool Clear command.

TROUBLESHOOTING

DTC TROUBLESHOOTING: P0501(CVT (TCM))

DTC P0501 : CVT Speed Sensor Circuit Range/Performance

NOTE:

- Before you troubleshoot, **review the General Troubleshooting Information** .
- This code is caused by an electrical circuit problem and cannot be caused by a mechanical problem in the transmission.

DTC Description	Confirmed DTC	Pending DTC	Freeze Frame
P0501 CVT Speed Sensor Circuit Range/Performance	B	B	B

DTC(CVT)

1. Problem verification

   -1. Turn the vehicle to the ON mode.

   -2. Clear the DTC with the HDS.

   -3. Raise the vehicle on a lift. Make sure it is securely supported, and allow all four wheels to rotate freely.

   -4. **Enter the VSA maintenance mode** .

   -5. Run the vehicle with the shift lever in D position/mode, and the engine speed at 1, 000 rpm or higher, then release the accelerator pedal without pressing it again, for at least 4 seconds. Slow down and stop the wheels.

   -6. Check for Pending or Confirmed DTCs with the HDS.

DTC Description	Confirmed DTC	Pending DTC	Freeze Frame
P0501 CVT Speed Sensor Circuit Range/Performance	B	B	B

   Is DTC P0501 indicated?

   YES

   The failure is duplicated. Go to step 2.

   NO

   Intermittent failure, the system is OK at this time. Check for poor connections and loose terminals between the CVT speed sensor and the TCM. If the freeze data/on-board snapshot of this DTC is recorded, try to reproduce the failure under the same conditions with the freeze data/on-board snapshot.

2. CVT speed sensor installation check

-1. Check for poor connections and loose terminals between the CVT speed sensor and the TCM, and check for proper installation of the CVT speed sensor.

Are the connection and installation OK?

YES

Connection and installation are OK. **Replace the CVT speed sensor** .

NO

Repair faulty connection or installation.

DTC TROUBLESHOOTING: P0502(CVT (TCM))

DTC P0502 : CVT Speed Sensor Circuit Open/Short

NOTE:

- Before you troubleshoot, **review the General Troubleshooting Information** .
- This code is caused by an electrical circuit problem and cannot be caused by a mechanical problem in the transmission.

DTC Description	Confirmed DTC	Pending DTC	Freeze Frame
P0502 CVT Speed Sensor Circuit Open/Short	B	B	B

DTC(CVT)

1. Problem verification

-1. Turn the vehicle to the ON mode.

-2. Clear the DTC with the HDS.

-3. Raise the vehicle on a lift. Make sure it is securely supported, and allow all four wheels to rotate freely.

-4. **Enter the VSA maintenance mode** .

-5. Run the vehicle with the shift lever in D position/mode, and the engine speed at 1, 000 rpm or higher, then release the accelerator pedal without pressing it again, for at least 4 seconds. Slow down and stop the wheels.

-6. Check for Pending or Confirmed DTCs with the HDS.

DTC Description	Confirmed DTC	Pending DTC	Freeze Frame
P0502 CVT Speed Sensor Circuit Open/Short	B	B	B

Is DTC P0502 indicated?

YES

The failure is duplicated. Go to step 2.

NO

Intermittent failure, the system is OK at this time. Check for poor connections and loose terminals between the CVT speed sensor and the TCM. If the freeze data/on-board snapshot of this DTC is recorded, try to reproduce the failure under the same conditions with the freeze data/on-board snapshot.

2. Determine possible failure area (VCC3 line, others)

-1. Turn the vehicle to the OFF (LOCK) mode.

-2. Disconnect the following connector.

CVT speed sensor 3P connector

-3. Turn the vehicle to the ON mode.

-4. Measure the voltage between test points 1 and 2.

Test condition	Vehicle ON mode
B	CVT speed sensor 3P connector: disconnected
Test point 1	CVT speed sensor 3P connector (female terminals) No. 3 : ①
Test point 2	Body ground

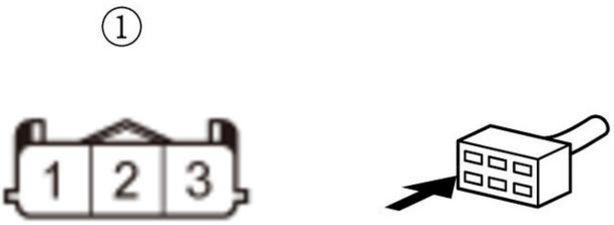

Is there about 5 V?

YES

Go to step 4.

NO

Go to step 3.

3. Open wire check (VCC3 line)

-1. Turn the vehicle to the OFF (LOCK) mode.

-2. Jump the SCS line with the HDS, and wait more than 1 minute.

NOTE: This step must be done to protect the TCM from damage.

-3. Disconnect the following connector.

TCM 50P connector

-4. Check for continuity between test points 1 and 2.

Test condition	Vehicle OFF (LOCK) mode
B	CVT speed sensor 3P connector: disconnected

B	TCM 50P connector: disconnected
Test point 1	CVT speed sensor 3P connector (female terminals) No. 3 : ①
Test point 2	**TCM 50P connector No. 41**

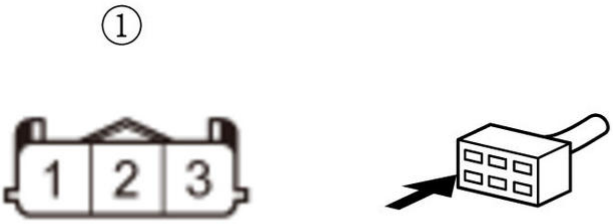

Is there continuity?

YES

The VCC3 wire is OK. Check for any authorized service information related to the DTCs or symptoms you are troubleshooting, or **replace the original TCM** .

NO

Repair an open in the VCC3 wire between the CVT speed sensor and the TCM.

4. Open wire check (SG3 line)

-1. Measure the voltage between test points 1 and 2.

Test condition	Vehicle ON mode
B	CVT speed sensor 3P connector: disconnected
Test point 1	CVT speed sensor 3P connector (female terminals) No. 2 : ①
Test point 2	CVT speed sensor 3P connector (female terminals) No. 3 : ①

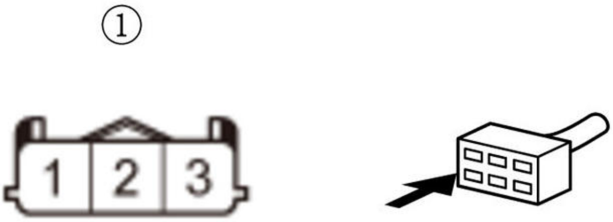

Is there about 5 V?

YES

The SG3 wire is OK. Go to step 5.

NO

Repair an open in the SG3 wire between the CVT speed sensor and the TCM.

5. Shorted wire check (VEL PWM line)

-1. Turn the vehicle to the OFF (LOCK) mode.

-2. Jump the SCS line with the HDS, and wait more than 1 minute.

NOTE: This step must be done to protect the TCM from damage.

-3. Disconnect the following connector.

TCM 50P connector

-4. Check for continuity between test points 1 and 2.

Test condition	Vehicle OFF (LOCK) mode
B	CVT speed sensor 3P connector: disconnected
B	TCM 50P connector: disconnected
Test point 1	CVT speed sensor 3P connector (female terminals) No. 1 : ①
Test point 2	Body ground

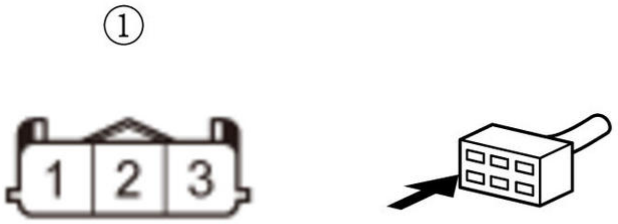

Is there continuity?

YES

Repair a short to ground in the VEL PWM wire between the CVT speed sensor and the TCM.

NO

The VEL PWM wire is not shorted. Go to step 6.

6. Open wire check (VEL PWM line)

-1. Check for continuity between test points 1 and 2.

Test condition	Vehicle OFF (LOCK) mode
B	CVT speed sensor 3P connector: disconnected
B	TCM 50P connector: disconnected

Test point 1	CVT speed sensor 3P connector (female terminals) No. 1 : ①
Test point 2	TCM 50P connector No. 22

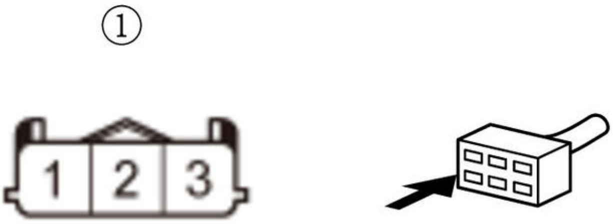

Is there continuity?

YES

The VEL-PWM wire is OK. Replace the CVT speed sensor .

NO

Repair an open in the VEL PWM wire between the CVT speed sensor and the TCM.

DTC TROUBLESHOOTING: P0600(CVT (TCM))

DTC P0600 : Serial Communication

NOTE:

- Before you troubleshoot, review the General Troubleshooting Information .
- This code is caused by an electrical circuit problem and cannot be caused by a mechanical problem in the transmission.

DTC Description	Confirmed DTC	Pending DTC	Freeze Frame
P0600 Serial Communication	B	B	B

DTC(CVT)

1. Problem verification

   -1. Turn the vehicle to the ON mode.

   -2. Clear the DTC with the HDS.

   -3. Turn the vehicle to the OFF (LOCK) mode.

   -4. Turn the vehicle to the ON mode.

   -5. Check for Pending or Confirmed DTCs with the HDS.

DTC Description	Confirmed DTC	Pending DTC	Freeze Frame
P0600 Serial Communication	B	B	B

Is DTC P0600 indicated?

YES

The failure is duplicated. Check for any authorized service information related to the DTCs or symptoms you are troubleshooting, or **replace the original TCM** .

NO

Intermittent failure, the system is OK at this time. Check for poor connections and loose terminals at the TCM. If the freeze data/on-board snapshot of this DTC is recorded, try to reproduce the failure under the same conditions with the freeze data/on-board snapshot.

DTC TROUBLESHOOTING: P0602(CVT (TCM))

DTC P0602 : Boot Mode(Programming Error)

NOTE:

- Before you troubleshoot, **review the General Troubleshooting Information** .
- This DTC is indicated when the TCM update procedure is not completed.
- Do not turn the vehicle to the OFF (LOCK) mode while updating the TCM. If you do, the TCM can be damaged.

DTC Description	Confirmed DTC	Pending DTC	Freeze Frame
P0602 Boot Mode(Programming Error)	B	B	B

DTC(CVT)

1. Problem verification (update)

-1. Turn the vehicle to the ON mode.

-2. Clear the DTC with the HDS.

-3. **Update the TCM** .

-4. Turn the vehicle to the OFF (LOCK) mode.

-5. Turn the vehicle to the ON mode.

-6. Check for Pending or Confirmed DTCs with the HDS.

DTC Description	Confirmed DTC	Pending DTC	Freeze Frame
P0602 Boot Mode(Programming Error)	B	B	B

Is DTC P0602 indicated?

YES

The failure is duplicated. **Replace the TCM** .

NO

Update is complete.

DTC TROUBLESHOOTING: P062F(CVT (TCM))

DTC P062F : TCM Internal Control Module Error

NOTE:

- Before you troubleshoot, **review the General Troubleshooting Information** .
- This code is caused by an electrical circuit problem and cannot be caused by a mechanical problem in the transmission.

DTC Description	Confirmed DTC	Pending DTC	Freeze Frame
P062F TCM Internal Control Module Error	B	B	B

DTC(CVT)

1. Problem verification

    -1. Turn the vehicle to the ON mode.

    -2. Clear the DTC with the HDS.

    -3. Turn the vehicle to the OFF (LOCK) mode.

    -4. Turn the vehicle to the ON mode.

    -5. Check for Pending or Confirmed DTCs with the HDS.

DTC Description	Confirmed DTC	Pending DTC	Freeze Frame
P062F TCM Internal Control Module Error	B	B	B

    Is DTC P062F indicated?

    YES

    The failure is duplicated. Check for any authorized service information related to the DTCs or symptoms you are troubleshooting, or **replace the original TCM** .

    NO

    Intermittent failure, the system is OK at this time. Check for poor connections and loose terminals at the TCM. If the freeze data/on-board snapshot of this DTC is recorded, try to reproduce the failure under the same conditions with the freeze data/on-board snapshot.

DTC TROUBLESHOOTING: P0641(CVT (TCM))

DTC P0641 : Sensor Reference Voltage 1 Circuit Malfunction

NOTE:

- Before you troubleshoot, **review the General Troubleshooting Information** .
- This code is caused by an electrical circuit problem and cannot be caused by a mechanical problem in the transmission.

DTC Description	Confirmed DTC	Pending DTC	Freeze Frame
P0641 Sensor Reference Voltage 1 Circuit Malfunction	B	B	B

DTC(CVT)

1. Problem verification

    -1. Turn the vehicle to the ON mode.

    -2. Clear the DTC with the HDS.

-3. Turn the vehicle to the OFF (LOCK) mode.

-4. Turn the vehicle to the ON mode.

-5. Check for Pending or Confirmed DTCs with the HDS.

DTC Description	Confirmed DTC	Pending DTC	Freeze Frame
P0641 Sensor Reference Voltage 1 Circuit Malfunction	B	B	B

Is DTC P0641 indicated?

YES

The failure is duplicated. Go to step 2.

NO

Intermittent failure, the system is OK at this time. Check for poor connections and loose terminals between the TCM and the following parts. If the freeze data/on-board snapshot of this DTC is recorded, try to reproduce the failure under the same conditions with the freeze data/on-board snapshot.

- CVT drive pulley speed sensor
- CVT driven pulley pressure sensor

2. Determine possible failure area (VCC lines, others)

-1. Clear the DTC with the HDS.

-2. Turn the vehicle to the OFF (LOCK) mode.

-3. Disconnect the following connector.

CVT drive pulley speed sensor 3P connector
CVT driven pulley pressure sensor 3P connector

-4. Turn the vehicle to the ON mode.

-5. Check for Pending or Confirmed DTCs with the HDS.

DTC Description	Confirmed DTC	Pending DTC	Freeze Frame
P0641 Sensor Reference Voltage 1 Circuit Malfunction	B	B	B

Is DTC P0641 indicated?

YES

Go to step 4.

NO

Go to step 3.

3. Shorted part check:

Check for Pending or Confirmed DTCs with the HDS while reconnecting these parts, one at a time:

- CVT drive pulley speed sensor

- CVT driven pulley pressure sensor

DTC Description	Confirmed DTC	Pending DTC	Freeze Frame
P0641 Sensor Reference Voltage 1 Circuit Malfunction	B	B	B

Is DTC P0641 indicated?

YES

Replace the part that caused the DTC when it was reconnected.

NO

Check for poor connections and loose terminals at the TCM and the following parts, then go to step 1.

- CVT drive pulley speed sensor
- CVT driven pulley pressure sensor

4. Shorted wire check (VCC lines to ground)

-1. Turn the vehicle to the OFF (LOCK) mode.

-2. Jump the SCS line with the HDS, and wait more than 1 minute.

NOTE: This step must be done to protect the TCM from damage.

-3. Disconnect the following connector.

TCM 50P connector

-4. Check for continuity between these test points and body ground individually.

Test condition	Vehicle OFF (LOCK) mode
B	CVT drive pulley speed sensor 3P connector: disconnected
B	CVT driven pulley pressure sensor 3P connector: disconnected
B	TCM 50P connector: disconnected

Connector	Terminal
TCM 50P connector	No. 17
	No. 18

Is there continuity?

YES

Repair a short to ground in the VCC wire between the TCM and each part that was disconnected in step 2.

NO

Go to step 5.

5. Shorted wire check (VCC lines to power)

-1. Turn the vehicle to the ON mode.

-2. Measure the voltage between these test points and body ground individually.

Test condition	Vehicle ON mode
B	CVT drive pulley speed sensor 3P connector: disconnected
B	CVT driven pulley pressure sensor 3P connector: disconnected
B	TCM 50P connector: disconnected

Connector	Terminal
TCM 50P connector	No. 17
	No. 18

Is there battery voltage?

YES

Repair a short to power in the VCC wire between the TCM and each part that was disconnected in step 2.

NO

The VCC wires are OK. Check for any authorized service information related to the DTCs or symptoms you are troubleshooting, or **replace the original TCM** .

DTC TROUBLESHOOTING: P0651(CVT (TCM))

DTC P0651 : Sensor Reference Voltage 2 Circuit Malfunc

NOTE:

- Before you troubleshoot, **review the General Troubleshooting Information** .
- This code is caused by an electrical circuit problem and cannot be caused by a mechanical problem in the transmission.

DTC Description	Confirmed DTC	Pending DTC	Freeze Frame
P0651 Sensor Reference Voltage 2 Circuit Malfunc	B	B	B

DTC(CVT)

1. Problem verification

-1. Turn the vehicle to the ON mode.

-2. Clear the DTC with the HDS.

-3. Turn the vehicle to the OFF (LOCK) mode.

-4. Turn the vehicle to the ON mode.

-5. Check for Pending or Confirmed DTCs with the HDS.

DTC Description	Confirmed DTC	Pending DTC	Freeze Frame
P0651 Sensor Reference Voltage 2 Circuit Malfunc	B	B	B

Is DTC P0651 indicated?

YES

The failure is duplicated. Go to step 2.

NO

Intermittent failure, the system is OK at this time. Check for poor connections and loose terminals between the TCM and the following parts. If the freeze data/on-board snapshot of this DTC is recorded, try to reproduce the failure under the same conditions with the freeze data/on-board snapshot.

- CVT speed sensor
- Torque converter turbine speed sensor

2. Determine possible failure area (VCC lines, others)

-1. Clear the DTC with the HDS.

-2. Turn the vehicle to the OFF (LOCK) mode.

-3. Disconnect the following connectors.

CVT speed sensor 3P connector
Torque converter turbine speed sensor 3P connector

-4. Turn the vehicle to the ON mode.

-5. Check for Pending or Confirmed DTCs with the HDS.

DTC Description	Confirmed DTC	Pending DTC	Freeze Frame
P0651 Sensor Reference Voltage 2 Circuit Malfunc	B	B	B

Is DTC P0651 indicated?

YES

Go to step 4.

NO

Go to step 3.

3. Shorted part check:

Check for Pending or Confirmed DTCs with the HDS while reconnecting these parts, one at a time:

- CVT speed sensor
- Torque converter turbine speed sensor

DTC Description	Confirmed DTC	Pending DTC	Freeze Frame
P0651 Sensor Reference Voltage 2 Circuit Malfunc	B	B	B

Is DTC P0651 indicated?

YES

Replace the part that caused the DTC when it was reconnected.

NO

Check for poor connections and loose terminals at the TCM and the following parts, then go to step 1.

- CVT speed sensor
- Torque converter turbine speed sensor

4. Shorted wire check (VCC lines to ground)

-1. Turn the vehicle to the OFF (LOCK) mode.

-2. Jump the SCS line with the HDS, and wait more than 1 minute.

NOTE: This step must be done to protect the TCM from damage.

-3. Disconnect the following connector.

TCM 50P connector

-4. Check for continuity between these test points and body ground individually.

Test condition	Vehicle OFF (LOCK) mode
B	CVT speed sensor 3P connector: disconnected
B	Torque converter turbine speed sensor 3P connector: disconnected
B	TCM 50P connector: disconnected

Connector	Terminal
TCM 50P connector	No. 21
	No. 41

Is there continuity?

YES

Repair a short to ground in the VCC wire between the TCM and each part that was disconnected in step 2.

NO

Go to step 5.

5. Shorted wire check (VCC lines to power)

-1. Turn the vehicle to the ON mode.

-2. Measure the voltage between these test points and body ground individually.

Test condition	Vehicle ON mode
	CVT speed sensor 3P connector: disconnected
	Torque converter turbine speed sensor 3P connector: disconnected
	TCM 50P connector: disconnected

Connector	Terminal
TCM 50P connector	No. 21
	No. 41

Is there battery voltage?

YES

Repair a short to power in the VCC wire between the TCM and each part that was disconnected in step 2.

NO

The VCC wires are OK. Check for any authorized service information related to the DTCs or symptoms you are troubleshooting, or **replace the original TCM** .

DTC TROUBLESHOOTING: P06A8(CVT (TCM))

DTC P06A8 : Internal VCC Power Malfunction

NOTE:

- Before you troubleshoot, **review the General Troubleshooting Information** .
- This code is caused by an electrical circuit problem and cannot be caused by a mechanical problem in the transmission.

DTC Description	Confirmed DTC	Pending DTC	Freeze Frame
P06A8 Internal VCC Power Malfunction	B	B	B

DTC(CVT)

1. Problem verification

    -1. Turn the vehicle to the ON mode.

    -2. Clear the DTC with the HDS.

    -3. Turn the vehicle to the OFF (LOCK) mode.

    -4. Turn the vehicle to the ON mode.

    -5. Check for Pending or Confirmed DTCs with the HDS.

DTC Description	Confirmed DTC	Pending DTC	Freeze Frame
P06A8 Internal VCC Power Malfunction	B	B	B

    Is DTC P06A8 indicated?

    YES

    The failure is duplicated. Check for any authorized service information related to the DTCs or symptoms you are troubleshooting, or **replace the original TCM** .

    NO

    Intermittent failure, the system is OK at this time. Check for poor connections and loose terminals at the TCM. If the freeze data/on-board snapshot of this DTC is recorded, try to reproduce the failure under the same conditions with the freeze data/on-board snapshot.

DTC TROUBLESHOOTING: P0705(CVT (TCM))

DTC P0705 : Transmission Range Switch Multiple Shift Position Input

NOTE:

- Before you troubleshoot, **review the General Troubleshooting Information** .
- This code is caused by an electrical circuit problem and cannot be caused by a mechanical problem in the transmission.

DTC Description	Confirmed DTC	Pending DTC	Freeze Frame
P0705 Transmission Range Switch Multiple Shift Position Input	B	B	B

DTC(CVT)

1. Problem verification

   -1. Turn the vehicle to the ON mode.

   -2. Compare the transmission range switch signal inputs with the HDS to the following table, in each shift lever position/mode.

Signal	Threshold						Current conditions	
	P	R	N	D	S	L	Values	Unit
A/T P Switch	ON	OFF	OFF	OFF	OFF	OFF	B	B
A/T R Switch	OFF	ON	OFF	OFF	OFF	OFF	B	B
A/T N Switch	OFF	OFF	ON	OFF	OFF	OFF	B	B

Signal	Threshold						Current conditions	
	P	R	N	D	S	L	Values	Unit
A/T D Switch	OFF	OFF	OFF	ON	OFF	OFF	B	B
A/T S Switch	OFF	OFF	OFF	OFF	ON	OFF	B	B
A/T L Switch	OFF	OFF	OFF	OFF	OFF	ON	B	B
ATP-FWD	OFF	OFF	OFF	ON	ON	ON	B	B
ATP-RVS	OFF	ON	OFF	OFF	OFF	OFF	B	B

   Do the transmission range switch signals match?

   YES

   Intermittent failure, the system is OK at this time. Check for poor connections and loose terminals between the transmission range switch and the TCM. If the freeze data/on-board snapshot of this DTC is recorded, try to reproduce the failure under the same conditions with the freeze data/on-board snapshot.

   NO

   The failure is duplicated. Go to step 2.

2. Transmission range switch signal check

   -1. Compare the transmission range switch signal inputs with the HDS to the following table, in each shift lever position/mode.

Signal	Threshold						Current conditions	
	P	R	N	D	S	L	Values	Unit
A/T P Switch	ON	OFF	OFF	OFF	OFF	OFF	B	B
A/T R Switch	OFF	ON	OFF	OFF	OFF	OFF	B	B
A/T N Switch	OFF	OFF	ON	OFF	OFF	OFF	B	B
A/T D Switch	OFF	OFF	OFF	ON	OFF	OFF	B	B
A/T S Switch	OFF	OFF	OFF	OFF	ON	OFF	B	B
A/T L Switch	OFF	OFF	OFF	OFF	OFF	ON	B	B
Forward Switch	OFF	OFF	OFF	ON	ON	ON	B	B
Reverse Switch(ATPRVS)	OFF	ON	OFF	OFF	OFF	OFF	B	B

Are any transmission range switch signals ON in all shift lever positions/modes?

YES

Record the abnormal circuit, then go to step 4.

NO

Record the abnormal circuit, then go to step 3.

3. Transmission range switch check

-1. Turn the vehicle to the OFF (LOCK) mode.

-2. Disconnect the following connector.

Transmission range switch 10P connector

-3. Connect the transmission range switch connector terminal that incorrectly indicates ON in step 2 to ground with a jumper wire.

Signal	**Transmission range switch 10P connector (female terminals) : ①**
	Terminal number
A/T P Switch	5
A/T R Switch	4
A/T N Switch	9
A/T D Switch	3

Signal	**Transmission range switch 10P connector (female terminals) : ①**
	Terminal number
A/T S Switch	8
A/T L Switch	2
Forward Switch	6
Reverse Switch(ATPRVS)	10

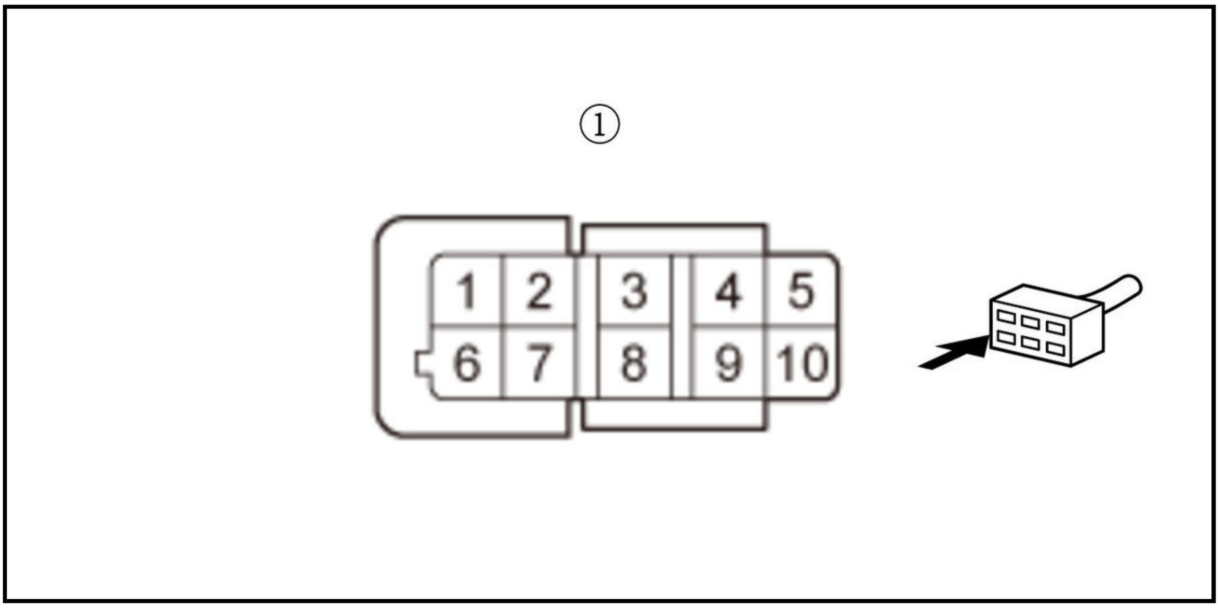

-4. Turn the vehicle to the ON mode.

-5. Compare the transmission range switch signal inputs with the HDS to the following table.

Signal	Current conditions	
	Values	Unit
A/T P Switch	B	B
A/T R Switch	B	B
A/T N Switch	B	B
A/T D Switch	B	B
A/T S Switch	B	B
A/T L Switch	B	B
Forward Switch	B	B
Reverse Switch(ATPRVS)	B	B

Do multiple transmission range switch signals indicate ON?

YES

The transmission range switch is OK. Repair a short in the wires between the corresponding transmission range switch connector terminal and the TCM. Refer to the following table.

B	ATPP	ATPR	ATPN	ATPD	ATPS	ATPL	ATP-FWD	ATP-RVS
TCM	48	47	46	37	36	35	44	43
Transmission range switch	5	4	9	3	8	2	6	10

NO

Replace the transmission range switch .

4. Transmission range switch check

-1. Turn the vehicle to the OFF (LOCK) mode.

-2. Disconnect the following connector.

Transmission range switch 10P connector

-3. Turn the vehicle to the ON mode.

-4. Check the transmission range switch signal input that remained ON with the HDS to the following table.

Signal	Current conditions	
	Values	Unit
A/T P Switch	B	B
A/T R Switch	B	B
A/T N Switch	B	B
A/T D Switch	B	B
A/T S Switch	B	B
A/T L Switch	B	B
Forward Switch	B	B
Reverse Switch(ATPRVS)	B	B

Do any transmission range switch signals remain ON?

YES

The transmission range switch is OK. Go to step 5.

NO

Replace the transmission range switch .

5. Shorted wire check (corresponding line)

-1. Turn the vehicle to the OFF (LOCK) mode.

-2. Jump the SCS line with the HDS, and wait more than 1 minute.

NOTE: This step must be done to protect the TCM from damage.

-3. Disconnect the following connector.

TCM 50P connector

-4. Check for continuity between the connector terminal on the circuit that remained ON in step 4 and ground; refer to the following table.

Signal	**Transmission range switch 10P connector (female terminals) : ①**
	Terminal number
A/T P Switch	5
A/T R Switch	4
A/T N Switch	9
A/T D Switch	3
A/T S Switch	8
A/T L Switch	2
Forward Switch	6
Reverse Switch(ATPRVS)	10

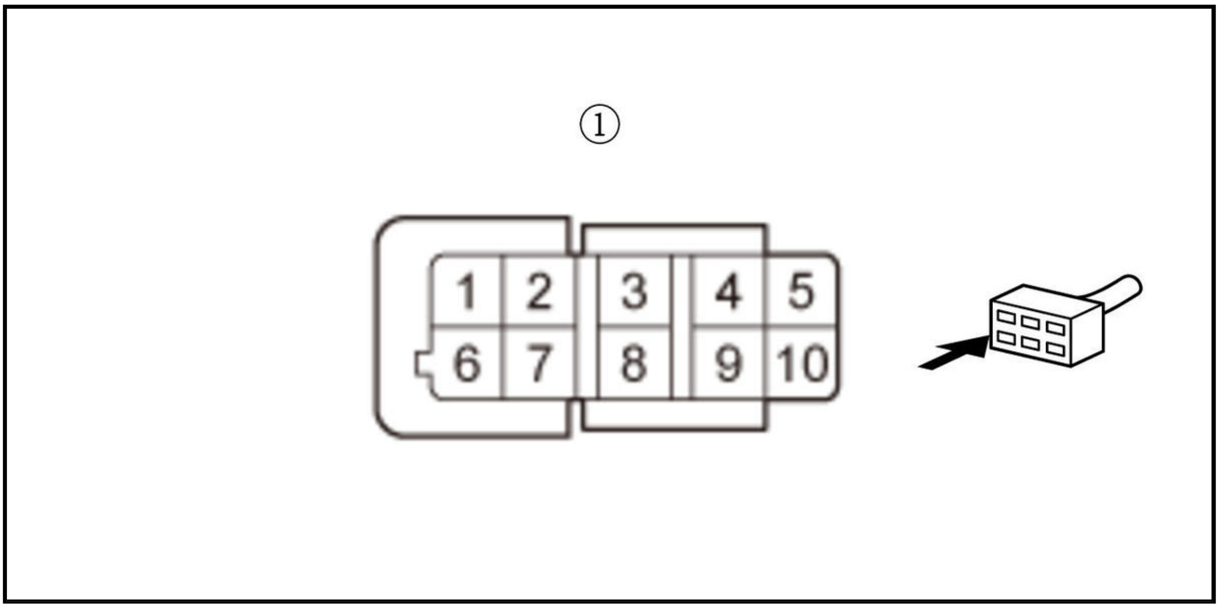

Does the circuit that indicated ON have continuity to ground?

YES

Repair a short to ground in the wire between the corresponding transmission range switch connector terminal, the shift position indicator, and the TCM.

NO

The wires are OK. Check for any authorized service information related to the DTCs or symptoms you are troubleshooting, or **replace the original TCM** .

DTC TROUBLESHOOTING: P0706(CVT (TCM))

DTC P0706 : Transmission Range Switch Open

NOTE:

- Before you troubleshoot, **review the General Troubleshooting Information** .
- This code is caused by an electrical circuit problem and cannot be caused by a mechanical problem in the transmission.

DTC Description	Confirmed DTC	Pending DTC	Freeze Frame
P0706 Transmission Range Switch Open	B	B	B

DTC(CVT)

1. Problem verification

-1. **Make sure the shift cable is properly adjusted** .

-2. Turn the vehicle to the ON mode.

-3. Compare the transmission range switch signal inputs with the HDS to the following table, in each shift lever position/mode.

Signal	Threshold						Current conditions	
	P	R	N	D	S	L	Values	Unit
A/T P Switch	ON	OFF	OFF	OFF	OFF	OFF	B	B
A/T R Switch	OFF	ON	OFF	OFF	OFF	OFF	B	B
A/T N Switch	OFF	OFF	ON	OFF	OFF	OFF	B	B

Signal	Threshold						Current conditions	
	P	R	N	D	S	L	Values	Unit
A/T D Switch	OFF	OFF	OFF	ON	OFF	OFF	B	B
A/T S Switch	OFF	OFF	OFF	OFF	ON	OFF	B	B
A/T L Switch	OFF	OFF	OFF	OFF	OFF	ON	B	B
ATP-FWD	OFF	OFF	OFF	ON	ON	ON	B	B
ATP-RVS	OFF	ON	OFF	OFF	OFF	OFF	B	B

Are the transmission range switch signals OK?

YES

Intermittent failure, the system is OK at this time. Check for poor connections and loose terminals between the transmission range switch and the TCM. If the freeze data/on-board snapshot of this DTC is recorded, try to reproduce the failure under the same conditions with the freeze data/on-board snapshot.

NO

The failure is duplicated. Go to step 2.

2. Transmission range switch signal check

-1. Compare the transmission range switch signal inputs with the HDS to the following table, in each shift lever position/mode.

Signal	**Threshold**						**Current conditions**	
	P	**R**	**N**	**D**	**S**	**L**	**Values**	**Unit**
A/T P Switch	ON	OFF	OFF	OFF	OFF	OFF	B	B
A/T R Switch	OFF	ON	OFF	OFF	OFF	OFF	B	B
A/T N Switch	OFF	OFF	ON	OFF	OFF	OFF	B	B
A/T D Switch	OFF	OFF	OFF	ON	OFF	OFF	B	B
A/T S Switch	OFF	OFF	OFF	OFF	ON	OFF	B	B
A/T L Switch	OFF	OFF	OFF	OFF	OFF	ON	B	B
ATP-FWD	OFF	OFF	OFF	ON	ON	ON	B	B
ATP-RVS	OFF	ON	OFF	OFF	OFF	OFF	B	B

Do all transmission range switch signals remain OFF?

YES

Go to step 5.

NO

Records the abnormal circuit, then go to step 3.

3. Transmission range switch check

-1. Turn the vehicle to the OFF (LOCK) mode.

-2. Disconnect the following connector.

Transmission range switch 10P connector

-3. Connect the transmission range switch connector terminal that did not indicate ON in step 2 to ground with a jumper wire; refer to the following table.

Signal	**Transmission range switch 10P connector (female terminals) : ①**
	Terminal number
A/T P Switch	5
A/T R Switch	4
A/T N Switch	9
A/T D Switch	3
A/T S Switch	8

Signal	**Transmission range switch 10P connector (female terminals) : ①**
	Terminal number
A/T L Switch	2
Forward Switch	6

Signal	Transmission range switch 10P connector (female terminals) : ①
	Terminal number
Reverse Switch(ATPRVS)	10

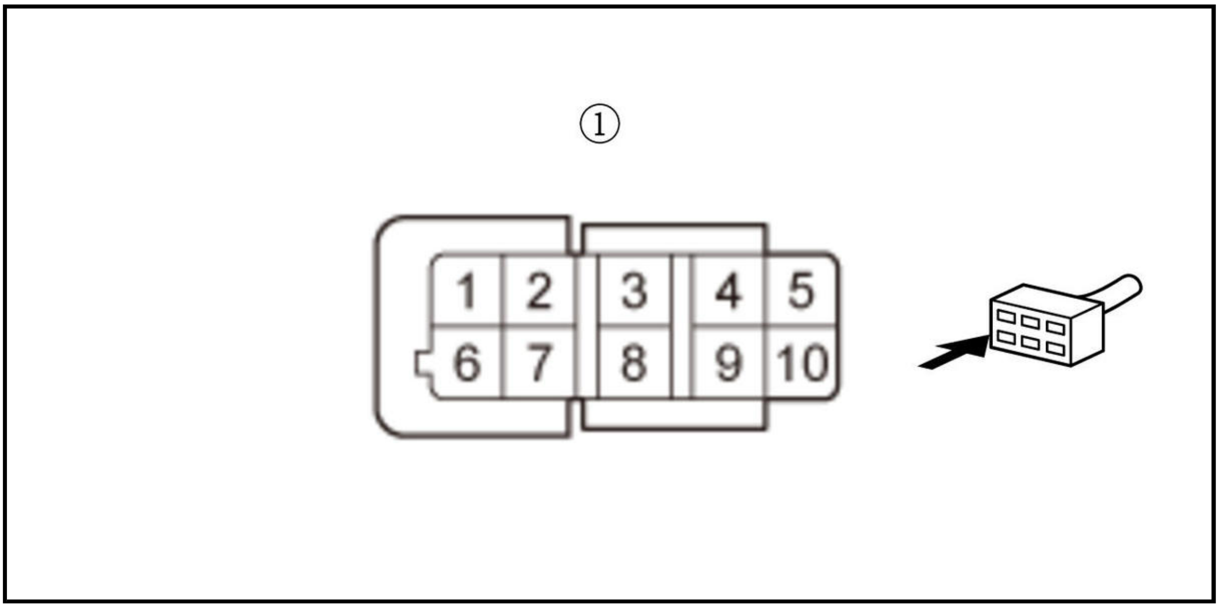

-4. Turn the vehicle to the ON mode.

-5. Check the transmission range switch signal that did not indicate ON with the HDS.

Does the transmission range switch signal indicate ON?

YES

Replace the transmission range switch .

NO

The transmission range switch is OK. Go to step 4.

4. Open wire check (corresponding line)

-1. Turn the vehicle to the OFF (LOCK) mode.

-2. Jump the SCS line with the HDS, and wait more than 1 minute.

NOTE: This step must be done to protect the TCM from damage.

-3. Disconnect the following connector.

TCM 50P connector

-4. Check for continuity between the transmission range switch connector terminal and the TCM terminal of the input which indicated OFF. Refer to the following table.

B	ATPP	ATPR	ATPN	ATPD	ATPS	ATPL	ATP-FWD	ATP-RVS
TCM	48	47	46	37	36	35	44	43
Transmission range switch	5	4	9	3	8	2	6	10

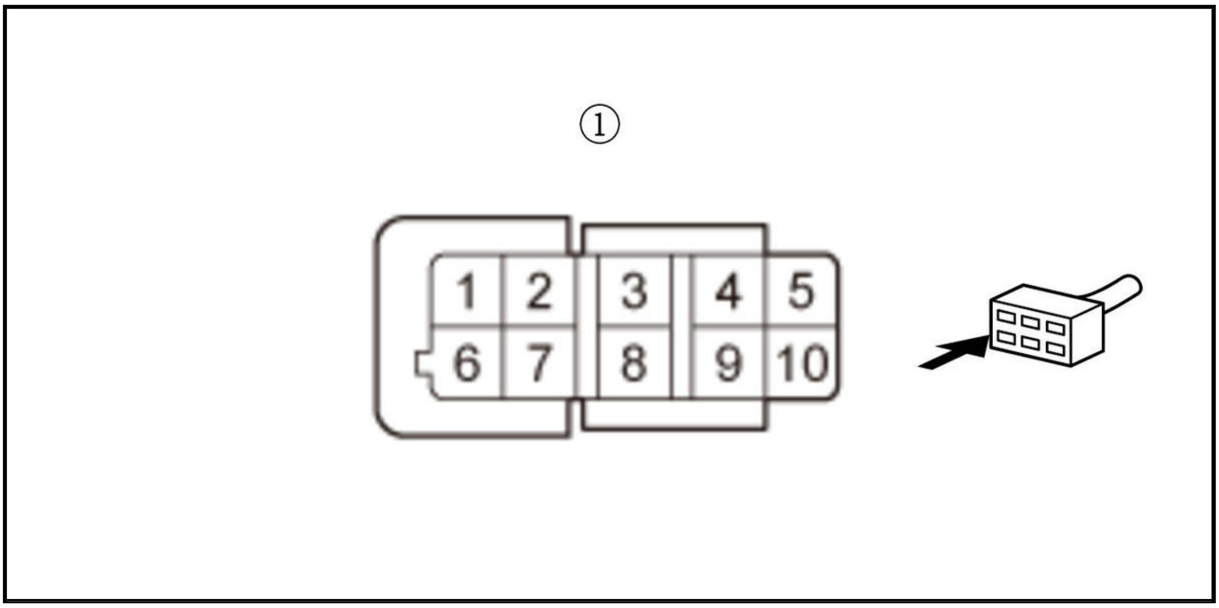

Is there continuity?

YES

The wires are OK. Check for any authorized service information related to the DTCs or symptoms you are troubleshooting, or **replace the original TCM** .

NO

Repair an open in the wire between the corresponding transmission range switch connector terminal and the TCM.

5. Open wire check (PG1 line)

   -1. Turn the vehicle to the OFF (LOCK) mode.

   -2. Disconnect the following connector.

Transmission range switch 10P connector

   -3. Check for continuity between test points 1 and 2.

Test condition	Vehicle OFF (LOCK) mode
B	Transmission range switch 10P connector: disconnected
Test point 1	Transmission range switch 10P connector (female terminals) No. 1 : ①
Test point 2	Body ground

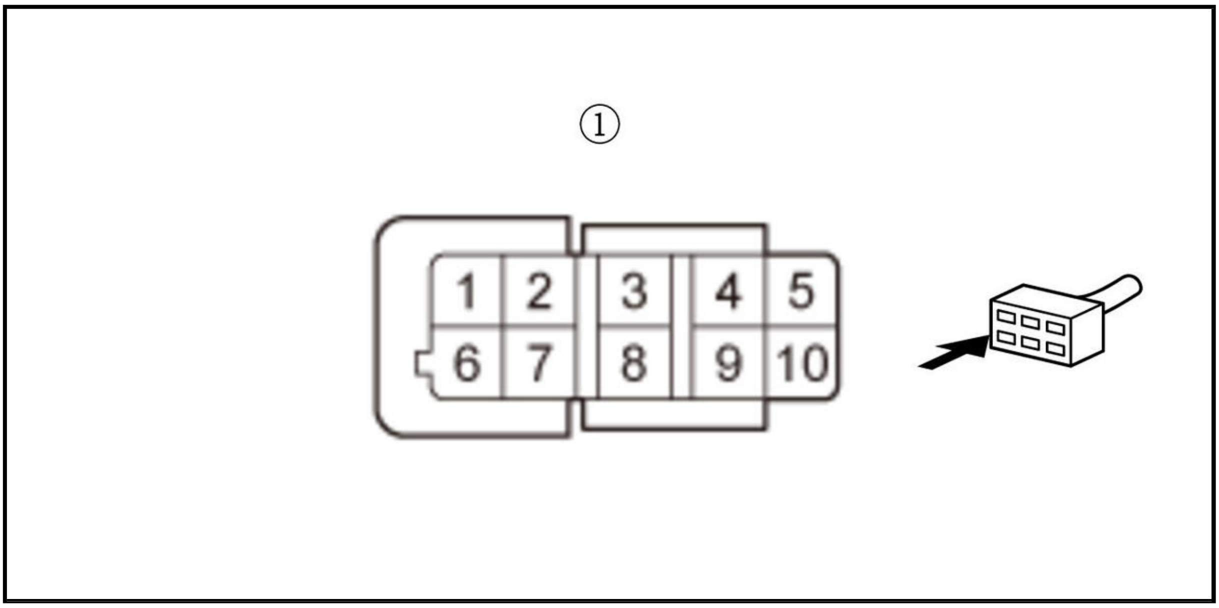

Is there continuity?

YES

The PG1 wire is OK, replace the transmission range switch .

NO

Repair an open in the PG1 wire between the transmission range switch and ground (G151), or repair poor ground (G151).

DTC TROUBLESHOOTING: P0710(CVT (TCM)) (2018 2019 2020 2021)

DTC P0710 : CVT Fluid Temperature Sensor (Out of Range)

NOTE:

- Before you troubleshoot, review the General Troubleshooting Information .
- This code is caused by an electrical circuit problem and cannot be caused by a mechanical problem in the transmission.

DTC Description	Confirmed DTC	Pending DTC	Freeze Frame
P0710 CVT Fluid Temperature Sensor (Out of Range)	B	B	B

DTC(CVT)

1. DTC check

   -1. Turn the vehicle to the ON mode.

   -2. Check for other Pending or Confirmed DTCs indicated along with DTC P0710 with the HDS.

DTC Description	Confirmed DTC	Pending DTC	Freeze Frame
P0712 CVT Fluid Temperature Sensor (Short)	B	B	B
P0713 CVT Fluid Temperature Sensor (Open)	B	B	B

   Are there other DTCs indicated at the same time?

   YES

Go to the indicated DTC's troubleshooting .

NO

Go to step 2.

2. Problem verification

-1. Check the parameter(s) below with the HDS.

Signal	Threshold		Current conditions	
	Values	Unit	Values	Unit
CVTF Temp Sensor (V)	0.05-0.09	V	B	B
	4.83-4.92	V	B	B

Do the current condition(s) match the threshold?

YES (0.05-0.09 V)

Go to step 3.

YES (4.83-4.92 V)

Go to step 5.

NO

Intermittent failure, the system is OK at this time. Check for poor connections and loose terminals between the transmission fluid temperature sensor and the TCM. If the freeze data/on-board snapshot of this DTC is recorded, try to reproduce the failure under the same conditions with the freeze data/onboard snapshot.

3. Transmission fluid temperature sensor check

-1. Turn the vehicle to the OFF (LOCK) mode.

-2. Disconnect the following connector.

Solenoid wire harness A 8P connector

-3. Turn the vehicle to the ON mode.

-4. Check the parameter(s) below with the HDS.

Signal	Threshold		Current conditions	
	Values	Unit	Values	Unit
CVTF Temp Sensor (V)	Less than 0.09	V	B	B

Do the current condition(s) match the threshold?

YES

The transmission fluid temperature sensor is OK. Go to step 4.

NO

Faulty transmission fluid temperature sensor. Replace solenoid wire harness A .

4. Shorted wire check (TATF line)

-1. Turn the vehicle to the OFF (LOCK) mode.

-2. Disconnect the following connector.

TCM 50P connector

-3. Check for continuity between test points 1 and 2.

Test condition	Vehicle OFF (LOCK) mode
B	Solenoid wire harness A 8P connector: disconnected
B	TCM 50P connector: disconnected
Test point 1	**TCM 50P connector No. 33**
Test point 2	Body ground

Is there continuity?

YES

Repair a short to ground in the TATF wire between solenoid wire harness A and the TCM.

NO

The TATF wire is OK. Check for any authorized service information related to the DTCs or symptoms you are troubleshooting, or **substitute a known-good TCM** , then recheck. If this DTC goes away and the TCM was substituted, **replace the original TCM** .

5. Determine possible failure area (TATF line, others)

-1. Turn the vehicle to the OFF (LOCK) mode.

-2. Disconnect the following connector.

Solenoid wire harness A 8P connector

-3. Connect terminals A and B with a jumper wire.

Terminal A	Solenoid wire harness A 8P connector (female terminals) No. 7: ①
Terminal B	Body ground

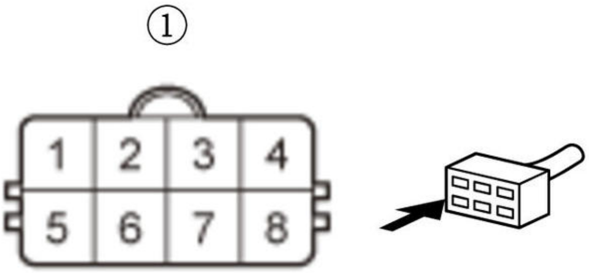

-4. Turn the vehicle to the ON mode.

-5. Check the parameter(s) below with the HDS.

Signal	Threshold		Current conditions	
	Values	Unit	Values	Unit
CVTF Temp Sensor (V)	Less than 0.07	V	B	B

Do the current condition(s) match the threshold?

YES

Go to step 6.

NO

Go to step 7.

6. Transmission fluid temperature sensor check

-1. Turn the vehicle to the OFF (LOCK) mode.

-2. Remove the jumper wire.

-3. Connect terminals A and B with a jumper wire.

Terminal A	Solenoid wire harness A 8P connector (female terminals) No. 6: ①
Terminal B	Solenoid wire harness A 8P connector (female terminals) No. 7: ①

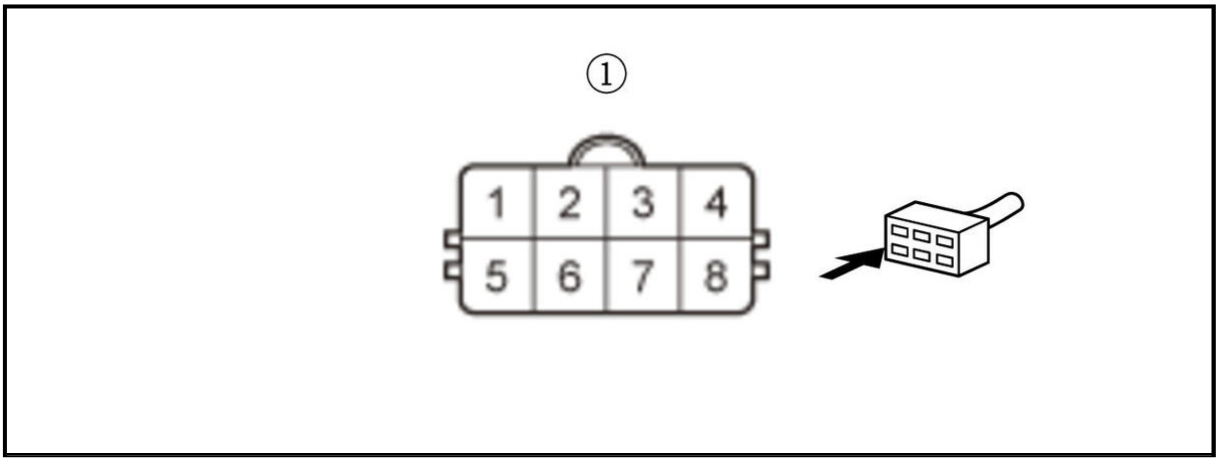

-4. Turn the vehicle to the ON mode.

-5. Check the parameter(s) below with the HDS.

Signal	Threshold		Current conditions	
	Values	Unit	Values	Unit
CVTF Temp Sensor (V)	Less than 0.07	V	B	B

Do the current condition(s) match the threshold?

YES

Faulty transmission fluid temperature sensor. **Replace solenoid wire harness A** .

NO

The transmission fluid temperature sensor is OK. Repair an open in the SG5 wire between solenoid wire harness A and the TCM.

7. Open wire check (TATF line)

-1. Turn the vehicle to the OFF (LOCK) mode.

-2. Remove the jumper wire.

-3. Disconnect the following connector.

TCM 50P connector

-4. Check for continuity between test points 1 and 2.

Test condition	Vehicle OFF (LOCK) mode
B	Solenoid wire harness A 8P connector: disconnected
B	TCM 50P connector: disconnected

Test point 1	Solenoid wire harness A 8P connector (female terminals) No. 7: ①
Test point 2	**TCM 50P connector No. 33**

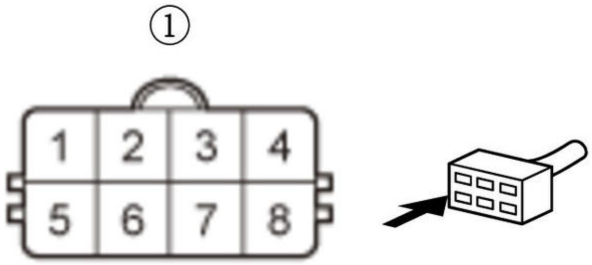

Is there continuity?

YES

The TATF wire is OK. Check for any authorized service information related to the DTCs or symptoms you are troubleshooting, or **substitute a known-good TCM** , then recheck. If this DTC goes away and the TCM was substituted, **replace the original TCM** .

NO

Repair an open in the TATF wire between solenoid wire harness A and the TCM.

DTC TROUBLESHOOTING: P0711(CVT (TCM))

DTC P0711 : CVT Fluid Temperature Sensor (Range/Performance)

NOTE:

- Before you troubleshoot, **review the General Troubleshooting Information** .
- This code is caused by an electrical circuit problem and cannot be caused by a mechanical problem in the transmission.

DTC Description	Confirmed DTC	Pending DTC	Freeze Frame
P0711 CVT Fluid Temperature Sensor (Range/Performance)	B	B	B

DTC(CVT)

1. Current transmission fluid temperature check

   -1. Turn the vehicle to the ON mode.

   -2. Check the parameter(s) below with the HDS.

Signal	Threshold		Current conditions	
	Values	Unit	Values	Unit
CVTF Temperature	-10 or less	deg.C	B	B
	14 or less	deg.F		

   Do the current condition(s) match the threshold?

   YES

   Go to step 2.

   NO

   Go to step 3.

2. Transmission fluid temperature sensor check (after warm up)

   -1. Start the engine, and warm it up to normal operating temperature (the radiator fan comes on twice).

   -2. Check the parameter(s) below with the HDS.

Signal	Threshold		Current conditions	
	Values	Unit	Values	Unit
CVTF Temperature	-10 or less	deg.C	B	B
	14 or less	deg.F		

   Do the current condition(s) match the threshold?

   14 deg.F (-10 deg.C) or below

   Faulty transmission fluid temperature sensor. **Replace solenoid wire harness A** .

   Abnormal temperature rise

   If there is an abnormal temperature rise in temperature of the transmission fluid temperature sensor, check for any authorized service information related to the DTCs or symptoms you are troubleshooting, or **replace the original TCM** .

   14 deg.F (-10 deg.C) or higher

   The transmission fluid temperature sensor is OK. Intermittent failure, the system is OK at this time. Check for poor connections and loose terminals between the transmission fluid temperature sensor and the TCM. If the freeze data/on-board snapshot of this DTC is recorded, try to reproduce the failure under the same conditions with the freeze data/on-board snapshot.

3. Problem verification

-1. Check the parameter(s) below with the HDS.

Signal	Threshold		Current conditions	
	Values	Unit	Values	Unit
CVTF Temperature	110 or more	deg.C	B	B
	230 or more	deg.F		

Do the current condition(s) match the threshold?

YES

The failure is duplicated. Go to step 4.

NO

Check for any authorized service information related to the DTCs or symptoms you are troubleshooting, or **replace the original TCM** .

4. Transmission fluid temperature sensor check (after cool down)

-1. Let the engine cool until the Engine Coolant Temperature reads 122 deg.F (50 deg.C) or below with the HDS.

Signal	Current conditions	
	Values	Unit
Engine Coolant Temperature	B	B

-2. Check the parameter(s) below with the HDS.

Signal	Threshold		Current conditions	
	Values	Unit	Values	Unit
CVTF Temperature	110 or more	deg.C	B	B
	230 or more	deg.F		

Do the current condition(s) match the threshold?

230 deg.F (110 deg.C) or higher

Faulty transmission fluid temperature sensor. **Replace solenoid wire harness A** .

Abnormal temperature decrease

If there is an abnormal temperature decrease in temperature of the transmission fluid temperature sensor, check for any authorized service information related to the DTCs or symptoms you are troubleshooting, or **replace the original TCM** .

230 deg.F (110 deg.C) or below

The transmission fluid temperature sensor is OK. Intermittent failure, the system is OK at this time. Check for poor connections and loose terminals between the transmission fluid temperature sensor and the TCM. If the freeze data/on-board snapshot of this DTC is recorded, try to reproduce the failure under the same conditions with the freeze data/on-board snapshot.

DTC TROUBLESHOOTING: P0712(CVT (TCM))

DTC P0712 : CVT Fluid Temperature Sensor (Short)

NOTE:

- Before you troubleshoot, **review the General Troubleshooting Information** .
- This code is caused by an electrical circuit problem and cannot be caused by a mechanical problem in the transmission.

DTC Description	Confirmed DTC	Pending DTC	Freeze Frame
P0712 CVT Fluid Temperature Sensor (Short)	B	B	B

DTC(CVT)

1. Problem verification

   -1. Turn the vehicle to the ON mode.

   -2. Check the parameter(s) below with the HDS.

Signal	Threshold		Current conditions	
	Values	Unit	Values	Unit
CVTF Temp Sensor (V)	Less than 0.07	V	B	B

   Do the current condition(s) match the threshold?

   YES

   The failure is duplicated. Go to step 2.

   NO

   Intermittent failure, the system is OK at this time. Check for poor connections and loose terminals between the transmission fluid temperature sensor and the TCM. If the freeze data/on-board snapshot of this DTC is recorded, try to reproduce the failure under the same conditions with the freeze data/onboard snapshot.

2. Transmission fluid temperature sensor check

   -1. Turn the vehicle to the OFF (LOCK) mode.

   -2. Disconnect the following connector.

Solenoid wire harness A 8P connector

   -3. Turn the vehicle to the ON mode.

   -4. Check the parameter(s) below with the HDS.

Signal	Threshold		Current conditions	
	Values	Unit	Values	Unit
CVTF Temp Sensor (V)	Less than 0.07	V	B	B

   Do the current condition(s) match the threshold?

   YES

   The transmission fluid temperature sensor is OK. Go to step 3.

   NO

   Faulty transmission fluid temperature sensor. **Replace solenoid wire harness A** .

3. Shorted wire check (TATF line)

-1. Turn the vehicle to the OFF (LOCK) mode.

-2. Jump the SCS line with the HDS, and wait more than 1 minute.

NOTE: This step must be done to protect the TCM from damage.

-3. Disconnect the following connector.

TCM 50P connector

-4. Check for continuity between test points 1 and 2.

Test condition	Vehicle OFF (LOCK) mode
B	Solenoid wire harness A 8P connector: disconnected
B	TCM 50P connector: disconnected
Test point 1	**TCM 50P connector No. 33**
Test point 2	Body ground

Is there continuity?

YES

Repair a short to ground in the TATF wire between solenoid wire harness A and the TCM.

NO

The TATF wire is OK. Check for any authorized service information related to the DTCs or symptoms you are troubleshooting, or **replace the original TCM** .

DTC TROUBLESHOOTING: P0713(CVT (TCM))

DTC P0713 : CVT Fluid Temperature Sensor (Open)

NOTE:

- Before you troubleshoot, **review the General Troubleshooting Information** .
- This code is caused by an electrical circuit problem and cannot be caused by a mechanical problem in the transmission.

DTC Description	Confirmed DTC	Pending DTC	Freeze Frame
P0713 CVT Fluid Temperature Sensor (Open)	B	B	B

DTC(CVT)

1. Problem verification

-1. Turn the vehicle to the ON mode.

-2. Check the parameter(s) below with the HDS.

Signal	Threshold		Current conditions	
	Values	Unit	Values	Unit
CVTF Temp Sensor (V)	More than 4.93	V	B	B

Do the current condition(s) match the threshold?

YES

The failure is duplicated. Go to step 2.

NO

Intermittent failure, the system is OK at this time. Check for poor connections and loose terminals between the transmission fluid temperature sensor and the TCM. If the freeze data/on-board snapshot of this DTC is recorded, try to reproduce the failure under the same conditions with the freeze data/onboard snapshot.

2. Determine possible failure area (TATF line, others)

-1. Turn the vehicle to the OFF (LOCK) mode.

-2. Disconnect the following connector.

Solenoid wire harness A 8P connector

-3. Connect terminals A and B with a jumper wire.

Terminal A	Solenoid wire harness A 8P connector (female terminals) No. 7 : ①
Terminal B	Body ground

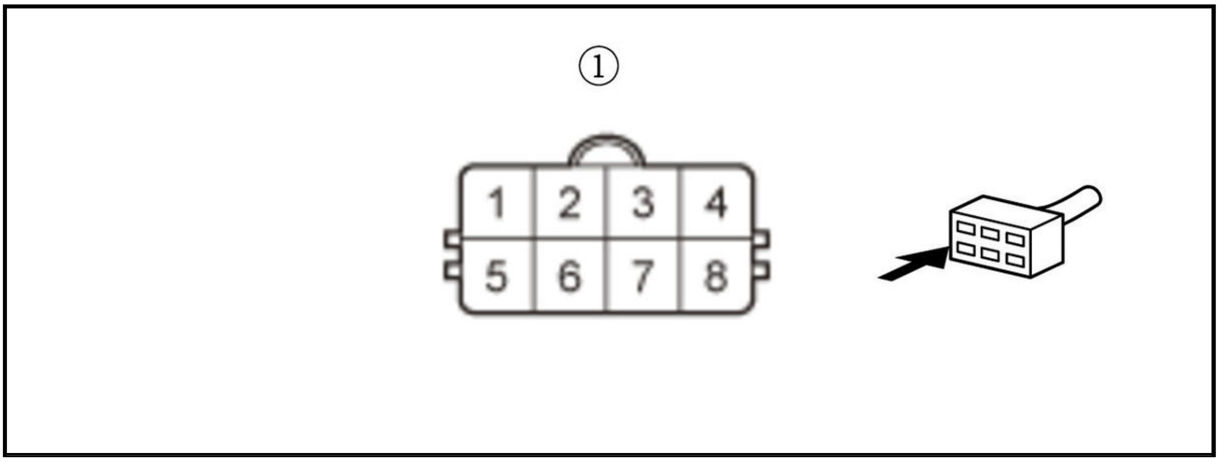

-4. Turn the vehicle to the ON mode.

-5. Check the parameter(s) below with the HDS.

Signal	Threshold		Current conditions	
	Values	Unit	Values	Unit
CVTF Temp Sensor (V)	Less than 0.07	V	B	B

Do the current condition(s) match the threshold?

YES

Go to step 3.

NO

Go to step 4.

3. Transmission fluid temperature sensor check

-1. Turn the vehicle to the OFF (LOCK) mode.

-2. Remove the jumper wire.

-3. Connect terminals A and B with a jumper wire.

Terminal A	Solenoid wire harness A 8P connector (female terminals) No. 6 : ①
Terminal B	Solenoid wire harness A 8P connector (female terminals) No. 7 : ①

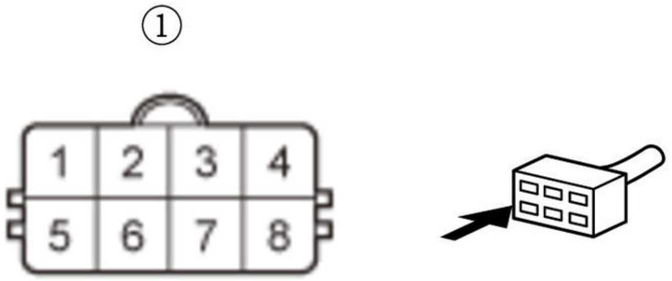

-4. Turn the vehicle to the ON mode.

-5. Check the parameter(s) below with the HDS.

Signal	**Threshold**		**Current conditions**	
	Values	**Unit**	**Values**	**Unit**
CVTF Temp Sensor (V)	Less than 0.07	V	B	B

Do the current condition(s) match the threshold?

YES

Faulty transmission fluid temperature sensor. **Replace solenoid wire harness A** .

NO

The transmission fluid temperature sensor is OK. Repair an open in the SG5 wire between solenoid wire harness A and the TCM.

4. Open wire check (TATF line)

-1. Turn the vehicle to the OFF (LOCK) mode.

-2. Remove the jumper wire.

-3. Jump the SCS line with the HDS, and wait more than 1 minute.

NOTE: This step must be done to protect the TCM from damage.

-4. Disconnect the following connector.

TCM 50P connector

-5. Check for continuity between test points 1 and 2.

Test condition	Vehicle OFF (LOCK) mode
B	Solenoid wire harness A 8P connector: disconnected
B	TCM 50P connector: disconnected
Test point 1	Solenoid wire harness A 8P connector (female terminals) No. 7 : ①
Test point 2	**TCM 50P connector No. 33**

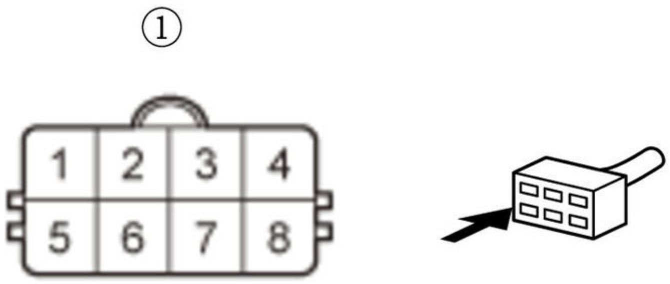

Is there continuity?

YES

The TATF wire is OK. Check for any authorized service information related to the DTCs or symptoms you are troubleshooting, or **replace the original TCM** .

NO

Repair an open in the TATF wire between solenoid wire harness A and the TCM.

DTC TROUBLESHOOTING: P0714(CVT (TCM))

DTC P0714 : CVT Fluid Temperature Sensor (Intermittent Failure)

NOTE:

- Before you troubleshoot, **review the General Troubleshooting Information** .
- This code is caused by an electrical circuit problem and cannot be caused by a mechanical problem in the transmission.

DTC Description	Confirmed DTC	Pending DTC	Freeze Frame
P0714 CVT Fluid Temperature Sensor (Intermittent Failure)	B	B	B

DTC(CVT)

1. Current transmission fluid temperature check

-1. Turn the vehicle to the ON mode.

-2. Check the parameter(s) below with the HDS.

CVT System

Signal	Current conditions	
	Values	Unit
CVTF Temperature	B	B

PGM-FI System

Signal	Current conditions	
	Values	Unit
ECT Sensor 2	B	B

Are the CVTF Temperature and ECT SENSOR 2 equal to the ambient air temperature?

YES

Go to step 3.

NO

Record the values of the CVTF Temperature, then go to step 2.

2. Transmission fluid temperature difference check

-1. Turn the vehicle to the OFF (LOCK) mode, and wait for at least 30 minutes.

-2. Turn the vehicle to the ON mode.

-3. Compare the current CVTF Temperature to the CVTF Temperature recorded in step 1

Signal	Current conditions	
	Values	Unit
CVTF Temperature	B	B

Did the CVTF Temperature change?

YES

Leave the engine off for at least 6 hours, then go to step 3.

NO

Faulty transmission fluid temperature sensor. **Replace solenoid wire harness A** .

3. Transmission fluid temperature sensor check

-1. Compare the values of the CVTF Temperature and ECT SENSOR 2 in the Data List with the HDS.

CVT System

Signal	Current conditions	
	Values	Unit
CVTF Temperature	B	B

PGM-FI System

Signal	Current conditions	
	Values	Unit
ECT Sensor 2	B	B

Is the value of the CVTF Temperature higher than the value of ECT SENSOR 2 by 58 deg.F (32 deg.C), or is the value of the CVTF Temperature lower than the value of ECT SENSOR 2 by 43 deg.F (24 deg.C)?

YES

Faulty transmission fluid temperature sensor. **Replace solenoid wire harness A** .

NO

The transmission fluid temperature sensor is OK. Intermittent failure, the system is OK at this time. Check for poor connections and loose terminals between the transmission fluid temperature sensor and the TCM. If the freeze data/on-board snapshot of this DTC is recorded, try to reproduce the failure under the same conditions with the freeze data/onboard snapshot.

DTC TROUBLESHOOTING: P0716(CVT (TCM))

DTC P0716 : CVT Input Shaft (Drive Pulley) Speed Sensor A Circuit Range/Performance / Input/Turbine Speed Sensor A Circuit Range/Performance

NOTE:

- Before you troubleshoot, **review the General Troubleshooting Information** .
- This code is caused by an electrical circuit problem and cannot be caused by a mechanical problem in the transmission.

DTC Description	Confirmed DTC	Pending DTC	Freeze Frame
P0716 CVT Input Shaft (Drive Pulley) Speed Sensor A Circuit Range/Performance / Input/Turbine Speed Sensor A Circuit Range/Performance	B	B	B

DTC(CVT)

1. Problem verification

-1. Turn the vehicle to the ON mode.

-2. Clear the DTC with the HDS.

-3. Raise the vehicle on a lift. Make sure it is securely supported, and allow all four wheels to rotate freely.

-4. **Enter the VSA maintenance mode** .

-5. Run the vehicle at speeds over 19 mph (30 km/h) for at least 30 seconds. Slow down, and stop the wheels.

-6. Check for Pending or Confirmed DTCs with the HDS.

DTC Description	Confirmed DTC	Pending DTC	Freeze Frame
P0716 CVT Input Shaft (Drive Pulley) Speed Sensor A Circuit Range/Performance / Input/Turbine Speed Sensor A Circuit Range/Performance	B	B	B

Is DTC P0716 indicated?

YES

The failure is duplicated. Go to step 2.

NO

Intermittent failure, the system is OK at this time. Check for poor connections and loose terminals between the torque converter turbine speed sensor and the TCM. If the freeze data/on-board snapshot of this DTC is recorded, try to reproduce the failure under the same conditions with the freeze data/onboard snapshot.

2. Torque converter turbine speed sensor check

   -1. Rotate the front wheels with the shift lever in D position/mode, and compare the Torque Converter Turbine Speed and the Input Shaft (Drive Pulley) Speed rpm in the Data List with the HDS.

Signal	Current conditions	
	Values	**Unit**
Torque Converter Turbine Speed	B	B
Input Shaft(Drive Pulley) Speed rpm	B	B

Are the speeds about the same?

YES

The torque converter turbine speed sensor is OK. Check for any authorized service information related to the DTCs or symptoms you are troubleshooting, or **replace the original TCM** .

NO

Replace the torque converter turbine speed sensor .

DTC TROUBLESHOOTING: P0717(CVT (TCM))

DTC P0717 : CVT Input Shaft (Drive Pulley) Speed Sensor A Circuit No Signal / Input/Turbine Speed Sensor A Circuit No Signal

NOTE:

- Before you troubleshoot, **review the General Troubleshooting Information** .
- This code is caused by an electrical circuit problem and cannot be caused by a mechanical problem in the transmission.

DTC Description	Confirmed DTC	Pending DTC	Freeze Frame
P0717 CVT Input Shaft (Drive Pulley) Speed Sensor A Circuit No Signal / Input/Turbine Speed Sensor A Circuit No Signal	B	B	B

DTC(CVT)

1. Problem verification

   -1. Turn the vehicle to the ON mode.

   -2. Clear the DTC with the HDS.

   -3. Raise the vehicle on a lift. Make sure it is securely supported, and allow all four wheels to rotate freely.

   -4. **Enter the VSA maintenance mode** .

-5. Run the vehicle at speeds over 19 mph (30 km/h) for at least 30 seconds. Slow down, and stop the wheels.

-6. Check for Pending or Confirmed DTCs with the HDS.

DTC Description	Confirmed DTC	Pending DTC	Freeze Frame
P0717 CVT Input Shaft (Drive Pulley) Speed Sensor A Circuit No Signal / Input/Turbine Speed Sensor A Circuit No Signal	B	B	B

Is DTC P0717 indicated?

YES

The failure is duplicated. Go to step 2.

NO

Intermittent failure, the system is OK at this time. Check for poor connections and loose terminals between the torque converter turbine speed sensor and the TCM. If the freeze data/on-board snapshot of this DTC is recorded, try to reproduce the failure under the same conditions with the freeze data/onboard snapshot.

2. Determine possible failure area (NT line, others)

-1. Turn the vehicle to the OFF (LOCK) mode.

-2. Disconnect the following connector.

Torque converter turbine speed sensor 3P connector

-3. Turn the vehicle to the ON mode.

-4. Measure the voltage between test points 1 and 2.

Test condition	Vehicle ON mode
B	Torque converter turbine speed sensor 3P connector: disconnected
Test point 1	Torque converter turbine speed sensor 3P connector (female terminals) No. 2 : ①
Test point 2	Body ground

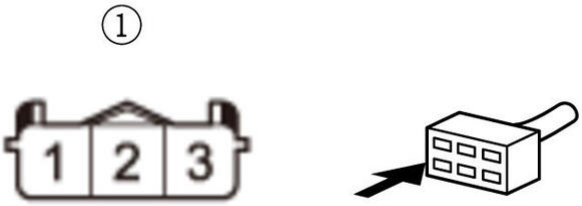

Is there about 5 V?

YES

Go to step 3.

NO

Go to step 5.

3. Open wire check (VCC2 line)

-1. Measure the voltage between test points 1 and 2.

Test condition	Vehicle ON mode
B	Torque converter turbine speed sensor 3P connector: disconnected
Test point 1	Torque converter turbine speed sensor 3P connector (female terminals) No. 3 : ①
Test point 2	Body ground

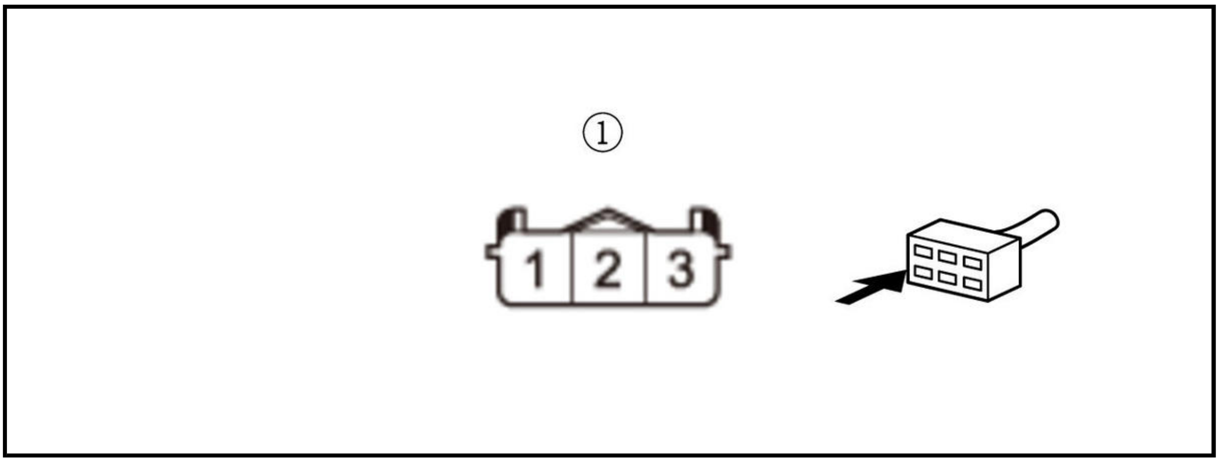

Is there about 5 V?

YES

The VCC2 wire is OK. Go to step 4.

NO

Repair an open in the VCC2 wire between the torque converter turbine speed sensor and the TCM.

4. Torque converter turbine speed sensor check

-1. Measure the voltage between test points 1 and 2.

Test condition	Vehicle ON mode
B	Torque converter turbine speed sensor 3P connector: disconnected
Test point 1	Torque converter turbine speed sensor 3P connector (female terminals) No. 1 : ①
Test point 2	Torque converter turbine speed sensor 3P connector (female terminals) No. 3 : ①

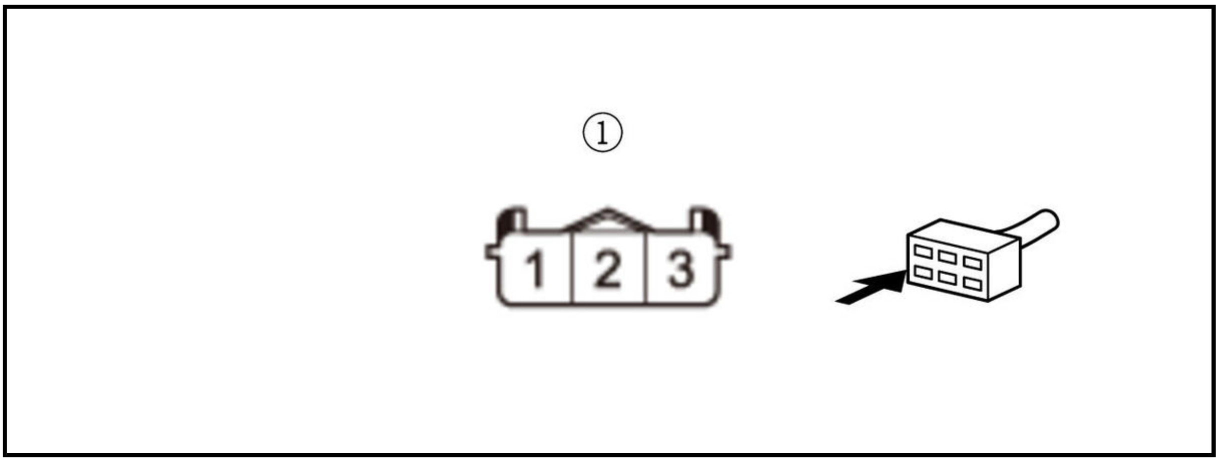

Is there about 5 V?

YES

Replace the torque converter turbine speed sensor .

NO

The torque converter turbine speed sensor is OK. Repair an open in the SG2 wire between the torque converter turbine speed sensor and the TCM.

5. Shorted wire check (NT line)

-1. Turn the vehicle to the OFF (LOCK) mode.

-2. Jump the SCS line with the HDS, and wait more than 1 minute.

NOTE: This step must be done to protect the TCM from damage.

-3. Disconnect the following connector.

TCM 50P connector

-4. Check for continuity between test points 1 and 2.

Test condition	Vehicle OFF (LOCK) mode
B	Torque converter turbine speed sensor 3P connector: disconnected
B	TCM 50P connector: disconnected

Test point 1	Torque converter turbine speed sensor 3P connector (female terminals) No. 2 : ①
Test point 2	Body ground

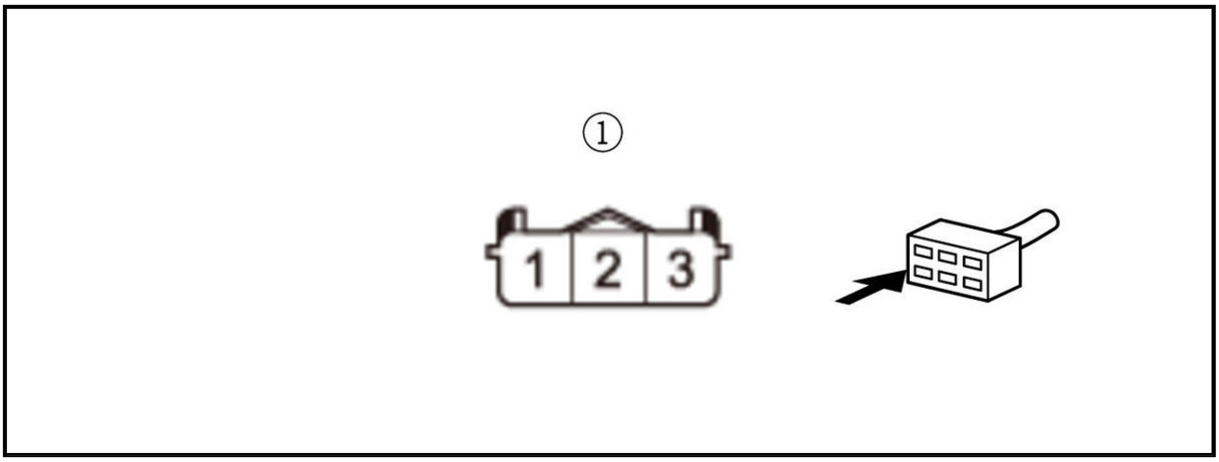

Is there continuity?

YES

Repair a short to ground in the NT wire between the torque converter turbine speed sensor and the TCM.

NO

The NT wire is not shorted. Go to step 6.

6. Open wire check (NT line)

-1. Check for continuity between test points 1 and 2.

Test condition	Vehicle OFF (LOCK) mode
B	Torque converter turbine speed sensor 3P connector: disconnected
B	TCM 50P connector: disconnected
Test point 1	Torque converter turbine speed sensor 3P connector (female terminals) No. 2 : ①
Test point 2	**TCM 50P connector No. 49**

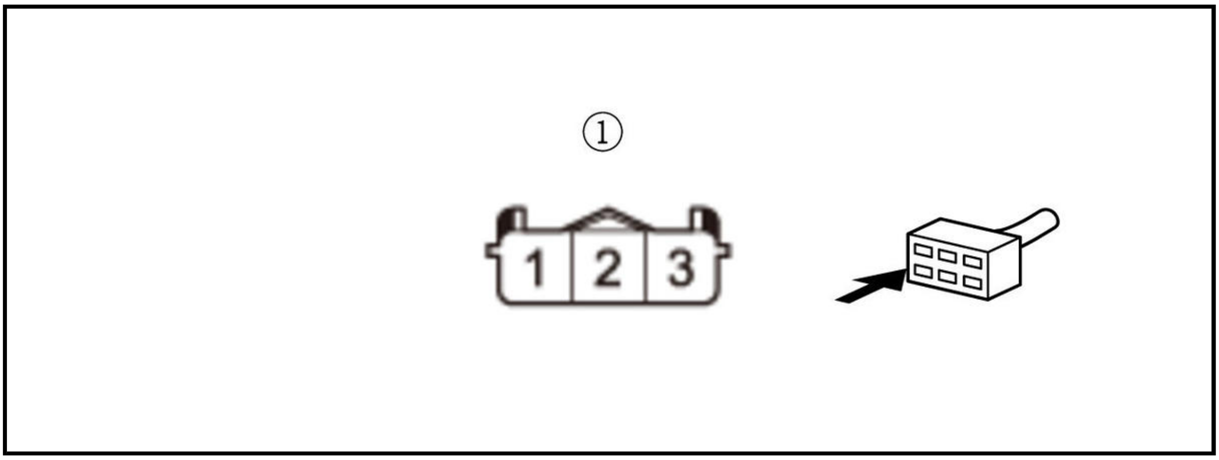

Is there continuity?

YES

The NT wire is OK. Check for any authorized service information related to the DTCs or symptoms you are troubleshooting, or **replace the original TCM** .

NO

Repair an open in the NT wire between the torque converter turbine speed sensor and the TCM.

DTC TROUBLESHOOTING: P0741(CVT (TCM))

DTC P0741 : Torque Converter Clutch Circuit Performance or Stuck OFF

NOTE: Before you troubleshoot, **review the General Troubleshooting Information** .

DTC Description	Confirmed DTC	Pending DTC	Freeze Frame
P0741 Torque Converter Clutch Circuit Performance or Stuck OFF	B	B	B

DTC(CVT)

1. Problem verification

   -1. Turn the vehicle to the ON mode.

   -2. Clear the DTC with the HDS.

   -3. Start the engine, and warm it up to normal operating temperature (the radiator fan comes on twice).

   -4. Test-drive the vehicle at speeds about 37 mph (60 km/h) on a flat road for at least 1 minute. Slow down and stop the wheels.

   -5. Repeat step 1

   -6. Check for Pending or Confirmed DTCs with the HDS.

DTC Description	Confirmed DTC	Pending DTC	Freeze Frame
P0741 Torque Converter Clutch Circuit Performance or Stuck OFF	B	B	B

   Is DTC P0741 indicated?

   YES

   The failure is duplicated. Go to step 2.

   NO

   Intermittent failure, the system is OK at this time. If the freeze data/on-board snapshot of this DTC is recorded, try to reproduce the failure under the same conditions with the freeze data/on-board snapshot.

2. Shift solenoid valve B check

   -1. **Do the shift solenoid valve B test** .

   Does shift solenoid valve B work properly?

   YES

   Shift solenoid valve B is OK. Go to step 3.

   NO

   Faulty shift solenoid valve B. **Replace the valve body assembly** .

3. CVT lock-up clutch control solenoid valve check

   -1. **Do the CVT lock-up clutch control solenoid valve test** .

Does the CVT lock-up clutch control solenoid valve work properly?

YES

The CVT lock-up clutch control solenoid valve is OK. **Replace the transmission, or the torque converter** .

NO

Faulty CVT lock-up clutch control solenoid valve. **Replace the valve body assembly** .

DTC TROUBLESHOOTING: P0746(CVT (TCM))

DTC P0746 : CVT Drive Pulley Pressure Control Solenoid Valve Stuck OFF

NOTE: Before you troubleshoot, **review the General Troubleshooting Information** .

DTC Description	Confirmed DTC	Pending DTC	Freeze Frame
P0746 CVT Drive Pulley Pressure Control Solenoid Valve Stuck OFF	B	B	B

DTC(CVT)

1. Problem verification

-1. Turn the vehicle to the ON mode.

-2. Clear the DTC with the HDS.

-3. Start the engine.

-4. Test-drive the vehicle in D position/mode until the vehicle speed reaches 37 mph (60 km/h). Slow down and stop the vehicle, then accelerate from a stop at full throttle in D position/mode until the vehicle speed reaches 37 mph (60 km/h).

-5. Check for Pending or Confirmed DTCs with the HDS.

DTC Description	Confirmed DTC	Pending DTC	Freeze Frame
P0746 CVT Drive Pulley Pressure Control Solenoid Valve Stuck OFF	B	B	B

Is DTC P0746 indicated?

YES

The failure is duplicated. Faulty CVT drive pulley pressure control solenoid valve. **Replace the valve body assembly** .

NO

Intermittent failure, the system is OK at this time. If the freeze data/on-board snapshot of this DTC is recorded, try to reproduce the failure under the same conditions with the freeze data/on-board snapshot.

DTC TROUBLESHOOTING: P0777(CVT (TCM))

DTC P0777 : CVT Driven Pulley Pressure Control Solenoid Valve Stuck ON

NOTE: Before you troubleshoot, **review the General Troubleshooting Information** .

DTC Description	Confirmed DTC	Pending DTC	Freeze Frame
P0777 CVT Driven Pulley Pressure Control Solenoid Valve Stuck ON	B	B	B

DTC(CVT)

1. Problem verification

-1. Turn the vehicle to the ON mode.

-2. Clear the DTC with the HDS.

-3. Start the engine.

-4. Test-drive the vehicle in D position/mode until the vehicle speed reaches 37 mph (60 km/h). Slow down and stop the vehicle, then accelerate from a stop at full throttle in D position/mode until the vehicle speed reaches 37 mph (60 km/h).

-5. Check for Pending or Confirmed DTCs with the HDS.

DTC Description	Confirmed DTC	Pending DTC	Freeze Frame
P0777 CVT Driven Pulley Pressure Control Solenoid Valve Stuck ON	B	B	B

Is DTC P0777 indicated?

YES

The failure is duplicated. Faulty CVT driven pulley pressure control solenoid valve. **Replace the valve body assembly** .

NO

Intermittent failure, the system is OK at this time. If the freeze data/on-board snapshot of this DTC is recorded, try to reproduce the failure under the same conditions with the freeze data/on-board snapshot.

DTC TROUBLESHOOTING: P0780(CVT (TCM))

DTC P0780 : Shift Error

NOTE:

- Before you troubleshoot, **review the General Troubleshooting Information** .
- This code is stored whenever DTCs P1898 and P1899 are detected.

DTC Description	Confirmed DTC	Pending DTC	Freeze Frame
P0780 Shift Error	B	B	B

DTC(CVT)

1. Problem verification

-1. Turn the vehicle to the ON mode.

-2. Clear the DTC with the HDS.

-3. Start the engine.

-4. Test-drive the vehicle in D position/mode until the vehicle speed reaches 37 mph (60 km/h). Slow down and stop the vehicle, then accelerate from a stop at full throttle in D position/mode until the vehicle speed reaches 37 mph (60 km/h).

-5. Check for other Pending or Confirmed DTCs indicated along with DTC P0780 with the HDS.

NOTE: P0780 means there is one or more CVT DTCs regarding the shift control system.

DTC Description	Confirmed DTC	Pending DTC	Freeze Frame
P0780 Shift Error	B	B	B
P1898 CVT Drive Pulley Pressure Control Valve Stuck ON or CVT Driven Pulley Pressure Control Valve Stuck OFF	B	B	B
P1899 CVT Drive Pulley Pressure Control Valve Stuck OFF or CVT Driven Pulley Pressure Control Valve Stuck ON	B	B	B

Are there other DTCs?

1. **YES**

   The failure is duplicated. Go to the indicated DTC's troubleshooting.

   - P1898
   - P1899

   NO

   There are no DTCs along with DTC P0780. Check for any authorized service information related to the DTCs or symptoms you are troubleshooting, or replace the original TCM .

DTC TROUBLESHOOTING: P0792(CVT (TCM))

DTC P0792 : Intermediate Shaft Speed Sensor A Circuit Range/Performance

NOTE:

- Before you troubleshoot, review the General Troubleshooting Information .
- This code is caused by an electrical circuit problem and cannot be caused by a mechanical problem in the transmission.

DTC Description	Confirmed DTC	Pending DTC	Freeze Frame
P0792 Intermediate Shaft Speed Sensor A Circuit Range/Performance	B	B	B

DTC(CVT)

1. Problem verification

   -1. Turn the vehicle to the ON mode.

   -2. Clear the DTC with the HDS.

   -3. Raise the vehicle on a lift. Make sure it is securely supported, and allow all four wheels to rotate freely.

   -4. Enter the VSA maintenance mode .

-5. Run the vehicle with the shift lever in D position/mode, and keep the vehicle at speeds over 19 mph (30 km/h) for at least 30 seconds. Slow down and stop the wheels.

-6. Check for Pending or Confirmed DTCs with the HDS.

DTC Description	Confirmed DTC	Pending DTC	Freeze Frame
P0792 Intermediate Shaft Speed Sensor A Circuit Range/Performance	B	B	B

Is DTC P0792 indicated?

YES

The failure is duplicated. Go to step 2.

NO

Intermittent failure, the system is OK at this time. Check for poor connections and loose terminals between the CVT drive pulley speed sensor and the TCM. If the freeze data/on-board snapshot of this DTC is recorded, try to reproduce the failure under the same conditions with the freeze data/on-board snapshot.

2. CVT drive pulley speed sensor check

-1. Rotate the front wheels with the shift lever in D position/mode, and compare the Input Shaft (Drive Pulley) Speed rpm and the Torque Converter Turbine Speed in the Data List with the HDS.

Signal	Current conditions	
	Values	Unit
Input Shaft(Drive Pulley) Speed rpm	B	B
Torque Converter Turbine Speed	B	B

Are the speeds about the same?

YES

The CVT drive pulley speed sensor is OK. Check for any authorized service information related to the DTCs or symptoms you are troubleshooting, or **replace the original TCM** .

NO

Replace the CVT drive pulley speed sensor .

DTC TROUBLESHOOTING: P0793(CVT (TCM))

DTC P0793 : Intermediate Shaft Speed Sensor A Circuit No Signal

NOTE:

- Before you troubleshoot, **review the General Troubleshooting Information** .
- This code is caused by an electrical circuit problem and cannot be caused by a mechanical problem in the transmission.

DTC Description	Confirmed DTC	Pending DTC	Freeze Frame
P0793 Intermediate Shaft Speed Sensor A Circuit No Signal	B	B	B

DTC(CVT)

1. Problem verification

   -1. Turn the vehicle to the ON mode.

   -2. Clear the DTC with the HDS.

   -3. Raise the vehicle on a lift. Make sure it is securely supported, and allow all four wheels to rotate freely.

   -4. **Enter the VSA maintenance mode** .

   -5. Run the vehicle with the shift lever in D position/mode, and keep the vehicle at speeds over 19 mph (30 km/h) for at least 30 seconds. Slow down and stop the wheels.

   -6. Check for Pending or Confirmed DTCs with the HDS.

DTC Description	Confirmed DTC	Pending DTC	Freeze Frame
P0793 Intermediate Shaft Speed Sensor A Circuit No Signal	B	B	B

   Is DTC P0793 indicated?

   YES

   The failure is duplicated. Go to step 2.

   NO

   Intermittent failure, the system is OK at this time. Check for poor connections and loose terminals between the CVT drive pulley speed sensor and the TCM. If the freeze data/on-board snapshot of this DTC is recorded, try to reproduce the failure under the same conditions with the freeze data/on-board snapshot.

2. Determine possible failure area (NDR PWM line, others)

   -1. Turn the vehicle to the OFF (LOCK) mode.

   -2. Disconnect the following connector.

CVT drive pulley speed sensor 3P connector

   -3. Turn the vehicle to the ON mode.

   -4. Measure the voltage between test points 1 and 2.

Test condition	Vehicle ON mode
B	CVT drive pulley speed sensor 3P connector: disconnected
Test point 1	CVT drive pulley speed sensor 3P connector (female terminals) No. 1 : ①
Test point 2	Body ground

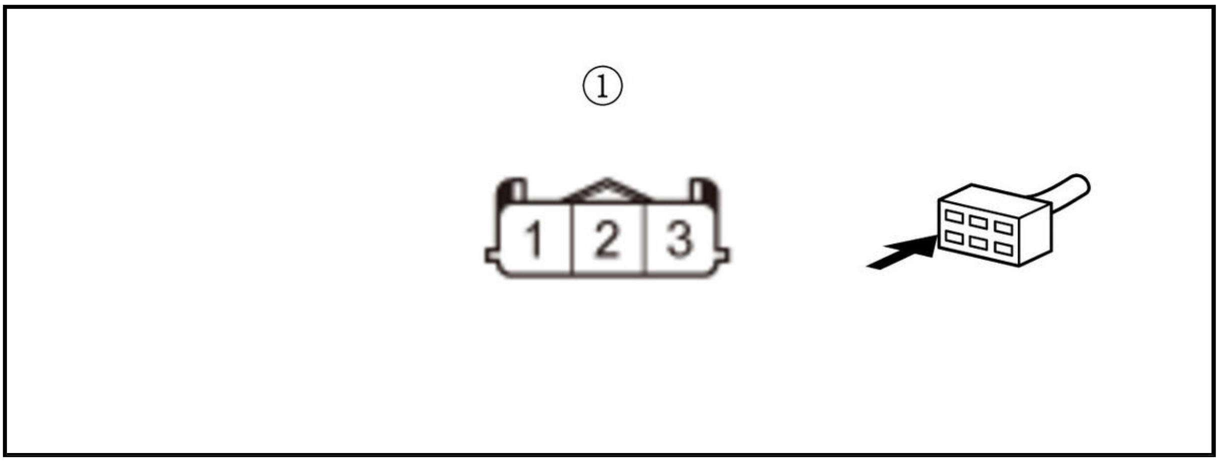

Is there about 5 V?

YES

Go to step 3.

NO

Go to step 5.

3. Open wire check (VCC1 line)

-1. Measure the voltage between test points 1 and 2.

Test condition	Vehicle ON mode
B	CVT drive pulley speed sensor 3P connector: disconnected
Test point 1	CVT drive pulley speed sensor 3P connector (female terminals) No. 3 : ①
Test point 2	Body ground

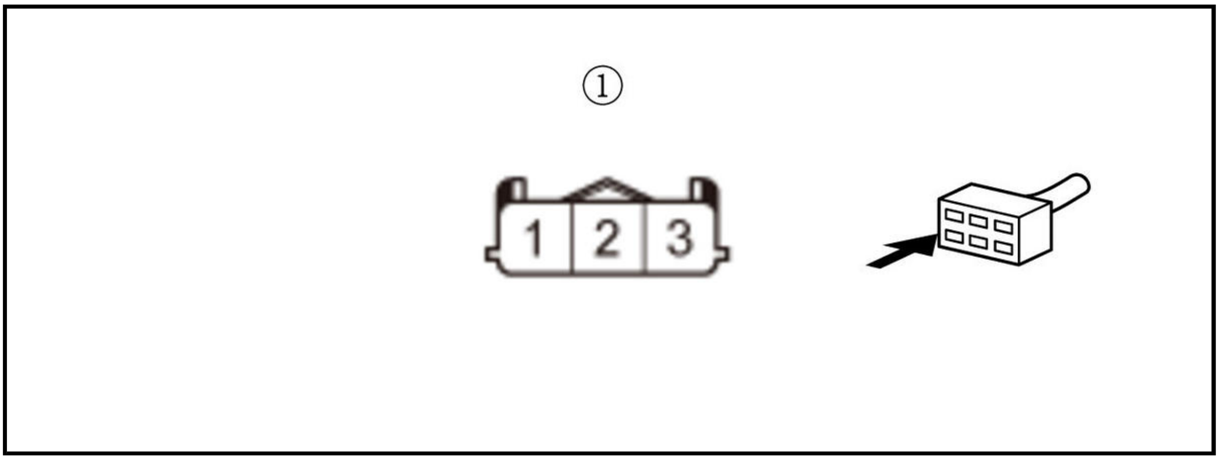

Is there about 5 V?

YES

The VCC1 wire is OK. Go to step 4.

NO

Repair an open in the VCC1 wire between the CVT drive pulley speed sensor and the TCM.

4. CVT drive pulley speed sensor check

-1. Measure the voltage between test points 1 and 2.

Test condition	Vehicle ON mode
B	CVT drive pulley speed sensor 3P connector: disconnected
Test point 1	CVT drive pulley speed sensor 3P connector (female terminals) No. 2 : ①
Test point 2	CVT drive pulley speed sensor 3P connector (female terminals) No. 3 : ①

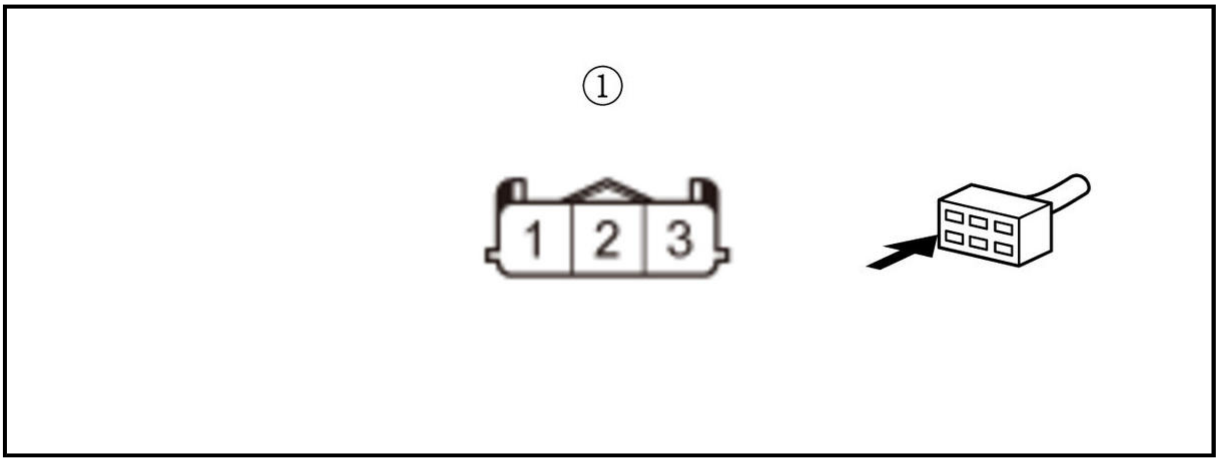

Is there about 5 V?

YES

Replace the CVT drive pulley speed sensor .

NO

The CVT drive pulley speed sensor is OK. Repair an open in the SG1 wire between the CVT drive pulley speed sensor and the TCM.

5. Shorted wire check (NDR PWM line)

-1. Turn the vehicle to the OFF (LOCK) mode.

-2. Jump the SCS line with the HDS, and wait more than 1 minute.

NOTE: This step must be done to protect the TCM from damage.

-3. Disconnect the following connector.

TCM 50P connector

-4. Check for continuity between test points 1 and 2.

Test condition	Vehicle OFF (LOCK) mode
B	CVT drive pulley speed sensor 3P connector: disconnected
B	TCM 50P connector: disconnected
Test point 1	CVT drive pulley speed sensor 3P connector (female terminals) No. 1 : ①
Test point 2	Body ground

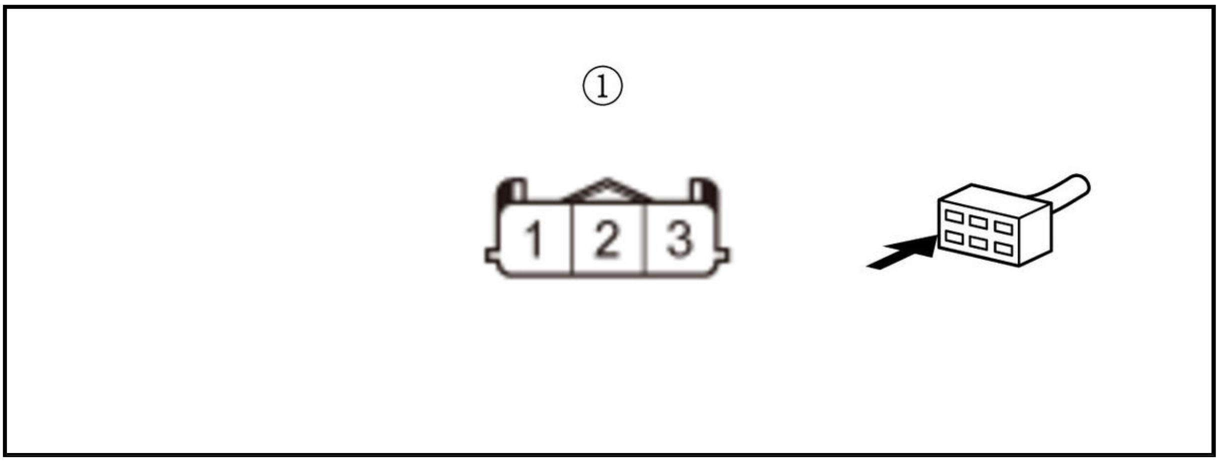

Is there continuity?

YES

Repair a short to ground in the NDR PWM wire between the CVT drive pulley speed sensor and the TCM.

NO

The NDR PWM wire is not shorted. Go to step 6.

6. Open wire check (NDR PWM line)

-1. Check for continuity between test points 1 and 2.

Test condition	Vehicle OFF (LOCK) mode
B	CVT drive pulley speed sensor 3P connector: disconnected
B	TCM 50P connector: disconnected
Test point 1	CVT drive pulley speed sensor 3P connector (female terminals) No. 1 : ①
Test point 2	**TCM 50P connector No. 28**

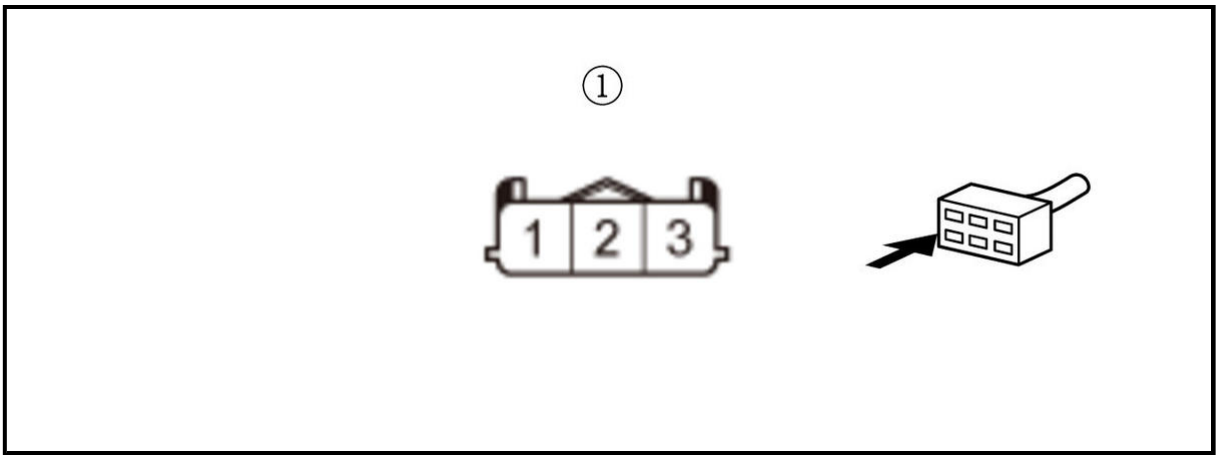

Is there continuity?

YES

The NDR PWM wire is OK. Check for any authorized service information related to the DTCs or symptoms you are troubleshooting, or **replace the original TCM** .

NO

Repair an open in the NDR PWM wire between the CVT drive pulley speed sensor and the TCM.

DTC TROUBLESHOOTING: P0796(CVT (TCM))

DTC P0796 : Pressure Control Solenoid Valve C Performance or Stuck OFF

NOTE: Before you troubleshoot, **review the General Troubleshooting Information** .

DTC Description	Confirmed DTC	Pending DTC	Freeze Frame
P0796 Pressure Control Solenoid Valve C Performance or Stuck OFF	B	B	B

DTC(CVT)

1. Problem verification

   -1. Turn the vehicle to the ON mode.

   -2. Clear the DTC with the HDS.

   -3. Start the engine in P position/mode. Shift the transmission to N position/mode, then to D position/mode while pressing the brake pedal, and wait for at least 30 seconds.

   -4. Turn the vehicle to the OFF (LOCK) mode. Repeat the shift lever operational mode in step 1-3 again.

   -5. Check for Pending or Confirmed DTCs with the HDS.

DTC Description	Confirmed DTC	Pending DTC	Freeze Frame
P0796 Pressure Control Solenoid Valve C Performance or Stuck OFF	B	B	B

Is DTC P0796 indicated?

YES

The failure is duplicated. Faulty CVT clutch pressure control solenoid valve. **Replace the valve body assembly** .

NO

Intermittent failure, the system is OK at this time. If the freeze data/on-board snapshot of this DTC is recorded, try to reproduce the failure under the same conditions with the freeze data/on-board snapshot.

DTC TROUBLESHOOTING: P0797(CVT (TCM))

DTC P0797 : Pressure Control Solenoid Valve C Stuck ON

NOTE: Before you troubleshoot, **review the General Troubleshooting Information** .

DTC Description	Confirmed DTC	Pending DTC	Freeze Frame
P0797 Pressure Control Solenoid Valve C Stuck ON	B	B	B

DTC(CVT)

1. Problem verification

   -1. Turn the vehicle to the ON mode.

   -2. Clear the DTC with the HDS.

-3. Start the engine.

-4. With the brake pedal pressed, do the following operational mode of the shift lever five times:

-1. Shift the transmission to N position/mode, then to D position/mode, and wait for at least 2 second.

-2. Shift the transmission to N position/mode, and wait for at least 2 seconds.

-3. Shift the transmission to D position/mode, and wait for at least 1 second.

-5. Turn the vehicle to the OFF (LOCK) mode. Repeat the shift lever operational mode in step 1-4 five times.

-6. Check for Pending or Confirmed DTCs with the HDS.

DTC Description	Confirmed DTC	Pending DTC	Freeze Frame
P0797 Pressure Control Solenoid Valve C Stuck ON	B	B	B

Is DTC P0797 indicated?

YES

The failure is duplicated. Faulty CVT clutch pressure control solenoid valve. **Replace the valve body assembly** .

NO

Intermittent failure, the system is OK at this time. If the freeze data/on-board snapshot of this DTC is recorded, try to reproduce the failure under the same conditions with the freeze data/on-board snapshot.

DTC TROUBLESHOOTING: P0842(CVT (TCM))

DTC P0842 : Transmission Fluid Pressure Sensor/Switch A Circuit Low

NOTE:

- Before you troubleshoot, **review the General Troubleshooting Information** .
- This code is caused by an electrical circuit problem and cannot be caused by a mechanical problem in the transmission.

DTC Description	Confirmed DTC	Pending DTC	Freeze Frame
P0842 Transmission Fluid Pressure Sensor/Switch A Circuit Low	B	B	B

DTC(CVT)

1. Problem verification

-1. Turn the vehicle to the ON mode.

-2. Clear the DTC with the HDS.

-3. Check the parameter(s) below with the HDS.

Signal	Threshold		Current conditions	
	Values	Unit	Values	Unit
Driven Pulley Pressure Sensor(V)	Less than 0.21	V	B	B

Do the current condition(s) match the threshold?

YES

The failure is duplicated. Go to step 2.

NO

Intermittent failure, the system is OK at this time. Check for poor connections and loose terminals between the CVT driven pulley pressure sensor and the TCM. If the freeze data/on-board snapshot of this DTC is recorded, try to reproduce the failure under the same conditions with the freeze data/onboard snapshot.

2. Determine possible failure area (PDN line, others)

-1. Turn the vehicle to the OFF (LOCK) mode.

-2. Disconnect the following connector.

CVT driven pulley pressure sensor 3P connector

-3. Turn the vehicle to the ON mode.

-4. Check the parameter(s) below with the HDS.

Signal	Threshold		Current conditions	
	Values	**Unit**	**Values**	**Unit**
Driven Pulley Pressure Sensor(V)	Less than 0.21	V	B	B

Do the current condition(s) match the threshold?

YES

Go to step 3.

NO

Go to step 4.

3. Shorted wire check (PDN line)

-1. Turn the vehicle to the OFF (LOCK) mode.

-2. Jump the SCS line with the HDS, and wait more than 1 minute.

NOTE: This step must be done to protect the TCM from damage.

-3. Disconnect the following connector.

TCM 50P connector

-4. Check for continuity between test points 1 and 2.

Test condition	Vehicle OFF (LOCK) mode
B	CVT driven pulley pressure sensor 3P connector: disconnected
B	TCM 50P connector: disconnected
Test point 1	CVT driven pulley pressure sensor 3P connector (female terminals) No. 2 : ①
Test point 2	Body ground

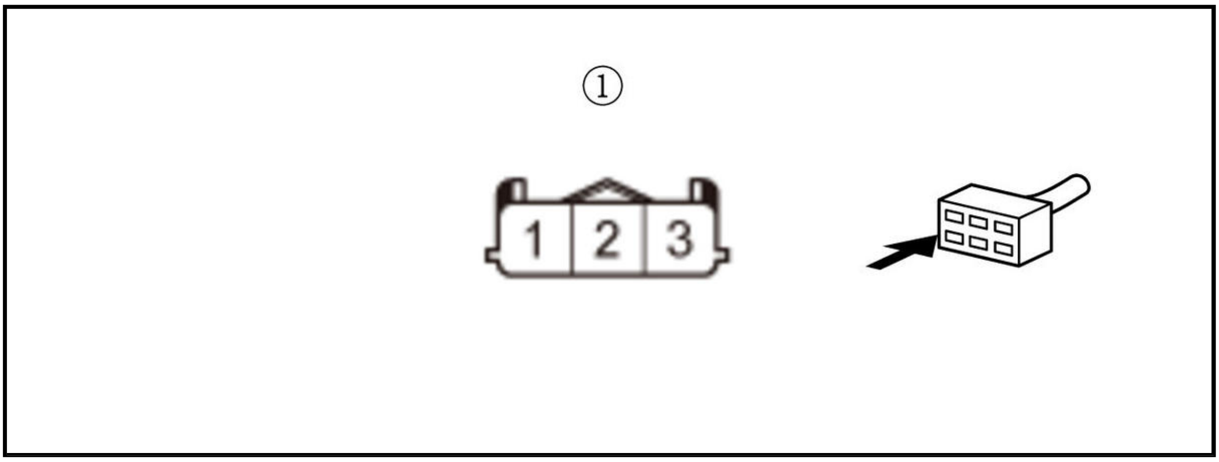

Is there continuity?

YES

Repair a short to ground in the PDN wire between the CVT driven pulley pressure sensor and the TCM.

NO

The PDN wire is OK. Check for any authorized service information related to the DTCs or symptoms you are troubleshooting, or **replace the original TCM** .

4. Open wire check (VCC4 line)

-1. Measure the voltage between test points 1 and 2.

Test condition	Vehicle ON mode
B	CVT driven pulley pressure sensor 3P connector: disconnected
Test point 1	CVT driven pulley pressure sensor 3P connector (female terminals) No. 3 : ①
Test point 2	Body ground

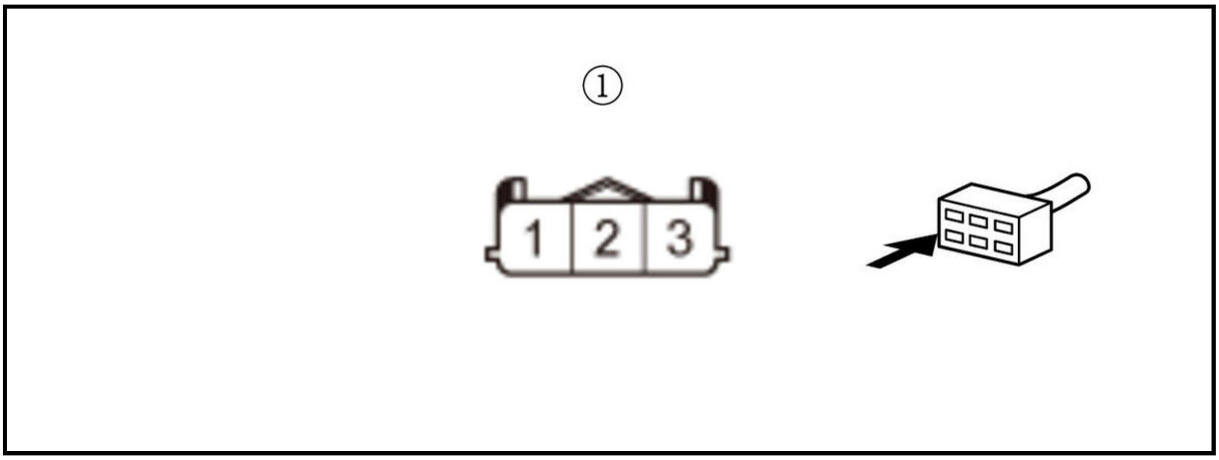

Is there about 5 V?

YES

The VCC4 wire is OK. **Replace the CVT driven pulley pressure sensor** .

NO

Repair an open in the VCC4 wire between the CVT driven pulley pressure sensor and the TCM.

DTC TROUBLESHOOTING: P0843(CVT (TCM))

DTC P0843 : Transmission Fluid Pressure Sensor/Switch A Circuit High

NOTE:

- Before you troubleshoot, **review the General Troubleshooting Information** .
- This code is caused by an electrical circuit problem and cannot be caused by a mechanical problem in the transmission.

DTC Description	Confirmed DTC	Pending DTC	Freeze Frame
P0843 Transmission Fluid Pressure Sensor/Switch A Circuit High	B	B	B

DTC(CVT)

1. Problem verification

   -1. Turn the vehicle to the ON mode.

   -2. Clear the DTC with the HDS.

   -3. Check the parameter(s) below with the HDS.

Signal	Threshold		Current conditions	
	Values	Unit	Values	Unit
Driven Pulley Pressure Sensor(V)	More than 4.84	V	B	B

   Do the current condition(s) match the threshold?

   YES

   The failure is duplicated. Go to step 2.

   NO

   Intermittent failure, the system is OK at this time. Check for poor connections and loose terminals between the CVT driven pulley pressure sensor and the TCM. If the freeze data/on-board snapshot of this DTC is recorded, try to reproduce the failure under the same conditions with the freeze data/onboard snapshot.

2. Determine possible failure area (PDN line, others)

   -1. Turn the vehicle to the OFF (LOCK) mode.

   -2. Disconnect the following connector.

CVT driven pulley pressure sensor 3P connector

   -3. Connect terminals A and B with a jumper wire.

Terminal A	CVT driven pulley pressure sensor 3P connector (female terminals) No. 1 : ①
Terminal B	CVT driven pulley pressure sensor 3P connector (female terminals) No. 2 : ①

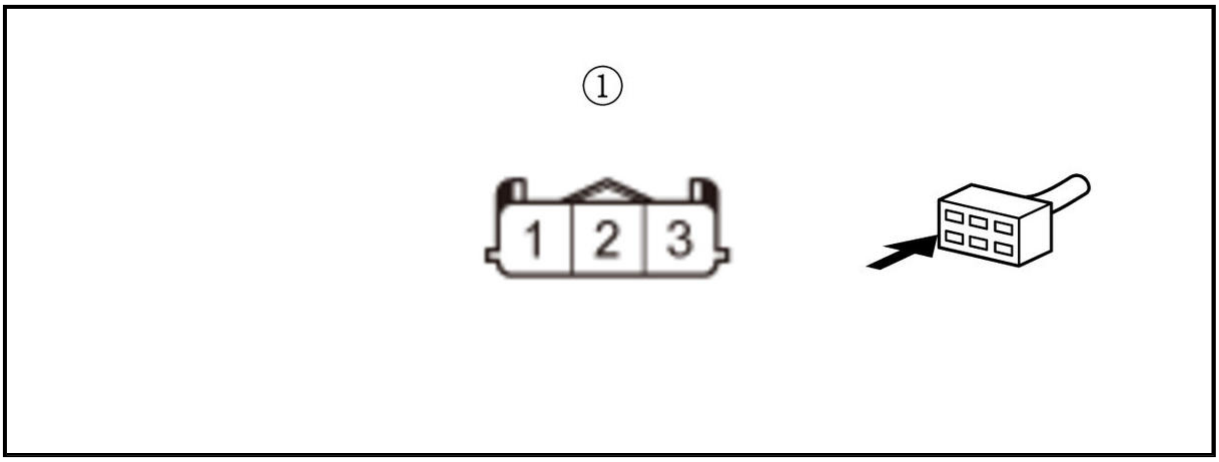

-4. Turn the vehicle to the ON mode.

-5. Check the parameter(s) below with the HDS.

Signal	Threshold		Current conditions	
	Values	Unit	Values	Unit
Driven Pulley Pressure Sensor(V)	More than 4.84	V	B	B

Do the current condition(s) match the threshold?

YES

Go to step 3.

NO

Go to step 4.

3. Open wire check (PDN line)

-1. Turn the vehicle to the OFF (LOCK) mode.

-2. Remove the jumper wire.

-3. Jump the SCS line with the HDS, and wait more than 1 minute.

NOTE: This step must be done to protect the TCM from damage.

-4. Disconnect the following connector.

TCM 50P connector

-5. Check for continuity between test points 1 and 2.

Test condition	Vehicle OFF (LOCK) mode
B	CVT driven pulley pressure sensor 3P connector: disconnected
B	TCM 50P connector: disconnected
Test point 1	CVT driven pulley pressure sensor 3P connector (female terminals) No. 2 : ①
Test point 2	**TCM 50P connector No. 31**

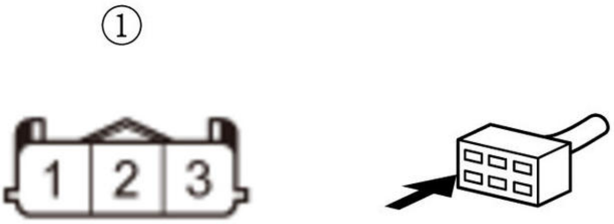

Is there continuity?

YES

The PDN wire is OK. Check for any authorized service information related to the DTCs or symptoms you are troubleshooting, or **replace the original TCM** .

NO

Repair an open in the PDN wire between the CVT driven pulley pressure sensor and the TCM.

4. CVT driven pulley pressure sensor check

-1. Turn the vehicle to the OFF (LOCK) mode.

-2. Remove the jumper wire.

-3. Turn the vehicle to the ON mode.

-4. Measure the voltage between test points 1 and 2.

Test condition	Vehicle ON mode
B	CVT driven pulley pressure sensor 3P connector: disconnected
Test point 1	CVT driven pulley pressure sensor 3P connector (female terminals) No. 1 : ①
Test point 2	CVT driven pulley pressure sensor 3P connector (female terminals) No. 3 : ①

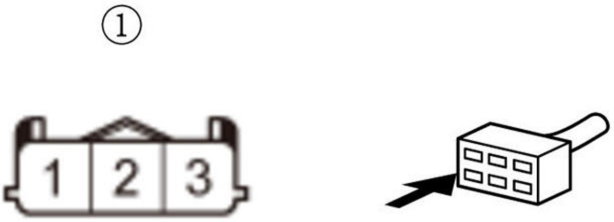

Is there about 5 V?

YES

Replace the CVT driven pulley pressure sensor .

NO

The CVT driven pulley pressure sensor is OK. Go to step 5.

5. Open wire check (VCC4 line)

-1. Measure the voltage between test points 1 and 2.

Test condition	Vehicle ON mode
B	CVT driven pulley pressure sensor 3P connector: disconnected

Test point 1	CVT driven pulley pressure sensor 3P connector (female terminals) No. 3 : ①
Test point 2	Body ground

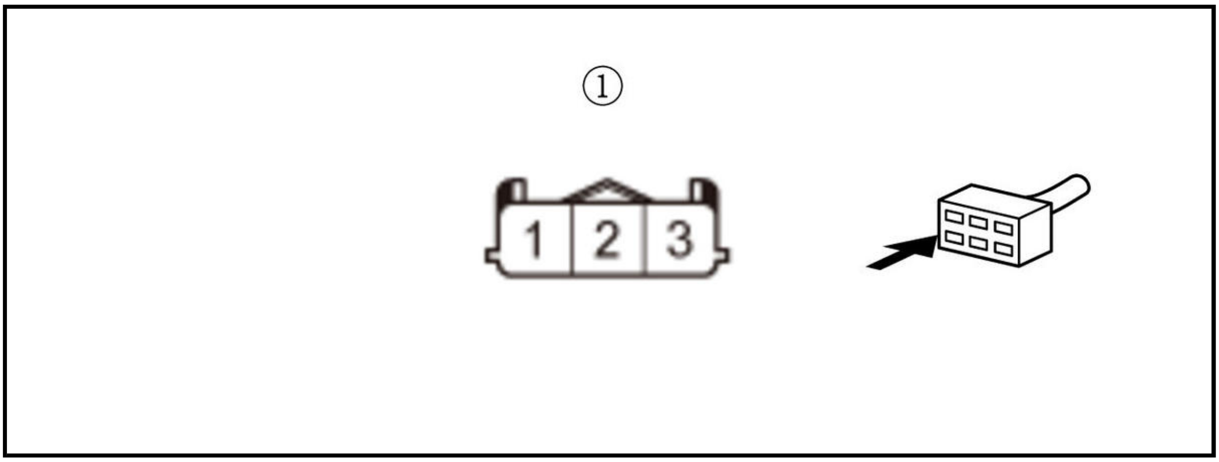

Is there about 5 V?

YES

Repair an open in the SG4 wire between the CVT driven pulley pressure sensor and the TCM.

NO

Repair an open in the VCC4 wire between the CVT driven pulley pressure sensor and the TCM.

DTC TROUBLESHOOTING: P0962, P0963(CVT (TCM))

DTC P0962 : CVT Drive Pulley Pressure Control Valve Circuit Low

DTC P0963 : CVT Drive Pulley Pressure Control Valve Circuit High

NOTE:

- Before you troubleshoot, **review the General Troubleshooting Information** .
- This code is caused by an electrical circuit problem and cannot be caused by a mechanical problem in the transmission.

DTC Description	Confirmed DTC	Pending DTC	Freeze Frame
P0962 CVT Drive Pulley Pressure Control Valve Circuit Low	B	B	B
P0963 CVT Drive Pulley Pressure Control Valve Circuit High	B	B	B

DTC(CVT)

1. Problem verification

   -1. Turn the vehicle to the ON mode.

   -2. Clear the DTC with the HDS.

   -3. Start the engine, and wait for at least 1 second.

   -4. Check for Pending or Confirmed DTCs with the HDS.

DTC Description	Confirmed DTC	Pending DTC	Freeze Frame
P0962 CVT Drive Pulley Pressure Control Valve Circuit Low	B	B	B
P0963 CVT Drive Pulley Pressure Control Valve Circuit High	B	B	B

   Is DTC P0962 or P0963 indicated?

   YES

   The failure is duplicated. Go to step 2.

   NO

   Intermittent failure, the system is OK at this time. Check for poor connections and loose terminals between the CVT drive pulley pressure control solenoid valve and the TCM. If the freeze data/on-board snapshot of this DTC is recorded, try to reproduce the failure under the same conditions with the freeze data/on-board snapshot.

2. Determine possible failure area (TCM, short in DRLS line, open in DRLS/DRC+ line)

   -1. Turn the vehicle to the OFF (LOCK) mode.

   -2. Jump the SCS line with the HDS, and wait more than 1 minute.

   NOTE: This step must be done to protect the TCM from damage.

   -3. Disconnect the following connector.

TCM 50P connector

   -4. Measure the resistance between test points 1 and 2.

Test condition	Vehicle OFF (LOCK) mode
B	TCM 50P connector: disconnected
Test point 1	**TCM 50P connector No. 15**
Test point 2	Body ground

   Is there 5.0-6.3 Ω?

   5.0-6.3 Ω

   Check for any authorized service information related to the DTCs or symptoms you are troubleshooting, or **replace the original TCM** .

   Less than 5.0 Ω

Go to step 3.

More than 6.3 Ω

Go to step 4.

3. Shorted wire check (DRLS line)

-1. Disconnect the following connector.

CVT drive pulley pressure control solenoid valve 2P connector

-2. Check for continuity between test points 1 and 2.

Test condition	Vehicle OFF (LOCK) mode
B	CVT drive pulley pressure control solenoid valve 2P connector: disconnected
B	TCM 50P connector: disconnected

Test point 1	**TCM 50P connector No. 15**
Test point 2	Body ground

Is there continuity?

YES

Repair a short to ground in the DRLS wire between the CVT drive pulley pressure control solenoid valve and the TCM.

NO

The DRLS wire is OK. Faulty CVT drive pulley pressure control solenoid valve. **Replace the valve body assembly** .

4. Open wire check (DRLS/DRC+ line)

-1. Disconnect the following connector.

CVT drive pulley pressure control solenoid valve 2P connector

-2. Check for continuity between test points 1 and 2.

Test condition	Vehicle OFF (LOCK) mode
B	CVT drive pulley pressure control solenoid valve 2P connector: disconnected
B	TCM 50P connector: disconnected
Test point 1	CVT drive pulley pressure control solenoid valve 2P connector (female terminals) No. 2 : ①
Test point 2	**TCM 50P connector No. 15**

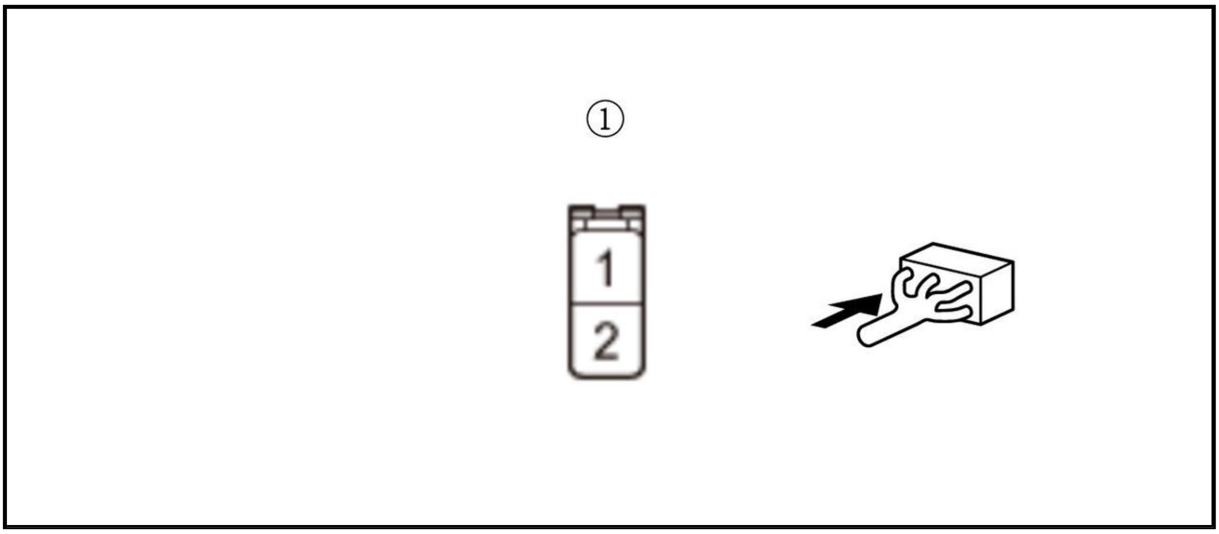

Is there continuity?

YES

The DRLS/DRC+ wire is OK. Go to step 5.

NO

Repair an open in the DRLS/DRC+ wire between the CVT drive pulley pressure control solenoid valve and the TCM.

5. Open wire check (DRC- line)

-1. Check for continuity between test points 1 and 2.

Test condition	Vehicle OFF (LOCK) mode
B	CVT drive pulley pressure control solenoid valve 2P connector: disconnected
B	TCM 50P connector: disconnected
Test point 1	CVT drive pulley pressure control solenoid valve 2P connector No. 1 : ①
Test point 2	Body ground

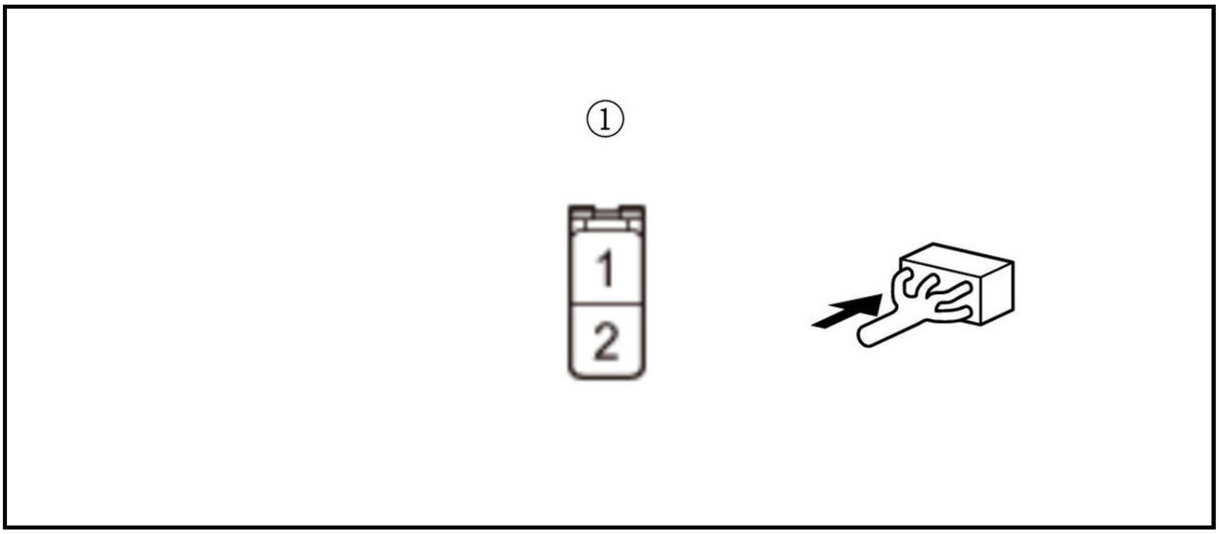

Is there continuity?

YES

The DRC- wire is OK. Faulty CVT drive pulley pressure control solenoid valve. **Replace the valve body assembly** .

NO

Repair an open in the DRC- wire between the CVT drive pulley pressure control solenoid valve and ground (G161), or repair poor ground (G161).

DTC TROUBLESHOOTING: P0966, P0967(CVT (TCM))

DTC P0966 : CVT Driven Pulley Pressure Control Valve Circuit Low

DTC P0967 : CVT Driven Pulley Pressure Control Valve Circuit High

NOTE:

- Before you troubleshoot, **review the General Troubleshooting Information** .
- This code is caused by an electrical circuit problem and cannot be caused by a mechanical problem in the transmission.

DTC Description	Confirmed DTC	Pending DTC	Freeze Frame
P0966 CVT Driven Pulley Pressure Control Valve Circuit Low	B	B	B
P0967 CVT Driven Pulley Pressure Control Valve Circuit High	B	B	B

DTC(CVT)

1. Problem verification

   -1. Turn the vehicle to the ON mode.

   -2. Clear the DTC with the HDS.

   -3. Start the engine, and wait for at least 1 second.

   -4. Check for Pending or Confirmed DTCs with the HDS.

DTC Description	Confirmed DTC	Pending DTC	Freeze Frame
P0966 CVT Driven Pulley Pressure Control Valve Circuit Low	B	B	B
P0967 CVT Driven Pulley Pressure Control Valve Circuit High	B	B	B

   Is DTC P0966 or P0967 indicated?

   YES

   The failure is duplicated. Go to step 2.

   NO

   Intermittent failure, the system is OK at this time. Check for poor connections and loose terminals between the CVT driven pulley pressure control solenoid valve and the TCM. If the freeze data/on-board snapshot of this DTC is recorded, try to reproduce the failure under the same conditions with the freeze data/on-board snapshot.

2. Determine possible failure area (TCM, short in DNLS line, open in DNLS/DNC+ line)

-1. Turn the vehicle to the OFF (LOCK) mode.

-2. Jump the SCS line with the HDS, and wait more than 1 minute.

NOTE: This step must be done to protect the TCM from damage.

-3. Disconnect the following connector.

TCM 50P connector

-4. Measure the resistance between test points 1 and 2.

Test condition	Vehicle OFF (LOCK) mode
B	TCM 50P connector: disconnected
Test point 1	**TCM 50P connector No. 14**
Test point 2	Body ground

Is there 5.0-6.3 Ω?

5.0-6.3 Ω

Check for any authorized service information related to the DTCs or symptoms you are troubleshooting, or **replace the original TCM** .

Less than 5.0 Ω

Go to step 3.

More than 6.3 Ω

Go to step 4.

3. Shorted wire check (DNLS line)

-1. Disconnect the following connector.

CVT driven pulley pressure control solenoid valve 2P connector

-2. Check for continuity between test points 1 and 2.

Test condition	Vehicle OFF (LOCK) mode
B	CVT driven pulley pressure control solenoid valve 2P connector: disconnected
B	TCM 50P connector: disconnected

Test point 1	**TCM 50P connector No. 14**
Test point 2	Body ground

Is there continuity?

YES

Repair a short to ground in the DNLS wire between the CVT driven pulley pressure control solenoid valve and the TCM.

NO

The DNLS wire is OK. Faulty CVT driven pulley pressure control solenoid valve. **Replace the valve body assembly** .

4. Open wire check (DNLS/DNC+ line)

-1. Disconnect the following connector.

CVT driven pulley pressure control solenoid valve 2P connector

-2. Check for continuity between test points 1 and 2.

Test condition	Vehicle OFF (LOCK) mode
B	CVT driven pulley pressure control solenoid valve 2P connector: disconnected
B	TCM 50P connector: disconnected
Test point 1	CVT driven pulley pressure control solenoid valve 2P connector (female terminals) No. 2 : ①
Test point 2	**TCM 50P connector No. 14**

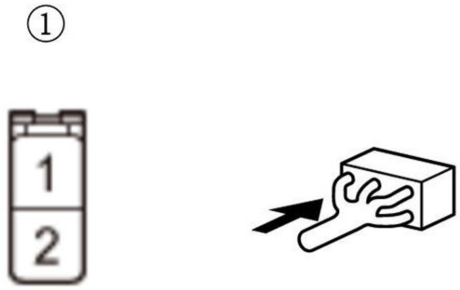

Is there continuity?

YES

The DNLS/DNC+ wire is OK. Go to step 5.

NO

Repair an open in the DNLS/DNC+ wire between the CVT driven pulley pressure control solenoid valve and the TCM.

5. Open wire check (DNC- line)

-1. Check for continuity between test points 1 and 2.

Test condition	Vehicle OFF (LOCK) mode
B	CVT driven pulley pressure control solenoid valve 2P connector: disconnected
B	TCM 50P connector: disconnected
Test point 1	CVT driven pulley pressure control solenoid valve 2P connector (female terminals) No. 1 : ①
Test point 2	Body ground

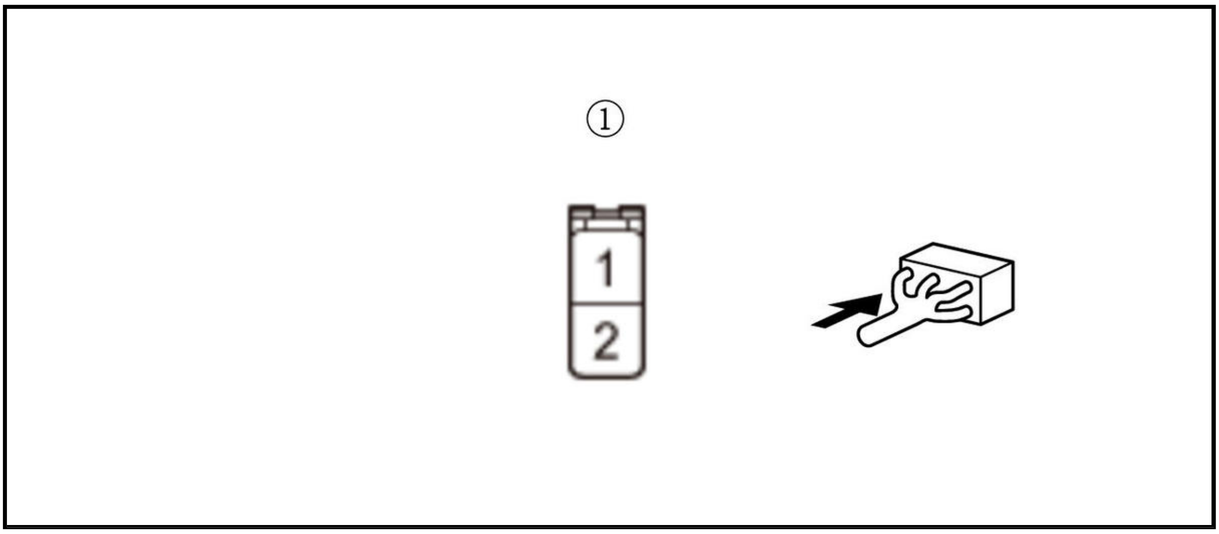

Is there continuity?

YES

The DNC- wire is OK. Faulty CVT driven pulley pressure control solenoid valve. **Replace the valve body assembly** .

NO

Repair an open in the DNC- wire between the CVT driven pulley pressure control solenoid valve and ground (G161), or repair poor ground (G161).

DTC TROUBLESHOOTING: P0970, P0971(CVT (TCM))

DTC P0970 : Pressure Control Solenoid C Control Circuit Low

DTC P0971 : Pressure Control Solenoid C Control Circuit High

NOTE:

- Before you troubleshoot, **review the General Troubleshooting Information** .
- This code is caused by an electrical circuit problem and cannot be caused by a mechanical problem in the transmission.

DTC Description	Confirmed DTC	Pending DTC	Freeze Frame
P0970 Pressure Control Solenoid C Control Circuit Low	B	B	B
P0971 Pressure Control Solenoid C Control Circuit High	B	B	B

DTC(CVT)

1. Problem verification

   -1. Turn the vehicle to the ON mode.

   -2. Clear the DTC with the HDS.

   -3. Start the engine, and wait for at least 1 second.

   -4. Check for Pending or Confirmed DTCs with the HDS.

DTC Description	Confirmed DTC	Pending DTC	Freeze Frame
P0970 Pressure Control Solenoid C Control Circuit Low	B	B	B
P0971 Pressure Control Solenoid C Control Circuit High	B	B	B

Is DTC P0970 or P0971 indicated?

YES

The failure is duplicated. Go to step 2.

NO

Intermittent failure, the system is OK at this time. Check for poor connections and loose terminals between the CVT clutch pressure control solenoid valve and the TCM. If the freeze data/on-board snapshot of this DTC is recorded, try to reproduce the failure under the same conditions with the freeze data/on-board snapshot.

2. Determine possible failure area (TCM, short in CPCLS line, open in CPCLS/CPC+ line)

-1. Turn the vehicle to the OFF (LOCK) mode.

-2. Jump the SCS line with the HDS, and wait more than 1 minute.

NOTE: This step must be done to protect the TCM from damage.

-3. Disconnect the following connector.

TCM 50P connector

-4. Measure the resistance between test points 1 and 2.

Test condition	Vehicle OFF (LOCK) mode
B	TCM 50P connector: disconnected
Test point 1	**TCM 50P connector No. 13**
Test point 2	Body ground

Is there 4.7-5.9 Ω?

4.7-5.9 Ω

Check for any authorized service information related to the DTCs or symptoms you are troubleshooting, or **replace the original TCM** .

Less than 4.7 Ω

Go to step 3.

More than 5.9 Ω

Go to step 4.

3. Shorted wire check (CPCLS line)

-1. Disconnect the following connector.

CVT clutch pressure control solenoid valve 2P connector

-2. Check for continuity between test points 1 and 2.

Test condition	Vehicle OFF (LOCK) mode
B	CVT clutch pressure control solenoid valve 2P connector: disconnected
B	TCM 50P connector: disconnected

Test point 1	**TCM 50P connector No. 13**
Test point 2	Body ground

Is there continuity?

YES

Repair a short to ground in the CPCLS wire between the CVT clutch pressure control solenoid valve and the TCM.

NO

The CPCLS wire is OK. Faulty CVT clutch pressure control solenoid valve. **Replace the valve body assembly** .

4. Open wire check (CPCLS/CPC+ line)

-1. Disconnect the following connector.

CVT clutch pressure control solenoid valve 2P connector

-2. Check for continuity between test points 1 and 2.

Test condition	Vehicle OFF (LOCK) mode
B	CVT clutch pressure control solenoid valve 2P connector: disconnected
B	TCM 50P connector: disconnected
Test point 1	CVT clutch pressure control solenoid valve 2P connector (female terminals) No. 2 : ①
Test point 2	**TCM 50P connector No. 13**

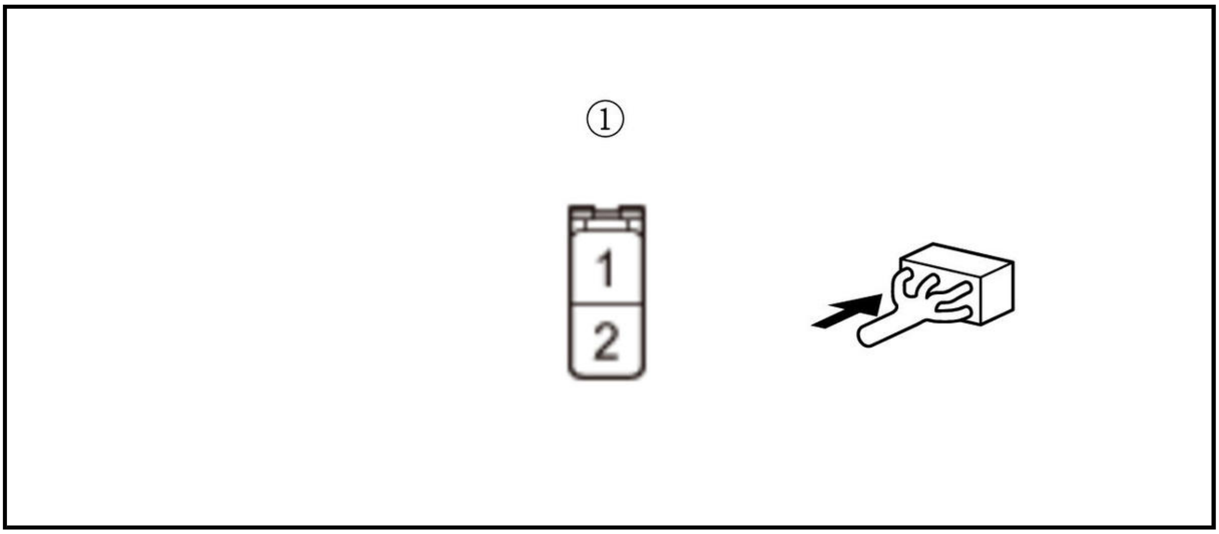

Is there continuity?

YES

The CPCLS/CPC+ wire is OK. Go to step 5.

NO

Repair an open in the CPCLS/CPC+ wire between the CVT clutch pressure control solenoid valve and the TCM.

5. Open wire check (CPC- line)

-1. Check for continuity between test points 1 and 2.

Test condition	Vehicle OFF (LOCK) mode
B	CVT clutch pressure control solenoid valve 2P connector: disconnected
B	TCM 50P connector: disconnected
Test point 1	CVT clutch pressure control solenoid valve 2P connector (female terminals) No. 1 : ①
Test point 2	Body ground

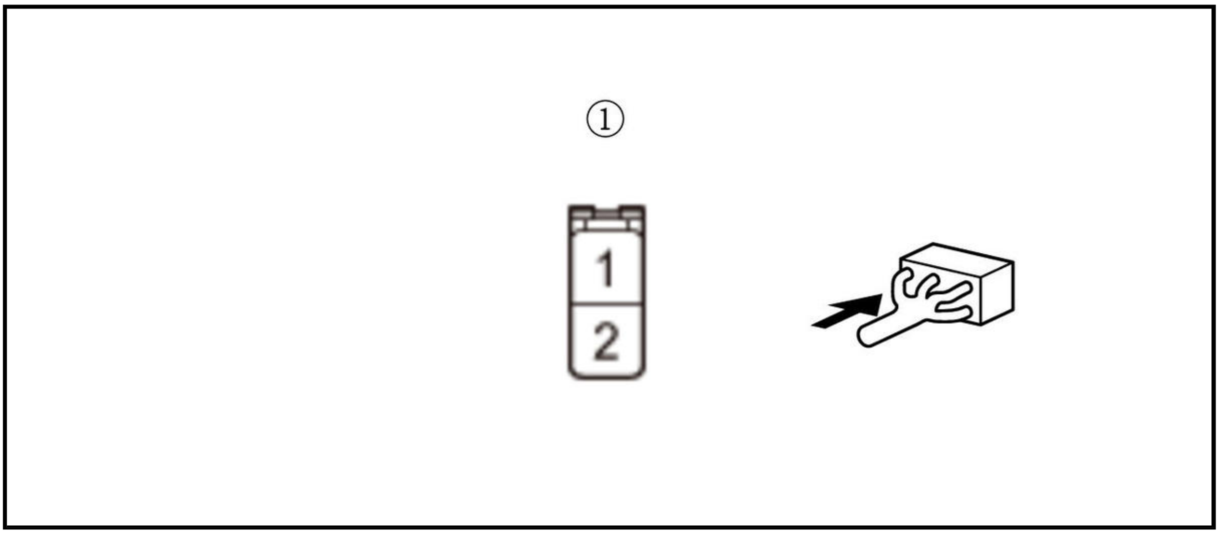

Is there continuity?

YES

The CPC- wire is OK. Faulty CVT clutch pressure control solenoid valve. **Replace the valve body assembly** .

NO

Repair an open in the CPC- wire between the CVT clutch pressure control solenoid valve and ground (G162), or repair poor ground (G162).

DTC TROUBLESHOOTING: P0976, P0977(CVT (TCM))

DTC P0976 : Shift Solenoid Valve B Circuit Low

DTC P0977 : Shift Solenoid Valve B Circuit High

NOTE:

- Before you troubleshoot, **review the General Troubleshooting Information** .
- This code is caused by an electrical circuit problem and cannot be caused by a mechanical problem in the transmission.

DTC Description	Confirmed DTC	Pending DTC	Freeze Frame
P0976 Shift Solenoid Valve B Circuit Low	B	B	B

DTC Description	Confirmed DTC	Pending DTC	Freeze Frame
P0977 Shift Solenoid Valve B Circuit High	B	B	B

DTC(CVT)

1. Problem verification

   -1. Turn the vehicle to the ON mode.

   -2. Clear the DTC with the HDS.

   -3. Test-drive under following conditions:

DTC	Test-drive condition
P0976	• Start the engine, and warm it up to normal operating temperature (the radiator fan comes on twice). • Test-drive the vehicle in D position/mode on a flat road at speeds about 37 mph (60 km/h) for at least 10 seconds.
P0977	• Shift the transmission to P position/mode. • Start the engine, and wait for at least 10 seconds.

   -4. Check for Pending or Confirmed DTCs with the HDS.

DTC Description	Confirmed DTC	Pending DTC	Freeze Frame
P0976 Shift Solenoid Valve B Circuit Low	B	B	B
P0977 Shift Solenoid Valve B Circuit High	B	B	B

   Is DTC P0976 or P0977 indicated?

   YES

   The failure is duplicated. Go to step 2.

   NO

   Intermittent failure, the system is OK at this time. Check for poor connections and loose terminals between shift solenoid valve B and the TCM. If the freeze data/on-board snapshot of this DTC is recorded, try to reproduce the failure under the same conditions with the freeze data/on-board snapshot.

2. Determine possible failure area (TCM, short in SOL B line, open in SOL B/SHB+ line)

   -1. Turn the vehicle to the OFF (LOCK) mode.

   -2. Disconnect the following connector.

TCM 50P connector

   -3. Check for continuity between test points 1 and 2.

Test condition	Vehicle OFF (LOCK) mode
B	TCM 50P connector: disconnected
Test point 1	**TCM 50P connector No. 7**
Test point 2	Body ground

   Is there 10.6-13.5 Ω?

10.6-13.5 Ω

Check for any authorized service information related to the DTCs or symptoms you are troubleshooting, or **replace the original TCM** .

Less than 10.6 Ω

Go to step 3.

More than 13.5 Ω

Go to step 4.

3. Shorted wire check (SOL B line)

-1. Disconnect the following connector.

Shift solenoid valve B 2P connector

-2. Check for continuity between test points 1 and 2.

Test condition	Vehicle OFF (LOCK) mode
B	Shift solenoid valve B 2P connector: disconnected
B	TCM 50P connector: disconnected
Test point 1	**TCM 50P connector No. 7**
Test point 2	Body ground

Is there continuity?

YES

Repair a short to ground in the SOL B wire between shift solenoid valve B and the TCM.

NO

The SOL B wire is OK. Faulty shift solenoid valve B. **Replace the valve body assembly** .

4. Open wire check (SOL B/SHB+ line)

-1. Disconnect the following connector.

Shift solenoid valve B 2P connector

-2. Check for continuity between test points 1 and 2.

Test condition	Vehicle OFF (LOCK) mode
	Shift solenoid valve B 2P connector: disconnected
	TCM 50P connector: disconnected
Test point 1	Shift solenoid valve B 2P connector (female terminals) No. 1 : ①
Test point 2	**TCM 50P connector No. 7**

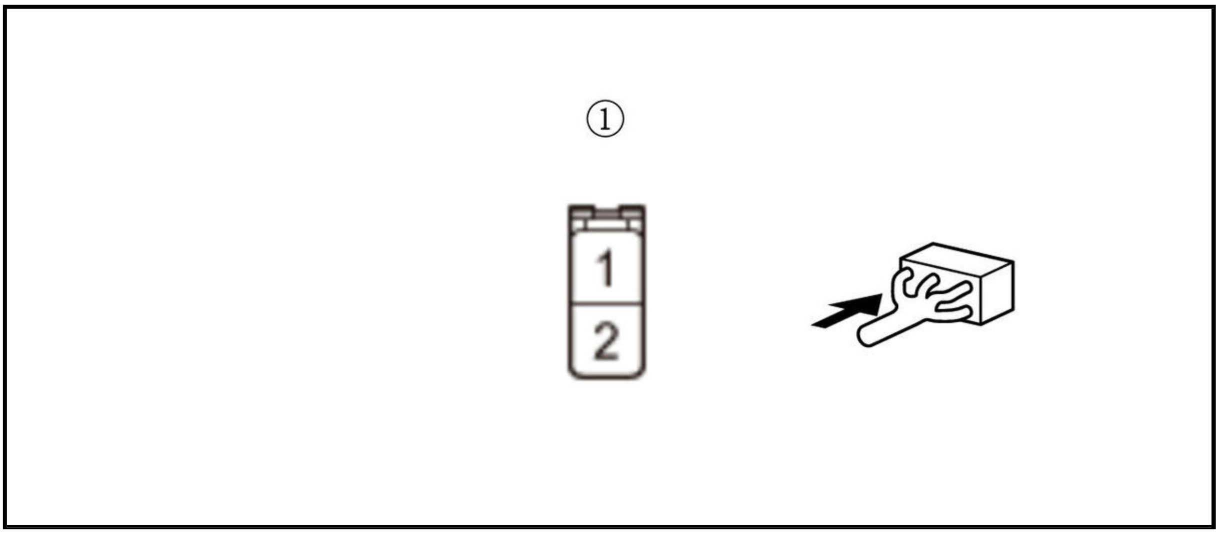

Is there continuity?

YES

The SOL B/SHB+ wire is OK. Faulty shift solenoid valve B. **Replace the valve body assembly** .

NO

Repair an open in the SOL B/SHB+ wire between shift solenoid valve B and the TCM.

DTC TROUBLESHOOTING: P1717(CVT (TCM))

DTC P1717 : Transmission Range Switch ATP RVS Switch (Open or Short)

NOTE:

- Before you troubleshoot, **review the General Troubleshooting Information** .
- This code is caused by an electrical circuit problem and cannot be caused by a mechanical problem in the transmission.

DTC Description	Confirmed DTC	Pending DTC	Freeze Frame
P1717 Transmission Range Switch ATP RVS Switch (Open or Short)	B	B	B

DTC(CVT)

1. Problem verification

-1. **Make sure the shift cable is properly adjusted** .

-2. Turn the vehicle to the ON mode.

-3. Shift the transmission to R position/mode.

-4. Check the parameter(s) below with the HDS.

Signal	Threshold		Current conditions	
	Values	Unit	Values	Unit
A/T R Switch	ON	B	B	B
Reverse Switch(ATPRVS)	ON	B	B	B

Do the current condition(s) match the threshold?

YES

Intermittent failure, the system is OK at this time. Check for poor connections and loose terminals between the transmission range switch and the TCM. If the freeze data/on-board snapshot of this DTC is recorded, try to reproduce the failure under the same conditions with the freeze data/on-board snapshot.

NO

The failure is duplicated. Go to step 2.

2. Transmission range switch check

-1. **Do the transmission range switch test** .

Is the transmission range switch OK?

YES

The transmission range switch is OK. Go to step 3.

NO

Check for proper transmission range switch installation, then recheck. If the transmission range switch installation is OK, **replace the transmission range switch** .

3. Open wire check (ATP-RVS line)

-1. Turn the vehicle to the OFF (LOCK) mode.

-2. Disconnect the following connector.

Transmission range switch 10P connector

-3. Turn the vehicle to the ON mode.

-4. Measure the voltage between test points 1 and 2.

Test condition	Vehicle ON mode
B	Transmission range switch 10P connector: disconnected
Test point 1	Transmission range switch 10P connector (female terminals) No. 10 : ①
Test point 2	Body ground

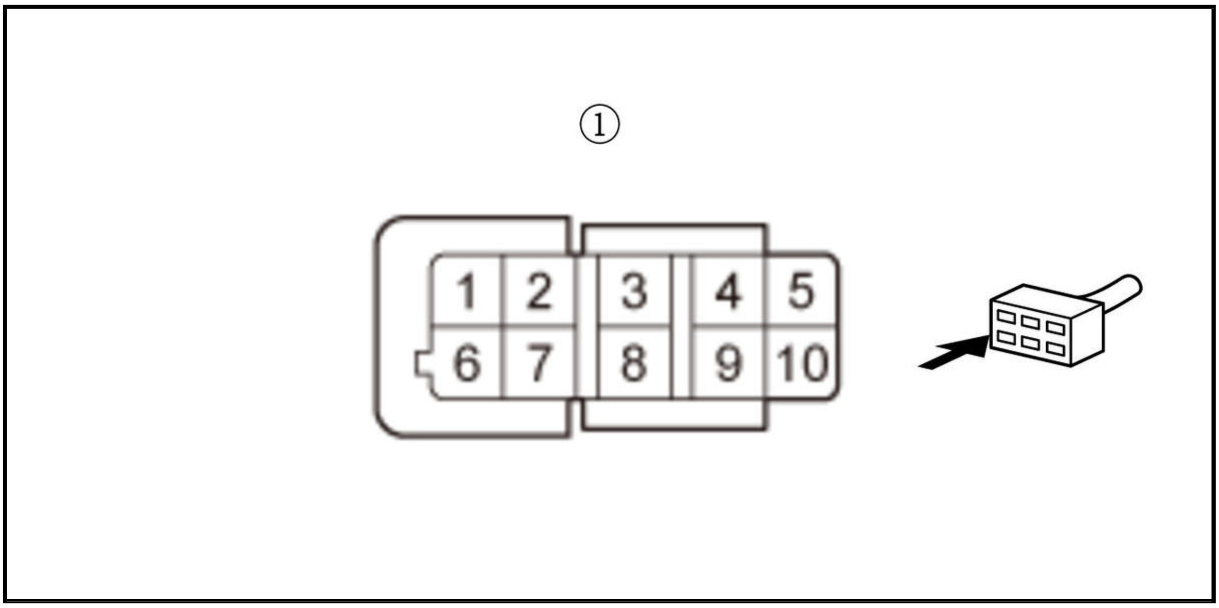

Is there about 5 V?

YES

The ATP-RVS wire is OK. Check for any authorized service information related to the DTCs or symptoms you are troubleshooting, or **replace the original TCM** .

NO

Repair an open in the ATP-RVS wire between the transmission range switch and the TCM.

DTC TROUBLESHOOTING: P1840(CVT (TCM))

DTC P1840 : CVT Speed Sensor Circuit Forward Rotation Range/Performance

NOTE: Before you troubleshoot, **review the General Troubleshooting Information** .

DTC Description	Confirmed DTC	Pending DTC	Freeze Frame
P1840 CVT Speed Sensor Circuit Forward Rotation Range/Performance	B	B	B

DTC(CVT)

1. CVT speed sensor check

-1. Turn the vehicle to the ON mode.

-2. Clear the DTC with the HDS.

-3. Raise the vehicle on a lift. Make sure it is securely supported, and allow all four wheels to rotate freely.

-4. **Enter the VSA maintenance mode** .

-5. Test-drive the vehicle in D position/mode at speeds over 19 mph (30 km/h) for at least 5 seconds.

-6. Check the parameter(s) below with the HDS while running the vehicle in D position/mode.

Signal	Threshold		Current conditions	
	Values	Unit	Values	Unit
Direction of Secondary-shaft Rotation	Forward	B	B	B

Do the current condition(s) match the threshold?

YES

The CVT speed sensor is OK. Check for any authorized service information related to the DTCs or symptoms you are troubleshooting, or **replace the original TCM** .

NO

Replace the CVT speed sensor .

DTC TROUBLESHOOTING: P1841(CVT (TCM))

DTC P1841 : CVT Speed Sensor Circuit Reverse Rotation Range/Performance

NOTE: Before you troubleshoot, **review the General Troubleshooting Information** .

DTC Description	Confirmed DTC	Pending DTC	Freeze Frame
P1841 CVT Speed Sensor Circuit Reverse Rotation Range/Performance	B	B	B

DTC(CVT)

1. CVT speed sensor check

   -1. Turn the vehicle to the ON mode.

   -2. Clear the DTC with the HDS.

   -3. Raise the vehicle on a lift. Make sure it is securely supported, and allow all four wheels to rotate freely.

   -4. **Enter the VSA maintenance mode** .

   -5. Test-drive the vehicle in R position/mode at speeds over 19 mph (30 km/h) for at least 5 seconds.

   -6. Check the parameter(s) below with the HDS while running the vehicle in R position/mode.

Signal	Threshold		Current conditions	
	Values	Unit	Values	Unit
Direction of Secondary-shaft Rotation	Reverse	B	B	B

Do the current condition(s) match the threshold?

YES

The CVT speed sensor is OK. Check for any authorized service information related to the DTCs or symptoms you are troubleshooting, or **replace the original TCM** .

NO

Replace the CVT speed sensor .

DTC TROUBLESHOOTING: P1844(CVT (TCM))

DTC P1844 : CVT Input Shaft Speed Sensor Circuit Forward Rotation Range/Performance

NOTE: Before you troubleshoot, **review the General Troubleshooting Information** .

DTC Description	Confirmed DTC	Pending DTC	Freeze Frame
P1844 CVT Input Shaft Speed Sensor Circuit Forward Rotation Range/Performance	B	B	B

DTC(CVT)

1. CVT drive pulley speed sensor check

   -1. Turn the vehicle to the ON mode.

   -2. Clear the DTC with the HDS.

   -3. Raise the vehicle on a lift. Make sure it is securely supported, and allow all four wheels to rotate freely.

   -4. **Enter the VSA maintenance mode** .

   -5. Test-drive the vehicle in D position/mode at speeds over 19 mph (30 km/h) for at least 5 seconds.

   -6. Check the parameter(s) below with the HDS while running the vehicle in D position/mode.

Signal	Threshold		Current conditions	
	Values	Unit	Values	Unit
Direction of Drive Pulley Rotation	Forward	B	B	B

Do the current condition(s) match the threshold?

YES

The CVT drive pulley speed sensor is OK. Check for any authorized service information related to the DTCs or symptoms you are troubleshooting, or **replace the original TCM** .

NO

Replace the CVT drive pulley speed sensor .

DTC TROUBLESHOOTING: P1845(CVT (TCM))

DTC P1845 : CVT Input Shaft Speed Sensor Circuit Reverse Rotation Range/Performance

NOTE: Before you troubleshoot, **review the General Troubleshooting Information** .

DTC Description	Confirmed DTC	Pending DTC	Freeze Frame
P1845 CVT Input Shaft Speed Sensor Circuit Reverse Rotation Range/Performance	B	B	B

DTC(CVT)

1. CVT drive pulley speed sensor check

   -1. Turn the vehicle to the ON mode.

   -2. Clear the DTC with the HDS.

-3. Raise the vehicle on a lift. Make sure it is securely supported, and allow all four wheels to rotate freely.

-4. **Enter the VSA maintenance mode** .

-5. Test-drive the vehicle in R position/mode at speeds over 19 mph (30 km/h) for at least 5 seconds.

-6. Check the parameter(s) below with the HDS while running the vehicle in R position/mode.

Signal	Threshold		Current conditions	
	Values	Unit	Values	Unit
Direction of Drive Pulley Rotation	Reverse	B	B	B

Do the current condition(s) match the threshold?

YES

The CVT drive pulley speed sensor is OK. Check for any authorized service information related to the DTCs or symptoms you are troubleshooting, or **replace the original TCM** .

NO

Replace the CVT drive pulley speed sensor .

DTC TROUBLESHOOTING: P1855(CVT (TCM)) (2020 2021)

DTC P1855 : Inclination Sensor Circuit Range/Performance

NOTE:

- Before you troubleshoot, **review the General Troubleshooting Information** .
- This code is caused by an electrical circuit problem and cannot be caused by a mechanical problem in the transmission.

DTC Description	Confirmed DTC	Pending DTC	Freeze Frame
P1855 Inclination Sensor Circuit Range/Performance	B	B	B

DTC (CVT)

1. Problem verification

-1. Turn the vehicle to the ON mode.

-2. Clear the DTC with the HDS.

Clear DTC (CVT)

-3. Test-drive the vehicle until the OBD status of DTC P1855 changes.

-4. Monitor the OBD STATUS for DTC P1855 in the DTCs MENU with the HDS.

DTC Description	OBD STATUS
P1855 Inclination Sensor Circuit Range/Performance	B

Does the HDS indicate FAILED?

YES

The failure is duplicated. **Replace the SRS unit** .

NO

If the HDS indicates PASSED, intermittent failure, the system is OK at this time. Check for poor connections and loose terminals between the SRS unit and the TCM. If the freeze data/on-board snapshot of this DTC is recorded, try to reproduce the failure under the same conditions with the freeze data/on-board snapshot. If the HDS indicates NOT COMPLETED, go to step 1-1 and recheck.

DTC TROUBLESHOOTING: P1890(CVT (TCM))

DTC P1890 : CVT Speed Control System

NOTE: Before you troubleshoot, **review the General Troubleshooting Information** .

DTC Description	Confirmed DTC	Pending DTC	Freeze Frame
P1890 CVT Speed Control System	B	B	B

DTC(CVT)

1. DTC check

   -1. Turn the vehicle to the ON mode.

   -2. Check for Pending or Confirmed DTCs with the HDS.

DTC Description	Confirmed DTC	Pending DTC	Freeze Frame
P1890 CVT Speed Control System	B	B	B

   Is there any DTC(s) other than DTC P1890?

   YES

   Go to the indicated DTC's troubleshooting.

   NO

   Go to step 2.

2. Problem verification

   -1. Clear the DTC with the HDS.

   -2. Start the engine.

   -3. Test-drive the vehicle in D position/mode, accelerate slowly until the vehicle speed reaches 37 mph (60 km/h) on a flat road, then keep the vehicle at speeds about 37 mph (60 km/h) for at least 60 seconds.

   -4. Monitor the OBD STATUS for P1890 in the DTCs MENU with the HDS.

DTC Description	OBD Status
P1890 CVT Speed Control System	B

   Does the HDS indicate FAILED?

   YES

   The failure is duplicated. **Replace the transmission** .

NO

If the HDS indicates PASSED, intermittent failure, the system is OK at this time. If the HDS indicates NOT COMPLETED, test-drive again. If the freeze data/on-board snapshot of this DTC is recorded, try to reproduce the failure under the same conditions with the freeze data/on-board snapshot.

DTC TROUBLESHOOTING: P1898(CVT (TCM))

DTC P1898 : CVT Drive Pulley Pressure Control Valve Stuck ON or CVT Driven Pulley Pressure Control Valve Stuck OFF

NOTE: Before you troubleshoot, **review the General Troubleshooting Information** .

DTC Description	Confirmed DTC	Pending DTC	Freeze Frame
P1898 CVT Drive Pulley Pressure Control Valve Stuck ON or CVT Driven Pulley Pressure Control Valve Stuck OFF	B	B	B

DTC(CVT)

1. Problem verification

-1. Turn the vehicle to the ON mode.

-2. Clear the DTC with the HDS.

-3. Start the engine.

-4. Test-drive the vehicle in D position/mode until the vehicle speed reaches 37 mph (60 km/h). Slow down and stop the vehicle, then accelerate from a stop at full throttle in D position/mode until the vehicle speed reaches 37 mph (60 km/h).

-5. Check for Pending or Confirmed DTCs with the HDS.

DTC Description	Confirmed DTC	Pending DTC	Freeze Frame
P0780 Shift Error	B	B	B
P1898 CVT Drive Pulley Pressure Control Valve Stuck ON or CVT Driven Pulley Pressure Control Valve Stuck OFF	B	B	B

Are DTC P1898 and P0780 indicated?

YES

The failure is duplicated. Faulty CVT drive pulley pressure control solenoid valve and/or CVT driven pulley pressure control solenoid valve. **Replace the valve body assembly** .

NO

Intermittent failure, the system is OK at this time. If the freeze data/on-board snapshot of this DTC is recorded, try to reproduce the failure under the same conditions with the freeze data/on-board snapshot.

DTC TROUBLESHOOTING: P1899(CVT (TCM))

DTC P1899 : CVT Drive Pulley Pressure Control Valve Stuck OFF or CVT Driven Pulley Pressure Control Valve Stuck ON

NOTE: Before you troubleshoot, **review the General Troubleshooting Information** .

DTC Description	Confirmed DTC	Pending DTC	Freeze Frame
P1899 CVT Drive Pulley Pressure Control Valve Stuck OFF or CVT Driven Pulley Pressure Control Valve Stuck ON	B	B	B

DTC(CVT)

1. Problem verification

   -1. Turn the vehicle to the ON mode.

   -2. Clear the DTC with the HDS.

   -3. Start the engine.

   -4. Test-drive the vehicle in D position/mode until the vehicle speed reaches 37 mph (60 km/h). Slow down and stop the vehicle, then accelerate from a stop at full throttle in D position/mode until the vehicle speed reaches 37 mph (60 km/h).

   -5. Check for Pending or Confirmed DTCs with the HDS.

DTC Description	Confirmed DTC	Pending DTC	Freeze Frame
P0780 Shift Error	B	B	B
P1899 CVT Drive Pulley Pressure Control Valve Stuck OFF or CVT Driven Pulley Pressure Control Valve Stuck ON	B	B	B

   Are DTC P1899 and P0780 indicated?

   YES

   The failure is duplicated. Faulty CVT drive pulley pressure control solenoid valve and/or CVT driven pulley pressure control solenoid valve. **Replace the valve body assembly** .

   NO

   Intermittent failure, the system is OK at this time. If the freeze data/on-board snapshot of this DTC is recorded, try to reproduce the failure under the same conditions with the freeze data/on-board snapshot.

DTC TROUBLESHOOTING: P1900(CVT (TCM)) (2020 2021)

DTC P1900 : EOP-RELAY High Input

NOTE:

- Before you troubleshoot, **review the General Troubleshooting Information** .
- This code is caused by an electrical circuit problem and cannot be caused by a mechanical problem in the transmission.

DTC Description	Confirmed DTC	Pending DTC	Freeze Frame
P1900 EOP-RELAY High Input	B	B	B

DTC(CVT)

1. Problem verification

   -1. Turn the vehicle to the ON mode.

-2. Clear the DTC with the HDS.

-3. Turn the vehicle to the OFF (LOCK) mode.

-4. Turn the vehicle to the ON mode, and wait for at least 5 seconds.

-5. Select the Electrical Oil Pump Activation in the Function Test Menu, and drive the auxiliary transmission fluid pump for at least 5 seconds with the HDS.

-6. Monitor the OBD STATUS for P1900 in the DTCs MENU with the HDS.

DTC Description	OBD Status
P1900 EOP-RELAY High Input	B

Does the HDS indicate FAILED?

YES

The failure is duplicated. Go to step 2.

NO

If the HDS indicates PASSED, intermittent failure, the system is OK at this time. Check for poor connections and loose terminals between the auxiliary transmission fluid pump relay, the auxiliary transmission fluid pump, and the TCM. If the HDS indicates NOT COMPLETED, go to step 1-3 and recheck.

2. Relay check

-1. Turn the vehicle to the OFF (LOCK) mode.

-2. **Remove the auxiliary transmission fluid pump relay** .

-3. **Test the auxiliary transmission fluid pump relay** .

Is the relay OK?

YES

The auxiliary transmission fluid pump relay is OK. Go to step 3.

NO

Replace the auxiliary transmission fluid pump relay.

3. Shorted wire check (EOPRLY line)

-1. Turn the vehicle to the OFF (LOCK) mode.

-2. Jump the SCS line with the HDS, and wait more than 1 minute.

NOTE: This step must be done to protect the TCM from damage.

-3. Disconnect the following connector.

TCM 50P connector

-4. Measure the resistance between test points 1 and 2.

Test condition	Vehicle OFF (LOCK) mode

B	Auxiliary transmission fluid pump relay 4P socket: disconnected
B	TCM 50P connector: disconnected
Test point 1	**TCM 50P connector No. 27**
Test point 2	Body ground

Is there 1 MΩ or more?

YES

The EOPRLY wire is OK. Go to step 4.

NO

Repair a short to ground in the EOPRLY wire between the auxiliary transmission fluid pump relay and the TCM.

4. Shorted wire check (EOPVB line to power)

-1. Disconnect the following connector.

Auxiliary transmission fluid pump 4P connector

-2. Turn the vehicle to the ON mode.

-3. Measure the voltage between test points 1 and 2.

Test condition	Vehicle ON mode
B	Auxiliary transmission fluid pump relay 4P socket: disconnected
B	Auxiliary transmission fluid pump 4P connector: disconnected
B	TCM 50P connector: disconnected

Test point 1	Auxiliary transmission fluid pump 4P connector (female terminals) No. 4: ①
Test point 2	Body ground

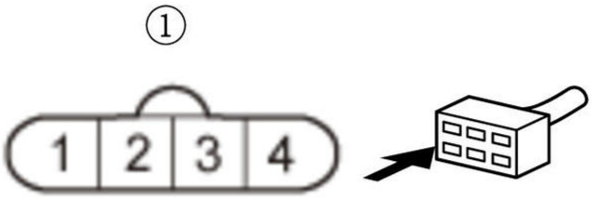

Is there battery voltage?

YES

Repair a short to power in the EOPVB wire between the auxiliary transmission fluid pump relay and the auxiliary transmission fluid pump.

NO

The EOPVB wire is OK. Check for any authorized service information related to the DTCs or symptoms you are troubleshooting, or **replace the original TCM** .

DTC TROUBLESHOOTING: P2715(CVT (TCM))

DTC P2715 : Pressure Control Solenoid D Stuck On

NOTE: Before you troubleshoot, **review the General Troubleshooting Information** .

DTC Description	Confirmed DTC	Pending DTC	Freeze Frame
P2715 Pressure Control Solenoid D Stuck On	B	B	B

DTC(CVT)

1. Problem verification

   -1. Turn the vehicle to the ON mode.

   -2. Clear the DTC with the HDS.

   -3. Start the engine. With the brake pedal pressed, shift the transmission to N position/mode, then shift to D position/mode, and wait for at least 1 second. Release the brake pedal, and test-drive the vehicle in D position/mode at speeds 12 mph (20 km/h) or below for at least 10 seconds.

   -4. Turn the vehicle to the OFF (LOCK) mode. Repeat the test-drive in step 1-3 again.

   -5. Check for Pending or Confirmed DTCs with the HDS.

DTC Description	Confirmed DTC	Pending DTC	Freeze Frame
P2715 Pressure Control Solenoid D Stuck On	B	B	B

   Is DTC P2715 indicated?

   YES

   The failure is duplicated. Faulty CVT lock-up clutch control solenoid valve. **Replace the valve body assembly** .

   NO

   Intermittent failure, the system is OK at this time. If the freeze data/on-board snapshot of this DTC is recorded, try to reproduce the failure under the same conditions with the freeze data/on-board snapshot.

DTC TROUBLESHOOTING: P2720, P2721(CVT (TCM))

DTC P2720 : Pressure Control Solenoid D Control Circuit Low

DTC P2721 : Pressure Control Solenoid D Control Circuit High

NOTE:

- Before you troubleshoot, **review the General Troubleshooting Information** .
- This code is caused by an electrical circuit problem and cannot be caused by a mechanical problem in the transmission.

DTC Description	Confirmed DTC	Pending DTC	Freeze Frame
P2720 Pressure Control Solenoid D Control Circuit Low	B	B	B
P2721 Pressure Control Solenoid D Control Circuit High	B	B	B

DTC(CVT)

1. Problem verification

   -1. Turn the vehicle to the ON mode.

   -2. Clear the DTC with the HDS.

   -3. Start the engine, and wait for at least 1 second.

   -4. Check for Pending or Confirmed DTCs with the HDS.

DTC Description	Confirmed DTC	Pending DTC	Freeze Frame
P2720 Pressure Control Solenoid D Control Circuit Low	B	B	B
P2721 Pressure Control Solenoid D Control Circuit High	B	B	B

   Is DTC P2720 or P2721 indicated?

   YES

   The failure is duplicated. Go to step 2.

   NO

   Intermittent failure, the system is OK at this time. Check for poor connections and loose terminals between the CVT lock-up clutch control solenoid valve and the TCM. If the freeze data/on-board snapshot of this DTC is recorded, try to reproduce the failure under the same conditions with the freeze data/on-board snapshot.

2. Determine possible failure area (TCM, short in LCCLS line, open in LCCLS/LCC+ line)

   -1. Turn the vehicle to the OFF (LOCK) mode.

   -2. Jump the SCS line with the HDS, and wait more than 1 minute.

   NOTE: This step must be done to protect the TCM from damage.

   -3. Disconnect the following connector.

TCM 50P connector

   -4. Measure the resistance between test points 1 and 2.

Test condition	Vehicle OFF (LOCK) mode
B	TCM 50P connector: disconnected
Test point 1	**TCM 50P connector No. 16**
Test point 2	Body ground

   Is there 5.0-6.3 Ω?

5.0-6.3 Ω

Check for any authorized service information related to the DTCs or symptoms you are troubleshooting, or **replace the original TCM** .

Less than 5.0 Ω

Go to step 3.

More than 6.3 Ω

Go to step 4.

3. Shorted wire check (LCCLS line)

-1. Disconnect the following connector.

CVT lock-up clutch control solenoid valve 2P connector

-2. Check for continuity between test points 1 and 2.

Test condition	Vehicle OFF (LOCK) mode
B	CVT lock-up clutch control solenoid valve 2P connector: disconnected
B	TCM 50P connector: disconnected

Test point 1	**TCM 50P connector No. 16**
Test point 2	Body ground

Is there continuity?

YES

Repair a short to ground in the LCCLS wire between the CVT lock-up clutch control solenoid valve and the TCM.

NO

The LCCLS wire is OK. Faulty CVT lock-up clutch control solenoid valve. **Replace the valve body assembly** .

4. Open wire check (LCCLS/LCC+ line)

-1. Disconnect the following connector.

CVT lock-up clutch control solenoid valve 2P connector

-2. Check for continuity between test points 1 and 2.

Test condition	Vehicle OFF (LOCK) mode
B	CVT lock-up clutch control solenoid valve 2P connector: disconnected
B	TCM 50P connector: disconnected
Test point 1	CVT lock-up clutch control solenoid valve 2P connector (female terminals) No. 2 : ①
Test point 2	**TCM 50P connector No. 16**

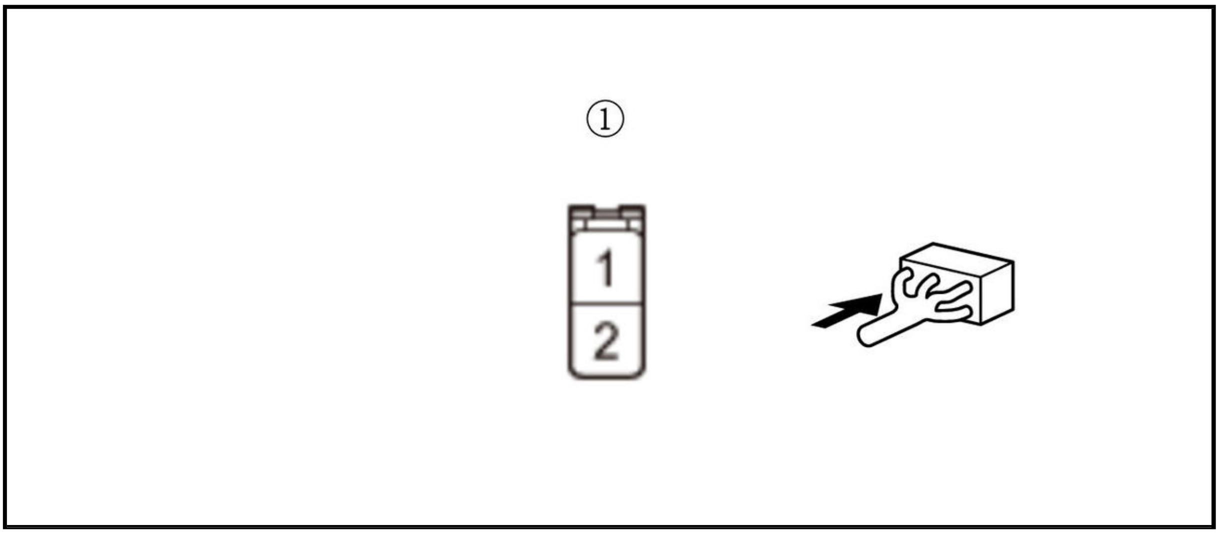

Is there continuity?

YES

The LCCLS/LCC+ wire is OK. Go to step 5.

NO

Repair an open in the LCCLS/LCC+ wire between the CVT lock-up clutch control solenoid valve and the TCM.

5. Open wire check (LCC- line)

-1. Check for continuity between test points 1 and 2.

Test condition	Vehicle OFF (LOCK) mode
B	CVT lock-up clutch control solenoid valve 2P connector: disconnected
B	TCM 50P connector: disconnected
Test point 1	CVT lock-up clutch control solenoid valve 2P connector (female terminals) No. 1 : ①
Test point 2	Body ground

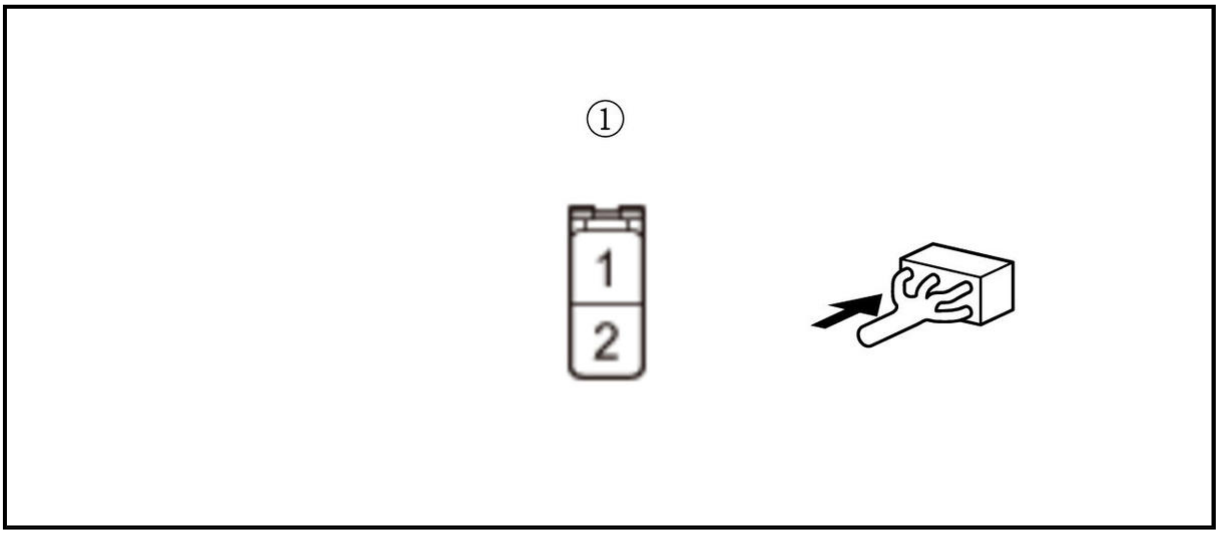

Is there continuity?

YES

The LCC- wire is OK. Faulty CVT lock-up clutch control solenoid valve. **Replace the valve body assembly** .

NO

Repair an open in the LCC- wire between the CVT lock-up clutch control solenoid valve and ground (G162), or repair poor ground (G162).

DTC TROUBLESHOOTING: P2797(CVT (TCM)) (2020 2021)

DTC P2797 : Auxiliary Transmission Fluid Pump Performance

NOTE:

- Before you troubleshoot, **review the General Troubleshooting Information** .
- This code is caused by an electrical circuit problem and cannot be caused by a mechanical problem in the transmission.

DTC Description	Confirmed DTC	Pending DTC	Freeze Frame
P2797 Auxiliary Transmission Fluid Pump Performance	B	B	B

DTC(CVT)

1. Determine possible failure area (PGM-FI system, others)

   -1. Turn the vehicle to the ON mode.

   -2. Check for Pending or Confirmed DTCs in the PGM-FI system with the HDS.

DTC Description	Confirmed DTC	Pending DTC
P0A94 Voltage Stabilizer Malfunction	B	B

   Is DTC P0A94 indicated?

   YES

   Go to the troubleshooting for DTC P0A94 in the PGM-FI system .

   NO

   Go to step 2.

2. Problem verification

   -1. Select the Electrical Oil Pump Activation in the Function Test Menu, and drive the auxiliary transmission fluid pump for at least 5 seconds with the HDS.

   -2. Check for Pending or Confirmed DTCs with the HDS.

DTC Description	Confirmed DTC	Pending DTC	Freeze Frame
P2797 Auxiliary Transmission Fluid Pump Performance	B	B	B

   Is DTC P2797 indicated?

   YES

   The failure is duplicated. **Replace the auxiliary transmission fluid pump** .

NO

Intermittent failure, the system is OK at this time. Check for poor connections and loose terminals between the auxiliary transmission fluid pump and the TCM. If the freeze data/on-board snapshot of this DTC is recorded, try to reproduce the failure under the same conditions with the freeze data/on-board snapshot.

DTC TROUBLESHOOTING: P2817(CVT (TCM))

DTC P2817 : Shift Solenoid Valve O/P (Pressure Control Solenoid H) Stuck Off

NOTE: Before you troubleshoot, **review the General Troubleshooting Information** .

DTC Description	Confirmed DTC	Pending DTC	Freeze Frame
P2817 Shift Solenoid Valve O/P (Pressure Control Solenoid H) Stuck Off	B	B	B

DTC(CVT)

1. Problem verification

   -1. Turn the vehicle to the ON mode.

   -2. Clear the DTC with the HDS.

   -3. Start the engine. With the brake pedal pressed, shift the transmission to N position/mode, then shift to D position/mode, and wait for at least 1 second. Release the brake pedal, and test-drive the vehicle in D position/mode until the vehicle speed reaches 12 mph (20 km/h). Slow down to a stop, and keep stopping for at least 10 seconds.

   -4. Turn the vehicle to the OFF (LOCK) mode. Repeat the test-drive in step 1-3 again.

   -5. Check for Pending or Confirmed DTCs with the HDS.

DTC Description	Confirmed DTC	Pending DTC	Freeze Frame
P2817 Shift Solenoid Valve O/P (Pressure Control Solenoid H) Stuck Off	B	B	B

   Is DTC P2817 indicated?

   YES

   The failure is duplicated. Go to step 2.

   NO

   Intermittent failure, the system is OK at this time. If the freeze data/on-board snapshot of this DTC is recorded, try to reproduce the failure under the same conditions with the freeze data/on-board snapshot.

2. Shift Solenoid Valve O/P operation check

   -1. Select the Shift Solenoid Valve O/P Test in the Miscellaneous Test Menu, and check that the shift solenoid valve O/P operates with the HDS.

   Does the shift solenoid valve O/P work properly?

   YES

   The shift solenoid valve O/P is OK. **Replace the transmission fluid pump** .

NO

Replace the shift solenoid valve O/P .

DTC TROUBLESHOOTING: P2818(CVT (TCM))

DTC P2818 : Shift Solenoid Valve O/P (Pressure Control Solenoid H) Stuck On

NOTE: Before you troubleshoot, review the General Troubleshooting Information .

DTC Description	Confirmed DTC	Pending DTC	Freeze Frame
P2818 Shift Solenoid Valve O/P (Pressure Control Solenoid H) Stuck On	B	B	B

DTC(CVT)

1. Problem verification

   -1. Turn the vehicle to the ON mode.

   -2. Clear the DTC with the HDS.

   -3. Start the engine. With the brake pedal pressed, shift the transmission to N position/mode, then shift to D position/mode, and wait for at least 1 second. Release the brake pedal, and test-drive the vehicle in D position/mode until the vehicle speed reaches 25 mph (40 km/h). Slow down to a stop, and keep stopping for at least 10 seconds.

   -4. Turn the vehicle to the OFF (LOCK) mode. Repeat the test-drive in step 1-3 again.

   -5. Check for Pending or Confirmed DTCs with the HDS.

DTC Description	Confirmed DTC	Pending DTC	Freeze Frame
P2818 Shift Solenoid Valve O/P (Pressure Control Solenoid H) Stuck On	B	B	B

   Is DTC P2818 indicated?

   YES

   The failure is duplicated. Go to step 2.

   NO

   Intermittent failure, the system is OK at this time. If the freeze data/on-board snapshot of this DTC is recorded, try to reproduce the failure under the same conditions with the freeze data/on-board snapshot.

2. Shift Solenoid Valve O/P operation check

   -1. Select the Shift Solenoid Valve O/P Test in the Miscellaneous Test Menu, and check that the shift solenoid valve O/P operates with the HDS.

   Does the shift solenoid valve O/P work properly?

   YES

   The shift solenoid valve O/P is OK. Replace the transmission fluid pump .

   NO

Replace the shift solenoid valve O/P .

DTC TROUBLESHOOTING: P281D, P281E(CVT (TCM))

DTC P281D : Shift Solenoid Valve O/P (Pressure Control Solenoid H) Control Circuit Low

DTC P281E : Shift Solenoid Valve O/P (Pressure Control Solenoid H) Control Circuit High

NOTE:

- Before you troubleshoot, **review the General Troubleshooting Information** .
- This code is caused by an electrical circuit problem and cannot be caused by a mechanical problem in the transmission.

DTC Description	Confirmed DTC	Pending DTC	Freeze Frame
P281D Shift Solenoid Valve O/P (Pressure Control Solenoid H) Control Circuit Low	B	B	B
P281E Shift Solenoid Valve O/P (Pressure Control Solenoid H) Control Circuit High	B	B	B

DTC(CVT)

1. Problem verification

-1. Turn the vehicle to the ON mode.

-2. Clear the DTC with the HDS.

-3. Test-drive under following conditions:

DTC	Test-drive condition
P281D	• Start the engine. • Shift the transmission to D position/mode while pressing the brake pedal, and wait for at least 30 seconds.
P281E	• Start the engine. • Shift the transmission to D position/mode while pressing the brake pedal, and wait for at least 30 seconds. • Shift the transmission to P position/mode. • Turn the vehicle to the OFF (LOCK) mode. • Start the engine, and wait for at least 1 second.

-4. Check for Pending or Confirmed DTCs with the HDS.

DTC Description	Confirmed DTC	Pending DTC	Freeze Frame
P281D Shift Solenoid Valve O/P (Pressure Control Solenoid H) Control Circuit Low	B	B	B
P281E Shift Solenoid Valve O/P (Pressure Control Solenoid H) Control Circuit High	B	B	B

Is DTC P281D or P281E indicated?

YES

The failure is duplicated. Go to step 2.

NO

Intermittent failure, the system is OK at this time. Check for poor connections and loose terminals between the shift solenoid valve O/P and the TCM. If the freeze data/on-board snapshot of this DTC is recorded, try to reproduce the failure under the same conditions with the freeze data/on-board snapshot.

2. Determine possible failure area (TCM, short in SOL C line, open in SOL C/SHC+ line)

-1. Turn the vehicle to the OFF (LOCK) mode.

-2. Jump the SCS line with the HDS, and wait more than 1 minute.

NOTE: This step must be done to protect the TCM from damage.

-3. Disconnect the following connector.

TCM 50P connector

-4. Measure the resistance between test points 1 and 2.

Test condition	Vehicle OFF (LOCK) mode
B	TCM 50P connector: disconnected
Test point 1	**TCM 50P connector No. 6**
Test point 2	Body ground

Is there 10.6-13.5 Ω?

10.6-13.5 Ω

Check for any authorized service information related to the DTCs or symptoms you are troubleshooting, or **replace the original TCM** .

Less than 10.6 Ω

Go to step 3.

More than 13.5 Ω

Go to step 4.

3. Shorted wire check (SOL C line)

-1. Disconnect the following connector.

Shift solenoid valve O/P 2P connector

-2. Check for continuity between test points 1 and 2.

Test condition	Vehicle OFF (LOCK) mode
B	Shift solenoid valve O/P 2P connector: disconnected
B	TCM 50P connector: disconnected
Test point 1	**TCM 50P connector No. 6**
Test point 2	Body ground

Is there continuity?

YES

Repair a short to ground in the SOL C wire between the shift solenoid valve O/P and the TCM.

NO

The SOL C wire is OK. **Replace the shift solenoid valve O/P** .

4. Open wire check (SOL C/SHC+ line)

-1. Disconnect the following connector.

Shift solenoid valve O/P 2P connector

-2. Check for continuity between test points 1 and 2.

Test condition	Vehicle OFF (LOCK) mode Shift solenoid valve O/P 2P connector: disconnected TCM 50P connector: disconnected
Test point 1	Shift solenoid valve O/P 2P connector (female terminals) No. 1 : ①
Test point 2	**TCM 50P connector No. 6**

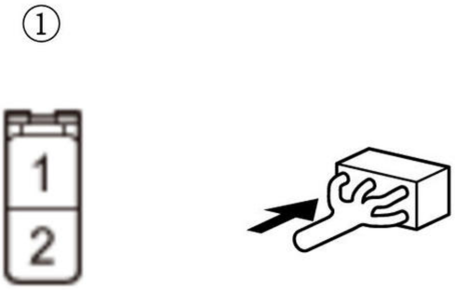

Is there continuity?

YES

The SOL C/SHC+ wire is OK. **Replace the shift solenoid valve O/P** .

NO

Repair an open in the SOL C/SHC+ wire between the shift solenoid valve O/P and the TCM.

DTC TROUBLESHOOTING: U0029(CVT (TCM))

DTC U0029 : F-CAN Malfunction (F-CAN Bus OFF)

NOTE:

- Before you troubleshoot, **review the General Troubleshooting Information** .
- This code is caused by an electrical circuit problem and cannot be caused by a mechanical problem in the transmission.

DTC Description	Confirmed DTC	Pending DTC	Freeze Frame
U0029 F-CAN Malfunction (F-CAN Bus OFF)	B	B	B

DTC(CVT)

1. CAN gateway system DTC check

   -1. Turn the vehicle to the ON mode.

   -2. Clear the DTC with the HDS.

   -3. Check for CAN gateway system DTCs with the HDS.

DTC Description	DTC
B	B

Are any DTCs indicated?

YES

Go to the indicated DTC's troubleshooting in the CAN gateway system .

NO

Intermittent failure, the system is OK at this time.

DTC TROUBLESHOOTING: U0038(CVT (TCM))

DTC U0038 : TM-CAN Malfunction (TCM-PCM)

NOTE:

- Before you troubleshoot, review the General Troubleshooting Information .
- This code is caused by an electrical circuit problem and cannot be caused by a mechanical problem in the transmission.

DTC Description	Confirmed DTC	Pending DTC	Freeze Frame
U0038 TM-CAN Malfunction (TCM-PCM)	B	B	B

DTC(CVT)

1. Problem verification

   -1. Turn the vehicle to the ON mode.

   -2. Clear the DTC with the HDS.

   -3. Turn the vehicle to the OFF (LOCK) mode.

   -4. Turn the vehicle to the ON mode.

   -5. Check for Pending or Confirmed DTCs in the PGM-FI system with the HDS.

DTC Description	Confirmed DTC	Pending DTC	Freeze Frame
U0038 TM-CAN Malfunction (TCM-PCM)	B	B	B

Is DTC U0038 indicated?

YES

The failure is duplicated. Go to step 2.

NO

Intermittent failure, the system is OK at this time. Check for poor connections and loose terminals between the PCM and the TCM. If the freeze data/on-board snapshot of this DTC is recorded, try to reproduce the failure under the same conditions with the freeze data/on-board snapshot.

2. Open wire check (TM-CAN_H line and TM-CAN_L line)

-1. Turn the vehicle to the OFF (LOCK) mode.

-2. Jump the SCS line with the HDS, and wait more than 1 minute.

NOTE: This step must be done to protect the TCM and the PCM from damage.

-3. Disconnect the following connectors.

TCM 50P connector
PCM connector A (50P)

-4. Check for continuity between test points 1 and 2.

TM-CAN_H line

Test condition	Vehicle OFF (LOCK) mode
B	TCM 50P connector: disconnected
B	PCM connector A (50P): disconnected
Test point 1	**TCM 50P connector No. 4**
Test point 2	**PCM connector A (50P) No. 21**

TM-CAN_L line

Test condition	Vehicle OFF (LOCK) mode
B	TCM 50P connector: disconnected
B	PCM connector A (50P): disconnected
Test point 1	**TCM 50P connector No. 12**
Test point 2	**PCM connector A (50P) No. 20**

Are there continuity?

YES

The TM-CAN_H wire and/or TM-CAN_L wire are not open. Go to step 3.

NO

Repair an open in the TM-CAN_H wire and/or TM-CAN_L wire between the PCM and the TCM.

3. Shorted wire check (TM-CAN_H line and TM-CAN_L line)

-1. Check for continuity between test points 1 and 2.

TM-CAN_H line

Test condition	Vehicle OFF (LOCK) mode
B	TCM 50P connector: disconnected
B	PCM connector A (50P): disconnected
Test point 1	**TCM 50P connector No. 4**

Test point 2	Body ground

TM-CAN_L line

Test condition	Vehicle OFF (LOCK) mode
B	TCM 50P connector: disconnected
B	PCM connector A (50P): disconnected
Test point 1	**TCM 50P connector No. 12**

Test point 2	Body ground

Are there continuity?

YES

Repair a short to ground in the TM-CAN_H wire and/or TM-CAN_L wire between the PCM and the TCM.

NO

The TM-CAN_H wire and/or TM-CAN_L wire are OK. Check for any authorized service information related to the DTCs or symptoms you are troubleshooting, or **replace the original PCM** .

DTC TROUBLESHOOTING: U0100, U0122, U0129, U0151, U0155(CVT (TCM))

DTC U0100 : F-CAN Malfunction (TCM - FI Control Module)

DTC U0122 : Lost Communication With Vehicle Dynamics Control Module

DTC U0129 : Lost Communication With Brake System Control Module

DTC U0151 : Lost Communication With SRS Unit

DTC U0155 : Lost Communication With Gauge Control Module

NOTE:

- Before you troubleshoot, **review the General Troubleshooting Information** .
- This code is caused by an electrical circuit problem and cannot be caused by a mechanical problem in the transmission.
- Refer to the DTC shown on the display, then inspect the connectors and terminals based on the instructions.
- According to the detected DTC(s), check for the power circuit and the ground circuit of the control unit which cannot communicate with the TCM.
- Before disconnecting the SRS unit connector, **do the 12 volt battery terminal disconnection procedure** , and wait for at least 3 minutes.

DTC Description	Confirmed DTC	Pending DTC	Freeze Frame
U0100 F-CAN Malfunction (TCM - FI Control Module)	B	B	B
U0122 Lost Communication With Vehicle Dynamics Control Module	B	B	B
U0129 Lost Communication With Brake System Control Module	B	B	B
U0151 Lost Communication With SRS Unit	B	B	B

DTC Description	Confirmed DTC	Pending DTC	Freeze Frame
U0155 Lost Communication With Gauge Control Module	B	B	B

DTC(CVT)

1. CAN gateway system DTC check

   -1. Turn the vehicle to the ON mode.

   -2. Check for CAN gateway system DTCs with the HDS.

DTC Description	DTC
B	B

   DTC (CAN gateway)

   Is any DTC indicated?

   YES

   Go to the troubleshooting for CAN gateway system DTC(s) .

   NO

   Go to step 2.

2. F-CAN circuit communication check (Receiving control unit)

   -1. Select the FUNCTION TEST in the CAN gateway with the HDS, then select the F-CAN Bus Connected Unit Check.

   F-CAN Bus Connected Unit Check

   Does the TCM detect the CAN gateway Bus channels A?

   Bus A is Not Available

   Go to step 3.

   Bus A is Available

   Go to step 4.

3. Open wire check (F-CAN A_H line, F-CAN A_L line)

   -1. Turn the vehicle to the OFF (LOCK) mode.

   -2. Jump the SCS line with the HDS, and wait more than 1 minute.

   NOTE: This step must be done to protect the TCM from damage.

   -3. Disconnect the following connectors.

CAN gateway 12P connector (12P connector type)
CAN gateway 16P connector (16P connector type)
TCM 50P connector

   -4. Check for continuity between test points 1 and 2.

F-CAN A_H line (12P connector type)

Test condition	Vehicle OFF (LOCK) mode
B	CAN gateway 12P connector: disconnected
B	TCM 50P connector: disconnected
Test point 1	CAN gateway 12P connector (female terminals) No. 3: ①
Test point 2	**TCM 50P connector No. 3**

F-CAN A_L line (12P connector type)

Test condition	Vehicle OFF (LOCK) mode
B	CAN gateway 12P connector: disconnected
B	TCM 50P connector: disconnected
Test point 1	CAN gateway 12P connector (female terminals) No. 9: ①
Test point 2	**TCM 50P connector No. 11**

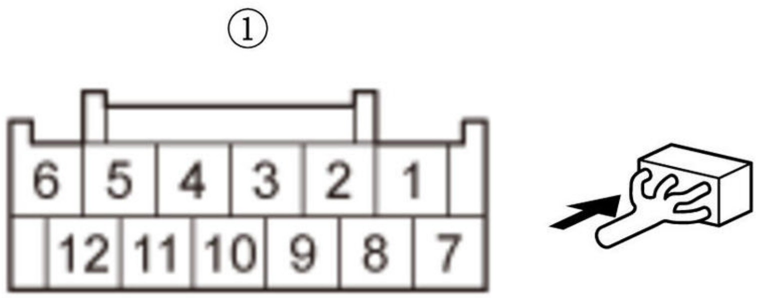

F-CAN A_H line (16P connector type)

Test condition	Vehicle OFF (LOCK) mode
B	CAN gateway 16P connector: disconnected
B	TCM 50P connector: disconnected
Test point 1	CAN gateway 16P connector (female terminals) No. 3: ①
Test point 2	**TCM 50P connector No. 3**

F-CAN A_L line (16P connector type)

Test condition	Vehicle OFF (LOCK) mode
B	CAN gateway 16P connector: disconnected
B	TCM 50P connector: disconnected
Test point 1	CAN gateway 16P connector (female terminals) No. 11: ①
Test point 2	**TCM 50P connector No. 11**

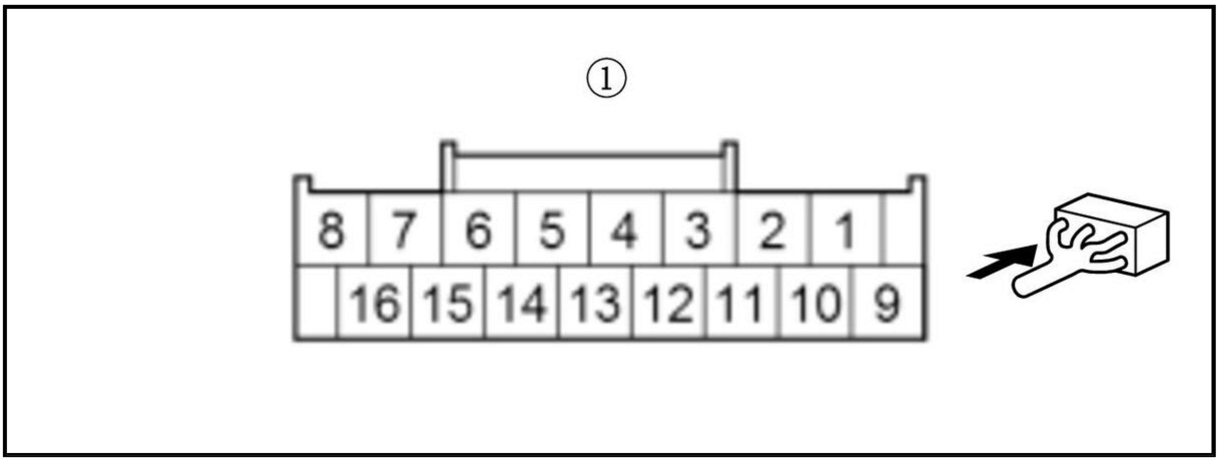

Is there continuity?

YES

The F-CAN A_H wire and the F-CAN A_L wire are OK. Check for any authorized service information related to the DTCs or symptoms you are troubleshooting, or **replace the original TCM** .

NO

Repair an open in the F-CAN A_H wire or the F-CAN A_L wire between the TCM and the CAN gateway.

4. F-CAN circuit communication check (Transmitting control unit)

-1. Select the FUNCTION TEST in the CAN gateway with the HDS, then select the F-CAN Bus Connected Unit Check.

F-CAN Bus Connected Unit Check

According to the detected DTC on the following table, make sure that the transmitting control unit detects the CAN gateway Bus channel(s) normally.

DTC	Transmitting control unit	Detected CAN geteway Bus channel(s) at normal
U0100	PCM	A, B
U0122	VSA modulator-control unit	A, B
U0129	Electric brake booster	A, B
U0151	SRS unit	B
U0155	Gauge control module	A

Is it detected normally?

Detected normal

Intermittent failure, the system is OK at this time. Check for poor connections or loose terminals at the transmitting control unit and the CAN gateway.

U0100: PCM is Not Available for Bus A

Go to step 5.

U0100: PCM is Not Available for Bus B

Go to step 6.

U0122: VSA modulator-control unit is Not Available for Bus A

Go to step 5.

U0122: VSA modulator-control unit is Not Available for Bus B

Go to step 6.

U0129: Electric brake booster is Not Available for Bus A

Go to step 5.

U0129: Electric brake booster is Not Available for Bus B

Go to step 6.

U0151: SRS unit is Not Available for Bus B

Go to step 6.

U0155: Gauge control module is Not Available for Bus A

Go to step 5.

5. Open wire check (F-CAN A_H line, F-CAN A_L line)

   -1. Turn the vehicle to the OFF (LOCK) mode.

   -2. U0100: Jump the SCS line with the HDS, and wait more than 1 minute.

   -3. U0129: Turn the vehicle to the OFF (LOCK) mode, then wait 5 seconds or more.

   NOTE: Do not open and close the driver's door.

   -4. According to the detected DTC on the following table, disconnect the transmitting control unit connector(s).

DTC	Connector
-	CAN gateway 12P connector (12P connector type)CAN gateway 16P connector (16P connector type)
U0100	PCM connector A (50P)
U0122	VSA modulator-control unit 46P connector
U0129	Electric brake booster 26P connector
U0155	Gauge control module connector A (32P)

   -5. Check for continuity between test points 1 and 2.

Test condition	Vehicle OFF (LOCK) mode
B	CAN gateway 12P connector (12P connector type): disconnected
B	CAN gateway 16P connector (16P connector type): disconnected
B	Transmitting control unit connector(s) for indicated DTCs: disconnected

12P connector type

DTC	Circuit name	Test point 1 (Receiving control unit)		Test point 2 (Transmitting control unit)	
		Connector	Terminal	Connector	Terminal
U0100	F-CAN A_H	CAN gateway 12P connector (female	No. 3	PCM connector A (50P)	No. 37
	F-CAN A_L		No. 9		No. 36

DTC	Circuit name	Test point 1 (Receiving control unit)		Test point 2 (Transmitting control unit)	
		Connector	Terminal	Connector	Terminal
U0122	F-CAN A_H	CAN gateway 12P connector (female terminals): ① terminals): ①	No. 3	VSA modulator-control unit 46P connector	No. 40
	F-CAN A_L		No. 9		No. 28
U0129	F-CAN A_H	CAN gateway 12P connector (female terminals): ①	No. 3	Electric brake booster 26P connector	No. 26
	F-CAN A_L		No. 9		No. 18
U0155	F-CAN A_H	CAN gateway 12P connector (female terminals): ①	No. 3	Gauge control module connector A (32P)	No. A19
	F-CAN A_L		No. 9		No. A20

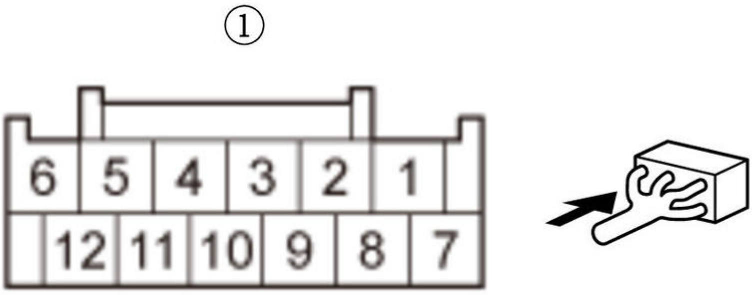

16P connector type

DTC	Circuit name	Test point 1 (Receiving control unit)		Test point 2 (Transmitting control unit)	
		Connector	Terminal	Connector	Terminal
U0100	F-CAN A_H	CAN gateway 16P connector (female terminals): ①	No. 3	PCM connector A (50P)	No. 37
	F-CAN A_L		No. 11		No. 36
U0122	F-CAN A_H	CAN gateway 16P connector (female terminals): ①	No. 3	VSA modulator-control unit 46P connector	No. 40
	F-CAN A_L		No. 11		No. 28
U0129	F-CAN A_H	CAN gateway 16P connector (female terminals): ①	No. 3	Electric brake booster 26P connector	No. 26
	F-CAN A_L		No. 11		No. 18

DTC	Circuit name	Test point 1 (Receiving control unit)		Test point 2 (Transmitting control unit)	
		Connector	Terminal	Connector	Terminal
U0155	F-CAN A_H	CAN gateway 16P connector (female terminals): ①	No. 3	Gauge control module connector A (32P)	No. A19
	F-CAN A_L		No. 11		No. A20

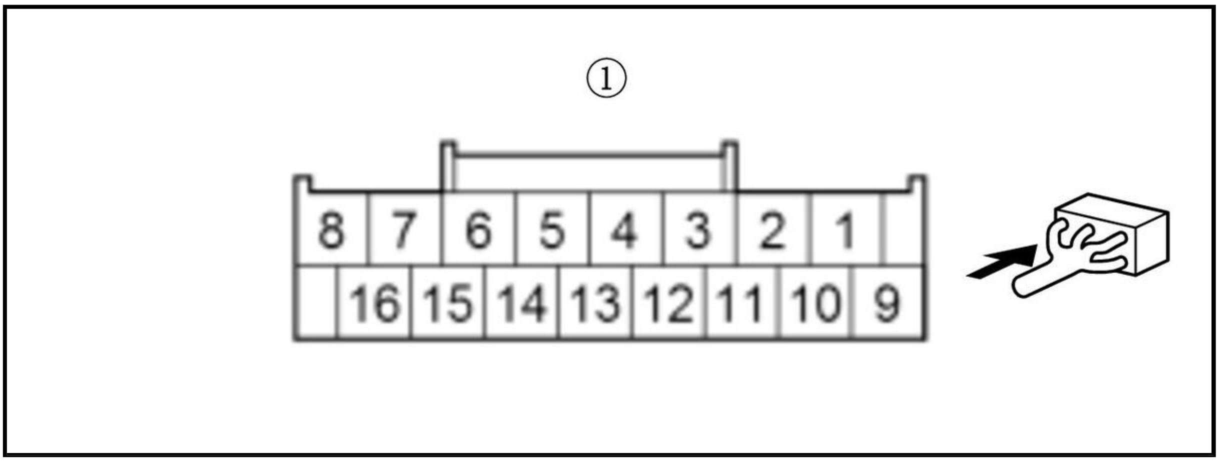

Is there continuity?

YES

The F-CAN A_H wire and the F-CAN A_L wire are OK. Check for any authorized service information related to the DTCs or symptoms you are troubleshooting.According to the detected DTC on the following table, substitute or replace the correspond control unit.

DTC	Operation for transmitting control unit
U0100	Check for poor connections or loose terminals at the CAN gateway and the PCM. **Replace the original PCM** .
U0122	Check for poor connections or loose terminals at the CAN gateway and the VSA modulator-control unit. **Replace the VSA modulator-control unit** .
U0129	Check for poor connections or loose terminals at the CAN gateway and the electric brake booster. **Replace the electric brake booster** .
U0155	Check for poor connections or loose terminals at the CAN gateway and the gauge control module. **Replace the original gauge control module** .

NO

Repair an open in the F-CAN A_H wire or the F-CAN A_L wire between the transmitting control unit and the CAN gateway.

6. Open wire check (F-CAN B_H line, F-CAN B_L line)

-1. Turn the vehicle to the OFF (LOCK) mode.

-2. U0100: Jump the SCS line with the HDS, and wait more than 1 minute.

-3. U0129: Turn the vehicle to the OFF (LOCK) mode, then wait 5 seconds or more.

NOTE: Do not open and close the driver's door.

-4. According to the detected DTC on the following table, disconnect the transmitting control unit connector(s).

DTC	Connector
-	CAN gateway 12P connector (12P connector type)CAN gateway 16P connector (16P connector type)
U0100	PCM connector A (50P)
U0129	Electric brake booster 26P connector
U0122	VSA modulator-control unit 46P connector
U0151	SRS Unit Connector A (39P) Type

-5. Check for continuity between test points 1 and 2.

Test condition	Vehicle OFF (LOCK) mode
B	CAN gateway 12P connector (12P connector type): disconnected
B	CAN gateway 16P connector (16P connector type): disconnected
B	Transmitting control unit connector(s) for indicated DTCs: disconnected

12P connector type

DTC	Circuit name	Test point 1 (Receiving control unit)		Test point 2 (Transmitting control unit)	
		Connector	**Terminal**	**Connector**	**Terminal**
U0100	F-CAN B_H	CAN gateway 12P connector (female terminals): ①	No. 12	**PCM connector A (50P)**	No. 39
	F-CAN B_L		No. 5		No. 38
U0129	F-CAN B_H	CAN gateway 12P connector (female terminals): ①	No. 12	**Electric brake booster 26P connector**	No. 19
	F-CAN B_L		No. 5		No. 12
U0122	F-CAN B_H	CAN gateway 12P connector (female terminals): ①	No. 12	**VSA modulator-control unit 46P connector**	No. 46
	F-CAN B_L		No. 5		No. 34

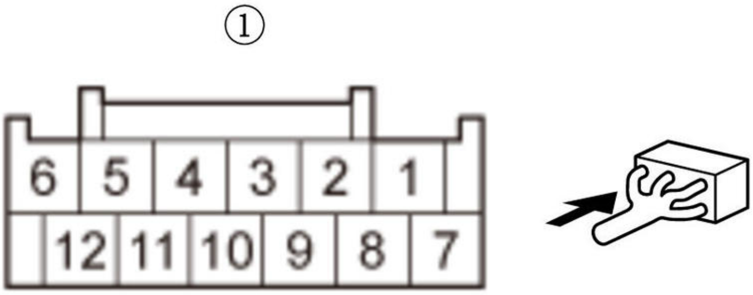

16P connector type

DTC	Circuit name	Test point 1 (Receiving control unit)		Test point 2 (Transmitting control unit)	
		Connector	**Terminal**	**Connector**	**Terminal**
U0100	F-CAN B_H	CAN gateway 16P connector (female terminals): ①	No. 6	**PCM connector A (50P)**	No. 39
	F-CAN B_L		No. 14		No. 38
U0129	F-CAN B_H	CAN gateway 16P connector (female terminals): ①	No. 6	**Electric brake booster 26P connector**	No. 19
	F-CAN B_L		No. 14		No. 12
U0122	F-CAN B_H	CAN gateway 16P connector (female terminals): ①	No. 6	**VSA modulator-control unit 46P connector**	No. 46
	F-CAN B_L		No. 14		No. 34

DTC	Circuit name	Test point 1 (Receiving control unit)		Test point 2 (Transmitting control unit)	
		Connector	Terminal	Connector	Terminal
U0151	F-CAN B_H	CAN gateway 16P connector (female terminals): ①	No. 6	**SRS Unit Connector A (39P) Type**	No. 34
	F-CAN B_L		No. 14		No. 35

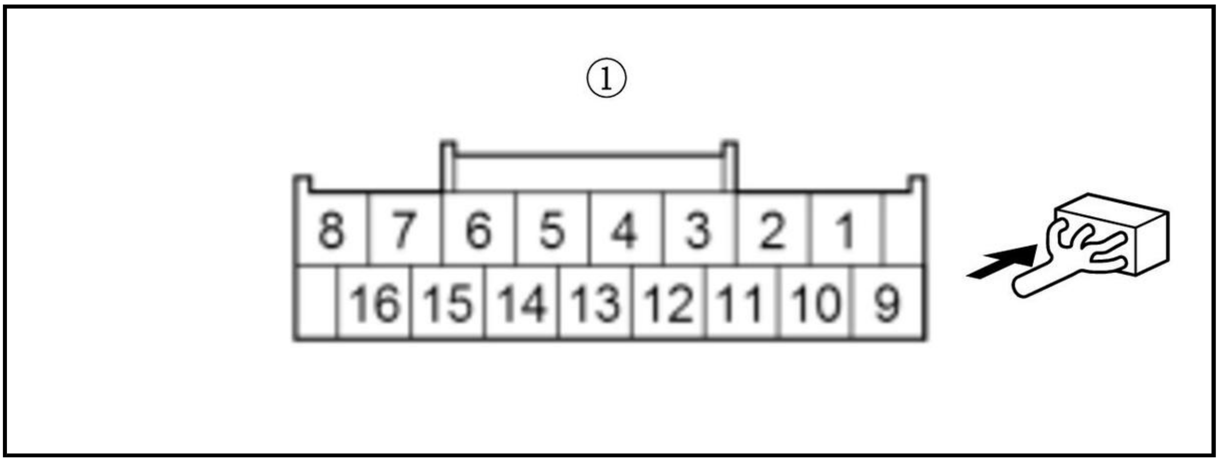

Is there continuity?

YES

The F-CAN B_H wire and the F-CAN B_L wire are OK. Check for any authorized service information related to the DTCs or symptoms you are troubleshooting.According to the detected DTC on the following table, substitute or replace the correspond control unit.

DTC	Operation for transmitting control unit
U0100	Check for poor connections or loose terminals at the CAN gateway and the PCM. **Replace the original PCM** .
U0122	Check for poor connections or loose terminals at the CAN gateway and the VSA modulator-control unit. **Replace the VSA modulator-control unit** .
U0129	Check for poor connections or loose terminals at the CAN gateway and the electric brake booster. **Replace the electric brake booster** .
U0151	Check for poor connections or loose terminals at the CAN gateway and the SRS unit. **Replace the SRS unit** .

NO

Repair an open in the F-CAN B_H wire or the F-CAN B_L wire between the transmitting control unit and the CAN gateway.

DTC TROUBLESHOOTING: U0302(CVT (TCM))

DTC U0302 : PGM-FI System and A/T System Program Version Mismatch

NOTE:

- Before you troubleshoot, **review the General Troubleshooting Information** .
- This DTC is indicated when the TCM update procedure is not completed.
- Do not turn the vehicle to the OFF (LOCK) mode while updating the TCM. If you do, the TCM can be damaged.

DTC Description	Confirmed DTC	Pending DTC	Freeze Frame
U0302 PGM-FI System and A/T System Program Version Mismatch	B	B	B

DTC(CVT)

1. Problem verification (update)

   -1. Turn the vehicle to the ON mode.

   -2. Clear the DTC with the HDS.

   -3. **Update the TCM** .

   -4. Turn the vehicle to the OFF (LOCK) mode.

   -5. Turn the vehicle to the ON mode.

   -6. Check for Pending or Confirmed DTCs with the HDS.

DTC Description	Confirmed DTC	Pending DTC	Freeze Frame
U0302 PGM-FI System and A/T System Program Version Mismatch	B	B	B

   Is DTC U0302 indicated?

   YES

   The failure is duplicated. **Replace the TCM** .

   NO

   Update is complete.

DTC TROUBLESHOOTING: U1260(CVT (TCM)) (2020 2021)

DTC U1260 : Lost Communication With Auxiliary Transmission Fluid Pump

NOTE:

- Before you troubleshoot, **review the General Troubleshooting Information** .
- This code is caused by an electrical circuit problem and cannot be caused by a mechanical problem in the transmission.

DTC Description	Confirmed DTC	Pending DTC	Freeze Frame
U1260 Lost Communication With Auxiliary Transmission Fluid Pump	B	B	B

DTC(CVT)

1. Determine possible failure area (PGM-FI system, others)

   -1. Turn the vehicle to the ON mode.

   -2. Check for Pending or Confirmed DTCs in the PGM-FI system with the HDS.

DTC Description	Confirmed DTC	Pending DTC
P0A94 Voltage Stabilizer Malfunction	B	B

Is DTC P0A94 indicated?

YES

Go to the troubleshooting for DTC P0A94 in the PGM-FI system .

NO

Go to step 2.

2. Problem verification

   -1. Select the Electrical Oil Pump Activation in the Function Test Menu, and drive the auxiliary transmission fluid pump for at least 5 seconds with the HDS.

   -2. Check for Pending or Confirmed DTCs with the HDS.

DTC Description	Confirmed DTC	Pending DTC	Freeze Frame
U1260 Lost Communication With Auxiliary Transmission Fluid Pump	B	B	B

   Is DTC U1260 indicated?

   YES

   The failure is duplicated. Go to step 3.

   NO

   Intermittent failure, the system is OK at this time. Check for poor connections and loose terminals between the auxiliary transmission fluid pump and the TCM. If the freeze data/on-board snapshot of this DTC is recorded, try to reproduce the failure under the same conditions with the freeze data/on-board snapshot.

3. Determine possible failure area (power circuit, others)

   -1. Clear the DTC with the HDS.

   -2. Turn the vehicle to the OFF (LOCK) mode.

   -3. Disconnect the following connector.

Auxiliary transmission fluid pump 4P connector

   -4. Turn the vehicle to the ON mode.

   -5. Measure the voltage between test points 1 and 2.

Test condition	Vehicle ON mode
B	Auxiliary transmission fluid pump 4P connector: disconnected
Test point 1	Auxiliary transmission fluid pump 4P connector (female terminals) No. 1: ①
Test point 2	Auxiliary transmission fluid pump 4P connector (female terminals) No. 4: ①

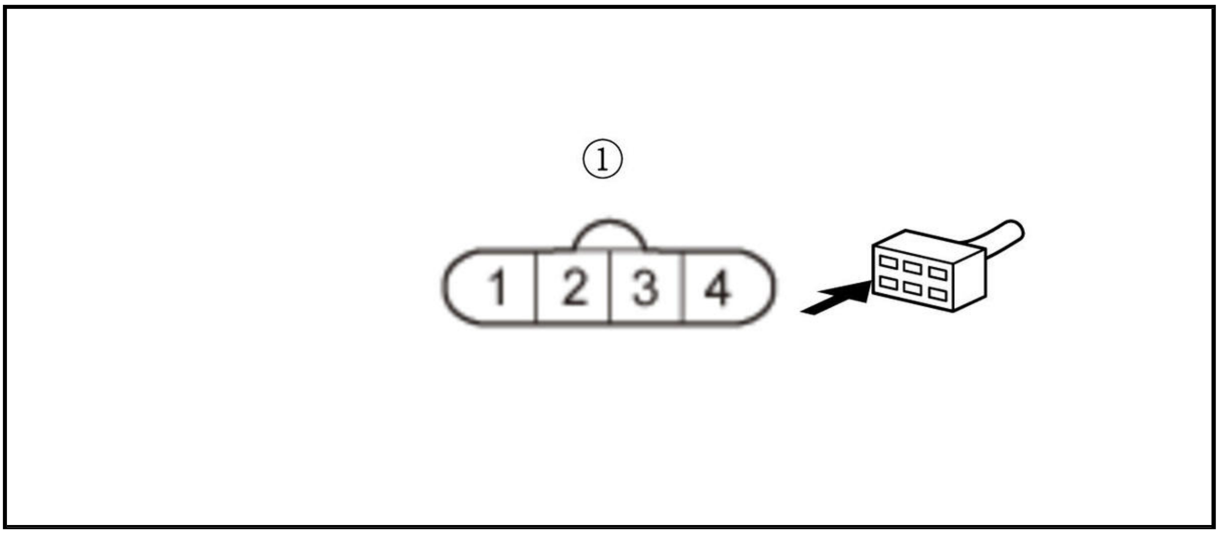

Is there battery voltage?

YES

Go to step 4.

NO

Go to step 10.

4. Determine possible failure area (EOPSTS line, others)

-1. Measure the voltage between test points 1 and 2.

Test condition	Vehicle ON mode
B	Auxiliary transmission fluid pump 4P connector: disconnected
Test point 1	Auxiliary transmission fluid pump 4P connector (female terminals) No. 2: ①
Test point 2	Body ground

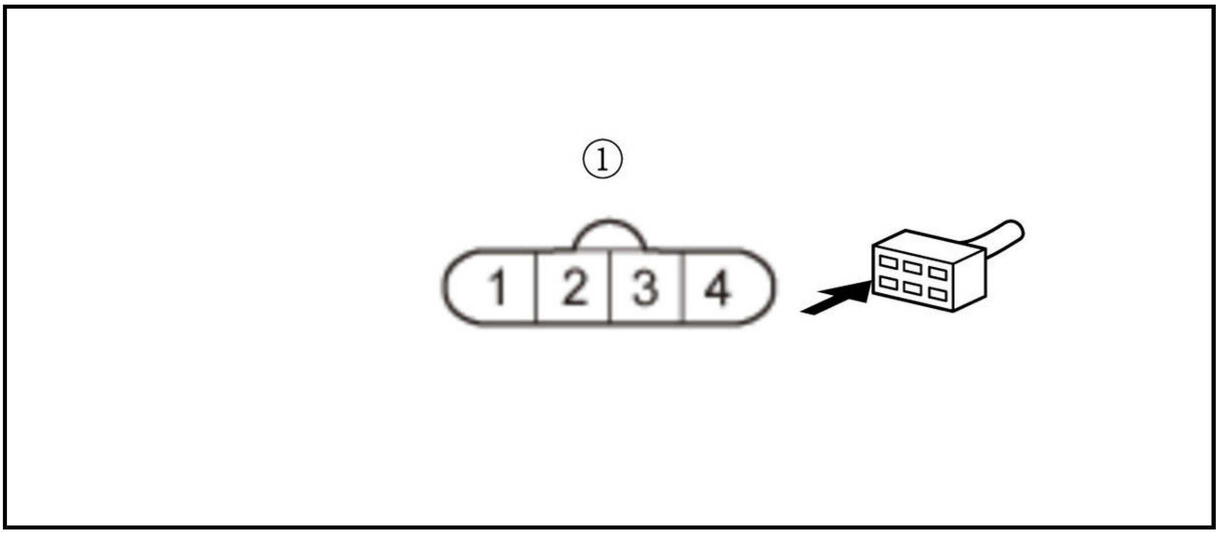

Is there battery voltage?

YES

Go to step 5.

NO

Go to step 8.

5. Open wire check (EOPSIG line)

-1. Turn the vehicle to the OFF (LOCK) mode.

-2. Jump the SCS line with the HDS, and wait more than 1 minute.

NOTE: This step must be done to protect the TCM from damage.

-3. Disconnect the following connector.

TCM 50P connector

-4. Measure the resistance between test points 1 and 2.

Test condition	Vehicle OFF (LOCK) mode

B	Auxiliary transmission fluid pump 4P connector: disconnected
B	TCM 50P connector: disconnected
Test point 1	Auxiliary transmission fluid pump 4P connector (female terminals) No. 3: ①
Test point 2	**TCM 50P connector No. 40**

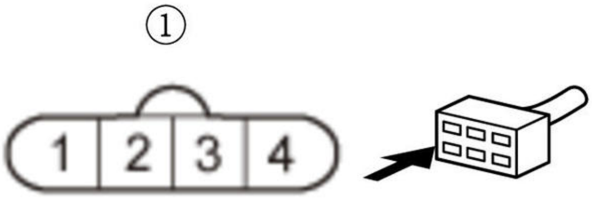

Is there 1.0 Ω or less?

YES

The EOPSIG wire is not open. Go to step 6.

NO

Repair an open in the EOPSIG wire between the auxiliary transmission fluid pump and the TCM.

6. Shorted wire check (EOPSIG line)

-1. Measure the resistance between test points 1 and 2.

Test condition	Vehicle OFF (LOCK) mode
B	Auxiliary transmission fluid pump 4P connector: disconnected
B	TCM 50P connector: disconnected

Test point 1	Auxiliary transmission fluid pump 4P connector (female terminals) No. 3: ①
Test point 2	Body ground

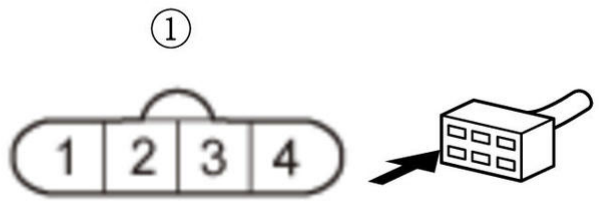

Is there 1 MΩ or more?

YES

Repair a short to ground in the EOPSIG wire between the auxiliary transmission fluid pump and the TCM.

NO

The EOPSIG wire is OK. Go to step 7.

7. Auxiliary transmission fluid pump check

-1. Reconnect all connectors.

-2. **Test the auxiliary transmission fluid pump** .

Is the auxiliary transmission fluid pump OK?

YES

The auxiliary transmission fluid pump is OK. Check for any authorized service information related to the DTCs or symptoms you are troubleshooting, **replace the original TCM** .

NO

Replace the auxiliary transmission fluid pump .

8. Shorted wire check (EOPSTS line)

-1. Turn the vehicle to the OFF (LOCK) mode.

-2. Jump the SCS line with the HDS, and wait more than 1 minute.

NOTE: This step must be done to protect the TCM from damage.

-3. Disconnect the following connector.

TCM 50P connector

-4. Measure the resistance between test points 1 and 2.

Test condition	Vehicle OFF (LOCK) mode
B	Auxiliary transmission fluid pump 4P connector: disconnected
B	TCM 50P connector: disconnected
Test point 1	Auxiliary transmission fluid pump 4P connector (female terminals) No. 2: ①
Test point 2	Body ground

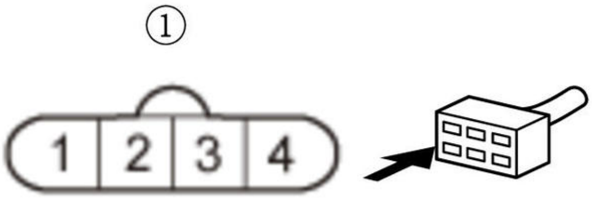

Is there 1 MΩ or more?

YES

The EOPSTS wire is not shorted. Go to step 9.

NO

Repair a short to ground in the EOPSTS wire between the auxiliary transmission fluid pump and the TCM.

9. Open wire check (EOPSTS line)

-1. Measure the resistance between test points 1 and 2.

Test condition	Vehicle OFF (LOCK) mode
B	Auxiliary transmission fluid pump 4P connector: disconnected
B	TCM 50P connector: disconnected
Test point 1	Auxiliary transmission fluid pump 4P connector (female terminals) No. 2: ①
Test point 2	**TCM 50P connector No. 50**

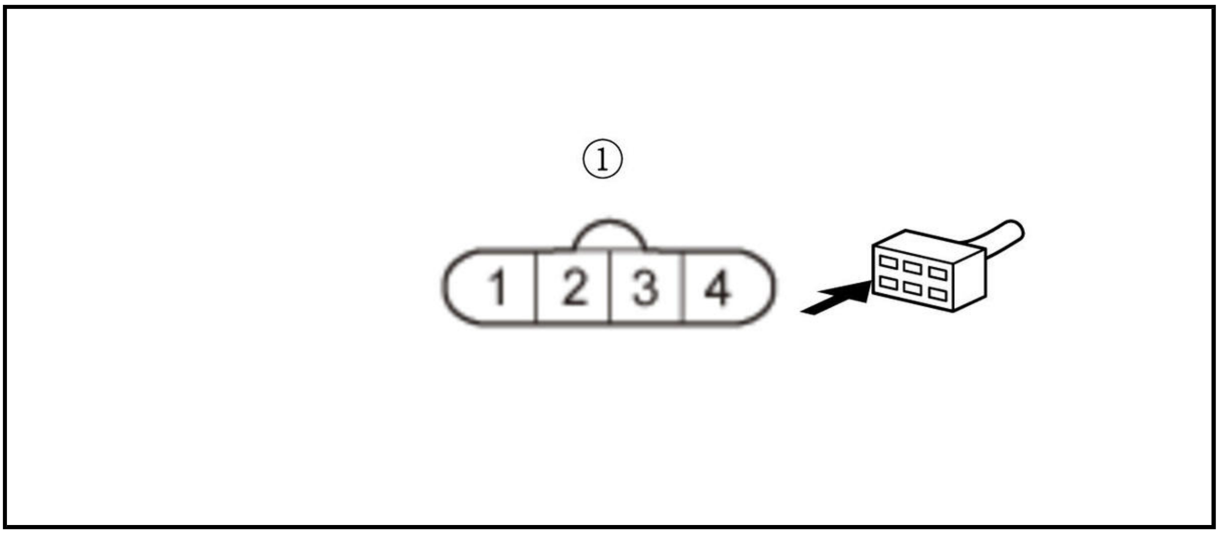

Is there 1.0 Ω or less?

YES

The EOPSTS wire is OK. Check for any authorized service information related to the DTCs or symptoms you are troubleshooting, **replace the original TCM** .

NO

Repair an open in the EOPSTS wire between the auxiliary transmission fluid pump and the TCM.

10. Open wire check (EOPGND line)

-1. Turn the vehicle to the OFF (LOCK) mode.

-2. Measure the resistance between test points 1 and 2.

Test condition	Vehicle OFF (LOCK) mode
B	Auxiliary transmission fluid pump 4P connector: disconnected
Test point 1	Auxiliary transmission fluid pump 4P connector (female terminals) No. 1: ①
Test point 2	Body ground

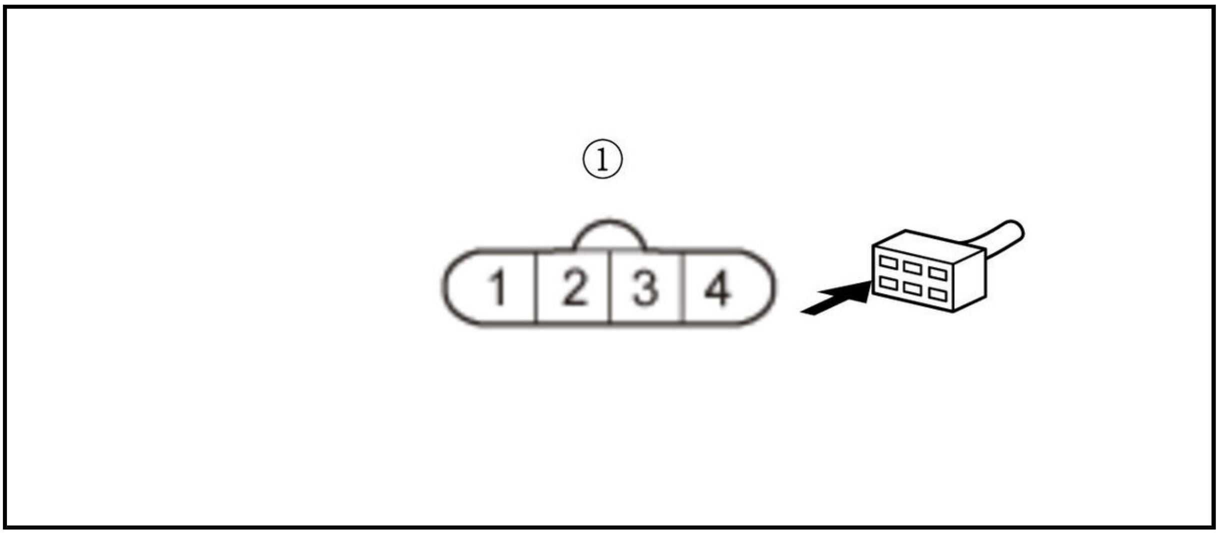

Is there 1.0 Ω or less?

YES

The EOPGND wire is OK. Go to step 11.

NO

Repair an open in the EOPGND wire between the auxiliary transmission fluid pump and ground (G151), or repair poor ground (G151).

11. Fuse check

-1. Check the following fuse.

Fuse	**No. F3**

Is the fuse OK?

YES

The fuse is OK. Reinstall the fuse, then go to step 12.

NO

Replace the No. F3 (7.5A) fuse, and recheck. If the fuse blows again, repair a short to ground in the No. F3 (7.5A) fuse circuit.

12. Relay check

-1. **Remove the auxiliary transmission fluid pump relay** .

-2. **Test the auxiliary transmission fluid pump relay** .

Is the relay OK?

YES

The auxiliary transmission fluid pump relay is OK. Go to step 13.

NO

Replace the auxiliary transmission fluid pump relay.

13. Open wire check (+B EOP line)

-1. Turn the vehicle to the ON mode.

-2. Measure the voltage between the following test points and body ground individually.

Test condition	Vehicle ON mode
B	Auxiliary transmission fluid pump relay 4P socket: disconnected
B	Auxiliary transmission fluid pump 4P connector: disconnected

Connector	**Terminal**
Auxiliary transmission fluid pump relay 4P socket (female terminals): ①	No. 2
	No. 4

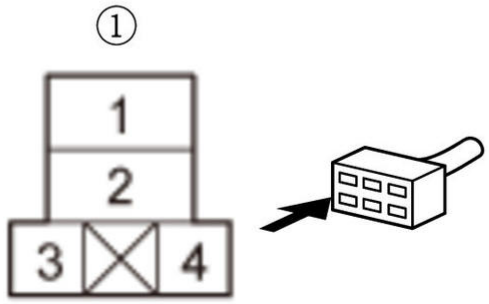

Is there battery voltage?

YES

The +B EOP wire is OK. Go to step 14.

NO

Repair an open in the +B EOP wire between the auxiliary transmission fluid pump relay and the DC-DC converter.

14. Open wire check (EOPRLY/EOP RLY CL- line)

-1. Turn the vehicle to the OFF (LOCK) mode.

-2. Jump the SCS line with the HDS, and wait more than 1 minute.

NOTE: This step must be done to protect the TCM from damage.

-3. Disconnect the following connector.

TCM 50P connector

-4. Measure the resistance between test points 1 and 2.

Test condition	Vehicle OFF (LOCK) mode
B	Auxiliary transmission fluid pump relay 4P socket: disconnected
B	Auxiliary transmission fluid pump 4P connector: disconnected
B	TCM 50P connector: disconnected
Test point 1	Auxiliary transmission fluid pump relay 4P socket (female terminals) No. 3: ①
Test point 2	**TCM 50P connector No. 27**

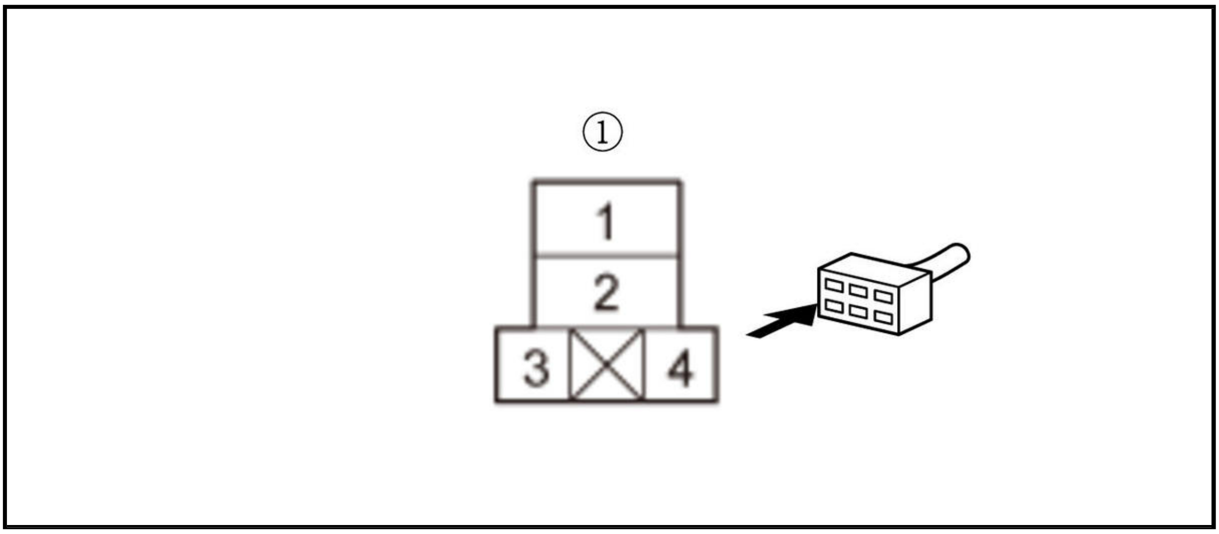

Is there 1.0 Ω or less?

YES

The EOPRLY/EOP RLY CL- wire is OK. Go to step 15.

NO

Repair an open in the EOPRLY/EOP RLY CL- wire between the auxiliary transmission fluid pump relay and TCM.

15. Open wire check (EOPVB/EOP RLY OUT line)

-1. Measure the resistance between test points 1 and 2.

Test condition	Vehicle OFF (LOCK) mode
B	Auxiliary transmission fluid pump relay 4P socket: disconnected
B	Auxiliary transmission fluid pump 4P connector: disconnected
B	TCM 50P connector: disconnected
Test point 1	Auxiliary transmission fluid pump relay 4P socket (female terminals) No. 1: ①
Test point 2	Auxiliary transmission fluid pump 4P connector (female terminals) No. 4: ②

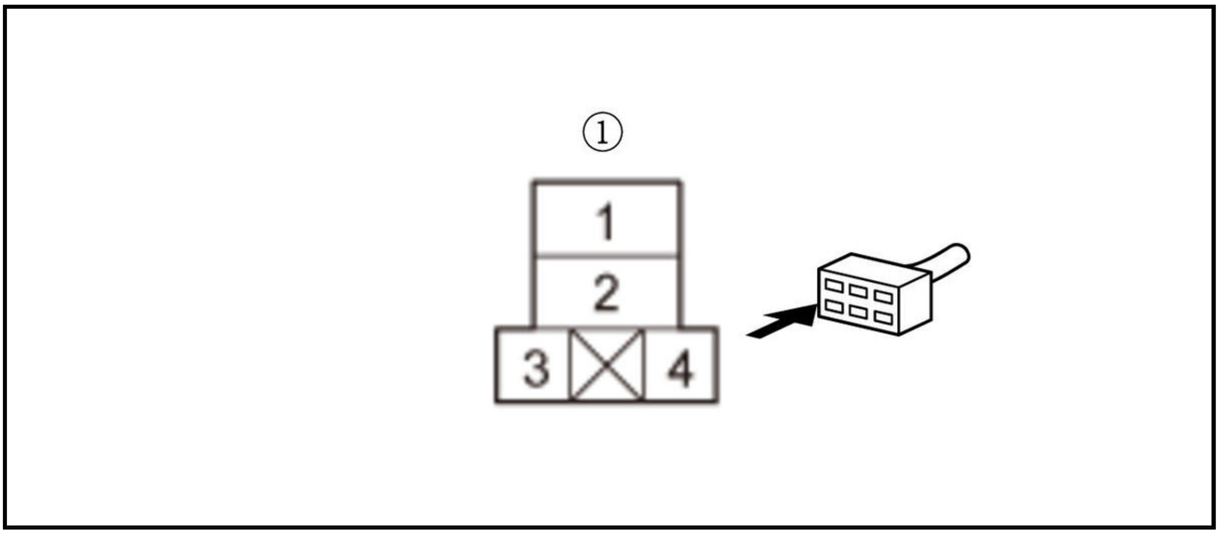

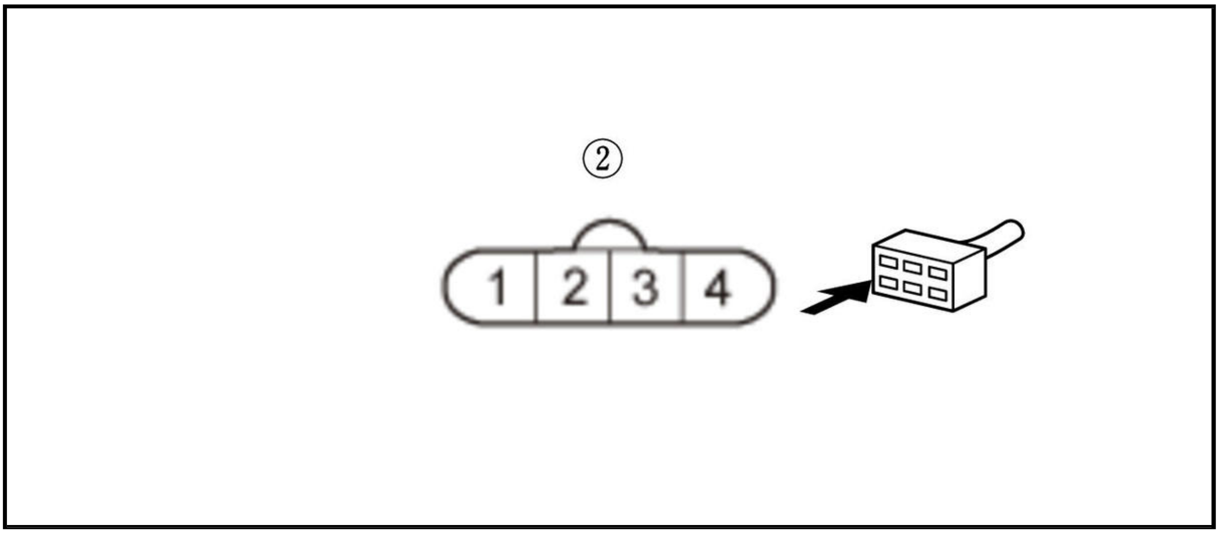

Is there 1.0 Ω or less?

YES

The EOPVB/EOP RLY OUT wire is OK. Check for any authorized service information related to the DTCs or symptoms you are troubleshooting, **replace the original TCM** .

NO

Repair an open in the EOPVB/EOP RLY OUT wire between the auxiliary transmission fluid pump relay and the auxiliary transmission fluid pump.

DISASSEMBLY AND REASSEMBLY

COUNTERSHAFT DISASSEMBLY AND REASSEMBLY

Special Tools Required

Image	Description/Tool Number
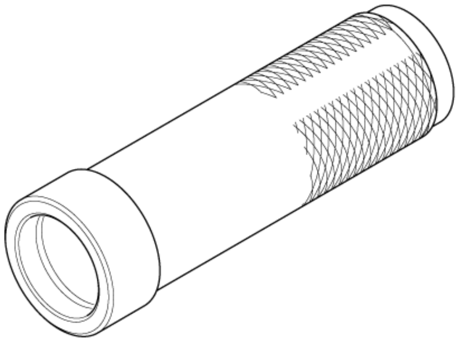	Driver Handle, 40 mm I.D. 07746-0030100
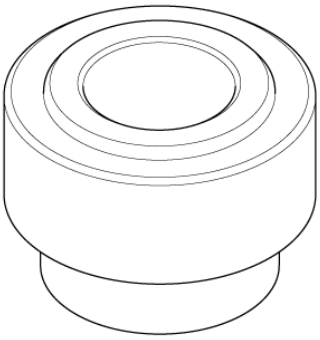	Bearing Driver Attachment, 30 mm I.D. 07746-0030300

Disassembly

NOTE:

- The bearing and the bearing outer race should be replaced as a set.

Procedure

NOTE: **Numbered call-outs in figure pertain to list numbers in following procedure.**

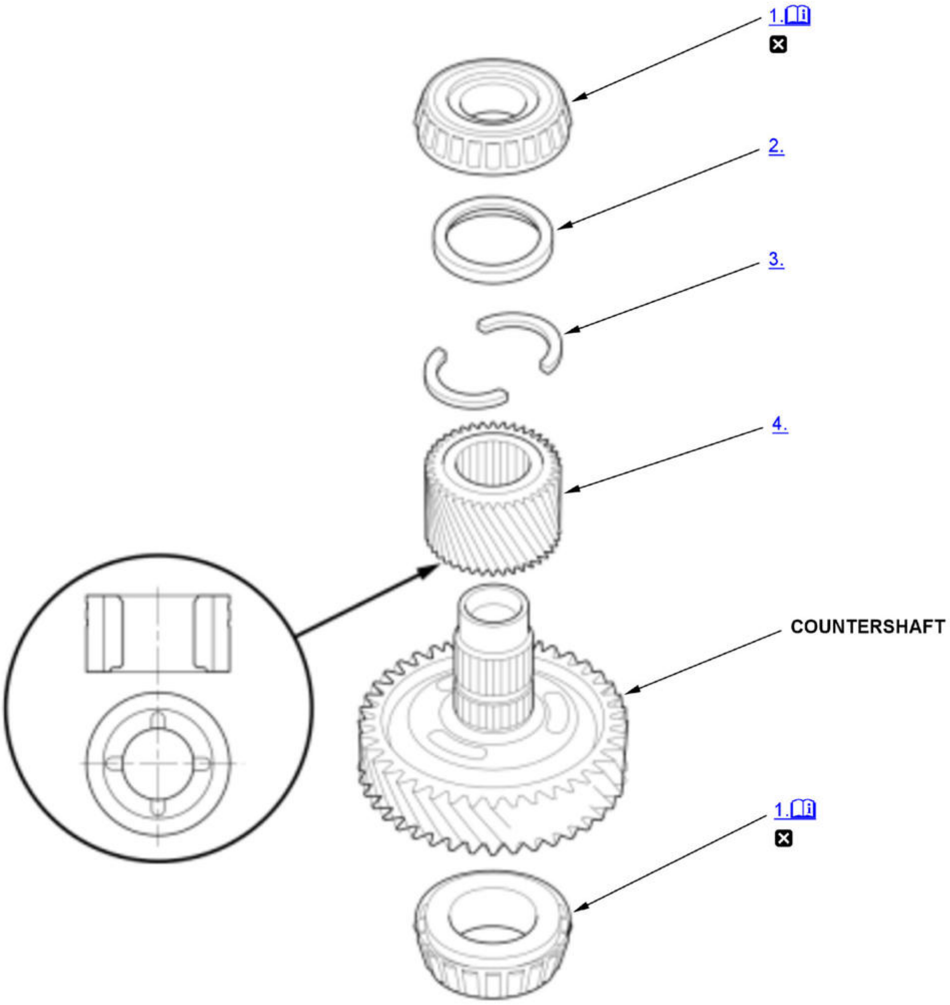

Fig. 1: Exploded View Of Countershaft Disassembly Components
Courtesy of HONDA, U.S.A., INC.

☒	Replace

1. Countershaft Bearing - Remove

Flywheel Housing Side 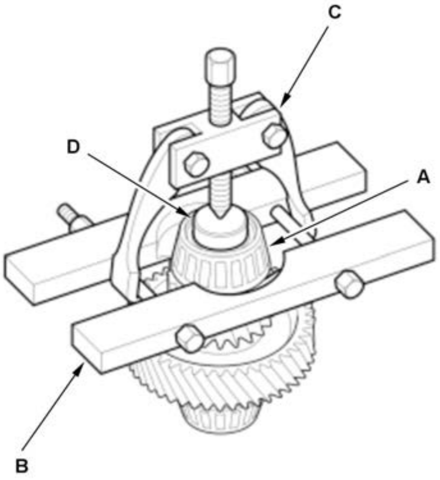 **Transmission Housing Side**	1. Remove the countershaft tapered roller bearings (A) using the commercially available bearing separator (B), a commercially available bearing puller (C), and a commercially available spacer (D).

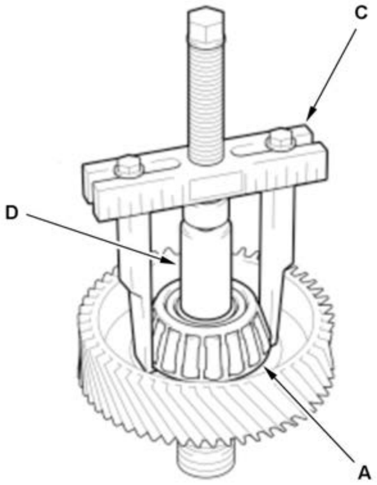

2. Cotter Retainer - Remove
3. Cotter - Remove
4. Final Drive Gear - Remove

Reassembly

NOTE:

- The bearing and the bearing outer race should be replaced as a set.
- **Inspect the countershaft bearing thrust clearance** whenever the bearing is replaced.
- Apply a light coat of clean ATF on all parts before installation.

Procedure

NOTE: **Numbered call-outs in figure pertain to list numbers in following procedure.**

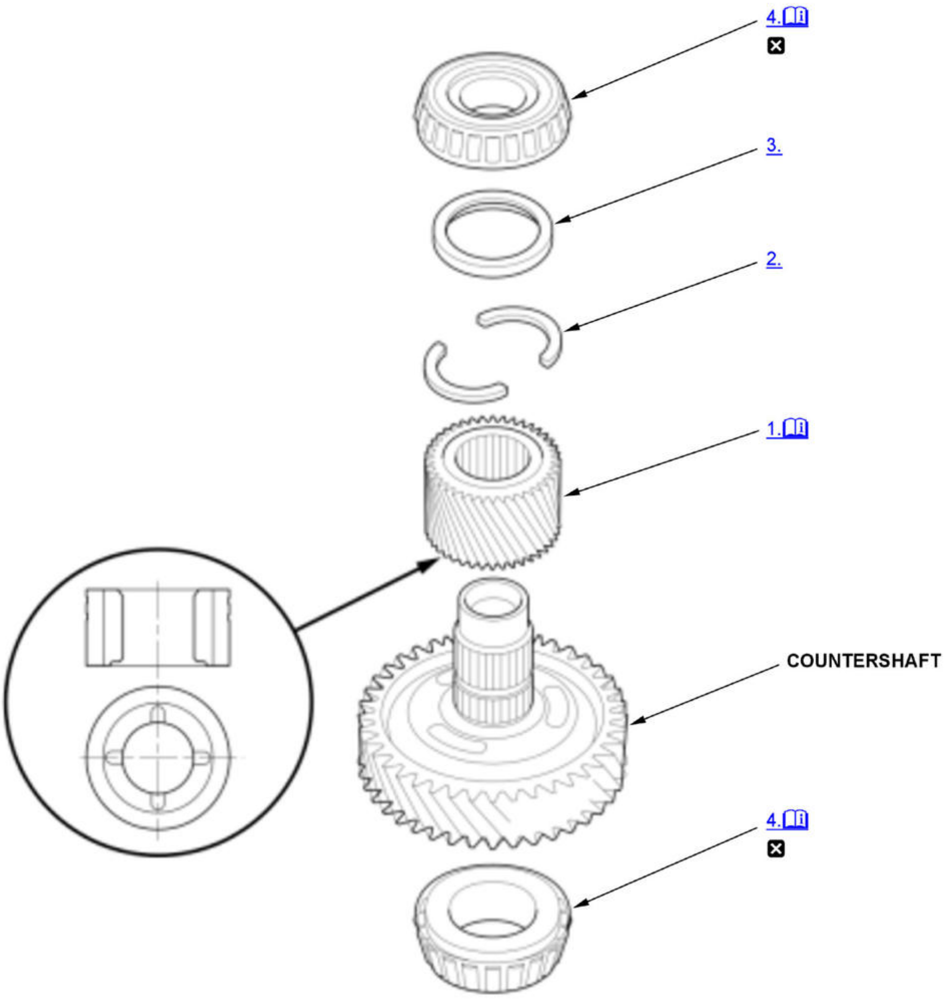

Fig. 2: Exploded View Of Countershaft Reassembly Components
Courtesy of HONDA, U.S.A., INC.

☒	Replace

1. Final Drive Gear - Install

   NOTE: Make sure the final drive gear is installed in the correct direction.

2. Cotter - Install
3. Cotter Retainer - Install
4. Countershaft Bearing - Install

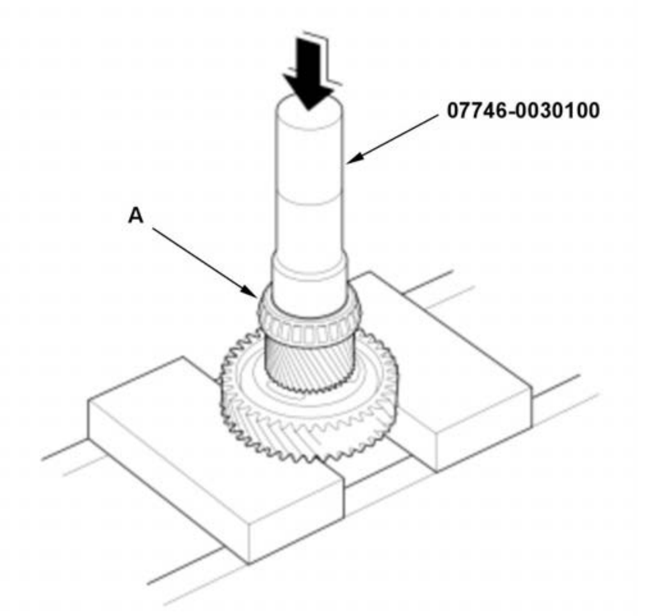	**Flywheel Housing Side** 1. Install the countershaft bearing (A) until it bottoms using the 40 mm I.D. driver handle and a press.

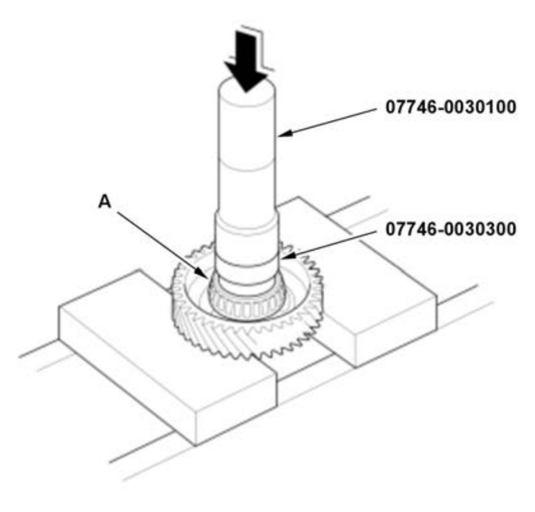	**Transmission Housing Side** 2. Install the countershaft bearing (A) until it bottoms using the 40 mm I.D. driver handle, the 30 mm I.D. bearing driver attachment, and a press.

DIFFERENTIAL DISASSEMBLY AND REASSEMBLY

Special Tools Required

Image	Description/Tool Number
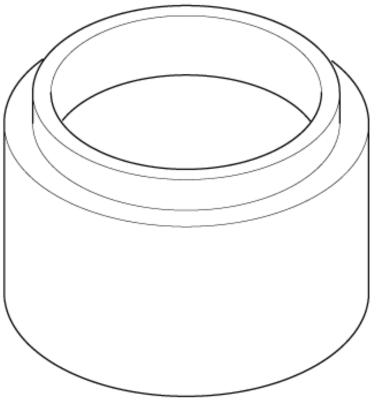	Installer Attachment, 45 x 55 mm 07MAD-PR90100

Disassembly

Procedure

NOTE: **Numbered call-outs in figure pertain to list numbers in following procedure.**

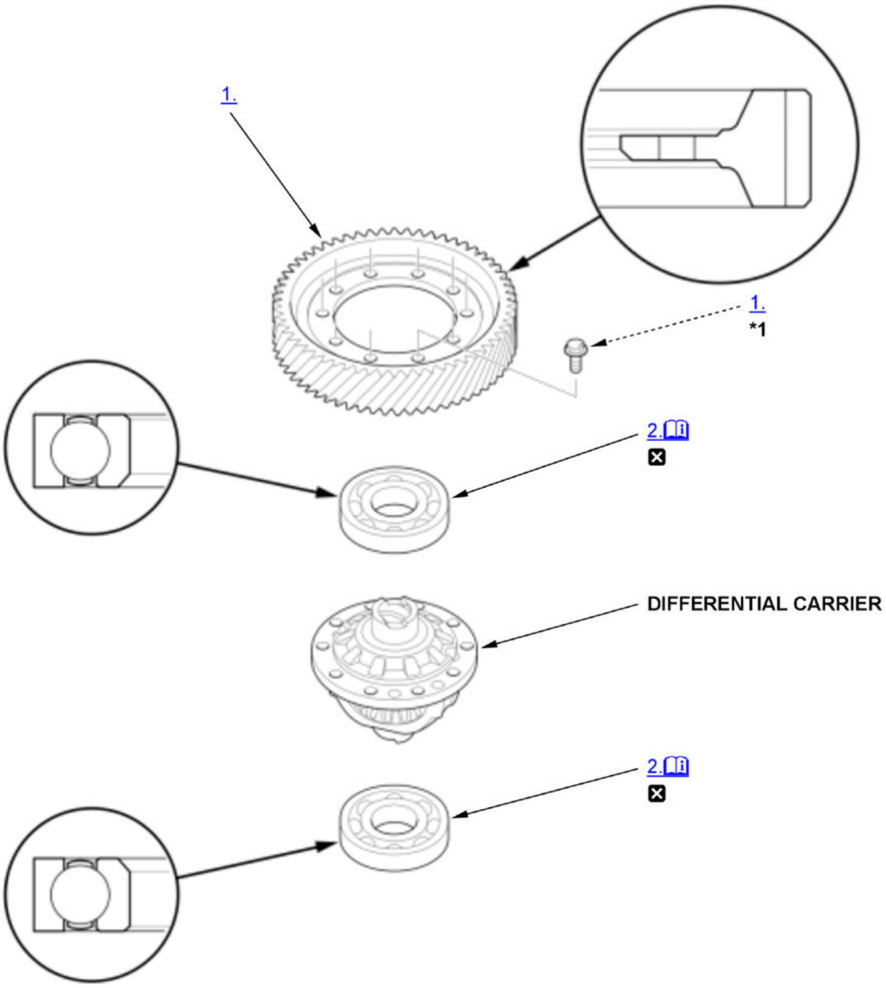

Fig. 3: Exploded View Of Differential Disassembly Components
Courtesy of HONDA, U.S.A., INC.

☒	Replace
*1	Left-hand threads

1. Final Driven Gear - Remove
2. Differential Carrier Bearing - Remove

B **Flywheel Housing Side**	1. Remove the differential carrier bearings (A) using a commercially available bearing puller (B) and a commercially available spacer (C).

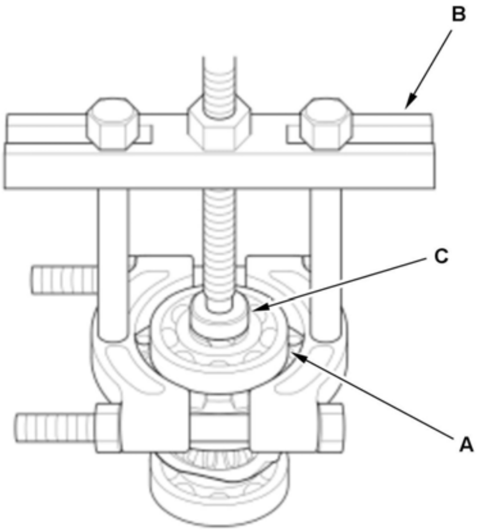

Transmission Housing Side

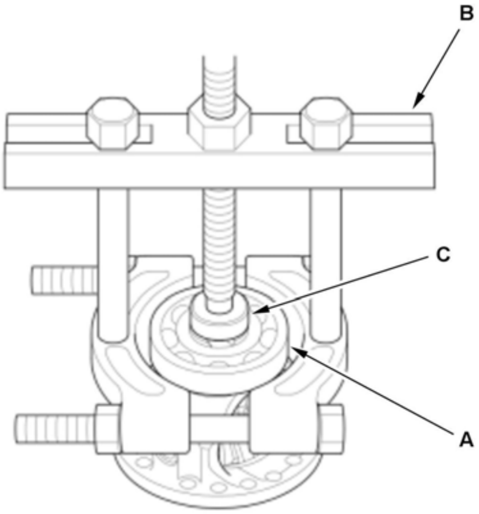

Reassembly

Procedure

NOTE: **Numbered call-outs in figure pertain to list numbers in following procedure.**

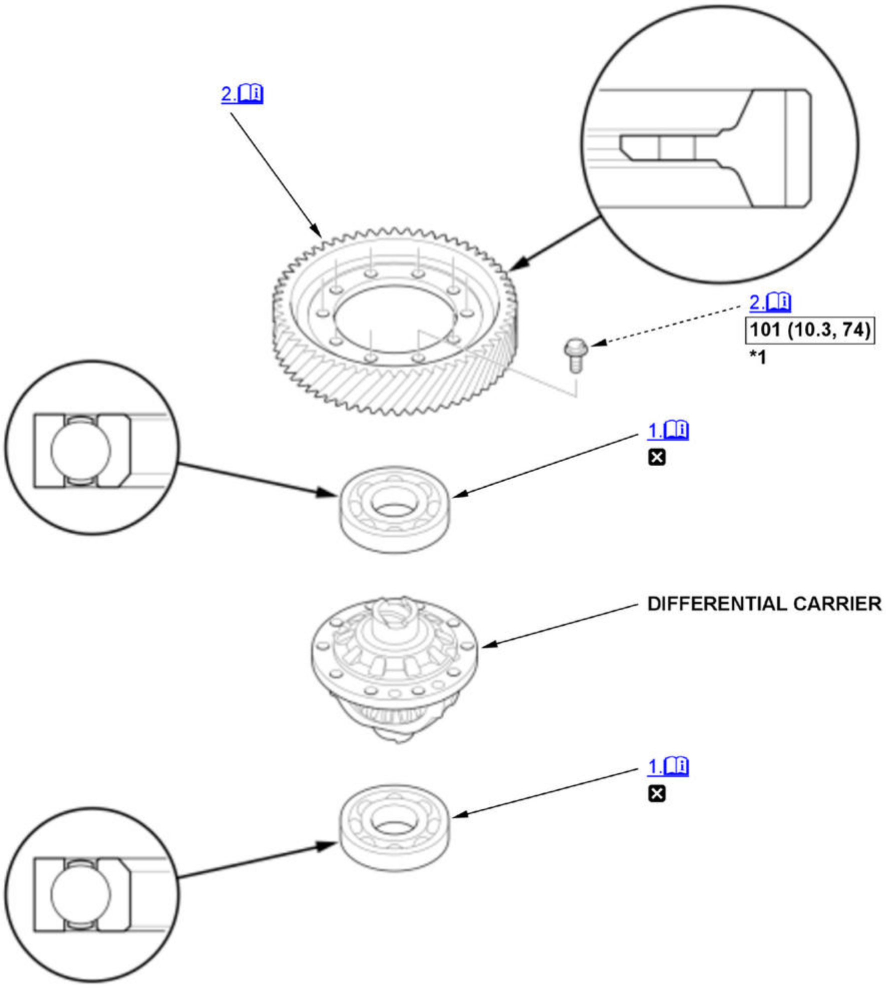

Fig. 4: Exploded View Of Differential Reassembly Components With Torque Specifications
Courtesy of HONDA, U.S.A., INC.

☐	Torque: N.m (kgf.m, lbf.ft)
☒	Replace
*1	Left-hand threads

1. Differential Carrier Bearing - Install

B **Flywheel Housing Side**	1. Install the differential carrier bearings (A) until it bottoms using the 45 x 55 mm installer attachment and a press. **NOTE:** Make sure the differential carrier bearing is installed in the correct direction.

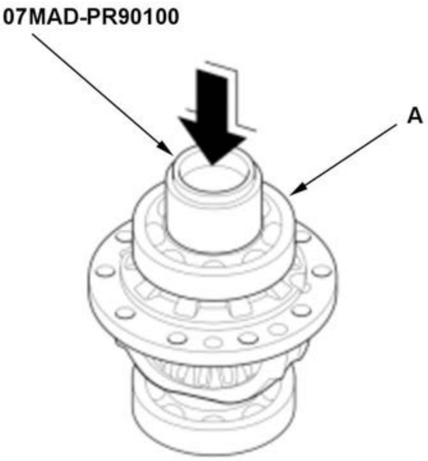 **Transmission Housing Side** 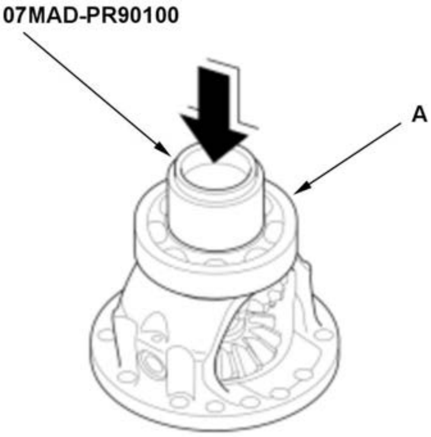 	

2. Final Driven Gear - Install

NOTE:

- Make sure the final driven gear is installed in the correct direction.
- Tighten the bolts to the specified torque in a crisscross pattern in at least two steps.

TRANSFER ASSEMBLY DISASSEMBLY AND REASSEMBLY

Special Tools Required

Image	Description/Tool Number
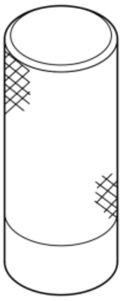	Driver, 32.5 mm 070AD-SAA0101

Image	Description/Tool Number
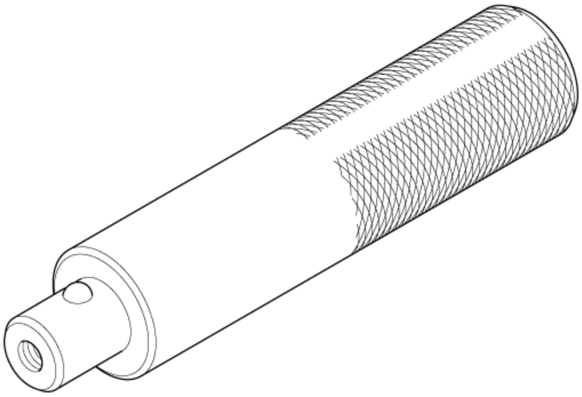	Driver Handle, 15 x 135L 07749-0010000
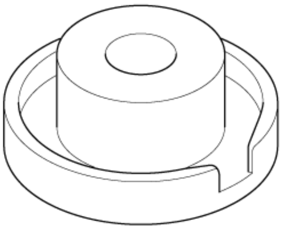	Oil Seal Driver Attachment, 58 mm 07JAD-PH80101
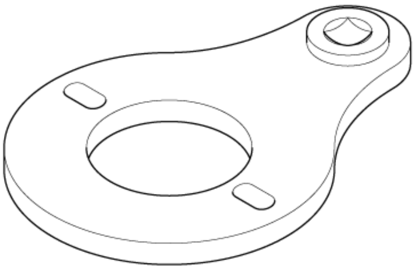	Holder, Companion 07PAB-0020000

Disassembly

Procedure

NOTE: **Numbered call-outs in figure pertain to list numbers in following procedure.**

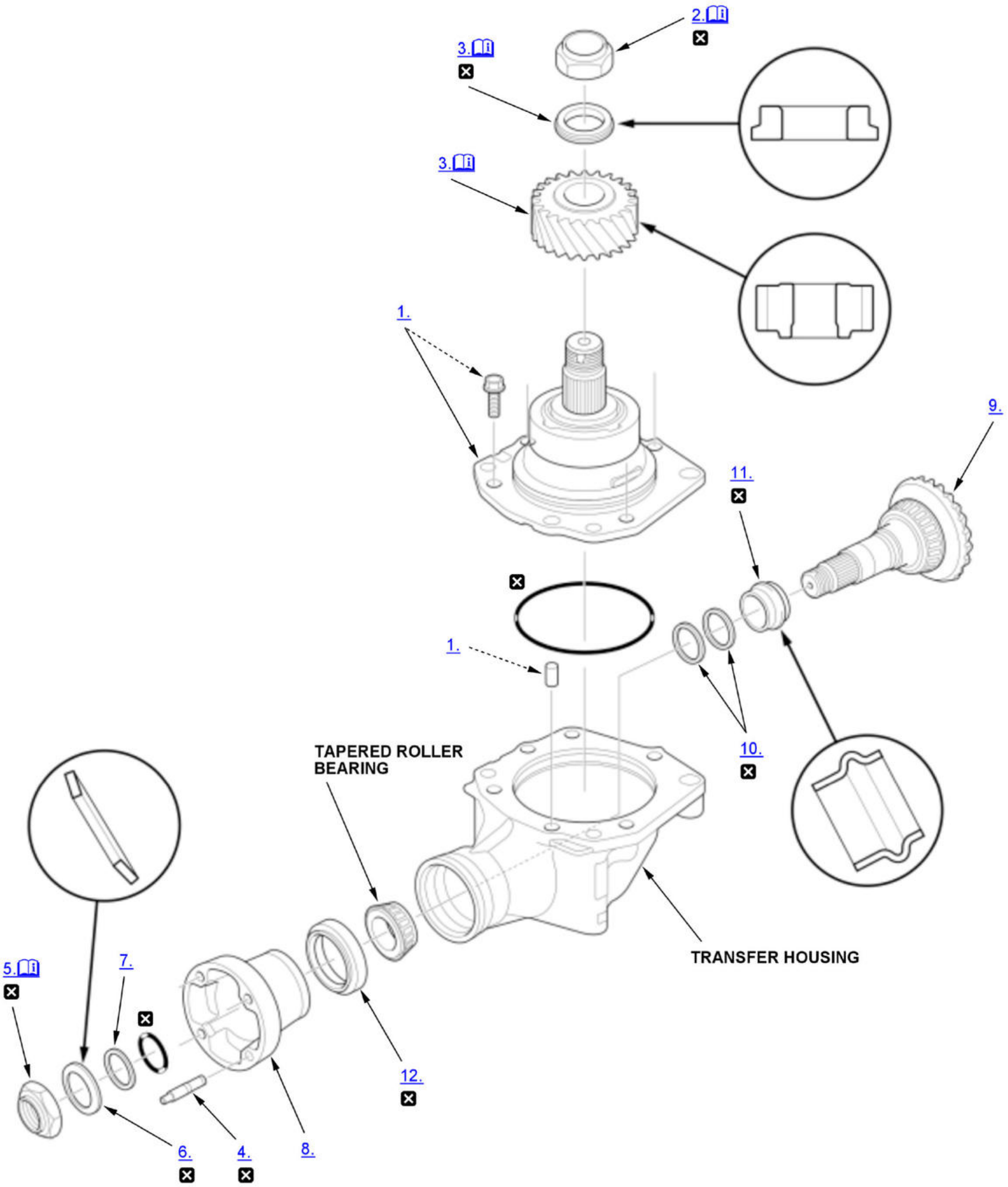
2.
3.
3.
1.
9.
11.
1.
TAPERED ROLLER BEARING
10.
TRANSFER HOUSING
5.
7.
12.
6.
4.
8.

Fig. 5: Exploded View Of Transfer Assembly Disassembly Components
Courtesy of HONDA, U.S.A., INC.

☒	Replace

1. Transfer Hypoid Drive Gear/Shaft Assembly - Remove
2. Locknut - Remove

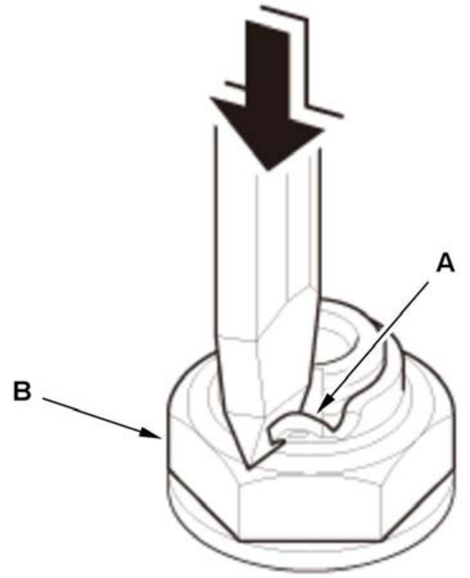	1. Using a chisel, cut the lock tab (A) of the locknut (B). **NOTE:** Be careful not to damage the shaft.

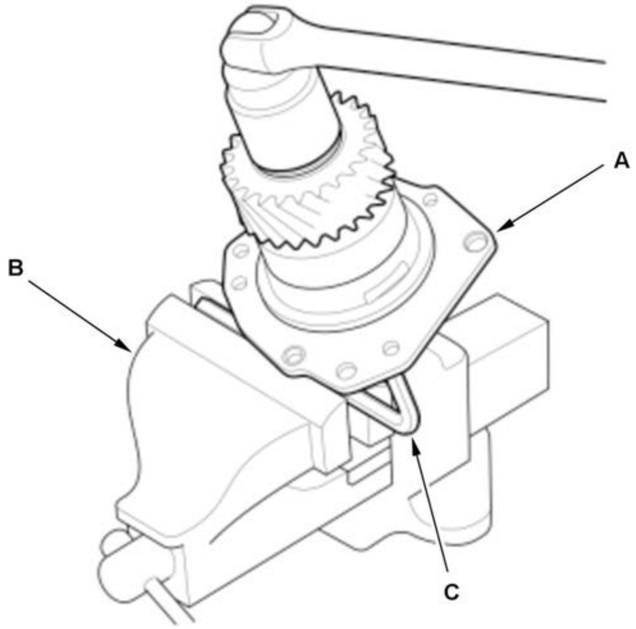	2. Secure the transfer hypoid drive gear/shaft assembly (A) in a bench vise (B) with hex wrench (C). 3. Remove the locknut.

3. Transfer Driven Gear and Washer - Remove

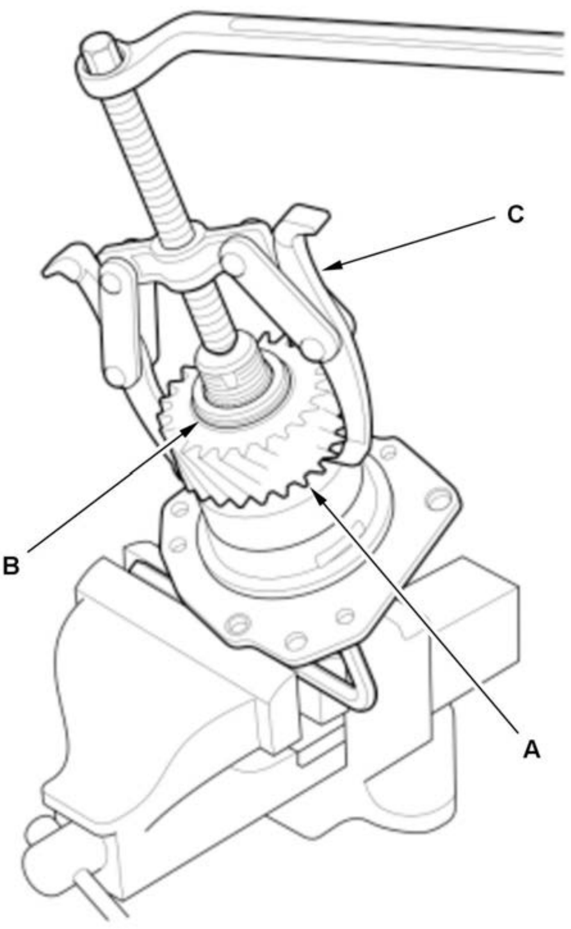	1. Remove the transfer driven gear (A) and the washer (B) using a puller (C).

4. Stud Bolt - Remove
5. Locknut - Remove

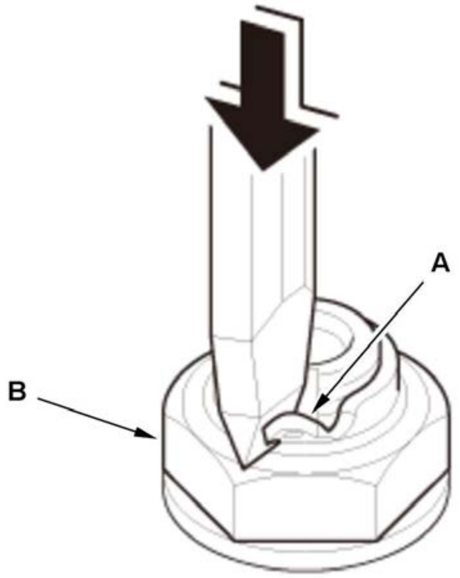	1. Using a chisel, cut the lock tab (A) of the locknut (B). **NOTE:** Be careful not to damage the shaft.

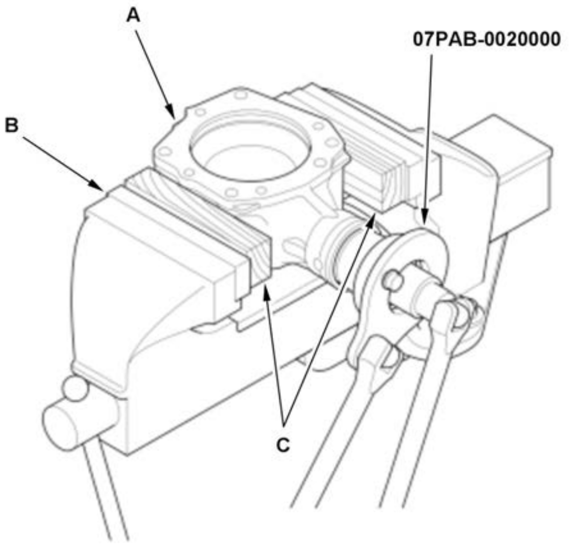	2. Secure the transfer housing (A) in a bench vise (B). **NOTE:** To prevent damaging, always use wood blocks (C) or equivalent materials between the transfer housing and the bench vise. 3. Set the companion holder on the companion flange, then loosen the locknut. 4. Remove the companion holder. 5. Remove the locknut.

6. Conical Spring Washer - Remove
7. Back-Up Ring - Remove
8. Companion Flange - Remove
9. Transfer Hypoid Driven Gear - Remove
10. Thrust Washer - Remove
11. Transfer Spacer - Remove
12. Transfer Oil Seal - Remove

Reassembly

NOTE:

- Apply a light coat of clean ATF on all O-rings and moving parts before reassembly.
- Be careful not to damage the O-rings.

Procedure

NOTE: **Numbered call-outs in figure pertain to list numbers in following procedure.**

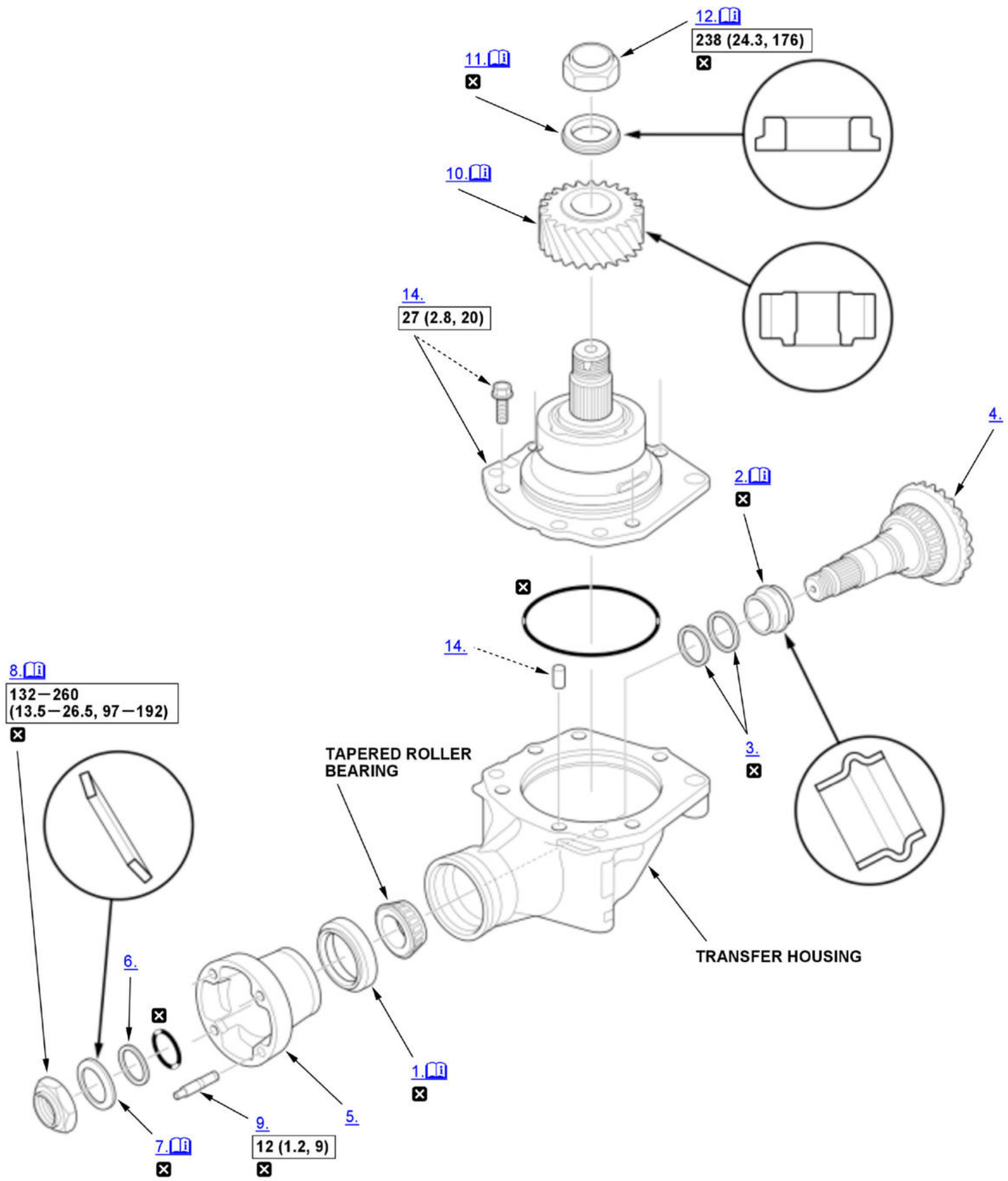
12.
238 (24.3, 176)
11.
10.
14.
27 (2.8, 20)
4.
2.
14.
8.
132−260
(13.5−26.5, 97−192)
TAPERED ROLLER BEARING
3.
TRANSFER HOUSING
6.
1.
5.
9.
12 (1.2, 9)
7.

Fig. 6: Exploded View Of Transfer Assembly Reassembly Components With Torque Specifications
Courtesy of HONDA, U.S.A., INC.

☐	Torque: N.m (kgf.m, lbf.ft)
☒	Replace

1. Transfer Oil Seal - Install

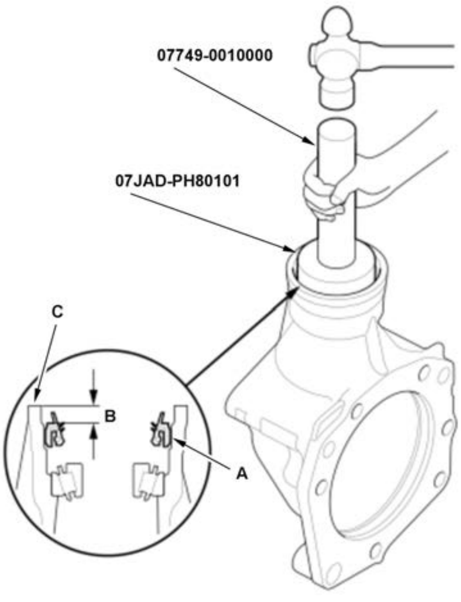	1. Install the transfer oil seal (A) to a depth (B) of 4.5-5.5 mm (0.177-0.217 in) below the transfer housing surface (C) using the 15 x 135L driver handle and the 58 mm oil seal driver attachment. **NOTE:** Apply a light coat of clean ATF to the oil seal surface of the press-fit part before installation.

2. Transfer Spacer - Install

   NOTE: Make sure the transfer spacer is installed in the correct direction.

3. Thrust Washer - Install
4. Transfer Hypoid Driven Gear - Install
5. Companion Flange - Install
6. Back-Up Ring - Install
7. Conical Spring Washer - Install

   NOTE: Make sure the conical spring washer is installed in the correct direction.

8. Locknut - Install

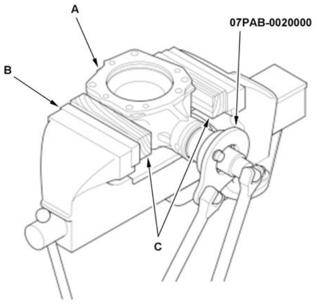	1. Secure the transfer housing (A) in a bench vise (B). **NOTE:** To prevent damaging, always use wood blocks (C) or equivalent materials between the transfer housing and the bench vise. 2. Loosely install the locknut. 3. Rotate the companion flange several turns to seat the tapered roller bearings. 4. Set the companion holder on the companion flange. 5. Tighten the locknut while measuring the starting torque of the transfer hypoid driven gear tapered roller bearing so the starting torque is within the specified torque. Tighten the locknut to the lower torque specification, then check the starting torque. If the starting torque is low, increase the torque on the locknut until the starting torque is acceptable. **NOTE:** • If the starting torque exceeds the specified torque, replace the transfer spacer and reassemble the parts. Do not adjust the torque with the locknut loose. • If the tightening torque exceeds the specified torque and the starting torque is below the specified torque, replace the transfer spacer and reassemble the parts.

	6. Remove the companion holder.

Starting Torque:
0.98-1.39 N.m (10.0-14.2 kgf.cm, 8.7-12.3 lbf.in)

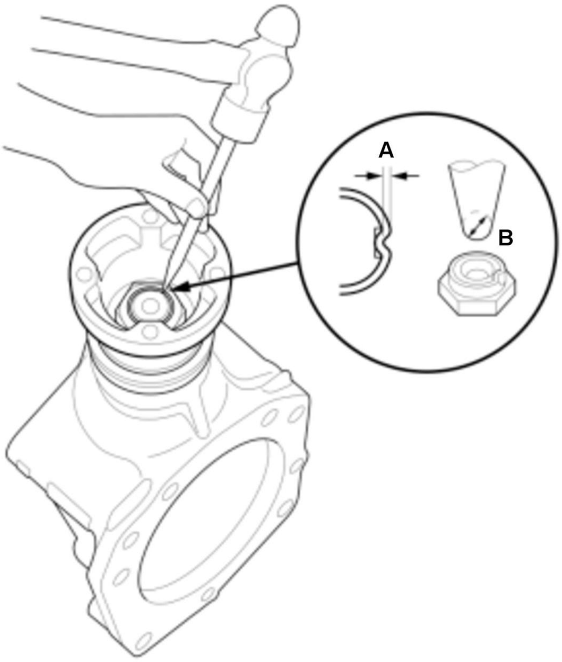	7. Stake the locknut to a depth (A) of at least 0.7 mm (0.028 in) using a 3.0-3.5 mm (0.118-0.138 in) punch (B). **NOTE:** Be careful not to crack the locknut when staking.

9. Stud Bolt - Install
10. Transfer Driven Gear - Install

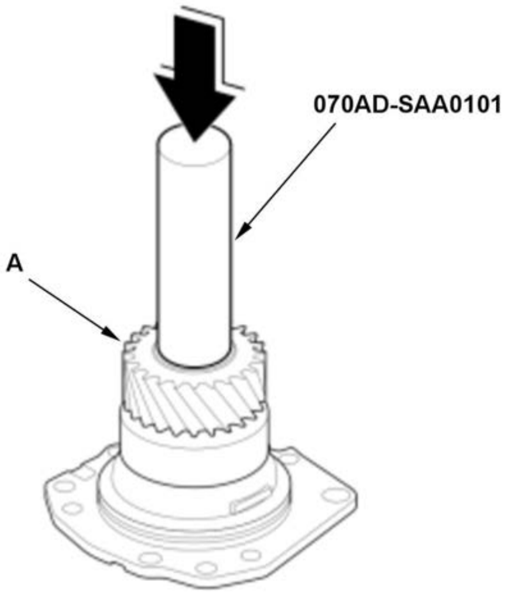	1. Install the transfer driven gear (A) using the 32.5 mm driver and a press. **NOTE:** Make sure the transfer driven gear is installed in the correct direction.

11. Washer - Install

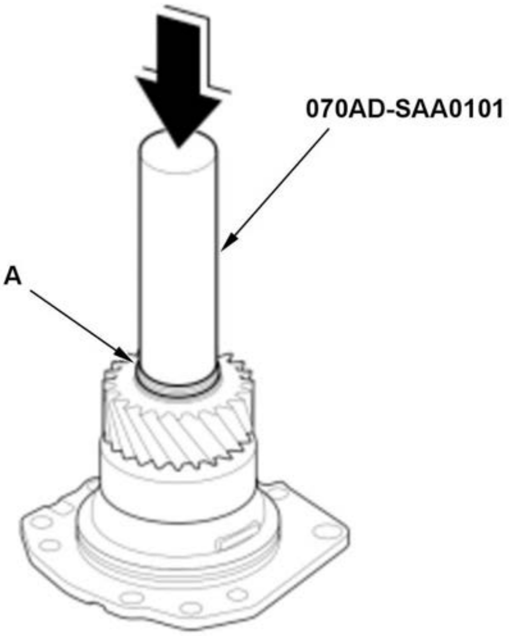	1. Install the washer (A) using the 32.5 mm driver and a press. **NOTE:** Make sure the washer is installed in the correct direction.

12. Locknut - Install

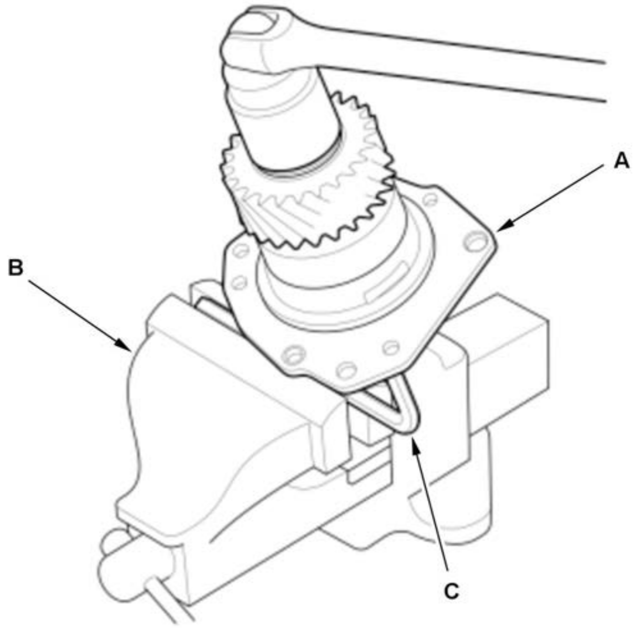	1. Secure the transfer hypoid drive gear/shaft assembly (A) in a bench vise (B) with hex wrench (C). 2. Install the locknut.

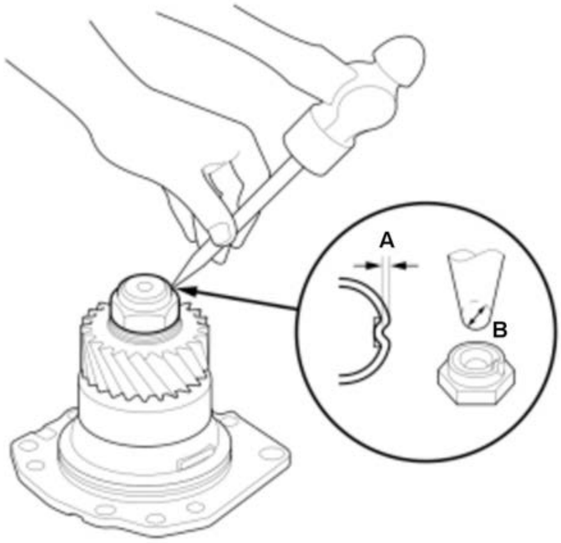	3. Stake the locknut to a depth (A) of at least 0.7 mm (0.028 in) using a 3.0-3.5 mm (0.118-0.138 in) punch (B). **NOTE:** Be careful not to crack the locknut when staking.

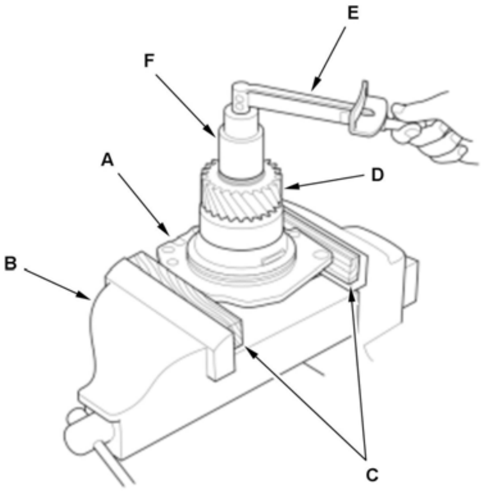	4. Secure the transfer hypoid drive gear/shaft assembly (A) in a bench vise (B). **NOTE:** To prevent damaging, always use wood blocks (C) or equivalent materials between the transfer hypoid drive gear/shaft assembly and the bench vise. 5. Rotate the transfer driven gear (D) several turns to seat the tapered roller bearings. 6. Measure the starting torque of the transfer hypoid drive gear tapered roller bearing using the torque wrench (E) and a socket (F). 7. If the starting torque is out of the specification, replace the transfer hypoid drive gear/shaft assembly.

Starting Torque:
1.63-5.23 N.m (16.6-53.4 kgf.cm, 14.4-46.3 lbf.in)

13. Transfer Hypoid Gear Tooth Contact Pattern - Check
14. Transfer Hypoid Drive Gear/Shaft Assembly - Install
15. Total Starting Torque - Check
16. Transfer Gear Backlash - Check

TRANSMISSION (E-CVT) DISASSEMBLY AND REASSEMBLY

Special Tools Required

Image	Description/Tool Number
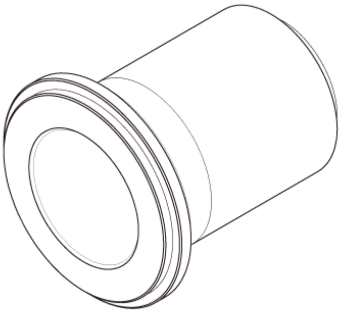	Oil Seal Driver C 070AD-TZ3A300
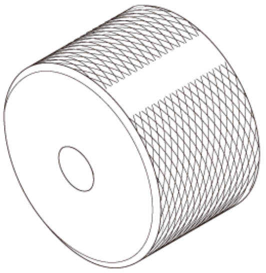	Slide Hammer 07936-371020A
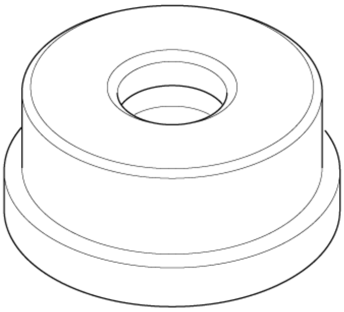	Bearing Driver Attachment, 42 x 47 mm 07746-0010300
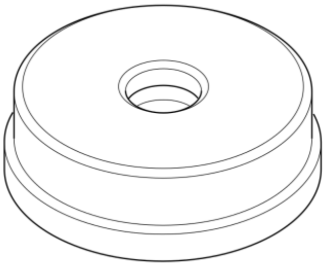	Bearing Driver Attachment, 62 x 68 mm 07746-0010500
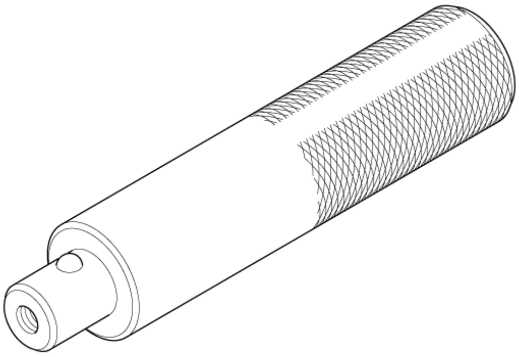	Driver Handle, 15 x 135L 07749-0010000

Image	Description/Tool Number
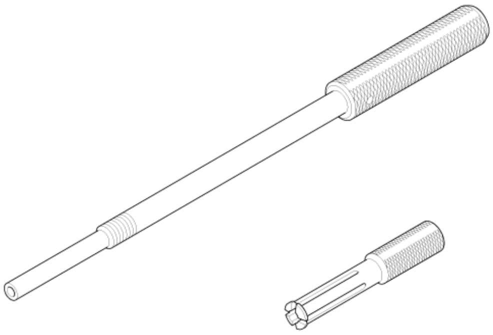	Bearing Remover Shaft Set, 12 mm 07936-166010A
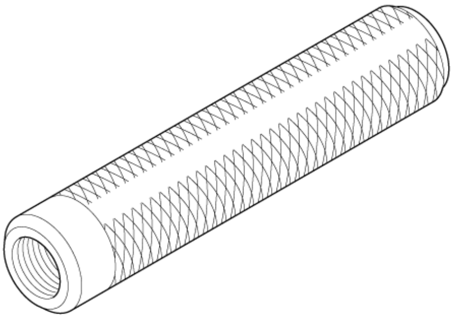	Remover Handle 07936-3710100
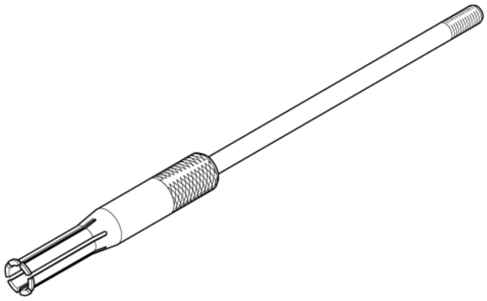	Bearing Remover Shaft Set, 20 mm 07936-3710600
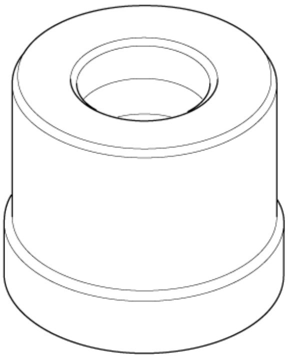	Bearing Driver Attachment, 28 x 30 mm 07946-1870100
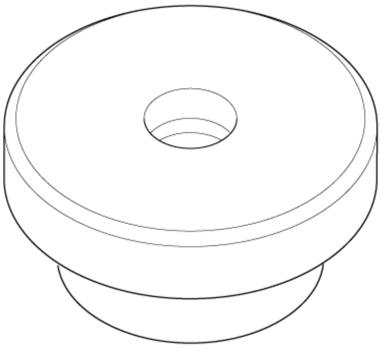	Oil Seal Driver Attachment 07GAD-PG40100

Image	Description/Tool Number
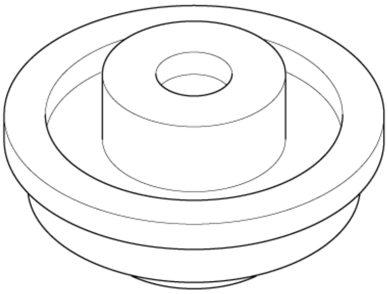	Oil Seal Driver Attachment, 64 x 72 mm 07JAD-PN00100
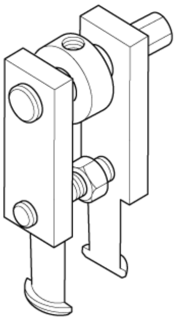	Adjustable Bearing Puller, 45-75 mm 07YAC-0010102*
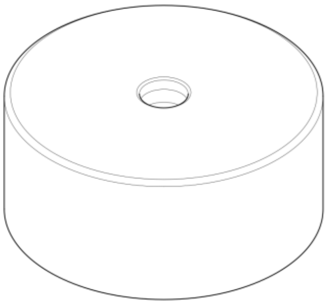	Oil Seal Attachment, 96 mm 07ZAD-PNA0100 or 07ZAD-PNAA100
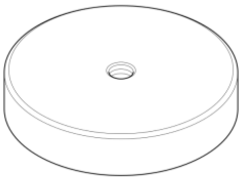	Driver Attachment 110 x 140 mm 07ZMD-MCT0100

*: 07YAC-0010102 must be used with a commercially available 3/8"-16 slide hammer.

Disassembly

NOTE:

- Keep all foreign particles out of the transmission (e-CVT).
- Mark or place all removed parts in order in a parts rack so they can be reassembled in their original places.

Procedure

NOTE: **Numbered call-outs in figure pertain to list numbers in following procedure.**

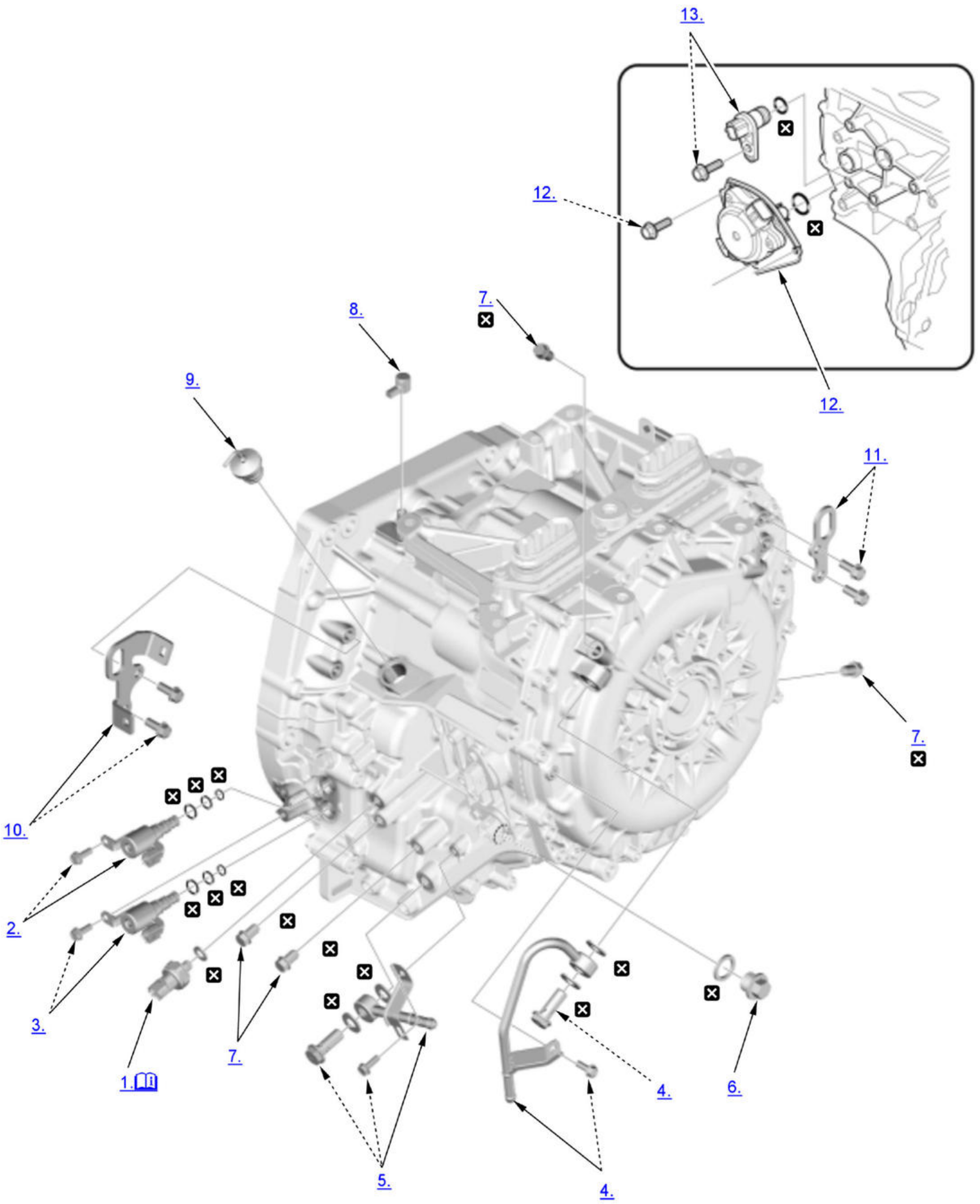

Fig. 7: Exploded View Of Transmission (e-CVT) Disassembly Components (1 Of 4)
Courtesy of HONDA, U.S.A., INC.

☒	Replace

NOTE: **Numbered call-outs in figure pertain to list numbers in following procedure.**

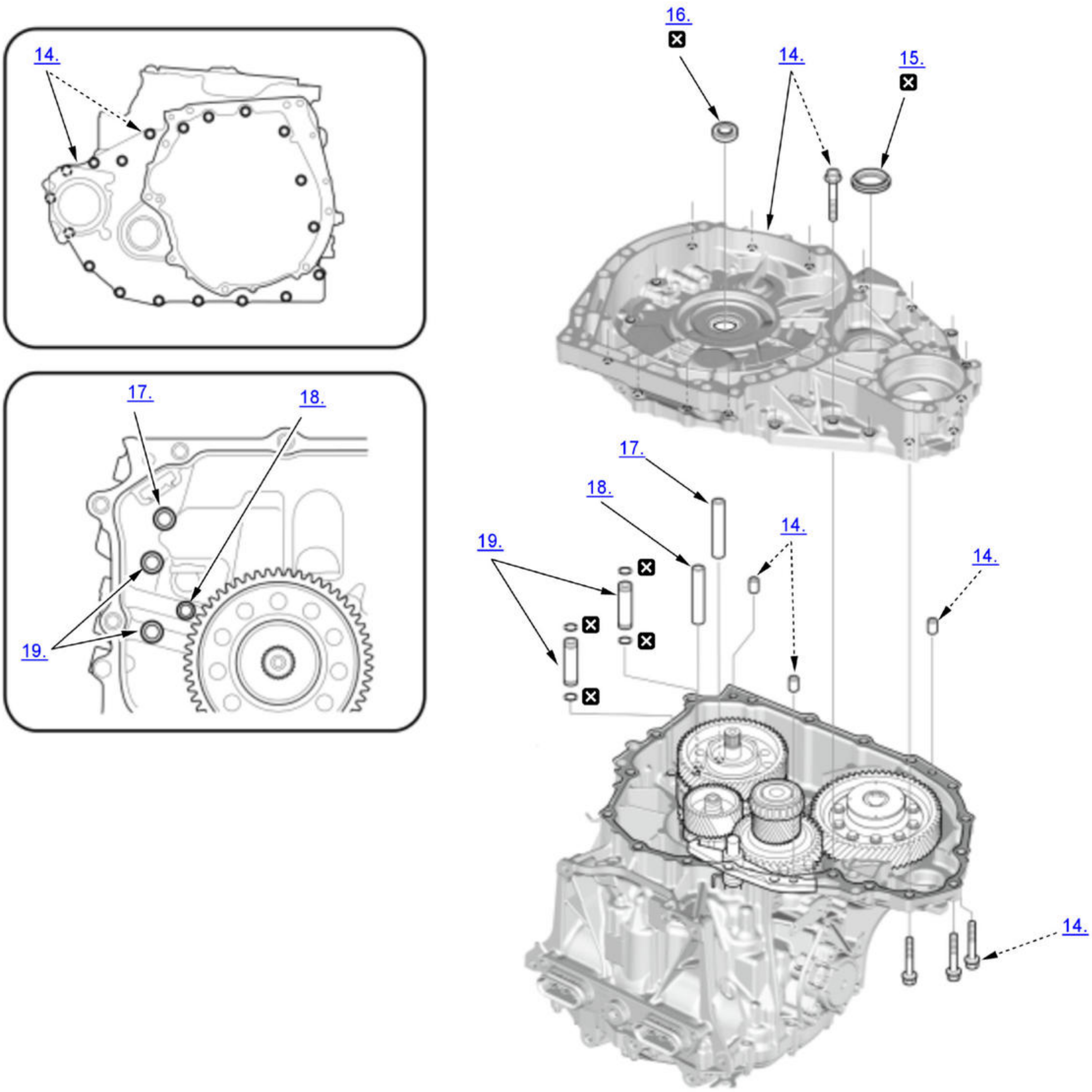
14.
17.
18.
19.
16.
14.
15.
17.
18.
19.
14.
14.
14.

[Fig. 8: Exploded View Of Transmission (e-CVT) Disassembly Components (2 Of 4)]

Courtesy of HONDA, U.S.A., INC.

☒	Replace

NOTE: **Numbered call-outs in figure pertain to list numbers in following procedure.**

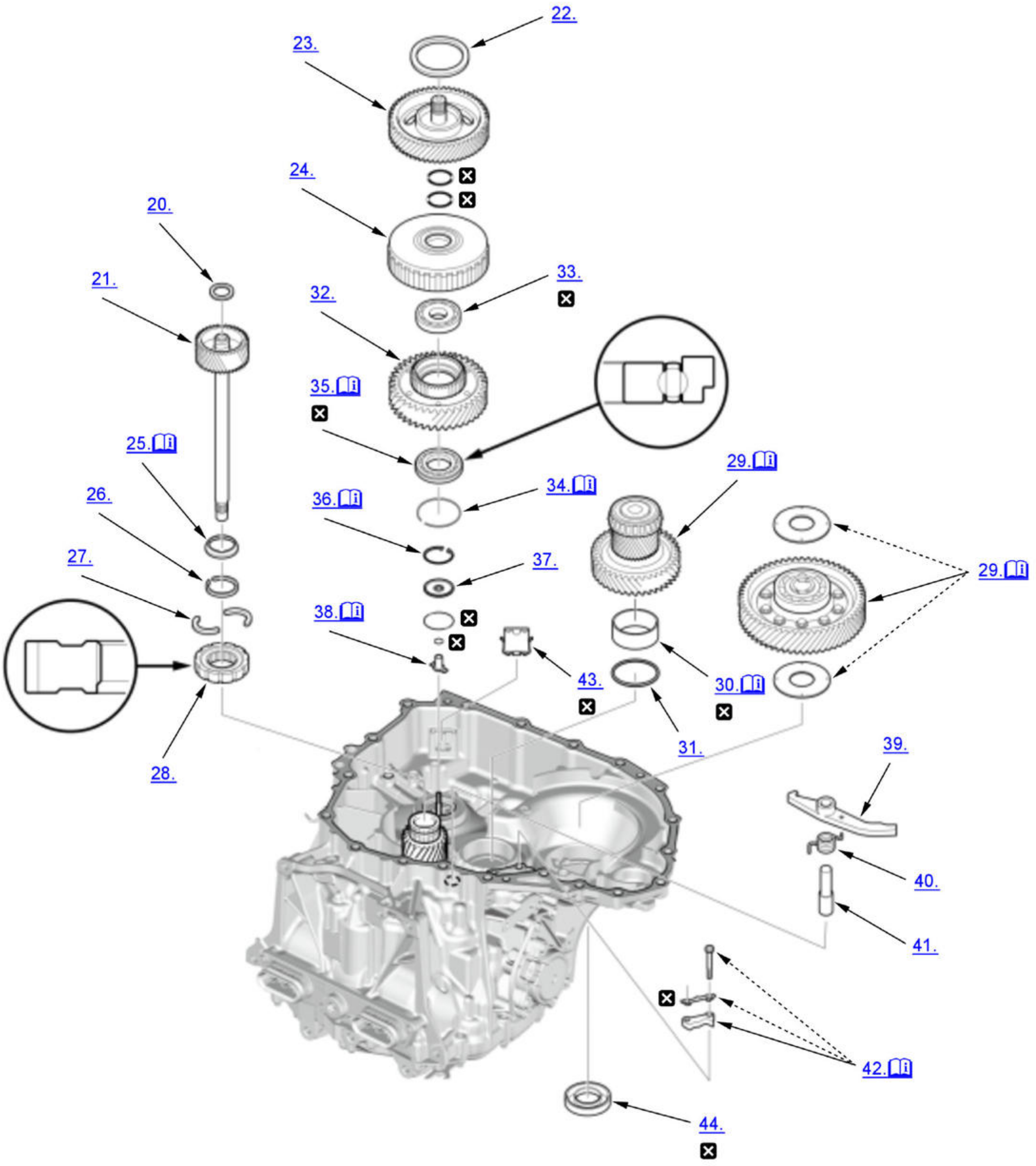
22.
23.
24.
20.
33.
21.
32.
35.
25.
29.
34.
36.
26.
27.
37.
38.
29.
43.
30.
28.
31.
39.
40.
41.
42.
44.

Fig. 9: Exploded View Of Transmission (e-CVT) Disassembly Components (3 Of 4)
Courtesy of HONDA, U.S.A., INC.

☒	Replace

NOTE: **Numbered call-outs in figure pertain to list numbers in following procedure.**

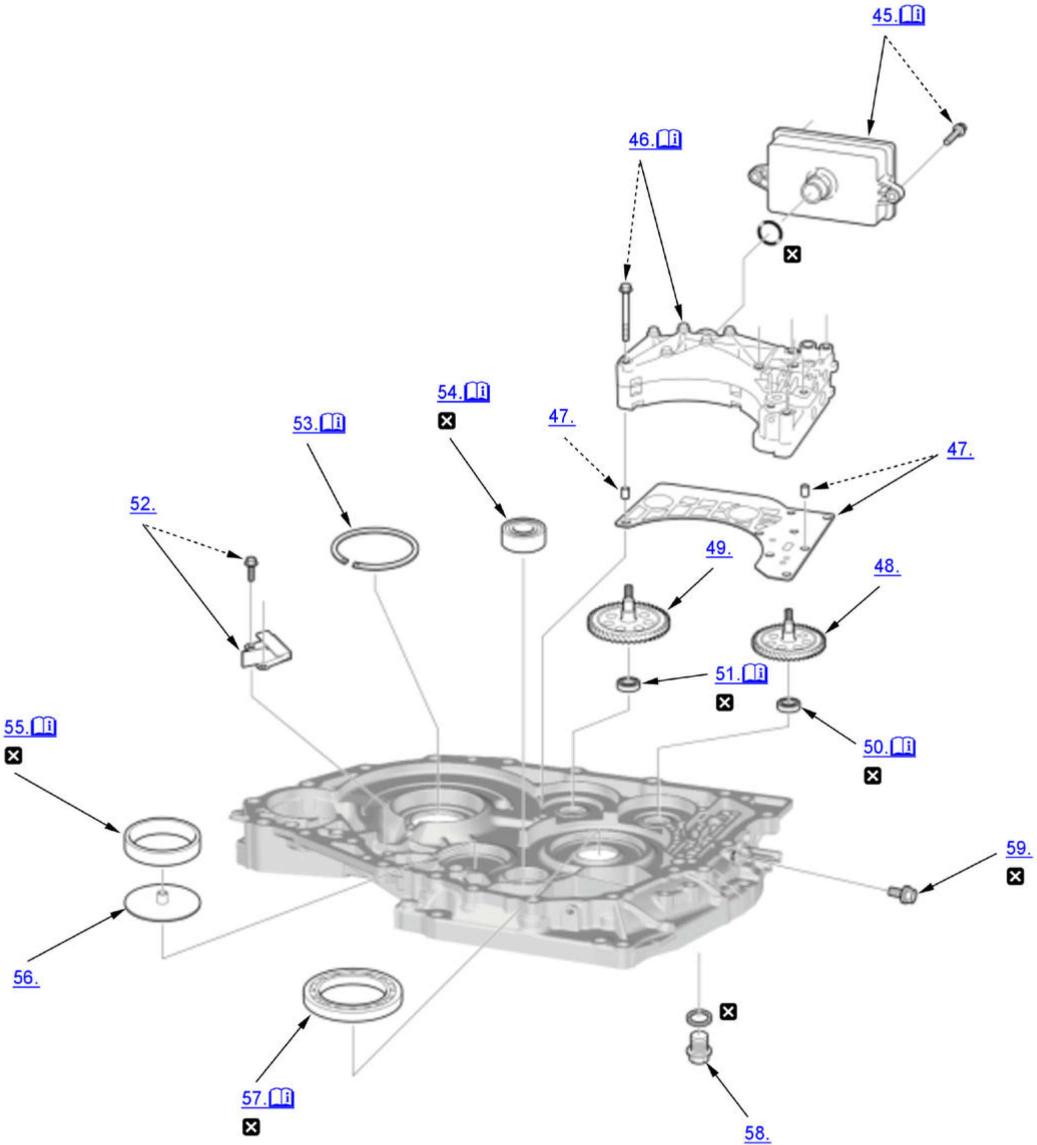

[Fig. 10: Exploded View Of Transmission (e-CVT) Disassembly Components (4 Of 4)]

Courtesy of HONDA, U.S.A., INC.

☒	Replace

1. Transmission Fluid Pressure Sensor - Remove

   NOTE: Be careful not to damage the plastic part.

2. Shift Solenoid Valve A - Remove
3. Shift Solenoid Valve B - Remove
4. ATF Inlet Line - Remove
5. ATF Outlet Line - Remove
6. Filler Plug - Remove
7. Sealing Bolt - Remove
8. Breather Cap - Remove
9. Filler Cap - Remove
10. Transmission Hanger A - Remove
11. Transmission Hanger B - Remove
12. Park Pawl Actuator - Remove

13. Park Position Sensor - Remove
14. Flywheel Housing - Remove
15. Intermediate Shaft Oil Seal - Remove
16. Input Shaft Oil Seal - Remove
17. 10 x 46.5 mm Pipe - Remove
18. 8 x 44.1 mm Pipe - Remove
19. 10.8 x 35 mm Pipe - Remove
20. Shim - Remove
21. Generator Shaft - Remove
22. Shim - Remove
23. Input Shaft - Remove
24. Over Drive Clutch - Remove
25. Cotter Retainer A - Remove

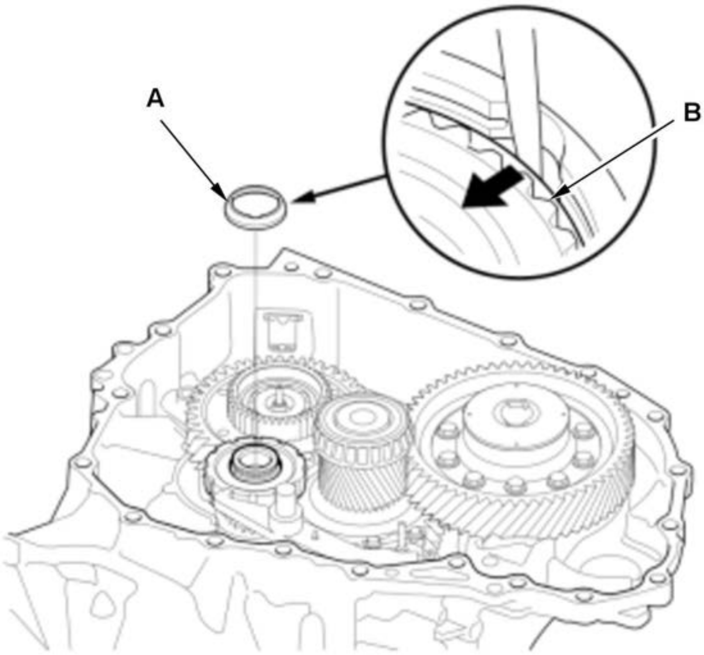	1. Remove cotter retainer A by compressing the snap ring (B).

26. Snap Ring - Remove
27. Cotter - Remove
28. Parking Gear - Remove
29. Countershaft and Differential - Remove

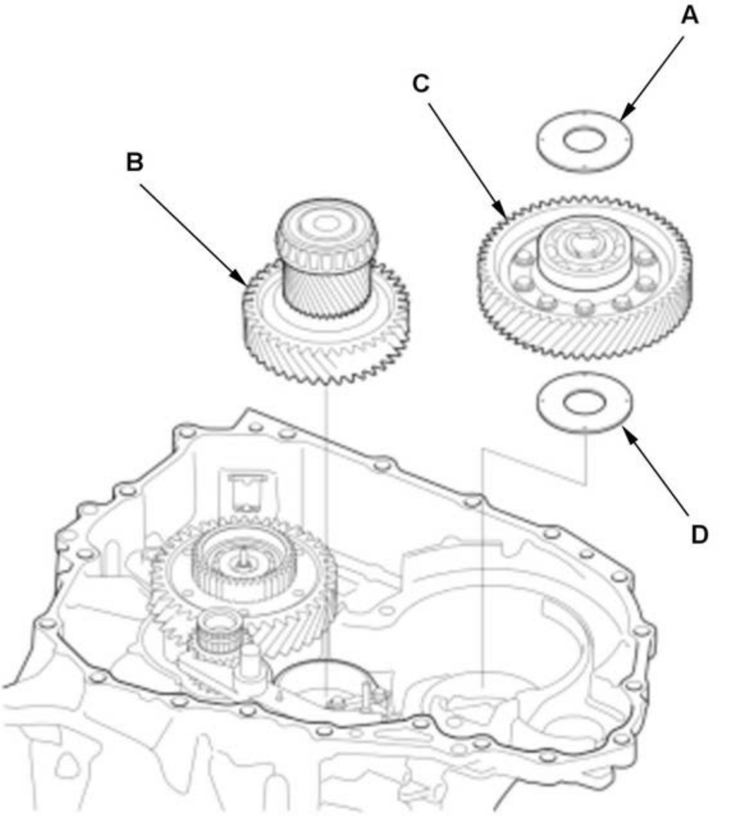	1. Remove the spacer (A). 2. Remove the countershaft (B) and the differential (C) together. 3. Remove the spacer (D).

30. Countershaft Bearing Outer Race (Transmission Housing Side) - Remove

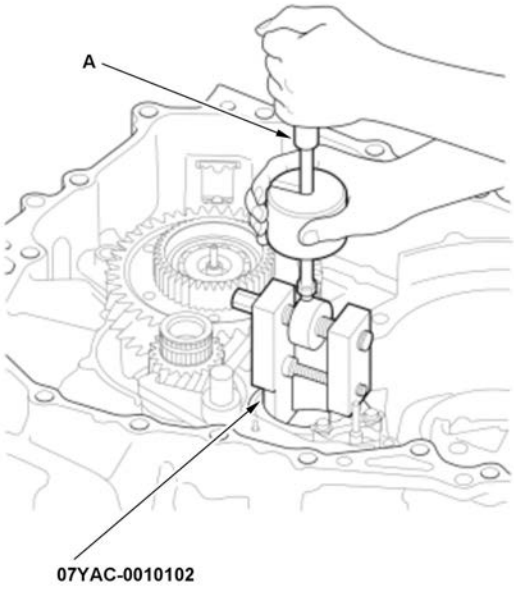	1. Remove the countershaft bearing outer race using the 45-75 mm adjustable bearing puller and a commercially available 3/8"-16 slide hammer (A).

31. Shim - Remove
32. Over Drive Gear - Remove
33. Over Drive Gear Bearing (Over Drive Clutch Side) - Remove
34. Internal Snap Ring - Remove

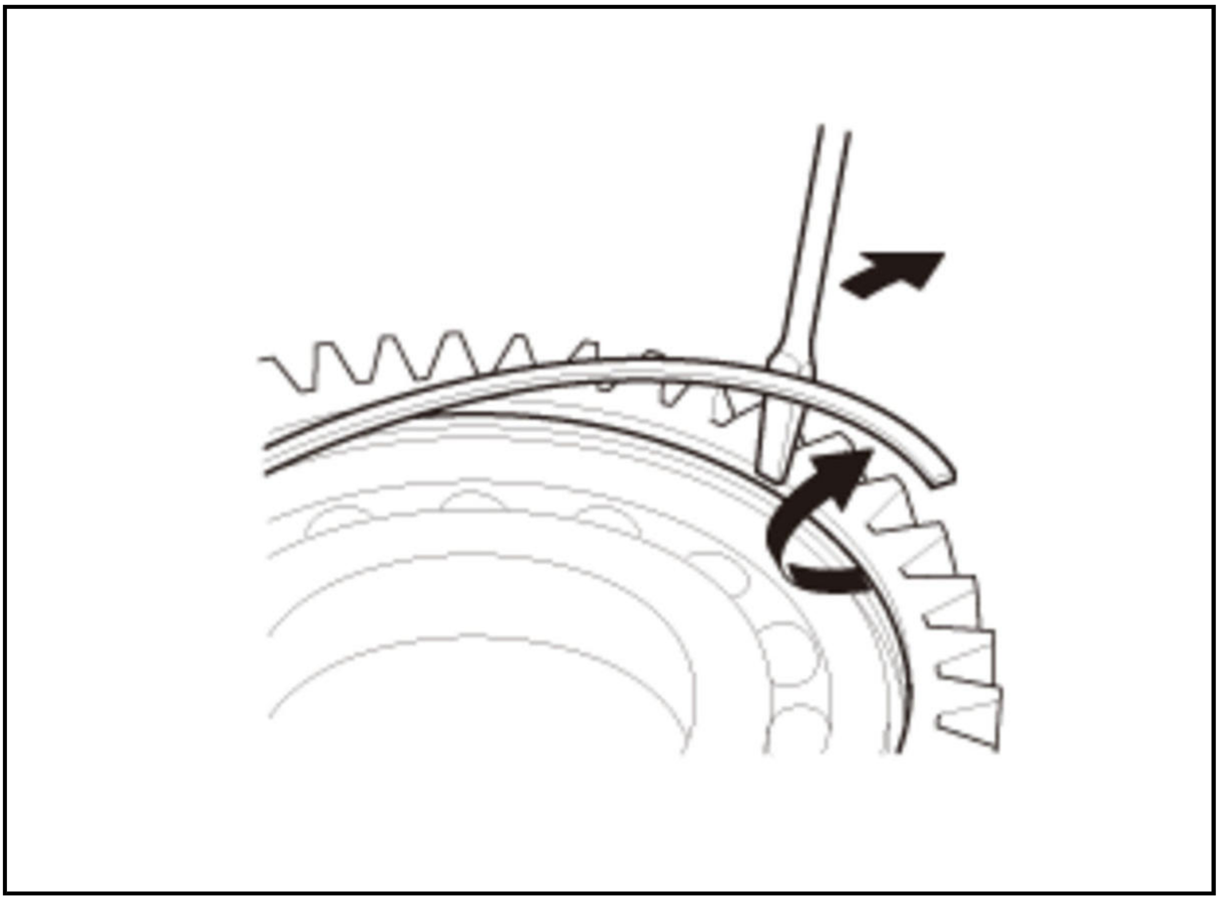

35. Over Drive Gear Bearing (Transmission Housing Side) - Remove

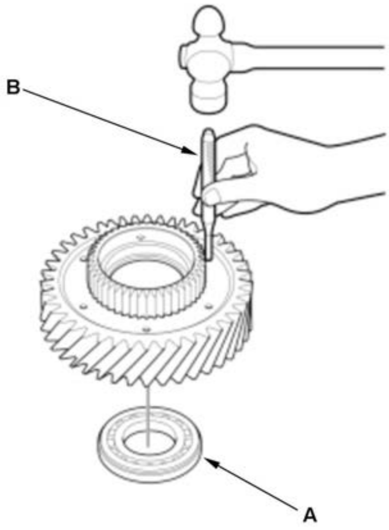	1. Remove the over drive gear bearing (A) (transmission housing side) using a commercially available 3.0 mm pin driver (B). **NOTE:** Lightly tap the pin driver in a crisscross pattern to prevent the bearing from binding.

36. Internal Snap Ring - Remove

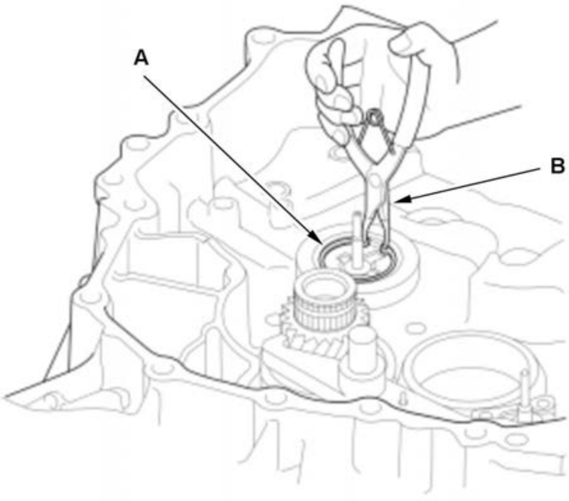 	1. Remove the internal snap ring (A) by compressing it using commercially available snap ring pliers (B).

37. Feed Pipe Flange - Remove
38. Feed Pipe A - Remove

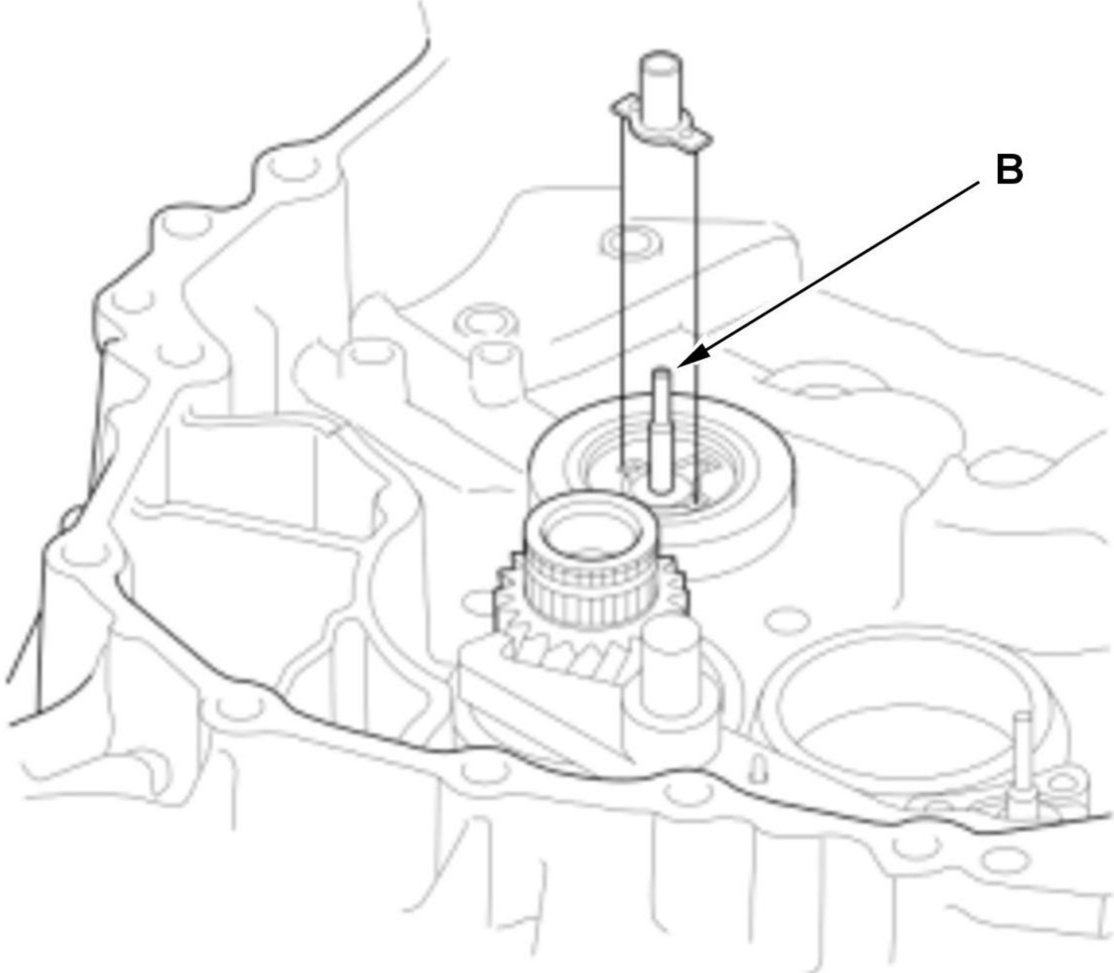

NOTE: Replace the transmission (e-CVT), if feed pipe B replacement is required.

39. Parking Brake Pawl - Remove
40. Parking Pawl Spring - Remove
41. Parking Shaft - Remove

42. Parking Brake Rod Holder - Remove

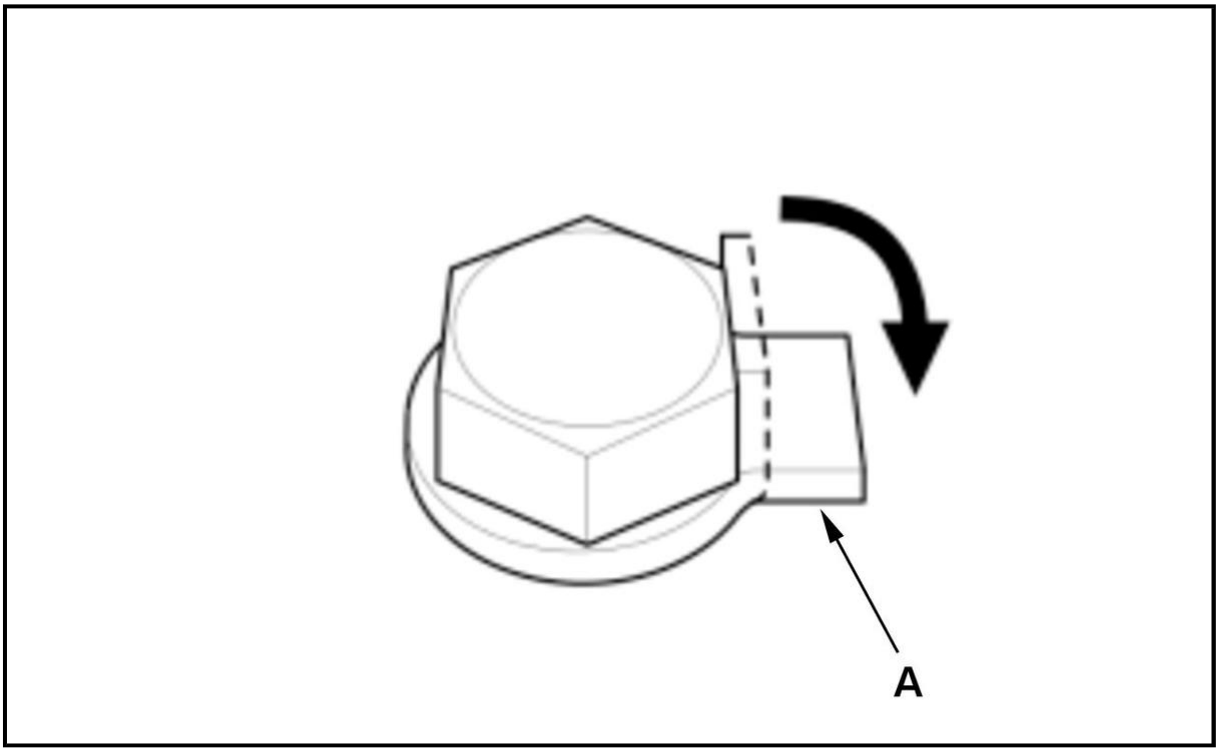

NOTE: Pry down the lock tab (A) of the lock washer.

43. ATF Magnet - Remove and Clean
44. Driveshaft Oil Seal - Remove
45. ATF Strainer - Remove

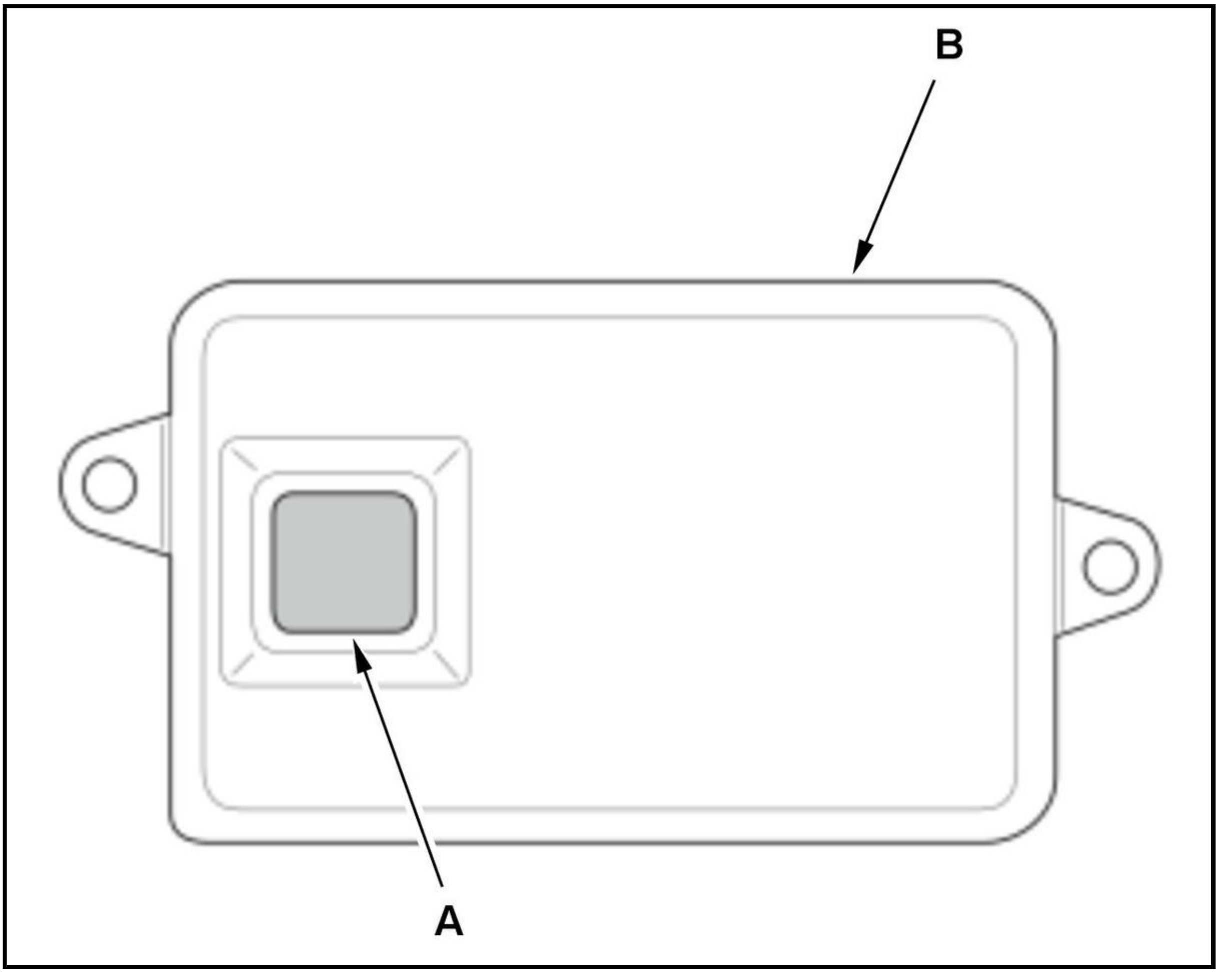

ATF Strainer Check

1. Clean the inlet opening (A) of the ATF strainer (B) thoroughly with compressed air, then check that it is in good condition and that the inlet opening is not clogged.

2. Check the ATF strainer for clogs, debris, or damage. If the strainer is clogged or damaged, replace it.

46. Valve Body Assembly - Remove

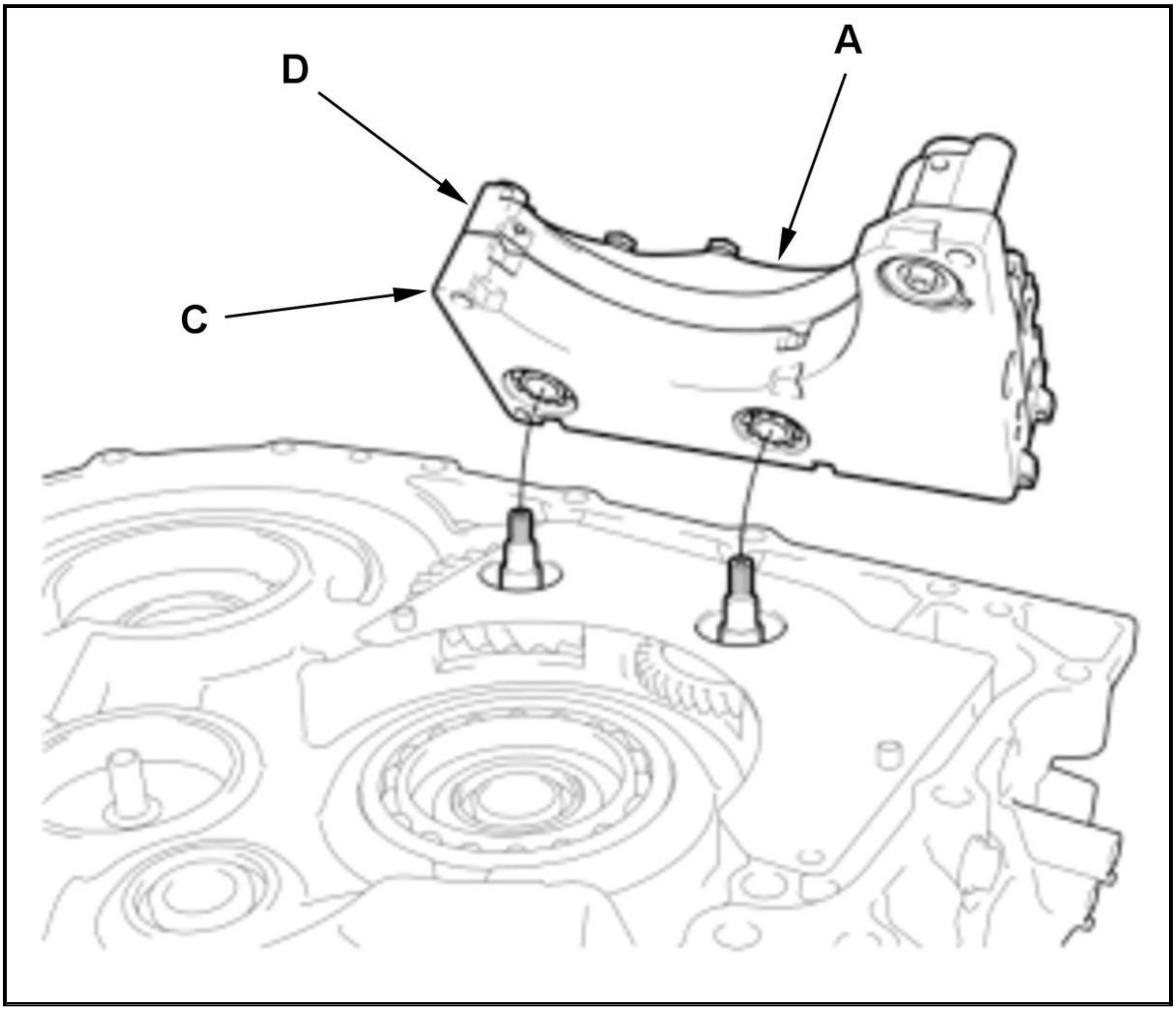

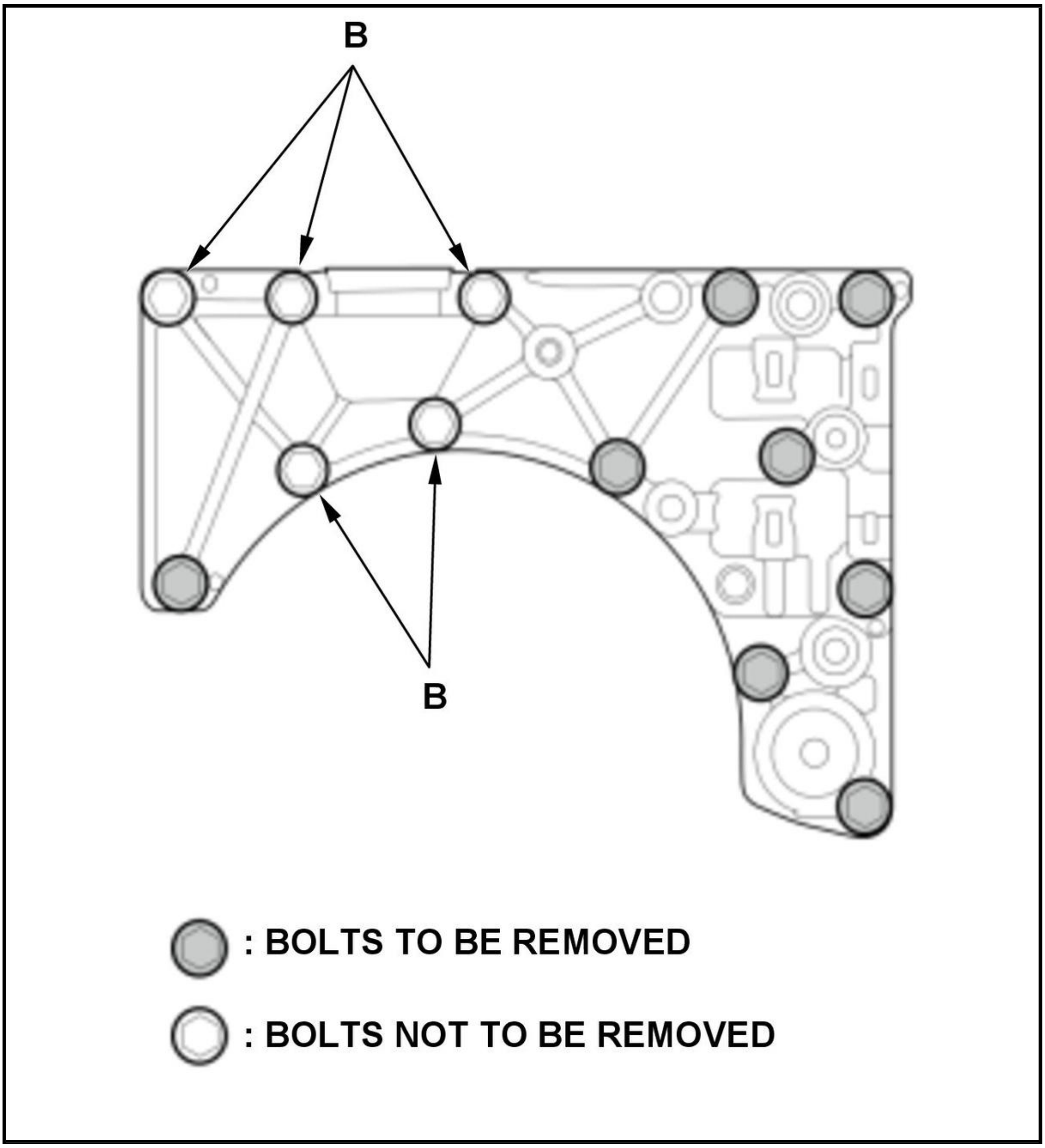
B
B
: BOLTS TO BE REMOVED
: BOLTS NOT TO BE REMOVED

NOTE:

- Do not disassemble the valve body assembly (A). If any problem occurs, replace the assembly.
- Remove the appropriate bolts as shown.
- Do not remove the mounting bolts (B). These bolts secure the regulator valve body (C) and the shift valve body (D).

47. Separator Plate - Remove
48. ATF Pump Drive Shaft A - Remove
49. ATF Pump Drive Shaft B - Remove
50. ATF Pump Drive Shaft A Bearing - Remove

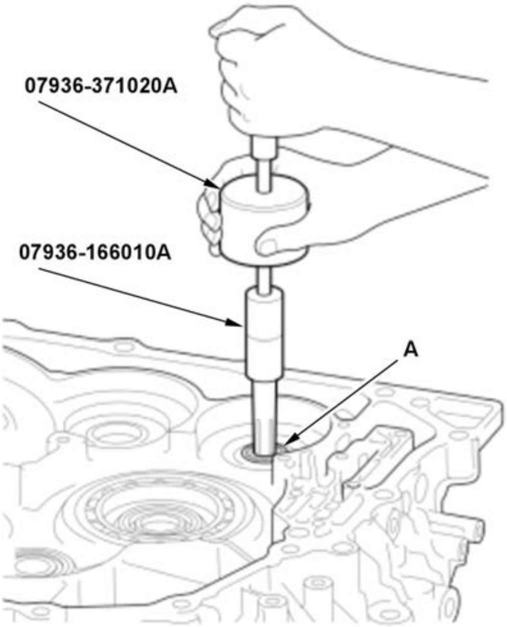 07936-371020A 07936-166010A A	1. Remove the ATF pump drive shaft A bearing (A) using the 12 mm bearing remover shaft set and the slide hammer.

51. ATF Pump Drive Shaft B Bearing - Remove

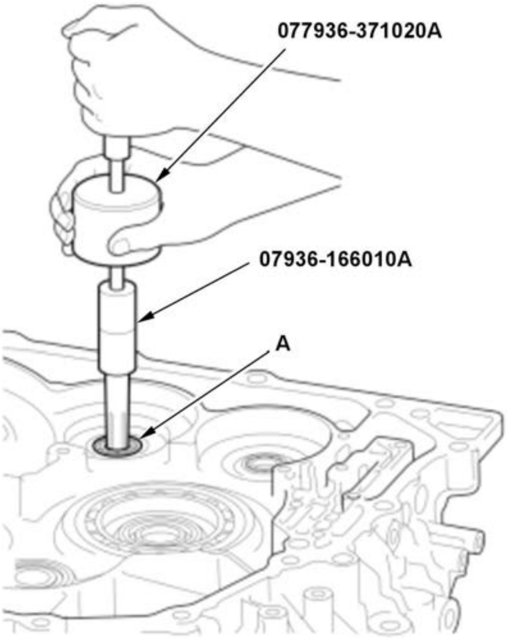 077936-371020A 07936-166010A A	1. Remove the ATF pump drive shaft B bearing (A) using the 12 mm bearing remover shaft set and the slide hammer.

52. Baffle Plate - Remove

53. Shim - Remove

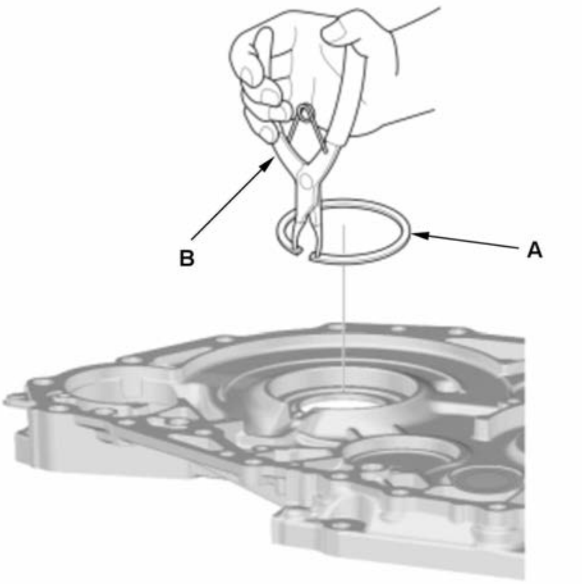	1. Using a commercially available snap ring pliers (B), remove the shim (A) by compressing it.

54. Generator Shaft Bearing - Remove

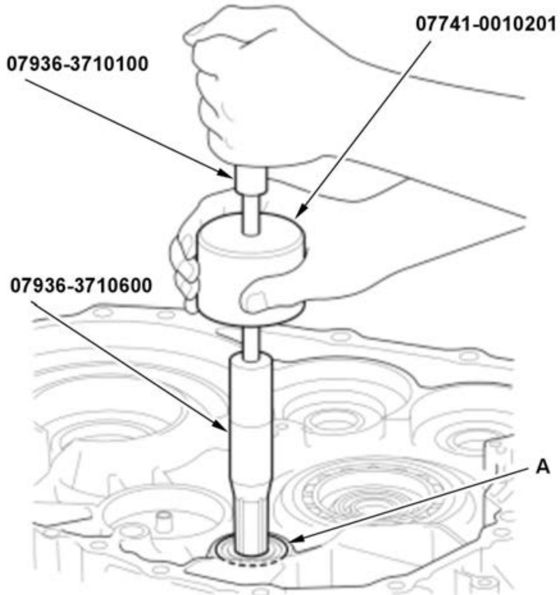	1. Remove the generator shaft bearing (A) using the 20 mm bearing remover shaft set, the remover handle, and the slide hammer.

55. Countershaft Bearing Outer Race (Flywheel Housing Side) - Remove

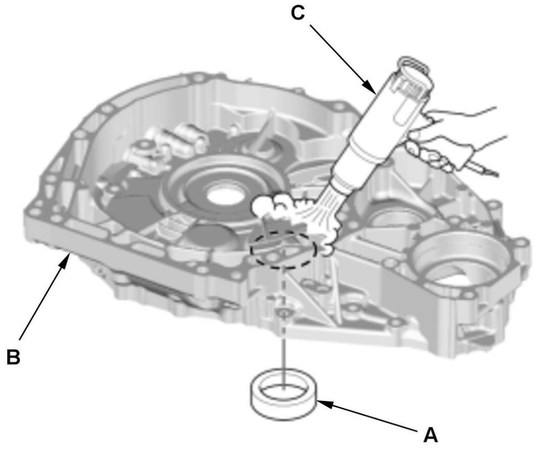	1. Remove the countershaft bearing outer race (A) by heating the flywheel housing (B) using a heat gun (C). **NOTE:** - Be careful not to burn yourself by the hot part. - Do not heat the flywheel housing more than 212B°F (100B°C).

56. Oil Guide Plate C - Remove

57. Input Shaft Bearing - Remove

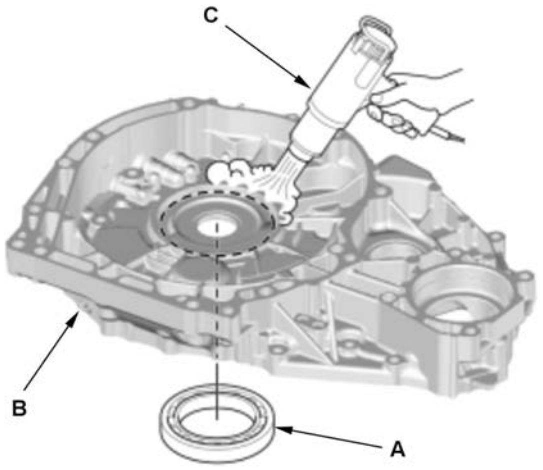	1. Remove the input shaft bearing (A) by heating the flywheel housing (B) using a heat gun (C). **NOTE:** • Be careful not to burn yourself by the hot part. • Do not heat the flywheel housing more than 212B°F (100B°C).

58. Drain Plug - Remove

59. Sealing Bolt - Remove

Reassembly

NOTE:

- Keep all foreign particles out of the transmission (e-CVT).
- Clean all removing parts before reassembly.
- Apply a light coat of clean ATF on all O-rings and moving parts before reassembly.
- Be careful not to damage the O-rings.

Procedure

NOTE: **Numbered call-outs in figure pertain to list numbers in following procedure.**

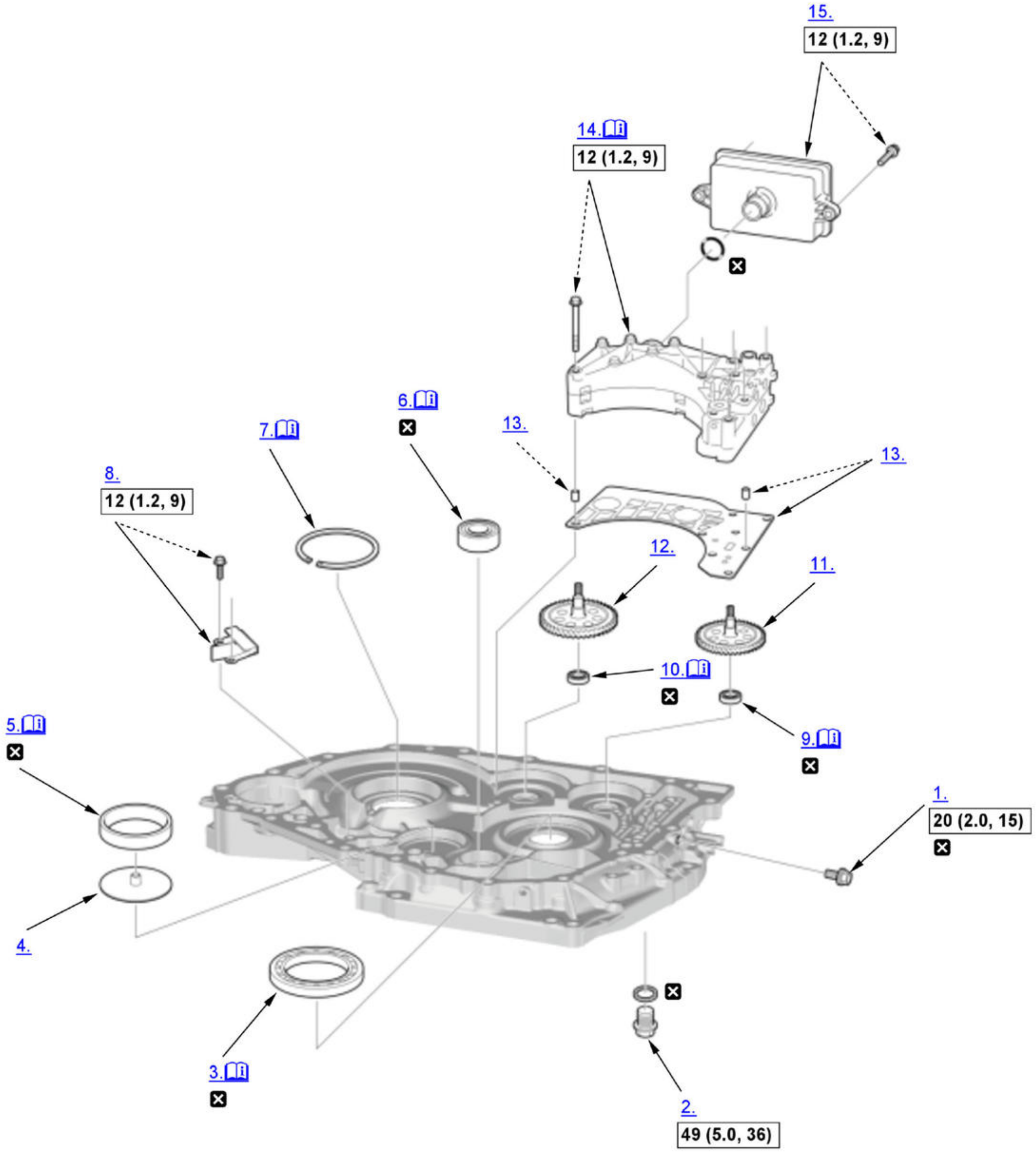
15.
12 (1.2, 9)
14.
12 (1.2, 9)
6.
☒
7.
13.
13.
8.
12 (1.2, 9)
12.
11.
10.
☒
9.
☒
5.
☒
1.
20 (2.0, 15)
☒
4.
☒
3.
☒
2.
49 (5.0, 36)

Fig. 11: Exploded View Of Transmission (e-CVT) Reassembly Components With Torque Specifications (1 Of 4)

Courtesy of HONDA, U.S.A., INC.

☐	Torque: N.m (kgf.m, lbf.ft)
☒	Replace

NOTE: **Numbered call-outs in figure pertain to list numbers in following procedure.**

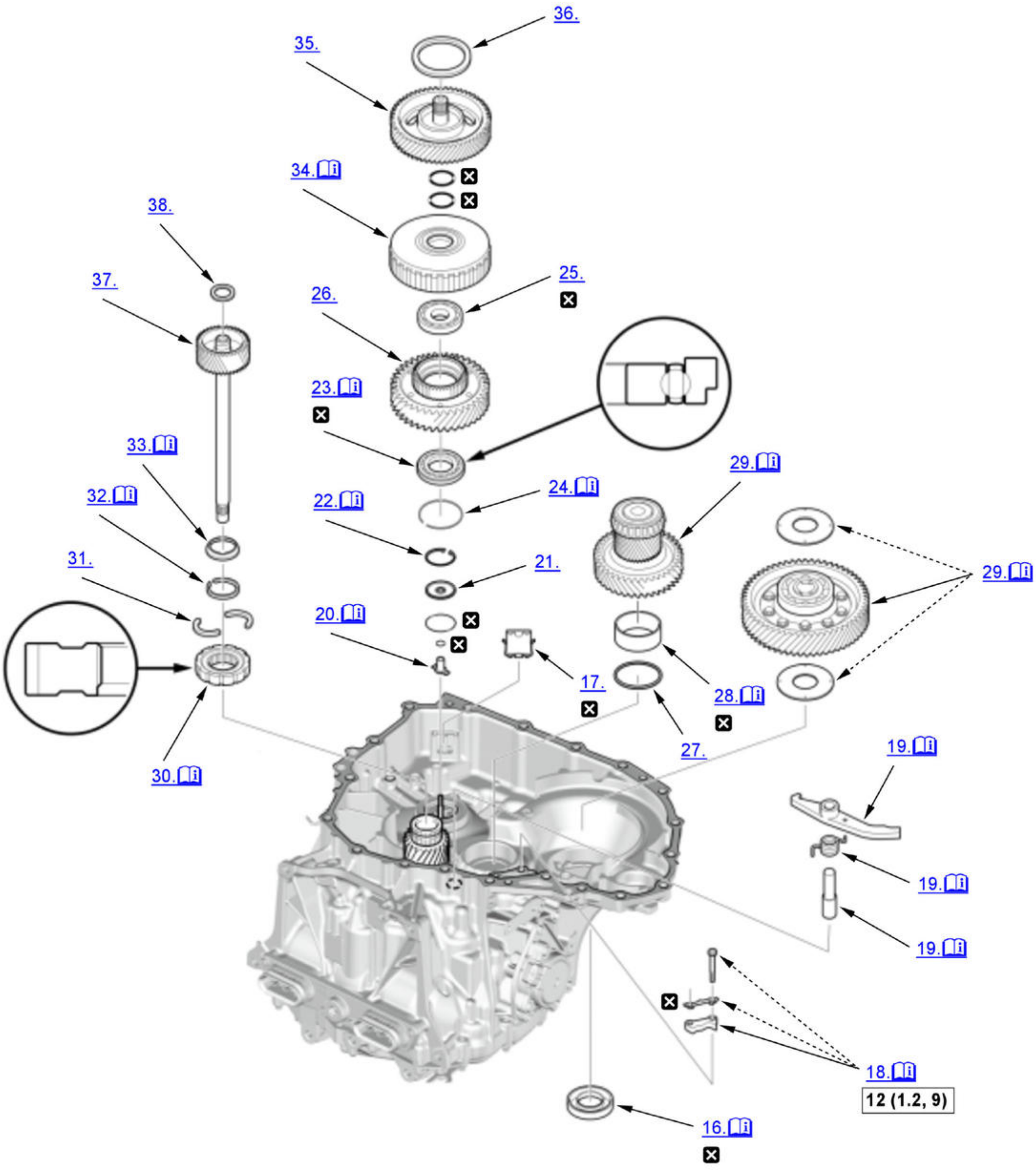
36.
35.
34.
38.
37.
25.
26.
23.
33.
32.
22.
24.
29.
21.
31.
20.
29.
17.
28.
27.
30.
19.
19.
19.
18.
12 (1.2, 9)
16.

Fig. 12: Exploded View Of Transmission (e-CVT) Reassembly Components With Torque Specifications (2 Of 4)

Courtesy of HONDA, U.S.A., INC.

☐	Torque: N.m (kgf.m, lbf.ft)
☒	Replace

NOTE: **Numbered call-outs in figure pertain to list numbers in following procedure.**

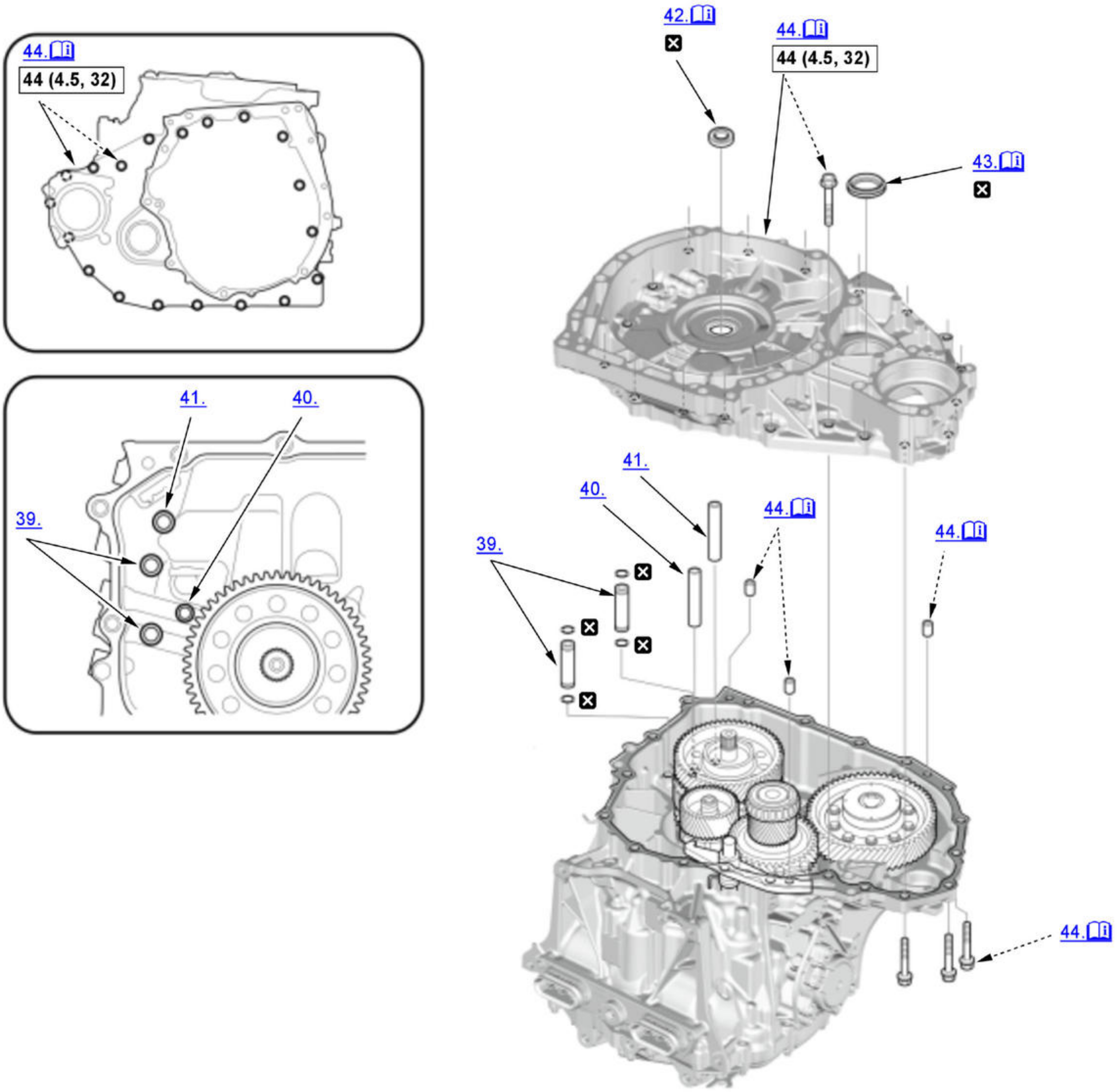
44.
44 (4.5, 32)
41.
40.
39.
42.
44.
44 (4.5, 32)
43.
41.
40.
44.
44.
39.
44.

Fig. 13: Exploded View Of Transmission (e-CVT) Reassembly Components With Torque Specifications (3 Of 4)

Courtesy of HONDA, U.S.A., INC.

☐	Torque: N.m (kgf.m, lbf.ft)
☒	Replace

NOTE: **Numbered call-outs in figure pertain to list numbers in following procedure.**

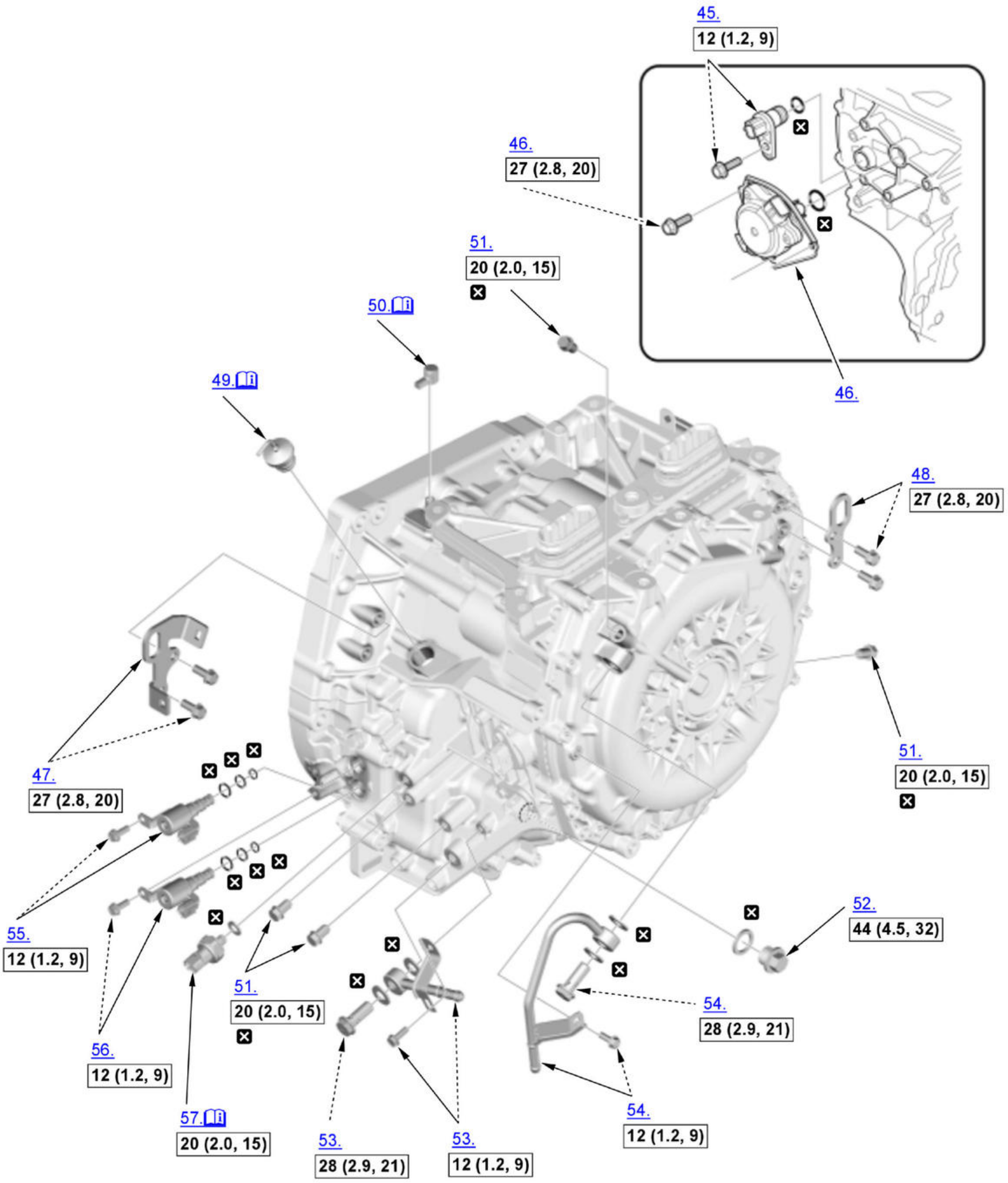
45.
12 (1.2, 9)
46.
27 (2.8, 20)
51.
20 (2.0, 15)
50.
49.
46.
48.
27 (2.8, 20)
47.
27 (2.8, 20)
51.
20 (2.0, 15)
52.
44 (4.5, 32)
55.
12 (1.2, 9)
51.
20 (2.0, 15)
54.
28 (2.9, 21)
56.
12 (1.2, 9)
54.
12 (1.2, 9)
57.
20 (2.0, 15)
53.
28 (2.9, 21)
53.
12 (1.2, 9)

Fig. 14: Exploded View Of Transmission (e-CVT) Reassembly Components With Torque Specifications (4 Of 4)

Courtesy of HONDA, U.S.A., INC.

☐	Torque: N.m (kgf.m, lbf.ft)
☒	Replace

1. Sealing Bolt - Install
2. Drain Plug - Install
3. Input Shaft Bearing - Install

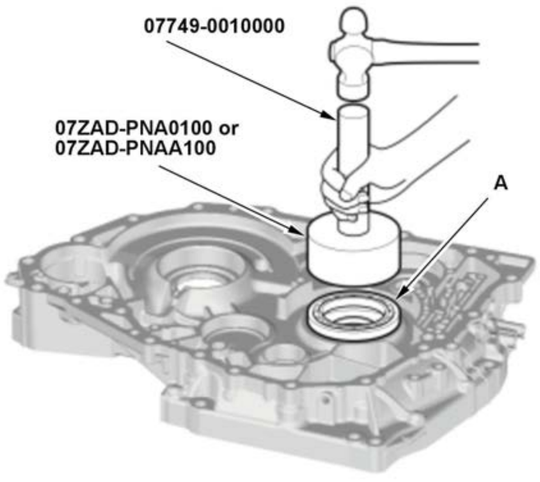 07749-0010000 07ZAD-PNA0100 or 07ZAD-PNAA100 A	1. Install the input shaft bearing (A) until it bottoms using the 15 x 135L driver handle and the 96 mm oil seal driver attachment.

4. Oil Guide Plate C - Install

5. Countershaft Bearing Outer Race (Flywheel Housing Side) - Install

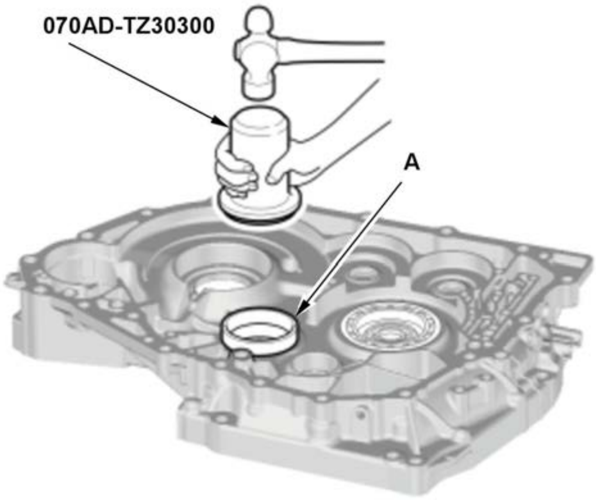 070AD-TZ30300 A	1. Install the countershaft bearing outer race (A) until it bottoms using oil seal driver C.

6. Generator Shaft Bearing - Install

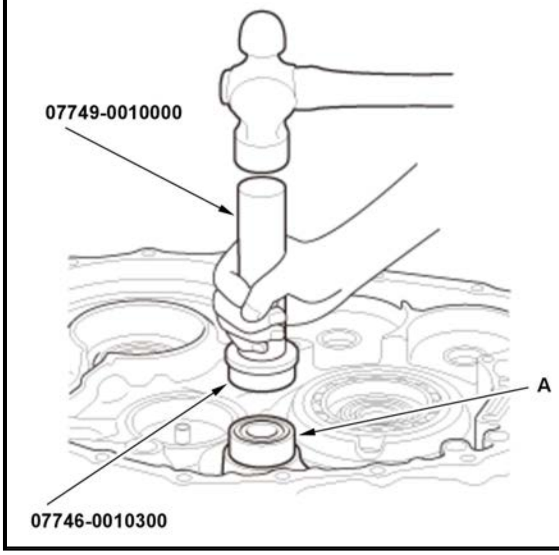 07749-0010000 A 07746-0010300	1. Install the generator shaft bearing (A) until it bottoms using the 15 x 135L driver handle and the 42 x 47 mm bearing driver attachment.

7. Shim - Install

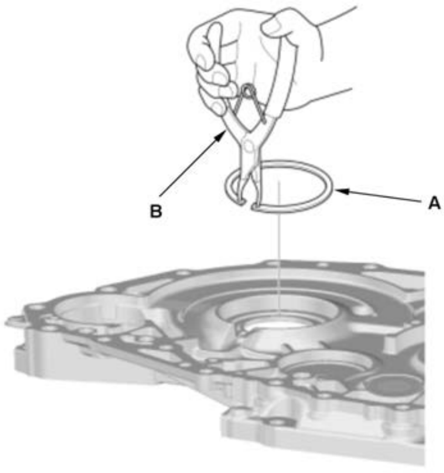

1. Using a commercially available snap ring pliers (B), install the shim (A) by compressing it.

NOTE:

- Be careful not to deform the snap ring by opening/closing it excessively.
- Make sure the snap ring is firmly installed in the groove. If it is not, remove the snap ring and check for dirt or debris in the groove.

8. Baffle Plate - Install
9. ATF Pump Drive Shaft A Bearing - Install

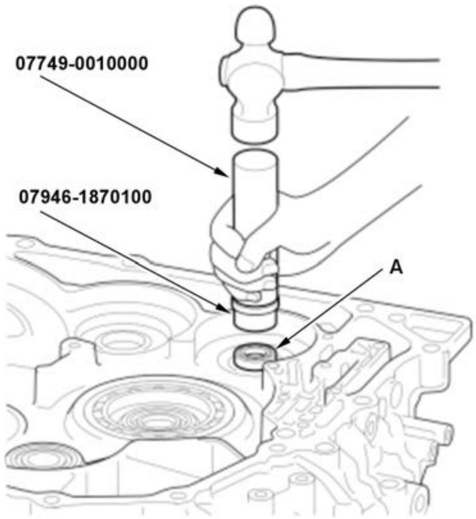

1. Install the ATF pump drive shaft A bearing (A) until it bottoms using the 15 x 135L driver handle and the 28 x 30 mm bearing driver attachment.

10. ATF Pump Drive Shaft B Bearing - Install

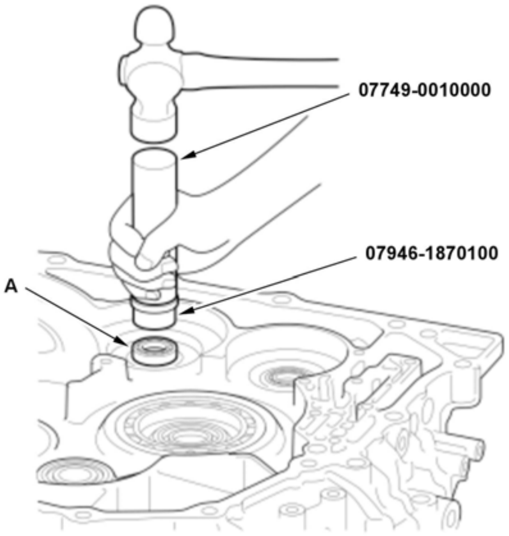

1. Install the ATF pump drive shaft B bearing (A) until it bottoms using the 15 x 135L driver handle and the 28 x 30 mm bearing driver attachment.

11. ATF Pump Drive Shaft A - Install
12. ATF Pump Drive Shaft B - Install
13. Separator Plate - Install
14. Valve Body Assembly - Install

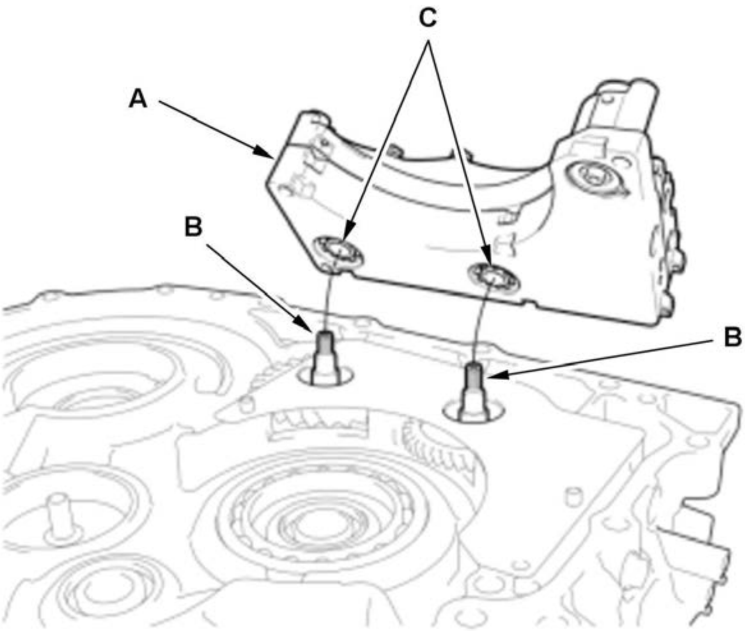

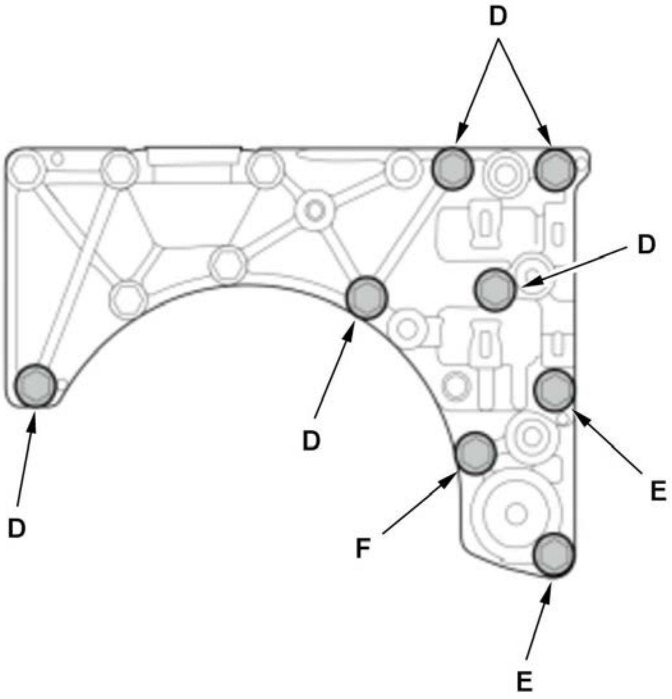

1. Install the valve body assembly (A) by aligning the ATF pump drive shafts (B) and the bearings (C).

Bolt	Length
D	70 mm (2.76 in)
E	60 mm (2.36 in)
F	30 mm (1.18 in)

15. ATF Strainer - Install
16. Drive Shaft Oil Seal - Install

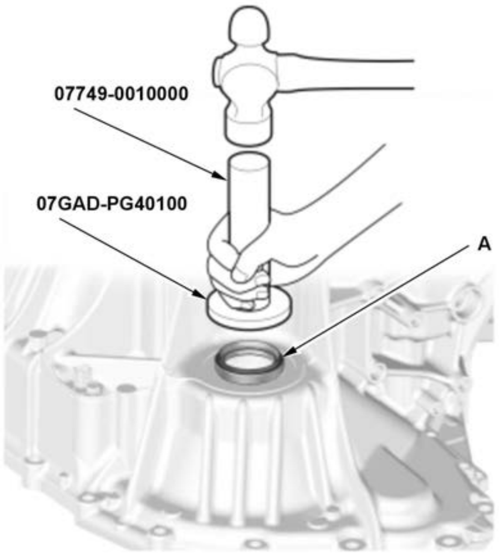	1. Install the drive shaft oil seal (A) flush with the transmission housing using the 15 x 135L driver handle and the oil seal driver attachment. **NOTE:** Apply a light coat of clean ATF to the oil seal surface of the press-fit part and the lip part before installation.

17. ATF Magnet - Install
18. Parking Brake Rod Holder - Install

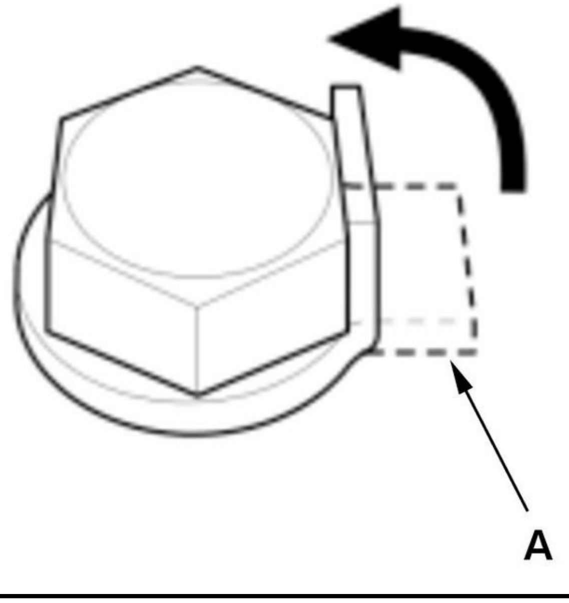

NOTE: Pry up the lock tab (A) of the lock washer.

19. Parking Shaft, Parking Pawl Spring, and Parking Brake Pawl - Install

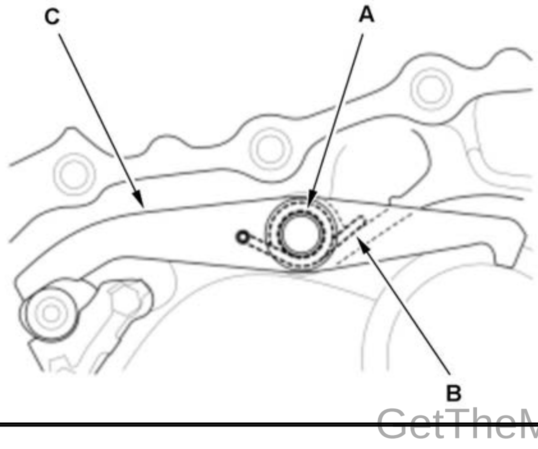	1. Install the parking shaft (A), the parking pawl spring (B), and the parking brake pawl (C) as shown.

20. Feed Pipe A - Install

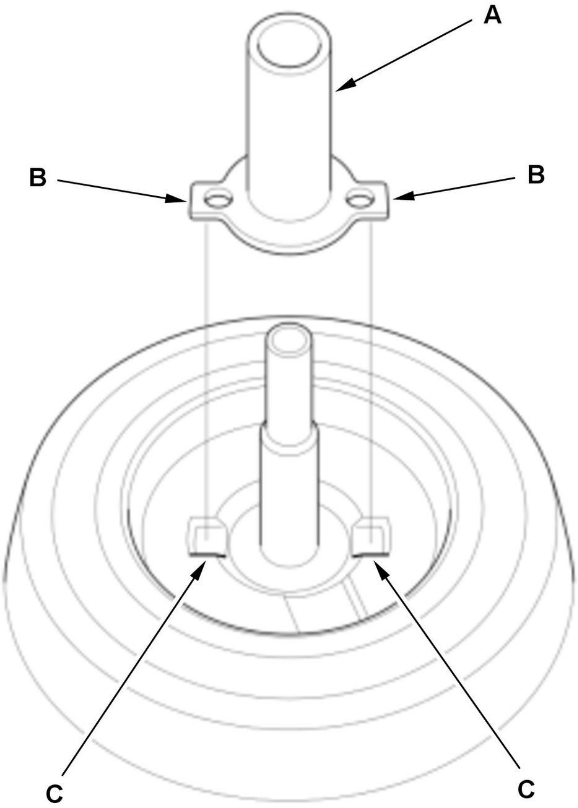	1. Install feed pipe A by aligning the fingers (B) with the grooves (C).

21. Feed Pipe Flange - Install

22. Internal Snap Ring - Install

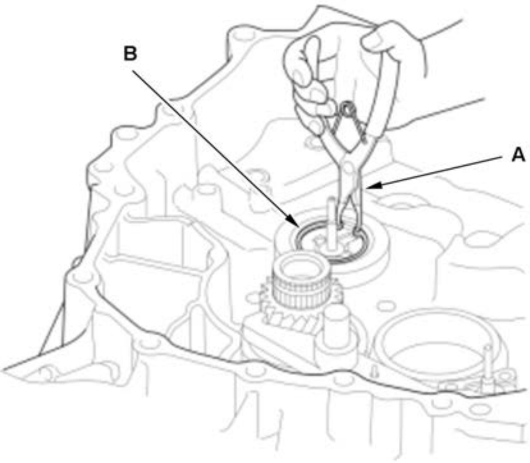	1. Using a commercially available snap ring pliers (A), install the internal snap ring (B) by compressing it. **NOTE:** • Be careful not to deform the snap ring by opening/closing it excessively. • Make sure the snap ring is firmly installed in the groove.

23. Over Drive Gear Bearing (Transmission Housing Side) - Install

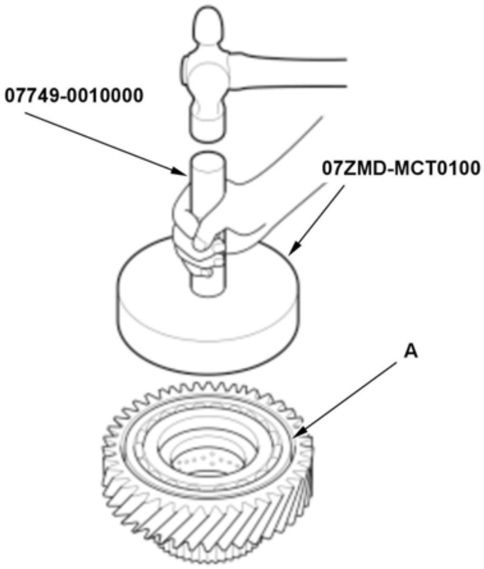	1. Install the over drive gear bearing (A) until it bottoms using the 15 x 135L driver handle and the 110 x 140 mm driver attachment. **NOTE:** Make sure the over drive gear bearing is installed in the correct direction.

24. Internal Snap Ring - Install

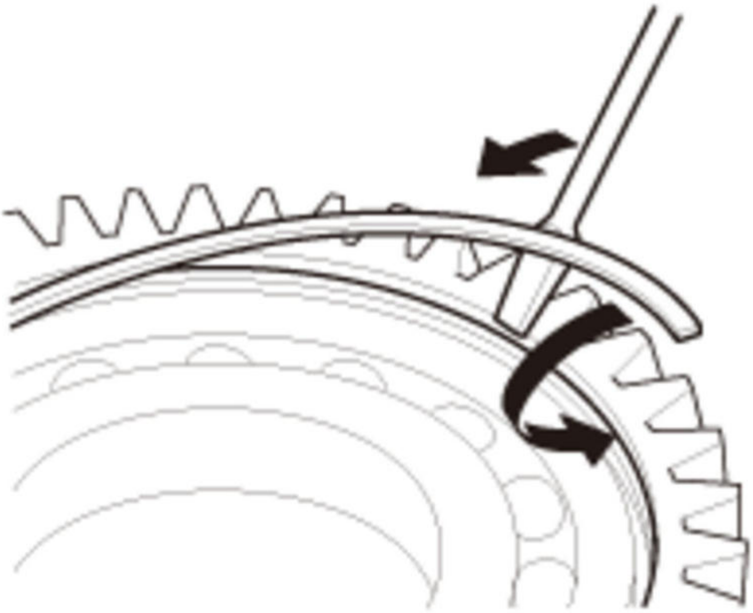

NOTE:

- Be careful not to deform the snap ring by opening/closing it excessively.
- Make sure the snap ring is firmly installed in the groove.

25. Over Drive Gear Bearing (Over Drive Clutch Side) - Install
26. Over Drive Gear - Install
27. Shim - Install
28. Countershaft Bearing Outer Race (Transmission Housing Side) - Install

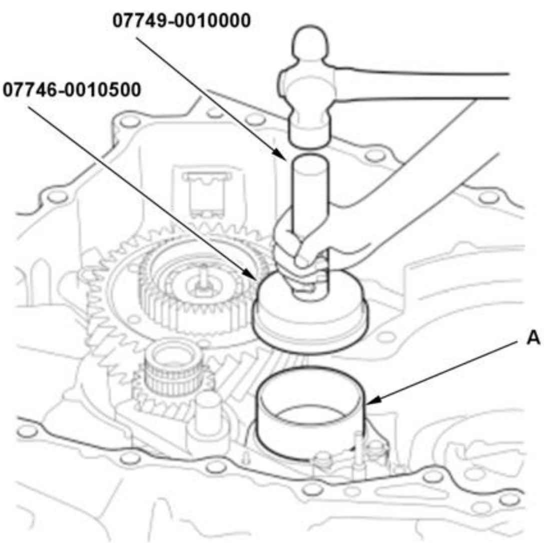

1. Install the countershaft bearing outer race (A) using the 15 x 135L driver handle and the 62 x 68 mm bearing driver attachment.

29. Countershaft and Differential - Install

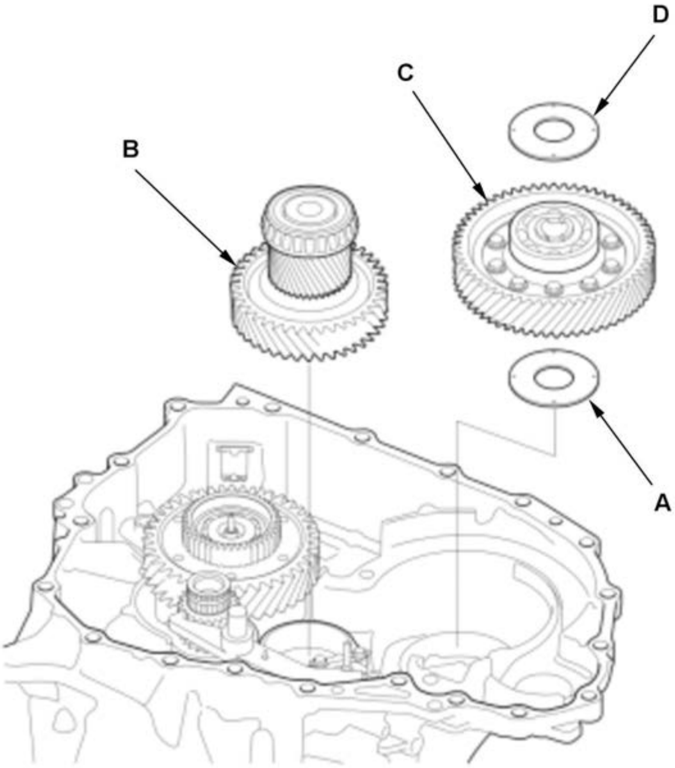

1. Install the spacer (A).

2. Join the countershaft (B) and the differential (C) together, then install them.

3. Install the spacer (D).

30. Parking Gear - Install

NOTE: Make sure the parking gear is installed in the correct direction.

31. Cotter - Install
32. Snap Ring - Install

NOTE:

- Be careful not to deform the snap ring by opening/closing it excessively.
- Make sure the snap ring is firmly installed in the groove.

33. Cotter Retainer A - Install

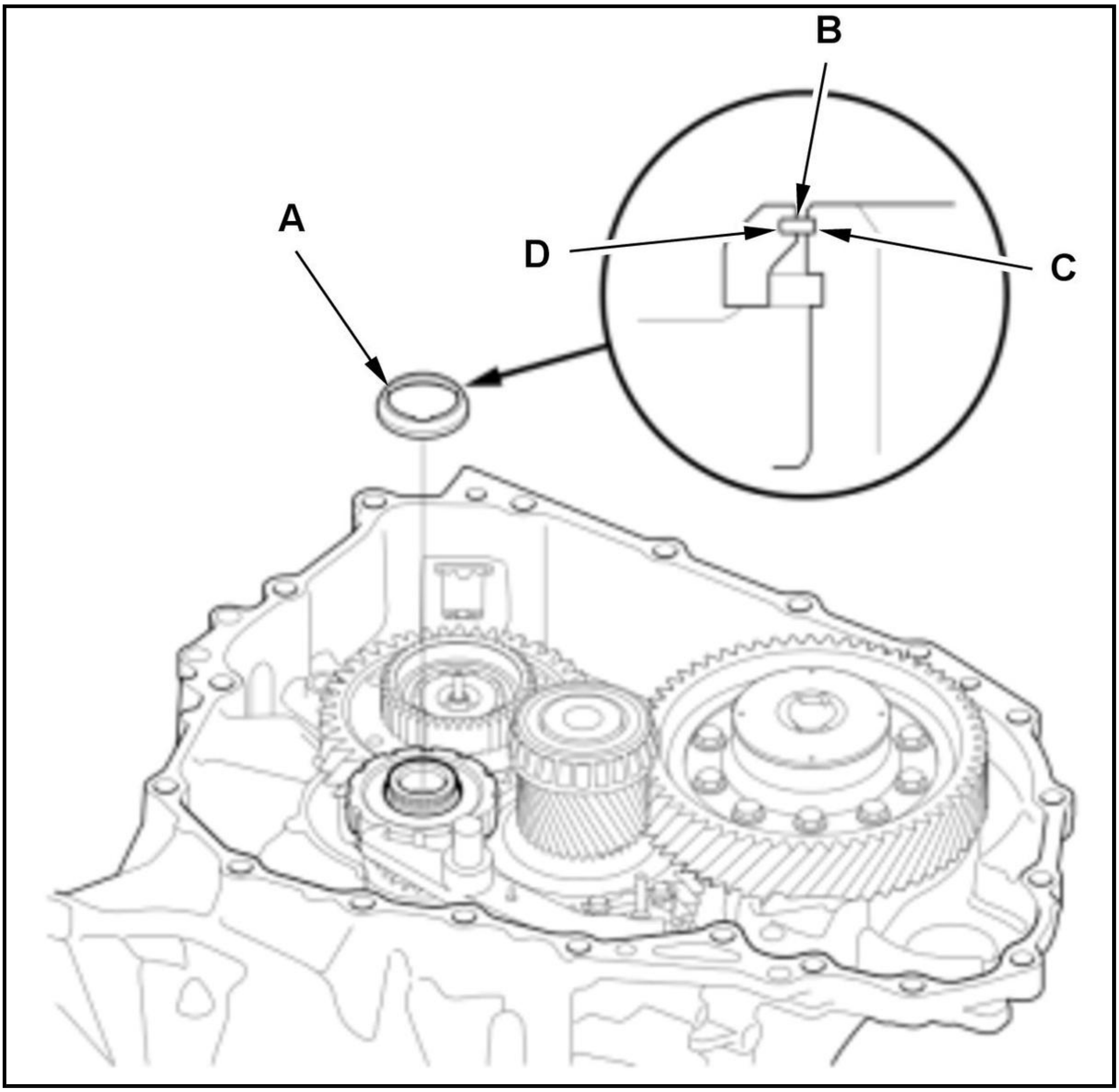

NOTE: The snap ring (B) locks cotter retainer A by engaging the shaft groove (C) with the retainer groove (D). Make sure the snap ring is firmly installed in each groove.

34. Over Drive Clutch - Install

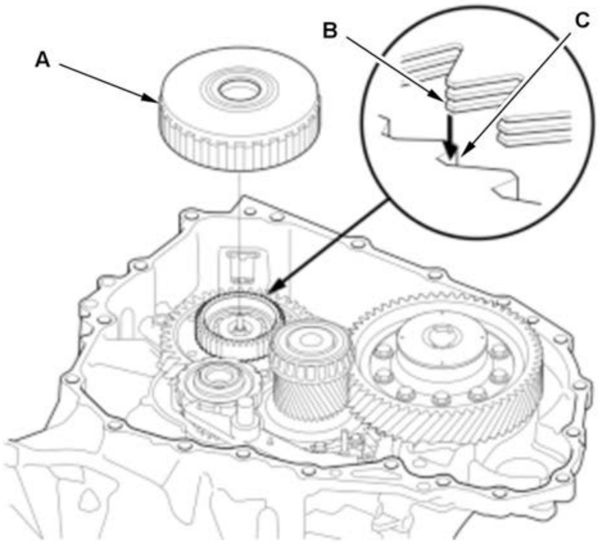	1. Install the over drive clutch (A) by aligning the over drive clutch discs (B) with the over drive gear splines (C).

35. Input Shaft - Install

36. Shim - Install
37. Generator Shaft - Install
38. Shim - Install
39. 10.8 x 35 mm Pipe - Install
40. 8 x 44.1 mm Pipe - Install
41. 10 x 46.5 mm Pipe - Install
42. Input Shaft Oil Seal - Install

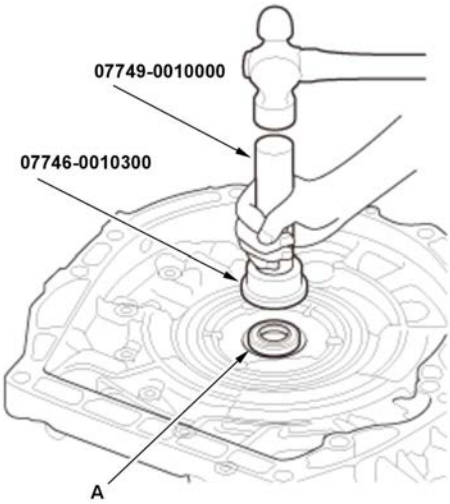	1. Install the input shaft oil seal (A) flush with the flywheel housing using the 15 x 135L driver handle and the 42 x 47 mm bearing driver attachment. **NOTE:** Apply a light coat of clean ATF to the oil seal surface of the press-fit part and the lip part before installation.

43. Intermediate Shaft Oil Seal - Install

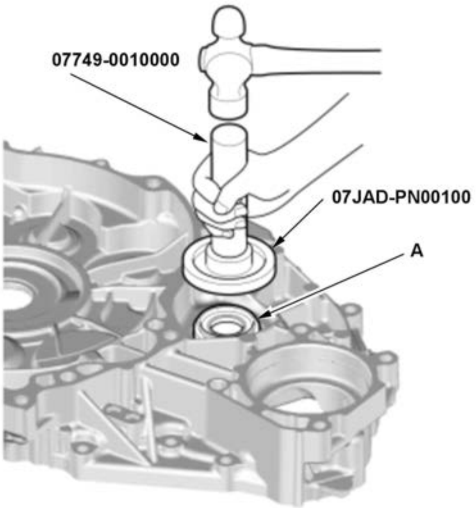	1. Install the intermediate shaft oil seal (A) flush with the flywheel housing using the 15 x 135L driver handle and the 64 x 72 mm oil seal driver attachment. **NOTE:** Apply a light coat of clean ATF to the oil seal surface of the press-fit part and the lip part before installation.

44. Flywheel Housing - Install

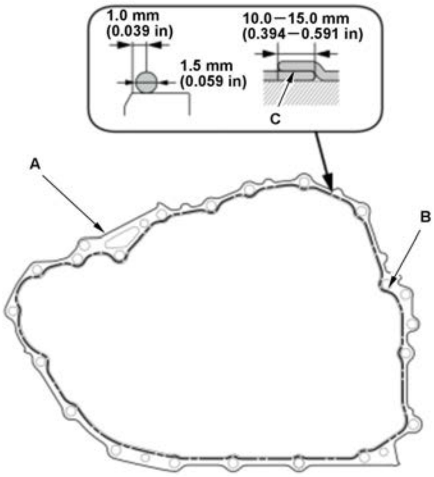

1. Remove all of the old liquid gasket, dirt, and oil from the sealing surface of the transmission housing, the flywheel housing, the bolt holes, and the bolts.

2. Apply liquid gasket (Honda Genuine Liquid Gasket 5460H) to the transmission housing (A).

NOTE:

- Apply a 1.5 mm (0.059 in) diameter bead of liquid gasket along the broken line (B) which is 1.0 mm (0.039 in) from the chamfered surface of the transmission housing inner side.
- Apply the liquid gasket all around as shown. When the bead is broken or arriving at the end point, overlap 10.0-15.0 mm (0.394-0.591 in) (C) the liquid gasket.
- Do not apply any liquid gasket to the bolt holes.
- The flywheel housing must be installed within 4 minutes. If too much time has passed after applying the liquid gasket, remove the old liquid gasket and residue, then reapply new liquid gasket.
- Do not touch the applied liquid gasket face.

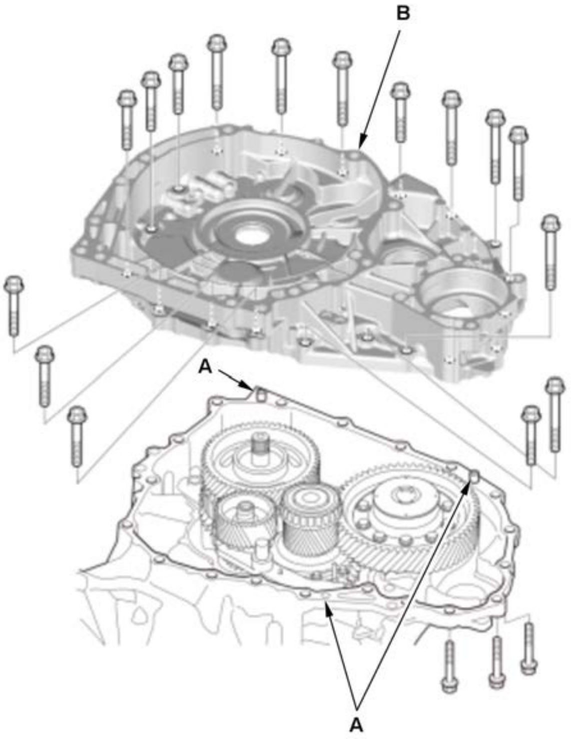

3. Install the dowel pins (A).

4. Place the flywheel housing (B).

5. Install the flywheel housing mounting bolts, then tighten the bolts in at least two steps in a crisscross pattern.

NOTE:

- Wait at least 1 hour before filling the transmission (e-CVT) with the recommended fluid.
- Do not run the engine for at least 3 hours after installing the parts.

45. Park Position Sensor - Install
46. Park Pawl Actuator - Install
47. Transmission Hanger A - Install
48. Transmission Hanger B - Install
49. Filler Cap - Install

NOTE: Turn the lever toward the front of the vehicle, and install it.

50. Breather Cap - Install

    NOTE: Be sure to install the suction hole of the breather cap to the front of the vehicle.

51. Sealing Bolt - Install
52. Filler Plug - Install
53. ATF Outlet Line - Install
54. ATF Inlet Line - Install
55. Shift Solenoid Valve A - Install
56. Shift Solenoid Valve B - Install
57. Transmission Fluid Pressure Sensor - Install

    NOTE: Be careful not to damage the plastic part.

REMOVAL AND INSTALLATION

ATF COOLER REMOVAL AND INSTALLATION

Removal and Installation

Procedure

NOTE: **Numbered call-outs in figure pertain to list numbers in following procedure.**

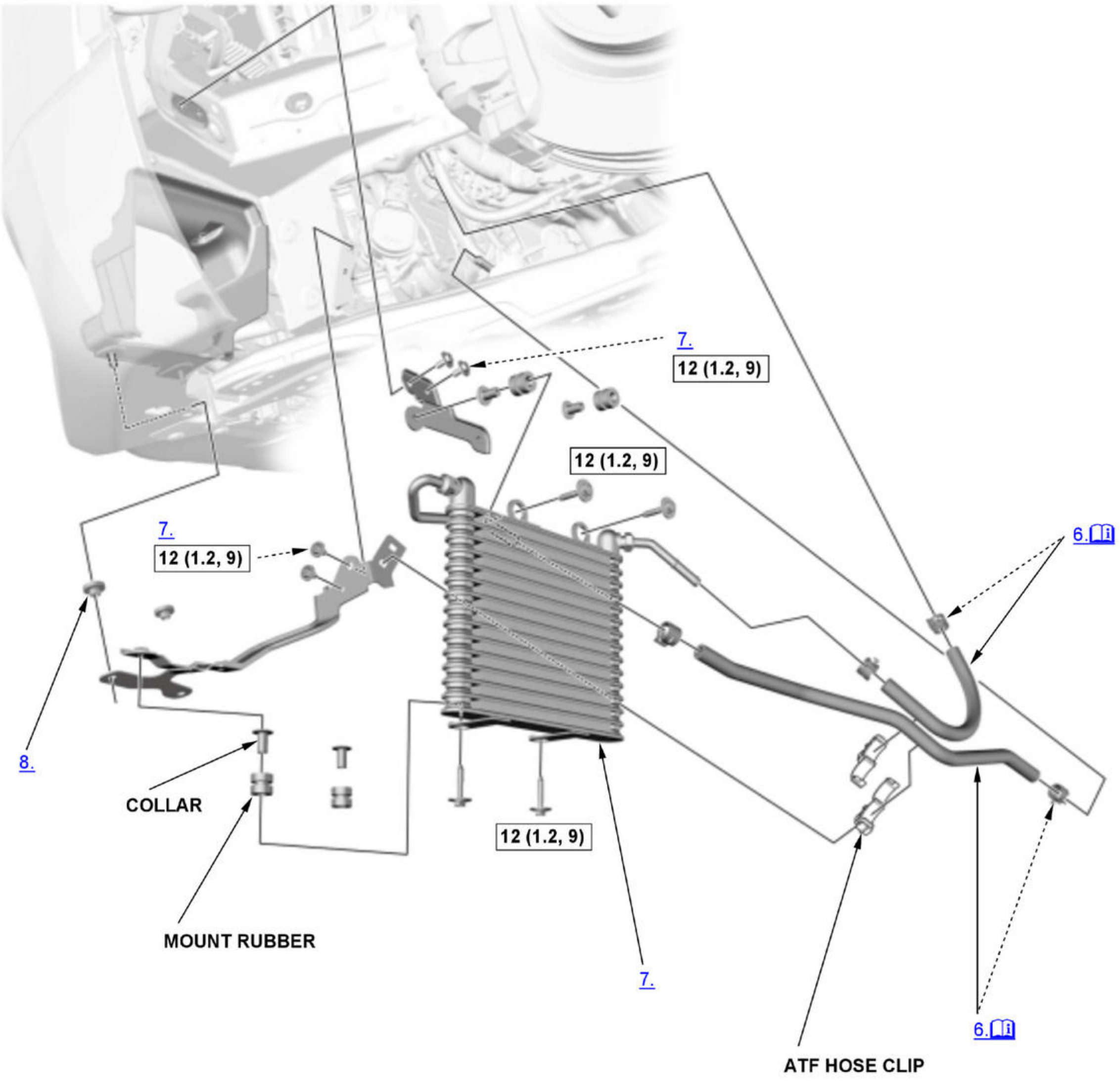
7.
12 (1.2, 9)
12 (1.2, 9)
6.
7.
12 (1.2, 9)
8.
COLLAR
12 (1.2, 9)
MOUNT RUBBER
7.
6.
ATF HOSE CLIP

Fig. 15: Exploded View Of ATF Cooler Components With Torque Specifications (1 Of 2)
Courtesy of HONDA, U.S.A., INC.

☐	Torque: N.m (kgf.m, lbf.ft)

NOTE: **Numbered call-outs in figure pertain to list numbers in following procedure.**

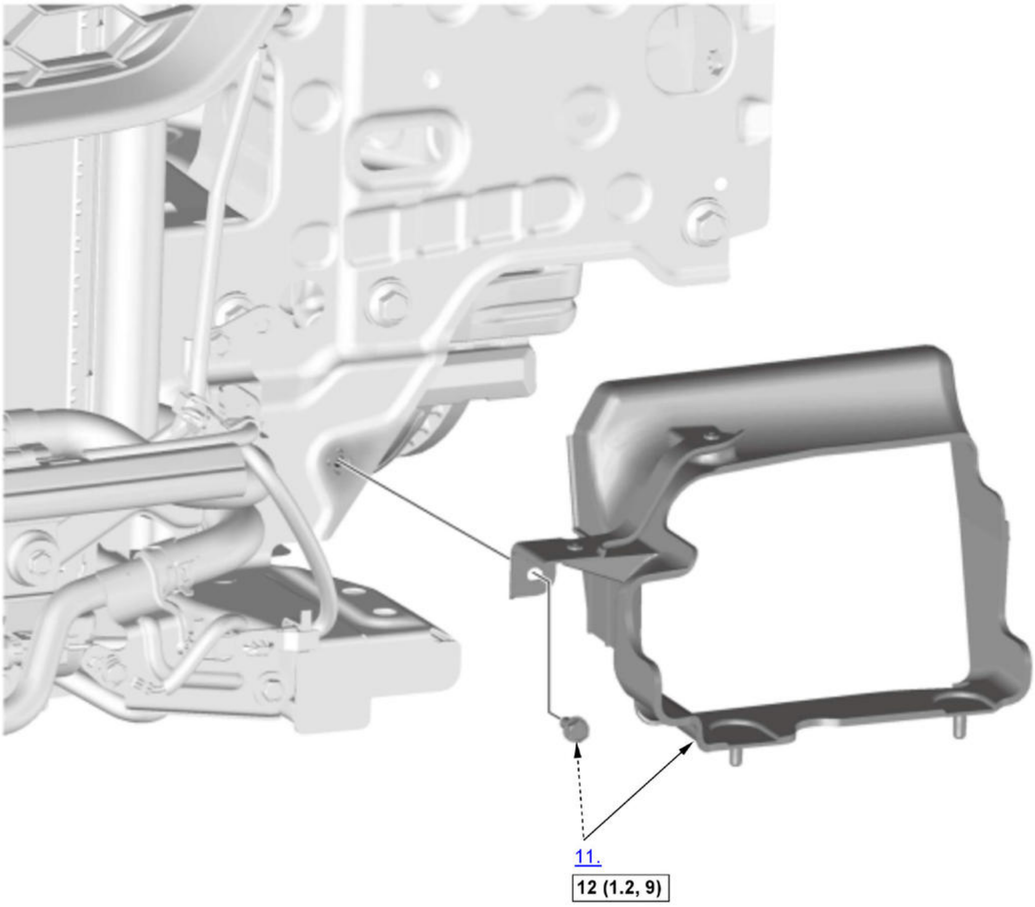

Fig. 16: Exploded View Of ATF Cooler Components With Torque Specifications (2 Of 2)
Courtesy of HONDA, U.S.A., INC.

☐	Torque: N.m (kgf.m, lbf.ft)

1. **Vehicle - Lift**
2. **Engine Undercover - Remove**
3. **ATF - Drain**
4. **Left Front Wheel - Remove**
5. **Left Front Inner Fender - Remove**
6. ATF Hose - Disconnect (Transmission Side)

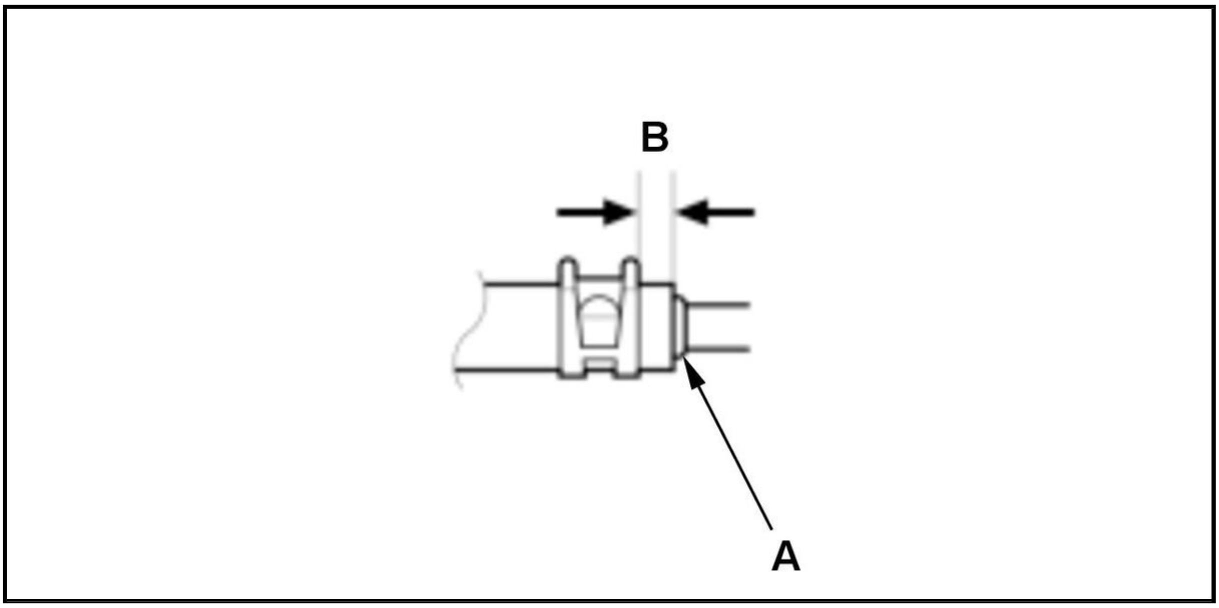

Note for installation

- Connect the hoses until the hose end contacts the bulge (A).
- Secure the hoses with the clamps at 6.0-8.0 mm (0.236-0.315 in) (B) from the hose ends, and make sure they do not interfere with the surrounding parts.

7. ATF Cooler Assembly - Remove
8. Intake Cover Mount Rubber - Remove
9. ATF Cooler Assembly - Disassembly (If Necessary)
10. **Front Bumper - Remove**
11. ATF Cooler Guide - Remove
12. All Removed Parts - Install

1. Install the parts in the reverse order of removal.

13. **ATF - Refill**

PARK PAWL ACTUATOR DRIVER UNIT REMOVAL AND INSTALLATION

Removal and Installation

SRS components are located in this area. Review **the SRS component locations** and **the precautions and procedures** before doing repair or service.

NOTE:

- If you only remove the park pawl actuator driver unit, skip the Procedure After Replacing Park Pawl Actuator Driver Unit.
- If you replace or substitute the park pawl actuator driver unit, you must do all procedures below.

Procedure

NOTE: **Numbered call-outs in figure pertain to list numbers in following procedure.**

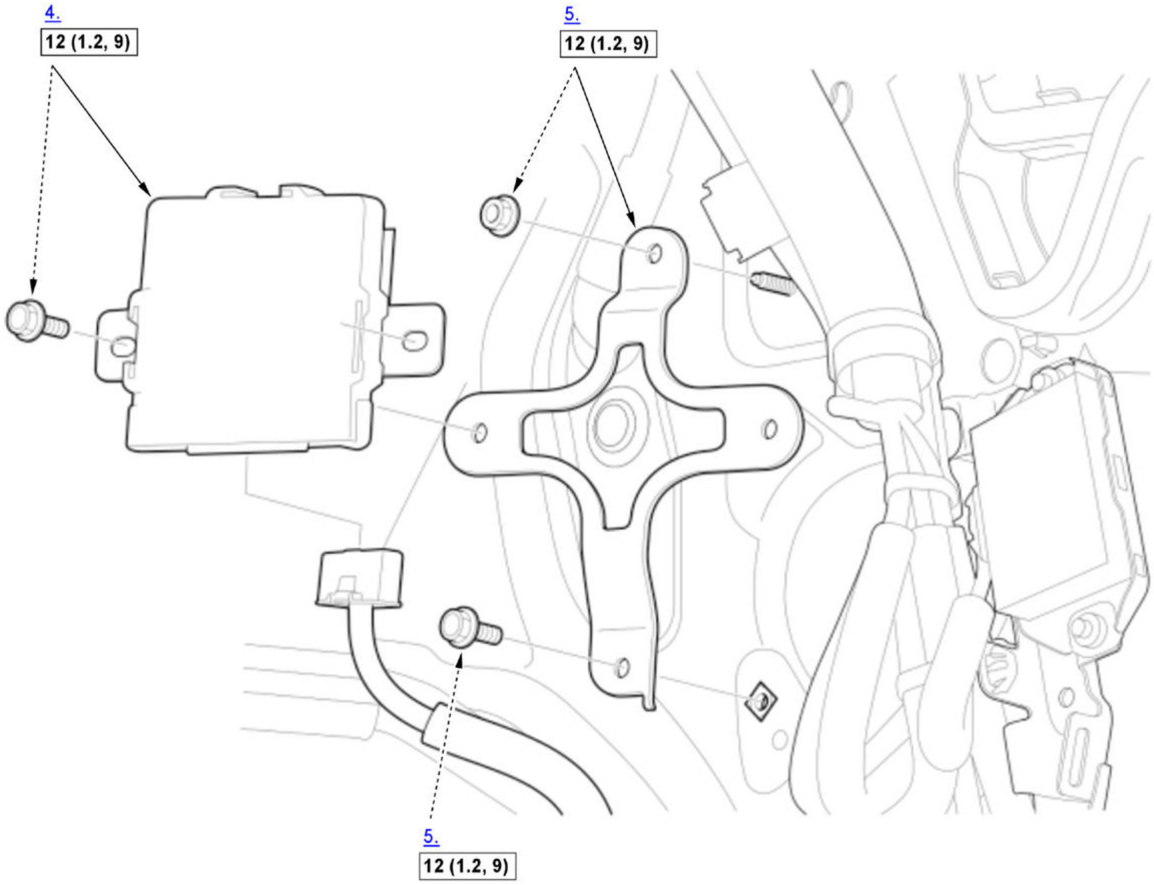

Fig. 17: Exploded View Of Park Pawl Actuator Driver Unit Components With Torque Specifications
Courtesy of HONDA, U.S.A., INC.

☐	Torque: N.m (kgf.m, lbf.ft)

1. 12 Volt Battery Terminal - Disconnect
2. Passenger's Dashboard Undercover - Remove
3. Kick Panel (Passenger's Side) - Remove
4. Park Pawl Actuator Driver Unit - Remove
5. Park Pawl Actuator Driver Unit Bracket - Remove
6. All Removed Parts - Install

    1. Install the parts in the reverse order of removal.

    Procedure After Replacing Park Pawl Actuator Driver Unit

7. Keyless Access System - Register
8. Park Pawl Actuator Driver Unit - Update

PARK PAWL ACTUATOR REMOVAL AND INSTALLATION

Removal and Installation

NOTE:

- Keep all foreign particles out of the transmission (e-CVT).
- Apply a light coat of clean ATF on the O-ring before installation.
- Check the connector for corrosion, dirt, or oil, and clean if necessary.

Procedure

NOTE: **Numbered call-outs in figure pertain to list numbers in following procedure.**

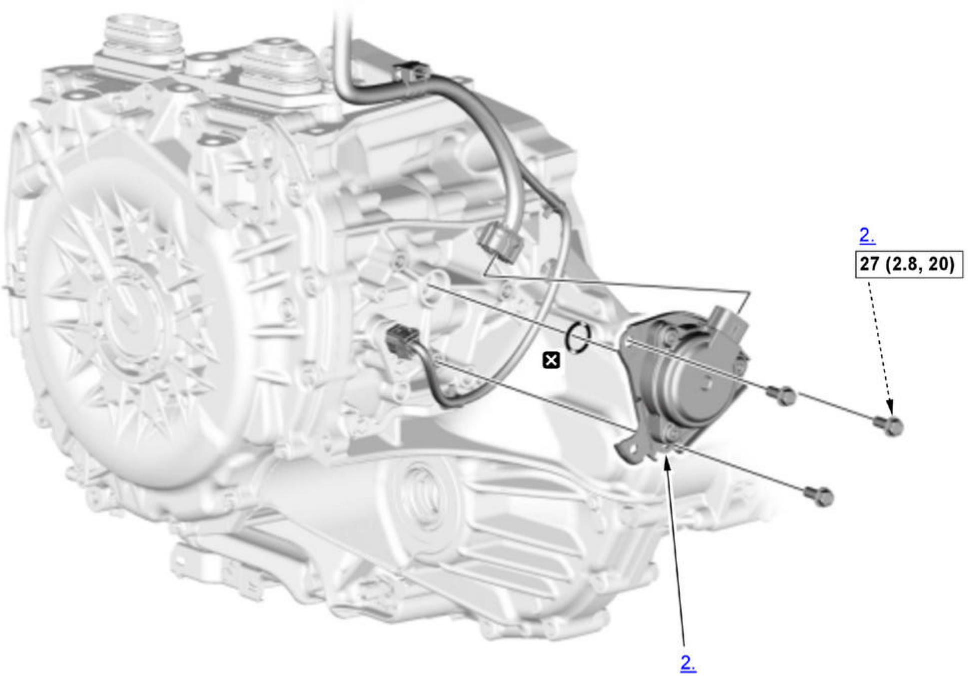

Fig. 18: Exploded View Of Park Pawl Actuator Components With Torque Specifications
Courtesy of HONDA, U.S.A., INC.

☐	Torque: N.m (kgf.m, lbf.ft)
☒	Replace

1. Vehicle - Lift
2. Park Pawl Actuator - Remove
3. All Removed Parts - Install
    1. Install the parts in the reverse order of removal.

PARK POSITION SENSOR REMOVAL AND INSTALLATION

Removal and Installation

NOTE:

- Keep all foreign particles out of the transmission (e-CVT).
- Apply a light coat of clean ATF on the O-ring before installation.
- Check the connector for corrosion, dirt, or oil, and clean if necessary.

Procedure

NOTE: **Numbered call-outs in figure pertain to list numbers in following procedure.**

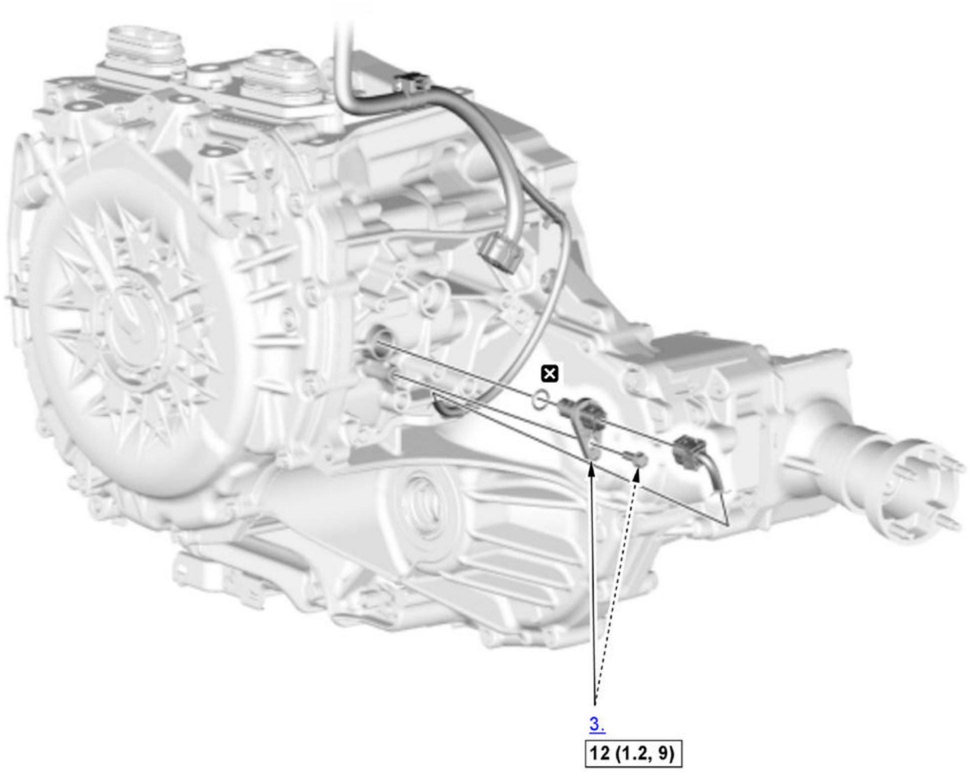

Fig. 19: Exploded View Of Park Position Sensor Components With Torque Specifications
Courtesy of HONDA, U.S.A., INC.

□	Torque: N.m (kgf.m, lbf.ft)
☒	Replace

1. Vehicle - Lift
2. Park Pawl Actuator - Remove
3. Park Position Sensor - Remove
4. All Removed Parts - Install

1. Install the parts in the reverse order of removal.

SBW SHIFTER ASSEMBLY REMOVAL AND INSTALLATION

Removal and Installation

Procedure

NOTE: **Numbered call-outs in figure pertain to list numbers in following procedure.**

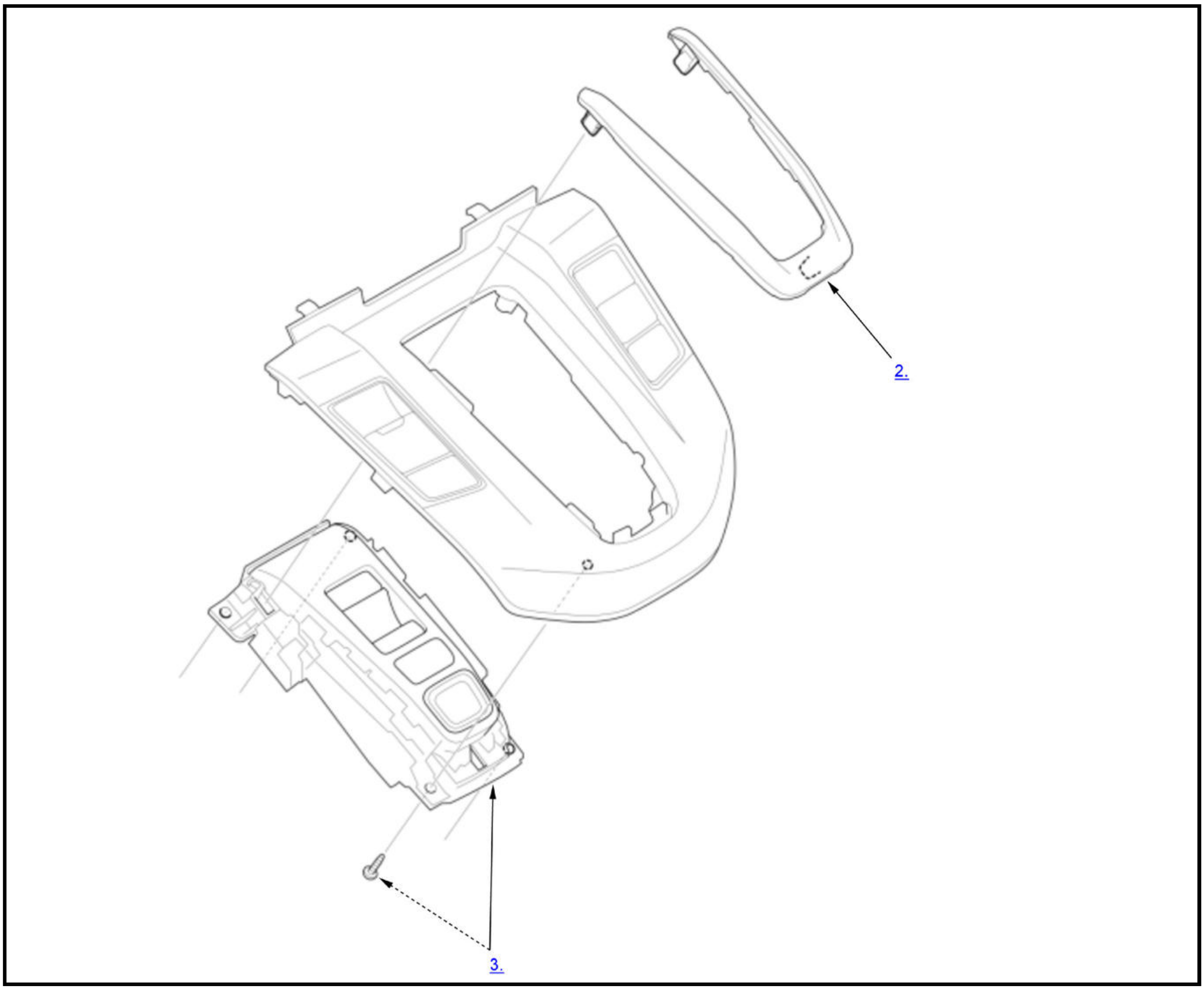

1. Escutcheon Panel - Remove
2. SBW Shifter Trim - Remove
3. SBW Shifter Assembly - Remove
4. All Removed Parts - Install

1. Install the parts in the reverse order of removal.

TRANSMISSION (E-CVT) REMOVAL AND INSTALLATION

Special Tools Required

Image	Description/Tool Number
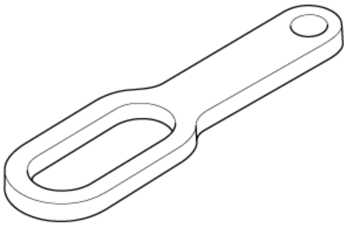	Universal Lifting Eyelet 07AAK-SNAA120

Image	Description/Tool Number
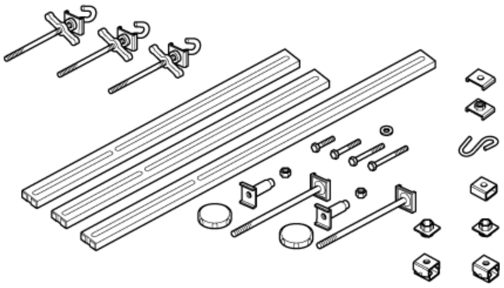	Engine Support Hanger, A and Reds AAR-T1256*
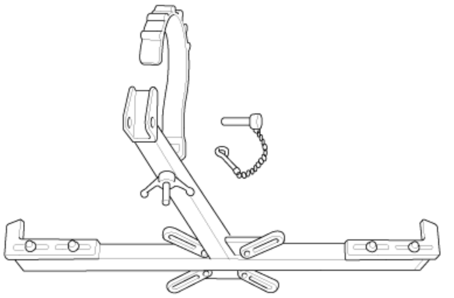	Subframe Adapter VSB02C000016*

*: Available from Snap-on Tools International, LLC.

Exploded View

NOTE:

- **How to read the torque specifications** .

1. Transmission (e-CVT) Mounting Bolt

   Transmission (e-CVT) Mounting Bolt - Exploded View

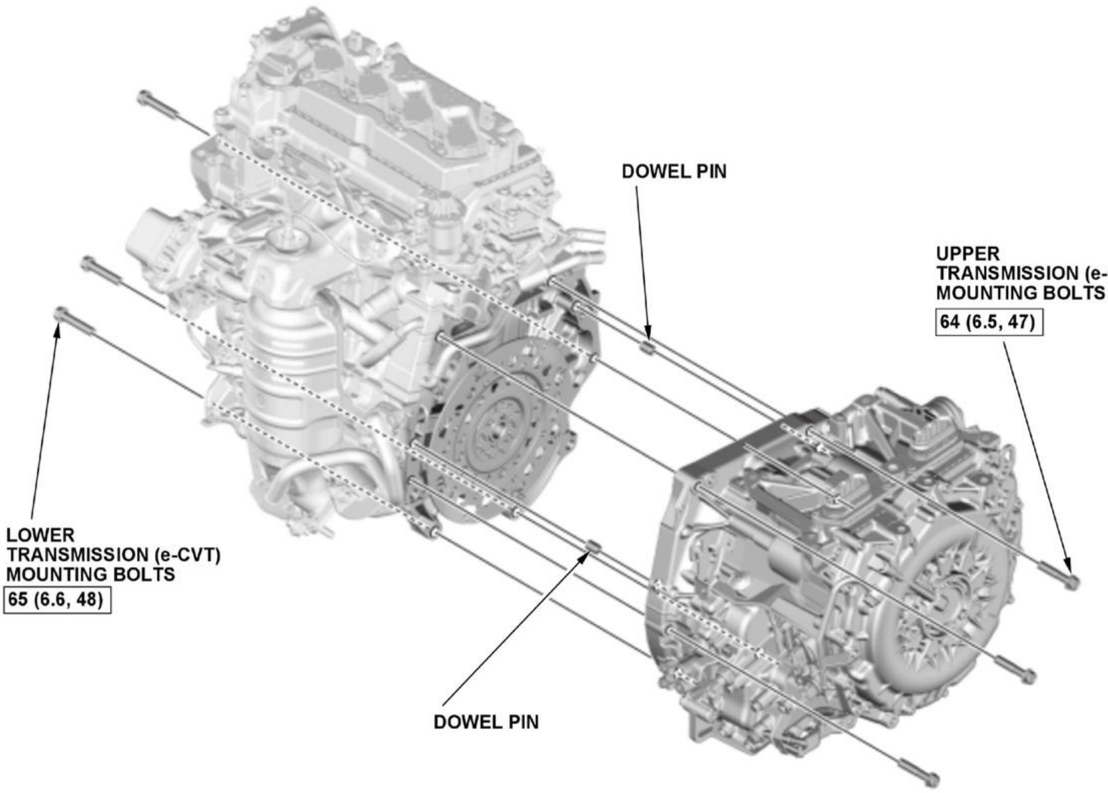
DOWEL PIN
UPPER TRANSMISSION (e-CVT) MOUNTING BOLTS
64 (6.5, 47)
LOWER TRANSMISSION (e-CVT) MOUNTING BOLTS
65 (6.6, 48)
DOWEL PIN

Fig. 20: Transmission (e-CVT) Mounting Bolts And Components With Torque Specifications
Courtesy of HONDA, U.S.A., INC.

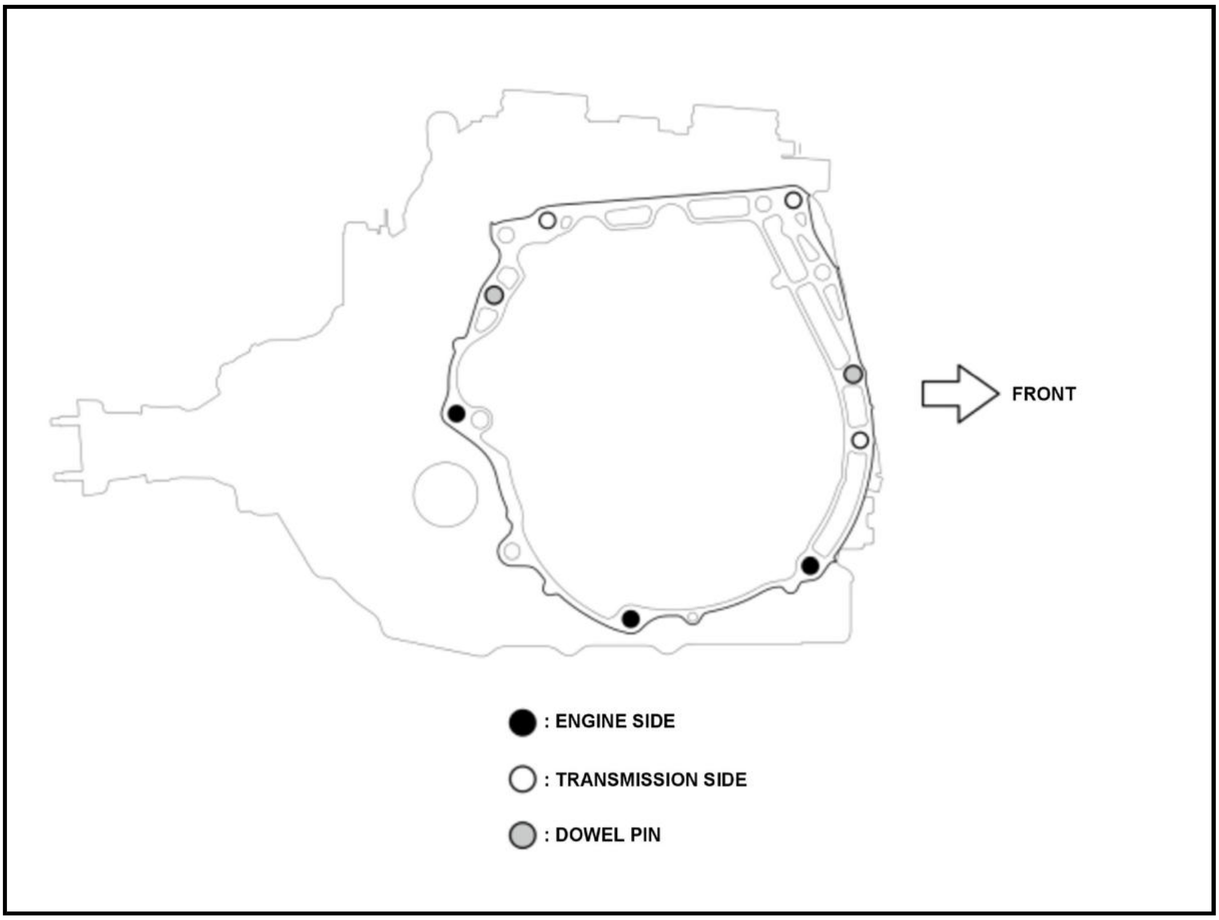

Removal

WARNING: **The power cables carry high voltage when the electric powertrain system is energized. To avoid serious injury from electrical shock, do not turn on the system with the power cables disconnected.**

The electric powertrain components are located in this area. The electric powertrain is a high-voltage system. You must be familiar with the electric powertrain system before working on or around it. Make sure you have read the electric powertrain service precautions before doing repairs or service .

NOTE:

- Use fender covers to avoid damaging painted surfaces.
- Special tool engine support hanger AAR-T-1256-J00 must be used with the side engine mount installed.
- Keep all foreign particles out of the transmission (e-CVT).

1. **Vehicle - Lift Set**
2. **DTC (Electric Powertrain System) - Check**

   1. Check for DTCs in the Electric Powertrain system with the HDS. If any DTCs are indicated, record them first, then go to the next step.

3. **Neutral Position Holding Mode - Enter**

   NOTE: Even if the negative terminal of the 12 volt battery is disconnected after the neutral position holding mode is actuated, the vehicle continues to keep the N position.

4. **12 Volt Battery Terminal - Disconnect**
5. **Service Plug - Turn Off**

NOTE: Do not connect the 12 volt battery terminal to keep the N position.

6. **Hood - Wide Open**
7. **12 Volt Battery - Remove**
8. **12 Volt Battery Base - Remove**
9. **Front Bulkhead Cover - Remove**
10. **Windshield Wiper Arm - Remove**
11. **Center Cowl Cover - Remove**
12. **Engine Undercover - Remove**
13. **PCU Coolant - Drain**
14. **PCU - Remove**
15. **Steering Joint - Disconnect**
16. Engine Wire Harness - Remove

NOTE: Swing the engine wire harness out of the way.

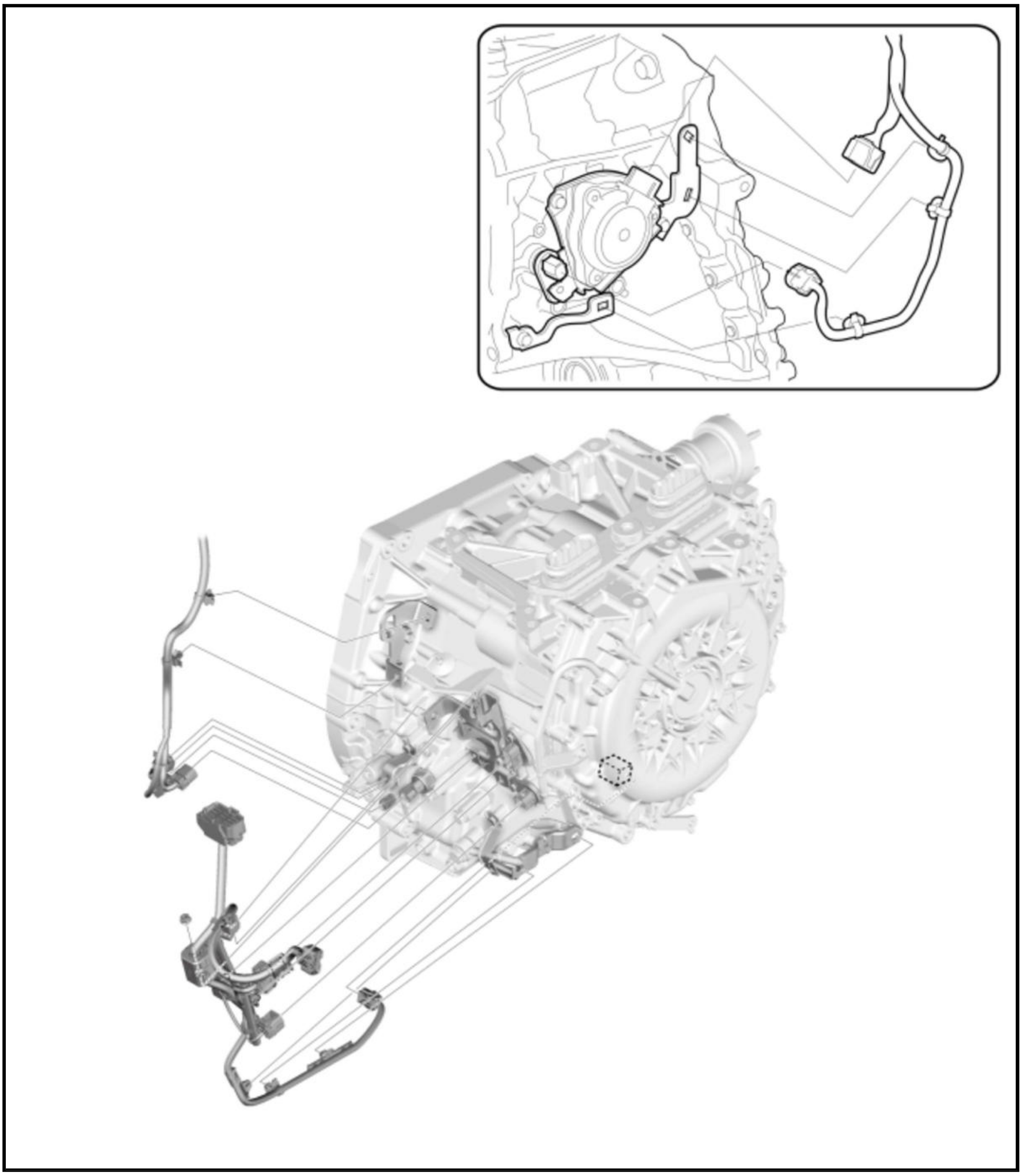

17. Harness Cover - Remove

NOTE: Swing the engine wire harness out of the way.

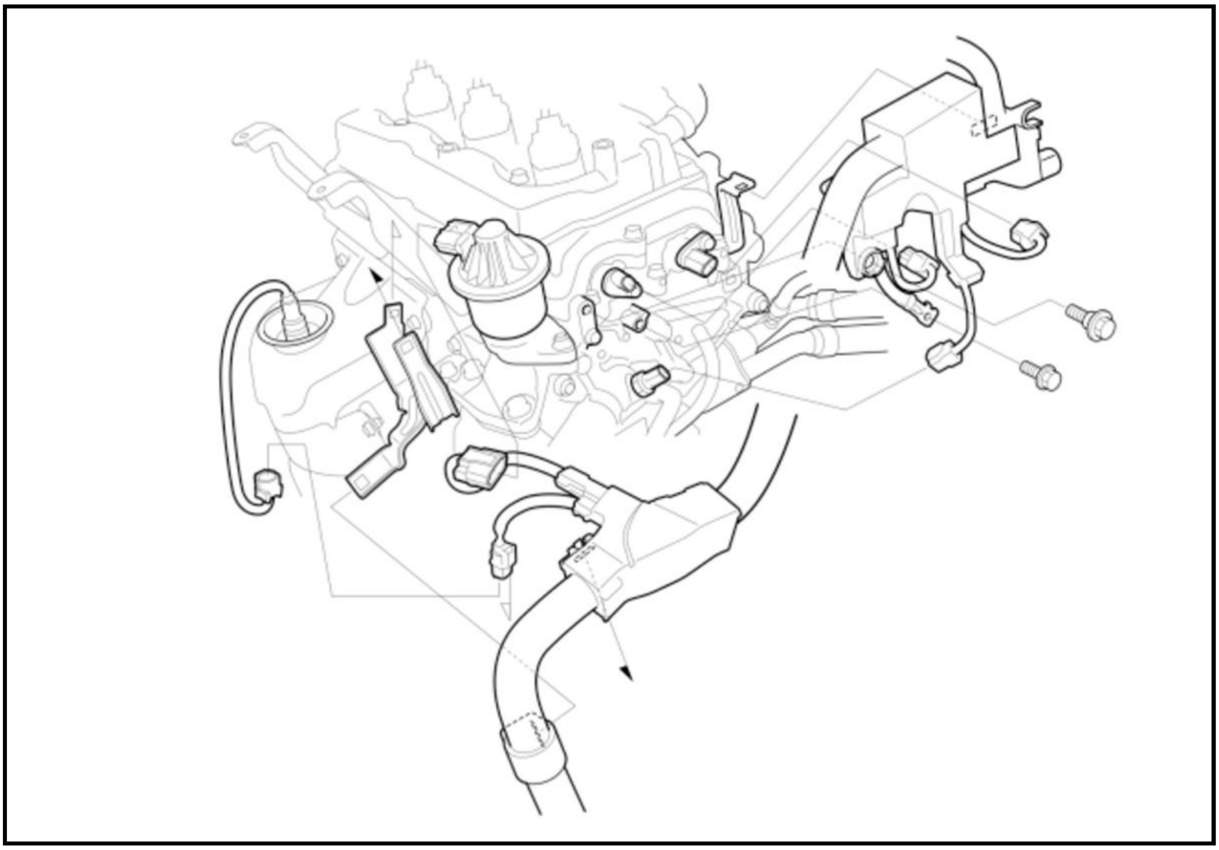

18. **CMP Sensor A - Remove**
19. Engine Support Hanger - Install

NOTE:

- Be careful when working around the windshield.
- Be careful not to damage the hood opener cable when installing the engine support hanger at the front bulkhead.

1. Remove the front damper caps.

2. **Remove the radiator cap base** .

3. Remove the hood open stay bracket (A).

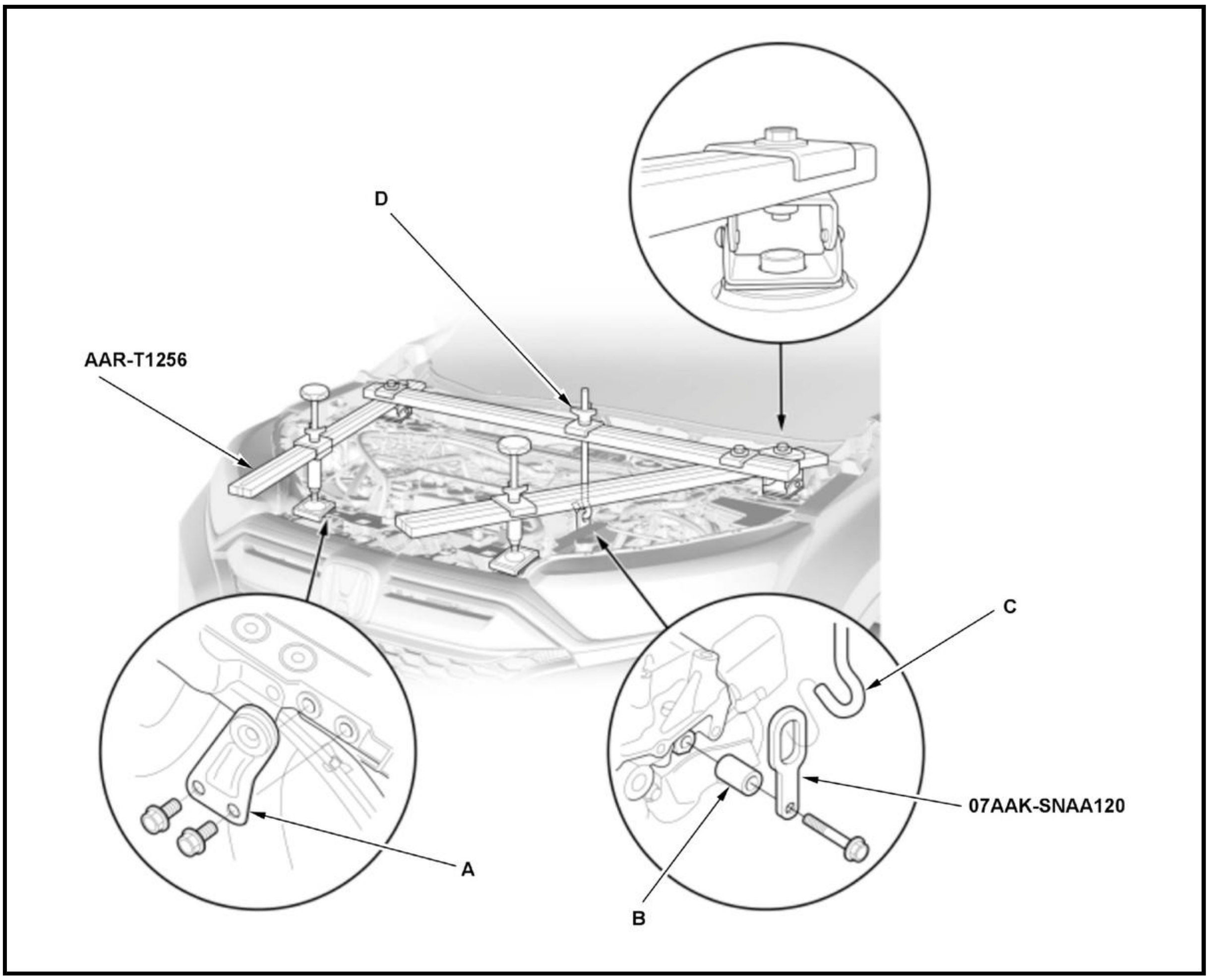

4. Install the sub hanger stay with a commercially available spacer (B).

NOTE: Make sure the sub hanger stay does not interfere with the surrounding parts.

5. Install the engine support hanger onto the vehicle as shown.

6. Attach the hook (C) to the slotted hole in the sub hanger stay.

7. Tighten the wing nut (D) by hand, lift and support the engine/transmission (e-CVT).

20. **Transmission Mount - Remove**
21. Upper Transmission (e-CVT) Mounting Bolt - Remove

    NOTE: Refer to the Exploded View as needed during this procedure.

22. Vehicle - Lift Up
23. **Front Wheel - Remove (Both Sides)**
24. **ATF - Drain**
25. **Exhaust Pipe A - Remove**
26. Drive Plate - Disconnect

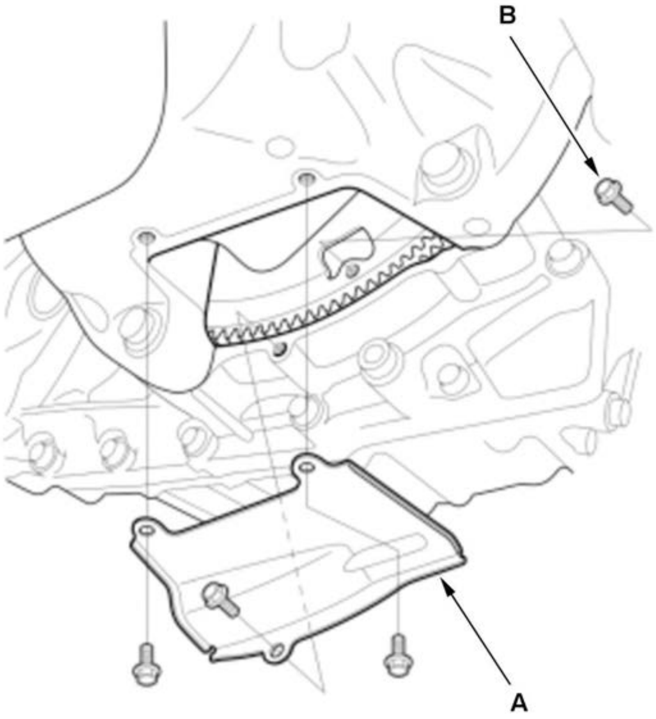	1. Remove the flywheel cover (A). 2. Remove eight flywheel bolts (B) while rotating the crankshaft pulley.

27. **Connectors (EPS Motor/Control Unit) - Disconnect**
28. **Lower Torque Rod Mounting Bolt - Remove**
29. **Lower Arm - Disconnect (Both Sides)**
30. Lower Arm Mounting Bolt - Remove (Both Sides)

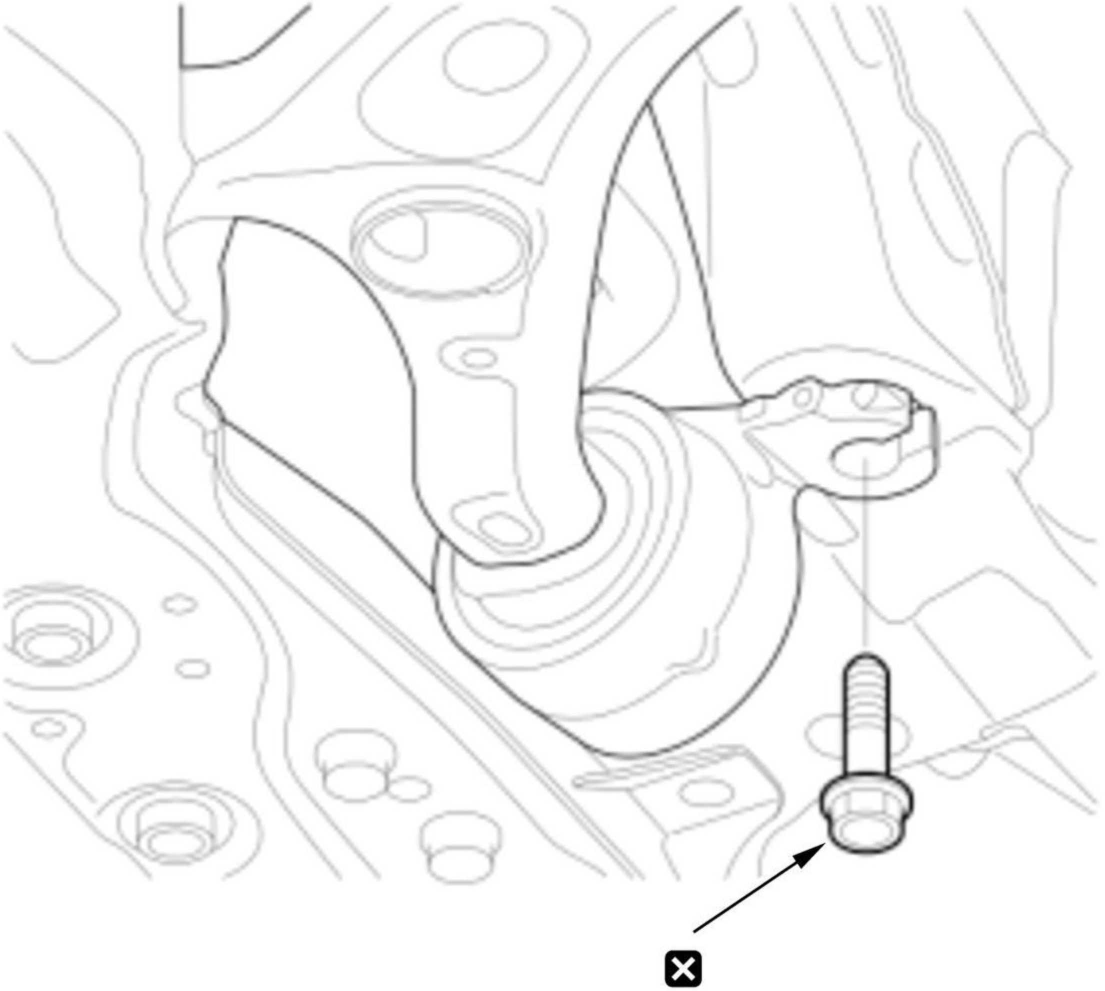

31. **Tie-Rod End Ball Joint - Disconnect (Both Sides)**
32. **Front Stabilizer Link Ball Joint - Disconnect (Both Sides)**
33. Front Subframe - Support

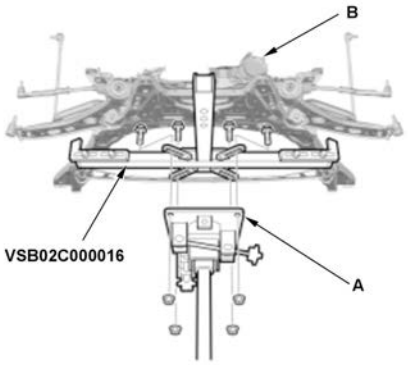	1. Set the subframe adapter (VSB02C000016) on a transmission jack (A), line up the slots in the arms with the bolt holes on the corner of the jack base, and tighten the bolts. 2. Attach the subframe adapter to the front subframe (B).

34. **Front Subframe - Remove**
35. Transmission - Support

1. Support the transmission with the transmission jack.

36. **Driveshaft Inboard Joint - Disconnect (Both Sides)**

NOTE: Secure the driveshaft to the body with a nylon strap on both sides.

37. **Intermediate Shaft - Remove**
38. **Propeller Shaft - Remove**
39. Ground Cable - Disconnect

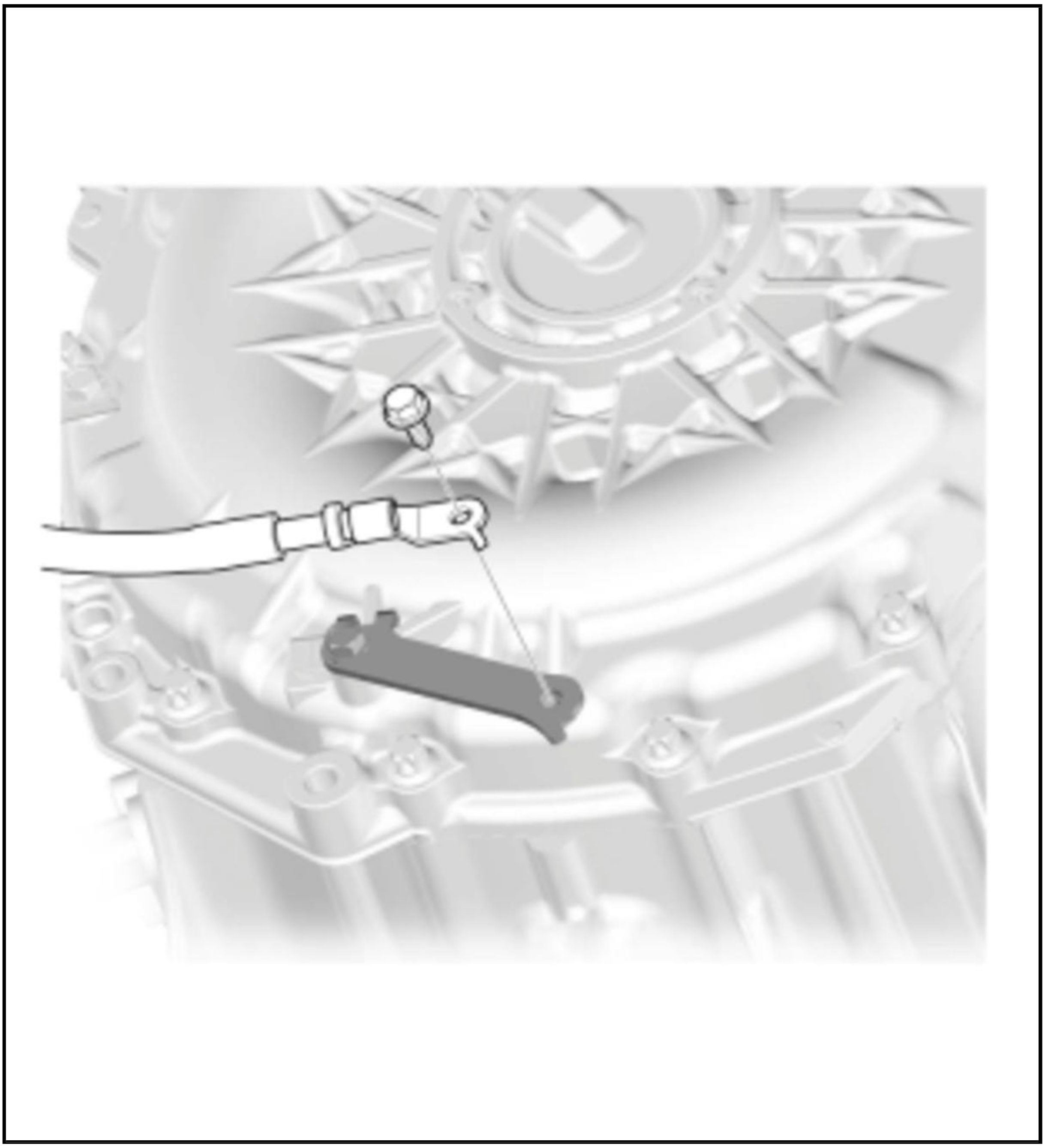

40. **ATF Hose (Transmission Side) - Disconnect**

    NOTE: Turn the ends of the ATF hoses up to prevent ATF from flowing out, then plug the hoses and the lines.

41. **Radiator Inlet Pipe A - Remove**

    NOTE: Remove the necessary part(s).

42. Lower Transmission (e-CVT) Mounting Bolt - Remove

    NOTE: Refer to the Exploded View as needed during this procedure.

43. Transmission (e-CVT) - Remove

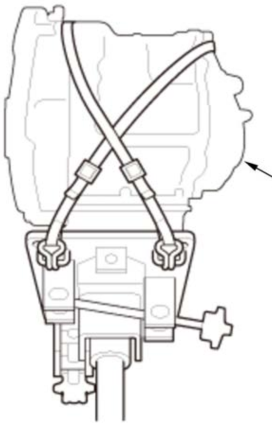 	1. Check once again that the transmission (e-CVT) (A) is free of hoses and electrical wiring. 2. Hold the transmission (e-CVT) on the transmission jack. 3. Lower the transmission (e-CVT) by loosening the wing nut of the engine support hanger, and tilt the engine just enough for the transmission (e-CVT) to clear its end from the side frame. 4. Slide the transmission (e-CVT) away from the engine, then remove the transmission (e-CVT) from the vehicle. 5. Lower the transmission (e-CVT) carefully. **NOTE:** Be careful not to drop the flywheel.

44. Flywheel - Remove

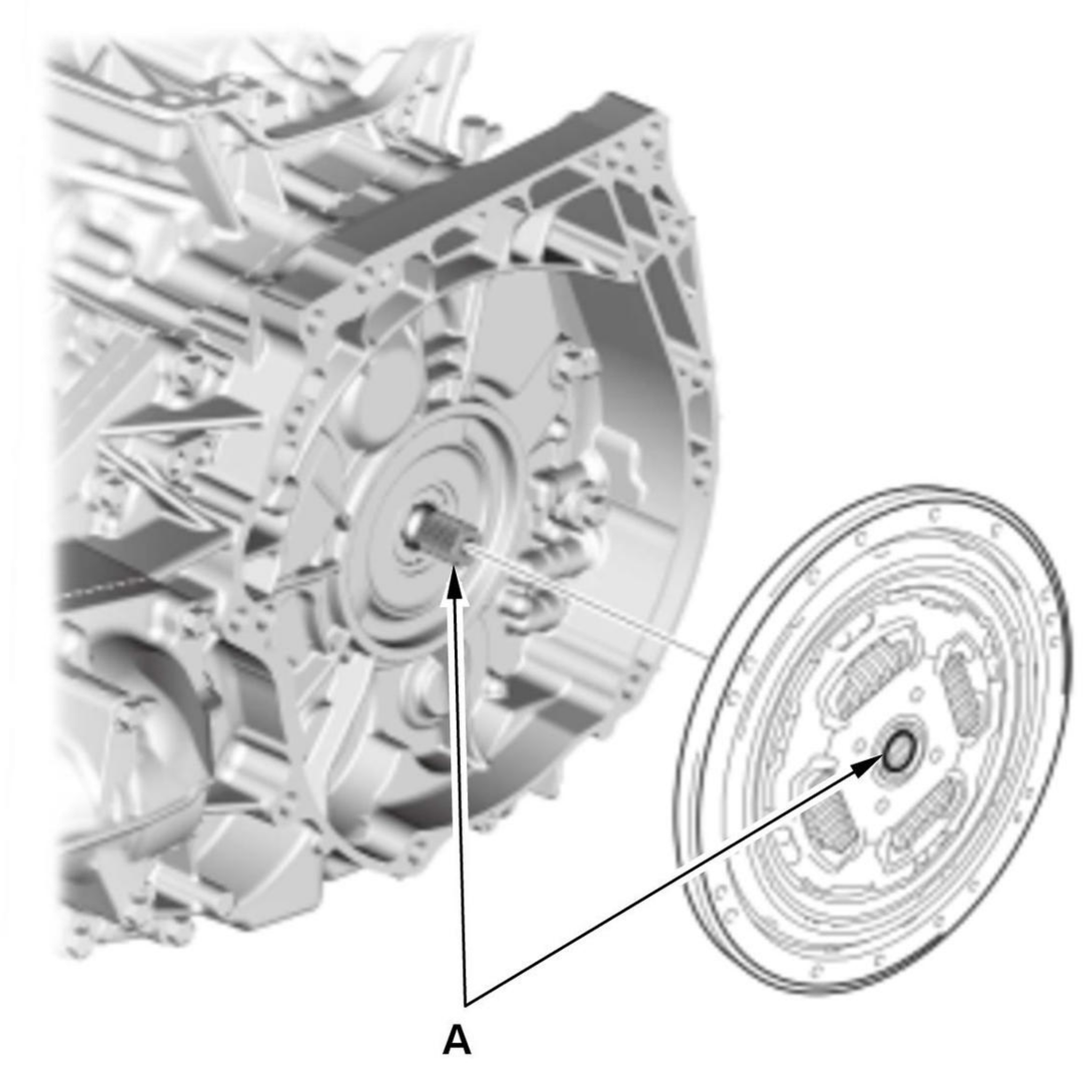

NOTE: Do not wipe off the special grease applied to the spline (A).

45. Dowel Pin - Remove

NOTE: Refer to the Exploded View as needed during this procedure.

46. Bracket - Remove (If Necessary)

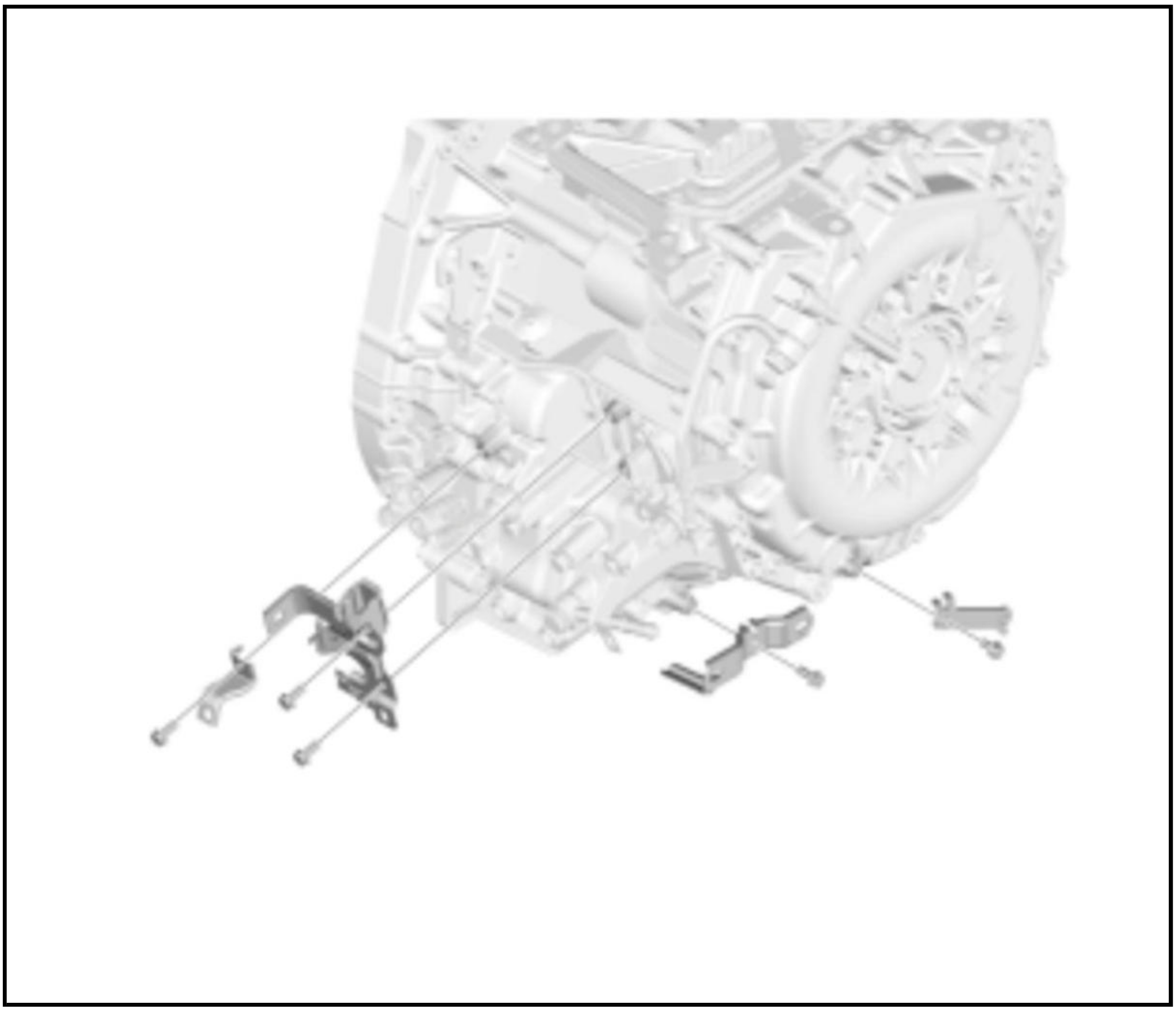

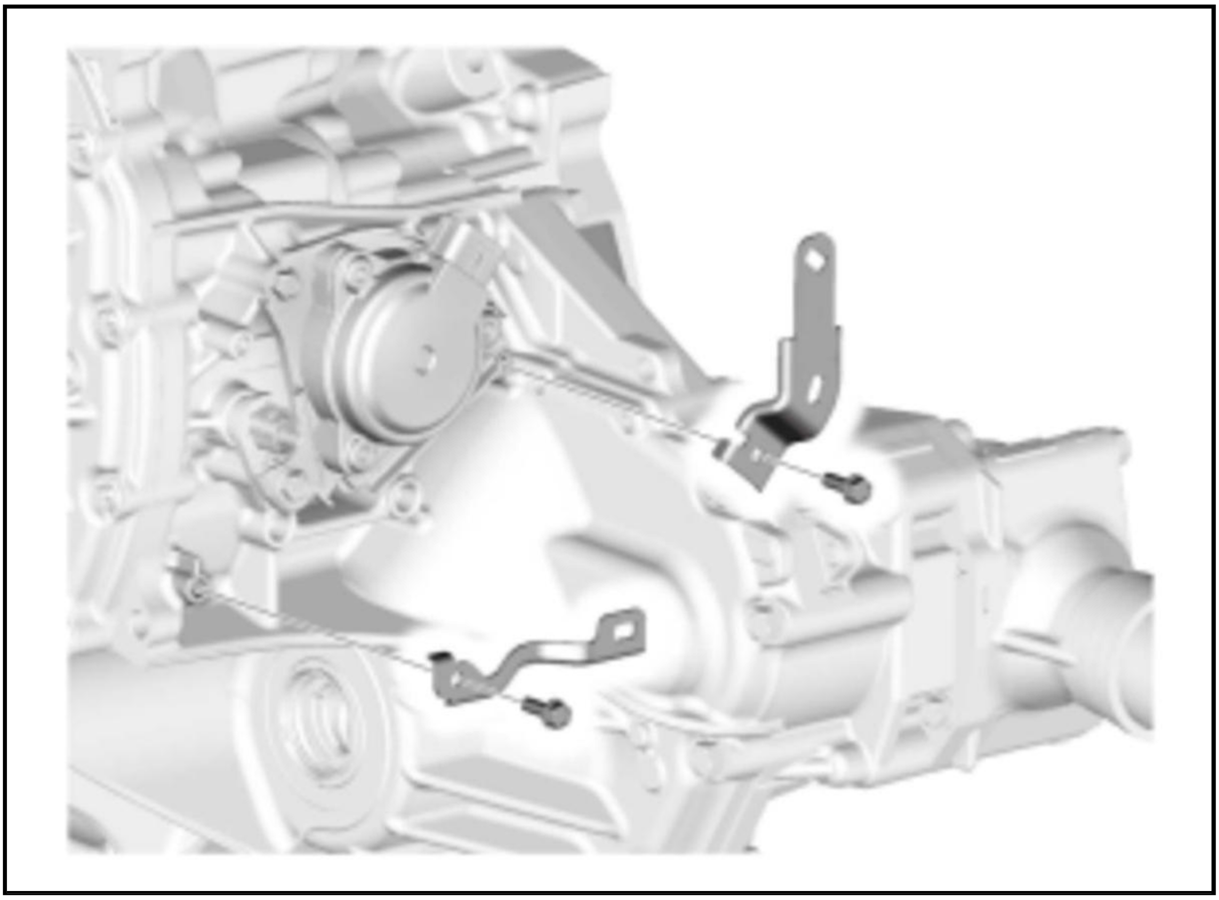

47. Drive Plate - Inspect

1. Inspect the drive plate, and replace it if it is damaged.

48. Transfer Assembly - Remove (If Necessary)

Installation

WARNING: **The power cables carry high voltage when the electric powertrain system is energized. To avoid serious injury from electrical shock, do not turn on the system with the power cables disconnected.**

The electric powertrain components are located in this area. The electric powertrain is a high-voltage system. You must be familiar with the electric powertrain system before working on or around it. Make sure you have read the electric powertrain service precautions before doing repairs or service .

NOTE:

- How to read the torque specifications .
- Use fender covers to avoid damaging painted surfaces.
- Special tool engine support hanger AAR-T-1256-J00 must be used with the side engine mount installed.
- Keep all foreign particles out of the transmission (e-CVT).

1. Transfer Assembly - Install (If Necessary)
2. Bracket - Install

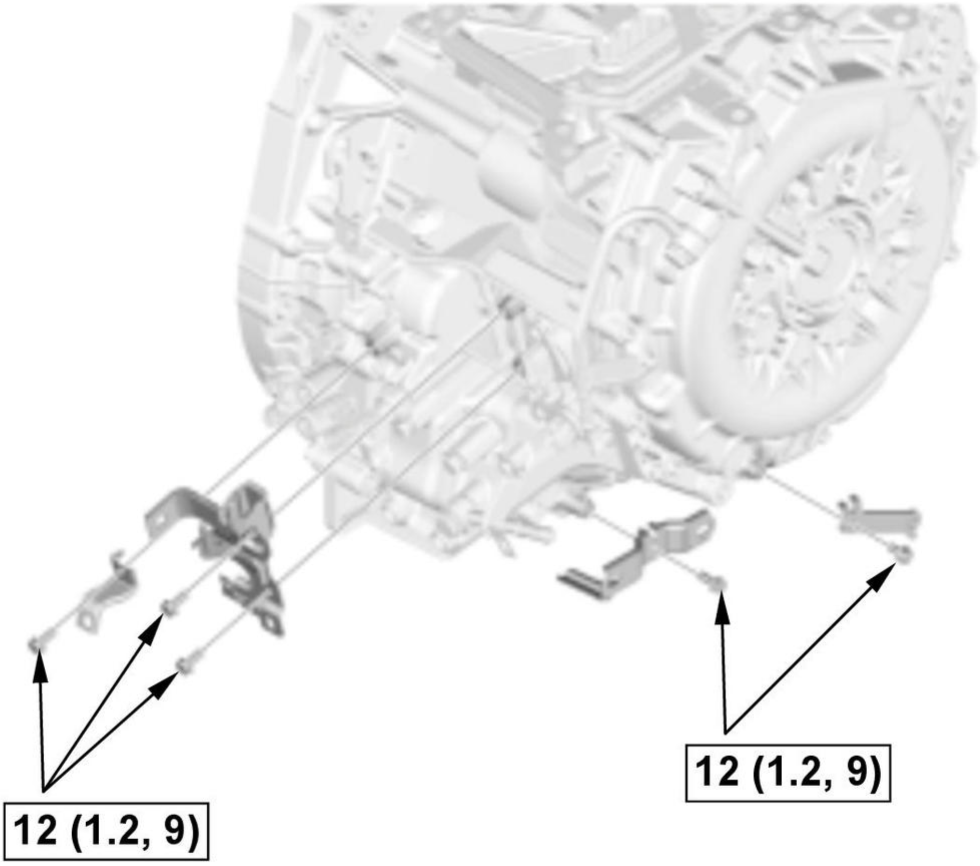

Fig. 21: Bracket Components With Torque Specifications (1 Of 2)
Courtesy of HONDA, U.S.A., INC.

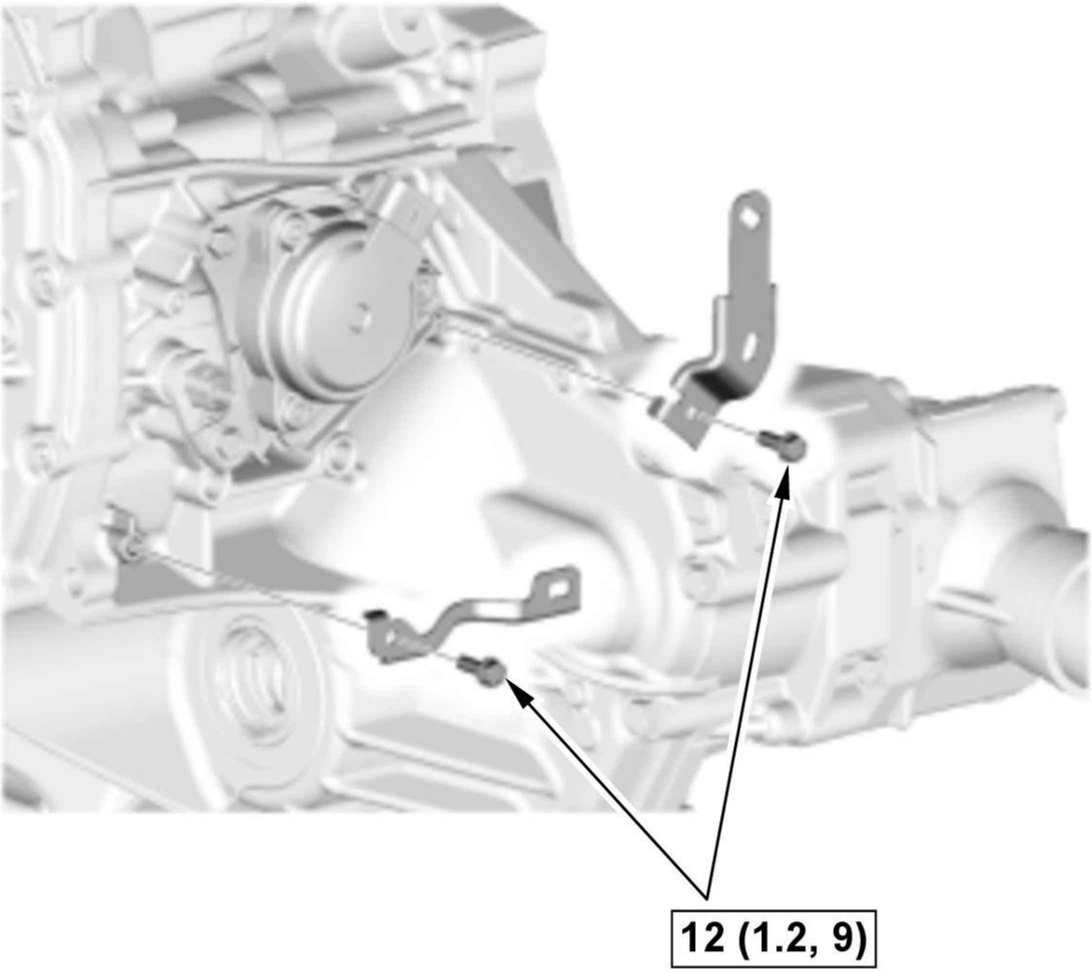

Fig. 22: Bracket Components With Torque Specifications (2 Of 2)
Courtesy of HONDA, U.S.A., INC.

3. Dowel Pin - Install

   NOTE: Refer to the Exploded View as needed during this procedure.

4. Flywheel - Install

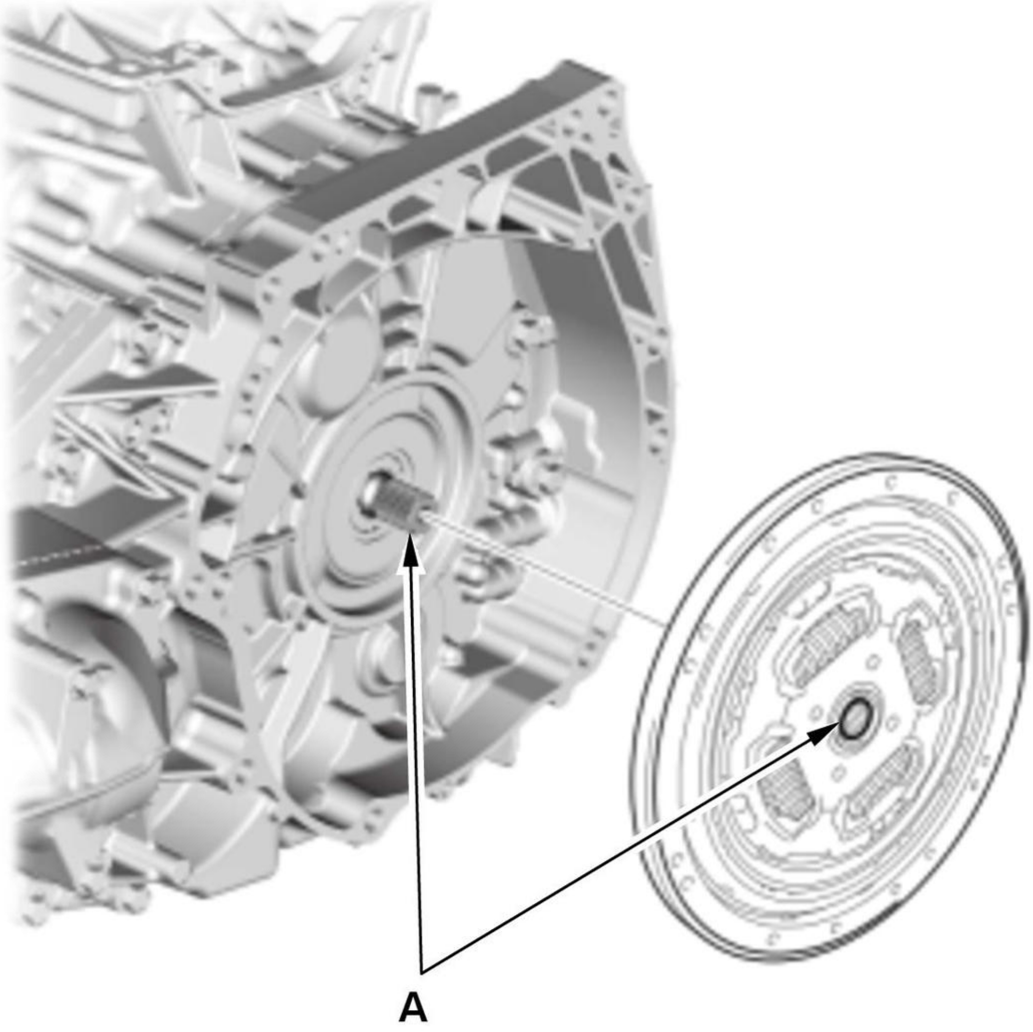

NOTE: Do not wipe off the special grease applied to the spline (A).

5. Transmission (e-CVT) - Install

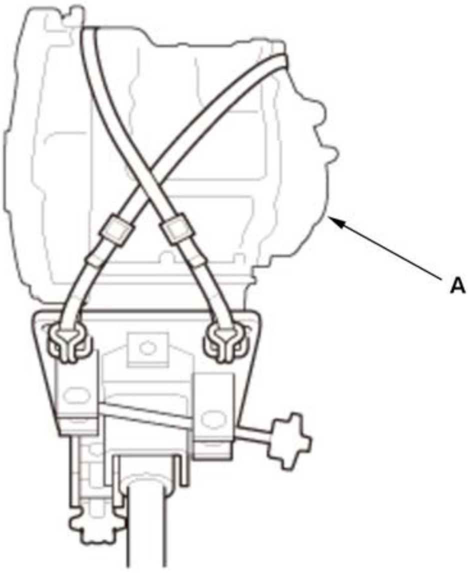	1. Place the transmission (e-CVT) (A) on a transmission jack, then raise it to the engine level. **NOTE:** Be careful not to drop the flywheel. 2. Attach the transmission (e-CVT) to the engine.

6. Lower Transmission (e-CVT) Mounting Bolt - Install

NOTE: Refer to the Exploded View as needed during this procedure.

7. Radiator Inlet Pipe A - Install
8. ATF Hose (Transmission Side) - Connect
9. Ground Cable - Connect

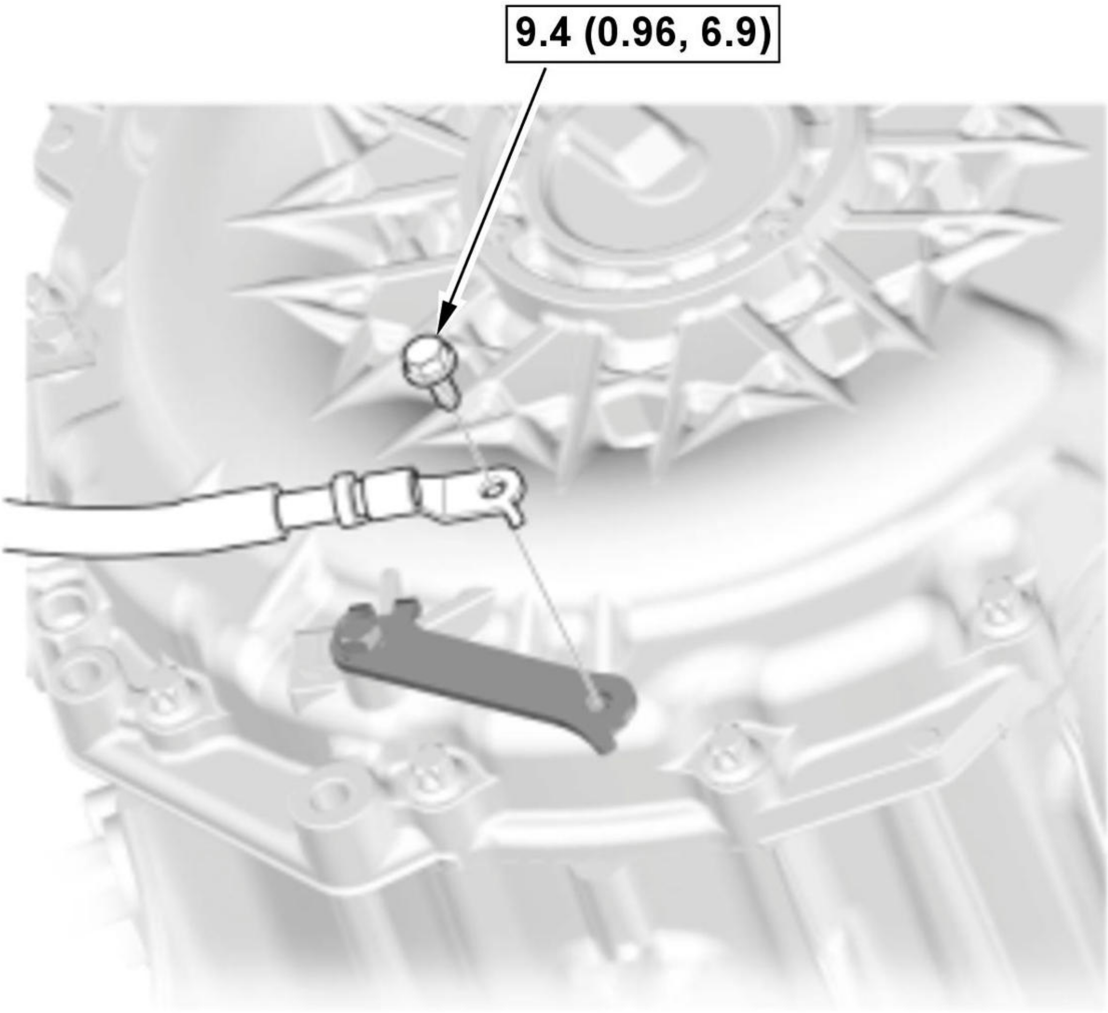

Fig. 23: Ground Cable Components With Torque Specifications
Courtesy of HONDA, U.S.A., INC.

10. Propeller Shaft - Install
11. Intermediate Shaft - Install
12. Driveshaft Inboard Joint - Connect (Both Sides)
13. Front Subframe - Support

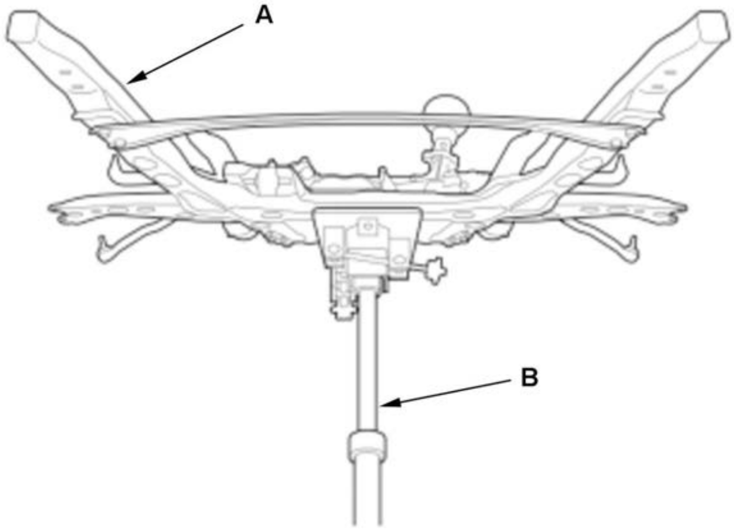	1. Support the front subframe (A) with a transmission jack (B).

14. Front Subframe - Install
15. Front Stabilizer Link Ball Joint - Connect (Both Sides)
16. Tie-Rod End Ball Joint - Connect (Both Sides)
17. Lower Arm Mounting Bolt - Install (Both Sides)

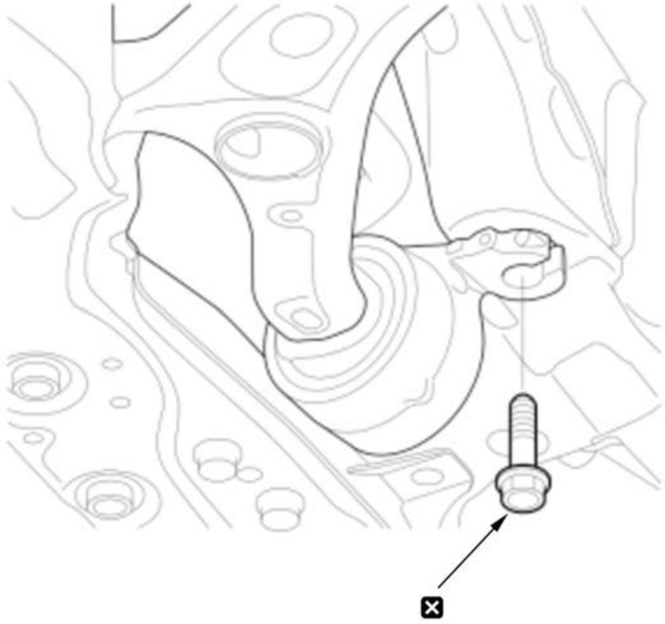	1. Install both sides of the front lower arm mounting bolt to the body .

18. Lower Arm - Connect (Both Sides)
19. Lower Torque Rod Mounting Bolt - Loosely Install
20. Connectors (EPS Motor/Control Unit) - Connect
21. Drive Plate - Connect

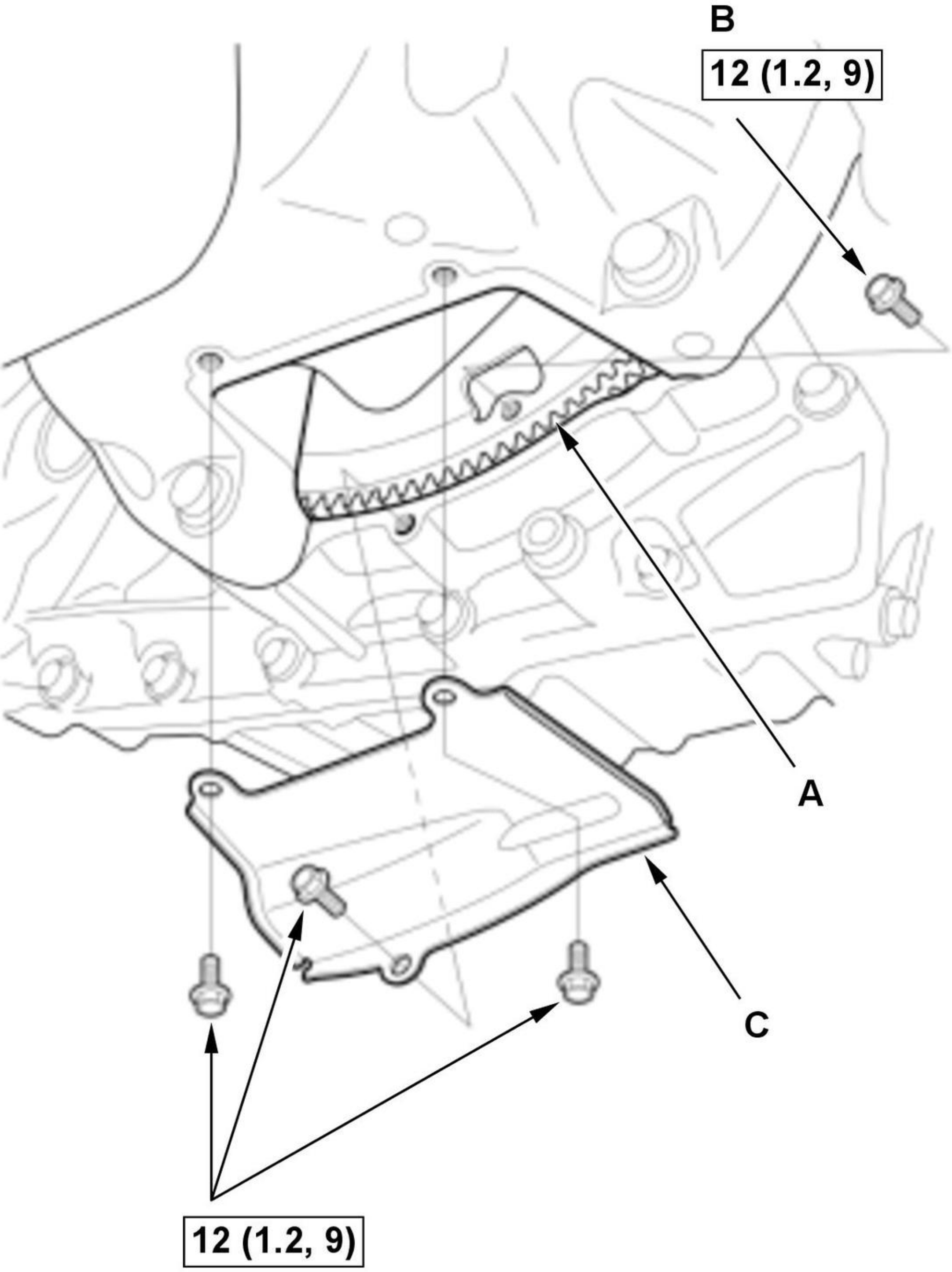

Fig. 24: Drive Plate Components With Torque Specifications
Courtesy of HONDA, U.S.A., INC.

1. Attach the drive plate (A) to the flywheel with eight flywheel bolts (B).

NOTE: There are eight flywheel bolts.

2. Rotate the crankshaft pulley as necessary to tighten the bolt to half of the specified torque, then to the final torque, in a crisscross pattern.

3. Check that the crankshaft rotates freely.

4. Install the torque converter cover (C).

22. **Exhaust Pipe A - Install**

23. Vehicle - Lower
24. Upper Transmission (e-CVT) Mounting Bolt - Install

NOTE: Refer to the Exploded View as needed during this procedure.

25. **Transmission Mount - Loosely Install**
26. Engine Support Hanger - Remove

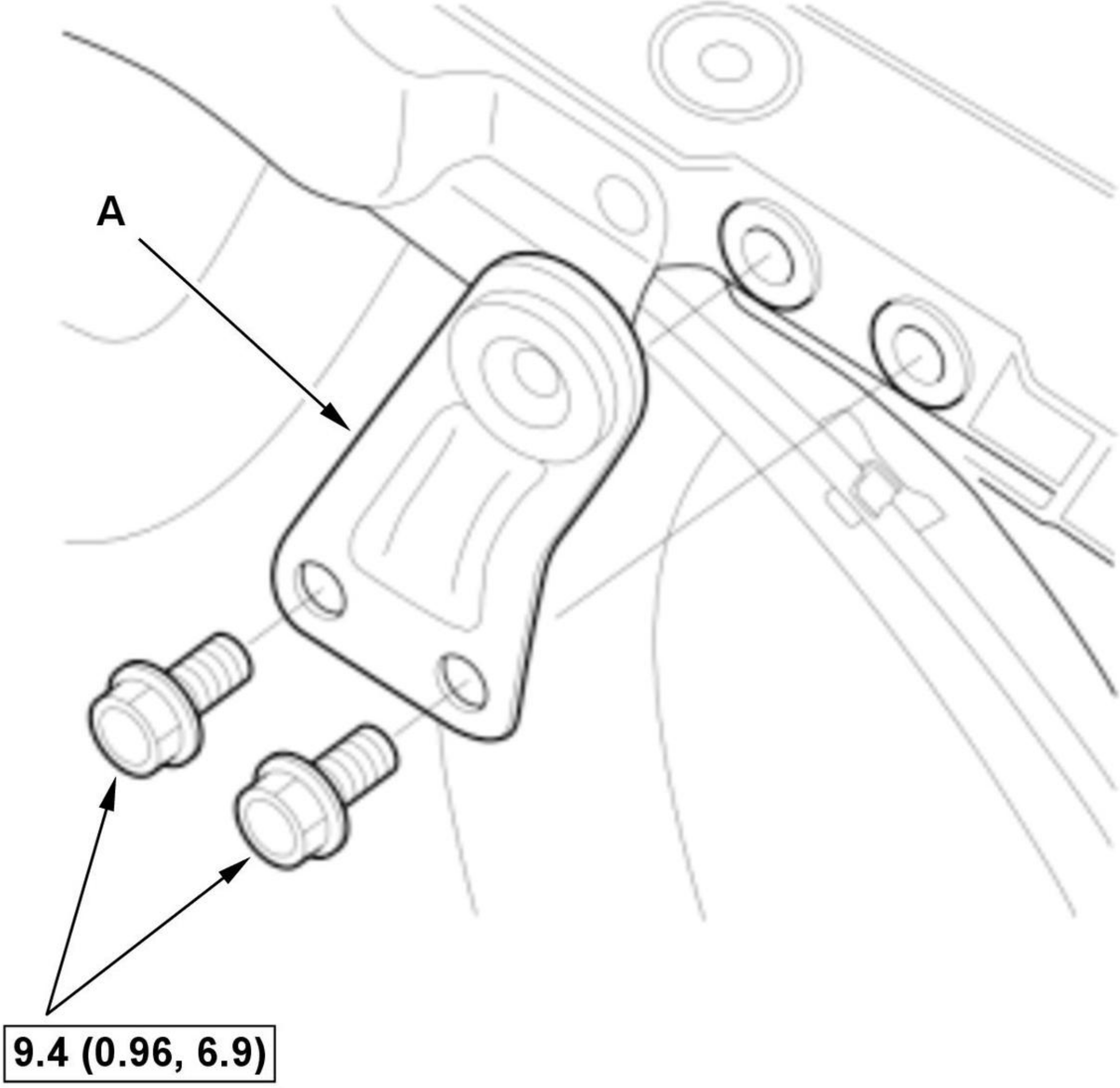

Fig. 25: Hood Open Stay Bracket Components With Torque Specifications
Courtesy of HONDA, U.S.A., INC.

1. Remove the engine support hanger and the sub hanger stay.

2. Install the hood open stay bracket (A).

3. **Install the radiator cap base** .

4. Install the front damper caps.

27. **Engine/Transmission Mount/Torque Rod - Tightening Procedure**
28. **CMP Sensor A - Install**
29. Harness Cover - Install

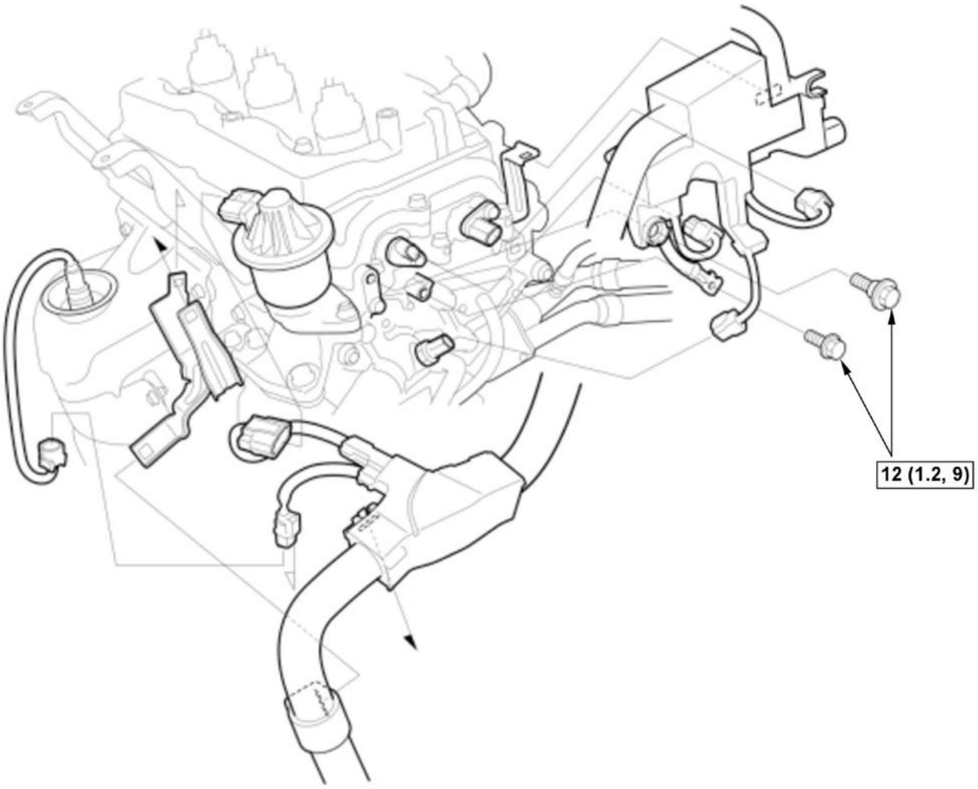

Fig. 26: Harness Cover Bolts With Torque Specifications
Courtesy of HONDA, U.S.A., INC.

30. Engine Wire Harness - Install

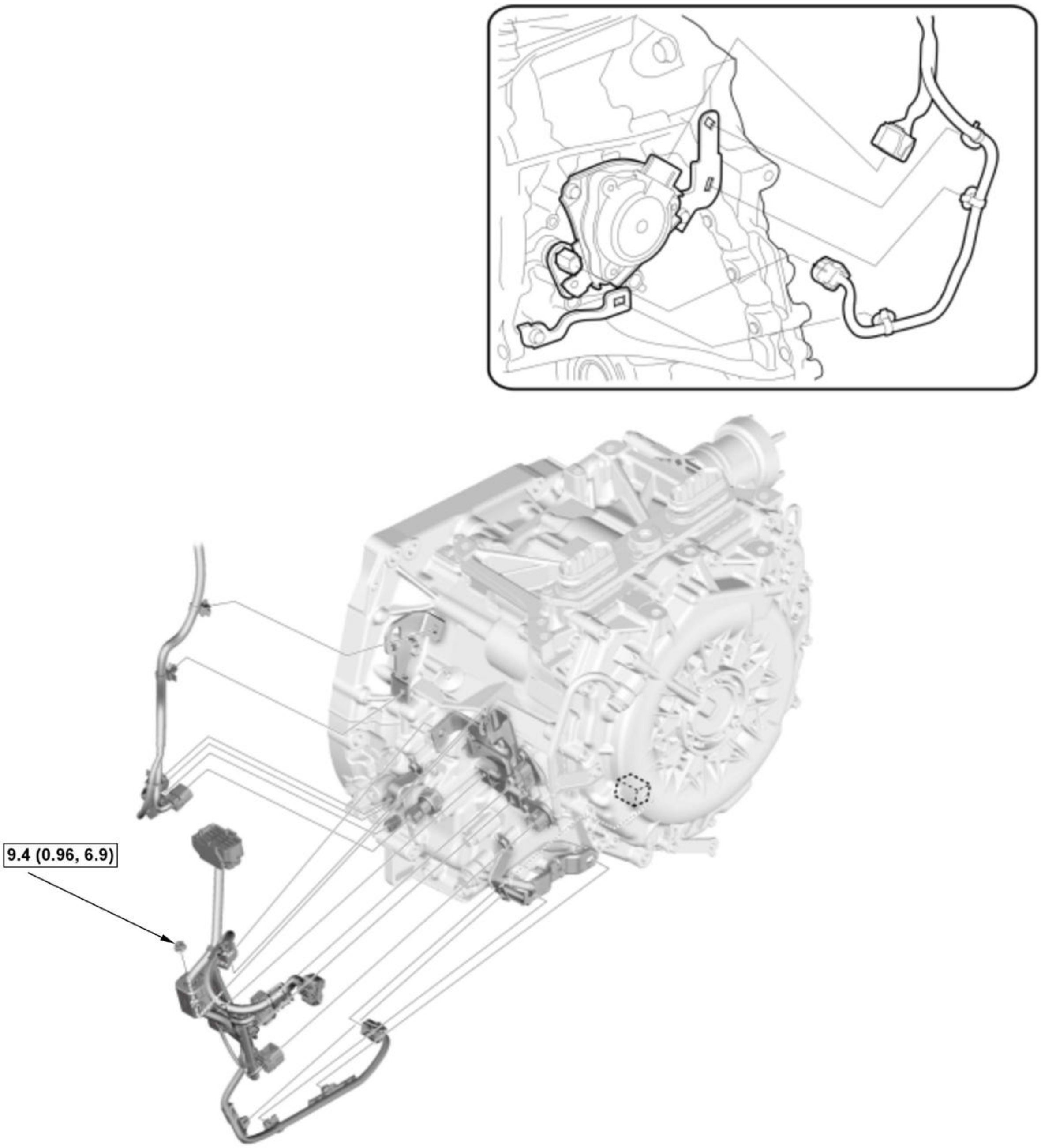

Fig. 27: Engine Wire Harness Components With Torque Specifications
Courtesy of HONDA, U.S.A., INC.

31. Steering Joint - Connect
32. PCU - Install
33. Center Cowl Cover - Install
34. Windshield Wiper Arm - Install
35. Front Bulkhead Cover - Install
36. Service Plug - Turn On
37. 12 Volt Battery Base - Install
38. 12 Volt Battery - Install
39. PCU Coolant - Refill
40. ATF - Refill
41. Engine Undercover - Install
42. Front Wheel - Install (Both Sides)
43. Wheel Alignment - Check

44. VSA Sensor Neutral Position - Memorize
45. Motor Rotor Position - Calibrate
46. Vehicle - Test-Drive

    NOTE: Before test drive, turn the vehicle to the ON mode and shift the transmission to each shift position/mode, and wait for at least 1 seconds to each position/mode. Make sure to be able to select each shift position.

TRANSMISSION FLUID PRESSURE SENSOR REMOVAL AND INSTALLATION

Removal and Installation

NOTE:

- Keep all foreign particles out of the transmission (e-CVT).
- Check the connector for corrosion, dirt, or oil, and clean if necessary.

Procedure

NOTE: **Numbered call-outs in figure pertain to list numbers in following procedure.**

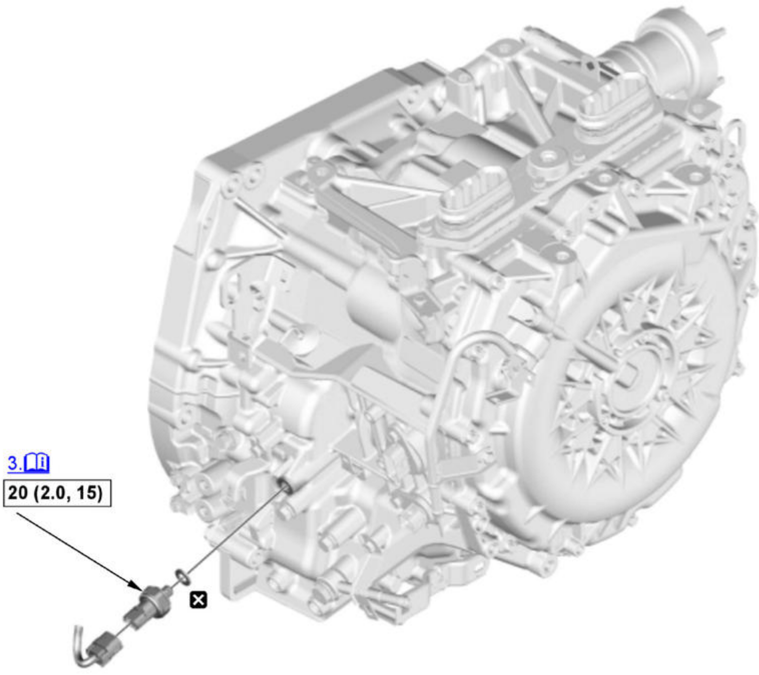

Fig. 28: Transmission Fluid Pressure Sensor Components With Torque Specifications
Courtesy of HONDA, U.S.A., INC.

☐	Torque: N.m (kgf.m, lbf.ft)
☒	Replace

1. Vehicle - Lift
2. Engine Undercover - Remove
3. Transmission Fluid Pressure Sensor - Remove

    NOTE: Be careful not to damage the plastic part.

4. All Removed Parts - Install

1. Install the parts in the reverse order of removal.

5. ATF Level - Check

REMOVAL, INSTALLATION & TEST

SHIFT SOLENOID VALVE REMOVAL, INSTALLATION, AND TEST

Removal and Installation

NOTE:

- Keep all foreign particles out of the transmission (e-CVT).
- Apply a light coat of clean ATF on all O-rings before installation.
- Check the connector for corrosion, dirt, or oil, and clean if necessary.

Procedure

NOTE: **Numbered call-outs in figure pertain to list numbers in following procedure.**

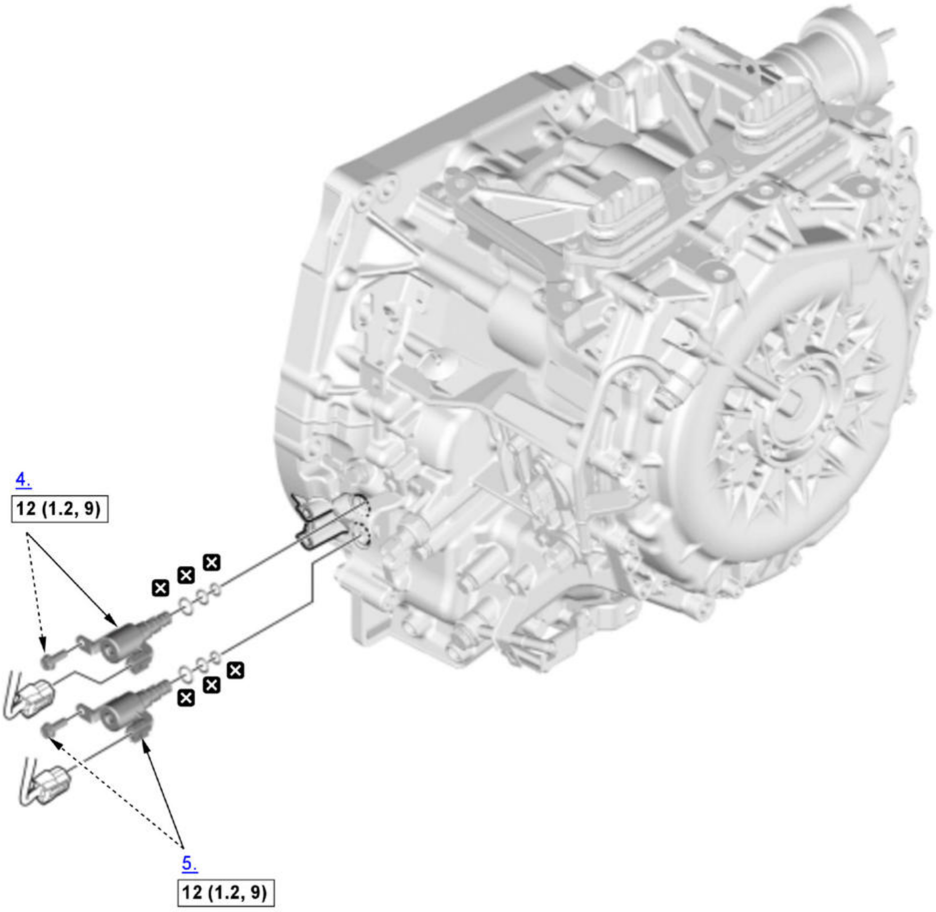

Fig. 29: Exploded View Of Shift Solenoid Valve Components With Torque Specifications
Courtesy of HONDA, U.S.A., INC.

☐	Torque: N.m (kgf.m, lbf.ft)

✖	Replace

1. **Vehicle - Lift**
2. **Engine Undercover - Remove**
3. **ATF - Drain**
4. Shift Solenoid Valve A - Remove
5. Shift Solenoid Valve B - Remove
6. All Removed Parts - Install

   1. Install the parts in the reverse order of removal.

7. **ATF - Refill**

Test

NOTE: Check the connector for corrosion, dirt, or oil, and clean if necessary.

1. **Vehicle - Lift**
2. **HDS - Connect**
3. Shift Solenoid Valve - HDS Function Test

   1. From the system selection menu, select AT, Function Test and then Shift Solenoid Test.

   2. Select Shift Solenoid Valve A or B, follow the screen prompts and check that the shift solenoid valve operates with the HDS. A clicking sound should be heard.

      - Select Shift Solenoid Valve C, D and E are not supported on this vehicle.
      - If a clicking sound is heard, the solenoid valve is OK. The test is complete, disconnect the HDS.
      - If no clicking sound is heard, go to the next step, and check the shift solenoid valve resistance.

4. **Engine Undercover - Remove**
5. Shift Solenoid Valve - Resistance Check

Shift Solenoid Valve A 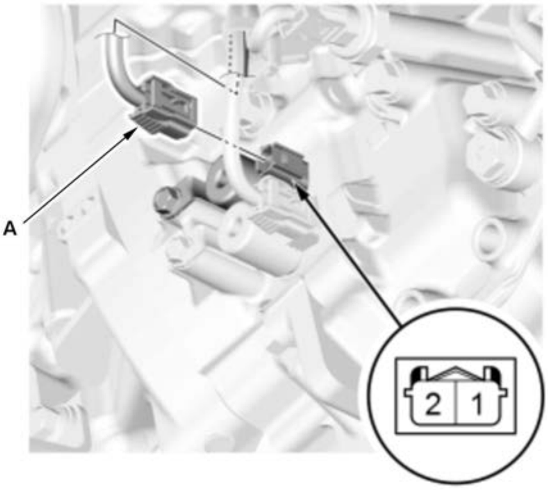 **Shift Solenoid Valve B**	1. Disconnect the connector (A). 2. Measure the resistance of the shift solenoid valve between connector (male terminals) terminals No. 1 and No. 2. - If the resistance is out of the specifications (change for all occurrences), replace the appropriate shift solenoid valve. - If the resistance is within the specifications (change for all occurrences), go to the next step, and check the shift solenoid valve operation.

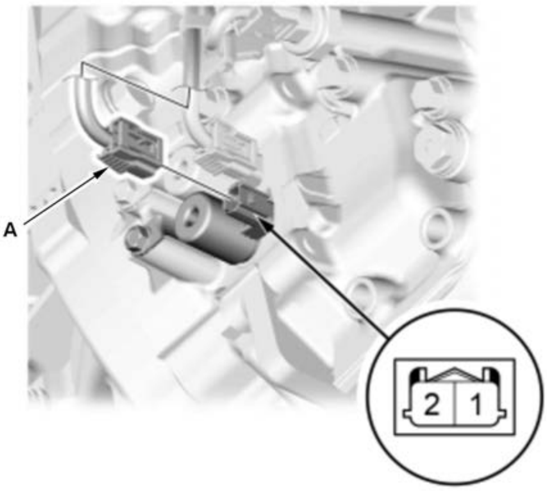 	

Standard:	**13.8-17.1 Ω**

6. Shift Solenoid Valve - Operation Check

Shift Solenoid Valve A 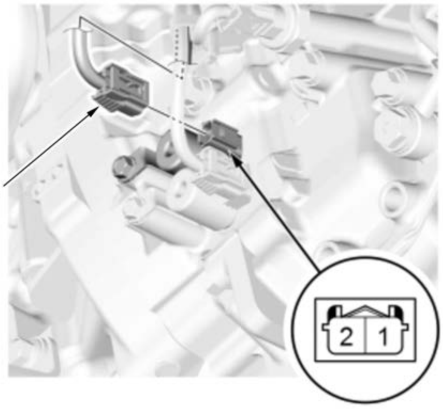 **Shift Solenoid Valve B** 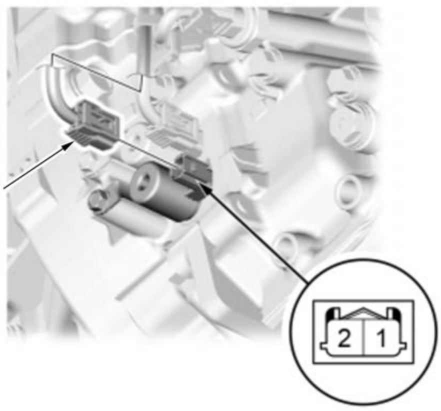 	1. Connect a jumper wire from the positive 12 volt battery terminal to connector (male terminals) terminal No. 1, and connect another jumper wire from the negative 12 volt battery terminal to connector (male terminals) terminal No. 2. • If a clicking sound is heard, go to the next step. • If no clicking sound is heard, replace the appropriate shift solenoid valve.

Shift Solenoid Valve A 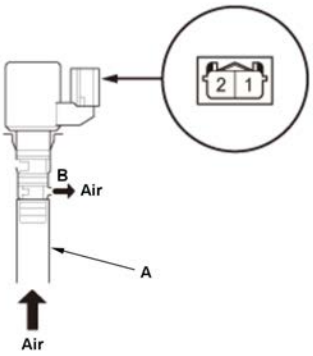 **Shift Solenoid Valve B** 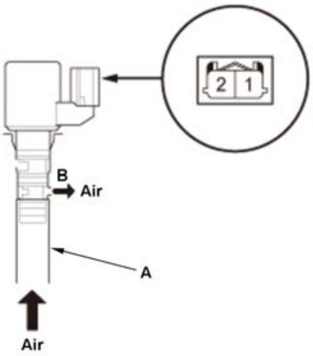 	2. Remove the appropriate shift solenoid valve. 3. Connect a tube (A) to the shift solenoid valve. 4. Connect a jumper wire from the positive 12 volt battery terminal to connector (male terminals) terminal No. 1, and connect another jumper wire from the negative 12 volt battery terminal to connector (male terminals) terminal No. 2. Blow the air into the tube. • If the air goes out of the port (B), go to the next step. • If the air does not go out of the port, replace the appropriate shift solenoid valve. 5. Disconnect the jumper wires. Blow the air into the tube. • If the air goes out of the port, replace the appropriate shift solenoid valve. • If the air does not go out of the port, repair the wire between the shift solenoid valve and the PCM.

7. All Removed Parts - Install

1. Install the parts in the reverse order of removal.

SPORT MODE SWITCH REMOVAL, INSTALLATION, AND TEST

Removal and Installation

Procedure

NOTE: **Numbered call-outs in figure pertain to list numbers in following procedure.**

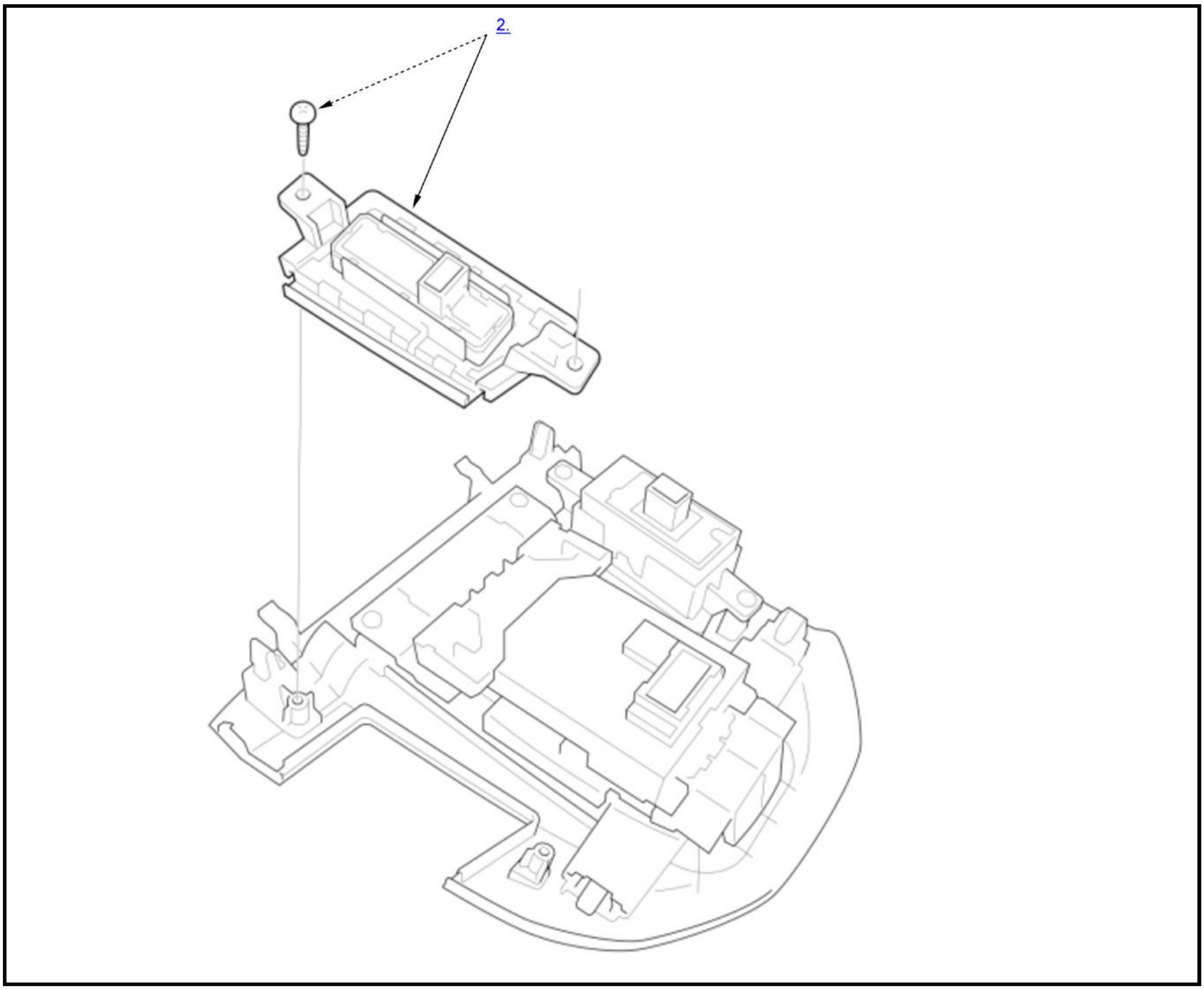

1. **Escutcheon Panel - Remove**
2. Sport Mode Switch - Remove
3. All Removed Parts - Install

1. Install the parts in the reverse order of removal.

Test

1. **Escutcheon Panel - Remove**
2. Sport Mode Switch - Test

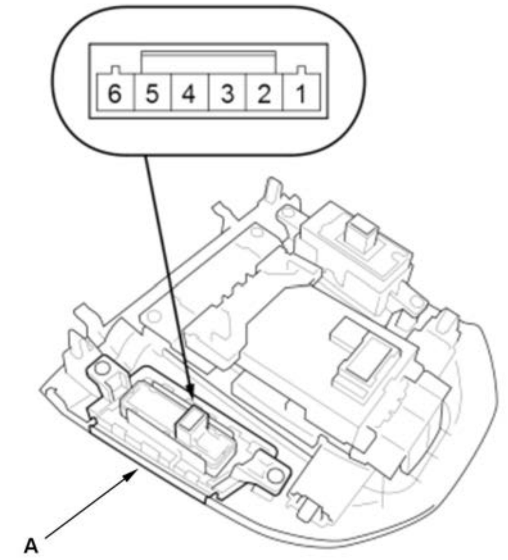

Terminal Position/Illumination	1	4	5		6
Pressed	○	○			
Switch lights			⊕	▷|—⋀⋀⋀	⊖

○—○ = Continuity check
⊕—⊖ = Voltage for LED

1. Test the sport mode switch (A) according to the table.

NOTE:

- When an LED is located between terminals, check if the LED illuminates by connecting power and ground to the LED.
- Note this important operating characteristic; diode bias causes a diode to fully conduct electricity in one direction (forward), while not at all in the opposite direction (reverse).

2. If the result is not as specified, replace the sport mode switch.

3. All Removed Parts - Install

1. Install the parts in the reverse order of removal.

SYMPTOM TROUBLESHOOTING INDEX FOR VIEWER

ENGINE VIBRATES UNDER ALL DRIVING CONDITIONS

Probable cause(s)

- Generator motor defective: worn or damaged:
-
    - Stator
    - Rotor
    - Position sensor
    - Position sensor line
    - Terminal plate
    - 3-phase wires
- Generator motor defective; faulty installations:
-
    - Stator
    - Position sensor
    - Terminals
    - 3-phase wire terminals
- Engine output low
- Clutch defective
- Clearance between clutch end-plate and top disc incorrect

NOTE:

- Check the engine control system.
- Inspect the generator shaft for wear and damage.
- Inspect the clearance between the clutch end-plate and the top disc. If the clearance is out of tolerance, replace the clutch.
- **Replace the transmission (e-CVT)** .

EXCESSIVE SHOCK WHEN CHANGING FROM EV DRIVE MODE TO HYBRID DRIVE MODE

Probable cause(s)

- Generator motor defective: worn or damaged:
-
    - Stator
    - Rotor
    - Position sensor
    - Position sensor line
    - Terminal plate
    - 3-phase wires
- Generator motor defective; faulty installations:
-

    - Stator
    - Position sensor
    - Terminals
    - 3-phase wire terminals
- Generator motor stator temperature high
- Generator motor position sensor not learned
- Flywheel defective
- Input shaft worn or damaged
- Generator shaft worn or damaged
- Torque limiter defective

NOTE:

- Check the flywheel for wear and damage, if the flywheel is worn or damaged, replace the flywheel.
- Inspect the input shaft for wear and damage.
- Inspect the generator shaft for wear and damage.
- **Replace the transmission (e-CVT)** .

EXCESSIVE SHOCK WHEN CHANGING FROM ENGINE DRIVE MODE TO HYBRID DRIVE MODE

Probable cause(s)

- Traction motor position sensor defective
- Traction motor position sensor line failure
- Transmission fluid temperature sensor defective
- Traction motor sensor harness failure
- Traction motor position sensor failed to install
- Generator motor position sensor defective
- Generator motor position sensor line failure
- Generator motor position sensor failed to install
- Low ATF level
- ATF pump worn or binding
- Main regulator valve stuck or spring worn
- Foreign material in separator plate orifice
- Cooler relief valve defective
- ATF strainer clogged
- Clutch defective
- Clearance between clutch end-plate and top disc incorrect

NOTE:

- Check the ATF level. If the level is below the lower level, check the ATF cooler lines for leaks and loose connections. If necessary, clean the ATF cooler lines.
- Check the motor position sensor harness for poor connections, loose terminals, wear, and damage.
- Check the ATF pump drive gears for wear and damage.
- Inspect the motor shaft for wear and damage.
- Inspect the generator shaft for wear and damage.
- Inspect the input shaft for wear and damage.

- **Replace the valve body assembly** .
- Check for a clogged orifice in the separator plate. If the orifice is clogged, remove it and clean the separator plate orifice.
- Check the ATF strainer for debris. If the strainer is clogged, find the damaged components that caused the debris.
- Inspect the clearance between the clutch end-plate and the top disc. If the clearance is out of tolerance, replace the clutch.
- **Replace the transmission (e-CVT)** .

EXCESSIVE SHOCK WHEN CHANGING FROM HYBRID DRIVE MODE TO EV DRIVE MODE

Probable cause(s)

- Flywheel defective
- Input shaft worn or damaged
- Generator shaft worn or damaged
- Torque limiter defective

NOTE:

- Check the flywheel for wear and damage, if the flywheel is worn or damaged, replace the flywheel.
- Inspect the input shaft for wear and damage.
- Inspect the generator shaft for wear and damage.
- **Replace the transmission (e-CVT)** .

EXCESSIVE SHOCK WHEN CHANGING FROM HYBRID DRIVE MODE TO ENGINE DRIVE MODE

Probable cause(s)

- Traction motor position sensor defective
- Traction motor position sensor line failure
- Transmission fluid temperature sensor defective
- Traction motor sensor harness failure
- Traction motor position sensor failed to install
- Generator motor position sensor defective
- Generator motor position sensor line failure
- Generator motor position sensor failed to install
- Shift solenoid valve A defective
- Shift solenoid valve B defective
- Transmission fluid pressure sensor defective
- Engine output low
- Low ATF level
- ATF pump worn or binding
- Main regulator valve stuck or spring worn
- Foreign material in separator plate orifice
- Shift valve A defective
- Shift valve B defective
- Input shaft worn or damaged
- Over drive gears worn or damaged

- Clutch defective
- Clearance between clutch end-plate and top disc incorrect
- Torque limiter defective

NOTE:

- Check the engine control system.
- Inspect the shift solenoid valve function with the HDS. Check for a seized shift solenoid valve, and inspect the O-rings.
- Check the motor position sensor harness for poor connections, loose terminals, wear, and damage.
- Check the ATF level. If the level is below the lower level, check the ATF cooler lines for leaks and loose connections. If necessary, clean the ATF cooler lines.
- Check the ATF pump drive gears for wear and damage.
- **Replace the valve body assembly** .
- Inspect the input shaft for wear and damage.
- Check the over drive gears for wear and damage.
- Check for a clogged orifice in the separator plate. If the orifice is clogged, remove it and clean the separator plate orifice.
- Inspect the motor shaft for wear and damage.
- Inspect the generator shaft for wear and damage.
- Inspect the countershaft for wear and damage.
- Inspect the clearance between the clutch end-plate and the top disc. If the clearance is out of tolerance, replace the clutch.
- Check the transmission fluid pressure sensor.
- **Replace the transmission (e-CVT)** .

HDS DOES NOT COMMUNICATE WITH THE PCM

Probable cause(s)

- DLC circuit error
- PCM defective

NOTE:

Troubleshooting the DLC circuit .

NOISE FROM TRANSMISSION (E-CVT) IN EV DRIVE MODE

Probable cause(s)

- Traction motor defective: worn or damaged:
-
    - Stator
    - Rotor
    - Position sensor
    - Position sensor line
    - Terminal plate
    - Sensor harness
    - 3-phase wires
- Traction motor defective; faulty installations:

-
    - Stator
    - Position sensor
    - Terminals
    - 3-phase wire terminals
- Foreign material in traction motor
- Countershaft worn or damaged
- Motor shaft worn or damaged
- Final gears worn or damaged
- Clutch defective
- Clearance between clutch end-plate and top disc incorrect
- Thrust washer seized, worn, or damaged
- Input shaft bearing, countershaft bearing, generator shaft bearing, motor shaft bearing, or differential carrier bearing defective

NOTE:

- Check the motor position sensor harness for poor connections, loose terminals, wear, and damage.
- Inspect the countershaft for wear and damage.
- Inspect the motor shaft for wear and damage.
- Check the final gears for wear and damage.
- Inspect the clearance between the clutch end-plate and the top disc. If the clearance is out of tolerance, replace the clutch.
- Check the thrust washers for seizure, wear and damage.
- Check the bearings for the input shaft, the countershaft, the generator shaft, the motor shaft, and the differential carrier.
- **Replace the transmission (e-CVT)** .

NOISE FROM TRANSMISSION (E-CVT) IN ENGINE DRIVE MODE

Probable cause(s)

- Traction motor defective: worn or damaged:
-
    - Stator
    - Rotor
    - Position sensor
    - Position sensor line
    - Terminal plate
    - Sensor harness
    - 3-phase wires
- Traction motor defective; faulty installations:
-
    - Stator
    - Position sensor
    - Terminals
    - 3-phase wire terminals
- Foreign material in traction motor

- Generator motor defective: worn or damaged:
-
    - Stator
    - Rotor
    - Position sensor
    - Position sensor line
    - Terminal plate
    - 3-phase wires
- Generator motor defective; faulty installations:
-
    - Stator
    - Position sensor
    - Terminals
    - 3-phase wire terminals
- Flywheel defective
- Low ATF level
- ATF pump worn or binding
- ATF strainer clogged
- Input shaft worn or damaged
- Countershaft worn or damaged
- Motor shaft worn or damaged
- Final gears worn or damaged
- Over drive gears worn or damaged
- Clutch defective
- Thrust washer seized, worn, or damaged
- Input shaft bearing, countershaft bearing, generator shaft bearing, motor shaft bearing, or differential carrier bearing defective

NOTE:

- Check the flywheel for wear and damage, if the flywheel is worn or damaged, replace the flywheel.
- Check the ATF level. If the level is below the lower level, check the ATF cooler lines for leaks and loose connections. If necessary, clean the ATF cooler lines.
- Check the motor position sensor harness for poor connections, loose terminals, wear, and damage.
- Check the ATF pump drive gears for wear and damage.
- Check the ATF strainer for debris. If the strainer is clogged, find the damaged components that caused the debris.
- **Replace the valve body assembly** .
- Inspect the input shaft for wear and damage.
- Inspect the countershaft for wear and damage.
- Inspect the motor shaft for wear and damage.
- Inspect the generator shaft for wear and damage.
- Check the final gears for wear and damage.
- Check the over drive gears for wear and damage.
- Check the thrust washers for seizure, wear and damage.
- Check the bearings for the input shaft, the countershaft, the generator shaft, the motor shaft, and the differential carrier.

- Replace the transmission (e-CVT) .

NOISE FROM TRANSMISSION (E-CVT) IN HYBRID DRIVE MODE

Probable cause(s)

- Traction motor defective: worn or damaged:
-
    - Stator
    - Rotor
    - Position sensor
    - Position sensor line
    - Terminal plate
    - Sensor harness
    - 3-phase wires
- Traction motor defective; faulty installations:
-
    - Stator
    - Position sensor
    - Terminals
    - 3-phase wire terminals
- Foreign material in traction motor
- Generator motor defective: worn or damaged:
-
    - Stator
    - Rotor
    - Position sensor
    - Position sensor line
    - Terminal plate
    - 3-phase wires
- Generator motor defective; faulty installations:
-
    - Stator
    - Position sensor
    - Terminals
    - 3-phase wire terminals
- Flywheel defective
- Low ATF level
- ATF pump worn or binding
- ATF strainer clogged
- Input shaft worn or damaged
- Countershaft worn or damaged
- Generator shaft worn or damaged
- Motor shaft worn or damaged
- Final gears worn or damaged
- Clutch defective
- Clearance between clutch end-plate and top disc incorrect

- Torque limiter defective
- Thrust washer seized, worn, or damaged
- Input shaft bearing, countershaft bearing, generator shaft bearing, motor shaft bearing, or differential carrier bearing defective

NOTE:

- Check the flywheel for wear and damage, if the flywheel is worn or damaged, replace the flywheel.
- Check the ATF level. If the level is below the lower level, check the ATF cooler lines for leaks and loose connections. If necessary, clean the ATF cooler lines.
- Check the motor position sensor harness for poor connections, loose terminals, wear, and damage.
- Check the ATF pump drive gears for wear and damage.
- Check the ATF strainer for debris. If the strainer is clogged, find the damaged components that caused the debris.
- **Replace the valve body assembly** .
- Inspect the input shaft for wear and damage.
- Inspect the countershaft for wear and damage.
- Inspect the generator shaft for wear and damage.
- Inspect the motor shaft for wear and damage.
- Check the final gears for wear and damage.
- Inspect the clearance between the clutch end-plate and the top disc. If the clearance is out of tolerance, replace the clutch.
- Check the thrust washers for seizure, wear and damage.
- Check the bearings for the input shaft, the countershaft, the generator shaft, the motor shaft, and the differential carrier.
- **Replace the transmission (e-CVT)** .

NOISE FROM TRANSMISSION (E-CVT) WHILE RECHARGING WHEN VEHICLE STOPPED

Probable cause(s)

- Foreign material in traction motor
- Generator motor defective: worn or damaged:
-
    - Stator
    - Rotor
    - Position sensor
    - Position sensor line
    - Terminal plate
    - 3-phase wires
- Generator motor defective; faulty installations:
-
    - Stator
    - Position sensor
    - Terminals
    - 3-phase wire terminals
- Flywheel defective
- Low ATF level
- ATF pump worn or binding

- ATF strainer clogged
- Input shaft worn or damaged
- Generator shaft worn or damaged
- Torque limiter defective

NOTE:

- Check the flywheel for wear and damage, if the flywheel is worn or damaged, replace the flywheel.
- Check the ATF level. If the level is below the lower level, check the ATF cooler lines for leaks and loose connections. If necessary, clean the ATF cooler lines.
- Check the ATF pump drive gears for wear and damage.
- Check the ATF strainer for debris. If the strainer is clogged, find the damaged components that caused the debris.
- **Replace the valve body assembly** .
- Inspect the input shaft for wear and damage.
- Inspect the generator shaft for wear and damage.
- **Replace the transmission (e-CVT)** .

POOR ACCELERATION

Probable cause(s)

- Traction motor defective: worn or damaged:
-
    - Stator
    - Rotor
    - Position sensor
    - Position sensor line
    - Terminal plate
    - Transmission fluid temperature sensor
    - Sensor harness
    - 3-phase wires
- Traction motor defective; faulty installations:
-
    - Stator
    - Position sensor
    - Terminals
    - 3-phase wire terminals
- Traction motor stator temperature high
- Traction motor rotor temperature high
- Traction motor position sensor not learned
- Generator motor defective: worn or damaged:
-
    - Stator
    - Rotor
    - Position sensor
    - Position sensor line
    - Terminal plate

    - 3-phase wires
- Generator motor defective; faulty installations:
-
    - Stator
    - Position sensor
    - Terminals
    - 3-phase wire terminals
- Generator motor stator temperature high
- Generator motor position sensor not learned
- Engine output low
- Low ATF level
- ATF pump worn or binding
- Main regulator valve stuck or spring worn
- Foreign material in separator plate orifice
- Cooler relief valve defective
- ATF strainer clogged
- ATF cooler clogged

NOTE:

- Check the engine control system.
- Check the ATF level. If the level is below the lower level, check the ATF cooler lines for leaks and loose connections. If necessary, clean the ATF cooler lines.
- Inspect the motor shaft for wear and damage.
- Inspect the generator shaft for wear and damage.
- Check the ATF pump drive gears for wear and damage.
- **Replace the valve body assembly** .
- Check for a clogged orifice in the separator plate. If the orifice is clogged, remove it and clean the separator plate orifice.
- Check the ATF strainer for debris. If the strainer is clogged, find the damaged components that caused the debris.
- Check the ATF cooler.
- **Replace the transmission (e-CVT)** .

SHIFT POSITION INDICATOR DOES NOT INDICATE AT ALL

Probable cause(s)

- Gauge control module defective
- SBW shifter control module defective
- PCM defective

NOTE:

- **Check the F-CAN communication line by using the gauge control module self-diagnostic function** .
- **Check the indicator drive circuit in the gauge control module by using the gauge control module self-diagnostic function** .

SPEEDOMETER AND ODOMETER DOES NOT OPERATE

Probable cause(s)

- Traction motor position sensor defective
- Traction motor position sensor line failure
- Traction motor sensor harness failure
- Traction motor position sensor failed to install

NOTE:

- Inspect the motor shaft for wear and damage.
- Check the motor position sensor harness for poor connections, loose terminals, wear, and damage.
- **Replace the transmission (e-CVT)** .

THE PADDLE SHIFTERS DO NOT OPERATE EVEN THOUGH THE PADDLE SHIFTER IS OPERATED IN D POSITION/MODE

Probable cause(s)

- A problem in the paddle shifter circuit
- Paddle shifter defective
- PCM defective

NOTE:

- **Troubleshoot the paddle shifter circuit** .
- **Test the paddle shifter** .

TRANSMISSION DOES NOT SHIFT INTO P POSITION/MODE OR SHIFT OUT OF P POSITION/MODE

Probable cause(s)

- Park pawl actuator defective
- Park pawl actuator driver unit defective
- Park position sensor defective
- SBW shifter control module defective
- Park mechanism defective

NOTE:

- Check the park position sensor.
- Inspect the park mechanism and the park pawl actuator.
- Check SBW shifter control module.

VEHICLE DOES NOT ACCELERATE ABOVE CERTAIN SPEED

Probable cause(s)

- Traction motor defective: worn or damaged:
-
    - Stator
    - Rotor
    - Position sensor
    - Position sensor line
    - Terminal plate

  - Transmission fluid temperature sensor
  - Sensor harness
  - 3-phase wires
- Traction motor defective; faulty installations:
-
  - Stator
  - Position sensor
  - Terminals
  - 3-phase wire terminals
- Traction motor stator temperature high
- Traction motor rotor temperature high
- Traction motor position sensor not learned
- Generator motor defective: worn or damaged:
-
  - Stator
  - Rotor
  - Position sensor
  - Position sensor line
  - Terminal plate
  - 3-phase wires
- Generator motor defective; faulty installations:
-
  - Stator
  - Position sensor
  - Terminals
  - 3-phase wire terminals
- Generator motor stator temperature high
- Generator motor position sensor not learned
- Engine output low
- Low ATF level
- ATF pump worn or binding
- Main regulator valve stuck or spring worn
- Foreign material in separator plate orifice
- Cooler relief valve defective
- ATF strainer clogged
- ATF cooler clogged

NOTE:

- Check the engine control system.
- Check the motor position sensor harness for poor connections, loose terminals, wear, and damage.
- Check the ATF level. If the level is below the lower level, check the ATF cooler lines for leaks and loose connections. If necessary, clean the ATF cooler lines.
- Check the ATF pump drive gears for wear and damage.
- **Replace the valve body assembly** .
- Inspect the motor shaft for wear and damage.

- Inspect the generator shaft for wear and damage.
- Check for a clogged orifice in the separator plate. If the orifice is clogged, remove it and clean the separator plate orifice.
- Check the ATF strainer for debris. If the strainer is clogged, find the damaged components that caused the debris.
- Check the ATF cooler.
- **Replace the transmission (e-CVT)** .

VEHICLE DOES NOT MOVE IN D POSITION/MODE

Probable cause(s)

- Traction motor position sensor defective
- Traction motor position sensor line failure
- Traction motor sensor harness failure
- Park pawl actuator defective
- Park pawl actuator driver unit defective
- Park position sensor defective
- SBW shifter control module defective

NOTE:

- Inspect the motor shaft for wear and damage.
- Check the motor position sensor harness for poor connections, loose terminals, wear, and damage.
- Check the park position sensor.
- Inspect the park mechanism and the park pawl actuator.
- Check the SBW shifter control module.
- **Replace the transmission (e-CVT)** .

VEHICLE DOES NOT MOVE IN R POSITION/MODE

Probable cause(s)

- Traction motor position sensor defective
- Traction motor position sensor line failure
- Traction motor sensor harness failure
- Park pawl actuator defective
- Park pawl actuator driver unit defective
- Park position sensor defective
- SBW shifter control module defective

NOTE:

- Inspect the motor shaft for wear and damage.
- Check the motor position sensor harness for poor connections, loose terminals, wear, or damage.
- Check the park position sensor.
- Inspect the park mechanism and the park pawl actuator.
- Check the SBW shifter control module.
- **Replace the transmission (e-CVT)** .

VEHICLE DOES NOT RECHARGE FROM GENERATOR MOTOR

Probable cause(s)

- Foreign material in traction motor
- Foreign material in PCU 3-phase connectors
- Generator motor defective: worn or damaged:
-
    - Stator
    - Rotor
    - Position sensor
    - Position sensor line
    - Terminal plate
    - 3-phase wires
- Generator motor defective; faulty installations:
-
    - Stator
    - Position sensor
    - Terminals
    - 3-phase wire terminals

- Countershaft worn or damaged
- Motor shaft worn or damaged
- Thrust washer seized, worn, or damaged
- Input shaft bearing, countershaft bearing, generator shaft bearing, motor shaft bearing, or differential carrier bearing defective
- Park mechanism defective

NOTE:

- Inspect the generator shaft for wear and damage.
- Inspect the countershaft for wear and damage.
- Inspect the motor shaft for wear and damage.
- Check the thrust washers for seizure, wear and damage.
- Check the bearings for the input shaft, the countershaft, the generator shaft, the motor shaft, and the differential carrier.
- Inspect the park mechanism and the park pawl actuator.
- **Replace the transmission (e-CVT)** .

VEHICLE DOES NOT RECHARGE FROM MOTOR REGENERATIVE SYSTEM

Probable cause(s)

- Traction motor defective: worn or damaged:
-
    - Stator
    - Rotor
    - Position sensor
    - Position sensor line
    - Terminal plate
    - Sensor harness

    - 3-phase wires
- Traction motor defective; faulty installations:
-
    - Stator
    - Position sensor
    - Terminals
    - 3-phase wire terminals
- Foreign material in traction motor
- Foreign material in PCU 3-phase connectors
- Countershaft worn or damaged
- Motor shaft worn or damaged
- Final gears worn or damaged
- Thrust washer seized, worn, or damaged
- Input shaft bearing, countershaft bearing, generator shaft bearing, motor shaft bearing, or differential carrier bearing defective

NOTE:

- Check the motor position sensor harness for poor connections, loose terminals, wear, and damage.
- Inspect the countershaft for wear and damage.
- Inspect the motor shaft for wear and damage.
- Check the final gears for wear and damage.
- Check the thrust washers for seizure, wear and damage.
- Check the bearings for the input shaft, the countershaft, the generator shaft, the motor shaft, and the differential carrier.
- **Replace the transmission (e-CVT)** .

VEHICLE DOES NOT TURN TO THE READY TO DRIVE MODE

Probable cause(s)

- Park pawl actuator defective
- Park pawl actuator driver unit defective
- Park position sensor defective
- SBW shifter control module defective

NOTE:

- Check the park position sensor.
- Inspect the park mechanism and the park pawl actuator.
- Check the SBW shifter control module.

VEHICLE IN READY TO DRIVE MODE, BUT VEHICLE DOES NOT MOVE IN ANY GEAR

Probable cause(s)

- Traction motor defective: worn or damaged:
-
    - Stator
    - Rotor
    - Position sensor

    - Position sensor line
    - Terminal plate
    - Sensor harness
    - 3-phase wires
- Traction motor defective; faulty installations:
-
    - Stator
    - Position sensor
    - Terminals
    - 3-phase wire terminals
- Foreign material in traction motor
- Foreign material in PCU 3-phase connectors
- Generator motor defective: worn or damaged:
-
    - Stator
    - Rotor
    - Position sensor
    - Position sensor line
    - Terminal plate
    - 3-phase wires
- Generator motor defective; faulty installations:
-
    - Stator
    - Position sensor
    - Terminals
    - 3-phase wire terminals
- Generator motor position sensor not learned
- Park pawl actuator defective
- Park pawl actuator driver unit defective
- Park position sensor defective
- SBW shifter control module defective
- Transmission assembly and drive plate installation defective
- Countershaft worn or damaged
- Motor shaft worn or damaged
- Final gears worn or damaged
- Thrust washer seized, worn, or damaged
- Input shaft bearing, countershaft bearing, generator shaft bearing, motor shaft bearing, or differential carrier bearing defective
- ATF cooler clogged
- Axle disengaged

NOTE:

- Check for an incorrectly installed transmission, and check the drive plate for wear and damage. Replace the drive plate if it is worn or damaged.
- Inspect the countershaft for wear and damage.
- Inspect the motor shaft for wear and damage.

- Inspect the generator shaft for wear and damage.
- Inspect the final gears for wear and damage.
- Check the thrust washer for seizure, wear, and damage.
- Check the bearings for the input shaft, the countershaft, the generator shaft, the motor shaft, and the differential carrier.
- Check the ATF cooler.
- Check the axles.
- Check the park position sensor.
- Inspect the park mechanism and the park pawl actuator.
- Check the SBW shifter control module.
- **Replace the transmission (e-CVT)** .

VEHICLE MOVES IN N POSITION/MODE

Probable cause(s)

- Excessive ATF
- Relief valve defective
- Clutch defective
- Clearance between clutch end-plate and top disc incorrect

NOTE:

- Check the ATF level. If the level is above the upper level, drain the ATF if it is over-filled.
- **Replace the valve body assembly** .
- Inspect the clearance between the clutch end-plate and the top disc. If the clearance is out of tolerance, replace the clutch.

VIBRATION IN ALL SHIFT POSITIONS/MODES

Probable cause(s)

- Transmission assembly and drive plate installation defective
- Flywheel defective

NOTE:

- Check for an incorrectly installed transmission, and check the drive plate for wear and damage. Replace the drive plate if it is worn or damaged.
- Check the flywheel for wear and damage, if the flywheel is worn or damaged, replace the flywheel.

WITH THE VEHICLE IN THE ON MODE, THE SHIFT POSITION INDICATOR DISPLAYS AN IMPROPER INDICATION, OR IT NEVER DISPLAYS AT ALL

Probable cause(s)

- Gauge control module defective
- SBW shifter control module defective
- PCM defective

NOTE:

- **Check the F-CAN communication line by using the gauge control module self-diagnostic function** .

- **Check the indicator drive circuit in the gauge control module by using the gauge control module self-diagnostic function** .

DESCRIPTION & OPERATION

GEAR SYSTEM DESCRIPTION - ELECTRONIC CONTROL SYSTEM

For locations of each component on the vehicle, refer to Component Location Index.

- **SBW shifter control module, Shift solenoid valve A, Shift solenoid valve B, Transmission fluid pressure sensor**
- **Paddle shifter +, Paddle shifter -, Sport mode switch, Shift position indicator, Deceleration Selector Indicator**
- **Battery condition monitor module, Motor control module, PCU, Traction motor, Generator motor, Transmission fluid temperature sensor**
- **PCM, APP sensor**
- **VSA modulator-control unit**
- **Electric servo brake control unit**
- **Brake pedal position switch**
- **Gauge control module**

Functional Diagram

The electronic control system consists of the PCM, sensors, switches, and shift solenoid valves. The PCM receives input signals from the sensors, switches, and other control units, processes data, and outputs signals for the engine control system and the gear control system. The gear control system includes clutch pressure control. The PCM determines the drive mode based on the information sent from each sensor and control unit. The PCM actuates shift solenoid valves A and B to engage over drive clutch.

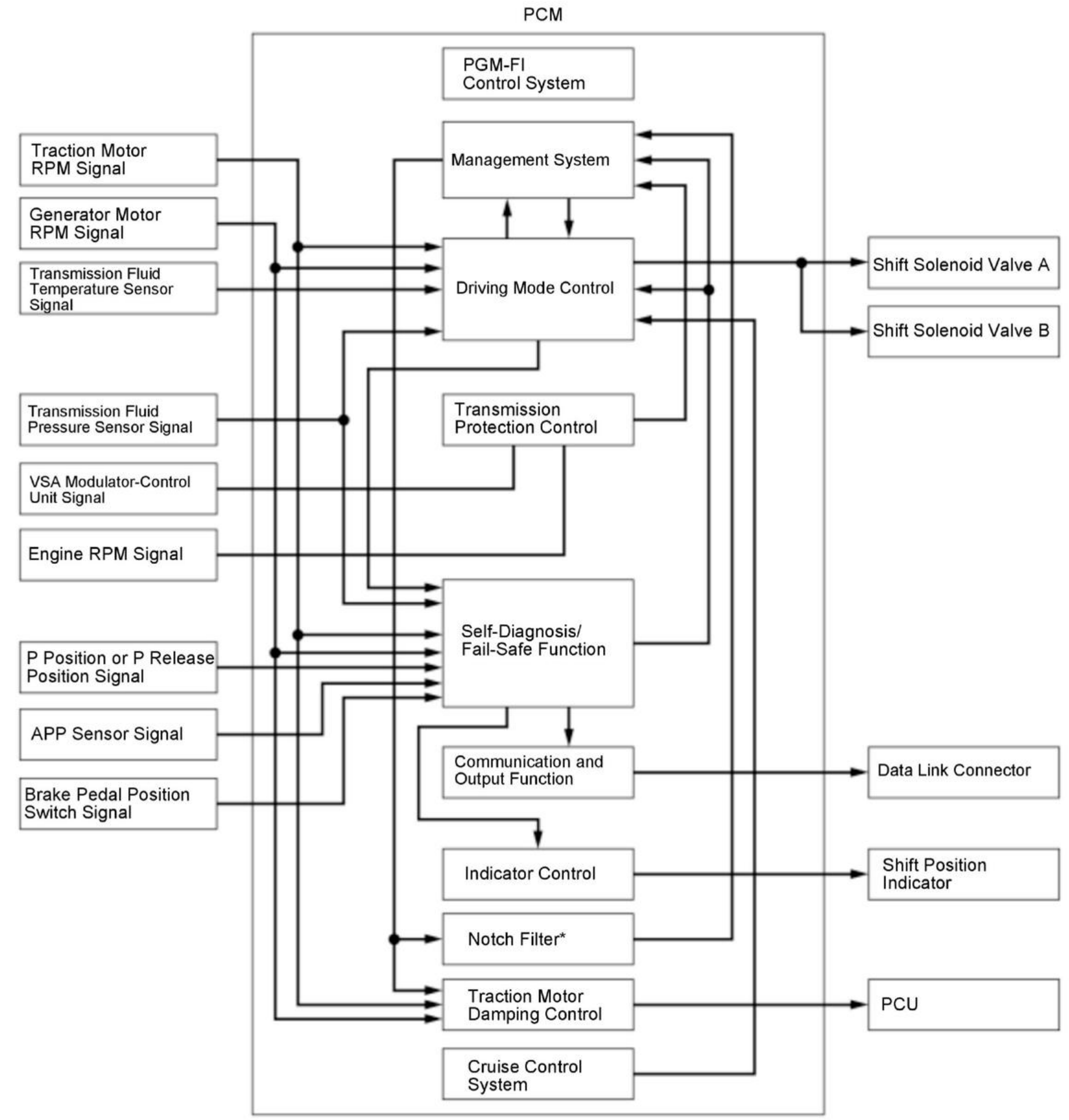
PCM
PGM-FI Control System
Management System
Driving Mode Control
Transmission Protection Control
Self-Diagnosis/ Fail-Safe Function
Communication and Output Function
Indicator Control
Notch Filter*
Traction Motor Damping Control
Cruise Control System
Traction Motor RPM Signal
Generator Motor RPM Signal
Transmission Fluid Temperature Sensor Signal
Transmission Fluid Pressure Sensor Signal
VSA Modulator-Control Unit Signal
Engine RPM Signal
P Position or P Release Position Signal
APP Sensor Signal
Brake Pedal Position Switch Signal
Shift Solenoid Valve A
Shift Solenoid Valve B
Data Link Connector
Shift Position Indicator
PCU

*: By filtering the target driving force calculated by the management system through the notch filter which reduces the specific frequency, the fluctuation in the motor torque command value generated by the drive system resonance is suppressed and it generates a fluent motor torque command value.

Clutch Pressure Control

The PCM actuates shift solenoid valves A and B to control the over drive clutch pressure. The PCM receives input signals from the various sensors, switches, and control units, then processes the data, and determines the drive mode. When the drive mode is shifted from HV drive mode to engine drive mode, the PCM actuates shift solenoid valve B and makes the over drive clutch ready to be engaged. To reduce the shock caused during the engagement, the PCM controls the rpm of the engine and traction motor to be synchronized with each other before engaging the over drive clutch. Once speed of the engine and traction motor are synchronized, the PCM actuates shift solenoid valve A, and engages the over drive clutch. When the drive mode is shifted from engine drive mode to HV drive mode, the PCM turns off shift solenoid valves A and B, and releases the over drive clutch.

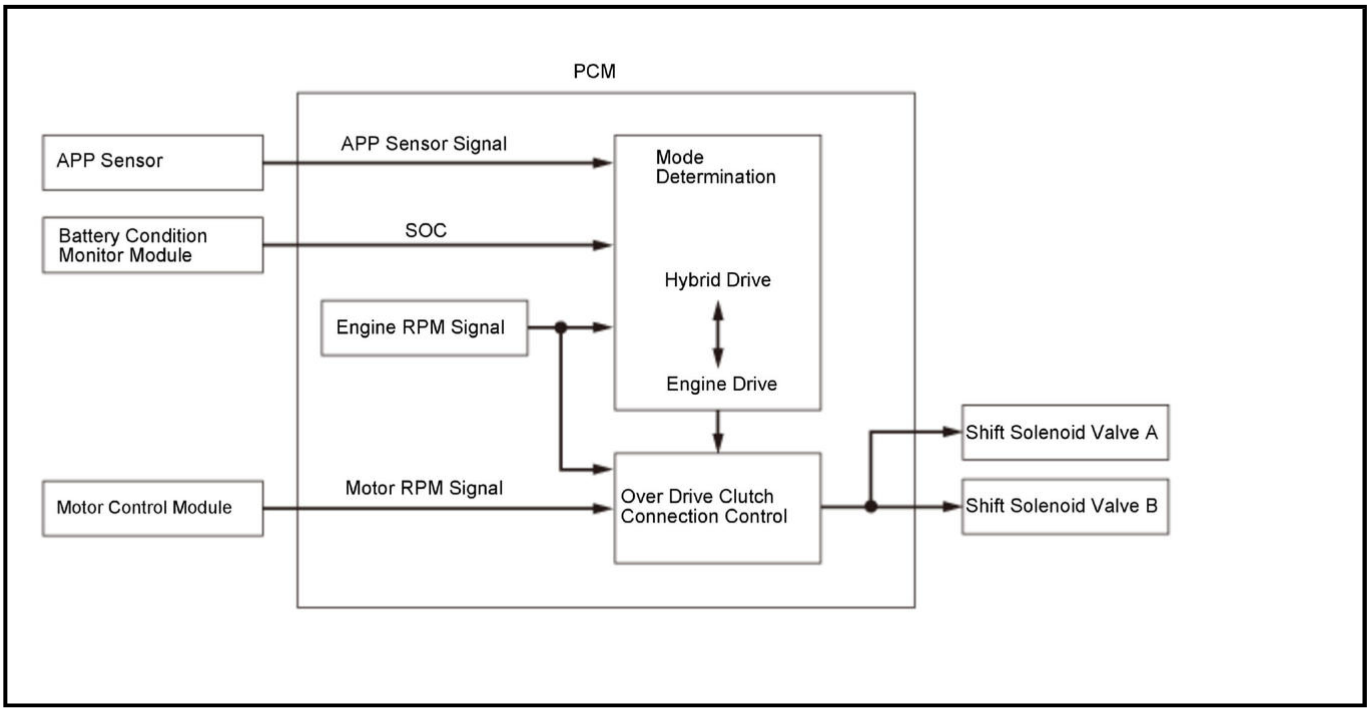
PCM
APP Sensor
APP Sensor Signal
Mode Determination
Battery Condition Monitor Module
SOC
Hybrid Drive
Engine RPM Signal
Engine Drive
Shift Solenoid Valve A
Motor Control Module
Motor RPM Signal
Over Drive Clutch Connection Control
Shift Solenoid Valve B

Deceleration Selector

Deceleration selector is adopted to use an auxiliary brake for engine braking, and produces decelerating power by the regenerative braking system and the coordination of the electric servo brake system. The PCM compares actual driving conditions with programmed driving conditions, based on the input from the paddle shifters, the SBW shifter control module, the motor control module, the battery condition monitor module, the electric servo brake control unit, and others, to control decelerating power while driving in D position/mode without pressing the accelerator.

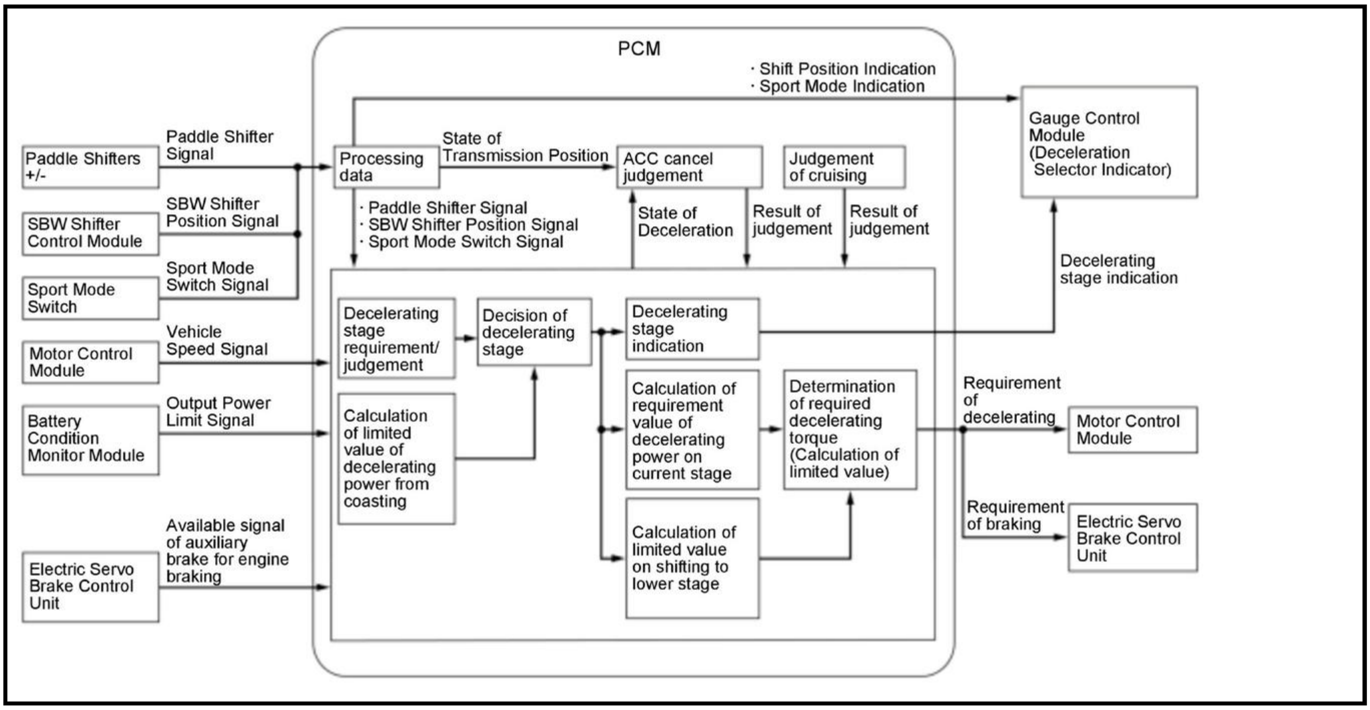
PCM
· Shift Position Indication
· Sport Mode Indication
Gauge Control Module (Deceleration Selector Indicator)
Paddle Shifters +/-
Paddle Shifter Signal
Processing data
State of Transmission Position
ACC cancel judgement
Judgement of cruising
SBW Shifter Control Module
SBW Shifter Position Signal
· Paddle Shifter Signal
· SBW Shifter Position Signal
· Sport Mode Switch Signal
State of Deceleration
Result of judgement
Result of judgement
Sport Mode Switch
Sport Mode Switch Signal
Decelerating stage indication
Motor Control Module
Vehicle Speed Signal
Decelerating stage requirement/ judgement
Decision of decelerating stage
Decelerating stage indication
Battery Condition Monitor Module
Output Power Limit Signal
Calculation of limited value of decelerating power from coasting
Calculation of requirement value of decelerating power on current stage
Determination of required decelerating torque (Calculation of limited value)
Requirement of decelerating
Motor Control Module
Electric Servo Brake Control Unit
Available signal of auxiliary brake for engine braking
Calculation of limited value on shifting to lower stage
Requirement of braking
Electric Servo Brake Control Unit

The vehicle can decelerate by pressing the paddle shifter -, and the decelerating stage returns by pressing the paddle shifter +. There are four stages of the decelerating power in the system, the driver can select the stage by using the paddle shifters. Each time the paddle shifter is pressed, the deceleration selector indicator in the gauge control module displays the current stage.

The extent of the decelerating power and the deceleration selector indicator by pressing the paddle shifters:

Paddle Shifter	Decelerating Power	Deceleration Selector Indicator
Pressing paddle shifter -	Changing to next higher stage at a press	Number of arrow increases from 1 to 2, 3, then 4
Pressing paddle shifter +	Returning to next lower stage at a press	Number of arrow decreases from 4 to 3, 2, then 1

There are limits to use the deceleration selector under certain conditions. When the deceleration selector makes an unavailable stage of the decelerating power, the PCM commands to change to next lower stage, or to cancel decelerating. If an unavailable stage is selected by pressing the paddle shifter -, the vehicle will not change the stage, and the deceleration selector indicator blinks the arrow(s) of the selected stage several times, then returns to the current stage.

Decelerating Limitations

- When high voltage battery is full-charged.
- When high voltage battery temperature is too low.
- When high voltage battery temperature is too high.
- When the protection of the hybrid system is required.
- The vehicle is coasting at speeds out of the allowable speed when pressing the paddle shifter.
- When the vehicle is stopped while turning on the ACC system with Low Speed Follow (LSF).

Each stage of the decelerating power, which can be selected by the deceleration selector, is set in accordance with the vehicle speed.

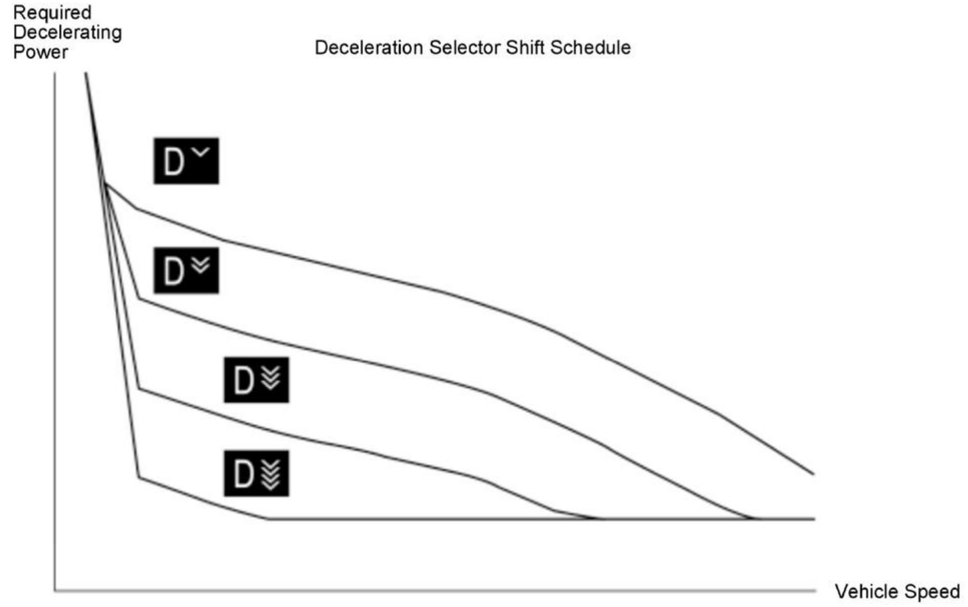

When the deceleration selector is selected, the system sets the decelerating power to:

- The 1st stage, when the system determines the vehicle is driving on a flat road.
- The 3rd stage, when the system determines the vehicle is descending a steep hill, and the 2nd and 1st stages are available.

GEAR SYSTEM DESCRIPTION - GENERAL OPERATION

General Description

The Electric Continuously Variable Transmission (e-CVT) is an electronically controlled transmission. The e-CVT provides stepless forward speeds and reverse. The e-CVT allows the vehicle to be driven under electric power, engine power, or combination of both power sources. Both power sources transmit power through the gears inside the transmission.

Transmission

The e-CVT assembly contains four parallel shafts, gears, the over drive clutch, the traction motor, and the generator motor. The input shaft is connected to the flywheel, which is connected to the engine crankshaft through the drive plate. Also, the input shaft is connected to the over drive clutch. When the input shaft is joined with the over drive gear by engaging the over drive clutch, engine power is transmitted through the input shaft, to the over drive gear and the countershaft, then to the final driven gear of the differential to provide drive. The motor shaft is connected to the traction motor, traction motor power is transmitted through the motor shaft, to the motor shaft gear and the countershaft, then to the final driven gear of the differential to provide drive. The generator shaft is connected to the generator motor. To charge the high voltage battery by generator motor, engine power is transmitted through the input shaft and generator shaft.

Electronic Control

The electronic control system consists of the powertrain control module (PCM), sensors, shift solenoid valves, and switches. The e-CVT seamlessly shifts between three drive modes; EV drive mode, HV drive mode, and engine drive mode. The PCM determines the drive mode based on the information sent from each sensor and control unit.

Hydraulic Control

The valve body assembly includes the regulator valve body and the shift valve body. They are installed to the flywheel housing. The regulator valve body contains ATF pumps A and B. ATF pump A is driven by the engine. ATF pump B is driven by the differential. These pumps supply hydraulic pressure to the hydraulic circuit. Transmission fluid pressure sensor is mounted on the outside of the transmission housing. Shift solenoid valves A and B are mounted on the outside of the flywheel housing. The PCM actuates the shift solenoid valves to control hydraulic pressure and engaging the over drive clutch.

Gear Selection

The SBW (Shift By Wire) system is a system that performs the shift operations of the driver electrically instead of using control cables. The SBW shifter has four positions/modes; P: PARK, R: REVERSE, N: NEUTRAL, and D: DRIVE.

Position	Description
P: PARK	Front wheels locked; the parking brake pawl engaged with the parking gear on the motor shaft. Over drive clutch is released. Traction motor does not rotate.
R: REVERSE	Traction motor rotates in reverse direction. The motor shaft drives the countershaft in reverse rotation.
N: NEUTRAL	Over drive clutch is released. Traction motor does not rotate.
D: DRIVE	General driving; D position/mode has three driving modes; EV drive mode, HV drive mode, and engine drive mode.

Shift Position Indicator

The shift position indicator in the gauge control module shows which shift position/mode has been selected without looking down at the console.

Over Drive Clutch

The over drive clutch is the hydraulic-actuated clutch, and is located at the end of the input shaft. The e-CVT applies hydraulic pressure to the over drive clutch to engage or disengage the over drive gear. When hydraulic pressure is introduced into the clutch drum, the clutch piston moves and presses the steel plates and the clutch discs. Power is then transmitted through the engaged clutch pack to its hub-mounted gear. Likewise, when the hydraulic pressure is bled from the clutch drum, the piston releases the steel plates and the clutch discs. Then the steel plates rotate with the clutch drum, and the clutch discs rotate with hub-mounted gear. The clutch discs are released from the steel plates. This allows the clutch disc to spin independently, transmitting no power.

Gear Operation

Gears on the input shaft:

- The input shaft gear is integral with the input shaft, and transmits the input shaft rotation to the generator shaft.
- The over drive gear is engaged/disengaged with the input shaft by the over drive clutch.

Gears on the motor shaft:

- The motor shaft gear is integral with the motor shaft, and transmits the traction motor rotation to the countershaft.
- The parking gear is splined with the motor shaft, and rotates with the motor shaft.

Gears on the generator shaft:

The generator shaft gear is integral with the generator shaft, and transmits the input shaft rotation to the generator motor.

Gears on the countershaft:

- The countershaft gear is integral with the countershaft, and transmits the motor shaft gear or over drive gear rotation to the final drive gear.
- The final drive gear is splined with the countershaft, and rotates with the countershaft.

Gears on the transfer assembly:

- The transfer driven gear is splined with the transfer hypoid drive gear/shaft assembly, and rotates with the transfer hypoid drive gear/shaft assembly.
- The transfer hypoid drive gear is integral with the hypoid drive shaft, and transmits the hypoid drive shaft rotation to the transfer hypoid driven gear.
- The transfer hypoid driven gear rotates the companion flange.

Transmission Cutaway View

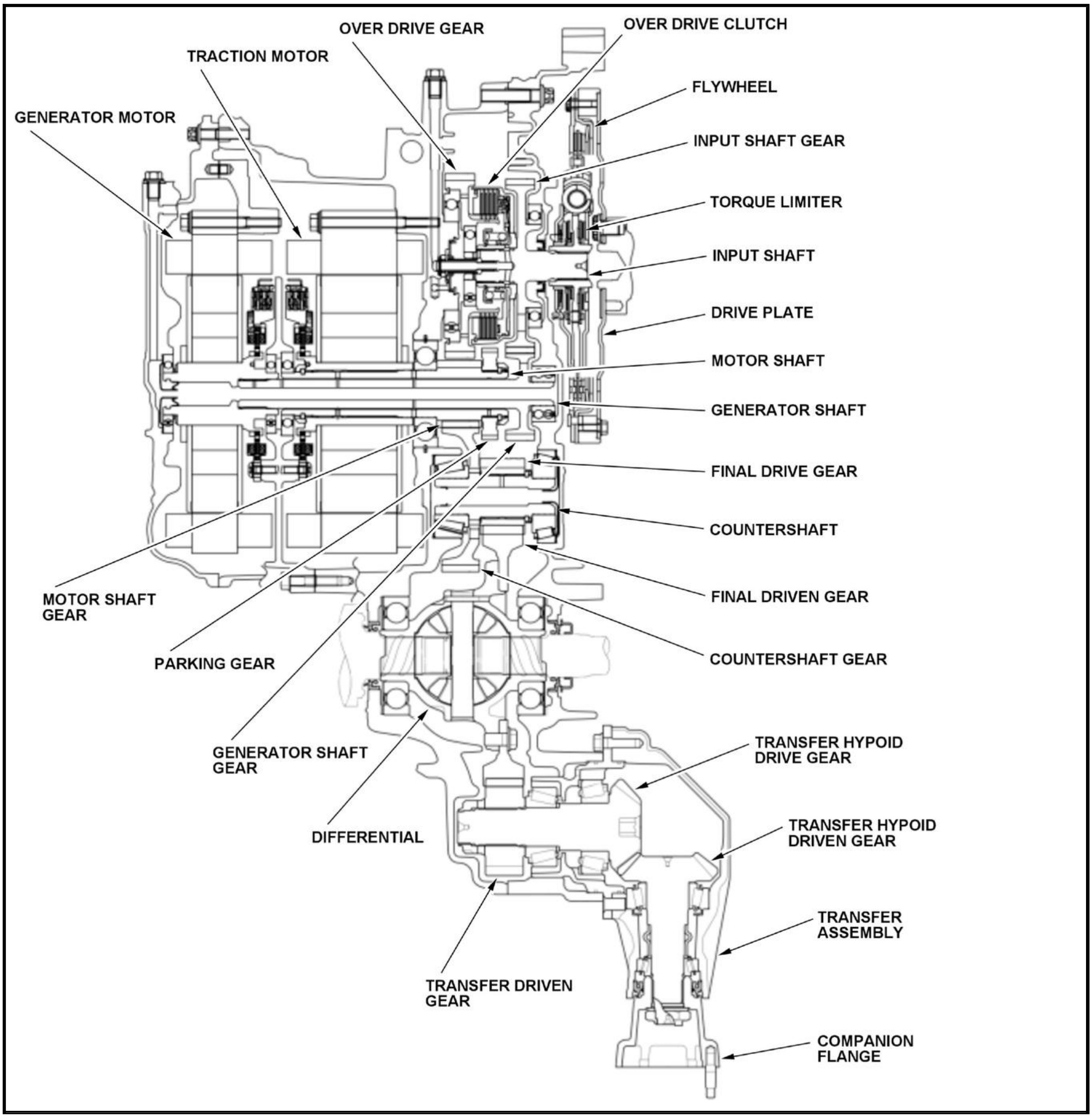
OVER DRIVE GEAR
OVER DRIVE CLUTCH
TRACTION MOTOR
FLYWHEEL
GENERATOR MOTOR
INPUT SHAFT GEAR
TORQUE LIMITER
INPUT SHAFT
DRIVE PLATE
MOTOR SHAFT
GENERATOR SHAFT
FINAL DRIVE GEAR
COUNTERSHAFT
MOTOR SHAFT GEAR
FINAL DRIVEN GEAR
PARKING GEAR
COUNTERSHAFT GEAR
GENERATOR SHAFT GEAR
TRANSFER HYPOID DRIVE GEAR
DIFFERENTIAL
TRANSFER HYPOID DRIVEN GEAR
TRANSFER ASSEMBLY
TRANSFER DRIVEN GEAR
COMPANION FLANGE

GEAR SYSTEM DESCRIPTION - HYDRAULIC CONTROLS

The valve body assembly includes the regulator valve body and the shift valve body. The regulator valve body contains ATF pumps A and B. ATF pump A is driven by ATF pump drive shaft A which the engine turns. ATF pump drive shaft A is connected to the input shaft which is driven by the engine via the flywheel. Fluid from ATF pump A flows through the main regulator valve to maintain specified pressure through the regulator valve body, directing pressure to each of the shafts, to the motors, and to the over drive clutch. ATF pump B is driven by ATF pump drive shaft B which the differential turns. ATF pump drive shaft B is connected to the final driven gear. Fluid from ATF pump B flows through each of the shafts and the motors. Shift solenoid valves A and B are mounted on the outside of the flywheel housing. Transmission fluid pressure sensor is mounted on the outside of the transmission housing.

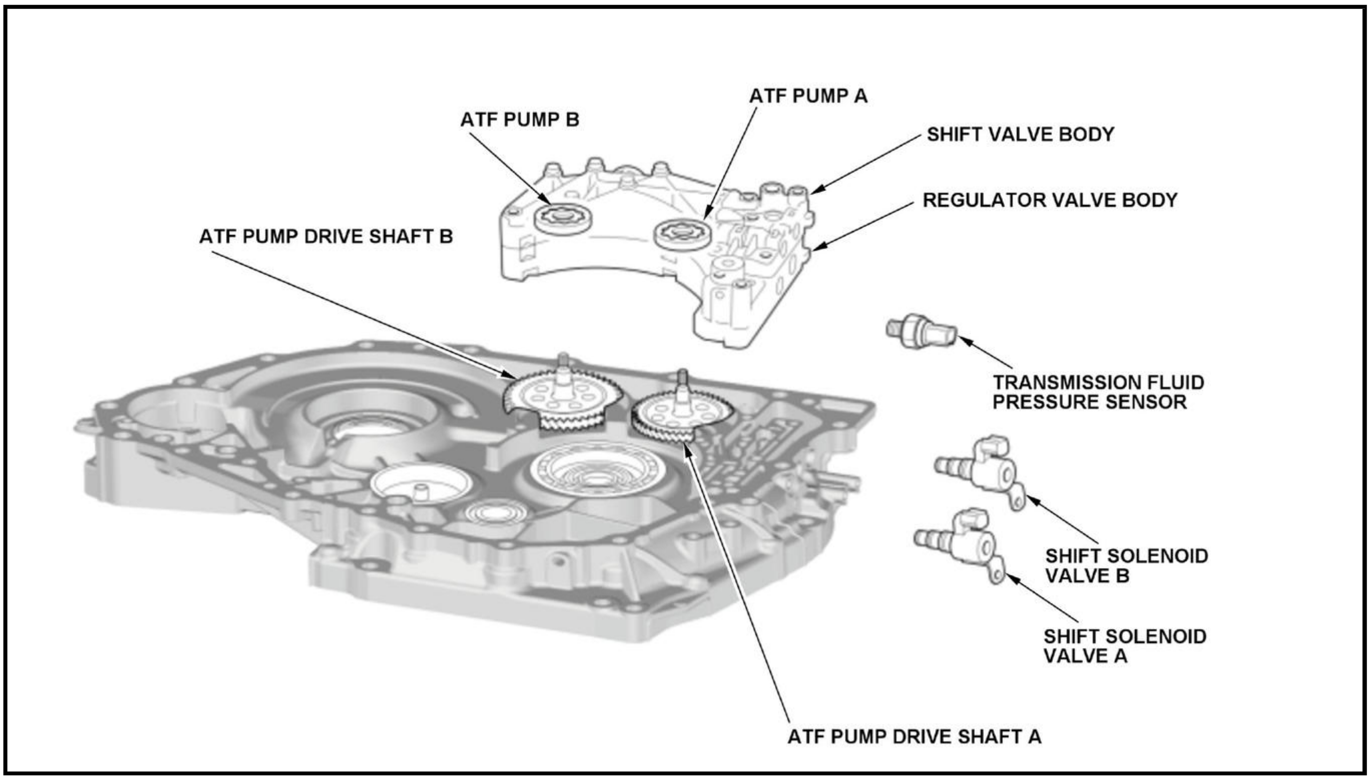
ATF PUMP A
ATF PUMP B
SHIFT VALVE BODY
REGULATOR VALVE BODY
ATF PUMP DRIVE SHAFT B
TRANSMISSION FLUID PRESSURE SENSOR
SHIFT SOLENOID VALVE B
SHIFT SOLENOID VALVE A
ATF PUMP DRIVE SHAFT A

Hydraulic Flow

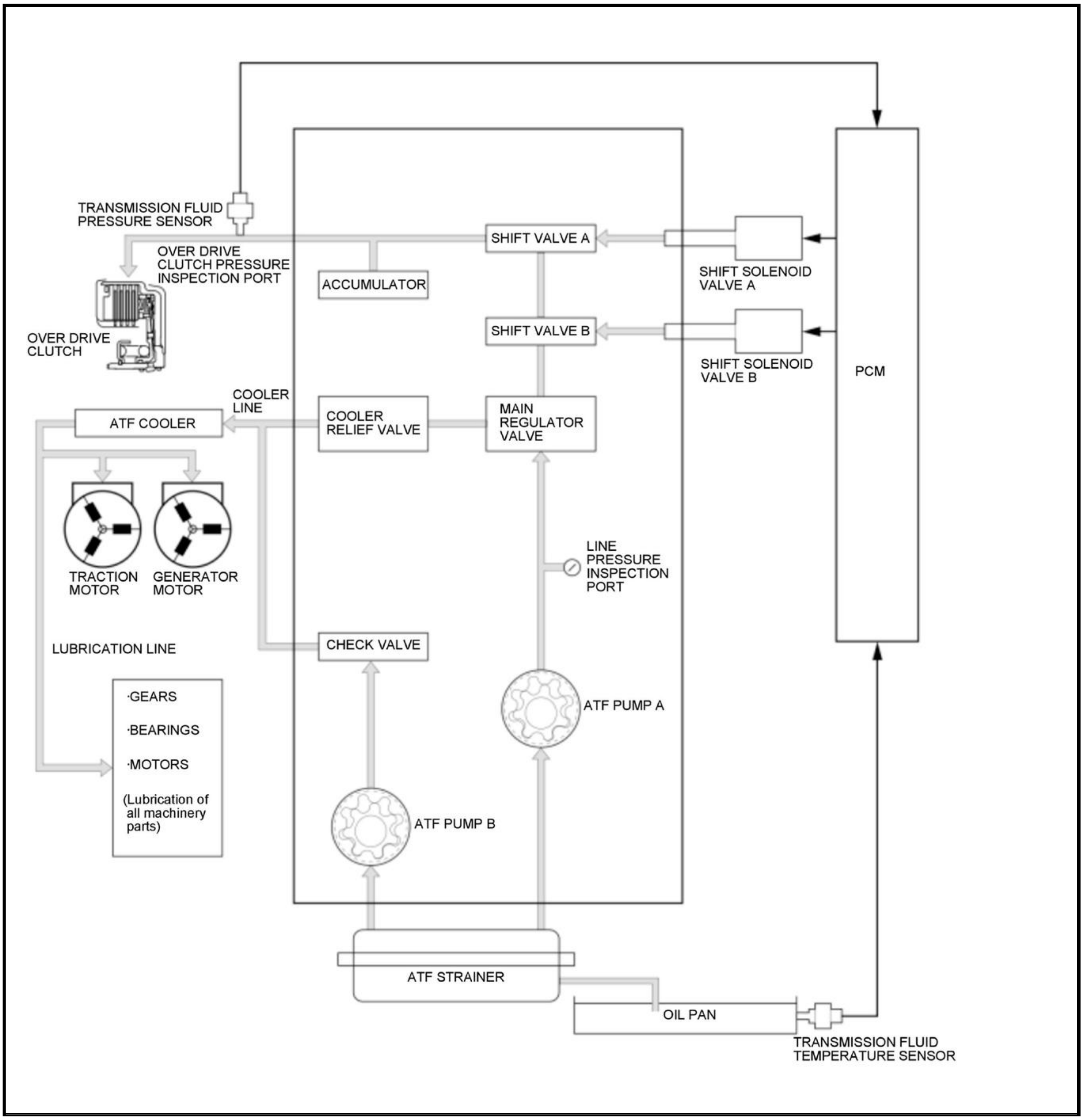
TRANSMISSION FLUID PRESSURE SENSOR
OVER DRIVE CLUTCH PRESSURE INSPECTION PORT
OVER DRIVE CLUTCH
ACCUMULATOR
SHIFT VALVE A
SHIFT VALVE B
SHIFT SOLENOID VALVE A
SHIFT SOLENOID VALVE B
PCM
COOLER LINE
ATF COOLER
COOLER RELIEF VALVE
MAIN REGULATOR VALVE
TRACTION MOTOR
GENERATOR MOTOR
LINE PRESSURE INSPECTION PORT
LUBRICATION LINE
CHECK VALVE
·GEARS
·BEARINGS
·MOTORS
(Lubrication of all machinery parts)
ATF PUMP A
ATF PUMP B
ATF STRAINER
OIL PAN
TRANSMISSION FLUID TEMPERATURE SENSOR

GEAR SYSTEM DESCRIPTION - POWER FLOW

P and N Positions/Modes

The traction motor does not rotate; motor power is not transmitted to the countershaft. When the battery module SOC value is low, the engine will run. Engine power transmitted from the flywheel drives the input shaft and generator shaft, but the hydraulic pressure is not applied to the over drive clutch. Power is transmitted from the engine to the generator motor. In P, the motor shaft is locked by the parking brake pawl interlocking the parking gear on the motor shaft.

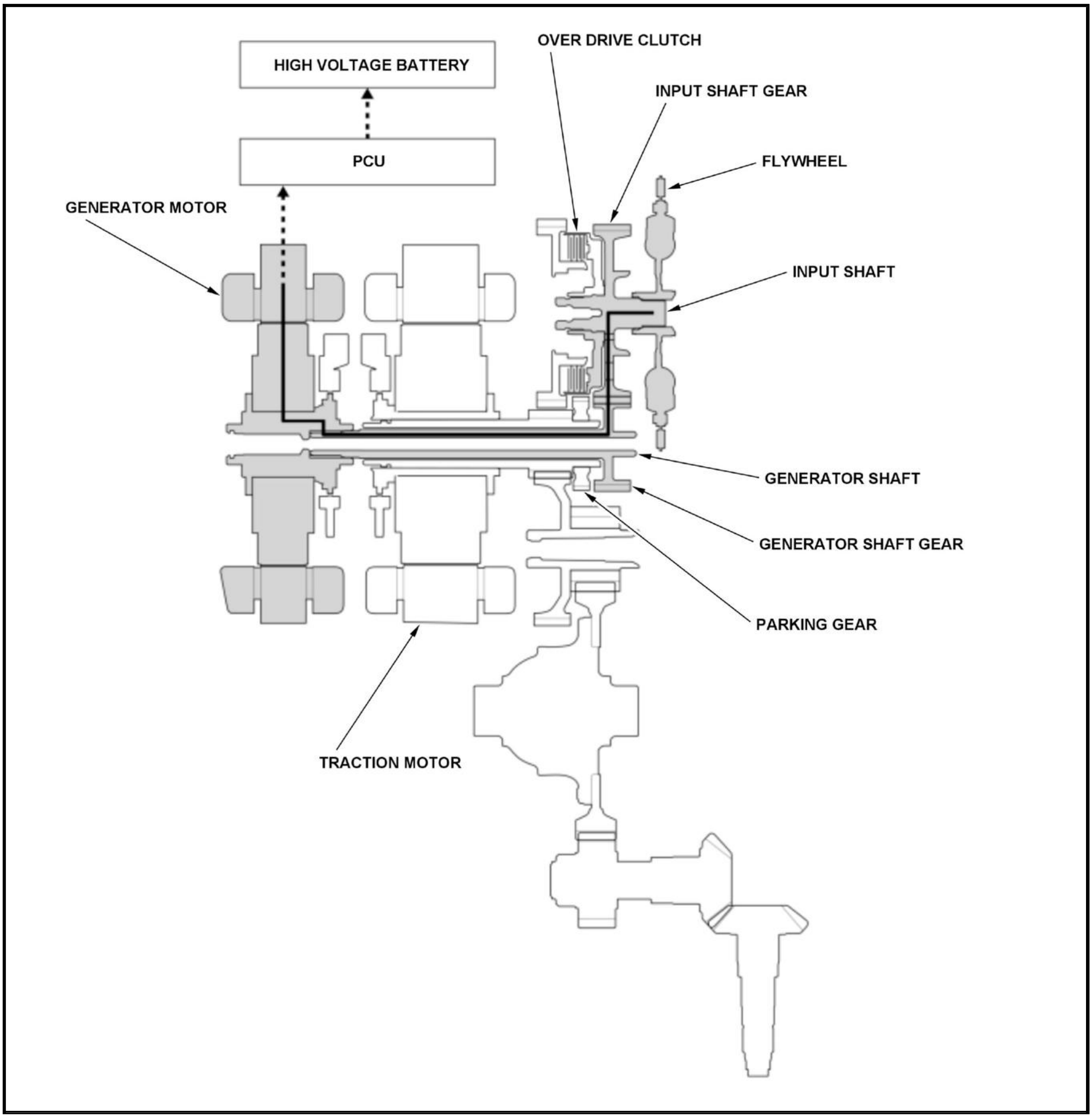
HIGH VOLTAGE BATTERY
PCU
OVER DRIVE CLUTCH
INPUT SHAFT GEAR
FLYWHEEL
GENERATOR MOTOR
INPUT SHAFT
GENERATOR SHAFT
GENERATOR SHAFT GEAR
PARKING GEAR
TRACTION MOTOR

D Position/Mode

In D, the optimum drive mode is automatically selected for different driving conditions from the EV drive mode, the HV drive mode, and the engine drive mode.

In EV Drive Mode

- Engine does not run; power is not transmitted from the flywheel.
- Traction motor rotates; power is transmitted to the motor shaft.
- Motor shaft transmits the motor power to the countershaft and the final drive gear, which in turn drives the final driven gear.

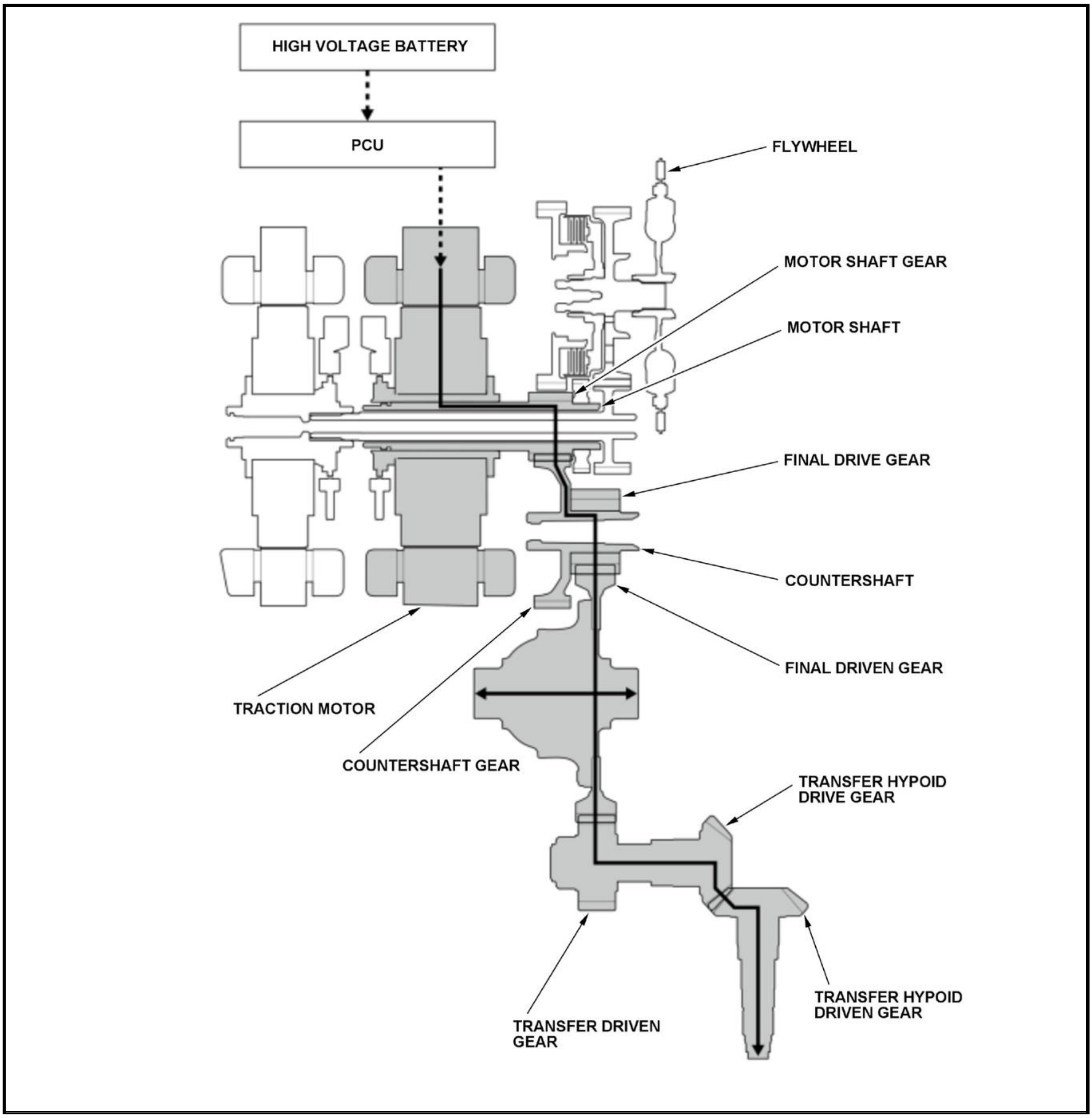
HIGH VOLTAGE BATTERY
PCU
FLYWHEEL
MOTOR SHAFT GEAR
MOTOR SHAFT
FINAL DRIVE GEAR
COUNTERSHAFT
FINAL DRIVEN GEAR
TRACTION MOTOR
COUNTERSHAFT GEAR
TRANSFER HYPOID DRIVE GEAR
TRANSFER HYPOID DRIVEN GEAR
TRANSFER DRIVEN GEAR

In HV Drive Mode

- Engine runs; power is transmitted from the flywheel.
- Traction motor rotates; power is transmitted to the motor shaft.
- Engine power transmitted from the flywheel drives the input shaft and generator shaft, but hydraulic pressure is not applied to the over drive clutch.
- Power is transmitted from the engine to the generator motor.
- Motor shaft transmits the motor power to the countershaft and the final drive gear, which in turn drives the final driven gear.

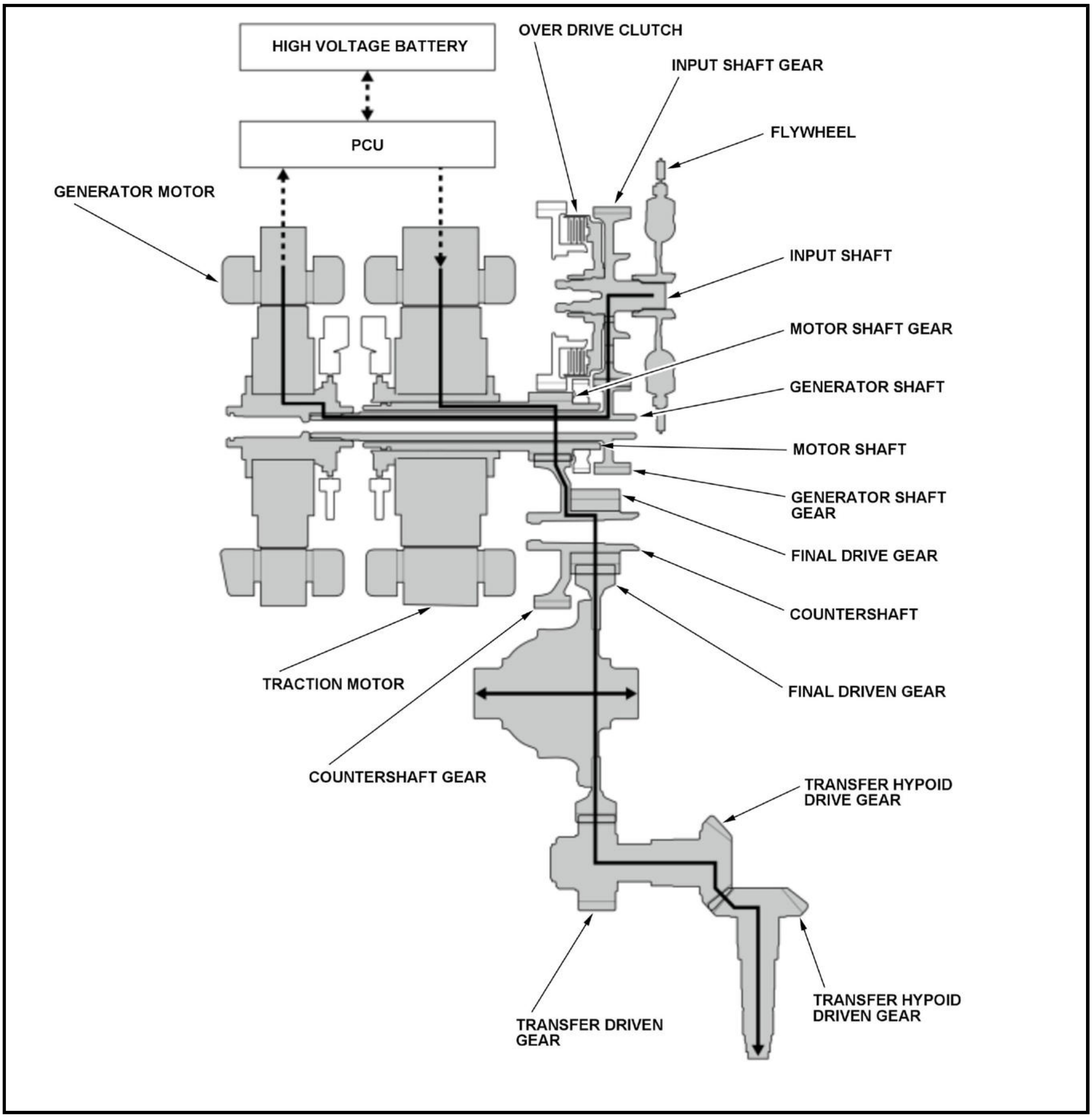
HIGH VOLTAGE BATTERY
PCU
GENERATOR MOTOR
OVER DRIVE CLUTCH
INPUT SHAFT GEAR
FLYWHEEL
INPUT SHAFT
MOTOR SHAFT GEAR
GENERATOR SHAFT
MOTOR SHAFT
GENERATOR SHAFT GEAR
FINAL DRIVE GEAR
COUNTERSHAFT
FINAL DRIVEN GEAR
TRACTION MOTOR
COUNTERSHAFT GEAR
TRANSFER HYPOID DRIVE GEAR
TRANSFER HYPOID DRIVEN GEAR
TRANSFER DRIVEN GEAR

In Engine Drive Mode

- Engine runs; engine power transmitted from the flywheel drives the input shaft.
- Hydraulic pressure is applied to the over drive clutch, then the over drive clutch engages the over drive gear with the input shaft.
- The input shaft drives countershaft via the over drive gear.
- Power is transmitted from the countershaft to the final drive gear, which in turn drives the final driven gear.

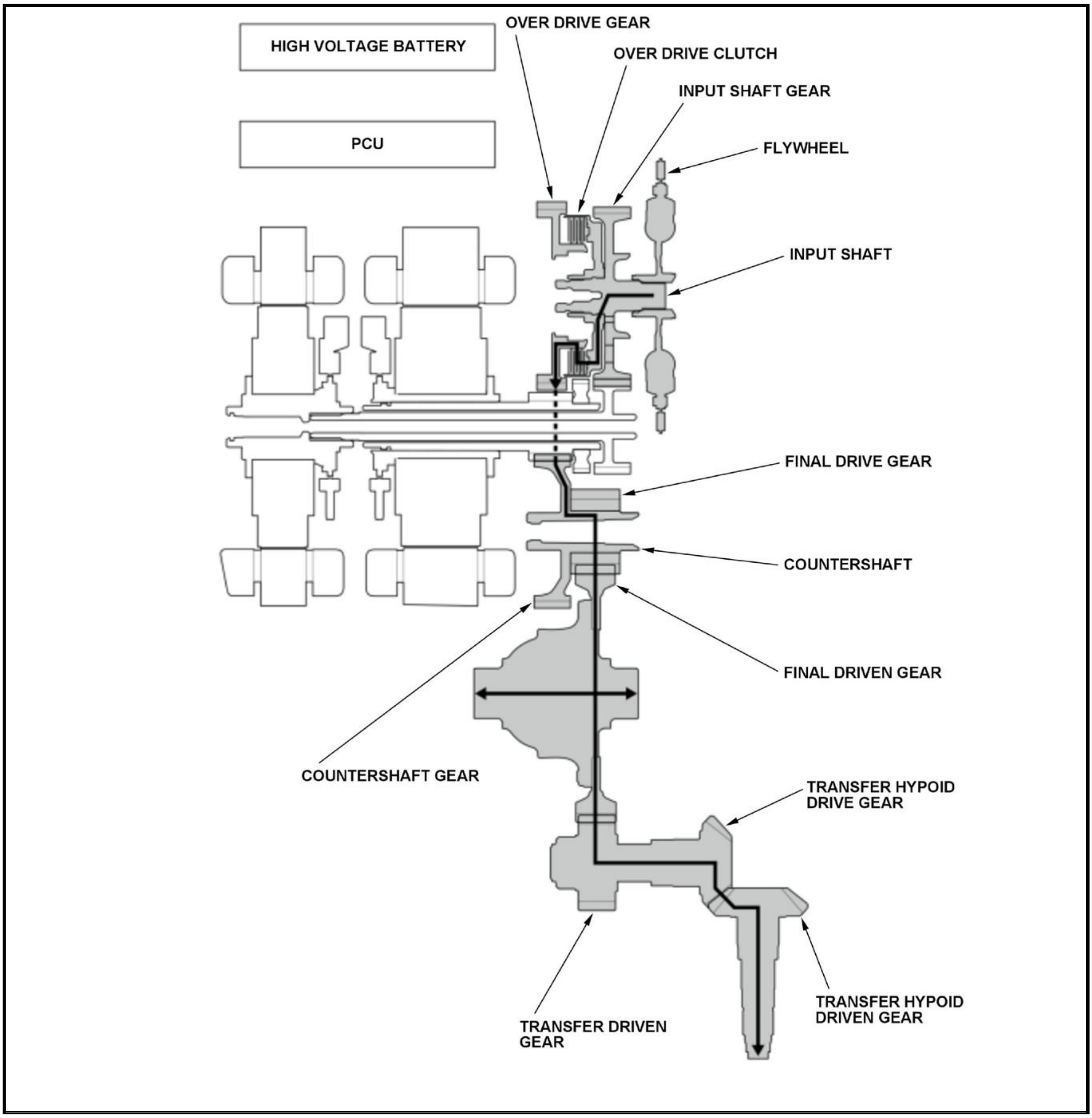
HIGH VOLTAGE BATTERY
PCU
OVER DRIVE GEAR
OVER DRIVE CLUTCH
INPUT SHAFT GEAR
FLYWHEEL
INPUT SHAFT
FINAL DRIVE GEAR
COUNTERSHAFT
FINAL DRIVEN GEAR
COUNTERSHAFT GEAR
TRANSFER HYPOID DRIVE GEAR
TRANSFER HYPOID DRIVEN GEAR
TRANSFER DRIVEN GEAR

R Position/Mode

In R, the vehicle runs only with the traction motor. The power flow through the transmission for reverse is identical in D. Reverse operation is enabled by reversing traction motor direction.

In EV Drive Mode

- Engine does not run; power is not transmitted from the flywheel.
- Traction motor rotates to the reverse direction in D; power is transmitted to the motor shaft.
- Motor shaft transmits the motor power to the countershaft and the final drive gear, which in turn drives the final driven gear.

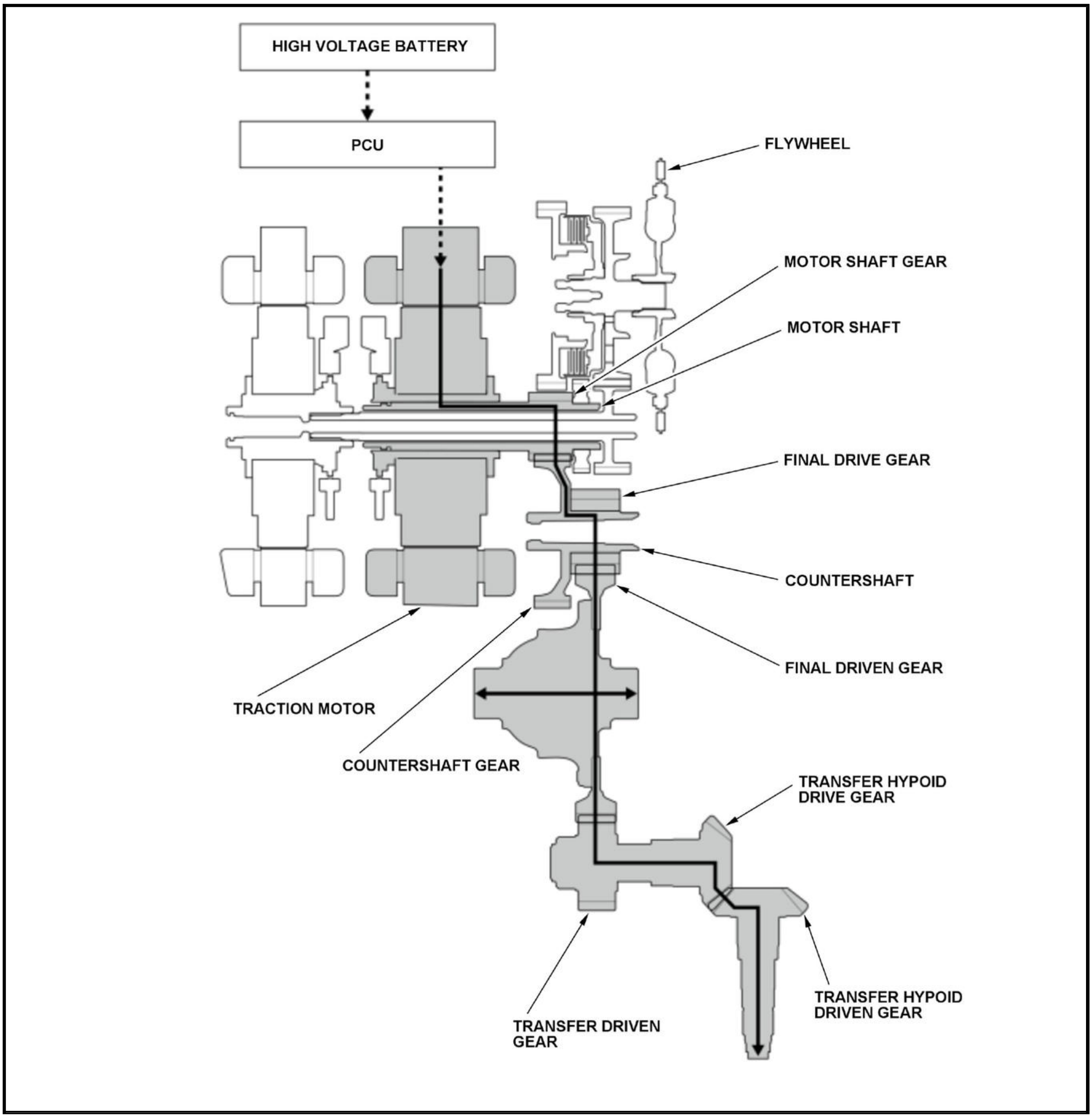
HIGH VOLTAGE BATTERY
PCU
FLYWHEEL
MOTOR SHAFT GEAR
MOTOR SHAFT
FINAL DRIVE GEAR
COUNTERSHAFT
FINAL DRIVEN GEAR
TRACTION MOTOR
COUNTERSHAFT GEAR
TRANSFER HYPOID DRIVE GEAR
TRANSFER HYPOID DRIVEN GEAR
TRANSFER DRIVEN GEAR

In HV Drive Mode

- Engine runs; engine power transmitted from the flywheel drives the input shaft and generator shaft, but hydraulic pressure is not applied to the over drive clutch.
- Power is transmitted from the engine to the generator motor.
- Traction motor rotates to the reverse direction in D; power is transmitted to the motor shaft.
- Motor shaft transmits the motor power to the countershaft and the final drive gear, which in turn drives the final driven gear.

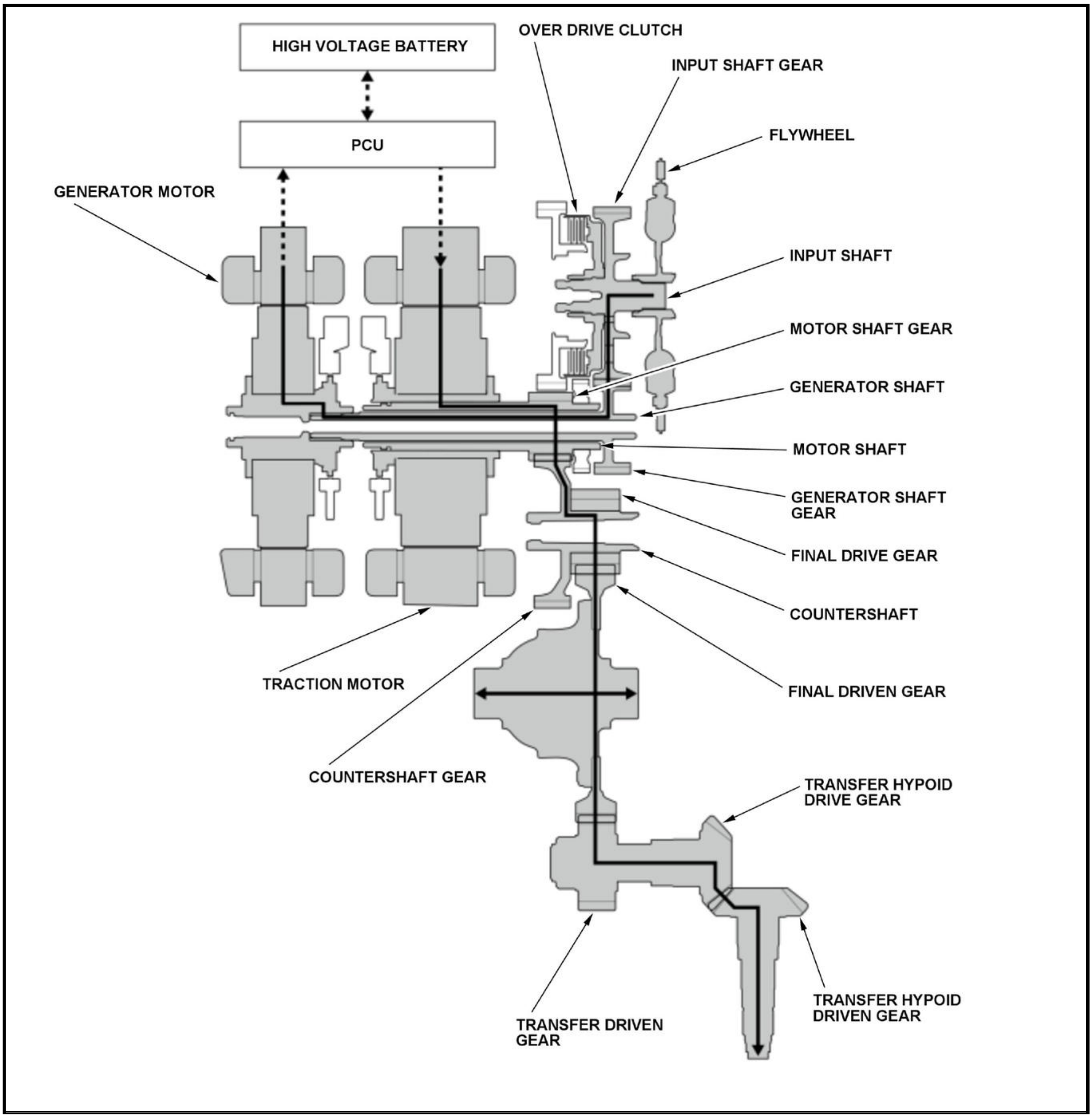
HIGH VOLTAGE BATTERY
PCU
OVER DRIVE CLUTCH
INPUT SHAFT GEAR
FLYWHEEL
GENERATOR MOTOR
INPUT SHAFT
MOTOR SHAFT GEAR
GENERATOR SHAFT
MOTOR SHAFT
GENERATOR SHAFT GEAR
FINAL DRIVE GEAR
COUNTERSHAFT
TRACTION MOTOR
FINAL DRIVEN GEAR
COUNTERSHAFT GEAR
TRANSFER HYPOID DRIVE GEAR
TRANSFER HYPOID DRIVEN GEAR
TRANSFER DRIVEN GEAR

Regenerative Braking

- When the vehicle is decelerating, the front wheels drive the final driven gear.
- The final driven gear drives the countershaft and the motor shaft.
- Power is transmitted from the front wheels to the traction motor.

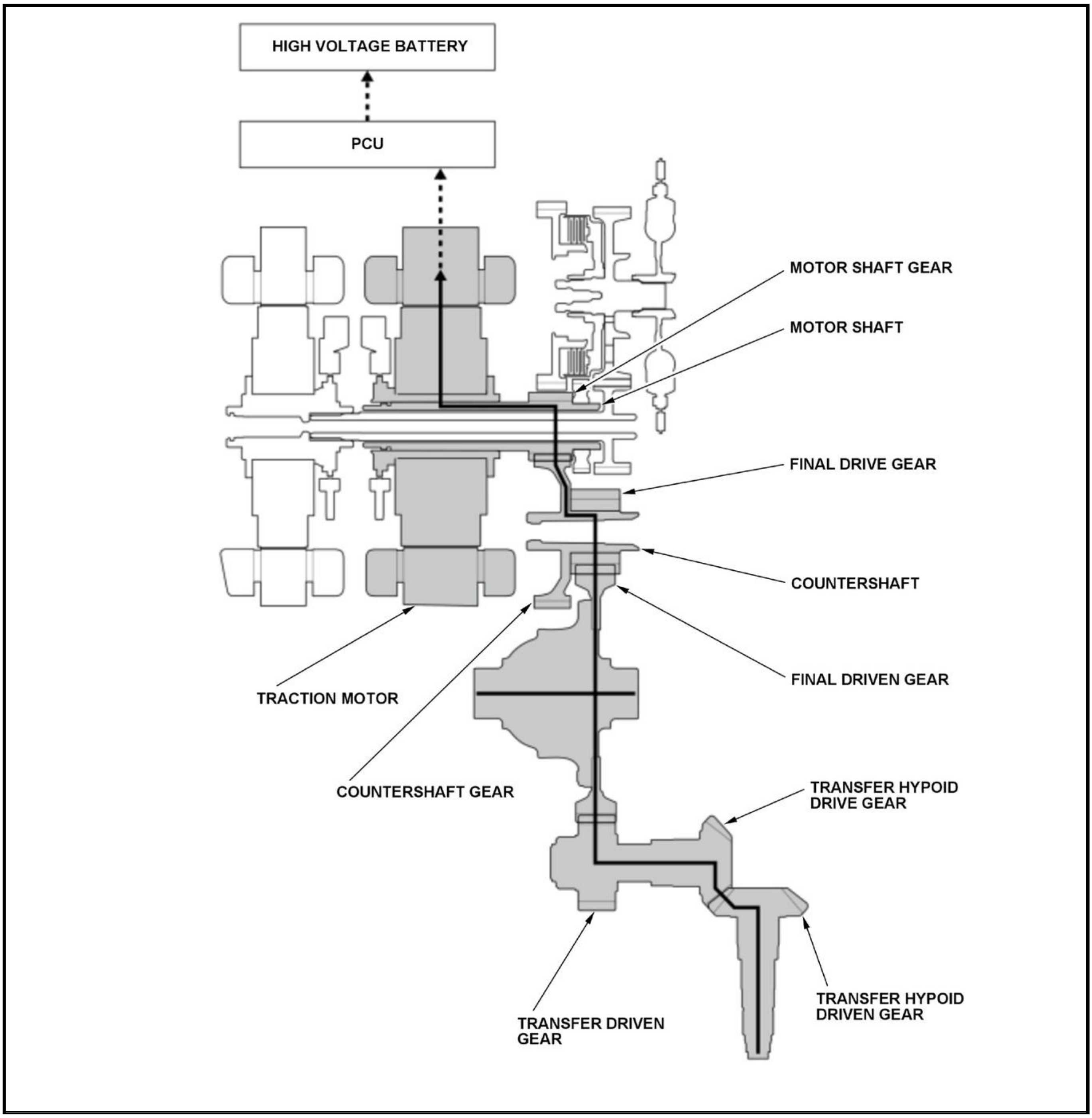
HIGH VOLTAGE BATTERY
PCU
MOTOR SHAFT GEAR
MOTOR SHAFT
FINAL DRIVE GEAR
COUNTERSHAFT
FINAL DRIVEN GEAR
TRACTION MOTOR
COUNTERSHAFT GEAR
TRANSFER HYPOID DRIVE GEAR
TRANSFER HYPOID DRIVEN GEAR
TRANSFER DRIVEN GEAR

GEAR SYSTEM DESCRIPTION - SHIFT CONTROL SYSTEM

For locations of each component on the vehicle, refer to Component Location Index.

- SBW shifter control module, Park pawl actuator driver unit, Park pawl actuator, Park position sensor
- PCM

Park Mechanism

The park mechanism locks the transmission by engaging the parking brake pawl with the parking gear which is splined with the motor shaft. The motor shaft gear which is integral with the motor shaft engages the countershaft gear which is integral with the countershaft, and the final drive gear which is splined with the countershaft engages the final driven gear.

Selecting the P position/mode switch commands the park pawl actuator turns the detent shaft to the P position. The detent shaft pushes the parking brake rod to engage the parking brake pawl with the park gear. When selecting the position/mode other than P, the park pawl actuator turns the detent shaft to the P release position to disengage the parking brake pawl from the park gear. Even if the end of the parking brake pawl rides on the top of the park gear teeth, slight movement of the vehicle will cause the parking brake pawl and the park gear to mesh with each other completely because the park brake rod spring puts tension on the park cone. The parking brake pawl receives the tension (which acts to separate the parking brake pawl from the parking gear) from the parking brake pawl spring.

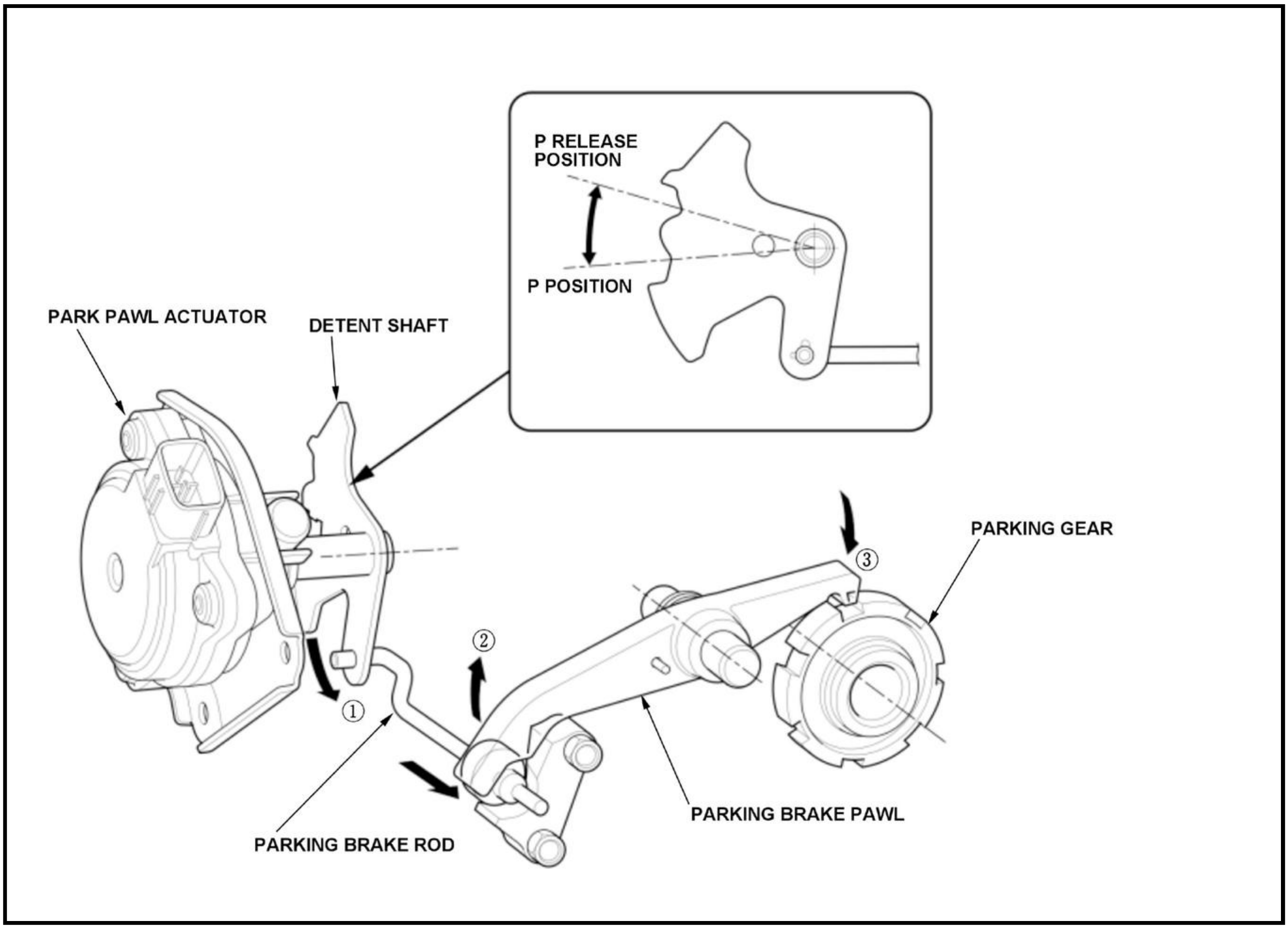
P RELEASE POSITION
P POSITION
PARK PAWL ACTUATOR
DETENT SHAFT
PARKING GEAR
③
②
①
PARKING BRAKE PAWL
PARKING BRAKE ROD

General Control Description

When the driver select one position/mode by operating the SBW shifter, the SBW shifter control module transmits a shift position signal to the park pawl actuator driver unit and the PCM. The PCM compares actual driving conditions with programmed conditions, based on the input from the SBW shifter control module and others, to perform the optimum driving under all conditions. The park position sensor outputs P position signal to the SBW shifter control module.

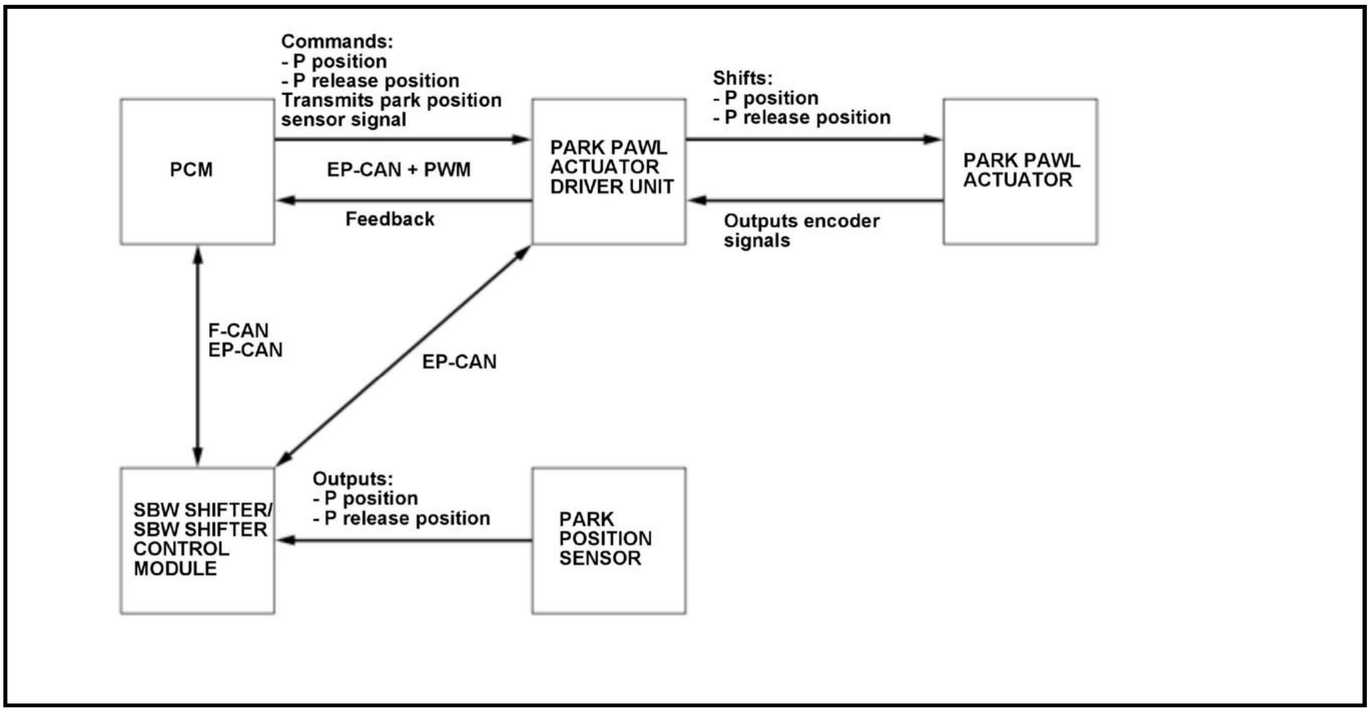
Commands:
- P position
- P release position
Transmits park position sensor signal
PCM
EP-CAN + PWM
Feedback
PARK PAWL ACTUATOR DRIVER UNIT
Shifts:
- P position
- P release position
PARK PAWL ACTUATOR
Outputs encoder signals
F-CAN
EP-CAN
EP-CAN
SBW SHIFTER/ SBW SHIFTER CONTROL MODULE
Outputs:
- P position
- P release position
PARK POSITION SENSOR

The shift control system includes the automatic P position/mode selection control, the neutral position holding mode, and the function for prevention of erroneous operation.

Automatic P Position/Mode Selection Control

Automatic P Position/Mode Selection Control with Door Open

When the vehicle stops (vehicle speed is less than 1 mph (2 km/h)) or if a driver disconnects the seat belt and opens the door with any other position/mode than P position/mode, P position/mode is automatically selected.

Operating Condition for Automatic P Position/Mode Selection Control with Door Open
With vehicle stop: See vehicle speed less than 1 mph (2 km/h)
With driver's seat belt disconnection: See seat belt switch OFF signal
Shift position condition: R, N, and D positions/modes
With driver's door open: See door switch OFF signal

After parking the vehicle in P position/mode by this mode you shift the position/mode out of P, the transmission returns to the P position/mode when you release the brake pedal unless the driver's door is closed and the driver's seat belt is fastened.

Automatic P Position/Mode Selection Control with POWER Switch OFF

When the vehicle stops (vehicle speed is less than 1 mph (2 km/h)) or if a driver turns the vehicle to the OFF (LOCK) mode with any other position/mode than P position/mode, P position/mode is automatically selected.

Neutral Position Holding Mode

This system is configured in such a way that the P position/mode is entered automatically when the vehicle is turned to the OFF (LOCK) mode. For this reason, a neutral position holding mode is provided when it is desired to stay in the N position/mode even when the vehicle is in the OFF (LOCK) mode. The neutral position holding mode keeps the transmission in the N position/mode for approximately 15 minutes.

Function for Prevention of Erroneous Operation

A function for prevention of erroneous operation is provided, to ensure that the operating safety is maintained at all times, even in case of a handling error in regard to the SBW shifter assembly.

Operations where the function for prevention of erroneous operation is activated:	Shift position after the function for prevention of erroneous operation was activated:
When the brake pedal is not pressed at the time of shifting from the P position/mode	P
When the accelerator pedal is pressed at the time of shifting from the P position/mode	P

Operations where the function for prevention of erroneous operation is activated:	Shift position after the function for prevention of erroneous operation was activated:
When the brake pedal is not pressed at the time of shifting from the N position/mode	N
When the accelerator pedal is pressed at the time of shifting from the N position/mode	N
When the vehicle speed is above 1 mph (2 km/h) at the time of shifting to the P position/mode	N
When the vehicle speed is above 5 mph (8 km/h) at the time of shifting from the D position/mode to the R position/mode	N
When the vehicle speed is above 7 mph (12 km/h) at the time of shifting from the R position/mode to the D position/mode	N

REMOVAL, INSTALLATION AND INSPECTION

TRANSFER ASSEMBLY REMOVAL, INSTALLATION, AND INSPECTION

Removal and Installation

NOTE:

- Clean the areas where the transfer assembly contacts the transmission (e-CVT) with solvent, and dry with compressed air.
- Keep all foreign particles out of the transmission (e-CVT).
- Apply a light coat of clean ATF on the O-ring before installation.

Procedure

NOTE: **Numbered call-outs in figure pertain to list numbers in following procedure.**

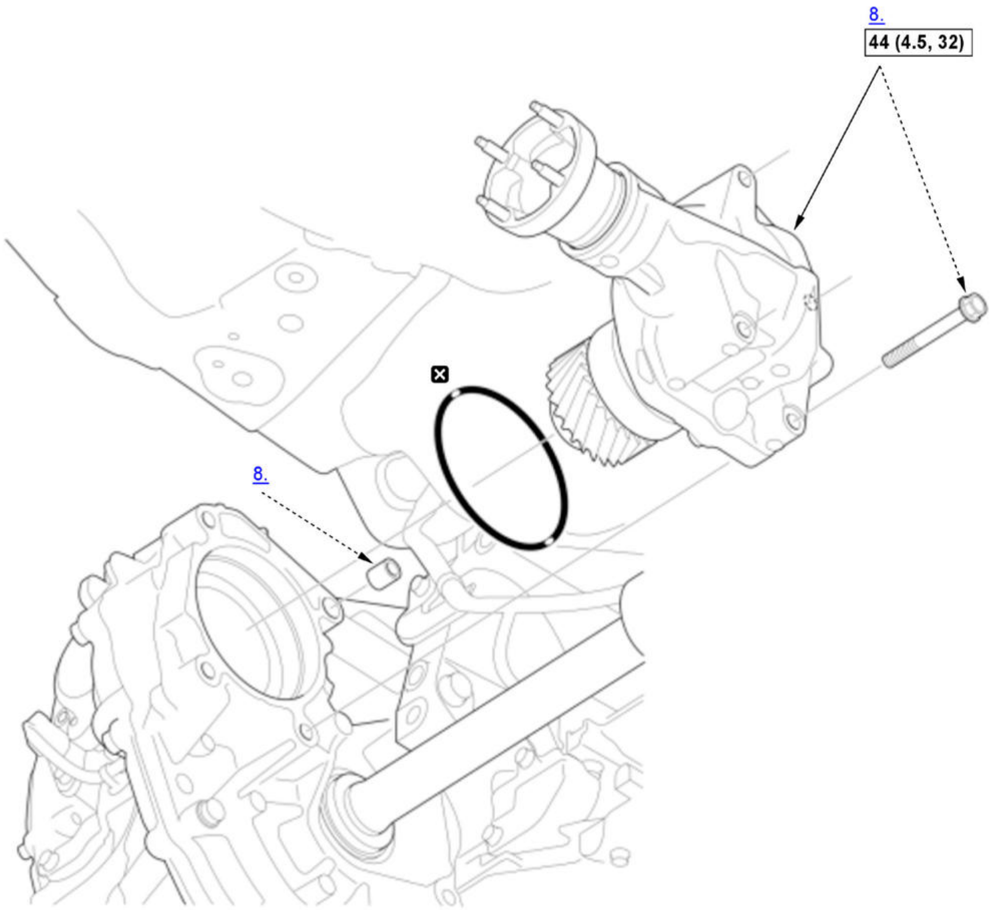

Fig. 1: Exploded View Of Transfer Assembly Components With Torque Specifications
Courtesy of HONDA, U.S.A., INC.

☐	Torque: N.m (kgf.m, lbf.ft)
☒	Replace

1. Vehicle - Lift
2. Neutral Position Holding Mode - Enter

   NOTE: Even if the negative terminal of the 12 volt battery is disconnected after the neutral position holding mode is actuated, the vehicle continues to keep the N position.

3. 12 Volt Battery Terminal - Disconnect
4. Engine Undercover - Remove
5. ATF - Drain
6. Exhaust Pipe A - Remove
7. Propeller Shaft - Remove
8. Transfer Assembly - Remove
9. All Removed Parts - Install

   1. Install the parts in the reverse order of removal.

10. ATF - Refill

Inspection

NOTE: How to read the torque specifications .

Transfer Gear Backlash Measurement

1. Vehicle - Lift
2. Neutral Position Holding Mode - Enter

   NOTE: Even if the negative terminal of the 12 volt battery is disconnected after the neutral position holding mode is actuated, the vehicle continues to keep the N position.

3. 12 Volt Battery Terminal - Disconnect
4. Engine Undercover - Remove
5. Propeller Shaft - Remove
6. Transfer Gear Backlash - Check

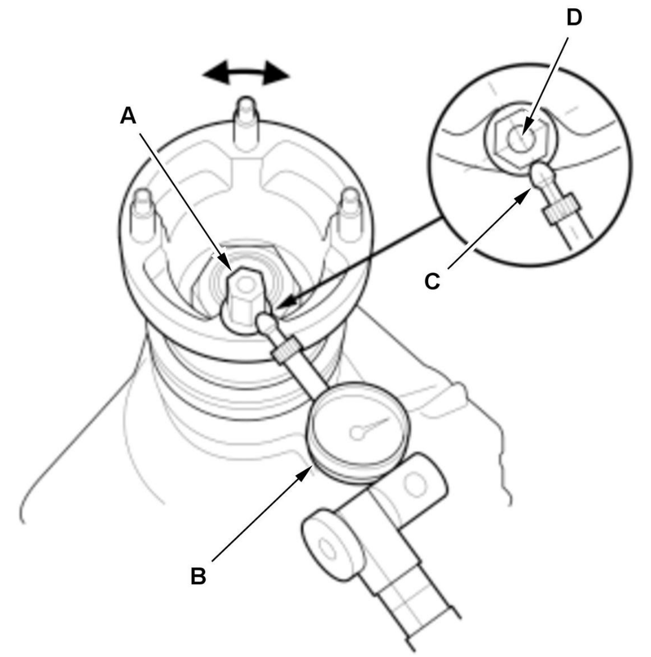	1. Temporarily install the transfer companion flange setting nut (A). 2. Set a dial indicator (B) on the transfer companion flange setting nut as shown. **NOTE:** Position the dial indicator tip (C) on the direct extension of the nut center (D). 3. Measure the transfer gear backlash. 4. If the transfer gear backlash is out of the standard, replace the transfer assembly.

Standard:	
Â	**0.06-0.16 mm (0.0024-0.0063 in)**

7. All Removed Parts - Install

   1. Install the parts in the reverse order of removal.

   Fluid Leak Check

8. Vehicle - Lift
9. Engine Undercover - Remove
10. Fluid Leak - Check

    Transmission (e-CVT) Side

    1. Check for fluid leaks between the mating faces of the transfer assembly and the transmission (e-CVT).

    2. If there is leak:

       - Replace the O-ring between the transfer assembly and the transmission (e-CVT).

- Replace the O-ring between the transfer housing and the transfer hypoid drive gear/shaft assembly .

Propeller Shaft Side

1. Check for fluid leaks at the transfer companion flange.

2. If there is leak, replace the transfer oil seal and the O-ring

.

11. All Removed Parts - Install

1. Install the parts in the reverse order of removal.

Total Starting Torque Measurement

12. Total Starting Torque - Check

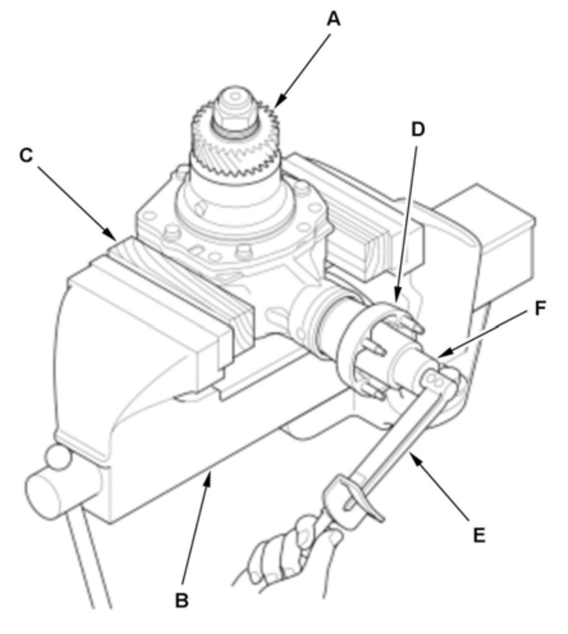	1. Secure the transfer assembly (A) in a bench vise (B). **NOTE:** To prevent damaging, always use wood blocks (C) or equivalent materials between the transfer housing and the bench vise. 2. Rotate the companion flange (D) several turns to seat the tapered roller bearings. 3. Measure the total starting torque at the companion flange using a torque wrench (E) and a socket (F). 4. If the total starting torque is out of the standard, replace the transfer assembly.

Standard:	
Â	**2.85-7.40 N.m (29.1-75.6 kgf.cm, 25.2-65.5 lbf.in)**

Transfer Hypoid Gear Tooth Contact Pattern Check

13. Transfer Hypoid Gear Tooth Contact Pattern - Check

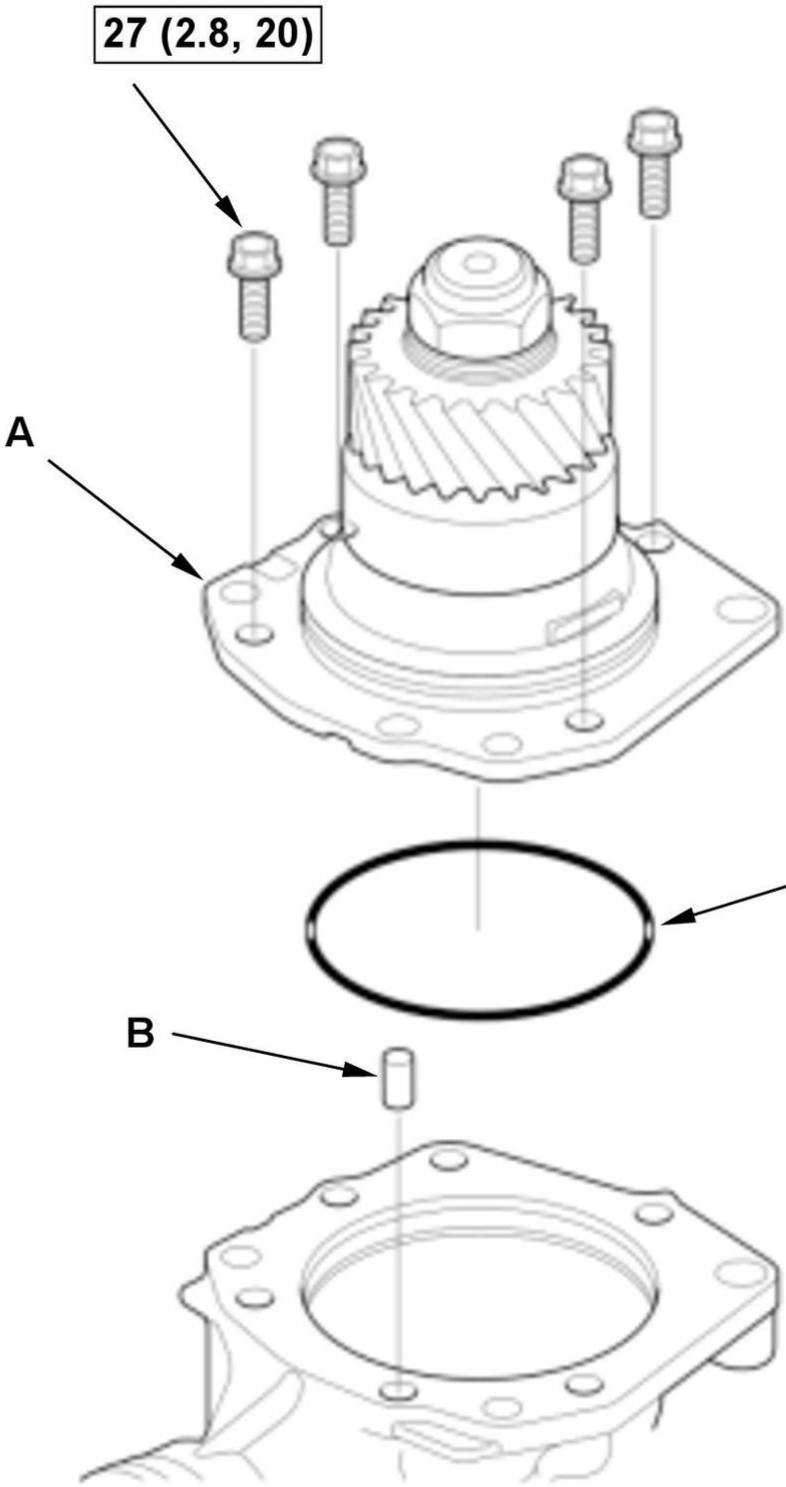

Fig. 2: Transfer Hypoid Drive Gear/Shaft Assembly Bolts With Torque Specifications
Courtesy of HONDA, U.S.A., INC.

1. Remove the transfer hypoid drive gear/shaft assembly (A) with the dowel pin (B) and the O-ring (C).

2. Apply Prussian Blue to both sides of the transfer hypoid drive gear teeth lightly and evenly.

3. Temporarily install the transfer hypoid drive gear/shaft assembly with the dowel pin and the old O-ring.

4. Rotate the companion flange in both directions until the transfer hypoid drive gear rotates one full turn.

5. Remove the transfer hypoid drive gear/shaft assembly with the dowel pin and the O-ring.

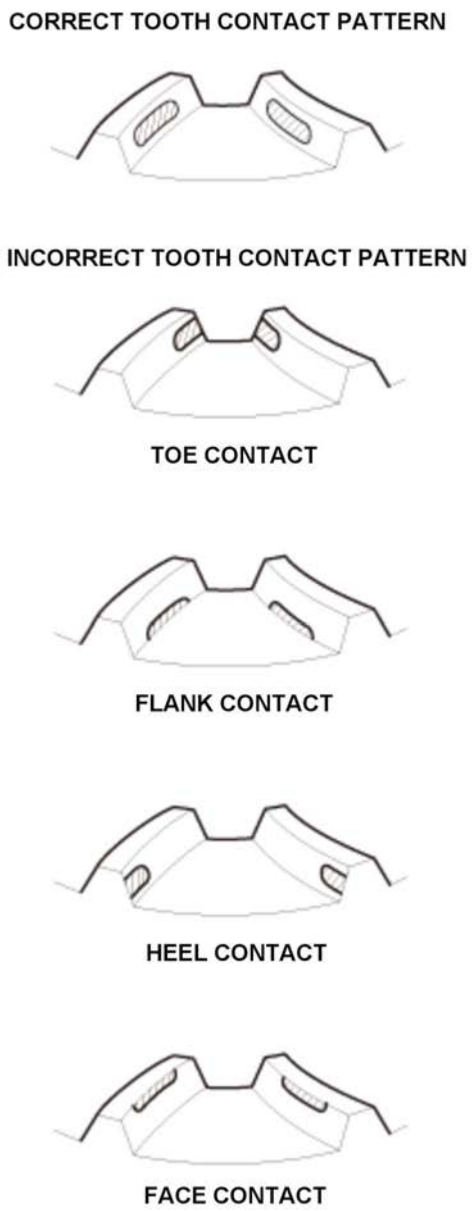
CORRECT TOOTH CONTACT PATTERN
INCORRECT TOOTH CONTACT PATTERN
TOE CONTACT
FLANK CONTACT
HEEL CONTACT
FACE CONTACT

6. Check the transfer hypoid gear tooth contact pattern.

7. If the transfer hypoid gear tooth contact pattern is incorrect, replace the transfer assembly.

GENERAL INFORMATION

HOW TO ENTER NEUTRAL POSITION HOLDING MODE

Procedure

NOTE:

- This function is automatically canceled after elapsed about 15 minutes from entering the neutral position holding mode.
- Even if the negative terminal of the 12 volt battery is disconnected after the neutral position holding mode is started, the vehicle continues to keep the N position/mode.

1. Neutral Position Holding Mode - Enter

1. Park the vehicle on level ground, and block all four wheels.

2. Turn the vehicle to the READY TO DRIVE mode.

3. Press and hold the brake pedal.

4. Press and release the N position/mode to shift the transmission to Neutral.

5. Press N again, and hold it for 2 seconds. The vehicle will enter neutral hold.

SYMPTOM TROUBLESHOOTING INDEX

GEAR UNIT CONTROL SYSTEM SYMPTOM TROUBLESHOOTING INDEX

NOTE: Do an all DTC check with the HDS, and troubleshoot any DTCs first before following the repair procedures listed in the index.

Symptom	Probable cause(s)	Notes
With the vehicle in the ON mode, the shift position indicator displays an improper indication, or it never displays at all	• Gauge control module defective • SBW shifter control module defective • PCM defective	• Check the F-CAN communication line by using the gauge control module self-diagnostic function . • Check the indicator drive circuit in the gauge control module by using the gauge control module self-diagnostic function .
Shift position indicator does not indicate at all	• Gauge control module defective • SBW shifter control module defective • PCM defective	• Check the F-CAN communication line by using the gauge control module self-diagnostic function . • Check the indicator drive circuit in the gauge control module by using the gauge control module self-diagnostic function .
The paddle shifters do not operate even though the paddle shifter is operated in D position/mode	• A problem in the paddle shifter circuit • Paddle shifter defective • PCM defective	• Troubleshoot the paddle shifter circuit . • Test the paddle shifter .
HDS does not communicate with the PCM	• DLC circuit error • PCM defective	Troubleshooting the DLC circuit .

Symptom	Probable cause(s)	Notes

Vehicle in READY TO DRIVE mode, but vehicle does not move in any gear	• Traction motor defective: worn or damaged:
	•
	  ◦ Stator
	  ◦ Rotor
	  ◦ Position sensor
	  ◦ Position sensor line
	  ◦ Terminal plate
	  ◦ Sensor harness
	  ◦ 3-phase wires
	• Traction motor defective; faulty installations:
		• Check for an incorrectly installed transmission, and check the drive plate for wear and damage. Replace the drive plate if it is worn or damaged.
		• Inspect the countershaft for wear and damage.
		• Inspect the motor shaft for wear and damage.
		• Inspect the generator shaft for wear and damage.
		• Inspect the final gears for wear and damage.

Symptom	Probable cause(s)	Notes
	• • Stator • Position sensor • Terminals • 3-phase wire terminals • Foreign material in traction motor • Foreign material in PCU 3-phase connectors • Generator motor defective: worn or damaged: • • Stator • Rotor • Position sensor • Position sensor line • Terminal plate • 3-phase wires • Generator motor defective; faulty installations: • • Stator • Position sensor • Terminals • 3-phase wire terminals • Generator motor position sensor not learned • Park pawl actuator defective • Park pawl actuator driver unit defective • Park position sensor defective • SBW shifter control module defective • Transmission assembly and drive plate installation defective • Countershaft worn or damaged • Motor shaft worn or damaged • Final gears worn or damaged • Thrust washer seized, worn, or damaged • Input shaft bearing, countershaft bearing, generator shaft bearing, motor shaft bearing, or differential carrier bearing defective • ATF cooler clogged • Axle disengaged	• Check the thrust washer for seizure, wear, and damage. • Check the bearings for the input shaft, the countershaft, the generator shaft, the motor shaft, and the differential carrier. • Check the ATF cooler. • Check the axles. • Check the park position sensor. • Inspect the park mechanism and the park pawl actuator. • Check the SBW shifter control module. • **Replace the transmission (e-CVT)** .

Symptom | Probable cause(s) | Notes

Symptom	Probable cause(s)	Notes
Vehicle does not move in D position/mode	• Traction motor position sensor defective • Traction motor position sensor line failure • Traction motor sensor harness failure • Park pawl actuator defective • Park pawl actuator driver unit defective • Park position sensor defective • SBW shifter control module defective	• Inspect the motor shaft for wear and damage. • Check the motor position sensor harness for poor connections, loose terminals, wear, and damage. • Check the park position sensor. • Inspect the park mechanism and the park pawl actuator. • Check the SBW shifter control module. • **Replace the transmission (e-CVT)** .
Vehicle does not move in R position/mode	• Traction motor position sensor defective • Traction motor position sensor line failure • Traction motor sensor harness failure • Park pawl actuator defective • Park pawl actuator driver unit defective • Park position sensor defective • SBW shifter control module defective	• Inspect the motor shaft for wear and damage. • Check the motor position sensor harness for poor connections, loose terminals, wear, or damage. • Check the park position sensor. • Inspect the park mechanism and the park pawl actuator. • Check the SBW shifter control module. • **Replace the transmission (e-CVT)** .

Symptom	Probable cause(s)	Notes

Poor acceleration	• Traction motor defective: worn or damaged:
	•
	  • Stator
	  • Rotor
	  • Position sensor
	  • Position sensor line
	  • Terminal plate
	  • Transmission fluid temperature sensor
	  • Sensor harness
	  • 3-phase wires
	• Traction motor defective; faulty installations:
	•
	  • Stator
	  • Position sensor
		• Check the engine control system.
		• Check the ATF level. If the level is below the lower level, check the ATF cooler lines for leaks and loose connections. If necessary, clean the ATF cooler lines.
		• Inspect the motor shaft for wear and damage.
		• Inspect the generator shaft for wear and damage.
		• Check the ATF pump drive gears for wear and damage.
		• **Replace the valve body assembly** .
		• Check for a clogged orifice in the separator plate. If the orifice is clogged, remove it and clean the separator plate orifice.
		• Check the ATF strainer for debris. If the strainer is clogged, find the

Symptom	Probable cause(s)	Notes
	• Terminals • 3-phase wire terminals • Traction motor stator temperature high • Traction motor rotor temperature high • Traction motor position sensor not learned • Generator motor defective: worn or damaged: • • Stator • Rotor • Position sensor • Position sensor line • Terminal plate • 3-phase wires • Generator motor defective; faulty installations: • • Stator • Position sensor • Terminals • 3-phase wire terminals • Generator motor stator temperature high • Generator motor position sensor not learned • Engine output low • Low ATF level • ATF pump worn or binding • Main regulator valve stuck or spring worn • Foreign material in separator plate orifice • Cooler relief valve defective • ATF strainer clogged • ATF cooler clogged	damaged components that caused the debris. • Check the ATF cooler. • **Replace the transmission (e-CVT)** .

Symptom	Probable cause(s)	Notes
Engine vibrates under all driving conditions	• Generator motor defective: worn or damaged: • • Stator • Rotor • Position sensor	• Check the engine control system. • Inspect the generator shaft for wear and damage. • Inspect the clearance between the clutch end-plate and the top disc. If the clearance is out of tolerance, replace the clutch.

Symptom	Probable cause(s)	Notes
	• Position sensor line • Terminal plate • 3-phase wires • Generator motor defective; faulty installations: • • Stator • Position sensor • Terminals • 3-phase wire terminals • Engine output low • Clutch defective • Clearance between clutch end-plate and top disc incorrect	• **Replace the transmission (e-CVT)** .
Vehicle moves in N position/mode	• Excessive ATF • Relief valve defective • Clutch defective • Clearance between clutch end-plate and top disc incorrect	• Check the ATF level. If the level is above the upper level, drain the ATF if it is over-filled. • **Replace the valve body assembly** . • Inspect the clearance between the clutch end-plate and the top disc. If the clearance is out of tolerance, replace the clutch.

Symptom	Probable cause(s)	Notes
Vehicle does not recharge from generator motor	• Foreign material in traction motor • Foreign material in PCU 3-phase connectors • Generator motor defective: worn or damaged: • • Stator • Rotor • Position sensor • Position sensor line • Terminal plate • 3-phase wires • Generator motor defective; faulty installations: • • Stator • Position sensor • Terminals • 3-phase wire terminals • Countershaft worn or damaged	• Inspect the generator shaft for wear and damage. • Inspect the countershaft for wear and damage. • Inspect the motor shaft for wear and damage. • Check the thrust washers for seizure, wear and damage. • Check the bearings for the input shaft, the countershaft, the generator shaft, the motor shaft, and the differential carrier. • Inspect the park mechanism and the park pawl actuator. • **Replace the transmission (e-CVT)** .

Symptom	Probable cause(s)	Notes
	• Motor shaft worn or damaged • Thrust washer seized, worn, or damaged • Input shaft bearing, countershaft bearing, generator shaft bearing, motor shaft bearing, or differential carrier bearing defective • Park mechanism defective	

Symptom	Probable cause(s)	Notes

Vehicle does not recharge from motor regenerative system	• Traction motor defective: worn or damaged:
	•
	  • Stator
	  • Rotor
	  • Position sensor
	  • Position sensor line
	  • Terminal plate
	  • Sensor harness
	  • 3-phase wires
	• Traction motor defective; faulty installations:
	•
	  • Stator
	  • Position sensor
	  • Terminals
	  • 3-phase wire terminals
	• Foreign material in traction motor
	• Foreign material in PCU 3-phase connectors
	• Countershaft worn or damaged
	• Motor shaft worn or damaged
	• Final gears worn or damaged
	• Thrust washer seized, worn, or damaged
	• Input shaft bearing, countershaft bearing, generator shaft bearing, motor shaft bearing, or differential carrier bearing defective
		• Check the motor position sensor harness for poor connections, loose terminals, wear, and damage.
		• Inspect the countershaft for wear and damage.
		• Inspect the motor shaft for wear and damage.
		• Check the final gears for wear and damage.
		• Check the thrust washers for seizure, wear and damage.
		• Check the bearings for the input shaft, the countershaft, the generator shaft, the motor shaft, and the differential carrier.
		• **Replace the transmission (e-CVT)** .

Symptom	Probable cause(s)	Notes
Excessive shock when changing from	• Traction motor position sensor defective	• Check the engine control system.

Symptom	Probable cause(s)	Notes
hybrid drive mode to engine drive mode	- Traction motor position sensor line failure - Transmission fluid temperature sensor defective - Traction motor sensor harness failure - Traction motor position sensor failed to install - Generator motor position sensor defective - Generator motor position sensor line failure - Generator motor position sensor failed to install - Shift solenoid valve A defective - Shift solenoid valve B defective - Transmission fluid pressure sensor defective - Engine output low - Low ATF level - ATF pump worn or binding - Main regulator valve stuck or spring worn - Foreign material in separator plate orifice - Shift valve A defective - Shift valve B defective - Input shaft worn or damaged - Over drive gears worn or damaged - Clutch defective - Clearance between clutch end-plate and top disc incorrect - Torque limiter defective	- Inspect the shift solenoid valve function with the HDS. Check for a seized shift solenoid valve, and inspect the O-rings. - Check the motor position sensor harness for poor connections, loose terminals, wear, and damage. - Check the ATF level. If the level is below the lower level, check the ATF cooler lines for leaks and loose connections. If necessary, clean the ATF cooler lines. - Check the ATF pump drive gears for wear and damage. - **Replace the valve body assembly** . - Inspect the input shaft for wear and damage. - Check the over drive gears for wear and damage. - Check for a clogged orifice in the separator plate. If the orifice is clogged, remove it and clean the separator plate orifice. - Inspect the motor shaft for wear and damage. - Inspect the generator shaft for wear and damage. - Inspect the countershaft for wear and damage. - Inspect the clearance between the clutch end-plate and the top disc. If the clearance is out of tolerance, replace the clutch. - Check the transmission fluid pressure sensor. - **Replace the transmission (e-CVT)** .

Symptom	Probable cause(s)	Notes
Excessive shock when changing from engine drive mode to hybrid drive mode	- Traction motor position sensor defective - Traction motor position sensor line failure - Transmission fluid temperature sensor defective - Traction motor sensor harness failure - Traction motor position sensor failed to install	- Check the ATF level. If the level is below the lower level, check the ATF cooler lines for leaks and loose connections. If necessary, clean the ATF cooler lines. - Check the motor position sensor harness for poor connections, loose terminals, wear, and damage. - Check the ATF pump drive gears for wear and damage.

Symptom	Probable cause(s)	Notes
	• Generator motor position sensor defective • Generator motor position sensor line failure • Generator motor position sensor failed to install • Low ATF level • ATF pump worn or binding • Main regulator valve stuck or spring worn • Foreign material in separator plate orifice • Cooler relief valve defective • ATF strainer clogged • Clutch defective • Clearance between clutch end-plate and top disc incorrect	• Inspect the motor shaft for wear and damage. • Inspect the generator shaft for wear and damage. • Inspect the input shaft for wear and damage. • **Replace the valve body assembly** . • Check for a clogged orifice in the separator plate. If the orifice is clogged, remove it and clean the separator plate orifice. • Check the ATF strainer for debris. If the strainer is clogged, find the damaged components that caused the debris. • Inspect the clearance between the clutch end-plate and the top disc. If the clearance is out of tolerance, replace the clutch. • **Replace the transmission (e-CVT)** .

Excessive shock when changing from EV drive mode to hybrid drive mode	• Generator motor defective: worn or damaged:
	•
	  • Stator
	  • Rotor
	  • Position sensor
	  • Position sensor line
	  • Terminal plate
	  • 3-phase wires
	• Generator motor defective; faulty installations:
	•
	  • Stator
	  • Position sensor
	  • Terminals
	  • 3-phase wire terminals
	• Generator motor stator temperature high
	• Generator motor position sensor not learned
	• Flywheel defective
	• Input shaft worn or damaged
	• Generator shaft worn or damaged
	• Torque limiter defective
		• Check the flywheel for wear and damage, if the flywheel is worn or damaged, replace the flywheel.
		• Inspect the input shaft for wear and damage.
		• Inspect the generator shaft for wear and damage.
		• **Replace the transmission (e-CVT)** .

Symptom	Probable cause(s)	Notes
Excessive shock when changing from hybrid drive mode to EV drive mode	• Flywheel defective • Input shaft worn or damaged • Generator shaft worn or damaged • Torque limiter defective	• Check the flywheel for wear and damage, if the flywheel is worn or damaged, replace the flywheel. • Inspect the input shaft for wear and damage. • Inspect the generator shaft for wear and damage. • **Replace the transmission (e-CVT)** .

Symptom	Probable cause(s)	Notes
Noise from transmission (e-CVT) in engine drive mode	• Traction motor defective: worn or damaged: • • Stator • Rotor • Position sensor • Position sensor line • Terminal plate • Sensor harness • 3-phase wires • Traction motor defective; faulty installations: • • Stator • Position sensor • Terminals • 3-phase wire terminals • Foreign material in traction motor • Generator motor defective: worn or damaged: • • Stator • Rotor • Position sensor • Position sensor line • Terminal plate • 3-phase wires • Generator motor defective; faulty installations: • • Stator • Position sensor • Terminals • 3-phase wire terminals	• Check the flywheel for wear and damage, if the flywheel is worn or damaged, replace the flywheel. • Check the ATF level. If the level is below the lower level, check the ATF cooler lines for leaks and loose connections. If necessary, clean the ATF cooler lines. • Check the motor position sensor harness for poor connections, loose terminals, wear, and damage. • Check the ATF pump drive gears for wear and damage. • Check the ATF strainer for debris. If the strainer is clogged, find the damaged components that caused the debris. • **Replace the valve body assembly** . • Inspect the input shaft for wear and damage. • Inspect the countershaft for wear and damage. • Inspect the motor shaft for wear and damage. • Inspect the generator shaft for wear and damage. • Check the final gears for wear and damage. • Check the over drive gears for wear and damage. • Check the thrust washers for seizure, wear and damage. • Check the bearings for the input shaft, the countershaft, the generator shaft, the motor shaft, and the differential carrier. • **Replace the transmission (e-CVT)** .

Symptom	Probable cause(s)	Notes
	• Flywheel defective • Low ATF level • ATF pump worn or binding • ATF strainer clogged • Input shaft worn or damaged • Countershaft worn or damaged • Motor shaft worn or damaged • Final gears worn or damaged • Over drive gears worn or damaged • Clutch defective • Thrust washer seized, worn, or damaged • Input shaft bearing, countershaft bearing, generator shaft bearing, motor shaft bearing, or differential carrier bearing defective	

Symptom	Probable cause(s)	Notes
Noise from transmission (e-CVT) in hybrid drive mode	• Traction motor defective: worn or damaged: • • Stator • Rotor • Position sensor • Position sensor line • Terminal plate • Sensor harness • 3-phase wires • Traction motor defective; faulty installations: • • Stator • Position sensor • Terminals • 3-phase wire terminals • Foreign material in traction motor • Generator motor defective: worn or damaged: • • Stator • Rotor • Position sensor • Position sensor line	• Check the flywheel for wear and damage, if the flywheel is worn or damaged, replace the flywheel. • Check the ATF level. If the level is below the lower level, check the ATF cooler lines for leaks and loose connections. If necessary, clean the ATF cooler lines. • Check the motor position sensor harness for poor connections, loose terminals, wear, and damage. • Check the ATF pump drive gears for wear and damage. • Check the ATF strainer for debris. If the strainer is clogged, find the damaged components that caused the debris. • **Replace the valve body assembly** . • Inspect the input shaft for wear and damage. • Inspect the countershaft for wear and damage. • Inspect the generator shaft for wear and damage. • Inspect the motor shaft for wear and damage. • Check the final gears for wear and damage.

Symptom	Probable cause(s)	Notes
	• Terminal plate • 3-phase wires • Generator motor defective; faulty installations: • • Stator • Position sensor • Terminals • 3-phase wire terminals • Flywheel defective • Low ATF level • ATF pump worn or binding • ATF strainer clogged • Input shaft worn or damaged • Countershaft worn or damaged • Generator shaft worn or damaged • Motor shaft worn or damaged • Final gears worn or damaged • Clutch defective • Clearance between clutch end-plate and top disc incorrect • Torque limiter defective • Thrust washer seized, worn, or damaged • Input shaft bearing, countershaft bearing, generator shaft bearing, motor shaft bearing, or differential carrier bearing defective	• Inspect the clearance between the clutch end-plate and the top disc. If the clearance is out of tolerance, replace the clutch. • Check the thrust washers for seizure, wear and damage. • Check the bearings for the input shaft, the countershaft, the generator shaft, the motor shaft, and the differential carrier. • **Replace the transmission (e-CVT)** .

Symptom	Probable cause(s)	Notes
Noise from transmission (e-CVT) in EV drive mode	• Traction motor defective: worn or damaged: • • Stator • Rotor • Position sensor • Position sensor line • Terminal plate • Sensor harness • 3-phase wires • Traction motor defective; faulty installations: • • Stator	• Check the motor position sensor harness for poor connections, loose terminals, wear, and damage. • Inspect the countershaft for wear and damage. • Inspect the motor shaft for wear and damage. • Check the final gears for wear and damage. • Inspect the clearance between the clutch end-plate and the top disc. If the clearance is out of tolerance, replace the clutch. • Check the thrust washers for seizure, wear and damage.

Symptom	Probable cause(s)	Notes
	- Position sensor - Terminals - 3-phase wire terminals • Foreign material in traction motor • Countershaft worn or damaged • Motor shaft worn or damaged • Final gears worn or damaged • Clutch defective • Clearance between clutch end-plate and top disc incorrect • Thrust washer seized, worn, or damaged • Input shaft bearing, countershaft bearing, generator shaft bearing, motor shaft bearing, or differential carrier bearing defective	• Check the bearings for the input shaft, the countershaft, the generator shaft, the motor shaft, and the differential carrier. • **Replace the transmission (e-CVT)** .

Symptom	Probable cause(s)	Notes
Noise from transmission (e-CVT) while recharging when vehicle stopped	• Foreign material in traction motor • Generator motor defective: worn or damaged: • • Stator • Rotor • Position sensor • Position sensor line • Terminal plate • 3-phase wires • Generator motor defective; faulty installations: • • Stator • Position sensor • Terminals • 3-phase wire terminals • Flywheel defective • Low ATF level • ATF pump worn or binding • ATF strainer clogged • Input shaft worn or damaged • Generator shaft worn or damaged • Torque limiter defective	• Check the flywheel for wear and damage, if the flywheel is worn or damaged, replace the flywheel. • Check the ATF level. If the level is below the lower level, check the ATF cooler lines for leaks and loose connections. If necessary, clean the ATF cooler lines. • Check the ATF pump drive gears for wear and damage. • Check the ATF strainer for debris. If the strainer is clogged, find the damaged components that caused the debris. • Replace the valve body assembly . • Inspect the input shaft for wear and damage. • Inspect the generator shaft for wear and damage. • Replace the transmission (e-CVT) .

Symptom	Probable cause(s)	Notes
Vehicle does not accelerate above certain speed	• Traction motor defective: worn or damaged: • • Stator • Rotor • Position sensor • Position sensor line • Terminal plate • Transmission fluid temperature sensor • Sensor harness • 3-phase wires • Traction motor defective; faulty installations: • • Stator • Position sensor	• Check the engine control system. • Check the motor position sensor harness for poor connections, loose terminals, wear, and damage. • Check the ATF level. If the level is below the lower level, check the ATF cooler lines for leaks and loose connections. If necessary, clean the ATF cooler lines. • Check the ATF pump drive gears for wear and damage. • Replace the valve body assembly . • Inspect the motor shaft for wear and damage. • Inspect the generator shaft for wear and damage. • Check for a clogged orifice in the separator plate. If the orifice is

Symptom	Probable cause(s)	Notes
	• Terminals • 3-phase wire terminals • Traction motor stator temperature high • Traction motor rotor temperature high • Traction motor position sensor not learned • Generator motor defective: worn or damaged: • • Stator • Rotor • Position sensor • Position sensor line • Terminal plate • 3-phase wires • Generator motor defective; faulty installations: • • Stator • Position sensor • Terminals • 3-phase wire terminals • Generator motor stator temperature high • Generator motor position sensor not learned • Engine output low • Low ATF level • ATF pump worn or binding • Main regulator valve stuck or spring worn • Foreign material in separator plate orifice • Cooler relief valve defective • ATF strainer clogged • ATF cooler clogged	clogged, remove it and clean the separator plate orifice. • Check the ATF strainer for debris. If the strainer is clogged, find the damaged components that caused the debris. • Check the ATF cooler. • **Replace the transmission (e-CVT)** .

Symptom	Probable cause(s)	Notes
Vibration in all shift positions/modes	• Transmission assembly and drive plate installation defective • Flywheel defective	• Check for an incorrectly installed transmission, and check the drive plate for wear and damage. Replace the drive plate if it is worn or damaged. • Check the flywheel for wear and damage, if the flywheel is worn or

Symptom	Probable cause(s)	Notes
		damaged, replace the flywheel.
Transmission does not shift into P position/mode or shift out of P position/mode	• Park pawl actuator defective • Park pawl actuator driver unit defective • Park position sensor defective • SBW shifter control module defective • Park mechanism defective	• Check the park position sensor. • Inspect the park mechanism and the park pawl actuator. • Check SBW shifter control module.
Speedometer and odometer does not operate	• Traction motor position sensor defective • Traction motor position sensor line failure • Traction motor sensor harness failure • Traction motor position sensor failed to install	• Inspect the motor shaft for wear and damage. • Check the motor position sensor harness for poor connections, loose terminals, wear, and damage. • Replace the transmission (e-CVT) .
Vehicle does not turn to the READY TO DRIVE mode	• Park pawl actuator defective • Park pawl actuator driver unit defective • Park position sensor defective • SBW shifter control module defective	• Check the park position sensor. • Inspect the park mechanism and the park pawl actuator. • Check the SBW shifter control module.

REWRITE

PARK PAWL ACTUATOR DRIVER UNIT UPDATE

Procedure

1. Park Pawl Actuator Driver Unit - Update

   NOTE: When updating control units, use the most current version of the HDS software and interface device. Refer to User Manual of the Update Device for more information about updating control units.

INSPECTION

CLUTCH CLEARANCE INSPECTION

Special Tools Required

Image	Description/Tool Number
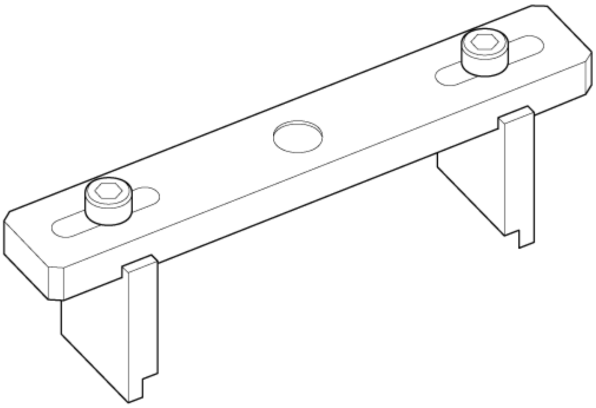	Clutch Compressor Attachment 07ZAE-PRP0100

Inspection

1. Over Drive Clutch Clearance - Inspect

    1. Set a dial indicator (A) on the clutch end-plate (B).

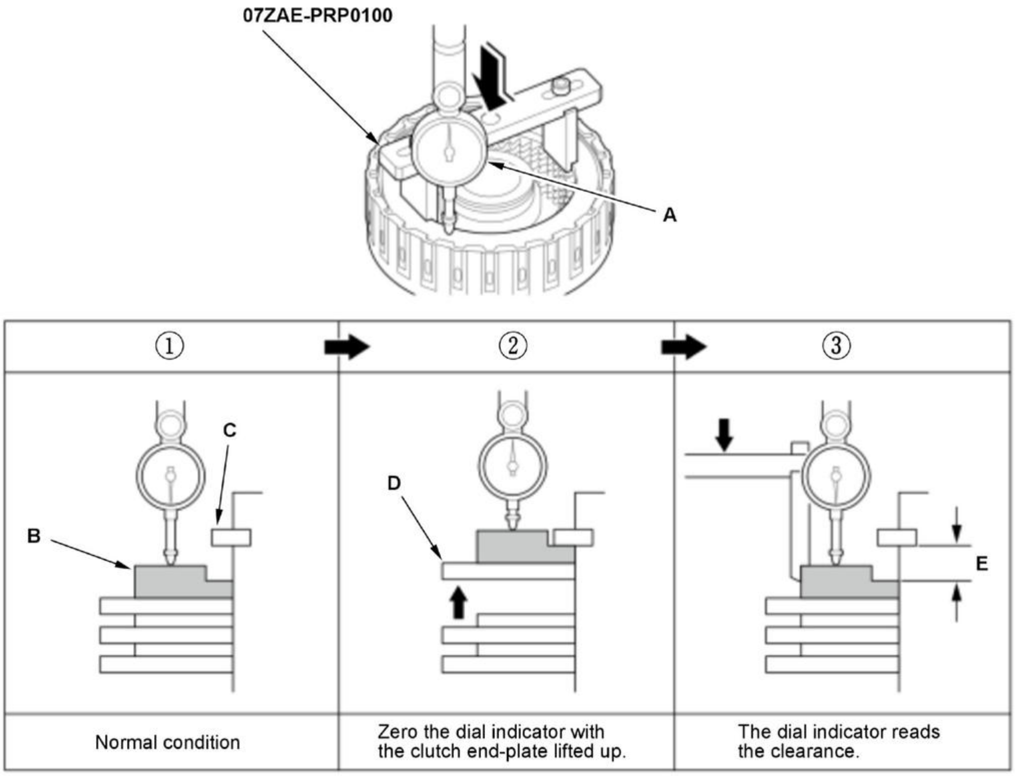
07ZAE-PRP0100
A
①
②
③
C
B
D
E
Normal condition
Zero the dial indicator with the clutch end-plate lifted up.
The dial indicator reads the clearance.

2. Zero the dial indicator with the clutch end-plate lifted up to the snap ring (C) by lifting the top disk (D) up.

3. Release the top disk.

4. Put the clutch compressor attachment on the clutch end-plate.

5. Press the clutch compressor attachment down with 147.1 N (15.00 kgf, 33.07 lbf) (the weight of the clutch compressor attachment is included) using a force gauge or equivalent, and read the dial indicator.The dial indicator reads the clearance (E) between the clutch end-plate and the top disc.

NOTE: Take measurements in at least three places, and use the average as the actual clearance.

Standard:	
Â	**1.2-1.4 mm (0.047-0.055 in)**

6. If the clearance is out of the standard, **replace the over drive clutch** .

COUNTERSHAFT BEARING THRUST CLEARANCE INSPECTION

Inspection

NOTE: Remove all of the old liquid gasket from the sealing surface of the flywheel housing and the transmission housing.

1. **Oil Guide Plate C - Install**
2. **Countershaft Bearing Outer Race (Flywheel Housing Side) - Install**
3. Countershaft - Install

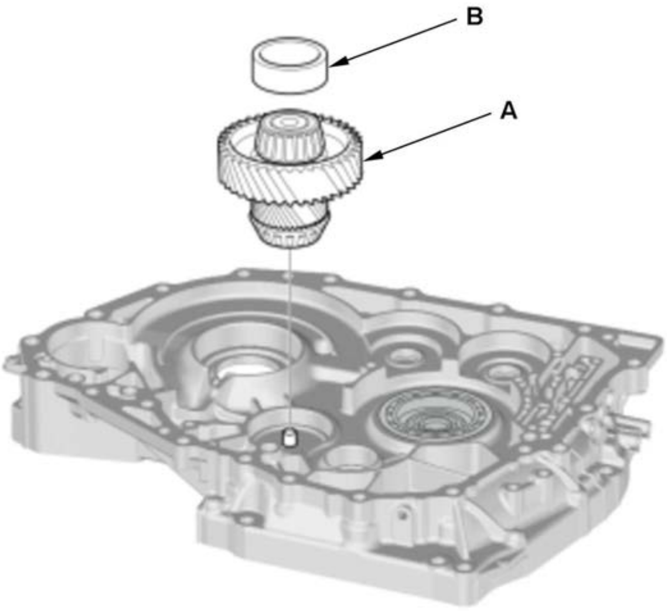	1. Install the countershaft (A) and the countershaft bearing outer race (B).

4. Countershaft Bearing Thrust Clearance - Inspect

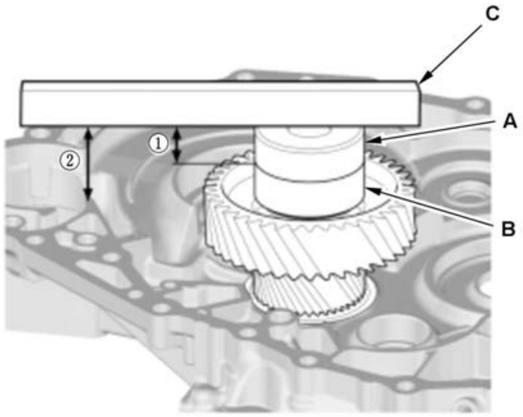

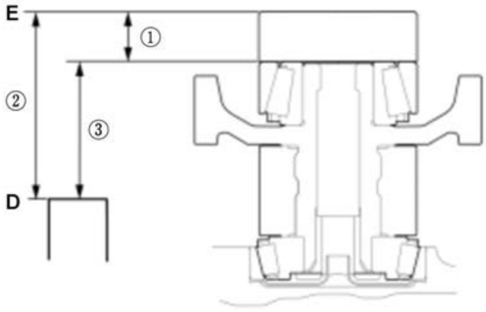

1. Measure an attachment (A) thickness ①

NOTE:

- **Use an attachment of about 1.0 kg (2.2 lbs).**
- **Measure at three locations, and average the reading.**

2. Set the attachment on the countershaft bearing outer race (B).

3. Rotate the countershaft in both directions to seat the bearings.

4. Set a straight edge (C) on the attachment.

5. Measure the height ② between the flywheel housing surface (D) and the top (E) of the attachment.

NOTE: Measure at three locations, and average the reading.

6. Calculate the height ③ in accordance with the following formula:

③ = ② - ①

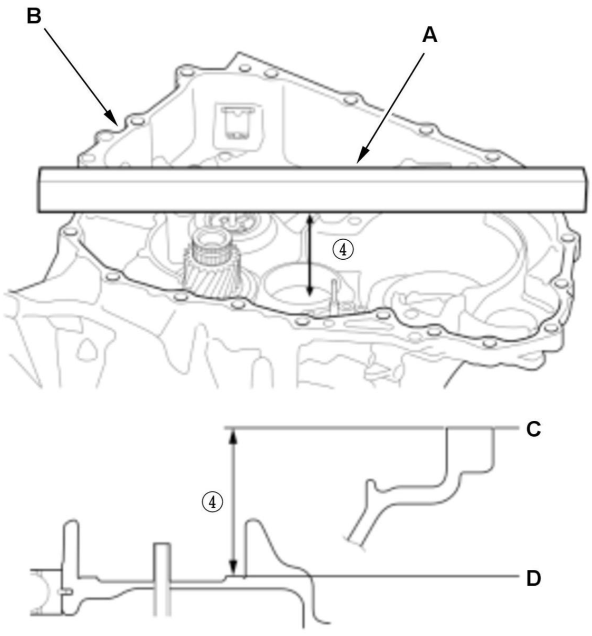

7. Set the straight edge (A) on the transmission housing (B).

8. Measure the height ④ between the transmission housing surface (C) and the shim contact area (D).

NOTE: Measure at three locations, and average the reading.

9. Calculate the optimum shim thickness ⑤ in accordance with the following formula:

⑤ (minimum) = ④ - ③ +0.12 mm (0.0047 in)

⑤ (maximum) = ④ - ③ +0.15 mm (0.0059 in)

10. Refer to the appropriate Parts catalog, then select appropriate shim.

11. Measure the selected shim thickness ⑥ .

NOTE: Measure at three locations, and average the reading.

12. Calculate the countershaft bearing thrust clearance in accordance with the following formula: Countershaft bearing thrust clearance = ④ - ③ - ⑥

Standard:

0.12-0.15 mm (0.0047-0.0059 in)

13. Make sure the thrust clearance is within the standard.

DIFFERENTIAL BACKLASH INSPECTION

Inspection

1. Final Driven Gear - Remove
2. Differential Backlash - Inspect

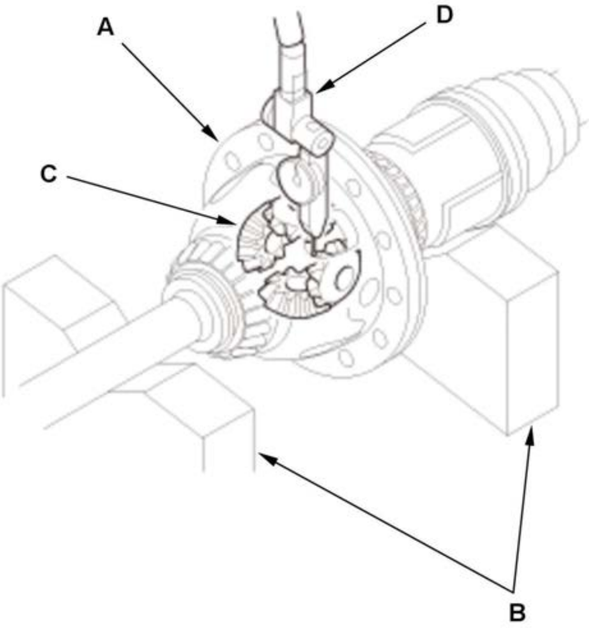	1. Install both axles into the differential carrier (A). 2. Place the axles on V-blocks (B). 3. Measure the backlash of the pinion gears (C) with a dial indicator (D). 4. If the backlash is out of the standard, **replace the differential carrier** .

Standard:	
Â	**0.05-0.15 mm (0.0020-0.0059 in)**

3. All Removed Parts - Install

1. Install the parts in the reverse order of removal.

DIFFERENTIAL INSTALLATION HEIGHT INSPECTION

Inspection

NOTE: Remove all of the old liquid gasket from the sealing surface of the transmission housing.

1. Differential - Install

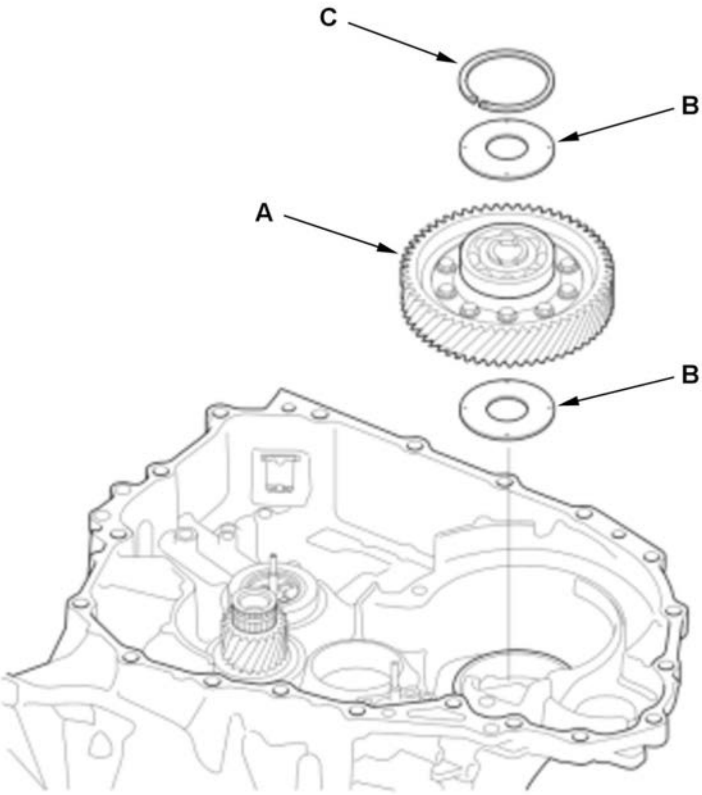	1. Install the differential (A) with the spacers (B) and the shim (C).

2. Differential Installation Height - Inspect

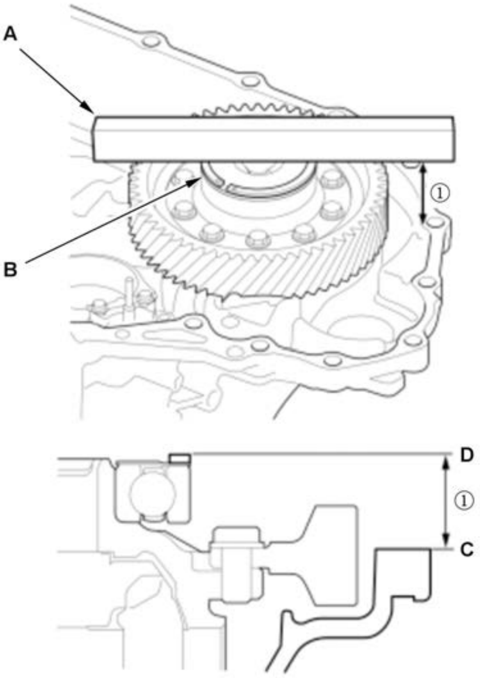	1. Set a straight edge (A) on the shim (B). 2. Measure the height ① between the transmission housing surface (C) and the shim surface (D). **NOTE:** Measure at three locations, and average the reading. 3. Measure the shim thickness. Refer to the Parts catalog, then select appropriate shim so the height ① is to be the standard value. 4. Install the selected shim, then recheck the installation height.

Standard:	
Â	**32.155-32.200 mm (1.26594-1.26771 in)**

GENERATOR SHAFT INSTALLATION HEIGHT INSPECTION

Inspection

NOTE: Remove all of the old liquid gasket from the sealing surface of the transmission housing.

1. **Generator Shaft - Install**

   NOTE: No need to install the parking gear, the cotter, the snap ring, and cotter retainer A in this procedure.

2. Shim - Install

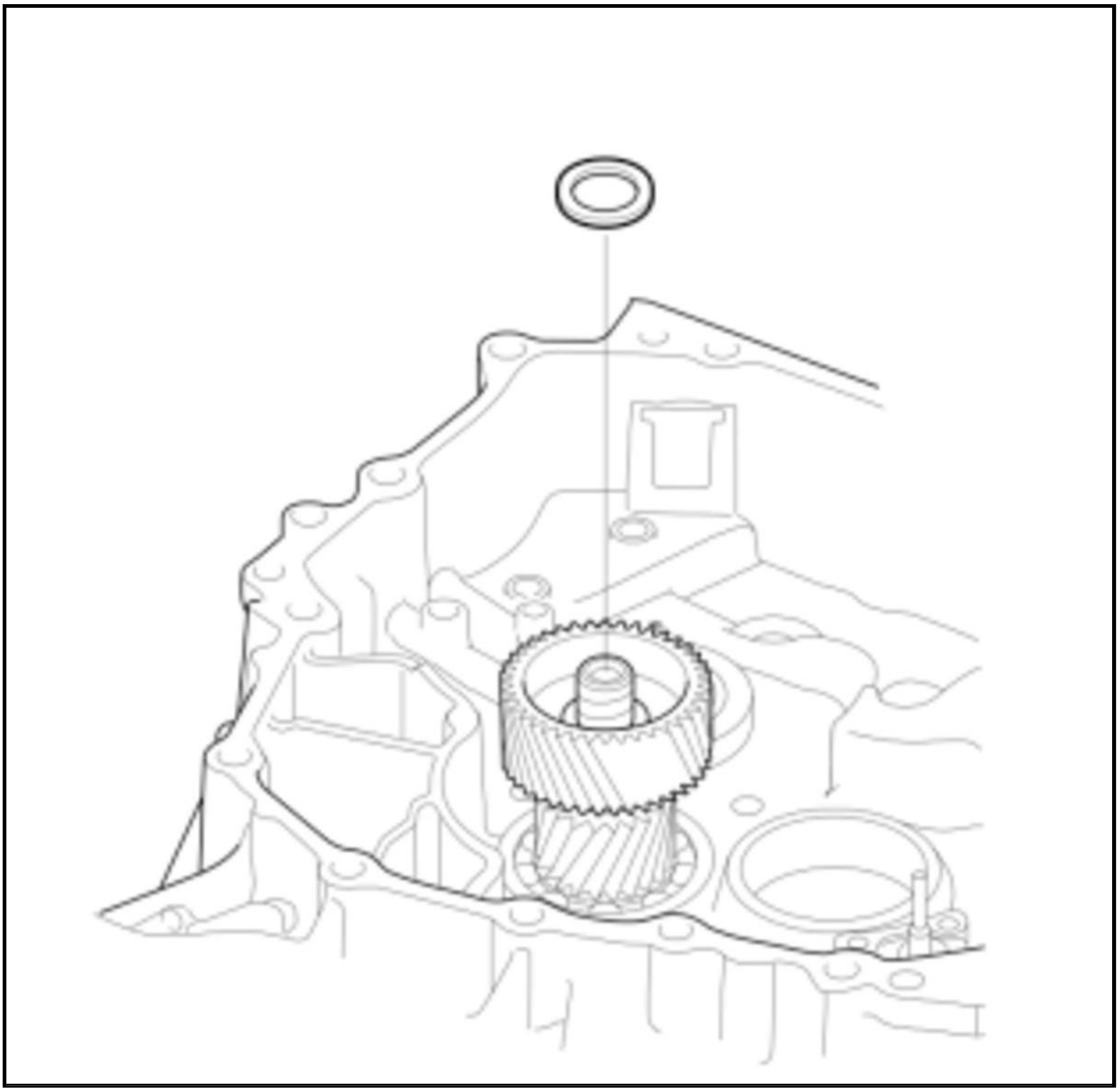

   NOTE: Measure the shim thickness before installing.

3. Generator Shaft Installation Height - Inspect

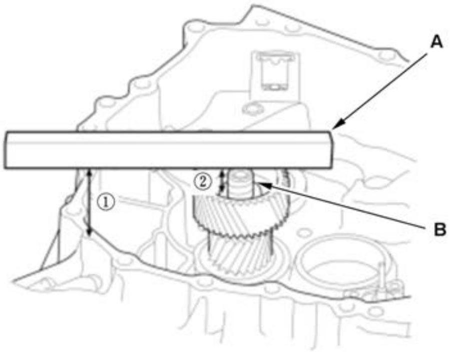 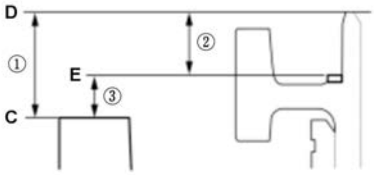	1. Set a straight edge (A) on the generator shaft (B). 2. Measure the height ① between the transmission housing surface (C) and the top (D) of the generator shaft. **NOTE:** Measure at three locations, and average the reading. 3. Measure the height ② between the shim surface (E) and the top (D) of the generator shaft. **NOTE:** Measure at three locations, and average the reading. 4. Calculate the height ③ in accordance with the following formula: ③ = ① - ② 5. If the height ③ is not within the specifications, refer to the parts catalog, then select appropriate a shim so the height ③ is with in the standard value. 6. Install the selected shim, then recheck the installation height.

Standard:	
Â	**19.195-19.240 mm (0.75571-0.75748 in)**

INPUT SHAFT INSTALLATION HEIGHT INSPECTION

Inspection

NOTE: Remove all of the old liquid gasket from the sealing surface of the transmission housing.

1. **Feed Pipe A - Install**
2. **Feed Pipe Flange - Install**
3. Internal Snap Ring - Install

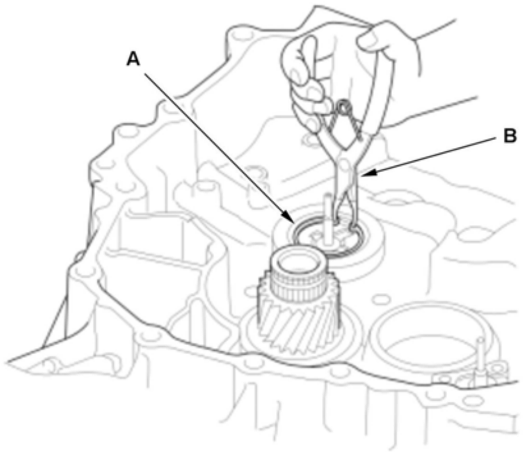

1. Install the internal snap ring (A) by compressing it using commercially available snap ring pliers (B).

NOTE:

- **Be careful not to deform the snap ring by opening/closing it excessively.**
- **Make sure the snap ring is firmly installed in the groove.**

4. Over Drive Gear Bearing (Transmission Housing Side) - Install
5. Over Drive Gear Bearing (Over Drive Clutch Side) - Install
6. Over Drive Gear - Install
7. Over Drive Clutch - Install
8. Input Shaft - Install

   NOTE: No need to install the O-rings in this procedure.

9. Shim - Install

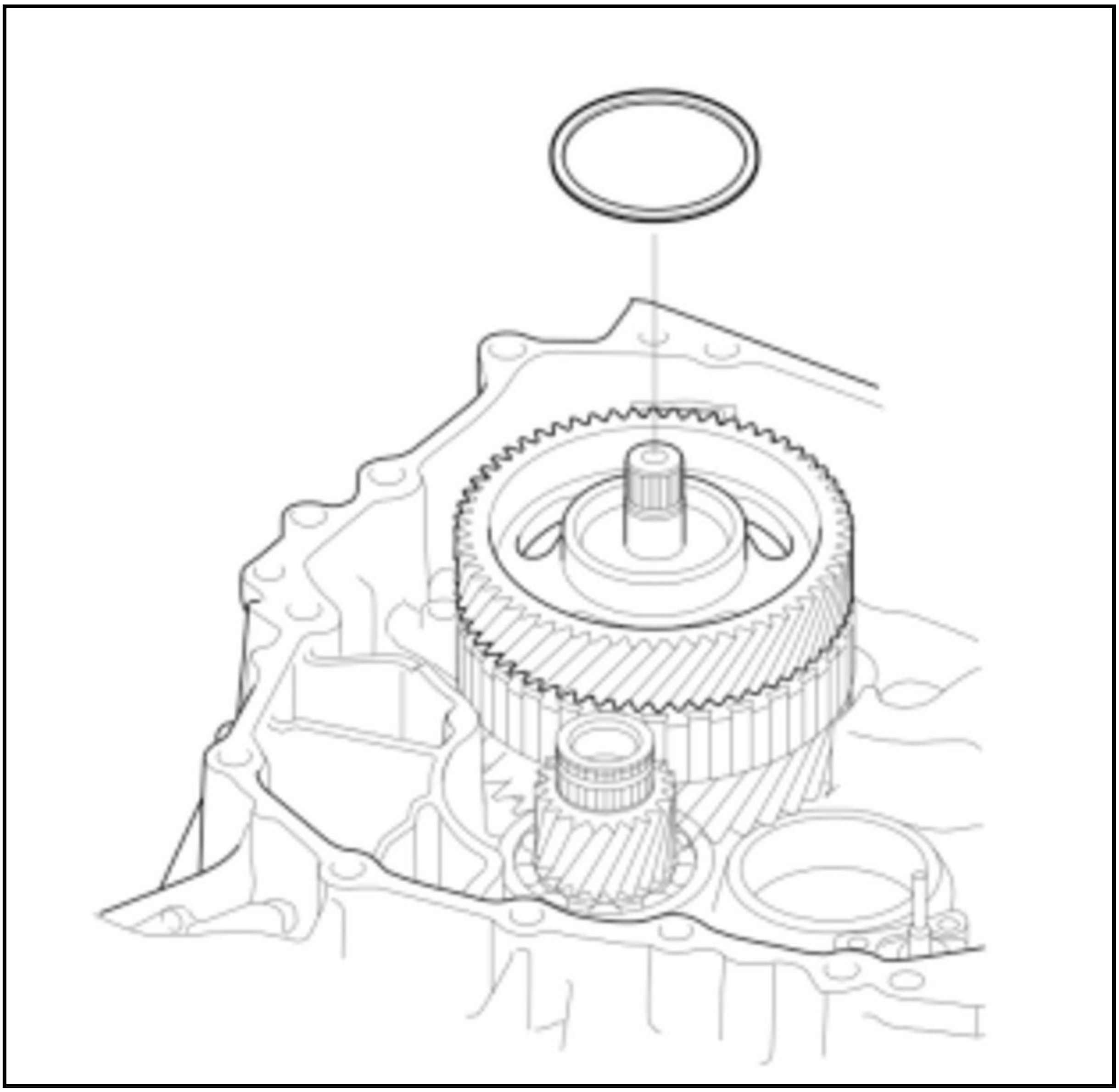

NOTE: Measure the shim thickness before installing.

10. Input Shaft Installation Height - Inspect

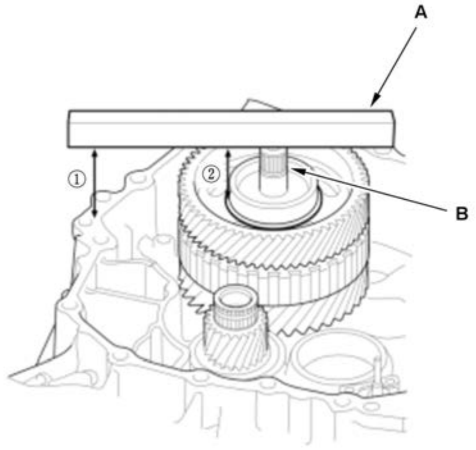 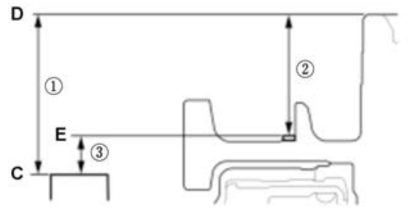	1. Set a straight edge (A) on the input shaft (B). 2. Measure the height ① between the transmission housing surface (C) and the top (D) of the input shaft. **NOTE:** Measure at three locations, and average the reading. 3. Measure the height ② between the shim surface (E) and the top of the input shaft. **NOTE:** Measure at three locations, and average the reading. 4. Calculate the height ③ in accordance with the following formula:

	③ = ① - ② 5. If the height ③ is not within the specifications, refer to the parts catalog, then select appropriate a shim so the height ③ is with in the standard value. 6. Install the selected shim, then recheck the installation height.

Standard:	
Â	**16.165-16.210 mm (0.63642-0.63819 in)**

DTC TROUBLESHOOTING INDEX

GEAR UNIT CONTROL SYSTEM DTC TROUBLESHOOTING INDEX

NOTE: Before you troubleshoot, record all freeze data and any on-board snapshot with the HDS, and **review the General Troubleshooting Information** .

DTC	Detection Item	Troubleshooting	Note
P0751	Shift Solenoid Valve A Stuck OFF	**TRS**	Â
P0752	Shift Solenoid Valve A Stuck ON	**TRS**	Â
P0756	Shift Solenoid Valve B Stuck OFF	**TRS**	Â
P0757	Shift Solenoid Valve B Stuck ON	**TRS**	Â
P07B3	Transmission Park Position Sensor/Switch A Circuit Low	**TRS**	*1
P07B4	Transmission Park Position Sensor/Switch A Circuit High	**TRS**	*1
P07B9	Transmission Park Position Sensor/Switch B Circuit Low	**TRS**	*1
P07BA	Transmission Park Position Sensor/Switch B Circuit High	**TRS**	*1
P07BE	Transmission Park Position Sensor/Switch A/B Incorrect Voltage Correlation	**TRS**	*1
P0811	Excessive Clutch A Slippage	**TRS**	Â
P0840	Transmission Fluid Pressure Sensor Malfunction	**TRS**	Â
P0841	Transmission Fluid Pressure Sensor Performance	**TRS**	*1
P0842	Transmission Fluid Pressure Switch A (2nd Clutch) Circuit Low/Transmission Fluid Pressure Sensor Circuit Low Input	**TRS**	*1
P0843	Transmission Fluid Pressure Switch A (2nd Clutch) Circuit High/Transmission Fluid Pressure Sensor Circuit High Input	**TRS**	*1
P084F	Park/Neutral Switch Output Circuit	**TRS**	*1
P0973	Shift Solenoid Valve A Control Circuit Low (Short)	**TRS**	*1
P0974	Shift Solenoid Valve A Control Circuit High (Open)	**TRS**	*1
P0976	Shift Solenoid Valve B Control Circuit Low (Short)	**TRS**	*1

DTC	Detection Item	Troubleshooting	Note
P0977	Shift Solenoid Valve B Control Circuit High (Open)	TRS	*1
P161B	Park Pawl Control Module Programming Error	TRS	Â
P170E	Park Pawl Motor Power Relay Circuit High	TRS	*1
P170F	Park Pawl Unit Communication Circuit (PWM)	TRS	*1
P1711	Park Pawl Unit Malfunction	TRS	Â
P1719	Park Pawl System Stuck Malfunction	TRS	Â
P171A	Park Pawl System Position Control Error	TRS	Â
P171C	Park Pawl System Multiple Sensor Correlation	TRS	Â
P171E	Park Pawl System Malfunction of learning mode	TRS	Â
P171F	Park Pawl System Stuck Malfunction After learning mode/Time-out	TRS	Â
P1720	Park Pawl Motor Current Range/Performance	TRS	*1
P1721	Park Pawl Unit IG1 SW No Signal	TRS	*1
P1722	Park Pawl Motor Torque Malfunction of learning mode	TRS	Â
P1723	Park Pawl System Initial Check Error	TRS	Â
P172A	KEY-Release Wake-up Output Circuit Malfunction	TRS	*1
P172B	KEY-Release Switch Input Circuit Malfunction	TRS	*1
P173A	Transmission Fluid Pressure Sensor Performance High	TRS	Â
P173B	Transmission Fluid Pressure Sensor Performance Low	TRS	Â
P26C3	Internal Control Module Transmission Range Sensor Performance	TRS	Â
P271A	Park Pawl Position Sensor A Circuit Low	TRS	*1
P272C	Park Pawl Motor Control Circuit	TRS	*1
P272D	Park Pawl Motor Control Circuit Current Too High	TRS	*1
P2872	Over Drive Clutch Stuck Engaged	TRS	Â

*1: This code is caused by an electrical circuit problem and cannot be caused by a mechanical problem in the transmission (e-CVT).

REPLACEMENT

TRANSMISSION OIL SEAL REPLACEMENT

Special Tools Required

Image	Description/Tool Number
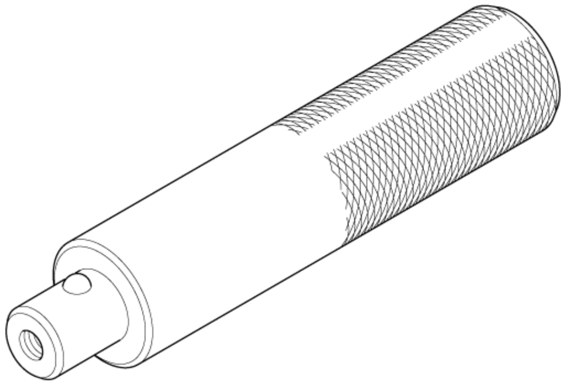	Driver Handle, 15 x 135L 07749-0010000

Image	Description/Tool Number
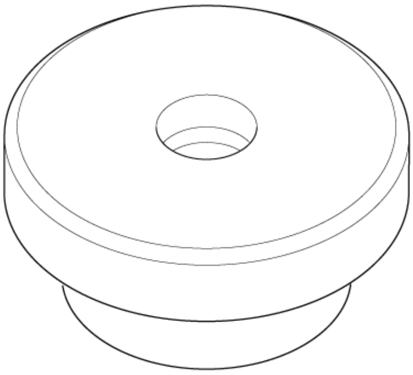	Oil Seal Driver Attachment 07GAD-PG40100
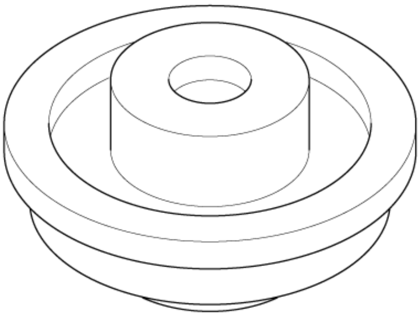	Oil Seal Driver Attachment, 64 x 72 mm 07JAD-PN00100

Replacement

NOTE:

- Keep all foreign particles out of the transmission (e-CVT).
- Apply a light coat of clean ATF to the oil seal surface of the press-fit part and the lip part before installation.

Procedure

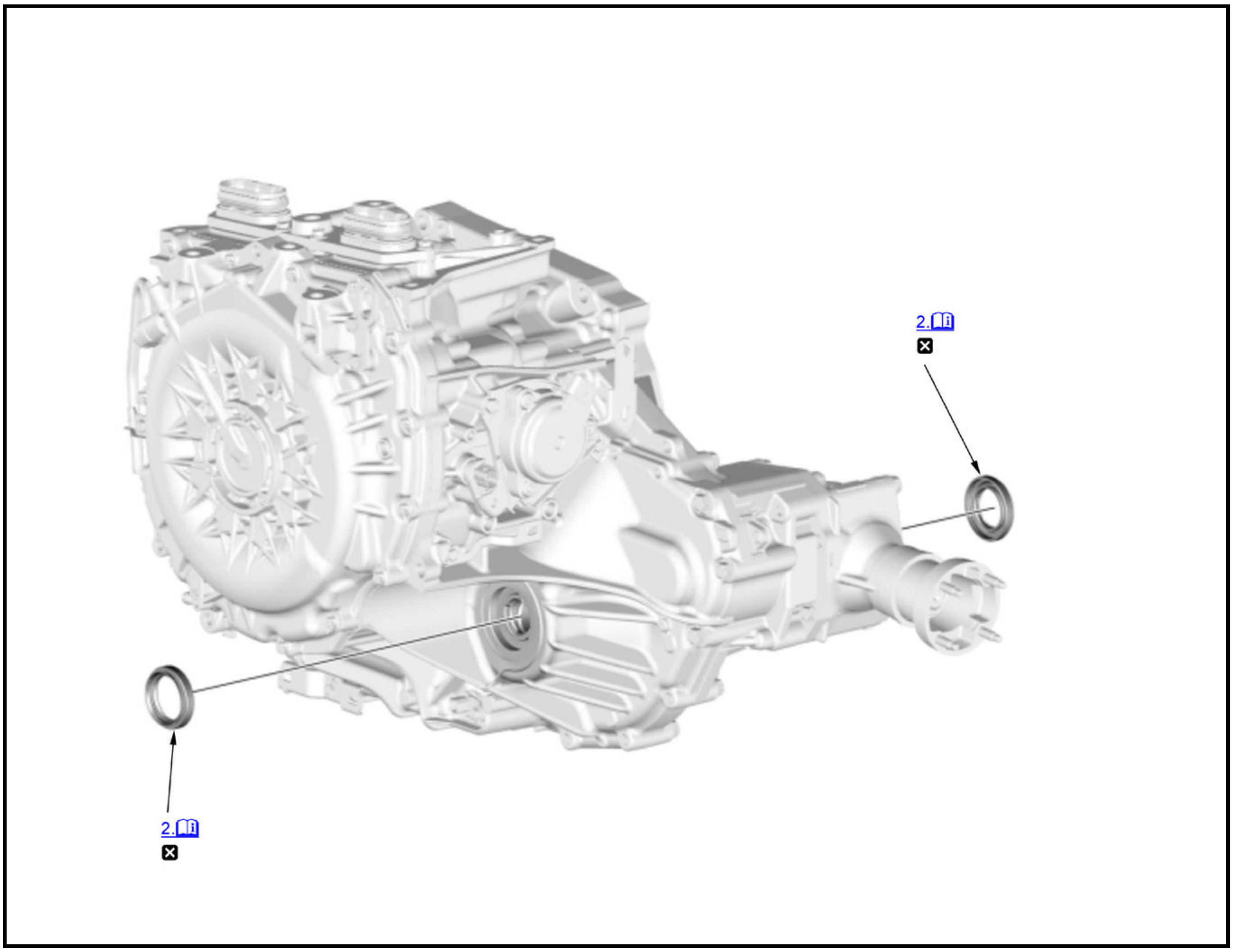

☒	Replace

Driveshaft Oil Seal

1. **Left Driveshaft Inboard Joint - Disconnect**
2. Driveshaft Oil Seal - Replace

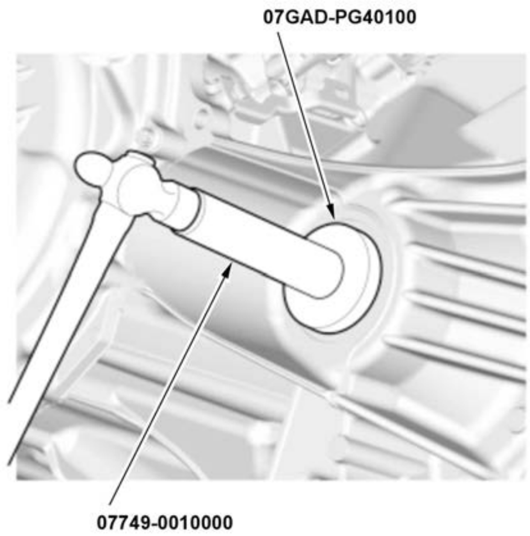	1. Install the driveshaft oil seal flush with the transmission housing using the 15 x 135L driver handle and the oil seal driver attachment.

3. All Removed Parts - Install

1. Install the parts in the reverse order of removal.

Intermediate Shaft Oil Seal

4. **Intermediate Shaft - Remove**
5. Intermediate Shaft Oil Seal - Replace

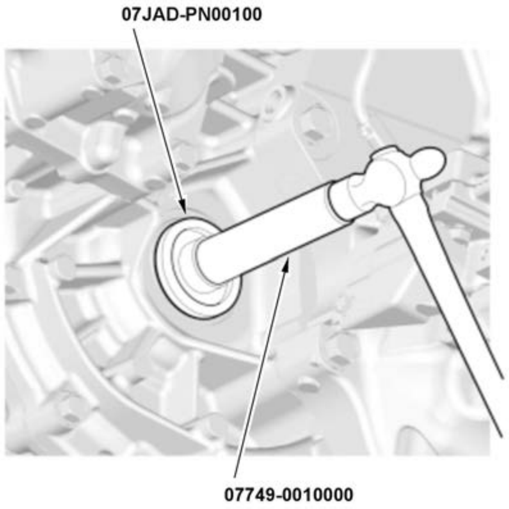 07JAD-PN00100 07749-0010000	1. Install the intermediate shaft oil seal flush with the flywheel housing using the 15 x 135L driver handle and the 64 x 72 mm oil seal driver attachment.

6. All Removed Parts - Install

1. Install the parts in the reverse order of removal.

SERVICE PROCEDURE

ATF LEVEL CHECK AND REPLACEMENT

Exploded View

1. ATF Maintenance Plug

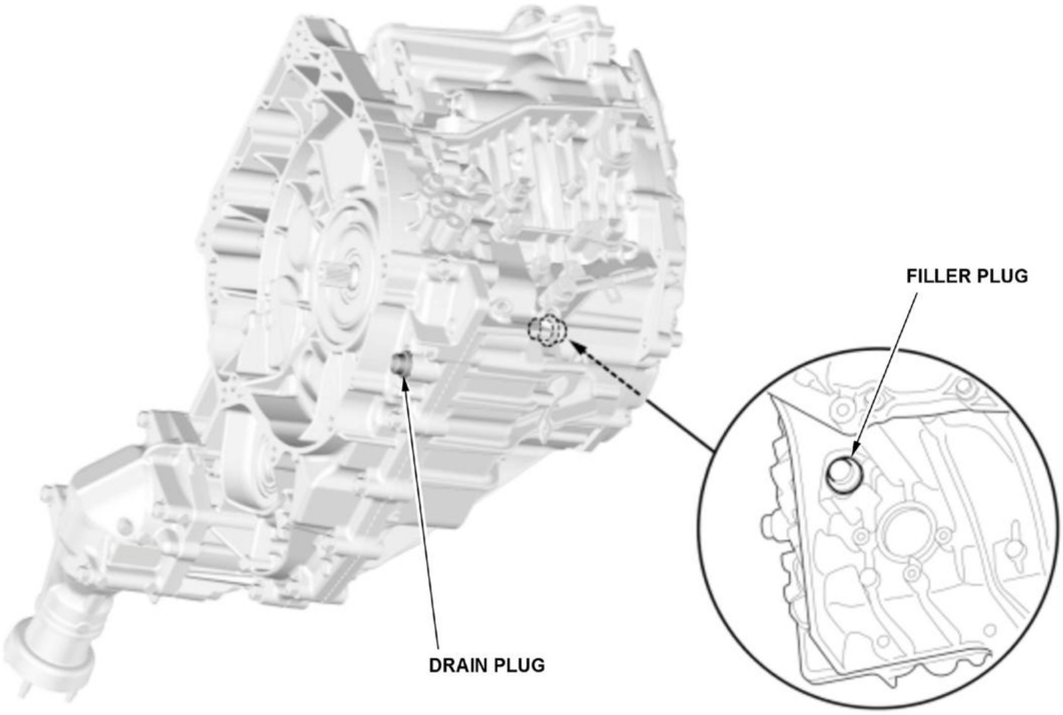
FILLER PLUG
DRAIN PLUG

Check

NOTE:

- How to read the torque specifications .
- Keep all foreign particles out of the transmission (e-CVT).
- Check the fluid level within 60-90 seconds after turning the engine off.
- Higher fluid level may be indicated if the radiator fan comes on three times or more.

1. Vehicle - Lift
2. Engine - Warm Up

1. Enter the maintenance mode, then start the engine
2. Warm up the engine by raising the engine speed around 3, 000 rpm until the cooling fan(s) comes on.
3. Turn the engine off.

3. Engine Undercover - Remove
4. ATF Level - Check

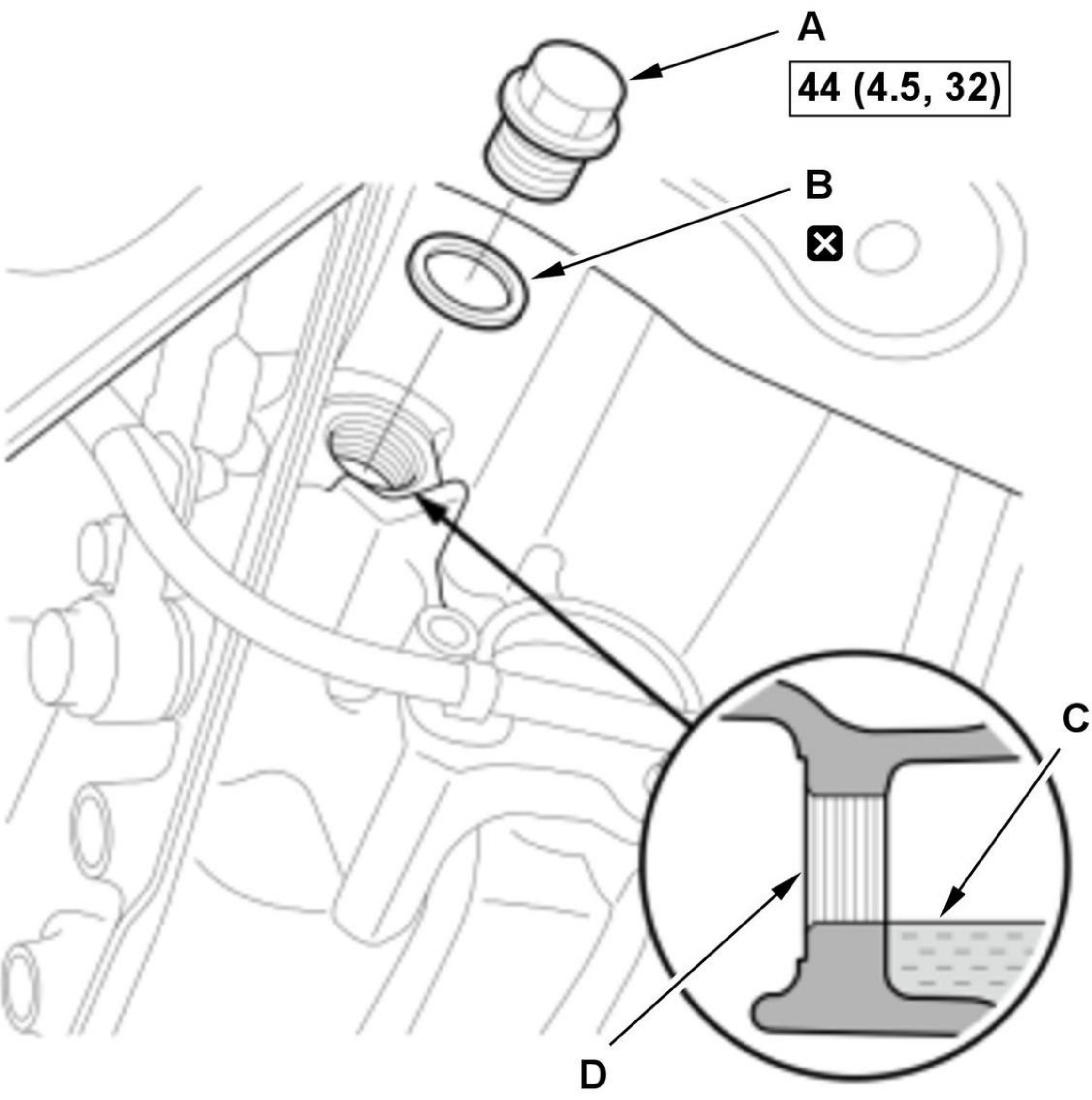

Fig. 3: Filler Plug And Sealing Washer With Torque Specifications
Courtesy of HONDA, U.S.A., INC.

1. Remove the filler plug (A) with the sealing washer (B).

NOTE: Be careful not to burn yourself by the hot part.

2. Make sure the ATF level is at the proper level (C).

- If the ATF is overfilled, drain the ATF from the filler plug hole (D) to the proper level.
- If the ATF is low, inspect and repair any external leaks. If there are no leaks, fill the transmission (e-CVT) with the recommended fluid through the filler plug hole to the proper level. Always use genuine Honda ATF DW

  -1. **NOTE:** Using the wrong type of fluid will damage the transmission (e-CVT).

5. All Removed Parts - Install

1. Install the parts in the reverse order of removal.

Replacement

NOTE:

- **How to read the torque specifications** .
- Keep all foreign particles out of the transmission (e-CVT).

1. **Vehicle - Lift**
2. Engine - Warm Up

1. **Enter the maintenance mode, then start the engine**

2. Warm up the engine by raising the engine speed around 3, 000 rpm until the cooling fan(s) comes on.

3. Turn the engine off.

3. **Engine Undercover - Remove**
4. ATF - Drain

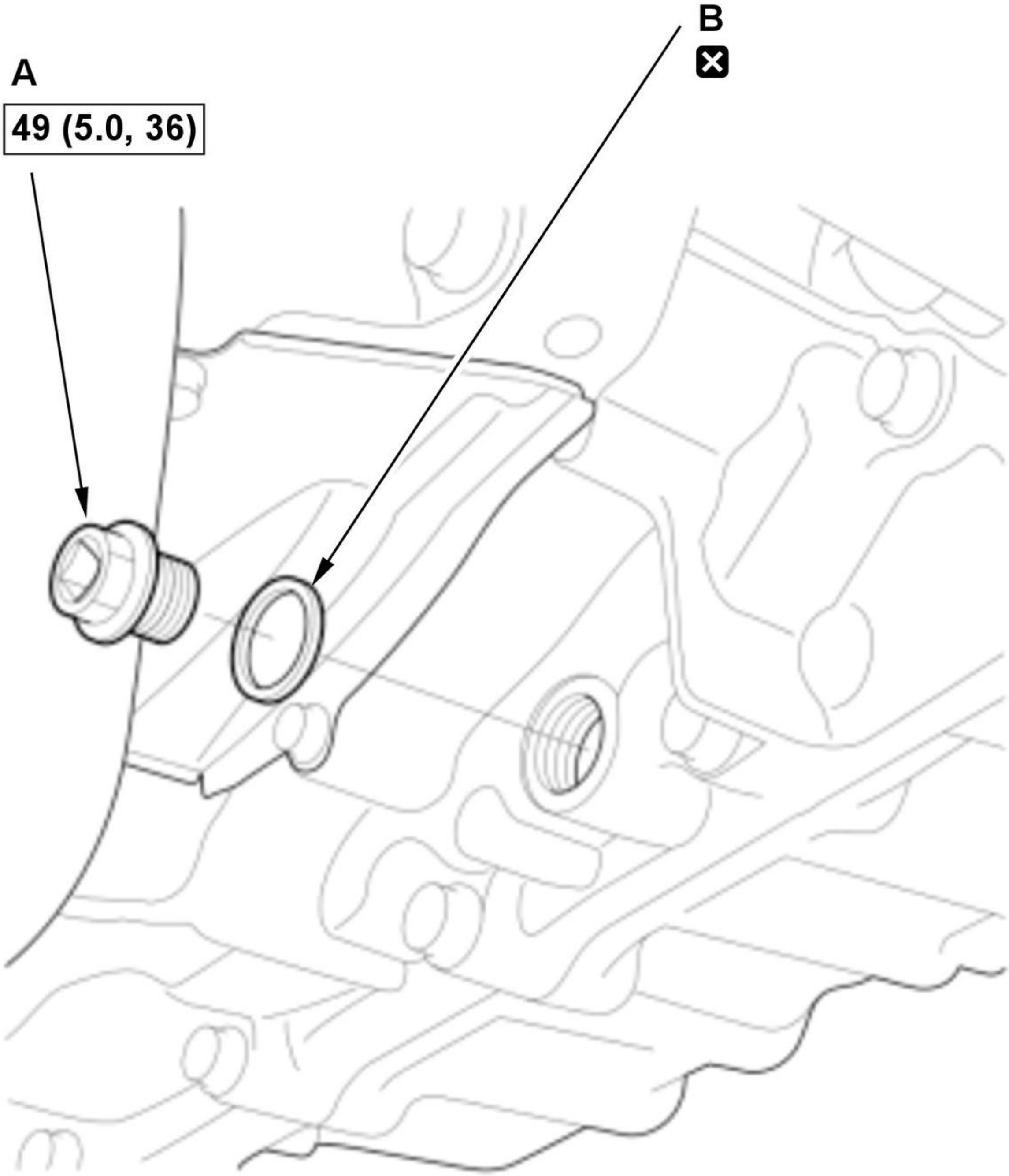

Fig. 4: Drain Plug And Sealing Washer With Torque Specifications
Courtesy of HONDA, U.S.A., INC.

1. Remove the drain plug (A) with the sealing washer (B).

NOTE: Be careful not to burn yourself by the hot part.

2. Drain the ATF.

3. Reinstall the drain plug with a new sealing washer.

5. ATF - Refill

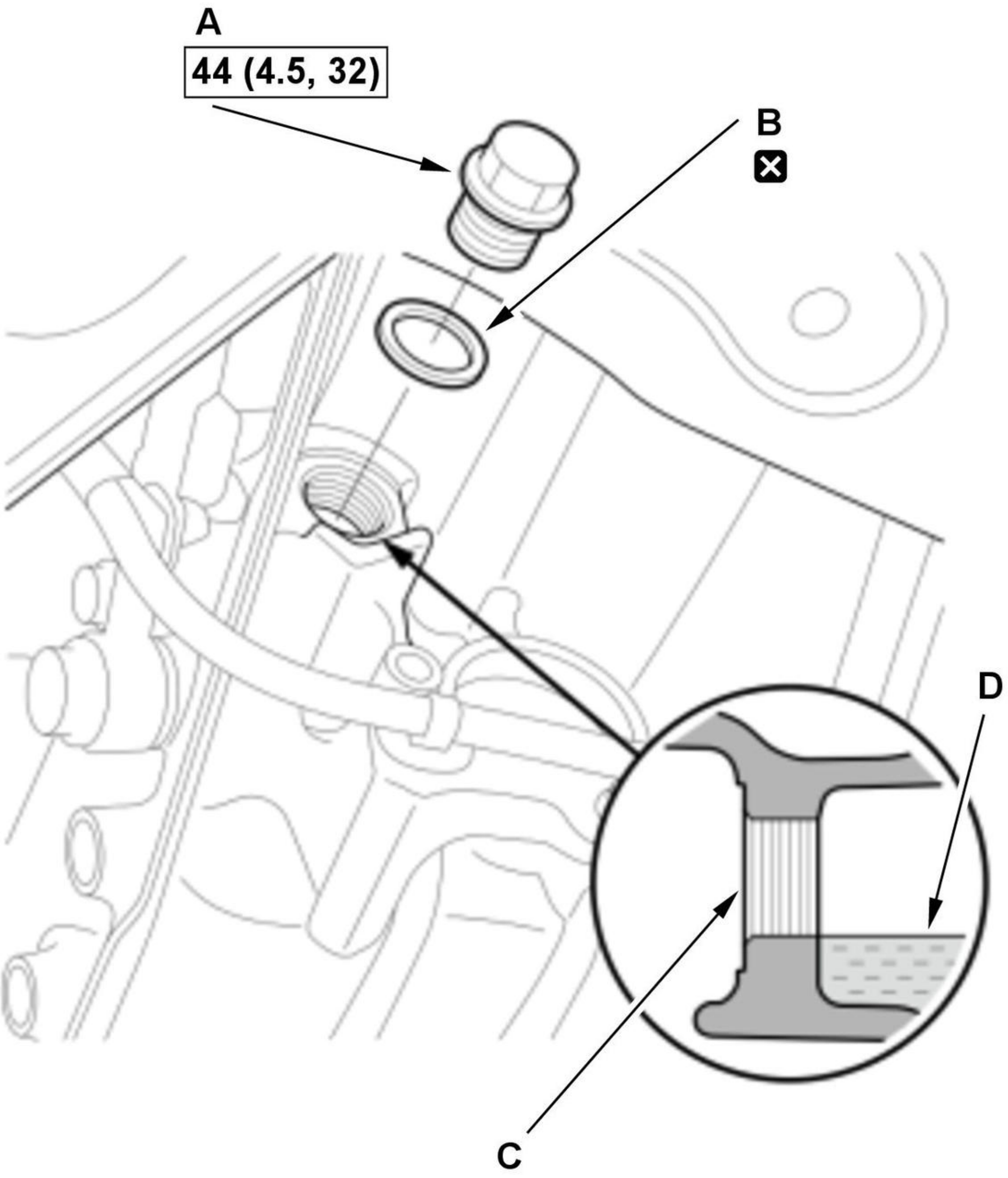

Fig. 5: Filler Plug And Sealing Washer With Torque Specifications
Courtesy of HONDA, U.S.A., INC.

1. Remove the filler plug (A) with the sealing washer (B).

2. Refill the transmission (e-CVT) with the recommended fluid through the filler plug hole (C) to the proper level (D). Always use genuine Honda ATF DW-1.

NOTE: Using the wrong type of fluid will damage the transmission (e-CVT).

Transmission Fluid (ATF) Capacity:

3.5 L (3.7 US qt) at overhaul

2.4 L (2.5 US qt) at change

6. All Removed Parts - Install

1. Install the parts in the reverse order of removal.

7. Maintenance Minder - Reset

1. If the Maintenance Minder required to replace the engine oil, **reset the Maintenance Minder with the gauge** (see "Resetting the Maintenance Minder"). If the Maintenance Minder did not require to replace the engine oil, **reset the Maintenance Minder with the HDS** (see "Resetting the Individual Maintenance Items").

TEST

GEAR PRESSURE TEST

Special Tools Required

Image	Description/Tool Number
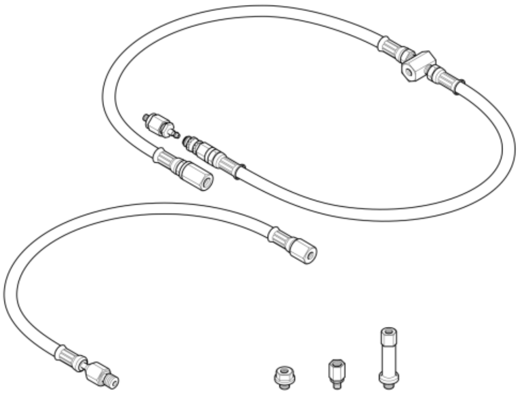	Pressure Gauge Adapter 070AJ-RT4A100 or 070AJ-RT4A101
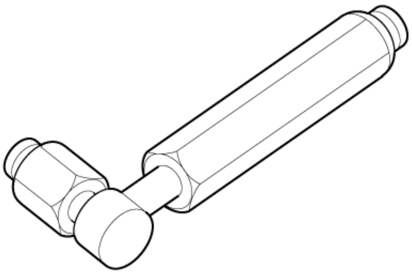	A/T Pressure Adapter 07MAJ-PY40120
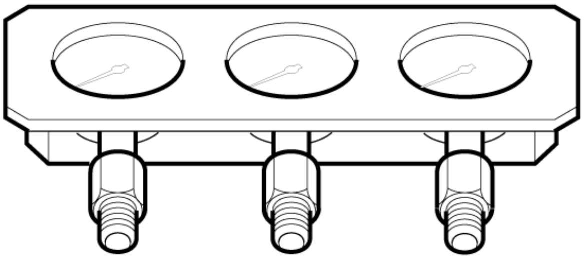	A/T Oil Pressure Gauge Set 07406-0020401 or 07406-0020400

Image	Description/Tool Number
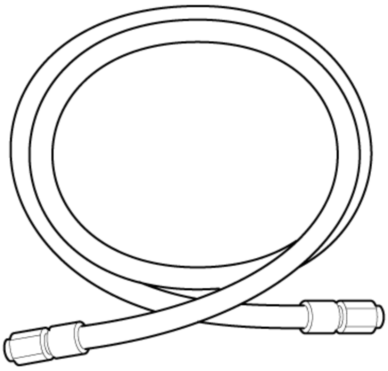	A/T Pressure Test Hose 07AAJ-PY4A100

Exploded View

1. Pressure Inspection Port

Pressure Inspection Port - Exploded View

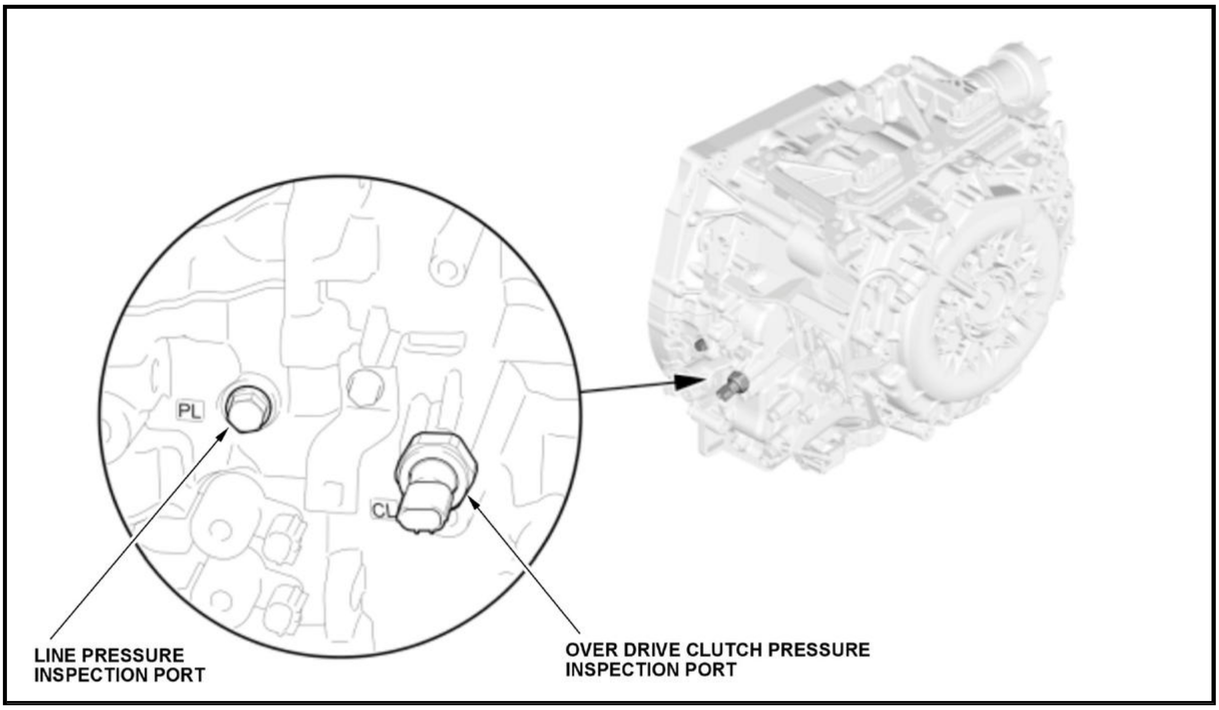
PL
CL
LINE PRESSURE INSPECTION PORT
OVER DRIVE CLUTCH PRESSURE INSPECTION PORT

Test

NOTE:

- **How to read the torque specifications** .
- Check for DTCs. If any DTCs are stored, troubleshoot and clear them first.
- Do not allow dust or other foreign particles to enter the port while installing the pressure gauge adapter.
- Be sure to check the ATF level after each pressure port test. When installing or removing the pressure gauge adapter, ATF may run out of the pressure inspection ports.
- Do not test pressure for more than 10 seconds at a time.
- Do not shift the transmission while raising the engine speed.
- VSA DTC(s) may come on during the test-drive. If the VSA DTC(s) come on, clear the DTC(s) after testing is done with the HDS.

1. A/T Oil Pressure Gauge - Set

1. When testing the hydraulic pressure at each inspection port, select a suitable adapter from the following table, and connect each adapter to the A/T oil pressure gauge.

Inspection Port	Tool
Line pressure	Pressure gauge adapter B
Over drive clutch pressure	• Pressure gauge adapter A • Pressure gauge adapter E

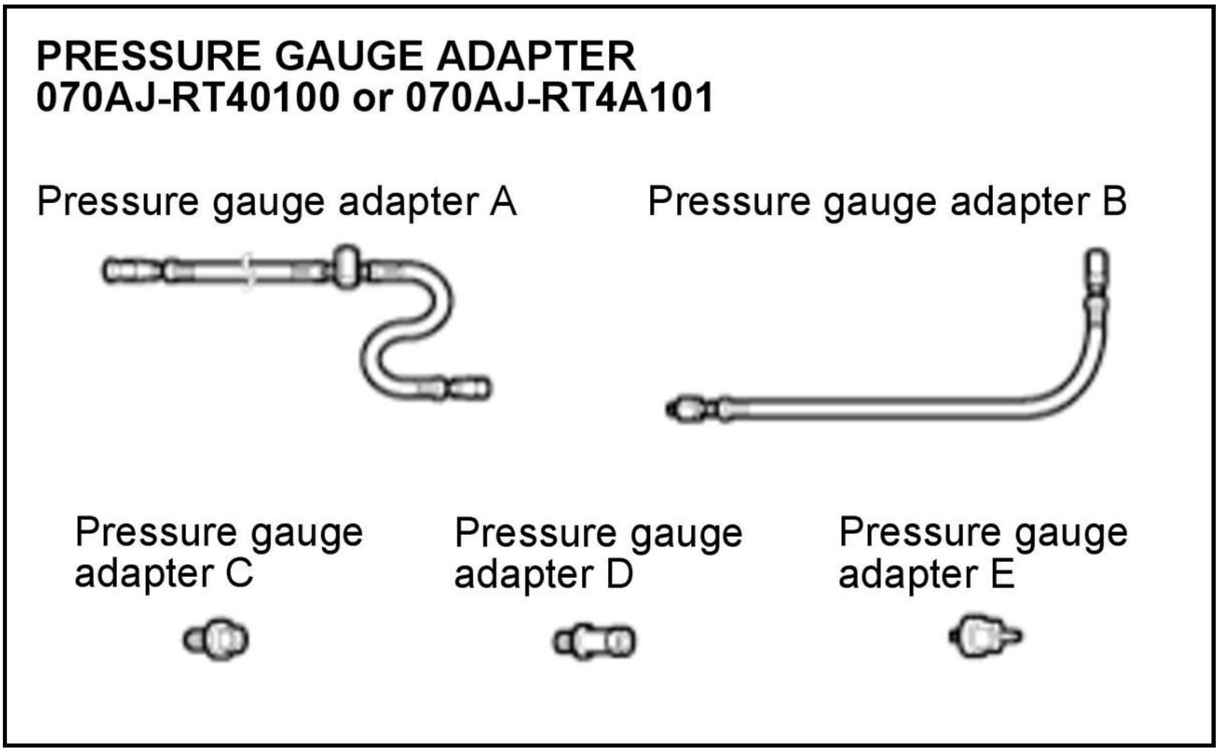
PRESSURE GAUGE ADAPTER
070AJ-RT40100 or 070AJ-RT4A101
Pressure gauge adapter A
Pressure gauge adapter B
Pressure gauge adapter C
Pressure gauge adapter D
Pressure gauge adapter E

2. **Vehicle - Lift**
3. **Engine Undercover - Remove**
4. **ATF Level - Check**
5. **HDS - Connect**
6. Line Pressure - Test

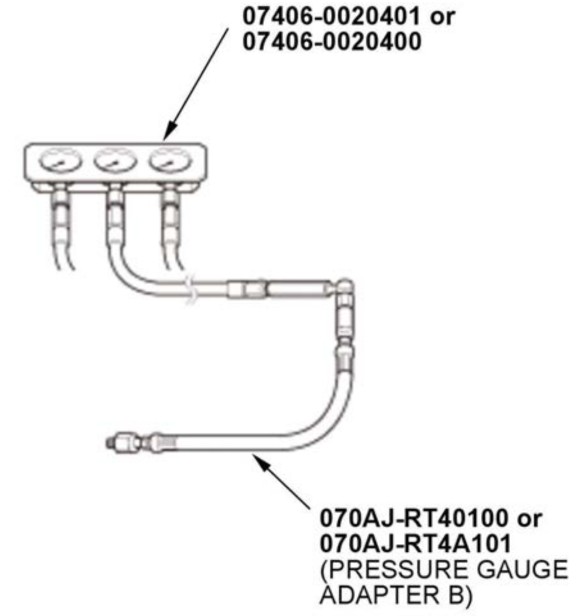 07406-0020401 or 07406-0020400 070AJ-RT40100 or 070AJ-RT4A101 (PRESSURE GAUGE ADAPTER B)	1. Install pressure gauge adapter B to the A/T oil pressure gauge set.

2. Remove the sealing bolt.

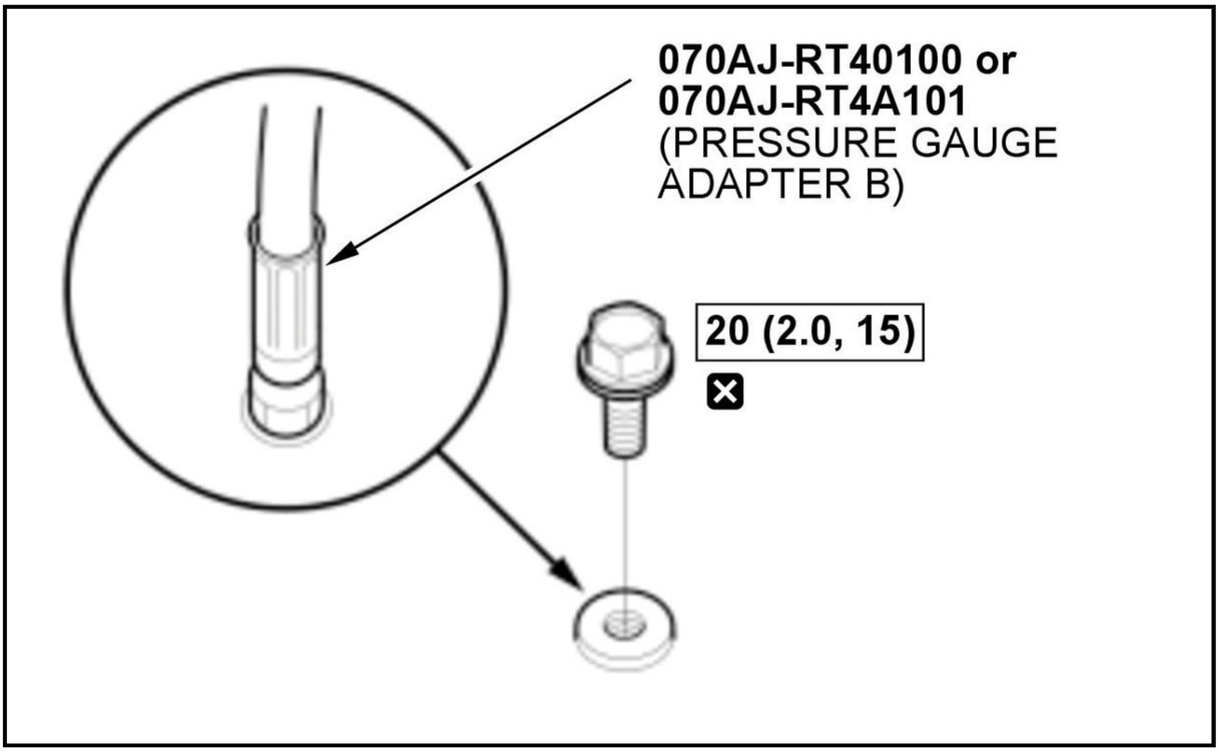

3. Install the A/T oil pressure gauge to the line pressure inspection port.

4. **Enter the maintenance mode, then start the engine**

5. Shift the transmission to D position/mode.

6. Measure the line pressure from the A/T oil pressure gauge while holding the engine speed at 1, 500 rpm and at 3, 000 rpm by monitoring with the HDS.

CAUTION: **Do not apply the brake hard when working on a running vehicle. It may cause some damage to the drive-line.**

Pressure	Fluid Pressure	
	Standard	Service Limit
Line (1, 500 rpm)	**750-850 kPa (7.65-8.67 kgf/cm 2, 108.8-123.3 psi)**	**700 kPa (7.14 kgf/cm 2, 101.5 psi)**
Line (3, 000 rpm)	**250-310 kPa (2.55-3.16 kgf/cm 2, 36.3-44.9 psi)**	-

7. If the line pressures are out of the service limit, refer to the problem and probable cause(s) listed in the table.

Problem	Probable cause(s)
No or low line pressure	• ATF pump • Clogged ATF strainer • Valve body assembly (regulator valve) • Shift solenoid valve B • Over drive clutch • Feed pipe (at over drive clutch)

8. Turn the engine off.

9. Remove the A/T oil pressure gauge.

10. Install a new sealing bolt.

7. Over Drive Clutch Pressure - Test

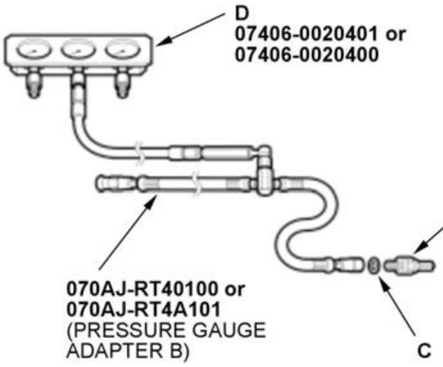 D 07406-0020401 or 07406-0020400 B 070AJ-RT40100 or 070AJ-RT4A101 (PRESSURE GAUGE ADAPTER B) C	1. **Remove the transmission fluid pressure sensor (B)** 2. Temporarily install the transmission fluid pressure sensor with the sealing washer (C) to pressure gauge adapter A. 3. Install pressure gauge adapter A to the A/T oil pressure gauge set (D).

4. Install pressure gauge adapter E (quick connector) to the over drive clutch pressure inspection port.

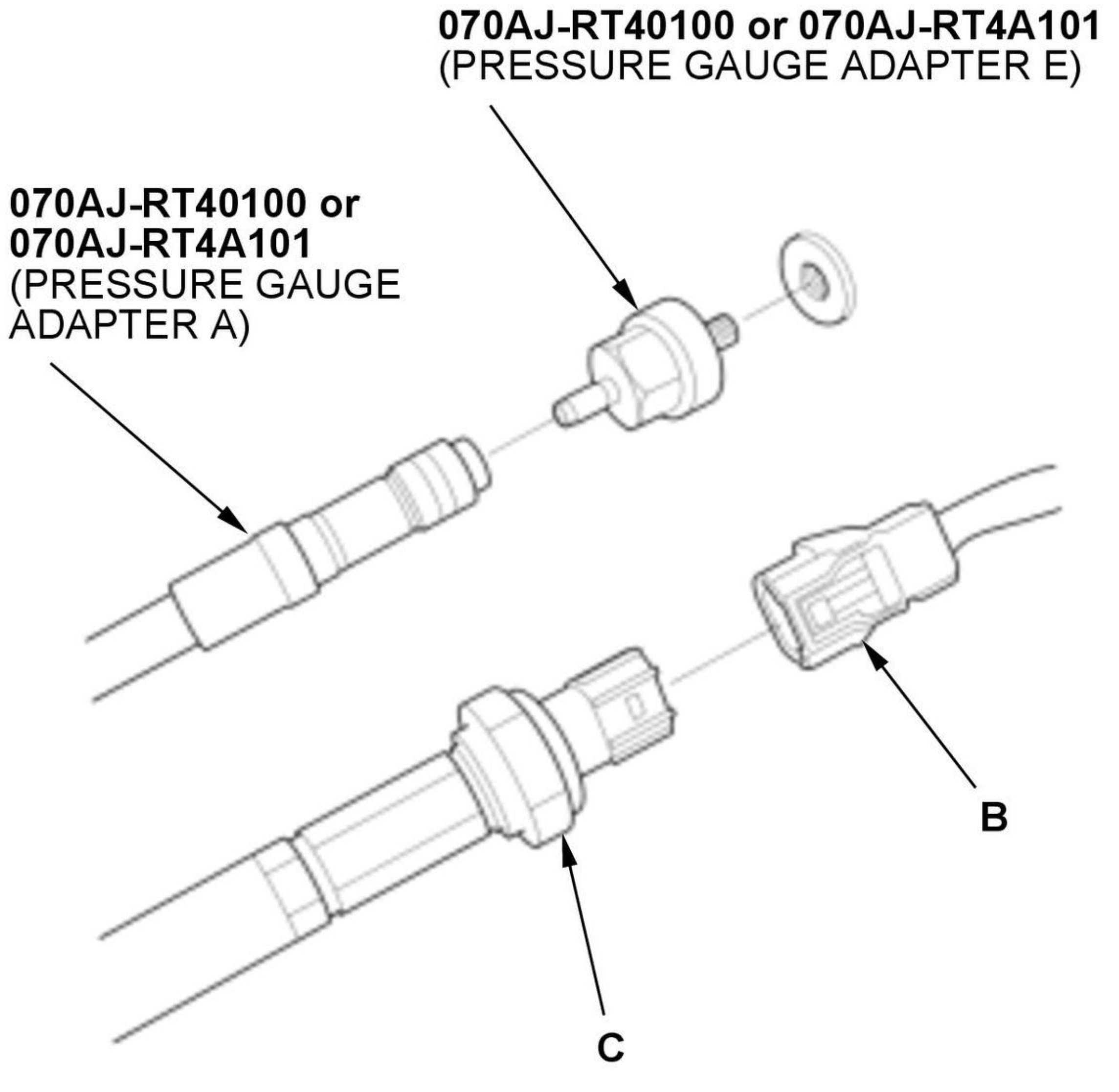
070AJ-RT40100 or 070AJ-RT4A101
(PRESSURE GAUGE ADAPTER E)
070AJ-RT40100 or
070AJ-RT4A101
(PRESSURE GAUGE
ADAPTER A)
B
C

5. Install pressure gauge adapter A to pressure gauge adapter E (quick connector).

6. Connect the connector (B) to the transmission fluid pressure sensor (C).

7. **Enter the maintenance mode, then start the engine**

8. Shift the transmission to D position/mode.

9. Measure the over drive clutch pressure from the A/T oil pressure gauge while holding the engine speed at 1, 500 rpm by monitoring with the HDS.

CAUTION: **Do not apply the brake hard when working on a running vehicle. It may cause some damage to the drive-line.**

Pressure	Fluid Pressure	
	Standard	Service Limit
Over drive clutch (1, 500 rpm)	**756-844 kPa (7.71-8.61 kgf/cm 2, 109.7-122.5 psi)**	**700 kPa (7.14 kgf/cm 2, 101.5 psi)**

10. If the over drive clutch pressure is out of the service limit, refer to the problem and probable cause(s) listed in the table.

Problem	Probable cause(s)
No or low over drive clutch pressure	• Valve body assembly (shift valve A) • Shift solenoid valve A

11. Turn the engine off.

12. Disconnect the connector from transmission fluid pressure sensor.

13. Remove the A/T oil pressure gauge.

14. Remove the transmission fluid pressure sensor from pressure gauge adapter A.

15. **Install the transmission fluid pressure sensor**

8. All Removed Parts - Install

1. Install the parts in the reverse order of removal.

9. **ATF Level - Check**
10. DTC - Check

1. Do an all DTC check with the HDS. If necessary, clear the DTC(s) with the HDS.

CONNECTOR VIEW

PCM GEAR UNIT CONTROL SYSTEM PCM CONNECTOR FOR INPUTS AND OUTPUTS

NOTE: Refer to the PCM Connector for Inputs and Outputs in the Fuel and Emissions Systems as needed.

Connector Index
PCM Connector A (50P)
PCM Connector E (80P)
SBW Shifter Control Module 20P Connector
Park Pawl Actuator Driver Unit 26P Connector

SBW Shifter Control Module 20P Connector (female terminals)

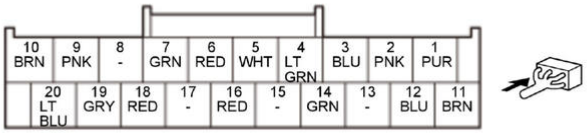
10 BRN
9 PNK
8 -
7 GRN
6 RED
5 WHT
4 LT GRN
3 BLU
2 PNK
1 PUR
20 LT BLU
19 GRY
18 RED
17 -
16 RED
15 -
14 GRN
13 -
12 BLU
11 BRN

Terminal Number	Terminal Name	Description
1	GND	Ground for SBW shifter control module
2	SBW SG	Sensor ground
3	ILL-(LED)	Detects illumination control signal
4	SBW PPOS2	Detects park position sensor P position signal
5	F-CAN A_H	Sends and receives communication signal
6	F-CAN A_L	Sends and receives communication signal
7	MTR_CUT2(IG1)	Outputs key-release signal
8	Not used	Â
9	EP-CAN A_H	Sends and receives communication signal
10	EP-CAN A_L	Sends and receives communication signal
11	SBW PPOS1	Detects park position sensor P position signal
12	SBW_VCC	Provides sensor reference voltage
13	Not used	Â
14	ATP-P	Outputs P position signal
15	Not used	Â
16	ACC	Power source for SBW shifter control module
17	Not used	Â
18	IG1_OPTION	Power source for SBW shifter control module
19	ILLUMI+	Power source for SBW shifter illumination
20	+B_SBW	Power source for SBW shifter control module

Park Pawl Actuator Driver Unit 26P Connector (female terminals)

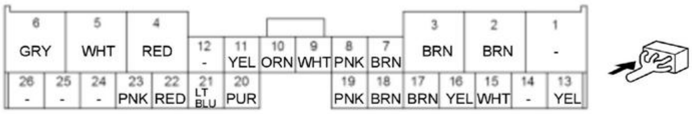
6 GRY
5 WHT
4 RED
12 -
11 YEL
10 ORN
9 WHT
8 PNK
7 BRN
3 BRN
2 BRN
1 -
26 -
25 -
24 -
23 PNK
22 RED
21 LT BLU
20 PUR
19 PNK
18 BRN
17 BRN
16 YEL
15 WHT
14 -
13 YEL

Terminal Number	Terminal Name	Description
1	Not used	Â
2	GND	Ground for park pawl actuator driver unit
3	GND	Ground for park pawl actuator driver unit
4	P-ACT_MTR_W	Detects park pawl actuator motor W-phase signal

Terminal Number	Terminal Name	Description
5	P-ACT_MTR_V	Detects park pawl actuator motor V-phase signal
6	P-ACT_MTR_U	Detects park pawl actuator motor U-phase signal
7	EP-CAN A_L	Sends and receives communication signal
8	EP-CAN A_H	Sends and receives communication signal
9	IGN_TRX	Communication line
10	PARKCMD	Sends and receives communication signal
11	PARKBUSY	Sends and receives communication signal
12	Not used	Â
13	+B_BACKUP_FI-ECU	Power source for park pawl actuator driver unit
14	Not used	Â
15	IG1_SRS2	Detects ignition signal
16	ESL_PWR	Detects ESL PWR signal
17	GND	Ground for park pawl actuator driver unit
18	GND	Ground for park pawl actuator driver unit
19	P-ACT_EENC	Ground for park pawl actuator encoder
20	P-ACT_VENC	Power source for park pawl actuator encoder
21	P-ACT_RB	Detects park pawl actuator encoder signal
22	P-ACT_RA	Detects park pawl actuator encoder signal
23	P-ACT_RLY_CL-	Drives park pawl actuator relay
24	Not used	Â
25	Not used	Â
26	Not used	Â

CIRCUIT DIAGRAM

GEAR UNIT CONTROL SYSTEM CIRCUIT DIAGRAM

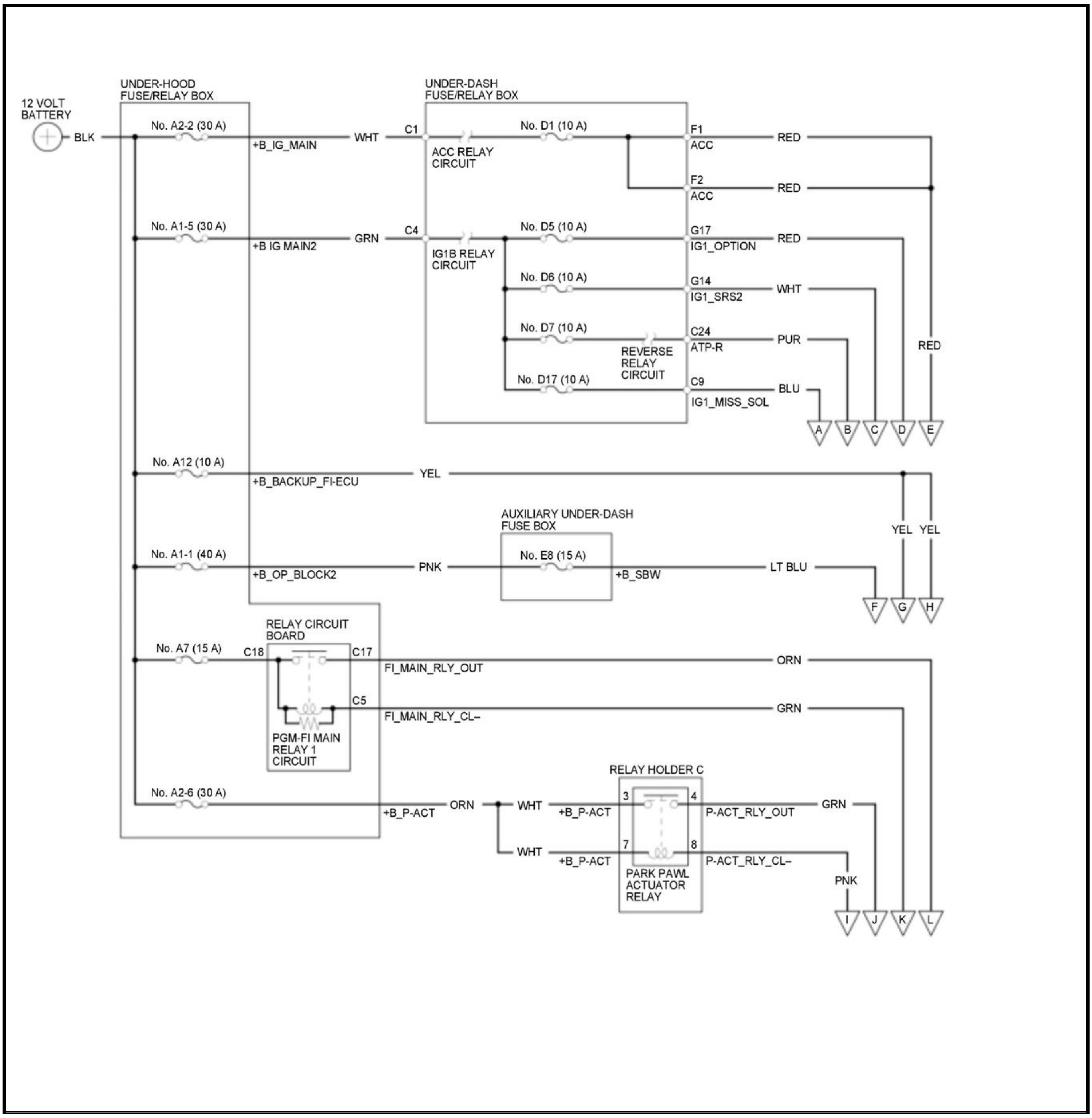
12 VOLT BATTERY
BLK
UNDER-HOOD FUSE/RELAY BOX
No. A2-2 (30 A)
+B_IG_MAIN
WHT
No. A1-5 (30 A)
+B IG MAIN2
GRN
No. A12 (10 A)
+B_BACKUP_FI-ECU
YEL
No. A1-1 (40 A)
+B_OP_BLOCK2
PNK
RELAY CIRCUIT BOARD
No. A7 (15 A)
C18
C17
C5
FI_MAIN_RLY_OUT
FI_MAIN_RLY_CL–
PGM-FI MAIN RELAY 1 CIRCUIT
ORN
GRN
No. A2-6 (30 A)
+B_P-ACT
ORN
UNDER-DASH FUSE/RELAY BOX
C1
ACC RELAY CIRCUIT
No. D1 (10 A)
F1
ACC
RED
F2
ACC
RED
C4
IG1B RELAY CIRCUIT
No. D5 (10 A)
G17
IG1_OPTION
RED
No. D6 (10 A)
G14
IG1_SRS2
WHT
No. D7 (10 A)
C24
ATP-R
PUR
REVERSE RELAY CIRCUIT
No. D17 (10 A)
C9
IG1_MISS_SOL
BLU
RED
A
B
C
D
E
AUXILIARY UNDER-DASH FUSE BOX
No. E8 (15 A)
+B_SBW
LT BLU
YEL
YEL
F
G
H
RELAY HOLDER C
WHT
+B_P-ACT
3
4
P-ACT_RLY_OUT
GRN
WHT
+B_P-ACT
7
8
P-ACT_RLY_CL–
PARK PAWL ACTUATOR RELAY
PNK
I
J
K
L

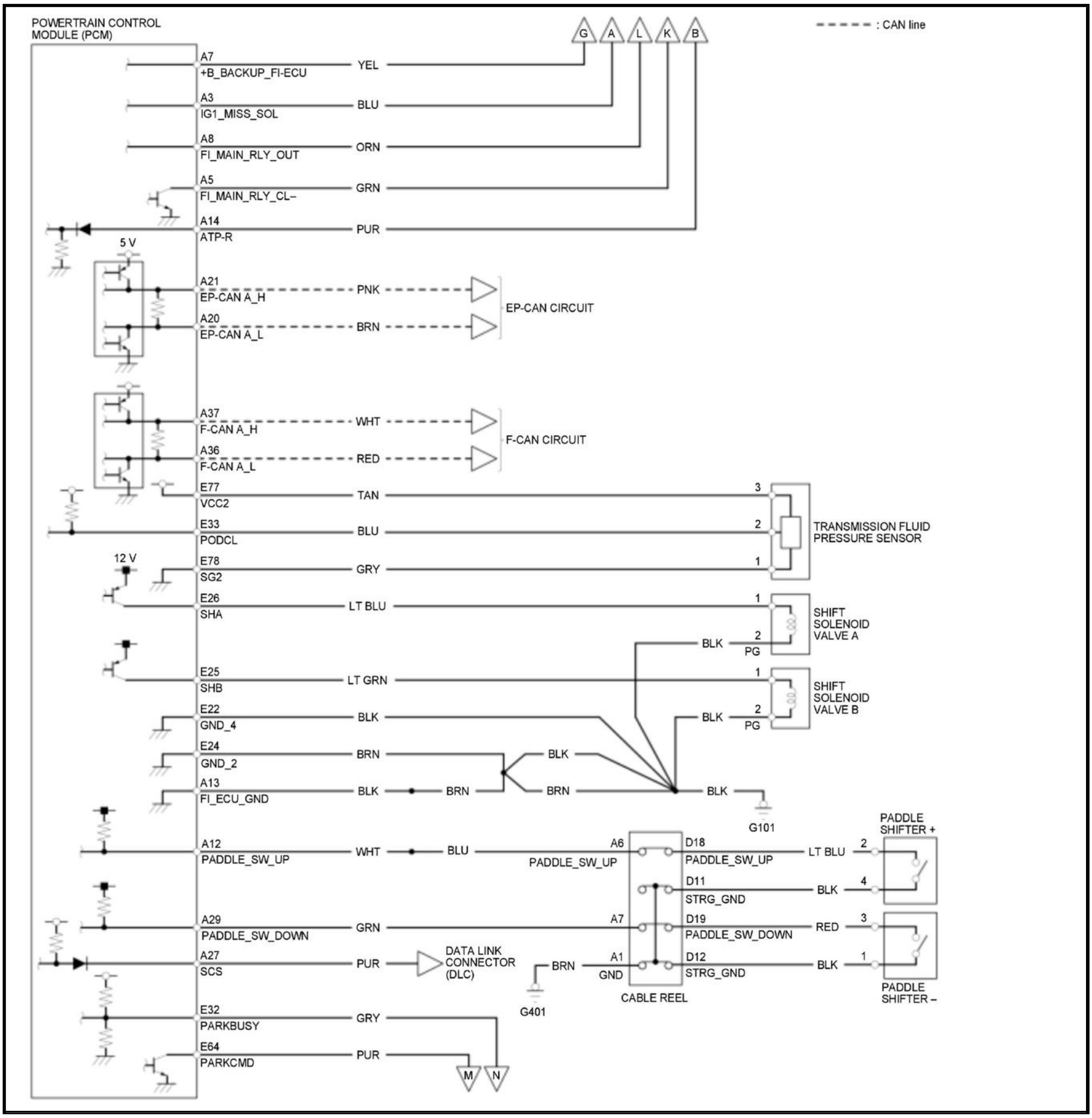
POWERTRAIN CONTROL MODULE (PCM)
: CAN line
G
A
L
K
B
A7
+B_BACKUP_FI-ECU
YEL
A3
IG1_MISS_SOL
BLU
A8
FI_MAIN_RLY_OUT
ORN
A5
FI_MAIN_RLY_CL–
GRN
A14
ATP-R
PUR
5 V
A21
EP-CAN A_H
PNK
A20
EP-CAN A_L
BRN
EP-CAN CIRCUIT
A37
F-CAN A_H
WHT
A36
F-CAN A_L
RED
F-CAN CIRCUIT
E77
VCC2
TAN
E33
PODCL
BLU
E78
SG2
GRY
12 V
3
2
1
TRANSMISSION FLUID PRESSURE SENSOR
E26
SHA
LT BLU
1
2
PG
BLK
SHIFT SOLENOID VALVE A
E25
SHB
LT GRN
1
2
PG
BLK
SHIFT SOLENOID VALVE B
E22
GND_4
BLK
E24
GND_2
BRN
BLK
A13
FI_ECU_GND
BLK
BRN
BRN
BLK
G101
A12
PADDLE_SW_UP
WHT
BLU
A6
PADDLE_SW_UP
D18
PADDLE_SW_UP
LT BLU
2
PADDLE SHIFTER +
D11
STRG_GND
BLK
4
A29
PADDLE_SW_DOWN
GRN
A7
D19
PADDLE_SW_DOWN
RED
3
A27
SCS
PUR
DATA LINK CONNECTOR (DLC)
BRN
A1
GND
D12
STRG_GND
BLK
1
PADDLE SHIFTER –
CABLE REEL
G401
E32
PARKBUSY
GRY
E64
PARKCMD
PUR
M
N

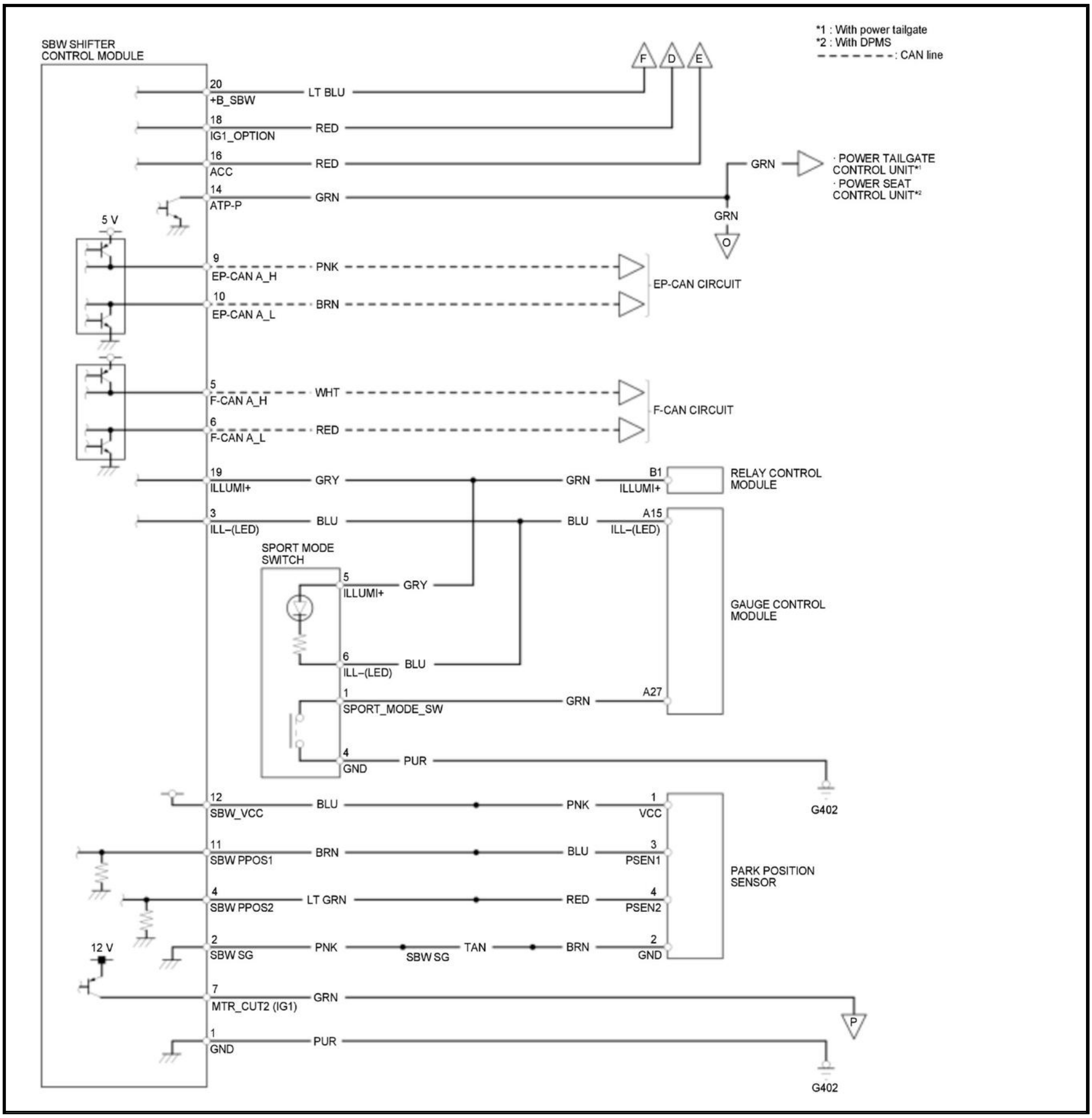
*1 : With power tailgate
*2 : With DPMS
: CAN line
SBW SHIFTER CONTROL MODULE
F
D
E
20
+B_SBW
LT BLU
18
IG1_OPTION
RED
16
ACC
RED
14
ATP-P
GRN
GRN
· POWER TAILGATE CONTROL UNIT*1
· POWER SEAT CONTROL UNIT*2
GRN
O
5 V
9
EP-CAN A_H
PNK
10
EP-CAN A_L
BRN
EP-CAN CIRCUIT
5
F-CAN A_H
WHT
6
F-CAN A_L
RED
F-CAN CIRCUIT
19
ILLUMI+
GRY
GRN
B1
ILLUMI+
RELAY CONTROL MODULE
3
ILL–(LED)
BLU
BLU
A15
ILL–(LED)
SPORT MODE SWITCH
5
ILLUMI+
GRY
6
ILL–(LED)
BLU
GAUGE CONTROL MODULE
1
SPORT_MODE_SW
GRN
A27
4
GND
PUR
G402
12
SBW_VCC
BLU
PNK
1
VCC
11
SBW PPOS1
BRN
BLU
3
PSEN1
4
SBW PPOS2
LT GRN
RED
4
PSEN2
PARK POSITION SENSOR
12 V
2
SBW SG
PNK
SBW SG
TAN
BRN
2
GND
7
MTR_CUT2 (IG1)
GRN
P
1
GND
PUR
G402

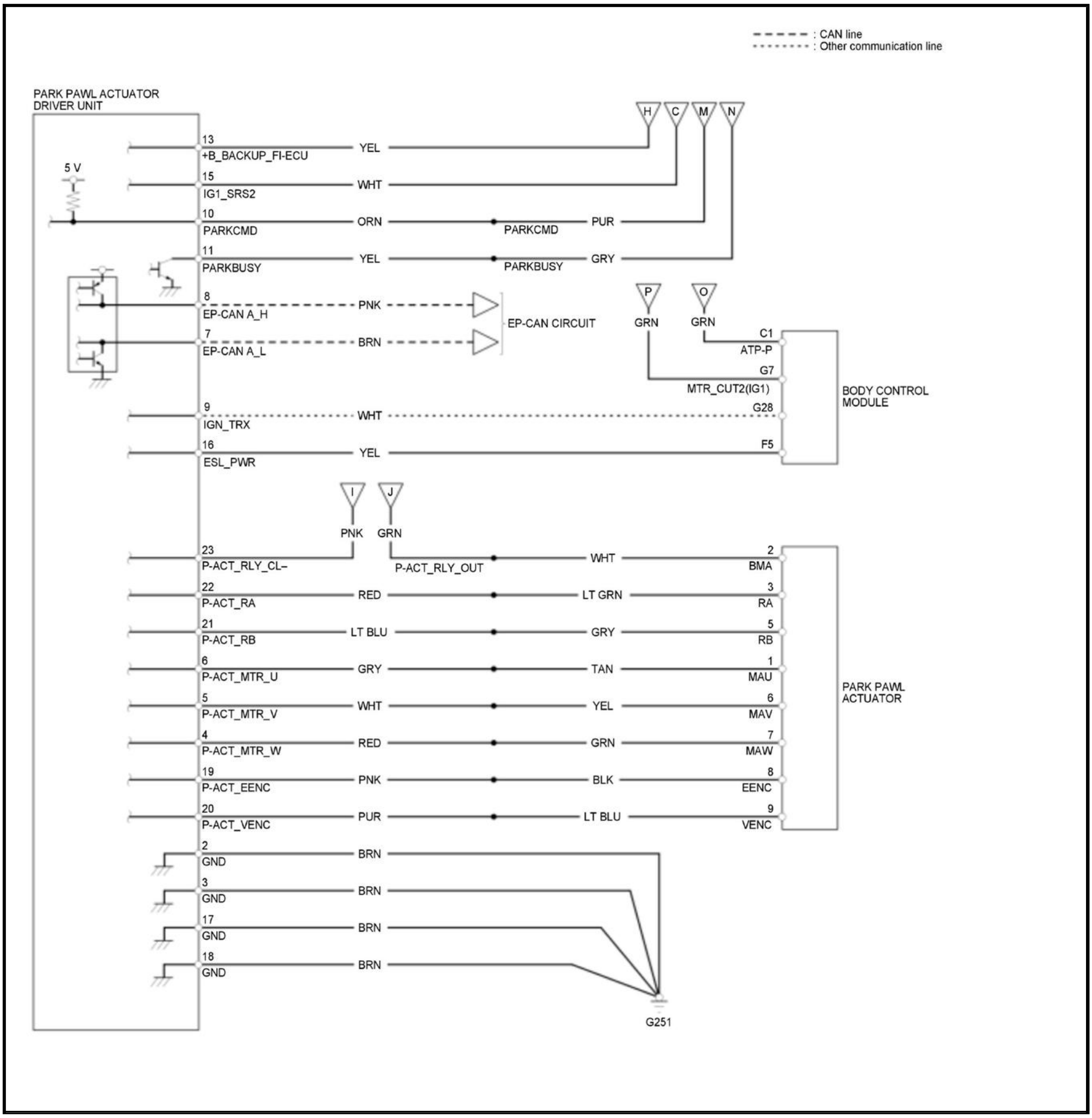

CAN line
Other communication line
PARK PAWL ACTUATOR DRIVER UNIT
5 V
13
+B_BACKUP_FI-ECU
YEL
15
IG1_SRS2
WHT
10
PARKCMD
ORN
PARKCMD
PUR
11
PARKBUSY
YEL
PARKBUSY
GRY
H
C
M
N
8
EP-CAN A_H
PNK
7
EP-CAN A_L
BRN
EP-CAN CIRCUIT
P
O
GRN
GRN
C1
ATP-P
G7
MTR_CUT2(IG1)
G28
F5
BODY CONTROL MODULE
9
IGN_TRX
WHT
16
ESL_PWR
YEL
I
J
PNK
GRN
23
P-ACT_RLY_CL–
P-ACT_RLY_OUT
WHT
2
BMA
22
P-ACT_RA
RED
LT GRN
3
RA
21
P-ACT_RB
LT BLU
GRY
5
RB
6
P-ACT_MTR_U
GRY
TAN
1
MAU
5
P-ACT_MTR_V
WHT
YEL
6
MAV
4
P-ACT_MTR_W
RED
GRN
7
MAW
19
P-ACT_EENC
PNK
BLK
8
EENC
20
P-ACT_VENC
PUR
LT BLU
9
VENC
PARK PAWL ACTUATOR
2
GND
BRN
3
GND
BRN
17
GND
BRN
18
GND
BRN
G251

COMPONENT LOCATION INDEX

DIFFERENTIAL COMPONENT LOCATION INDEX

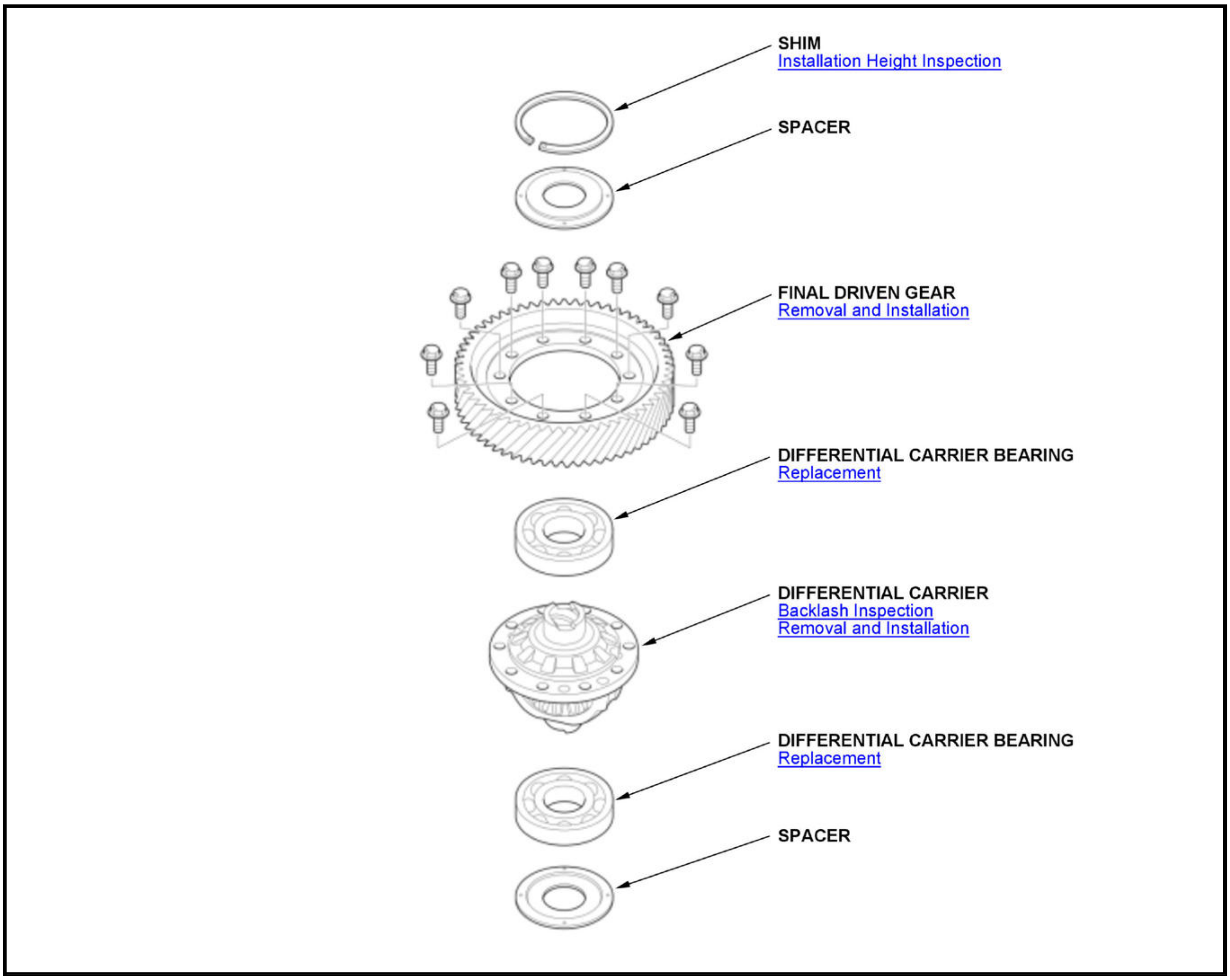
SHIM
Installation Height Inspection
SPACER
FINAL DRIVEN GEAR
Removal and Installation
DIFFERENTIAL CARRIER BEARING
Replacement
DIFFERENTIAL CARRIER
Backlash Inspection
Removal and Installation
DIFFERENTIAL CARRIER BEARING
Replacement
SPACER

GEAR UNIT CONTROL SYSTEM COMPONENT LOCATION INDEX

For relationships between signals in a system, refer to System Diagram.

Electronic Control SystemShift Control System

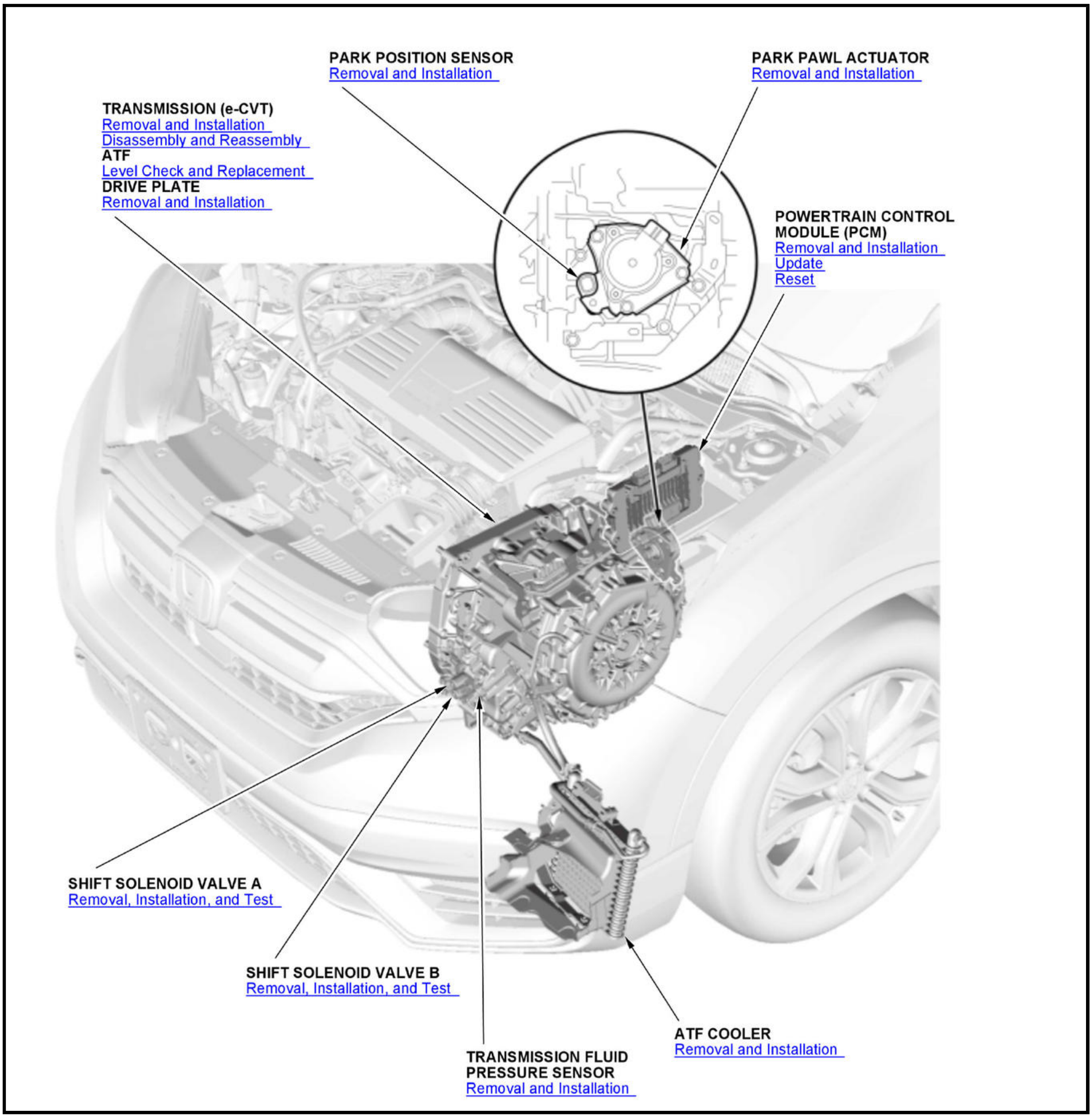
PARK POSITION SENSOR
Removal and Installation
PARK PAWL ACTUATOR
Removal and Installation
TRANSMISSION (e-CVT)
Removal and Installation
Disassembly and Reassembly
ATF
Level Check and Replacement
DRIVE PLATE
Removal and Installation
POWERTRAIN CONTROL MODULE (PCM)
Removal and Installation
Update
Reset
SHIFT SOLENOID VALVE A
Removal, Installation, and Test
SHIFT SOLENOID VALVE B
Removal, Installation, and Test
ATF COOLER
Removal and Installation
TRANSMISSION FLUID PRESSURE SENSOR
Removal and Installation

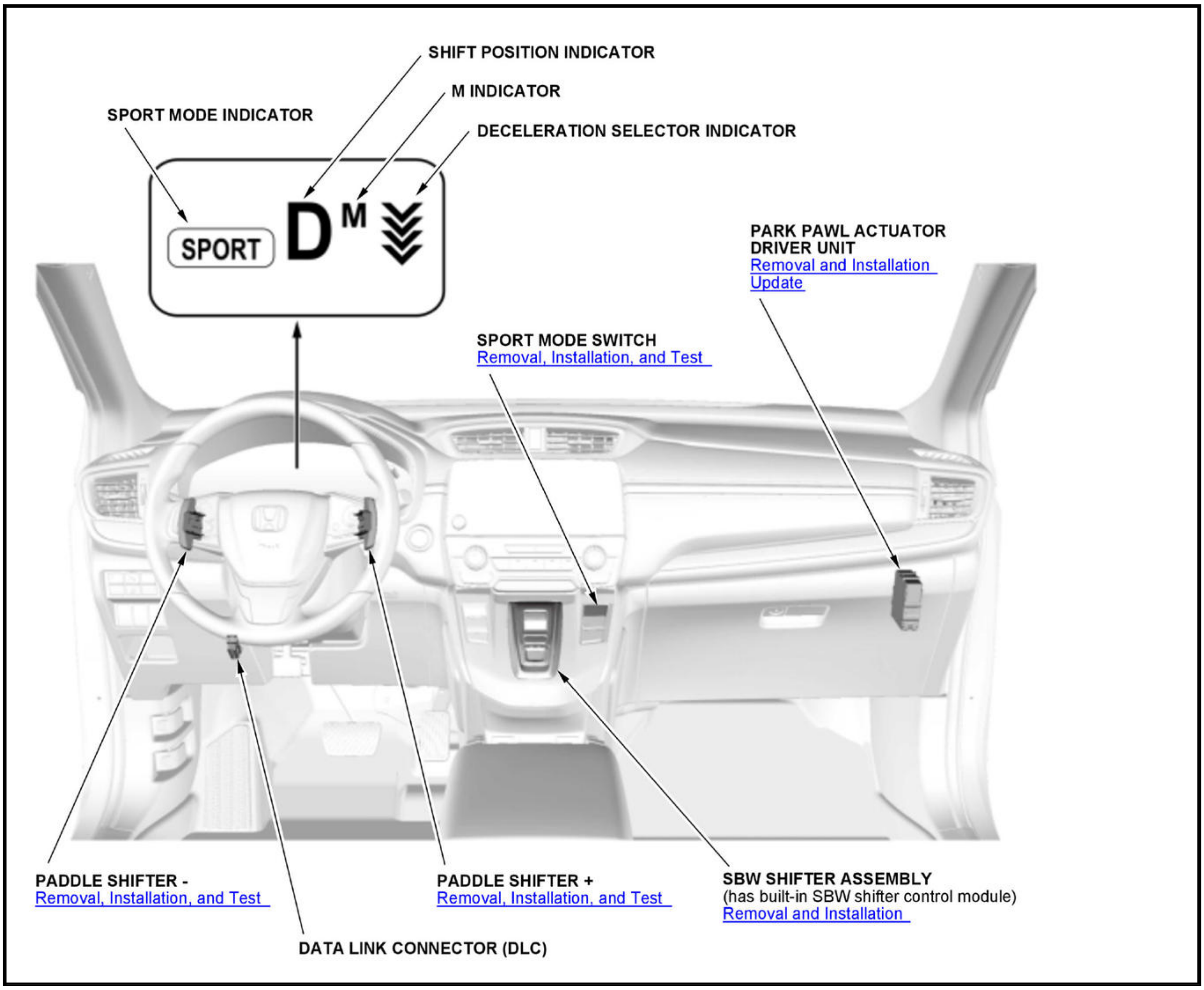
SHIFT POSITION INDICATOR
M INDICATOR
SPORT MODE INDICATOR
DECELERATION SELECTOR INDICATOR
SPORT
D
M
PARK PAWL ACTUATOR DRIVER UNIT
Removal and Installation
Update
SPORT MODE SWITCH
Removal, Installation, and Test
PADDLE SHIFTER -
Removal, Installation, and Test
PADDLE SHIFTER +
Removal, Installation, and Test
SBW SHIFTER ASSEMBLY
(has built-in SBW shifter control module)
Removal and Installation
DATA LINK CONNECTOR (DLC)

TRANSFER ASSEMBLY COMPONENT LOCATION INDEX

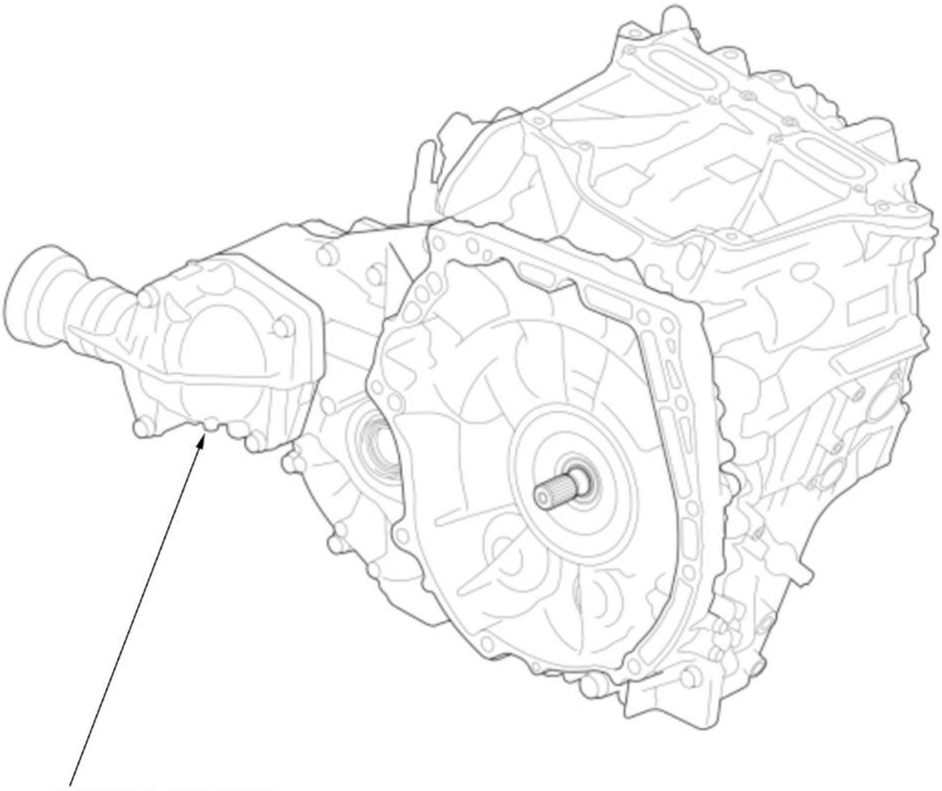
TRANSFER ASSEMBLY
Removal, Installation, and Inspection
Disassembly and Reassembly

LEARNING RESET CLEAR

PCM RESET (GEAR UNIT)

Procedure

1. **HDS - Connect**
2. PCM - Reset

1. Select the A/T system with the HDS.
2. Select the ECU Reset while the engine is stopped.
3. Turn the vehicle to the OFF (LOCK) mode.
4. Turn the vehicle to the ON mode, and wait 30 seconds.
5. Turn the vehicle to the OFF (LOCK) mode, and disconnect the HDS from the DLC.

REMOVAL & INSTALLATION TEST

AUXILIARY TRANSMISSION FLUID PUMP REMOVAL, INSTALLATION, AND TEST (2020 2021)

Special Tools Required

Image	Description/Tool Number
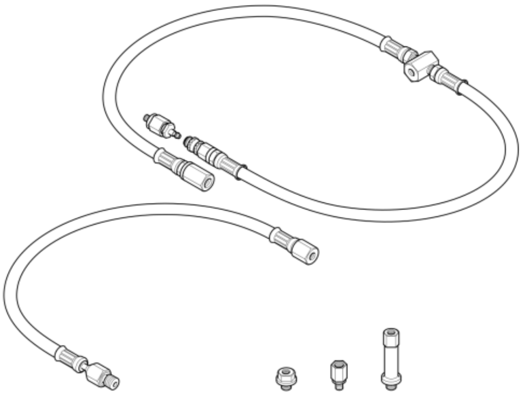	Pressure Gauge Adapter 070AJ-RT4A100 or 070AJ-RT4A101
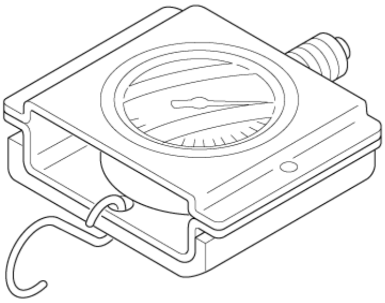	A/T Low Pressure Gauge w/Panel 07406-0070301
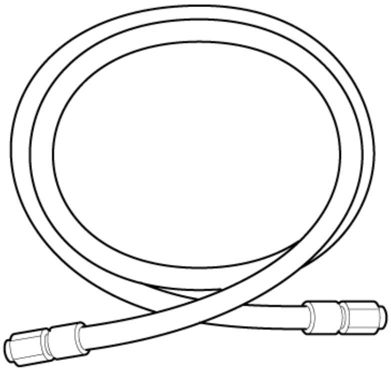	A/T Pressure Test Hose 07AAJ-PY4A100
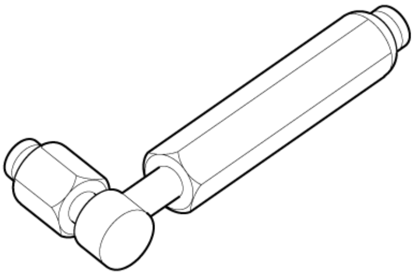	A/T Pressure Adapter 07MAJ-PY40120

Removal and Installation

NOTE:

- 📖 Where icon is shown, further information shown below.
- Keep all foreign particles out of the transmission.

1

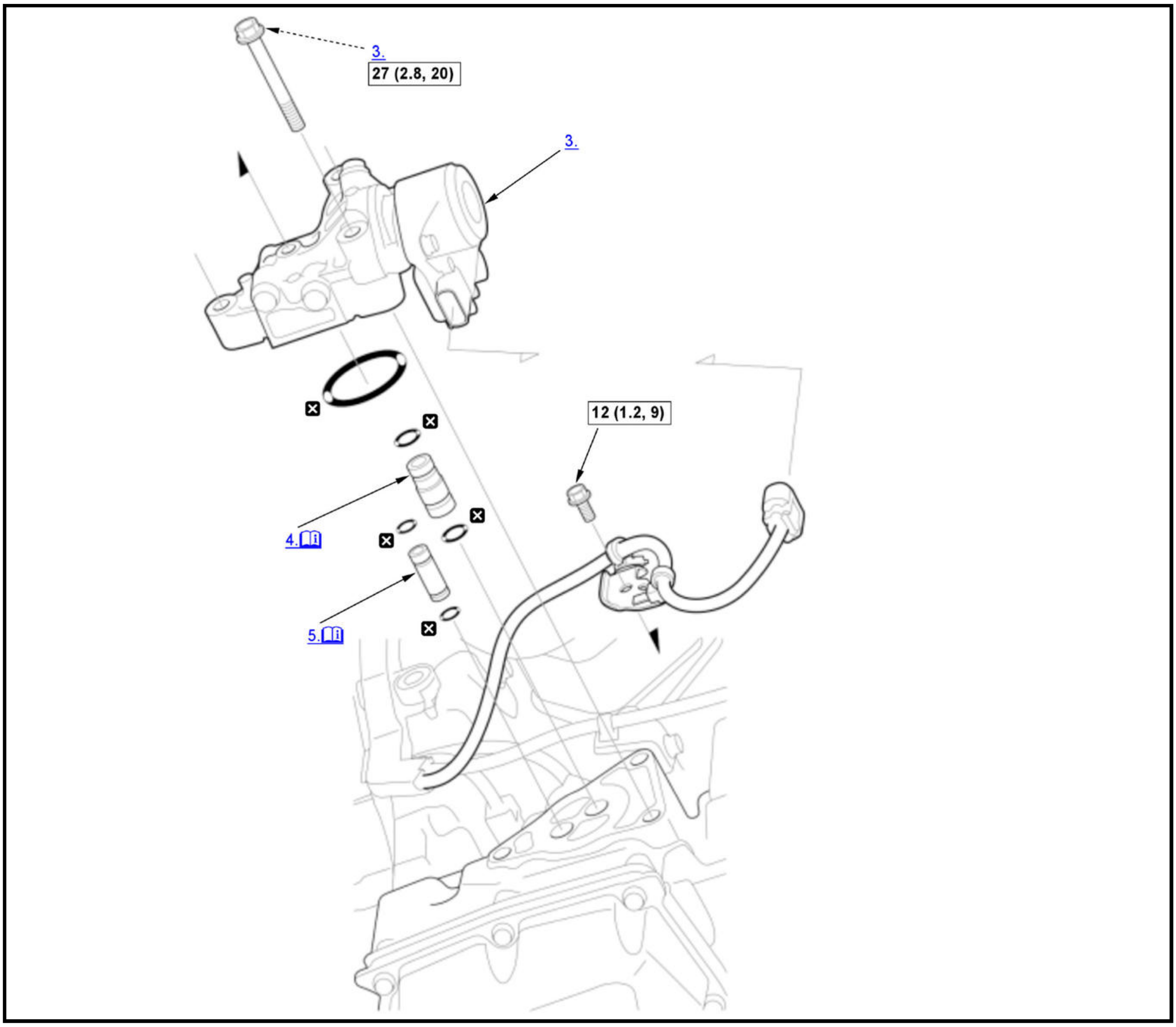

📖	Detailed information, notes and precautions
☐	Torque: N.m (kgf.m, lbf.ft)
☒	Replace

1. **Vehicle - Lift**
2. **Engine Undercover - Remove**
3. Auxiliary Transmission Fluid Pump - Remove
4. Delivery Pipe - Remove

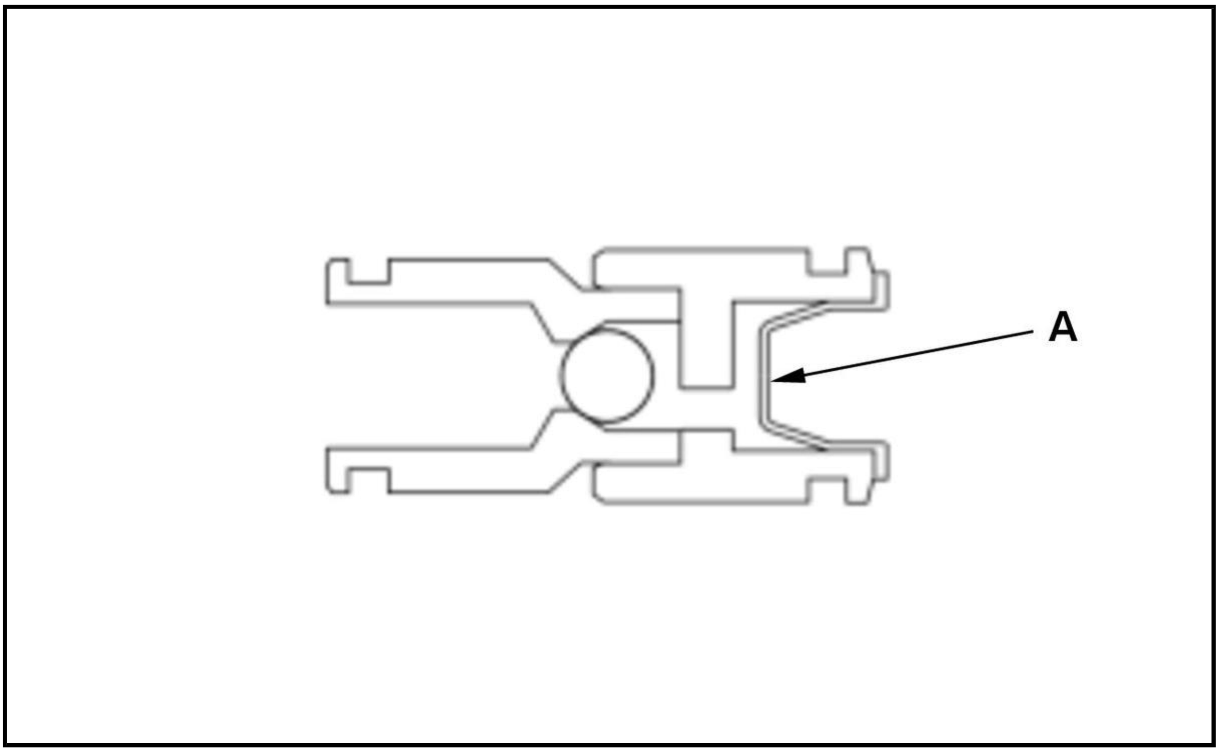

NOTE: The delivery pipe has the filter (A). The filter end should face the transmission side.

5. 10.9 x 31.5 mm Pipe - Remove

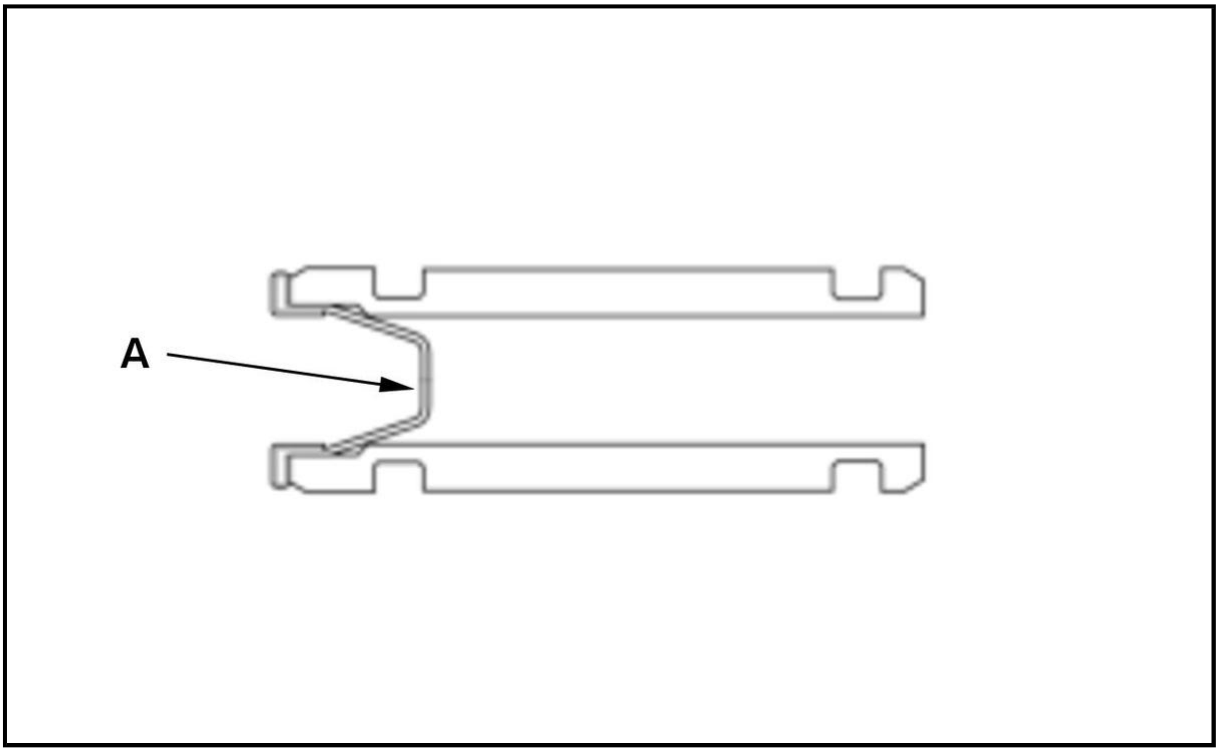

NOTE: The 10.9 x 31.5 mm pipe has the filter (A). The filter end should face the auxiliary transmission fluid pump side.

6. All Removed Parts - Install

1. Install the parts in the reverse order of removal.

NOTE:

- **Be sure to use new O-rings which**

should be applied a light coat of clean transmission fluid before installation.

- **Check the connector for corrosion, dirt, or oil, and clean or repair if necessary.**

7. Auxiliary Transmission Fluid Pump - Air Bleed
8. Transmission Fluid Level - Check

Test

NOTE:

- Hydraulic pressure measurement of the auxiliary transmission fluid pump is performed by the driven pulley pressure inspection port .
- Check for DTCs. If any DTCs are stored, troubleshoot and clear them first.
- Keep all foreign particles out of the transmission.
- Be sure to check the transmission fluid level after the test. When installing or removing the A/T oil pressure gauge, transmission fluid may run out of the inspection port.

1. A/T Oil Pressure Gauge - Set

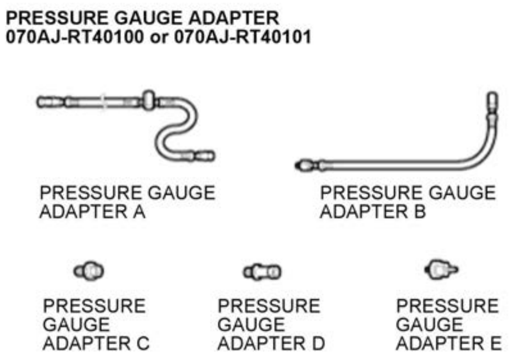 PRESSURE GAUGE ADAPTER 070AJ-RT40100 or 070AJ-RT40101 PRESSURE GAUGE ADAPTER A PRESSURE GAUGE ADAPTER B PRESSURE GAUGE ADAPTER C PRESSURE GAUGE ADAPTER D PRESSURE GAUGE ADAPTER E	1. When testing the auxiliary transmission fluid pump pressure at the driven pulley pressure inspection port, select pressure gauge adapters A and E. **NOTE:** **Other pressure gauge adapters are not used.**

Inspection port	Tool
Forward clutch pressure	Pressure gauge adapter B
CVT drive pulley pressure	Pressure gauge adapter B
CVT driven pulley pressure	- Pressure gauge adapter A - Pressure gauge adapter E
Reverse brake pressure	Pressure gauge adapter B

2. HDS - Connect
3. Transmission Fluid Level - Check
4. Auxiliary Transmission Fluid Pump - Test

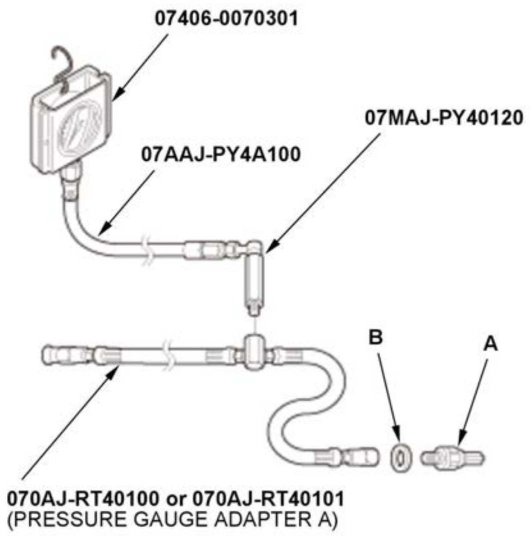
07406-0070301
07MAJ-PY40120
07AAJ-PY4A100
B
A
070AJ-RT40100 or 070AJ-RT40101
(PRESSURE GAUGE ADAPTER A)

1. **Remove the air cleaner** .
2. **Remove the CVT driven pulley pressure sensor (A)**

3. Temporarily install the CVT driven pulley pressure sensor with the sealing washer (B) to pressure gauge adapter A.

4. Assemble the pressure gauge; install the A/T low pressure gauge set to pressure gauge adapter A.

5. Install pressure gauge adapter E (quick connector) to the CVT driven pulley pressure inspection port.

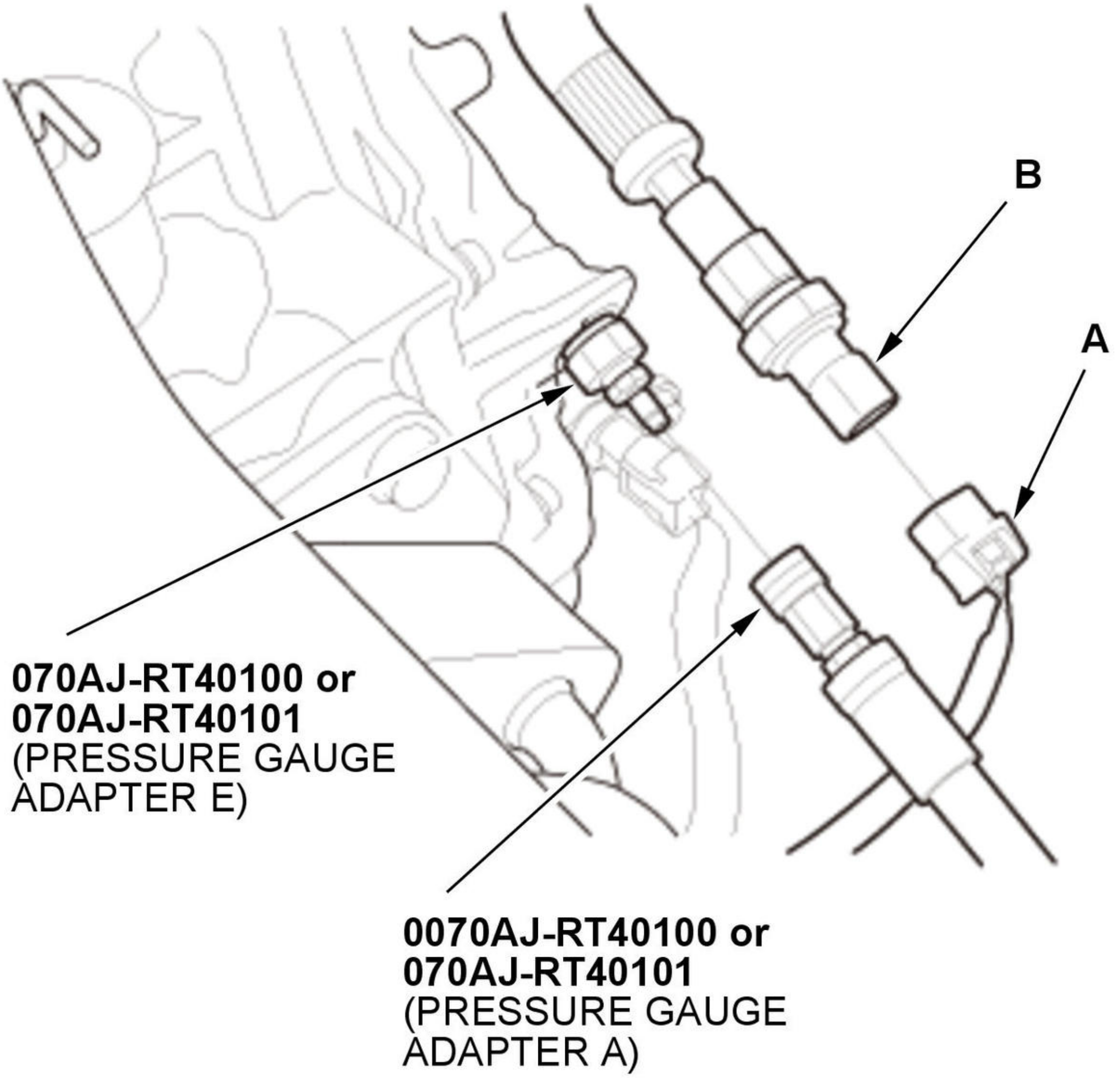
B
A
070AJ-RT40100 or
070AJ-RT40101
(PRESSURE GAUGE
ADAPTER E)
0070AJ-RT40100 or
070AJ-RT40101
(PRESSURE GAUGE
ADAPTER A)

6. Install pressure gauge to pressure gauge adapter E (quick connector).

7. Connect the connector (A) to the CVT driven pulley pressure sensor (B).

8. Temporarily install the air cleaner.

9. Start the engine, and warm it up to normal operating temperature (the radiator fan comes on twice).

10. Turn the engine off.

11. Select the Electrical Oil Pump Activation in the Miscellaneous Test Menu with the HDS, and measure the driven pulley pressure while driving the auxiliary transmission fluid pump.

NOTE: **Do not drive the auxiliary transmission fluid pump for more than 160 seconds at a time.**

Pressure	Standard
CVT driven Pulley	216-270 kPa (2.20-2.75 kgf/cm 2, 31.3-39.2 psi)

12. If the pressure is out of the standard, replace the auxiliary transmission fluid pump.

13. Remove the air cleaner.

14. Disconnect the connector from the CVT driven pulley pressure sensor.

15. Remove the pressure gauge and pressure gauge adapter E (quick connector).

16. Remove the CVT driven pulley pressure sensor.

17. **Install the CVT driven pulley pressure sensor**

18. **Install the air cleaner** .

5. All Removed Parts - Install

1. Install the parts in the reverse order of removal.

6. **Transmission Fluid Level - Check**

TRANSMISSION RANGE SWITCH REMOVAL, INSTALLATION, AND TEST

Removal

NOTE: Unless otherwise indicated, illustrations used in the procedure are for 1.5 L engine.

1

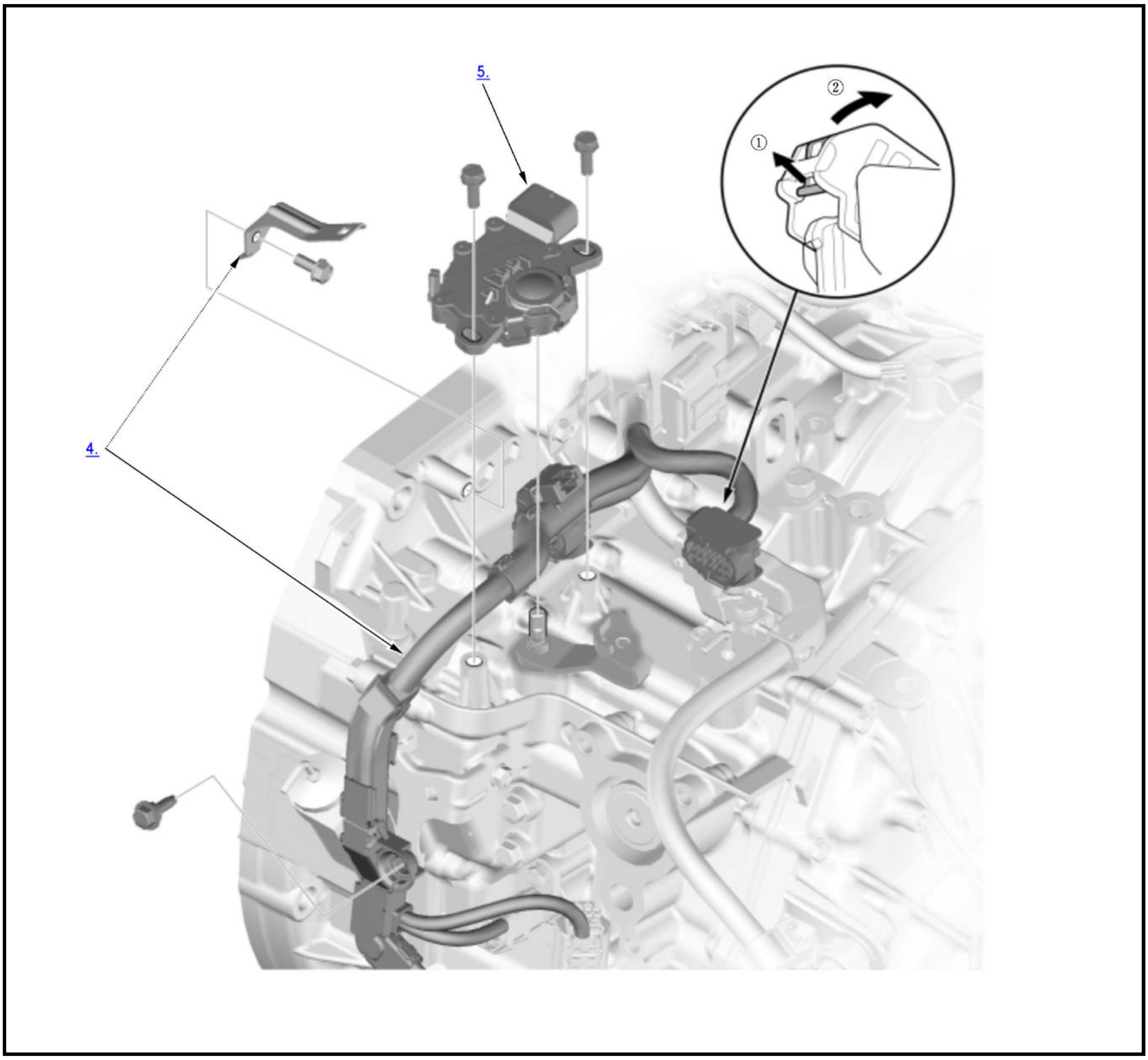

1. **Air Cleaner - Remove**
2. **Throttle Body Inlet Pipe - Remove** (1.5 L engine)
3. **Shift Cable (Shift Lever Side) - Remove**
4. Transmission Harness - Remove
5. Transmission Range Switch - Remove

Installation

NOTE:

- 🛈 Where icon is shown, further information shown below.
- Unless otherwise indicated, illustrations used in the procedure are for 1.5 L engine.

1

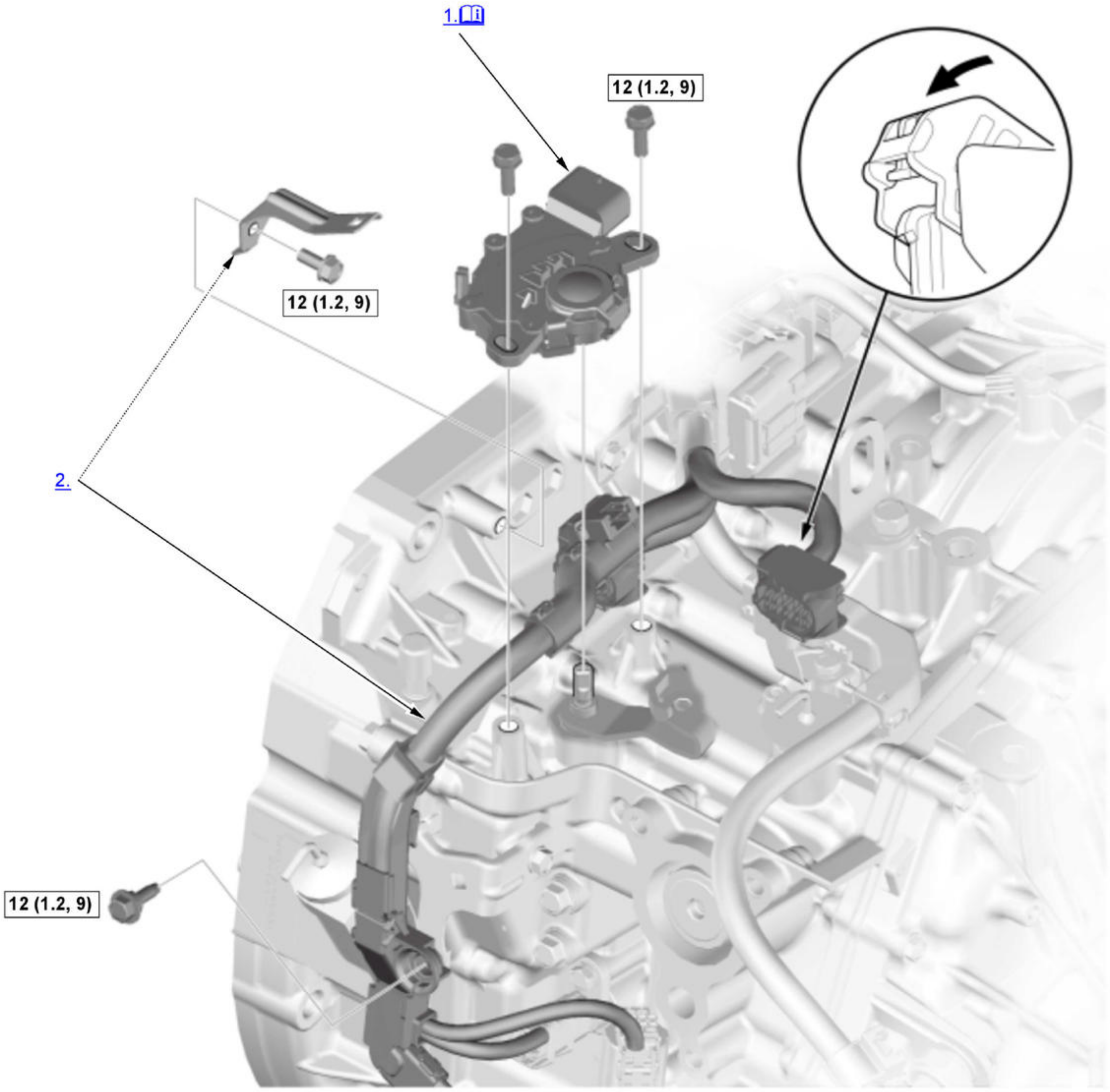

📖	Detailed information, notes and precautions
▭	Torque: N.m (kgf.m, lbf.ft)

1. Transmission Range Switch - Install

   1. Make sure the control lever (A) is in the N position/mode. If necessary, move the control lever to the N position/mode.

NOTE: **Do not use the control shaft (B) to adjust the shift position. If the control shaft tips are squeezed together, it will cause a faulty signal or position due to play between the control shaft and the transmission range switch.**

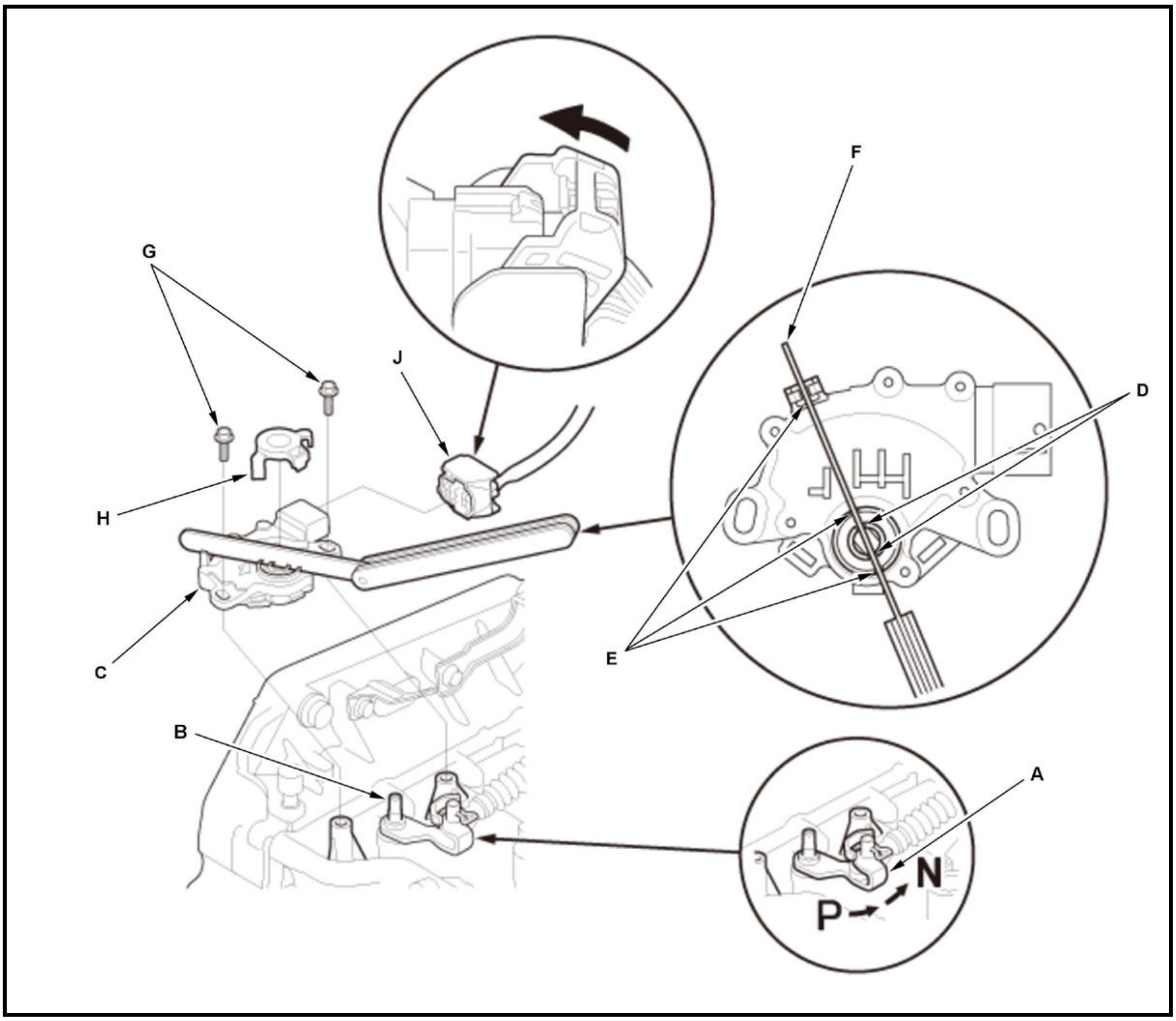

2. Set the transmission range switch (C) to the N position/mode. Align the cutouts (D) on the rotary-frame with the N positioning cutouts (E) on the transmission range switch, then put a 2.0 mm (0.079 in) feeler gauge blade (F) in the cutouts to hold the transmission range switch in the N position/mode.

NOTE: **Be sure to use a 2.0 mm (0.079 in) feeler gauge blade or equivalent to hold the transmission range switch in the N position/mode.**

3. Loosely install the transmission range switch gently on the control shaft while holding it in the N position/mode with the 2.0 mm (0.079 in) feeler gauge blade.

4. Tighten the bolts (G) on the transmission range switch while you continue holding the N position/mode.

NOTE: **Do not move the transmission range switch when tightening the bolts.**

5. Remove the feeler gauge.

6. Install the control shaft cover (H).

7. Connect the connector (J), and make sure it is fully seated.

NOTE: **Check the connector for corrosion, dirt, or oil, and clean or repair if necessary.**

2. Transmission Harness - Install
3. **Shift Cable (Shift Lever Side) - Install**
4. **Throttle Body Inlet Pipe - Install** (1.5 L engine)

5. Air Cleaner - Install
6. Transmission Range Switch - After Install Check

1. Turn the vehicle to the ON mode.

2. Move the shift lever through all positions/modes, and check that the shift position indicator follows the shift lever operation.

3. Start the engine.

NOTE:

Check that the engine starts in P or N position/mode, and does not start in any other positions/modes.

4. Check that the back-up lights come on when the transmission is in R position/mode.

Test

1. Air Cleaner - Remove
2. Throttle Body Inlet Pipe - Remove (1.5 L engine)
3. Transmission Range Switch - Test

1. Disconnect the connector (A) by pulling the lock (B) and the lever (C) in the numbered sequence shown in illustration.

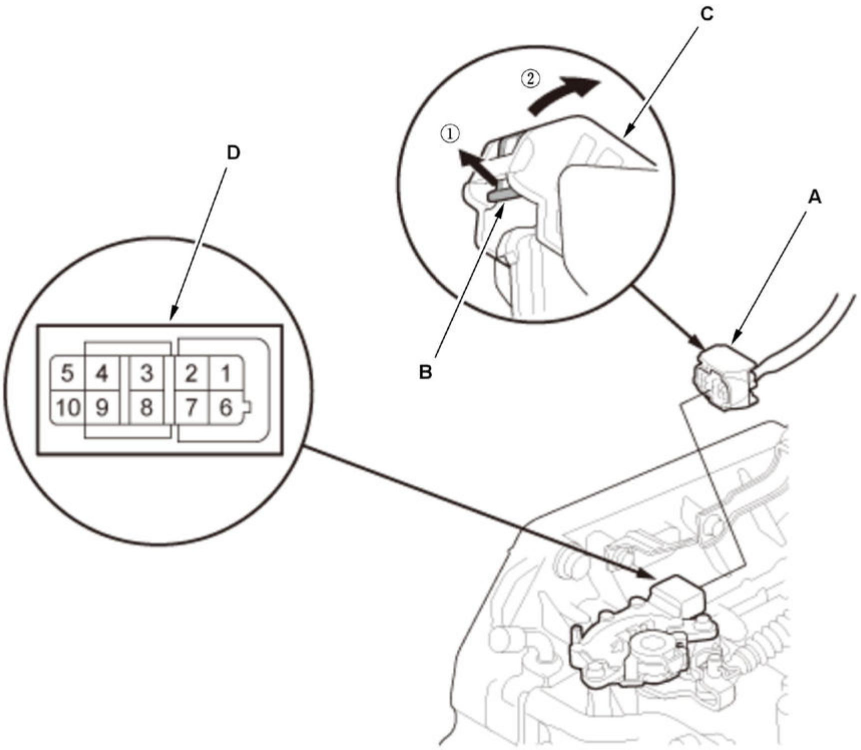

Fig. 1: Disconnecting Connector And Lever In Sequence
Courtesy of HONDA, U.S.A., INC.

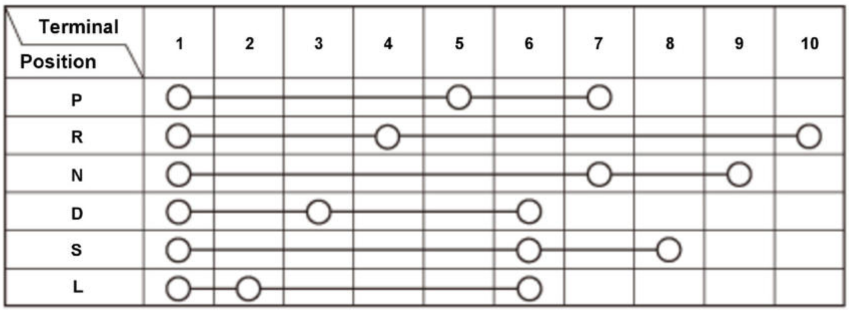

Terminal / Position	1	2	3	4	5	6	7	8	9	10
P	○				○		○			
R	○			○						○
N	○						○		○	
D	○		○			○				
S	○					○		○		
L	○	○				○				

2. Check for continuity between the terminals at the connector (male terminals) (D). There should be continuity between the terminals in the table for each transmission range switch position.

- If the test results are OK, the transmission range switch test is finished, and install all removed parts.
- If there is no continuity between any terminals, check the transmission range switch installation. If the switch installation is OK, go to step 5.

4. Transmission Range Switch - Remove
5. Control Shaft End Clearance - Check

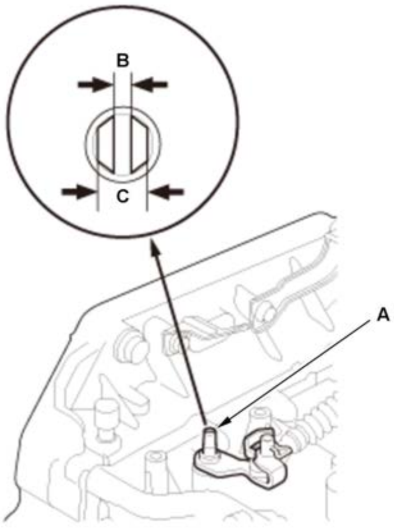

1. Check the end of the control shaft (A).
   - If the measurement at the end of the control shaft is within the specification, replace the transmission range switch.
   - If the measurement is out of the specification, repair the control shaft end, and recheck the transmission range switch continuity.

Control Shaft Specification	
End Gap (B):	**1.8-2.0 mm (0.071-0.079 in)**
Width (C):	**6.1-6.2 mm (0.240-0.244 in)**

6. All Removed Parts - Install

1. Install the parts in the reverse order of removal.

NOTE:

Check the connector for corrosion, dirt, or oil, and clean or repair if necessary.

DISASSEMBLY AND REASSEMBLY

CVT DIFFERENTIAL CARRIER DISASSEMBLY AND REASSEMBLY

Special Tools Required

Image	Description/Tool Number
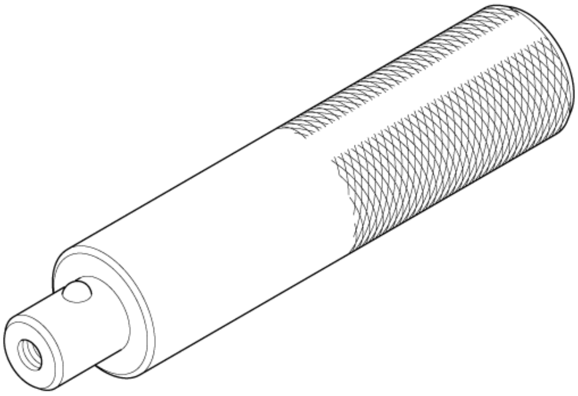	Driver Handle, 15 x 135L 07749-0010000
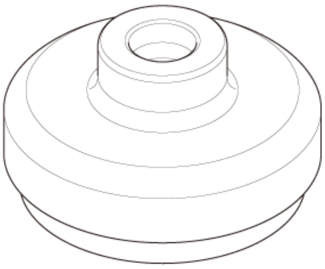	Oil Seal Driver Attachment, 66 mm 07MAD-SP00100
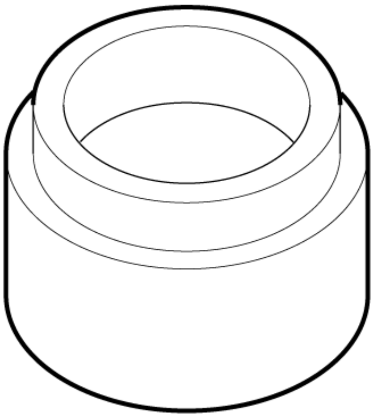	Installer Attachment 40 mm 07LAD-PW50601

Disassembly

NOTE:

- ℹ Where icon is shown, further information shown below.
- The bearing and the bearing outer race should be replaced as a set.

1

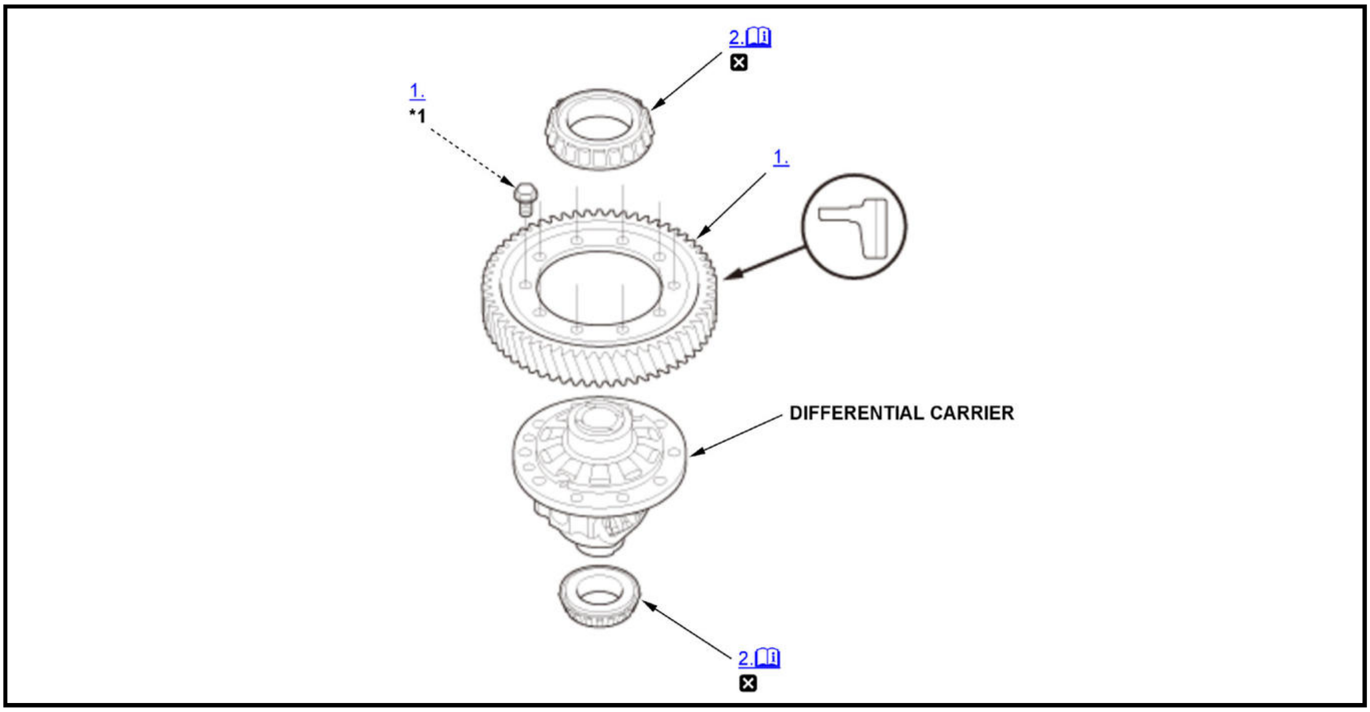
2. ℹ
☒
1.
*1
1.
DIFFERENTIAL CARRIER
2. ℹ
☒

ℹ	Detailed information, notes and precautions
☒	Replace
*1	Left-hand threads

1. Final Driven Gear - Remove
2. Differential Carrier Tapered Roller Bearing - Remove

<table>
<tr>
<td>
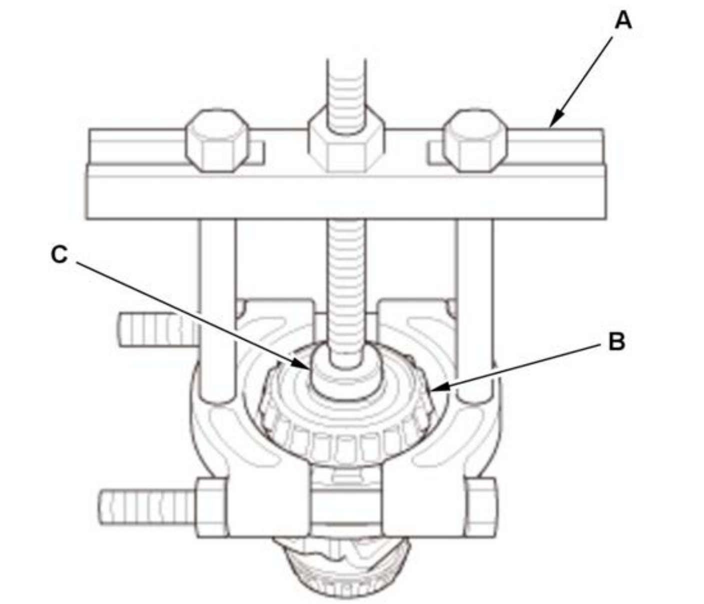

This illustration shows transmission housing side.

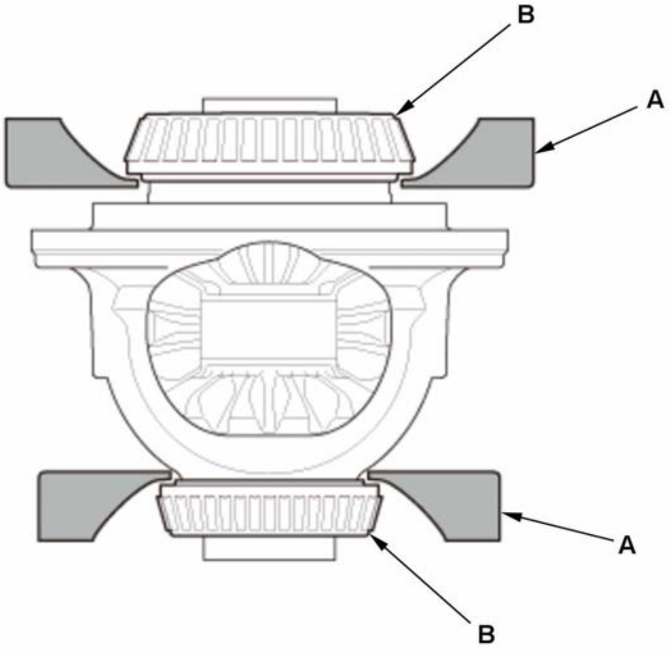

</td>
<td>
1. Set a commercially available bearing puller (A) under the differential carrier tapered roller bearings (B) as shown.

2. Remove the bearings using the commercially available bearing puller and a commercially available spacer (C).
</td>
</tr>
</table>

Reassembly

NOTE:

- ℹ Where icon is shown, further information shown below.
- The bearing and the bearing outer race should be replaced as a set.
- Adjust the differential carrier tapered roller bearing preload whenever the bearing and the bearing outer race are replaced.
- Apply a light coat of clean transmission fluid on all parts before installation.

1

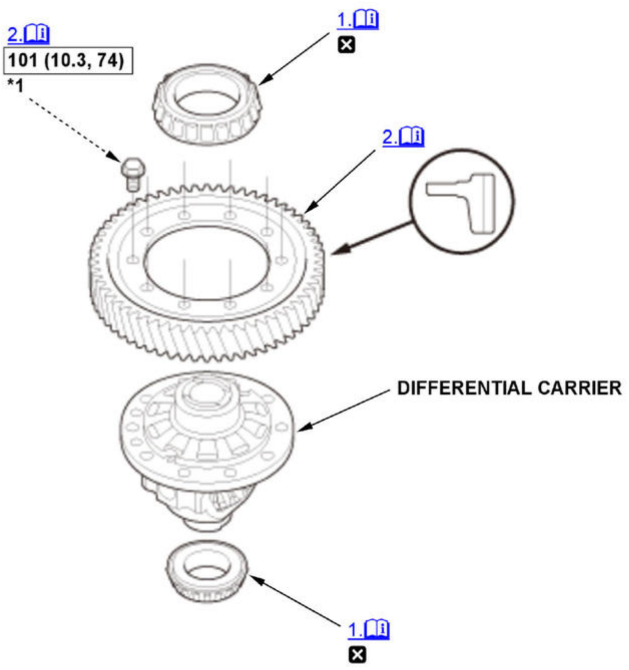
2.
101 (10.3, 74)
*1
1.
☒
2.
DIFFERENTIAL CARRIER
1.
☒

ℹ	Detailed information, notes and precautions
☐	Torque: N.m (kgf.m, lbf.ft)
☒	Replace
*1	Left-hand threads

1. Differential Carrier Tapered Roller Bearing - Install

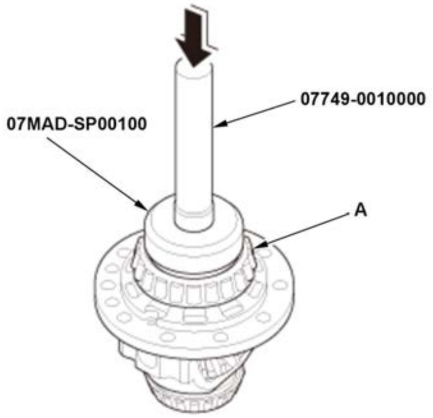
07MAD-SP00100
07749-0010000
A

B

Transmission Housing Side

1. Install the differential carrier tapered roller bearing (A) until it bottoms using the 15 x 135L driver handle, the 66 mm oil seal driver attachment, and a press.

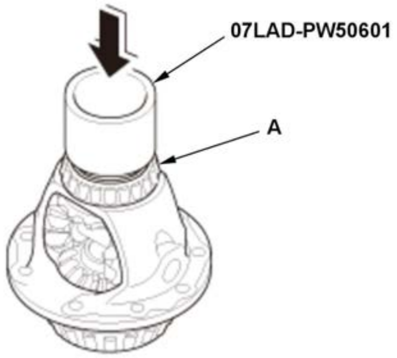
07LAD-PW50601
A

B

Torque Converter Housing Side

2. Install the differential carrier tapered roller bearing (A) until it bottoms using the 40 mm installer attachment and a press.

2. Final Driven Gear - Install

NOTE:

- Tighten the final driven gear bolts to the specified torque in a crisscross pattern in at least two steps.
- Make sure the final driven gear is installed in the correct direction.
- Make sure to assemble the final drive shaft and the final driven gear correctly (Combination A or B) as shown in the chart if either one of them or both are to be replaced. Correct combinations of the shaft and gear can be identified by the presence or the absence of the groove as shown in the chart.

	Final Drive Shaft	Final Driven Gear
Combination A (With Groove)	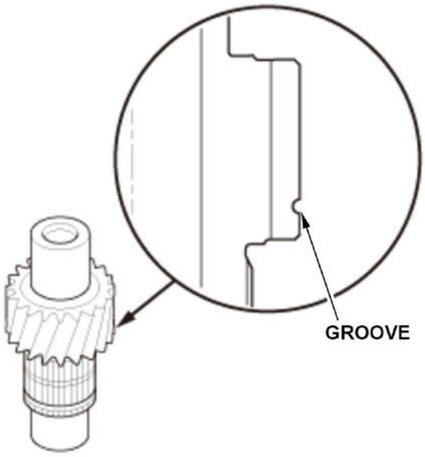	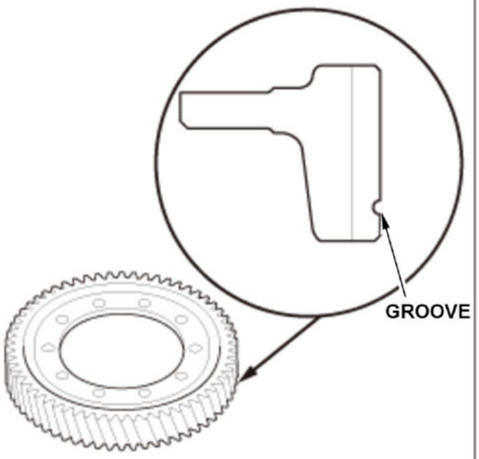
Combination B (Without Groove)	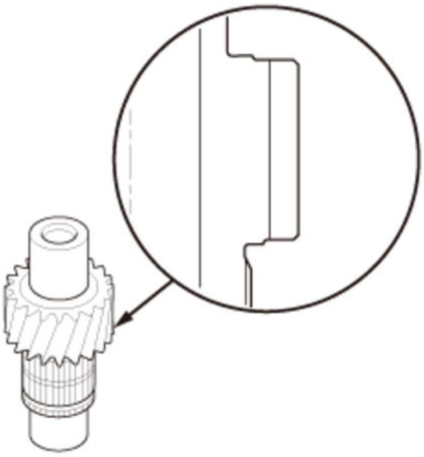	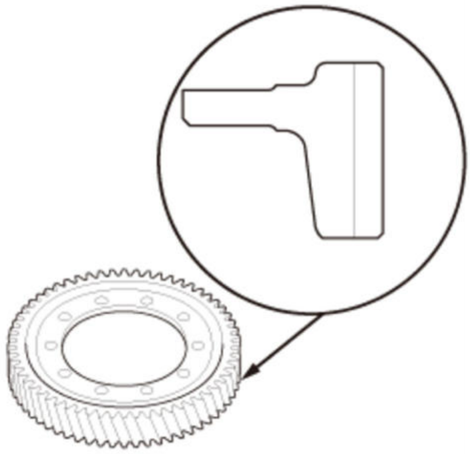

CVT TRANSMISSION DISASSEMBLY AND REASSEMBLY

*: 07YAC-0010102 must be used with a commercially available 3/8"-16 slide hammer.

Special Tools Required

Image	Description/Tool Number
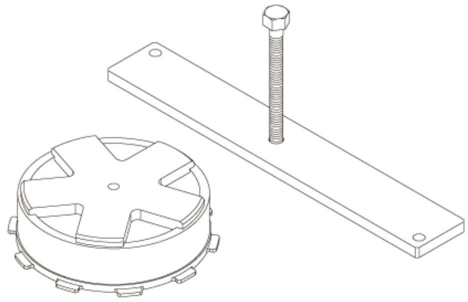	Reverse Brake Spring Compressor Set 070AF-RJ2A100
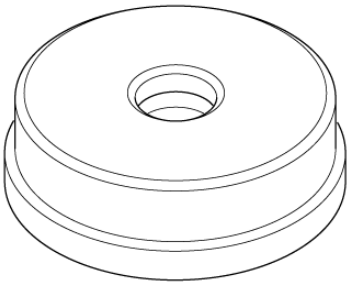	Bearing Driver Attachment, 72 x 75 mm 07746-0010600
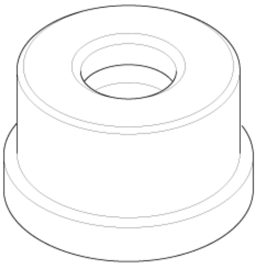	Attachment, 22 x 24 mm 07746-001A800
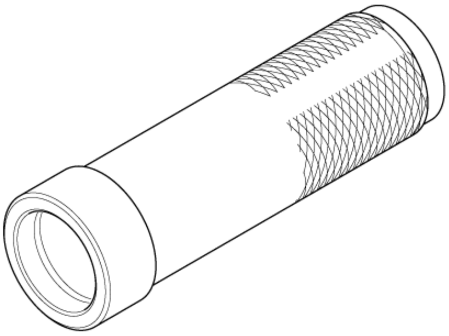	Driver Handle, 40 mm I.D. 07746-0030100

Image	Description/Tool Number
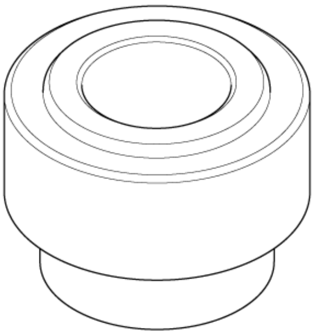	Bearing Driver Attachment, 30 mm I.D. 07746-0030300
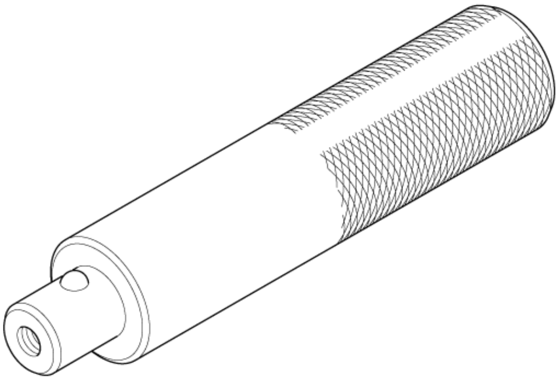	Driver Handle, 15 x 135L 07749-0010000
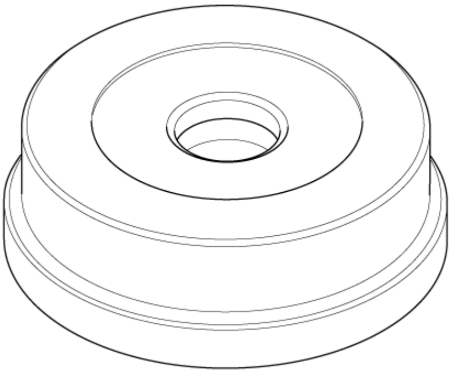	Bearing Driver Attachment, 62 x 64 mm 07947-6340400
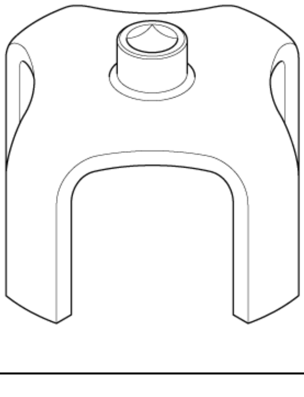	Fuel Sender Wrench 07AAA-S0XA100

Image	Description/Tool Number
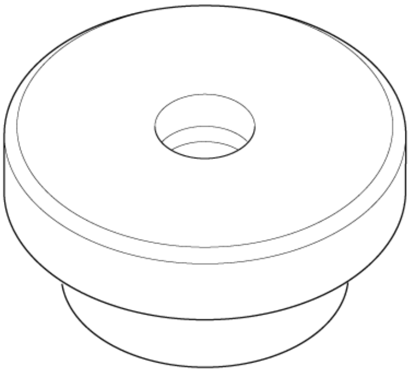	Oil Seal Driver Attachment 07GAD-PG40100
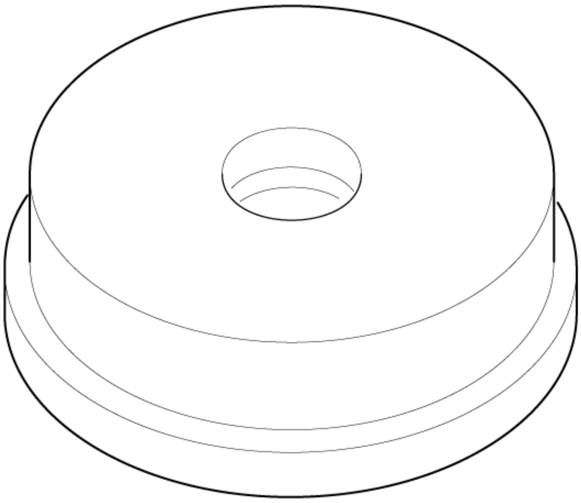	Attachment, 78 x 90 mm 07GAD-SD40101
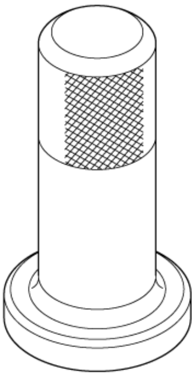	Oil Seal Driver, 65 mm 07JAD-PL9A100
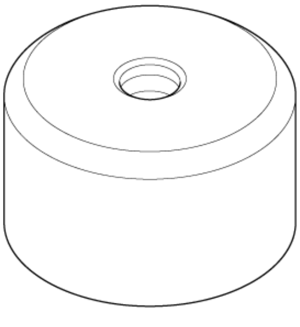	Attachment, 70 mm 07LAD-PW50500

Image	Description/Tool Number
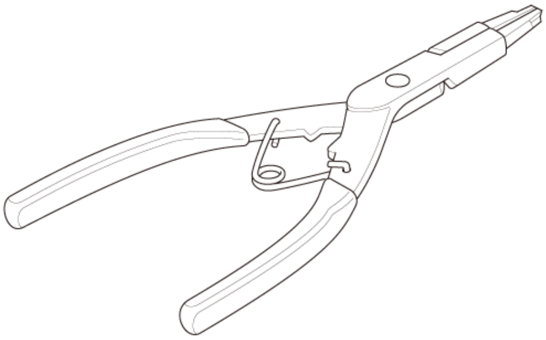	Snap Ring Pliers 07LGC-0010100
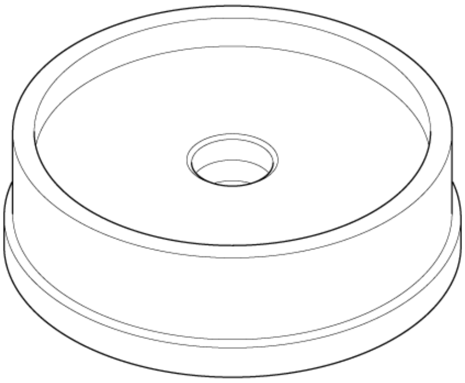	Bearing Driver Attachment, 78 x 80 mm 07NAD-PX40100
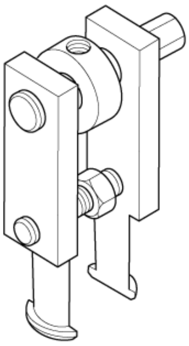	Adjustable Bearing Puller, 45-75 mm 07YAC-0010102*

Disassembly

NOTE:

- ℹ Where icon is shown, further information shown below.
- Mark or place all removed parts in order in a parts rack so they can be reassembled in their original places.
- Keep all foreign particles out of the transmission.
- Unless otherwise indicated, illustrations used in the procedure are for AWD models.

1

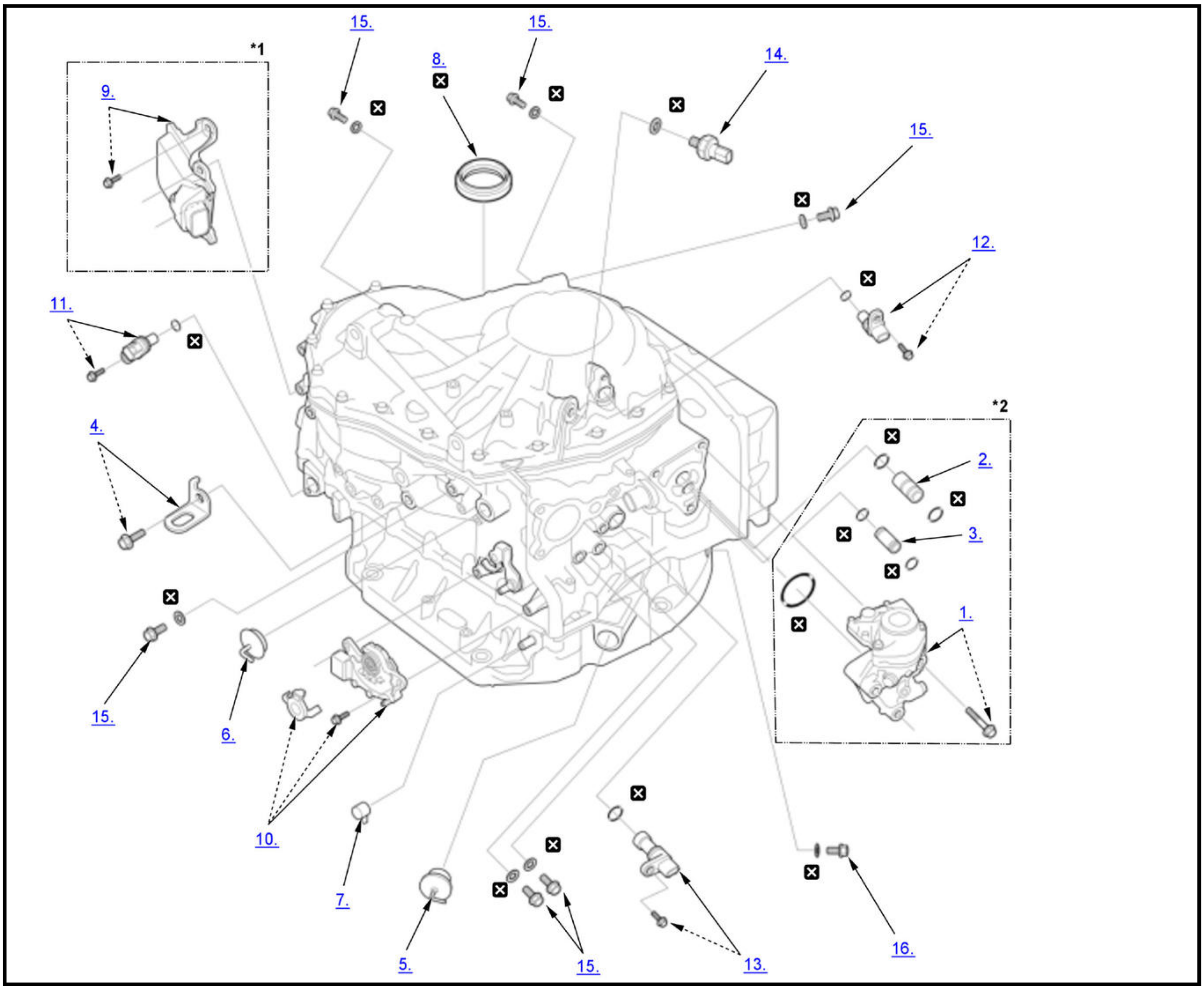
15.
8.
15.
14.
*1
9.
15.
12.
11.
*2
4.
2.
3.
1.
15.
6.
10.
7.
5.
15.
13.
16.

☒	Replace
*1	1.5 L engine
*2	With auto idle stop system

2

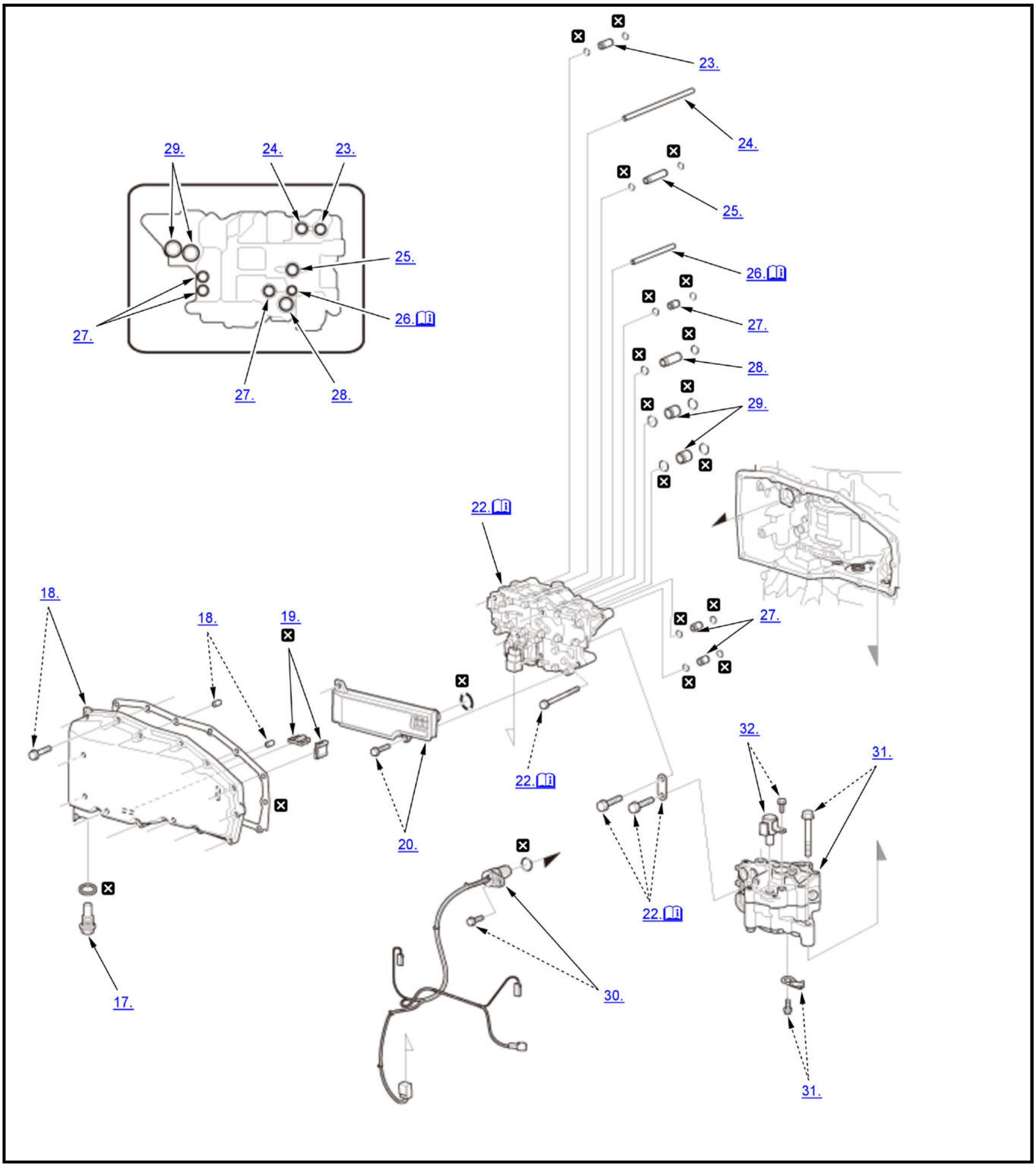
23.
24.
29.
24.
23.
25.
25.
26.
26.
27.
27.
27.
28.
28.
29.
22.
18.
18.
19.
27.
22.
20.
32.
31.
22.
30.
17.
31.

ℹ	Detailed information, notes and precautions
☒	Replace

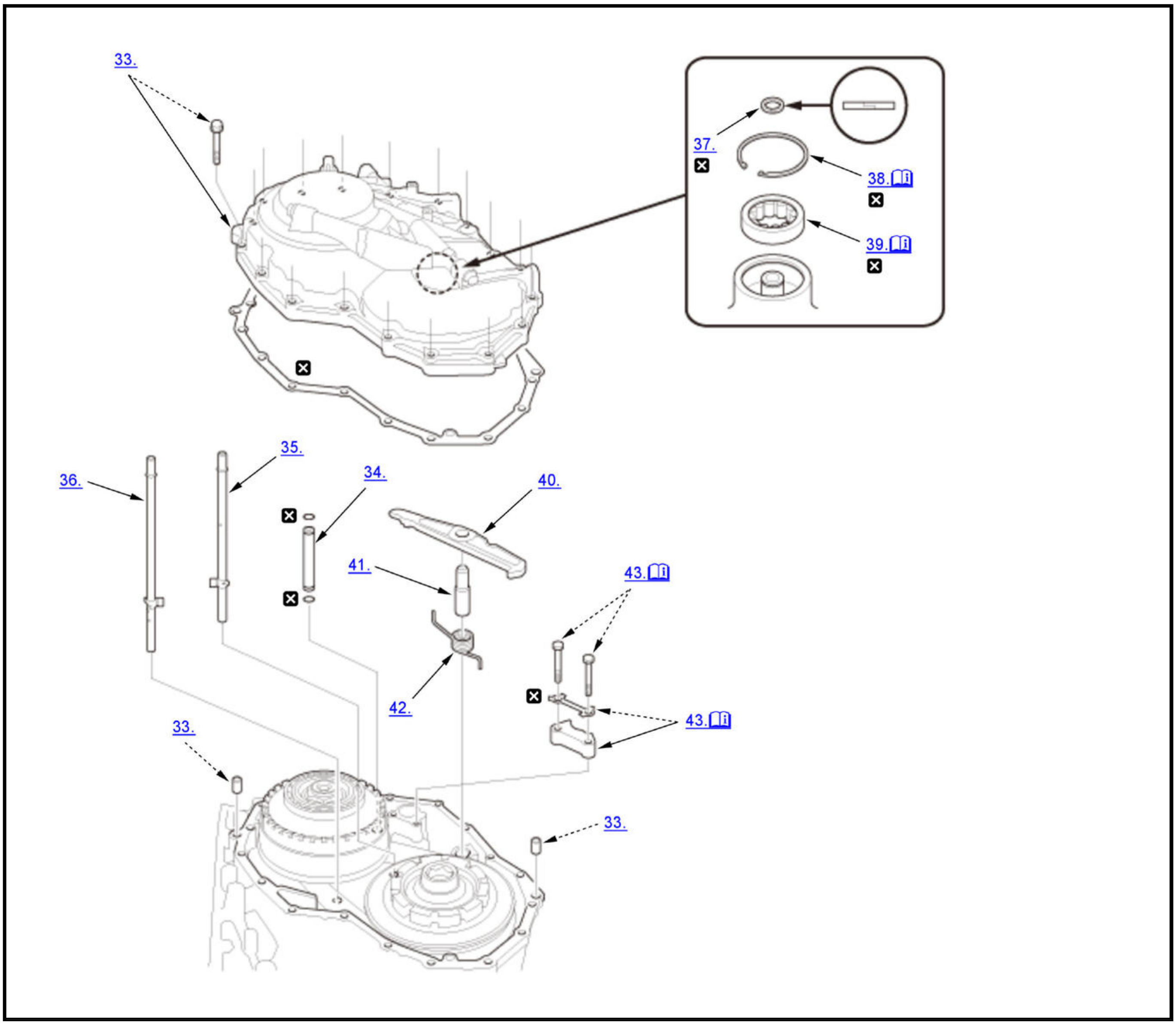
33.
37. ☒
38. ℹ ☒
39. ℹ ☒
☒
36.
35.
34.
☒
☒
40.
41.
43. ℹ
42.
☒
43. ℹ
33.
33.

ℹ	Detailed information, notes and precautions
☒	Replace

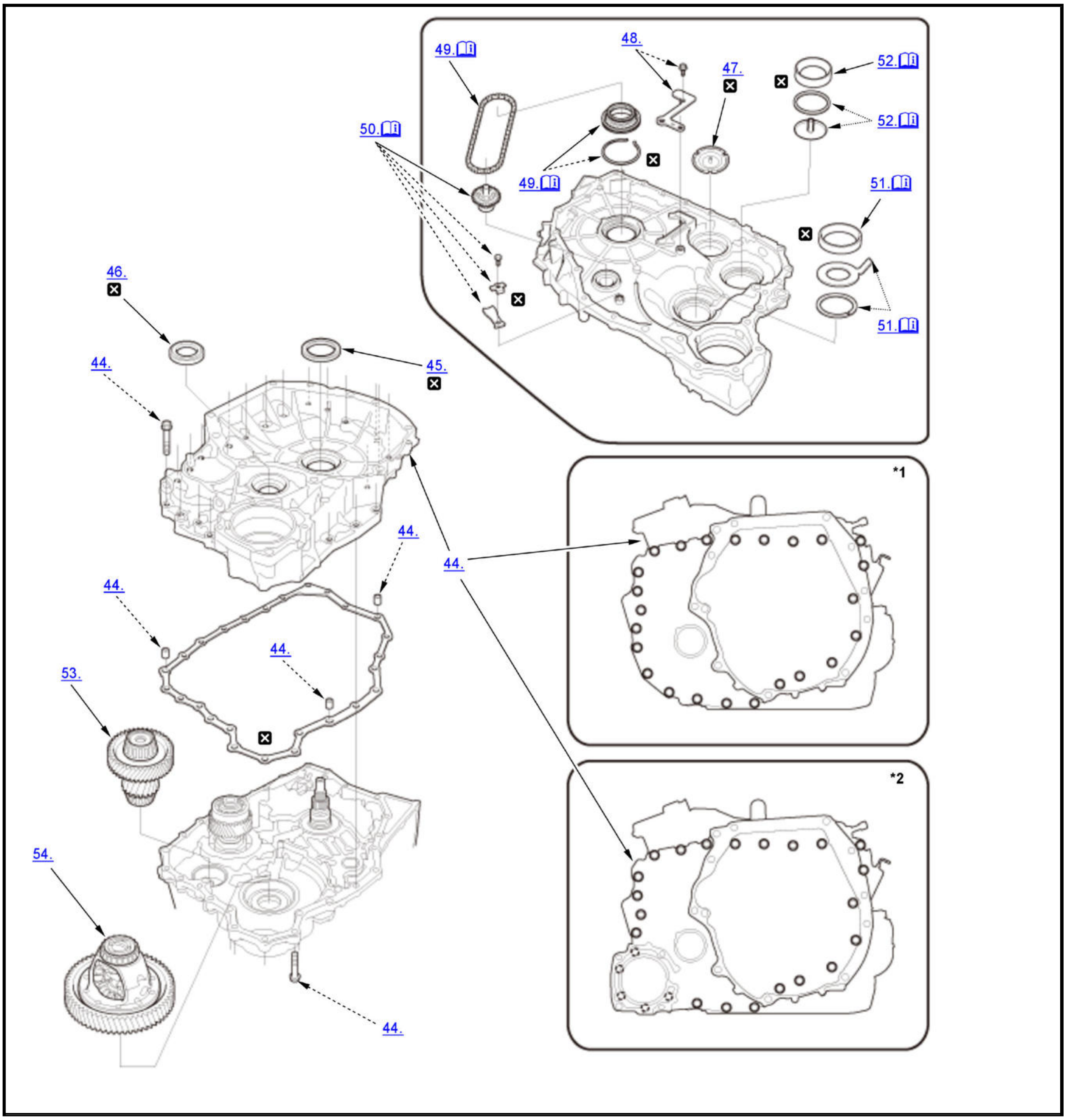
49.
48.
47.
52.
52.
50.
49.
51.
51.
46.
44.
45.
44.
44.
44.
44.
53.
54.
44.
*1
*2

ℹ	Detailed information, notes and precautions
☐	Torque: N.m (kgf.m, lbf.ft)
☒	Replace
*1	2WD
*2	AWD

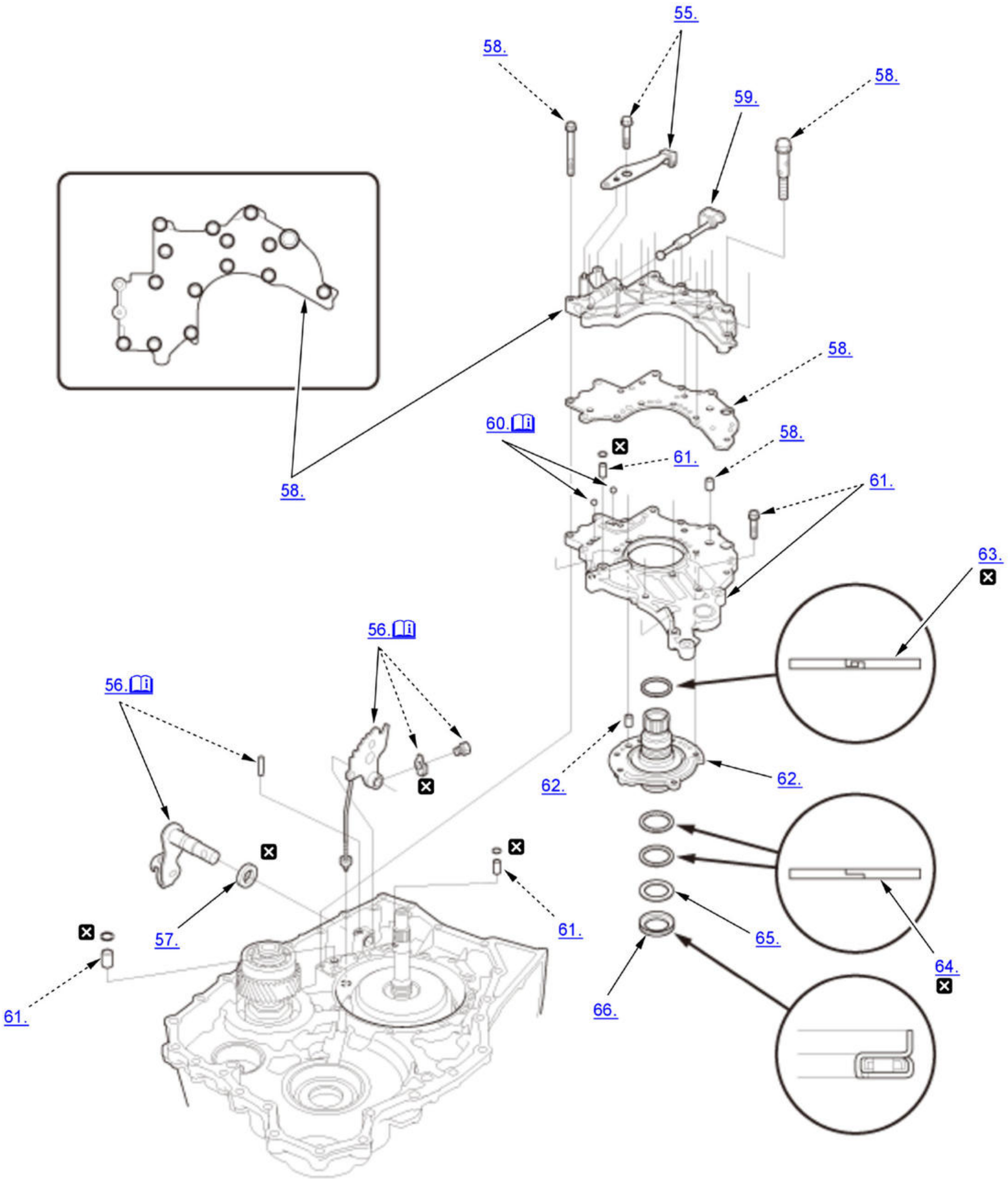
55.
58.
59.
58.
58.
58.
60.
61.
58.
61.
61.
63.
56.
56.
62.
62.
57.
61.
65.
64.
61.
66.

📖	Detailed information, notes and precautions
▭	Torque: N.m (kgf.m, lbf.ft)
☒	Replace

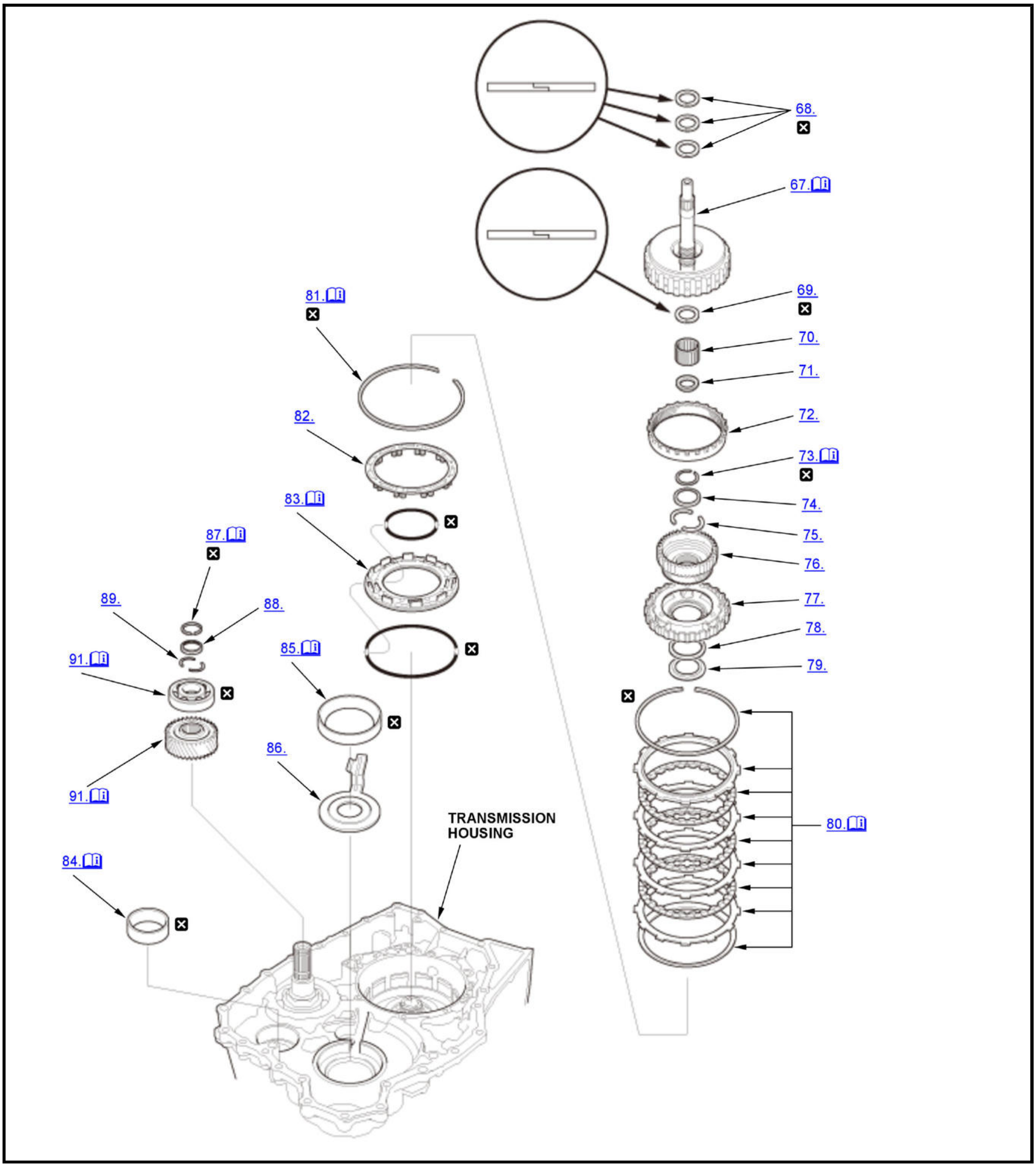
68.
67.
69.
70.
71.
72.
73.
74.
75.
76.
77.
78.
79.
80.
81.
82.
83.
87.
89.
88.
85.
91.
86.
91.
84.
TRANSMISSION HOUSING

ℹ	Detailed information, notes and precautions
☒	Replace

1. Auxiliary Transmission Fluid Pump - Remove (With Auto Idle Stop System)
2. Delivery Pipe - Remove (With Auto Idle Stop System)
3. 10.9 x 31.5 mm Pipe - Remove (With Auto Idle Stop System)
4. Transmission Hanger - Remove
5. Filler Cap A - Remove
6. Filler Cap B - Remove
7. Breather Cap - Remove

8. Left Differential Oil Seal - Remove
9. TCM - Remove (1.5 L engine)
10. Transmission Range Switch - Remove
11. CVT Speed Sensor - Remove
12. CVT Drive Pulley Speed Sensor - Remove
13. Torque Converter Turbine Speed Sensor - Remove
14. CVT Driven Pulley Pressure Sensor - Remove
15. Sealing Bolt - Remove
16. Check Bolt - Remove
17. Drain Plug - Remove
18. Transmission Fluid Pan - Remove
19. Magnet - Remove
20. Transmission Fluid Strainer - Remove
21. Transmission Fluid Strainer - Check

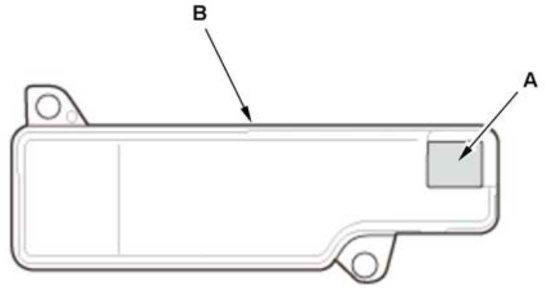	1. Clean the inlet opening (A) of the transmission fluid strainer (B) thoroughly with compressed air. 2. Check that it is in good condition and that the inlet opening is not clogged. 3. Test the strainer by pouring clean transmission fluid through the inlet opening, and replace it if it is clogged or damaged.

22. Valve Body Assembly - Remove

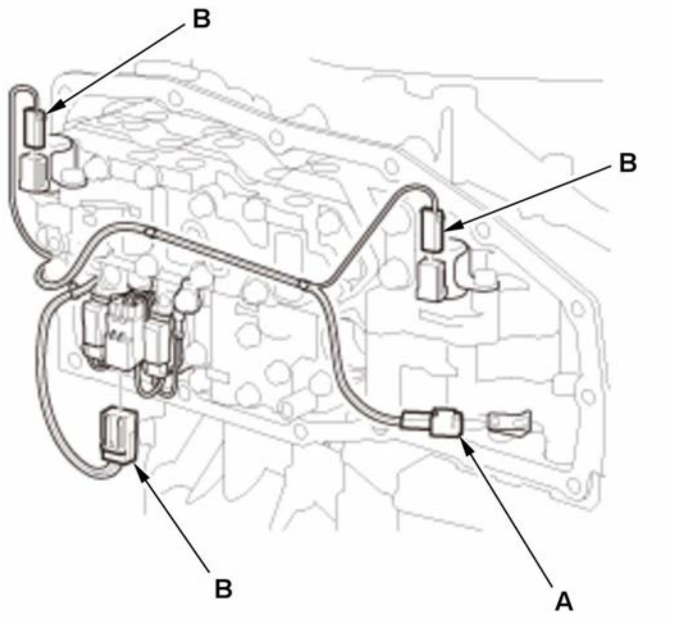	1. Remove the transmission fluid temperature sensor (A). 2. Disconnect the connectors (B).

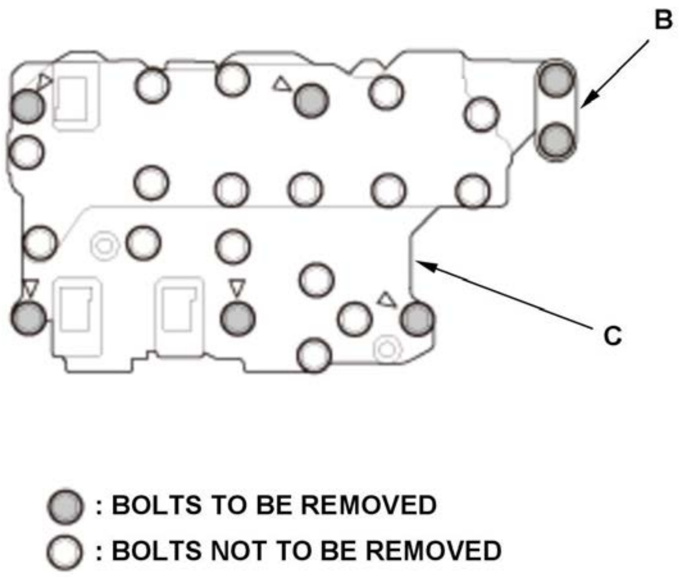
B
C
● : BOLTS TO BE REMOVED
○ : BOLTS NOT TO BE REMOVED

3. Remove the guide plate (B).

4. Remove the valve body assembly (C).

NOTE:

- **Do not remove the bolts with no ' marked on them.**
- **Check that the valve body assembly is free from solenoid wire harness A.**
- **Be careful not to damage solenoid wire harness A.**

23. 10.9 x 26 mm Pipe - Remove
24. 8 x 133.5 mm Pipe - Remove
25. 12 x 56.7 mm Pipe - Remove
26. Joint Pipe - Remove

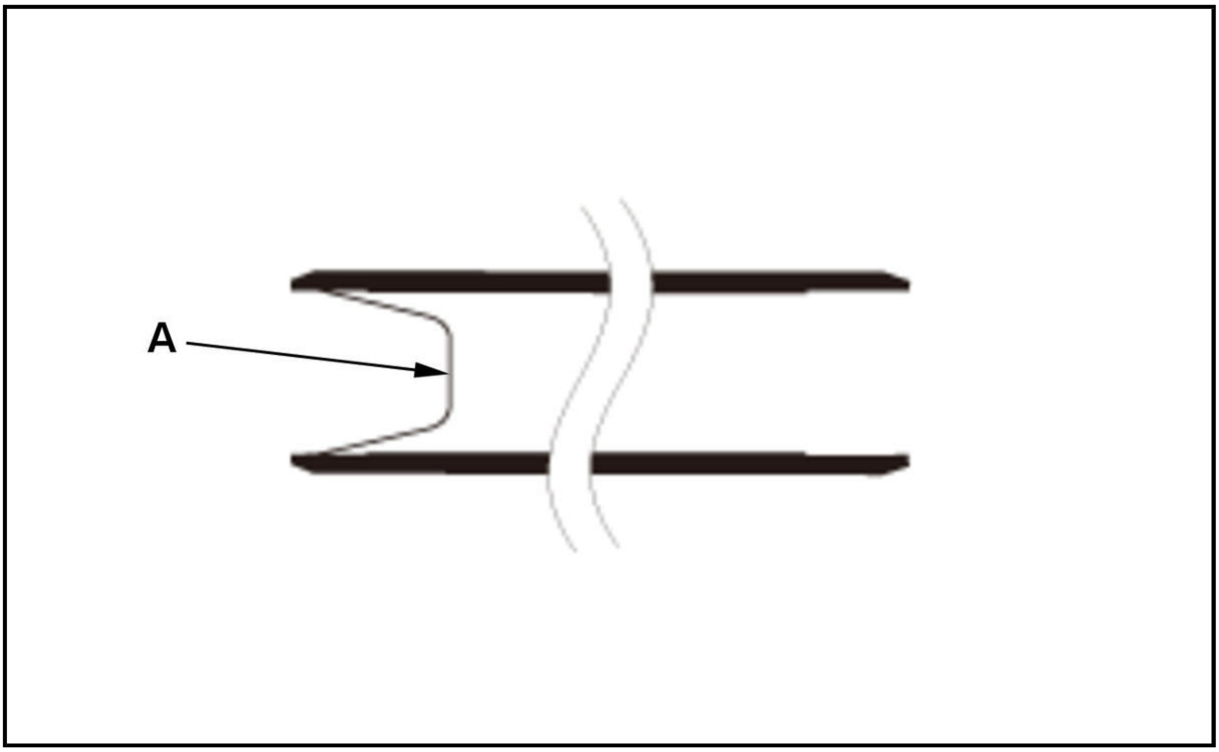

NOTE: **Be careful not to drop the filter (A).**

27. 10.9 x 18.5 mm Pipe - Remove
28. 14.3 x 36.2 mm Pipe - Remove
29. 18 x 18 mm Pipe - Remove
30. Solenoid Wire Harness A - Remove
31. Transmission Fluid Pump - Remove
32. Shift Solenoid Valve O/P - Remove
33. End Cover - Remove
34. 12 x 89 mm Pipe - Remove
35. Lubrication Pipe D - Remove
36. Lubrication Pipe E - Remove
37. 22 mm Sealing Ring - Remove
38. Snap Ring - Remove

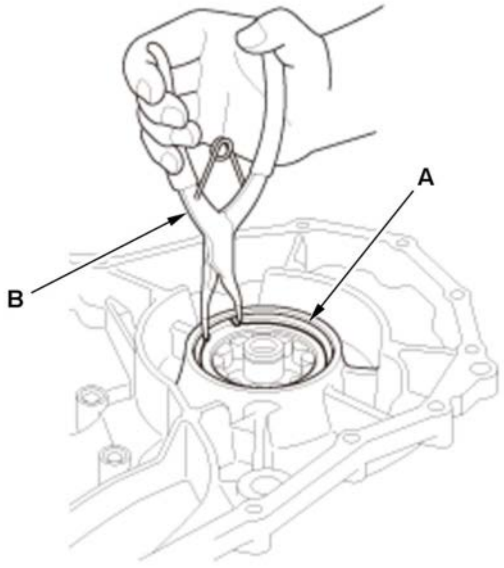	1. Remove the snap ring (A) using commercially available snap ring pliers (B).

39. Driven Pulley Shaft Bearing (End Cover Side) - Remove

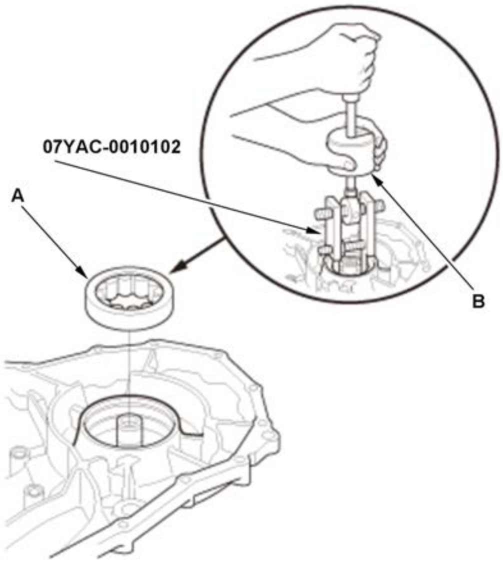	1. Remove the driven pulley shaft bearing (A) using the 45-75 mm adjustable bearing puller and a commercially available 3/8"-16 slide hammer (B).

40. Parking Brake Pawl - Remove
41. Parking Shaft - Remove
42. Parking Pawl Spring - Remove
43. Parking Brake Rod Holder - Remove

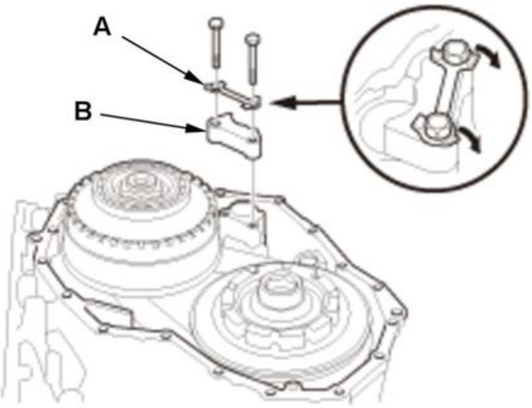	1. Pry down the lock tabs of the lock washer (A). 2. Remove the parking brake rod holder (B) with the lock washer.

44. Torque Converter Housing - Remove
45. Input Shaft Oil Seal - Remove
46. Right Differential Oil Seal - Remove
47. Oil Guide Plate - Remove
48. Lubrication Plate - Remove
49. Transmission Fluid Pump Drive Sprocket and Transmission Fluid Pump Drive Chain - Remove

1. While expanding the snap ring (A) using the snap ring pliers, remove the transmission fluid pump drive sprocket (B) and the transmission fluid pump drive chain (C).

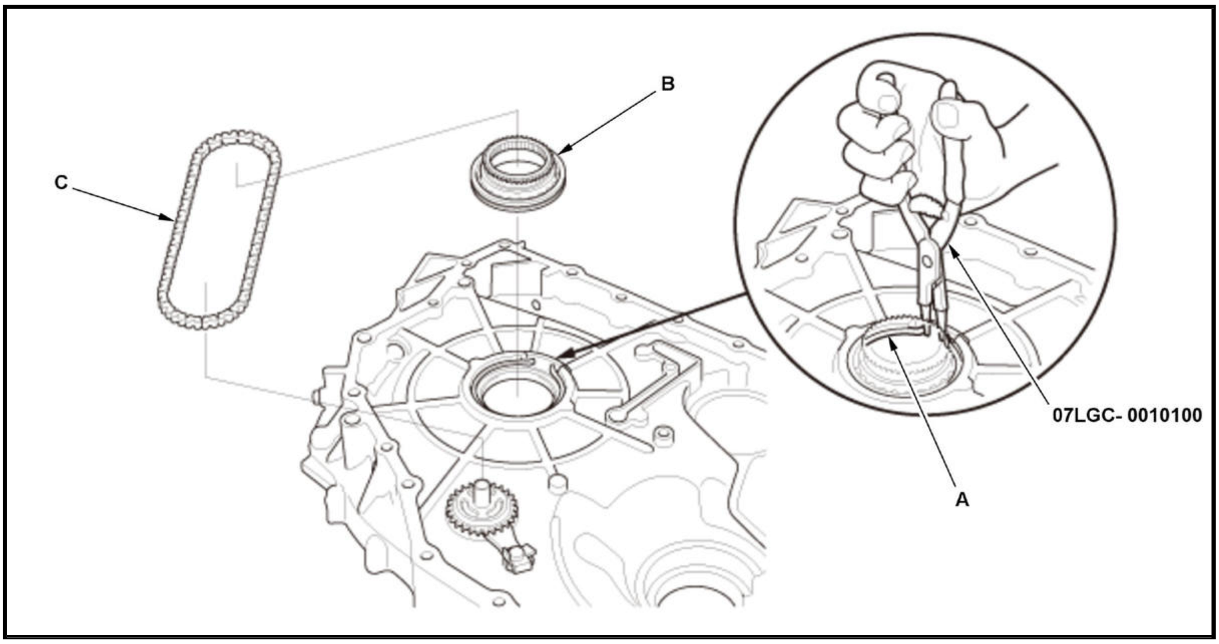

2. Remove the snap ring.

50. Transmission Fluid Pump Driven Sprocket - Remove

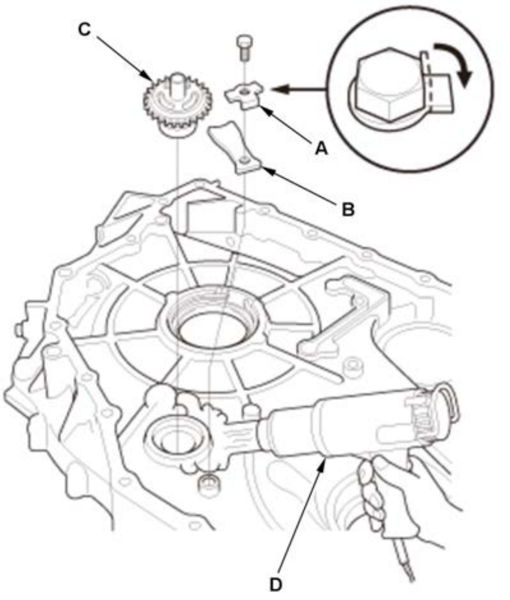

1. Pry down the lock tab of the lock washer (A).

2. Remove the bearing set plate (B).

3. Remove the transmission fluid pump driven sprocket (C) by heating the torque converter housing to about 212B°F (100B°C) using a heat gun (D).

NOTE:

Do not heat the torque converter housing more than 212B°F (100B°C).

51. Differential Carrier Tapered Roller Bearing Outer Race (Torque Converter Housing Side) - Remove

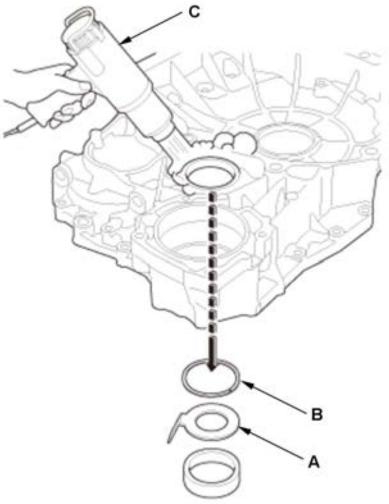	1. Remove the differential tapered roller bearing outer race, the spacer (A), and the thrust shim (B) by heating the torque converter housing to about 212B°F (100B°C) using a heat gun (C). **NOTE:** **Do not heat the torque converter housing more than 212B°F (100B°C).**

52. Final Drive Shaft Tapered Roller Bearing Outer Race (Torque Converter Housing Side) - Remove

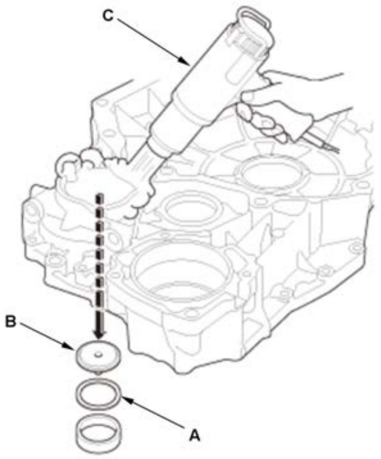	1. Remove the final drive shaft tapered roller bearing outer race, the thrust shim (A), and the oil guide plate (B) by heating the torque converter housing to about 212B°F (100B°C) using a heat gun (C). **NOTE:** **Do not heat the torque converter housing more than 212B°F (100B°C).**

53. Final Drive Shaft Assembly - Remove
54. Differential Assembly - Remove
55. Detent Spring - Remove
56. Control Shaft and Detent Lever - Remove

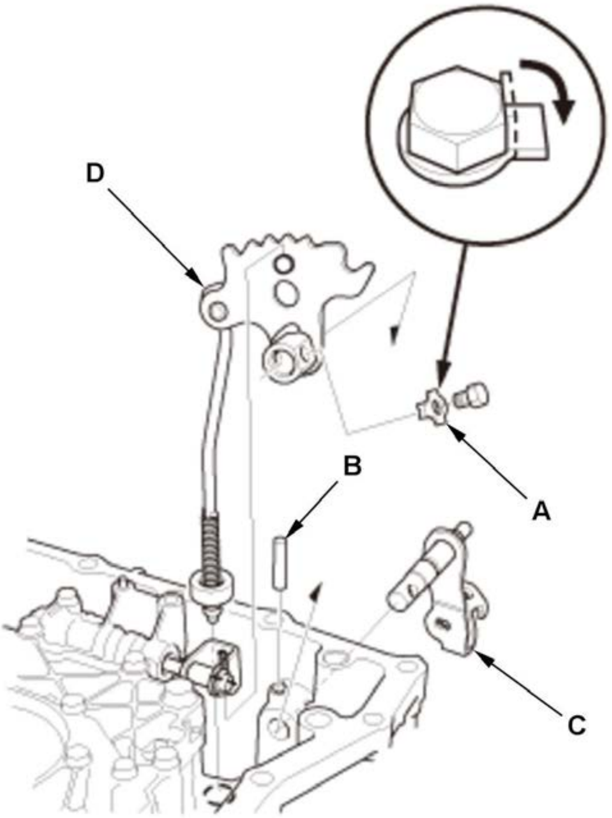

1. Pry down the lock tab of the lock washer (A).

2. Remove the roller (B).

3. Remove the control shaft (C) and the detent lever (D).

57. Control Shaft Oil Seal - Remove
58. Manual Valve Body - Remove
59. Manual Valve - Remove
60. Check Ball - Remove

NOTE:

- Be careful not to drop the check balls.
- Do not use a magnet to remove the check balls, it may magnetize the check balls.

61. Stator Shaft Flange - Remove
62. Stator Shaft - Remove
63. 40 mm Sealing Ring - Remove
64. 47 mm Sealing Ring - Remove
65. Thrust Shim - Remove
66. Thrust Needle Bearing - Remove
67. Input Shaft Assembly - Remove

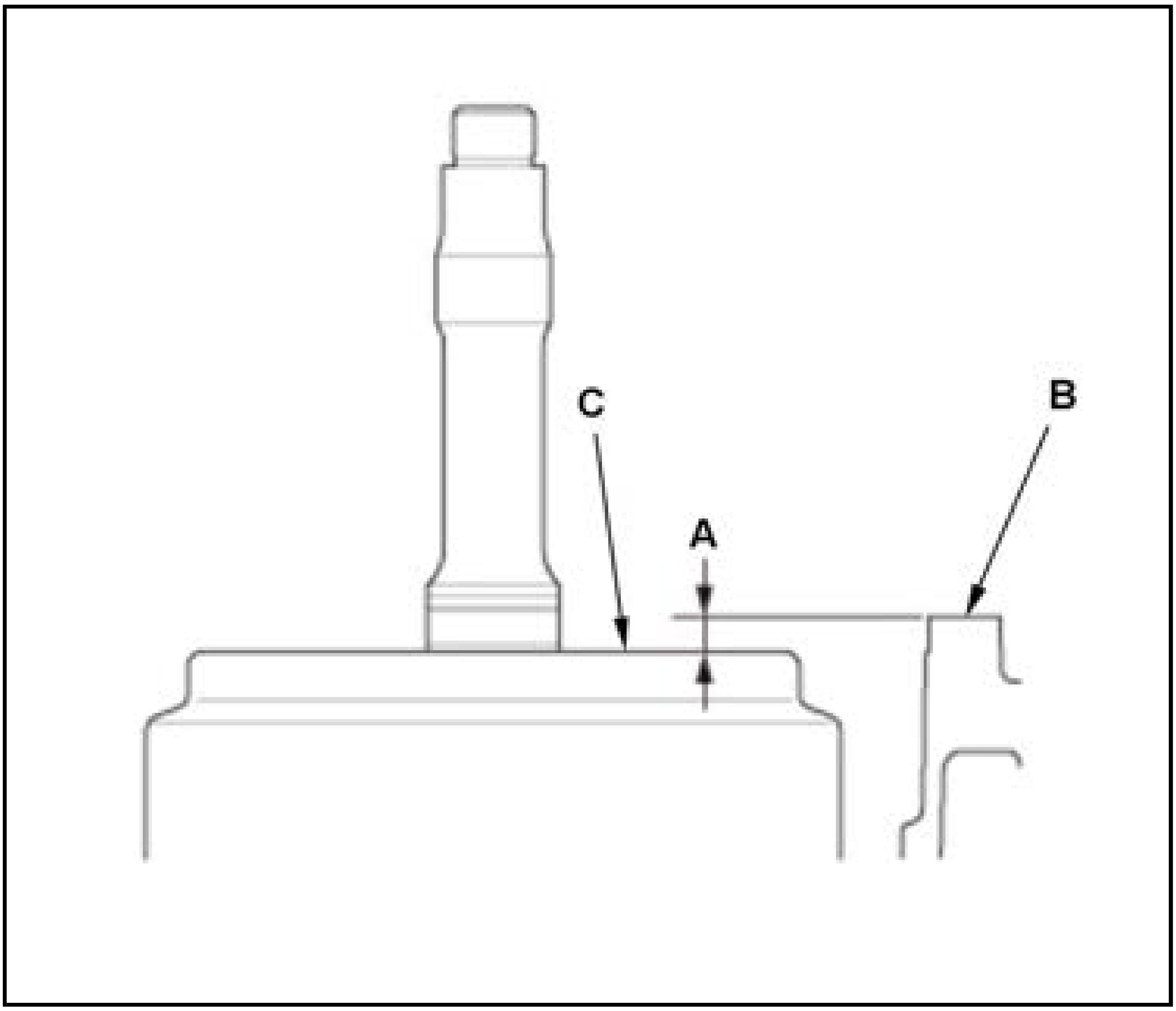

NOTE: **Note the depth (A) between the surface of the transmission housing (B) and the clutch guide (C). The recorded value of the depth will be the standard when installing the input shaft assembly.**

68. 27 mm Sealing Ring - Remove
69. 24 mm Sealing Ring - Remove
70. Needle Bearing - Remove
71. Thrust Needle Bearing - Remove
72. Ring Gear - Remove
73. Snap Ring - Remove

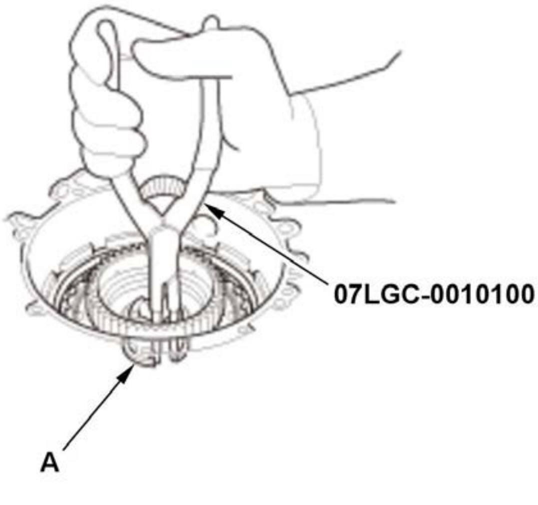	1. Remove the snap ring (A) using the snap ring pliers.

74. Cotter Retainer - Remove
75. Cotter - Remove
76. Sun Gear - Remove
77. Planetary Carrier Assembly - Remove
78. Thrust Washer - Remove
79. Washer - Remove
80. Reverse Brake - Remove

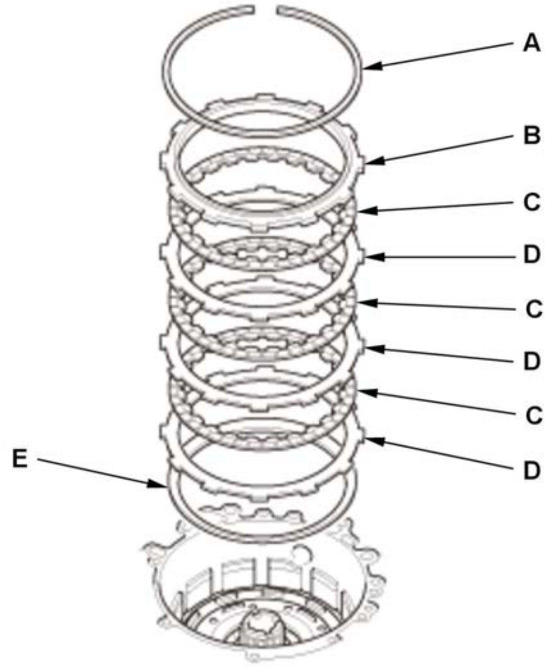

1. Remove the snap ring (A).

2. Remove the reverse brake end-plate (B).

3. Remove the reverse brake discs (C) and the reverse brake plates (D).

4. Remove the disc spring (E).

81. Snap Ring - Remove

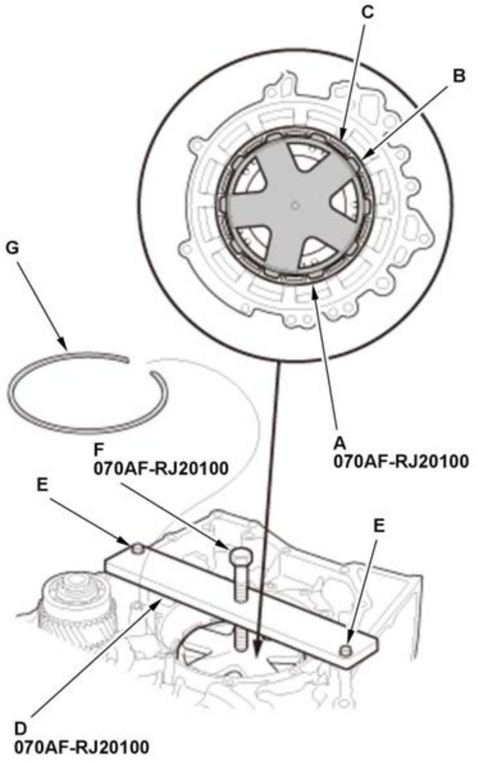

1. Put the reverse brake spring compressor attachment (A) on the spring retainer/return spring assembly (B).

NOTE:

Be sure the attachment is set over the return springs, not on the reverse brake piston (C).

2. Install the reverse brake spring compressor plate (D) with the UP mark facing up using bolts (E).

3. Make sure that the reverse brake spring compressor bolt (F) is properly installed on the pins (E).

	4. Compress the return springs using the reverse brake spring compressor until the snap ring securing the spring retainer/return spring can be removed. 5. Remove the snap ring (G). 6. Remove the reverse brake spring compressor.

82. Spring Retainer/Return Spring Assembly - Remove
83. Reverse Brake Piston - Remove

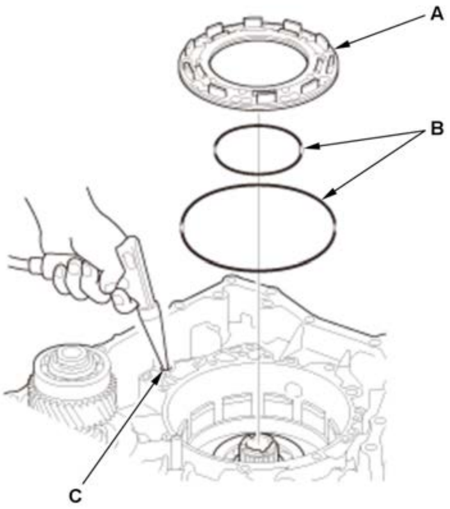	1. Remove the reverse brake piston (A) with the O-rings (B) while applying air pressure to the reverse brake hydraulic circuit hole (C). **NOTE:** **Cover the hydraulic circuit hole using a shop towel to prevent scatter of the transmission fluid.**

84. Final Drive Shaft Tapered Roller Bearing Outer Race (Transmission Housing Side) - Remove

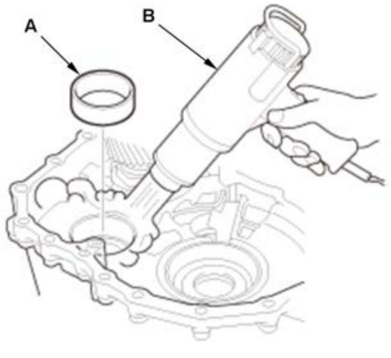	1. Remove the final drive shaft tapered roller bearing outer race (A) by heating the transmission housing to about 212B°F (100B°C) using a heat gun (B). **NOTE:** **Do not heat the transmission housing more than 212B°F (100B°C).**

85. Differential Carrier Tapered Roller Bearing Outer Race (Transmission Housing Side) - Remove

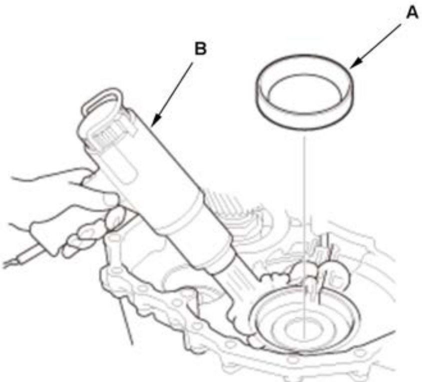	1. Remove the differential carrier tapered roller bearing outer race (A) by heating the transmission housing to about 212B°F (100B°C) using a heat gun (B). **NOTE:** **Do not heat the transmission housing more than**

	212B°F (100B°C).

86. Spacer - Remove
87. Snap Ring - Remove

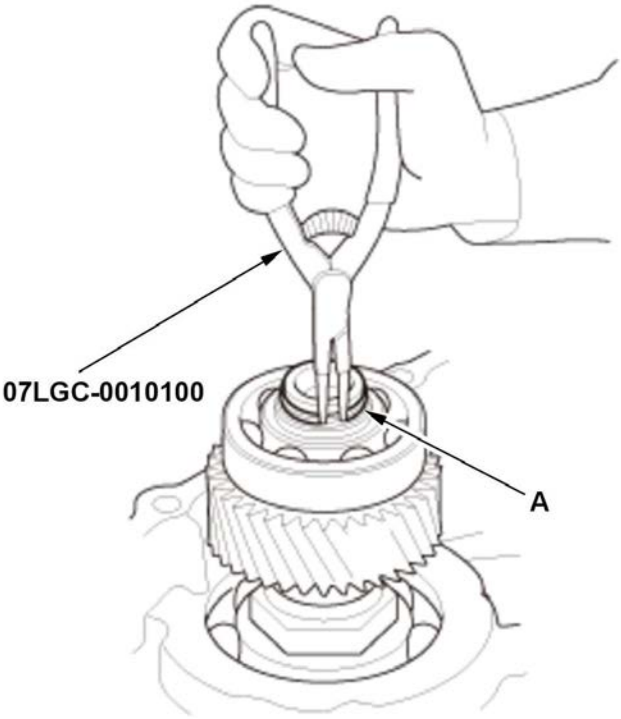	1. Remove the snap ring (A) using the snap ring pliers.

88. Cotter Retainer - Remove
89. Cotter - Remove
90. Driven Pulley Shaft Bearing (Transmission Housing Side) - Remove

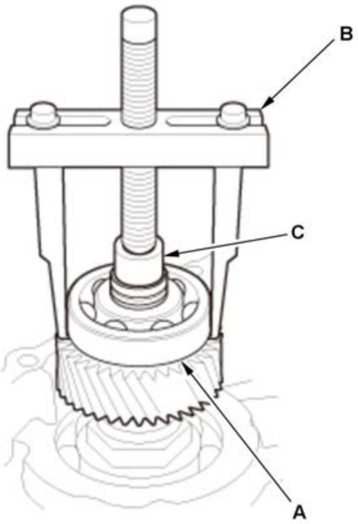	1. Remove the driven pulley shaft bearing (A) using a commercially available bearing puller (B) and a commercially available spacer (C).

91. Secondary Drive Gear - Remove

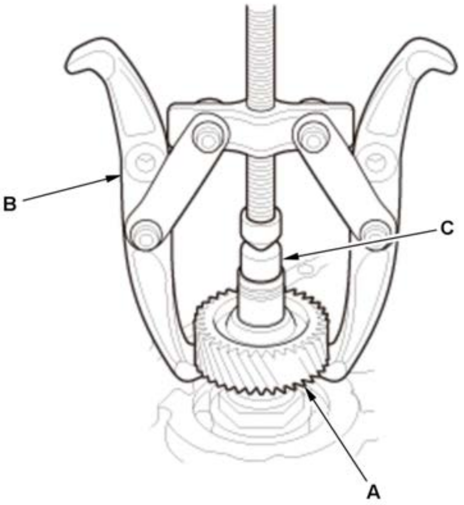	1. Remove the secondary drive gear (A) using a commercially available bearing puller (B) and a commercially available spacer (C).

Reassembly

NOTE:

- ℹ Where icon is shown, further information shown below.
- Keep all foreign particles out of the transmission.
- When you reassemble the transmission, apply a light coat of clean transmission fluid on all oil seals, O-rings, bearings, and shaft splines. Also soak the forward clutch assembly and the reverse brake discs, in clean transmission fluid for at least 30 minutes prior to installation.
- Be careful not to damage the O-rings.
- Unless otherwise indicated, illustrations used in the procedure are for AWD.

1

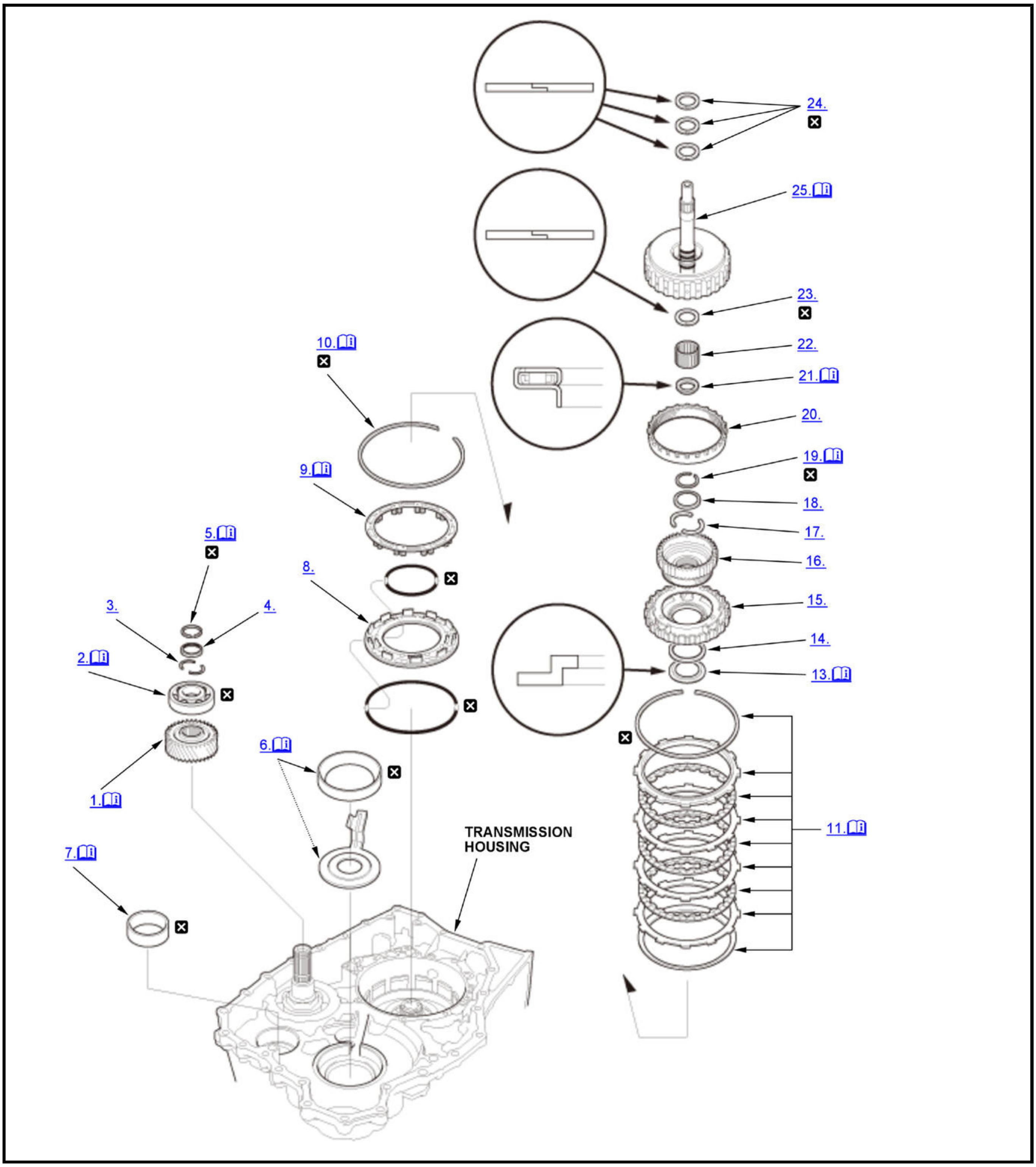
24.
25.
23.
10.
22.
21.
20.
9.
19.
18.
17.
5.
16.
8.
3.
4.
15.
14.
2.
13.
6.
1.
11.
TRANSMISSION HOUSING
7.

ℹ	Detailed information, notes and precautions
☒	Replace

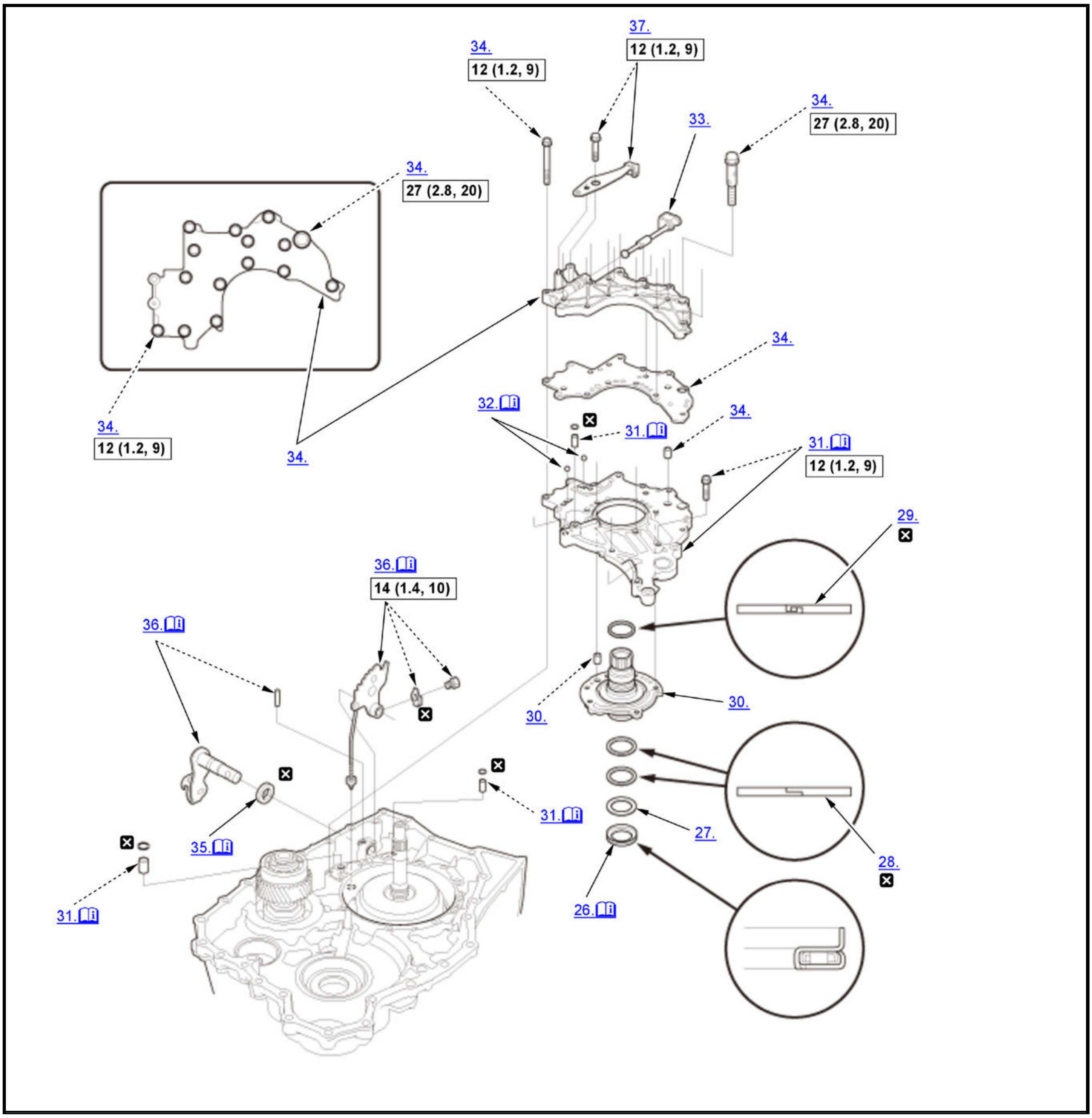
37.
12 (1.2, 9)
34.
12 (1.2, 9)
33.
34.
27 (2.8, 20)
34.
27 (2.8, 20)
34.
12 (1.2, 9)
34.
34.
32.
31.
34.
31.
12 (1.2, 9)
29.
36.
14 (1.4, 10)
36.
30.
30.
31.
35.
27.
28.
31.
26.

ℹ	Detailed information, notes and precautions
☐	Torque: N.m (kgf.m, lbf.ft)
☒	Replace

3

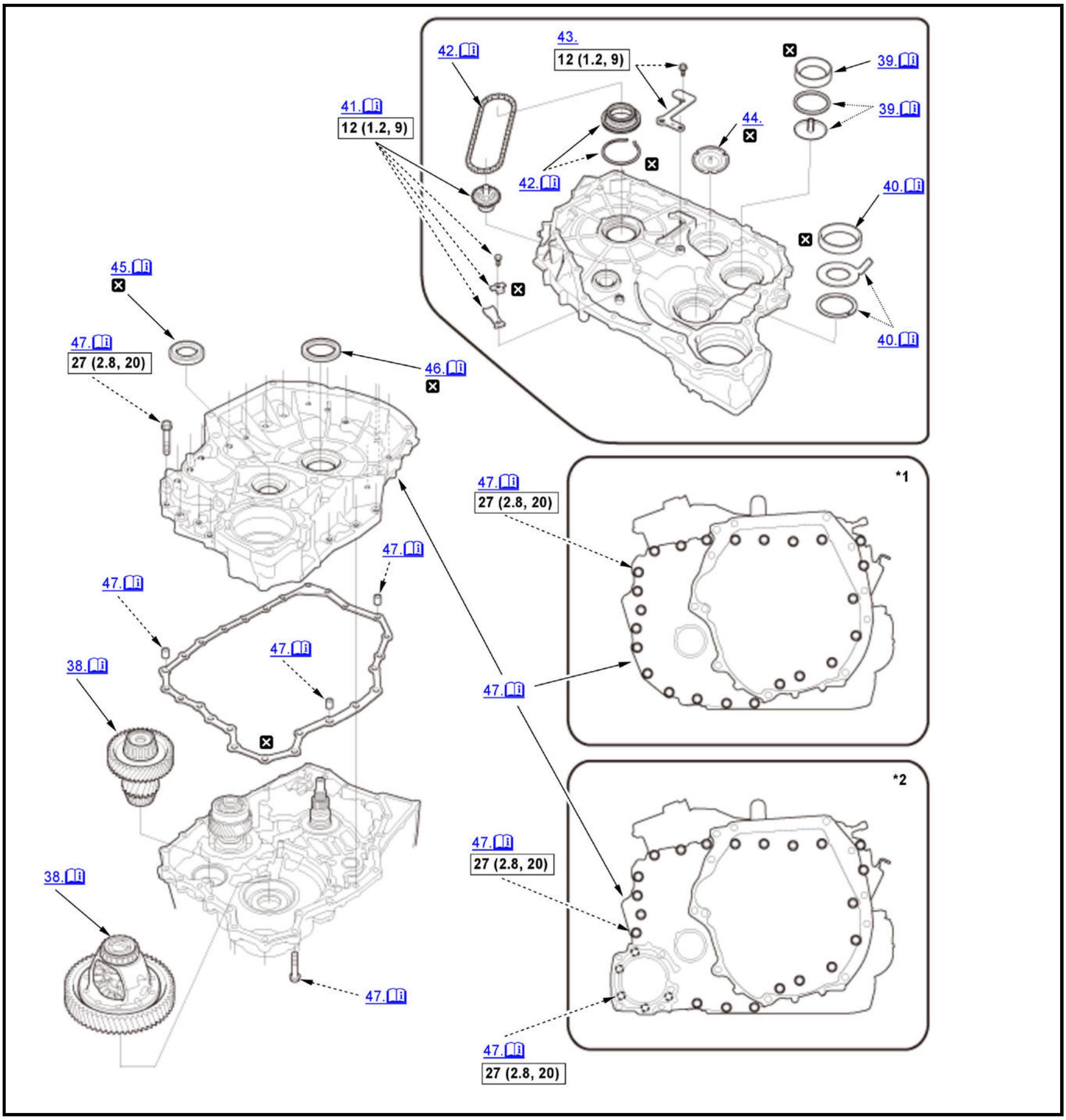
42.
43.
12 (1.2, 9)
39.
41.
12 (1.2, 9)
39.
44.
42.
40.
45.
47.
27 (2.8, 20)
46.
40.
*1
47.
27 (2.8, 20)
47.
47.
47.
38.
47.
*2
47.
27 (2.8, 20)
38.
47.
47.
27 (2.8, 20)

🕮	Detailed information, notes and precautions
▭	Torque: N.m (kgf.m, lbf.ft)
☒	Replace
*1	2WD
*2	AWD

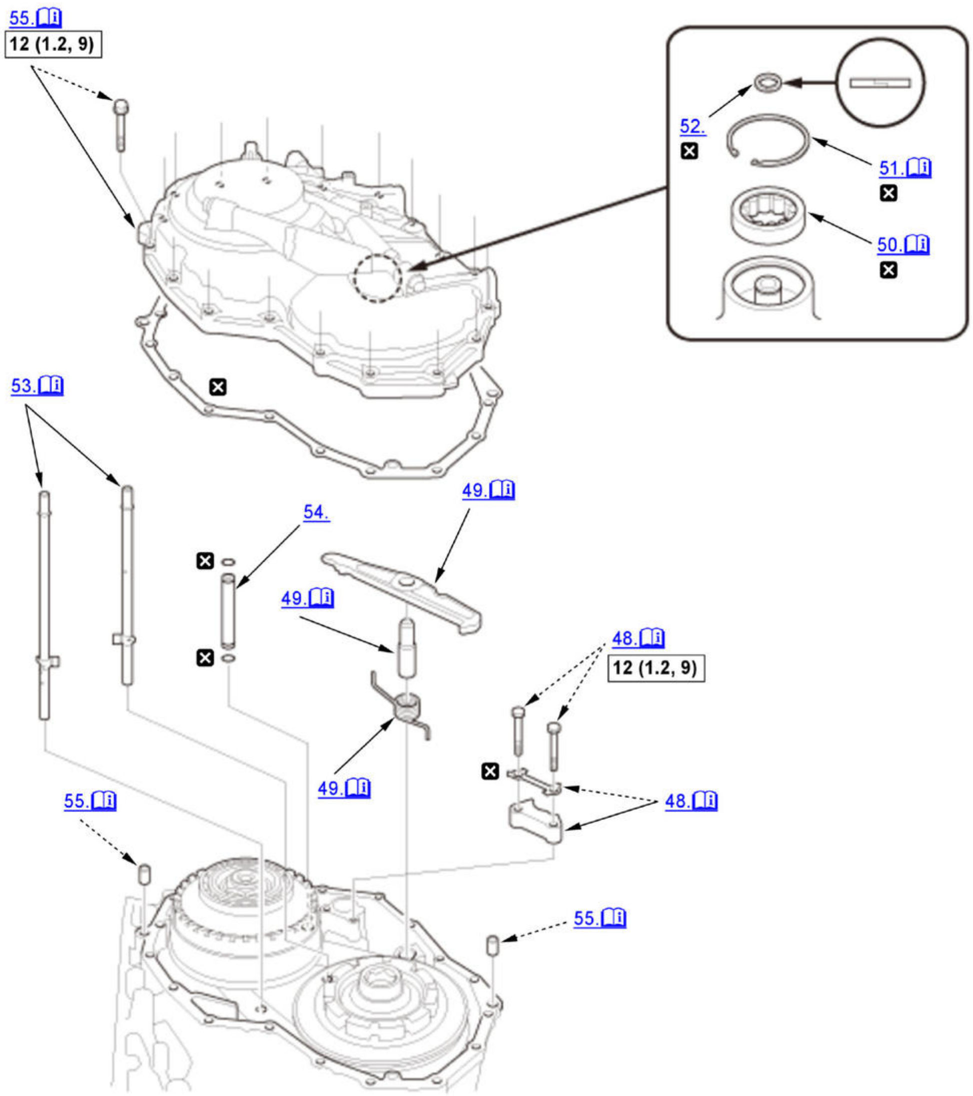
55.
12 (1.2, 9)
52.
51.
50.
53.
49.
54.
49.
48.
12 (1.2, 9)
49.
48.
55.
55.

ℹ	Detailed information, notes and precautions
☐	Torque: N.m (kgf.m, lbf.ft)
☒	Replace

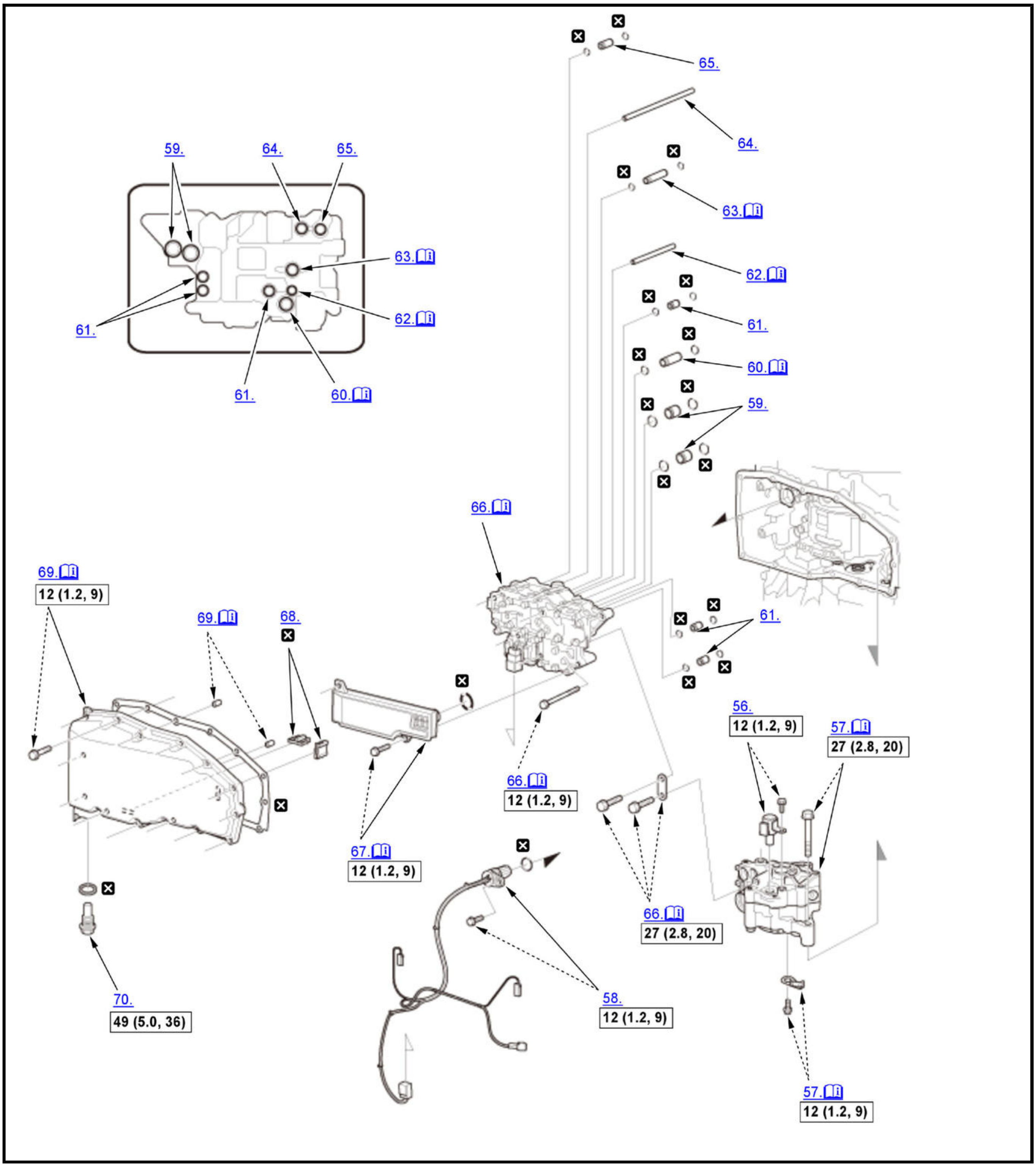
65.
64.
59.
64.
65.
63.
63.
62.
62.
61.
61.
60.
61.
60.
59.
66.
69.
12 (1.2, 9)
69.
68.
61.
56.
12 (1.2, 9)
57.
27 (2.8, 20)
66.
12 (1.2, 9)
67.
12 (1.2, 9)
66.
27 (2.8, 20)
70.
49 (5.0, 36)
58.
12 (1.2, 9)
57.
12 (1.2, 9)

ℹ	Detailed information, notes and precautions
☐	Torque: N.m (kgf.m, lbf.ft)
☒	Replace

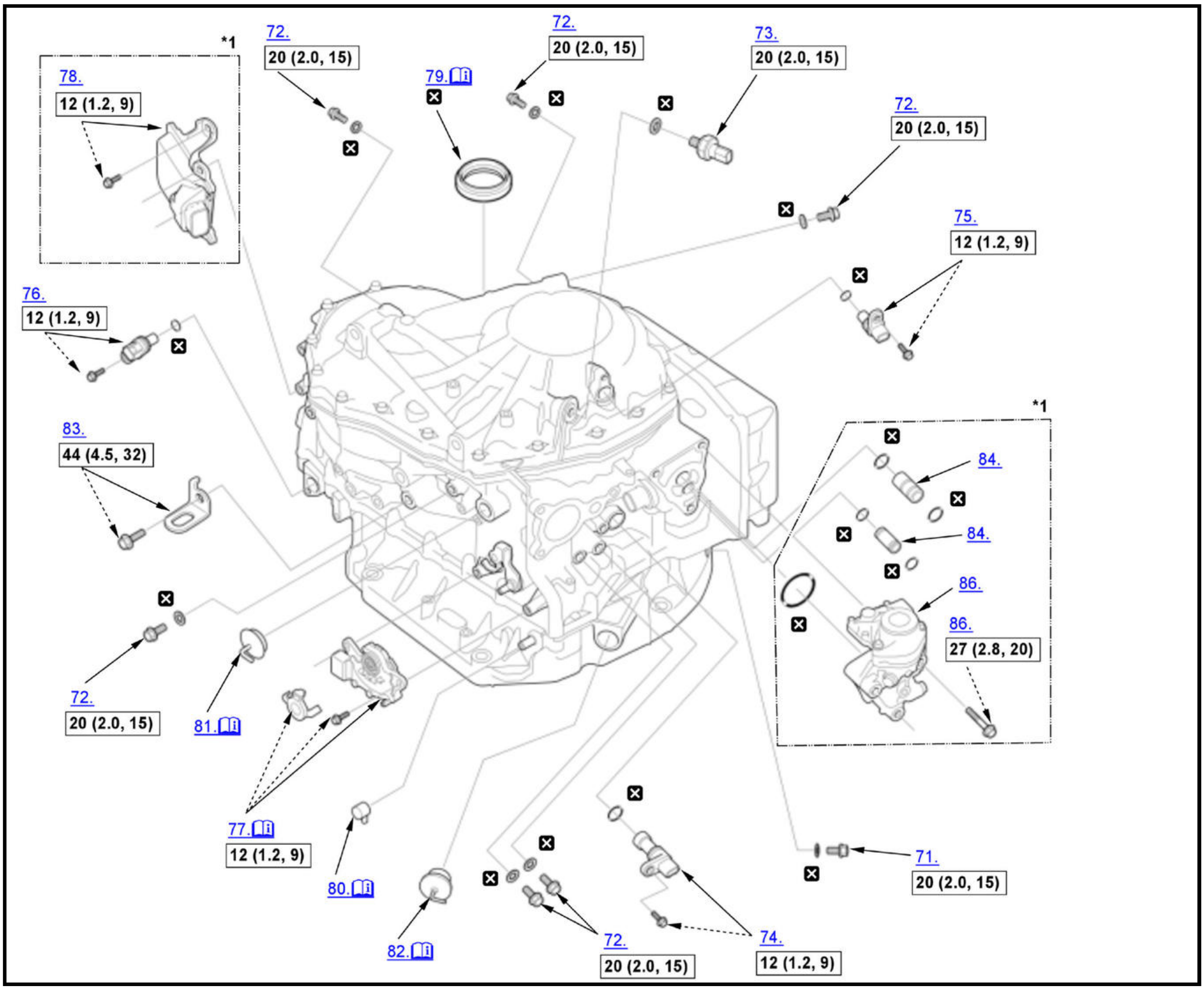
*1
78.
12 (1.2, 9)
72.
20 (2.0, 15)
79.
72.
20 (2.0, 15)
73.
20 (2.0, 15)
72.
20 (2.0, 15)
75.
12 (1.2, 9)
76.
12 (1.2, 9)
83.
44 (4.5, 32)
*1
84.
84.
86.
86.
27 (2.8, 20)
72.
20 (2.0, 15)
81.
77.
12 (1.2, 9)
80.
82.
72.
20 (2.0, 15)
74.
12 (1.2, 9)
71.
20 (2.0, 15)

ℹ	Detailed information, notes and precautions
☐	Torque: N.m (kgf.m, lbf.ft)
☒	Replace
*1	1.5 L engine
*2	With auto idle stop system

1. Secondary Drive Gear - Install

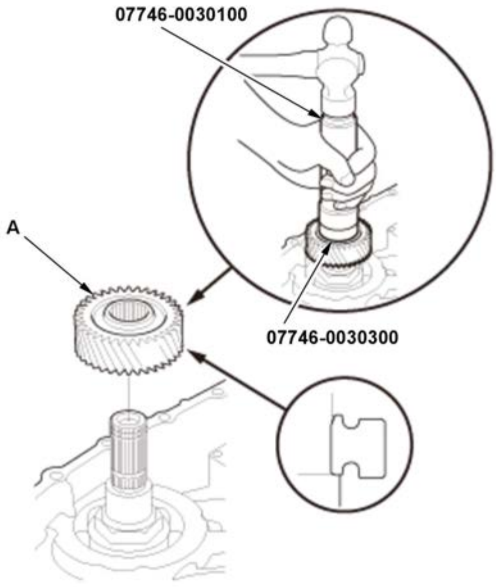 07746-0030100 A 07746-0030300	1. Install the secondary drive gear (A) until it bottoms out in the direction shown using the I.D. driver handle and the I.D. bearing driver attachment.

2. Driven Pulley Shaft Bearing (Transmission Housing Side) - Install

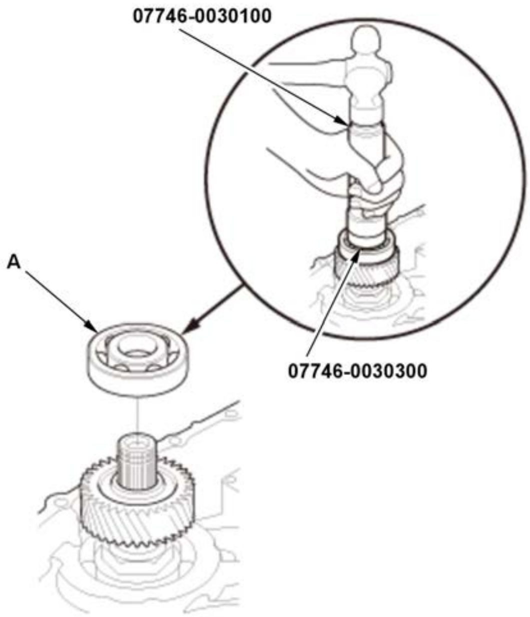 07746-0030100 A 07746-0030300	1. Install the driven pulley shaft bearing (A) until it bottoms out using the I.D. driver handle and the I.D. bearing driver attachment.

3. Cotter - Install
4. Cotter Retainer - Install
5. Snap Ring - Install

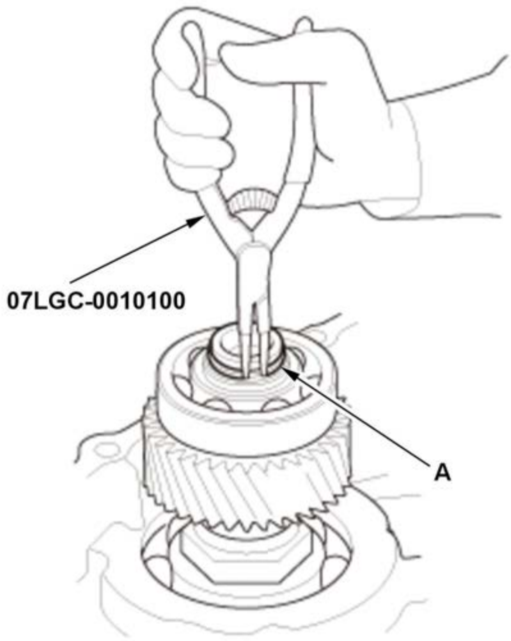

1. Install the snap ring (A) using the snap ring pliers.

NOTE:

- **Be careful not to deform the snap ring by opening/closing it excessively.**
- **Make sure the snap ring is firmly installed in the groove.**

6. Differential Carrier Tapered Roller Bearing Outer Race (Transmission Housing Side) - Install

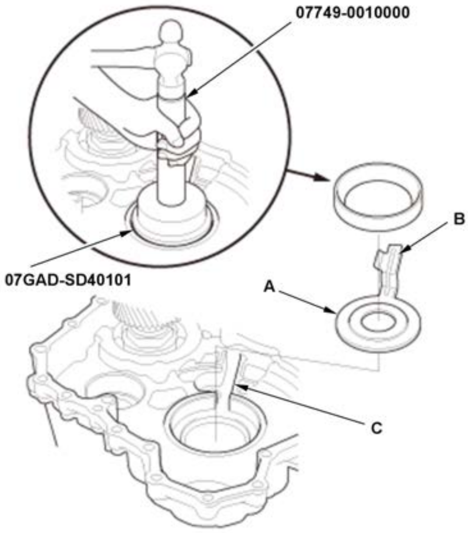

1. Install the spacer (A) by aligning the tab (B) with the groove (C).

2. Install the differential tapered roller bearing outer race using the driver handle and the attachment so there is no clearance between the bearing outer race, the spacer, and the transmission housing.

7. Final Drive Shaft Tapered Roller Bearing Outer Race (Transmission Housing Side) - Install

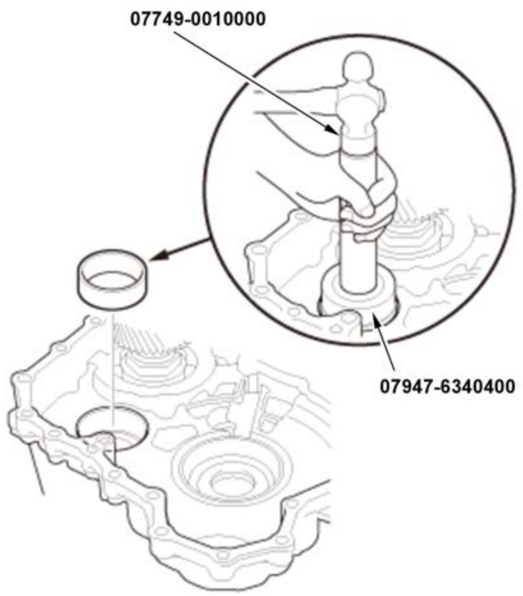	1. Install the final drive shaft tapered roller bearing outer race until it bottoms out using the driver handle and the bearing driver attachment.

8. Reverse Brake Piston - Install
9. Spring Retainer/Return Spring Assembly - Install

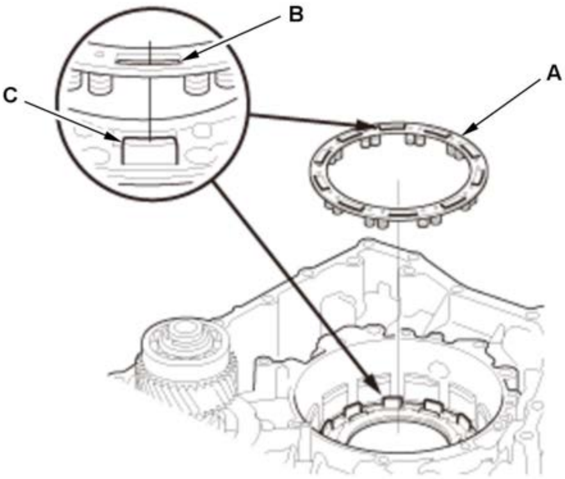	1. Install the spring retainer/return spring assembly (A) by aligning their holes (B) with the bosses (C).

10. Snap Ring - Install

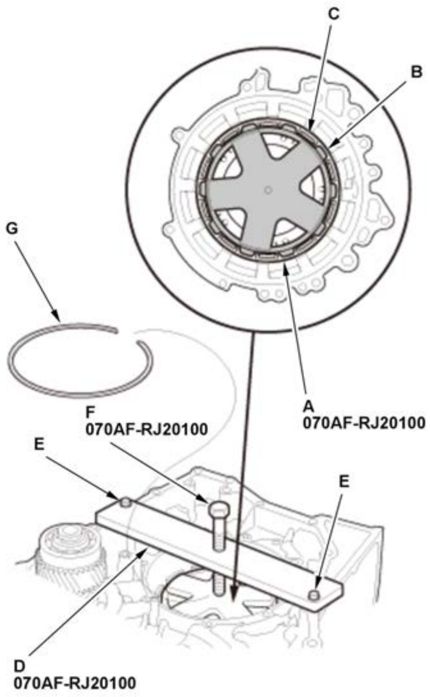

1. Put the reverse brake spring compressor attachment (A) on the spring retainer/return spring assembly (B).

NOTE:

Be sure the attachment is set over the return springs, not on the reverse brake piston (C).

2. Install the reverse brake spring compressor plate (D) with facing the UP mark to the upside using bolts (E).

3. Make sure that the reverse brake spring compressor bolt (F) is properly installed on the dent in the surface of the reverse brake spring compressor attachment.

4. Compress the return springs using the reverse brake spring compressor until the snap ring securing the spring retainer/return spring can be installed.

5. Install the snap ring (G).

- Be careful not to deform the snap ring by opening/closing it excessively.
- Make sure the snap ring is firmly installed in the groove.

6. Remove the reverse brake spring compressor.

11. Reverse Brake - Install

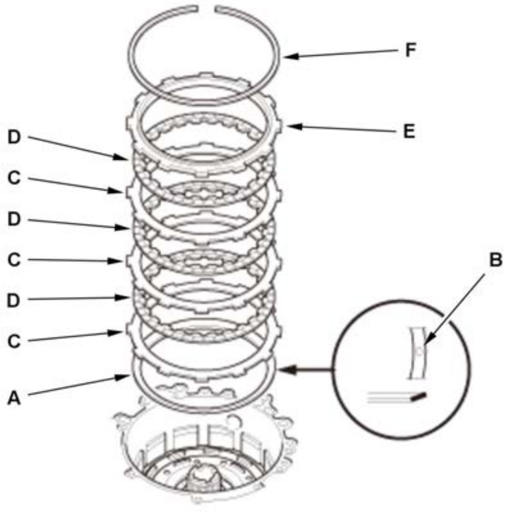

1. Install the disc spring (A).

NOTE:

Be sure to install the disc spring with the indented mark (B) facing the upward.

2. Starting with the reverse brake plate (C), alternately install the reverse brake plates and the reverse brake discs (D).

3. Install the reverse brake end-plate (E) with the flat side toward the top disc.

4. Install the snap ring (F).

	- Be careful not to deform the snap ring by opening/closing it excessively. - Make sure the snap ring is firmly installed in the groove.

12. Reverse Brake Clearance - Adjust

1. Set a dial indicator (A) on the reverse brake end-plate (B).

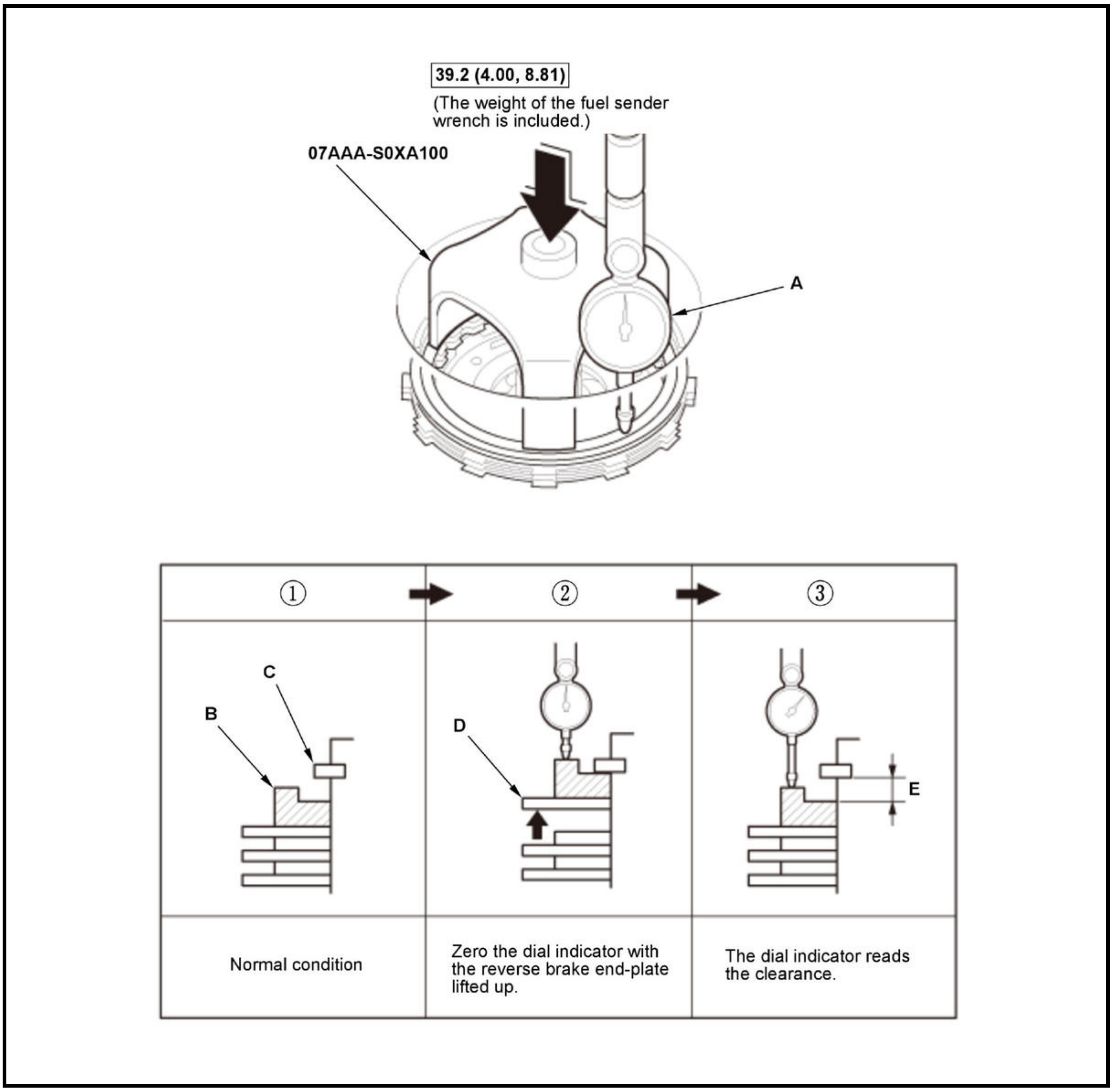
39.2 (4.00, 8.81)
(The weight of the fuel sender wrench is included.)
07AAA-S0XA100
A
①
②
③
C
B
D
E
Normal condition
Zero the dial indicator with the reverse brake end-plate lifted up.
The dial indicator reads the clearance.

2. Zero the dial indicator with the reverse brake end-plate lifted up to the snap ring (C) by lifting the top disk (D) up.

3. Release the top disk.

4. Put the fuel sender wrench on the reverse brake end-plate.

5. Press the fuel sender wrench down with 39.2 N (4.00 kgf, 8.81 lbf) (the weight of the fuel sender wrench is included) using a force gauge, and read the dial indicator. The dial indicator reads the clearance (E) between the reverse brake end-plate and the top disc.

NOTE: **Take measurements in at least three places, and use the average as the actual clearance.**

Standard:	**0.9-1.1 mm (0.035-0.043 in)**

    6. Refer to the Parts catalog, then select appropriate reverse brake end-plate.

    7. Install a selected reverse brake end-plate, then recheck the clearance.

13. Washer - Install

NOTE: **Make sure the washer is installed in the correct direction.**

14. Thrust Washer - Install
15. Planetary Carrier Assembly - Install
16. Sun Gear - Install
17. Cotter - Install
18. Cotter Retainer - Install
19. Snap Ring - Install

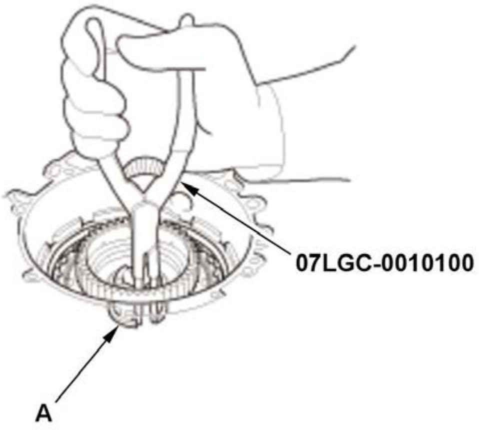	1. Install the snap ring (A) using the snap ring pliers. **NOTE:** - **Be careful not to deform the snap ring by opening/closing it excessively.** - **Make sure the snap ring is firmly installed in the groove.**

20. Ring Gear - Install
21. Thrust Needle Bearing - Install

NOTE: Make sure the thrust needle bearing is installed in the correct direction.

22. Needle Bearing - Install
23. 24 mm Sealing Ring - Install
24. 27 mm Sealing Ring - Install
25. Input Shaft Assembly - Install

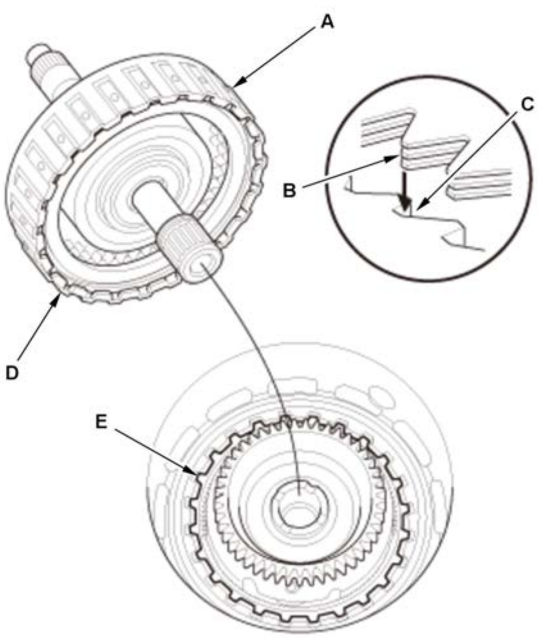	1. Install the input shaft assembly (A) by aligning the clutch discs (B) with the sun gear (C), and aligning the clutch guide (D) with the ring gear (E).

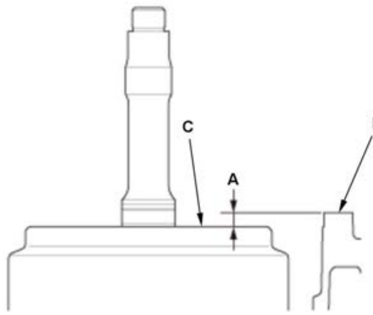	2. Measure the depth (A) between the surface of the transmission housing (B) and the clutch guide (C), then make sure the measured value of the depth is within the recorded value before it was removed.

26. Thrust Needle Bearing - Install

    NOTE: Make sure the thrust needle bearing is installed in the correct direction.

27. Thrust Shim - Install
28. 47 mm Sealing Ring - Install
29. 40 mm Sealing Ring - Install
30. Stator Shaft - Install
31. Stator Shaft Flange - Install

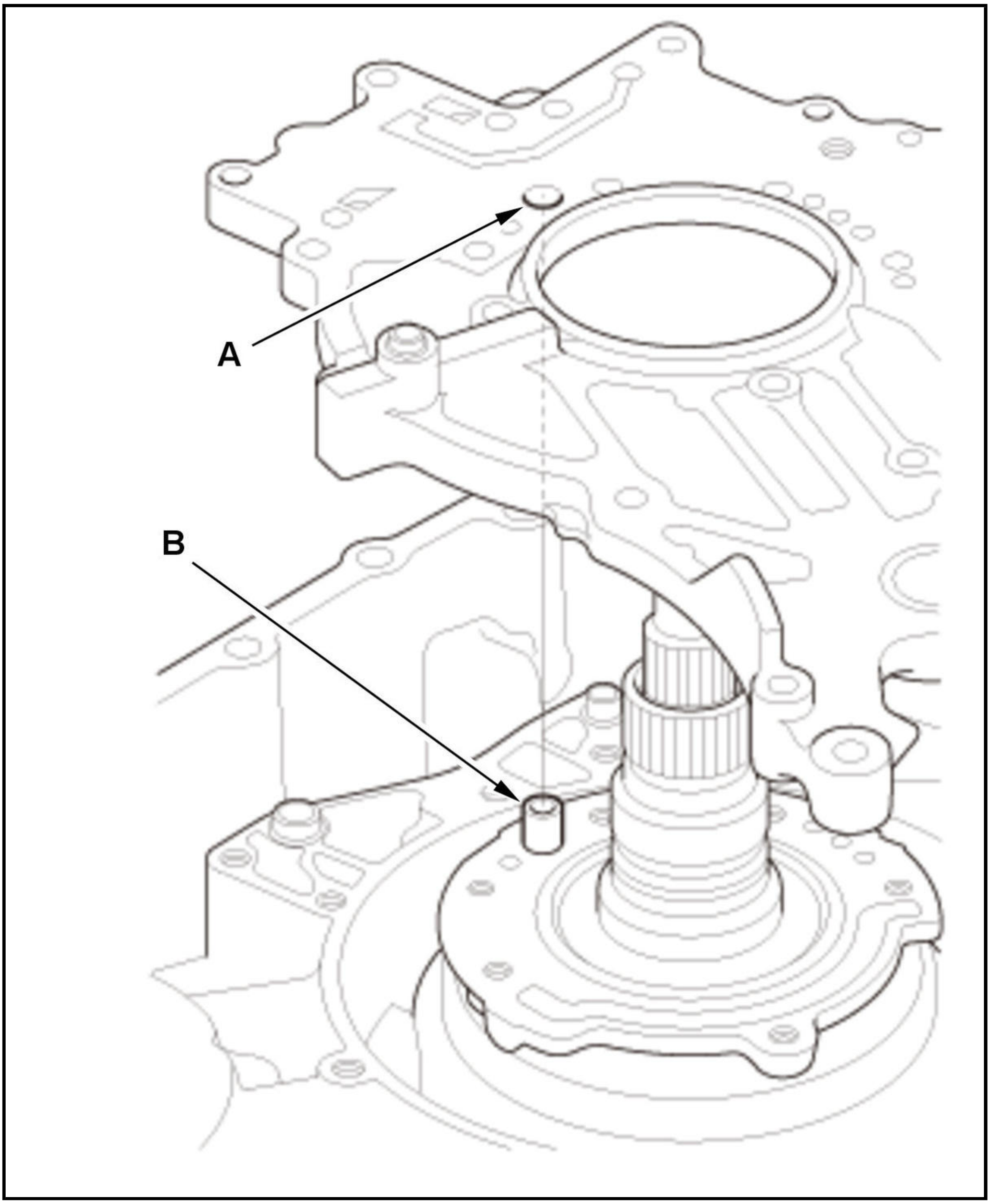

NOTE: Align the hole (A) of the stator shaft flange with the dowel pin (B) of the stator shaft when installing the stator shaft flange.

32. Check Ball - Install

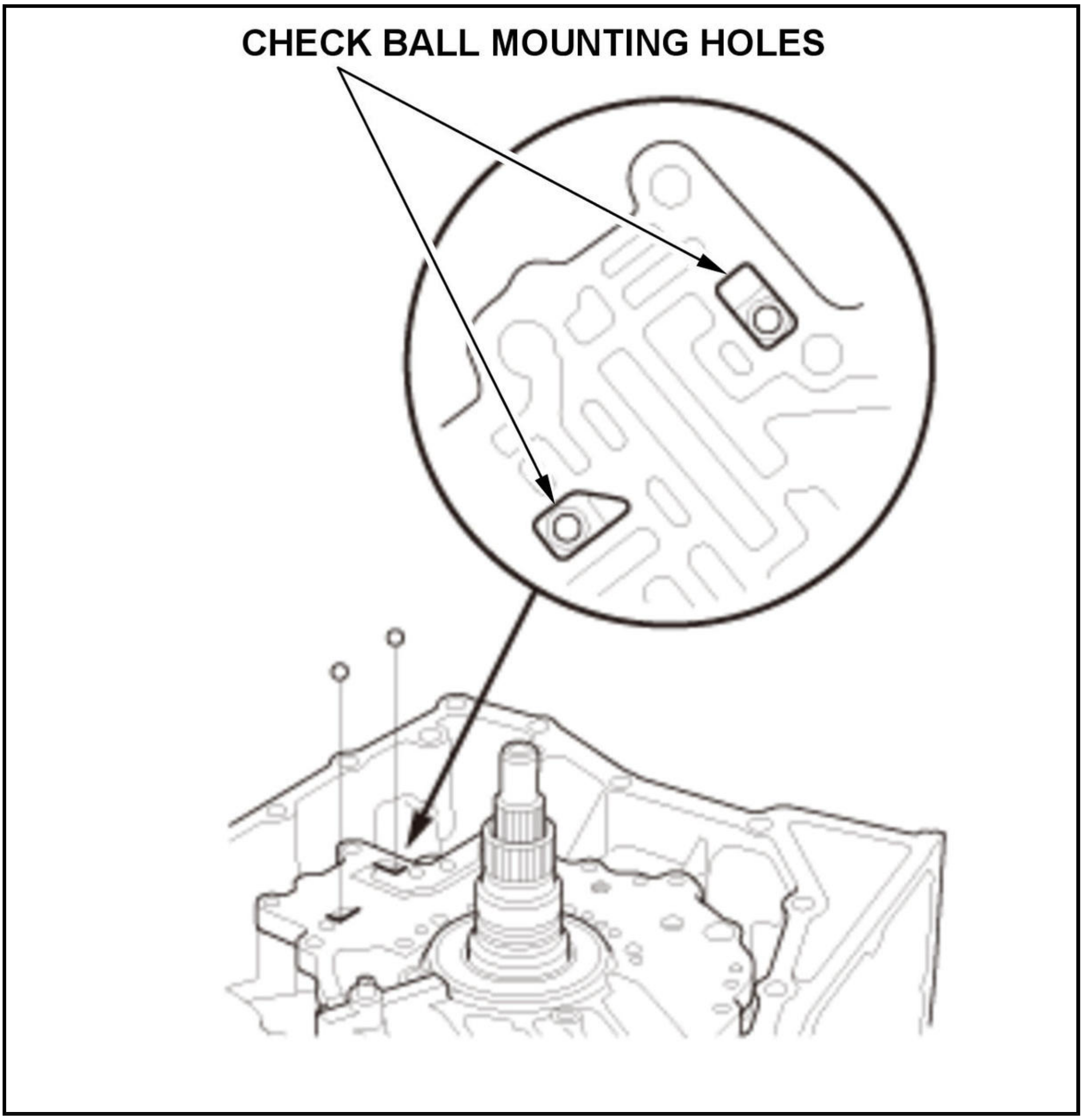
CHECK BALL MOUNTING HOLES

NOTE:

- Be careful not to drop the check balls.
- Do not use a magnet to install the check balls, it may magnetize the check balls.

33. Manual Valve - Install
34. Manual Valve Body - Install
35. Control Shaft Oil Seal - Install

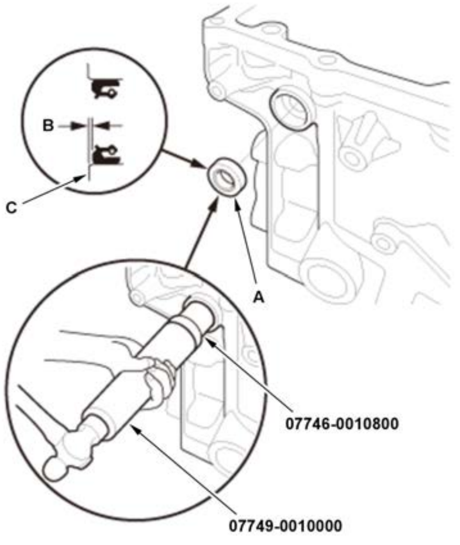	1. Install the control shaft oil seal (A) to a depth (B) of 0.5-1.5 mm (0.020-0.059 in) below the transmission housing surface (C) using the driver handle and the bearing driver attachment. **NOTE:** **Before installation, apply a light coat of clean transmission fluid to the surfaces of the press fit and the lip of the oil seal.**

36. Control Shaft and Detent Lever - Install

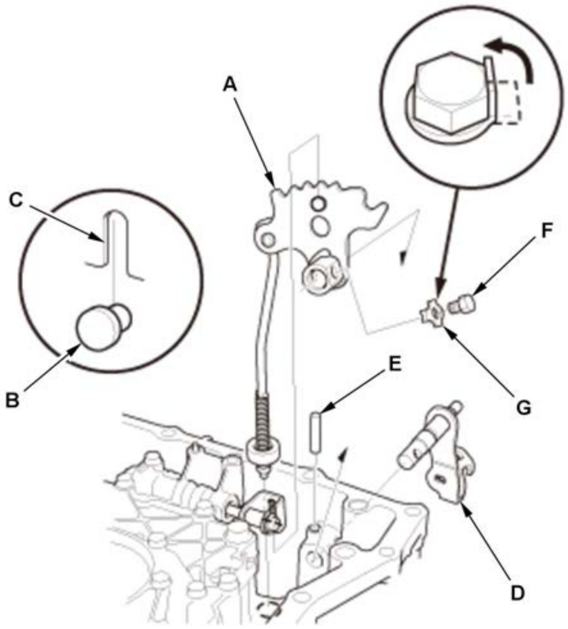	1. Install the detent lever (A) by aligning the guide tab (B) of the detent lever with the opening (C) of the manual valve. 2. Insert the control shaft (D) into the transmission housing and the detent lever, then install the roller (E). 3. Secure the control shaft and the detent lever with the mounting bolt (F) and the lock washer (G). 4. Pry up the lock tab of the lock washer.

37. Detent Spring - Install
38. Differential Assembly and Final Drive Shaft Assembly - Install

    NOTE: Make sure to assemble the final drive shaft and the final driven gear correctly (Combination A or B) as shown in the chart if either one or both are to be replaced. Correct combinations of the shaft and gear can be identified by the presence or the absence of the groove as shown in the chart.

	Final Drive Shaft	**Final Driven Gear**
Combination A (With Groove)	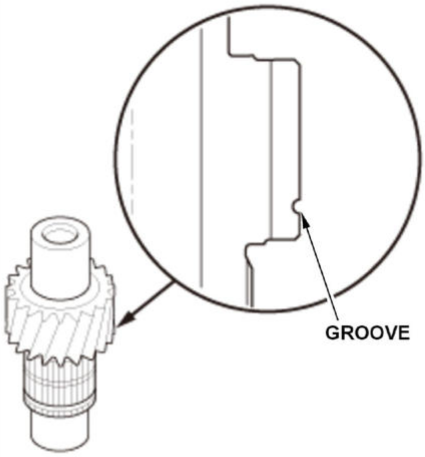	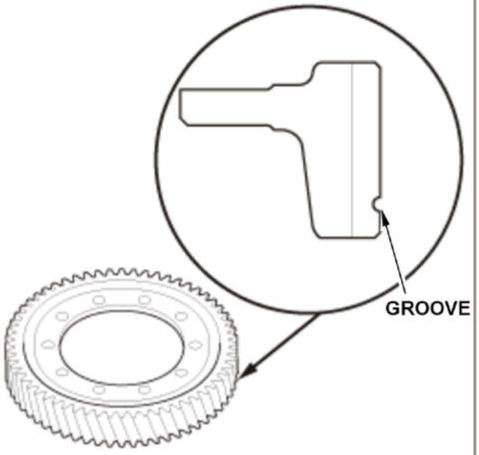
Combination B (Without Groove)	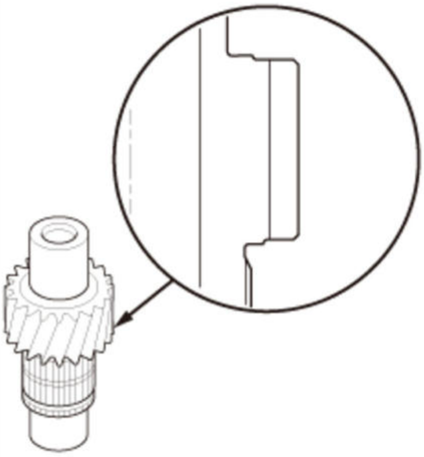	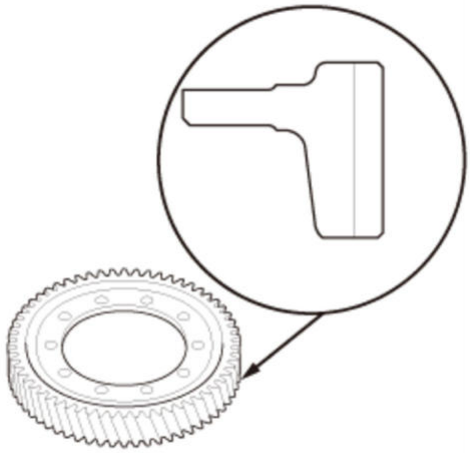

39. Final Drive Shaft Tapered Roller Bearing Outer Race (Torque Converter Housing Side) - Install

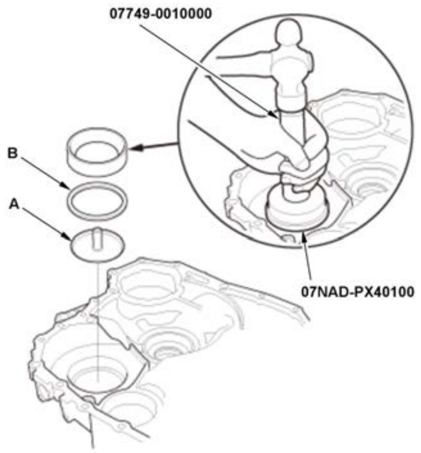	1. Install the oil guide plate (A) and the thrust shim (B). 2. Install the final drive shaft tapered roller bearing outer race using the driver handle and the bearing driver attachment so there is no clearance between the bearing outer race, the thrust shim, the oil guide plate, and the torque converter housing.

40. Differential Carrier Tapered Roller Bearing Outer Race (Torque Converter Housing Side) - Install

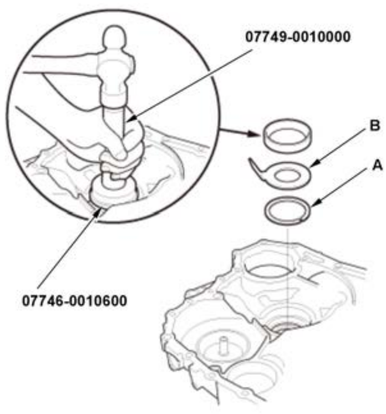 	1. Install the thrust shim (A) and the spacer (B). 2. Install the differential tapered roller bearing outer race using the driver handle and the bearing driver attachment so there is no clearance between the bearing outer race, the spacer, the thrust shim, and the torque converter housing.

41. Transmission Fluid Pump Driven Sprocket - Install

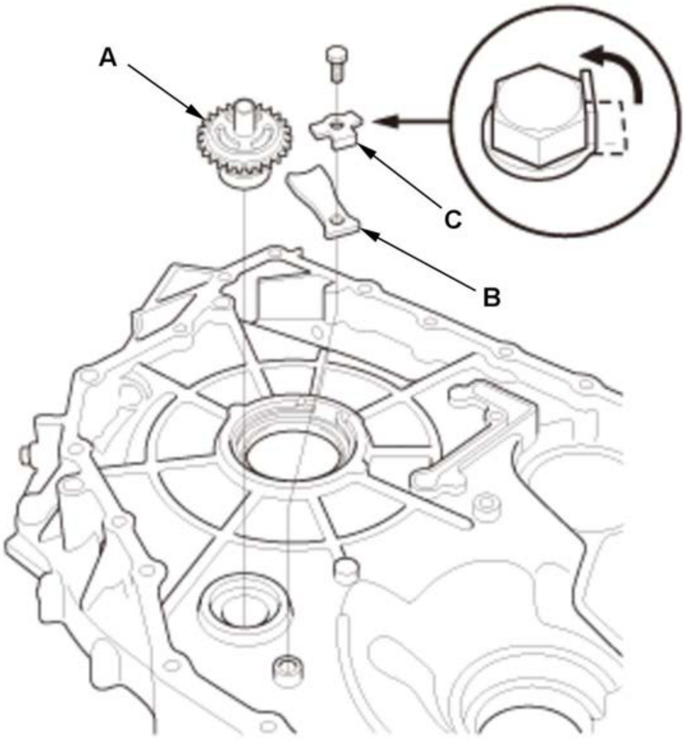 	1. Install the transmission fluid pump driven sprocket (A). 2. Install the bearing set plate (B) with the lock washer (C). 3. Pry up the lock tab of the lock washer.

42. Transmission Fluid Pump Drive Sprocket and Transmission Fluid Pump Drive Chain - Install

1. Install the snap ring (A).

NOTE:

- **Be careful not to deform the snap ring by opening/closing it excessively.**
- **Make sure the snap ring is firmly installed in the groove.**

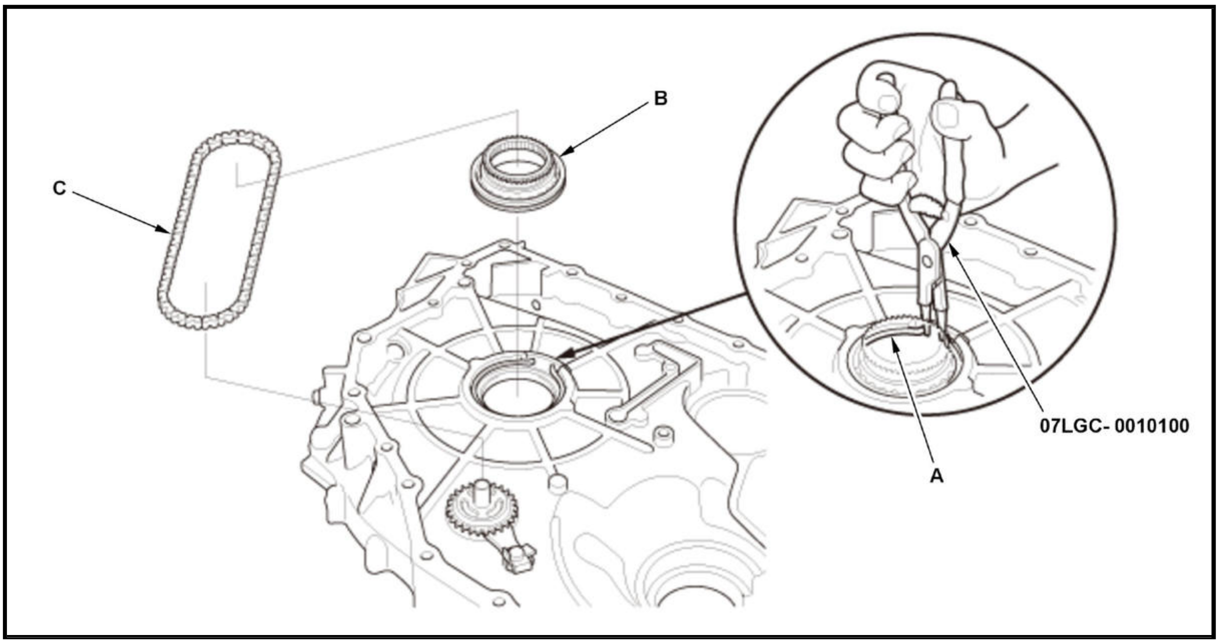

2. While expanding the snap ring using the snap ring pliers, install the transmission fluid pump drive sprocket (B) and the transmission fluid pump drive chain (C).

NOTE:

- **Be careful not to deform the snap ring by opening/closing it excessively.**
- **Make sure the snap ring is firmly installed in the groove.**

43. Lubrication Plate - Install

44. Oil Guide Plate - Install

45. Right Differential Oil Seal - Install

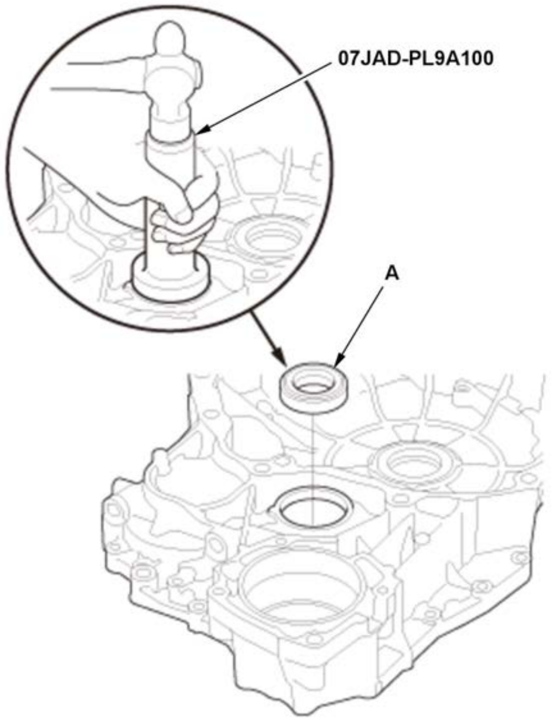	1. Install the right differential oil seal (A) flush with the torque converter housing using the 65 mm oil seal driver. **NOTE:** **Before installation, apply a light coat of clean transmission fluid to the surfaces of the press fit and the lip of the oil seal.**

46. Input Shaft Oil Seal - Install

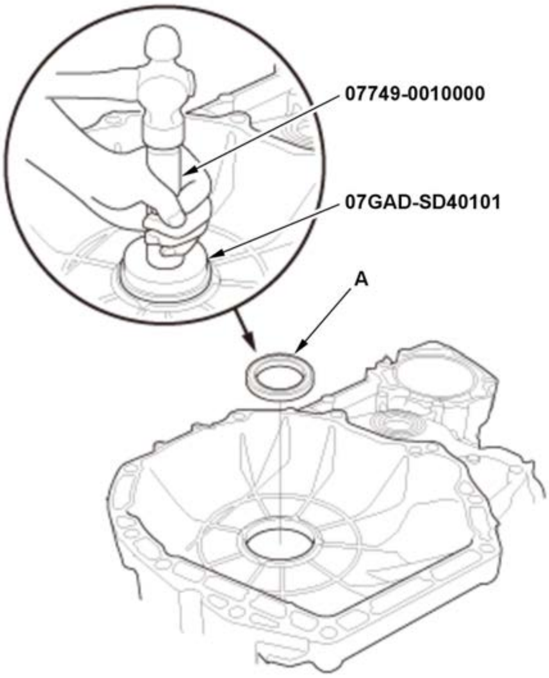	1. Install the input shaft oil seal (A) flush with the torque converter housing using the driver handle and the attachment. **NOTE:** **Before installation, apply a light coat of clean transmission fluid to the surface both of the press-fit and the lip that are on the oil seal.**

47. Torque Converter Housing - Install

NOTE:

- Tighten the torque converter housing mounting bolts in a crisscross pattern in at least two steps.
- Be careful not to drop the oil guide plate.

48. Parking Brake Rod Holder - Install

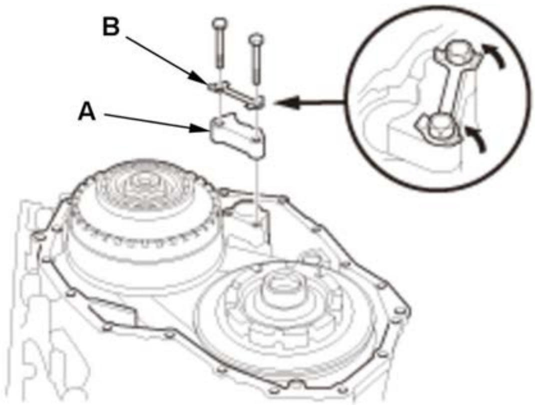	1. Install the parking brake rod holder (A) with the lock washer (B). 2. Pry up the lock tabs of the lock washer.

49. Parking Brake Pawl, Parking Shaft, and Parking Pawl Spring - Install

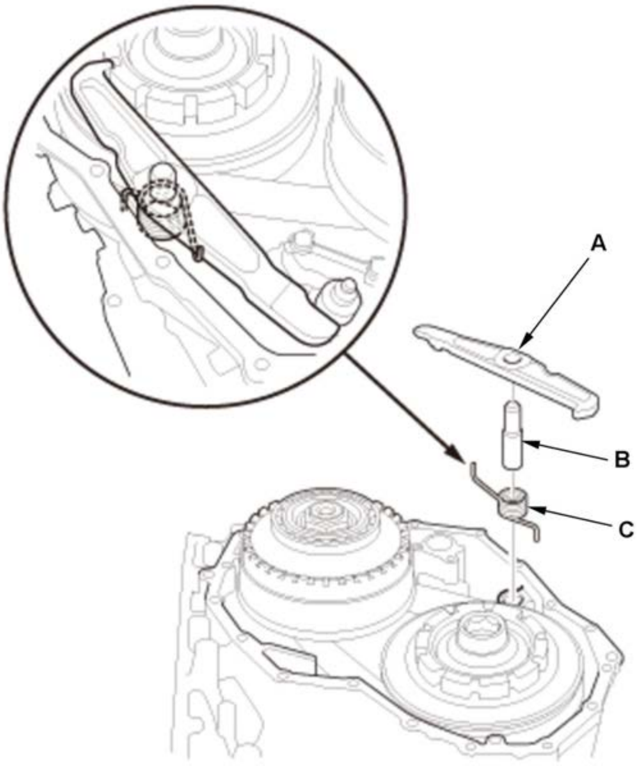 	1. Install the parking brake pawl (A), the parking shaft (B), and the parking pawl spring (C) as shown.

50. Driven Pulley Shaft Bearing (End Cover Side) - Install

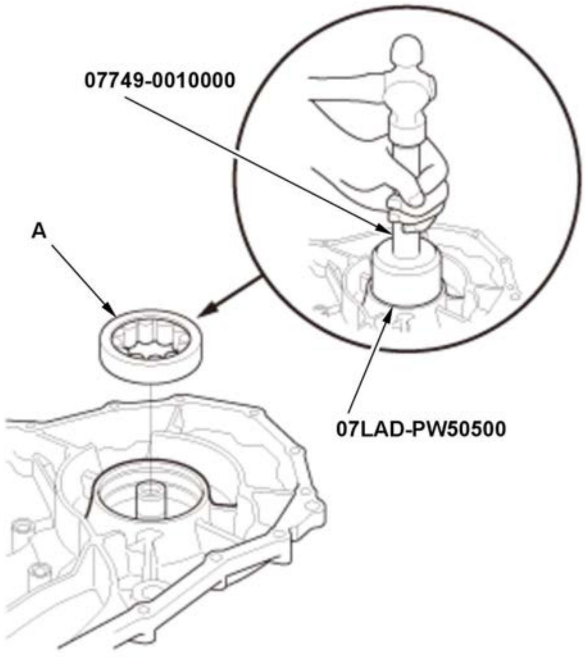 07749-0010000 A 07LAD-PW50500	1. Install the driven pulley shaft bearing (A) until it bottoms out using the driver handle and the attachment.

51. Snap Ring - Install

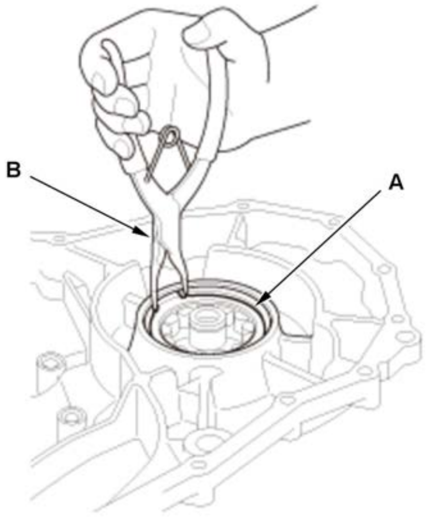	1. Install the snap ring (A) using commercially available snap ring pliers (B). **NOTE:** • **Be careful not to deform the snap ring by opening/closing it excessively.** • **Make sure the snap ring is firmly installed in the groove.**

52. 22 mm Sealing Ring - Install
53. Lubrication Pipe D and E - Install

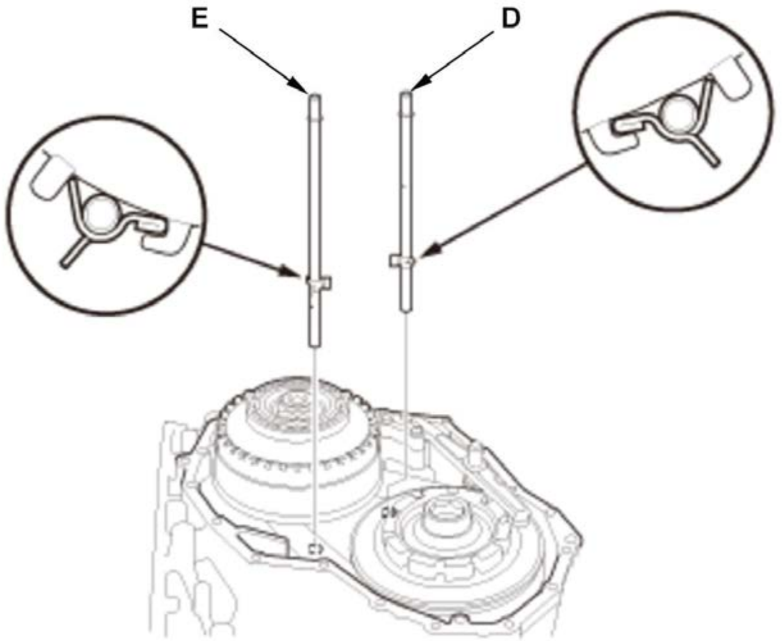	1. Install lubrication pipes D and E as shown.

54. 12 x 89 mm Pipe - Install
55. End Cover - Install

    NOTE: Tighten the end cover mounting bolts in a crisscross pattern in at least two steps.

56. Shift Solenoid Valve O/P - Install
57. Transmission Fluid Pump - Install

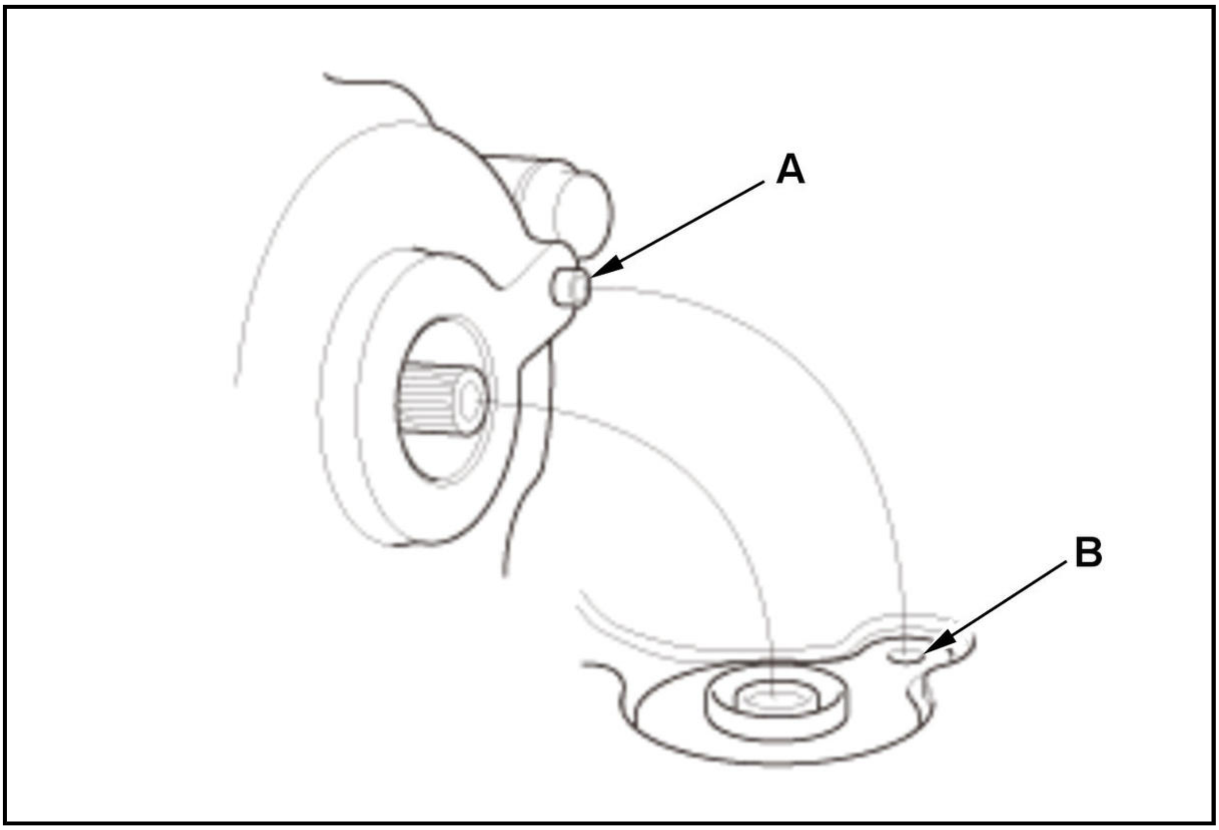

NOTE: Align the guide pin (A) of the transmission fluid pump with the guide hole (B) of the stator shaft flange.

58. Solenoid Wire Harness A - Install
59. 18 x 18 mm Pipe - Install
60. 14.3 x 36.2 mm Pipe - Install

NOTE: You can install the pipe regardless of its direction.

61. 10.9 x 18.5 mm Pipe - Install
62. Joint Pipe - Install

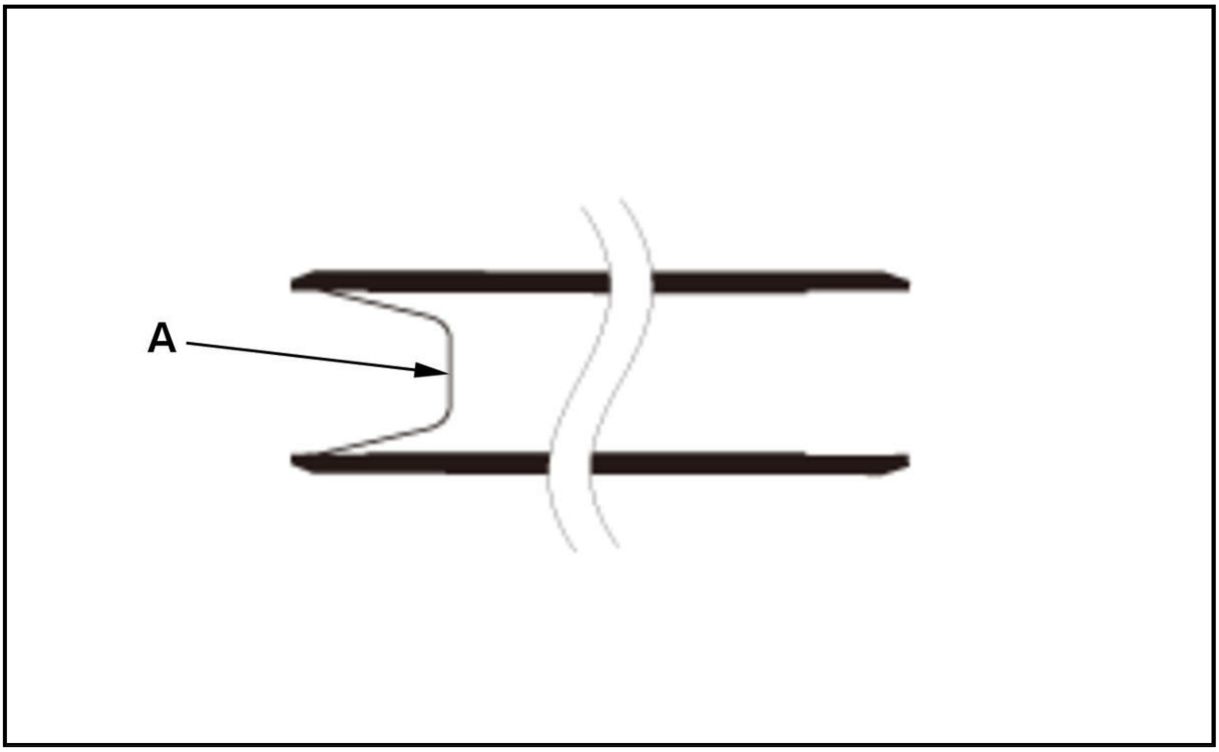

NOTE:

- The joint pipe has the filter (A). The filter end should face the valve body assembly side.
- Be careful not to drop the filter.

63. 12 x 56.7 mm Pipe - Install

NOTE: You can install the pipe regardless of its direction.

64. 8 x 133.5 mm Pipe - Install
65. 10.9 x 26 mm Pipe - Install
66. Valve Body Assembly - Install

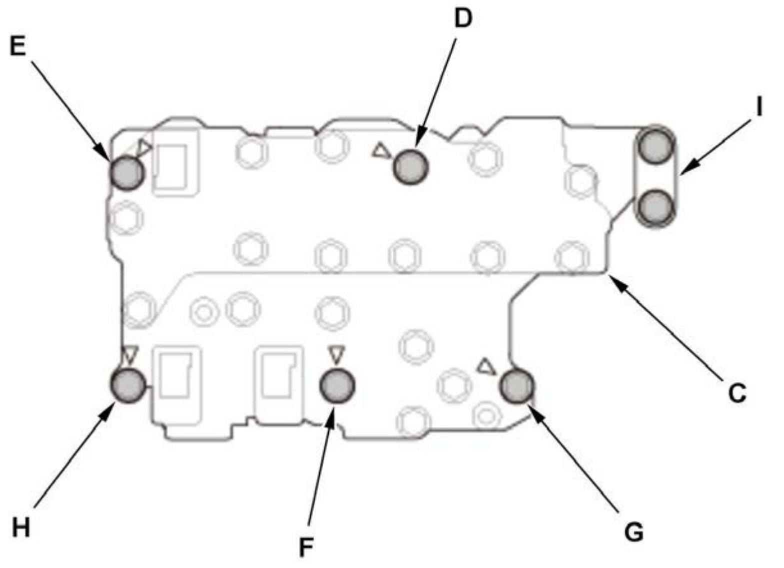

1. Install the valve body assembly (C) straightly.

NOTE:

Do not pinch solenoid wire harnesses A and B.

2. Install the guide plate (I).

Bolt	Length
D	90 mm (3.54 in)
E	80 mm (3.15 in)
F	65 mm (2.56 in)
G	55 mm (2.17 in)
H	40 mm (1.57 in)

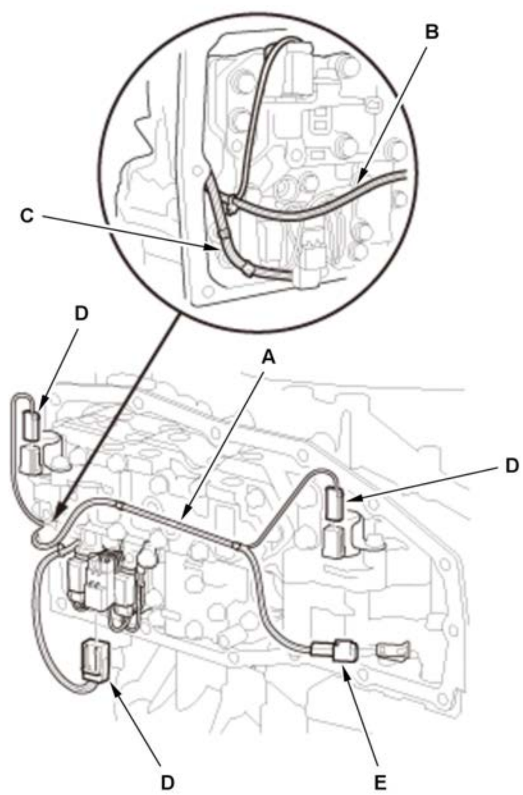	3. Make sure each branch of solenoid wire harness A is routed to the correction locations as shown, especially areas (B) and (C). 4. Connect the connectors (D). 5. Install the transmission fluid temperature sensor (E).

67. Transmission Fluid Strainer - Install

    NOTE: Do not pinch solenoid wire harnesses A and B.

68. Magnet - Install
69. Transmission Fluid Pan - Install

    NOTE:

    - Tighten the transmission fluid pan mounting bolts in a crisscross pattern in two steps.
    - Do not pinch solenoid wire harnesses A and B.

70. Drain Plug - Install
71. Check Bolt - Install
72. Sealing Bolt - Install
73. CVT Driven Pulley Pressure Sensor - Install
74. Torque Converter Turbine Speed Sensor - Install
75. CVT Drive Pulley Speed Sensor - Install
76. CVT Speed Sensor - Install
77. Transmission Range Switch - Install

    1. Turn the control lever (A) to the P position.

NOTE: **Do not use the control shaft (B) to adjust the shift position. If the control shaft tips are squeezed together, it will cause a faulty signal or position due to play between the control shaft and the transmission range switch.**

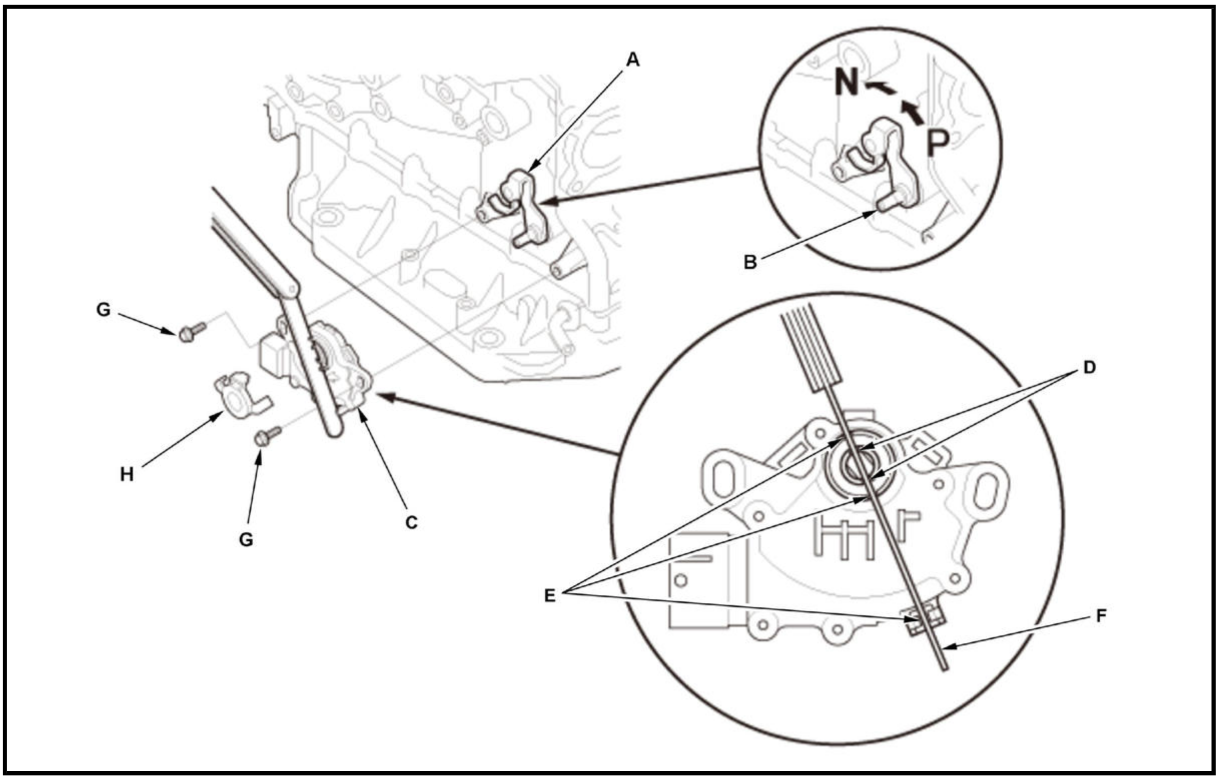

2. Turn the control lever back two clicks to the N position.

3. Set the transmission range switch (C) to the N position. Align the cutouts (D) on the rotary-frame with the N positioning cutouts (E) on the transmission range switch, then put a 2.0 mm (0.079 in) feeler gauge blade (F) in the cutouts to hold the transmission range switch in the N position.

NOTE: **Be sure to use a 2.0 mm (0.079 in) feeler gauge blade or equivalent to hold the transmission range switch in the N position.**

4. Loosely install the transmission range switch gently on the control shaft while holding it in the N position with the 2.0 mm (0.079 in) feeler gauge blade.

5. Tighten the bolts (G) on the transmission range switch while you continue holding the N position.

NOTE: **Do not move the transmission range switch when tightening the bolts.**

6. Remove the feeler gauge.

7. Install the control shaft cover (H).

78. TCM - Install (1.5 L engine)
79. Left Differential Oil Seal - Install

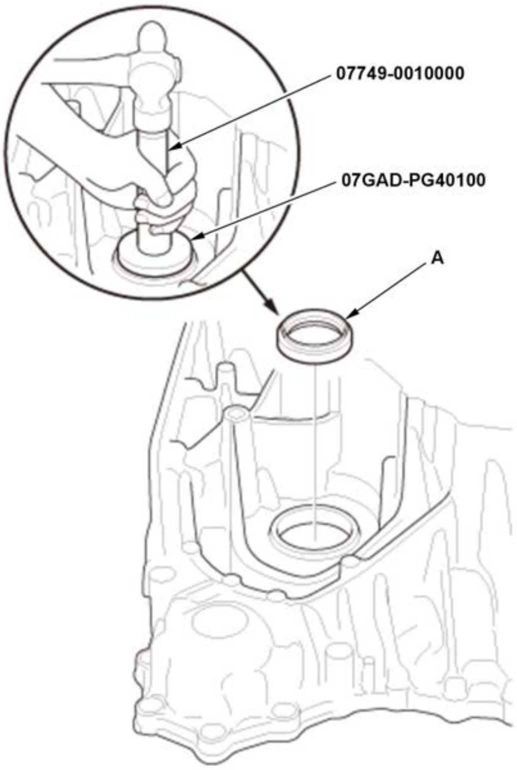	1. Install the left differential oil seal (A) flush with the transmission housing using the 15 x 135L driver handle and the oil seal driver attachment. **NOTE:** **Before installation, apply a light coat of clean transmission fluid to the surface both of the press-fit and the lip that are on the oil seal.**

80. Breather Cap - Install

    NOTE: Be sure to install the suction hole of the breather cap to the torque converter side.

81. Filler Cap B - Install

    NOTE: Turn the lever toward the front of the vehicle, and install it.

82. Filler Cap A - Install

    NOTE: Turn the lever toward the front of the vehicle, and install it.

83. Transmission Hanger - Install
84. 10.9 x 31.5 mm Pipe - Install (With Auto Idle Stop System)
85. Delivery Pipe - Install (With Auto Idle Stop System)
86. Auxiliary Transmission Fluid Pump - Install (With Auto Idle Stop System)

FINAL DRIVE SHAFT DISASSEMBLY AND REASSEMBLY

Special Tools Required

Image	Description/Tool Number
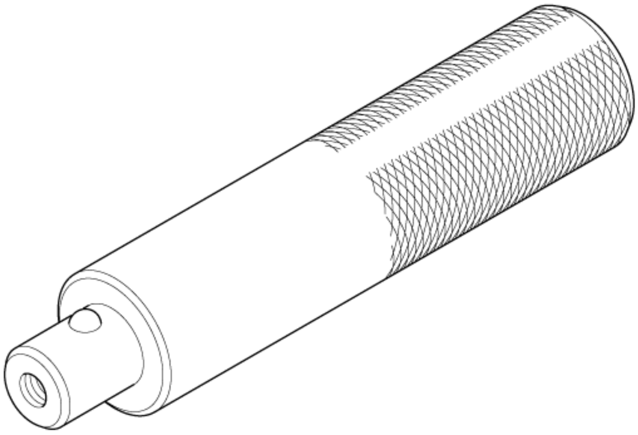	Driver Handle, 15 x 135L 07749-0010000

Image	Description/Tool Number
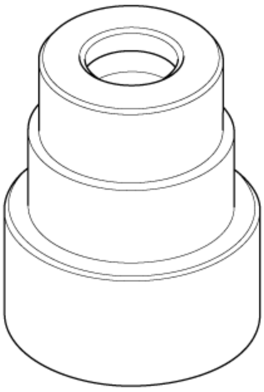	Attachment, 40 mm 07947-6340300
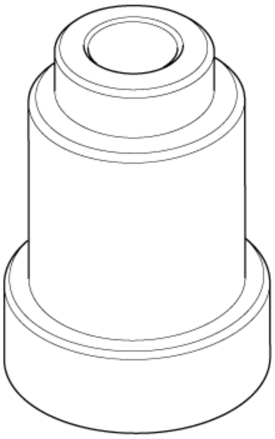	Attachment, 45 mm 07947-6890300
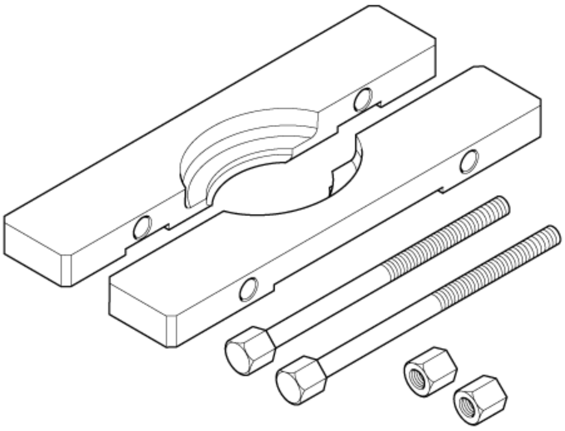	Bearing Separator 07KAF-PS30200

Disassembly

NOTE:

- ℹ Where icon is shown, further information shown below.
- The bearing and the bearing outer race should be replaced as a set.

1

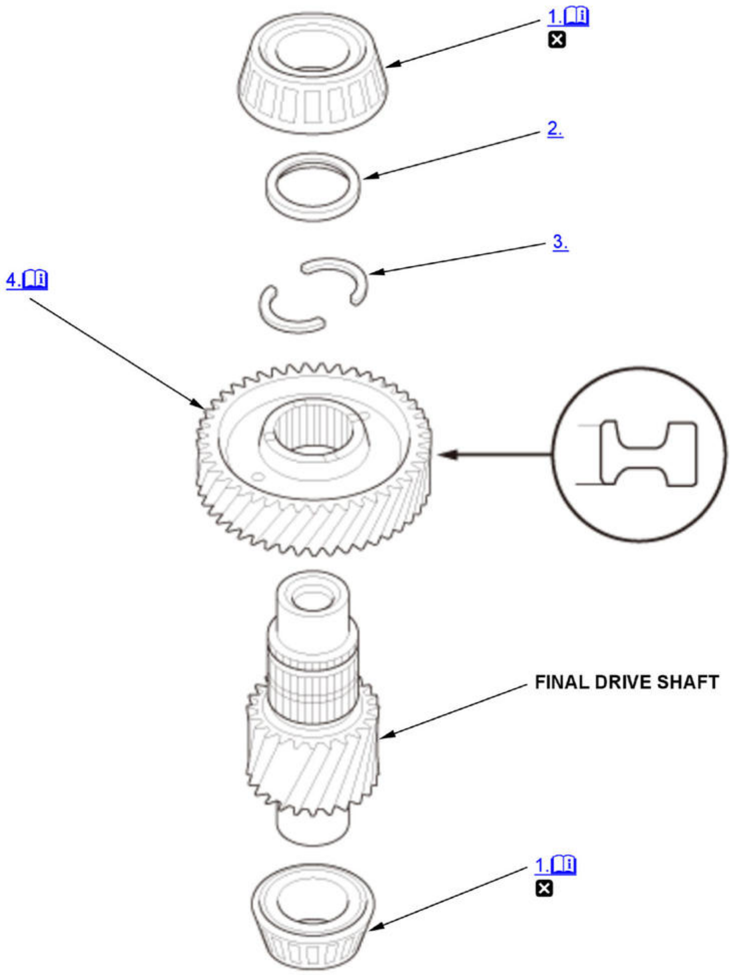
1.
2.
3.
4.
FINAL DRIVE SHAFT
1.

📖	Detailed information, notes and precautions
☒	Replace

1. Final Drive Shaft Tapered Roller Bearing - Remove

B **Transmission Housing Side** 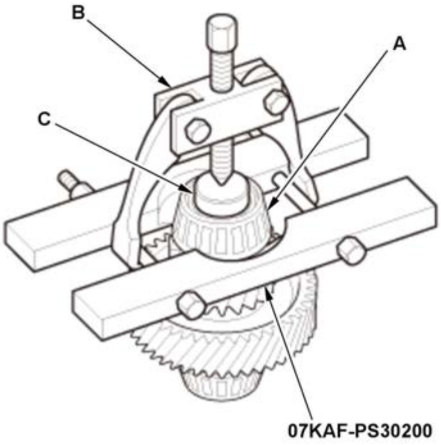 B C A 07KAF-PS30200 **Torque Converter Housing Side**	1. Remove the final drive shaft tapered roller bearings (A) using the bearing separator, a commercially available bearing puller (B), and a commercially available spacer (C).

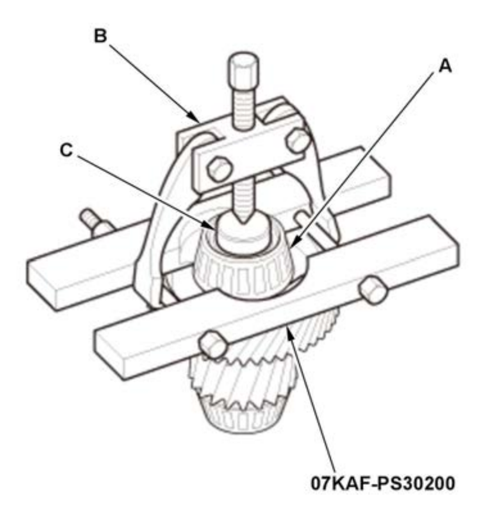	

2. Cotter Retainer - Remove
3. 38 mm Cotter - Remove
4. Secondary Driven Gear - Remove

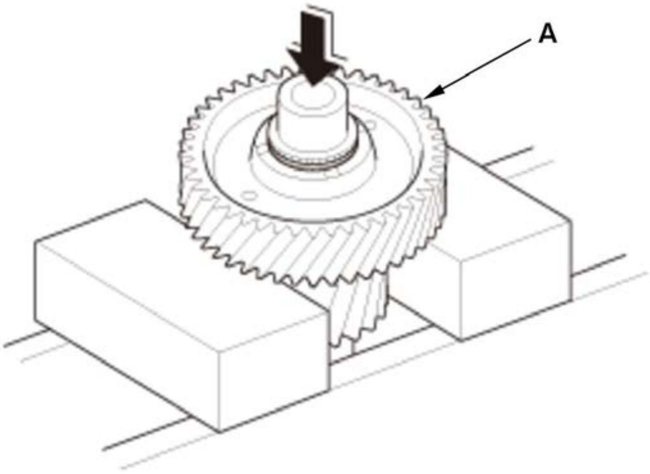	1. Remove the secondary driven gear (A) using a press.

Reassembly

NOTE:

- Where icon is shown, further information shown below.
- The bearing and the bearing outer race should be replaced as a set.
- Adjust the final drive shaft tapered roller bearing preload whenever the bearing is replaced.
- Apply a light coat of clean transmission fluid on all parts before installation.

1

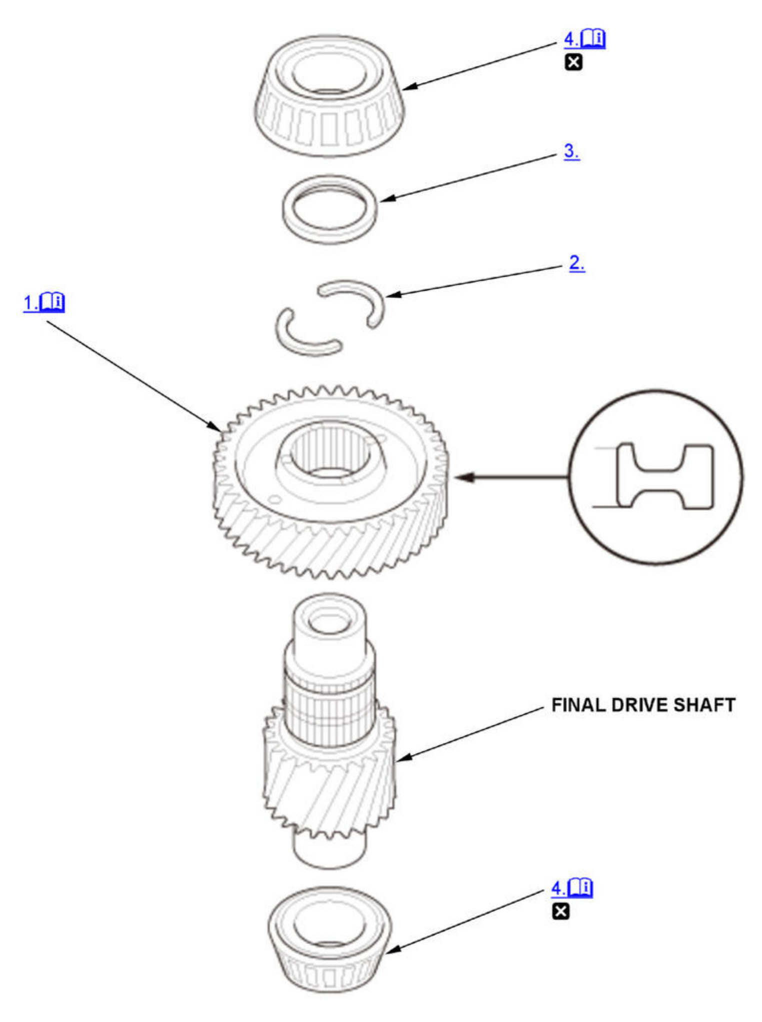

ℹ	Detailed information, notes and precautions
☒	Replace

1. Secondary Driven Gear - Install

NOTE: **Make sure to assemble the final drive shaft and the final driven gear correctly (Combination A or B) as shown in the chart if either one of them or both are to be replaced. Correct combinations of the shaft and gear can be identified by the presence or the absence of the groove as shown in the chart.**

	Final Drive Shaft	Final Driven Gear
Combination A (With Groove)	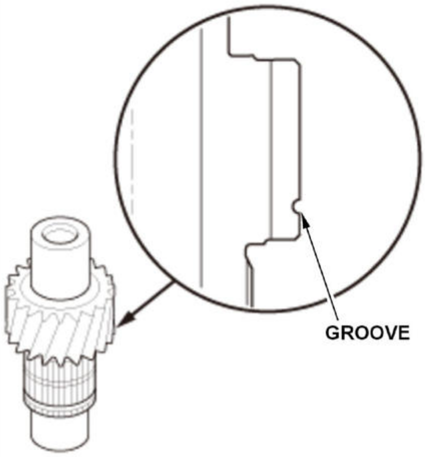	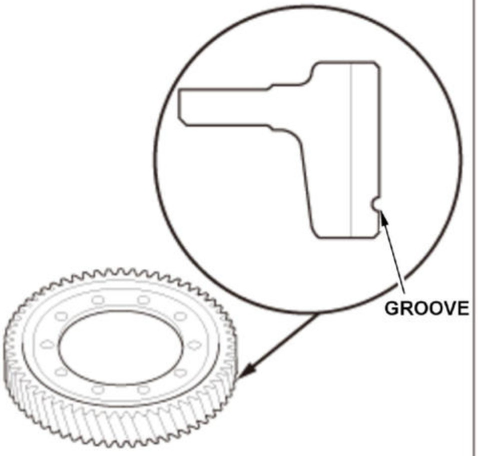
Combination B (Without Groove)	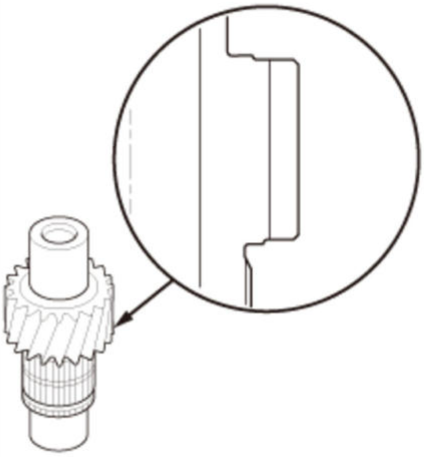	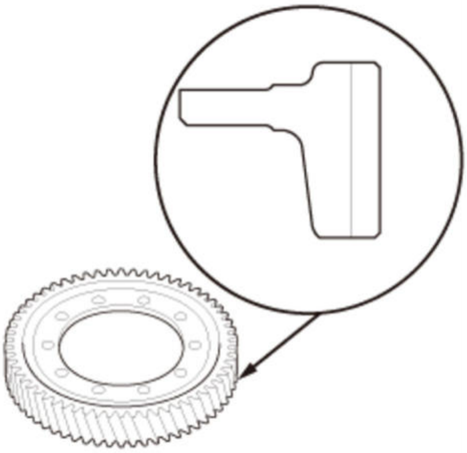

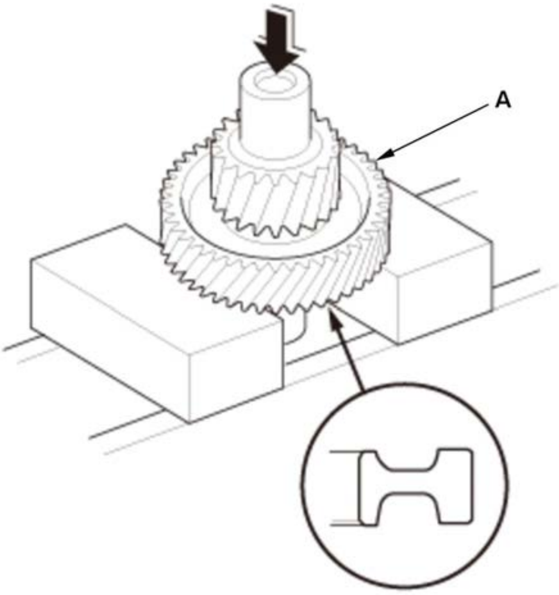	1. Install the secondary driven gear (A) until it bottoms in the direction shown using a press.

2. 38 mm Cotter - Install
3. Cotter Retainer - Install
4. Final Drive Shaft Tapered Roller Bearing - Install

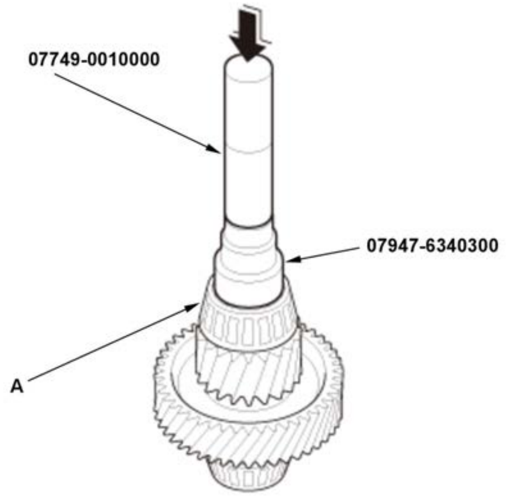 07749-0010000 07947-6340300 A	**Transmission Housing Side** 1. Install the final drive shaft tapered roller bearing (A) until it bottoms using the 15 x 135L driver handle, the 40 mm attachment, and a press.
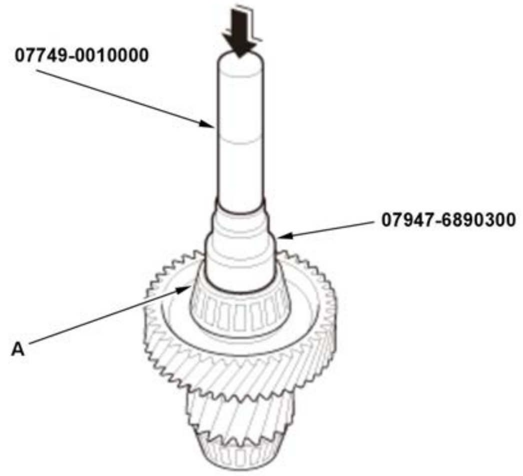 07749-0010000 07947-6890300 A	**Torque Converter Housing Side** 2. Install the final drive shaft tapered roller bearing (A) until it bottoms using the 15 x 135L driver handle, the 45 mm attachment, and a press.

SHIFT LEVER DISASSEMBLY AND REASSEMBLY

Disassembly and Reassembly

NOTE: Where icon is shown, further information shown below.

1

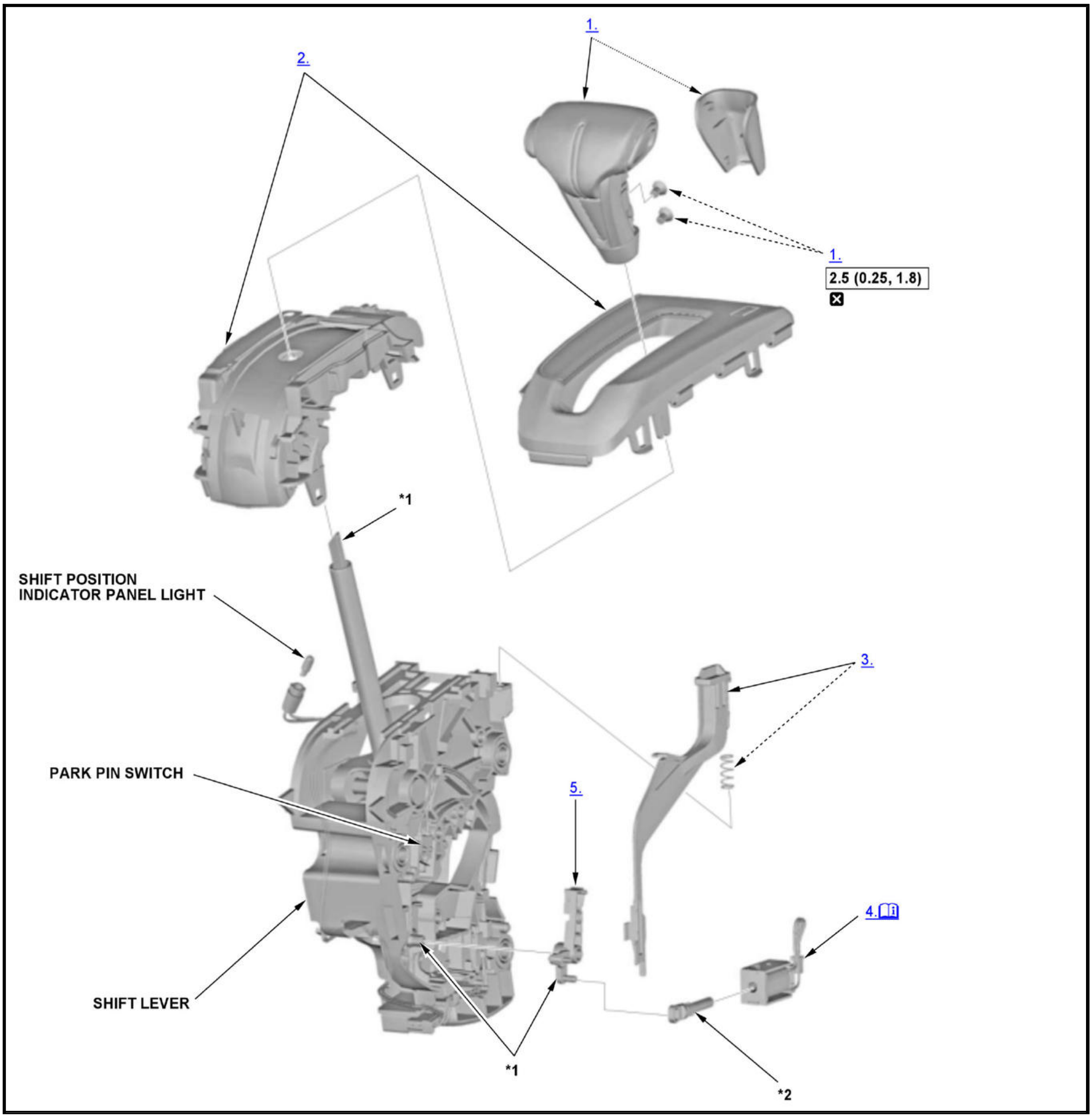
1.
2.
1.
2.5 (0.25, 1.8)
☒
*1
SHIFT POSITION INDICATOR PANEL LIGHT
3.
PARK PIN SWITCH
5.
4.
SHIFT LEVER
*1
*2

i	Detailed information, notes and precautions
☐	Torque: N.m (kgf.m, lbf.ft)
☒	Replace
*1	Do not wipe off special grease applied in advance.
*2	Component of shift lock solenoid

1. Shift Lever Knob - Remove
2. Shift Position Indicator Panel Assembly - Remove
3. Shift Lock Release - Remove
4. Shift Lock Solenoid - Remove

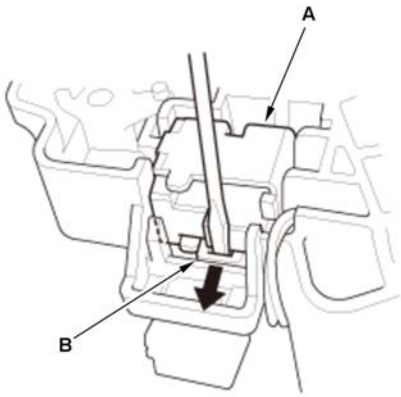	**NOTE:** Do not wipe off the special grease applied to the area of the shift lever marked with an asterisk (*) when you disassemble or assemble it. 1. Pull the shift lock solenoid (A) out by releasing the lock tab (B) using a screwdriver. 2. Remove the shift lock solenoid.

5. Shift Lock Stop/Shift Lock Stop Cushion - Remove
6. All Removed Parts - Install

1. Install the parts in the reverse order of removal.

TRANSFER ASSEMBLY DISASSEMBLY AND REASSEMBLY

Special Tools Required

Image	Description/Tool Number
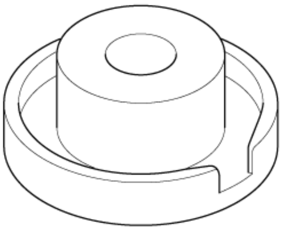	Oil Seal Driver Attachment, 58 mm 07JAD-PH80101
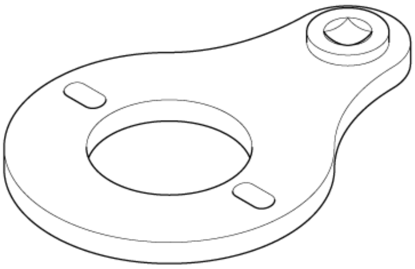	Holder, Companion 07PAB-0020000

Image	Description/Tool Number
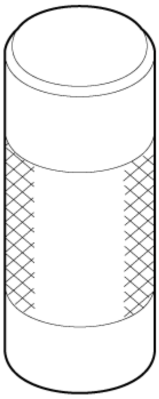	Driver, 32.5 mm 070AD-SAA0100
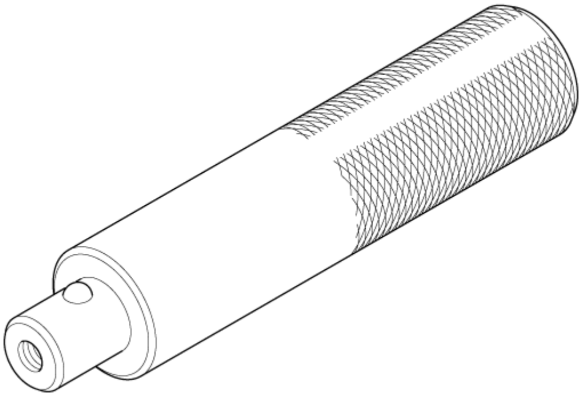	Driver Handle, 15 x 135L 07749-0010000

Disassembly

NOTE:

- ℹ Where icon is shown, further information shown below.
- Refer to the Exploded View as needed during the following procedure.

1

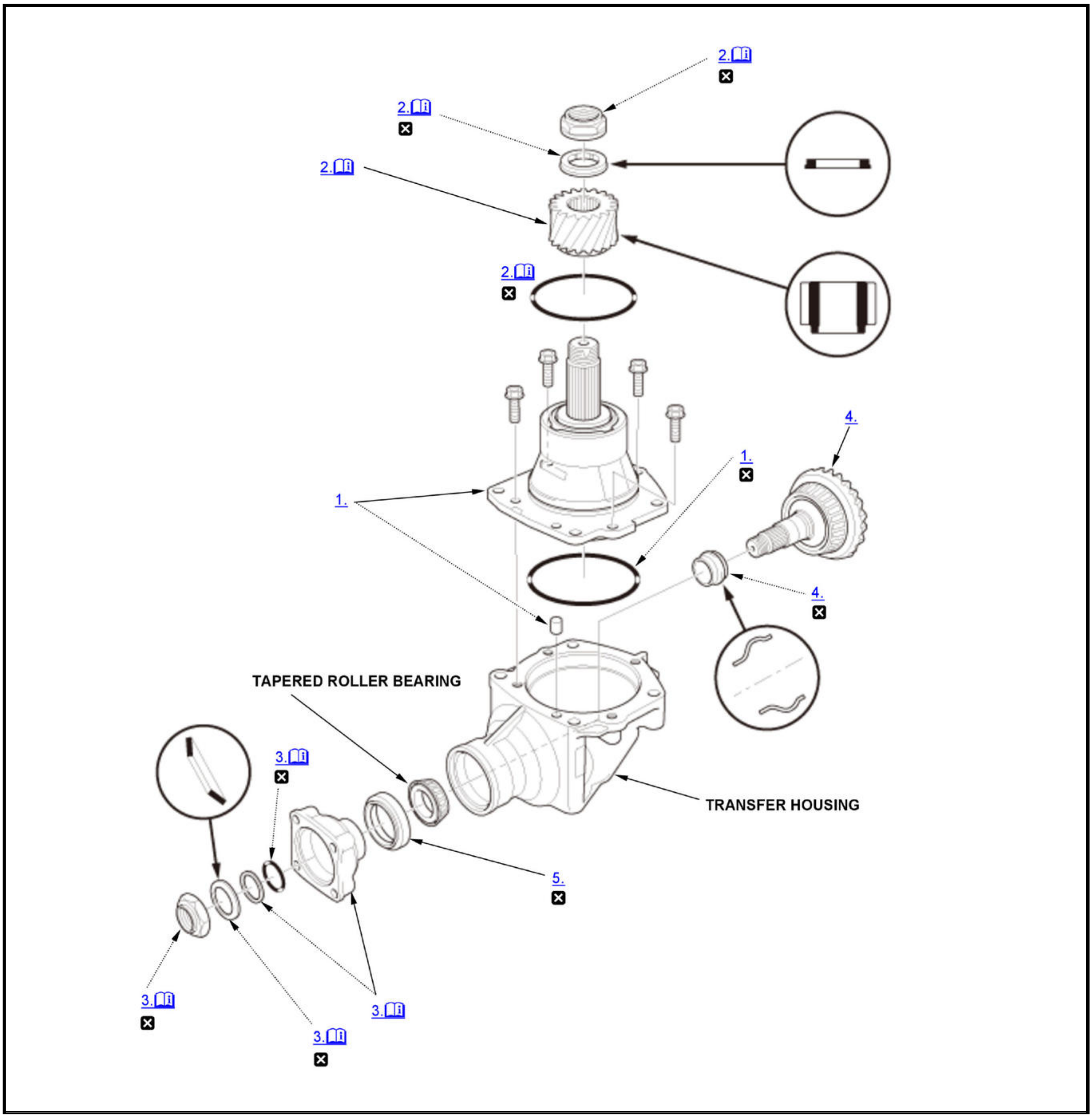
2. 📖 ☒
2. 📖 ☒
2. 📖
2. 📖 ☒
4.
1. ☒
1.
4. ☒
TAPERED ROLLER BEARING
3. 📖 ☒
TRANSFER HOUSING
5. ☒
3. 📖 ☒
3. 📖
3. 📖 ☒

📖	Detailed information, notes and precautions
☒	Replace

1. Transfer Hypoid Drive Gear/Shaft Assembly - Remove
2. Transfer Driven Gear - Remove

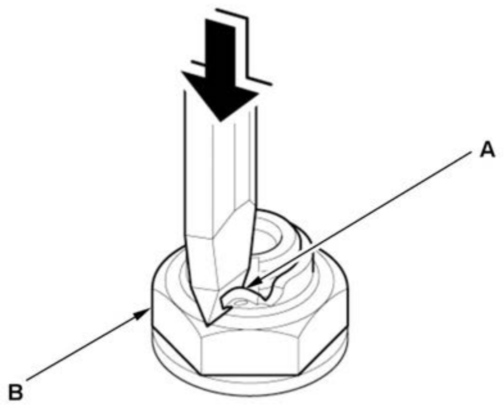

1. Cut the lock tab (A) on the locknut (B) of the transfer output shaft using a chisel.

NOTE:

- **Be careful not to damage the shaft.**
- **Make sure the tab completely clears the groove to prevent damaging the shaft.**

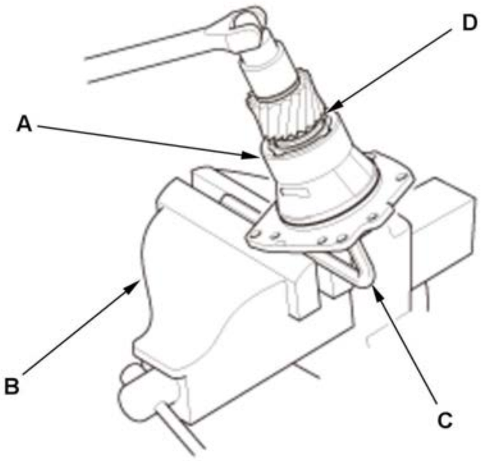

2. Secure the transfer hypoid drive gear/shaft assembly (A) in a bench vise (B) with hex wrench (C).

3. Remove the locknut (D).

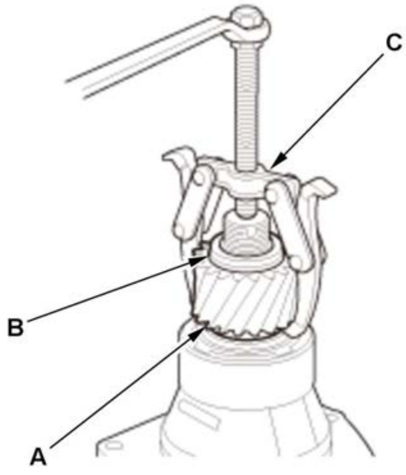

4. Remove the transfer driven gear (A) and the thrust washer (B) using a puller (C).

3. Companion Flange - Remove

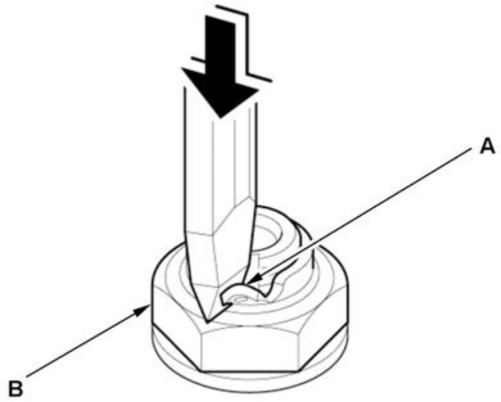	1. Cut the lock tab (A) on the locknut (B) of the transfer output shaft using a chisel. **NOTE:** - **Be careful not to damage the shaft.** - **Make sure the tab completely clears the groove to prevent damaging the shaft.**

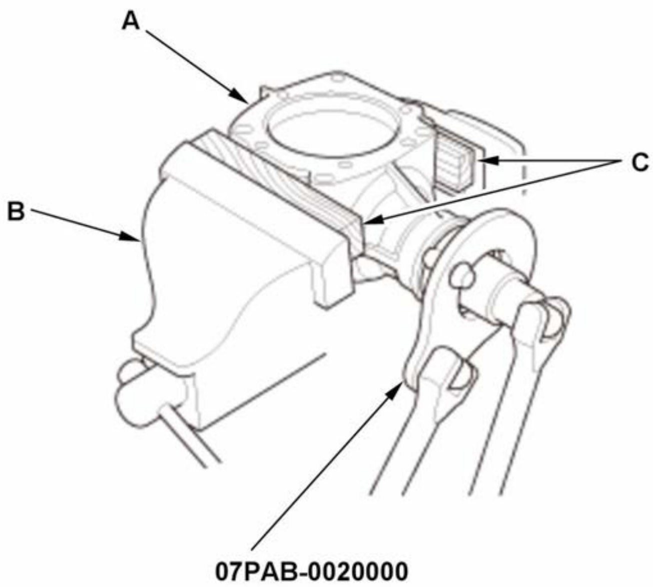	2. Secure the transfer housing (A) in a bench vise (B). **NOTE:** **To prevent damaging the transfer housing, always use wood blocks or equivalent materials (C) between the transfer housing and the bench vise.** 3. Install the companion holder, then loosen the locknut. 4. Remove the companion holder.

4. Transfer Hypoid Driven Gear - Remove
5. Transfer Oil Seal - Remove

Reassembly

NOTE:

- ℹ Where icon is shown, further information shown below.
- Apply a light coat of clean transmission fluid on all moving parts before reassembly.
- Refer to the Exploded View as needed during the following procedure.

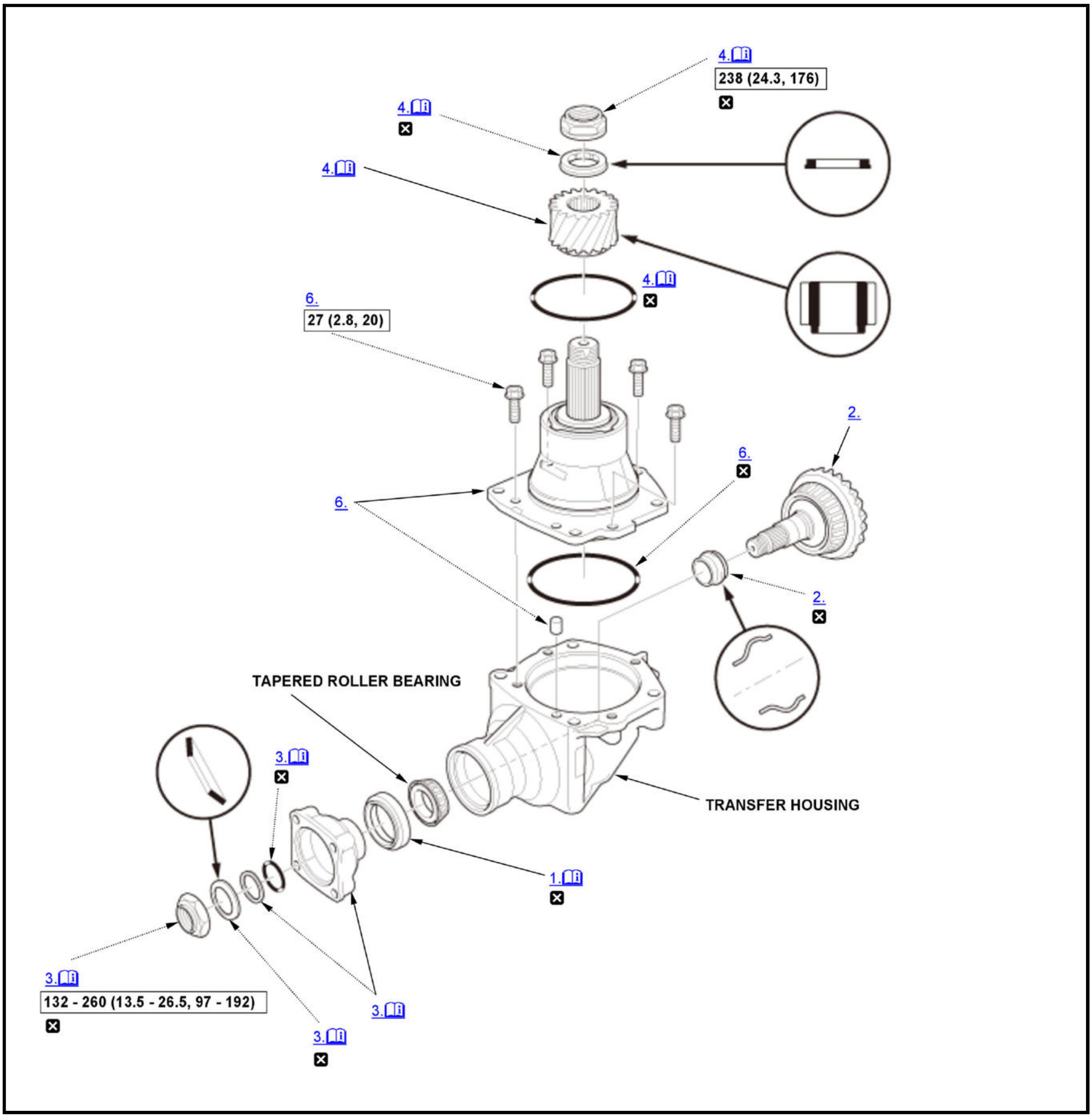
4.
238 (24.3, 176)
4.
4.
4.
6.
27 (2.8, 20)
2.
6.
6.
2.
TAPERED ROLLER BEARING
TRANSFER HOUSING
3.
1.
3.
132 - 260 (13.5 - 26.5, 97 - 192)
3.
3.

🕮	Detailed information, notes and precautions
▭	Torque: N.m (kgf.m, lbf.ft)
☒	Replace

1. Transfer Oil Seal - Install

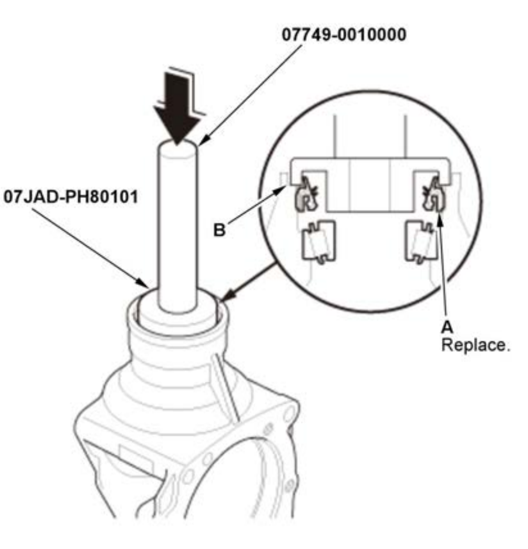	1. Install a new transfer oil seal (A) flush with the transfer housing surface (B) using the 15 x 135L driver handle and the 58 mm oil seal driver attachment. **NOTE:** **Apply a light coat of clean transmission fluid on oil seal before installation.**

2. Transfer Hypoid Driven Gear - Install

3. Companion Flange - Install

1. Secure the transfer housing (A) in a bench vise (B).

NOTE: **To prevent damaging the transfer housing, always use wood blocks or equivalent materials (C) between the transfer housing and the bench vise.**

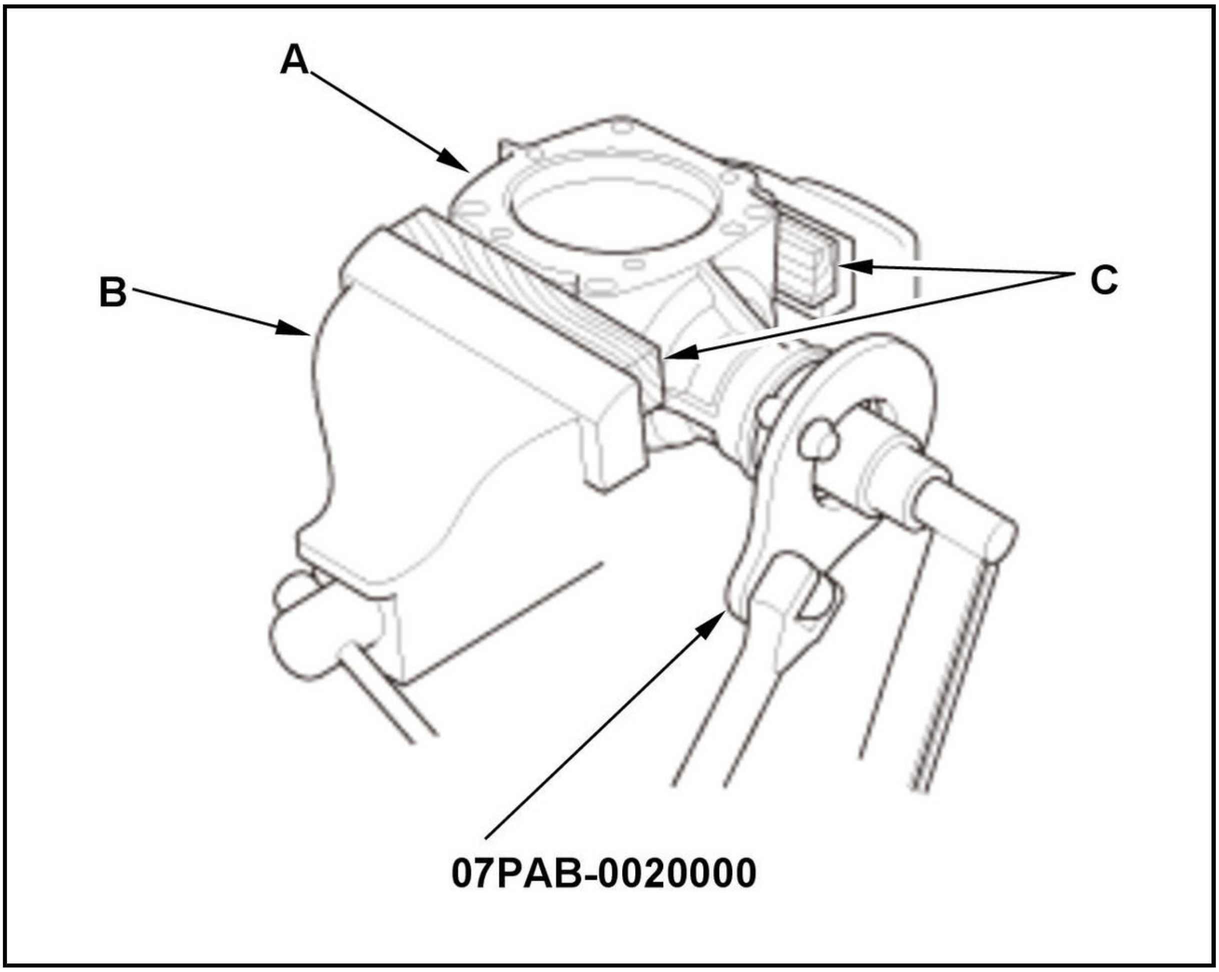

2. Install the companion holder.

3. Tighten the locknut while measuring the starting torque of the transfer output shaft (hypoid gear) so the starting torque is within 0.98-1.39 N.m (10.0-14.2 kgf.cm, 8.7-12.3 Ibf.in). Tighten the locknut to the

lower torque specification, then check the starting torque. If the starting torque is low, increase the torque on the locknut until the starting torque is acceptable.

Tightening Torque:	
B	**132-260 N.m (13.5-26.5 kgf.m, 97-192 Ibf.ft)**
Starting Torque:	
B	**0.98-1.39 N.m (10.0-14.2 kgf.cm, 8.7-12.3 Ibf.in)**

NOTE:

- Rotate the companion flange several times to seat the tapered roller bearings, then measure the starting torque.
- If the starting torque exceeds 1.39 N.m (14.2 kgf.cm, 12.3 Ibf.in), replace the transfer spacer and reassemble the parts. Do not adjust the torque with the locknut loose.
- If the tightening torque exceeds 260 N.m (26.5 kgf.m, 192 Ibf.ft), replace the transfer spacer and reassemble the parts.

4. Remove the companion holder.

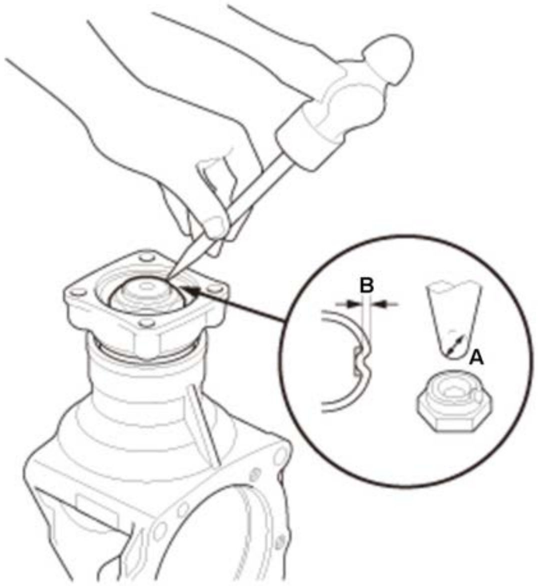	5. Stake the locknut to a depth (A) of at least 0.7 mm (0.028 in) using a 3.0 - 3.5 mm (0.118 - 0.138 in) punch (B). **NOTE:** **Be careful not to crack the locknut when staking.**

4. Transfer Driven Gear - Install

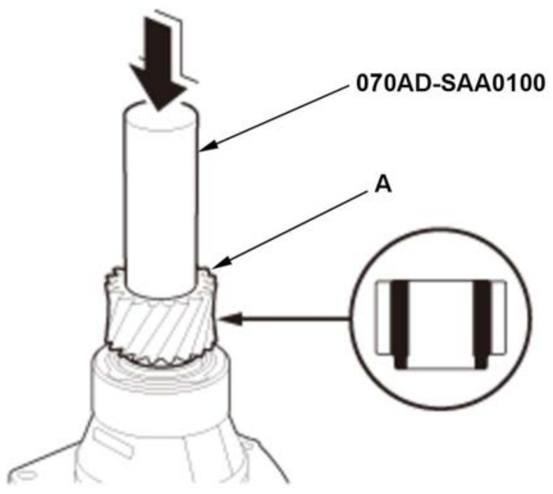	1. Install the transfer driven gear (A) using the 32.5 mm driver attachment. **NOTE:** **Install the transfer driven gear in the direction shown.**

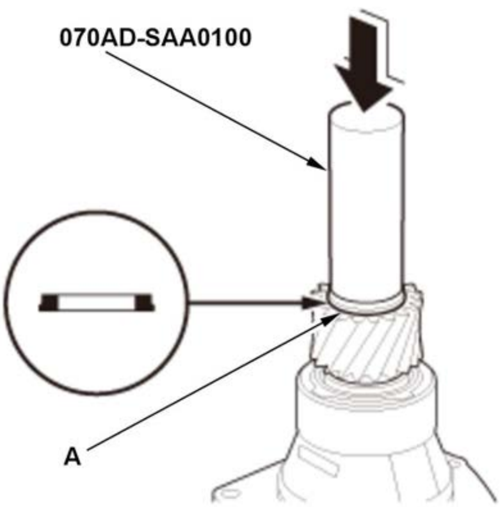

2. Install a new thrust washer (A) using the 32.5 mm driver attachment.

NOTE:

Install the thrust washer in the direction shown.

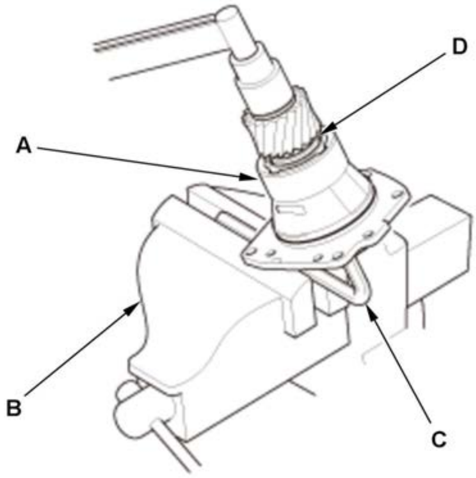

3. Secure the transfer hypoid drive gear/shaft assembly (A) in a bench vise (B) with hex wrench (C).

4. Install a new locknut (D).

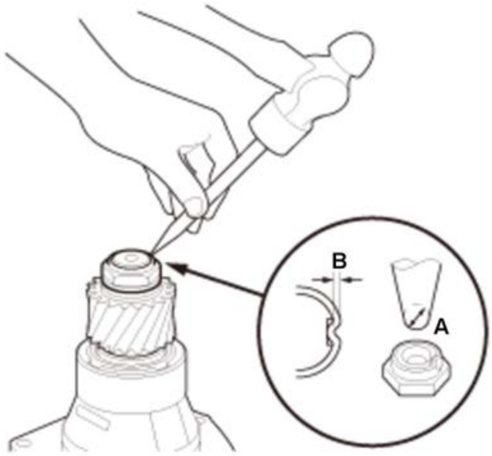

5. Stake the locknut to a depth (A) of at least 0.7 mm (0.028 in) using a 3.0 - 3.5 mm (0.118 - 0.138 in) (B).

NOTE:

Be careful not to crack the locknut when staking.

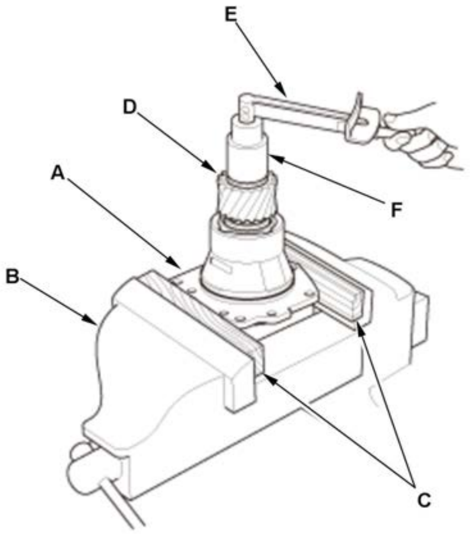 	6. Secure the transfer hypoid drive gear/shaft assembly (A) in a bench vise (B). **NOTE:** **To prevent damaging the transfer hypoid drive gear/shaft assembly, always use wood blocks or equivalent materials (C) between the transfer hypoid drive gear/shaft assembly and the bench vise.** 7. Rotate the transfer driven gear (D) in both directions to seat the bearings. 8. Measure the starting torque of the transfer hypoid drive gear/shaft assembly using the torque wrench (E), and a socket (F). 9. If the starting torque is out of the standard, replace the transfer assembly .

Starting Torque:
1.63-5.23 N.m (16.6-53.4 kgf.cm, 14.4-46.3 Ibf.in)

5. Transfer Hypoid Drive Gear - Tooth Contact Pattern Check
6. Transfer Hypoid Drive Gear/Shaft Assembly - Install
7. Transfer Assembly - Total Starting Torque Check
8. Transfer Assembly - Transfer Gear Backlash Check

REMOVAL AND INSTALLATION

CVT DRIVEN PULLEY PRESSURE SENSOR REMOVAL AND INSTALLATION

Removal and Installation

NOTE:

- Be careful not to damage the plastic part.
- Keep all foreign particles out of the transmission.
- Unless otherwise indicated, illustrations used in the procedure are for 1.5 L engine.

1

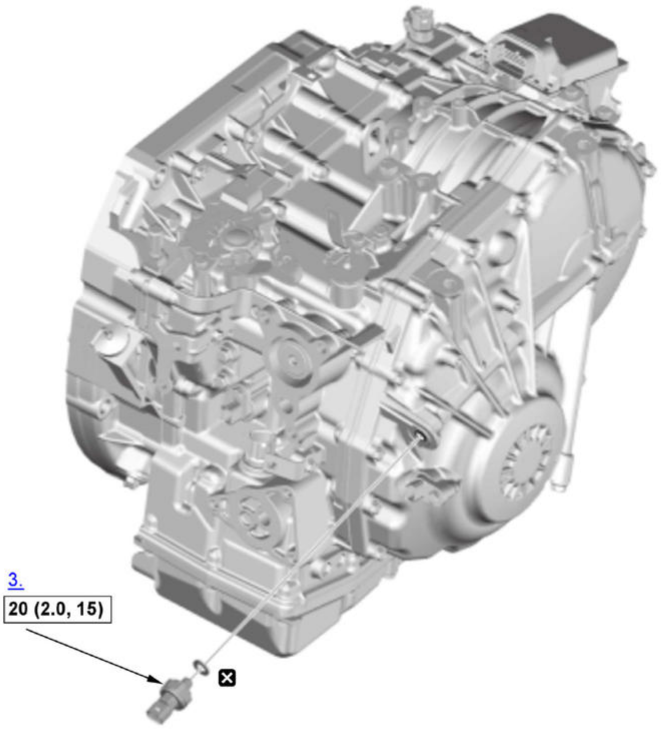

☐	Torque: N.m (kgf.m, lbf.ft)
☒	Replace

1. 12 Volt Battery Terminals - Disconnect (2.4 L engine)

   NOTE: **Make sure to reset the learned value of CVT system when replacing hydraulically-controlled parts in order not to cause any damage the transmission. The learned value of the CVT system is reset when the negative battery terminal is disconnected.**

2. Air Cleaner - Remove
3. CVT Driven Pulley Pressure Sensor - Remove
4. All Removed Parts - Install

   1. Install the parts in the reverse order of removal.

   NOTE:

   - **Be sure to use a new sealing washer.**
   - **Check the connector for corrosion, dirt, or oil,**

and clean or repair if necessary.

5. TCM - Reset (1.5 L engine)

   NOTE:

   - This procedure is not required, only for replacing CVT driven pulley pressure sensor.
   - This procedure is not required, if the CVT driven pulley pressure sensor and the TCM are replaced simultaneously.

CVT SPEED SENSOR REMOVAL AND INSTALLATION

Removal and Installation

NOTE:

- Keep all foreign particles out of the transmission.
- Unless otherwise indicated, illustrations used in the procedure are for 1.5 L engine.

1

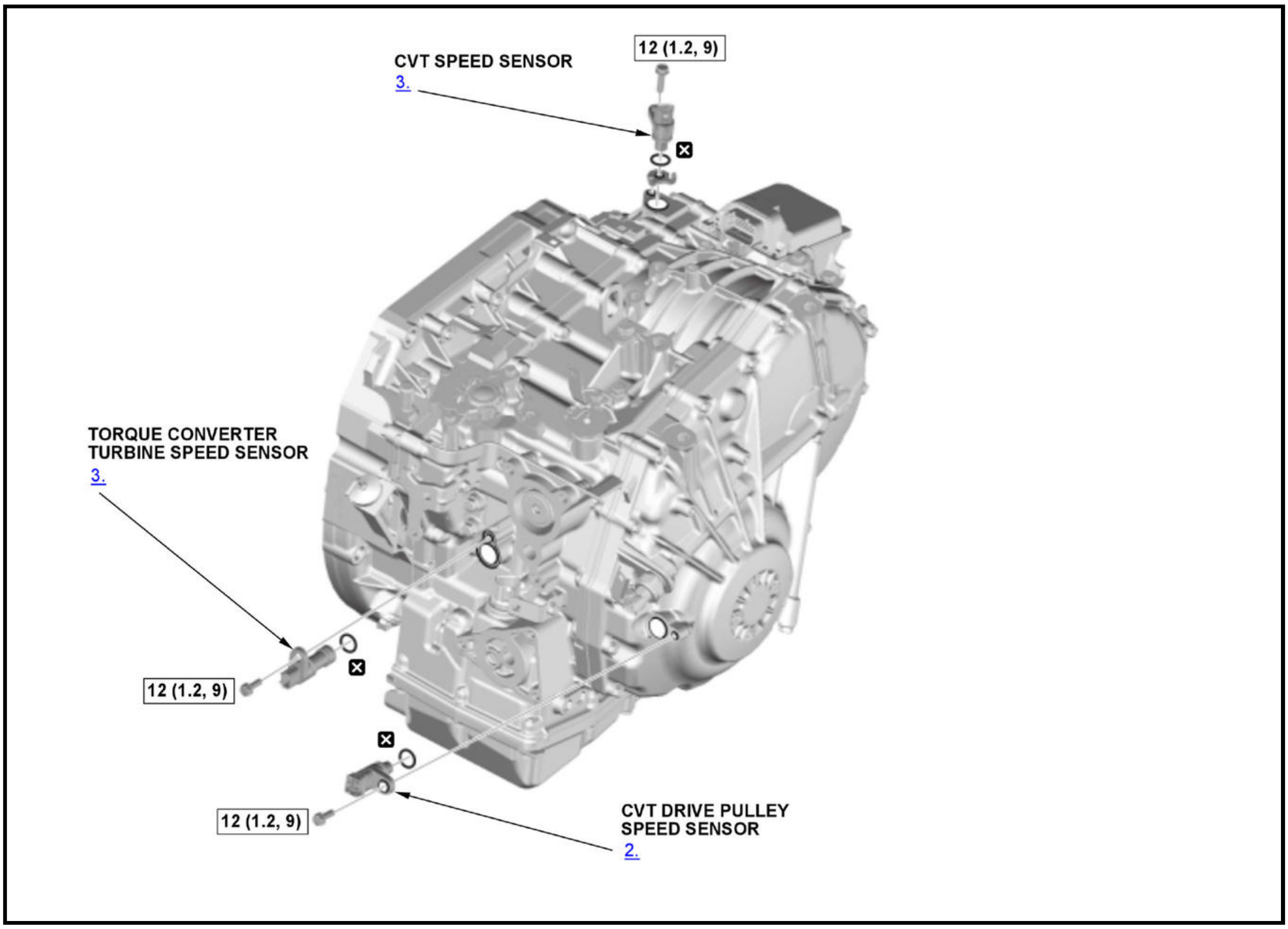
CVT SPEED SENSOR
3.
12 (1.2, 9)
TORQUE CONVERTER TURBINE SPEED SENSOR
3.
12 (1.2, 9)
12 (1.2, 9)
CVT DRIVE PULLEY SPEED SENSOR
2.

▭	Torque: N.m (kgf.m, lbf.ft)
☒	Replace

CVT Speed Sensor

1. 12 Volt Battery - Remove

2. **Throttle Body Duct - Remove**
3. CVT Speed Sensor - Remove
4. All Removed Parts - Install

1. Install the parts in the reverse order of removal.

NOTE:

- **Be sure to use a new O-ring which should be applied a light coat of clean transmission fluid before installation.**
- **Check the connector for corrosion, dirt, or oil, and clean or repair if necessary.**

CVT Drive Pulley Speed Sensor

5. **Air Cleaner - Remove**
6. CVT Drive Pulley Speed Sensor -Remove
7. All Removed Parts - Install

1. Install the parts in the reverse order of removal.

NOTE:

- **Be sure to use a new O-ring which should be applied a light coat of clean transmission fluid before installation.**
- **Check the connector for corrosion, dirt, or oil, and clean or repair if necessary.**

Torque Converter Turbine Speed Sensor

8. Vehicle - Lift
9. Front Engine Undercover Lid - Remove
10. Torque Converter Turbine Speed Sensor - Remove
11. All Removed Parts - Install

1. Install the parts in the reverse order of removal.

NOTE:

- **Be sure to use a new O-ring which should be applied a light coat of clean transmission fluid before installation.**
- **Check the connector for corrosion, dirt, or oil, and clean or repair if necessary.**

CVT TRANSMISSION REMOVAL AND INSTALLATION (1.5 L ENGINE)

*: Available from Snap-on Tools International, LLC.

Special Tools Required

Image	Description/Tool Number
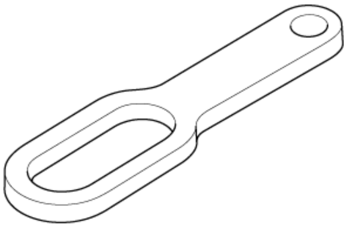	Universal Lifting Eyelet 07AAK-SNAA120

Image	Description/Tool Number
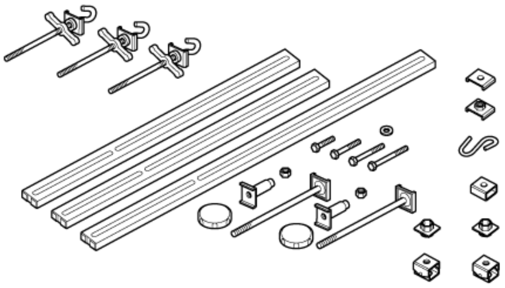	Engine Support Hanger, A and Reds AAR-T1256*
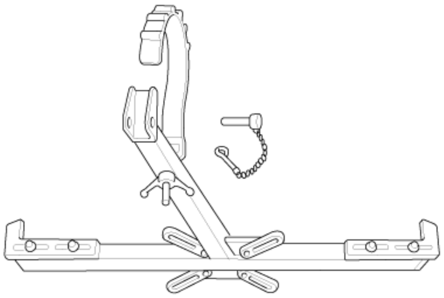	Subframe Adapter VSB02C000016*

*: Available from Snap-on Tools International, LLC.

Exploded View

1. Transmission Assembly Mounting Bolt

Transmission Assembly Mounting Bolt - Exploded View

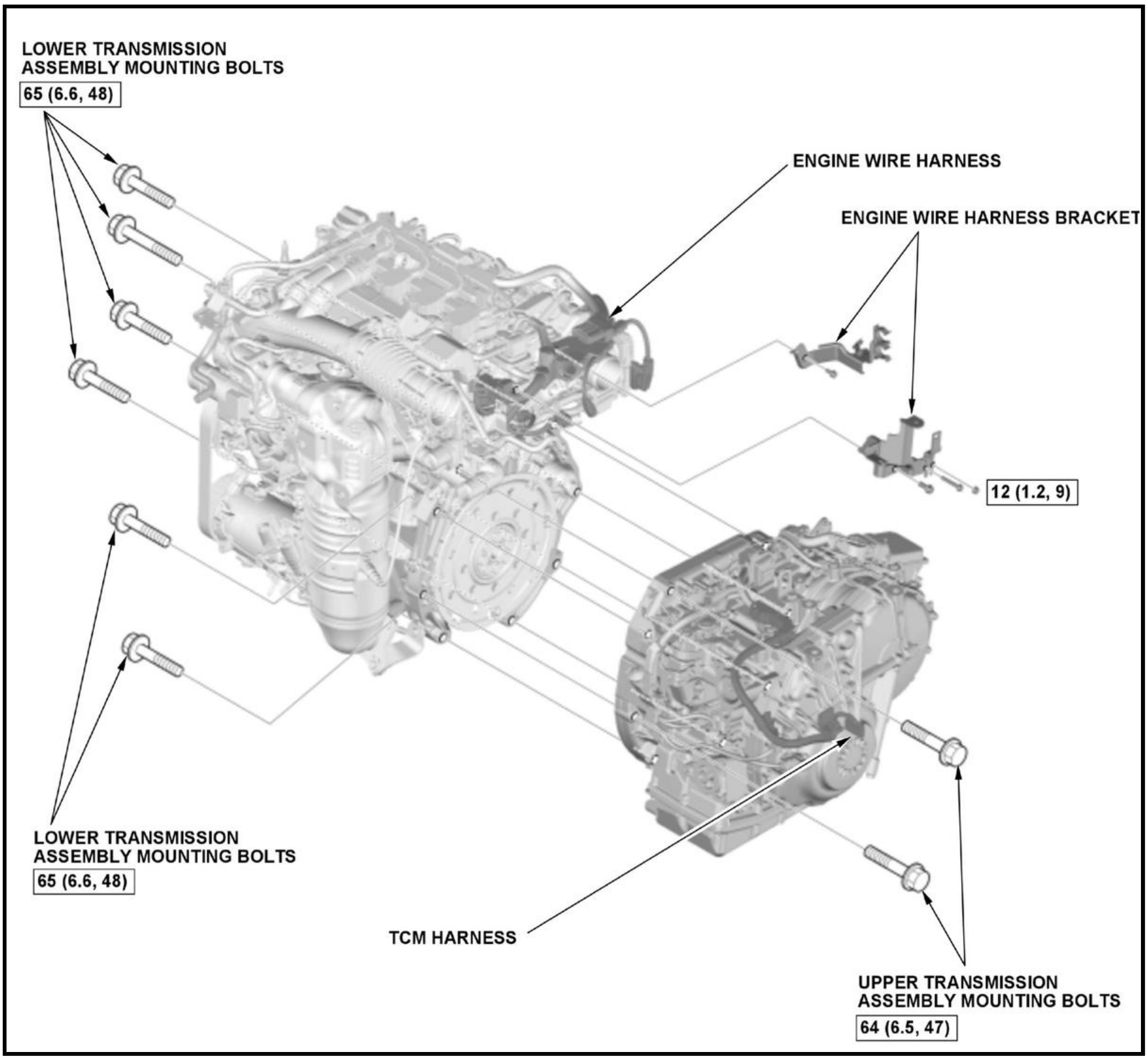
LOWER TRANSMISSION ASSEMBLY MOUNTING BOLTS
65 (6.6, 48)
ENGINE WIRE HARNESS
ENGINE WIRE HARNESS BRACKET
12 (1.2, 9)
LOWER TRANSMISSION ASSEMBLY MOUNTING BOLTS
65 (6.6, 48)
TCM HARNESS
UPPER TRANSMISSION ASSEMBLY MOUNTING BOLTS
64 (6.5, 47)

▭	Torque: N.m (kgf.m, lbf.ft)

Removal

NOTE:

- How to read the torque specifications .
- Use fender covers to avoid damaging painted surfaces.
- Keep all foreign particles out of the transmission.
- Engine support hanger AAR-T1256-J00 must be used with the side engine mount installed.

1. Vehicle - Lift Set
2. Engine Undercover - Remove
3. Transmission Fluid - Drain
4. Vehicle - Lift Down
5. Hood - Wide Open
6. Steering Joint - Disconnect

   NOTE: **Hold the steering wheel with a steering wheel holder tool.**

7. Front Wheel - Remove (Both Sides)
8. Front Bulkhead Cover - Remove

9. Air Cleaner - Remove
10. 12 Volt Battery - Remove
11. 12 Volt Battery Base - Remove

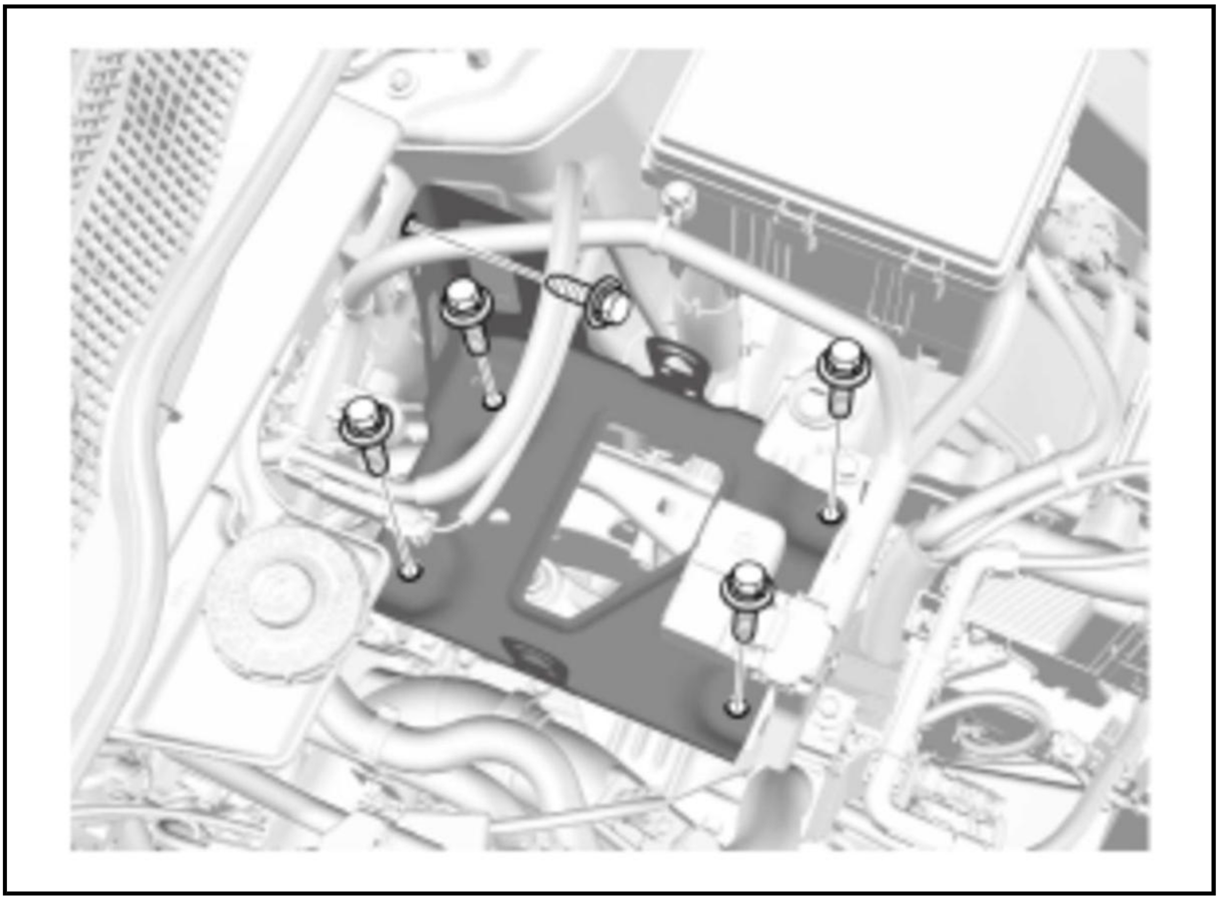

12. 12 Volt Battery Base Bracket - Remove
13. Throttle Body Inlet Pipe - Remove
14. Throttle Body Duct - Remove
15. Shift Cable (Transmission Side) - Remove
16. CVTF Warmer - Remove

    1. To prevent damage, cover the connector (A) located under the CVTF warmer (B) using a shop towel.

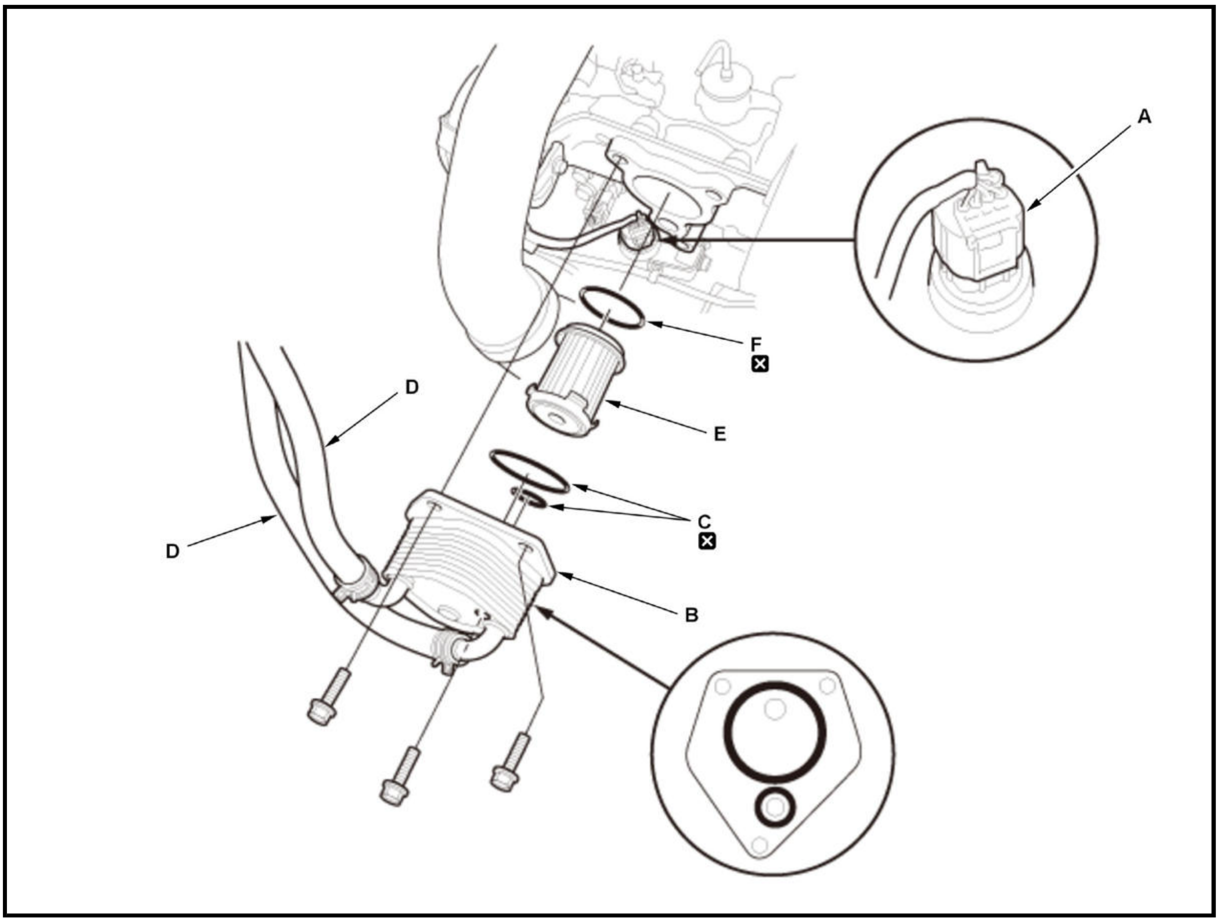

2. Remove the CVTF warmer with the O-rings (C) without disconnecting the CVTF warmer hoses (D).

NOTE: **The CVTF warmer is an aluminum part. Be careful not to damage the CVTF warmer.**

3. Put a plastic bag over the CVTF warmer, then move it out of the way.

4. Remove the CVTF warmer strainer (E) with the O-ring (F).

5. Clean the CVTF warmer strainer if necessary. Replace the CVTF warmer strainer, if it is clogged or damaged.

   - Do not use compressed air to clean the CVTF warmer strainer.
   - Soak the CVTF warmer strainer thoroughly in transmission fluid.

17. Intake Air Resonator - Remove
18. Engine Wire Harness Bracket - Remove

    NOTE: Refer to the Exploded View as needed during this procedure.

19. TCM Harness - Disconnect
20. Windshield Wiper Arm - Remove
21. Center Cowl Cover - Remove
22. Engine Support Hanger - Install

    NOTE: Be careful when working around the windshield.

    1. Remove the front damper caps.

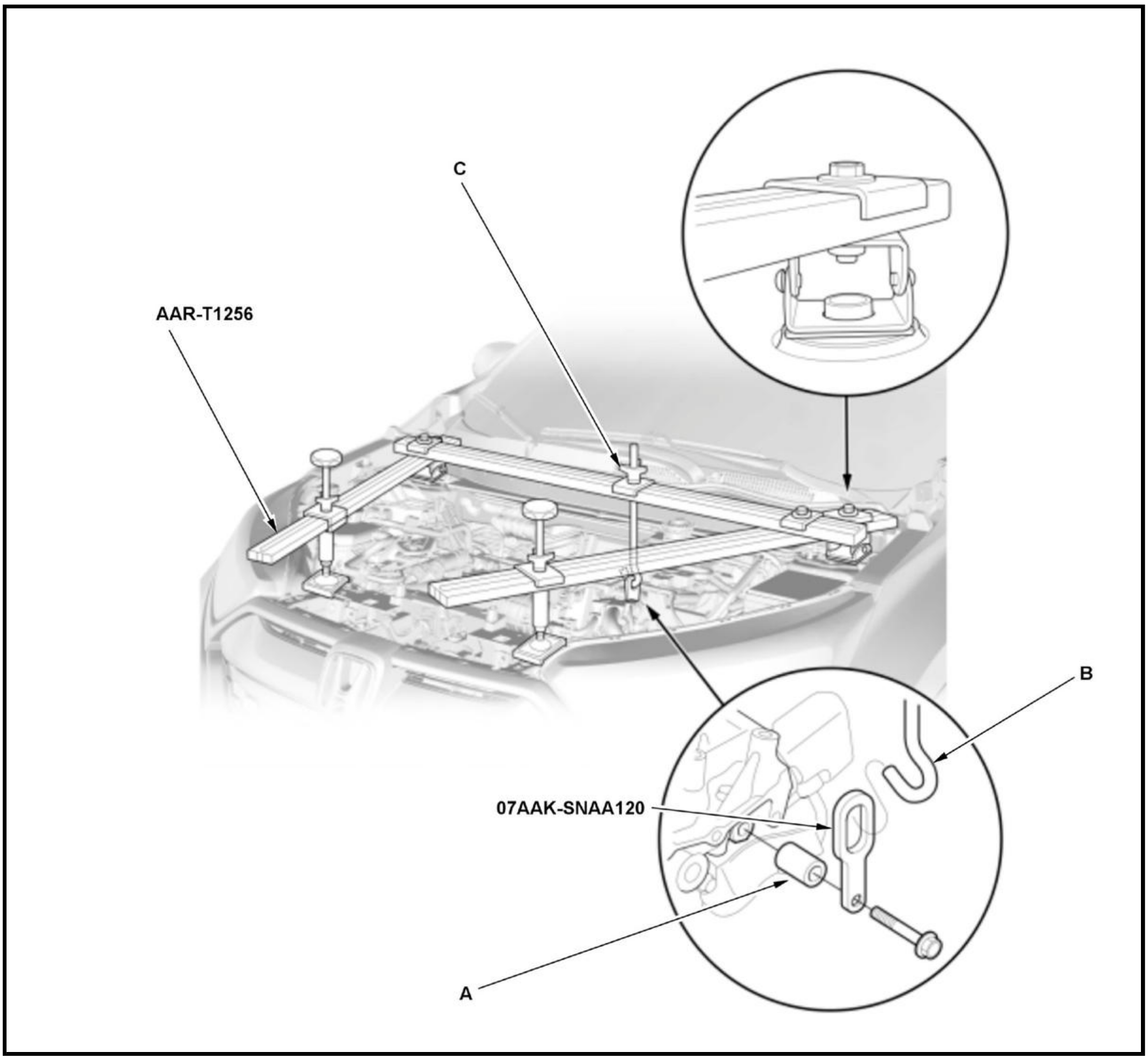

2. Install the sub hanger stay with an approximately 50 mm (2.00 in) commercially available spacer (A).

3. Install the engine support hanger onto the vehicle as shown.

4. Attach the hook (B) to the slotted hole in the sub hanger stay.

5. Tighten the wing nut (C) by hand, and lift and support the engine/transmission.

23. Upper Transmission Assembly Mounting Bolt - Remove

NOTE: Refer to the Exploded View as needed during this procedure.

24. Transmission Mount - Remove
25. Vehicle - Lift Up
26. Exhaust Pipe A - Remove
27. Connector (EPS Subharness) - Disconnect
28. Tie-Rod End Ball Joint - Disconnect (Both Sides)
29. Stabilizer Link Ball Joint - Disconnect (Both Sides)
30. Lower Arm Ball Joint - Disconnect (Both Sides)
31. Propeller Shaft - Remove (AWD)
32. Transfer Assembly - Remove (AWD)
33. Torque Rod Mounting Bolt - Remove
34. Front Lower Arm Mounting Bolt - Remove

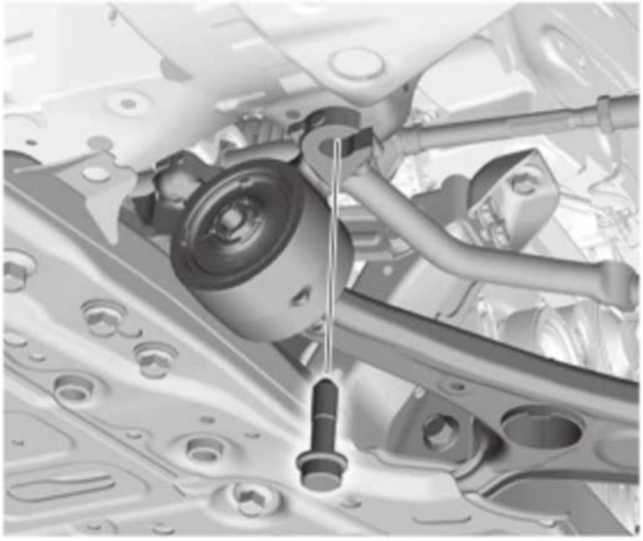	1. **Remove both sides of the front lower arm mounting bolt from the body** .

35. Front Subframe - Support

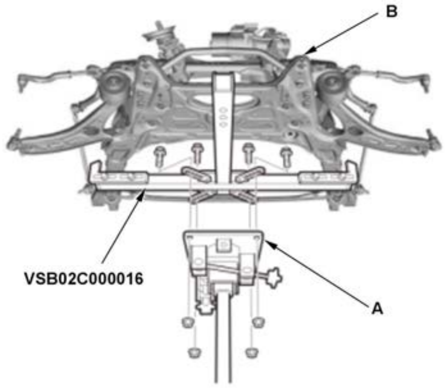	1. Set the subframe adapter (VSB02C000016) on a transmission jack (A), line up the slots in the arms with the bolt holes on the corner of the jack base, and tighten the bolts. 2. Attach the subframe adapter to the front subframe (B).

36. **Front Subframe - Remove**
37. Transmission - Support

1. Support the transmission with the transmission jack.

38. Drive Plate - Disconnect

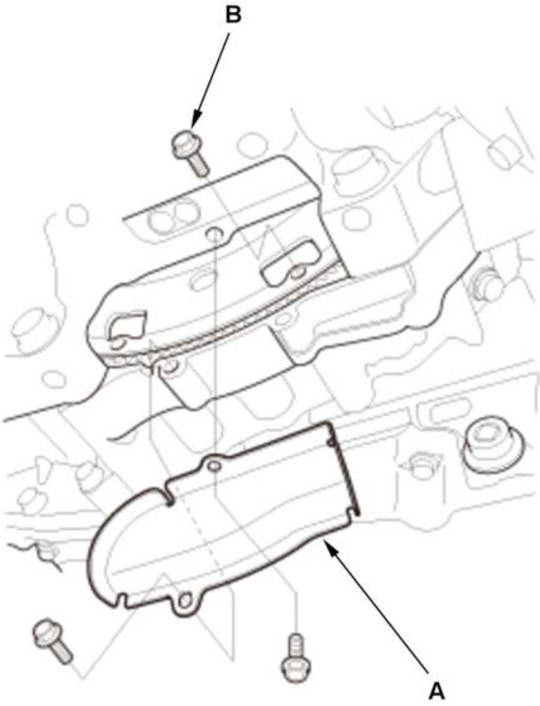	1. Remove the torque converter cover (A). 2. Remove the eight torque converter bolts (B) while rotating the crankshaft pulley.

39. **Driveshaft Inboard Joint - Disconnect (Both Sides)**

    NOTE: Secure the driveshaft to the body with a nylon strap on both sides.

40. **Intermediate Shaft - Remove**
41. Lower Transmission Assembly Mounting Bolt - Remove

    NOTE: Refer to the Exploded View as needed during this procedure.

42. Transmission - Remove

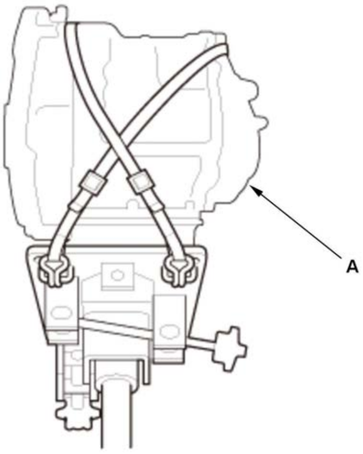	1. Check once that the transmission (A) is free of hoses and electrical wiring. 2. Secure the transmission on the transmission jack. 3. Lower the transmission by loosening the wing nut of the engine support hanger, and tilt the engine just enough for the transmission to clear its end from the frame. 4. Slide the transmission away from the engine, then remove it from the vehicle. **NOTE:** **Be careful not to drop the torque converter.** 5. Lower the transmission carefully.

43. Torque Converter - Remove

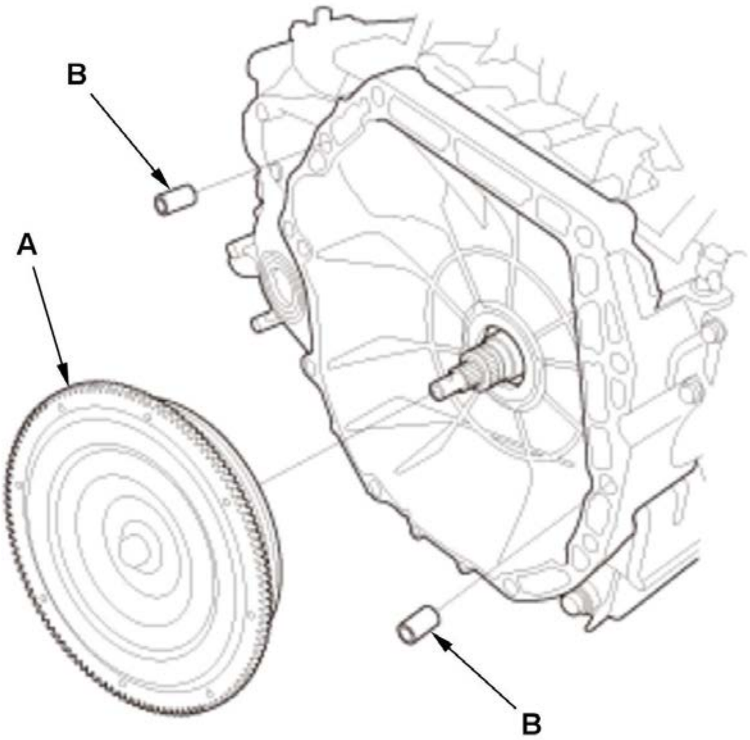	1. Remove the torque converter (A). 2. Remove the dowel pins (B).

44. TCM Harness - Remove

1. Disconnect the connectors (A).

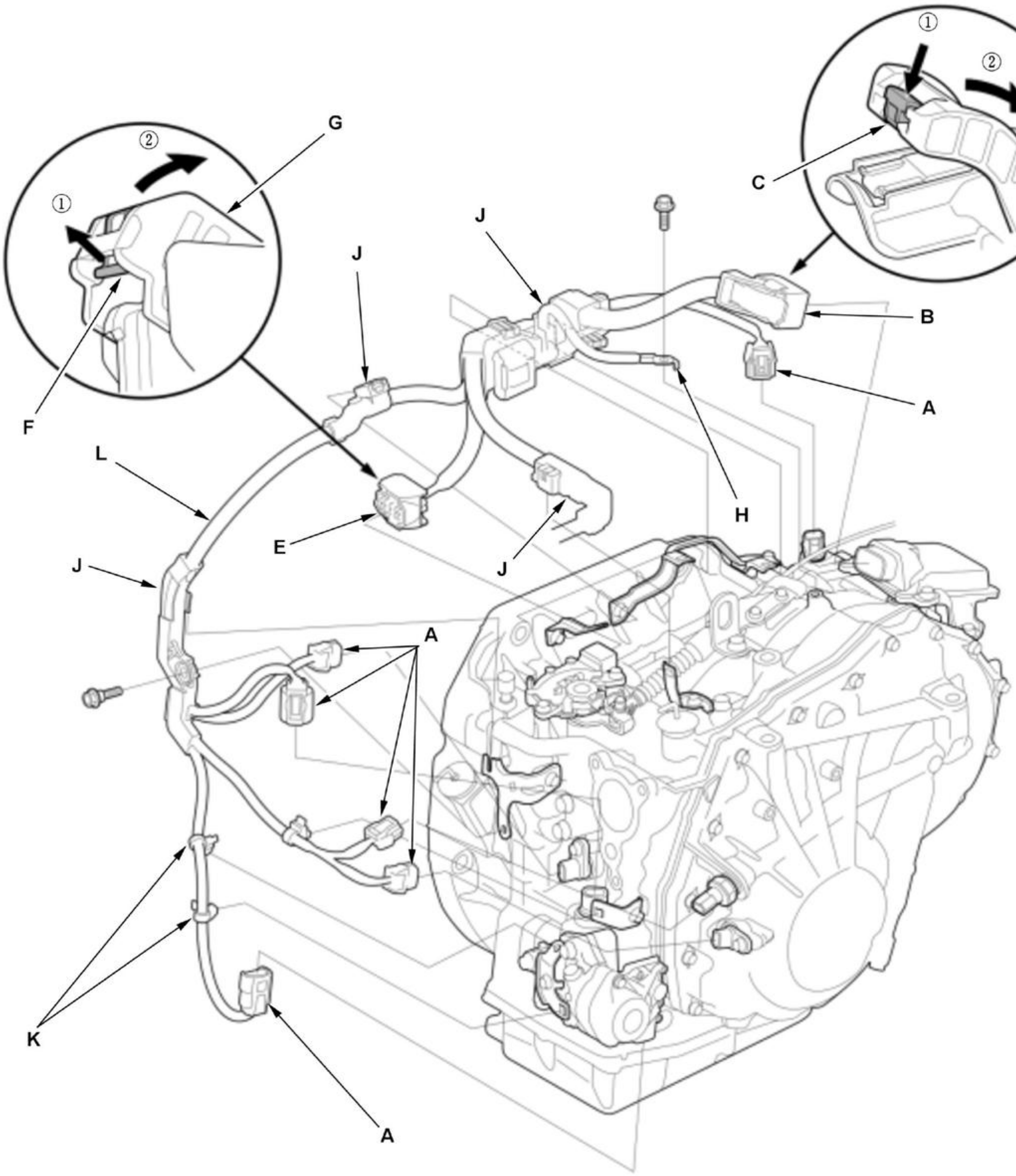

This illustration shows with auxiliary transmission fluid pump.

Fig. 2: Disconnecting TCM Harness Connector And Lever In Sequence
Courtesy of HONDA, U.S.A., INC.

2. Disconnect the connector (B) by pushing the lock (C) and pulling the lever (D) in the numbered sequence shown in illustration.

3. Disconnect the connector (E) by pulling the lock (F) and the lever (G) in the numbered sequence shown in illustration.

4. Remove the ground cable (H).

5. Remove the harness covers (J) and the harness clamp (K), then swing the TCM harness (L) out of the way.

45. Harness Bracket - Remove

1. If necessary, remove the harness brackets.

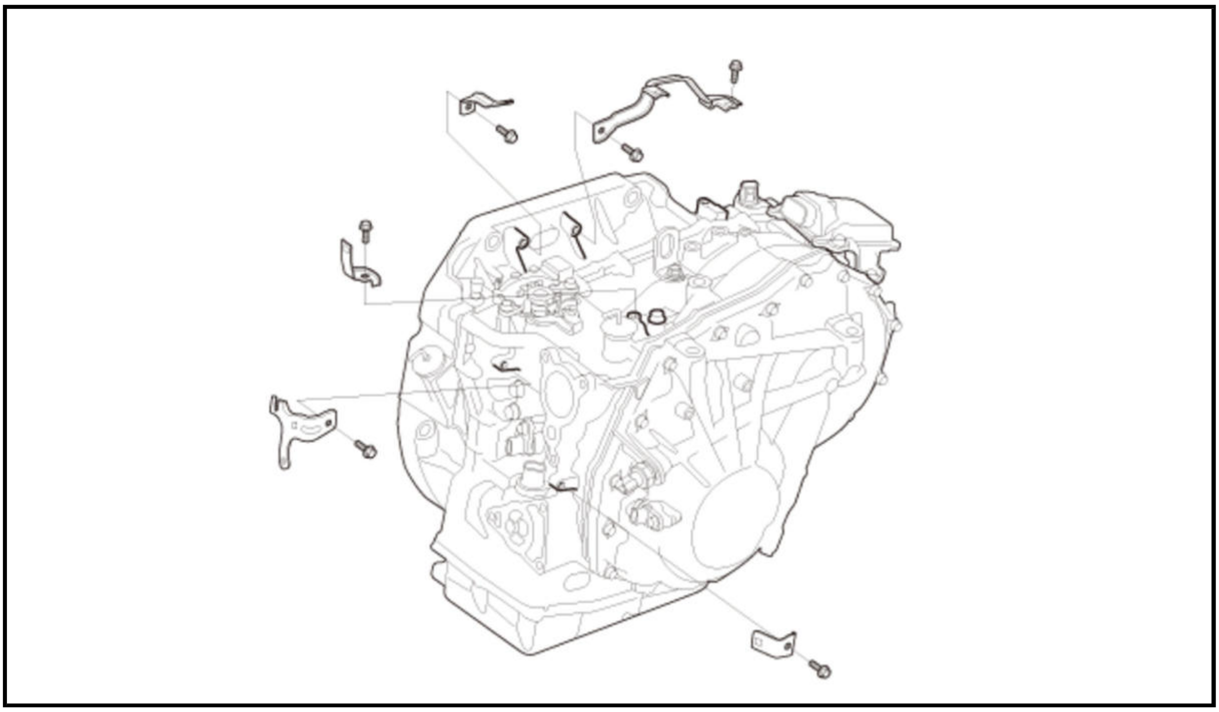

46. Drive Plate - Inspect

    1. Inspect the drive plate, and **replace it if it is damaged**.

Installation

NOTE:

- **How to read the torque specifications** .
- Use fender covers to avoid damaging painted surfaces.
- Keep all foreign particles out of the transmission.
- Apply a light coat of clean transmission fluid on all O-rings before installation.
- When connecting the connector, check for corrosion, dirt, or oil, and clean or repair if necessary.

1. Harness Bracket - Install

    1. If necessary, install the harness brackets.

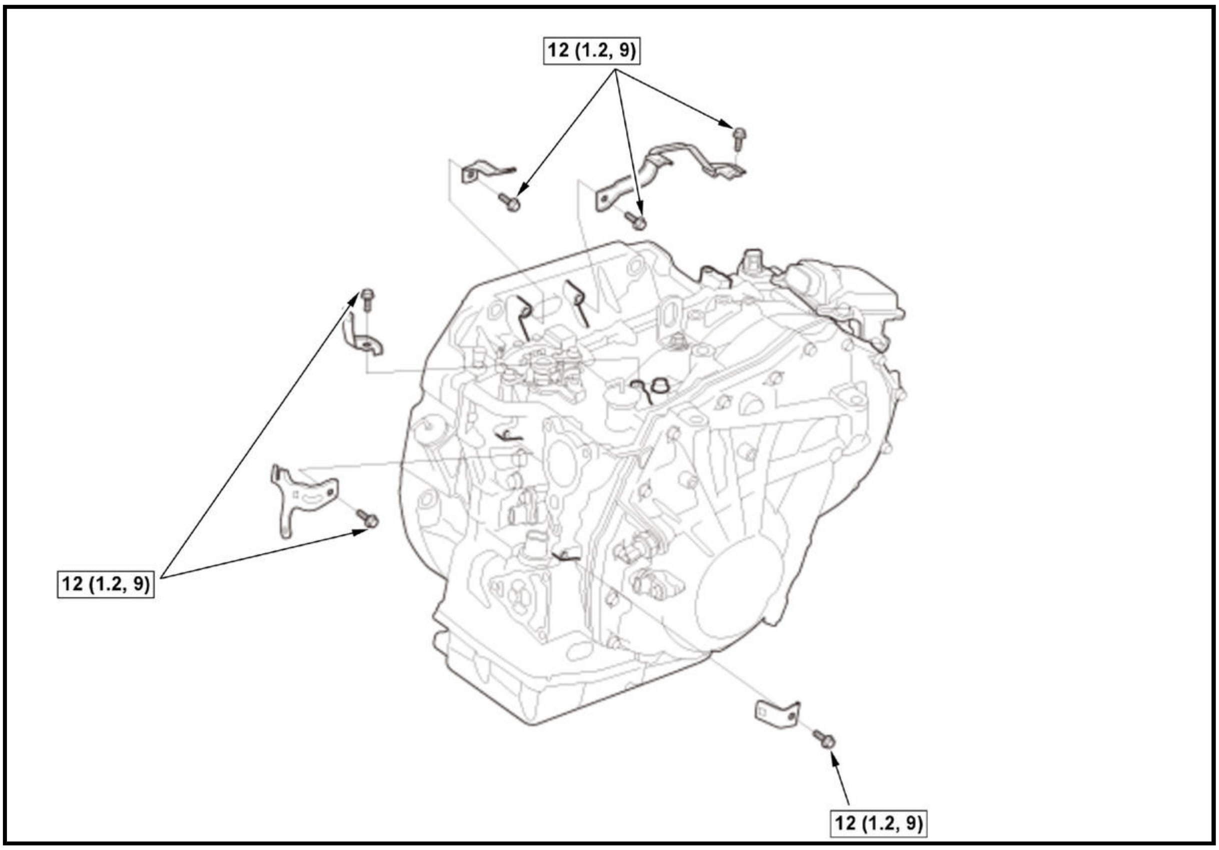
12 (1.2, 9)
12 (1.2, 9)
12 (1.2, 9)

2. TCM Harness - Install

   1. Install the harness covers (A) and the harness clamp (B).

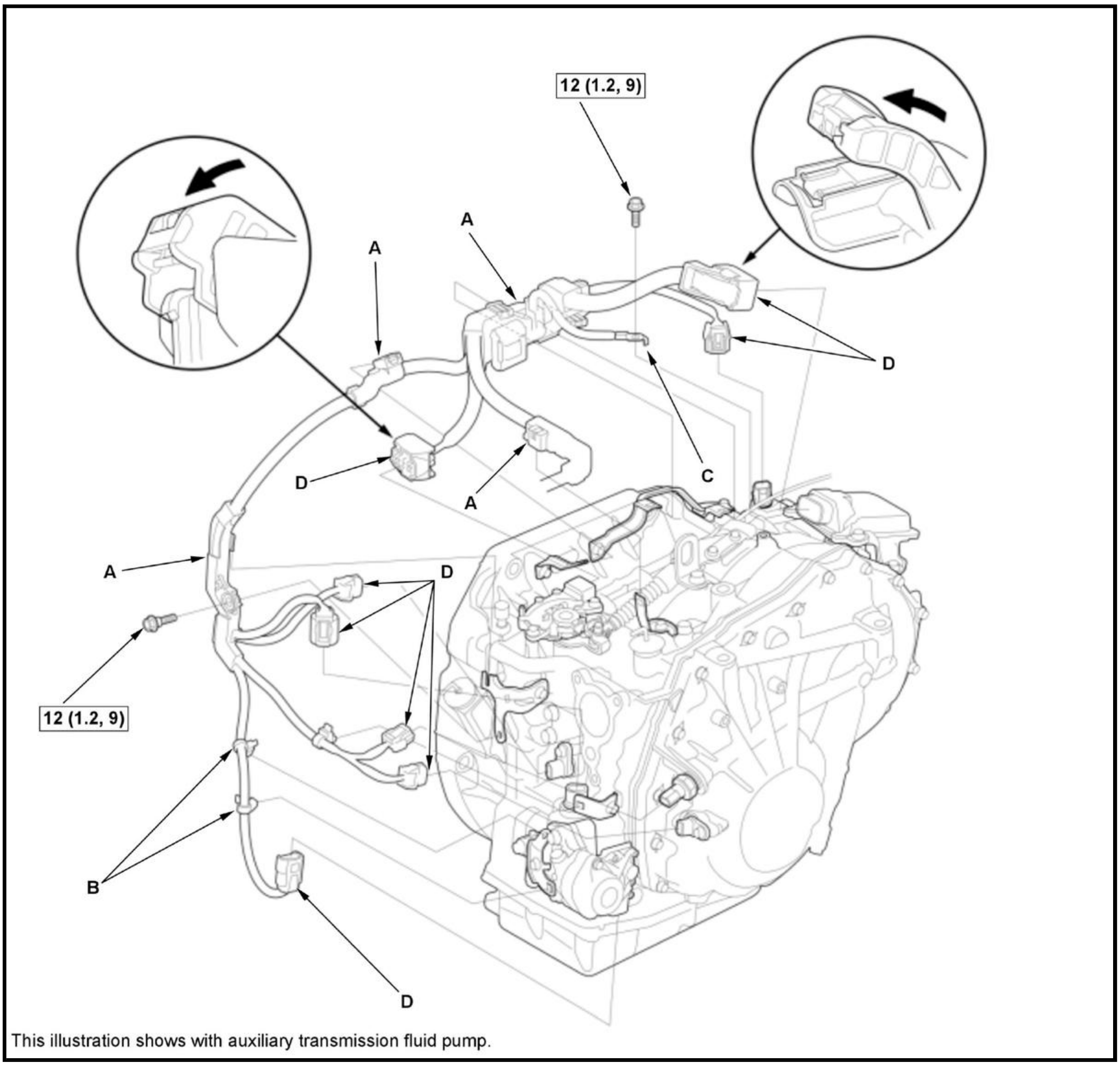
12 (1.2, 9)
A
A
D
A
D
A
C
A
D
12 (1.2, 9)
B
D

This illustration shows with auxiliary transmission fluid pump.

2. Install the ground cable (C).

3. Connect the connectors (D), and make sure they are fully seated.

3. Torque Converter - Install

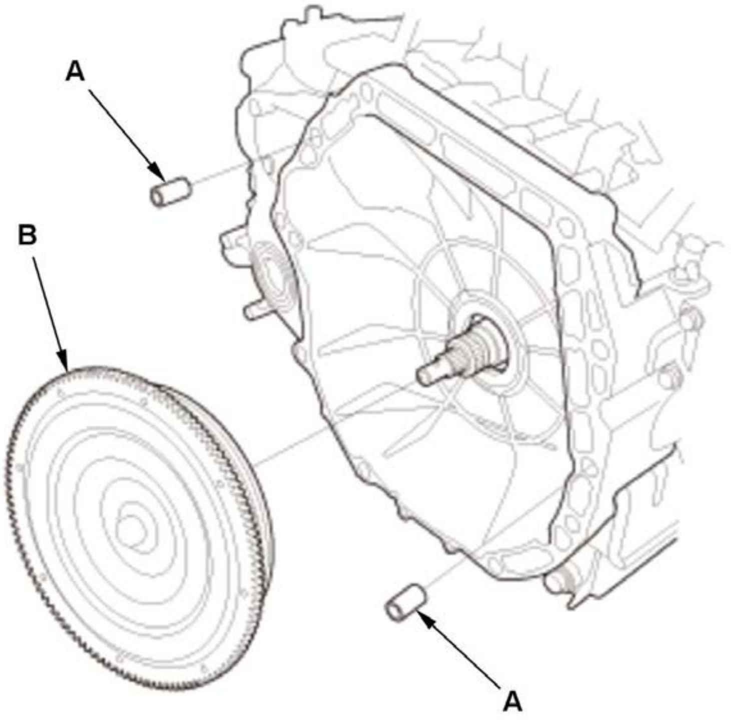	1. Install the dowel pins (A). 2. Install the torque converter (B). **NOTE:** **Make sure the torque converter is fully engaged on the input shaft, the stator shaft, and the transmission fluid pump drive sprocket. Failure to do so will result in severe transmission or engine damage.**

4. Transmission - Install

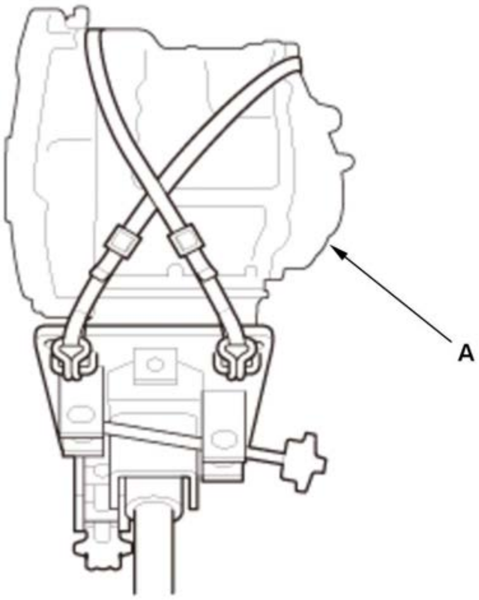	1. Secure the transmission (A) on a transmission jack, and raise it to engine level. **NOTE:** **Be careful not to drop the torque converter.** 2. Attach the transmission to the engine.

5. Transmission - Support

1. Support the transmission with the transmission jack.

6. Lower Transmission Assembly Mounting Bolt - Install

NOTE: Refer to the Exploded View as needed during this procedure.

7. **Intermediate Shaft - Install**
8. **Driveshaft Inboard Joint - Connect (Both Sides)**

9. Drive Plate - Connect

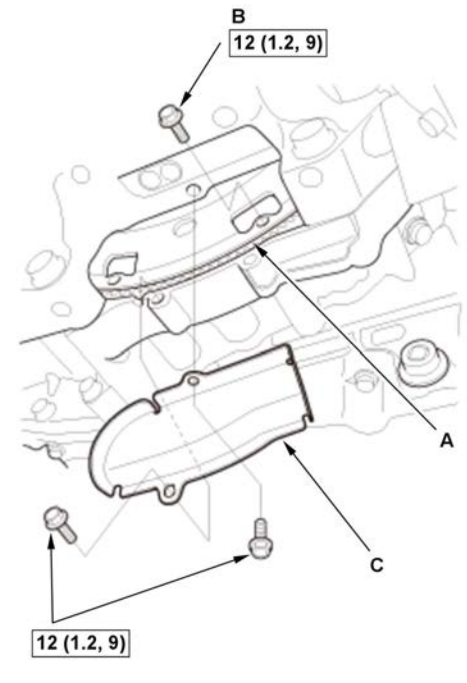	1. Attach the drive plate (A) to the torque converter with eight torque converter bolts (B). 2. Rotate the crankshaft pulley as necessary to tighten the bolt to half of the specified torque, then to the final torque, in a crisscross pattern. 3. Check that the crankshaft rotates freely. 4. Install the torque converter cover (C).

10. Front Subframe - Support

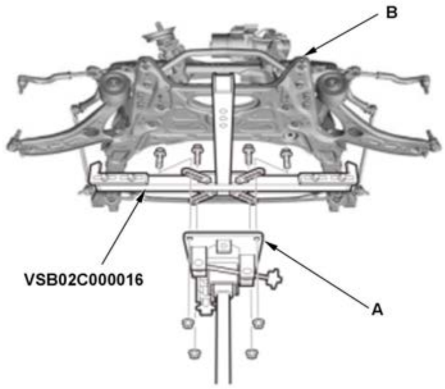	1. Set the subframe adapter (VSB02C000016) on a transmission jack (A), line up the slots in the arms with the bolt holes on the corner of the jack base, and tighten the bolts. 2. Attach the subframe adapter to the front subframe (B).

11. **Front Subframe - Install**
12. **Torque Rod Mounting Bolt - Loosely Install**
13. **Transfer Assembly - Install (AWD)**
14. **Propeller Shaft - Install (AWD)**
15. Front Lower Arm Mounting Bolt - Install

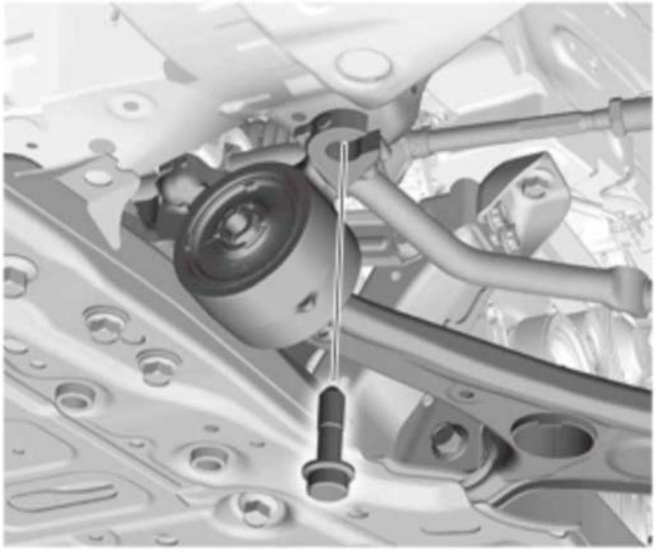	1. **Install both sides of the front lower arm mounting bolt to the body** .

16. **Lower Arm Ball Joint - Connect (Both Sides)**
17. **Stabilizer Link Ball Joint - Connect (Both Sides)**
18. **Tie-Rod End Ball Joint - Connect (Both Sides)**
19. **Connector (EPS Subharness) - Connect**
20. **Exhaust Pipe A - Install**
21. Vehicle - Lift Down
22. **Transmission Mount - Loosely Install**
23. Upper Transmission Assembly Mounting Bolt - Install

    NOTE: Refer to the Exploded View as needed during this procedure.

24. Engine Support Hanger - Remove

1. Remove the engine support hanger and the sub hanger stay. 2. Install the front damper caps.

25. **Engine/Transmission Mount, Torque Rod Mounting Bolt - Tightening Procedure**
26. **TCM Harness - Connect**
27. **Center Cowl Cover - Install**
28. **Windshield Wiper Arm - Install**
29. Engine Wire Harness - Install

    NOTE: Refer to the Exploded View as needed during this procedure.

30. **Intake Air Resonator - Install**
31. CVTF Warmer - Install

    1. Install the CVTF warmer strainer (A) with a new O-ring (B) in the direction shown.

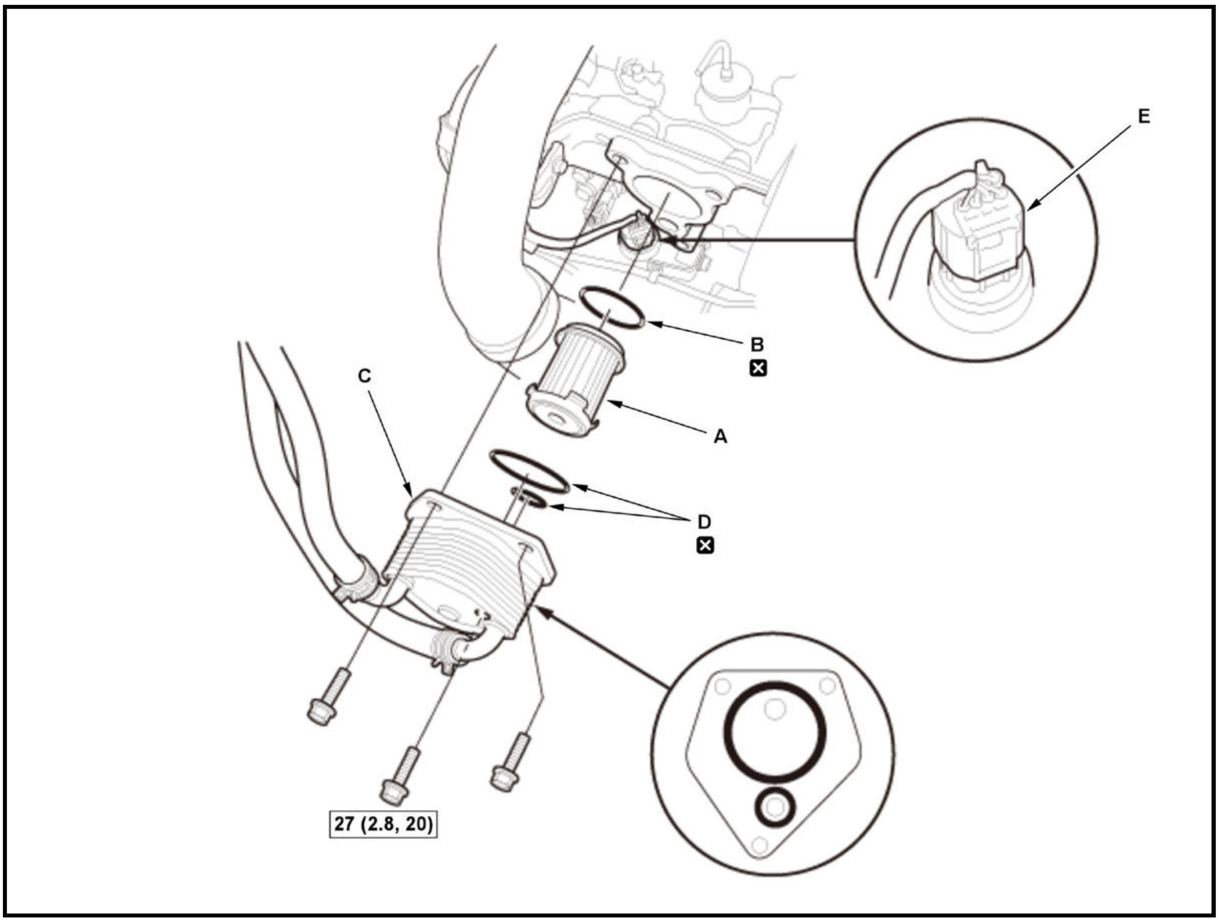

2. Install the CVTF warmer (C) with new O-rings (D).

NOTE:

- **The CVTF warmer is an aluminum part. Be careful not to damage the CVTF warmer.**
- **Make sure the O-rings are firmly installed in the grooves.**
- **Check the connector (E) for corrosion, dirt, or oil, and clean or repair if necessary.**

32. Shift Cable (Transmission Side) - Install

NOTE: Be sure to adjust the shift cable after installing the shift cable.

33. Throttle Body Duct - Install
34. Throttle Body Inlet Pipe - Install
35. 12 Volt Battery Base Bracket - Install
36. 12 Volt Battery Base - Install

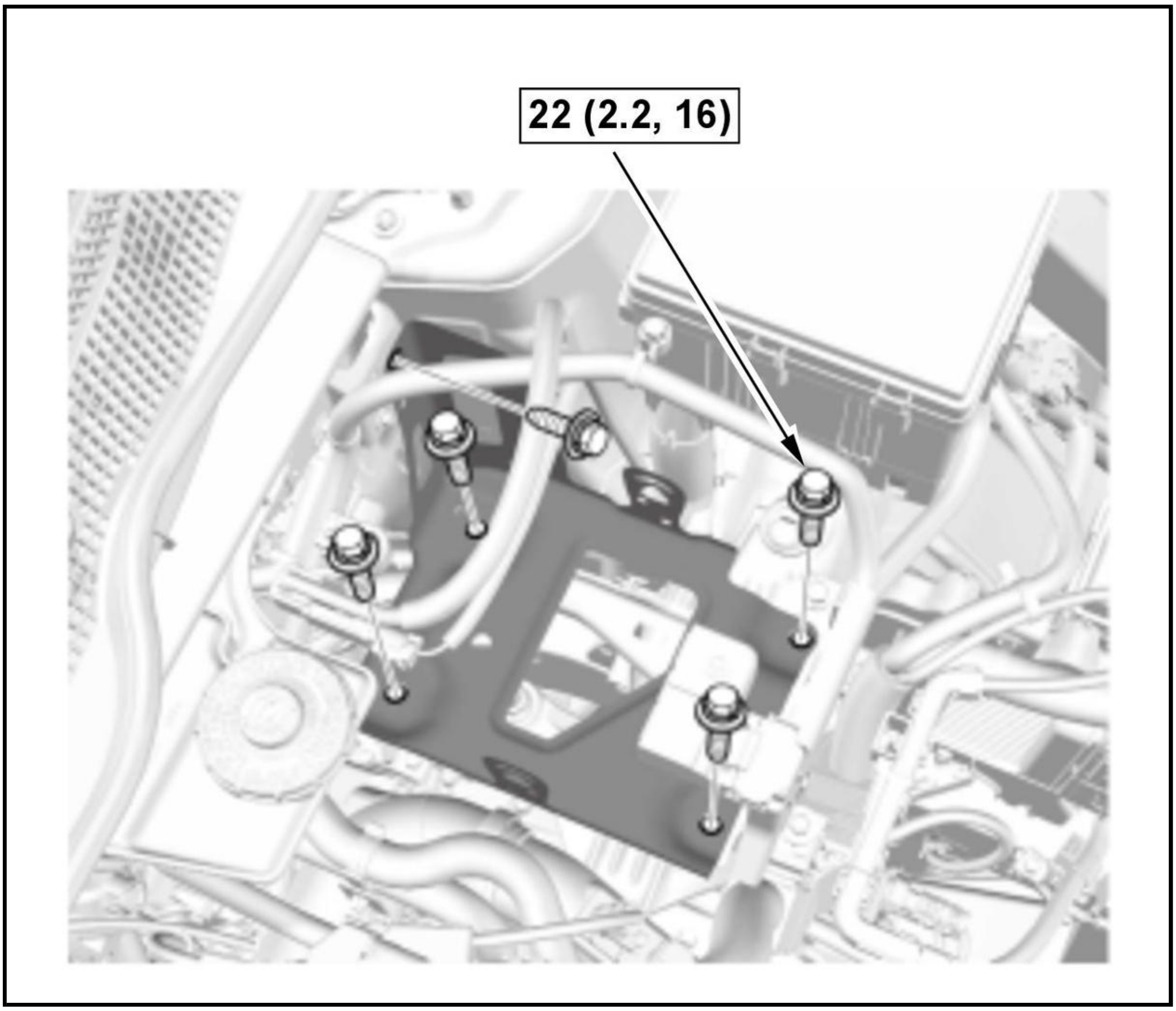

37. **12 Volt Battery - Install**
38. **Front Bulkhead Cover - Install**
39. **Air Cleaner - Install**
40. **Front Wheel - Install (Both Sides)**
41. **Steering Joint - Connect**
42. **Transmission Fluid - Refill**
43. **Transmission Fluid Level - Check**
44. **Auxiliary Transmission Fluid Pump - Air Bleed** (With auto idle stop system)
45. Transmission - After Install Check

1. Make sure all four wheels to rotate freely.

2. Turn the vehicle to the ON mode.

3. Move the shift lever to each position, and check that the shift position indicator follows the shift lever operation.

4. Start the engine.

NOTE:

Check that the engine starts in the P or N position/mode, and does not

start in any other positions/modes.

5. Check the shift lever operation.

6. Make sure the vehicle is turned to the OFF (LOCK) mode with the shift lever in P position/mode. If it is not, **adjust the shift cable**

again.

46. **Engine Undercover - Install**
47. **TCM - Reset** (Only for Replacing Transmission)

NOTE:

- **This procedure is not required, if the transmission and the TCM are replaced together.**

48. **Front Wheel Alignment - Check**
49. **VSA Sensor Neutral Position - Memorize**
50. **Vehicle - Road Test**

CVT TRANSMISSION REMOVAL AND INSTALLATION (2.4 L ENGINE) (2017 2018 2019)

*: Available from Snap-on Tools International, LLC.

Special Tools Required

Image	Description/Tool Number
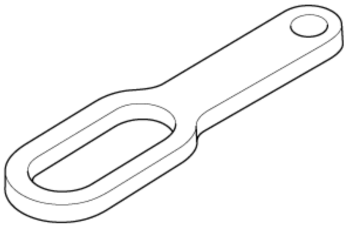	Universal Lifting Eyelet 07AAK-SNAA120
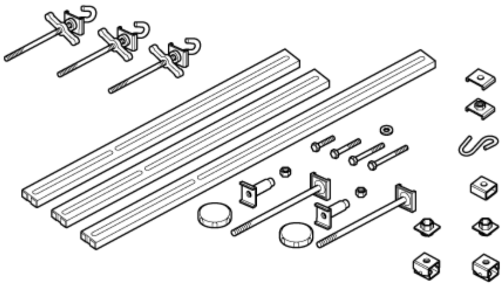	Engine Support Hanger, A and Reds AAR-T1256*

Image	Description/Tool Number
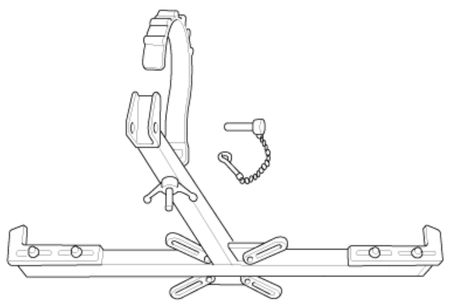	Subframe Adapter VSB02C000016*

*: Available from Snap-on Tools International, LLC.

Exploded View

1. Transmission Assembly Mounting Bolt

   Transmission Assembly Mounting Bolt - Exploded View

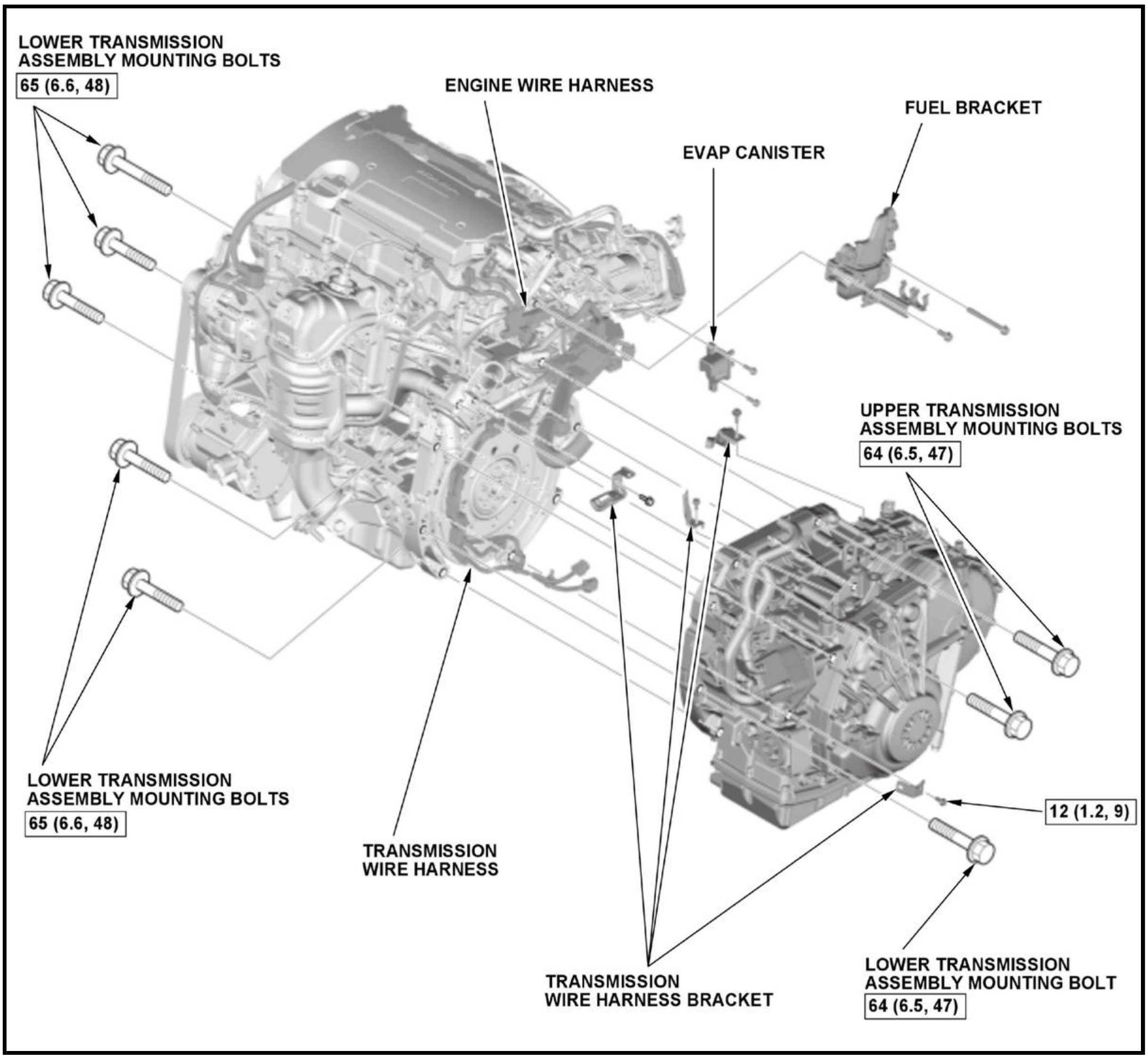
LOWER TRANSMISSION ASSEMBLY MOUNTING BOLTS
65 (6.6, 48)
ENGINE WIRE HARNESS
FUEL BRACKET
EVAP CANISTER
UPPER TRANSMISSION ASSEMBLY MOUNTING BOLTS
64 (6.5, 47)
12 (1.2, 9)
LOWER TRANSMISSION ASSEMBLY MOUNTING BOLTS
65 (6.6, 48)
TRANSMISSION WIRE HARNESS
TRANSMISSION WIRE HARNESS BRACKET
LOWER TRANSMISSION ASSEMBLY MOUNTING BOLT
64 (6.5, 47)

Removal

NOTE:

- How to read the torque specifications .
- Use fender covers to avoid damaging painted surfaces.
- Keep all foreign particles out of the transmission.
- Engine support hanger AAR-T1256-J00 must be used with the side engine mount installed.

1. Vehicle - Lift Set
2. Engine Undercover - Remove
3. Transmission Fluid - Drain
4. Vehicle - Lift Down
5. Hood - Wide Open
6. Steering Joint - Disconnect

   NOTE: Hold the steering wheel with the steering wheel holder tool.

7. Front Wheel - Remove (Both Sides)
8. Front Bulkhead Cover - Remove
9. Air Cleaner - Remove
10. 12 Volt Battery - Remove

    NOTE: **Make sure to reset the learned value of CVT system when replacing hydraulically-controlled parts in order not to cause any damage the transmission. The learned value of the CVT system is reset when the negative battery terminal is disconnected.**

11. 12 Volt Battery Base - Remove
12. 12 Volt Battery Base Bracket - Remove
13. Intake Air Duct - Remove
14. Shift Cable (Transmission Side) - Remove
15. CVTF Warmer - Remove

    1. To prevent damage, cover the connector (A) located under the CVTF warmer (B) using a shop towel.

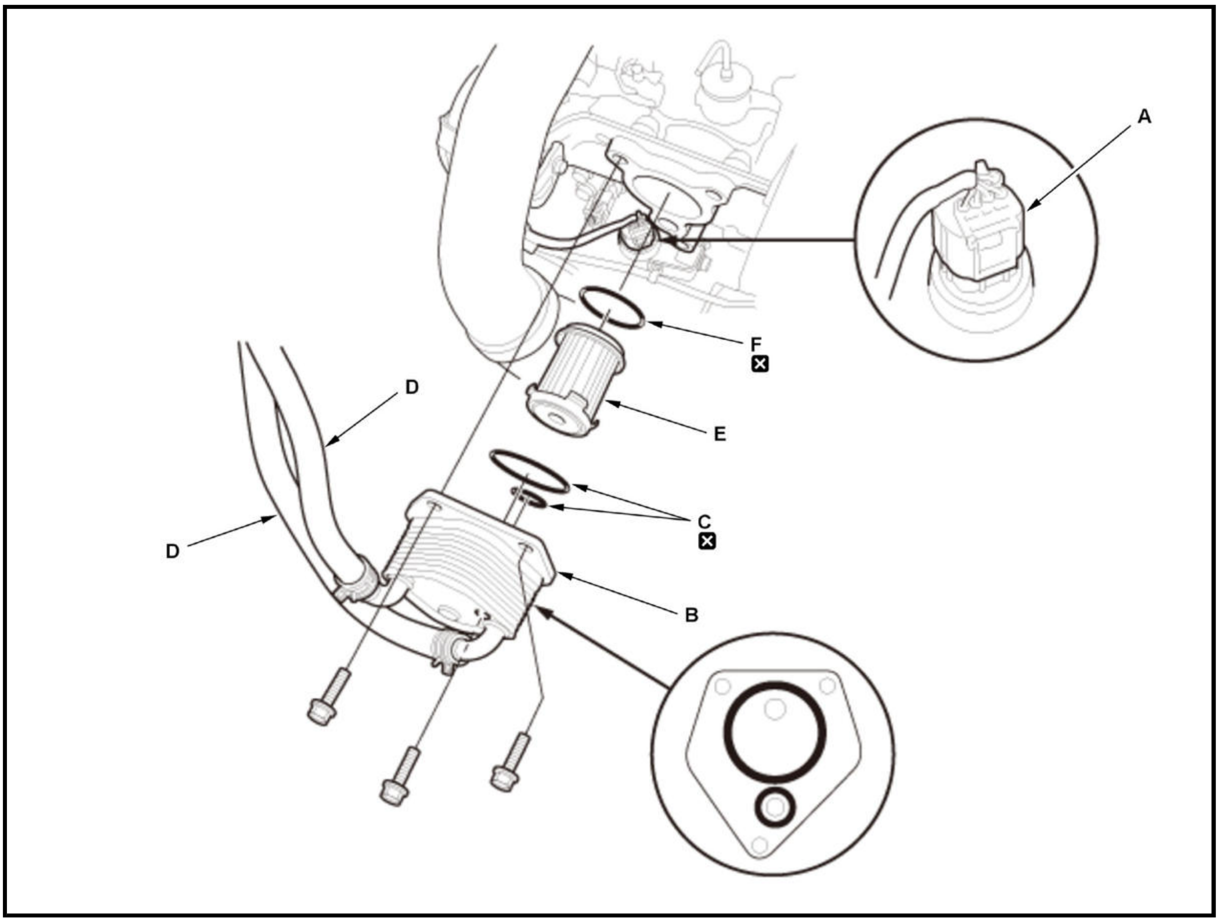

2. Remove the CVTF warmer with the O-rings (C) without disconnecting the CVTF warmer hoses (D).

NOTE: **The CVTF warmer is aluminum part. Be careful not to damage the CVTF warmer.**

3. Put plastic bag over the CVTF warmer, then swing it out of the way.

4. Remove the CVTF warmer strainer (E) with the O-ring (F).

5. Clean the CVTF warmer strainer if necessary. Replace the CVTF warmer strainer, if it is clogged or damaged.

- Do not use compressed air to clean the CVTF warmer strainer.
- Soak the CVTF warmer strainer thoroughly in transmission fluid.

16. **Fuel Bracket - Remove**

    NOTE: Refer to the Exploded View as needed during this procedure.

17. EVAP Canister - Remove

    NOTE: Refer to the Exploded View as needed during this procedure.

18. Transmission Wire Harness - Disconnect

    NOTE: Refer to the Exploded View as needed during this procedure.

19. **Windshield Wiper Arm - Remove**
20. **Center Cowl Cover - Remove**
21. Engine Support Hanger - Install

    NOTE: Be careful when working around the windshield.

1. Remove the front damper caps.

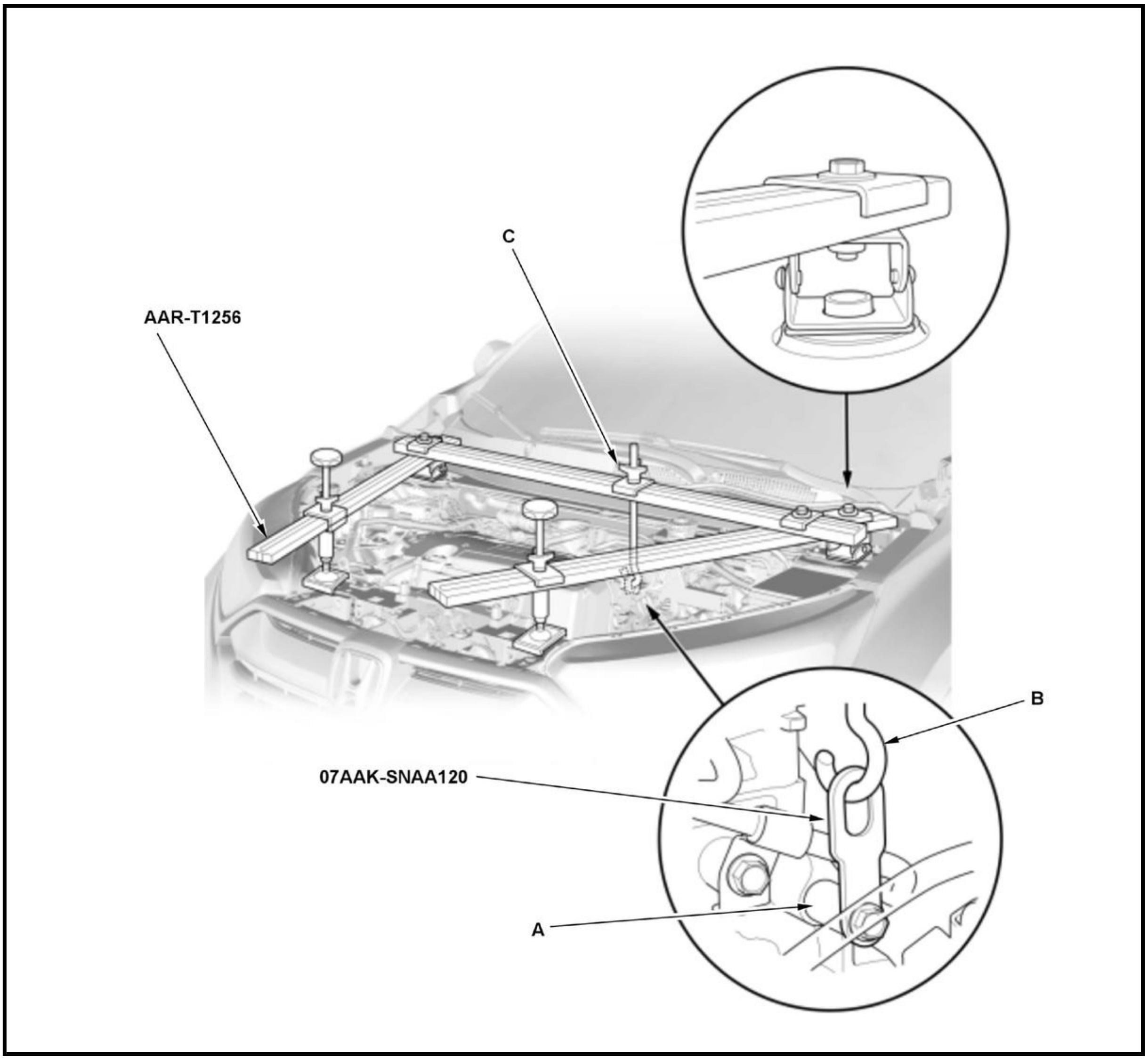

2. Install the sub hanger stay with a spacer (A).

3. Install the engine support hanger onto the vehicle as shown.

4. Attach the hook (B) to the slotted hole in the sub hanger stay.

5. Tighten the wing nut (C) by hand, and lift and support the engine/transmission.

22. Upper Transmission Assembly Mounting Bolt - Remove

    NOTE: Refer to the Exploded View as needed during this procedure.

23. Transmission Mount - Remove
24. Vehicle - Lift Up
25. Exhaust Pipe A - Remove
26. Connector (EPS Subharness) - Disconnect
27. Tie-Rod End Ball Joint - Disconnect (Both Sides)
28. Stabilizer Link Ball Joint - Disconnect (Both Sides)
29. Lower Arm Ball Joint - Disconnect (Both Sides)
30. Torque Rod Mounting Bolt - Remove
31. Propeller Shaft - Remove (AWD)
32. Transfer Assembly - Remove (AWD)

33. Front Subframe - Remove

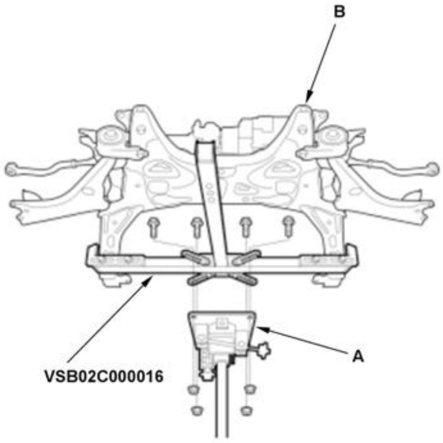	1. Set the subframe adapter (VSB02C000016) on a transmission jack (A), line up the slots in the arms with the bolt holes on the corner of the jack base, and tighten the bolts. 2. Attach the subframe adapter to the front subframe (B). 3. **Remove the front subframe** .

34. Front Lower Arm Mounting Bolt - Remove

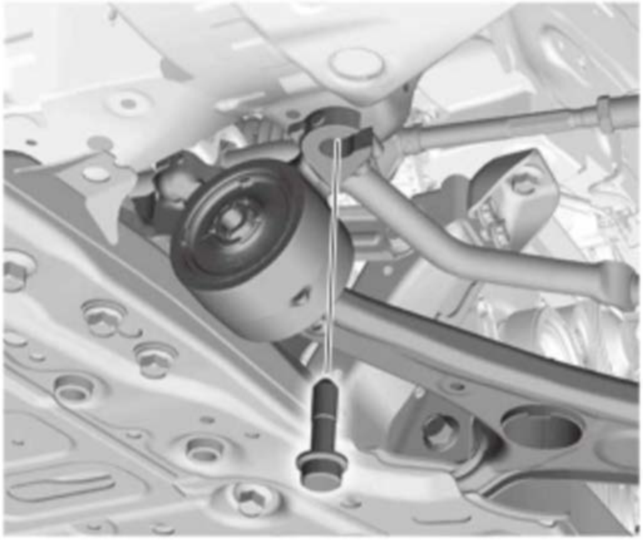	1. **Remove both sides of the front lower arm mounting bolt from the body** .

35. **Front Subframe - Remove**

36. Transmission - Support

1. Support the transmission with the transmission jack.

37. Drive Plate - Disconnect

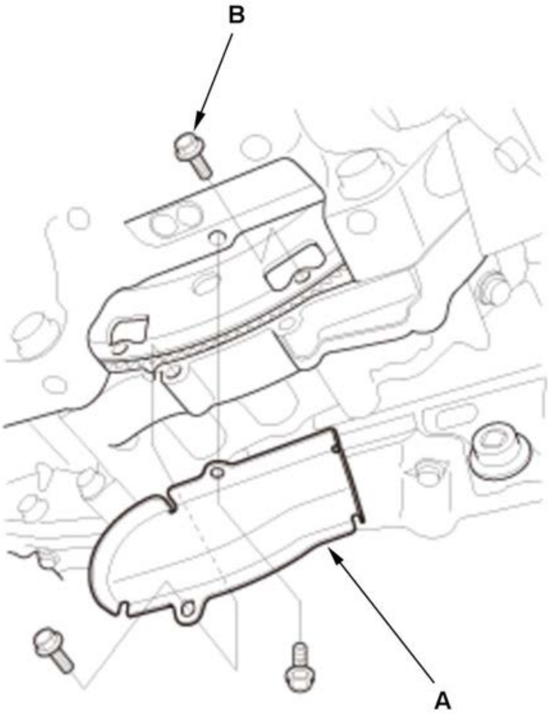	1. Remove the torque converter cover (A). 2. Remove eight torque converter bolts (B) while rotating the crankshaft pulley.

38. **Driveshaft Inboard Joint - Disconnect (Both Sides)**

    NOTE: Secure the driveshaft to the body with a nylon strap on both sides.

39. **Intermediate Shaft - Remove**
40. Lower Transmission Assembly Mounting Bolt - Remove

    NOTE: Refer to the Exploded View as needed during this procedure.

41. Transmission - Remove

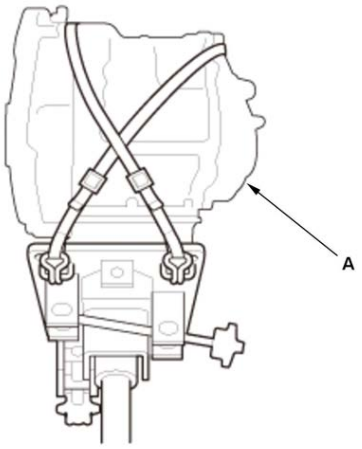	1. Check once again that the transmission (A) is free of hoses and electrical wiring. 2. Hold the transmission on the transmission jack. 3. Lower the transmission by loosening the wing nut of the engine support hanger, and tilt the engine just enough for the transmission to clear its end from the side frame. 4. Slide the transmission away from the engine, then remove it from the vehicle. **NOTE:** **Be careful not to drop the torque converter.** 5. Lower the transmission carefully.

42. Torque Converter - Remove

<table>
<tr><td>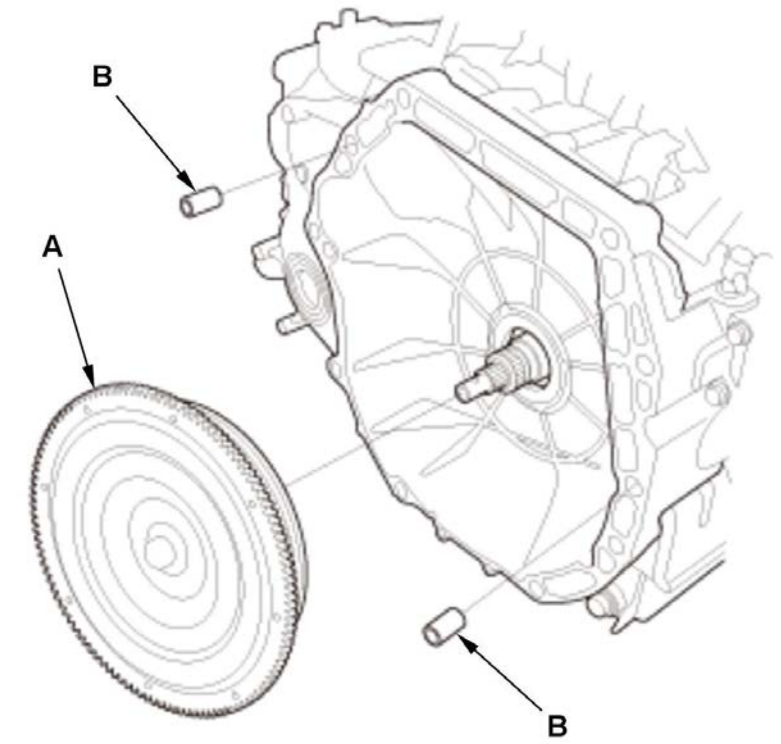 </td><td>1. Remove the torque converter (A).
2. Remove the dowel pins (B).</td></tr>
</table>

43. Harness Bracket - Remove

1. If necessary, remove the harness brackets. **NOTE:** **Refer to the Exploded View as needed during this procedure.**

44. Drive Plate - Inspect

1. Inspect the drive plate, and **replace it if it is damaged**.

Installation

NOTE:

- Use fender covers to avoid damaging painted surfaces.
- Keep all foreign particles out of the transmission.
- Apply a light coat of clean transmission fluid on all O-rings before installation.
- When connecting the connector, check for corrosion, dirt, or oil, and clean or repair if necessary.

1. Harness Bracket - Install

   NOTE: Refer to the Exploded View as needed during this procedure.

2. Torque Converter - Install

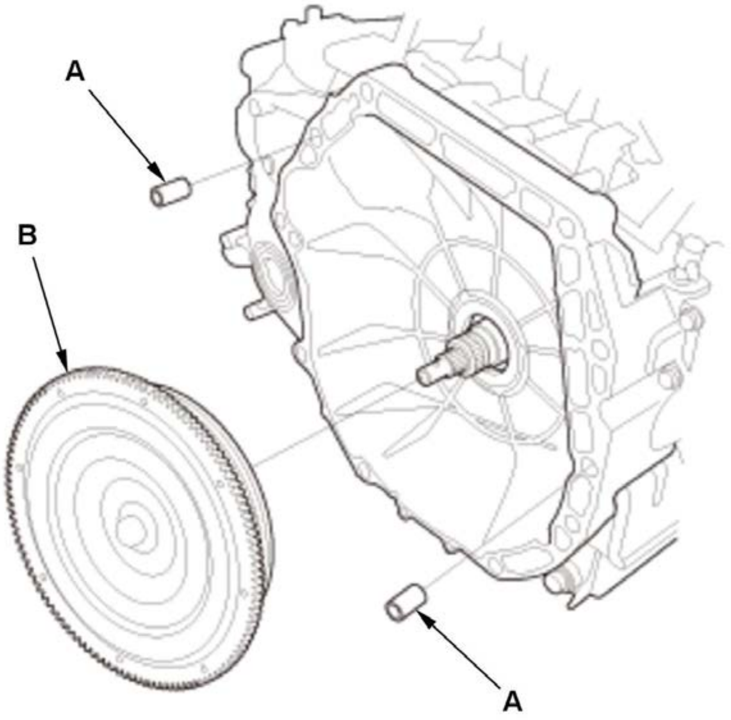	1. Install the dowel pins (A). 2. Install the torque converter (B). **NOTE:** **Make sure the torque converter is fully engaged on the input shaft, the stator shaft, and the transmission fluid pump drive sprocket. Failure to do so will result in severe transmission or engine damage.**

3. Transmission - Install

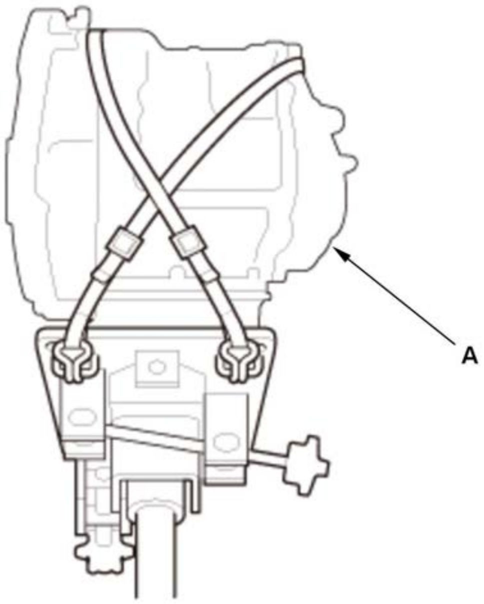	1. Hold the transmission (A) on a transmission jack, and raise it to engine level. **NOTE:** **Be careful not to drop the torque converter.** 2. Attach the transmission to the engine.

4. Transmission - Support

1. Support the transmission with the transmission jack.

5. Lower Transmission Assembly Mounting Bolt - Install

NOTE: Refer to the Exploded View as needed during this procedure.

6. **Intermediate Shaft - Install**
7. **Driveshaft Inboard Joint - Connect (Both Sides)**

8. Drive Plate - Connect

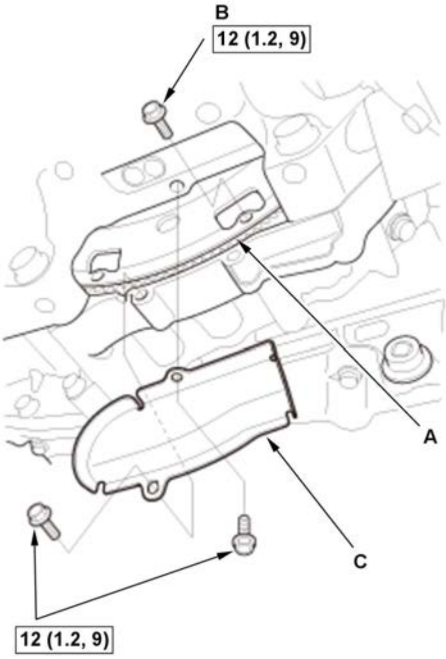	1. Attach the drive plate (A) to the torque converter with eight torque converter bolts (B). 2. Rotate the crankshaft pulley as necessary to tighten the bolt to half of the specified torque, then to the final torque, in a crisscross pattern. 3. Check that the crankshaft rotates freely. 4. Install the torque converter cover (C).

9. Front Subframe - Support

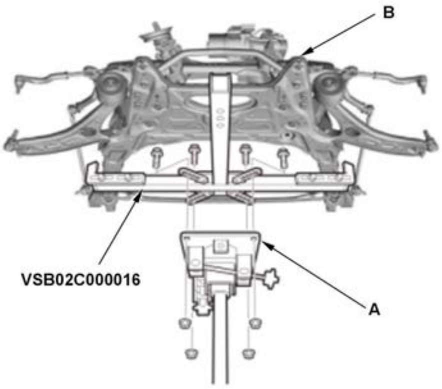	1. Set the subframe adapter (VSB02C000016) on a transmission jack (A), line up the slots in the arms with the bolt holes on the corner of the jack base, and tighten the bolts. 2. Attach the subframe adapter to the front subframe (B).

10. **Front Subframe - Install**

11. Front Lower Arm Mounting Bolt - Install

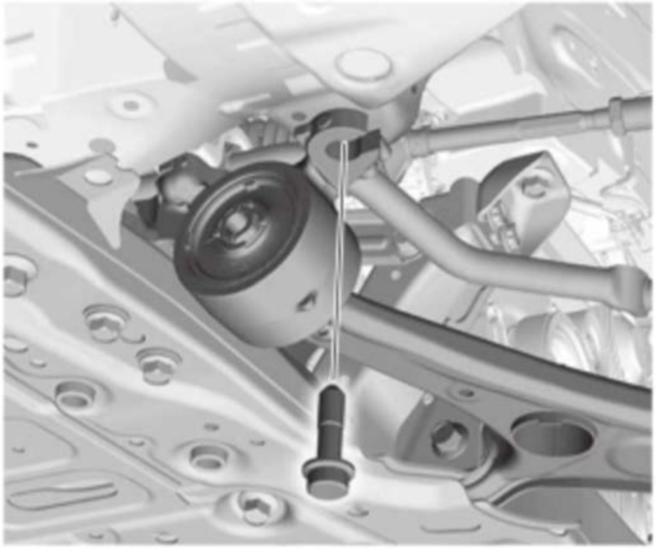	1. **Install both sides of the front lower arm mounting bolt to the body** .

12. Transfer Assembly - Install (AWD)
13. Propeller Shaft - Install (AWD)
14. Torque Rod Mounting Bolt - Loosely Install
15. Lower Arm Ball Joint - Connect (Both Sides)
16. Stabilizer Link Ball Joint - Connect (Both Sides)
17. Tie-Rod End Ball Joint - Connect (Both Sides)
18. Connector (EPS Subharness) - Connect
19. Exhaust Pipe A - Install
20. Vehicle - Lift Down
21. Transmission Mount - Loosely Install
22. Upper Transmission Assembly Mounting Bolt - Install

    NOTE: Refer to the Exploded View as needed during this procedure.

23. Engine Support Hanger - Remove

1. Remove the engine support hanger and the sub hanger stay.
2. Install the front damper caps.

24. Engine/Transmission Mount - Tightening Procedure
25. Engine Wire Harness - Install

    NOTE: Refer to the Exploded View as needed during this procedure.

26. Center Cowl Cover - Install
27. Windshield Wiper Arm - Install
28. CVTF Warmer - Install

    1. Install the CVTF warmer strainer (A) with a new O-ring (B) in the direction shown.

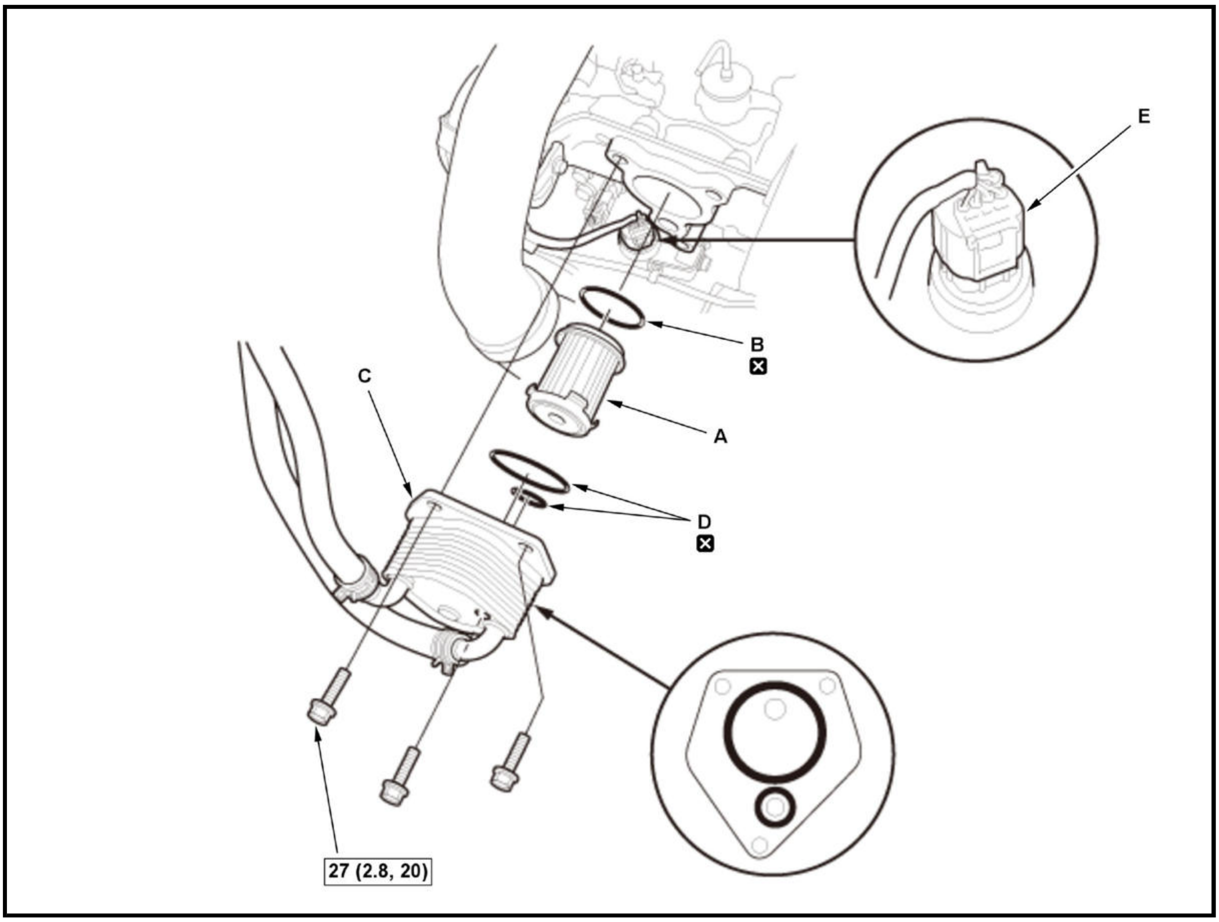

2. Install the CVTF warmer (C) with new O-rings (D).

NOTE:

- **The CVTF warmer is aluminum part. Be careful not to damage the CVTF warmer.**
- **Make sure the O-rings are firmly installed in the grooves.**
- **Check the connector (E) for corrosion, dirt, or oil, and clean or repair if necessary.**

29. Shift Cable (Transmission Side) - Install

NOTE: Be sure to adjust the shift cable after installing the shift cable.

30. Intake Air Duct - Install
31. 12 Volt Battery Base Bracket - Install
32. 12 Volt Battery Base - Install
33. 12 Volt Battery - Install
34. Air Cleaner - Install
35. Front Bulkhead Cover - Install
36. Front Wheel - Install (Both Sides)
37. Steering Joint - Connect
38. Transmission Fluid - Refill
39. Transmission Fluid Level - Check
40. Transmission - After Install Check

1. Make sure all four wheels to rotate freely.

2. Turn the vehicle to the ON mode.

3. Move the shift lever to each position, and check that the shift position indicator follows the shift lever operation.

4. Start the engine.

NOTE:

Check that the engine starts in P or N position/mode, and does not start in any other positions/modes.

5. Check the shift lever operation.

6. Make sure the vehicle is turned to the OFF (LOCK) mode with the shift lever in P position/mode. If it is not, **adjust the shift cable**

again.

41. **Engine Undercover - Install**
42. **Front Wheel Alignment - Check**
43. **VSA Sensor Neutral Position - Memorize**
44. **Vehicle - Road Test**

CVTF WARMER HOSE REMOVAL AND INSTALLATION

Removal

NOTE:

- ℹ Where icon is shown, further information shown below.
- Unless otherwise indicated, illustrations used in the procedure are for 1.5 L engine.

1

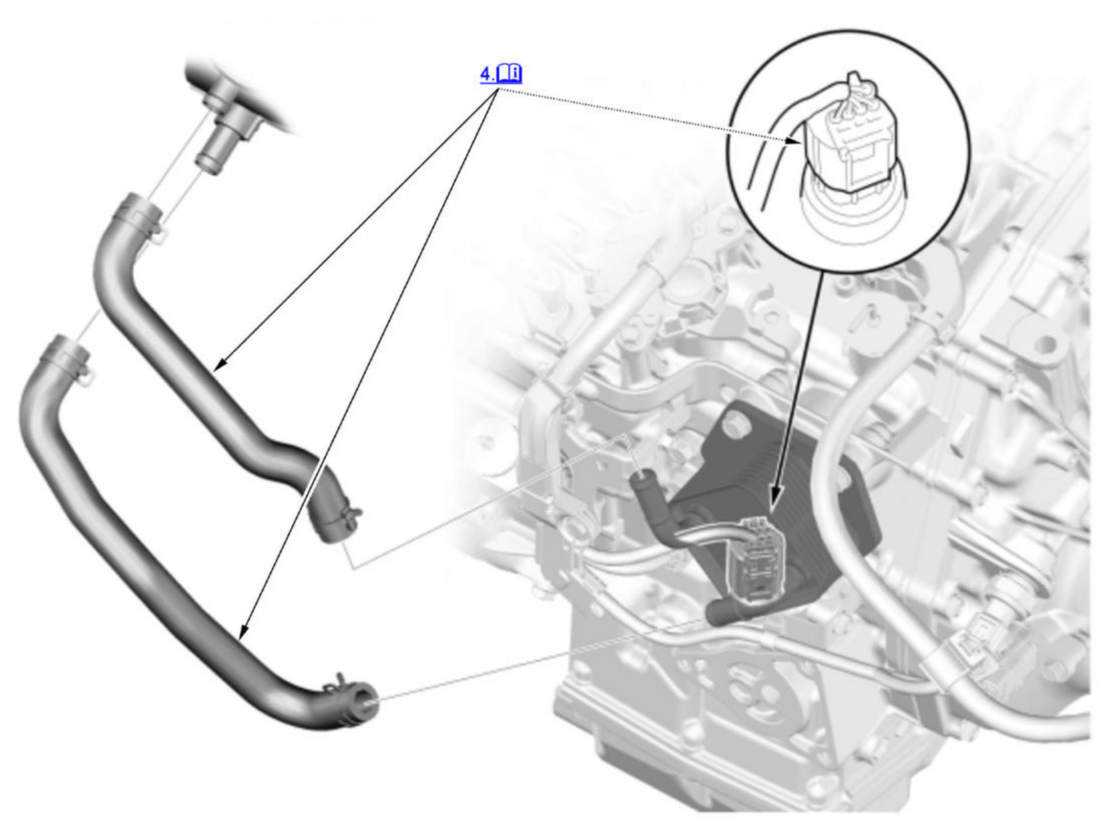

ℹ	Detailed information, notes and precautions

1. **Engine Coolant - Drain**
2. **Air Cleaner - Remove**
3. **Throttle Body Inlet Pipe - Remove** (1.5 L engine)
4. CVTF Warmer Hose - Disconnect

   NOTE:

   - When disconnecting/connecting the hoses, do not bend the warmer pipes excessively, or they will be damaged or deformed.
   - To prevent damage, cover the connector located under the CVTF warmer using a shop towel.
5. CVTF Warmer Hose - Connect

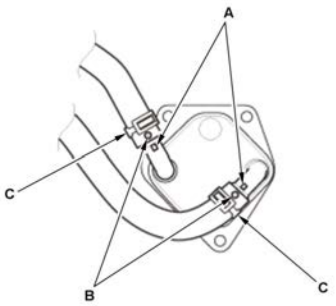	1. Connect the CVTF warmer inlet hose and outlet hose to each bulge of the CVTF warmer lines by aligning the paint marks (A) on the lines with the paint marks (B) on the hose ends. **NOTE:** **When disconnecting/connecting the hoses, do not bend the warmer pipes excessively, or they will be damaged or deformed.** 2. Secure the CVTF warmer hoses with the clamps (C). - When securing the clamps, make sure they do not interfere with the surrounding parts.

	• Check the connector for corrosion, dirt, or oil, and clean or repair if necessary.

6. All Removed Parts - Install

1. Install the parts in the reverse order of removal.

7. **Engine Coolant - Refill**

CVTF WARMER REMOVAL AND INSTALLATION

Removal and Installation

NOTE:

- 📖 Where icon is shown, further information shown below.
- Keep all foreign particles out of the transmission.

1

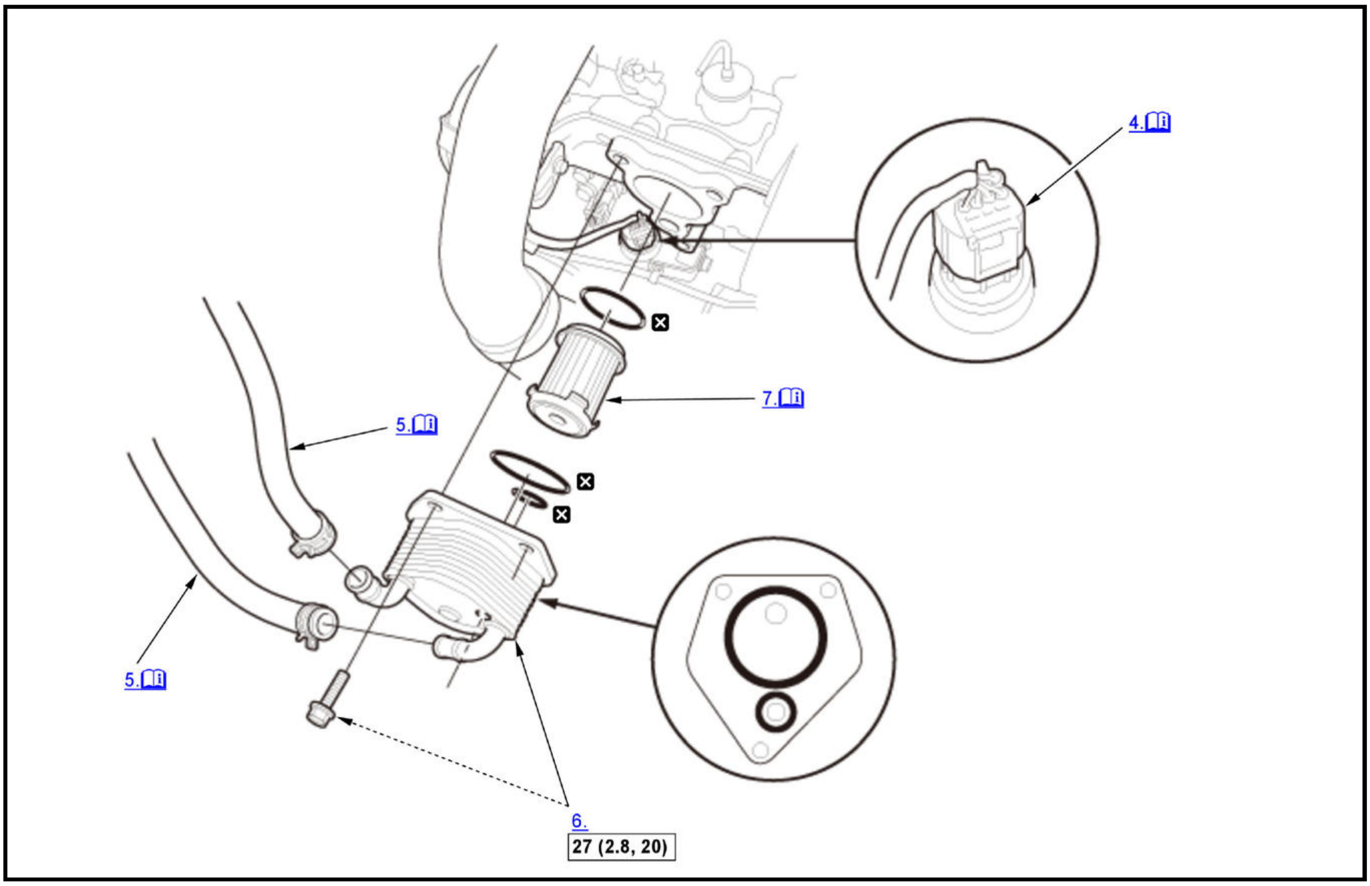

📖	Detailed information, notes and precautions
☐	Torque: N.m (kgf.m, lbf.ft)
☒	Replace

1. **Engine Coolant - Drain**
2. **Air Cleaner - Remove**
3. **Throttle Body Inlet Pipe - Remove** (1.5 L engine)
4. Connector (Solenoid Wire Harness A) - Cover

NOTE: To prevent damage, cover the connector located under the CVTF warmer using a shop towel.

5. CVTF Warmer Hose - Disconnect

NOTE: When disconnecting/connecting the hoses, do not bend the warmer pipes excessively, or they will be damaged or deformed.

6. CVTF Warmer - Remove
7. CVTF Warmer Strainer - Remove

1. Clean the CVTF warmer strainer if necessary. Replace the CVTF warmer strainer, if it is clogged or damaged.

NOTE:

- **Do not use compressed air to clean the CVTF warmer strainer.**
- **Soak the CVTF warmer strainer thoroughly in transmission fluid.**

8. All Removed Parts - Install

1. Install the parts in the reverse order of removal.

NOTE:

- **Apply a light coat of clean transmission fluid on all O-rings before installation.**
- **Make sure the O-rings are firmly installed in the grooves.**
- **Make sure the CVTF warmer strainer is installed in the correct direction.**
- **Check the connector**

for corrosion, dirt, or oil, and clean or repair if necessary. - If necessary, add transmission fluid to the proper level .

9. Engine Coolant - Refill

DRIVE PLATE REMOVAL AND INSTALLATION

Removal and Installation

NOTE: How to read the torque specifications .

1. Transmission - Remove
2. Drive Plate - Remove

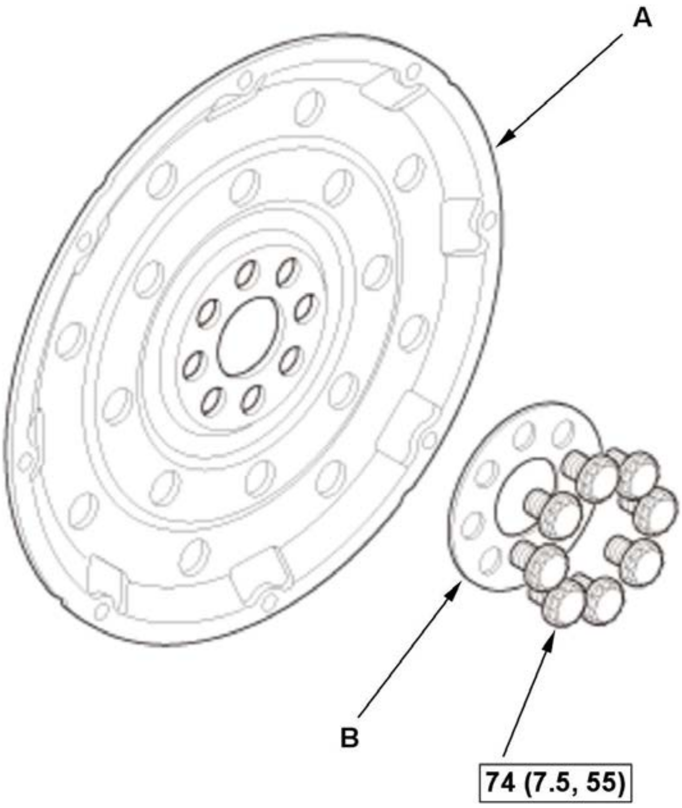	1. Remove the drive plate (A) with the washer (B).

3. All Removed Parts - Install

1. Install the parts in the reverse order of removal. **NOTE:** **Tighten eight bolts in a crisscross pattern in at**

least two steps.

SHIFT LEVER REMOVAL AND INSTALLATION

Removal and Installation

SRS components are located in this area. Review **the SRS component locations** and **the precautions and procedures** before doing repair or service.

NOTE:

- ℹ Where icon is shown, further information shown below.

1

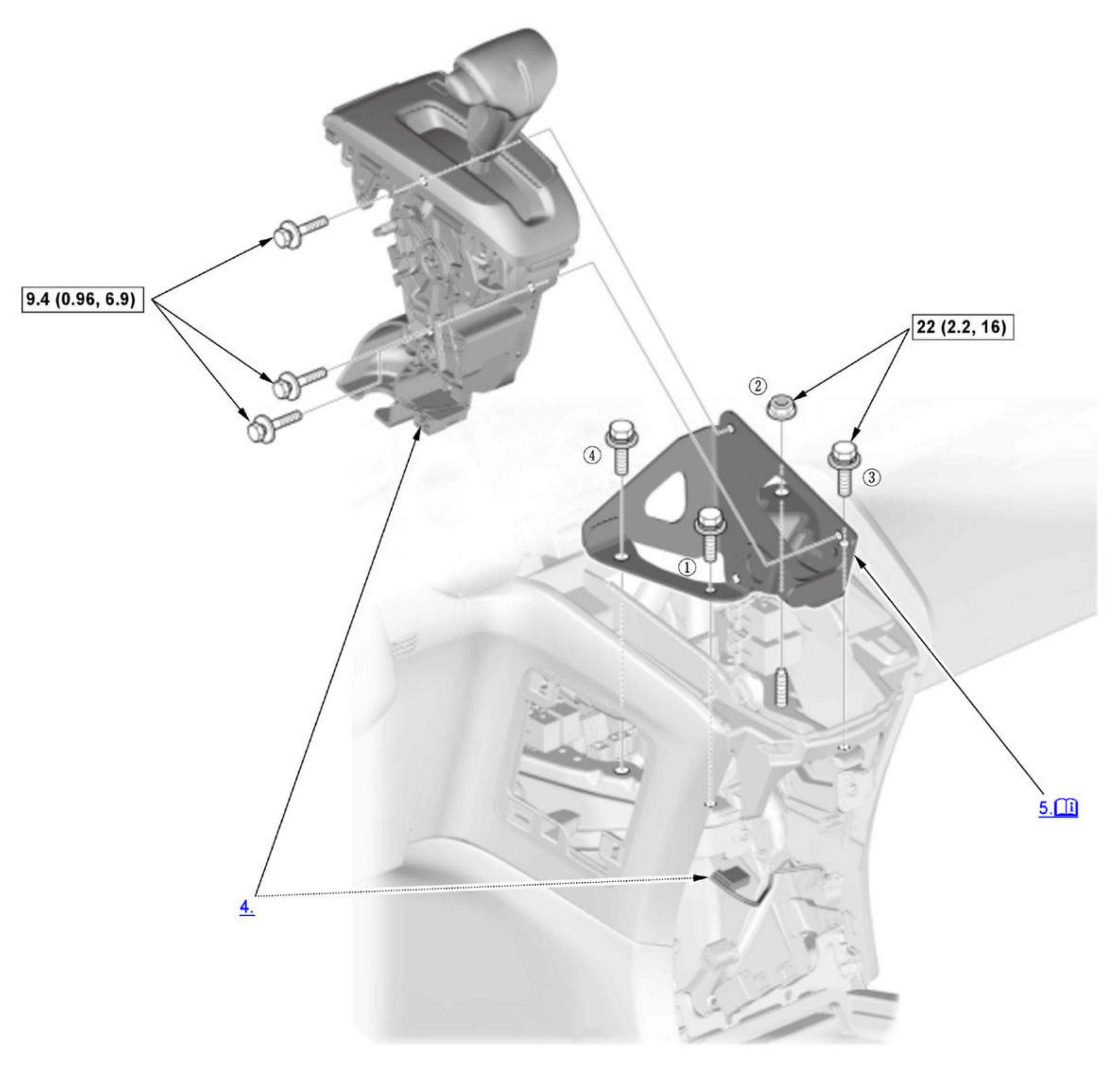

ℹ	Detailed information, notes and precautions
▭	Torque: N.m (kgf.m, lbf.ft)

1. **Shift Lever Panel - Remove**

2. Center Console - Remove
3. Shift Cable (Shift Lever Side) - Remove
4. Shift Lever - Remove
5. Shift Lever Bracket Base - Remove

1. If necessary, removed the shift lever bracket base.

6. All Removed Parts - Install

1. Install the parts in the reverse order of removal.

NOTE:

- **Tighten the shift lever bracket base bolts and nut in the sequence shown in exploded view above.**
- **Be sure to adjust the shift cable before installing the shift cable.**

7. Shift Lever - After Install Check

1. Turn the vehicle to the ON mode.

2. Move the shift lever to each position, and check that the shift position indicator follows the shift lever operation.

3. Shift the transmission to P position/mode, and check that the shift lock works properly.

4. Push the shift lock release, and check that the shift lever releases. Also check that the shift lever locks when it is shifted back to P.

5. Start the engine.

NOTE:

Check that the engine starts in P or N position/mode, and does not start in any other positions/modes.

6. Make sure the vehicle is turned to the OFF (LOCK) mode with the shift lever in P position/mode. If it is not, **adjust the shift cable** again.

SHIFT SOLENOID VALVE O/P REMOVAL AND INSTALLATION

Removal and Installation

NOTE:

- **How to read the torque specifications** .
- Keep all foreign particles out of the transmission.

1. **Transmission Fluid - Drain**
2. **12 Volt Battery Terminals - Disconnect**

   NOTE: Make sure to reset the learned value of CVT system when replacing hydraulically-controlled parts in order not to cause any damage the transmission. The learned value of the CVT system is reset when the negative battery terminal is disconnected.

3. **Transmission Fluid Pan - Remove**

   NOTE: The actual transmission fluid (HCF-2) capacity will vary from the specified capacity based on the length of time the transmission fluid pan is off the transmission. Avoid leaving the transmission fluid pan off for extend periods of time.

4. Shift Solenoid Valve O/P - Remove

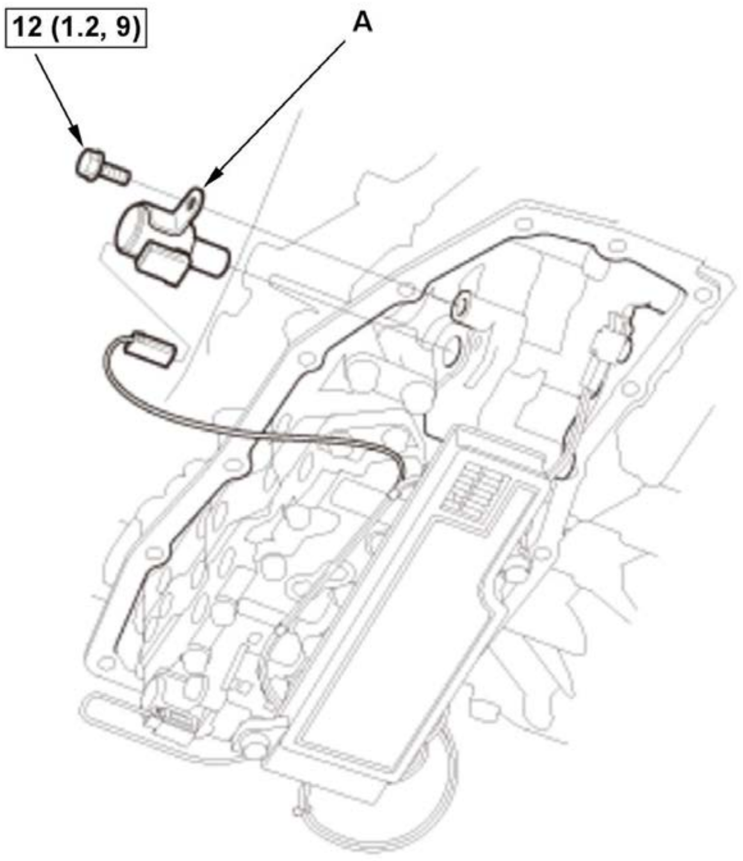	1. Remove the shift solenoid valve O/P (A).

5. All Removed Parts - Install

1. Install the parts in the reverse order of removal.

6. Transmission Fluid - Refill
7. 12 Volt Battery Terminals - Reconnect
8. Transmission Fluid Level - Check

TCM REMOVAL AND INSTALLATION (1.5 L ENGINE)

Removal and Installation

1

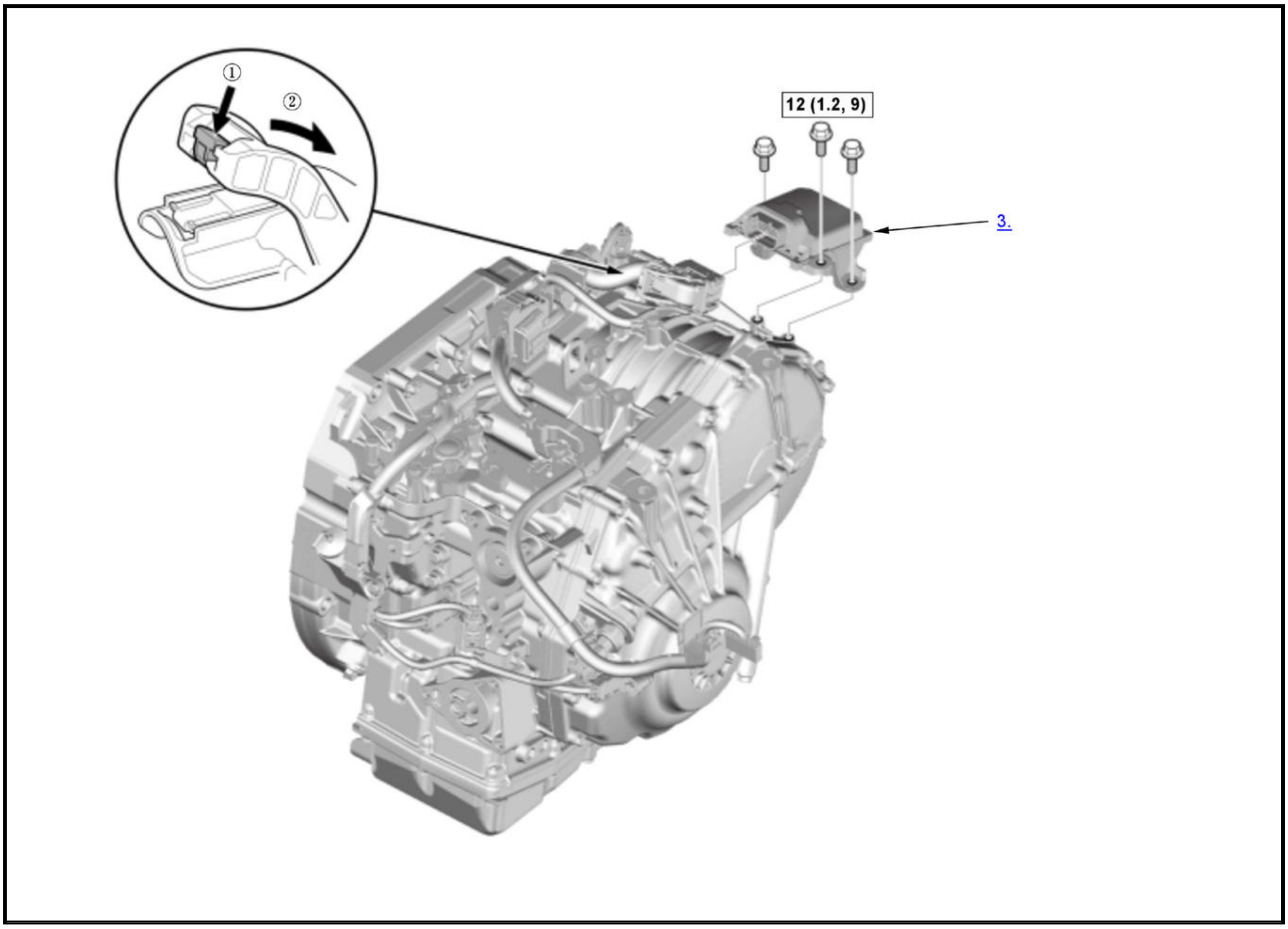

▭	Torque: N.m (kgf.m, lbf.ft)

1. 12 Volt Battery - Remove
2. 12 Volt Battery Base - Remove
3. TCM - Remove
4. All Removed Parts - Install

1. Install the parts in the reverse order of removal.

NOTE:

- **Check the connector for corrosion, dirt, or oil, and clean** or repair if necessary.

- Make sure the connector is fully seated.

Procedure After Replacing the TCM

5. Auxiliary Transmission Fluid Pump - Air Bleed (With auto idle stop system)
6. Transmission Fluid Level - Check (With auto idle stop system)
7. TCM - Update

TRANSMISSION FLUID PUMP REMOVAL AND INSTALLATION

Removal

NOTE:

- ℹ Where icon is shown, further information shown below.
- Keep all foreign particles out of the transmission.

1

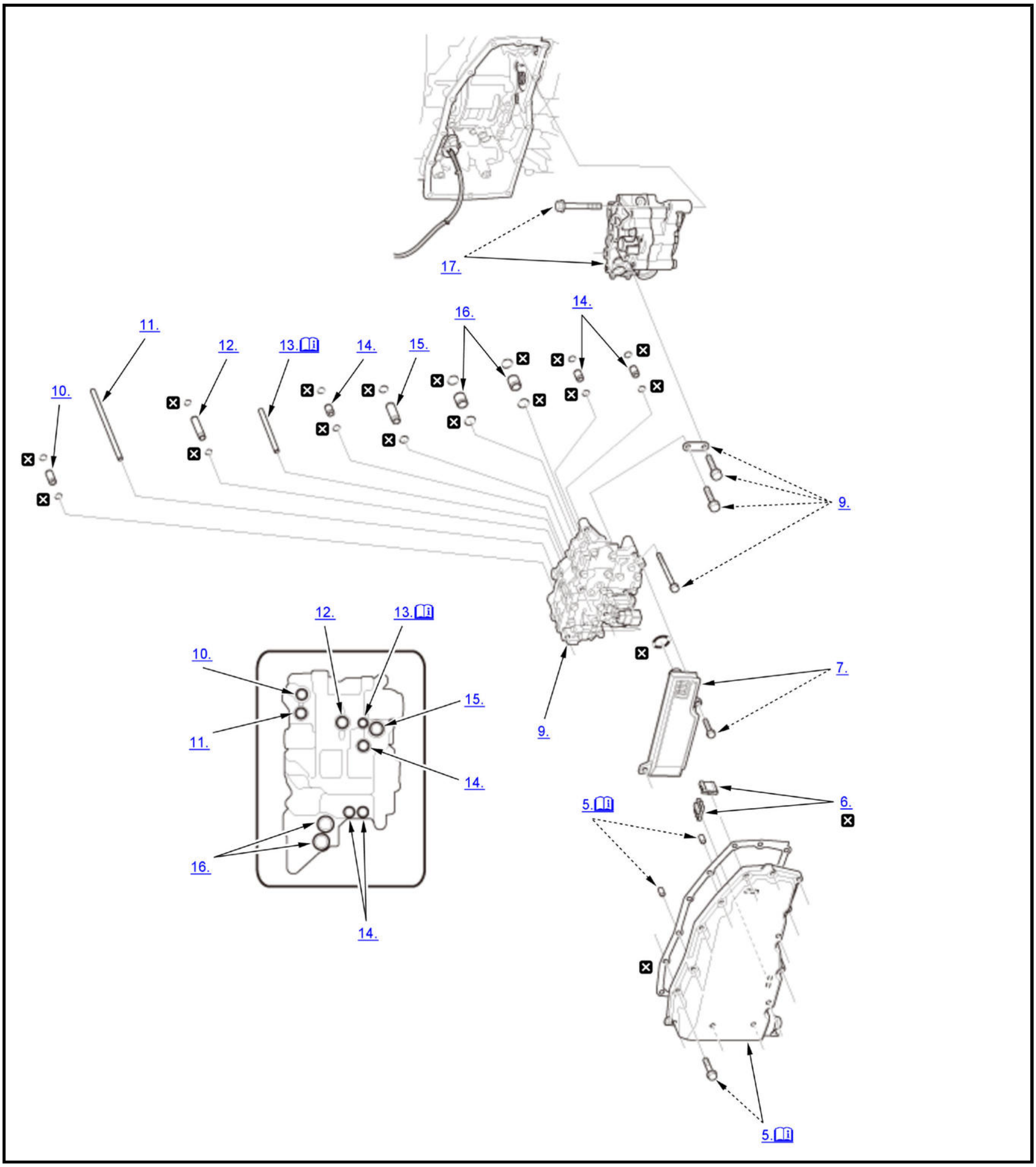
17.
16.
14.
11.
12.
13.
14.
15.
10.
9.
7.
9.
6.
5.
5.
12.
13.
10.
15.
11.
14.
16.
14.

ℹ	Detailed information, notes and precautions
☒	Replace

1. **Vehicle - Lift**
2. **Engine Undercover - Remove**
3. **12 Volt Battery Terminals - Disconnect** (2.4 L engine)

   NOTE: The learned values of the CVT system is reset when the negative battery terminal is disconnected to prevent damage to the transmission.

4. **Transmission Fluid - Drain**
5. Transmission Fluid Pan - Remove

NOTE: The actual transmission fluid (HCF-2) capacity will vary from the specified capacity based on the length of time the transmission fluid pan is off the transmission. Avoid leaving the transmission fluid pan off for extend periods of time.

6. Magnet - Remove
7. Transmission Fluid Strainer - Remove
8. Transmission Fluid Strainer - Check

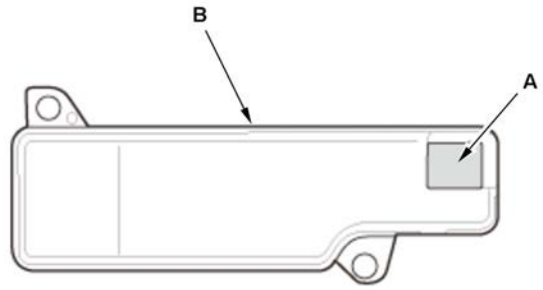	1. Clean the inlet opening (A) of the transmission fluid strainer (B) thoroughly with compressed air. 2. Check that it is in good condition and that the inlet opening is not clogged. 3. Test the strainer by pouring clean transmission fluid through the inlet opening, and replace it if it is clogged or damaged.

9. Valve Body Assembly - Remove
10. 10.9 x 26 mm Pipe - Remove
11. 8 x 133.5 mm Pipe - Remove
12. 12 x 56.7 mm Pipe - Remove
13. Joint Pipe - Remove

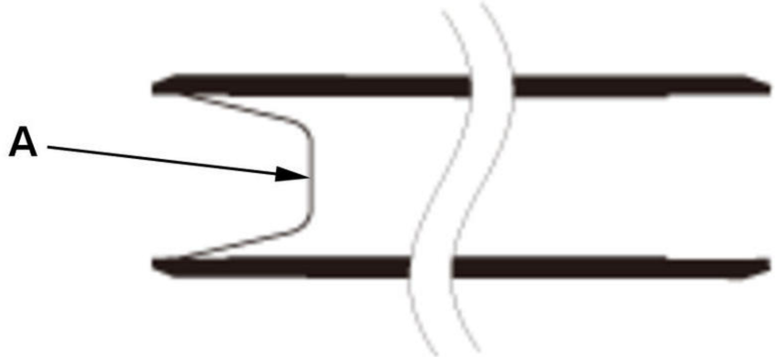

NOTE: Be careful not to drop the filter (A).

14. 10.9 x 18.5 mm Pipe - Remove
15. 14.3 x 36.2 mm Pipe - Remove
16. 18 x 18 mm Pipe - Remove
17. Transmission Fluid Pump - Remove

Installation

NOTE:

- 📖 Where icon is shown, further information shown below.
- Keep all foreign particles out of the transmission.
- Apply a light coat of clean transmission fluid on all O-rings before installation.
- Be careful not to damage the O-rings.

1

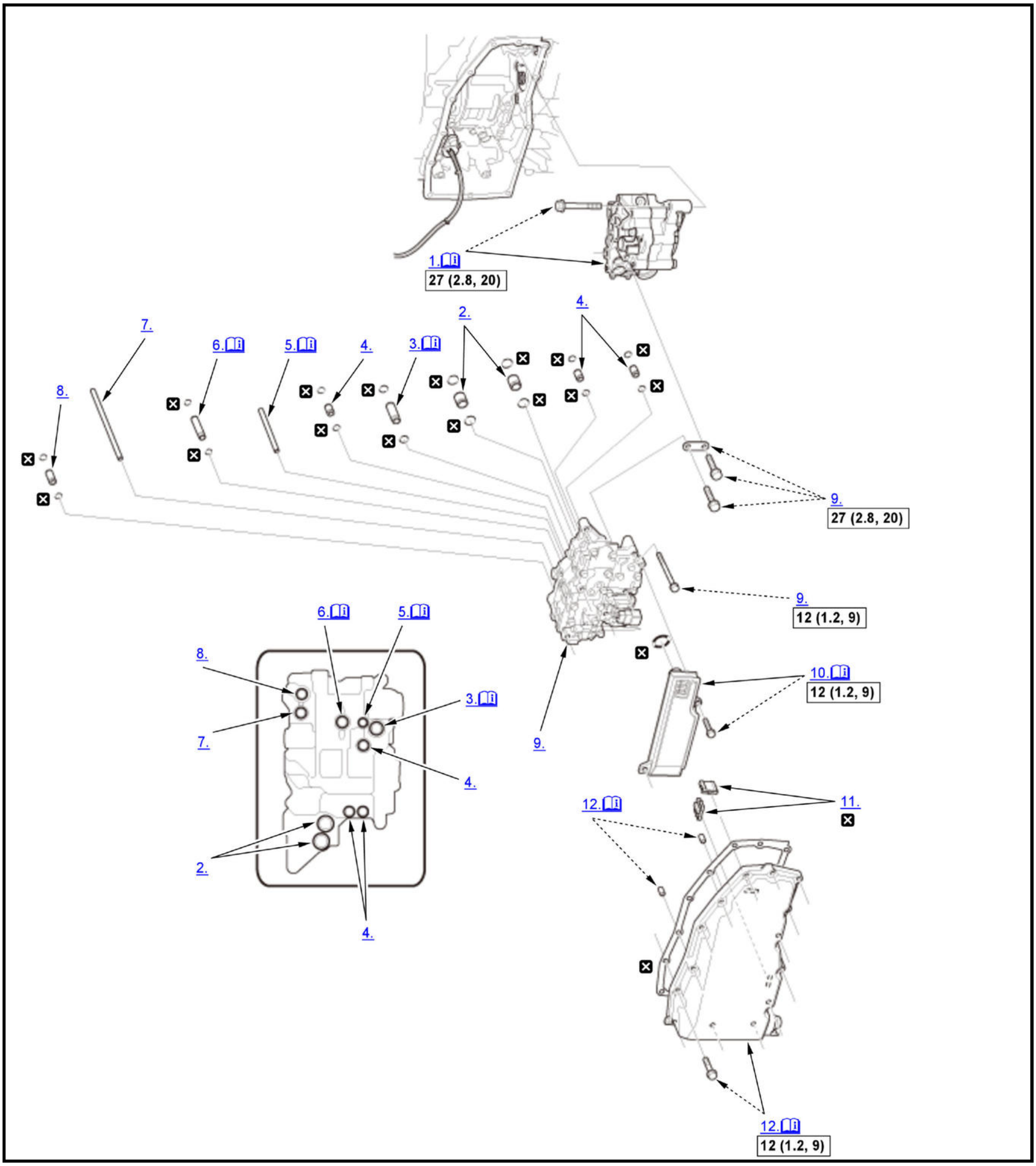
1. 📖
27 (2.8, 20)
2.
4.
7.
6. 📖
5. 📖
4.
3. 📖
8.
9.
27 (2.8, 20)
9.
12 (1.2, 9)
6. 📖
5. 📖
8.
3. 📖
7.
9.
4.
10. 📖
12 (1.2, 9)
11.
12. 📖
2.
4.
12. 📖
12 (1.2, 9)

📖	Detailed information, notes and precautions
▭	Torque: N.m (kgf.m, lbf.ft)

☒	Replace

1. Transmission Fluid Pump - Install

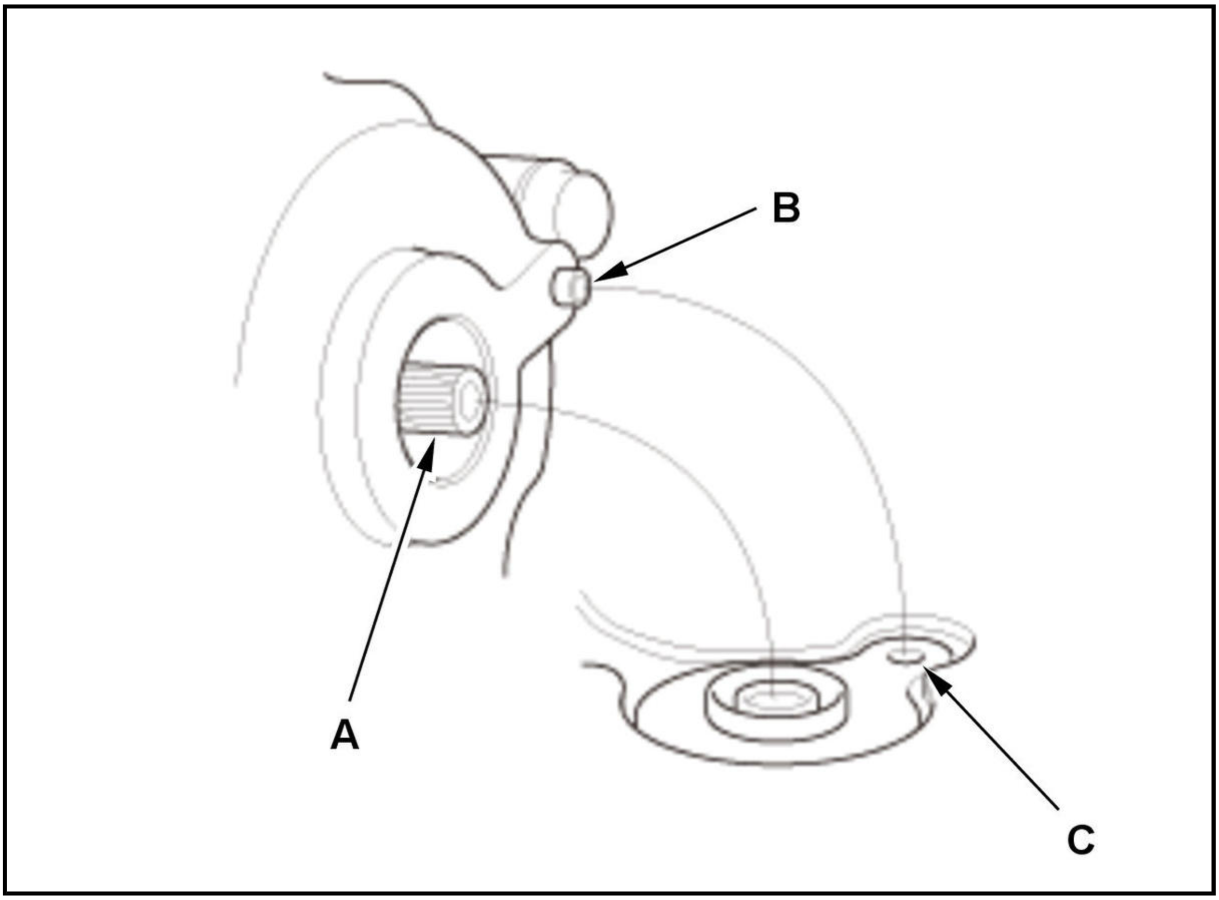

NOTE:

- Apply transmission fluid to the transmission fluid pump shaft splines (A).
- Align the guide pin (B) of the transmission fluid pump with the guide hole (C) of the stator shaft flange.

2. 18 x 18 mm Pipe - Install
3. 14.3 x 36.2 mm Pipe - Install

NOTE: You can install the pipe regardless of its direction.

4. 10.9 x 18.5 mm Pipe - Install
5. Joint Pipe - Install

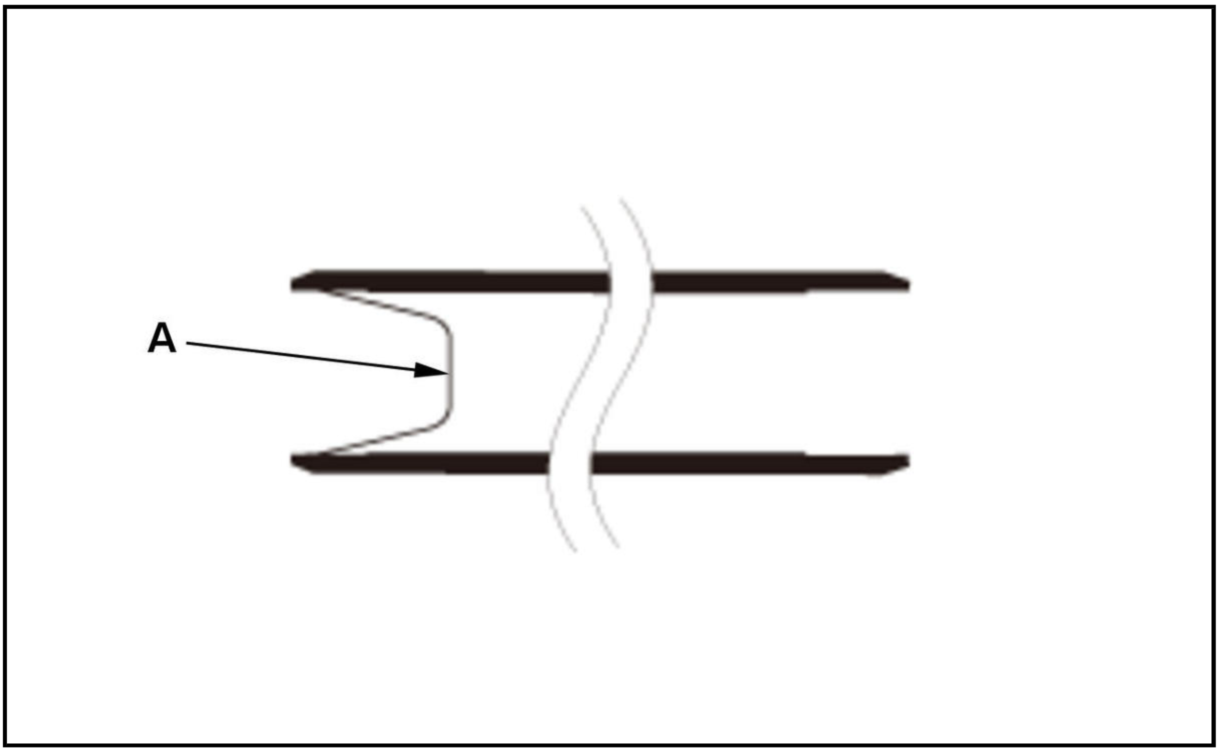

NOTE:

- The joint pipe has the filter (A). The filter end should face the valve body assembly side.
- Be careful not to drop the filter.

6. 12 x 56.7 mm Pipe - Install

   NOTE: You can install the pipe regardless of its direction.

7. 8 x 133.5 mm Pipe - Install
8. 10.9 x 26 mm Pipe - Install
9. **Valve Body Assembly - Install**
10. Transmission Fluid Strainer - Install

    NOTE: Do not pinch solenoid wire harnesses A and B.

11. Magnet - Install
12. Transmission Fluid Pan - Install

    NOTE:

    - Tighten the transmission fluid pan mounting bolts in a crisscross pattern in two steps.
    - Do not pinch solenoid wire harnesses A and B.

13. **Transmission Fluid - Refill**
14. **12 Volt Battery Terminals - Reconnect** (2.4 L engine)
15. **Auxiliary Transmission Fluid Pump - Air Bleed** (With auto idle stop system)
16. **Transmission Fluid Level - Check**
17. **Engine Undercover - Install**
18. **TCM - Reset** (1.5 L engine)

    NOTE:

    - Make sure to reset the learned value of CVT system when replacing hydraulically-controlled parts in order to prevent damage to the transmission.

  - This procedure is not required if the transmission fluid pump and the TCM are replaced together.

VALVE BODY ASSEMBLY REMOVAL AND INSTALLATION

Removal

NOTE:

- ℹ Where icon is shown, further information shown below.
- Keep all foreign particles out of the transmission.
- Unless otherwise indicated, illustrations used in the procedure are for the 1.5 L engine model.
- Solenoid wire harness A and the transmission fluid temperature sensor are not available separately. Replace them as a set.
- For models with the auto idle stop system, The auxiliary transmission fluid pump and the lower valve body assembly are connected with the delivery pipe and the 10.9 x 31.5 mm pipe. Make sure to remove them.
- The valve body assembly and the following parts are not available separately. Replace them as a set.
-
  - -

    CVT clutch pressure control solenoid valve
  - -

    CVT drive pulley pressure control solenoid valve
  - -

    CVT driven pulley pressure control solenoid valve
  - -

    CVT lock-up clutch control solenoid valve
  - -

    Shift solenoid valve B
  - -

    Solenoid wire harness B

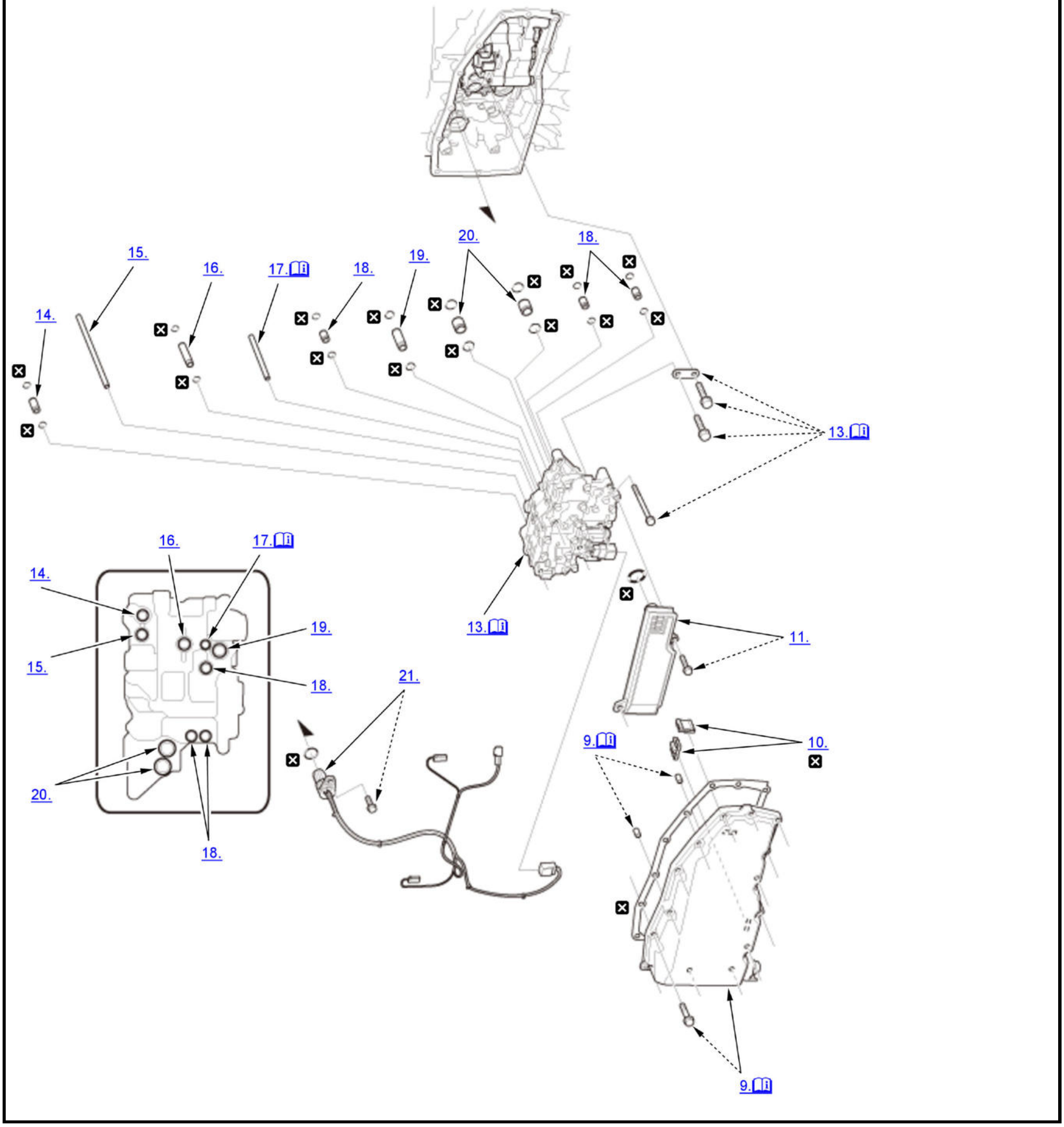
15.
16.
17.
18.
19.
20.
18.
14.
13.
16.
17.
14.
19.
15.
18.
13.
11.
21.
9.
10.
20.
18.
9.

ℹ	Detailed information, notes and precautions
☒	Replace

1. **Vehicle - Lift**
2. **Engine Undercover - Remove**
3. **12 Volt Battery Terminals - Disconnect** (2.4 L engine)

   NOTE: The learned values of the CVT system is reset when the negative battery terminal is disconnected to prevent damage to the transmission.

4. **Transmission Fluid - Drain**
5. **Auxiliary Transmission Fluid Pump - Remove** (With auto idle stop system)

6. **Delivery Pipe - Remove** (With auto idle stop system)
7. **10.9 x 31.5 mm Pipe - Remove** (With auto idle stop system)
8. Connector (Solenoid Wire Harness A) - Disconnect

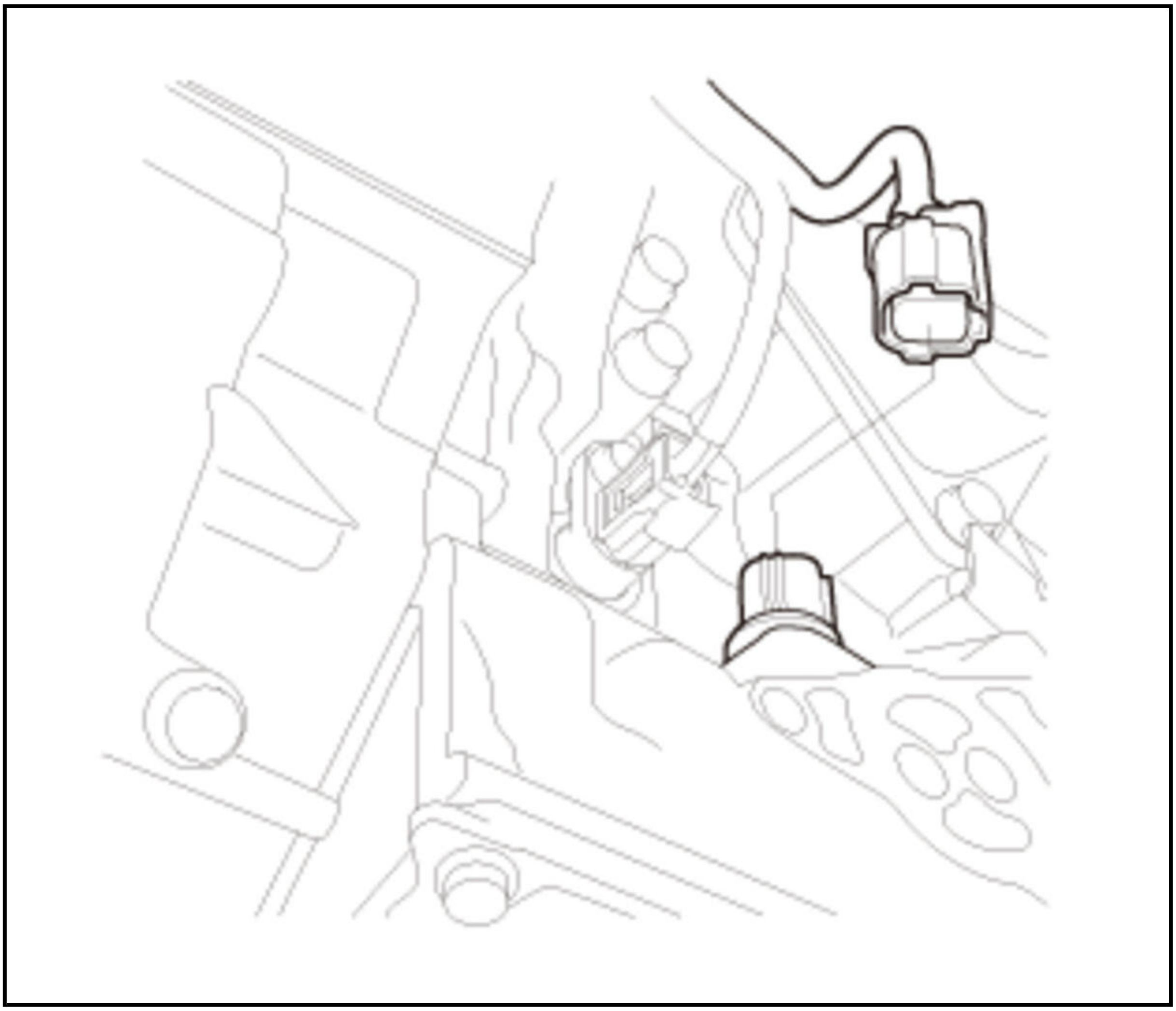

9. Transmission Fluid Pan - Remove

   NOTE: The actual transmission fluid (HCF-2) capacity will vary from the specified capacity based on the length of time the transmission fluid pan is off the transmission. Avoid leaving the transmission fluid pan off for extend periods of time.

10. Magnet - Remove
11. Transmission Fluid Strainer - Remove
12. Transmission Fluid Strainer - Check

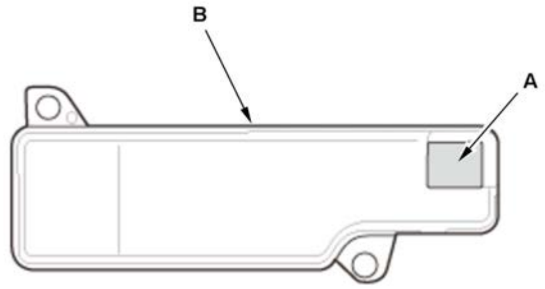	1. Clean the inlet opening (A) of the transmission fluid strainer (B) thoroughly with compressed air. 2. Check that it is in good condition and that the inlet opening is not clogged. 3. Test the strainer by pouring clean transmission fluid through the inlet opening, and replace it if it is clogged or damaged.

13. Valve Body Assembly - Remove

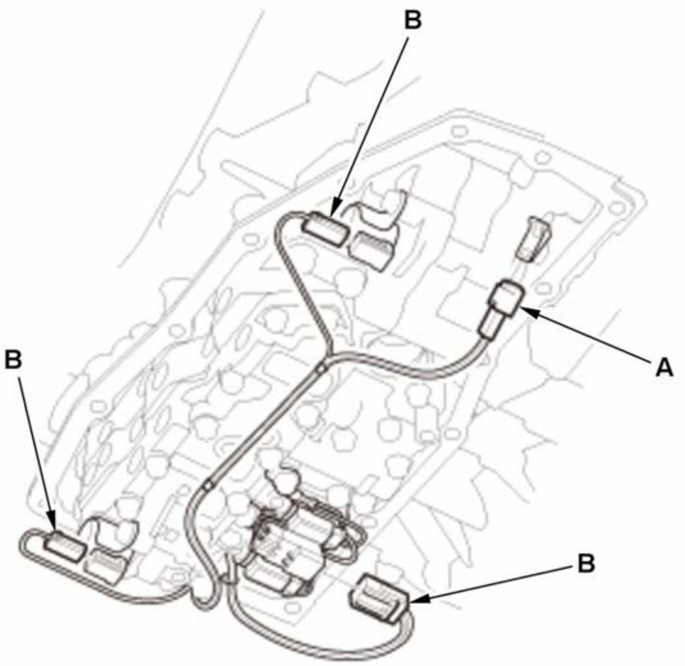

1. Remove the transmission fluid temperature sensor (A).

2. Disconnect the connectors (B).

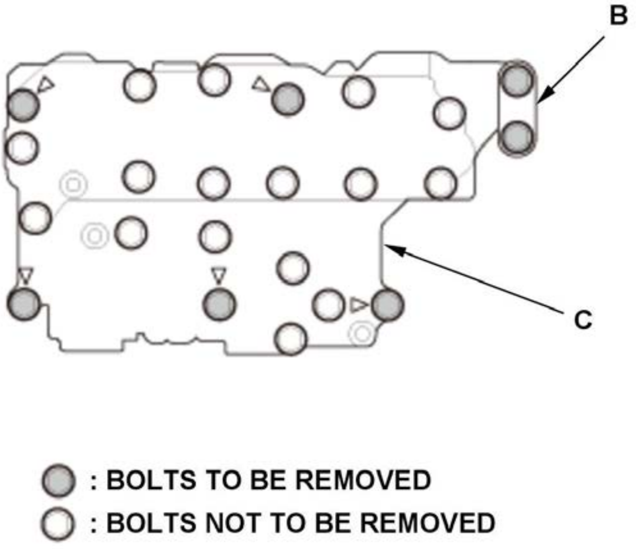
B
C
● : BOLTS TO BE REMOVED
○ : BOLTS NOT TO BE REMOVED

3. Remove the guide plate (B).

4. Remove the valve body assembly (C).

NOTE:

- **Do not remove the bolts with no ' marked on them.**
- **Check that the valve body assembly is free from solenoid wire harness A.**
- **Be careful not to damage solenoid wire harness A.**

14. 10.9 x 26 mm Pipe - Remove
15. 8 x 133.5 mm Pipe - Remove
16. 12 x 56.7 mm Pipe - Remove
17. Joint Pipe - Remove

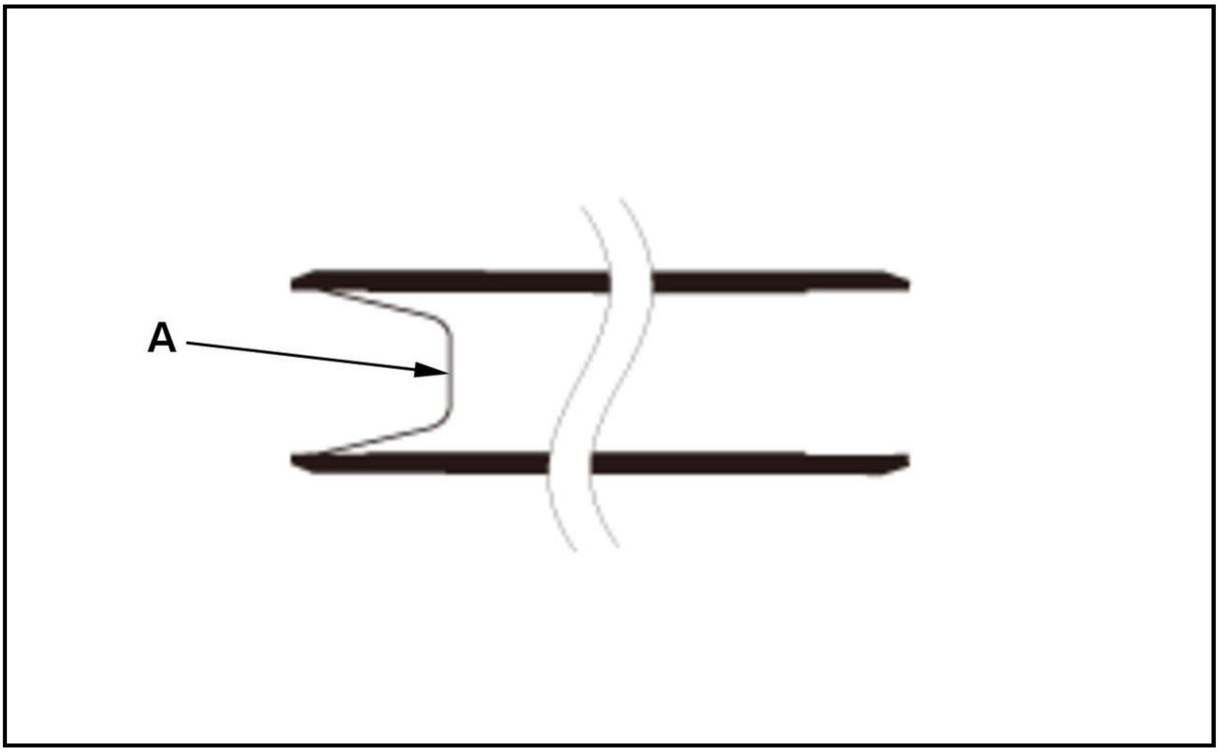

NOTE: Be careful not to drop the filter (A).

18. 10.9 x 18.5 mm Pipe - Remove
19. 14.3 x 36.2 mm Pipe - Remove
20. 18 x 18 mm Pipe - Remove
21. Solenoid Wire Harness A - Remove

Installation

NOTE:

- ℹ Where icon is shown, further information shown below.
- Keep all foreign particles out of the transmission.
- Apply a light coat of clean transmission fluid on all O-rings before installation.
- Be careful not to damage the O-rings.
- Unless otherwise indicated, illustrations used in the procedure are for the 1.5 L engine model.
- Solenoid wire harness A and the transmission fluid temperature sensor are not available separately. Replace them as a set if necessary.
- The valve body assembly and the following parts are not available separately. Replace them as a set.
-
  - -

    CVT clutch pressure control solenoid valve

  - -

    CVT drive pulley pressure control solenoid valve

- -

  CVT driven pulley pressure control solenoid valve

- -

  CVT lock-up clutch control solenoid valve

- -

  Shift solenoid valve B

- -

  Solenoid wire harness B

1

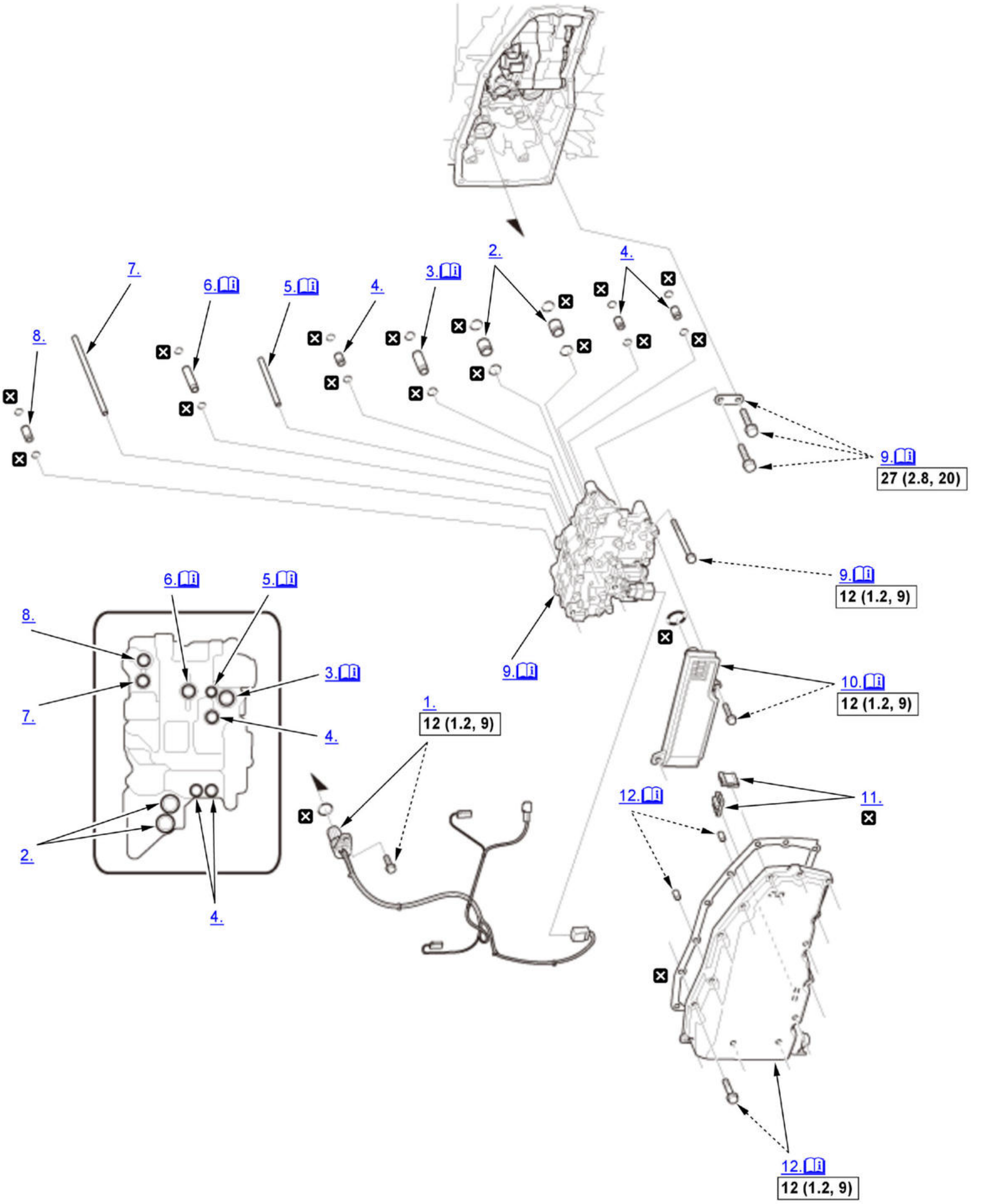
8.
7.
6.
5.
4.
3.
2.
4.
9.
27 (2.8, 20)
9.
12 (1.2, 9)
6.
5.
8.
3.
7.
4.
2.
4.
9.
1.
12 (1.2, 9)
10.
12 (1.2, 9)
12.
11.
12.
12 (1.2, 9)

ⓘ	Detailed information, notes and precautions
☐	Torque: N.m (kgf.m, lbf.ft)
☒	Replace

1. Solenoid Wire Harness A - Install
2. 18 x 18 mm Pipe - Install
3. 14.3 x 36.2 mm Pipe - Install

   NOTE: You can install the pipe regardless of its direction.

4. 10.9 x 18.5 mm Pipe - Install

5. Joint Pipe - Install

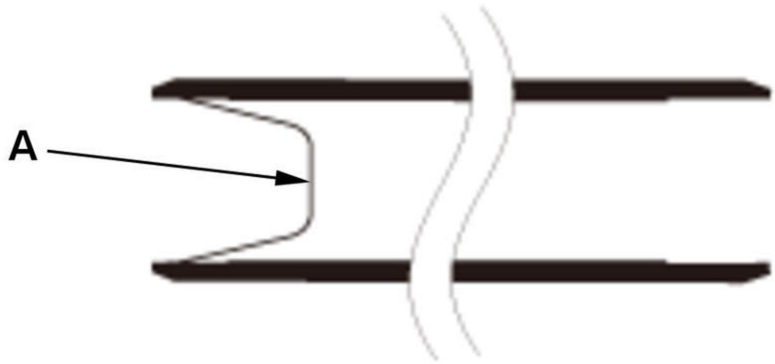

NOTE:

- The joint pipe has the filter (A). The filter end should face the valve body assembly side.
- Be careful not to drop the filter.

6. 12 x 56.7 mm Pipe - Install

NOTE: You can install the pipe regardless of its direction.

7. 8 x 133.5 mm Pipe - Install
8. 10.9 x 26 mm Pipe - Install
9. Valve Body Assembly - Install

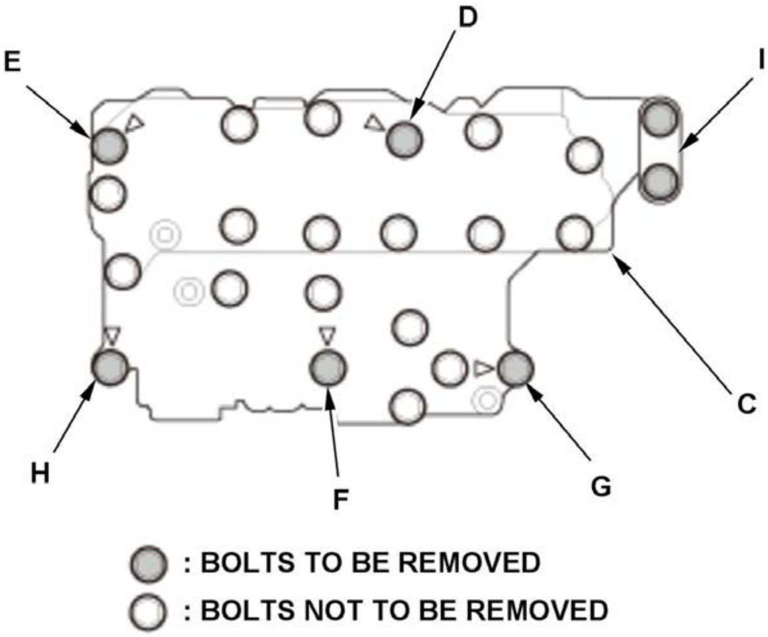 D E I C H F G ● : BOLTS TO BE REMOVED ○ : BOLTS NOT TO BE REMOVED	1. Install the valve body assembly (C). **NOTE:** **Do not pinch solenoid wire harnesses A and B.** 2. Install the guide plate (I).

Bolt	Length
D	90 mm (3.54 in)
E	80 mm (3.15 in)
F	65 mm (2.56 in)
G	55 mm (2.17 in)
H	40 mm (1.57 in)

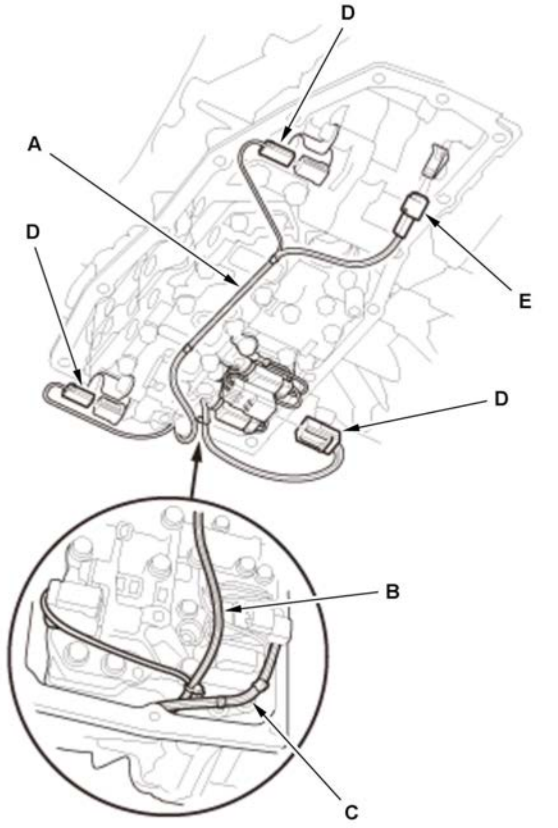	3. Make sure each branch of solenoid wire harness A is routed to the correction locations as shown, especially areas (B) and (C). 4. Connect the connectors (D). 5. Install the transmission fluid temperature sensor (E).

10. Transmission Fluid Strainer - Install

    NOTE: Do not pinch solenoid wire harnesses A and B.

11. Magnet - Install
12. Transmission Fluid Pan - Install

    NOTE:

    - Tighten the transmission fluid pan mounting bolts in a crisscross pattern in two steps.
    - Do not pinch solenoid wire harnesses A and B.

13. Connector (Solenoid Wire Harness A) - Connect

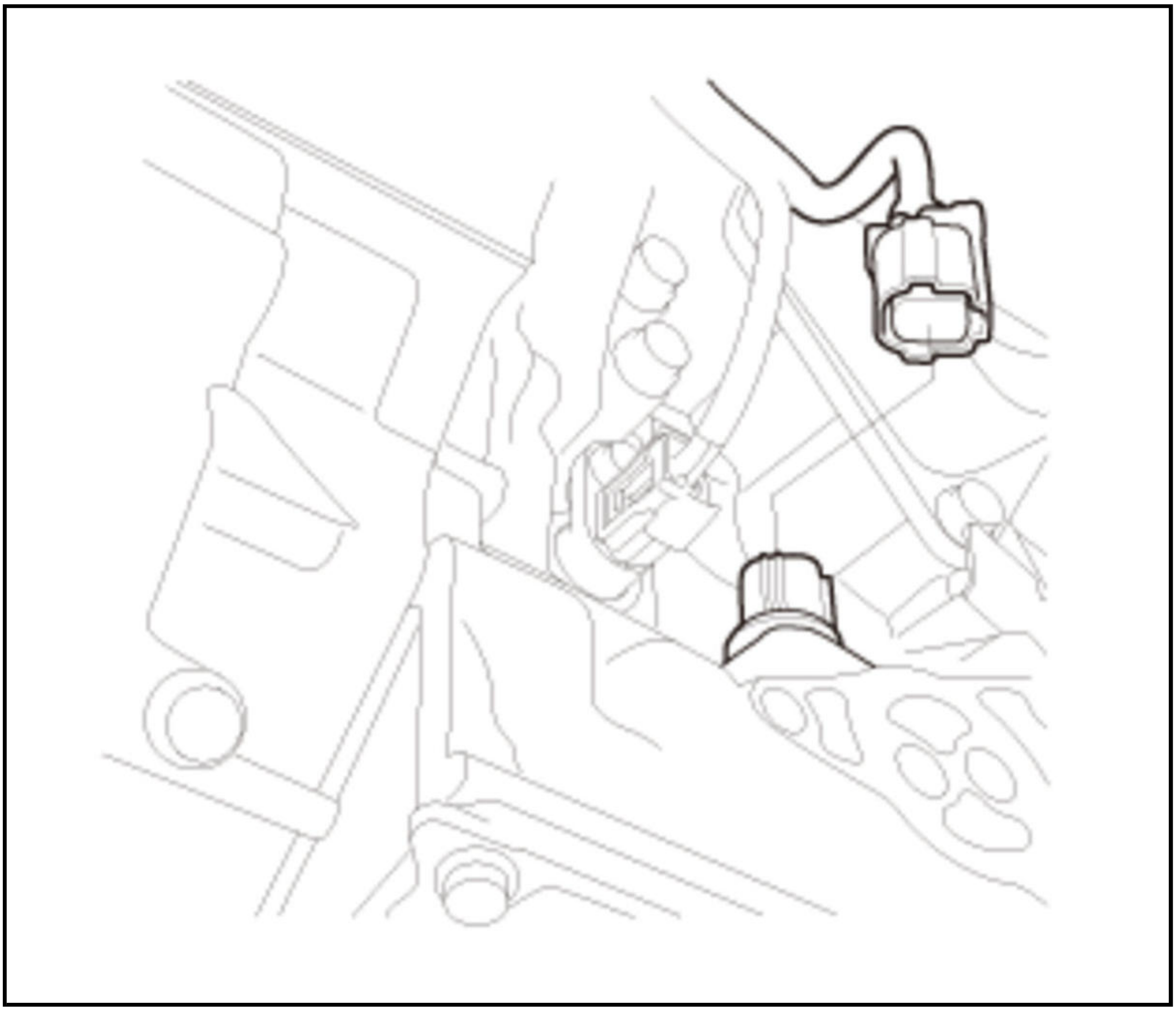

NOTE: Check the connector for corrosion, dirt, or oil, and clean or repair it if necessary.

14. 10.9 x 31.5 mm Pipe - Install (With auto idle stop system)
15. Delivery Pipe - Install (With auto idle stop system)
16. Auxiliary Transmission Fluid Pump - Install (With auto idle stop system)
17. Transmission Fluid - Refill
18. 12 Volt Battery Terminals - Reconnect (2.4 L engine)
19. Auxiliary Transmission Fluid Pump - Air Bleed (With auto idle stop system)
20. Transmission Fluid Level - Check
21. Engine Undercover - Install
22. TCM - Reset (1.5 L engine)

NOTE:

- Make sure to reset the learned value of CVT system when replacing hydraulically-controlled to prevent damage to the transmission.
- This procedure is not required if the valve body assembly and the TCM are replaced together.

REPLACEMENT

CVT OIL SEAL REPLACEMENT

Special Tools Required

Image	Description/Tool Number
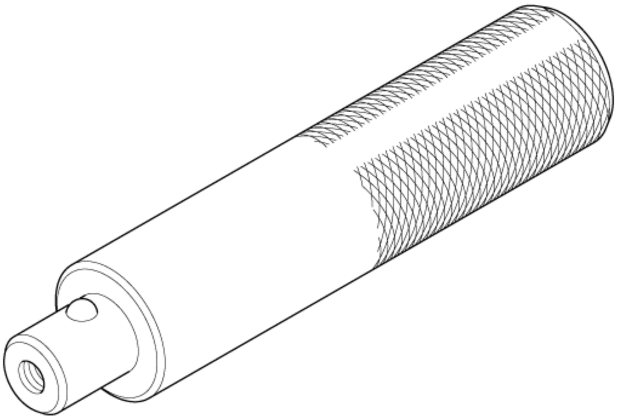	Driver Handle, 15 x 135L 07749-0010000
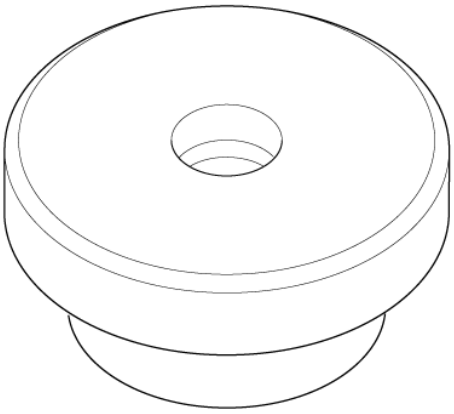	Oil Seal Driver Attachment 07GAD-PG40100
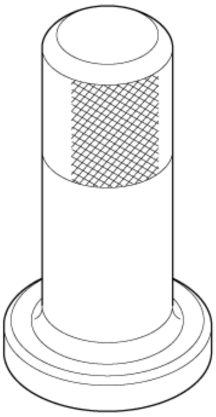	Oil Seal Driver, 65 mm 07JAD-PL90100

Replacement

NOTE: Keep all foreign particles out of the transmission.

Left Differential Oil Seal

1. Vehicle - Lift

2. **Engine Undercover - Remove**
3. **Transmission Fluid - Drain**
4. **Left Driveshaft Inboard Joint - Disconnect**
5. Left Differential Oil Seal - Remove

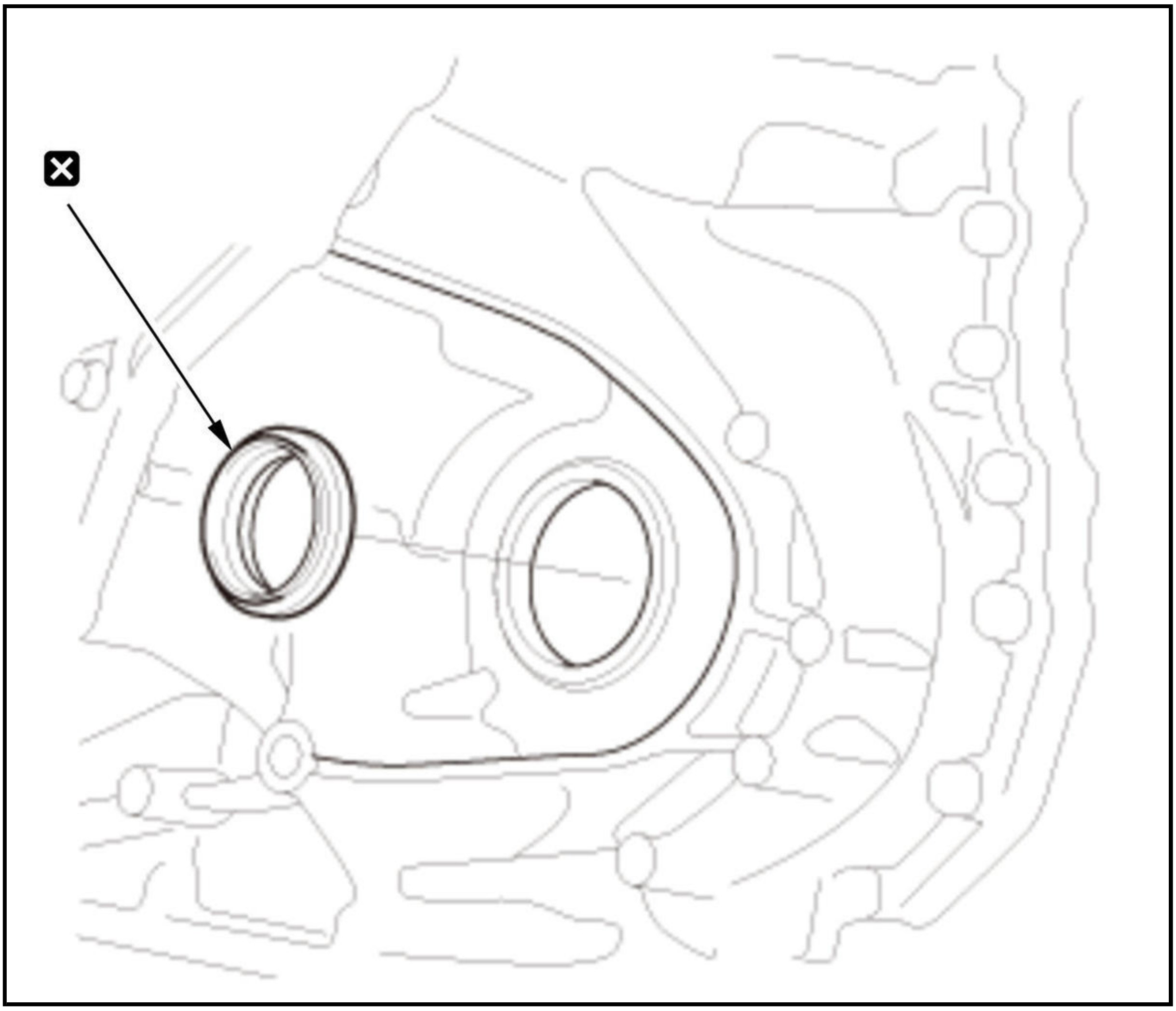

6. Left Differential Oil Seal - Install

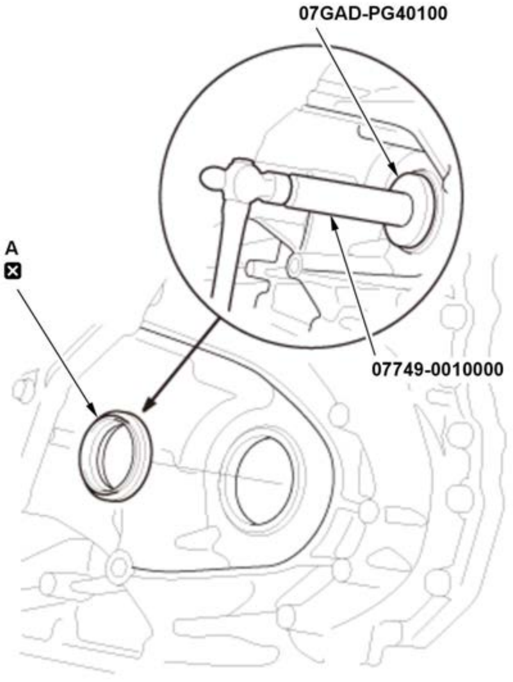	1. Install the left differential oil seal (A) flush with the transmission housing using the 15 x 135L driver handle and the oil seal driver attachment. **NOTE:** Before installation, apply a light coat of clean transmission fluid to the surface both of the press-fit and the lip that are on the oil seal.

7. **Left Driveshaft Inboard Joint - Connect**
8. **Transmission Fluid - Refill**
9. **Transmission Fluid Level - Check**
10. **Engine Undercover - Install**

Right Differential Oil Seal

11. **Vehicle - Lift**
12. **Engine Undercover - Remove**
13. **Transmission Fluid - Drain**
14. **Intermediate Shaft - Remove**
15. Right Differential Oil Seal - Remove

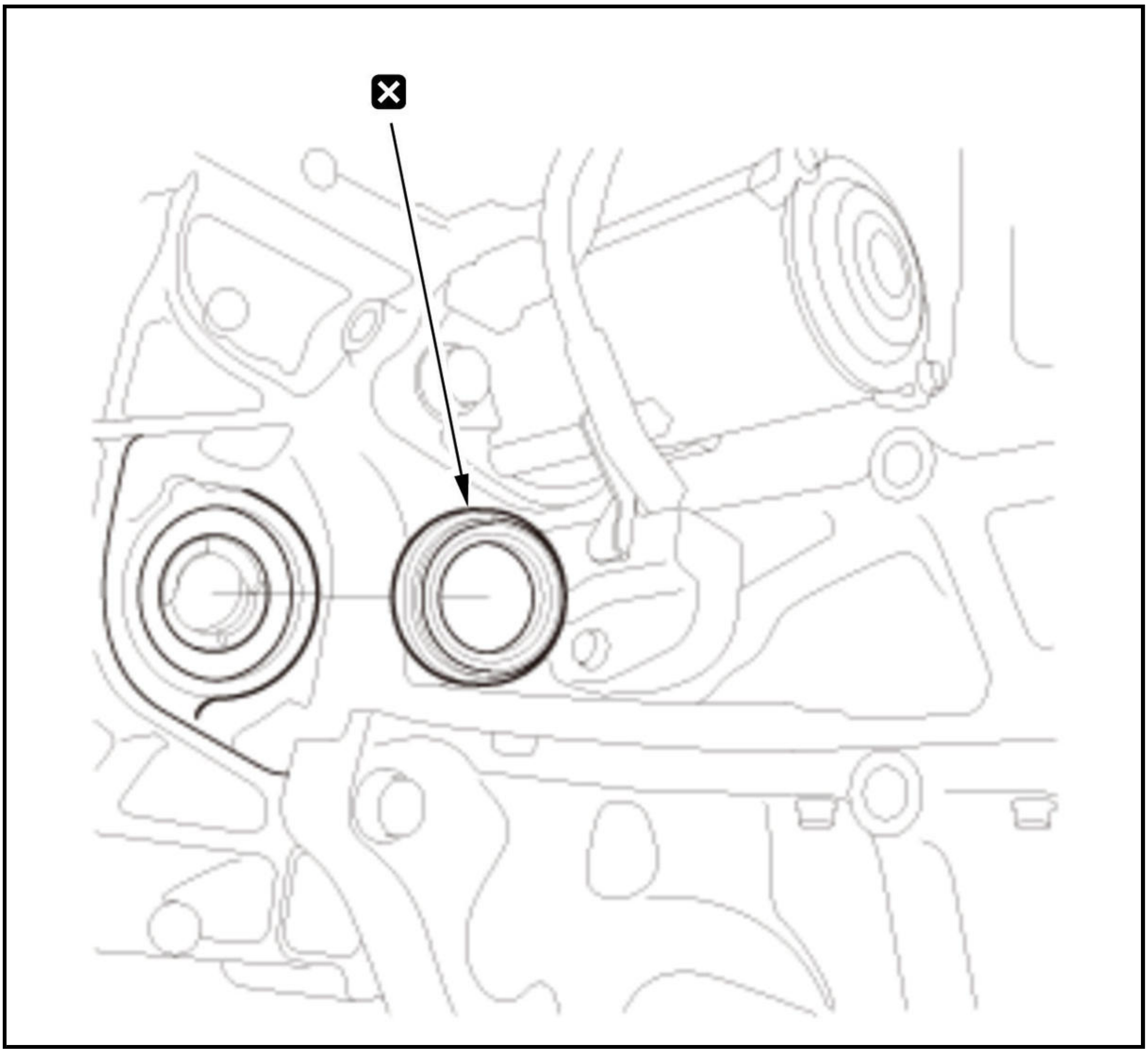

16. Right Differential Oil Seal - Install

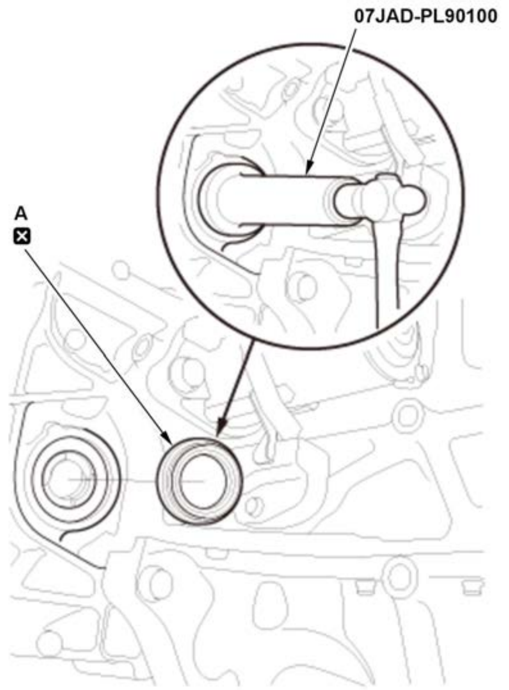	1. Install the right differential oil seal (A) flush with the torque converter housing using the 65 mm oil seal driver. **NOTE:** Before installation, apply a light coat of clean transmission fluid to the surface both of the press-fit and the lip that are on the oil seal.

17. **Intermediate Shaft - Install**
18. **Transmission Fluid - Refill**
19. **Transmission Fluid Level - Check**

20. **Engine Undercover - Install**

DESCRIPTION AND OPERATION

CVT SYSTEM DESCRIPTION

Clutches

Forward Clutch, Reverse Brake, Planetary Gear Train, and Pulleys

Forward Clutch

The forward clutch is the hydraulic-actuated clutch, and engages and disengages the sun gear. When hydraulic pressure is introduced into the forward clutch drum, the forward clutch piston moves. This presses the friction discs and the steel plates together, locking them so they do not slip. Power is then transmitted through the engaged clutch pack to the forward clutch hub/sun gear. Likewise, when hydraulic pressure is bled from the clutch pack, the piston releases the friction discs and the steel plates, and they are free to slide past each other. This allows the sun gear to spin independently on the forward clutch, transmitting no power. The forward clutch is integrated with the input shaft, and located at the end of the drive pulley shaft. The forward clutch is supplied with hydraulic pressure by a circuit connected to the internal hydraulic circuit.

Reverse Brake

The reverse brake is the hydraulic-actuated brake, and engages and disengages the planetary carrier with the transmission housing. When hydraulic pressure is introduced into the reverse brake piston cavity, the reverse brake piston moves. This presses the friction discs and the steel plates together, locking them so the planetary carrier locks. Power from the forward clutch drum and the ring gear is then transmitted through the planetary pinion gears and the sun gear. Likewise, when hydraulic pressure is bled from the reverse brake piston cavity, the piston releases the friction discs and the steel plates, and they are free to slide past each other. This allows the planetary carrier to free from the reverse brake, transmitting no power. The reverse brake is mounted in the transmission housing. The reverse brake is supplied with hydraulic pressure by a circuit connected to the internal hydraulic circuit.

Planetary Gear Train

The planetary gear train is only used for switching the rotational direction of the pulley shafts in R. The planetary gear train consists of the sun gear, the planetary pinion gears, the planetary carrier, and the ring gear. The sun gear is connected to the drive pulley shaft by the splines. The planetary pinion gears are installed on the planetary carrier. The planetary carrier assembly is located on the drive pulley shaft, the carrier is mounted in the reverse brake, and the pinion gears are engaged with the sun gear. The ring gear is connected with the forward clutch drum, and engaged with the planetary pinion gears. In R, the reverse brake locks the planetary carrier, and the ring gear drives the planetary pinion gears to rotate. The pinion gears drive the sun gear in the reverse direction from the rotational direction of the input shaft. The engine power from the input shaft drives the sun gear and the drive pulley shaft via the forward clutch drum, the ring gear, and the planetary pinion gears.

Pulleys

The drive pulley and the driven pulley consist of a movable face and a fixed face, and the effective pulley ratio changes with engine speed. The drive pulley and the driven pulley are linked by the steel belt. To achieve a high pulley ratio; low speed range, high hydraulic pressure works on the movable face of the driven pulley and reduces the effective diameter of the drive pulley, and lower hydraulic pressure works on the movable face of the drive pulley to eliminate the steel belt slippage. To achieve a low pulley ratio; high speed range, high hydraulic pressure works on the movable face of the drive pulley and reduces the effective diameter of the driven pulley, and lower hydraulic pressure works on the movable face of the driven pulley to eliminate the steel belt slippage.

Transmission Cutaway View

NOTE: The illustration shows the AWD transmission; 2WD transmission does not have the transfer mechanism.

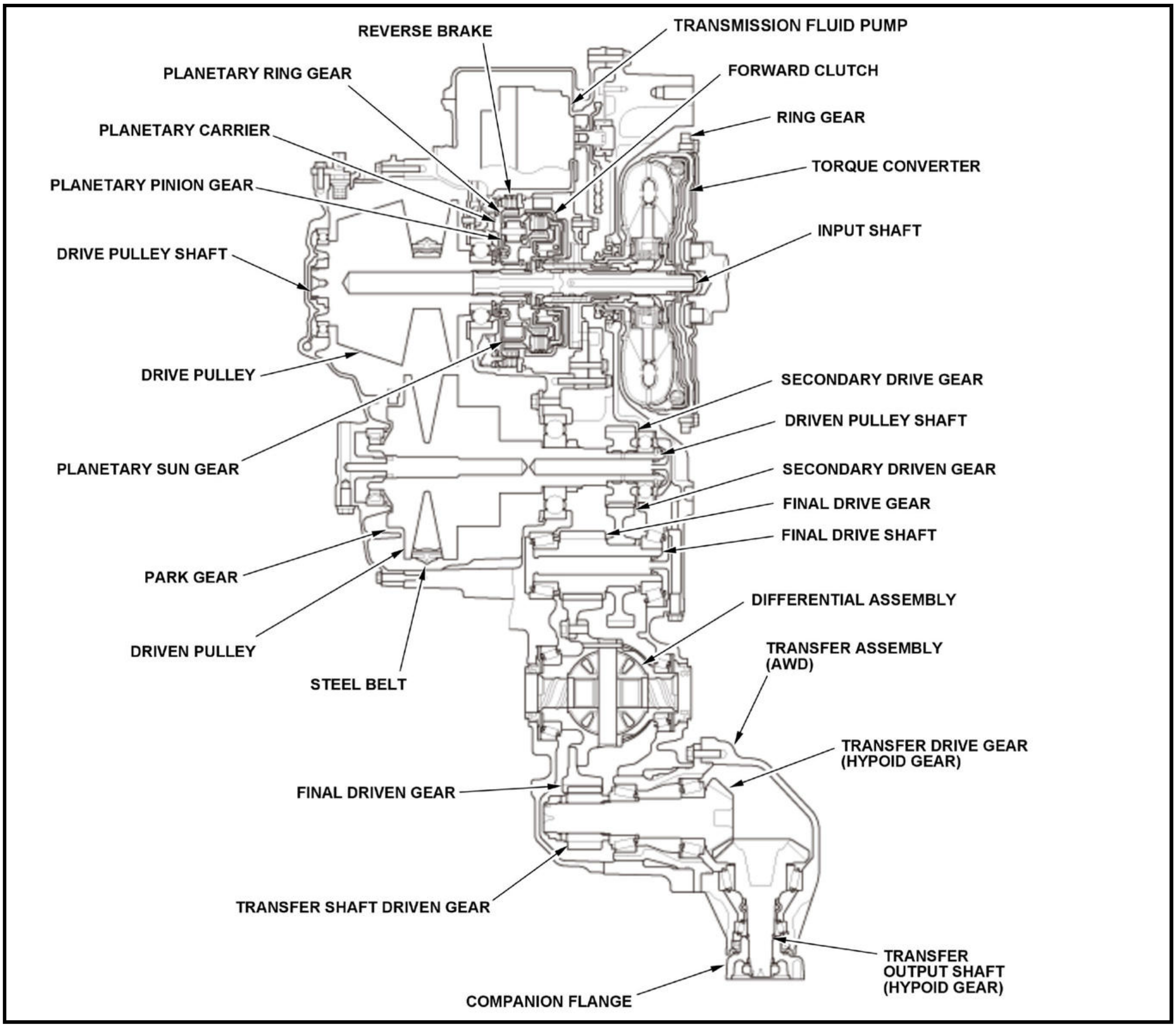
REVERSE BRAKE
TRANSMISSION FLUID PUMP
PLANETARY RING GEAR
FORWARD CLUTCH
RING GEAR
PLANETARY CARRIER
TORQUE CONVERTER
PLANETARY PINION GEAR
INPUT SHAFT
DRIVE PULLEY SHAFT
DRIVE PULLEY
SECONDARY DRIVE GEAR
DRIVEN PULLEY SHAFT
PLANETARY SUN GEAR
SECONDARY DRIVEN GEAR
FINAL DRIVE GEAR
FINAL DRIVE SHAFT
PARK GEAR
DIFFERENTIAL ASSEMBLY
TRANSFER ASSEMBLY (AWD)
DRIVEN PULLEY
STEEL BELT
TRANSFER DRIVE GEAR (HYPOID GEAR)
FINAL DRIVEN GEAR
TRANSFER SHAFT DRIVEN GEAR
TRANSFER OUTPUT SHAFT (HYPOID GEAR)
COMPANION FLANGE

Electronic Control System

CVT Control System Component Location

For locations of each component on vehicle, refer to Component Location Index.

Location Index	Component
CVT System Component Location Index	Speed Sensor, Transmission Fluid Temperature Sensor, TCM, Transmission Range Switch, CVT Driven Pulley Pressure Sensor, Auxiliary transmission fluid pump
Conventional Brake Component Location Index	Brake Pedal Position
Fuel and Emissions Systems Component Location Index	PCM, Engine RPM, Accelerator Pedal Position Sensor, Engine Coolant Temperature Sensor, Throttle Position Sensor, Manifold Absolute Pressure Sensor
VSA System Component Location Index	VSA Modulator-Control Unit
Gauges Component Location Index	ECON Switch

Electronic Control System

Functional Diagram

The electronic control system consists of the TCM or the PCM, sensors, switches, and solenoid valves. Shifting and lock-up are electronically controlled for comfortable driving under all conditions. The TCM or the PCM receives input signals from the sensors and the other control units, processes data, and outputs signals for the engine control system and the CVT control system. The CVT control system includes the shift control, the pulley pressure control, the clutch pressure control, the lock-up control, the transmission fluid pump pressure control, and the indicator control. The TCM or the PCM switches the shift solenoid valves and the CVT pulley control solenoid valves to control shifting position and lock-up torque converter clutch.

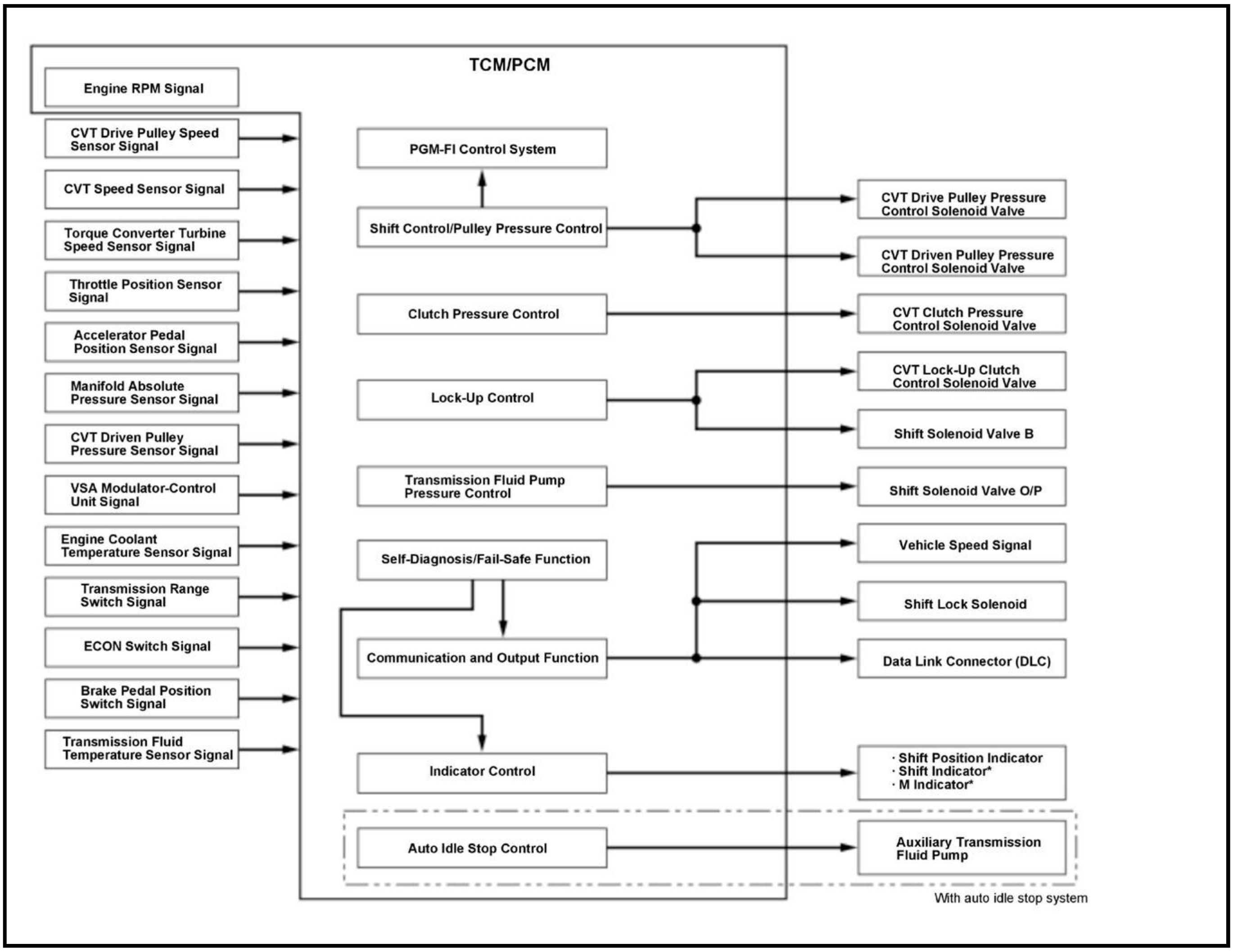
TCM/PCM
Engine RPM Signal
CVT Drive Pulley Speed Sensor Signal
CVT Speed Sensor Signal
Torque Converter Turbine Speed Sensor Signal
Throttle Position Sensor Signal
Accelerator Pedal Position Sensor Signal
Manifold Absolute Pressure Sensor Signal
CVT Driven Pulley Pressure Sensor Signal
VSA Modulator-Control Unit Signal
Engine Coolant Temperature Sensor Signal
Transmission Range Switch Signal
ECON Switch Signal
Brake Pedal Position Switch Signal
Transmission Fluid Temperature Sensor Signal
PGM-FI Control System
Shift Control/Pulley Pressure Control
Clutch Pressure Control
Lock-Up Control
Transmission Fluid Pump Pressure Control
Self-Diagnosis/Fail-Safe Function
Communication and Output Function
Indicator Control
Auto Idle Stop Control
CVT Drive Pulley Pressure Control Solenoid Valve
CVT Driven Pulley Pressure Control Solenoid Valve
CVT Clutch Pressure Control Solenoid Valve
CVT Lock-Up Clutch Control Solenoid Valve
Shift Solenoid Valve B
Shift Solenoid Valve O/P
Vehicle Speed Signal
Shift Lock Solenoid
Data Link Connector (DLC)
· Shift Position Indicator
· Shift Indicator*
· M Indicator*
Auxiliary Transmission Fluid Pump
With auto idle stop system

Shift Control/Pulley Pressure Control

To reduce the steel belt slippage and increase the steel belt life, the TCM or the PCM calculates signals from sensors and switches, and actuates the pulley pressure control solenoid valves to maintain optimum pulley pressure. When the pulley ratio is high (low vehicle speed), high hydraulic pressure works on the movable face of the driven pulley and reduces the effective diameter of the drive pulley, and lower hydraulic pressure works on the movable face of the drive pulley to eliminate the steel belt slippage. When the pulley ratio is low (high vehicle speed), high hydraulic pressure works on the movable face of the drive pulley and reduces the effective diameter of the driven pulley, and lower hydraulic pressure works on the movable face of the driven pulley to eliminate the steel belt slippage.The TCM or the PCM compares actual driving conditions with programmed driving conditions to control shifting, and it instantly determines a drive pulley ratio from various signals sent from sensors and switches. The TCM or the PCM activates the CVT drive pulley pressure control solenoid valve and the CVT driven pulley pressure control solenoid valve to control pulley pressure to the pulleys.The shift control includes the grade logic control and the shift-hold control.

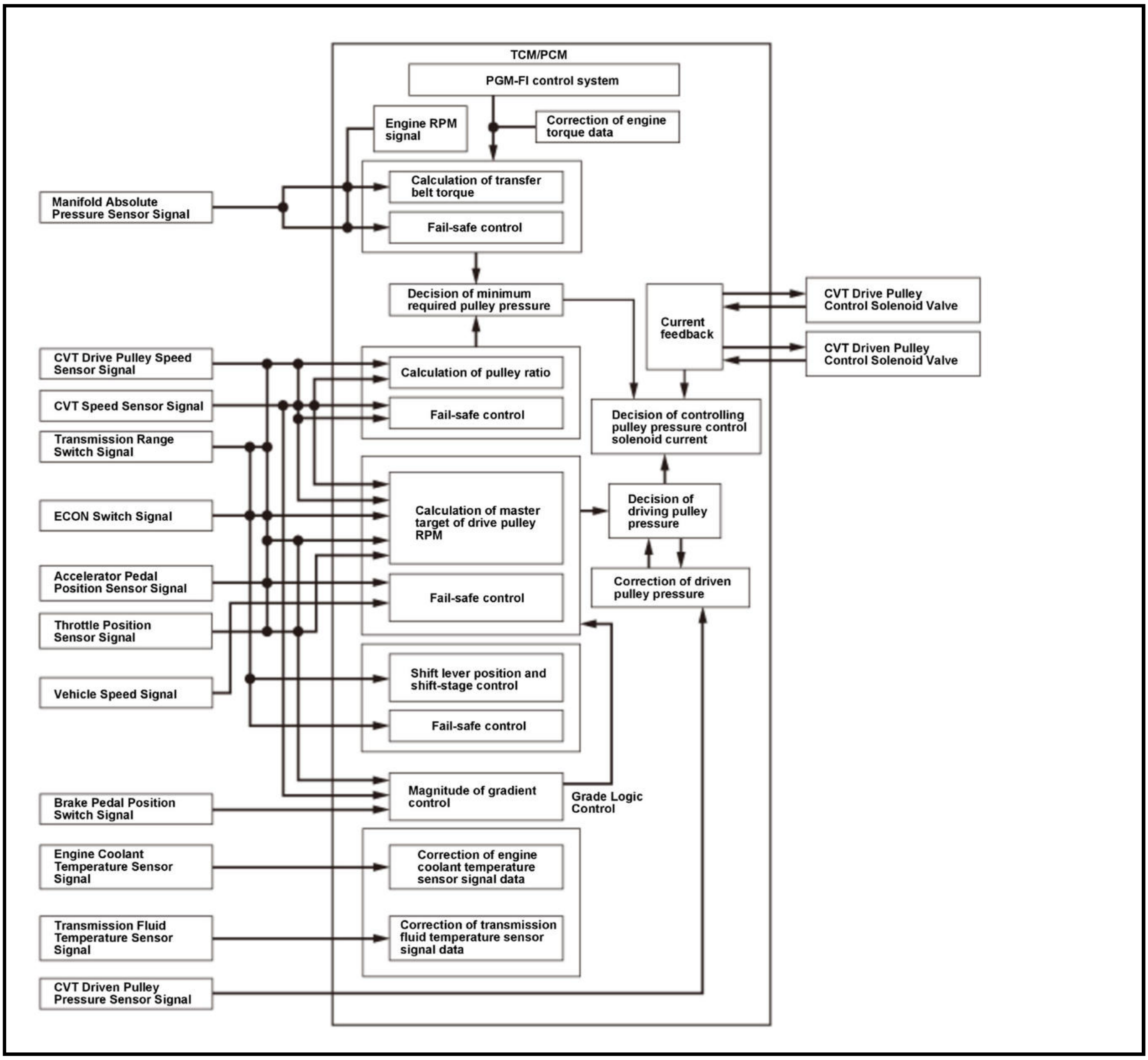
TCM/PCM
PGM-FI control system
Engine RPM signal
Correction of engine torque data
Manifold Absolute Pressure Sensor Signal
Calculation of transfer belt torque
Fail-safe control
Decision of minimum required pulley pressure
Current feedback
CVT Drive Pulley Control Solenoid Valve
CVT Driven Pulley Control Solenoid Valve
CVT Drive Pulley Speed Sensor Signal
Calculation of pulley ratio
CVT Speed Sensor Signal
Fail-safe control
Decision of controlling pulley pressure control solenoid current
Transmission Range Switch Signal
ECON Switch Signal
Calculation of master target of drive pulley RPM
Decision of driving pulley pressure
Accelerator Pedal Position Sensor Signal
Correction of driven pulley pressure
Fail-safe control
Throttle Position Sensor Signal
Vehicle Speed Signal
Shift lever position and shift-stage control
Fail-safe control
Magnitude of gradient control
Grade Logic Control
Brake Pedal Position Switch Signal
Engine Coolant Temperature Sensor Signal
Correction of engine coolant temperature sensor signal data
Transmission Fluid Temperature Sensor Signal
Correction of transmission fluid temperature sensor signal data
CVT Driven Pulley Pressure Sensor Signal

Shift Control - Grade Logic Control

The grade logic control system has been adopted to control shifting in D position/mode and S position/mode. The TCM or the PCM compares actual driving conditions with memorized driving conditions, based on the input signal from the various sensors and switches, to control shifting while the vehicle is ascending or descending a slope.

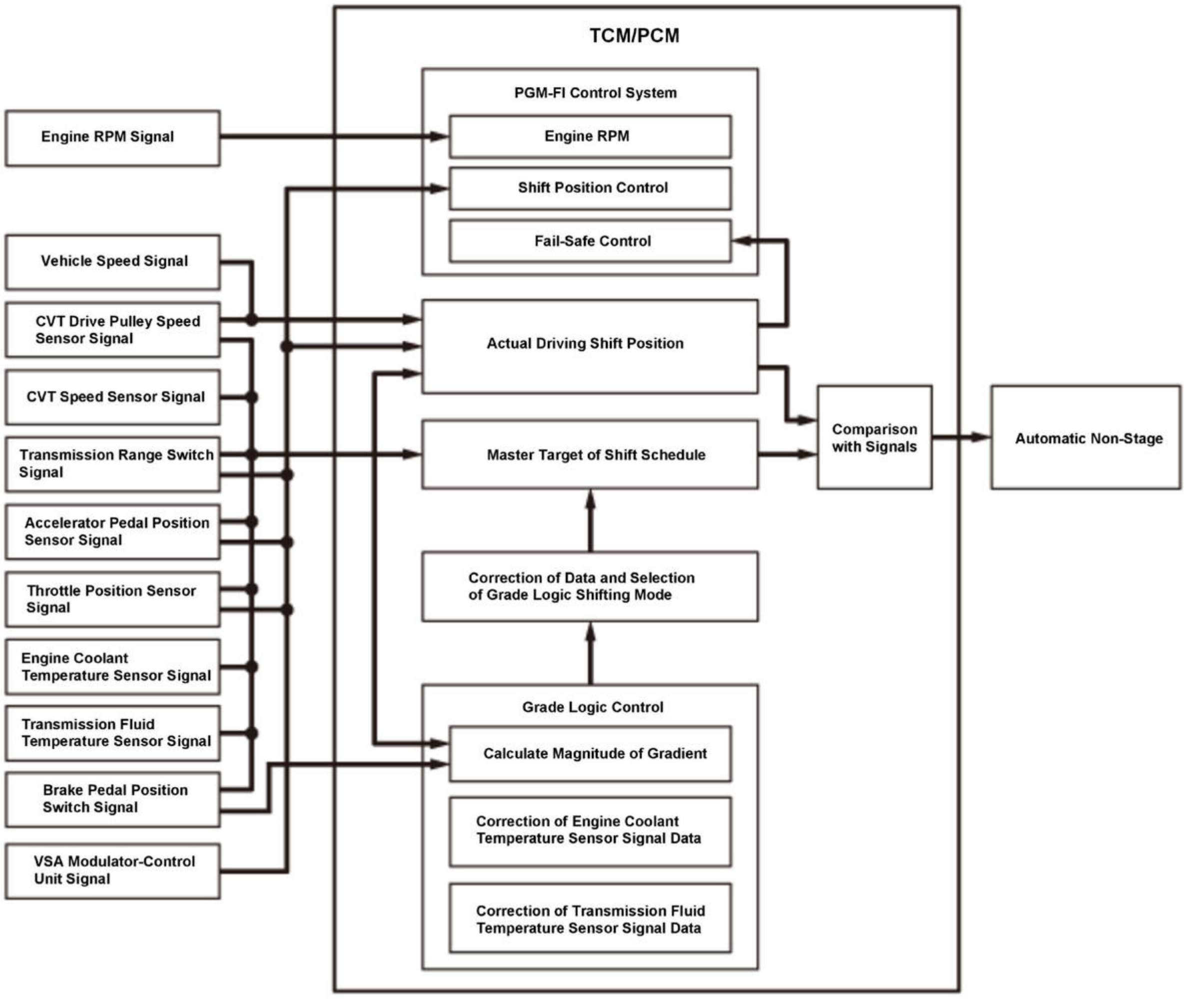
TCM/PCM
PGM-FI Control System
Engine RPM Signal
Engine RPM
Shift Position Control
Fail-Safe Control
Vehicle Speed Signal
CVT Drive Pulley Speed Sensor Signal
Actual Driving Shift Position
CVT Speed Sensor Signal
Comparison with Signals
Automatic Non-Stage
Transmission Range Switch Signal
Master Target of Shift Schedule
Accelerator Pedal Position Sensor Signal
Correction of Data and Selection of Grade Logic Shifting Mode
Throttle Position Sensor Signal
Engine Coolant Temperature Sensor Signal
Grade Logic Control
Transmission Fluid Temperature Sensor Signal
Calculate Magnitude of Gradient
Brake Pedal Position Switch Signal
Correction of Engine Coolant Temperature Sensor Signal Data
VSA Modulator-Control Unit Signal
Correction of Transmission Fluid Temperature Sensor Signal Data

Grade Logic Control: Ascending Control

When the TCM or the PCM determines that the vehicle is climbing a hill in D position/mode or S position/mode, the system selects the most suitable shift schedule according to the magnitude of a gradient, so the vehicle can run smooth and have more power when needed.

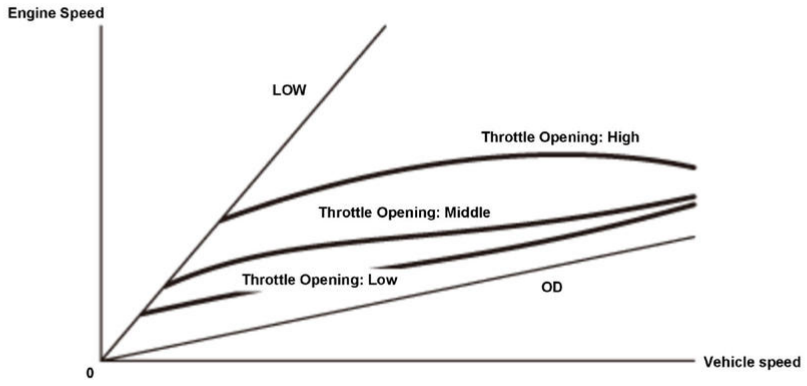

Grade Logic Control: Descending Control

When the TCM or the PCM determines that the vehicle is going down a hill in D position/mode or S position/mode, the system selects the most suitable shift schedule according to the magnitude of a gradient, so the vehicle can run smooth in combination with engine braking.

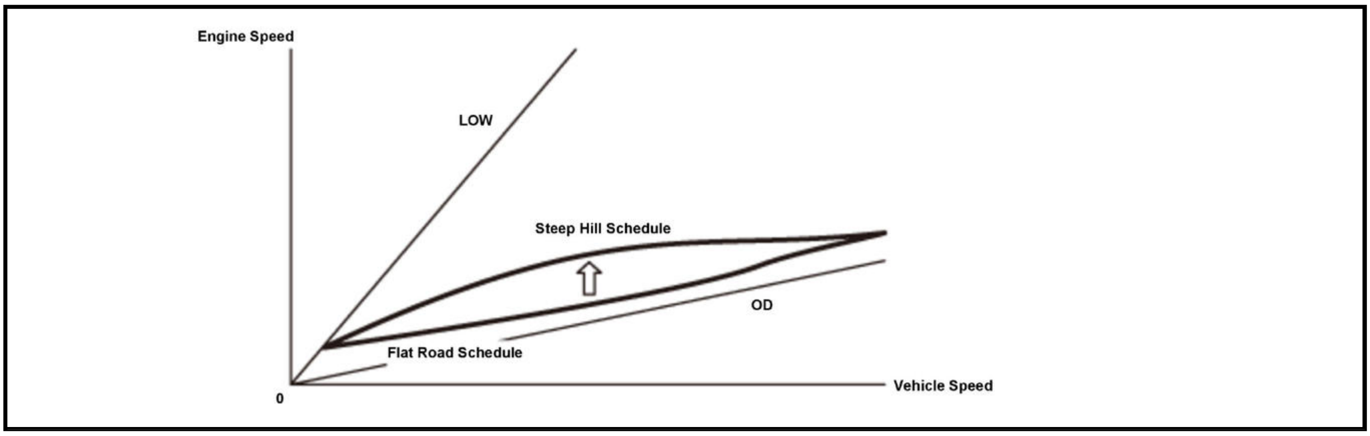

Shift-Hold Control

When negotiating winding roads, the throttle is suddenly released and the brakes are applied, as is the case when decelerating at the entrance of a corner, Shift-Hold Control keeps the transmission in its current (lower) ratio as it negotiates the corner and accelerates out. When the vehicle is driven aggressively on a winding road, the TCM or the PCM will keep the engine speed on a higher-than-normal setting, so the vehicle can run smooth and have more power. The transmission will resume the normal setting after the TCM or the PCM determines that normal driving has resumed.

Clutch Pressure Control

The TCM or the PCM actuates the CVT clutch pressure control solenoid valve to control the forward clutch pressure and the reverse brake pressure. When the transmission is in-gear, the forward clutch pressure and the reverse brake pressure regulated by the CVT clutch pressure control solenoid valve engage and disengage the forward clutch and the reverse brake smoothly.The TCM or the PCM receives input signals from the various sensors and switches, processes data, and outputs current to the CVT clutch pressure control solenoid valve.

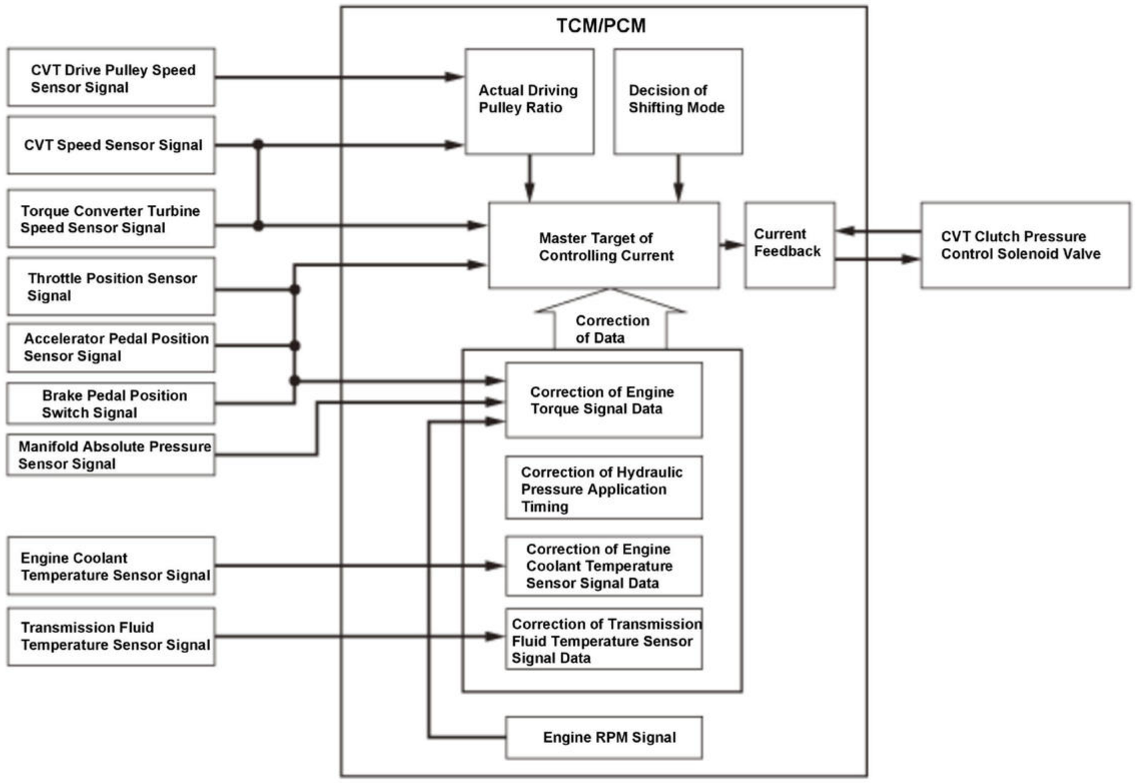
TCM/PCM
CVT Drive Pulley Speed Sensor Signal
CVT Speed Sensor Signal
Torque Converter Turbine Speed Sensor Signal
Throttle Position Sensor Signal
Accelerator Pedal Position Sensor Signal
Brake Pedal Position Switch Signal
Manifold Absolute Pressure Sensor Signal
Engine Coolant Temperature Sensor Signal
Transmission Fluid Temperature Sensor Signal
Actual Driving Pulley Ratio
Decision of Shifting Mode
Master Target of Controlling Current
Current Feedback
CVT Clutch Pressure Control Solenoid Valve
Correction of Data
Correction of Engine Torque Signal Data
Correction of Hydraulic Pressure Application Timing
Correction of Engine Coolant Temperature Sensor Signal Data
Correction of Transmission Fluid Temperature Sensor Signal Data
Engine RPM Signal

Lock-Up Control

Shift solenoid valve B controls hydraulic pressure to lock-up ON and OFF. The TCM or the PCM actuates shift solenoid valve B and the CVT lock-up clutch control solenoid valve to start lock-up. The CVT lock-up clutch control solenoid valve applies and regulates hydraulic pressure to control the volume of the lock-up. The lock-up mechanism operates in D position/mode, S position/mode, at transmission fluid temperature exceeding 68 deg.F (20 deg.C).

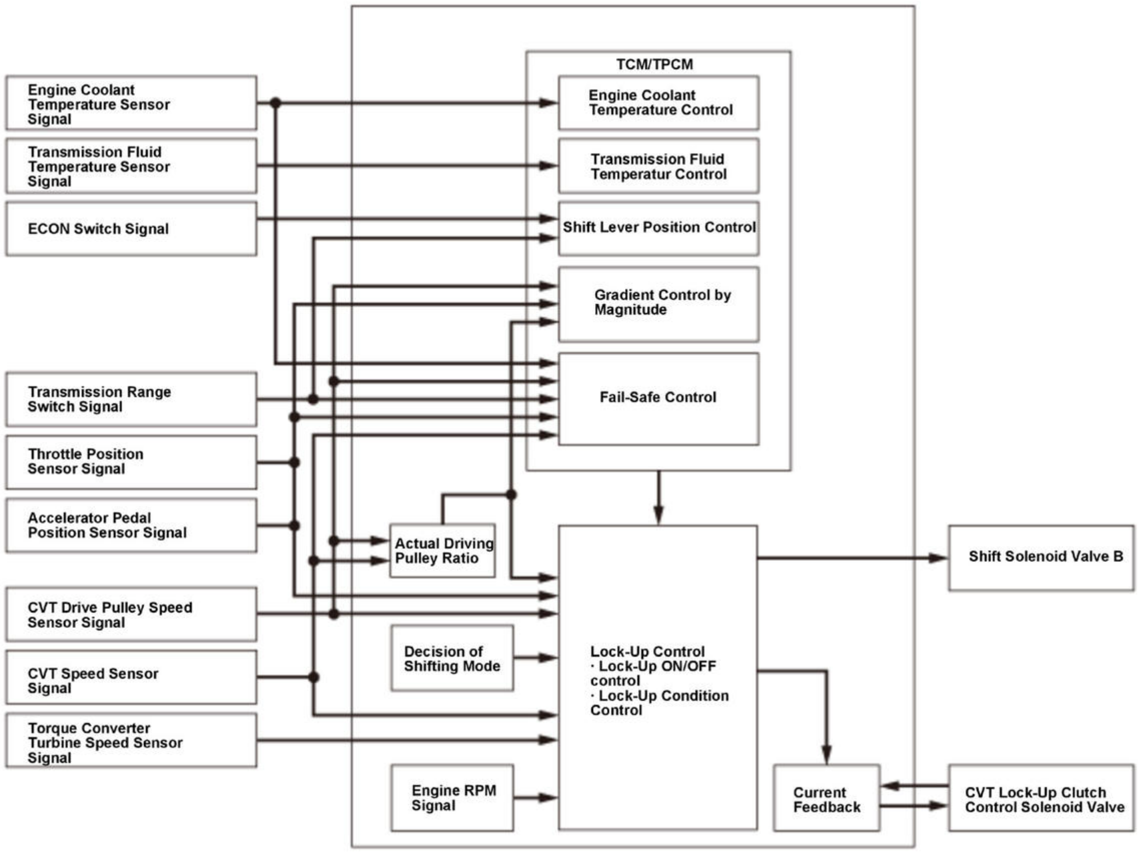

Engine Coolant Temperature Sensor Signal
Transmission Fluid Temperature Sensor Signal
ECON Switch Signal
Transmission Range Switch Signal
Throttle Position Sensor Signal
Accelerator Pedal Position Sensor Signal
CVT Drive Pulley Speed Sensor Signal
CVT Speed Sensor Signal
Torque Converter Turbine Speed Sensor Signal
TCM/TPCM
Engine Coolant Temperature Control
Transmission Fluid Temperatur Control
Shift Lever Position Control
Gradient Control by Magnitude
Fail-Safe Control
Actual Driving Pulley Ratio
Decision of Shifting Mode
Engine RPM Signal
Lock-Up Control
· Lock-Up ON/OFF control
· Lock-Up Condition Control
Shift Solenoid Valve B
Current Feedback
CVT Lock-Up Clutch Control Solenoid Valve

Auxiliary Transmission Fluid Pump Control (With Auto Idle Stop System)

The auxiliary transmission fluid pump supplies hydraulic pressure to the hydraulic circuit during the operation of the auto idle stop system.When the vehicle comes to an engine stop in the operation of the auto idle stop system, the transmission fluid pump also stops, then the TCM starts the auxiliary transmission fluid pump to supply hydraulic pressure to the hydraulic circuit. The auxiliary transmission fluid pump continues to supply enough hydraulic pressure for the clutch to engage until the engine restarts. When the engine restarts, the TCM stops the auxiliary transmission fluid pump.The auxiliary transmission fluid pump is installed out of the transmission housing, and consists of the relief valve, the pump, the motor, and the driver.

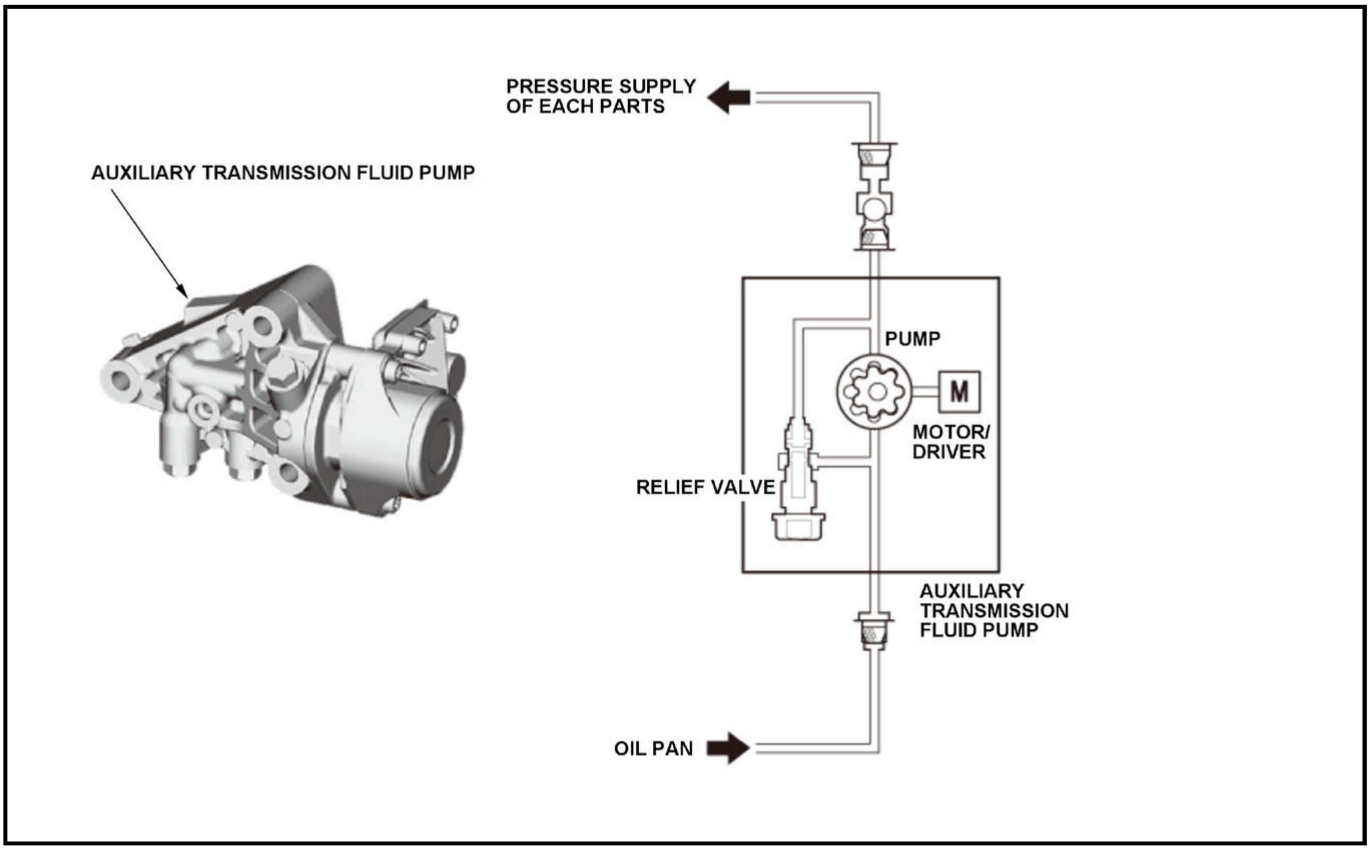
PRESSURE SUPPLY OF EACH PARTS
AUXILIARY TRANSMISSION FLUID PUMP
PUMP
M
MOTOR/ DRIVER
RELIEF VALVE
AUXILIARY TRANSMISSION FLUID PUMP
OIL PAN

General Operation

The continuously variable transmission (CVT) is an electronically controlled automatic transmission with drive and driven pulleys, steel belt, and new transmission fluid (HCF-2). The CVT provides non-stage speeds forward and non-stage speeds reverse. The entire unit is positioned in line with the engine.

Transmission

The torque converter consists of a pump, a turbine, and a stator assembly in a single unit. The torque converter is connected to the engine crankshaft and turns as the engine turns. Around the outside of the torque converter is a ring gear which meshes with the starter drive gear when the engine is being started. The entire torque converter assembly serves as a flywheel, transmitting power to the transmission input shaft. The transmission has four parallel shafts: the input shaft, the drive pulley shaft, the driven pulley shaft, and the final drive shaft. The input shaft is connected to the torque converter turbine, and integrates the forward clutch on the drive pulley shaft end. The drive pulley shaft and the driven pulley shaft consist of movable and fixed face pulleys. Both pulleys are linked by the steel belt. The input shaft includes the forward clutch. The drive pulley shaft includes the drive pulley. The input shaft is connected with the drive pulley shaft by the forward clutch hub/sun gear, and by the ring gear, the planetary pinion gears, and the sun gear. The planetary carrier is positioned between the ring gear and the sun gear, and engaged with the planetary pinion gears. The driven pulley shaft includes the driven pulley (with the park gear). The secondary drive gear is splined to the driven pulley shaft. The final drive shaft is positioned between the secondary drive gear and the final driven gear. The final drive shaft integrates the secondary driven gear and the final drive gear which serves to change the rotational direction of the drive and driven pulley shafts, because the drive pulley shaft and driven pulley shaft rotate the same direction. When the input shaft is joined with the drive pulley shaft by engaging the forward clutch or the reverse brake, the power is transmitted through the input shaft, the drive pulley shaft, and the driven pulley shaft to the final drive shaft provide drive.

Gear Selection

The shift lever has following position/mode;

Position/Mode	Description
P: PARK	Front wheels locked; the parking brake pawl engages with the park gear on the driven pulley. The forward clutch disengages.

Position/Mode		Description
R: REVERSE		The reverse brake engages, and it locks with the planetary carrier to the transmission housing.
N: NEUTRAL		The forward clutch disengages.
D: DRIVE		Transmission automatically adjusts to keep the engine at the best rpm for driving under all conditions. The lock-up mechanism operates in this position/mode. The WOT Step Shift Mode * operates in this position/mode. (with 1.5 L engine)
S: SPORT	Sport driving mode (non-stage speeds)	Transmission automatically adjusts to keep the engine at a higher rpm than in D position/mode driving conditions for sport driving. The lock-up mechanism operates in this position/mode. The WOT Step Shift Mode* operates in this position/mode. (with 1.5 L engine)
L: LOW		For engine braking and power for climbing; the transmission shifts into the lowest pulley ratio. The lock-up mechanism operates in this position/mode.

*: When accelerating and the engine speed reaches the maximum while the accelerator pedal is depressed deeply and the vehicle is driving at high speed, the CVT system switches the gear shift method to provide an automatic transmission-like multistage gear shift.

Starting the engine is possible only the transmission is in P or N position/mode because of a neutral-safety switch.

Shift Position Indicator

The shift position indicator in the gauge control module shows which shift lever position/mode has been selected without having look down at the console.

1.5 L engine

Electronic Control

The electronic control system consists of the transmission control module (TCM), sensors, and solenoid valves. Shifting and lock-up are electronically controlled for comfortable driving under all conditions. The TCM is located in the engine compartment.

Shift Control

The TCM actuates the CVT drive pulley pressure control solenoid valve and the CVT driven pulley pressure control solenoid valve to change drive and driven pulley pressures. The drive pulley pressure is applied to the drive pulley, and the driven pulley pressure is applied to the driven pulley, and pulley ratio is changed to their effective ratio.

Hydraulic Control

The hydraulic control system is controlled by the TCM, the transmission fluid pump, and the valves and the solenoid valves in the valve body. The transmission fluid pump is driven by the engine. The transmission fluid pump drive sprocket is connected to the torque converter housing, as the engine turns, it drives the transmission fluid pump driven sprocket by the transmission fluid pump drive chain. The transmission fluid pump supplies hydraulic pressure to the hydraulic circuit. Fluid from the transmission fluid pump passes to the various control valves, the drive/driven pulleys, the forward clutch, and the reverse brake.

Lock-Up Mechanism

The lock-up mechanism of the torque converter clutch operates in D position/mode, S position/mode, and L position/mode (without paddle shifter), at transmission fluid temperature exceeding 68 deg.F (20 deg.C). The pressurized fluid is drained from the back of the torque converter through a fluid passage, causing the torque converter clutch piston to be held against the transmission fluid pump. As this takes place, the input shaft and the drive pulley shaft rotate as the same as the engine crankshaft. Together with hydraulic control, the TCM optimizes the timing of the lock-up mechanism. When shift solenoid valve B is turned ON by the TCM, shift solenoid valve B pressure switches lock-up ON and OFF. The CVT lock-up clutch control solenoid valve controls the volume of lock-up.

Except 1.5 L engine

Electronic Control

The electronic control system consists of the powertrain control module (PCM), sensors, and solenoid valves. Shifting and lock-up are electronically controlled for comfortable driving under all conditions. The PCM is located in the engine compartment.

Hydraulic Control

The hydraulic control system is controlled by the PCM, the transmission fluid pump, and the valves and the solenoid valves in the valve body. The transmission fluid pump is driven by the engine turns. The transmission fluid pump drive sprocket is connected to the torque converter housing, turns as the engine turns, and drives the transmission fluid pump driven sprocket by the transmission fluid pump drive chain. The transmission fluid pump supplies hydraulic pressure to the hydraulic circuit. Fluid from the transmission fluid pump passes to the various control valves, the drive/driven pulleys, the forward clutch, and the reverse brake.

Shift Control

The PCM controls shift solenoid valve B, the shift solenoid valve O/P, the CVT drive pulley pressure control solenoid valve, the CVT driven pulley pressure control solenoid valve, the CVT clutch pressure control solenoid valve, and the CVT lock-up clutch control solenoid valve while receiving input signals from various sensors and switches located throughout the vehicle. The PCM actuates the CVT drive pulley pressure control solenoid valve and the CVT driven pulley pressure control solenoid valve to change drive and driven pulley pressures. The drive pulley pressure is applied to the drive pulley, and the driven pulley pressure is applied to the driven pulley, and pulley ratio is changed to their effective ratio.

Lock-Up Mechanism

The lock-up mechanism of the torque converter clutch operates in D position/mode, S position/mode, and L position/mode (without paddle shifter), at transmission fluid temperature exceeding 68 deg.F (20 deg.C). The pressurized fluid is drained from the back of the torque converter through a fluid passage, causing the torque converter clutch piston to be held against the transmission fluid pump. As this takes place, the input shaft and the drive pulley shaft rotate as the same as the engine crankshaft. Together with hydraulic control, the PCM optimizes the timing of the lock-up mechanism. When shift solenoid valve B is turned ON by the PCM, shift solenoid valve B pressure switches lock-up ON and OFF. The CVT lock-up clutch control solenoid valve controls the volume of lock-up.

Hydraulic Controls

The hydraulic control system is controlled by the TCM or the PCM, the transmission fluid pump, and the valves and the solenoid valves in the valve body. The transmission fluid pump is driven by the engine turns. The transmission fluid pump drive sprocket is connected to the torque converter housing, turns as the engine turns, and drives the transmission fluid pump driven sprocket by the transmission fluid pump drive chain. The transmission fluid pump supplies hydraulic pressure to the hydraulic circuit. Fluid from the transmission fluid pump passes to the various control valves, the drive/driven pulleys, the forward clutch, and the reverse brake.

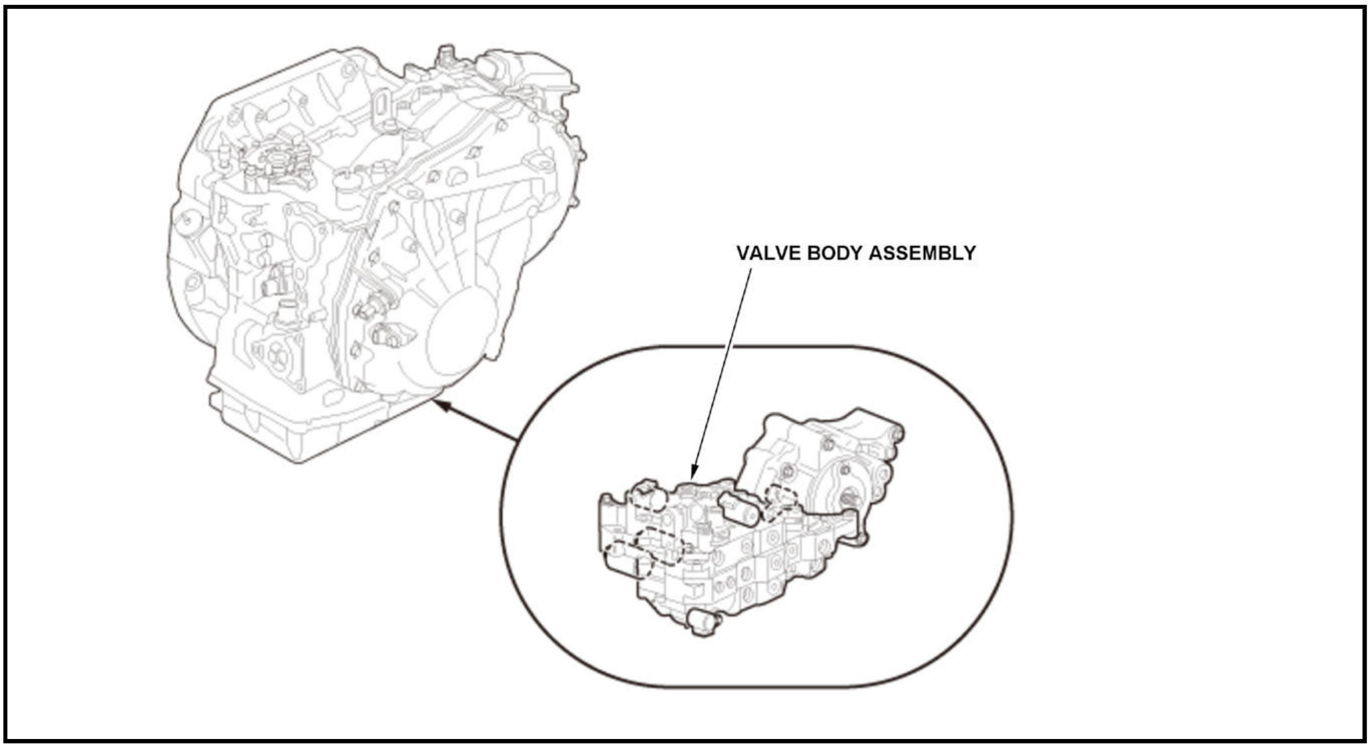
VALVE BODY ASSEMBLY

Hydraulic Flow

Hydraulic Pressure Flow Circuit Diagram

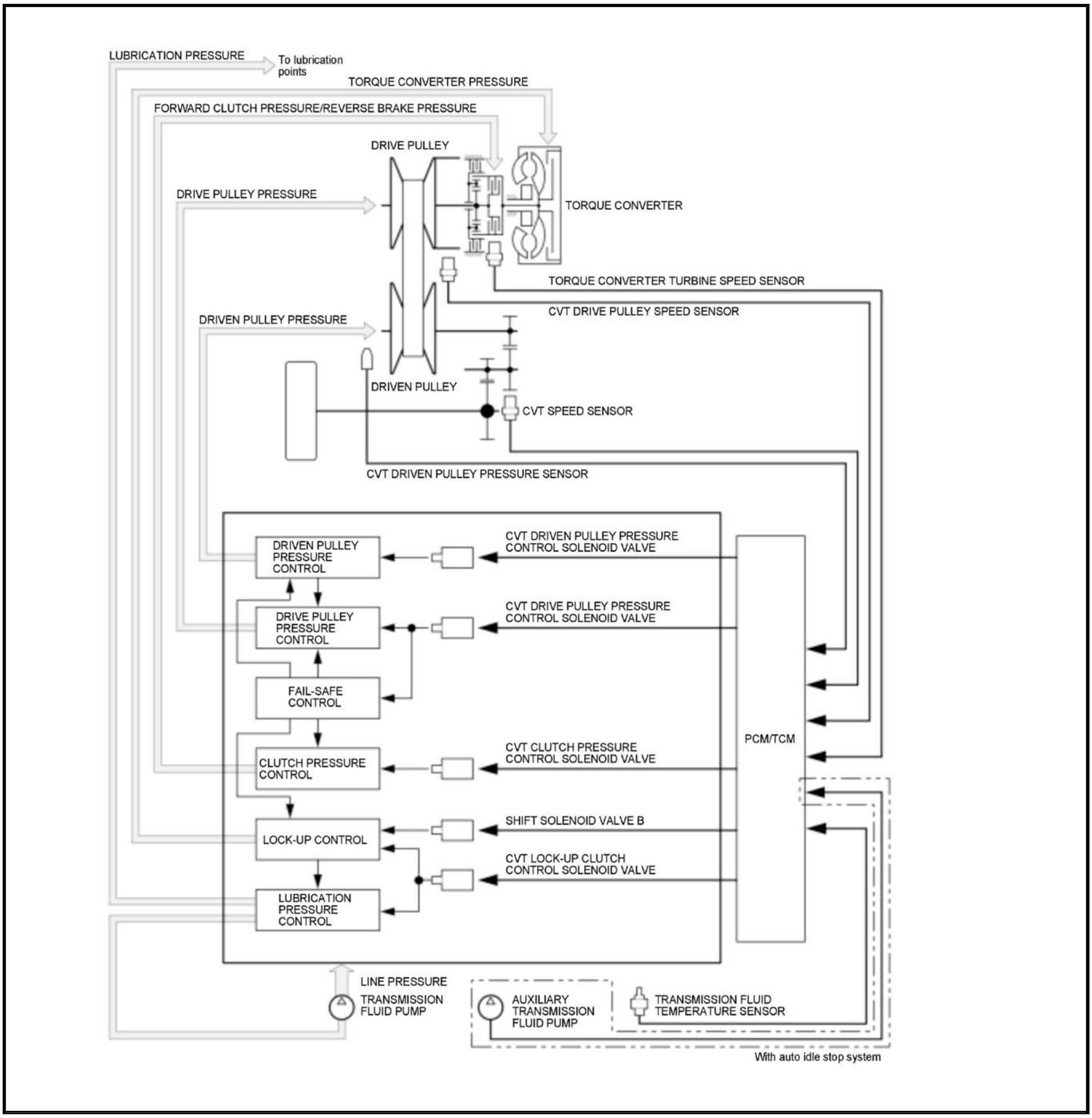
LUBRICATION PRESSURE
To lubrication points
TORQUE CONVERTER PRESSURE
FORWARD CLUTCH PRESSURE/REVERSE BRAKE PRESSURE
DRIVE PULLEY
DRIVE PULLEY PRESSURE
TORQUE CONVERTER
TORQUE CONVERTER TURBINE SPEED SENSOR
CVT DRIVE PULLEY SPEED SENSOR
DRIVEN PULLEY PRESSURE
DRIVEN PULLEY
CVT SPEED SENSOR
CVT DRIVEN PULLEY PRESSURE SENSOR
DRIVEN PULLEY PRESSURE CONTROL
CVT DRIVEN PULLEY PRESSURE CONTROL SOLENOID VALVE
DRIVE PULLEY PRESSURE CONTROL
CVT DRIVE PULLEY PRESSURE CONTROL SOLENOID VALVE
FAIL-SAFE CONTROL
PCM/TCM
CLUTCH PRESSURE CONTROL
CVT CLUTCH PRESSURE CONTROL SOLENOID VALVE
LOCK-UP CONTROL
SHIFT SOLENOID VALVE B
CVT LOCK-UP CLUTCH CONTROL SOLENOID VALVE
LUBRICATION PRESSURE CONTROL
LINE PRESSURE
TRANSMISSION FLUID PUMP
AUXILIARY TRANSMISSION FLUID PUMP
TRANSMISSION FLUID TEMPERATURE SENSOR
With auto idle stop system

Lock-Up System

The lock-up mechanism of the torque converter clutch operates in D position/mode, S position/mode, and L position/mode, at transmission fluid temperature exceeding 68 deg.F (20 deg.C). The pressurized fluid is drained from the back of the torque converter through a fluid passage, causing the torque converter clutch piston to be held against the transmission fluid pump. As this takes place, the input shaft and the drive pulley shaft rotate as the same as the engine crankshaft. Together with hydraulic control, the TCM or the PCM optimizes the timing of the lock-up mechanism. When shift solenoid valve B is turned ON by the TCM or the PCM, shift solenoid valve B pressure switches lock-up ON and OFF. The CVT lock-up clutch control solenoid valve controls the volume of lock-up.

Torque Converter Clutch Lock-Up ON (Engaging Torque Converter Clutch)

Fluid in the chamber between the torque converter cover and the torque converter clutch piston is drained off, and fluid entering from the chamber between the pump and the stator exerts pressure through the torque converter clutch piston against the torque converter cover. The torque converter clutch piston engages with the torque converter cover; torque converter clutch lock-up ON, and the input shaft rotates at the same as the engine.

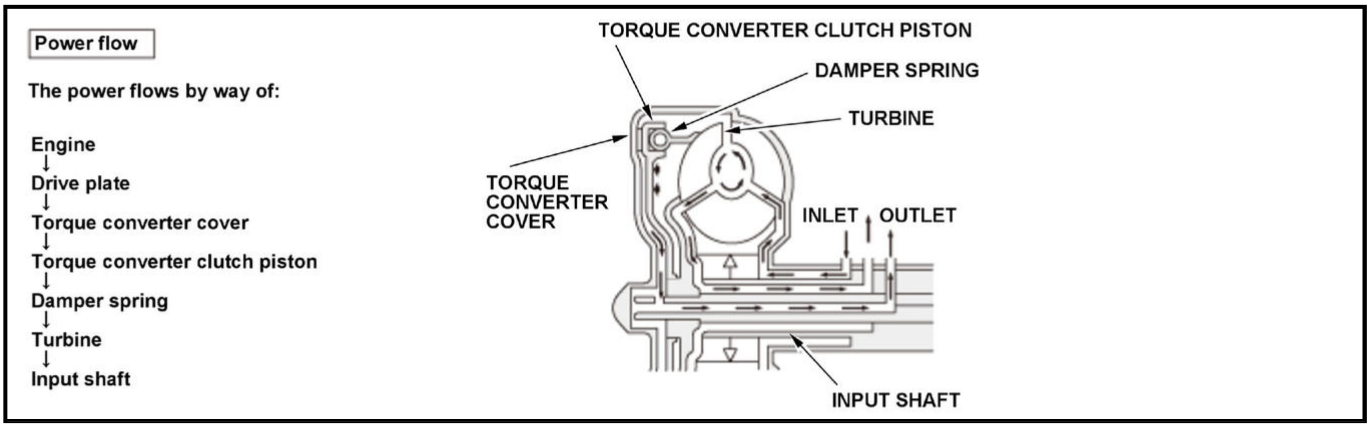
Power flow
The power flows by way of:
Engine
Drive plate
Torque converter cover
Torque converter clutch piston
Damper spring
Turbine
Input shaft
TORQUE CONVERTER CLUTCH PISTON
DAMPER SPRING
TURBINE
TORQUE CONVERTER COVER
INLET
OUTLET
INPUT SHAFT

Torque Converter Clutch Lock-Up OFF (Disengaging Torque Converter Clutch)

Fluid entered from the chamber between the torque converter cover and the torque converter clutch piston passes through the torque converter and goes out from the chambers between the turbine and the stator, and between the pump and the stator. As a result, the torque converter clutch piston moves away from the torque converter cover, and the torque converter clutch lock-up is released; torque converter clutch lock-up OFF.

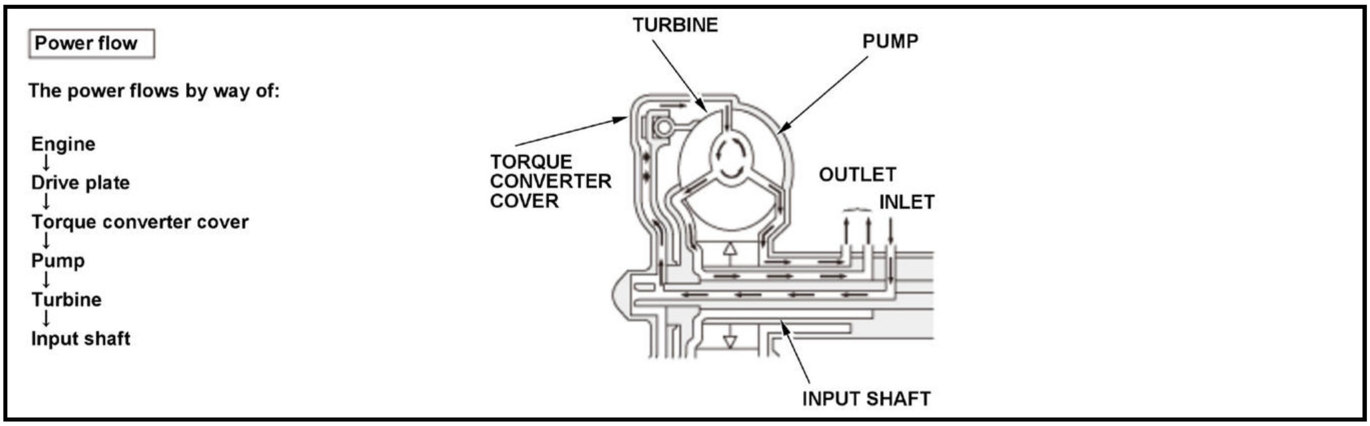
Power flow
The power flows by way of:
Engine
Drive plate
Torque converter cover
Pump
Turbine
Input shaft
TURBINE
PUMP
TORQUE CONVERTER COVER
OUTLET
INLET
INPUT SHAFT

Power Flow

P Position

Hydraulic pressure is not applied to the forward clutch and the reverse brake. Power is not transmitted to the secondary drive gear. The driven pulley is locked by the park pawl interlocking the park gear.

N Position

Engine power transmitted from the torque converter drives the input shaft, but the hydraulic pressure is not applied to the forward clutch and reverse brake. Power is not transmitted to the drive pulley shaft.

NOTE: The illustration shows the AWD transmission; 2WD transmission does not have the transfer mechanism.

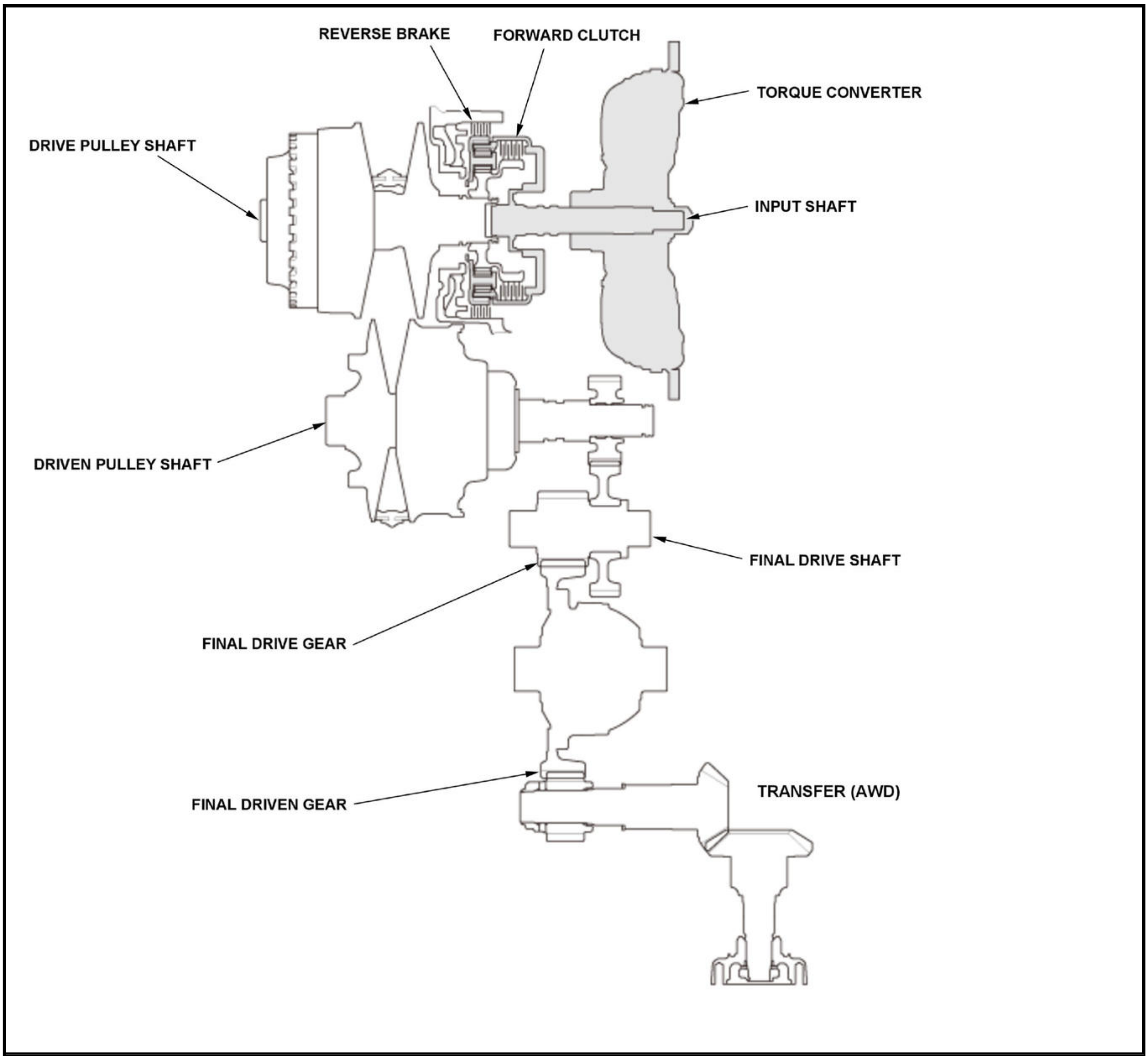
REVERSE BRAKE
FORWARD CLUTCH
TORQUE CONVERTER
DRIVE PULLEY SHAFT
INPUT SHAFT
DRIVEN PULLEY SHAFT
FINAL DRIVE SHAFT
FINAL DRIVE GEAR
FINAL DRIVEN GEAR
TRANSFER (AWD)

D and S position, at low speed range, and L position (Without Paddle Shifter)

- Hydraulic pressure is applied to the forward clutch, then the forward clutch engages the forward clutch hub/sun gear with the drive pulley shaft.
- Drive pulley shaft drives the driven pulley shaft and the secondary drive gear, and secondary driven gear.
- Power is transmitted to the final drive gear, which in turn drives the final driven gear.
- At low speed range; pulley ratio low, the drive pulley receives lower pressure than driven pulley received pressure, the drive pulley applies the small-pulley-diameter to the steel belt.
- AWD: The final driven gear drives the transfer drive gear (hypoid gear) and the transfer output shaft (hypoid gear).

NOTE: The illustration shows the AWD transmission; 2WD transmission does not have the transfer mechanism.

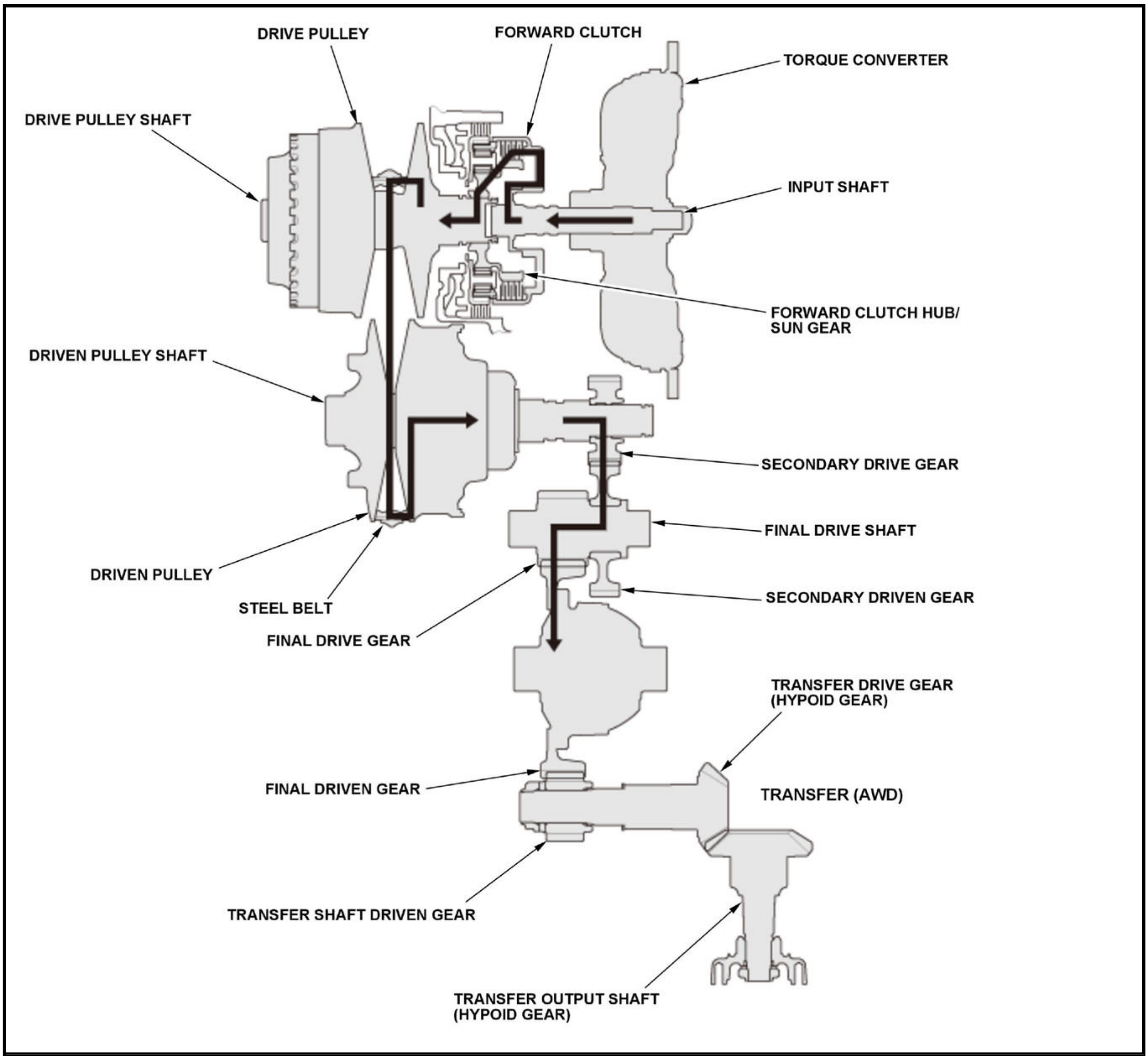
DRIVE PULLEY
FORWARD CLUTCH
TORQUE CONVERTER
DRIVE PULLEY SHAFT
INPUT SHAFT
FORWARD CLUTCH HUB/
SUN GEAR
DRIVEN PULLEY SHAFT
SECONDARY DRIVE GEAR
FINAL DRIVE SHAFT
DRIVEN PULLEY
STEEL BELT
SECONDARY DRIVEN GEAR
FINAL DRIVE GEAR
TRANSFER DRIVE GEAR
(HYPOID GEAR)
FINAL DRIVEN GEAR
TRANSFER (AWD)
TRANSFER SHAFT DRIVEN GEAR
TRANSFER OUTPUT SHAFT
(HYPOID GEAR)

D and S position, at high speed range

- Power flow to the final driven gear is the same as at the low speed range in the D and S position.
- Vehicle speed is increased, the drive pulley pressure is increased by the CVT drive pulley pressure control solenoid valve, and the driven pulley pressure decreased by the CVT driven pulley pressure control solenoid valve.
- At high speed range; pulley ratio high, the drive pulley receives higher pressure than driven pulley received pressure, the drive pulley applies the large-pulley-diameter to the steel belt.
- AWD: The final driven gear drives the transfer drive gear (hypoid gear) and the transfer output shaft (hypoid gear).

NOTE: The illustration shows the AWD transmission; 2WD transmission does not have the transfer mechanism.

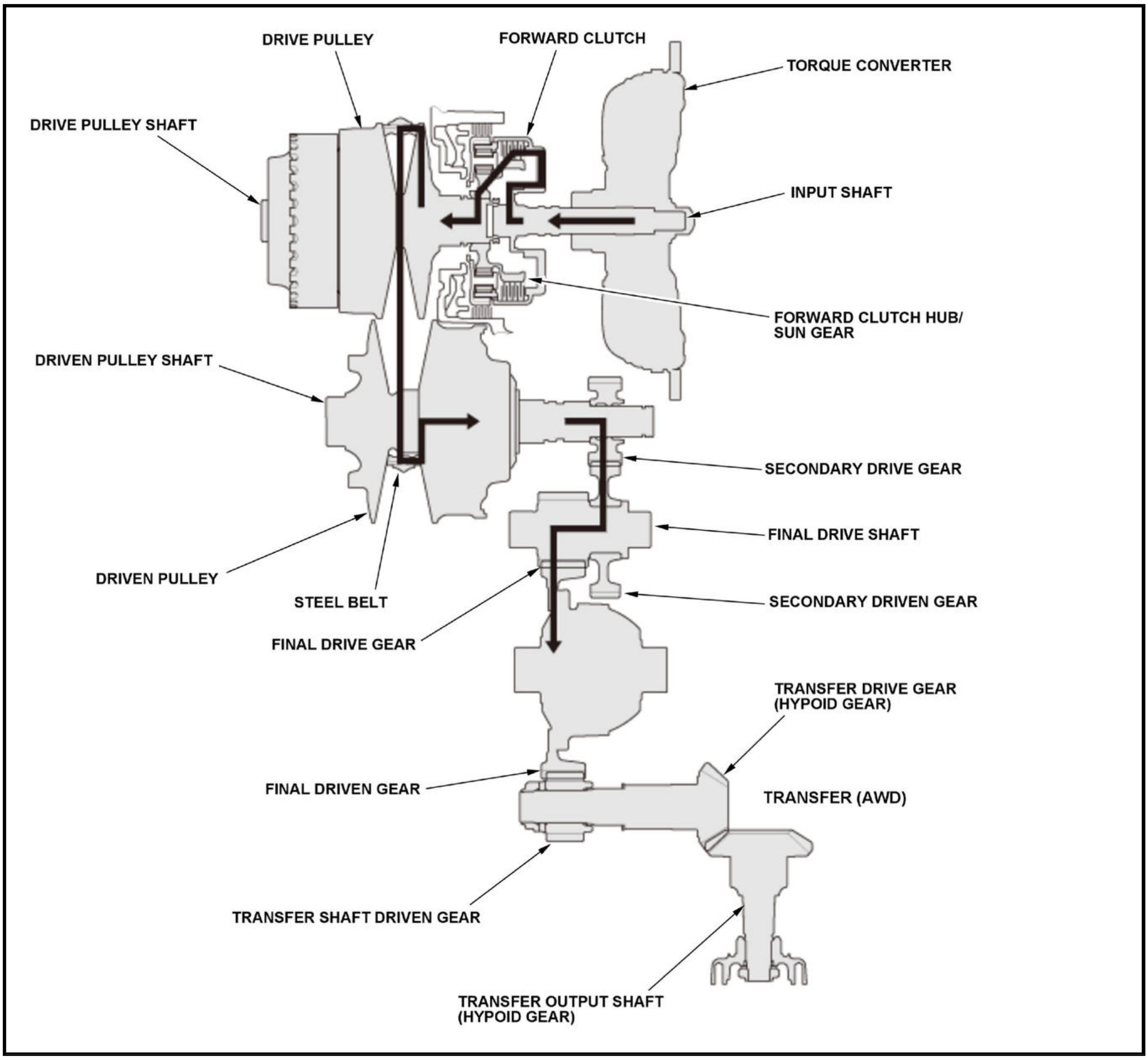
DRIVE PULLEY
FORWARD CLUTCH
TORQUE CONVERTER
DRIVE PULLEY SHAFT
INPUT SHAFT
FORWARD CLUTCH HUB/ SUN GEAR
DRIVEN PULLEY SHAFT
SECONDARY DRIVE GEAR
FINAL DRIVE SHAFT
DRIVEN PULLEY
STEEL BELT
SECONDARY DRIVEN GEAR
FINAL DRIVE GEAR
TRANSFER DRIVE GEAR (HYPOID GEAR)
FINAL DRIVEN GEAR
TRANSFER (AWD)
TRANSFER SHAFT DRIVEN GEAR
TRANSFER OUTPUT SHAFT (HYPOID GEAR)

R Position

- Hydraulic pressure is applied to the reverse brake, and the planetary carrier locks with the reverse brake.
- The ring gear joined with the forward clutch drum and input shaft drives the planetary sun gear via the planetary pinion gears.
- The sun gear rotates in the reverse direction from input shaft rotational direction, and drives the drive pulley shaft.
- Drive pulley shaft drives the driven pulley shaft and the secondary drive gear, and secondary driven gear.
- Power is transmitted to the final drive gear, which in turn drives the final driven gear.
- AWD: The final driven gear drives the transfer drive gear (hypoid gear) and the transfer output shaft (hypoid gear).

NOTE: The illustration shows the AWD transmission; 2WD transmission does not have the transfer mechanism.

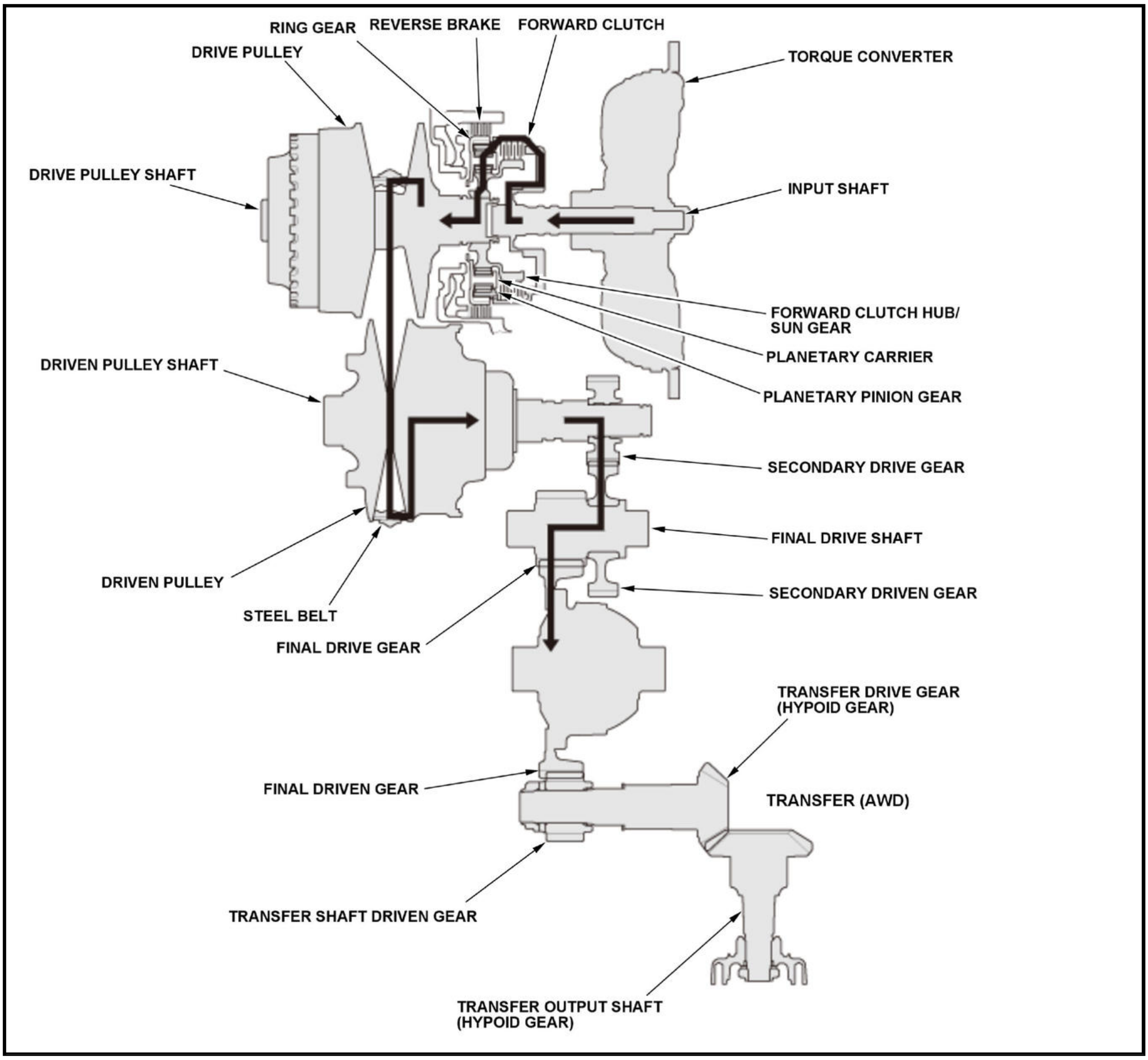
RING GEAR
REVERSE BRAKE
FORWARD CLUTCH
DRIVE PULLEY
TORQUE CONVERTER
DRIVE PULLEY SHAFT
INPUT SHAFT
FORWARD CLUTCH HUB/ SUN GEAR
PLANETARY CARRIER
DRIVEN PULLEY SHAFT
PLANETARY PINION GEAR
SECONDARY DRIVE GEAR
FINAL DRIVE SHAFT
DRIVEN PULLEY
SECONDARY DRIVEN GEAR
STEEL BELT
FINAL DRIVE GEAR
TRANSFER DRIVE GEAR (HYPOID GEAR)
FINAL DRIVEN GEAR
TRANSFER (AWD)
TRANSFER SHAFT DRIVEN GEAR
TRANSFER OUTPUT SHAFT (HYPOID GEAR)

Shift Lock System

Shift Lever Assembly

The shift lever is equipped with the shift lock function to prevent the miss-handling when selecting the position.Also, the park pin switch is used for one of the key interlock system and installed on the shift lever, and sends the park position signal (lever is in P position) to the TCM or the PCM.

Shift Lock System

The shift lock system prevents the shift lever from miss shifting when starting the engine. The shift lock solenoid is usually OFF. After starting the engine in P, the shift lever cannot move to any other position from P because the shift lock stop stops the lock pin unless pressing the brake pedal. When the brake pedal is pressed and the accelerator pedal is not pressed, the shift lock solenoid is ON; the shift lock solenoid plunger in the shift lock solenoid pulls the shift lock stop to release the lock pin. Then push the shift lever button, and the shift lever can move to any other position. When the brake pedal and the accelerator pedal are pressed at the same time, the shift lock system is not unlocked.

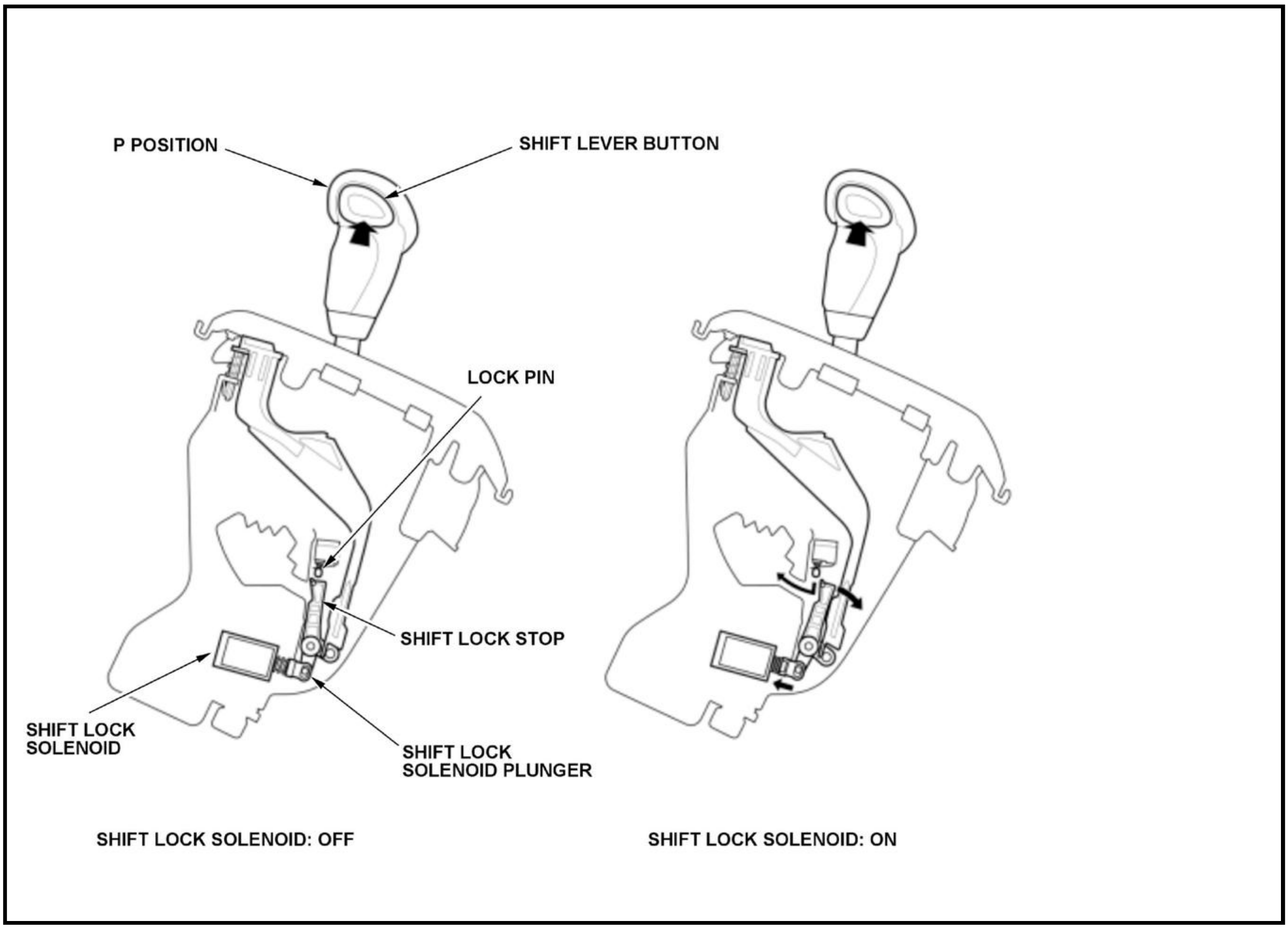
P POSITION
SHIFT LEVER BUTTON
LOCK PIN
SHIFT LOCK STOP
SHIFT LOCK SOLENOID
SHIFT LOCK SOLENOID PLUNGER
SHIFT LOCK SOLENOID: OFF
SHIFT LOCK SOLENOID: ON

Shift Lock Release

When the shift lock system does not operate due to a mechanical or electrical trouble, you can unlock the shift lock temporarily by inserting the mechanical key into the shift lock release hole and pressing the shift lock release. When the shift lock release is pressed, the shift lock stop releases the lock pin, and the shift lever can move to any other position.

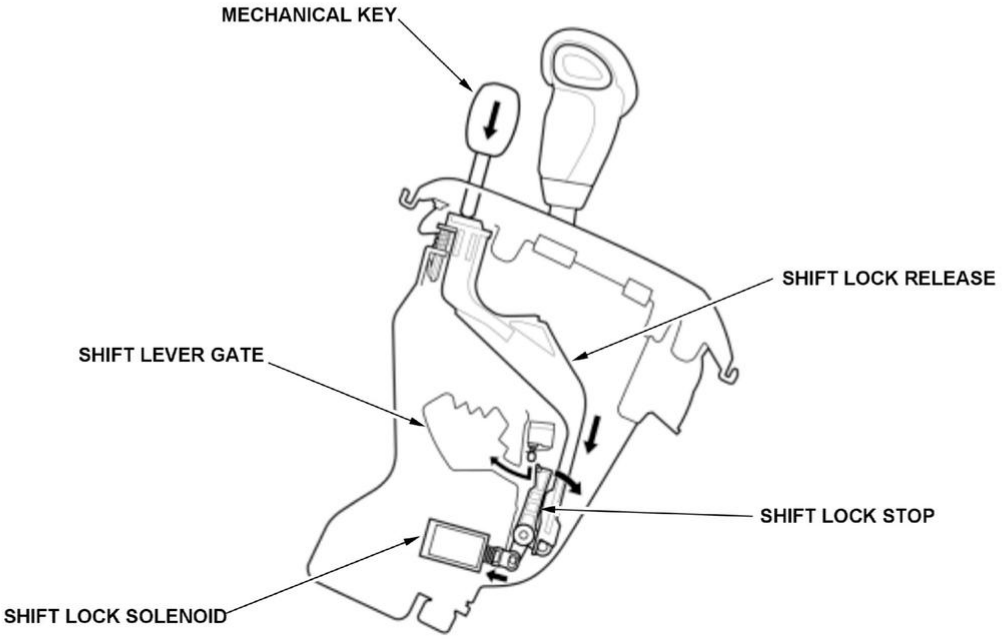
MECHANICAL KEY
SHIFT LOCK RELEASE
SHIFT LEVER GATE
SHIFT LOCK STOP
SHIFT LOCK SOLENOID

CONNECTOR VIEW

PCM CVT CONTROL SYSTEM PCM CONNECTOR FOR INPUTS AND OUTPUTS

NOTE: Refer to the PCM Connector for Inputs and Outputs in the Fuel and Emissions Systems as needed . (1.5 L engine)

NOTE: Refer to the PCM Connector for Inputs and Outputs in the Fuel and Emissions Systems as needed . (2.4 L engine)

TCM CONNECTOR FOR INPUTS AND OUTPUTS(1.5 L ENGINE)

TCM 50P Connector (female terminals)

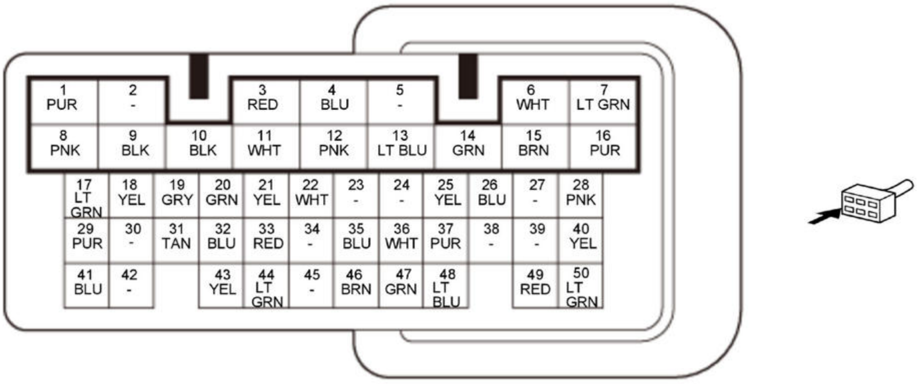

1 PUR	2 -		3 RED	4 BLU	5 -		6 WHT	7 LT GRN
8 PNK	9 BLK	10 BLK	11 WHT	12 PNK	13 LT BLU	14 GRN	15 BRN	16 PUR

17 LT GRN	18 YEL	19 GRY	20 GRN	21 YEL	22 WHT	23 -	24 -	25 YEL	26 BLU	27 -	28 PNK
29 PUR	30 -	31 TAN	32 BLU	33 RED	34 -	35 BLU	36 WHT	37 PUR	38 -	39 -	40 YEL
41 BLU	42 -		43 YEL	44 LT GRN	45 -	46 BRN	47 GRN	48 LT BLU		49 RED	50 LT GRN

Terminal Number	Terminal Name	Description
1	+B (POWER SOURCE)	Power source for TCM
2	Not used	B
3	F-CAN A_H (F-CAN COMMUNICATION SIGNAL HIGH)	Sends and receives communication signal
4	TM-CAN_H (TM-CAN COMMUNICATION SIGNAL HIGH)	Sends and receives communication signal
5	Not used	B
6	SOL C (SHIFT SOLENOID VALVE O/P)	Drives shift solenoid valve O/P
7	SOL B (SHIFT SOLENOID VALVE B)	Drives shift solenoid valve B
8	IG1 (IGNITION SIGNAL)	Detects ignition signal
9	GND2(TCU) (TCM GROUND)	Ground for TCM
10	GND1(TCU) (TCM GROUND)	Ground for TCM
11	F-CAN A_L (F-CAN COMMUNICATION SIGNAL LOW)	Sends and receives communication signal
12	TM-CAN_L (TM-CAN COMMUNICATION SIGNAL LOW)	Sends and receives communication signal
13	CPCLS (CVT CLUTCH PRESSURE CONTROL SOLENOID VALVE)	Drives CVT clutch pressure control solenoid valve
14	DNLS (CVT DRIVEN PULLEY PRESSURE CONTROL SOLENOID VALVE)	Drives CVT driven pulley pressure control solenoid valve
15	DRLS (CVT DRIVE PULLEY PRESSURE CONTROL SOLENOID VALVE)	Drives CVT drive pulley pressure control solenoid valve
16	LCCLS (CVT LOCK-UP CLUTCH CONTROL SOLENOID VALVE)	Drives CVT lock-up clutch control solenoid valve
17	VCC4 (SENSOR VOLTAGE)	Provides sensor reference voltage
18	VCC1 (SENSOR VOLTAGE)	Provides sensor reference voltage
19	SG2 (SENSOR GROUND)	Sensor ground
20	SG1 (SENSOR GROUND)	Sensor ground
21	VCC2 (SENSOR VOLTAGE)	Provides sensor reference voltage
22	VEL PWM (CVT SPEED SENSOR)	Detects CVT speed sensor signal
23	Not used	B
24	Not used	B
25	SG3 (SENSOR GROUND)	Sensor ground
26	SLS (SHIFT LOCK SOLENOID)	Drives shift lock solenoid
27 *1	EOPRLY (AUXILIARY TRANSMISSION FLUID PUMP RELAY)	Drives auxiliary transmission fluid pump relay
28	NDR PWM (CVT DRIVE PULLEY SPEED SENSOR)	Detects CVT drive pulley speed sensor signal
29	SG4 (SENSOR GROUND)	Sensor ground
30	Not used	B
31	PDN (CVT DRIVEN PULLEY PRESSURE SENSOR)	Detects CVT driven pulley pressure sensor signal

*1: With auto idle stop system

Terminal Number	Terminal Name	Description
32	SG5 (SENSOR GROUND)	Sensor ground
33	TATF (TRANSMISSION FLUID TEMPERATURE SENSOR)	Detects transmission fluid temperature sensor signal

Terminal Number	Terminal Name	Description
34	Not used	B
35	ATPL (TRANSMISSION RANGE SWITCH L POSITION)	Detects transmission range switch L position signal
36	ATPS (TRANSMISSION RANGE SWITCH S POSITION)	Detects transmission range switch S position signal
37	ATPD (TRANSMISSION RANGE SWITCH D POSITION)	Detects transmission range switch D position signal
38	Not used	B
39	Not used	B
40 *1	EOPSIG (AUXILIARY TRANSMISSION FLUID PUMP)	Drives auxiliary transmission fluid pump
41	VCC3 (SENSOR VOLTAGE)	Provides sensor reference voltage
42	Not used	B
43	ATP-RVS (TRANSMISSION RANGE SWITCH RVS POSITION)	Detects transmission range switch RVS position signal
44	ATP-FWD (TRANSMISSION RANGE SWITCH FWD POSITION)	Detects transmission range switch FWD position signal
45	Not used	B
46	ATPN (TRANSMISSION RANGE SWITCH N POSITION)	Detects transmission range switch N position signal
47	ATPR (TRANSMISSION RANGE SWITCH R POSITION)	Detects transmission range switch R position signal
48	ATPP (TRANSMISSION RANGE SWITCH P POSITION)	Detects transmission range switch P position signal
49	NT (TORQUE CONVERTER TURBINE SPEED SENSOR)	Detects torque converter turbine speed sensor signal
50 *1	EOPSTS (AUXILIARY TRANSMISSION FLUID PUMP)	Detects auxiliary transmission fluid pump signal

*1: With auto idle stop system

TROUBLESHOOTING

SHIFT LOCK SYSTEM CIRCUIT TROUBLESHOOTING (1.5 L ENGINE)

NOTE:

- Check for PGM-FI DTCs and CVT DTCs. If any DTCs are present, troubleshoot those first.
- Before you troubleshoot, record all freeze data and any on-board snapshots, and review the **General Troubleshooting Information**.

PGM-FI System

DTC Description	Confirmed DTC	Pending DTC
B	B	B

CVT System

DTC Description	Confirmed DTC	Pending DTC	Freeze Frame
B	B	B	B

DTC (CVT)

1. Shift lock solenoid operation check

   -1. **Connect the HDS to the DLC** .

   -2. Turn the vehicle to the ON mode.

   -3. Select the Shift Lock Solenoid Test in the Miscellaneous Test Menu, and check that the shift lock solenoid operates with the HDS.

   Does the shift lock solenoid work properly?

   YES

   The shift lock solenoid is OK. Go to step 6.

   NO

   Go to step 2.

2. Fuse check

   -1. Turn the vehicle to the OFF (LOCK) mode.

   -2. Check the following fuse.

Fuse	No. D7 (10 A)
Location	Under-dash fuse/relay box

   Is the fuse OK?

   YES

   The fuse is OK. Reinstall the fuse, then go to step 3.

   NO

   Replace the No. D7 (10 A) fuse, and recheck. If the fuse blows again, repair a short to ground in the No. D7 (10 A) fuse circuit.

3. Open wire check (IG1 METER line)

   -1. Disconnect the following connector.

Shift lever 6P connector

   -2. Turn the vehicle to the ON mode.

   -3. Measure the voltage between test points 1 and 2.

Test condition	Vehicle ON mode
	Shift lever 6P connector: disconnected

Test point 1	Shift lever 6P connector (female terminals) No. 5 : ①
Test point 2	Body ground

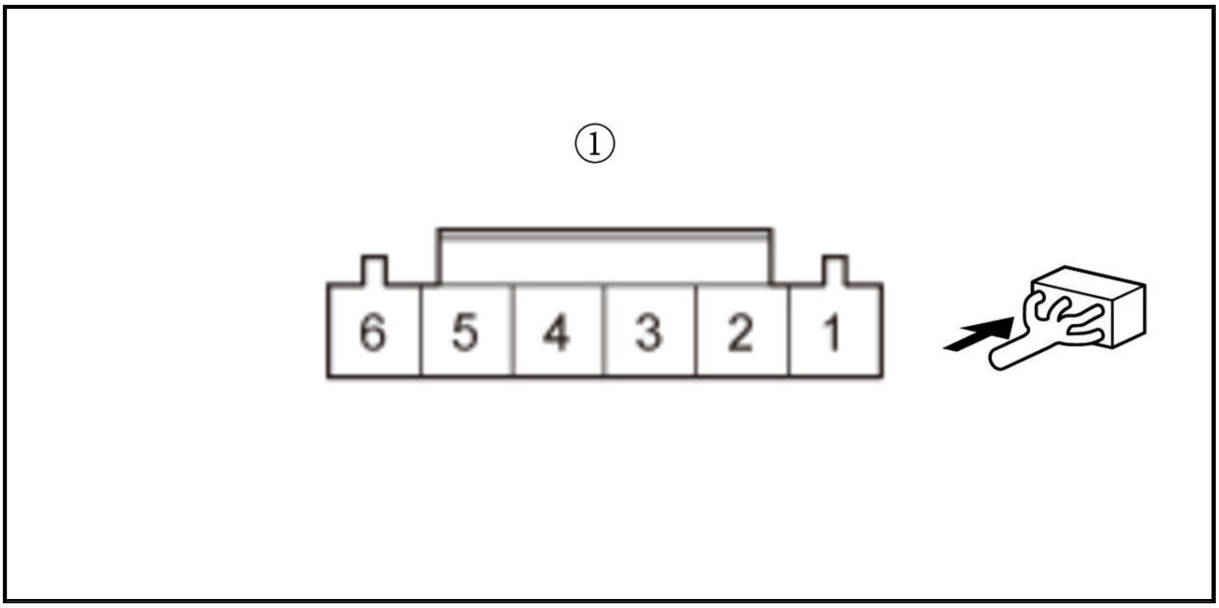

Is there battery voltage?

YES

The IG1 METER wire is OK. Go to step 4.

NO

Repair an open in the IG1 METER wire between the shift lock solenoid and the No. D7 (10 A) fuse in the under-dash fuse/relay box.

4. Determine possible failure area (shift lock solenoid, others)

-1. With the transmission in P position/mode, press the brake pedal.

NOTE: Do not press the accelerator pedal.

-2. Measure the voltage between test points 1 and 2.

Test condition	Vehicle ON mode
	Shift lever 6P connector: disconnected
Test point 1	Shift lever 6P connector (female terminals) No. 5 : ①
Test point 2	Shift lever 6P connector (female terminals) No. 6 : ①

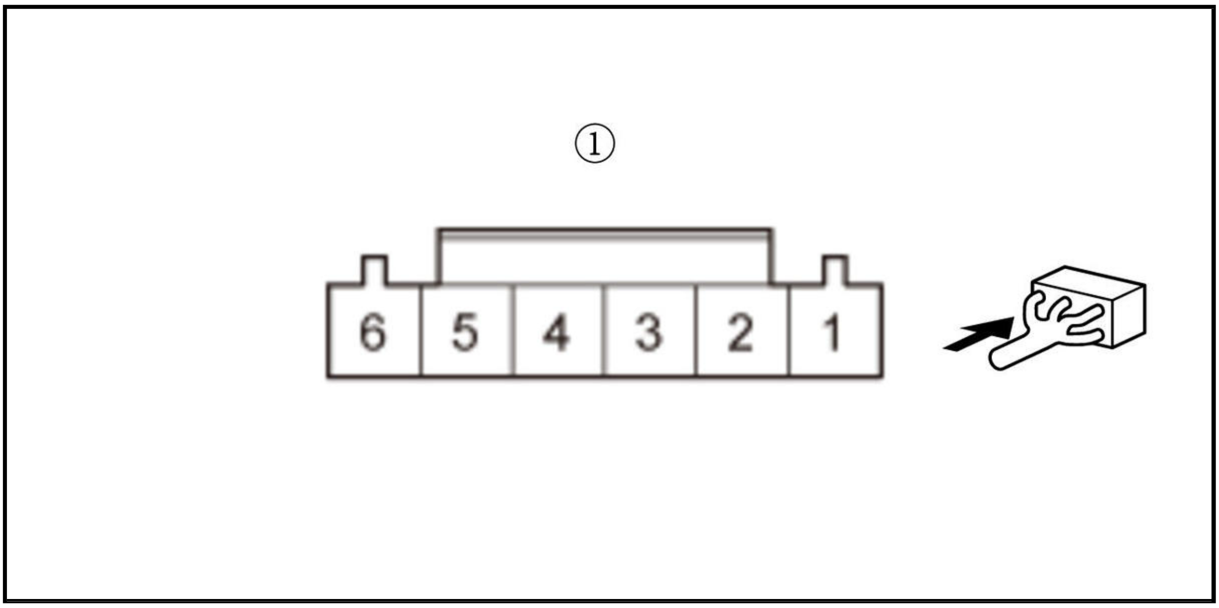

Is there battery voltage?

YES

Check the shift lock mechanism . If the mechanism is OK, replace the shift lock solenoid .

NO

Go to step 5.

5. Open wire check (SLS/SHIFT LOCK SOL line)

-1. Turn the vehicle to the OFF (LOCK) mode.

-2. Jump the SCS line with the HDS, and wait more than 1 minute.

NOTE: This step must be done to protect the TCM from damage.

-3. Disconnect the following connector.

TCM 50P connector

-4. Check for continuity between test points 1 and 2.

Test condition	Vehicle OFF (LOCK) mode
	Shift lever 6P connector: disconnected
	TCM 50P connector: disconnected
Test point 1	Shift lever 6P connector (female terminals) No. 6 : ①
Test point 2	TCM 50P connector No. 26

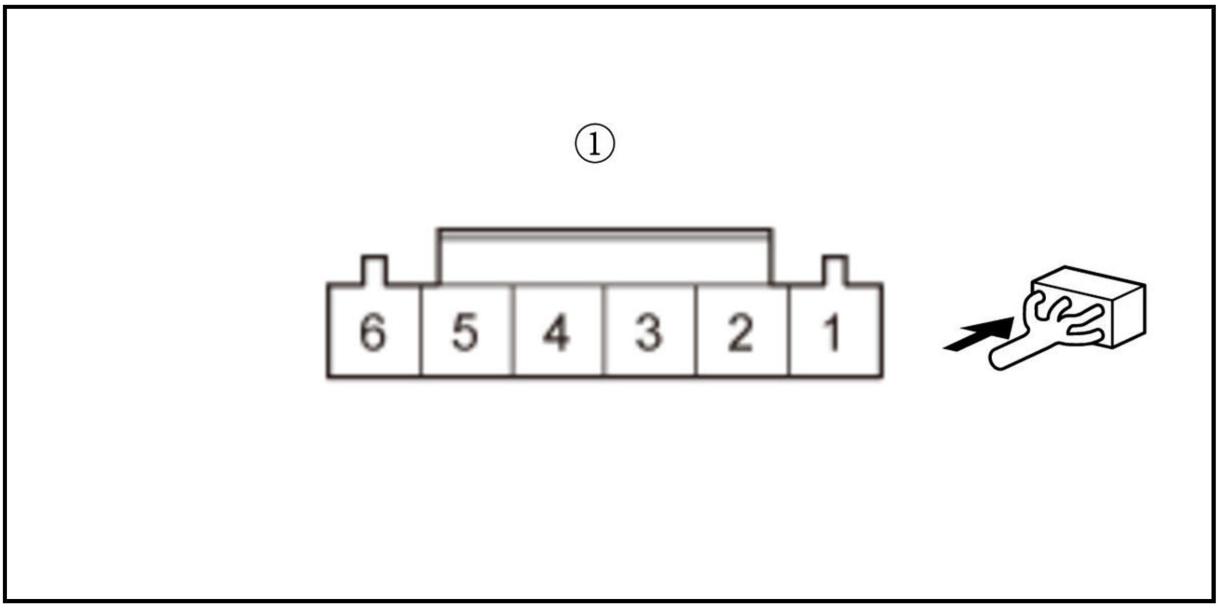

Is there continuity?

YES

The SLS/SHIFT LOCK SOL wire is OK. Check for any authorized service information related to the DTCs or symptoms you are troubleshooting, or **replace the original TCM** .

NO

Repair an open in the SLS/SHIFT LOCK SOL wire between the shift lock solenoid and the TCM.

6. Brake pedal position switch operation check

-1. Check the parameter(s) below with the HDS while pressing the brake pedal.

Signal	**Threshold**		**Current conditions**	
	Values	**Unit**	**Values**	**Unit**
Brake Switch	ON	B	B	B

Do the current condition(s) match the threshold?

YES

The brake pedal position switch is OK. Go to step 8.

NO

If the brake lights come on, go to step 7. If the brake lights do not work, repair faulty brake light circuit.

7. Open wire check (STOP SW line)

-1. Turn the vehicle to the OFF (LOCK) mode.

-2. Jump the SCS line with the HDS, and wait more than 1 minute.

NOTE: This step must be done to protect the PCM from damage.

-3. Disconnect the following connector.

PCM connector A (50P)

-4. Measure the voltage between test points 1 and 2.

Test condition	Vehicle OFF (LOCK) mode
B	PCM connector A (50P): disconnected
Test point 1	**PCM connector A (50P) No. 26**
Test point 2	Body ground

Is there battery voltage while pressing the brake pedal and about 0 V when the pedal is released?

YES

The STOP SW wire is OK. Check for any authorized service information related to the DTCs or symptoms you are troubleshooting, or **replace the original PCM** .

NO

Repair an open in the STOP SW wire between the PCM and the brake pedal position switch.

8. Transmission range switch parameter check

-1. Shift the transmission to P position/mode.

-2. Check the parameter(s) below with the HDS.

Signal	Threshold		Current conditions	
	Values	Unit	Values	Unit
A/T P Switch	ON	B	B	B

Do the current condition(s) match the threshold?

YES

The transmission range switch is OK. Check for any authorized service information related to the DTCs or symptoms you are troubleshooting, or **replace the original TCM** .

NO

Go to step 9.

9. Transmission range switch check

-1. Turn the vehicle to the OFF (LOCK) mode.

-2. Disconnect the following connector.

Transmission range switch 10P connector

-3. Connect terminals A and B with a jumper wire.

Terminal A	Transmission range switch 10P connector (female terminals) No. 5 : ①
Terminal B	Body ground

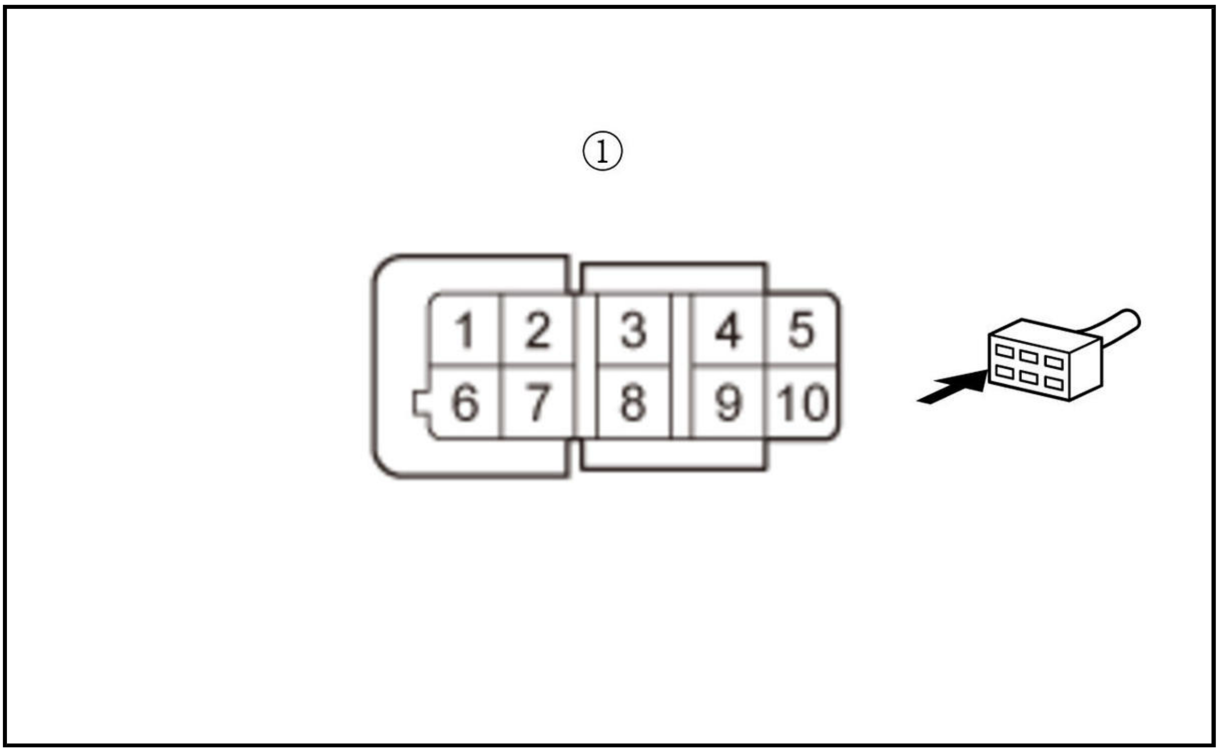

-4. Turn the vehicle to the ON mode.

-5. Check the parameter(s) below.

Signal	Threshold		Current conditions	
	Values	Unit	Values	Unit
A/T P Switch	ON	B	B	B

Do the current condition(s) match the threshold?

YES

Replace the transmission range switch .

NO

The transmission range switch is OK. Go to step 10.

10. Open wire check (ATPP line)

-1. Turn the vehicle to the OFF (LOCK) mode.

-2. Remove the jumper wire.

-3. Jump the SCS line with the HDS, and wait more than 1 minute.

NOTE: This step must be done to protect the TCM from damage.

-4. Disconnect the following connector.

TCM 50P connector

-5. Check for continuity between test points 1 and 2.

Test condition	Vehicle OFF (LOCK) mode
B	Transmission range switch 10P connector: disconnected
B	TCM 50P connector: disconnected

Test point 1	Transmission range switch 10P connector (female terminals) No. 5 : ①
Test point 2	TCM 50P connector No. 48

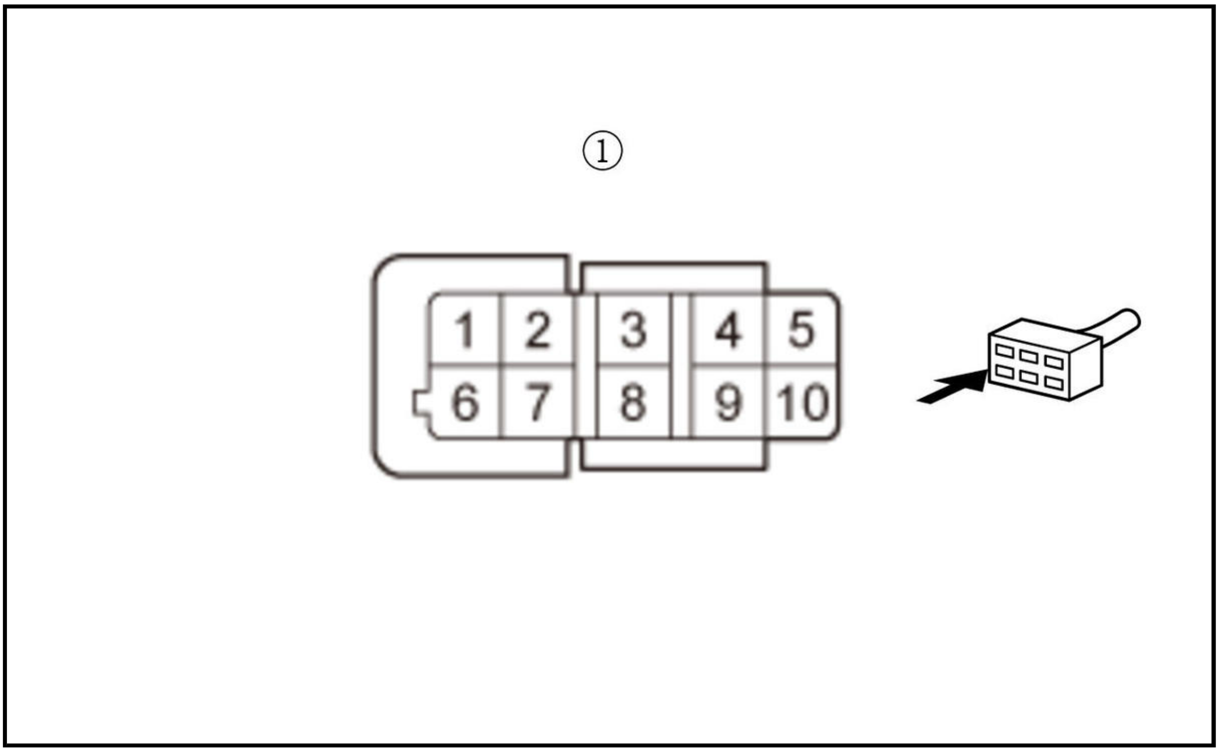

Is there continuity?

YES

The ATPP wire is OK. Check for any authorized service information related to the DTCs or symptoms you are troubleshooting, or replace the original TCM .

NO

Repair an open in the ATPP wire between the transmission range switch and the TCM.

SHIFT LOCK SYSTEM CIRCUIT TROUBLESHOOTING (2.4 L ENGINE) (2017 2018 2019)

NOTE:

- Check for PGM-FI DTCs and CVT DTCs. If any DTCs are present, troubleshoot those first.
- Before you troubleshoot, record all freeze data and any on-board snapshots, and review the General Troubleshooting Information.

PGM-FI System

DTC Description	Confirmed DTC	Pending DTC
B	B	B

CVT System

DTC Description	Confirmed DTC	Pending DTC	Freeze Frame
B	B	B	B

DTC (CVT)

1. Shift lock solenoid operation check

-1. Connect the HDS to the DLC .

-2. Turn the vehicle to the ON mode.

-3. Select the Shift Lock Solenoid Test in the Miscellaneous Test Menu, and check that the shift lock solenoid operates with the HDS.

Does the shift lock solenoid work properly?

YES

The shift lock solenoid is OK. Go to step 6.

NO

Go to step 2.

2. Fuse check

-1. Turn the vehicle to the OFF (LOCK) mode.

-2. Check the following fuse.

Fuse	No. D7 (10 A)
Location	Under-dash fuse/relay box

Is the fuse OK?

YES

The fuse is OK. Reinstall the fuse, then go to step 3.

NO

Replace the No. D7 (10 A) fuse, and recheck. If the fuse blows again, repair a short to ground in the No. D7 (10 A) fuse circuit.

3. Open wire check (IG1 METER line)

-1. Disconnect the following connector.

Shift lever 6P connector

-2. Turn the vehicle to the ON mode.

-3. Measure the voltage between test points 1 and 2.

Test condition	Vehicle ON mode
	Shift lever 6P connector: disconnected

Test point 1	Shift lever 6P connector (female terminals) No. 5 : ①
Test point 2	Body ground

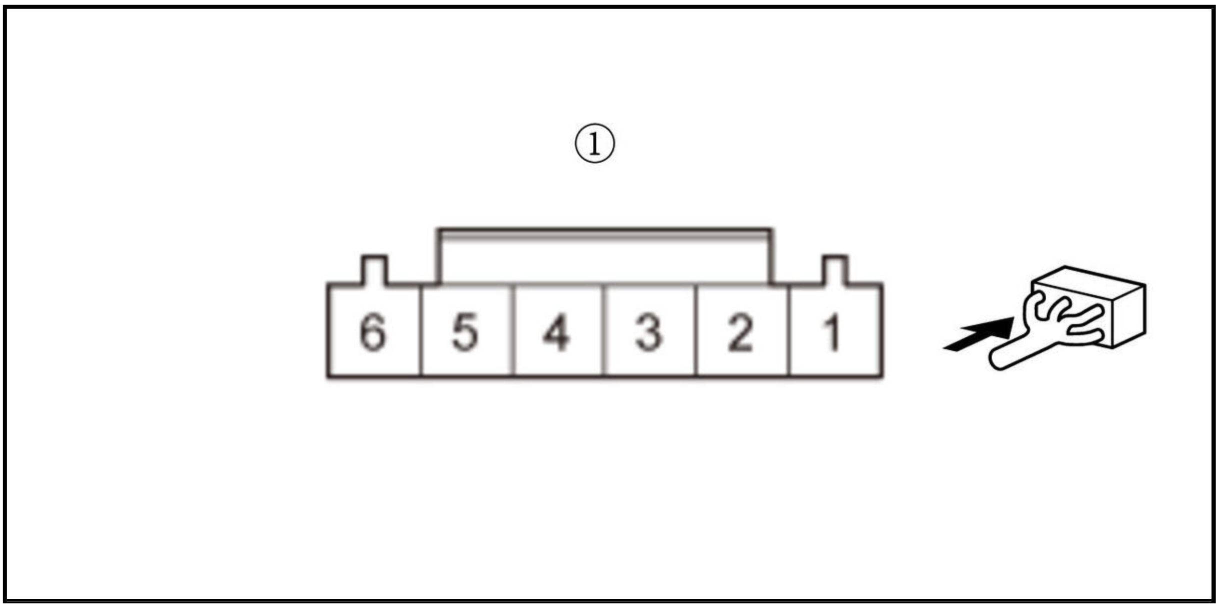

Is there battery voltage?

YES

The IG1 METER wire is OK. Go to step 4.

NO

Repair an open in the IG1 METER wire between the shift lock solenoid and the No. D7 (10 A) fuse in the under-dash fuse/relay box.

4. Determine possible failure area (shift lock solenoid, others)

-1. With the transmission in P position/mode, press the brake pedal.

NOTE: Do not press the accelerator pedal.

-2. Measure the voltage between test points 1 and 2.

Test condition	Vehicle ON mode
	Shift lever 6P connector: disconnected
Test point 1	Shift lever 6P connector (female terminals) No. 5 : ①
Test point 2	Shift lever 6P connector (female terminals) No. 6 : ①

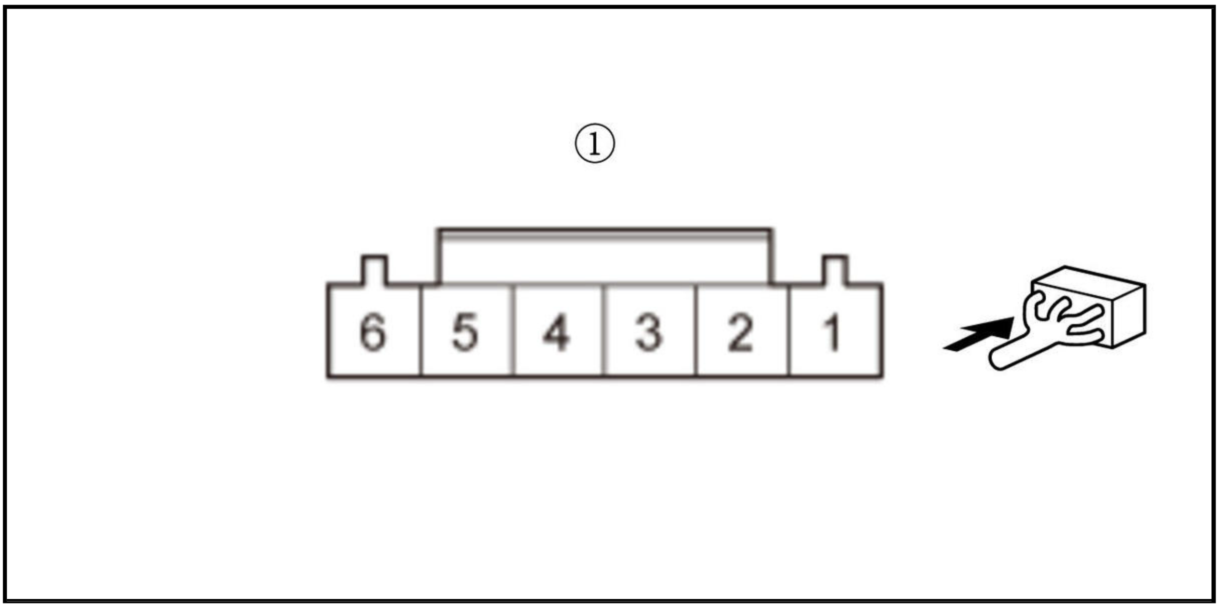

Is there battery voltage?

YES

Check the shift lock mechanism . If the mechanism is OK, **replace the shift lock solenoid** .

NO

Go to step 5.

5. Open wire check (SLS/SHIFT LOCK SOL line)

-1. Turn the vehicle to the OFF (LOCK) mode.

-2. Jump the SCS line with the HDS, and wait more than 1 minute.

NOTE: This step must be done to protect the PCM from damage.

-3. Disconnect the following connector.

PCM connector A (51P)

-4. Check for continuity between test points 1 and 2.

Test condition	Vehicle OFF (LOCK) mode
	Shift lever 6P connector: disconnected
	PCM connector A (51P): disconnected
Test point 1	Shift lever 6P connector (female terminals) No. 6 : ①
Test point 2	**PCM connector A (51P) No. 12**

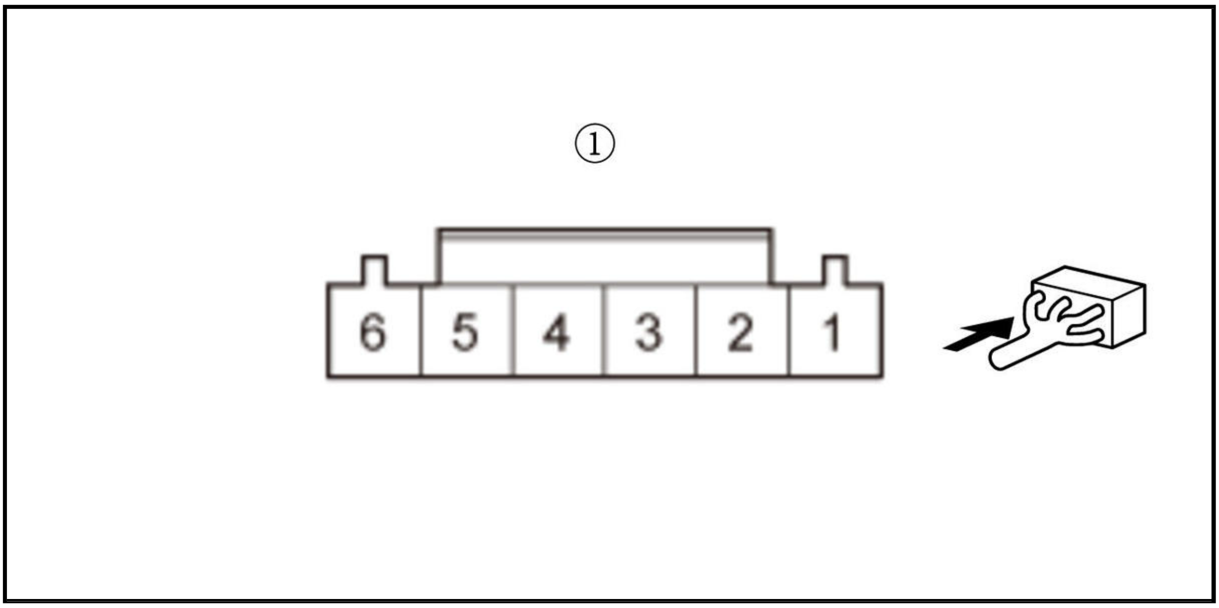

Is there continuity?

YES

The SLS/SHIFT LOCK SOL wire is OK. Check for any authorized service information related to the DTCs or symptoms you are troubleshooting, or **replace the original PCM** .

NO

Repair an open in the SLS/SHIFT LOCK SOL wire between the shift lock solenoid and the PCM.

6. Brake pedal position switch operation check

-1. Check the parameter(s) below with the HDS while pressing the brake pedal.

Signal	Threshold		Current conditions	
	Values	Unit	Values	Unit
Brake Switch	ON	B	B	B

Do the current condition(s) match the threshold?

YES

The brake pedal position switch is OK. Go to step 8.

NO

If the brake lights come on, go to step 7. If the brake lights do not work, repair faulty brake light circuit.

7. Open wire check (STOP SW line)

-1. Turn the vehicle to the OFF (LOCK) mode.

-2. Jump the SCS line with the HDS, and wait more than 1 minute.

NOTE: This step must be done to protect the PCM from damage.

-3. Disconnect the following connector.

PCM connector A (51P)

-4. Measure the voltage between test points 1 and 2.

Test condition	Vehicle OFF (LOCK) mode
B	PCM connector A (51P): disconnected
Test point 1	**PCM connector A (51P) No. 37**
Test point 2	Body ground

Is there battery voltage while pressing the brake pedal and about 0 V when the pedal is released?

YES

The STOP SW wire is OK. Check for any authorized service information related to the DTCs or symptoms you are troubleshooting, or **replace the original PCM** .

NO

Repair an open in the STOP SW wire between the PCM and the brake pedal position switch.

8. Transmission range switch parameter check

-1. Shift the transmission to P position/mode.

-2. Check the parameter(s) below with the HDS.

Signal	Threshold		Current conditions	
	Values	Unit	Values	Unit
A/T P Switch	ON	B	B	B

Do the current condition(s) match the threshold?

YES

The transmission range switch is OK. Check for any authorized service information related to the DTCs or symptoms you are troubleshooting, or **replace the original PCM** .

NO

Go to step 9.

9. Transmission range switch check

-1. Turn the vehicle to the OFF (LOCK) mode.

-2. Disconnect the following connector.

Transmission range switch 10P connector

-3. Connect terminals A and B with a jumper wire.

Terminal A	Transmission range switch 10P connector (female terminals) No. 5 : ①
Terminal B	Body ground

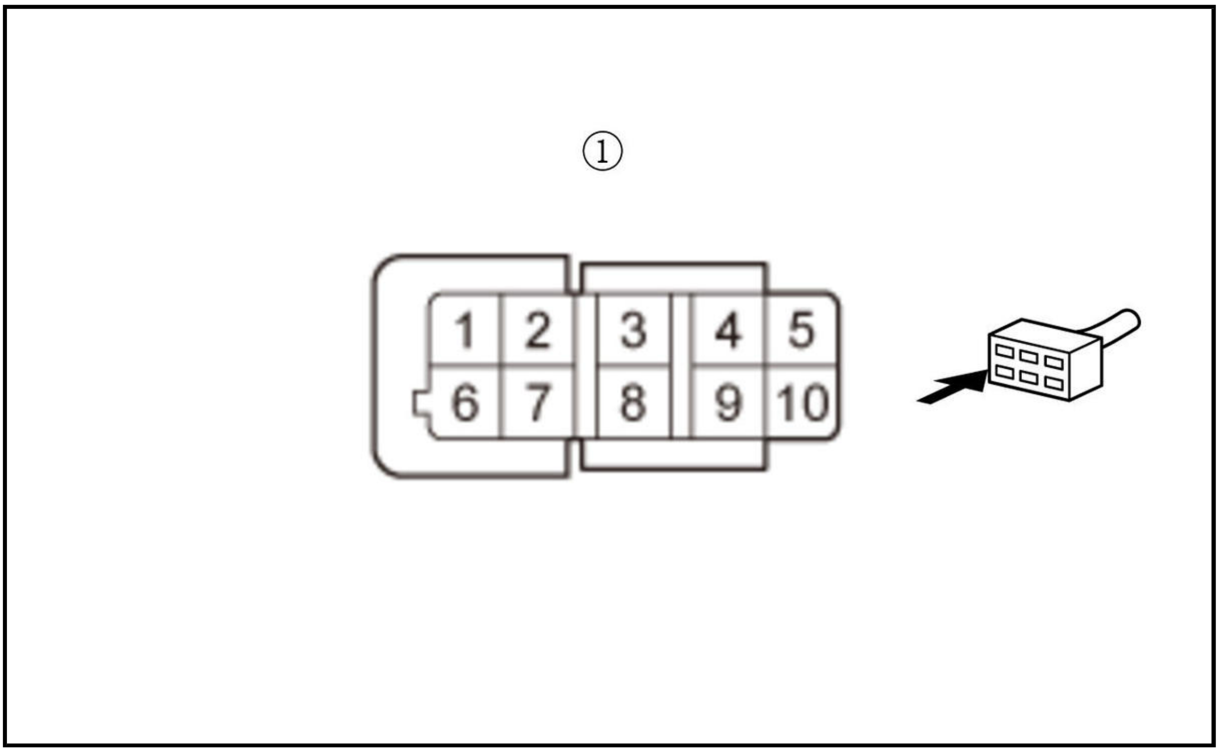

-4. Turn the vehicle to the ON mode.

-5. Check the parameter(s) below.

Signal	Threshold		Current conditions	
	Values	**Unit**	**Values**	**Unit**
A/T P Switch	ON	B	B	B

Do the current condition(s) match the threshold?

YES

Replace the transmission range switch .

NO

The transmission range switch is OK. Go to step 10.

10. Open wire check (ATPP line)

-1. Turn the vehicle to the OFF (LOCK) mode.

-2. Remove the jumper wire.

-3. Jump the SCS line with the HDS, and wait more than 1 minute.

NOTE: This step must be done to protect the PCM from damage.

-4. Disconnect the following connector.

PCM connector C (51P)

-5. Check for continuity between test points 1 and 2.

Test condition	Vehicle OFF (LOCK) mode
B	Transmission range switch 10P connector: disconnected
B	PCM connector C (51P): disconnected

Test point 1	Transmission range switch 10P connector (female terminals) No. 5 : ①
Test point 2	**PCM connector C (51P) No. 34**

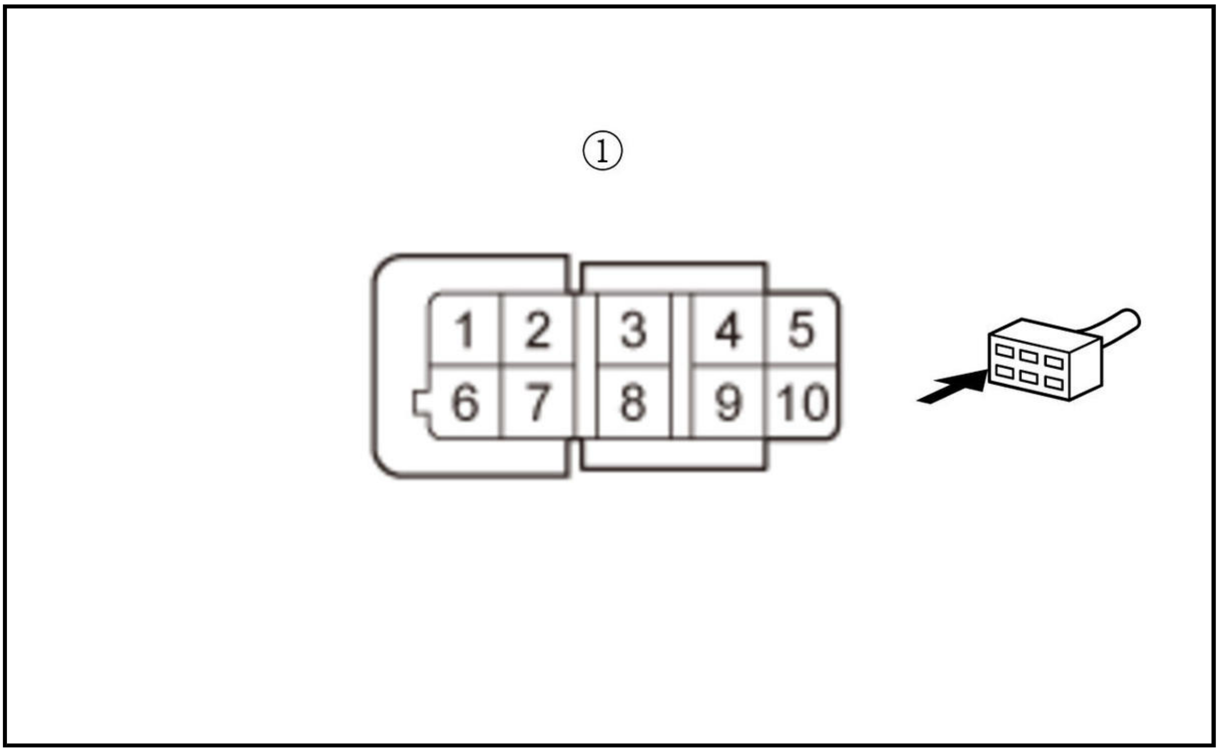

Is there continuity?

YES

The ATPP wire is OK. Check for any authorized service information related to the DTCs or symptoms you are troubleshooting, or **replace the original PCM** .

NO

Repair an open in the ATPP wire between the transmission range switch and the PCM.

REPAIR PROCEDURES AND TESTS

AUXILIARY TRANSMISSION FLUID PUMP AIR BLEEDING (2020 2021)

Bleeding

NOTE: The auxiliary transmission fluid pump air bleeding procedure must be done when:

- The auxiliary transmission fluid pump is removed.
- The transmission fluid is replaced.
- The TCM is replaced.
- The transmission is replaced.
- The valve body assembly is replaced.

Procedure With HDS

1. **HDS - Connect**
2. **Transmission Fluid Level - Check**
3. Engine - Warm Up

> 1. Start the engine, and warm up the engine by raising the engine speed around 3, 000 rpm until the cooling fans comes on.
>
> 2. Turn the engine off.

4. Auxiliary Transmission Fluid Pump - Air Bleed

> 1. Select the Function Test in the A/T SYSTEM, and drive the auxiliary transmission fluid pump for at least 15 seconds with the HDS.
> **NOTE:** Do not drive the auxiliary transmission fluid pump for more than 160 seconds at a time.

5. **Transmission Fluid Level - Check**

Procedure Without HDS

6. **Transmission Fluid Level - Check**
7. Engine - Warm Up

> 1. Start the engine, and warm up the engine by raising the engine speed around 3, 000 rpm until the cooling fans comes on.

8. Auxiliary Transmission Fluid Pump - Air Bleed

> 1. **Do the auto idle stop system operation** . If the auto idle stop system does not operate for at least 15 seconds, repeat this procedure and recheck, or do the procedure with the HDS.

9. **Transmission Fluid Level - Check**

Procedure After Replacing TCM and Transmission or Only TCM

10. Auxiliary Transmission Fluid Pump - Air Bleed

> 1. Turn the vehicle to the ON mode, then wait for at least 2 seconds.
>
> 2. Turn the vehicle to the OFF mode, then wait for at least 10 seconds.
>
> **NOTE:** Do not start the engine.
>
> 3. Turn the vehicle to the ON mode, then make sure the shift position indicator does not blink.
>
> - If the shift position indicator does not blink, the air bleed is complete.
> - If the shift position indicator blinks, repeat from step 2.

SHIFT CABLE REMOVAL, INSTALLATION, AND ADJUSTMENT

Removal

SRS components are located in this area. Review **the SRS component locations** and **the precautions and procedures** before doing repair or service.

NOTE:

- ℹ Where icon is shown further information.
- Do not bend the shift cable excessively.

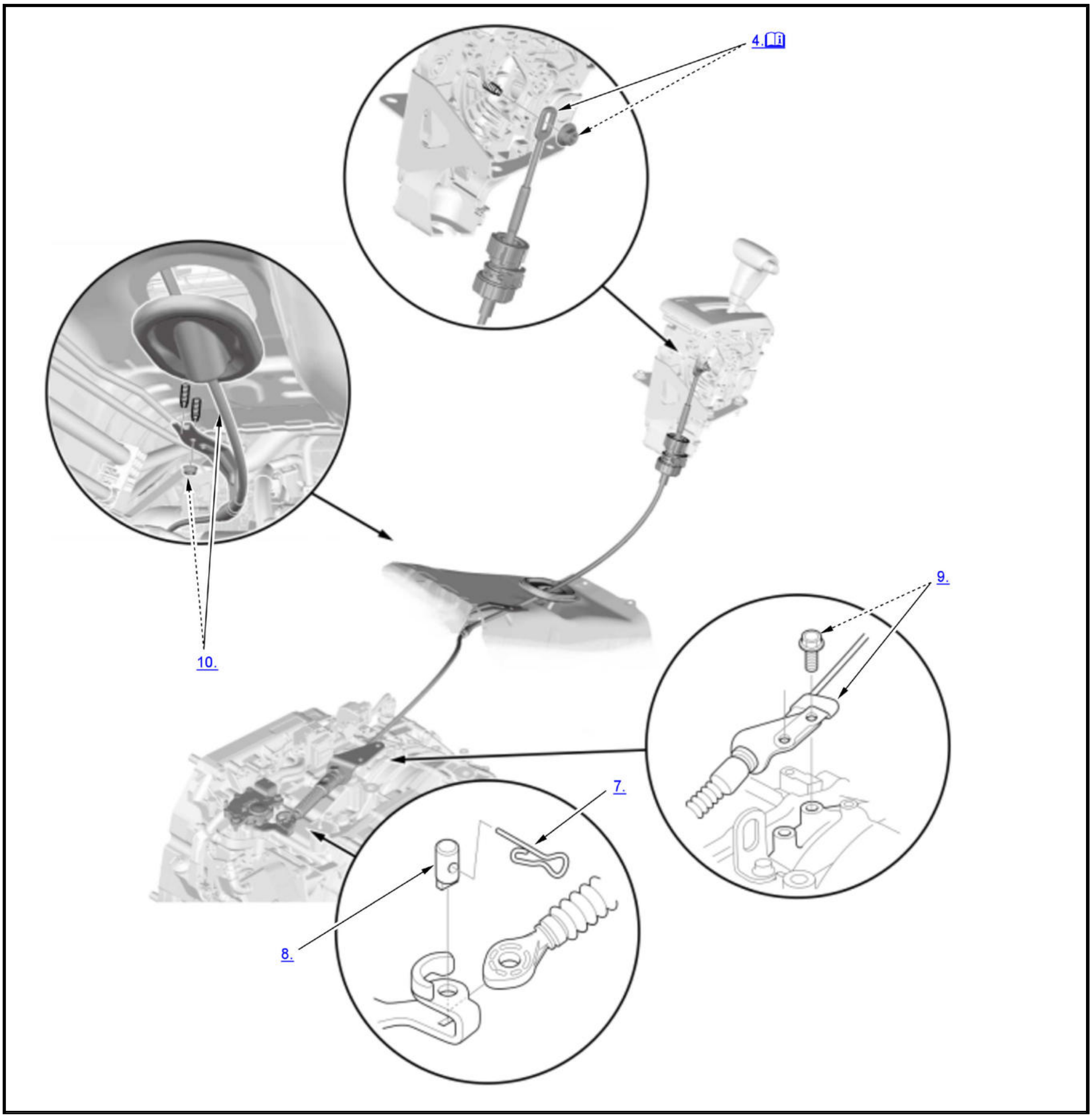

🕮	Detailed information, notes and precautions

1. **Vehicle - Lift**
2. Center Maintenance Cover - Remove
   1. Remove the center maintenance cover (A),

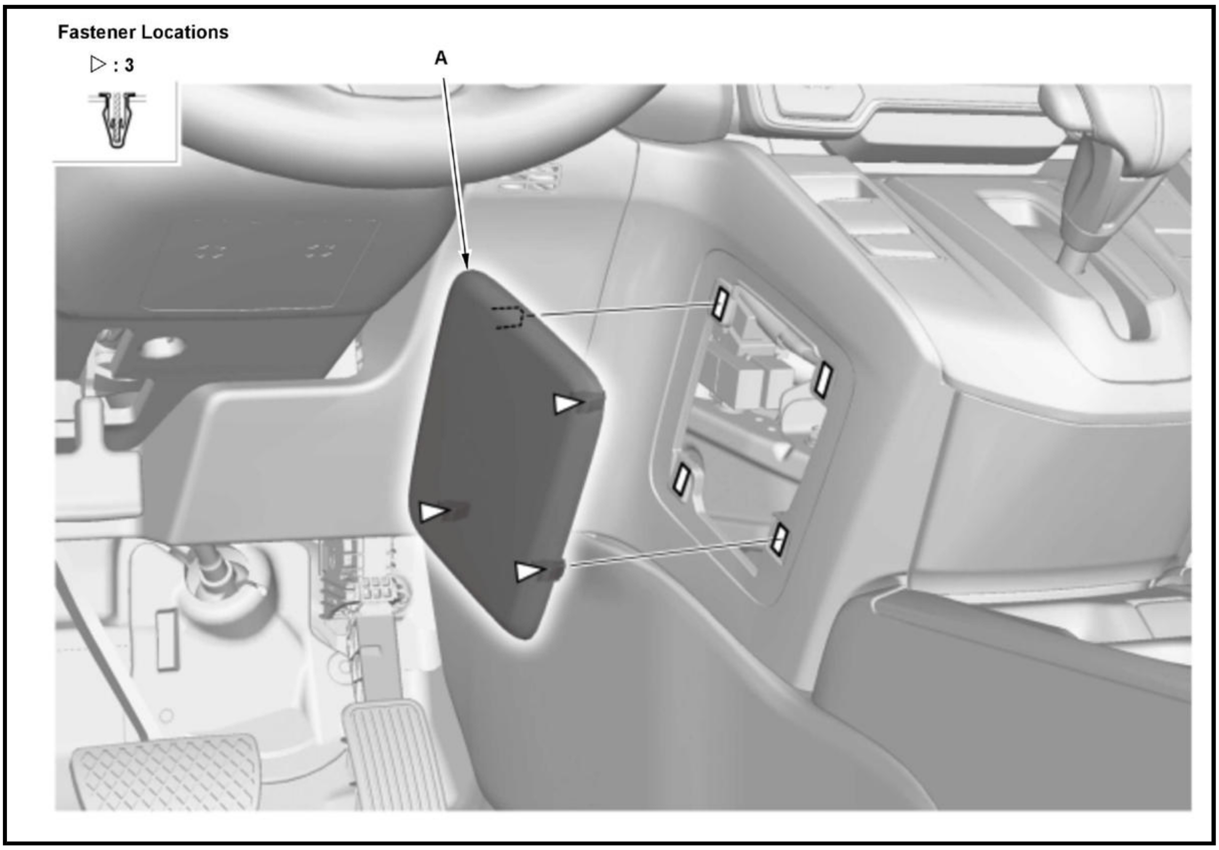

3. [Front Console Cover - Remove (Driver's Side)]

4. Shift Cable (Shift Lever Side) - Remove

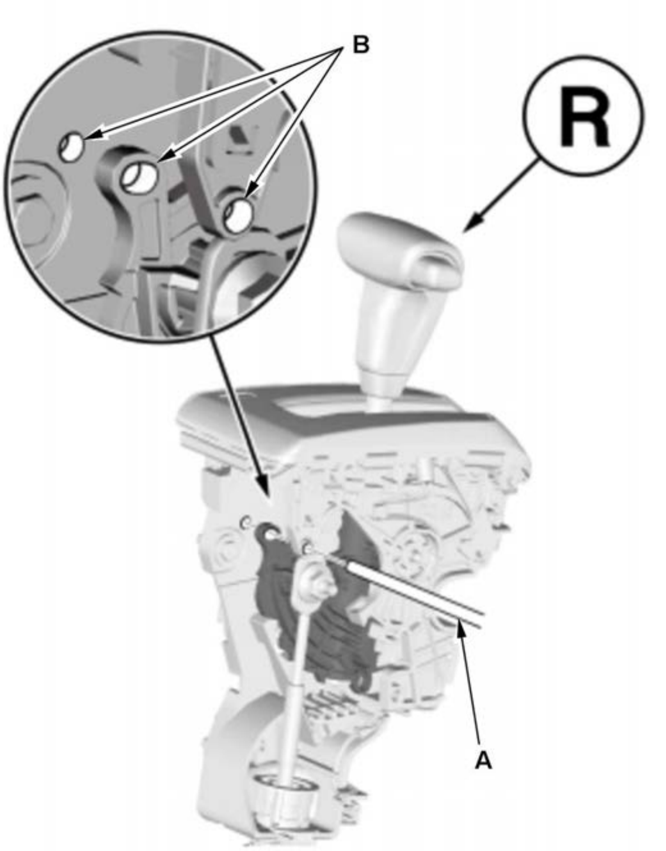	1. Shift the transmission to R position/mode. 2. Insert a 6.0 mm (0.236 in) pin (A) into the positioning holes (B). **NOTE:** Use only a 6.0 mm (0.236 in) pin with no burrs. 3. Remove the shift cable end nut.

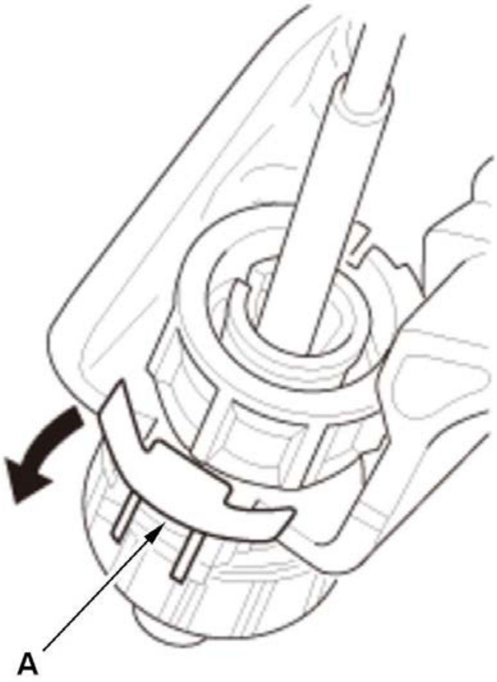	4. Unlock the retainer lock (A).

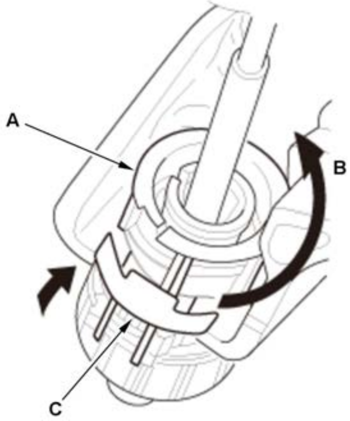	5. Rotate the socket holder retainer (A) in arrow direction (B) until it stops, and push the retainer lock (C) into the socket holder retainer to lock the retainer.

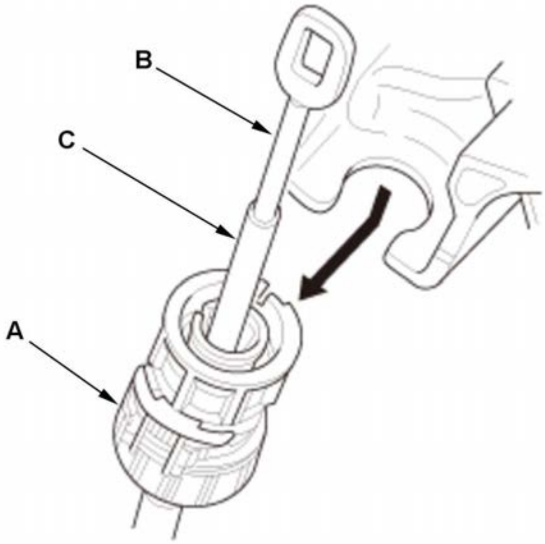	6. Slide the socket holder (A) away as shown to remove the shift cable (B). **NOTE:** Do not remove the shift cable by pulling the shift cable guide (C).

5. **Air Cleaner - Remove**
6. **Throttle Body Inlet Pipe - Remove** (1.5 L engine)

7. Lock Pin - Remove
8. Control Pin - Remove
9. Shift Cable Bracket - Remove
10. Shift Cable (Under Side) - Remove

Installation

SRS components are located in this area. Review **the SRS component locations** and **the precautions and procedures** before doing repair or service.

NOTE:

- Where icon is shown further information.
- Do not bend the shift cable excessively.
- Unless otherwise indicated, illustrations used in the procedure are for LHD model.

1

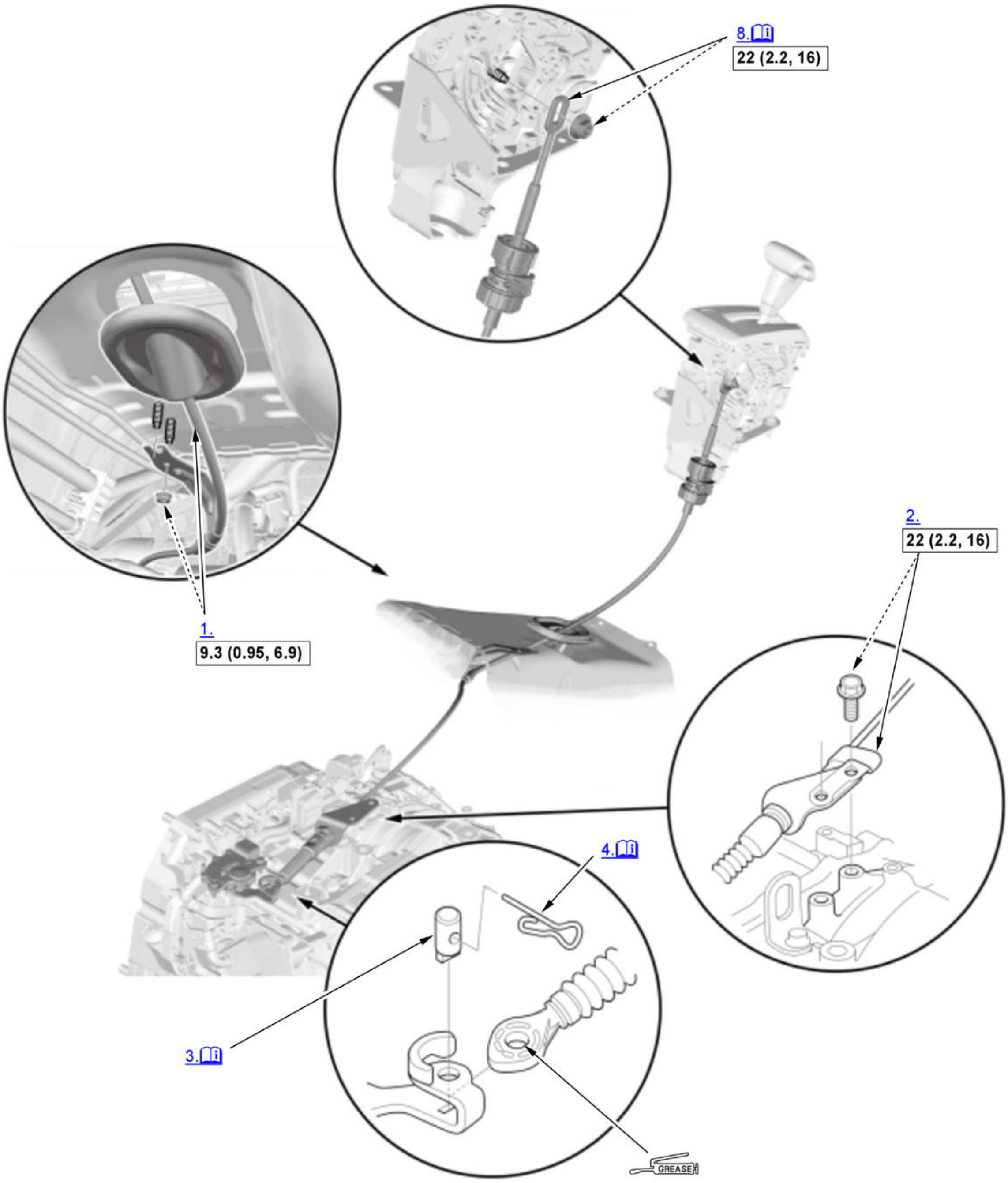

Fig. 1: Shift Cable Replacement Components With Torque Specifications
Courtesy of HONDA, U.S.A., INC.

ℹ	Detailed information, notes and precautions
▭	Torque: N.m (kgf.m, lbf.ft)
GREASE	Apply molybdenum grease to inner surface of hole.

1. Shift Cable (Under Side) - Install
2. Shift Cable Bracket - Install
3. Control Pin - Install

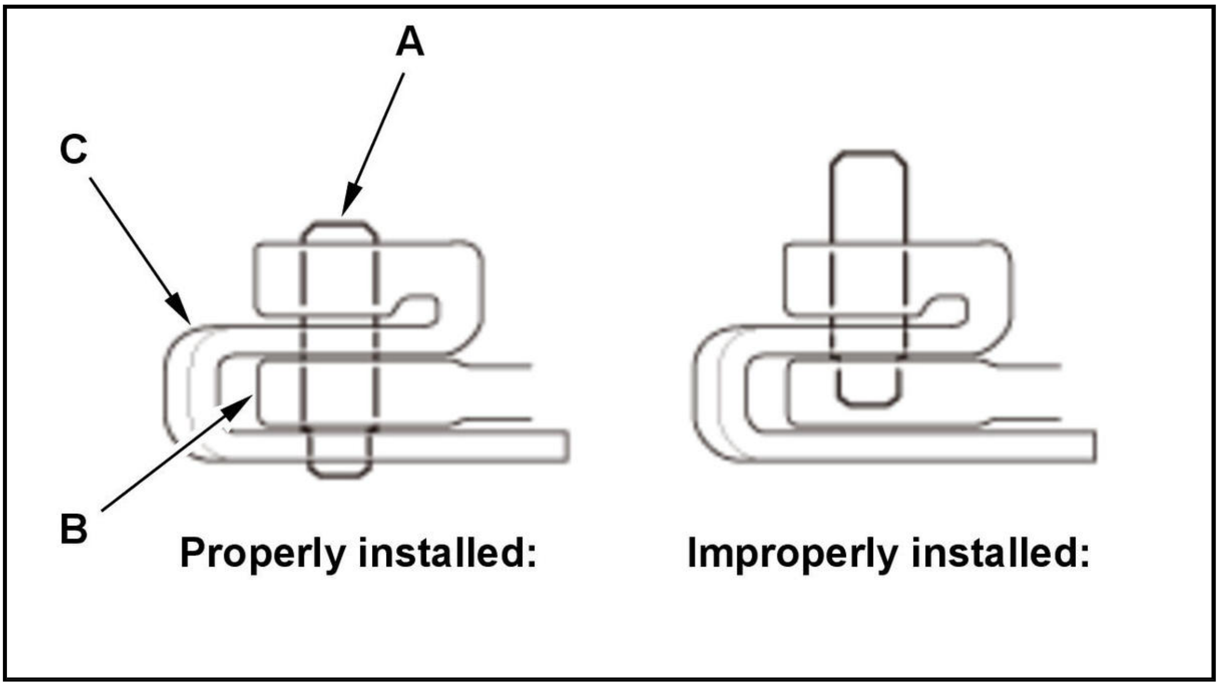

NOTE: Make sure the control pin (A) is inserted through the shift cable end (B) and fully seated on the control lever (C).

4. Lock Pin - Install

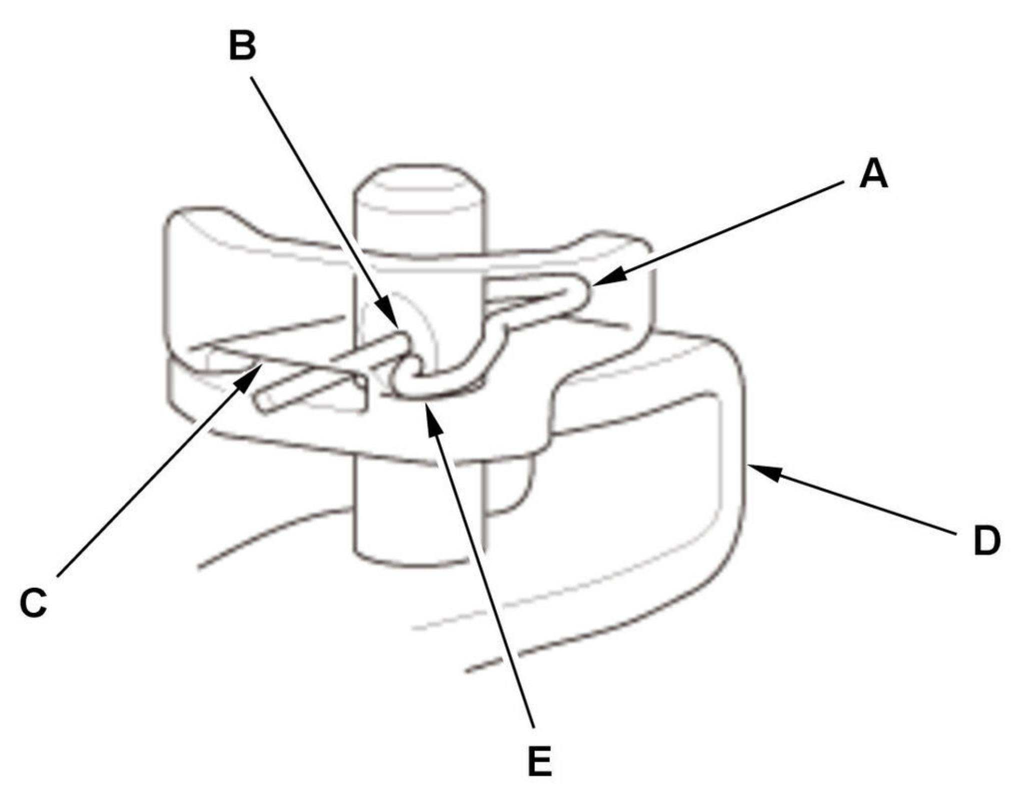

NOTE: Make sure the lock pin (A) is inserted through the control pin hole (B) to the opening (C) of the control lever (D) so that the hooked end (E) of the lock pin locks into the control pin hole.

5. **Throttle Body Inlet Pipe - Install** (1.5 L engine)
6. **Air Cleaner - Install**
7. Shift Cable - Adjust
8. Shift Cable (Shift Lever Side) - Install

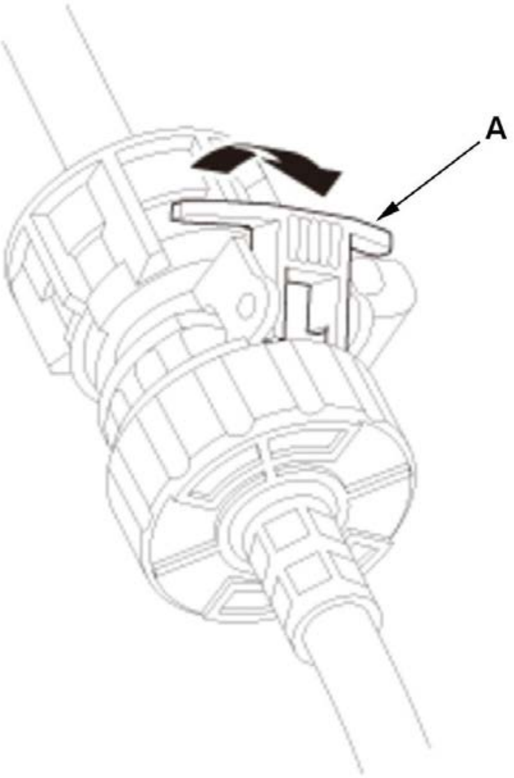	1. Unlock the retainer lock (A).

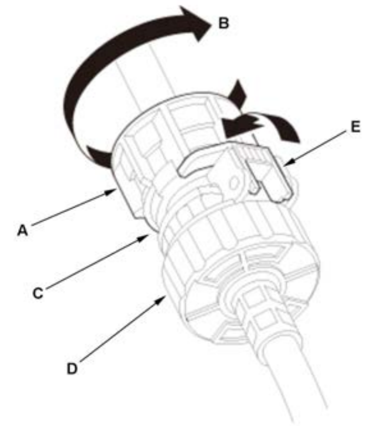

2. Rotate the socket holder retainer (A) in arrow direction (B) until it stops to create clearance (C) between the socket holder (D) and holder retainer, and push the retainer lock (E) into the socket holder retainer to lock the retainer.

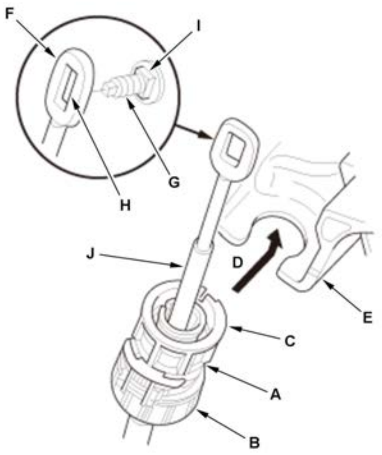
F
I
H
G
J
D
E
C
A
B

3. Align the shift cable slot (A) between the socket holder (B) and the socket holder retainer (C) with the opening (D).

4. Slide the socket holder into the shift cable bracket (E) while installing the shift cable end (F) over the mounting stud (G) by aligning its square hole (H) with the square fitting (I) at the bottom of the stud.

NOTE:

- Do not install the shift cable by holding the shift cable guide (J).
- When the socket holder is installed in the shift cable bracket, the retainer lock is unhinged and releases the holder retainer lock, then the holder retainer returns under spring force to secure the shift cable.

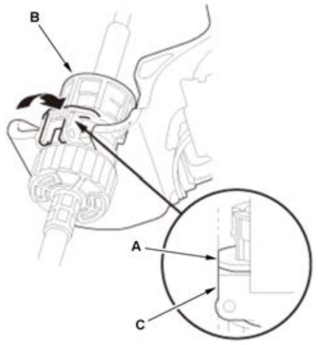

5. Push the retainer lock (A) fully to lock the socket holder retainer (B), and make sure that the retainer lock fits into the hinged-joint (C). If the retainer lock does not fit with the edge of the hinged-joint, rotate the holder retainer clockwise while pushing the retainer lock until it locks.

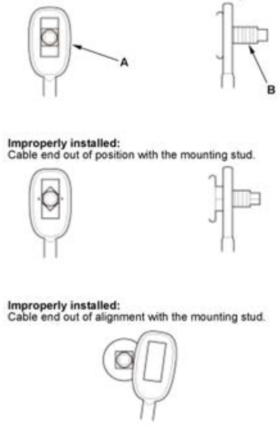
Properly installed:
Cable end rides on the bottom of the mounting stud.
A
B
Improperly installed:
Cable end out of position with the mounting stud.
Improperly installed:
Cable end out of alignment with the mounting stud.

6. Make sure that the shift cable end (A) is properly installed on the mounting stud (B).

- If the cable end is out of position with the mounting stud, remove the shift cable from the shift cable bracket, then reinstall the cable end over the mounting stud before reinstalling the shift cable to the shift cable bracket. Do not install the shift cable end on the mounting stud with the shift cable install on the shift cable bracket.
- If the shift cable end does not ride at the bottom of the mounting stud, rotate the stud to align the square fitting with the hole.

9. 6.0 mm (0.236 in) Pin - Remove

10. All Removed Parts - Install

1. Install the parts in the reverse order of removal.

11. Shift Cable - After Install Check

1. Turn the vehicle to the ON mode.

2. Move the shift lever through all positions/modes, and check that the shift position indicator follows the shift lever operation.

3. Shift the transmission to P position/mode, and check that the shift lock works properly.

4. Push the shift lock release, and check that the shift lever releases. Also check that the shift lever locks when it is shifted back to P.

5. Check that the back-up lights come on when the transmission is in R position/mode.

6. Start the engine.

NOTE: Check that the engine starts in P or N position/mode, and does not start in any other positions/modes.

7. Make sure the vehicle is turned to the OFF (LOCK) mode with the shift lever in P position/mode. If it is not, adjust the shift cable again.

Adjustment

NOTE: Do not bend the shift cable excessively.

1. Center Maintenance Cover - Remove
2. **Front Console Cover - Remove (Driver's Side)**
3. Shift Cable (Shift Lever Side) - Disconnect
4. Shift Cable - Adjust

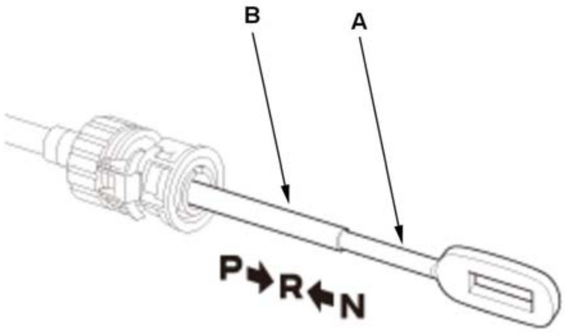	1. Push the shift cable (A) until it stops, then release it. **NOTE:** Do not hold the shift cable guide (B) to adjust the shift cable. 2. Pull the shift cable back one step from the P position so that the shift position is in R. 3. Turn the vehicle to the ON mode. 4. Check that the R indicator comes on. 5. Turn the vehicle to the ACCESSORY mode.

5. All Removed Parts - Install

1. Install the parts in the reverse order of removal.

6. Shift Cable - After Adjust Check

1. Turn the vehicle to the ON mode.

2. Move the shift lever through all positions/modes, and verify the transmission range switch matches with the shift position indicator.

3. Shift the transmission to P position/mode, and check that the shift lock works properly.

4. Push the shift lock release, and check that the shift lever releases. Also check that the shift lever locks when it is shifted back to P.

5. Check that the back-up lights come on when the transmission is in R position/mode.

6. Start the engine.

NOTE: Check that the engine starts in P or N position/mode, and does not start in any other positions/modes.

7. Make sure the vehicle is turned to the OFF (LOCK) mode with the shift lever in P position/mode. If it is not, adjust the shift cable again.

TRANSMISSION FLUID (HCF-2) LEVEL CHECK AND REPLACEMENT

Replacement

NOTE:

- **How to read the torque specifications** .
- Keep all foreign particles out of the transmission.
- For your safety, drain the transmission fluid when the engine is cool.
- Unless otherwise indicated, illustrations used in the procedures are for a 1.5L engine model.

1. **Vehicle - Lift**
2. **Engine Undercover Lid - Remove**
3. Engine - Warm Up

1. Start the engine, and warm up the engine by raising the engine speed around 3, 000 rpm until the cooling fans comes on.

2. Turn the engine off.

4. Transmission Fluid - Drain

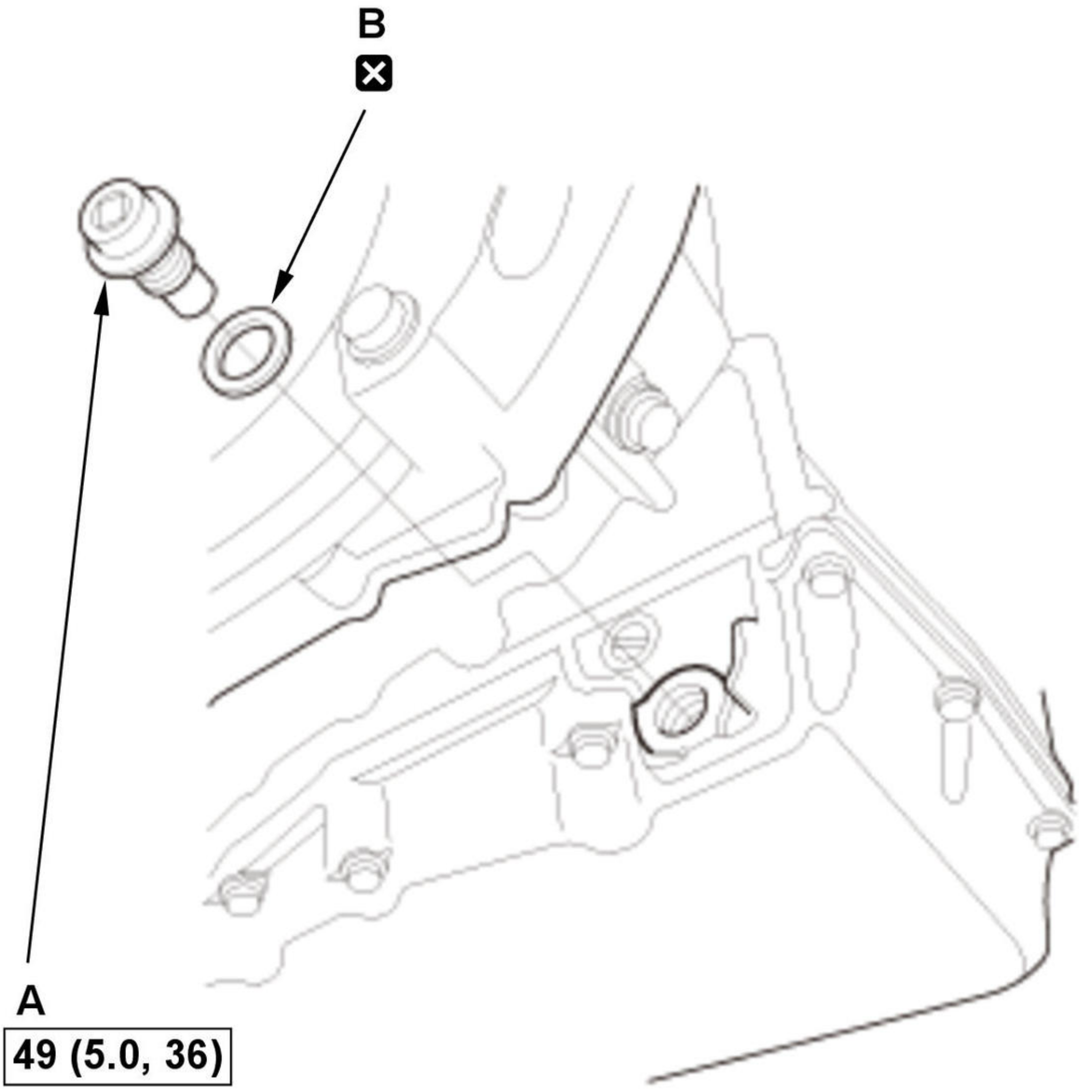

Fig. 2: Transmission Fluid Drain Plug Torque Specifications
Courtesy of HONDA, U.S.A., INC.

1. Remove the drain plug (A) with the sealing washer (B), and drain the transmission fluid for at least 5 minutes.

NOTE:

- Be careful not to burn yourself by nearby parts as they may be hot.
- Remove metal particles from the magnetic surface of the drain plug.

2. Reinstall the drain plug with a new sealing washer.

5. Transmission Fluid - Refill

   1. Lower the vehicle.

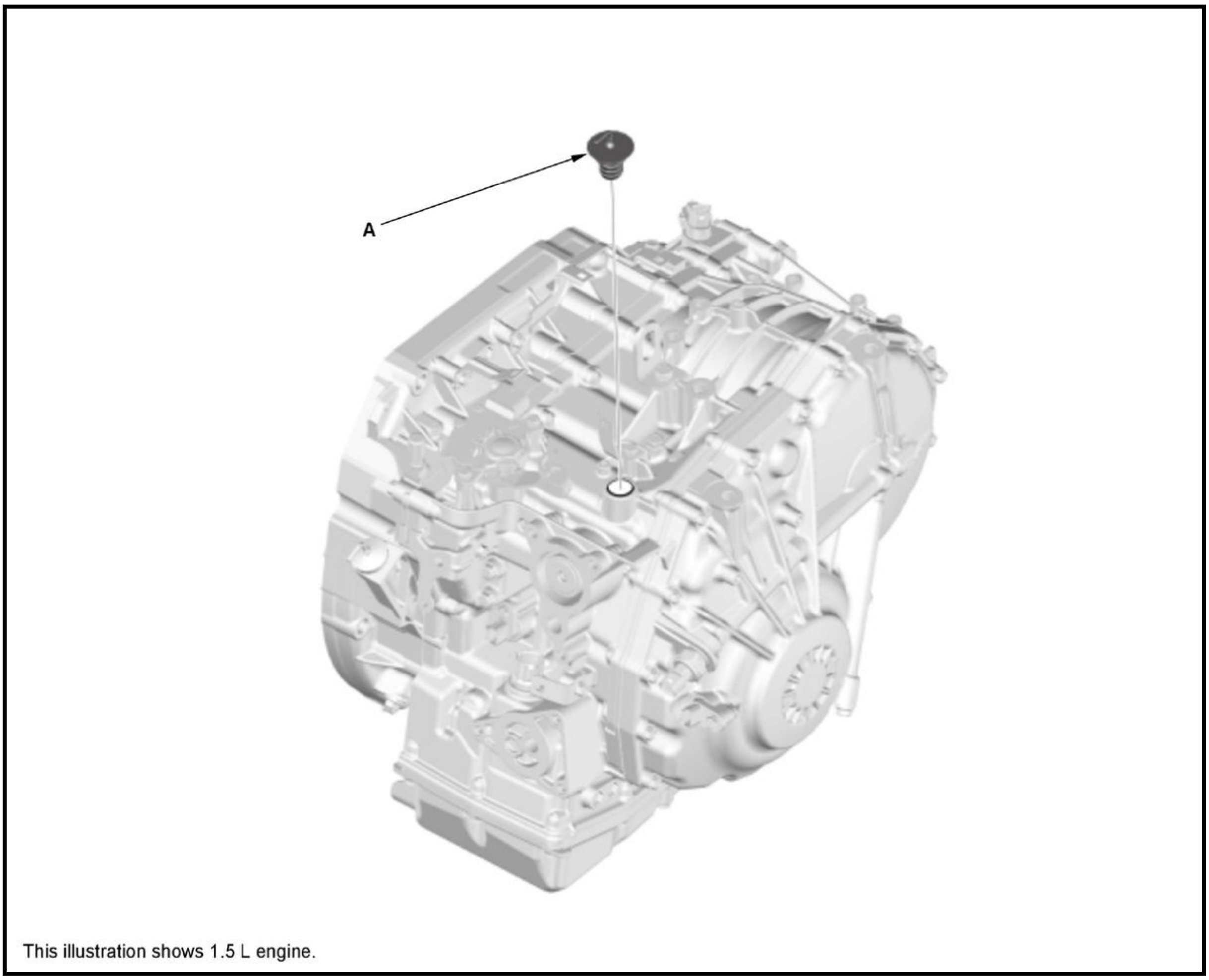

This illustration shows 1.5 L engine.

2. Remove filler cap (A).

NOTE: The position of the filler cap is different depending on the model.

3. Refill the transmission with the recommended fluid into the filler hole. Always use Honda HCF-2 Continuously Variable Transmission Fluid.

NOTE: Using the wrong type of fluid will damage the transmission.

Transmission Fluid (HCF-2) Capacity:	
2WD:	
B	**3.6 L (3.8 US qt) at change**
B	**5.8 L (6.1 US qt) at oil pan, valve body assembly, and transmission fluid pump removal, installation, and replacement***
B	**7.6 L (8.0 US qt) at overhaul**
AWD:	
B	**4.2 L (4.4 US qt) at change**
B	**4.8 L (5.1 US qt) at transfer removal, installation, and replacement**
B	**6.8 L (7.2 US qt) at oil pan, valve body assembly, and transmission fluid pump removal, installation, and replacement***
B	**8.4 L (8.9 US qt) at overhaul**

NOTE:

*The actual transmission fluid (HCF-2) capacity will vary from the specified capacity based on the length of time the transmission fluid pan is off the transmission. Avoid leaving the transmission fluid pan off for extend periods of time.

4. Install the filler cap with the lever toward the front of the vehicle.

6. **Auxiliary Transmission Fluid Pump - Air Bleed** (With auto idle stop system)
7. Transmission Fluid Level - Check
8. All Removed Parts - Install

1. Install the parts in the reverse order of removal.

9. Maintenance Minder - Reset (With Maintenance Minder System)

1. If the Maintenance Minder required to replace the transmission fluid, **reset the Maintenance Minder with the gauge** (see "Resetting the Maintenance Minder").If the Maintenance Minder did not require to replace the transmission fluid, **reset the Maintenance Minder with the HDS** (see "Resetting the Individual Maintenance Items").

Check

NOTE:

- **How to read the torque specifications** .
- Keep all foreign particles out of the transmission.

1. **Vehicle - Lift**
2. **Engine Undercover Lid - Remove**
3. Transmission Fluid Level - Check

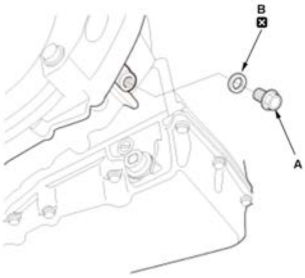	**NOTE:** • Be careful not to burn yourself by nearby parts as they may be hot. • When checking the transmission fluid level at the check bolt, it is not uncommon to find the fluid in the upper or lower level. • Do the transmission fluid level check immediately, after the shift lever operation. 1. Start the engine. 2. While pressing the brake pedal firmly, shift the transmission to P

R

N

D

S

L

S

D

N

→

R

→

P position/mode, waiting at least 3 seconds between each gear shift.

3. Turn the engine off.

4. Remove the check bolt (A) with the sealing washer (B).

5. Check the transmission fluid level.

NOTE: The transmission fluid is at the proper level if the transmission fluid is dripping from the check hole gradually.

- If the transmission fluid is dripless from the check hole, check for transmission fluid leaks at the transmission, the transmission fluid pan, the transmission fluid hoses, and the transmission fluid lines. If a problem is found, fix it before filling the transmission with transmission fluid, then go to step 3
- If the transmission fluid is flowing out of the check hole, go to step 3-12.

6. Temporarily install the check bolt with the sealing washer.

7. Lower the vehicle.

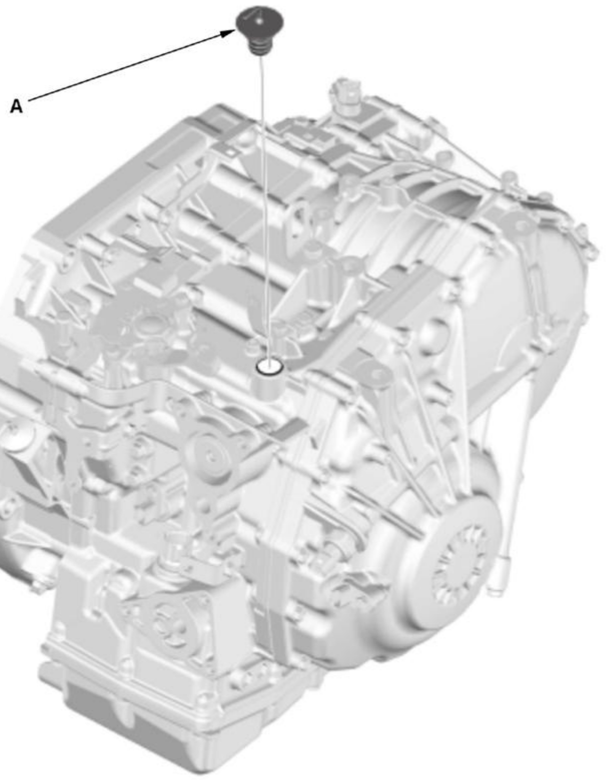

This illustration shows 1.5 L engine.

8. Remove filler cap (A).

NOTE: The position of the filler cap is different depending on the model.

9. Refill the transmission with the recommended fluid into the filler hole at the suitable amount. Always use Honda HCF-2 Continuously Variable Transmission Fluid.

NOTE: Using the wrong type of fluid will damage the transmission.

10. Install the filler cap with the lever toward the front of the vehicle.

11. Go to step 3-1, then recheck.

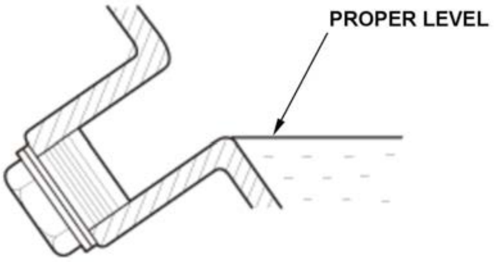	12. Wait until the transmission fluid is at the proper level. **NOTE:** The transmission fluid is at the proper level if the transmission fluid is dripping from the check hole gradually.

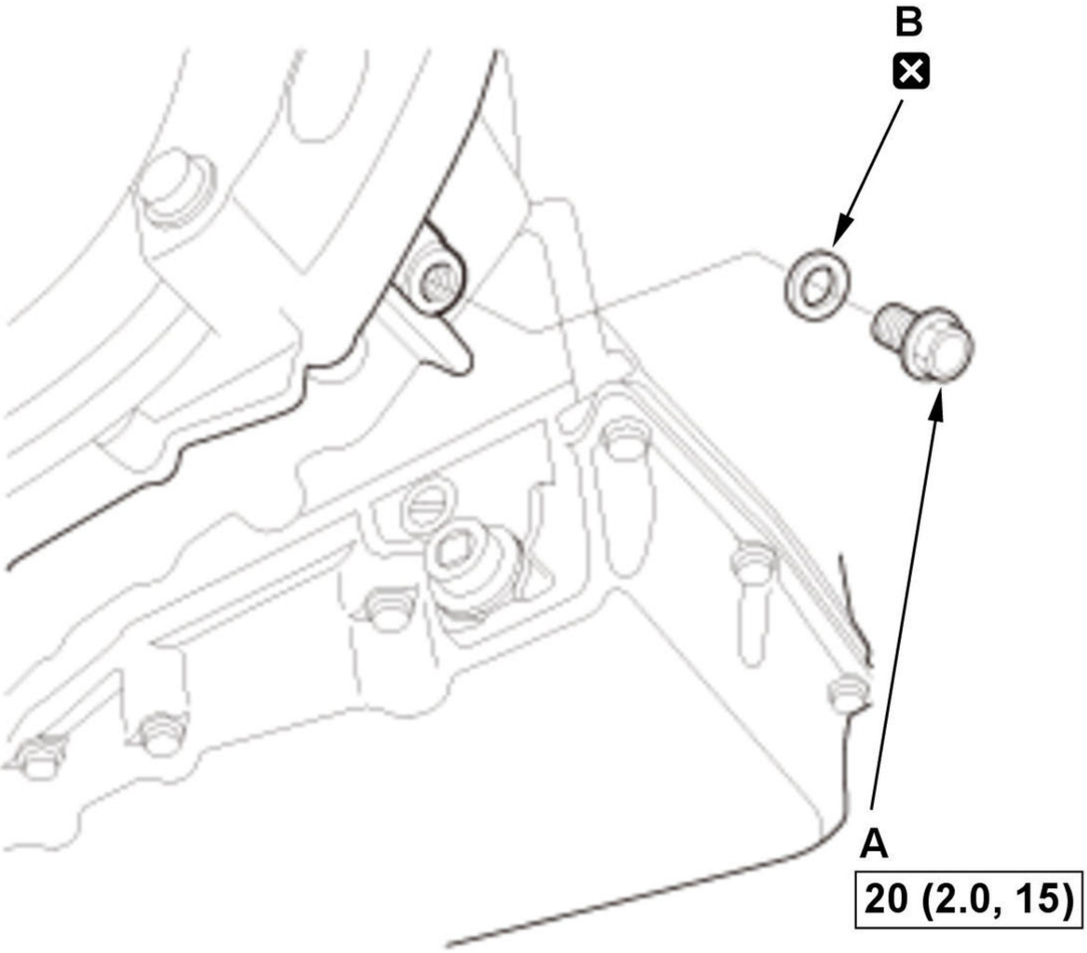

Fig. 3: Transmission Fluid Check Bolt Torque Specifications
Courtesy of HONDA, U.S.A., INC.

13. After checking the transmission fluid level, install the check bolt (A) with a new sealing washer (B).

4. All Removed Parts - Install

1. Install the parts in the reverse order of removal.

ADJUSTMENT

INPUT SHAFT THRUST CLEARANCE ADJUSTMENT

Special Tools Required

Image	Description/Tool Number
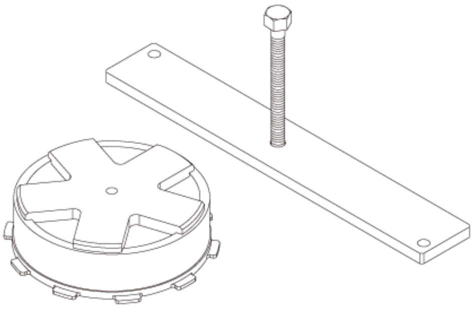	Reverse Brake Spring Compressor Set 070AF-RJ2A100
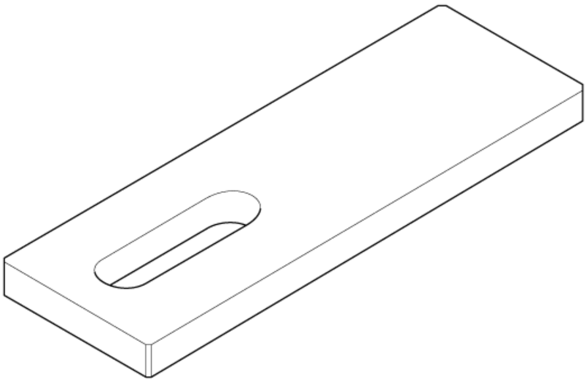	Magnet Stand Base 07979-PJ40001
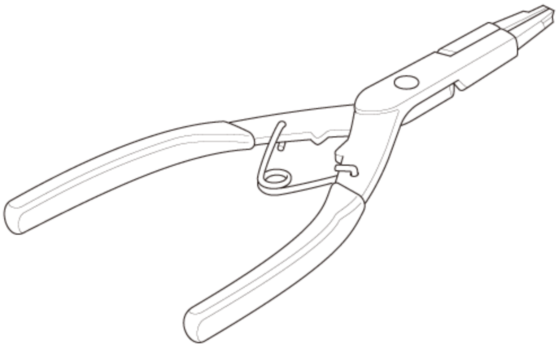	Snap Ring Pliers 07LGC-0010100

Adjustment

NOTE:

- How to read the torque specifications .
- If the transmission was disassembled, the input shaft thrust clearance must be adjusted.
- Apply a light coat of clean transmission fluid on all parts before installation.

1. Reverse brake piston - Install

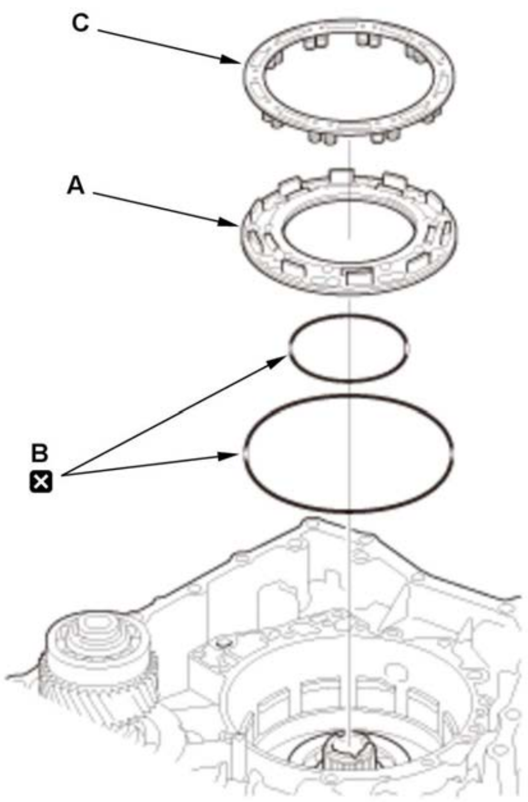

1. Install the reverse brake piston (A) with new O-rings (B).

2. Install the spring retainer/return spring assembly (C).

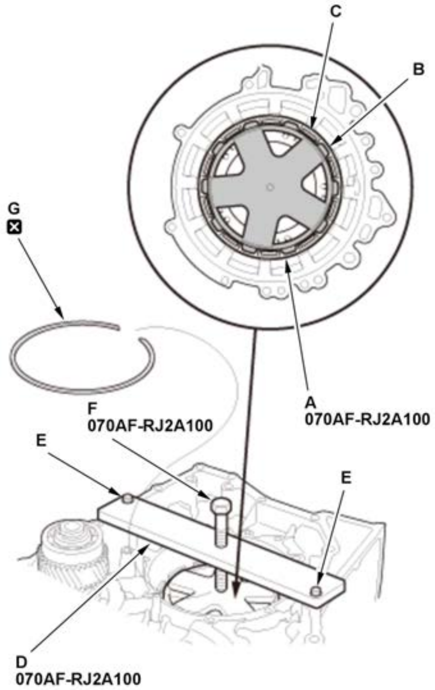

3. Put the reverse brake spring compressor attachment (A) on the spring retainer/return spring assembly (B).

NOTE: Be sure the attachment is set over the return springs, not on the reverse brake piston (C).

4. Install the reverse brake spring compressor plate (D) with facing the UP mark to the upside using bolts (E).

5. Make sure that the reverse brake spring compressor bolt (F) is properly installed on the dent in the surface of the reverse brake spring compressor attachment.

6. Compress the return springs using the reverse brake spring compressor until the snap ring securing the spring retainer/return spring can be installed.

7. Install a new snap ring (G).

- Be careful not to deform the snap ring by opening/closing it excessively.
- Make sure the snap ring is firmly installed in the groove.

8. Remove the reverse brake spring compressor.

2. Reverse Brake - Install

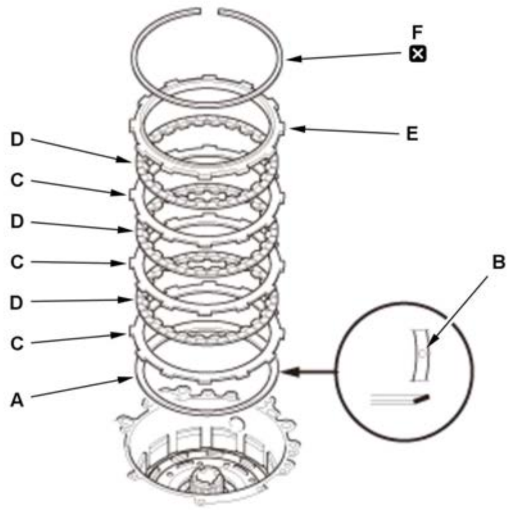

1. Install the disc spring (A).

NOTE: Be sure to install the disc spring with the indented mark (B) facing the upward.

2. Starting with the reverse brake plate (C), alternately install the reverse brake plates and the reverse brake discs (D).

3. Install the reverse brake end-plate (E) with the flat side toward the top disc.

4. Install a new snap ring (F).

  - Be careful not to deform the snap ring by opening/closing it excessively.
  - Make sure the snap ring is firmly installed in the groove.

3. Planetary Carrier Assembly - Install

1. Install the 40 x 63 x 5.5 mm washer (A) in the direction shown.

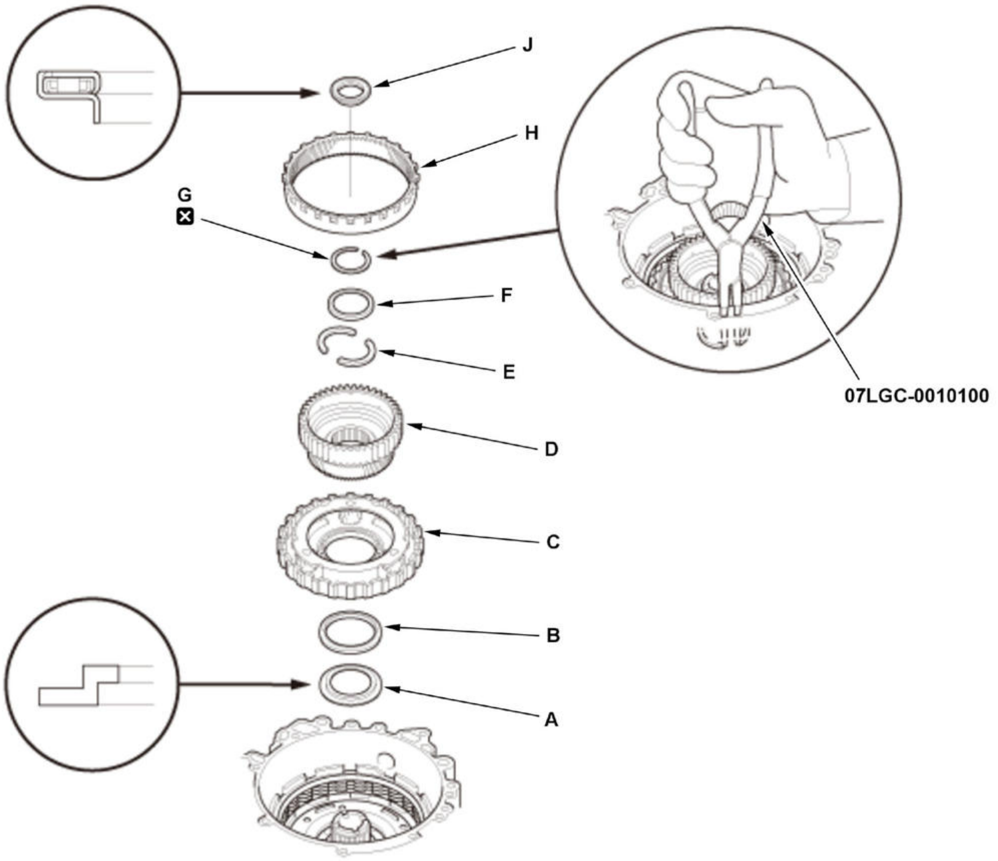

2. Install these parts in the following order:

- 50 x 65 x 3 mm thrust washer (B)
- Planetary carrier assembly (C)
- Sun gear (D)
- 32.5 mm cotters (E)

- Cotter retainer (F)

3. Install a new snap ring (G) using the snap ring pliers.

NOTE:

- Be careful not to deform the snap ring by opening/closing it excessively.
- Make sure the snap ring is firmly installed in the groove.

4. Install the ring gear (H).

5. Install the 24.5 x 39.1 x 3.2 mm thrust needle bearing (J) in the direction shown.

4. Input Shaft Assembly - Install

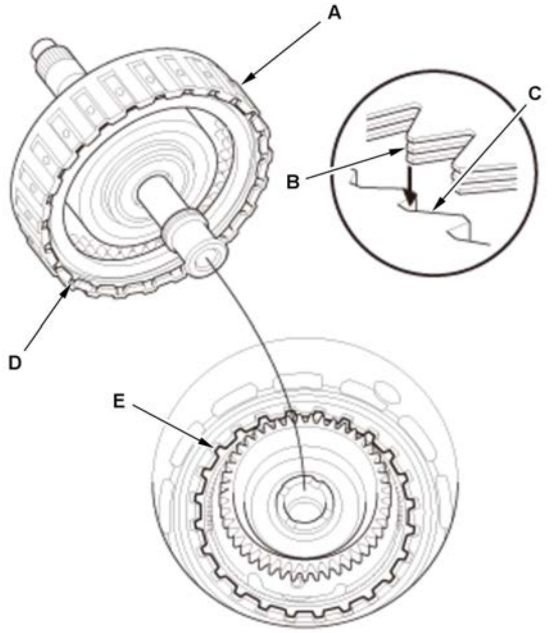	1. Install the input shaft assembly (A) by aligning the clutch discs (B) with the sun gear (C), and aligning the clutch guide (D) with the ring gear (E).

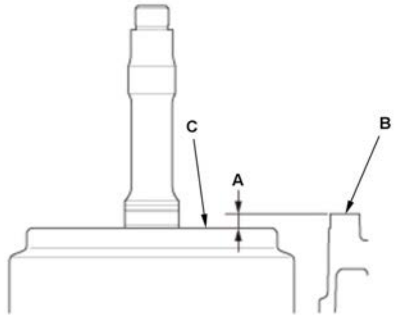	2. Measure the depth (A) between the surface of the transmission housing (B) and the clutch guide (C), then make sure the measured value of the depth is within the recorded value when removing.

5. Stator Shaft - Install

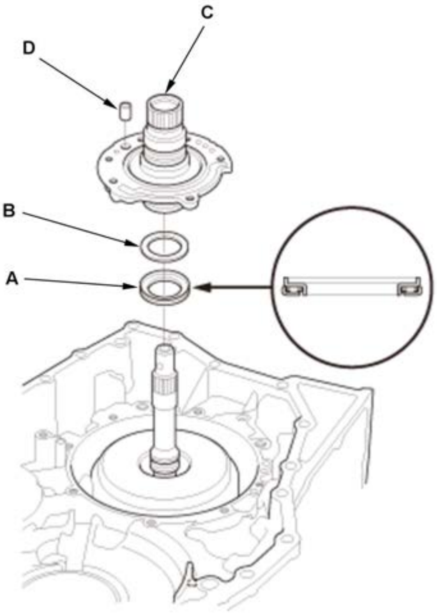 	1. Install the 29.55 x 45 x 3.62 mm thrust needle bearing (A) in the direction shown. 2. Install the 32 x 42 mm thrust shim (B). **NOTE:** If you install a new 32 x 42 mm thrust shim, use the same thickness shim as the old one, or use the 2.10 mm (0.0827 in) thickness of the 32 x 42 mm thrust shim. 3. Install the stator shaft (C) with the dowel pin (D).

6. Stator Shaft Flange - Install

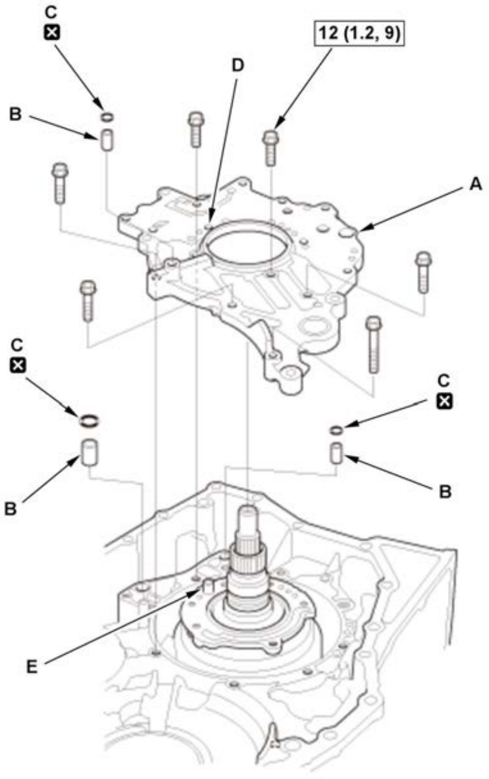 	1. Install the stator shaft flange (A) with the dowel pins (B) and new O-rings (C) by aligning the hole (D) of the stator shaft flange with the dowel pin (E) of the stator shaft.

7. Manual Valve Body - Install

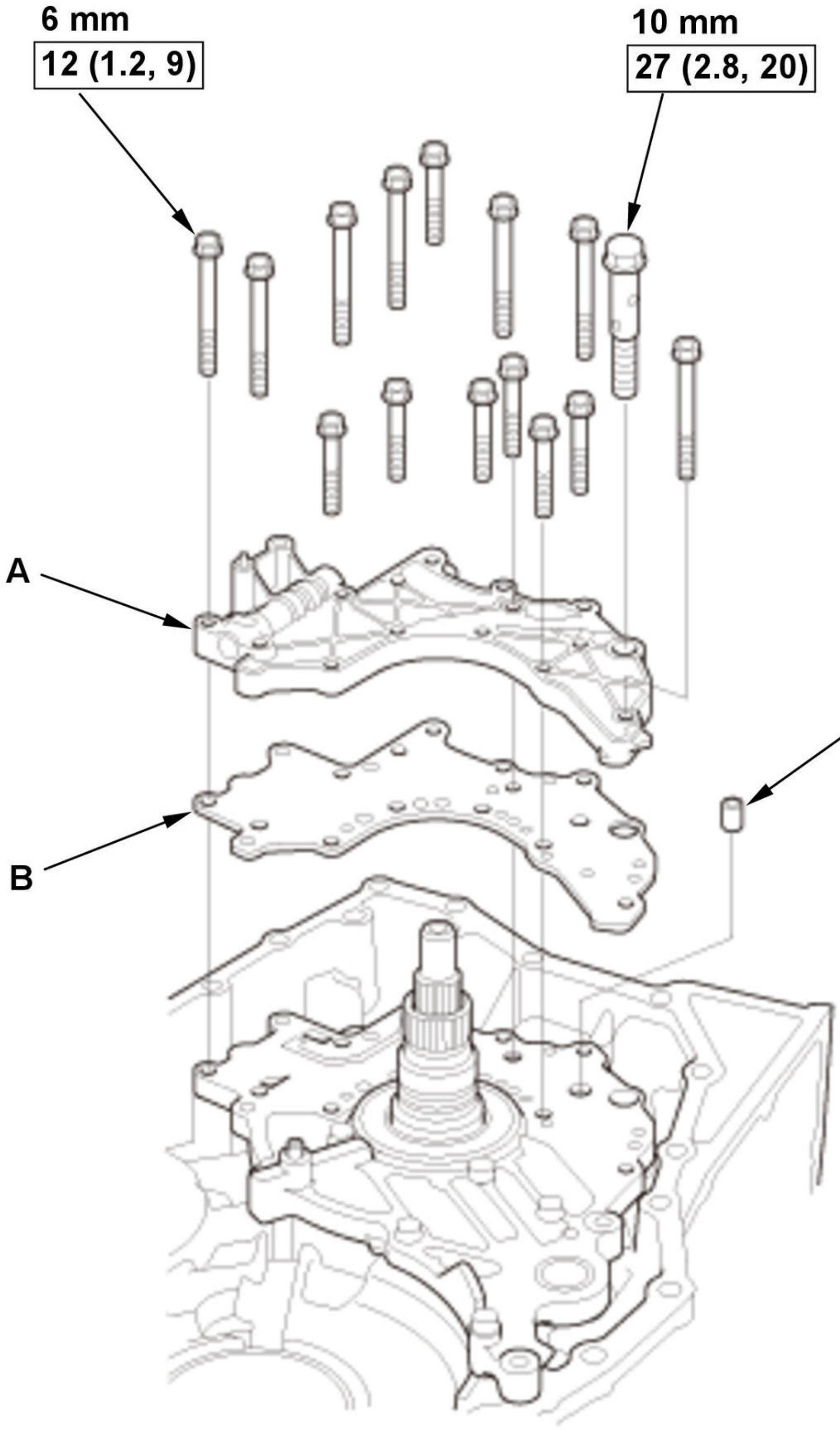

Fig. 4: Manual Valve Body Bolts Torque Specifications
Courtesy of HONDA, U.S.A., INC.

1. Install the manual valve body (A) with the separator plate (B) and the dowel pin (C).

8. Torque Converter Housing - Install

   1. Install the torque converter housing (A) with the dowel pins (B) and a new gasket (C), then tighten the bolts in a crisscross pattern in at least two steps.

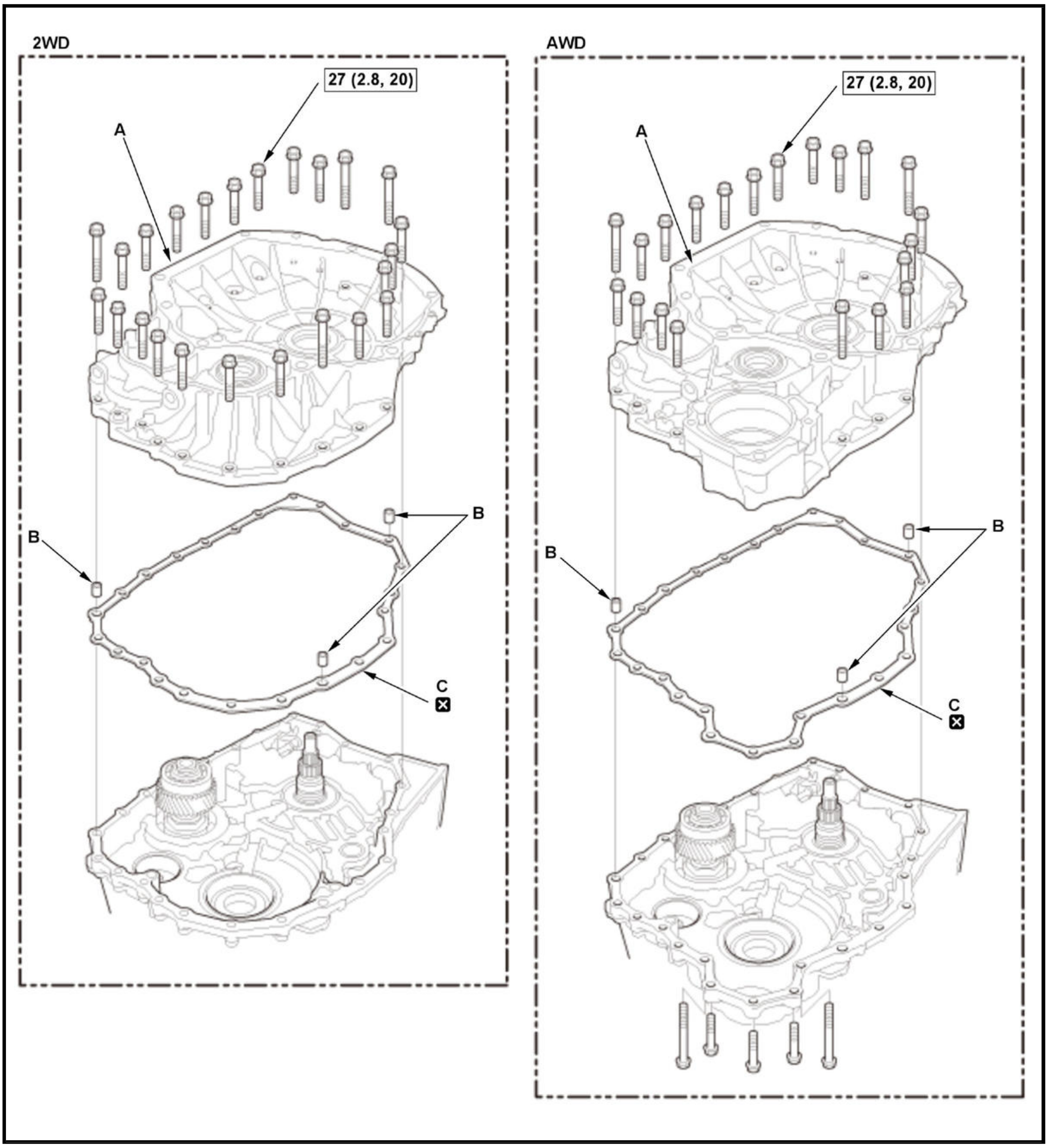

9. Input Shaft Thrust Clearance - Adjust

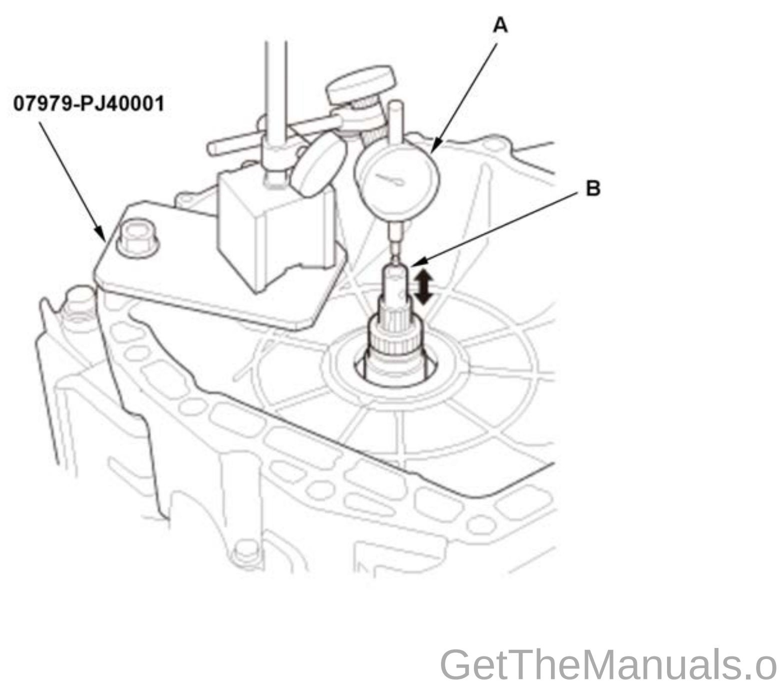	1. Install the magnet stand base as shown. 2. Set a dial indicator (A) on the tip of the input shaft (B). 3. Zero the dial indicator. 4. Measure the input shaft thrust clearance by lifting the input shaft up. **NOTE:** Take measurements in at least three places, and use the average as the actual clearance. 5. If the clearance is out of the standard, remove the 32 x 42 mm thrust shim, and measure its thickness. 6. Select a new 32 x 42 mm thrust shim.

	32 x 42 mm Thrust Shim 7. Install a selected 32 x 42 mm thrust shim, then recheck the clearance.

No.	Thickness
A	1.65 mm (0.0650 in)
B	1.70 mm (0.0669 in)
C	1.75 mm (0.0689 in)
D	1.80 mm (0.0709 in)
E	1.85 mm (0.0728 in)
F	1.90 mm (0.0748 in)
G	1.95 mm (0.0768 in)
H	2.00 mm (0.0787 in)
I	2.05 mm (0.0807 in)
J	2.10 mm (0.0827 in)
K	2.15 mm (0.0846 in)
L	2.20 mm (0.0866 in)
M	2.25 mm (0.0886 in)
N	2.30 mm (0.0906 in)
O	2.35 mm (0.0925 in)
P	2.40 mm (0.0945 in)
Q	2.45 mm (0.0965 in)
R	2.50 mm (0.0984 in)
S	2.55 mm (0.1004 in)
T	2.60 mm (0.1024 in)

Standard:	**0.15-0.25 mm (0.0059-0.0098 in)**

TRANSMISSION HOUSING DRIVEN PULLEY SHAFT THRUST CLEARANCE ADJUSTMENT

Adjustment

1. **Secondary Drive Gear - Install**
2. **Driven Pulley Shaft Bearing (Transmission Housing Side) - Install**
3. Driven Pulley Shaft Thrust Clearance - Adjust

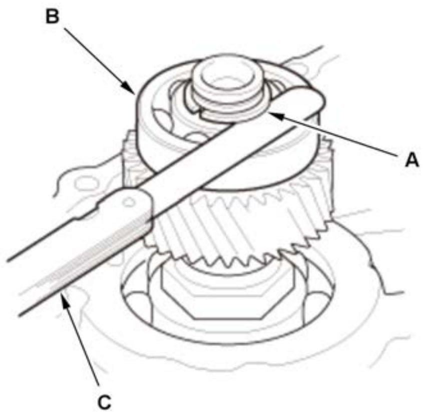	1. Clean the cotter groove of the driven pulley shaft. 2. Install the 25.5 mm cotters (A). 3. Measure the clearance between the 25.5 mm cotters and the driven pulley shaft bearing (B) using a feeler gauge (C). **NOTE:** Take measurements in at least three places, and use the average as the actual clearance. 4. If the clearance is out of the standard, remove the 25.5 mm cotters, and measure its thickness.

	5. Select new 25.5 mm cotters. **25.5 mm Cotters** 6. Install the selected 25.5 mm cotters, then recheck the clearance.

No.	Thickness
A	2.9 mm (0.114 in)
B	3.0 mm (0.118 in)
C	3.1 mm (0.122 in)
D	3.2 mm (0.126 in)

Standard:	**0-0.13 mm (0-0.0051 in)**

TEST

CVT PRESSURE TEST

Special Tools Required

Image	Description/Tool Number
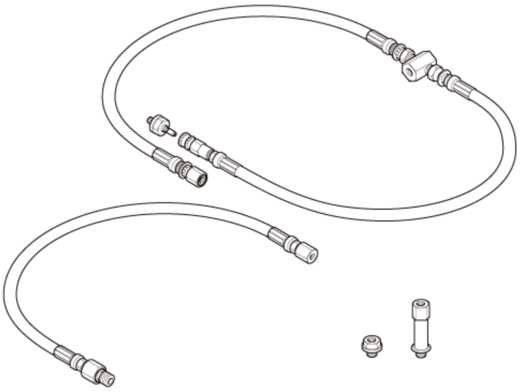	Pressure Gauge Adapter 070AJ-RT4A101
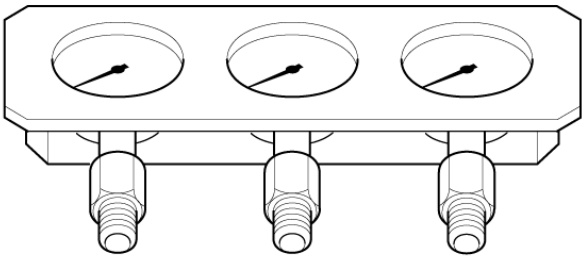	A/T Oil Pressure Gauge Set 07406-0020400 or 07406-0020401

Image	Description/Tool Number
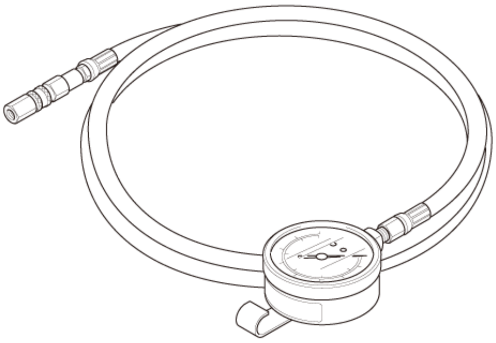	A/T High Pressure Gauge 07AAJ-PLYA100
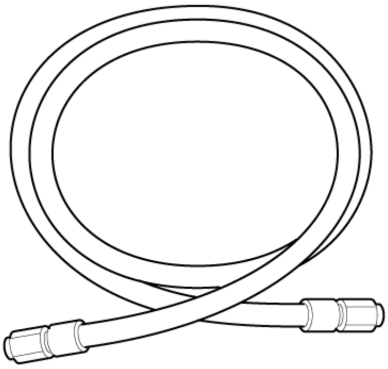	A/T Pressure Hose, 2, 210 mm 07MAJ-PY4011A
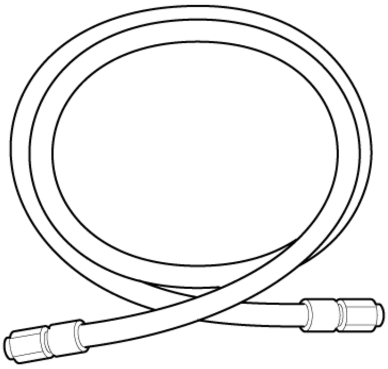	A/T Pressure Test Hose 07AAJ-PY4A100
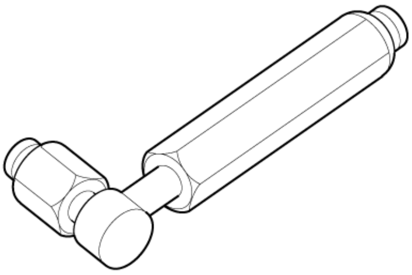	A/T Pressure Adapter 07MAJ-PY40120

Exploded View

1. Pressure Inspection Port

   Pressure Inspection Port - Exploded View

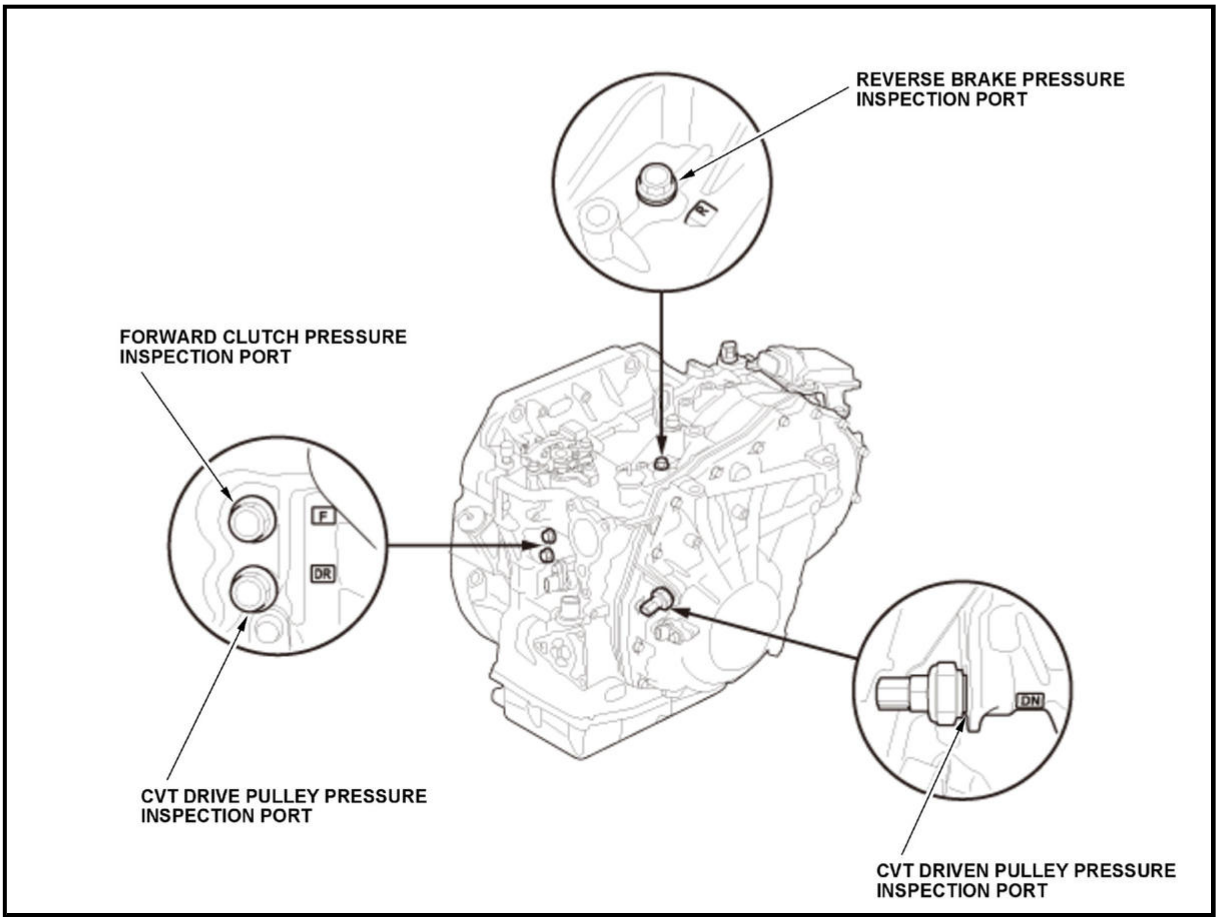
REVERSE BRAKE PRESSURE INSPECTION PORT
FORWARD CLUTCH PRESSURE INSPECTION PORT
F
DR
DN
CVT DRIVE PULLEY PRESSURE INSPECTION PORT
CVT DRIVEN PULLEY PRESSURE INSPECTION PORT

Test

NOTE:

- **How to read the torque specifications** .
- Check for DTCs. If any DTCs are stored, troubleshoot and clear them first.
- Do not allow dust or other foreign particles to enter the port while installing the A/T oil pressure gauge.
- Be sure to check the transmission fluid level after each pressure port test. When installing or removing the A/T oil pressure gauge, transmission fluid may run out of the pressure inspection ports.
- Do not test pressure for more than 10 seconds at a time.
- Do not move the shift lever while raising the engine speed.
- Disable the VSA by **enter the VSA maintenance mode** .
- VSA DTC(s) may come on during the test-drive. If the VSA DTC(s) come on, clear the DTC(s) after testing is done with the HDS.
- Unless otherwise indicated, illustrations used in the procedures are for a 1.5L engine model.

1. A/T Oil Pressure Gauge - Set

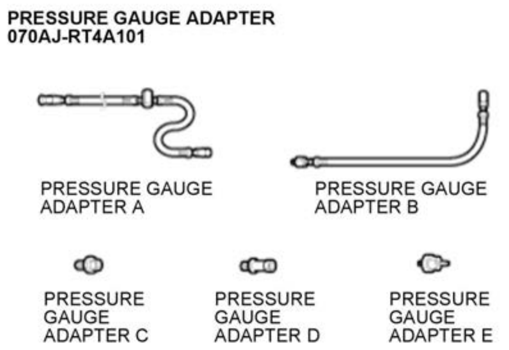	1. When testing the oil pressure at each inspection port, select a suitable adapter from the following table, and connect each adapter to the A/T oil pressure gauge.

PRESSURE GAUGE ADAPTER
070AJ-RT4A101
PRESSURE GAUGE ADAPTER A
PRESSURE GAUGE ADAPTER B
PRESSURE GAUGE ADAPTER C
PRESSURE GAUGE ADAPTER D
PRESSURE GAUGE ADAPTER E

Inspection port	Tool
CVT drive pulley pressure	Pressure gauge adapter B
CVT driven pulley pressure	- Pressure gauge adapter A - Pressure gauge adapter E
Reverse brake pressure	Pressure gauge adapter B

Inspection port	Tool
Forward clutch pressure	Pressure gauge adapter B

2. **Vehicle - Lift**
3. **Engine Undercover - Remove**
4. **Transmission Fluid Level - Check**
5. Forward Clutch Pressure - Test

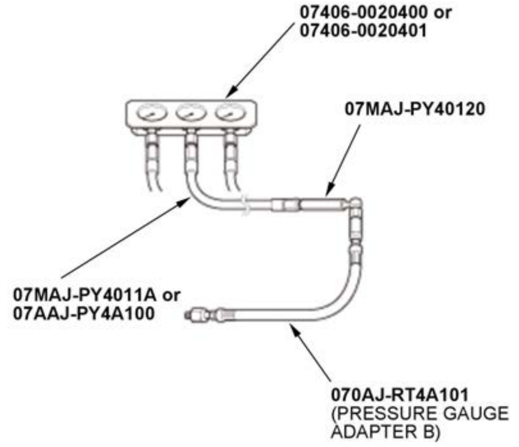 07406-0020400 or 07406-0020401 07MAJ-PY40120 07MAJ-PY4011A or 07AAJ-PY4A100 070AJ-RT4A101 (PRESSURE GAUGE ADAPTER B)	1. Assemble the pressure gauge; install the 2, 210 mm A/T pressure hose, the A/T pressure adapter, and pressure gauge adapter B to the A/T oil pressure gauge set.

2. Remove the sealing bolt (A) with the sealing washer (B).

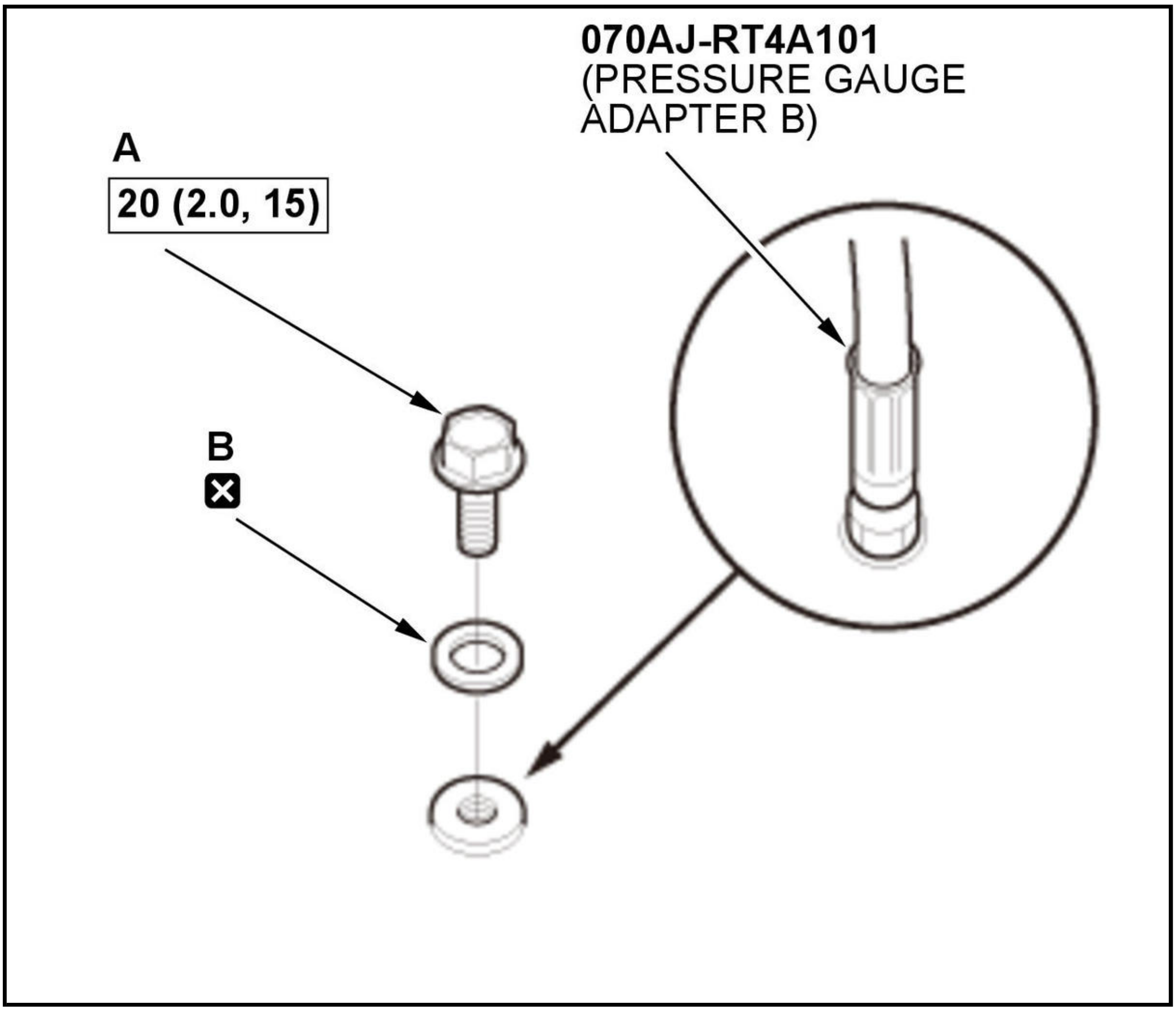

3. Install the pressure gauge to the forward clutch pressure inspection port.

4. Start the engine, and warm it up to normal operating temperatures (the radiator fan comes on twice).

5. Shift the transmission to D position/mode.

6. Measure the forward clutch pressure at the engine idling while firmly pressing the brake pedal.

Pressure	Specifications
Forward clutch	450-730 kPa (4.60-7.40 kgf/cm 2, 65.4-105.2 psi)

7. Turn the engine off.

8. If the forward clutch pressure is out of the specifications, refer to the problem and probable causes listed in the table.

Problem	Probable causes
No or low forward clutch pressure	• Transmission fluid pump defective • CVT clutch pressure control solenoid valve defective • Forward clutch defective • Valve body assembly defective • Manual valve body defective

9. Remove the pressure gauge.

10. Install the sealing bolt with a new sealing washer to the forward clutch pressure inspection port.

NOTE: Do not reuse the old sealing washer.

6. CVT Drive Pulley Pressure - Test

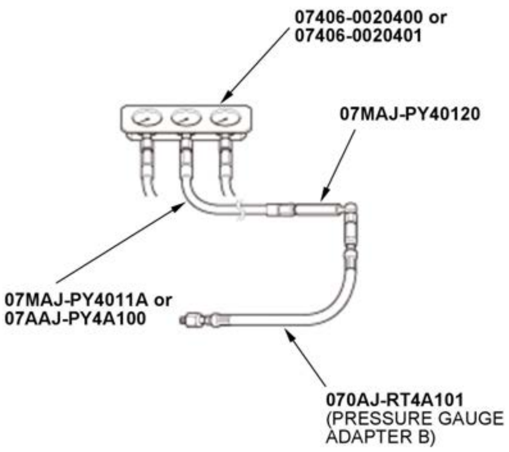 07406-0020400 or 07406-0020401 07MAJ-PY40120 07MAJ-PY4011A or 07AAJ-PY4A100 070AJ-RT4A101 (PRESSURE GAUGE ADAPTER B)	1. Assemble the pressure gauge; install the 2, 210 mm A/T pressure hose, the A/T pressure adapter, and pressure gauge adapter B to the A/T oil pressure gauge set.

2. Remove the sealing bolt (A) with the sealing washer (B).

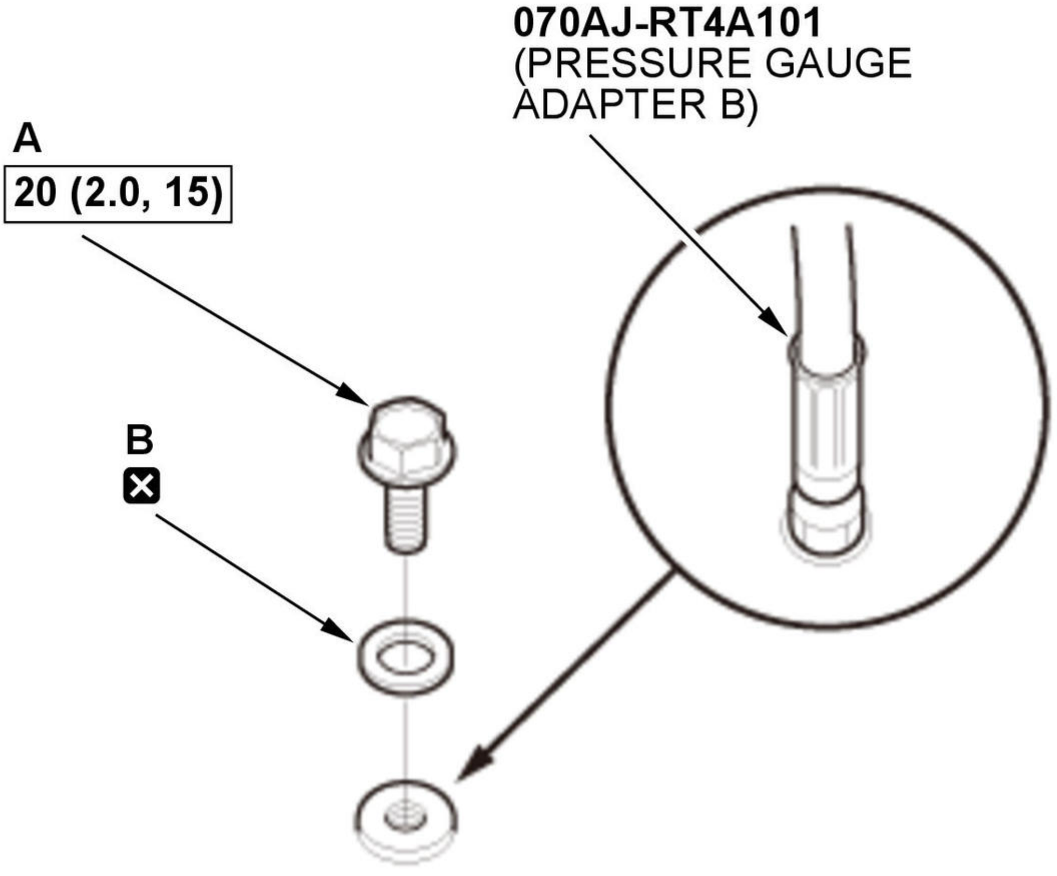
070AJ-RT4A101
(PRESSURE GAUGE
ADAPTER B)
A
20 (2.0, 15)
B
☒

3. Install the pressure gauge to the CVT drive pulley pressure inspection port.

4. Start the engine, and warm it up to normal operating temperatures (the radiator fan comes on twice).

5. Shift the transmission to N position/mode.

6. With the engine idling, measure the CVT drive pulley pressure at engine idling while firmly pressing the brake pedal.

Pressure	Specifications
CVT drive pulley	260-540 kPa (2.70-5.50 kgf/cm 2, 38.4-78.2 psi)

7. Turn the engine off.

8. If the CVT drive pulley pressure is out of the specifications, refer to the problems and probable causes listed in the table.

Problems	Probable causes
No or low CVT drive pulley pressure	• Transmission fluid pump defective • CVT drive pulley pressure control solenoid valve defective • Valve body assembly defective
CVT drive pulley pressure too high	• CVT drive pulley pressure control solenoid valve defective • Valve body assembly defective

9. Remove the pressure gauge.

10. Install the sealing bolt with a new sealing washer to the CVT drive pulley pressure inspection port.

NOTE: Do not reuse the old sealing washer.

7. CVT Driven Pulley Pressure - Test

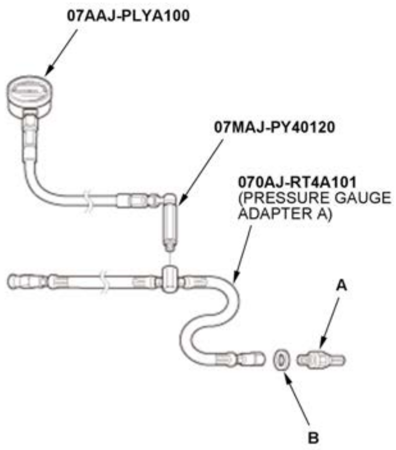 07AAJ-PLYA100 07MAJ-PY40120 070AJ-RT4A101 (PRESSURE GAUGE ADAPTER A) A B	**NOTE:** • CVT driven pulley pressure may be above 3, 740 kPa (38.14 kgf/cm 2, 542.4 psi) when there is a transmission problem that causes the TCM to go into fail-safe operation. • When troubleshooting, you must use the A/T high pressure gauge to measure the CVT driven pulley pressure. 1. **Remove the air cleaner** . 2. **Remove the CVT driven pulley pressure sensor (A)** 3. Temporarily install the CVT driven pulley pressure sensor with the sealing washer (B) to pressure gauge adapter A. 4. Assemble the pressure gauge; install the A/T high pressure gauge and the A/T pressure adapter to pressure gauge adapter A.

5. Install pressure gauge adapter E (quick connector) to the CVT driven pulley pressure inspection port.

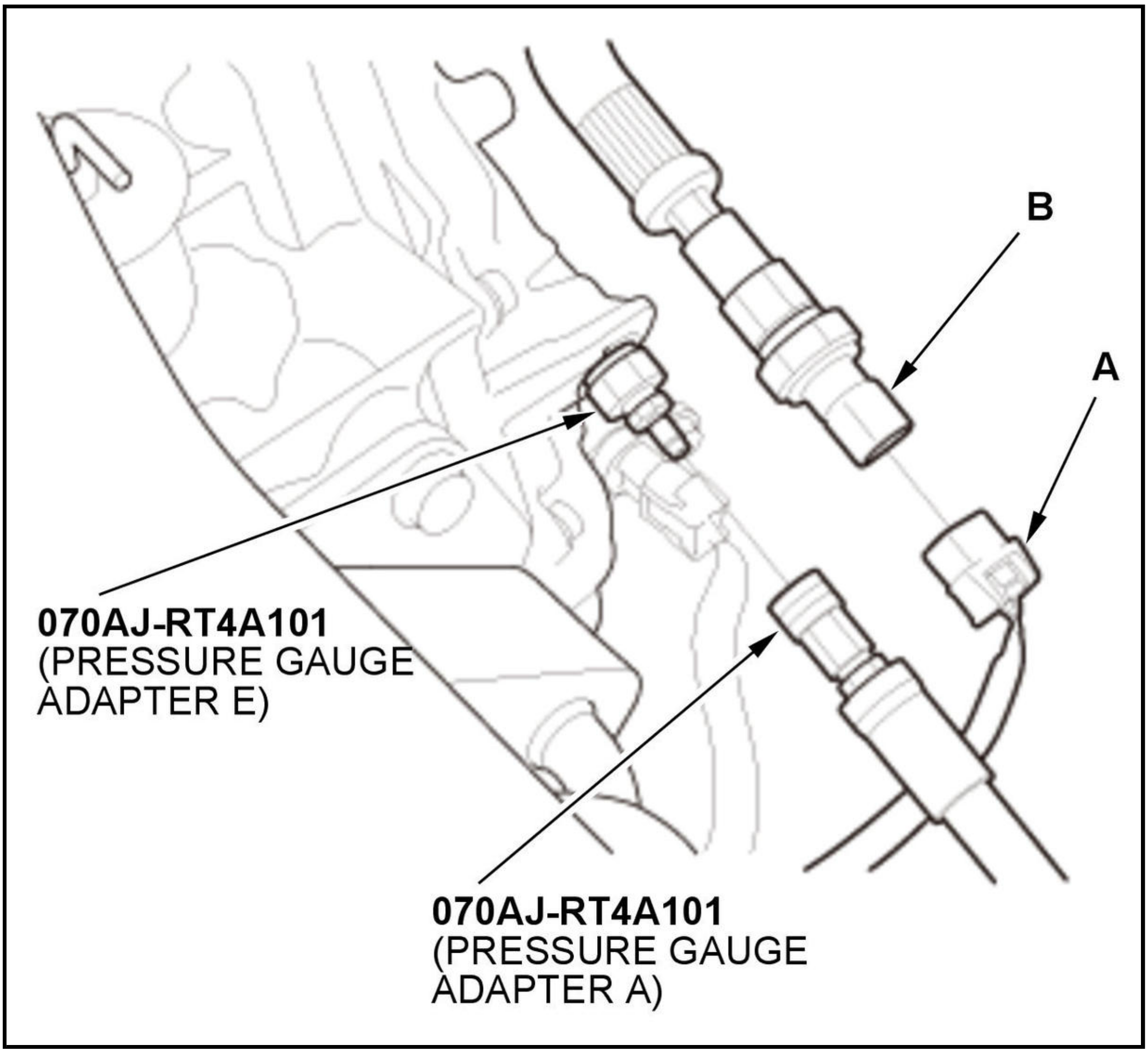

6. Install the pressure gauge to pressure gauge adapter E (quick connector).

7. Connect the connector (A) to the CVT driven pulley pressure sensor (B).

8. Temporarily install the air cleaner.

9. Start the engine, and warm it up to normal operating temperatures (the radiator fan comes on twice).

10. Shift the transmission to N position/mode.

11. With the engine idling, measure the CVT driven pulley pressure at engine idling while firmly pressing the brake pedal.

Pressure	Specifications
CVT driven pulley	490-900 kPa (5.00-9.20 kgf/cm 2, 71.1-130.8 psi)

12. Turn the engine off.

13. If the CVT driven pulley pressure is out of the specifications, refer to the problems and probable causes listed in the table.

Problems	Probable causes
No or low CVT driven pulley pressure	• Transmission fluid pump defective • CVT driven pulley pressure control solenoid valve defective • Valve body assembly defective

Problems	Probable causes
CVT driven pulley pressure too high	• CVT driven pulley pressure control solenoid valve defective • Valve body assembly defective

14. Remove the air cleaner.

15. Disconnect the connector from the CVT driven pulley pressure sensor.

16. Remove the pressure gauge and pressure gauge adapter E (quick connector).

17. Remove the CVT driven pulley pressure sensor.

18. **Install the CVT driven pulley pressure sensor** .

19. **Install the air cleaner** .

8. Reverse Brake Pressure - Test

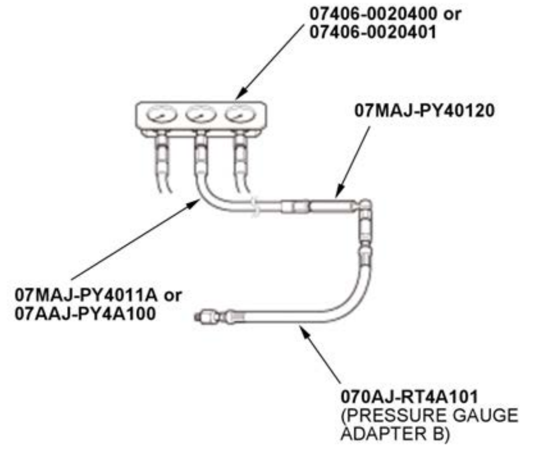 07406-0020400 or 07406-0020401 07MAJ-PY40120 07MAJ-PY4011A or 07AAJ-PY4A100 070AJ-RT4A101 (PRESSURE GAUGE ADAPTER B)	1. Assemble the pressure gauge; install the 2, 210 mm A/T pressure hose, the A/T pressure adapter, and pressure gauge adapter B to the A/T oil pressure gauge set. 2. **Remove the air cleaner** .

3. Remove the sealing bolt (A) with the sealing washer (B).

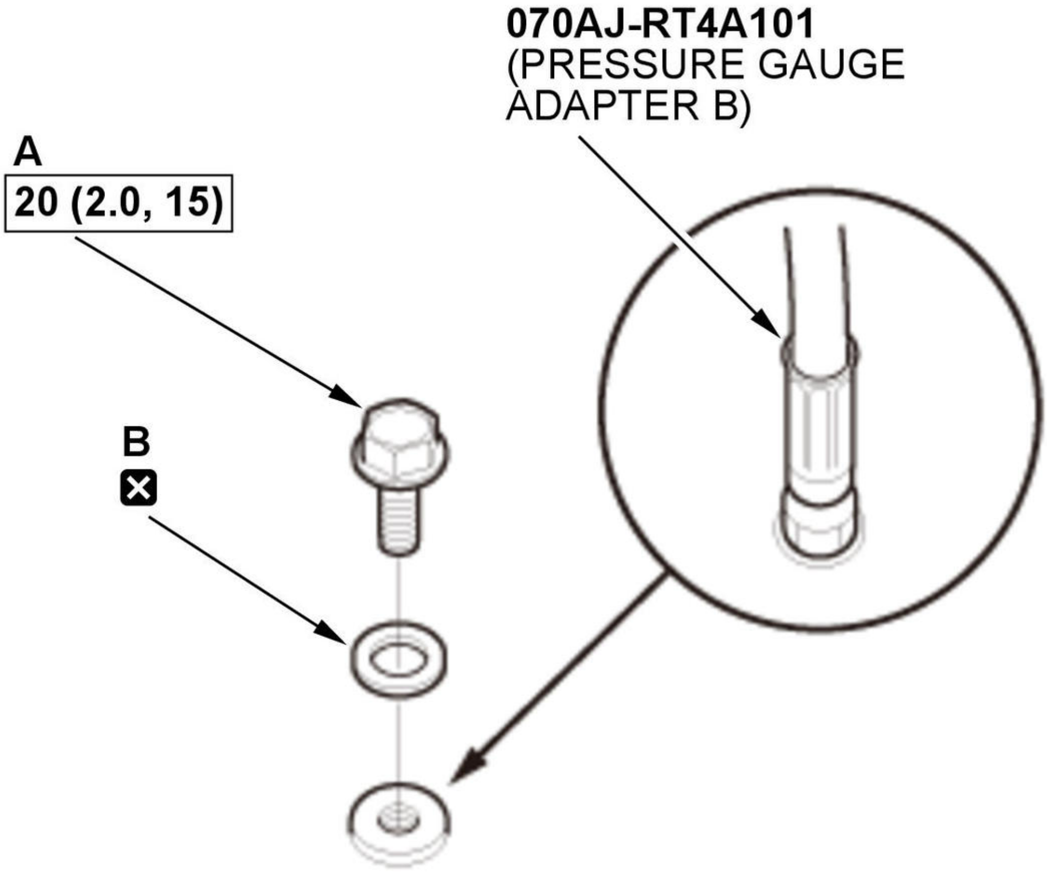

Fig. 5: Sealing Bolt Torque Specifications
Courtesy of HONDA, U.S.A., INC.

4. Install the pressure gauge to the reverse brake pressure inspection port.

5. Temporarily install the air cleaner.

6. Start the engine, and warm it up to normal operating temperatures (the radiator fan comes on twice).

7. Shift the transmission to R position/mode.

8. With the engine idling, measure the reverse brake pressure at engine idling while firmly pressing the brake pedal.

Pressure	Specifications
Reverse brake	50-440 kpa (0.50-4.50 kgf/cm 2, 7.1-64.0 psi)

9. Turn the engine off.

10. If the reverse brake pressure is out of the specifications, refer to the problem and probable causes listed in the table.

Problem	Probable causes
No or low reverse brake pressure	• Transmission fluid pump defective • CVT clutch pressure control solenoid valve defective • Reverse brake defective • Valve body assembly defective

Problem	Probable causes
	- Manual valve body defective

11. Remove the air cleaner.

12. Remove the pressure gauge.

13. Install the sealing bolt with a new sealing washer to the reverse brake pressure inspection port.

NOTE: Do not reuse the old sealing washer.

14. **Install the air cleaner** .

9. **Transmission Fluid Level - Check**
10. All Removed Parts - Install

1. Install the parts in the reverse order of removal.

CVT ROAD TEST (1.5 L ENGINE)

Test

1. **HDS - Connect**
2. Engine - Warm Up

1. Start the engine, and warm it up to normal operating temperature (the radiator fan comes on twice).

3. Vehicle - Road Test

1. Park the vehicle on level ground.

2. Apply the parking brake, and block all four wheels.

3. Shift the transmission to D position/mode while pressing the brake pedal. Press the accelerator pedal, and release it suddenly. The engine should not stall.

4. Repeat step 3 in all positions/modes.

5. Prepare the HDS and the MVCI to take a SNAPSHOT (refer to the HDS user's guide for more details if needed):

- Set the Trigger Type to Parameter.
- Adjust the Parameter setting to APP Sensor A (V) above 1.1 V.
- Set the Record Time to 60 seconds.
- Set the Trigger Point to (Negative) - 30 seconds.

6. Find a suitable level road.

7. When you are ready to do the test, press OK on the HDS.

8. Accelerate quickly until APP Sensor A (V) reads 1.2 V. Maintain a steady throttle at 1.2 V until the vehicle reaches a reasonable speed, then slow the vehicle, and come to a stop.

9. Save the snapshot if the entire event was recorded, or increase the recording time setting as necessary, and repeat step 8.

10. Adjust the parameter setting to 2.2 V.

11. Test-drive the vehicle again. Accelerate quickly until APP Sensor A (V) reads 2.3 V. Maintain a steady throttle at 2.3 V until the vehicle reaches a reasonable speed, then slow the vehicle, and come to a stop.

12. Save the snapshot if the entire event was recorded, or increase the recording time setting as necessary, and repeat step 11.

13. Accelerate quickly until the accelerator pedal is to the floor. Maintain a steady pedal until the vehicle reaches reasonable speed, then slow to a stop, and save the snapshot.

14. Review each snapshot individually, and compare APP Sensor A (V), the Vehicle Speed, and the Engine Speed to the following table:

D Position/Mode

APP Sensor A (V)	Vehicle Speed	Engine Speed
1.2 V	25 mph (40 km/h)	1, 050-1, 650 rpm
	37 mph (60 km/h)	1, 120-1, 720 rpm
	62 mph (100 km/h)	1, 431-2, 031 rpm
2.3 V	25 mph (40 km/h)	1, 840-2, 440 rpm
	37 mph (60 km/h)	1, 960-2, 560 rpm
	62 mph (100 km/h)	2, 140-2, 740 rpm
4.5 V	25 mph (40 km/h)	3, 800-4, 400 rpm
	37 mph (60 km/h)	5, 100-5, 700 rpm
	62 mph (100 km/h)	5, 700-6, 300 rpm

S Position/Mode

APP Sensor A (V)	Vehicle Speed	Engine Speed
1.2 V	25 mph (40 km/h)	1, 740-2, 340 rpm
	37 mph (60 km/h)	2, 030-2, 630 rpm
	62 mph (100 km/h)	2, 660-3, 260 rpm
2.3 V	25 mph (40 km/h)	2, 030-2, 630 rpm
	37 mph (60 km/h)	2, 220-2, 820 rpm
	62 mph (100 km/h)	2, 660-3, 260 rpm
4.5 V	25 mph (40 km/h)	3, 800-4, 400 rpm
	37 mph (60 km/h)	5, 100-5, 700 rpm
	62 mph (100 km/h)	5, 700-6, 300 rpm

L Position/Mode

APP Sensor A (V)	Vehicle Speed	Engine Speed
1.2 V	25 mph (40 km/h)	2, 717-3, 317 rpm
	37 mph (60 km/h)	3, 380-3, 980 rpm
	62 mph (100 km/h)	4, 140-4, 740 rpm
2.3 V	25 mph (40 km/h)	2, 717-3, 317 rpm
	37 mph (60 km/h)	3, 380-3, 980 rpm
	62 mph (100 km/h)	4, 140-4, 740 rpm
4.5 V	25 mph (40 km/h)	3, 800-4, 400 rpm
	37 mph (60 km/h)	4, 700-5, 300 rpm
	62 mph (100 km/h)	5, 300-5, 900 rpm

15. Park the vehicle on an upward slope (about 16 degrees), apply the parking brake, and shift the transmission to P position/mode. Release the brake; the vehicle should not move.

NOTE: Always use the parking brake to hold the vehicle when stopped on an incline. Depending on the grade of the incline, the vehicle could roll if the brake is released.

CVT ROAD TEST (2.4 L ENGINE) (2017 2018 2019)

Test

1. **HDS - Connect**
2. Engine - Warm Up

    1. Start the engine, and warm it up to normal operating temperature (the radiator fan comes on twice).

3. Vehicle - Road Test

    1. Park the vehicle on level ground.

    2. Apply the parking brake, and block all four wheels.

    3. Shift the transmission to D position/mode while pressing the brake pedal. Press the accelerator pedal, and release it suddenly. The engine should not stall.

    4. Repeat step 3 in all positions/modes.

    5. Prepare the HDS and the MVCI to take a SNAPSHOT (refer to the HDS user's guide for more details if needed):

        - Set the Trigger Type to Parameter.
        - Adjust the Parameter setting to APP Sensor A (V) above 1.1 V.
        - Set the Record Time to 60 seconds.
        - Set the Trigger Point to (Negative) - 30 seconds.

    6. Find a suitable level road.

    7. When you are ready to do the test, press OK on the HDS.

    8. Accelerate quickly until APP Sensor A (V) reads 1.2 V. Maintain a steady throttle at 1.2 V until the vehicle reaches a reasonable speed, then slow the vehicle, and come to a stop.

    9. Save the snapshot if the entire event was recorded, or increase the recording time setting as necessary, and repeat step 8.

    10. Adjust the parameter setting to 2.2 V.

    11. Test-drive the vehicle again. Accelerate quickly until APP Sensor A (V) reads 2.3 V. Maintain a steady throttle at 2.3 V until the vehicle reaches a reasonable speed, then slow the vehicle, and come to a stop.

    12. Save the snapshot if the entire event was recorded, or increase the recording time setting as necessary, and repeat step 11.

    13. Accelerate quickly until the accelerator pedal is to the floor. Maintain a steady pedal until the vehicle reaches reasonable speed, then slow to a stop, and save the snapshot.

    14. Review each snapshot individually, and compare APP Sensor A (V), the Vehicle Speed, and the Engine Speed to the following table:

D Position/Mode

APP Sensor A (V)	Vehicle Speed	Engine Speed
1.2 V	25 mph (40 km/h)	850-1, 450 rpm
	37 mph (60 km/h)	850-1, 450 rpm
	62 mph (100 km/h)	1, 291-1, 891 rpm
2.3 V	25 mph (40 km/h)	2, 500-3, 100 rpm
	37 mph (60 km/h)	2, 800-3, 400 rpm
	62 mph (100 km/h)	3, 200-3, 800 rpm
4.5 V	25 mph (40 km/h)	4, 300-4, 900 rpm
	37 mph (60 km/h)	5, 300-5, 900 rpm
	62 mph (100 km/h)	6, 250-6, 850 rpm

S Position/Mode

APP Sensor A (V)	Vehicle Speed	Engine Speed
1.2 V	25 mph (40 km/h)	1, 700-2, 300 rpm
	37 mph (60 km/h)	2, 020-2, 620 rpm
	62 mph (100 km/h)	2, 660-3, 260 rpm
2.3 V	25 mph (40 km/h)	2, 550-3, 150 rpm
	37 mph (60 km/h)	2, 850-3, 450 rpm
	62 mph (100 km/h)	3, 430-4, 030 rpm
4.5 V	25 mph (40 km/h)	4, 300-4, 900 rpm
	37 mph (60 km/h)	5, 300-5, 900 rpm
	62 mph (100 km/h)	6, 250-6, 850 rpm

L Position/Mode

APP Sensor A (V)	Vehicle Speed	Engine Speed
1.2 V	25 mph (40 km/h)	2, 100-2, 700 rpm
	37 mph (60 km/h)	2, 840-3, 440 rpm
	62 mph (100 km/h)	3, 900-4, 500 rpm
2.3 V	25 mph (40 km/h)	2, 640-3, 240 rpm
	37 mph (60 km/h)	3, 040-3, 640 rpm
	62 mph (100 km/h)	3, 800-4, 500 rpm
4.5 V	25 mph (40 km/h)	4, 300-4, 900 rpm
	37 mph (60 km/h)	5, 300-5, 900 rpm
	62 mph (100 km/h)	6, 250-6, 850 rpm

15. Park the vehicle on an upward slope (about 16 degrees), apply the parking brake, and shift the transmission to P position/mode. Release the brake; the vehicle should not move.

NOTE: Always use the parking brake to hold the vehicle when stopped on an incline. Depending on the grade of the incline, the vehicle could roll if the brake is released.

CVT SOLENOID VALVE TEST

Test

NOTE:

- Keep all foreign particles out of the transmission.
- Unless otherwise indicated, illustrations used in the procedure are for 1.5 L engine.

Solenoid Valve Resistance Check

1. Vehicle - Lift
2. Front Engine Undercover Lid - Remove
3. Solenoid Valve - Resistance Check

1. Disconnect the connector (A).

NOTE: To prevent damage, cover the connector using a shop towel.

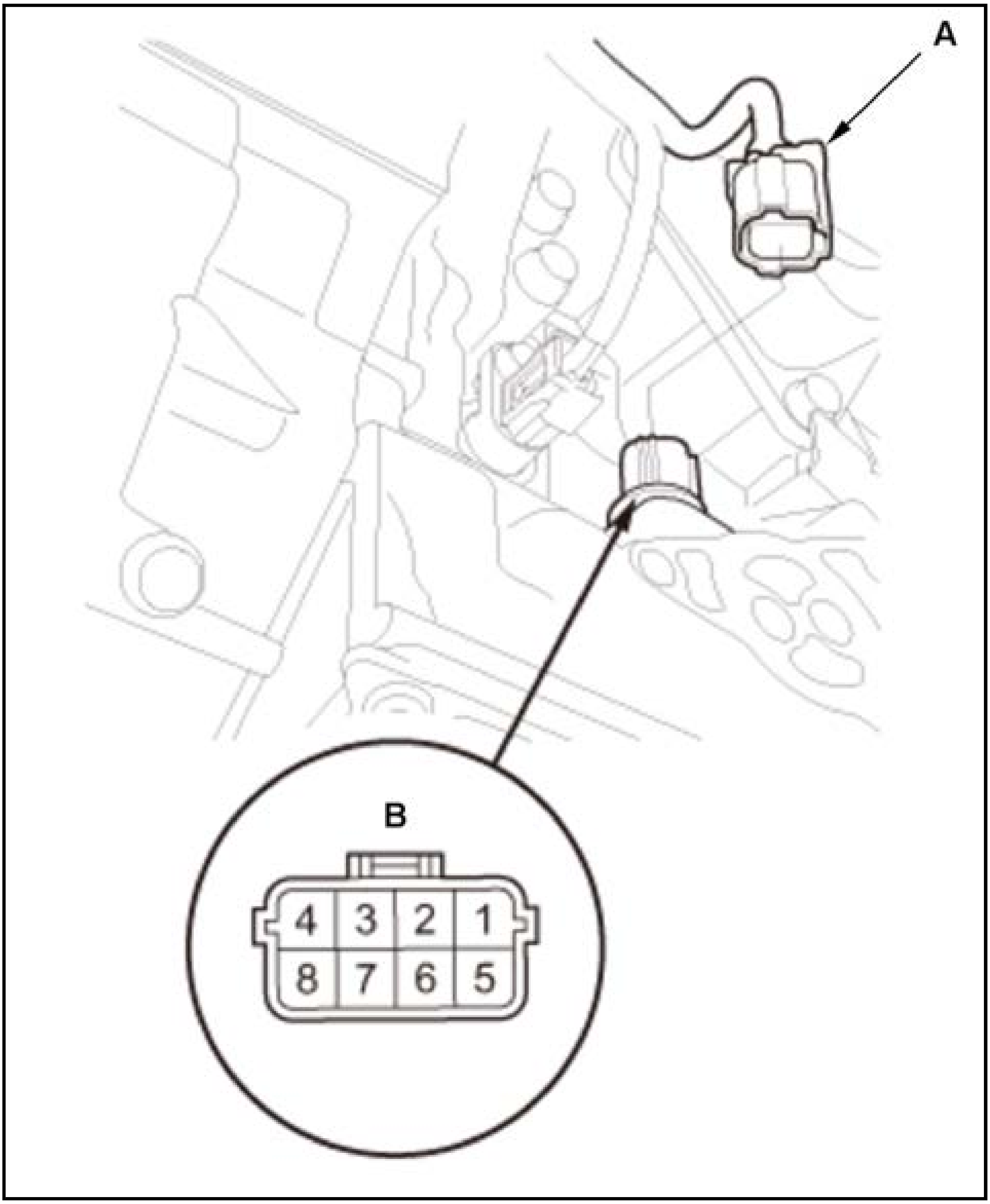

2. Measure the resistance between the connector (male terminals) (B) and body ground according to the table.

- If the resistance is within the standard, the test is complete, and install all removed parts.
- If the resistance is out of the standard, check the solenoid valve operation.

Solenoid valve	Terminal	Standard Resistance
CVT clutch pressure control solenoid valve	No. 1	4.7-5.9 Ω
CVT drive pulley pressure control solenoid valve	No. 8	5.0-6.3 Ω
CVT driven pulley pressure control solenoid valve	No. 3	5.0-6.3 Ω
CVT lock-up clutch control solenoid valve	No. 4	5.0-6.3 Ω
Shift solenoid valve B	No. 5	10.6-13.5 Ω
Shift solenoid valve O/P	No. 2	10.6-13.5 Ω

CVT Clutch Pressure Control Solenoid Valve

4. CVT Clutch Pressure Control Solenoid Valve - Operation Check

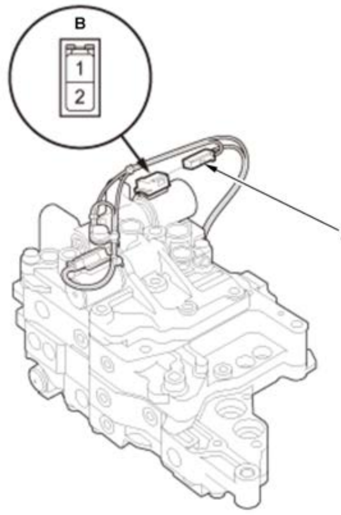

1. **Remove the valve body assembly**

2. Disconnect the connector (A).

3. Connect a jumper wire from the positive battery terminal to connector (male terminals) No. 2 (B), and connect another jumper wire from the negative battery terminal to connector terminal No. 1.

- If a clicking sound is heard, repair or replace the solenoid wire harness.
- If no clicking sound is heard, **replace the CVT clutch pressure control solenoid valve** .

5. All Removed Parts - Install

1. Install the parts in the reverse order of removal.

CVT Drive Pulley Pressure Control Solenoid Valve

6. CVT Drive Pulley Pressure Control Solenoid Valve - Operation Check

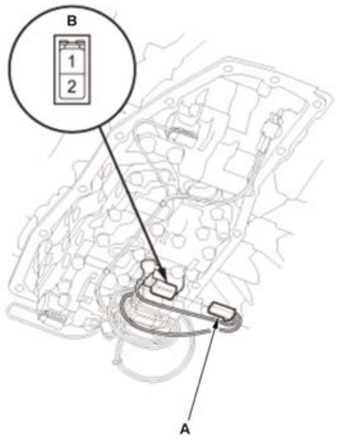

1. **Remove the transmission fluid pan** .

NOTE: The actual transmission fluid (HCF-2) capacity will vary from the specified capacity based on the length of time the transmission fluid pan is off the transmission. Avoid leaving the transmission fluid pan off for extend periods of time.

2. **Remove the transmission fluid strainer**

3. Disconnect the connector (A).

4. Connect a jumper wire from the positive battery terminal to connector (male terminals) No. 2 (B), and connect another jumper wire from the negative battery terminal to connector terminal No. 1.

- If a clicking sound is heard, repair or replace the solenoid wire harness.

- If no clicking sound is heard, **replace the CVT drive pulley pressure control solenoid valve** .

7. All Removed Parts - Install

1. Install the parts in the reverse order of removal.

CVT Driven Pulley Pressure Control Solenoid Valve

8. CVT Driven Pulley Pressure Control Solenoid Valve - Operation Check

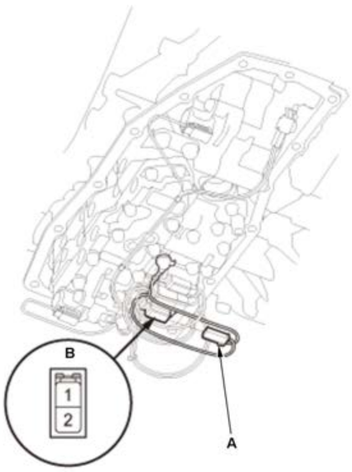

1. **Remove the transmission fluid pan** .

NOTE: The actual transmission fluid (HCF-2) capacity will vary from the specified capacity based on the length of time the transmission fluid pan is off the transmission. Avoid leaving the transmission fluid pan off for extend periods of time.

2. **Remove the transmission fluid strainer**

3. Disconnect the connector (A).

4. Connect a jumper wire from the positive battery terminal to connector (male terminals) No. 2 (B), and connect another jumper wire from the negative battery terminal to connector terminal No. 1.

- If a clicking sound is heard, repair or replace the solenoid wire harness.
- If no clicking sound is heard, **replace the CVT driven pulley pressure control solenoid valve** .

9. All Removed Parts - Install

1. Install the parts in the reverse order of removal.

CVT Lock-Up Clutch Control Solenoid Valve

10. CVT Lock-Up Clutch Control Solenoid Valve - Operation Check

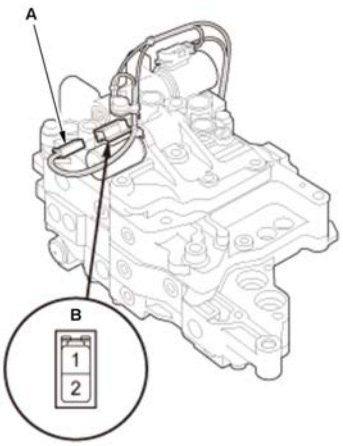

1. **Remove the valve body assembly**

2. Disconnect the connector (A).

3. Connect a jumper wire from the positive battery terminal to connector (male terminals) No. 2 (B), and connect another jumper wire from the negative battery terminal to connector terminal No. 1.

- If a clicking sound is heard, repair or replace the solenoid wire harness.
- If no clicking sound is heard, **replace the CVT lock-up clutch control solenoid valve** .

11. All Removed Parts - Install

1. Install the parts in the reverse order of removal.

Shift Solenoid Valve B

12. Shift Solenoid Valve B - Operation Check

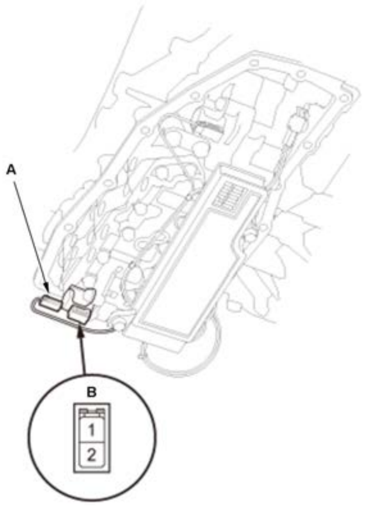	1. **Remove the transmission fluid pan** . **NOTE:** The actual transmission fluid (HCF-2) capacity will vary from the specified capacity based on the length of time the transmission fluid pan is off the transmission. Avoid leaving the transmission fluid pan off for extend periods of time. 2. Disconnect the connector (A). 3. Connect a jumper wire from the positive battery terminal to connector (male terminals) No. 1 (B), and connect another jumper wire from the negative battery terminal to the solenoid valve body. • If a clicking sound is heard, repair or replace the solenoid wire harness. • If no clicking sound is heard, **replace shift solenoid valve B** .

13. All Removed Parts - Install

1. Install the parts in the reverse order of removal.

Shift Solenoid Valve O/P

14. Shift Solenoid Valve O/P - Operation Check

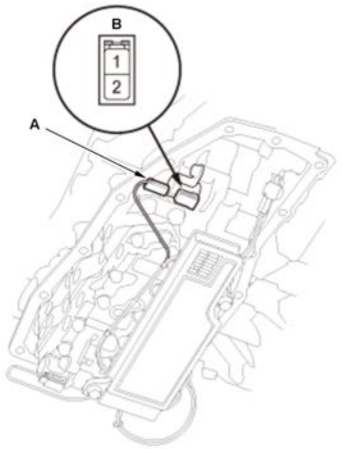	1. **Remove the transmission fluid pan** . **NOTE:** The actual transmission fluid (HCF-2) capacity will vary from the specified capacity based on the length of time the transmission fluid pan is off the transmission. Avoid leaving the transmission fluid pan off for extend periods of time. 2. Disconnect the connector (A). 3. Connect a jumper wire from the positive battery terminal to connector (male terminals) No. 1 (B), and connect another jumper wire from the negative battery terminal to the solenoid valve body. • If a clicking sound is heard, go to the next step. • If no clicking sound is heard, **replace the shift solenoid valve O/P** .

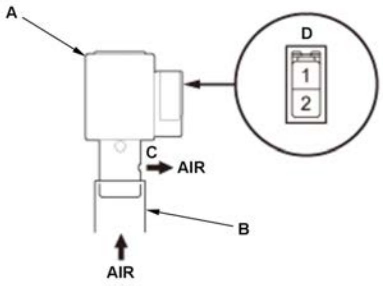

4. **Remove the shift solenoid valve O/P**

(A).

5. Connect a tube (B) to the shift solenoid valve O/P.

6. Blow air into the tube.

- If the air goes out of the port (C), go to the next step.
- If the air does not go out of the port, **replace the shift solenoid valve O/P** .

7. Connect a jumper wire from the positive battery terminal to connector (male terminals) No. 1 (D), and connect another jumper wire from the negative battery terminal to the solenoid valve body.

8. Blow air into the tube.

- If the air goes out of the port, **replace the shift solenoid valve O/P** .
- If the air does not go out of the port, repair or replace the solenoid wire harness.

15. All Removed Parts - Install

1. Install the parts in the reverse order of removal.

SHIFT LOCK SOLENOID TEST

Test

1. **HDS - Connect**
2. Shift Lock Solenoid - Test

1. Select the Shift Lock Solenoid Test in the Miscellaneous Test Menu, and check that the shift lock solenoid operates with the HDS.

2. Check that the shift lever can be moved out of P position/mode when the Shift Lock Solenoid is ON. Move the shift lever back to P position/mode, and check that it locks when the Shift Lock Solenoid is OFF.

3. Check that the shift lock releases when the shift lock release is pushed, and check that it locks when the shift lock release is released.

4. If the shift lock solenoid does not work properly, **go to the shift lock system circuit troubleshooting**

.

STALL SPEED TEST

Test

1. **Transmission Fluid Level - Check**
2. **HDS - Connect**
3. Engine - Warm Up

1. Start the engine, and warm it up to normal operating temperature (the radiator fan comes on twice).

4. Stall Speed - Test

NOTE:

- Do not test stall speed for more than 10 seconds at a time.
- Record the engine speed at 6 to 8 seconds after pressing the accelerator pedal. Higher engine speed will be indicated for 5 seconds.
- Stall speed tests should be used for diagnostic purposes only.
- The stall speed should be the same in all positions/modes.
- Do not test stall speed with a pressure gauge installed.

1. Apply the parking brake, and block all four wheels.

2. Make sure the A/C switch is OFF.

3. Shift the transmission to D position/mode while pressing the brake pedal firmly, then press the accelerator pedal for 6 to 8 seconds, and note the engine speed.

NOTE: Do not move the shift lever or remove your foot off the brake pedal, while raising the engine speed.

4. Allow 2 minutes for cooling, then repeat the test in the all positions/modes.

Stall Speed rpm	
1.5 L engine:	
B	**Specification: 2, 500 rpm**
B	**Service Limit: 2, 350-2, 650 rpm**
2.4 L engine:	
B	**Specification: 2, 300 rpm**
B	**Service Limit: 2, 150-2, 450 rpm**

5. If any of the stall speeds are out of the service limit, refer to the problems and probable causes listed in the table.

Problems	Probable Causes
Stall speed rpm	• Low transmission fluid level • Transmission fluid deteriorated • Transmission fluid pump worn, binding, or foreign material in transmission fluid pump • Torque converter assembly defective • Forward clutch assembly defective • Input shaft worn or damaged • Reverse brake defective • Valve body assembly defective • Lubrication pipe defective • Stator shaft defective • TCM defective
Stall speed rpm	• Torque converter assembly defective • Valve body assembly defective • Lubrication pipe defective

Problems	Probable Causes
	- Stator shaft defective - Engine output low - TCM defective

TRANSMISSION FLUID TEMPERATURE SENSOR TEST

Test

NOTE: Unless otherwise indicated, illustrations used in the procedure are for the model not equipped with the CVTF cooler.

1. Vehicle - Lift
2. Front Engine Undercover Lid - Remove
3. Transmission Fluid Temperature Sensor - Test

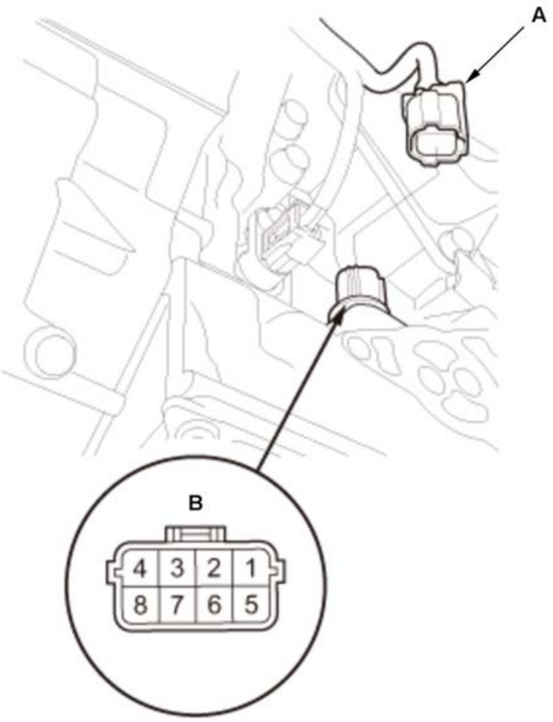

1. Disconnect the connector (A).

NOTE: To prevent damage, cover the connector using a shop towel.

2. Measure the resistance between connector (male terminals) No. 6 and No. 7 (B).

- If the resistance is within the standard, the test is complete.
- If the resistance is out of the standard, replace the transmission fluid temperature sensor .

Standard:	**50 Ω-25 kΩ**

4. All Removed Parts - Install

1. Install the parts in the reverse order of removal.
NOTE: Check the connector for corrosion, dirt, or oil, and clean or repair if necessary.

INSPECTION

CVT DIFFERENTIAL BACKLASH INSPECTION

Inspection

1. Differential Backlash - Inspect

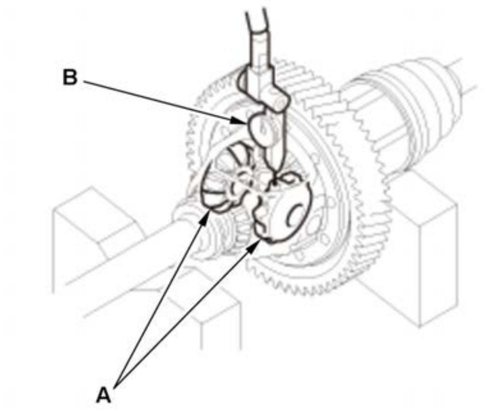	1. Install the driveshaft and the intermediate shaft on the differential, then place the axles on V-blocks. 2. Check the backlash of the pinion gears (A) using a dial indicator (B). 3. If the backlash is out of the standard, replace the differential carrier .

Standard:	**0.05-0.15 mm (0.0020-0.0059 in)**

CVT DIFFERENTIAL CARRIER BEARING PRELOAD INSPECTION

Special Tools Required

Image	Description/Tool Number
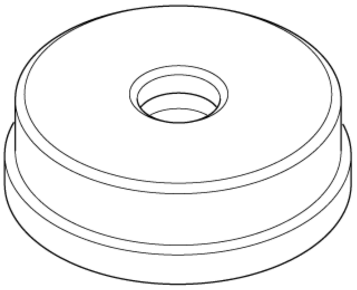	Bearing Driver Attachment, 72 x 75 mm 07746-0010600
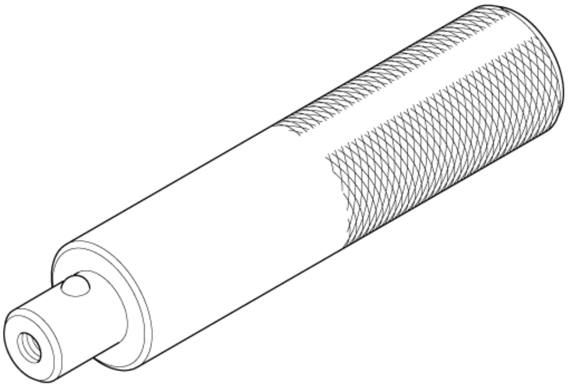	Driver Handle, 15 x 135L 07749-0010000

Image	Description/Tool Number
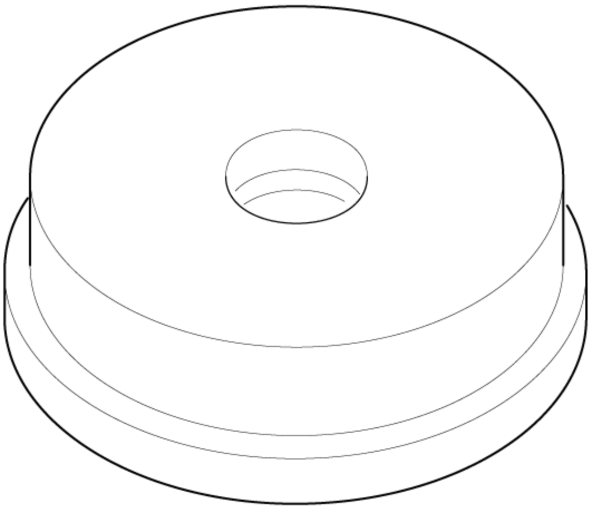	Attachment, 78 x 90 mm 07GAD-SD40101
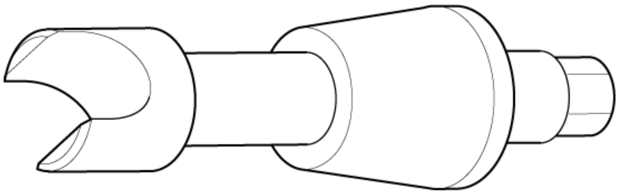	Preload Inspection Tool 07HAJ-PK40201

Inspection

NOTE:

- **How to read the torque specifications** .
- If the transmission was disassembled, the differential carrier tapered roller bearing preload must be adjusted.
- Apply a light coat of clean transmission fluid on all parts before installation.
- Unless otherwise indicated, illustrations used in the procedure are for AWD.

1. Differential Carrier Tapered Roller Bearing Outer Race (Torque Converter Housing Side) - Install

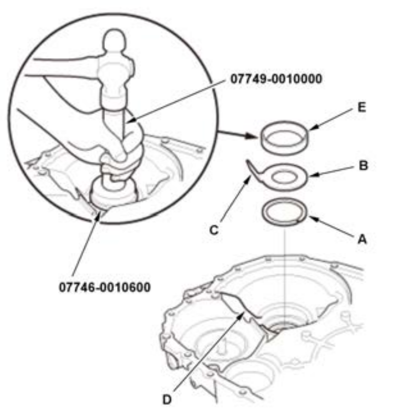	1. Install the 76 mm thrust shim (A). 2. Install the 41 x 76.2 x 1 mm spacer (B) by aligning the tab (C) with the groove (D). 3. Install the differential carrier tapered roller bearing outer race (E) using the 15 x 135L driver handle and the 72 x 75 mm bearing driver attachment so there is no clearance between the bearing outer race, the 41 x 76.2 x 1 mm spacer, the 76 mm thrust shim, and the torque converter housing.

2. Differential Carrier Tapered Roller Bearing Outer Race (Transmission Housing Side) - Install

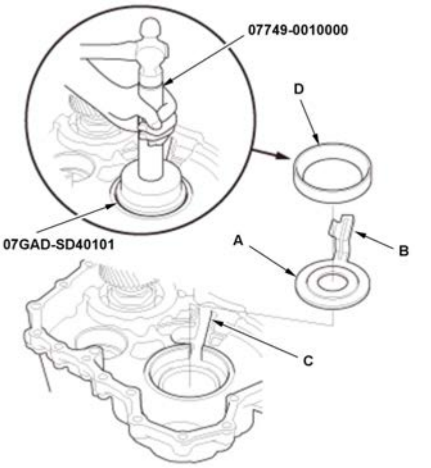	1. Install the 41 x 92 x 1 mm spacer (A) by aligning the tab (B) with the groove (C). 2. Install the differential carrier tapered roller bearing outer race (D) using the 15 x 135L driver handle and the 78 x 90 mm attachment so there is no clearance between the bearing outer race, the 41 x 92 x 1 mm spacer, and the transmission housing.

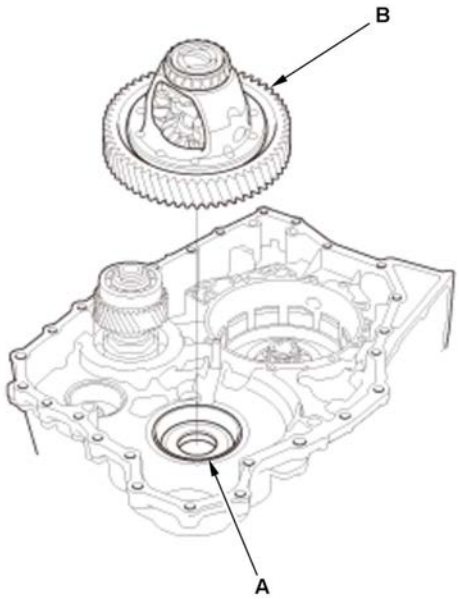	3. Apply transmission fluid to the bearing outer race (A) and the carrier bearings of the CVT differential assembly (B). 4. Install the CVT differential assembly.

3. Torque Converter Housing - Install

1. Apply transmission fluid to the bearing outer race of the torque converter housing.

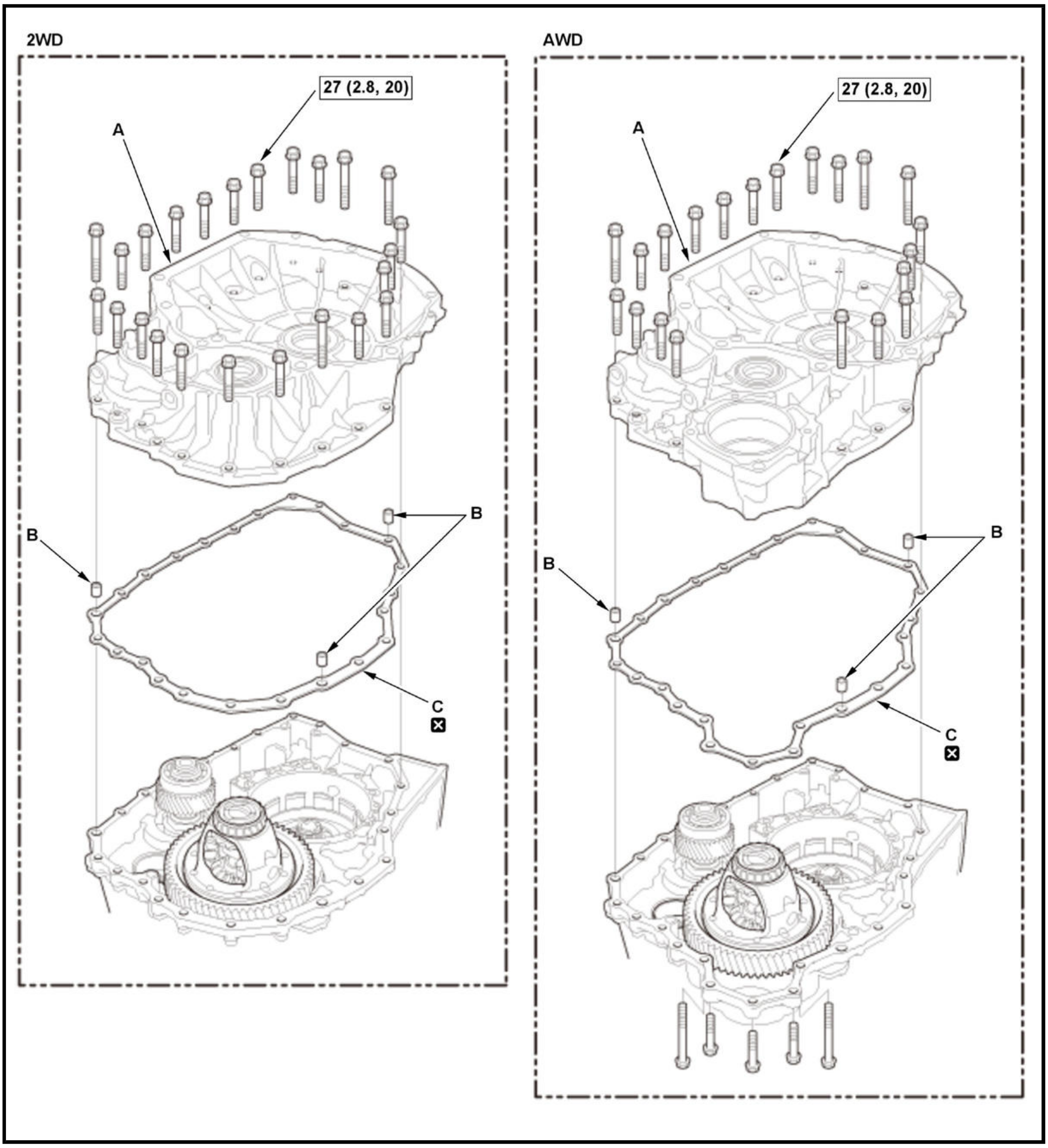

2. Install the torque converter housing (A) with the dowel pins (B) and a new gasket (C), and tighten the bolts in a crisscross pattern in at least two steps.

4. Differential Carrier Tapered Roller Bearing Preload - Inspect

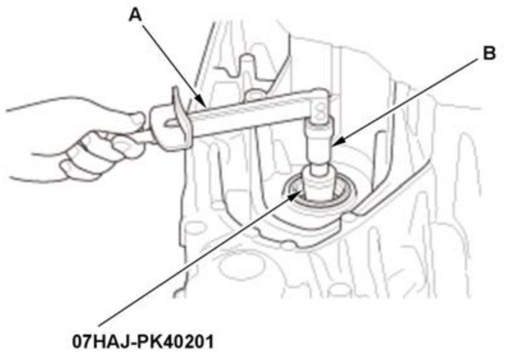	1. Rotate the differential assembly in both directions to seat the bearings using the preload inspection tool. 2. Measure the starting torque using the preload inspection tool, a torque wrench (A), and a socket (B). **NOTE:** Measure the starting torque at normal room temperature in both directions. 3. If the measurement is out of the standard, remove the 76 mm thrust shim, and measure its thickness. 4. Select a new 76 mm thrust shim.

NOTE:

- To increase the starting torque, increase thickness of the 76 mm thrust shim.
- To decrease the starting torque, decrease the thickness of the 76 mm thrust shim.
- Changing the 76 mm thrust shim to the next size will increase or decrease starting torque about 0.3-0.4 N.m (3-4 kgf.cm, 2-3 lbf.in).
- Do not use more than two thrust shims to adjust the starting torque.

Type A 76 mm Thrust Shim

Type B 76 mm Thrust Shim

Type C 76 mm Thrust Shim

Type D 76 mm Thrust Shim

5. Install a selected 76 mm thrust shim, then recheck the starting torque.

No.	Thickness
P	2.950 mm (0.11614 in)
Q	3.000 mm (0.11811 in)
R	3.050 mm (0.12008 in)

No.	Thickness
A	2.200 mm (0.08661 in)
B	2.250 mm (0.08858 in)
C	2.300 mm (0.09055 in)
D	2.350 mm (0.09252 in)
E	2.400 mm (0.09449 in)
F	2.450 mm (0.09646 in)
G	2.500 mm (0.09843 in)
H	2.550 mm (0.10039 in)
I	2.600 mm (0.10236 in)
J	2.650 mm (0.10433 in)
K	2.700 mm (0.10630 in)
L	2.750 mm (0.10827 in)
M	2.800 mm (0.11024 in)
N	2.850 mm (0.11220 in)
O	2.900 mm (0.11417 in)

No.	Thickness
S	2.050 mm (0.08071 in)
T	2.100 mm (0.08268 in)
U	2.150 mm (0.08465 in)

No.	Thickness
0A	1.550 mm (0.06102 in)

No.	Thickness
0B	1.600 mm (0.06299 in)
0C	1.650 mm (0.06496 in)
0D	1.700 mm (0.06693 in)
0E	1.750 mm (0.06890 in)
0F	1.800 mm (0.07087 in)
0G	1.850 mm (0.07283 in)
0H	1.900 mm (0.07480 in)
0I	1.950 mm (0.07677 in)
0J	2.000 mm (0.07874 in)

No.	Thickness
S	2.475 mm (0.09744 in)
T	2.525 mm (0.09941 in)
U	2.575 mm (0.10138 in)
V	2.625 mm (0.10335 in)
W	2.675 mm (0.10531 in)
X	2.725 mm (0.10728 in)
Y	2.775 mm (0.10925 in)
Z	2.825 mm (0.11122 in)
0A	2.875 mm (0.11319 in)
0B	2.925 mm (0.11516 in)
0C	2.975 mm (0.11713 in)
0D	3.025 mm (0.11909 in)

No.	Thickness
A	1.575 mm (0.06201 in)
B	1.625 mm (0.06398 in)
C	1.675 mm (0.06594 in)
D	1.725 mm (0.06791 in)
E	1.775 mm (0.06988 in)
F	1.825 mm (0.07185 in)
G	1.875 mm (0.07382 in)
H	1.925 mm (0.07579 in)
I	1.975 mm (0.07776 in)
J	2.025 mm (0.07972 in)
K	2.075 mm (0.08169 in)
L	2.125 mm (0.08366 in)
M	2.175 mm (0.08563 in)
N	2.225 mm (0.08760 in)
O	2.275 mm (0.08957 in)
P	2.325 mm (0.09154 in)
Q	2.375 mm (0.09350 in)
R	2.425 mm (0.09547 in)

Standard	
B	**New Bearing:**
B	**1.35-3.07 N.m (13.8-31.3 kgf.cm, 12.0-27.2 lbf.in)**
B	**Reused Bearing:**
B	**1.06-2.78 N.m (10.8-28.3 kgf.cm, 9.4-24.6 lbf.in)**

FINAL DRIVE SHAFT TAPERED ROLLER BEARING PRELOAD INSPECTION

Special Tools Required

Image	Description/Tool Number
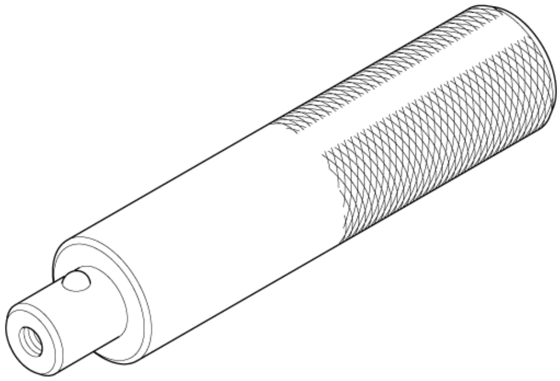	Driver Handle, 15 x 135L 07749-0010000
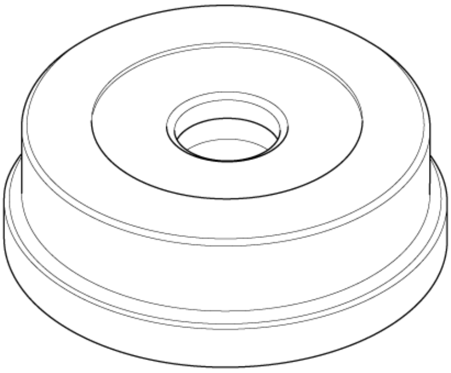	Bearing Driver Attachment, 62 x 64 mm 07947-6340400
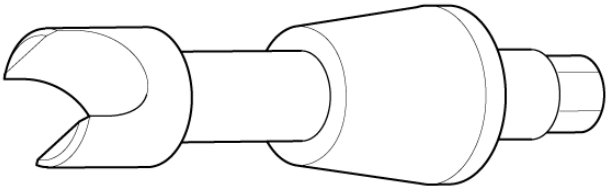	Preload Inspection Tool 07HAJ-PK40201
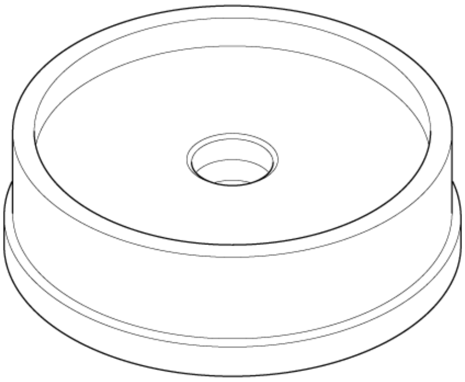	Bearing Driver Attachment, 78 x 80 mm 07NAD-PX40100

Inspection

NOTE:

- **How to read the torque specifications** .
- If the transmission was disassembled, the final drive shaft tapered roller bearing preload must be adjusted.
- The final drive shaft tapered roller bearing preload must be inspected and adjusted with the differential assembly. The final drive shaft tapered roller bearing preload value needs the differential carrier tapered roller bearing preload measurements. Incorrect measurements may be indicated if the differential carrier tapered roller bearing preload inspection has not been completed.
- Apply a light coat of clean transmission fluid on all parts before installation.

1. **Differential Carrier Tapered Roller Bearing Preload - Inspect**
2. Final Drive Shaft Tapered Roller Bearing Outer Race (Torque Converter Housing Side) - Install

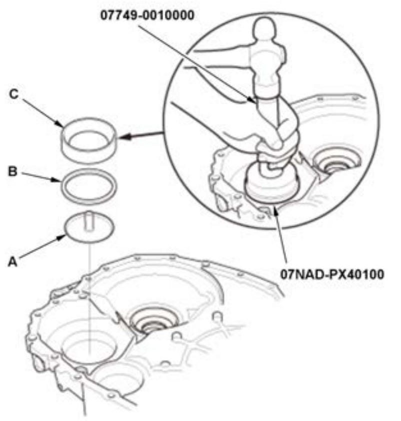	1. Install the oil guide plate (A) and the 80 mm thrust shim (B). 2. Install the final drive shaft tapered roller bearing outer race (C) using the 15 x 135L driver handle and the 78 x 80 mm bearing driver attachment so there is no clearance between the bearing outer race, the 80 mm thrust shim, the oil guide plate, and the torque converter housing.

3. Final Drive Shaft Tapered Roller Bearing Outer Race (Transmission Housing Side) - Install

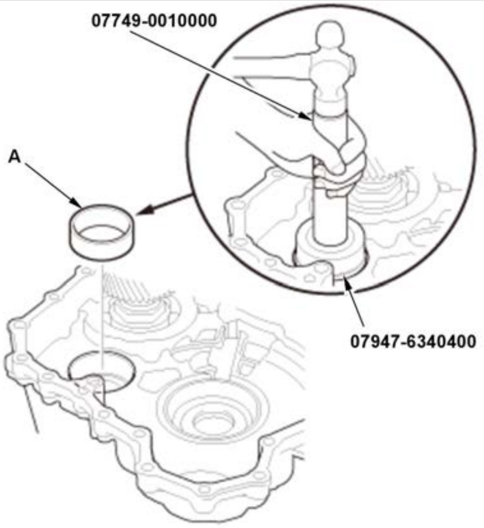	1. Install the final drive shaft tapered roller bearing outer race (A) until it bottoms using the 15 x 135L driver handle and the 62 x 64 mm bearing driver attachment.

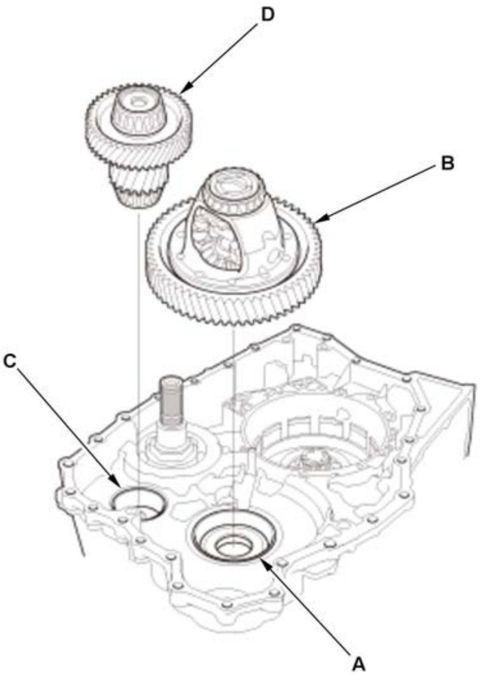	2. Apply transmission fluid to the carrier bearing outer race (A) and the carrier bearings of the CVT differential assembly (B). 3. Install the CVT differential assembly. 4. Apply transmission fluid to the tapered roller bearing outer race (C) and the tapered roller bearings of the final drive shaft assembly (D). 5. Install the final drive shaft assembly.

4. Torque Converter Housing - Install

   1. Apply transmission fluid to the bearing outer races of the torque converter housing.

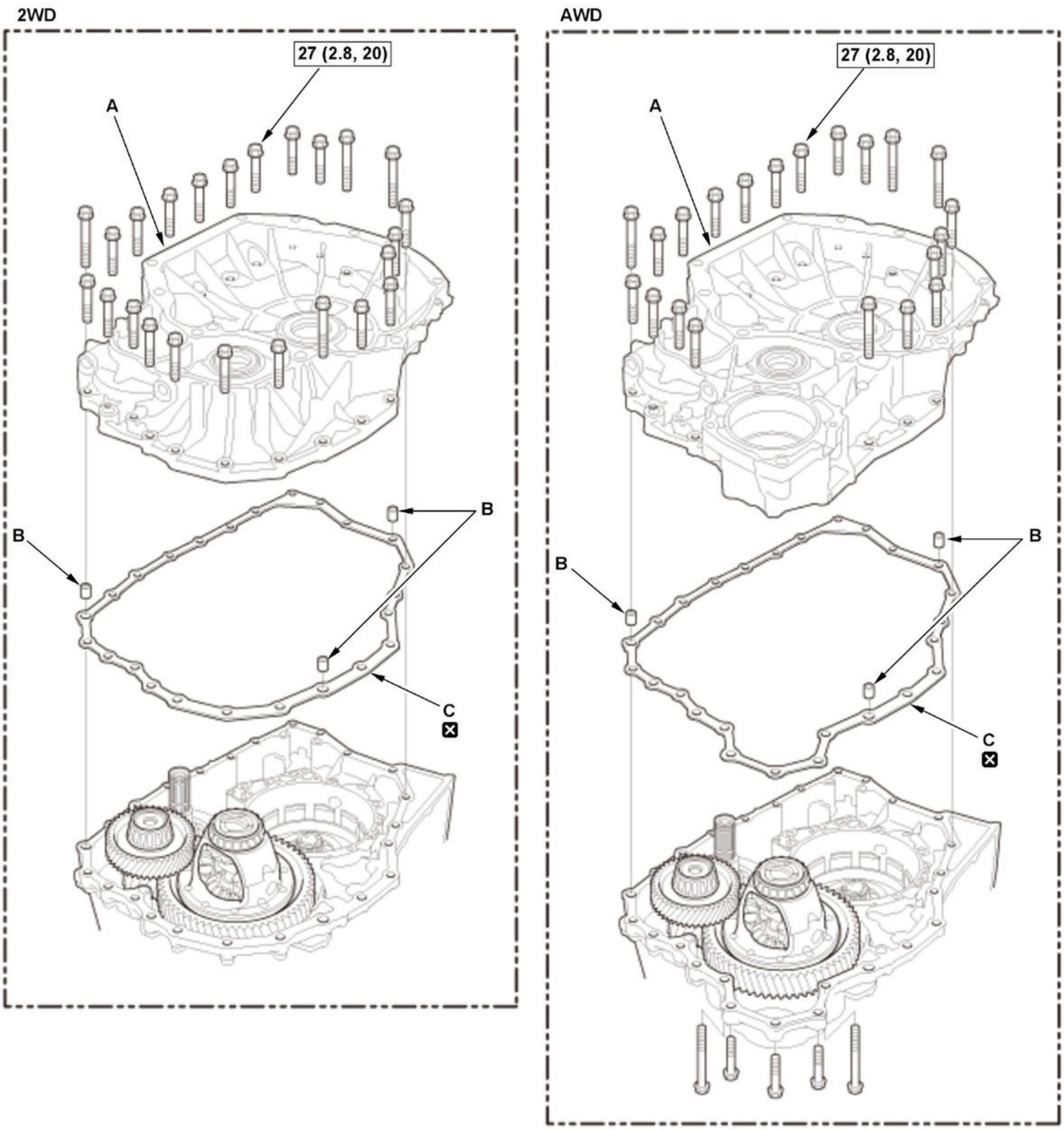

[Fig. 6: Torque Converter Housing Bolts Torque Specifications](#)
Courtesy of HONDA, U.S.A., INC.

2. Install the torque converter housing (A) with the dowel pins (B) and a new gasket (C), and tighten the bolts in a crisscross pattern in at least two steps.

5. Final Drive Shaft Tapered Roller Bearing Preload - Inspect

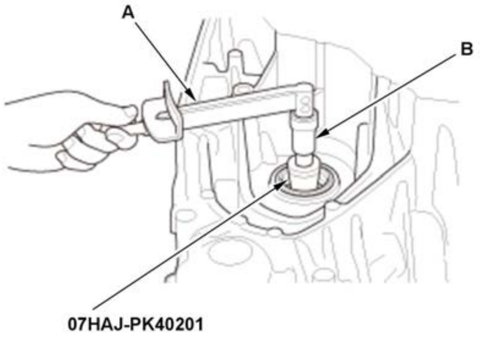	1. Rotate the differential assembly in both directions to seat the bearings using the preload inspection tool. 2. Measure the starting torque using the preload inspection tool, a torque wrench (A), and a socket (B). **NOTE:** Measure the starting torque at normal room temperature in both directions. 3. If the measurement is out of the standard, remove the 80 mm thrust shim, and measure its thickness. 4. Select a new 80 mm thrust shim.

- To increase the starting torque, increase thickness of the 80 mm thrust shim.
- To decrease the starting torque, decrease the thickness of the 80 mm thrust shim.
- Changing the 80 mm thrust shim to the next size will increase or decrease the starting torque about 0.5- 0.6 N.m (5.10-6.12 kgf.cm, 3.8-4.5 lbf.in).
- Do not use more than two thrust shims to adjust the starting torque.

Type A 80 mm Thrust Shim

Type B 80 mm Thrust Shim

5. Install a selected 80 mm thrust shim, then recheck the starting torque.

No.	Thickness
M	1.880 mm (0.07402 in)
N	1.910 mm (0.07520 in)
O	1.940 mm (0.07638 in)

No.	Thickness
S	1.350 mm (0.05315 in)
T	1.375 mm (0.05413 in)
U	1.400 mm (0.05512 in)
V	1.425 mm (0.05610 in)
W	1.450 mm (0.05709 in)
X	1.475 mm (0.05807 in)
Y	1.500 mm (0.05906 in)
Z	1.525 mm (0.06004 in)
0A	1.550 mm (0.06102 in)
0B	1.575 mm (0.06201 in)
0C	1.600 mm (0.06299 in)
0D	1.625 mm (0.06398 in)
0E	1.650 mm (0.06496 in)
0F	1.675 mm (0.06594 in)
0G	1.700 mm (0.06693 in)
0H	1.725 mm (0.06791 in)
0I	1.750 mm (0.06890 in)
0J	1.775 mm (0.06988 in)
0K	1.800 mm (0.07087 in)
0L	1.825 mm (0.07185 in)
0M	1.850 mm (0.07283 in)

No.	Thickness
A	0.900 mm (0.03543 in)
B	0.925 mm (0.03642 in)
C	0.950 mm (0.03740 in)
D	0.975 mm (0.03839 in)

No.	Thickness
E	1.000 mm (0.03937 in)
F	1.025 mm (0.04035 in)
G	1.050 mm (0.04134 in)
H	1.075 mm (0.04232 in)
I	1.100 mm (0.04331 in)
J	1.125 mm (0.04429 in)
K	1.150 mm (0.04528 in)
L	1.175 mm (0.04626 in)
M	1.200 mm (0.04724 in)
N	1.225 mm (0.04823 in)
O	1.250 mm (0.04921 in)
P	1.275 mm (0.05020 in)
Q	1.300 mm (0.05118 in)
R	1.325 mm (0.05217 in)

Standard	
B	**New Bearing:**
B	**6.88-27.39 N.m (70.1-279.3 kgf.cm, 60.9-242.5 lbf.in)**
B	**Reused Bearing:**
B	**5.63-26.15 N.m (57.4-266.6 kgf.cm, 49.8-231.4 lbf.in)**

FORWARD CLUTCH CLEARANCE INSPECTION

Special Tools Required

Image	Description/Tool Number
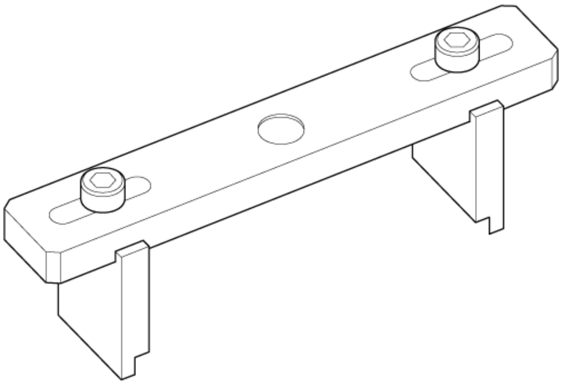	Clutch Compressor Attachment 07ZAE-PRP0100
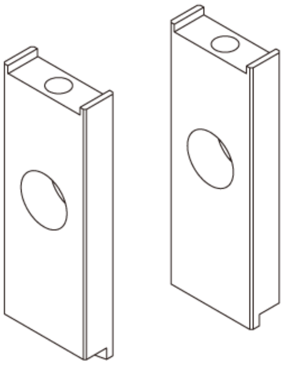	Clutch Compressor Attachment 64 mm 07ZAE-PRPA110

Inspection

NOTE: How to read the torque specifications .

1. Forward Clutch Clearance - Inspect

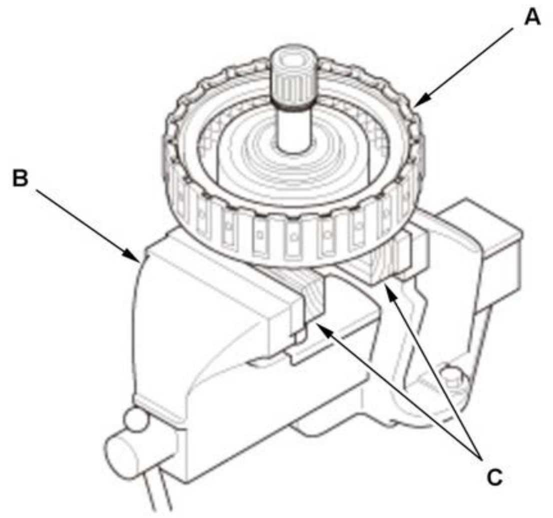 	1. Secure the input shaft assembly (A) in a bench vise (B) with wood blocks (C). **NOTE:** After this procedure, remove any wood chips that may be stuck to the spline.

2. Set a dial indicator (A) on the clutch end-plate (B).

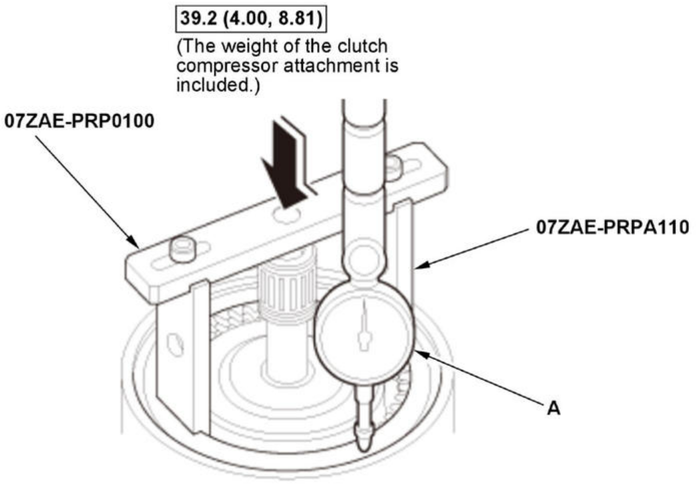
39.2 (4.00, 8.81)
(The weight of the clutch compressor attachment is included.)
07ZAE-PRP0100
07ZAE-PRPA110
A

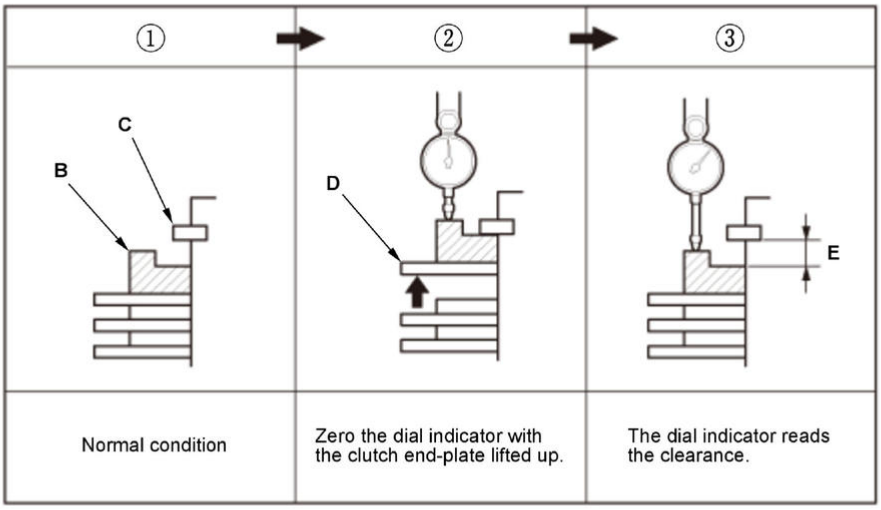

①	②	③
Normal condition	Zero the dial indicator with the clutch end-plate lifted up.	The dial indicator reads the clearance.

3. Zero the dial indicator with the clutch end-plate lifted up to the snap ring (C) by lifting the top disk (D) up.

4. Release the top disk.

5. Put the clutch compressor attachment with the 64 mm clutch compressor attachment on the clutch end-plate.

NOTE: Be sure to set the clutch compressor attachment with the indented mark facing upward.

6. Press the clutch compressor attachment down with 39.2 N (4.00 kgf, 8.81 lbf) (the weight of the clutch compressor attachment is included) using a force gauge, and read the dial indicator. The dial indicator reads the clearance (E) between the clutch end-plate and the top disc.

NOTE: Take measurements in at least three places, and use the average as the actual clearance.

Standard:	**0.8-1.0 mm (0.031-0.039 in)**

7. If the clearance is out of the standard, replace the input shaft assembly.

DTC TROUBLESHOOTING INDEX

CVT SYSTEM DTC TROUBLESHOOTING INDEX (1.5 L ENGINE)

NOTE: Before you troubleshoot, record all freeze data and any on-board snapshot with the HDS, and **review the General Troubleshooting Information**.

DTC *(1)	Shift Position Indicator	MIL	Detection Item
P0501 (36) *(2)	Blinks	ON	CVT Speed Sensor Circuit Range/Performance
P0502 (36) *(2)	Blinks	ON	CVT Speed Sensor Circuit Open/Short
P0600 (94) *(2)	Blinks	ON	Serial Communication
P0602 (0)	OFF	ON	Boot Mode(Programming Error)
P062F (0) *(2)	Blinks	ON	TCM Internal Control Module Error
P0641 (183) *(2)	Blinks	ON	Sensor Reference Voltage 1 Circuit Malfunction
P0651 (184) *(2)	Blinks	ON	Sensor Reference Voltage 2 Circuit Malfunc
P06A8 (0) *(2)	Blinks	ON	Internal VCC Power Malfunction
P0705 (5) *(2)	Blinks	ON	Transmission Range Switch Multiple Shift Position Input
P0706 (6) *(2)	OFF	ON	Transmission Range Switch Open
P0710 (28) *(2)	Blinks	ON	CVT Fluid Temperature Sensor (Out of Range)
P0711 (28) *(2)	Blinks	ON	CVT Fluid Temperature Sensor (Range/Performance)
P0712 (28) *(2)	Blinks	ON	CVT Fluid Temperature Sensor (Short)
P0713 (28) *(2)	Blinks	ON	CVT Fluid Temperature Sensor (Open)
P0714 (28) *(2)	Blinks	ON	CVT Fluid Temperature Sensor (Intermittent Failure)
P0716 (52) *(2)	Blinks	ON	CVT Input Shaft (Drive Pulley) Speed Sensor A Circuit Range/Performance / Input/Turbine Speed Sensor A Circuit Range/Performance
P0717 (52) *(2)	Blinks	ON	CVT Input Shaft (Drive Pulley) Speed Sensor A Circuit No Signal / Input/Turbine Speed Sensor A Circuit No Signal
P0741 (40)	Blinks	ON	Torque Converter Clutch Circuit Performance or Stuck OFF
P0746 (104)	Blinks	ON	CVT Drive Pulley Pressure Control Solenoid Valve Stuck OFF
P0777 (105)	Blinks	ON	CVT Driven Pulley Pressure Control Solenoid Valve Stuck ON
P0780 (100) *(3)	Blinks	ON	Shift Error

DTC *(1)	Shift Position Indicator	MIL	Detection Item
P0792 (34) *(2)	Blinks	ON	Intermediate Shaft Speed Sensor A Circuit Range/Performance
P0793 (34) *(2)	Blinks	ON	Intermediate Shaft Speed Sensor A Circuit No Signal
P0796 (106)	Blinks	ON	Pressure Control Solenoid Valve C Performance or Stuck OFF
P0797 (106)	Blinks	ON	Pressure Control Solenoid Valve C Stuck ON
P0842 (56) *(2)	Blinks	OFF	Transmission Fluid Pressure Sensor/Switch A Circuit Low
P0843 (56) *(2)	Blinks	OFF	Transmission Fluid Pressure Sensor/Switch A Circuit High
P0962 (38) *(2)	Blinks	ON	CVT Drive Pulley Pressure Control Valve Circuit Low
P0963 (38) *(2)	Blinks	ON	CVT Drive Pulley Pressure Control Valve Circuit High
P0966 (39) *(2)	Blinks	ON	CVT Driven Pulley Pressure Control Valve Circuit Low
P0967 (39) *(2)	Blinks	ON	CVT Driven Pulley Pressure Control Valve Circuit High
P0970 (50) *(2)	Blinks	ON	Pressure Control Solenoid C Control Circuit Low
P0971 (50) *(2)	Blinks	ON	Pressure Control Solenoid C Control Circuit High

DTC *(1)	Shift Position Indicator	MIL	Detection Item
P0976 (8) *(2)	Blinks	ON	Shift Solenoid Valve B Circuit Low
P0977 (8) *(2)	Blinks	ON	Shift Solenoid Valve B Circuit High
P1717 (62) *(2)	Blinks	OFF	Transmission Range Switch ATP RVS Switch (Open or Short)
P1840 (36)	Blinks	OFF	CVT Speed Sensor Circuit Forward Rotation Range/Performance
P1841 (36)	Blinks	OFF	CVT Speed Sensor Circuit Reverse Rotation Range/Performance
P1844 (34)	Blinks	OFF	CVT Input Shaft Speed Sensor Circuit Forward Rotation Range/Performance
P1845 (34)	Blinks	OFF	CVT Input Shaft Speed Sensor Circuit Reverse Rotation Range/Performance
P1855 (58)	OFF	OFF	Inclination Sensor Circuit Range/Performance
P1890 (42)	Blinks	OFF	CVT Speed Control System
P1898 (100)	Blinks	ON	CVT Drive Pulley Pressure Control Valve Stuck ON or CVT Driven Pulley Pressure Control Valve Stuck OFF
P1899 (100)	Blinks	ON	CVT Drive Pulley Pressure Control Valve Stuck OFF or CVT Driven Pulley Pressure Control Valve Stuck ON
P1900 (115)	Blinks	OFF	EOP-RELAY High Input
P2715 (102)	Blinks	ON	Pressure Control Solenoid D Stuck On
P2720 (51) *(2)	Blinks	ON	Pressure Control Solenoid D Control Circuit Low
P2721 (51) *(2)	Blinks	ON	Pressure Control Solenoid D Control Circuit High
P2797 (114)	Blinks	OFF	Auxiliary Transmission Fluid Pump Performance
P2817 (108)	Blinks	OFF	Shift Solenoid Valve O/P (Pressure Control Solenoid H) Stuck Off

DTC *(1)	Shift Position Indicator	MIL	Detection Item
P2818 (108)	Blinks	OFF	Shift Solenoid Valve O/P (Pressure Control Solenoid H) Stuck On
P281D (57) *(2)	Blinks	OFF	Shift Solenoid Valve O/P (Pressure Control Solenoid H) Control Circuit Low
P281E (57) *(2)	Blinks	OFF	Shift Solenoid Valve O/P (Pressure Control Solenoid H) Control Circuit High
U0029 (107) *(2)	Blinks	ON	F-CAN Malfunction (F-CAN Bus OFF)
U0038 (121) *(2)	Blinks	ON	TM-CAN Malfunction (TCM-PCM)
U0100 (107) *(2)	Blinks	ON	F-CAN Malfunction (TCM - FI Control Module)
U0122 (107) *(2)	Blinks	OFF	Lost Communication With Vehicle Dynamics Control Module
U0129 (107) *(2)	Blinks	OFF	Lost Communication With Brake System Control Module
U0151 (107) *(2)	Blinks	OFF	Lost Communication With SRS Unit
U0155 (107) *(2)	Blinks	OFF	Lost Communication With Gauge Control Module
U0302 (129)	Blinks	ON	PGM-FI System and A/T System Program Version Mismatch
U1260 (116)	Blinks	OFF	Lost Communication With Auxiliary Transmission Fluid Pump

NOTE:

*(1): The DTC in parentheses is the flash code the shift position indicator indicates when the data link connector (DLC) is connected to the HDS, and in the SCS mode.

*(2): This code is caused by an electrical circuit problem and cannot be caused by a mechanical problem in the transmission.

*(3): This code is stored whenever DTCs P1898 and P1899 are detected.

REWRITE

TCM UPDATE (1.5 L ENGINE)

Rewriting

NOTE: High temperatures in the engine compartment might cause the TCM to become too hot to run the update. If the engine has been running before this procedure, open the hood and cool the engine compartment.

1. TCM - Update

CIRCUIT DIAGRAM

CVT ELECTRONIC CONTROL SYSTEM CIRCUIT DIAGRAM (1.5 L ENGINE)

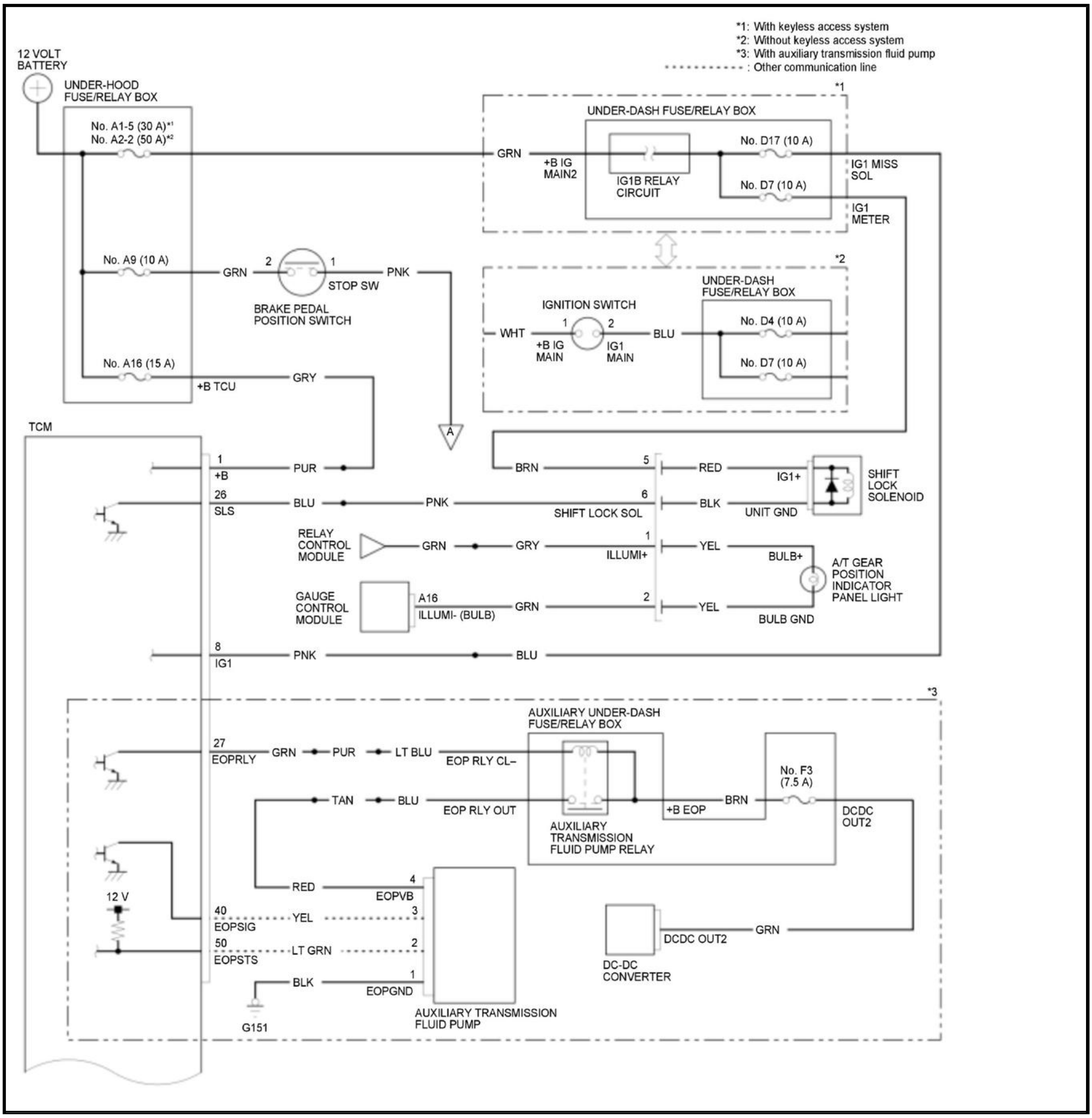
*1: With keyless access system
*2: Without keyless access system
*3: With auxiliary transmission fluid pump
: Other communication line
12 VOLT BATTERY
UNDER-HOOD FUSE/RELAY BOX
No. A1-5 (30 A)*1
No. A2-2 (50 A)*2
No. A9 (10 A)
No. A16 (15 A)
+B TCU
GRN
GRY
PNK
2
1
STOP SW
BRAKE PEDAL POSITION SWITCH
A
UNDER-DASH FUSE/RELAY BOX
+B IG MAIN2
IG1B RELAY CIRCUIT
No. D17 (10 A)
No. D7 (10 A)
IG1 MISS SOL
IG1 METER
IGNITION SWITCH
WHT
BLU
+B IG MAIN
IG1 MAIN
No. D4 (10 A)
TCM
1
+B
PUR
26
SLS
BLU
SHIFT LOCK SOL
BRN
5
6
RED
BLK
IG1+
UNIT GND
SHIFT LOCK SOLENOID
RELAY CONTROL MODULE
GAUGE CONTROL MODULE
A16
ILLUMI- (BULB)
ILLUMI+
YEL
BULB+
BULB GND
A/T GEAR POSITION INDICATOR PANEL LIGHT
8
IG1
AUXILIARY UNDER-DASH FUSE/RELAY BOX
27
EOPRLY
LT BLU
EOP RLY CL–
TAN
EOP RLY OUT
+B EOP
No. F3 (7.5 A)
DCDC OUT2
AUXILIARY TRANSMISSION FLUID PUMP RELAY
12 V
40
EOPSIG
50
EOPSTS
LT GRN
4
EOPVB
3
EOPGND
G151
AUXILIARY TRANSMISSION FLUID PUMP
DC-DC CONVERTER

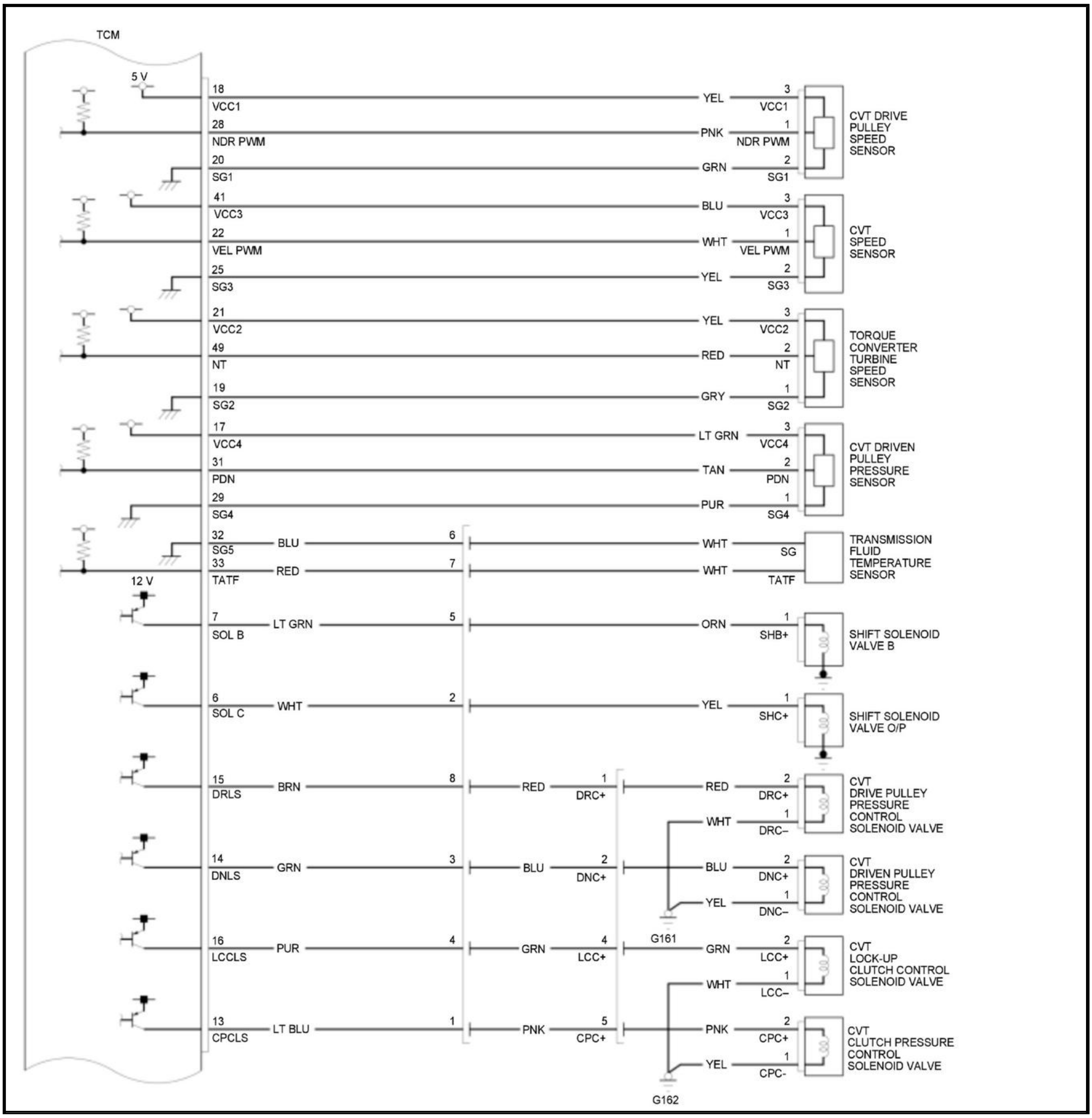
TCM
5 V
18
VCC1
YEL
3
VCC1
28
NDR PWM
PNK
1
NDR PWM
20
SG1
GRN
2
SG1
CVT DRIVE PULLEY SPEED SENSOR
41
VCC3
BLU
3
VCC3
22
VEL PWM
WHT
1
VEL PWM
25
SG3
YEL
2
SG3
CVT SPEED SENSOR
21
VCC2
YEL
3
VCC2
49
NT
RED
2
NT
19
SG2
GRY
1
SG2
TORQUE CONVERTER TURBINE SPEED SENSOR
17
VCC4
LT GRN
3
VCC4
31
PDN
TAN
2
PDN
29
SG4
PUR
1
SG4
CVT DRIVEN PULLEY PRESSURE SENSOR
32
SG5
BLU
6
WHT
SG
33
TATF
RED
7
WHT
TATF
TRANSMISSION FLUID TEMPERATURE SENSOR
12 V
7
SOL B
LT GRN
5
ORN
1
SHB+
SHIFT SOLENOID VALVE B
6
SOL C
WHT
2
YEL
1
SHC+
SHIFT SOLENOID VALVE O/P
15
DRLS
BRN
8
RED
1
DRC+
RED
2
DRC+
WHT
1
DRC–
CVT DRIVE PULLEY PRESSURE CONTROL SOLENOID VALVE
14
DNLS
GRN
3
BLU
2
DNC+
BLU
2
DNC+
YEL
1
DNC–
CVT DRIVEN PULLEY PRESSURE CONTROL SOLENOID VALVE
G161
16
LCCLS
PUR
4
GRN
4
LCC+
GRN
2
LCC+
WHT
1
LCC–
CVT LOCK-UP CLUTCH CONTROL SOLENOID VALVE
13
CPCLS
LT BLU
1
PNK
5
CPC+
PNK
2
CPC+
YEL
1
CPC-
CVT CLUTCH PRESSURE CONTROL SOLENOID VALVE
G162

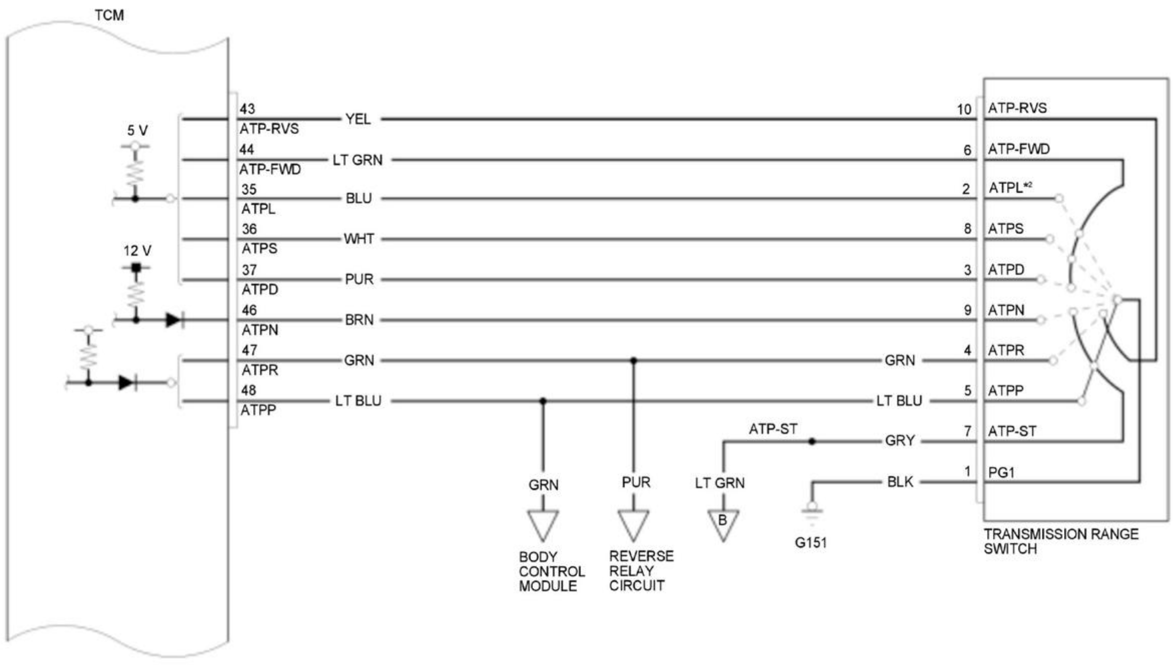
TCM
5 V
12 V
43
ATP-RVS
YEL
44
ATP-FWD
LT GRN
35
ATPL
BLU
36
ATPS
WHT
37
ATPD
PUR
46
ATPN
BRN
47
ATPR
GRN
48
ATPP
LT BLU
10
ATP-RVS
6
ATP-FWD
2
ATPL*2
8
ATPS
3
ATPD
9
ATPN
4
ATPR
GRN
5
ATPP
LT BLU
7
ATP-ST
GRY
ATP-ST
1
PG1
BLK
GRN
BODY CONTROL MODULE
PUR
REVERSE RELAY CIRCUIT
LT GRN
B
G151
TRANSMISSION RANGE SWITCH

CAN gateway 12P connector type

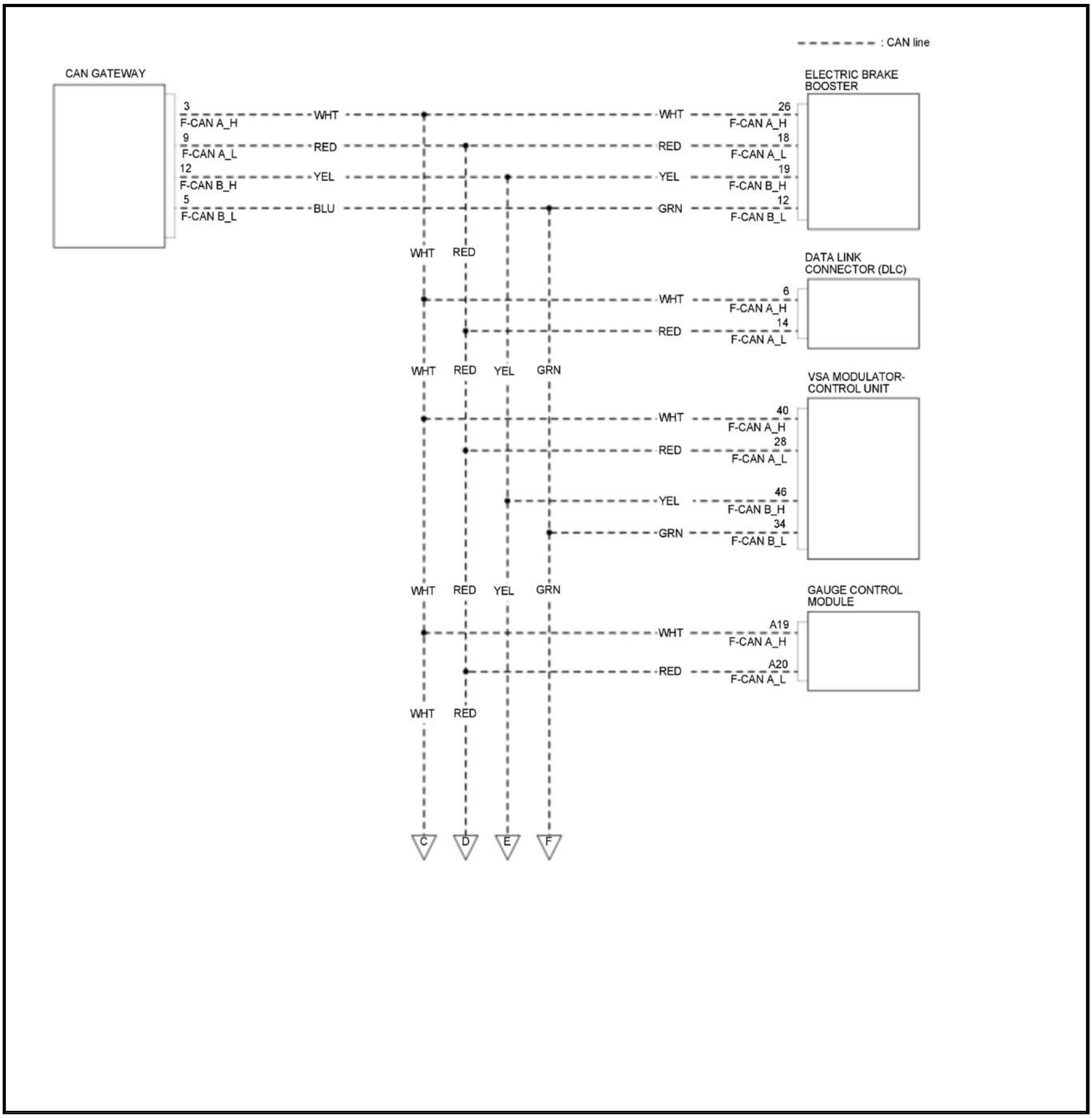
: CAN line
CAN GATEWAY
3
F-CAN A_H
9
F-CAN A_L
12
F-CAN B_H
5
F-CAN B_L
WHT
RED
YEL
BLU
ELECTRIC BRAKE BOOSTER
WHT
RED
YEL
GRN
26
F-CAN A_H
18
F-CAN A_L
19
F-CAN B_H
12
F-CAN B_L
WHT
RED
DATA LINK CONNECTOR (DLC)
WHT
RED
6
F-CAN A_H
14
F-CAN A_L
WHT
RED
YEL
GRN
VSA MODULATOR-CONTROL UNIT
WHT
RED
YEL
GRN
40
F-CAN A_H
28
F-CAN A_L
46
F-CAN B_H
34
F-CAN B_L
WHT
RED
YEL
GRN
GAUGE CONTROL MODULE
WHT
RED
A19
F-CAN A_H
A20
F-CAN A_L
WHT
RED
C
D
E
F

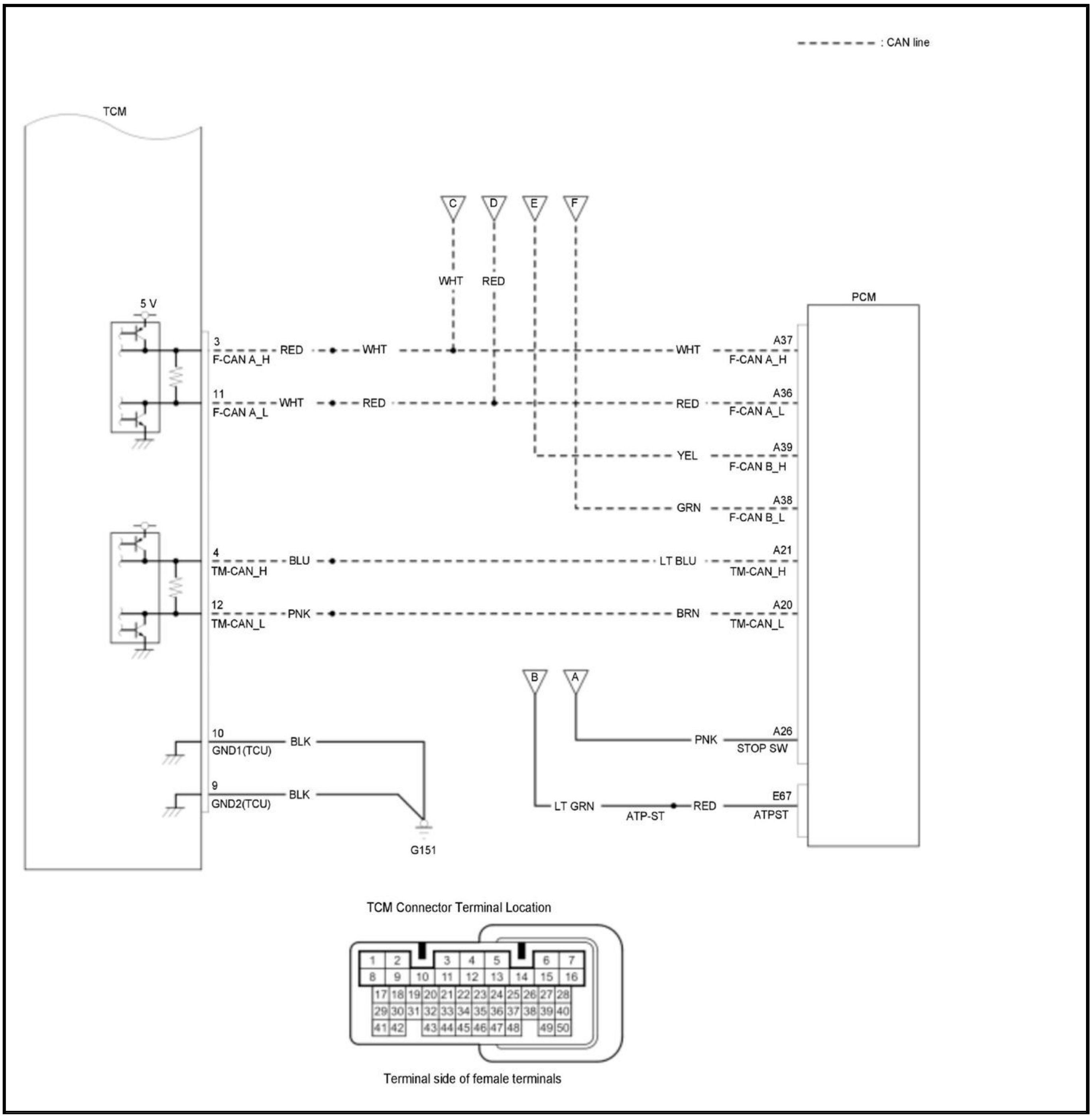
: CAN line
TCM
5 V
C
D
E
F
WHT
RED
PCM
3
F-CAN A_H
RED
WHT
WHT
A37
F-CAN A_H
11
F-CAN A_L
WHT
RED
RED
A36
F-CAN A_L
YEL
A39
F-CAN B_H
GRN
A38
F-CAN B_L
4
TM-CAN_H
BLU
LT BLU
A21
TM-CAN_H
12
TM-CAN_L
PNK
BRN
A20
TM-CAN_L
B
A
PNK
A26
STOP SW
10
GND1(TCU)
BLK
9
GND2(TCU)
BLK
G151
LT GRN
ATP-ST
RED
E67
ATPST
TCM Connector Terminal Location
1 2 3 4 5 6 7
8 9 10 11 12 13 14 15 16
17 18 19 20 21 22 23 24 25 26 27 28
29 30 31 32 33 34 35 36 37 38 39 40
41 42 43 44 45 46 47 48 49 50
Terminal side of female terminals

CAN gateway 16P connector type

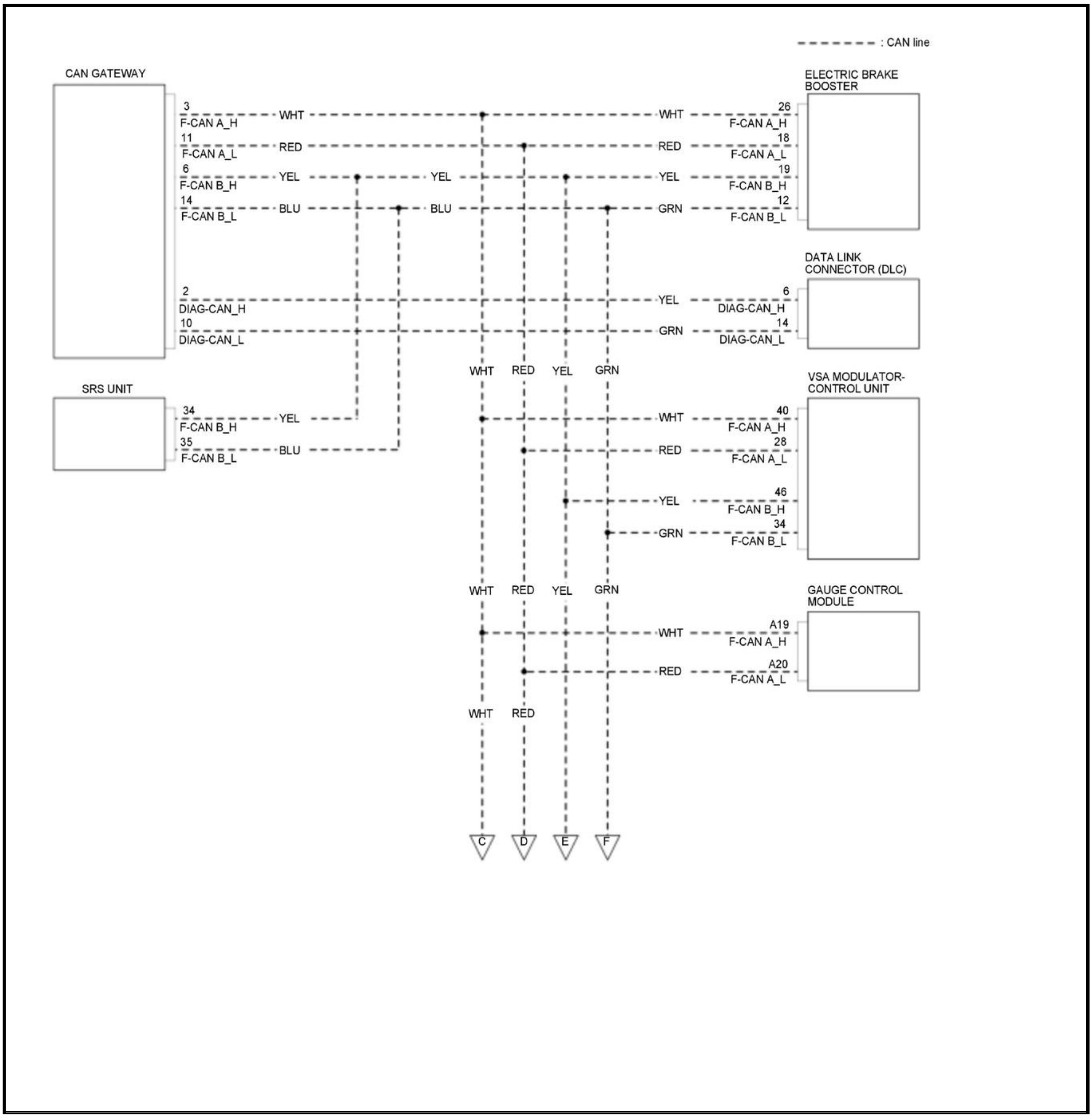
: CAN line
CAN GATEWAY
3
F-CAN A_H
11
F-CAN A_L
6
F-CAN B_H
14
F-CAN B_L
2
DIAG-CAN_H
10
DIAG-CAN_L
WHT
RED
YEL
BLU
ELECTRIC BRAKE BOOSTER
26
F-CAN A_H
18
F-CAN A_L
19
F-CAN B_H
12
F-CAN B_L
GRN
DATA LINK CONNECTOR (DLC)
6
DIAG-CAN_H
14
DIAG-CAN_L
SRS UNIT
34
F-CAN B_H
35
F-CAN B_L
VSA MODULATOR-CONTROL UNIT
40
F-CAN A_H
28
F-CAN A_L
46
F-CAN B_H
34
F-CAN B_L
GAUGE CONTROL MODULE
A19
F-CAN A_H
A20
F-CAN A_L
C
D
E
F

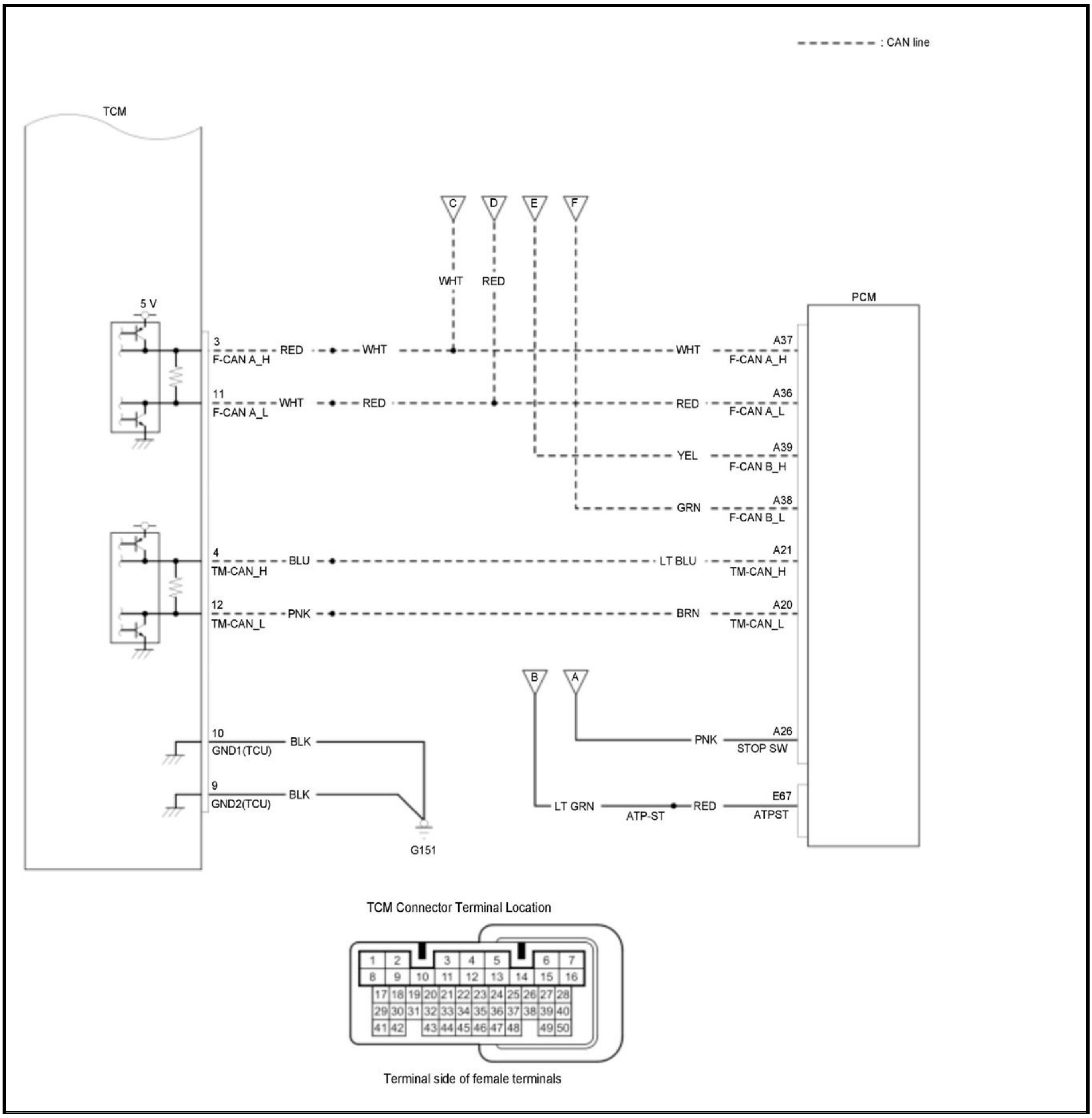

: CAN line
TCM
PCM
5 V
C
D
E
F
WHT
RED
3
F-CAN A_H
RED
WHT
WHT
A37
F-CAN A_H
11
F-CAN A_L
WHT
RED
RED
A36
F-CAN A_L
YEL
A39
F-CAN B_H
GRN
A38
F-CAN B_L
4
TM-CAN_H
BLU
LT BLU
A21
TM-CAN_H
12
TM-CAN_L
PNK
BRN
A20
TM-CAN_L
B
A
PNK
A26
STOP SW
10
GND1(TCU)
BLK
9
GND2(TCU)
BLK
G151
LT GRN
ATP-ST
RED
E67
ATPST
TCM Connector Terminal Location
1 2 3 4 5 6 7
8 9 10 11 12 13 14 15 16
17 18 19 20 21 22 23 24 25 26 27 28
29 30 31 32 33 34 35 36 37 38 39 40
41 42 43 44 45 46 47 48 49 50
Terminal side of female terminals

CVT ELECTRONIC CONTROL SYSTEM CIRCUIT DIAGRAM (2.4 L ENGINE) (2017 2018 2019)

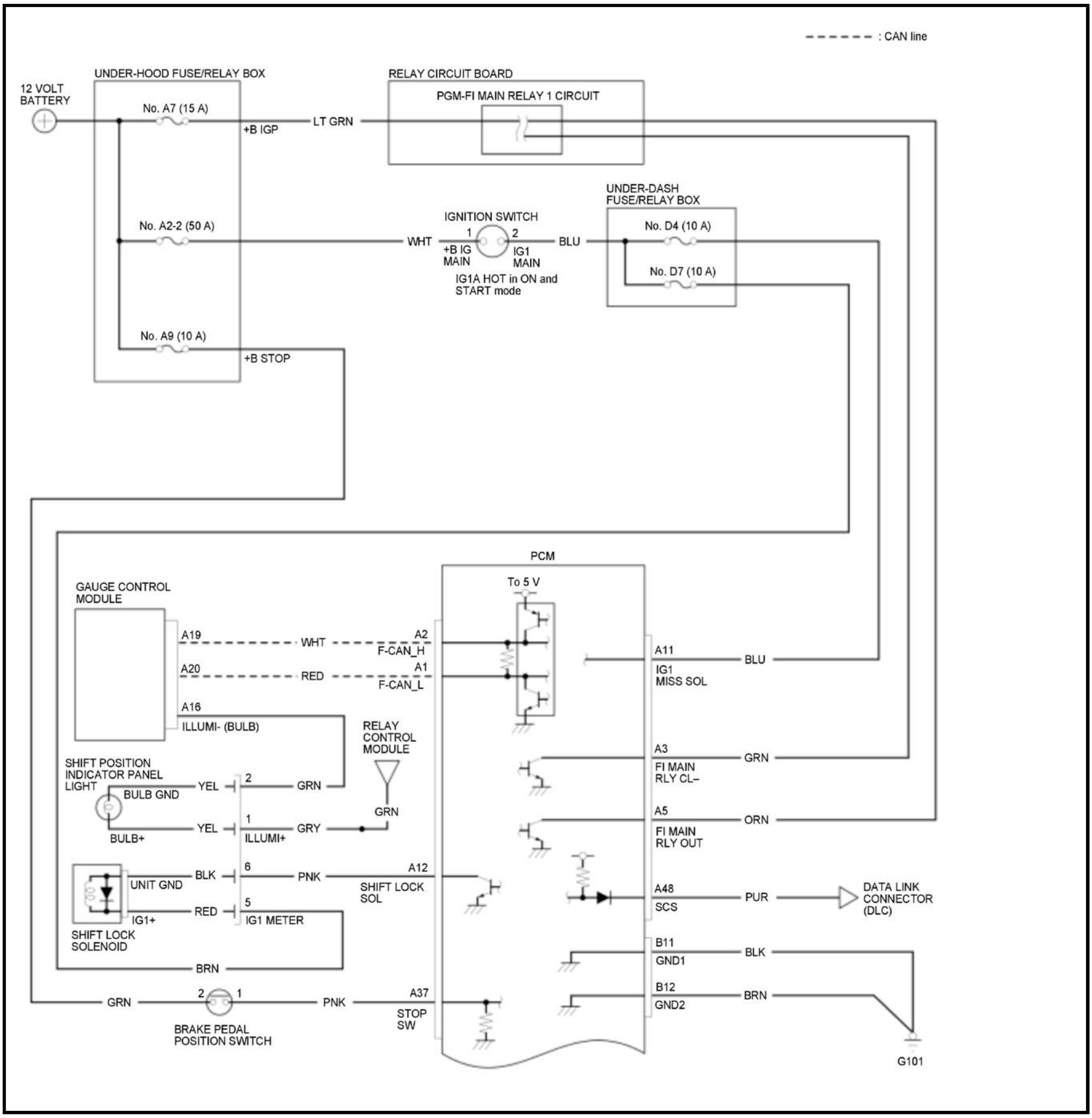

: CAN line
UNDER-HOOD FUSE/RELAY BOX
12 VOLT BATTERY
No. A7 (15 A)
+B IGP
LT GRN
RELAY CIRCUIT BOARD
PGM-FI MAIN RELAY 1 CIRCUIT
No. A2-2 (50 A)
WHT
IGNITION SWITCH
1
2
+B IG MAIN
IG1 MAIN
IG1A HOT in ON and START mode
BLU
UNDER-DASH FUSE/RELAY BOX
No. D4 (10 A)
No. D7 (10 A)
No. A9 (10 A)
+B STOP
PCM
To 5 V
GAUGE CONTROL MODULE
A19
WHT
A2
F-CAN_H
A20
RED
A1
F-CAN_L
A16
ILLUMI- (BULB)
A11
IG1 MISS SOL
BLU
RELAY CONTROL MODULE
SHIFT POSITION INDICATOR PANEL LIGHT
BULB GND
YEL
2
GRN
BULB+
YEL
1
ILLUMI+
GRY
GRN
A3
FI MAIN RLY CL–
GRN
A5
FI MAIN RLY OUT
ORN
UNIT GND
BLK
6
PNK
A12
SHIFT LOCK SOL
IG1+
RED
5
IG1 METER
SHIFT LOCK SOLENOID
A48
SCS
PUR
DATA LINK CONNECTOR (DLC)
BRN
B11
GND1
BLK
B12
GND2
BRN
GRN
2
1
PNK
A37
STOP SW
BRAKE PEDAL POSITION SWITCH
G101

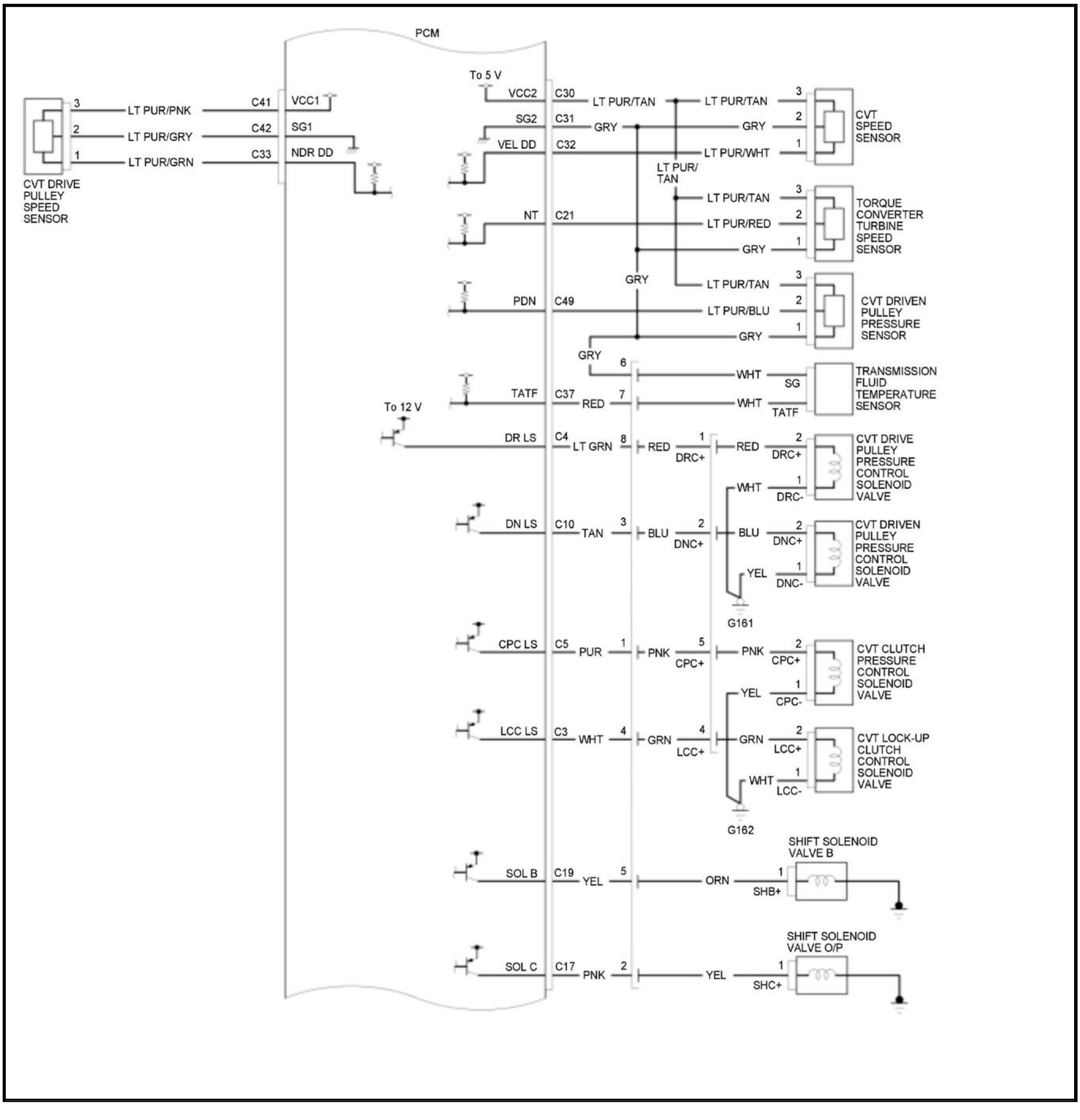
PCM
CVT DRIVE PULLEY SPEED SENSOR
3 LT PUR/PNK C41 VCC1
2 LT PUR/GRY C42 SG1
1 LT PUR/GRN C33 NDR DD
To 5 V
VCC2 C30 LT PUR/TAN
SG2 C31 GRY
VEL DD C32
LT PUR/TAN
GRY
LT PUR/WHT
CVT SPEED SENSOR
LT PUR/ TAN
NT C21
LT PUR/TAN
LT PUR/RED
GRY
TORQUE CONVERTER TURBINE SPEED SENSOR
GRY
PDN C49
LT PUR/TAN
LT PUR/BLU
GRY
CVT DRIVEN PULLEY PRESSURE SENSOR
GRY
6 WHT SG
TATF C37 RED 7 WHT TATF
TRANSMISSION FLUID TEMPERATURE SENSOR
To 12 V
DR LS C4 LT GRN 8 RED 1 DRC+ RED 2 DRC+
WHT 1 DRC-
CVT DRIVE PULLEY PRESSURE CONTROL SOLENOID VALVE
DN LS C10 TAN 3 BLU 2 DNC+ BLU 2 DNC+
YEL 1 DNC-
CVT DRIVEN PULLEY PRESSURE CONTROL SOLENOID VALVE
G161
CPC LS C5 PUR 1 PNK 5 CPC+ PNK 2 CPC+
YEL 1 CPC-
CVT CLUTCH PRESSURE CONTROL SOLENOID VALVE
LCC LS C3 WHT 4 GRN 4 LCC+ GRN 2 LCC+
WHT 1 LCC-
CVT LOCK-UP CLUTCH CONTROL SOLENOID VALVE
G162
SHIFT SOLENOID VALVE B
SOL B C19 YEL 5 ORN 1 SHB+
SHIFT SOLENOID VALVE O/P
SOL C C17 PNK 2 YEL 1 SHC+

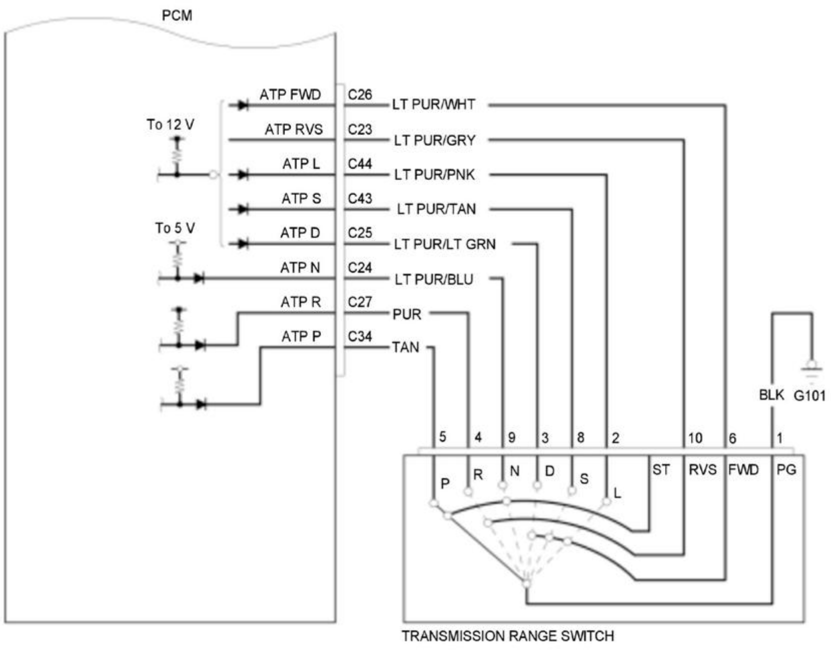
PCM
To 12 V
To 5 V
ATP FWD
ATP RVS
ATP L
ATP S
ATP D
ATP N
ATP R
ATP P
C26
C23
C44
C43
C25
C24
C27
C34
LT PUR/WHT
LT PUR/GRY
LT PUR/PNK
LT PUR/TAN
LT PUR/LT GRN
LT PUR/BLU
PUR
TAN
BLK
G101
5
4
9
3
8
2
10
6
1
P
R
N
D
S
L
ST
RVS
FWD
PG
TRANSMISSION RANGE SWITCH

PCM Connector Terminal Locations

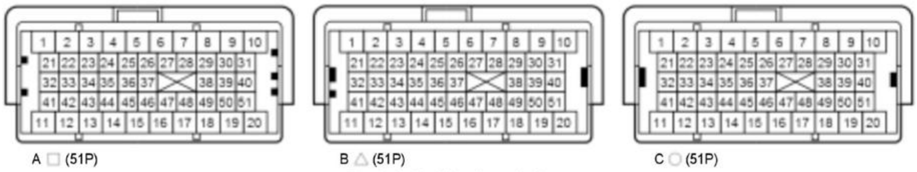
A □ (51P)
B △ (51P)
C ○ (51P)

Terminal side of female terminals

LEARNING RESET CLEAR

TCM RESET (1.5 L ENGINE)

Procedure

NOTE:

- Make sure to reset the learned value of CVT system when replacing hydraulically-controlled parts in order not to cause any damage the transmission.
- This procedure is not required, if the TCM, and the transmission fluid pump and/or the valve body assembly are replaced simultaneously.

1. HDS - Connect
2. TCM - Reset

1. Select the A/T SYSTEM with the HDS.

2. Reset the TCM with the HDS while the engine is stopped.

3. Turn the vehicle to the OFF (LOCK) mode.

4. Turn the vehicle to the ON mode, then wait for 30 seconds.

5. Turn the vehicle to the OFF (LOCK) mode, then disconnect the HDS from the DLC.

COMPONENT LOCATION INDEX

CVT DIFFERENTIAL COMPONENT LOCATION INDEX

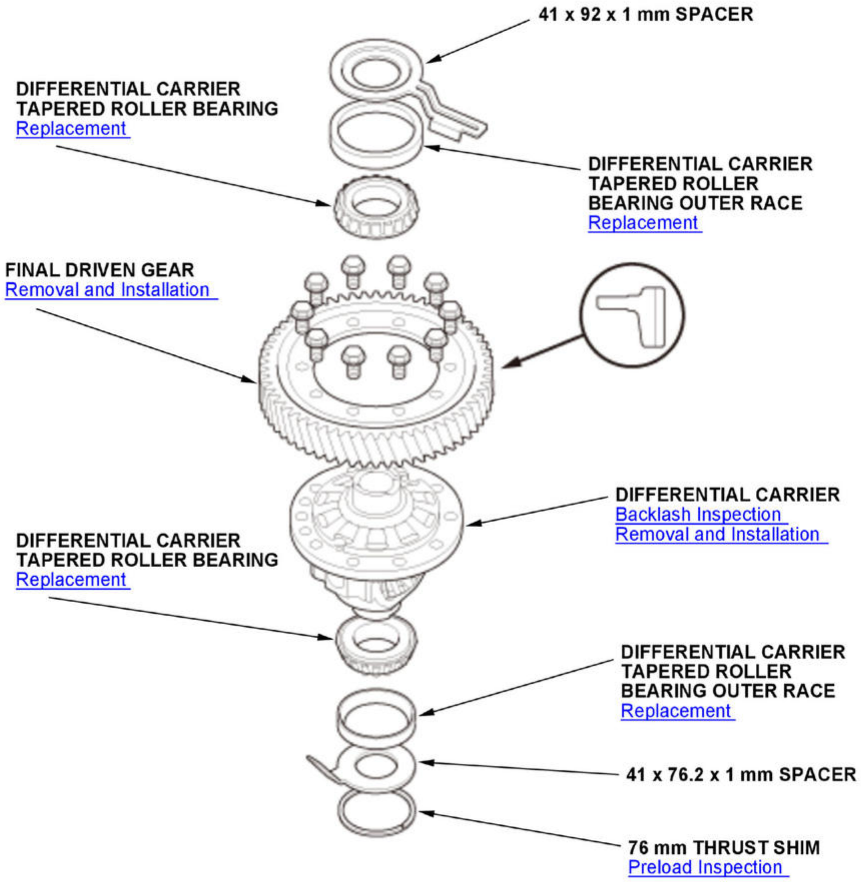
41 x 92 x 1 mm SPACER
DIFFERENTIAL CARRIER TAPERED ROLLER BEARING
Replacement
DIFFERENTIAL CARRIER TAPERED ROLLER BEARING OUTER RACE
Replacement
FINAL DRIVEN GEAR
Removal and Installation
DIFFERENTIAL CARRIER
Backlash Inspection
Removal and Installation
DIFFERENTIAL CARRIER TAPERED ROLLER BEARING
Replacement
DIFFERENTIAL CARRIER TAPERED ROLLER BEARING OUTER RACE
Replacement
41 x 76.2 x 1 mm SPACER
76 mm THRUST SHIM
Preload Inspection

CVT SYSTEM COMPONENT LOCATION INDEX (1.5 L ENGINE)

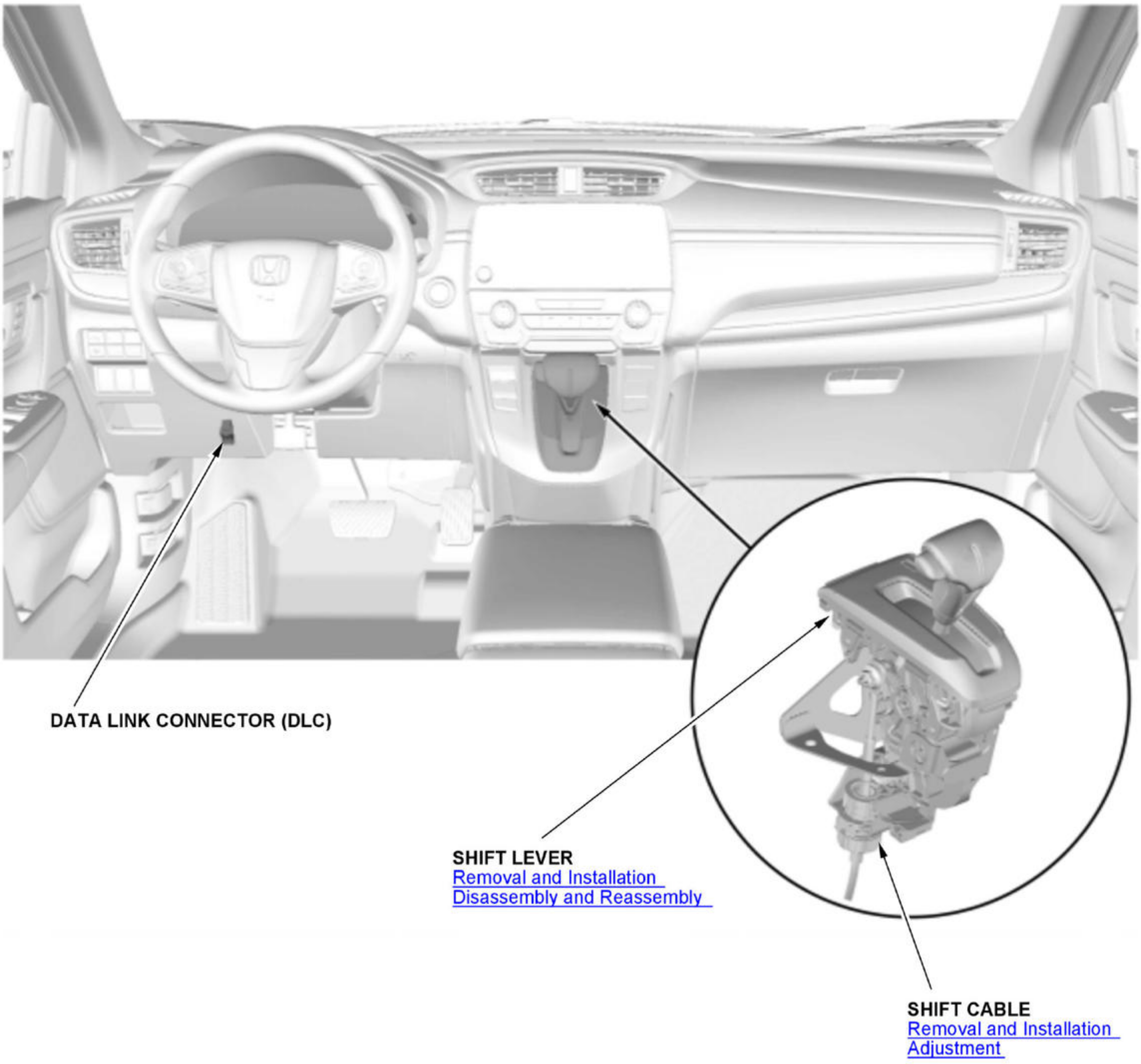
DATA LINK CONNECTOR (DLC)
SHIFT LEVER
Removal and Installation
Disassembly and Reassembly
SHIFT CABLE
Removal and Installation
Adjustment

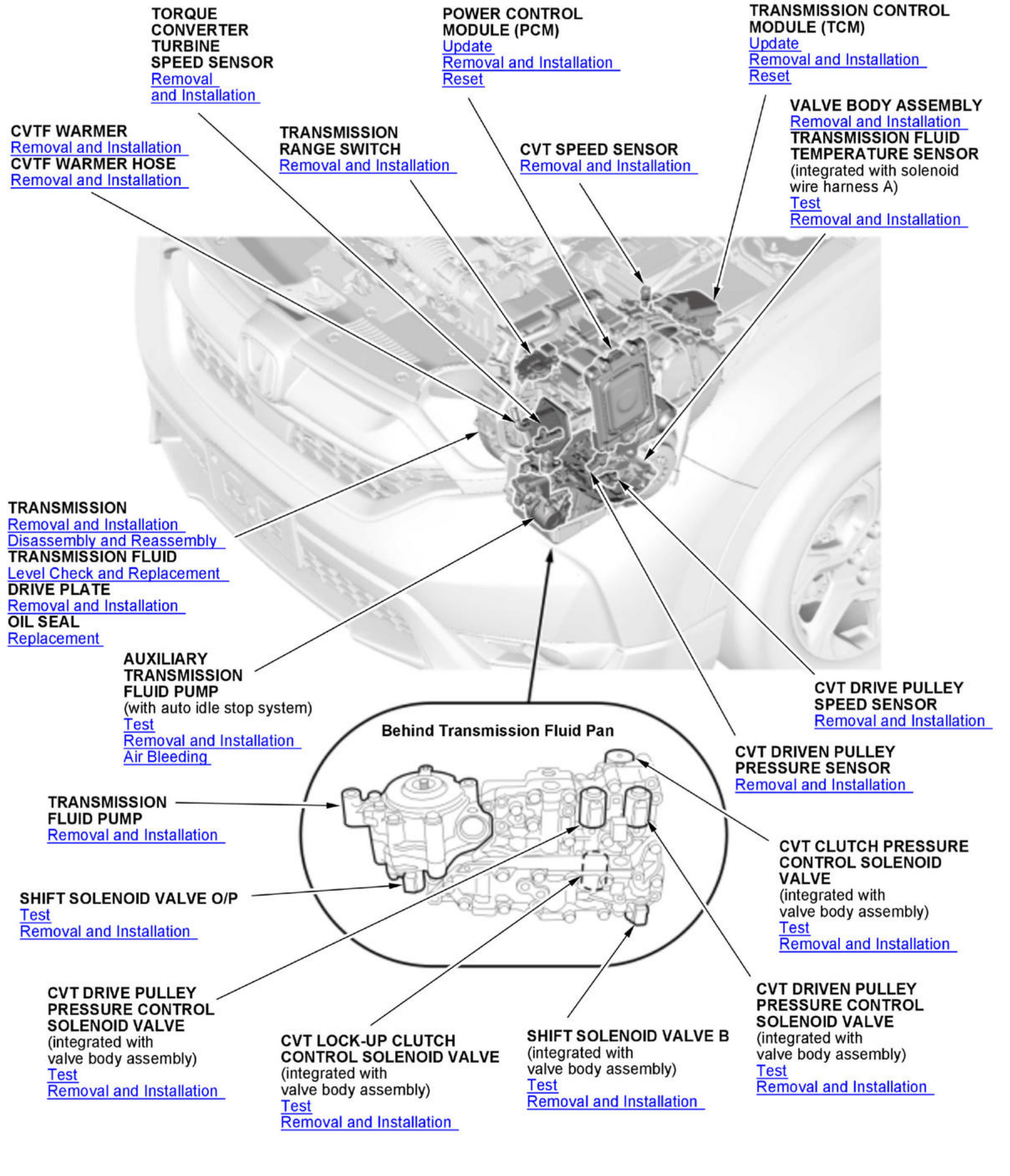
TORQUE CONVERTER TURBINE SPEED SENSOR
Removal and Installation
POWER CONTROL MODULE (PCM)
Update
Removal and Installation
Reset
TRANSMISSION CONTROL MODULE (TCM)
Update
Removal and Installation
Reset
VALVE BODY ASSEMBLY
Removal and Installation
TRANSMISSION FLUID TEMPERATURE SENSOR
(integrated with solenoid wire harness A)
Test
Removal and Installation
CVTF WARMER
Removal and Installation
CVTF WARMER HOSE
Removal and Installation
TRANSMISSION RANGE SWITCH
Removal and Installation
CVT SPEED SENSOR
Removal and Installation
TRANSMISSION
Removal and Installation
Disassembly and Reassembly
TRANSMISSION FLUID
Level Check and Replacement
DRIVE PLATE
Removal and Installation
OIL SEAL
Replacement
AUXILIARY TRANSMISSION FLUID PUMP
(with auto idle stop system)
Test
Removal and Installation
Air Bleeding
CVT DRIVE PULLEY SPEED SENSOR
Removal and Installation
Behind Transmission Fluid Pan
CVT DRIVEN PULLEY PRESSURE SENSOR
Removal and Installation
TRANSMISSION FLUID PUMP
Removal and Installation
CVT CLUTCH PRESSURE CONTROL SOLENOID VALVE
(integrated with valve body assembly)
Test
Removal and Installation
SHIFT SOLENOID VALVE O/P
Test
Removal and Installation
CVT DRIVE PULLEY PRESSURE CONTROL SOLENOID VALVE
(integrated with valve body assembly)
Test
Removal and Installation
CVT LOCK-UP CLUTCH CONTROL SOLENOID VALVE
(integrated with valve body assembly)
Test
Removal and Installation
SHIFT SOLENOID VALVE B
(integrated with valve body assembly)
Test
Removal and Installation
CVT DRIVEN PULLEY PRESSURE CONTROL SOLENOID VALVE
(integrated with valve body assembly)
Test
Removal and Installation

Unless otherwise indicated, illustrations used are for 1.5 L engine.

SHIFT POSITION INDICATOR COMPONENT LOCATION INDEX

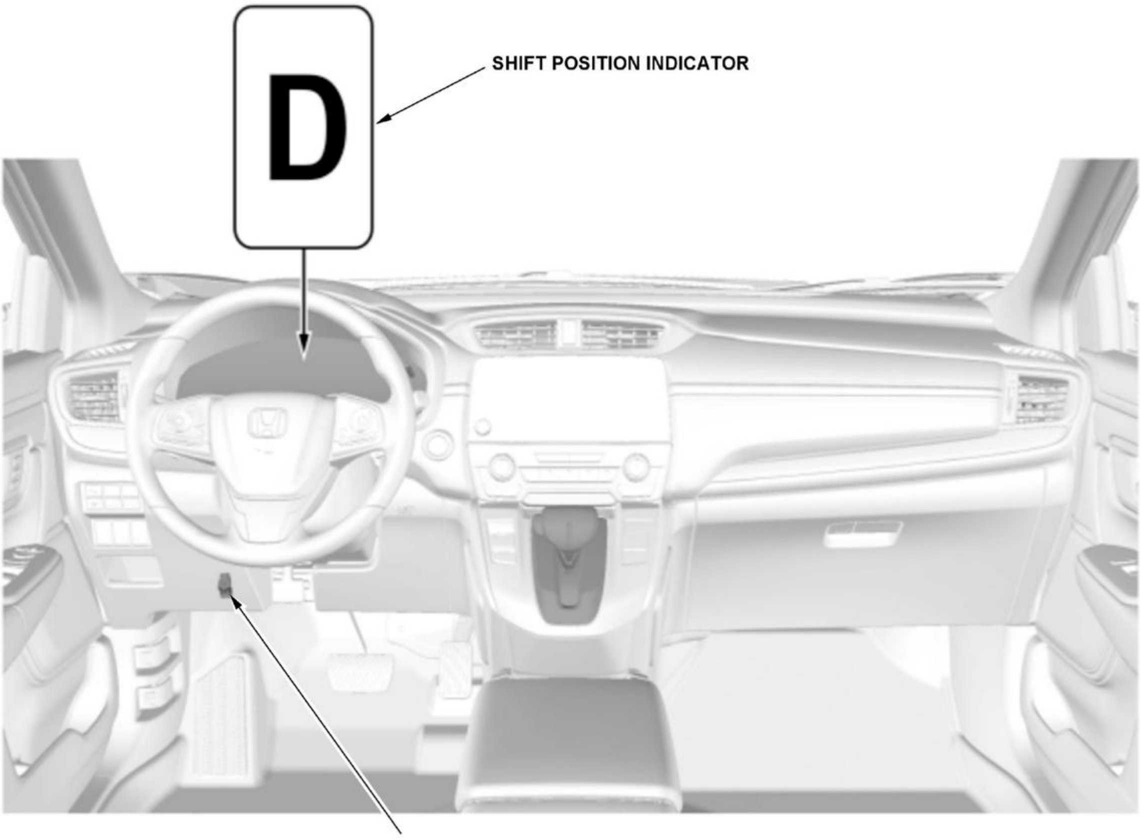
SHIFT POSITION INDICATOR
D
DATA LINK CONNECTOR (DLC)

TRANSFER ASSEMBLY COMPONENT LOCATION INDEX

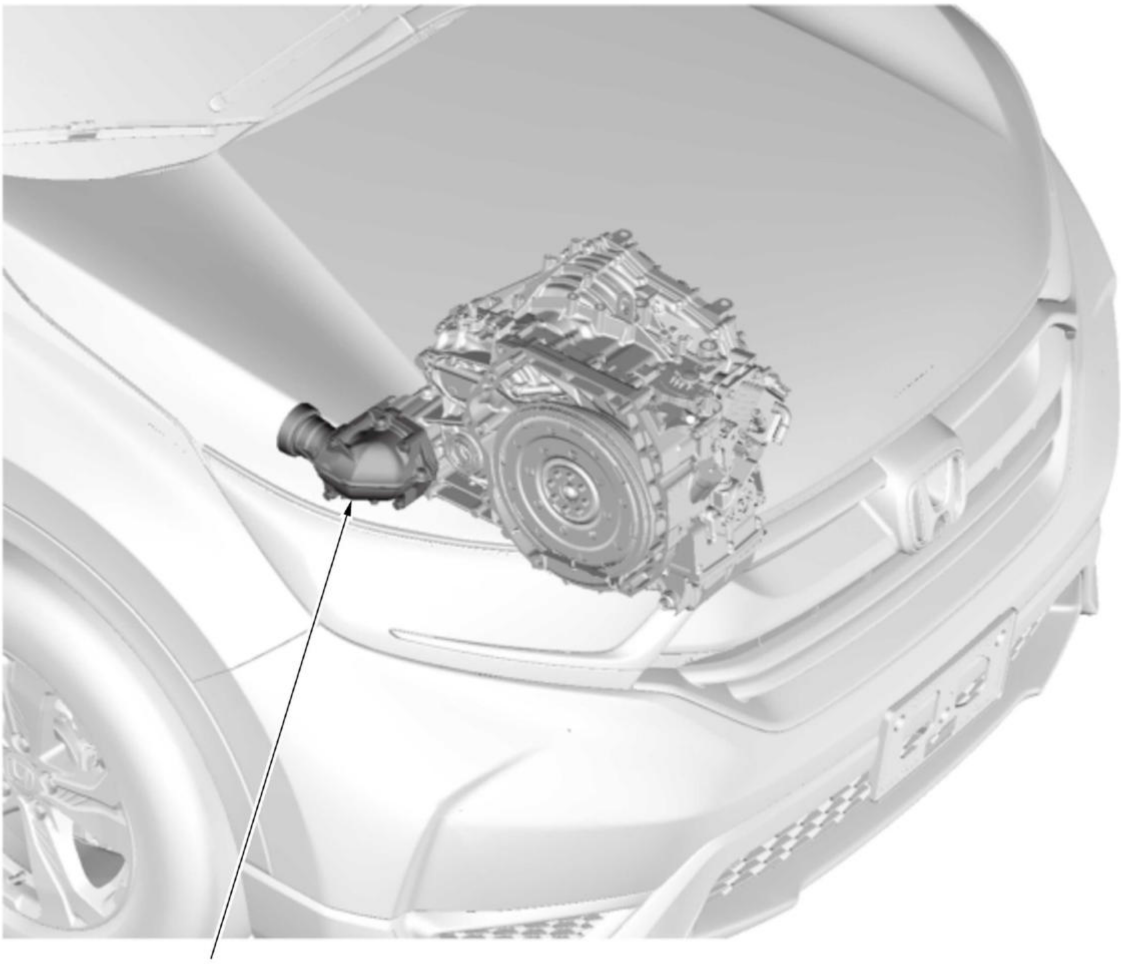
TRANSFER ASSEMBLY
Inspection
Removal and Installation
Disassembly and Reassembly

SYMPTOM TROUBLESHOOTING

CVT SYMPTOM TROUBLESHOOTING - HDS DOES NOT COMMUNICATE WITH THE TCM (1.5 L ENGINE)

HDS does not communicate with the TCM

NOTE: Before you troubleshoot, record all freeze data and any on-board snapshots, and review the **General Troubleshooting Information**.

1. CVT system communication check

   -1. **Connect the HDS to the DLC** .

   -2. Turn the vehicle to the ON mode.

   -3. Check the Mode Menu of the CVT system with the HDS.

   Does the HDS show the Mode Menu of the CVT system?

   YES

   The CVT system communication is OK. Intermittent failure, the system is OK at this time.

   NO

   Go to step 2.

2. Fuse check

-1. Turn the vehicle to the OFF (LOCK) mode.

-2. Check the following fuses.

Fuse	No. A16
B	No. D17

Are the fuses OK?

YES

The fuses are OK. Reinstall the fuses, then go to step 3.

NO

Replace the fuse(s), and recheck. If the fuse blows again, repair a short to ground in the blown fuse circuit(s).

3. Open wire check (+B/+B TCU line)

-1. Jump the SCS line with the HDS, and wait more than 1 minute.

NOTE: This step must be done to protect the TCM from damage.

-2. Disconnect the following connector.

TCM 50P connector

-3. Measure the voltage between test points 1 and 2.

Test condition	Vehicle OFF (LOCK) mode
B	TCM 50P connector: disconnected
Test point 1	TCM 50P connector No. 1
Test point 2	Body ground

Is there battery voltage?

YES

The +B/+B TCU wire is OK. Go to step 4.

NO

Repair an open in the +B/+B TCU wire between the under-hood fuse/relay box and the TCM.

4. Open wire check (IG1/IG1 MISS SOL line)

-1. Turn the vehicle to the ON mode.

-2. Measure the voltage between test points 1 and 2.

Test condition	Vehicle ON mode
	TCM 50P connector: disconnected
Test point 1	TCM 50P connector No. 8
Test point 2	Body ground

Is there battery voltage?

YES

The IG1 wire is OK. Go to step 5.

NO

Repair an open in the IG1 wire between the under-dash fuse/relay box and the TCM.

5. Open wire check (GND1 (TCU) line, GND2 (TCU) line)

-1. Turn the vehicle to the OFF (LOCK) mode.

-2. Measure the resistance between test points 1 and 2.

Test condition	Vehicle OFF (LOCK) mode
B	TCM 50P connector: disconnected
Test point 1	**TCM 50P connector No. 9**
	TCM 50P connector No. 10
Test point 2	Body ground

Is there 1.0 Ω or less?

YES (CAN gateway 12P connector type)

The GND1 (TCU) wire and the GND2 (TCU) wire are OK. Go to step 6.

YES (CAN gateway 16P connector type)

The GND1 (TCU) wire and the GND2 (TCU) wire are OK. Go to step 7.

NO

Repair an open in the GND1 (TCU) wire and/or the GND2 (TCU) wire between the TCM and ground (G151), or repair poor ground (G151).

6. Open wire check (F-CAN A_H line, F-CAN A_L line)

-1. Measure the resistance between test points 1 and 2.

F-CAN A_H wire

Test condition	Vehicle OFF (LOCK) mode
B	TCM 50P connector: disconnected
Test point 1	DLC (16P) (female terminals) No. 6 : ①
Test point 2	**TCM 50P connector No. 3**

F-CAN A_L wire

Test condition	Vehicle OFF (LOCK) mode
B	TCM 50P connector: disconnected
Test point 1	DLC (16P) (female terminals) No. 14 : ①
Test point 2	**TCM 50P connector No. 11**

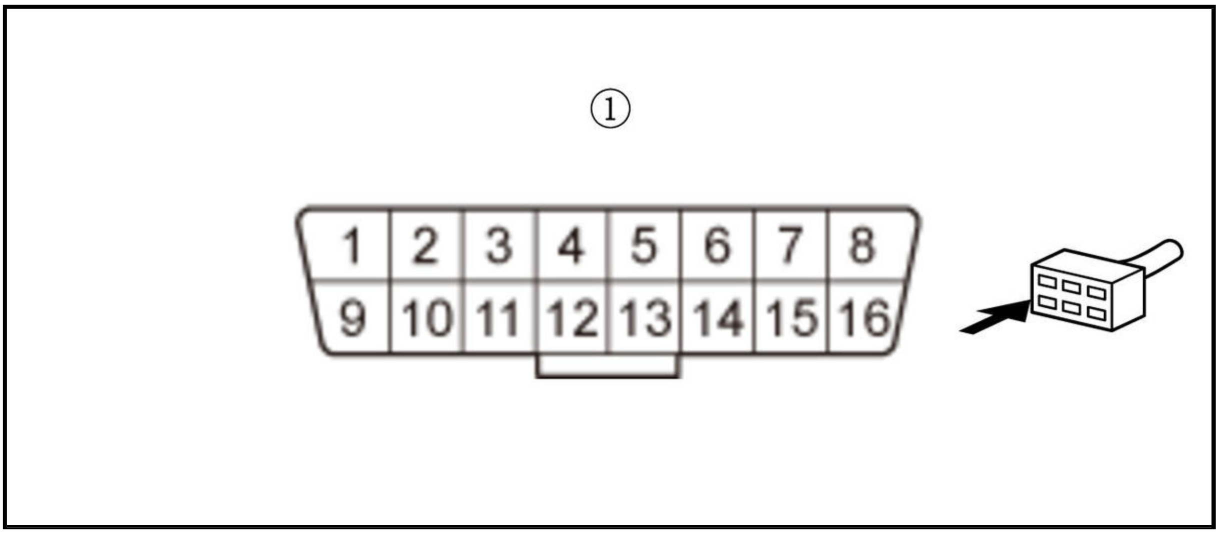

Is there 1.0 Ω or less?

YES

The F-CAN A_H wire and the F-CAN A_L wire are OK. Check for any authorized service information related to the DTCs or symptoms you are troubleshooting, or **replace the original TCM** .

NO

Repair an open in the F-CAN A_H wire and/or the F-CAN A_L wire between the DLC and the TCM.

7. Open wire check (F-CAN A_H line, F-CAN A_L line)

-1. Disconnect the following connector.

CAN gateway 16P connector

-2. Measure the resistance between test points 1 and 2 individually.

Test condition	Vehicle OFF (LOCK) mode
B	TCM 50P connector: disconnected
B	CAN gateway 16P connector: disconnected
Test point 1	**TCM 50P connector No. 3**
Test point 2	CAN gateway 16P connector (female terminals) No. 3: ①

Test point 1	**TCM 50P connector No. 11**
Test point 2	CAN gateway 16P connector (female terminals) No. 11: ①

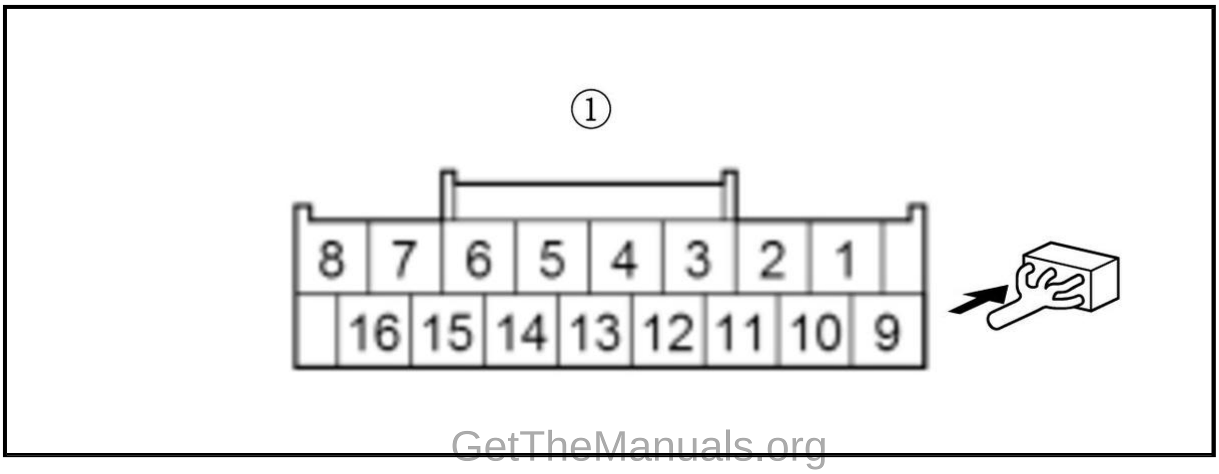

Is there 1.0 Ω or less?

YES

The F-CAN A_H wire and the F-CAN A_L wire are OK. Go to step 8.

NO

Repair an open in the F-CAN A_H wire and/or the F-CAN A_L wire between the CAN gateway and the TCM.

8. Open wire check (DIAG-CAN_H line, DIAG-CAN_L line)

-1. Measure the resistance between test points 1 and 2 individually.

Test condition	Vehicle OFF (LOCK) mode
B	TCM 50P connector: disconnected
B	CAN gateway 16P connector: disconnected
Test point 1	DLC (16P) (female terminals) No. 6: ①
Test point 2	CAN gateway 16P connector (female terminals) No. 2: ②

Test point 1	DLC (16P) (female terminals) No. 14: ①
Test point 2	CAN gateway 16P connector (female terminals) No. 10: ②

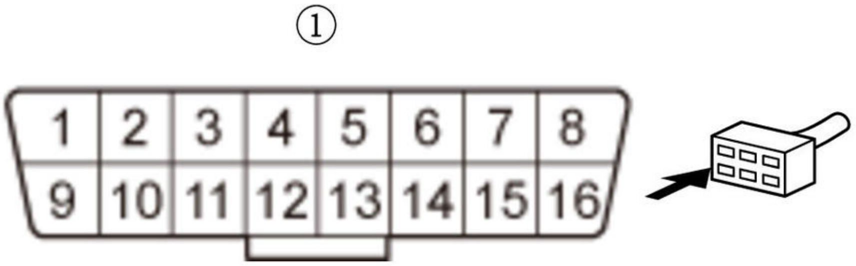

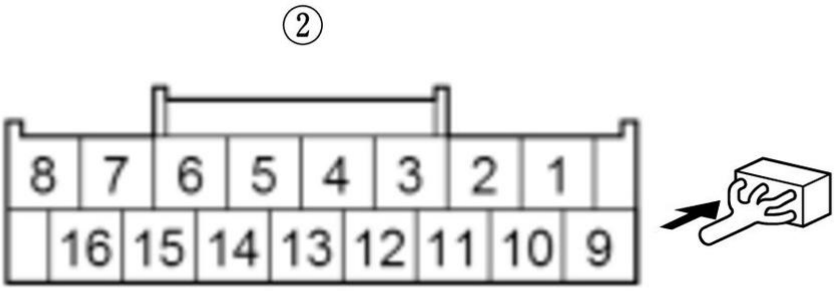

Is there 1.0 Ω or less?

YES

The DIAG-CAN_H wire and the DIAG-CAN_L wire are not open. Go to step 9.

NO

Repair an open in the DIAG-CAN_H wire and/or the DIAG-CAN_L wire between the CAN gateway and the DLC.

9. Shorted wire check (DIAG-CAN_H line)

-1. Measure the resistance between test points 1 and 2.

Test condition	Vehicle OFF (LOCK) mode
B	TCM 50P connector: disconnected
B	CAN gateway 16P connector: disconnected
Test point 1	DLC (16P) (female terminals) No. 6: ①
Test point 2	Body ground

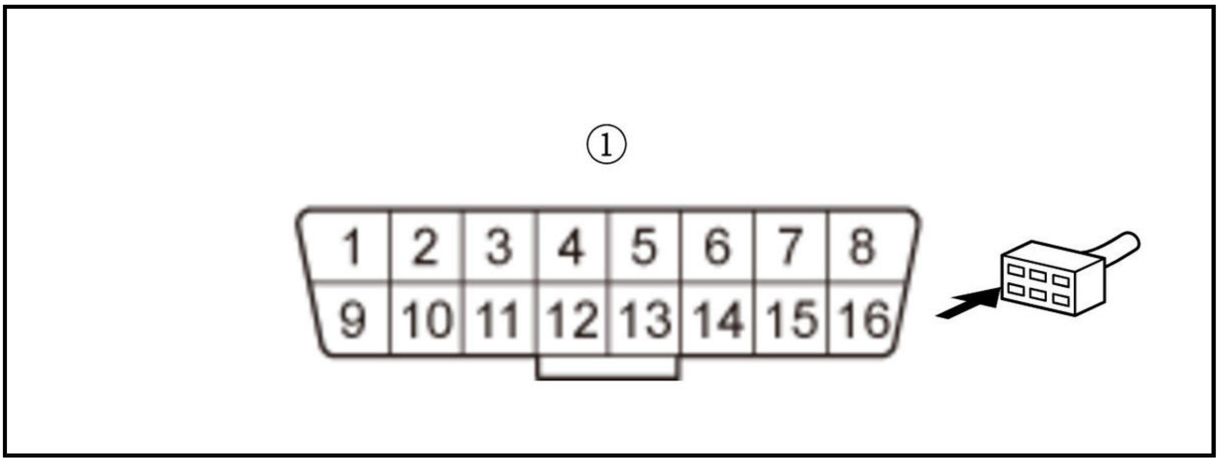

Is there 1 MΩ or more?

YES

The DIAG-CAN_H wire is not shorted to ground. Go to step 10.

NO

Repair a short to ground in the DIAG-CAN_H wire between the CAN gateway and the DLC.

10. Shorted wire check (DIAG-CAN_H line to DIAG-CAN_L line)

-1. Measure the resistance between test points 1 and 2.

Test condition	Vehicle OFF (LOCK) mode
B	TCM 50P connector: disconnected
B	CAN gateway 16P connector: disconnected
Test point 1	DLC (16P) (female terminals) No. 6: ①
Test point 2	DLC (16P) (female terminals) No. 14: ①

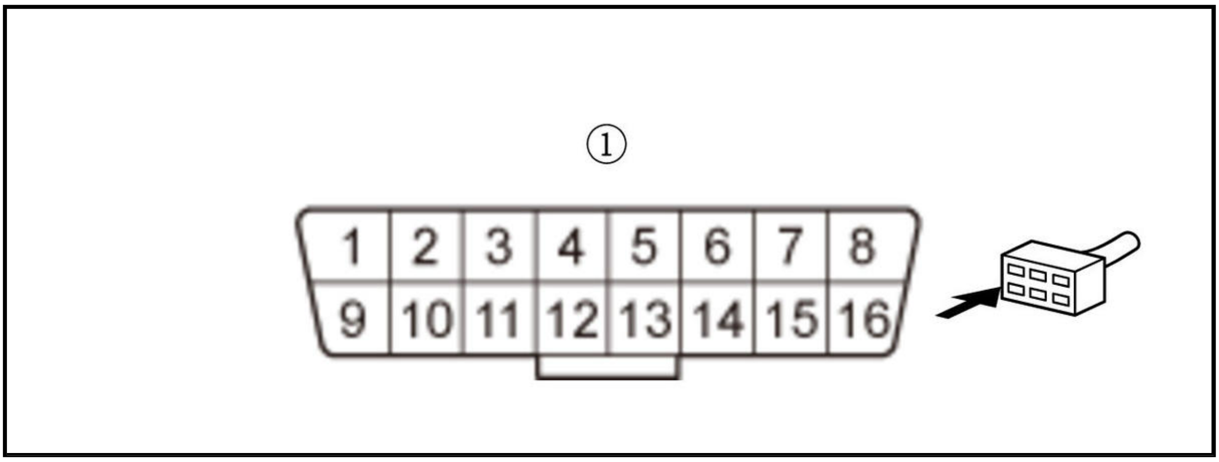

Is there 1 MΩ or more?

YES

The DIAG-CAN_H wire and the DIAG-CAN_L wire are OK. Check for any authorized service information related to the DTCs or symptoms you are troubleshooting, or **replace the original TCM** .

NO

Repair a short in the DIAG-CAN_H wire to the DIAG-CAN_L wire between the CAN gateway and the DLC.

SYMPTOM TROUBLESHOOTING INDEX

CVT SYSTEM SYMPTOM TROUBLESHOOTING INDEX

NOTE: Do an all DTC check with the HDS, and troubleshoot any DTCs first before following the repair procedures listed in the index.

Symptom	Probable cause(s)	Notes
With the vehicle in the ON mode, the shift position indicator displays an improper indication, or it never displays at all	• F-CAN communication line error • Gauge control module defective • TCM defective (1.5 L engine) • PCM defective (except 1.5 L engine) • Transmission range switch defective or out of adjustment • Transmission range switch circuit • Shift cable broken or out of adjustment • Control pin broken • Control shaft, roller, detent lever, and detent spring worn or damaged	• **Check the F-CAN communication line** (1.5 L engine). • **Check the F-CAN communication line** (2.4 L engine). • **Check the F-CAN communication line by using the gauge control module self-diagnostic function** . • **Inspect the transmission range switch** . • Inspect the open or short in the wire between the TCM and transmission range switch. • **Check for a loose shift cable at the shift lever and the control lever**. • Check the control shaft, roller, detent lever, and detent spring for wear and damage.
Shift lever cannot be moved from P position/mode while	• Shift lock solenoid defective • Shift lock solenoid control circuit	• **Test the shift lock solenoid**. • **Troubleshoot the shift lock system circuit**.

Symptom	Probable cause(s)	Notes
pressing on the brake pedal	- Shift lock mechanism defective - Transmission range switch defective - Transmission range switch circuit - Brake pedal position switch circuit - Brake pedal position switch defective - Accelerator pedal position sensor circuit - Accelerator pedal position sensor defective - Throttle body defective	- **Inspect the transmission range switch** . - **Inspect the APP sensor signal** . - **Check the throttle body** .
HDS does not communicate with the TCM	- DLC circuit error - TCM defective	- **Troubleshoot the TCM communication circuit**. - **Troubleshoot the DLC circuit** .
Engine does not start	- Shift cable broken or out of adjustment - Control pin broken - Transmission range switch defective or out of adjustment - Drive plate worn or damaged - Torque converter assembly defective - Torque converter ring gear worn or damaged - Transmission assembly and drive plate installation defective	- **Check for a loose shift cable at the shift lever and the control lever**. - **Inspect the transmission range switch** . - Inspect the drive plate for wear and damage. If the drive plate is worn or damaged, **replace it** . - Inspect the torque converter assembly for wear and damage. If the torque converter assembly is worn or damaged, **replace it as an assembly** .

Symptom	Probable cause(s)	Notes
Engine runs, but vehicle does not move in any positions/modes	- Low transmission fluid (HCF-2) level - Transmission range switch defective or out of adjustment - Engine output low - Transmission fluid strainer or CVTF warmer strainer clogged - Drive pulley, driven pulley, pulley shaft, steel belt, and pulley related parts worn or damaged - Pulley pressure feed pipe defective	- **Check the transmission fluid (HCF-2) level**. - **Inspect the transmission range switch** . - Adjust the engine output. - **Check the transmission fluid strainer** and the **CVTF warmer strainer** for debris. If the transmission fluid strainer or the CVTF warmer strainer is clogged, find the damaged components that caused debris. - Check the drive pulley, the driven pulley, the pulley shafts, the steel

Symptom	Probable cause(s)	Notes
	- Input shaft assembly worn or damaged - Secondary drive/driven gear worn or damaged - Final driven gear worn or damaged - Sun gear worn or damaged - Control shaft, roller, detent lever, and detent spring worn or damaged - Control lever worn or damaged - Parking brake pawl and parking shaft worn or damaged - Manual valve worn or damaged - Transmission fluid pump worn, binding, or foreign material in transmission fluid pump - Transmission fluid pump drive chain or transmission fluid pump drive/driven sprocket worn or damaged - Valve body assembly defective - Joint pipes defective - Stator shaft worn or damaged - Torque converter assembly defective - Torque converter ring gear worn or damaged - Transmission assembly and drive plate installation defective	belt, and pulley related parts for wear and damage. If there are worn or damaged, **replace the transmission housing assembly** . - Check the pulley pressure feed pipe and the sealing ring for wear and damage. - Inspect the input shaft assembly for wear and damage. If the input shaft assembly is worn or damaged, replace it and also check the related part of the input shaft assembly for wear and damage. - Check the secondary drive/driven gear for wear and damage. - Check the final driven gear for wear and damage. - Check the sun gear for wear and damage. If the sun gear is worn or damaged, replace it and also check the planetary carrier pinion gears, the forward clutch, and the drive pulley shaft splines for wear and damage. - Check the control shaft, roller, detent lever, and detent spring for wear and damage. - Check the control lever for wear and damage. - Check the parking brake pawl and the parking shaft for wear and damage. If the parking brake pawl or the parking shaft are worn or damaged, replace them and also check the park gear for wear and damage. - Check the manual valve for wear and damage. - Check the transmission fluid pump for wear and damage. If the transmission fluid pump is worn or damaged, **replace it as an assembly** . - Check the transmission fluid pump drive chain and the transmission fluid pump drive/driven sprocket for wear and damage. - Check the valve body assembly for wear and damage. - Check the joint pipes and O-rings for wear and damage. - Check the stator shaft for wear and damage.

Symptom	Probable cause(s)	Notes
		- Inspect the torque converter assembly for wear and damage. If the torque converter assembly is worn or damaged, **replace it as an assembly** .

Symptom	Probable cause(s)	Notes
Vehicle does not move in D, S, or L positions/modes	- Transmission range switch defective or out of adjustment - Shift cable broken or out of adjustment - Control pin broken - Engine output low - Forward clutch defective - Reverse brake piston defective - Sun gear worn or damaged - Manual valve worn or damaged - Valve body assembly defective - Stator shaft worn or damaged	- **Inspect the transmission range switch** . - **Check for a loose shift cable at the shift lever and the control lever**. - Adjust the engine output. - **Inspect the clearance between the forward clutch end-plate and the top disc** . If the clearance is out of tolerance, replace the input shaft assembly. - Inspect the reverse brake piston and the O-rings. Check the spring retainer/return spring assembly for wear and damage. **Inspect the clearance between the reverse brake end-plate and the top disc** . If the clearance is out of tolerance, inspect the reverse brake discs and reverse brake plates for wear and damage. If the discs and plates are worn or damaged, replace them as a set. If they are OK, adjust the clearance with the reverse brake end-plate. - Check the sun gear for wear and damage. If the sun gear is worn or damaged, replace it and also check the planetary carrier pinion gears, the forward clutch, and the drive pulley shaft splines for wear and damage. - Check the manual valve for wear and damage. - Check the valve body assembly for wear and damage. - Check the stator shaft for wear and damage.

Symptom	Probable cause(s)	Notes
Vehicle does not move in R position/mode	- Transmission range switch defective or out of adjustment - Shift cable broken or out of adjustment - Control pin broken	- **Inspect the transmission range switch** . - **Check for a loose shift cable at the shift lever and the control lever**. - Inspect the reverse brake piston and the O-rings. Check the spring

Symptom	Probable cause(s)	Notes
	- Reverse brake defective - Reverse brake piston defective - Planetary carrier assembly worn or damaged - Sun gear worn or damaged - Ring gear worn or damaged - Thrust needle bearing or thrust washer on planetary carrier assembly seized, worn, or damaged - Manual valve worn or damaged - Valve body assembly defective - Stator shaft worn or damaged	retainer/return spring assembly for wear and damage. **Inspect the clearance between the reverse brake end-plate and the top disc** . If the clearance is out of tolerance, inspect the reverse brake discs and reverse brake plates for wear and damage. If the discs and plates are worn or damaged, replace them as a set. If they are OK, adjust the clearance with the reverse brake end-plate. - Check the planetary carrier assembly for wear and damage. If the planetary carrier assembly is worn or damaged, replace it and also check the planetary carrier pinion gears, the reverse brake, and the drive pulley shaft splines for wear and damage. - Check the sun gear for wear and damage. If the sun gear is worn or damaged, replace it and also check the planetary carrier pinion gears, the forward clutch, and the drive pulley shaft splines for wear and damage. - Check the ring gear for wear and damage. If the ring gear is worn or damaged, replace it and also check the planetary carrier assembly and the reverse brake for wear and damage. - Check the thrust needle bearing and the thrust washer on the planetary carrier assembly for seize, wear, and damage. If the thrust needle bearing or the thrust washer are seized, worn, or damaged, replace them and adjust the clearance with the thrust shim. - Check the manual valve for wear and damage. - Check the valve body assembly for wear and damage. - Check the stator shaft for wear and damage.
Engine stalls when shifted to D position/mode from N position/mode	- Engine output low - Reverse brake defective - Reverse brake piston defective - Torque converter assembly defective - Torque converter ring gear worn or damaged	- Adjust the engine output. - Inspect the reverse brake piston and the O-rings. Check the spring retainer/return spring assembly for wear and damage. **Inspect the clearance between the reverse brake end-plate and the top disc** . If the clearance is out of tolerance, inspect the reverse brake discs and reverse brake plates for wear and

Symptom	Probable cause(s)	Notes
	- Transmission assembly and drive plate installation defective	damage. If the discs and plates are worn or damaged, replace them as a set. If they are OK, adjust the clearance with the reverse brake end-plate. - Inspect the torque converter assembly for wear and damage. If the torque converter assembly is worn or damaged, **replace it as an assembly** .

Symptom	Probable cause(s)	Notes
Engine stalls when shifted to R position/mode from N position/mode	- Engine output low - Forward clutch defective - Planetary carrier assembly worn or damaged - Thrust needle bearing or thrust washer on planetary carrier assembly seized, worn, or damaged - Torque converter assembly defective - Torque converter ring gear worn or damaged - Transmission assembly and drive plate installation defective	- Adjust the engine output. - **Inspect the clearance between the forward clutch end-plate and the top disc** . If the clearance is out of tolerance, replace the input shaft assembly. - Check the planetary carrier assembly for wear and damage. If the planetary carrier assembly is worn or damaged, replace it and also check the planetary carrier pinion gears, the reverse brake, and the drive pulley shaft splines for wear and damage. - Check the thrust needle bearing and the thrust washer on the planetary carrier assembly for seize, wear, and damage. If the thrust needle bearing or the thrust washer are seized, worn, or damaged, replace them and adjust the clearance with the thrust shim. - Inspect the torque converter assembly for wear and damage. If the torque converter assembly is worn or damaged, **replace it as an assembly** .
No shift to higher or lower ratio	- TCM defective (1.5 L engine) - PCM defective (except 1.5 L engine) - Low transmission fluid (HCF-2) level - Transmission fluid strainer or CVTF warmer strainer clogged - Drive pulley, driven pulley, pulley shaft, steel belt, and pulley related parts worn or damaged - Pulley pressure feed pipe defective - Transmission fluid pump worn, binding, or foreign	- **Check the transmission fluid (HCF-2) level**. - **Check the transmission fluid strainer** and the **CVTF warmer strainer** for debris. If the transmission fluid strainer or the CVTF warmer strainer is clogged, find the damaged components that caused debris. - Check the drive pulley, the driven pulley, the pulley shafts, the steel belt, and pulley related parts for wear and damage. If there are worn or damaged, **replace the transmission housing assembly** .

Symptom	Probable cause(s)	Notes
	material in transmission fluid pump - Valve body assembly defective - Solenoid wire harness worn or damaged - Stator shaft worn or damaged	- Check the pulley pressure feed pipe and the sealing ring for wear and damage. - Check the transmission fluid pump for wear and damage. If the transmission fluid pump is worn or damaged, **replace it as an assembly** . - Check the valve body assembly for wear and damage. - Inspect the solenoid wire harness for open and short. - Check the stator shaft for wear and damage.

Symptom	Probable cause(s)	Notes
Poor acceleration	- TCM defective (1.5 L engine) - PCM defective (except 1.5 L engine) - CVT drive pulley speed sensor defective - Engine output low - Drive pulley, driven pulley, pulley shaft, steel belt, and pulley related parts worn or damaged - Pulley pressure feed pipe defective - Transmission fluid pump worn, binding, or foreign material in transmission fluid pump - Valve body assembly defective - Joint pipes defective - Solenoid wire harness worn or damaged - Stator shaft worn or damaged - Torque converter assembly defective - Torque converter ring gear worn or damaged - Transmission assembly and drive plate installation defective	- Check the CVT drive pulley speed sensor for wear and damage, and also check the O-ring for wear and damage. - Adjust the engine output. - Check the drive pulley, the driven pulley, the pulley shafts, the steel belt, and pulley related parts for wear and damage. If there are worn or damaged, **replace the transmission housing assembly** . - Check the pulley pressure feed pipe and the sealing ring for wear and damage. - Check the transmission fluid pump for wear and damage. If the transmission fluid pump is worn or damaged, **replace it as an assembly** . - Check the valve body assembly for wear and damage. - Check the joint pipes and O-rings for wear and damage. - Inspect the solenoid wire harness for open and short. - Check the stator shaft for wear and damage. - Inspect the torque converter assembly for wear and damage. If the torque converter assembly is worn or damaged, **replace it as an assembly** .
Engine revs up abnormally high while driving, and no acceleration	- TCM defective (1.5 L engine) - PCM defective (except 1.5 L engine)	- Check the drive pulley, the driven pulley, the pulley shafts, the steel belt, and pulley related parts for wear and damage. If there are worn or damaged,

Symptom	Probable cause(s)	Notes
	- Drive pulley, driven pulley, pulley shaft, steel belt, and pulley related parts worn or damaged - Pulley pressure feed pipe defective - Forward clutch defective - Reverse brake defective - Reverse brake piston defective - Transmission fluid pump worn, binding, or foreign material in transmission fluid pump - Transmission fluid pump drive chain or transmission fluid pump drive/driven sprocket worn or damaged - Valve body assembly defective - Joint pipes defective - Solenoid wire harness worn or damaged - Stator shaft worn or damaged	**replace the transmission housing assembly** . - Check the pulley pressure feed pipe and the sealing ring for wear and damage. - **Inspect the clearance between the forward clutch end-plate and the top disc** . If the clearance is out of tolerance, replace the input shaft assembly. - Inspect the reverse brake piston and the O-rings. Check the spring retainer/return spring assembly for wear and damage. **Inspect the clearance between the reverse brake end-plate and the top disc** . If the clearance is out of tolerance, inspect the reverse brake discs and reverse brake plates for wear and damage. If the discs and plates are worn or damaged, replace them as a set. If they are OK, adjust the clearance with the reverse brake end-plate. - Check the transmission fluid pump for wear and damage. If the transmission fluid pump is worn or damaged, **replace it as an assembly** . - Check the transmission fluid pump drive chain and the transmission fluid pump drive/driven sprocket for wear and damage. - Check the valve body assembly for wear and damage. - Check the joint pipes and O-rings for wear and damage. - Inspect the solenoid wire harness for open and short. - Check the stator shaft for wear and damage.

Symptom	Probable cause(s)	Notes
Excessive shock when accelerating and decelerating	- TCM defective (1.5 L engine) - PCM defective (except 1.5 L engine) - Low transmission fluid (HCF-2) level - Transmission fluid (HCF-2) deteriorated - Drive pulley, driven pulley, pulley shaft, steel belt, and	- **Check the transmission fluid (HCF-2) level**. - Check the transmission fluid (HCF-2) condition. If necessary, **replace the transmission fluid (HCF-2)**. - Check the drive pulley, the driven pulley, the pulley shafts, the steel belt, and pulley related parts for wear and damage. If there are worn or damaged, **replace the transmission housing assembly** .

Symptom	Probable cause(s)	Notes
	pulley related parts worn or damaged • Pulley pressure feed pipe defective • Forward clutch defective • Reverse brake defective • Reverse brake piston defective • Valve body assembly defective • Joint pipes defective • Stator shaft worn or damaged • Torque converter assembly defective • Torque converter ring gear worn or damaged • Transmission assembly and drive plate installation defective	• Check the pulley pressure feed pipe and the sealing ring for wear and damage. • **Inspect the clearance between the forward clutch end-plate and the top disc** . If the clearance is out of tolerance, replace the input shaft assembly. • Inspect the reverse brake piston and the O-rings. Check the spring retainer/return spring assembly for wear and damage. **Inspect the clearance between the reverse brake end-plate and the top disc** . If the clearance is out of tolerance, inspect the reverse brake discs and reverse brake plates for wear and damage. If the discs and plates are worn or damaged, replace them as a set. If they are OK, adjust the clearance with the reverse brake end-plate. • Check the valve body assembly for wear and damage. • Check the joint pipes and O-rings for wear and damage. • Check the stator shaft for wear and damage. • Inspect the torque converter assembly for wear and damage. If the torque converter assembly is worn or damaged, **replace it as an assembly** .
No engine braking	• TCM defective (1.5 L engine) • PCM defective (except 1.5 L engine) • Drive pulley, driven pulley, pulley shaft, steel belt, and pulley related parts worn or damaged • Pulley pressure feed pipe defective • Valve body assembly defective • Joint pipes defective • Solenoid wire harness worn or damaged • Stator shaft worn or damaged	• Check the drive pulley, the driven pulley, the pulley shafts, the steel belt, and pulley related parts for wear and damage. If there are worn or damaged, **replace the transmission housing assembly** . • Check the pulley pressure feed pipe and the sealing ring for wear and damage. • Check the valve body assembly for wear and damage. • Check the joint pipes and O-rings for wear and damage. • Inspect the solenoid wire harness for open and short. • Check the stator shaft for wear and damage.

Symptom	Probable cause(s)	Notes
Vehicle does not creep on a flat road in D, S, or L positions/modes	- TCM defective (1.5 L engine) - PCM defective (except 1.5 L engine) - CVT drive pulley speed sensor defective - Engine output low - Low transmission fluid (HCF-2) level - Transmission fluid strainer or CVTF warmer strainer clogged - Drive pulley, driven pulley, pulley shaft, steel belt, and pulley related parts worn or damaged - Pulley pressure feed pipe defective - Transmission fluid pump worn, binding, or foreign material in transmission fluid pump - Valve body assembly defective - Joint pipes defective - Solenoid wire harness worn or damaged - Stator shaft worn or damaged - Torque converter assembly defective - Torque converter ring gear worn or damaged - Transmission assembly and drive plate installation defective	- Check the CVT drive pulley speed sensor for wear and damage, and also check the O-ring for wear and damage. - Adjust the engine output. - **Check the transmission fluid (HCF-2) level**. - **Check the transmission fluid strainer** and the **CVTF warmer strainer** for debris. If the transmission fluid strainer or the CVTF warmer strainer is clogged, find the damaged components that caused debris. - Check the drive pulley, the driven pulley, the pulley shafts, the steel belt, and pulley related parts for wear and damage. If there are worn or damaged, **replace the transmission housing assembly** . - Check the pulley pressure feed pipe and the sealing ring for wear and damage. - Check the transmission fluid pump for wear and damage. If the transmission fluid pump is worn or damaged, **replace it as an assembly** . - Check the valve body assembly for wear and damage. - Check the joint pipes and O-rings for wear and damage. - Inspect the solenoid wire harness for open and short. - Check the stator shaft for wear and damage. - Inspect the torque converter assembly for wear and damage. If the torque converter assembly is worn or damaged, **replace it as an assembly** .
Vehicle moves in N position/mode, shift cable is properly adjusted	- Forward clutch defective - Reverse brake defective - Reverse brake piston defective - Spring retainer/return spring assembly defective - Thrust needle bearing on input shaft assembly seized, worn, or damaged	- **Inspect the clearance between the forward clutch end-plate and the top disc** . If the clearance is out of tolerance, replace the input shaft assembly. - Inspect the reverse brake piston and the O-rings. Check the spring retainer/return spring assembly for wear and damage. **Inspect the clearance between the reverse**

Symptom	Probable cause(s)	Notes
	- Manual valve worn or damaged - Stator shaft worn or damaged	**brake end-plate and the top disc** . If the clearance is out of tolerance, inspect the reverse brake discs and reverse brake plates for wear and damage. If the discs and plates are worn or damaged, replace them as a set. If they are OK, adjust the clearance with the reverse brake end-plate. - Check the thrust needle bearing on the input shaft assembly for seize, wear, and damage. If the thrust needle bearing is seized, worn, or damaged, replace it and also check the related part of the input shaft assembly for wear and damage. - Check the manual valve for wear and damage. - Check the stator shaft for wear and damage.

Symptom	Probable cause(s)	Notes
Late shift after shifting to D position/mode from N position/mode, and return to N position/mode	- TCM defective (1.5 L engine) - PCM defective (except 1.5 L engine) - Torque converter turbine speed sensor defective - Low transmission fluid (HCF-2) level - Transmission range switch defective or out of adjustment - Shift cable broken or out of adjustment - Control pin broken - Transmission fluid strainer or CVTF warmer strainer clogged - Forward clutch defective - Manual valve worn or damaged - Valve body assembly defective - Joint pipes defective - Stator shaft worn or damaged	- Check the torque converter turbine speed sensor for wear and damage, and also check the O-ring for wear and damage. - **Check the transmission fluid (HCF-2) level**. - **Inspect the transmission range switch** . - **Check for a loose shift cable at the shift lever and the control lever**. - **Check the transmission fluid strainer** and the **CVTF warmer strainer** for debris. If the transmission fluid strainer or the CVTF warmer strainer is clogged, find the damaged components that caused debris. - **Inspect the clearance between the forward clutch end-plate and the top disc** . If the clearance is out of tolerance, replace the input shaft assembly. - Check the manual valve for wear and damage. - Check the valve body assembly for wear and damage. - Check the joint pipes and O-rings for wear and damage. - Check the stator shaft for wear and damage.
Late shift after shifting to R position/mode from N position/mode, and return to N position/mode	- TCM defective (1.5 L engine) - PCM defective (except 1.5 L engine) - Torque converter turbine speed sensor defective - Low transmission fluid (HCF-2) level - Transmission range switch defective or out of adjustment - Shift cable broken or out of adjustment - Control pin broken - Transmission fluid strainer or CVTF warmer strainer clogged - Reverse brake defective - Reverse brake piston defective	- Check the torque converter turbine speed sensor for wear and damage, and also check the O-ring for wear and damage. - **Check the transmission fluid (HCF-2) level**. - **Inspect the transmission range switch** . - **Check for a loose shift cable at the shift lever and the control lever**. - **Check the transmission fluid strainer** and the **CVTF warmer strainer** for debris. If the transmission fluid strainer or the CVTF warmer strainer is clogged, find the damaged components that caused debris. - Inspect the reverse brake piston and the O-rings. Check the spring retainer/return spring assembly for wear and damage. **Inspect the**

Symptom	Probable cause(s)	Notes
	• Manual valve worn or damaged • Valve body assembly defective • Joint pipes defective • Stator shaft worn or damaged	**clearance between the reverse brake end-plate and the top disc** . If the clearance is out of tolerance, inspect the reverse brake discs and reverse brake plates for wear and damage. If the discs and plates are worn or damaged, replace them as a set. If they are OK, adjust the clearance with the reverse brake end-plate. • Check the manual valve for wear and damage. • Check the valve body assembly for wear and damage. • Check the joint pipes and O-rings for wear and damage. • Check the stator shaft for wear and damage.

Symptom	Probable cause(s)	Notes
Unstable engine speed	• TCM defective (1.5 L engine) • PCM defective (except 1.5 L engine) • Low transmission fluid (HCF-2) level • Transmission fluid (HCF-2) deteriorated • Transmission fluid strainer or CVTF warmer strainer clogged • Drive pulley, driven pulley, pulley shaft, steel belt, and pulley related parts worn or damaged • Pulley pressure feed pipe defective • Forward clutch defective • Reverse brake defective • CVT drive pulley pressure control solenoid valve defective • CVT driven pulley pressure control solenoid valve defective • CVT clutch pressure control solenoid valve defective • CVT lock-up clutch control solenoid valve defective • Shift solenoid valve B defective	• **Check the transmission fluid (HCF-2) level**. • Check the transmission fluid (HCF-2) condition. If necessary, **replace the transmission fluid (HCF-2)**. • **Check the transmission fluid strainer** and the **CVTF warmer strainer** for debris. If the transmission fluid strainer or the CVTF warmer strainer is clogged, find the damaged components that caused debris. • Check the drive pulley, the driven pulley, the pulley shafts, the steel belt, and pulley related parts for wear and damage. If there are worn or damaged, **replace the transmission housing assembly** . • Check the pulley pressure feed pipe and the sealing ring for wear and damage. • **Inspect the clearance between the forward clutch end-plate and the top disc** . If the clearance is out of tolerance, replace the input shaft assembly. • Inspect the reverse brake piston and the O-rings. Check the spring retainer/return spring assembly for wear and damage. **Inspect the clearance between the reverse brake end-plate and the top disc** . If the clearance is out of tolerance, inspect

Symptom	Probable cause(s)	Notes
	• Shift solenoid valve O/P defective • Transmission fluid pump worn, binding, or foreign material in transmission fluid pump • Valve body assembly defective • Joint pipes defective • Torque converter assembly defective • Torque converter ring gear worn or damaged • Transmission assembly and drive plate installation defective	the reverse brake discs and reverse brake plates for wear and damage. If the discs and plates are worn or damaged, replace them as a set. If they are OK, adjust the clearance with the reverse brake end-plate. • **Inspect the CVT solenoid valve**. • Check the transmission fluid pump for wear and damage. If the transmission fluid pump is worn or damaged, **replace it as an assembly** . • Check the valve body assembly for wear and damage. • Check the joint pipes and O-rings for wear and damage. • Inspect the torque converter assembly for wear and damage. If the torque converter assembly is worn or damaged, **replace it as an assembly** .

Symptom	Probable cause(s)	Notes
Excessive shock when starting off	• TCM defective (1.5 L engine) • PCM defective (except 1.5 L engine) • Low transmission fluid (HCF-2) level • Transmission fluid (HCF-2) deteriorated • Transmission fluid strainer or CVTF warmer strainer clogged • Pulley pressure feed pipe defective • Forward clutch defective • Reverse brake defective • Reverse brake piston defective • Valve body assembly defective • Joint pipes defective	• **Check the transmission fluid (HCF-2) level**. • Check the transmission fluid (HCF-2) condition. If necessary, **replace the transmission fluid (HCF-2)**. • **Check the transmission fluid strainer** and the **CVTF warmer strainer** for debris. If the transmission fluid strainer or the CVTF warmer strainer is clogged, find the damaged components that caused debris. • Check the pulley pressure feed pipe and the sealing ring for wear and damage. • **Inspect the clearance between the forward clutch end-plate and the top disc** . If the clearance is out of tolerance, replace the input shaft assembly. • Inspect the reverse brake piston and the O-rings. Check the spring retainer/return spring assembly for wear and damage. **Inspect the clearance between the reverse brake end-plate and the top disc** . If the clearance is out of tolerance, inspect the reverse brake discs and reverse brake plates for wear and damage. If the discs and plates are worn or damaged, replace them as a

Symptom	Probable cause(s)	Notes
		set. If they are OK, adjust the clearance with the reverse brake end-plate. - Check the valve body assembly for wear and damage. - Check the joint pipes and O-rings for wear and damage.
Vibration in all positions/modes	- Engine output low - Input shaft assembly worn or damaged - Torque converter assembly defective - Torque converter ring gear worn or damaged - Transmission assembly and drive plate installation defective	- Adjust the engine output. - Inspect the input shaft assembly for wear and damage. If the input shaft assembly is worn or damaged, replace it and also check the related part of the input shaft assembly for wear and damage. - Inspect the torque converter assembly for wear and damage. If the torque converter assembly is worn or damaged, **replace it as an assembly** .

Symptom	Probable cause(s)	Notes
Excessive idle vibration in R, D, S, or L positions/modes	- TCM defective (1.5 L engine) - PCM defective (except 1.5 L engine) - Engine output low - Drive pulley, driven pulley, pulley shaft, steel belt, and pulley related parts worn or damaged - Forward clutch defective - Input shaft assembly worn or damaged - Reverse brake defective - Reverse brake piston defective - Thrust washer on planetary carrier assembly seized, worn, or damaged - Valve body assembly defective - Joint pipes defective - Solenoid wire harness worn or damaged - Torque converter assembly defective - Torque converter ring gear worn or damaged - Transmission assembly and drive plate installation	- Adjust the engine output - Check the drive pulley, the driven pulley, the pulley shafts, the steel belt, and pulley related parts for wear and damage. If there are worn or damaged, **replace the transmission housing assembly** . - **Inspect the clearance between the forward clutch end-plate and the top disc** . If the clearance is out of tolerance, replace the input shaft assembly. - Inspect the input shaft assembly for wear and damage. If the input shaft assembly is worn or damaged, replace it and also check the related part of the input shaft assembly for wear and damage. - Inspect the reverse brake piston and the O-rings. Check the spring retainer/return spring assembly for wear and damage. **Inspect the clearance between the reverse brake end-plate and the top disc** . If the clearance is out of tolerance, inspect the reverse brake discs and reverse brake plates for wear and damage. If the discs and plates are worn or damaged, replace them as a set. If they are OK, adjust the

Symptom	Probable cause(s)	Notes
	defective	clearance with the reverse brake end-plate. - Check the thrust washer on the planetary carrier assembly for seize, wear, and damage. If the thrust washer is seized, worn, or damaged, replace it and adjust the clearance with the thrust shim. - Check the valve body assembly for wear and damage. - Check the joint pipes and O-rings for wear and damage. - Inspect the solenoid wire harness for open and short. - Inspect the torque converter assembly for wear and damage. If the torque converter assembly is worn or damaged, **replace it as an assembly** .
Excessive idle vibration in N and P positions/modes	- TCM defective (1.5 L engine) - PCM defective (except 1.5 L engine) - Engine output low - Forward clutch defective - Input shaft assembly worn or damaged - Reverse brake defective - Reverse brake piston defective - Torque converter assembly defective - Torque converter ring gear worn or damaged - Transmission assembly and drive plate installation defective	- Adjust the engine output. - **Inspect the clearance between the forward clutch end-plate and the top disc** . If the clearance is out of tolerance, replace the input shaft assembly. - Inspect the input shaft assembly for wear and damage. If the input shaft assembly is worn or damaged, replace it and also check the related part of the input shaft assembly for wear and damage. - Inspect the reverse brake piston and the O-rings. Check the spring retainer/return spring assembly for wear and damage. **Inspect the clearance between the reverse brake end-plate and the top disc** . If the clearance is out of tolerance, inspect the reverse brake discs and reverse brake plates for wear and damage. If the discs and plates are worn or damaged, replace them as a set. If they are OK, adjust the clearance with the reverse brake end-plate. - Inspect the torque converter assembly for wear and damage. If the torque converter assembly is worn or damaged, **replace it as an assembly** .

Symptom	Probable cause(s)	Notes
Noise from transmission in N and P positions/modes	- Forward clutch defective - Input shaft assembly worn or damaged - Reverse brake defective - Reverse brake piston defective - Thrust needle bearing or thrust shim on input shaft assembly seized, worn, or damaged - Planetary carrier assembly worn or damaged - Sun gear worn or damaged - Ring gear worn or damaged - Thrust needle bearing or thrust washer on planetary carrier assembly seized, worn, or damaged - Transmission fluid pump worn, binding, or foreign material in transmission fluid pump	- **Inspect the clearance between the forward clutch end-plate and the top disc** . If the clearance is out of tolerance, replace the input shaft assembly. - Inspect the input shaft assembly for wear and damage. If the input shaft assembly is worn or damaged, replace it and also check the related part of the input shaft assembly for wear and damage. - Inspect the reverse brake piston and the O-rings. Check the spring retainer/return spring assembly for wear and damage. **Inspect the clearance between the reverse brake end-plate and the top disc** . If the clearance is out of tolerance, inspect the reverse brake discs and reverse brake plates for wear and damage. If the discs and plates are worn or damaged, replace them as a set. If they are OK, adjust the clearance with the reverse brake end-plate. - Check the thrust needle bearing and the thrust shim on the input shaft assembly for seize, wear, and damage. If the thrust needle bearing or the thrust shim are seized, worn, or damaged, replace them and also check the related part of the input shaft assembly for wear and damage. - Check the planetary carrier assembly for wear and damage. If the planetary carrier assembly is worn or damaged, replace it and also check the planetary carrier pinion gears, the reverse brake, and the drive pulley shaft splines for wear and damage. - Check the sun gear for wear and damage. If the sun gear is worn or damaged, replace it and also check the planetary carrier pinion gears, the forward clutch, and the drive pulley shaft splines for wear and damage. - Check the ring gear for wear and damage. If the ring gear is worn or damaged, replace it and also check the planetary carrier assembly and the reverse brake for wear and damage. - Check the thrust needle bearing and the thrust washer on the planetary

Symptom	Probable cause(s)	Notes
		carrier assembly for seize, wear, and damage. If the thrust needle bearing or the thrust washer are seized, worn, or damaged, replace them and adjust the clearance with the thrust shim. • Check the transmission fluid pump for wear and damage. If the transmission fluid pump is worn or damaged, **replace it as an assembly** .

Symptom	Probable cause(s)	Notes
Noise from transmission in D, S, or L positions/modes	• Drive pulley, driven pulley, pulley shaft, steel belt, and pulley related parts worn or damaged • Input shaft assembly worn or damaged • Secondary drive/driven gear worn or damaged • Final driven gear worn or damaged • Control shaft, roller, detent lever, and detent spring worn or damaged • Parking brake pawl and parking shaft worn or damaged • Parking pawl spring worn or damaged	• Check the drive pulley, the driven pulley, the pulley shafts, the steel belt, and pulley related parts for wear and damage. If there are worn or damaged, **replace the transmission housing assembly** . • Inspect the input shaft assembly for wear and damage. If the input shaft assembly is worn or damaged, replace it and also check the related part of the input shaft assembly for wear and damage. • Check the secondary drive/driven gear for wear and damage. • Check the final driven gear for wear and damage. • Check the control shaft, roller, detent lever, and detent spring for wear and damage. • Check the parking brake pawl and the parking shaft for wear and damage. If the parking brake pawl or the parking shaft are worn or damaged, replace them and also check the park gear for wear and damage. • Check the parking pawl spring for wear and damage.

Symptom	Probable cause(s)	Notes
Noise from transmission in R position/mode	• Drive pulley, driven pulley, pulley shaft, steel belt, and pulley related parts worn or damaged • Input shaft assembly worn or damaged • Reverse brake defective • Reverse brake piston defective	• Check the drive pulley, the driven pulley, the pulley shafts, the steel belt, and pulley related parts for wear and damage. If there are worn or damaged, **replace the transmission housing assembly** . • Inspect the input shaft assembly for wear and damage. If the input shaft assembly is worn or damaged,

Symptom	Probable cause(s)	Notes
	• Spring retainer/return spring assembly defective • Secondary drive/driven gear worn or damaged • Final driven gear worn or damaged • Thrust needle bearing or thrust shim on input shaft assembly seized, worn, or damaged • Planetary carrier assembly worn or damaged • Sun gear worn or damaged • Ring gear worn or damaged • Thrust needle bearing or thrust washer on planetary carrier assembly seized, worn, or damaged • Control shaft, roller, detent lever, and detent spring worn or damaged • Parking brake pawl and parking shaft worn or damaged • Parking pawl spring worn or damaged	replace it and also check the related part of the input shaft assembly for wear and damage. • Inspect the reverse brake piston and the O-rings. Check the spring retainer/return spring assembly for wear and damage. **Inspect the clearance between the reverse brake end-plate and the top disc** . If the clearance is out of tolerance, inspect the reverse brake discs and reverse brake plates for wear and damage. If the discs and plates are worn or damaged, replace them as a set. If they are OK, adjust the clearance with the reverse brake end-plate. • Check the secondary drive/driven gear for wear and damage. • Check the final driven gear for wear and damage. • Check the thrust needle bearing and the thrust shim on the input shaft assembly for seize, wear, and damage. If the thrust needle bearing or the thrust shim are seized, worn, or damaged, replace them and also check the related part of the input shaft assembly for wear and damage. • Check the planetary carrier assembly for wear and damage. If the planetary carrier assembly is worn or damaged, replace it and also check the planetary carrier pinion gears, the reverse brake, and the drive pulley shaft splines for wear and damage. • Check the sun gear for wear and damage. If the sun gear is worn or damaged, replace it and also check the planetary carrier pinion gears, the forward clutch, and the drive pulley shaft splines for wear and damage. • Check the ring gear for wear and damage. If the ring gear is worn or damaged, replace it and also check the planetary carrier assembly and the reverse brake for wear and damage. • Check the thrust needle bearing and the thrust washer on the planetary carrier assembly for seize, wear, and damage. If the thrust needle bearing or the thrust washer are seized, worn,

Symptom	Probable cause(s)	Notes
		or damaged, replace them and adjust the clearance with the thrust shim. • Check the control shaft, roller, detent lever, and detent spring for wear and damage. • Check the parking brake pawl and the parking shaft for wear and damage. If the parking brake pawl or the parking shaft are worn or damaged, replace them and also check the park gear for wear and damage. • Check the parking pawl spring for wear and damage.

Symptom	Probable cause(s)	Notes
Stall speed high	• TCM defective (1.5 L engine) • PCM defective (except 1.5 L engine) • Low transmission fluid (HCF-2) level • Transmission fluid (HCF-2) deteriorated • Forward clutch defective • Input shaft assembly worn or damaged • Reverse brake defective • Reverse brake piston defective • Transmission fluid pump worn, binding, or foreign material in transmission fluid pump • Valve body assembly defective • Joint pipes defective • Stator shaft worn or damaged • Torque converter assembly defective • Torque converter ring gear worn or damaged • Transmission assembly and drive plate installation defective	• **Check the transmission fluid (HCF-2) level**. • Check the transmission fluid (HCF-2) condition. If necessary, **replace the transmission fluid (HCF-2)**. • **Inspect the clearance between the forward clutch end-plate and the top disc** . If the clearance is out of tolerance, replace the input shaft assembly. • Inspect the input shaft assembly for wear and damage. If the input shaft assembly is worn or damaged, replace it and also check the related part of the input shaft assembly for wear and damage. • Inspect the reverse brake piston and the O-rings. Check the spring retainer/return spring assembly for wear and damage. **Inspect the clearance between the reverse brake end-plate and the top disc** . If the clearance is out of tolerance, inspect the reverse brake discs and reverse brake plates for wear and damage. If the discs and plates are worn or damaged, replace them as a set. If they are OK, adjust the clearance with the reverse brake end-plate. • Check the transmission fluid pump for wear and damage. If the transmission fluid pump is worn or damaged, **replace it as an assembly** . • Check the valve body assembly for wear and damage.

Symptom	Probable cause(s)	Notes
		- Check the joint pipes and O-rings for wear and damage. - Check the stator shaft for wear and damage. - Inspect the torque converter assembly for wear and damage. If the torque converter assembly is worn or damaged, **replace it as an assembly** .
Stall speed low	- TCM defective (1.5 L engine) - PCM defective (except 1.5 L engine) - Engine output low - Valve body assembly defective - Joint pipes defective - Stator shaft worn or damaged - Torque converter assembly defective - Torque converter ring gear worn or damaged - Transmission assembly and drive plate installation defective	- Adjust the engine output. - Check the valve body assembly for wear and damage. - Check the joint pipes and O-rings for wear and damage. - Check the stator shaft for wear and damage. - Inspect the torque converter assembly for wear and damage. If the torque converter assembly is worn or damaged, **replace it as an assembly** .
Judder when starting off	- Low transmission fluid (HCF-2) level - Transmission fluid (HCF-2) deteriorated - Transmission fluid strainer or CVTF warmer strainer clogged - Transmission fluid pump worn, binding, or foreign material in transmission fluid pump - Valve body assembly defective - Joint pipes defective	- **Check the transmission fluid (HCF-2) level**. - Check the transmission fluid (HCF-2) condition. If necessary, **replace the transmission fluid (HCF-2)**. - **Check the transmission fluid strainer** and the **CVTF warmer strainer** for debris. If the transmission fluid strainer or the CVTF warmer strainer is clogged, find the damaged components that caused debris. - Check the transmission fluid pump for wear and damage. If the transmission fluid pump is worn or damaged, **replace it as an assembly** . - Check the valve body assembly for wear and damage. - Check the joint pipes and O-rings for wear and damage.

Symptom	Probable cause(s)	Notes
Shift lever does not operate smoothly	- Transmission range switch defective or out of adjustment - Shift cable broken or out of adjustment - Control pin broken	- **Inspect the transmission range switch** . - **Check for a loose shift cable at the shift lever and the control lever**.

Symptom	Probable cause(s)	Notes
	- Control shaft, roller, detent lever, and detent spring worn or damaged - Control lever worn or damaged - Parking brake pawl and parking shaft worn or damaged - Manual valve worn or damaged - Stator shaft worn or damaged	- Check the control shaft, roller, detent lever, and detent spring for wear and damage. - Check the control lever for wear and damage. - Check the parking brake pawl and the parking shaft for wear and damage. If the parking brake pawl or the parking shaft are worn or damaged, replace them and also check the park gear for wear and damage. - Check the manual valve for wear and damage. - Check the stator shaft for wear and damage.
Transmission will not shift into P position/mode, or transmission cannot shift out of P position/mode	- TCM defective (1.5 L engine) - PCM defective (except 1.5 L engine) - Drive pulley, driven pulley, pulley shaft, steel belt, and pulley related parts worn or damaged - Transmission range switch defective or out of adjustment - Shift cable broken or out of adjustment - Control pin broken - Control shaft, roller, detent lever, and detent spring worn or damaged - Control lever worn or damaged - Parking brake pawl and parking shaft worn or damaged - Park gear worn or damaged - Parking pawl spring worn or damaged - Manual valve worn or damaged - Valve body assembly defective - Stator shaft worn or damaged	- Check the drive pulley, the driven pulley, the pulley shafts, the steel belt, and pulley related parts for wear and damage. If there are worn or damaged, **replace the transmission housing assembly** . - **Inspect the transmission range switch** . - **Check for a loose shift cable at the shift lever and the control lever**. - Check the control shaft, roller, detent lever, and detent spring for wear and damage. - Check the control lever for wear and damage. - Check the parking brake pawl and the parking shaft for wear and damage. If the parking brake pawl or the parking shaft are worn or damaged, replace them and also check the park gear for wear and damage. - Check the park gear for wear and damage. - Check the parking pawl spring for wear and damage. - Check the manual valve for wear and damage. - Check the valve body assembly for wear and damage. - Check the stator shaft for wear and damage.
Torque converter clutch does not	- Shift solenoid valve B defective	- **Inspect shift solenoid valve B**.

Symptom	Probable cause(s)	Notes
disengage; engine stalls easily	- CVT lock-up clutch control solenoid valve defective - Torque converter clutch piston defective - Valve body assembly defective	- **Inspect the CVT lock-up clutch control solenoid valve**. - Inspect the torque converter assembly for wear and damage. If the torque converter assembly is worn or damaged, **replace it as an assembly** . - Check the valve body assembly for wear and damage.

HOW TO INFORMATION

HOW TO TROUBLESHOOT THE CVT SYSTEM

How to Check for DTCs with the Honda Diagnostic System (HDS)

When the transmission control module (TCM) or the powertrain control module (PCM) senses an abnormality in the input or output systems, the shift position indicator (A) in the gauge control module will usually blink as shown.

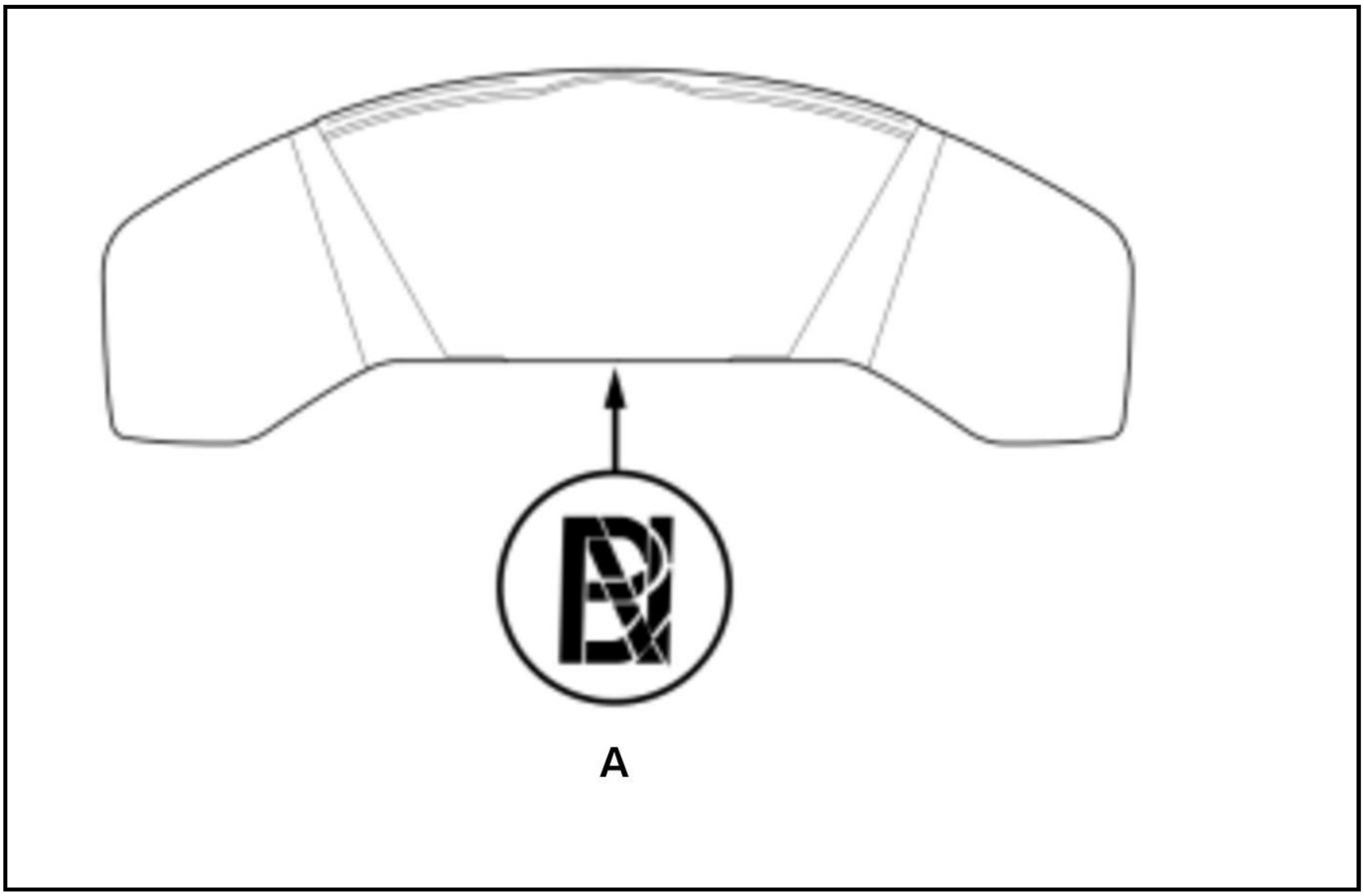

When the Honda Diagnostic System (HDS) is connected to the data link connector (DLC) located under the driver's side of the dashboard, and then the vehicle is turned to the ON mode, and the appropriate menu is selected, it will indicate the diagnostic trouble code (DTC).

If the shift position indicator or the malfunction indicator lamp (MIL) has been reported on, or if a driveability problem is suspected, follow this procedure:

1. **Connect the HDS to the DLC**

2. Check for Pending or Confirmed DTCs with the HDS.

3. Record the freeze data and the on-board snapshots for all PGM-FI DTCs and A/T DTCs.

4. If there is a PGM-FI DTC, first check the PGM-FI system as indicated by the DTC.

5. Clear the DTC and the data.

6. Drive the vehicle for several minutes under the same conditions as those indicated by the freeze data or the on-board snapshot, and then recheck for the DTC. If the A/T DTC returns, go to the indicated DTC's troubleshooting. If the DTC does not return, there was an intermittent problem within the circuit. Make sure all pins and terminals in the circuit are tight.

Symptom Troubleshooting Versus DTC Troubleshooting

Some symptoms will not set DTCs or cause the shift position indicator to blink. If the MIL was reported ON or the shift position indicator has been blinking, check for DTCs. If the vehicle has an abnormal symptom, and there are no DTCs stored, do the symptom troubleshooting. Check the list of probable cause(s) for the symptom, in the sequence listed, until you find the problem.

How to Troubleshoot Circuits at the TCM Connector (1.5 L engine)

Special Tools Required

Male Pin Probe 07ZAJ-RDJA110

1. Jump the SCS line with the HDS, and wait more than 1 minute.

NOTE: This step must be done to protect the TCM from damage.

2. Disconnect the connector (A) by pushing the lock (B) and pulling the lever (C) in the numbered sequence shown.

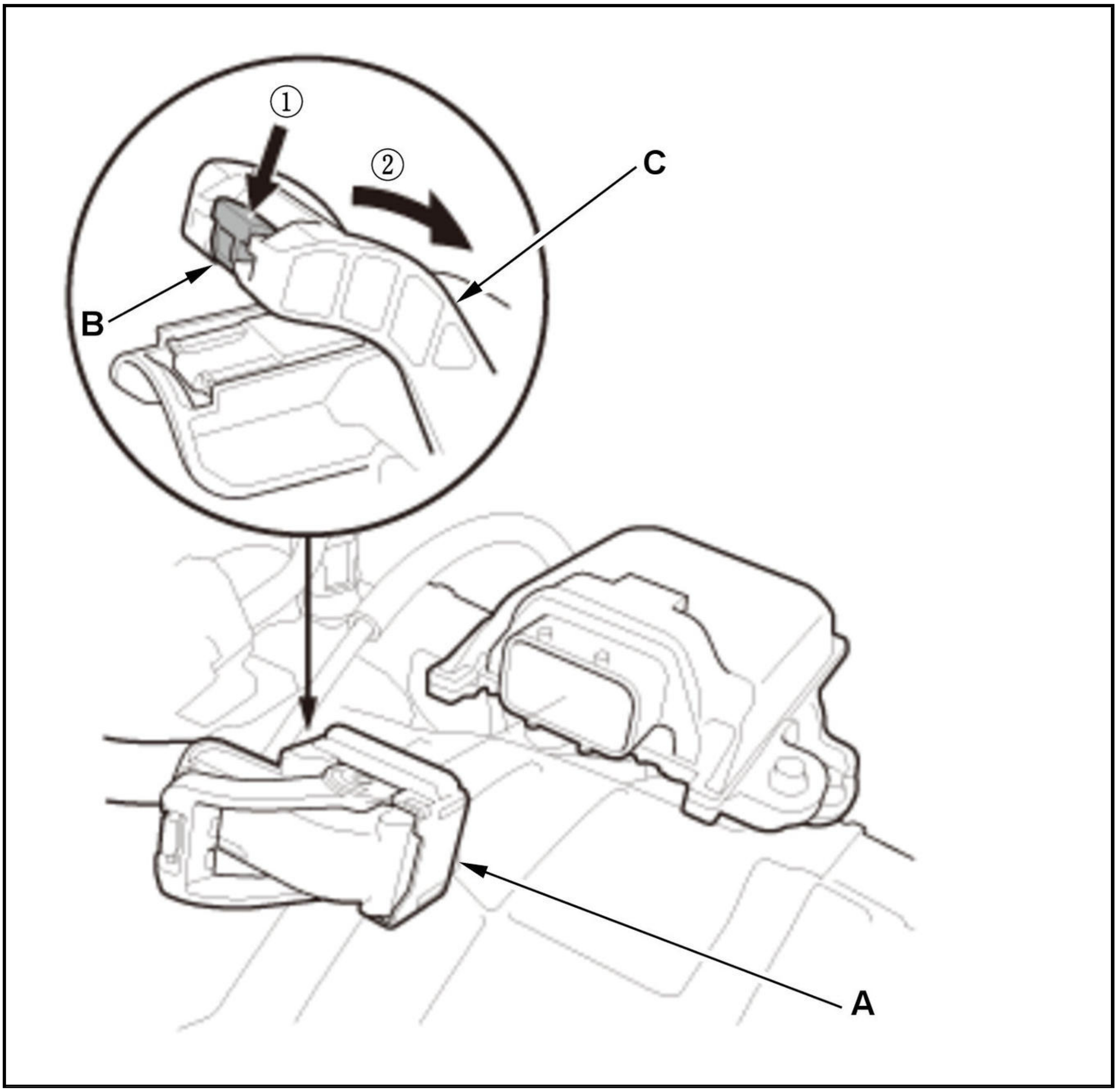

3. When diagnosis/troubleshooting is done at the TCM connector, use the terminal test port (A) above the terminal you need to check.

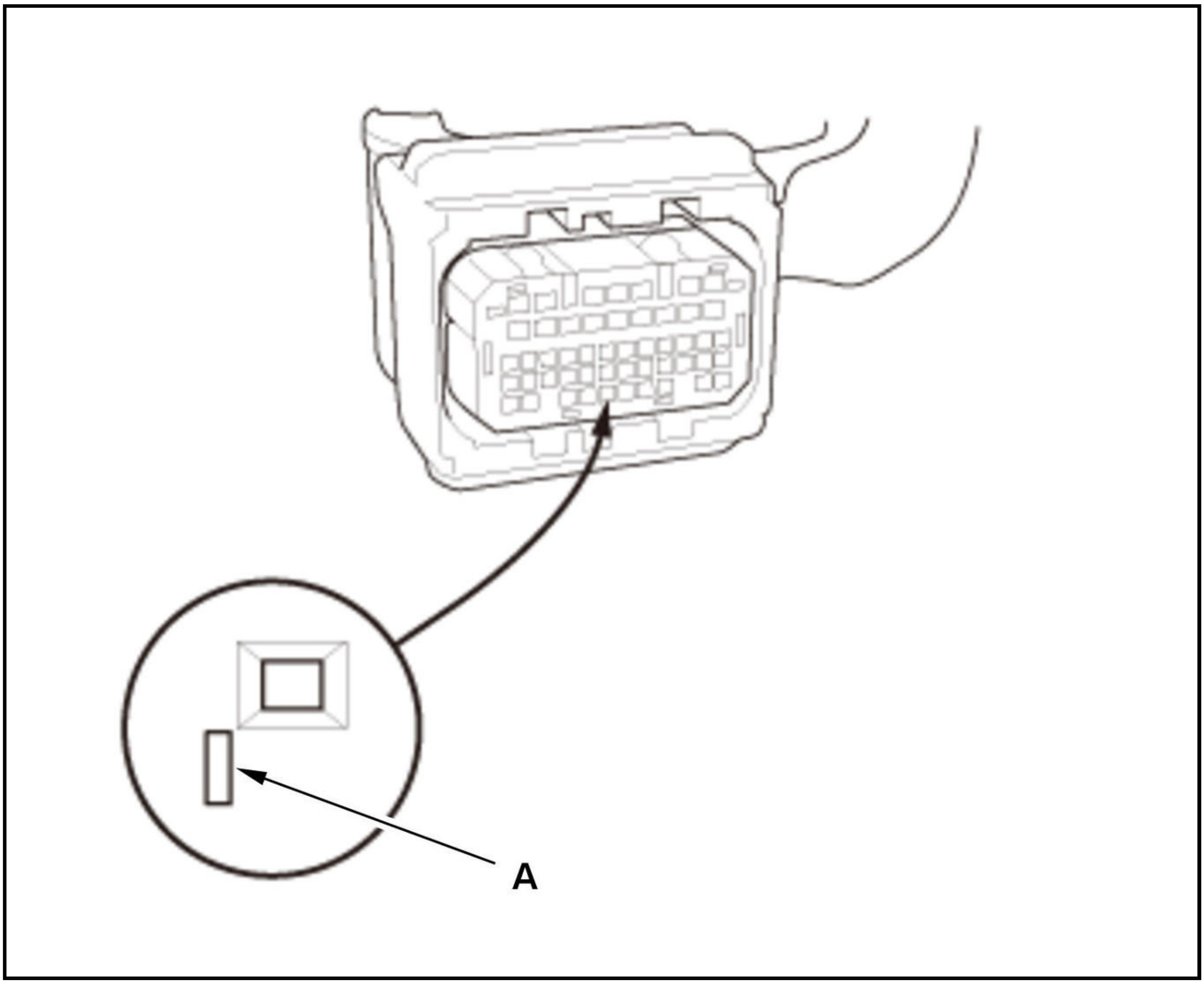

4. Connect one side of the patch cord terminals (A) to a commercially available digital multimeter (B), and connect the other side of the terminals (C) to the pin probe male.

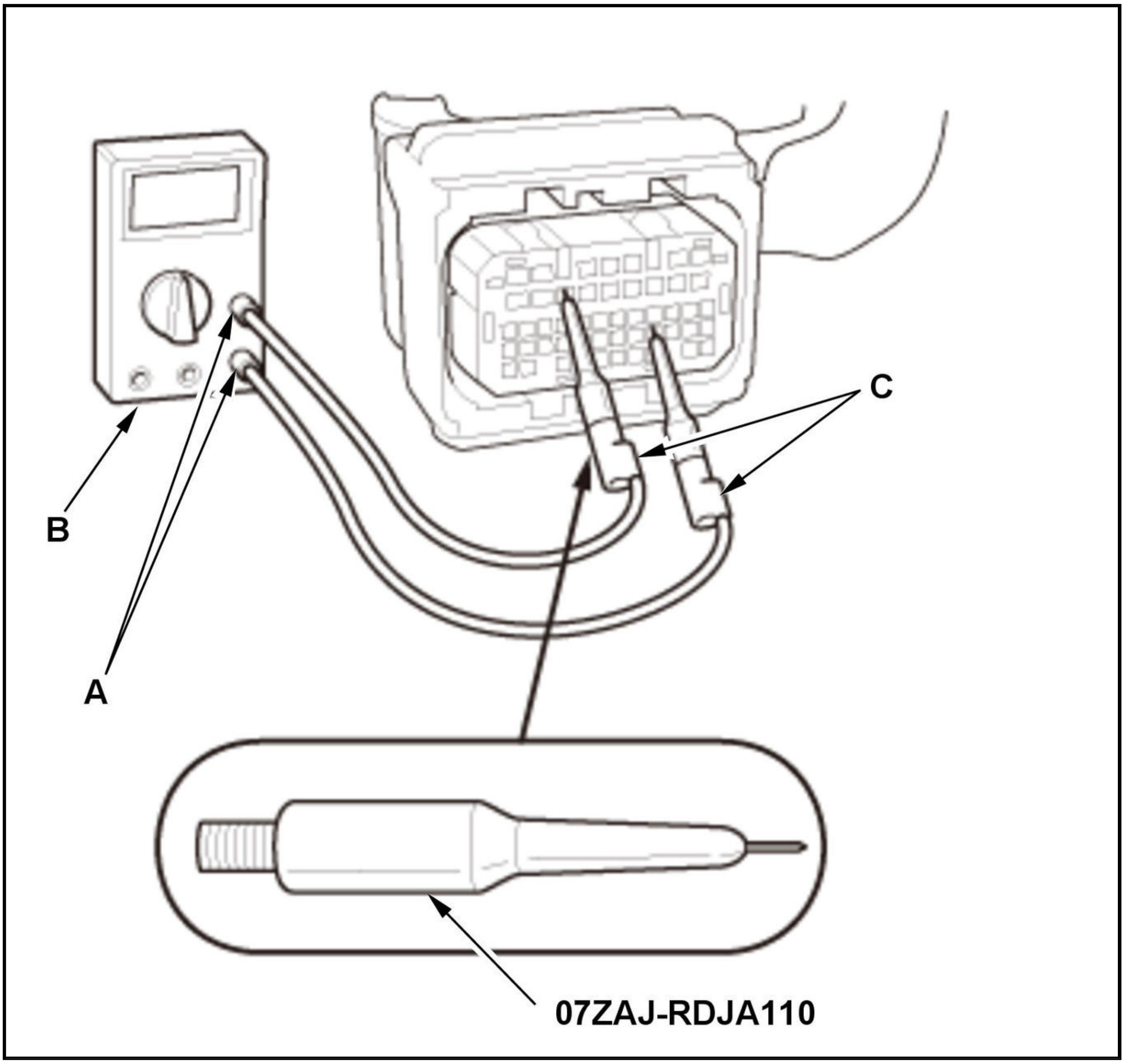

Gently contact the pin probe (male) at the terminal test port from the terminal side. Do not force the tips into the terminals.

NOTICE:

- For accurate results, always use the pin probe (male).
- To prevent damage to the connector terminals, do not insert test equipment probes, paper clips, or other substitutes as they can damage the terminals. Damaged terminals cause a poor connection and an incorrect measurement.
- Do not puncture the insulation on a wire. Punctures can cause or eventually lead to poor or intermittent electrical connections.

How to Troubleshoot Circuits at the PCM Connectors

Special Tools Required (for some models)

Pin Probe Male 07ZAJ-RDJA110

NOTE: The PCM stays on for up to an hour after the vehicle is turned to the OFF (LOCK) mode. Jumping the SCS line after turning the vehicle to the OFF (LOCK) mode cancels this function. Disconnecting the PCM during this function, without jumping the SCS line first, can damage the PCM.

1. Jump the SCS line with the HDS, and wait more than 1 minute.

NOTE: This step must be done to protect the PCM from damage.

2. **Disconnect PCM connectors**

3. When diagnosis/troubleshooting is done at the PCM connectors, use the terminal test port (A) above the terminal you need to check.

1.5 L engine

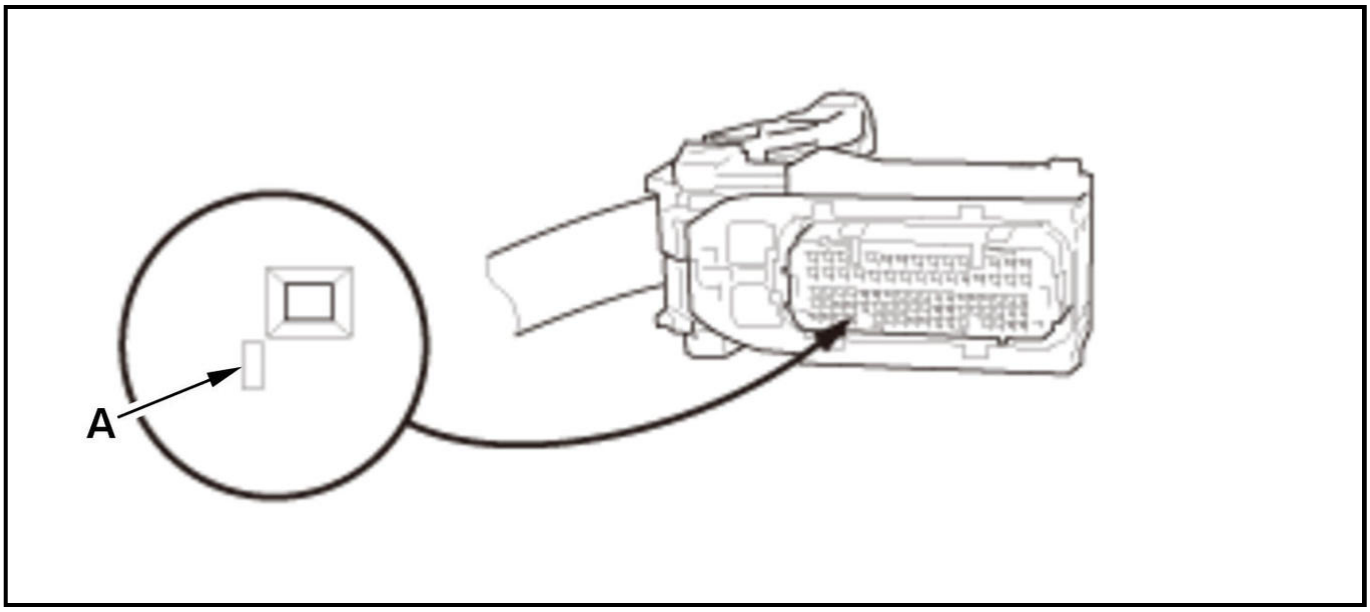

Except 1.5 L engine

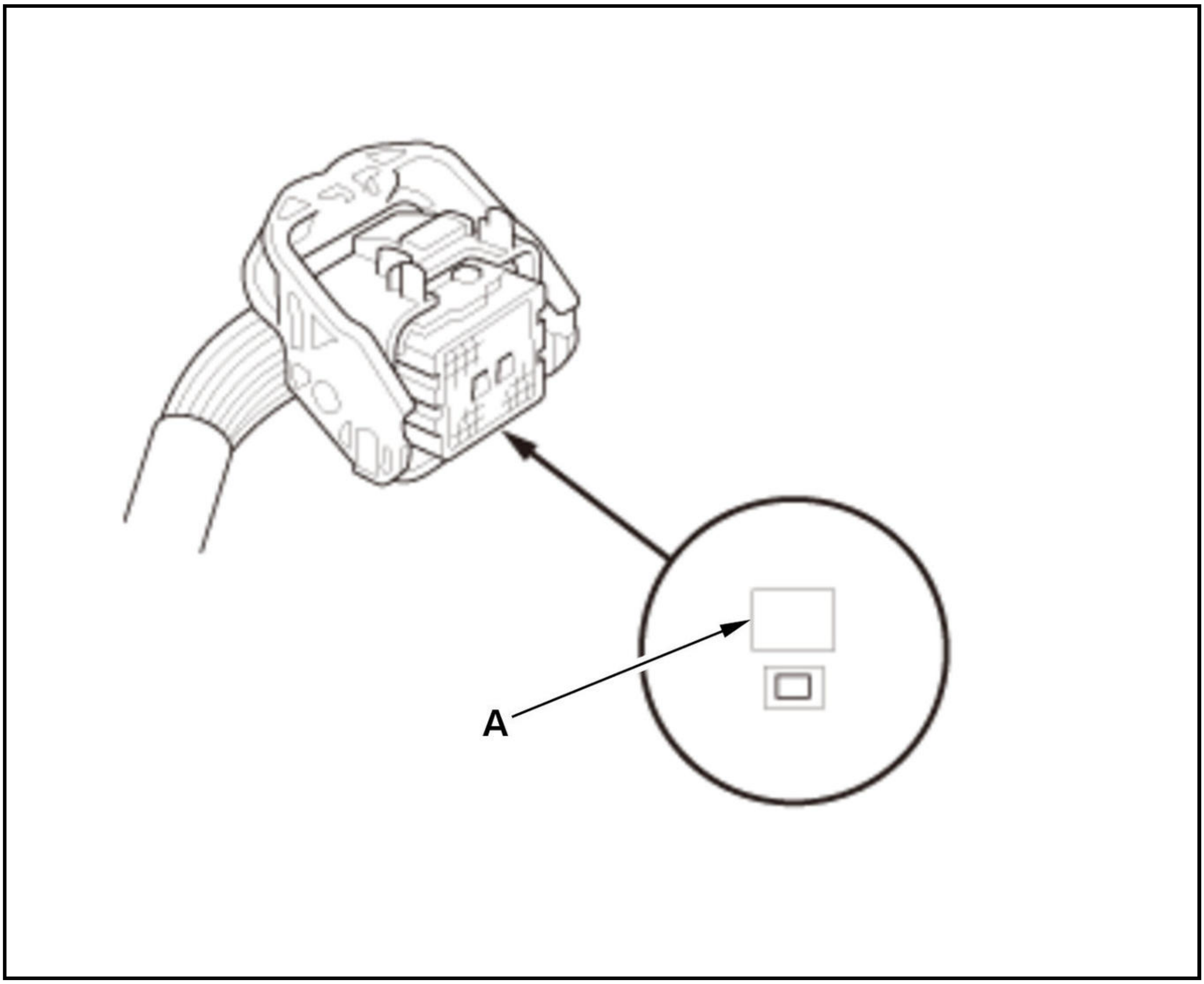

4. 1.5 L engine: Connect one side of the patch cord terminals (A) to a commercially available digital multimeter (B), and connect the other side of the terminal (C) to the pin probe male.

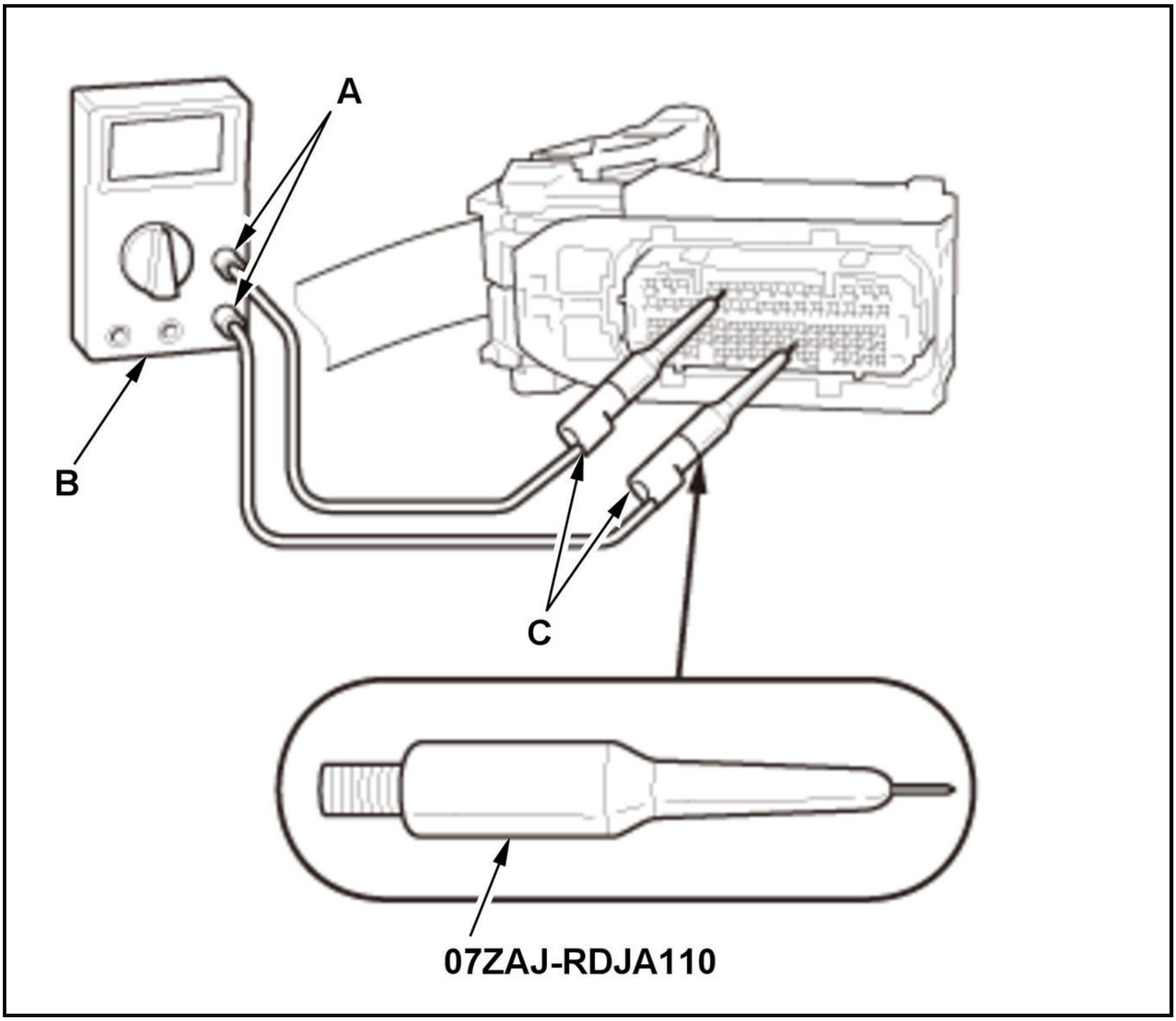

5. Except 1.5 L engine: Connect one side of the patch cord terminals (A) to a commercially available digital multimeter (B), and connect the other side of the terminal (C) to a commercially available banana jack (Pomona Electronics Tool No. 3563 or equivalent) (D).

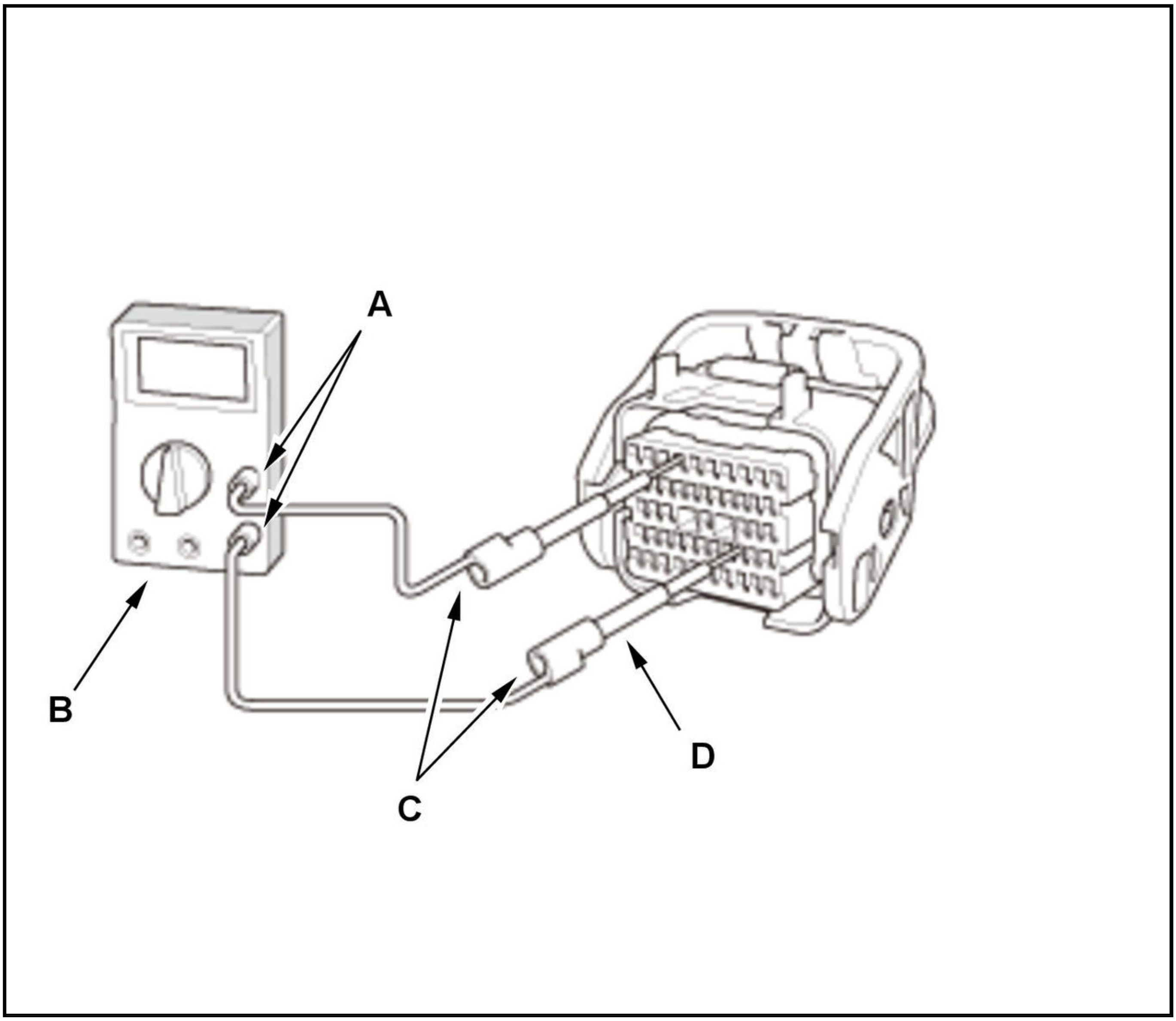

Gently contact the pin probe (male) at the terminal test port from the terminal side. Do not force the tips into the terminals.

NOTICE:

- For accurate results, always use the pin probe (male).
- To prevent damage to the connector terminals, do not insert test equipment probes, paper clips, or other substitutes as they can damage the terminals. Damaged terminals cause a poor connection and an incorrect measurement.
- Do not puncture the insulation on a wire. Punctures can cause or eventually lead to poor or intermittent electrical connections.

Clear A/T DTCs Procedure

1. **Connect the HDS to the DLC** .

2. Clear the DTC(s) on the HDS screen.

OBD Status

The OBD STATUS shows the current system status of each DTC and all of the parameters. This function is used to see if the repair was successfully completed. The results of diagnostic tests for the DTC are displayed as:

- PASSED: The on-board diagnosis is successfully completed.

- FAILED: The on-board diagnosis has completed but failed.
- NOT COMPLETED: The on-board diagnosis was running but is out of the enable conditions of the DTC.

How to End a Troubleshooting Session (required after any troubleshooting) (1.5 L engine)

NOTE: **Reset the TCM** with the HDS while the engine is stopped.

1. Turn the vehicle to the OFF (LOCK) mode.

2. Turn the vehicle to the ON mode, and wait for 30 seconds.

3. Turn the vehicle to the OFF (LOCK) mode, and disconnect the HDS from the DLC.

4. Start the engine, and warm it up to normal operating temperature (the radiator fan comes on twice).

5. To verify that the problem is repaired, test-drive the vehicle for several minutes at speeds over 31 mph (50 km/h) or under the same conditions as those indicated by the freeze data.

How to End a Troubleshooting Session (required after any troubleshooting)

1. **Reset the PCM with the HDS** .

2. **Do the PCM idle learn procedure**

3. Turn the vehicle to the OFF (LOCK) mode.

4. Disconnect the HDS from the data link connector.

NOTE: The PCM is part of the immobilizer system. If you replace the PCM, you must register the PCM to the keyless access system.

Failure Reproduction Technique

NOTE: Follow these rules while the vehicle is raised on a lift for the test-drive

- In case of the vehicle speed below 31 mph (50 km/h): Disable the VSA by pressing the VSA OFF button.
- In case of the vehicle speed above 31 mph (50 km/h): **Enter the VSA maintenance mode** .
- VSA DTC(s) may come on when test-driving on a lift. If the VSA system sets a DTC(s), clear the DTC(s) with the HDS.

Self-Diagnosis

If the TCM or the PCM detects the failure of a signal from a sensor, a switch, a solenoid valve, or from another control unit, it stores a Pending or Confirmed DTC. Depending on the failure, a DTC is stored in either the first or second drive cycle. When a Confirmed DTC is stored, the TCM or the PCM blinks the shift position indicator and/or turns on the MIL by a signal sent to the gauge control module via F-CAN.

- One Drive Cycle Detection Method:

  When an abnormality occurs in the signal from a sensor, a switch, a solenoid valve, or from another control unit, the TCM or the PCM stores a Pending or Confirmed DTC for the failure and blinks the shift position indicator and/or turns on the MIL immediately.

- Two Drive Cycle Detection Method:

  When an abnormality occurs in the signal from a sensor, a switch, a solenoid valve, or from another control unit in the first drive cycle, the TCM or the PCM stores a Pending DTC. The shift position indicator and the MIL do not turns on at this time. If the failure continues in the second drive cycle, the TCM or the PCM stores a Confirmed DTC and blinks the shift position indicator and/or turns on the MIL.

Fail-Safe Function

When an abnormality occurs in the signal from a sensor, a switch, a solenoid valve, or from another control unit, the TCM or the PCM ignores that signal and substitutes a pre-programmed value for that signal to allow the CVT to continue operating. This causes a DTC to be stored and the shift position indicator to blink and/or the MIL to come on. The transmission may not shift normally during fail-safe operation. Do not run the test-driving diagnosis when the MIL is ON, or the shift position indicator is blinking.

REMOVAL, INSTALLATION, AND INSPECTION

TRANSFER ASSEMBLY REMOVAL, INSTALLATION, AND INSPECTION

Removal and Installation

NOTE: Keep all foreign particles out of the transmission.

1

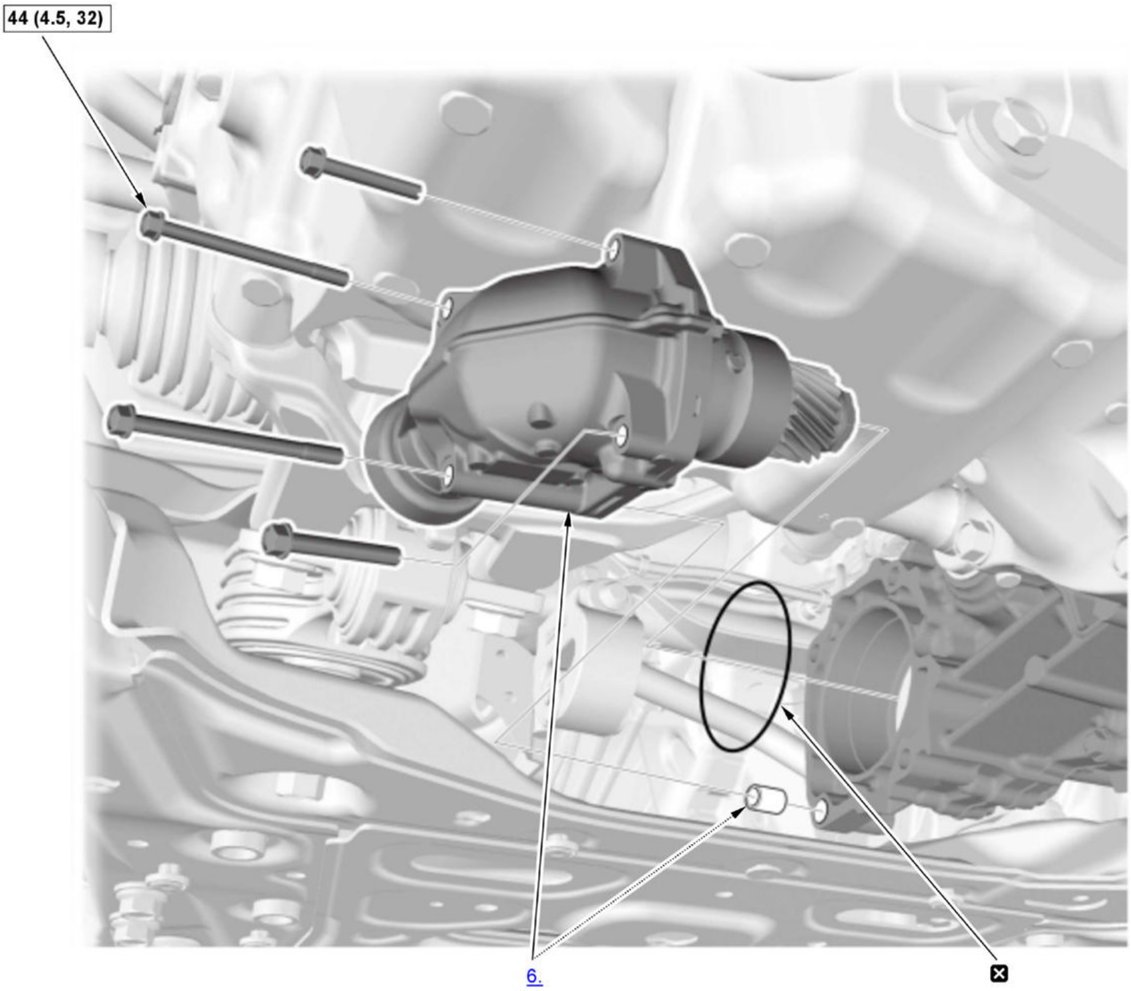

Fig. 7: Transfer Assembly Bolts Torque Specifications
Courtesy of HONDA, U.S.A., INC.

☐	Torque: N.m (kgf.m, lbf.ft)
☒	Replace

1. Vehicle - Lift
2. Engine Undercover - Remove

3. Transmission Fluid (HCF-2) - Drain
4. Exhaust Pipe A - Remove
5. Propeller Shaft (Transfer Side) - Disconnect
6. Transfer Assembly - Remove
7. All Removed Parts - Install

1. Clean the areas where the transfer assembly contacts the transmission with solvent, and dry with compressed air.

2. Install the parts in the reverse order of removal.

8. Transmission Fluid - Refill
9. Transmission Fluid Level - Check

Inspection

NOTE: How to read the torque specifications .

Transfer Gear Backlash Measurement

1. Vehicle - Lift
2. Engine Undercover - Remove
3. Propeller Shaft (Transfer Side) - Disconnect
4. Transfer Assembly - Transfer Gear Backlash Check

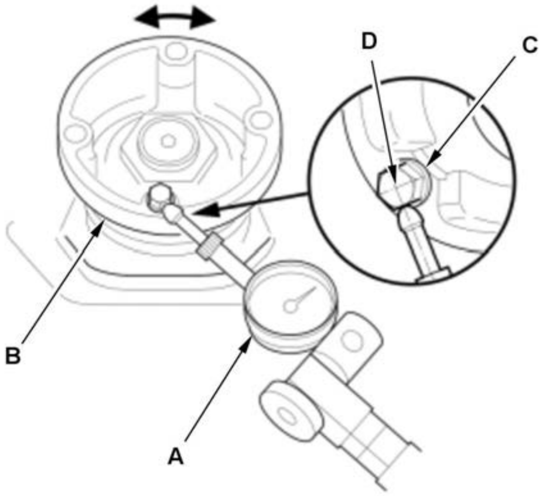

1. Shift the transmission to N.

2. Set a dial indicator (A) on the transfer companion flange setting bolt (B).

NOTE: Position the dial indicator tip (C) on the direct extension of the bolt center (D).

3. Measure the transfer gear backlash.

4. If the transfer gear backlash is out of the standard, replace the transfer assembly.

Standard:	**0.06-0.16 mm (0.0024-0.0063 in)**

Fluid Leak Check

5. Transfer Assembly Fluid (Transmission Side) - Leak Check

1. Check for fluid leaks between the mating faces of the transfer assembly and the transmission.

2. If there is leak:

- Replace the O-ring between the transfer assembly and the transmission.
- Replace the O-ring between the transfer housing and the transfer hypoid drive shaft assembly.

6. Transfer Assembly Fluid (Propeller Shaft Side) - Leak Check

1. Check for fluid leaks between the transfer companion flange and the transfer oil seal.

2. If there is leak, replace the transfer oil seal and the O-ring.

Total Starting Torque Measurement

7. **Transmission Fluid (HCF-2) - Drain**
8. Transfer Assembly - Remove
9. Transfer Assembly - Total Starting Torque Check

1. Secure the transfer housing (A) in a bench vise (B).

NOTE: To prevent damaging the transfer housing, always use wood blocks or equivalent materials (C) between the transfer housing and the bench vise.

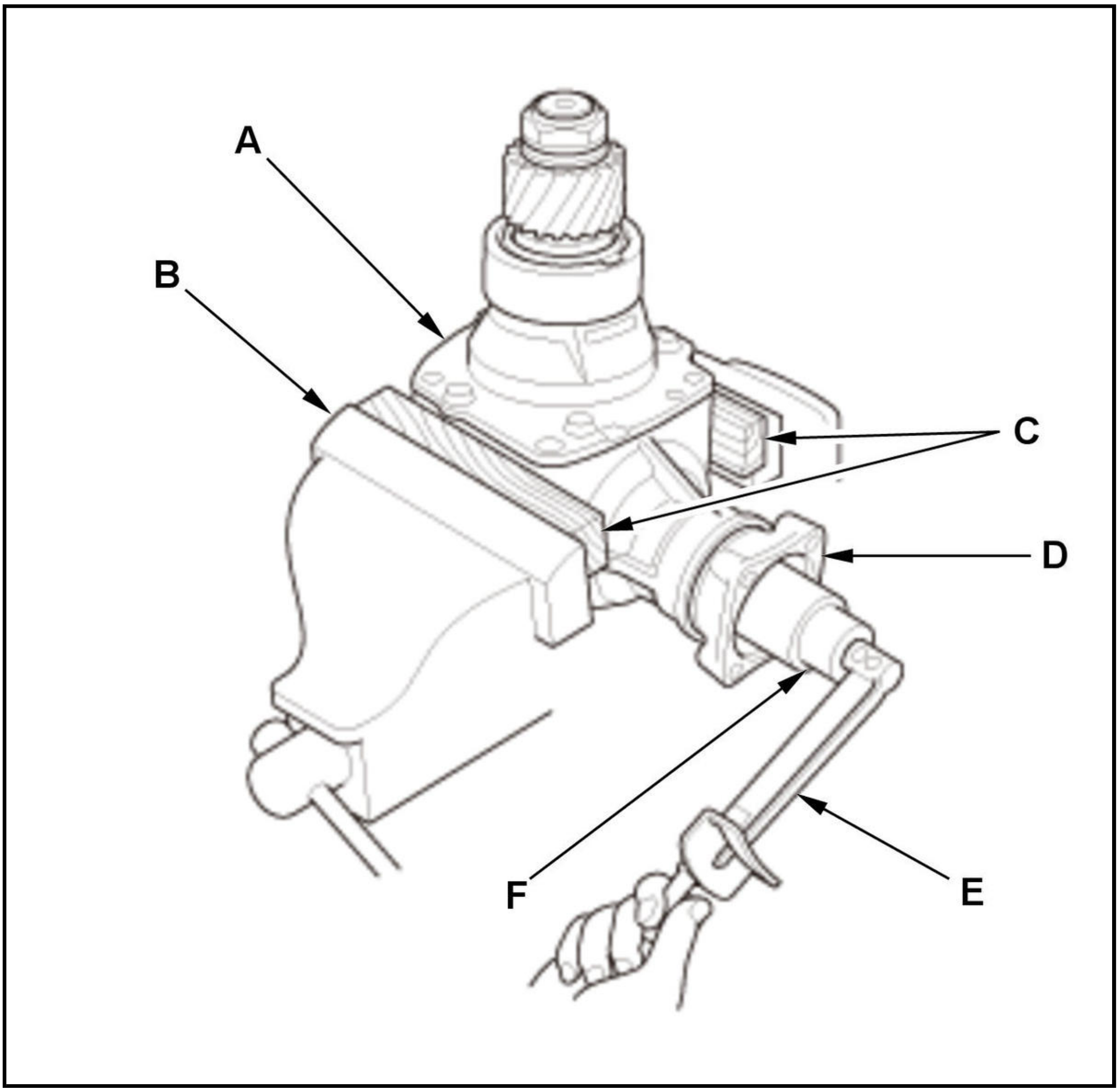

2. Rotate the companion flange several turns to seat the tapered roller bearings.

3. Measure the total starting torque at the companion flange (D) using a torque wrench (E) and a socket (F).

Standard:	**3.28-8.77 N.m (33.4-89.4 kgf.cm, 29.0-77.6 Ibf.in)**

4. If the total starting torque is out of the standard, replace the transfer assembly.

Transfer Hypoid Drive Gear Tooth Contact Pattern Check

10. Transfer Hypoid Drive Gear/Shaft Assembly - Remove

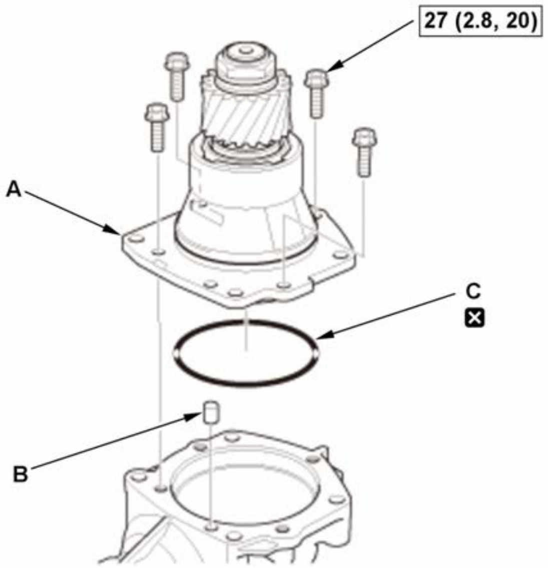	1. Remove the transfer hypoid drive gear/shaft assembly (A) with the dowel pin (B) and the O-ring (C).

11. Transfer Hypoid Drive Gear - Tooth Contact Pattern Check

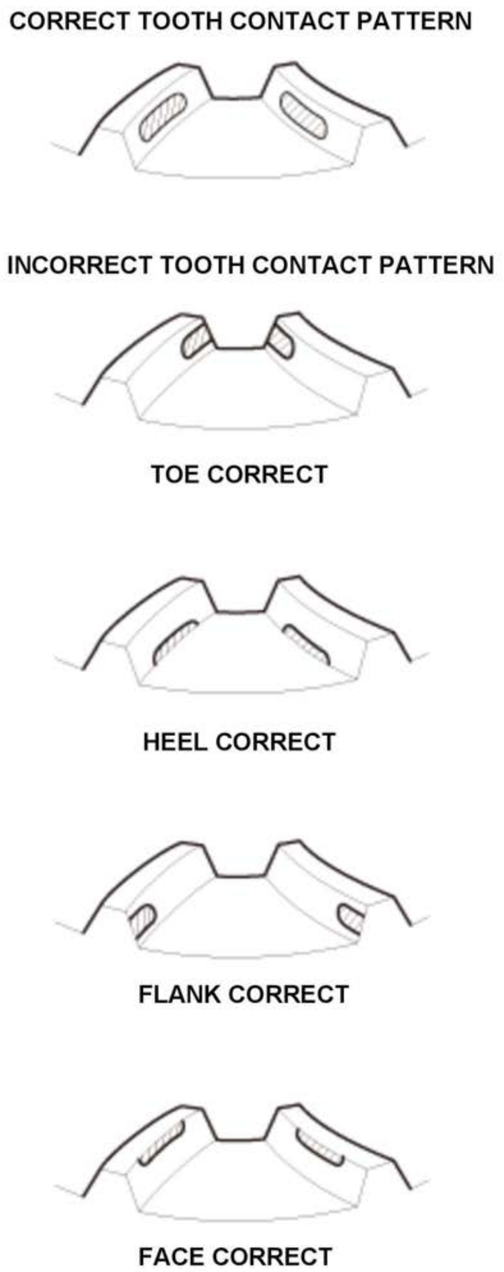 CORRECT TOOTH CONTACT PATTERN INCORRECT TOOTH CONTACT PATTERN TOE CORRECT HEEL CORRECT FLANK CORRECT FACE CORRECT	1. Check the transfer hypoid drive gear tooth contact pattern. 2. If the transfer gear tooth contact is incorrect, replace the transfer assembly.

12. All Removed Parts - Install

1. Install the parts in the reverse order of removal.

SYMPTOM TROUBLESHOOTING INDEX FOR VIEWER

ENGINE DOES NOT START

Probable cause(s)

- Shift cable broken or out of adjustment
- Control pin broken
- Transmission range switch defective or out of adjustment
- Drive plate worn or damaged
- Torque converter assembly defective
- Torque converter ring gear worn or damaged
- Transmission assembly and drive plate installation defective

NOTES

- Check for a loose shift cable at the shift lever and the control lever.
- Inspect the transmission range switch .
- Inspect the drive plate for wear and damage. If the drive plate is worn or damaged, replace it .
- Inspect the torque converter assembly for wear and damage. If the torque converter assembly is worn or damaged, replace it as an assembly .

ENGINE REVS UP ABNORMALLY HIGH WHILE DRIVING, AND NO ACCELERATION

Probable cause(s)

- TCM defective (1.5 L engine)
- PCM defective (except 1.5 L engine)
- Drive pulley, driven pulley, pulley shaft, steel belt, and pulley related parts worn or damaged
- Pulley pressure feed pipe defective
- Forward clutch defective
- Reverse brake defective
- Reverse brake piston defective
- Transmission fluid pump worn, binding, or foreign material in transmission fluid pump
- Transmission fluid pump drive chain or transmission fluid pump drive/driven sprocket worn or damaged
- Valve body assembly defective
- Joint pipes defective
- Solenoid wire harness worn or damaged
- Stator shaft worn or damaged

Notes

- Check the drive pulley, the driven pulley, the pulley shafts, the steel belt, and pulley related parts for wear and damage. If there are worn or damaged, replace the transmission housing assembly .
- Check the pulley pressure feed pipe and the sealing ring for wear and damage.
- Inspect the clearance between the forward clutch end-plate and the top disc . If the clearance is out of tolerance, replace the input shaft assembly.
- Inspect the reverse brake piston and the O-rings. Check the spring retainer/return spring assembly for wear and damage. Inspect the clearance between the reverse brake end-plate and the top disc . If the clearance is out of tolerance, inspect the reverse brake discs and reverse brake plates for wear and damage. If the discs and plates are worn or damaged, replace them as a set. If they are OK, adjust the clearance with the reverse brake end-plate.
- Check the transmission fluid pump for wear and damage. If the transmission fluid pump is worn or damaged, replace it as an assembly .
- Check the transmission fluid pump drive chain and the transmission fluid pump drive/driven sprocket for wear and damage.
- Check the valve body assembly for wear and damage.
- Check the joint pipes and O-rings for wear and damage.
- Inspect the solenoid wire harness for open and short.
- Check the stator shaft for wear and damage.

ENGINE RUNS, BUT VEHICLE DOES NOT MOVE IN ANY POSITIONS/MODES

Probable cause(s)

- Low transmission fluid (HCF-2) level
- Transmission range switch defective or out of adjustment

- Engine output low
- Transmission fluid strainer or CVTF warmer strainer clogged
- Drive pulley, driven pulley, pulley shaft, steel belt, and pulley related parts worn or damaged
- Pulley pressure feed pipe defective
- Input shaft assembly worn or damaged
- Secondary drive/driven gear worn or damaged
- Final driven gear worn or damaged
- Sun gear worn or damaged
- Control shaft, roller, detent lever, and detent spring worn or damaged
- Control lever worn or damaged
- Parking brake pawl and parking shaft worn or damaged
- Manual valve worn or damaged
- Transmission fluid pump worn, binding, or foreign material in transmission fluid pump
- Transmission fluid pump drive chain or transmission fluid pump drive/driven sprocket worn or damaged
- Valve body assembly defective
- Joint pipes defective
- Stator shaft worn or damaged
- Torque converter assembly defective
- Torque converter ring gear worn or damaged
- Transmission assembly and drive plate installation defective

Notes

- **Check the transmission fluid (HCF-2) level**.
- **Inspect the transmission range switch** .
- Adjust the engine output.
- **Check the transmission fluid strainer** and the **CVTF warmer strainer** for debris. If the transmission fluid strainer or the CVTF warmer strainer is clogged, find the damaged components that caused debris.
- Check the drive pulley, the driven pulley, the pulley shafts, the steel belt, and pulley related parts for wear and damage. If there are worn or damaged, **replace the transmission housing assembly** .
- Check the pulley pressure feed pipe and the sealing ring for wear and damage.
- Inspect the input shaft assembly for wear and damage. If the input shaft assembly is worn or damaged, replace it and also check the related part of the input shaft assembly for wear and damage.
- Check the secondary drive/driven gear for wear and damage.
- Check the final driven gear for wear and damage.
- Check the sun gear for wear and damage. If the sun gear is worn or damaged, replace it and also check the planetary carrier pinion gears, the forward clutch, and the drive pulley shaft splines for wear and damage.
- Check the control shaft, roller, detent lever, and detent spring for wear and damage.
- Check the control lever for wear and damage.
- Check the parking brake pawl and the parking shaft for wear and damage. If the parking brake pawl or the parking shaft are worn or damaged, replace them and also check the park gear for wear and damage.
- Check the manual valve for wear and damage.
- Check the transmission fluid pump for wear and damage. If the transmission fluid pump is worn or damaged, **replace it as an assembly** .
- Check the transmission fluid pump drive chain and the transmission fluid pump drive/driven sprocket for wear and damage.
- Check the valve body assembly for wear and damage.

- Check the joint pipes and O-rings for wear and damage.
- Check the stator shaft for wear and damage.
- Inspect the torque converter assembly for wear and damage. If the torque converter assembly is worn or damaged, **replace it as an assembly** .

ENGINE STALLS WHEN SHIFTED TO D POSITION/MODE FROM N POSITION/MODE

Probable cause(s)

- Engine output low
- Reverse brake defective
- Reverse brake piston defective
- Torque converter assembly defective
- Torque converter ring gear worn or damaged
- Transmission assembly and drive plate installation defective

Notes

- Adjust the engine output.
- Inspect the reverse brake piston and the O-rings. Check the spring retainer/return spring assembly for wear and damage. **Inspect the clearance between the reverse brake end-plate and the top disc** . If the clearance is out of tolerance, inspect the reverse brake discs and reverse brake plates for wear and damage. If the discs and plates are worn or damaged, replace them as a set. If they are OK, adjust the clearance with the reverse brake end-plate.
- Inspect the torque converter assembly for wear and damage. If the torque converter assembly is worn or damaged, **replace it as an assembly** .

ENGINE STALLS WHEN SHIFTED TO R POSITION/MODE FROM N POSITION/MODE

Probable cause(s)

- Engine output low
- Forward clutch defective
- Planetary carrier assembly worn or damaged
- Thrust needle bearing or thrust washer on planetary carrier assembly seized, worn, or damaged
- Torque converter assembly defective
- Torque converter ring gear worn or damaged
- Transmission assembly and drive plate installation defective

Notes

- Adjust the engine output.
- **Inspect the clearance between the forward clutch end-plate and the top disc** . If the clearance is out of tolerance, replace the input shaft assembly.
- Check the planetary carrier assembly for wear and damage. If the planetary carrier assembly is worn or damaged, replace it and also check the planetary carrier pinion gears, the reverse brake, and the drive pulley shaft splines for wear and damage.
- Check the thrust needle bearing and the thrust washer on the planetary carrier assembly for seize, wear, and damage. If the thrust needle bearing or the thrust washer are seized, worn, or damaged, replace them and adjust the clearance with the thrust shim.
- Inspect the torque converter assembly for wear and damage. If the torque converter assembly is worn or damaged, **replace it as an assembly** .

EXCESSIVE IDLE VIBRATION IN N AND P POSITIONS/MODES

Probable cause(s)

- TCM defective (1.5 L engine)
- PCM defective (except 1.5 L engine)
- Engine output low
- Forward clutch defective
- Input shaft assembly worn or damaged
- Reverse brake defective
- Reverse brake piston defective
- Torque converter assembly defective
- Torque converter ring gear worn or damaged
- Transmission assembly and drive plate installation defective

Notes

- Adjust the engine output.
- **Inspect the clearance between the forward clutch end-plate and the top disc** . If the clearance is out of tolerance, replace the input shaft assembly.
- Inspect the input shaft assembly for wear and damage. If the input shaft assembly is worn or damaged, replace it and also check the related part of the input shaft assembly for wear and damage.
- Inspect the reverse brake piston and the O-rings. Check the spring retainer/return spring assembly for wear and damage. **Inspect the clearance between the reverse brake end-plate and the top disc** . If the clearance is out of tolerance, inspect the reverse brake discs and reverse brake plates for wear and damage. If the discs and plates are worn or damaged, replace them as a set. If they are OK, adjust the clearance with the reverse brake end-plate.
- Inspect the torque converter assembly for wear and damage. If the torque converter assembly is worn or damaged, **replace it as an assembly** .

EXCESSIVE IDLE VIBRATION IN R, D, S, OR L POSITIONS/MODES

Probable cause(s)

- TCM defective (1.5 L engine)
- PCM defective (except 1.5 L engine)
- Engine output low
- Drive pulley, driven pulley, pulley shaft, steel belt, and pulley related parts worn or damaged
- Forward clutch defective
- Input shaft assembly worn or damaged
- Reverse brake defective
- Reverse brake piston defective
- Thrust washer on planetary carrier assembly seized, worn, or damaged
- Valve body assembly defective
- Joint pipes defective
- Solenoid wire harness worn or damaged
- Torque converter assembly defective
- Torque converter ring gear worn or damaged
- Transmission assembly and drive plate installation defective

Notes

- Adjust the engine output
- Check the drive pulley, the driven pulley, the pulley shafts, the steel belt, and pulley related parts for wear and damage. If there are worn or damaged, **replace the transmission housing assembly** .
- **Inspect the clearance between the forward clutch end-plate and the top disc** . If the clearance is out of tolerance, replace the input shaft assembly.
- Inspect the input shaft assembly for wear and damage. If the input shaft assembly is worn or damaged, replace it and also check the related part of the input shaft assembly for wear and damage.
- Inspect the reverse brake piston and the O-rings. Check the spring retainer/return spring assembly for wear and damage. **Inspect the clearance between the reverse brake end-plate and the top disc** . If the clearance is out of tolerance, inspect the reverse brake discs and reverse brake plates for wear and damage. If the discs and plates are worn or damaged, replace them as a set. If they are OK, adjust the clearance with the reverse brake end-plate.
- Check the thrust washer on the planetary carrier assembly for seize, wear, and damage. If the thrust washer is seized, worn, or damaged, replace it and adjust the clearance with the thrust shim.
- Check the valve body assembly for wear and damage.
- Check the joint pipes and O-rings for wear and damage.
- Inspect the solenoid wire harness for open and short.
- Inspect the torque converter assembly for wear and damage. If the torque converter assembly is worn or damaged, **replace it as an assembly** .

EXCESSIVE SHOCK WHEN ACCELERATING AND DECELERATING

Probable cause(s)

- TCM defective (1.5 L engine)
- PCM defective (except 1.5 L engine)
- Low transmission fluid (HCF-2) level
- Transmission fluid (HCF-2) deteriorated
- Drive pulley, driven pulley, pulley shaft, steel belt, and pulley related parts worn or damaged
- Pulley pressure feed pipe defective
- Forward clutch defective
- Reverse brake defective
- Reverse brake piston defective
- Valve body assembly defective
- Joint pipes defective
- Stator shaft worn or damaged
- Torque converter assembly defective
- Torque converter ring gear worn or damaged
- Transmission assembly and drive plate installation defective

Notes

- **Check the transmission fluid (HCF-2) level**.
- Check the transmission fluid (HCF-2) condition. If necessary, **replace the transmission fluid (HCF-2)**.
- Check the drive pulley, the driven pulley, the pulley shafts, the steel belt, and pulley related parts for wear and damage. If there are worn or damaged, **replace the transmission housing assembly** .
- Check the pulley pressure feed pipe and the sealing ring for wear and damage.
- **Inspect the clearance between the forward clutch end-plate and the top disc** . If the clearance is out of tolerance, replace the input shaft assembly.

- Inspect the reverse brake piston and the O-rings. Check the spring retainer/return spring assembly for wear and damage. **Inspect the clearance between the reverse brake end-plate and the top disc** . If the clearance is out of tolerance, inspect the reverse brake discs and reverse brake plates for wear and damage. If the discs and plates are worn or damaged, replace them as a set. If they are OK, adjust the clearance with the reverse brake end-plate.
- Check the valve body assembly for wear and damage.
- Check the joint pipes and O-rings for wear and damage.
- Check the stator shaft for wear and damage.
- Inspect the torque converter assembly for wear and damage. If the torque converter assembly is worn or damaged, **replace it as an assembly** .

EXCESSIVE SHOCK WHEN STARTING OFF

Probable cause(s)

- TCM defective (1.5 L engine)
- PCM defective (except 1.5 L engine)
- Low transmission fluid (HCF-2) level
- Transmission fluid (HCF-2) deteriorated
- Transmission fluid strainer or CVTF warmer strainer clogged
- Pulley pressure feed pipe defective
- Forward clutch defective
- Reverse brake defective
- Reverse brake piston defective
- Valve body assembly defective
- Joint pipes defective

Notes

- **Check the transmission fluid (HCF-2) level**.
- Check the transmission fluid (HCF-2) condition. If necessary, **replace the transmission fluid (HCF-2)**.
- **Check the transmission fluid strainer** and the **CVTF warmer strainer** for debris. If the transmission fluid strainer or the CVTF warmer strainer is clogged, find the damaged components that caused debris.
- Check the pulley pressure feed pipe and the sealing ring for wear and damage.
- **Inspect the clearance between the forward clutch end-plate and the top disc** . If the clearance is out of tolerance, replace the input shaft assembly.
- Inspect the reverse brake piston and the O-rings. Check the spring retainer/return spring assembly for wear and damage. **Inspect the clearance between the reverse brake end-plate and the top disc** . If the clearance is out of tolerance, inspect the reverse brake discs and reverse brake plates for wear and damage. If the discs and plates are worn or damaged, replace them as a set. If they are OK, adjust the clearance with the reverse brake end-plate.
- Check the valve body assembly for wear and damage.
- Check the joint pipes and O-rings for wear and damage.

HDS DOES NOT COMMUNICATE WITH THE TCM

Probable cause(s)

- DLC circuit error
- TCM defective

Notes

- **Troubleshoot the TCM communication circuit**.
- **Troubleshoot the DLC circuit** .

JUDDER WHEN STARTING OFF

Probable cause(s)

- Low transmission fluid (HCF-2) level
- Transmission fluid (HCF-2) deteriorated
- Transmission fluid strainer or CVTF warmer strainer clogged
- Transmission fluid pump worn, binding, or foreign material in transmission fluid pump
- Valve body assembly defective
- Joint pipes defective

Notes

- **Check the transmission fluid (HCF-2) level**.
- Check the transmission fluid (HCF-2) condition. If necessary, **replace the transmission fluid (HCF-2)**.
- **Check the transmission fluid strainer** and the **CVTF warmer strainer** for debris. If the transmission fluid strainer or the CVTF warmer strainer is clogged, find the damaged components that caused debris.
- Check the transmission fluid pump for wear and damage. If the transmission fluid pump is worn or damaged, **replace it as an assembly** .
- Check the valve body assembly for wear and damage.
- Check the joint pipes and O-rings for wear and damage.

LATE SHIFT AFTER SHIFTING TO D POSITION/MODE FROM N POSITION/MODE, AND RETURN TO N POSITION/MODE

Probable cause(s)

- TCM defective (1.5 L engine)
- PCM defective (except 1.5 L engine)
- Torque converter turbine speed sensor defective
- Low transmission fluid (HCF-2) level
- Transmission range switch defective or out of adjustment
- Shift cable broken or out of adjustment
- Control pin broken
- Transmission fluid strainer or CVTF warmer strainer clogged
- Forward clutch defective
- Manual valve worn or damaged
- Valve body assembly defective
- Joint pipes defective
- Stator shaft worn or damaged

Notes

- Check the torque converter turbine speed sensor for wear and damage, and also check the O-ring for wear and damage.
- **Check the transmission fluid (HCF-2) level**.
- **Inspect the transmission range switch** .
- **Check for a loose shift cable at the shift lever and the control lever**.

- **Check the transmission fluid strainer** and the **CVTF warmer strainer** for debris. If the transmission fluid strainer or the CVTF warmer strainer is clogged, find the damaged components that caused debris.
- **Inspect the clearance between the forward clutch end-plate and the top disc** . If the clearance is out of tolerance, replace the input shaft assembly.
- Check the manual valve for wear and damage.
- Check the valve body assembly for wear and damage.
- Check the joint pipes and O-rings for wear and damage.
- Check the stator shaft for wear and damage.

LATE SHIFT AFTER SHIFTING TO R POSITION/MODE FROM N POSITION/MODE, AND RETURN TO N POSITION/MODE

Probable cause(s)

- TCM defective (1.5 L engine)
- PCM defective (except 1.5 L engine)
- Torque converter turbine speed sensor defective
- Low transmission fluid (HCF-2) level
- Transmission range switch defective or out of adjustment
- Shift cable broken or out of adjustment
- Control pin broken
- Transmission fluid strainer or CVTF warmer strainer clogged
- Reverse brake defective
- Reverse brake piston defective
- Manual valve worn or damaged
- Valve body assembly defective
- Joint pipes defective
- Stator shaft worn or damaged

Notes

- Check the torque converter turbine speed sensor for wear and damage, and also check the O-ring for wear and damage.
- **Check the transmission fluid (HCF-2) level**.
- **Inspect the transmission range switch** .
- **Check for a loose shift cable at the shift lever and the control lever**.
- **Check the transmission fluid strainer** and the **CVTF warmer strainer** for debris. If the transmission fluid strainer or the CVTF warmer strainer is clogged, find the damaged components that caused debris.
- Inspect the reverse brake piston and the O-rings. Check the spring retainer/return spring assembly for wear and damage. **Inspect the clearance between the reverse brake end-plate and the top disc** . If the clearance is out of tolerance, inspect the reverse brake discs and reverse brake plates for wear and damage. If the discs and plates are worn or damaged, replace them as a set. If they are OK, adjust the clearance with the reverse brake end-plate.
- Check the manual valve for wear and damage.
- Check the valve body assembly for wear and damage.
- Check the joint pipes and O-rings for wear and damage.
- Check the stator shaft for wear and damage.

NO ENGINE BRAKING

Probable cause(s)

- TCM defective (1.5 L engine)
- PCM defective (except 1.5 L engine)
- Drive pulley, driven pulley, pulley shaft, steel belt, and pulley related parts worn or damaged
- Pulley pressure feed pipe defective
- Valve body assembly defective
- Joint pipes defective
- Solenoid wire harness worn or damaged
- Stator shaft worn or damaged

Notes

- Check the drive pulley, the driven pulley, the pulley shafts, the steel belt, and pulley related parts for wear and damage. If there are worn or damaged, **replace the transmission housing assembly** .
- Check the pulley pressure feed pipe and the sealing ring for wear and damage.
- Check the valve body assembly for wear and damage.
- Check the joint pipes and O-rings for wear and damage.
- Inspect the solenoid wire harness for open and short.
- Check the stator shaft for wear and damage.

NO SHIFT TO HIGHER OR LOWER RATIO

Probable cause(s)

- TCM defective (1.5 L engine)
- PCM defective (except 1.5 L engine)
- Low transmission fluid (HCF-2) level
- Transmission fluid strainer or CVTF warmer strainer clogged
- Drive pulley, driven pulley, pulley shaft, steel belt, and pulley related parts worn or damaged
- Pulley pressure feed pipe defective
- Transmission fluid pump worn, binding, or foreign material in transmission fluid pump
- Valve body assembly defective
- Solenoid wire harness worn or damaged
- Stator shaft worn or damaged

Notes

- **Check the transmission fluid (HCF-2) level**.
- **Check the transmission fluid strainer** and the **CVTF warmer strainer** for debris. If the transmission fluid strainer or the CVTF warmer strainer is clogged, find the damaged components that caused debris.
- Check the drive pulley, the driven pulley, the pulley shafts, the steel belt, and pulley related parts for wear and damage. If there are worn or damaged, **replace the transmission housing assembly** .
- Check the pulley pressure feed pipe and the sealing ring for wear and damage.
- Check the transmission fluid pump for wear and damage. If the transmission fluid pump is worn or damaged, **replace it as an assembly** .
- Check the valve body assembly for wear and damage.
- Inspect the solenoid wire harness for open and short.
- Check the stator shaft for wear and damage.

NOISE FROM TRANSMISSION IN D, S, OR L POSITIONS/MODES

Probable cause(s)

- Drive pulley, driven pulley, pulley shaft, steel belt, and pulley related parts worn or damaged
- Input shaft assembly worn or damaged
- Secondary drive/driven gear worn or damaged
- Final driven gear worn or damaged
- Control shaft, roller, detent lever, and detent spring worn or damaged
- Parking brake pawl and parking shaft worn or damaged
- Parking pawl spring worn or damaged

Notes

- Check the drive pulley, the driven pulley, the pulley shafts, the steel belt, and pulley related parts for wear and damage. If there are worn or damaged, **replace the transmission housing assembly** .
- Inspect the input shaft assembly for wear and damage. If the input shaft assembly is worn or damaged, replace it and also check the related part of the input shaft assembly for wear and damage.
- Check the secondary drive/driven gear for wear and damage.
- Check the final driven gear for wear and damage.
- Check the control shaft, roller, detent lever, and detent spring for wear and damage.
- Check the parking brake pawl and the parking shaft for wear and damage. If the parking brake pawl or the parking shaft are worn or damaged, replace them and also check the park gear for wear and damage.
- Check the parking pawl spring for wear and damage.

NOISE FROM TRANSMISSION IN N AND P POSITIONS/MODES

Probable cause(s)

- Forward clutch defective
- Input shaft assembly worn or damaged
- Reverse brake defective
- Reverse brake piston defective
- Thrust needle bearing or thrust shim on input shaft assembly seized, worn, or damaged
- Planetary carrier assembly worn or damaged
- Sun gear worn or damaged
- Ring gear worn or damaged
- Thrust needle bearing or thrust washer on planetary carrier assembly seized, worn, or damaged
- Transmission fluid pump worn, binding, or foreign material in transmission fluid pump

Notes

- **Inspect the clearance between the forward clutch end-plate and the top disc** . If the clearance is out of tolerance, replace the input shaft assembly.
- Inspect the input shaft assembly for wear and damage. If the input shaft assembly is worn or damaged, replace it and also check the related part of the input shaft assembly for wear and damage.
- Inspect the reverse brake piston and the O-rings. Check the spring retainer/return spring assembly for wear and damage. **Inspect the clearance between the reverse brake end-plate and the top disc** . If the clearance is out of tolerance, inspect the reverse brake discs and reverse brake plates for wear and damage. If the discs and plates are worn or damaged, replace them as a set. If they are OK, adjust the clearance with the reverse brake end-plate.
- Check the thrust needle bearing and the thrust shim on the input shaft assembly for seize, wear, and damage. If the thrust needle bearing or the thrust shim are seized, worn, or damaged, replace them and also check the related part of the input shaft assembly for wear and damage.

- Check the planetary carrier assembly for wear and damage. If the planetary carrier assembly is worn or damaged, replace it and also check the planetary carrier pinion gears, the reverse brake, and the drive pulley shaft splines for wear and damage.
- Check the sun gear for wear and damage. If the sun gear is worn or damaged, replace it and also check the planetary carrier pinion gears, the forward clutch, and the drive pulley shaft splines for wear and damage.
- Check the ring gear for wear and damage. If the ring gear is worn or damaged, replace it and also check the planetary carrier assembly and the reverse brake for wear and damage.
- Check the thrust needle bearing and the thrust washer on the planetary carrier assembly for seize, wear, and damage. If the thrust needle bearing or the thrust washer are seized, worn, or damaged, replace them and adjust the clearance with the thrust shim.
- Check the transmission fluid pump for wear and damage. If the transmission fluid pump is worn or damaged, **replace it as an assembly** .

NOISE FROM TRANSMISSION IN R POSITION/MODE

Probable cause(s)

- Drive pulley, driven pulley, pulley shaft, steel belt, and pulley related parts worn or damaged
- Input shaft assembly worn or damaged
- Reverse brake defective
- Reverse brake piston defective
- Spring retainer/return spring assembly defective
- Secondary drive/driven gear worn or damaged
- Final driven gear worn or damaged
- Thrust needle bearing or thrust shim on input shaft assembly seized, worn, or damaged
- Planetary carrier assembly worn or damaged
- Sun gear worn or damaged
- Ring gear worn or damaged
- Thrust needle bearing or thrust washer on planetary carrier assembly seized, worn, or damaged
- Control shaft, roller, detent lever, and detent spring worn or damaged
- Parking brake pawl and parking shaft worn or damaged
- Parking pawl spring worn or damaged

Notes

- Check the drive pulley, the driven pulley, the pulley shafts, the steel belt, and pulley related parts for wear and damage. If there are worn or damaged, **replace the transmission housing assembly** .
- Inspect the input shaft assembly for wear and damage. If the input shaft assembly is worn or damaged, replace it and also check the related part of the input shaft assembly for wear and damage.
- Inspect the reverse brake piston and the O-rings. Check the spring retainer/return spring assembly for wear and damage. **Inspect the clearance between the reverse brake end-plate and the top disc** . If the clearance is out of tolerance, inspect the reverse brake discs and reverse brake plates for wear and damage. If the discs and plates are worn or damaged, replace them as a set. If they are OK, adjust the clearance with the reverse brake end-plate.
- Check the secondary drive/driven gear for wear and damage.
- Check the final driven gear for wear and damage.
- Check the thrust needle bearing and the thrust shim on the input shaft assembly for seize, wear, and damage. If the thrust needle bearing or the thrust shim are seized, worn, or damaged, replace them and also check the related part of the input shaft assembly for wear and damage.
- Check the planetary carrier assembly for wear and damage. If the planetary carrier assembly is worn or damaged, replace it and also check the planetary carrier pinion gears, the reverse brake, and the drive

pulley shaft splines for wear and damage.

- Check the sun gear for wear and damage. If the sun gear is worn or damaged, replace it and also check the planetary carrier pinion gears, the forward clutch, and the drive pulley shaft splines for wear and damage.
- Check the ring gear for wear and damage. If the ring gear is worn or damaged, replace it and also check the planetary carrier assembly and the reverse brake for wear and damage.
- Check the thrust needle bearing and the thrust washer on the planetary carrier assembly for seize, wear, and damage. If the thrust needle bearing or the thrust washer are seized, worn, or damaged, replace them and adjust the clearance with the thrust shim.
- Check the control shaft, roller, detent lever, and detent spring for wear and damage.
- Check the parking brake pawl and the parking shaft for wear and damage. If the parking brake pawl or the parking shaft are worn or damaged, replace them and also check the park gear for wear and damage.
- Check the parking pawl spring for wear and damage.

POOR ACCELERATION

Probable cause(s)

- TCM defective (1.5 L engine)
- PCM defective (except 1.5 L engine)
- CVT drive pulley speed sensor defective
- Engine output low
- Drive pulley, driven pulley, pulley shaft, steel belt, and pulley related parts worn or damaged
- Pulley pressure feed pipe defective
- Transmission fluid pump worn, binding, or foreign material in transmission fluid pump
- Valve body assembly defective
- Joint pipes defective
- Solenoid wire harness worn or damaged
- Stator shaft worn or damaged
- Torque converter assembly defective
- Torque converter ring gear worn or damaged
- Transmission assembly and drive plate installation defective

Notes

- Check the CVT drive pulley speed sensor for wear and damage, and also check the O-ring for wear and damage.
- Adjust the engine output.
- Check the drive pulley, the driven pulley, the pulley shafts, the steel belt, and pulley related parts for wear and damage. If there are worn or damaged, **replace the transmission housing assembly** .
- Check the pulley pressure feed pipe and the sealing ring for wear and damage.
- Check the transmission fluid pump for wear and damage. If the transmission fluid pump is worn or damaged, **replace it as an assembly** .
- Check the valve body assembly for wear and damage.
- Check the joint pipes and O-rings for wear and damage.
- Inspect the solenoid wire harness for open and short.
- Check the stator shaft for wear and damage.
- Inspect the torque converter assembly for wear and damage. If the torque converter assembly is worn or damaged, **replace it as an assembly** .

SHIFT LEVER CANNOT BE MOVED FROM P POSITION/MODE WHILE PRESSING ON THE BRAKE PEDAL

Probable cause(s)

- Shift lock solenoid defective
- Shift lock solenoid control circuit
- Shift lock mechanism defective
- Transmission range switch defective
- Transmission range switch circuit
- Brake pedal position switch circuit
- Brake pedal position switch defective
- Accelerator pedal position sensor circuit
- Accelerator pedal position sensor defective
- Throttle body defective

Notes

- **Test the shift lock solenoid**.
- **Troubleshoot the shift lock system circuit**.
- **Inspect the transmission range switch** .
- **Inspect the APP sensor signal** .
- **Check the throttle body** .

SHIFT LEVER DOES NOT OPERATE SMOOTHLY

Probable cause(s)

- Transmission range switch defective or out of adjustment
- Shift cable broken or out of adjustment
- Control pin broken
- Control shaft, roller, detent lever, and detent spring worn or damaged
- Control lever worn or damaged
- Parking brake pawl and parking shaft worn or damaged
- Manual valve worn or damaged
- Stator shaft worn or damaged

Notes

- **Inspect the transmission range switch** .
- **Check for a loose shift cable at the shift lever and the control lever**.
- Check the control shaft, roller, detent lever, and detent spring for wear and damage.
- Check the control lever for wear and damage.
- Check the parking brake pawl and the parking shaft for wear and damage. If the parking brake pawl or the parking shaft are worn or damaged, replace them and also check the park gear for wear and damage.
- Check the manual valve for wear and damage.
- Check the stator shaft for wear and damage.

STALL SPEED HIGH

Probable cause(s)

- TCM defective (1.5 L engine)
- PCM defective (except 1.5 L engine)
- Low transmission fluid (HCF-2) level
- Transmission fluid (HCF-2) deteriorated
- Forward clutch defective
- Input shaft assembly worn or damaged
- Reverse brake defective
- Reverse brake piston defective
- Transmission fluid pump worn, binding, or foreign material in transmission fluid pump
- Valve body assembly defective
- Joint pipes defective
- Stator shaft worn or damaged
- Torque converter assembly defective
- Torque converter ring gear worn or damaged
- Transmission assembly and drive plate installation defective

Notes

- **Check the transmission fluid (HCF-2) level**.
- Check the transmission fluid (HCF-2) condition. If necessary, **replace the transmission fluid (HCF-2)**.
- **Inspect the clearance between the forward clutch end-plate and the top disc** . If the clearance is out of tolerance, replace the input shaft assembly.
- Inspect the input shaft assembly for wear and damage. If the input shaft assembly is worn or damaged, replace it and also check the related part of the input shaft assembly for wear and damage.
- Inspect the reverse brake piston and the O-rings. Check the spring retainer/return spring assembly for wear and damage. **Inspect the clearance between the reverse brake end-plate and the top disc** . If the clearance is out of tolerance, inspect the reverse brake discs and reverse brake plates for wear and damage. If the discs and plates are worn or damaged, replace them as a set. If they are OK, adjust the clearance with the reverse brake end-plate.
- Check the transmission fluid pump for wear and damage. If the transmission fluid pump is worn or damaged, **replace it as an assembly** .
- Check the valve body assembly for wear and damage.
- Check the joint pipes and O-rings for wear and damage.
- Check the stator shaft for wear and damage.
- Inspect the torque converter assembly for wear and damage. If the torque converter assembly is worn or damaged, **replace it as an assembly** .

STALL SPEED LOW

Probable cause(s)

- TCM defective (1.5 L engine)
- PCM defective (except 1.5 L engine)
- Engine output low
- Valve body assembly defective
- Joint pipes defective
- Stator shaft worn or damaged
- Torque converter assembly defective
- Torque converter ring gear worn or damaged

- Transmission assembly and drive plate installation defective

Notes

- Adjust the engine output.
- Check the valve body assembly for wear and damage.
- Check the joint pipes and O-rings for wear and damage.
- Check the stator shaft for wear and damage.
- Inspect the torque converter assembly for wear and damage. If the torque converter assembly is worn or damaged, **replace it as an assembly** .

TORQUE CONVERTER CLUTCH DOES NOT DISENGAGE; ENGINE STALLS EASILY

Probable cause(s)

- Shift solenoid valve B defective
- CVT lock-up clutch control solenoid valve defective
- Torque converter clutch piston defective
- Valve body assembly defective

Notes

- **Inspect shift solenoid valve B**.
- **Inspect the CVT lock-up clutch control solenoid valve**.
- Inspect the torque converter assembly for wear and damage. If the torque converter assembly is worn or damaged, **replace it as an assembly** .
- Check the valve body assembly for wear and damage.

TRANSMISSION WILL NOT SHIFT INTO P POSITION/MODE, OR TRANSMISSION CANNOT SHIFT OUT OF P POSITION/MODE

Probable cause(s)

- TCM defective (1.5 L engine)
- PCM defective (except 1.5 L engine)
- Drive pulley, driven pulley, pulley shaft, steel belt, and pulley related parts worn or damaged
- Transmission range switch defective or out of adjustment
- Shift cable broken or out of adjustment
- Control pin broken
- Control shaft, roller, detent lever, and detent spring worn or damaged
- Control lever worn or damaged
- Parking brake pawl and parking shaft worn or damaged
- Park gear worn or damaged
- Parking pawl spring worn or damaged
- Manual valve worn or damaged
- Valve body assembly defective
- Stator shaft worn or damaged

Notes

- Check the drive pulley, the driven pulley, the pulley shafts, the steel belt, and pulley related parts for wear and damage. If there are worn or damaged, **replace the transmission housing assembly** .

- **Inspect the transmission range switch** .
- **Check for a loose shift cable at the shift lever and the control lever**.
- Check the control shaft, roller, detent lever, and detent spring for wear and damage.
- Check the control lever for wear and damage.
- Check the parking brake pawl and the parking shaft for wear and damage. If the parking brake pawl or the parking shaft are worn or damaged, replace them and also check the park gear for wear and damage.
- Check the park gear for wear and damage.
- Check the parking pawl spring for wear and damage.
- Check the manual valve for wear and damage.
- Check the valve body assembly for wear and damage.
- Check the stator shaft for wear and damage.

UNSTABLE ENGINE SPEED

Probable cause(s)

- TCM defective (1.5 L engine)
- PCM defective (except 1.5 L engine)
- Low transmission fluid (HCF-2) level
- Transmission fluid (HCF-2) deteriorated
- Transmission fluid strainer or CVTF warmer strainer clogged
- Drive pulley, driven pulley, pulley shaft, steel belt, and pulley related parts worn or damaged
- Pulley pressure feed pipe defective
- Forward clutch defective
- Reverse brake defective
- CVT drive pulley pressure control solenoid valve defective
- CVT driven pulley pressure control solenoid valve defective
- CVT clutch pressure control solenoid valve defective
- CVT lock-up clutch control solenoid valve defective
- Shift solenoid valve B defective
- Shift solenoid valve O/P defective
- Transmission fluid pump worn, binding, or foreign material in transmission fluid pump
- Valve body assembly defective
- Joint pipes defective
- Torque converter assembly defective
- Torque converter ring gear worn or damaged
- Transmission assembly and drive plate installation defective

Notes

- **Check the transmission fluid (HCF-2) level**.
- Check the transmission fluid (HCF-2) condition. If necessary, **replace the transmission fluid (HCF-2)**.
- **Check the transmission fluid strainer** and the **CVTF warmer strainer** for debris. If the transmission fluid strainer or the CVTF warmer strainer is clogged, find the damaged components that caused debris.
- Check the drive pulley, the driven pulley, the pulley shafts, the steel belt, and pulley related parts for wear and damage. If there are worn or damaged, **replace the transmission housing assembly** .
- Check the pulley pressure feed pipe and the sealing ring for wear and damage.
- **Inspect the clearance between the forward clutch end-plate and the top disc** . If the clearance is out of tolerance, replace the input shaft assembly.

- Inspect the reverse brake piston and the O-rings. Check the spring retainer/return spring assembly for wear and damage. **Inspect the clearance between the reverse brake end-plate and the top disc** . If the clearance is out of tolerance, inspect the reverse brake discs and reverse brake plates for wear and damage. If the discs and plates are worn or damaged, replace them as a set. If they are OK, adjust the clearance with the reverse brake end-plate.
- **Inspect the CVT solenoid valve**.
- Check the transmission fluid pump for wear and damage. If the transmission fluid pump is worn or damaged, **replace it as an assembly** .
- Check the valve body assembly for wear and damage.
- Check the joint pipes and O-rings for wear and damage.
- Inspect the torque converter assembly for wear and damage. If the torque converter assembly is worn or damaged, **replace it as an assembly** .

VEHICLE DOES NOT CREEP ON A FLAT ROAD IN D, S, OR L POSITIONS/MODES

Probable cause(s)

- TCM defective (1.5 L engine)
- PCM defective (except 1.5 L engine)
- CVT drive pulley speed sensor defective
- Engine output low
- Low transmission fluid (HCF-2) level
- Transmission fluid strainer or CVTF warmer strainer clogged
- Drive pulley, driven pulley, pulley shaft, steel belt, and pulley related parts worn or damaged
- Pulley pressure feed pipe defective
- Transmission fluid pump worn, binding, or foreign material in transmission fluid pump
- Valve body assembly defective
- Joint pipes defective
- Solenoid wire harness worn or damaged
- Stator shaft worn or damaged
- Torque converter assembly defective
- Torque converter ring gear worn or damaged
- Transmission assembly and drive plate installation defective

Notes

- Check the CVT drive pulley speed sensor for wear and damage, and also check the O-ring for wear and damage.
- Adjust the engine output.
- **Check the transmission fluid (HCF-2) level**.
- **Check the transmission fluid strainer** and the **CVTF warmer strainer** for debris. If the transmission fluid strainer or the CVTF warmer strainer is clogged, find the damaged components that caused debris.
- Check the drive pulley, the driven pulley, the pulley shafts, the steel belt, and pulley related parts for wear and damage. If there are worn or damaged, **replace the transmission housing assembly** .
- Check the pulley pressure feed pipe and the sealing ring for wear and damage.
- Check the transmission fluid pump for wear and damage. If the transmission fluid pump is worn or damaged, **replace it as an assembly** .
- Check the valve body assembly for wear and damage.
- Check the joint pipes and O-rings for wear and damage.
- Inspect the solenoid wire harness for open and short.

- Check the stator shaft for wear and damage.
- Inspect the torque converter assembly for wear and damage. If the torque converter assembly is worn or damaged, **replace it as an assembly** .

VEHICLE DOES NOT MOVE IN D, S, OR L POSITIONS/MODES

Probable cause(s)

- Transmission range switch defective or out of adjustment
- Shift cable broken or out of adjustment
- Control pin broken
- Engine output low
- Forward clutch defective
- Reverse brake piston defective
- Sun gear worn or damaged
- Manual valve worn or damaged
- Valve body assembly defective
- Stator shaft worn or damaged

Notes

- **Inspect the transmission range switch** .
- **Check for a loose shift cable at the shift lever and the control lever**.
- Adjust the engine output.
- **Inspect the clearance between the forward clutch end-plate and the top disc** . If the clearance is out of tolerance, replace the input shaft assembly.
- Inspect the reverse brake piston and the O-rings. Check the spring retainer/return spring assembly for wear and damage. **Inspect the clearance between the reverse brake end-plate and the top disc** . If the clearance is out of tolerance, inspect the reverse brake discs and reverse brake plates for wear and damage. If the discs and plates are worn or damaged, replace them as a set. If they are OK, adjust the clearance with the reverse brake end-plate.
- Check the sun gear for wear and damage. If the sun gear is worn or damaged, replace it and also check the planetary carrier pinion gears, the forward clutch, and the drive pulley shaft splines for wear and damage.
- Check the manual valve for wear and damage.
- Check the valve body assembly for wear and damage.
- Check the stator shaft for wear and damage.

VEHICLE DOES NOT MOVE IN R POSITION/MODE

Probable cause(s)

- Transmission range switch defective or out of adjustment
- Shift cable broken or out of adjustment
- Control pin broken
- Reverse brake defective
- Reverse brake piston defective
- Planetary carrier assembly worn or damaged
- Sun gear worn or damaged
- Ring gear worn or damaged
- Thrust needle bearing or thrust washer on planetary carrier assembly seized, worn, or damaged

- Manual valve worn or damaged
- Valve body assembly defective
- Stator shaft worn or damaged

Notes

- **Inspect the transmission range switch** .
- **Check for a loose shift cable at the shift lever and the control lever**.
- Inspect the reverse brake piston and the O-rings. Check the spring retainer/return spring assembly for wear and damage. **Inspect the clearance between the reverse brake end-plate and the top disc** . If the clearance is out of tolerance, inspect the reverse brake discs and reverse brake plates for wear and damage. If the discs and plates are worn or damaged, replace them as a set. If they are OK, adjust the clearance with the reverse brake end-plate.
- Check the planetary carrier assembly for wear and damage. If the planetary carrier assembly is worn or damaged, replace it and also check the planetary carrier pinion gears, the reverse brake, and the drive pulley shaft splines for wear and damage.
- Check the sun gear for wear and damage. If the sun gear is worn or damaged, replace it and also check the planetary carrier pinion gears, the forward clutch, and the drive pulley shaft splines for wear and damage.
- Check the ring gear for wear and damage. If the ring gear is worn or damaged, replace it and also check the planetary carrier assembly and the reverse brake for wear and damage.
- Check the thrust needle bearing and the thrust washer on the planetary carrier assembly for seize, wear, and damage. If the thrust needle bearing or the thrust washer are seized, worn, or damaged, replace them and adjust the clearance with the thrust shim.
- Check the manual valve for wear and damage.
- Check the valve body assembly for wear and damage.
- Check the stator shaft for wear and damage.

VEHICLE MOVES IN N POSITION/MODE, SHIFT CABLE IS PROPERLY ADJUSTED

Probable cause(s)

- Forward clutch defective
- Reverse brake defective
- Reverse brake piston defective
- Spring retainer/return spring assembly defective
- Thrust needle bearing on input shaft assembly seized, worn, or damaged
- Manual valve worn or damaged
- Stator shaft worn or damaged

Notes

- **Inspect the clearance between the forward clutch end-plate and the top disc** . If the clearance is out of tolerance, replace the input shaft assembly.
- Inspect the reverse brake piston and the O-rings. Check the spring retainer/return spring assembly for wear and damage. **Inspect the clearance between the reverse brake end-plate and the top disc** . If the clearance is out of tolerance, inspect the reverse brake discs and reverse brake plates for wear and damage. If the discs and plates are worn or damaged, replace them as a set. If they are OK, adjust the clearance with the reverse brake end-plate.
- Check the thrust needle bearing on the input shaft assembly for seize, wear, and damage. If the thrust needle bearing is seized, worn, or damaged, replace it and also check the related part of the input shaft assembly for wear and damage.
- Check the manual valve for wear and damage.

- Check the stator shaft for wear and damage.

VIBRATION IN ALL POSITIONS/MODES

Probable cause(s)

- Engine output low
- Input shaft assembly worn or damaged
- Torque converter assembly defective
- Torque converter ring gear worn or damaged
- Transmission assembly and drive plate installation defective

Notes

- Adjust the engine output.
- Inspect the input shaft assembly for wear and damage. If the input shaft assembly is worn or damaged, replace it and also check the related part of the input shaft assembly for wear and damage.
- Inspect the torque converter assembly for wear and damage. If the torque converter assembly is worn or damaged, **replace it as an assembly** .

WITH THE VEHICLE IN THE ON MODE, THE SHIFT POSITION INDICATOR DISPLAYS AN IMPROPER INDICATION, OR IT NEVER DISPLAYS AT ALL

Probable cause(s)

- F-CAN communication line error
- Gauge control module defective
- TCM defective (1.5 L engine)
- PCM defective (except 1.5 L engine)
- Transmission range switch defective or out of adjustment
- Transmission range switch circuit
- Shift cable broken or out of adjustment
- Control pin broken
- Control shaft, roller, detent lever, and detent spring worn or damaged

Notes

- **Check the F-CAN communication line** (1.5 L engine).
- **Check the F-CAN communication line** (2.4 L engine).
- **Check the F-CAN communication line by using the gauge control module self-diagnostic function** .
- **Inspect the transmission range switch** .
- Inspect the open or short in the wire between the TCM and transmission range switch.
- **Check for a loose shift cable at the shift lever and the control lever**.
- Check the control shaft, roller, detent lever, and detent spring for wear and damage.

STANDARDS AND SERVICE LIMITS (2020-21)

CVT AND CVT DIFFERENTIAL

Item	Measurement	Qualification	Standard or New	Service Limit
Transmission fluid	Capacity (AWD)	Fluid change	4.2 L (4.4 US qt)	-
		Transfer removal, installation, and replacement	4.8 L (5.1 US qt)	-
		Oil pan, valve body assembly, and transmission fluid pump removal, installation, and replacement	6.8 L (7.2 US qt)*	*Standard amount
		Overhaul	8.4 L (8.9 US qt)	-
	Capacity (2WD)	Fluid change	3.6 L (3.8 US qt)	-
		Oil pan, valve body assembly, and transmission fluid pump removal, installation, and replacement	5.8 L (6.1 US qt)*	*Standard amount
		Overhaul	7.6 L (8.0 US qt)	-
	Fluid type	B	Use Honda HCF-2.**NOTE:** Using the wrong type of fluid will damage the transmission.	
Hydraulic pressure	Forward clutch pressure	At idle in D	450-730 kPa (4.60-7.40 kgf/cm 2, 65.4-105.2 psi)	-
	Reverse brake pressure	At idle in R	50-440 kPa (0.50-4.50 kgf/cm 2, 7.1-64.0 psi)	-
	CVT drive pulley pressure	At idle in N	260-540 kPa (2.70-5.50 kgf/cm 2, 38.4-78.2 psi)	-
	CVT driven pulley pressure	At idle in N	490-900 kPa (5.00-9.20 kgf/cm 2, 71.1-130.8 psi)	-
Stall speed	Check with vehicle on level ground	B	2,500 rpm	2,350-2,650 rpm
Forward clutch	Clearance between clutch end-plate and top disc	B	0.8-1.0 mm (0.031-0.039 in)	-
Reverse brake	Clearance between reverse brake end-plate and top disc	B	0.9-1.1 mm (0.035-0.043 in)	Adjust
Input shaft	Thrust clearance	B	0.15-0.25 mm (0.0059-	Adjust

Item	Measurement	Qualification	Standard or New	Service Limit
			0.0098 in)	
Driven pulley shaft	Thrust clearance	B	0-0.13 mm (0-0.0051 in)	Adjust
Final drive shaft	Tapered roller bearing starting torque: differential assembly and final drive shaft total preload	For new bearing	6.88-27.39 N.m (70.1-279.3 kgf.cm, 60.9-242.5 lbf.in)	Adjust
		For reused bearing	5.63-26.15 N.m (57.4-266.6 kgf.cm, 49.8-231.4 lbf.in)	Adjust

Item	Measurement	Qualification	Standard or New	Service Limit
CVT differential carrier	Tapered roller bearing starting torque: preload	For new bearing	1.35-3.07 N.m (13.8-31.3 kgf.cm, 12.0-27.2 lbf.in)	Adjust
		For reused bearing	1.06-2.78 N.m (10.8-28.3 kgf.cm, 9.4-24.6 lbf.in)	Adjust
CVT differential pinion gear	Backlash	B	0.05-0.15 mm (0.0020-0.0059 in)	-
Transfer assembly	Transfer gear backlash	B	0.06-0.16 mm (0.0024-0.0063 in)	-
	Tapered roller bearing total starting torque (preload)	B	3.28-8.77 N.m (33.4-89.4 kgf.cm, 29.0-77.6 lbf.in)	-